2012 GENERAL INFORMATION

Circuit Testing Procedures - Non-DTC-Based Diagnostics - Ram Pickup

WARNING

WARNING

WARNINGS provide information to prevent personal injury and vehicle damage. Below is a list of general warnings that should be followed any time a vehicle is being serviced.

WARNING: **Always wear safety glasses for eye protection.**

WARNING: **Use safety stands anytime a procedure requires being under a vehicle.**

WARNING: **Be sure that the ignition switch always is in the off position, unless the procedure requires it to be on.**

WARNING: **Set the parking brake when working on any vehicle. An automatic transmission should be in park. A manual transmission should be in neutral.**

WARNING: **Operate the engine only in a well-ventilated area.**

WARNING: **Keep away from moving parts when the engine is running, especially the fan and belts.**

WARNING: **To prevent serious burns, avoid contact with hot parts such as the radiator, exhaust manifold(s), tail pipe, catalytic converter and muffler.**

WARNING: **Do not allow flame or sparks near the battery. Gases are always present in and around the battery.**

WARNING: **Always remove rings, watches, loose hanging jewelry and avoid loose clothing.**

DESCRIPTION

CIRCUIT FUNCTIONS

All circuits in the diagrams use an alpha/numeric code to identify the wire and its function. To identify which circuit code applies to a system, refer to the Circuit Identification Code Chart below. This chart shows the main circuits only and does not show the secondary codes that may apply to some models.

CIRCUIT IDENTIFICATION CODE CHART

CIRCUIT	FUNCTION
A	BATTERY FEED
B	BRAKE CONTROLS
C	CLIMATE CONTROLS
D	DIAGNOSTIC CIRCUITS
E	DIMMING ILLUMINATION CIRCUITS
F	FUSED CIRCUITS
G	MONITORING CIRCUITS (GAUGES)
H	MULTIPLE
I	NOT USED
J	OPEN
K	POWERTRAIN CONTROL MODULE
L	EXTERIOR LIGHTING
M	INTERIOR LIGHTING
N	MULTIPLE
O	NOT USED
P	POWER OPTION (BATTERY FEED)
Q	POWER OPTIONS (IGNITION FEED)
R	PASSIVE RESTRAINT
S	SUSPENSION/STEERING
T	TRANSMISSION/TRANSAXLE/ TRANSFER CASE
U	OPEN
V	SPEED CONTROL, WIPER/WASHER
W	WIPERS
X	AUDIO SYSTEMS
Y	TEMPORARY
Z	GROUNDS

CIRCUIT INFORMATION

Each wire shown in the diagrams contains a code which identifies the main circuit, a specific part of the main circuit, gage of wire, and color. An example would be **A 2 18 LB/YL** . This is a Battery Feed circuit, level two, eighteen gauge, light blue with a yellow tracer.

WIRE COLOR CODE CHART

COLOR CODE	COLOR

BL	BLUE
BK	BLACK
BR	BROWN
DB	DARK BLUE
DG	DARK GREEN
GY	GRAY
LB	LIGHT BLUE
LG	LIGHT GREEN
OR	ORANGE
PK	PINK
RD	RED
TN	TAN
VT	VIOLET
WT	WHITE
YL	YELLOW
*	WITH TRACER

DIAGNOSIS AND TESTING

DIAGNOSIS AND TESTING - WIRING HARNESS TESTING

TROUBLESHOOTING TOOLS

When diagnosing a problem in an electrical circuit there are several common tools necessary. These tools are listed and explained below.

- Jumper Wire - This is a test wire used to connect two points of a circuit. It can be used to bypass an open in a circuit.

  WARNING: Never use a jumper wire across a load, such as a motor, connected between a battery feed and ground.

- Voltmeter - Used to check for voltage on a circuit. Always connect the black lead to a known good ground and the red lead to the positive side of the circuit.

  CAUTION: Most of the electrical components used in today's vehicles are Solid State. When checking voltages in these circuits, use a meter with a 10 - megohm or greater impedance rating.

- Ohmmeter - Used to check the resistance between two points of a circuit. Low or no resistance in a circuit means good continuity.

  CAUTION: Most of the electrical components used in today's vehicles are Solid State.

When checking resistance in these circuits use a meter with a 10 - megohm or greater impedance rating. In addition, make sure the power is disconnected from the circuit. Circuits that are powered up by the vehicle's electrical system can cause damage to the equipment and provide false readings.

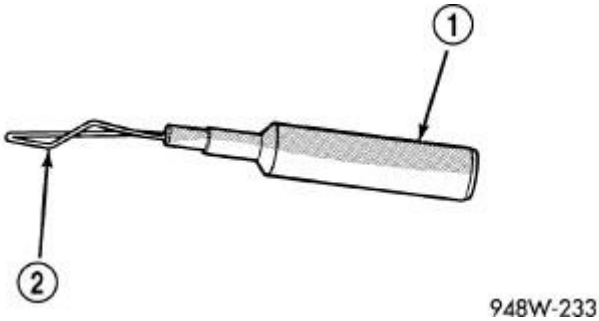

Fig. 1: Probing Tool
Courtesy of CHRYSLER GROUP, LLC

1 - SPECIAL TOOL 6801
2 - PROBING END

- Probing Tools - These tools are used for probing terminals in connectors. Select the proper size tool from Special Tool Package (special tool #6807, Terminal Tools), and insert the probing end (2) into the terminal being tested. Use the other end of the tool (1) to insert the meter probe.

INTERMITTENT AND POOR CONNECTIONS

Most intermittent electrical problems are caused by faulty electrical connections or wiring. It is also possible for a sticking component or relay to cause a problem. Before condemning a component or wiring assembly, check the following items.

- Connectors are fully seated
- Spread terminals, or terminal push out
- Terminals in the wiring assembly are fully seated into the connector/component and locked into position
- Dirt or corrosion on the terminals. Any amount of corrosion or dirt could cause an intermittent problem
- Damaged connector/component casing exposing the item to dirt or moisture
- Wire insulation that has rubbed through causing a short to ground
- Some or all of the wiring strands broken inside of the insulation
- Wiring broken inside of the insulation

TROUBLESHOOTING WIRING PROBLEMS

When troubleshooting wiring problems there are six steps which can aid in the procedure. The steps are listed and explained below. Always check for non-factory items added to the vehicle before doing any diagnosis. If the vehicle is equipped with these items, disconnect them to verify these add-on items are not the cause of the problem.

1. Verify the problem.
2. Verify any related symptoms. Do this by performing operational checks on components that are in the same circuit. Refer to the appropriate wiring diagrams.
3. Analyze the symptoms. Use the wiring diagrams to determine what the circuit is doing, where the problem most likely is occurring and where the diagnosis will continue.
4. Isolate the problem area.
5. Repair the problem area.
6. Verify the proper operation. For this step, check for proper operation of all items on the repaired circuit. Refer to the appropriate wiring diagrams.

STANDARD PROCEDURE

CHECK A BATTERY OR IGNITION VOLTAGE CIRCUIT WITH A 12-VOLT TEST LIGHT

DIAGNOSTIC TEST

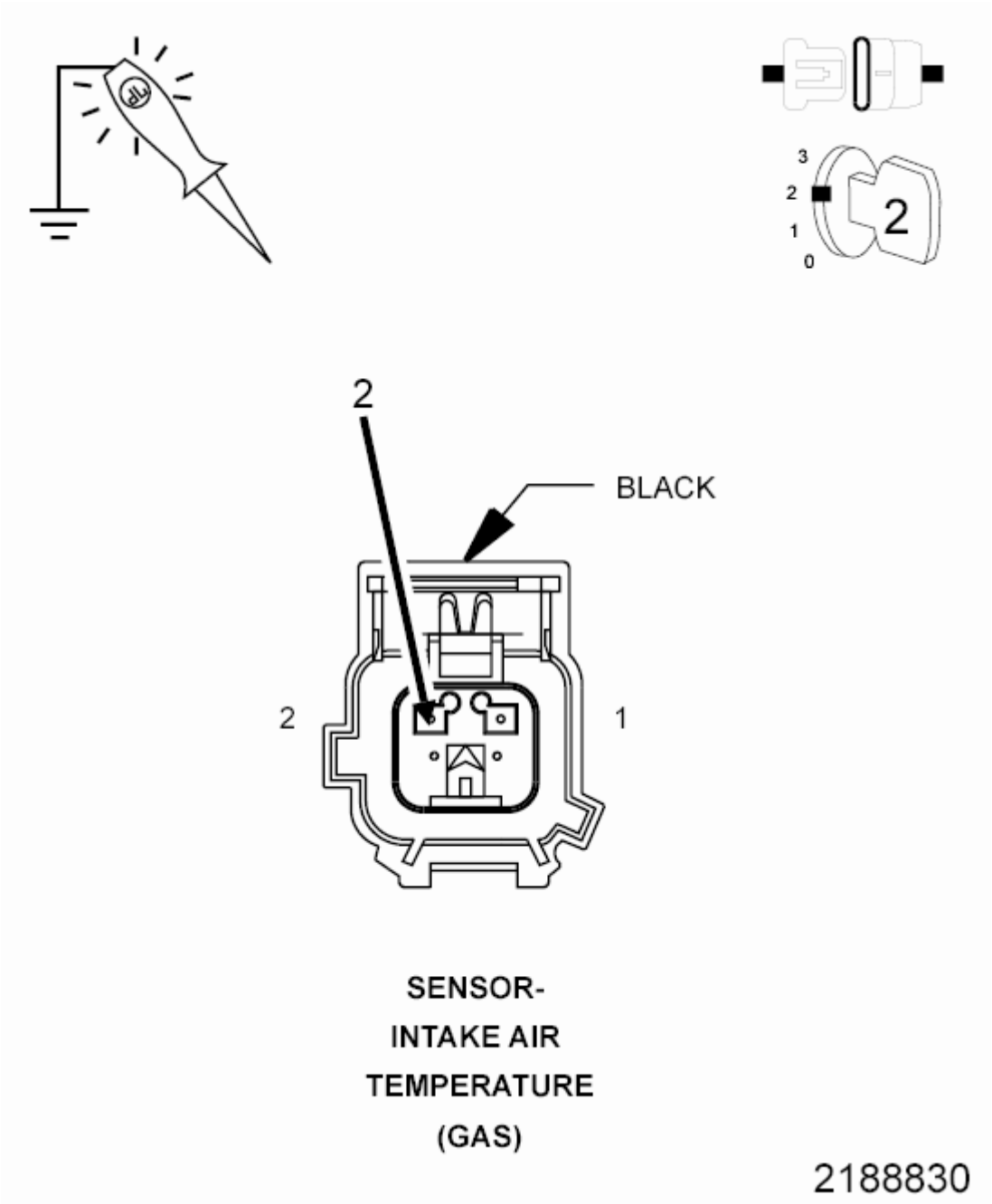

Fig. 2: Checking For Voltage Using 12-Volt Test Light
Courtesy of CHRYSLER GROUP, LLC

1.

   1. Turn the ignition off.
   2. Disconnect the wire harness connector of the component that is receiving the voltage.

   NOTE: Check connectors - Clean/repair as necessary.

3. At this time, leave all in-line connectors connected.

NOTE: **Before inspecting any circuits, first test the 12-volt test light. Connect the 12-volt test light to battery ground or to any other known good ground. Touch the lead of the test light to Battery +. If the test light is good, it should illuminate brightly.**

4. Connect the 12-volt test light to a known good ground.
5. Use the test light lead to carefully probe the Battery or Ignition Voltage circuit in the harness connector.
6. First check with the ignition off, next check with the ignition on, and lastly check while cranking the engine.

   Does the test light illuminate brightly?

   Yes

   - The circuit is not open at this time or the condition that originally caused the open may not be present at this time. Continue to monitor the test light and wiggle the wire harness and connectors to check for an intermittent open or excessive resistance condition.
   - Use the wiring application as a guide to trace the circuits and look for any in-line connectors where the open could occur intermittently.
   - Look for any chafed, pierced, pinched, or partially broken wires.
   - Look for broken, bent, pushed out or corroded terminals. Verify that there is good pin to terminal contact in the related wire harness connectors.
   - Perform any Technical Service Bulletins (TSBs) that may apply.

   No

   - Repair the open in the circuit. Use the wiring application as a guide to trace the circuit and look for any in-line connectors where the short could occur.
   - One way to help isolate the open is to disconnect any in-line connectors and measure the resistance from one side of the in-line connector to the matching component harness connector. If the open goes away, the open is on the other side of the in-line connector.
   - If this is a fused circuit, make sure to inspect the fuse. If the fuse is open, check the circuit for a short to ground before installing a new fuse. The circuit may have a short to ground causing the fuse to open. This short to ground could be in the wire harness or in one of the components the circuit is supplying voltage to.

CHECK A CIRCUIT FOR A SHORT TO GROUND

DIAGNOSTIC TEST

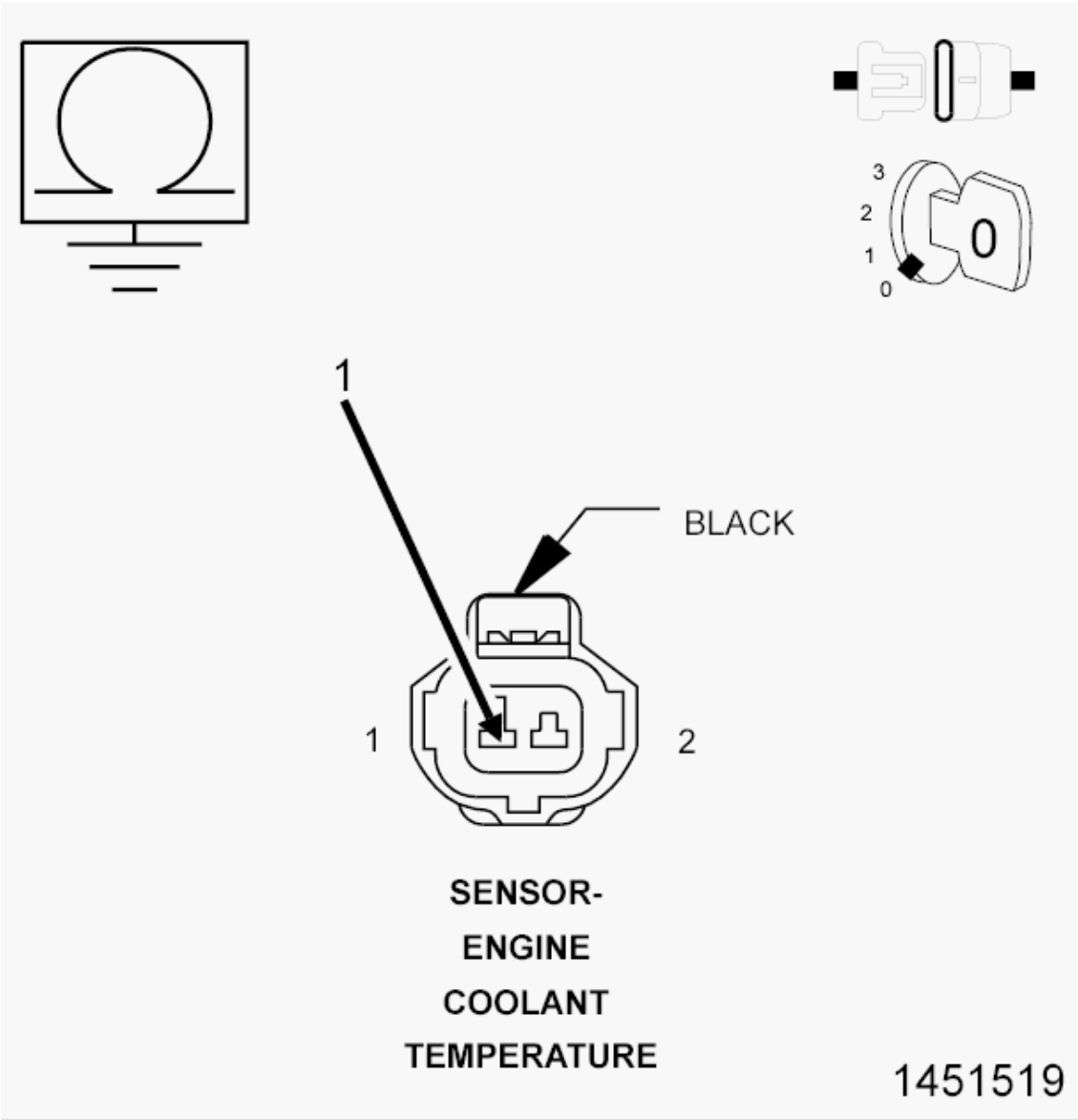

Fig. 3: Measuring Resistance Between Ground And ECT Sensor Signal Circuit In Sensor Harness Connector
Courtesy of CHRYSLER GROUP, LLC

1.

1. Turn the ignition off.
2. Disconnect the wire harness connectors of the components that contain the circuit suspected as being shorted to ground.

NOTE: **Check connectors - Clean/repair as necessary.**

NOTE: **Before checking the circuit for a short to ground, first measure the resistance between the two leads of the multimeter. Take this value and subtract it from the value recorded when measuring the**

resistance between ground and the circuit being checked. The leads of the meter can add up to or over 0.5 of an Ohm of resistance.

3. With the component wire harness connectors disconnected, use a meter set to measure Ohms (?), and measure the resistance between the circuit and a known good ground.
4. Use the negative lead of the meter and touch a known good ground.
5. Use the positive lead of the meter and carefully probe the circuit suspected as having the short.

   Is the resistance to ground below 10k Ohms ?

   Yes

   - Repair the short to ground. Use the wiring application as a guide to follow the path of the circuit.
   - One way to help isolate the short is to disconnect any in-line connectors that the circuit being tested runs through and measure for the short again. If the short goes away, the short is on the other side of the in-line connector.

   No

   - The circuit is not shorted to ground or the condition that originally caused the short may not be present at this time. Continue to measure the resistance, wiggle the wire harness and connectors while checking for an intermittent short.
   - Use the wiring application as a guide to trace the circuits and look for any in-line connectors where the short could occur intermittently.
   - Look for any chafed, pierced, pinched, or partially broken wires.
   - Look for broken, bent, pushed out or corroded terminals. Verify that there is good pin to terminal contact in the related wire harness connectors.
   - Perform any Technical Service Bulletins (TSBs) that may apply.

CHECK A CIRCUIT FOR VOLTAGE

THEORY OF OPERATION

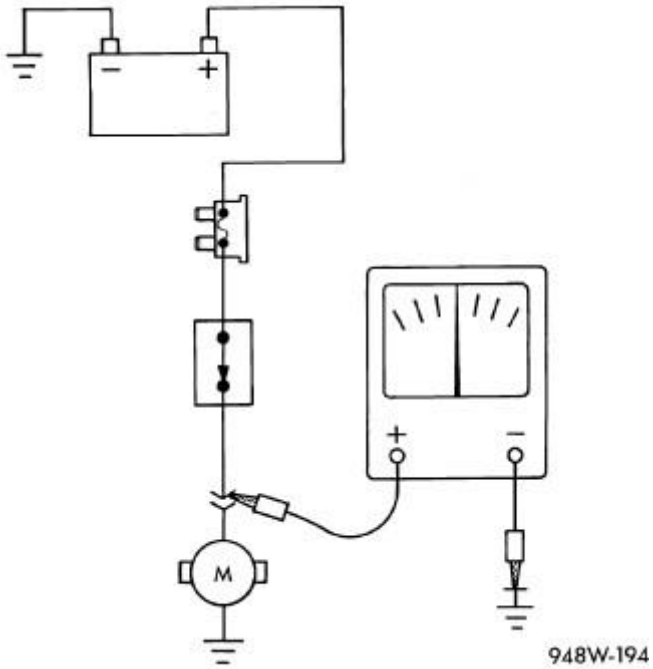

Fig. 4: Testing For Voltage Potential
Courtesy of CHRYSLER GROUP, LLC

The purpose for the following procedure is to show different methods of checking the voltage of a circuit. When diagnosing a DTCs it might be necessary to verify that proper voltage is on a circuit or that a circuit is not shorted high. Below are four examples of checking the voltage in a circuit.

Test Procedures
CHECKING FOR VOLTAGE ON A CIRCUIT, Refer to 1.
CHECKING FOR A SHORT TO BATTERY VOLTAGE USING A MULTIMETER, Refer to 2.
CHECKING FOR A SHORT TO IGNITION VOLTAGE USING A MULTIMETER, Refer to 3.
CHECKING FOR A SHORT TO VOLTAGE USING A 12-VOLT TEST LIGHT, Refer to 4.

DIAGNOSTIC TEST

1. **CHECKING FOR VOLTAGE**

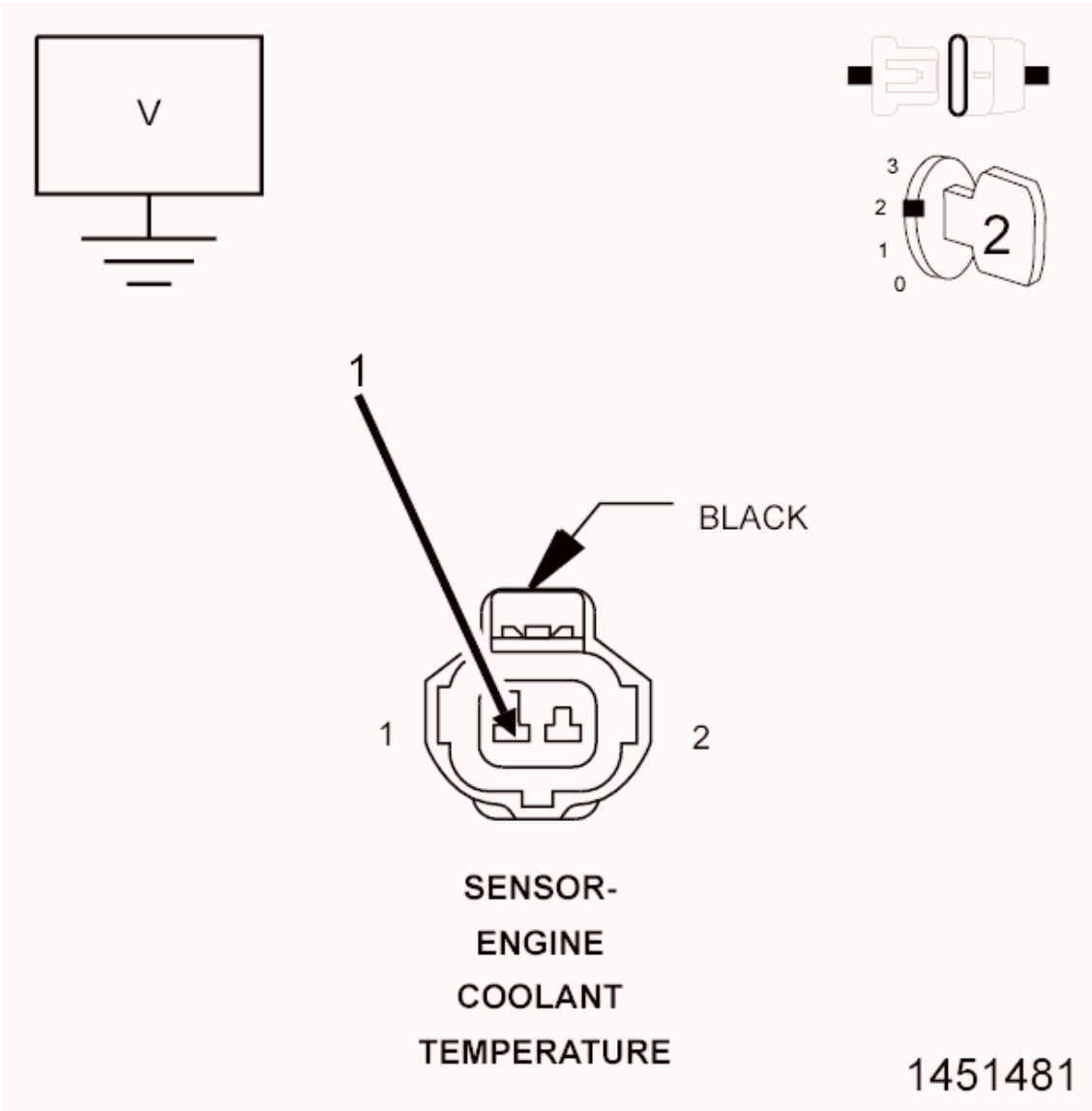

Fig. 5: Measuring Voltage On ECT Sensor Signal Circuit Harness Connector
Courtesy of CHRYSLER GROUP, LLC

NOTE: The connector displayed in the graphics are only an example.

1. Turn the ignition off.
2. Disconnect the wire harness connector of the component that is being tested.

NOTE: Check connectors - Clean/repair as necessary.

3. At this time leave all in-line connectors connected.
4. Use a multimeter set to measure DC voltage.
5. Connect the ground lead of the meter to a known good ground circuit.
6. Use the positive lead of the multimeter and probe the circuit you are checking for voltage.

7. Ignition on, engine not running.

   Is the voltage within specifications for this circuit?

   Yes

   - The circuit is functioning properly or the condition that originally caused the open or short may not be present at this time. Continue to measure the voltage and wiggle the wire harness and connectors while checking for an intermittent open or short.
   - Use the wiring application as a guide to trace the circuits and look for any in-line connectors where the short could occur intermittently.
   - Look for any chafed, pierced, pinched, or partially broken wires.
   - Look for broken, bent, pushed out or corroded terminals. Verify that there is good pin to terminal contact in the related wire harness connectors.
   - Perform any Technical Service Bulletins that may apply.

   No

   - Repair the open or short to ground in the circuit. Use the wiring application as a guide to trace the circuits and look for any in-line connectors where the short could occur.
   - One way to help isolate the open or short is to disconnect any in-line connectors that the circuit being checked runs through and check for the voltage again. If the voltage is present, the open or short is on the other side of the in-line connector.

2. **CHECKING FOR A SHORT TO BATTERY VOLTAGE USING A MULTIMETER**

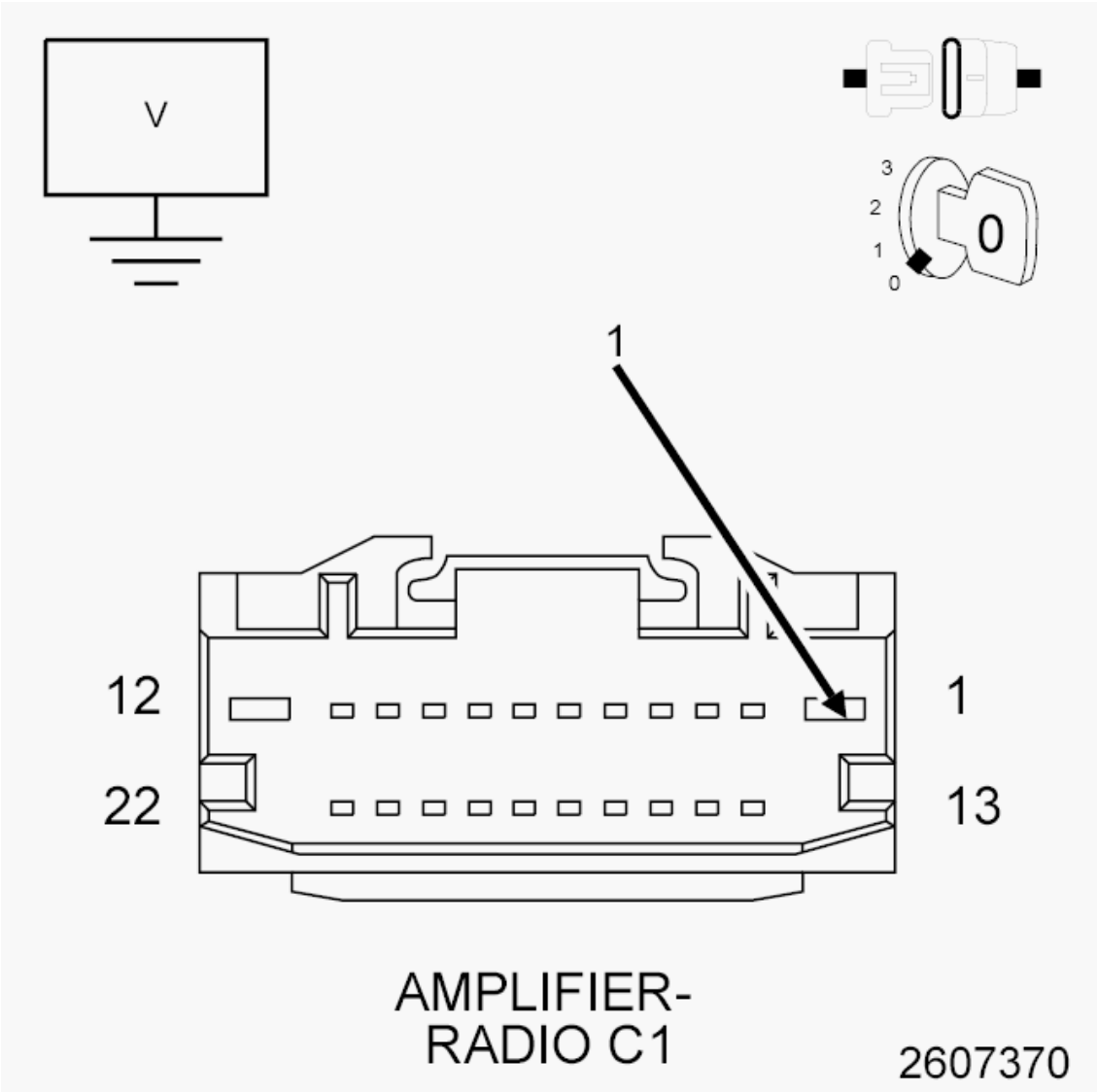

Fig. 6: Checking For Short To Battery Voltage Using Multimeter
Courtesy of CHRYSLER GROUP, LLC

1. Turn the ignition off.
2. Disconnect the wire harness connectors of the components that contain the circuit that is suspected as having a short.

NOTE: Check connectors - Clean/repair as necessary.

3. At this time leave all in-line connectors connected.
4. With all the component wire harness connectors disconnected, use a multimeter set to measure DC voltage.
5. Connect the ground lead of the meter to a known good ground circuit.
6. Use the positive lead of the multimeter and probe the circuit you suspect has a short.

Is there any voltage present?

Yes

- Repair the short to battery voltage. Use the wiring application as a guide to trace the circuits and look for any in-line connectors where the short could occur.
- One way to help isolate the short is to disconnect any in-line connectors that the circuit being checked runs through and measure for the short again. If the short goes away, the short is on the other side of the in-line connector.

No

- The circuit is not shorted to voltage or the condition that originally caused the short may not be present at this time. Continue to measure the voltage and wiggle the wire harness to check for an intermittent short.

NOTE: **By disconnecting the wire harness connectors you may have eliminated the source of the voltage causing the short. Use the wiring application as a guide, check to see if there are any battery circuits in the same wire harness as the circuit you are testing. It is necessary to check for a short to those circuits using an Ohm meter. Refer to STANDARD PROCEDURE and perform the CHECK FOR A SHORT BETWEEN MULTIPLE CIRCUITS diagnostic procedure.**

- Use the wiring application as a guide to trace the circuits and look for any in-line connectors where the short could occur intermittently.
- Look for any chafed, pierced, pinched, or partially broken wires.
- Look for broken, bent, pushed out or corroded terminals. Verify that there is good pin to terminal contact in the related wire harness connectors.
- Perform any Technical Service Bulletins (TSBs) that may apply.

3. **CHECKING FOR A SHORT TO IGNITION VOLTAGE OR TO CHECK FOR VOLTAGE ON A CIRCUIT USING A MULTIMETER**

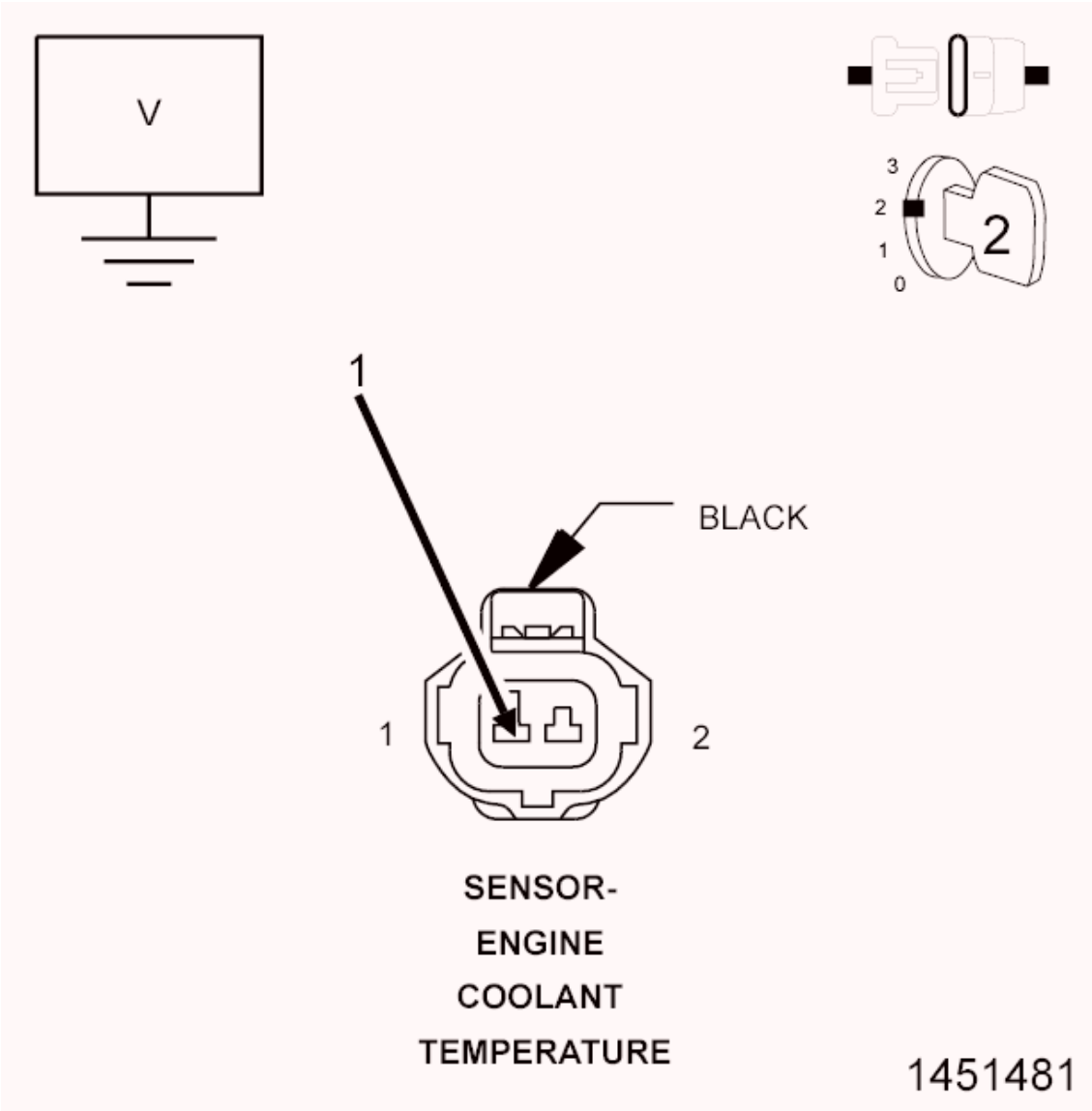

Fig. 7: Measuring Voltage On ECT Sensor Signal Circuit Harness Connector
Courtesy of CHRYSLER GROUP, LLC

1. Turn the ignition off.
2. Disconnect the wire harness connectors of all components that contain the circuits that are suspected as being shorted.
3. At this time leave all in-line connectors connected.
4. With all the component wire harness connectors disconnected, use a multimeter set to measure DC voltage.
5. Connect the ground lead of the meter to a known good ground circuit.
6. Use the positive lead of the multimeter and probe the circuit you suspect has a short.
7. Ignition on, engine not running.

   Is any voltage present?

Yes

- Repair the short to ignition voltage. Use the wiring application as a guide to trace the circuits and look for any in-line connectors where the short could occur.
- One way to help isolate the short is to disconnect any in-line connectors that the circuit being checked runs through and check for the short again. If the short goes away, the short is on the other side of the in-line connector.

No

- The circuit is not shorted to voltage or the condition that originally caused the short may not be present at this time. Continue to measure the voltage and wiggle the wire harness to check for an intermittent short.

NOTE: **By disconnecting the wire harness connectors you may have eliminated the source of the voltage causing the short. Use the wiring application as a guide, check to see if there are any battery circuits in the same wire harness as the circuit you are testing. It is necessary to check for a short to those circuits using an Ohm meter. Refer to STANDARD PROCEDURE and perform the CHECK FOR A SHORT BETWEEN MULTIPLE CIRCUITS diagnostic procedure.**

- Use the wiring application as a guide to trace the circuits and look for any in-line connectors where the short could occur intermittently.
- Look for any chafed, pierced, pinched, or partially broken wires.
- Look for broken, bent, pushed out or corroded terminals. Verify that there is good pin to terminal contact in the related wire harness connectors.
- Perform any Technical Service Bulletins (TSBs) that may apply.

4. **CHECKING FOR A SHORT TO VOLTAGE USING A 12-VOLT TEST LIGHT**

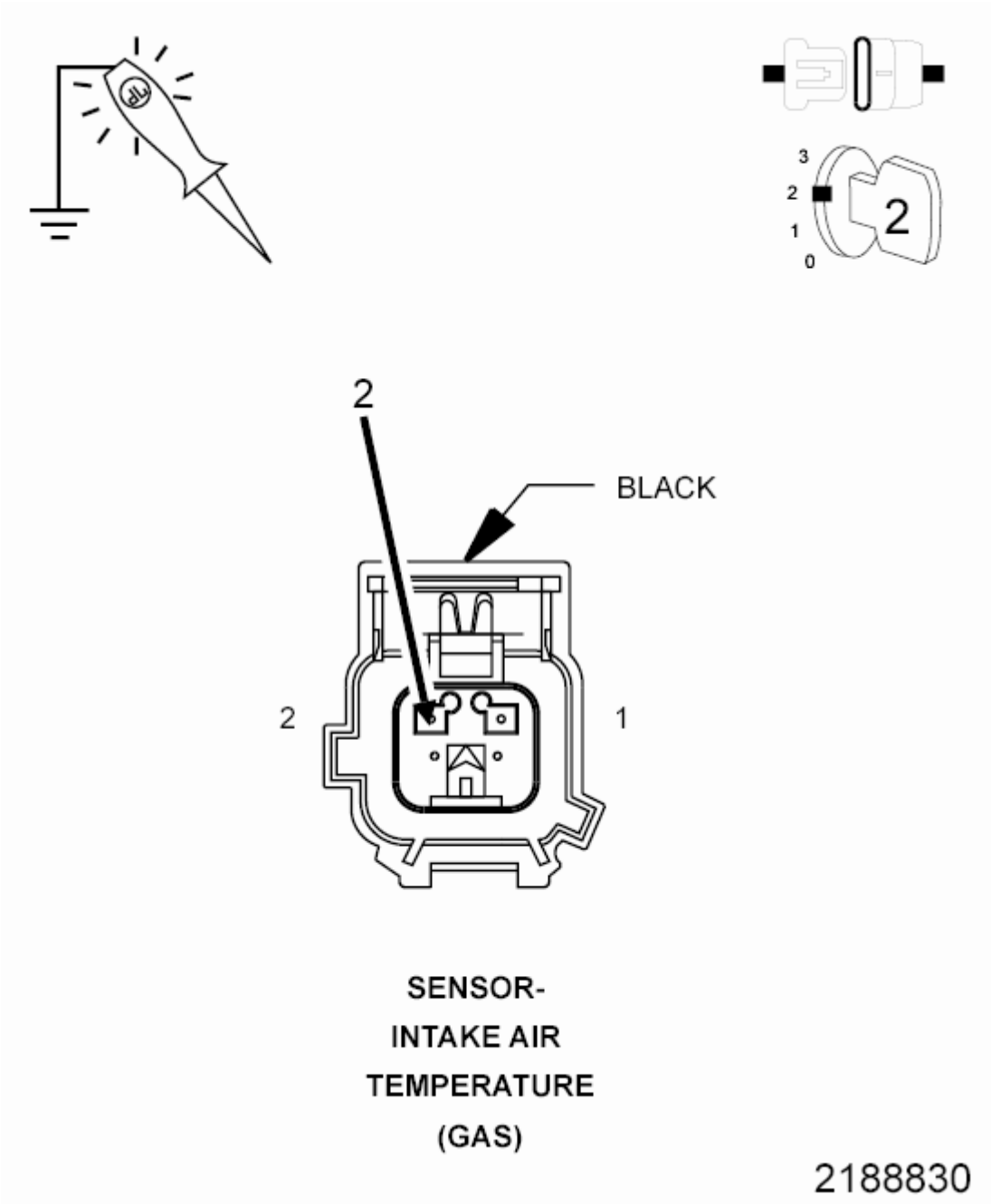

Fig. 8: Checking For Voltage Using 12-Volt Test Light
Courtesy of CHRYSLER GROUP, LLC

1. Turn the ignition off.
2. Disconnect the wire harness connectors of all components that contain the circuits that are suspected as being shorted.

   NOTE: Check connectors - Clean/repair as necessary.

3. At this time leave all in-line connectors connected.

NOTE: **Before inspecting any circuits, first test the 12-volt test light. Connect the 12-volt test light to battery ground or to any other known good ground. Touch the lead of the test light to Battery +. If the test light is good, it should illuminate brightly.**

4. Connect the 12-volt test light to a known good ground circuit.
5. Use the lead of the test light and carefully probe the circuit you suspect has a short.

WARNING: **When the engine is operating, do not stand in direct line with the fan. Do not put your hands near the pulleys, belts or fan. Do not wear loose clothing. Failure to follow these instructions may result in possible serious or fatal injury.**

6. First, check with the ignition off, next with the ignition on, and lastly while cranking the engine.

   Does the test light illuminate brightly?

   Yes

   - Repair the short to voltage. Use the wiring application as a guide to trace the circuits and look for any in-line connectors where the short could occur.
   - One way to help isolate the short is to disconnect any in-line connectors that the circuit being checked runs through and check for the short again. If the short goes away, the short is on the other side of the in-line connector.

   No

   - The circuit is not shorted to voltage or the condition that originally caused the short may not be present at this time. Continue to measure the resistance and wiggle the wire harness to check for an intermittent short.

     NOTE: **By disconnecting the wire harness connectors you may have eliminated the source of the voltage causing the short. Use the wiring application as a guide, check to see if there are any battery circuits in the same wire harness as the circuit you are testing. It is necessary to check for a short to those circuits using an Ohm meter. Refer to STANDARD PROCEDURE and perform the <u>CHECK FOR A SHORT BETWEEN MULTIPLE CIRCUITS</u> diagnostic procedure.**

   - Use the wiring application as a guide to trace the circuits and look for any in-line connectors where the short could occur intermittently.
   - Look for any chafed, pierced, pinched, or partially broken wires.
   - Look for broken, bent, pushed out or corroded terminals. Verify that there is good pin to terminal contact in the related component and wire harness connectors.

- Perform any Technical Service Bulletins (TSBs) that may apply.

CHECK A GROUND CIRCUIT FOR AN OPEN USING A 12-VOLT TEST LIGHT

DIAGNOSTIC TEST

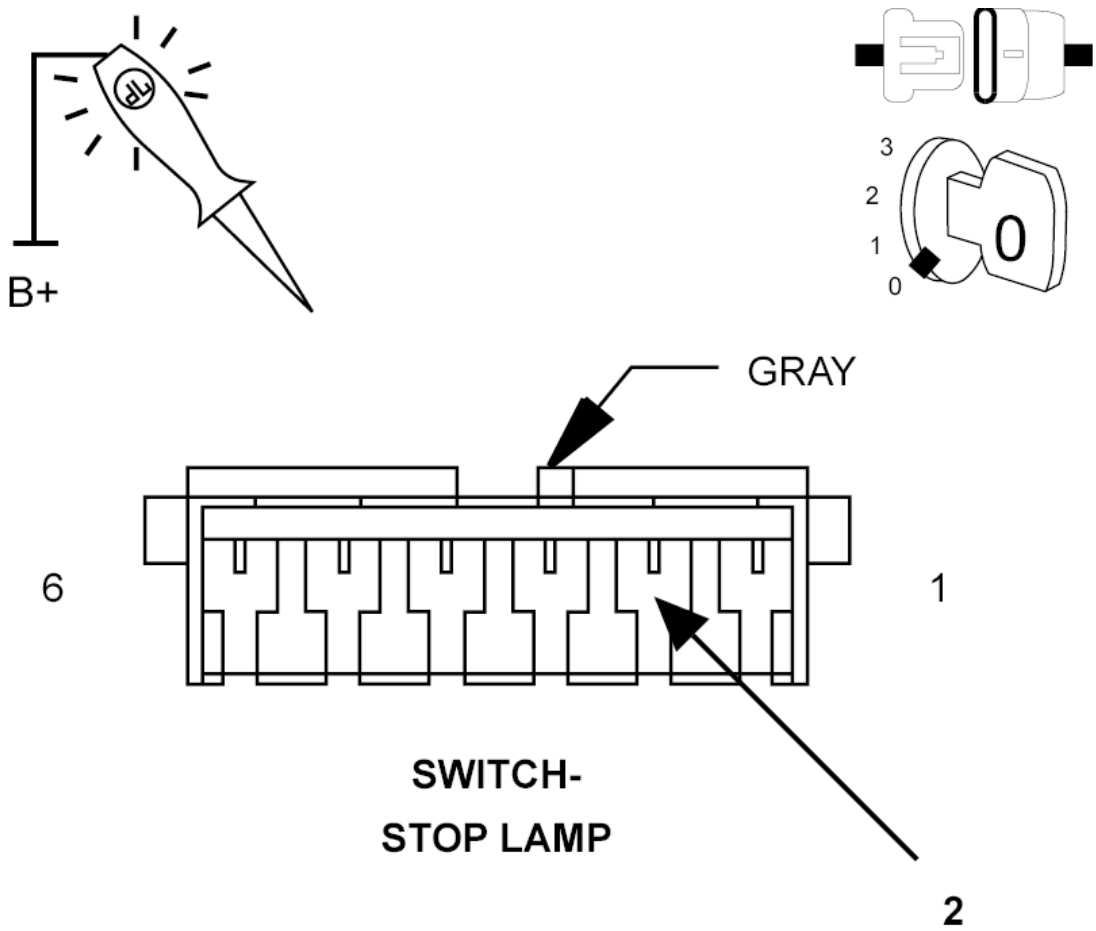

Fig. 9: Using 12 Volt Test Light Connected To 12 Volts To Check Ground Circuit In Stop Lamp Switch Harness Connector
Courtesy of CHRYSLER GROUP, LLC

1.
    1. Turn the ignition off.
    2. Disconnect the wire harness connectors of the components that contain the ground circuit suspected as containing excessive resistance.

        NOTE: Check connectors - Clean/repair as necessary.

    3. At this time leave all in-line connectors connected.

        NOTE: Before inspecting any circuits, first test the 12-volt test light. Connect

the 12-volt test light to battery ground or to any other known good ground. Touch the lead of the test light to Battery +. If the test light is good, it should illuminate brightly.

4. With all the component wire harness connectors disconnected, connect the 12-volt test light to Battery +.
5. Use the test light lead to lightly probe the ground circuit in the harness connector.

   Does the test light illuminate brightly?

   Yes

   - The suspected ground circuit is not open or the condition that originally caused the open or excessive resistance is not present at this time. Another way to check for an open would be to use an Ohm meter and measure the resistance of the ground circuit. While continuing to measure the resistance of the circuit, wiggle the wire harness and connectors to check for an intermittent open or poor connection.
   - Use the wiring application as a guide to trace the circuits and look for any in-line connectors where the open could occur intermittently.
   - Look for any chafed, pierced, pinched, or partially broken wires.
   - Look for broken, bent, pushed out or corroded terminals. Verify that there is good pin to terminal contact in the related wire harness connectors.
   - Perform any Technical Service Bulletins (TSBs) that may apply.

   No

   - Repair the open in the circuit between the two wire harness connectors. Use the wiring application as a guide to trace the circuit and look for any in-line connectors where the short could occur.
   - One way to help isolate the open is to disconnect any in-line connectors and measure the resistance from one side of the in-line connector to the matching component harness connector. If the open goes away, the open is on the other side of the in-line connector.

CHECK FOR A SHORT BETWEEN MULTIPLE CIRCUITS

DIAGNOSTIC TEST

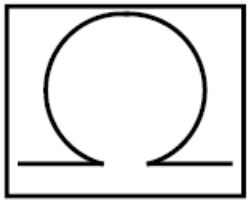

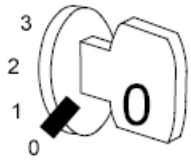

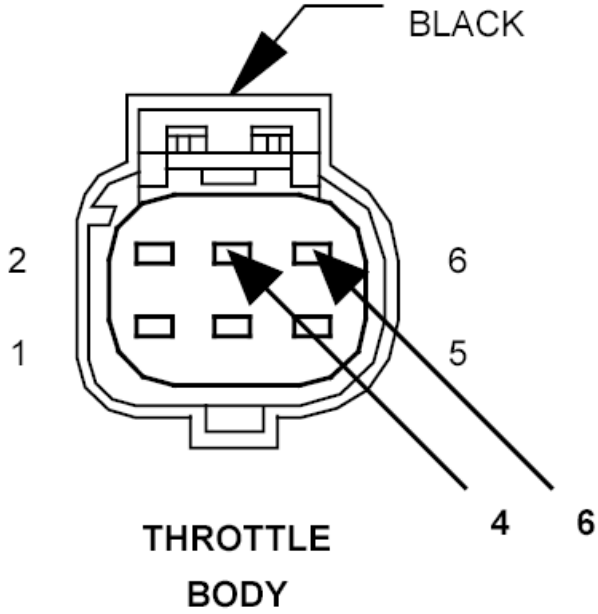

Fig. 10: Measuring Resistance Between TP Signal Circuit And TP Sensor Ground Circuit At Throttle Body Harness Connector
Courtesy of CHRYSLER GROUP, LLC

1.

1. Turn the ignition off.
2. Disconnect the wire harness connectors of the components that contain the circuits that are suspected as being shorted together.

NOTE: **Check connectors - Clean/repair as necessary.**

3. At this time leave all in-line connectors connected.

NOTE: **Before you measure the resistance between any circuits, first measure the resistance between the two leads of the multimeter. Take this value and subtract it from the value recorded after**

measuring the resistance between the circuits. The leads of the meter can add up to or over 0.5 of an Ohm of resistance.

4. With all the component wire harness connectors disconnected, use a multimeter set to Ohms (?), and measure the resistance between the applicable circuits in one of the harness connectors.
5. Use one lead of the multimeter and carefully probe the circuit suspected as being shorted.
6. Use the other lead of the meter and one at a time, carefully probe the other circuits in the harness connector.

   Is the resistance below 10k Ohms when probing any two circuits?

   Yes

   - Repair the short between the circuits. Use the wiring application as a guide to trace the circuits and look for any in-line connectors where the short could occur.
   - One way to help isolate the short is to disconnect any in-line connectors that the circuit being tested runs through and measure for the short again. If the short goes away, the short is on the other side of the in-line connector.

   No

   - The circuit is not shorted or the condition that originally caused the short may not be present at this time. Continue to measure the resistance and wiggle the wire harness and connectors while checking for an intermittent short.
   - Use the wiring application as a guide to trace the circuits and look for any in-line connectors where the short could occur intermittently.
   - Look for any chafed, pierced, pinched, or partially broken wires.
   - Look for broken, bent, pushed out or corroded terminals. Verify that there is good pin to terminal contact in the related wire harness connectors.
   - Perform any Technical Service Bulletins (TSBs) that may apply.

CHECK FOR AN EXCESSIVE CURRENT DRAW

DIAGNOSTIC TEST

1.
   1. Turn the ignition off.
   2. Disconnect the Negative Battery cable (ground).
   3. Using a multimeter, set the multimeter leads up to properly measure Amperage.
   4. Connect the ground lead that is plugged into the COM port of the multimeter to the Negative Battery cable.
   5. Connect the other lead of the multimeter that is plugged into the Amp port of the multimeter to the negative battery post/terminal.

CAUTION: Do not crank the engine or turn on any accessories that may draw more than 10 Amps. You may open the protective fuse in the multimeter.

NOTE: To get a more accurate reading and current draw, wait 20 minutes to make sure all modules have powered down before continuing. Some modules may stay powered up longer than others.

6. While monitoring the amperage reading, remove a fuse and see if the amperage drops.
7. If the amperage does not drop, install that fuse you just removed and remove the next fuse.

   Does the amperage drop to between 0.02 to 0.04 of an Amp when removing any fuses.

   Yes

   - Use the wiring application as a guide to find out what components or modules are powered by the fuse. At this point you can install the fuse and begin disconnecting the components powered by the fuse. When the amperage drops after disconnecting a component you will know which component is at fault. It is important to know how long some modules are supposed to remain awake. You don't want to replace a component that is operating normally.

   No

   - The condition that originally caused the draw may not be present at this time.
   - Look for any chafed, pierced, pinched, or partially broken wires.
   - Look for broken, bent, pushed out or corroded ground terminals.
   - Perform any Technical Service Bulletins that may apply.

CHECK THE RESISTANCE IN A CIRCUIT USING AN OHM METER

DIAGNOSTIC TEST

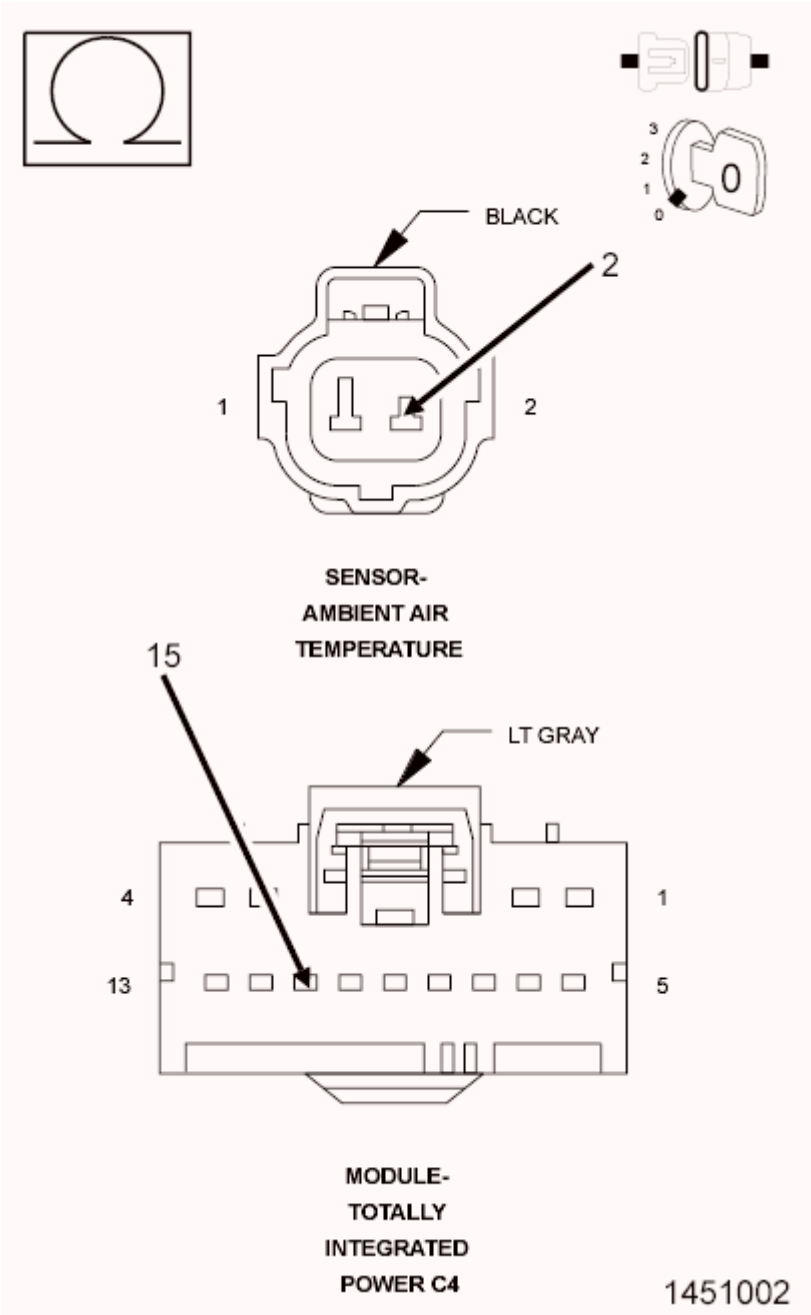

Fig. 11: Measuring Resistance Of Sensor Ground Circuit From AAT Sensor Harness Connector To TIPM Harness Connector
Courtesy of CHRYSLER GROUP, LLC

NOTE: **This is not the best way of checking for an open ground circuit. When checking for an open in a ground circuit, perform the Check a Ground Circuit for an Open Using a 12-Volt Test Light diagnostic procedure.**

1.

1. Turn the ignition off.

2. Disconnect the wire harness connectors of the components that contain the circuit suspected as being open.

   NOTE: Check connectors - Clean/repair as necessary.

3. At this time leave all in-line connectors connected.

   NOTE: Before measuring the resistance of any circuit, first measure the resistance between the two leads of the multimeter. Take this value and subtract it from the value recorded when measuring the resistance of the circuit being checked. The leads of the meter can add up to or over 0.5 of an Ohm of resistance.

4. With the component wire harness connectors disconnected, use a multimeter set to Ohms (?), and measure the resistance of the circuit.
5. Use one lead of the meter and probe the circuit in one harness connector.
6. Use the other lead of the meter and probe the same circuit in the other harness connector.

   Is the resistance in the circuit below 20k Ohms?

   Yes

   - Repair the excessive resistance in the circuit between the two wire harness connectors. Using the wiring application as a guide, trace the circuit and check for any in-line connectors where the open or excessive resistance could occur.
   - One way to help isolate the open is to disconnect any in-line connectors and measure the resistance from one side of the in-line connector to the matching component harness connector. If the open or excessive resistance is not present, the open or excessive resistance is on the other side of the in-line connector

   No

   - The circuit does not contain any excessive resistance or the condition that originally caused the excessive resistance may not be present at this time. Continue to measure the resistance of the circuit, wiggle the wire harness and connectors to check for an intermittent open or poor connection.
   - Use the wiring application as a guide to trace the circuits and look for any in-line connectors where the open could occur intermittently.
   - Look for any chafed, pierced, pinched, or partially broken wires.
   - Look for broken, bent, pushed out or corroded terminals. Verify that there is good pin to terminal contact in the related wire harness connectors.
   - Perform any Technical Service Bulletins (TSBs) that may apply.

CHECK THE VOLTAGE ON A 5-VOLT SUPPLY CIRCUIT

DIAGNOSTIC TEST

1. **MEASURE THE VOLTAGE BETWEEN THE 5-VOLT SUPPLY CIRCUIT AND GROUND**

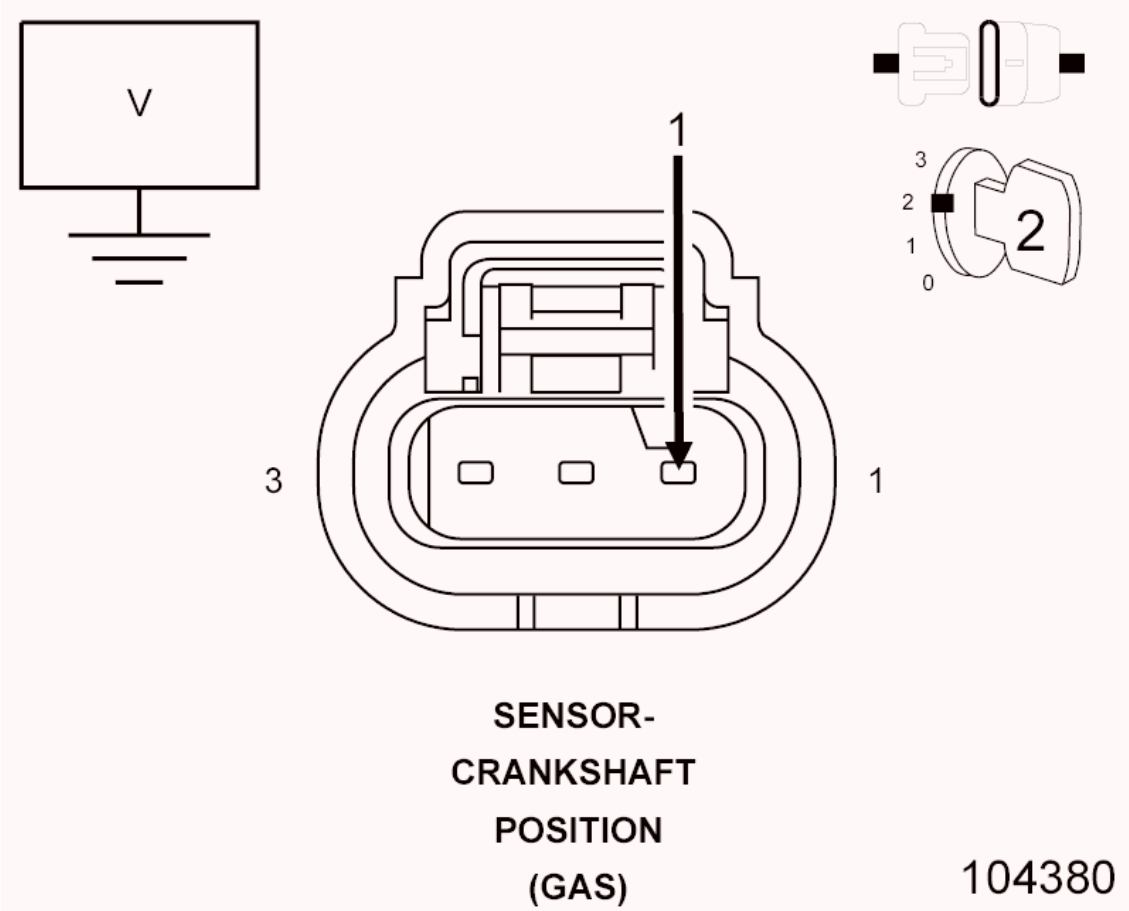

Fig. 12: Measuring Voltage Between 5-Volt Supply Circuit And Ground
Courtesy of CHRYSLER GROUP, LLC

1. Turn the ignition off.
2. Disconnect the sensor harness connector.

NOTE: Check connectors - Clean/repair as necessary.

3. Turn the ignition on.
4. Use a multimeter set to measure DC voltage.
5. Connect the negative lead of the meter to a known good ground.
6. With the positive lead of the meter, carefully probe the 5-volt supply circuit.

Is the voltage between 4.7 and 5.2 volts?

Yes

- Go To 2.

No

- Check the 5-volt supply circuit for an open or short to ground. Perform the appropriate Sensor Reference Voltage DTC diagnostic procedure for assistance, if one exists.

2. **MEASURE THE VOLTAGE BETWEEN THE 5-VOLT SUPPLY AND SENSOR GROUND CIRCUIT**

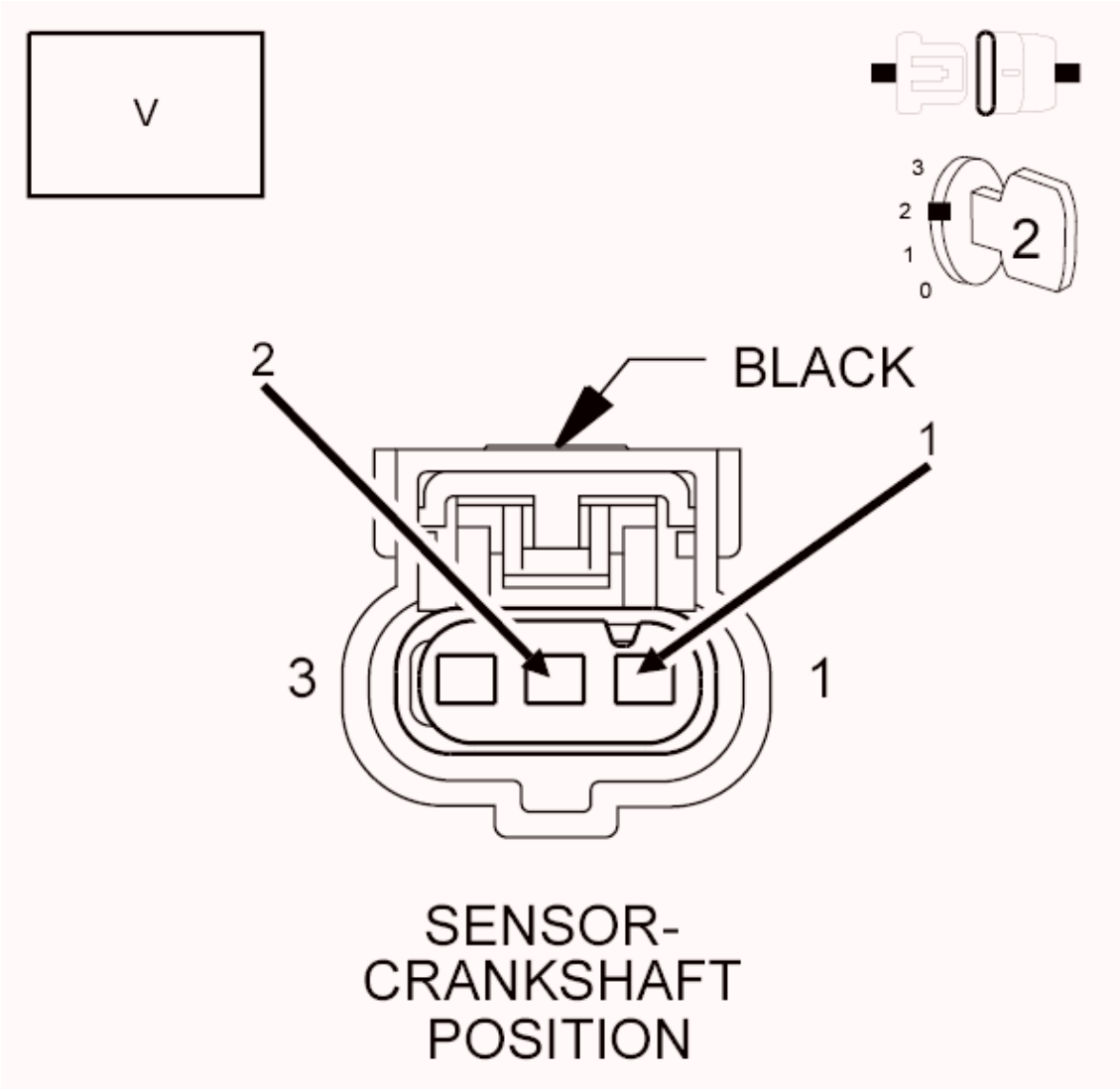

Fig. 13: Measuring Voltage Between 5-Volt Supply And Sensor Ground Circuit
Courtesy of CHRYSLER GROUP, LLC

1. The multimeter is still set to measure DC voltage.
2. Move the negative lead of the meter to carefully probe the sensor ground or sensor return circuit in the harness connector.
3. With the positive lead of the meter, carefully probe the 5-volt supply circuit.

Is the voltage between 4.8 and 5.2 volts?

Yes

- At this time the 5-volt supply and sensor ground circuit are working properly. Continue to measure the voltage between the wires, wiggle the wire harness and connectors while checking for an intermittent condition.
- Use the wiring application as a guide to trace the circuits and look for any in-line connectors where the short could occur intermittently.
- Look for any chafed, pierced, pinched, or partially broken wires.
- Look for broken, bent, pushed out or corroded terminals. Verify that there is good pin to terminal contact in the related wire harness connectors.
- Perform any Technical Service Bulletins (TSBs) that may apply.

No

- Repair the open or excessive resistance in the Sensor Ground (Sensor Return) circuit.

ELECTROSTATIC DISCHARGE (ESD) SENSITIVE DEVICES

Fig. 14: Electrostatic Discharge Symbol
Courtesy of CHRYSLER GROUP, LLC

All ESD sensitive components are solid state and a symbol is used to indicate this. When handling any component with this symbol, comply with the following procedures to reduce the possibility of electrostatic charge build up on the body and inadvertent discharge into the component. If it is not known whether the part is ESD sensitive, assume that it is.

1. Always touch a known good ground before handling the part. This should be repeated while handling the part and more frequently after sliding across a seat, sitting down from a standing position, or walking a distance.
2. Avoid touching electrical terminals of the part, unless instructed to do so by a written procedure.
3. When using a voltmeter, be sure to connect the ground lead first.
4. Do not remove the part from it's protective packing until it is time to install the part.
5. Before removing the part from it's package, ground the package to a known good ground on the vehicle.

VOLTAGE DROP TEST

THEORY OF OPERATION

Voltage drop is the reduction in voltage in an electrical circuit between the source and load components. The wires and connectors of a circuit should contain next to no resistance. All the voltage should be used through the load. The "load" is the component using the power, such as a light, starter, or blower motor. If a circuit has excessive resistance, it prevents the wire from carrying sufficient current under high load conditions. A voltage drop test is an effective way to find excessive resistance in connections and circuits. To preform a voltage drop test, a Digital Volt Ohm Meter (DVOM) is used to measure the voltage drop across a live circuit or connection while it is under the load. If the circuit or connection being tested has excessive resistance, the DVOM will measure the voltage that the resistance is using. Little or no voltage drop should be read, ideally less that 0.4 of a volt, anything greater indicates excessive resistance and the circuit or connection should be inspected for cleaning or repair.

DIAGNOSTIC TEST

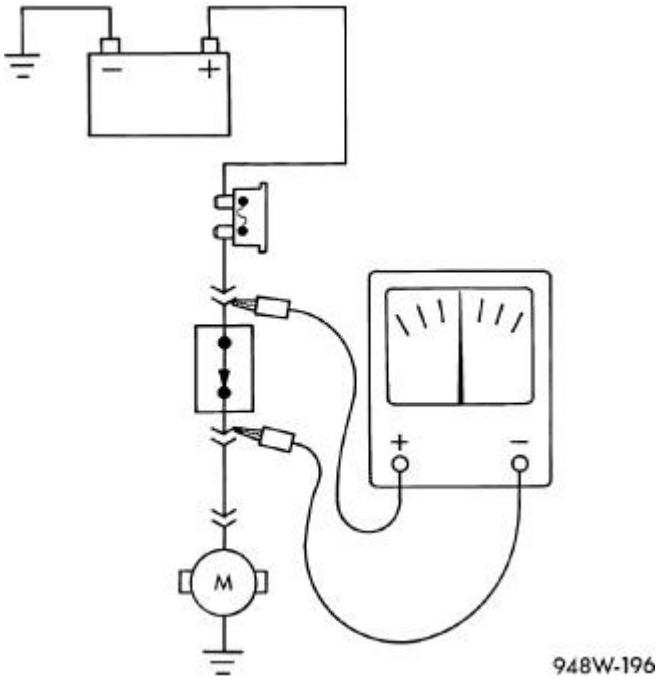

Fig. 15: Testing For Voltage Drop
Courtesy of CHRYSLER GROUP, LLC

1.
    1. Turn the ignition off.
    2. Use the wiring application as a guide, trace the circuit being tested and locate the components related to the circuit.
    3. Set your multimeter up to check for DC voltage.
    4. Carefully back probe the two component harness connectors of the circuit being tested.

WARNING: When the engine is operating, do not stand in direct line with the fan. Do not put your hands near the pulleys, belts or fan. Do

not wear loose clothing. Failure to follow these instructions may result in possible serious or fatal injury.

NOTE: **If you are testing the starting circuit, disable the engine so the engine does not start.**

5. Crank the engine for five seconds if you are testing the starting circuit and monitor the multimeter voltage reading.
6. For circuits that don't require the engine running, turn the ignition on.
7. For circuits that require the engine running, start the engine.

NOTE: **If the circuit you are checking needs to be turned on, such as Blower Motor or a lamp, do so now.**

8. Monitor the voltage reading.
9. The voltmeter will show the difference in voltage between the two points.

Is the voltage less than 0.4 of a Volt?

Yes

- At this time the circuit is functioning properly. Continue to measure the voltage between the components and wiggle the wire harness and connectors while checking for an intermittent condition.
- Use the wiring application as a guide to trace the circuits and look for any in-line connectors where the excessive resistance could occur intermittently.
- Look for any chafed, pierced, pinched, or partially broken wires.
- Look for broken, bent, pushed out or corroded terminals. Verify that there is good pin to terminal contact in the related wire harness connectors.
- Perform any Technical Service Bulletins (TSBs) that may apply.

No

- Repair the excessive resistance in the circuit.
- Use the wiring application as a guide to trace the circuit and look for any in-line connectors where the excessive resistance may occur.
- Look for any chafed, pierced, pinched, or partially broken wires.
- Look for broken, bent, pushed out or corroded terminals. Verify that there is good pin to terminal contact in the related wire harness connectors.
- Perform any Technical Service Bulletins (TSBs) that may apply.

WIRE SPLICING

CAUTION: If additional wire is needed when making a splice repair to any wire, it is important that the same or next larger size wire gauge be used. Refer to the appropriate wiring diagram for the original wire gauge size.

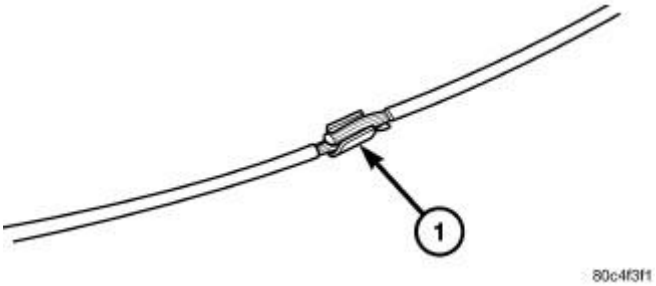

Fig. 16: Splice Band
Courtesy of CHRYSLER GROUP, LLC

1. Remove 13 millimeters (0.50 inch) of insulation from each wire that needs to be spliced.
2. Place a piece of adhesive sealant-lined heat shrink tubing (Part Number 04778570 or equivalent) over the wire on one side of the splice. Be certain the length of tubing will be sufficient to cover and seal the entire repair area.
3. Place the strands of the wires being spliced so that they are overlapping each other within the splice band (1).

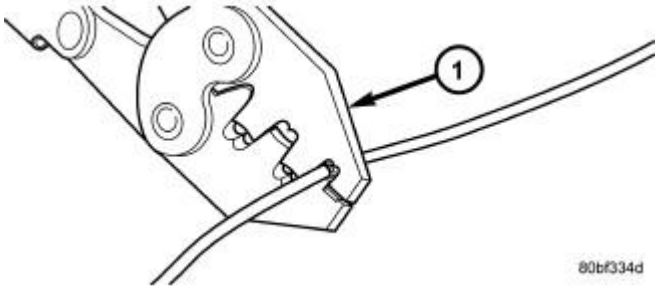

Fig. 17: Crimping Tool
Courtesy of CHRYSLER GROUP, LLC

4. Using a crimping tool (1) (MOPAR Part Number 05019912AA, Miller Special Tool Number (special tool #10042, Crimper, Wire/Terminal) or equivalent) crimp the splice band and wires together securely.

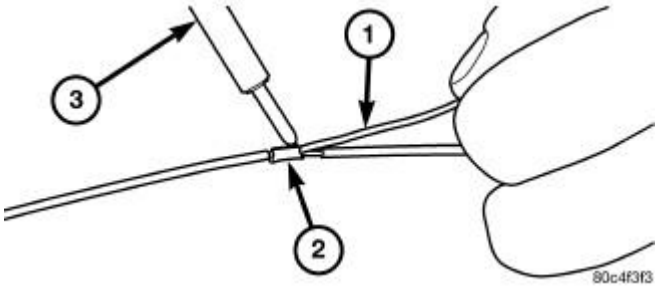

Fig. 18: Solder Splice

Courtesy of CHRYSLER GROUP, LLC

CAUTION: Never use acid core solder for electrical wiring repairs.

5. Using rosin core type solder (1) only and a suitable soldering iron (3), solder the wire and splice band connection (2) together.

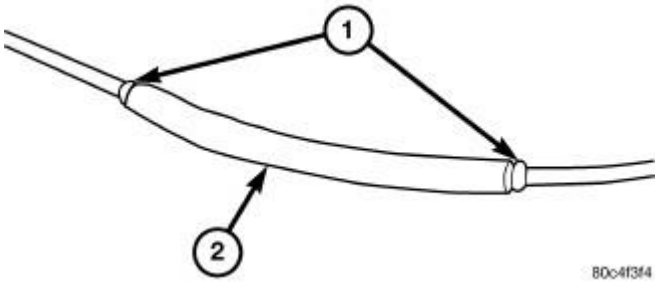

Fig. 19: Heat Shrink Tube
Courtesy of CHRYSLER GROUP, LLC

6. Center the heat shrink tubing (2) over the splice joint repair and heat using a suitable heat gun. Heat the joint until the tubing is tightly sealed and sealant (1) begins to ooze out of both ends of the tubing.

REMOVAL

REMOVAL

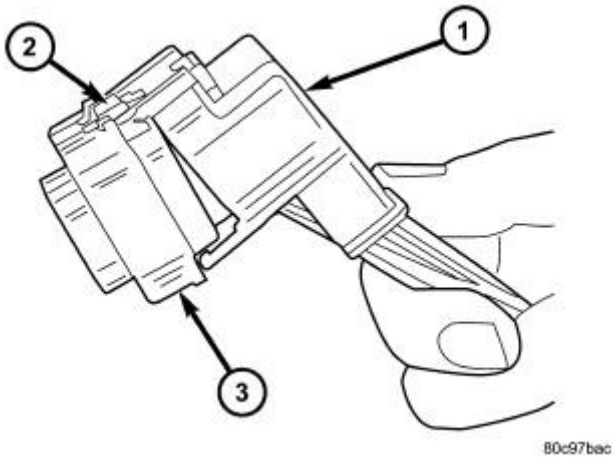

Fig. 20: Removal Of Connector Dress Cover
Courtesy of CHRYSLER GROUP, LLC

1 - DRESS COVER
2 - CONNECTOR LOCK

3 - CONNECTOR

1. Disconnect battery.
2. Release Connector Lock (2).
3. Disconnect the connector (3) being repaired from its mating half/component.
4. Remove the dress cover (if applicable) (1).

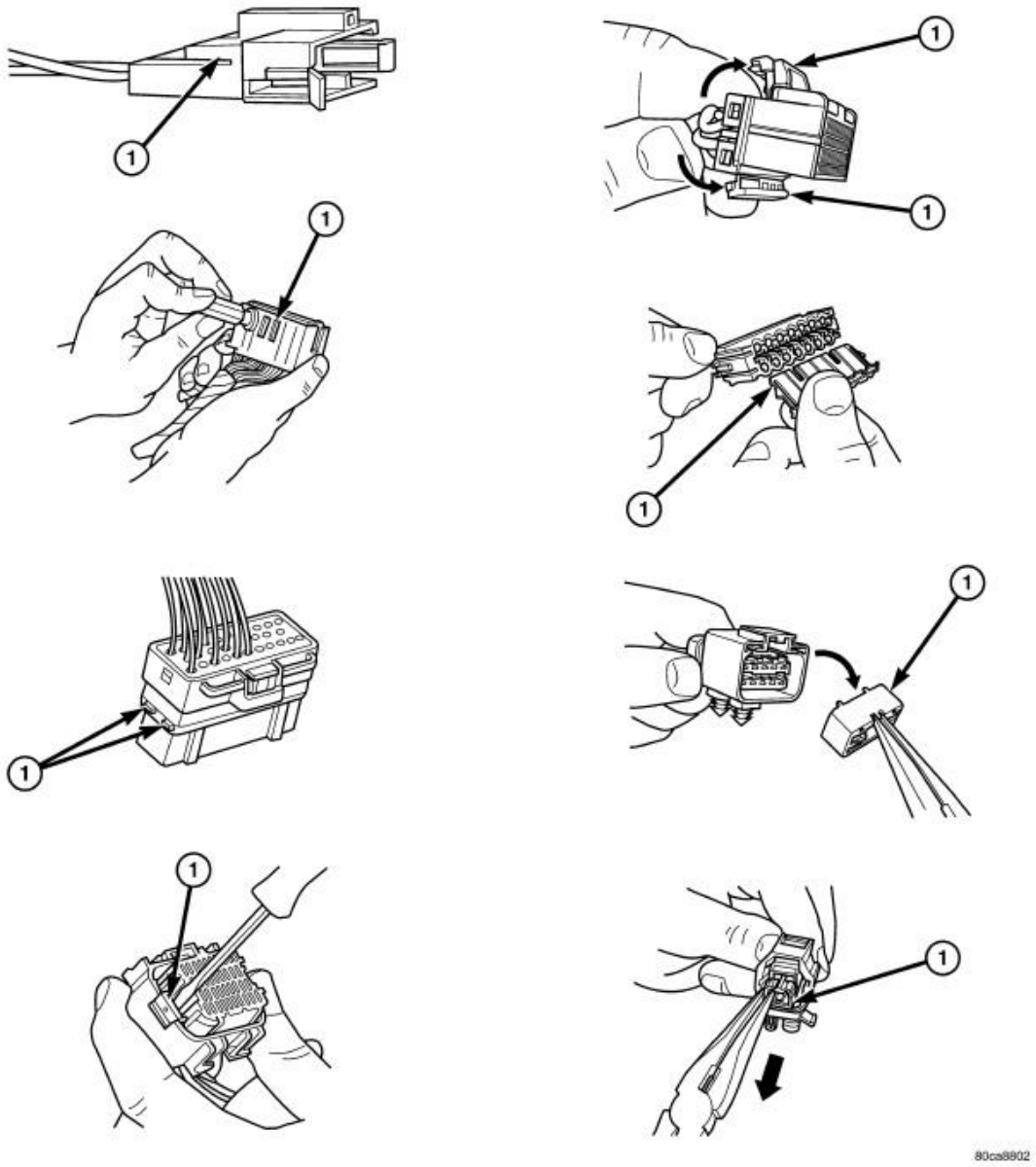

Fig. 21: Connector Secondary Terminal Lock
Courtesy of CHRYSLER GROUP, LLC

1 - Secondary Terminal Lock

5. Release the Secondary Terminal Lock, if required (1).

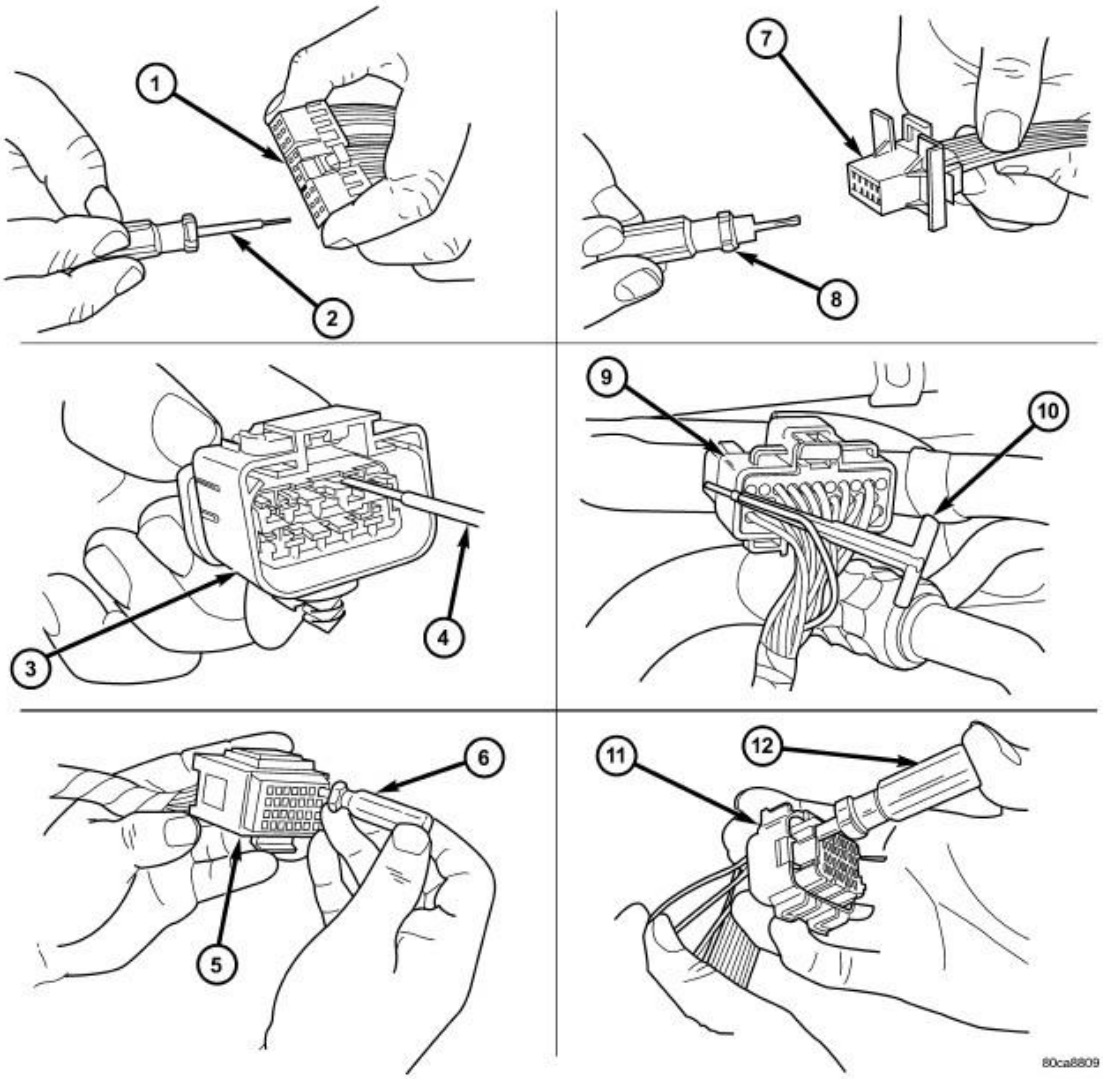

Fig. 22: Terminal Removal
Courtesy of CHRYSLER GROUP, LLC

1 - TYPICAL CONNECTOR
2 - PICK FROM TERMINAL REMOVER KIT 6680 OR 8197A
3 - APEX CONNECTOR
4 - PICK FROM TERMINAL REMOVER KIT 6680 OR 8197A
5 - AUGAT CONNECTOR
6 - ELECTRICAL REMOVER 6932
7 - MOLEX CONNECTOR
8 - PICK FROM TERMINAL REMOVER KIT 8197A

9 - THOMAS AND BETTS CONNECTOR
10 - TERMINAL REMOVER 6934
11 - TYCO CONNECTOR
12 - ELECTRICAL TERMINAL REMOVER 8638

6. Position the connector locking finger away from the terminal using the proper special tool. Pull on the wire to remove the terminal from the connector.

INSTALLATION

INSTALLATION

1. Select a wire from the terminal repair kit that best matches the color and gage of the wire being repaired.
2. Cut the repair wire to the proper length and remove one-half (1/2) inch of insulation.
3. Splice the repair wire to the wire harness (see wire splicing procedure). Refer to **WIRE SPLICING**.
4. Insert the repaired wire into the connector.
5. Install the connector locking wedge, if required, and reconnect the connector to its mating half/component.
6. Re-tape the wire harness starting at 1-1/2 inches behind the connector and 2 inches past the repair.
7. Connect battery and test all affected systems.

SPECIAL TOOLS

SPECIAL TOOLS

	C-4755 - Trim Stick (Originally Shipped In Kit Number(s) 9299, 9299CC, 9299CC, 9300A-CAN.)

DRIVING CONVENIENCE

INSTRUCTION SHEET

REMOTE START

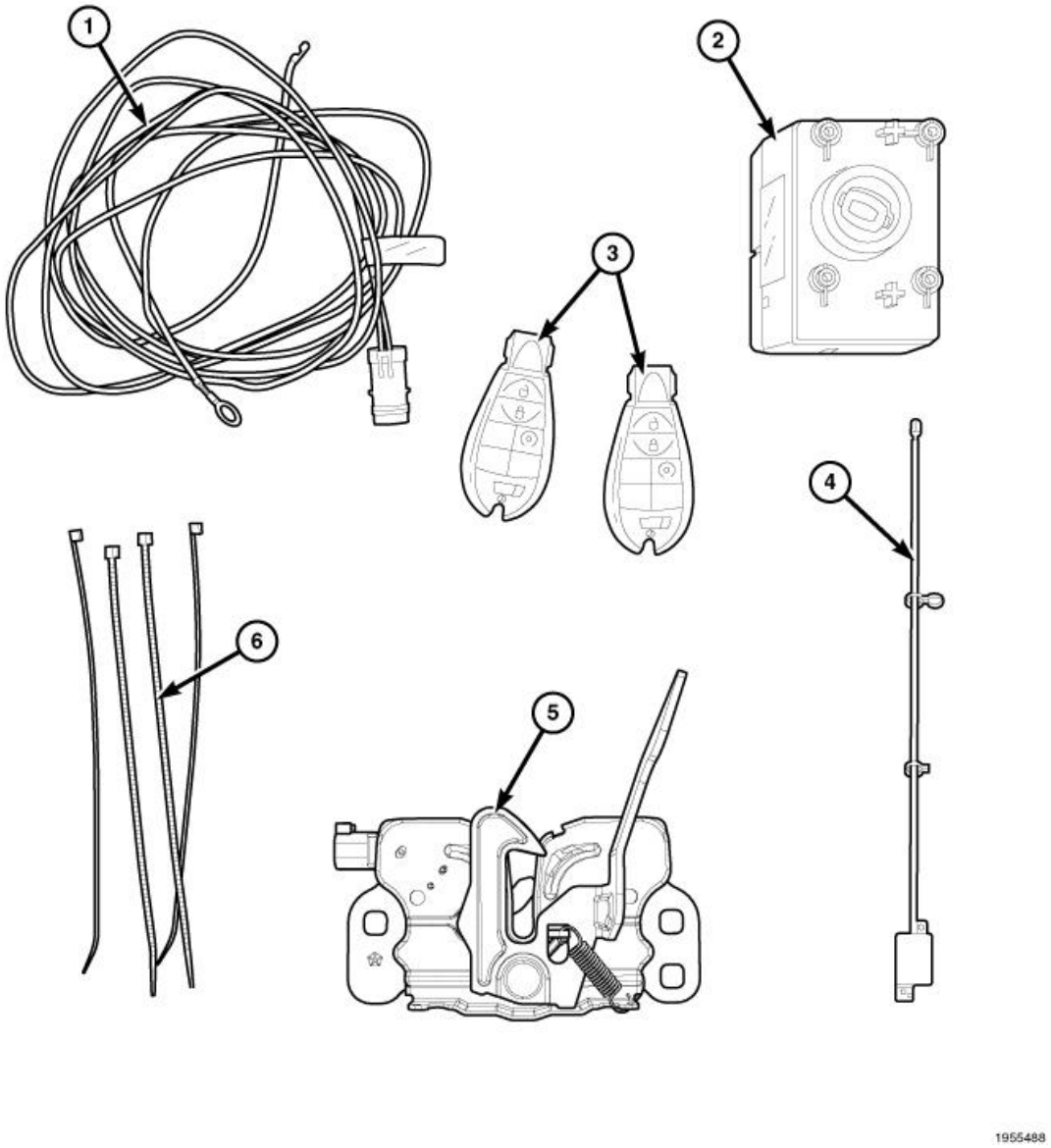

Fig. 1: Remote Start Components
Courtesy of CHRYSLER GROUP, LLC

CALL OUT	DESCRIPTION	QUANTITY
1	Hood Switch Harness	1
2	Wireless Ignition Module (WIN)	1
3	FOBIK	2
4	WIN Antenna	1
	Hood Latch	

5	Assembly	1
6	Zip Ties	10

CAUTION: XBM remote start can ONLY be installed on vehicles that have the following factory options: Automatic Transmission, Remote Keyless Entry and Immobilizer.

WinFobik based vehicles, the sales code must be added to the database and the Restore Vehicle Configuration (using a diagnostic scan tool) must be performed prior to installing the new WIN module. Failure to do so will render the WIN module's remote start function inoperative.

The technician should wait 1/2 hour between adding XBM sales code in DealerConnect before installing the WIN module & restoring vehicle configuration. In the interim, the technician can install all other components except the WIN module.

NOTE: Prior to installation, obtain the four digit PIN from the dealership's parts department.

RESTORE VEHICLE CONFIGURATION

NOTE: The wiTECH software level must be at the latest release to perform this procedure.

1. VIN must be updated with the sales code of the added accessory in order to enable system functionality. Using the DealerCONNECT website and the wiTECH diagnostic application, complete the vehicle configuration.
2. Log on to https://dealerconnect.chrysler.com.
3. In the "Vehicle Option" screen under the "Global Claims System" category in the "Service" tab, enter the vehicle VIN, four digit pin number obtained from the dealership parts department and add sales code(s) noted below as a "Dealer Installed Option".

XBM (REMOTE START)

1. Confirm that the new sales code has been successfully added to the VIN.
2. With the wiTECH diagnostic application, perform the following steps form the Initial Start Up Screen:

- Select the "DIAGNOSTIC PROCEDURES" tab
- Highlight "RESTORE VEHICLE CONFIGURATION"
- Select the "Run Diagnostic" button
- Select "CONTINUE"
- Verify that the vehicle VIN number is correct
- Once verified, select the "Correct VIN" button

- Note On-Screen instructions and select the "Close" button

HOOD SWITCH AND HARNESS INSTALLATION

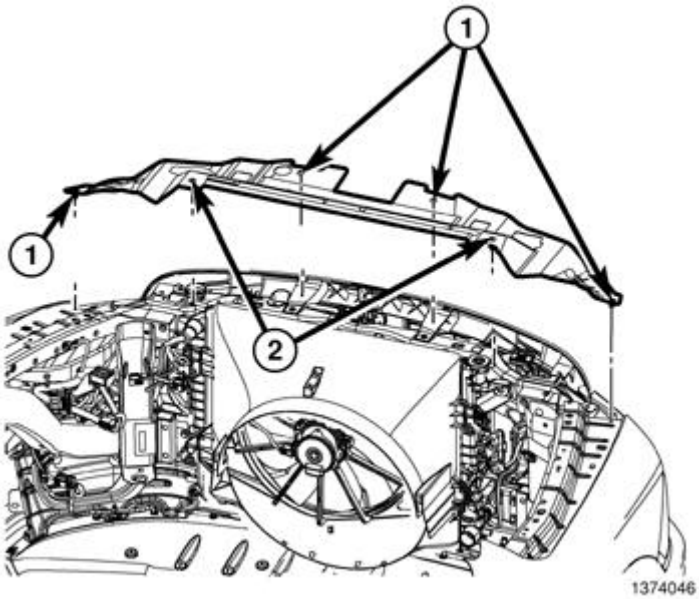

Fig. 2: Upper Radiator Seal
Courtesy of CHRYSLER GROUP, LLC

1. **Disconnect and isolate the negative battery cable. If equipped with an auxiliary battery, disconnect and isolate the auxiliary battery's negative cable as well.**

   NOTE: Engine removed from graphic for clarity.

2. Remove the push pin retainers (2) and the upper radiator seal/shroud (1).

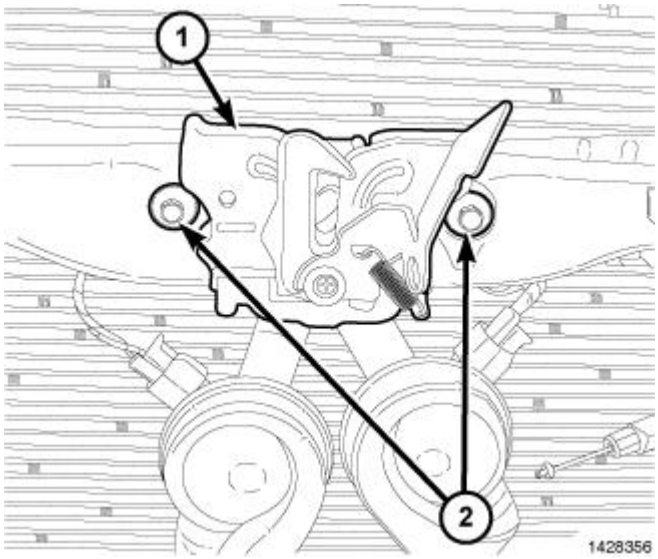

Fig. 3: Hood Latch

Courtesy of CHRYSLER GROUP, LLC

3. Using a grease pencil or equivalent, mark the position of the hood latch (1) on the upper radiator crossmember.
4. Remove the two bolts (3) that secure the hood latch to the upper radiator crossmember.

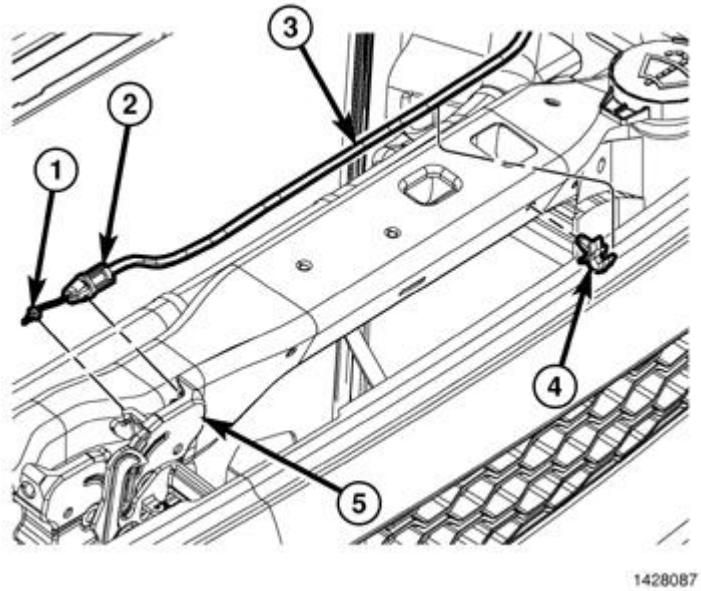

Fig. 4: Hood Release Cable
Courtesy of CHRYSLER GROUP, LLC

5. Disconnect the hood latch cable (1) from the hood latch (5) and remove the latch.

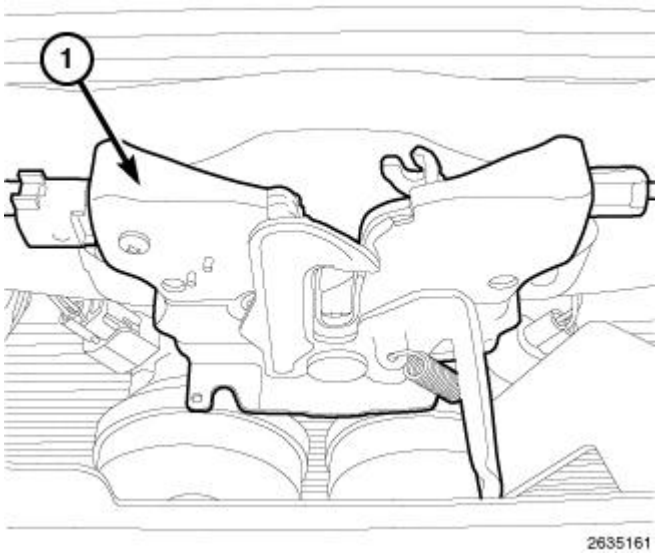

Fig. 5: Hood Latch Assembly
Courtesy of CHRYSLER GROUP, LLC

6. Connect the hood latch cable to the hood latch assembly (1).

7. Position the hood latch assembly (1) to the upper radiator crossmember and loosely install the two bolts that secure the latch to the crossmember.
8. Align the hood latch assembly (1) to the upper radiator crossmember using the reference marks made during the removal procedure and tighten the bolts to 11 N.m (8 ft. lbs.).

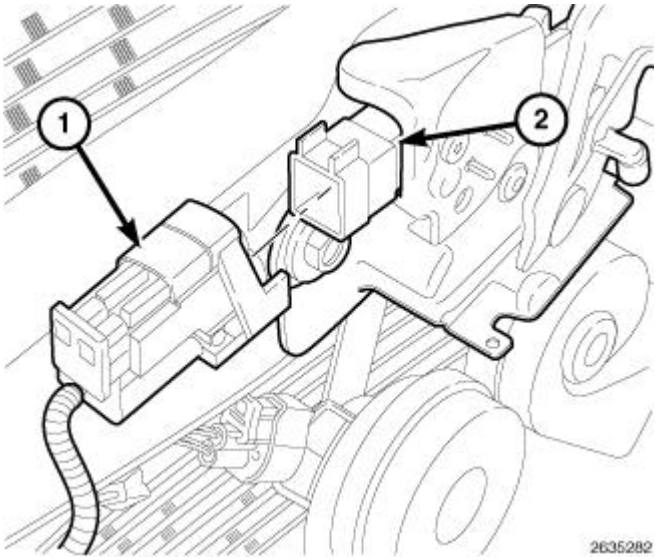

Fig. 6: Hood Switch Harness & Hood Latch Assembly
Courtesy of CHRYSLER GROUP, LLC

NOTE: **There may be an unused factory installed hood switch harness taped back on the existing vehicle harness located behind the radiator just below the upper radiator crossmember. If present, detach it, route it under the radiator crossmember through to the hood latch assembly and connect. If the factory hood switch harness is not present, follow steps 9-32.**

9. Using the supplied wiring harness in the kit, connect the hood switch harness (1) to the hood latch assembly (2).

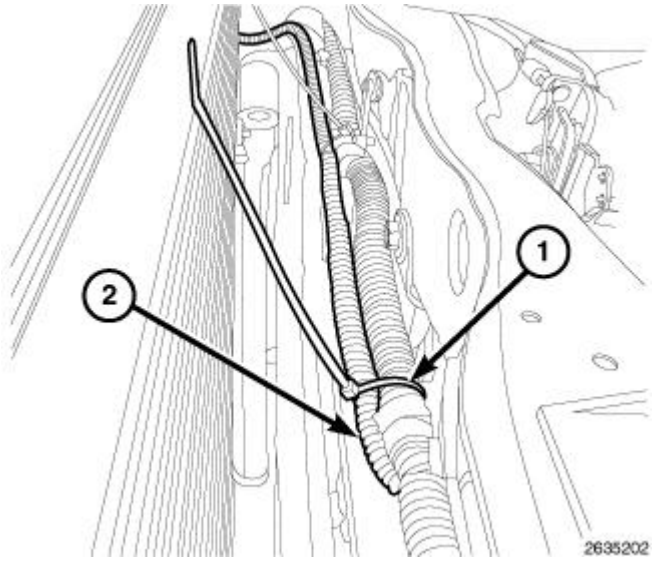

Fig. 7: Hood Switch Harness & Tie Straps
Courtesy of CHRYSLER GROUP, LLC

10. Route the hood switch harness (2) under the upper radiator crossmember towards the left side of the vehicle.
11. Secure the hood switch harness (2) as necessary to the existing vehicle harness using the tie straps (1) included in the kit.

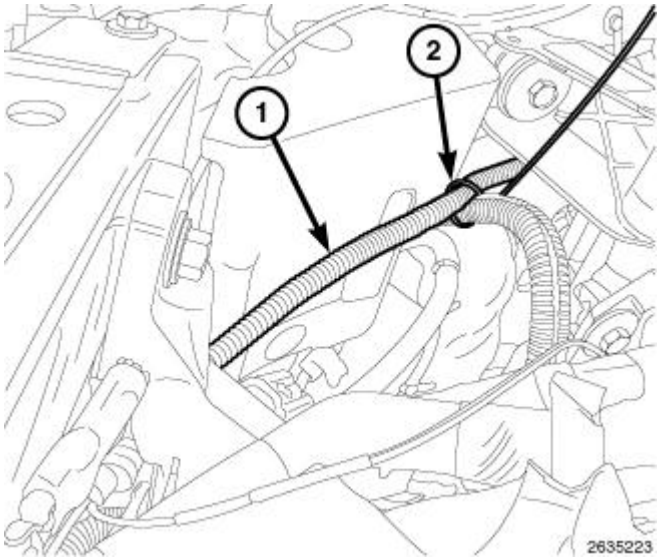

Fig. 8: Hood Switch Harness
Courtesy of CHRYSLER GROUP, LLC

12. Route the hood switch harness (1) under the radiator mounting bracket towards the inner left fender. Secure the hood switch harness (2) as necessary to the existing vehicle harness using the tie straps (1) included in the kit.

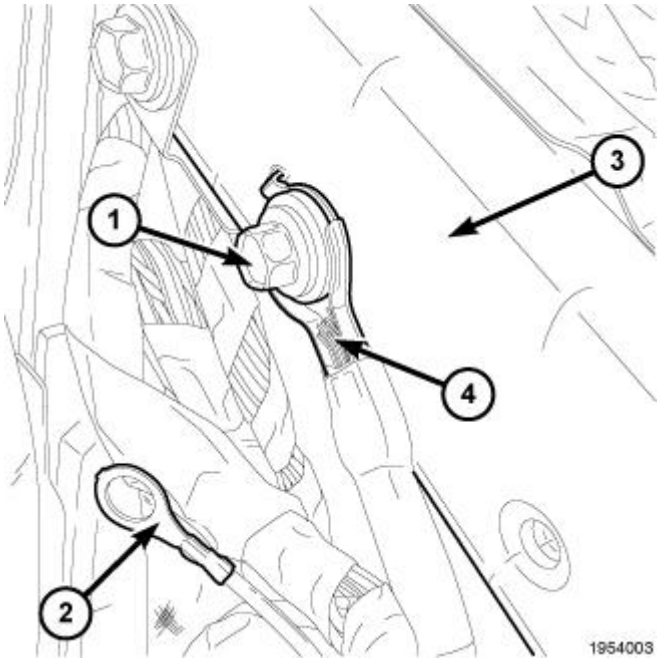

Fig. 9: Ground Retainer
Courtesy of CHRYSLER GROUP, LLC

13. Remove the ground retainer (1) from the inner left fender (3).

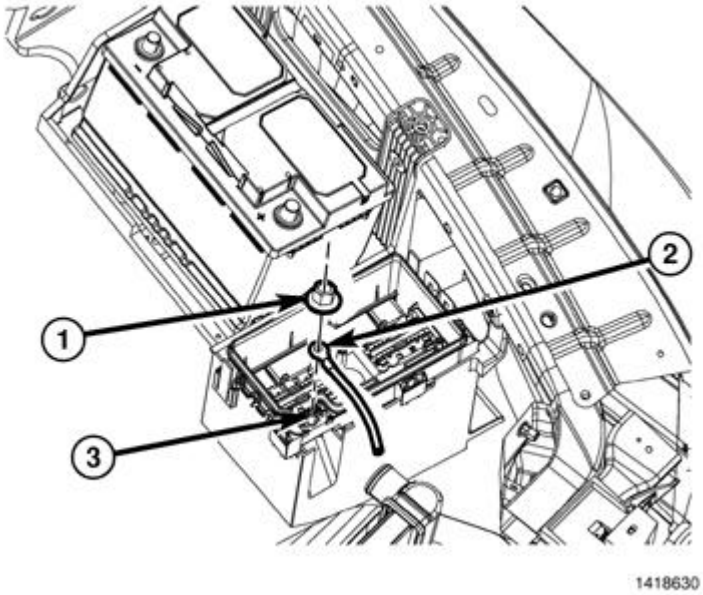

Fig. 10: B+ Terminal Cable & Nut
Courtesy of CHRYSLER GROUP, LLC

14. Remove the B+ terminal nut (1) from the Totally Integrated Power Module (3) (TIPM) B+ terminal. Remove the B+ cable (2) from the TIPM.
15. Using a suitable flat blade tool, disengage the TIPM upper retaining tabs from the battery tray bracket.

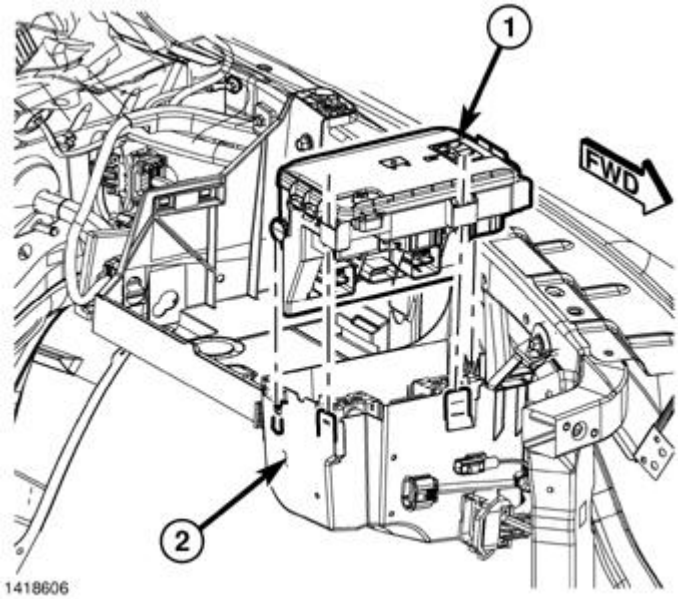

Fig. 11: Totally Integrated Power Module (TIPM)
Courtesy of CHRYSLER GROUP, LLC

16. Grasp the TIPM (1) and rotate the assembly up to free it from its mounting bracket (3). Position the assembly upside down to access the electrical connectors located on the bottom of the unit.

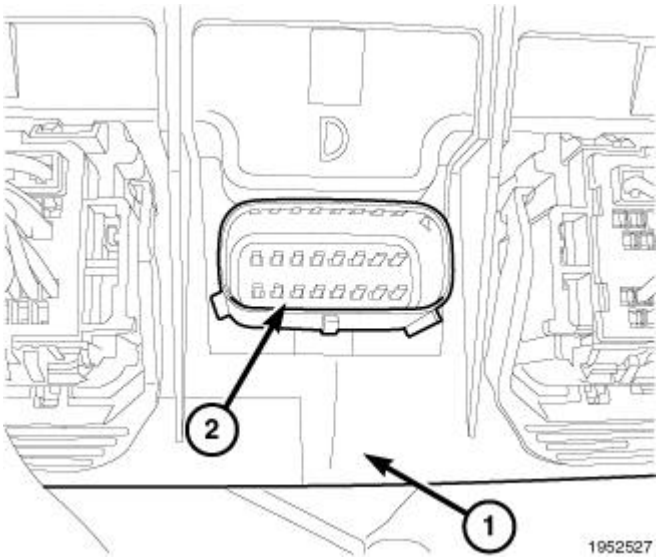

Fig. 12: Totally Integrated Power Module Connector Terminals
Courtesy of CHRYSLER GROUP, LLC

17. Disconnect the connector C4, letter D labeled on the bottom of the TIPM. Release by depressing the locking tab and rotating the connector arm outboard, until the connector is free from the TIPM assembly (1). Be certain to pull the connector straight off.

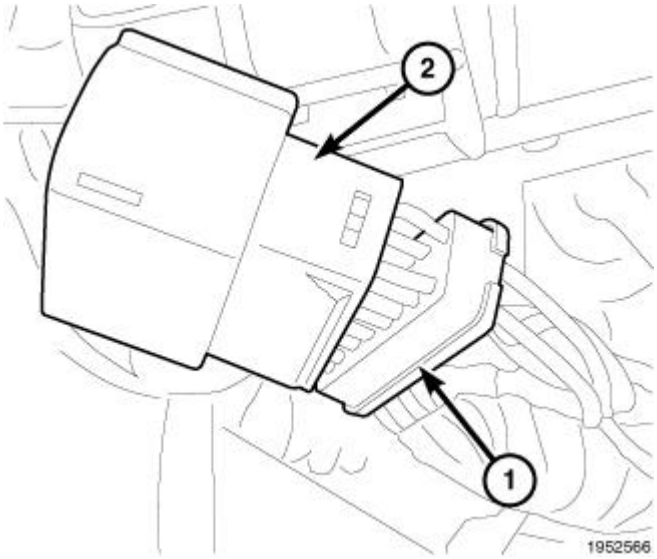

Fig. 13: Totally Integrated Power Module Harness Connector
Courtesy of CHRYSLER GROUP, LLC

18. Route the pigtail wires down the harness to the TIPM and secure where necessary.
19. Remove the "Secondary Lock" from the rear of the connector.

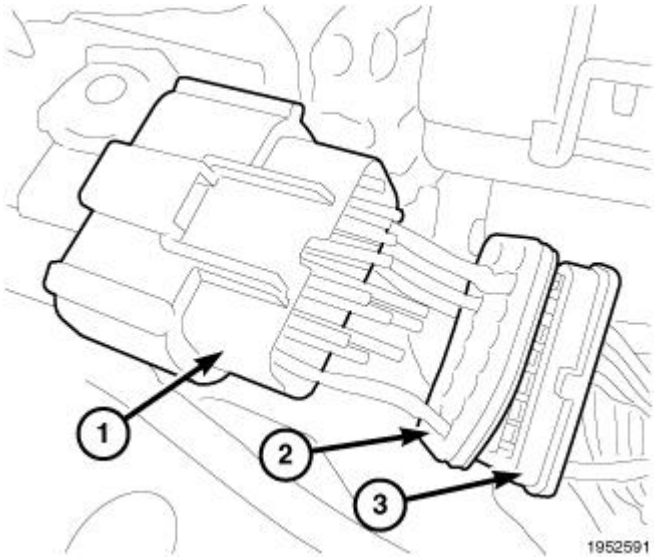

Fig. 14: Totally Integrated Power Module Connector Weather Seal
Courtesy of CHRYSLER GROUP, LLC

20. Remove the weather seal from the rear of the connector.

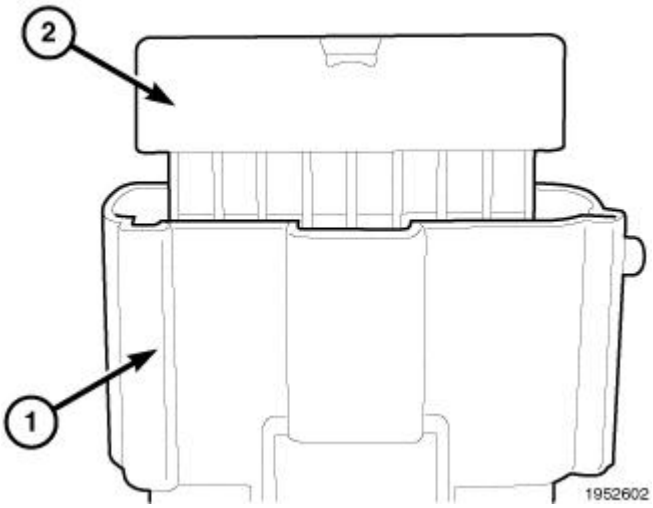

Fig. 15: Totally Integrated Power Module Connector
Courtesy of CHRYSLER GROUP, LLC

21. Remove the front portion of the connector from the connector housing. This portion of the connector aligns the terminals properly within the connector housing.

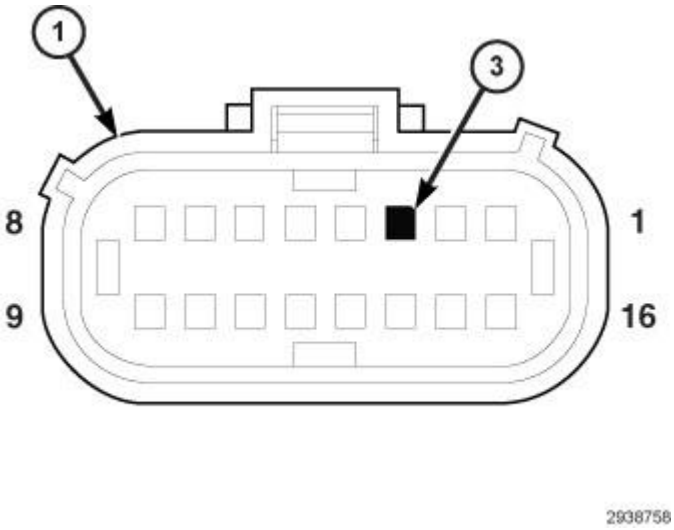

Fig. 16: Identifying Terminal 3 Of G70 Connector End View
Courtesy of CHRYSLER GROUP, LLC

22. Locate terminal 3 (G70 circuit) slot/cavity (3) of the connector housing's mating side.

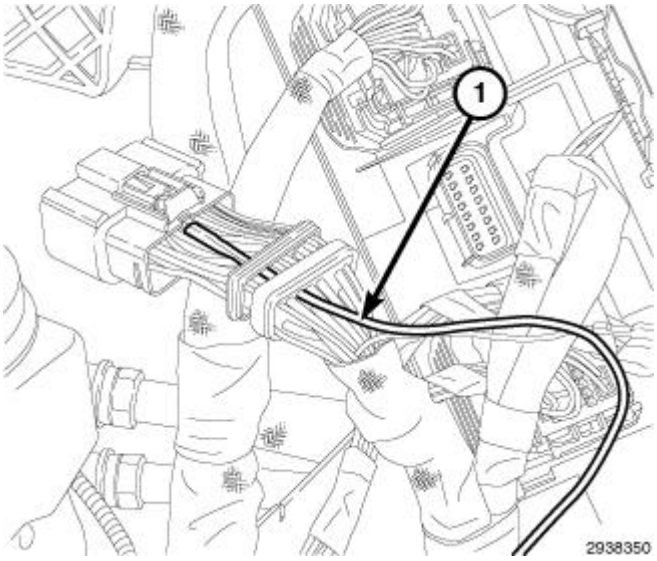

Fig. 17: Identifying Purple/White Wire
Courtesy of CHRYSLER GROUP, LLC

23. Route the Purple/White wire (1) from the hood switch harness through the secondary lock, through the weather seal and into the terminal 3 (G70 circuit) slot of the connector housing's wiring side.
24. Reinstall the front portion of the connector, making sure that all terminals are seated correctly and are in the right direction. Reinstall the weather seal and the secondary lock.

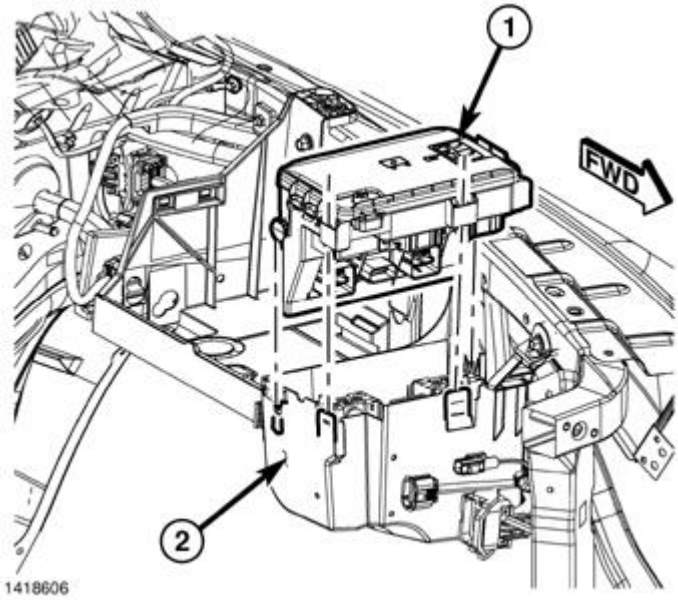

Fig. 18: Totally Integrated Power Module (TIPM)
Courtesy of CHRYSLER GROUP, LLC

NOTE: Totally Integrated power module electrical connectors are color coded to ease location reference.

25. Connect the electrical connector by pushing straight on and rotating the connector arm inboard, until the

connector is firmly locked in place on the TIPM assembly.

26. Turn the TIPM so that the connector side is facing down. Install the assembly onto the TIPM battery tray bracket making sure to line up the lower retaining tab with the retaining slot in the tray.
27. Push the TIPM (1) downward to lock the upper retaining clips into the bracket (2).

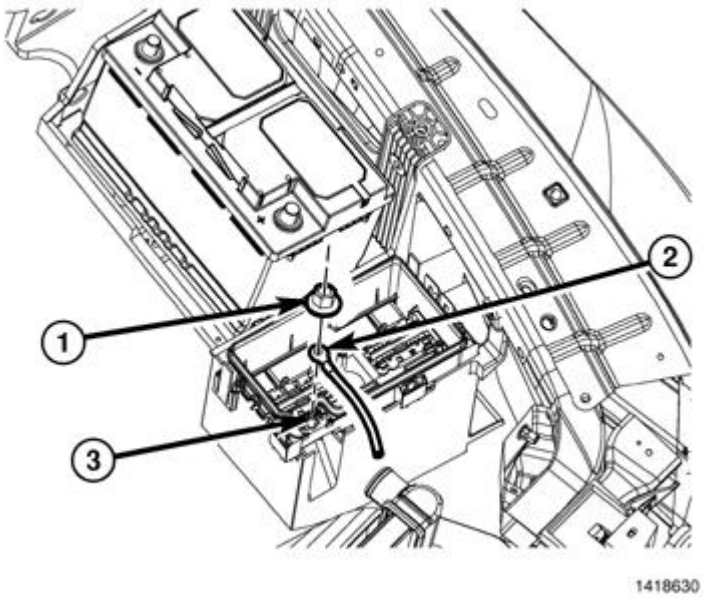

Fig. 19: B+ Terminal Cable & Nut
Courtesy of CHRYSLER GROUP, LLC

28. Install the B+ terminal cable (2) and nut (1) on the B+ terminal of the TIPM (3).
29. From the top of the mounting bracket, press the switch downward into the mounting hole until the integral switch latch tabs lock it into place.

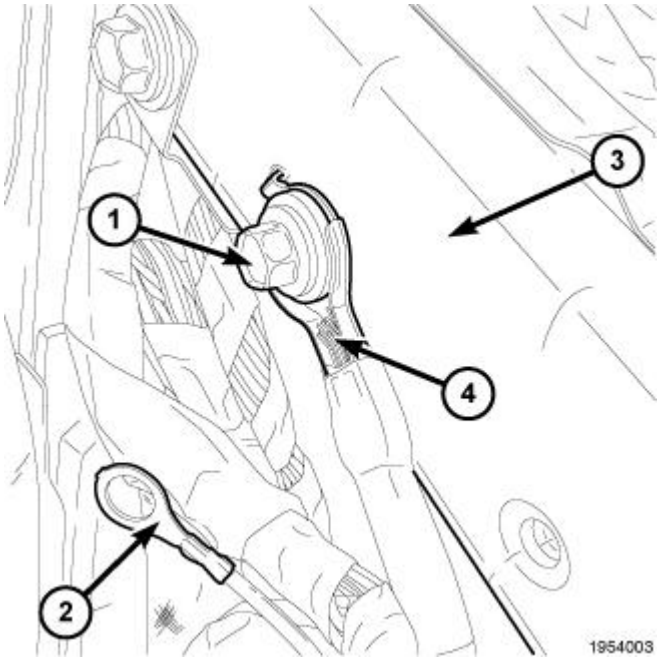

Fig. 20: Ground Retainer
Courtesy of CHRYSLER GROUP, LLC

30. Install the ground from the pigtail harness (2), to the fender under the body ground (4).

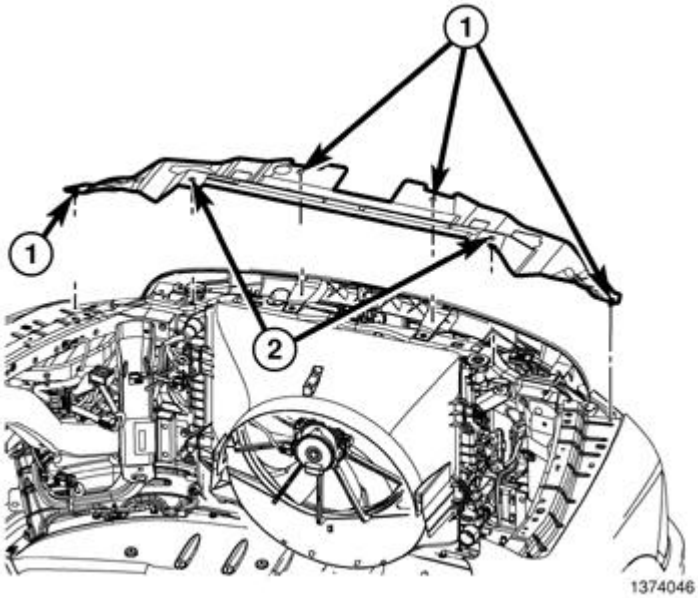

Fig. 21: Upper Radiator Seal
Courtesy of CHRYSLER GROUP, LLC

NOTE: Engine removed from graphic for clarity.

31. Install the push pin retainers (2) and the upper radiator seal/shroud (1).
32. Connect the negative battery cable.

WIRELESS IGNITION MODULE (WIN) MODULE REMOVAL

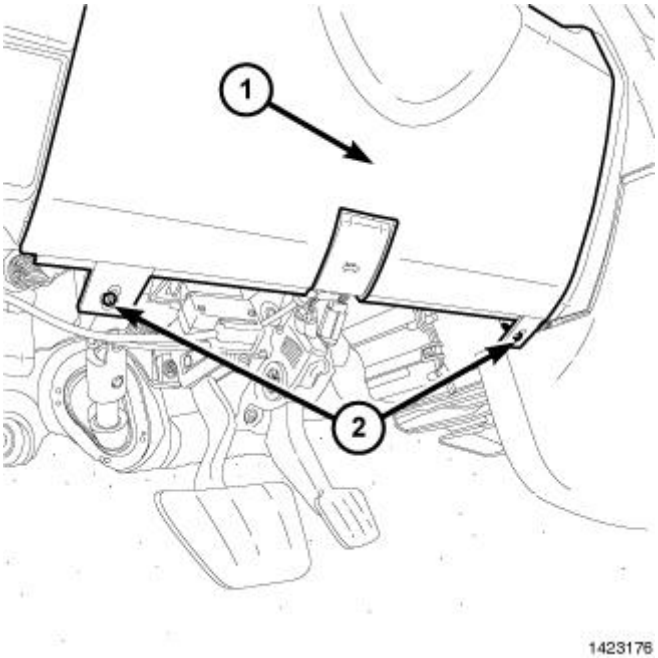

Fig. 22: Steering Column Opening Cover & Fasteners
Courtesy of CHRYSLER GROUP, LLC

1. Using a trim stick (special tool #C-4755, Trim Stick) or equivalent, disengage the retainer clip that secures the hood release to the steering column opening cover, and remove the hood release handle from the cover.
2. Remove the two fasteners (2) that secure the bottom of the steering column opening cover (1) to the instrument panel.

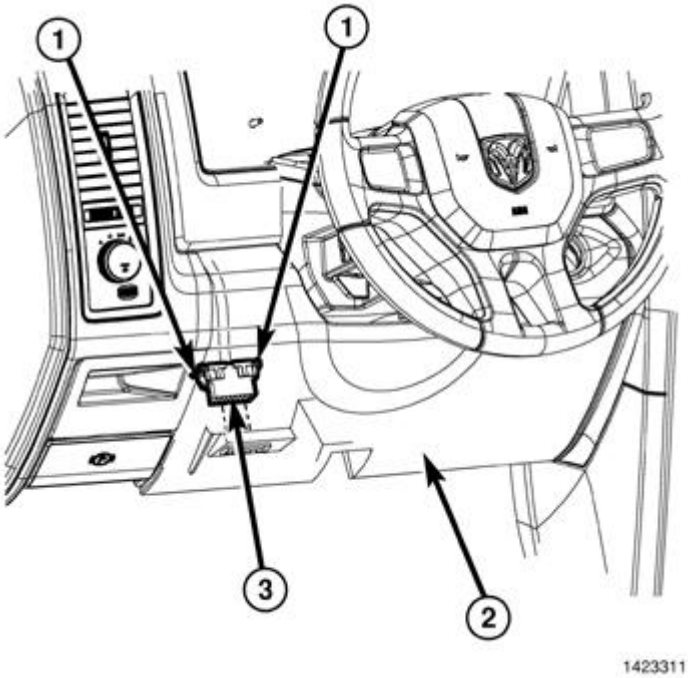

Fig. 23: Data Link Connector
Courtesy of CHRYSLER GROUP, LLC

3. Remove the Data Link Connector (3) from the steering column opening cover (2) by pressing in the tabs (1) and pushing the connector through the opening on the back side of the cover.

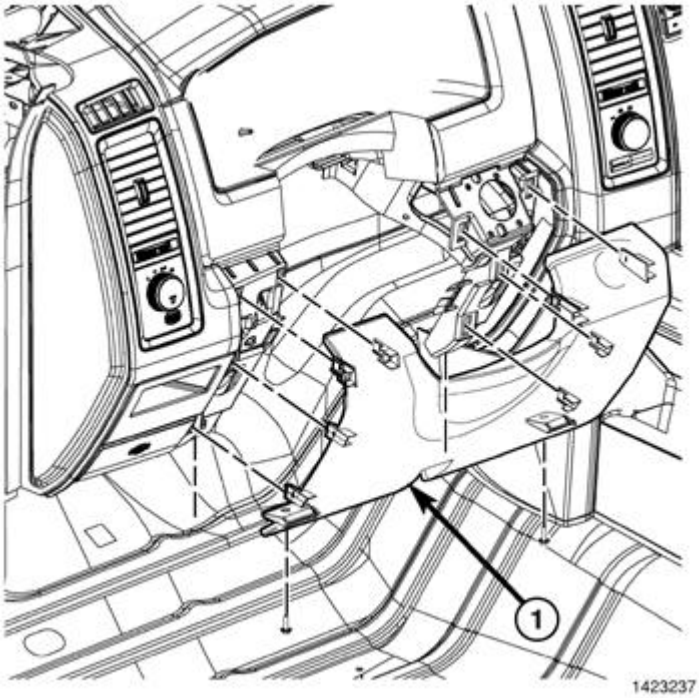

Fig. 24: Steering Column Opening Cover
Courtesy of CHRYSLER GROUP, LLC

4. Using a trim stick (special tool #C-4755, Trim Stick) or equivalent, release the retainer clips that secure the steering column opening cover (1) to the instrument panel and remove the cover.

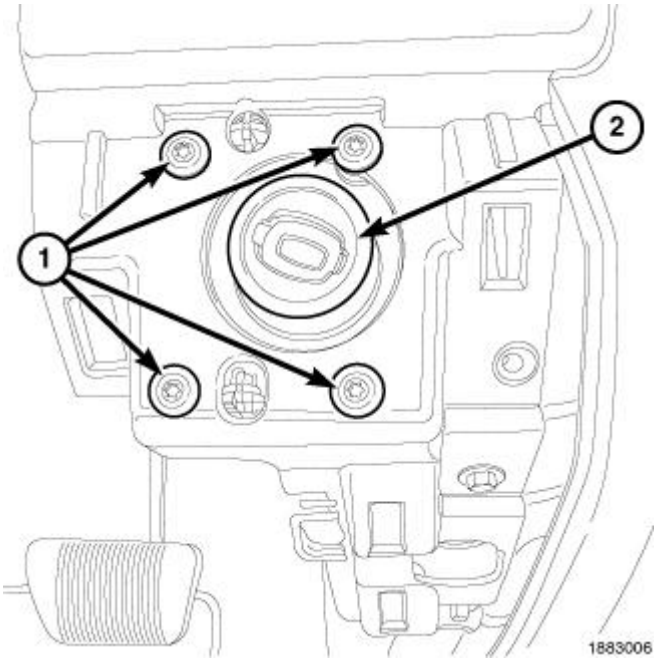

Fig. 25: WIN Module & Retainers
Courtesy of CHRYSLER GROUP, LLC

5. Remove the four WIN retainers (1).
6. Disconnect the WIN electrical connector.
7. Remove the WIN from the instrument panel opening.

REMOTE START ANTENNA INSTALLATION

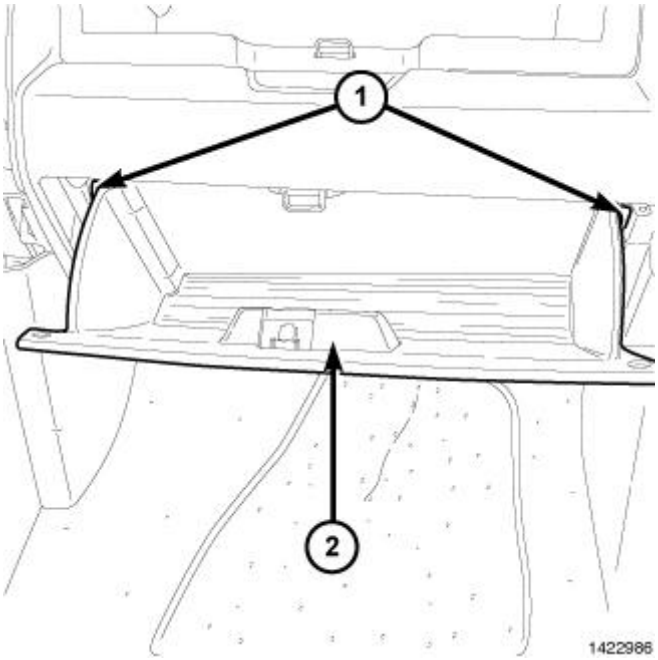

Fig. 26: Glove Box

Courtesy of CHRYSLER GROUP, LLC

1. Open the glove box (2).
2. Release the two glove box stops (1) and lower the glove box (2) downward past the stops.

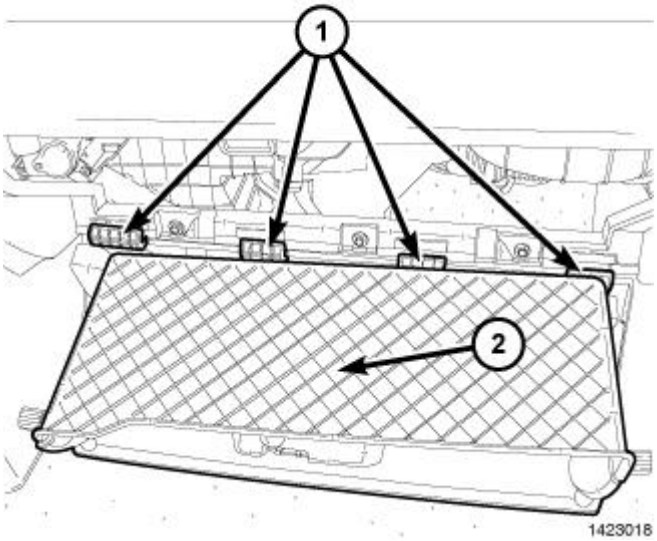

Fig. 27: Glove Box Hinges
Courtesy of CHRYSLER GROUP, LLC

3. Disengage the glove box hinges (1) from the instrument panel and remove the glove box (2).

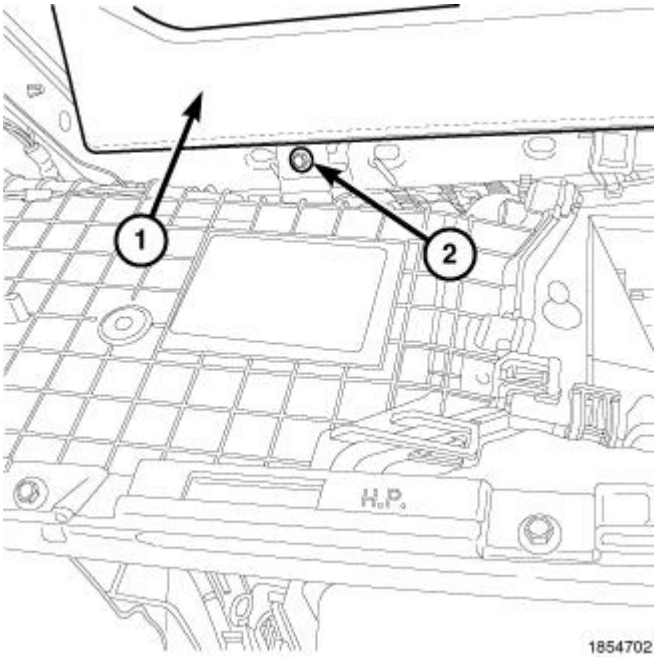

Fig. 28: Storage Bin Fastener

Courtesy of CHRYSLER GROUP, LLC

4. Through the glove box opening remove storage bin fastener (2) located at the back of the storage bin (1).

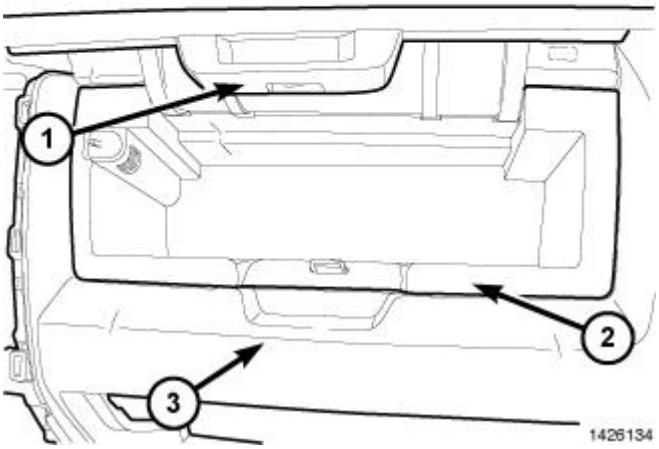

Fig. 29: Storage Bin
Courtesy of CHRYSLER GROUP, LLC

5. Open storage bin door (1).
6. Disengage the retainer clips that secure the storage bin (2) to the instrument panel (3).
7. Partial remove the storage bin and disconnect the storage bin light electrical connector.
8. Remove storage bin (2) from vehicle.

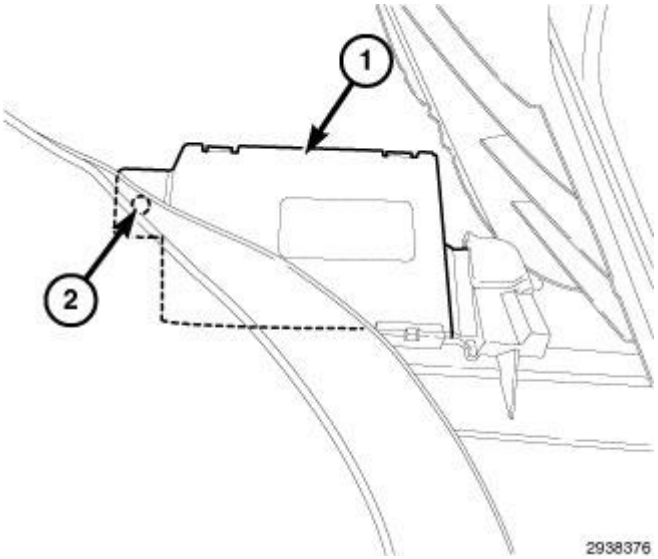

Fig. 30: WIN Antenna

Courtesy of CHRYSLER GROUP, LLC

NOTE: The WIN antenna is located behind the left side of the storage bin.

9. Insert the right side of the WIN antenna module first, then push firmly on the left side to engage holding clip (2).
10. Secure the WIN antenna connector end to a stiff wire.
11. Route the antenna wire behind the radio toward the drives side of the vehicle.

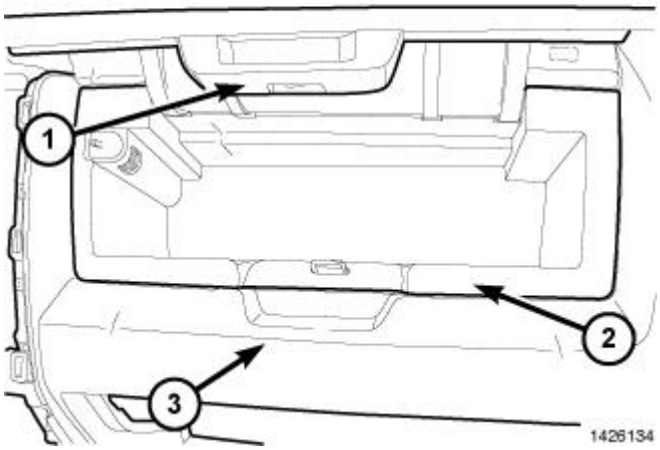

Fig. 31: Storage Bin
Courtesy of CHRYSLER GROUP, LLC

12. Partial install the storage bin and connect the storage bin light electrical connector.
13. Engage the storage bin retainer clips and fully seat the storage bin (2) to the instrument panel (3).
14. Close storage bin door (1).

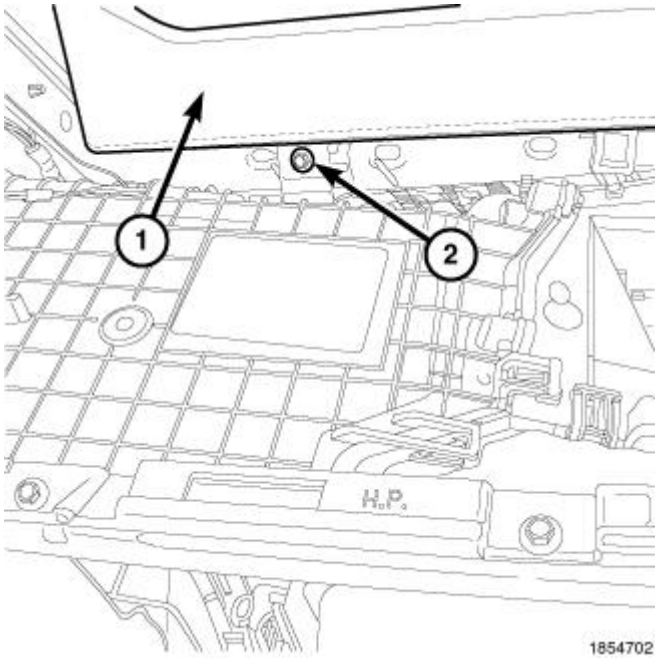

Fig. 32: Storage Bin Fastener
Courtesy of CHRYSLER GROUP, LLC

15. Through the glove box opening install the storage bin fastener (2) at rear of storage bin (1).

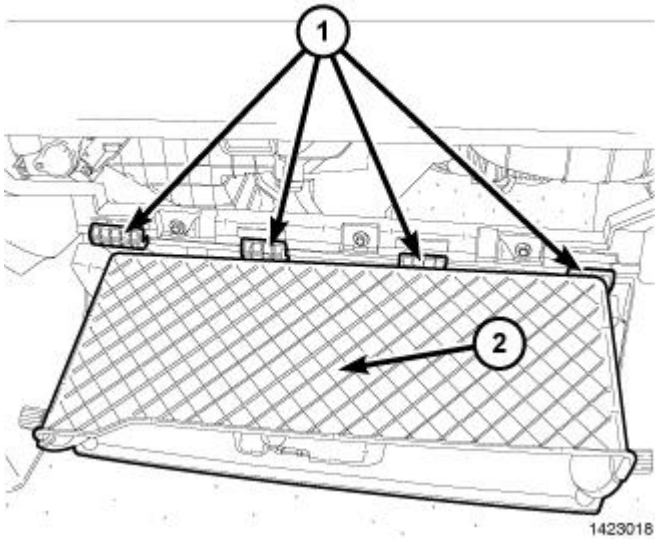

Fig. 33: Glove Box Hinges
Courtesy of CHRYSLER GROUP, LLC

16. Engage the hinges (1) of the glove box (2) to the instrument panel.

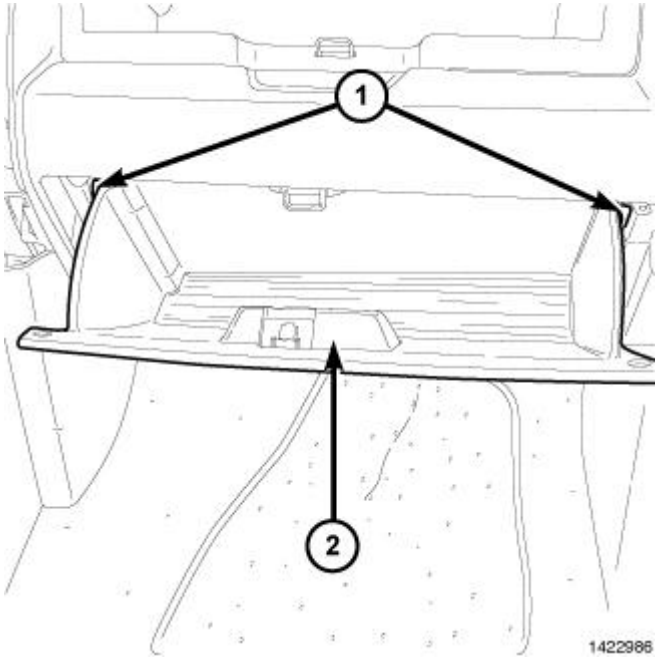

Fig. 34: Glove Box
Courtesy of CHRYSLER GROUP, LLC

17. Press downward on the back edge of the glove box (2) and raise the glove box past the two stops (1).
18. Close the glove box.

WIN MODULE INSTALLATION

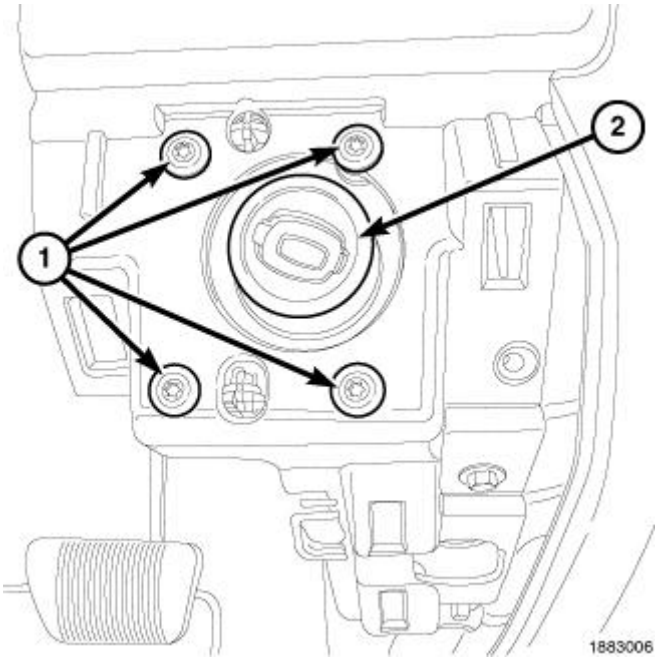

Fig. 35: WIN Module & Retainers
Courtesy of CHRYSLER GROUP, LLC

1. Connect the WIN electrical connector.
2. Connect the antenna connector to the WIN.
3. Install the WIN (2) into the to instrument panel.

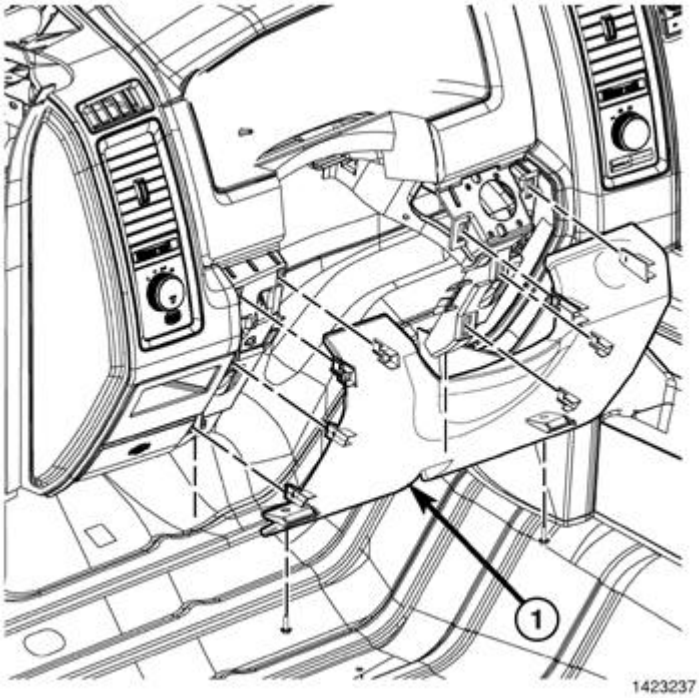

Fig. 36: Steering Column Opening Cover
Courtesy of CHRYSLER GROUP, LLC

4. Position the steering column opening cover (2) to the instrument panel and fully engage the retainer clips to the instrument panel.

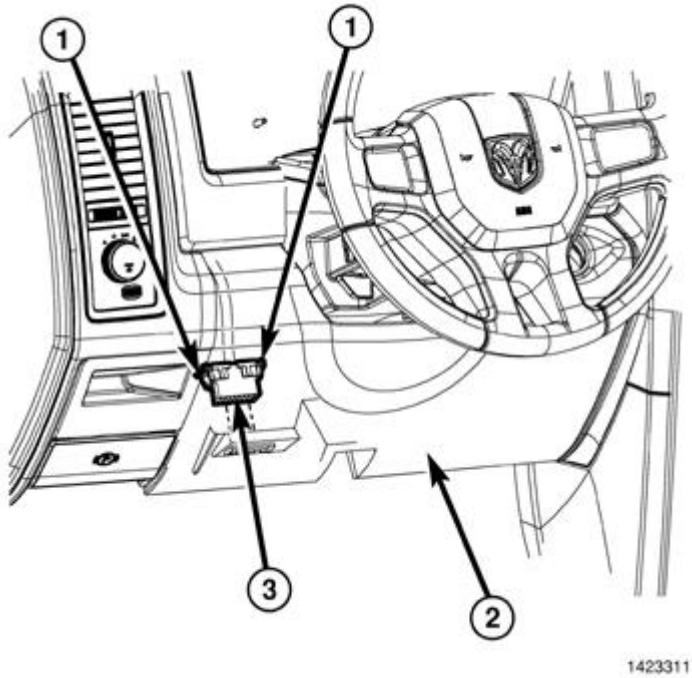

Fig. 37: Data Link Connector
Courtesy of CHRYSLER GROUP, LLC

5. Install the Data Link Connector (3) to the steering column opening cover (2) by pushing the connector through the opening on the back side of the cover and fully engaging the lock tabs (1) of the connector.

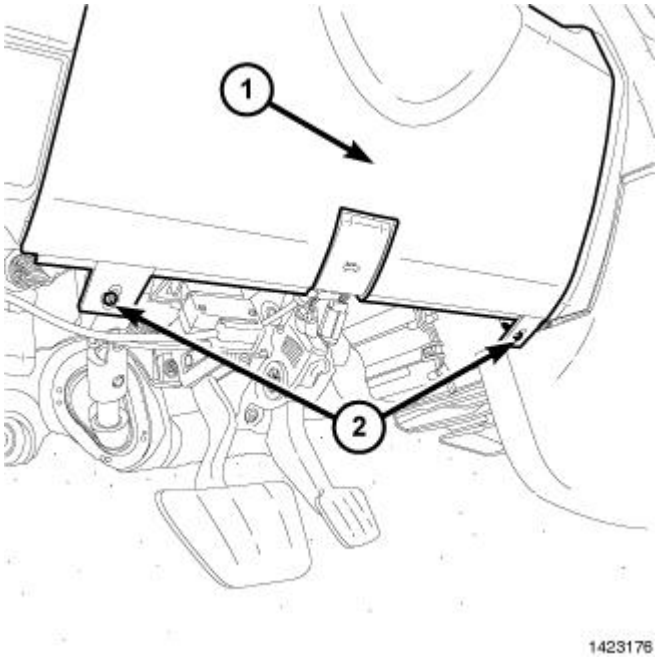

Fig. 38: Steering Column Opening Cover & Fasteners
Courtesy of CHRYSLER GROUP, LLC

6. Install the two fasteners (2) that secure the steering column opening cover (1) to the instrument panel.
7. Position the hood release handle onto the column opening cover and fully engage the retainer clip that secures the hood release handle to the steering column opening cover.
8. Connect the negative battery cable.

PROGRAMMING THE WIN

CAUTION: Read all notes and cautions for programming procedures.

NOTE: Have the vehicle PIN readily available before running the routine

CAUTION: If the PCM and WIN are replaced at the same time, the PCM MUST be programmed before the WIN.

1. Connect a battery charger to the vehicle.
2. With the wiTECH diagnostic application, perform the following steps:
   - Select "WIRELESS CONTROL MODULE (WCM)"
   - Select the "MISCELLANEOUS FUNCTIONS" tab
   - Highlight "WIN REPLACED"
   - Select the "Start Misc Function" button
   - Select "NEXT"
   - Enter the PIN when prompted.
   - Select "NEXT"
   - Verify that the PIN number is correct
   - Once verified select "NEXT"
   - Select "NEXT"
   - Note On-Screen instructions and select the "FINISH" button
   - Cycle ignition key after the successful routine completion.

PROGRAMMING IGNITION KEYS TO THE WIN

CAUTION: Read all notes and cautions for programming procedures.

NOTE: Have the vehicle PIN readily available before running the routine

1. Connect a battery charger to the vehicle.
2. With the wiTECH diagnostic application, perform the following steps:
   - Select "WIRELESS CONTROL MODULE (WCM)"

- Select the "MISCELLANEOUS FUNCTIONS" tab
- Highlight "PROGRAMMING IGNITION KEYS OR KEY FOBS"
- Select "NEXT"
- Enter the PIN when prompted.
- Select "NEXT"
- Verify that the PIN number is correct
- Once verified select "NEXT"
- Note On-Screen instructions and select the "FINISH" button
- Cycle ignition key after the successful routine completion.

NOTE: If the original keys do not successfully program to the new WIN after the proper procedures are followed correctly, programming new keys will be necessary.

NOTE: A maximum of eight keys can be learned by the WIN. Once a key is learned by a WIN, that key has acquired the Secret Key for that WIN and cannot be transferred to any other vehicle.

ECU RESET

NOTE: The wiTECH software level must be at the latest release to perform this procedure.

CAUTION: Read all notes and cautions for programming procedures.

1. Connect a battery charger to the vehicle.
2. With the wiTECH diagnostic application, perform the following steps:
   - Select "WIRELESS CONTROL MODULE (WCM)"
   - Select the "MISCELLANEOUS FUNCTIONS" tab
   - Highlight "RESET ECU"
   - Note On-Screen instructions and select the "NEXT" button
   - Select "FINISH"

WINDOW CALIBRATION

NOTE: Vehicles equipped with the auto up feature must have the windows calibrated after a battery disconnect.

NOTE: The door must be completely closed when starting this step.

1. Sit in the driver seat and close the door.
2. Lower the window part of the way down.
3. Run the window to the full up position and continue to hold the switch for an additional two seconds.
4. Run the window to the full down position and continue to hold the switch for an additional two seconds.
5. Raise the window to the full up position.
6. Repeat the steps for the remaining windows.

UPDATE PRESSURE THRESHOLDS

NOTE: The wiTECH software level must be at the latest release to perform this procedure.

NOTE: The vehicle must be driven before the TPMS light will turn off.

CAUTION: Read all notes and cautions for programming procedures.

NOTE: Have the vehicle PIN readily available before running the routine

1. Connect a battery charger to the vehicle.
2. With the wiTECH diagnostic application, perform the following steps:
    - Select the "TIPMCGW"
    - Select the "MISCELLANEOUS FUNCTIONS" tab
    - Highlight and select "UPDATE PRESSURE THRESHOLDS"
    - Note On-Screen instructions and select the "NEXT" button
    - Verify current settings, select the "NEXT" button to change settings
    - Select "NEXT"
    - Enter the PIN when prompted.
    - Select "NEXT"
    - Verify that the PIN number is correct
    - Once verified, select "NEXT"
    - Select "NEXT"
    - Wait for the WCM/WIN to update it's configuration
    - Once the WCM/WIN configuration is complete, select "NEXT"
    - Note On-Screen instructions and select the "FINISH" button

TEMPORARY REMOTE START DISABLE

NOTE: The wiTECH software level must be at the latest release to perform this procedure.

CAUTION: Read all notes and cautions for programming procedures.

1. Connect a battery charger to the vehicle.
2. With the wiTECH diagnostic application, perform the following steps:
    - Select the "TIPMCGW"
    - Select the "MISCELLANEOUS FUNCTIONS" tab
    - Highlight and select "TEMPORARY REMOTE START DISABLE"
    - Note On-Screen instructions and select the "NEXT" button
    - Select the "DISABLE" button to activate the remote start function
    - Select "YES" to reset the module and exit the routine, select "NO" to toggle the value back
    - Select "FINISH"

CLEAR ALL DTC'S

NOTE: The wiTECH diagnostic application is the preferred method for clearing all DTC's.

NOTE: The wiTECH software level must be at the latest release to perform this procedure.

ACTIVATE THE REMOTE START

To activate the remote start the vehicle must have been driven at least 35 MPH.

With the vehicle off, and the doors closed and locked, verify the remote start is functioning properly.

5.7L ENGINE BLOCK HEATER

RAM TRUCK 1500/2500/3500

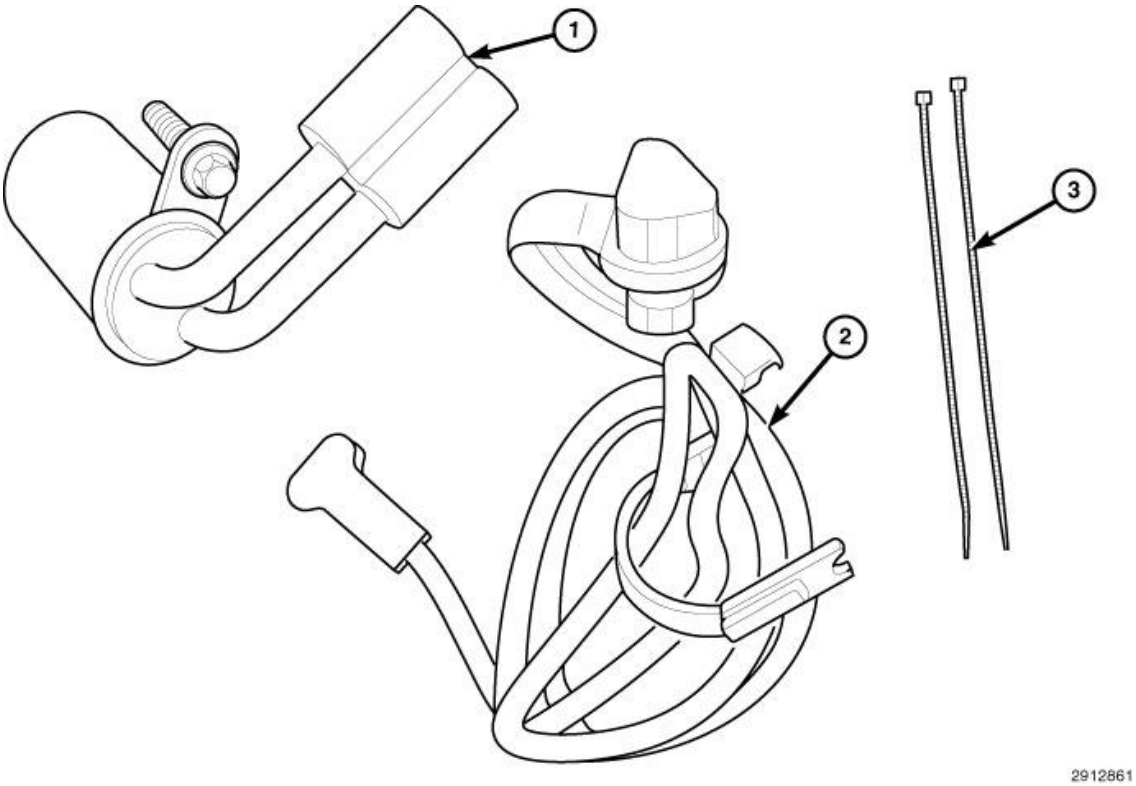

Fig. 39: Engine Block Heater Replacement Components
Courtesy of CHRYSLER GROUP, LLC

CALL OUT	DESCRIPTION	QUANTITY
1	Engine Block Heater (with PIA Bolt)	1
2	Cord	1
3	Tie Straps	2

PROCEDURE STEPS:

The engine block heater element will locate on the driver side towards the rear of the engine just under the exhaust manifold.

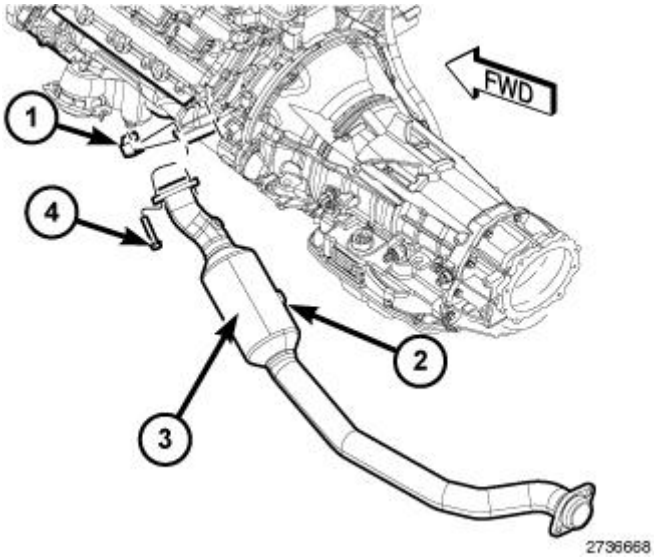

Fig. 40: Exhaust Pipe/Catalytic Converter Assembly, Bolts & Nuts
Courtesy of CHRYSLER GROUP, LLC

NOTE: **It may be necessary to reposition the catalytic converter at the exhaust manifold to install this accessory. LET THE VEHICLE COOL DOWN COMPLETELY BEFORE INSTALLATION OF THIS PRODUCT.**

1. Remove negative battery cable located under passenger side front seat.
2. Remove the engine cover.
3. Remove the air cleaner housing assembly.
4. Raise and support the vehicle.
5. If equipped, remove the skid plate.
6. If necessary, saturate the bolts (4) and nuts (1) with heat valve lubricant. Allow 5 minutes for penetration.
7. If necessary, remove the bolts (4) and flanged nuts (1) at the exhaust manifold.
8. If necessary, reposition the front exhaust pipe/catalytic converter assembly (3) away from the exhaust manifold.

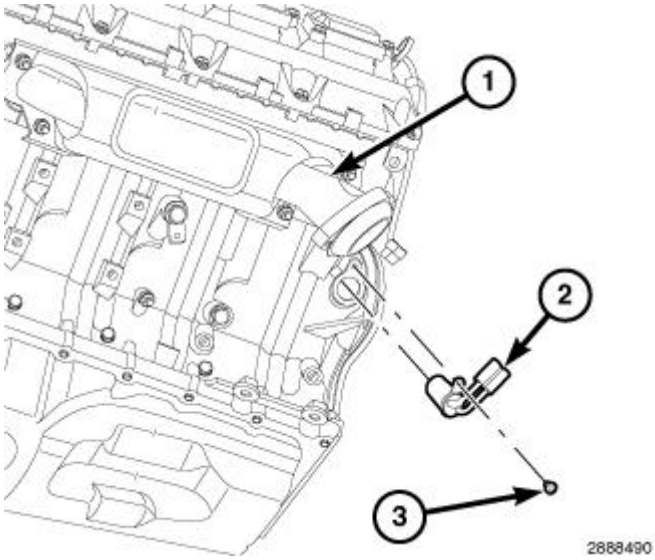

Fig. 41: Engine Block Heater Element & PIA Bolt
Courtesy of CHRYSLER GROUP, LLC

NOTE: PIA Bolt (3) shown in illustration exploded for clarity.

9. Position and install the engine block heater element (2) and PIA bolt (3) into the opening under the rear of the exhaust manifold (1).
10. Tighten the PIA bolt (3) to 9 N-m (80 in-lbs).

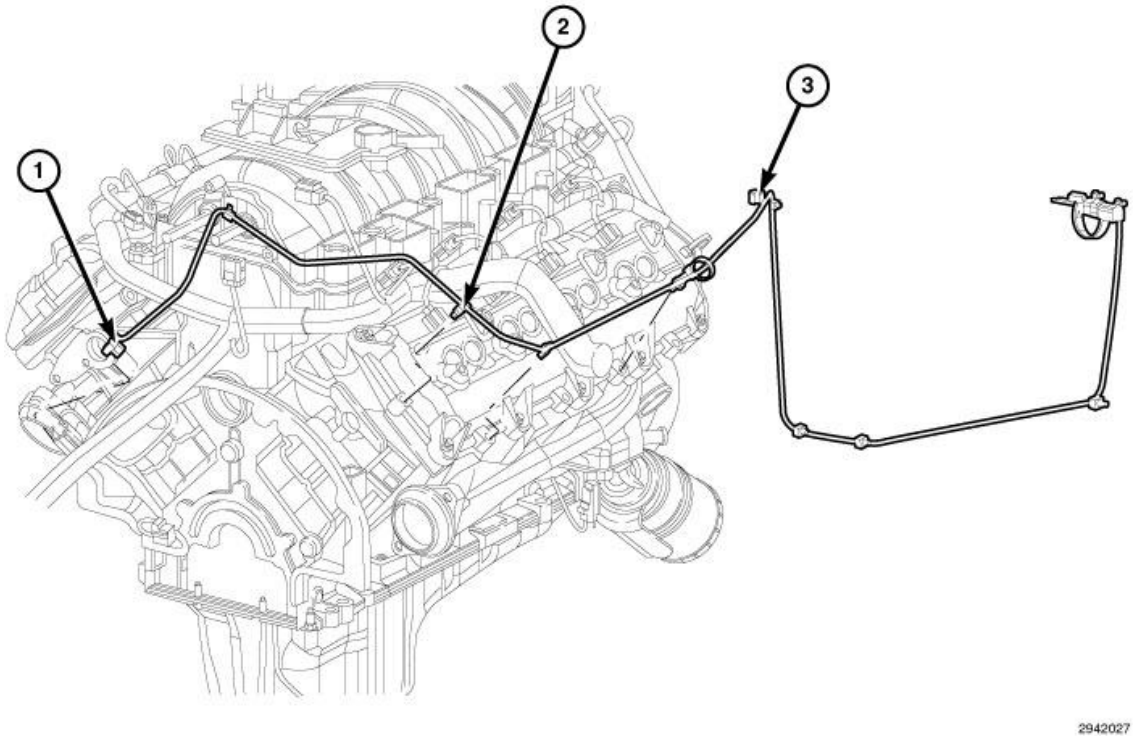

Fig. 42: Engine Block Heater Cord

Courtesy of CHRYSLER GROUP, LLC

11. Plug in the engine block heater cord (1) into the element.
12. Lower the vehicle.
13. Begin routing the cord (1) upward, position and install locator clips (2) onto the existing engine studs.

CAUTION: Make sure the harness is clear of any moving parts or extreme heat sources.

14. Connect the clip (3) to the engine wiring harness. Let the remainder of the harness drop to the right hand side of the engine, towards the floor.
15. Raise the vehicle.

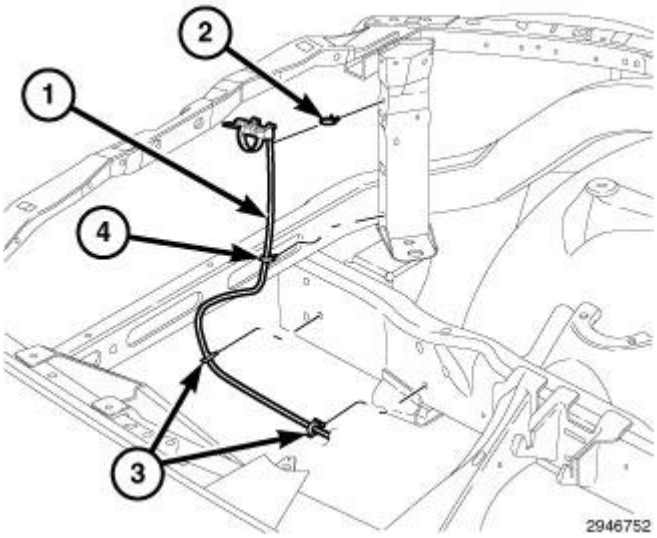

Fig. 43: Engine Block Heater Harness & PIA Fasteners
Courtesy of CHRYSLER GROUP, LLC

CAUTION: Make sure the harness is clear of any moving parts or extreme heat sources.

NOTE: Engine removed for clarity.

16. On 1500 models, route the engine block heater harness (1) to the right hand side inner frame rail.
17. On 1500 models, insert the PIA fasteners (3) into the inner frame rail.
18. On 1500 models, insert the PIA fastener (4) into the lower inside portion of the right hand side radiator support.

NOTE: PIA clip exploded for clarity.

19. On 1500 models, insert the PIA fastener (2) into the upper inside portion of the right hand side radiator support.

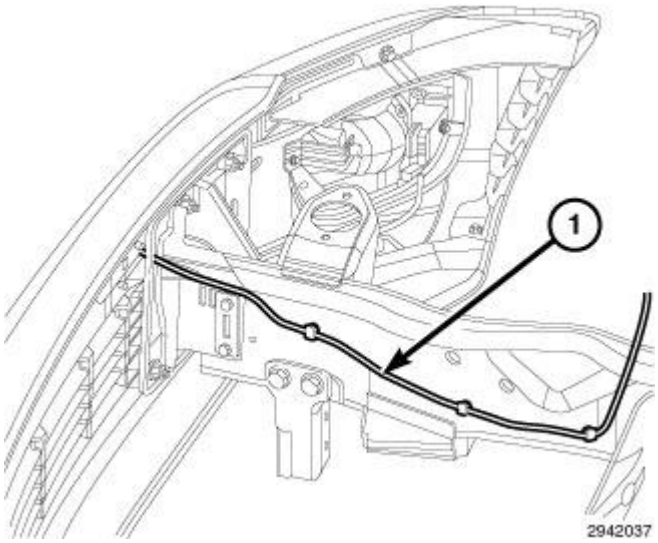

Fig. 44: Engine Block Heater Harness
Courtesy of CHRYSLER GROUP, LLC

NOTE: Engine removed for clarity.

CAUTION: Make sure the harness is clear of any moving parts or extreme heat sources.

20. On 2500/3500 models, route the engine block heater harness (1) to the right hand side inner frame rail.
21. On 2500/3500 models, insert the PIA fasteners into the inner frame rail.
22. On 2500/3500 models, route the remainder of the harness (1) to the inside of the bumper flange/air close panel.

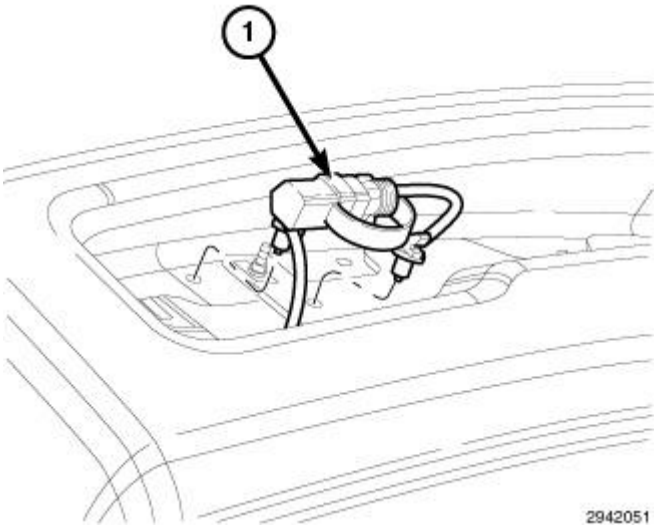

Fig. 45: End Of Engine Block Heater Harness
Courtesy of CHRYSLER GROUP, LLC

23. On 2500/3500 models, install the end of the harness (1) into the inner bumper flange/air close panel.
24. On 2500/3500 models, using the kit supplied tie wrap, secure the remainder of the harness to the battery cable.

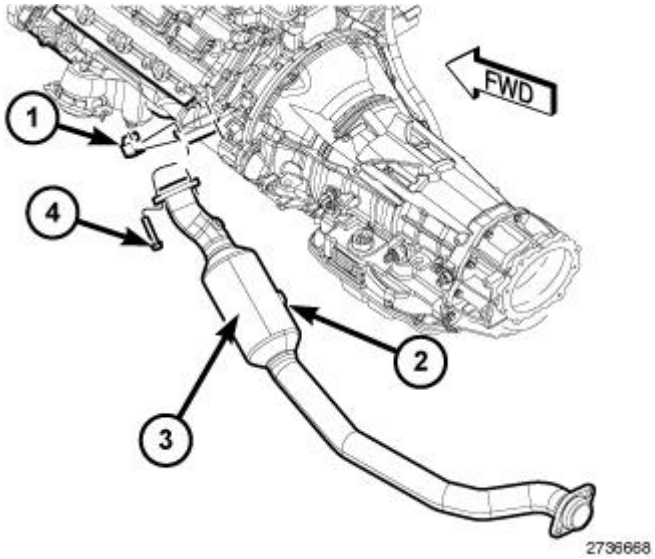

Fig. 46: Exhaust Pipe/Catalytic Converter Assembly, Bolts & Nuts
Courtesy of CHRYSLER GROUP, LLC

25. If necessary, raise the vehicle and position the front exhaust pipe/catalytic converter assembly (3) to the exhaust manifold.
26. Install the bolts (2) at the front exhaust pipe/catalytic converter assembly (4) to exhaust manifold flange.
27. Install the nuts (1) at the front exhaust pipe/catalytic converter assembly to muffler flange at the exhaust manifold. Tighten to 47 N.m (35 ft. lbs.) torque.

28. If equipped, install the skid plate.
29. Lower the vehicle.
30. Install the air cleaner housing assembly.
31. Install the engine cover.
32. Connect the negative battery cable.

3.7L/4.7L ENGINE BLOCK HEATER

RAM TRUCK 1500

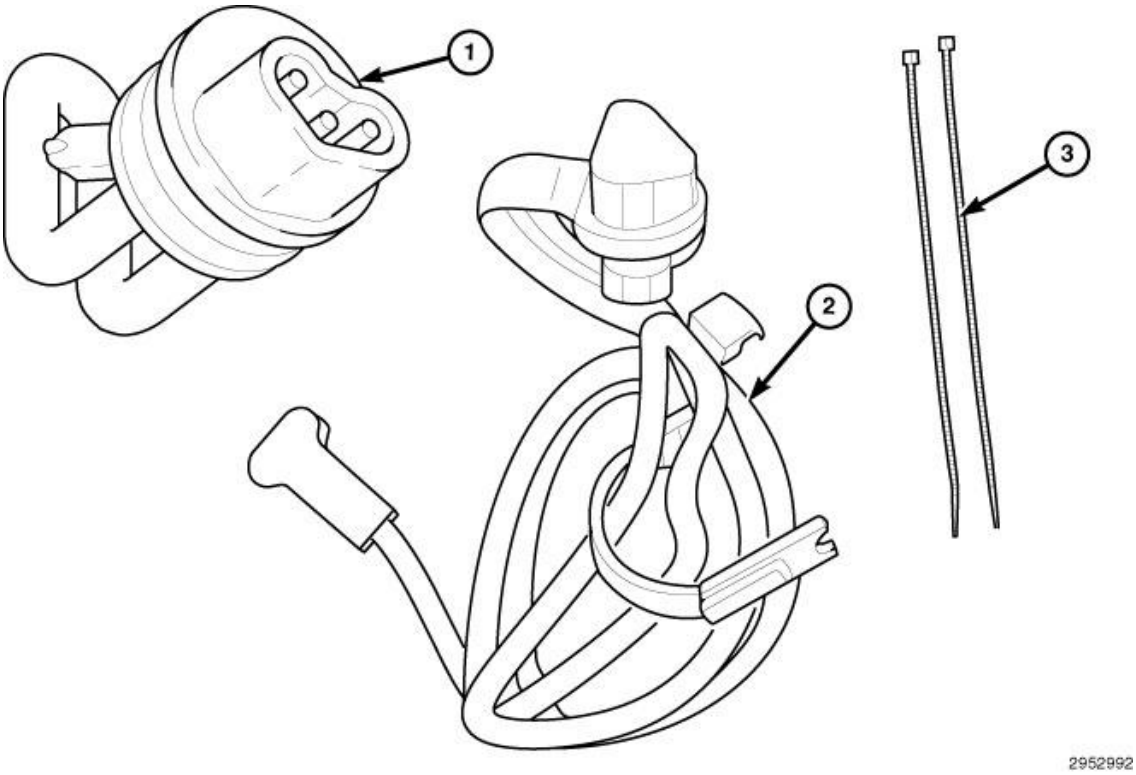

Fig. 47: Engine Block Heater Replacement Components
Courtesy of CHRYSLER GROUP, LLC

CALL OUT	DESCRIPTION	QUANTITY
1	Engine Block Heater (with PIA Bolt)	1
2	Cord	1
3	Tie Straps	2

PROCEDURE STEPS:

4.7L Engines: The engine block heater element will locate on the passenger side towards the rear of the engine

just under the exhaust manifold.

3.7L Engines: The engine block heater element will locate on the passenger side towards the middle of the engine just under the exhaust manifold.

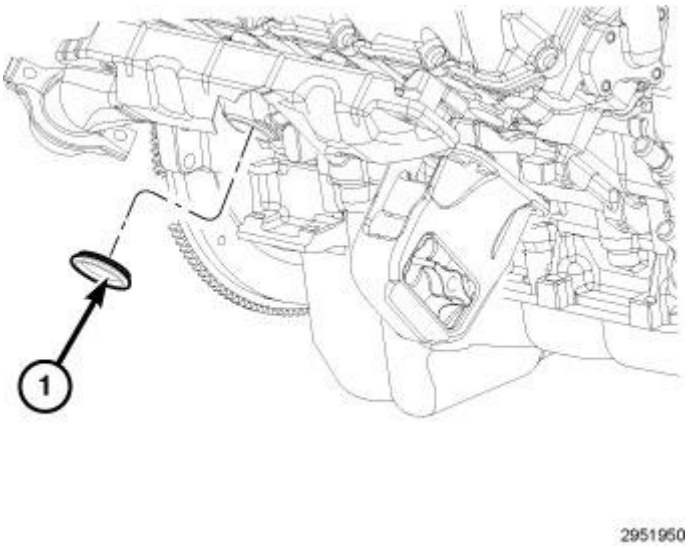

Fig. 48: Cylinder Block Drain Plug
Courtesy of CHRYSLER GROUP, LLC

NOTE: **It may be necessary to reposition the catalytic converter at the exhaust manifold to install this accessory. LET THE VEHICLE COOL DOWN COMPLETELY BEFORE INSTALLATION OF THIS PRODUCT.**

WARNING: **Do not remove cylinder block drain plugs or loosen radiator draincock with system hot and under pressure. Serious burns from coolant can occur.**

NOTE: **DO NOT WASTE reusable coolant. If solution is clean, drain coolant into a clean container for reuse.**

1. Remove the negative battery cable.
2. Remove the engine cover.
3. Remove the air cleaner housing assembly.
4. Raise and support the vehicle.
5. If equipped, remove the skid plate.
6. Attach one end of a hose to the draincock. Put the other end into a clean container.
7. **DO NOT REMOVE THE RADIATOR CAP** when draining the coolant from the reservoir/overflow tank. Open the radiator draincock and when the tank is empty, remove the radiator cap and continue draining the cooling system.
8. If equipped with 4.7L engine, locate the rear core/freeze plug to be removed on the right hand side of the

engine just under the exhaust manifold.

9. If equipped with 3.7L engine, locate the second core/freeze plug from the rear to be removed on the right hand side of the engine just under the exhaust manifold.
10. If necessary, saturate the catalytic converter to exhaust manifold bolts and nuts with heat valve lubricant. Allow 5 minutes for penetration.
11. If necessary, remove the catalytic converter to exhaust manifold bolts and nuts at the exhaust manifold.
12. If necessary, reposition the front exhaust pipe/catalytic converter assembly away from the exhaust manifold.
13. Using a blunt tool such as a drift, punch or a screw driver and a hammer, strike the bottom edge of the cup plug (1).
14. Using a suitable pair of pliers, grasp the core/freeze plug (1) and remove.

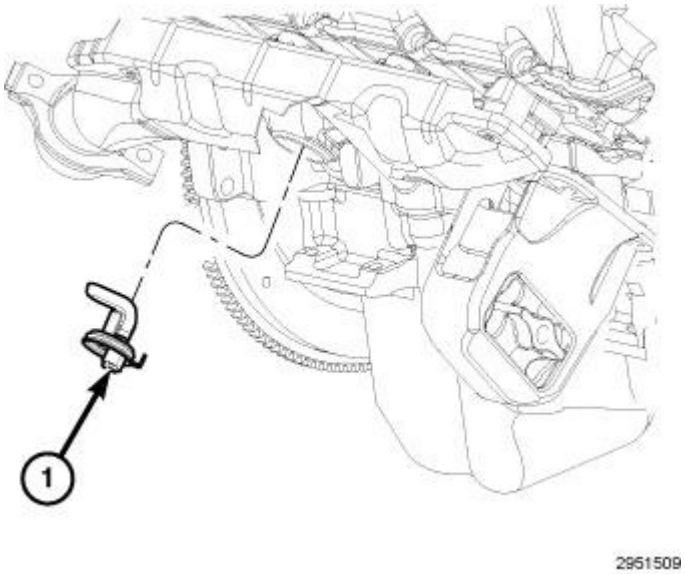

Fig. 49: Engine Block Heater Element
Courtesy of CHRYSLER GROUP, LLC

15. Clean the opening where the core/freeze plug was removed and apply Mopar Nye® Synthetic Lubricant or equivalent to the heater element's outer flange and o-ring.
16. Position and install the engine block heater element (1) into the opening under the rear of the exhaust manifold (1) where the appropriate core/freeze plug was removed.

NOTE: Make sure the element is facing down in the engine block.

17. Tighten the PIA bolt on the heater element (1) to 1.9 N-m (17 in-lbs).

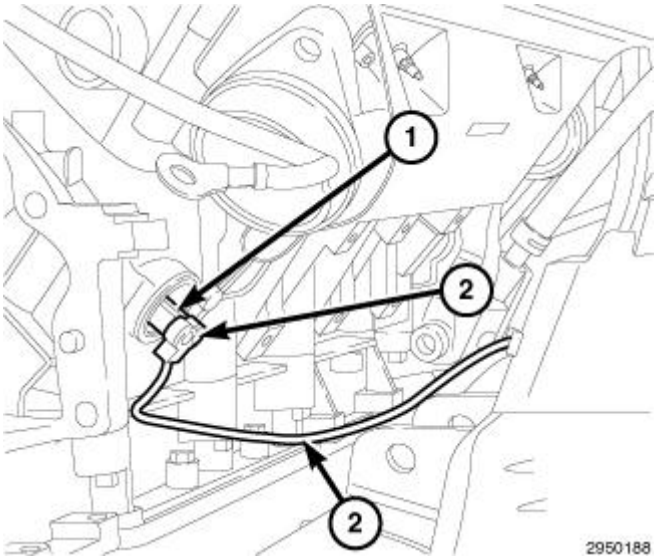

Fig. 50: Engine Block Heater Cord & Element
Courtesy of CHRYSLER GROUP, LLC

18. Plug in the engine block heater cord (2) into the element (1).
19. Begin routing the cord (2) forward, position and install locator clip into the upper control arm bracket.

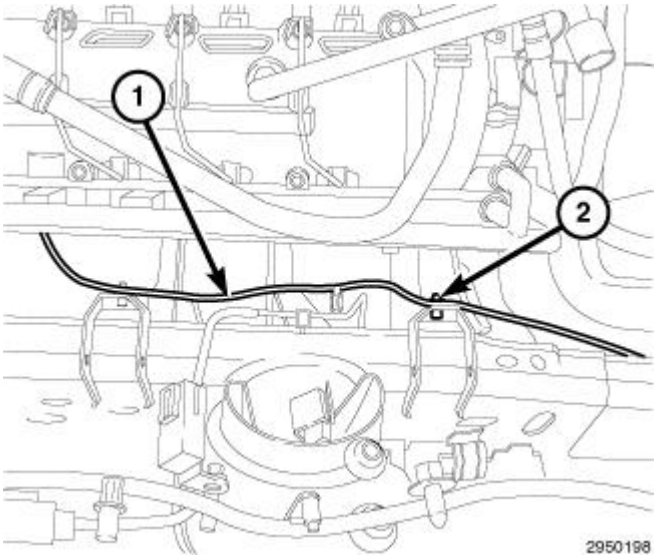

Fig. 51: Engine Block Heater Harness & Locator Clip
Courtesy of CHRYSLER GROUP, LLC

CAUTION: Make sure the harness is clear of any moving parts or extreme heat sources.

20. Continue routing the harness (1) along the upper inner frame rail towards the front of the vehicle.
21. Connect the locator clip (2) to the brake line and then to the upper control arm bracket.

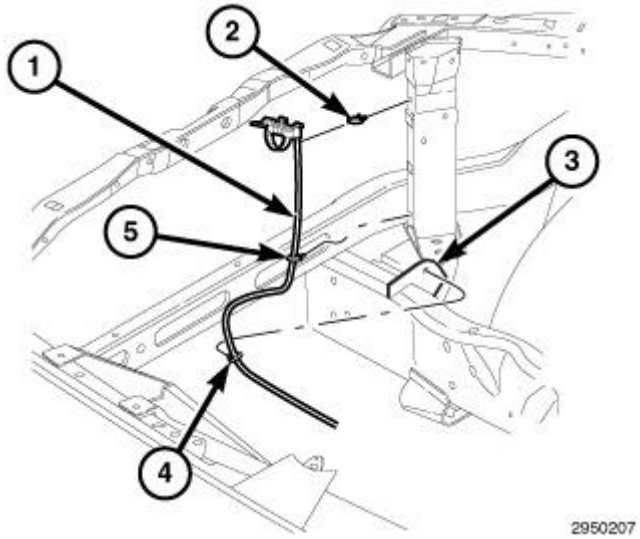

Fig. 52: Engine Block Heater Harness, PIA Fasteners & Viking Bracket
Courtesy of CHRYSLER GROUP, LLC

CAUTION: Make sure the harness is clear of any moving parts or extreme heat sources.

NOTE: PIA clip exploded for clarity.

NOTE: Engine removed for clarity.

22. Route the engine block heater harness (1) across the top of the frame rail.
23. Connect the PIA fastener (4) to the viking bracket (3).
24. Route the harness (1) up and insert the PIA fasteners (2, 5) into the inside portion of the right hand side radiator support.
25. If necessary, position the front exhaust pipe/catalytic converter assembly (3) to the exhaust manifold.
26. Install the bolts at the front exhaust pipe/catalytic converter assembly (4) to exhaust manifold flange.
27. Install the nuts (1) at the front exhaust pipe/catalytic converter assembly to muffler flange at the exhaust manifold. Tighten to 47 N.m (35 ft. lbs.) torque.
28. If equipped, install the skid plate.
29. Lower the vehicle.
30. Clip the end of the heater cord (1) into the top of the radiator support.
31. Using the kit supplied tie wraps, secure the remainder of the harness to the battery cable.
32. Install the air cleaner housing assembly.
33. Install the engine cover.
34. Fill the cooling system and evacuate any air that may be trapped in the system.
35. Connect the negative battery cable.

INTERIOR STORAGE

INSTRUCTION SHEET

LOCKABLE GLOVE BOX

DODGE RAM

PROCEDURE STEPS:

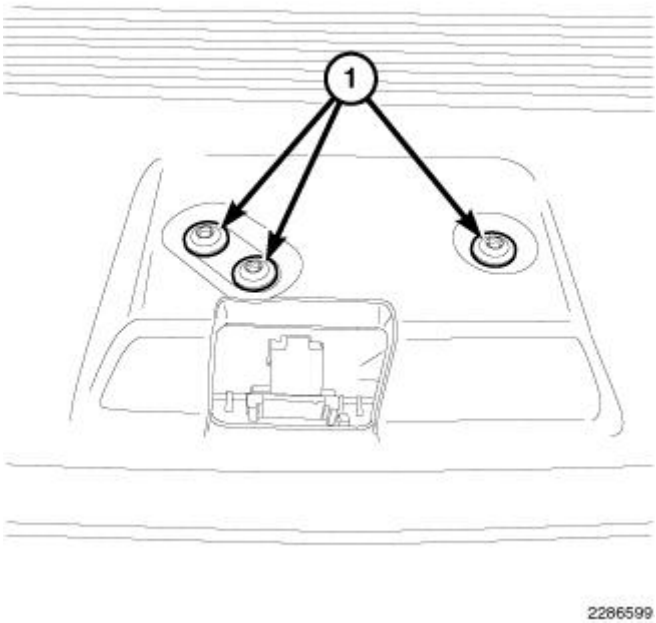

Fig. 53: Glove Box Lock Retainers
Courtesy of CHRYSLER GROUP, LLC

1. Open the glove box.
2. Remove the retainers (1) from the glove box and remove the latch assembly.

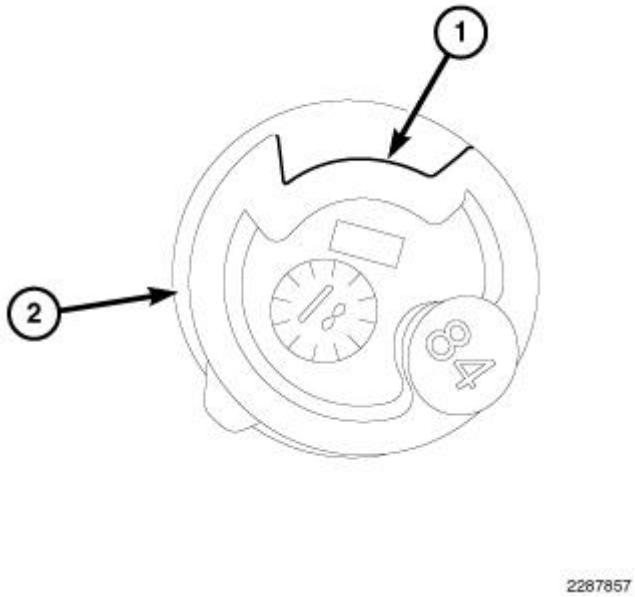

Fig. 54: Lock Cylinder
Courtesy of CHRYSLER GROUP, LLC

3. Insert the key into the lock cylinder (2), align the slot (1) on the lock cylinder with the tab on the latch (shown in illustration in step 4).

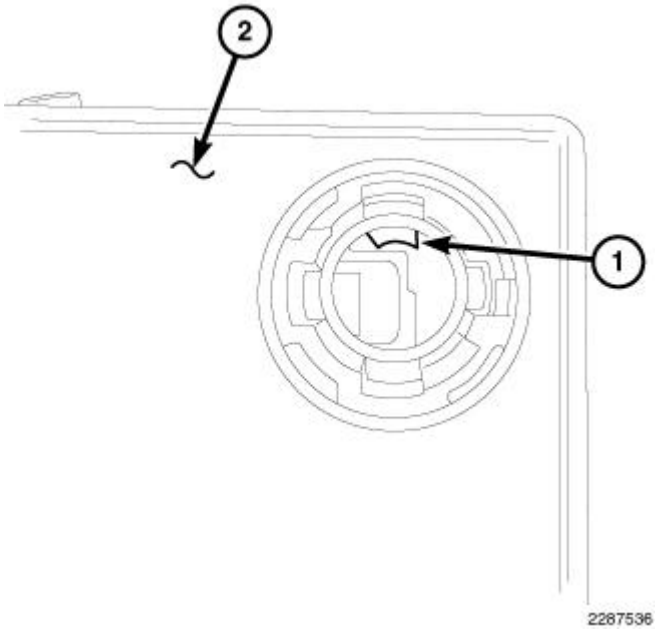

Fig. 55: Aligning The Slot With The Tab
Courtesy of CHRYSLER GROUP, LLC

4. While aligning the slot with the tab (1) it may be necessary to move the key around in the cylinder to allow easier installation.

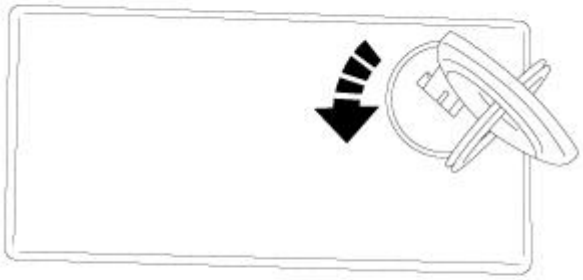

2287882

Fig. 56: Turning Key Counterclockwise
Courtesy of CHRYSLER GROUP, LLC

5. Turn the key counter clockwise until it clicks in a vertical position.
6. Remove the key from the handle.
7. Install the handle into the glove box and tighten the retainers (reverse step 1 for installation).
8. Verify that the glove box locks and unlocks.

FLEXIBLE HIDDEN STORAGE LOCK

DODGE RAM

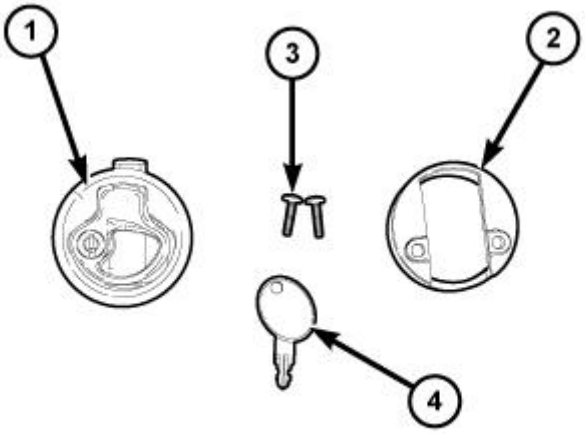

1446699

Fig. 57: Flexible Hidden Storage Lock

Courtesy of CHRYSLER GROUP, LLC

Call Out	Description	Parts	Quantity
1	Latch	Supplied in kit	2
2	Latch Back	Supplied in kit	2
3	Retaining Screw	Supplied in kit	4
4	Key	Supplied in kit	2

PROCEDURE STEPS:

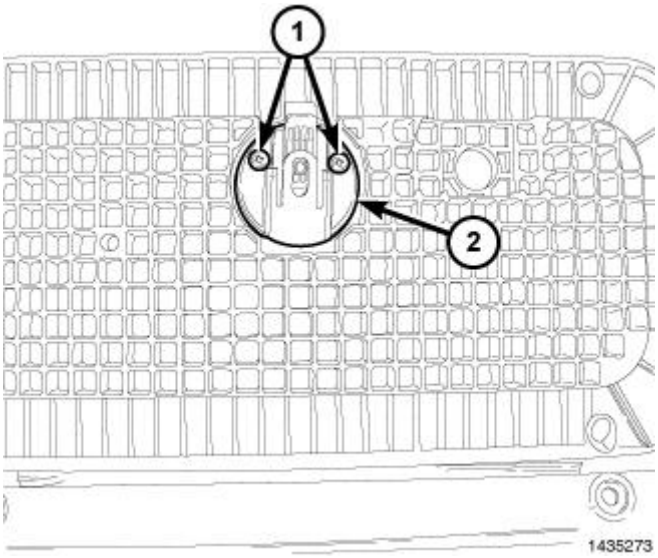

Fig. 58: Flexible Hidden Storage Lock & Retaining Screws
Courtesy of CHRYSLER GROUP, LLC

1. Remove the two retaining screws (1) from the latch (2) and discard.
2. Remove and discard the latch (2) from the storage bin cover.

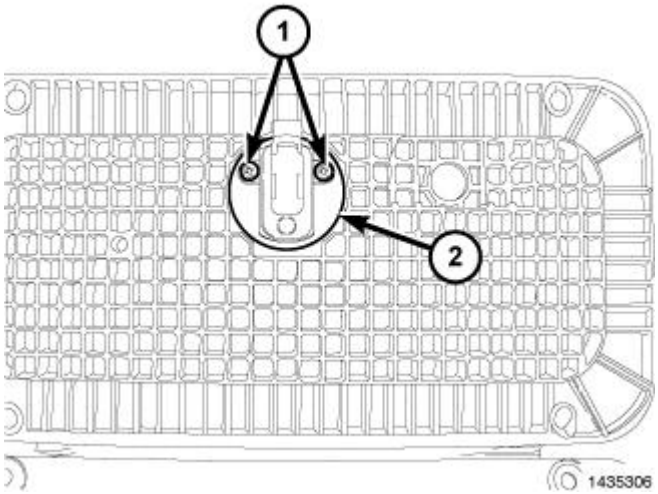

Fig. 59: Flexible Hidden Storage Lock & Retaining Screws
Courtesy of CHRYSLER GROUP, LLC

3. Install the new storage latch (2) into the storage bin cover.
4. Hand tighten the two supplied retaining screws (1) in the new storage latch (2).

AUDIO AND ELECTRONICS

INSTRUCTION SHEET

BACKUP CAMERA

DODGE RAM

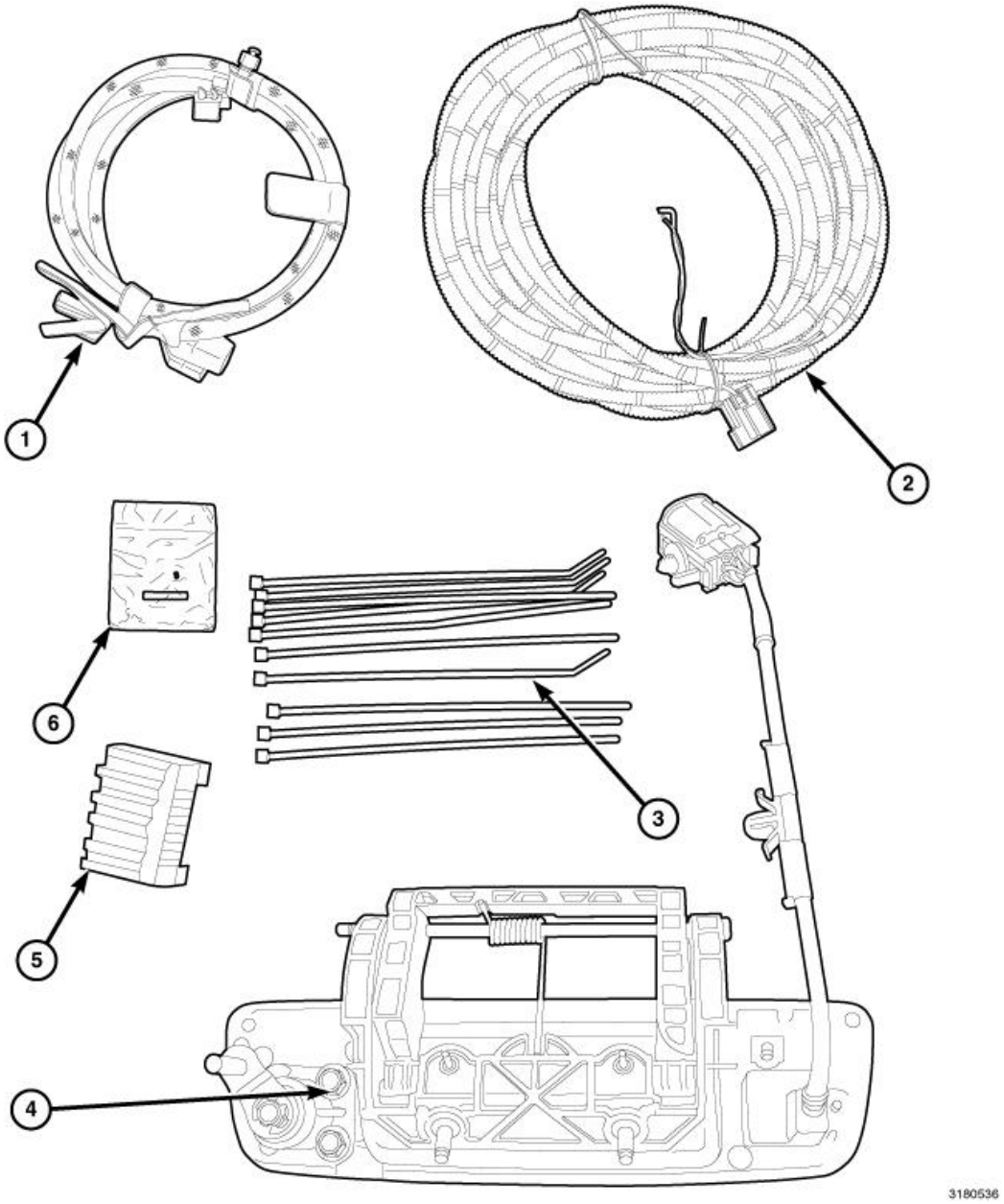

Fig. 60: Backup Camera Replacement Components
Courtesy of CHRYSLER GROUP, LLC

CALL OUT	DESCRIPTION	QUANTITY
1	Backup camera tailgate harness	1
2	Backup camera overlay harness	1
3	Zip Ties	26
4	Tailgate release handle with backup camera	1

5	Backup camera radio connector	1
6	Splice Kit (includes one splice collar and shrink tube)	1

PROCEDURE STEPS:

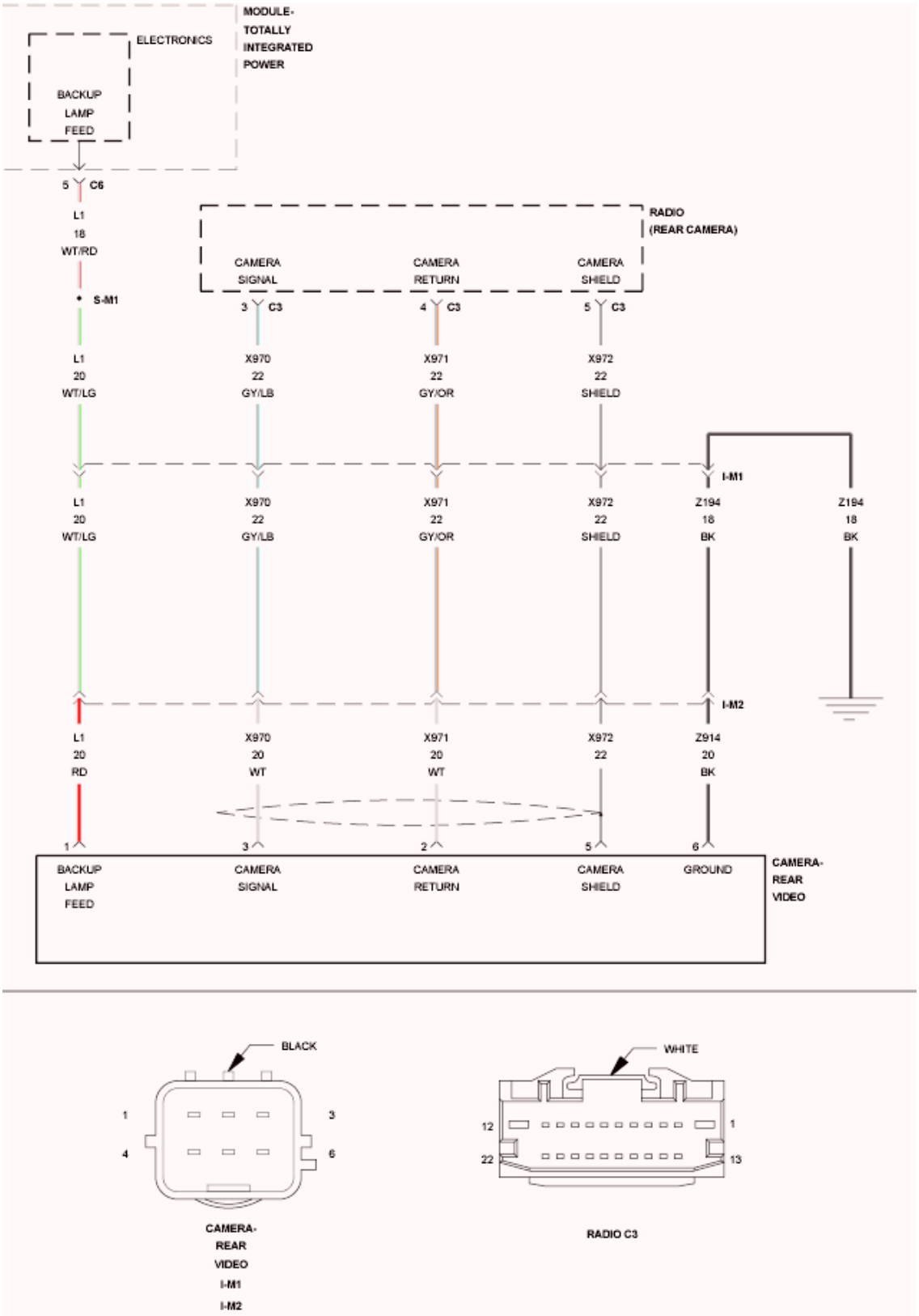

Fig. 61: Backup Camera Circuit
Courtesy of CHRYSLER GROUP, LLC

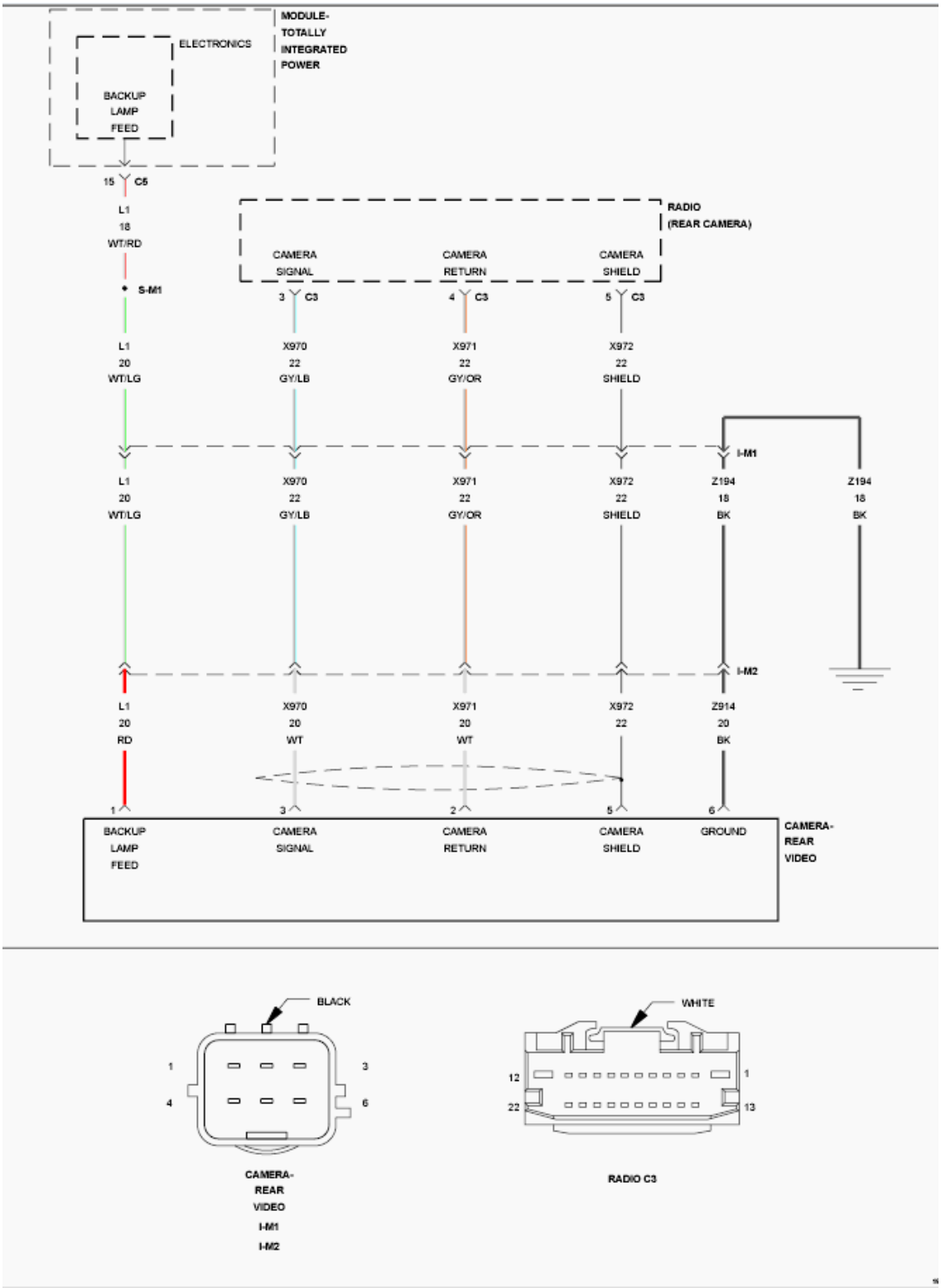

Fig. 62: Backup Camera Circuit Diagram
Courtesy of CHRYSLER GROUP, LLC

WARNING: On vehicles equipped with airbags, disable the airbag system before

attempting any steering wheel, steering column, seat belt tensioner, or instrument panel component diagnosis or service. Refer to WARNING . Disconnect and isolate the battery negative (ground) cable, then wait two minutes for the airbag system capacitor to discharge before performing further diagnosis or service. This is the only sure way to disable the airbag system. Failure to take the proper precautions could result in accidental airbag deployment and personal or fatal injury.

1. Disconnect and isolate the negative battery cable.

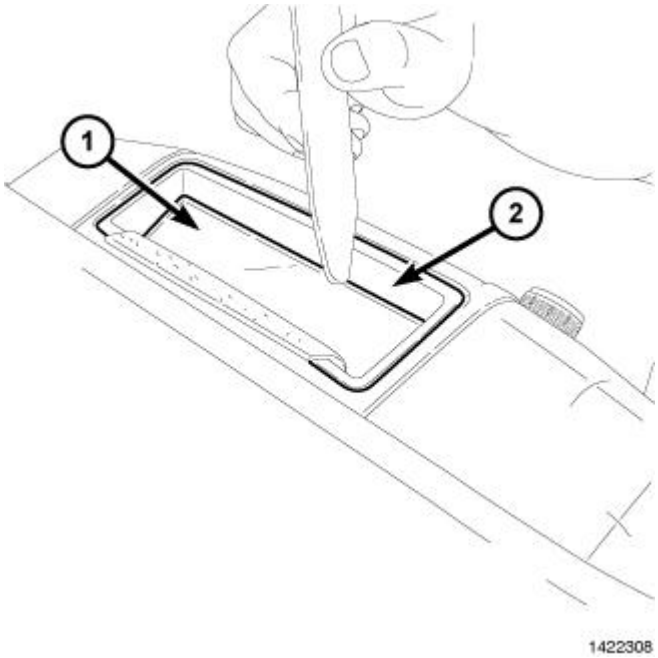

Fig. 63: Upper Center Bezel Tray Liner
Courtesy of CHRYSLER GROUP, LLC

2. Remove the upper and lower center bezel tray liners (1).

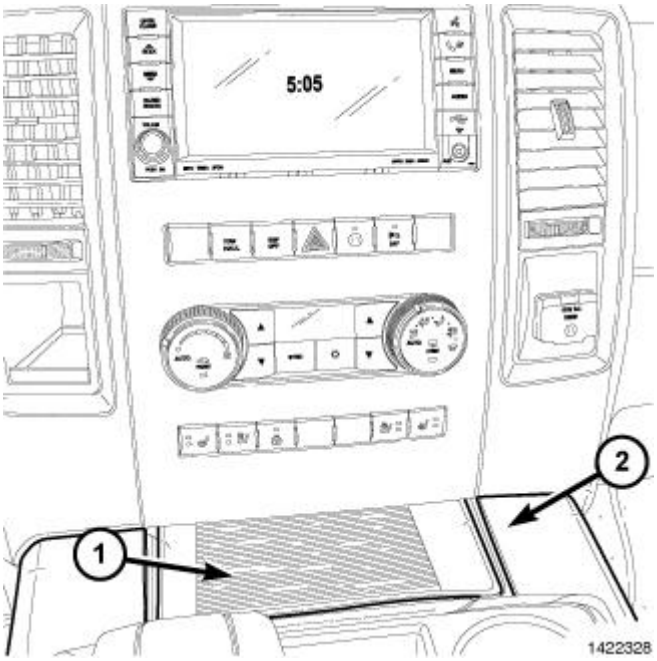

Fig. 64: Lower Center Bezel Tray Liner
Courtesy of CHRYSLER GROUP, LLC

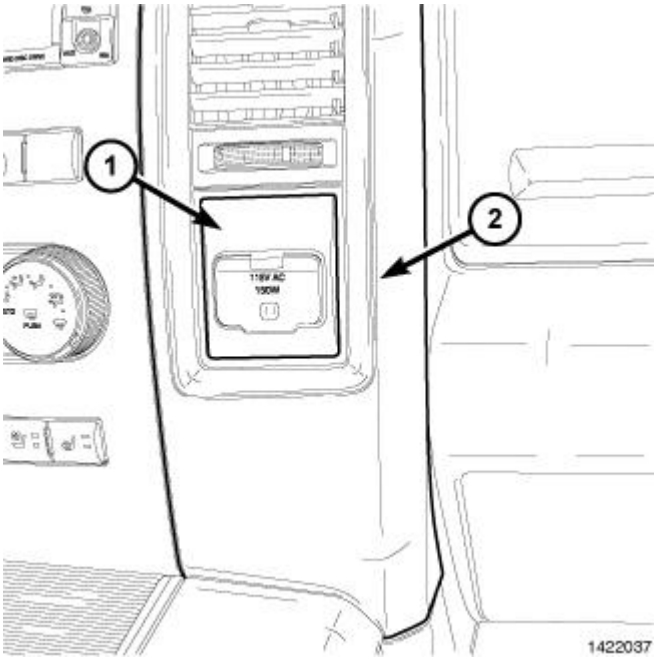

Fig. 65: Power Outlet Trim Bezel
Courtesy of CHRYSLER GROUP, LLC

3. Using a trim stick C-4755 or equivalent, disengage the retainers clips that secure the power outlet trim bezel (1) to the center bezel (2).

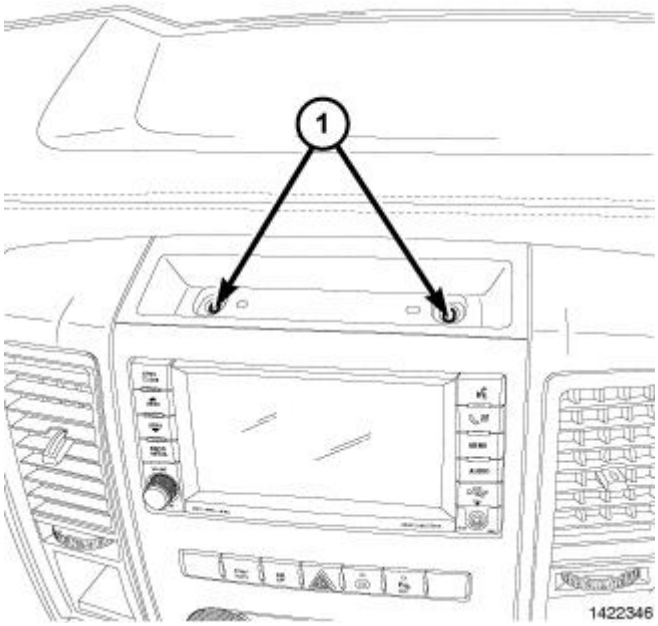

Fig. 66: Top Center Bezel Fasteners
Courtesy of CHRYSLER GROUP, LLC

4. Remove the two top center bezel fasteners (1).

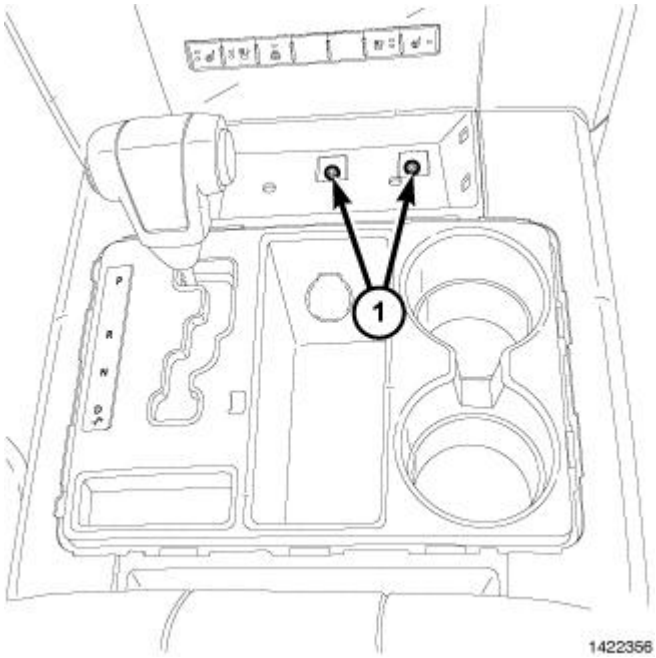

Fig. 67: Console Bin Fasteners
Courtesy of CHRYSLER GROUP, LLC

5. Remove the fasteners from the console bin (1).

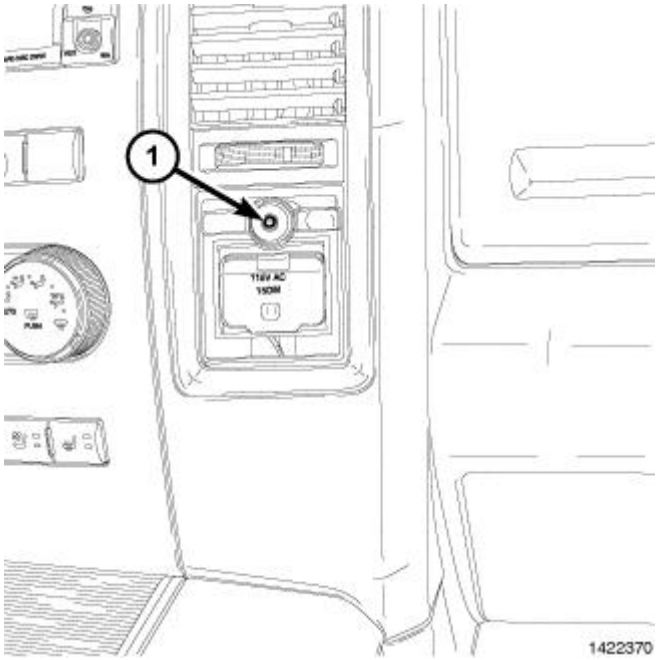

Fig. 68: Power Outlet Fasteners
Courtesy of CHRYSLER GROUP, LLC

6. Remove the fastener from the power outlet (1).

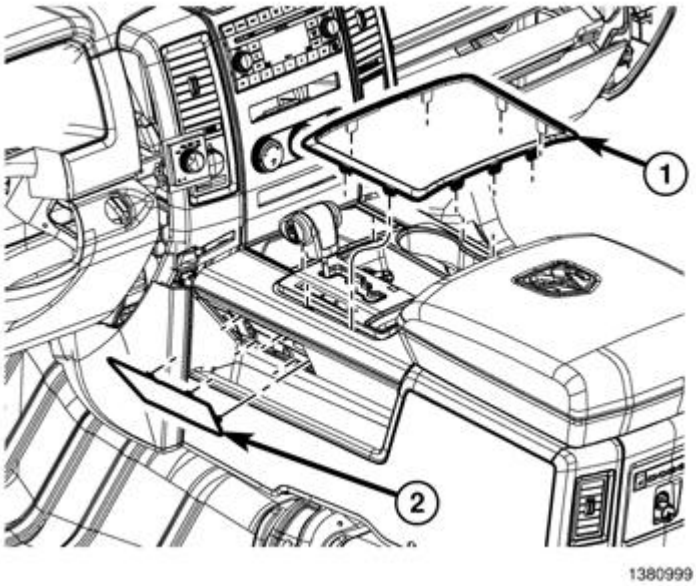

Fig. 69: Shifter Bezel Trim Ring
Courtesy of CHRYSLER GROUP, LLC

7. Using a trim stick C-4755 or equivalent, disengage the retainer clips that secure the trim ring to the floor console.

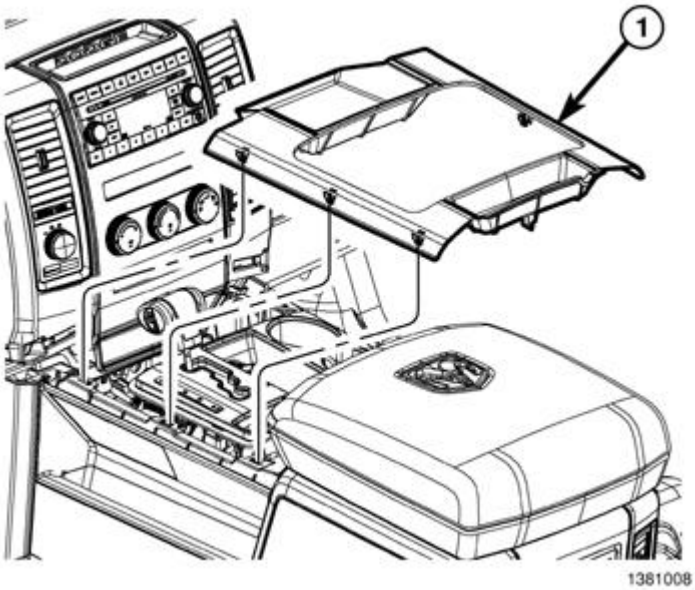

Fig. 70: Console Bezel
Courtesy of CHRYSLER GROUP, LLC

8. Using a trim stick C-4755 or equivalent, disengage the retainer clips that secure the shifter bezel to the floor console

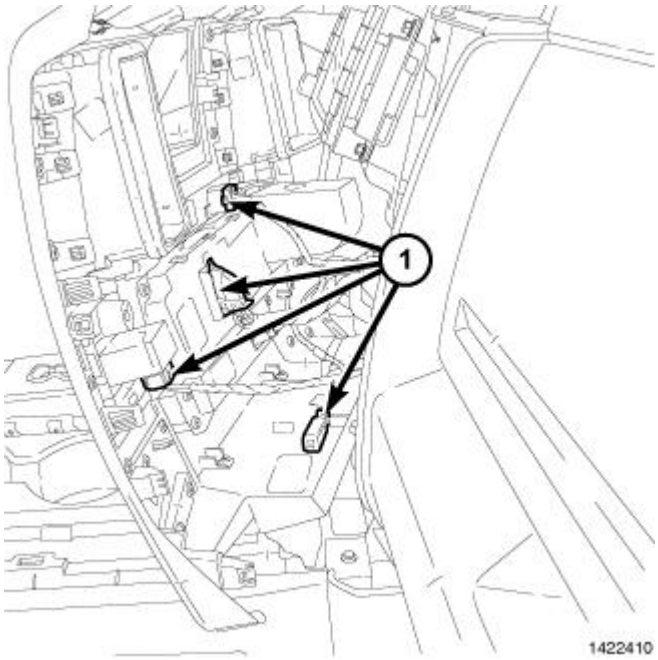

Fig. 71: Instrument Panel Center Bezel Retaining Clips
Courtesy of CHRYSLER GROUP, LLC

9. Using a trim stick C-4755 or equivalent, disengage the retainer clips that secure the instrument panel center bezel (1) to the instrument panel.
10. Disconnect the wire harness connectors (4) and remove the center bezel from the instrument panel.

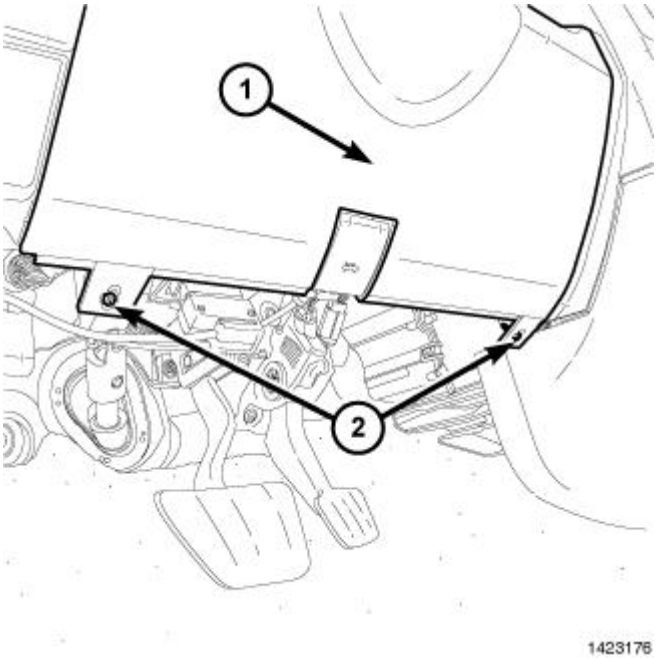

Fig. 72: Steering Column Opening Cover & Fasteners
Courtesy of CHRYSLER GROUP, LLC

11. Using a trim stick C-4755 or equivalent, disengage the retainer clip that secures the hood release to the steering column opening cover, and remove the hood release handle from the cover.
12. Remove the two fasteners (2) that secure the bottom of the steering column opening cover (1) to the instrument panel.

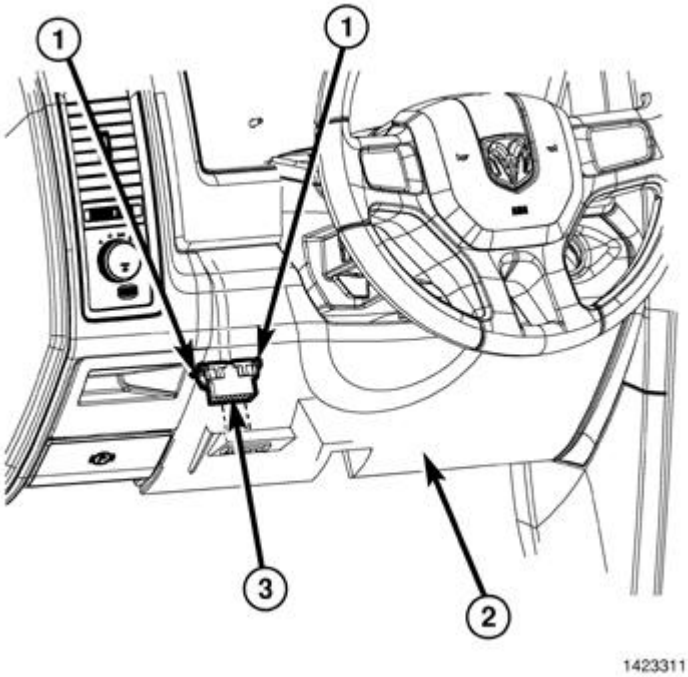

Fig. 73: Data Link Connector

Courtesy of CHRYSLER GROUP, LLC

13. Remove the Data Link Connector (3) from the steering column opening cover (2) by pressing in the tabs (1) and pushing the connector through the opening on the back side of the cover.

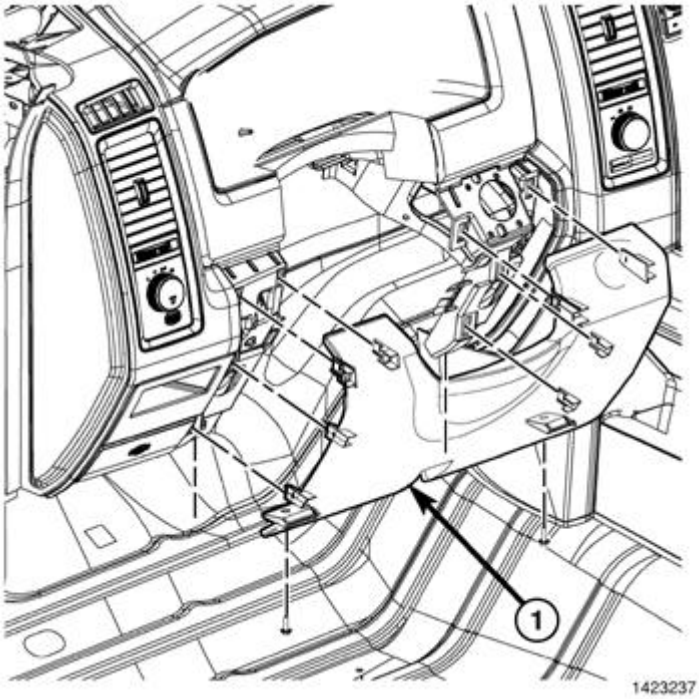

Fig. 74: Steering Column Opening Cover
Courtesy of CHRYSLER GROUP, LLC

14. Using a trim stick C-4755 or equivalent, release the retainer clips that secure the steering column opening cover (1) to the instrument panel and remove the cover.

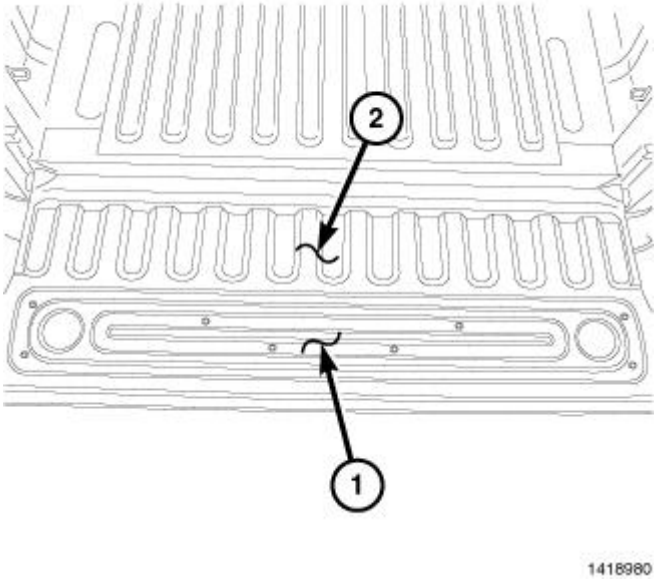

Fig. 75: Tailgate Bedliner
Courtesy of CHRYSLER GROUP, LLC

15. If equipped, remove the tailgate bedliner.
16. Remove the tailgate access cover.

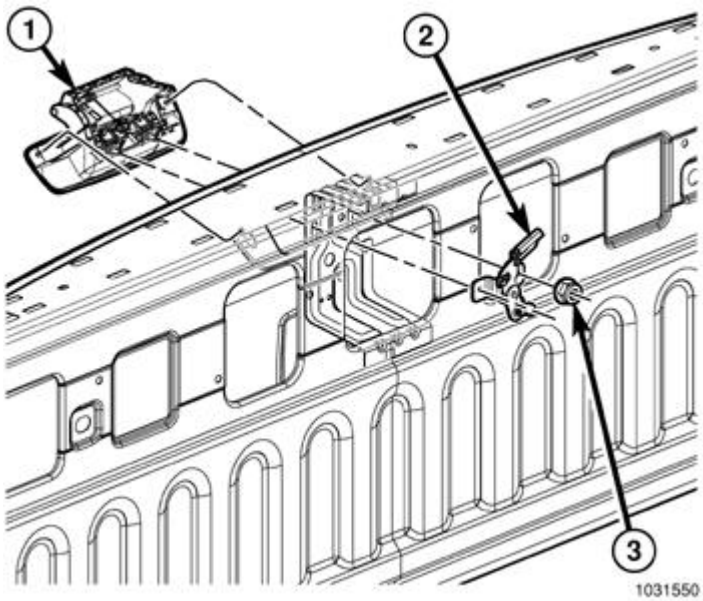

Fig. 76: Tailgate Release Handle & Actuator Rods
Courtesy of CHRYSLER GROUP, LLC

17. Using a grease pencil or equivalent, mark the location of the actuator rods at the control (2).
18. Disconnect the actuator rods from the control.

19. Remove the two nuts (3) that secure the release handle (1) and the control (2) to the tailgate.
20. Remove the control (2) and the release handle (1) from the tailgate.

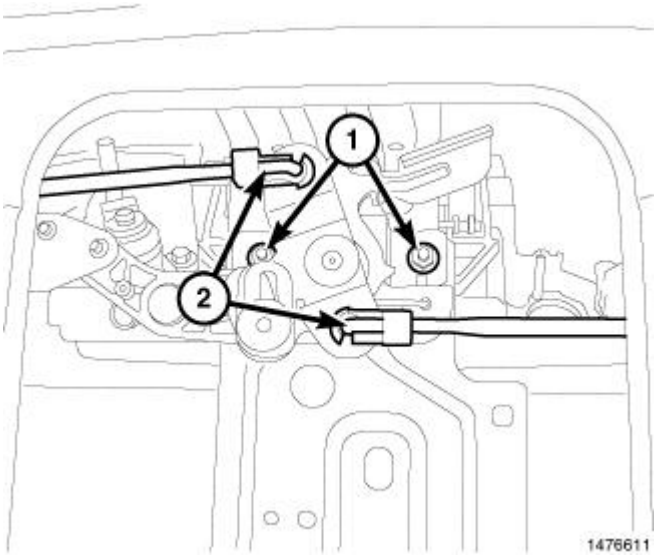

Fig. 77: Tailgate Control Rod
Courtesy of CHRYSLER GROUP, LLC

21. Install the new tailgate release handle with backup camera.
22. Install the two nuts (1) that secure the release handle and the control to the tailgate.
23. Connect the actuator rods (2) to the control.

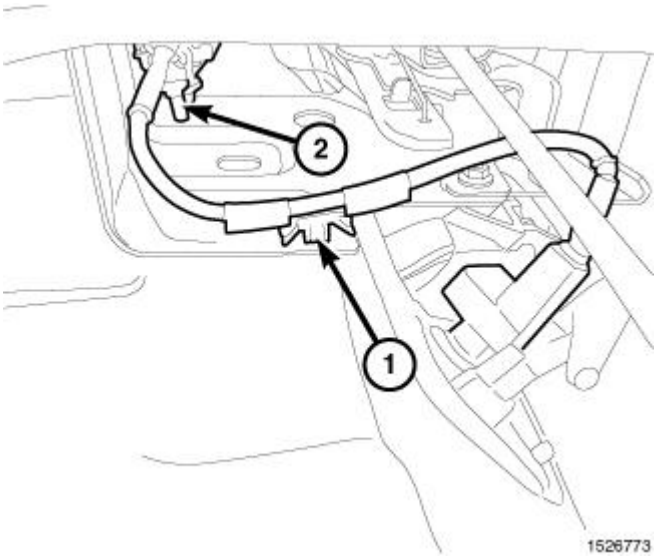

Fig. 78: Tailgate Actuator Rods
Courtesy of CHRYSLER GROUP, LLC

24. Route the camera harness under the actuator rods.
25. Clip backup camera harness into the two slots in the metal bracket.

26. Route the harness down the drivers side body harness and secure where necessary.
27. Route up through the fender well to the engine compartment.

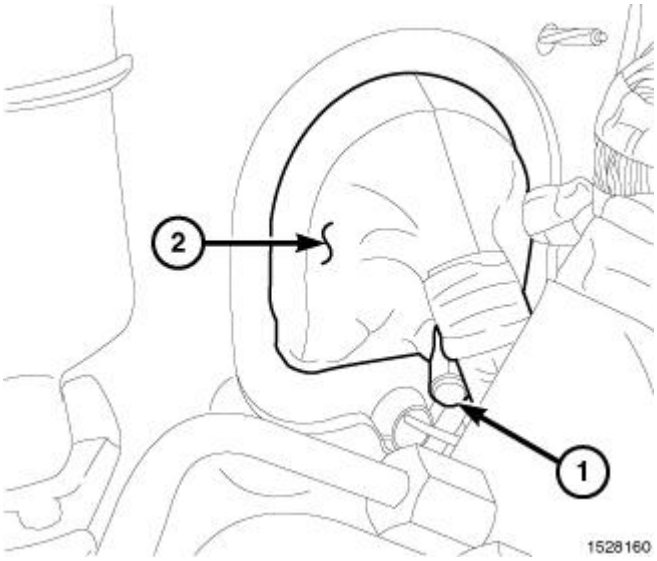

Fig. 79: Dash Panel Grommet Nipple
Courtesy of CHRYSLER GROUP, LLC

28. Cut the end off the dash panel grommet nipple (1) hanging off the bottom side of the body harness near the brake booster.

NOTE: Ensure when routing the wire not to damage the wire terminals.

29. Route the backup camera harness through the dash panel grommet nipple, except for the WT/LG and BK wire.
30. Apply Mopar® RTV 82300234 around the grommet nipple.

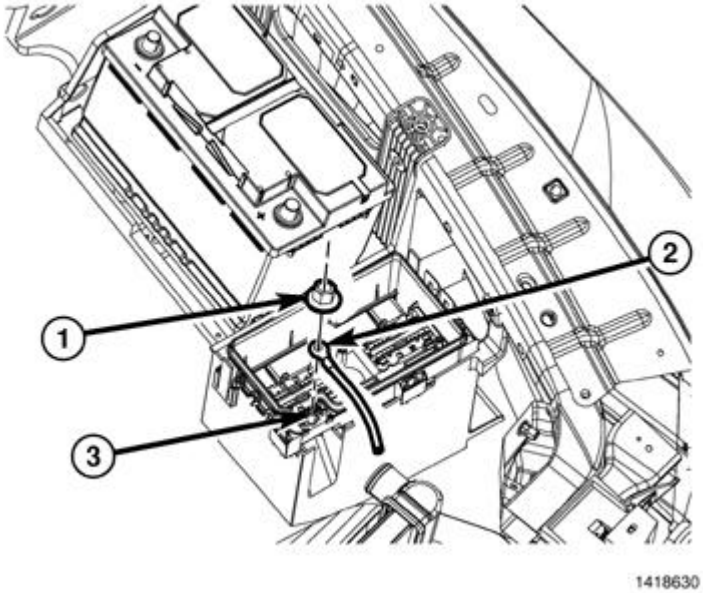

Fig. 80: B+ Terminal Cable & Nut
Courtesy of CHRYSLER GROUP, LLC

31. Remove the B+ terminal nut (1) from the Totally Integrated Power Module (3) (TIPM) B+ terminal. Remove the B+ cable (2) from the TIPM.
32. Using a suitable flat blade tool, disengage the TIPM upper retaining tabs from the battery tray bracket.

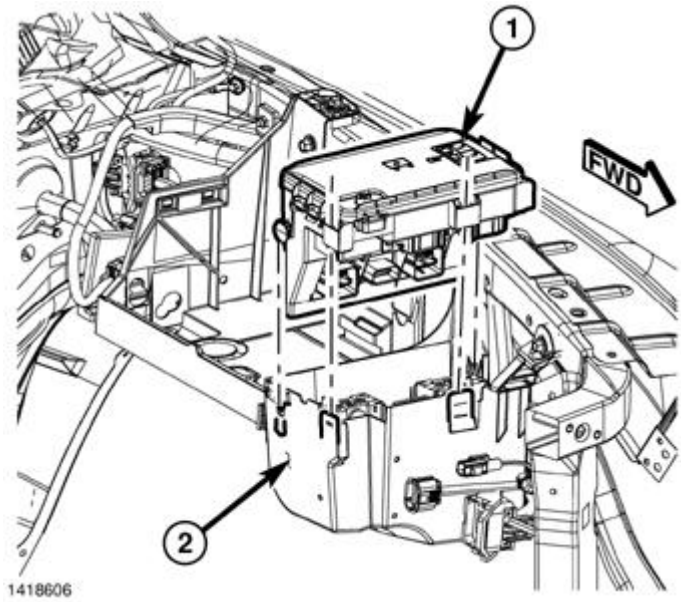

Fig. 81: Totally Integrated Power Module (TIPM)
Courtesy of CHRYSLER GROUP, LLC

33. Grasp the TIPM (1) and rotate the assembly up to free it from its mounting bracket (2). Position the assembly upside down to access the electrical connectors located on the bottom of the unit.
34. **2009 - 2010 Ram 1500, 2010 Ram - Current 2500/3500** , Disconnect connector C6, letter F labeled on

the bottom of the TIPM. Release by depressing the locking tab and rotating the connector arm outboard, until the connector is free from the TIPM assembly (1). Be certain to pull the connector straight off.

35. **2011 - Current Ram 1500** , Disconnect connector C5, letter E labeled on the bottom of the TIPM. Release by depressing the locking tab and rotating the connector arm outboard, until the connector is free from the TIPM assembly (1). Be certain to pull the connector straight off.
36. Cut the backup lamp feed wire to length.

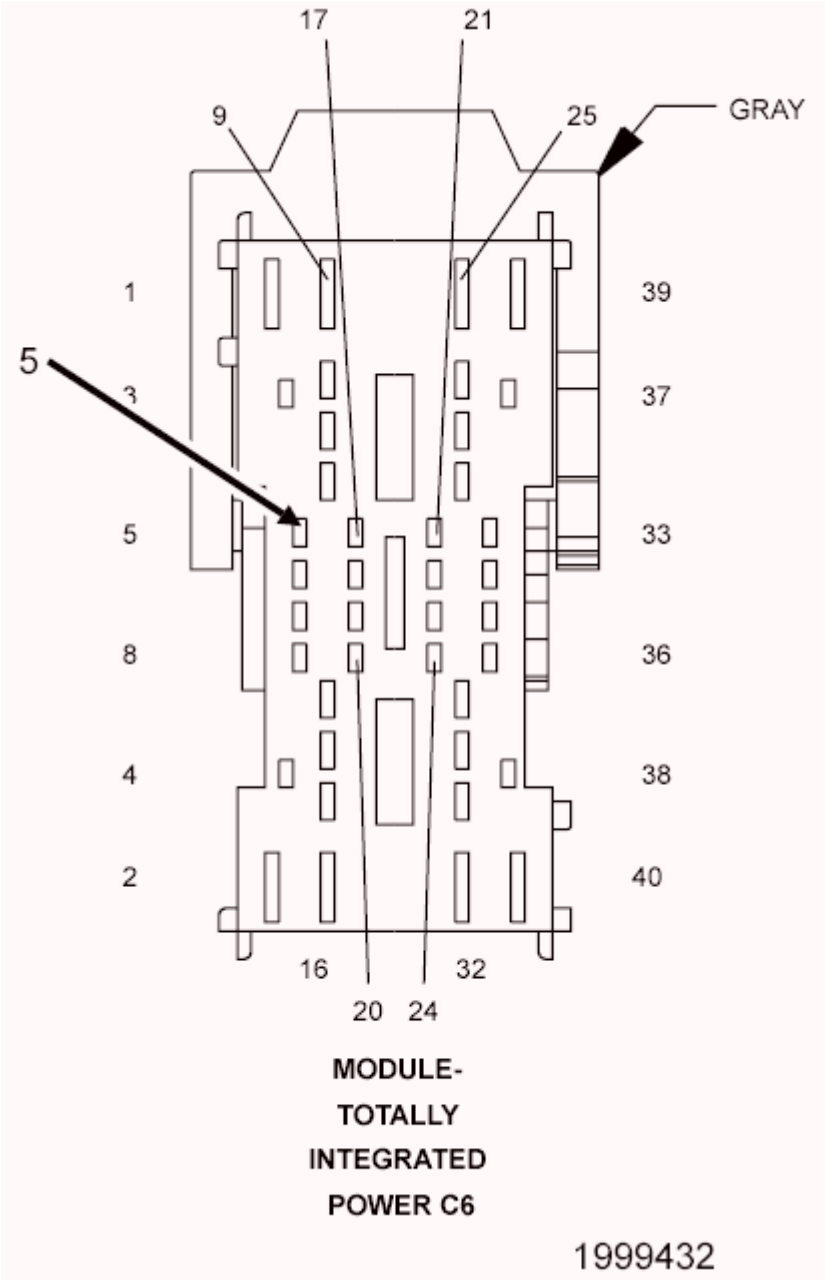

Fig. 82: Totally Integrated Power Module Cavity 5
Courtesy of CHRYSLER GROUP, LLC

37. **2009 - 2010 Ram 1500, 2010 - Current Ram 2500/3500** , Cut the L1 circuit WT/RD from cavity 5,

using steps 37 - 42, solder in the WT/LG backup lamp feed wire.

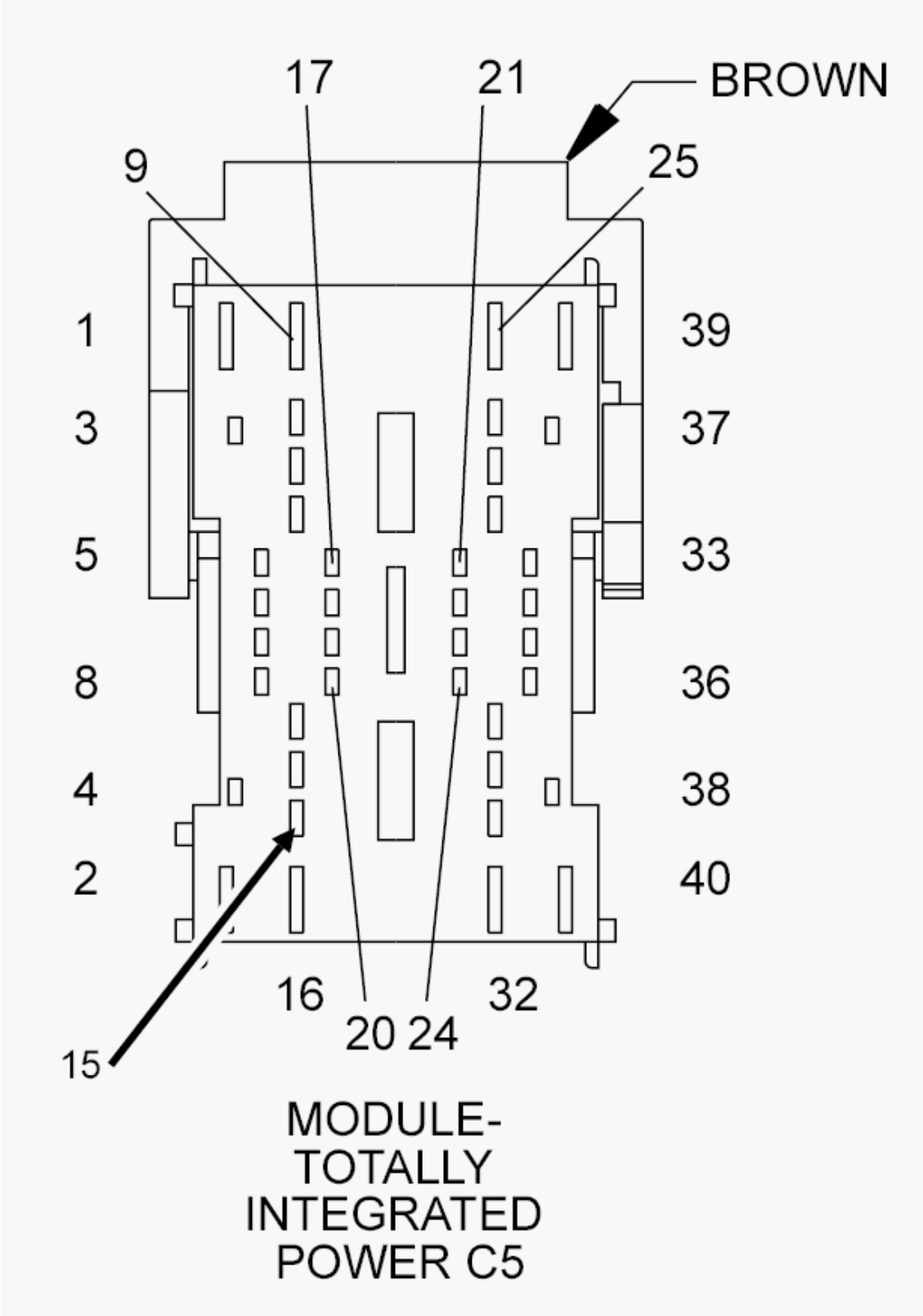

Fig. 83: Totally Integrated Power Module Cavity 15

Courtesy of CHRYSLER GROUP, LLC

38. **2011 - Current Ram 1500** , Cut the L1 circuit WT/LG from cavity 15, using steps 37 - 42, solder in the WT/LG backup lamp feed wire.
39. Cut each wire and remove 13mm (0.5 in.) of insulation from each wire that needs to be soldered/spliced.
40. Place a piece of supplied adhesive lined heat shrink tubing on one side of each cut wire. Insure the tubing will be long enough to cover and seal the entire soldered area.

CAUTION: Do not use acid core solder.

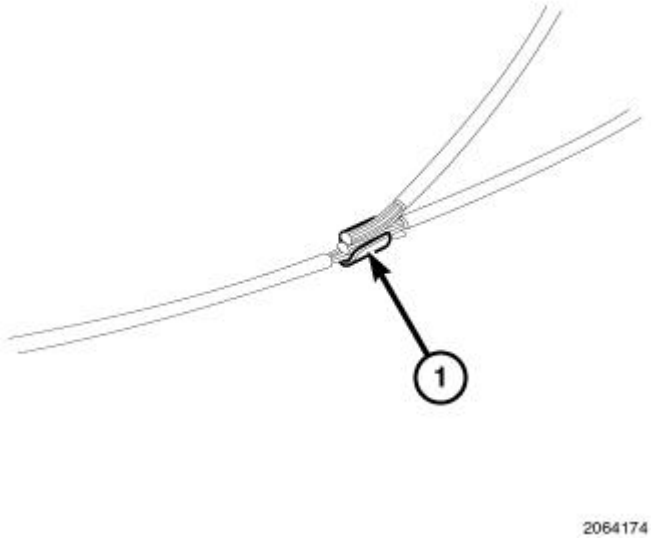

Fig. 84: Splice Clip
Courtesy of CHRYSLER GROUP, LLC

41. Place the strands of the power side wires overlapping each other inside of the splice clip (1).

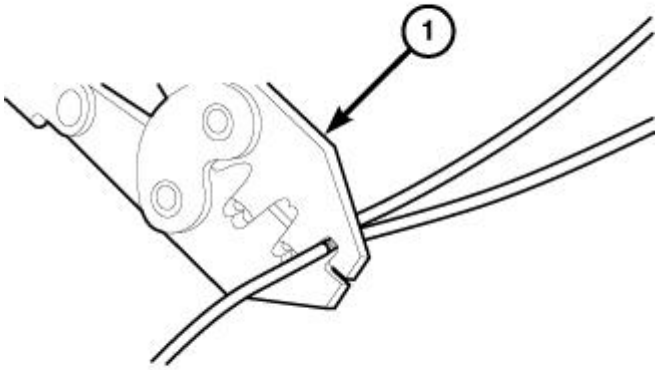

2064185

Fig. 85: Crimping Splice Clip & Wires
Courtesy of CHRYSLER GROUP, LLC

42. Using crimping tool (1), Mopar® p/n 05019912AA or equivalent, crimp the splice clip and wires together.

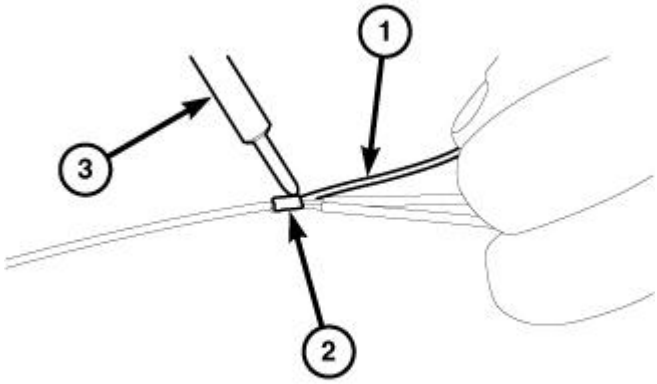

2064198

Fig. 86: Soldering Connection Together
Courtesy of CHRYSLER GROUP, LLC

43. Solder (3) the connection (2) together using rosin core solder (1).

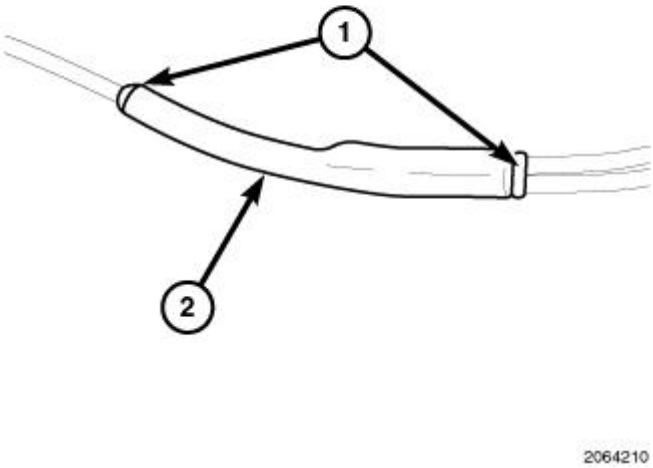

Fig. 87: Heat Shrink Tubing
Courtesy of CHRYSLER GROUP, LLC

44. Center the heat shrink tubing (2) over the solder joint and heat using a heat gun. Heat the joint until the tubing is tightly sealed and sealant (1) comes out of both ends of the tubing.

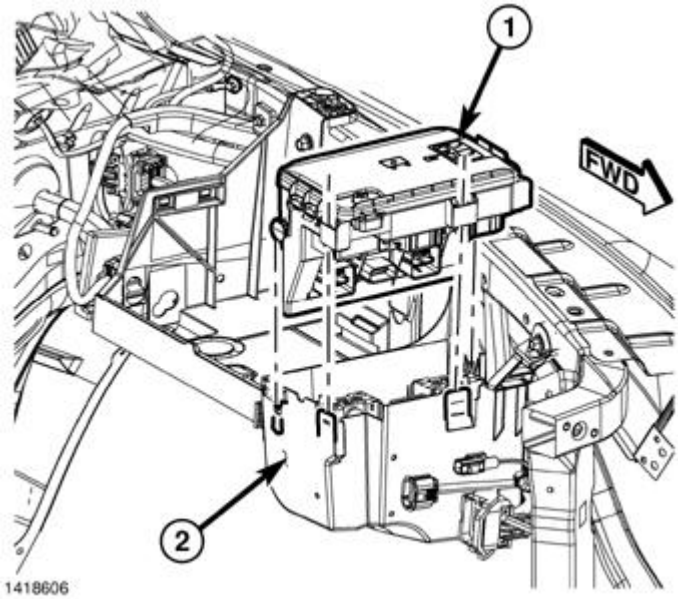

Fig. 88: Totally Integrated Power Module (TIPM)
Courtesy of CHRYSLER GROUP, LLC

NOTE: **Totally Integrated power module electrical connectors are color coded to ease location reference.**

45. Connect the electrical connector by pushing straight on and rotating the connector arm inboard, until the connector is firmly locked in place on the TIPM assembly (1).
46. Turn the TIPM (1) so that the connector side is facing down. Install the assembly onto the TIPM battery tray bracket making sure to line up the lower retaining tab with the retaining slot in the tray.
47. Push the TIPM (1) downward to lock the upper retaining clips into the bracket (2).

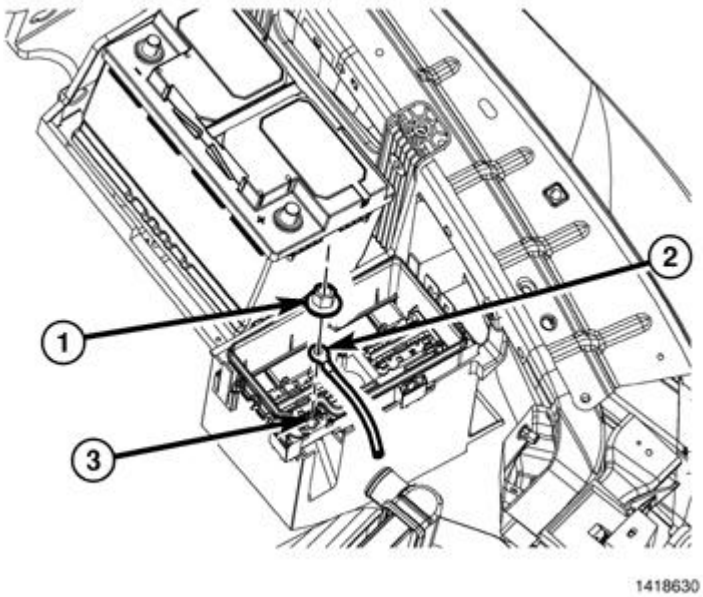

Fig. 89: B+ Terminal Cable & Nut
Courtesy of CHRYSLER GROUP, LLC

48. Install the B+ terminal cable (2) and nut (1) on the B+ terminal of the TIPM (3).

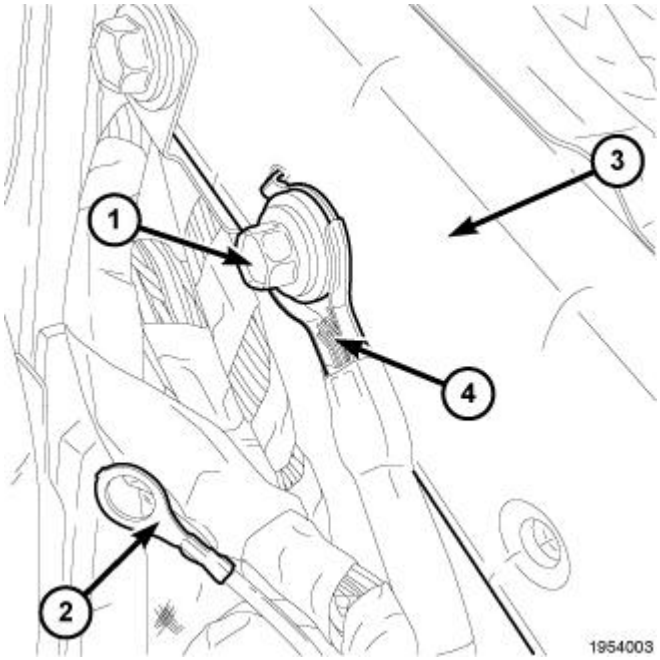

Fig. 90: Ground Retainer
Courtesy of CHRYSLER GROUP, LLC

49. Remove the ground retainer (1) from the fender (3).
50. Install the ground from the pigtail harness (2), to the fender under the body ground (4).
51. Route the wire under the dash panel and out through the radio opening securing were necessary.

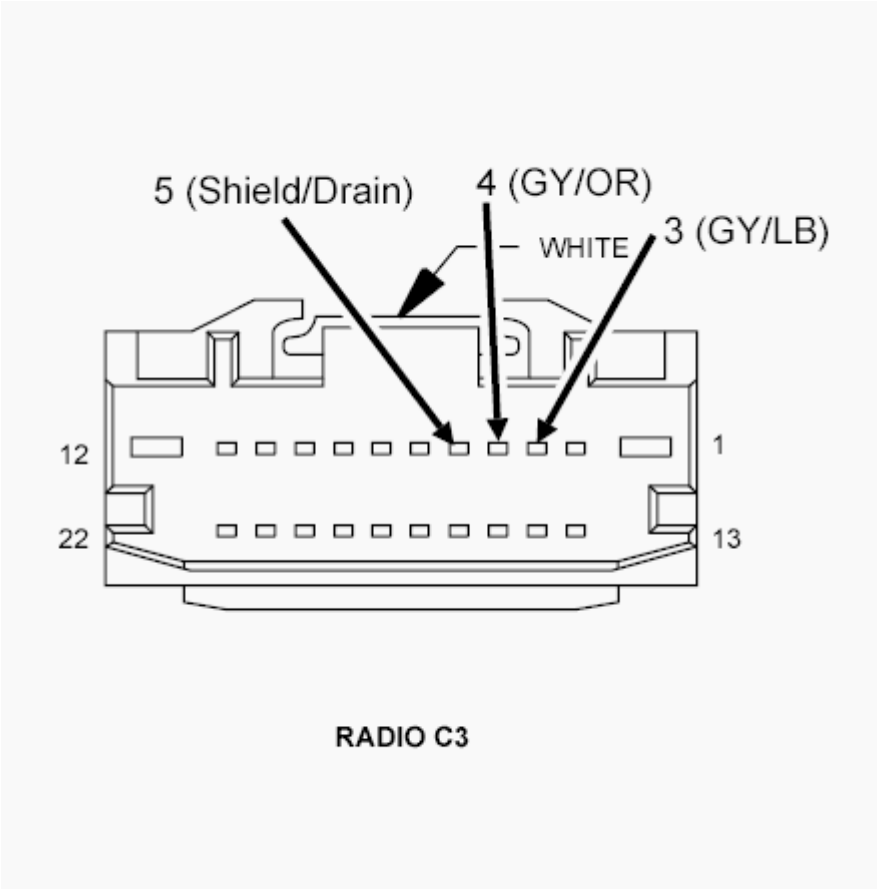

Fig. 91: C3 Radio Connector Terminal Identification
Courtesy of CHRYSLER GROUP, LLC

NOTE: **Install the harness into the existing C3 radio connector if equipped, if not use the kit supplied C3 connector.**

52. Remove the white C3 connector from Radio (If Equipped). Some vehicles may have cavities 3, 4, and 5, of the C3 connector populated remove existing terminals and proceed to next step.
53. Lift C3 terminal locking Tab, Insert Terminal as shown in illustration above. GY/LB into Cavity 3, GY/OR into cavity 4, Uninsulated shield wire into Cavity 5. Relocate terminal locking tab. If Vehicle is not equipped with white C3 connector Populate Connector supplied in kit.

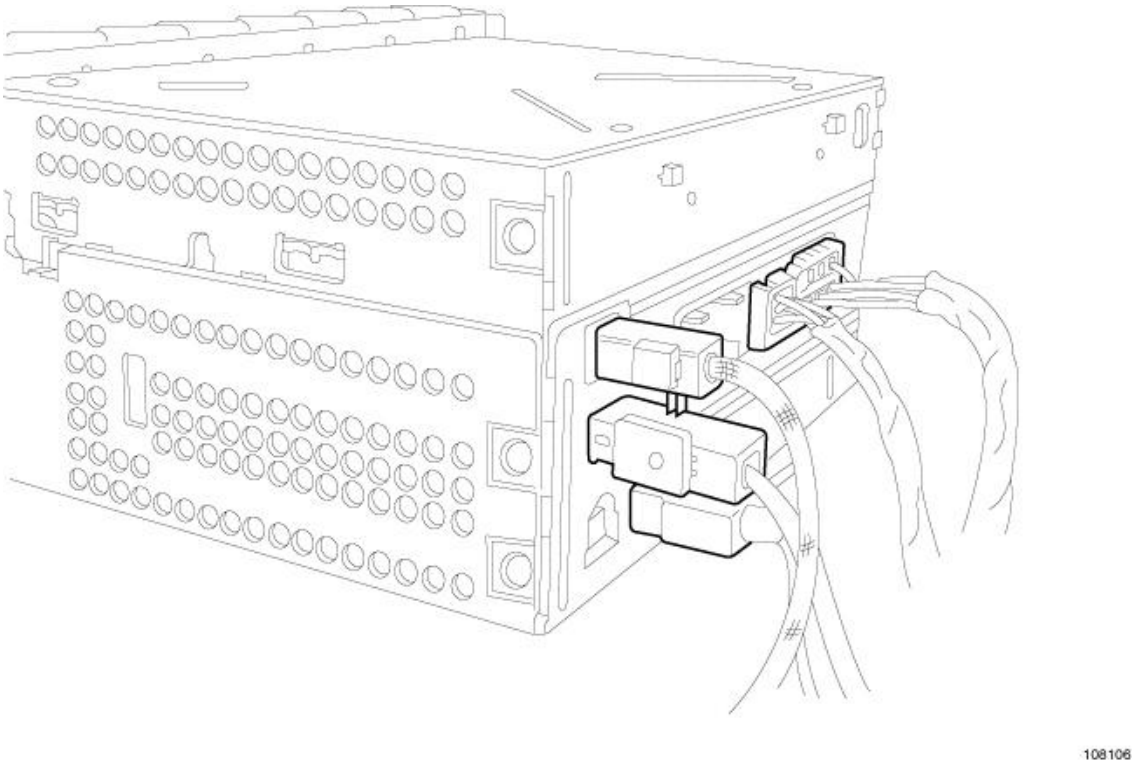

Fig. 92: Radio Electrical & Antenna Connectors
Courtesy of CHRYSLER GROUP, LLC

54. Connect the electrical and antenna connectors to the radio.
55. Position the radio to the instrument panel.
56. Install and tighten the mounting fasteners.

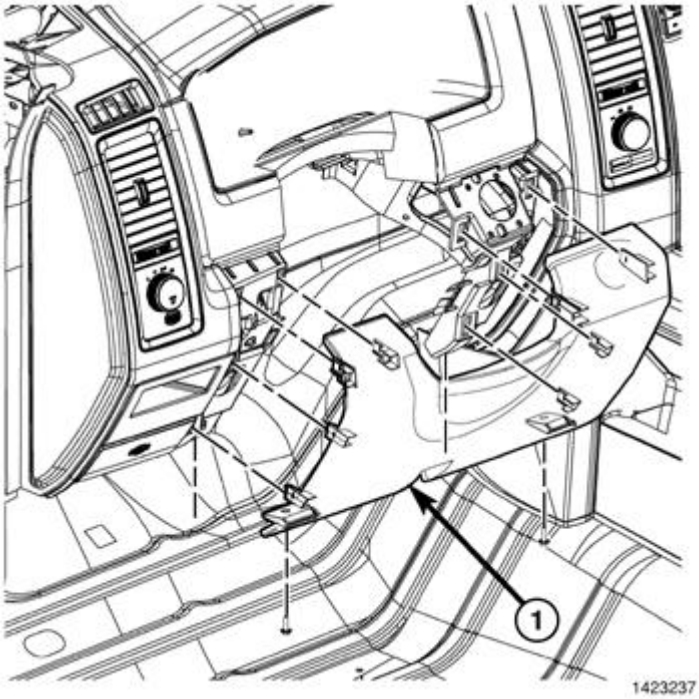

Fig. 93: Steering Column Opening Cover
Courtesy of CHRYSLER GROUP, LLC

57. Position the steering column opening cover (2) to the instrument panel and fully engage the retainer clips to the instrument panel.

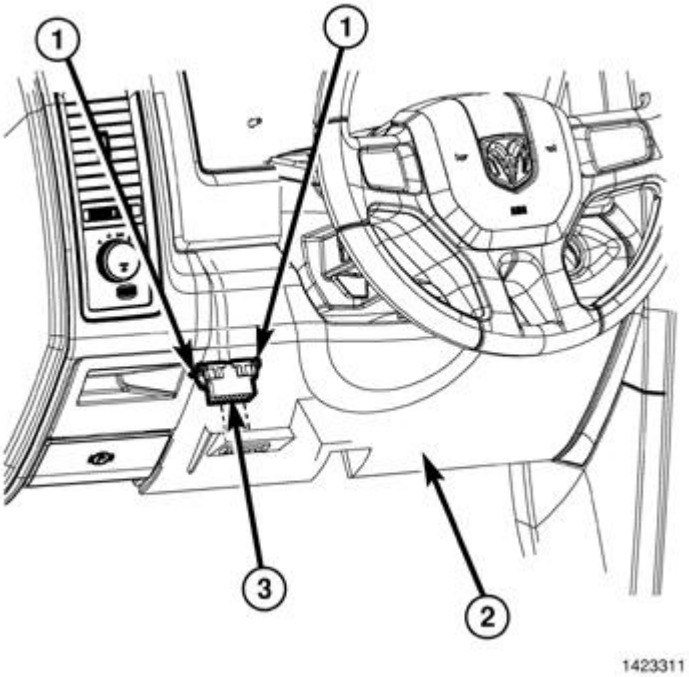

Fig. 94: Data Link Connector
Courtesy of CHRYSLER GROUP, LLC

58. Install the Data Link Connector (3) to the steering column opening cover (2) by pushing the connector through the opening on the back side of the cover and fully engaging the lock tabs (1) of the connector.

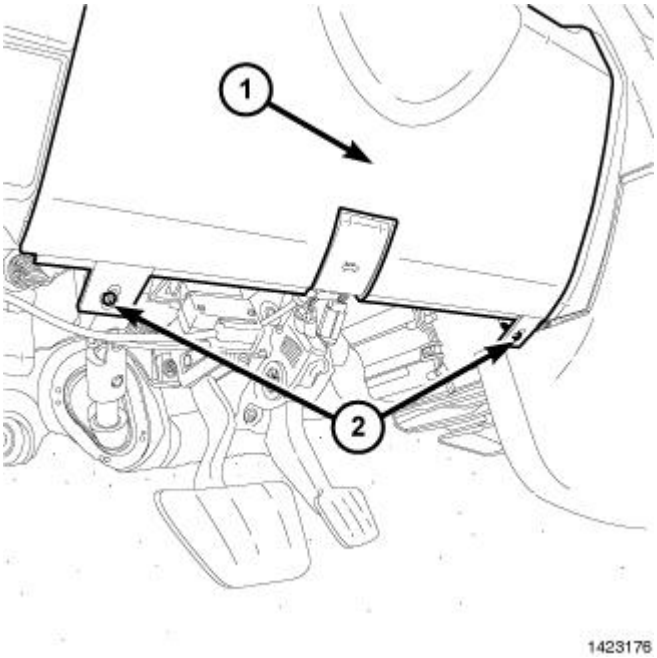

Fig. 95: Steering Column Opening Cover & Fasteners
Courtesy of CHRYSLER GROUP, LLC

59. Install the two fasteners (2) that secure the steering column opening cover (1) to the instrument panel.
60. Position the hood release handle onto the column opening cover and fully engage the retainer clip that secures the hood release handle to the steering column opening cover.

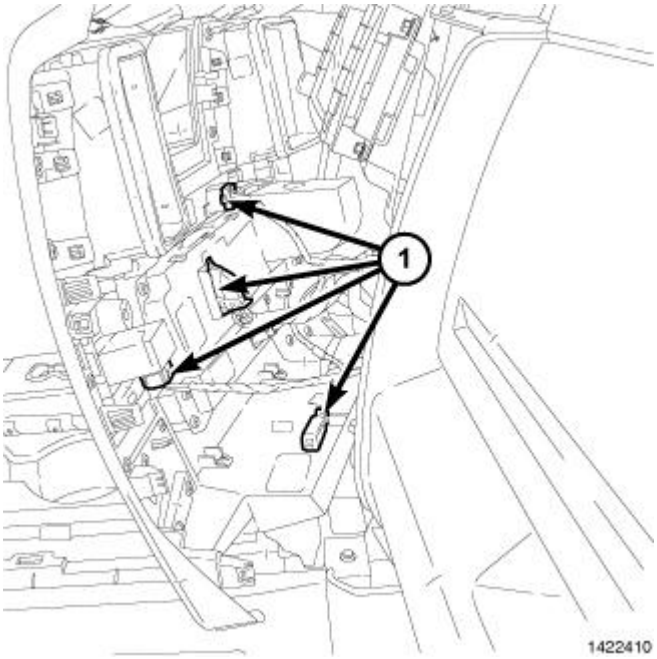

Fig. 96: Instrument Panel Center Bezel Retaining Clips
Courtesy of CHRYSLER GROUP, LLC

61. Position the instrument panel center bezel (1) near the instrument panel and connect the wire harness connectors (4).
62. Install the instrument panel center bezel (1) onto the instrument panel and fully engage the retainer clips.

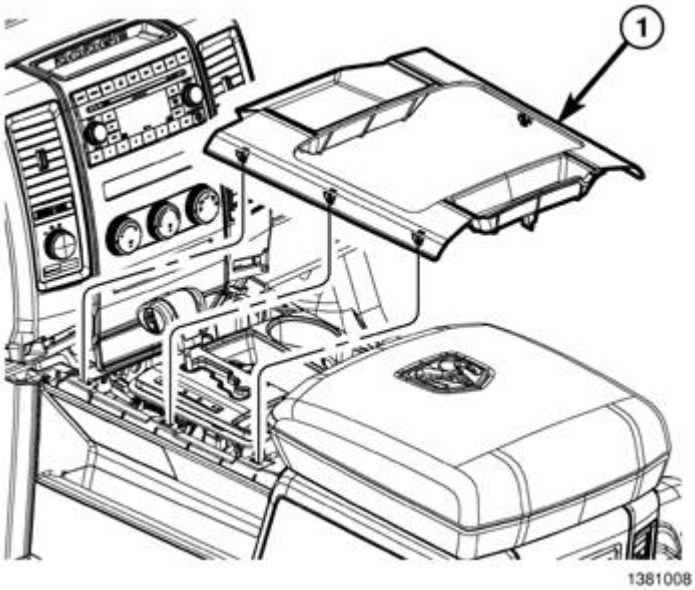

Fig. 97: Console Bezel
Courtesy of CHRYSLER GROUP, LLC

63. Install the shifter bezel to the floor console and fully engage the retainer clips.

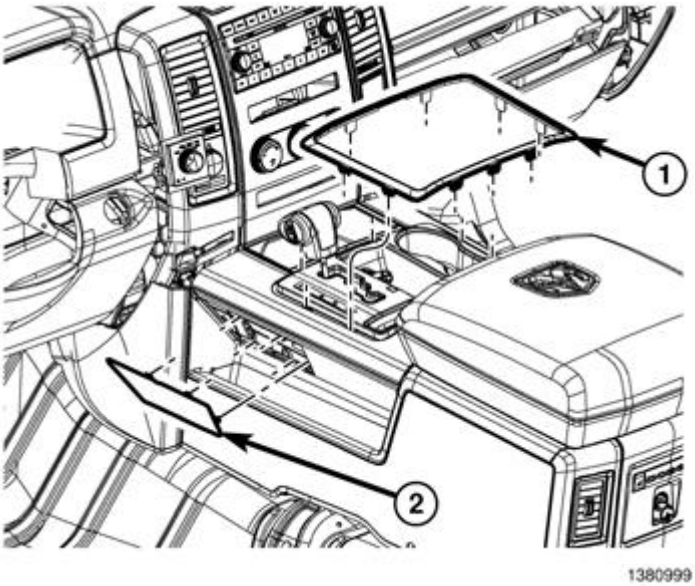

Fig. 98: Shifter Bezel Trim Ring

Courtesy of CHRYSLER GROUP, LLC

64. Install the shifter bezel trim ring and fully engage the retainer clips.

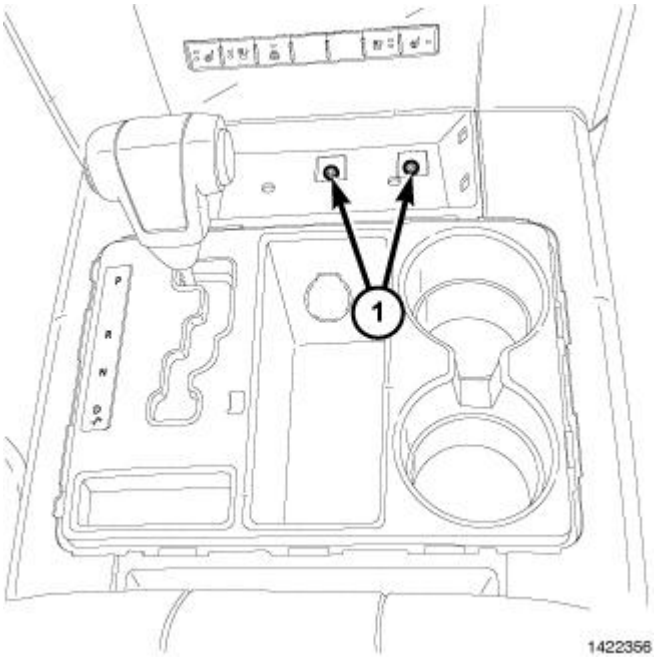

Fig. 99: Console Bin Fasteners
Courtesy of CHRYSLER GROUP, LLC

65. Install the five instrument panel fasteners.

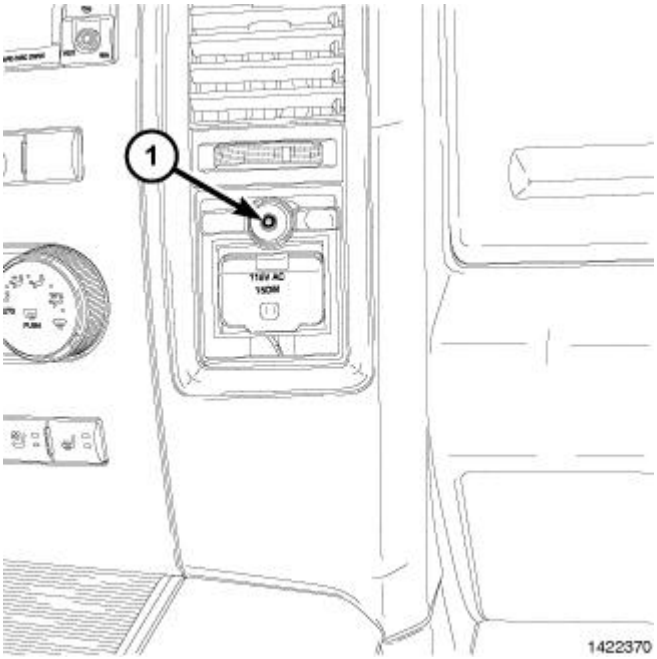

Fig. 100: Power Outlet Fasteners
Courtesy of CHRYSLER GROUP, LLC

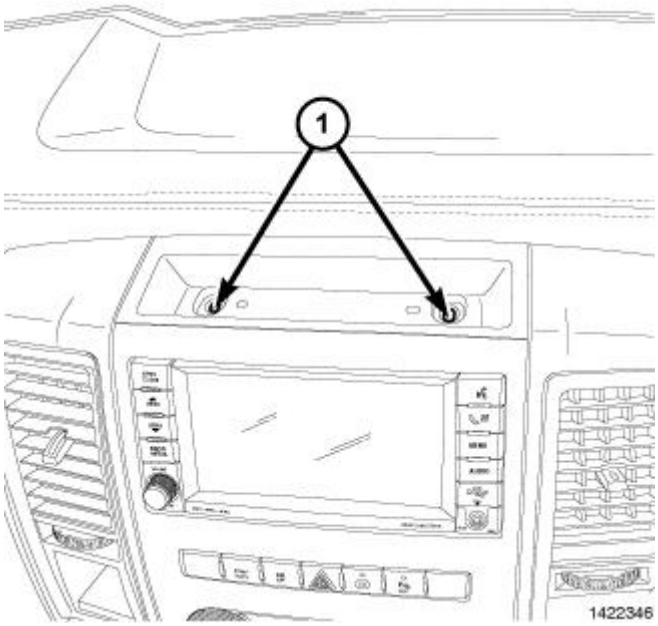

Fig. 101: Top Center Bezel Fasteners
Courtesy of CHRYSLER GROUP, LLC

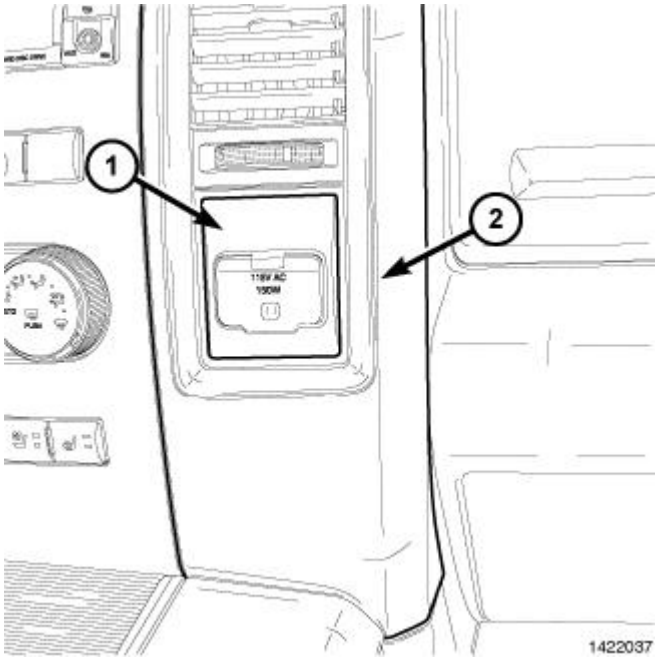

Fig. 102: Power Outlet Trim Bezel
Courtesy of CHRYSLER GROUP, LLC

66. Install the power outlet trim bezel (1), to the center bezel (2), fully engaging the retainer clips.

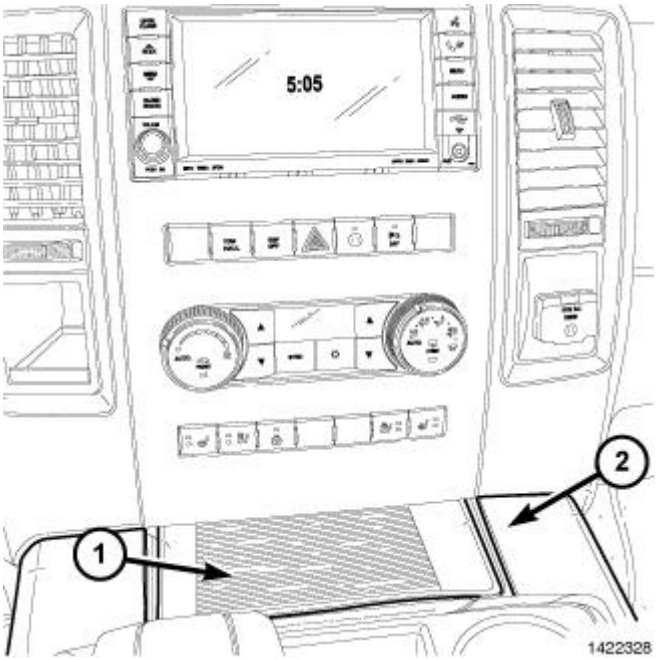

Fig. 103: Lower Center Bezel Tray Liner
Courtesy of CHRYSLER GROUP, LLC

67. Install the upper and lower center bezel tray liners (1).

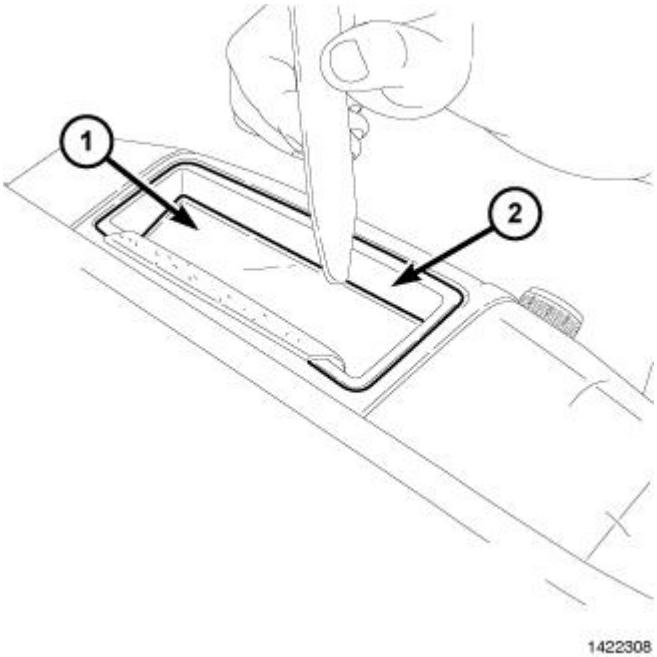

Fig. 104: Upper Center Bezel Tray Liner
Courtesy of CHRYSLER GROUP, LLC

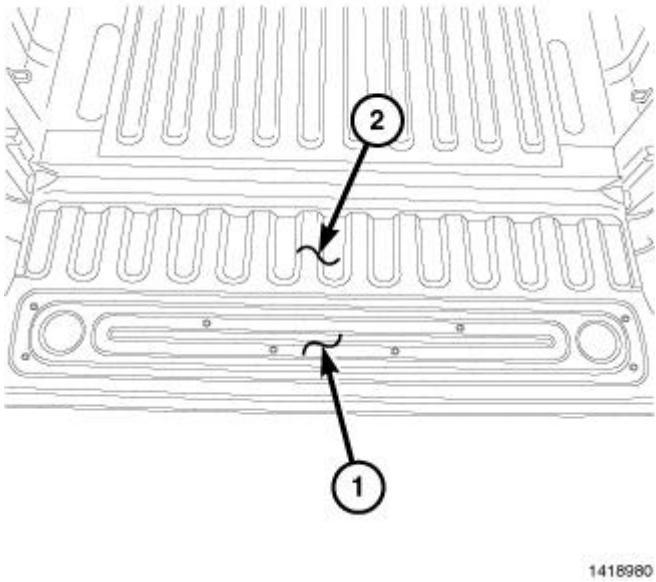

Fig. 105: Tailgate Bedliner
Courtesy of CHRYSLER GROUP, LLC

68. Install the tailgate access cover (1).
69. If equipped, install the tailgate bedliner.
70. Connect the battery negative cable.

PARK VIEW REAR BACK-UP CAMERA VEHICLE CONFIGURATION

Vehicle VIN must be updated with the sales code of the added accessory in order to enable system functionality. Using the DealerCONNECT website and the scan tool, complete the procedure below:

1. Log on to https://dealerconnect.chrysler.com
2. In the "Vehicle Option" screen under the "Global Claims System" category in the "Service" tab, enter the vehicle VIN and add the sales code **XAC (Park View Rear Back-Up Camera)** as a "Dealer Installed Option".
3. Confirm that the new sales code has been successfully added to the VIN.

   With the scan tool connected to both the internet (via Ethernet port or wireless connection) and the vehicle, follow the steps below:

4. Using the scan tool select the **VEHICLE PREPARATION** and then select **RESTORE VEHICLE CONFIGURATION** .
5. Follow the step by step instructions on the scan tool to complete the Park View Rear Back-Up Camera vehicle configuration.
6. When the **Park View Rear Back-Up Camera Vehicle Configuration** is complete, go to the **Validation Process** to verify that the vehicle has been updated.

VALIDATION PROCESS

From the "Initial Start Up" screen on the scan tool follow the steps below:

1. Using the scan tool follow the menu to **ECU VIEW** , select **TIPMCGW CENTRAL GATEWAY** , **MORE OPTIONS** , **ECU DETAILS** and then **CONFIG INFO**
2. Verify **REAR CAMERA PRESET- - - -SET** is present.

RHR NAVIGATION RADIO KIT

RAM

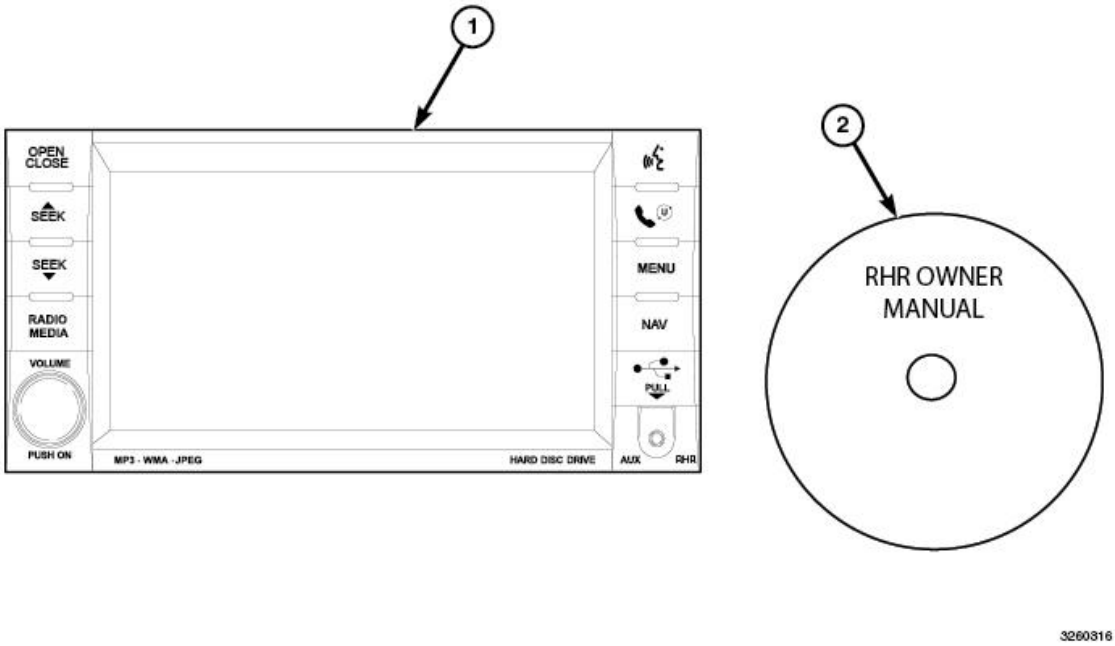

Fig. 106: RHR Radio & RHR Owner Manual DVD
Courtesy of CHRYSLER GROUP, LLC

CALL OUT	DESCRIPTION	QUANTITY
1	RHR Radio (AM/FM/CD/DVD/HDD/MP3/NAV)	1
2	RHR Owner Manual DVD	1

TOOLS REQUIRED			
Phillips Head Screw Driver	Fiber Trim Stick	Scan Tool	T25 Torx Screw Driver

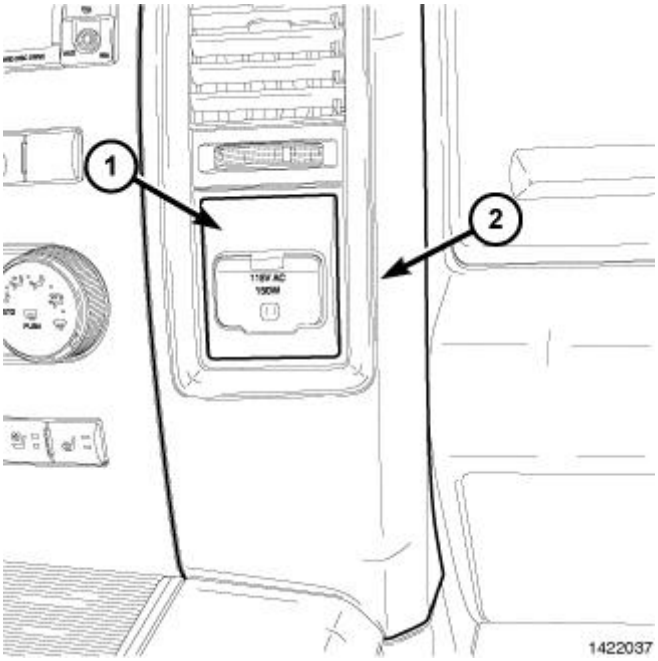

Fig. 107: Power Outlet Trim Bezel
Courtesy of CHRYSLER GROUP, LLC

1. Disconnect and isolate the negative battery cable.
2. Using a trim stick C-4755 or equivalent, disengage the retainer clips that secure the power outlet trim bezel (1) to the center bezel (2).

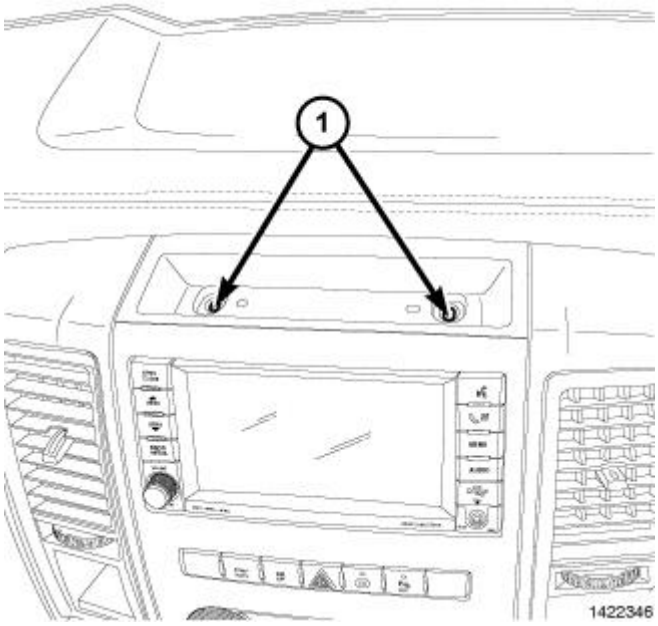

Fig. 108: Top Center Bezel Fasteners
Courtesy of CHRYSLER GROUP, LLC

3. Remove the upper center bezel bin tray liner.

4. Remove the retainers from the bin above the radio (1).

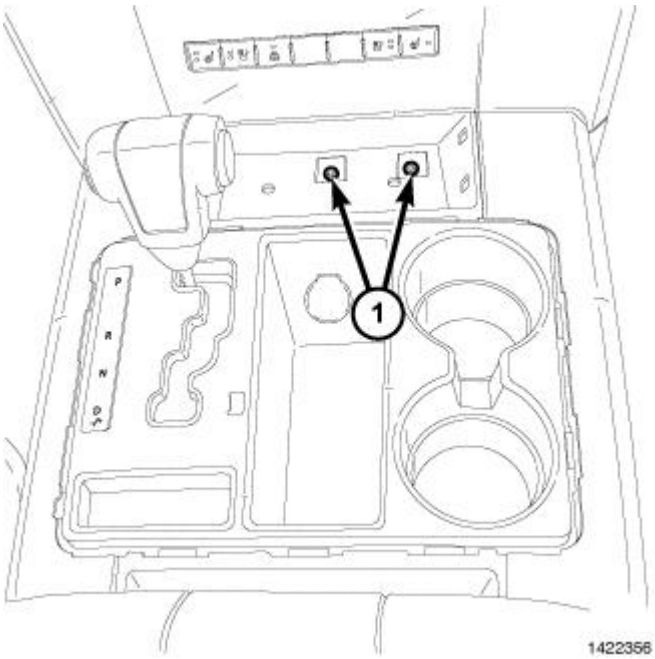

Fig. 109: Console Bin Fasteners
Courtesy of CHRYSLER GROUP, LLC

5. Remove the lower center bezel bin tray liner from the center console.
6. Remove the retainers from the center console bin (1).

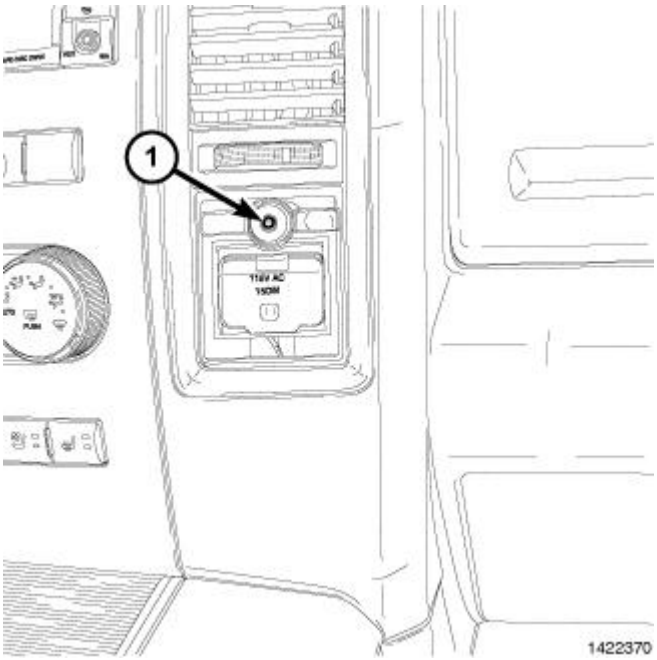

Fig. 110: Power Outlet Fasteners
Courtesy of CHRYSLER GROUP, LLC

7. Remove the retainer (1) from above the power outlet.

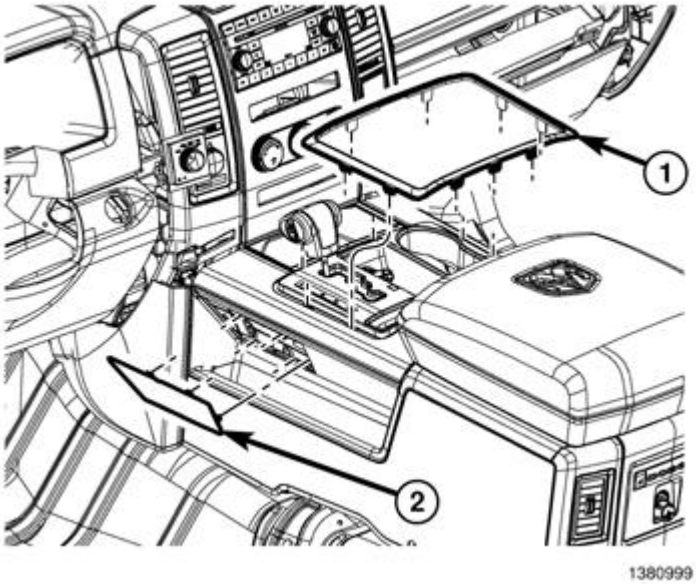

Fig. 111: Shifter Bezel Trim Ring
Courtesy of CHRYSLER GROUP, LLC

8. Using a trim stick C-4755 or equivalent, disengage the retainer clips that secure the trim ring to the floor console (1).

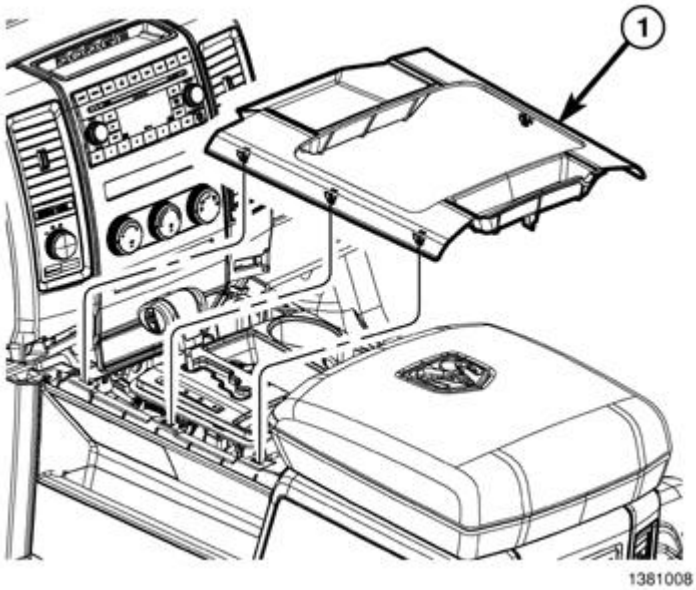

Fig. 112: Console Bezel
Courtesy of CHRYSLER GROUP, LLC

9. Using a trim stick C-4755 or equivalent, disengage the retainer clips that secure the shifter bezel to the floor console (1).

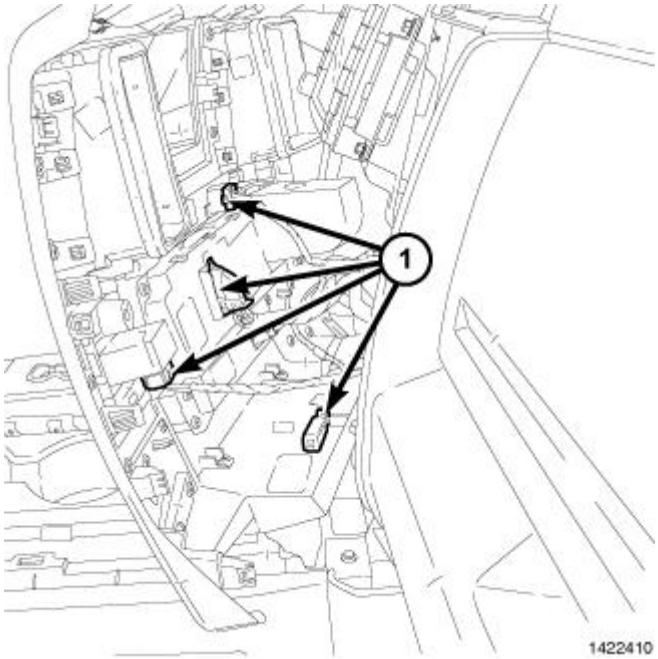

Fig. 113: Instrument Panel Center Bezel Retaining Clips
Courtesy of CHRYSLER GROUP, LLC

10. Using a trim stick C-4755 or equivalent, disengage the retainer clips that secure the instrument panel center bezel to the instrument panel.
11. Disconnect the wire harness connectors (1) and remove the center bezel from the vehicle.
12. Remove the radio mounting fasteners.

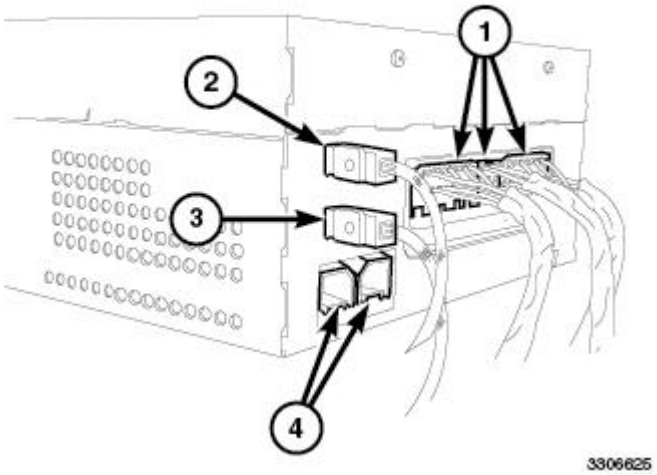

Fig. 114: Electrical Connectors, AM/FM Antenna Connectors, Navigation Antenna Connector & USB Connector Port
Courtesy of CHRYSLER GROUP, LLC

CAUTION: Pulling the antenna cable straight out of the radio without pulling on

the locking antenna connector could damage the cable or radio.

13. Pull the radio out far enough to access the back of the radio.
14. Disconnect the AM/FM antenna (2) and electrical connectors (1).
15. If equipped, disconnect the navigation antenna (3).
16. If equipped, disconnect the USB connectors (4).
17. Remove the radio from the instrument panel.
18. Position the new radio to the instrument panel.
19. Connect the AM/FM antenna (2) and electrical connectors (1).
20. Connect the satellite/navigation antenna (3).
21. If equipped, connect the USB connectors (4).

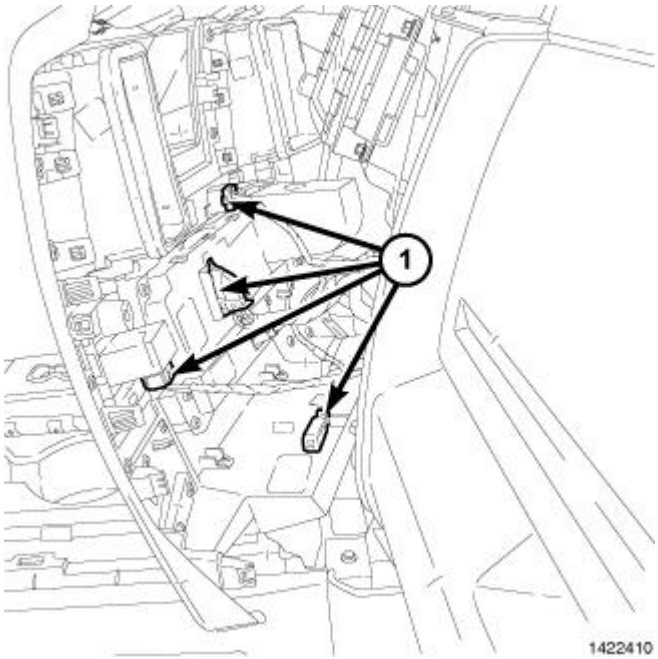

Fig. 115: Instrument Panel Center Bezel Retaining Clips
Courtesy of CHRYSLER GROUP, LLC

22. Position the instrument panel center bezel near the instrument panel and connect the wire harness connectors (1).
23. Install the instrument panel center bezel onto the instrument panel and fully engage the retainer clips.

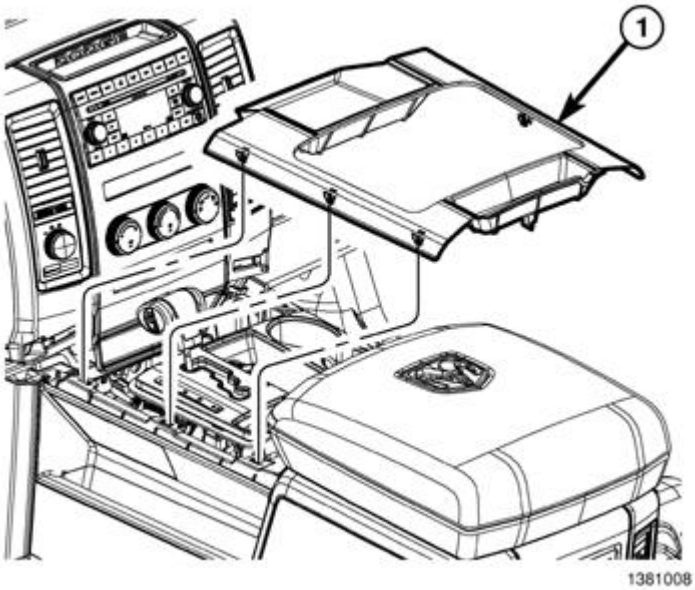

Fig. 116: Console Bezel
Courtesy of CHRYSLER GROUP, LLC

24. Install the shifter bezel to the floor console (1) and fully engage the retainer clips.

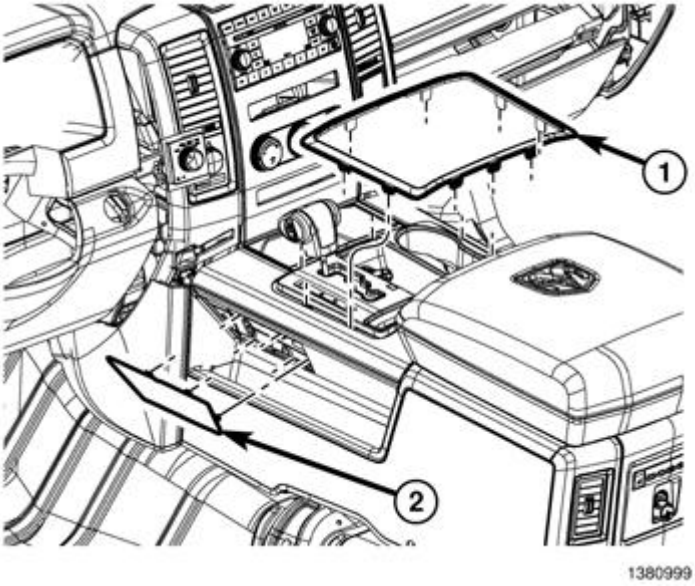

Fig. 117: Shifter Bezel Trim Ring
Courtesy of CHRYSLER GROUP, LLC

25. Install the shifter bezel trim ring (1) and fully engage the retainer clips.

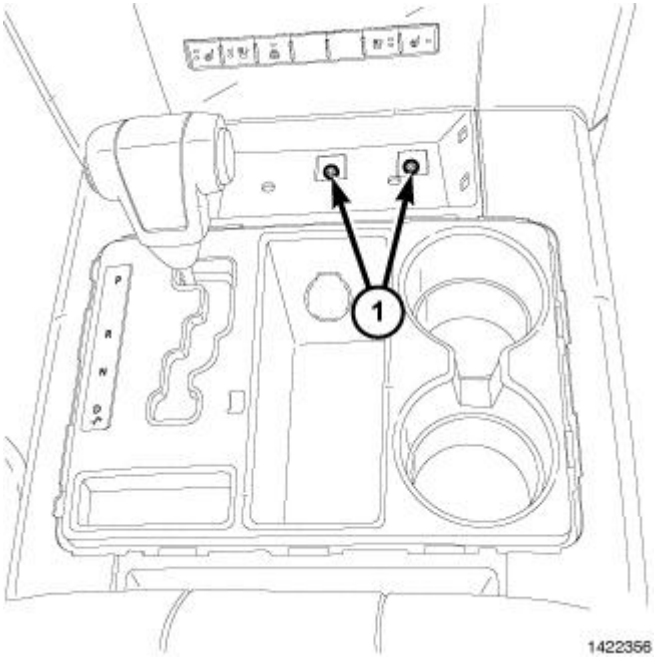

Fig. 118: Console Bin Fasteners
Courtesy of CHRYSLER GROUP, LLC

26. Install the retainers from the center console bin (1).
27. Install the lower center bezel tray liner.

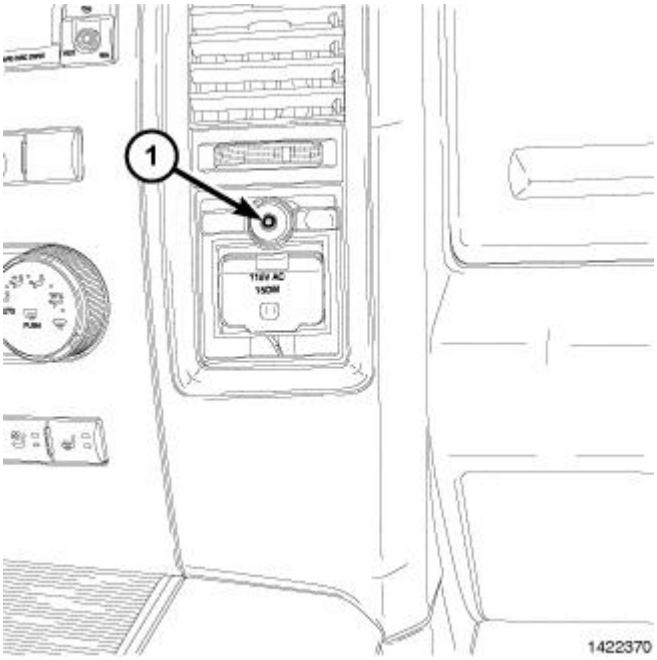

Fig. 119: Power Outlet Fasteners
Courtesy of CHRYSLER GROUP, LLC

28. Install the retainer (1) from above the power outlet.

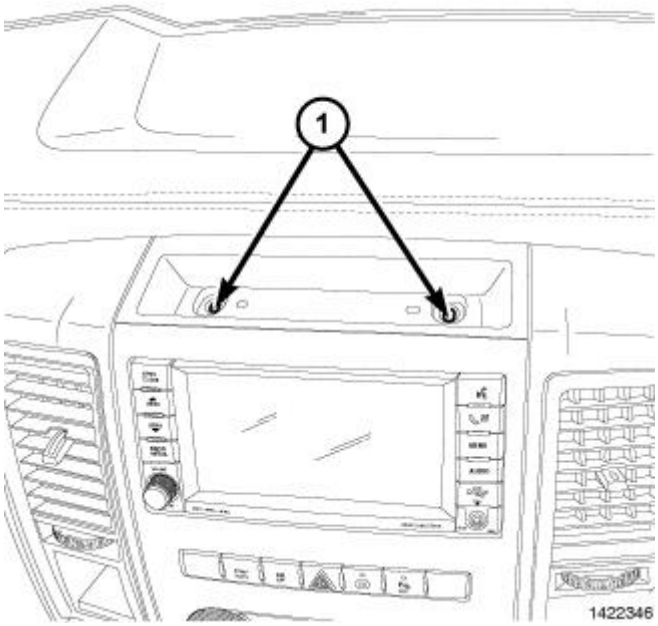

Fig. 120: Top Center Bezel Fasteners
Courtesy of CHRYSLER GROUP, LLC

29. Install the retainers to the bin above the radio (1).
30. Install the upper bin tray liner.

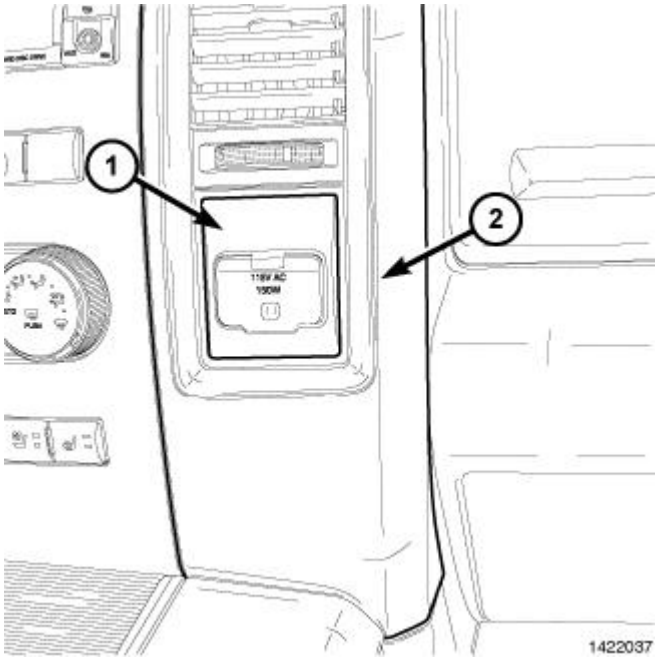

Fig. 121: Power Outlet Trim Bezel
Courtesy of CHRYSLER GROUP, LLC

31. Install the power outlet trim bezel (1), to the center bezel (2), fully engaging the retainer clips.

32. Connect the negative battery cable.

UPDATE VEHICLE CONFIGURATION

NOTE: The wiTECH software level must be at the latest release to perform this procedure.

1. VIN must be updated with the sales code of the added accessory in order to enable system functionality. Using the DealerCONNECT website and the wiTECH diagnostic application, complete the vehicle configuration.
2. Log on to https://dealerconnect.chrysler.com.
3. In the "Vehicle Option" screen under the "Global Claims System" category in the "Service" tab, enter the vehicle VIN, four digit pin number obtained from the dealership parts department and add sales code(s) noted below as a "Dealer Installed Option".

   RHR (AM/FM/DVD/HDD with SDARS)

4. Confirm that the new sales code has been successfully added to the VIN.
5. With the wiTECH diagnostic application, perform the following steps form the Initial Start Up Screen:
   - Select the "DIAGNOSTIC PROCEDURES" tab
   - Select "RESTORE VEHICLE CONFIGURATION"
   - Select the "Run Diagnostic" button
   - Select "CONTINUE"
   - Verify that the vehicle VIN number is correct
   - Once verified, select the "Correct VIN" button
   - Note On-Screen instructions and select the "Close" button

RHR HANDS FREE ADAPTER WITH USB

RAM

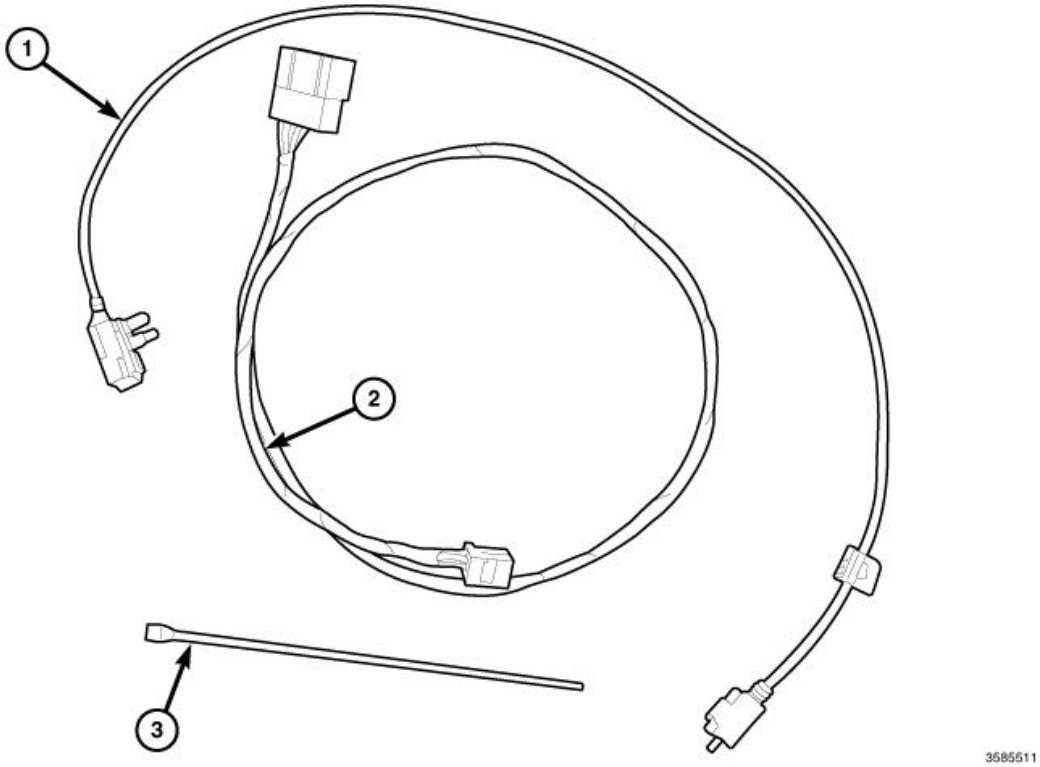

Fig. 122: RHR Hands Free Adapter With USB Replacement Components
Courtesy of CHRYSLER GROUP, LLC

CALL OUT	DESCRIPTION	QUANTITY
1	USB Extension Cable	1
2	Hands Free Wiring Harness	1
3	Tie strap	8

TOOLS REQUIRED				
Phillips Head Screw Driver	(special tool #C-4755, Trim Stick)	7mm Socket and Wrench	T20 Torx Screw Driver	10mm Wrench

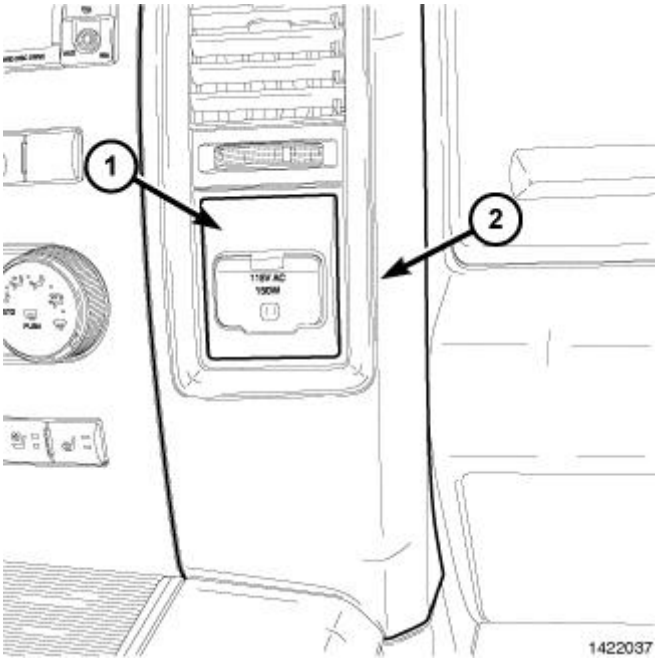

Fig. 123: Power Outlet Trim Bezel
Courtesy of CHRYSLER GROUP, LLC

1. Disconnect and isolate the negative battery cable.
2. Using (special tool #C-4755, Trim Stick) disengage the retainer clips that secure the power outlet trim bezel (1) to the center bezel (2).

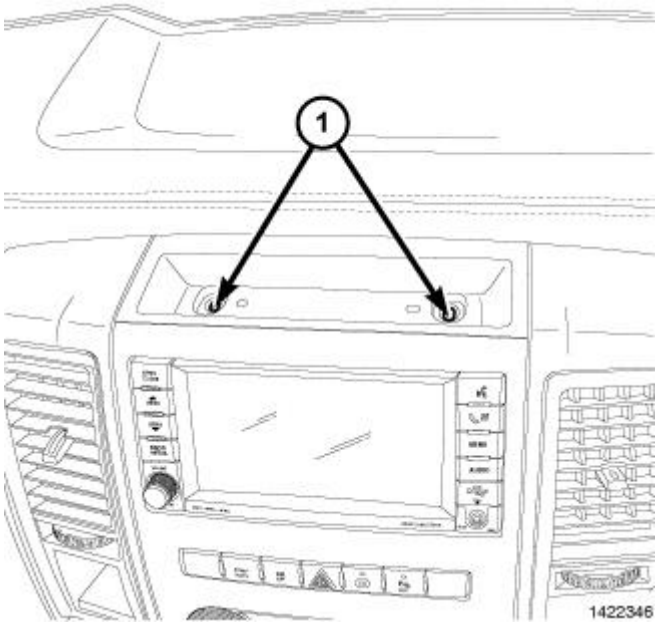

Fig. 124: Top Center Bezel Fasteners
Courtesy of CHRYSLER GROUP, LLC

3. Remove the upper center bezel bin tray liner.

4. Remove the retainers from the bin above the radio (1).

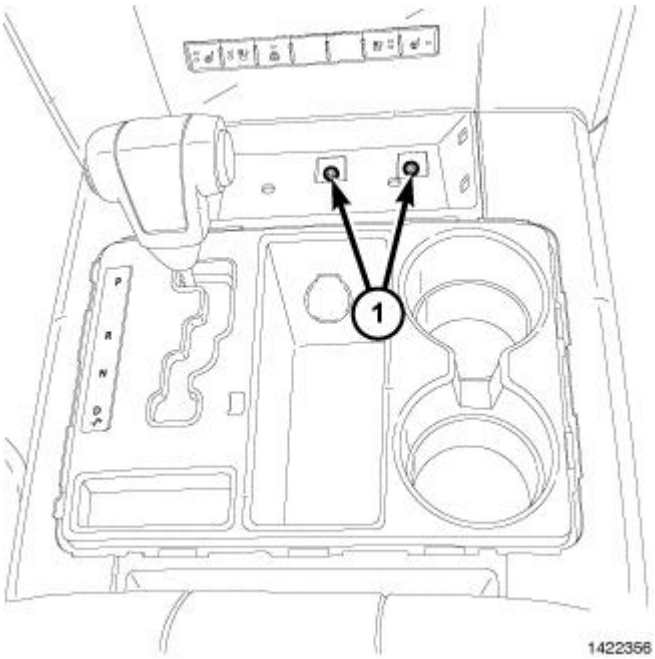

Fig. 125: Console Bin Fasteners
Courtesy of CHRYSLER GROUP, LLC

5. Remove the lower center bezel bin tray liner from the center console.
6. Remove the retainers from the center console bin (1).

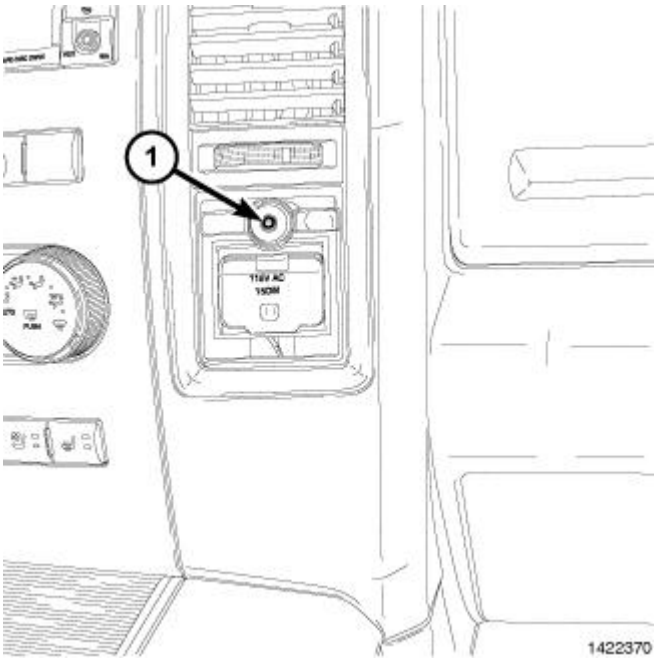

Fig. 126: Power Outlet Fasteners
Courtesy of CHRYSLER GROUP, LLC

7. Remove the retainer (1) from above the power outlet.

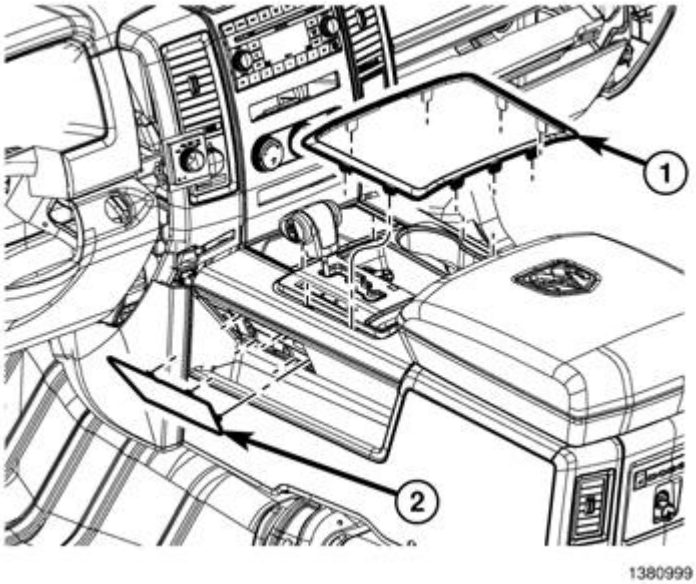

Fig. 127: Shifter Bezel Trim Ring
Courtesy of CHRYSLER GROUP, LLC

8. Using (special tool #C-4755, Trim Stick) disengage the retainer clips that secure the trim ring to the floor console (1).

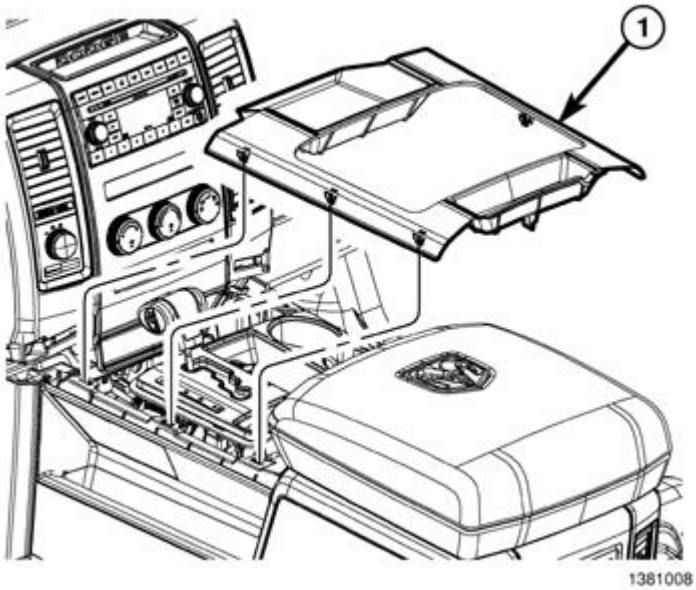

Fig. 128: Console Bezel
Courtesy of CHRYSLER GROUP, LLC

9. Using (special tool #C-4755, Trim Stick) disengage the retainer clips that secure the shifter bezel to the floor console (1).

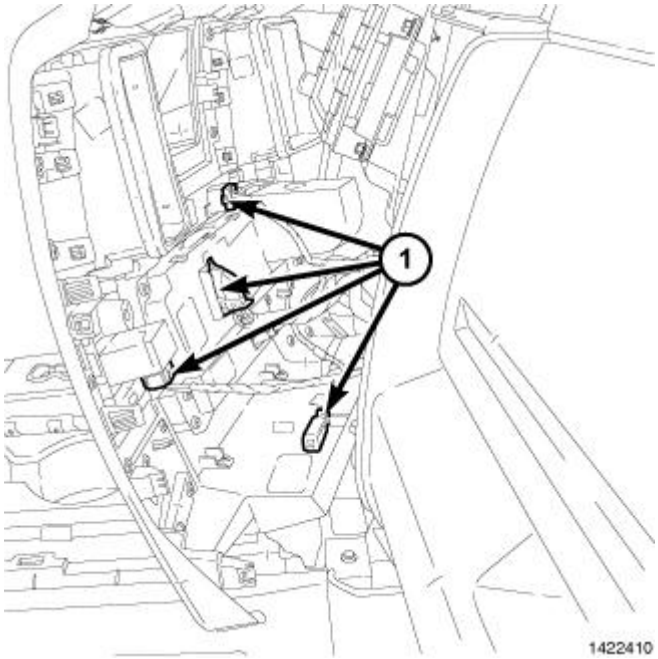

Fig. 129: Instrument Panel Center Bezel Retaining Clips
Courtesy of CHRYSLER GROUP, LLC

10. Using (special tool #C-4755, Trim Stick) disengage the retainer clips that secure the instrument panel center bezel to the instrument panel.
11. Disconnect the wire harness connectors (1) and remove the center bezel from the vehicle.
12. Remove the radio mounting fasteners.

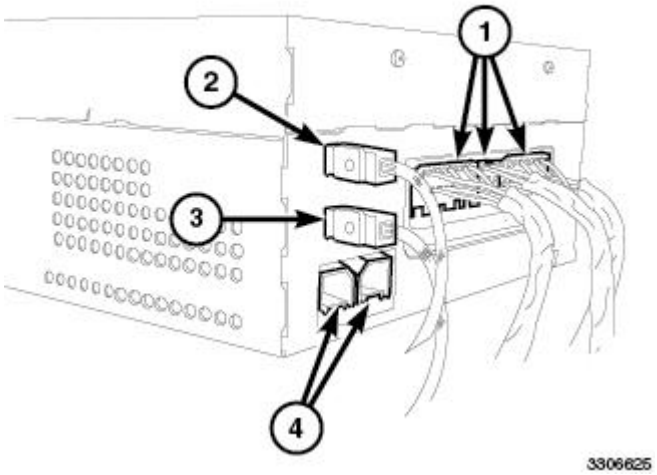

Fig. 130: Electrical Connectors, AM/FM Antenna Connectors, Navigation Antenna Connector & USB Connector Port
Courtesy of CHRYSLER GROUP, LLC

13. Pull the radio out far enough to access the back of the radio.

14. Disconnect the AM/FM antenna (2) and electrical connectors (1).
15. If equipped, disconnect the navigation antenna (3).
16. If equipped, disconnect the USB connectors (4).

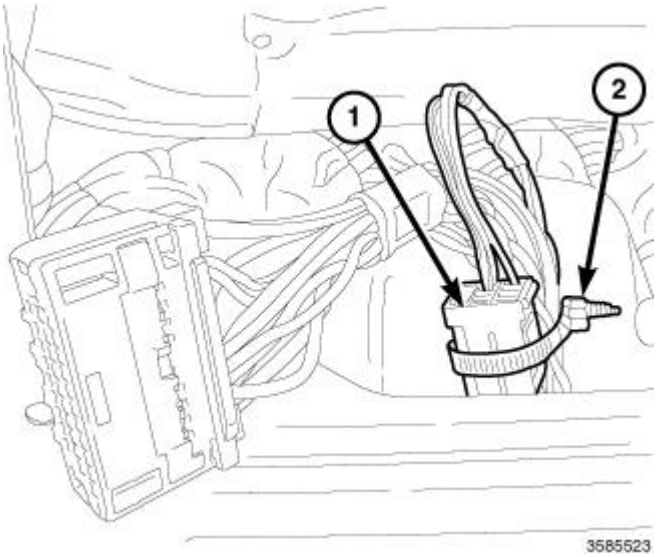

Fig. 131: 10-way Connector & Tie Strap
Courtesy of CHRYSLER GROUP, LLC

17. After removing the 10-way connector (1) from the back of the radio, secure it to the existing harness with a tie strap (2).

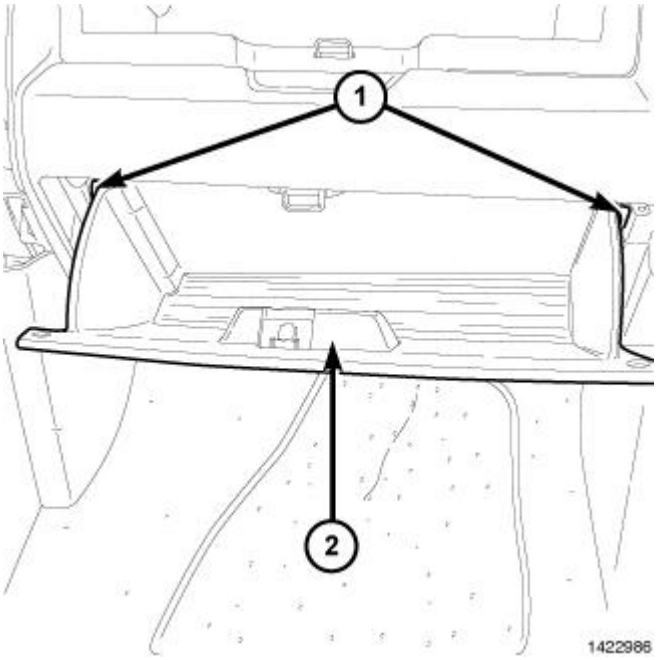

Fig. 132: Glove Box
Courtesy of CHRYSLER GROUP, LLC

18. Open the glove box (2).
19. Release the two glove box stops (1) and lower the glove box (2) downward past the stops.

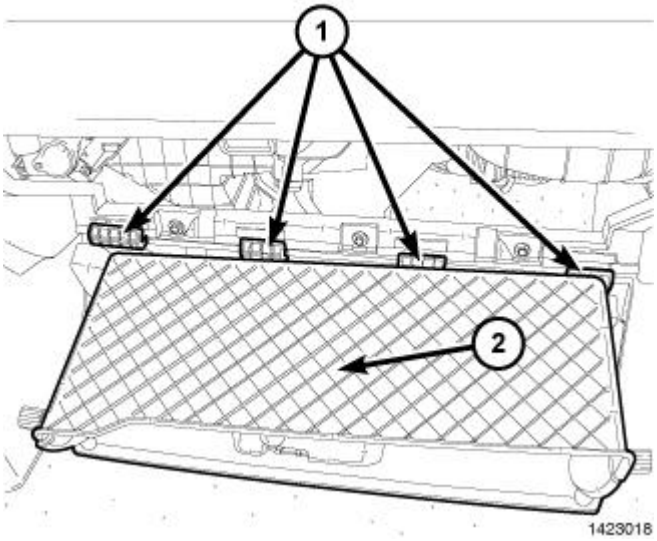

Fig. 133: Glove Box Hinges
Courtesy of CHRYSLER GROUP, LLC

20. Disengage the glove box hinges (1) from the instrument panel and remove the glove box (2).

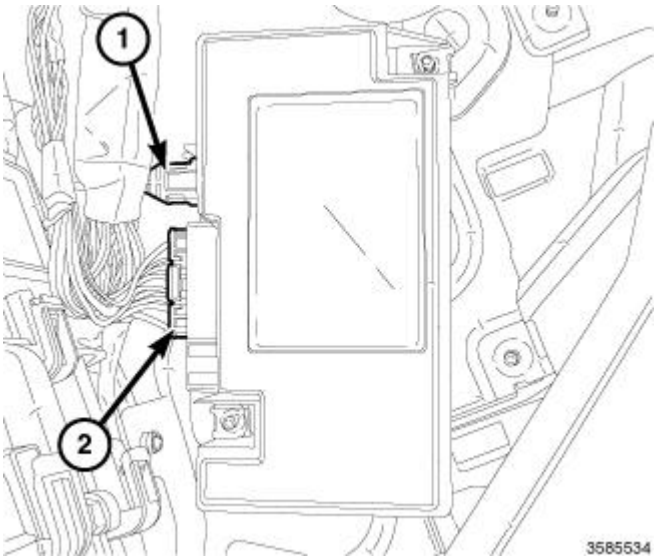

Fig. 134: Hands Free Module & USB Connector
Courtesy of CHRYSLER GROUP, LLC

21. Disconnect the electrical connector (2) from the Hands Free Module (HFM).
22. If equipped, disconnect the USB connector (1) from the HFM.

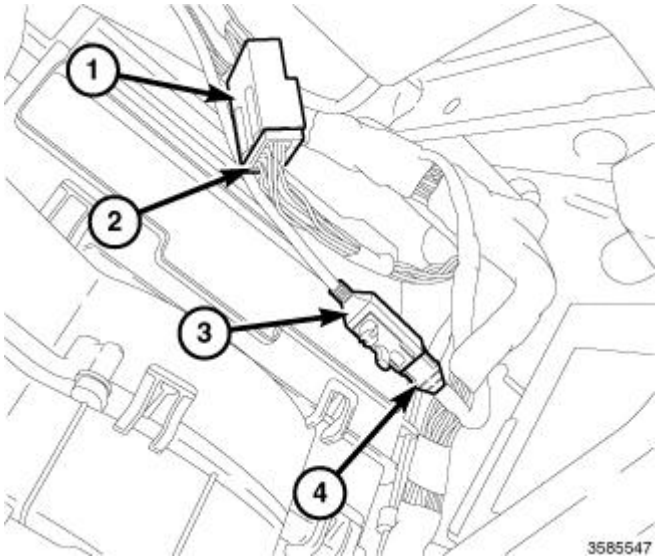

Fig. 135: HFM Overlay Harness & USB Connectors
Courtesy of CHRYSLER GROUP, LLC

23. Connect the factory wiring harness connector (2) to the HFM overlay harness connector (1).
24. If equipped with USB, connect the factory USB connector (4) to the USB extension harness connector (3).
25. Route the overlay harness and extension cable along the existing harness to the radio and secure with the provided tie straps.

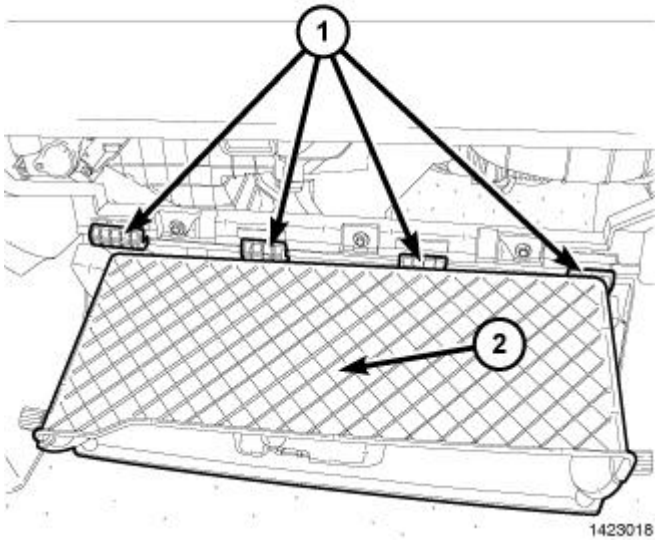

Fig. 136: Glove Box Hinges
Courtesy of CHRYSLER GROUP, LLC

26. Engage the hinges (1) of the glove box (2) to the instrument panel.

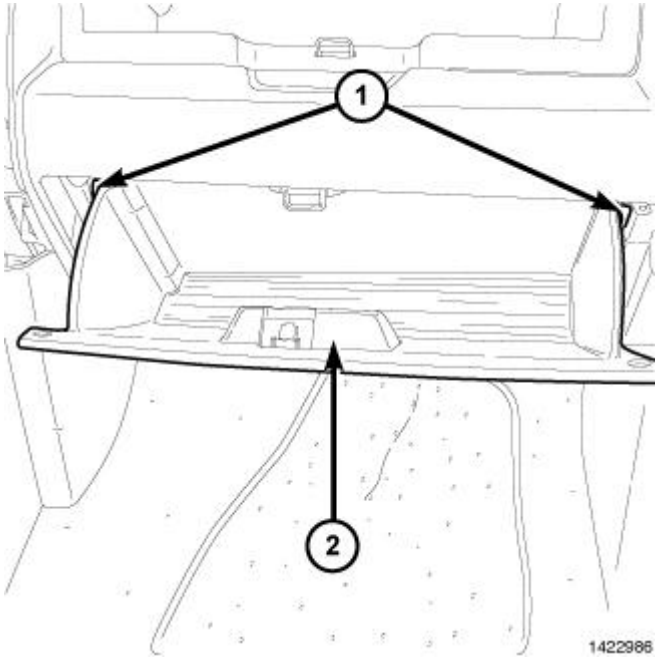

Fig. 137: Glove Box
Courtesy of CHRYSLER GROUP, LLC

27. Press downward on the back edge of the glove box (2) and raise the glove box past the two stops (1).
28. Close the glove box.

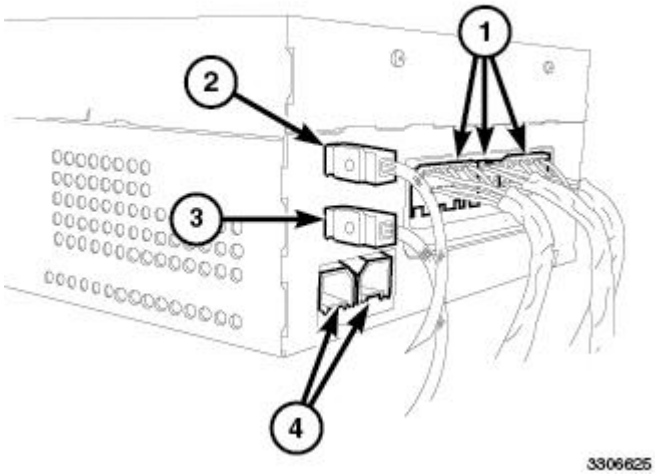

Fig. 138: Electrical Connectors, AM/FM Antenna Connectors, Navigation Antenna Connector & USB Connector Port
Courtesy of CHRYSLER GROUP, LLC

29. Position the radio to the instrument panel.
30. Connect the AM/FM antenna (2).
31. Connect the factory electrical connector (1) and the connector from the supplied wiring harness that was

routed from the HFM.

32. Connect the satellite/navigation antenna (3).
33. If equipped, connect the USB connectors (4), including the one that was routed from the HFM.
34. Install the radio mounting fasteners.

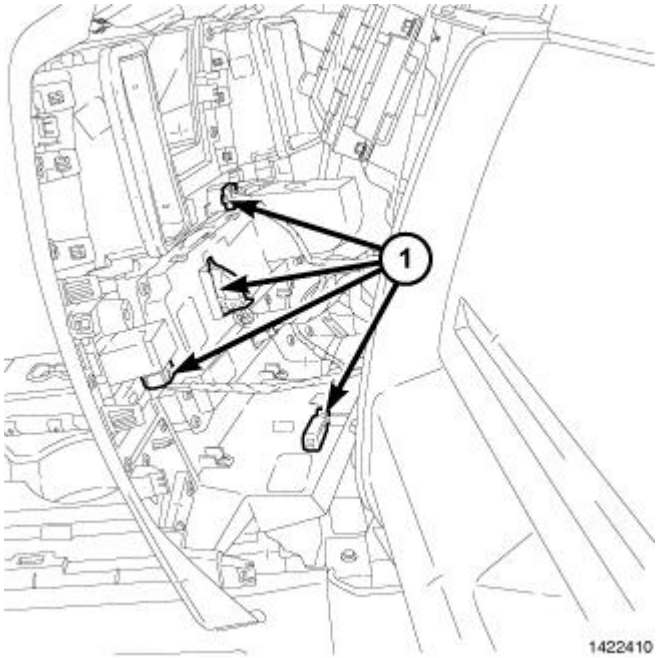

Fig. 139: Instrument Panel Center Bezel Retaining Clips
Courtesy of CHRYSLER GROUP, LLC

35. Position the instrument panel center bezel near the instrument panel and connect the wire harness connectors (1).
36. Install the instrument panel center bezel onto the instrument panel and fully engage the retainer clips.

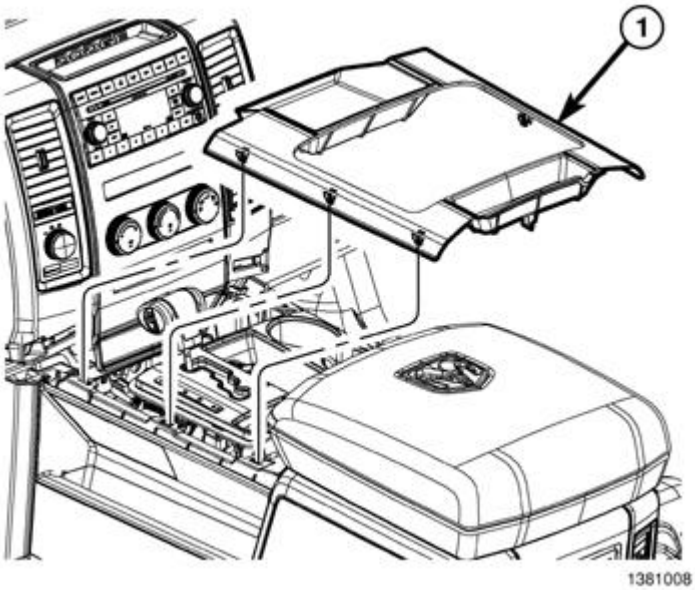

Fig. 140: Console Bezel
Courtesy of CHRYSLER GROUP, LLC

37. Install the shifter bezel to the floor console (1) and fully engage the retainer clips.

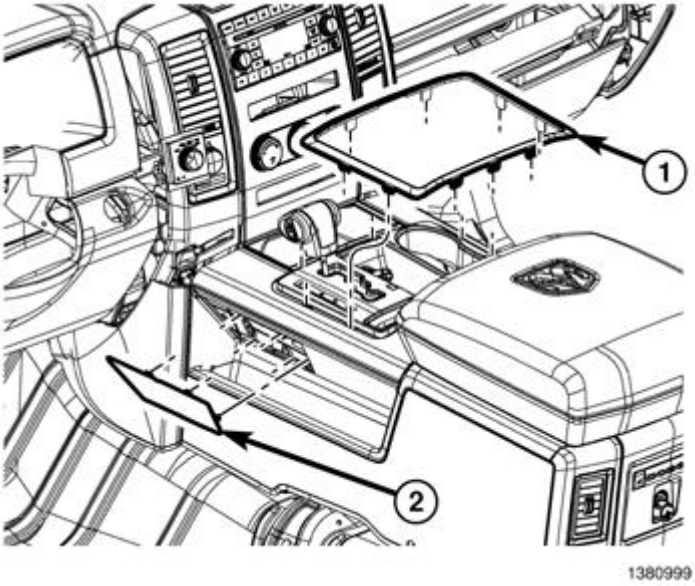

Fig. 141: Shifter Bezel Trim Ring
Courtesy of CHRYSLER GROUP, LLC

38. Install the shifter bezel trim ring (1) and fully engage the retainer clips.

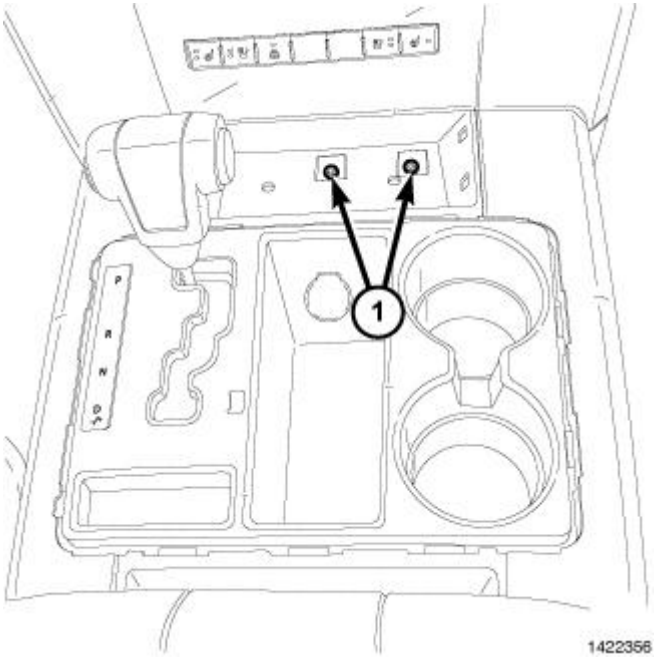

Fig. 142: Console Bin Fasteners
Courtesy of CHRYSLER GROUP, LLC

39. Install the retainers from the center console bin (1).
40. Install the lower center bezel tray liner.

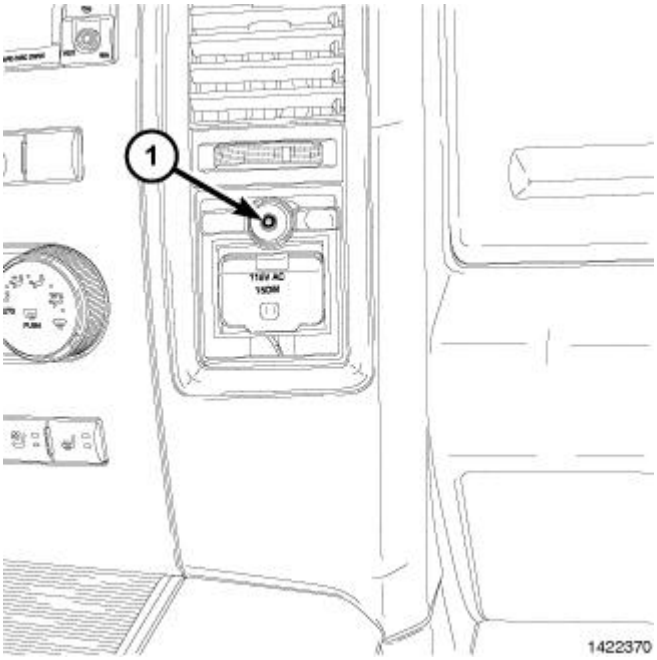

Fig. 143: Power Outlet Fasteners
Courtesy of CHRYSLER GROUP, LLC

41. Install the retainer (1) from above the power outlet.

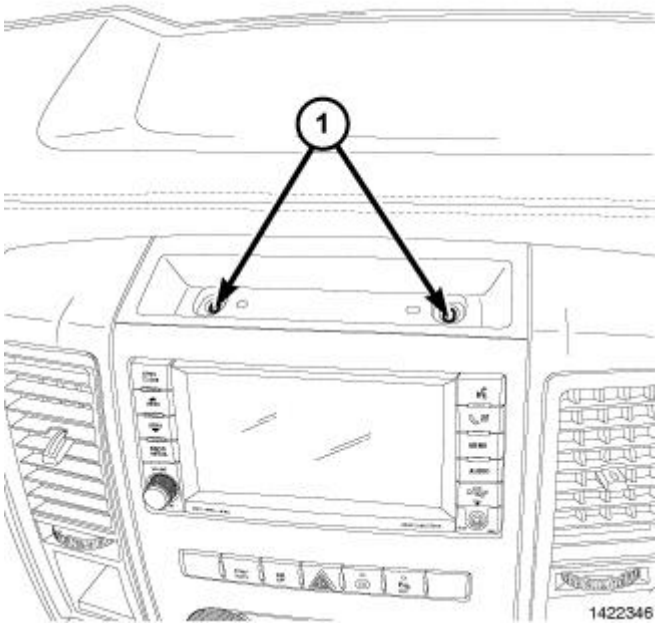

Fig. 144: Top Center Bezel Fasteners
Courtesy of CHRYSLER GROUP, LLC

42. Install the retainers to the bin above the radio (1).
43. Install the upper bin tray liner.

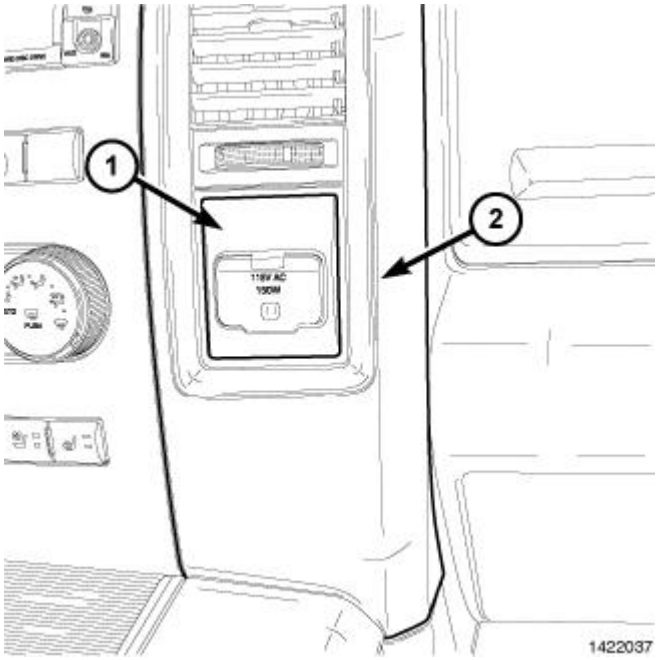

Fig. 145: Power Outlet Trim Bezel
Courtesy of CHRYSLER GROUP, LLC

44. Install the power outlet trim bezel (1), to the center bezel (2), fully engaging the retainer clips.

45. Connect the negative battery cable.

WI-FI ROUTER

DODGE RAM, QUAD/CREW CAB

NOTE: Using a test light, verify the cigarette lighter outlet being used is ignition switched. Power must not be present with the ignition in the OFF position.

PROCEDURE STEPS

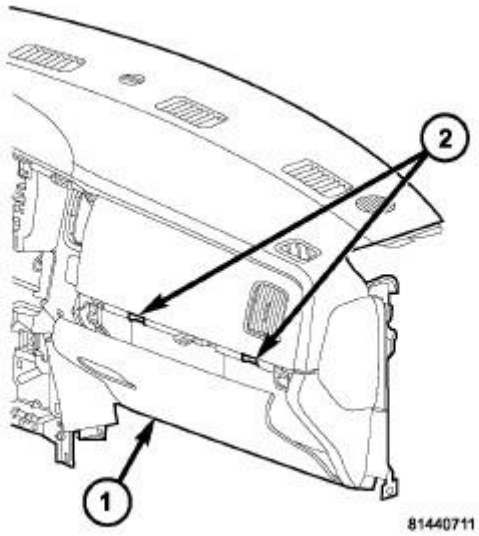

Fig. 146: Glove Box Stops
Courtesy of CHRYSLER GROUP, LLC

1. Disconnect and isolate the negative battery cable.
2. Open the glove box (1).
3. Release the two glove box stops (2) and lower the glove box downward past the stops.
4. Disengage the glove box hinges from the instrument panel and remove the glove box.

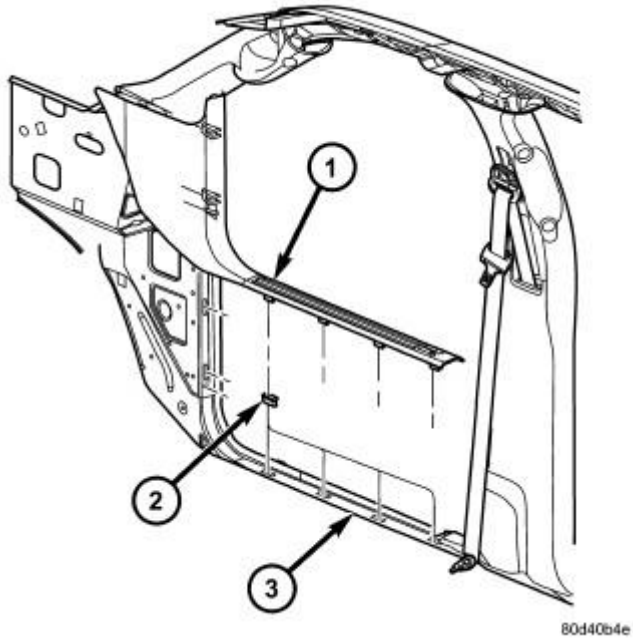

Fig. 147: Cowl Trim Panel & Retainer Clips
Courtesy of CHRYSLER GROUP, LLC

5. Using a trim stick (special tool #C-4755, Trim Stick) or equivalent, disengage the retaining tabs of the cowl trim panel (1) from the retainer clips (2) in the door sill (3).
6. Pull the cowl trim panel rearward and remove it from the vehicle.

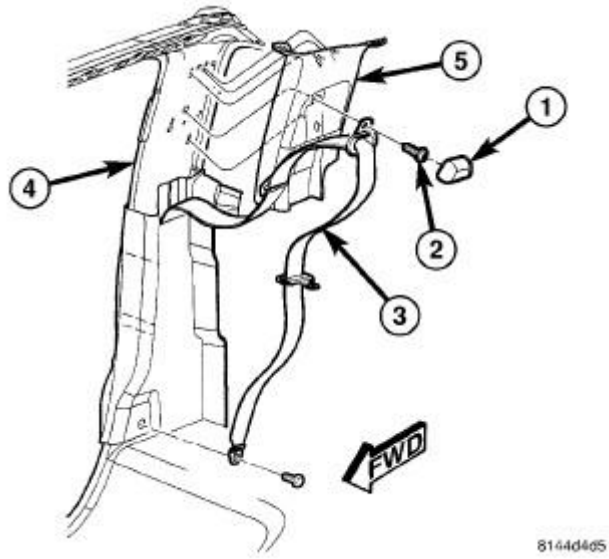

Fig. 148: C-Pillar Upper Trim Panel
Courtesy of CHRYSLER GROUP, LLC

7. Remove the cap (1) and then the bolt (2) that secures the seat belt (3) to the top of the C-pillar (4) and

position the seat belt out of the way.

8. Using a trim stick (special tool #C-4755, Trim Stick) or equivalent, disengage the retaining tabs that secure the upper C-pillar trim panel (5) to the C-pillar and remove the trim panel.

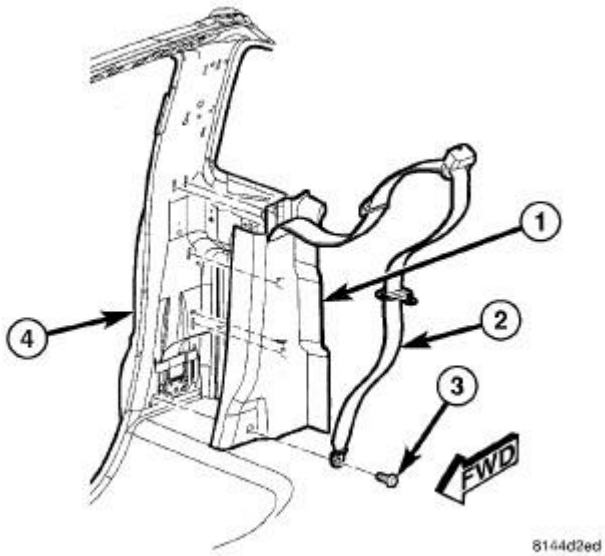

Fig. 149: C-Pillar Lower Trim Panel
Courtesy of CHRYSLER GROUP, LLC

9. Remove the bolt (3) that secures the seat belt (2) to the bottom of the C-pillar (4) and position the seat belt out of the way.
10. Using a trim stick (special tool #C-4755, Trim Stick) or equivalent, disengage the retaining tabs that secure the lower C-pillar trim panel (1) to the C-pillar.
11. Remove the seat belt from the lower C-pillar trim panel through the slot provided and remove the trim panel.

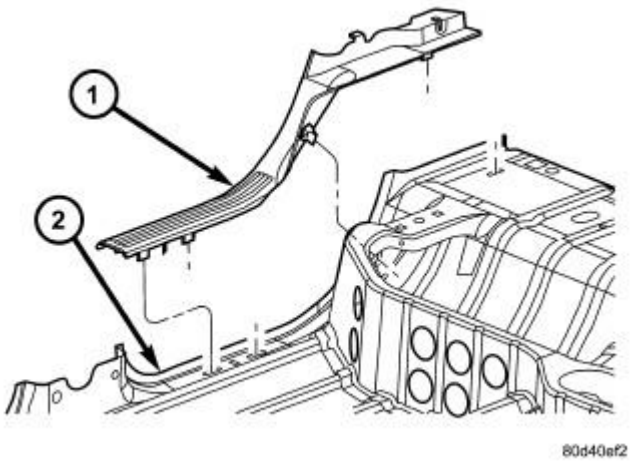

Fig. 150: Rear Door Sill & Trim Panel
Courtesy of CHRYSLER GROUP, LLC

12. Using a trim stick (special tool #C-4755, Trim Stick) or equivalent, disengage the retaining tabs of the sill trim panel (1) from the retainer clips in the rear door sill (2) and remove the trim panel.

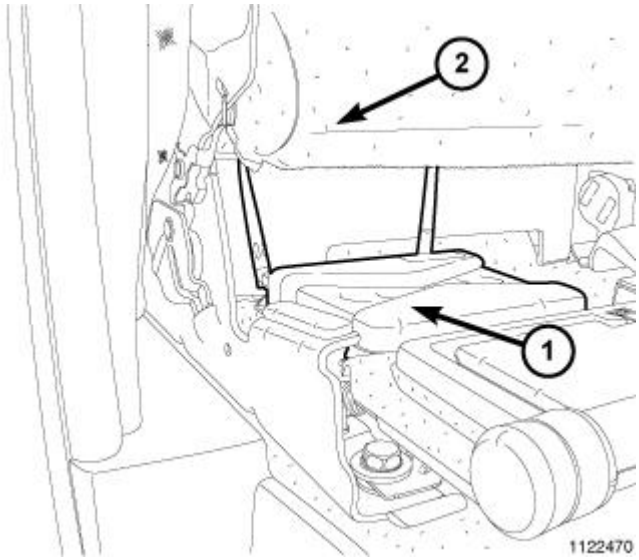

Fig. 151: Installing Wi-Fi Router To Floor
Courtesy of CHRYSLER GROUP, LLC

13. Install and secure the Wi-Fi router to the floor with the provided material.
14. Route the Wi-Fi power harness behind the glove box and up to the key on power outlet and cut to length.

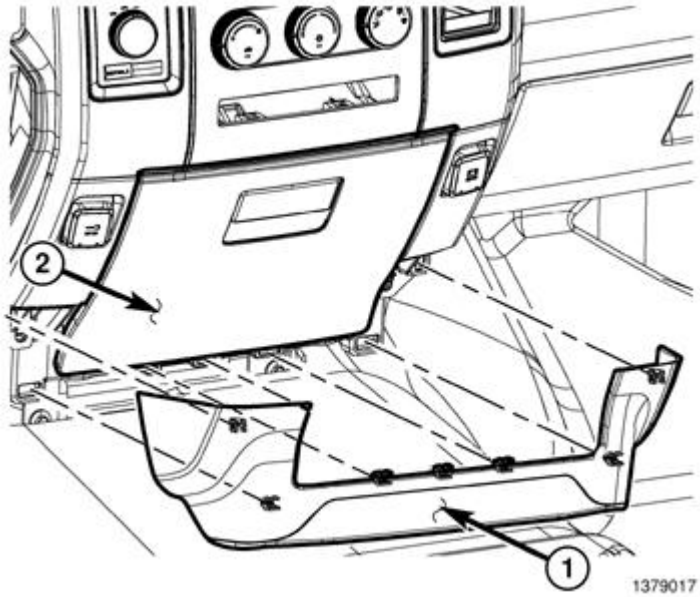

Fig. 152: Lower Bezel Panel & Cup Holder
Courtesy of CHRYSLER GROUP, LLC

WITHOUT FULL CENTER CONSOLE

15. Using a trim stick (special tool #C-4755, Trim Stick) or equivalent, disengage the retaining tabs and remove the lower bezel panel (1).
16. Remove the two lower screws securing the cup holder to the IP.
17. Fold the cup holder down and lower the cup holder (2) close out panel by depressing the tab at the top of the panel.
18. Remove the two screws from behind the close out and remove the cup holder.
19. Using trim stick (special tool #C-4755, Trim Stick) or equivalent, disengage the power outlet retaining tabs and disconnect the power outlet electrical connectors.
20. Remove the lower IP surround from the vehicle.
21. Route the Wi-Fi power harness behind the glove box and up to the key on power outlet and cut to length.

ALL

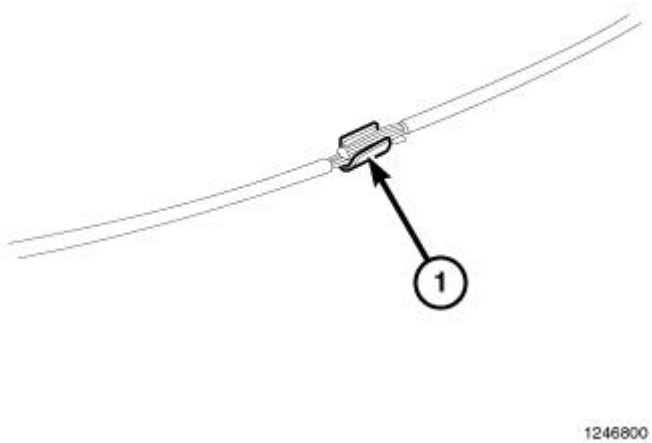

Fig. 153: Adhesive Lined Heat Shrink Tubing
Courtesy of CHRYSLER GROUP, LLC

22. Locate the cigarette lighter outlet wiring harness.
23. Cut each wire and remove 13mm (0.5 in.) of insulation from each wire that needs to be soldered/spliced.
24. Place a piece of supplied adhesive lined heat shrink tubing on one side of each cut wire. Insure the tubing will be long enough to cover and seal the entire soldered area.

CAUTION: Do not use acid core solder.

25. Solder the supplied fused pigtail to Wi-Fi power harness power wire.

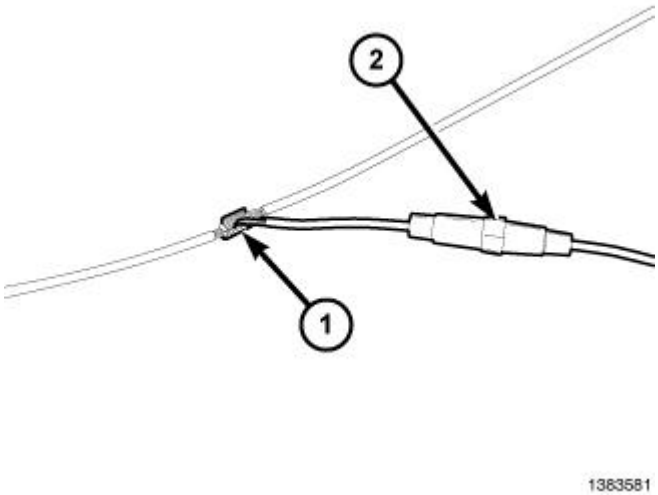

Fig. 154: Splice Clip
Courtesy of CHRYSLER GROUP, LLC

26. Place the strands of the power side wires overlapping each other inside of the splice clip (1).

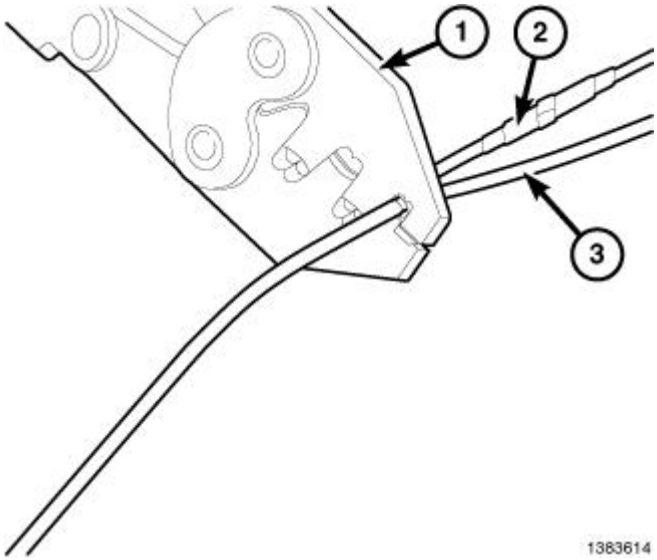

Fig. 155: Crimping Splice Clip & Wires Together
Courtesy of CHRYSLER GROUP, LLC

27. Using crimping tool (1), Mopar® p/n 05019912AA or equivalent, crimp the splice clip and wires together.
28. Repeat the previous two steps for the ground side wires.

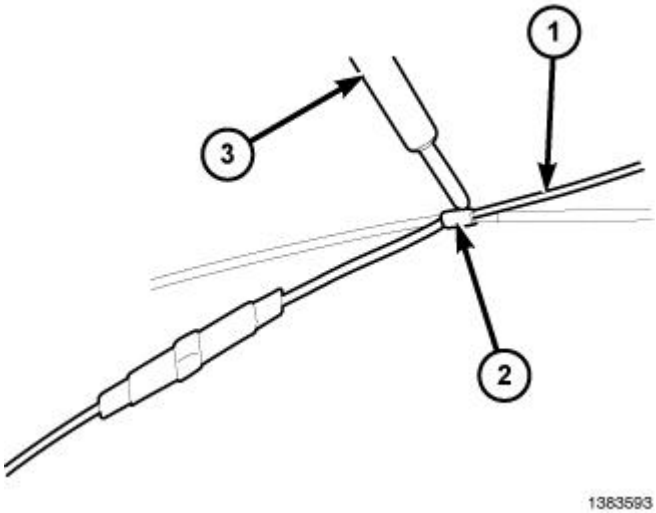

Fig. 156: Soldering Connection
Courtesy of CHRYSLER GROUP, LLC

29. Solder (3) the connection (2) together using rosin core solder (1).

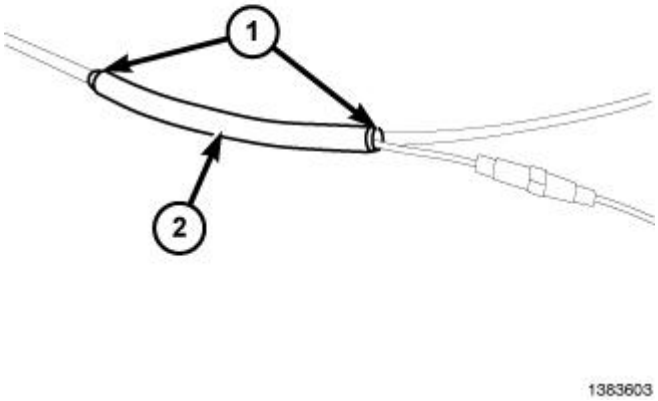

Fig. 157: Heat Shrink Tubing
Courtesy of CHRYSLER GROUP, LLC

30. Center the heat shrink tubing (2) over the solder joint and heat using a heat gun. Heat the joint until the tubing is tightly sealed and sealant (1) comes out of both ends of the tubing.

FULL CENTER CONSOLE

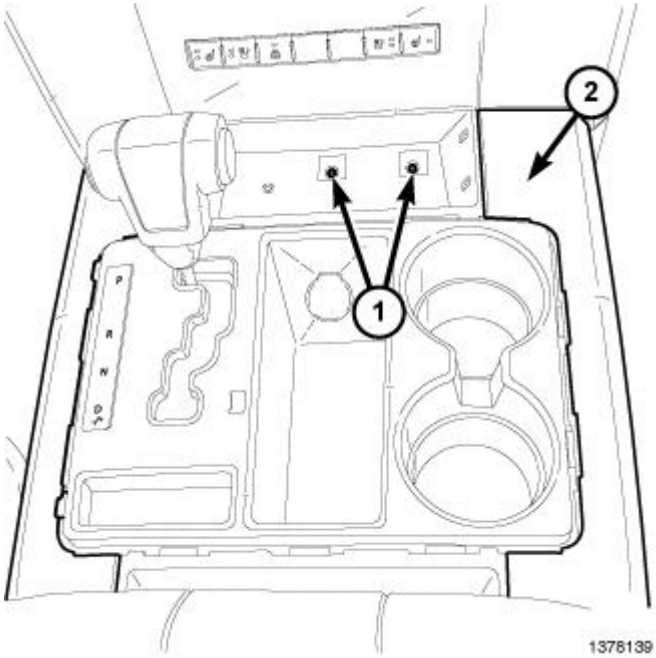

Fig. 158: Center Console Retainers
Courtesy of CHRYSLER GROUP, LLC

31. Install the center console trim (2).
32. Install the two retainers (1).

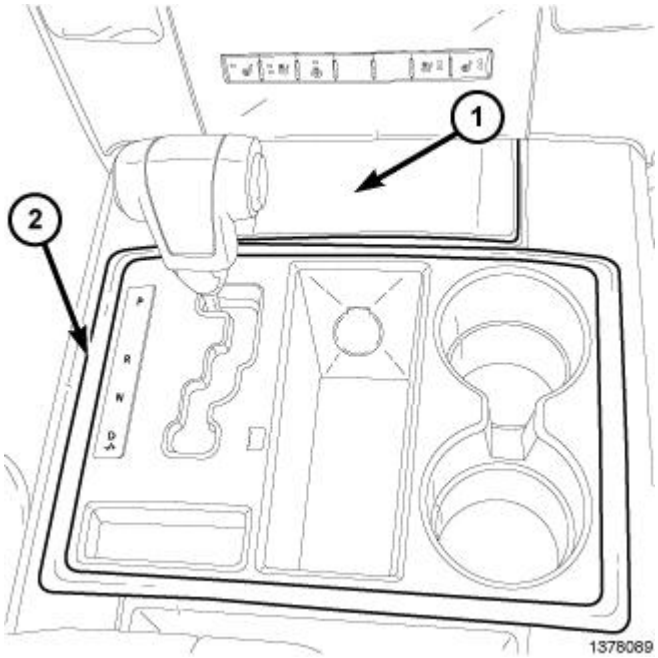

Fig. 159: Shifter Bezel Ring & Rubber Mat
Courtesy of CHRYSLER GROUP, LLC

33. Install the rubber mat (1).

34. Install the shifter bezel ring (2).

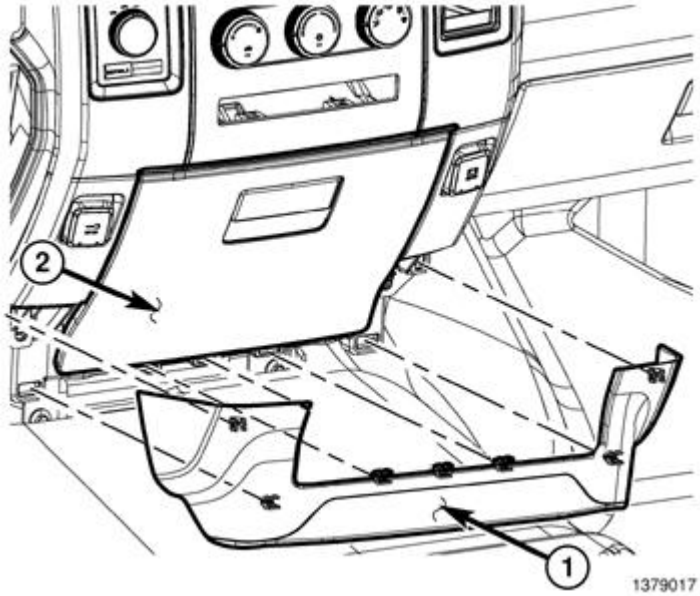

Fig. 160: Lower Bezel Panel & Cup Holder
Courtesy of CHRYSLER GROUP, LLC

WITHOUT FULL CENTER CONSOLE

35. Install the lower IP surround to the vehicle.
36. Connect the power outlet electrical connectors and install the power outlet trim panel.
37. Close the close out panel by depressing the tab at the top of the panel.
38. Install the two screws behind the close out and install the cup holder (2).
39. Install the two lower screws securing the cup holder to the IP.
40. Install the lower bezel panel (1).

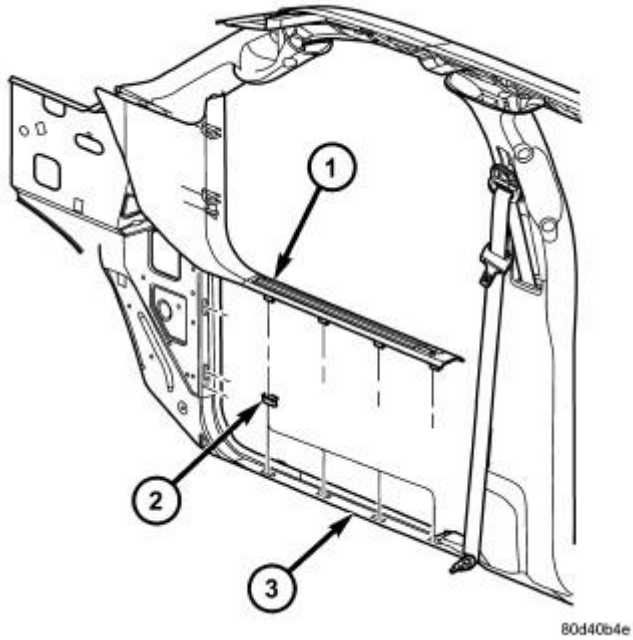

Fig. 161: Cowl Trim Panel & Retainer Clips
Courtesy of CHRYSLER GROUP, LLC

ALL

41. Position the cowl trim panel (1) onto the door sill (3).
42. Push the cowl trim panel forward and then engage the retaining tabs that secure the sill trim panel to the rear door sill.

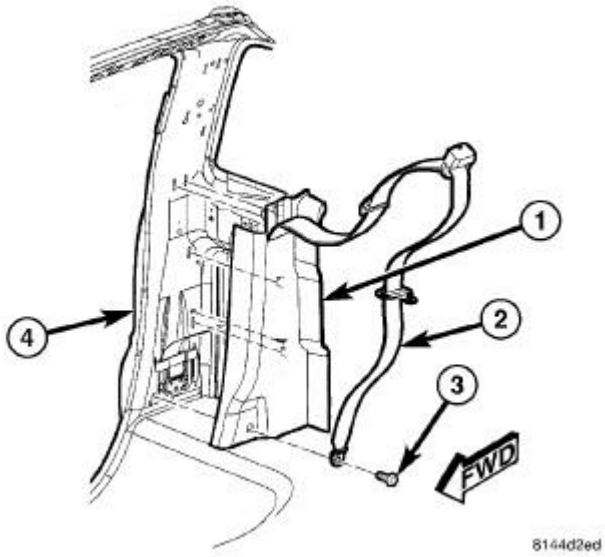

Fig. 162: C-Pillar Lower Trim Panel
Courtesy of CHRYSLER GROUP, LLC

43. Route the seat belt (2) through the slot in the lower C-pillar trim panel (1) and position the trim panel to the C-pillar (4).
44. Engage the retaining tabs that secure the lower C-pillar trim panel to the C-pillar.
45. Install the bolt (3) that secures the seat belt to the bottom of the C-pillar. Tighten the bolt to 40 N.m (30 ft. lbs.).

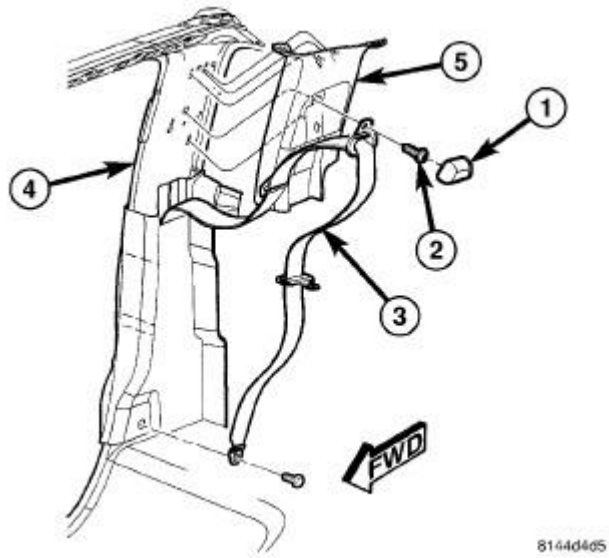

Fig. 163: C-Pillar Upper Trim Panel
Courtesy of CHRYSLER GROUP, LLC

46. Position the upper C-pillar trim panel (5) to the C-pillar (4).
47. Engage the retaining tabs that secure the upper C-pillar trim panel to the C-pillar.
48. Install the bolt (2) that secures the seat belt (3) to the top of the C-pillar. Tighten the bolt to 40 N.m (30 ft. lbs.).
49. Install the cap (1) onto the seat belt.
50. Connect the negative battery cable.
51. Route the Wi-Fi power harness from the router along the sill securing where necessary.

FULL CENTER CONSOLE

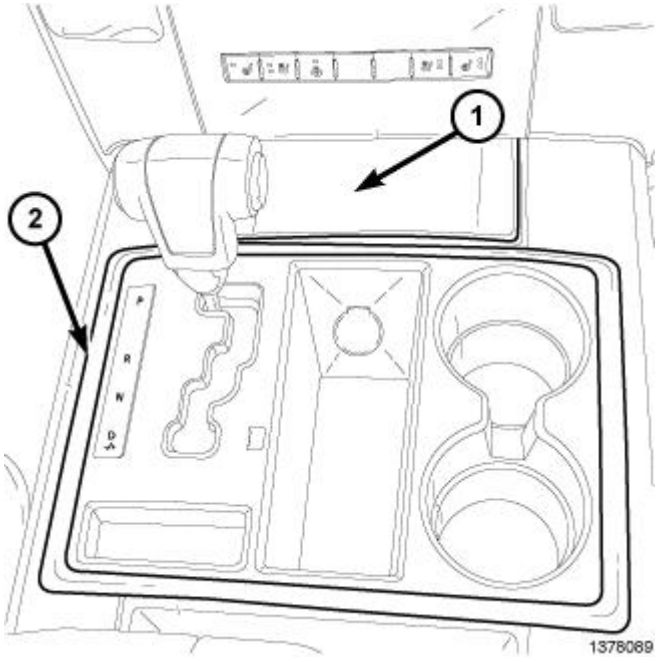

Fig. 164: Shifter Bezel Ring & Rubber Mat
Courtesy of CHRYSLER GROUP, LLC

52. Remove the rubber mat (1).
53. Using a trim stick (special tool #C-4755, Trim Stick) or equivalent, disengage the retaining tabs of the shifter bezel ring (2).

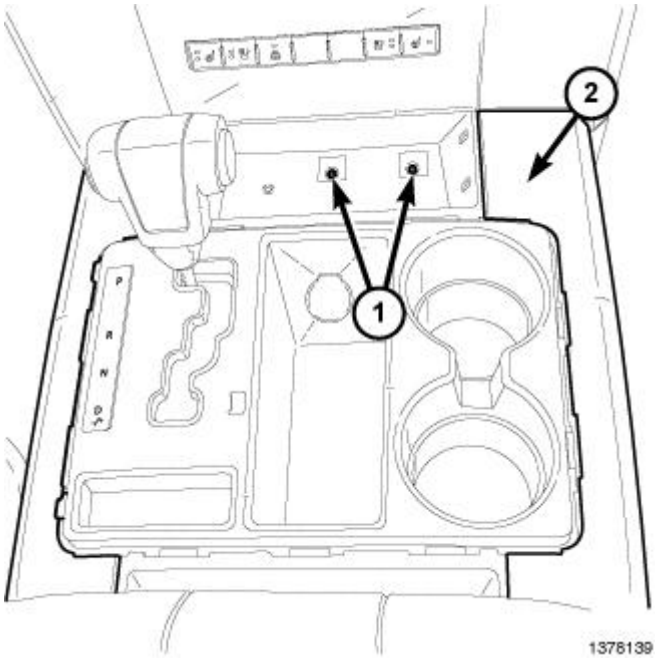

Fig. 165: Center Console Retainers
Courtesy of CHRYSLER GROUP, LLC

54. Remove the two center console retainers (1).

55. Using a trim stick (special tool #C-4755, Trim Stick) or equivalent, disengage the retaining tabs and remove the center console trim (2).

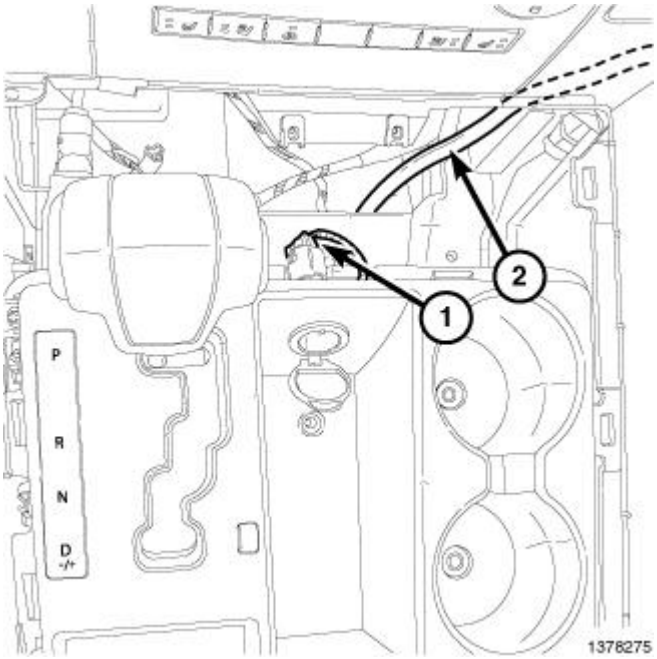

Fig. 166: Power Outlet
Courtesy of CHRYSLER GROUP, LLC

56. Disconnect the power outlet (1).

WI-FI ROUTER, REGULAR CAB

DODGE RAM-REGULAR CAB

PROCEDURE STEPS:

NOTE: **Using a test light, verify the cigarette lighter outlet being used is ignition switched. Power must not be supplied with the ignition in the OFF position.**

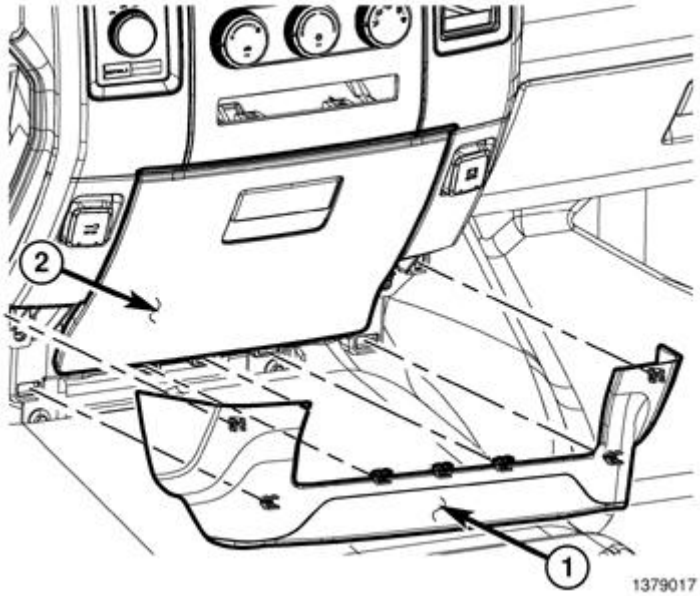

Fig. 167: Lower Bezel Panel & Cup Holder
Courtesy of CHRYSLER GROUP, LLC

1. Disconnect and isolate the battery negative cable.
2. Using a trim stick (special tool #C-4755, Trim Stick) or equivalent, disengage the retaining tabs and remove the lower bezel panel (1).
3. Remove the two lower screws securing the cup holder to the IP.
4. Fold the cup holder down and lower the cup holder (2) close out panel by depressing the tab at the top of the panel.
5. Remove the two screws from behind the close out and remove the cup holder.
6. Using trim stick (special tool #C-4755, Trim Stick) or equivalent, disengage the retaining tabs and disconnect the power outlet electrical connectors.
7. Remove the lower IP surround from the vehicle.

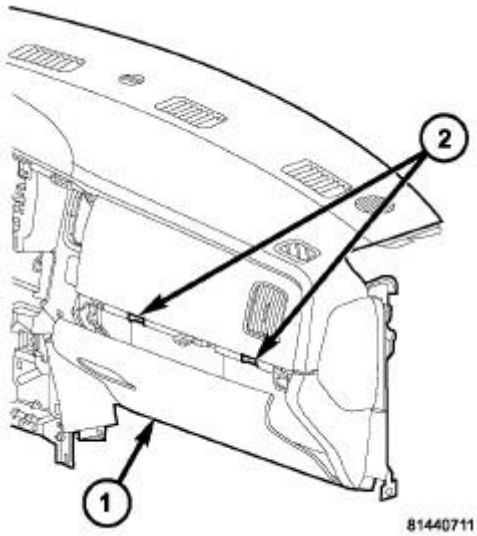

Fig. 168: Glove Box Stops
Courtesy of CHRYSLER GROUP, LLC

8. Open the glove box (1).
9. Release the two glove box stops (2) and lower the glove box downward past the stops.
10. Disengage the glove box hinges from the instrument panel and remove the glove box.

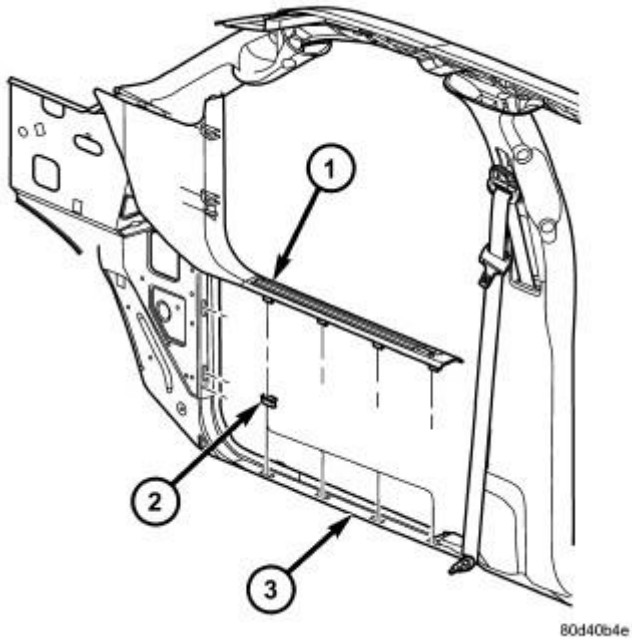

Fig. 169: Cowl Trim Panel & Retainer Clips
Courtesy of CHRYSLER GROUP, LLC

11. Using a trim stick (special tool #C-4755, Trim Stick) or equivalent, disengage the retaining tabs of the cowl trim panel (1) from the retainer clips (2) in the door sill (3).
12. Pull the cowl trim panel rearward and remove it from the vehicle.

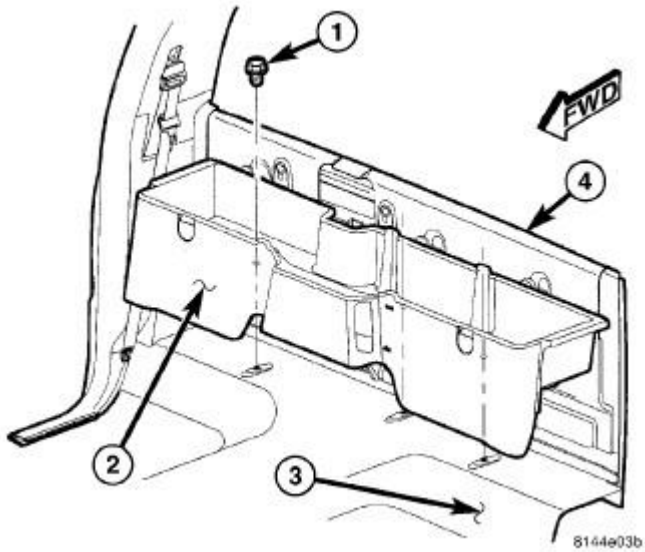

Fig. 170: Rear Storage Compartment-Reg Cab
Courtesy of CHRYSLER GROUP, LLC

13. Remove the three bolts (1) that secure the rear storage compartment (2) to the floor panel (3) and remove the storage compartment from the rear cab trim panel (4).

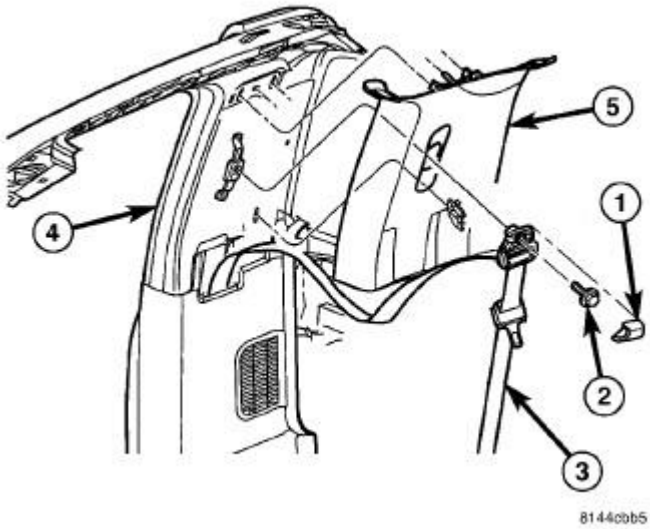

Fig. 171: Upper B-Pillar Trim Panel
Courtesy of CHRYSLER GROUP, LLC

14. Remove the cap (1) and then the bolt (2) that secures the seat belt (3) to the top of the B-pillar (4) and position the seat belt out of the way.
15. Using a trim stick (special tool #C-4755, Trim Stick) or equivalent, disengage the retaining tabs that secure the upper B-pillar trim panel (5) to the B-pillar and remove the trim panel.

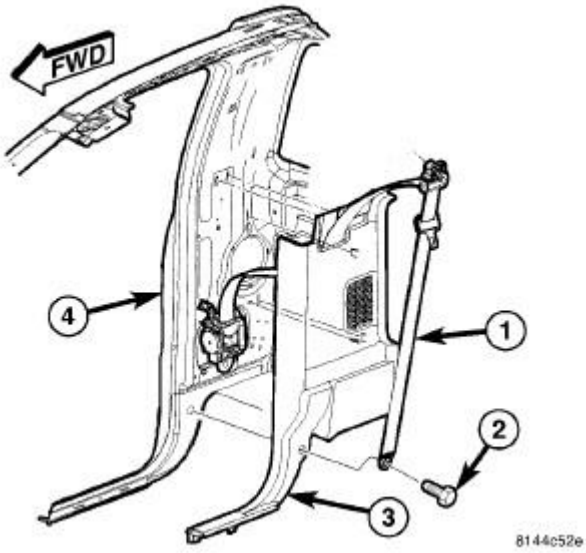

Fig. 172: Lower B-Pillar Trim Panel
Courtesy of CHRYSLER GROUP, LLC

16. Remove the bolt (2) that secures the seat belt (1) to the bottom of the B-pillar (4) and position the seat belt out of the way.
17. Using a trim stick (special tool #C-4755, Trim Stick) or equivalent, disengage the retaining tabs that secure the lower B-pillar trim panel (3) to the B-pillar.
18. Remove the seat belt from the lower B-pillar trim panel through the slot provided and remove the trim panel.

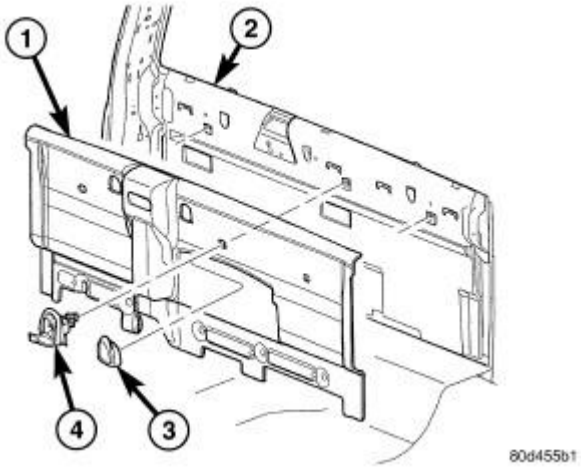

Fig. 173: Rear Cab Trim Panel
Courtesy of CHRYSLER GROUP, LLC

19. Remove the utility hooks (3) from the rear cab trim panel (1) and remove the trim panel.

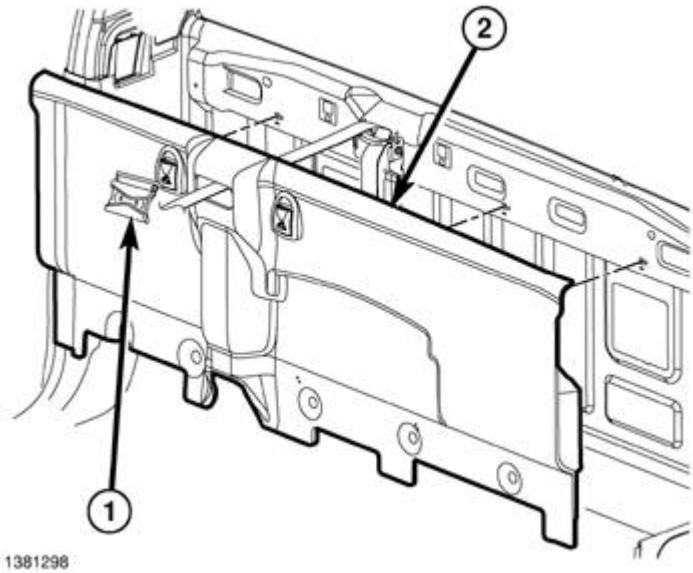

Fig. 174: Installing Wi-Fi Router To Rear Cab Trim Panel
Courtesy of CHRYSLER GROUP, LLC

20. Install the WiFi router to the rear cab trim panel with the provided materials.
21. Make a small cut in the rear cab trim panel and route the WiFi router connector through
22. Place the rear cab trim panel into position in the vehicle.
23. Connect the wire harness to the WiFi router connector.
24. Route the wire harness down the back of the rear panel to the door sill.
25. Firmly seat the rear panel and install the utility hooks to the rear panel.
26. Continue to route the wire harness along the passenger side, under the glove box opening and behind the center stack and cut to the proper length.

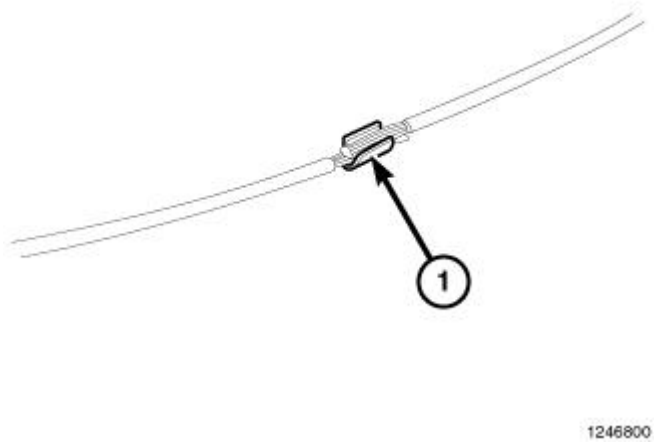

Fig. 175: Adhesive Lined Heat Shrink Tubing
Courtesy of CHRYSLER GROUP, LLC

27. Locate the cigarette lighter outlet wiring harness.
28. Cut each wire and remove 13 mm (0.5 in.) of insulation from each wire that needs to be soldered/spliced.
29. Place a piece of supplied adhesive lined heat shrink tubing on one side of each cut wire. Insure the tubing will be long enough to cover and seal the entire soldered area.

CAUTION: Do not use acid core solder.

30. Solder the supplied fused pigtail to Wi-Fi power harness power wire.

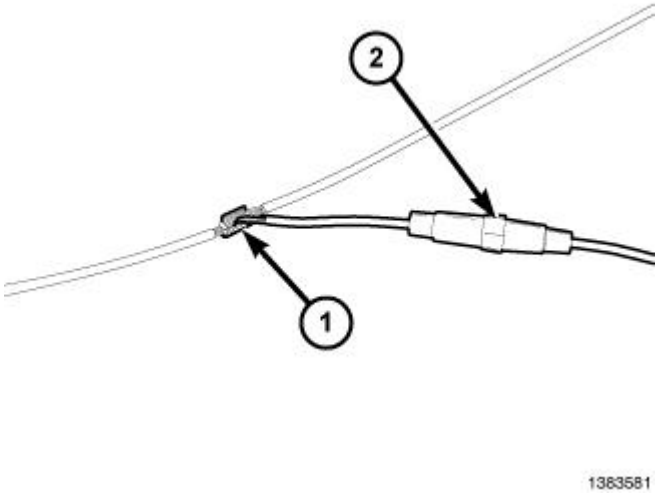

Fig. 176: Splice Clip
Courtesy of CHRYSLER GROUP, LLC

31. Place the strands of the power side wires overlapping each other inside of the splice clip (1).

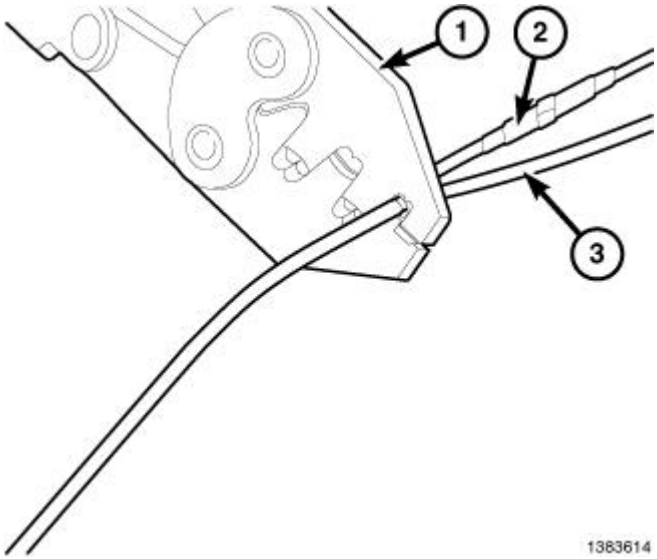

Fig. 177: Crimping Splice Clip & Wires Together
Courtesy of CHRYSLER GROUP, LLC

32. Using crimping tool (1), Mopar® p/n 05019912AA or equivalent, crimp the splice clip and wires together.
33. Repeat the previous two steps for the ground side wires.

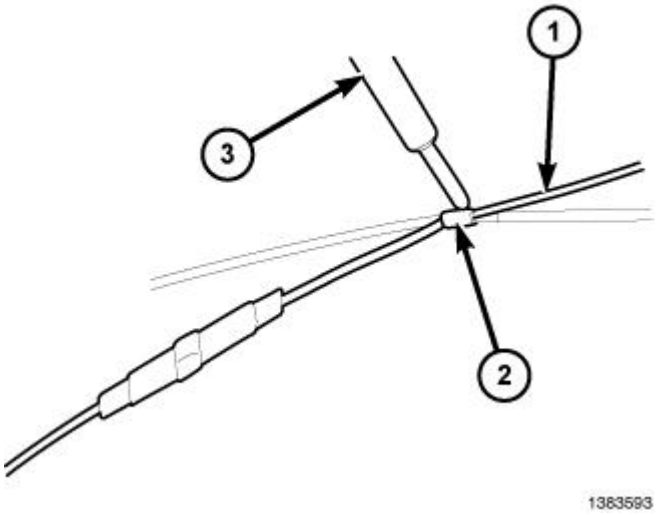

Fig. 178: Soldering Connection
Courtesy of CHRYSLER GROUP, LLC

CAUTION: Do not use acid core solder.

34. Solder (3) the connection (2) together using rosin core solder (1).

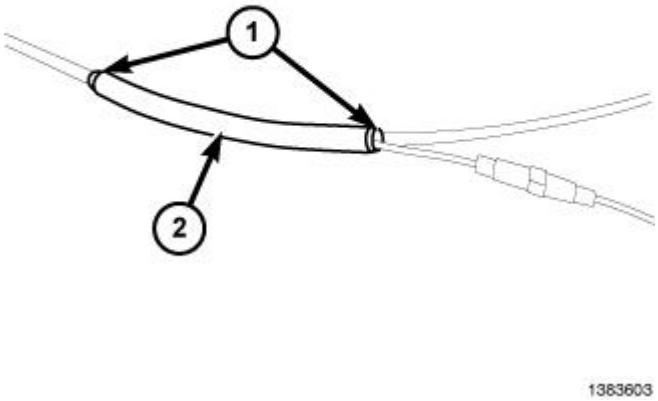

Fig. 179: Heat Shrink Tubing
Courtesy of CHRYSLER GROUP, LLC

35. Center the heat shrink tubing (2) over the solder joint and heat using a heat gun. Heat the joint until the tubing is tightly sealed and sealant (1) comes out of both ends of the tubing.

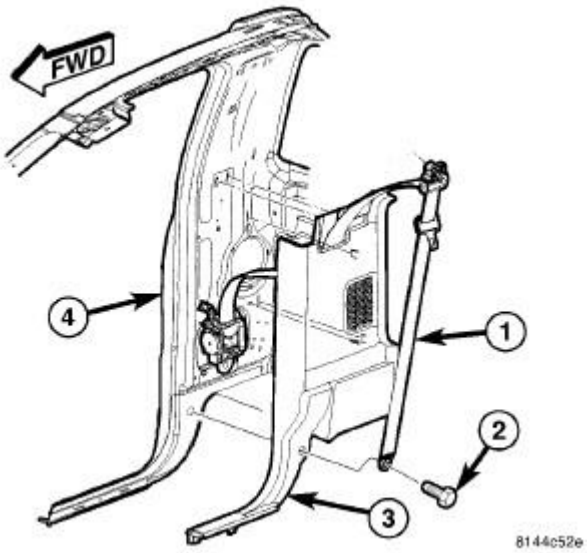

Fig. 180: Lower B-Pillar Trim Panel
Courtesy of CHRYSLER GROUP, LLC

36. Place the lower B-pillar trim panel (3) into position and engage the retaining tabs that secure the trim panel to the B-pillar (4).
37. Route the seat belt through the slot provided in the B-pillar trim panel.

38. Install the bolt (2) that secures the seat belt (1) to the bottom of the B-pillar (4).

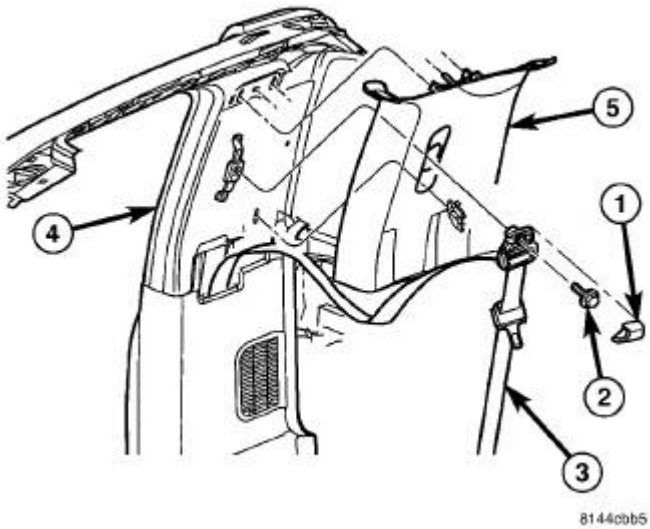

Fig. 181: Upper B-Pillar Trim Panel
Courtesy of CHRYSLER GROUP, LLC

39. Place the upper B-pillar trim panel (5) into position and engage the retaining tabs that secure the trim panel to the B-pillar (4).
40. Install the bolt (2) that secures the seat belt (3) to the top of the B-pillar (4) and Install the cap (1).

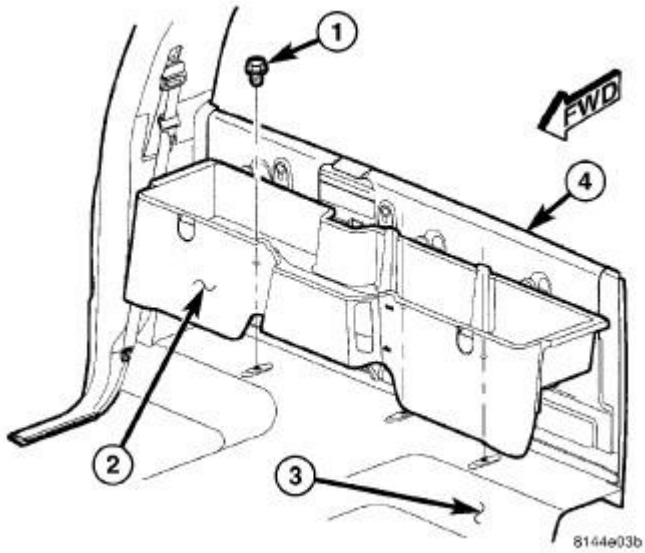

Fig. 182: Rear Storage Compartment-Reg Cab
Courtesy of CHRYSLER GROUP, LLC

41. Install the storage compartment (2) to the rear cab and install the three fasteners (1) that secure the rear

storage compartment to the floor panel (3).

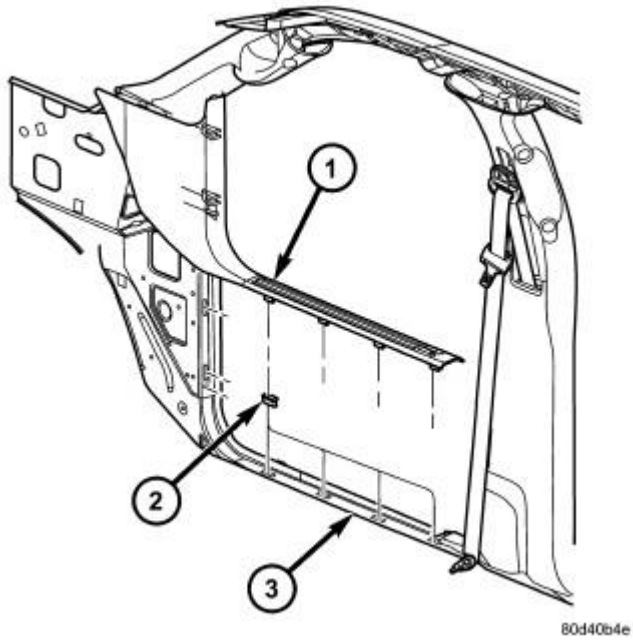

Fig. 183: Cowl Trim Panel & Retainer Clips
Courtesy of CHRYSLER GROUP, LLC

42. Place the cowl trim panel (1) into position and engage the retaining tabs to the door sill (3).

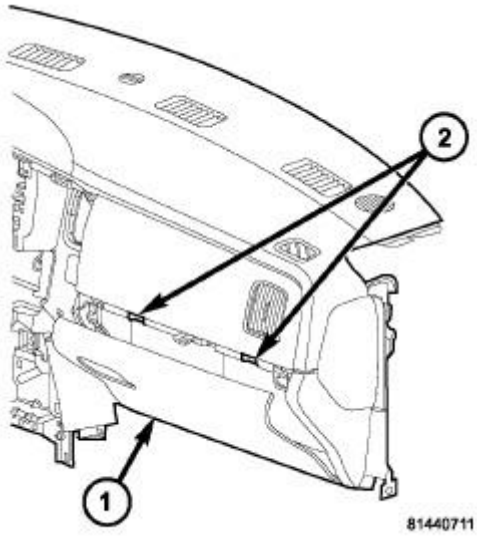

Fig. 184: Glove Box Stops
Courtesy of CHRYSLER GROUP, LLC

43. Engage the glove box (1) hinges to the instrument panel.

44. Press the two glove box stops (2) and raise the glove box upward.
45. Close the glove box.

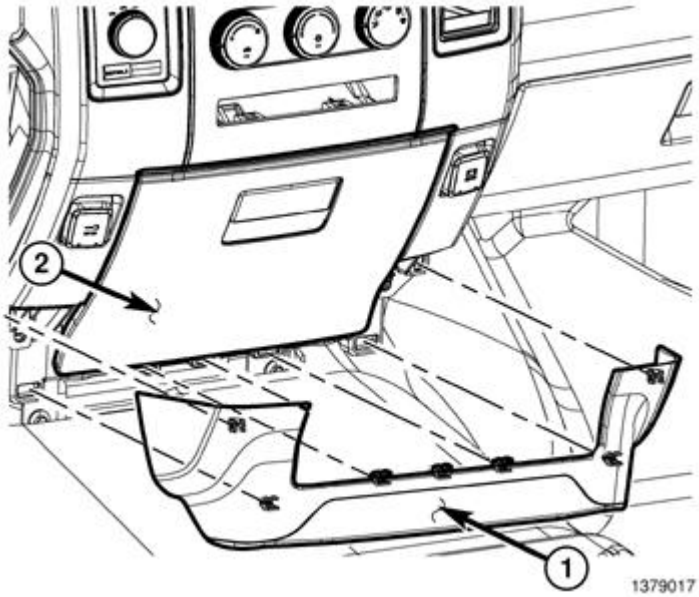

Fig. 185: Lower Bezel Panel & Cup Holder
Courtesy of CHRYSLER GROUP, LLC

46. Connect the power outlet connectors and install the lower IP surround to the vehicle.
47. Place the cup holder into position and install the two screws behind the close out.
48. Fold the cup holder up and install the two lower screws securing the cup holder to the IP.
49. Install the lower bezel panel (1) ensuring the retaining tabs engage.
50. Connect the battery negative cable.

SDARS ANTENNA

DODGE RAM

PROCEDURE STEPS:

NOTE: **Verify that the radio is satellite compatible. Look for the SIRIUS® logo on the radio.**

WARNING: **Disable the airbag system before attempting any steering wheel, steering column, or instrument panel component diagnosis or service. Refer to WARNING . Disconnect and isolate the negative battery (ground) cable. Wait two minutes for the airbag system capacitor to discharge before performing further diagnosis or service. This is the only sure way to disable the airbag system. Failure to follow these instructions may result in possible serious or fatal injury.**

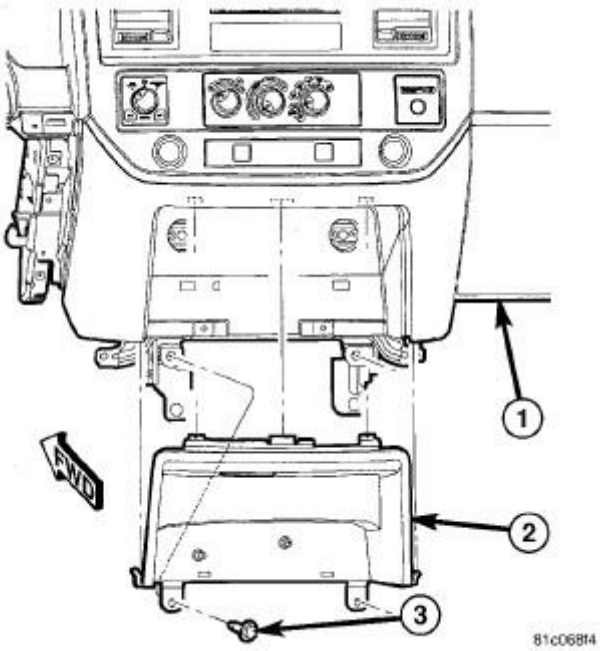

Fig. 186: Close Out Panel
Courtesy of CHRYSLER GROUP, LLC

1. Disconnect and isolate the negative battery cable.
2. If equipped, remove the floor console.
3. Remove the cup holder if equipped.
4. On vehicles with a close out panel, remove the screws (3) and remove the close out panel (2).

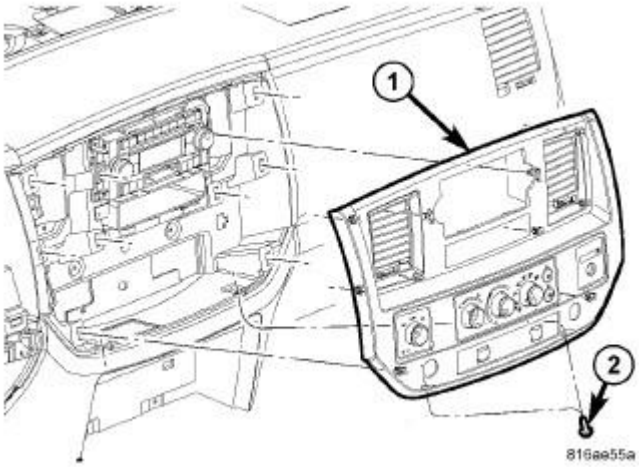

Fig. 187: Center Bezel & Screws
Courtesy of CHRYSLER GROUP, LLC

5. Remove the screws (2).
6. Using a trim stick (special tool #C-4755, Trim Stick) or equivalent, disengage the retainer clips that

secure the instrument panel center bezel (1) to the instrument panel.

7. Disconnect the wire harness connectors (4) and remove the center bezel from the vehicle.

CAUTION: Pulling the antenna cable straight out of the radio without pulling on the locking antenna connector could damage the cable or radio.

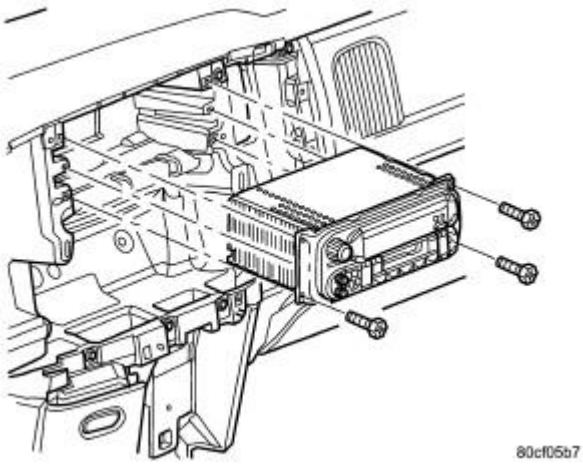

Fig. 188: Radio & Fasteners
Courtesy of CHRYSLER GROUP, LLC

8. Remove radio mounting fasteners.
9. Disconnect the antenna cable by pulling the locking antenna connector (2) away from the radio.
10. Disconnect electrical connectors.

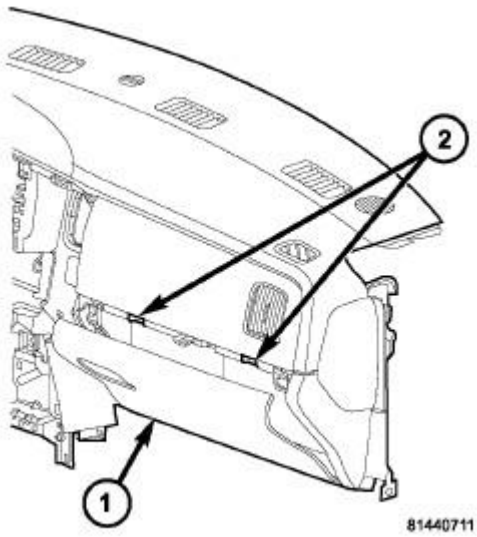

Fig. 189: Glove Box Stops
Courtesy of CHRYSLER GROUP, LLC

11. Open the glove box (1).
12. Release the two glove box stops (2) and lower the glove box downward past the stops.
13. Disengage the glove box hinges from the instrument panel and remove the glove box.

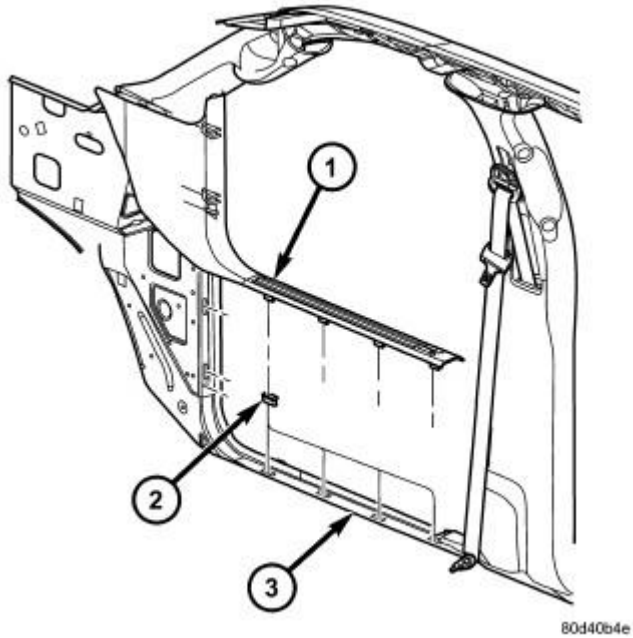

Fig. 190: Cowl Trim Panel & Retainer Clips
Courtesy of CHRYSLER GROUP, LLC

14. Using a trim stick (special tool #C-4755, Trim Stick) or equivalent, disengage the retaining tabs of the cowl trim panel (1) from the retainer clips (2) in the door sill (3).
15. Pull the cowl trim panel rearward and remove it from the vehicle.

REGULAR CAB

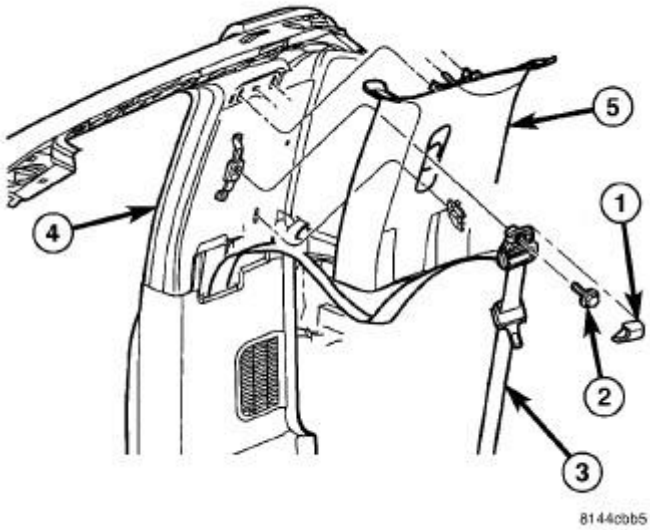

Fig. 191: Upper B-Pillar Trim Panel
Courtesy of CHRYSLER GROUP, LLC

16. Remove the cap (1) and then the bolt (2) that secures the seat belt (3) to the top of the B-pillar (4) and position the seat belt out of the way.
17. Using a trim stick (special tool #C-4755, Trim Stick) or equivalent, disengage the retaining tabs that secure the upper B-pillar trim panel (5) to the B-pillar and remove the trim panel.

QUAD CAB

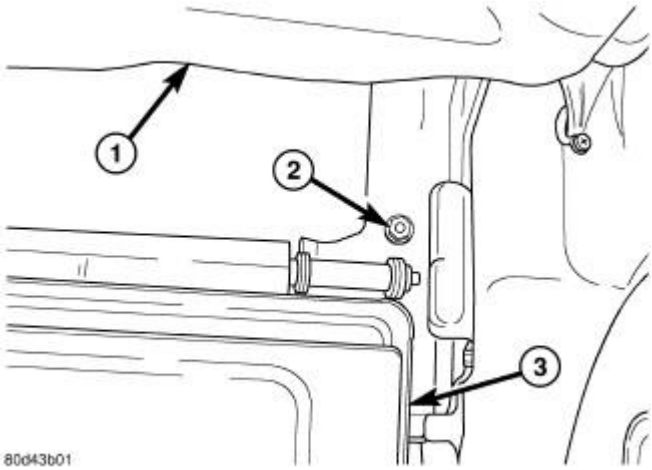

Fig. 192: Load Floor & Nuts
Courtesy of CHRYSLER GROUP, LLC

18. Move the rear seat cushion (1) to the up position.
19. Remove the two nuts (2) that secure the rear of the load floor (3) to the floor panel.

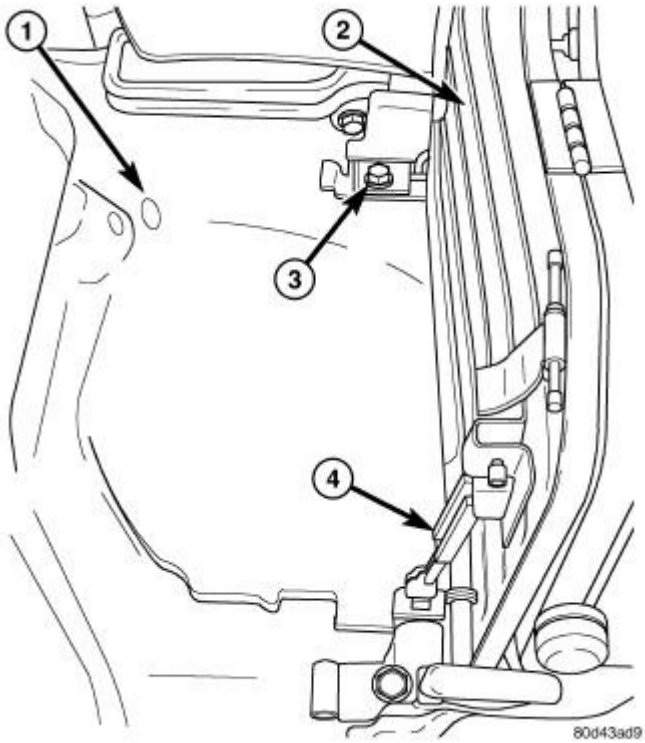

Fig. 193: Load Floor & Bolts
Courtesy of CHRYSLER GROUP, LLC

20. Move the load floor (2) to the up position.
21. Remove the two bolts (3) that secure the load floor to the floor panel (1) and remove the load floor.
22. If required, remove the support cylinder (4).

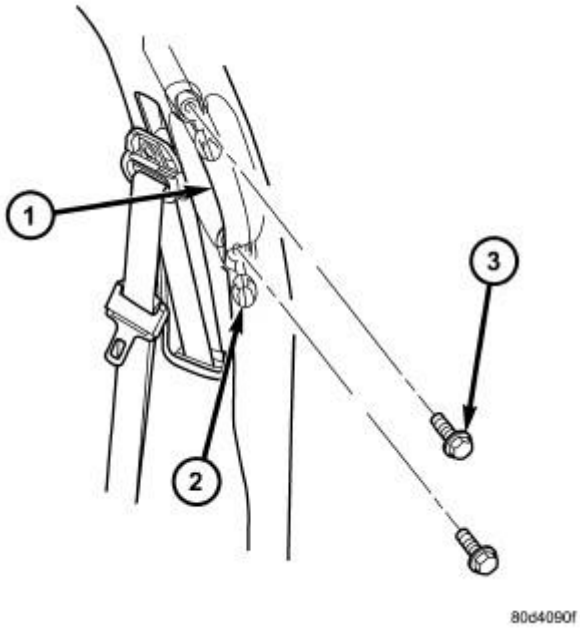

Fig. 194: Grab Handle
Courtesy of CHRYSLER GROUP, LLC

23. Using a small flat-bladed tool, carefully open the two fastener covers (2) located on the grab handle (1).
24. Remove the two bolts (3) that secure the grab handle to the B-pillar and remove the grab handle.

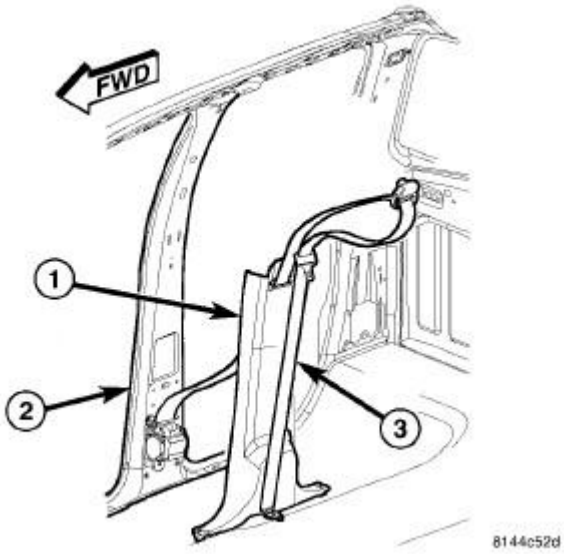

Fig. 195: Trim Panel-Lower B-Pillar-Quad Cab
Courtesy of CHRYSLER GROUP, LLC

25. Remove the cap (1) and the bolt (2) that secures the seat belt (3) to the top of the B-pillar (4) and position the seat belt out of the way.

26. Using a trim stick (special tool #C-4755, Trim Stick) or equivalent, disengage the retaining tabs that secure the upper B-pillar trim panel (5) to the B-pillar and remove the trim panel.

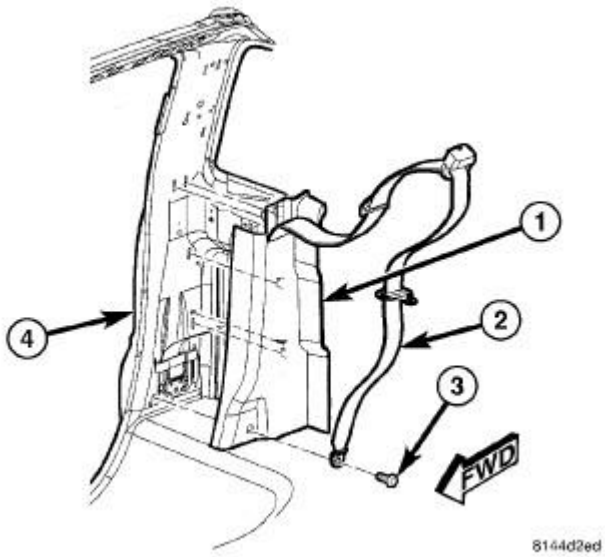

Fig. 196: C-Pillar Lower Trim Panel
Courtesy of CHRYSLER GROUP, LLC

27. Remove the cap (1) and then the bolt (2) that secures the seat belt (3) to the top of the C-pillar (4) and position the seat belt out of the way.
28. Using a trim stick (special tool #C-4755, Trim Stick) or equivalent, disengage the retaining tabs that secure the upper C-pillar trim panel (5) to the C-pillar and remove the trim panel.
29. Remove the bolt (3) that secures the seat belt (2) to the bottom of the C-pillar (4) and position the seat belt out of the way.
30. Using a trim stick (special tool #C-4755, Trim Stick) or equivalent, disengage the retaining tabs that secure the lower C-pillar trim panel (1) to the C-pillar.
31. Remove the seat belt from the lower C-pillar trim panel through the slot provided and remove the trim panel.
32. Using a trim stick (special tool #C-4755, Trim Stick) or equivalent, disengage the retaining tabs of the sill trim panel (1) from the retainer clips in the rear door sill (2) and remove the trim panel.

ALL

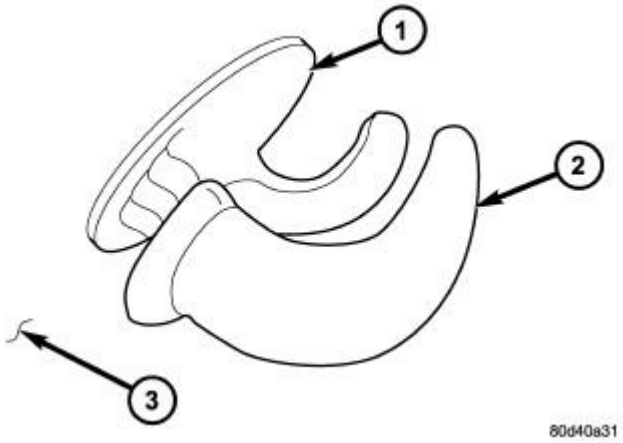

Fig. 197: Coat Hook
Courtesy of CHRYSLER GROUP, LLC

33. Using a trim stick (special tool #C-4755, Trim Stick) or equivalent, disengage the release clip (2) as shown in illustration and remove the coat hook (1) from the headliner (3)

NOTE: **There are two types of single lamp dome lamps available in this vehicle: one with a switch that is activated by depressing the lamp lens, and one without a switch. The bulb types and service procedures are identical for both of these lamps.**

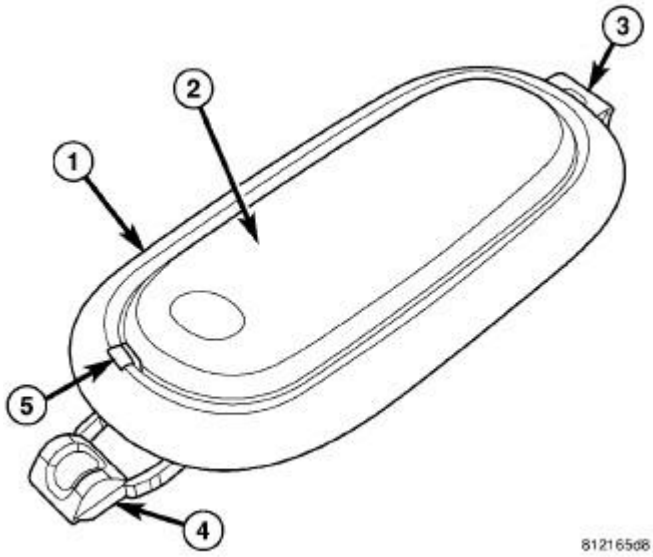

Fig. 198: Dome Lamp Unit, Housing, Hinge, Lens & Notch
Courtesy of CHRYSLER GROUP, LLC

34. Gently pry the end (5) of the lens (2) outward until it unsnaps from the housing (1).
35. Swing the lens outward until it is perpendicular to the housing.

36. Pull the lens hinge/retainer end (3) of the housing outward slightly from the headliner, then slide the exposed end of the housing away from the mounting hole far enough to disengage the fixed retainer (4) on the notched end from the headliner.
37. Pull the lamp away from the headliner mounting hole far enough to access and disconnect the wire harness connector from the back of the lamp.
38. Remove the lamp from the vehicle and position the rear passenger side headliner down to access the antenna area.

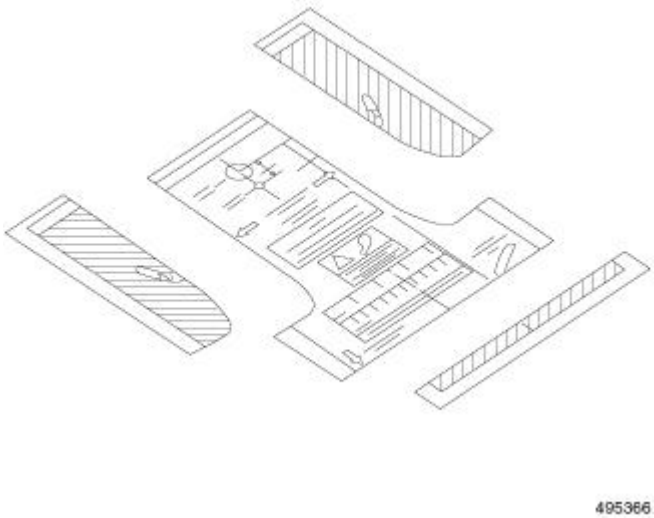

Fig. 199: Template
Courtesy of CHRYSLER GROUP, LLC

39. Cut out the template as marked.

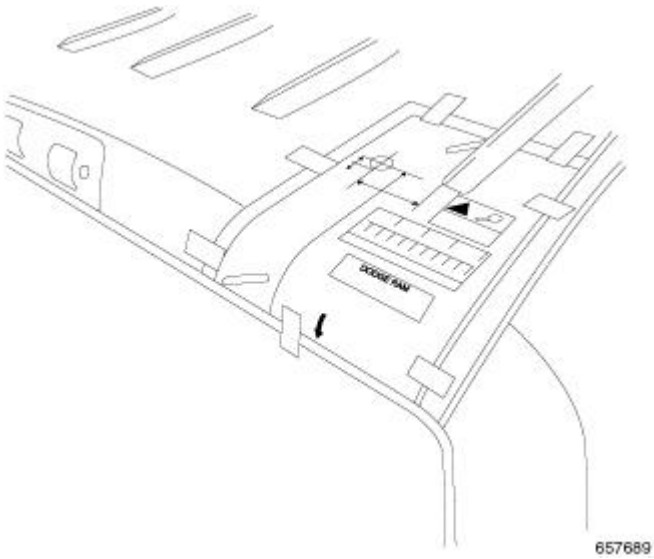

Fig. 200: Laying Out Template On Rear Of Roof
Courtesy of CHRYSLER GROUP, LLC

40. Lay out the template on the rear of the roof as indicated and tape in place.
41. Center punch the two marks ad directed, remove and discard the template.

CAUTION: Do not drill more than a 6 mm (1/4 in.). Failure to do so results in damage to the vehicles headliner.

42. Drill a 3 mm (1/8 in.) pilot hole at each of the center punched locations.
43. Drill the rear hole to 5 mm (13/64 in.).
44. Drill the front hole to 19 mm (3/4 in.).
45. Debur both of the holes.
46. Apply Mopar® Corrosion Inhibitor, p/n 82300508, to the bare metal surface of the drilled holes.

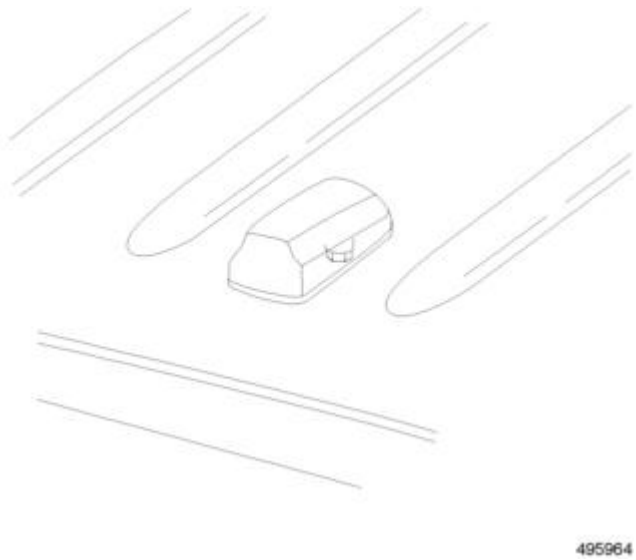

Fig. 201: Antenna Area
Courtesy of CHRYSLER GROUP, LLC

47. Clean and prep the area for the antenna.
48. Install the satellite antenna. Tighten to 9 N.m (80 in. lbs.).
49. Connect the satellite antenna cable to the extension cable.
50. Secure the antenna cable to the headliner and route toward the right rear pillar.
51. Route the extension cable down the right rear pillar, along the scuff plate sill and up to the cowl and secure to the vehicles body electrical harness.

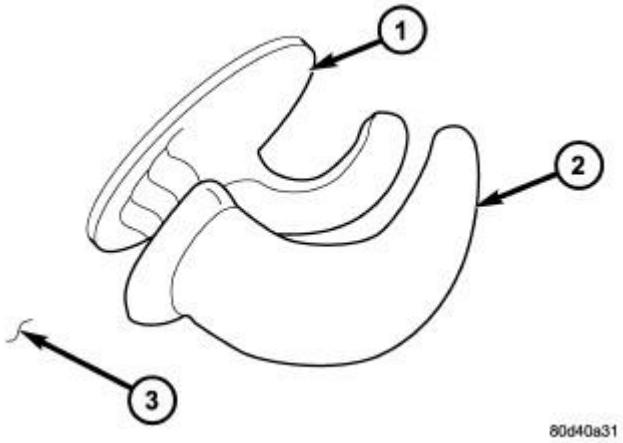

Fig. 202: Coat Hook
Courtesy of CHRYSLER GROUP, LLC

52. Position the coat hook (1) through the headliner (3) and fully seat the base of the support to the roof panel.
53. Engage the release clip (2).

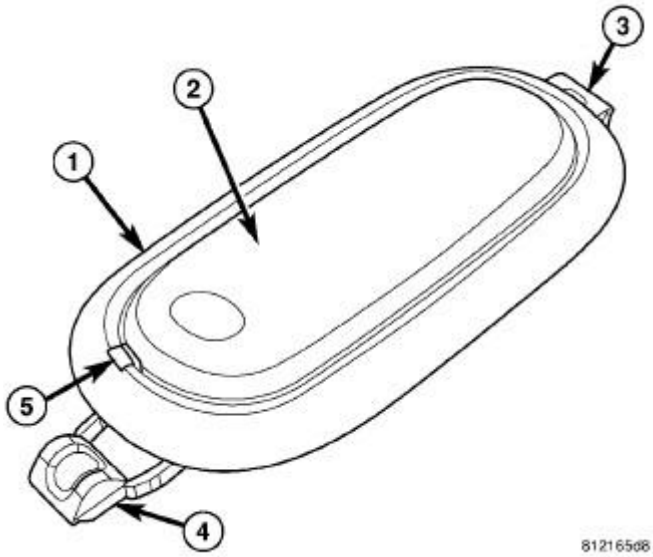

Fig. 203: Dome Lamp Unit, Housing, Hinge, Lens & Notch
Courtesy of CHRYSLER GROUP, LLC

54. Position the dome lamp unit (1) to the mounting hole in the headliner.
55. Reconnect the wire harness connector to the connector on the back of the lamp.
56. Insert the fixed retainer on the notched end (4) of the lamp housing up into one side of the mounting hole in the headliner.
57. Slide the notched end of the housing into the mounting hole far enough to engage the lens hinge/retainer (3) into the opposite side of the hole in the headliner.

58. Gently and evenly press the lens hinge/retainer end of the lamp into the mounting hole until the bezel of the lamp housing is flush with the headliner.
59. Swing the notched end of the lamp lens (2) into position against the lamp housing, then press on the lens firmly and evenly until it snaps into the housing.

REGULAR CAB

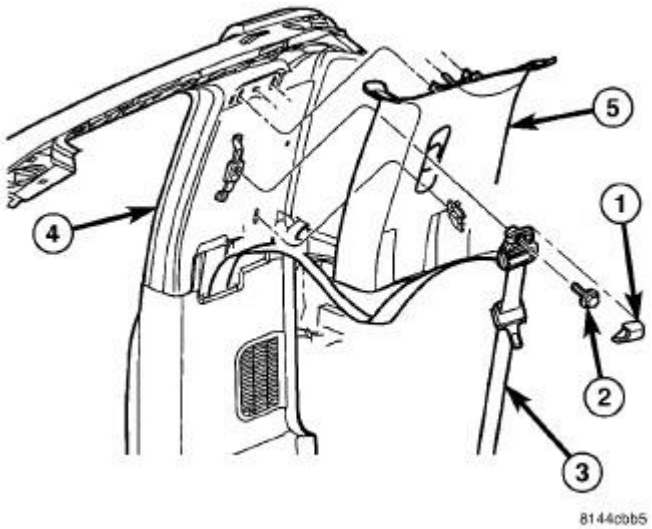

Fig. 204: Upper B-Pillar Trim Panel
Courtesy of CHRYSLER GROUP, LLC

60. Position the upper B-pillar trim panel (5) to the B-pillar (4).
61. Engage the retaining tabs that secure the upper B-pillar trim panel to the B-pillar
62. Install the bolt (2) that secures the seat belt (3) to the top of the B-pillar. Tighten the bolt to 40 N.m (30 ft. lbs.).
63. Install the cap (1) onto the seat belt.

QUAD CAB

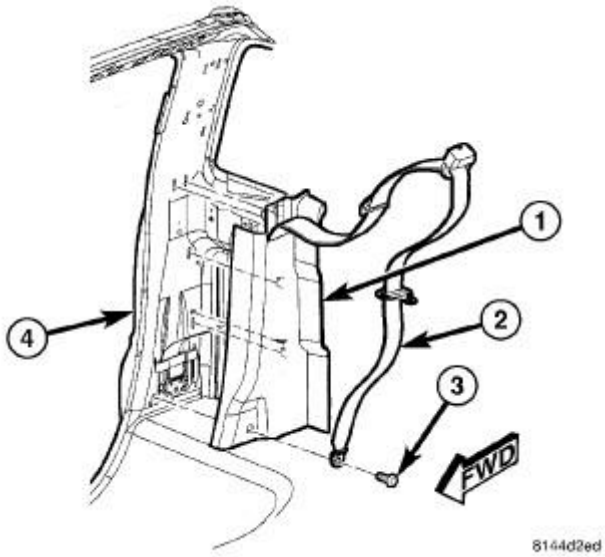

Fig. 205: C-Pillar Lower Trim Panel
Courtesy of CHRYSLER GROUP, LLC

64. Route the seat belt (2) through the slot in the lower C-pillar trim panel (1) and position the trim panel to the C-pillar (4).
65. Engage the retaining tabs that secure the lower C-pillar trim panel to the C-pillar.
66. Install the bolt (3) that secures the seat belt to the bottom of the C-pillar. Tighten the bolt to 40 N.m (30 ft. lbs.).

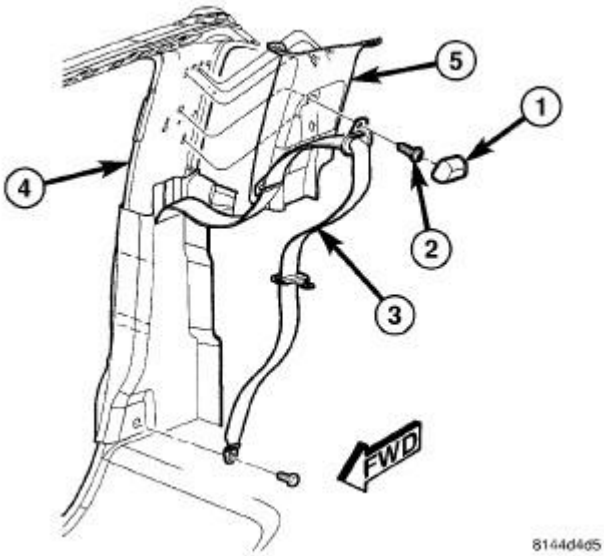

Fig. 206: C-Pillar Upper Trim Panel
Courtesy of CHRYSLER GROUP, LLC

67. Position the upper C-pillar trim panel (5) to the C-pillar (4).

68. Engage the retaining tabs that secure the upper C-pillar trim panel to the C-pillar.
69. Install the bolt (2) that secures the seat belt (3) to the top of the C-pillar. Tighten the bolt to 40 N.m (30 ft. lbs.).
70. Install the cap (1) onto the seat belt.

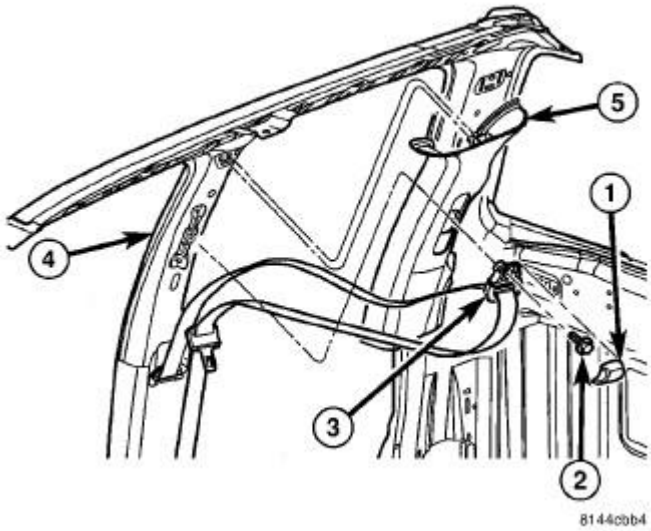

Fig. 207: Trim Panel-Upper B-Pillar-Quad Cab
Courtesy of CHRYSLER GROUP, LLC

71. Position the upper B-pillar trim panel (5) to the B-pillar (4).
72. Engage the retaining tabs that secure the upper B-pillar trim panel to the B-pillar.
73. Install the bolt (2) that secures the seat belt (3) to the top of the B-pillar. Tighten the bolt to 40 N.m (30 ft. lbs.).
74. Install the cap (1) onto the seat belt.

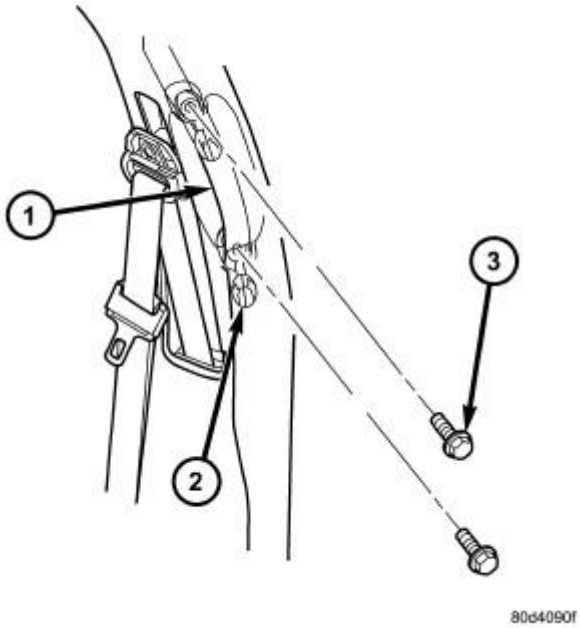

Fig. 208: B-Pillar Grab Handle
Courtesy of CHRYSLER GROUP, LLC

75. Install the grab handle (1) onto the B-pillar and install the two bolts (3). Tighten the bolts to 6 N.m (55 in. lbs.).
76. Close the two fastener covers (2) located on the grab handle.

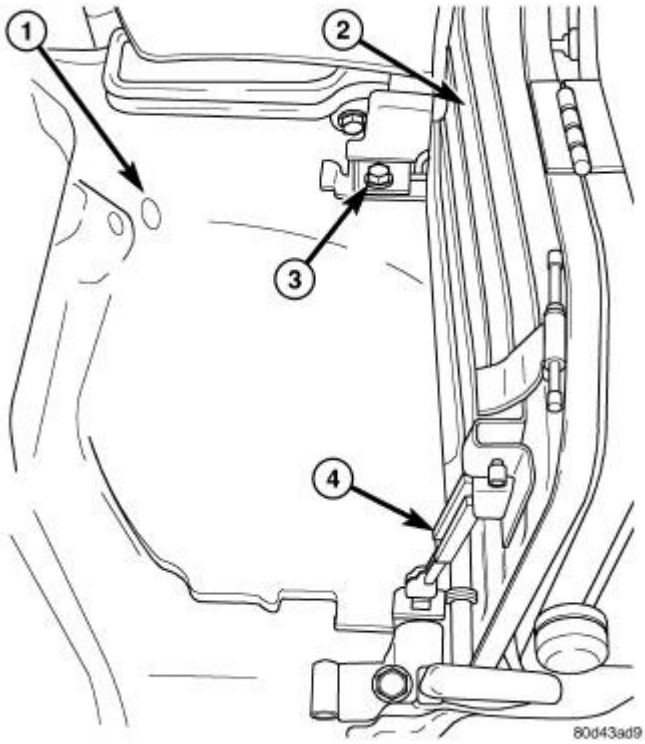

Fig. 209: Load Floor & Bolts
Courtesy of CHRYSLER GROUP, LLC

77. If removed, install the load floor support cylinder (4).
78. Position the load floor (2) into the vehicle and install the two bolts (3) that secure it to the floor panel (1). Tighten the bolts to 40 N.m (30 ft. lbs.).

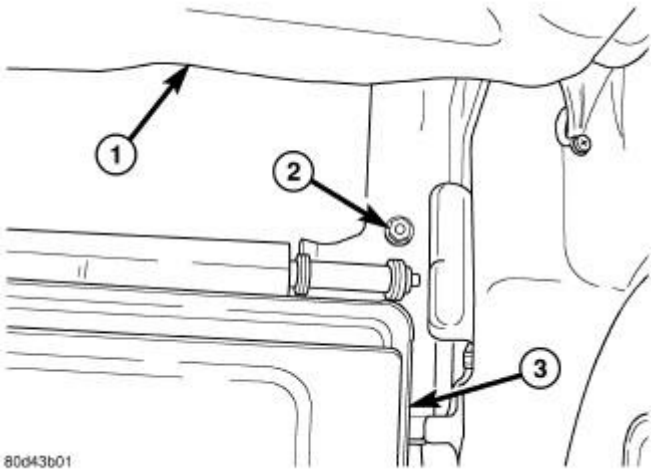

Fig. 210: Load Floor & Nuts
Courtesy of CHRYSLER GROUP, LLC

79. Move the load floor (3) to the down position and install the two nuts (2) that secure the load floor to the floor panel. Tighten the nuts to 25 N.m (18 ft. labs.
80. Move the rear seat cushion (1) to the down position.

All

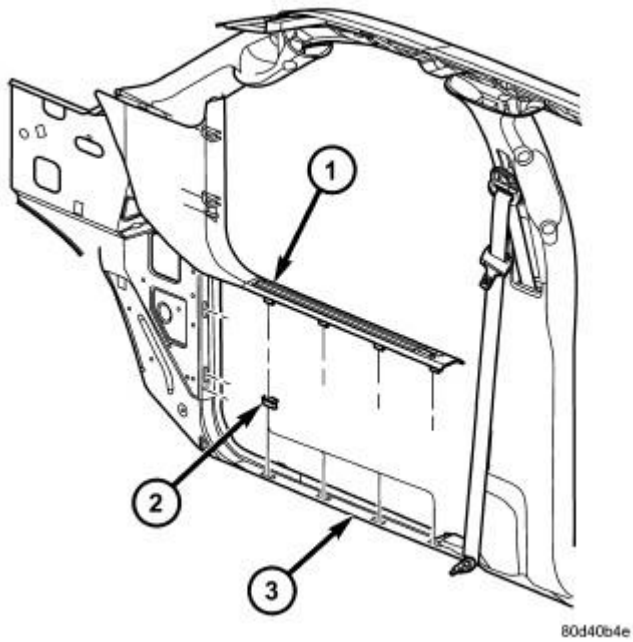

Fig. 211: Cowl Trim Panel & Retainer Clips
Courtesy of CHRYSLER GROUP, LLC

81. Position the cowl trim panel (1) onto the door sill (3).
82. Push the cowl trim panel forward and then engage the retaining tabs that secure the sill trim panel to the rear door sill.

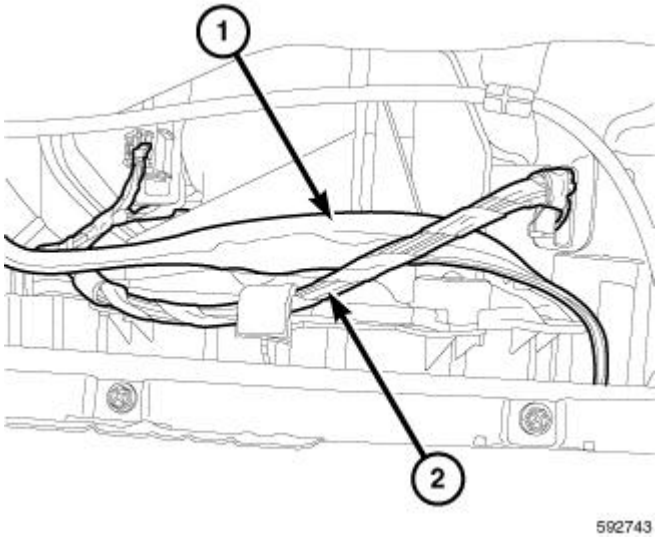

Fig. 212: Antenna Harness & HVAC Harness
Courtesy of CHRYSLER GROUP, LLC

83. Route and secure antenna harness (1) along the HVAC harness (2) and up to the radio opening.

NOTE: **The antenna ports are keyed and color coded for there specific antenna connection.**

NOTE: **All SDARS antenna connections are Yellow.**

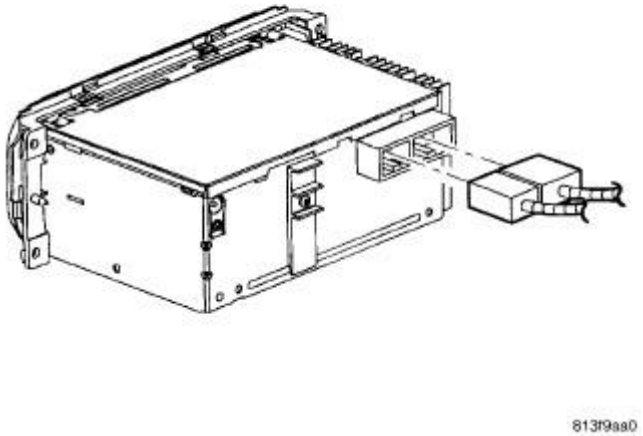

Fig. 213: Installing Radio Harness Connector
Courtesy of CHRYSLER GROUP, LLC

84. Connect electrical connectors to radio.

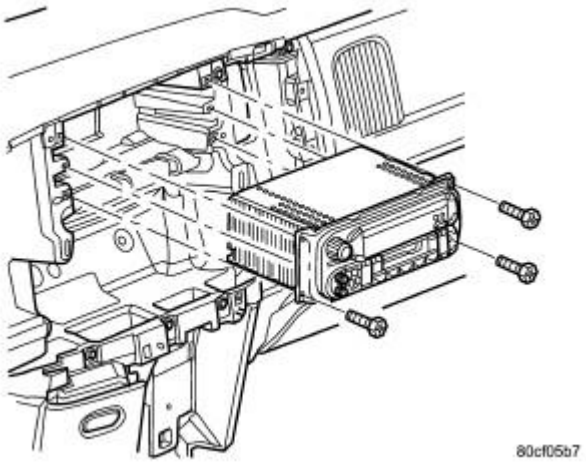

Fig. 214: Radio & Fasteners
Courtesy of CHRYSLER GROUP, LLC

85. Position radio to instrument panel.
86. Install and tighten mounting fasteners.

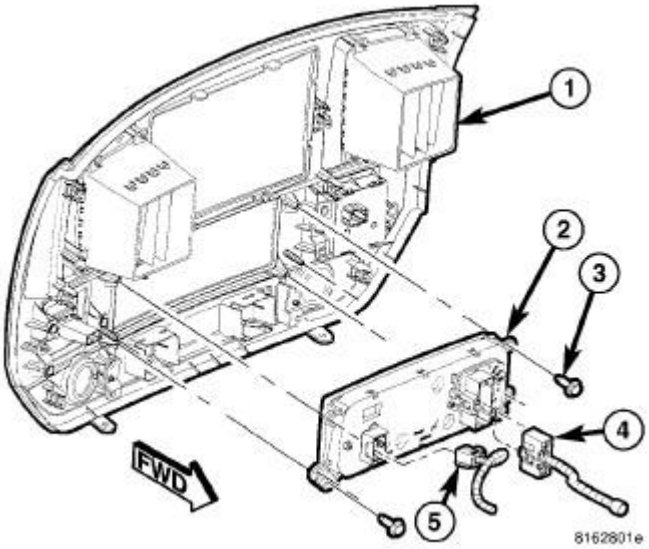

Fig. 215: Center Bezel Wire Harness Connectors
Courtesy of CHRYSLER GROUP, LLC

87. Position the instrument panel center bezel (1) near the instrument panel and connect the wire harness connectors (4).

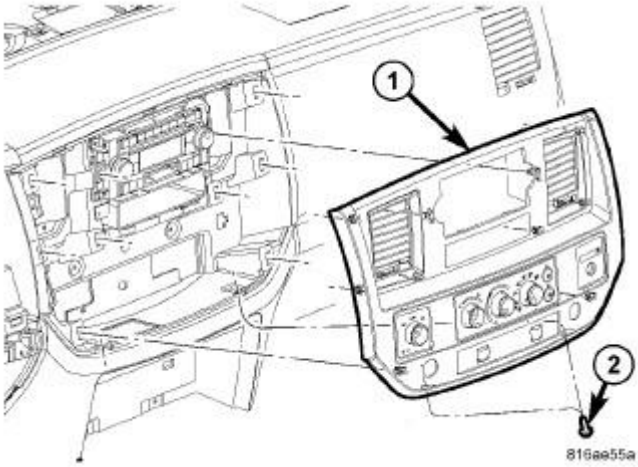

Fig. 216: Center Bezel & Screws
Courtesy of CHRYSLER GROUP, LLC

88. Install the instrument panel center bezel (1) onto the instrument panel and fully engage the retainer clips.
89. Install the two lower screws (2).

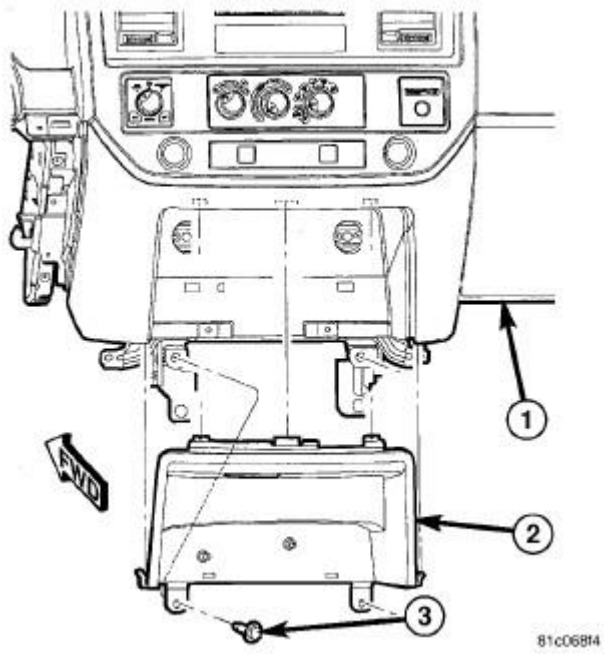

Fig. 217: Close Out Panel
Courtesy of CHRYSLER GROUP, LLC

90. If necessary, install the close out panel (2) and install the screws (3).
91. Position the cup holder (2) onto the clips (1) and seat fully.
92. Install the screws (2).
93. Position the bezel and seat the clips fully.

94. Connect the negative battery cable.

SDARS VEHICLE CONFIGURATION

Vehicle VIN must be updated with the sales code of the added accessory in order to enable system functionality.

Using the DealerCONNECT website and a scantool, complete the procedure below.

- Log on to Http://dealerconnect.chrysler.com.
- In the "Vehicle Options" screen under the "Global Claims System" category in the "Service tab, enter the vehicle VIN and add the sales code **RSC (SIRIUS SATELLITE RADIO)** as a "Dealer Installed option".
- Confirm the new sales code has been successfully added to the VIN.

With the ScanTool connected to both the internet (via Ethernet port or wireless connection) and the vehicle, follow the steps below:

- In the "Initial Start Up" screen select **VEHICLE PREPARATION**
- Toggle down and highlight **RESTORE VEHICLE CONFIGURATION**
- Press **START**
- Press **NEXT**
- If necessary, select proper vehicle line and model year and press **NEXT**
- Confirm correct selection and press **NEXT**
- Enter vehicle VIN using the on screen keyboard or confirm that the Auto Filled VIN plate is correct and press **NEXT**
- Press **OK**
- Enter the user ID, password and dealer code using the one screen keyboard and press **OK**

NOTE: At this point the ScanTool is downloading the vehicle configuration from the network.

- Confirm that the new vehicle configuration has been successfully programmed, follow the on screen instructions and press **FINISH**

VALIDATION PROCESS

from the "Initial Start up" screen on the ScanTool follow the steps below:

- Using a ScanTool follow the menu to **ECU VIEW** , select either **TPIMCGW CENTRAL GATEWAY** or **FCMCGW CENTRAL GATEWAY** depending on the vehicle.
- Select **MORE OPTIONS, ECU DETAILS,** and then **CONFIG INFO** .
- Verify **SDARV - - - - SET** is present.
- Drive the vehicle outside for a clear satellite signal to the antenna and verify system operation.

EXTERIOR APPEARANCE

INSTRUCTION SHEET

ACCESSORY HOOD

DODGE RAM

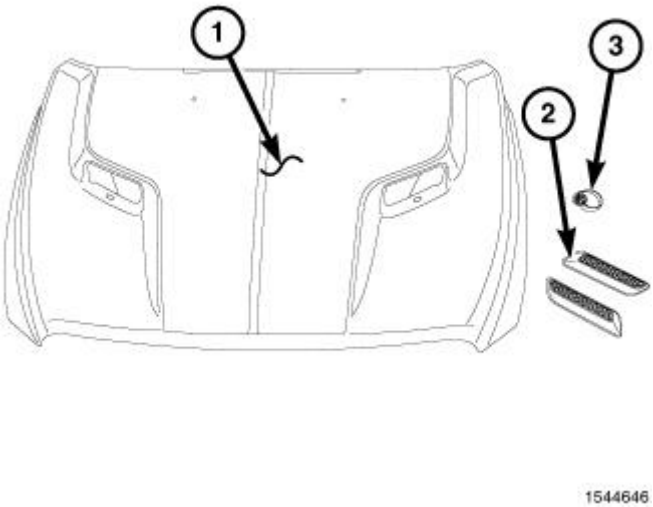

Fig. 218: Hood Accessories
Courtesy of CHRYSLER GROUP, LLC

Call Out	Description	Parts	Quantity
1	Hood	Supplied in kit	1
2	Bezel	Supplied in kit	2
3	Foam tape	supplied in kit	1

PROCEDURE STEPS:

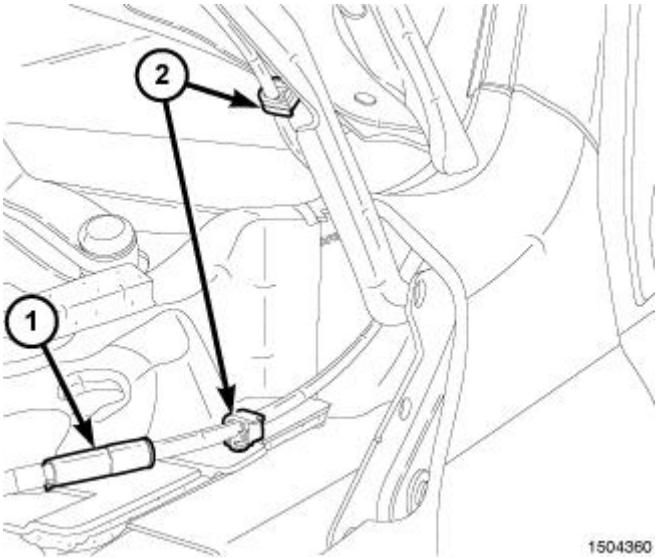

Fig. 219: Washer Fluid Hose & Retaining Clips
Courtesy of CHRYSLER GROUP, LLC

1. Disconnect the washer fluid hose (1) and release the hose from the retaining clips (2).

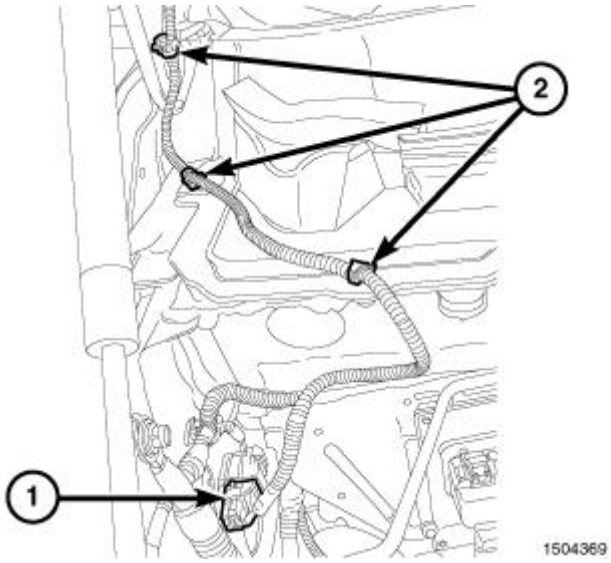

Fig. 220: Underhood Lamp Connector
Courtesy of CHRYSLER GROUP, LLC

2. If equipped, disconnect the underhood lamp connector (1) and release the wire harness from the retaining clips. (2).

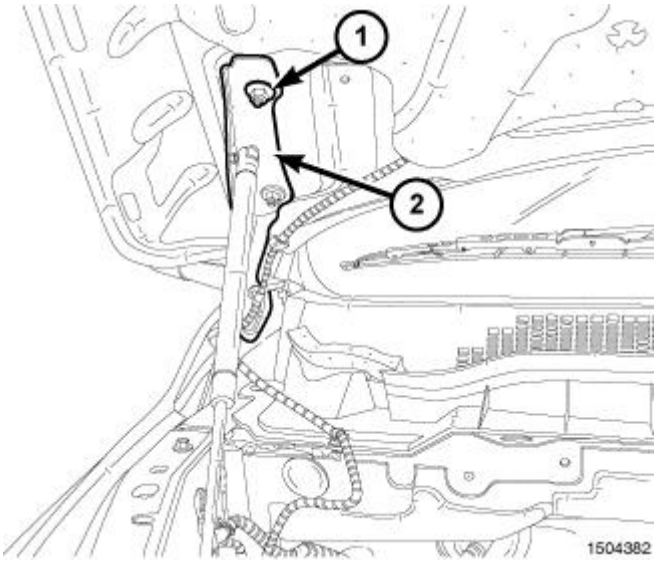

Fig. 221: Hinge Nuts
Courtesy of CHRYSLER GROUP, LLC

CAUTION: Be sure to not to damage the paint finish of the hood by placing the hood on non-abrasive surface.

3. With the help of an assistant, remove the two nuts (1) from the hinge (2). Repeat steps on opposite side and remove the hood.

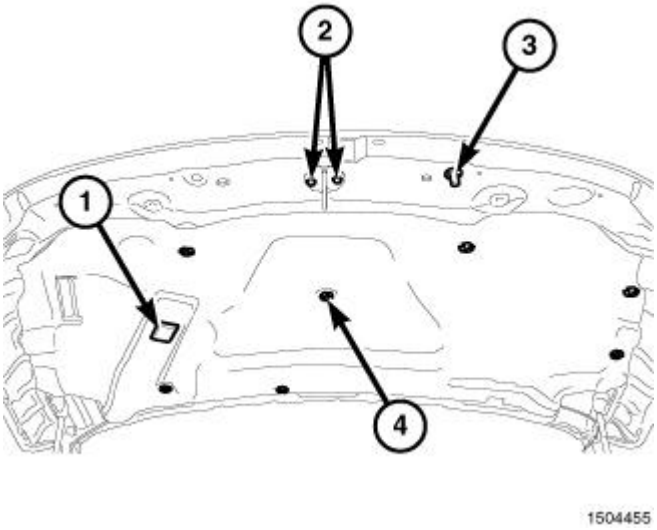

Fig. 222: Hood Silencer Pad Retaining Clips
Courtesy of CHRYSLER GROUP, LLC

4. Remove the hood silencer pad by removing the seven retaining clips (4).

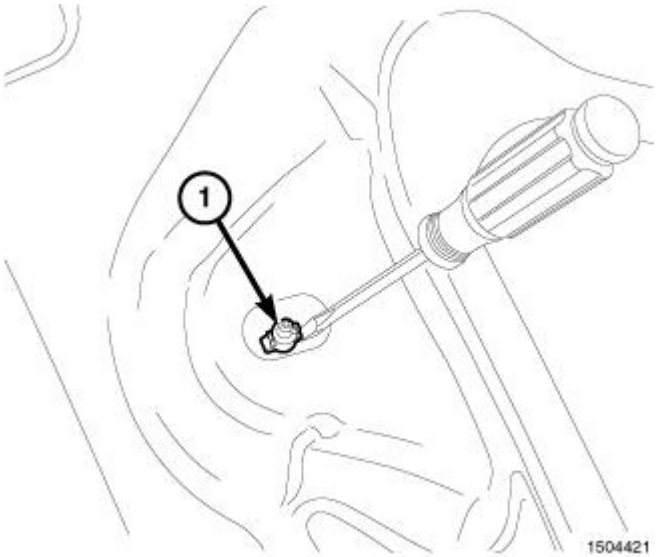

Fig. 223: Washer Nozzle
Courtesy of CHRYSLER GROUP, LLC

5. Disconnect the washer hose and washer nozzles by releasing the integral latch features of the washer nozzle by pushing the nozzle out through the mounting hole toward the top side of the hood. Install the nozzles on the new accessory hood.

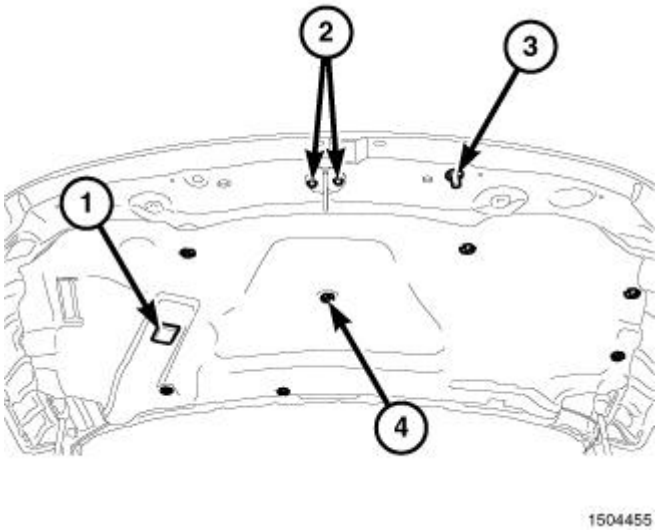

Fig. 224: Hood Silencer Pad Retaining Clips
Courtesy of CHRYSLER GROUP, LLC

6. If equipped, transfer the underhood lamp (1) and remote starter plunger (3) to the new accessory hood.
7. Transfer the hood striker to the new accessory hood and tighten the bolts (2) to 17 N.m (12.5 ft. lbs.).
8. Install the hood silencer pad on the new accessory hood by pressing the seven retaining clips (4) into the new accessory hood.

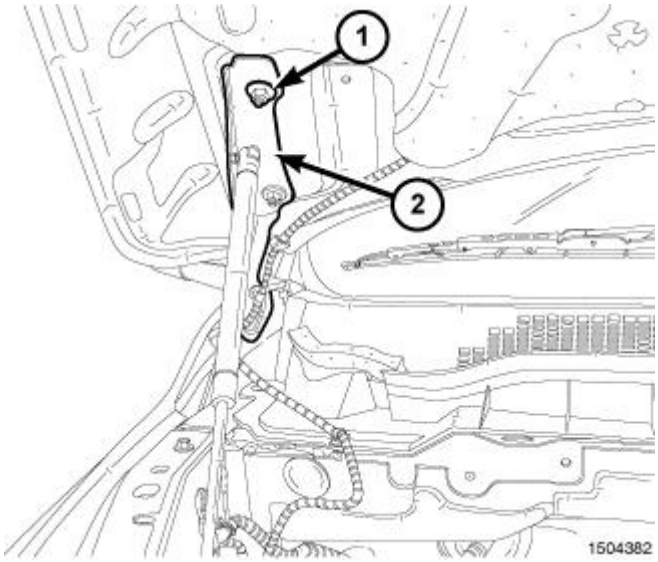

Fig. 225: Hinge Nuts
Courtesy of CHRYSLER GROUP, LLC

9. With the help of an assistant, position the hood onto the hood hinge (2) and loosely install the two nuts (1) that secure the hood to the hinge (2). Repeat steps for the opposite side.

NOTE: Quad Cab shown in illustration, Regular Cab and Crew Cab similar.

10. Adjust the hood to the correct position. Refer to **HOOD FLUSHNESS CHART**. Once the hood is positioned properly, tighten the hood hinge nuts (1) to 18 N.m (13 ft. lbs.).

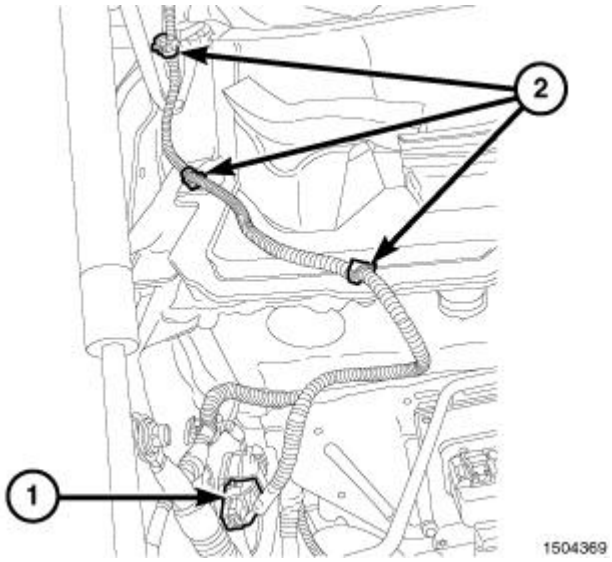

Fig. 226: Underhood Lamp Connector
Courtesy of CHRYSLER GROUP, LLC

11. Connect the underhood lamp connector (1) and the wire harness retaining clips. (2).

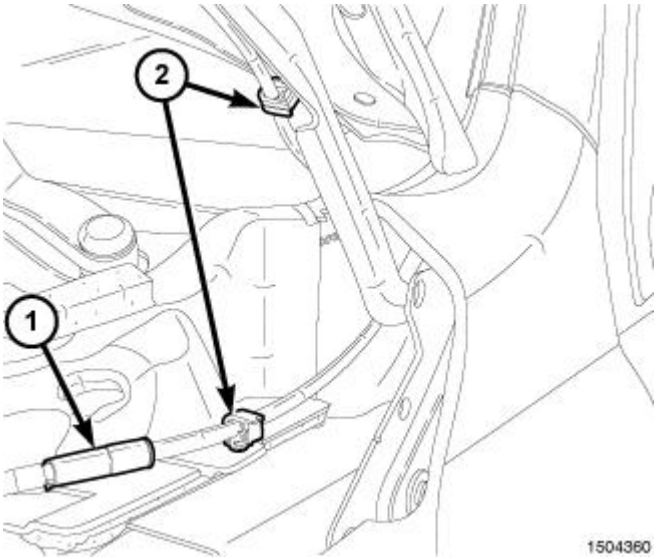

Fig. 227: Washer Fluid Hose & Retaining Clips
Courtesy of CHRYSLER GROUP, LLC

12. Connect the washer fluid hose (1) and the hose in the retaining clips (2).

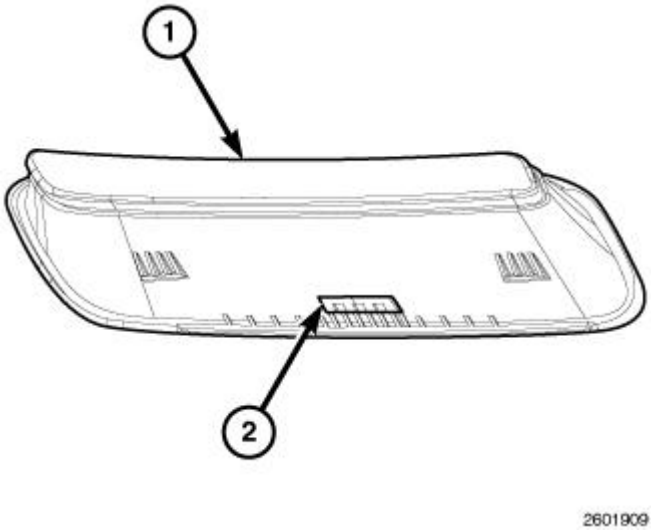

Fig. 228: Bezel & Center Clip
Courtesy of CHRYSLER GROUP, LLC

NOTE: **Previous model year kits may include hood assemblies without center clip retainer openings. To determine which hood is in your kit, look for a small rectangular hole near the front of each bezel opening on the hood. If the center clip retainer openings are not present on the hood, foam tape will be required to install the bezels. If the center clip retainer openings are present on the hood, foam tape is not necessary to install the bezels.**

13. If the center clip retainer openings are not present on the hood, remove the center clip (2) from the bezel

(1). Repeat steps for the opposite side.

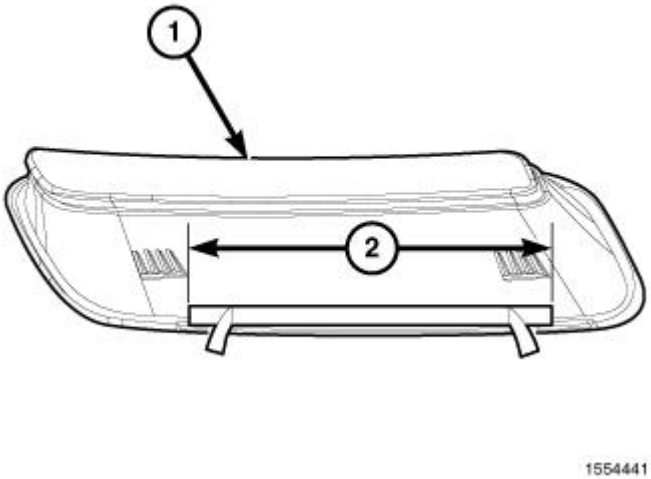

Fig. 229: Foam Tape Location
Courtesy of CHRYSLER GROUP, LLC

14. If the center clip retainer openings are not present on the hood, apply 152.4 mm (6 in.) (2) of the supplied foam tape to the hood bezels (1) as shown in illustration. Press down firmly for 30 seconds minimum to ensure good adhesion. Peel the tape protector back on a 45° angle on both ends of the tape. Repeat steps for the opposite side.

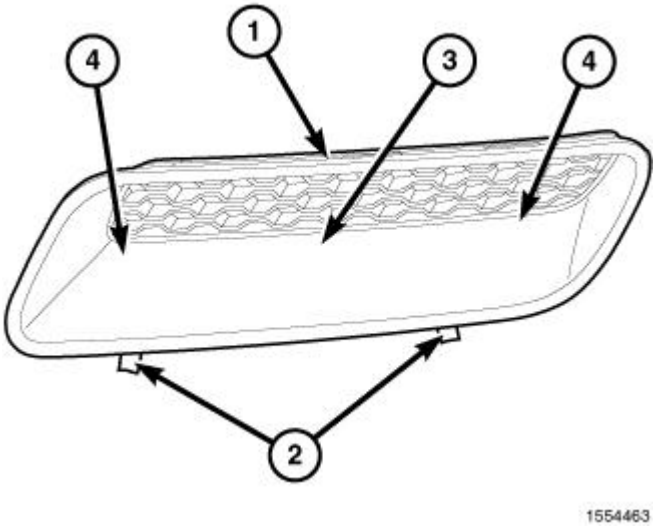

Fig. 230: Hood Bezel
Courtesy of CHRYSLER GROUP, LLC

15. Install the bezel into the accessory hood.

• If the clip retainer openings are present on the hood, position the bezel into the accessory hood by

loading the top edge first (1), then push downward in the center of the bezel (3) to engage the center clip. Continue pushing downward in the center and rearward (4) until all the clips are engaged. Repeat steps for the opposite side.

• If the clip retainer openings are not present on the hood, position the bezel properly into the accessory hood by loading the top edge first (1). Pushing downward in the center and rearward (4) until all the clips are engaged. Peel the tape protector (2) off to expose the tape adhesive. Press down firmly for 30 seconds minimum to ensure good adhesion. Repeat steps for the opposite side.

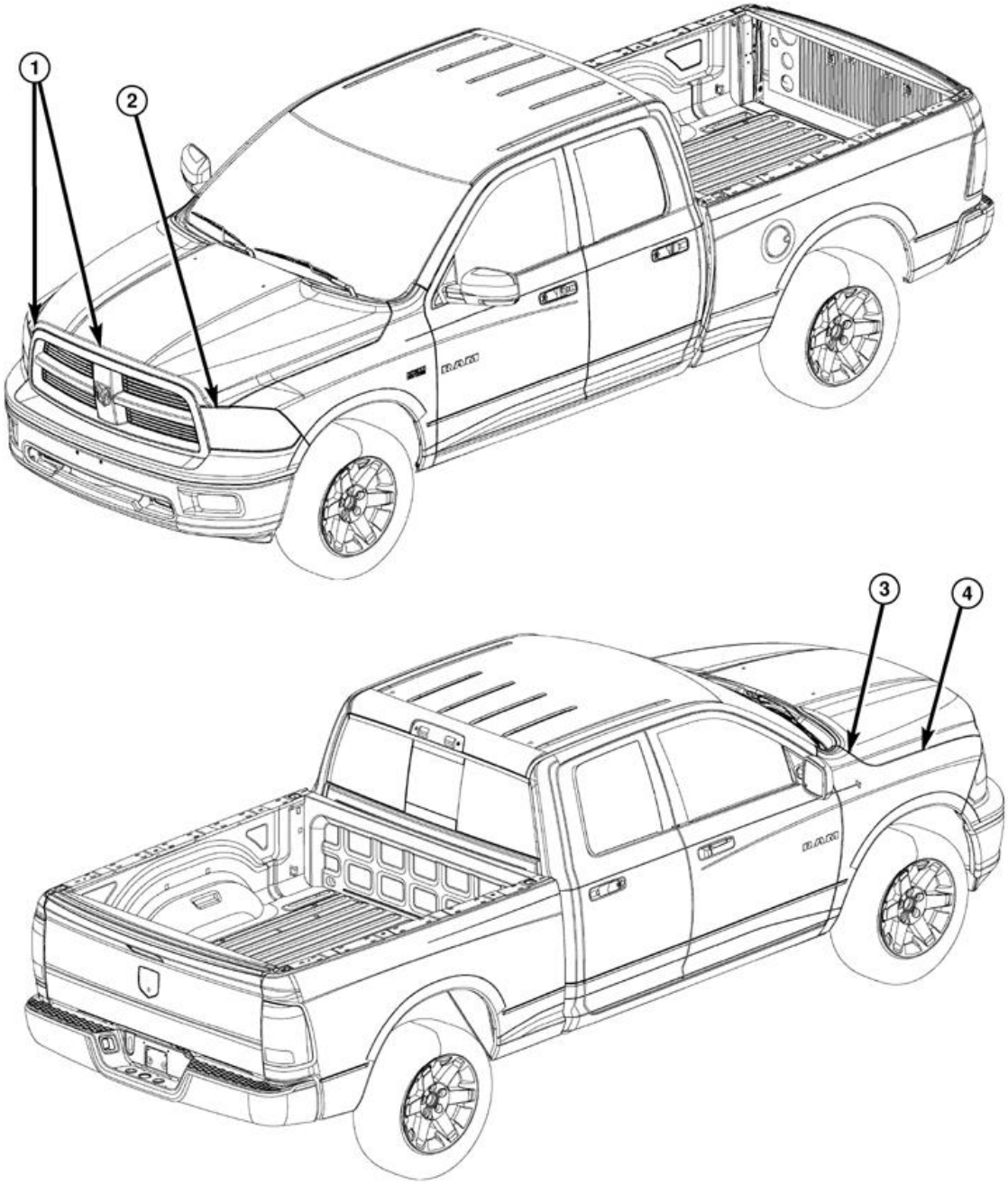

Fig. 231: Hood Flushness - Quad CAB
Courtesy of CHRYSLER GROUP, LLC

HOOD FLUSHNESS CHART

NOTE:
All measurements are in millimeters.
O/F = Over Flush,

U/D = Up/Down
U/F = Under Flush,
F/A = Fore/Aft

DIMENSION	DESCRIPTION	GAP	FLUSH
1	Hood to grille (along top)	7.0 +/- 2.0 transition to 4.5 after corner	Hood o/f 7.0 @ center to 5.5 @ corner to 1.0 around corner +/- 2.0
2	Headlamp to hood	7.0 +/- 2.0 Parallel within 2.0 Side to side within 3.0	Headlamp o/f 4.0 +/- 2.0 Parallel within 2.0 Side to side within 2.0
3	Fender to hood @ cowl	4.5 +/- 1.5 Parallel within 1.5 Side to side within 2.0	Fender u/d-u/f 0.75 +/- 1.5 Cross/car 0.0 +/- 1.5
4	Fender to hood	4.5 +/- 1.5 Parallel within 1.5 Side to side within 2.0	Fender o/f 0.5 +/- 1.5

LOCKING REAR TAILGATE AND KEYLESS LOCK ACTUATOR

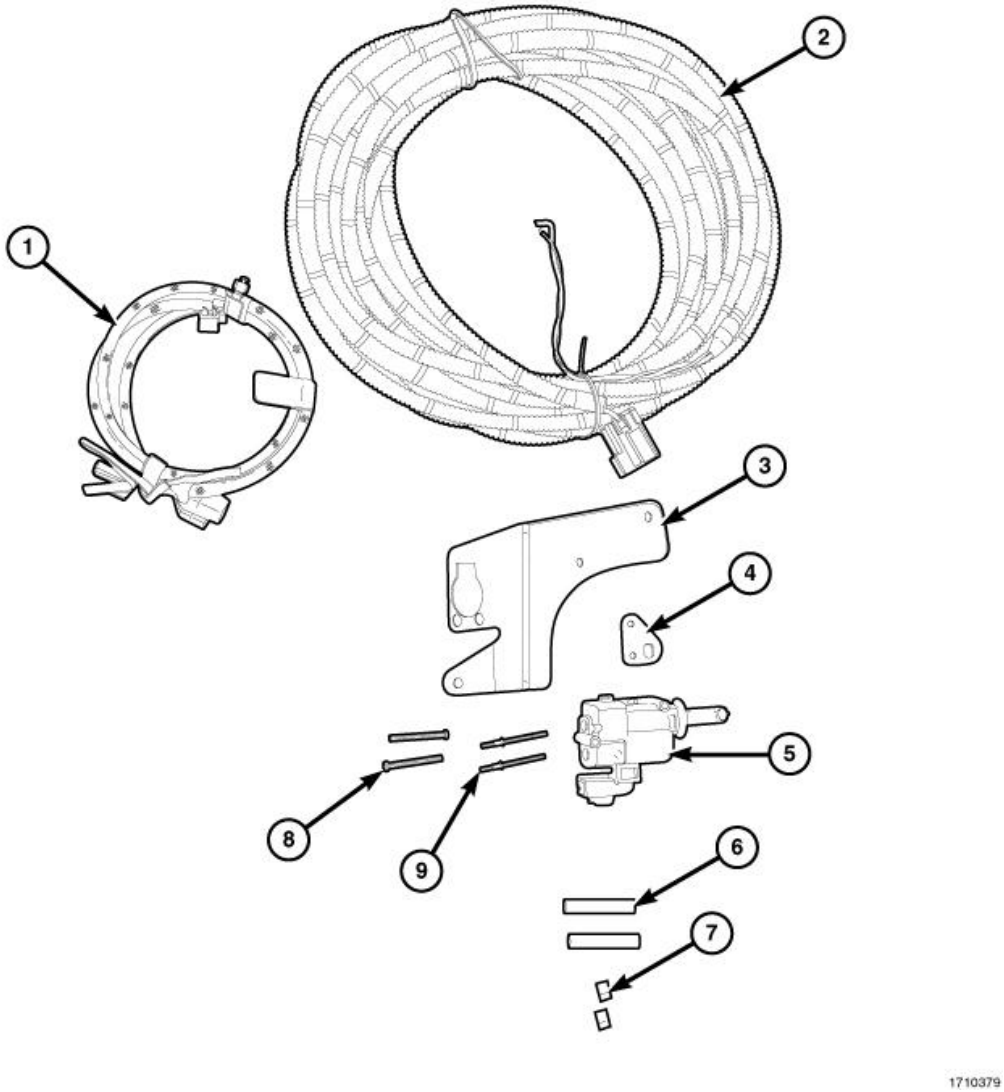

Fig. 232: Locking Rear Tailgate & Keyless Lock Actuator Components
Courtesy of CHRYSLER GROUP, LLC

CALL OUT	DESCRIPTION	QUANTITY
1	Power Lock Actuator Tailgate Harness	1
2	Power Lock Actuator Body Harness	1
3	Power Lock Actuator	1

	Mounting Bracket	
4	Power Lock Actuator Arm Bracket	1
5	Liftgate Power Lock Actuator	1
6	Heat Shrink Tube	2
7	Splice Clips	2
8	Liftgate Power Lock Actuator T20 Torx® Screws	2
9	Rivets	2
	Zip Ties	22

PROCEDURE STEPS:

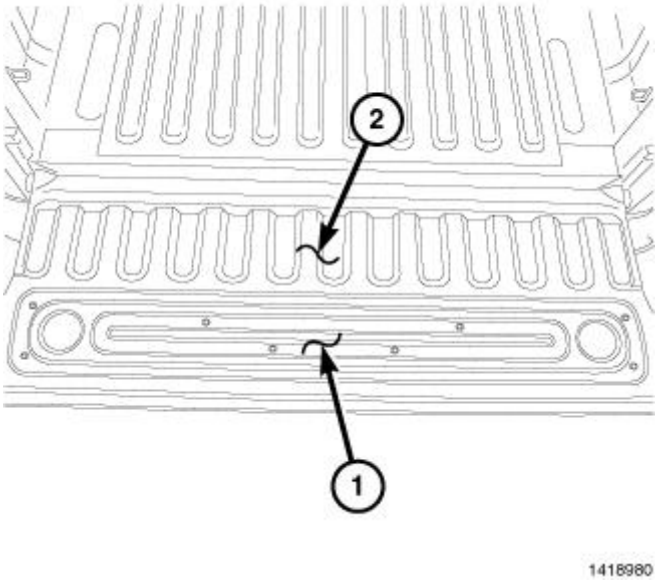

Fig. 233: Tailgate Bedliner
Courtesy of CHRYSLER GROUP, LLC

1. Disconnect and isolate the battery negative cable.
2. If equipped, remove the tailgate bedliner.
3. Remove the tailgate (2) access cover (1).

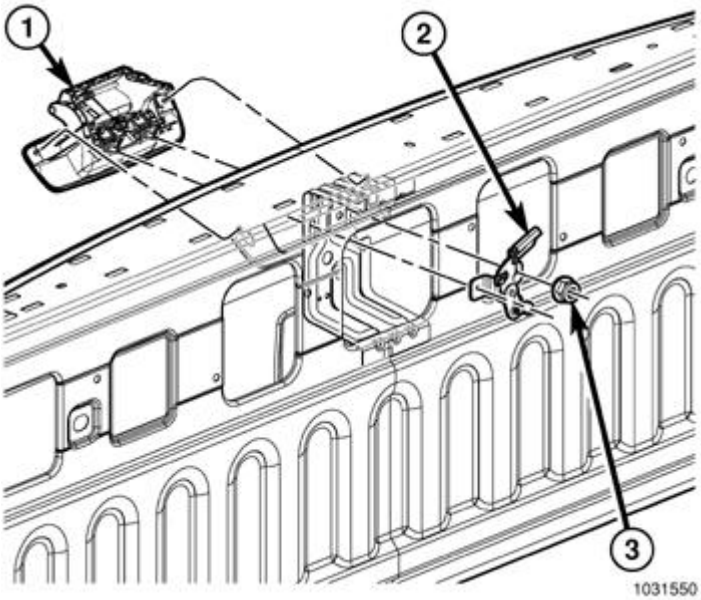

Fig. 234: Tailgate Release Handle & Actuator Rods
Courtesy of CHRYSLER GROUP, LLC

4. Using a grease pencil or equivalent, mark the location of the actuator rods at the control (2).
5. Disconnect the actuator rods from the control.
6. Remove the two nuts (3) that secure the release handle (1) and the control (2) to the tailgate.
7. Remove the control and the release handle from the tailgate.

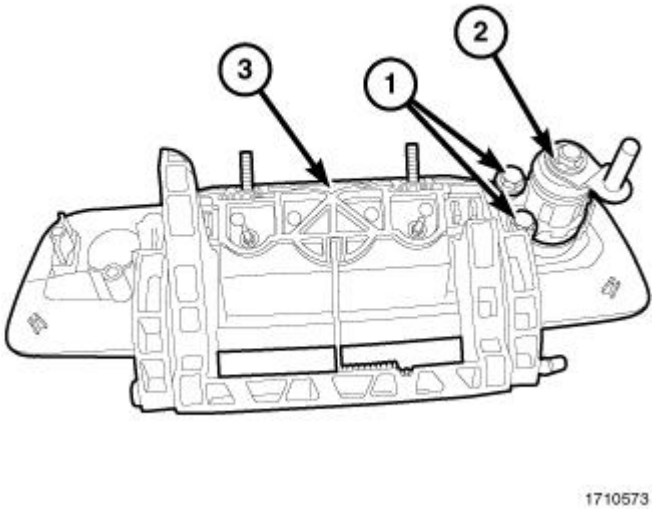

Fig. 235: Lock Cylinder & Handle
Courtesy of CHRYSLER GROUP, LLC

8. Remove the two retainers (1) holding in the lock cylinder (2) to the handle (3).

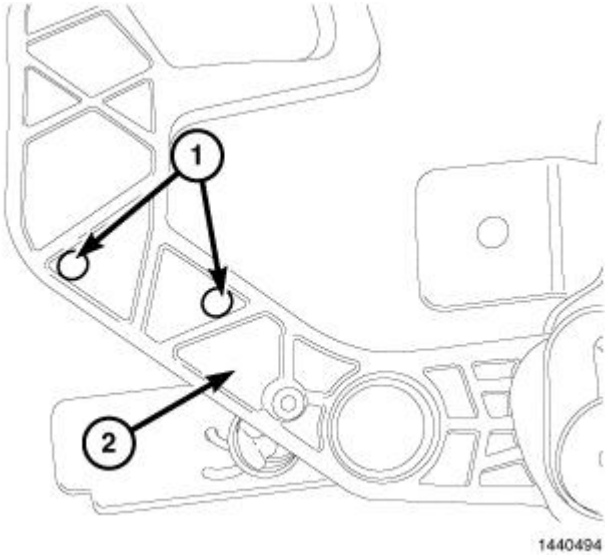

Fig. 236: Lock Actuator Arm
Courtesy of CHRYSLER GROUP, LLC

9. Drill two 4 mm (5/32 in.) holes (1) in the lock actuator arm (2).

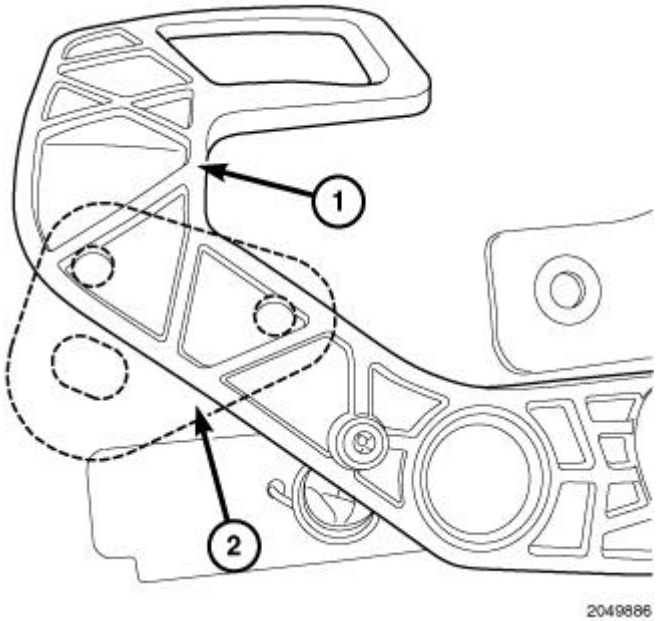

Fig. 237: Aligning Arm Bracket
Courtesy of CHRYSLER GROUP, LLC

10. Align arm bracket (2) as outlined.

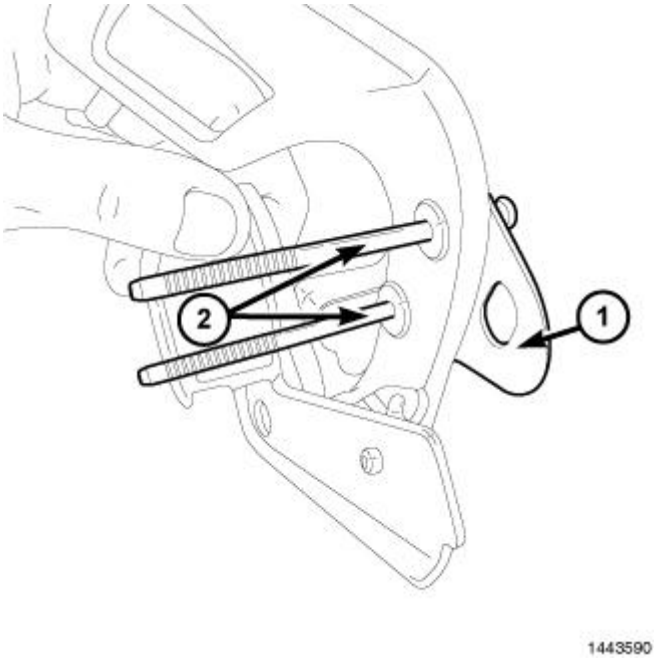

Fig. 238: Actuator Arm & Bracket
Courtesy of CHRYSLER GROUP, LLC

11. Rivet (2) the bracket (1) to the actuator arm.

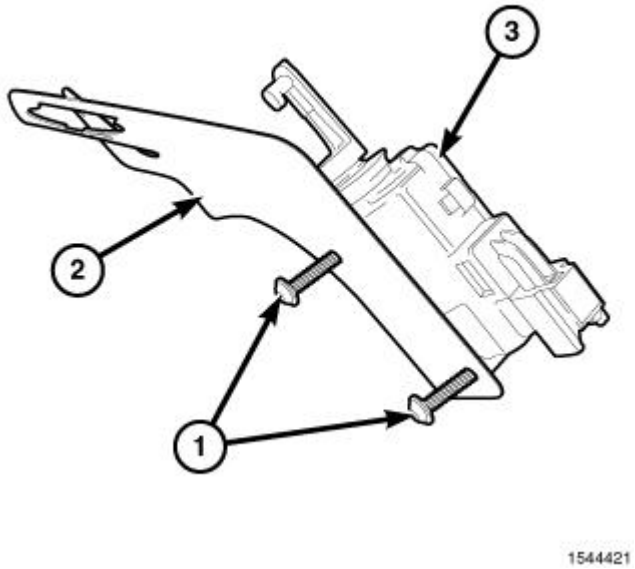

Fig. 239: Power Lock Actuator
Courtesy of CHRYSLER GROUP, LLC

12. Mount the power lock actuator (3) to the bracket (2) with the two T20 Torx® screws (1).
13. Insert the new handle into the liftgate.

14. Install the lock cylinder, do not install the retainers at this time.

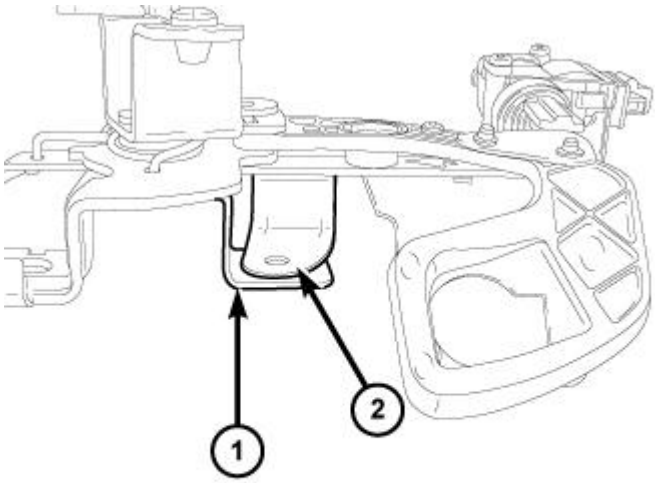

1451168

Fig. 240: Power Lock Actuator Bracket & Linkage Control Arm Bracket
Courtesy of CHRYSLER GROUP, LLC

NOTE: Parts removed for clarity.

15. Install the power lock actuator bracket and the linkage control arm bracket.
16. Ensure that the power lock actuator bracket (2) over laps the linkage control arm bracket (1).

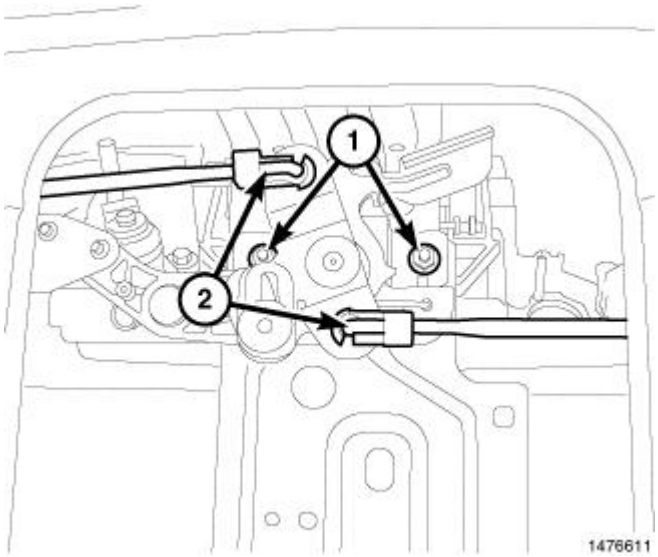

1476611

Fig. 241: Tailgate Control Rod
Courtesy of CHRYSLER GROUP, LLC

17. Install the two nuts (1) that secure the release handle and the control to the tailgate.
18. Install the two lock cylinder retainers.
19. Connect the actuator rods (2) to the control.

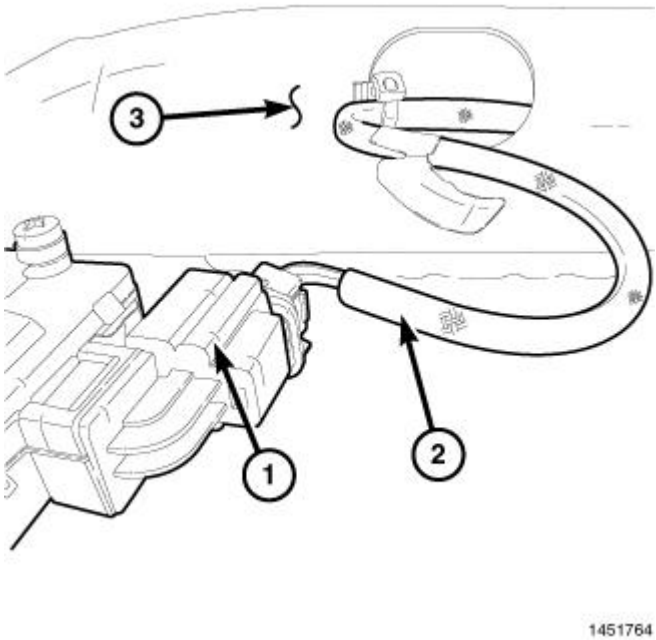

Fig. 242: Tailgate Power Lock Actuator Harness
Courtesy of CHRYSLER GROUP, LLC

20. Connect the tailgate power lock actuator harness (2) to the lock actuator and clip onto tailgate support (3).

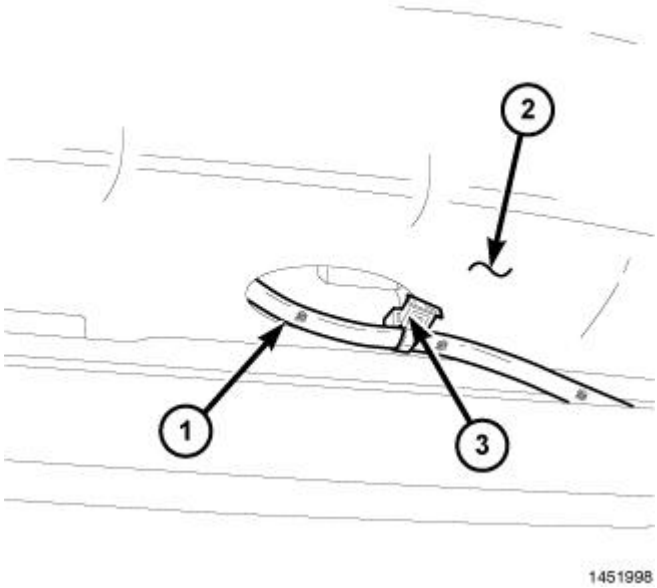

Fig. 243: Jumper Wire Harness

Courtesy of CHRYSLER GROUP, LLC

21. Route jumper wire harness (1) through the large hole in the bottom of the tailgate (2).
22. Clip the harness (3) to the tailgate (2).

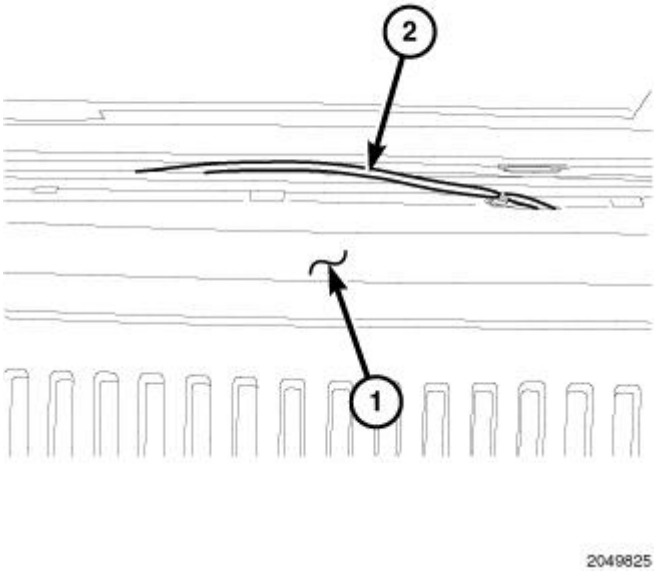

Fig. 244: Securing Wire
Courtesy of CHRYSLER GROUP, LLC

23. Secure wire so that the tailgate (1) does not pinch the harness (2) when open.

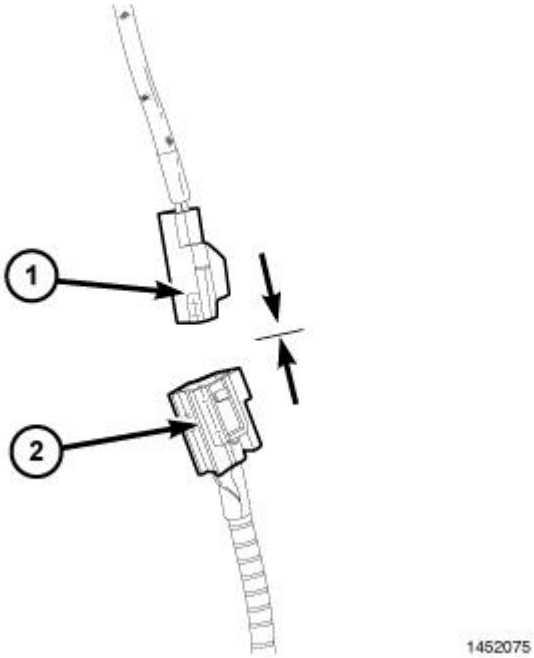

Fig. 245: Liftgate Power Lock Jumper Harness

Courtesy of CHRYSLER GROUP, LLC

24. Connect the liftgate power lock jumper harness (1) to the liftgate power lock overlay body harness (2).
25. Route the harness down the drivers side body harness and secure where necessary.
26. Route up through the fender well to the engine compartment up to the Totally Integrated Power Module (TIPM).

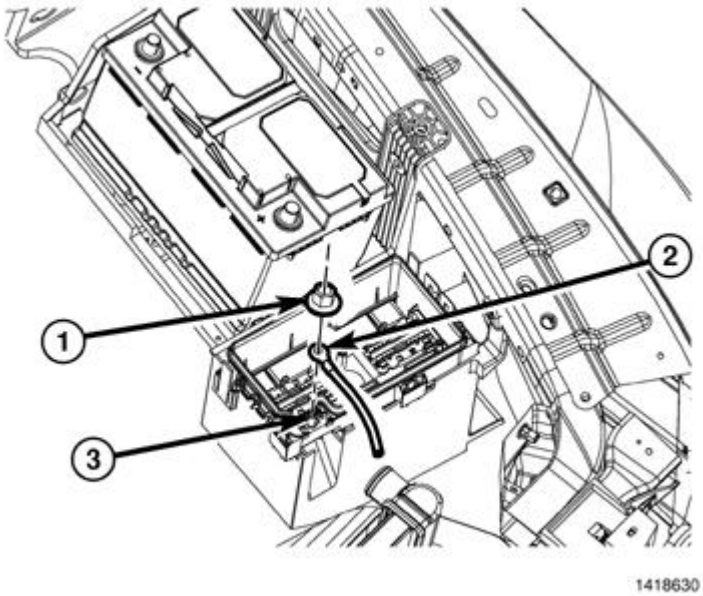

Fig. 246: B+ Terminal Cable & Nut
Courtesy of CHRYSLER GROUP, LLC

27. Remove the B+ terminal nut (1) from the Totally Integrated Power Module (3) (TIPM) B+ terminal. Remove the B+ cable (2) from the TIPM.
28. Using a suitable flat blade tool, disengage the TIPM upper retaining tabs from the battery tray bracket.

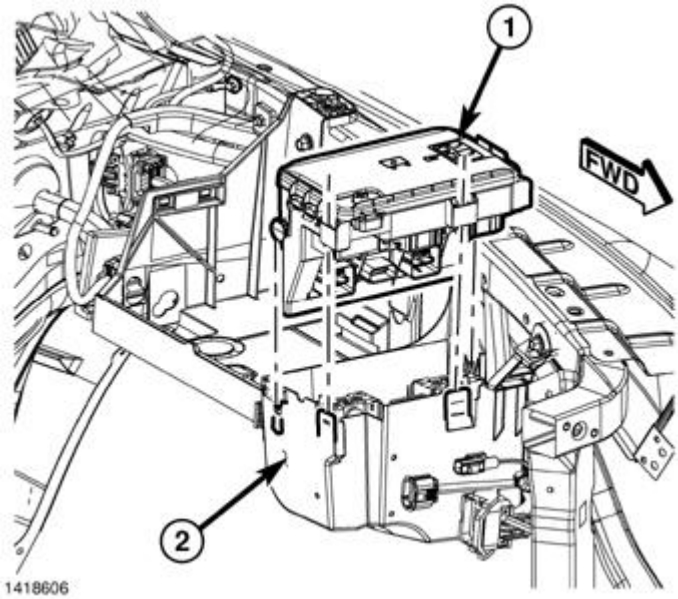

Fig. 247: Totally Integrated Power Module (TIPM)
Courtesy of CHRYSLER GROUP, LLC

29. Grasp the TIPM (1) and rotate the assembly up to free it from its mounting bracket (3). Position the assembly upside down to access the electrical connectors located on the bottom of the unit.
30. Disconnect connector C5, letter E labeled on the bottom of the TIPM. Release by depressing the locking tab and rotating the connector arm outboard, until the connector is free from the TIPM assembly (1). Be certain to pull the connector straight off.
31. Cut the tailgate power lock harness to length.

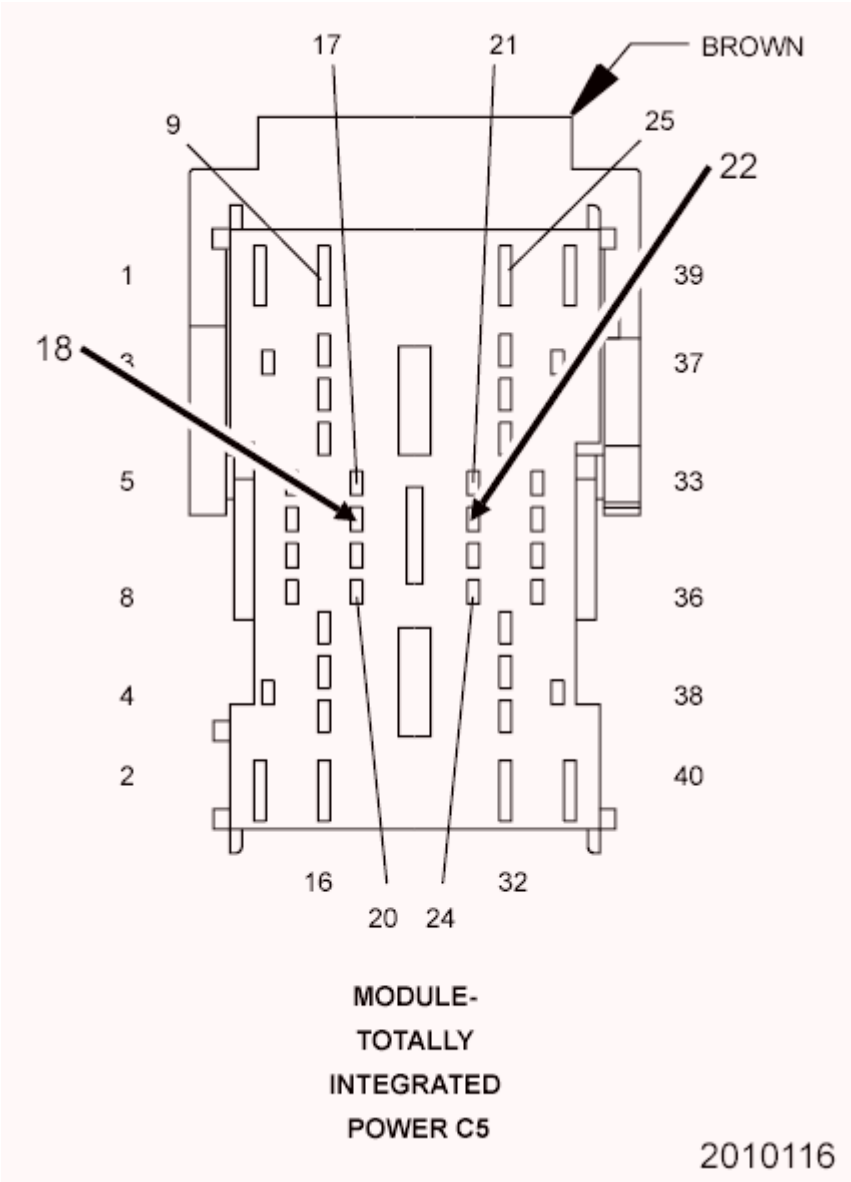

Fig. 248: Totally Integrated Power Module Cavity 18 & 22
Courtesy of CHRYSLER GROUP, LLC

32. Cut the P34 circuit TN/LB from cavity 18, using steps 33 through 37 solder in the W/P tailgate wire.
33. Cut the P38 circuit TN/DB from cavity 22, using steps 33 through 37 solder in the BK/DB tailgate wire.
34. Cut each wire and remove 13mm (0.5 in.) of insulation from each wire that needs to be soldered/spliced.
35. Place a piece of supplied adhesive lined heat shrink tubing on one side of each cut wire. Insure the tubing will be long enough to cover and seal the entire soldered area.

CAUTION: Do not use acid core solder.

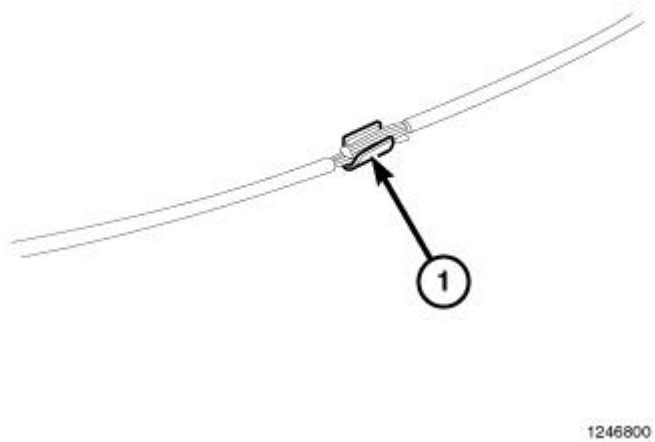

Fig. 249: Adhesive Lined Heat Shrink Tubing
Courtesy of CHRYSLER GROUP, LLC

36. Place the strands of the power side wires overlapping each other inside of the splice clip (1).

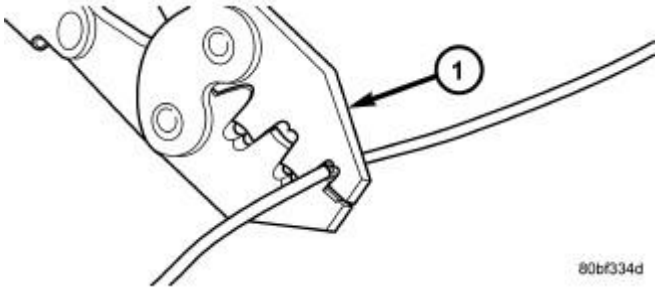

Fig. 250: Crimping Tool
Courtesy of CHRYSLER GROUP, LLC

37. Using crimping tool (1), Mopar® p/n 05019912AA or equivalent, crimp the splice clip and wires together.

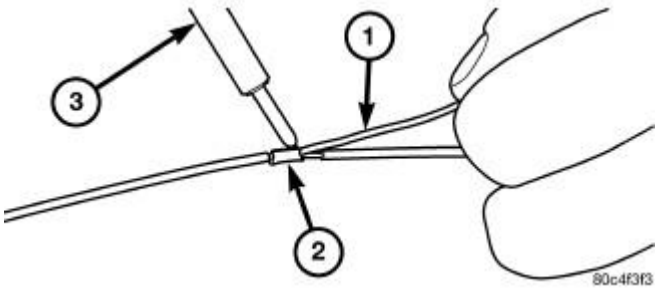

Fig. 251: Soldering Connection
Courtesy of CHRYSLER GROUP, LLC

38. Solder (3) the connection (2) together using rosin core solder (1).

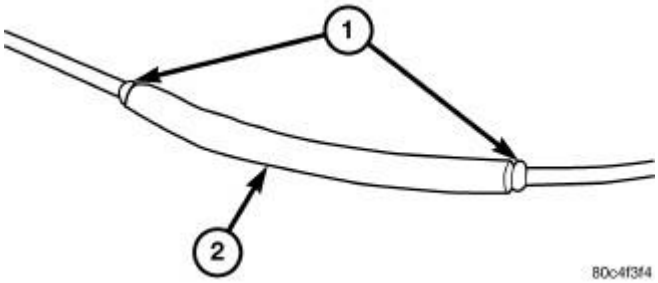

Fig. 252: Heat Shrink Tube
Courtesy of CHRYSLER GROUP, LLC

39. Center the heat shrink tubing (2) over the solder joint and heat using a heat gun. Heat the joint until the tubing is tightly sealed and sealant (1) comes out of both ends of the tubing.
40. Secure the power lock actuator harness to the TIPM harness.

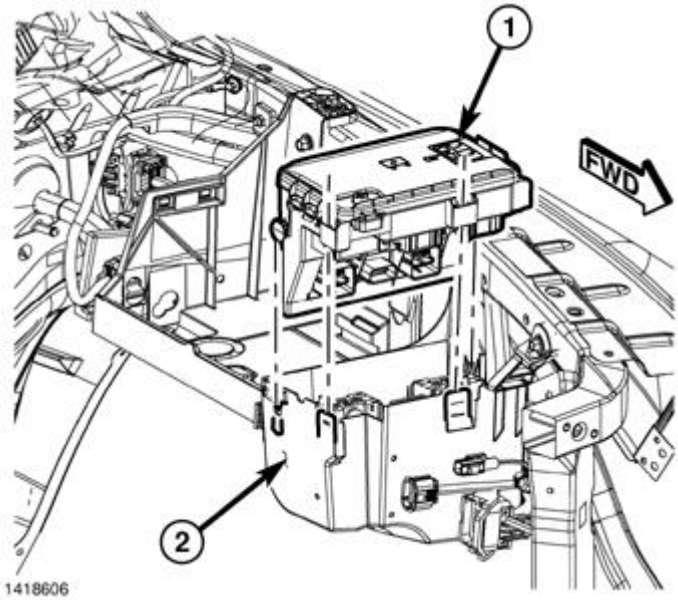

Fig. 253: Totally Integrated Power Module (TIPM)
Courtesy of CHRYSLER GROUP, LLC

NOTE: Totally Integrated power module electrical connectors are color coded to ease location reference.

41. Connect the electrical connector by pushing straight on and rotating the connector arm inboard, until the connector is firmly locked in place on the TIPM assembly.
42. Turn the TIPM so that the connector side is facing down. Install the assembly onto the TIPM battery tray bracket making sure to line up the lower retaining tab with the retaining slot in the tray.
43. Push the TIPM (1) downward to lock the upper retaining clips into the bracket (2).

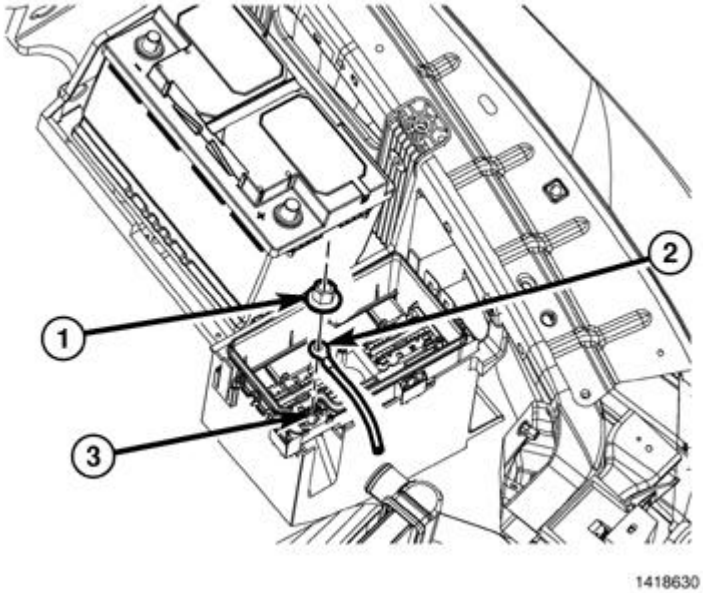

Fig. 254: B+ Terminal Cable & Nut
Courtesy of CHRYSLER GROUP, LLC

44. Install the B+ terminal cable (2) and nut (1) on the B+ terminal of the TIPM (3).

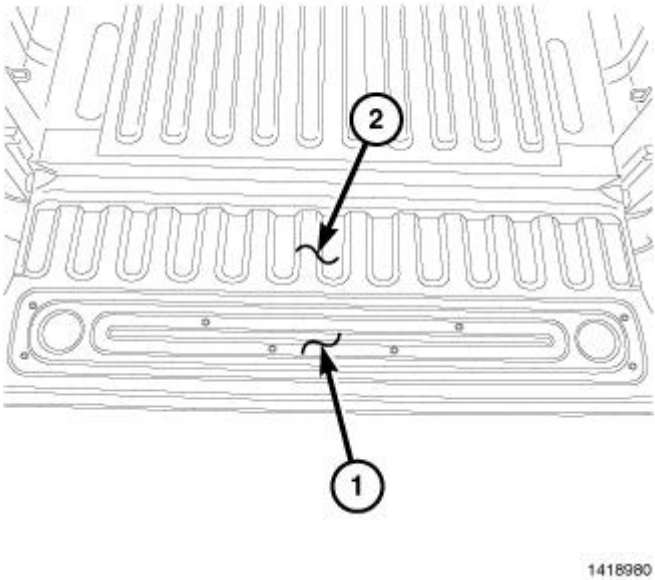

Fig. 255: Tailgate Bedliner
Courtesy of CHRYSLER GROUP, LLC

45. Install the tailgate (2) access cover (1).
46. If equipped, install the tailgate bedliner.
47. Connect the negative battery cable.

TRAILER TOW MIRRORS

DODGE RAM

PROCEDURE STEPS:

NOTE: The following procedure applies to the driver and passenger doors.

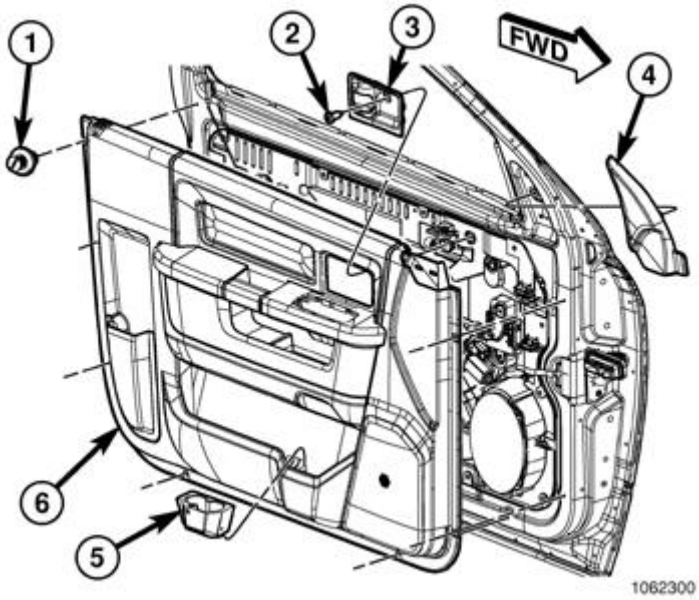

Fig. 256: Interior Door Handle Trim & Interior Door Panel
Courtesy of CHRYSLER GROUP, LLC

1. Remove the screw (2) that secures the interior door handle trim (3) to the interior door panel (6).
2. Remove the interior door handle trim (3) from the interior door panel (6).

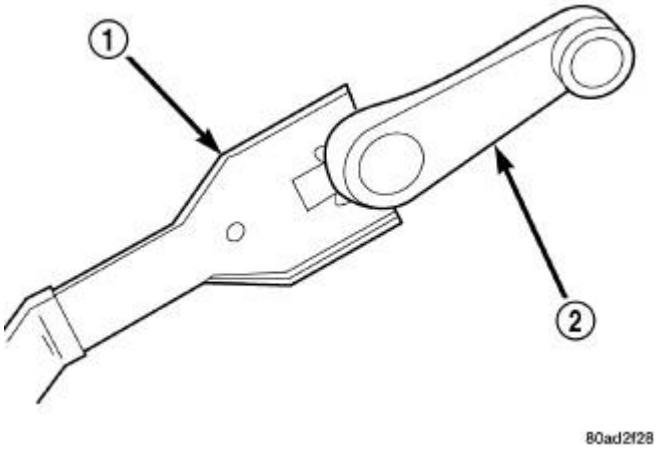

Fig. 257: Removing Manual Window Crank
Courtesy of CHRYSLER GROUP, LLC

3. If equipped, remove the manual window crank (1) using a window crank removal tool (2).

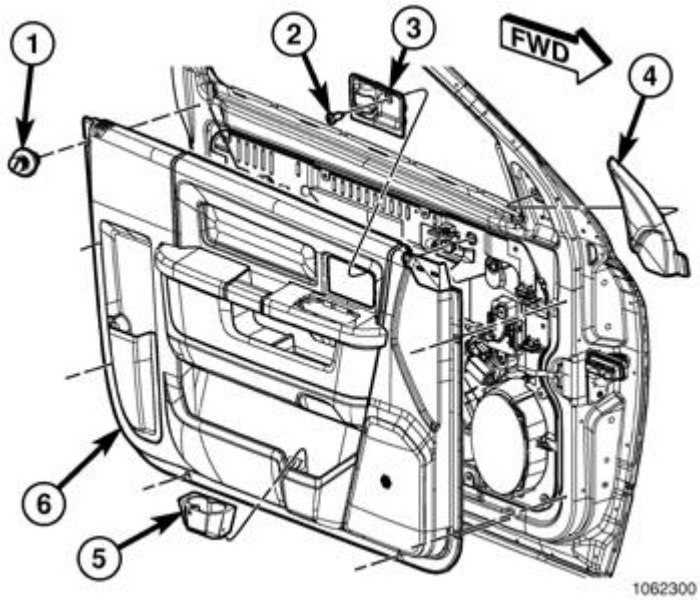

Fig. 258: Interior Door Handle Trim & Interior Door Panel
Courtesy of CHRYSLER GROUP, LLC

4. Remove the six screws (1) that secure the door trim panel (6).
5. Using a trim stick (special tool #C-4755, Trim Stick) or equivalent, remove the mirror trim cover (4).

CAUTION: The door trim panel is attached to the door by molded plastic retaining clips that are integral to the door trim panel. Do not pull the door trim panel directly off of the door or damage to the trim panel and/or the power switch assembly will occur.

6. Lift the door trim panel straight upward to disconnect the molded plastic retaining clips from the door.
7. If equipped, disconnect the door wire harness from the power door switch assembly and remove the door trim panel.

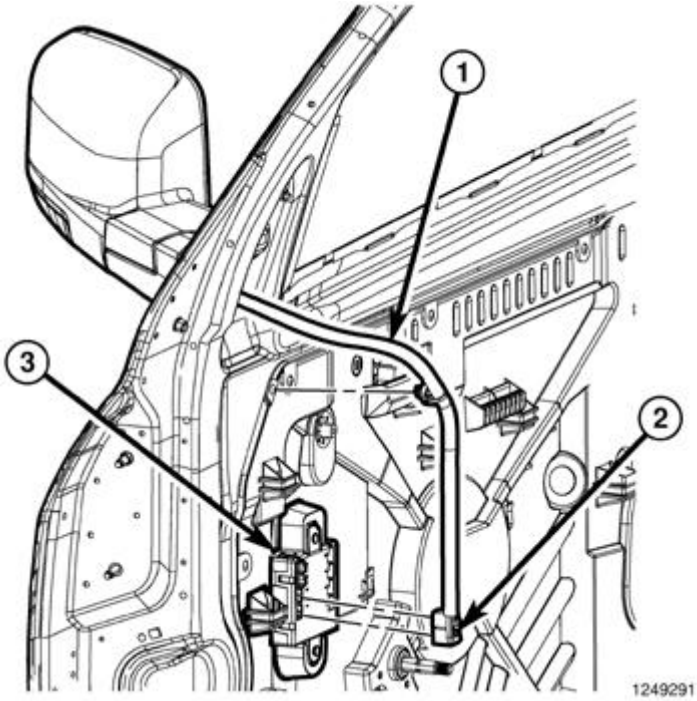

Fig. 259: Door Module Harness Connector
Courtesy of CHRYSLER GROUP, LLC

8. If equipped, disconnect the wire harness connector (2) from the door module (3) and separate the support clip.

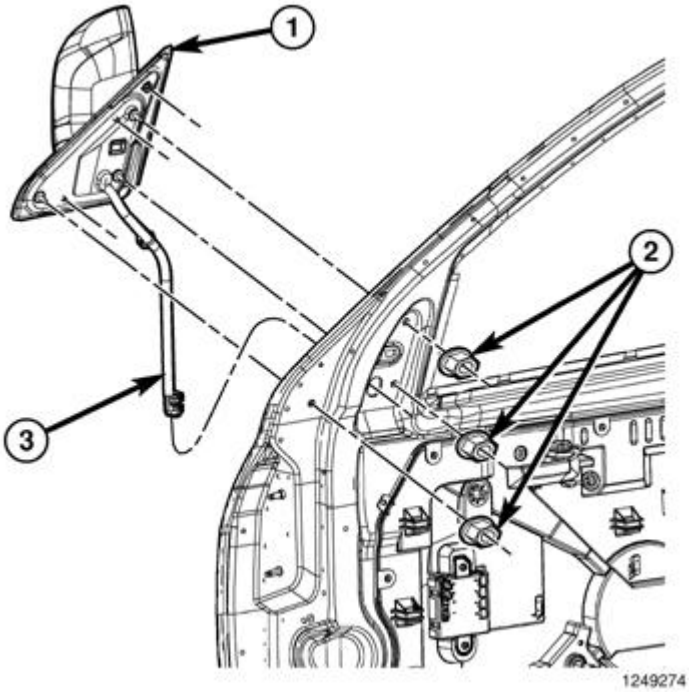

Fig. 260: Outside Rearview Mirror & Harness Connector
Courtesy of CHRYSLER GROUP, LLC

9. Remove the three nuts (2) that secure the mirror to the door and carefully remove the mirror.

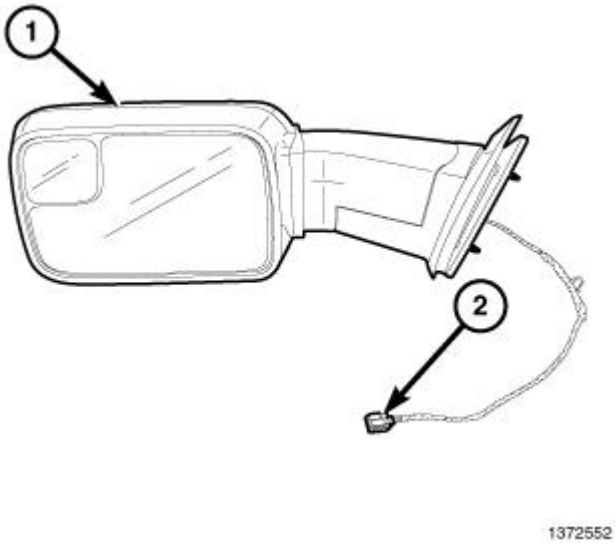

Fig. 261: Trailer Tow Mirror
Courtesy of CHRYSLER GROUP, LLC

10. Install the trailer tow mirror (1).

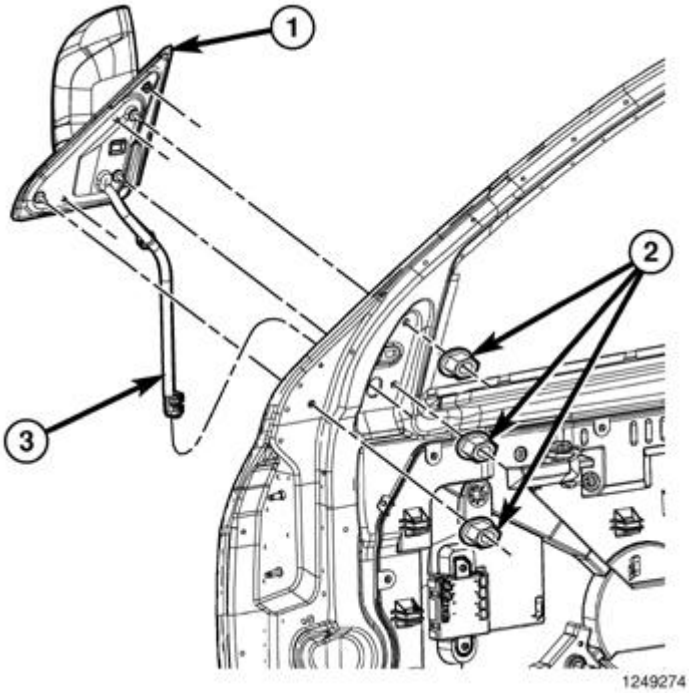

Fig. 262: Outside Rearview Mirror & Harness Connector
Courtesy of CHRYSLER GROUP, LLC

11. Position the wire harness (3) through the door.
12. Position the trailer tow mirror (1) onto the door.

13. Install the three nuts (2) that secure the trailer tow mirror to the door. Tighten the nuts to 7 N.m (60 in. lbs.).

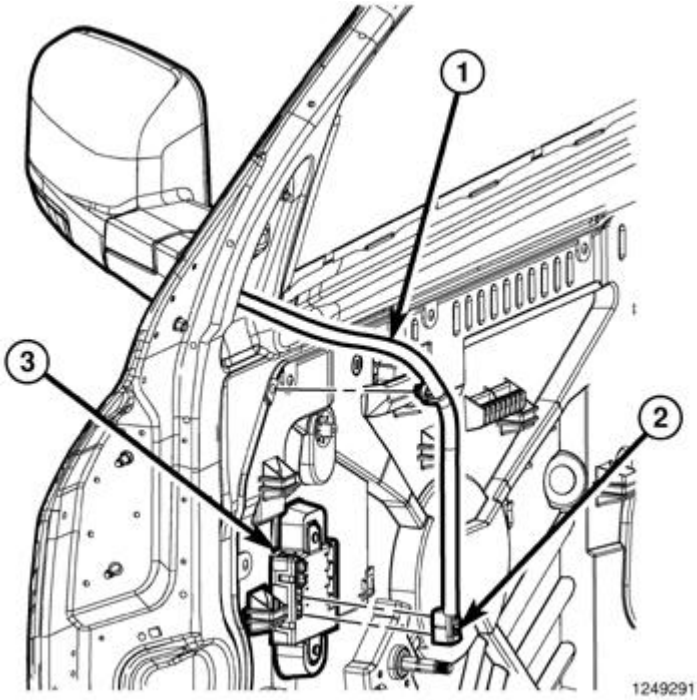

Fig. 263: Door Module Harness Connector
Courtesy of CHRYSLER GROUP, LLC

14. If equipped, connect the wire harness connector (2) to the door module (3).
15. Install the left and right front interior door panels.

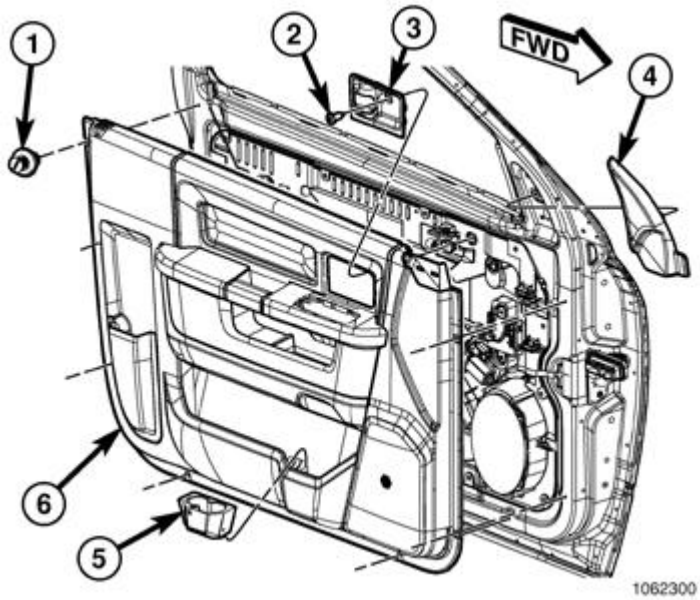

Fig. 264: Interior Door Handle Trim & Interior Door Panel

Courtesy of CHRYSLER GROUP, LLC

16. If equipped, connect the door wire harness to the power door switch assembly.

CAUTION: The door trim panel is attached to the door by molded plastic retaining clips that are integral to the door trim panel. Do not force the door trim panel onto the door or damage to the trim panel and/or the power switch assembly will occur.

17. Position the door trim panel and align the molded plastic retaining clips to the door.
18. Push the door trim panel straight downward until all of the retaining clips are fully engaged to the door.
19. Install the six screws (1) that secure the door trim panel to the door (6).
20. If equipped, install the manual window crank.
21. Position the interior door handle trim (3) onto the interior door panel (6).
22. Install the screw (2) that secures the interior door handle trim to the interior door panel. Tighten the screw securely.
23. Install the mirror trim cover (4)

FRONT TOW HOOKS

DODGE RAM

PROCEDURE STEPS:

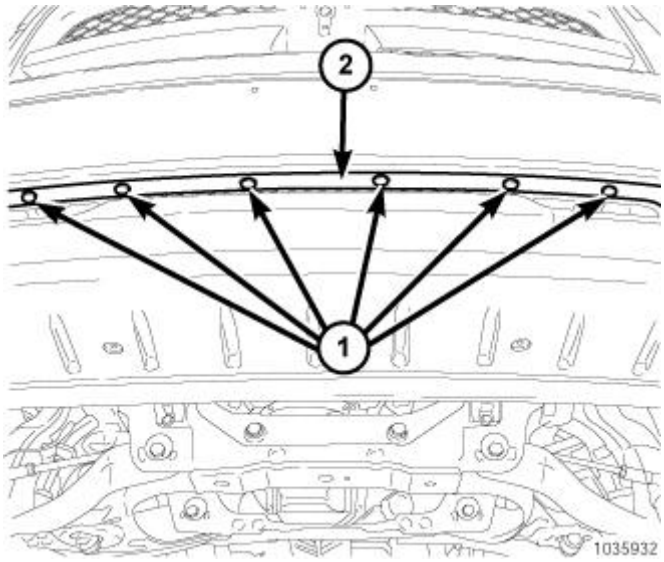

Fig. 265: Front Bumper Close Out Panel Push Pins
Courtesy of CHRYSLER GROUP, LLC

1. Raise the vehicle on a hoist.
2. Remove the push pins (1) from the front bumper close out panel (2).

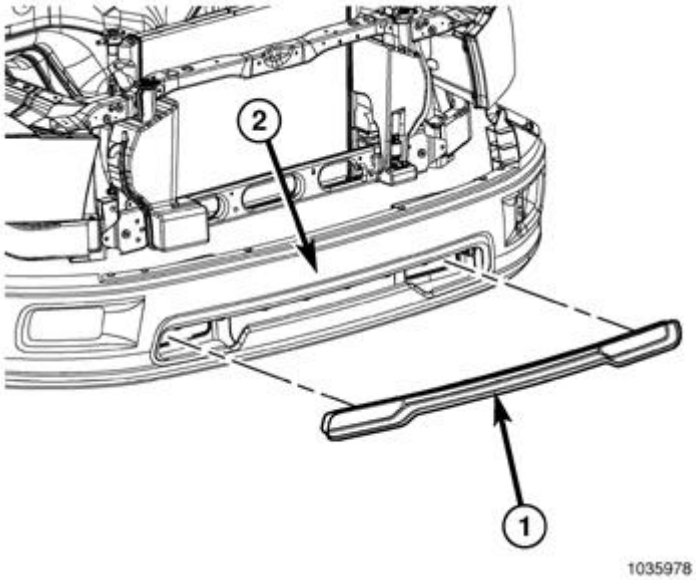

Fig. 266: Front Bumper Close Out Panel
Courtesy of CHRYSLER GROUP, LLC

3. Remove the front bumper close out panel (1) from the front bumper (2).

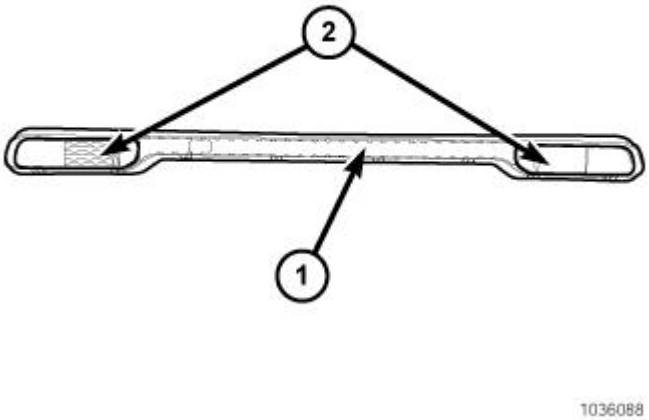

Fig. 267: Tow Hook Area
Courtesy of CHRYSLER GROUP, LLC

4. Cut out the tow hook area (2) of the close out panel (1).

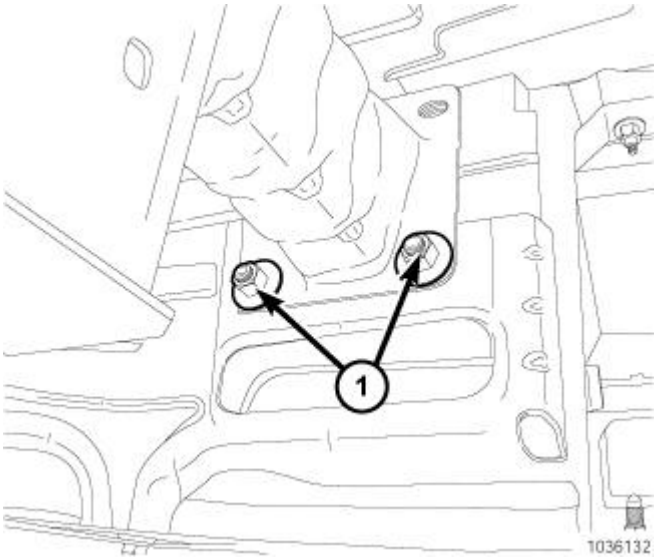

Fig. 268: Bumper Bracket Retainers
Courtesy of CHRYSLER GROUP, LLC

5. Remove the bumper bracket retainers (1) on each side.

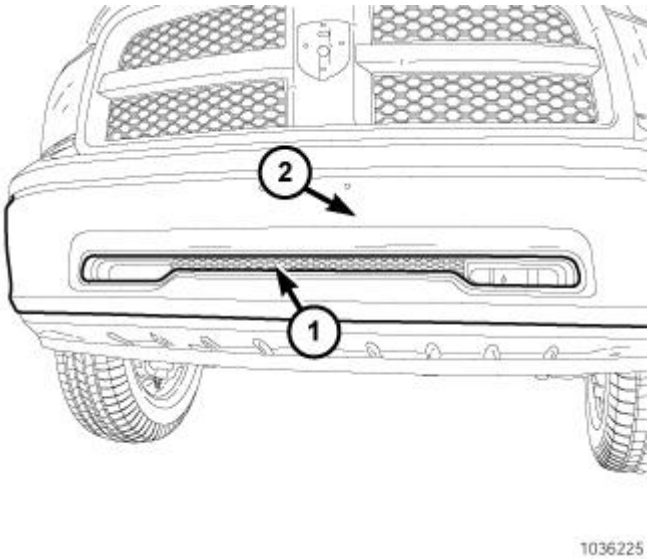

Fig. 269: Front Bumper Close Out Panel
Courtesy of CHRYSLER GROUP, LLC

6. Install the front bumper close out panel (1) to the bumper (2).

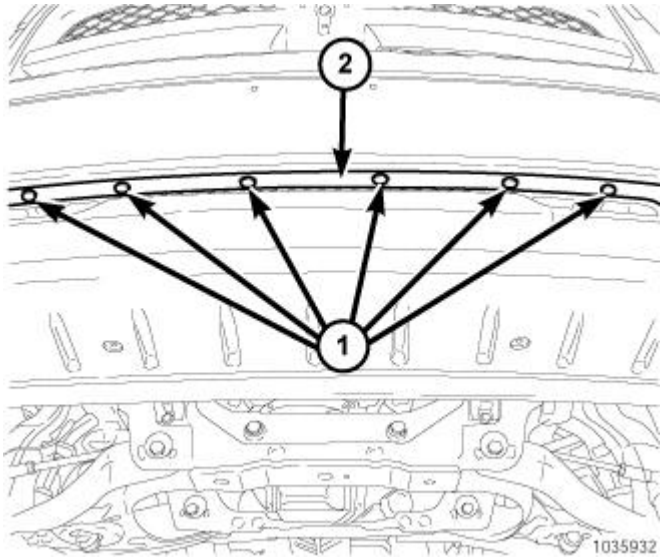

Fig. 270: Front Bumper Close Out Panel Push Pins
Courtesy of CHRYSLER GROUP, LLC

7. Install the push pins (1) into the front bumper close out panel (2).

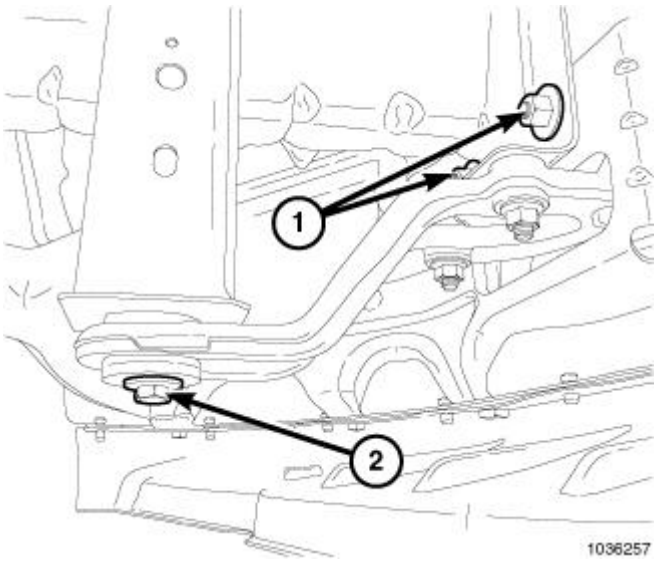

Fig. 271: Tow Hook, Bolts & Nuts
Courtesy of CHRYSLER GROUP, LLC

8. Install the tow hook and nuts (1). Tighten to 95 N.m (70 ft. ibs.). Repeat on other side.
9. Install the tow hook bolt (2). Tighten to 85 N.m (63 ft. lbs.). Repeat on other side.

FLARE MOLDINGS

DODGE RAM

PROCEDURE STEPS:

FRONT WHEEL OPENING FLARE MOLDING

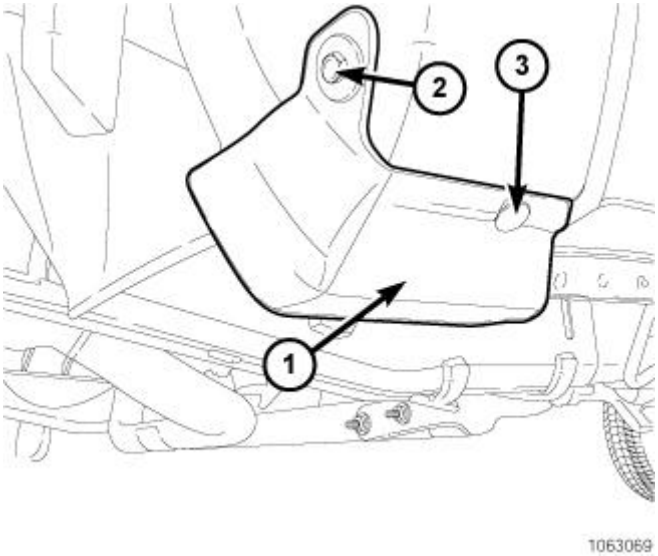

Fig. 272: Front Wheel Opening Spat
Courtesy of CHRYSLER GROUP, LLC

1. Remove the push pin (3) and screw (2) and remove the front wheel opening spat (1).

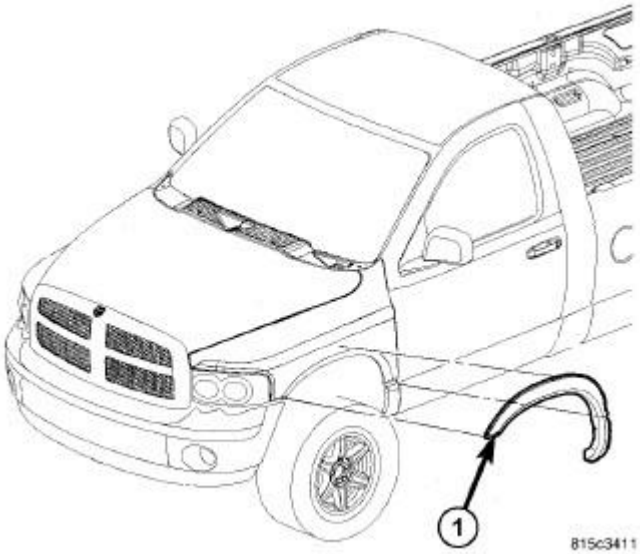

Fig. 273: Identifying Front Flare
Courtesy of CHRYSLER GROUP, LLC

2. Install the supplied j-clips to the wheel opening.
3. Clean and prep the area where the flare molding will be attached.
4. Position the flare (1) to fender aligning attachment holes with holes in fender flange.

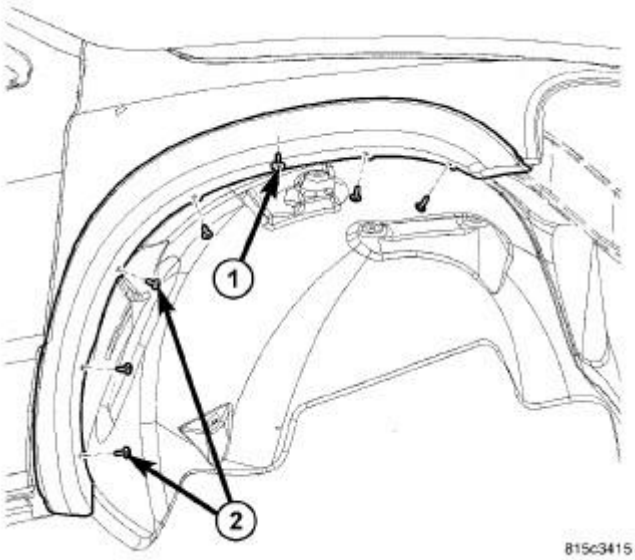

Fig. 274: Identifying Front Flare Fasteners
Courtesy of CHRYSLER GROUP, LLC

5. Install the push-pin (1) first for correct flare positioning. Install the six screws (2) in sequence starting from the center and proceeding outward. For a correct fit, hold the flare tight against the fender as the screws are tightened. Tighten to 2.3 N.m (20 In. lbs.).
6. Remove the protective film from the back of the fender flare and apply pressure.

REAR WHEEL OPENING FLARE MOLDING

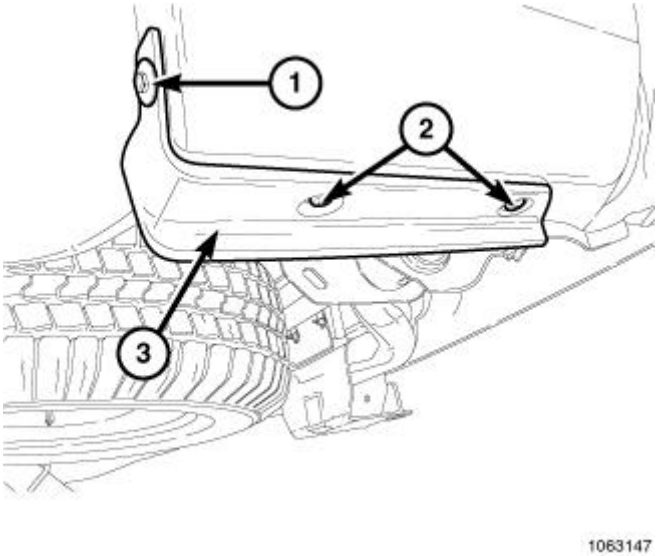

Fig. 275: Rear Wheel Opening Spat
Courtesy of CHRYSLER GROUP, LLC

1. Remove the torx head retainers (2) and screw (1) and remove the rear wheel opening spat (3).

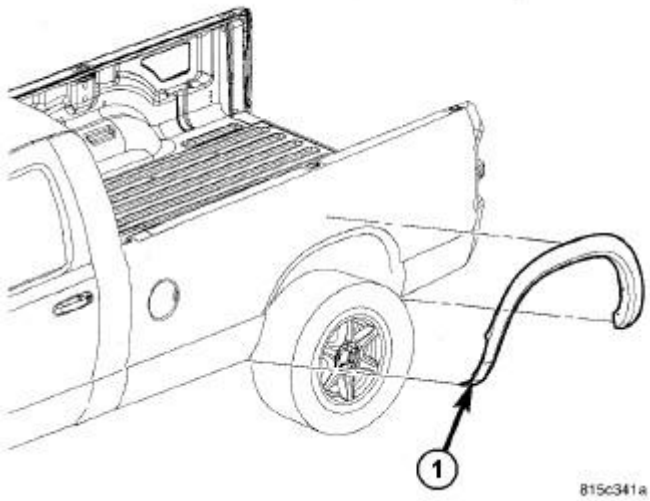

Fig. 276: Identifying Rear Flare
Courtesy of CHRYSLER GROUP, LLC

2. Install the supplied j-clips to the wheel opening.
3. Clean and prep the area where the flare molding will be attached.
4. Position the flare (1) to fender aligning attachment holes with holes in fender flange.

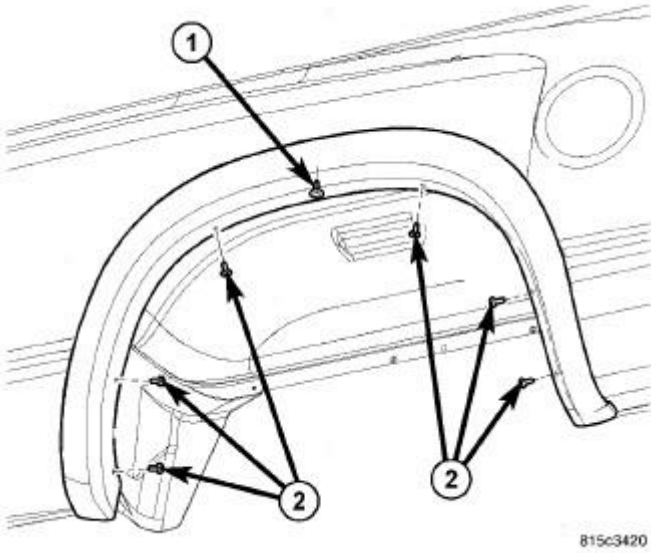

Fig. 277: Identifying Rear Flare Fasteners
Courtesy of CHRYSLER GROUP, LLC

5. Install the push-pin (1) first for correct flare positioning. Install the six screws (2) in sequence starting from the center and proceeding outward. For a correct fit, hold the flare tight against the fender as the screws are tightened. Tighten to 2.3 N.m (20 In. lbs.).

6. Remove the protective film from the back of the fender flare and apply pressure.

DUAL EXHAUST

DODGE RAM

PROCEDURE STEPS:

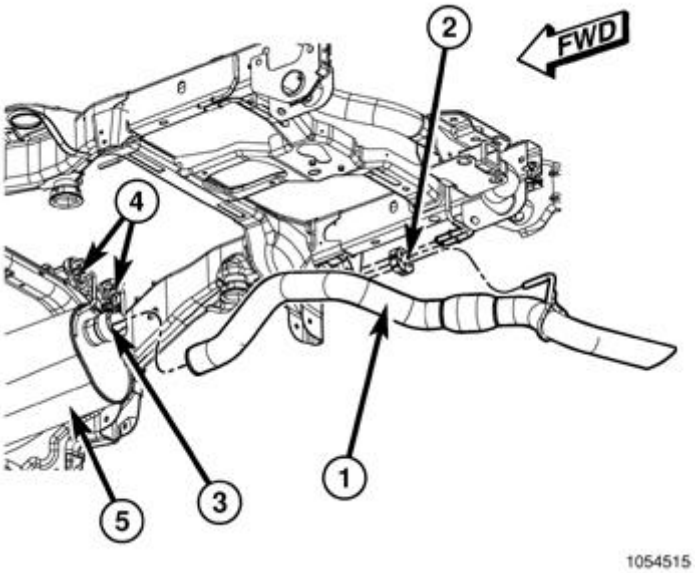

Fig. 278: Exhaust Tailpipe
Courtesy of CHRYSLER GROUP, LLC

1. Raise and support the vehicle.
2. Saturate the clamp nuts with spray lubricant (3).
3. Loosen the exhaust clamps (3).
4. Pull the exhaust tailpipe off of the isolator (2) and remove the exhaust tail pipe (1).

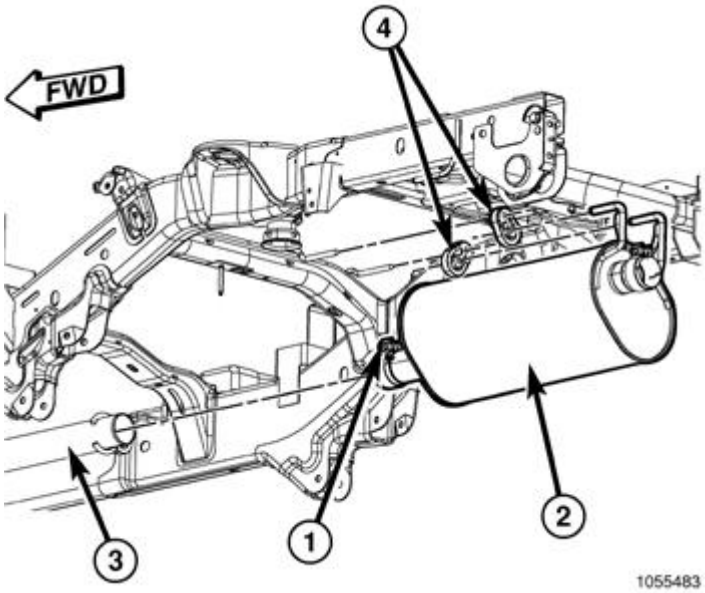

Fig. 279: Muffler
Courtesy of CHRYSLER GROUP, LLC

5. Loosen the muffler exhaust clamp (1).
6. Remove the muffler (2) from the isolators (4) and remove from the exhaust pipe (3).

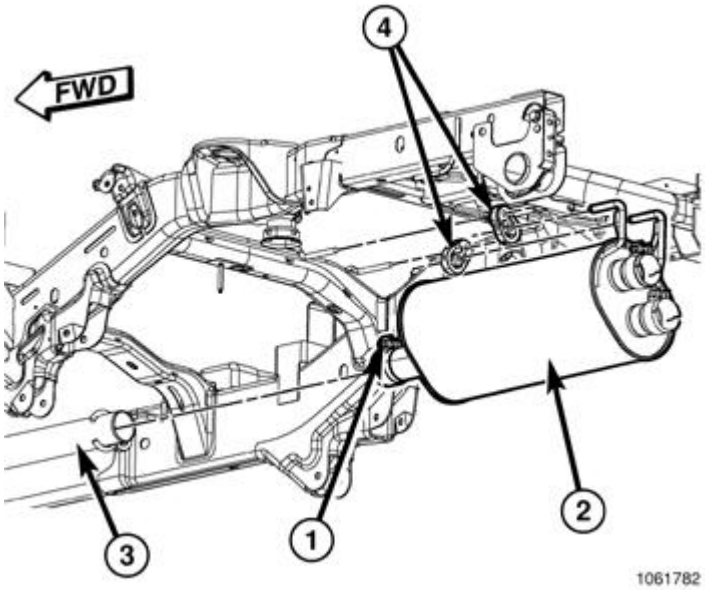

Fig. 280: Dual Outlet Muffler
Courtesy of CHRYSLER GROUP, LLC

7. Hang the dual outlet muffler (2) from the isolators (4) and install on the exhaust pipe (3). Tighten to 57 N.m (42 ft. lbs.).

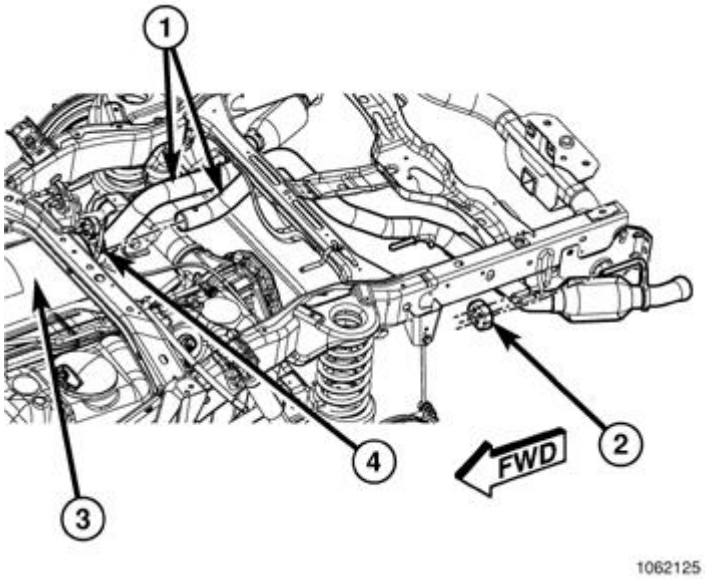

Fig. 281: Exhaust Isolator
Courtesy of CHRYSLER GROUP, LLC

8. Install the new exhaust isolator (2) on the drivers side.
9. Install the dual tailpipes (1), hanging on the isolators and then inserting into the muffler (3). Tighten to 57 N.m (42 ft. lbs.).

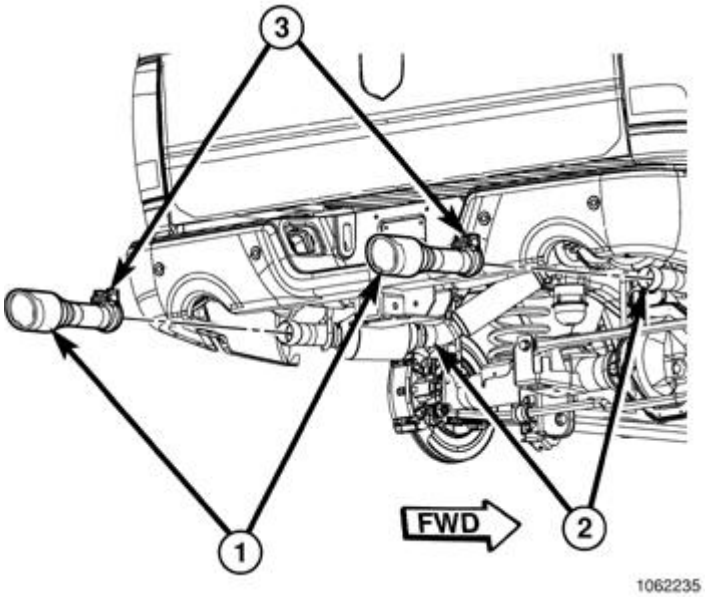

Fig. 282: Exhaust Tailpipe Tips
Courtesy of CHRYSLER GROUP, LLC

10. Snug the exhaust tailpipe tips (1), do not torque the exhaust tailpipe tips (3) at this time.

CUT OUT BUMPER

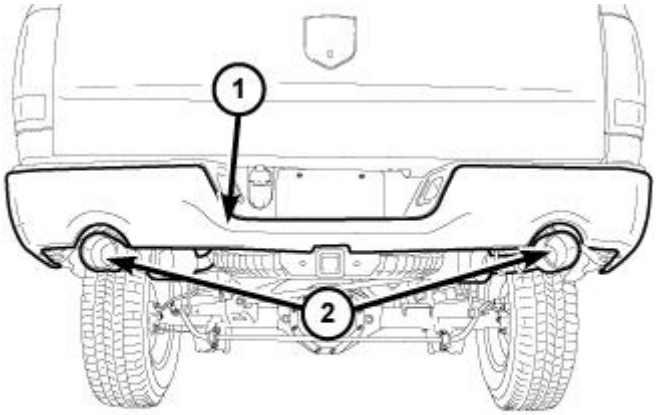

1062351

Fig. 283: Tailpipe Tips - Cut Out Bumper
Courtesy of CHRYSLER GROUP, LLC

1. Adjust the exhaust tip so that they are 25 mm (0.984 in) below the bumper. Tighten to 25 N.m (19 ft. lbs.).

NON-CUT OUT BUMPER

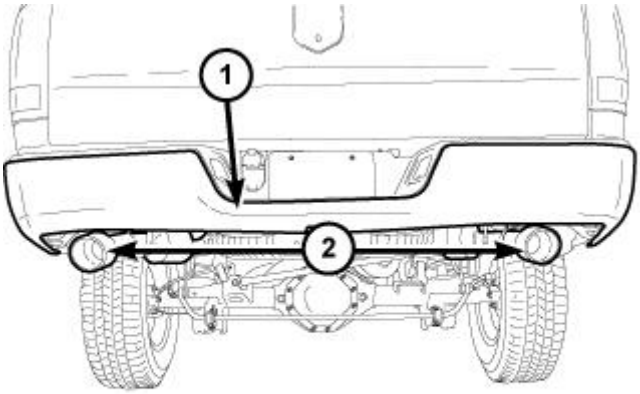

1062364

Fig. 284: Tailpipe Tips - Non-Cut Out Bumper
Courtesy of CHRYSLER GROUP, LLC

1. Adjust the exhaust tip so that it is 25 mm (0.984 in) below the bumper. Tighten to 25 N.m (19 ft. lbs.).

SPECIFICATIONS

SCAN TOOL DATA - POWERTRAIN CONTROL MODULE (PCM) (NGC)

The following chart lists data values taken from the Scan Tool Powertrain Control Module (PCM) data list for the NGC controller. The values were taken at key on, engine off and at idle. The data is to be used for reference only.

The following data values were recorded under the following conditions unless otherwise specified:

- No DTCs set
- Key On, Engine Off values recorded at ambient air temperature.
- Engine at operating temperature.
- Vehicle in Park or Neutral
- A/C Off
- Speed Control Off
- Accessories Off
- Altitude at 55.7 meters (600 ft) above sea level

Some data values can vary as much as 20 percent due to the following:

- Vehicle age and wear
- Altitude
- Weather
- Ambient air temperature
- Engine, Transmission and other Vehicle Options
- Aftermarket Accessories

NOTE: **There are footnotes located next to values in the data table to reference specific conditions or additional information. They are listed in detail after the data table.**

Scan Tool Data - Powertrain Control Module (PCM) (NGC)			
Data	**Unit**	**Key On, Engine Off**	**Idle**
Current Fuel Shutoff	-	ASD	None
SKIM/VTA Has Completed	-	True	True
MAP Vacuum	in Hg	0.06	18.94
MAP Volts	Volts	4.2819 (1)	1.378 (1)

Barometric Pressure	in Hg	28.56 (1)	29.03 (1)
P-Ratio MAP/BARO	PRatio	1.0 (1)	0.3 (1)
Accelerator Pedal Position	%	0.0	0.0
APP1	Volts	0.4399	0.8896
APP2	Volts	0.2151	0.4497
TPS1 Minimum Volts	Volts	0.5209	0.124
TPS1 Volts	Volts	0.9138	0.6503
TPS2 Minimum Volts	Volts	4.4859	4.4933
TPS2 Volts	Volts	4.0821	4.3591
Desired TPS Position	Volts	0.3941	0.1391
Throttle Blade Position	%	8	3
ETC Directional Duty Cycle	%	-1.733- -2.09	-24.5 - -21.19
RPM vs Vehicle Speed Ratio	RPM/	255.0	255.0
Engine Speed	RPM	0	650
Target Idle Speed	RPM	720	648
Time from Start Run	second	0	Varies
Time Fuel System in Run Mode	second	0	Varies
Ignition Off Time	minute	869	4
Engine Runtime	second	0.0	0.0 to 655.3
Purge Duty Cycle	%	0.0	18 - 20
Desired Purge Current	mA	0.0	147.52
Actual Purge Current	mA	-0.977 - 1.954	148 - 150
Purge Airflow	g/s / kg/h	0.0	0.0801
Purge Mode	-	Off	Normal Flow
Purge Vapor Ratio	-	0.23	0.14
Purge Adaptive	-	0	-4.1 - -1.4
Actual Torque	Ft-Lbs / N*m	-61.47	-1.65 - -2.45
ETC Starter Inhibit	miles / km	2146.3041	Varies
EGR Sensed Volts	Volts	3.9691	3.9691
EGR Duty Cycle	%	0.0	1.001
EGR Flow	g/s / kg/h	0.0	0.0
Desired EGR Position	inch / mm	0.0	0.0
Actual EGR Position	inch / mm	0.0	0.01
Injector Pulse Width Cylinder 1	US	0.0	1950 - 2050
Injector Pulse Width Cylinder 2	US	0.0	1950 - 2050
Injector Pulse Width Cylinder 3	US	0.0	1950 - 2050
Injector Pulse Width Cylinder 4	US	0.0	1950 - 2050
Injector Pulse Width Cylinder 5	US	0.0	1950 - 2050
Injector Pulse Width Cylinder 6	US	0.0	1950 - 2050
Injector Pulse Width Cylinder 7 (9)	US	0.0	1950 - 2050
Injector Pulse Width Cylinder 8 (9)	US	0.0	1950 - 2050
Cumulative Injector Pulse Width			

	US	0.0	25504
1/1 O2 Sensor Level	-	Low	Low/High (2)
2/1 O2 Sensor Level	-	Low	Low/High (2)
1/1 O2 Goal (0-1)	Volts	0.0	0.41
2/1 O2 Goal (0-1)	Volts	0.0	0.45
1/1 O2 Volts (0-1)	Volts	2.49	0.08 - 0.85 (3)
1/1 O2 Sensor Volts	Volts	5.0004	2.6 - 3.3
1/2 O2 Volts (0-1)	Volts	2.49	0.75
1/2 O2 Sensor Volts	Volts	5.0004	3.275 (4)
2/1 O2 Volts (0-1)	Volts	2.49	0.08 - 0.85 (3)
2/1 O2 Sensor Volts	Volts	5.0004	2.6 - 3.3
2/2 O2 Volts (0-1)	Volts	2.49	0.75
2/2 O2 Sensor Volts	Volts	5.0004	3.275 (4)
1/1 O2 Fuel Feedback	-	Open	Closed
2/1 O2 Fuel Feedback	-	Open	Closed
1/1 O2 Heater Temp	C / F	699.8	1250.0
1/2 O2 Heater Temp	C / F	771.8	1250.0
2/1 O2 Heater Temp	C / F	708.8	1250.0
2/2 O2 Heater Temp	C / F	780.6	1250.0
1/1 Short Term ADAP	%	0.0	-3.5 - 0.2
2/1 Short Term ADAP	%	0.0	-3.5 - 1.0
1/1 Long Term ADAP	%	-0.6	-0.6
2/1 Long Term ADAP	%	-0.2	-0.2
Closed Loop Timer	second	12.6	0.0
Current ADAP Cell ID	-	24	24
Engine Coolant Temp	C / F	73.4	199.4
Engine Coolant Temp Volt	Volts	3.6856	0.8701
Intake Air Temp Deg	C / F	73.4 (5)	80.6 (5)
Intake Air Temp Deg Volt	Volts	3.4265 (5)	3.4705 (5)
Ambient Temp	C / F	73.4	71.6
Fuel Level Percent	%	80(6)	80(6)
Fuel Tank Vapor Volume	Gallon / Liters	5.125 (7)	5.125 (7)
Fuel Tank Size	Gallon / Liters	20.5 (8)	20.5 (8)
Fuel Level Sensor #1 Volts	Volts	0.65 (6)	0.65 (6)
Ambient Temp Voltage	Volts	3.14	3.14
CAT Modeled Temp	C / F	-83.2	834.8
OIL PRESS SW	-	Closed	Open
Voltage Sense	Volts	12.29	14.0
Target Charging Voltage	Volts	14.143	14.267
Generator Duty Cycle	% DC	0.0	55.0
Mass Airflow	g/s / kg/h	3.43	4.192 - 4.229
Knock Sensor 1 Volt			

	Volts	0.0	0.2465
ST Knock Retard	degree / Grad	0.0	0.0
Base Spark	degree / Grad	-55.0	-37.0
Spark Advance	Engine	0.0	7.5 - 12.5
ESIM Switch	-	Open	Closed
AC Hi-Side Pressure	psi / kpa	83.3	77.2
AC Hi-Side Voltage	Volts	0.92	0.88
PCM Odometer	miles / km	Varies	Varies
Vehicle Speed	MPH / km/hr	0.0	0.0
Cam Sync State	-	Out of Sync	In Sync
Crank Signal Missing	-	False	False
Crank Sync State	-	Out of Sync	In Sync
Crank System Fault and in Limp-Home Mode	-	False	False
Cam Crank Difference	degree / Grad	1.2	1.9
Brake Switch Filtered Switch State	-	Off	Off
Brake Switch 2 Filtered Switch State	-	Off	Off
Park Neutral Switch Filtered Switch State	-	On	On
AC Select Switch Filtered Switch State	-	Off	Off
AC Request Switch Filtered Switch State	-	Off	Off
Act AC Clutch Relay	-	Off	Off
AC Output Current	Amps	0.0	0.0
ASD Sense Switch Filtered Switch State	-	Off	Off
Desired ASD Relay	-	Off	On
MTV Output State	-	Deenergized	Deenergized
MTV PWM Feedback	%	49	49
SRV Output State	-	Deenergized	Deenergized
SRV PWM Feedback	%	49	49
Fuel Pump Relay	-	Off	On
Ignition Start Switch Filtered Switch State	-	Off	On
Ignition Run/Start Switch Filtered Switch State	-	On	On
Desired Malfunction Lamp	-	On	Off
S/C Switch Voltage	Volts	4.55	4.55
S/C Switch Voltage 2	Volts	4.55	4.55
Cruise Lamp Status	-	Off	Off
S/C Working Status	-	Off	Off
S/C Denied Status	-	Allowed	Allowed
S/C Disenable Reason	-	Cruise Off	Remain Enable
S/C Disengage Reason	-	Disengage Due To	Speed Sensor
S/C Switch State 1	-	Open (Switch	Open (Switch
S/C Switch State 2	-	Open (Switch	Open (Switch
EATX Limp-In Status	-	Not Set	Not Set

	RPM	0	607-615
Transfer Speed	RPM	0	0
Output Speed	RPM	0	0
Torque Converter Slip	RPM	0	28-41
Converter Clutch State	-	TCC Unlock	TCC Unlock
Calculate Trans Oil Temp	-	False	True
Trans Oil Temp	C / F	-3.0	104.53
Trans Temperature Voltage	Volts	2.86	2.75
LR Pressure Switch	-	Open	Closed
2-4 Pressure Switch	-	Open	Open
OD Pressure Switch	-	Open	Open
LC Pressure Switch	-	Open	Open
DC Pressure Switch	-	Open	Open
Pressure Switch Error Counter	-	0	0
OD Lockout Switch	-	Open	Open
Autostick® Upshift	-	False	False
Autostick® Downshift	-	False	False
Autostick® Gear Position	-	No Display	No Display
PRNDL Display	-	Park	Park
T41/C1 Switch	-	Closed	Closed
T42/C2 Switch	-	Closed	Closed
T3/C3 Switch	-	Closed	Closed
T1/C4 Switch	-	Open	Open
Line Pressure Sensor	Volts	0.469	2.265 - 2.325
Actual Line Pressure Sensor 1	psi / kpa	0.0	124.0 - 127.0
Desired Line Pressure	psi / kpa	135.0	135.0
LR Clutch Fill Volume Index	-	35	35
LC Clutch Fill Volume Index	-	18	18
DC 1-2 Shift Fill Volume Index	-	28	28
2-4 or 2C Clutch Fill Volume Index	-	27	27
UD Clutch Fill Volume Index	-	25	25
OD Clutch Fill Volume Index	-	78	78
Present Gear	-	Neutral	Neutral
Target Gear	-	Neutral	Neutral

Footnotes

1. Value may vary due to altitude and weather.
2. O2 Sensor will toggle from Low to High every few seconds.
3. Pre-catalyst O2 Sensors will toggle from 0.0 volt to 1.0 volt when operating in closed loop.
4. Post-catalyst O2 Sensors should remain near a fixed value.

5. Value may vary due to ambient air temperature.
6. Value will change due to fuel level change. Voltage will increase as available fuel decreases.
7. Will vary due to fuel level and ambient air temperature.
8. Can be different due to vehicle option.
9. Value is application specific.

SPECIAL TOOLS

	6801 - Terminal Probe (Originally Shipped In Kit Number(s) 10190.) 6922 - Adapter, Fuel Tank (Originally Shipped In Kit Number(s) 6872A, 8404-AK.) 8197A - Electric Terminal Tool Kit 8259 - Adapter, Pressure Test (Originally Shipped In Kit Number(s) 8283, 8283CC, 8527, 8527CC, 8575, 8575CC, 9975.) 8333-1A - Set, Adapter Cable 8333A - Simulator, Transmission 8382 - Adapter, Leak Check (Originally Shipped In Kit Number(s) 8649, 8649CC, 8650, 8652, 8653, 8700, 8700CC.) 8399 - Adapter, Leak Check (Originally Shipped In Kit Number(s) 8649, 8649CC, 8650, 8653, 8700, 8700CC.) 8404-14 - Adapter, Evaporative Service Port 8404-20 - Goggles, Yellow 8404-ADP - Smoke Machine Adapters 8404-CLL - Light, White 8404-EC - Exhaust Cone 8404-ECT - Exhaust Cone, Truck (Originally Shipped In Kit Number(s) 8404-ECT.) 8404-UVL - Light, UV 8404B - Kit, EELD And Accessory (Originally Shipped In Kit Number(s) 8404B.) 8443-1 - Jumpers, 2 Pin (Originally Shipped In Kit Number(s) 8443A.) 8443-19 - 4 Pin Jumper (Originally Shipped In Kit Number(s) 8443A, 9911.) 8443-24 - 32-Way Adapter (Originally Shipped In Kit Number(s) 8443A, 8716, 8716CC.) 8443-8 - Jumper, SRS Load (Originally Shipped In Kit Number(s) 8443A, 8716, 8716CC.) 8443A - SRS Load Tool (Originally Shipped In Kit Number(s) 8443.) 8815-1 - PCM Pinout Box Adapter (Originally Shipped In Kit Number(s) 9565, 9719.) 8815A - Kit, NGC, 38 Position (Originally Shipped In Kit Number(s) 8718, 8718CC, 8815A.) 8978A - Decay Tool, Fuel 9001 - Rf Detector

	(Originally Shipped In Kit Number(s) 9001.)
	9864 - Cap, Fuel Rail
	(Originally Shipped In Kit Number(s) 9860.)
	9977-6 - Kit, Radio Antenna Diagnostic
	9977-6-1 - Adapter
	9977-6-2 - Jumper
	9977-6-3 - Adapter
	9977-6-4 - Jumper
	9977-6-FM - Antenna
	9977-6-SAT - Antenna
	C-3293-SP - Gauge, Pressure 0-300 P.S.I.
	CH9936 - Analyzer, TPM/RKE
	(Originally Shipped In Kit Number(s) CH9936.)

SPECIAL TOOLS

	10042 - Crimper, Wire/Terminal (Originally Shipped In Kit Number(s) 10042.)
	10137 - Adapter, Charge Air (Originally Shipped In Kit Number(s) 10138.)
	6801 - Terminal Probe (Originally Shipped In Kit Number(s) 10190.)
	6807 - Terminal Tools (Originally Shipped In Kit Number(s) 6784, 6809.)
	8404-EC - Exhaust Cone
	8404-ECT - Exhaust Cone, Truck (Originally Shipped In Kit Number(s) 8404-ECT.)
	8443-24 - 32-Way Adapter (Originally Shipped In Kit Number(s) 8443A, 8716, 8716CC.)
	8815-1 - PCM Pinout Box Adapter (Originally Shipped In Kit Number(s) 9565, 9719.)
	8815A - Kit, NGC, 38 Position (Originally Shipped In Kit Number(s) 8718, 8718CC, 8815A.)
	8978-1 - Gauge, Fuel Pressure Assembly
	8978A - Decay Tool, Fuel
	9001 - Rf Detector (Originally Shipped In Kit Number(s) 9001.)
	9011 - Adapter, Fuel Pressure Test (Originally Shipped In Kit Number(s) 8848, 8849, 8849CC.)
	9012 - Fitting, Fuel System Test (Originally Shipped In Kit Number(s) 8999, 8999CC.)
	9014 - Fitting, Fuel System Test (Originally Shipped In Kit Number(s) 8999, 8999CC.)
	9864 - Cap, Fuel Rail (Originally Shipped In Kit Number(s) 9860.)
	9977-6-1 - Adapter
	9977-6-2 - Jumper
	9977-6-3 - Adapter
	9977-6-4 - Jumper
	9977-6-FM - Antenna
	9977-6-SAT - Antenna

VEHICLE INFORMATION

INTERNATIONAL VEHICLE CONTROL AND DISPLAY SYMBOLS

DESCRIPTION

DESCRIPTION

Chrysler LLC uses international symbols to identify various systems on the vehicle.

The graphic symbols illustrated are used to identify various instrument controls, vehicle controls and service information references. The symbols correspond to the controls and displays that are located on the instrument panel and throughout the vehicle.

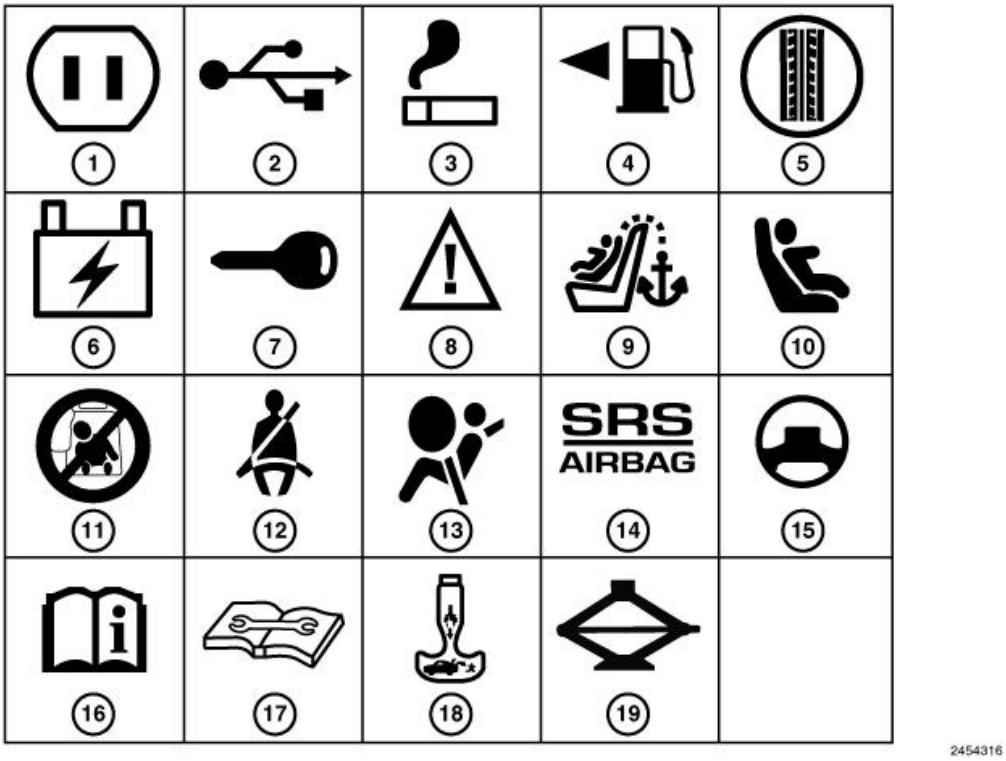

Fig. 1: Information Symbols
Courtesy of CHRYSLER GROUP, LLC

INTERNATIONAL INFORMATION SYMBOL IDENTIFICATION

SYMBOL	DESCRIPTION	SYMBOL	DESCRIPTION
1	115-Volt Power Inverter	11	Side Airbag
2	USB Connector	12	Seat Belt

3	Lighter	13	Airbag
4	Fuel Fill Side	14	Supplemental Restraint System
5	Spare Tire Winch	15	Power Steering Fluid
6	Fuse	16	See Owner's Manual
7	Key Activate (Power Outlet)	17	Refer to appropriate service information
8	Warning	18	Emergency Release Handle
9	Child Seat Tether Anchor	19	Jack/Jack Tools Location
10	Lower Anchors and Tether for Children (latch)		

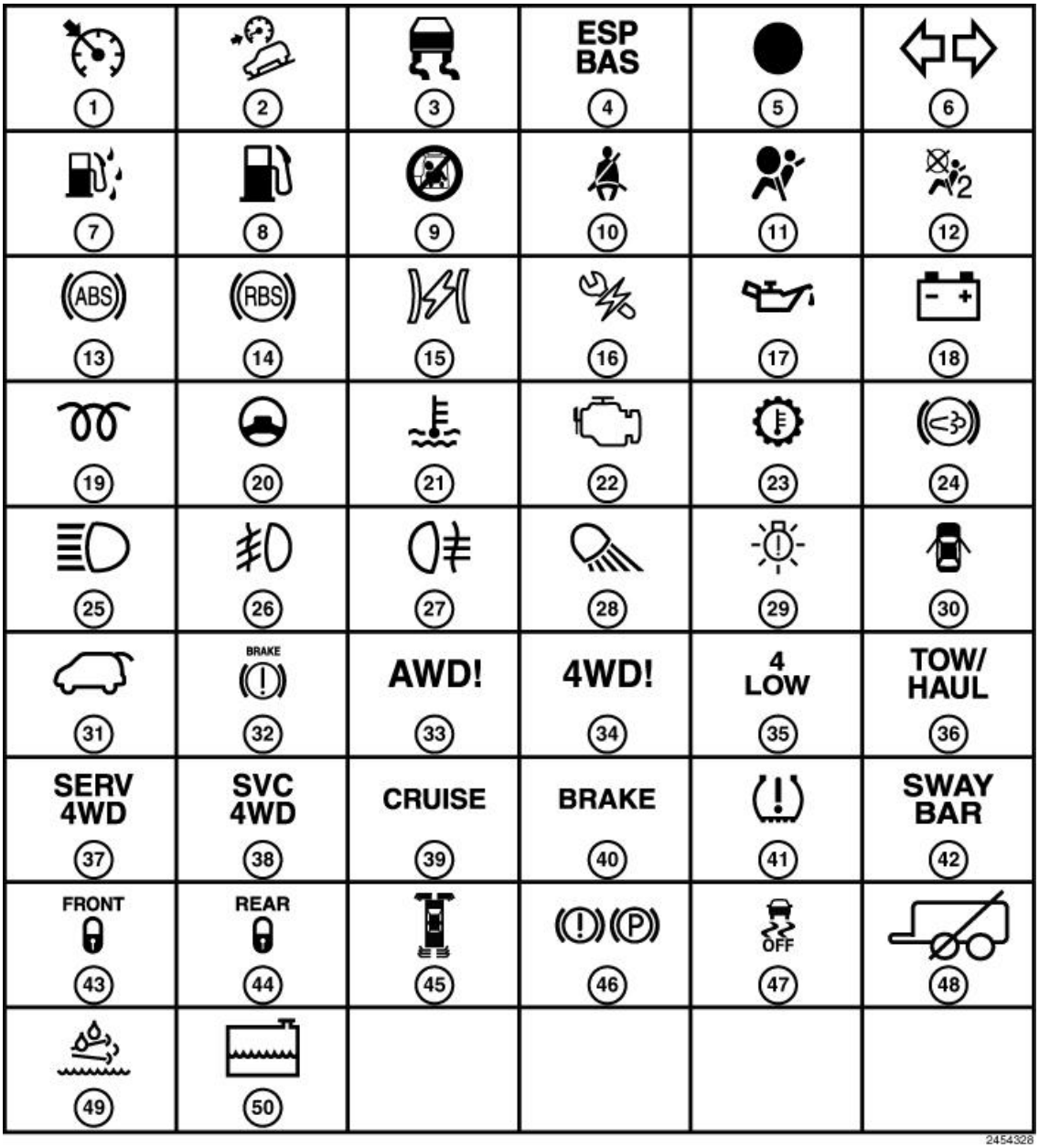

Fig. 2: Indicator Symbols
Courtesy of CHRYSLER GROUP, LLC

INTERNATIONAL INDICATOR SYMBOL IDENTIFICATION

SYMBOL	DESCRIPTION	SYMBOL	DESCRIPTION
1	Electronic Speed Control	26	Front Fog Light
2	Hill Descent Control	27	Rear Fog Light
3	Traction Control	28	Cargo Lamp
4	Electronic Stability Program/Brake System Assist System	29	Exterior Bulb Failure
5	Security Indicator	30	Door Ajar
6	Turn Signals	31	Liftgate Open
7	Water In Fuel	32	Brake System Warning Parking Brake
8	Low Fuel	33	All Wheel Drive
9	Side Airbag	34	Four Wheel Drive
10	Seat Belt Reminder	35	Four Wheel Drive Low
11	Airbag Warning Light	36	Tow/Haul
12	Passenger Airbag Off	37	Service Four Wheel Drive
13	Failure Of Anti-Lock Braking System	38	Service Four Wheel Drive
14	HEV Brake Regenerative Light	39	Cruise Indicator
15	Electronic Throttle Control	40	Brake System Warning Parking Brake
16	HEV Service Light	41	Tire Pressure Monitor
17	Engine Oil	42	Sway Bar Disconnect Indicator
18	Battery Charging	43	Front Axle Lock
19	Glow Plug/Intake Air Heated	44	Rear Axle Lock
20	Power Steering Fluid	45	Park Assist Indicator
21	Engine Coolant Temperature	46	Park Brake Indicator
22	Malfunction Indicator Light	47	Electronic Stability Control/Traction Control Off
23	Transmission Oil Temperature Light	48	Trailer Brake System Off
24	Diesel Exhaust Brake	49	
25	High Beam	50	

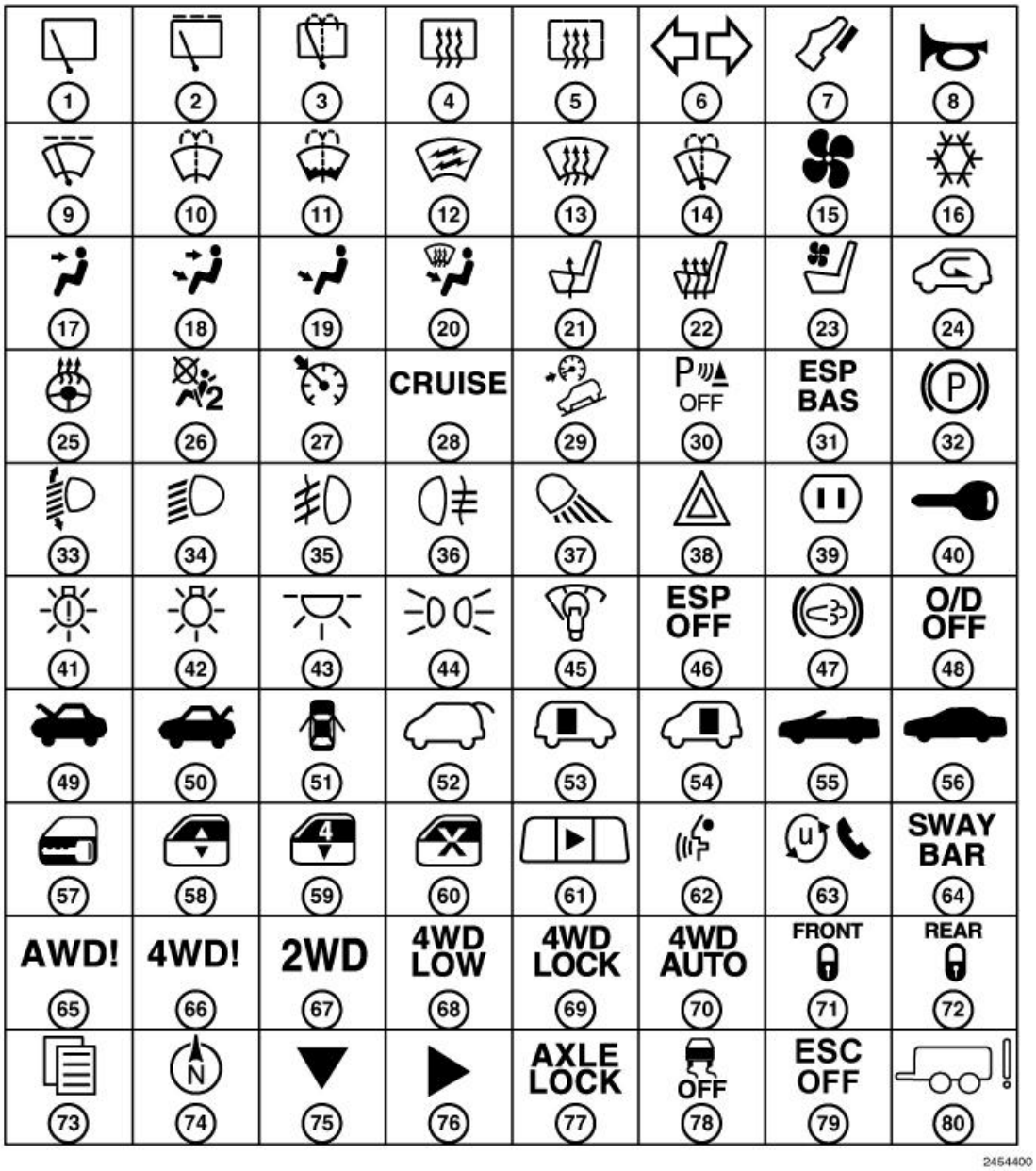

Fig. 3: Control Symbols
Courtesy of CHRYSLER GROUP, LLC

INTERNATIONAL CONTROL SYMBOL IDENTIFICATION

SYMBOL	DESCRIPTION	SYMBOL	DESCRIPTION	SYMBOL	DESCRIPTION
1	Rear Window Wiper	26	Passenger Air Bag Off	51	Door Ajar
2	Rear Window Intermittent Wiper	27	Electronic Speed Control	52	Liftgate Release
3	Rear Window Washer	28	Cruise Indicator	53	Sliding Door
	Rear Window				

4	Defrost	29	Hill Descent Control	54	Sliding Door
5	Heated Mirror	30	Park Assist Off	55	Convertible Top Down
6	Turn Signals	31	Electronic Stability Program/Brake System Assist System	56	Convertible Top Up
7	Adjustable Pedals	32	Park Brake Release	57	Door Lock
8	Horn	33	Adjustable Headlights	58	Window Lift
9	Windshield Wiper Intermittent	34	Low Beam	59	Convertible 4 Window Down
10	Windshield Washer	35	Front Fog Light	60	Window Lock
11	Windshield Washer Fluid Level	36	Rear Fog Light	61	Power Rear Window
12	Windshield Electrically Heated	37	Cargo Lamp	62	Voice Recognition Button
13	Windshield Defrost	38	Hazard Lights	63	Uconnect™ Button
14	Windshield Wiper And Washer	39	115-Volt Power Inverter	64	SwayBar Disconnect
15	Ventilating Fan	40	Key Activate (Power Outlet)	65	All Wheel Drive
16	Air Conditioning	41	Exterior Bulb Failure	66	Four Wheel Drive
17	Upper Air Outlet	42	Master Lighting Switch	67	Two Wheel Drive
18	Upper And Lower Air Outlet	43	Dome Light	68	Four Wheel Drive Low
19	Lower Air Outlet	44	Park Lights	69	Four Wheel Drive Lock
20	Defrost And Lower Air Outlet	45	Instrument Panel Illumination	70	Four Wheel Drive Auto
21	Heated Seat Low	46	Electronic Stability Program Off	71	Front Axle Lock
22	Heated Seat High	47	Diesel Exhaust Brake	72	Rear Axle Lock
23	Ventilated Seat	48	Overdrive Off	73	EVIC Menu
24	Recirculation	49	Hood Release	74	Navigation Button
25	Heated Steering Wheel	50	Trunk/Deck Release	75	Step
76	Reset	77	Axle Lock Button	78	Traction Control Off
79	Electronic Stability Control Off	80	Trailer Brakes		

ENGINE COMPARTMENT

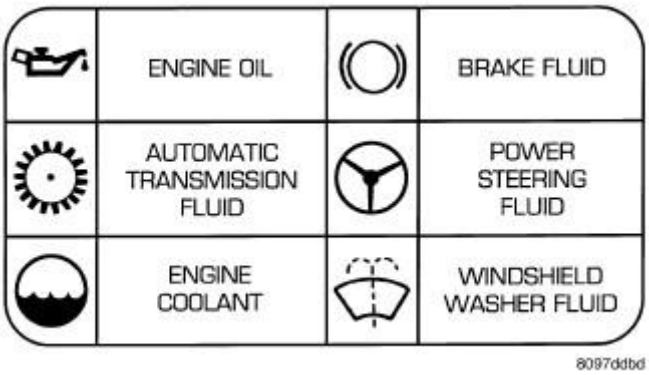

Fig. 4: International Symbols
Courtesy of CHRYSLER GROUP, LLC

The graphic symbols illustrated are used to identify engine compartment lubricant and fluid inspection and fill locations. The symbols correspond to the caps located within the engine compartment.

LABEL, VEHICLE EMISSION CERTIFICATION INFORMATION (VECI)

DESCRIPTION

DESCRIPTION

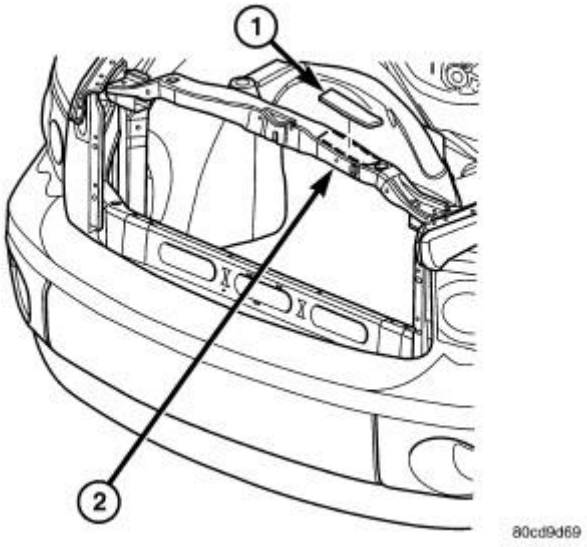

Fig. 5: Vehicle Emissions Certification Information Label
Courtesy of CHRYSLER GROUP, LLC

1 - VECI LABEL LOCATION
2 - RADIATOR SUPPORT

NOTE: **The Vehicle Emission Control Information (VECI) label(s) must be in place for the life of the vehicle. When replacing the component in which the VECI label is adhered, a new VECI label must also be adhered to the new component.**

All models have a VECI Label (1). Chrysler LLC permanently attaches the label in the engine compartment. The label cannot be removed without defacing label information and destroying label.

There are unique labels for vehicles built for sale in the state of California and the country of Canada. Canadian labels are written in both the English and French languages.

The VECI label contains the following:

- Engine family and displacement.
- Evaporative family.
- Certification application.
- Engine timing specifications (if adjustable).
- Idle speeds (if adjustable).
- Spark plug and gap.

VEHICLE CERTIFICATION LABEL

DESCRIPTION

DESCRIPTION

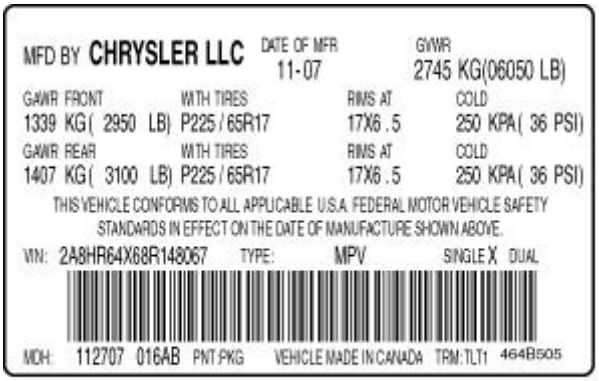

19125

Fig. 6: Vehicle Certification Label - Typical
Courtesy of CHRYSLER GROUP, LLC

A vehicle certification label is attached to every Chrysler LLC vehicle. The label certifies that the vehicle conforms to all applicable Federal Motor Vehicle Standards. The label also lists:

- Month and year of vehicle manufacture.
- Gross Vehicle Weight Rating (GVWR). The gross front and rear axle weight ratings (GAWR's) are based

on a minimum rim size and maximum cold tire inflation pressure.

- Vehicle Identification Number (VIN).
- Type of vehicle.
- Type of rear wheels.
- Bar code.
- Month, Day and Hour (MDH) of final assembly.
- Paint and Trim codes.
- Country of origin.

The label is located on the driver-side door shut-face.

VEHICLE IDENTIFICATION NUMBER

DESCRIPTION

VEHICLE IDENTIFICATION NUMBER

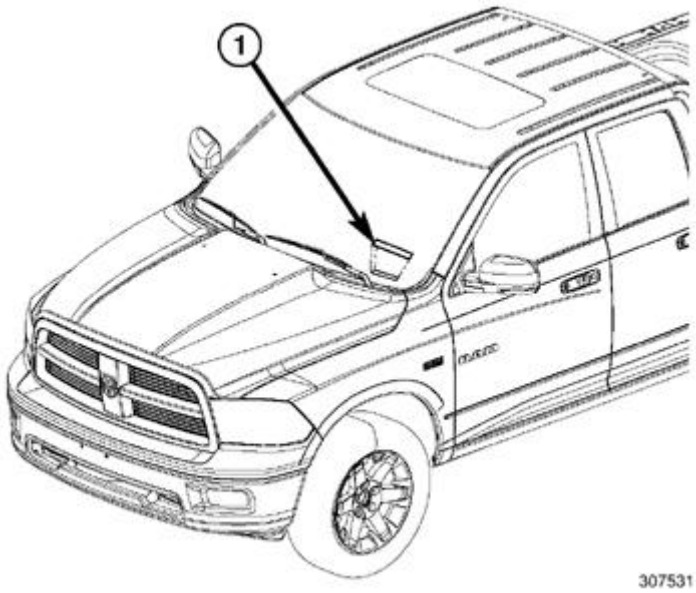

Fig. 7: Locating Vim Plate
Courtesy of CHRYSLER GROUP, LLC

The Vehicle Identification Number (VIN) plate (1) is located on the lower windshield fence near the left a-pillar. The VIN contains 17 characters that provide data concerning the vehicle. Refer to the VIN decoding chart to determine the identification of a vehicle.

The VIN is also imprinted on the:

- Equipment Identification Plate.
- Vehicle Safety Certification Label.
- Frame rail.

To protect the consumer from theft and possible fraud the manufacturer is required to include a Check Digit at the ninth position of the VIN. The check digit is used by the manufacturer and government agencies to verify the authenticity of the vehicle and official documentation. The formula to use the check digit is not released to the general public.

POSITIONS 1 - 3: WORLD MANUFACTURER IDENTIFIER

1	2	3	Manufacturer	Vehicle Type
1	C	4	Chrysler Group LLC (USA)	MPV
1	C	6	Chrysler Group LLC (USA)	Truck
1	C	7	Chrysler Group LLC (USA)	Incomplete Vehicle (Cab Chassis)
2	C	4	Chrysler Canada	MPV
2	C	6	Chrysler Canada	Truck
2	C	7	Chrysler Canada	Incomplete Vehicle (Cab Chassis)
3	C	4	Chrysler de Mexico	MPV
3	C	6	Chrysler de Mexico	Truck
3	C	7	Chrysler de Mexico	Incomplete Vehicle (Cab Chassis)

POSITION 4: BRAKE SYSTEM & GVWR

Brake System	GVWR Range		Active Belts, Air Bags	Active Belts, Air Bags, Side Bags-Front Row	Active Belts, Air Bags, Side Bags-All Rows	Active Belts, No Air Bags	Active Belts, GVWR > 10, 000 lbs.
	Pounds	Kilograms					
Hydraulic	1 - 3000	(0 - 1360 KG)					
Hydraulic	3001 - 4000	(1361 - 1814 KG)					
Hydraulic	4001 -	(1815 -	A	G	N	V	

	5000	2267 KG)					
Hydraulic	5001 - 6000	(2268 - 2721 KG)	B	H	P	X	
Hydraulic	6001 - 7000	(2722 - 3175 KG)	C	J	R	Y	
Hydraulic	7001 - 8000	(3176 - 3628 KG)	D	K	S	Z	
Hydraulic	8001 - 9000	(3629 - 4082 KG)	E	L	T	1	
Hydraulic	9001 - 10000	(4083 - 4535 KG)	F	M	U	2	
Hydraulic	10001 - 14000	(4536 - 6349 KG)					3
Hydraulic	14001 - 16000	(6350 - 7256 KG)					4
Hydraulic	16001 - 19500	(7257 - 8845 KG)					5
Hydraulic	19501 - 26000	(8846 - 11793 KG)					6

POSITIONS 5 - 7 DEFINE THE FOLLOWING: BRAND, MARKETING NAME, DRIVE WHEELS, CAB/BODY TYPE, DRIVE POSITION, AND PRICE SERIES

Dodge Ram 1500 (DS) Left Hand Drive Truck Single Rear Wheels							
2WD			**4WD**			**Cab Type**	**Series**
D	6	A	D	7	A	Regular Cab Short Bed	ST
D	6	B	D	7	B		SLT
D	6	C	D	7	C		Sport
D	6	D	D	7	D	Regular Cab Long Bed	ST
D	6	E	D	7	E		SLT
D	6	F	D	7	F	Quad Cab	ST
D	6	G	D	7	G		SLT
D	6	H	D	7	H		Sport
D	6	J	D	7	J		Laramie
D	6	K	D	7	K	Crew Cab	ST
D	6	L	D	7	L		SLT
D	6	M	D	7	M		Sport
D	6	N	D	7	N		Laramie
D	6	P	D	7	P		Longhorn

POSITIONS 5 - 7 DEFINE THE FOLLOWING: BRAND, MARKETING NAME, DRIVE WHEELS, CAB/BODY TYPE, DRIVE POSITION, AND PRICE SERIES

Dodge Ram 2500 (DJ) Left Hand Drive Truck Single Rear Wheels			

2WD			4WD			Cab Type	Series
D	4	A	D	5	A	Regular Cab	ST
D	4	B	D	5	B		SLT
D	4	C	D	5	D	Crew Cab Short Wheel Base	ST
D	4	D	D	5	E		SLT
-	-	-	D	5	E		Powerwagon
D	4	F	D	5	F		Laramie
D	4	G	D	5	G		Longhorn
D	4	H	D	5	H	Crew Cab Long Wheel Base	ST
D	4	J	D	5	J		SLT
D	4	K	D	5	K		Laramie
D	4	L	D	5	L		Longhorn
D	4	M	D	5	M	Mega Cab	SLT
D	4	N	D	5	N		Laramie
D	4	P	D	5	P		Longhorn

POSITIONS 5 - 7 DEFINE THE FOLLOWING: BRAND, MARKETING NAME, DRIVE WHEELS, CAB/BODY TYPE, DRIVE POSITION, AND PRICE SERIES

Dodge Ram 3500 (D2) Left Hand Drive Truck Single Rear Wheels							
2WD			4WD			Cab Type	Series
D	2	C	D	3	C	Crew Cab Short Bed	ST
D	2	D	D	3	D		SLT
D	2	E	D	3	E		Laramie
D	2	F	D	3	F		Longhorn
-	2	G	D	3	G	Crew Cab Long Bed	ST
D	2	H	D	3	H		SLT
D	2	J	D	3	J		Laramie
D	2	K	D	3	K		Longhorn
D	2	L	D	3	L	Mega Cab	SLT
D	2	M	D	3	M		Laramie
D	2	N	D	3	N		Longhorn

POSITIONS 5 - 7 DEFINE THE FOLLOWING: BRAND, MARKETING NAME, DRIVE WHEELS, CAB/BODY TYPE, DRIVE POSITION, AND PRICE SERIES

Dodge Ram 3500 (D2) Left Hand Drive Truck Dual Rear Wheels							
2WD			4WD			Cab Type	Series
D	P	A	D	R	A	Regular Cab	ST
D	P	B	D	R	B		SLT
D	P	G	D	R	G	Crew Cab Long Bed	ST
D	P	H	D	R	H		SLT
-	P	J	D	R	J		Laramie
D	P	K	D	R	K		Longhorn

D	P	L	D	R	L	Mega Cab	SLT
D	P	M	D	R	M		Laramie
D	P	N	D	R	N		Longhorn

POSITIONS 5 - 7 DEFINE THE FOLLOWING: BRAND, MARKETING NAME, DRIVE WHEELS, CAB/BODY TYPE, DRIVE POSITION, AND PRICE SERIES

Dodge Ram 3500 (DD) Left Hand Drive Truck Single Rear Wheels							
2WD			**4WD**			**Cab Type**	**Wheel Base**
D	8	A	D	9	A	Regular Cab	Short
D	8	C	D	9	C	Crew Cab	Standard

POSITIONS 5 - 7 DEFINE THE FOLLOWING: BRAND, MARKETING NAME, DRIVE WHEELS, CAB/BODY TYPE, DRIVE POSITION, AND PRICE SERIES

Dodge Ram 3500 (DD) Left Hand Drive Truck Dual Rear Wheels							
2WD			**4WD**			**Cab Type**	**Wheel Base**
D	S	A	D	T	A	Regular Cab	Short
D	S	B	D	T	B		Long
D	S	C	D	T	C	Crew Cab	Standard

POSITIONS 5 - 7 DEFINE THE FOLLOWING: BRAND, MARKETING NAME, DRIVE WHEELS, CAB/BODY TYPE, DRIVE POSITION, AND PRICE SERIES

Dodge Ram 4500 (DP) Left Hand Drive Truck Dual Rear Wheels							
2WD			**4WD**			**Cab Type**	**Wheel Base**
D	K	A	D	L	A	Regular Cab	Short
D	K	B	D	L	B		Standard
D	K	C	D	L	C		Long
D	K	D	D	L	D		Extra Long
D	K	E	D	L	E	Crew Cab	Short
D	K	F	D	L	F		Long

POSITIONS 5 - 7 DEFINE THE FOLLOWING: BRAND, MARKETING NAME, DRIVE WHEELS, CAB/BODY TYPE, DRIVE POSITION, AND PRICE SERIES

Dodge Ram 5500 (DP) Left Hand Drive Truck Dual Rear Wheels							
2WD			**4WD**			**Cab Type**	**Wheel Base**
D	M	A	D	N	A	Regular Cab	Short
D	M	B	D	N	B		Standard
D	M	C	D	N	C		Long
D	M	D	D	N	D		Extra Long
D	M	E	D	N	E	Crew Cab	Short
D	M	F	D	N	F		Long

POSITION 8: ENGINE

Code	Displacement	Cylinders	Fuel	Turbo	Sales Codes
K	3.7 Liter	6	Gasoline	No	EKG
P	4.7 Liter	8	Gasoline	No	EVE
T	5.7 Liter	8	Gasoline	No	EZC, EZH
2	5.7 Liter	8	Gasoline/Compressed Natural Gas	No	EZF
L	6.7 Liter	6	Diesel	Yes	ETJ

POSITION 9: CHECK DIGIT

0 through 9 or X

POSITION 10: MODEL YEAR

C = 2012

POSITION 11: ASSEMBLY PLANT

Code	Plant
G	Saltillo Assembly
S	Warren Truck Assembly

POSITION 12 - 17: PLANT SEQUENCE NUMBER

A six digit number assigned by assembly plant.

COMMON SPECS & PROCEDURES

3500 CAB & CHASSIS COMMON SPECS & PROCEDURES

System	Specification/Procedure
Air Conditioning	
Service	**A/C SYSTEM**
Torque	**FASTENER TORQUE SPECIFICATIONS**
Axle Nut/Hub Nut	
Front	N/A
Rear	N/A
Battery	**SPECIFICATIONS**
Brakes	
Bleeding Sequence	Base Brakes: **STANDARD PROCEDURE** , Antilock Brakes: **STANDARD PROCEDURE**
Disc Brakes	
Service Specifications	**SPECIFICATIONS**
Torque	Base Brakes: **TORQUE SPECIFICATIONS** , Antilock Brakes: **SPECIFICATIONS**
Drum Brakes	
Service Specifications	N/A
Torque	N/A
Charging	
Generator	**GENERATOR RATINGS**
Torque	**TORQUE SPECIFICATIONS - GENERATOR / CHARGING SYSTEM**
Drive Belts	
Adjustment	Serpentine belt used, not adjustable.
Drive Belt Routing	Refer to appropriate "Belt Routing" figure under **REMOVAL** .
Engine Cooling	
General Service Specifications	**FILL VOLUMES**
Radiator Cap Pressure	14-to-18 psi (97-to-124 kPa)
Thermostat R & I	**THERMOSTAT**
Water Pump R & I	**REMOVAL**

Engine Mechanical	
5.7L	
Compression	Compression should not be less than 689 kPa (100 psi) and not vary more than 25 percent from cylinder to cylinder.
Oil Pressure	At Curb Idle Speed (MIN): 4 psi (25 kPa), @ 3000 RPM: 25-110 psi (170-758 kPa), If pressure is zero at curb idle, DO NOT run engine.
Overhaul	**SPECIFICATIONS**
Torque	**TORQUE SPECIFICATIONS**
6.7L	
Compression	**CYLINDER COMPRESSION/LEAKAGE TESTS**
Oil pressure	Refer to OIL PRESSURE table under **6.7L DIESEL** .
Overhaul	**6.7L DIESEL**
Torque	**TORQUE SPECIFICATIONS**
Fluid Specifications	See FLUIDS under MAINTENANCE/FLUIDS tab. From within Manager or Service Writer, click the "30/60/90 Interval" or "Maint." button.
Flywheel/Flex Plate/Drive Plate Torque	
5.7L	
Flexplate	70 ft. lbs. (95 N.m)
Flywheel	55 ft. lbs. (75 N.m)
6.7L	100 ft. lbs. (137 N.m)
Fuel System	
Pressure Specification	
Diesel	As high as 26, 107 psi (1800 bar)
Gas	58 psi +/- 2 psi
Fuel Pressure Test Procedure	
Diesel	**CHECKING THE FUEL DELIVERY SYSTEM**
Gas	**CHECKING THE FUEL DELIVERY SYSTEM**
Fuel Filter Location	
Diesel	The fuel filter/water separator assembly is located on left side of engine above the starter motor.
Gas	Fuel filter is part of fuel pump module.
Fuel Filter R & I	
Diesel	**FILTER, FUEL**
Gas	**MODULE, FUEL PUMP**
Ignition	
Firing Order & Cylinder Identification	**FIRING ORDER & CYLINDER IDENTIFICATION**
Ignition Wires (Resistance)	Coil On Plug
Ignition Wires (Routing)	Coil On Plug
Spark Plug	
5.7L	

Type	REC14MCC4
Gap	.040 in. (1.0 mm)
Torque	13 (± 2) ft. lbs. (18 (± 3) N.m): Torque critical tapered design. Do not exceed 15 ft. lbs.
Starting	
Starter	**STARTING SYSTEM**
Torque	**TORQUE SPECIFICATIONS**
Wheel Alignment	
Adjustment Specifications	**SPECIFICATIONS**
Torque	Independent front suspension: **SPECIFICATIONS** , Link and coil suspension: **SPECIFICATIONS**
Wheel & Tire	
Wheel Lug Nut Torque	**SPECIFICATIONS**

AMPLIFIER (AMP)

DIAGNOSTIC CODE INDEX

DTC	Description
B1460	CHANNEL 1 AUDIO SPEAKER OUTPUT CIRCUIT PERFORMANCE
B1461	CHANNEL 1 AUDIO SPEAKER OUTPUT CIRCUIT LOW
B1462	CHANNEL 1 AUDIO SPEAKER OUTPUT CIRCUIT HIGH
B1463	CHANNEL 1 AUDIO SPEAKER OUTPUT CIRCUIT OPEN
B1464	CHANNEL 1 AUDIO SPEAKER OUTPUT CIRCUIT SHORTED TOGETHER
B1465	CHANNEL 2 AUDIO SPEAKER OUTPUT CIRCUIT PERFORMANCE
B1466	CHANNEL 2 AUDIO SPEAKER OUTPUT CIRCUIT LOW
B1467	CHANNEL 2 AUDIO SPEAKER OUTPUT CIRCUIT HIGH
B1468	CHANNEL 2 AUDIO SPEAKER OUTPUT CIRCUIT OPEN
B1469	CHANNEL 2 AUDIO SPEAKER OUTPUT CIRCUIT SHORTED TOGETHER
B146A	CHANNEL 3 AUDIO SPEAKER OUTPUT CIRCUIT PERFORMANCE
B146B	CHANNEL 3 AUDIO SPEAKER OUTPUT CIRCUIT LOW
B146C	CHANNEL 3 AUDIO SPEAKER OUTPUT CIRCUIT HIGH
B146D	CHANNEL 3 AUDIO SPEAKER OUTPUT CIRCUIT OPEN
B146E	CHANNEL 3 AUDIO SPEAKER OUTPUT CIRCUIT SHORTED TOGETHER
B146F	CHANNEL 4 AUDIO SPEAKER OUTPUT CIRCUIT PERFORMANCE
B1470	CHANNEL 4 AUDIO SPEAKER OUTPUT CIRCUIT LOW
B1471	CHANNEL 4 AUDIO SPEAKER OUTPUT CIRCUIT HIGH
B1472	CHANNEL 4 AUDIO SPEAKER OUTPUT CIRCUIT OPEN
B1473	CHANNEL 4 AUDIO SPEAKER OUTPUT CIRCUIT SHORTED TOGETHER
B1474	CHANNEL 5 AUDIO SPEAKER OUTPUT CIRCUIT PERFORMANCE
B1475	CHANNEL 5 AUDIO SPEAKER OUTPUT CIRCUIT LOW
B1476	CHANNEL 5 AUDIO SPEAKER OUTPUT CIRCUIT HIGH
B1477	CHANNEL 5 AUDIO SPEAKER OUTPUT CIRCUIT OPEN
B1478	CHANNEL 5 AUDIO SPEAKER OUTPUT CIRCUIT SHORTED TOGETHER
B1479	CHANNEL 6 AUDIO SPEAKER OUTPUT CIRCUIT PERFORMANCE
B147A	CHANNEL 6 AUDIO SPEAKER OUTPUT CIRCUIT LOW
B147B	CHANNEL 6 AUDIO SPEAKER OUTPUT CIRCUIT HIGH
B147C	CHANNEL 6 AUDIO SPEAKER OUTPUT CIRCUIT OPEN
B147D	CHANNEL 6 AUDIO SPEAKER OUTPUT CIRCUIT SHORTED TOGETHER
B147E	CHANNEL 7 AUDIO SPEAKER OUTPUT CIRCUIT PERFORMANCE
B147F	CHANNEL 7 AUDIO SPEAKER OUTPUT CIRCUIT LOW
B1480	CHANNEL 7 AUDIO SPEAKER OUTPUT CIRCUIT HIGH
B1481	CHANNEL 7 AUDIO SPEAKER OUTPUT CIRCUIT OPEN

B1482	CHANNEL 7 AUDIO SPEAKER OUTPUT CIRCUIT SHORTED TOGETHER
B1483	CHANNEL 8 AUDIO SPEAKER OUTPUT CIRCUIT/PERFORMANCE
B1484	CHANNEL 8 AUDIO SPEAKER OUTPUT CIRCUIT LOW
B1485	CHANNEL 8 AUDIO SPEAKER OUTPUT CIRCUIT HIGH
B1486	CHANNEL 8 AUDIO SPEAKER OUTPUT CIRCUIT OPEN
B1487	CHANNEL 8 AUDIO SPEAKER OUTPUT CIRCUIT SHORTED TOGETHER
B1488	CABIN EQ MISMATCH PERFORMANCE
B14B9	CHANNEL 9 AUDIO SPEAKER OUTPUT CIRCUIT PERFORMANCE
B14BA	CHANNEL 9 AUDIO SPEAKER OUTPUT CIRCUIT LOW
B14BB	CHANNEL 9 AUDIO SPEAKER OUTPUT CIRCUIT HIGH
B14BC	CHANNEL 9 AUDIO SPEAKER OUTPUT CIRCUIT OPEN
B14BD	CHANNEL 9 AUDIO SPEAKER OUTPUT CIRCUIT SHORTED TOGETHER
B14BE	CHANNEL 10 AUDIO SPEAKER OUTPUT CIRCUIT PERFORMANCE
B14BF	CHANNEL 10 AUDIO SPEAKER OUTPUT CIRCUIT LOW
B14C0	CHANNEL 10 AUDIO SPEAKER OUTPUT CIRCUIT HIGH
B14C1	CHANNEL 10 AUDIO SPEAKER OUTPUT CIRCUIT OPEN
B14C2	CHANNEL 10 AUDIO SPEAKER OUTPUT CIRCUIT SHORTED TOGETHER
B14C3	CHANNEL 11 AUDIO SPEAKER OUTPUT CIRCUIT PERFORMANCE
B14C4	CHANNEL 11 AUDIO SPEAKER OUTPUT CIRCUIT LOW
B14C6	CHANNEL 11 AUDIO SPEAKER OUTPUT CIRCUIT OPEN
B14C5	CHANNEL 11 AUDIO SPEAKER OUTPUT CIRCUIT HIGH
B14C7	CHANNEL 11 AUDIO SPEAKER OUTPUT CIRCUIT SHORTED TOGETHER
B210D	BATTERY VOLTAGE LOW
B210E	BATTERY VOLTAGE HIGH
B221F	AMPLIFIER INTERNAL
B222C	VEHICLE CONFIGURATION NOT PROGRAMMED
U0010	CAN INTERIOR BUS
U0011	CAN INTERIOR BUS OFF PERFORMANCE
U0141	LOST COMMUNICATION WITH IPM (FCM/TIPM)
U0184	LOST COMMUNICATION WITH RADIO

CONTROLLER, OCCUPANT RESTRAINT (ORC)

DIAGNOSTIC CODE INDEX

DTC	Description
B0001-11	DRIVER FRONTAL SQUIB 1 CONTROL - CIRCUIT SHORT TO GROUND
B0001-12	DRIVER FRONTAL SQUIB 1 CONTROL - CIRCUIT SHORT TO BATTERY
B0001-13	DRIVER FRONTAL SQUIB 1 CONTROL - CIRCUIT OPEN
B0001-2B	DRIVER FRONTAL SQUIB 1 CONTROL - WIRES SHORTED TOGETHER
B0002-11	DRIVER FRONTAL SQUIB 2 CONTROL - CIRCUIT SHORT TO GROUND
B0002-12	DRIVER FRONTAL SQUIB 2 CONTROL - CIRCUIT SHORT TO BATTERY

B0002-13	DRIVER FRONTAL SQUIB 2 CONTROL - CIRCUIT OPEN
B0002-2B	DRIVER FRONTAL SQUIB 2 CONTROL - WIRES SHORTED TOGETHER
B0010-11	PASSENGER FRONTAL SQUIB 1 CONTROL - CIRCUIT SHORT TO GROUND
B0010-12	PASSENGER FRONTAL SQUIB 1 CONTROL - CIRCUIT SHORT TO BATTERY
B0010-13	PASSENGER FRONTAL SQUIB 1 CONTROL - CIRCUIT OPEN
B0010-2B	PASSENGER FRONTAL SQUIB 1 CONTROL - WIRES SHORTED TOGETHER
B0011-11	PASSENGER FRONTAL SQUIB 2 CONTROL - CIRCUIT SHORT TO GROUND
B0011-12	PASSENGER FRONTAL SQUIB 2 CONTROL - CIRCUIT SHORT TO BATTERY
B0011-13	PASSENGER FRONTAL SQUIB 2 CONTROL - CIRCUIT OPEN
B0011-2B	PASSENGER FRONTAL SQUIB 2 CONTROL - WIRES SHORTED TOGETHER
B0021-11	LEFT CURTAIN DEPLOYMENT SQUIB 1 - CIRCUIT SHORT TO GROUND
B0021-12	LEFT CURTAIN DEPLOYMENT SQUIB 1 - CIRCUIT SHORT TO BATTERY
B0021-13	LEFT CURTAIN DEPLOYMENT SQUIB 1 - CIRCUIT OPEN
B0021-2B	LEFT CURTAIN DEPLOYMENT SQUIB 1 - WIRES SHORTED TOGETHER
B0029-11	RIGHT CURTAIN DEPLOYMENT SQUIB 1 - CIRCUIT SHORT TO GROUND
B0029-12	RIGHT CURTAIN DEPLOYMENT SQUIB 1 - CIRCUIT SHORT TO BATTERY
B0029-13	RIGHT CURTAIN DEPLOYMENT SQUIB 1 - CIRCUIT OPEN
B0029-2B	RIGHT CURTAIN DEPLOYMENT SQUIB 1 - WIRES SHORTED TOGETHER
B0050-11	DRIVER SEATBELT SENSOR - CIRCUIT SHORT TO GROUND
B0050-12	DRIVER SEATBELT SENSOR - CIRCUIT SHORT TO BATTERY
B0050-13	DRIVER SEATBELT SENSOR - CIRCUIT OPEN
B0090-49	LEFT FRONTAL RESTRAINTS SENSOR - INTERNAL ELECTRONIC FAILURE
B0095-49	RIGHT FRONTAL ACCELERATION SENSOR - INTERNAL ELECTRONIC FAILURE
B0091-49	LEFT SIDE ACCELERATION SENSOR 1 - INTERNAL ELECTRONIC FAILURE
B0092-49	LEFT SIDE ACCELERATION SENSOR 2 - INTERNAL ELECTRONIC FAILURE
B009A-49	LEFT SIDE SATELLITE SENSOR 4 - INTERNAL ELECTRONIC FAILURE
B0096-49	RIGHT SIDE ACCELERATION SENSOR 1 - INTERNAL ELECTRONIC FAILURE
B0097-49	RIGHT SIDE ACCELERATION SENSOR 2 - INTERNAL ELECTRONIC FAILURE
B009D-49	RIGHT SIDE SATELLITE SENSOR 4 - INTERNAL ELECTRONIC FAILURE
B1BA5-00	AIRBAG SQUIB CONFIGURATION MISMATCH -
B1BC7-00	DEPLOYMENT DATA RECORD FULL -

B007E-11	DRIVER SEATBELT RETRACTOR PRETENSIONER DEPLOYMENT CONTROL - CIRCUIT SHORT TO GROUND
B007E-12	DRIVER SEATBELT RETRACTOR PRETENSIONER DEPLOYMENT CONTROL - CIRCUIT SHORT TO BATTERY
B007E-13	DRIVER SEATBELT RETRACTOR PRETENSIONER DEPLOYMENT CONTROL - CIRCUIT OPEN
B007E-2B	DRIVER SEATBELT RETRACTOR PRETENSIONER DEPLOYMENT CONTROL - WIRES SHORTED TOGETHER
B007F-11	PASSENGER SEATBELT RETRACTOR PRETENSIONER DEPLOYMENT CONTROL - CIRCUIT SHORT TO GROUND
B007F-12	PASSENGER SEATBELT RETRACTOR PRETENSIONER DEPLOYMENT CONTROL - CIRCUIT SHORT TO BATTERY
B007F-13	PASSENGER SEATBELT RETRACTOR PRETENSIONER DEPLOYMENT CONTROL - CIRCUIT OPEN
B007F-2B	PASSENGER SEATBELT RETRACTOR PRETENSIONER DEPLOYMENT CONTROL - WIRES SHORTED TOGETHER
B2199-16	BATTERY VOLTAGE - CIRCUIT VOLTAGE BELOW THRESHOLD
B2199-17	BATTERY VOLTAGE - CIRCUIT VOLTAGE ABOVE THRESHOLD
B212C-13	IGNITION RUN/START INPUT - CIRCUIT OPEN
B212D-13	IGNITION RUN ONLY INPUT-CIRCUIT OPEN
B210F-00	LOSS OF BATTERY VOLTAGE
B2207-00	OCCUPANT RESTRAINT CONTROLLER INTERNAL 1
B2208-00	OCCUPANT RESTRAINT CONTROLLER INTERNAL 2
B2209-00	OCCUPANT RESTRAINT CONTROLLER INTERNAL 3
B220A-00	OCCUPANT RESTRAINT CONTROLLER INTERNAL 4
B220B-00	OCCUPANT RESTRAINT CONTROLLER FIRING STORED ENERGY
B223B-00	VEHICLE CONFIGURATION MISMATCH -
B222A-00	VEHICLE LINE MISMATCH -
B2722-00	ORC UNLOCKED-ALL DEPLOYMENT DISABLED
U0001-00	CAN C BUS
U0002-00	CAN C BUS OFF PERFORMANCE
U0141-00	LOST COMMUNICATION WITH IPM (FCM/TIPM)
U0170-00	LOST COMMUNICATION W/ UP-FRONT LEFT SATELLITE SENSOR
U0171-00	LOST COMMUNICATION W/ UP-FRONT RIGHT SATELLITE SENSOR
U0172-00	LOST COMMUNICATION W/ LEFT SIDE SATELLITE SENSOR 1
U0173-00	LOST COMMUNICATION W/ LEFT SIDE SATELLITE SENSOR 2
U0175-00	LOST COMMUNICATION W/ RIGHT SIDE SATELLITE SENSOR 1
U0176-00	LOST COMMUNICATION W/ RIGHT SIDE SATELLITE SENSOR 2
U11AD-00	LOST COMMUNICATION W/ LEFT SIDE SATELLITE SENSOR 4
U11B0-00	LOST COMMUNICATION W/ RIGHT SIDE SATELLITE SENSOR 4
U1414-00	IMPLAUSIBLE/MISSING ECU NETWORK CONFIGURATION DATA -
U1415-00	IMPLAUSIBLE/MISSING VEHICLE CONFIGURATION DATA -

HVAC, MTC - DD/DP - CHASSIS CAB

DIAGNOSTIC CODE INDEX

DTC	Description
B1000-92	A/C SWITCH REQUEST INPUT - PERFORMANCE OR INCORRECT OPERATION
B1009-92	RECIRCULATION SWITCH REQUEST INPUT - PERFORMANCE OR INCORRECT OPERATION
B1015-12	REAR DEFROST SWITCH REQUEST INPUT CIRCUIT/PERFORMANCE
B1030-11	EVAPORATOR TEMPERATURE SENSOR - CIRCUIT SHORT TO GROUND
B1030-12	EVAPORATOR TEMPERATURE SENSOR - CIRCUIT SHORT TO BATTERY
B1058-13	RECIRCULATION DOOR CONTROL - CIRCUIT OPEN
B1058-92	RECIRCULATION DOOR CONTROL - PERFORMANCE OR INCORRECT OPERATION
B105C-00	RECIRCULATION DOOR TRAVEL RANGE TOO SMALL
B105D-00	RECIRCULATION DOOR TRAVEL RANGE TOO LARGE
B10B2-00	A/C COOL DOWN TEST PERFORMANCE
B11C2-13	FRONT MODE DOOR 1 CONTROL - CIRCUIT OPEN
B11C2-92	FRONT MODE DOOR 1 CONTROL - PERFORMANCE OR INCORRECT OPERATION
B11C3-00	FRONT MODE DOOR 1 TRAVEL RANGE TOO SMALL
B11C4-00	FRONT MODE DOOR 1 TRAVEL RANGE TOO LARGE
B11CB-13	MAIN/LEFT TEMPERATURE DOOR 1 CONTROL - CIRCUIT OPEN
B11CB-92	MAIN/LEFT TEMPERATURE DOOR 1 CONTROL - PERFORMANCE OR INCORRECT OPERATION
B11CC-00	MAIN/LEFT TEMPERATURE DOOR 1 TRAVEL TOO SMALL
B11CD-00	MAIN/LEFT TEMPERATURE DOOR 1 TRAVEL TOO LARGE
B160F-11	TWILIGHT/AMBIENT LIGHT SENSOR INPUT - CIRCUIT SHORT TO GROUND
B160F-12	TWILIGHT/AMBIENT LIGHT SENSOR INPUT - CIRCUIT SHORT TO BATTERY
B210A-84	SYSTEM VOLTAGE LOW - SIGNAL BELOW ALLOWABLE RANGE
B210B-85	SYSTEM VOLTAGE HIGH - SIGNAL ABOVE ALLOWABLE RANGE
B210D-84	BATTERY VOLTAGE LOW - SIGNAL BELOW ALLOWABLE RANGE
B210E-85	BATTERY VOLTAGE HIGH - SIGNAL ABOVE ALLOWABLE RANGE
B2214-00	(HVAC) CLIMATE CONTROL INTERNAL
B222A-00	VEHICLE LINE MISMATCH
U0010-00	CAN INTERIOR BUS
U0141	LOST COMMUNICATION WITH IPM (FCM/TIPM)
U0155	LOST COMMUNICATION WITH CLUSTER/CCN

HVAC, MTC - DS/DJ/D2 - PICKUP

DIAGNOSTIC CODE INDEX

DTC	Description
B1000-92	A/C SWITCH REQUEST INPUT - PERFORMANCE OR INCORRECT OPERATION
B1009-92	RECIRCULATION SWITCH REQUEST INPUT - PERFORMANCE OR INCORRECT OPERATION
B1015-12	REAR DEFROST SWITCH REQUEST INPUT CIRCUIT/PERFORMANCE
B1030-11	EVAPORATOR TEMPERATURE SENSOR - CIRCUIT SHORT TO GROUND
B1030-12	EVAPORATOR TEMPERATURE SENSOR - CIRCUIT SHORT TO BATTERY
B1058-13	RECIRCULATION DOOR CONTROL - CIRCUIT OPEN
B1058-92	RECIRCULATION DOOR CONTROL - PERFORMANCE OR INCORRECT OPERATION
B105C-00	RECIRCULATION DOOR TRAVEL RANGE TOO SMALL
B105D-00	RECIRCULATION DOOR TRAVEL RANGE TOO LARGE
B10B2-00	A/C COOL DOWN TEST PERFORMANCE
B11C2-13	FRONT MODE DOOR 1 CONTROL - CIRCUIT OPEN
B11C2-92	FRONT MODE DOOR 1 CONTROL - PERFORMANCE OR INCORRECT OPERATION
B11C3-00	FRONT MODE DOOR 1 TRAVEL RANGE TOO SMALL
B11C4-00	FRONT MODE DOOR 1 TRAVEL RANGE TOO LARGE
B11CB-13	MAIN/LEFT TEMPERATURE DOOR 1 CONTROL - CIRCUIT OPEN
B11CB-92	MAIN/LEFT TEMPERATURE DOOR 1 CONTROL - PERFORMANCE OR INCORRECT OPERATION
B11CC-00	MAIN/LEFT TEMPERATURE DOOR 1 TRAVEL TOO SMALL
B11CD-00	MAIN/LEFT TEMPERATURE DOOR 1 TRAVEL TOO LARGE
B160F-11	TWILIGHT/AMBIENT LIGHT SENSOR INPUT - CIRCUIT SHORT TO GROUND
B160F-12	TWILIGHT/AMBIENT LIGHT SENSOR INPUT - CIRCUIT SHORT TO BATTERY
B210A-84	SYSTEM VOLTAGE LOW - SIGNAL BELOW ALLOWABLE RANGE
B210B-85	SYSTEM VOLTAGE HIGH - SIGNAL ABOVE ALLOWABLE RANGE
B210D-84	BATTERY VOLTAGE LOW - SIGNAL BELOW ALLOWABLE RANGE
B210E-85	BATTERY VOLTAGE HIGH - SIGNAL ABOVE ALLOWABLE RANGE
B2214-00	(HVAC) CLIMATE CONTROL INTERNAL
U0010	CAN INTERIOR BUS
B222A-00	VEHICLE LINE MISMATCH
U0141	LOST COMMUNICATION WITH IPM (FCM/TIPM)
U0155	LOST COMMUNICATION WITH CLUSTER/CCN

HVAC, ATC - DD/DP - CHASSIS CAB

DIAGNOSTIC CODE INDEX

DTC	Description
B1000	A/C SWITCH REQUEST INPUT CIRCUIT/PERFORMANCE
B1009	RECIRCULATION SWITCH REQUEST INPUT CIRCUIT/PERFORMANCE
B1015	REAR DEFROST SWITCH REQUEST INPUT CIRCUIT/PERFORMANCE
B1031	EVAPORATOR TEMPERATURE SENSOR CIRCUIT LOW
B1032	EVAPORATOR TEMPERATURE SENSOR CIRCUIT HIGH
B1034	INFRARED TEMPERATURE SENSOR CIRCUIT LOW
B1035	INFRARED TEMPERATURE SENSOR CIRCUIT HIGH
B1040	PANEL MODE DOOR 1 CONTROL CIRCUIT/PERFORMANCE
B1043	PANEL MODE DOOR 1 CONTROL CIRCUIT OPEN
B1044	PANEL MODE DOOR 1 TRAVEL RANGE TOO SMALL
B1045	PANEL MODE DOOR 1 TRAVEL RANGE TOO LARGE
B1058	RECIRCULATION DOOR CONTROL CIRCUIT/PERFORMANCE
B105B	RECIRCULATION DOOR CONTROL CIRCUIT OPEN
B105C	RECIRCULATION DOOR TRAVEL RANGE TOO SMALL
B105D	RECIRCULATION DOOR TRAVEL RANGE TOO LARGE
B109B	PANEL MODE DOOR 2 CONTROL CIRCUIT/PERFORMANCE
B109E	PANEL MODE DOOR 2 CONTROL CIRCUIT OPEN
B109F	PANEL MODE DOOR 2 TRAVEL RANGE TOO SMALL
B10A0	PANEL MODE DOOR 2 TRAVEL RANGE TOO LARGE
B10A5	LEFT BLEND DOOR 1 CONTROL CIRCUIT OPEN
B10A6	LEFT BLEND DOOR 1 TRAVEL TOO SMALL
B10A7	LEFT BLEND DOOR 1 TRAVEL TOO LARGE
B10A8	LEFT BLEND DOOR ACTUATOR PERFORMANCE
B10AC	RIGHT BLEND DOOR CONTROL CIRCUIT OPEN
B10AD	RIGHT BLEND DOOR TRAVEL TOO SMALL
B10AE	RIGHT BLEND DOOR TRAVEL TOO LARGE
B10AF	RIGHT BLEND DOOR ACTUATOR PERFORMANCE
B10B2	A/C COOL DOWN TEST PERFORMANCE
B10E9	BLOWER MOTOR CONTROL CIRCUIT LOW
B10EA	BLOWER MOTOR CONTROL CIRCUIT HIGH
B1141	CLIMATE SYNC SWITCH PERFORMANCE
B1184	LEFT TEMP UP SWITCH REQUEST INPUT CIRCUIT/PERFORMANCE
B1185	LEFT TEMP DOWN SWITCH REQUEST INPUT CIRCUIT/PERFORMANCE
B1186	RIGHT TEMP UP SWITCH REQUEST INPUT CIRCUIT/PERFORMANCE
B1187	RIGHT TEMP DOWN SWITCH REQUEST INPUT CIRCUIT/PERFORMANCE
B1601	LEFT SOLAR SENSOR CIRCUIT LOW
B1602	LEFT SOLAR SENSOR CIRCUIT HIGH
B1604	RIGHT SOLAR SENSOR CIRCUIT LOW
B1605	RIGHT SOLAR SENSOR CIRCUIT HIGH
B1610	AMBIENT LIGHT SENSOR 1 INPUT CIRCUIT LOW
B1611	

	AMBIENT LIGHT SENSOR 1 INPUT CIRCUIT HIGH
B2214-00	(HVAC) CLIMATE CONTROL INTERNAL
B222A	VEHICLE LINE MISMATCH
U0010	CAN INTERIOR BUS
U0141	LOST COMMUNICATION WITH IPM (FCM/TIPM)
U0155	LOST COMMUNICATION WITH CLUSTER/CCN

HVAC, ATC - DS/DJ/D2 - PICKUP

DIAGNOSTIC CODE INDEX

DTC	Description
B1000	A/C SWITCH REQUEST INPUT CIRCUIT/PERFORMANCE
B1009	RECIRCULATION SWITCH REQUEST INPUT CIRCUIT/PERFORMANCE
B1015	REAR DEFROST SWITCH REQUEST INPUT CIRCUIT/PERFORMANCE
B1031	EVAPORATOR TEMPERATURE SENSOR CIRCUIT LOW
B1032	EVAPORATOR TEMPERATURE SENSOR CIRCUIT HIGH
B1034	INFRARED TEMPERATURE SENSOR CIRCUIT LOW
B1035	INFRARED TEMPERATURE SENSOR CIRCUIT HIGH
B1040	PANEL MODE DOOR 1 CONTROL CIRCUIT/PERFORMANCE
B1043	PANEL MODE DOOR 1 CONTROL CIRCUIT OPEN
B1044	PANEL MODE DOOR 1 TRAVEL RANGE TOO SMALL
B1045	PANEL MODE DOOR 1 TRAVEL RANGE TOO LARGE
B1058	RECIRCULATION DOOR CONTROL CIRCUIT/PERFORMANCE
B105B	RECIRCULATION DOOR CONTROL CIRCUIT OPEN
B105C	RECIRCULATION DOOR TRAVEL RANGE TOO SMALL
B105D	RECIRCULATION DOOR TRAVEL RANGE TOO LARGE
B109B	PANEL MODE DOOR 2 CONTROL CIRCUIT/PERFORMANCE
B109E	PANEL MODE DOOR 2 CONTROL CIRCUIT OPEN
B109F	PANEL MODE DOOR 2 TRAVEL RANGE TOO SMALL
B10A0	PANEL MODE DOOR 2 TRAVEL RANGE TOO LARGE
B10A5	LEFT BLEND DOOR 1 CONTROL CIRCUIT OPEN
B10A6	LEFT BLEND DOOR 1 TRAVEL TOO SMALL
B10A7	LEFT BLEND DOOR 1 TRAVEL TOO LARGE
B10A8	LEFT BLEND DOOR ACTUATOR PERFORMANCE
B10AC	RIGHT BLEND DOOR CONTROL CIRCUIT OPEN
B10AD	RIGHT BLEND DOOR TRAVEL TOO SMALL
B10AE	RIGHT BLEND DOOR TRAVEL TOO LARGE
B10AF	RIGHT BLEND DOOR ACTUATOR PERFORMANCE
B10B2	A/C COOL DOWN TEST PERFORMANCE
B10E9	BLOWER MOTOR CONTROL CIRCUIT LOW
B10EA	BLOWER MOTOR CONTROL CIRCUIT HIGH

B1141	CLIMATE SYNC SWITCH PERFORMANCE
B1184	LEFT TEMP UP SWITCH REQUEST INPUT CIRCUIT/PERFORMANCE
B1185	LEFT TEMP DOWN SWITCH REQUEST INPUT CIRCUIT/PERFORMANCE
B1186	RIGHT TEMP UP SWITCH REQUEST INPUT CIRCUIT/PERFORMANCE
B1187	RIGHT TEMP DOWN SWITCH REQUEST INPUT CIRCUIT/PERFORMANCE
B1601	LEFT SOLAR SENSOR CIRCUIT LOW
B1602	LEFT SOLAR SENSOR CIRCUIT HIGH
B1604	RIGHT SOLAR SENSOR CIRCUIT LOW
B1605	RIGHT SOLAR SENSOR CIRCUIT HIGH
B1610	AMBIENT LIGHT SENSOR 1 INPUT CIRCUIT LOW
B1611	AMBIENT LIGHT SENSOR 1 INPUT CIRCUIT HIGH
B2214-00	(HVAC) CLIMATE CONTROL INTERNAL
B222A	VEHICLE LINE MISMATCH
U0010	CAN INTERIOR BUS
U0141	LOST COMMUNICATION WITH IPM (FCM/TIPM)
U0155	LOST COMMUNICATION WITH CLUSTER/CCN

MODULE, ANTILOCK BRAKE (ABS), DD/DP - CHASSIS CAB

DIAGNOSTIC CODE INDEX

DTC	Description
C1000	BRAKE PEDAL SWITCH 1 CIRCUIT PERFORMANCE
C1008	BRAKE FLUID LEVEL CIRCUIT HIGH
C1009	BRAKE FLUID LEVEL LOW
C100A	LEFT FRONT WHEEL SPEED SENSOR CIRCUIT
C1011	LEFT FRONT WHEEL SPEED SENSOR SIGNAL ERRATIC PERFORMANCE
C1014	LEFT FRONT WHEEL SPEED COMPARATIVE PERFORMANCE
C1015	RIGHT FRONT WHEEL SPEED SENSOR CIRCUIT
C101C	RIGHT FRONT WHEEL SPEED SENSOR SIGNAL ERRATIC PERFORMANCE
C101F	RIGHT FRONT WHEEL SPEED COMPARATIVE PERFORMANCE
C1020	LEFT REAR WHEEL SPEED SENSOR CIRCUIT
C1027	LEFT REAR WHEEL SPEED SENSOR SIGNAL ERRATIC PERFORMANCE
C102A	LEFT REAR WHEEL SPEED COMPARATIVE PERFORMANCE
C102B	RIGHT REAR WHEEL SPEED SENSOR CIRCUIT
C1032	RIGHT REAR WHEEL SPEED SENSOR SIGNAL ERRATIC PERFORMANCE
C1035	RIGHT REAR WHEEL SPEED COMPARATIVE PERFORMANCE
C1036	REAR WHEEL SPEED SENSOR CIRCUIT
C103D	REAR WHEEL SPEED SENSOR SIGNAL ERRATIC PERFORMANCE
C1040	REAR WHEEL SPEED COMPARATIVE PERFORMANCE
C104C	LEFT FRONT INLET VALVE CONTROL CIRCUIT LOW
C1050	RIGHT FRONT INLET VALVE CONTROL CIRCUIT LOW

C1054	LEFT REAR INLET VALVE CONTROL CIRCUIT LOW
C1058	RIGHT REAR INLET VALVE CONTROL CIRCUIT LOW
C105C	REAR INLET VALVE CONTROL CIRCUIT LOW
C1060	LEFT FRONT OUTLET VALVE CONTROL CIRCUIT LOW
C1064	RIGHT FRONT OUTLET VALVE CONTROL CIRCUIT LOW
C1068	LEFT REAR OUTLET VALVE CONTROL CIRCUIT LOW
C106C	RIGHT REAR OUTLET VALVE CONTROL CIRCUIT LOW
C1070	REAR OUTLET VALVE CONTROL CIRCUIT LOW
C1073	ABS MOTOR CONTROL CIRCUIT
C1078	TIRE REVOLUTIONS RANGE PERFORMANCE
C1079	TONE WHEEL TEETH COUNT RANGE PERFORMANCE
C107B	WHEEL SPEED COMPARATIVE PERFORMANCE
C107D	BRAKE PEDAL SWITCH 1/2 CORRELATION
C1086	ABS SYSTEM CONTROL TOO LONG
C1090	ABS BRAKE LAMP CONTROL CIRCUIT LOW
C1091	ABS BRAKE LAMP CONTROL CIRCUIT HIGH
C1201	FRONT TRACTION CONTROL INLET VALVE CONTROL CIRCUIT LOW
C1205	REAR TRACTION CONTROL INLET VALVE CONTROL CIRCUIT LOW
C1209	FRONT TRACTION CONTROL PRIME VALVE CONTROL CIRCUIT LOW
C120D	REAR TRACTION CONTROL PRIME VALVE CONTROL CIRCUIT LOW
C1213	G SENSOR INPUT SIGNAL STUCK
C1219	STEERING ANGLE SENSOR ERRATIC PERFORMANCE
C121C	TORQUE REQUEST SIGNAL DENIED
C121D	BRAKE PRESSURE SENSOR CIRCUIT
C121E	BRAKE PRESSURE SENSOR COMPARATIVE PERFORMANCE
C1231	DRIVE TEST: STEERING ANGLE SENSOR
C1232	DRIVE TEST: PRESSURE SENSOR
C1234	DRIVE TEST: SENSOR CLUSTER INSTALLATION
C1235	C1235 DRIVE TEST: TEST ACTIVE
C1238	DRIVE TEST: UNSUCCESSFUL
C1239	EMISSION ROLLS TEST ACTIVE
C123A	ESP SYSTEM SENSORS CALIBRATION
C123B	ESP SYSTEM CONTROL TOO LONG
C123F	STEERING ANGLE SENSOR COMPARATIVE PERFORMANCE
C1240	STEERING ANGLE SENSOR OVERTRAVEL PERFORMANCE
C1242	G SENSOR INPUT SIGNAL PERFORMANCE
C1243	G SENSOR NOT INITIALIZED
C2100	BATTERY VOLTAGE LOW
C2101	BATTERY VOLTAGE HIGH
C2105	ABS VALVE SUPPLY VOLTAGE CIRCUIT LOW
C2200	ANTI-LOCK BRAKE MODULE INTERNAL
C2202	

	ORIGINAL VIN MISMATCH / MISSING
C2204	DYNAMICS SENSOR INTERNAL
C2205	STEERING ANGLE SENSOR INTERNAL
C2206	VEHICLE CONFIGURATION MISMATCH
U0002	CAN C BUS OFF PERFORMANCE
U0100	LOST COMMUNICATION WITH THE ECM/PCM
U0101	LOST COMMUNICATION WITH TCM
U0102-00	LOST COMMUNICATION WITH TRANSFER CASE CONTROL MODULE / AWD
U0125	LOST COMMUNICATION WITH DYNAMICS SENSOR
U0126	LOST COMMUNICATION WITH STEERING ANGLE SENSOR
U0141	LOST COMMUNICATION WITH IPM (FCM/TIPM)
U0401	IMPLAUSIBLE DATA RECEIVED FROM ECM/PCM
U1003	ESP CAN C BUS PERFORMANCE
U1004	CAN C BUS TRANSMIT PERFORMANCE

MODULE, ANTILOCK BRAKE (ABS), DS/DJ/D2 - PICKUP

DIAGNOSTIC CODE INDEX

DTC	Description
C1000	BRAKE PEDAL SWITCH 1 CIRCUIT PERFORMANCE
C1008	BRAKE FLUID LEVEL CIRCUIT HIGH
C1009	BRAKE FLUID LEVEL LOW
C100A	LEFT FRONT WHEEL SPEED SENSOR CIRCUIT
C1011	LEFT FRONT WHEEL SPEED SENSOR SIGNAL ERRATIC PERFORMANCE
C1014	LEFT FRONT WHEEL SPEED COMPARATIVE PERFORMANCE
C1015	RIGHT FRONT WHEEL SPEED SENSOR CIRCUIT
C101C	RIGHT FRONT WHEEL SPEED SENSOR SIGNAL ERRATIC PERFORMANCE
C101F	RIGHT FRONT WHEEL SPEED COMPARATIVE PERFORMANCE
C1020	LEFT REAR WHEEL SPEED SENSOR CIRCUIT
C1027	LEFT REAR WHEEL SPEED SENSOR SIGNAL ERRATIC PERFORMANCE
C102A	LEFT REAR WHEEL SPEED COMPARATIVE PERFORMANCE
C102B	RIGHT REAR WHEEL SPEED SENSOR CIRCUIT
C1032	RIGHT REAR WHEEL SPEED SENSOR SIGNAL ERRATIC PERFORMANCE
C1035	RIGHT REAR WHEEL SPEED COMPARATIVE PERFORMANCE
C1036	REAR WHEEL SPEED SENSOR CIRCUIT
C103D	REAR WHEEL SPEED SENSOR SIGNAL ERRATIC PERFORMANCE
C1040	REAR WHEEL SPEED COMPARATIVE PERFORMANCE
C104C	LEFT FRONT INLET VALVE CONTROL CIRCUIT LOW
C1050	RIGHT FRONT INLET VALVE CONTROL CIRCUIT LOW
C1054	LEFT REAR INLET VALVE CONTROL CIRCUIT LOW

C1058	RIGHT REAR INLET VALVE CONTROL CIRCUIT LOW
C105C	REAR INLET VALVE CONTROL CIRCUIT LOW
C1060	LEFT FRONT OUTLET VALVE CONTROL CIRCUIT LOW
C1064	RIGHT FRONT OUTLET VALVE CONTROL CIRCUIT LOW
C1068	LEFT REAR OUTLET VALVE CONTROL CIRCUIT LOW
C106C	RIGHT REAR OUTLET VALVE CONTROL CIRCUIT LOW
C1070	REAR OUTLET VALVE CONTROL CIRCUIT LOW
C1073	ABS MOTOR CONTROL CIRCUIT
C1078	TIRE REVOLUTIONS RANGE PERFORMANCE
C1079	TONE WHEEL TEETH COUNT RANGE PERFORMANCE
C107B	WHEEL SPEED COMPARATIVE PERFORMANCE
C107D	BRAKE PEDAL SWITCH 1/2 CORRELATION
C1086	ABS SYSTEM CONTROL TOO LONG
C1090	ABS BRAKE LAMP CONTROL CIRCUIT LOW
C1091	ABS BRAKE LAMP CONTROL CIRCUIT HIGH
C1201	FRONT TRACTION CONTROL INLET VALVE CONTROL CIRCUIT LOW
C1205	REAR TRACTION CONTROL INLET VALVE CONTROL CIRCUIT LOW
C1209	FRONT TRACTION CONTROL PRIME VALVE CONTROL CIRCUIT LOW
C120D	REAR TRACTION CONTROL PRIME VALVE CONTROL CIRCUIT LOW
C1213	G SENSOR INPUT SIGNAL STUCK
C1219	STEERING ANGLE SENSOR ERRATIC PERFORMANCE
C121C	TORQUE REQUEST SIGNAL DENIED
C121D	BRAKE PRESSURE SENSOR CIRCUIT
C121E	BRAKE PRESSURE SENSOR COMPARATIVE PERFORMANCE
C1231	DRIVE TEST: STEERING ANGLE SENSOR
C1232	DRIVE TEST: PRESSURE SENSOR
C1234	DRIVE TEST: SENSOR CLUSTER INSTALLATION
C1235	C1235 DRIVE TEST: TEST ACTIVE
C1238	DRIVE TEST: UNSUCCESSFUL
C1239	EMISSION ROLLS TEST ACTIVE
C123A	ESP SYSTEM SENSORS CALIBRATION
C123B	ESP SYSTEM CONTROL TOO LONG
C123F	STEERING ANGLE SENSOR COMPARATIVE PERFORMANCE
C1240	STEERING ANGLE SENSOR OVERTRAVEL PERFORMANCE
C1242	G SENSOR INPUT SIGNAL PERFORMANCE
C1243	G SENSOR NOT INITIALIZED
C2100	BATTERY VOLTAGE LOW
C2101	BATTERY VOLTAGE HIGH
C2105	ABS VALVE SUPPLY VOLTAGE CIRCUIT LOW
C2200	ANTI-LOCK BRAKE MODULE INTERNAL
C2202	ORIGINAL VIN MISMATCH / MISSING
C2204	

	DYNAMICS SENSOR INTERNAL
C2205	STEERING ANGLE SENSOR INTERNAL
C2206	VEHICLE CONFIGURATION MISMATCH
U0002	CAN C BUS OFF PERFORMANCE
U0100	LOST COMMUNICATION WITH THE ECM/PCM
U0101	LOST COMMUNICATION WITH TCM
U0102-00	LOST COMMUNICATION WITH TRANSFER CASE CONTROL MODULE / AWD
U0125	LOST COMMUNICATION WITH DYNAMICS SENSOR
U0126	LOST COMMUNICATION WITH STEERING ANGLE SENSOR
U0141	LOST COMMUNICATION WITH IPM (FCM/TIPM)
U1003	ESP CAN C BUS PERFORMANCE
U1004	CAN C BUS TRANSMIT PERFORMANCE

MODULE, DRIVER DOOR (DDM), (DMFL)

DIAGNOSTIC CODE INDEX

DTC	Description
B164A-11	DRIVER MIRROR SIGNAL LAMP CONTROL - CIRCUIT SHORT TO GROUND
B164A-15	DRIVER MIRROR SIGNAL LAMP CONTROL - CIRCUIT SHORT TO BATTERY OR OPEN
B1800-2A	DRIVER DOOR LOCK/UNLOCK SWITCH - SIGNAL STUCK IN RANGE
B1853-11	DRIVER WINDOW CONTROL - CIRCUIT SHORT TO GROUND
B1853-13	DRIVER WINDOW CONTROL - CIRCUIT OPEN
B1857-11	DRIVER WINDOW POSITION SENSOR POWER SUPPLY - CIRCUIT SHORT TO GROUND
B1857-15	DRIVER WINDOW POSITION SENSOR POWER SUPPLY - CIRCUIT SHORT TO BATTERY OR OPEN - EXPRESS MOTOR ONLY
B185A-31	DRIVER WINDOW POSITION SENSOR - NO SIGNAL
B18B5-00	MASTER SWITCH - FRONT LEFT WINDOW SWITCH
B18B-	B18B-00-MASTER SWITCH - FRONT RIGHT WINDOW SWITCH
B18B7-00	MASTER SWITCH - REAR LEFT WINDOW SWITCH
B18B8-00	MASTER SWITCH - REAR RIGHT WINDOW SWITCH
B1D00-2A	MIRROR FOLD SWITCH INPUT STUCK
B1D04-2A	MIRROR ADJUST SWITCH INPUT - SIGNAL STUCK IN RANGE
B1D08-11	DRIVER MIRROR POSITION SENSOR POWER SUPPLY - CIRCUIT SHORT TO GROUND
B1D0B-11	DRIVER MIRROR VERTICAL POSITION SENSOR INPUT - CIRCUIT SHORT TO GROUND
B1D0B-12	DRIVER MIRROR VERTICAL POSITION SENSOR INPUT - CIRCUIT SHORT TO BATTERY

B1D0E-11	DRIVER MIRROR HORIZONTAL POSITION SENSOR INPUT - CIRCUIT SHORT TO GROUND
B1D0E-12	DRIVER MIRROR HORIZONTAL POSITION SENSOR INPUT - CIRCUIT SHORT TO BATTERY
B1D1E-11	DRIVER MIRROR VERTICAL MOTOR CONTROL - CIRCUIT SHORT TO GROUND
B1D22-11	DRIVER MIRROR HORIZONTAL MOTOR CONTROL - CIRCUIT SHORT TO GROUND
B1D32-11	DRIVER MIRROR HEATER CONTROL - CIRCUIT SHORT TO GROUND
B1D32-15	DRIVER MIRROR HEATER CONTROL - CIRCUIT SHORT TO BATTERY OR OPEN
B1D4A-2A	MEMORY SWITCH INPUT - SIGNAL STUCK IN RANGE
B1E64-00	LEFT MIRROR SELECT SWITCH STUCK
B1E65-00	RIGHT MIRROR SELECT SWITCH STUCK
B1E66-11	DRIVER MIRROR FOLD CONTROL CIRCUIT SHORT TO GROUND
B1E66-15	DRIVER MIRROR FOLD CONTROL CIRCUIT SHORT TO BATTERY OR OPEN
B210C-16	BATTERY VOLTAGE INPUT - CIRCUIT VOLTAGE BELOW THRESHOLD - DD/DP
B210C-16	BATTERY VOLTAGE INPUT - CIRCUIT VOLTAGE BELOW THRESHOLD - DS/DJ/D2
B210C-17	BATTERY VOLTAGE INPUT - CIRCUIT VOLTAGE ABOVE THRESHOLD - DD/DP
B210C-17	BATTERY VOLTAGE INPUT - CIRCUIT VOLTAGE ABOVE THRESHOLD - DS/DJ/D2
B21A1-00	ECU RESET/RECOVERY OCCURRED
B21DD-84	SYSTEM VOLTAGE - SIGNAL BELOW ALLOWABLE RANGE
B21DD-85	SYSTEM VOLTAGE - SIGNAL ABOVE ALLOWABLE RANGE
B2598-54	DOOR MODULE FRONT LEFT - MISSING CALIBRATION - QUAD/CREW CAB ONLY
B2598-96	DOOR MODULE FRONT LEFT - COMPONENT INTERNAL FAILURE
B282E-11	DRIVER PUDDLE LAMP CONTROL - CIRCUIT SHORT TO GROUND
B282E-15	DRIVER PUDDLE LAMP CONTROL - CIRCUIT SHORT TO BATTERY OR OPEN
U0010-00	CAN INTERIOR BUS
U0037-11	LIN BUS - CIRCUIT SHORT TO GROUND - DD/DP
U0037-11	LIN BUS - CIRCUIT SHORT TO GROUND - DS/DJ/D2
U0141-00	LOST COMMUNICATION WITH IPM (FCM/TIPM)
U0155-00	LOST COMMUNICATION WITH CLUSTER/CCN
U0164-00	LOST COMMUNICATION WITH HVAC CONTROL MODULE
U0203-00	LOST COMMUNICATION WITH DOOR MODULE FRONT LEFT
U0204-00	LOST COMMUNICATION WITH DOOR MODULE FRONT RIGHT
U0209-00	LOST COMMUNICATION WITH MEMORY SEAT CONTROL MODULE

U113D	LOST COMMUNICATION WITH MASTER POWER WINDOW SWITCH - DD/DP
U113D	LOST COMMUNICATION WITH MASTER POWER WINDOW SWITCH - DS/DJ/D2

MODULE, DRIVETRAIN CONTROL (DTCM), DD/DP - CHASSIS CAB

DIAGNOSTIC CODE INDEX

DTC	Description
C1403	TRANSFER CASE RANGE POSITION SENSOR PERFORMANCE
C1404	TRANSFER CASE RANGE POSITION SENSOR CIRCUIT LOW
C1405	TRANSFER CASE RANGE POSITION SENSOR CIRCUIT HIGH
C1406	TRANSFER CASE BRAKE PERFORMANCE
C1407	TRANSFER CASE BRAKE CONTROL CIRCUIT LOW
C1408	TRANSFER CASE BRAKE CONTROL CIRCUIT HIGH
C140A	TRANSFER CASE MOTOR PERFORMANCE
C140D	TRANSFER CASE MOTOR CONTROL CIRCUIT OPEN
C140E	TRANSFER CASE MOTOR BLOCKED
C140F	TRANSFER CASE RANGE POSITION SENSOR ERRATIC PERFORMANCE
C1415	TRANSFER CASE MOTOR CURRENT PERFORMANCE
C1438	TRANSFER CASE DIFFERENTIAL CLUTCH WORN
C1444	TRANSFER CASE MOTOR OVERUSE
C1464	FRONT AXLE DISCONNECT CONTROL CIRCUIT LOW
C1465	FRONT AXLE DISCONNECT CONTROL CIRCUIT HIGH
C1472	TRANSFER CASE CLUTCH CONTROL CIRCUIT PERFORMANCE
C1477	TRANSFER CASE CLUTCH OVER TEMPERATURE
C147B	FRONT AXLE DISCONNECT SENSOR CIRCUIT PERFORMANCE
C2100	BATTERY VOLTAGE LOW
C2101	BATTERY VOLTAGE HIGH
C2111	SENSOR SUPPLY 1 VOLTAGE CIRCUIT LOW
C2112	SENSOR SUPPLY 1 VOLTAGE CIRCUIT HIGH
C2201	FDCM/DTCM INTERNAL
U0001	CAN C BUS
U0100	LOST COMMUNICATION WITH THE ECM/PCM
U0101	LOST COMMUNICATION WITH TCM
U0121	LOST COMMUNICATION WITH ABS
U0212	LOST COMMUNICATION WITH SCM (SAS)
U0401	IMPLAUSIBLE DATA RECEIVED FROM ECM
U0402	IMPLAUSIBLE DATA RECEIVED FROM TCM
U0415	IMPLAUSIBLE DATA RECEIVED FROM ABS
U0429	IMPLAUSIBLE DATA RECEIVED FROM SCM (SAS)

MODULE, DRIVETRAIN CONTROL (DTCM), DS/DJ/D2 - PICKUP

DIAGNOSTIC CODE INDEX

DTC	Description
C1078	TIRE REVOLUTIONS RANGE PERFORMANCE
C1404	TRANSFER CASE RANGE POSITION SENSOR CIRCUIT LOW
C1405	TRANSFER CASE RANGE POSITION SENSOR CIRCUIT HIGH
C1406	TRANSFER CASE BRAKE PERFORMANCE
C1407	TRANSFER CASE BRAKE CONTROL CIRCUIT LOW
C1408	TRANSFER CASE BRAKE CONTROL CIRCUIT HIGH
C140A	TRANSFER CASE MOTOR PERFORMANCE
C140D	TRANSFER CASE MOTOR CONTROL CIRCUIT OPEN
C140E	TRANSFER CASE MOTOR BLOCKED
C140F	TRANSFER CASE RANGE POSITION SENSOR ERRATIC PERFORMANCE
C1415	TRANSFER CASE MOTOR CURRENT PERFORMANCE
C1438	TRANSFER CASE DIFFERENTIAL CLUTCH WORN
C1444	TRANSFER CASE MOTOR OVERUSE
C1456	AWD CLUTCH POWER CONTROL CIRCUIT LOW
C1457	AWD CLUTCH POWER CONTROL CIRCUIT HIGH
C145D	AWD CLUTCH POWER /RETURN CONTROL CIRCUIT OPEN
C1464	FRONT AXLE DISCONNECT CONTROL CIRCUIT LOW
C1465	FRONT AXLE DISCONNECT CONTROL CIRCUIT HIGH
C1472	TRANSFER CASE CLUTCH CONTROL CIRCUIT PERFORMANCE
C1477	TRANSFER CASE CLUTCH OVER TEMPERATURE
C147B	FRONT AXLE DISCONNECT SENSOR CIRCUIT PERFORMANCE
C147C	FRONT AXLE DISCONNECT POWER CIRCUIT LOW
C147D	FRONT AXLE DISCONNECT POWER SUPPLY CIRCUIT HIGH
C1480	TRANSFER CASE RANGE DIGITAL POSITION SENSOR PERFORMANCE
C2100	BATTERY VOLTAGE LOW
C2101	BATTERY VOLTAGE HIGH
C2111	SENSOR SUPPLY 1 VOLTAGE CIRCUIT LOW
C2112	SENSOR SUPPLY 1 VOLTAGE CIRCUIT HIGH
C2201	FDCM/DTCM INTERNAL
U0001	CAN C BUS
U0100	LOST COMMUNICATION WITH THE ECM/PCM
U0101	LOST COMMUNICATION WITH TCM
U0121	LOST COMMUNICATION WITH ABS
U0141	LOST COMMUNICATION WITH IPM (FCM/TIPM)
U0212	LOST COMMUNICATION WITH SCM (SAS)
U0401	IMPLAUSIBLE DATA RECEIVED FROM ECM
U0402	IMPLAUSIBLE DATA RECEIVED FROM TCM

U0415	IMPLAUSIBLE DATA RECEIVED FROM ABS
U0429	IMPLAUSIBLE DATA RECEIVED FROM SCM (SAS)
U0431	IMPLAUSIBLE DATA RECEIVED FROM FCM/TIPM

MODULE, FINAL DRIVE CONTROL (FDCM)

DIAGNOSTIC CODE INDEX

DTC	Description
C1417	FRONT DIFFERENTIAL CONTROL CIRCUIT LOW
C1418	FRONT DIFFERENTIAL CONTROL CIRCUIT HIGH
C1419	FRONT DIFFERENTIAL CONTROL CIRCUIT OPEN
C141D	REAR DIFFERENTIAL CONTROL CIRCUIT LOW
C141E	REAR DIFFERENTIAL CONTROL CIRCUIT HIGH
C141F	REAR DIFFERENTIAL CONTROL CIRCUIT OPEN
C143A	C143A - DIFFERENTIAL/LOCKER SELECT SWITCH PERFORMANCE
C143B	DIFFERENTIAL/LOCKER SELECT SWITCH CIRCUIT LOW
C143C	DIFFERENTIAL/LOCKER SELECT SWITCH CIRCUIT HIGH
C143D	STABILIZER SELECT SWITCH PERFORMANCE
C143E	STABILIZER BAR SWITCH CIRCUIT LOW
C143F	STABILIZER SELECT SWITCH CIRCUIT HIGH
C1446	FRONT DIFFERENTIAL RETURN CIRCUIT LOW
C1447	FRONT DIFFERENTIAL RETURN CIRCUIT HIGH
C144A	REAR DIFFERENTIAL RETURN CIRCUIT LOW
C144B	REAR DIFFERENTIAL RETURN CIRCUIT HIGH
C144E	FRONT DIFFERENTIAL POSITION SENSOR PERFORMANCE
C144F	FRONT DIFFERENTIAL POSITION SENSOR LOW
C1450	FRONT DIFFERENTIAL POSITION SENSOR CIRCUIT HIGH
C1452	REAR DIFFERENTIAL POSITION SENSOR PERFORMANCE
C1453	REAR DIFFERENTIAL POSITION SENSOR LOW
C1454	REAR DIFFERENTIAL POSITION SENSOR CIRCUIT HIGH
C2100	BATTERY VOLTAGE LOW
C2101	BATTERY VOLTAGE HIGH
C2111	SENSOR SUPPLY 1 VOLTAGE CIRCUIT LOW
C2112	SENSOR SUPPLY 1 VOLTAGE CIRCUIT HIGH
C2124	STABILIZER BAR INDICATOR CONTROL CIRCUIT
C2126	SENSOR SUPPLY 2 VOLTAGE CIRCUIT LOW
C2127	SENSOR SUPPLY 2 VOLTAGE CIRCUIT HIGH
C2201	FDCM/DTCM INTERNAL
C230F	LOCKER/DIFFERENTIAL INDICATOR SUPPLY CIRCUIT PERFORMANCE
C2310	STABILIZER/DIFFERENTIAL INDICATOR SUPPLY CIRCUIT LOW
C2311	STABILIZER/DIFFERENTIAL INDICATOR SUPPLY CIRCUIT HIGH

C2324	STABILIZER BAR INDICATOR CONTROL CIRCUIT
U0100	LOST COMMUNICATION WITH ECM/PCM
U0155	NO CLUSTER BUS MESSAGE
U0401	IMPLAUSIBLE DATA RECEIVED FROM PCM
U0431	IMPLAUSIBLE DATA RECEIVED FROM FCM (TIPM)

MODULE, HANDS FREE (HFM)

DIAGNOSTIC CODE INDEX

DTC	Description
B143B	MICROPHONE 1 CIRCUIT LOW
B143C	MICROPHONE 1 CIRCUIT HIGH
B143E	MICROPHONE 2 CIRCUIT LOW
B143F	MICROPHONE 2 CIRCUIT HIGH
U0010	CAN INTERIOR BUS
U0141	LOST COMMUNICATION WITH IPM (FCM/TIPM)
U0155	LOST COMMUNICATION WITH CLUSTER/CCN
U0184	LOST COMMUNICATION WITH RADIO

MODULE, HEATED SEAT (HSM)

DIAGNOSTIC CODE INDEX

DTC	Description
B10C4-11	HEATED STEERING WHEEL CONTROL - CIRCUIT SHORT TO GROUND
B10C4-12	HEATED STEERING WHEEL CONTROL - CIRCUIT SHORT TO BATTERY
B10C4-13	HEATED STEERING WHEEL CONTROL - CIRCUIT OPEN
B10C4-1E	HEATED STEERING WHEEL CONTROL - CIRCUIT RESISTANCE OUT OF RANGE
B11C1-13	STEERING WHEEL HEATER POWER SUPPLY - CIRCUIT OPEN
B11DC-13	REAR HEATED SEATS POWER SUPPLY - CIRCUIT OPEN
B1E99-11	FRONT LEFT HEATER CONTROL CIRCUIT - CIRCUIT SHORT TO GROUND
B1E99-12	FRONT LEFT HEATER CONTROL CIRCUIT - CIRCUIT SHORT TO BATTERY
B1E99-13	FRONT LEFT HEATER CONTROL CIRCUIT - CIRCUIT OPEN
B1E99-1E	FRONT LEFT HEATER CONTROL CIRCUIT - CIRCUIT RESISTANCE OUT OF RANGE
B1E9A-11	FRONT RIGHT HEATER CONTROL CIRCUIT - CIRCUIT SHORT TO GROUND
B1E9A-12	FRONT RIGHT HEATER CONTROL CIRCUIT - CIRCUIT SHORT TO BATTERY
B1E9A-13	FRONT RIGHT HEATER CONTROL CIRCUIT - CIRCUIT OPEN
B1E9A-1E	FRONT RIGHT HEATER CONTROL CIRCUIT - CIRCUIT RESISTANCE OUT

	OF RANGE
B1E9B-11	REAR LEFT HEATER CONTROL CIRCUIT - CIRCUIT SHORT TO GROUND
B1E9B-12	REAR LEFT HEATER CONTROL CIRCUIT - CIRCUIT SHORT TO BATTERY
B1E9B-13	REAR LEFT HEATER CONTROL CIRCUIT - CIRCUIT OPEN
B1E9B-1E	REAR LEFT HEATER CONTROL CIRCUIT - CIRCUIT RESISTANCE OUT OF RANGE
B1E9C-11	REAR RIGHT HEATER CONTROL CIRCUIT - CIRCUIT SHORT TO GROUND
B1E9C-12	REAR RIGHT HEATER CONTROL CIRCUIT - CIRCUIT SHORT TO BATTERY
B1E9C-13	REAR RIGHT HEATER CONTROL CIRCUIT - CIRCUIT OPEN
B1E9C-1E	REAR RIGHT HEATER CONTROL CIRCUIT - CIRCUIT RESISTANCE OUT OF RANGE
B1E9D-11	FRONT LEFT VENT CONTROL CIRCUIT - CIRCUIT SHORT TO GROUND
B1E9D-12	FRONT LEFT VENT CONTROL CIRCUIT - CIRCUIT SHORT TO BATTERY
B1E9E-13	FRONT RIGHT VENT CONTROL CIRCUIT - CIRCUIT OPEN
B1E9D-13	FRONT LEFT VENT CONTROL CIRCUIT - CIRCUIT OPEN
B1E9E-11	FRONT RIGHT VENT CONTROL CIRCUIT - CIRCUIT SHORT TO GROUND
B1E9E-12	FRONT RIGHT VENT CONTROL CIRCUIT - CIRCUIT SHORT TO BATTERY
B1EB1-1A	FRONT LEFT SEAT HEATER SENSOR - CIRCUIT RESISTANCE BELOW THRESHOLD
B1EB1-1B	FRONT LEFT SEAT HEATER SENSOR - CIRCUIT RESISTANCE ABOVE THRESHOLD
B1EB2-1A	FRONT RIGHT SEAT HEATER SENSOR - CIRCUIT RESISTANCE BELOW THRESHOLD
B1EB2-1B	FRONT RIGHT SEAT HEATER SENSOR - CIRCUIT RESISTANCE ABOVE THRESHOLD
B1EB3-1A	REAR LEFT SEAT HEATER SENSOR - CIRCUIT RESISTANCE BELOW THRESHOLD
B1EB3-1B	REAR LEFT SEAT HEATER SENSOR - CIRCUIT RESISTANCE ABOVE THRESHOLD
B1EB4-1A	REAR RIGHT SEAT HEATER SENSOR - CIRCUIT RESISTANCE BELOW THRESHOLD
B1EB4-1B	REAR RIGHT SEAT HEATER SENSOR - CIRCUIT RESISTANCE ABOVE THRESHOLD
B210C-17	BATTERY VOLTAGE INPUT - CIRCUIT VOLTAGE ABOVE THRESHOLD
B210C-18	BATTERY VOLTAGE INPUT - CIRCUIT BELOW THRESHOLD
B21DD-84	SYSTEM VOLTAGE - SIGNAL BELOW ALLOWABLE RANGE
B21DD-85	SYSTEM VOLTAGE - SIGNAL ABOVE ALLOWABLE RANGE
B221A-00	(HSM) HEATED SEAT MODULE INTERNAL
U0011-00	CAN B BUS PERFORMANCE
U0141-00	LOST COMMUNICATION WITH IPM (FCM/TIPM)
U0155-00	LOST COMMUNICATION WITH CLUSTER/CCN
U1446-00	IMPLAUSIBLE HEATED STEERING WHEEL TEMPERATURE MESSAGE

	RECEIVED (CCN)

MODULE, INTEGRATED TRAILER BRAKE (ITBM), DD/DP - CHASSIS CAB

DIAGNOSTIC CODE INDEX

DTC	Description
C10C5	92 ELECTRONIC TRAILER BRAKE ACCELEROMETER-PERFORMANCE OR INCORRECT OPERATION
C10C6	92 ELECTRONIC TRAILER BRAKE MANUAL LEVER-PERFORMANCE OR INCORRECT OPERATION
C10C7	00 ELECTRONIC TRAILER BRAKE CONTROL OUTPUT
C10C7	11 ELECTRONIC TRAILER BRAKE CONTROL OUTPUT-CIRCUIT SHORT TO GROUND
C10C7	12 ELECTRONIC TRAILER BRAKE CONTROL OUTPUT-CIRCUIT SHORT TO BATTERY
C10C7	19 ELECTRONIC TRAILER BRAKE CONTROL OUTPUT-OVERCURRENT
C10C9	00 ELECTRONIC TRAILER BRAKE MANUAL LEVER FAILSAFE CIRCUIT
C10CA	2A ITBM ADJUSTMENT SWITCH STUCK
C2129	16 BATTERY VOLTAGE - CIRCUIT VOLTAGE BELOW THRESHOLD
C2129	17 BATTERY VOLTAGE - CIRCUIT VOLTAGE ABOVE THRESHOLD
C2213	00 TRAILER BRAKE MODULE INTERNAL
C2213-42	TRAILER BRAKE MODULE INTERNAL-GENERAL MEMORY FAILURE
C2214-00	ITBM NOT CALIBRATED
U0001-00	CAN C BUS
U0100-00	LOST COMMUNICATION WITH ECM/PCM
U0121-00	LOST COMMUNICATION WITH ANTI-LOCK BRAKE SYSTEM (ABS) CONTROL MODULE
U0141-00	LOST COMMUNICATION WITH IPM (FCM/TIPM)
U0401	00 IMPLAUSIBLE DATA RECEIVED FROM ECM/PCM
U0415	00 IMPLAUSIBLE DATA RECEIVED FROM ABS
U0431	00 IMPLAUSIBLE DATA RECEIVED FROM IPM (FCM/TIPM)
U1601-00	ECU APPLICATION SOFTWARE CODE 1 MISSING OR CORRUPTED

MODULE, INTEGRATED TRAILER BRAKE (ITBM), DS/DJ/D2 - PICKUP

DIAGNOSTIC CODE INDEX

DTC	Description
C10C5	92 ELECTRONIC TRAILER BRAKE ACCELEROMETER-PERFORMANCE OR INCORRECT OPERATION
C10C6	92 ELECTRONIC TRAILER BRAKE MANUAL LEVER-PERFORMANCE OR INCORRECT OPERATION
C10C7	00 ELECTRONIC TRAILER BRAKE CONTROL OUTPUT

C10C7	11 ELECTRONIC TRAILER BRAKE CONTROL OUTPUT-CIRCUIT SHORT TO GROUND
C10C7	12 ELECTRONIC TRAILER BRAKE CONTROL OUTPUT-CIRCUIT SHORT TO BATTERY
C10C7	19 ELECTRONIC TRAILER BRAKE CONTROL OUTPUT-OVERCURRENT
C10C9	00 ELECTRONIC TRAILER BRAKE MANUAL LEVER FAILSAFE CIRCUIT
C10CA	2A ITBM ADJUSTMENT SWITCH STUCK
C2129	16 BATTERY VOLTAGE - CIRCUIT VOLTAGE BELOW THRESHOLD
C2129	17 BATTERY VOLTAGE - CIRCUIT VOLTAGE ABOVE THRESHOLD
C2213	00 TRAILER BRAKE MODULE INTERNAL
C2213-42	TRAILER BRAKE MODULE INTERNAL-GENERAL MEMORY FAILURE
C2214-00	ITBM NOT CALIBRATED
U0001-00	CAN C BUS
U0100-00	LOST COMMUNICATION WITH ECM/PCM
U0121-00	LOST COMMUNICATION WITH ANTI-LOCK BRAKE SYSTEM (ABS) CONTROL MODULE
U0141-00	LOST COMMUNICATION WITH IPM (FCM/TIPM)
U0401	00 IMPLAUSIBLE DATA RECEIVED FROM ECM/PCM
U0415	00 IMPLAUSIBLE DATA RECEIVED FROM ABS
U0431	00 IMPLAUSIBLE DATA RECEIVED FROM IPM (FCM/TIPM)
U1601-00	ECU APPLICATION SOFTWARE CODE 1 MISSING OR CORRUPTED

MODULE, MEMORY SEAT (MSMD)

DIAGNOSTIC CODE INDEX

DTC	Description
B1D56	ADJUSTABLE PEDAL SENSOR CIRCUIT LOW
B1D57	ADJUSTABLE PEDAL SENSOR CIRCUIT HIGH
B1D5B	ADJUSTABLE PEDAL SWITCH CIRCUIT PERFORMANCE
B1D5C	ADJUSTABLE PEDAL SWITCH CIRCUIT STUCK FORWARD
B1D5D	ADJUSTABLE PEDAL SWITCH CIRCUIT STUCK REARWARD
B1D62	POWER SEAT SWITCH STUCK
B1D63	POWER SEAT SWITCH OPEN
B1D67	ADJUSTABLE PEDAL CONTROL CIRCUIT PERFORMANCE
B1D6D	SEAT HORIZONTAL POSITION SENSOR CIRCUIT LOW
B1D6E	SEAT HORIZONTAL POSITION SENSOR CIRCUIT HIGH
B1D71	SEAT FRONT VERTICAL POSITION SENSOR CIRCUIT LOW
B1D72	SEAT FRONT VERTICAL POSITION SENSOR CIRCUIT HIGH
B1D75	SEAT REAR VERTICAL POSITION SENSOR CIRCUIT LOW
B1D76	SEAT REAR VERTICAL POSITION SENSOR CIRCUIT HIGH
B1D79	SEAT RECLINER POSITION SENSOR CIRCUIT LOW
B1D7A	SEAT RECLINER POSITION SENSOR CIRCUIT HIGH

B1D7B	SEAT HORIZONTAL MOTOR CONTROL CIRCUIT PERFORMANCE
B1D7F	SEAT FRONT VERTICAL MOTOR CONTROL CIRCUIT PERFORMANCE
B1D83	SEAT REAR VERTICAL MOTOR CONTROL CIRCUIT PERFORMANCE
B1D87	SEAT BACKREST MOTOR CONTROL CIRCUIT PERFORMANCE
B1D9B	SEAT HORIZONTAL FRONT STOP NOT LEARNED
B210D	BATTERY VOLTAGE LOW
B210E	BATTERY VOLTAGE HIGH
B221C	MEMORY SEAT MODULE INTERNAL
U0011	CAN INTERIOR BUS OFF PERFORMANCE
U0014	CAN INTERIOR BUS (+) CIRCUIT HIGH
U0016	CAN INTERIOR BUS (-) CIRCUIT LOW
U0141	LOST COMMUNICATION WITH IPM (FCM/TIPM)
U0155	LOST COMMUNICATION WITH CLUSTER/CCN
U0203	LOST COMMUNICATION WITH DOOR MODULE FRONT LEFT
U0204	LOST COMMUNICATION WITH DOOR MODULE FRONT RIGHT

MODULE, PARK ASSIST (PAM)

DIAGNOSTIC CODE INDEX

DTC	Description
B1295-11	PTS SENSOR 8 - CIRCUIT SHORT TO GROUND
B1295-12	PTS SENSOR 8 - CIRCUIT SHORT TO BATTERY
B1295-25	PTS SENSOR 8 - SIGNAL SHAPE / WAVEFORM FAILURE
B1295-92	PTS SENSOR 8 - PERFORMANCE OR INCORRECT OPERATION
B1296-11	PTS SENSOR 9 - CIRCUIT SHORT TO GROUND
B1296-12	PTS SENSOR 9 - CIRCUIT SHORT TO BATTERY
B1296-25	PTS SENSOR 9 - SIGNAL SHAPE / WAVEFORM FAILURE
B1296-92	PTS SENSOR 9 - PERFORMANCE OR INCORRECT OPERATION
B1297-11	PTS SENSOR 10 - CIRCUIT SHORT TO GROUND
B1297-12	PTS SENSOR 10 - CIRCUIT SHORT TO BATTERY
B1297-25	PTS SENSOR 10 - SIGNAL SHAPE / WAVEFORM FAILURE
B1297-92	PTS SENSOR 10 - PERFORMANCE OR INCORRECT OPERATION
B1298-11	PTS SENSOR 11 - CIRCUIT SHORT TO GROUND
B1298-12	PTS SENSOR 11 - CIRCUIT SHORT TO BATTERY
B1298-25	PTS SENSOR 11 - SIGNAL SHAPE / WAVEFORM FAILURE
B1298-92	PTS SENSOR 11 - PERFORMANCE OR INCORRECT OPERATION
B210C-16	BATTERY VOLTAGE INPUT-CIRCUIT VOLTAGE BELOW THRESHOLD
B210C-17	BATTERY VOLTAGE INPUT-CIRCUIT VOLTAGE ABOVE THRESHOLD
B2128-16	SENSOR SUPPLY VOLTAGE-CIRCUIT VOLTAGE BELOW THRESHOLD
B2128-17	SENSOR SUPPLY VOLTAGE-CIRCUIT VOLTAGE ABOVE THRESHOLD
B222A-00	VEHICLE LINE MISMATCH

B2232-00	(PTS) PARKTRONICS INTERNAL
U0010-00	CAN INTERIOR BUS
U0423-00	IMPLAUSIBLE DATA RECEIVED FROM CLUSTER/CCN
U0141-00	LOST COMMUNICATION WITH IPM (FCM/TIPM)
U0155-00	LOST COMMUNICATION WITH CLUSTER/CCN

MODULE, PASSENGER DOOR (PDM), (DMFR)

DIAGNOSTIC CODE INDEX

DTC	Description
B164E-11	PASSENGER MIRROR SIGNAL LAMP CONTROL - CIRCUIT SHORT TO GROUND
B164E-15	PASSENGER MIRROR SIGNAL LAMP CONTROL - CIRCUIT SHORT TO BATTERY OR OPEN
B16A3-11	PASSENGER WINDOW SWITCH BACKLIGHTING - CIRCUIT SHORT TO GROUND
B16A3-15	PASSENGER WINDOW SWITCH BACKLIGHTING - CIRCUIT SHORT TO BATTERY OR OPEN
B1805-2A	PASSENGER DOOR LOCK/UNLOCK SWITCH - SIGNAL STUCK IN RANGE
B185E-11	PASSENGER WINDOW CONTROL - CIRCUIT SHORT TO GROUND
B185E-13	PASSENGER WINDOW CONTROL - CIRCUIT OPEN
B1862-11	PASSENGER WINDOW POSITION SENSOR POWER SUPPLY - CIRCUIT SHORT TO GROUND
B1862-15	PASSENGER WINDOW POSITION SENSOR POWER SUPPLY - CIRCUIT SHORT TO BATTERY OR OPEN - EXPRESS MOTOR ONLY
B1865-31	PASSENGER WINDOW POSITION SENSOR - NO SIGNAL
B1910-2A	PASSENGER WINDOW SWITCH - SIGNAL STUCK IN RANGE
B1D11-11	PASSENGER MIRROR POSITION SENSOR POWER SUPPLY - CIRCUIT SHORT TO GROUND
B1D14-11	PASSENGER MIRROR VERTICAL POSITION SENSOR INPUT - CIRCUIT SHORT TO GROUND
B1D14-12	PASSENGER MIRROR VERTICAL POSITION SENSOR INPUT - CIRCUIT SHORT TO BATTERY
B1D17-11	PASSENGER MIRROR HORIZONTAL POSITION SENSOR INPUT - CIRCUIT SHORT TO GROUND
B1D17-12	PASSENGER MIRROR HORIZONTAL POSITION SENSOR INPUT - CIRCUIT SHORT TO BATTERY
B1D2A-11	PASSENGER MIRROR VERTICAL MOTOR CONTROL - CIRCUIT SHORT TO GROUND
B1D2E-11	PASSENGER MIRROR HORIZONTAL MOTOR CONTROL - CIRCUIT SHORT TO GROUND
B1D36-11	PASSENGER MIRROR HEATER CONTROL - CIRCUIT SHORT TO GROUND
B1D36-15	PASSENGER MIRROR HEATER CONTROL - CIRCUIT SHORT TO

	BATTERY OR OPEN
B1E6A-11	PASSENGER MIRROR FOLD CONTROL CIRCUIT SHORT TO GROUND
B1E6A-15	PASSENGER MIRROR FOLD CONTROL CIRCUIT SHORT TO BATTERY OR OPEN
B210C-16	BATTERY VOLTAGE INPUT - CIRCUIT VOLTAGE BELOW THRESHOLD - DD/DP
B210C-16	BATTERY VOLTAGE INPUT - CIRCUIT VOLTAGE BELOW THRESHOLD - DS/DJ/D2
B210C-17	BATTERY VOLTAGE INPUT - CIRCUIT VOLTAGE ABOVE THRESHOLD - DD/DP
B210C-17	BATTERY VOLTAGE INPUT - CIRCUIT VOLTAGE ABOVE THRESHOLD - DS/DJ/D2
B21A1-00	ECU RESET/RECOVERY OCCURRED
B21DD-84	SYSTEM VOLTAGE - SIGNAL BELOW ALLOWABLE RANGE
B21DD-85	SYSTEM VOLTAGE - SIGNAL ABOVE ALLOWABLE RANGE
B2599-54	DOOR MODULE FRONT RIGHT - MISSING CALIBRATION - QUAD/CREW CAB ONLY
B2599-96	DOOR MODULE FRONT RIGHT - COMPONENT INTERNAL FAILURE
B282F-11	PASSENGER PUDDLE LAMP CONTROL - CIRCUIT SHORT TO GROUND
B282F-15	PASSENGER PUDDLE LAMP CONTROL - CIRCUIT SHORT TO BATTERY OR OPEN
U0010-00	CAN INTERIOR BUS
U0141-00	LOST COMMUNICATION WITH IPM (FCM/TIPM)
U0155-00	LOST COMMUNICATION WITH CLUSTER/CCN
U0164-00	LOST COMMUNICATION WITH HVAC CONTROL MODULE
U0203-00	LOST COMMUNICATION WITH DOOR MODULE FRONT LEFT
U0204-00	LOST COMMUNICATION WITH DOOR MODULE FRONT RIGHT
U0209-00	LOST COMMUNICATION WITH MEMORY SEAT CONTROL MODULE

MODULE, POWERTRAIN CONTROL (PCM), NGC

DIAGNOSTIC CODE INDEX

DTC	Description
P000B	BANK 1 CAMSHAFT 2 POSITION SLOW RESPONSE
P0013	BANK 1 CAMSHAFT 2 POSITION ACTUATOR CIRCUIT OPEN
P0016	CRANKSHAFT/CAMSHAFT TIMING MISALIGNMENT
P0031	O2 SENSOR 1/1 HEATER CIRCUIT LOW
P0032	O2 SENSOR 1/1 HEATER CIRCUIT HIGH
P0037	O2 SENSOR 1/2 HEATER CIRCUIT LOW
P0038	O2 SENSOR 1/2 HEATER CIRCUIT HIGH
P0051	O2 SENSOR 2/1 HEATER CIRCUIT LOW
P0052	O2 SENSOR 2/1 HEATER CIRCUIT HIGH

P0057	O2 SENSOR 2/2 HEATER CIRCUIT LOW
P0058	O2 SENSOR 2/2 HEATER CIRCUIT HIGH
P0071	AMBIENT AIR TEMPERATURE SENSOR PERFORMANCE
P0072	AMBIENT AIR TEMPERATURE SENSOR CIRCUIT LOW
P0073	AMBIENT AIR TEMPERATURE SENSOR CIRCUIT HIGH
P0107	MANIFOLD ABSOLUTE PRESSURE SENSOR CIRCUIT LOW
P0108	MANIFOLD ABSOLUTE PRESSURE SENSOR CIRCUIT HIGH
P0111	INTAKE AIR TEMPERATURE SENSOR RATIONALITY
P0112	INTAKE AIR TEMPERATURE SENSOR CIRCUIT LOW
P0113	INTAKE AIR TEMPERATURE SENSOR CIRCUIT HIGH
P0116	ENGINE COOLANT TEMPERATURE SENSOR CIRCUIT PERFORMANCE
P0117	ENGINE COOLANT TEMPERATURE SENSOR CIRCUIT LOW
P0118	ENGINE COOLANT TEMPERATURE SENSOR CIRCUIT HIGH
P0121	THROTTLE POSITION SENSOR 1 PERFORMANCE
P0122	THROTTLE POSITION SENSOR 1 CIRCUIT LOW
P0123	THROTTLE POSITION SENSOR 1 CIRCUIT HIGH
P0125	INSUFFICIENT COOLANT TEMP FOR CLOSED-LOOP FUEL CONTROL
P0128	THERMOSTAT RATIONALITY
P0129	BAROMETRIC PRESSURE OUT-OF-RANGE LOW
P0131	O2 SENSOR 1/1 CIRCUIT LOW
P0132	O2 SENSOR 1/1 CIRCUIT HIGH
P0133	O2 SENSOR 1/1 SLOW RESPONSE
P0135	O2 SENSOR 1/1 HEATER PERFORMANCE
P0137	O2 SENSOR 1/2 CIRCUIT LOW
P0138	O2 SENSOR 1/2 CIRCUIT HIGH
P0139	O2 SENSOR 1/2 SLOW RESPONSE
P0140	O2 SENSOR 1/2 NO ACTIVITY DETECTED
P0141	O2 SENSOR 1/2 HEATER PERFORMANCE
P0151	O2 SENSOR 2/1 CIRCUIT LOW
P0152	O2 SENSOR 2/1 CIRCUIT HIGH
P0153	O2 SENSOR 2/1 SLOW RESPONSE
P0155	O2 SENSOR 2/1 HEATER PERFORMANCE
P0157	O2 SENSOR 2/2 CIRCUIT LOW
P0158	O2 SENSOR 2/2 CIRCUIT HIGH
P0159	O2 SENSOR 2/2 SLOW RESPONSE
P0160	O2 SENSOR 2/2 NO ACTIVITY DETECTED
P0161	O2 SENSOR 2/2 HEATER PERFORMANCE
P0171	FUEL SYSTEM 1/1 LEAN
P0172	FUEL SYSTEM 1/1 RICH
P0174	FUEL SYSTEM 2/1 LEAN
P0175	FUEL SYSTEM 2/1 RICH
P0196	

	ENGINE OIL TEMPERATURE SENSOR PERFORMANCE
P0197	ENGINE OIL TEMPERATURE SENSOR CIRCUIT LOW
P0198	ENGINE OIL TEMPERATURE SENSOR CIRCUIT HIGH
P0201	FUEL INJECTOR 1 CIRCUIT
P0202	FUEL INJECTOR 2 CIRCUIT
P0203	FUEL INJECTOR 3 CIRCUIT
P0204	FUEL INJECTOR 4 CIRCUIT
P0205	FUEL INJECTOR 5 CIRCUIT
P0206	FUEL INJECTOR 6 CIRCUIT
P0207	FUEL INJECTOR 7 CIRCUIT
P0208	FUEL INJECTOR 8 CIRCUIT
P0221	THROTTLE POSITION SENSOR 2 PERFORMANCE
P0222	THROTTLE POSITION SENSOR 2 CIRCUIT LOW
P0223	THROTTLE POSITION SENSOR 2 CIRCUIT HIGH
P0298	ENGINE OIL TEMPERATURE TOO HIGH
P0300	MULTIPLE CYLINDER MISFIRE
P0301	CYLINDER 1 MISFIRE
P0302	CYLINDER 2 MISFIRE
P0303	CYLINDER 3 MISFIRE
P0304	CYLINDER 4 MISFIRE
P0305	CYLINDER 5 MISFIRE
P0306	CYLINDER 6 MISFIRE
P0307	CYLINDER 7 MISFIRE
P0308	CYLINDER 8 MISFIRE
P0315	NO CRANK SENSOR LEARNED
P0325	KNOCK SENSOR 1 CIRCUIT
P0330	KNOCK SENSOR 2 CIRCUIT
P0335	CRANKSHAFT POSITION SENSOR CIRCUIT
P0339	CRANKSHAFT POSITION SENSOR INTERMITTENT
P0340	CAMSHAFT POSITION SENSOR CIRCUIT
P0344	CAMSHAFT POSITION SENSOR INTERMITTENT
P0401	EGR SYSTEM PERFORMANCE
P0403	EGR SOLENOID CIRCUIT
P0404	EGR POSITION SENSOR PERFORMANCE
P0405	EGR POSITION SENSOR CIRCUIT LOW
P0406	EGR POSITION SENSOR CIRCUIT HIGH
P0420	CATALYST EFFICIENCY (BANK 1)
P0430	CATALYST EFFICIENCY (BANK 2)
P0440	GENERAL EVAP SYSTEM FAILURE
P0441	EVAP PURGE SYSTEM PERFORMANCE
P0443	EVAP PURGE SOLENOID CIRCUIT
P0452	

	EVAP PRESSURE SWITCH STUCK CLOSED
P0455	EVAP PURGE SYSTEM LARGE LEAK
P0456	EVAP PURGE SYSTEM SMALL LEAK
P0457	LOOSE FUEL CAP
P0461	FUEL LEVEL SENSOR 1 PERFORMANCE
P0462	FUEL LEVEL SENSOR 1 CIRCUIT LOW
P0463	FUEL LEVEL SENSOR 1 CIRCUIT HIGH
P0480	COOLING FAN 1 CONTROL CIRCUIT
P0481	COOLING FAN 2 CONTROL CIRCUIT
P0501	VEHICLE SPEED SENSOR 1 PERFORMANCE
P0503	VEHICLE SPEED SENSOR 1 ERRATIC
P0506	IDLE SPEED PERFORMANCE LOWER THAN EXCEPTED
P0507	IDLE SPEED PERFORMANCE HIGHER THAN EXCEPTED
P050B	COLD START IGNITION TIMING PERFORMANCE
P050D	COLD START ROUGH IDLE
P0513	INVALID SKIM KEY
P0520	ENGINE OIL PRESSURE SENSOR CIRCUIT
P0521	ENGINE OIL PRESSURE SENSOR PERFORMANCE
P0522	ENGINE OIL PRESSURE SENSOR CIRCUIT LOW 5.7L
P0522	OIL PRESSURE TOO LOW 3.7L, 4.7L
P0523	ENGINE OIL PRESSURE SENSOR CIRCUIT HIGH
P0524	ENGINE OIL PRESSURE TOO LOW
P0532	A/C PRESSURE SENSOR CIRCUIT LOW
P0533	A/C PRESSURE SENSOR CIRCUIT HIGH
P0562	BATTERY VOLTAGE LOW
P0563	BATTERY VOLTAGE HIGH
P0571	BRAKE SWITCH 1 PERFORMANCE
P0572	BRAKE SWITCH 1 STUCK ON
P0573	BRAKE SWITCH 1 STUCK OFF
P0579	SPEED CONTROL SWITCH 1 PERFORMANCE
P0580	SPEED CONTROL SWITCH 1 CIRCUIT LOW
P0581	SPEED CONTROL SWITCH 1 CIRCUIT HIGH
P0585	SPEED CONTROL SWITCH 1/2 CORRELATION
P0591	SPEED CONTROL SWITCH 2 PERFORMANCE
P0592	SPEED CONTROL SWITCH 2 CIRCUIT LOW
P0593	SPEED CONTROL SWITCH 2 CIRCUIT HIGH
P0600	SERIAL COMMUNICATION LINK
P0601	INTERNAL MEMORY CHECKSUM INVALID
P0602	CONTROL MODULE PROGRAMMING ERROR/NOT PROGRAMMED
P0606	INTERNAL ECM PROCESSOR
P060B	ETC A/D GROUND PERFORMANCE
P060D	

	ETC LEVEL 2 APP PERFORMANCE
P060E	ETC LEVEL 2 TPS PERFORMANCE
P060F	ETC LEVEL 2 ECT PERFORMANCE
P061A	ETC LEVEL 2 TORQUE PERFORMANCE
P061C	ETC LEVEL 2 RPM PERFORMANCE
P0622	GENERATOR FIELD CONTROL CIRCUIT
P0627	FUEL PUMP CONTROL CIRCUIT
P062C	ETC LEVEL 2 MPH PERFORMANCE
P0630	VIN NOT PROGRAMMED IN PCM
P0632	ODOMETER NOT PROGRAMMED IN PCM
P0633	SKIM KEY NOT PROGRAMMED IN PCM
P063A	GENERATOR VOLTAGE SENSE CIRCUIT
P0642	SENSOR REFERENCE VOLTAGE 1 CIRCUIT LOW
P0643	PRIMARY 5-VOLT SUPPLY CIRCUIT HIGH
P0645	A/C CLUTCH CONTROL CIRCUIT
P0652	SENSOR REFERENCE VOLTAGE 2 CIRCUIT LOW
P0653	SENSOR REFERENCE VOLTAGE 2 CIRCUIT HIGH
P0685	AUTO SHUTDOWN CONTROL CIRCUIT
P0688	AUTO SHUTDOWN SENSE CIRCUIT LOW
P0703	BRAKE SWITCH 2 PERFORMANCE
P0850	PARK/NEUTRAL SWITCH PERFORMANCE
P1004	SHORT RUNNER VALVE CONTROL PERFORMANCE
P1115	GENERAL TEMPERATURE RATIONALITY
P1128	CLOSED LOOP FUELING NOT ACHIEVED - BANK 1
P1129	CLOSED LOOP FUELING NOT ACHIEVED - BANK 2
P1239	ENGINE OIL TEMPERATURE TOO LOW
P1404	EGR POSITION SENSOR RATIONALITY CLOSED
P1411	CYLINDER 1 REACTIVATION CONTROL PERFORMANCE
P1414	CYLINDER 4 REACTIVATION CONTROL PERFORMANCE
P1416	CYLINDER 6 REACTIVATION CONTROL PERFORMANCE
P1417	CYLINDER 7 REACTIVATION CONTROL PERFORMANCE
P1456	FUEL TANK PRESSURE SENSOR CIRCUIT LOW
P1457	FUEL TANK PRESSURE SENSOR CIRCUIT HIGH
P150D	COLD START ROUGH IDLE - OPEN THROTTLE START
P1521	INCORRECT ENGINE OIL TYPE
P1524	OIL PRESSURE OUT OF RANGE - CAMSHAFT ADVANCE/RETARD DISABLED
P1572	BRAKE PEDAL STUCK ON
P1573	BRAKE PEDAL STUCK OFF
P1593	SPEED CONTROL SWITCH 1 STUCK
P1607	PCM INTERNAL SHUTDOWN TIMER SLOW RATIONALITY

P1618	SENSOR REFERENCE VOLTAGE 1 CIRCUIT ERRATIC
P1628	SENSOR REFERENCE VOLTAGE 2 CIRCUIT ERRATIC
P1696	EEPROM MEMORY WRITE DENIED/INVALID
P1697	EMR (SRI) MILEAGE NOT STORED
P1718	EEPROM INTEGRITY FAILURE
P2008	SHORT RUNNER VALVE (SRV) CONTROL CIRCUIT
P2016	SHORT RUNNER VALVE (SRV) POSITION SENSOR CIRCUIT LOW
P2017	SHORT RUNNER VALVE (SRV) POSITION SENSOR CIRCUIT HIGH
P2072	ELECTRONIC THROTTLE CONTROL SYSTEM - ICE BLOCKAGE
P2096	DOWNSTREAM FUEL TRIM SYSTEM 1 LEAN
P2097	DOWNSTREAM FUEL TRIM SYSTEM 1 RICH
P2098	DOWNSTREAM FUEL TRIM SYSTEM 2 LEAN
P2099	DOWNSTREAM FUEL TRIM SYSTEM 2 RICH
P2100	ELECTRONIC THROTTLE CONTROL MOTOR CIRCUIT
P2101	ELECTRONIC THROTTLE CONTROL MOTOR PERFORMANCE
P2107	ELECTRONIC THROTTLE CONTROL MODULE PROCESSOR
P2110	ELECTRONIC THROTTLE CONTROL - FORCED LIMITED RPM
P2111	ELECTRONIC THROTTLE CONTROL - UNABLE TO CLOSE
P2112	ELECTRONIC THROTTLE CONTROL - UNABLE TO OPEN
P2115	ACCELERATOR PEDAL POSITION SENSOR 1 MINIMUM STOP PERFORMANCE
P2116	ACCELERATOR PEDAL POSITION SENSOR 2 MINIMUM STOP PERFORMANCE
P2118	ELECTRONIC THROTTLE CONTROL MOTOR CIRCUIT
P2122	ACCELERATOR PEDAL POSITION SENSOR 1 CIRCUIT LOW
P2123	ACCELERATOR PEDAL POSITION SENSOR 1 CIRCUIT HIGH
P2127	ACCELERATOR PEDAL POSITION SENSOR 2 CIRCUIT LOW
P2128	ACCELERATOR PEDAL POSITION SENSOR 2 CIRCUIT HIGH
P2135	THROTTLE POSITION SENSOR 1/2 CORRELATION
P2138	ACCELERATOR PEDAL POSITION SENSOR 1/2 CORRELATION
P2161	VEHICLE SPEED SENSOR 2 ERRATIC
P2166	ACCELERATOR PEDAL POSITION SENSOR 1 MAXIMUM STOP PERFORMANCE
P2167	ACCELERATOR PEDAL POSITION SENSOR 2 MAXIMUM STOP PERFORMANCE
P2172	HIGH AIRFLOW/VACUUM LEAK DETECTED (INSTANTANEOUS ACCUMULATION)
P2173	HIGH AIRFLOW/VACUUM LEAK DETECTED (SLOW ACCUMULATION)
P2174	LOW AIRFLOW/RESTRICTION DETECTED (INSTANTANEOUS ACCUMULATION)
P2181	COOLING SYSTEM PERFORMANCE
P2245	O2 SENSOR 1/1, 2/1 REFERENCE VOLTAGE CIRCUIT LOW

P2246	O2 SENSOR 1/1, 2/1 REFERENCE VOLTAGE CIRCUIT HIGH
P2271	O2 SENSOR 1/2 SIGNAL STUCK RICH
P2273	O2 SENSOR 2/2 SIGNAL STUCK RICH
P2299	BRAKE PEDAL POSITION/ACCELERATOR PEDAL POSITION INCOMPATIBLE
P2302	IGNITION COIL 1 SECONDARY CIRCUIT- INSUFFICIENT IONIZATION
P2305	IGNITION COIL 2 SECONDARY CIRCUIT- INSUFFICIENT IONIZATION
P2308	IGNITION COIL 3 SECONDARY CIRCUIT- INSUFFICIENT IONIZATION
P2311	IGNITION COIL 4 SECONDARY CIRCUIT- INSUFFICIENT IONIZATION
P2314	IGNITION COIL 5 SECONDARY CIRCUIT- INSUFFICIENT IONIZATION
P2317	IGNITION COIL 6 SECONDARY CIRCUIT- INSUFFICIENT IONIZATION
P2320	IGNITION COIL 7 SECONDARY CIRCUIT- INSUFFICIENT IONIZATION
P2323	IGNITION COIL 8 SECONDARY CIRCUIT- INSUFFICIENT IONIZATION
P2245	O2 SENSOR 1/1, 2/1 REFERENCE VOLTAGE CIRCUIT LOW
P2246	O2 SENSOR 1/1, 2/1 REFERENCE VOLTAGE CIRCUIT HIGH
P2503	CHARGING SYSTEM OUTPUT LOW
P2504	CHARGING SYSTEM OUTPUT HIGH
P2610	PCM INTERNAL SHUTDOWN TIMER FAST RATIONALITY
P3400	MDS RATIONALITY BANK 1
P3401	MDS SOLENOID 1 CIRCUIT
P3402	CYLINDER 1 DEACTIVATION CONTROL PERFORMANCE
P3425	MDS SOLENOID 4 CIRCUIT
P3426	CYLINDER 4 DEACTIVATION CONTROL PERFORMANCE
P3441	MDS SOLENOID 6 CIRCUIT
P3442	CYLINDER 6 DEACTIVATION CONTROL PERFORMANCE
P3449	MDS SOLENOID 7 CIRCUIT
P3450	CYLINDER 7 DEACTIVATION CONTROL PERFORMANCE
P3497	MDS RATIONALITY BANK 2
U0001	CAN C BUS
U0002	CAN C BUS OFF PERFORMANCE
U0121	LOST COMMUNICATION WITH ABS
U0141	LOST COMMUNICATION WITH IPM (FCM/TIPM)
U0151	LOST COMMUNICATION WITH OCCUPANT RESTRAINT CONTROLLER (ORC)
U0168	LOST COMMUNICATION WITH VEHICLE SECURITY CONTROL MODULE (WIN)
U0300	INTERNAL CONTROL MODULE SOFTWARE INCOMPATIBILITY
U0416	IMPLAUSIBLE DATA RECEIVED FROM ESP
U110A	LOST COMMUNICATION WITH SCM (SAS)
U110C	NO FUEL LEVEL BUS MESSAGE RECEIVED
U110E	LOST AMBIENT TEMPERATURE MESSAGE
U1110	LOST VEHICLE SPEED MESSAGE

U1113	LOST A/C PRESSURE MESSAGE
U1120	LOST WHEEL DISTANCE MESSAGE
U1403	IMPLAUSIBLE FUEL LEVEL SIGNAL RECEIVED
U1411	IMPLAUSIBLE FUEL VOLUME SIGNAL RECEIVED
U1412	IMPLAUSIBLE VEHICLE SPEED SIGNAL RECEIVED
U1417	IMPLAUSIBLE LEFT WHEEL DISTANCE SIGNAL RECEIVED
U1418	IMPLAUSIBLE RIGHT WHEEL DISTANCE SIGNAL RECEIVED

MODULE, POWERTRAIN CONTROL (PCM), NGC - DD - CHASSIS CAB

DIAGNOSTIC CODE INDEX

DTC	Description
P000B	BANK 1 CAMSHAFT 2 POSITION SLOW RESPONSE
P0013	BANK 1 CAMSHAFT 2 POSITION ACTUATOR CIRCUIT OPEN
P0014	EXHAUST TARGET ERROR BANK 1
P0016	CRANKSHAFT/CAMSHAFT TIMING MISALIGNMENT
P0031	O2 SENSOR 1/1 HEATER CIRCUIT LOW
P0032	O2 SENSOR 1/1 HEATER CIRCUIT HIGH
P0037	O2 SENSOR 1/2 HEATER CIRCUIT LOW
P0038	O2 SENSOR 1/2 HEATER CIRCUIT HIGH
P0051	O2 SENSOR 2/1 HEATER CIRCUIT LOW
P0052	O2 SENSOR 2/1 HEATER CIRCUIT HIGH
P0057	O2 SENSOR 2/2 HEATER CIRCUIT LOW
P0058	O2 SENSOR 2/2 HEATER CIRCUIT HIGH
P0071	AMBIENT AIR TEMPERATURE SENSOR PERFORMANCE
P0072	AMBIENT AIR TEMPERATURE SENSOR CIRCUIT LOW
P0073	AMBIENT AIR TEMPERATURE SENSOR CIRCUIT HIGH
P0107	MANIFOLD ABSOLUTE PRESSURE SENSOR CIRCUIT LOW
P0108	MANIFOLD ABSOLUTE PRESSURE SENSOR CIRCUIT HIGH
P0111	INTAKE AIR TEMPERATURE SENSOR RATIONALITY
P0112	INTAKE AIR TEMPERATURE SENSOR CIRCUIT LOW
P0113	INTAKE AIR TEMPERATURE SENSOR CIRCUIT HIGH
P0116	ENGINE COOLANT TEMPERATURE SENSOR CIRCUIT PERFORMANCE
P0117	ENGINE COOLANT TEMPERATURE SENSOR CIRCUIT LOW
P0118	ENGINE COOLANT TEMPERATURE SENSOR CIRCUIT HIGH
P0121	THROTTLE POSITION SENSOR 1 PERFORMANCE
P0122	THROTTLE POSITION SENSOR 1 CIRCUIT LOW
P0123	THROTTLE POSITION SENSOR 1 CIRCUIT HIGH
P0125	INSUFFICIENT COOLANT TEMP FOR CLOSED-LOOP FUEL CONTROL
P0128	THERMOSTAT RATIONALITY
P0129	BAROMETRIC PRESSURE OUT-OF-RANGE LOW

P0131	O2 SENSOR 1/1 CIRCUIT LOW
P0132	O2 SENSOR 1/1 CIRCUIT HIGH
P0133	O2 SENSOR 1/1 SLOW RESPONSE
P0135	O2 SENSOR 1/1 HEATER PERFORMANCE
P0137	O2 SENSOR 1/2 CIRCUIT LOW
P0138	O2 SENSOR 1/2 CIRCUIT HIGH
P0139	O2 SENSOR 1/2 SLOW RESPONSE
P0140	O2 SENSOR 1/2 NO ACTIVITY DETECTED
P0141	O2 SENSOR 1/2 HEATER PERFORMANCE
P0151	O2 SENSOR 2/1 CIRCUIT LOW
P0152	O2 SENSOR 2/1 CIRCUIT HIGH
P0153	O2 SENSOR 2/1 SLOW RESPONSE
P0155	O2 SENSOR 2/1 HEATER PERFORMANCE
P0157	O2 SENSOR 2/2 CIRCUIT LOW
P0158	O2 SENSOR 2/2 CIRCUIT HIGH
P0159	O2 SENSOR 2/2 SLOW RESPONSE
P0160	O2 SENSOR 2/2 NO ACTIVITY DETECTED
P0161	O2 SENSOR 2/2 HEATER PERFORMANCE
P0171	FUEL SYSTEM 1/1 LEAN
P0172	FUEL SYSTEM 1/1 RICH
P0174	FUEL SYSTEM 2/1 LEAN
P0175	FUEL SYSTEM 2/1 RICH
P0196	ENGINE OIL TEMPERATURE SENSOR PERFORMANCE
P0197	ENGINE OIL TEMPERATURE SENSOR CIRCUIT LOW
P0198	ENGINE OIL TEMPERATURE SENSOR CIRCUIT HIGH
P0201	FUEL INJECTOR 1 CIRCUIT
P0202	FUEL INJECTOR 2 CIRCUIT
P0203	FUEL INJECTOR 3 CIRCUIT
P0204	FUEL INJECTOR 4 CIRCUIT
P0205	FUEL INJECTOR 5 CIRCUIT
P0206	FUEL INJECTOR 6 CIRCUIT
P0207	FUEL INJECTOR 7 CIRCUIT
P0208	FUEL INJECTOR 8 CIRCUIT
P0221	THROTTLE POSITION SENSOR 2 PERFORMANCE
P0222	THROTTLE POSITION SENSOR 2 CIRCUIT LOW
P0223	THROTTLE POSITION SENSOR 2 CIRCUIT HIGH
P0298	ENGINE OIL TEMPERATURE TOO HIGH
P0300	MULTIPLE CYLINDER MISFIRE
P0301	CYLINDER 1 MISFIRE
P0302	CYLINDER 2 MISFIRE
P0303	CYLINDER 3 MISFIRE
P0304	

	CYLINDER 4 MISFIRE
P0305	CYLINDER 5 MISFIRE
P0306	CYLINDER 6 MISFIRE
P0307	CYLINDER 7 MISFIRE
P0308	CYLINDER 8 MISFIRE
P0315	NO CRANK SENSOR LEARNED
P0325	KNOCK SENSOR 1 CIRCUIT
P0330	KNOCK SENSOR 2 CIRCUIT
P0335	CRANKSHAFT POSITION SENSOR CIRCUIT
P0339	CRANKSHAFT POSITION SENSOR INTERMITTENT
P0340	CAMSHAFT POSITION SENSOR CIRCUIT
P0344	CAMSHAFT POSITION SENSOR INTERMITTENT
P0420	CATALYST EFFICIENCY (BANK 1)
P0430	CATALYST EFFICIENCY (BANK 2)
P0440	GENERAL EVAP SYSTEM FAILURE
P0441	EVAP PURGE SYSTEM PERFORMANCE
P0443	EVAP PURGE SOLENOID CIRCUIT
P0452	EVAP PRESSURE SWITCH STUCK CLOSED
P0455	EVAP PURGE SYSTEM LARGE LEAK
P0456	EVAP PURGE SYSTEM SMALL LEAK
P0457	LOOSE FUEL CAP
P0461	FUEL LEVEL SENSOR 1 PERFORMANCE
P0462	FUEL LEVEL SENSOR 1 CIRCUIT LOW
P0463	FUEL LEVEL SENSOR 1 CIRCUIT HIGH
P0480	COOLING FAN 1 CONTROL CIRCUIT
P0501	VEHICLE SPEED SENSOR 1 PERFORMANCE
P0503	VEHICLE SPEED SENSOR 1 ERRATIC
P0506	IDLE SPEED PERFORMANCE LOWER THAN EXCEPTED
P0507	IDLE SPEED PERFORMANCE HIGHER THAN EXCEPTED
P050B	COLD START IGNITION TIMING PERFORMANCE
P0513	INVALID SKIM KEY
P0520	ENGINE OIL PRESSURE SENSOR CIRCUIT
P0521	ENGINE OIL PRESSURE SENSOR PERFORMANCE
P0522	ENGINE OIL PRESSURE SENSOR CIRCUIT LOW 5.7L
P0523	ENGINE OIL PRESSURE SENSOR CIRCUIT HIGH
P0532	A/C PRESSURE SENSOR CIRCUIT LOW
P0533	A/C PRESSURE SENSOR CIRCUIT HIGH
P0562	BATTERY VOLTAGE LOW
P0563	BATTERY VOLTAGE HIGH
P0571	BRAKE SWITCH 1 PERFORMANCE
P0572	BRAKE SWITCH 1 STUCK ON
P0573	

	BRAKE SWITCH 1 STUCK OFF
P0579	SPEED CONTROL SWITCH 1 PERFORMANCE
P0580	SPEED CONTROL SWITCH 1 CIRCUIT LOW
P0581	SPEED CONTROL SWITCH 1 CIRCUIT HIGH
P0585	SPEED CONTROL SWITCH 1/2 CORRELATION
P0591	SPEED CONTROL SWITCH 2 PERFORMANCE
P0592	SPEED CONTROL SWITCH 2 CIRCUIT LOW
P0593	SPEED CONTROL SWITCH 2 CIRCUIT HIGH
P0600	SERIAL COMMUNICATION LINK
P0601	INTERNAL MEMORY CHECKSUM INVALID
P0602	CONTROL MODULE PROGRAMMING ERROR/NOT PROGRAMMED
P0606	INTERNAL ECM PROCESSOR
P060B	ETC A/D GROUND PERFORMANCE
P060D	ETC LEVEL 2 APP PERFORMANCE
P060E	ETC LEVEL 2 TPS PERFORMANCE
P060F	ETC LEVEL 2 ECT PERFORMANCE
P061A	ETC LEVEL 2 TORQUE PERFORMANCE
P061C	ETC LEVEL 2 RPM PERFORMANCE
P0622	GENERATOR FIELD CONTROL CIRCUIT
P0627	FUEL PUMP CONTROL CIRCUIT
P062C	ETC LEVEL 2 MPH PERFORMANCE
P0630	VIN NOT PROGRAMMED IN PCM
P0632	ODOMETER NOT PROGRAMMED IN PCM
P0633	SKIM KEY NOT PROGRAMMED IN PCM
P063A	GENERATOR VOLTAGE SENSE CIRCUIT
P0642	SENSOR REFERENCE VOLTAGE 1 CIRCUIT LOW
P0643	PRIMARY 5-VOLT SUPPLY CIRCUIT HIGH
P0645	A/C CLUTCH CONTROL CIRCUIT
P0652	SENSOR REFERENCE VOLTAGE 2 CIRCUIT LOW
P0653	SENSOR REFERENCE VOLTAGE 2 CIRCUIT HIGH
P0685	AUTO SHUTDOWN CONTROL CIRCUIT
P0688	AUTO SHUTDOWN SENSE CIRCUIT LOW
P0703	BRAKE SWITCH 2 PERFORMANCE
P0850	PARK/NEUTRAL SWITCH PERFORMANCE
P1004	SHORT RUNNER VALVE CONTROL PERFORMANCE
P1115	GENERAL TEMPERATURE RATIONALITY
P1128	CLOSED LOOP FUELING NOT ACHIEVED - BANK 1
P1129	CLOSED LOOP FUELING NOT ACHIEVED - BANK 2
P1239	ENGINE OIL TEMPERATURE TOO LOW
P1524	OIL PRESSURE OUT OF RANGE - CAMSHAFT ADVANCE/RETARD DISABLED

P1572	BRAKE PEDAL STUCK ON
P1573	BRAKE PEDAL STUCK OFF
P1593	SPEED CONTROL SWITCH 1 STUCK
P1607	PCM INTERNAL SHUTDOWN TIMER SLOW RATIONALITY
P1618	SENSOR REFERENCE VOLTAGE 1 CIRCUIT ERRATIC
P1628	SENSOR REFERENCE VOLTAGE 2 CIRCUIT ERRATIC
P1696	EEPROM MEMORY WRITE DENIED/INVALID
P1697	EMR (SRI) MILEAGE NOT STORED
P1718	EEPROM INTEGRITY FAILURE
P2008	SHORT RUNNER VALVE (SRV) CONTROL CIRCUIT
P2016	SHORT RUNNER VALVE (SRV) POSITION SENSOR CIRCUIT LOW
P2017	SHORT RUNNER VALVE (SRV) POSITION SENSOR CIRCUIT HIGH
P2072	ELECTRONIC THROTTLE CONTROL SYSTEM - ICE BLOCKAGE
P2096	DOWNSTREAM FUEL TRIM SYSTEM 1 LEAN
P2097	DOWNSTREAM FUEL TRIM SYSTEM 1 RICH
P2098	DOWNSTREAM FUEL TRIM SYSTEM 2 LEAN
P2099	DOWNSTREAM FUEL TRIM SYSTEM 2 RICH
P2100	ELECTRONIC THROTTLE CONTROL MOTOR CIRCUIT
P2101	ELECTRONIC THROTTLE CONTROL MOTOR PERFORMANCE
P2107	ELECTRONIC THROTTLE CONTROL MODULE PROCESSOR
P2110	ELECTRONIC THROTTLE CONTROL - FORCED LIMITED RPM
P2111	ELECTRONIC THROTTLE CONTROL - UNABLE TO CLOSE
P2112	ELECTRONIC THROTTLE CONTROL - UNABLE TO OPEN
P2115	ACCELERATOR PEDAL POSITION SENSOR 1 MINIMUM STOP PERFORMANCE
P2116	ACCELERATOR PEDAL POSITION SENSOR 2 MINIMUM STOP PERFORMANCE
P2118	ELECTRONIC THROTTLE CONTROL MOTOR CIRCUIT
P2122	ACCELERATOR PEDAL POSITION SENSOR 1 CIRCUIT LOW
P2123	ACCELERATOR PEDAL POSITION SENSOR 1 CIRCUIT HIGH
P2127	ACCELERATOR PEDAL POSITION SENSOR 2 CIRCUIT LOW
P2128	ACCELERATOR PEDAL POSITION SENSOR 2 CIRCUIT HIGH
P2135	THROTTLE POSITION SENSOR 1/2 CORRELATION
P2138	ACCELERATOR PEDAL POSITION SENSOR 1/2 CORRELATION
P2161	VEHICLE SPEED SENSOR 2 ERRATIC
P2166	ACCELERATOR PEDAL POSITION SENSOR 1 MAXIMUM STOP PERFORMANCE
P2167	ACCELERATOR PEDAL POSITION SENSOR 2 MAXIMUM STOP PERFORMANCE
P2172	HIGH AIRFLOW/VACUUM LEAK DETECTED (INSTANTANEOUS ACCUMULATION)
P2173	HIGH AIRFLOW/VACUUM LEAK DETECTED (SLOW ACCUMULATION)

P2174	LOW AIRFLOW/RESTRICTION DETECTED (INSTANTANEOUS ACCUMULATION)
P2175	LOW AIRFLOW/RESTRICTION DETECTED (SLOW ACCUMULATION)
P2181	COOLING SYSTEM PERFORMANCE
P2245	O2 SENSOR 1/1, 2/1 REFERENCE VOLTAGE CIRCUIT LOW
P2246	O2 SENSOR 1/1, 2/1 REFERENCE VOLTAGE CIRCUIT HIGH
P2271	O2 SENSOR 1/2 SIGNAL STUCK RICH
P2273	O2 SENSOR 2/2 SIGNAL STUCK RICH
P2299	BRAKE PEDAL POSITION/ACCELERATOR PEDAL POSITION INCOMPATIBLE
P2302	IGNITION COIL 1 SECONDARY CIRCUIT- INSUFFICIENT IONIZATION
P2305	IGNITION COIL 2 SECONDARY CIRCUIT- INSUFFICIENT IONIZATION
P2308	IGNITION COIL 3 SECONDARY CIRCUIT- INSUFFICIENT IONIZATION
P2311	IGNITION COIL 4 SECONDARY CIRCUIT- INSUFFICIENT IONIZATION
P2314	IGNITION COIL 5 SECONDARY CIRCUIT- INSUFFICIENT IONIZATION
P2317	IGNITION COIL 6 SECONDARY CIRCUIT- INSUFFICIENT IONIZATION
P2320	IGNITION COIL 7 SECONDARY CIRCUIT- INSUFFICIENT IONIZATION
P2323	IGNITION COIL 8 SECONDARY CIRCUIT- INSUFFICIENT IONIZATION
P2503	CHARGING SYSTEM OUTPUT LOW
P2504	CHARGING SYSTEM OUTPUT HIGH
P2610	PCM INTERNAL SHUTDOWN TIMER FAST RATIONALITY
U0001	CAN C BUS
U0002	U0002 CAN C BUS OFF PERFORMANCE
U0103	LOST COMMUNICATION WITH ELECTRIC GEAR SHIFT MODULE
U0121	LOST COMMUNICATION WITH ANTI-LOCK BRAKE MODULE
U0141	LOST COMMUNICATION WITH IPM (FCM/TIPM)
U0151	LOST COMMUNICATION WITH OCCUPANT RESTRAINT CONTROLLER (ORC)
U0168	LOST COMMUNICATION WITH VEHICLE SECURITY CONTROL MODULE (WIN)
U0300	INTERNAL CONTROL MODULE SOFTWARE INCOMPATIBILITY
U110C	NO FUEL LEVEL BUS MESSAGE RECEIVED
U110E	LOST AMBIENT TEMPERATURE MESSAGE
U1110	LOST VEHICLE SPEED MESSAGE
U1113	LOST A/C PRESSURE MESSAGE
U1120	LOST WHEEL DISTANCE MESSAGE
U1403	IMPLAUSIBLE FUEL LEVEL SIGNAL RECEIVED
U1412	IMPLAUSIBLE VEHICLE SPEED SIGNAL RECEIVED
U1417	IMPLAUSIBLE LEFT WHEEL DISTANCE SIGNAL RECEIVED
U1418	IMPLAUSIBLE RIGHT WHEEL DISTANCE SIGNAL RECEIVED

MODULE, POWERTRAIN CONTROL (PCM), 42RLE

DIAGNOSTIC CODE INDEX

DTC	Description
P0122	TPS/APP CIRCUIT LOW
P0123	TPS/APP CIRCUIT HIGH
P0124	TPS/APP INTERMITTENT
P0218	HIGH TEMPERATURE OPERATION ACTIVATED
P0562	BATTERY VOLTAGE LOW
P0602	CONTROL MODULE PROGRAMMING ERROR/NOT PROGRAMMED
P0604	INTERNAL CONTROL MODULE RAM
P0605	INTERNAL CONTROL MODULE ROM
P0613	INTERNAL TRANSMISSION PROCESSOR
P0706	TRANSMISSION RANGE SENSOR RATIONALITY
P0711	TRANSMISSION TEMPERATURE SENSOR PERFORMANCE
P0712	TRANSMISSION TEMPERATURE SENSOR LOW
P0713	TRANSMISSION TEMPERATURE SENSOR HIGH
P0714	TRANSMISSION TEMPERATURE SENSOR INTERMITTENT
P0716	INPUT SPEED SENSOR 1 CIRCUIT PERFORMANCE
P0721	OUTPUT SPEED SENSOR CIRCUIT PERFORMANCE
P0726	ENGINE SPEED INPUT CIRCUIT RANGE/PERFORMANCE
P0731	GEAR RATIO ERROR IN 1ST
P0732	GEAR RATIO ERROR IN 2ND
P0733	GEAR RATIO ERROR IN 3RD
P0734	GEAR RATIO ERROR IN 4TH
P0736	GEAR RATIO ERROR IN REVERSE
P0740	TCC OUT OF RANGE
P0750	LR SOLENOID CIRCUIT
P0755	2/4 SOLENOID CIRCUIT
P0760	OD SOLENOID CIRCUIT
P0765	UD SOLENOID CIRCUIT
P0841	LR PRESSURE SWITCH RATIONALITY
P0845	2/4 HYDRAULIC PRESSURE TEST
P0846	2/4 PRESSURE SWITCH RATIONALITY
P0868	LINE PRESSURE LOW
P0869	LINE PRESSURE HIGH
P0870	OD HYDRAULIC PRESSURE TEST
P0871	OD PRESSURE SWITCH RATIONALITY
P0882	TCM POWER INPUT LOW
P0883	TCM POWER INPUT HIGH
P0884	POWER UP AT SPEED
P0890	SWITCHED BATTERY
P0897	TRANSMISSION FLUID DETERIORATED

P0933	HYDRAULIC PRESSURE SENSOR RANGE/PERFORMANCE
P0934	LINE PRESSURE SENSOR CIRCUIT LOW
P0935	LINE PRESSURE SENSOR CIRCUIT HIGH
P0944	LOSS OF HYDRAULIC PUMP PRIME
P0992	2/4/OD HYDRAULIC PRESSURE TEST
P1684	BATTERY WAS DISCONNECTED
P1713	RESTRICTED MANUAL VALVE IN T2 RANGE
P1745	TRANSMISSION LINE PRESSURE TOO HIGH FOR TOO LONG
P1775	SOLENOID SWITCH VALVE LATCHED IN TCC POSITION
P1776	SOLENOID SWITCH VALVE LATCHED IN LR POSITION
P1790	FAULT IMMEDIATELY AFTER SHIFT
P1794	SPEED SENSOR GROUND ERROR
P1797	MANUAL SHIFT OVERHEAT
U0002	CAN C BUS OFF PERFORMANCE
U0100	LOST COMMUNICATION WITH THE ECM/PCM
U0121	LOST COMMUNICATION WITH ABS
U0141	LOST COMMUNICATION WITH IPM (FCM/TIPM)
U1449	IMPLAUSIBLE ERS MESSAGE RECEIVED

MODULE, POWERTRAIN CONTROL (PCM), 545RFE - DS/DJ/D2

DIAGNOSTIC CODE INDEX

DTC	Description
P0122	TPS/APP CIRCUIT LOW
P0123	TPS/APP CIRCUIT HIGH
P0124	TPS/APP INTERMITTENT
P0218	HIGH TEMPERATURE OPERATION ACTIVATED
P0562	BATTERY VOLTAGE LOW
P0602	CONTROL MODULE PROGRAMMING ERROR/NOT PROGRAMMED
P0604	INTERNAL CONTROL MODULE RAM
P0605	INTERNAL CONTROL MODULE ROM
P0613	INTERNAL TRANSMISSION PROCESSOR
P0706	TRANSMISSION RANGE SENSOR RATIONALITY
P0711	TRANSMISSION TEMPERATURE SENSOR PERFORMANCE
P0712	TRANSMISSION TEMPERATURE SENSOR LOW
P0713	TRANSMISSION TEMPERATURE SENSOR HIGH
P0714	TRANSMISSION TEMPERATURE SENSOR INTERMITTENT
P0716	INPUT SPEED SENSOR 1 CIRCUIT PERFORMANCE
P0721	OUTPUT SPEED SENSOR CIRCUIT PERFORMANCE
P0726	ENGINE SPEED INPUT CIRCUIT RANGE/PERFORMANCE
P0731	GEAR RATIO ERROR IN 1ST

P0732	GEAR RATIO ERROR IN 2ND
P0733	GEAR RATIO ERROR IN 3RD
P0734	GEAR RATIO ERROR IN 4TH
P0735	GEAR RATIO ERROR IN 5TH
P0736	GEAR RATIO ERROR IN REVERSE
P0740	TCC OUT OF RANGE
P0750	LR SOLENOID CIRCUIT
P0755	2C SOLENOID CIRCUIT
P0765	UD SOLENOID CIRCUIT
P0770	4C SOLENOID CIRCUIT
P0841	LR PRESSURE SWITCH RATIONALITY
P0845	2C HYDRAULIC PRESSURE TEST
P0846	2C PRESSURE SWITCH RATIONALITY
P0868	LINE PRESSURE LOW
P0869	LINE PRESSURE HIGH
P0870	OD HYDRAULIC PRESSURE TEST
P0871	OD PRESSURE SWITCH RATIONALITY
P0875	UD HYDRAULIC PRESSURE TEST
P0876	UD PRESSURE SWITCH RATIONALITY
P0882	TCM POWER INPUT LOW
P0883	TCM POWER INPUT HIGH
P0884	POWER UP AT SPEED
P0890	SWITCHED BATTERY
P0933	HYDRAULIC PRESSURE SENSOR RANGE/PERFORMANCE
P0934	LINE PRESSURE SENSOR CIRCUIT LOW
P0935	LINE PRESSURE SENSOR CIRCUIT HIGH
P0944	LOSS OF HYDRAULIC PUMP PRIME
P0987	4C HYDRAULIC PRESSURE TEST
P0988	4C PRESSURE SWITCH RATIONALITY
P1684	BATTERY WAS DISCONNECTED
P1715	RESTRICTED MANUAL VALVE IN T3 RANGE
P1736	GEAR RATIO ERROR IN 2ND PRIME
P1775	SOLENOID SWITCH VALVE LATCHED IN TCC POSITION
P1776	SOLENOID SWITCH VALVE LATCHED IN LR POSITION
P1794	SPEED SENSOR GROUND ERROR
P2700	INADEQUATE ELEMENT VOLUME LR
P2701	INADEQUATE ELEMENT VOLUME 2C
P2702	INADEQUATE ELEMENT VOLUME OD
P2703	INADEQUATE ELEMENT VOLUME UD
P2704	INADEQUATE ELEMENT VOLUME 4C
P2706	MS SOLENOID CIRCUIT
U0002	

	CAN C BUS OFF PERFORMANCE
U0100	LOST COMMUNICATION WITH THE ECM/PCM
U0121	LOST COMMUNICATION WITH ABS
U0141	LOST COMMUNICATION WITH IPM (FCM/TIPM)

MODULE, POWERTRAIN CONTROL (PCM), 545RFE - DD - CHASSIS CAB

DIAGNOSTIC CODE INDEX

DTC	Description
P0122	TPS/APP CIRCUIT LOW
P0123	TPS/APP CIRCUIT HIGH
P0124	TPS/APP INTERMITTENT
P0218	HIGH TEMPERATURE OPERATION ACTIVATED
P0562	BATTERY VOLTAGE LOW
P0602	CONTROL MODULE PROGRAMMING ERROR/NOT PROGRAMMED
P0604	INTERNAL CONTROL MODULE RAM
P0605	INTERNAL CONTROL MODULE ROM
P0613	INTERNAL TRANSMISSION PROCESSOR
P0706	TRANSMISSION RANGE SENSOR RATIONALITY
P0711	TRANSMISSION TEMPERATURE SENSOR PERFORMANCE
P0712	TRANSMISSION TEMPERATURE SENSOR LOW
P0713	TRANSMISSION TEMPERATURE SENSOR HIGH
P0714	TRANSMISSION TEMPERATURE SENSOR INTERMITTENT
P0716	INPUT SPEED SENSOR 1 CIRCUIT PERFORMANCE
P0721	OUTPUT SPEED SENSOR CIRCUIT PERFORMANCE
P0726	ENGINE SPEED INPUT CIRCUIT RANGE/PERFORMANCE
P0731	GEAR RATIO ERROR IN 1ST
P0732	GEAR RATIO ERROR IN 2ND
P0733	GEAR RATIO ERROR IN 3RD
P0734	GEAR RATIO ERROR IN 4TH
P0735	GEAR RATIO ERROR IN 5TH
P0736	GEAR RATIO ERROR IN REVERSE
P0740	TCC OUT OF RANGE
P0750	LR SOLENOID CIRCUIT
P0755	2C SOLENOID CIRCUIT
P0765	UD SOLENOID CIRCUIT
P0770	4C SOLENOID CIRCUIT
P0841	LR PRESSURE SWITCH RATIONALITY
P0845	2C HYDRAULIC PRESSURE TEST
P0846	2C PRESSURE SWITCH RATIONALITY
P0868	LINE PRESSURE LOW

P0869	LINE PRESSURE HIGH
P0870	OD HYDRAULIC PRESSURE TEST
P0871	OD PRESSURE SWITCH RATIONALITY
P0875	UD HYDRAULIC PRESSURE TEST
P0876	UD PRESSURE SWITCH RATIONALITY
P0882	TCM POWER INPUT LOW
P0883	TCM POWER INPUT HIGH
P0884	POWER UP AT SPEED
P0890	SWITCHED BATTERY
P0933	HYDRAULIC PRESSURE SENSOR RANGE/PERFORMANCE
P0934	LINE PRESSURE SENSOR CIRCUIT LOW
P0935	LINE PRESSURE SENSOR CIRCUIT HIGH
P0944	LOSS OF HYDRAULIC PUMP PRIME
P0987	4C HYDRAULIC PRESSURE TEST
P0988	4C PRESSURE SWITCH RATIONALITY
P1684	BATTERY WAS DISCONNECTED
P1715	RESTRICTED MANUAL VALVE IN T3 RANGE
P1736	GEAR RATIO ERROR IN 2ND PRIME
P1775	SOLENOID SWITCH VALVE LATCHED IN TCC POSITION
P1776	SOLENOID SWITCH VALVE LATCHED IN LR POSITION
P1794	SPEED SENSOR GROUND ERROR
P2700	INADEQUATE ELEMENT VOLUME LR
P2701	INADEQUATE ELEMENT VOLUME 2C
P2702	INADEQUATE ELEMENT VOLUME OD
P2703	INADEQUATE ELEMENT VOLUME UD
P2704	INADEQUATE ELEMENT VOLUME 4C
P2706	MS SOLENOID CIRCUIT
U0002	CAN C BUS OFF PERFORMANCE
U0100	LOST COMMUNICATION WITH THE ECM/PCM
U0121	LOST COMMUNICATION WITH ABS
U0141	LOST COMMUNICATION WITH IPM (FCM/TIPM)

MODULE, POWERTRAIN CONTROL (PCM), 65RFE

DIAGNOSTIC CODE INDEX

DTC	Description
P0122	TPS/APP CIRCUIT LOW
P0123	TPS/APP CIRCUIT HIGH
P0124	TPS/APP INTERMITTENT
P0218	HIGH TEMPERATURE OPERATION ACTIVATED
P0562	BATTERY VOLTAGE LOW

P0602	CONTROL MODULE PROGRAMMING ERROR/NOT PROGRAMMED
P0604	INTERNAL CONTROL MODULE RAM
P0605	INTERNAL CONTROL MODULE ROM
P0613	INTERNAL TRANSMISSION PROCESSOR
P0706	TRANSMISSION RANGE SENSOR RATIONALITY
P0711	TRANSMISSION TEMPERATURE SENSOR PERFORMANCE
P0712	TRANSMISSION TEMPERATURE SENSOR LOW
P0713	TRANSMISSION TEMPERATURE SENSOR HIGH
P0714	TRANSMISSION TEMPERATURE SENSOR INTERMITTENT
P0716	INPUT SPEED SENSOR 1 CIRCUIT PERFORMANCE
P0721	OUTPUT SPEED SENSOR CIRCUIT PERFORMANCE
P0726	ENGINE SPEED INPUT CIRCUIT RANGE/PERFORMANCE
P0731	GEAR RATIO ERROR IN 1ST
P0732	GEAR RATIO ERROR IN 2ND
P0733	GEAR RATIO ERROR IN 3RD
P0734	GEAR RATIO ERROR IN 4TH
P0735	GEAR RATIO ERROR IN 5TH
P0736	GEAR RATIO ERROR IN REVERSE
P0740	TCC OUT OF RANGE
P0750	LR SOLENOID CIRCUIT
P0755	2C SOLENOID CIRCUIT
P0765	UD SOLENOID CIRCUIT
P0770	4C SOLENOID CIRCUIT
P0841	LR PRESSURE SWITCH RATIONALITY
P0845	2C HYDRAULIC PRESSURE TEST
P0846	2C PRESSURE SWITCH RATIONALITY
P0868	LINE PRESSURE LOW
P0869	LINE PRESSURE HIGH
P0870	OD HYDRAULIC PRESSURE TEST
P0871	OD PRESSURE SWITCH RATIONALITY
P0875	UD HYDRAULIC PRESSURE TEST
P0876	UD PRESSURE SWITCH RATIONALITY
P0882	TCM POWER INPUT LOW
P0883	TCM POWER INPUT HIGH
P0884	POWER UP AT SPEED
P0890	SWITCHED BATTERY
P0933	HYDRAULIC PRESSURE SENSOR RANGE/PERFORMANCE
P0934	LINE PRESSURE SENSOR CIRCUIT LOW
P0935	LINE PRESSURE SENSOR CIRCUIT HIGH
P0944	LOSS OF HYDRAULIC PUMP PRIME
P0987	4C HYDRAULIC PRESSURE TEST
P0988	

	4C PRESSURE SWITCH RATIONALITY
P1684	BATTERY WAS DISCONNECTED
P1715	RESTRICTED MANUAL VALVE IN T3 RANGE
P1736	GEAR RATIO ERROR IN 2ND PRIME
P1775	SOLENOID SWITCH VALVE LATCHED IN TCC POSITION
P1776	SOLENOID SWITCH VALVE LATCHED IN LR POSITION
P1794	SPEED SENSOR GROUND ERROR
P2700	INADEQUATE ELEMENT VOLUME LR
P2701	INADEQUATE ELEMENT VOLUME 2C
P2702	INADEQUATE ELEMENT VOLUME OD
P2703	INADEQUATE ELEMENT VOLUME UD
P2704	INADEQUATE ELEMENT VOLUME 4C
P2706	MS SOLENOID CIRCUIT
U0002	CAN C BUS OFF PERFORMANCE
U0100	LOST COMMUNICATION WITH THE ECM/PCM
U0121	LOST COMMUNICATION WITH ABS
U0141	LOST COMMUNICATION WITH IPM (FCM/TIPM)

MODULE, POWERTRAIN CONTROL (PCM), 66RFE

DIAGNOSTIC CODE INDEX

DTC	Description
P0218	HIGH TEMPERATURE OPERATION ACTIVATED
P0562	BATTERY VOLTAGE LOW
P0602	CONTROL MODULE PROGRAMMING ERROR/NOT PROGRAMMED
P0604	INTERNAL CONTROL MODULE RAM
P0605	INTERNAL CONTROL MODULE ROM
P0613	INTERNAL TCM
P0706	TRANSMISSION RANGE SENSOR RATIONALITY
P0711	TRANSMISSION TEMPERATURE SENSOR PERFORMANCE
P0712	TRANSMISSION TEMPERATURE SENSOR LOW
P0713	TRANSMISSION TEMPERATURE SENSOR HIGH
P0714	TRANSMISSION TEMPERATURE SENSOR INTERMITTENT
P0716	INPUT SPEED SENSOR 1 CIRCUIT PERFORMANCE
P0721	OUTPUT SPEED SENSOR CIRCUIT PERFORMANCE
P0729	GEAR RATIO ERROR IN 6TH
P0731	GEAR RATIO ERROR IN 1ST
P0732	GEAR RATIO ERROR IN 2ND
P0733	GEAR RATIO ERROR IN 3RD
P0734	GEAR RATIO ERROR IN 4TH
P0735	GEAR RATIO ERROR IN 5TH

P0736	GEAR RATIO ERROR IN REVERSE
P0740	TCC OUT OF RANGE
P0750	LR SOLENOID CIRCUIT
P0755	2C SOLENOID CIRCUIT
P0765	UD SOLENOID CIRCUIT
P0770	4C SOLENOID CIRCUIT
P0841	LR PRESSURE SWITCH RATIONALITY
P0845	2C HYDRAULIC PRESSURE TEST
P0846	2C PRESSURE SWITCH RATIONALITY
P0868	LINE PRESSURE LOW
P0869	LINE PRESSURE HIGH
P0870	OD HYDRAULIC PRESSURE TEST
P0871	OD PRESSURE SWITCH RATIONALITY
P0875	UD HYDRAULIC PRESSURE TEST
P0876	UD PRESSURE SWITCH RATIONALITY
P0882	TCM POWER INPUT LOW
P0883	TCM POWER INPUT HIGH
P0884	POWER UP AT SPEED
P0890	SWITCHED BATTERY
P0933	HYDRAULIC PRESSURE SENSOR RANGE/PERFORMANCE
P0934	LINE PRESSURE SENSOR CIRCUIT LOW
P0935	LINE PRESSURE SENSOR CIRCUIT HIGH
P0944	LOSS OF HYDRAULIC PUMP PRIME
P0987	4C HYDRAULIC PRESSURE TEST
P0988	4C PRESSURE SWITCH RATIONALITY
P1684	BATTERY WAS DISCONNECTED
P1715	RESTRICTED MANUAL VALVE IN T3 RANGE
P1775	SOLENOID SWITCH VALVE LATCHED IN TCC POSITION
P1776	SOLENOID SWITCH VALVE LATCHED IN LR POSITION
P1794	SPEED SENSOR GROUND ERROR
P2700	INADEQUATE ELEMENT VOLUME LR
P2701	INADEQUATE ELEMENT VOLUME 2C
P2702	INADEQUATE ELEMENT VOLUME OD
P2703	INADEQUATE ELEMENT VOLUME UD
P2704	INADEQUATE ELEMENT VOLUME 4C
P2706	MS SOLENOID CIRCUIT
U0002	CAN C BUS OFF PERFORMANCE
U0100	LOST COMMUNICATION WITH THE ECM/PCM
U0121	LOST COMMUNICATION WITH ABS
U0141	LOST COMMUNICATION WITH IPM (FCM/TIPM)
U1449	IMPLAUSIBLE ERS MESSAGE RECEIVED

MODULE, POWERTRAIN CONTROL (PCM), 68RFE

DIAGNOSTIC CODE INDEX

DTC	Description
P0218	HIGH TEMPERATURE OPERATION ACTIVATED
P0562	BATTERY VOLTAGE LOW
P0602	CONTROL MODULE PROGRAMMING ERROR/NOT PROGRAMMED
P0604	INTERNAL CONTROL MODULE RAM
P0605	INTERNAL CONTROL MODULE ROM
P0613	INTERNAL TCM
P0706	TRANSMISSION RANGE SENSOR RATIONALITY
P0711	TRANSMISSION TEMPERATURE SENSOR PERFORMANCE
P0712	TRANSMISSION TEMPERATURE SENSOR LOW
P0713	TRANSMISSION TEMPERATURE SENSOR HIGH
P0714	TRANSMISSION TEMPERATURE SENSOR INTERMITTENT
P0716	INPUT SPEED SENSOR 1 CIRCUIT PERFORMANCE
P0721	OUTPUT SPEED SENSOR CIRCUIT PERFORMANCE
P0729	GEAR RATIO ERROR IN 6TH
P0731	GEAR RATIO ERROR IN 1ST
P0732	GEAR RATIO ERROR IN 2ND
P0733	GEAR RATIO ERROR IN 3RD
P0734	GEAR RATIO ERROR IN 4TH
P0735	GEAR RATIO ERROR IN 5TH
P0736	GEAR RATIO ERROR IN REVERSE
P0740	TCC OUT OF RANGE
P0750	LR SOLENOID CIRCUIT
P0755	2C SOLENOID CIRCUIT
P0765	UD SOLENOID CIRCUIT
P0770	4C SOLENOID CIRCUIT
P0841	LR PRESSURE SWITCH RATIONALITY
P0845	2C HYDRAULIC PRESSURE TEST
P0846	2C PRESSURE SWITCH RATIONALITY
P0868	LINE PRESSURE LOW
P0869	LINE PRESSURE HIGH
P0870	OD HYDRAULIC PRESSURE TEST
P0871	OD PRESSURE SWITCH RATIONALITY
P0875	UD HYDRAULIC PRESSURE TEST
P0876	UD PRESSURE SWITCH RATIONALITY
P0882	TCM POWER INPUT LOW
P0883	TCM POWER INPUT HIGH
P0884	POWER UP AT SPEED

P0890	SWITCHED BATTERY
P0933	HYDRAULIC PRESSURE SENSOR RANGE/PERFORMANCE
P0934	LINE PRESSURE SENSOR CIRCUIT LOW
P0935	LINE PRESSURE SENSOR CIRCUIT HIGH
P0944	LOSS OF HYDRAULIC PUMP PRIME
P0987	4C HYDRAULIC PRESSURE TEST
P0988	4C PRESSURE SWITCH RATIONALITY
P1684	BATTERY WAS DISCONNECTED
P1715	RESTRICTED MANUAL VALVE IN T3 RANGE
P1775	SOLENOID SWITCH VALVE LATCHED IN TCC POSITION
P1776	SOLENOID SWITCH VALVE LATCHED IN LR POSITION
P1794	SPEED SENSOR GROUND ERROR
P2700	INADEQUATE ELEMENT VOLUME LR
P2701	INADEQUATE ELEMENT VOLUME 2C
P2702	INADEQUATE ELEMENT VOLUME OD
P2703	INADEQUATE ELEMENT VOLUME UD
P2704	INADEQUATE ELEMENT VOLUME 4C
P2706	MS SOLENOID CIRCUIT
U0002	CAN C BUS OFF PERFORMANCE
U0100	LOST COMMUNICATION WITH THE ECM/PCM
U0121	LOST COMMUNICATION WITH ABS
U0141	LOST COMMUNICATION WITH IPM (FCM/TIPM)
U1449	IMPLAUSIBLE ERS MESSAGE RECEIVED

MODULE, POWERTRAIN CONTROL (PCM), 6.7L DIESEL

DIAGNOSTIC CODE INDEX

DTC	Description
P0008	ENGINE POSITION SYSTEM PERFORMANCE BANK 1
P000F	FUEL SYSTEM OVER PRESSURE RELIEF VALVE ACTIVATED
P0016	CRANKSHAFT/CAMSHAFT TIMING MISALIGNMENT - BANK 1 SENSOR 1
P0030	O2 SENSOR 1/1 HEATER CIRCUIT OPEN
P0031	O2 SENSOR 1/1 HEATER CIRCUIT LOW
P0032	O2 SENSOR 1/1 HEATER CIRCUIT HIGH
P0036	O2 SENSOR 1/2 HEATER CIRCUIT OPEN
P0037	O2 SENSOR 1/2 HEATER CIRCUIT LOW
P0038	O2 SENSOR 1/2 HEATER CIRCUIT HIGH
P003A	TURBOCHARGER BOOST CONTROL MODULE POSITION EXCEEDED LEARNING LIMIT
P0046	TURBOCHARGER BOOST CONTROL CIRCUIT PERFORMANCE
P0049	TURBOCHARGER TURBINE OVERSPEED

P0053	O2 SENSOR 1/1 HEATER RESISTANCE
P0054	O2 SENSOR 1/2 HEATER RESISTANCE
P006E	TURBOCHARGER BOOST CONTROL SUPPLY VOLTAGE CIRCUIT LOW
P007B	CHARGE AIR COOLER TEMPERATURE SENSOR CIRCUIT PERFORMANCE
P007C	CHARGE AIR COOLER TEMPERATURE SENSOR CIRCUIT LOW
P007D	CHARGE AIR COOLER TEMPERATURE SENSOR CIRCUIT HIGH
P0087	FUEL RAIL PRESSURE TOO LOW
P0088	FUEL RAIL PRESSURE TOO HIGH
P00AF	TURBOCHARGER BOOST CONTROL MODULE PERFORMANCE
P0101	MASS AIR FLOW SENSOR "A" CIRCUIT PERFORMANCE
P0102	MASS AIR FLOW SENSOR "A" CIRCUIT LOW
P0103	MASS AIR FLOW SENSOR "A" CIRCUIT HIGH
P0106	MANIFOLD ABSOLUTE PRESSURE SENSOR PERFORMANCE
P0107	MANIFOLD ABSOLUTE PRESSURE SENSOR CIRCUIT LOW
P0108	MANIFOLD ABSOLUTE PRESSURE SENSOR CIRCUIT HIGH
P0111	INTAKE AIR TEMPERATURE SENSOR 1 PERFORMANCE
P0112	INTAKE AIR TEMPERATURE SENSOR 1 CIRCUIT LOW
P0113	INTAKE AIR TEMPERATURE SENSOR 1 CIRCUIT HIGH
P0116	ENGINE COOLANT TEMPERATURE SENSOR PERFORMANCE
P0117	ENGINE COOLANT TEMPERATURE SENSOR CIRCUIT LOW
P0118	ENGINE COOLANT TEMPERATURE SENSOR CIRCUIT HIGH
P0128	THERMOSTAT RATIONALITY
P0131	O2 SENSOR 1/1 CIRCUIT LOW
P0132	O2 SENSOR 1/1 CIRCUIT HIGH
P0135	O2 SENSOR 1/1 HEATER PERFORMANCE
P0137	O2 SENSOR 1/2 CIRCUIT LOW
P0138	O2 SENSOR 1/2 CIRCUIT HIGH
P013A	O2 SENSOR 1/2 SLOW RESPONSE - RICH TO LEAN
P013B	O2 SENSOR 1/2 SLOW RESPONSE - LEAN TO RICH
P0141	O2 SENSOR 1/2 HEATER PERFORMANCE
P014C	O2 SENSOR 1/1 SLOW RESPONSE - RICH TO LEAN
P014D	O2 SENSOR 1/1 SLOW RESPONSE - LEAN TO RICH
P0169	WATER IN FUEL DETECTED FOR TOO LONG
P0191	FUEL RAIL PRESSURE SENSOR CIRCUIT PERFORMANCE
P0192	FUEL PRESSURE SENSOR LOW
P0193	FUEL PRESSURE SENSOR HIGH
P0201	FUEL INJECTOR 1 CIRCUIT/OPEN
P0202	FUEL INJECTOR 2 CIRCUIT/OPEN
P0203	FUEL INJECTOR 3 CIRCUIT/OPEN
P0204	FUEL INJECTOR 4 CIRCUIT/OPEN
P0205	FUEL INJECTOR 5 CIRCUIT/OPEN
P0206	

	FUEL INJECTOR 6 CIRCUIT/OPEN
P020A	FUEL INJECTOR 1 PERFORMANCE
P020B	FUEL INJECTOR 2 PERFORMANCE
P020C	FUEL INJECTOR 3 PERFORMANCE
P020D	FUEL INJECTOR 4 PERFORMANCE
P020E	FUEL INJECTOR 5 PERFORMANCE
P020F	FUEL INJECTOR 6 PERFORMANCE
P0217	COOLANT TEMPERATURE TOO HIGH
P0219	ENGINE OVERSPEED
P0253	INJECTION PUMP FUEL CONTROL CIRCUIT LOW
P0254	INJECTION PUMP FUEL CONTROL CIRCUIT HIGH
P0255	INJECTION PUMP FUEL CONTROL CIRCUIT PERFORMANCE
P026A	CHARGE AIR COOLER EFFICIENCY BELOW THRESHOLD
P0299	MANIFOLD PRESSURE SENSOR OUT OF RANGE LOW
P02E1	DIESEL INTAKE AIR FLOW CONTROL PERFORMANCE
P02E2	DIESEL INTAKE AIR FLOW CONTROL CIRCUIT LOW
P02E3	DIESEL INTAKE AIR FLOW CONTROL CIRCUIT HIGH
P02E7	DIESEL INTAKE AIR FLOW POSITION SENSOR PERFORMANCE
P02E9	DIESEL INTAKE AIR FLOW POSITION SENSOR CIRCUIT HIGH
P02E8	DIESEL INTAKE AIR FLOW POSITION SENSOR CIRCUIT LOW
P0300	MULTIPLE CYLINDER MISFIRE
P0301	CYLINDER 1 MISFIRE
P0302	CYLINDER 2 MISFIRE
P0303	CYLINDER 3 MISFIRE
P0304	CYLINDER 4 MISFIRE
P0305	CYLINDER 5 MISFIRE
P0306	CYLINDER 6 MISFIRE
P0335	CRANKSHAFT POSITION SENSOR CIRCUIT
P0336	CRANKSHAFT POSITION SENSOR PERFORMANCE
P0340	CAMSHAFT POSITION SENSOR CIRCUIT - BANK 1 SENSOR 1
P0341	CAMSHAFT POSITION SENSOR PERFORMANCE - BANK 1 SENSOR 1
P0381	WAIT TO START LAMP INOPERATIVE
P0401	EGR SYSTEM PERFORMANCE
P0402	EGR FLOW EXCESSIVE DETECTED
P0404	EGR CONTROL CIRCUIT PERFORMANCE
P0405	EGR POSITION SENSOR CIRCUIT LOW
P040B	EXHAUST GAS RECIRCULATION TEMPERATURE SENSOR "A" CIRCUIT PERFORMANCE
P040C	EXHAUST GAS RECIRCULATION TEMPERATURE SENSOR "A" CIRCUIT LOW
P040D	EXHAUST GAS RECIRCULATION TEMPERATURE SENSOR "A" CIRCUIT HIGH

P0420	CATALYST EFFICIENCY BELOW THRESHOLD
P0461	FUEL LEVEL SENSOR 1 PERFORMANCE
P0462	FUEL LEVEL SENSOR 1 CIRCUIT LOW
P0463	FUEL LEVEL SENSOR 1 CIRCUIT HIGH
P046C	EGR POSITION SENSOR PERFORMANCE
P0471	EXHAUST PRESSURE SENSOR 1 PERFORMANCE
P0472	EXHAUST PRESSURE SENSOR 1 LOW
P0473	EXHAUST PRESSURE SENSOR 1 HIGH
P0489	EGR CONTROL CIRCUIT LOW
P049D	EGR CONTROL POSITION EXCEEDED LEARNING LIMIT
P04DB	CRANKCASE VENTILATION SYSTEM DISCONNECTED
P0501	VEHICLE SPEED SENSOR 1 PERFORMANCE
P0513	INVALID WIN KEY
P051B	CRANKCASE PRESSURE SENSOR CIRCUIT RANGE/PERFORMANCE
P051C	CRANKCASE PRESSURE SENSOR CIRCUIT LOW
P051D	CRANKCASE PRESSURE SENSOR CIRCUIT HIGH
P0521	ENGINE OIL PRESSURE SENSOR PERFORMANCE
P0524	ENGINE OIL PRESSURE SENSOR CIRCUIT LOW
P0532	A/C PRESSURE SENSOR CIRCUIT LOW
P0533	A/C PRESSURE SENSOR CIRCUIT HIGH
P0541	INTAKE AIR HEATER CONTROL CIRCUIT 1 LOW
P0542	INTAKE AIR HEATER CONTROL CIRCUIT 1 HIGH
P0545	EXHAUST GAS TEMPERATURE SENSOR CIRCUIT LOW - BANK 1 SENSOR 1
P0546	EXHAUST GAS TEMPERATURE SENSOR CIRCUIT HIGH - BANK 1 SENSOR 1
P0507	IDLE CONTROL SYSTEM RPM - HIGHER THAN EXPECTED
P0506	IDLE CONTROL SYSTEM RPM - LOWER THAN EXPECTED
P0562	BATTERY VOLTAGE LOW
P0563	BATTERY VOLTAGE HIGH
P0571	BRAKE SWITCH 1 PERFORMANCE
P0572	BRAKE SWITCH 1 STUCK ON
P0573	BRAKE SWITCH 1 STUCK OFF
P0579	SPEED CONTROL SWITCH 1 PERFORMANCE
P0580	SPEED CONTROL SWITCH 1 CIRCUIT LOW
P0581	SPEED CONTROL SWITCH 1 CIRCUIT HIGH
P0585	SPEED CONTROL SWITCH 1/2 CORRELATION
P0591	SPEED CONTROL SWITCH 2 PERFORMANCE
P0592	SPEED CONTROL SWITCH 2 CIRCUIT LOW
P0593	SPEED CONTROL SWITCH 2 CIRCUIT HIGH
P0601	INTERNAL MEMORY CHECKSUM ERROR

P0604	INTERNAL CONTROL MODULE RAM ERROR
P0606	INTERNAL CONTROL PROCESSOR
P0607	ECU INTERNAL PERFORMANCE
P061A	ETC LEVEL 2 TORQUE PERFORMANCE
P061C	ETC LEVEL 2 RPM PERFORMANCE
P0625	GENERATOR FIELD CONTROL CIRCUIT LOW
P0626	GENERATOR FIELD CONTROL CIRCUIT HIGH
P0628	FUEL PUMP CONTROL CIRCUIT LOW
P0629	FUEL PUMP CONTROL CIRCUIT HIGH
P062C	ETC LEVEL 2 MPH PERFORMANCE
P0630	VIN NOT PROGRAMMED IN PCM
P0633	SKIM SECRET KEY NOT STORED IN PCM
P063C	GENERATOR VOLTAGE SENSE LOW
P063D	GENERATOR VOLTAGE SENSE HIGH
P0642	SENSOR REFERENCE VOLTAGE 1 CIRCUIT LOW
P0643	SENSOR REFERENCE VOLTAGE 1 CIRCUIT HIGH
P0646	A/C CONTROL CIRCUIT LOW
P0647	A/C CONTROL CIRCUIT HIGH
P064C	GLOW PLUG MODULE INTERNAL PERFORMANCE
P064D	O2 SENSOR MODULE INTERNAL PERFORMANCE
P0652	SENSOR REFERENCE VOLTAGE 2 LOW
P0653	SENSOR REFERENCE VOLTAGE 2 HIGH
P0658	ACTUATOR SUPPLY VOLTAGE "A" CIRCUIT LOW
P0686	POWER ENABLE CONTROL CIRCUIT LOW
P0691	COOLING FAN 1 CONTROL CIRCUIT LOW
P0692	COOLING FAN 1 CONTROL CIRCUIT HIGH
P0698	SENSOR REFERENCE VOLTAGE 3 CIRCUIT LOW
P0699	SENSOR REFERENCE VOLTAGE 3 CIRCUIT HIGH
P06A4	SENSOR REFERENCE VOLTAGE 4 CIRCUIT LOW
P06A5	SENSOR REFERENCE VOLTAGE 4 CIRCUIT HIGH
P0850	PARK/NEUTRAL SWITCH PERFORMANCE
P1123	POWER TAKE OFF SYSTEM MONITOR CONTROL ERROR
P113C	O2 SENSOR POWER SUPPLY CIRCUIT PERFORMANCE
P1191	P1191 - INLET AIR TEMPERATURE SENSOR RATIONAL/PERFORMANCE
P1192	INLET AIR TEMPERATURE SENSOR CIRCUIT LOW
P1193	INLET AIR TEMPERATURE SENSOR CIRCUIT HIGH
P144E	EGR COOLER BYPASS STATUS LINE CIRCUIT LOW
P144F	EGR COOLER BYPASS STATUS LINE CIRCUIT HIGH
P1451	DIESEL PARTICULATE FILTER SYSTEM PERFORMANCE
P1484	CATALYST OVERHEAT DETECTION
P1507	CRANKCASE FILTER RESTRICTION
P1508	

	CRANKCASE FILTER RESTRICTION - REPLACE FILTER
P1593	SPEED CONTROL SWITCH 1 STUCK
P1CEF	COLD CLIMATE TURBO PROTECTION ENGINE DE-RATE MODE
P2000	NOX ABSORBER EFFICIENCY BELOW THRESHOLD
P2002	DIESEL PARTICULATE FILTER EFFICIENCY BELOW THRESHOLD
P2032	EXHAUST GAS TEMPERATURE SENSOR CIRCUIT LOW- BANK 1 SENSOR 2
P2033	EXHAUST GAS TEMPERATURE SENSOR CIRCUIT HIGH - BANK 1 SENSOR 2
P2080	EXHAUST GAS TEMP SENSOR CIRCUIT PERFORMANCE - BANK 1 SENSOR 1
P2084	EXHAUST GAS TEMP SENSOR CIRCUIT PERFORMANCE - BANK 1 SENSOR 2
P2121	ACCELERATOR PEDAL POSITION SENSOR 1 PERFORMANCE
P2122	ACCELERATOR PEDAL POSITION SENSOR 1 CIRCUIT LOW
P2123	ACCELERATOR PEDAL POSITION SENSOR 1 CIRCUIT HIGH
P2127	ACCELERATOR PEDAL POSITION SENSOR 2 CIRCUIT LOW
P2128	ACCELERATOR PEDAL POSITION SENSOR 2 CIRCUIT HIGH
P2195	O2 SENSOR 1/1 OUT OF RANGE HIGH
P2196	O2 SENSOR 1/1 OUT OF RANGE LOW
P21B2	EXCESSIVE TIME TO ENTER CLOSED LOOP NOX ABSORBER CONTROL
P21B3	CLOSED LOOP NOX ABSORBER CONTROL AT LIMIT - TOO HIGH
P21B4	NOX ABSORBER - OVER TEMPERATURE
P2227	BAROMETERIC PRESSURE SENSOR RATIONALITY
P2228	BAROMETRIC PRESSURE CIRCUIT LOW
P2229	BAROMETRIC PRESSURE CIRCUIT HIGH
P2237	O2 SENSOR 1/1 POSITIVE PUMPING CIRCUIT OPEN
P2243	O2 SENSOR 1/1 SIGNAL CIRCUIT BELOW NORMAL OR OPEN
P2251	O2 SENSOR 1/1 RETURN CIRCUIT OPEN
P2262	TURBOCHARGER BOOST PRESSURE NOT DETECTED - MECHANICAL
P2267	WATER IN FUEL SENSOR CIRCUIT HIGH
P2269	WATER IN FUEL CONDITION
P226B	TURBOCHARGER BOOST PRESSURE NOT RESPONDING
P226C	TURBOCHARGER BOOST CONTROL "A" SLOW RESPONSE
P2270	O2 SENSOR 1/2 OUT OF RANGE HIGH
P2271	O2 SENSOR 1/2 OUT OF RANGE LOW
P2280	AIR FLOW RESTRICTION / LEAK BETWEEN AIR CLEANER AND MAF
P2281	AIR LEAK BETWEEN MAF AND THROTTLE BODY
P2299	BRAKE PEDAL POSITION / ACCELERATOR PEDAL POSITION INCOMPATIBLE
P22AB	O2 SENSOR 1/2 POSITIVE CURRENT CONTROL CIRCUIT OPEN
P22AE	O2 SENSOR 1/2 SIGNAL CIRCUIT OPEN

P22B2	O2 SENSOR 1/2 RETURN CIRCUIT OPEN
P22B5	O2 SENSOR 1/2 PUMP CELL CURRENT TRIM CIRCUIT OPEN
P241A	O2 SENSOR 1/1 AND 1/2 OXYGEN CONCENTRATION MISMATCH
P242B	EXHAUST GAS TEMP SENSOR CIRCUIT PERFORMANCE - BANK 1 SENSOR 3
P242C	EXHAUST GAS TEMPERATURE SENSOR CIRCUIT LOW- BANK 1 SENSOR 3
P242D	EXHAUST GAS TEMPERATURE SENSOR CIRCUIT HIGH - BANK 1 SENSOR 3
P242F	DIESEL PARTICULATE FILTER RESTRICTION - ASH ACCUMULATION
P244A	DIESEL PARTICULATE FILTER DIFFERENTIAL PRESSURE TOO LOW
P244D	EXHAUST TEMPERATURE TOO HIGH FOR PARTICULATE FILTER REGENERATION
P2453	DIESEL PARTICULATE FILTER PRESSURE SENSOR A CIRCUIT PERFORMANCE
P2454	DIESEL PARTICULATE FILTER PRESSURE SENSOR A CIRCUIT LOW
P2455	DIESEL PARTICULATE FILTER PRESSURE SENSOR A CIRCUIT HIGH
P2457	EXHAUST GAS RECIRCULATION COOLING SYSTEM PERFORMANCE
P2459	DIESEL PARTICULATE FILTER REGENERATION TOO FREQUENT
P245A	EGR COOLER BYPASS CONTROL CIRCUIT/OPEN
P245B	EGR COOLER BYPASS STATUS LINE INTERMITTENT
P245D	EGR COOLER BYPASS CONTROL CIRCUIT HIGH
P245C	EGR COOLER BYPASS CONTROL CIRCUIT LOW
P2463	DIESEL PARTICULATE FILTER - SOOT ACCUMULATION
P246F	EXHAUST GAS TEMP SENSOR CIRCUIT PERFORMANCE - BANK 1 SENSOR 4
P2470	EXHAUST GAS TEMPERATURE SENSOR CIRCUIT LOW - BANK 1 SENSOR 4
P2471	EXHAUST GAS TEMPERATURE SENSOR CIRCUIT HIGH - BANK 1 SENSOR 4
P249F	EXCESSIVE TIME TO ENTER CLOSED LOOP DPF REGENERATION CONTROL
P24A0	CLOSED LOOP DPF REGENERATION CONTROL AT LIMIT - TEMPERATURE TOO LOW
P2503	CHARGING SYSTEM OUTPUT LOW
P2504	CHARGING SYSTEM OUTPUT HIGH
P2509	PCM/PCM POWER INPUT SIGNAL INTERMITTENT
P2563	TURBOCHARGER BOOST CONTROL POSITION SENSOR PERFORMANCE
P2579	TURBOCHARGER SPEED SENSOR CIRCUIT PERFORMANCE
P2580	TURBOCHARGER SPEED SENSOR CIRCUIT LOW
P2609	INTAKE AIR HEATER SYSTEM PERFORMANCE
P2626	O2 SENSOR 1/1 PUMP CELL CURRENT TRIM CIRCUIT OPEN
P268C	CYLINDER 1 INJECTOR DATA INCOMPATIBLE

P268D	CYLINDER 2 INJECTOR DATA INCOMPATIBLE
P268E	CYLINDER 3 INJECTOR DATA INCOMPATIBLE
P268F	CYLINDER 4 INJECTOR DATA INCOMPATIBLE
P2690	CYLINDER 5 INJECTOR DATA INCOMPATIBLE
P2691	CYLINDER 6 INJECTOR DATA INCOMPATIBLE
P2A01	O2 SENSOR 1/2 CIRCUIT PERFORMANCE
P2A00	O2 SENSOR 1/1 CIRCUIT PERFORMANCE
P2BAC	NOx EXCEEDENCE - DEACTIVATION OF EGR
U0001	CAN C BUS
U0101	LOST COMMUNICATION WITH TCM
U010C	LOST COMMUNICATION WITH TURBOCHARGER/SUPERCHARGER CONTROL MODULE
U011A	LOST COMMUNICATION WITH EXHAUST GAS SENSOR MODULE
U0121	LOST COMMUNICATION WITH ANTI-LOCK BRAKE MODULE
U0141	LOST COMMUNICATION WITH IPM (FCM/TIPM)
U1403	IMPLAUSIBLE FUEL LEVEL SIGNAL RECEIVED
U1412	IMPLAUSIBLE VEHICLE SPEED SIGNAL RECEIVED
U1421	IMPLAUSIBLE IGNITION KEY OFF TIME RECEIVED
U1601	ECU APPLICATION SOFTWARE CODE 1 MISSING OR CORRUPTED

MODULE, POWERTRAIN CONTROL (PCM), DD/DP - CHASSIS CAB

DIAGNOSTIC CODE INDEX

DTC	Description
P0008	ENGINE POSITION SYSTEM PERFORMANCE BANK 1
P000F	FUEL SYSTEM OVER PRESSURE RELIEF VALVE ACTIVATED
P0016	CRANKSHAFT/CAMSHAFT TIMING MISALIGNMENT - BANK 1 SENSOR 1
P003A	TURBOCHARGER BOOST CONTROL MODULE POSITION EXCEEDED LEARNING LIMIT
P0046	TURBOCHARGER BOOST CONTROL CIRCUIT PERFORMANCE
P0049	TURBOCHARGER TURBINE OVERSPEED
P006E	TURBOCHARGER BOOST CONTROL SUPPLY VOLTAGE CIRCUIT LOW
P0087	FUEL RAIL PRESSURE TOO LOW
P0088	FUEL RAIL PRESSURE TOO HIGH
P00AF	TURBOCHARGER BOOST CONTROL MODULE PERFORMANCE
P00DA	AMBIENT AIR TEMPERATURE SENSOR CIRCUIT PERFORMANCE
P00DB	AMBIENT AIR TEMPERATURE SENSOR CIRCUIT LOW
P00DC	AMBIENT AIR TEMPERATURE SENSOR CIRCUIT HIGH
P0101	MASS AIR FLOW SENSOR "A" CIRCUIT PERFORMANCE
P0102	MASS AIR FLOW SENSOR "A" CIRCUIT LOW
P0103	MASS AIR FLOW SENSOR "A" CIRCUIT HIGH

P0106	MANIFOLD ABSOLUTE PRESSURE SENSOR PERFORMANCE
P0107	MANIFOLD ABSOLUTE PRESSURE SENSOR CIRCUIT LOW
P0108	MANIFOLD ABSOLUTE PRESSURE SENSOR CIRCUIT HIGH
P0111	INTAKE AIR TEMPERATURE SENSOR 1 PERFORMANCE
P0112	INTAKE AIR TEMPERATURE SENSOR 1 CIRCUIT LOW
P0113	INTAKE AIR TEMPERATURE SENSOR 1 CIRCUIT HIGH
P0116	ENGINE COOLANT TEMPERATURE SENSOR PERFORMANCE
P0117	ENGINE COOLANT TEMPERATURE SENSOR CIRCUIT LOW
P0118	ENGINE COOLANT TEMPERATURE SENSOR CIRCUIT HIGH
P0128	THERMOSTAT RATIONALITY
P0169	WATER IN FUEL DETECTED FOR TOO LONG
P0191	FUEL RAIL PRESSURE SENSOR CIRCUIT PERFORMANCE
P0192	FUEL PRESSURE SENSOR LOW
P0193	FUEL PRESSURE SENSOR HIGH
P0201	FUEL INJECTOR 1 CIRCUIT/OPEN
P0202	FUEL INJECTOR 2 CIRCUIT/OPEN
P0203	FUEL INJECTOR 3 CIRCUIT/OPEN
P0204	FUEL INJECTOR 4 CIRCUIT/OPEN
P0205	FUEL INJECTOR 5 CIRCUIT/OPEN
P0206	FUEL INJECTOR 6 CIRCUIT/OPEN
P020A	FUEL INJECTOR 1 PERFORMANCE
P020B	FUEL INJECTOR 2 PERFORMANCE
P020C	FUEL INJECTOR 3 PERFORMANCE
P020D	FUEL INJECTOR 4 PERFORMANCE
P020E	FUEL INJECTOR 5 PERFORMANCE
P020F	FUEL INJECTOR 6 PERFORMANCE
P0217	COOLANT TEMPERATURE TOO HIGH
P0219	ENGINE OVERSPEED
P0253	INJECTION PUMP FUEL CONTROL CIRCUIT LOW
P0254	INJECTION PUMP FUEL CONTROL CIRCUIT HIGH
P0255	INJECTION PUMP FUEL CONTROL CIRCUIT PERFORMANCE
P026A	CHARGE AIR COOLER EFFICIENCY BELOW THRESHOLD
P0299	MANIFOLD PRESSURE SENSOR OUT OF RANGE LOW
P02E1	DIESEL INTAKE AIR FLOW CONTROL PERFORMANCE
P02E2	DIESEL INTAKE AIR FLOW CONTROL CIRCUIT LOW
P02E3	DIESEL INTAKE AIR FLOW CONTROL CIRCUIT HIGH
P02E7	DIESEL INTAKE AIR FLOW POSITION SENSOR PERFORMANCE
P02E8	DIESEL INTAKE AIR FLOW POSITION SENSOR CIRCUIT LOW
P02E9	DIESEL INTAKE AIR FLOW POSITION SENSOR CIRCUIT HIGH
P0300	MULTIPLE CYLINDER MISFIRE
P0301	CYLINDER 1 MISFIRE
P0302	

	CYLINDER 2 MISFIRE
P0303	CYLINDER 3 MISFIRE
P0304	CYLINDER 4 MISFIRE
P0305	CYLINDER 5 MISFIRE
P0306	CYLINDER 6 MISFIRE
P0335	CRANKSHAFT POSITION SENSOR CIRCUIT
P0336	CRANKSHAFT POSITION SENSOR PERFORMANCE
P0340	CAMSHAFT POSITION SENSOR CIRCUIT - BANK 1 SENSOR 1
P0341	CAMSHAFT POSITION SENSOR PERFORMANCE - BANK 1 SENSOR 1
P0381	WAIT TO START LAMP INOPERATIVE
P0401	EGR SYSTEM PERFORMANCE
P0402	EGR FLOW EXCESSIVE DETECTED
P0404	EGR CONTROL CIRCUIT PERFORMANCE
P0405	EGR POSITION SENSOR CIRCUIT LOW
P040B	EXHAUST GAS RECIRCULATION TEMPERATURE SENSOR "A" CIRCUIT PERFORMANCE
P040C	EXHAUST GAS RECIRCULATION TEMPERATURE SENSOR "A" CIRCUIT LOW
P040D	EXHAUST GAS RECIRCULATION TEMPERATURE SENSOR "A" CIRCUIT HIGH
P0420	CATALYST EFFICIENCY BELOW THRESHOLD
P0461	FUEL LEVEL SENSOR 1 PERFORMANCE
P0462	FUEL LEVEL SENSOR 1 CIRCUIT LOW
P0463	FUEL LEVEL SENSOR 1 CIRCUIT HIGH
P046C	EGR POSITION SENSOR CIRCUIT PERFORMANCE
P0471	EXHAUST PRESSURE SENSOR 1 PERFORMANCE
P0472	EXHAUST PRESSURE SENSOR 1 LOW
P0473	EXHAUST PRESSURE SENSOR 1 HIGH
P0489	EGR CONTROL CIRCUIT LOW
P049D	EGR CONTROL POSITION EXCEEDED LEARNING LIMIT
P04DB	CRANKCASE VENTILATION SYSTEM DISCONNECTED
P0501	VEHICLE SPEED SENSOR 1 PERFORMANCE
P0506	IDLE CONTROL SYSTEM RPM - LOWER THAN EXPECTED
P0507	IDLE CONTROL SYSTEM RPM - HIGHER THAN EXPECTED
P0513	INVALID WIN KEY
P051B	CRANKCASE PRESSURE SENSOR CIRCUIT RANGE/PERFORMANCE
P051C	CRANKCASE PRESSURE SENSOR CIRCUIT LOW
P051D	CRANKCASE PRESSURE SENSOR CIRCUIT HIGH
P0521	ENGINE OIL PRESSURE SENSOR PERFORMANCE
P0524	ENGINE OIL PRESSURE SENSOR CIRCUIT LOW
P0532	A/C PRESSURE SENSOR CIRCUIT LOW
P0533	A/C PRESSURE SENSOR CIRCUIT HIGH

P0541	INTAKE AIR HEATER CONTROL CIRCUIT 1 LOW
P0542	INTAKE AIR HEATER CONTROL CIRCUIT 1 HIGH
P0545	EXHAUST GAS TEMPERATURE SENSOR CIRCUIT LOW - BANK 1 SENSOR 1
P0546	EXHAUST GAS TEMPERATURE SENSOR CIRCUIT HIGH - BANK 1 SENSOR 1
P0562	BATTERY VOLTAGE LOW
P0563	BATTERY VOLTAGE HIGH
P056D	REDUCTANT CONTROL MODULE SYSTEM VOLTAGE
P0571	BRAKE SWITCH 1 PERFORMANCE
P0572	BRAKE SWITCH 1 STUCK ON
P0573	BRAKE SWITCH 1 STUCK OFF
P0579	SPEED CONTROL SWITCH 1 PERFORMANCE
P0580	SPEED CONTROL SWITCH 1 CIRCUIT LOW
P0581	SPEED CONTROL SWITCH 1 CIRCUIT HIGH
P0585	SPEED CONTROL SWITCH 1/2 CORRELATION
P0591	SPEED CONTROL SWITCH 2 PERFORMANCE
P0592	SPEED CONTROL SWITCH 2 CIRCUIT LOW
P0593	SPEED CONTROL SWITCH 2 CIRCUIT HIGH
P0601	INTERNAL MEMORY CHECKSUM ERROR
P0604	INTERNAL CONTROL MODULE RAM ERROR
P0606	INTERNAL CONTROL PROCESSOR
P0607	ECU INTERNAL PERFORMANCE
P061A	ETC LEVEL 2 TORQUE PERFORMANCE
P061C	ETC LEVEL 2 RPM PERFORMANCE
P0625	GENERATOR FIELD CONTROL CIRCUIT LOW
P0626	GENERATOR FIELD CONTROL CIRCUIT HIGH
P0628	FUEL PUMP CONTROL CIRCUIT LOW
P0629	FUEL PUMP CONTROL CIRCUIT HIGH
P062C	ETC LEVEL 2 MPH PERFORMANCE
P0630	VIN NOT PROGRAMMED IN PCM
P0633	SKIM SECRET KEY NOT STORED IN PCM
P063C	GENERATOR VOLTAGE SENSE LOW
P063D	GENERATOR VOLTAGE SENSE HIGH
P0642	SENSOR REFERENCE VOLTAGE 1 CIRCUIT LOW
P0643	SENSOR REFERENCE VOLTAGE 1 CIRCUIT HIGH
P0646	A/C CONTROL CIRCUIT LOW
P0647	A/C CONTROL CIRCUIT HIGH
P064C	GLOW PLUG MODULE INTERNAL PERFORMANCE
P0652	SENSOR REFERENCE VOLTAGE 2 LOW
P0653	SENSOR REFERENCE VOLTAGE 2 HIGH

P0658	ACTUATOR SUPPLY VOLTAGE "A" CIRCUIT LOW
P0686	POWER ENABLE CONTROL CIRCUIT LOW
P0691	COOLING FAN 1 CONTROL CIRCUIT LOW
P0692	COOLING FAN 1 CONTROL CIRCUIT HIGH
P0698	SENSOR REFERENCE VOLTAGE 3 CIRCUIT LOW
P0699	SENSOR REFERENCE VOLTAGE 3 CIRCUIT HIGH
P06A4	SENSOR REFERENCE VOLTAGE 4 CIRCUIT LOW
P06A5	SENSOR REFERENCE VOLTAGE 4 CIRCUIT HIGH
P06F3	(DIESEL EXHAUST FLUID) REDUCTANT CONTROL MODULE INTERNAL TEMPERATURE SENSOR CIRCUIT HIGH
P0700	TRANSMISSION CONTROL SYSTEM (MIL REQUEST)
P0850	PARK/NEUTRAL SWITCH PERFORMANCE
P1123	POWER TAKE OFF SYSTEM MONITOR CONTROL ERROR
P1191	P1191 - INLET AIR TEMPERATURE SENSOR RATIONAL/PERFORMANCE
P1192	INLET AIR TEMPERATURE SENSOR CIRCUIT LOW
P1193	INLET AIR TEMPERATURE SENSOR CIRCUIT HIGH
P1451	DIESEL PARTICULATE FILTER SYSTEM PERFORMANCE
P1484	CATALYST OVERHEAT DETECTION
P1507	CRANKCASE FILTER RESTRICTION
P1593	SPEED CONTROL SWITCH 1 STUCK
P1C54	SCR NOx CATALYST MISSING
P1C55	NOx SENSOR INTERMITTENT - BANK 1 SENSOR 1
P1C56	NOx SENSOR INTERMITTENT - BANK 1 SENSOR 2
P1C57	REDUCTANT CONTROL MODULE SHUTDOWN - CRASH EVENT DETECTED
P1C6F	(DIESEL EXHAUST FLUID) REDUCTANT LINE HEATER RELAY CIRCUIT PERFORMANCE
P1C70	SCR ERROR DETECTED - ENGINE DISABLED
P2002	DIESEL PARTICULATE FILTER EFFICIENCY BELOW THRESHOLD
P202A	(DIESEL EXHAUST FLUID) REDUCTANT TANK HEATER CONTROL CIRCUIT OPEN
P202B	(DIESEL EXHAUST FLUID) REDUCTANT TANK HEATER CONTROL CIRCUIT LOW
P202C	(DIESEL EXHAUST FLUID) REDUCTANT TANK HEATER CONTROL CIRCUIT HIGH
P202E	(DIESEL EXHAUST FLUID) REDUCTANT INJECTOR PERFORMANCE
P2032	EXHAUST GAS TEMPERATURE SENSOR CIRCUIT LOW- BANK 1 SENSOR 2
P2033	EXHAUST GAS TEMPERATURE SENSOR CIRCUIT HIGH - BANK 1 SENSOR 2
P203C	(DIESEL EXHAUST FLUID) REDUCTANT LEVEL SENSOR CIRCUIT LOW
P203D	(DIESEL EXHAUST FLUID) REDUCTANT LEVEL SENSOR CIRCUIT HIGH

P203F	(DIESEL EXHAUST FLUID) REDUCTANT LEVEL TOO LOW
P2048	(DIESEL EXHAUST FLUID) REDUCTANT INJECTOR CIRCUIT LOW
P2049	(DIESEL EXHAUST FLUID) REDUCTANT INJECTOR CIRCUIT HIGH
P204A	(DIESEL EXHAUST FLUID) REDUCTANT PRESSURE SENSOR CIRCUIT
P204B	(DIESEL EXHAUST FLUID) REDUCTANT PRESSURE SENSOR CIRCUIT PERFORMANCE
P204C	(DIESEL EXHAUST FLUID) REDUCTANT PRESSURE SENSOR CIRCUIT LOW
P204D	(DIESEL EXHAUST FLUID) REDUCTANT PRESSURE SENSOR CIRCUIT HIGH
P204E	(DIESEL EXHAUST FLUID) REDUCTANT PRESSURE SENSOR CIRCUIT INTERMITTENT
P205B	(DIESEL EXHAUST FLUID) REDUCTANT TANK TEMPERATURE SENSOR CIRCUIT RANGE/PERFORMANCE
P205C	(DIESEL EXHAUST FLUID) REDUCTANT TANK TEMPERATURE SENSOR CIRCUIT LOW
P205D	(DIESEL EXHAUST FLUID) REDUCTANT TANK TEMPERATURE SENSOR CIRCUIT HIGH
P205E	(DIESEL EXHAUST FLUID) REDUCTANT TANK TEMPERATURE SENSOR CIRCUIT INTERMITTENT
P207F	REDUCTANT QUALITY PERFORMANCE
P2080	EXHAUST GAS TEMP SENSOR CIRCUIT PERFORMANCE - BANK 1 SENSOR 1
P2084	EXHAUST GAS TEMP SENSOR CIRCUIT PERFORMANCE - BANK 1 SENSOR 2
P208A	(DIESEL EXHAUST FLUID) REDUCTANT PUMP CONTROL CIRCUIT OPEN
P208B	(DIESEL EXHAUST FLUID) REDUCTANT PUMP PERFORMANCE
P208C	(DIESEL EXHAUST FLUID) REDUCTANT PUMP CONTROL CIRCUIT LOW
P208D	(DIESEL EXHAUST FLUID) REDUCTANT PUMP CONTROL CIRCUIT HIGH
P209F	(DIESEL EXHAUST FLUID) REDUCTANT TANK HEATER CONTROL CIRCUIT PERFORMANCE
P20A0	(DIESEL EXHAUST FLUID) REDUCTANT PURGE CONTROL VALVE CIRCUIT OPEN
P20A2	(DIESEL EXHAUST FLUID) REDUCTANT PURGE CONTROL VALVE CIRCUIT LOW
P20A3	(DIESEL EXHAUST FLUID) REDUCTANT PURGE CONTROL VALVE CIRCUIT HIGH
P20B0	(DIESEL EXHAUST FLUID) REDUCTANT PUMP TEMPERATURE PERFORMANCE
P20B2	(DIESEL EXHAUST FLUID) REDUCTANT HEATER CONTROL VALVE PERFORMANCE
P20B5	(DIESEL EXHAUST FLUID) REDUCTANT PUMP HEATER CONTROL CIRCUIT OPEN
P20B7	(DIESEL EXHAUST FLUID) REDUCTANT PUMP HEATER CONTROL

	CIRCUIT LOW
P20B8	(DIESEL EXHAUST FLUID) REDUCTANT PUMP HEATER CONTROL CIRCUIT HIGH
P20BD	(DIESEL EXHAUST FLUID) REDUCTANT PRESSURE LINE HEATER CONTROL CIRCUIT/OPEN
P20BE	(DIESEL EXHAUST FLUID) REDUCTANT PRESSURE LINE HEATER CONTROL CIRCUIT PERFORMANCE
P20BF	(DIESEL EXHAUST FLUID) REDUCTANT PRESSURE LINE HEATER CONTROL CIRCUIT LOW
P20C0	(DIESEL EXHAUST FLUID) REDUCTANT PRESSURE LINE HEATER CONTROL CIRCUIT HIGH
P20C1	(DIESEL EXHAUST FLUID) REDUCTANT RETURN LINE HEATER CONTROL CIRCUIT/OPEN
P20C3	(DIESEL EXHAUST FLUID) REDUCTANT RETURN LINE HEATER CONTROL CIRCUIT LOW
P20C4	(DIESEL EXHAUST FLUID) REDUCTANT RETURN LINE HEATER CONTROL CIRCUIT HIGH
P20C6	(DIESEL EXHAUST FLUID) REDUCTANT HEATER D CONTROL PERFORMANCE
P20E8	(DIESEL EXHAUST FLUID) REDUCTANT PRESSURE TOO LOW
P20E9	(DIESEL EXHAUST FLUID) REDUCTANT PRESSURE TOO HIGH
P20EC	SCR NOx CATALYST - OVER TEMPERATURE BANK 1
P20EE	SCR NOx CATALYST EFFICIENCY BELOW THRESHOLD - BANK 1
P20FE	(DIESEL EXHAUST FLUID) REDUCTANT METERING UNIT PERFORMANCE
P20FF	(DIESEL EXHAUST FLUID) REDUCTANT CONTROL MODULE PERFORMANCE
P2121	ACCELERATOR PEDAL POSITION SENSOR 1 PERFORMANCE
P2122	ACCELERATOR PEDAL POSITION SENSOR 1 CIRCUIT LOW
P2123	ACCELERATOR PEDAL POSITION SENSOR 1 CIRCUIT HIGH
P2127	ACCELERATOR PEDAL POSITION SENSOR 2 CIRCUIT LOW
P2128	ACCELERATOR PEDAL POSITION SENSOR 2 CIRCUIT HIGH
P214A	SCR NOx CATALYST INLET TEMPERATURE TOO HIGH
P214B	SCR NOx CATALYST INLET TEMPERATURE TOO HIGH DURING PARTICULATE FILTER REGENERATION
P214C	SCR NOx CATALYST OUTLET TEMPERATURE TOO HIGH
P214D	SCR NOx CATALYST OUTLET TEMPERATURE TOO HIGH DURING PARTICULATE FILTER REGENERATION
P21C2	(DIESEL EXHAUST FLUID) REDUCTANT LINE HEATER RELAY CONTROL CIRCUIT OPEN
P21C3	(DIESEL EXHAUST FLUID) REDUCTANT LINE HEATER RELAY CONTROL CIRCUIT LOW
P21C4	(DIESEL EXHAUST FLUID) REDUCTANT LINE HEATER RELAY CONTROL

	CIRCUIT HIGH
P2201	AFTERTREATMENT NOx SENSOR CIRCUIT PERFORMANCE - BANK 1 SENSOR 1
P2202	AFTERTREATMENT NOx SENSOR CIRCUIT - BANK 1 SENSOR 1
P2209	NOx SENSOR HEATER CIRCUIT PERFORMANCE - BANK 1 SENSOR 1
P220A	NOx SENSOR SUPPLY CIRCUIT PERFORMANCE - BANK 1 SENSOR 1
P220B	NOx SENSOR SUPPLY CIRCUIT PERFORMANCE - BANK 1 SENSOR 2
P2227	BAROMETERIC PRESSURE SENSOR RATIONALITY
P2228	BAROMETRIC PRESSURE CIRCUIT LOW
P2229	BAROMETRIC PRESSURE CIRCUIT HIGH
P2262	TURBOCHARGER BOOST PRESSURE NOT DETECTED - MECHANICAL
P2266	WATER IN FUEL SENSOR CIRCUIT LOW
P2267	WATER IN FUEL SENSOR CIRCUIT HIGH
P2269	WATER IN FUEL CONDITION
P226B	TURBOCHARGER BOOST PRESSURE NOT RESPONDING
P226C	TURBOCHARGER BOOST CONTROL "A" SLOW RESPONSE
P2280	AIR FLOW RESTRICTION / LEAK BETWEEN AIR CLEANER AND MAF
P2281	AIR LEAK BETWEEN MAF AND THROTTLE BODY
P2299	BRAKE PEDAL POSITION / ACCELERATOR PEDAL POSITION INCOMPATIBLE
P229E	AFTERTREATMENT NOx SENSOR CIRCUIT - BANK 1 SENSOR 2
P229F	AFTERTREATMENT NOx SENSOR CIRCUIT PERFORMANCE - BANK 1 SENSOR 2
P22A7	NOx SENSOR HEATER CIRCUIT PERFORMANCE - BANK 1 SENSOR 2
P240F	EGR SLOW RESPONSE
P242B	EXHAUST GAS TEMP SENSOR CIRCUIT PERFORMANCE - BANK 1 SENSOR 3
P242C	EXHAUST GAS TEMPERATURE SENSOR CIRCUIT LOW- BANK 1 SENSOR 3
P242D	EXHAUST GAS TEMPERATURE SENSOR CIRCUIT HIGH - BANK 1 SENSOR 3
P242F	DIESEL PARTICULATE FILTER RESTRICTION - ASH ACCUMULATION
P244A	DIESEL PARTICULATE FILTER DIFFERENTIAL PRESSURE TOO LOW
P244D	EXHAUST TEMPERATURE TOO HIGH FOR PARTICULATE FILTER REGENERATION
P2453	DIESEL PARTICULATE FILTER PRESSURE SENSOR A CIRCUIT PERFORMANCE
P2454	DIESEL PARTICULATE FILTER PRESSURE SENSOR A CIRCUIT LOW
P2455	DIESEL PARTICULATE FILTER PRESSURE SENSOR A CIRCUIT HIGH
P2457	EXHAUST GAS RECIRCULATION COOLING SYSTEM PERFORMANCE
P2459	DIESEL PARTICULATE FILTER REGENERATION TOO FREQUENT
P2463	DIESEL PARTICULATE FILTER - SOOT ACCUMULATION

P246F	EXHAUST GAS TEMP SENSOR CIRCUIT PERFORMANCE - BANK 1 SENSOR 4
P2470	EXHAUST GAS TEMPERATURE SENSOR CIRCUIT LOW - BANK 1 SENSOR 4
P242D	EXHAUST GAS TEMPERATURE SENSOR CIRCUIT HIGH - BANK 1 SENSOR 4
P249C	EXCESSIVE TIME TO ENTER CLOSED LOOP SCR REDUCTANT INJECTION CONTROL
P249E	CLOSED LOOP SCR REDUCTANT INJECTION CONTROL AT LIMIT - FLOW TOO HIGH
P249F	EXCESSIVE TIME TO ENTER CLOSED LOOP DPF REGENERATION CONTROL
P24A0	CLOSED LOOP DPF REGENERATION CONTROL AT LIMIT - TEMPERATURE TOO LOW
P2503	CHARGING SYSTEM OUTPUT LOW
P2504	CHARGING SYSTEM OUTPUT HIGH
P2509	PCM/PCM POWER INPUT SIGNAL INTERMITTENT
P2563	TURBOCHARGER BOOST CONTROL POSITION SENSOR PERFORMANCE
P2579	TURBOCHARGER SPEED SENSOR CIRCUIT PERFORMANCE
P2580	TURBOCHARGER SPEED SENSOR CIRCUIT LOW
P2609	INTAKE AIR HEATER SYSTEM PERFORMANCE
P268C	CYLINDER 1 INJECTOR DATA INCOMPATIBLE
P268D	CYLINDER 2 INJECTOR DATA INCOMPATIBLE
P268E	CYLINDER 3 INJECTOR DATA INCOMPATIBLE
P268F	CYLINDER 4 INJECTOR DATA INCOMPATIBLE
P2690	CYLINDER 5 INJECTOR DATA INCOMPATIBLE
P2691	CYLINDER 6 INJECTOR DATA INCOMPATIBLE
P2BAC	NOx EXCEEDENCE - DEACTIVATION OF EGR
U0001	CAN C BUS
U0101	LOST COMMUNICATION WITH TCM
U010C	LOST COMMUNICATION WITH TURBOCHARGER/SUPERCHARGER CONTROL MODULE
U010E	LOST COMMUNICATION WITH DIESEL EXHAUST FLUID CONTROL UNIT
U0121	LOST COMMUNICATION WITH ANTI-LOCK BRAKE MODULE
U0141	LOST COMMUNICATION WITH IPM (FCM/TIPM)
U029D	LOST COMMUNICATION WITH NOx SENSOR "A"
U029E	LOST COMMUNICATION WITH NOx SENSOR "B"
U040F	INVALID DATA RECEIVED FROM REDUCTANT CONTROL MODULE
U059E	INVALID DATA RECEIVED FROM NOx SENSOR "A"
U059F	INVALID DATA RECEIVED FROM NOx SENSOR "B"
U11C1	LOST COMMUNICATION WITH DIESEL EXHAUST FLUID CONTROL UNIT
U1403	IMPLAUSIBLE FUEL LEVEL SIGNAL RECEIVED

U1412	IMPLAUSIBLE VEHICLE SPEED SIGNAL RECEIVED
U1421	IMPLAUSIBLE IGNITION KEY OFF TIME RECEIVED
U1601	ECU APPLICATION SOFTWARE CODE 1 MISSING OR CORRUPTED

MODULE, TIRE PRESSURE (TPM)

DIAGNOSTIC CODE INDEX

DTC	Description
B2199-16	BATTERY VOLTAGE - CIRCUIT VOLTAGE BELOW THRESHOLD
B2199-17	BATTERY VOLTAGE - CIRCUIT VOLTAGE ABOVE THRESHOLD
B21DD-84	SYSTEM VOLTAGE - SIGNAL VOLTAGE BELOW ALLOWABLE RANGE
B21DD-85	SYSTEM VOLTAGE - SIGNAL ABOVE ALLOWABLE RANGE
C0077-00	LOW TIRE PRESSURE
C1501-96	TIRE PRESSURE SENSOR 1 - INTERNAL COMPONENT FAILURE
C1502-96	TIRE PRESSURE SENSOR 2 - INTERNAL COMPONENT FAILURE
C1503-96	TIRE PRESSURE SENSOR 3 - INTERNAL COMPONENT FAILURE
C1504-96	TIRE PRESSURE SENSOR 4 - INTERNAL COMPONENT FAILURE
C151C-00	TIRE PRESSURE SENSORS MISSING
C151D-00	TIRE PRESSURE SENSOR LOCATION UNDETERMINED
C1580-00	LEFT/RIGHT SIDE TIRE PRESSURE SENSOR LOCATION UNDETERMINED
C1581-00	FRONT/REAR TIRE PRESSURE SENSOR LOCATION UNDETERMINED
C1597-00	TPM SYSTEM DEACTIVATED-WINTER MODE
C2209-00	TIRE PRESSURE MONITOR INTERNAL
U0001-00	CAN C BUS
U0100-00	LOST COMMUNICATION WITH ECM/PCM
U0121-00	LOST COMMUNICATION WITH ANTI-LOCK BRAKE SYSTEM (ABS) CONTROL MODULE
U0141-00	LOST COMMUNICATION WITH IPM (FCM/TIPM)

MODULE, TOTALLY INTEGRATED POWER (TIPM)

DIAGNOSTIC CODE INDEX

DTC	Description
B162B	LEFT LOW BEAM CONTROL CIRCUIT LOW
B162C	LEFT LOW BEAM CONTROL CIRCUIT HIGH
B162F	RIGHT LOW BEAM CONTROL CIRCUIT LOW
B1630	RIGHT LOW BEAM CONTROL CIRCUIT HIGH
B1633	LEFT HI BEAM CONTROL CIRCUIT LOW
B1634	LEFT HI BEAM CONTROL CIRCUIT HIGH
B1637	RIGHT HI BEAM CONTROL CIRCUIT LOW
B1638	RIGHT HI BEAM CONTROL CIRCUIT HIGH

B163B	FRONT LEFT TURN LAMP CONTROL CIRCUIT LOW
B163C	FRONT LEFT TURN LAMP CONTROL CIRCUIT HIGH
B163F	FRONT RIGHT TURN LAMP CONTROL CIRCUIT LOW
B1640	FRONT RIGHT TURN LAMP CONTROL CIRCUIT HIGH
B1643	REAR LEFT TURN LAMP CONTROL CIRCUIT LOW
B1644	REAR LEFT TURN LAMP CONTROL CIRCUIT HIGH
B1647	REAR RIGHT TURN LAMP CONTROL CIRCUIT LOW
B1648	REAR RIGHT TURN LAMP CONTROL CIRCUIT HIGH
B165C	PARK LAMP CONTROL CIRCUIT LOW
B16F8	FRONT LEFT FOG LAMP CONTROL CIRCUIT LOW
B16F9	FRONT LEFT FOG LAMP CONTROL CIRCUIT HIGH
B16FC	FRONT RIGHT FOG LAMP CONTROL CIRCUIT LOW
B16FD	FRONT RIGHT FOG LAMP CONTROL CIRCUIT HIGH
B17AE	REAR LEFT TRAILER TURN LAMP CONTROL CIRCUIT LOW
B17B2	REAR RIGHT TRAILER TURN LAMP CONTROL CIRCUIT LOW
B1801	DRIVER DOOR LOCK/UNLOCK SWITCH CIRCUIT LOW
B1806	PASSENGER DOOR LOCK/UNLOCK SWITCH CIRCUIT LOW
B1820	HOOD AJAR INPUT CIRCUIT HIGH
B1934	DRIVER DOOR LOCK/UNLOCK SWITCH CIRCUIT STUCK
B1935	PASSENGER DOOR LOCK/UNLOCK SWITCH CIRCUIT STUCK
B1D4F	ADJUSTABLE PEDAL INHIBIT CIRCUIT LOW
B2101	IGNITION RUN/START INPUT LOW
B2102	IGNITION RUN/START INPUT HIGH
B210D	BATTERY VOLTAGE LOW
B210E	BATTERY VOLTAGE HIGH
B212F	IGNITION RUN/ACC CONTROL CIRCUIT LOW
B2142	IGNITION OFF DRAW (IOD) FUSE NOT PRESENT
B219A	IGNITION UNLOCK RUN/START CONTROL CIRCUIT OVERCURRENT
B219F	IGNITION OFF DRAW (IOD) FUSE BLOWN
B2206	CURRENT VIN MISSING / MISMATCH
B2215	FRONT CONTROL MODULE INTERNAL (TOTALLY INTEGRATED POWER MODULE)
B222C	VEHICLE CONFIGURATION NOT PROGRAMMED
B2304	WIPER PARK SWITCH INPUT CIRCUIT LOW (STUCK LOW)
B2305	WIPER PARK SWITCH INPUT CIRCUIT HIGH (STUCK HIGH)
C1008	BRAKE FLUID LEVEL CIRCUIT HIGH
C1404	TRANSFER CASE RANGE POSITION SENSOR CIRCUIT LOW
C1405	TRANSFER CASE RANGE POSITION SENSOR CIRCUIT HIGH
P0072	AMBIENT AIR TEMPERATURE SENSOR CIRCUIT LOW
P0073	AMBIENT AIR TEMPERATURE SENSOR CIRCUIT HIGH
P0462	FUEL LEVEL SENSOR 1 CIRCUIT LOW

P0463	FUEL LEVEL SENSOR 1 CIRCUIT HIGH
P0691	COOLING FAN 1 CONTROL CIRCUIT LOW
P0692	COOLING FAN 1 CONTROL CIRCUIT HIGH
P0693	COOLING FAN 2 CONTROL CIRCUIT LOW
P0694	COOLING FAN 2 CONTROL CIRCUIT HIGH
P1273	A/C CONTROL CIRCUIT 2 HIGH
P1275	A/C CONTROL CIRCUIT 2 OVERCURRENT
P129E	INVERTER CONTROL CIRCUIT OVERCURRENT
U0001	CAN C BUS
U0010	CAN INTERIOR BUS
U0100	LOST COMMUNICATION WITH ECM/PCM
U0101	LOST COMMUNICATION WITH TCM
U0102	LOST COMMUNICATION WITH TRANSFER CASE CONTROL MODULE / AWD
U0114	LOST COMMUNICATION WITH FINAL DRIVE CONTROL MODULE
U0121	LOST COMMUNICATION WITH ABS
U0127	LOST COMMUNICATION WITH TIRE PRESSURE MONITOR MODULE
U0137	LOST COMMUNICATION WITH TRAILER BRAKE CONTROL MODULE
U0141	LOST COMMUNICATION WITH IPM (FCM/TIPM)
U0151	LOST COMMUNICATION WITH OCCUPANT RESTRAINT CONTROLLER (ORC)
U0155	LOST COMMUNICATION WITH CLUSTER/CCN
U0159	LOST COMMUNICATION WITH PARK ASSIST MODULE (PTS)
U0164	LOST COMMUNICATION WITH HVAC CONTROL MODULE
U0168	LOST COMMUNICATION WITH VEHICLE SECURITY CONTROL MODULE (WIRELESS IGNITION NODE OR WIN)
U0184	LOST COMMUNICATION WITH RADIO
U0186	LOST COMMUNICATION WITH AUDIO AMPLIFIER (AMP)
U0197	LOST COMMUNICATION WITH HANDS FREE PHONE MODULE (HFM)
U0203	LOST COMMUNICATION WITH DOOR MODULE FRONT LEFT (DMFL) (DRIVER DOOR MODULE)
U0204	LOST COMMUNICATION WITH DOOR MODULE FRONT RIGHT (DMFR) (PASSENGER DOOR MODULE)
U0208	LOST COMMUNICATION WITH HEATED SEAT CONTROL MODULE
U0209	LOST COMMUNICATION WITH MEMORY SEAT CONTROL MODULE (MSMD)
U0212	LOST COMMUNICATION WITH SCM
U0249	LOST COMMUNICATION WITH VEHICLE ENTERTAINMENT CONTROL MODULE - LAST ROW (VES3)
U1147	ADDITIONAL CAN INTERIOR BUS ECU DETECTED
U1148	ADDITIONAL CAN C BUS ECU DETECTED

MODULE, TRANSMISSION CONTROL (TCM), AS68RC

DIAGNOSTIC CODE INDEX

DTC	Description
C1400	TRANSFER CASE RANGE SELECT SWITCH PERFORMANCE
P0560	BATTERY SYSTEM VOLTAGE
P0613	INTERNAL TRANSMISSION PROCESSOR
P0702	TRANSMISSION CONTROL SYSTEM ELECTRICAL
P0706	TRANSMISSION RANGE SENSOR RATIONALITY
P0707	TRANSMISSION RANGE SENSOR CIRCUIT LOW
P0708	TRANSMISSION RANGE SENSOR CIRCUIT HIGH
P0711	TRANSMISSION TEMPERATURE SENSOR 1 PERFORMANCE
P0712	TRANSMISSION TEMPERATURE SENSOR 1 LOW
P0713	TRANSMISSION TEMPERATURE SENSOR 1 HIGH
P0717	INPUT SPEED SENSOR 1 CIRCUIT NO SIGNAL
P0722	OUTPUT SPEED SENSOR CIRCUIT NO SIGNAL
P0730	INCORRECT GEAR RATIO
P0745	LINE PRESSURE SOLENOID CIRCUIT
P0746	PRESSURE CONTROL SOLENOID A PERFORMANCE
P0748	PRESSURE CONTROL SOLENOID A CIRCUIT
P0751	SHIFT SOLENOID A PERFORMANCE
P0756	SHIFT SOLENOID B PERFORMANCE
P0761	SHIFT SOLENOID C PERFORMANCE
P0766	SHIFT SOLENOID D PERFORMANCE
P0776	PRESSURE CONTROL SOLENOID B PERFORMANCE
P0778	PRESSURE CONTROL SOLENOID B CIRCUIT
P0796	PRESSURE CONTROL SOLENOID C PERFORMANCE
P0798	PRESSURE CONTROL SOLENOID C CIRCUIT
P0973	SHIFT SOLENOID A CONTROL CIRCUIT LOW
P0974	SHIFT SOLENOID A CONTROL CIRCUIT HIGH
P0976	SHIFT SOLENOID B CONTROL CIRCUIT LOW
P0977	SHIFT SOLENOID B CONTROL CIRCUIT HIGH
P0979	SHIFT SOLENOID C CONTROL CIRCUIT LOW
P0980	SHIFT SOLENOID C CONTROL CIRCUIT HIGH
P0982	SHIFT SOLENOID D CONTROL CIRCUIT LOW
P0983	SHIFT SOLENOID D CONTROL CIRCUIT HIGH
P1679	CALIBRATION NOT LEARNED
P1720	LOSS OF OUTPUT SPEED / WHEEL SPEED
P2741	TRANSMISSION FLUID TEMPERATURE SENSOR 2 PERFORMANCE
P2742	TRANSMISSION FLUID TEMPERATURE SENSOR 2 LOW
P2743	TRANSMISSION FLUID TEMPERATURE SENSOR 2 HIGH

P2757	TCC PRESSURE CONTROL SOLENOID CONTROL CIRCUIT PERFORMANCE
P2806	TRANSMISSION RANGE SENSOR ALIGNMENT
U0001	CAN C BUS
U0100	LOST COMMUNICATION WITH ECM / PCM
U0121	LOST COMMUNICATION WITH ANTI-LOCK BRAKE MODULE
U0141	LOST COMMUNICATION WITH IPM (FCM/TIPM)
U1111	LOST ODOMETER MESSAGE
U1400	IMPLAUSIBLE TPS SIGNAL RECEIVED
U1401	IMPLAUSIBLE ENGINE SPEED SIGNAL RECEIVED
U1402	IMPLAUSIBLE ENGINE TEMPERATURE SIGNAL RECEIVED
U1407	IMPLAUSIBLE ENGINE TORQUE REQUEST RECEIVED
U1408	IMPLAUSIBLE BRAKE SIGNAL RECEIVED
U140D	IMPLAUSIBLE WHEEL SPEED SIGNALS RECEIVED
U1424	IMPLAUSIBLE ENGINE TORQUE RECEIVED
U1437	IMPLAUSIBLE INTAKE AIR TEMPERATURE MESSAGE RECEIVED
U1439	IMPLAUSIBLE/MISSING PROGRAMMED AXLE RATIO
U1440	IMPLAUSIBLE/MISSING PROGRAMMED TRANSFER CASE HI RATIO
U1441	IMPLAUSIBLE/MISSING PROGRAMMED TRANSFER CASE LOW RATIO
U1449	IMPLAUSIBLE ERS MESSAGE RECEIVED

NODE, CABIN COMPARTMENT (CCN)

DIAGNOSTIC CODE INDEX

DTC	Description
B10BB	LEFT HEATED SEAT SWITCH INPUT CIRCUIT STUCK
B10BC	RIGHT HEATED SEAT SWITCH INPUT CIRCUIT STUCK
B114C	LEFT REAR HEATED SEAT SWITCH STUCK
B1151	RIGHT REAR HEATED SEAT SWITCH STUCK
B127A	COMPASS PERFORMACE
B1285	PARK ASSIST DISABLE SWITCH PERFORMANCE
B1286	COMPASS / TEMP BUTTON PERFORMANCE
B1287	RESET SWITCH PERFORMANCE
B1288	TRIP / TOGGLE SWITCH PERFORMANCE
B1427	REMOTE RADIO SWITCH INPUT CIRCUIT HIGH
B1428	REMOTE RADIO SWITCH INPUT CIRCUIT STUCK
B1502	STEERING WHEEL CONTROL DOWN SWITCH PERFORMANCE
B1503	STEERING WHEEL CONTROL RIGHT SWITCH PERFORMANCE
B1607	HEADLAMP SWITCH INPUT CIRCUIT LOW
B1608	HEADLAMP SWITCH INPUT CIRCUIT HIGH
B160A	PANEL DIMMER INPUT CIRCUIT LOW

B160B	PANEL DIMMER INPUT CIRCUIT HIGH
B1629	CARGO LAMP CONTROL CIRCUIT OPEN
B168F	FRONT FOG LAMP SWITCH CIRCUIT STUCK
B169C	CARGO LAMP SWITCH STUCK
B17E3	TURN SIGNAL SWITCH PERFORMANCE
B2301	WIPER MODE SWITCH INPUT CIRCUIT LOW
B2307	WASHER SWITCH INPUT CIRCUIT LOW
B2339	HORN SWITCH STUCK
B238E	HI BEAM SWITCH CIRCUIT LOW
B2390	MIST SWITCH CIRCUIT LOW
B2394	FLASH TO PASS / OPTICAL HORN SWITCH CIRCUIT STUCK
C159C	TIRE PRESSURE LOAD SWITCH STUCK
C2312	TRAC/ESP OFF SWITCH STUCK
P0838	FOUR WHEEL DRIVE (4WD) SWITCH CIRCUIT LOW
P0839	FOUR WHEEL DRIVE (4WD) SWITCH CIRCUIT HIGH
P0853	OVERDRIVE / TOW SWITCH INPUT CIRCUIT STUCK
P0952	AUTOSTICK INPUT CIRCUIT LOW - DS/DJ/D2
P0952	AUTOSTICK INPUT CIRCUIT LOW - DD/DP
P0953	AUTOSTICK INPUT CIRCUIT HIGH - DS/DJ/D2
P0953	AUTOSTICK INPUT CIRCUIT HIGH - DD/DP
P1103	DC TO AC CONVERTER SWITCH STUCK
U0010	CAN INTERIOR BUS
U0141	LOST COMMUNICATION WITH IPM (FCM/TIPM)
U0159	LOST COMMUNICATION WITH PARKING ASSIST CONTROL MODULE
U0161	LOST COMMUNICATION WITH COMPASS MODULE
U0164	LOST COMMUNICATION WITH HVAC CONTROL MODULE
U0184	LOST COMMUNICATION WITH RADIO
U0197	LOST COMMUNICATION WITH HANDS FREE PHONE MODULE
U0208	LOST COMMUNICATION WITH HEATED SEAT CONTROL MODULE
U0209	LOST COMMUNICATION WITH MEMORY SEAT CONTROL MODULE
U1008	LIN 1 BUS
U1109	LOST COMMUNICATION WITH LIN STEERING WHEEL CONTROLS
U1149	LOST COMMUNICATION WITH MULTI-FUNCTION SWITCH
U1191	LOST COMMUNICATION WITH UPPER SWITCH BANK
U1192	LOST COMMUNICATION WITH LOWER SWITCH BANK

NODE, WIRELESS IGNITION (WIN)

DIAGNOSTIC CODE INDEX

DTC	**Description**
B1A08	RKE FOB 1 PERFORMANCE

B1A09	RKE FOB 2 PERFORMANCE
B1A0A	RKE FOB 3 PERFORMANCE
B1A0B	RKE FOB 4 PERFORMANCE
B1A0C	RKE FOB 5 PERFORMANCE
B1A0D	RKE FOB 6 PERFORMANCE
B1A0E	RKE FOB 7 PERFORMANCE
B1A0F	RKE FOB 8 PERFORMANCE
B1A10	RKE FOB 1 BATTERY LOW
B1A11	RKE FOB 2 BATTERY LOW
B1A12	RKE FOB 3 BATTERY LOW
B1A13	RKE FOB 4 BATTERY LOW
B1A14	RKE FOB 5 BATTERY LOW
B1A15	RKE FOB 6 BATTERY LOW
B1A16	RKE FOB 7 BATTERY LOW
B1A17	RKE FOB 8 BATTERY LOW
B1A24	KEY NOT PROGRAMMED
B1A25	INVALID KEY
B1A26	MAXIMUM NUMBER OF KEYS PROGRAMMED
B1A27	SKREEM PROGRAMMING PERFORMANCE
B1A28	ECM MISMATCH WITH SKIM
B1A29	SKIM BASESTATION MISMATCH
B1A35	UNIDENTIFIED KEY COMMUNICATION ERROR
B1A6C	SECRET KEY MISMATCH
B1A77	REMOTE START ANTENNA CIRCUIT LOW
B1A79	REMOTE START ANTENNA CIRCUIT OPEN OR NOT CONNECTED
B210A	SYSTEM VOLTAGE LOW
B210B	SYSTEM VOLTAGE HIGH
B210D	BATTERY VOLTAGE LOW - DD/DP
B210D	BATTERY VOLTAGE LOW - DS/DJ/D2
B210E	BATTERY VOLTAGE HIGH - DD/DP
B210E	BATTERY VOLTAGE HIGH - DS/DJ/D2
B2204	ECU CONFIGURATION MISMATCH
B2205	ORIGINAL VIN MISSING/MISMATCH
B2224	SKREEM INTERNAL
C0077	LOW TIRE PRESSURE
C1501	TIRE PRESSURE SENSOR 1 INTERNAL
C1502	TIRE PRESSURE SENSOR 2 INTERNAL
C1503	TIRE PRESSURE SENSOR 3 INTERNAL
C1504	TIRE PRESSURE SENSOR 4 INTERNAL
C151C	TIRE PRESSURE MONITORING (TPM) SENSORS MISSING
P0928	BTSI CONTROL CIRCUIT
U0001	

	CAN C BUS
U0100	LOST COMMUNICATION WITH THE ECM/PCM
U0121	LOST COMMUNICATION WITH ABS
U0146	LOST COMMUNICATION WITH CENTRAL GATEWAY (TIPM)
U1197	SECURITY SEED RESPONSE NOT RECEIVED FROM ECM/PCM

RADIO

DIAGNOSTIC CODE INDEX

DTC	Description
B1401	FRONT LEFT AUDIO SPEAKER OUTPUT CIRCUIT LOW
B1402	FRONT LEFT AUDIO SPEAKER OUTPUT CIRCUIT HIGH
B1403	FRONT LEFT AUDIO SPEAKER OUTPUT CIRCUIT OPEN
B1405	FRONT RIGHT AUDIO SPEAKER OUTPUT CIRCUIT LOW
B1406	FRONT RIGHT AUDIO SPEAKER OUTPUT CIRCUIT HIGH
B1407	FRONT RIGHT AUDIO SPEAKER OUTPUT CIRCUIT OPEN
B1409	REAR LEFT AUDIO SPEAKER OUTPUT CIRCUIT LOW - BASE
B1409	REAR LEFT AUDIO SPEAKER OUTPUT CIRCUIT LOW - PREMIUM
B140A	REAR LEFT AUDIO SPEAKER OUTPUT CIRCUIT HIGH - BASE
B140A	REAR LEFT AUDIO SPEAKER OUTPUT CIRCUIT HIGH - PREMIUM
B140B	REAR LEFT AUDIO SPEAKER OUTPUT CIRCUIT OPEN - BASE
B140B	REAR LEFT AUDIO SPEAKER OUTPUT CIRCUIT OPEN - PREMIUM
B140D	REAR RIGHT AUDIO SPEAKER OUTPUT CIRCUIT LOW - BASE
B140D	REAR RIGHT AUDIO SPEAKER OUTPUT CIRCUIT LOW - PREMIUM
B140E	REAR RIGHT AUDIO SPEAKER OUTPUT CIRCUIT HIGH - BASE
B140E	REAR RIGHT AUDIO SPEAKER OUTPUT CIRCUIT HIGH - PREMIUM
B140F	REAR RIGHT AUDIO SPEAKER OUTPUT CIRCUIT OPEN - BASE
B140F	REAR RIGHT AUDIO SPEAKER OUTPUT CIRCUIT OPEN - PREMIUM
B1420	AUDIO CASSETTE ERROR/INOPERABLE CASSETTE
B1421	AUDIO CD READ ERROR/INOPERABLE DISC
B1422	AUDIO DVD READ ERROR/INOPERABLE DISC
B1424	IMPROPER DVD-WRONG REGION
B1429	RADIO DISPLAY HIGH TEMPERATURE
B142A	RADIO UNIT HIGH TEMPERATURE
B142D	AUDIO ANTENNA NOT CONNECTED
B142E	GPS ANTENNA NOT CONNECTED
B142F	SATELLITE RADIO ANTENNA NOT CONNECTED
B1430	B1430(2.5)-SATELLITE RADIO ANTENNA INTERNAL PERFORMANCE
B1430	B1430(4.0)-SATELLITE RADIO ANTENNA INTERNAL PERFORMANCE
B143A	MICROPHONE 1 CIRCUIT PERFORMANCE
B143B	MICROPHONE 1 CIRCUIT LOW

B143C	MICROPHONE 1 CIRCUIT HIGH
B143D	MICROPHONE 2 CIRCUIT PERFORMANCE
B143E	MICROPHONE 2 CIRCUIT LOW
B143F	MICROPHONE 2 CIRCUIT HIGH
B156B	SATELLITE RADIO ANTENNA CIRCUIT
B210D	BATTERY VOLTAGE LOW
B210E	BATTERY VOLTAGE HIGH
B221E	RADIO INTERNAL
B222C	VEHICLE CONFIGURATION NOT PROGRAMMED
U0010	CAN INTERIOR BUS
U0011	CAN INTERIOR BUS OFF PERFORMANCE
U0141	LOST COMMUNICATION WITH IPM (FCM/TIPM)
U0155	LOST COMMUNICATION WITH CLUSTER/CCN
U0159	LOST COMMUNICATION WITH PARKING ASSIST CONTROL MODULE
U0168	LOST COMMUNICATION WITH VEHICLE SECURITY CONTROL MODULE (WIN)
U0186	LOST COMMUNICATION WITH AUDIO AMPLIFIER
U0197	LOST COMMUNICATION WITH HANDS FREE PHONE MODULE
U0249	LOST COMMUNICATION WITH VEHICLE ENTERTAINMENT CONTROL MODULE - LAST ROW
U1158	LOST COMMUNICATION WITH SATELLITE VIDEO RECEIVER (SDARV)

SYSTEM, VIDEO ENTERTAINMENT, THREE (VES3)

DIAGNOSTIC CODE INDEX

DTC	Description
B142B	VES UNIT HIGH TEMPERATURE
B14CE	VES BRIGHTNESS UP INPUT BUTTON STUCK
B14CF	VES BRIGHTNESS DOWN INPUT BUTTON STUCK
B210A	SYSTEM VOLTAGE LOW
B210B	SYSTEM VOLTAGE HIGH
B210D	BATTERY VOLTAGE LOW
B210E	BATTERY VOLTAGE HIGH
B21A1	ECU RESET/RECOVERY OCCURRED
B222B	VEHICLE ENTERTAINMENT SYSTEM INTERNAL
B222C	VEHICLE CONFIGURATION NOT PROGRAMMED
U0010	CAN INTERIOR BUS
U0011	CAN INTERIOR BUS OFF PERFORMANCE
U0141	LOST COMMUNICATION WITH IPM (FCM/TIPM)
U0155	LOST COMMUNICATION WITH CLUSTER/CCN
U0168	LOST COMMUNICATION WITH VEHICLE SECURITY CONTROL MODULE (WIN)

U0184	LOST COMMUNICATION WITH RADIO
U1158	LOST COMMUNICATION WITH SATELLITE VIDEO RECEIVER (SDARV)

DIAGNOSTIC CODE INDEX

DIAGNOSTIC CODE INDEX

DTC	Description
B1460	CHANNEL 1 AUDIO SPEAKER OUTPUT CIRCUIT PERFORMANCE
B1461	CHANNEL 1 AUDIO SPEAKER OUTPUT CIRCUIT LOW
B1462	CHANNEL 1 AUDIO SPEAKER OUTPUT CIRCUIT HIGH
B1463	CHANNEL 1 AUDIO SPEAKER OUTPUT CIRCUIT OPEN
B1464	CHANNEL 1 AUDIO SPEAKER OUTPUT CIRCUIT SHORTED TOGETHER
B1465	CHANNEL 2 AUDIO SPEAKER OUTPUT CIRCUIT PERFORMANCE
B1466	CHANNEL 2 AUDIO SPEAKER OUTPUT CIRCUIT LOW
B1467	CHANNEL 2 AUDIO SPEAKER OUTPUT CIRCUIT HIGH
B1468	CHANNEL 2 AUDIO SPEAKER OUTPUT CIRCUIT OPEN
B1469	CHANNEL 2 AUDIO SPEAKER OUTPUT CIRCUIT SHORTED TOGETHER
B146A	CHANNEL 3 AUDIO SPEAKER OUTPUT CIRCUIT PERFORMANCE
B146B	CHANNEL 3 AUDIO SPEAKER OUTPUT CIRCUIT LOW
B146C	CHANNEL 3 AUDIO SPEAKER OUTPUT CIRCUIT HIGH
B146D	CHANNEL 3 AUDIO SPEAKER OUTPUT CIRCUIT OPEN
B146E	CHANNEL 3 AUDIO SPEAKER OUTPUT CIRCUIT SHORTED TOGETHER
B146F	CHANNEL 4 AUDIO SPEAKER OUTPUT CIRCUIT PERFORMANCE
B1470	CHANNEL 4 AUDIO SPEAKER OUTPUT CIRCUIT LOW
B1471	CHANNEL 4 AUDIO SPEAKER OUTPUT CIRCUIT HIGH
B1472	CHANNEL 4 AUDIO SPEAKER OUTPUT CIRCUIT OPEN
B1473	CHANNEL 4 AUDIO SPEAKER OUTPUT CIRCUIT SHORTED TOGETHER
B1474	CHANNEL 5 AUDIO SPEAKER OUTPUT CIRCUIT PERFORMANCE
B1475	CHANNEL 5 AUDIO SPEAKER OUTPUT CIRCUIT LOW
B1476	CHANNEL 5 AUDIO SPEAKER OUTPUT CIRCUIT HIGH
B1477	CHANNEL 5 AUDIO SPEAKER OUTPUT CIRCUIT OPEN
B1478	CHANNEL 5 AUDIO SPEAKER OUTPUT CIRCUIT SHORTED TOGETHER
B1479	CHANNEL 6 AUDIO SPEAKER OUTPUT CIRCUIT PERFORMANCE
B147A	CHANNEL 6 AUDIO SPEAKER OUTPUT CIRCUIT LOW
B147B	CHANNEL 6 AUDIO SPEAKER OUTPUT CIRCUIT HIGH
B147C	CHANNEL 6 AUDIO SPEAKER OUTPUT CIRCUIT OPEN
B147D	CHANNEL 6 AUDIO SPEAKER OUTPUT CIRCUIT SHORTED TOGETHER
B147E	CHANNEL 7 AUDIO SPEAKER OUTPUT CIRCUIT PERFORMANCE
B147F	CHANNEL 7 AUDIO SPEAKER OUTPUT CIRCUIT LOW
B1480	CHANNEL 7 AUDIO SPEAKER OUTPUT CIRCUIT HIGH
B1481	CHANNEL 7 AUDIO SPEAKER OUTPUT CIRCUIT OPEN

B1482	CHANNEL 7 AUDIO SPEAKER OUTPUT CIRCUIT SHORTED TOGETHER
B1483	CHANNEL 8 AUDIO SPEAKER OUTPUT CIRCUIT/PERFORMANCE
B1484	CHANNEL 8 AUDIO SPEAKER OUTPUT CIRCUIT LOW
B1485	CHANNEL 8 AUDIO SPEAKER OUTPUT CIRCUIT HIGH
B1486	CHANNEL 8 AUDIO SPEAKER OUTPUT CIRCUIT OPEN
B1487	CHANNEL 8 AUDIO SPEAKER OUTPUT CIRCUIT SHORTED TOGETHER
B1488	CABIN EQ MISMATCH PERFORMANCE
B14B9	CHANNEL 9 AUDIO SPEAKER OUTPUT CIRCUIT PERFORMANCE
B14BA	CHANNEL 9 AUDIO SPEAKER OUTPUT CIRCUIT LOW
B14BB	CHANNEL 9 AUDIO SPEAKER OUTPUT CIRCUIT HIGH
B14BC	CHANNEL 9 AUDIO SPEAKER OUTPUT CIRCUIT OPEN
B14BD	CHANNEL 9 AUDIO SPEAKER OUTPUT CIRCUIT SHORTED TOGETHER
B14BE	CHANNEL 10 AUDIO SPEAKER OUTPUT CIRCUIT PERFORMANCE
B14BF	CHANNEL 10 AUDIO SPEAKER OUTPUT CIRCUIT LOW
B14C0	CHANNEL 10 AUDIO SPEAKER OUTPUT CIRCUIT HIGH
B14C1	CHANNEL 10 AUDIO SPEAKER OUTPUT CIRCUIT OPEN
B14C2	CHANNEL 10 AUDIO SPEAKER OUTPUT CIRCUIT SHORTED TOGETHER
B14C3	CHANNEL 11 AUDIO SPEAKER OUTPUT CIRCUIT PERFORMANCE
B14C4	CHANNEL 11 AUDIO SPEAKER OUTPUT CIRCUIT LOW
B14C6	CHANNEL 11 AUDIO SPEAKER OUTPUT CIRCUIT OPEN
B14C5	CHANNEL 11 AUDIO SPEAKER OUTPUT CIRCUIT HIGH
B14C7	CHANNEL 11 AUDIO SPEAKER OUTPUT CIRCUIT SHORTED TOGETHER
B210D	BATTERY VOLTAGE LOW
B210E	BATTERY VOLTAGE HIGH
B221F	AMPLIFIER INTERNAL
B222C	VEHICLE CONFIGURATION NOT PROGRAMMED
U0010	CAN INTERIOR BUS
U0011	CAN INTERIOR BUS OFF PERFORMANCE
U0141	LOST COMMUNICATION WITH IPM (FCM/TIPM)
U0184	LOST COMMUNICATION WITH RADIO

DIAGNOSIS AND TESTING

B1460-CHANNEL 1 AUDIO SPEAKER OUTPUT CIRCUIT PERFORMANCE

For a complete wiring diagram, **refer to appropriate SYSTEM WIRING DIAGRAMS article** .

WHEN MONITORED:

With the ignition on.

SET CONDITION:

This Diagnostic Trouble Code (DTC) sets if a Direct Current (DC) offset occurs on the output channel, the amplifier shall set a DTC after a maturity rate of four to six seconds.

POSSIBLE CAUSES

Possible Causes
AMPLIFIER

DIAGNOSTIC TEST

1. **CHECK FOR AN INTERMITTENT CONDITION**
    1. Turn the ignition on and open one of the front doors.

       NOTE: A front door must remain open whenever checking or erasing Amplifier DTC's.

    2. Using the scan tool, record and erase the Amplifier DTC's.
    3. Cycle the ignition switch from on to off, wait five seconds and then back to on.
    4. Turn the Radio on and set the volume to 20.
    5. Adjust the speakers to the front and center.
    6. Using the scan tool, read the active Amplifier DTC's.

       Does the scan tool display active: B1460-CHANNEL 1 AUDIO SPEAKER OUTPUT CIRCUIT PERFORMANCE?

       Yes

       - Replace the Amplifier in accordance with the Service Information.
       - Perform the BODY VERIFICATION TEST. Refer to **BODY VERIFICATION TEST** .

       No

       - Test complete, the condition or conditions that originally set this DTC are not present at this time. Using the wiring diagrams as a guide, check all related splices and connectors for signs of water intrusion, corrosion, pushed out or bent terminals and correct pin tension.
       - Perform the BODY VERIFICATION TEST. Refer to **BODY VERIFICATION TEST** .

B1461-CHANNEL 1 AUDIO SPEAKER OUTPUT CIRCUIT LOW

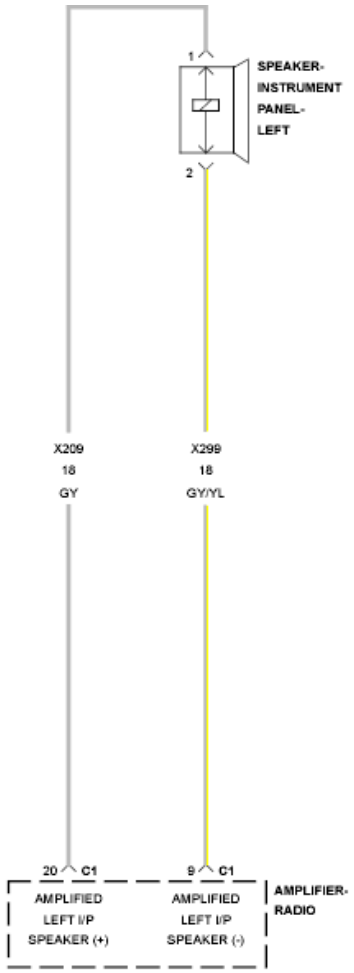

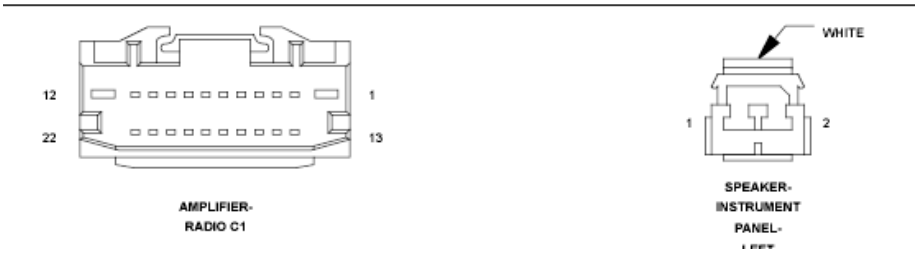

Fig. 1: Channel 1 Audio Speaker Output Wiring Diagram
Courtesy of CHRYSLER GROUP, LLC

For a complete wiring diagram, **refer to appropriate SYSTEM WIRING DIAGRAMS article** .

WHEN MONITORED:

With the ignition on.

SET CONDITION:

The Amplifier detects a shorted to ground condition on the speaker output circuit.

POSSIBLE CAUSES

Possible Causes
(X209) AMPLIFIED LEFT FRONT I/P SPEAKER (+) CIRCUIT SHORTED TO GROUND
(X299) AMPLIFIED LEFT FRONT I/P SPEAKER (-) CIRCUIT SHORTED TO GROUND
LEFT FRONT I/P SPEAKER
AMPLIFIER

DIAGNOSTIC TEST

1. **CHECK FOR AN INTERMITTENT CONDITION**
    1. Turn the ignition on and open one of the front doors.

        NOTE: A front door must remain open whenever checking or erasing Amplifier DTC's.

    2. With the scan tool, record and erase the Amplifier DTC's.
    3. Cycle the ignition switch from on to off, wait five seconds and then back to on.
    4. Turn the Radio on and set the volume to 20.
    5. Adjust the speakers to the front and center.
    6. With the scan tool, read the active Amplifier DTC's.

        Does the scan tool display active: B1461-CHANNEL 1 AUDIO SPEAKER OUTPUT CIRCUIT LOW?

        Yes

        - Go To 2.

        No

        - Test complete, the condition or conditions that originally set this DTC are not present at this time. Using the wiring diagrams as a guide, check all related splices and connectors for signs of water intrusion, corrosion, pushed out or bent terminals and correct pin tension.
        - Perform the BODY VERIFICATION TEST. Refer to **BODY VERIFICATION TEST** .
2. **LEFT INSTRUMENT PANEL (I/P) SPEAKER**

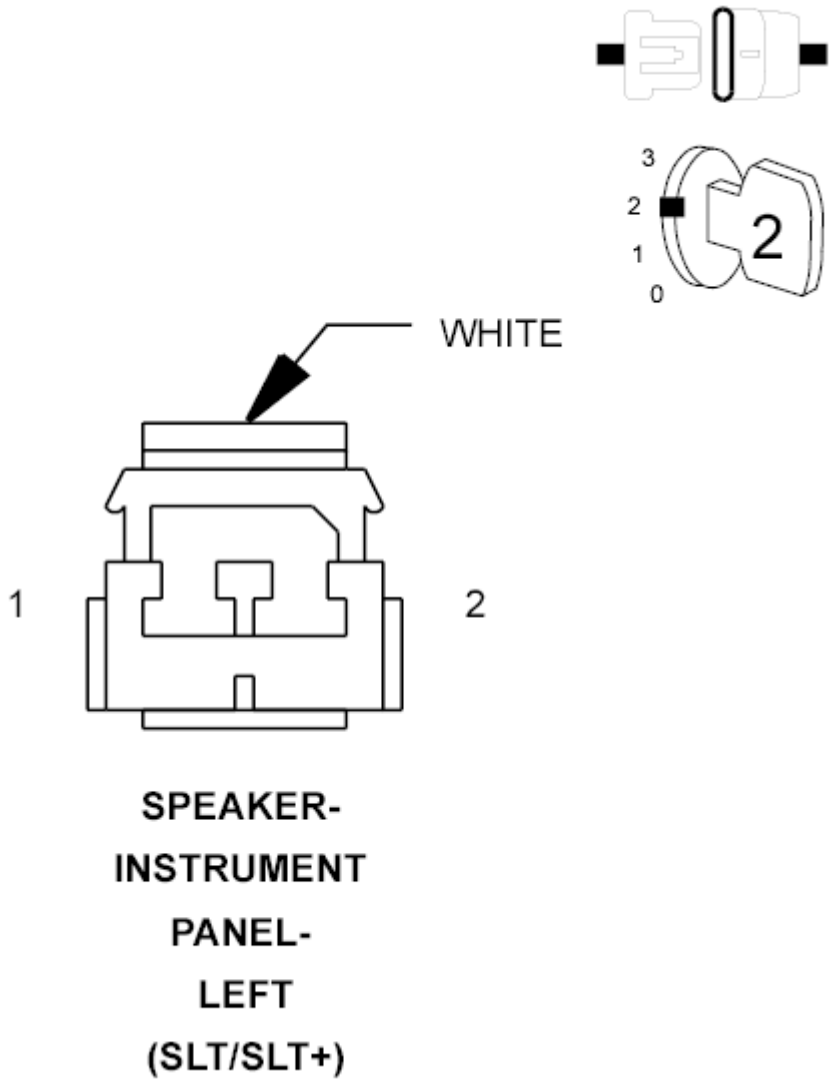

Fig. 2: Left Instrument Panel (I/P) Speaker Connector End View
Courtesy of CHRYSLER GROUP, LLC

1. Ensure one of the front doors is still open.
2. With the scan tool, erase the DTC's.
3. Turn the ignition off.
4. Disconnect the Left I/P Speaker harness connector.
5. Turn the ignition on.
6. Turn the radio on and set the volume to 25.
7. With the scan tool, read the active Amplifier DTC's.

   Does the scan tool display active: B1461-CHANNEL 1 AUDIO SPEAKER OUTPUT CIRCUIT LOW?

Yes

- Go To 3.

No

- Replace the Left Instrument Panel Speaker.
- Perform the BODY VERIFICATION TEST. Refer to **BODY VERIFICATION TEST** .

3. **CHECK THE (X209) AMPLIFIED LEFT FRONT I/P SPEAKER (+) CIRCUIT FOR A SHORT TO GROUND**

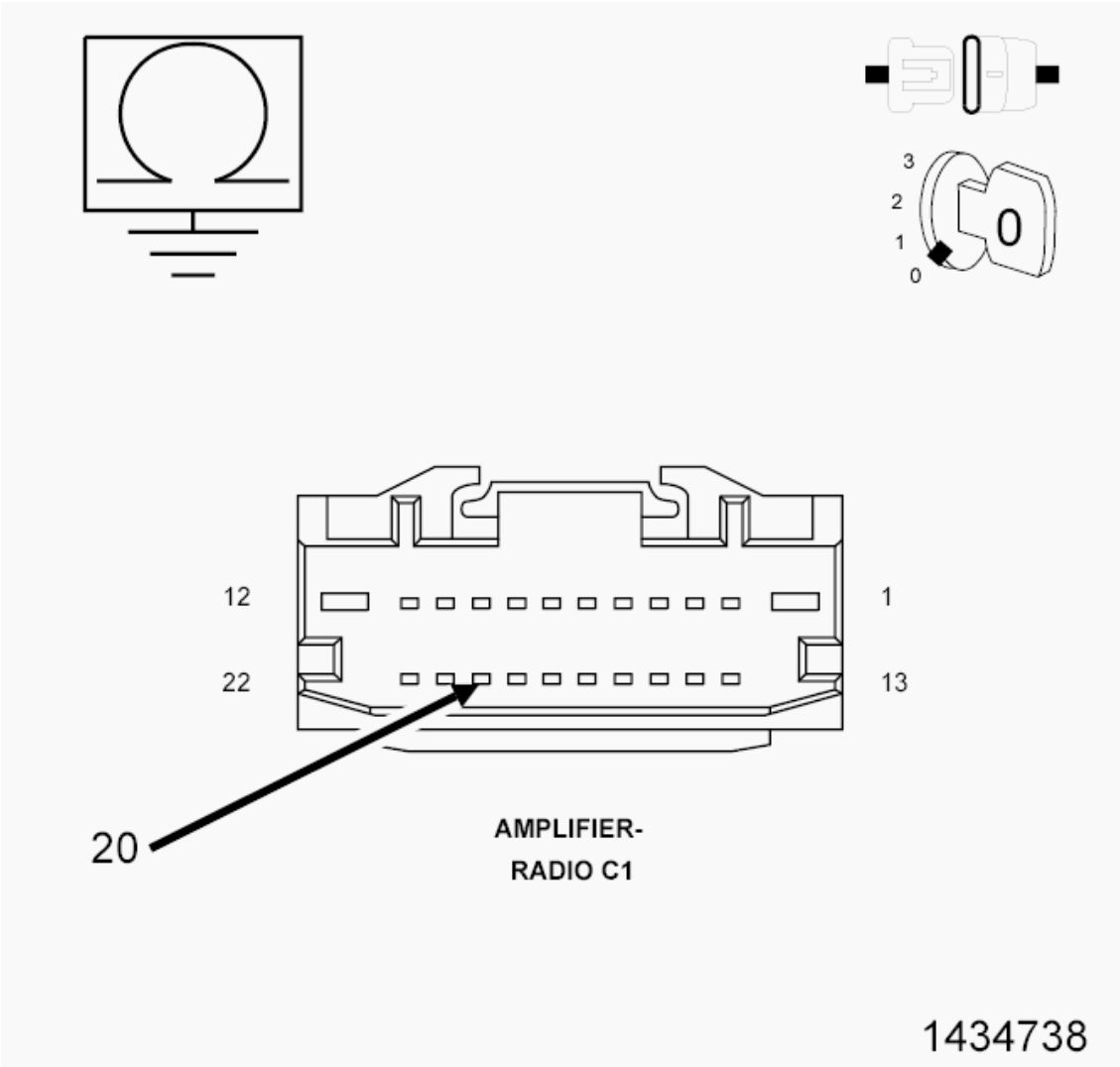

Fig. 3: Checking Amplified Left Front I/P Speaker (+) Circuit For A Short To Ground
Courtesy of CHRYSLER GROUP, LLC

1. Turn the ignition off.
2. Disconnect the Amplifier C1 harness connector.

3. Measure the resistance between ground and the (X209) Left I/P Speaker (+) circuit.

   Is the resistance below 10K Ohms?

   Yes

   - Repair the (X209) Left I/P Speaker (+) circuit for a short to ground.
   - Perform the BODY VERIFICATION TEST. Refer to **BODY VERIFICATION TEST** .

   No

   - Go To 4.

4. **CHECK THE (X299) AMPLIFIED LEFT FRONT I/P SPEAKER (-) CIRCUIT FOR A SHORT TO GROUND**

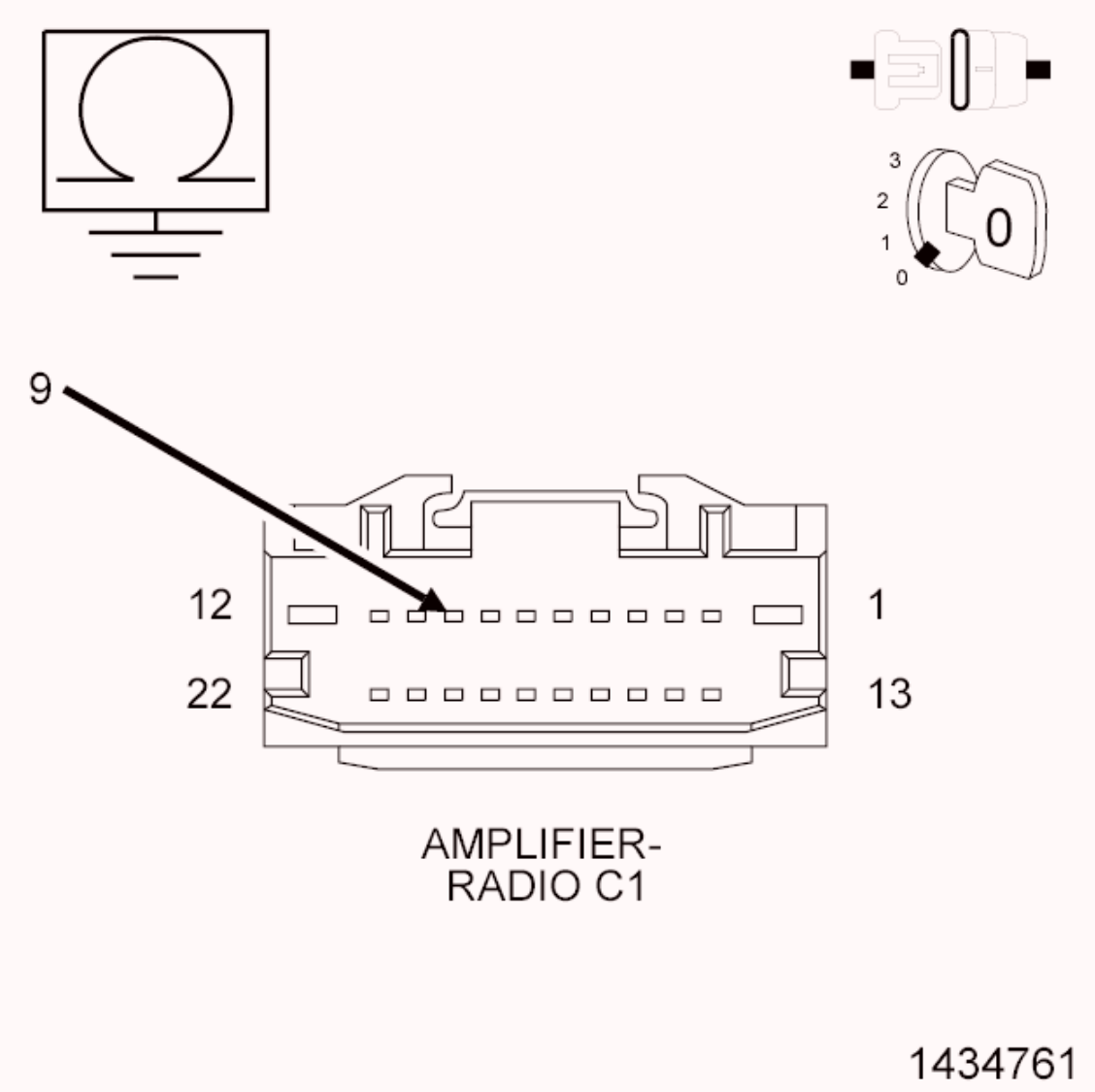

Fig. 4: Checking Amplified Left Front I/P Speaker (-) Circuit For A Short To Ground
Courtesy of CHRYSLER GROUP, LLC

1. Measure the resistance between ground and the (X299) Left I/P Speaker (-) circuit.

   Is the resistance below 10K Ohms?

   Yes

   - Repair the (X299) Left I/P Speaker (-) circuit for a short to ground.
   - Perform the BODY VERIFICATION TEST. Refer to **BODY VERIFICATION TEST** .

   No

   - Replace the Amplifier in accordance with the Service Information.
   - Perform the BODY VERIFICATION TEST. Refer to **BODY VERIFICATION TEST** .

B1462-CHANNEL 1 AUDIO SPEAKER OUTPUT CIRCUIT HIGH

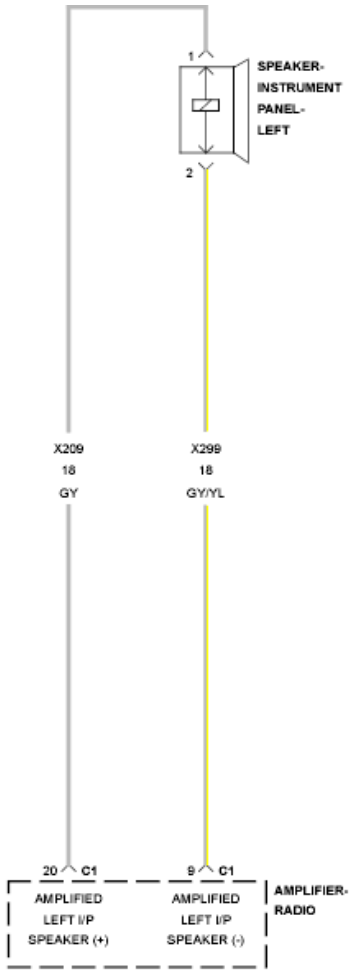

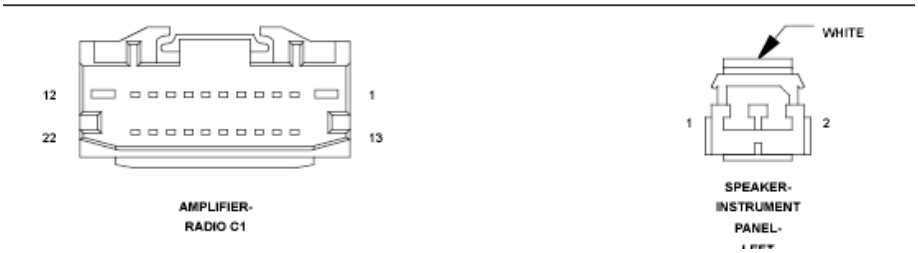

Fig. 5: Channel 1 Audio Speaker Output Wiring Diagram
Courtesy of CHRYSLER GROUP, LLC

For a complete wiring diagram, **refer to appropriate SYSTEM WIRING DIAGRAMS article** .

- **When Monitored:**

  With the ignition on.

- **Set Condition:**

  The Amplifier detects a short to battery condition on the output circuit.

WHEN MONITORED:

SET CONDITION:

POSSIBLE CAUSES

Possible Causes
(X209) AMPLIFIED LEFT I/P SPEAKER (+) CIRCUIT SHORTED TO VOLTAGE
(X299) AMPLIFIED LEFT I/P SPEAKER (-) CIRCUIT SHORTED TO VOLTAGE
AMPLIFIER

DIAGNOSTIC TEST

1. **CHECK FOR AN INTERMITTENT CONDITION**
   1. Turn the ignition on and open one of the front doors.

      NOTE: A front door must remain open whenever checking or erasing Amplifier DTC's.

   2. With the scan tool, record and erase the Amplifier DTC's.
   3. Cycle the ignition switch from on to off, wait five seconds and then back to on.
   4. Turn the Radio on and set the volume to 20.
   5. Adjust the speakers to the front and center.
   6. With the scan tool, read the active Amplifier DTC's.

      Does the scan tool display active: B1462-CHANNEL 1 AUDIO SPEAKER OUTPUT CIRCUIT HIGH?

      Yes

      - Go To 2.

      No

      - Test complete, the condition or conditions that originally set this DTC are not present at this time. Using the wiring diagrams as a guide, check all related splices and connectors for signs of water intrusion, corrosion, pushed out or bent terminals and correct pin tension.

- Perform the BODY VERIFICATION TEST. Refer to **BODY VERIFICATION TEST** .

2. **CHECK FOR VOLTAGE ON THE (X209) LEFT INSTRUMENT PANEL (I/P) SPEAKER (+) CIRCUIT**

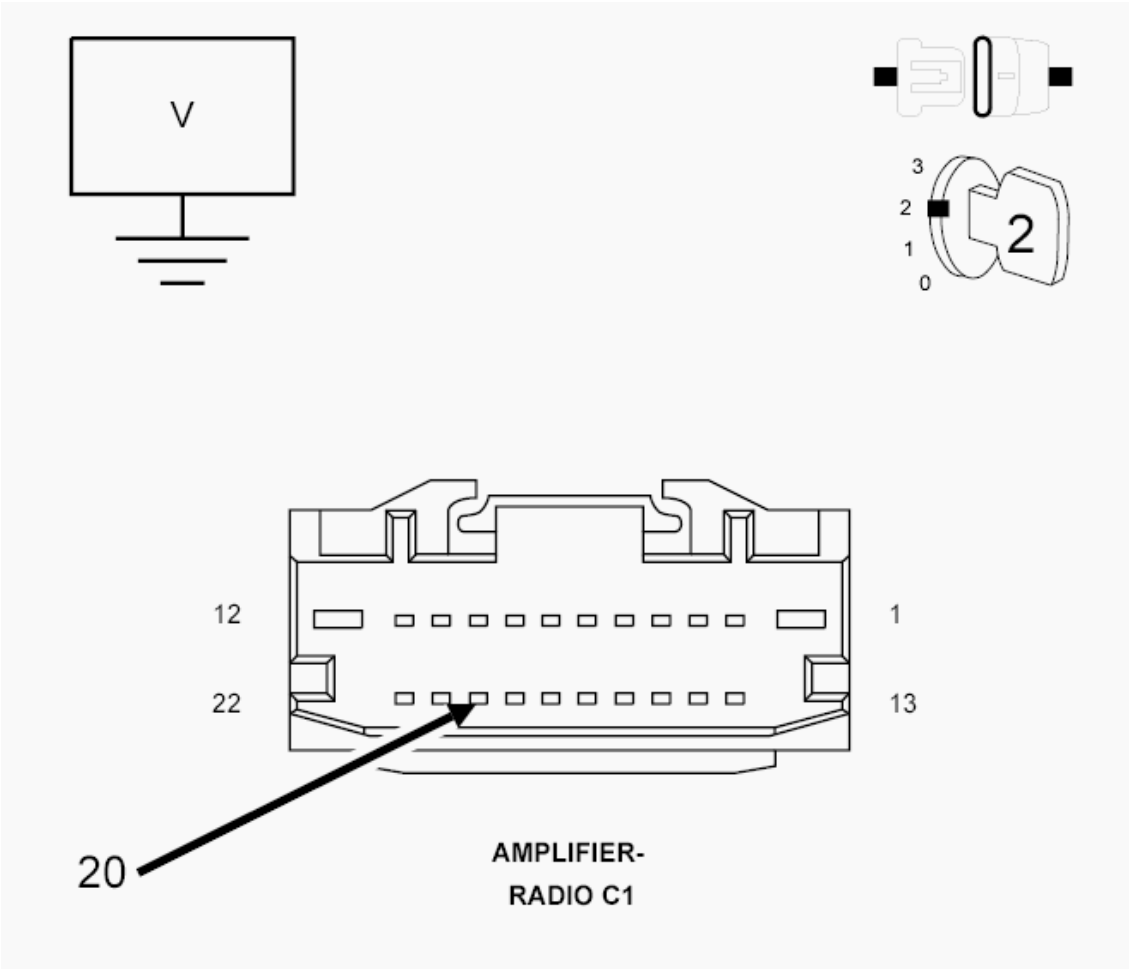

Fig. 6: Measuring Voltage On The Left Instrument Panel (I/P) Speaker (+) Circuit
Courtesy of CHRYSLER GROUP, LLC

1. Turn the ignition off.
2. Disconnect the Amplifier C1 harness connector.
3. Disconnect the Amplified Left I/P Speaker harness connector.
4. Turn the ignition on.
5. Measure the voltage between the (X209) Left I/P Speaker (+) circuit and ground.

   Is there any voltage present?

   Yes

   - Repair the (X209) Left I/P Speaker (+) circuit for a short to voltage.
   - Perform the BODY VERIFICATION TEST. Refer to **BODY VERIFICATION TEST** .

No

- Go To 3.

3. **CHECK FOR VOLTAGE ON THE (X299) LEFT I/P SPEAKER (-) CIRCUIT**

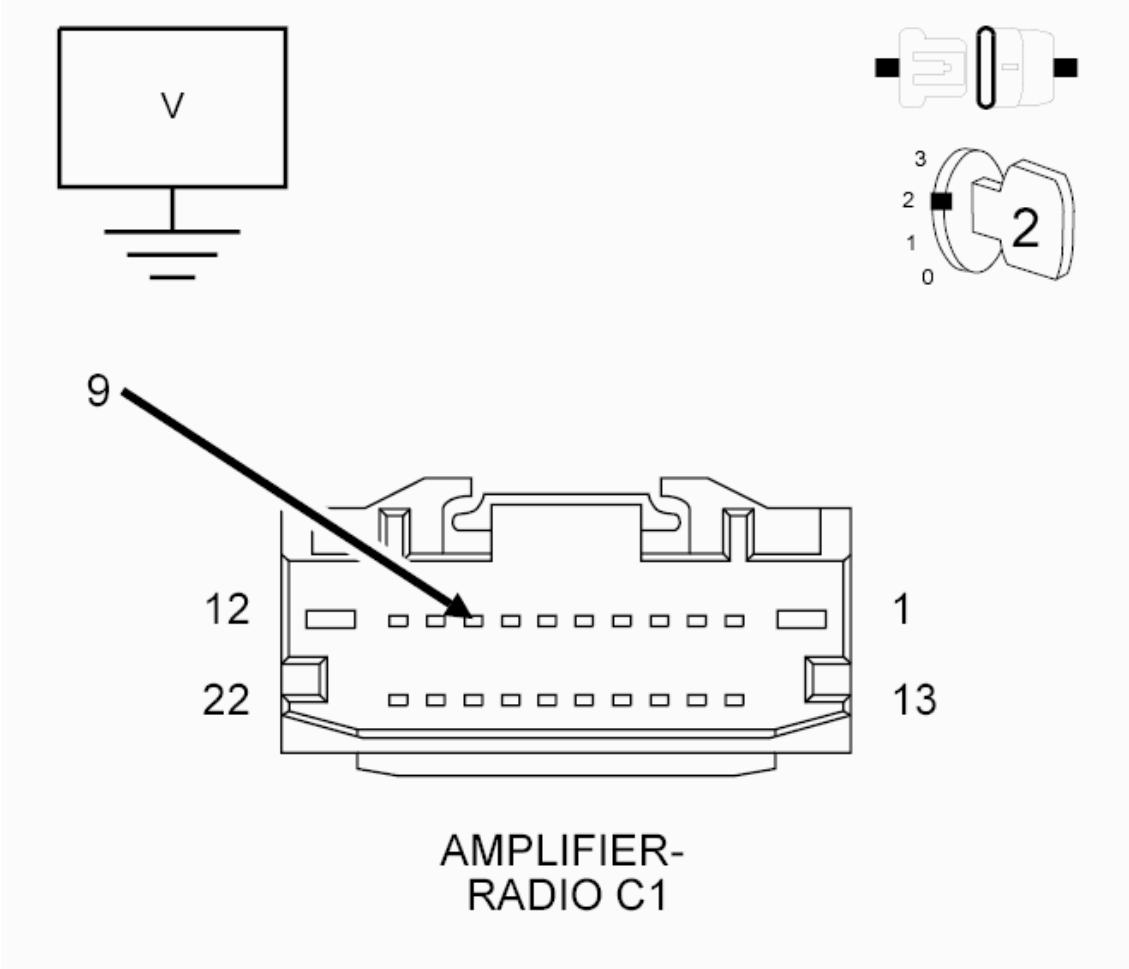

Fig. 7: Measuring Voltage On The Left I/P Speaker (-) Circuit
Courtesy of CHRYSLER GROUP, LLC

1. Measure the voltage between the (X299) Left I/P Speaker (-) circuit and ground.

   Is there any voltage present?

   Yes

   - Repair the (X299) Left I/P Speaker (-) circuit for a short to voltage.
   - Perform the BODY VERIFICATION TEST. Refer to **BODY VERIFICATION TEST** .

   No

   - Replace the Amplifier in accordance with the Service Information.

- Perform the BODY VERIFICATION TEST. Refer to **BODY VERIFICATION TEST** .

B1463-CHANNEL 1 AUDIO SPEAKER OUTPUT CIRCUIT OPEN

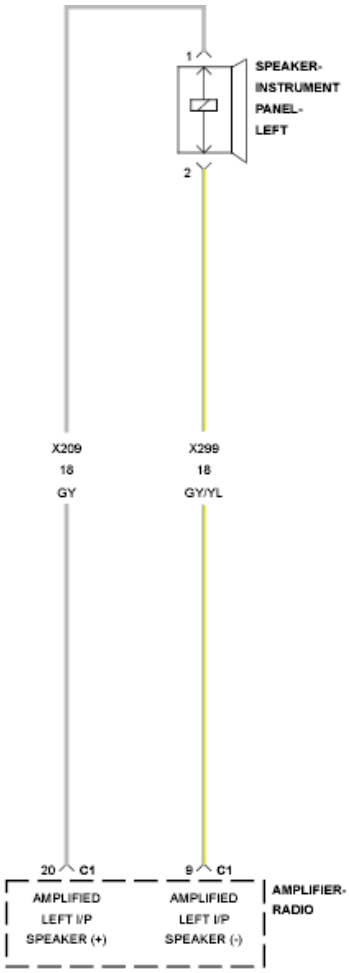

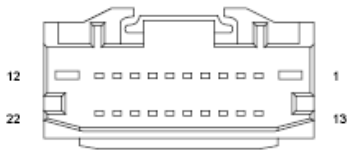

AMPLIFIER-
RADIO C1

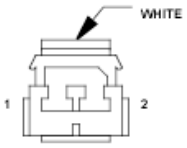

SPEAKER-
INSTRUMENT
PANEL-

Fig. 8: Channel 1 Audio Speaker Output Wiring Diagram
Courtesy of CHRYSLER GROUP, LLC

For a complete wiring diagram, **refer to appropriate SYSTEM WIRING DIAGRAMS article** .

WHEN MONITORED:

Amplifier Bus wake-up. Amplifier reset with scan tool.

SET CONDITION:

The Amplifier detects an open condition on the speaker output circuit.

POSSIBLE CAUSES

Possible Causes
(X209) AMPLIFIED LEFT I/P SPEAKER (+) CIRCUIT OPEN
(X299) AMPLIFIED LEFT I/P SPEAKER (-) CIRCUIT OPEN
LEFT FRONT I/P SPEAKER
AMPLIFIER

DIAGNOSTIC TEST

1. **CHECK FOR AN INTERMITTENT CONDITION**
    1. Turn the ignition on and open one of the front doors.

        NOTE: A front door must remain open whenever checking or erasing Amplifier DTC's.

    2. With the scan tool, record and erase the Amplifier DTC's.
    3. Cycle the ignition switch from on to off, wait five seconds and then back to on.
    4. Turn the Radio on and set the volume to 20.
    5. Adjust the speakers to the front and center.
    6. With the scan tool, read the active Amplifier DTC's.

        Does the scan tool display active: B1463-CHANNEL 1 AUDIO SPEAKER OUTPUT CIRCUIT OPEN?

        Yes

        - Go To 2.

        No

        - Test complete, the condition or conditions that originally set this DTC are not present at this

time. Using the wiring diagrams as a guide, check all related splices and connectors for signs of water intrusion, corrosion, pushed out or bent terminals and correct pin tension.

- Perform the BODY VERIFICATION TEST. Refer to **BODY VERIFICATION TEST** .

2. **CHECK THE OPERATION OF THE LEFT FRONT I/P SPEAKER**

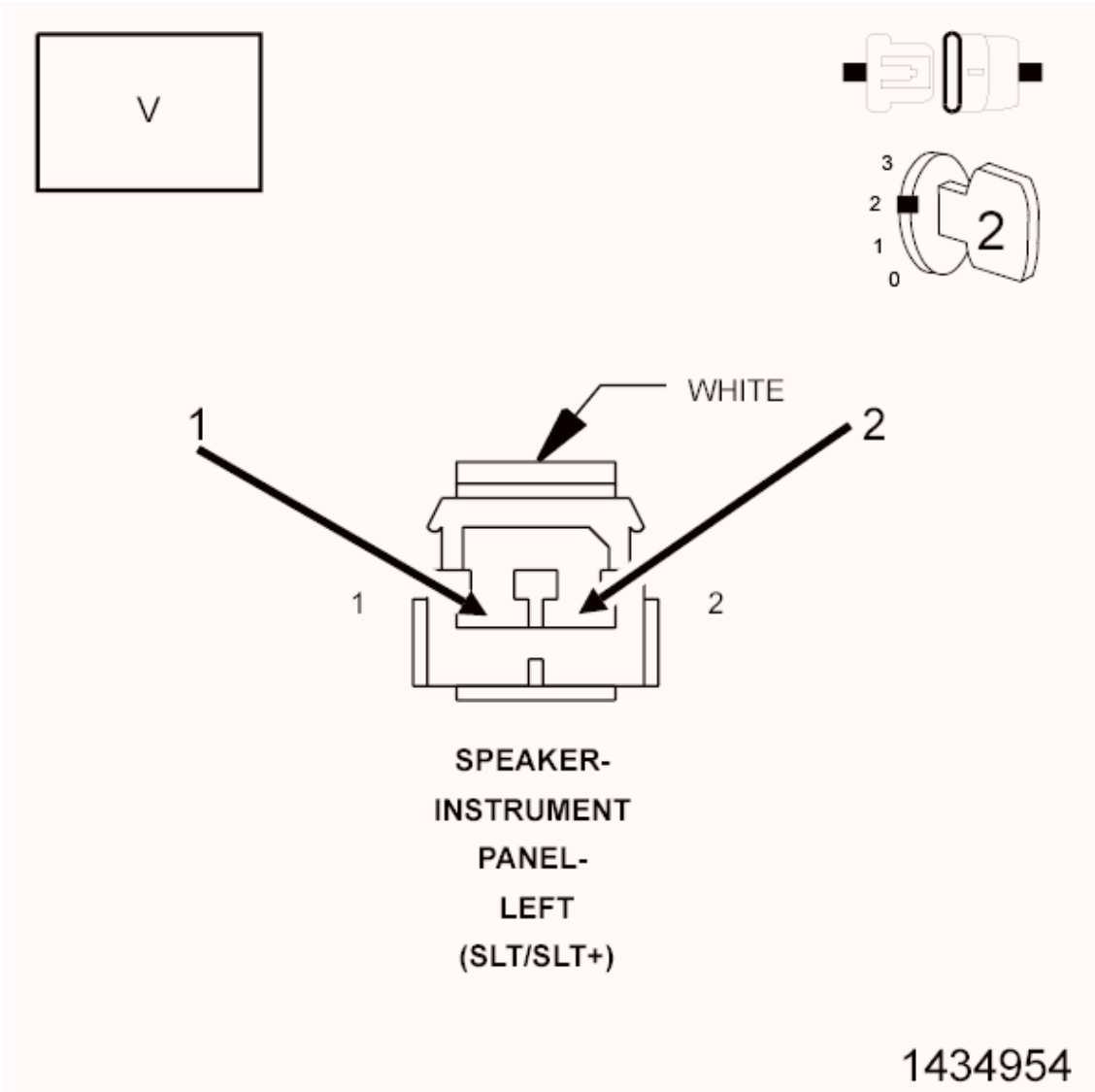

Fig. 9: Checking The Operation Of The Left Front I/P Speaker
Courtesy of CHRYSLER GROUP, LLC

1. Turn the ignition off.
2. Disconnect the Left I/P Speaker harness connector.
3. Turn the ignition on.
4. Turn the radio on and set the volume to 25.
5. Adjust the speakers to the front and center.
6. With a voltmeter set to read in A/C voltage, measure the voltage of the Amplified Left I/P Speaker

circuits in the Amplified Left I/P Speaker harness connector.

Is the voltage present greater than 1 volt?

Yes

- Replace the Amplified Left I/P Speaker in accordance with the Service Information.
- Perform the BODY VERIFICATION TEST. Refer to **BODY VERIFICATION TEST** .

No

- Go To 3.

3. **CHECK THE (X209) LEFT I/P SPEAKER (+) CIRCUIT FOR AN OPEN**

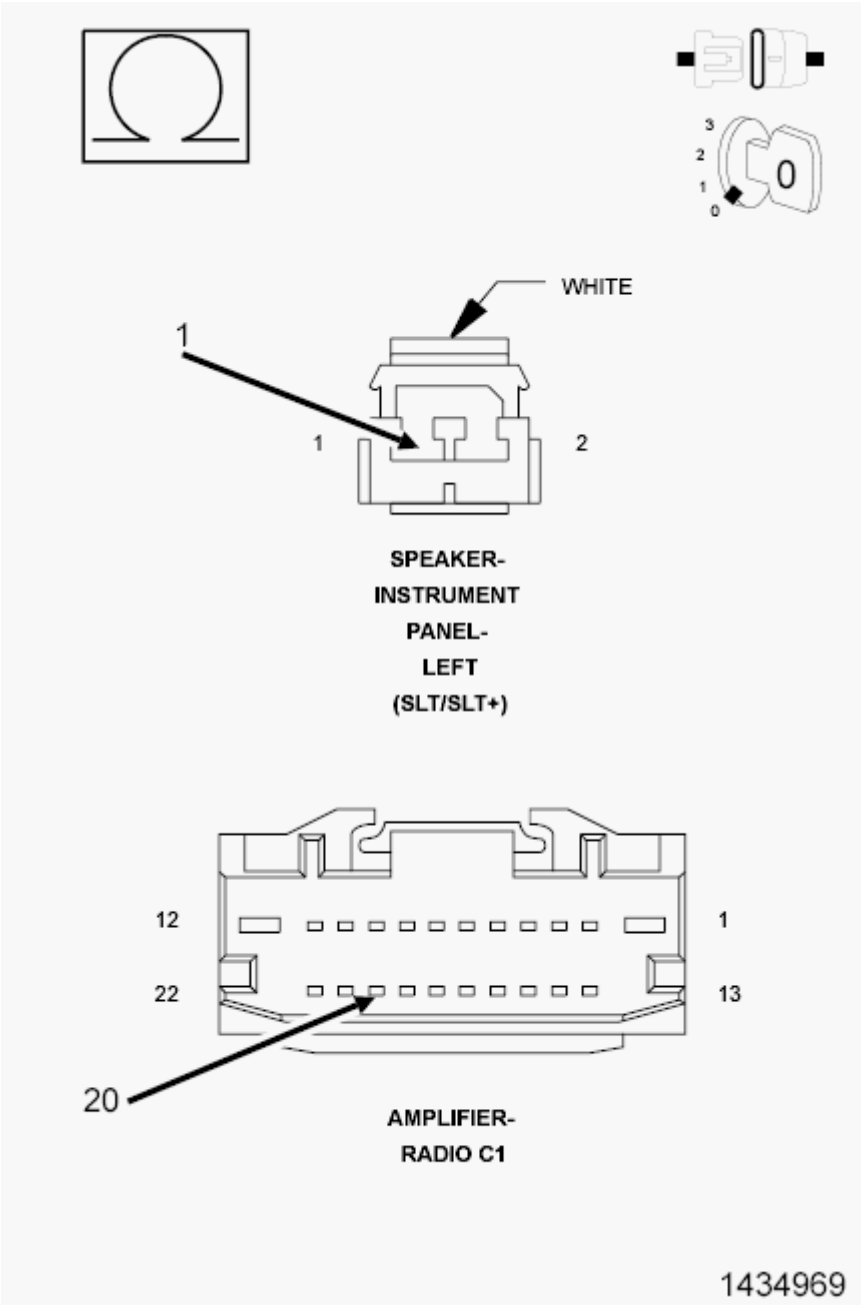

Fig. 10: Checking Amplified Left I/P Speaker Circuits For An Open
Courtesy of CHRYSLER GROUP, LLC

1. Turn the ignition off.
2. Disconnect the Amplifier C1 harness connector.
3. Measure the resistance of the (X209) Left I/P Speaker (+) circuit between the Amplifier C1 harness connector and the Left I/P Speaker harness connector.

   Is the resistance below 2.0 Ohms?

   Yes

- Go To 4.

No

- Repair the (X209) Left I/P Speaker (+) circuit for an open.
- Perform the BODY VERIFICATION TEST. Refer to **BODY VERIFICATION TEST** .

4. **CHECK THE (X299) LEFT I/P SPEAKER (-) CIRCUIT FOR AN OPEN**

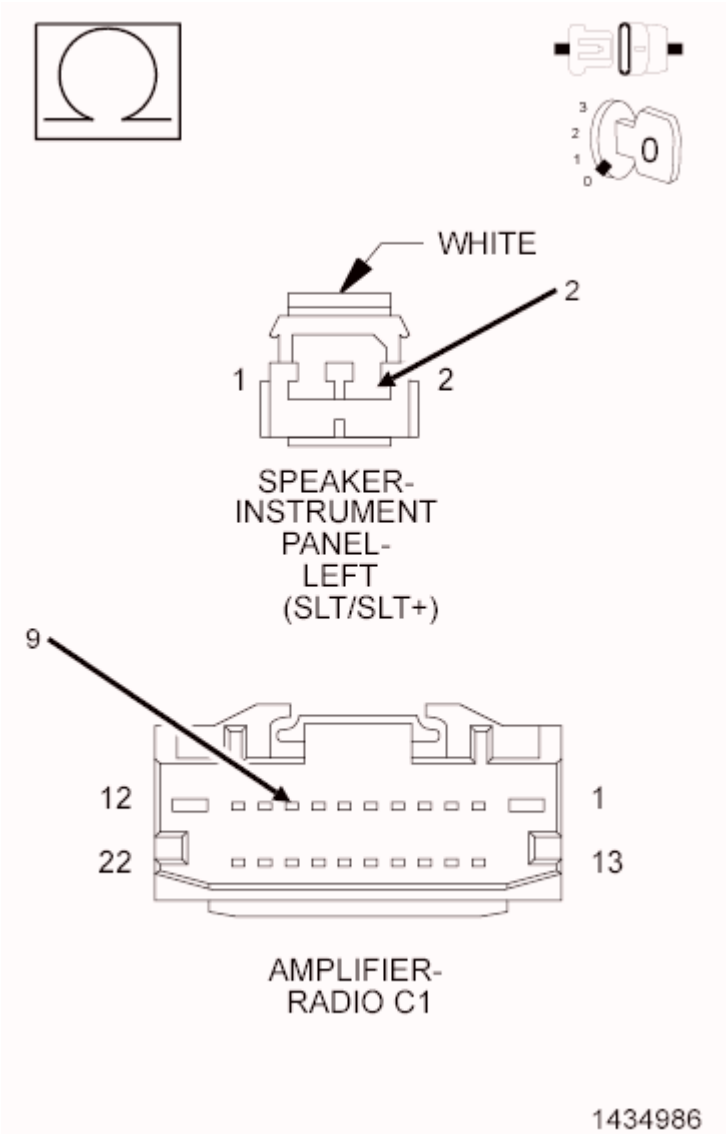

Fig. 11: Checking Amplified Left I/P Speaker Circuits For An Open
Courtesy of CHRYSLER GROUP, LLC

1. Measure the resistance of the (X299) Left I/P Speaker (-) circuit between the Amplifier C1 harness connector and the Left I/P Speaker harness connector.

   Is the resistance below 2.0 Ohms?

Yes

- Replace the Amplifier in accordance with the Service Information.
- Perform the BODY VERIFICATION TEST. Refer to **BODY VERIFICATION TEST** .

No

- Repair the (X299) Left I/P Speaker (-) circuit for an open.
- Perform the BODY VERIFICATION TEST. Refer to **BODY VERIFICATION TEST** .

B1464-CHANNEL 1 AUDIO SPEAKER OUTPUT CIRCUIT SHORTED TOGETHER

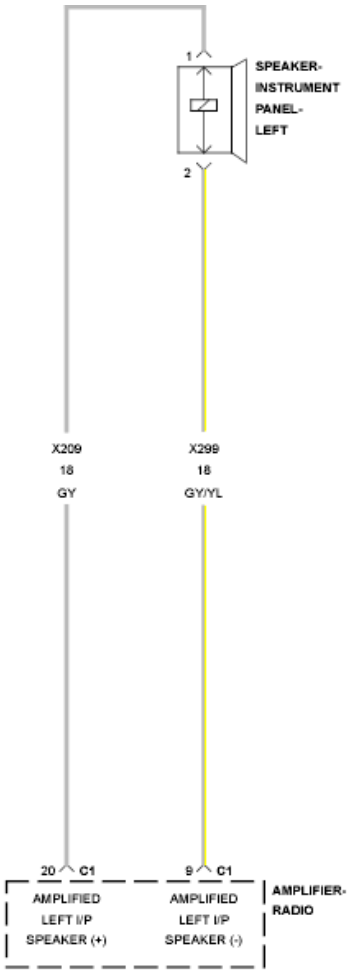

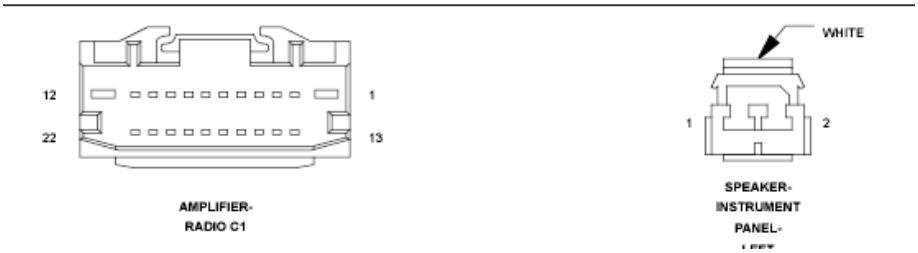

Fig. 12: Channel 1 Audio Speaker Output Wiring Diagram
Courtesy of CHRYSLER GROUP, LLC

For a complete wiring diagram, **refer to appropriate SYSTEM WIRING DIAGRAMS article** .

WHEN MONITORED:

With the ignition on. Radio volume at 25 or higher.

SET CONDITION:

The Amplifier detects that the output circuits are shorted together.

POSSIBLE CAUSES

Possible Causes
(X209) AMPLIFIED LEFT INSTRUMENT PANEL (I/P) (+) CIRCUIT SHORTED TO THE (X299) AMPLIFIED LEFT INSTRUMENT PANEL (I/P) (-) CIRCUIT
LEFT INSTRUMENT PANEL (I/P) SPEAKER
AMPLIFIER

DIAGNOSTIC TEST

1. **CHECK FOR AN INTERMITTENT CONDITION**
   1. Turn the ignition on and open one of the front doors.

      NOTE: A front door must remain open whenever checking or erasing Amplifier DTC's.

   2. Using the scan tool, record and erase the Amplifier DTC's.
   3. Cycle the ignition switch from on to off, wait five seconds and then back to on.
   4. Turn the Radio on and set the volume to 20.
   5. Adjust the speakers to the front and center.
   6. Using the scan tool, read the active Amplifier DTC's.

      Does the scan tool display active: B1464-CHANNEL 1 AUDIO SPEAKER OUTPUT CIRCUIT SHORTED TOGETHER?

      Yes

      - Go To 2.

      No

      - Test complete, the condition or conditions that originally set this DTC are not present at this time. Using the wiring diagrams as a guide, check all related splices and connectors for signs of water intrusion, corrosion, pushed out or bent terminals and correct pin tension.
      - Perform the BODY VERIFICATION TEST. Refer to **BODY VERIFICATION TEST** .
2. **CHECK THE OPERATION OF THE AMPLIFIED LEFT I/P SPEAKER**

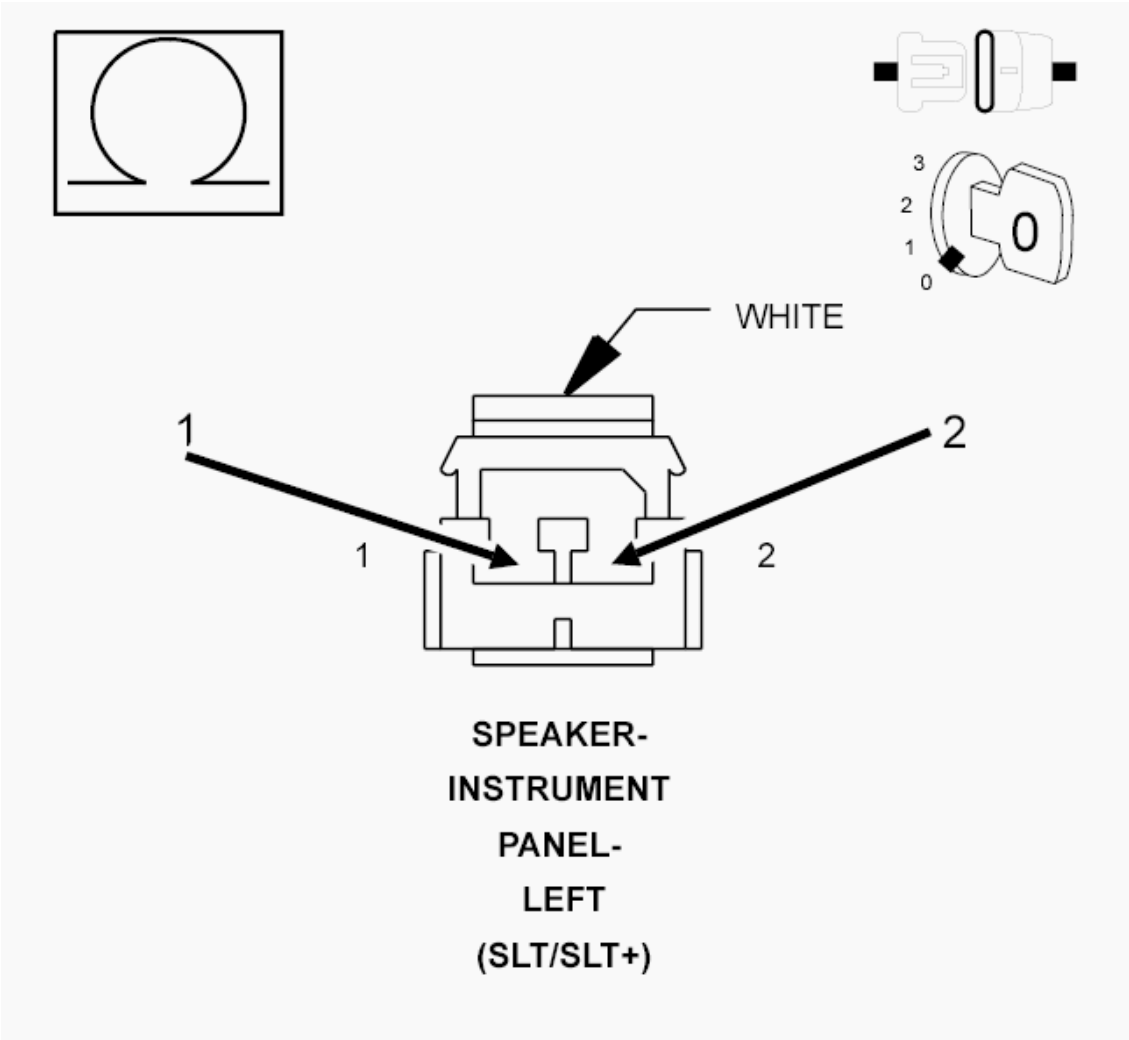

Fig. 13: Checking The Operation Of The Amplified Left I/P Speaker
Courtesy of CHRYSLER GROUP, LLC

1. Turn the ignition off.
2. Disconnect the Left I/P Speaker harness connector.
3. Measure the resistance of the speaker between the two terminals.

NOTE: **The graphic shows the connector for reference only. Measure at the speaker terminals.**

Is the resistance of the speaker less than 1 Ohm?

Yes

- Replace the Left I/P Speaker in accordance with the Service Information.
- Perform the BODY VERIFICATION TEST. Refer to **BODY VERIFICATION TEST** .

No

- Go To 3.

3. **CHECK THE (X209) AMPLIFIED LEFT I/P SPEAKER (+) CIRCUIT, AND THE (X299) AMPLIFIED LEFT I/P SPEAKER (-) CIRCUITS FOR A SHORT TOGETHER**

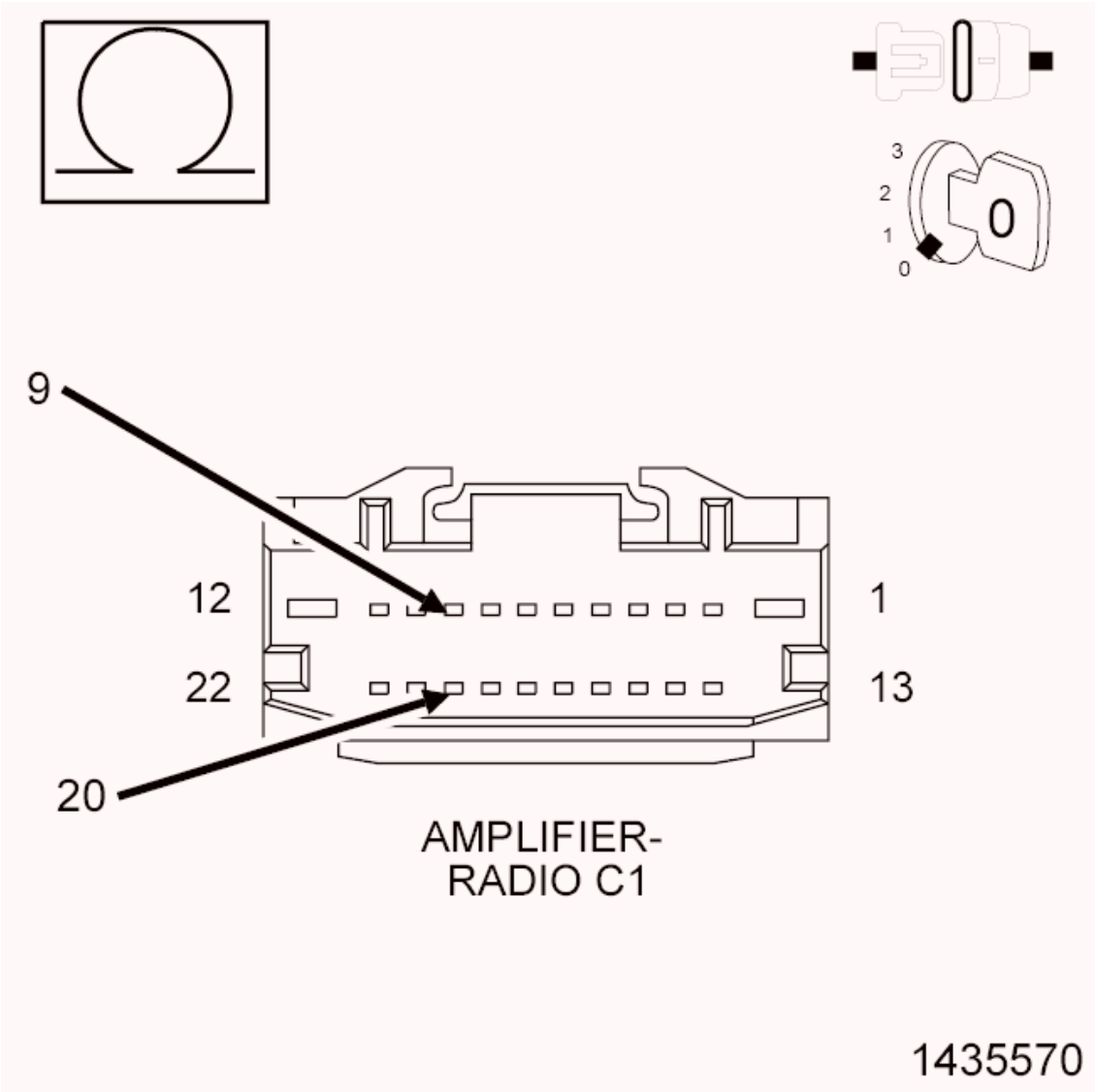

Fig. 14: Checking Left I/P Speaker (+) & Left I/P Speaker (-) Circuits For A Short Together
Courtesy of CHRYSLER GROUP, LLC

1. Disconnect the Amplifier C1 harness connector.
2. Measure the resistance between the (X209) Left I/P Speaker (+) circuit and the (X299) Left I/P Speaker (-) circuit.

   Is the resistance below 10K Ohms?

Yes

- Repair the (X209) Left I/P Speaker (+) circuit for a short to the (X299) Left I/P Speaker (-) circuit.
- Perform the BODY VERIFICATION TEST. Refer to **BODY VERIFICATION TEST** .

No

- Replace the Amplifier in accordance with the Service Information.
- Perform the BODY VERIFICATION TEST. Refer to **BODY VERIFICATION TEST** .

B1465-CHANNEL 2 AUDIO SPEAKER OUTPUT CIRCUIT PERFORMANCE

For a complete wiring diagram, **refer to appropriate SYSTEM WIRING DIAGRAMS article** .

WHEN MONITORED:

With the ignition on.

SET CONDITION:

This Diagnostic Trouble Code (DTC) sets if a Direct Current (DC) offset occurs on the output channel, the amplifier shall set a DTC after a maturity rate of four to six seconds.

POSSIBLE CAUSES

Possible Causes
AMPLIFIER

DIAGNOSTIC TEST

1. **CHECK FOR AN INTERMITTENT CONDITION**
    1. Turn the ignition on and open one of the front doors.

       NOTE: A front door must remain open whenever checking or erasing Amplifier DTC's.

    2. With the scan tool, record and erase the Amplifier DTC's.
    3. Cycle the ignition switch from on to off, wait five seconds and then back to on.
    4. Turn the Radio on and set the volume to 20.
    5. Adjust the speakers to the front and center.
    6. With the scan tool, read the active Amplifier DTC's.

       Does the scan tool display active: B1465-CHANNEL 2 AUDIO SPEAKER OUTPUT CIRCUIT PERFORMANCE?

Yes

- Replace the Amplifier in accordance with the service information.
- Perform the BODY VERIFICATION TEST. Refer to **BODY VERIFICATION TEST** .

No

- Test complete, the condition or conditions that originally set this DTC are not present at this time. Using the wiring diagrams as a guide, check all related splices and connectors for signs of water intrusion, corrosion, pushed out or bent terminals and correct pin tension.
- Perform the BODY VERIFICATION TEST. Refer to **BODY VERIFICATION TEST** .

B1466-CHANNEL 2 AUDIO SPEAKER OUTPUT CIRCUIT LOW

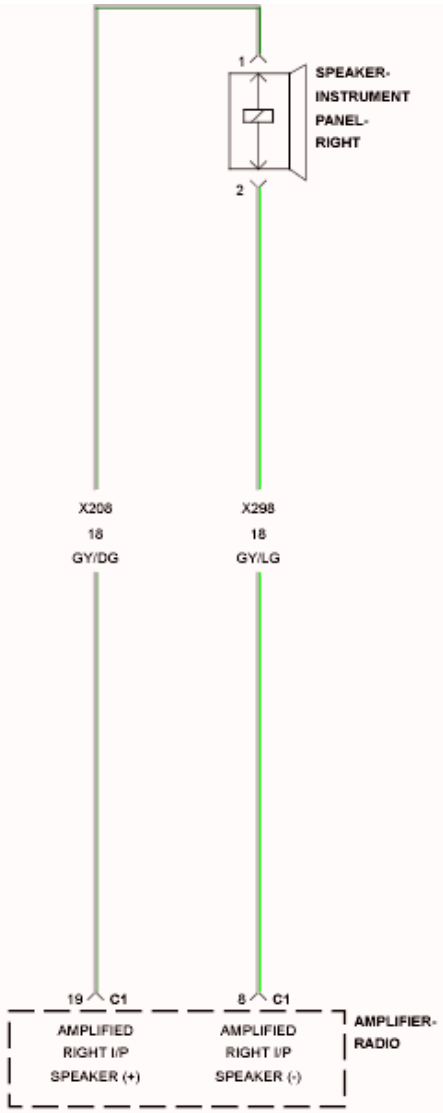

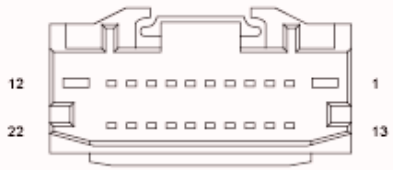

AMPLIFIER-
RADIO C1

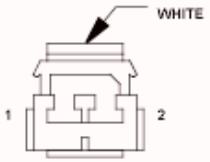

SPEAKER-
INSTRUMENT
PANEL-
RIGHT

Fig. 15: Channel 2 Audio Speaker Output Wiring Diagram
Courtesy of CHRYSLER GROUP, LLC

For a complete wiring diagram, **refer to appropriate SYSTEM WIRING DIAGRAMS article** .

WHEN MONITORED:

With the ignition on.

SET CONDITION:

The Amplifier detects a shorted to ground condition on the speaker output circuit.

POSSIBLE CAUSES

Possible Causes
(X208) AMPLIFIED RIGHT I/P SPEAKER (+) CIRCUIT SHORTED TO GROUND
(X298) AMPLIFIED RIGHT I/P SPEAKER (-) CIRCUIT SHORTED TO GROUND
RIGHT I/P SPEAKER
AMPLIFIER

DIAGNOSTIC TEST

1. **CHECK FOR AN INTERMITTENT CONDITION**
    1. Turn the ignition on and open one of the front doors.

        NOTE: A front door must remain open whenever checking or erasing Amplifier DTC's.

    2. Using the scan tool, record and erase the Amplifier DTC's.
    3. Cycle the ignition switch from on to off, wait five seconds and then back to on.
    4. Turn the Radio on and set the volume to 20.
    5. Adjust the speakers to the front and center.
    6. Using the scan tool, read the active Amplifier DTC's.

        Does the scan tool display active: B1466-CHANNEL 2 AUDIO SPEAKER OUTPUT CIRCUIT LOW?

        Yes

        - Go To 2.

        No

        - Test complete, the condition or conditions that originally set this DTC are not present at this

time. Using the wiring diagrams as a guide, check all related splices and connectors for signs of water intrusion, corrosion, pushed out or bent terminals and correct pin tension.

- Perform the BODY VERIFICATION TEST. Refer to **BODY VERIFICATION TEST** .

2. **CHECK THE RIGHT INSTRUMENT PANEL (I/P) SPEAKER**

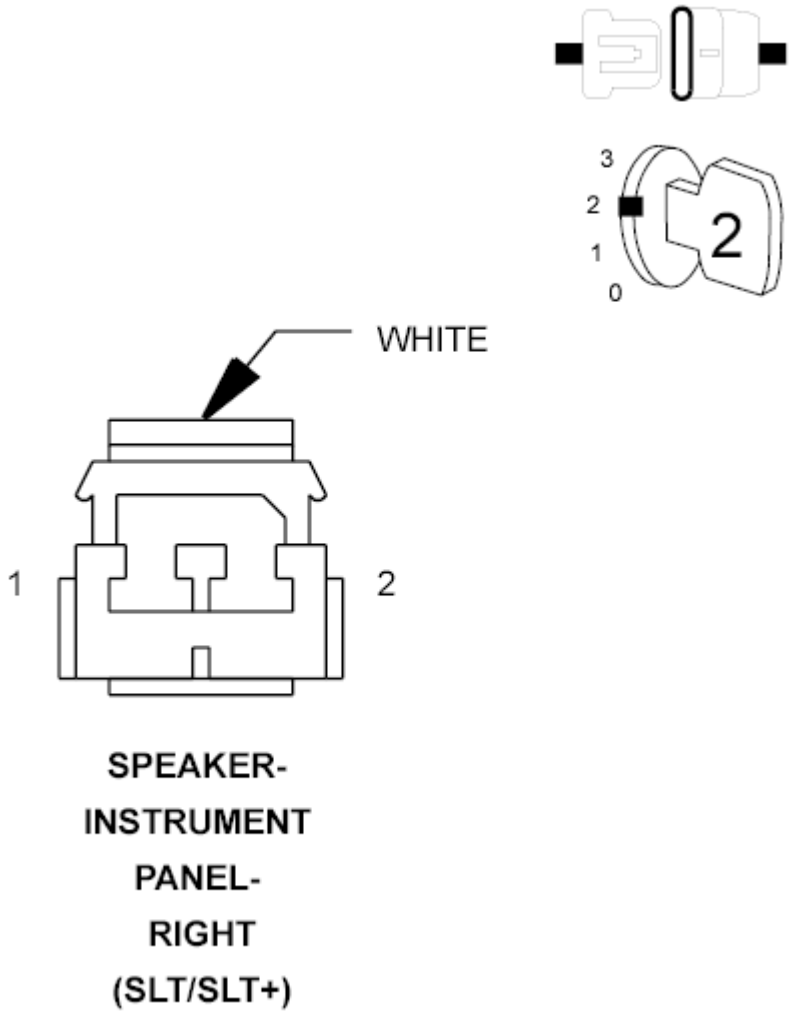

Fig. 16: Right Instrument Panel (I/P) Speaker Connector End View
Courtesy of CHRYSLER GROUP, LLC

1. Make sure one of the front doors is still open.
2. Using the scan tool, erase the DTC's.
3. Turn the ignition off.
4. Disconnect the Right I/P Speaker harness connector.
5. Turn the ignition on.
6. Turn the radio on and set the volume to 25.

7. Using the scan tool, read the active Amplifier DTC's.

   Does the scan tool display active: B1466-CHANNEL 2 AUDIO SPEAKER OUTPUT CIRCUIT LOW?

   Yes

   - Go To 3.

   No

   - Replace the Right Instrument Panel Speaker.
   - Perform the BODY VERIFICATION TEST. Refer to **BODY VERIFICATION TEST** .

3. **CHECK THE (X208) AMPLIFIED RIGHT I/P SPEAKER (+) CIRCUIT FOR A SHORT TO GROUND**

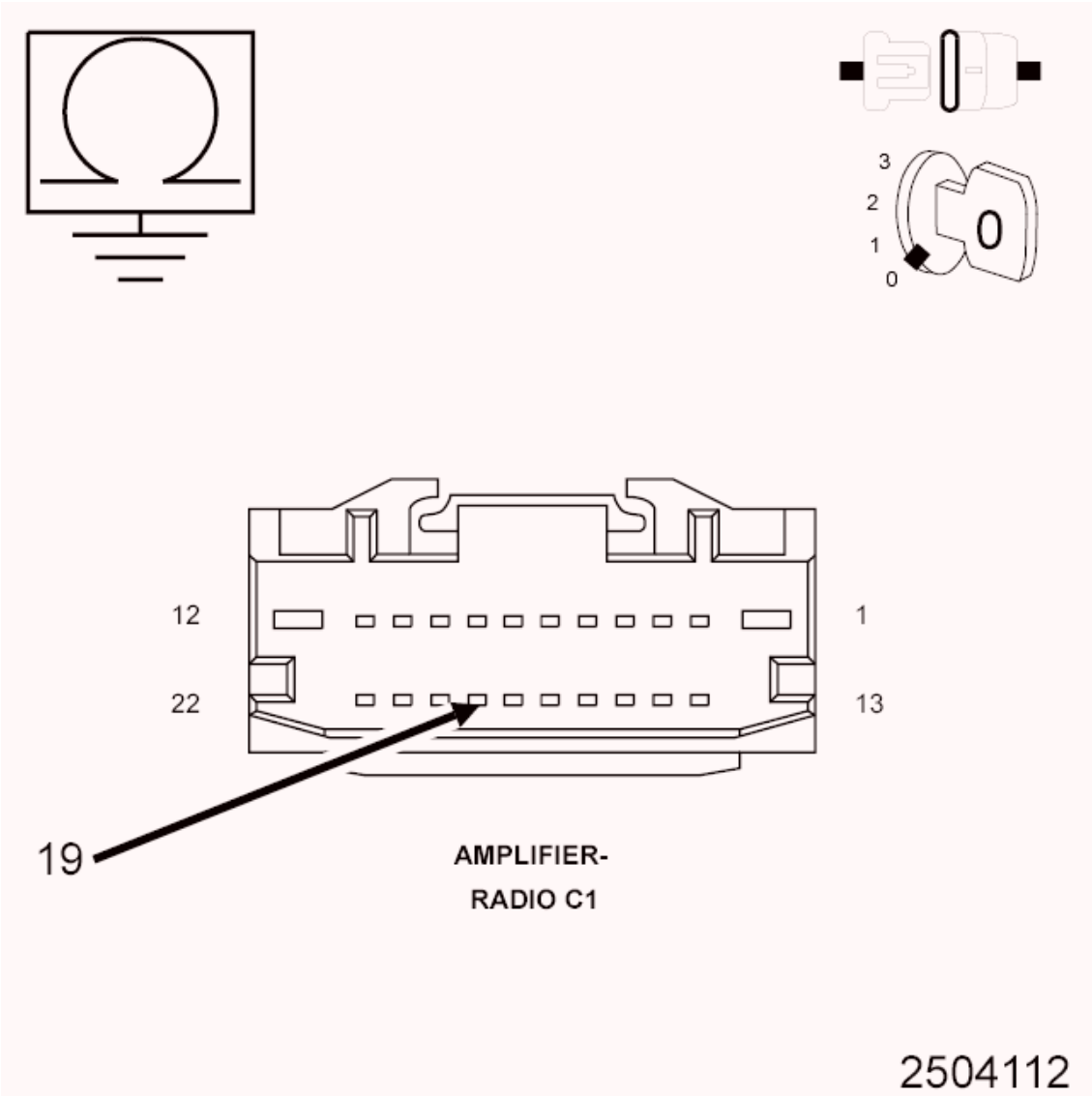

Fig. 17: Checking Amplified Right I/P Speaker (+) Circuit For A Short To Ground
Courtesy of CHRYSLER GROUP, LLC

1. Turn the ignition off.
2. Disconnect the Amplifier C1 harness connector.
3. Measure the resistance between ground and the (X208) Right I/P Speaker (+) circuit.

   Is the resistance below 10K Ohms?

   Yes

   - Repair the (X208) Right I/P Speaker (+) circuit for a short to ground.
   - Perform the BODY VERIFICATION TEST. Refer to **BODY VERIFICATION TEST** .

   No

- Go To 4.

4. **CHECK THE (X298) AMPLIFIED RIGHT I/P SPEAKER (-) CIRCUIT FOR A SHORT TO GROUND**

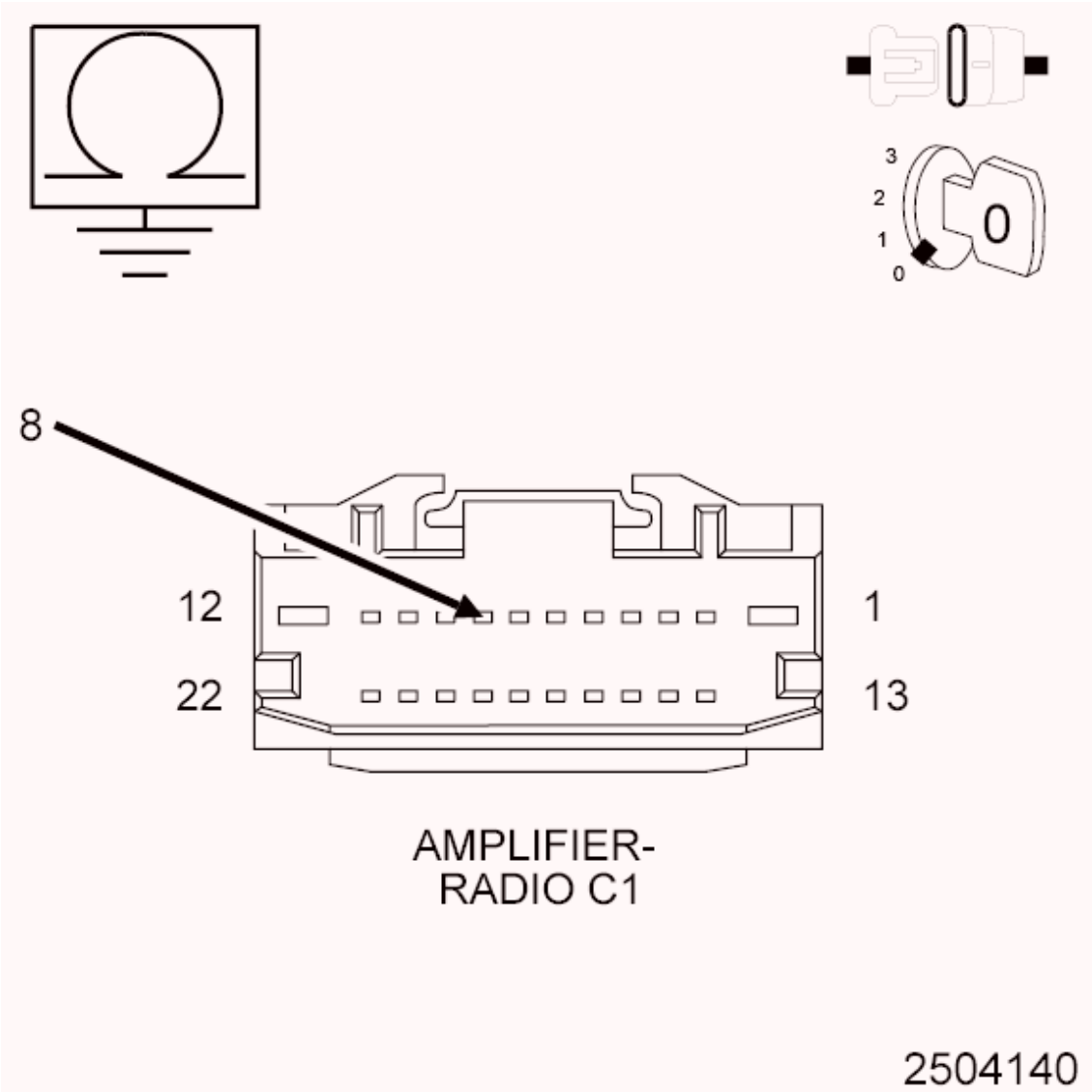

Fig. 18: Checking Amplified Right I/P Speaker (+) Circuit For A Short To Ground
Courtesy of CHRYSLER GROUP, LLC

1. Measure the resistance between ground and the (X298) Amplified Right I/P Speaker (-) circuit.

   Is the resistance below 10K Ohms?

   Yes

   - Repair the (X298) Amplified Right I/P Speaker (-) for a short to ground.
   - Perform the BODY VERIFICATION TEST. Refer to **BODY VERIFICATION TEST** .

No

- Replace the Amplifier in accordance with the Service Information.
- Perform the BODY VERIFICATION TEST. Refer to **BODY VERIFICATION TEST** .

B1467-CHANNEL 2 AUDIO SPEAKER OUTPUT CIRCUIT HIGH

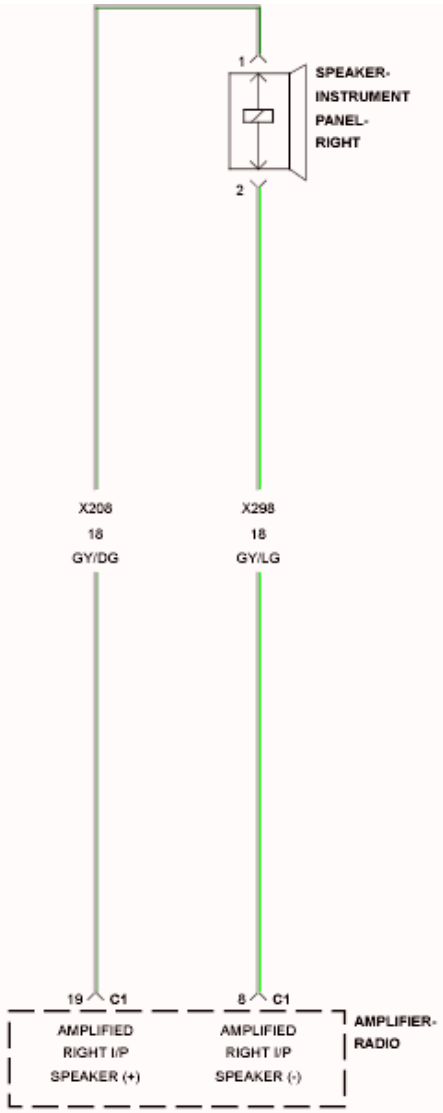

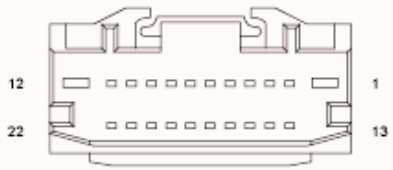

AMPLIFIER-
RADIO C1

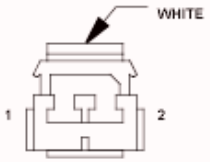

SPEAKER-
INSTRUMENT
PANEL-
RIGHT

Fig. 19: Channel 2 Audio Speaker Output Wiring Diagram
Courtesy of CHRYSLER GROUP, LLC

For a complete wiring diagram, **refer to appropriate SYSTEM WIRING DIAGRAMS article** .

WHEN MONITORED:

With the ignition on.

SET CONDITION:

The Amplifier detects a short to battery condition on the output circuit.

POSSIBLE CAUSES

Possible Causes
(X208) AMPLIFIED RIGHT I/P SPEAKER (+) CIRCUIT SHORTED TO VOLTAGE
(X298) AMPLIFIED RIGHT I/P SPEAKER (-) CIRCUIT SHORTED TO VOLTAGE
AMPLIFIER

DIAGNOSTIC TEST

1. **CHECK FOR AN INTERMITTENT CONDITION**
    1. Turn the ignition on and open one of the front doors.

        NOTE: A front door must remain open whenever checking or erasing Amplifier DTC's.

    2. Using the scan tool, record and erase the Amplifier DTC's.
    3. Cycle the ignition switch from on to off, wait five seconds and then back to on.
    4. Turn the Radio on and set the volume to 20.
    5. Adjust the speakers to the front and center.
    6. Using the scan tool, read the active Amplifier DTC's.

        Does the scan tool display active: B1467-CHANNEL 2 AUDIO SPEAKER OUTPUT CIRCUIT HIGH?

        Yes

        - Go To 2.

        No

        - Test complete, the condition or conditions that originally set this DTC are not present at this time. Using the wiring diagrams as a guide, check all related splices and connectors for signs

of water intrusion, corrosion, pushed out or bent terminals and correct pin tension.

- Perform the BODY VERIFICATION TEST. Refer to **BODY VERIFICATION TEST** .

2. **CHECK FOR VOLTAGE ON THE (X208) AMPLIFIED RIGHT I/P SPEAKER (+) CIRCUIT**

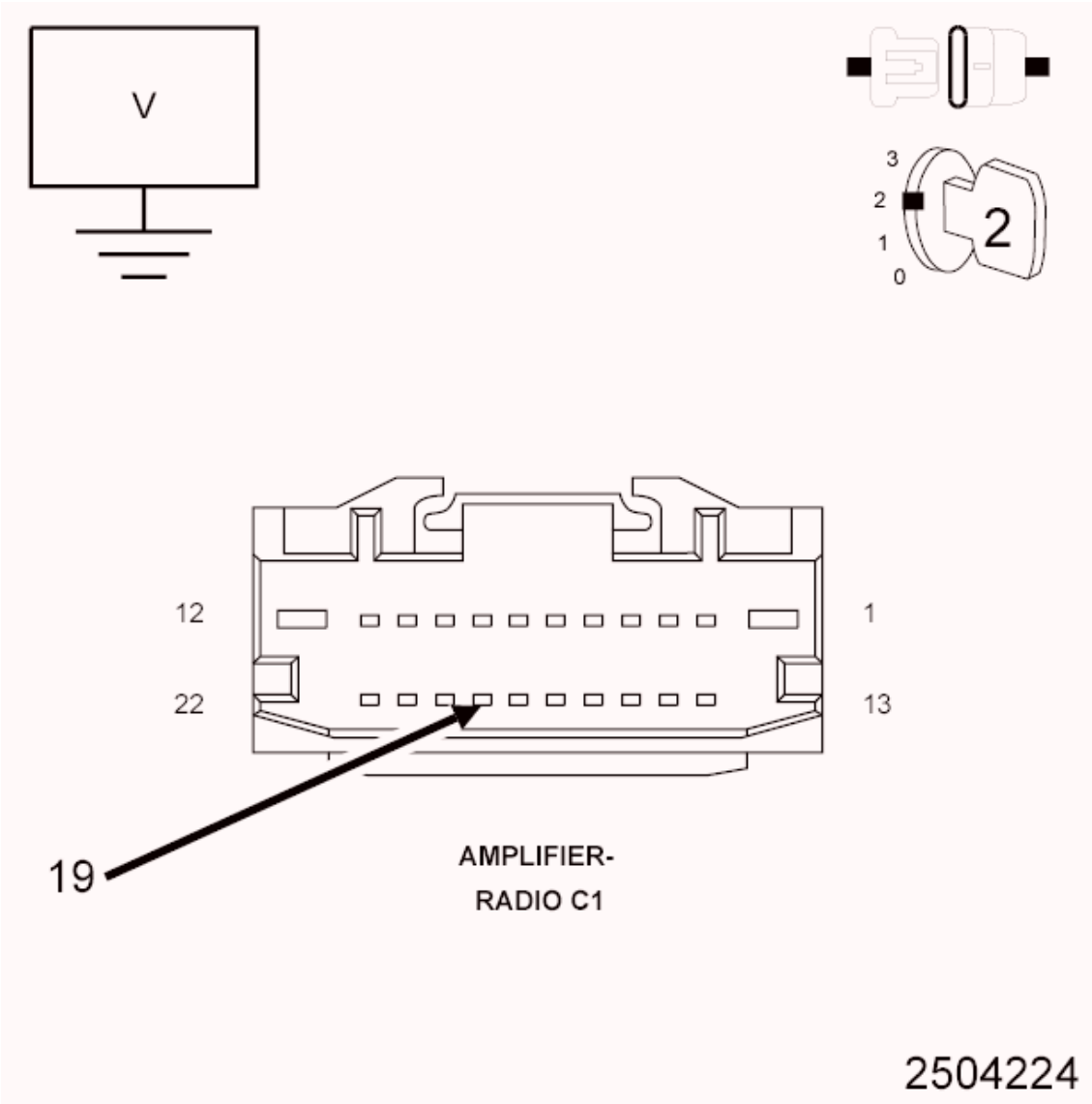

Fig. 20: Measuring Voltage On Amplified Right I/P Speaker (+) Circuit
Courtesy of CHRYSLER GROUP, LLC

1. Turn the ignition off.
2. Disconnect the Amplifier C1 harness connector.
3. Disconnect the Amplified Right I/P Speaker harness connector.
4. Turn the ignition on.
5. Measure for voltage between the (X208) Amplified Right I/P Speaker (+) circuit and ground.

   Is there any voltage present?

Yes

- Repair the (X208) Amplified Right I/P Speaker (+) circuit for a short to voltage.
- Perform the BODY VERIFICATION TEST. Refer to **BODY VERIFICATION TEST** .

No

- Go To 3.

3. **CHECK FOR VOLTAGE ON THE (X298) AMPLIFIED RIGHT I/P SPEAKER (-) CIRCUIT**

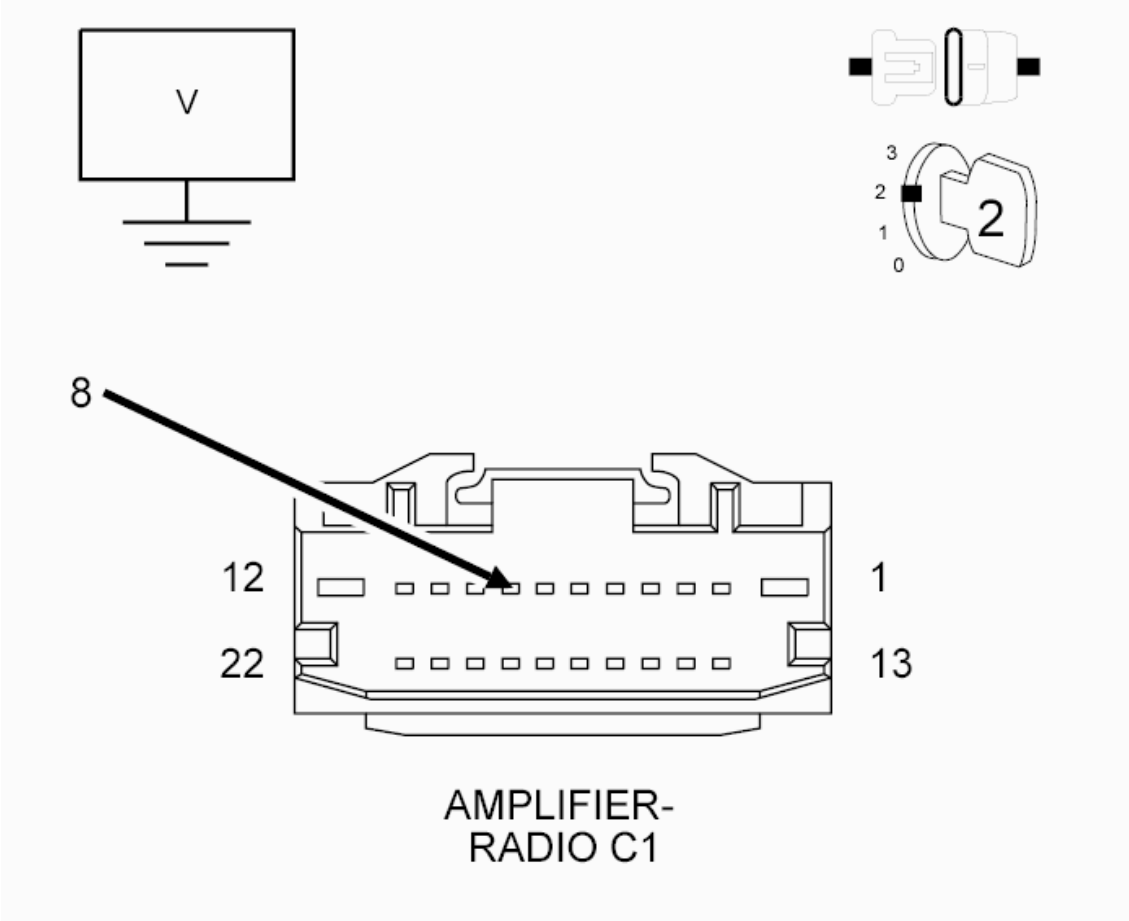

Fig. 21: Measuring Voltage On Amplified Right I/P Speaker (-) Circuit
Courtesy of CHRYSLER GROUP, LLC

1. Measure for voltage on the (X298) Amplified Right I/P Speaker (-) circuit and ground.

   Is there any voltage present?

   Yes

   - Repair the (X298) Amplified Right I/P Speaker (-) circuit for a short to voltage.
   - Perform the BODY VERIFICATION TEST. Refer to **BODY VERIFICATION TEST** .

No

- Replace the Amplifier in accordance with the Service Information.
- Perform the BODY VERIFICATION TEST. Refer to **BODY VERIFICATION TEST** .

B1468-CHANNEL 2 AUDIO SPEAKER OUTPUT CIRCUIT OPEN

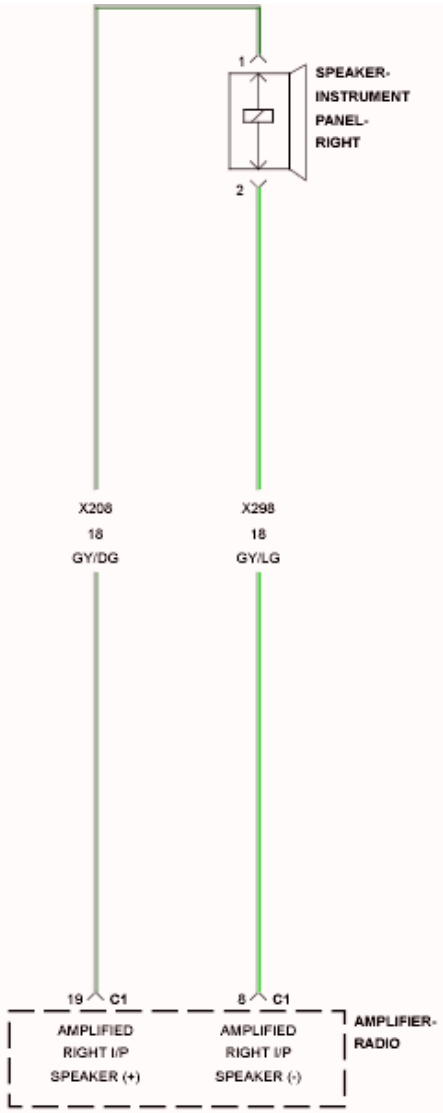

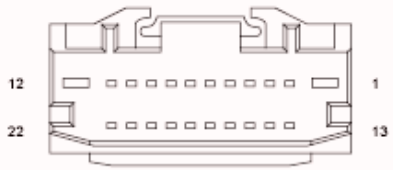

AMPLIFIER-
RADIO C1

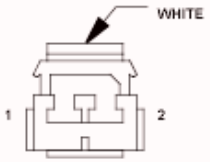

SPEAKER-
INSTRUMENT
PANEL-
RIGHT

Fig. 22: Channel 2 Audio Speaker Output Wiring Diagram
Courtesy of CHRYSLER GROUP, LLC

For a complete wiring diagram, **refer to appropriate SYSTEM WIRING DIAGRAMS article** .

WHEN MONITORED:

Amplifier Bus wake-up. Amplifier reset with scan tool.

SET CONDITION:

The Amplifier detects an open condition on the speaker output circuit.

POSSIBLE CAUSES

Possible Causes
(X208) AMPLIFIED RIGHT I/P SPEAKER (+) CIRCUIT OPEN
(X298) AMPLIFIED RIGHT I/P SPEAKER (-) CIRCUIT OPEN
RIGHT I/P SPEAKER
AMPLIFIER

DIAGNOSTIC TEST

1. **CHECK FOR AN INTERMITTENT CONDITION**
    1. Turn the ignition on and open one of the front doors.

        NOTE: A front door must remain open whenever checking or erasing Amplifier DTC's.

    2. With the scan tool, record and erase the Amplifier DTC's.
    3. Cycle the ignition switch from on to off, wait five seconds and then back to on.
    4. Turn the Radio on and set the volume to 20.
    5. Adjust the speakers to the front and center.
    6. With the scan tool, read the active Amplifier DTC's.

        Does the scan tool display active: B1468-CHANNEL 2 AUDIO SPEAKER OUTPUT CIRCUIT OPEN?

        Yes

        - Go To 2.

        No

        - Test complete, the condition or conditions that originally set this DTC are not present at this

time. Using the wiring diagrams as a guide, check all related splices and connectors for signs of water intrusion, corrosion, pushed out or bent terminals and correct pin tension.

- Perform the BODY VERIFICATION TEST. Refer to **BODY VERIFICATION TEST** .

2. **CHECK THE OPERATION OF THE RIGHT FRONT I/P SPEAKER**

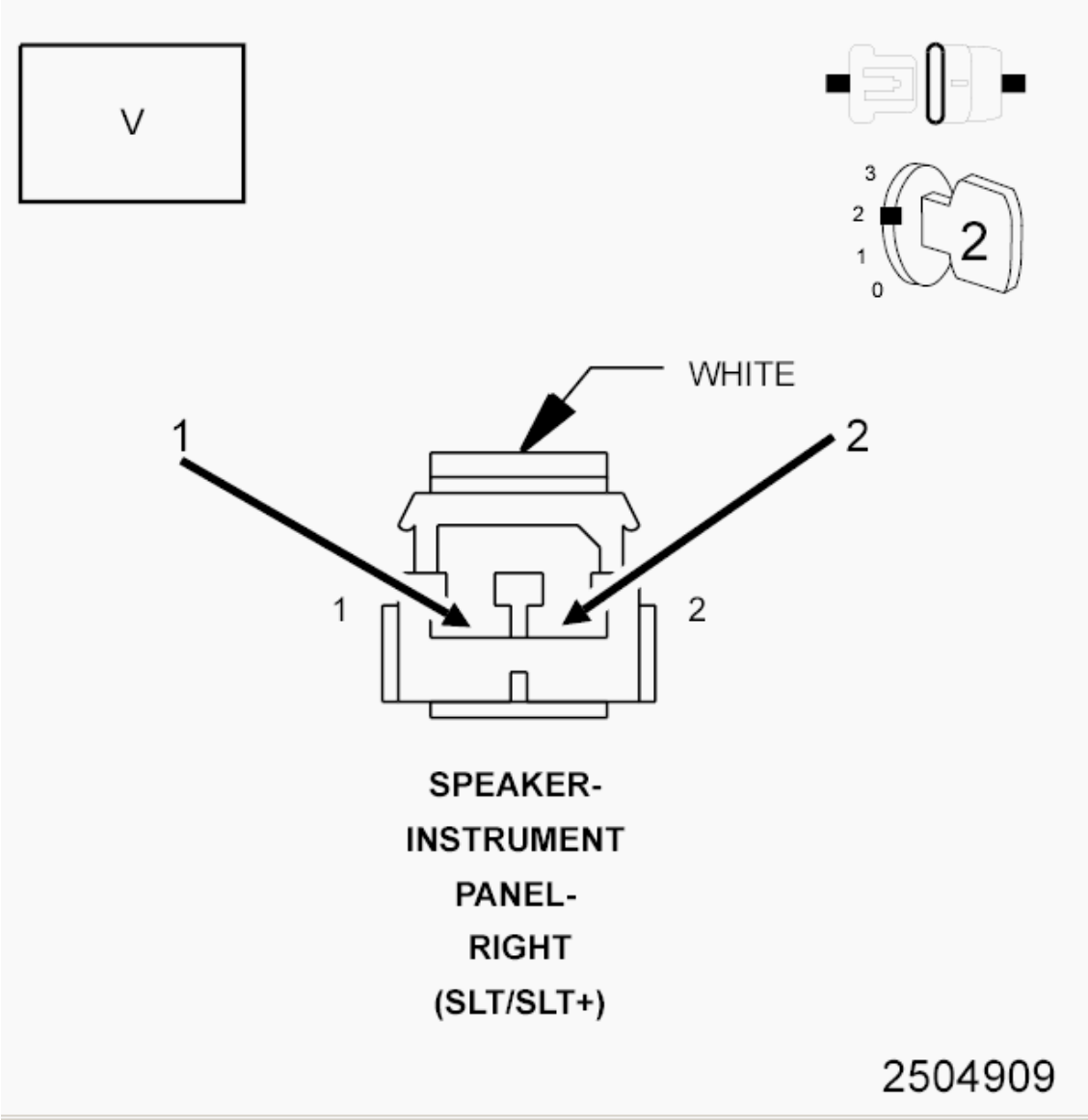

Fig. 23: Checking The Operation Of The Right Front I/P Speaker
Courtesy of CHRYSLER GROUP, LLC

1. Turn the ignition off.
2. Disconnect the Right I/P Speaker harness connector.
3. Turn the radio on and turn the volume to 25.
4. With a voltmeter set to read in A/C voltage, measure the voltage of the Amplified Right I/P Speaker circuits in the Amplified Right I/P Speaker harness connector.

Is the voltage present greater than 1 volt?

Yes

- Replace the Amplified Right I/P Speaker in accordance with the Service Information.
- Perform the BODY VERIFICATION TEST. Refer to **BODY VERIFICATION TEST** .

No

- Go To 3.

3. **CHECK THE (X208) AMPLIFIED RIGHT I/P SPEAKER (+) CIRCUIT FOR AN OPEN**

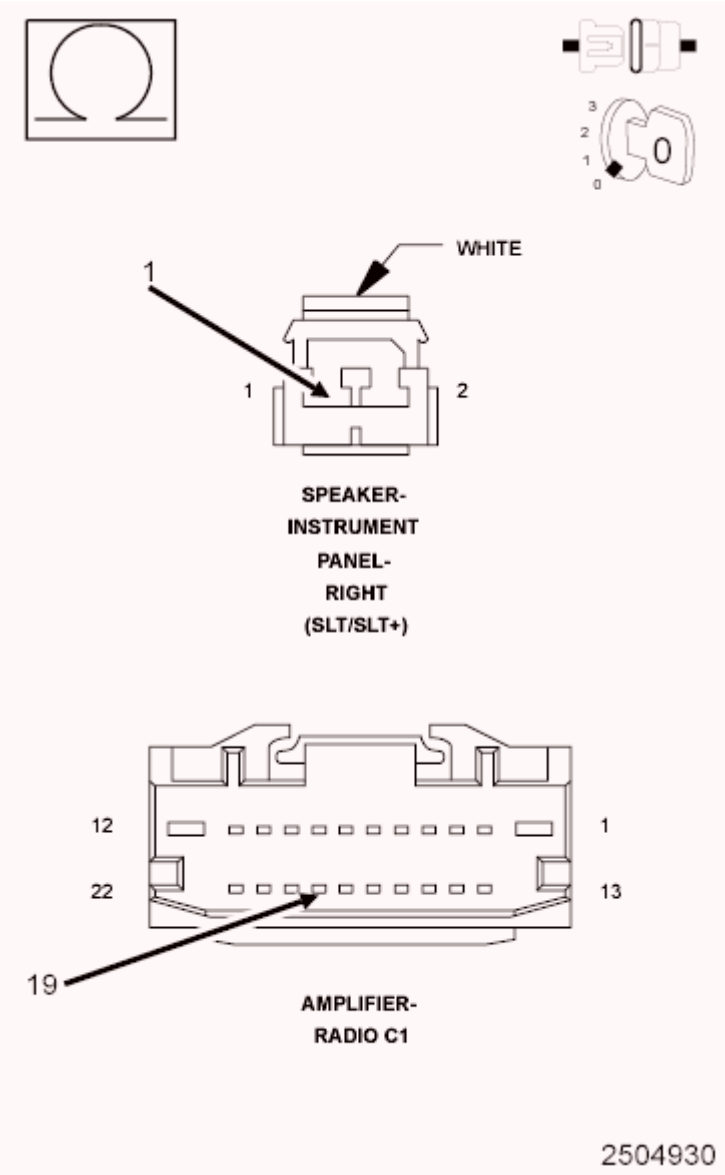

Fig. 24: Checking Amplified Right I/P Speaker (+) Circuit For An Open
Courtesy of CHRYSLER GROUP, LLC

1. Turn the ignition off.
2. Disconnect the Amplifier C1 harness connector.
3. Measure the resistance of the (X208) Amplified Right I/P Speaker (+) circuit between the Amplifier C1 harness connector and the Amplified Right I/P Speaker harness connector.

   Is the resistance below 2.0 Ohms?

   Yes

   - Go To 4.

   No

   - Repair the (X208) Amplified Right I/P Speaker (+) circuit for an open.
   - Perform the BODY VERIFICATION TEST. Refer to **BODY VERIFICATION TEST** .

4. **CHECK THE (X298) AMPLIFIED RIGHT I/P SPEAKER (-) CIRCUIT FOR AN OPEN**

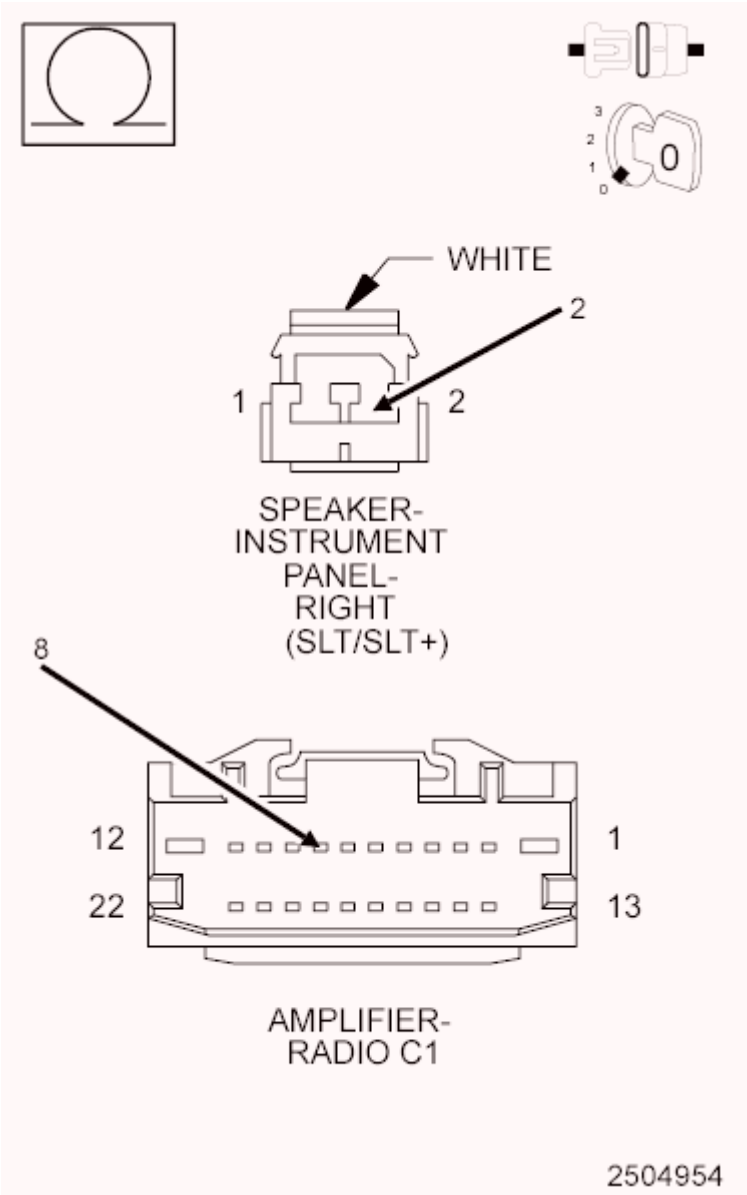

Fig. 25: Checking Amplified Right I/P Speaker (-) Circuit For An Open
Courtesy of CHRYSLER GROUP, LLC

1. Measure the resistance of the (X298) Amplified Right I/P Speaker (-) circuit between the Amplifier C1 harness connector and the Amplified Right I/P Speaker harness connector.

   Is the resistance below 2.0 Ohms?

   Yes

   - Replace the Amplifier in accordance with the Service Information.
   - Perform the BODY VERIFICATION TEST. Refer to **BODY VERIFICATION TEST** .

   No

- Repair the (X298) Amplified Right I/P Speaker (-) circuit for an open.
- Perform the BODY VERIFICATION TEST. Refer to **BODY VERIFICATION TEST** .

B1469-CHANNEL 2 AUDIO SPEAKER OUTPUT CIRCUIT SHORTED TOGETHER

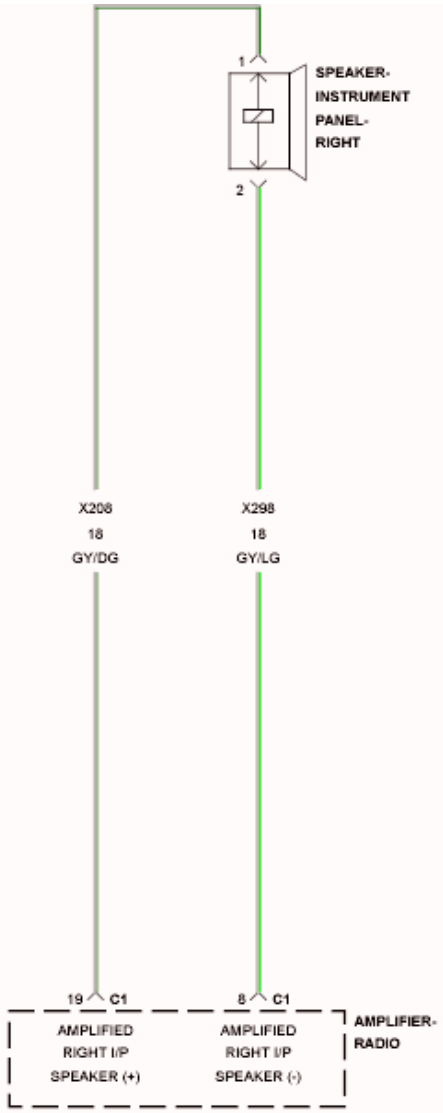

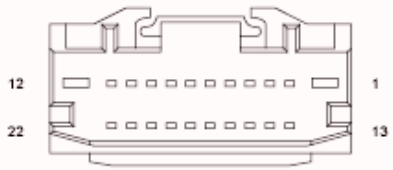

AMPLIFIER-
RADIO C1

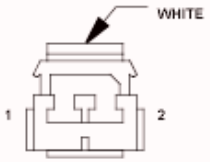

SPEAKER-
INSTRUMENT
PANEL-
RIGHT

Fig. 26: Channel 2 Audio Speaker Output Wiring Diagram
Courtesy of CHRYSLER GROUP, LLC

For a complete wiring diagram, **refer to appropriate SYSTEM WIRING DIAGRAMS article** .

WHEN MONITORED:

With the ignition on. Radio volume at 25 or higher.

SET CONDITION:

The Amplifier detects that the output circuits are shorted together.

POSSIBLE CAUSES

Possible Causes
(X208) AMPLIFIED RIGHT I/P SPEAKER (+) CIRCUIT SHORTED TO THE (X298) AMPLIFIED RIGHT I/P SPEAKER (-) CIRCUIT
AMPLIFIED RIGHT I/P SPEAKER
AMPLIFIER

DIAGNOSTIC TEST

1. **CHECK FOR AN INTERMITTENT CONDITION**
    1. Turn the ignition on and open one of the front doors.

        NOTE: A front door must remain open whenever checking or erasing Amplifier DTC's.

    2. With the scan tool, record and erase the Amplifier DTC's.
    3. Cycle the ignition switch from on to off, wait five seconds and then back to on.
    4. Turn the Radio on and set the volume to 20.
    5. Adjust the speakers to the front and center.
    6. With the scan tool, read the active Amplifier DTC's.

        Does the scan tool display active: B1469-CHANNEL 2 AUDIO SPEAKER OUTPUT CIRCUIT SHORTED TOGETHER?

        Yes

        - Go To 2.

        No

        - Test complete, the condition or conditions that originally set this DTC are not present at this

time. Using the wiring diagrams as a guide, check all related splices and connectors for signs of water intrusion, corrosion, pushed out or bent terminals and correct pin tension.

- Perform the BODY VERIFICATION TEST. Refer to **BODY VERIFICATION TEST** .

2. **CHECK THE OPERATION OF THE AMPLIFIED RIGHT I/P SPEAKER**

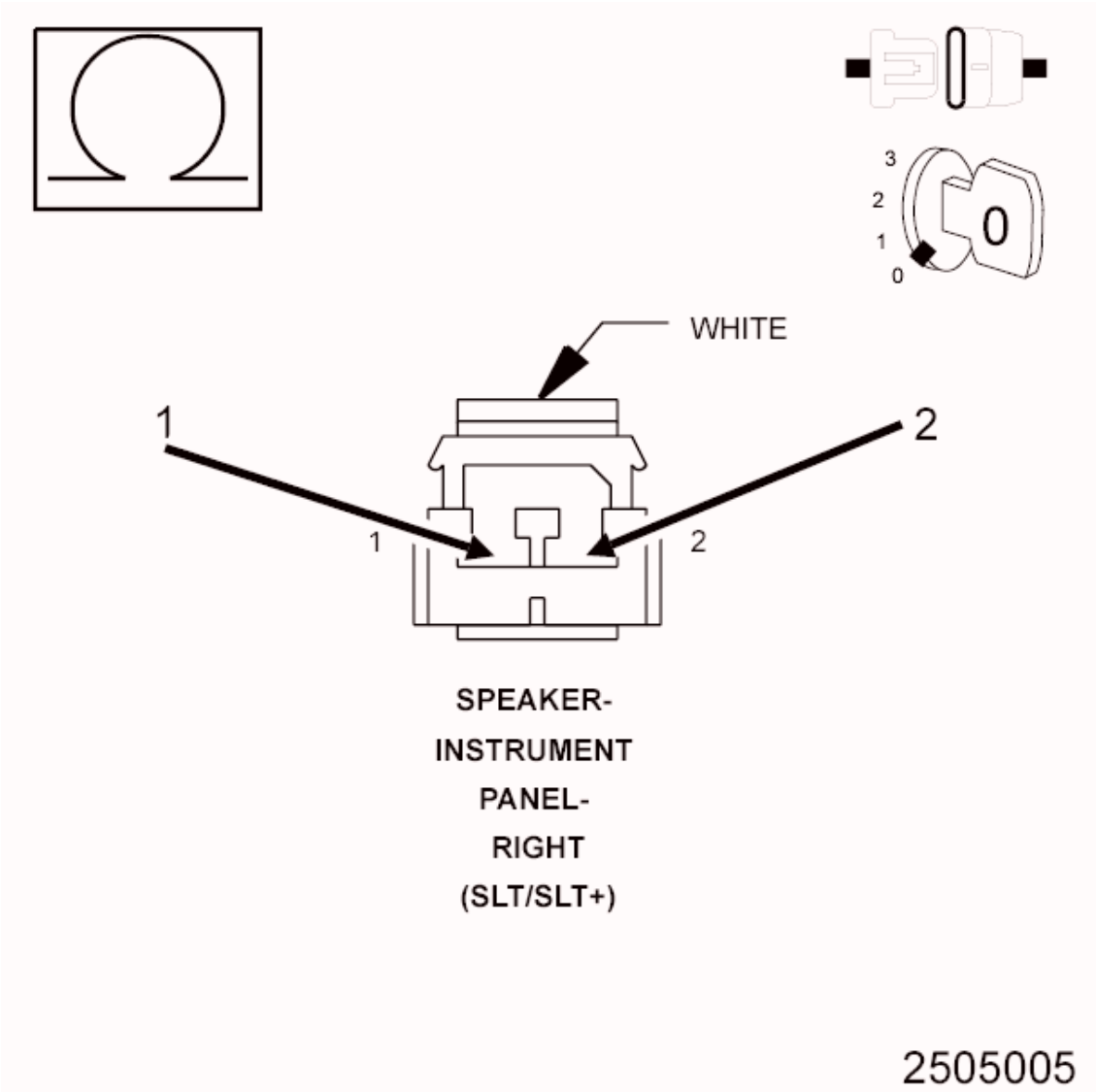

Fig. 27: Checking The Operation Of The Amplified Right I/P Speaker
Courtesy of CHRYSLER GROUP, LLC

1. Turn the ignition off.
2. Disconnect the Amplified Right I/P Speaker.
3. Measure the resistance of the speaker between the two terminals.

NOTE: **The graphic shows the connector for reference only. Measure at the speaker terminals.**

Is the resistance of the speaker less than 1 Ohm?

Yes

- Replace the Amplified Right I/P Speaker in accordance with the Service Information.
- Perform the BODY VERIFICATION TEST. Refer to **BODY VERIFICATION TEST** .

No

- Go To 3.

3. **CHECK THE (X208) AMPLIFIED RIGHT I/P SPEAKER (+) CIRCUIT, AND THE (X298) AMPLIFIED RIGHT I/P SPEAKER (-) CIRCUITS FOR A SHORT TOGETHER**

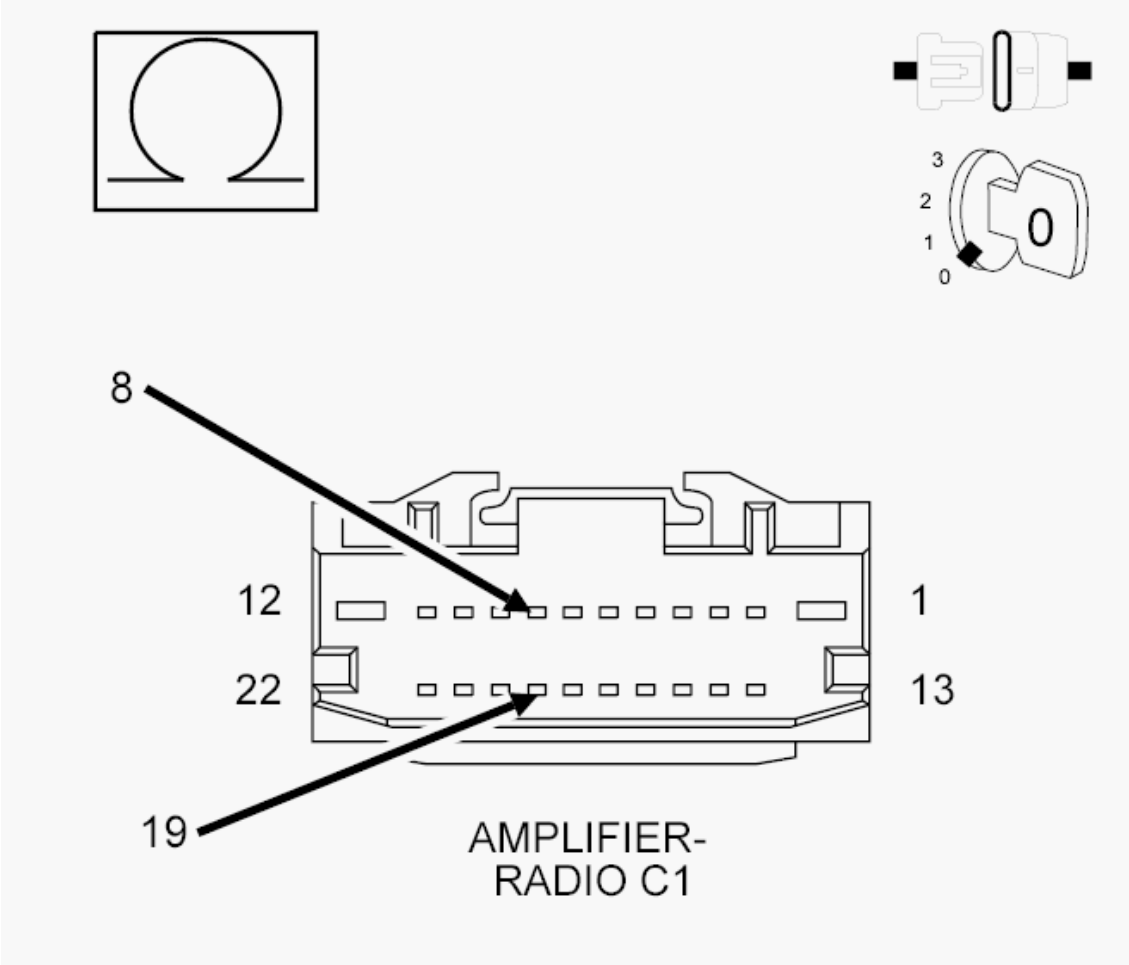

Fig. 28: Checking Amplified Right I/P Speaker (+) Circuit, And The Amplified Right I/P Speaker (-) Circuits For A Short Together
Courtesy of CHRYSLER GROUP, LLC

1. Disconnect the Amplifier C1 harness connector.
2. Measure the resistance between the (X208) Amplified Right I/P Speaker (+) circuit, and the (X298) Amplified Right I/P Speaker (-) circuit.

Is the resistance below 10K Ohms?

Yes

- Repair the (X208) Amplified Right I/P Speaker (+) circuit, and the (X298) Amplified Right I/P Speaker (-) circuit for a short together.
- Perform the BODY VERIFICATION TEST. Refer to **BODY VERIFICATION TEST** .

No

- Replace the Amplifier in accordance with the Service Information.
- Perform the BODY VERIFICATION TEST. Refer to **BODY VERIFICATION TEST** .

B146A-CHANNEL 3 AUDIO SPEAKER OUTPUT CIRCUIT PERFORMANCE

For a complete wiring diagram, **refer to appropriate SYSTEM WIRING DIAGRAMS article** .

WHEN MONITORED:

With the ignition on.

SET CONDITION:

This Diagnostic Trouble Code (DTC) sets if a Direct Current (DC) offset occurs on the output channel, the amplifier shall set a DTC after a maturity rate of four to six seconds.

POSSIBLE CAUSES

Possible Causes
AMPLIFIER

DIAGNOSTIC TEST

1. **CHECK FOR AN INTERMITTENT CONDITION**
    1. Turn the ignition on and open one of the front doors.

        NOTE: A front door must remain open whenever checking or erasing Amplifier DTC's.

    2. With the scan tool, record and erase the Amplifier DTC's.
    3. Cycle the ignition switch from on to off, wait five seconds and then back to on.
    4. Turn the Radio on and set the volume to 20.
    5. Adjust the speakers to the front and center.
    6. With the scan tool, read the active Amplifier DTC's.

Does the scan tool display active: B146A-CHANNEL 3 AUDIO SPEAKER OUTPUT CIRCUIT PERFORMANCE?

Yes

- Replace the Amplifier in accordance with the Service Information.
- Perform the BODY VERIFICATION TEST. Refer to **BODY VERIFICATION TEST** .

No

- Test complete, the condition or conditions that originally set this DTC are not present at this time. Using the wiring diagrams as a guide, check all related splices and connectors for signs of water intrusion, corrosion, pushed out or bent terminals and correct pin tension.
- Perform the BODY VERIFICATION TEST. Refer to **BODY VERIFICATION TEST** .

B146B-CHANNEL 3 AUDIO SPEAKER OUTPUT CIRCUIT LOW

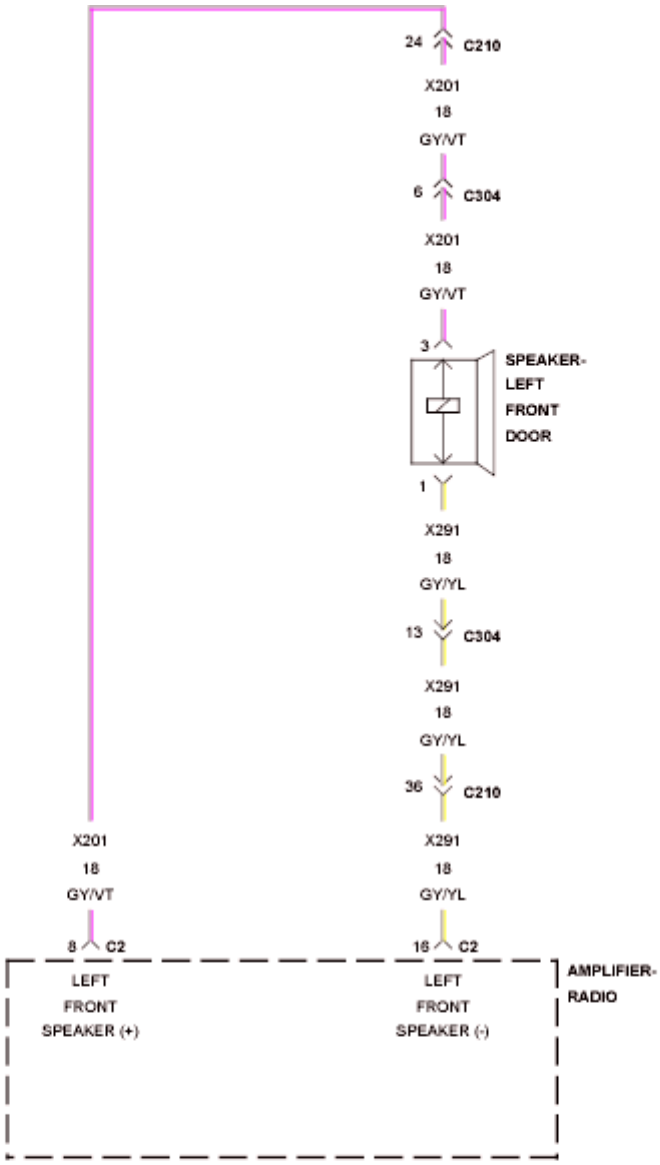

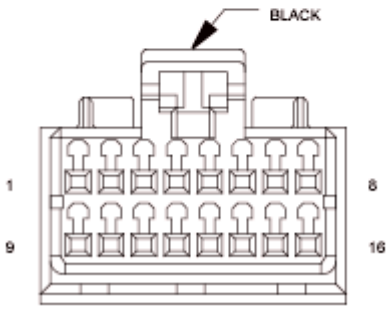

AMPLIFIER-

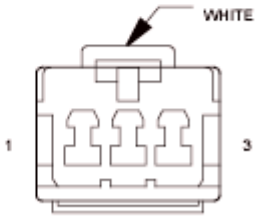

SPEAKER-
LEFT

Fig. 29: Channel 3 Audio Speaker Output Wiring Diagram
Courtesy of CHRYSLER GROUP, LLC

For a complete wiring diagram, **refer to appropriate SYSTEM WIRING DIAGRAMS article** .

WHEN MONITORED:

With the ignition on.

SET CONDITION:

The Amplifier detects a shorted to ground condition on the speaker output circuit.

POSSIBLE CAUSES

Possible Causes
(X201) LEFT FRONT DOOR SPEAKER (+) CIRCUIT SHORTED TO GROUND
(X291) LEFT FRONT DOOR SPEAKER (-) CIRCUIT SHORTED TO GROUND
LEFT FRONT DOOR SPEAKER
AMPLIFIER

DIAGNOSTIC TEST

1. **CHECK FOR AN INTERMITTENT CONDITION**
    1. Turn the ignition on and open one of the front doors.

        NOTE: A front door must remain open whenever checking or erasing Amplifier DTC's.

    2. Using the scan tool, record and erase the Amplifier DTC's.
    3. Cycle the ignition switch from on to off, wait five seconds and then back to on.
    4. Turn the Radio on and set the volume to 20.
    5. Adjust the speakers to the front and center.
    6. Using the scan tool, read the active Amplifier DTC's.

        Does the scan tool display active: B146B-CHANNEL 3 AUDIO SPEAKER OUTPUT CIRCUIT LOW?

        Yes

        - Go To 2.

        No

        - Test complete, the condition or conditions that originally set this DTC are not present at this

time. Using the wiring diagrams as a guide, check all related splices and connectors for signs of water intrusion, corrosion, pushed out or bent terminals and correct pin tension.

- Perform the BODY VERIFICATION TEST. Refer to **BODY VERIFICATION TEST** .

2. **CHECK THE LEFT FRONT DOOR SPEAKER**

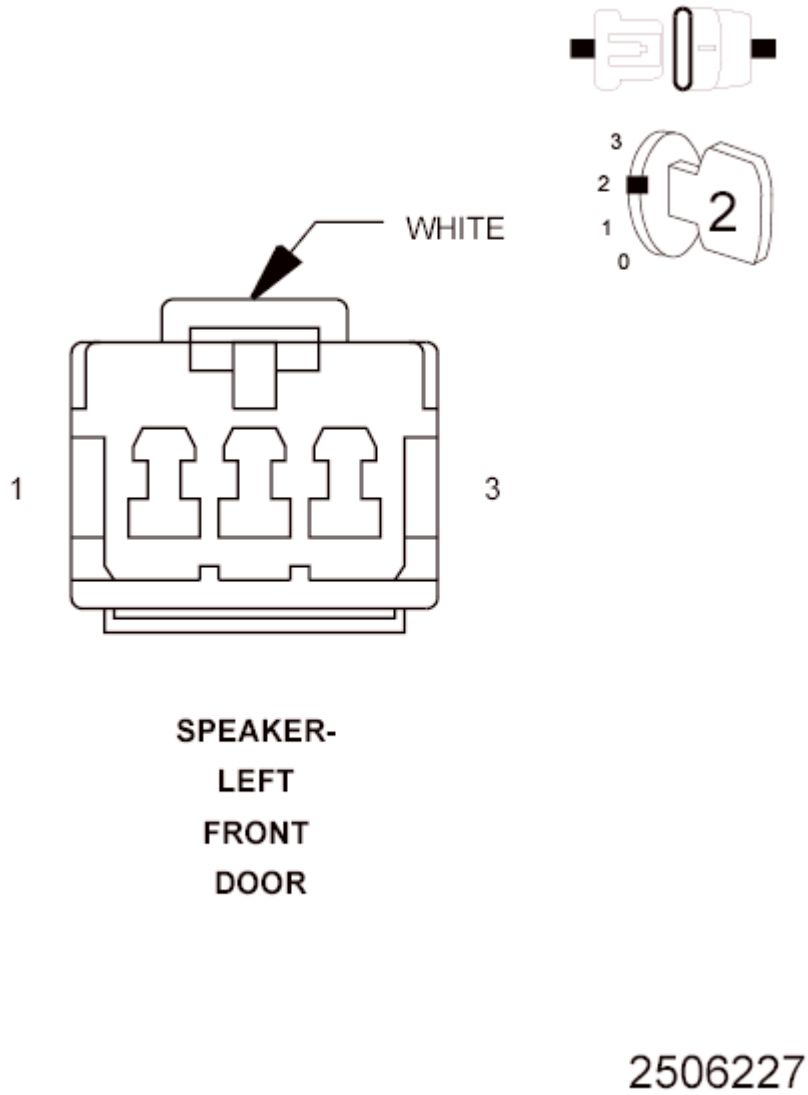

Fig. 30: Left Front Door Speaker Connector End View
Courtesy of CHRYSLER GROUP, LLC

1. Make sure one of the front doors is still open.
2. Using the scan tool, erase the DTC's.
3. Turn the ignition off.
4. Disconnect the Left Front Door Speaker harness connector.
5. Turn the ignition on.
6. Turn the radio on and set the volume to 25.

7. Using the scan tool, read the active Amplifier DTC's.

   Does the scan tool display active: B146B-CHANNEL 3 AUDIO SPEAKER OUTPUT CIRCUIT LOW?

   Yes

   - Go To 3.

   No

   - Replace the Left Front Door Speaker.
   - Perform the BODY VERIFICATION TEST. Refer to **BODY VERIFICATION TEST** .

3. **CHECK THE (X201) LEFT FRONT DOOR SPEAKER (+) CIRCUIT FOR A SHORT TO GROUND**

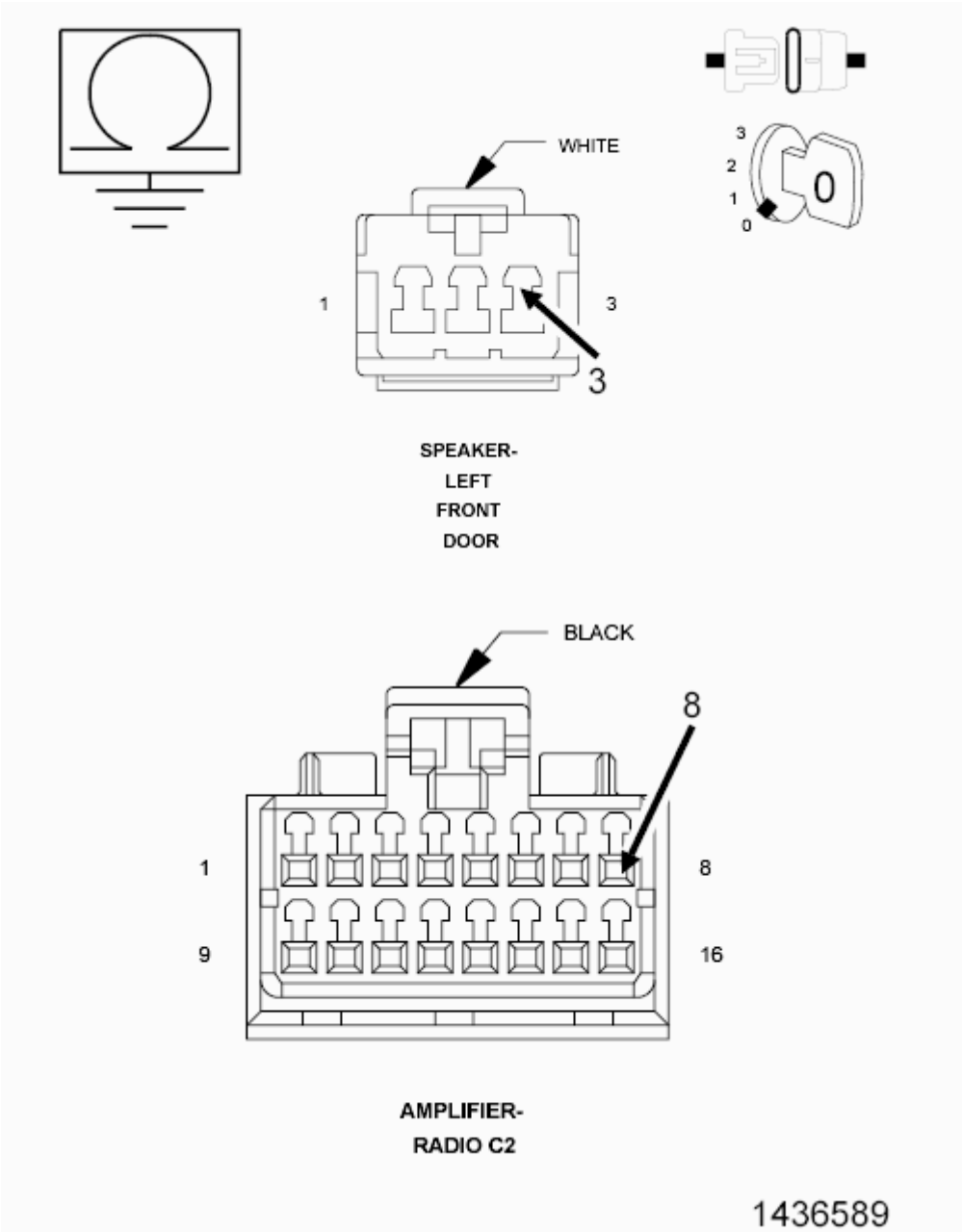

Fig. 31: Checking Left Front Door Speaker (+) Circuit For A Short To Ground
Courtesy of CHRYSLER GROUP, LLC

1. Turn the ignition off.
2. Disconnect the Amplifier C2 harness connector.
3. Measure the resistance between ground and the (X201) Left Front Door Speaker (+) circuit.

   Is the resistance below 10K Ohms?

   Yes

- Repair the (X201) Left Front Door Speaker (+) circuit for a short to ground.
- Perform the BODY VERIFICATION TEST. Refer to **BODY VERIFICATION TEST** .

No

- Go To 4.

4. **CHECK THE (X291) LEFT FRONT DOOR SPEAKER (-) CIRCUIT FOR A SHORT TO GROUND**

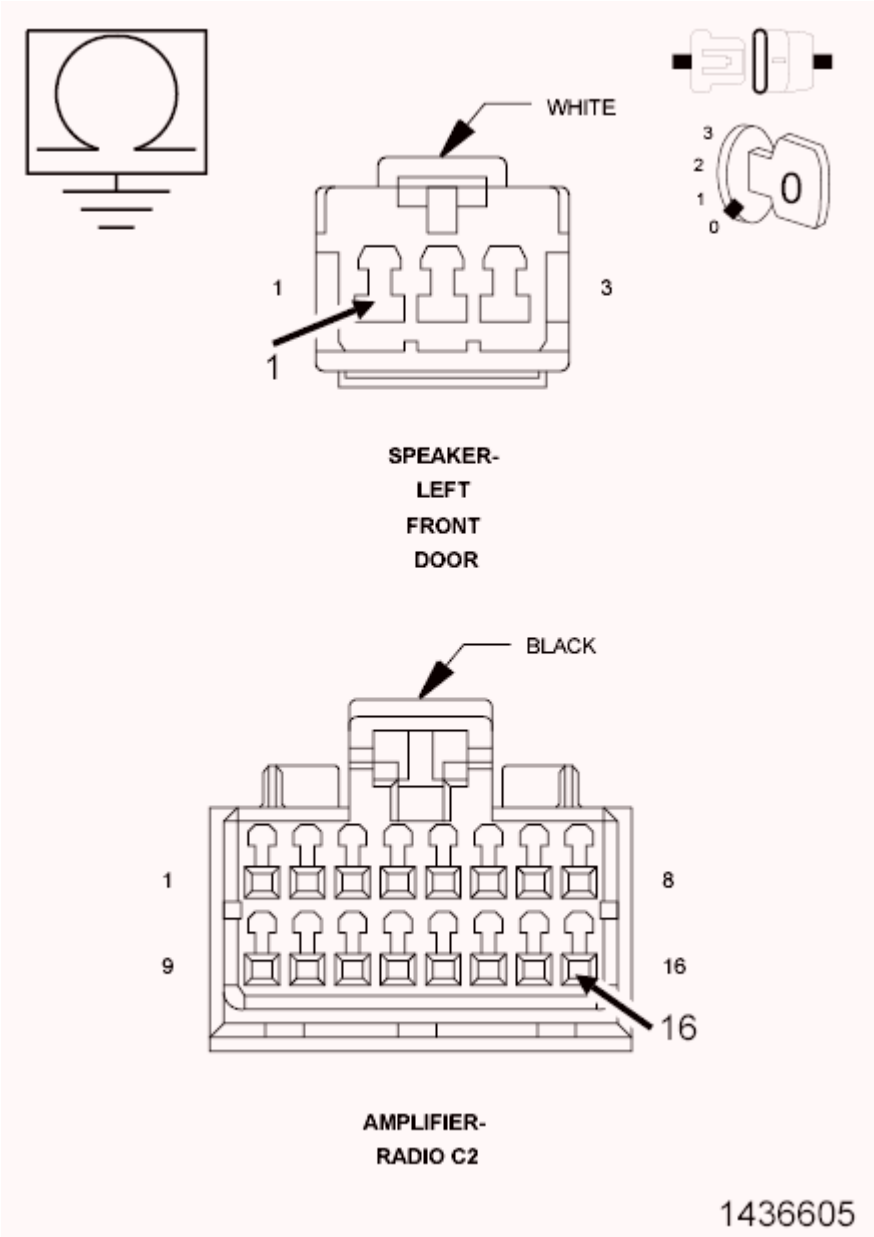

Fig. 32: Checking Left Front Door Speaker (-) Circuit For A Short To Ground
Courtesy of CHRYSLER GROUP, LLC

1. Measure the resistance between ground and the (X291) Left Front Door Speaker (-) circuit.

   Is the resistance below 10K Ohms?

   Yes

   - Repair the (X291) Left Front Door Speaker (-) for a short to ground.
   - Perform the BODY VERIFICATION TEST. Refer to **BODY VERIFICATION TEST** .

   No

   - Replace the Amplifier in accordance with the Service Information.
   - Perform the BODY VERIFICATION TEST. Refer to **BODY VERIFICATION TEST** .

B146C-CHANNEL 3 AUDIO SPEAKER OUTPUT CIRCUIT HIGH

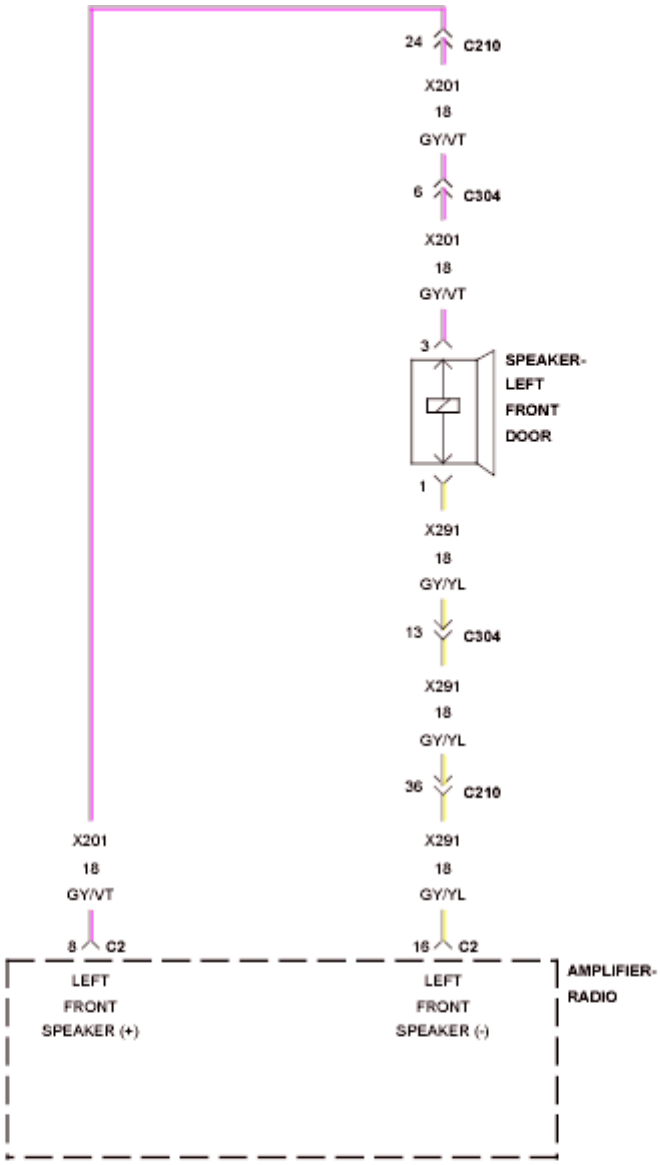

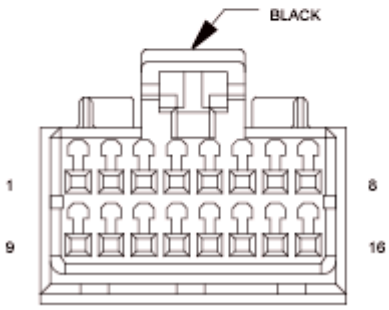

AMPLIFIER-

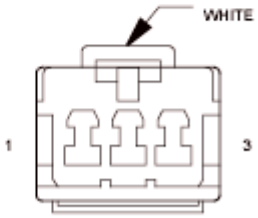

SPEAKER-
LEFT

Fig. 33: Channel 3 Audio Speaker Output Wiring Diagram
Courtesy of CHRYSLER GROUP, LLC

For a complete wiring diagram, **refer to appropriate SYSTEM WIRING DIAGRAMS article** .

WHEN MONITORED:

With the ignition on.

SET CONDITION:

The Amplifier detects a short to battery condition on the output circuit.

POSSIBLE CAUSES

Possible Causes
(X201) LEFT FRONT DOOR SPEAKER (+) CIRCUIT SHORTED TO VOLTAGE
(X291) LEFT FRONT DOOR SPEAKER (-) CIRCUIT SHORTED TO VOLTAGE
AMPLIFIER

DIAGNOSTIC TEST

1. **CHECK FOR AN INTERMITTENT CONDITION**
    1. Turn the ignition on and open one of the front doors.

        NOTE: A front door must remain open whenever checking or erasing Amplifier DTC's.

    2. With the scan tool, record and erase the Amplifier DTC's.
    3. Cycle the ignition switch from on to off, wait five seconds and then back to on.
    4. Turn the Radio on and set the volume to 20.
    5. Adjust the speakers to the front and center.
    6. With the scan tool, read the active Amplifier DTC's.

        Does the scan tool display active: B146C-CHANNEL 3 AUDIO SPEAKER OUTPUT CIRCUIT HIGH?

        Yes

        - Go To 2.

        No

        - Test complete, the condition or conditions that originally set this DTC are not present at this time. Using the wiring diagrams as a guide, check all related splices and connectors for signs

of water intrusion, corrosion, pushed out or bent terminals and correct pin tension.

- Perform the BODY VERIFICATION TEST. Refer to **BODY VERIFICATION TEST** .

2. **CHECK FOR VOLTAGE ON THE (X201) LEFT FRONT DOOR SPEAKER (+) CIRCUIT**

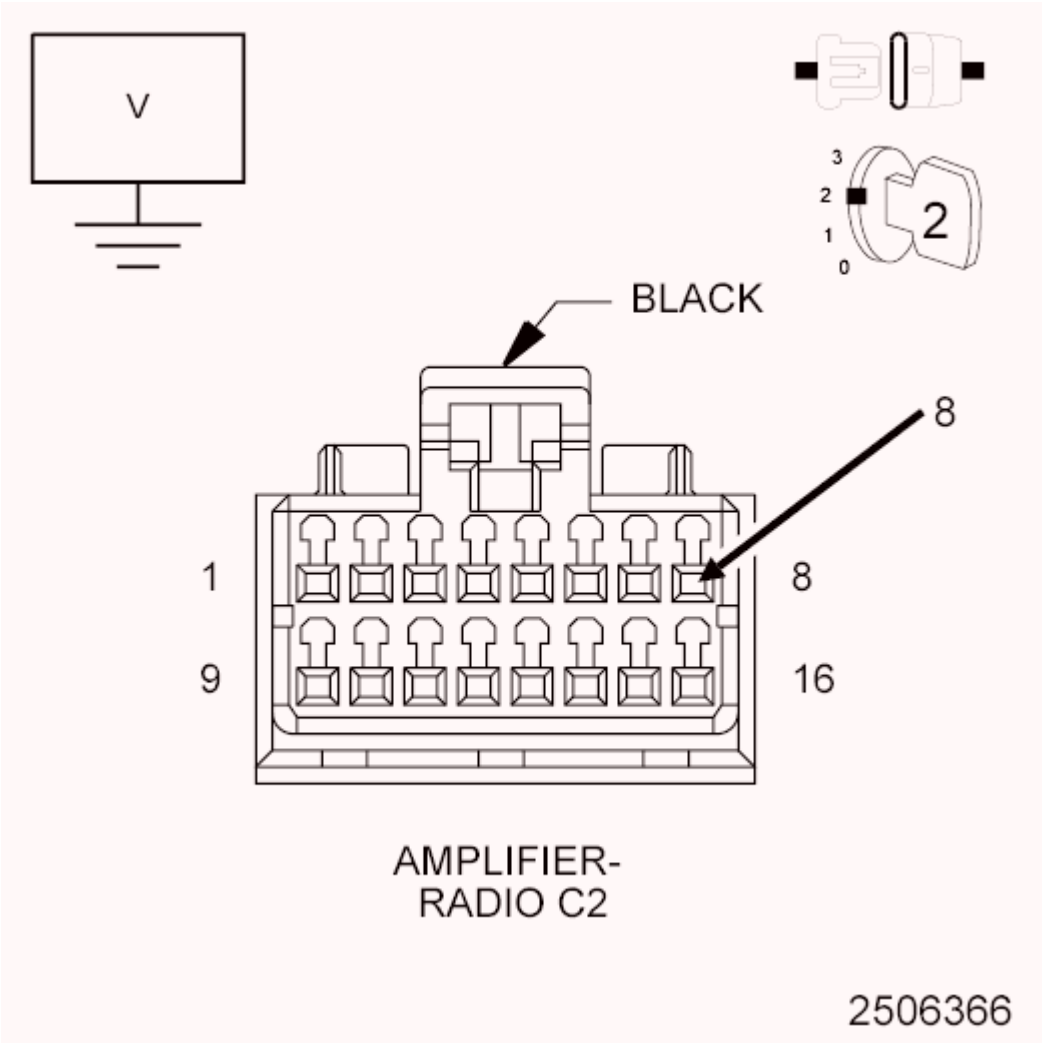

Fig. 34: Measuring Voltage On Left Front Door Speaker (+) Circuit
Courtesy of CHRYSLER GROUP, LLC

1. Turn the ignition off.
2. Disconnect the Amplifier C2 harness connector.
3. Disconnect the Left Front Door Speaker harness connector.
4. Turn the ignition on.
5. Measure for voltage between the (X201) Left Front Door Speaker (+) circuit and ground.

   Is there any voltage present?

   Yes

- Repair the (X201) Left Front Door Speaker (+) circuit for a short to voltage.
- Perform the BODY VERIFICATION TEST. Refer to **BODY VERIFICATION TEST** .

No

- Go To 3.

3. **CHECK FOR VOLTAGE ON THE (X291) LEFT FRONT DOOR SPEAKER (-) CIRCUIT**

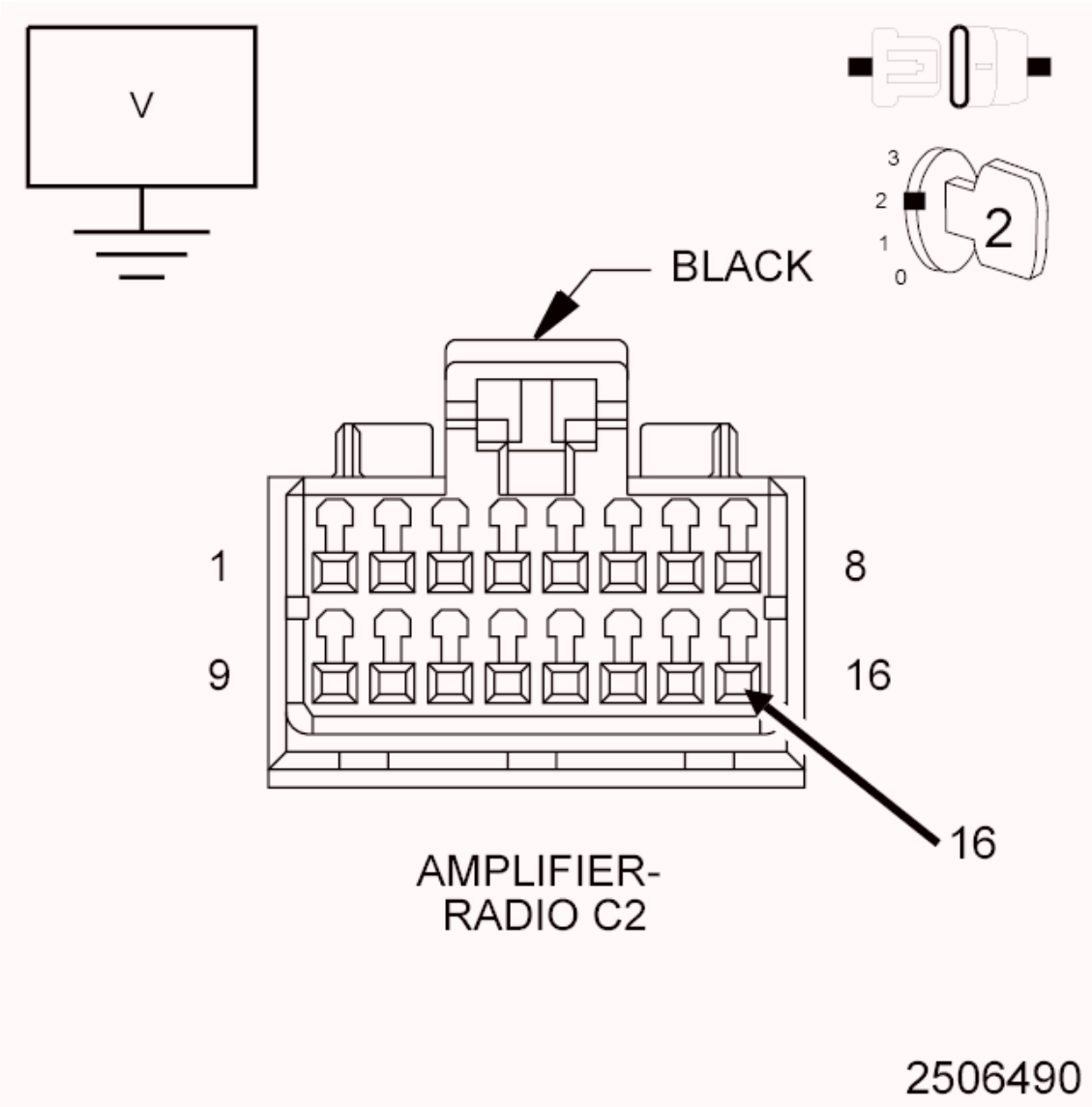

Fig. 35: Measuring Voltage On Left Front Door Speaker (-) Circuit
Courtesy of CHRYSLER GROUP, LLC

1. Measure for voltage between the (X291) Left Front Door Speaker (-) circuit and ground.

   Is there any voltage present?

Yes

- Repair the (X291) Left Front Door Speaker (-) circuit for a short to voltage.
- Perform the BODY VERIFICATION TEST. Refer to **BODY VERIFICATION TEST** .

No

- Replace the Amplifier in accordance with the Service Information.
- Perform the BODY VERIFICATION TEST. Refer to **BODY VERIFICATION TEST** .

B146D-CHANNEL 3 AUDIO SPEAKER OUTPUT CIRCUIT OPEN

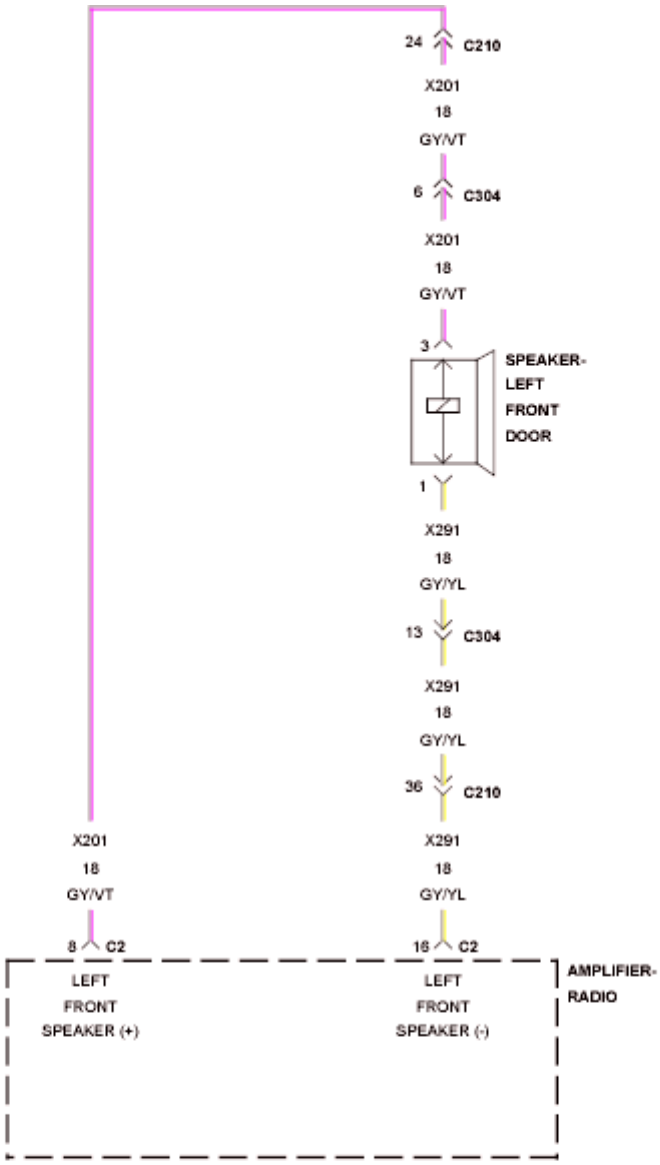

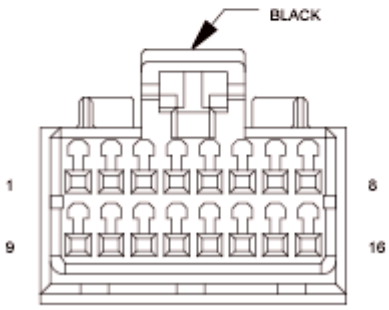

AMPLIFIER-

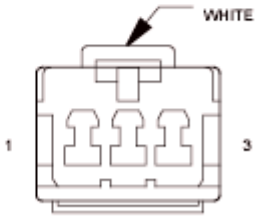

SPEAKER-
LEFT

Fig. 36: Channel 3 Audio Speaker Output Wiring Diagram
Courtesy of CHRYSLER GROUP, LLC

For a complete wiring diagram, **refer to appropriate SYSTEM WIRING DIAGRAMS article** .

WHEN MONITORED:

Amplifier Bus wake-up. Amplifier reset with scan tool.

SET CONDITION:

The Amplifier detects an open condition on the speaker output circuit.

POSSIBLE CAUSES

Possible Causes
(X201) LEFT FRONT DOOR SPEAKER (+) CIRCUIT OPEN
(X291) LEFT FRONT DOOR SPEAKER (-) CIRCUIT OPEN
LEFT FRONT DOOR SPEAKER
AMPLIFIER

DIAGNOSTIC TEST

1. **CHECK FOR AN INTERMITTENT CONDITION**
    1. Turn the ignition on and open one of the front doors.

        NOTE: A front door must remain open whenever checking or erasing Amplifier DTC's.

    2. With the scan tool, record and erase the Amplifier DTC's.
    3. Cycle the ignition switch from on to off, wait five seconds and then back to on.
    4. Turn the Radio on and set the volume to 20.
    5. Adjust the speakers to the front and center.
    6. With the scan tool, read the active Amplifier DTC's.

        Does the scan tool display active: B146D-CHANNEL 3 AUDIO SPEAKER OUTPUT CIRCUIT OPEN?

        Yes

        - Go To 2.

        No

        - Test complete, the condition or conditions that originally set this DTC are not present at this

time. Using the wiring diagrams as a guide, check all related splices and connectors for signs of water intrusion, corrosion, pushed out or bent terminals and correct pin tension.

- Perform the BODY VERIFICATION TEST. Refer to **BODY VERIFICATION TEST** .

2. **CHECK THE OPERATION OF THE LEFT FRONT DOOR SPEAKER**

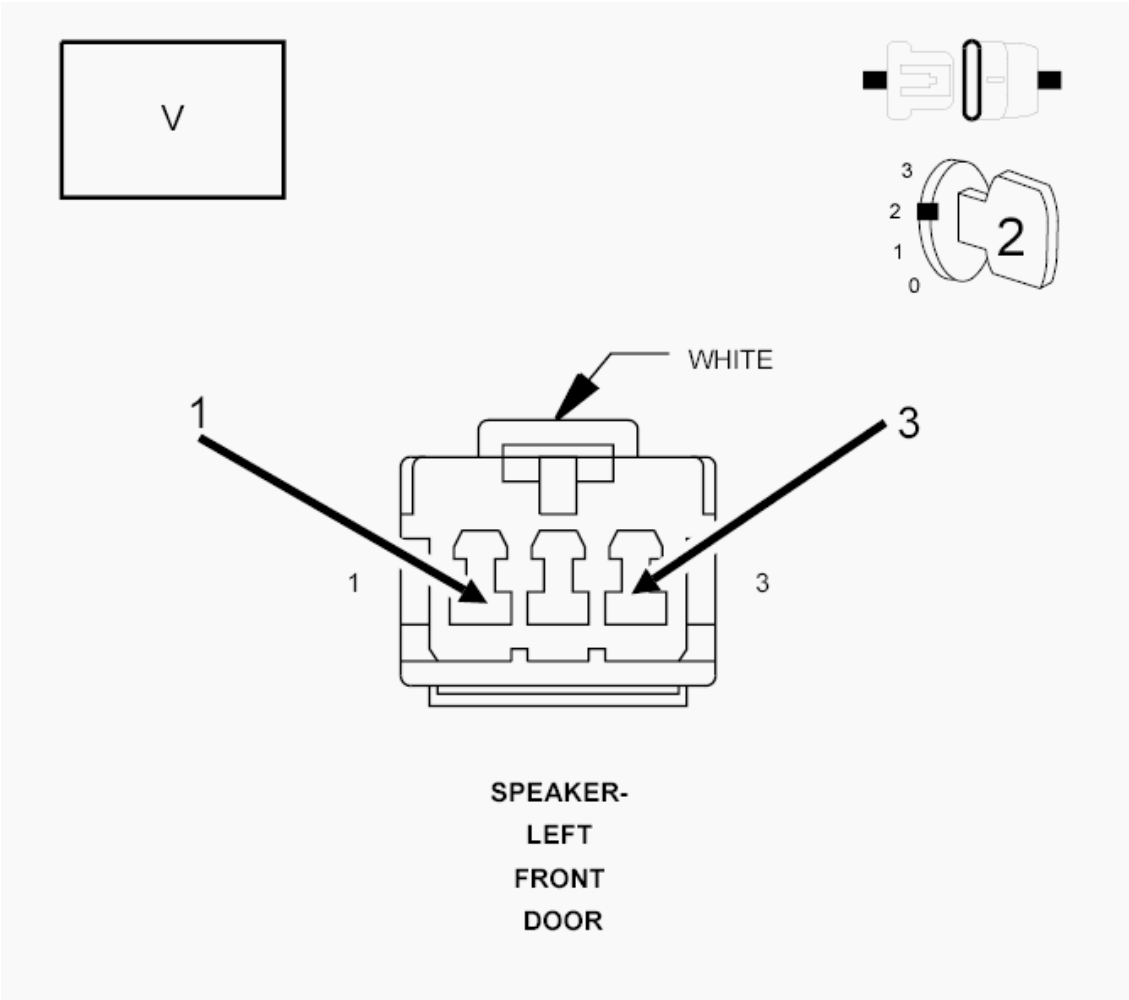

Fig. 37: Checking The Operation Of The Left Front Door Speaker
Courtesy of CHRYSLER GROUP, LLC

1. Turn the ignition off.
2. Disconnect the Left Front Door Speaker harness connector.
3. Turn the ignition on.
4. Turn the radio on and turn the volume to 25.
5. Adjust the speakers to the front and center.
6. With a voltmeter set to read in A/C voltage, measure the voltage of the Left Front Door Speaker circuits in the Left Front Door Speaker harness connector.

   Is the voltage present greater than 1 volt?

Yes

- Replace the Left Front Door Speaker in accordance with the Service Information.
- Perform the BODY VERIFICATION TEST. Refer to **BODY VERIFICATION TEST** .

No

- Go To 3.

3. **CHECK THE (X201) LEFT FRONT DOOR SPEAKER (+) CIRCUIT FOR AN OPEN**

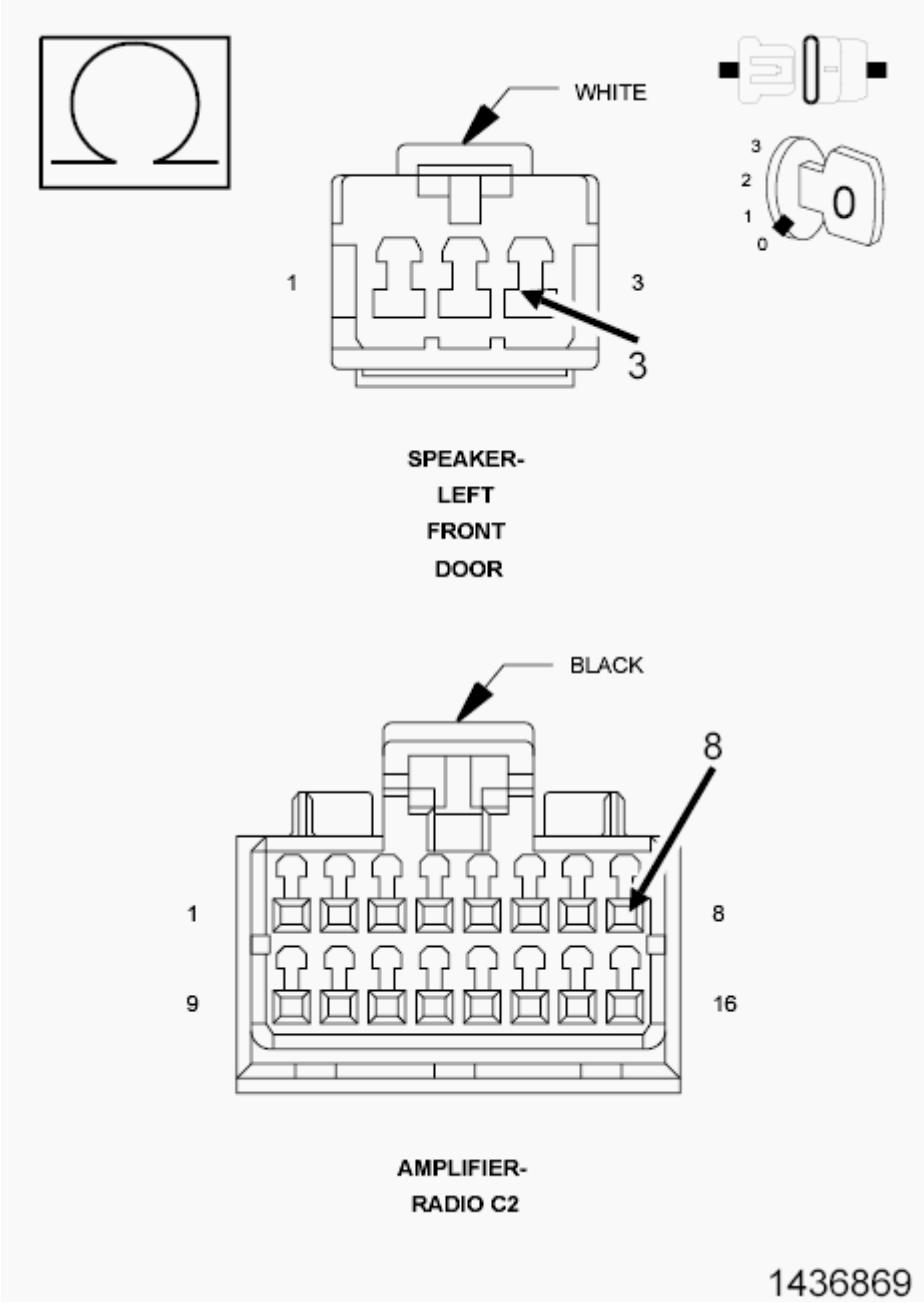

Fig. 38: Checking Left Front Door Speaker (+) Circuit For An Open

Courtesy of CHRYSLER GROUP, LLC

1. Turn the ignition off.
2. Disconnect the Amplifier C2 harness connector.
3. Measure the resistance of the (X201) Left Front Door Speaker (+) circuit between the Amplifier C2 harness connector and the Left Rear Speaker harness connector.

   Is the resistance below 2.0 Ohms?

   Yes

   - Go To 4.

   No

   - Repair the (X201) Left Front Door Speaker (+) circuit for an open.
   - Perform the BODY VERIFICATION TEST. Refer to **BODY VERIFICATION TEST** .

4. **CHECK THE (X291) LEFT FRONT DOOR SPEAKER (-) CIRCUIT FOR AN OPEN**

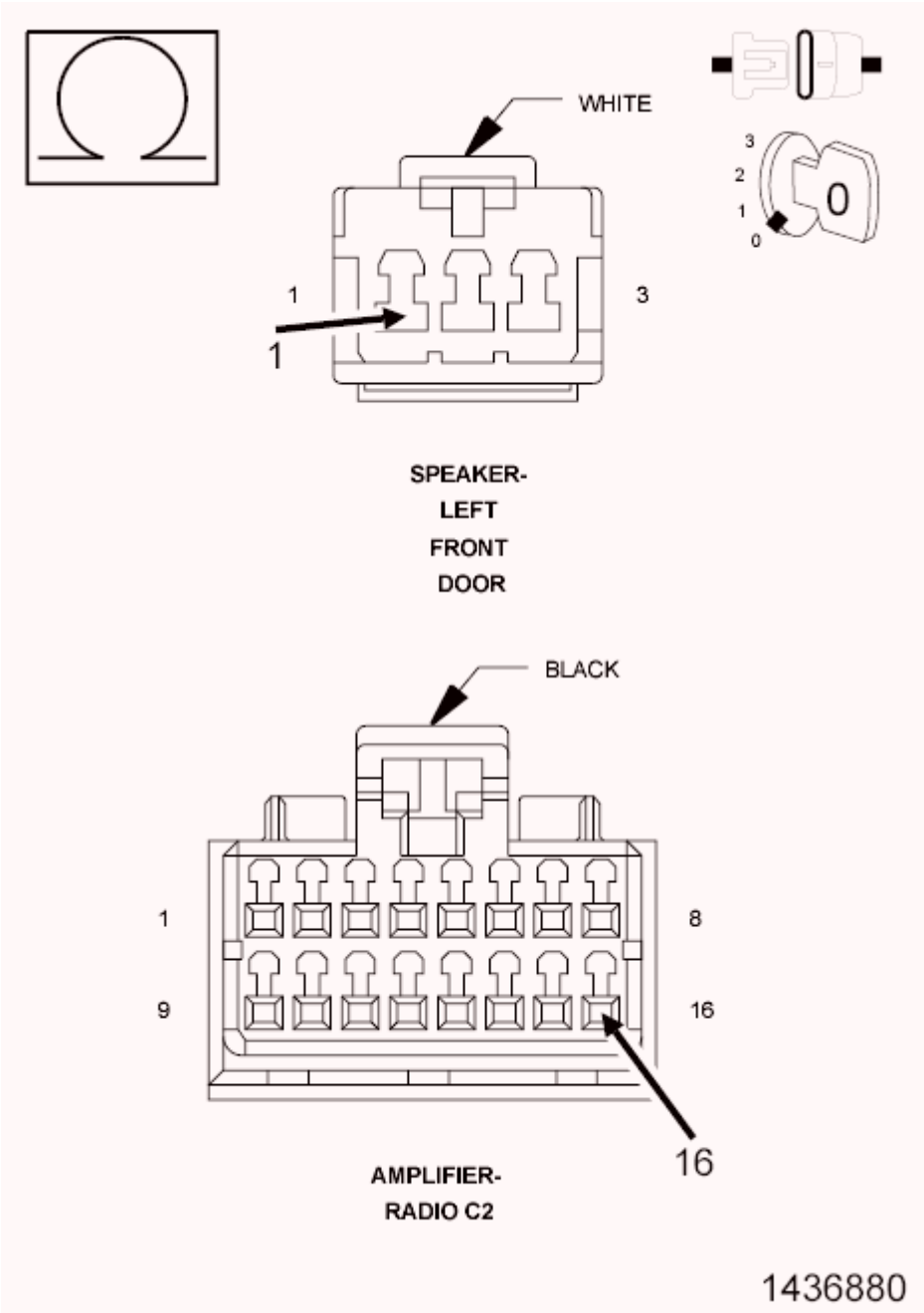

Fig. 39: Checking Left Front Door Speaker (-) Circuit For An Open
Courtesy of CHRYSLER GROUP, LLC

1. Measure the resistance of the (X291) Left Front Door Speaker (-) circuit between the Amplifier C2 harness connector and the Left Front Door Speaker harness connector.

   Is the resistance below 2.0 Ohms?

   Yes

   - Replace the Amplifier in accordance with the Service Information.

- Perform the BODY VERIFICATION TEST. Refer to **BODY VERIFICATION TEST** .

No

- Repair the (X291) Left Front Door Speaker (-) circuit for an open.
- Perform the BODY VERIFICATION TEST. Refer to **BODY VERIFICATION TEST** .

B146E-CHANNEL 3 AUDIO SPEAKER OUTPUT CIRCUIT SHORTED TOGETHER

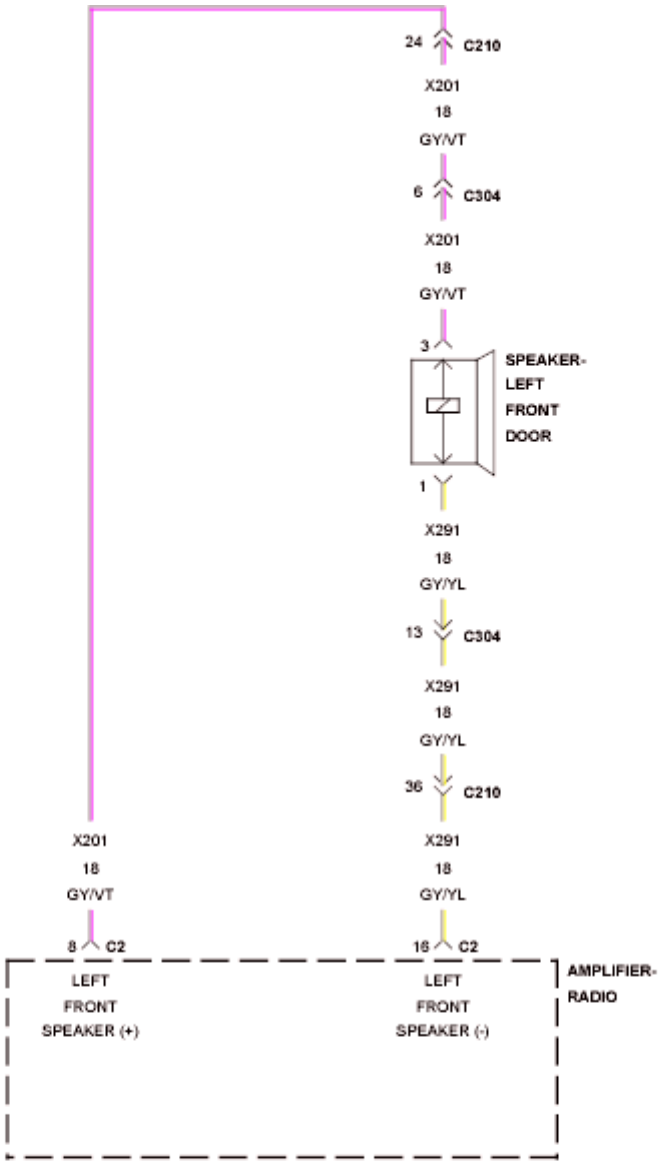

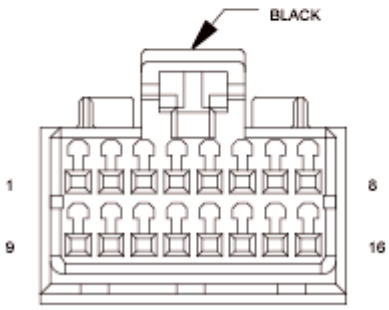

AMPLIFIER-

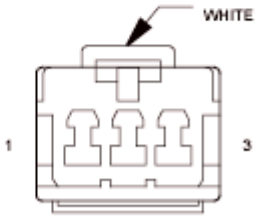

SPEAKER-
LEFT

Fig. 40: Channel 3 Audio Speaker Output Wiring Diagram
Courtesy of CHRYSLER GROUP, LLC

For a complete wiring diagram, **refer to appropriate SYSTEM WIRING DIAGRAMS article** .

WHEN MONITORED:

With the ignition on. Radio volume at 25 or higher.

SET CONDITION:

The Amplifier detects that the output circuits are shorted together.

POSSIBLE CAUSES

Possible Causes
(X201) LEFT FRONT DOOR SPEAKER (+) CIRCUIT SHORTED TO THE (X291) LEFT FRONT DOOR SPEAKER (-) CIRCUIT
LEFT FRONT DOOR SPEAKER
AMPLIFIER

DIAGNOSTIC TEST

1. **CHECK FOR AN INTERMITTENT CONDITION**
    1. Turn the ignition on and open one of the front doors.

        NOTE: A front door must remain open whenever checking or erasing Amplifier DTC's.

    2. With the scan tool, record and erase the Amplifier DTC's.
    3. Cycle the ignition switch from on to off, wait five seconds and then back to on.
    4. Turn the Radio on and set the volume to 20.
    5. Adjust the speakers to the front and center.
    6. With the scan tool, read the active Amplifier DTC's.

        Does the scan tool display active: B146E-CHANNEL 3 AUDIO SPEAKER OUTPUT CIRCUIT SHORTED TOGETHER?

        Yes

        - Go To 2.

        No

        - Test complete, the condition or conditions that originally set this DTC are not present at this

time. Using the wiring diagrams as a guide, check all related splices and connectors for signs of water intrusion, corrosion, pushed out or bent terminals and correct pin tension.

- Perform the BODY VERIFICATION TEST. Refer to **BODY VERIFICATION TEST** .

2. **CHECK THE OPERATION OF THE LEFT FRONT DOOR SPEAKER**

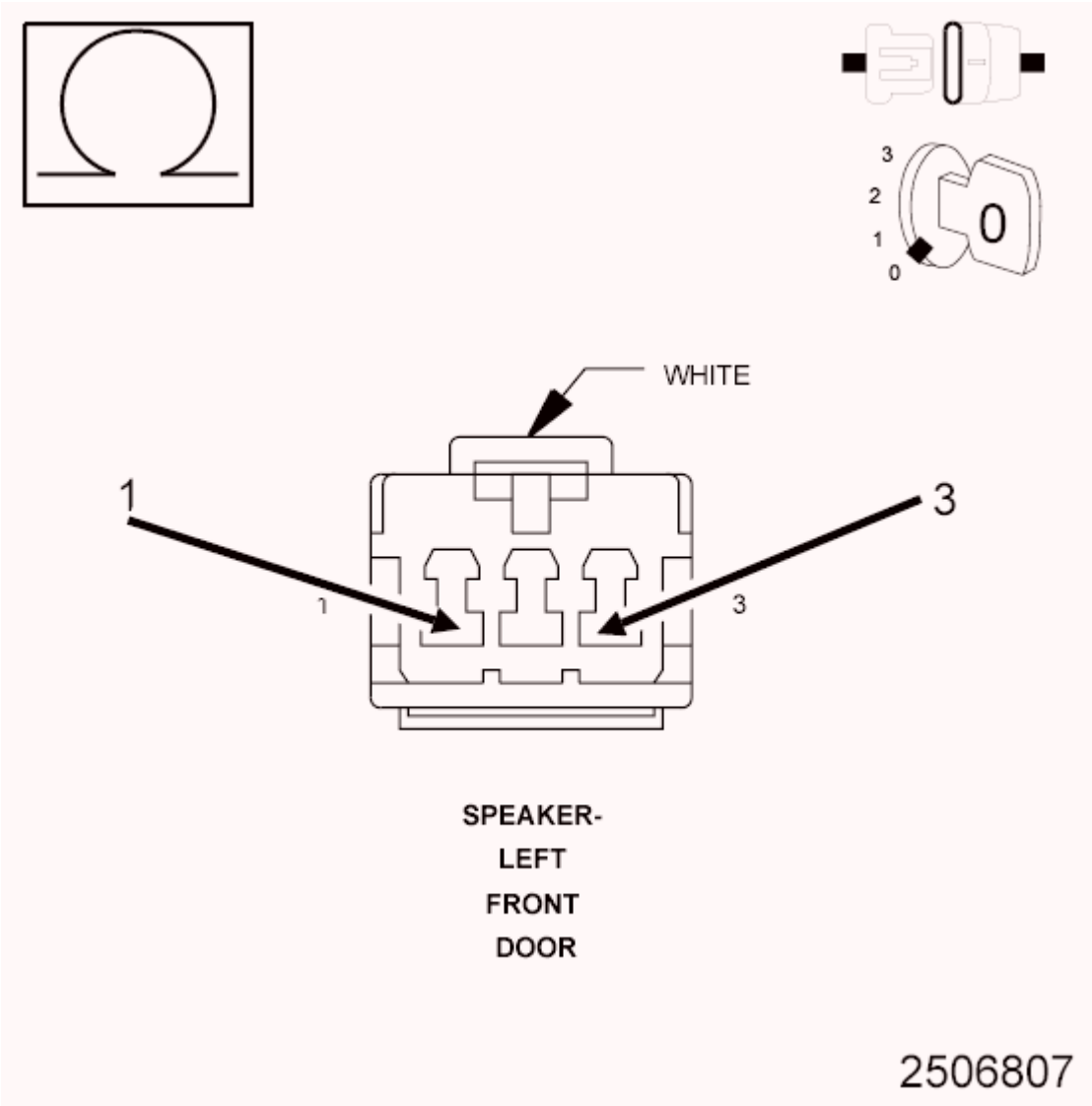

Fig. 41: Checking The Operation Of The Left Front Door Speaker
Courtesy of CHRYSLER GROUP, LLC

1. Turn the ignition off.
2. Disconnect the Left Front Door Speaker harness connector.
3. Measure the resistance of the speaker between the two terminals.

NOTE: **The graphic shows the connector for reference only. Measure at the speaker terminals.**

Is the resistance of the speaker less than 1 Ohm?

Yes

- Replace the Left Front Door Speaker in accordance with the Service Information.
- Perform the BODY VERIFICATION TEST. Refer to **BODY VERIFICATION TEST** .

No

- Go To 3.

3. **CHECK THE (X201) LEFT FRONT DOOR SPEAKER (+) CIRCUIT, AND THE (X291) LEFT FRONT DOOR SPEAKER (-) CIRCUITS FOR A SHORT TOGETHER**

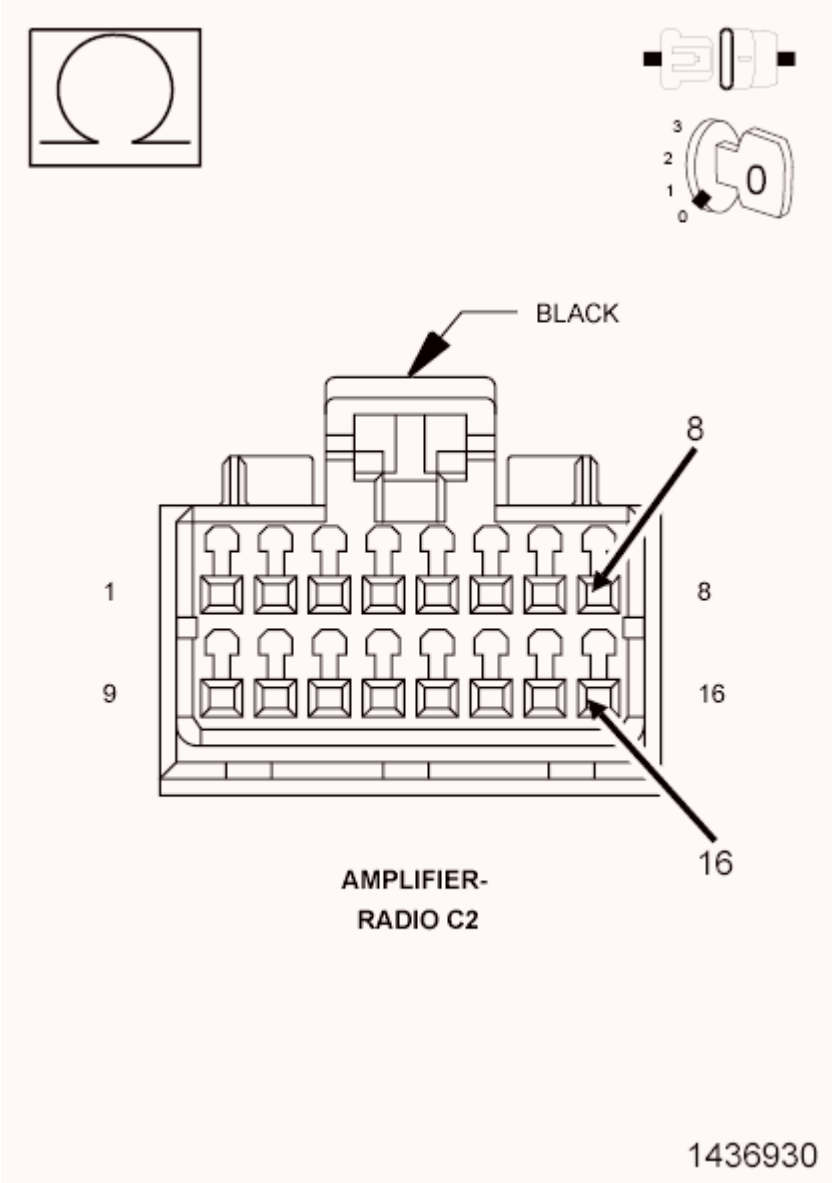

Fig. 42: Checking Left Front Door Speaker (+) Circuit, And The Left Front Door Speaker (-)

Circuits For A Short Together
Courtesy of CHRYSLER GROUP, LLC

1. Disconnect the Amplifier C2 harness connector.
2. Measure the resistance between the (X201) Left Front Door Speaker (+) circuit, and the (X291) Left Front Door Speaker (-) circuit.

   Is the resistance below 10K Ohms?

   Yes

   - Repair the (X201) Left Front Door Speaker (+) circuit, and the (X291) Left Front Door Speaker (-) circuit for a short together.
   - Perform the BODY VERIFICATION TEST. Refer to **BODY VERIFICATION TEST** .

   No

   - Replace the Amplifier in accordance with the Service Information.
   - Perform the BODY VERIFICATION TEST. Refer to **BODY VERIFICATION TEST** .

B146F-CHANNEL 4 AUDIO SPEAKER OUTPUT CIRCUIT PERFORMANCE

For a complete wiring diagram, **refer to appropriate SYSTEM WIRING DIAGRAMS article** .

WHEN MONITORED:

With the ignition on.

SET CONDITION:

This Diagnostic Trouble Code (DTC) sets if a Direct Current (DC) offset occurs on the output channel, the amplifier shall set a DTC after a maturity rate of four to six seconds.

POSSIBLE CAUSES

Possible Causes
AMPLIFIER

DIAGNOSTIC TEST

1. **CHECK FOR AN INTERMITTENT CONDITION**
   1. Turn the ignition on and open one of the front doors.

      NOTE: A front door must remain open whenever checking or erasing Amplifier DTC's.

2. With the scan tool, record and erase the Amplifier DTC's.
3. Cycle the ignition switch from on to off, wait five seconds and then back to on.
4. Turn the Radio on and set the volume to 20.
5. Adjust the speakers to the front and center.
6. With the scan tool, read the active Amplifier DTC's.

   Does the scan tool display active: B146F-CHANNEL 4 AUDIO SPEAKER OUTPUT CIRCUIT PERFORMANCE?

   Yes

   - Replace the Amplifier in accordance with the Service Information.
   - Perform the BODY VERIFICATION TEST. Refer to **BODY VERIFICATION TEST** .

   No

   - Test complete, the condition or conditions that originally set this DTC are not present at this time. Using the wiring diagrams as a guide, check all related splices and connectors for signs of water intrusion, corrosion, pushed out or bent terminals and correct pin tension.
   - Perform the BODY VERIFICATION TEST. Refer to **BODY VERIFICATION TEST** .

B1470-CHANNEL 4 AUDIO SPEAKER OUTPUT CIRCUIT LOW

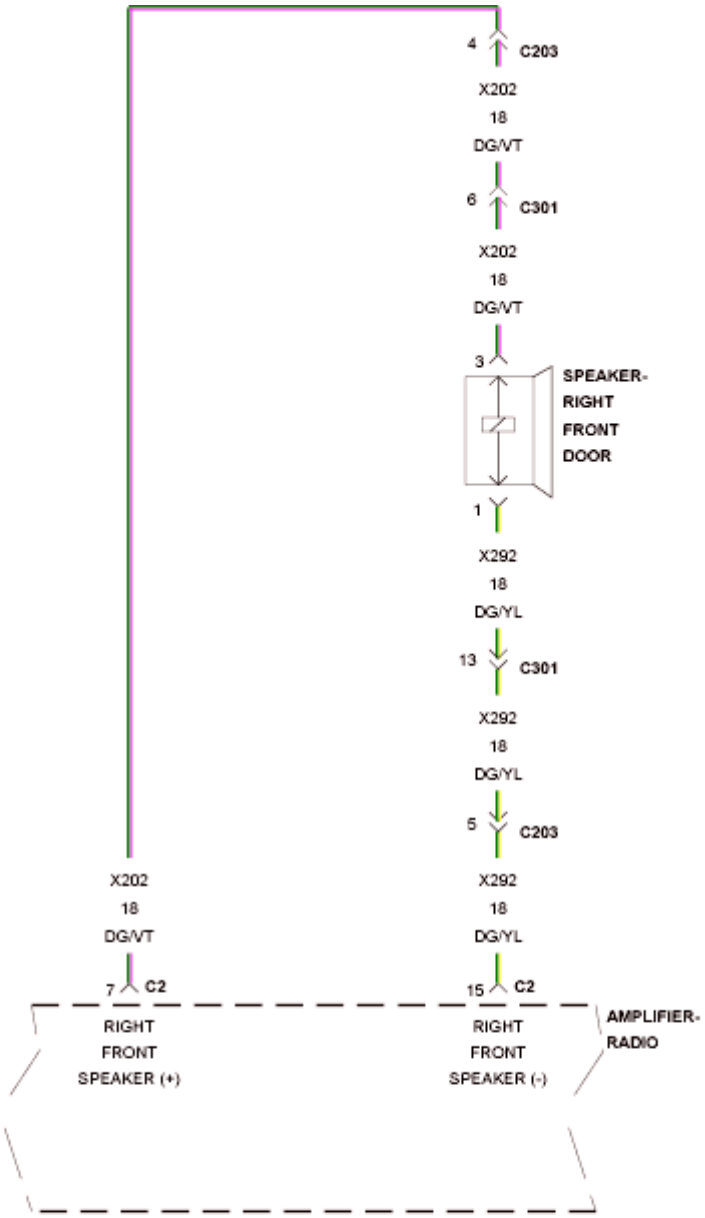
4
C203
X202
18
DG/VT
6
C301
X202
18
DG/VT
3
SPEAKER-
RIGHT
FRONT
DOOR
1
X292
18
DG/YL
13
C301
X292
18
DG/YL
5
C203
X202
18
DG/VT
X292
18
DG/YL
7
C2
15
C2
RIGHT
FRONT
SPEAKER (+)
RIGHT
FRONT
SPEAKER (-)
AMPLIFIER-
RADIO

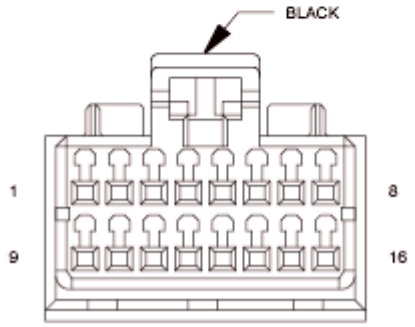
BLACK
1
8
9
16

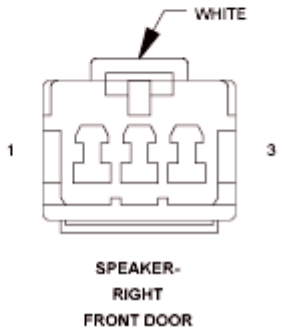
WHITE
1
3
SPEAKER-
RIGHT
FRONT DOOR

Fig. 43: Channel 4 Audio Speaker Output Wiring Diagram
Courtesy of CHRYSLER GROUP, LLC

For a complete wiring diagram, **refer to appropriate SYSTEM WIRING DIAGRAMS article** .

WHEN MONITORED:

With the ignition on.

SET CONDITION:

The Amplifier detects a shorted to ground condition on the speaker output circuit.

POSSIBLE CAUSES

Possible Causes
(X202) RIGHT FRONT DOOR SPEAKER (+) CIRCUIT SHORTED TO GROUND
(X292) RIGHT FRONT DOOR SPEAKER (-) CIRCUIT SHORTED TO GROUND
RIGHT FRONT DOOR SPEAKER
AMPLIFIER

DIAGNOSTIC TEST

1. **CHECK FOR AN INTERMITTENT CONDITION**
    1. Turn the ignition on and open one of the front doors.

        NOTE: A front door must remain open whenever checking or erasing Amplifier DTC's.

    2. With the scan tool, record and erase the Amplifier DTC's.
    3. Cycle the ignition switch from on to off, wait five seconds and then back to on.
    4. Turn the Radio on and set the volume to 20.
    5. Adjust the speakers to the front and center.
    6. With the scan tool, read the active Amplifier DTC's.

        Does the scan tool display active: B1470-CHANNEL 4 AUDIO SPEAKER OUTPUT CIRCUIT LOW?

        Yes

        - Go To 2.

        No

        - Test complete, the condition or conditions that originally set this DTC are not present at this

time. Using the wiring diagrams as a guide, check all related splices and connectors for signs of water intrusion, corrosion, pushed out or bent terminals and correct pin tension.

- Perform BODY VERIFICATION TEST. Refer to **STANDARD PROCEDURE** .

2. **CHECK THE RIGHT FRONT DOOR SPEAKER**

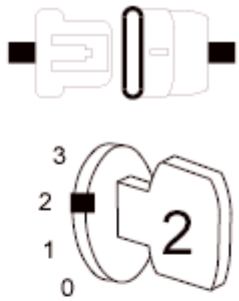

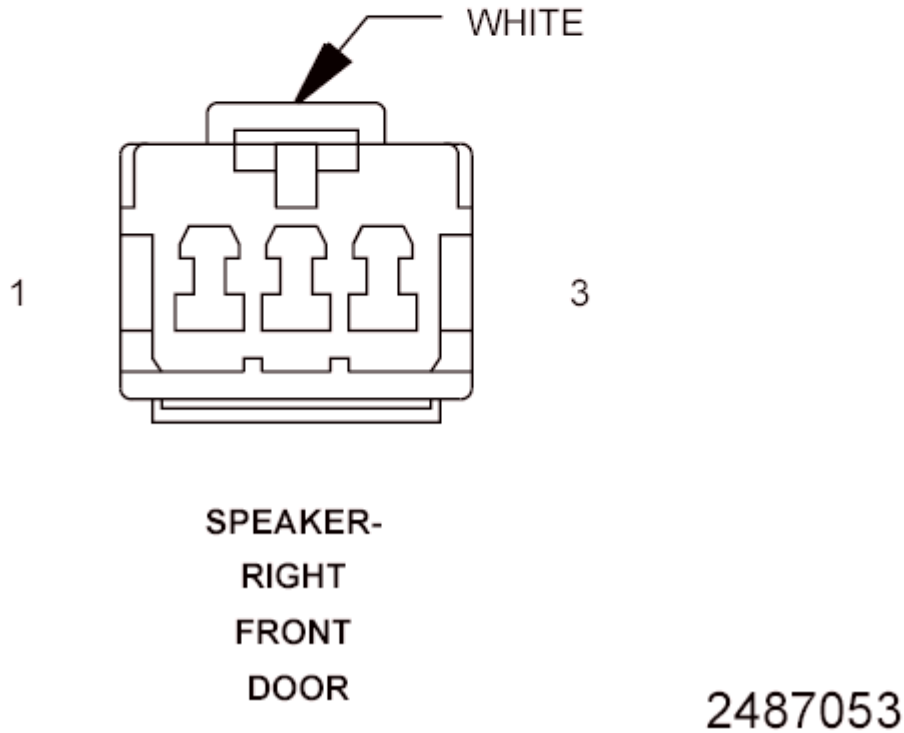

Fig. 44: Right Front Door Speaker Connector End View
Courtesy of CHRYSLER GROUP, LLC

1. Ensure one of the front doors is still open.
2. With the scan tool, erase the DTC's.
3. Turn the ignition off.
4. Disconnect the Right Front Door Speaker harness connector.

5. Turn the ignition on.
6. Turn the radio on and set the volume to 25.
7. With the scan tool, read the active Amplifier DTC's.

   Does the scan tool display active: B1470-CHANNEL 4 AUDIO SPEAKER OUTPUT CIRCUIT LOW?

   Yes

   - Go To 3.

   No

   - Replace the Right Front Door Speaker.
   - Perform the BODY VERIFICATION TEST. Refer to **BODY VERIFICATION TEST** .

3. **CHECK THE (X202) RIGHT FRONT DOOR SPEAKER (+) CIRCUIT FOR A SHORT TO GROUND**

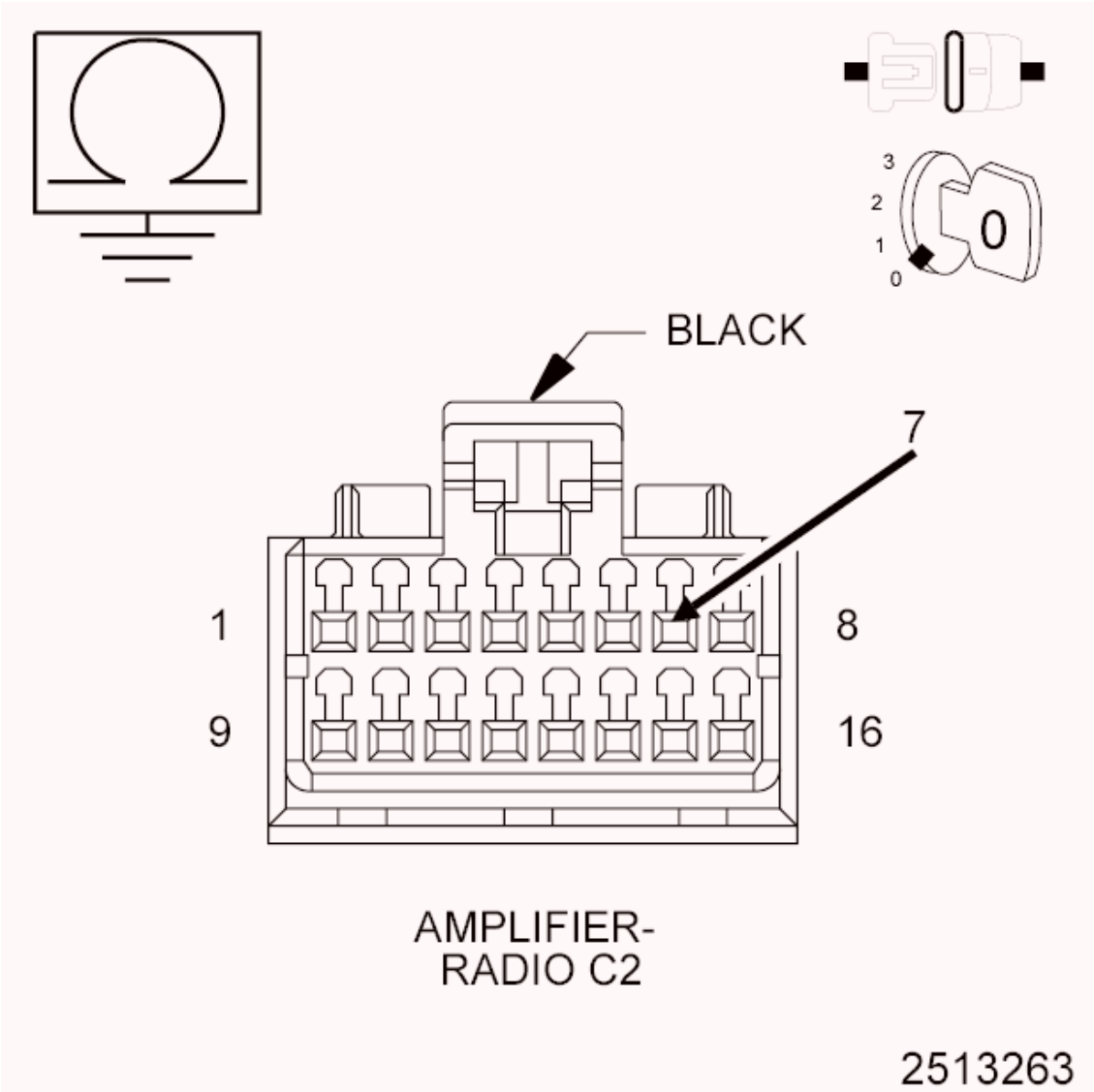

Fig. 45: Checking Right Front Door Speaker (+) Circuit For A Short To Ground
Courtesy of CHRYSLER GROUP, LLC

1. Turn the ignition off.
2. Disconnect the Amplifier C2 harness connector.
3. Measure the resistance between ground and the (X202) Right Front Door Speaker (+) circuit.

   Is the resistance below 10K Ohms?

   Yes

   - Repair the (X202) Right Front Door Speaker (+) circuit for a short to ground.
   - Perform BODY VERIFICATION TEST. Refer to **STANDARD PROCEDURE** .

   No

- Go To 4.

4. **CHECK THE (X292) RIGHT FRONT DOOR SPEAKER (-) CIRCUIT FOR A SHORT TO GROUND**

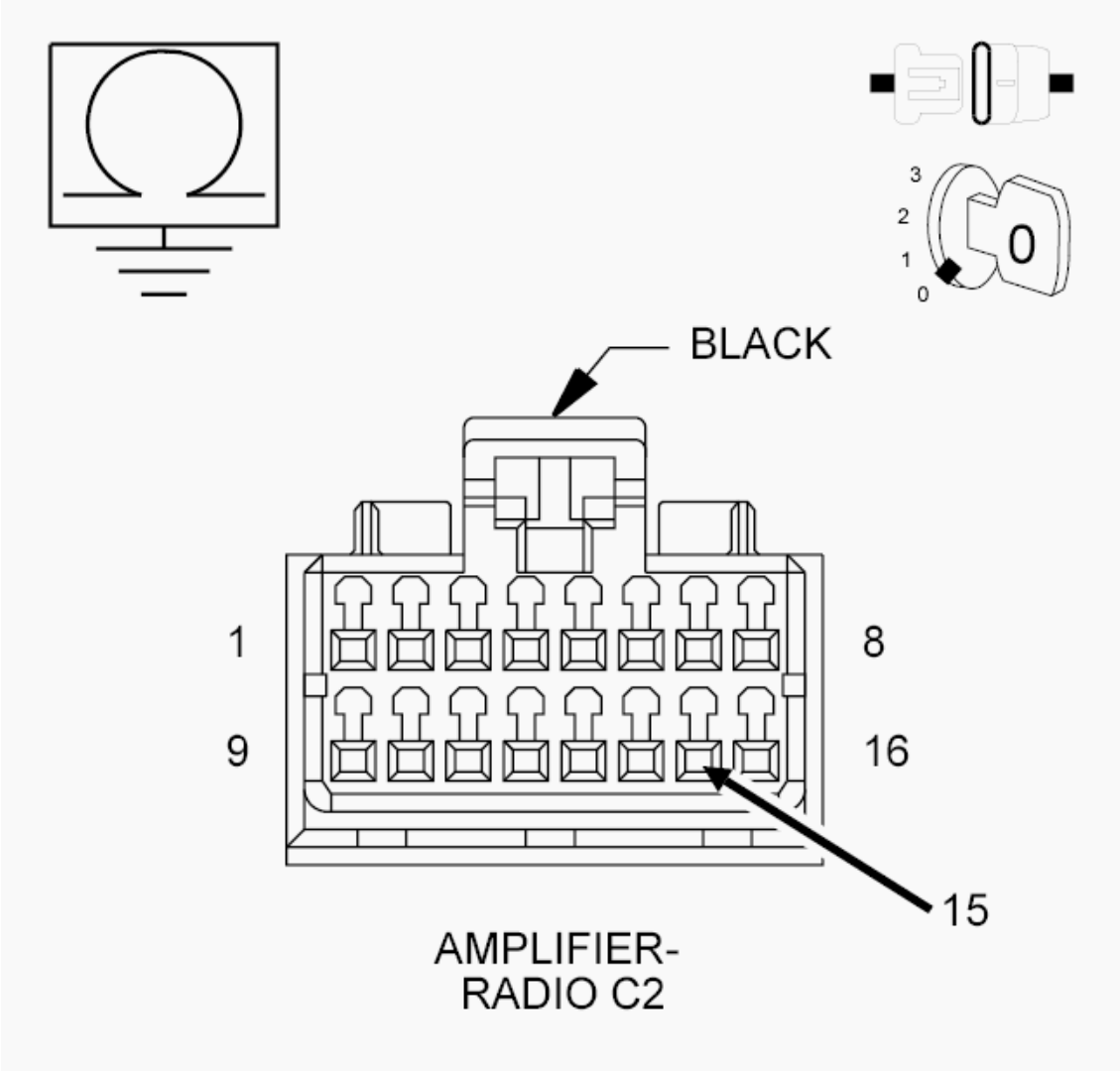

Fig. 46: Checking Right Front Door Speaker (-) Circuit For A Short To Ground
Courtesy of CHRYSLER GROUP, LLC

1. Measure the resistance between ground and the (X292) Right Front Door Speaker (-) circuit.

   Is the resistance below 10K Ohms?

   Yes

   - Repair the (X292) Right Front Door Speaker (-) for a short to ground.
   - Perform BODY VERIFICATION TEST. Refer to **STANDARD PROCEDURE** .

No

- Replace the Amplifier in accordance with the Service Information.
- Perform the BODY VERIFICATION TEST. Refer to **BODY VERIFICATION TEST** .

B1471-CHANNEL 4 AUDIO SPEAKER OUTPUT CIRCUIT HIGH

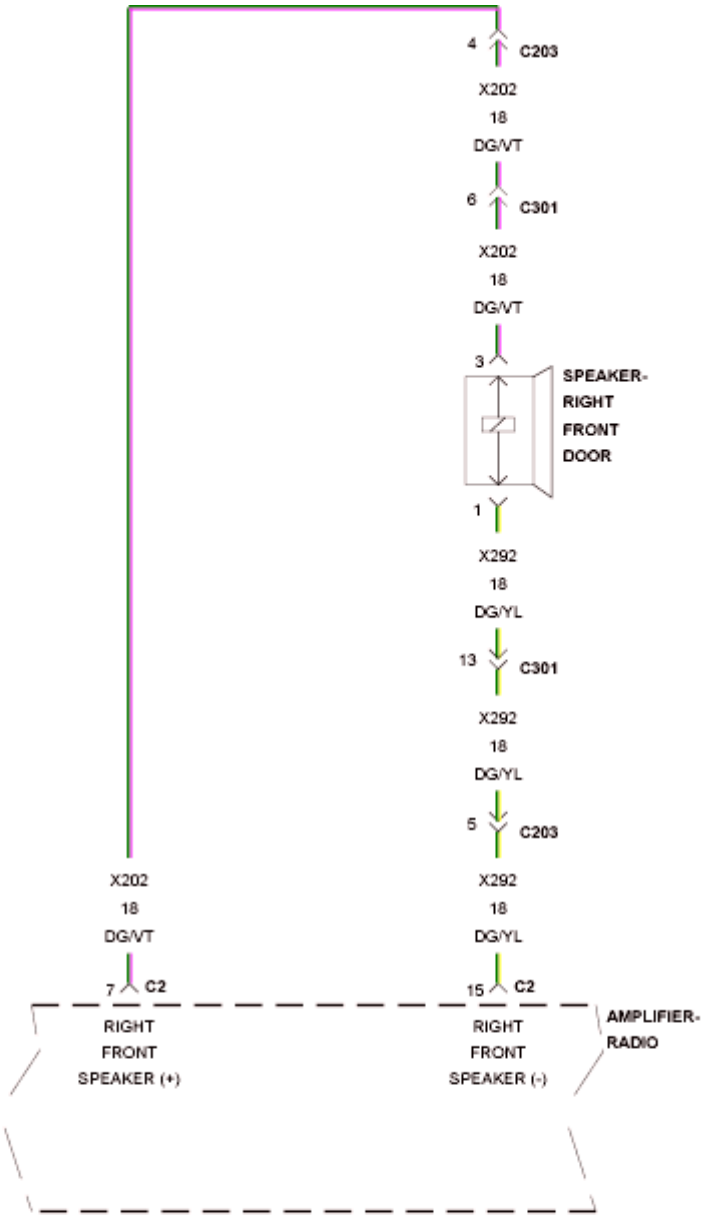
4
C203
X202
18
DG/VT
6
C301
X202
18
DG/VT
3
SPEAKER-
RIGHT
FRONT
DOOR
1
X292
18
DG/YL
13
C301
X292
18
DG/YL
5
C203
X202
18
DG/VT
X292
18
DG/YL
7
C2
15
C2
RIGHT
FRONT
SPEAKER (+)
RIGHT
FRONT
SPEAKER (-)
AMPLIFIER-
RADIO

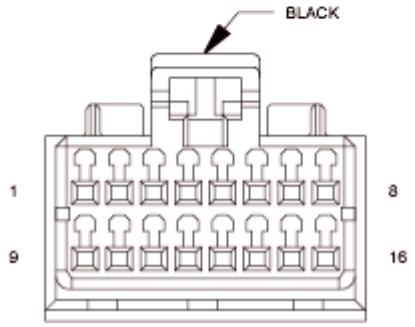
BLACK
1
8
9
16

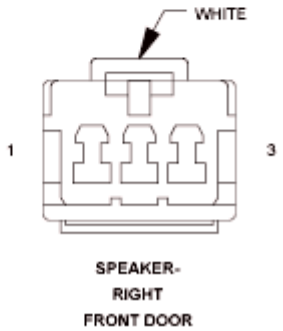
WHITE
1
3
SPEAKER-
RIGHT
FRONT DOOR

Fig. 47: Channel 4 Audio Speaker Output Wiring Diagram
Courtesy of CHRYSLER GROUP, LLC

For a complete wiring diagram, **refer to appropriate SYSTEM WIRING DIAGRAMS article** .

WHEN MONITORED:

With the ignition on.

SET CONDITION:

The Amplifier detects a short to battery condition on the output circuit.

POSSIBLE CAUSES

Possible Causes
(X202) RIGHT FRONT DOOR SPEAKER (+) CIRCUIT SHORTED TO VOLTAGE
(X292) RIGHT FRONT DOOR SPEAKER (-) CIRCUIT SHORTED TO VOLTAGE
AMPLIFIER

DIAGNOSTIC TEST

1. **CHECK FOR AN INTERMITTENT CONDITION**
    1. Turn the ignition on and open one of the front doors.

        NOTE: A front door must remain open whenever checking or erasing Amplifier DTC's.

    2. With the scan tool, record and erase the Amplifier DTC's.
    3. Cycle the ignition switch from on to off, wait five seconds and then back to on.
    4. Turn the Radio on and set the volume to 20.
    5. Adjust the speakers to the front and center.
    6. With the scan tool, read the active Amplifier DTC's.

        Does the scan tool display active: B1471-CHANNEL 4 AUDIO SPEAKER OUTPUT CIRCUIT HIGH?

        Yes

        - Go To 2.

        No

        - Test complete, the condition or conditions that originally set this DTC are not present at this time. Using the wiring diagrams as a guide, check all related splices and connectors for signs

of water intrusion, corrosion, pushed out or bent terminals and correct pin tension.

- Perform the BODY VERIFICATION TEST. Refer to **BODY VERIFICATION TEST** .

2. **CHECK FOR VOLTAGE ON THE (X202) RIGHT FRONT DOOR SPEAKER (+) CIRCUIT**

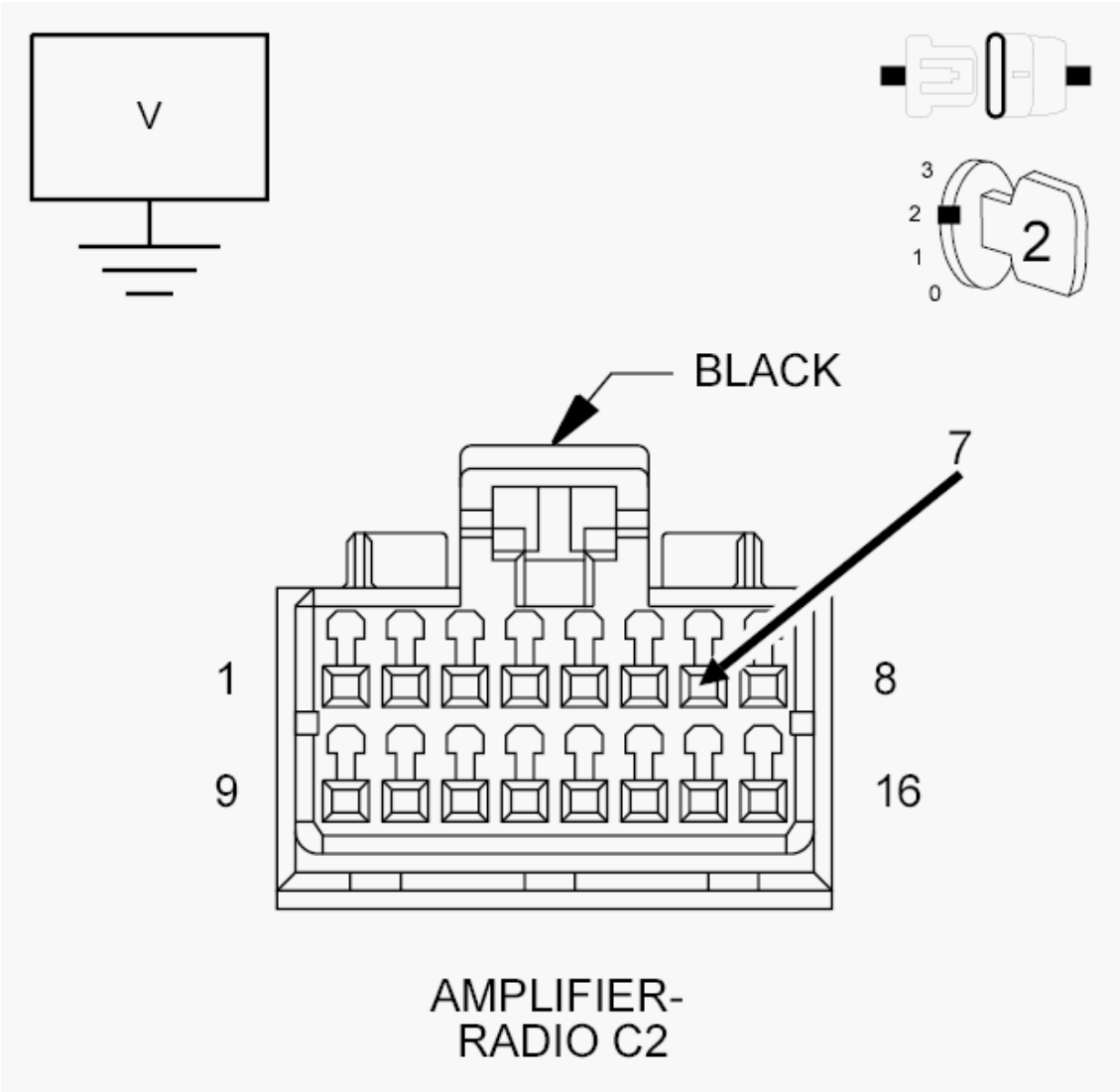

Fig. 48: Measuring Voltage On The Right Front Door Speaker (+) Circuit
Courtesy of CHRYSLER GROUP, LLC

1. Turn the ignition off.
2. Disconnect the Amplifier C2 harness connector.
3. Disconnect the Right Front Door Speaker harness connector.
4. Turn the ignition on.
5. Measure the voltage between the (X202) Right Front Door Speaker (+) circuit and ground.

   Is there any voltage present?

Yes

- Repair the (X202) Right Front Door Speaker (+) circuit for a short to voltage.
- Perform the BODY VERIFICATION TEST. Refer to **BODY VERIFICATION TEST** .

No

- Go To 3.

3. **CHECK FOR VOLTAGE ON THE (X292) RIGHT FRONT DOOR SPEAKER (-) CIRCUIT**

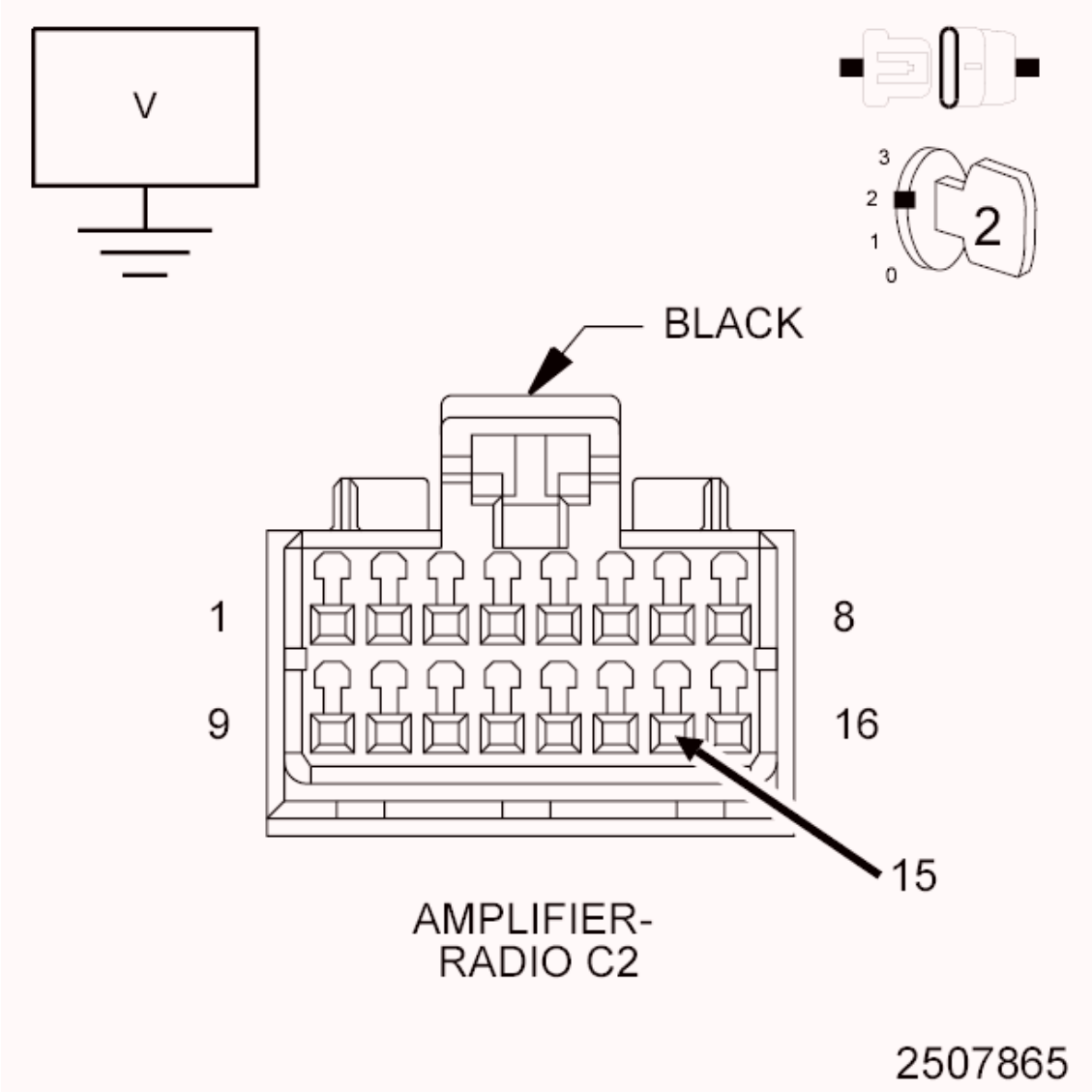

Fig. 49: Measuring Voltage On The Right Front Door Speaker (-) Circuit
Courtesy of CHRYSLER GROUP, LLC

1. Measure the voltage between the (X292) Right Front Door Speaker (-) circuit and ground.

Is there any voltage present?

Yes

- Repair the (X292) Right Front Door Speaker (-) circuit for a short to voltage.
- Perform the BODY VERIFICATION TEST. Refer to **BODY VERIFICATION TEST** .

No

- Replace the Amplifier in accordance with the Service Information.
- Perform the BODY VERIFICATION TEST. Refer to **BODY VERIFICATION TEST** .

B1472-CHANNEL 4 AUDIO SPEAKER OUTPUT CIRCUIT OPEN

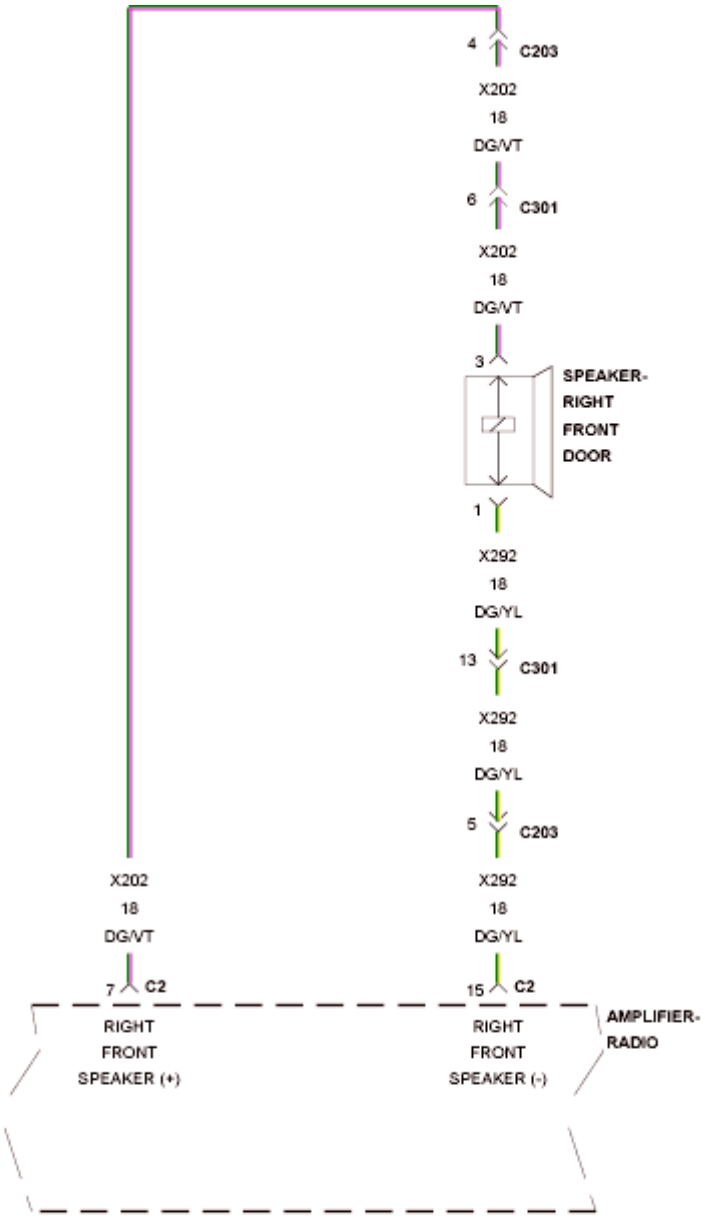
4
C203
X202
18
DG/VT
6
C301
X202
18
DG/VT
3
SPEAKER-
RIGHT
FRONT
DOOR
1
X292
18
DG/YL
13
C301
X292
18
DG/YL
5
C203
X202
18
DG/VT
X292
18
DG/YL
7
C2
15
C2
RIGHT
FRONT
SPEAKER (+)
RIGHT
FRONT
SPEAKER (-)
AMPLIFIER-
RADIO

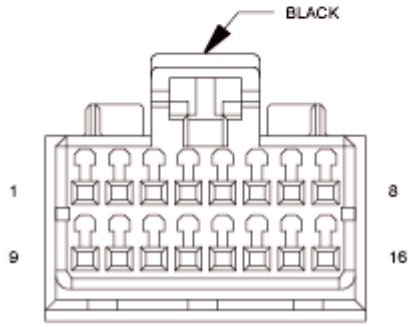
BLACK
1
8
9
16

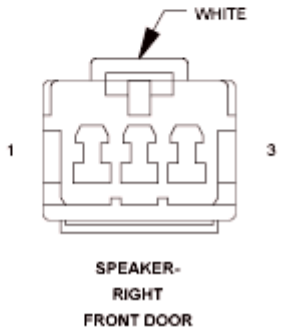
WHITE
1
3
SPEAKER-
RIGHT
FRONT DOOR

Fig. 50: Channel 4 Audio Speaker Output Wiring Diagram
Courtesy of CHRYSLER GROUP, LLC

For a complete wiring diagram, **refer to appropriate SYSTEM WIRING DIAGRAMS article** .

WHEN MONITORED:

Amplifier Bus wake-up. Amplifier reset with scan tool.

SET CONDITION:

The Amplifier detects an open condition on the speaker output circuit.

POSSIBLE CAUSES

Possible Causes
(X202) RIGHT FRONT DOOR SPEAKER (+) CIRCUIT OPEN
(X292) RIGHT FRONT DOOR SPEAKER (-) CIRCUIT OPEN
RIGHT FRONT DOOR SPEAKER
AMPLIFIER

DIAGNOSTIC TEST

1. **CHECK FOR AN INTERMITTENT CONDITION**
    1. Turn the ignition on and open one of the front doors.

        NOTE: A front door must remain open whenever checking or erasing Amplifier DTC's.

    2. With the scan tool, record and erase the Amplifier DTC's.
    3. Cycle the ignition switch from on to off, wait five seconds and then back to on.
    4. Turn the Radio on and set the volume to 20.
    5. Adjust the speakers to the front and center.
    6. With the scan tool, read the active Amplifier DTC's.

        Does the scan tool display active: B1472-CHANNEL 4 AUDIO SPEAKER OUTPUT CIRCUIT OPEN?

        Yes

        - Go To 2.

        No

        - Test complete, the condition or conditions that originally set this DTC are not present at this

time. Using the wiring diagrams as a guide, check all related splices and connectors for signs of water intrusion, corrosion, pushed out or bent terminals and correct pin tension.

- Perform the BODY VERIFICATION TEST. Refer to **BODY VERIFICATION TEST** .

2. **CHECK THE OPERATION OF THE RIGHT FRONT DOOR SPEAKER**

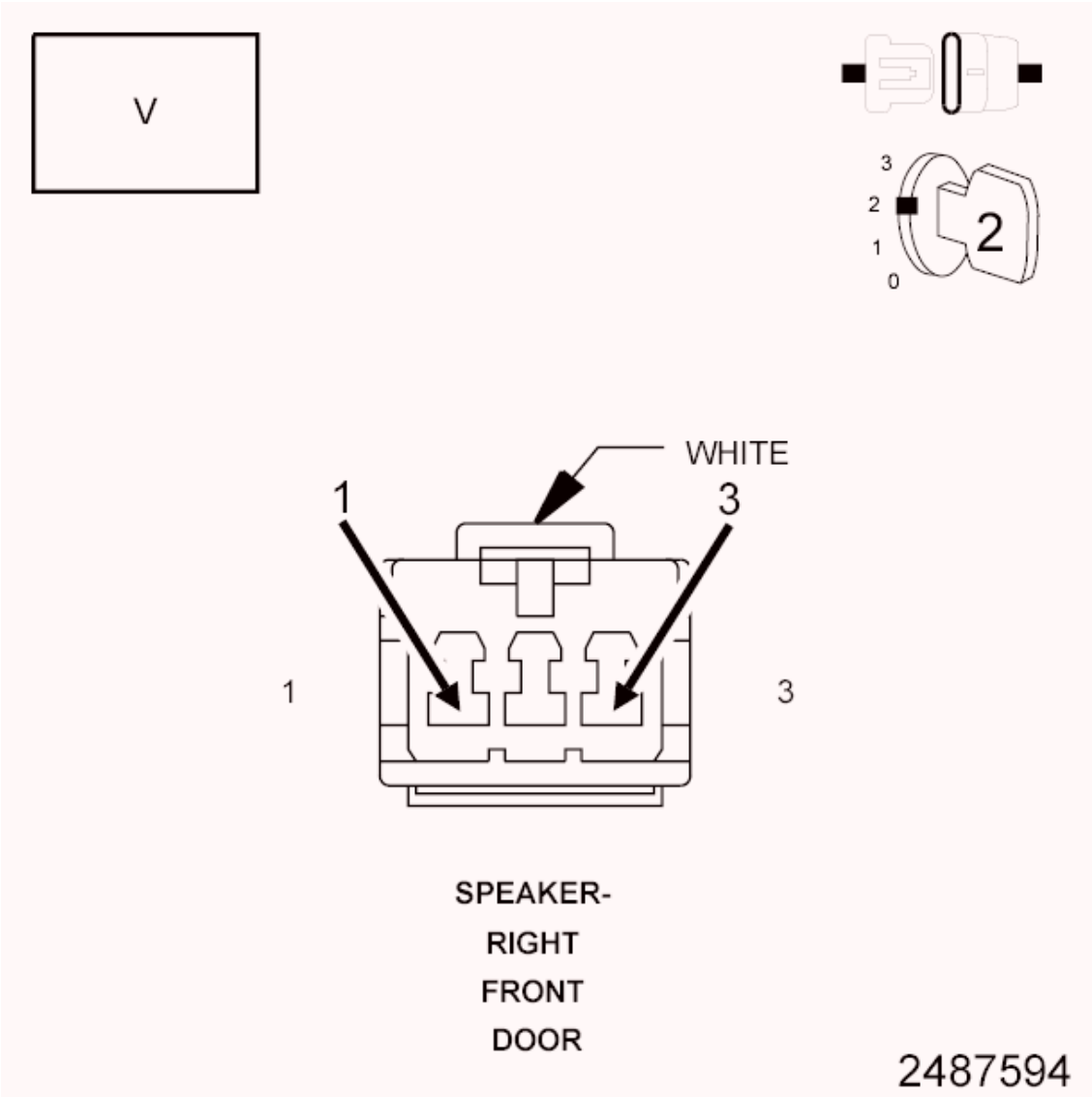

Fig. 51: Checking Operation Of Right Front Door Speaker
Courtesy of CHRYSLER GROUP, LLC

1. Turn the ignition off.
2. Disconnect the Right Front Door Speaker harness connector.
3. Turn the ignition on.
4. Turn the radio on and turn the volume to 25.
5. Adjust the speakers to the front and center.
6. With a voltmeter set to read in A/C voltage, measure the voltage of the Right Front Door Speaker

circuits in the Right Front Door Speaker harness connector.

Is the voltage present greater than 1 volt?

Yes

- Replace the Right Front Door Speaker in accordance with the Service Information.
- Perform the BODY VERIFICATION TEST. Refer to **BODY VERIFICATION TEST** .

No

- Go To 3.

3. **CHECK THE (X202) RIGHT FRONT DOOR SPEAKER (+) CIRCUIT FOR AN OPEN**

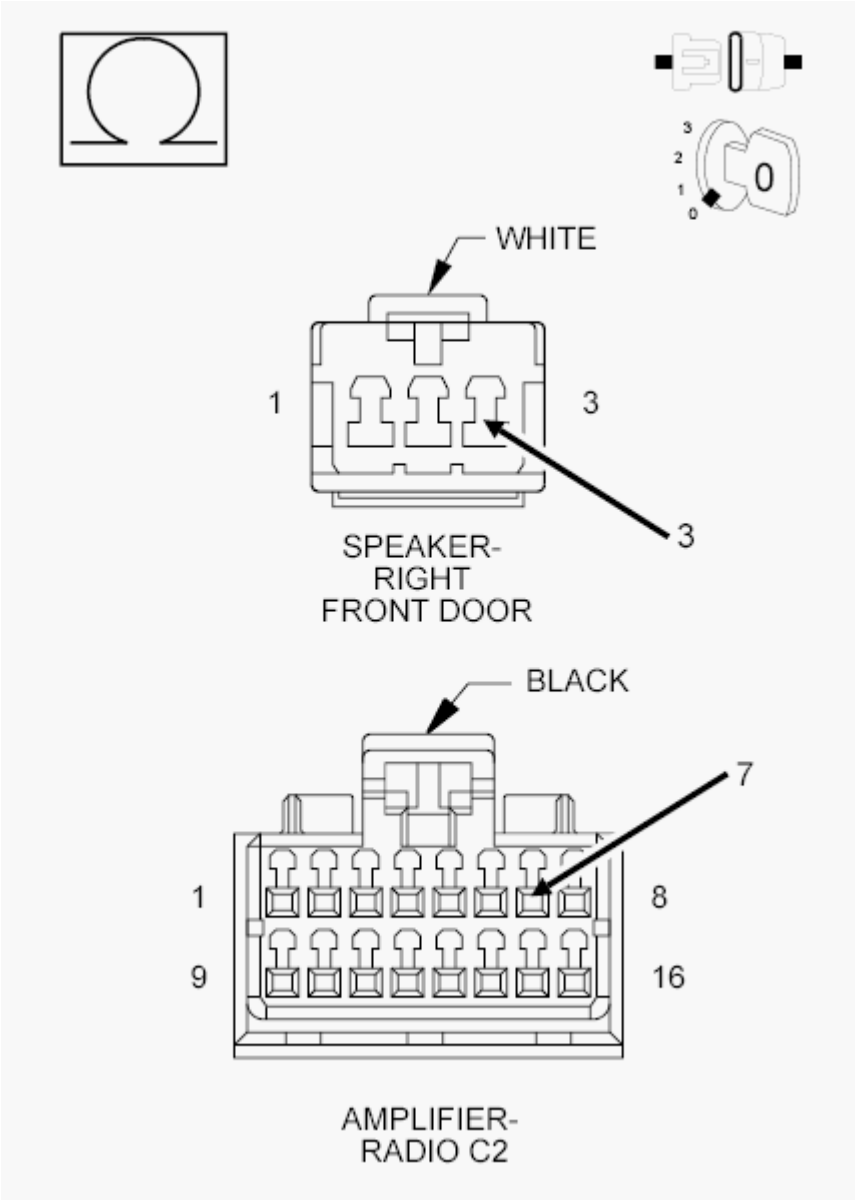

Fig. 52: Checking Right Front Door Speaker (+) Circuit For An Open
Courtesy of CHRYSLER GROUP, LLC

1. Turn the ignition off.
2. Disconnect the Amplifier C2 harness connector.
3. Measure the resistance of the (X202) Right Front Door Speaker (+) circuit between the Amplifier C2 harness connector and the Right Front Door Speaker harness connector.

   Is the resistance below 2.0 Ohms?

   Yes

   - Go To 4.

   No

   - Repair the (X202) Right Front Door Speaker (+) circuit for an open.
   - Perform the BODY VERIFICATION TEST. Refer to **BODY VERIFICATION TEST** .

4. **CHECK THE (X292) RIGHT FRONT DOOR SPEAKER (-) CIRCUIT FOR AN OPEN**

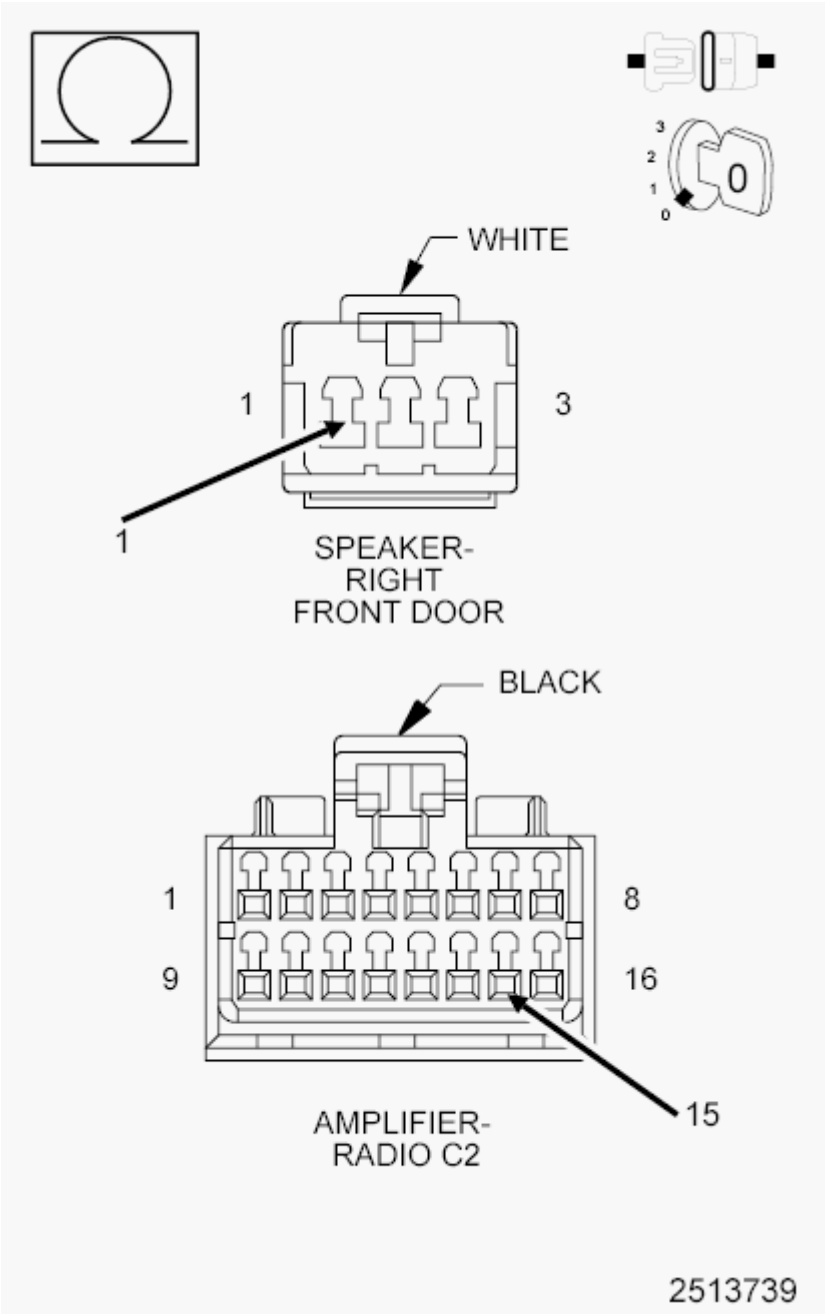

Fig. 53: Checking Right Front Door Speaker (-) Circuit For An Open
Courtesy of CHRYSLER GROUP, LLC

1. Measure the resistance of the (X292) Right Front Door Speaker (-) circuit between the Amplifier C2 harness connector and the Right Front Door Speaker harness connector.

   Is the resistance below 2.0 Ohms?

   Yes

   - Replace the Amplifier in accordance with the Service Information.

- Perform the BODY VERIFICATION TEST. Refer to **BODY VERIFICATION TEST** .

No

- Repair the (X292) Right Front Door Speaker (-) circuit for an open.
- Perform the BODY VERIFICATION TEST. Refer to **BODY VERIFICATION TEST** .

B1473-CHANNEL 4 AUDIO SPEAKER OUTPUT CIRCUIT SHORTED TOGETHER

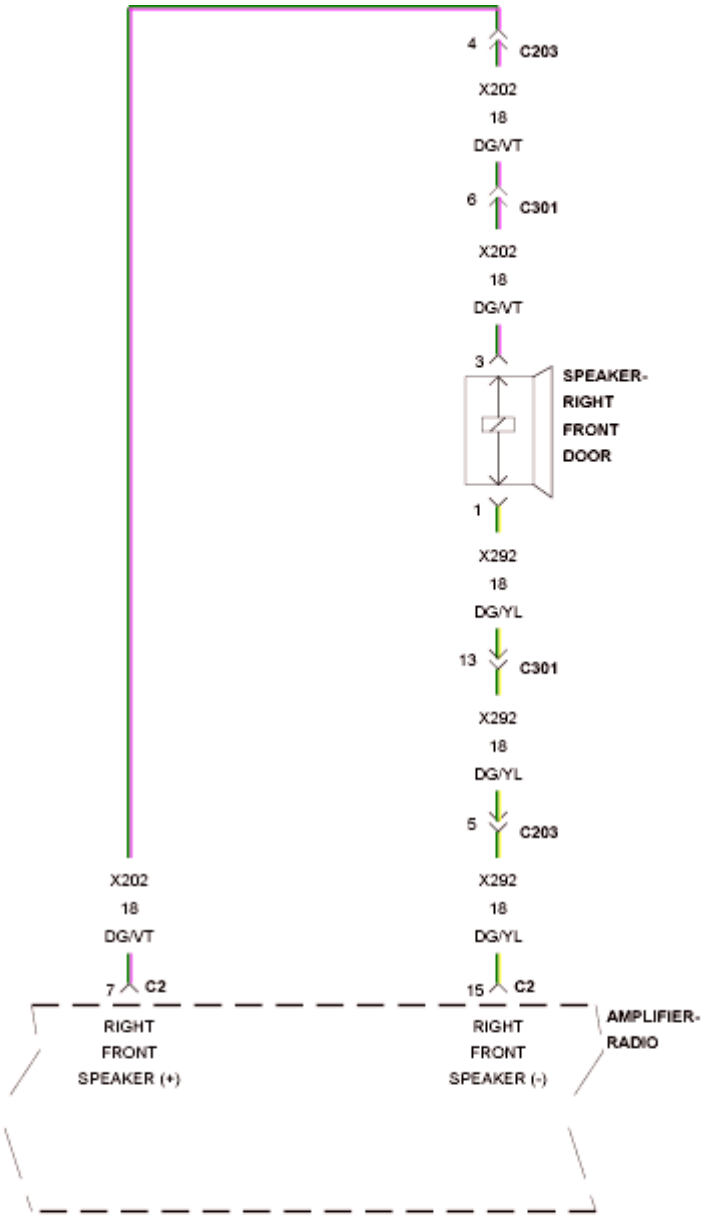
4
C203
X202
18
DG/VT
6
C301
X202
18
DG/VT
3
SPEAKER-
RIGHT
FRONT
DOOR
1
X292
18
DG/YL
13
C301
X292
18
DG/YL
5
C203
X202
18
DG/VT
X292
18
DG/YL
7
C2
15
C2
RIGHT
FRONT
SPEAKER (+)
RIGHT
FRONT
SPEAKER (-)
AMPLIFIER-
RADIO

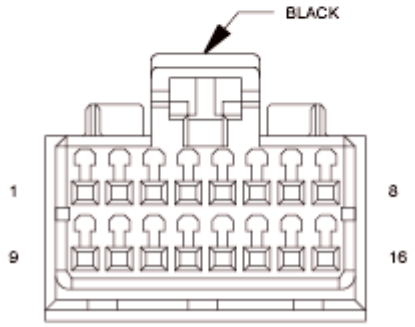
BLACK
1
8
9
16

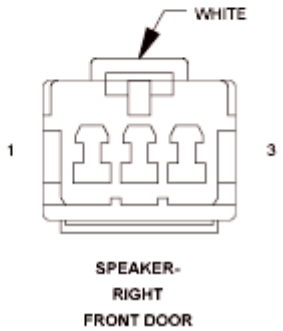
WHITE
1
3
SPEAKER-
RIGHT
FRONT DOOR

Fig. 54: Channel 4 Audio Speaker Output Wiring Diagram
Courtesy of CHRYSLER GROUP, LLC

For a complete wiring diagram, **refer to appropriate SYSTEM WIRING DIAGRAMS article** .

WHEN MONITORED:

With the ignition on.

Radio volume at 25 or higher.

SET CONDITION:

The Amplifier detects that the output circuits are shorted together.

POSSIBLE CAUSES

Possible Causes
(X202) RIGHT FRONT DOOR SPEAKER (+) CIRCUIT SHORTED TO THE (X292) RIGHT FRONT DOOR SPEAKER (-) CIRCUIT
RIGHT FRONT DOOR SPEAKER
AMPLIFIER

DIAGNOSTIC TEST

1. **CHECK FOR AN INTERMITTENT CONDITION**
    1. Turn the ignition on and open one of the front doors.

        NOTE: A front door must remain open whenever checking or erasing Amplifier DTC's.

    2. With the scan tool, record and erase the Amplifier DTC's.
    3. Cycle the ignition switch from on to off, wait five seconds and then back to on.
    4. Turn the Radio on and set the volume to 20.
    5. Adjust the speakers to the front and center.
    6. With the scan tool, read the active Amplifier DTC's.

        Does the scan tool display active: B1473-CHANNEL 4 AUDIO SPEAKER OUTPUT CIRCUIT SHORTED TOGETHER?

        Yes

        - Go To 2.

        No

- Test complete, the condition or conditions that originally set this DTC are not present at this time. Using the wiring diagrams as a guide, check all related splices and connectors for signs of water intrusion, corrosion, pushed out or bent terminals and correct pin tension.
- Perform the BODY VERIFICATION TEST. Refer to **BODY VERIFICATION TEST** .

2. **CHECK THE OPERATION OF THE RIGHT FRONT DOOR SPEAKER**

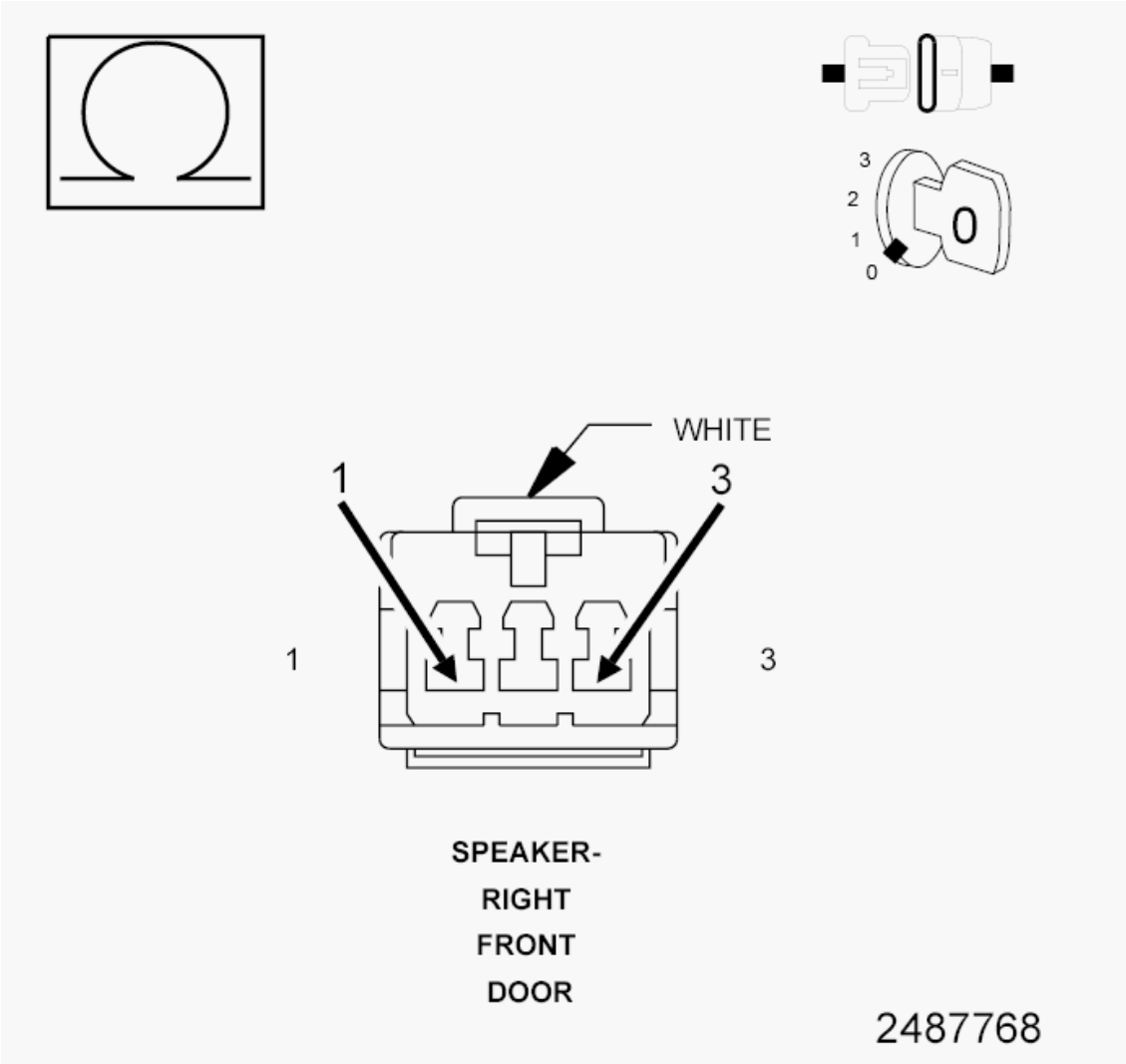

Fig. 55: Checking The Operation Of The Right Front Door Speaker
Courtesy of CHRYSLER GROUP, LLC

1. Turn the ignition off.
2. Disconnect the Right Front Door Speaker.
3. Measure the resistance of the speaker between the two terminals.

NOTE: **The graphic shows the connector for reference only. Measure at the speaker terminals.**

Is the resistance of the speaker less than 1 Ohm?

Yes

- Replace the Right Front Door Speaker in accordance with the Service Information.
- Perform the BODY VERIFICATION TEST. Refer to **BODY VERIFICATION TEST** .

No

- Go To 3.

3. **CHECK THE (X202) RIGHT FRONT DOOR SPEAKER (+) CIRCUIT, AND THE (X292) RIGHT FRONT DOOR SPEAKER (-) CIRCUITS FOR A SHORT TOGETHER**

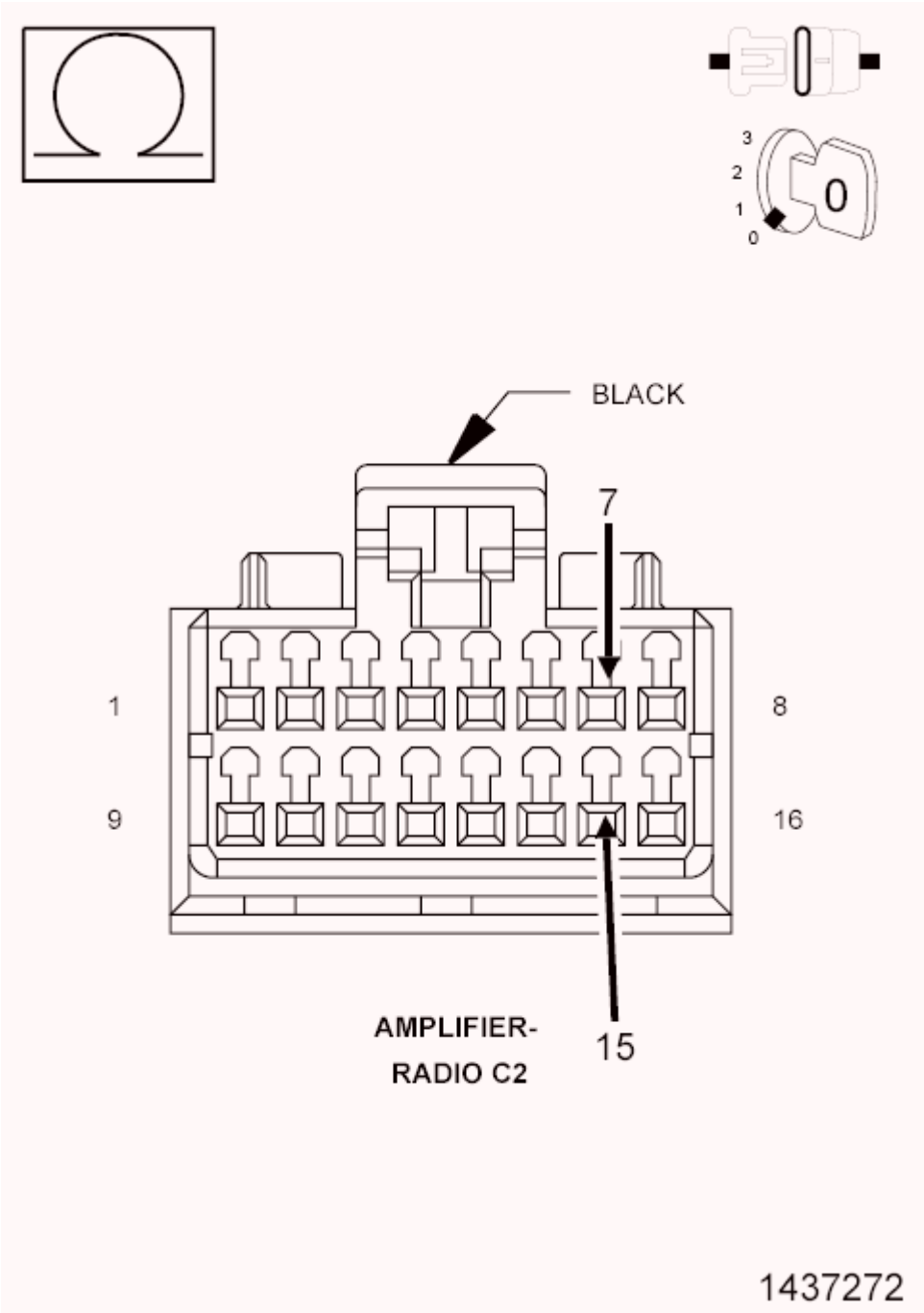

Fig. 56: Checking Right Front Door Speaker (+) Circuit, And The Right Front Door Speaker (-) Circuits For A Short Together
Courtesy of CHRYSLER GROUP, LLC

1. Disconnect the Amplifier C2 harness connector.
2. Measure the resistance between the (X202) Right Front Door Speaker (+) circuit, and the (X292) Right Front Door Speaker (-) circuit.

   Is the resistance below 10K Ohms?

Yes

- Repair the (X202) Right Front Door Speaker (+) circuit, and the (X292) Right Front Door Speaker (-) circuit for a short together.
- Perform the BODY VERIFICATION TEST. Refer to **BODY VERIFICATION TEST** .

No

- Replace the Amplifier in accordance with the Service Information.
- Perform the BODY VERIFICATION TEST. Refer to **BODY VERIFICATION TEST** .

B1474-CHANNEL 5 AUDIO SPEAKER OUTPUT CIRCUIT PERFORMANCE

For a complete wiring diagram, **refer to appropriate SYSTEM WIRING DIAGRAMS article** .

WHEN MONITORED:

With the ignition on.

SET CONDITION:

This Diagnostic Trouble Code (DTC) sets if a Direct Current (DC) offset occurs on the output channel, the amplifier shall set a DTC after a maturity rate of four to six seconds.

POSSIBLE CAUSES

Possible Causes
AMPLIFIER

DIAGNOSTIC TEST

1. **CHECK FOR AN INTERMITTENT CONDITION**
    1. Turn the ignition on and open one of the front doors.

       NOTE: A front door must remain open whenever checking or erasing Amplifier DTC's.

    2. With the scan tool, record and erase the Amplifier DTC's.
    3. Cycle the ignition switch from on to off, wait five seconds and then back to on.
    4. Turn the Radio on and set the volume to 20.
    5. Adjust the speakers to the rear and center.
    6. With the scan tool, read the active Amplifier DTC's.

       Does the scan tool display active: B1474-CHANNEL 5 AUDIO SPEAKER OUTPUT CIRCUIT PERFORMANCE?

Yes

- Replace the Amplifier in accordance with the Service Information.
- Perform the BODY VERIFICATION TEST. Refer to **BODY VERIFICATION TEST** .

No

- Test complete, the condition or conditions that originally set this DTC are not present at this time. Using the wiring diagrams as a guide, check all related splices and connectors for signs of water intrusion, corrosion, pushed out or bent terminals and correct pin tension.
- Perform the BODY VERIFICATION TEST. Refer to **BODY VERIFICATION TEST** .

B1475-CHANNEL 5 AUDIO SPEAKER OUTPUT CIRCUIT LOW

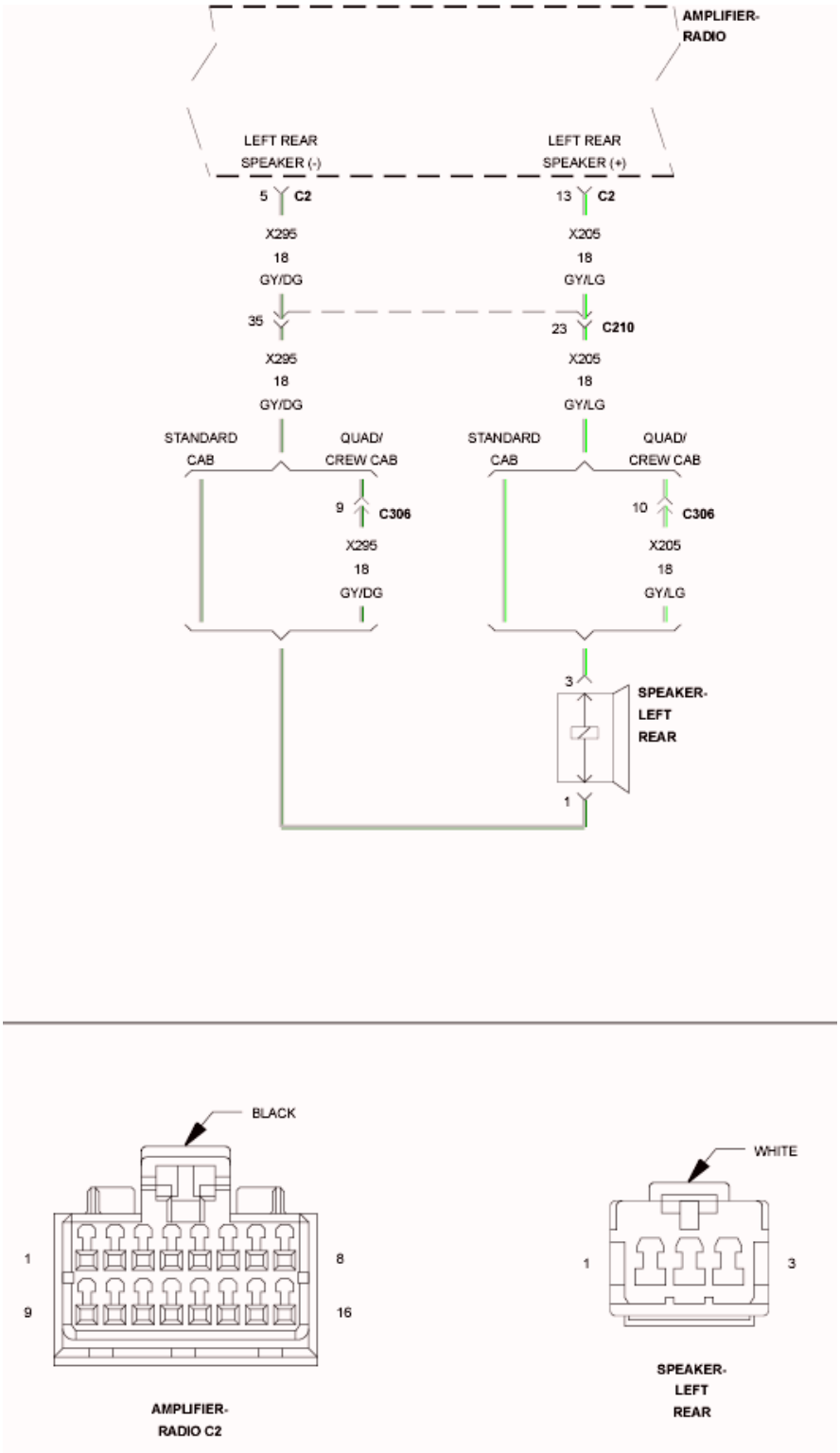

Fig. 57: Channel 5 Audio Speaker Output Wiring Diagram
Courtesy of CHRYSLER GROUP, LLC

For a complete wiring diagram, **refer to appropriate SYSTEM WIRING DIAGRAMS article** .

WHEN MONITORED:

With the ignition on.

SET CONDITION:

The Amplifier detects a shorted to ground condition on the speaker output circuit.

POSSIBLE CAUSES

Possible Causes
(X205) LEFT REAR SPEAKER (+) CIRCUIT SHORTED TO GROUND
(X295) LEFT REAR SPEAKER (-) CIRCUIT SHORTED TO GROUND
LEFT REAR SPEAKER
AMPLIFIER

DIAGNOSTIC TEST

1. **CHECK FOR AN INTERMITTENT CONDITION**
   1. Turn the ignition on and open one of the front doors.

      NOTE: A front door must remain open whenever checking or erasing Amplifier DTC's.

   2. Using the scan tool, record and erase the Amplifier DTC's.
   3. Cycle the ignition switch from on to off, wait five seconds and then back to on.
   4. Turn the Radio on and set the volume to 20.
   5. Adjust the speakers to the rear and center.
   6. Using the scan tool, read the active Amplifier DTC's.

      Does the scan tool display active: B1475-CHANNEL 5 OUTPUT CIRCUIT LOW?

      Yes

      - Go To 2.

      No

      - Test complete, the condition or conditions that originally set this DTC are not present at this time. Using the wiring diagrams as a guide, check all related splices and connectors for signs of water intrusion, corrosion, pushed out or bent terminals and correct pin tension.
      - Perform the BODY VERIFICATION TEST. Refer to **BODY VERIFICATION TEST** .
2. **CHECK THE LEFT REAR SPEAKER**

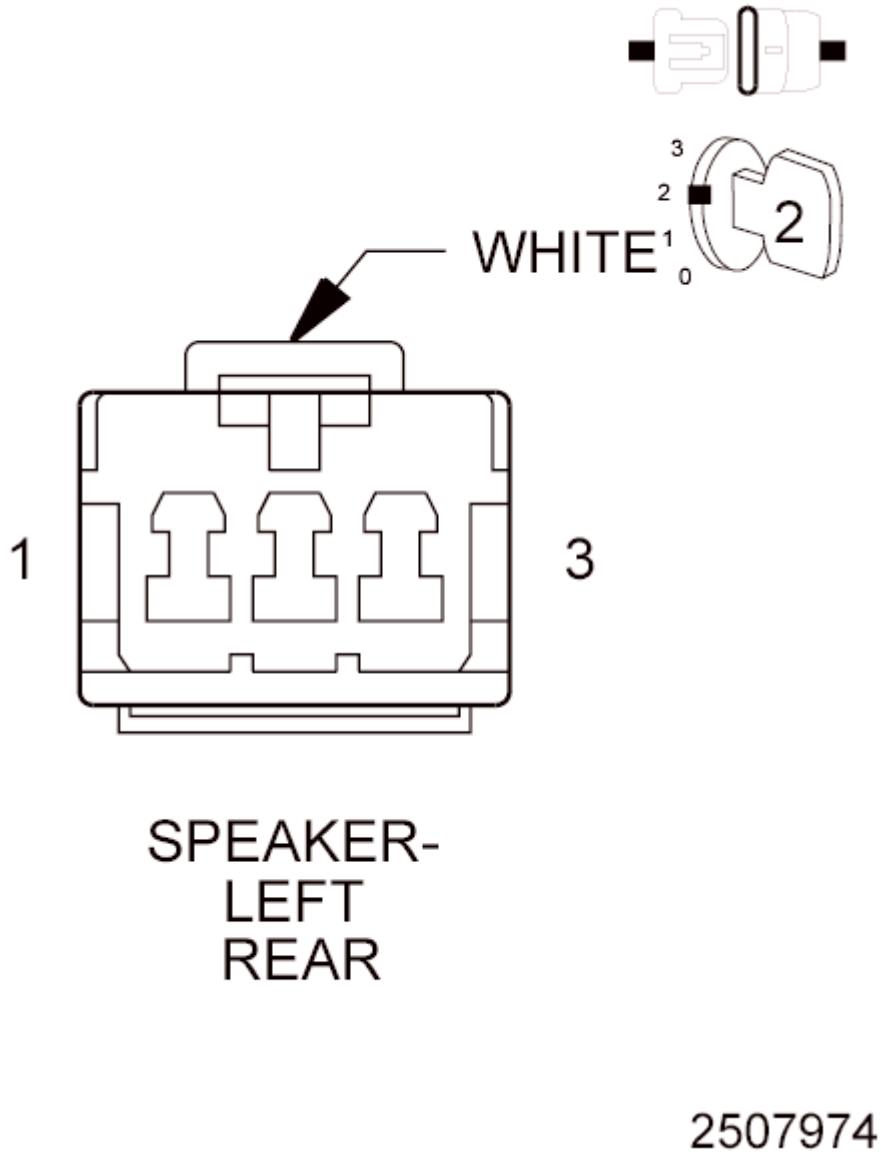

Fig. 58: Left Rear Speaker Connector End View
Courtesy of CHRYSLER GROUP, LLC

1. Make sure one of the front doors is still open.
2. Using the scan tool, erase the DTC's.
3. Turn the ignition off.
4. Disconnect the Left Rear Speaker harness connector.
5. Turn the ignition on.
6. Turn the radio on and set the volume to 25.
7. Using the scan tool, read the active Amplifier DTC's.

   Does the scan tool display active: B1475-CHANNEL 5 OUTPUT CIRCUIT LOW?

Yes

- Go To 3.

No

- Replace the Left Rear Speaker.
- Perform the BODY VERIFICATION TEST. Refer to **BODY VERIFICATION TEST** .

3. **CHECK THE (X205) LEFT REAR SPEAKER (+) CIRCUIT FOR A SHORT TO GROUND**

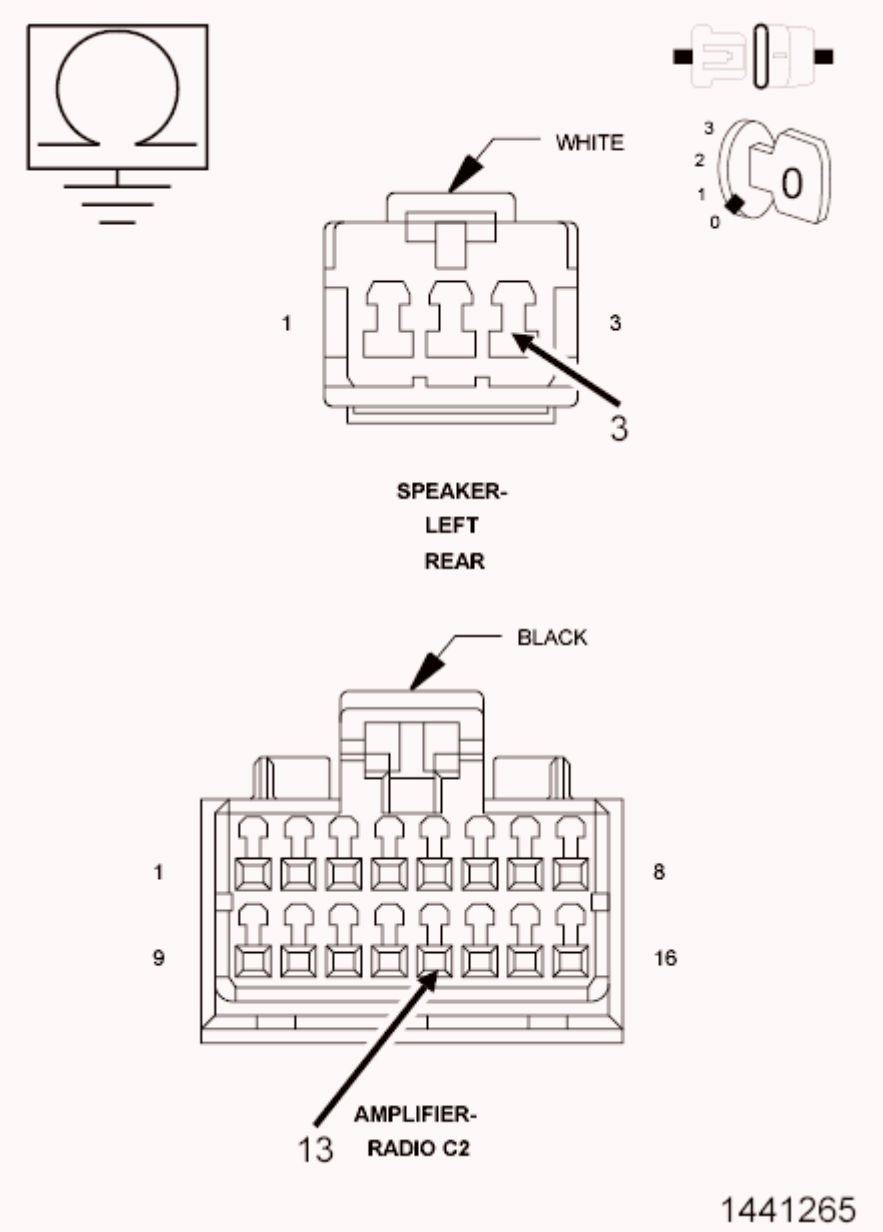

Fig. 59: Checking Left Rear Speaker (+) Circuit For A Short To Ground
Courtesy of CHRYSLER GROUP, LLC

1. Turn the ignition off.
2. Disconnect the Amplifier C2 harness connector.
3. Measure the resistance between ground and the (X205) Left Rear Speaker (+) circuit.

   Is the resistance below 10K Ohms?

   Yes

   - Repair the (X205) Left Rear Speaker (+) circuit for a short to ground.
   - Perform the BODY VERIFICATION TEST. Refer to **BODY VERIFICATION TEST** .

   No

   - Go To 4.

4. **CHECK THE (X295) LEFT REAR SPEAKER (-) CIRCUIT FOR A SHORT TO GROUND**

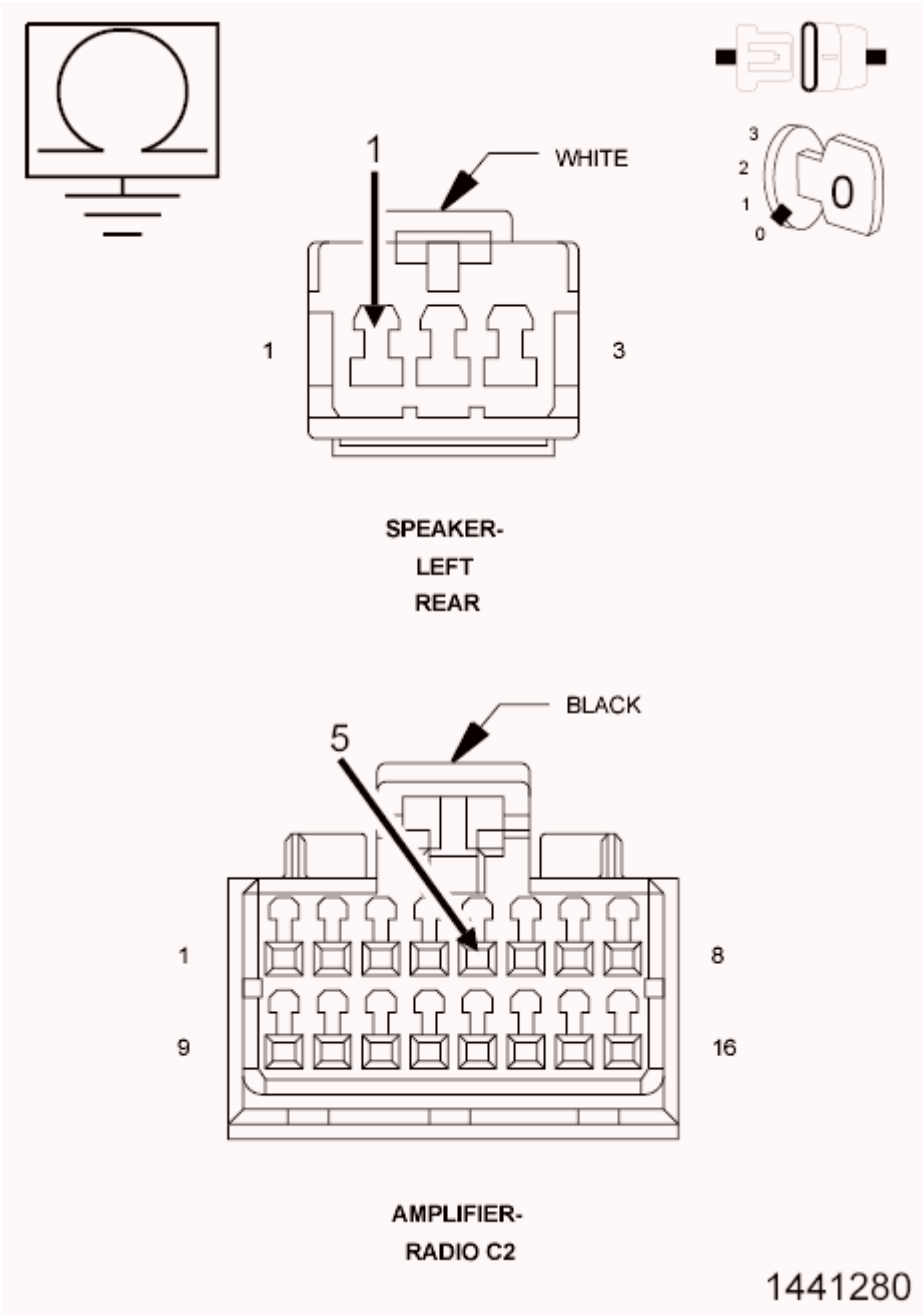

Fig. 60: Checking Left Rear Speaker (-) Circuit For A Short To Ground
Courtesy of CHRYSLER GROUP, LLC

1. Measure the resistance between ground and the (X295) Left Rear Speaker (-) circuit.

   Is the resistance below 10K Ohms?

   Yes

   - Repair the (X295) Left Rear Speaker (-) for a short to ground.
   - Perform the BODY VERIFICATION TEST. Refer to **BODY VERIFICATION TEST** .

No

- Replace the Amplifier in accordance with the Service Information.
- Perform the BODY VERIFICATION TEST. Refer to **BODY VERIFICATION TEST** .

B1476-CHANNEL 5 AUDIO SPEAKER OUTPUT CIRCUIT HIGH

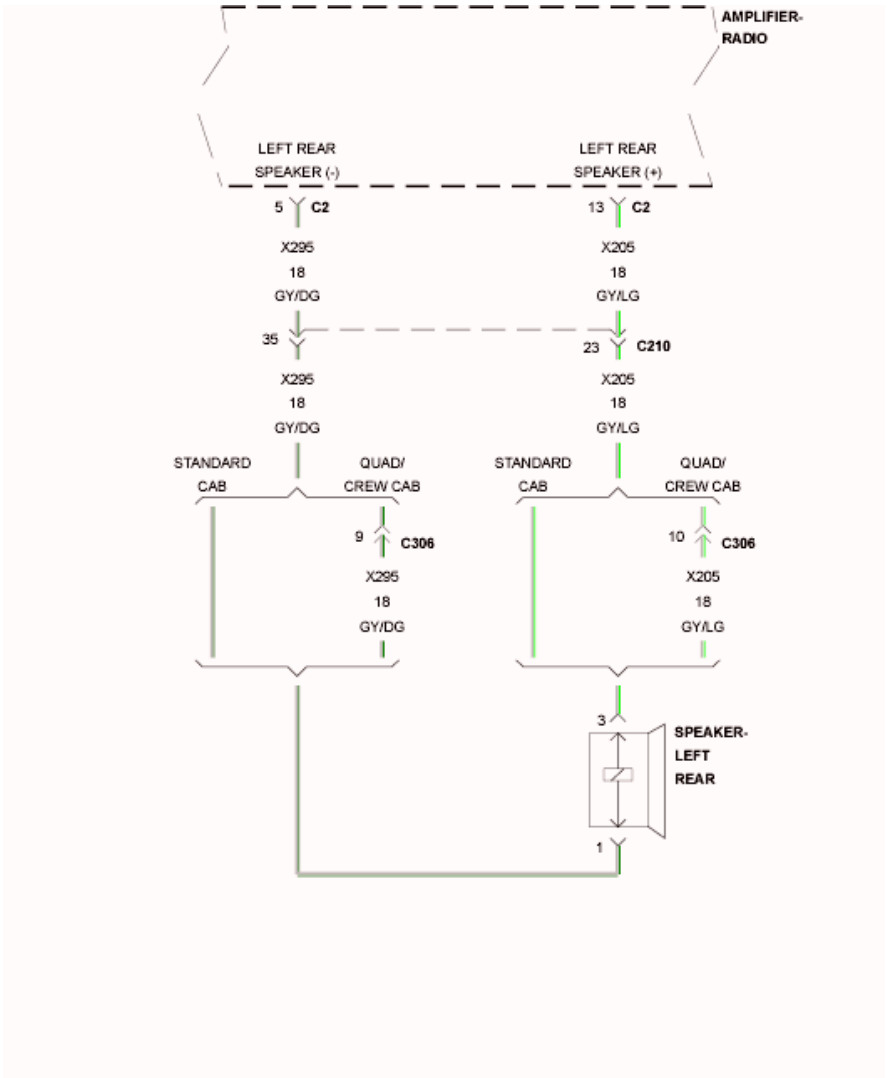

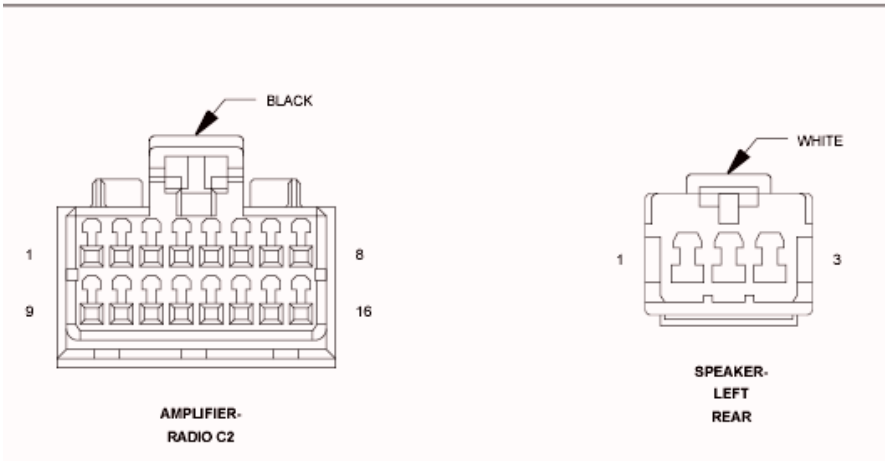

Fig. 61: Channel 5 Audio Speaker Output Wiring Diagram
Courtesy of CHRYSLER GROUP, LLC

For a complete wiring diagram, **refer to appropriate SYSTEM WIRING DIAGRAMS article** .

WHEN MONITORED:

With the ignition on.

SET CONDITION:

The Amplifier detects a short to battery condition on the output circuit.

POSSIBLE CAUSES

Possible Causes
(X205) LEFT REAR SPEAKER (+) CIRCUIT SHORTED TO VOLTAGE
(X295) LEFT REAR SPEAKER (-) CIRCUIT SHORTED TO VOLTAGE
AMPLIFIER

DIAGNOSTIC TEST

1. **CHECK FOR AN INTERMITTENT CONDITION**
    1. Turn the ignition on and open one of the front doors.

        NOTE: A front door must remain open whenever checking or erasing Amplifier DTC's.

    2. Using the scan tool, record and erase the Amplifier DTC's.
    3. Cycle the ignition switch from on to off, wait five seconds and then back to on.
    4. Turn the Radio on and set the volume to 20.
    5. Adjust the speakers to the rear and center.
    6. Using the scan tool, read the active Amplifier DTC's.

    Does the scan tool display active: B1476-CHANNEL 5 AUDIO SPEAKER OUTPUT CIRCUIT HIGH?

    Yes

    - Go To 2.

    No

    - Test complete, the condition or conditions that originally set this DTC are not present at this time. Using the wiring diagrams as a guide, check all related splices and connectors for signs of water intrusion, corrosion, pushed out or bent terminals and correct pin tension.
    - Perform the BODY VERIFICATION TEST. Refer to **BODY VERIFICATION TEST** .
2. **CHECK FOR VOLTAGE ON THE (X205) LEFT REAR SPEAKER (+) CIRCUIT**

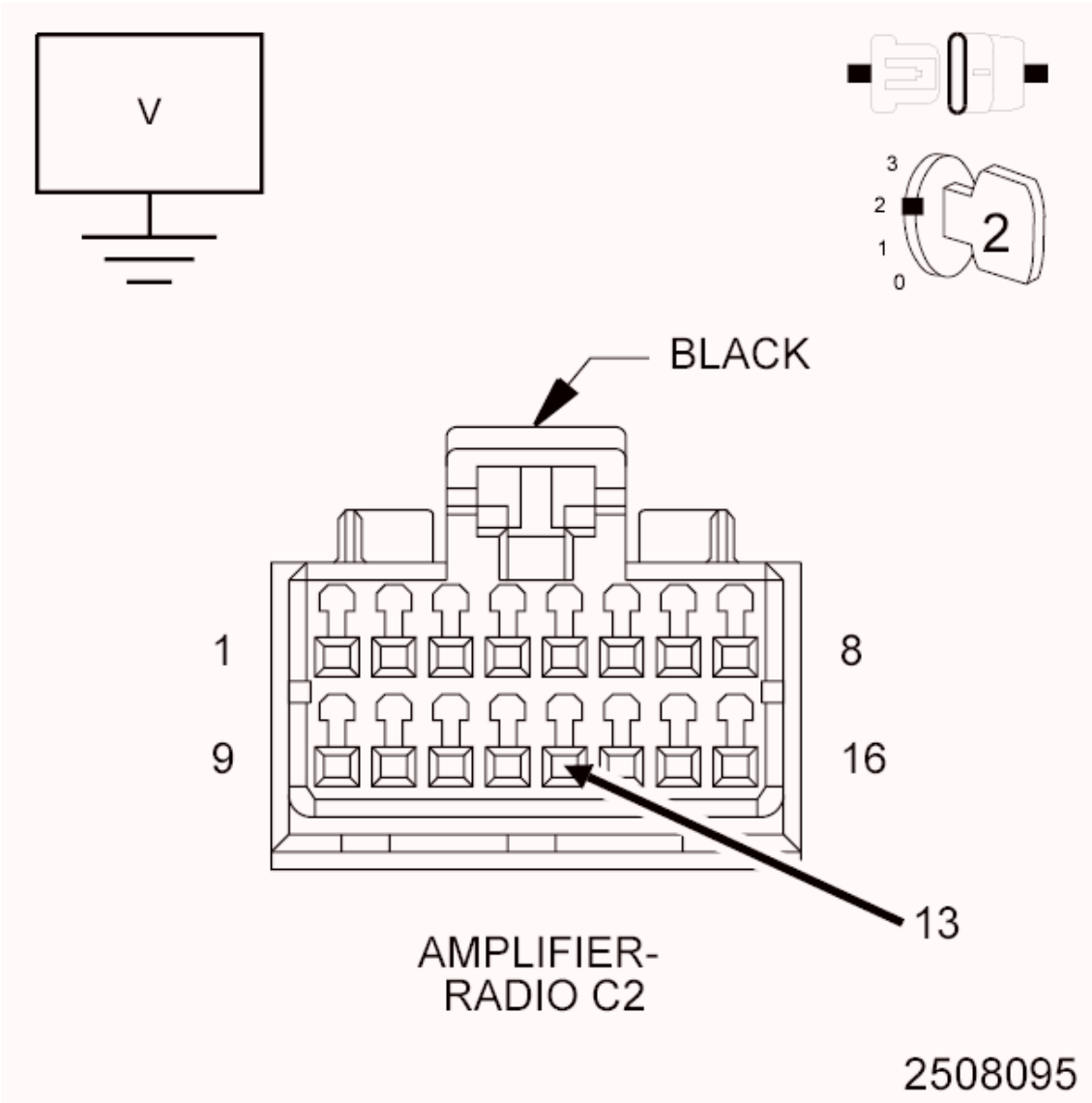

Fig. 62: Measuring Voltage On Left Rear Speaker (+) Circuit
Courtesy of CHRYSLER GROUP, LLC

1. Turn the ignition off.
2. Disconnect the Amplifier C2 harness connector.
3. Disconnect the Left Rear Speaker harness connector.
4. Turn the ignition on.
5. Measure the voltage between the (X205) Left Rear Speaker (+) circuit and ground.

   Is there any voltage present?

   Yes

   - Repair the (X205) Left Rear Speaker (+) circuit for a short to voltage.

- Perform the BODY VERIFICATION TEST. Refer to **BODY VERIFICATION TEST** .

No

- Go To 3.

3. **CHECK FOR VOLTAGE ON THE (X295) LEFT REAR SPEAKER (-) CIRCUIT**

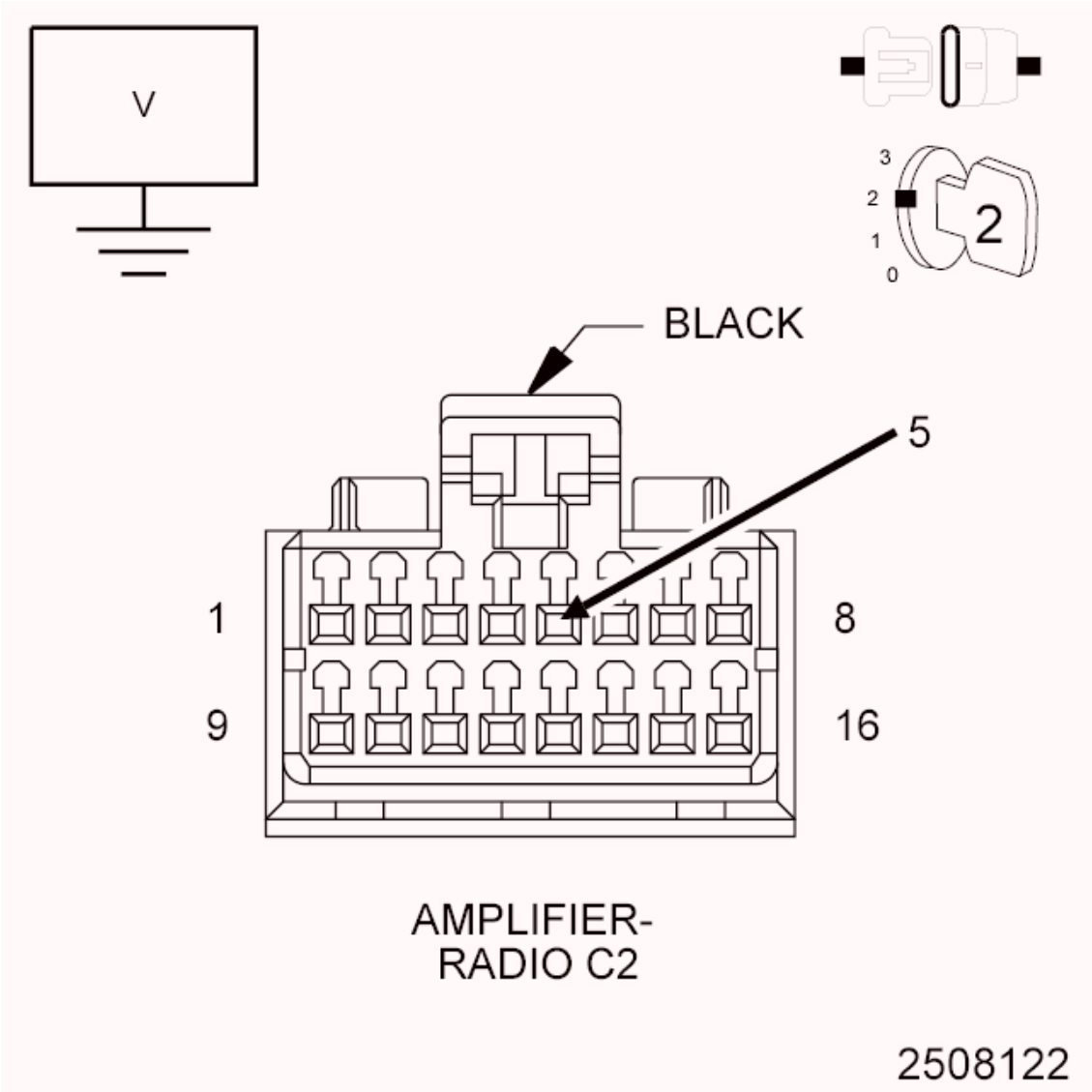

Fig. 63: Measuring Voltage On Left Rear Speaker (-) Circuit
Courtesy of CHRYSLER GROUP, LLC

1. Measure the voltage between the (X295) Left Rear Speaker (-) circuit and ground.

   Is there any voltage present?

   Yes

- Repair the (X295) Left Rear Speaker (-) circuit for a short to voltage.
- Perform the BODY VERIFICATION TEST. Refer to **BODY VERIFICATION TEST** .

No

- Replace the Amplifier in accordance with the Service Information.
- Perform the BODY VERIFICATION TEST. Refer to **BODY VERIFICATION TEST** .

B1477-CHANNEL 5 AUDIO SPEAKER OUTPUT CIRCUIT OPEN

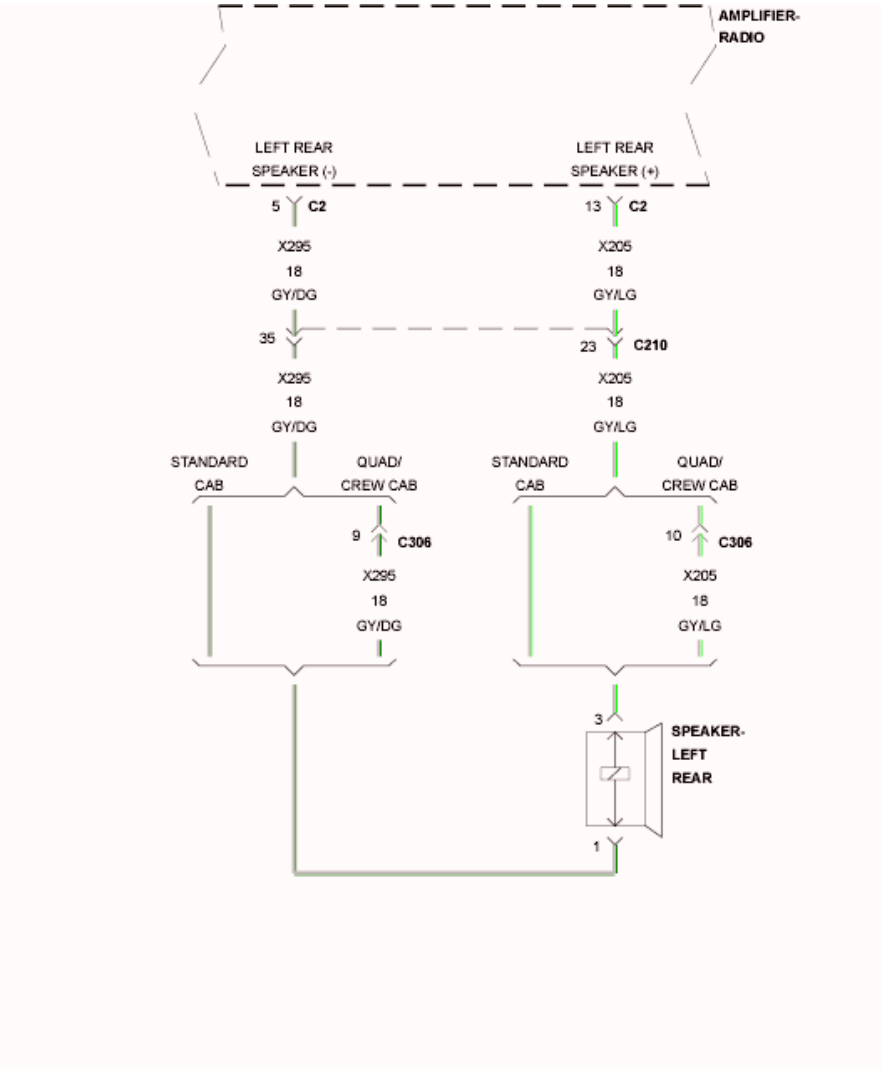

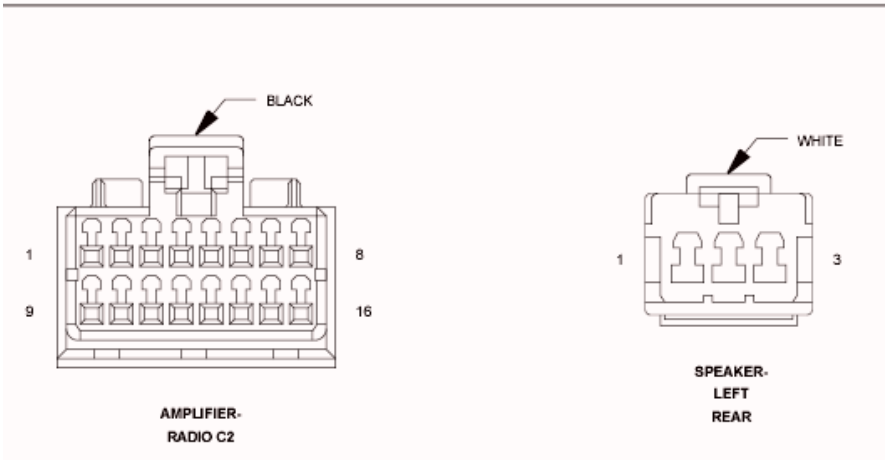

Fig. 64: Channel 5 Audio Speaker Output Wiring Diagram
Courtesy of CHRYSLER GROUP, LLC

For a complete wiring diagram, **refer to appropriate SYSTEM WIRING DIAGRAMS article** .

WHEN MONITORED:

Amplifier Bus wake-up. Amplifier reset with scan tool.

SET CONDITION:

The Amplifier detects an open condition on the speaker output circuit.

POSSIBLE CAUSES

Possible Causes
(X205) LEFT REAR SPEAKER (+) CIRCUIT OPEN
(X295) LEFT REAR SPEAKER (-) CIRCUIT OPEN
LEFT REAR SPEAKER
AMPLIFIER

DIAGNOSTIC TEST

1. **CHECK FOR AN INTERMITTENT CONDITION**
   1. Turn the ignition on and open one of the front doors.

      NOTE: A front door must remain open whenever checking or erasing Amplifier DTC's.

   2. Using the scan tool, record and erase the Amplifier DTC's.
   3. Cycle the ignition switch from on to off, wait five seconds and then back to on.
   4. Turn the Radio on and set the volume to 20.
   5. Adjust the speakers to the rear and center.
   6. Using the scan tool, read the active Amplifier DTC's.

      Does the scan tool display active: B1477-CHANNEL 5 AUDIO SPEAKER OUTPUT CIRCUIT OPEN?

      Yes

      - Go To 2.

      No

      - Test complete, the condition or conditions that originally set this DTC are not present at this time. Using the wiring diagrams as a guide, check all related splices and connectors for signs of water intrusion, corrosion, pushed out or bent terminals and correct pin tension.
      - Perform the BODY VERIFICATION TEST. Refer to **BODY VERIFICATION TEST** .
2. **CHECK THE OPERATION OF THE LEFT REAR SPEAKER**

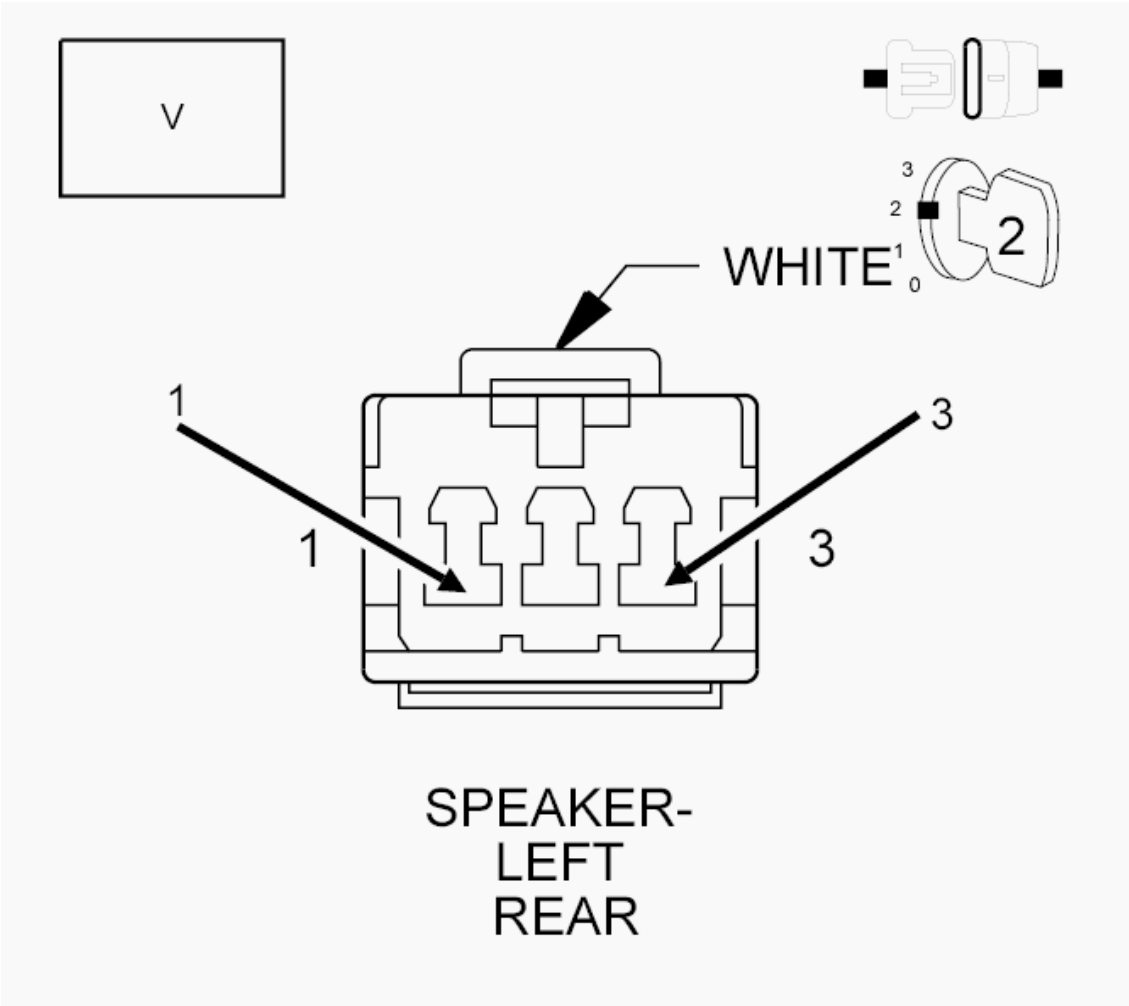

Fig. 65: Checking The Operation Of The Left Rear Speaker
Courtesy of CHRYSLER GROUP, LLC

1. Turn the ignition off.
2. Disconnect the Left Rear Speaker harness connector.
3. Turn the ignition on.
4. Turn the radio on and turn the volume to 25.
5. Adjust the speakers to the rear and center.
6. With a Voltmeter set to read in A/C voltage, measure the voltage of the Left Rear Speaker circuits in the Left Rear Speaker harness connector.

   Is the voltage present greater than 1 Volt?

   Yes

   - Replace the Left Rear Speaker in accordance with the Service Information.
   - Perform the BODY VERIFICATION TEST. Refer to **BODY VERIFICATION TEST** .

No

- Go To 3.

3. **CHECK THE (X205) LEFT REAR SPEAKER (+) CIRCUIT FOR AN OPEN**

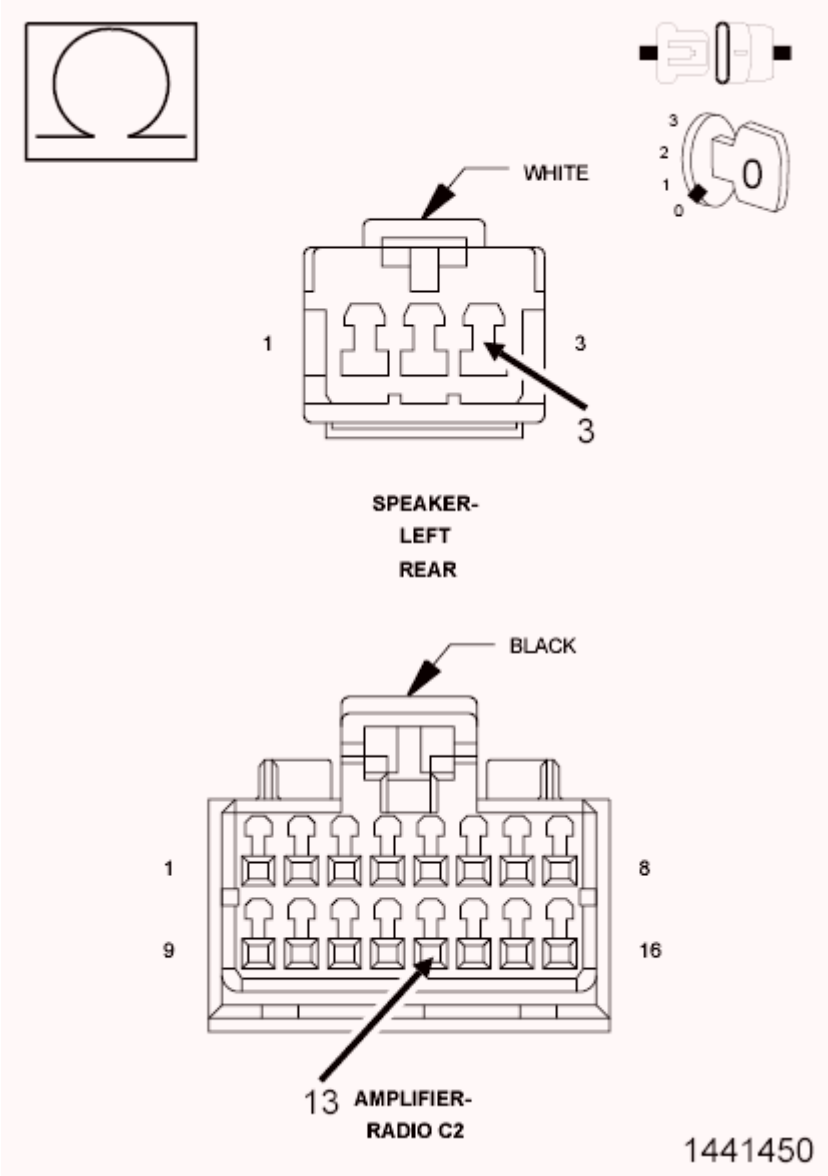

Fig. 66: Checking Left Rear Speaker (+) Circuit For An Open
Courtesy of CHRYSLER GROUP, LLC

1. Turn the ignition off.
2. Disconnect the Amplifier C2 harness connector.
3. Measure the resistance of the (X205) Left Rear Speaker (+) circuit between the Amplifier C2 harness connector and the Left Rear Speaker harness connector.

   Is the resistance below 2.0 Ohms?

Yes

- Go To 4.

No

- Repair the (X205) Left Rear Speaker (+) circuit for an open.
- Perform the BODY VERIFICATION TEST. Refer to **BODY VERIFICATION TEST** .

4. **CHECK THE (X295) LEFT REAR SPEAKER (-) CIRCUIT FOR AN OPEN**

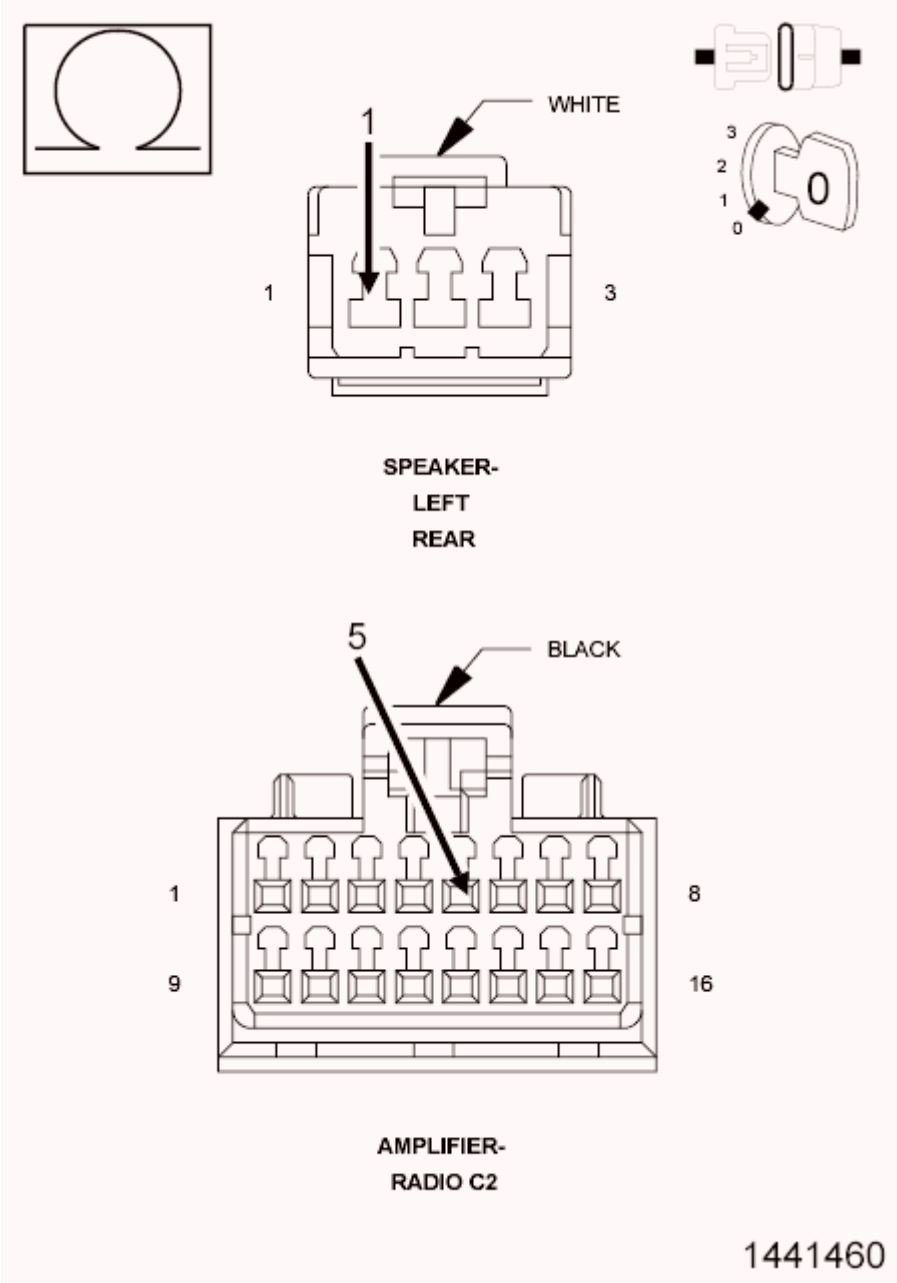

Fig. 67: Checking Left Rear Speaker (-) Circuit For An Open

Courtesy of CHRYSLER GROUP, LLC

1. Measure the resistance of the (X295) Left Rear Speaker (-) circuit between the Amplifier C2 harness connector and the Left Rear Speaker harness connector.

   Is the resistance below 2.0 Ohms?

   Yes

   - Replace the Amplifier in accordance with the Service Information.
   - Perform the BODY VERIFICATION TEST. Refer to **BODY VERIFICATION TEST** .

   No

   - Repair the (X295) Left Rear Shelf Speaker (-) circuit for an open.
   - Perform the BODY VERIFICATION TEST. Refer to **BODY VERIFICATION TEST** .

B1478-CHANNEL 5 AUDIO SPEAKER OUTPUT CIRCUIT SHORTED TOGETHER

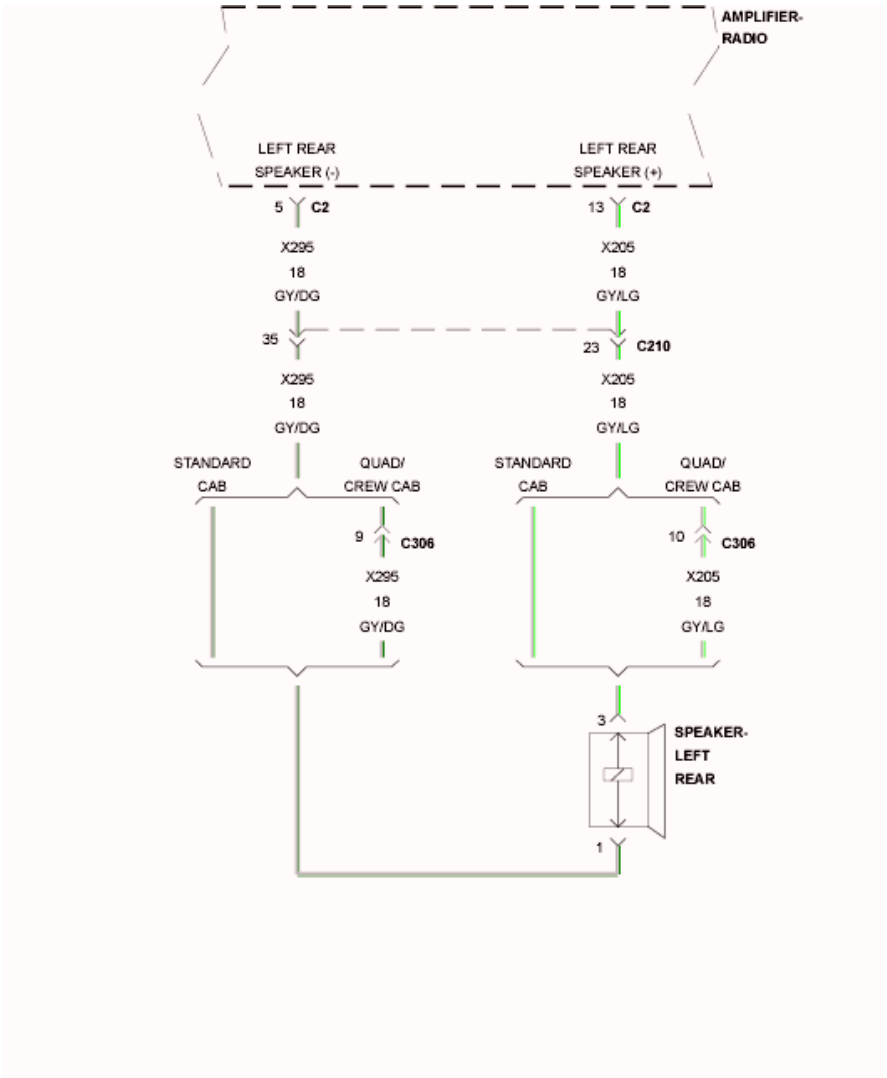

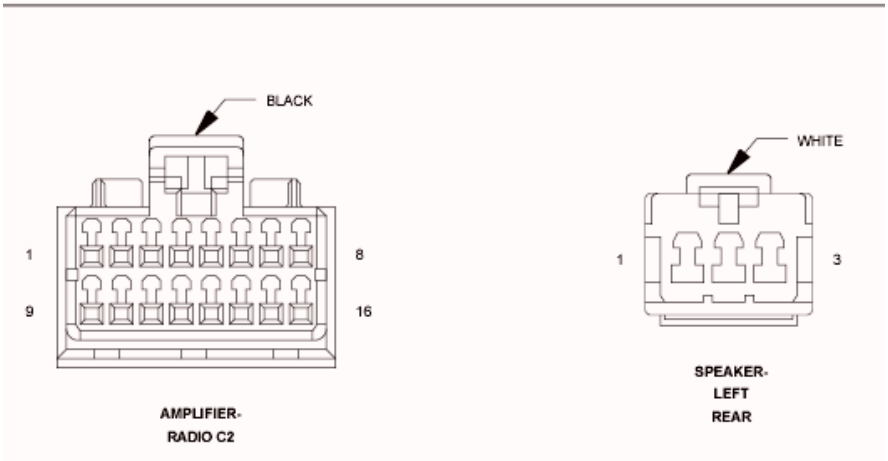

Fig. 68: Channel 5 Audio Speaker Output Wiring Diagram
Courtesy of CHRYSLER GROUP, LLC

For a complete wiring diagram, **refer to appropriate SYSTEM WIRING DIAGRAMS article** .

WHEN MONITORED:

With the ignition on. Radio volume at 25 or higher.

SET CONDITION:

The Amplifier detects that the output circuits are shorted together.

POSSIBLE CAUSES

Possible Causes
(X205) LEFT REAR SPEAKER (+) CIRCUIT SHORTED TO THE (X295) LEFT REAR SPEAKER (-) CIRCUIT
LEFT REAR SPEAKER
AMPLIFIER

DIAGNOSTIC TEST

1. **CHECK FOR AN INTERMITTENT CONDITION**
   1. Turn the ignition on and open one of the front doors.

      NOTE: A front door must remain open whenever checking or erasing Amplifier DTC's.

   2. Using the scan tool, record and erase the Amplifier DTC's.
   3. Cycle the ignition switch from on to off, wait five seconds and then back to on.
   4. Turn the Radio on and set the volume to 20.
   5. Adjust the speakers to the rear and center.
   6. Using the scan tool, read the active Amplifier DTC's.

      Does the scan tool display active: B1478-CHANNEL 5 AUDIO SPEAKER OUTPUT CIRCUIT SHORTED TOGETHER?

      Yes

      - Go To 2.

      No

      - Test complete, the condition or conditions that originally set this DTC are not present at this time. Using the wiring diagrams as a guide, check all related splices and connectors for signs of water intrusion, corrosion, pushed out or bent terminals and correct pin tension.
      - Perform the BODY VERIFICATION TEST. Refer to **BODY VERIFICATION TEST** .
2. **CHECK THE OPERATION OF THE LEFT REAR SPEAKER**

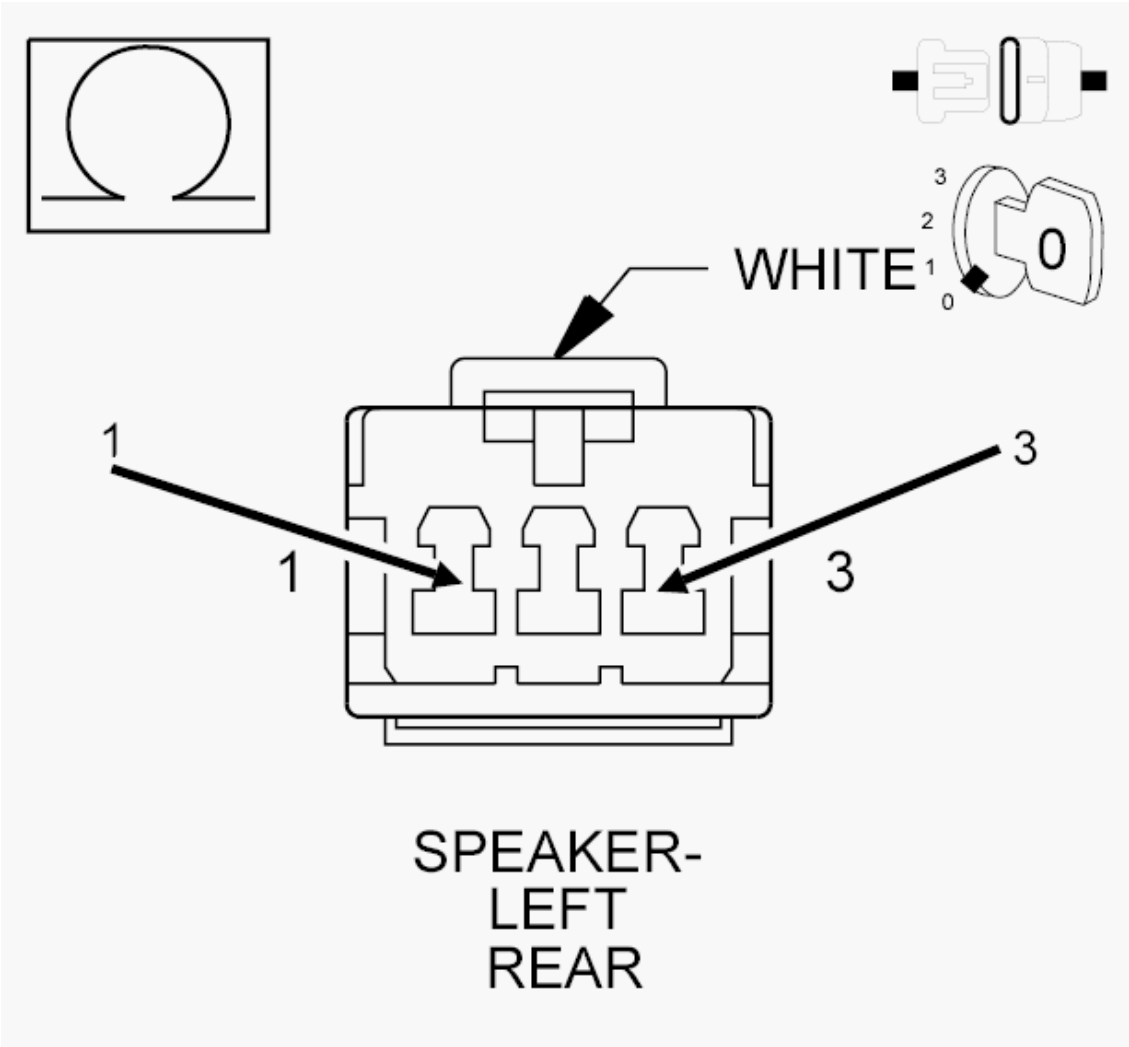

Fig. 69: Checking The Operation Of The Left Rear Speaker
Courtesy of CHRYSLER GROUP, LLC

1. Turn the ignition off.
2. Disconnect the Left Rear Speaker.
3. Measure the resistance of the speaker between the two terminals.

NOTE: **The graphic shows the connector for reference only. Measure between the speaker terminals.**

Is the resistance of the speaker less than 1 Ohm?

Yes

- Replace the Left Rear Speaker in accordance with the Service Information.
- Perform the BODY VERIFICATION TEST. Refer to **BODY VERIFICATION TEST** .

No

- Go To 3.

3. **CHECK THE (X205) LEFT REAR SPEAKER (+) CIRCUIT, AND THE (X295) LEFT REAR SPEAKER (-) CIRCUITS FOR A SHORT TOGETHER**

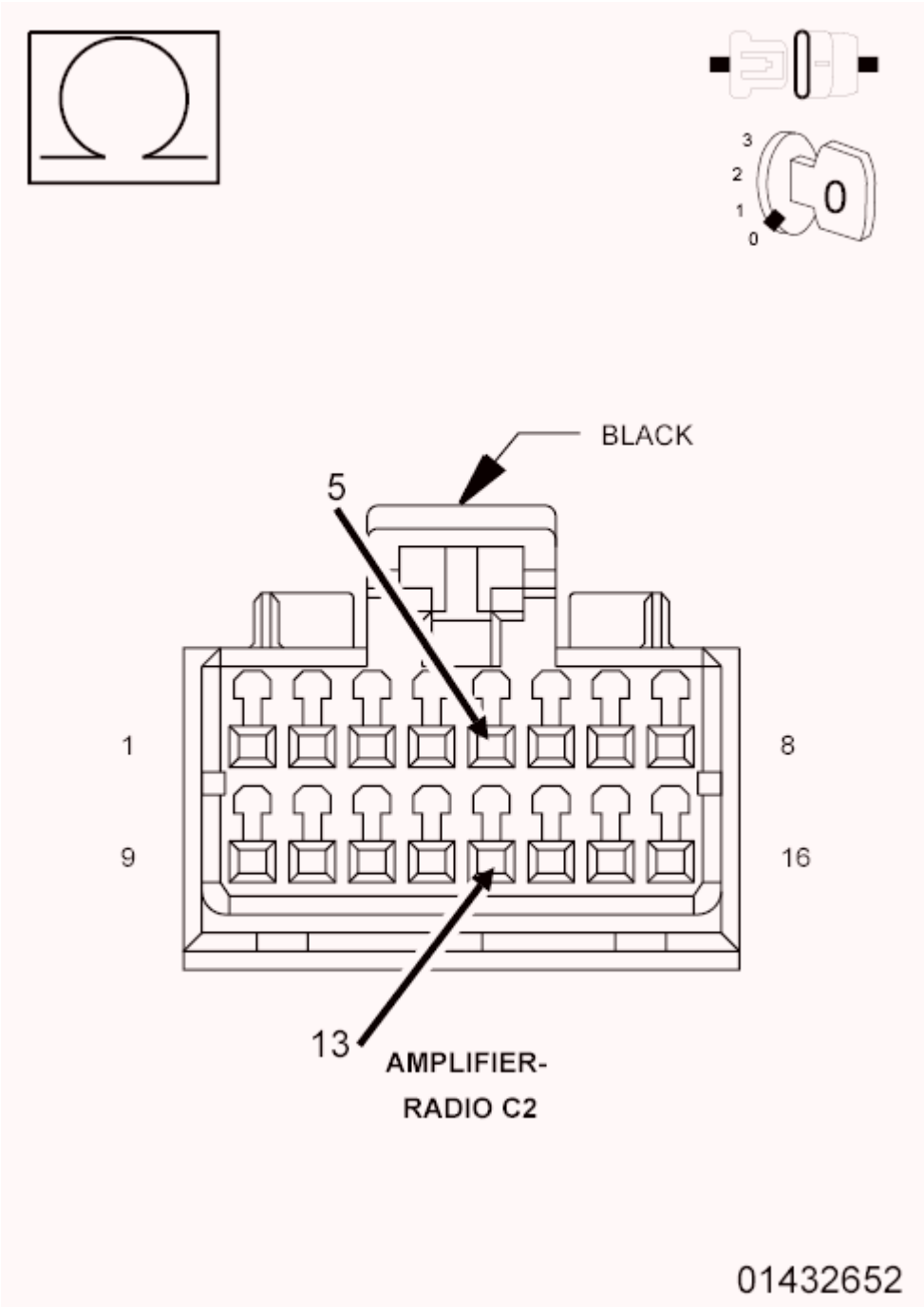

Fig. 70: Checking Left Rear Speaker (+) Circuit, And The Left Rear Speaker (-) Circuits For A Short Together
Courtesy of CHRYSLER GROUP, LLC

1. Turn the ignition off.
2. Disconnect the Amplifier C2 harness connector.
3. Measure the resistance between the (X205) Left Rear Speaker (+) circuit, and the (X295) Left Rear Speaker (-) circuit.

   Is the resistance below 10K Ohms?

   Yes

   - Repair the (X205) Left Rear Speaker (+) circuit, and the (X295) Left Rear Speaker (-) circuit for a short together.
   - Perform the BODY VERIFICATION TEST. Refer to **BODY VERIFICATION TEST** .

   No

   - Replace the Amplifier in accordance with the Service Information.
   - Perform the BODY VERIFICATION TEST. Refer to **BODY VERIFICATION TEST** .

B1479-CHANNEL 6 AUDIO SPEAKER OUTPUT CIRCUIT PERFORMANCE

For a complete wiring diagram, **refer to appropriate SYSTEM WIRING DIAGRAMS article** .

WHEN MONITORED:

With the ignition on.

SET CONDITION:

This Diagnostic Trouble Code (DTC) sets if a Direct Current (DC) offset occurs on the output channel, the amplifier shall set a DTC after a maturity rate of four to six seconds.

POSSIBLE CAUSES

Possible Causes
AMPLIFIER

DIAGNOSTIC TEST

1. **CHECK FOR AN INTERMITTENT CONDITION**
   1. Turn the ignition on and open one of the front doors.

      NOTE: A front door must remain open whenever checking or erasing Amplifier DTC's.

   2. Using the scan tool, record and erase the Amplifier DTC's.

3. Cycle the ignition switch from on to off, wait five seconds and then back to on.
4. Turn the Radio on and set the volume to 20.
5. Adjust the speakers to the rear and center.
6. Using the scan tool, read the active Amplifier DTC's.

   Does the scan tool display active: B1479-CHANNEL 6 AUDIO SPEAKER OUTPUT CIRCUIT PERFORMANCE?

   Yes

   - Replace the Amplifier in accordance with the Service Information.
   - Perform the BODY VERIFICATION TEST. Refer to **BODY VERIFICATION TEST** .

   No

   - Test complete, the condition or conditions that originally set this DTC are not present at this time. Using the wiring diagrams as a guide, check all related splices and connectors for signs of water intrusion, corrosion, pushed out or bent terminals and correct pin tension.
   - Perform the BODY VERIFICATION TEST. Refer to **BODY VERIFICATION TEST** .

B147A-CHANNEL 6 AUDIO SPEAKER OUTPUT CIRCUIT LOW

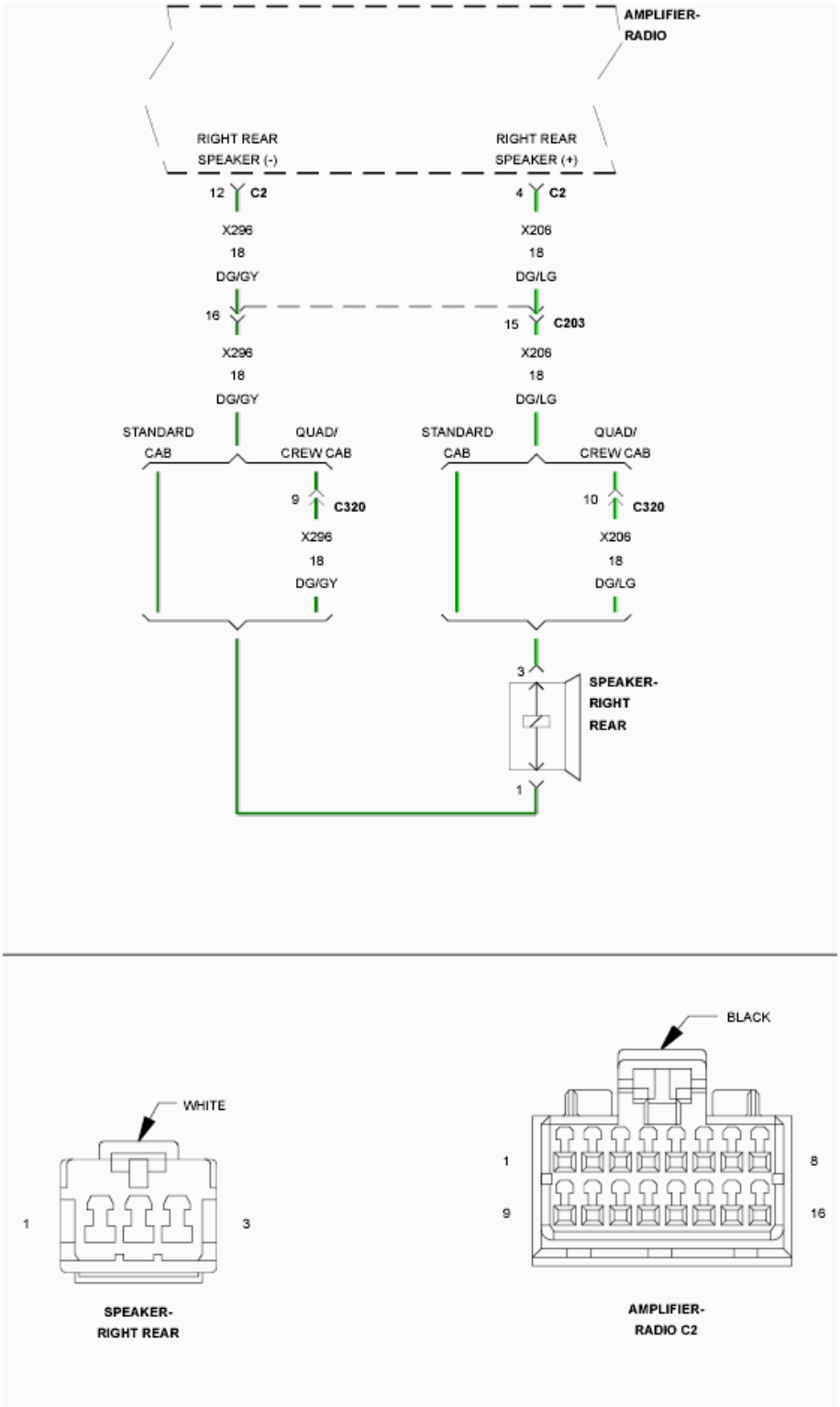

Fig. 71: Channel 6 Audio Speaker Output Wiring Diagram
Courtesy of CHRYSLER GROUP, LLC

For a complete wiring diagram, **refer to appropriate SYSTEM WIRING DIAGRAMS article** .

WHEN MONITORED:

With the ignition on.

SET CONDITION:

The Amplifier detects a shorted to ground condition on the speaker output circuit.

POSSIBLE CAUSES

Possible Causes
(X206) RIGHT REAR SPEAKER (+) CIRCUIT SHORTED TO GROUND
(X296) RIGHT REAR SPEAKER (-) CIRCUIT SHORTED TO GROUND
RIGHT REAR SPEAKER
AMPLIFIER

DIAGNOSTIC TEST

1. **CHECK FOR AN INTERMITTENT CONDITION**
   1. Turn the ignition on and open one of the front doors.

      NOTE: A front door must remain open whenever checking or erasing Amplifier DTC's.

   2. Using the scan tool, record and erase the Amplifier DTC's.
   3. Cycle the ignition switch from on to off, wait five seconds and then back to on.
   4. Turn the Radio on and set the volume to 20.
   5. Adjust the speakers to the rear and center.
   6. Using the scan tool, read the active Amplifier DTC's.

      Does the scan tool display active: B147A-CHANNEL 6 AUDIO SPEAKER OUTPUT CIRCUIT LOW?

      Yes

      - Go To 2.

      No

      - Test complete, the condition or conditions that originally set this DTC are not present at this time. Using the wiring diagrams as a guide, check all related splices and connectors for signs of water intrusion, corrosion, pushed out or bent terminals and correct pin tension.
      - Perform the BODY VERIFICATION TEST. Refer to **BODY VERIFICATION TEST** .
2. **CHECK THE RIGHT REAR SPEAKER**

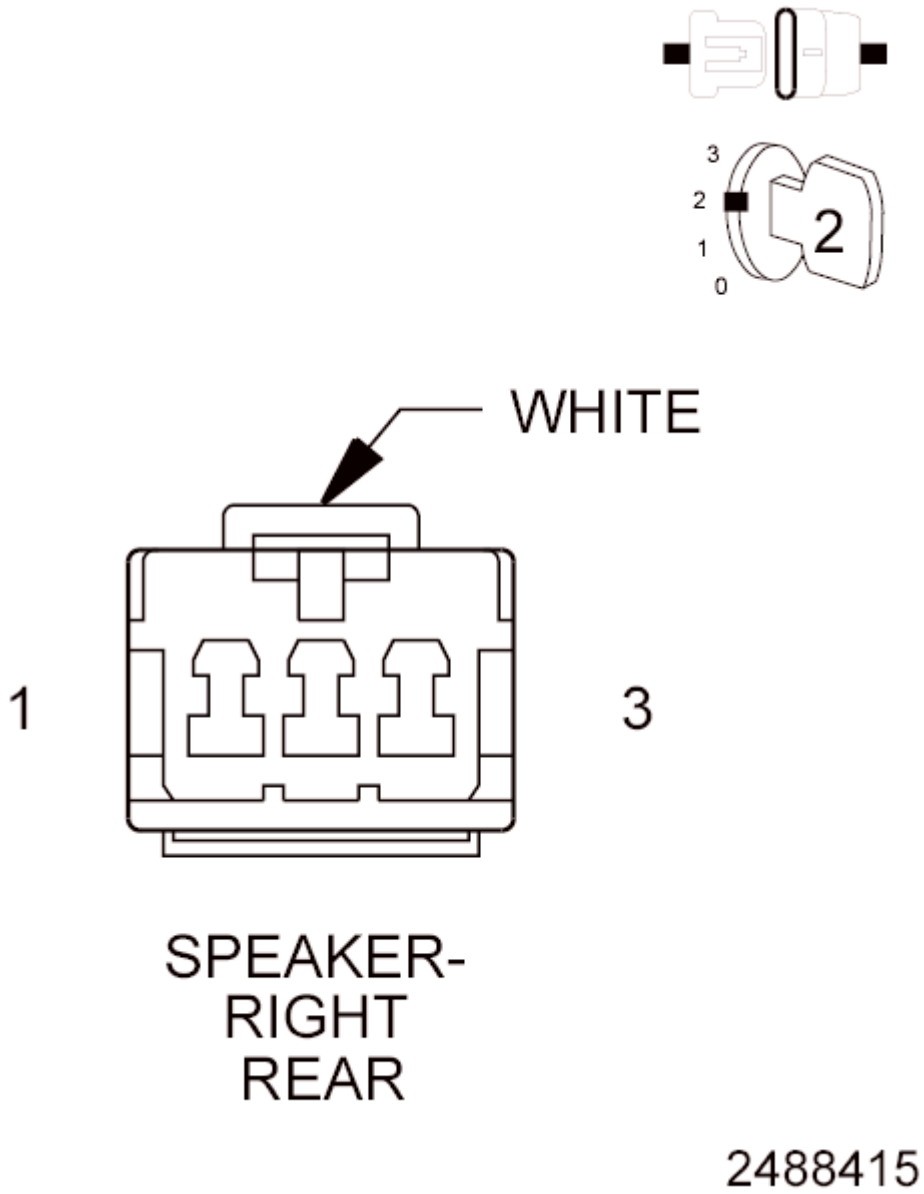

Fig. 72: Right Rear Speaker Connector End View
Courtesy of CHRYSLER GROUP, LLC

1. Make sure one of the front doors is still open.
2. Using the scan tool, erase the DTC's.
3. Turn the ignition off.
4. Disconnect the Right Rear Speaker harness connector.
5. Turn the ignition on.
6. Turn the radio on and set the volume to 25.
7. Using the scan tool, read the active Amplifier DTC's.

   Does the scan tool display active: B147A-CHANNEL 6 OUTPUT CIRCUIT LOW?

Yes

- Go To 3.

No

- Replace the Right Rear Speaker.
- Perform the BODY VERIFICATION TEST. Refer to **BODY VERIFICATION TEST** .

3. **CHECK THE (X206) RIGHT REAR SPEAKER (+) CIRCUIT FOR A SHORT TO GROUND**

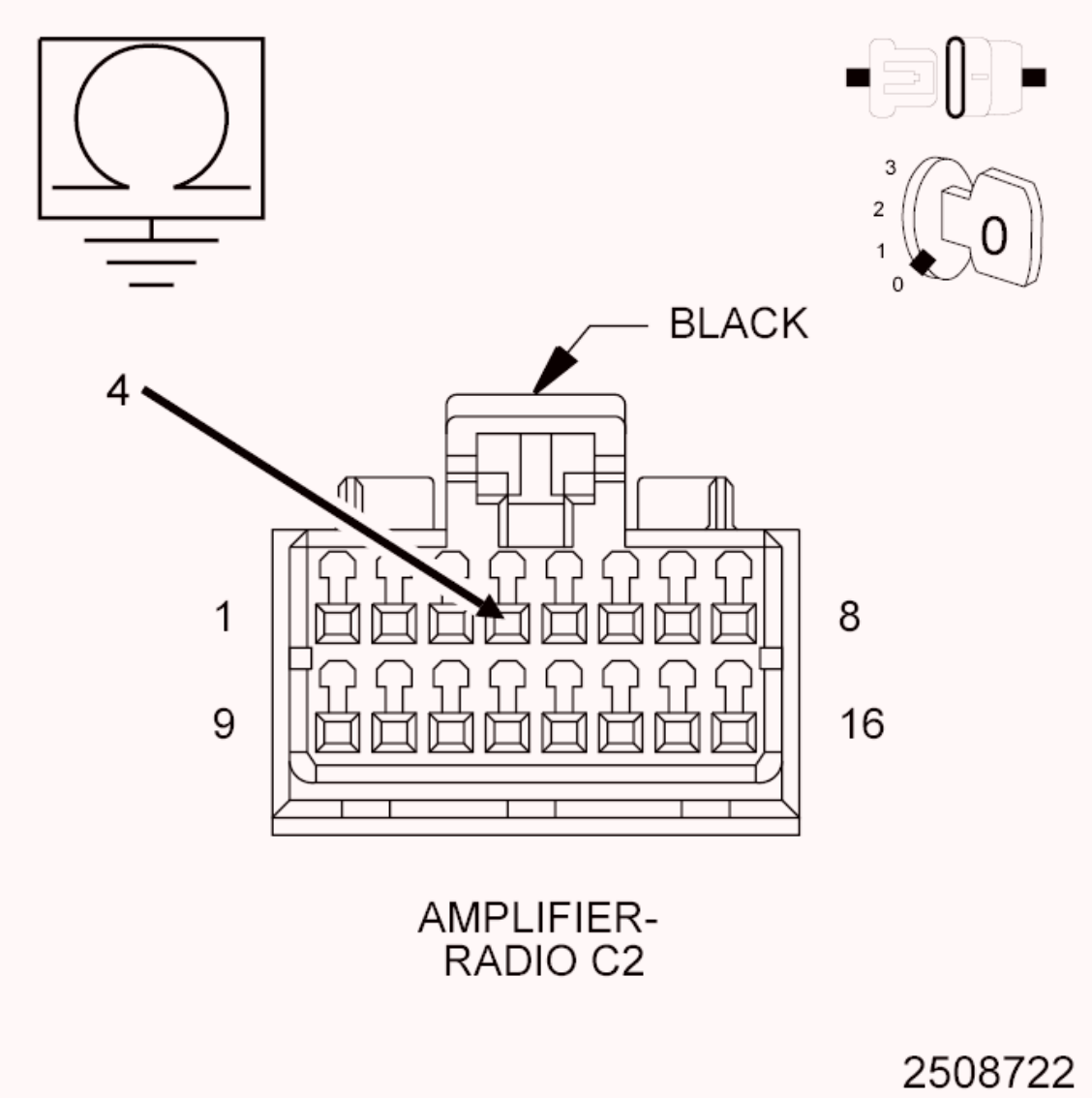

Fig. 73: Checking Right Rear Speaker (+) Circuit For A Short To Ground
Courtesy of CHRYSLER GROUP, LLC

1. Turn the ignition off.
2. Disconnect the Amplifier C2 harness connector.

3. Measure the resistance between ground and the (X206) Right Rear Speaker (+) circuit.

   Is the resistance below 10K Ohms?

   Yes

   - Repair the (X206) Right Rear Speaker (+) circuit for a short to ground.
   - Perform the BODY VERIFICATION TEST. Refer to **BODY VERIFICATION TEST** .

   No

   - Go To 4.

4. **CHECK THE (X296) RIGHT REAR SPEAKER (-) CIRCUIT FOR A SHORT TO GROUND**

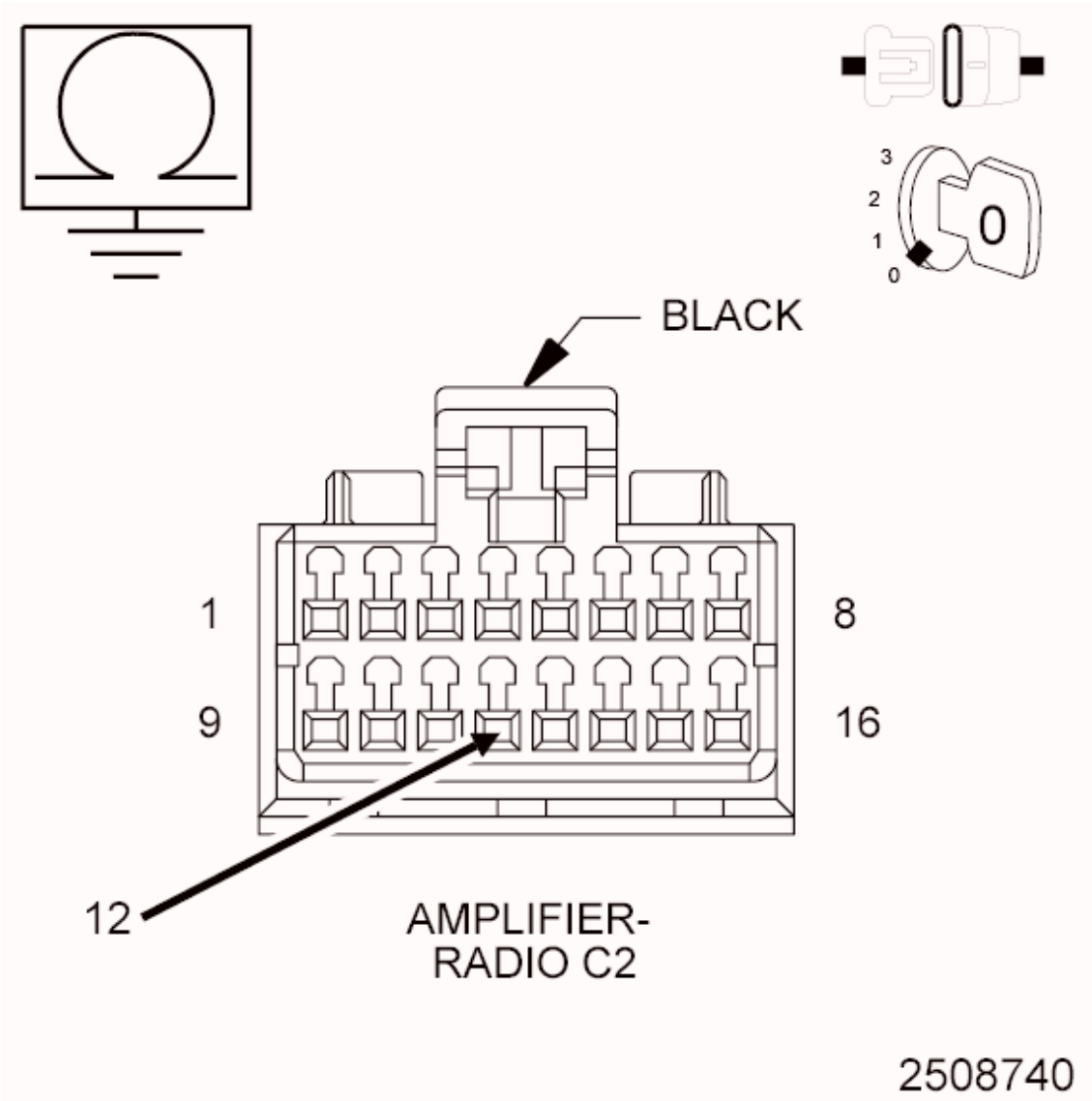

Fig. 74: Checking Right Rear Speaker (-) Circuit For A Short To Ground

Courtesy of CHRYSLER GROUP, LLC

1. Measure the resistance between ground and the (X296) Right Rear Speaker (-) circuit.

   Is the resistance below 10K Ohms?

   Yes

   - Repair the (X296) Right Rear Speaker (-) for a short to ground.
   - Perform the BODY VERIFICATION TEST. Refer to **BODY VERIFICATION TEST** .

   No

   - Replace the Amplifier in accordance with the Service Information.
   - Perform the BODY VERIFICATION TEST. Refer to **BODY VERIFICATION TEST** .

B147B-CHANNEL 6 AUDIO SPEAKER OUTPUT CIRCUIT HIGH

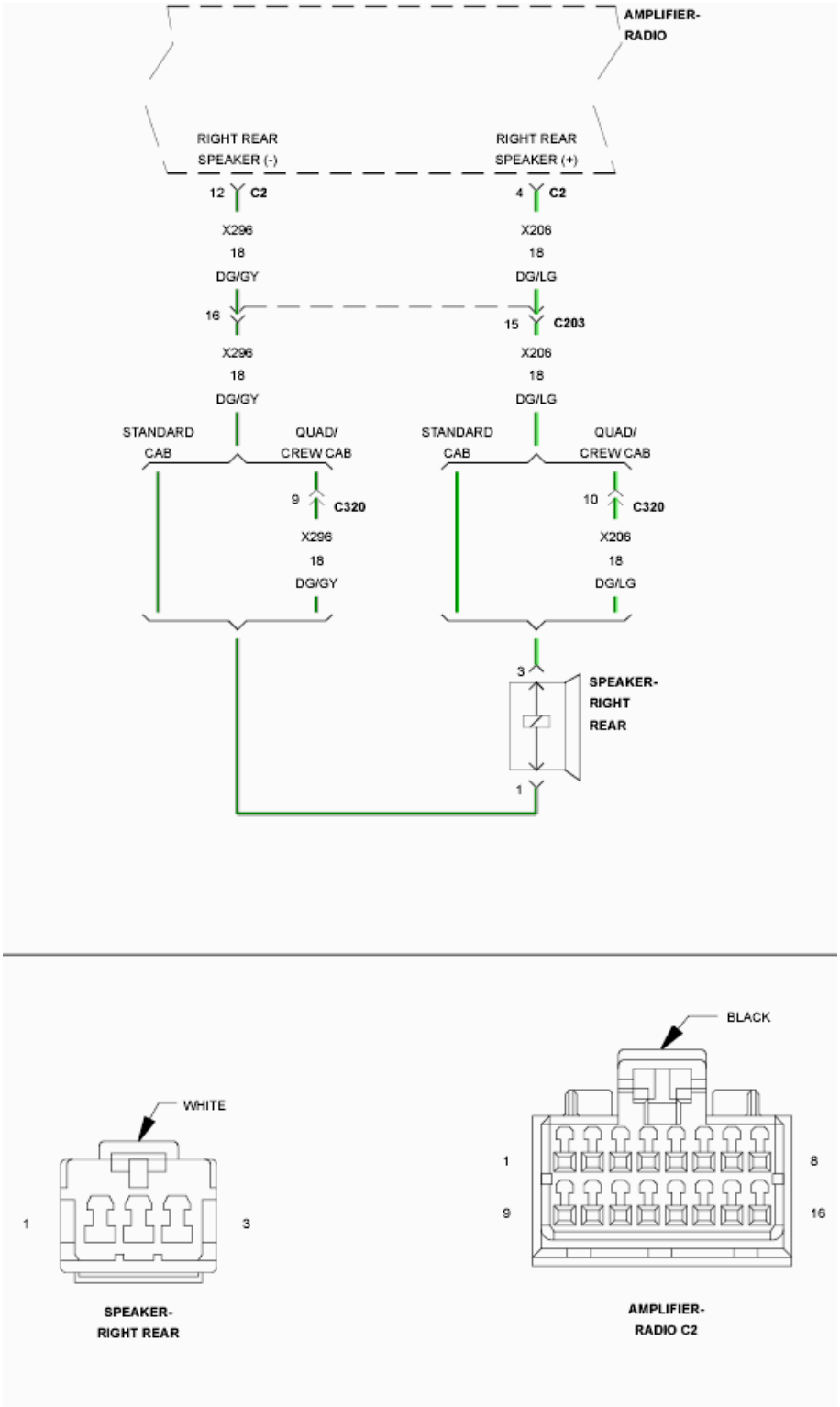

Fig. 75: Channel 6 Audio Speaker Output Wiring Diagram
Courtesy of CHRYSLER GROUP, LLC

For a complete wiring diagram, **refer to appropriate SYSTEM WIRING DIAGRAMS article** .

WHEN MONITORED:

With the ignition on.

SET CONDITION:

The Amplifier detects a short to battery condition on the output circuit.

POSSIBLE CAUSES

Possible Causes
(X206) RIGHT REAR SPEAKER (+) CIRCUIT SHORTED TO VOLTAGE
(X296) RIGHT REAR SPEAKER (-) CIRCUIT SHORTED TO VOLTAGE
AMPLIFIER

DIAGNOSTIC TEST

1. **CHECK FOR AN INTERMITTENT CONDITION**
   1. Turn the ignition on and open one of the front doors.

      NOTE: A front door must remain open whenever checking or erasing Amplifier DTC's.

   2. With the scan tool, record and erase the Amplifier DTC's.
   3. Cycle the ignition switch from on to off, wait five seconds and then back to on.
   4. Turn the Radio on and set the volume to 20.
   5. Adjust the speakers to the rear and center.
   6. With the scan tool, read the active Amplifier DTC's.

      Does the scan tool display active: B147B-CHANNEL 6 AUDIO SPEAKER OUTPUT CIRCUIT HIGH?

      Yes

      - Go To 2.

      No

      - Test complete, the condition or conditions that originally set this DTC are not present at this time. Using the wiring diagrams as a guide, check all related splices and connectors for signs of water intrusion, corrosion, pushed out or bent terminals and correct pin tension.
      - Perform the BODY VERIFICATION TEST. Refer to **BODY VERIFICATION TEST** .
2. **CHECK FOR VOLTAGE ON THE (X206) RIGHT REAR SPEAKER (+) CIRCUIT**

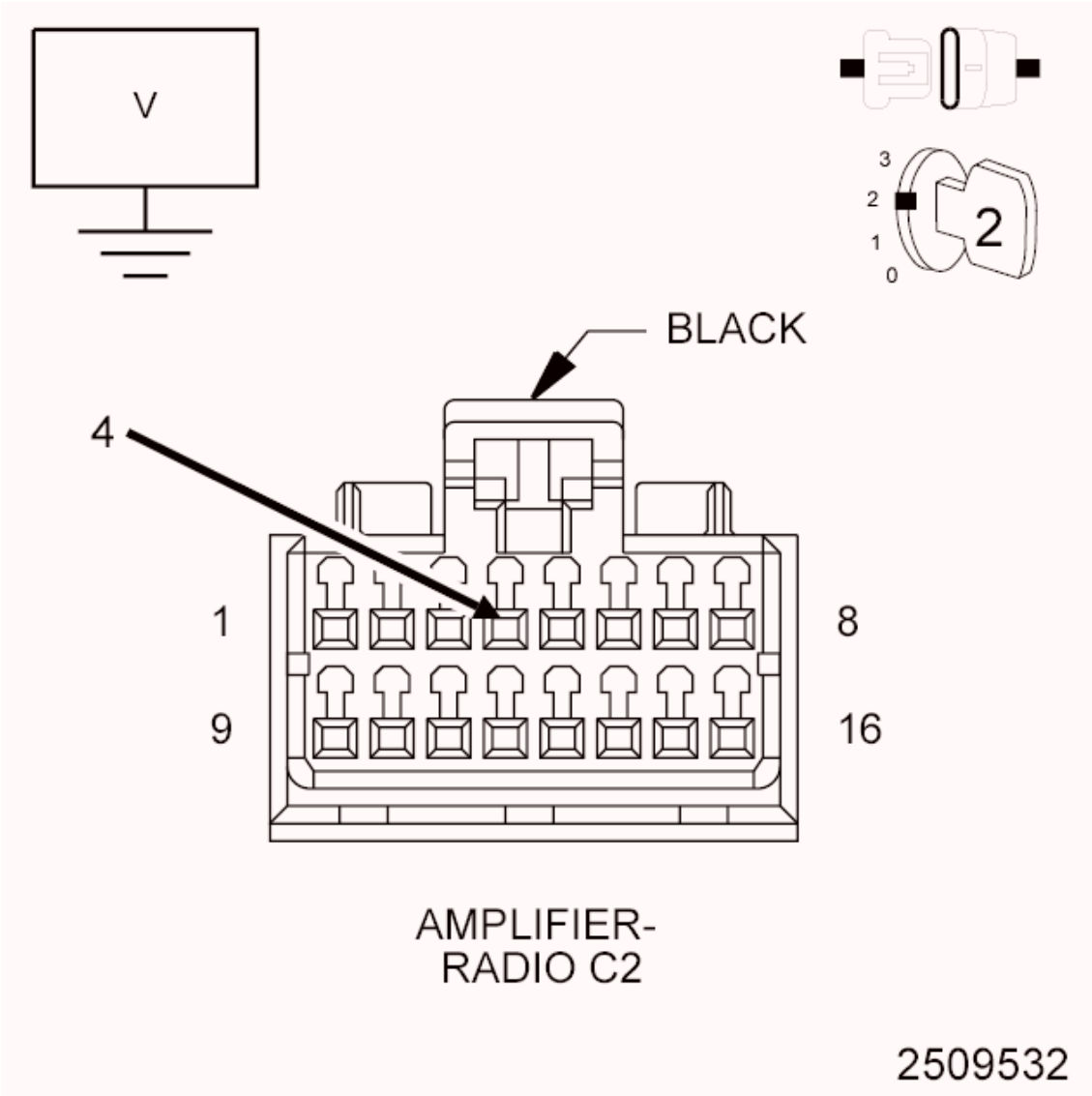

Fig. 76: Measuring Voltage On Right Rear Speaker (+) Circuit
Courtesy of CHRYSLER GROUP, LLC

1. Turn the ignition off.
2. Disconnect the Amplifier C2 harness connector.
3. Disconnect the Right Rear Speaker harness connector.
4. Turn the ignition on.
5. Measure the voltage between the (X206) Right Rear Speaker (+) circuit and ground.

   Is there any voltage present?

   Yes

   - Repair the (X206) Right Rear Speaker (+) circuit for a short to voltage.
   - Perform the BODY VERIFICATION TEST. Refer to **BODY VERIFICATION TEST** .

No

- Go To 3.

3. **CHECK FOR VOLTAGE ON THE (X296) RIGHT REAR SPEAKER (-) CIRCUIT**

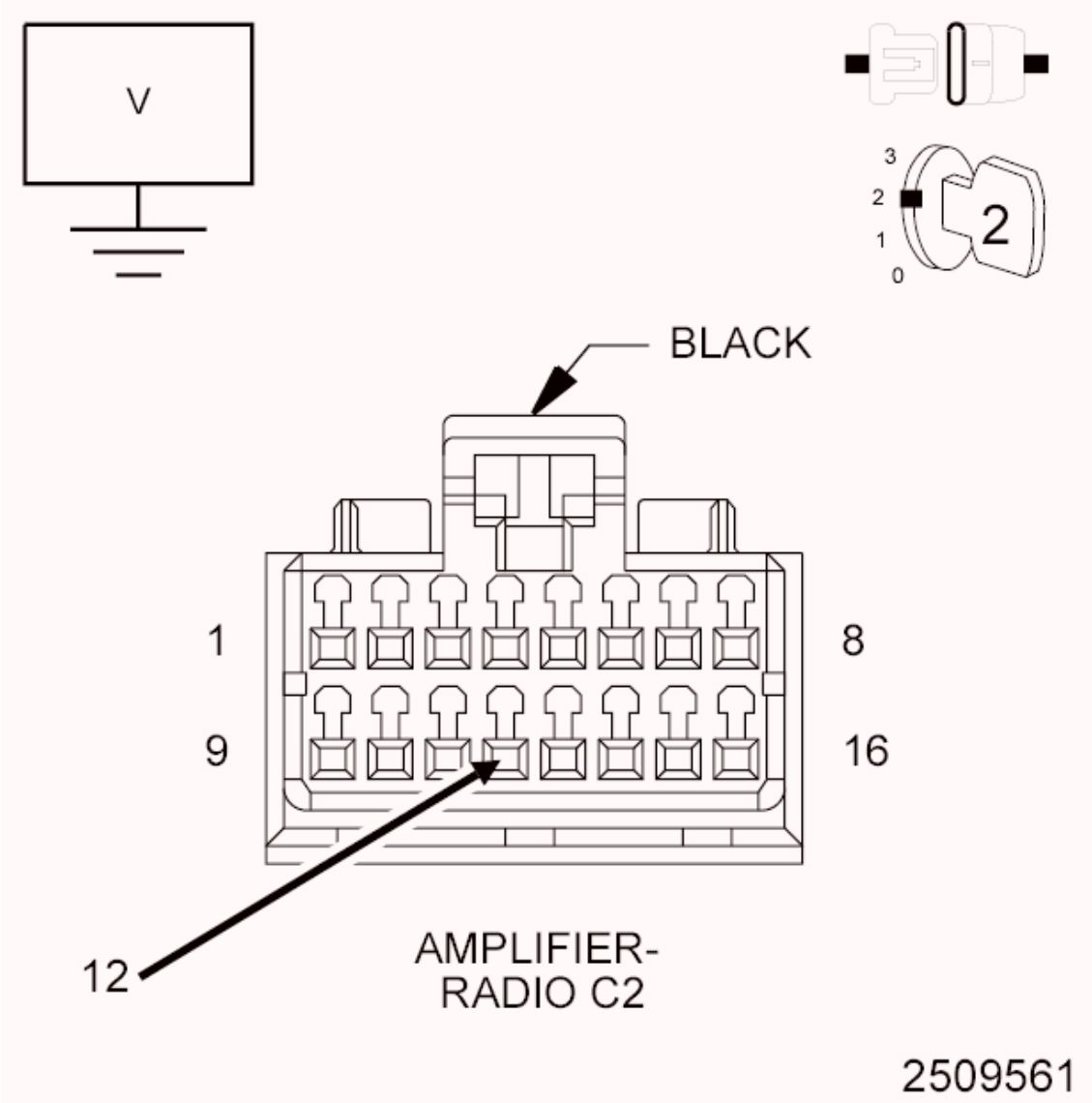

Fig. 77: Measuring Voltage On Right Rear Speaker (-) Circuit
Courtesy of CHRYSLER GROUP, LLC

1. Measure the voltage between the (X296) Right Rear Speaker (-) circuit and ground.

   Is there any voltage present?

   Yes

   - Repair the (X296) Right Rear Speaker (-) circuit for a short to voltage.

- Perform the BODY VERIFICATION TEST. Refer to **BODY VERIFICATION TEST** .

No

- Replace the Amplifier in accordance with the Service Information.
- Perform the BODY VERIFICATION TEST. Refer to **BODY VERIFICATION TEST** .

B147C-CHANNEL 6 AUDIO SPEAKER OUTPUT CIRCUIT OPEN

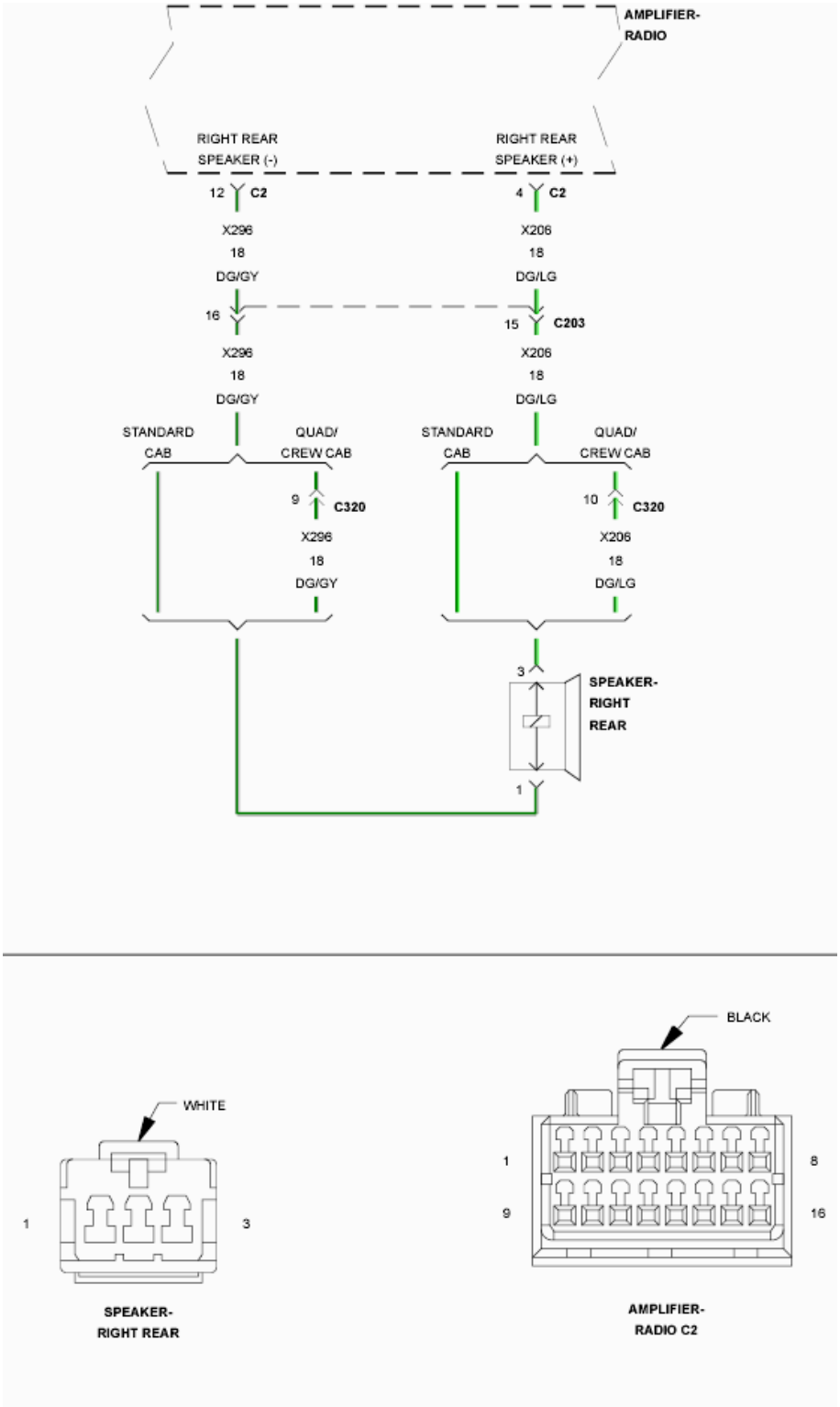

Fig. 78: Channel 6 Audio Speaker Output Wiring Diagram
Courtesy of CHRYSLER GROUP, LLC

For a complete wiring diagram, **refer to appropriate SYSTEM WIRING DIAGRAMS article** .

WHEN MONITORED:

Amplifier Bus wake-up. Amplifier reset with scan tool.

SET CONDITION:

The Amplifier detects an open condition on the speaker output circuit.

POSSIBLE CAUSES

Possible Causes
(X206) RIGHT REAR SPEAKER (+) CIRCUIT OPEN
(X296) RIGHT REAR SPEAKER (-) CIRCUIT OPEN
RIGHT REAR SPEAKER
AMPLIFIER

DIAGNOSTIC TEST

1. **CHECK FOR AN INTERMITTENT CONDITION**
   1. Turn the ignition on and open one of the front doors.

      NOTE: A front door must remain open whenever checking or erasing Amplifier DTC's.

   2. With the scan tool, record and erase the Amplifier DTC's.
   3. Cycle the ignition switch from on to off, wait five seconds and then back to on.
   4. Turn the Radio on and set the volume to 20.
   5. Adjust the speakers to the rear and center.
   6. With the scan tool, read the active Amplifier DTC's.

      Does the scan tool display active: B147C-CHANNEL 6 AUDIO SPEAKER OUTPUT CIRCUIT OPEN?

      Yes

      - Go To 2.

      No

      - Test complete, the condition or conditions that originally set this DTC are not present at this time. Using the wiring diagrams as a guide, check all related splices and connectors for signs of water intrusion, corrosion, pushed out or bent terminals and correct pin tension.
      - Perform the BODY VERIFICATION TEST. Refer to **BODY VERIFICATION TEST** .
2. **CHECK THE OPERATION OF THE RIGHT REAR SPEAKER**

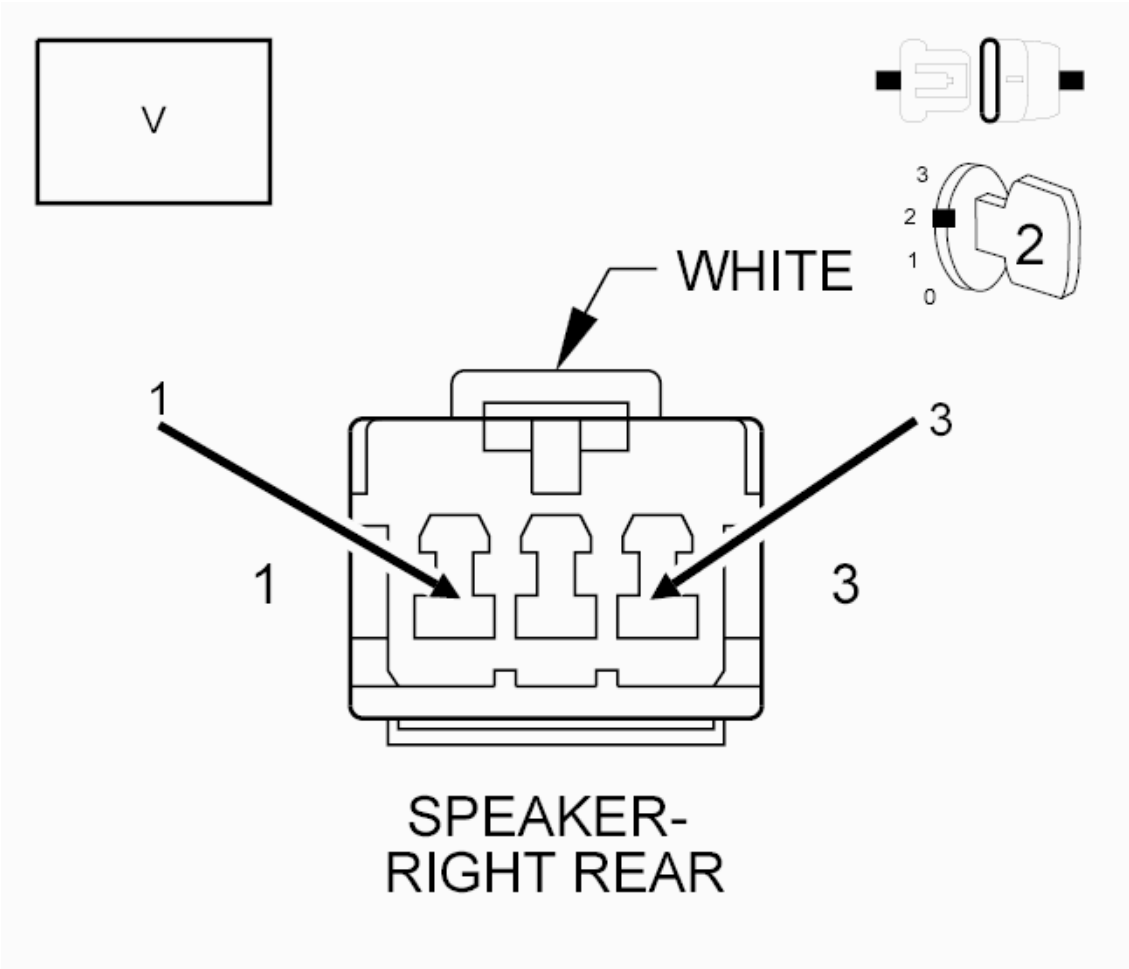

Fig. 79: Checking The Operation Of The Right Rear Speaker
Courtesy of CHRYSLER GROUP, LLC

1. Turn the ignition off.
2. Disconnect the Right Rear Speaker harness connector.
3. Turn the radio on and turn the volume to 25.
4. With a voltmeter set to read in A/C voltage, measure the voltage of the Right Rear Speaker circuits in the Right Rear Speaker harness connector.

   Is the voltage present greater than 1 volt?

   Yes

   - Replace the Right Rear Speaker in accordance with the Service Information.
   - Perform the BODY VERIFICATION TEST. Refer to **BODY VERIFICATION TEST** .

   No

   - Go To 3.

3. **CHECK THE (X206) RIGHT REAR SPEAKER (+) CIRCUIT FOR AN OPEN**

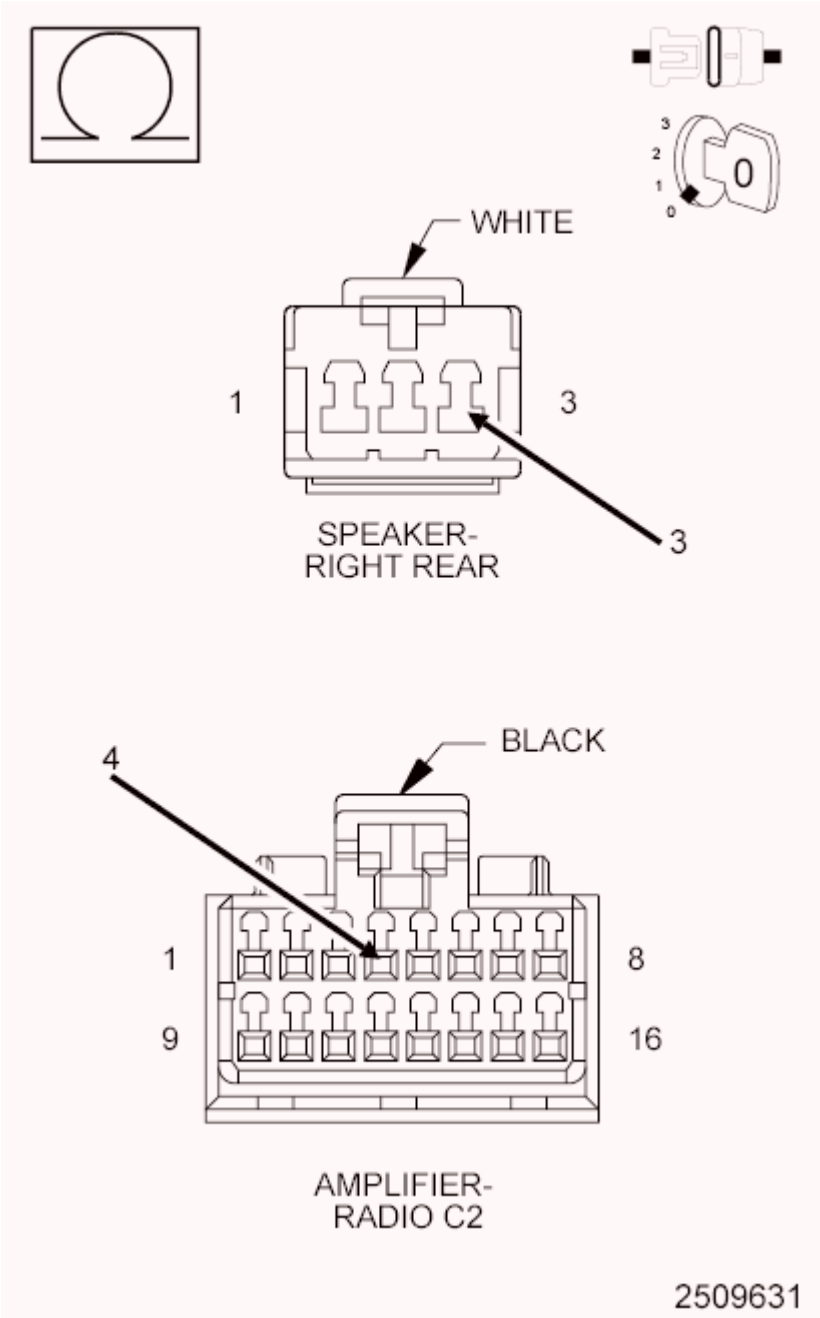

Fig. 80: Checking Right Rear Speaker (+) Circuit For An Open
Courtesy of CHRYSLER GROUP, LLC

1. Turn the ignition off.
2. Disconnect the Amplifier C2 harness connector.
3. Measure the resistance of the (X206) Right Rear Speaker (+) circuit between the Amplifier C2 harness connector and the Right Rear Speaker harness connector.

Is the resistance below 2.0 Ohms?

Yes

- Go To 4.

No

- Repair the (X206) Right Rear Speaker (+) circuit for an open.
- Perform the BODY VERIFICATION TEST. Refer to **BODY VERIFICATION TEST** .

4. **CHECK THE (X296) RIGHT REAR SPEAKER (-) CIRCUIT FOR AN OPEN**

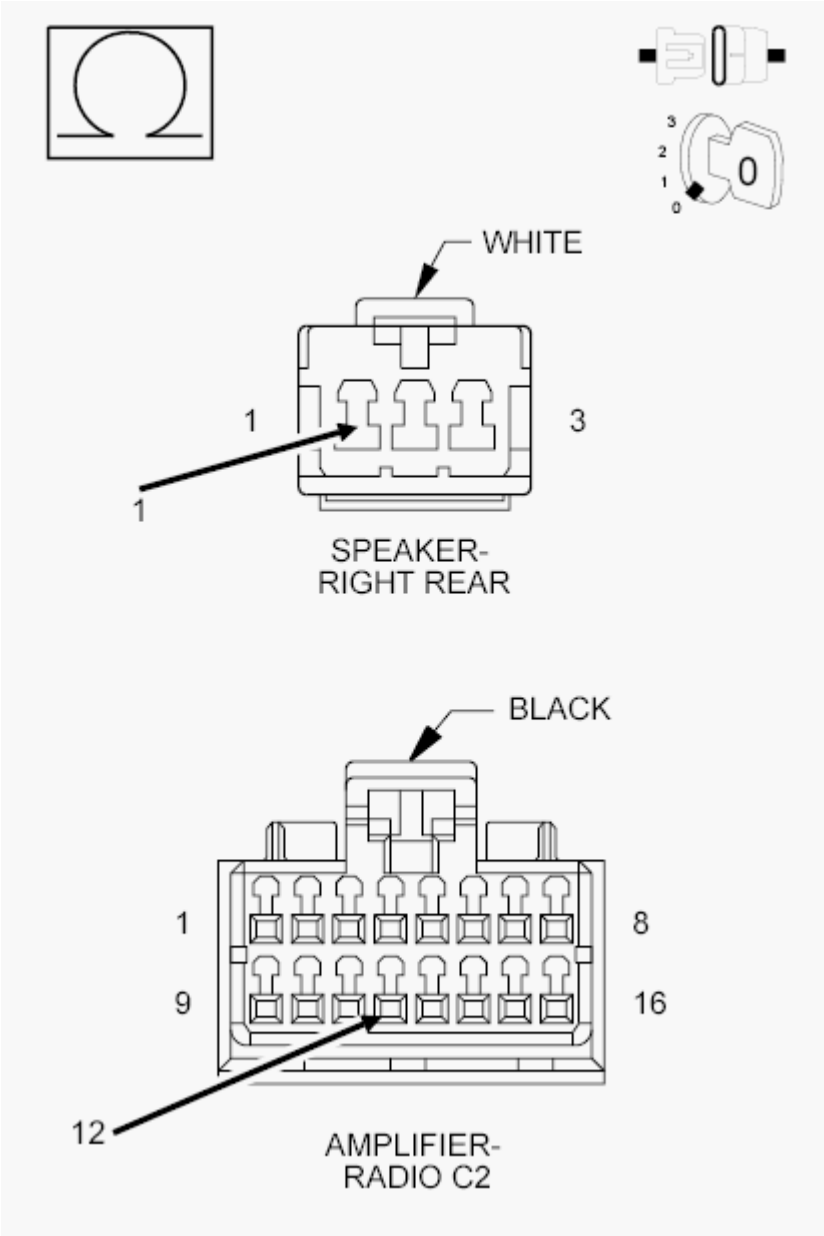

Fig. 81: Checking Right Rear Speaker (-) Circuit For An Open
Courtesy of CHRYSLER GROUP, LLC

1. Measure the resistance of the (X296) Right Rear Speaker (-) circuit between the Amplifier C2 harness connector and the Right Rear Speaker harness connector.

   Is the resistance below 2.0 Ohms?

   Yes

   - Replace the Amplifier in accordance with the Service Information.
   - Perform the BODY VERIFICATION TEST. Refer to **BODY VERIFICATION TEST** .

   No

   - Repair the (X296) Right Rear Speaker (-) circuit for an open.
   - Perform the BODY VERIFICATION TEST. Refer to **BODY VERIFICATION TEST** .

B147D-CHANNEL 6 AUDIO SPEAKER OUTPUT CIRCUIT SHORTED TOGETHER

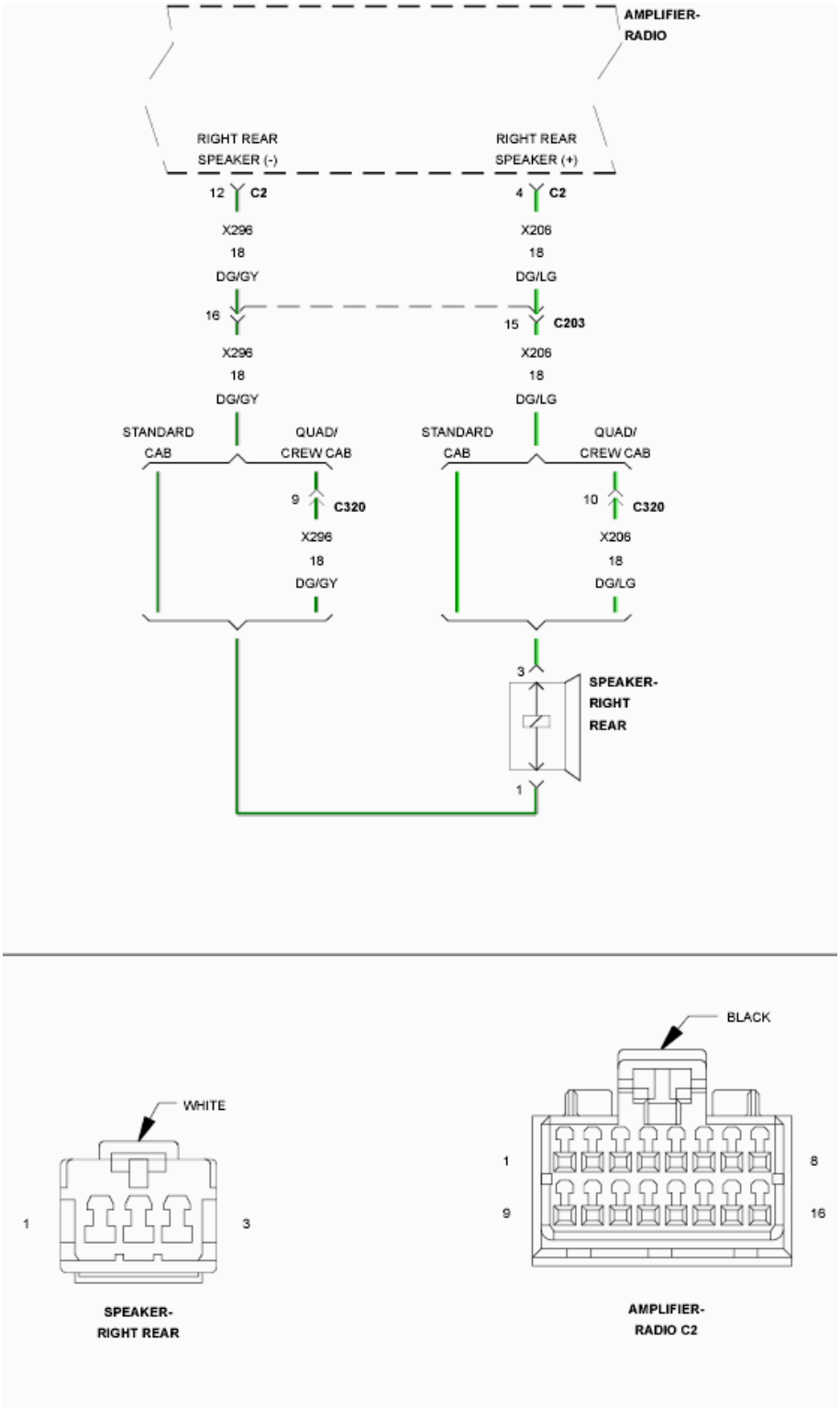

Fig. 82: Channel 6 Audio Speaker Output Wiring Diagram
Courtesy of CHRYSLER GROUP, LLC

For a complete wiring diagram, **refer to appropriate SYSTEM WIRING DIAGRAMS article** .

WHEN MONITORED:

With the ignition on. Radio volume at 25 or higher.

SET CONDITION:

The Amplifier detects that the output circuits are shorted together.

POSSIBLE CAUSES

Possible Causes
(X206) RIGHT REAR SPEAKER (+) CIRCUIT SHORTED TO THE (X296) RIGHT REAR SPEAKER (-) CIRCUIT
RIGHT REAR SPEAKER
AMPLIFIER

DIAGNOSTIC TEST

1. **CHECK FOR AN INTERMITTENT CONDITION**
    1. Turn the ignition on and open one of the front doors.

       NOTE: A front door must remain open whenever checking or erasing Amplifier DTC's.

    2. With the scan tool, record and erase the Amplifier DTC's.
    3. Cycle the ignition switch from on to off, wait five seconds and then back to on.
    4. Turn the Radio on and set the volume to 20.
    5. Adjust the speakers to the rear and center.
    6. With the scan tool, read the active Amplifier DTC's.

       Does the scan tool display active: B147D-CHANNEL 6 AUDIO SPEAKER OUTPUT CIRCUIT SHORTED TOGETHER?

       Yes

       - Go To 2.

       No

       - Test complete, the condition or conditions that originally set this DTC are not present at this time. Using the wiring diagrams as a guide, check all related splices and connectors for signs of water intrusion, corrosion, pushed out or bent terminals and correct pin tension.
       - Perform the BODY VERIFICATION TEST. Refer to **BODY VERIFICATION TEST** .
2. **CHECK THE OPERATION OF THE RIGHT REAR SPEAKER**

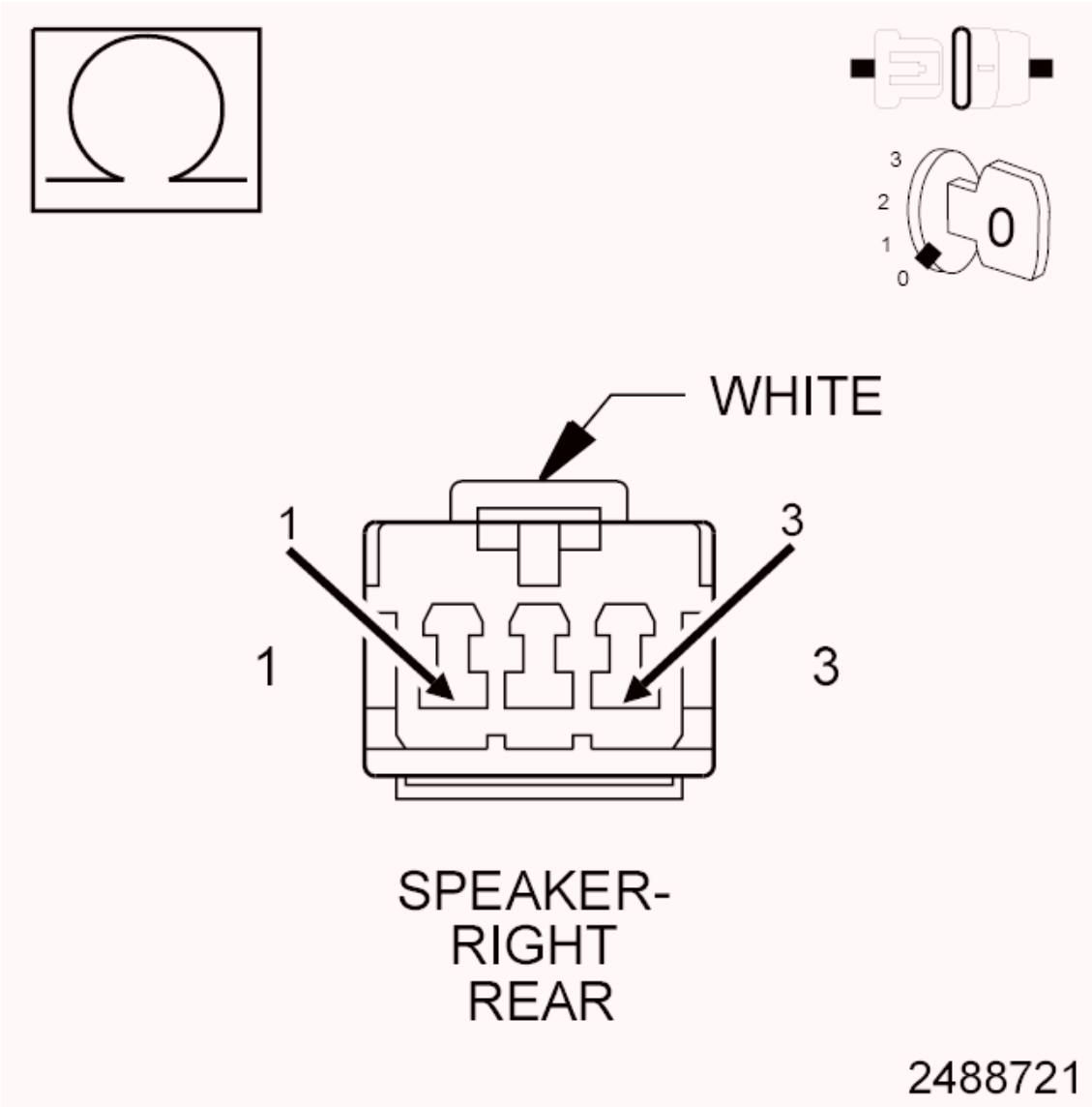

Fig. 83: Checking The Operation Of The Right Rear Speaker
Courtesy of CHRYSLER GROUP, LLC

1. Turn the ignition off.
2. Disconnect the Right Rear Speaker.
3. Measure the resistance of the speaker between the two terminals.

NOTE: **The graphic shows the connector for reference only. Measure between the speaker terminals.**

Is the resistance of the speaker less than 1 Ohm?

Yes

- Replace the Right Rear Speaker in accordance with the Service Information.

- Perform the BODY VERIFICATION TEST. Refer to **BODY VERIFICATION TEST** .

No

- Go To 3.

3. **CHECK THE (X206) RIGHT REAR SPEAKER (+) CIRCUIT, AND THE (X296) RIGHT REAR SPEAKER (-) CIRCUITS FOR A SHORT TOGETHER**

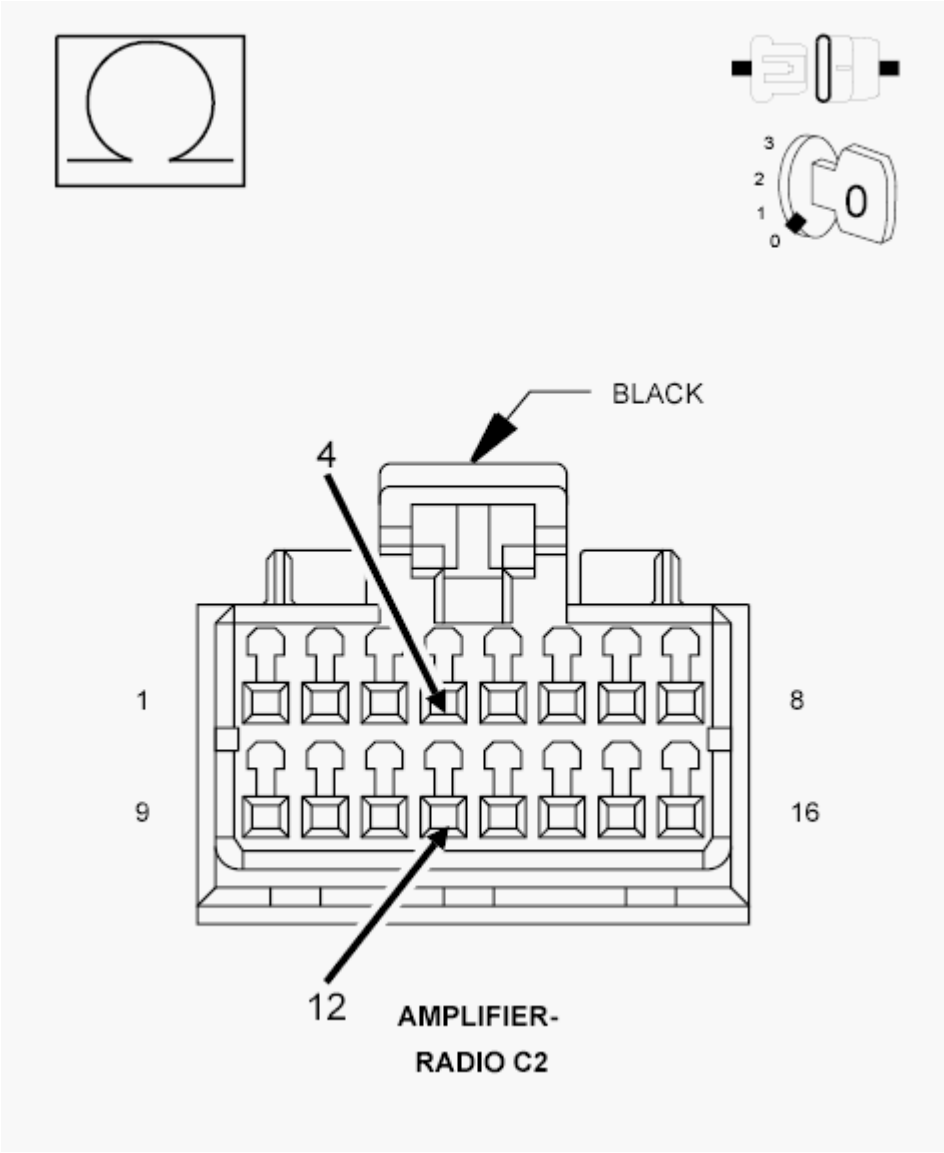

Fig. 84: Checking Right Rear Speaker (+) Circuit, And The Right Rear Speaker (-) Circuits For A Short Together
Courtesy of CHRYSLER GROUP, LLC

1. Disconnect the Amplifier C2 harness connector.
2. Measure the resistance between the (X206) Right Rear Speaker (+) circuit, and the (X296) Right Rear Speaker (-) circuit.

Is the resistance below 10K Ohms?

Yes

- Repair the (X206) Right Rear Speaker (+) circuit, and the (X296) Right Rear Speaker (-) circuit for a short together.
- Perform the BODY VERIFICATION TEST. Refer to **BODY VERIFICATION TEST** .

No

- Replace the Amplifier in accordance with the Service Information.
- Perform the BODY VERIFICATION TEST. Refer to **BODY VERIFICATION TEST** .

B147E-CHANNEL 7 AUDIO SPEAKER OUTPUT CIRCUIT PERFORMANCE

For a complete wiring diagram, **refer to appropriate SYSTEM WIRING DIAGRAMS article** .

WHEN MONITORED:

With the ignition on.

SET CONDITION:

This Diagnostic Trouble Code (DTC) sets if a Direct Current (DC) offset occurs on the output channel, the amplifier shall set a DTC after a maturity rate of four to six seconds.

POSSIBLE CAUSES

Possible Causes
AMPLIFIER

DIAGNOSTIC TEST

1. **CHECK FOR AN INTERMITTENT CONDITION**
    1. Turn the ignition on and open one of the front doors.

        NOTE: A front door must remain open whenever checking or erasing Amplifier DTC's.

    2. With the scan tool, record and erase the Amplifier DTC's.
    3. Cycle the ignition switch from on to off, wait five seconds and then back to on.
    4. Turn the Radio on and set the volume to 20.
    5. Adjust the speakers to the rear and center.
    6. With the scan tool, read the active Amplifier DTC's.

Does the scan tool display active: B147E-CHANNEL 7 AUDIO SPEAKER OUTPUT CIRCUIT PERFORMANCE?

Yes

- Replace the Amplifier in accordance with the Service Information.
- Perform the BODY VERIFICATION TEST. Refer to **BODY VERIFICATION TEST** .

No

- Test complete, the condition or conditions that originally set this DTC are not present at this time. Using the wiring diagrams as a guide, check all related splices and connectors for signs of water intrusion, corrosion, pushed out or bent terminals and correct pin tension.
- Perform the BODY VERIFICATION TEST. Refer to **BODY VERIFICATION TEST** .

B147F-CHANNEL 7 AUDIO SPEAKER OUTPUT CIRCUIT LOW

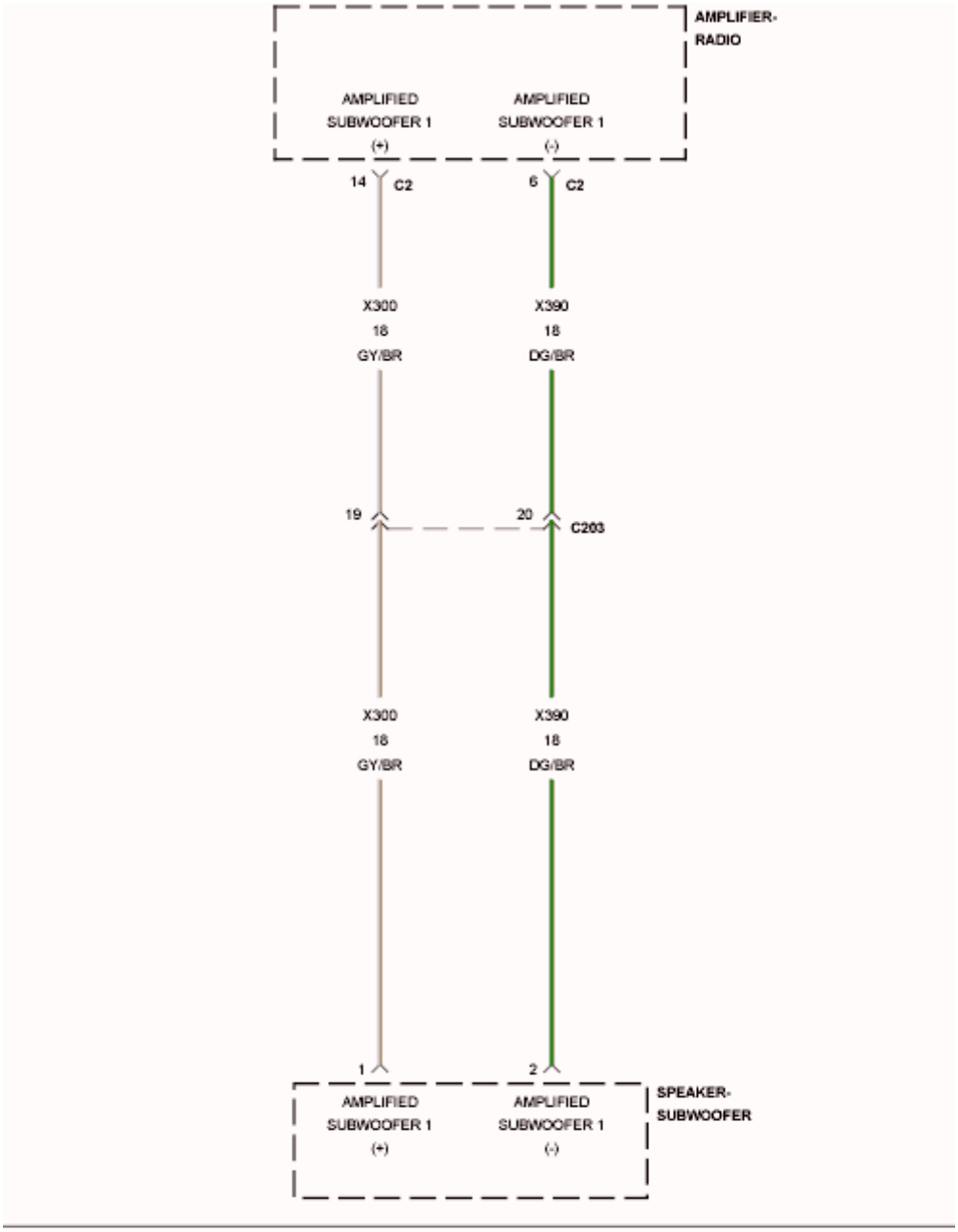
AMPLIFIER-
RADIO
AMPLIFIED
SUBWOOFER 1
(+)
AMPLIFIED
SUBWOOFER 1
(-)
14
C2
6
C2
X300
18
GY/BR
X390
18
DG/BR
19
20
C203
X300
18
GY/BR
X390
18
DG/BR
1
2
AMPLIFIED
SUBWOOFER 1
(+)
AMPLIFIED
SUBWOOFER 1
(-)
SPEAKER-
SUBWOOFER

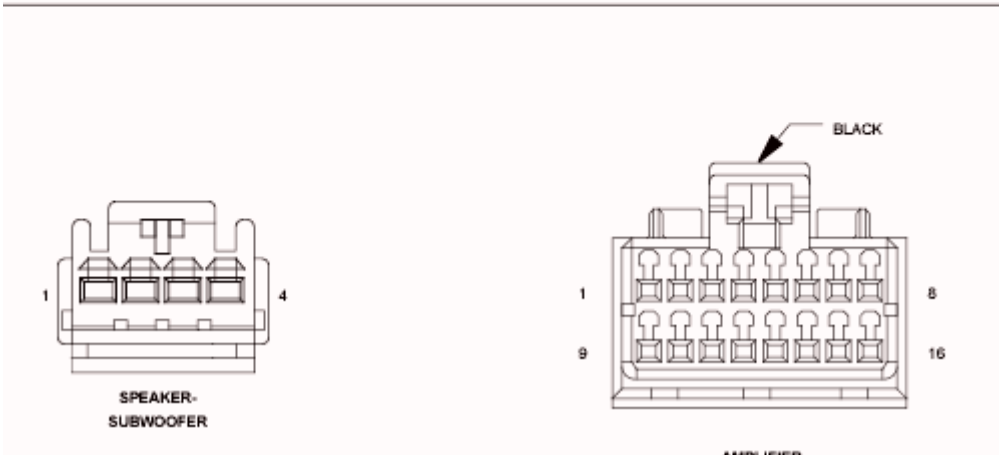
1
4
SPEAKER-
SUBWOOFER
BLACK
1
8
9
16

Fig. 85: Channel 7 Audio Speaker Output Wiring Diagram
Courtesy of CHRYSLER GROUP, LLC

For a complete wiring diagram, **refer to appropriate SYSTEM WIRING DIAGRAMS article** .

WHEN MONITORED:

With the ignition on.

SET CONDITION:

The Amplifier detects a shorted to ground condition on the speaker output circuit.

POSSIBLE CAUSES

Possible Causes
(X300) AMPLIFIED SUBWOOFER 1 (+) CIRCUIT SHORTED TO GROUND
(X390) AMPLIFIED SUBWOOFER 1 (-) CIRCUIT SHORTED TO GROUND
AMPLIFIED SUBWOOFER SPEAKER
AMPLIFIER

DIAGNOSTIC TEST

1. **CHECK FOR AN INTERMITTENT CONDITION**
    1. Turn the ignition on and open one of the front doors.

        NOTE: A front door must remain open whenever checking or erasing Amplifier DTC's.

    2. Using the scan tool, record and erase the Amplifier DTC's.
    3. Cycle the ignition switch from on to off, wait five seconds and then back to on.
    4. Turn the Radio on and set the volume to 20.
    5. Adjust the speakers to the rear and center.
    6. Using the scan tool, read the active Amplifier DTC's.

        Does the scan tool display active: B147F-CHANNEL 7 AUDIO SPEAKER OUTPUT CIRCUIT LOW?

        Yes

        - Go To 2.

        No

        - Test complete, the condition or conditions that originally set this DTC are not present at this

time. Using the wiring diagrams as a guide, check all related splices and connectors for signs of water intrusion, corrosion, pushed out or bent terminals and correct pin tension.

- Perform the BODY VERIFICATION TEST. Refer to **BODY VERIFICATION TEST** .

2. **CHECK THE SUBWOOFER SPEAKER**

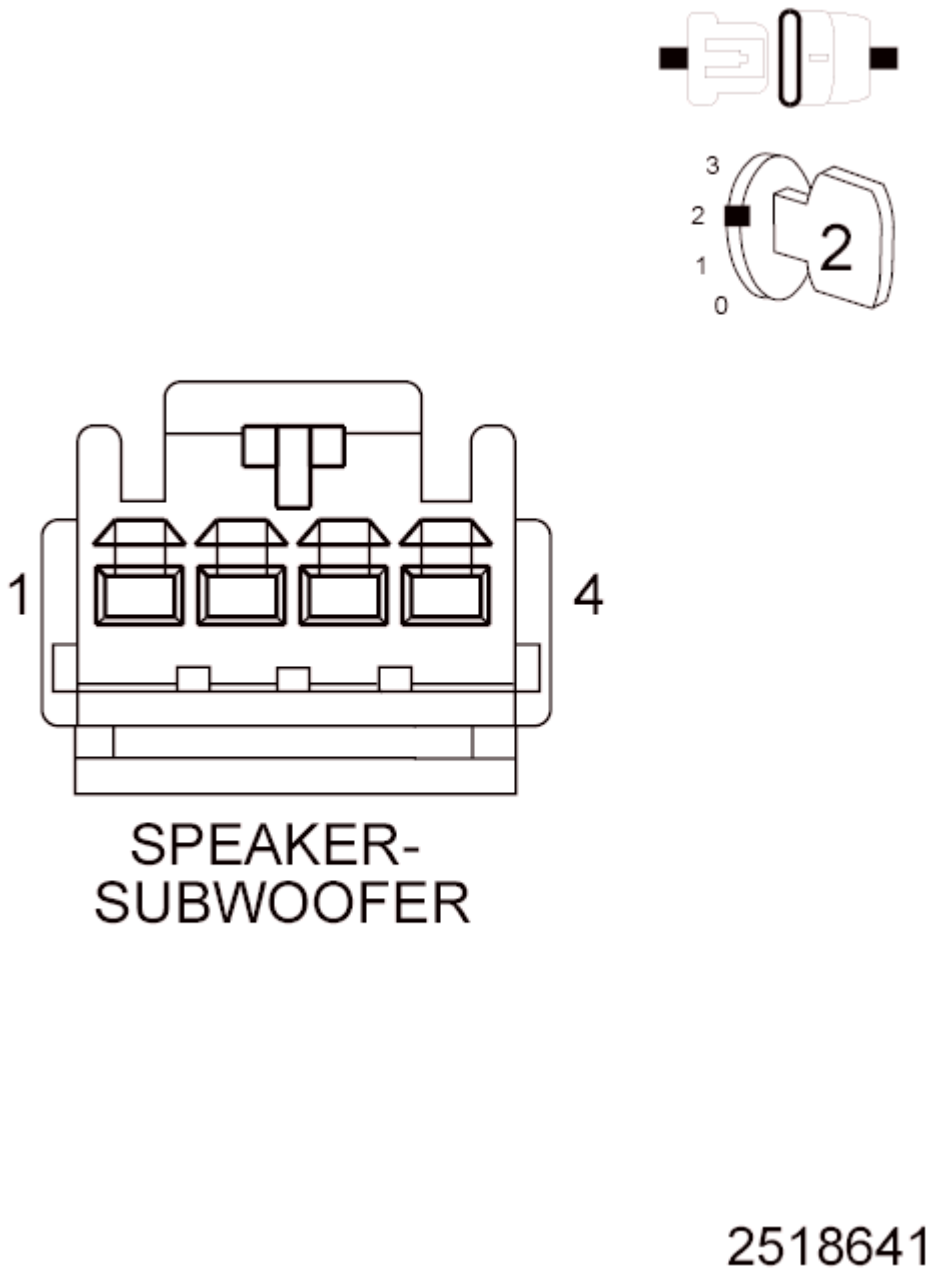

Fig. 86: Subwoofer Speaker Connector End View
Courtesy of CHRYSLER GROUP, LLC

1. Make sure one of the front doors is still open.
2. Using the scan tool, erase the DTC's.

3. Turn the ignition off.
4. Disconnect the Subwoofer Speaker harness connector.
5. Turn the ignition on.
6. Turn the radio on and set the volume to 25.
7. Using the scan tool, read the active Amplifier DTC's.

   Does the scan tool display active: B147F-CHANNEL 7 OUTPUT CIRCUIT LOW?

   Yes

   - Go To 3.

   No

   - Replace the Subwoofer Speaker.
   - Perform the BODY VERIFICATION TEST. Refer to **BODY VERIFICATION TEST** .

3. **CHECK THE (X300) AMPLIFIED SUBWOOFER 1 (+) CIRCUIT FOR A SHORT TO GROUND**

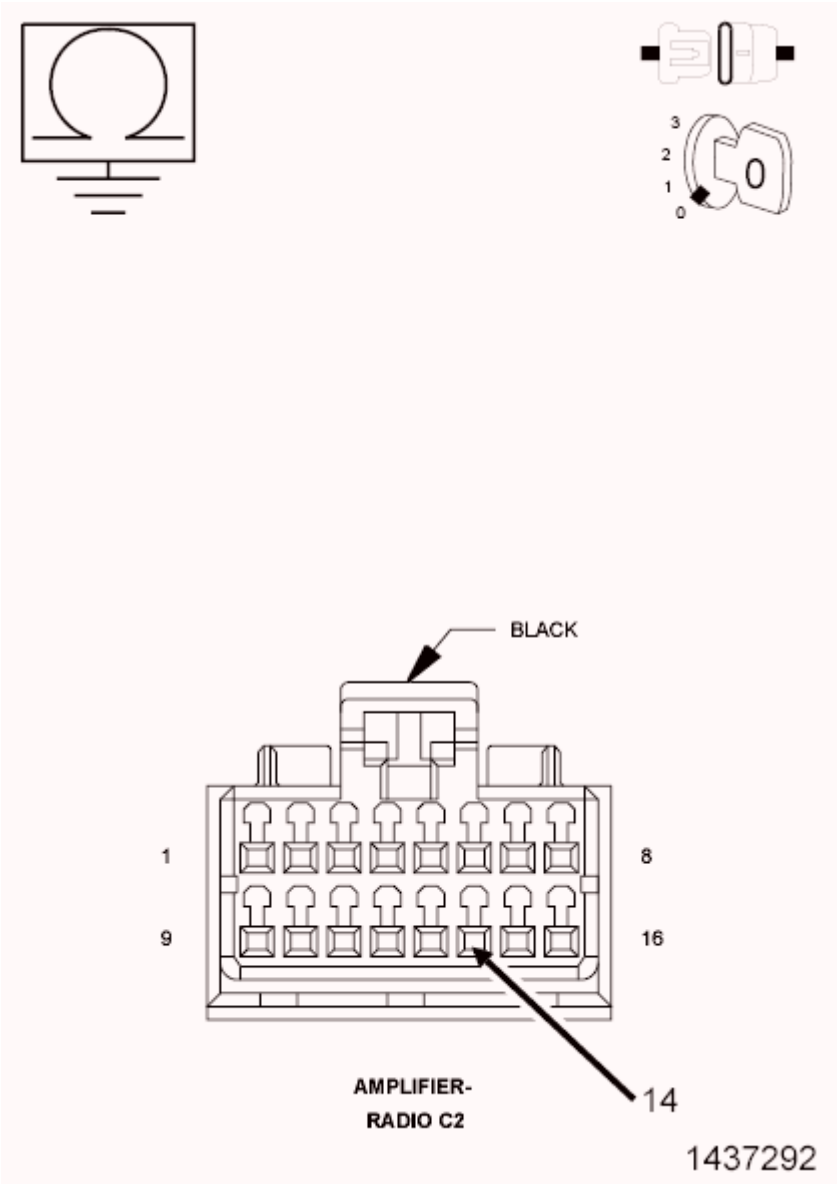

Fig. 87: Checking Amplified Subwoofer 1 (+) Circuit For A Short To Ground
Courtesy of CHRYSLER GROUP, LLC

1. Disconnect the Amplifier C2 harness connector.
2. Disconnect the Subwoofer Speaker harness connector.
3. Measure the resistance between ground and the (X300) Amplified Subwoofer 1 (+) circuit.

   Is the resistance below 10K Ohms?

   Yes

   - Repair the (X300) Amplified Subwoofer 1 (+) circuit for a short to ground.
   - Perform the BODY VERIFICATION TEST. Refer to **BODY VERIFICATION TEST** .

No

- Go To 4.

4. **CHECK THE (X390) AMPLIFIED SUBWOOFER 1 (-) CIRCUIT FOR A SHORT TO GROUND**

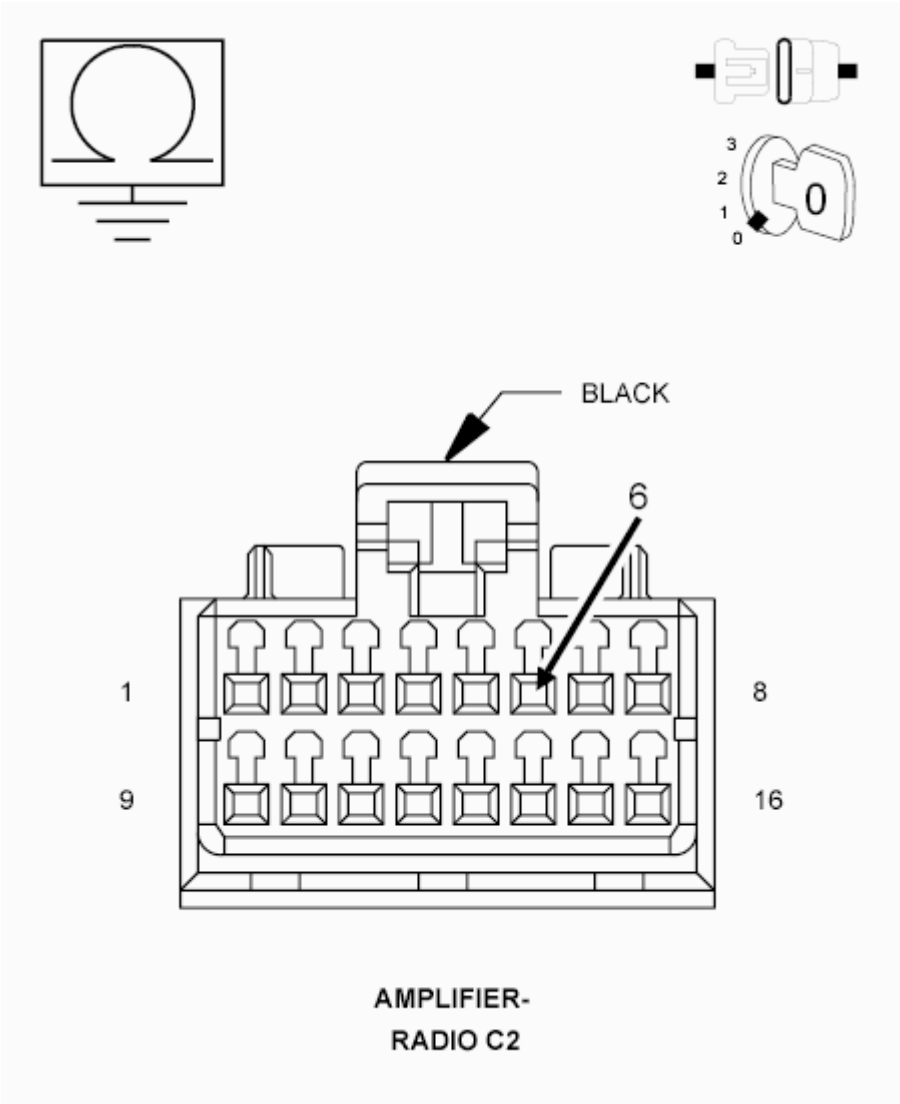

Fig. 88: Checking Amplified Subwoofer 1 (-) Circuit For A Short To Ground
Courtesy of CHRYSLER GROUP, LLC

1. Measure the resistance between ground and the (X390) Amplified Subwoofer 1 (-) circuit.

   Is the resistance below 10K Ohms?

   Yes

   - Repair the (X390) Amplified Subwoofer 1 (-) circuit for a short to ground.
   - Perform the BODY VERIFICATION TEST. Refer to **BODY VERIFICATION TEST** .

No

- Replace the Amplifier in accordance with the Service Information.
- Perform the BODY VERIFICATION TEST. Refer to **BODY VERIFICATION TEST** .

B1480-CHANNEL 7 AUDIO SPEAKER OUTPUT CIRCUIT HIGH

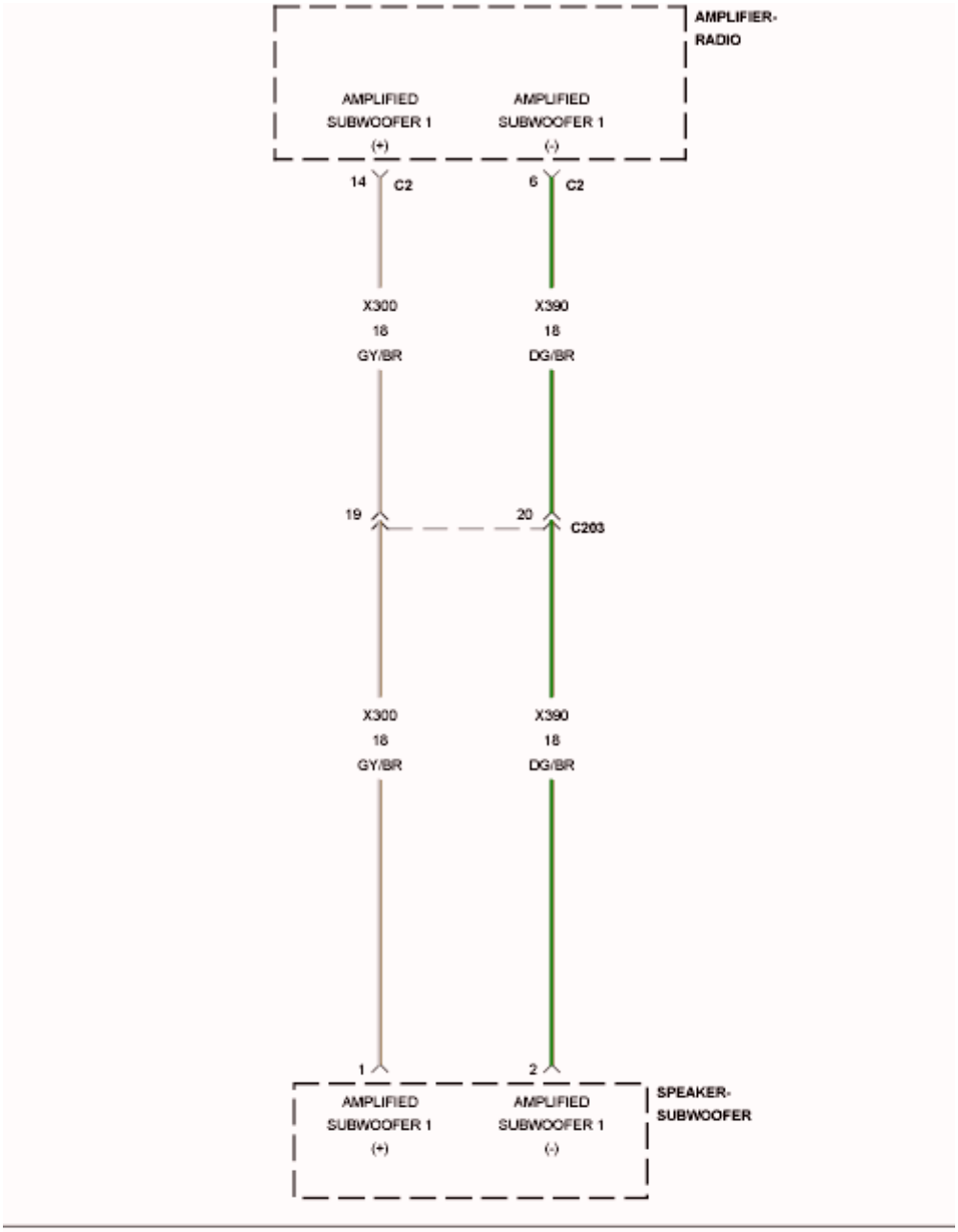
AMPLIFIER-
RADIO
AMPLIFIED
SUBWOOFER 1
(+)
AMPLIFIED
SUBWOOFER 1
(-)
14
C2
6
C2
X300
18
GY/BR
X390
18
DG/BR
19
20
C203
X300
18
GY/BR
X390
18
DG/BR
1
2
AMPLIFIED
SUBWOOFER 1
(+)
AMPLIFIED
SUBWOOFER 1
(-)
SPEAKER-
SUBWOOFER

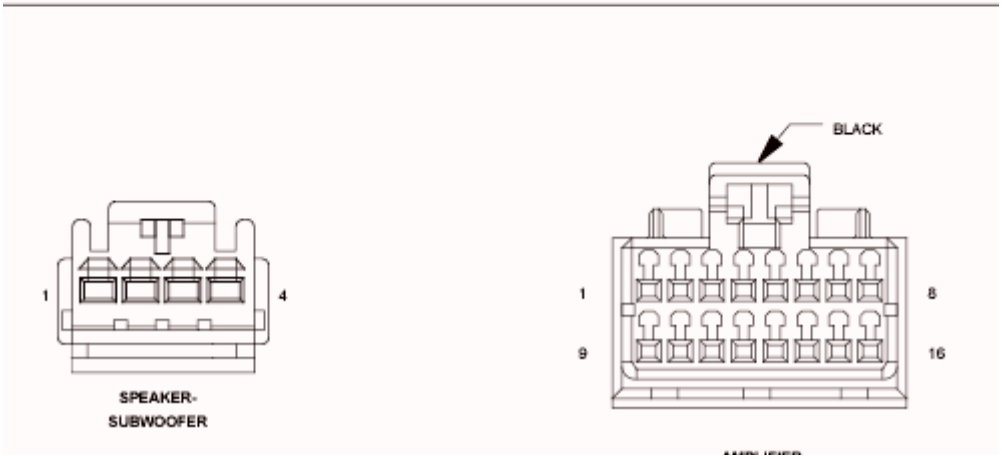
1
4
SPEAKER-
SUBWOOFER
BLACK
1
8
9
16

Fig. 89: Channel 7 Audio Speaker Output Wiring Diagram
Courtesy of CHRYSLER GROUP, LLC

For a complete wiring diagram, **refer to appropriate SYSTEM WIRING DIAGRAMS article** .

WHEN MONITORED:

With the ignition on.

SET CONDITION:

The Amplifier detects a short to battery condition on the output circuit.

POSSIBLE CAUSES

Possible Causes
(X300) AMPLIFIED SUBWOOFER 1 (+) CIRCUIT SHORTED TO VOLTAGE
(X390) AMPLIFIED SUBWOOFER 1 (-) CIRCUIT SHORTED TO VOLTAGE
AMPLIFIER

DIAGNOSTIC TEST

1. **CHECK FOR AN INTERMITTENT CONDITION**
    1. Turn the ignition on and open one of the front doors.

        NOTE: A front door must remain open whenever checking or erasing Amplifier DTC's.

    2. With the scan tool, record and erase the Amplifier DTC's.
    3. Cycle the ignition switch from on to off, wait five seconds and then back to on.
    4. Turn the Radio on and set the volume to 20.
    5. Adjust the speakers to the rear and center.
    6. With the scan tool, read the active Amplifier DTC's.

        Does the scan tool display active: B1480-CHANNEL 7 AUDIO SPEAKER OUTPUT CIRCUIT HIGH?

        Yes

        - Go To 2.

        No

        - Test complete, the condition or conditions that originally set this DTC are not present at this time. Using the wiring diagrams as a guide, check all related splices and connectors for signs

of water intrusion, corrosion, pushed out or bent terminals and correct pin tension.

- Perform the BODY VERIFICATION TEST. Refer to **BODY VERIFICATION TEST** .

2. **CHECK FOR VOLTAGE ON THE (X300) AMPLIFIED SUBWOOFER 1 (+) CIRCUIT**

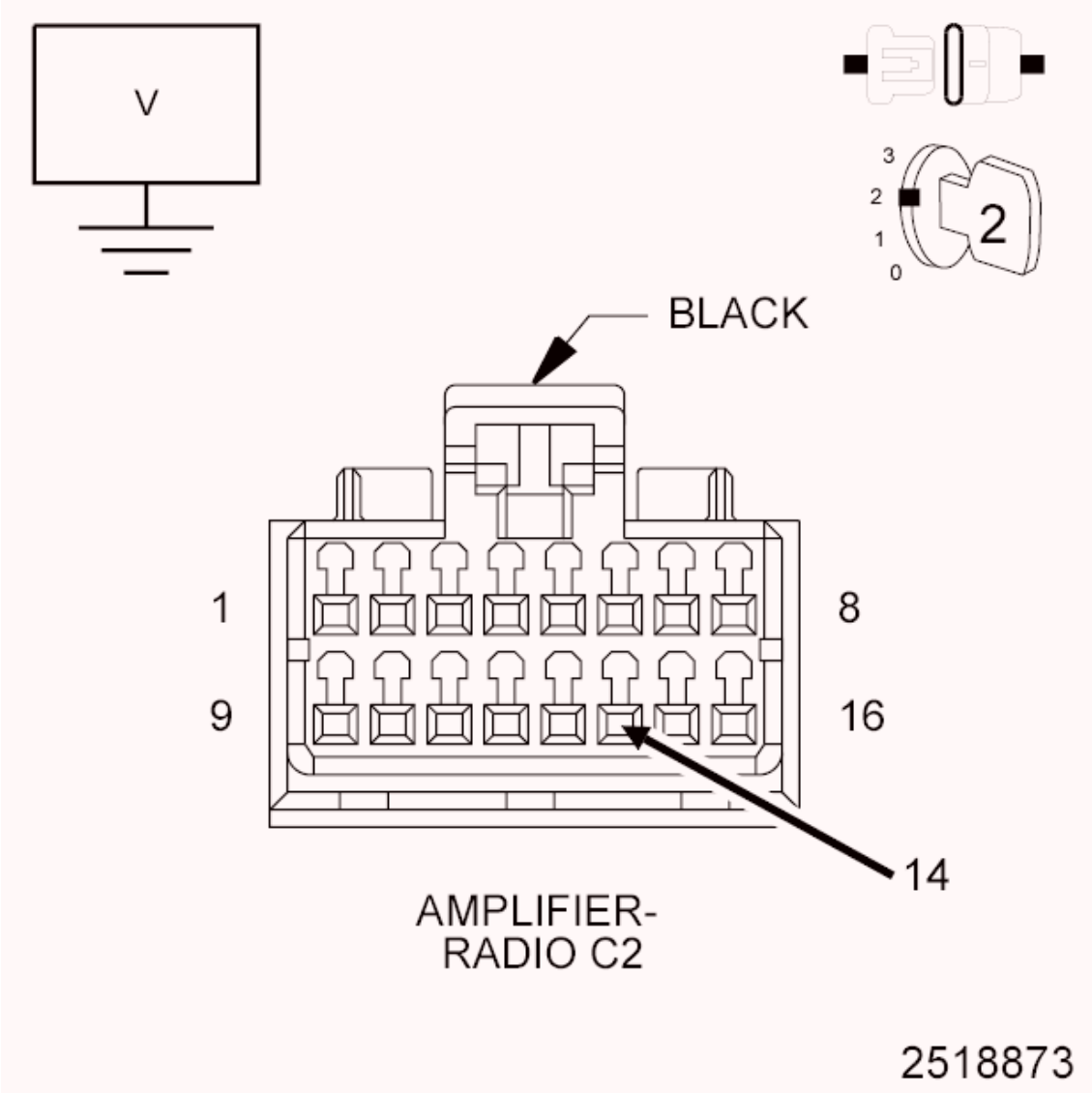

Fig. 90: Measuring For Voltage On Amplified Subwoofer 1 (+) Circuit
Courtesy of CHRYSLER GROUP, LLC

1. Turn the ignition off.
2. Disconnect the Amplifier C2 harness connector.
3. Disconnect the Subwoofer Speaker harness connector.
4. Turn the ignition on.
5. Measure the voltage between the (X300) Amplified Subwoofer 1 (+) circuit and ground.

   Is there any voltage present?

Yes

- Repair the (X300) Amplified Subwoofer 1 (+) circuit for a short to voltage.
- Perform the BODY VERIFICATION TEST. Refer to **BODY VERIFICATION TEST** .

No

- Go To 3.

3. **CHECK FOR VOLTAGE ON THE (X390) AMPLIFIED SUBWOOFER 1 (-) CIRCUIT**

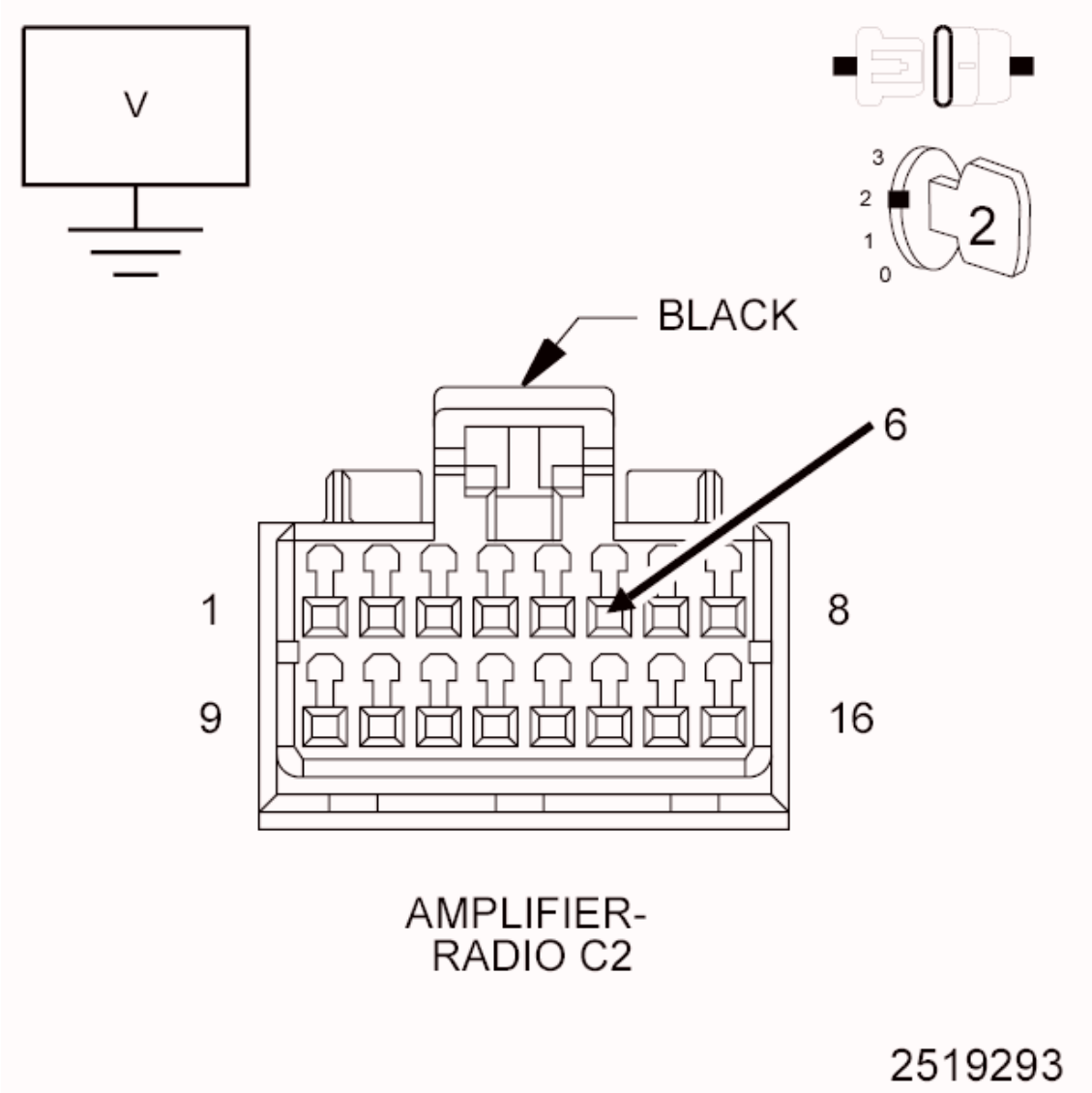

Fig. 91: Measuring Voltage On Amplified Subwoofer 1 (-) Circuit
Courtesy of CHRYSLER GROUP, LLC

1. Measure the voltage between the (X390) Amplified Subwoofer 1 (-) circuit and ground.

Is there any voltage present?

Yes

- Repair the (X390) Amplified Subwoofer 1 (-) circuit for a short to voltage.
- Perform the BODY VERIFICATION TEST. Refer to **BODY VERIFICATION TEST** .

No

- Replace the Amplifier in accordance with the Service Information.
- Perform the BODY VERIFICATION TEST. Refer to **BODY VERIFICATION TEST** .

B1481-CHANNEL 7 AUDIO SPEAKER OUTPUT CIRCUIT OPEN

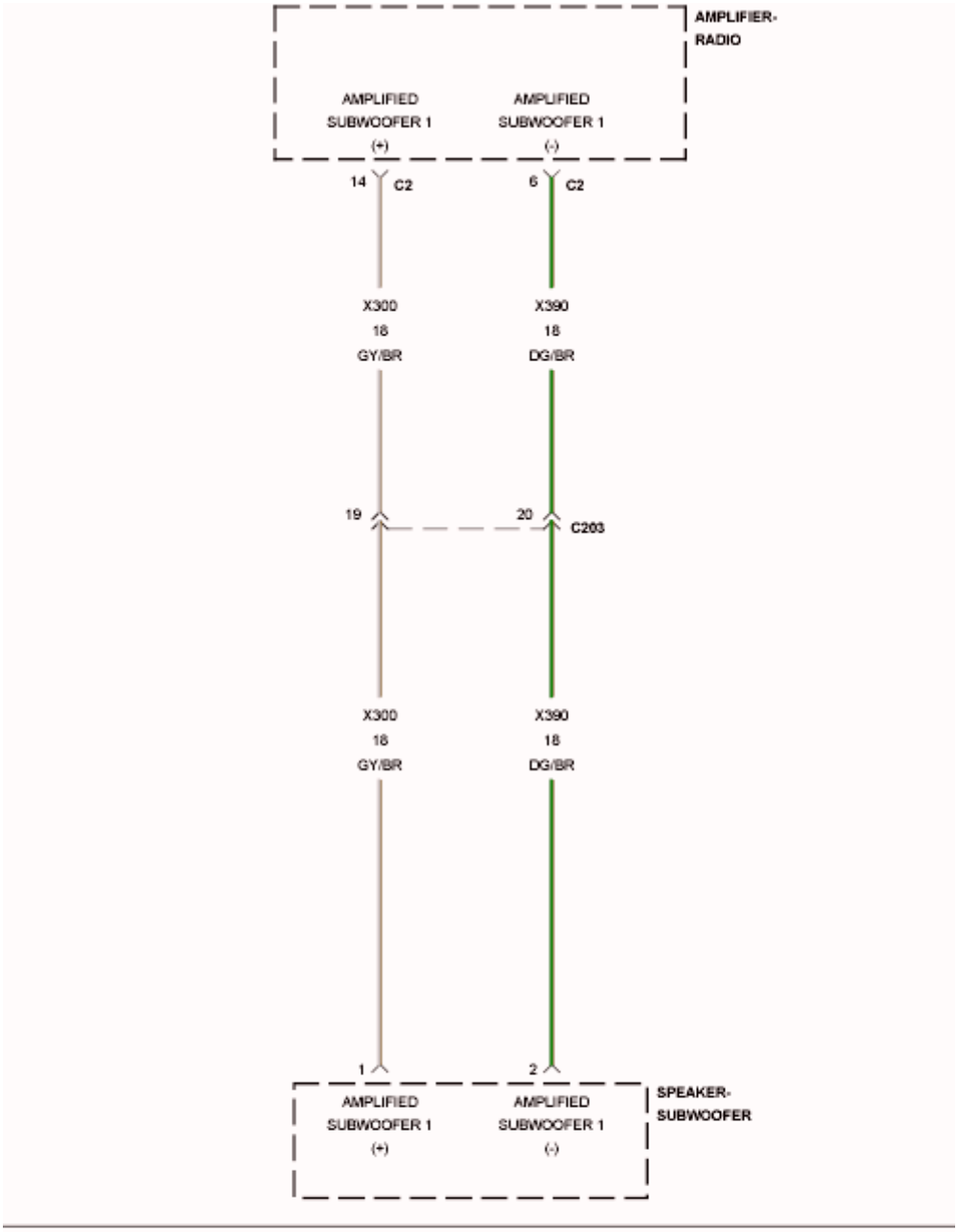
AMPLIFIER-
RADIO
AMPLIFIED
SUBWOOFER 1
(+)
AMPLIFIED
SUBWOOFER 1
(-)
14
C2
6
C2
X300
18
GY/BR
X390
18
DG/BR
19
20
C203
X300
18
GY/BR
X390
18
DG/BR
1
2
AMPLIFIED
SUBWOOFER 1
(+)
AMPLIFIED
SUBWOOFER 1
(-)
SPEAKER-
SUBWOOFER

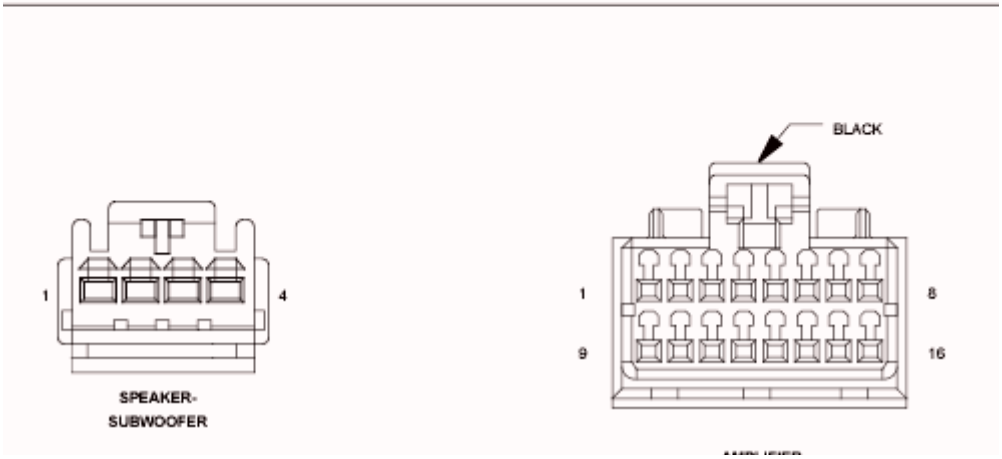
1
4
SPEAKER-
SUBWOOFER
BLACK
1
8
9
16

Fig. 92: Channel 7 Audio Speaker Output Wiring Diagram
Courtesy of CHRYSLER GROUP, LLC

For a complete wiring diagram, **refer to appropriate SYSTEM WIRING DIAGRAMS article** .

WHEN MONITORED:

Amplifier Bus wake-up. Amplifier reset with scan tool.

SET CONDITION:

The Amplifier detects an open condition on the speaker output circuit.

POSSIBLE CAUSES

Possible Causes
(X300) AMPLIFIED SUBWOOFER 1 (+) CIRCUIT OPEN
(X390) AMPLIFIED SUBWOOFER 1 (-) CIRCUIT OPEN
AMPLIFIED SUBWOOFER SPEAKER
AMPLIFIER

DIAGNOSTIC TEST

1. **CHECK FOR AN INTERMITTENT CONDITION**
    1. Turn the ignition on and open one of the front doors.

        NOTE: A front door must remain open whenever checking or erasing Amplifier DTC's.

    2. With the scan tool, record and erase the Amplifier DTC's.
    3. Cycle the ignition switch from on to off, wait five seconds and then back to on.
    4. Turn the Radio on and set the volume to 20.
    5. Adjust the speakers to the rear and center.
    6. With the scan tool, read the active Amplifier DTC's.

        Does the scan tool display active: B1481-CHANNEL 7 AUDIO SPEAKER OUTPUT CIRCUIT OPEN?

        Yes

        - Go To 2.

        No

        - Test complete, the condition or conditions that originally set this DTC are not present at this

time. Using the wiring diagrams as a guide, check all related splices and connectors for signs of water intrusion, corrosion, pushed out or bent terminals and correct pin tension.

- Perform the BODY VERIFICATION TEST. Refer to **BODY VERIFICATION TEST** .

2. **CHECK THE OPERATION OF THE SUBWOOFER SPEAKER**

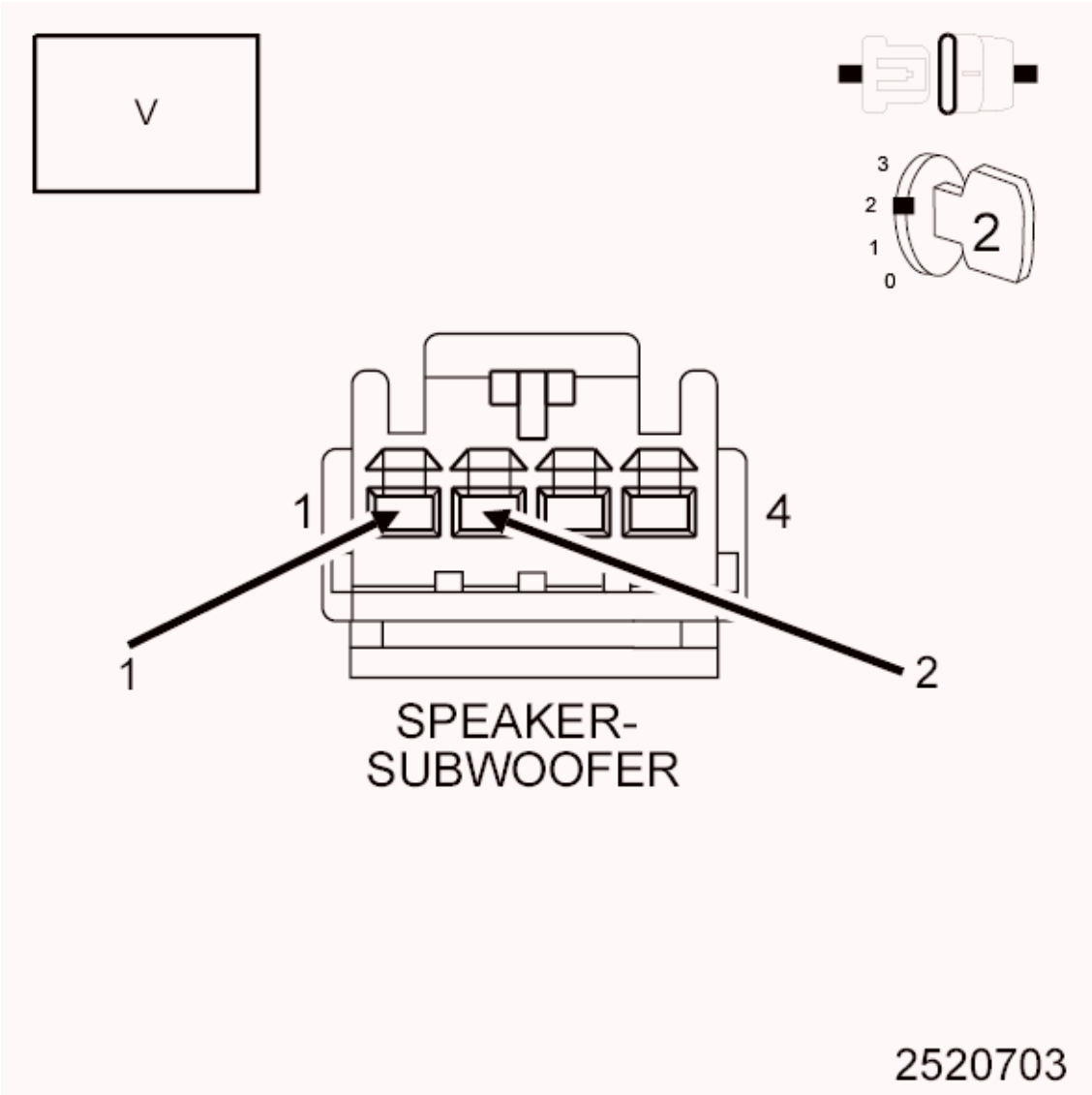

Fig. 93: Checking The Operation Of The Subwoofer Speaker
Courtesy of CHRYSLER GROUP, LLC

1. Turn the ignition off.
2. Disconnect the Subwoofer Speaker harness connector.
3. Turn the ignition on.
4. Turn the radio on and turn the volume to 25.
5. Adjust the speakers to the rear and center.
6. With a voltmeter set to read in A/C voltage, measure the voltage of the Subwoofer Speaker circuits

in the Subwoofer Speaker harness connector.

Is the voltage present greater than 1 volt?

Yes

- Replace the Subwoofer Speaker in accordance with the Service Information.
- Perform the BODY VERIFICATION TEST. Refer to **BODY VERIFICATION TEST** .

No

- Go To 3.

3. **CHECK THE (X300) AMPLIFIED SUBWOOFER 1 (+) CIRCUIT FOR AN OPEN**

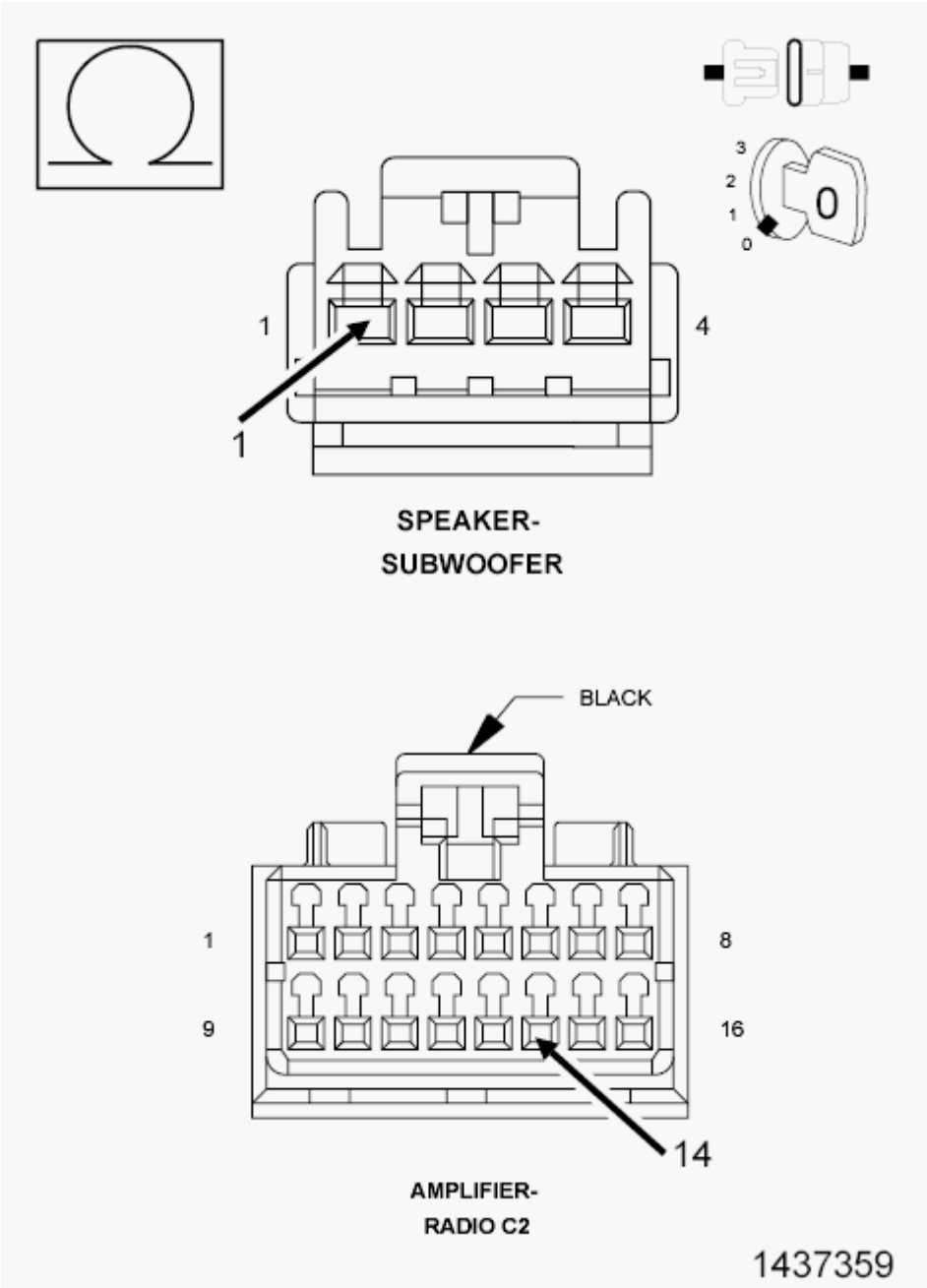

Fig. 94: Checking Amplified Subwoofer 1 (+) Circuit For An Open
Courtesy of CHRYSLER GROUP, LLC

1. Turn the ignition off.
2. Disconnect the Amplifier C2 harness connector.
3. Measure the resistance of the (X300) Amplified Subwoofer 1 (+) circuit between the Amplifier C2 harness connector and the Subwoofer Speaker harness connector.

   Is the resistance below 2.0 Ohms?

Yes

- Go To 4.

No

- Repair the (X300) Amplified Subwoofer 1 (+) circuit for an open.
- Perform the BODY VERIFICATION TEST. Refer to **BODY VERIFICATION TEST** .

4. **CHECK THE (X390) AMPLIFIED SUBWOOFER 1 (-) CIRCUIT FOR AN OPEN**

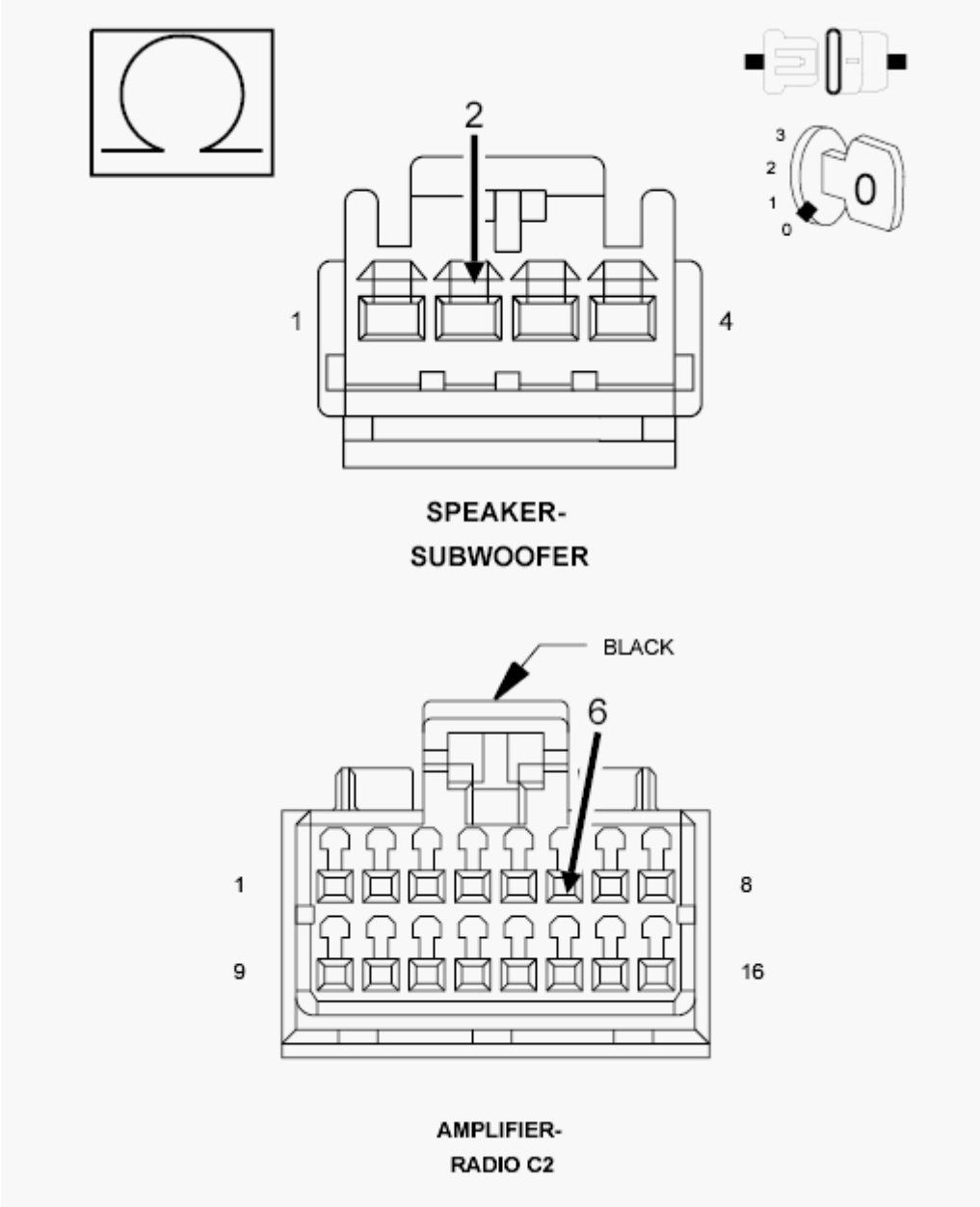

Fig. 95: Checking Amplified Subwoofer 1 (-) Circuit For An Open
Courtesy of CHRYSLER GROUP, LLC

1. Measure the resistance of the (X390) Amplified Subwoofer 1 (-) circuit between the Amplifier C2 harness connector and the Subwoofer Speaker harness connector.

   Is the resistance below 2.0 Ohms?

   Yes

   - Replace the Amplifier in accordance with the Service Information.
   - Perform the BODY VERIFICATION TEST. Refer to **BODY VERIFICATION TEST** .

   No

   - Repair the (X390) Amplified Subwoofer 1 (-) circuit for an open.
   - Perform the BODY VERIFICATION TEST. Refer to **BODY VERIFICATION TEST** .

B1482-CHANNEL 7 AUDIO SPEAKER OUTPUT CIRCUIT SHORTED TOGETHER

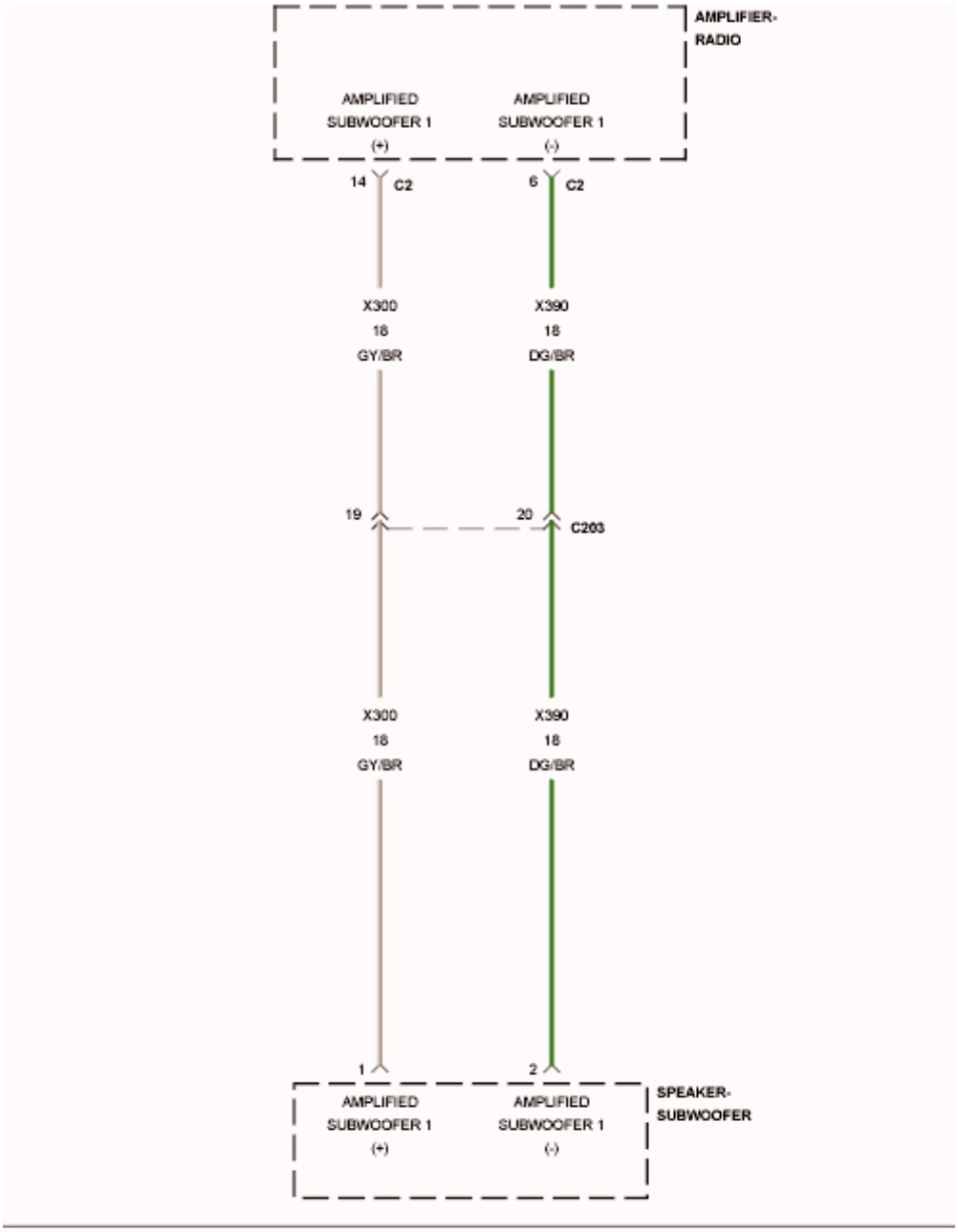
AMPLIFIER-
RADIO
AMPLIFIED
SUBWOOFER 1
(+)
AMPLIFIED
SUBWOOFER 1
(-)
14
C2
6
C2
X300
18
GY/BR
X390
18
DG/BR
19
20
C203
X300
18
GY/BR
X390
18
DG/BR
1
2
AMPLIFIED
SUBWOOFER 1
(+)
AMPLIFIED
SUBWOOFER 1
(-)
SPEAKER-
SUBWOOFER

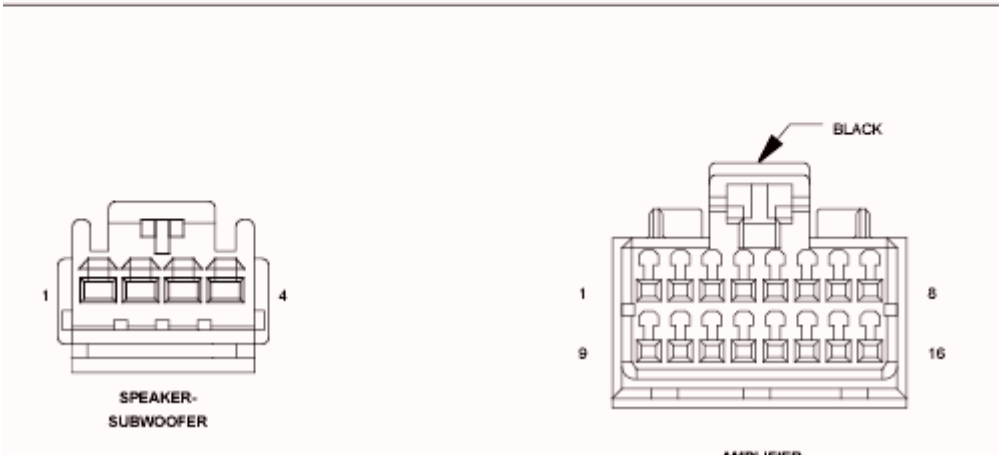
1
4
SPEAKER-
SUBWOOFER
BLACK
1
8
9
16

Fig. 96: Channel 7 Audio Speaker Output Wiring Diagram
Courtesy of CHRYSLER GROUP, LLC

For a complete wiring diagram, **refer to appropriate SYSTEM WIRING DIAGRAMS article** .

WHEN MONITORED:

With the ignition on. Radio volume at 25 or higher.

SET CONDITION:

The Amplifier detects that the output circuits are shorted together.

POSSIBLE CAUSES

Possible Causes
(X300) AMPLIFIED SUBWOOFER 1 (+) CIRCUIT SHORTED TO THE (X390) AMPLIFIED SUBWOOFER 1 (-) CIRCUIT
AMPLIFIED SUBWOOFER SPEAKER
AMPLIFIER

DIAGNOSTIC TEST

1. **CHECK FOR AN INTERMITTENT CONDITION**
    1. Turn the ignition on and open one of the front doors.

        NOTE: A front door must remain open whenever checking or erasing Amplifier DTC's.

    2. With the scan tool, record and erase the Amplifier DTC's.
    3. Cycle the ignition switch from on to off, wait five seconds and then back to on.
    4. Turn the Radio on and set the volume to 20.
    5. Adjust the speakers to the rear and center.
    6. With the scan tool, read the active Amplifier DTC's.

        Does the scan tool display active: B1482-CHANNEL 7 AUDIO SPEAKER OUTPUT CIRCUIT SHORTED TOGETHER?

        Yes

        - Go To 2.

        No

        - Test complete, the condition or conditions that originally set this DTC are not present at this

time. Using the wiring diagrams as a guide, check all related splices and connectors for signs of water intrusion, corrosion, pushed out or bent terminals and correct pin tension.

- Perform the BODY VERIFICATION TEST. Refer to **BODY VERIFICATION TEST** .

2. **CHECK THE OPERATION OF THE SUBWOOFER SPEAKER**

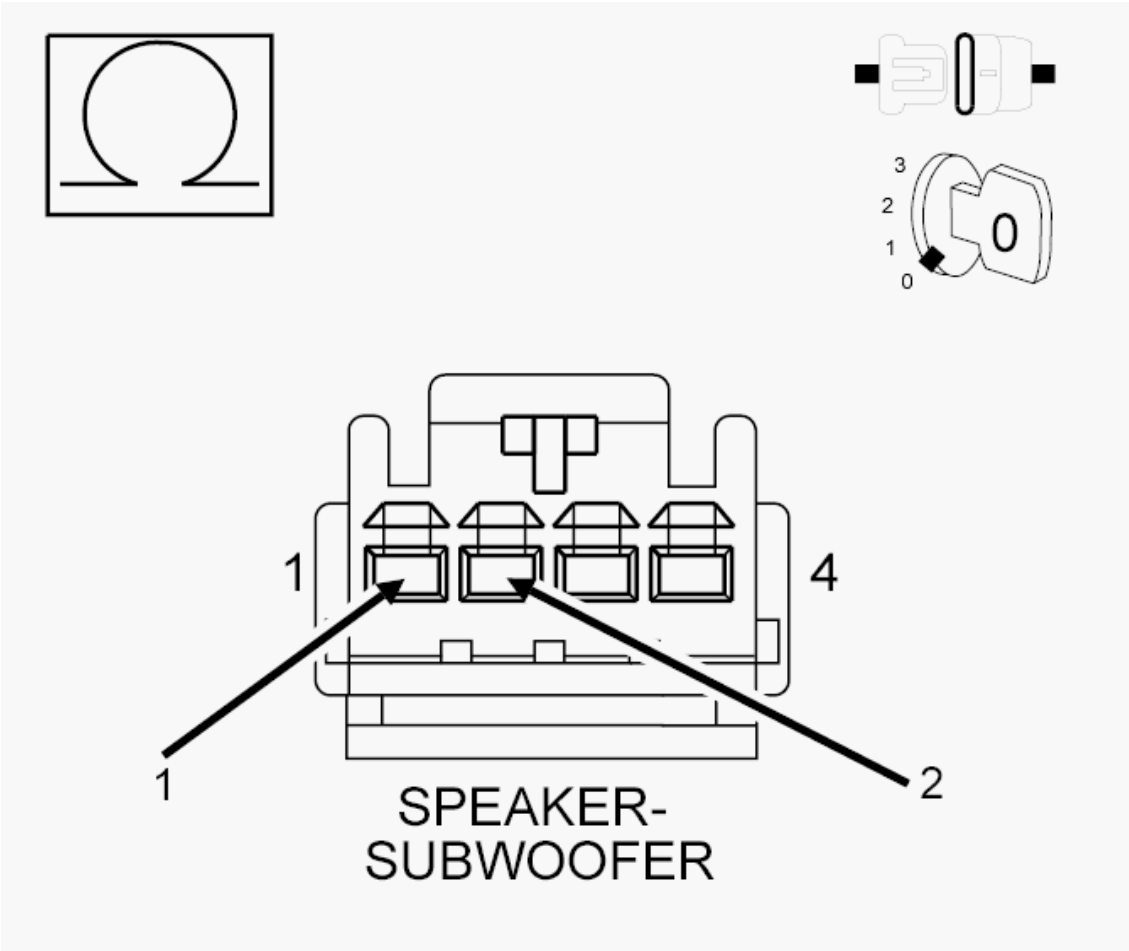

Fig. 97: Checking The Operation Of The Subwoofer Speaker
Courtesy of CHRYSLER GROUP, LLC

1. Turn the ignition off.
2. Disconnect the Subwoofer Speaker.
3. Measure the resistance of the speaker between the two terminals.

NOTE: **The graphic shows the connector for reference only. Measure between the speaker terminals.**

Is the resistance of the speaker less than 1 Ohm?

Yes

- Replace the Subwoofer Speaker in accordance with the Service Information.
- Perform the BODY VERIFICATION TEST. Refer to **BODY VERIFICATION TEST** .

No

- Go To 3.

3. **CHECK THE (X300) AMPLIFIED SUBWOOFER 1 (+) CIRCUIT, AND THE (X390) AMPLIFIED SUBWOOFER 1 (-) CIRCUITS FOR A SHORT TOGETHER**

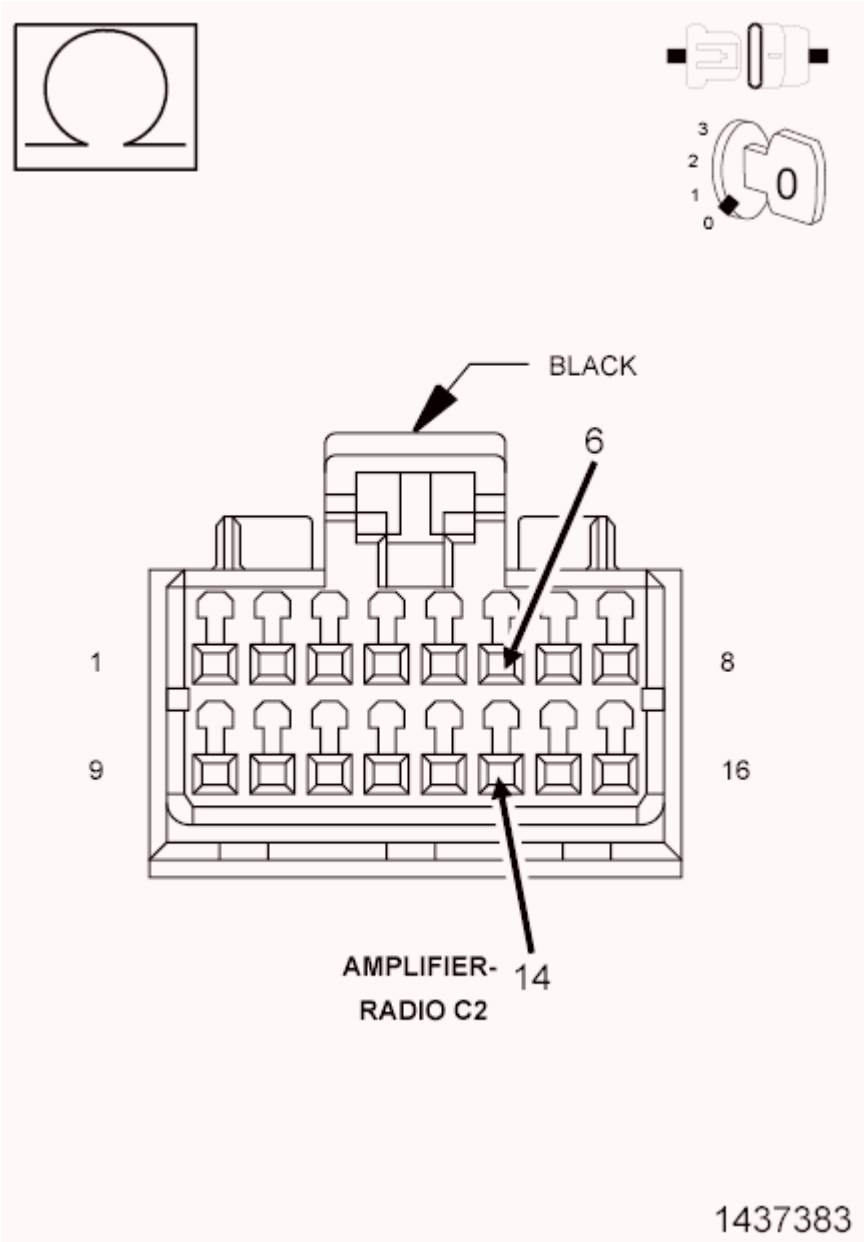

Fig. 98: Checking Amplified Subwoofer 1 (+) Circuit, And The Amplified Subwoofer 1 (-) Circuits For A Short Together
Courtesy of CHRYSLER GROUP, LLC

1. Turn the ignition off.
2. Disconnect the Amplifier C2 harness connector.
3. Measure the resistance between the (X300) Amplified Subwoofer 1 (+) circuit, and the (X390) Amplified Subwoofer 1 (-) circuit.

   Is the resistance below 10K Ohms?

   Yes

   - Repair the (X300) Amplified Subwoofer 1 (+) circuit, and the (X390) Amplified Subwoofer 1 (-) circuit for a short together.
   - Perform the BODY VERIFICATION TEST. Refer to **BODY VERIFICATION TEST** .

   No

   - Replace the Amplifier in accordance with the Service Information.
   - Perform the BODY VERIFICATION TEST. Refer to **BODY VERIFICATION TEST** .

B1483-CHANNEL 8 AUDIO SPEAKER OUTPUT CIRCUIT/PERFORMANCE

For a complete wiring diagram, **refer to appropriate SYSTEM WIRING DIAGRAMS article** .

WHEN MONITORED:

With the ignition on.

SET CONDITION:

This Diagnostic Trouble Code (DTC) sets if a Direct Current (DC) offset occurs on the output channel, the amplifier shall set a DTC after a maturity rate of four to six seconds.

POSSIBLE CAUSES

Possible Causes
AMPLIFIER

DIAGNOSTIC TEST

1. **CHECK FOR AN INTERMITTENT CONDITION**
   1. Turn the ignition on and open one of the front doors.

      NOTE: A front door must remain open whenever checking or erasing Amplifier DTC's.

   2. With the scan tool, record and erase the Amplifier DTC's.

3. Cycle the ignition switch from on to off, wait five seconds and then back to on.
4. Turn the Radio on and set the volume to 20.
5. Adjust the speakers to the front and center.
6. With the scan tool, read the active Amplifier DTC's.

   Does the scan tool display active: B1483-CHANNEL 8 AUDIO SPEAKER OUTPUT CIRCUIT/PERFORMANCE?

   Yes

   - Replace the Amplifier in accordance with the Service Information.
   - Perform the BODY VERIFICATION TEST. Refer to **BODY VERIFICATION TEST** .

   No

   - Test complete, the condition or conditions that originally set this DTC are not present at this time. Using the wiring diagrams as a guide, check all related splices and connectors for signs of water intrusion, corrosion, pushed out or bent terminals and correct pin tension.
   - Perform the BODY VERIFICATION TEST. Refer to **BODY VERIFICATION TEST** .

B1484-CHANNEL 8 AUDIO SPEAKER OUTPUT CIRCUIT LOW

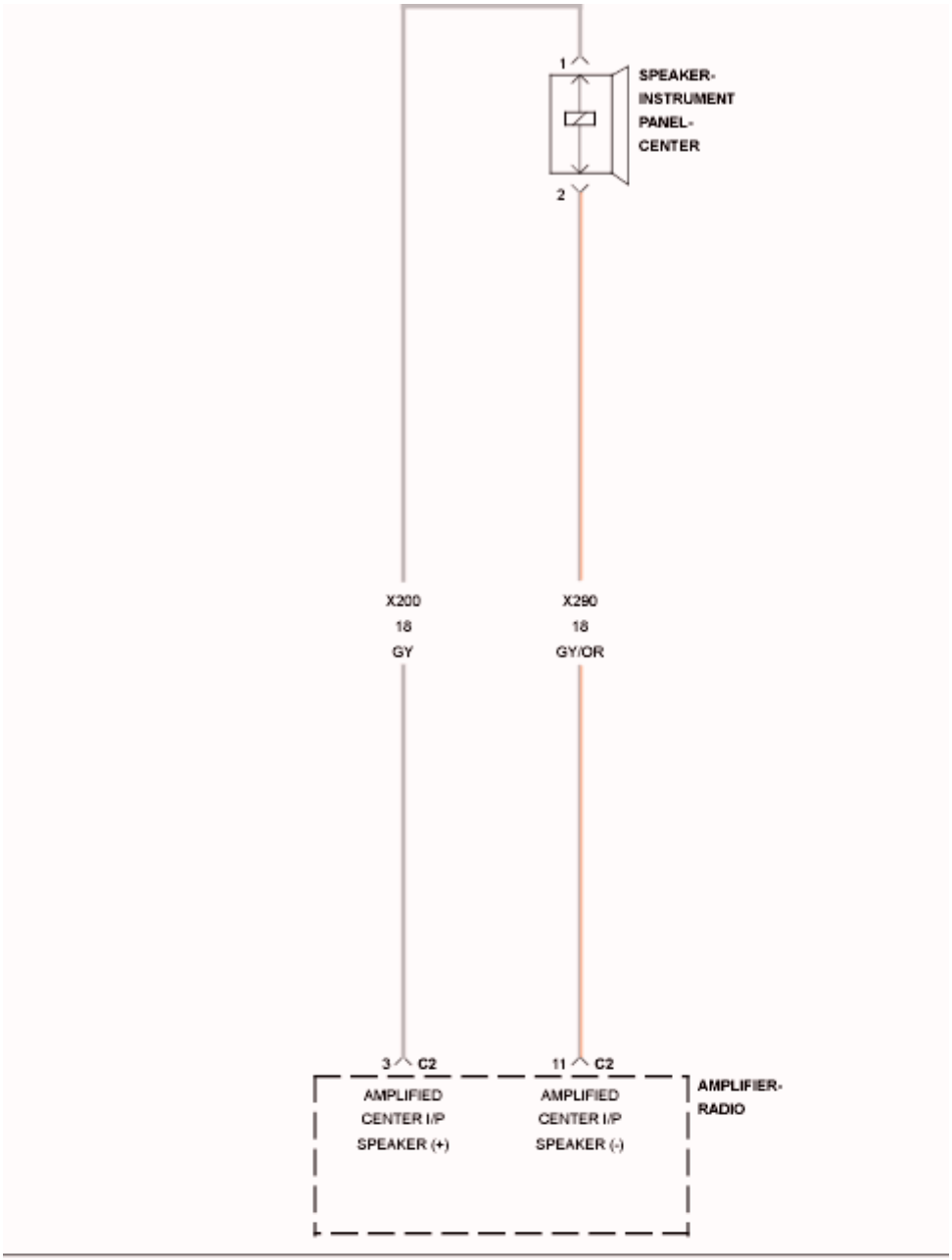
1
SPEAKER-
INSTRUMENT
PANEL-
CENTER
2
X200
18
GY
X290
18
GY/OR
3 C2
11 C2
AMPLIFIED
CENTER I/P
SPEAKER (+)
AMPLIFIED
CENTER I/P
SPEAKER (-)
AMPLIFIER-
RADIO

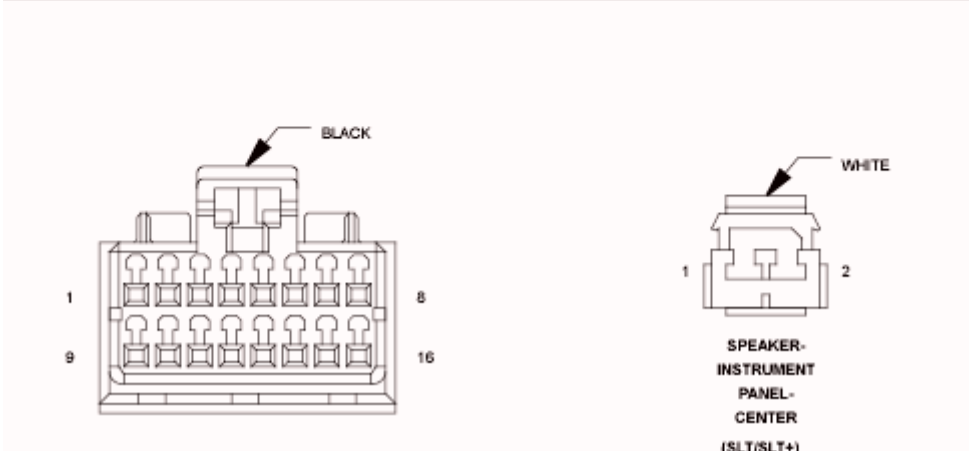
BLACK
1
8
9
16
WHITE
1
2
SPEAKER-
INSTRUMENT
PANEL-
CENTER
(SLT/SLT+)

Fig. 99: Channel 8 Audio Speaker Output Wiring Diagram
Courtesy of CHRYSLER GROUP, LLC

For a complete wiring diagram, **refer to appropriate SYSTEM WIRING DIAGRAMS article** .

WHEN MONITORED:

With the ignition on.

SET CONDITION:

The Amplifier detects a shorted to ground condition on the speaker output circuit.

POSSIBLE CAUSES

Possible Causes
(X200) AMPLIFIED CENTER I/P SPEAKER (+) CIRCUIT SHORTED TO GROUND
(X290) AMPLIFIED CENTER I/P SPEAKER (-) CIRCUIT SHORTED TO GROUND
CENTER I/P SPEAKER
AMPLIFIER

DIAGNOSTIC TEST

1. **CHECK FOR AN INTERMITTENT CONDITION**
    1. Turn the ignition on and open one of the front doors.

        NOTE: A front door must remain open whenever checking or erasing Amplifier DTC's.

    2. Using the scan tool, record and erase the Amplifier DTC's.
    3. Cycle the ignition switch from on to off, wait five seconds and then back to on.
    4. Turn the Radio on and set the volume to 20.
    5. Adjust the speakers to the front and center.
    6. Using the scan tool, read the active Amplifier DTC's.

        Does the scan tool display active: B1484-CHANNEL 8 AUDIO SPEAKER OUTPUT CIRCUIT LOW?

        Yes

        - Go To 2.

        No

        - Test complete, the condition or conditions that originally set this DTC are not present at this

time. Using the wiring diagrams as a guide, check all related splices and connectors for signs of water intrusion, corrosion, pushed out or bent terminals and correct pin tension.

- Perform the BODY VERIFICATION TEST. Refer to **BODY VERIFICATION TEST** .

2. **CENTER INSTRUMENT PANEL (I/P) SPEAKER**

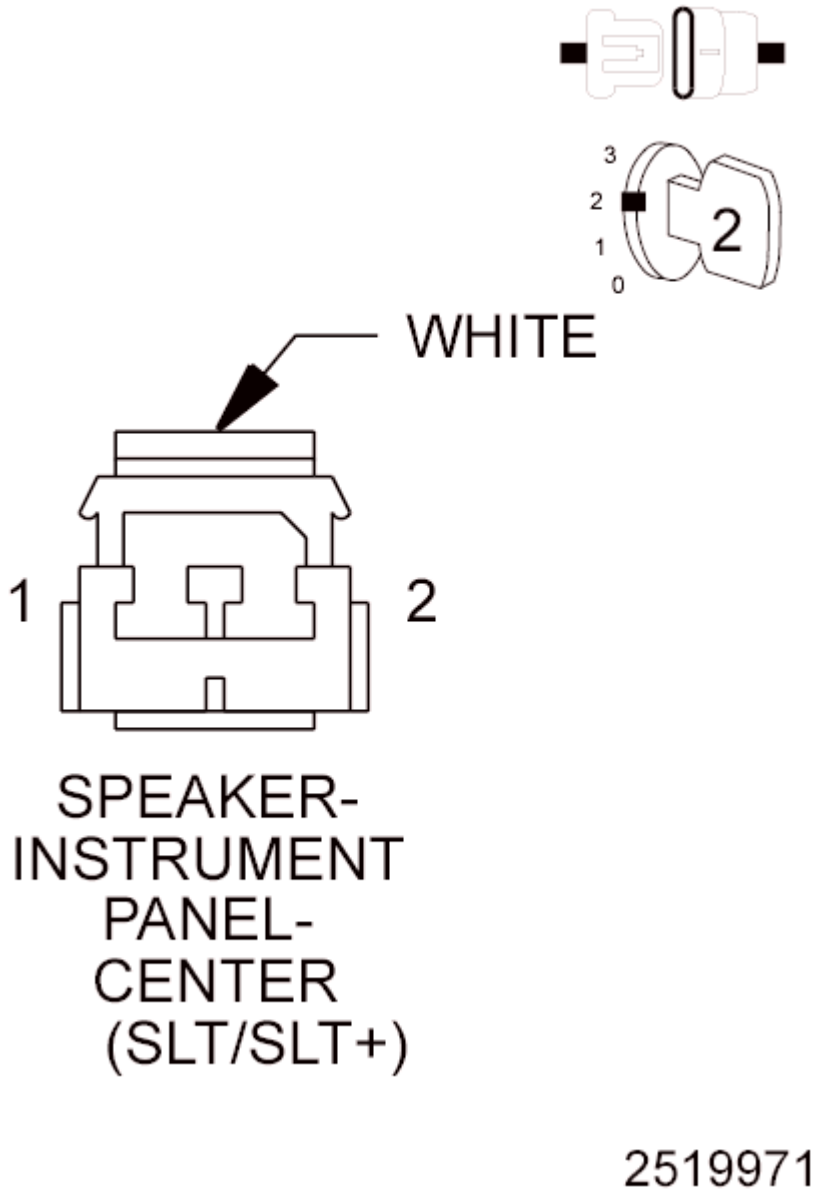

Fig. 100: Center Instrument Panel (I/P) Speaker Connector End View
Courtesy of CHRYSLER GROUP, LLC

1. Make sure one of the front doors is still open.
2. Using the scan tool, erase the DTC's.
3. Turn the ignition off.
4. Disconnect the Center I/P Speaker harness connector.

5. Turn the ignition on.
6. Turn the radio on and set the volume to 25.
7. Using the scan tool, read the active Amplifier DTC's.

   Does the scan tool display active: B1484-CHANNEL 8 AUDIO SPEAKER OUTPUT CIRCUIT LOW?

   Yes

   - Go To 3.

   No

   - Replace the Center Instrument Panel Speaker.
   - Perform the BODY VERIFICATION TEST. Refer to **BODY VERIFICATION TEST** .

3. **CHECK THE (X200) AMPLIFIED CENTER I/P SPEAKER (+) CIRCUIT FOR A SHORT TO GROUND**

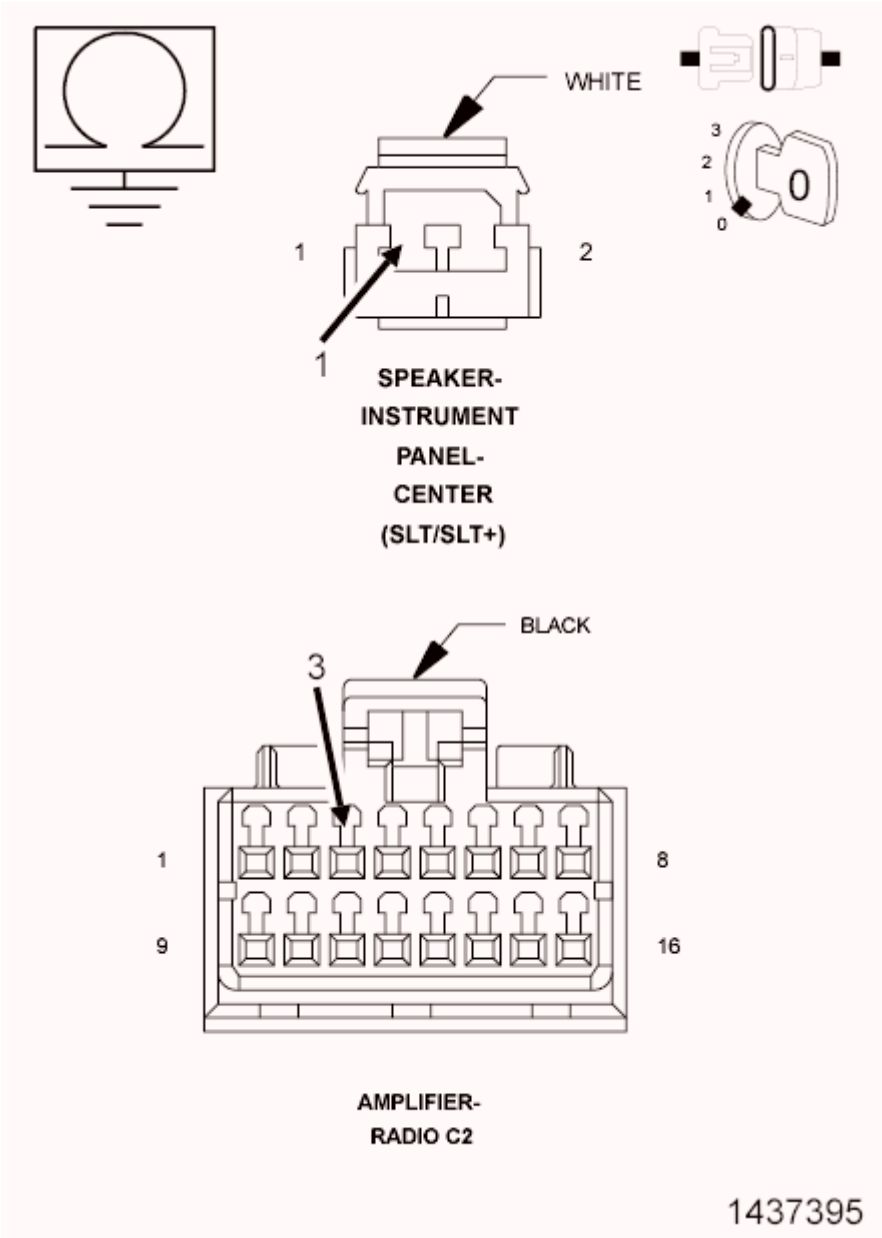

Fig. 101: Checking Amplified Center I/P Speaker (+) Circuit For A Short To Ground
Courtesy of CHRYSLER GROUP, LLC

1. Turn the ignition off.
2. Disconnect the Amplifier C2 harness connector.
3. Measure the resistance between ground and the (X200) Amplified Center I/P Speaker (+) circuit.

   Is the resistance below 10K Ohms?

   Yes

   - Repair the (X200) Amplified Center I/P Speaker (+) circuit for a short to ground.

- Perform the BODY VERIFICATION TEST. Refer to **BODY VERIFICATION TEST** .

No

- Go To 4.

4. **CHECK THE (X290) AMPLIFIED CENTER I/P SPEAKER (-) CIRCUIT FOR A SHORT TO GROUND**

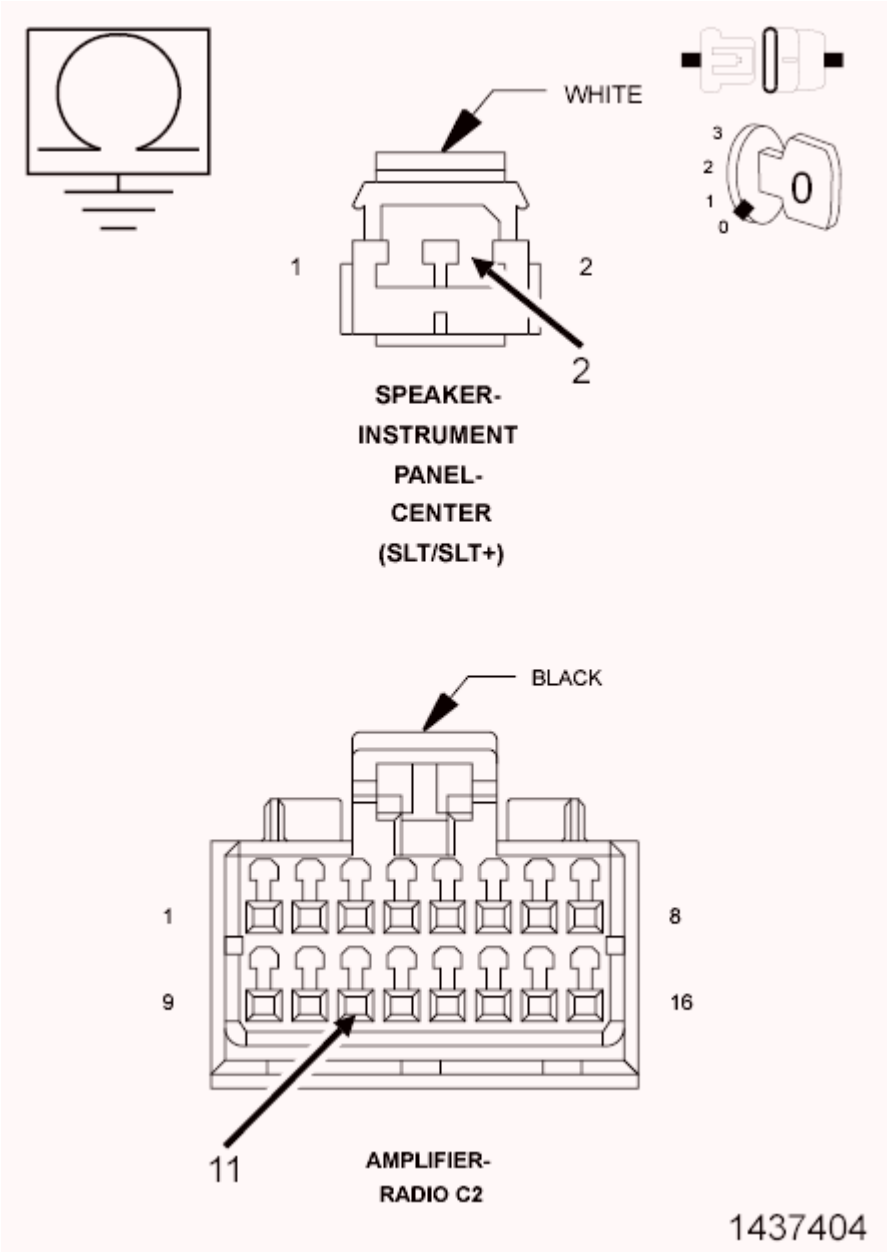

Fig. 102: Checking Amplified Center I/P Speaker (-) Circuit For A Short To Ground
Courtesy of CHRYSLER GROUP, LLC

1. Measure the resistance between ground and the (X290) Amplified Center I/P Speaker (-) circuit.

Is the resistance below 10K Ohms?

Yes

- Repair the (X290) Amplified Center I/P Speaker (-) for a short to ground.
- Perform the BODY VERIFICATION TEST. Refer to **BODY VERIFICATION TEST** .

No

- Replace the Amplifier in accordance with the Service Information.
- Perform the BODY VERIFICATION TEST. Refer to **BODY VERIFICATION TEST** .

B1485-CHANNEL 8 AUDIO SPEAKER OUTPUT CIRCUIT HIGH

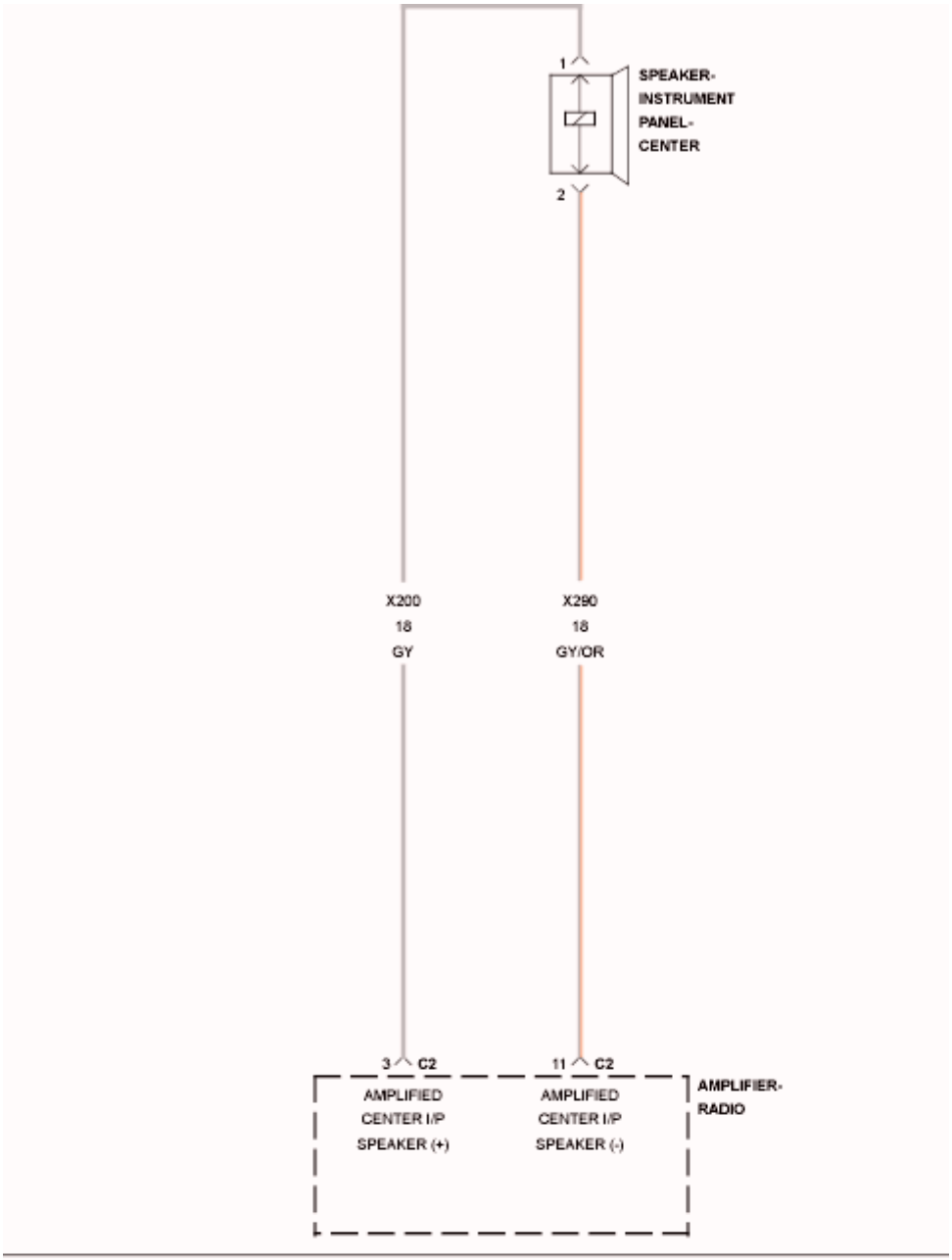
1
SPEAKER-
INSTRUMENT
PANEL-
CENTER
2
X200
18
GY
X290
18
GY/OR
3 C2
11 C2
AMPLIFIED
CENTER I/P
SPEAKER (+)
AMPLIFIED
CENTER I/P
SPEAKER (-)
AMPLIFIER-
RADIO

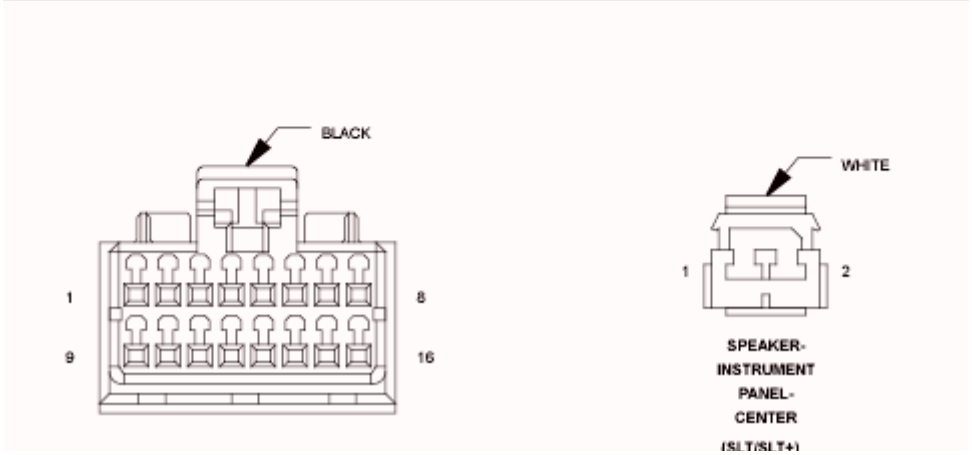
BLACK
1
8
9
16
WHITE
1
2
SPEAKER-
INSTRUMENT
PANEL-
CENTER
(SLT/SLT+)

Fig. 103: Channel 8 Audio Speaker Output Wiring Diagram
Courtesy of CHRYSLER GROUP, LLC

For a complete wiring diagram, **refer to appropriate SYSTEM WIRING DIAGRAMS article** .

WHEN MONITORED:

With the ignition on.

SET CONDITION:

The Amplifier detects a short to battery condition on the output circuit.

POSSIBLE CAUSES

Possible Causes
(X200) AMPLIFIED CENTER I/P SPEAKER (+) CIRCUIT SHORTED TO VOLTAGE
(X290) AMPLIFIED CENTER I/P SPEAKER (-) CIRCUIT SHORTED TO VOLTAGE
AMPLIFIER

DIAGNOSTIC TEST

1. **CHECK FOR AN INTERMITTENT CONDITION**
    1. Turn the ignition on and open one of the front doors.

        NOTE: A front door must remain open whenever checking or erasing Amplifier DTC's.

    2. With the scan tool, record and erase the Amplifier DTC's.
    3. Cycle the ignition switch from on to off, wait five seconds and then back to on.
    4. Turn the Radio on and set the volume to 20.
    5. Adjust the speakers to the front and center.
    6. With the scan tool, read the active Amplifier DTC's.

        Does the scan tool display active: B1485-CHANNEL 8 AUDIO SPEAKER OUTPUT CIRCUIT HIGH?

        Yes

        - Go To 2.

        No

        - Test complete, the condition or conditions that originally set this DTC are not present at this time. Using the wiring diagrams as a guide, check all related splices and connectors for signs

of water intrusion, corrosion, pushed out or bent terminals and correct pin tension.

- Perform the BODY VERIFICATION TEST. Refer to **BODY VERIFICATION TEST** .

2. **CHECK FOR VOLTAGE ON THE (X200) AMPLIFIED CENTER I/P SPEAKER (+) CIRCUIT**

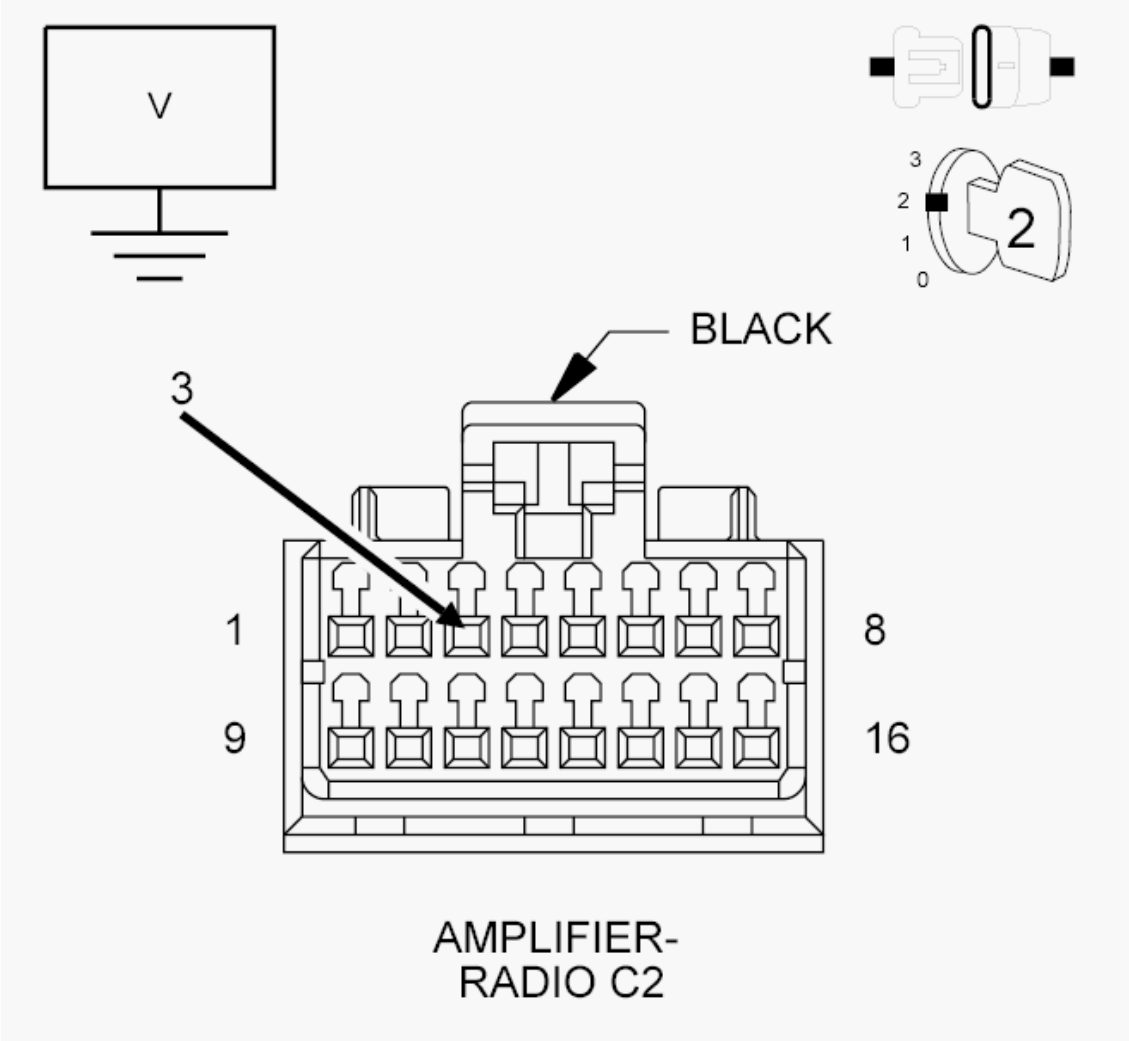

Fig. 104: Measuring Voltage On The Amplified Center I/P Speaker (+) Circuit
Courtesy of CHRYSLER GROUP, LLC

1. Turn the ignition off.
2. Disconnect the Amplifier C2 harness connector.
3. Disconnect the Center I/P Speaker harness connector.
4. Turn the ignition on.
5. Measure for voltage between the (X200) Amplified Center I/P Speaker (+) circuit and ground.

   Is there any voltage present?

   Yes

- Repair the (X200) Amplified Center I/P Speaker (+) circuit for a short to voltage.
- Perform the BODY VERIFICATION TEST. Refer to **BODY VERIFICATION TEST** .

No

- Go To 3.

3. **CHECK FOR VOLTAGE ON THE (X290) AMPLIFIED CENTER I/P SPEAKER (-) CIRCUIT**

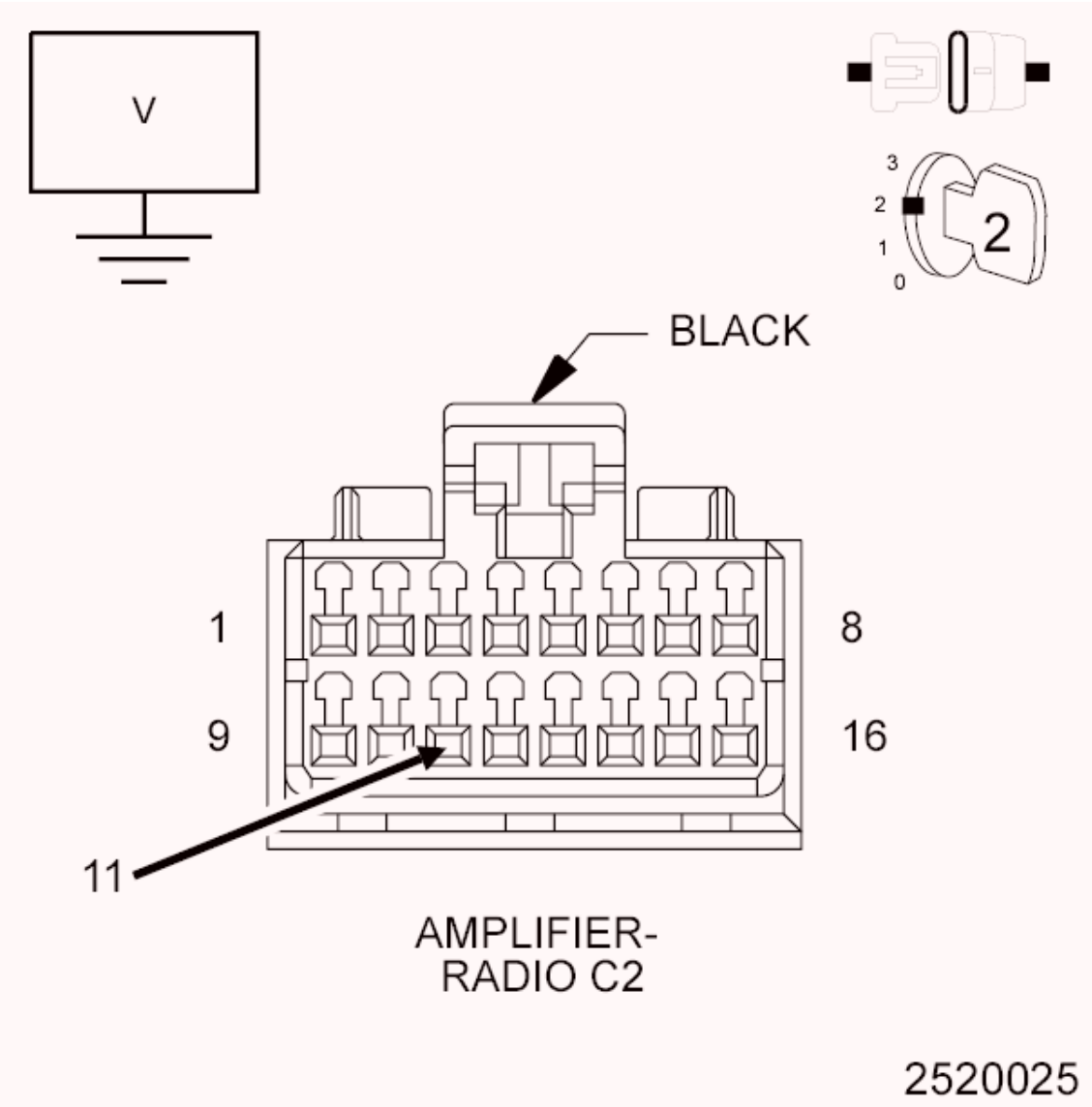

Fig. 105: Measuring Voltage On Amplified Center I/P Speaker (-) Circuit
Courtesy of CHRYSLER GROUP, LLC

1. Measure for voltage between the (X290) Amplified Center I/P Speaker (-) circuit and ground.

   Is there any voltage present?

Yes

- Repair the (X290) Amplified Center I/P Speaker (-) circuit for a short to voltage.
- Perform the BODY VERIFICATION TEST. Refer to **BODY VERIFICATION TEST** .

No

- Replace the Amplifier in accordance with the Service Information.
- Perform the BODY VERIFICATION TEST. Refer to **BODY VERIFICATION TEST** .

B1486-CHANNEL 8 AUDIO SPEAKER OUTPUT CIRCUIT OPEN

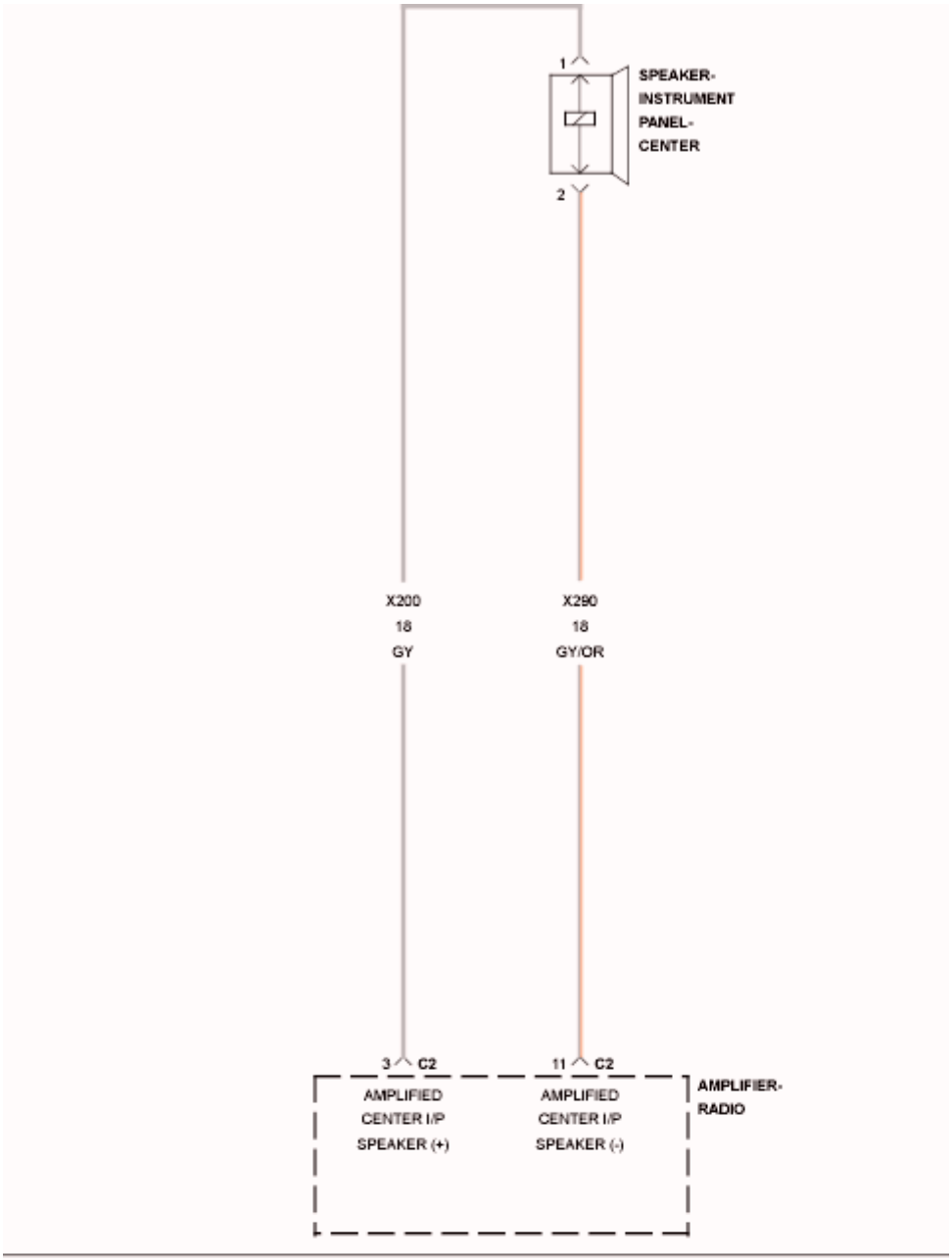
1
SPEAKER-
INSTRUMENT
PANEL-
CENTER
2
X200
18
GY
X290
18
GY/OR
3 C2
11 C2
AMPLIFIED
CENTER I/P
SPEAKER (+)
AMPLIFIED
CENTER I/P
SPEAKER (-)
AMPLIFIER-
RADIO

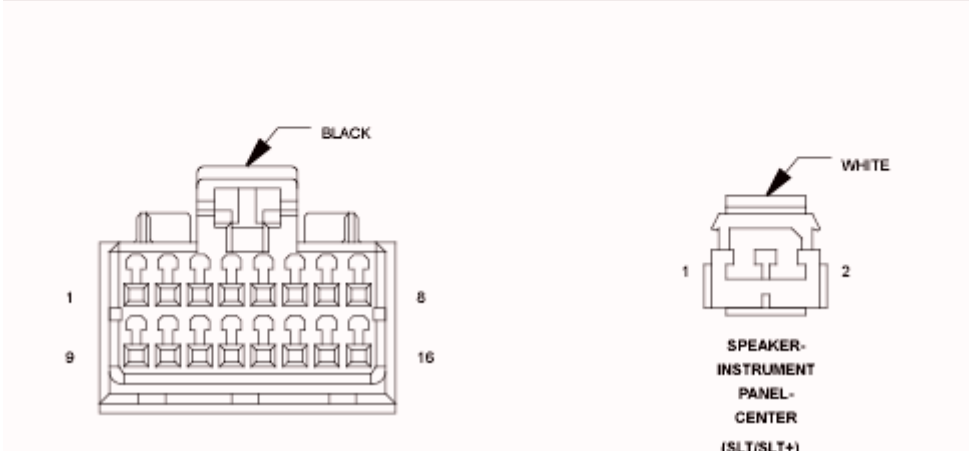
BLACK
1
8
9
16
WHITE
1
2
SPEAKER-
INSTRUMENT
PANEL-
CENTER
(SLT/SLT+)

Fig. 106: Channel 8 Audio Speaker Output Wiring Diagram
Courtesy of CHRYSLER GROUP, LLC

For a complete wiring diagram, **refer to appropriate SYSTEM WIRING DIAGRAMS article** .

WHEN MONITORED:

Amplifier Bus wake-up. Amplifier reset with scan tool.

SET CONDITION:

The Amplifier detects an open condition on the speaker output circuit.

POSSIBLE CAUSES

Possible Causes
(X200) AMPLIFIED CENTER I/P SPEAKER (+) CIRCUIT OPEN
(X290) AMPLIFIED CENTER I/P SPEAKER (-) CIRCUIT OPEN
AMPLIFIED CENTER I/P SPEAKER
AMPLIFIER

DIAGNOSTIC TEST

1. **CHECK FOR AN INTERMITTENT CONDITION**
    1. Turn the ignition on and open one of the front doors.

        NOTE: A front door must remain open whenever checking or erasing Amplifier DTC's.

    2. With the scan tool, record and erase the Amplifier DTC's.
    3. Cycle the ignition switch from on to off, wait five seconds and then back to on.
    4. Turn the Radio on and set the volume to 20.
    5. Adjust the speakers to the front and center.
    6. With the scan tool, read the active Amplifier DTC's.

        Does the scan tool display active: B1486-CHANNEL 8 AUDIO SPEAKER OUTPUT CIRCUIT OPEN?

        Yes

        - Go To 2.

        No

        - Test complete, the condition or conditions that originally set this DTC are not present at this

time. Using the wiring diagrams as a guide, check all related splices and connectors for signs of water intrusion, corrosion, pushed out or bent terminals and correct pin tension.

- Perform the BODY VERIFICATION TEST. Refer to **BODY VERIFICATION TEST** .

2. **CHECK THE OPERATION OF THE CENTER I/P SPEAKER**

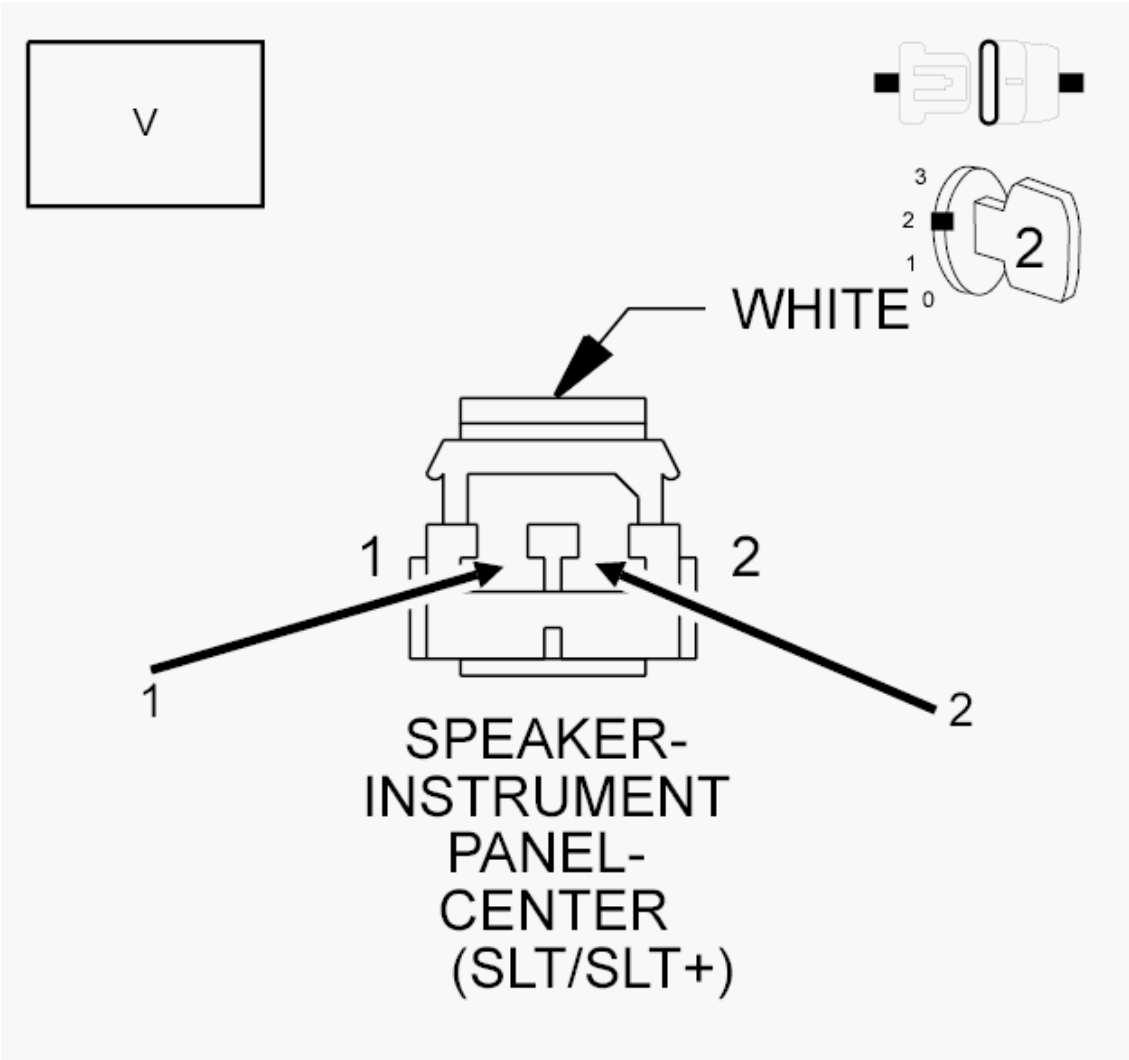

Fig. 107: Checking The Operation Of The Center I/P Speaker
Courtesy of CHRYSLER GROUP, LLC

1. Turn the ignition off.
2. Disconnect the Center I/P Speaker harness connector.
3. Turn the ignition on.
4. Turn the radio on and turn the volume to 25.
5. Adjust the speakers to the front and center.
6. With a voltmeter set to read in A/C voltage, measure the voltage of the Center I/P Speaker circuits in the Center I/P Speaker harness connector.

Is the voltage present greater than 1 volt?

Yes

- Replace the Center I/P Speaker in accordance with the Service Information.
- Perform the BODY VERIFICATION TEST. Refer to **BODY VERIFICATION TEST** .

No

- Go To 3.

3. **CHECK THE (X200) AMPLIFIED CENTER I/P SPEAKER (+) CIRCUIT FOR AN OPEN**

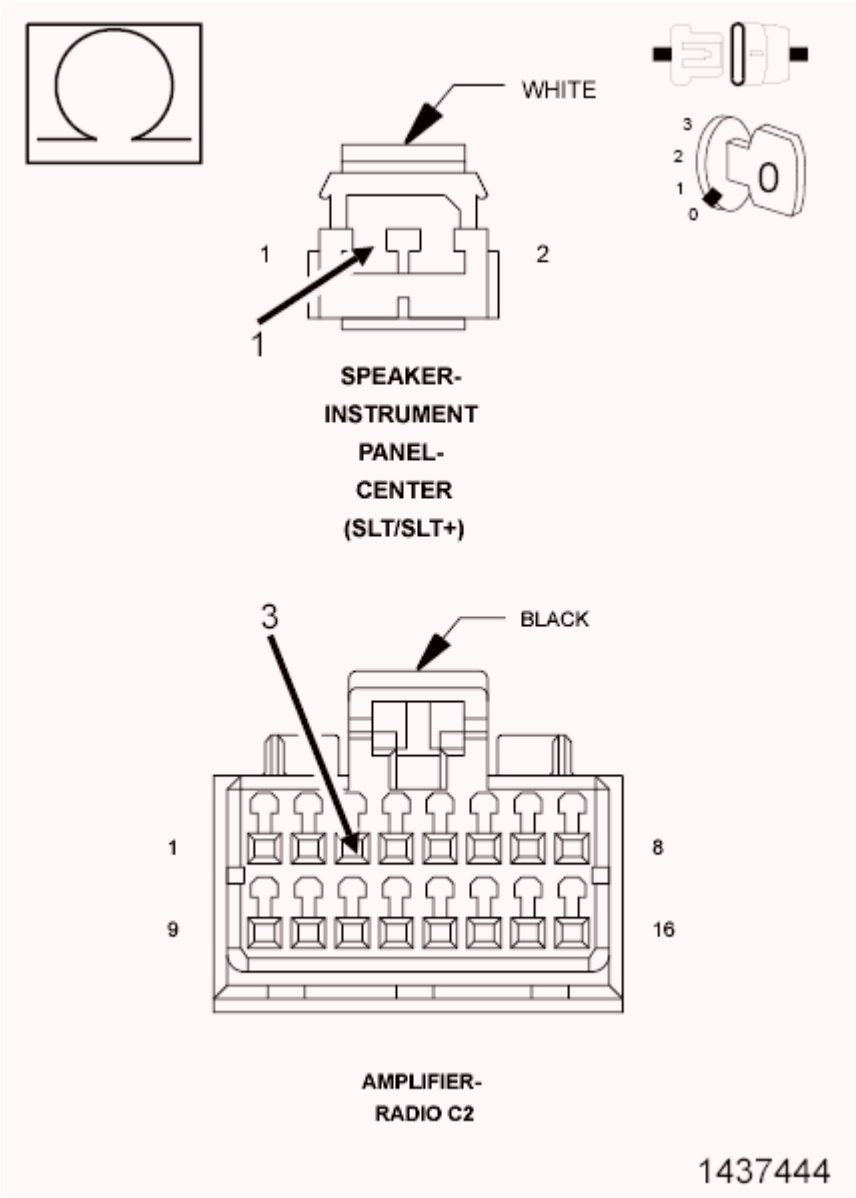

Fig. 108: Checking Amplified Center I/P Speaker (+) Circuit For An Open

Courtesy of CHRYSLER GROUP, LLC

1. Turn the ignition off.
2. Disconnect the Amplifier C2 harness connector.
3. Measure the resistance of the (X200) Amplified Center I/P Speaker (+) circuit between the Amplifier C2 harness connector and the Center I/P Speaker harness connector.

   Is the resistance below 2.0 Ohms?

   Yes

   - Go To 4.

   No

   - Repair the (X200) Amplified Center I/P Speaker (+) circuit for an open.
   - Perform the BODY VERIFICATION TEST. Refer to **BODY VERIFICATION TEST** .

4. **CHECK THE (X290) AMPLIFIED CENTER I/P SPEAKER (-) CIRCUIT FOR AN OPEN**

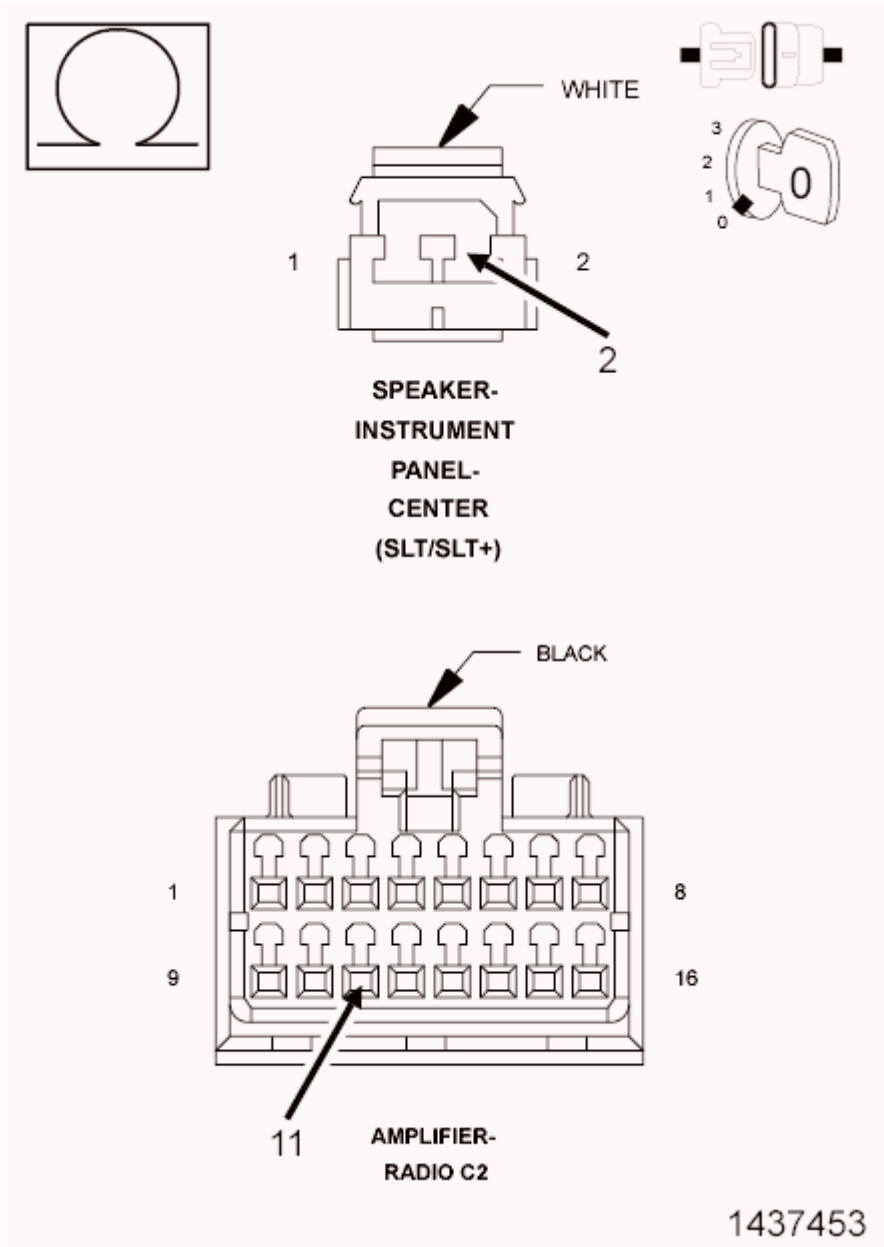

Fig. 109: Checking Amplified Center I/P Speaker (-) Circuit For An Open
Courtesy of CHRYSLER GROUP, LLC

1. Measure the resistance of the (X290) Amplified Center I/P Speaker (-) circuit between the Amplifier C2 harness connector and the Center I/P Speaker harness connector.

   Is the resistance below 2.0 Ohms?

   Yes

   - Replace the Amplifier in accordance with the Service Information.
   - Perform the BODY VERIFICATION TEST. Refer to **BODY VERIFICATION TEST** .

No

- Repair the (X290) Amplified Center I/P Speaker (-) circuit for an open.
- Perform the BODY VERIFICATION TEST. Refer to **BODY VERIFICATION TEST** .

B1487-CHANNEL 8 AUDIO SPEAKER OUTPUT CIRCUIT SHORTED TOGETHER

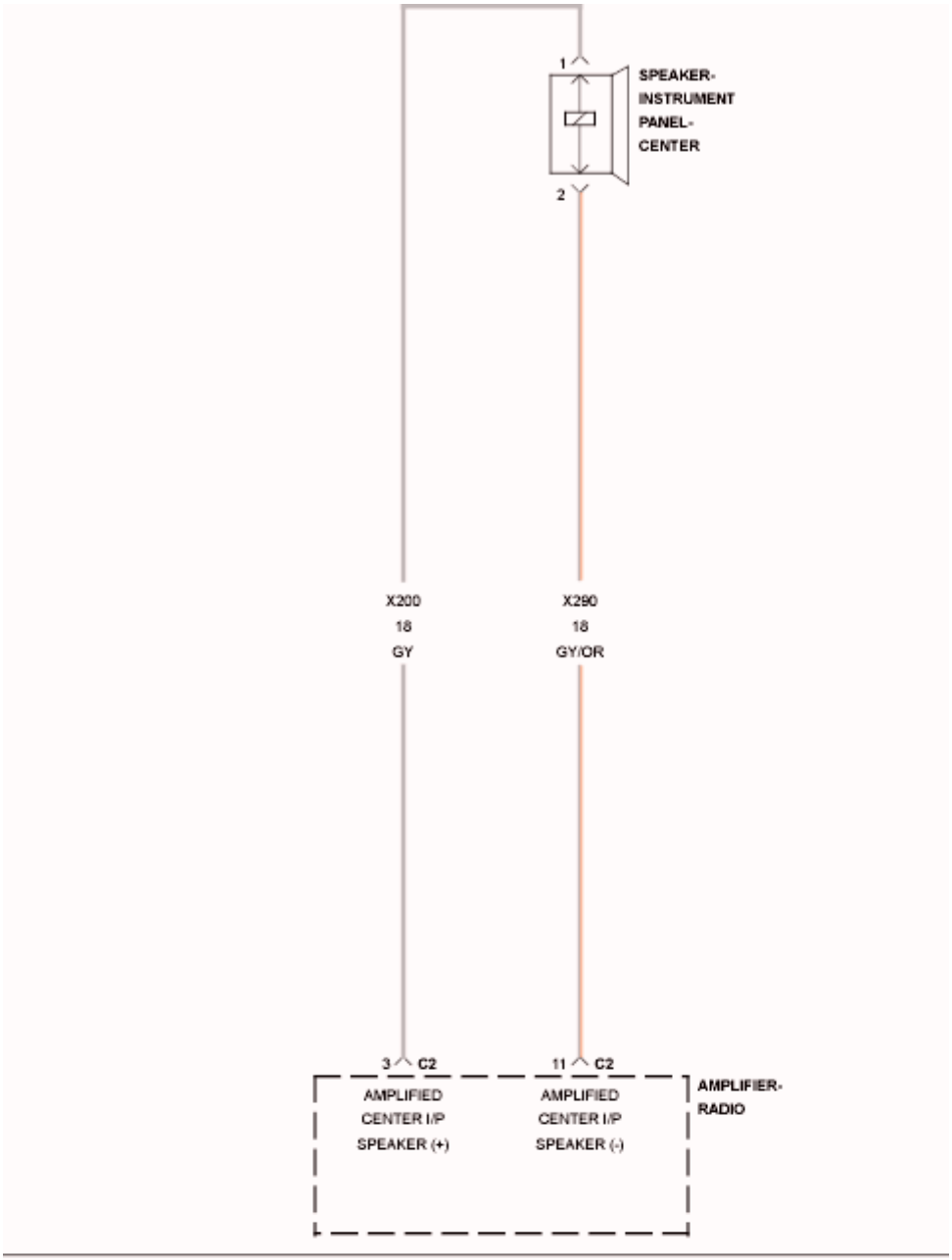
1
SPEAKER-
INSTRUMENT
PANEL-
CENTER
2
X200
18
GY
X290
18
GY/OR
3 C2
11 C2
AMPLIFIED
CENTER I/P
SPEAKER (+)
AMPLIFIED
CENTER I/P
SPEAKER (-)
AMPLIFIER-
RADIO

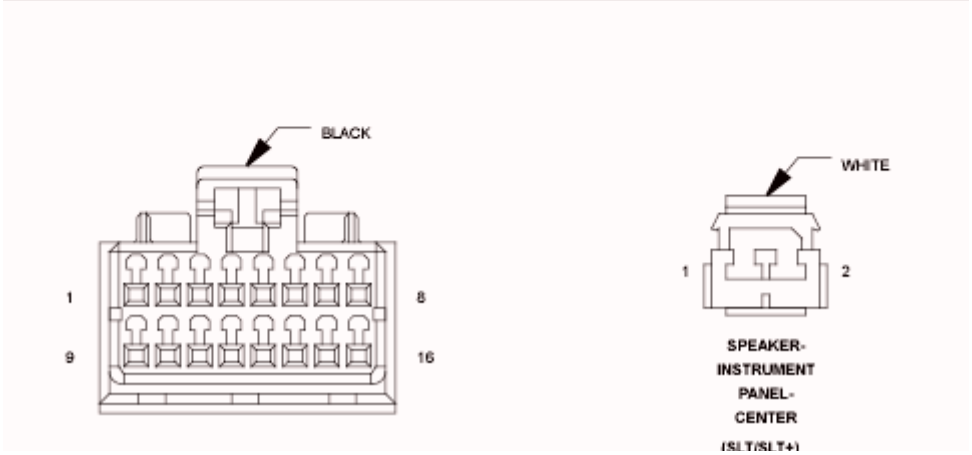
BLACK
1
8
9
16
WHITE
1
2
SPEAKER-
INSTRUMENT
PANEL-
CENTER
(SLT/SLT+)

Fig. 110: Channel 8 Audio Speaker Output Wiring Diagram
Courtesy of CHRYSLER GROUP, LLC

For a complete wiring diagram, **refer to appropriate SYSTEM WIRING DIAGRAMS article** .

WHEN MONITORED:

With the ignition on. Radio volume at 25 or higher.

SET CONDITION:

The Amplifier detects that the output circuits are shorted together.

POSSIBLE CAUSES

Possible Causes
(X200) AMPLIFIED CENTER I/P SPEAKER (+) CIRCUIT SHORTED TO THE (X290) AMPLIFIED CENTER I/P SPEAKER (-) CIRCUIT
AMPLIFIED CENTER I/P SPEAKER
AMPLIFIER

DIAGNOSTIC TEST

1. **CHECK FOR AN INTERMITTENT CONDITION**
    1. Turn the ignition on and open one of the front doors.

        NOTE: A front door must remain open whenever checking or erasing Amplifier DTC's.

    2. With the scan tool, record and erase the Amplifier DTC's.
    3. Cycle the ignition switch from on to off, wait five seconds and then back to on.
    4. Turn the Radio on and set the volume to 20.
    5. Adjust the speakers to the front and center.
    6. With the scan tool, read the active Amplifier DTC's.

        Does the scan tool display active: B1487-CHANNEL 8 AUDIO SPEAKER OUTPUT CIRCUIT SHORTED TOGETHER?

        Yes

        - Go To 2.

        No

        - Test complete, the condition or conditions that originally set this DTC are not present at this

time. Using the wiring diagrams as a guide, check all related splices and connectors for signs of water intrusion, corrosion, pushed out or bent terminals and correct pin tension.

- Perform the BODY VERIFICATION TEST. Refer to **BODY VERIFICATION TEST** .

2. **CHECK THE OPERATION OF CENTER I/P SPEAKER**

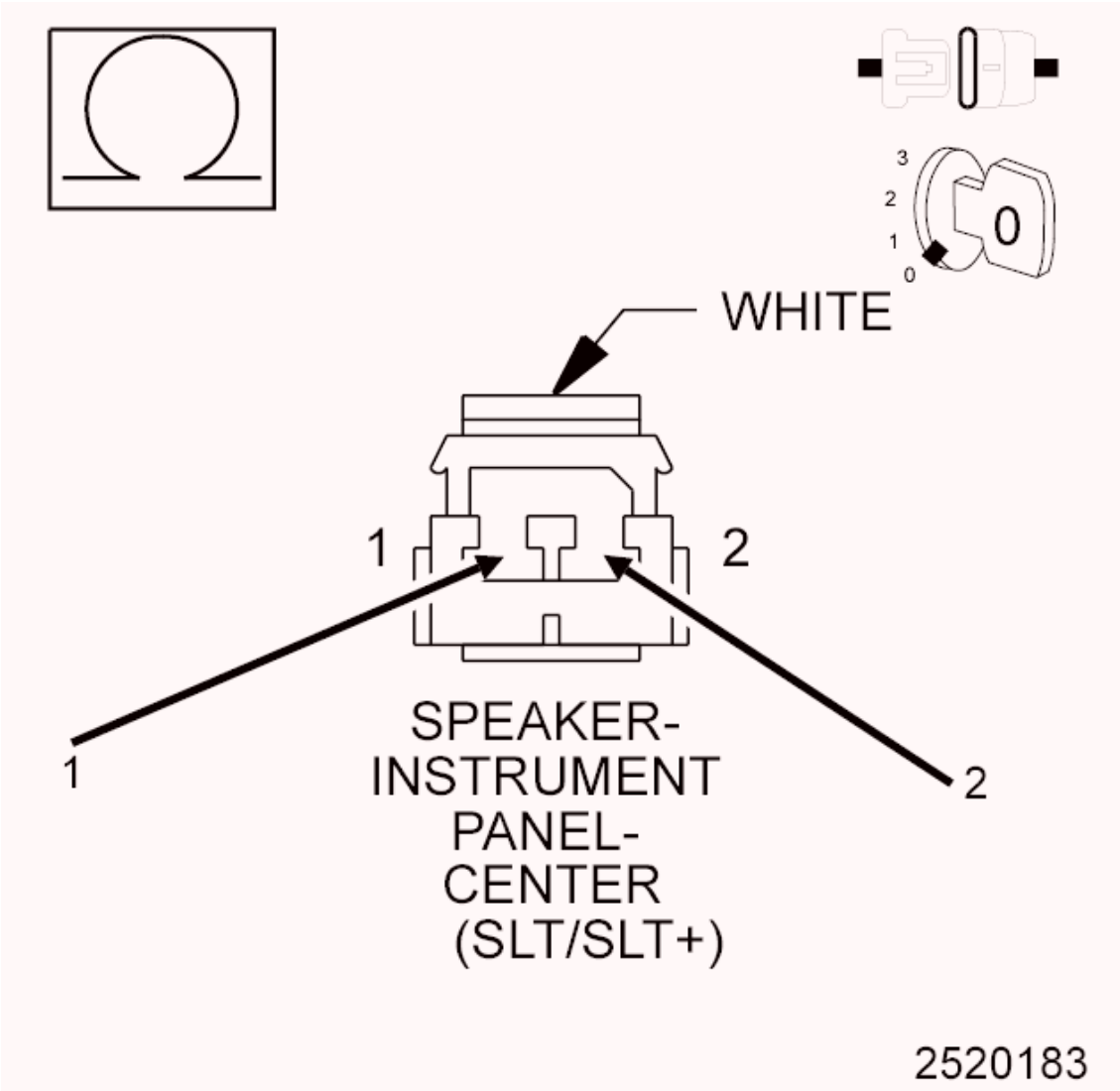

Fig. 111: Checking The Operation Of Center I/P Speaker
Courtesy of CHRYSLER GROUP, LLC

1. Turn the ignition off.
2. Disconnect the Center I/P Speaker.
3. Measure the resistance of the speaker between the two terminals.

NOTE: **The graphic shows the connector for reference only. Measure at the speaker terminals.**

Is the resistance of the speaker less than 1 Ohm?

Yes

- Replace the Center I/P Speaker in accordance with the Service Information.
- Perform the BODY VERIFICATION TEST. Refer to **BODY VERIFICATION TEST** .

No

- Go To 3.

3. **CHECK THE (X200) AMPLIFIED CENTER I/P SPEAKER (+) CIRCUIT, AND THE (X290) AMPLIFIED CENTER I/P SPEAKER (-) CIRCUITS FOR A SHORT TOGETHER**

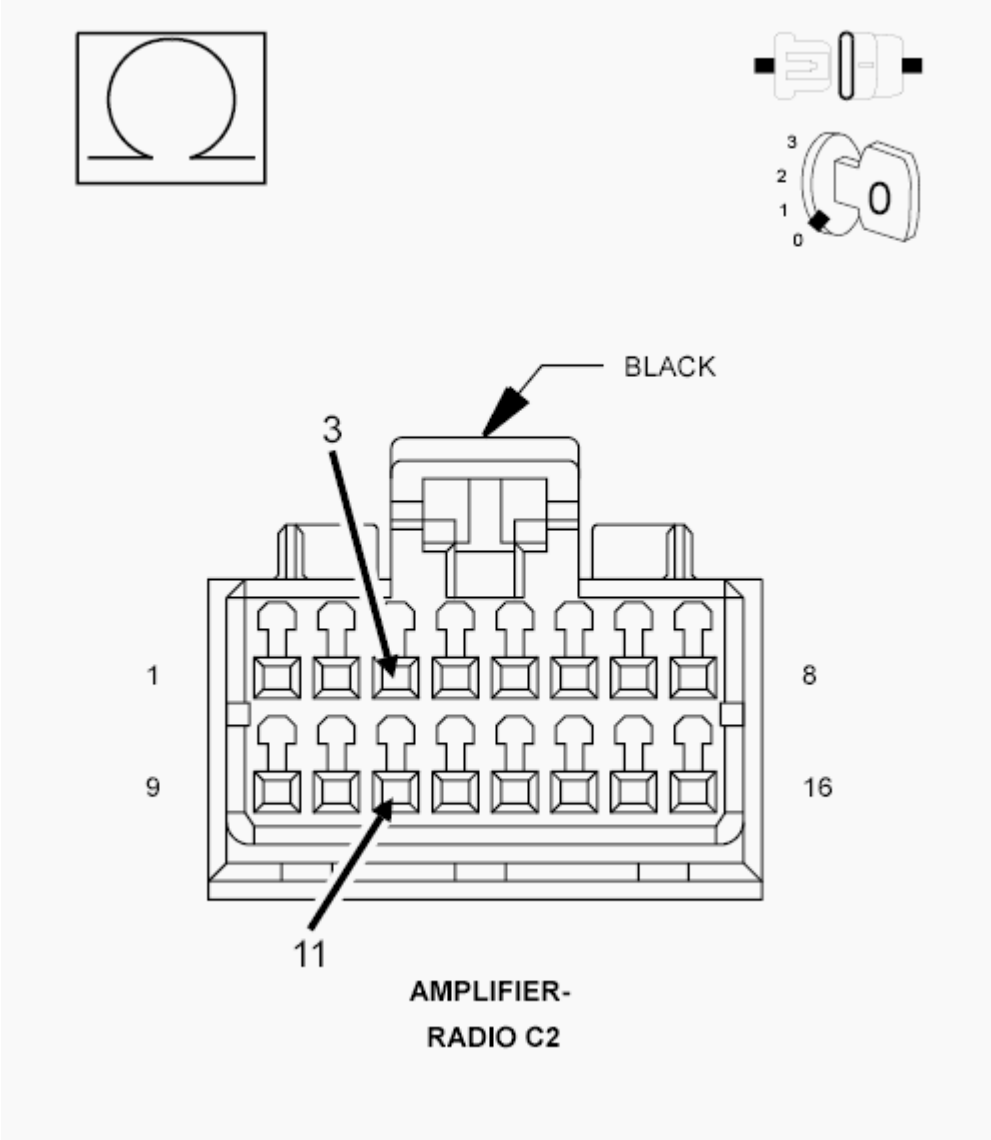

Fig. 112: Checking Amplified Center I/P Speaker (+) Circuit, And The Amplified Center I/P Speaker (-) Circuits For A Short Together

Courtesy of CHRYSLER GROUP, LLC

1. Disconnect the Amplifier C2 harness connector.
2. Measure the resistance between the (X200) Amplified Center I/P Speaker (+) circuit, and the (X290) Amplified Center I/P Speaker (-) circuit.

   Is the resistance below 10K Ohms?

   Yes

   - Repair the (X200) Amplified Center I/P Speaker (+) circuit, and the (X290) Amplified Center I/P Speaker (-) circuit for a short together.
   - Perform the BODY VERIFICATION TEST. Refer to **BODY VERIFICATION TEST** .

   No

   - Replace the Amplifier in accordance with the Service Information.
   - Perform the BODY VERIFICATION TEST. Refer to **BODY VERIFICATION TEST** .

B1488-CABIN EQ MISMATCH PERFORMANCE

For a complete wiring diagram, **refer to appropriate SYSTEM WIRING DIAGRAMS article** .

WHEN MONITORED:

With the ignition on.

SET CONDITION:

If the Cabin Equalization Curve number message from the Totally Integrated Power Module (TIPM) is not the same as the Cabin Equalization Curve number stored in the Amplifier for 10 consecutive cycles, then the Amplifier will set this DTC.

POSSIBLE CAUSES

POSSIBLE CAUSES
NO COMMUNICATION WITH TOTALLY INTEGRATED POWER MODULE (TIPM)
ACTIVE TIPM DTC's
TOTALLY INTEGRATED POWER MODULE (TIPM)
AMPLIFIER

DIAGNOSTIC TEST

1. **CHECK FOR AN INTERMITTENT CONDITION**
   1. Turn the ignition on and open one of the front doors.

NOTE: **A front door must remain open whenever checking or erasing Amplifier DTC's.**

2. Turn the radio on.
3. With the scan tool, erase Amplifier DTC's.
4. With the scan tool, reset the amplifier.
5. With the scan tool, read Amplifier DTC's.

Does the scan tool display active: B1488-CABIN EQ MISMATCH PERFORMANCE?

Yes

- Go To 2.

No

- Test complete, the condition or conditions that originally set this DTC are not present at this time. Using the wiring diagrams as a guide, check all related splices and connectors for signs of water intrusion, corrosion, pushed out or bent terminals and correct pin tension.
- Perform the BODY VERIFICATION TEST. Refer to **BODY VERIFICATION TEST** .

2. **CHECK AMPLIFIER BUSSED INPUTS/SENSORS**
   1. With the scan tool in Amplifier Data Display, read the Cabin Equalization Curve number in the Bussed Inputs and Sensors Sections.

NOTE: **The Cabin EQ Curve settings in the Inputs/Sensors section should match one another. The Cabin EQ# in the Inputs section is the information that is received from the TIPM. The Cabin EQ in the Sensors section is the information that is Stored in the Amplifier's memory.**

Do the Cabin EQ settings match one another?

Yes

- Replace the Amplifier in accordance to the service information.
- Perform the BODY VERIFICATION TEST. Refer to **BODY VERIFICATION TEST** .

No

- Go To 3.

3. **VERIFY COMMUNICATION WITH TIPM**
   1. With the scan tool, read the active modules on the BUS.

Does the scan tool show the TIPM active on the BUS?

Yes

- Go To 4.

No

- Refer to **COMMUNICATION - DIAGNOSIS AND TESTING** and perform the No Response From TIPM (Totally Integrated Power Module) diagnostic procedure.

4. **CHECK TIPM FOR ACTIVE DTC's**
   1. With the scan tool, erase TIPM DTC's.
   2. Turn the ignition off. Wait approximately 10 seconds.
   3. Turn the ignition on.
   4. With the scan tool, read TIPM DTC's.

   Are any active DTC's present?

   Yes

   - Refer to **TIPM - DIAGNOSIS AND TESTING** and perform the appropriate diagnostic procedure.

   No

   - Replace the Totally Integrated Power Module (TIPM) in accordance with the Service Information.
   - Perform the BODY VERIFICATION TEST. Refer to **BODY VERIFICATION TEST** .

B14B9-CHANNEL 9 AUDIO SPEAKER OUTPUT CIRCUIT PERFORMANCE

For a complete wiring diagram, **refer to appropriate SYSTEM WIRING DIAGRAMS article** .

WHEN MONITORED:

With the ignition on.

SET CONDITION:

This Diagnostic Trouble Code (DTC) sets if a Direct Current (DC) offset occurs on the output channel, the amplifier shall set a DTC after a maturity rate of four to six seconds.

POSSIBLE CAUSES

Possible Causes
AMPLIFIER

DIAGNOSTIC TEST

1. **CHECK FOR AN INTERMITTENT CONDITION**
    1. Turn the ignition on and open one of the front doors.

        NOTE: A front door must remain open whenever checking or erasing Amplifier DTC's.

    2. With the scan tool, record and erase the Amplifier DTC's.
    3. Cycle the ignition switch from on to off, wait five seconds and then back to on.
    4. Turn the Radio on and set the volume to 20.
    5. Adjust the speakers to the front and center.
    6. With the scan tool, read the active Amplifier DTC's.

    Does the scan tool display active: B14B9-CHANNEL 9 AUDIO SPEAKER OUTPUT CIRCUIT PERFORMANCE?

    Yes

    - Replace the Amplifier in accordance with the Service Information.
    - Perform the BODY VERIFICATION TEST. Refer to **BODY VERIFICATION TEST** .

    No

    - Test complete, the condition or conditions that originally set this DTC are not present at this time. Using the wiring diagrams as a guide, check all related splices and connectors for signs of water intrusion, corrosion, pushed out or bent terminals and correct pin tension.
    - Perform the BODY VERIFICATION TEST. Refer to **BODY VERIFICATION TEST** .

B14BA-CHANNEL 9 AUDIO SPEAKER OUTPUT CIRCUIT LOW

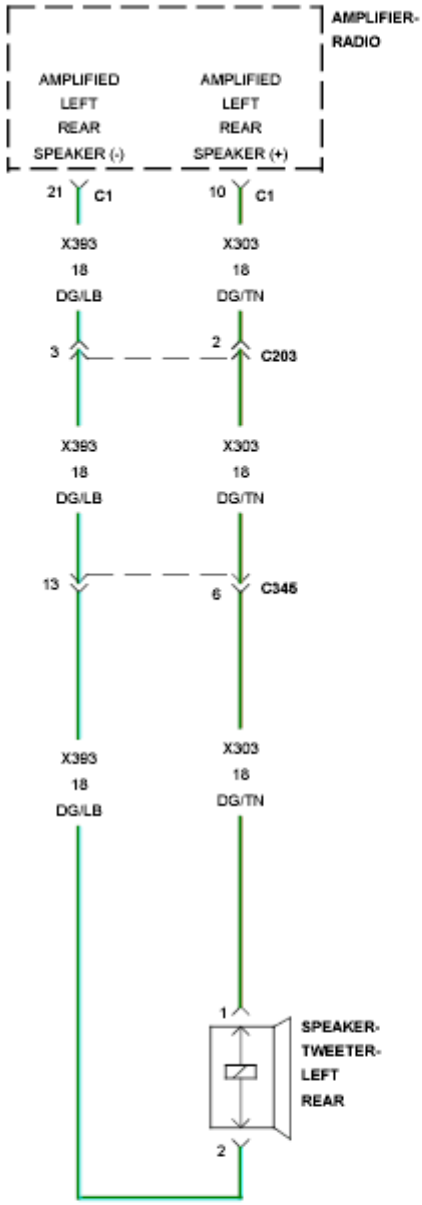

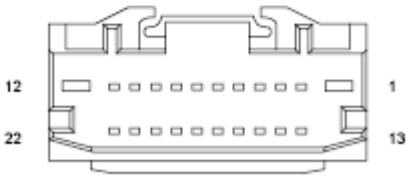

AMPLIFIER-
RADIO C1

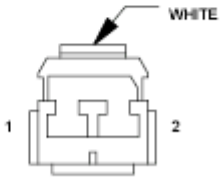

SPEAKER-
TWEETER-
LEFT REAR

Fig. 113: Channel 9 Audio Speaker Output Wiring Diagram
Courtesy of CHRYSLER GROUP, LLC

For a complete wiring diagram, **refer to appropriate SYSTEM WIRING DIAGRAMS article** .

- **When Monitored:**

  With the ignition on.

- **Set Condition:**

  The Amplifier detects a shorted to ground condition on the speaker output circuit.

WHEN MONITORED:

SET CONDITION:

POSSIBLE CAUSES

Possible Causes
(X303) LEFT REAR SPEAKER (+) CIRCUIT SHORTED TO GROUND
(X393) LEFT REAR SPEAKER (-) CIRCUIT SHORTED TO GROUND
LEFT REAR SPEAKER
AMPLIFIER

DIAGNOSTIC TEST

1. **CHECK FOR AN INTERMITTENT CONDITION**
   1. Turn the ignition on and open one of the front doors.

      NOTE: A front door must remain open whenever checking or erasing Amplifier DTC's.

   2. With the scan tool, record and erase the Amplifier DTC's.
   3. Cycle the ignition switch from on to off, wait five seconds and then back to on.
   4. Turn the Radio on and set the volume to 20.
   5. Adjust the speakers to the front and center.
   6. With the scan tool, read the active Amplifier DTC's.

      Does the scan tool display active: B14BA-CHANNEL 9 AUDIO SPEAKER OUTPUT CIRCUIT LOW?

      Yes

      - Go To 2.

No

- Test complete, the condition or conditions that originally set this DTC are not present at this time. Using the wiring diagrams as a guide, check all related splices and connectors for signs of water intrusion, corrosion, pushed out or bent terminals and correct pin tension.
- Perform the BODY VERIFICATION TEST. Refer to **BODY VERIFICATION TEST** .

2. **CHECK THE LEFT REAR SPEAKER**

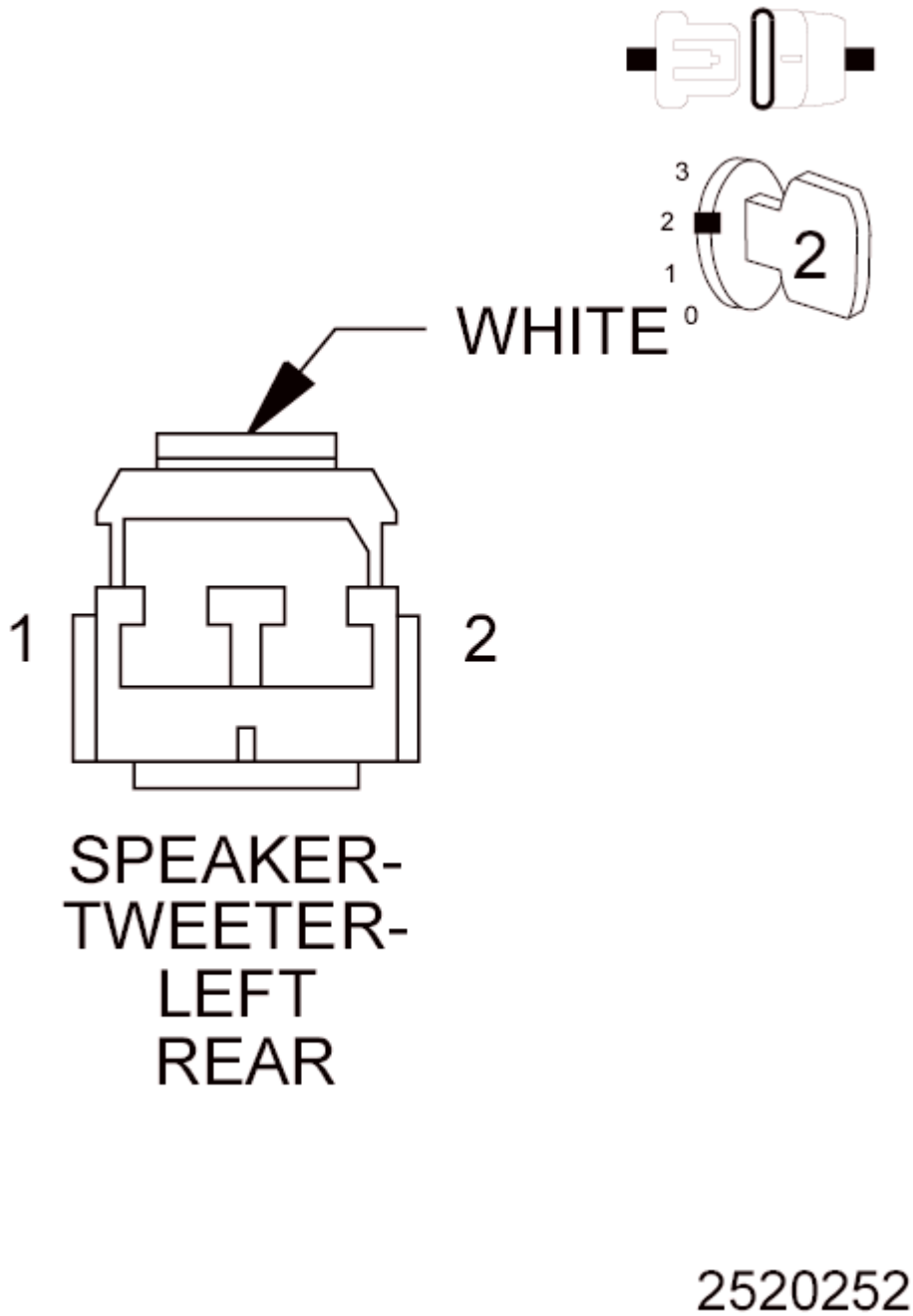

Fig. 114: Left Rear Speaker Connector End View

Courtesy of CHRYSLER GROUP, LLC

1. Make sure one of the front doors is still open.
2. With the scan tool, erase the DTC's.
3. Turn the ignition off.
4. Disconnect the Left Rear Speaker harness connector.
5. Turn the ignition on.
6. Turn the radio on and set the volume to 25.
7. With the scan tool, read the active Amplifier DTC's.

   Does the scan tool display active: B14BA-CHANNEL 9 AUDIO SPEAKER OUTPUT CIRCUIT LOW?

   Yes

   - Go To 3.

   No

   - Replace the Left Rear Speaker.
   - Perform the BODY VERIFICATION TEST. Refer to **BODY VERIFICATION TEST** .

3. **CHECK THE (X303) LEFT REAR SPEAKER (+) CIRCUIT FOR A SHORT TO GROUND**

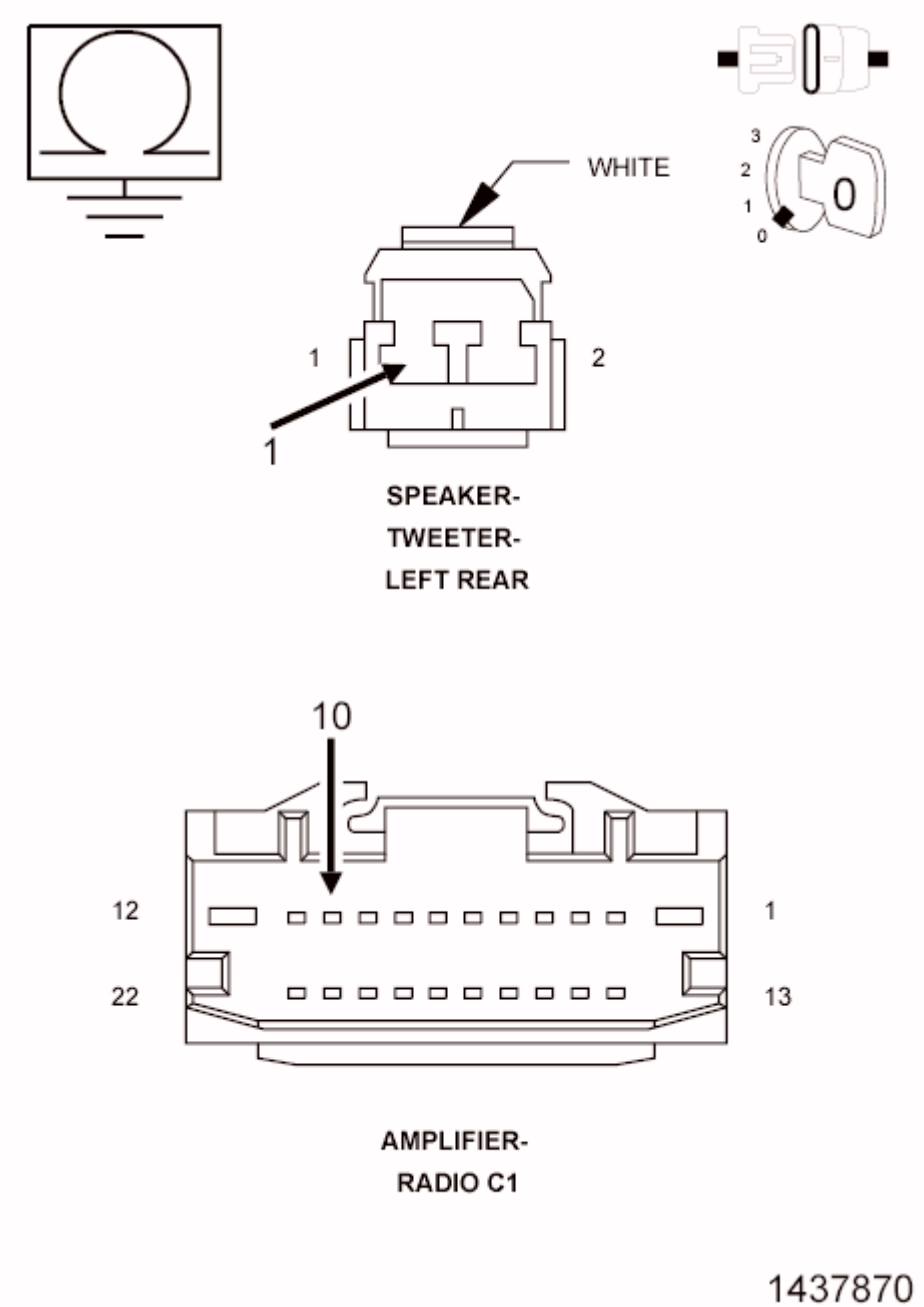

Fig. 115: Checking Left Rear Speaker (+) Circuit For A Short To Ground
Courtesy of CHRYSLER GROUP, LLC

1. Disconnect the Amplifier C1 harness connector.
2. Disconnect the Left Rear Speaker harness connector.
3. Measure the resistance between ground and the (X303) Left Rear Speaker (+) circuit.

   Is the resistance below 10K Ohms?

   Yes

- Repair the (X303) Left Rear Speaker (+) circuit for a short to ground.
- Perform the BODY VERIFICATION TEST. Refer to **BODY VERIFICATION TEST** .

No

- Go To 4.

4. **CHECK THE (X393) LEFT REAR SPEAKER (-) CIRCUIT FOR A SHORT TO GROUND**

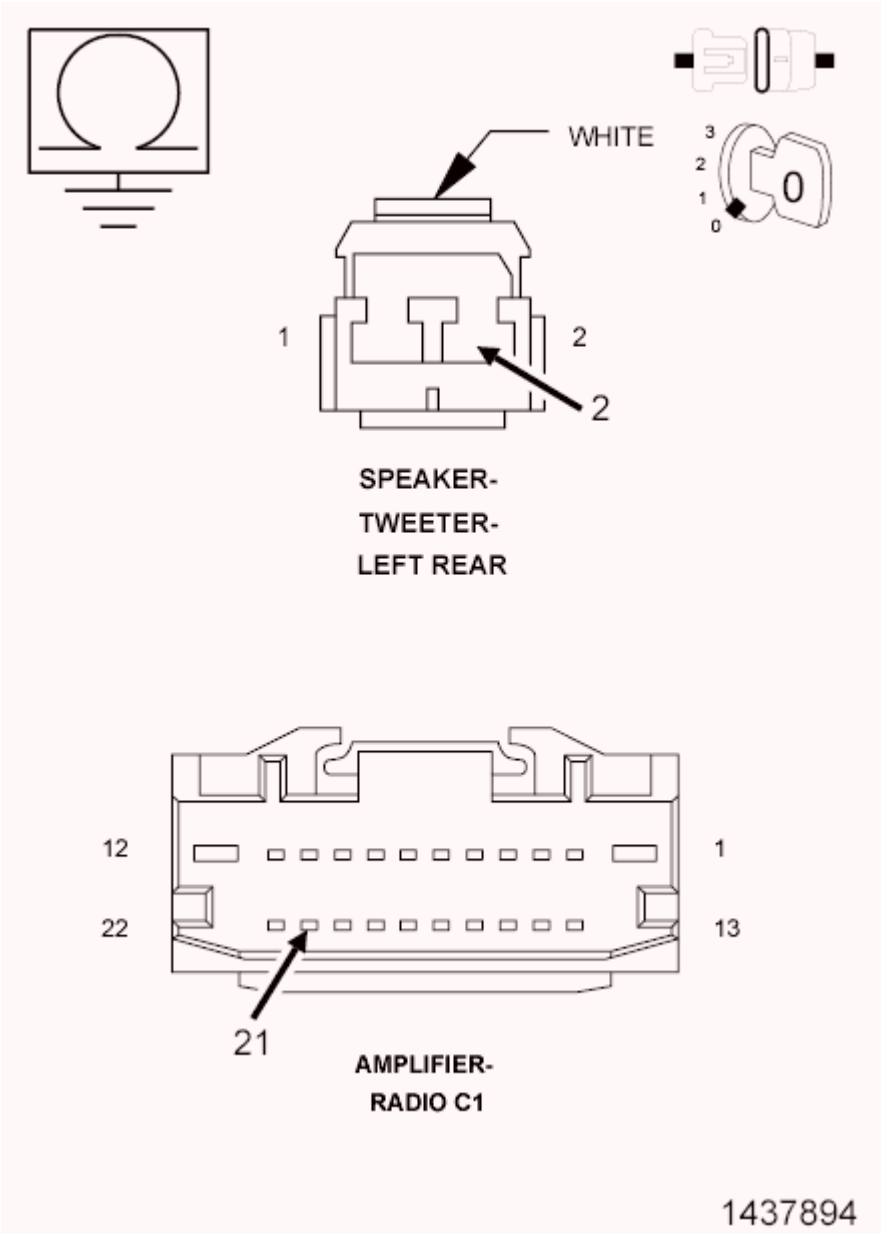

Fig. 116: Checking Left Rear Speaker (-) Circuit For A Short To Ground
Courtesy of CHRYSLER GROUP, LLC

1. Measure the resistance between ground and the (X393) Left Rear Speaker (-) circuit.

Is the resistance below 10K Ohms?

Yes

- Repair the (X393) Left Rear Speaker (-) for a short to ground.
- Perform the BODY VERIFICATION TEST. Refer to **BODY VERIFICATION TEST** .

No

- Replace the Amplifier in accordance with the Service Information.
- Perform the BODY VERIFICATION TEST. Refer to **BODY VERIFICATION TEST** .

B14BB-CHANNEL 9 AUDIO SPEAKER OUTPUT CIRCUIT HIGH

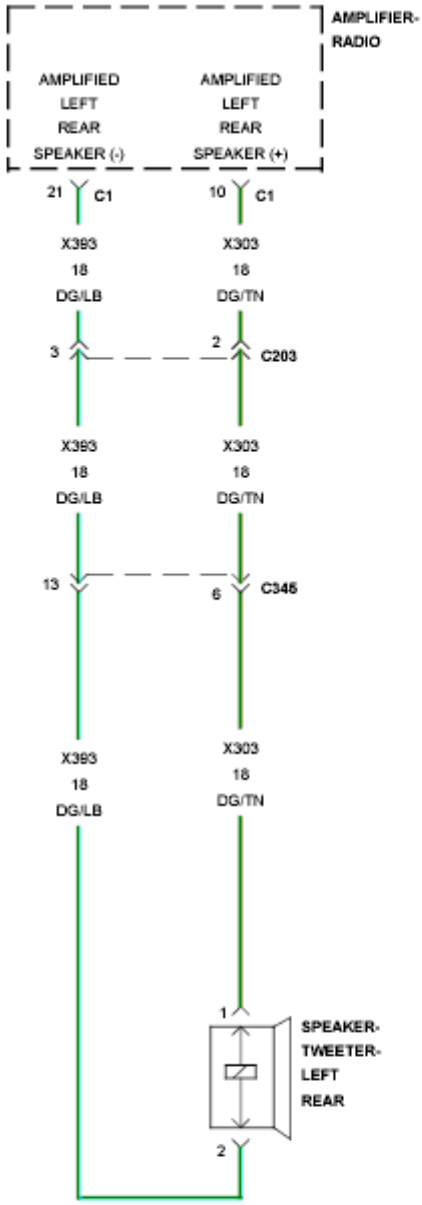

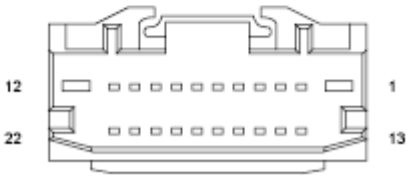

AMPLIFIER-
RADIO C1

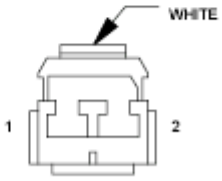

SPEAKER-
TWEETER-
LEFT REAR

Fig. 117: Channel 9 Audio Speaker Output Wiring Diagram
Courtesy of CHRYSLER GROUP, LLC

For a complete wiring diagram, **refer to appropriate SYSTEM WIRING DIAGRAMS article** .

- **When Monitored:**

  With the ignition on.

- **Set Condition:**

  The Amplifier detects a short to battery condition on the output circuit.

WHEN MONITORED:

SET CONDITION:

POSSIBLE CAUSES

Possible Causes
(X303) LEFT REAR SPEAKER (+) CIRCUIT SHORTED TO VOLTAGE
(X393) LEFT REAR SPEAKER (-) CIRCUIT SHORTED TO VOLTAGE
AMPLIFIER

DIAGNOSTIC TEST

1. **CHECK FOR AN INTERMITTENT CONDITION**
   1. Turn the ignition on and open one of the front doors.

      NOTE: A front door must remain open whenever checking or erasing Amplifier DTC's.

   2. With the scan tool, record and erase the Amplifier DTC's.
   3. Cycle the ignition switch from on to off, wait five seconds and then back to on.
   4. Turn the Radio on and set the volume to 20.
   5. Adjust the speakers to the front and center.
   6. With the scan tool, read the active Amplifier DTC's.

      Does the scan tool display active: B14BB-CHANNEL 9 AUDIO SPEAKER OUTPUT CIRCUIT HIGH?

      Yes

      - Go To 2.

No

- Test complete, the condition or conditions that originally set this DTC are not present at this time. Using the wiring diagrams as a guide, check all related splices and connectors for signs of water intrusion, corrosion, pushed out or bent terminals and correct pin tension.
- Perform the BODY VERIFICATION TEST. Refer to **BODY VERIFICATION TEST** .

2. **CHECK FOR VOLTAGE ON THE (X303) LEFT REAR SPEAKER (+) CIRCUIT**

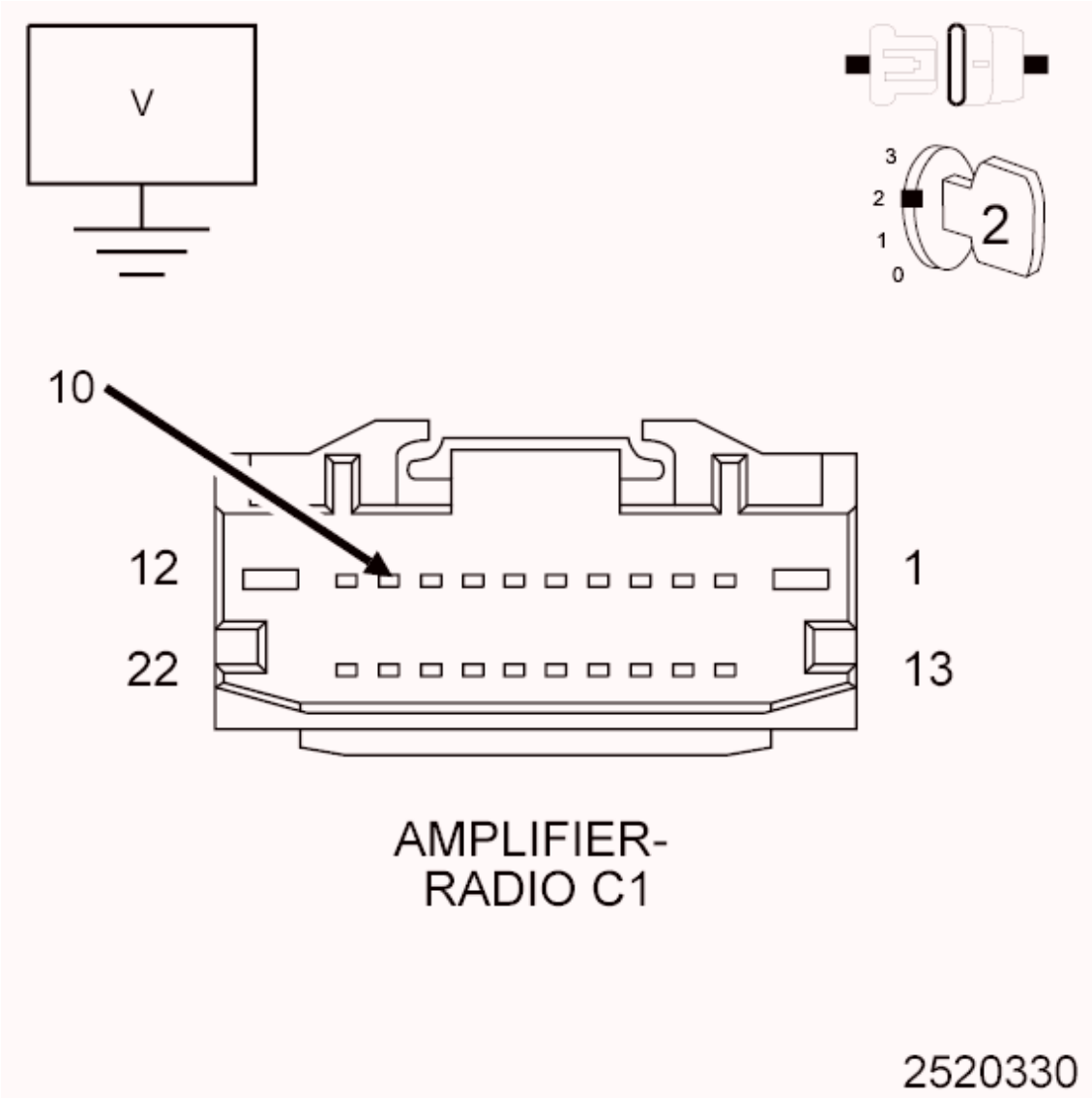

Fig. 118: Measuring Voltage On Left Rear Speaker (+) Circuit
Courtesy of CHRYSLER GROUP, LLC

1. Turn the ignition off.
2. Disconnect the Amplifier C1 harness connector.
3. Disconnect the Left Rear Speaker harness connector.

4. Turn the ignition on.
5. Measure for voltage between the (X303) Left Rear Speaker (+) circuit and ground.

   Is there any voltage present?

   Yes

   - Repair the (X303) Left Rear Speaker (+) circuit for a short to voltage.
   - Perform the BODY VERIFICATION TEST. Refer to **BODY VERIFICATION TEST** .

   No

   - Go To 3.

3. **CHECK FOR VOLTAGE ON THE (X393) LEFT REAR SPEAKER (-) CIRCUIT**

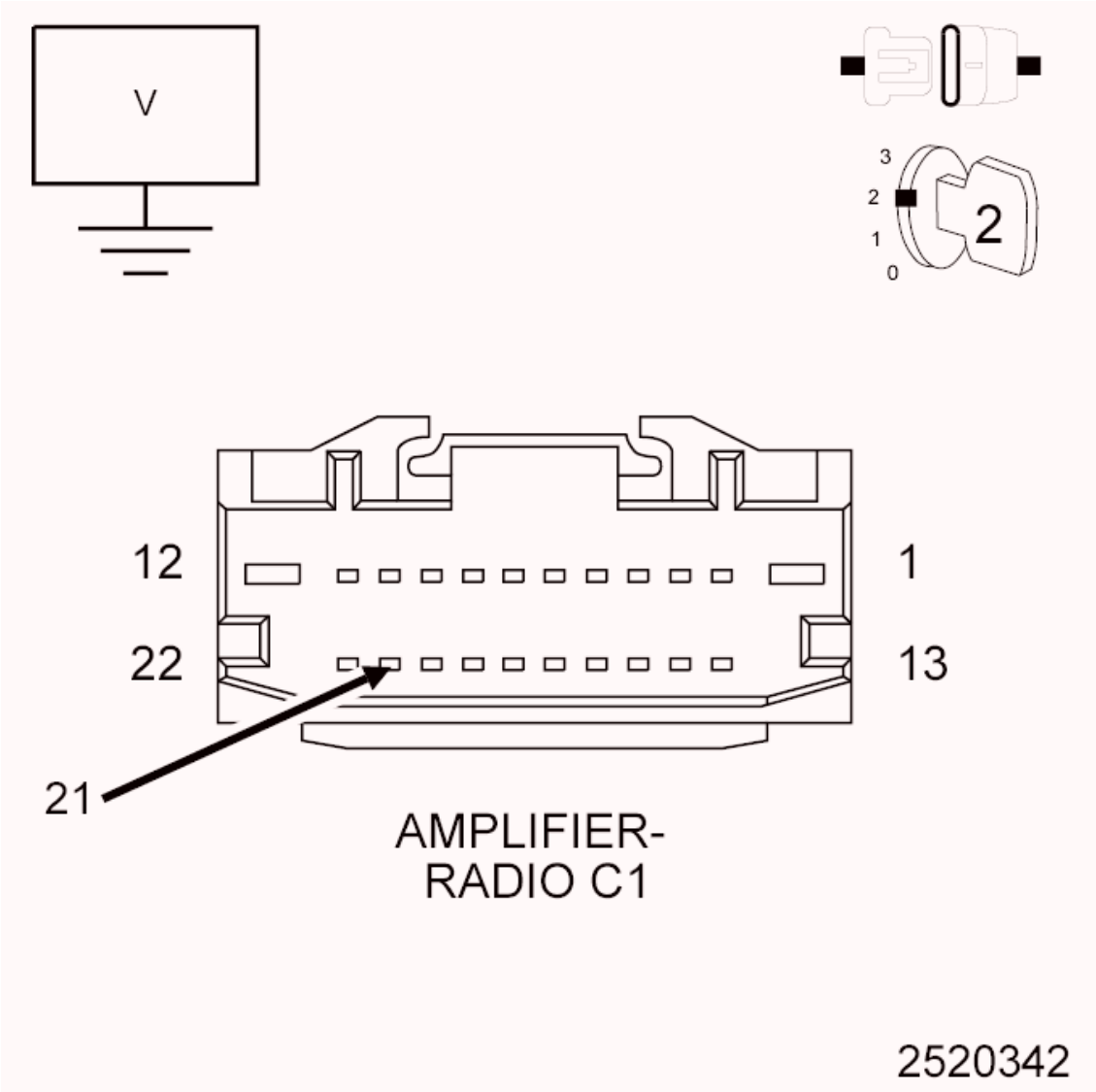

Fig. 119: Measuring Voltage On Left Rear Speaker (-) Circuit
Courtesy of CHRYSLER GROUP, LLC

1. Measure for voltage between the (X393) Left Rear Speaker (-) circuit and ground.

   Is there any voltage present?

   Yes

   - Repair the (X393) Left Rear Speaker (-) circuit for a short to voltage.
   - Perform the BODY VERIFICATION TEST. Refer to **BODY VERIFICATION TEST** .

   No

   - Replace the Amplifier in accordance with the Service Information.
   - Perform the BODY VERIFICATION TEST. Refer to **BODY VERIFICATION TEST** .

B14BC-CHANNEL 9 AUDIO SPEAKER OUTPUT CIRCUIT OPEN

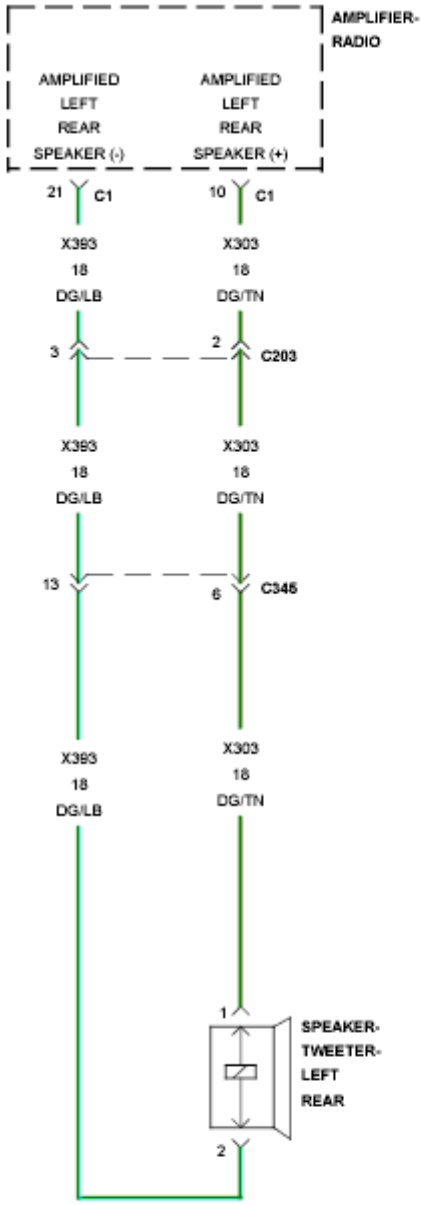

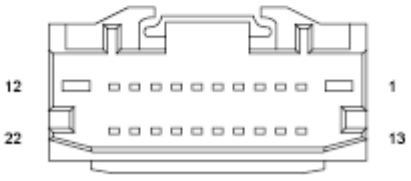

AMPLIFIER-
RADIO C1

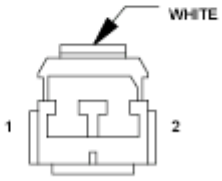

SPEAKER-
TWEETER-
LEFT REAR

Fig. 120: Channel 9 Audio Speaker Output Wiring Diagram
Courtesy of CHRYSLER GROUP, LLC

For a complete wiring diagram, **refer to appropriate SYSTEM WIRING DIAGRAMS article** .

- **When Monitored:**

  Amplifier Bus wake-up. Amplifier reset with scan tool.

- **Set Condition:**

  The Amplifier detects an open condition on the speaker output circuit.

WHEN MONITORED:

SET CONDITION:

POSSIBLE CAUSES

Possible Causes
(X303) LEFT REAR SPEAKER (+) CIRCUIT OPEN
(X393) LEFT REAR SPEAKER (-) CIRCUIT OPEN
LEFT REAR SPEAKER
AMPLIFIER

DIAGNOSTIC TEST

1. **CHECK FOR AN INTERMITTENT CONDITION**
   1. Turn the ignition on and open one of the front doors.

      NOTE: A front door must remain open whenever checking or erasing Amplifier DTC's.

   2. With the scan tool, record and erase the Amplifier DTC's.
   3. Cycle the ignition switch from on to off, wait five seconds and then back to on.
   4. Turn the Radio on and set the volume to 20.
   5. Adjust the speakers to the front and center.
   6. With the scan tool, read the active Amplifier DTC's.

      Does the scan tool display active: B14BC-CHANNEL 9 AUDIO SPEAKER OUTPUT CIRCUIT OPEN?

      Yes

      - Go To 2.

No

- Test complete, the condition or conditions that originally set this DTC are not present at this time. Using the wiring diagrams as a guide, check all related splices and connectors for signs of water intrusion, corrosion, pushed out or bent terminals and correct pin tension.
- Perform the BODY VERIFICATION TEST. Refer to **BODY VERIFICATION TEST** .

2. **CHECK THE OPERATION OF THE LEFT REAR SPEAKER**

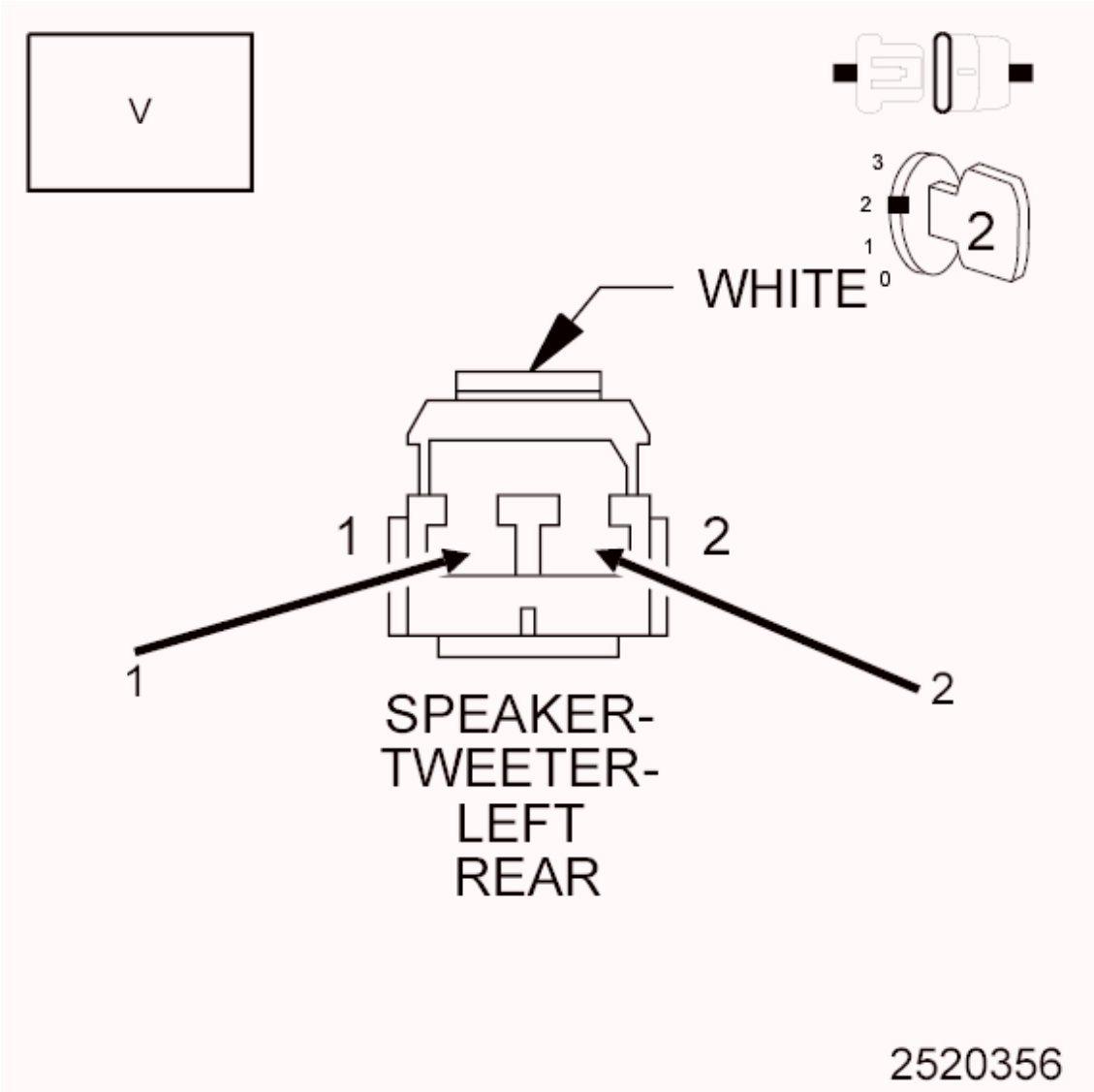

Fig. 121: Checking The Operation Of The Left Rear Speaker
Courtesy of CHRYSLER GROUP, LLC

1. Turn the ignition off.
2. Disconnect the Left Rear Speaker harness connector.
3. Turn the ignition on.
4. Turn the radio on and turn the volume to 25.

5. Adjust the speakers to the rear and center.
6. With a voltmeter set to read in A/C voltage, measure the voltage of the Left Rear Speaker circuits in the Left Rear Speaker harness connector.

   Is the voltage present greater than 1 volt?

   Yes

   - Replace the Left Rear Speaker in accordance with the Service Information.
   - Perform the BODY VERIFICATION TEST. Refer to **BODY VERIFICATION TEST** .

   No

   - Go To 3.

3. **CHECK THE (X303) LEFT REAR SPEAKER (+) CIRCUIT FOR AN OPEN**

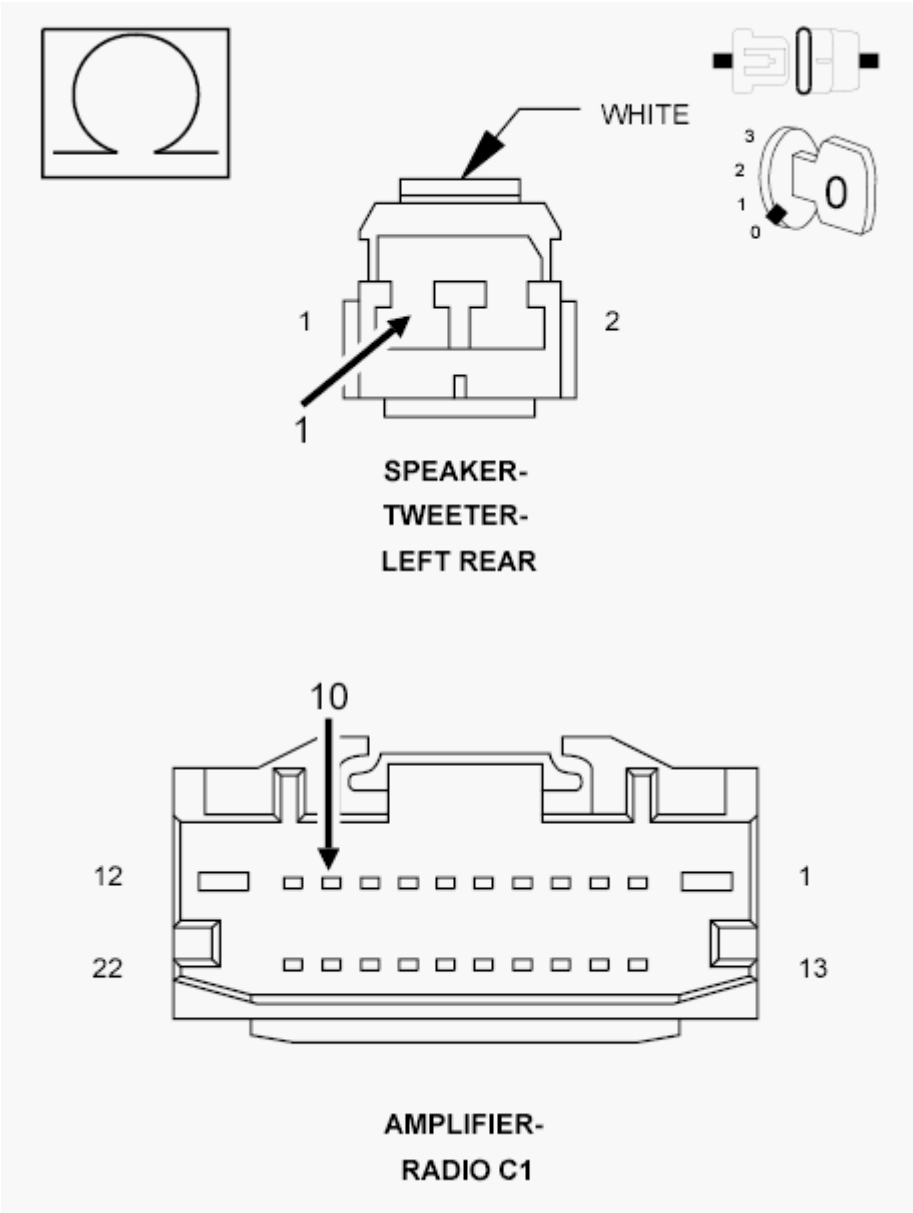

Fig. 122: Checking Left Rear Speaker (+) Circuit For An Open
Courtesy of CHRYSLER GROUP, LLC

1. Turn the ignition off.
2. Disconnect the Amplifier C1 harness connector.
3. Measure the resistance of the (X303) Left Rear Speaker (+) circuit between the Amplifier C1 harness connector and the Left Rear Speaker harness connector.

   Is the resistance below 2.0 Ohms?

   Yes

   - Go To 4.

No

- Repair the (X303) Left Rear Speaker (+) circuit for an open.
- Perform the BODY VERIFICATION TEST. Refer to **BODY VERIFICATION TEST** .

4. **CHECK THE (X393) LEFT REAR SPEAKER (-) CIRCUIT FOR AN OPEN**

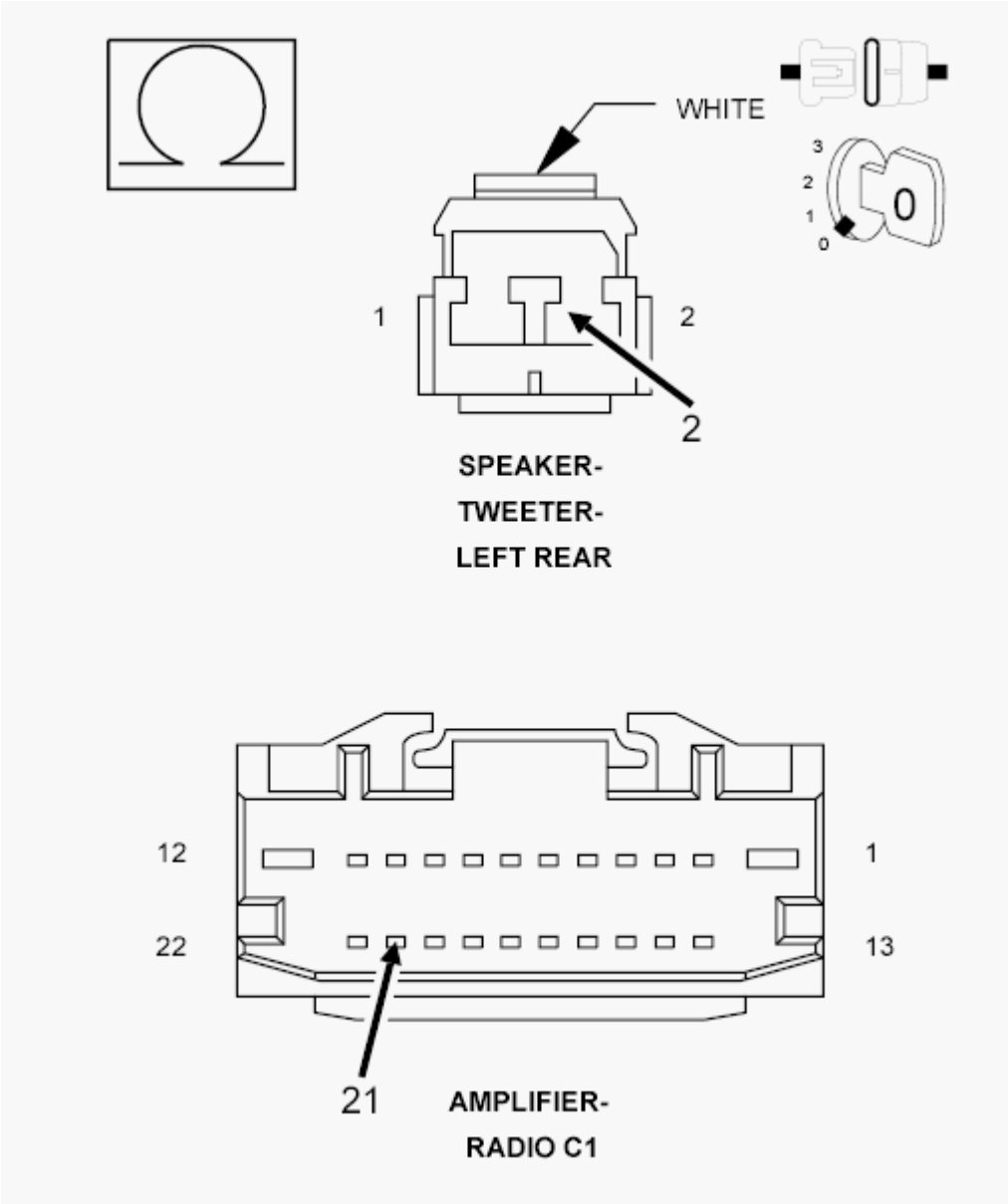

Fig. 123: Checking Left Rear Speaker (-) Circuit For An Open
Courtesy of CHRYSLER GROUP, LLC

1. Measure the resistance of the (X393) Left Rear Speaker (-) circuit between the Amplifier C1 harness connector and the Left Rear Speaker harness connector.

   Is the resistance below 2.0 Ohms?

Yes

- Replace the Amplifier in accordance with the Service Information.
- Perform the BODY VERIFICATION TEST. Refer to **BODY VERIFICATION TEST** .

No

- Repair the (X393) Left Rear Speaker (-) circuit for an open.
- Perform the BODY VERIFICATION TEST. Refer to **BODY VERIFICATION TEST** .

B14BD-CHANNEL 9 AUDIO SPEAKER OUTPUT CIRCUIT SHORTED TOGETHER

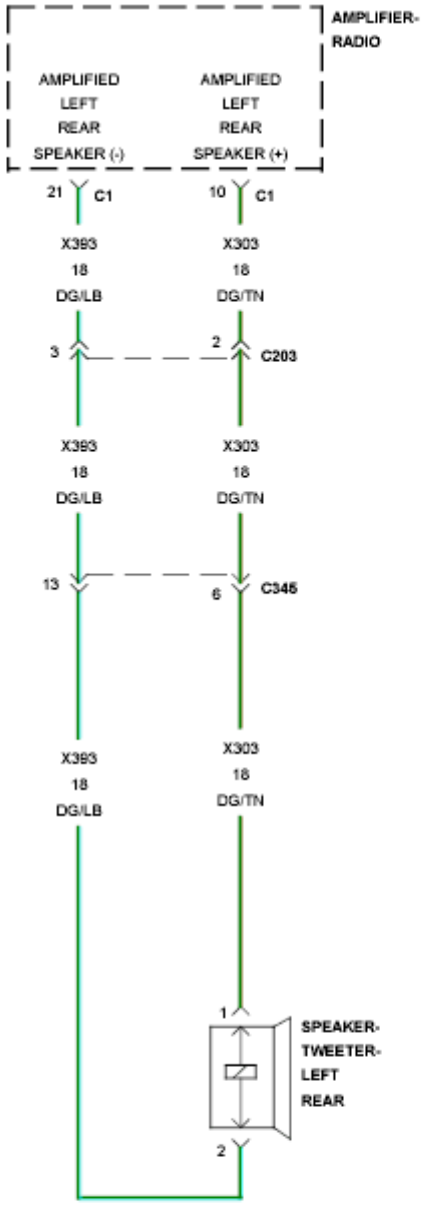

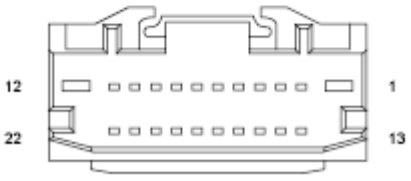

AMPLIFIER-
RADIO C1

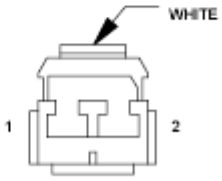

SPEAKER-
TWEETER-
LEFT REAR

Fig. 124: Channel 9 Audio Speaker Output Wiring Diagram
Courtesy of CHRYSLER GROUP, LLC

For a complete wiring diagram, **refer to appropriate SYSTEM WIRING DIAGRAMS article** .

- **When Monitored:**

  With the ignition on. Radio volume at 25 or higher.

- **Set Condition:**

  The Amplifier detects that the output circuits are shorted together.

WHEN MONITORED:

SET CONDITION:

POSSIBLE CAUSES

Possible Causes
(X303) LEFT REAR SPEAKER (+) CIRCUIT SHORTED TO THE (X393) LEFT REAR SPEAKER (-) CIRCUIT
LEFT REAR SPEAKER
AMPLIFIER

DIAGNOSTIC TEST

1. **CHECK FOR AN INTERMITTENT CONDITION**
   1. Turn the ignition on and open one of the front doors.

      NOTE: A front door must remain open whenever checking or erasing Amplifier DTC's.

   2. With the scan tool, record and erase the Amplifier DTC's.
   3. Cycle the ignition switch from on to off, wait five seconds and then back to on.
   4. Turn the Radio on and set the volume to 20.
   5. Adjust the speakers to the front and center.
   6. With the scan tool, read the active Amplifier DTC's.

      Does the scan tool display active: B14BD-CHANNEL 9 AUDIO SPEAKER OUTPUT CIRCUIT SHORTED TOGETHER?

      Yes

      - Go To 2.

No

- Test complete, the condition or conditions that originally set this DTC are not present at this time. Using the wiring diagrams as a guide, check all related splices and connectors for signs of water intrusion, corrosion, pushed out or bent terminals and correct pin tension.
- Perform the BODY VERIFICATION TEST. Refer to **BODY VERIFICATION TEST** .

2. **CHECK THE OPERATION OF THE LEFT REAR SPEAKER**

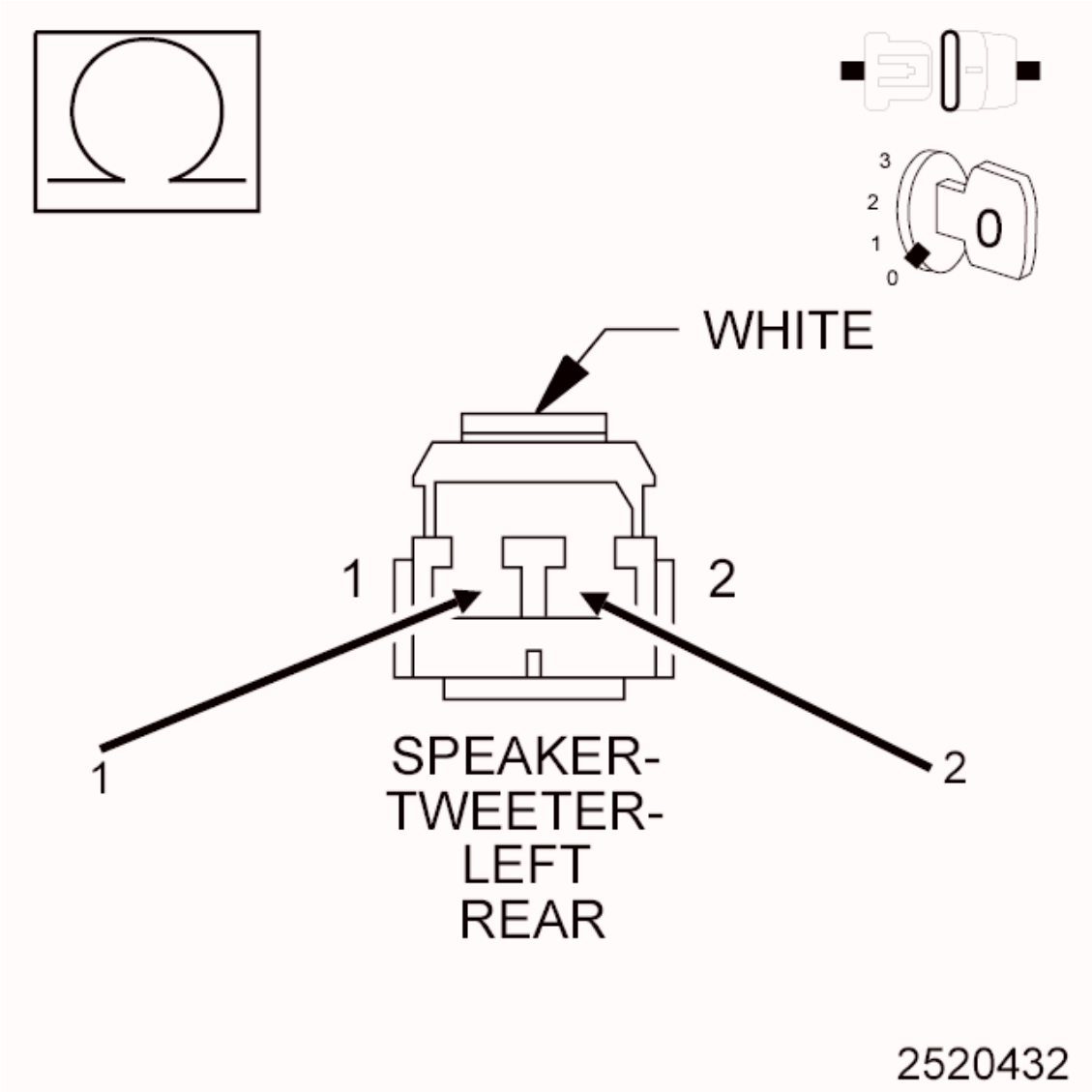

Fig. 125: Checking The Operation Of The Left Rear Speaker
Courtesy of CHRYSLER GROUP, LLC

1. Turn the ignition off.
2. Disconnect the Left Rear Speaker.
3. Measure the resistance of the speaker between the two terminals.

NOTE: **The graphic shows the connector for reference only. Measure at the speaker terminals.**

Is the resistance of the speaker less than 1 Ohm?

Yes

- Replace the Left Rear Speaker in accordance with the Service Information.
- Perform the BODY VERIFICATION TEST. Refer to **BODY VERIFICATION TEST** .

No

- Go To 3.

3. **CHECK THE (X303) LEFT REAR SPEAKER (+) CIRCUIT, AND THE (X393) LEFT REAR SPEAKER (-) CIRCUITS FOR A SHORT TOGETHER**

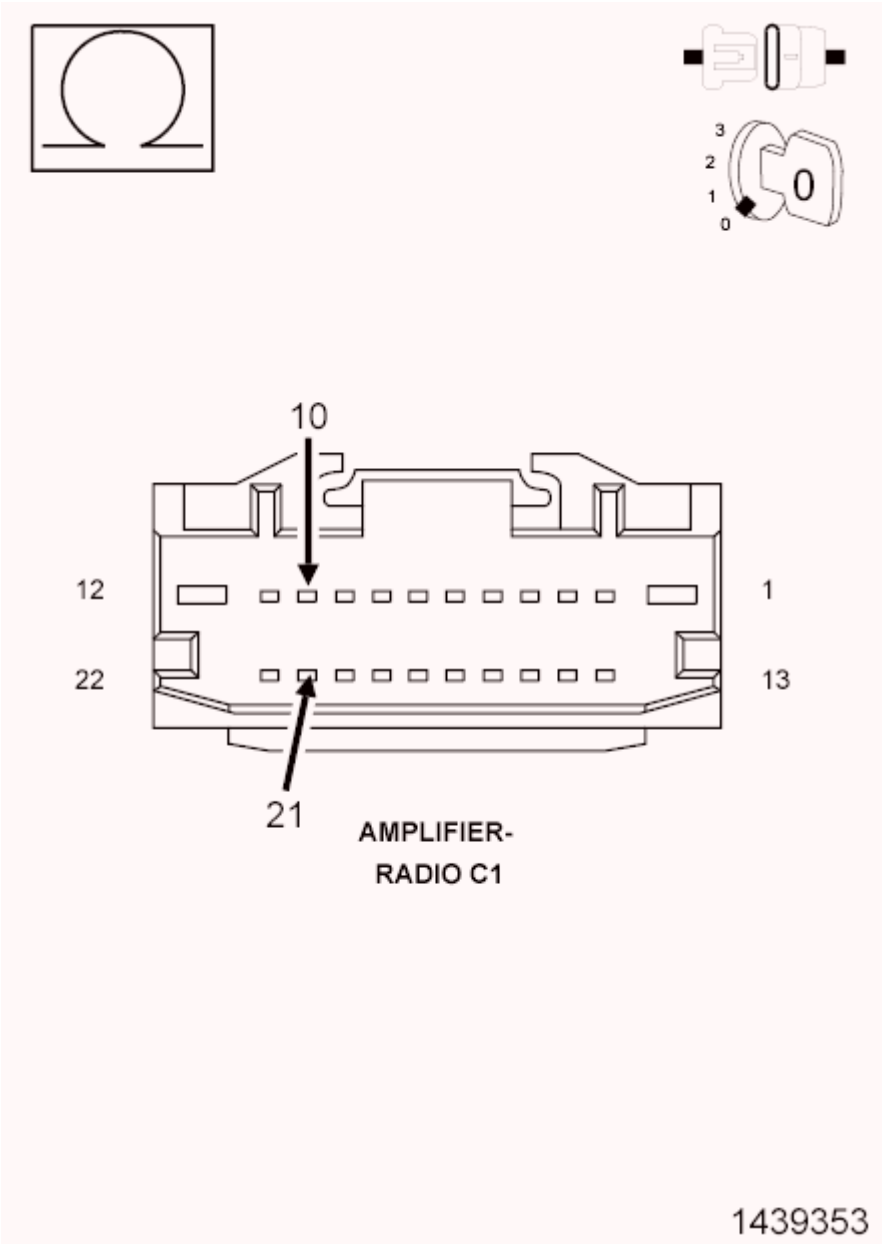

Fig. 126: Checking Left Rear Speaker (+) Circuit, And The Left Rear Speaker (-) Circuits For A Short Together
Courtesy of CHRYSLER GROUP, LLC

1. Turn the ignition off.
2. Disconnect the Amplifier C1 harness connector.
3. Measure the resistance between the (X303) Left Rear Speaker (+) circuit, and the (X393) Left Rear Speaker (-) circuit.

   Is the resistance below 10K Ohms?

   Yes

- Repair the (X303) Left Rear Speaker (+) circuit, and the (X393) Left Rear Speaker (-) circuit for a short together.
- Perform the BODY VERIFICATION TEST. Refer to **BODY VERIFICATION TEST** .

No

- Replace the Amplifier in accordance with the Service Information.
- Perform the BODY VERIFICATION TEST. Refer to **BODY VERIFICATION TEST** .

B14BE-CHANNEL 10 AUDIO SPEAKER OUTPUT CIRCUIT PERFORMANCE

For a complete wiring diagram, **refer to appropriate SYSTEM WIRING DIAGRAMS article** .

WHEN MONITORED:

With the ignition on.

SET CONDITION:

This Diagnostic Trouble Code (DTC) sets if a Direct Current (DC) offset occurs on the output channel, the amplifier shall set a DTC after a maturity rate of four to six seconds.

POSSIBLE CAUSES

Possible Causes
AMPLIFIER

DIAGNOSTIC TEST

1. **CHECK FOR AN INTERMITTENT CONDITION**
    1. Turn the ignition on and open one of the front doors.

       NOTE: A front door must remain open whenever checking or erasing Amplifier DTC's.

    2. With the scan tool, record and erase the Amplifier DTC's.
    3. Cycle the ignition switch from on to off, wait five seconds and then back to on.
    4. Turn the Radio on and set the volume to 20.
    5. Adjust the speakers to the rear and center.
    6. With the scan tool, read the active Amplifier DTC's.

       Does the scan tool display active: B14BE-CHANNEL 10 AUDIO SPEAKER OUTPUT CIRCUIT PERFORMANCE?

       Yes

- Replace the Amplifier in accordance with the Service Information.
- Perform the BODY VERIFICATION TEST. Refer to **BODY VERIFICATION TEST** .

No

- Test complete, the condition or conditions that originally set this DTC are not present at this time. Using the wiring diagrams as a guide, check all related splices and connectors for signs of water intrusion, corrosion, pushed out or bent terminals and correct pin tension.
- Perform the BODY VERIFICATION TEST. Refer to **BODY VERIFICATION TEST** .

B14BF-CHANNEL 10 AUDIO SPEAKER OUTPUT CIRCUIT LOW

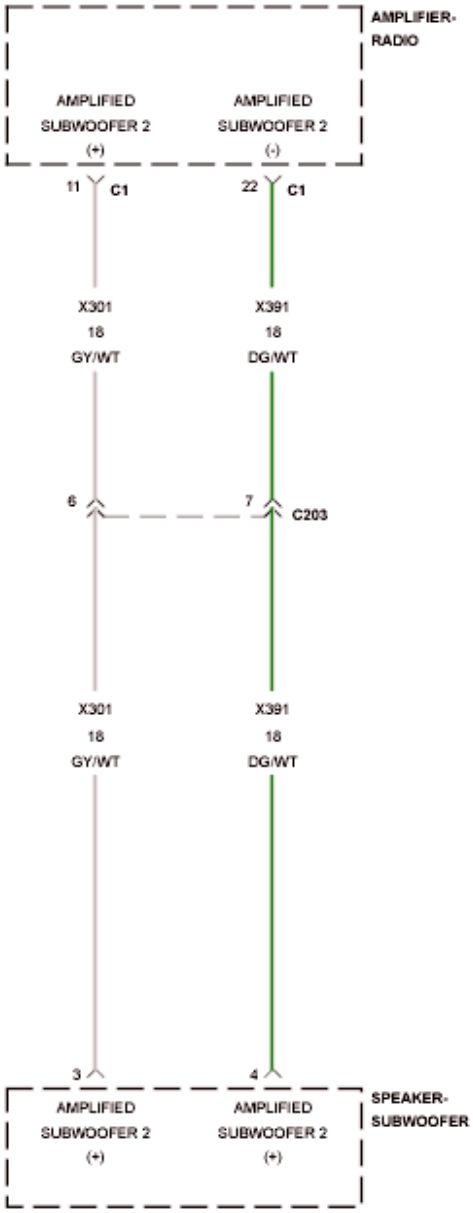

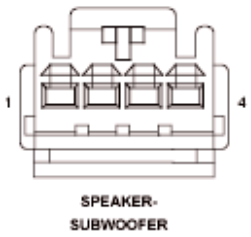

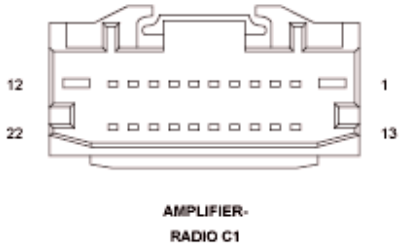

Fig. 127: Channel 10 Audio Speaker Output Wiring Diagram

Courtesy of CHRYSLER GROUP, LLC

For a complete wiring diagram, **refer to appropriate SYSTEM WIRING DIAGRAMS article** .

- **When Monitored:**

  With the ignition on.

- **Set Condition:**

  The Amplifier detects a shorted to ground condition on the speaker output circuit.

WHEN MONITORED:

SET CONDITION:

POSSIBLE CAUSES

Possible Causes
(X301) AMPLIFIED SUBWOOFER 2 (+) CIRCUIT SHORTED TO GROUND
(X391) AMPLIFIED SUBWOOFER 2 (-) CIRCUIT SHORTED TO GROUND
AMPLIFIED SUBWOOFER SPEAKER
AMPLIFIER

DIAGNOSTIC TEST

1. **CHECK FOR AN INTERMITTENT CONDITION**
   1. Turn the ignition on and open one of the front doors.

      NOTE: A front door must remain open whenever checking or erasing Amplifier DTC's.

   2. With the scan tool, record and erase the Amplifier DTC's.
   3. Cycle the ignition switch from on to off, wait five seconds and then back to on.
   4. Turn the Radio on and set the volume to 20.
   5. Adjust the speakers to the rear and center.
   6. With the scan tool, read the active Amplifier DTC's.

      Does the scan tool display active: B14BF-CHANNEL 10 AUDIO SPEAKER OUTPUT CIRCUIT LOW?

      Yes

      - Go To 2.

No

- Test complete, the condition or conditions that originally set this DTC are not present at this time. Using the wiring diagrams as a guide, check all related splices and connectors for signs of water intrusion, corrosion, pushed out or bent terminals and correct pin tension.
- Perform the BODY VERIFICATION TEST. Refer to **BODY VERIFICATION TEST** .

2. **CHECK THE SUBWOOFER SPEAKER**

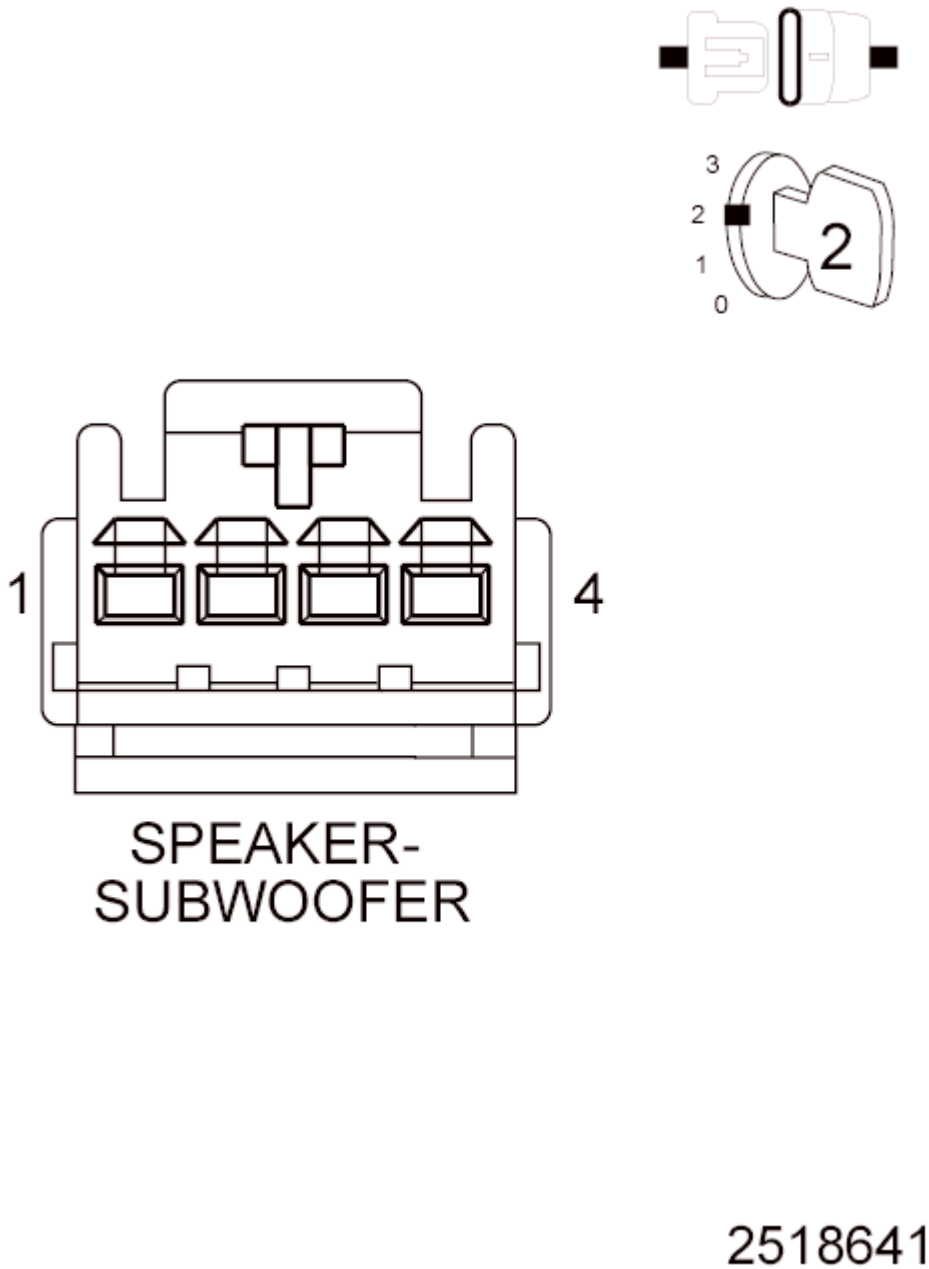

Fig. 128: Subwoofer Speaker Connector End View
Courtesy of CHRYSLER GROUP, LLC

1. Make sure one of the front doors is still open.
2. With the scan tool, erase the DTC's.
3. Turn the ignition off.
4. Disconnect the Subwoofer Speaker harness connector.
5. Turn the ignition on.
6. Turn the radio on and set the volume to 25.
7. With the scan tool, read the active Amplifier DTC's.

   Does the scan tool display active: B14BF-CHANNEL10 OUTPUT CIRCUIT LOW?

   Yes

   - Go To 3.

   No

   - Replace the Subwoofer Speaker.
   - Perform the BODY VERIFICATION TEST. Refer to **BODY VERIFICATION TEST** .

3. **CHECK THE (X301) AMPLIFIED SUBWOOFER 2 (+) CIRCUIT FOR A SHORT TO GROUND**

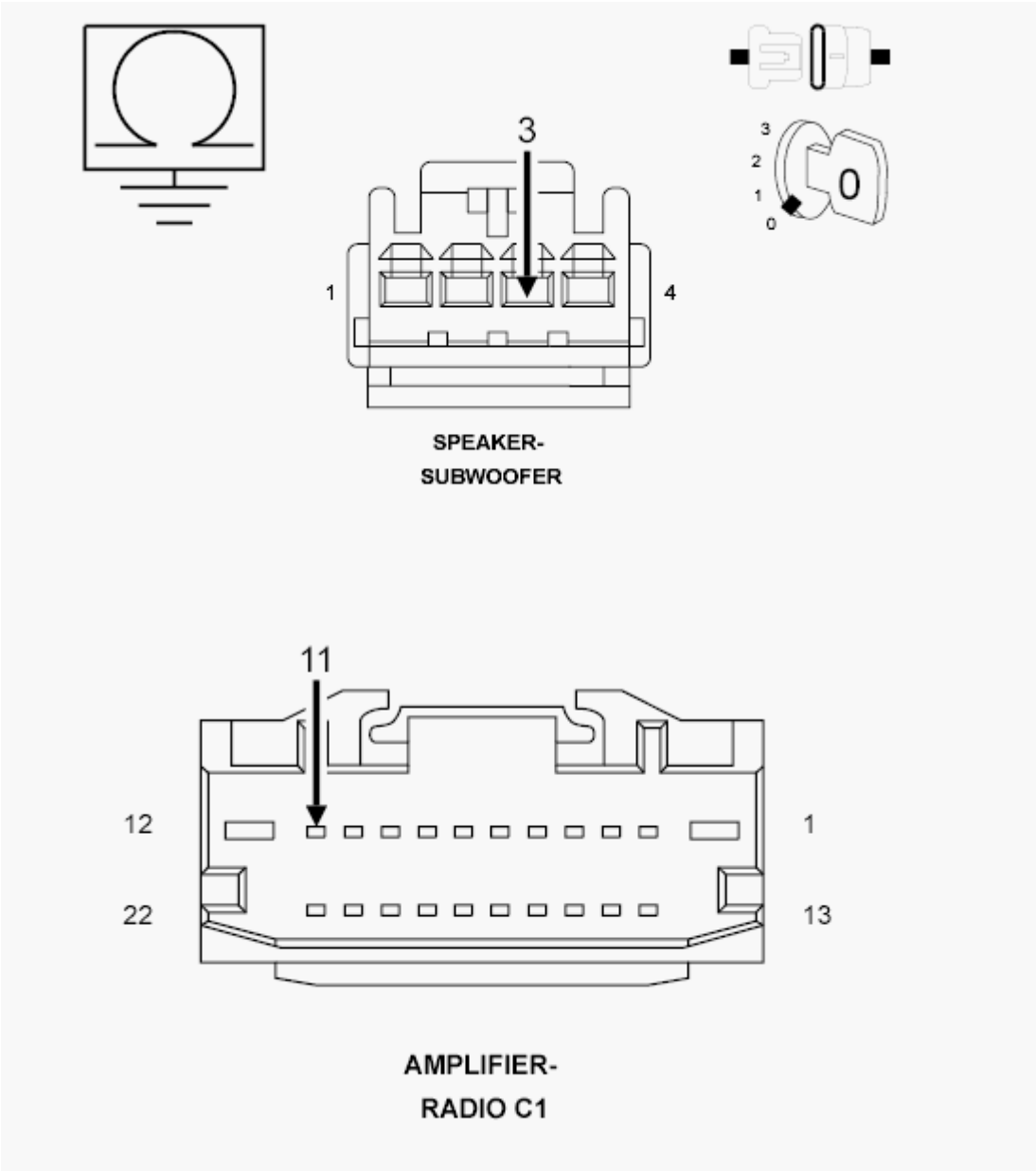

Fig. 129: Checking Amplified Subwoofer 2 (+) Circuit For A Short To Ground
Courtesy of CHRYSLER GROUP, LLC

1. Disconnect the Amplifier C1 harness connector.
2. Disconnect the Subwoofer Speaker harness connector.
3. Measure the resistance between ground and the (X301) Amplified Subwoofer 2 (+) circuit.

   Is the resistance below 10K Ohms?

   Yes

   - Repair the (X301) Amplified Subwoofer 2 (+) circuit for a short to ground.

- Perform the BODY VERIFICATION TEST. Refer to **BODY VERIFICATION TEST** .

No

- Go To 4.

4. **CHECK THE (X391) AMPLIFIED SUBWOOFER 2 (-) CIRCUIT FOR A SHORT TO GROUND**

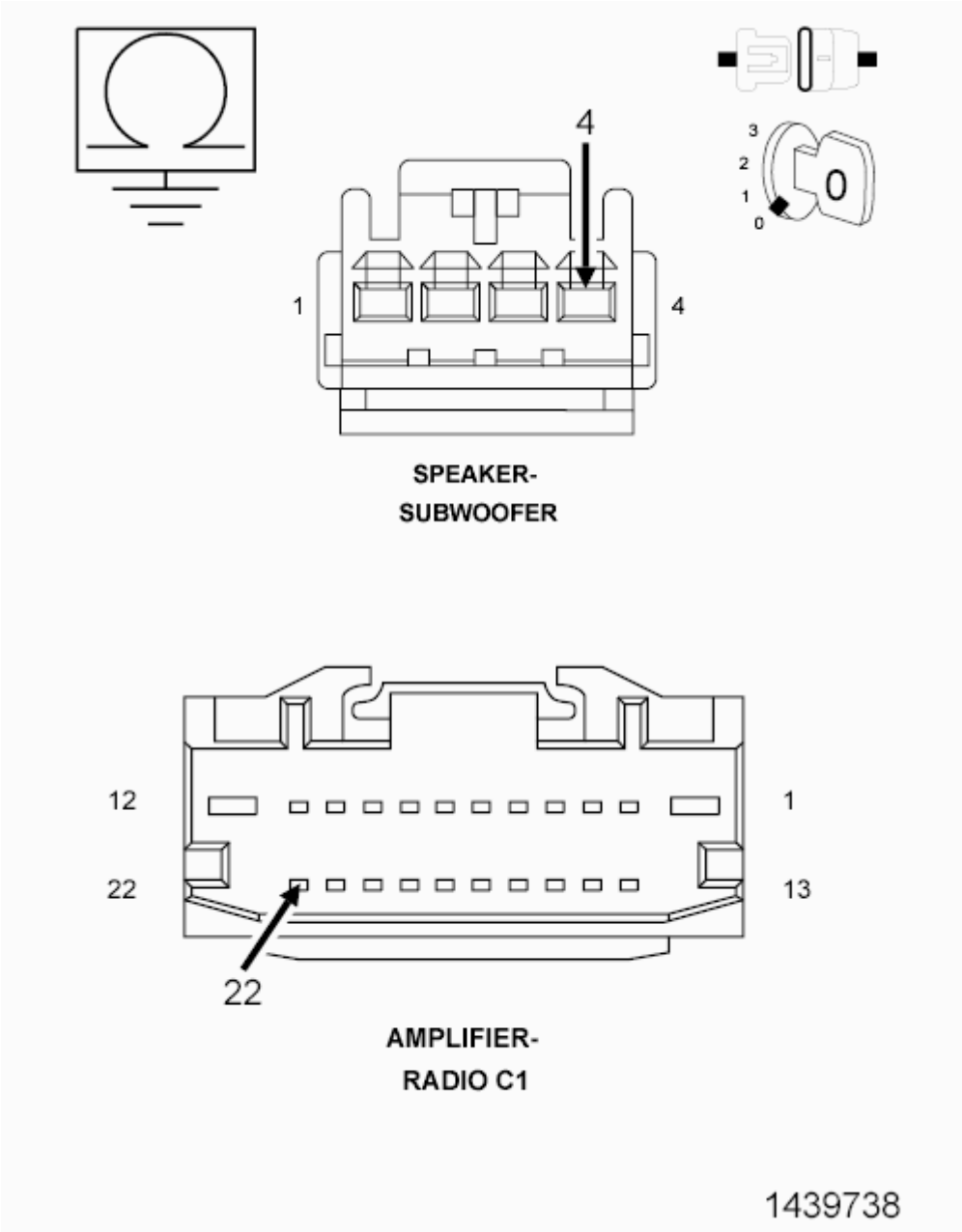

Fig. 130: Checking Amplified Subwoofer 2 (-) Circuit For A Short To Ground
Courtesy of CHRYSLER GROUP, LLC

1. Measure the resistance between ground and the (X391) Amplified Subwoofer 2 (-) circuit.

Is the resistance below 10K Ohms?

Yes

- Repair the (X391) Amplified Subwoofer 2 (-) circuit for a short to ground.
- Perform the BODY VERIFICATION TEST. Refer to **BODY VERIFICATION TEST** .

No

- Replace the Amplifier in accordance with the Service Information.
- Perform the BODY VERIFICATION TEST. Refer to **BODY VERIFICATION TEST** .

B14C0-CHANNEL 10 AUDIO SPEAKER OUTPUT CIRCUIT HIGH

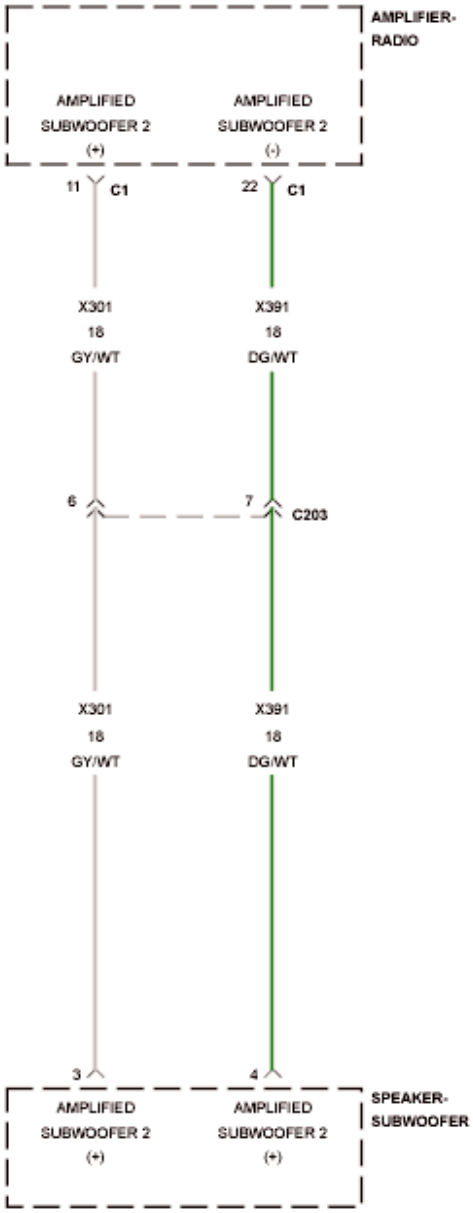

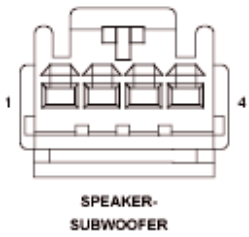

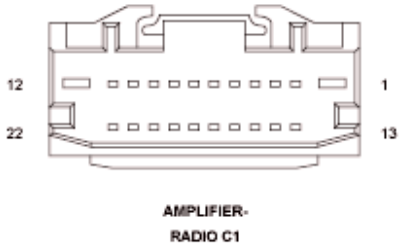

Fig. 131: Channel 10 Audio Speaker Output Wiring Diagram

Courtesy of CHRYSLER GROUP, LLC

For a complete wiring diagram, **refer to appropriate SYSTEM WIRING DIAGRAMS article** .

- **When Monitored:**

  With the ignition on.

- **Set Condition:**

  The Amplifier detects a short to battery condition on the output circuit.

WHEN MONITORED:

SET CONDITION:

POSSIBLE CAUSES

Possible Causes
(X301) AMPLIFIED SUBWOOFER 2 (+) CIRCUIT SHORTED TO VOLTAGE
(X391) AMPLIFIED SUBWOOFER 2 (-) CIRCUIT SHORTED TO VOLTAGE
AMPLIFIER

DIAGNOSTIC TEST

1. **CHECK FOR AN INTERMITTENT CONDITION**
   1. Turn the ignition on and open one of the front doors.

      NOTE: A front door must remain open whenever checking or erasing Amplifier DTC's.

   2. With the scan tool, record and erase the Amplifier DTC's.
   3. Cycle the ignition switch from on to off, wait five seconds and then back to on.
   4. Turn the Radio on and set the volume to 20.
   5. Adjust the speakers to the rear and center.
   6. With the scan tool, read the active Amplifier DTC's.

      Does the scan tool display active: B14C0-CHANNEL 10 AUDIO SPEAKER OUTPUT CIRCUIT HIGH?

      Yes

      - Go To 2.

      No

- Test complete, the condition or conditions that originally set this DTC are not present at this time. Using the wiring diagrams as a guide, check all related splices and connectors for signs of water intrusion, corrosion, pushed out or bent terminals and correct pin tension.
- Perform the BODY VERIFICATION TEST. Refer to **BODY VERIFICATION TEST** .

2. **CHECK FOR VOLTAGE ON THE (X301) AMPLIFIED SUBWOOFER 2 (+) CIRCUIT**

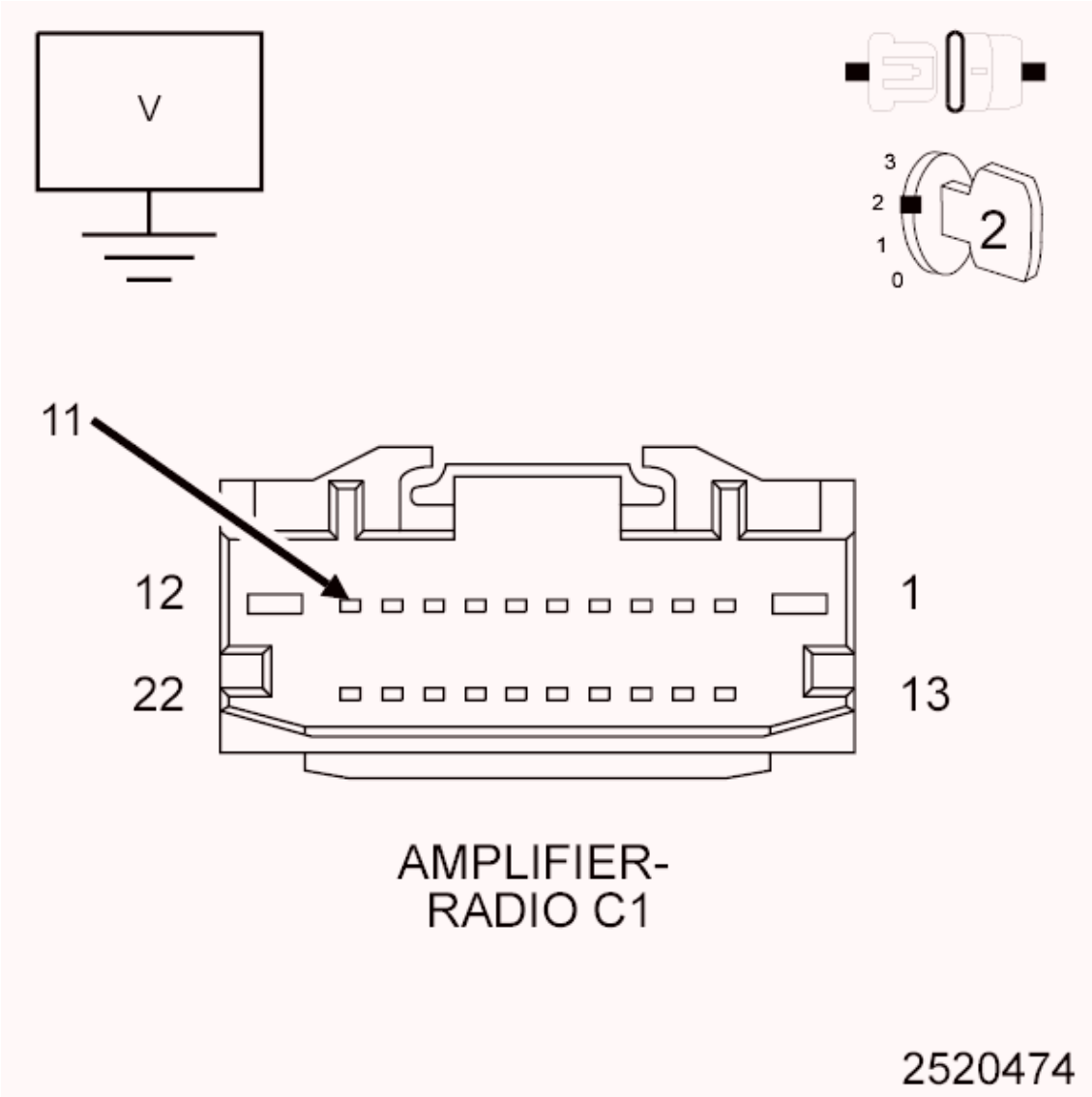

Fig. 132: Measuring Voltage On The Amplified Subwoofer 2 (+) Circuit
Courtesy of CHRYSLER GROUP, LLC

1. Turn the ignition off.
2. Disconnect the Amplifier C1 harness connector.
3. Disconnect the Subwoofer Speaker harness connector.
4. Turn the ignition on.
5. Measure the voltage between the (X301) Subwoofer Speaker 2 (+) circuit and ground.

Is there any voltage present?

Yes

- Repair the (X301) Subwoofer Speaker 2 (+) circuit for a short to voltage.
- Perform the BODY VERIFICATION TEST. Refer to **BODY VERIFICATION TEST** .

No

- Go To 3.

3. **CHECK FOR VOLTAGE ON THE (X391) AMPLIFIED SUBWOOFER 2 (-) CIRCUIT**

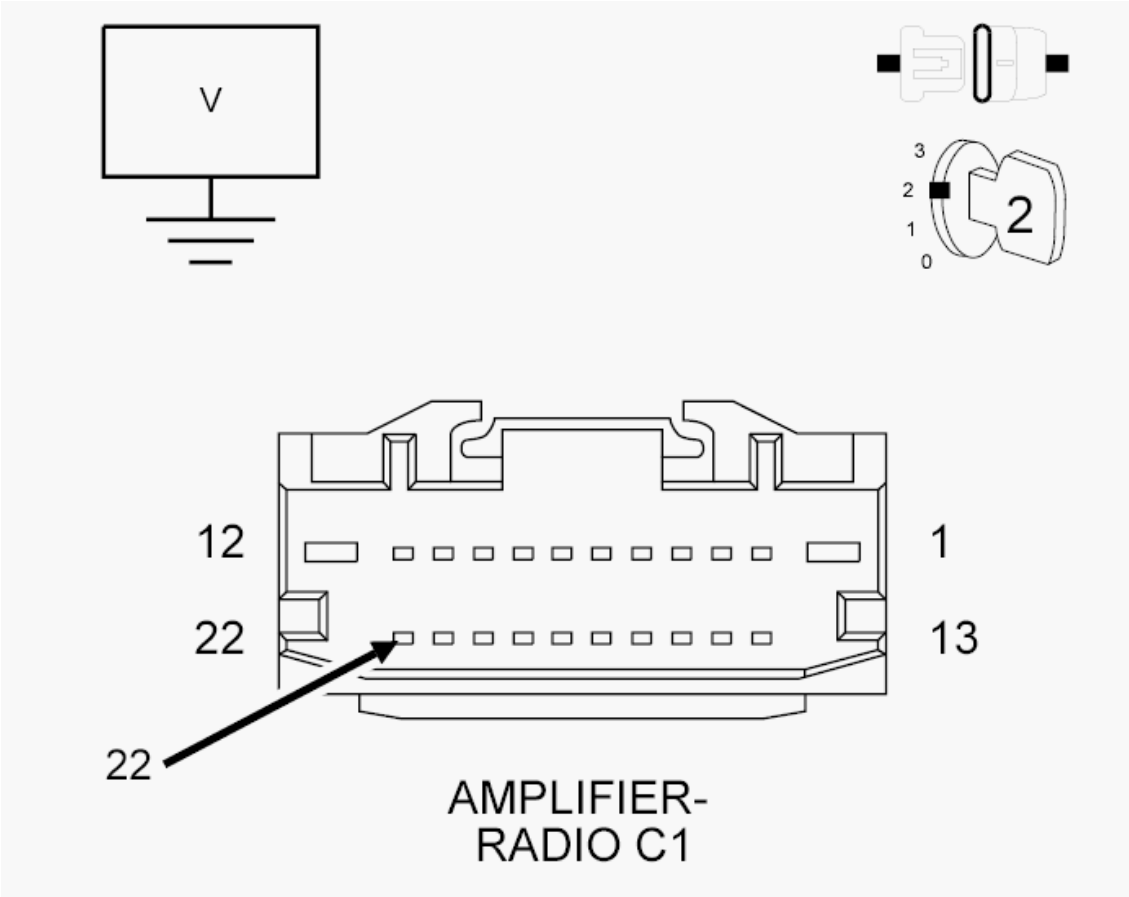

Fig. 133: Measuring For Voltage On Amplified Subwoofer 2 (-) Circuit
Courtesy of CHRYSLER GROUP, LLC

1. Measure the voltage between the (X391) Subwoofer Speaker 2 (-) circuit and ground.

   Is there any voltage present?

   Yes

   - Repair the (X391) Subwoofer Speaker 2 (-) circuit for a short to voltage.

- Perform the BODY VERIFICATION TEST. Refer to **BODY VERIFICATION TEST** .

No

- Replace the Amplifier in accordance with the Service Information.
- Perform the BODY VERIFICATION TEST. Refer to **BODY VERIFICATION TEST** .

B14C1-CHANNEL 10 AUDIO SPEAKER OUTPUT CIRCUIT OPEN

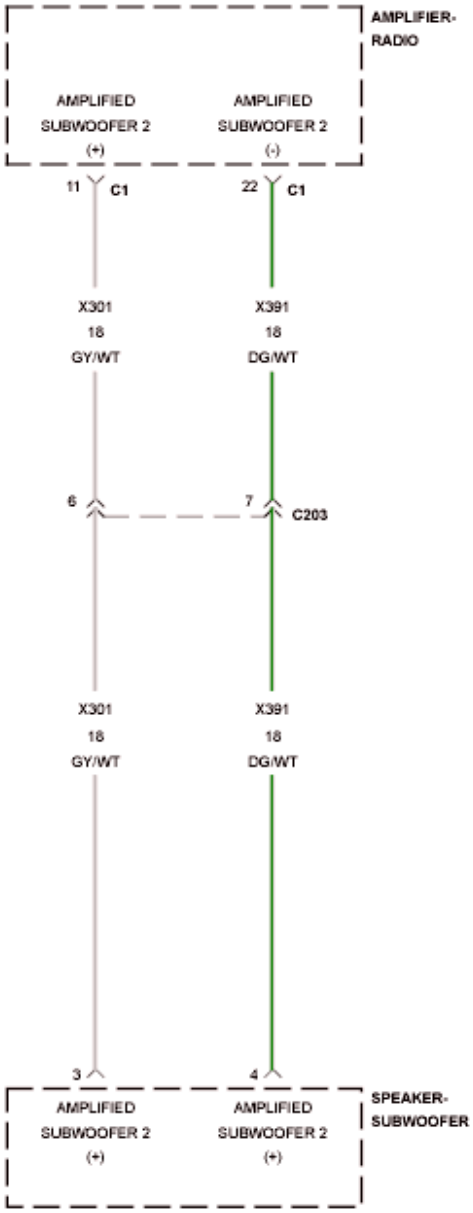

Fig. 134: Channel 10 Audio Speaker Output Wiring Diagram

Courtesy of CHRYSLER GROUP, LLC

For a complete wiring diagram, **refer to appropriate SYSTEM WIRING DIAGRAMS article** .

- **When Monitored:**

  Amplifier Bus wake-up. Amplifier reset with scan tool.

- **Set Condition:**

  The Amplifier detects an open condition on the speaker output circuit.

WHEN MONITORED:

SET CONDITION:

POSSIBLE CAUSES

Possible Causes
(X301) AMPLIFIED SUBWOOFER 2 (+) CIRCUIT OPEN
(X391) AMPLIFIED SUBWOOFER 2 (-) CIRCUIT OPEN
AMPLIFIED SUBWOOFER SPEAKER
AMPLIFIER

DIAGNOSTIC TEST

1. **CHECK FOR AN INTERMITTENT CONDITION**
   1. Turn the ignition on and open one of the front doors.

      NOTE: A front door must remain open whenever checking or erasing Amplifier DTC's.

   2. With the scan tool, record and erase the Amplifier DTC's.
   3. Cycle the ignition switch from on to off, wait five seconds and then back to on.
   4. Turn the Radio on and set the volume to 20.
   5. Adjust the speakers to the rear and center.
   6. With the scan tool, read the active Amplifier DTC's.

      Does the scan tool display active: B14C1-CHANNEL 10 AUDIO SPEAKER OUTPUT CIRCUIT OPEN?

      Yes

      - Go To 2.

No

- Test complete, the condition or conditions that originally set this DTC are not present at this time. Using the wiring diagrams as a guide, check all related splices and connectors for signs of water intrusion, corrosion, pushed out or bent terminals and correct pin tension.
- Perform the BODY VERIFICATION TEST. Refer to **BODY VERIFICATION TEST** .

2. **CHECK THE OPERATION OF THE SUBWOOFER SPEAKER**

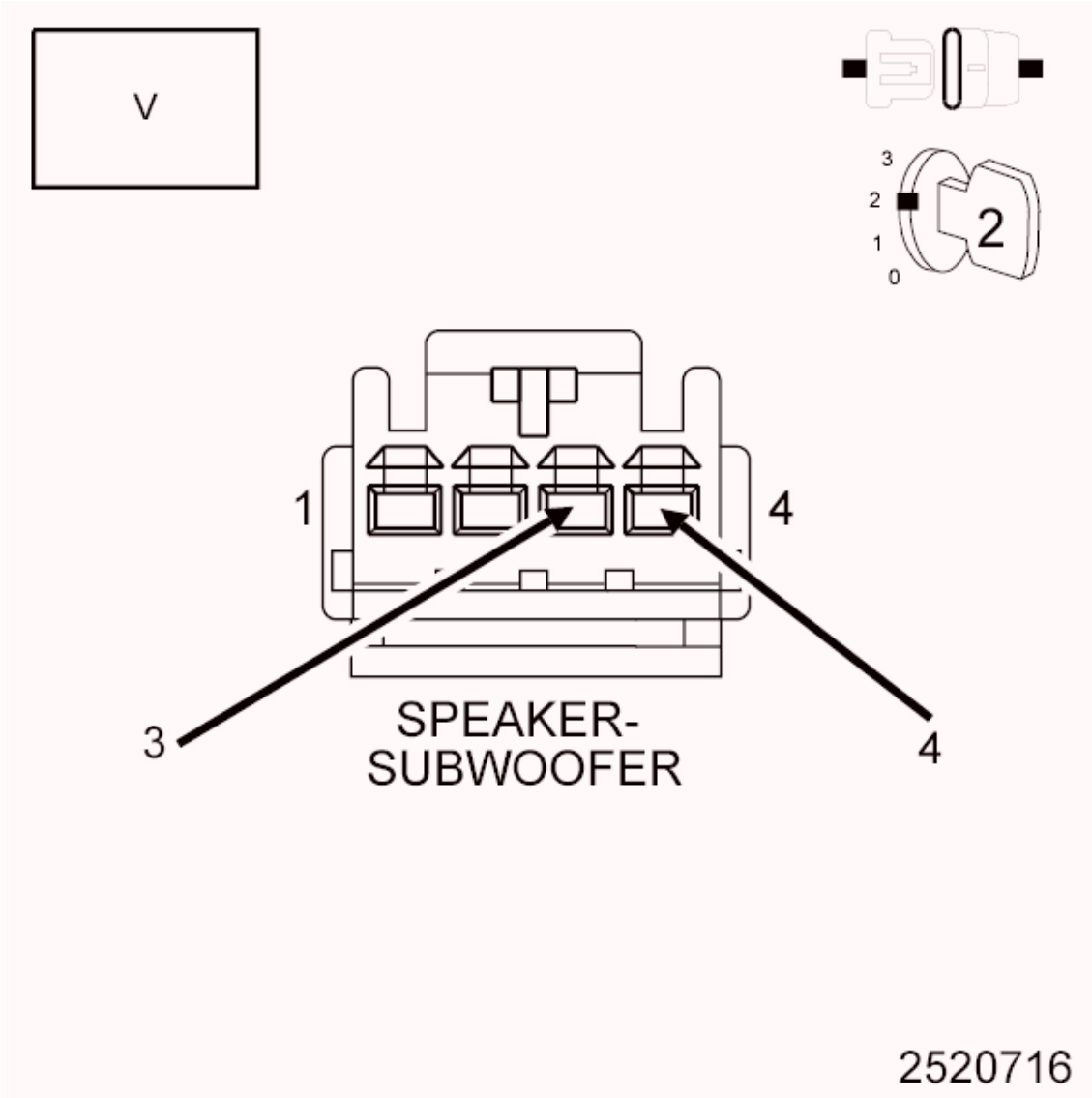

Fig. 135: Checking Operation Of Subwoofer Speaker
Courtesy of CHRYSLER GROUP, LLC

1. Turn the ignition off.
2. Disconnect the Subwoofer Speaker harness connector.
3. Turn the ignition on.

4. Turn the radio on and turn the volume to 25.
5. Adjust the speakers to the rear and center.
6. With a voltmeter set to read in A/C voltage, measure the voltage of the Subwoofer Speaker circuits in the Subwoofer Speaker harness connector.

   Is the voltage present greater than 1 volt?

   Yes

   - Replace the Subwoofer Speaker in accordance with the Service Information.
   - Perform the BODY VERIFICATION TEST. Refer to **BODY VERIFICATION TEST** .

   No

   - Go To 3.

3. **CHECK THE (X301) AMPLIFIED SUBWOOFER 2 (+) CIRCUIT FOR AN OPEN**

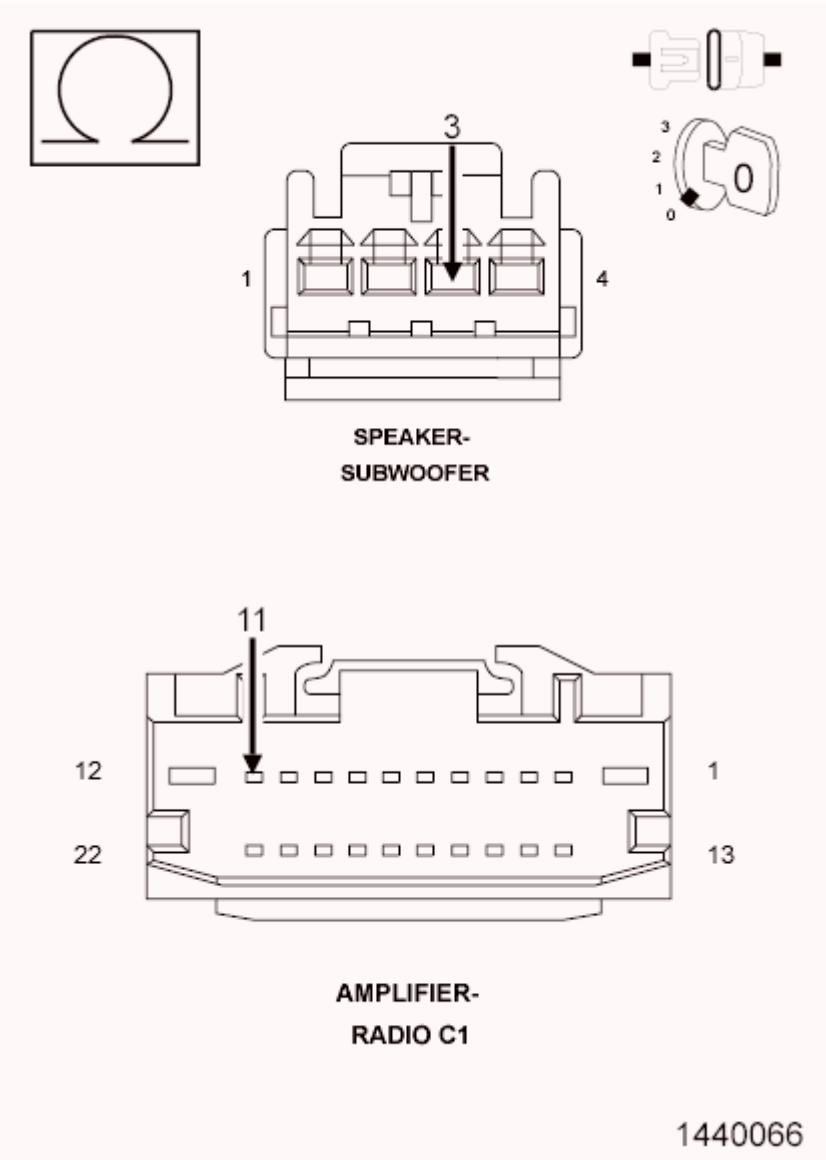

Fig. 136: Checking Amplified Subwoofer 2 (+) Circuit For An Open
Courtesy of CHRYSLER GROUP, LLC

1. Turn the ignition off.
2. Disconnect the Amplifier C1 harness connector.
3. Measure the resistance of the (X301) Amplified Subwoofer 2 (+) circuit between the Amplifier C1 harness connector and the Subwoofer Speaker harness connector.

   Is the resistance below 2.0 Ohms?

   Yes

   - Go To 4.

   No

- Repair the (X301) Amplified Subwoofer 2 (+) circuit for an open.
- Perform the BODY VERIFICATION TEST. Refer to **BODY VERIFICATION TEST** .

4. **CHECK THE (X391) AMPLIFIED SUBWOOFER 2 (-) CIRCUIT FOR AN OPEN**

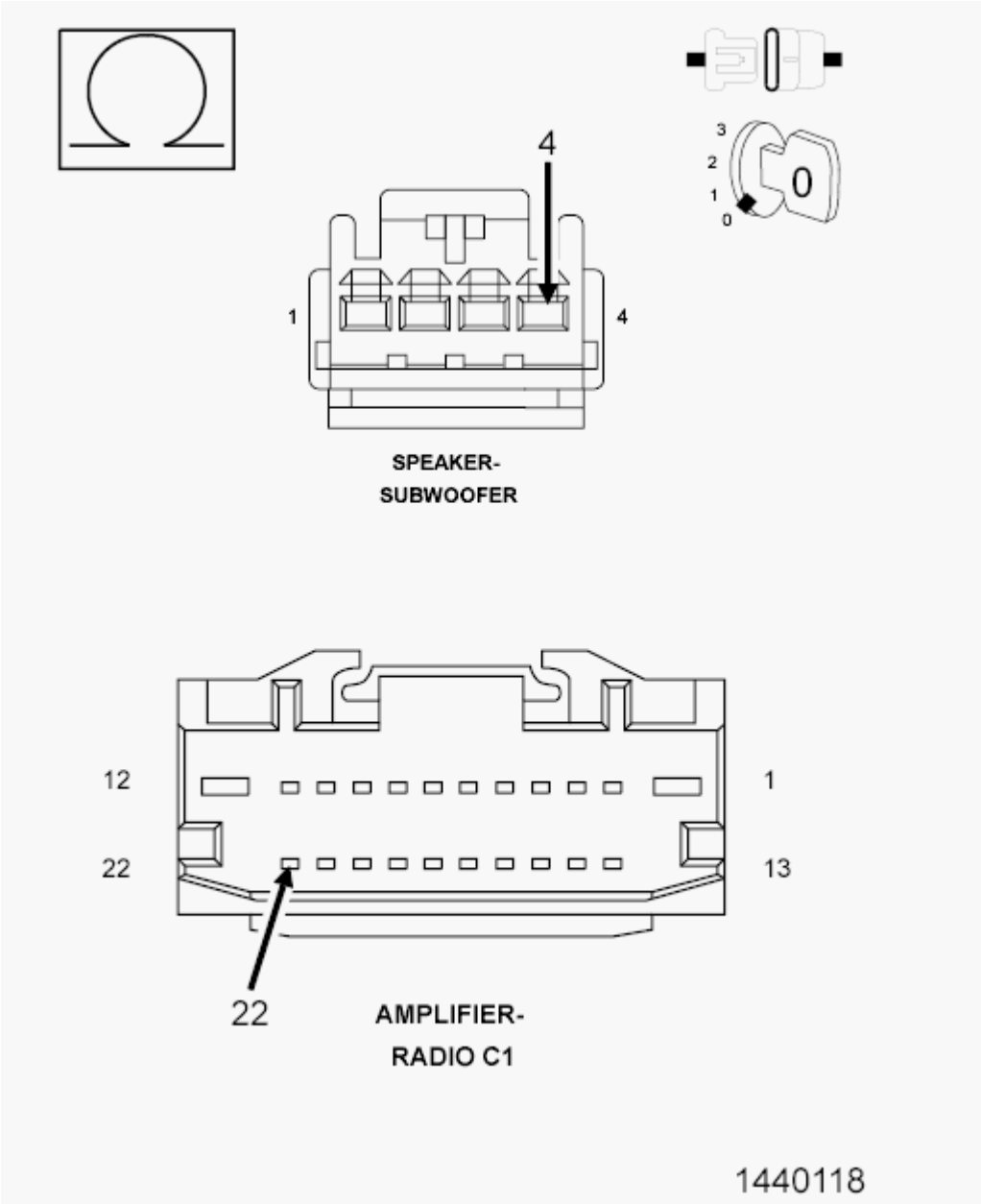

Fig. 137: Checking Amplified Subwoofer 2 (-) Circuit For An Open
Courtesy of CHRYSLER GROUP, LLC

1. Measure the resistance of the (X391) Amplified Subwoofer 2 (-) circuit between the Amplifier C1 harness connector and the Subwoofer Speaker harness connector.

   Is the resistance below 2.0 Ohms?

Yes

- Replace the Amplifier in accordance with the Service Information.
- Perform the BODY VERIFICATION TEST. Refer to **BODY VERIFICATION TEST** .

No

- Repair the (X391) Amplified Subwoofer 2 (-) circuit for an open.
- Perform the BODY VERIFICATION TEST. Refer to **BODY VERIFICATION TEST** .

B14C2-CHANNEL 10 AUDIO SPEAKER OUTPUT CIRCUIT SHORTED TOGETHER

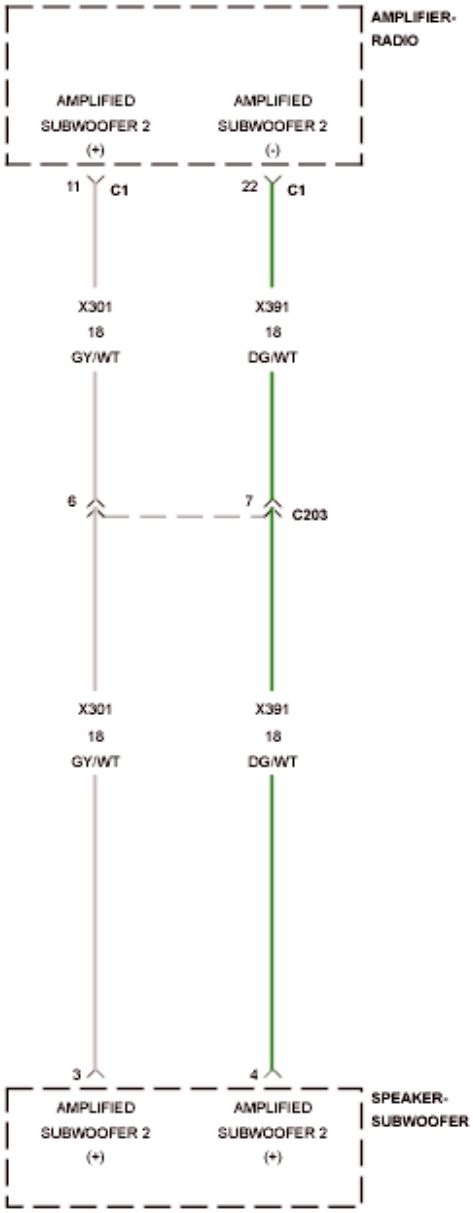

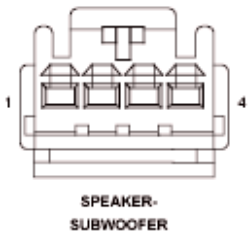

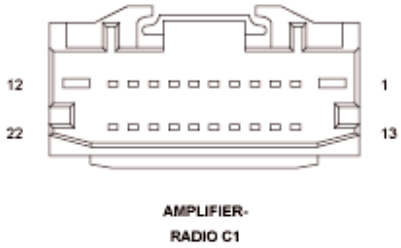

Fig. 138: Channel 10 Audio Speaker Output Wiring Diagram

Courtesy of CHRYSLER GROUP, LLC

For a complete wiring diagram, **refer to appropriate SYSTEM WIRING DIAGRAMS article** .

- **When Monitored:**

  With the ignition on. Radio volume at 25 or higher.

- **Set Condition:**

  The Amplifier detects that the output circuits are shorted together.

WHEN MONITORED:

SET CONDITION:

POSSIBLE CAUSES

Possible Causes
(X301) AMPLIFIED SUBWOOFER 2 (+) CIRCUIT SHORTED TO THE (X391) AMPLIFIED SUBWOOFER 2 (-) CIRCUIT
AMPLIFIED SUBWOOFER SPEAKER
AMPLIFIER

DIAGNOSTIC TEST

1. **CHECK FOR AN INTERMITTENT CONDITION**
   1. Turn the ignition on and open one of the front doors.

      NOTE: A front door must remain open whenever checking or erasing Amplifier DTC's.

   2. With the scan tool, record and erase the Amplifier DTC's.
   3. Cycle the ignition switch from on to off, wait five seconds and then back to on.
   4. Turn the Radio on and set the volume to 20.
   5. Adjust the speakers to the rear and center.
   6. With the scan tool, read the active Amplifier DTC's.

      Does the scan tool display active: B14C2-CHANNEL 10 AUDIO SPEAKER OUTPUT CIRCUIT SHORTED TOGETHER?

      Yes

      - Go To 2.

No

- Test complete, the condition or conditions that originally set this DTC are not present at this time. Using the wiring diagrams as a guide, check all related splices and connectors for signs of water intrusion, corrosion, pushed out or bent terminals and correct pin tension.
- Perform the BODY VERIFICATION TEST. Refer to **BODY VERIFICATION TEST** .

2. **CHECK THE OPERATION OF THE AMPLIFIED SUBWOOFER SPEAKER**

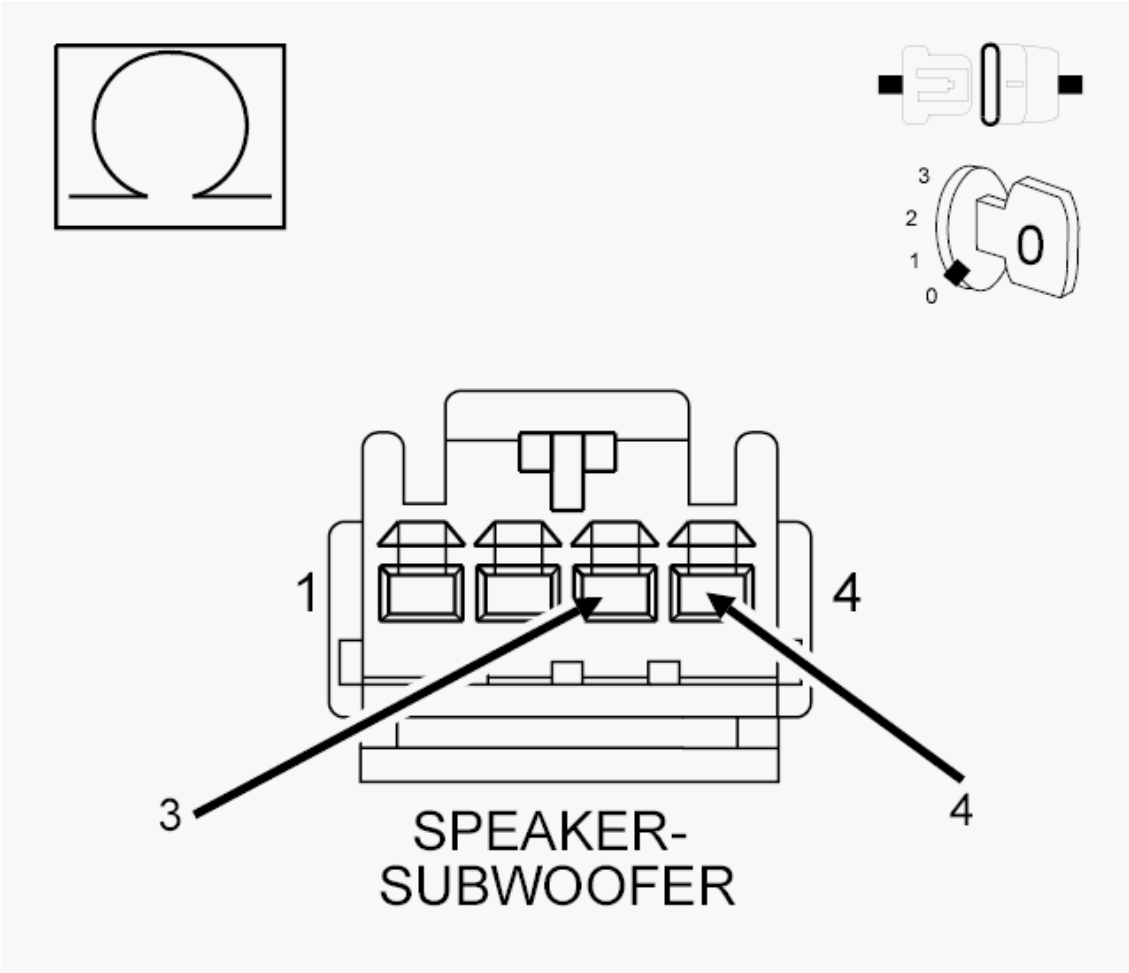

Fig. 139: Checking The Operation Of The Amplified Subwoofer Speaker
Courtesy of CHRYSLER GROUP, LLC

1. Turn the ignition off.
2. Disconnect the Subwoofer Speaker.
3. Measure the resistance of the speaker between the two terminals.

NOTE: **The graphic shows the connector for reference only. Measure between the speaker terminals.**

Is the resistance of the speaker less than 1 Ohm?

Yes

- Replace the Subwoofer Speaker in accordance with the Service Information.
- Perform the BODY VERIFICATION TEST. Refer to **BODY VERIFICATION TEST** .

No

- Go To 3.

3. **CHECK THE (X301) AMPLIFIED SUBWOOFER 2 (+) CIRCUIT, AND THE (X391) AMPLIFIED SUBWOOFER 2 (-) CIRCUITS FOR A SHORT TOGETHER**

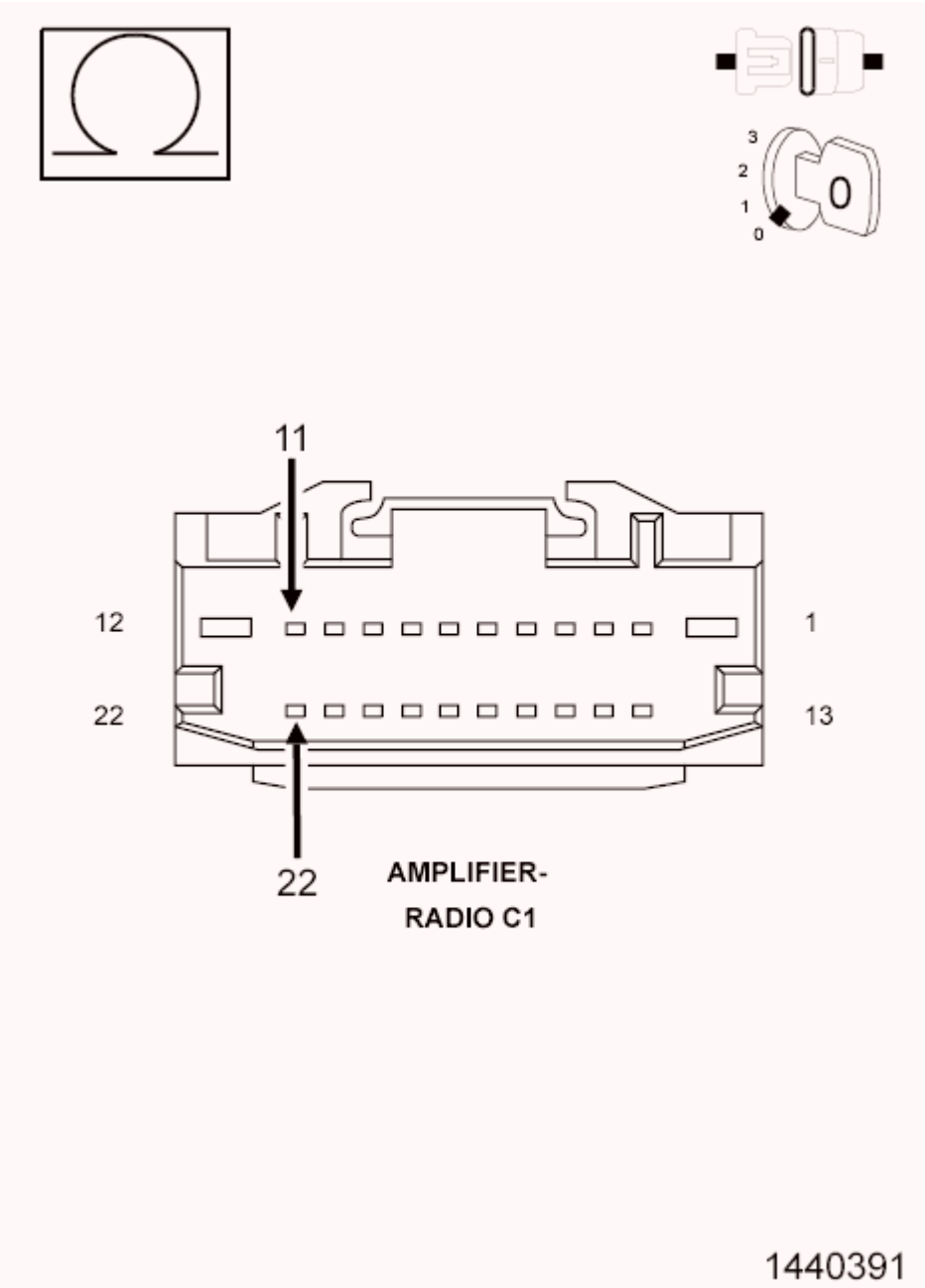

Fig. 140: Checking Amplified Subwoofer 2 (+) Circuit, And The Amplified Subwoofer 2 (-) Circuits For A Short Together
Courtesy of CHRYSLER GROUP, LLC

1. Turn the ignition off.
2. Disconnect the Amplifier C1 harness connector.
3. Measure the resistance between the (X301) Amplified Subwoofer 2 (+) circuit, and the (X391) Amplified Subwoofer 2 (-) circuit.

   Is the resistance below 10K Ohms?

   Yes

   - Repair the (X301) Amplified Subwoofer 2 (+) circuit, and the (X391) Amplified Subwoofer 2(-) circuit for a short together.
   - Perform the BODY VERIFICATION TEST. Refer to **BODY VERIFICATION TEST** .

   No

   - Replace the Amplifier in accordance with the Service Information.
   - Perform the BODY VERIFICATION TEST. Refer to **BODY VERIFICATION TEST** .

B14C3-CHANNEL 11 AUDIO SPEAKER OUTPUT CIRCUIT PERFORMANCE

For a complete wiring diagram, **refer to appropriate SYSTEM WIRING DIAGRAMS article** .

WHEN MONITORED:

With the ignition on.

SET CONDITION:

This Diagnostic Trouble Code (DTC) sets if a Direct Current (DC) offset occurs on the output channel, the amplifier shall set a DTC after a maturity rate of four to six seconds.

POSSIBLE CAUSES

Possible Causes
AMPLIFIER

DIAGNOSTIC TEST

1. **CHECK FOR AN INTERMITTENT CONDITION**
   1. Turn the ignition on and open one of the front doors.

   NOTE: A front door must remain open whenever checking or erasing

Amplifier DTC's.

2. With the scan tool, record and erase the Amplifier DTC's.
3. Cycle the ignition switch from on to off, wait five seconds and then back to on.
4. Turn the Radio on and set the volume to 20.
5. Adjust the speakers to the front and center.
6. With the scan tool, read the active Amplifier DTC's.

   Does the scan tool display active: B14C3-CHANNEL 11 AUDIO SPEAKER OUTPUT CIRCUIT PERFORMANCE?

   Yes

   - Replace the Amplifier in accordance with the Service Information.
   - Perform the BODY VERIFICATION TEST. Refer to **BODY VERIFICATION TEST** .

   No

   - Test complete, the condition or conditions that originally set this DTC are not present at this time. Using the wiring diagrams as a guide, check all related splices and connectors for signs of water intrusion, corrosion, pushed out or bent terminals and correct pin tension.
   - Perform the BODY VERIFICATION TEST. Refer to **BODY VERIFICATION TEST** .

B14C4-CHANNEL 11 AUDIO SPEAKER OUTPUT CIRCUIT LOW

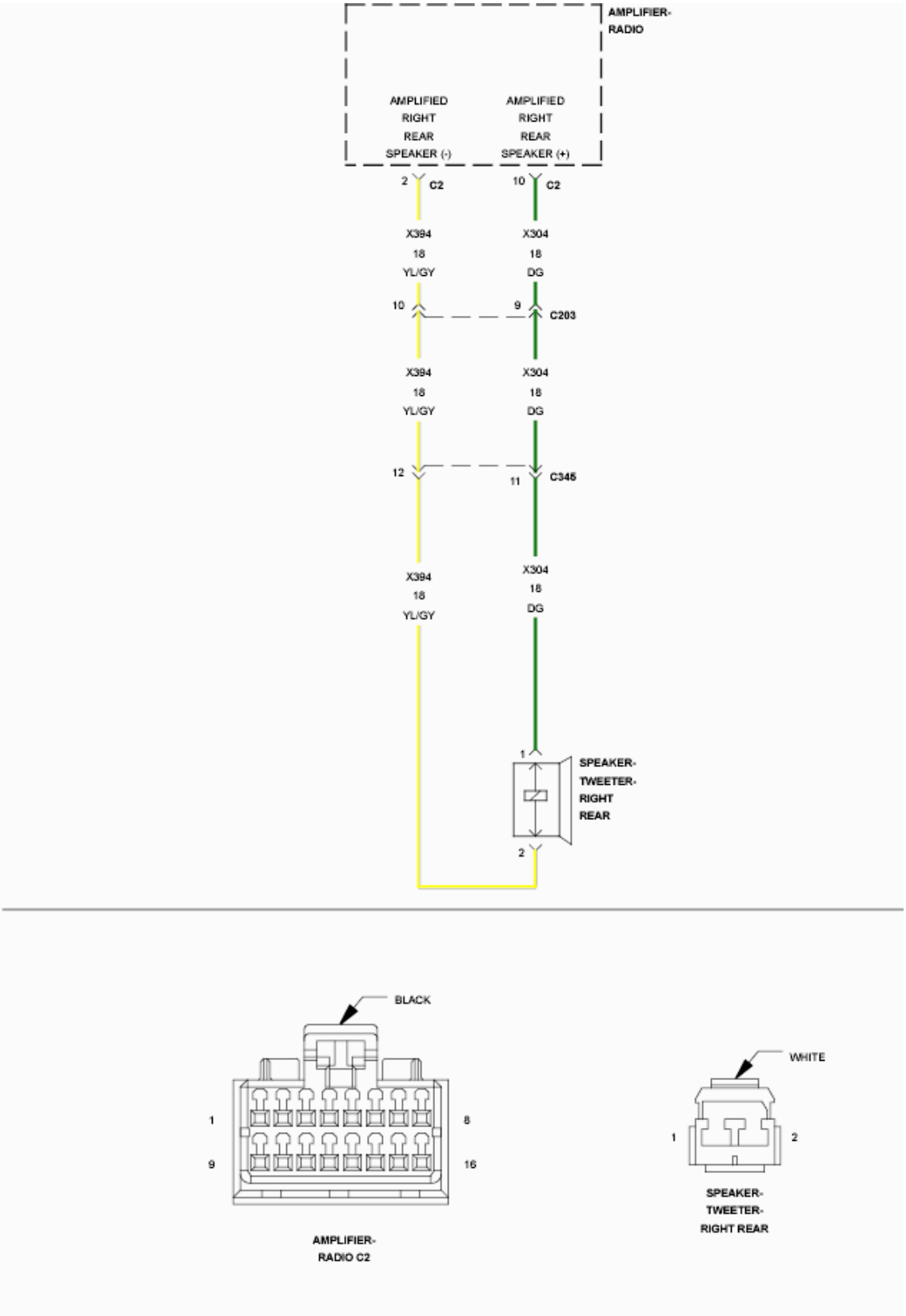

Fig. 141: Channel 11 Audio Speaker Output Wiring Diagram
Courtesy of CHRYSLER GROUP, LLC

For a complete wiring diagram, **refer to appropriate SYSTEM WIRING DIAGRAMS article** .

- **When Monitored:**

  With the ignition on.

- **Set Condition:**

  The Amplifier detects a shorted to ground condition on the speaker output circuit.

WHEN MONITORED:

SET CONDITION:

POSSIBLE CAUSES

Possible Causes
(X304) RIGHT REAR SPEAKER (+) CIRCUIT SHORTED TO GROUND
(X394) RIGHT REAR SPEAKER (-) CIRCUIT SHORTED TO GROUND
RIGHT REAR SPEAKER
AMPLIFIER

DIAGNOSTIC TEST

1. **CHECK FOR AN INTERMITTENT CONDITION**
   1. Turn the ignition on and open one of the front doors.

      NOTE: A front door must remain open whenever checking or erasing Amplifier DTC's.

   2. With the scan tool, record and erase the Amplifier DTC's.
   3. Cycle the ignition switch from on to off, wait five seconds and then back to on.
   4. Turn the Radio on and set the volume to 20.
   5. Adjust the speakers to the front and center.
   6. With the scan tool, read the active Amplifier DTC's.

      Does the scan tool display active: B14C4-CHANNEL 11 AUDIO SPEAKER OUTPUT CIRCUIT LOW?

      Yes

      - Go To 2.

      No

- Test complete, the condition or conditions that originally set this DTC are not present at this time. Using the wiring diagrams as a guide, check all related splices and connectors for signs of water intrusion, corrosion, pushed out or bent terminals and correct pin tension.
- Perform the BODY VERIFICATION TEST. Refer to **BODY VERIFICATION TEST** .

2. **CHECK THE RIGHT REAR SPEAKER**

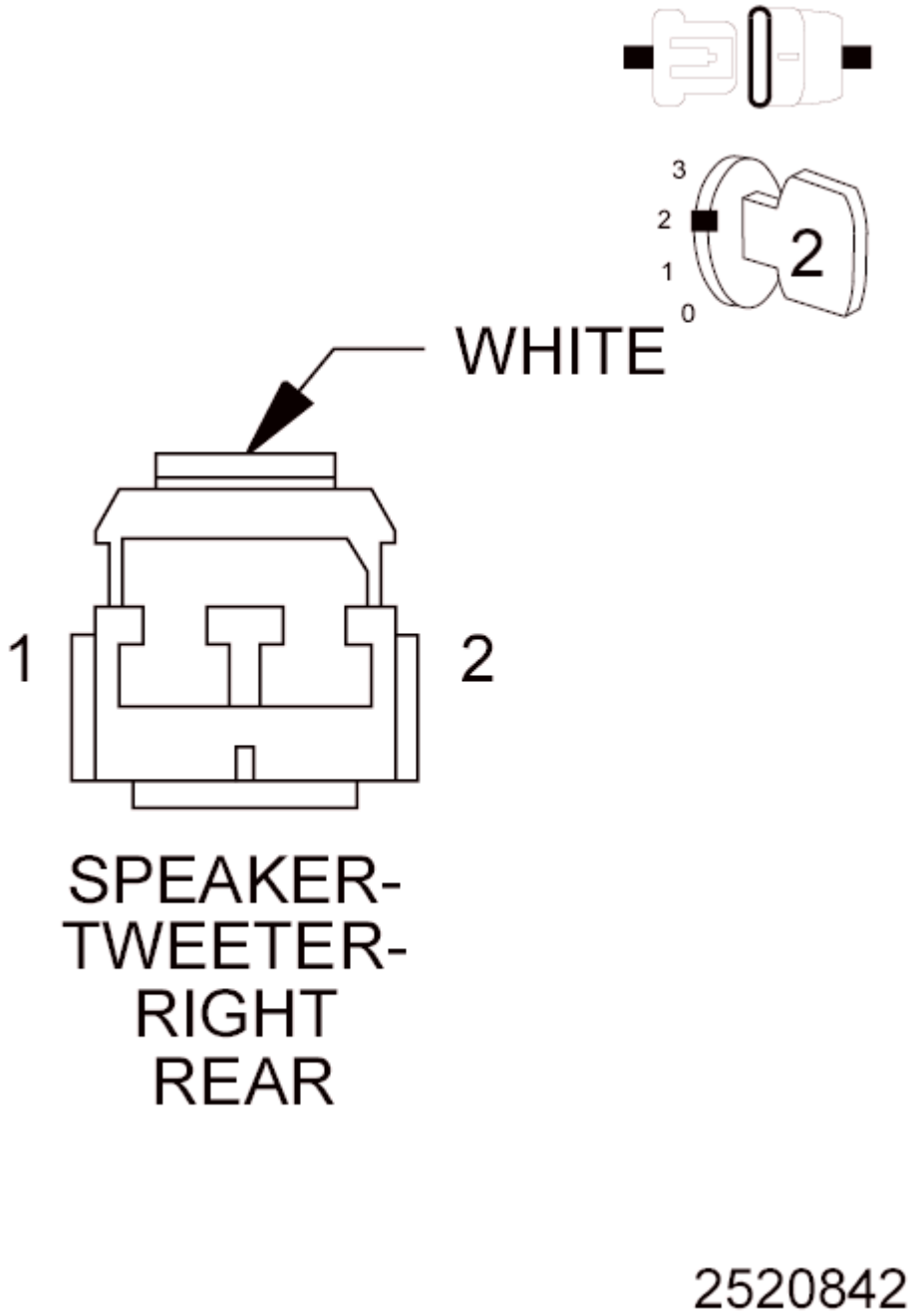

Fig. 142: Right Rear Speaker Connector End View
Courtesy of CHRYSLER GROUP, LLC

1. Make sure one of the front doors is still open.
2. With the scan tool, erase the DTC's.
3. Turn the ignition off.
4. Disconnect the Right Rear Speaker harness connector.
5. Turn the ignition on.
6. Turn the radio on and set the volume to 25.
7. With the scan tool, read the active Amplifier DTC's.

   Does the scan tool display active: B14C4-CHANNEL 11 AUDIO SPEAKER OUTPUT CIRCUIT LOW?

   Yes

   - Go To 3.

   No

   - Replace the Right Rear Speaker.
   - Perform the BODY VERIFICATION TEST. Refer to **BODY VERIFICATION TEST** .

3. **CHECK THE (X304) RIGHT REAR SPEAKER (+) CIRCUIT FOR A SHORT TO GROUND**

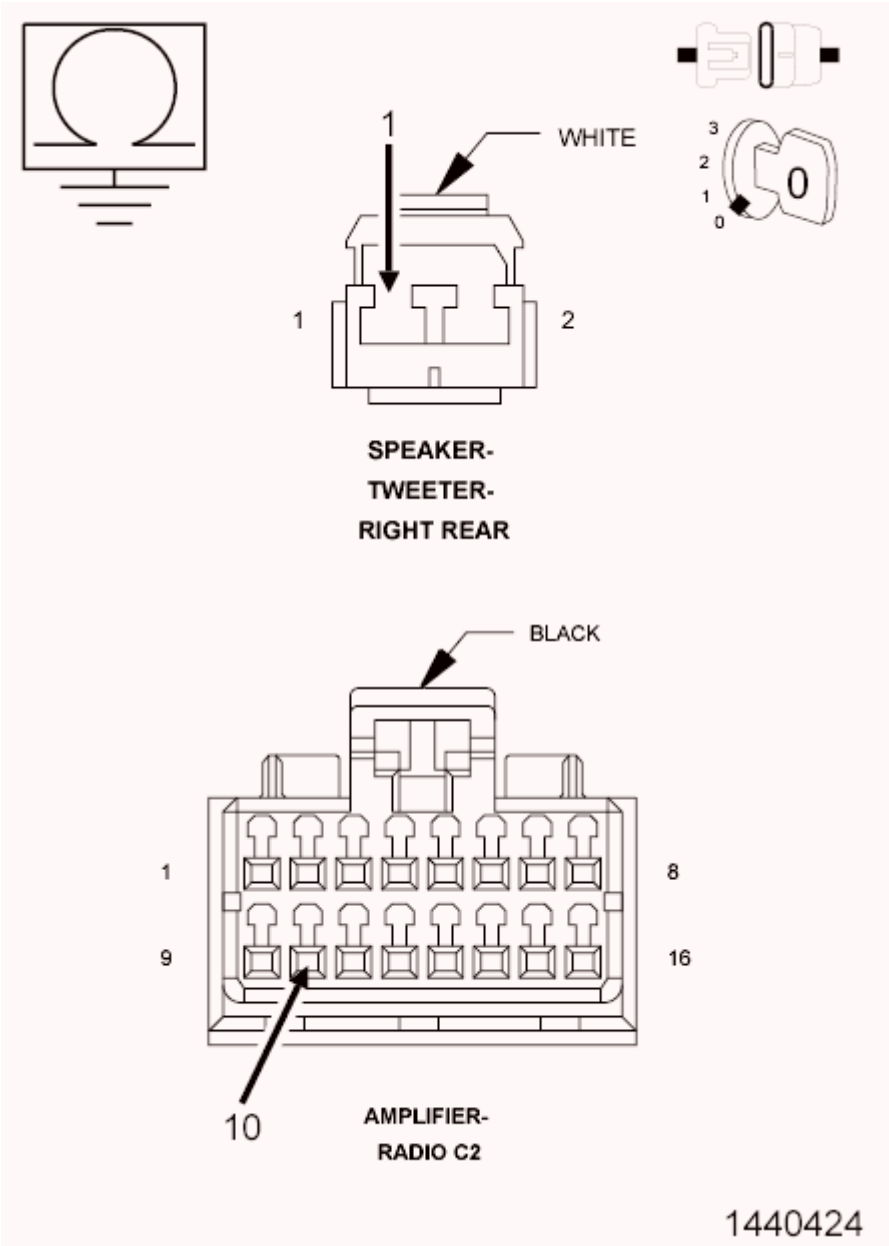

Fig. 143: Checking Right Rear Speaker (+) Circuit For A Short To Ground
Courtesy of CHRYSLER GROUP, LLC

1. Disconnect the Amplifier C2 harness connector.
2. Disconnect the Right Rear Speaker harness connector.
3. Measure the resistance between ground and the (X304) Right Rear Speaker (+) circuit.

   Is the resistance below 10K Ohms?

   Yes

   - Repair the (X304) Right Rear Speaker (+) circuit for a short to ground.

- Perform the BODY VERIFICATION TEST. Refer to **BODY VERIFICATION TEST** .

No

- Go To 4.

4. **CHECK THE (X394) RIGHT REAR SPEAKER (-) CIRCUIT FOR A SHORT TO GROUND**

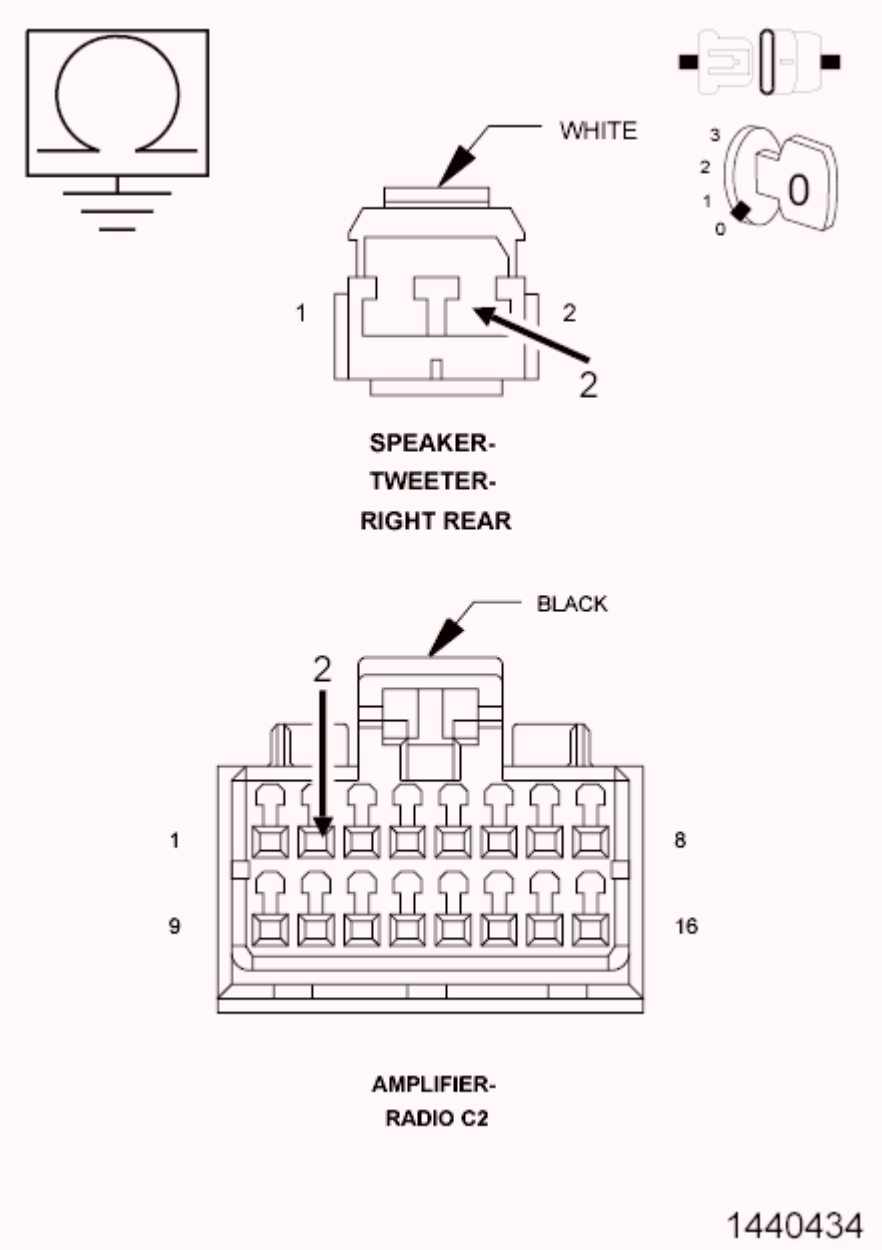

Fig. 144: Checking Right Rear Speaker (-) Circuit For A Short To Ground
Courtesy of CHRYSLER GROUP, LLC

1. Measure the resistance between ground and the (X394) Right Rear Speaker (-) circuit.

Is the resistance below 10K Ohms?

Yes

- Repair the (X394) Right Rear Speaker (-) for a short to ground.
- Perform the BODY VERIFICATION TEST. Refer to **BODY VERIFICATION TEST** .

No

- Replace the Amplifier in accordance with the Service Information.
- Perform the BODY VERIFICATION TEST. Refer to **BODY VERIFICATION TEST** .

B14C6-CHANNEL 11 AUDIO SPEAKER OUTPUT CIRCUIT OPEN

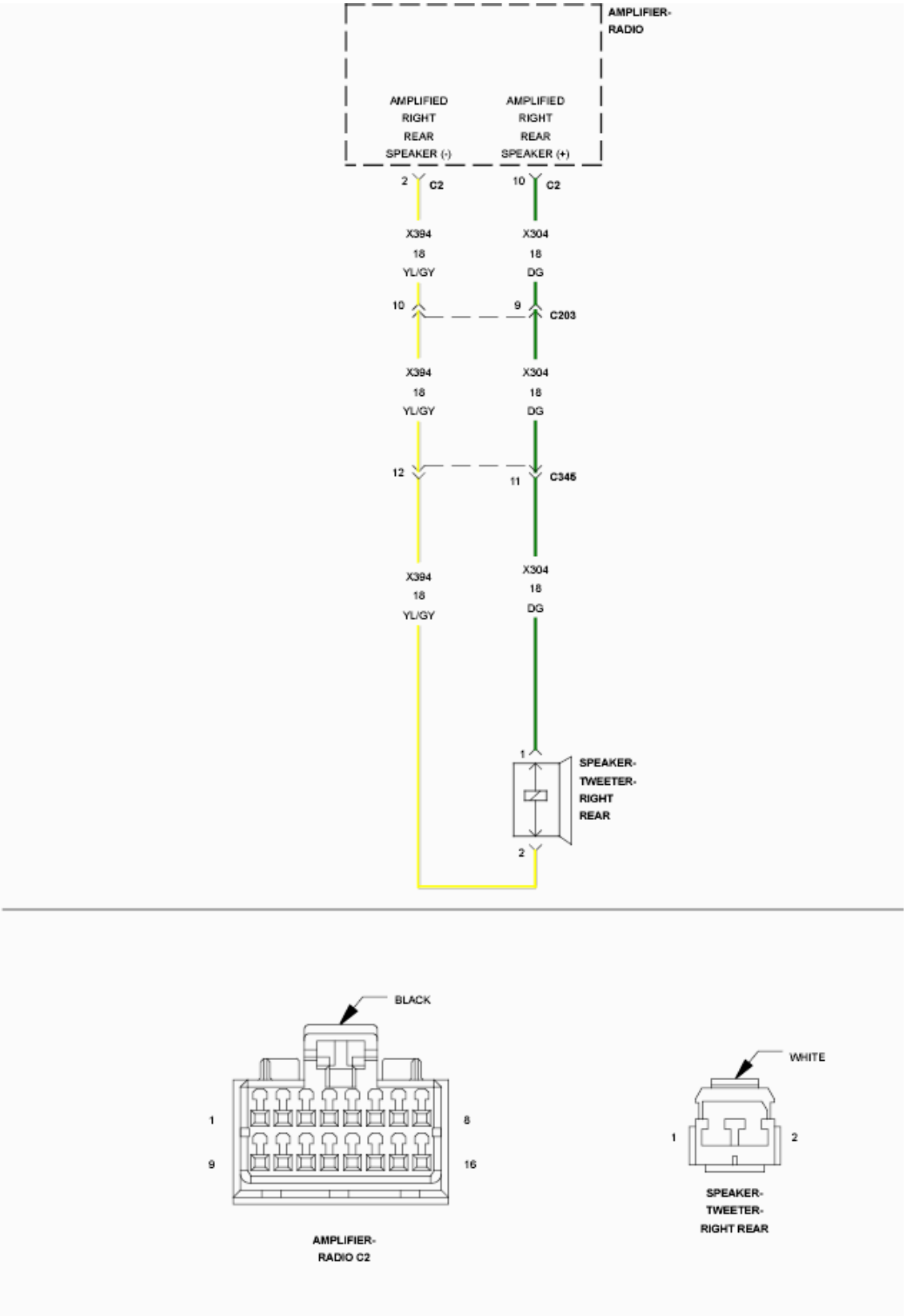

Fig. 145: Channel 11 Audio Speaker Output Wiring Diagram
Courtesy of CHRYSLER GROUP, LLC

For a complete wiring diagram, **refer to appropriate SYSTEM WIRING DIAGRAMS article** .

- **When Monitored:**

  Amplifier Bus wake-up. Amplifier reset with scan tool.

- **Set Condition:**

  The Amplifier detects an open condition on the speaker output circuit.

WHEN MONITORED:

SET CONDITION:

POSSIBLE CAUSES

Possible Causes
(X304) RIGHT REAR SPEAKER (+) CIRCUIT OPEN
(X394) RIGHT REAR SPEAKER (-) CIRCUIT OPEN
RIGHT REAR SPEAKER
AMPLIFIER

DIAGNOSTIC TEST

1. **CHECK FOR AN INTERMITTENT CONDITION**
   1. Turn the ignition on and open one of the front doors.

      NOTE: A front door must remain open whenever checking or erasing Amplifier DTC's.

   2. With the scan tool, record and erase the Amplifier DTC's.
   3. Cycle the ignition switch from on to off, wait five seconds and then back to on.
   4. Turn the Radio on and set the volume to 20.
   5. Adjust the speakers to the front and center.
   6. With the scan tool, read the active Amplifier DTC's.

      Does the scan tool display active: B14C6-CHANNEL 11 AUDIO SPEAKER OUTPUT CIRCUIT OPEN?

      Yes

      - Go To 2.

      No

- Test complete, the condition or conditions that originally set this DTC are not present at this time. Using the wiring diagrams as a guide, check all related splices and connectors for signs of water intrusion, corrosion, pushed out or bent terminals and correct pin tension.
- Perform the BODY VERIFICATION TEST. Refer to **BODY VERIFICATION TEST** .

2. **CHECK THE OPERATION OF THE RIGHT REAR SPEAKER**

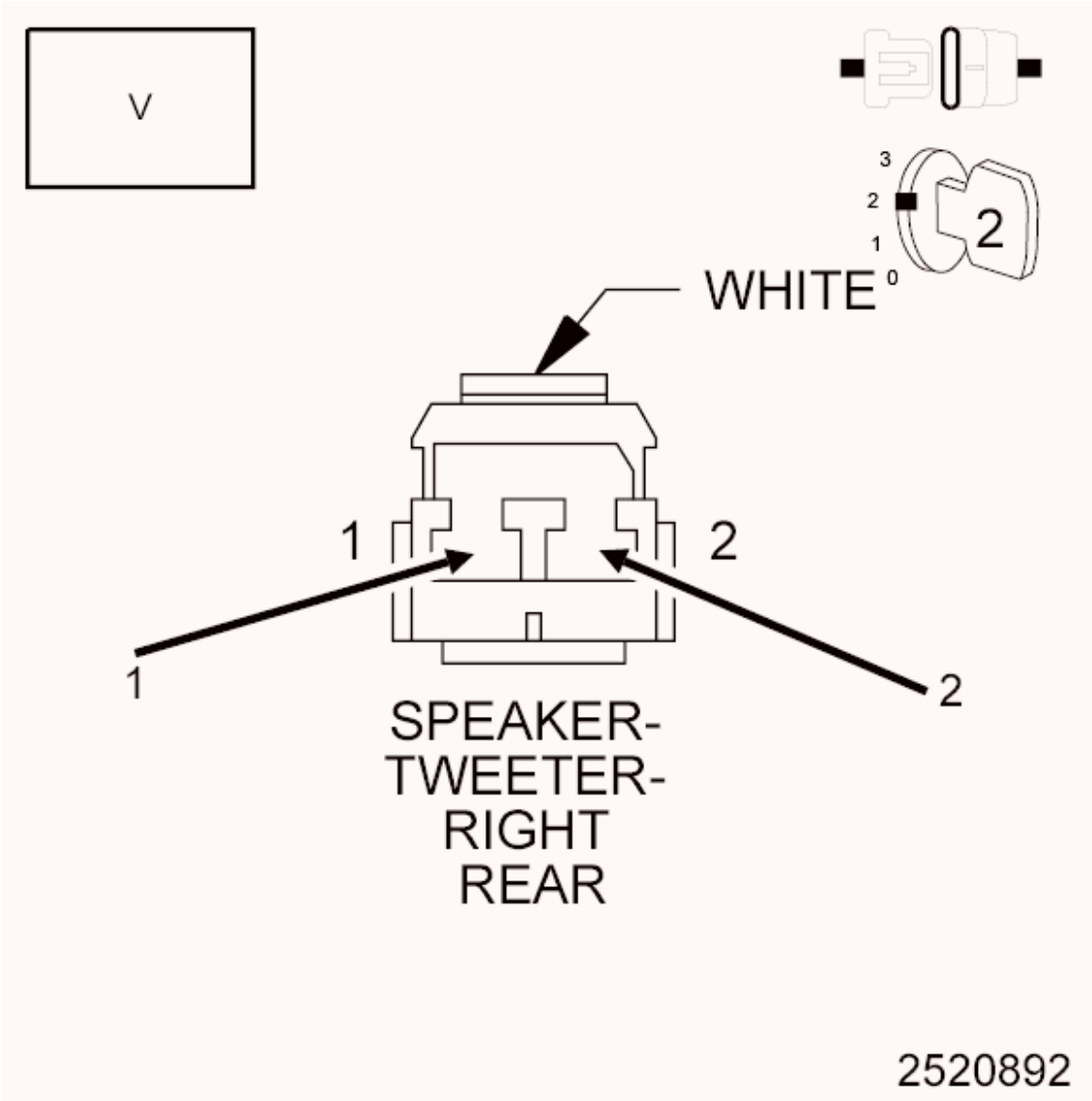

Fig. 146: Checking The Operation Of The Right Rear Speaker
Courtesy of CHRYSLER GROUP, LLC

1. Turn the ignition off.
2. Disconnect the Right Rear Speaker harness connector.
3. Turn the ignition on.
4. Turn the radio on and turn the volume to 25.
5. Adjust the speakers to the rear and center.

6. With a voltmeter set to read in A/C voltage, measure the voltage of the Right Rear Speaker circuits in the Right Rear Speaker harness connector.

   Is the voltage present greater than 1 volt?

   Yes

   - Replace the Right Rear Speaker in accordance with the Service Information.
   - Perform the BODY VERIFICATION TEST. Refer to **BODY VERIFICATION TEST** .

   No

   - Go To 3.

3. **CHECK THE (X304) RIGHT REAR SPEAKER (+) CIRCUIT FOR AN OPEN**

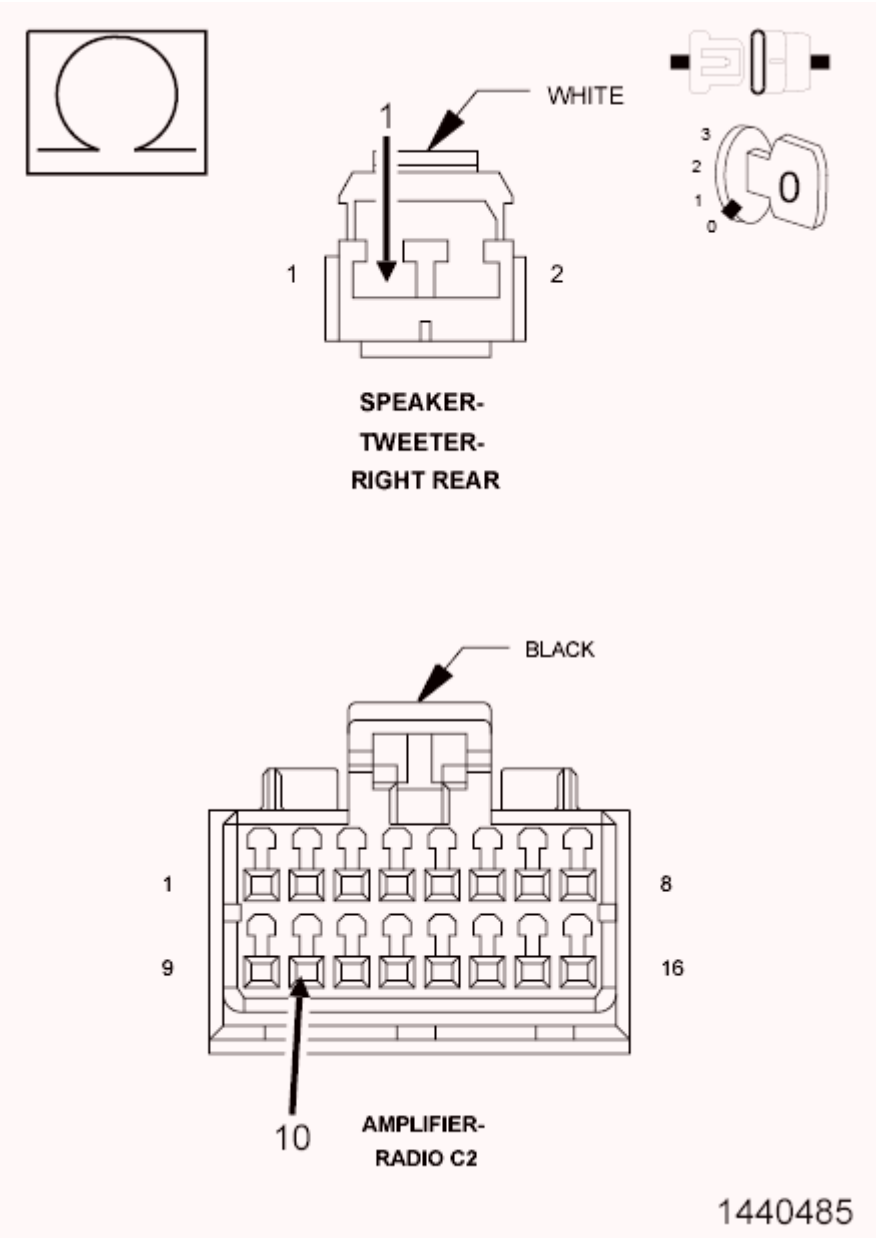

Fig. 147: Checking Right Rear Speaker (+) Circuit For An Open
Courtesy of CHRYSLER GROUP, LLC

1. Turn the ignition off.
2. Disconnect the Amplifier C2 harness connector.
3. Measure the resistance of the (X304) Right Rear Speaker (+) circuit between the Amplifier C2 harness connector and the Right Rear Speaker harness connector.

   Is the resistance below 2.0 Ohms?

   Yes

- Go To 4.

No

- Repair the (X304) Right Rear Speaker (+) circuit for an open.
- Perform the BODY VERIFICATION TEST. Refer to **BODY VERIFICATION TEST** .

4. **CHECK THE (X394) RIGHT REAR SPEAKER (-) CIRCUIT FOR AN OPEN**

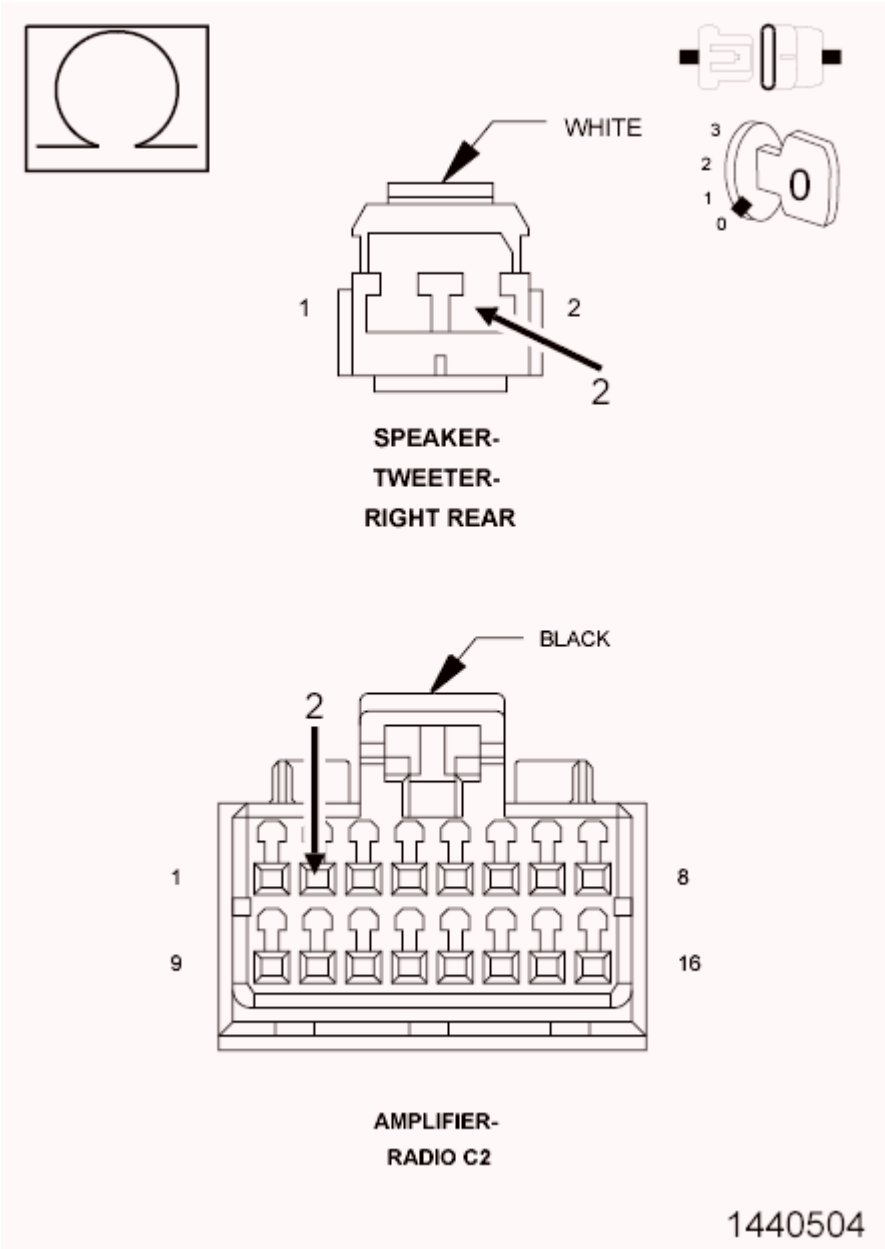

Fig. 148: Checking Right Rear Speaker (-) Circuit For An Open
Courtesy of CHRYSLER GROUP, LLC

1. Turn the ignition off.

2. Disconnect the Amplifier C2 harness connector.
3. Measure the resistance of the (X394) Right Rear Speaker (-) circuit between the Amplifier C2 harness connector and the Right Rear Speaker harness connector.

   Is the resistance below 2.0 Ohms?

   Yes

   - Replace the Amplifier in accordance with the Service Information.
   - Perform the BODY VERIFICATION TEST. Refer to **BODY VERIFICATION TEST** .

   No

   - Repair the (X394) Right Rear Speaker (-) circuit for an open.
   - Perform the BODY VERIFICATION TEST. Refer to **BODY VERIFICATION TEST** .

B14C5-CHANNEL 11 AUDIO SPEAKER OUTPUT CIRCUIT HIGH

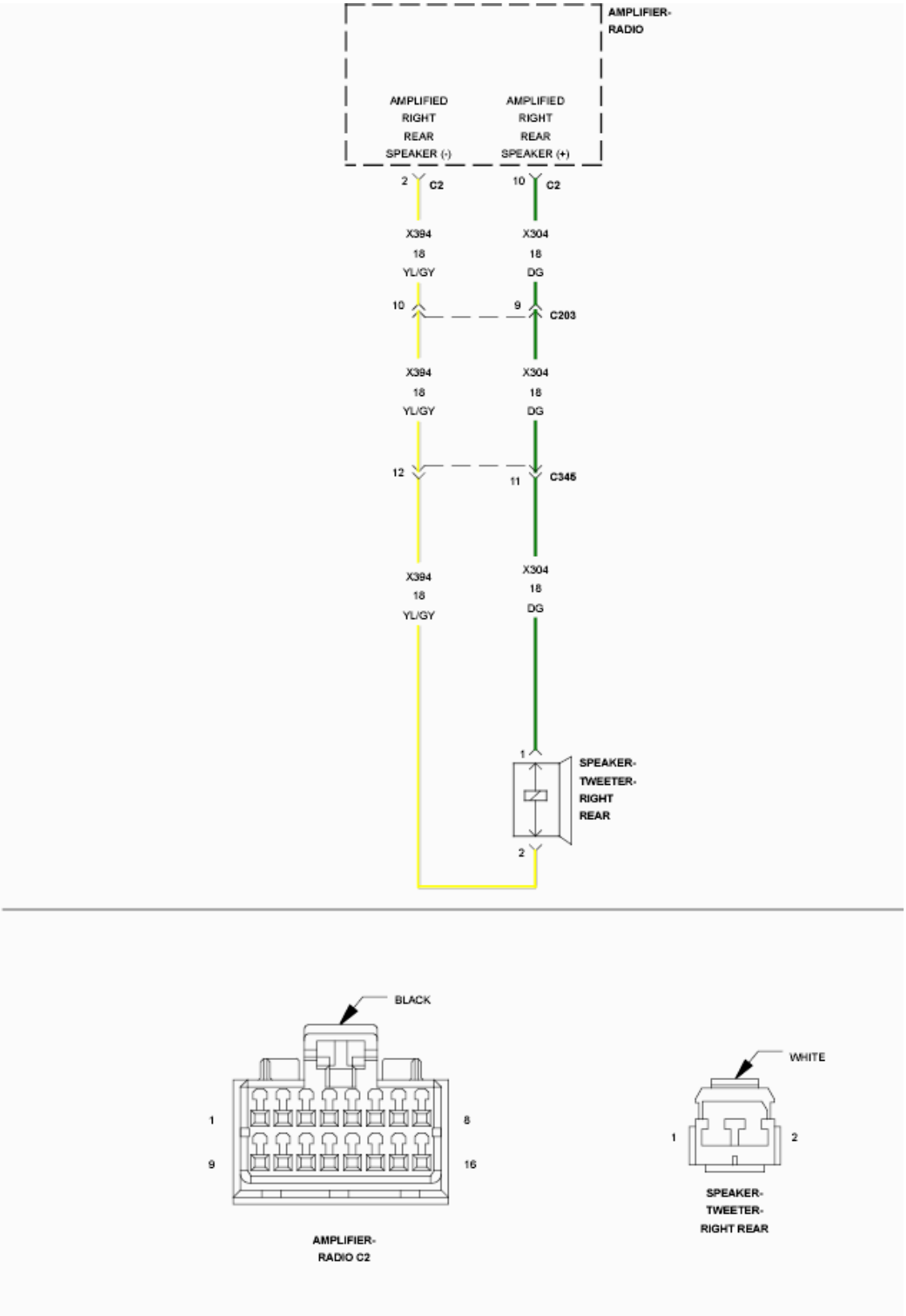

Fig. 149: Channel 11 Audio Speaker Output Wiring Diagram
Courtesy of CHRYSLER GROUP, LLC

For a complete wiring diagram, **refer to appropriate SYSTEM WIRING DIAGRAMS article** .

- **When Monitored:**

  With the ignition on.

- **Set Condition:**

  The Amplifier detects a short to battery condition on the output circuit.

WHEN MONITORED:

SET CONDITION:

POSSIBLE CAUSES

Possible Causes
(X304) RIGHT REAR SPEAKER (+) CIRCUIT SHORTED TO VOLTAGE
(X394) RIGHT REAR SPEAKER (-) CIRCUIT SHORTED TO VOLTAGE
AMPLIFIER

DIAGNOSTIC TEST

1. **CHECK FOR AN INTERMITTENT CONDITION**
   1. Turn the ignition on and open one of the front doors.

      NOTE: A front door must remain open whenever checking or erasing Amplifier DTC's.

   2. With the scan tool, record and erase the Amplifier DTC's.
   3. Cycle the ignition switch from on to off, wait five seconds and then back to on.
   4. Turn the Radio on and set the volume to 20.
   5. Adjust the speakers to the front and center.
   6. With the scan tool, read the active Amplifier DTC's.

      Does the scan tool display active: B14C5-CHANNEL 11 AUDIO SPEAKER OUTPUT CIRCUIT HIGH?

      Yes

      - Go To 2.

      No

      - Test complete, the condition or conditions that originally set this DTC are not present at this

time. Using the wiring diagrams as a guide, check all related splices and connectors for signs of water intrusion, corrosion, pushed out or bent terminals and correct pin tension.

- Perform the BODY VERIFICATION TEST. Refer to **BODY VERIFICATION TEST** .

2. **CHECK FOR VOLTAGE ON THE (X304) RIGHT REAR SPEAKER (+) CIRCUIT**

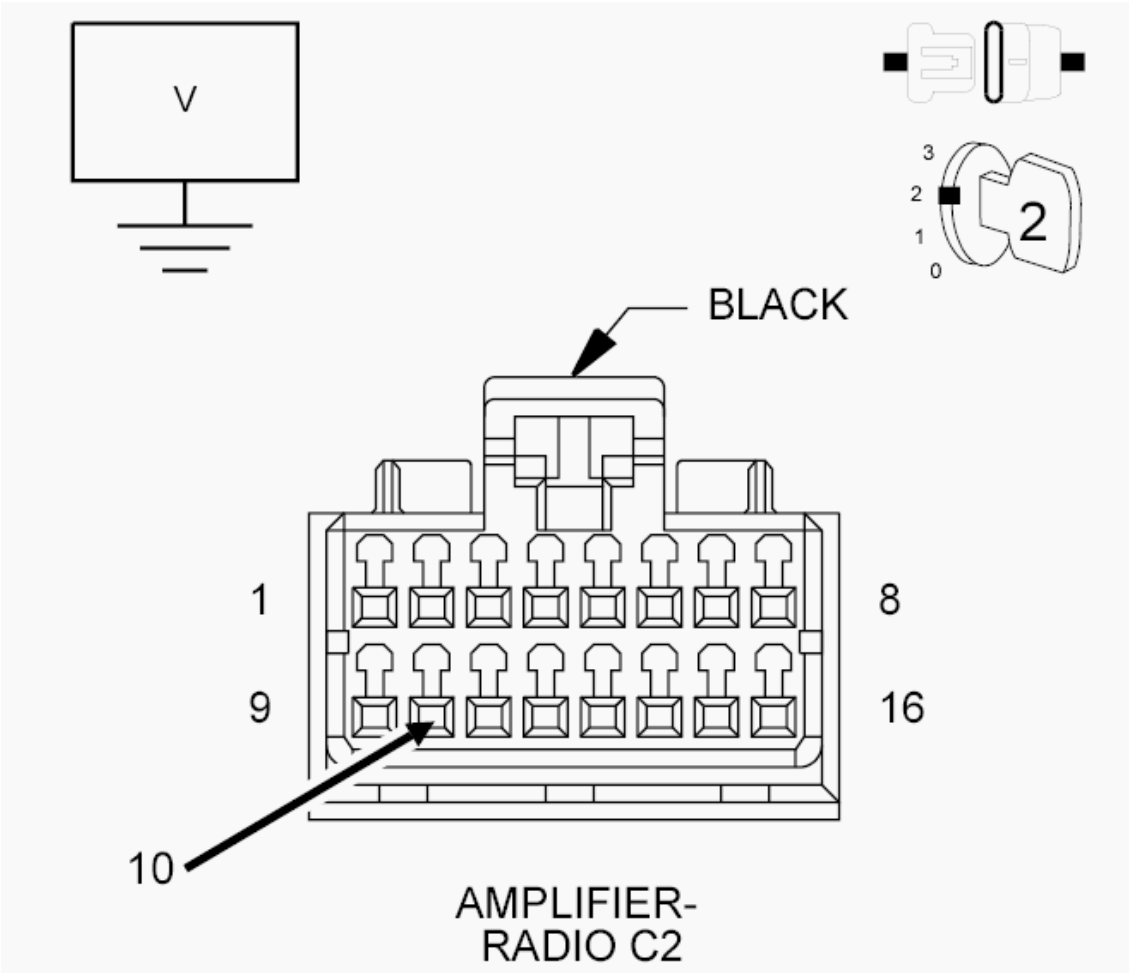

Fig. 150: Measuring Voltage On Right Rear Speaker (+) Circuit
Courtesy of CHRYSLER GROUP, LLC

1. Turn the ignition off.
2. Disconnect the Amplifier C2 harness connector.
3. Disconnect the Right Rear Speaker harness connector.
4. Turn the ignition on.
5. Measure for voltage on the (X304) Right Rear Speaker (+) circuit and ground.

   Is there any voltage present?

   Yes

   - Repair the (X304) Right Rear Speaker (+) circuit for a short to voltage.

- Perform the BODY VERIFICATION TEST. Refer to **BODY VERIFICATION TEST** .

No

- Go To 3.

3. **CHECK FOR VOLTAGE ON THE (X394) RIGHT REAR SPEAKER (-) CIRCUIT**

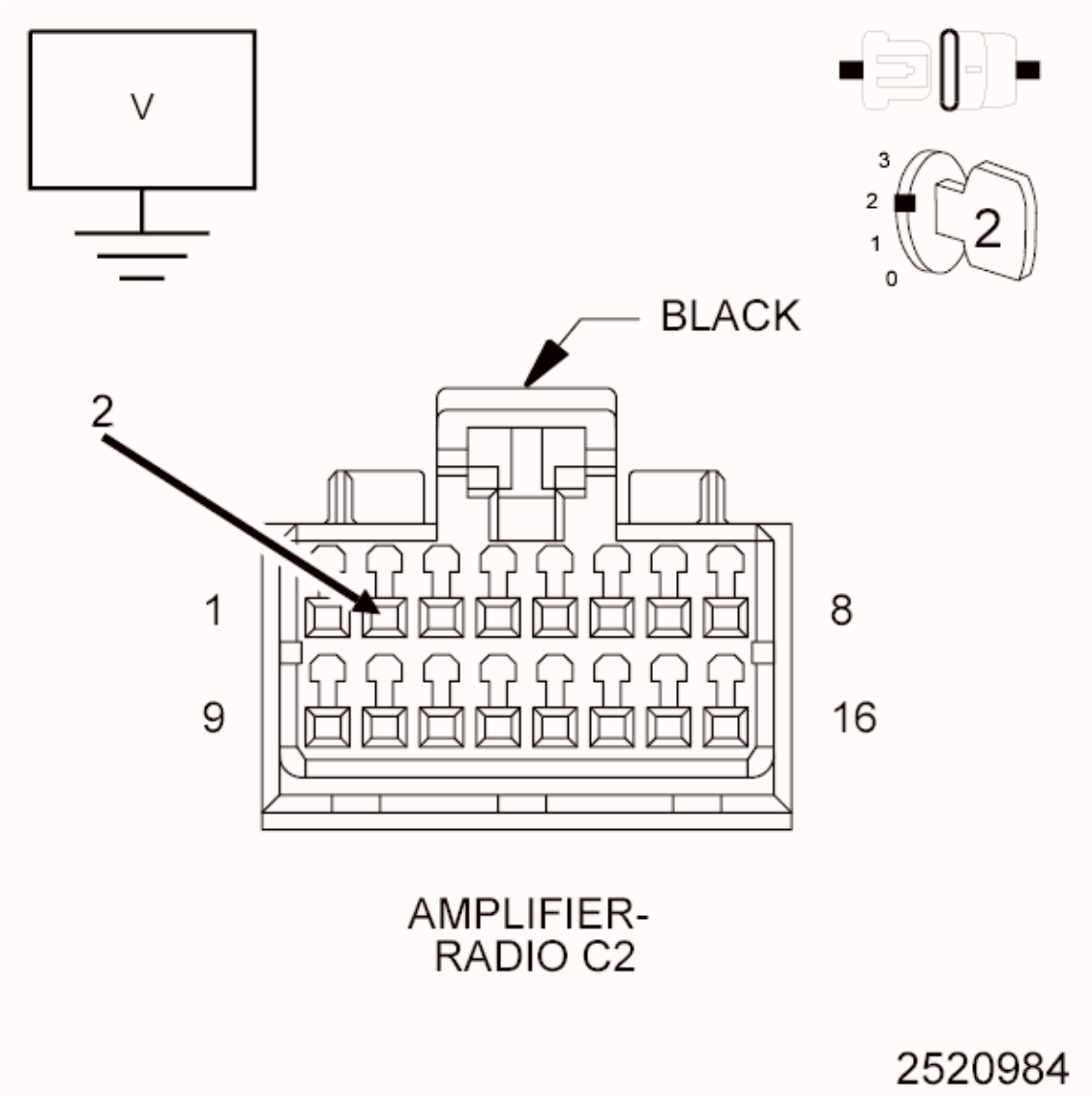

Fig. 151: Measuring Voltage On Right Rear Speaker (-) Circuit
Courtesy of CHRYSLER GROUP, LLC

1. Measure for voltage on the (X394) Right Rear Speaker (-) circuit and ground.

   Is there any voltage present?

   Yes

- Repair the (X394) Right Rear Speaker (-) circuit for a short to voltage.
- Perform the BODY VERIFICATION TEST. Refer to **BODY VERIFICATION TEST** .

No

- Replace the Amplifier in accordance with the Service Information.
- Perform the BODY VERIFICATION TEST. Refer to **BODY VERIFICATION TEST** .

B14C7-CHANNEL 11 AUDIO SPEAKER OUTPUT CIRCUIT SHORTED TOGETHER

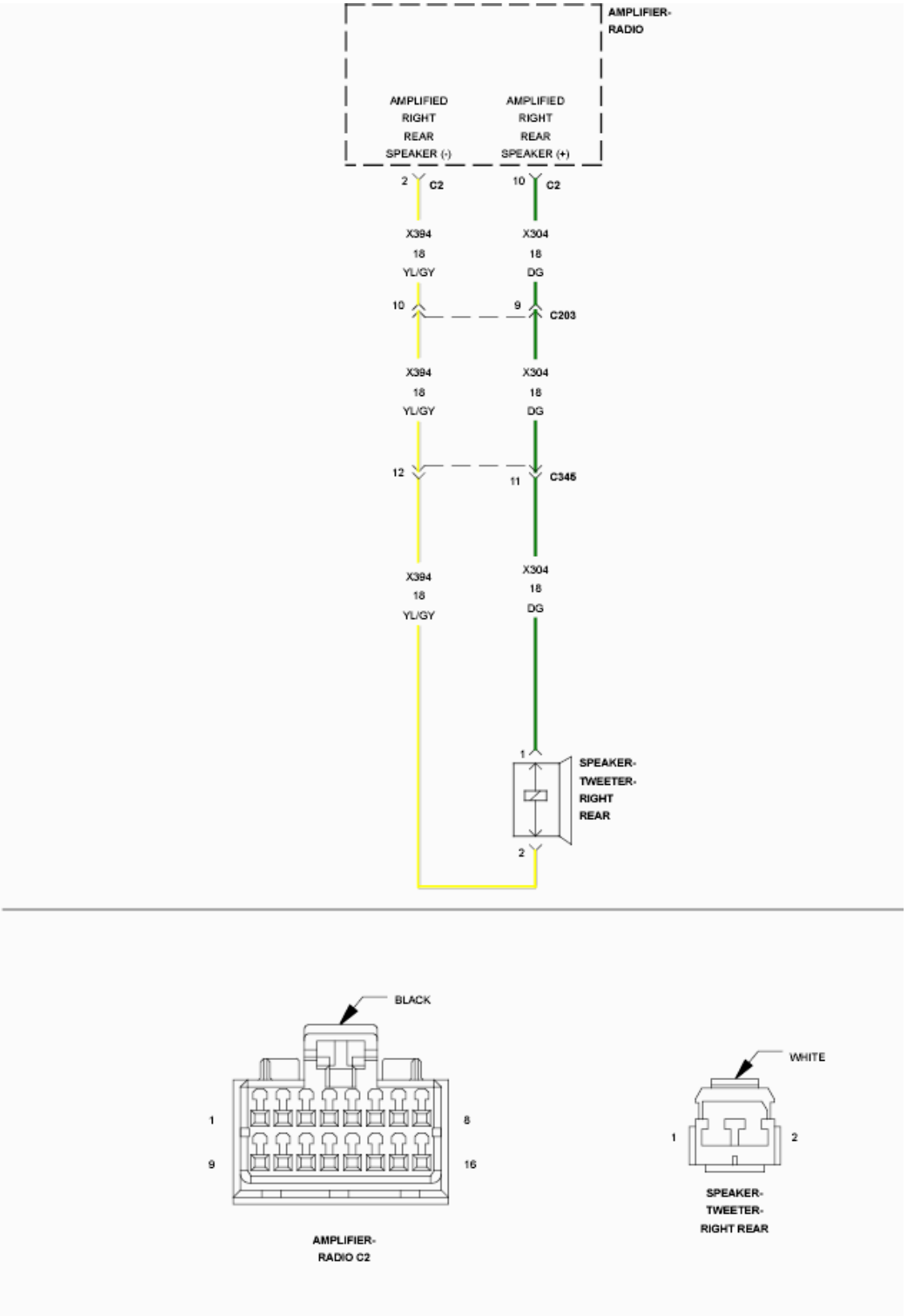

Fig. 152: Channel 11 Audio Speaker Output Wiring Diagram
Courtesy of CHRYSLER GROUP, LLC

For a complete wiring diagram, **refer to appropriate SYSTEM WIRING DIAGRAMS article** .

- **When Monitored:**

  With the ignition on. Radio volume at 25 or higher.

- **Set Condition:**

  The Amplifier detects that the output circuits are shorted together.

WHEN MONITORED:

SET CONDITION:

POSSIBLE CAUSES

Possible Causes
(X304) RIGHT REAR SPEAKER (+) CIRCUIT SHORTED TO THE (X394) RIGHT REAR SPEAKER (-) CIRCUIT
RIGHT REAR SPEAKER
AMPLIFIER

DIAGNOSTIC TEST

1. **CHECK FOR AN INTERMITTENT CONDITION**
   1. Turn the ignition on and open one of the front doors.

      NOTE: A front door must remain open whenever checking or erasing Amplifier DTC's.

   2. With the scan tool, record and erase the Amplifier DTC's.
   3. Cycle the ignition switch from on to off, wait five seconds and then back to on.
   4. Turn the Radio on and set the volume to 20.
   5. Adjust the speakers to the front and center.
   6. With the scan tool, read the active Amplifier DTC's.

      Does the scan tool display active: B14C7-CHANNEL 11 AUDIO SPEAKER OUTPUT CIRCUIT SHORTED TOGETHER?

      Yes

      - Go To 2.

      No

- Test complete, the condition or conditions that originally set this DTC are not present at this time. Using the wiring diagrams as a guide, check all related splices and connectors for signs of water intrusion, corrosion, pushed out or bent terminals and correct pin tension.
- Perform the BODY VERIFICATION TEST. Refer to **BODY VERIFICATION TEST** .

2. **CHECK THE OPERATION OF THE RIGHT REAR SPEAKER**

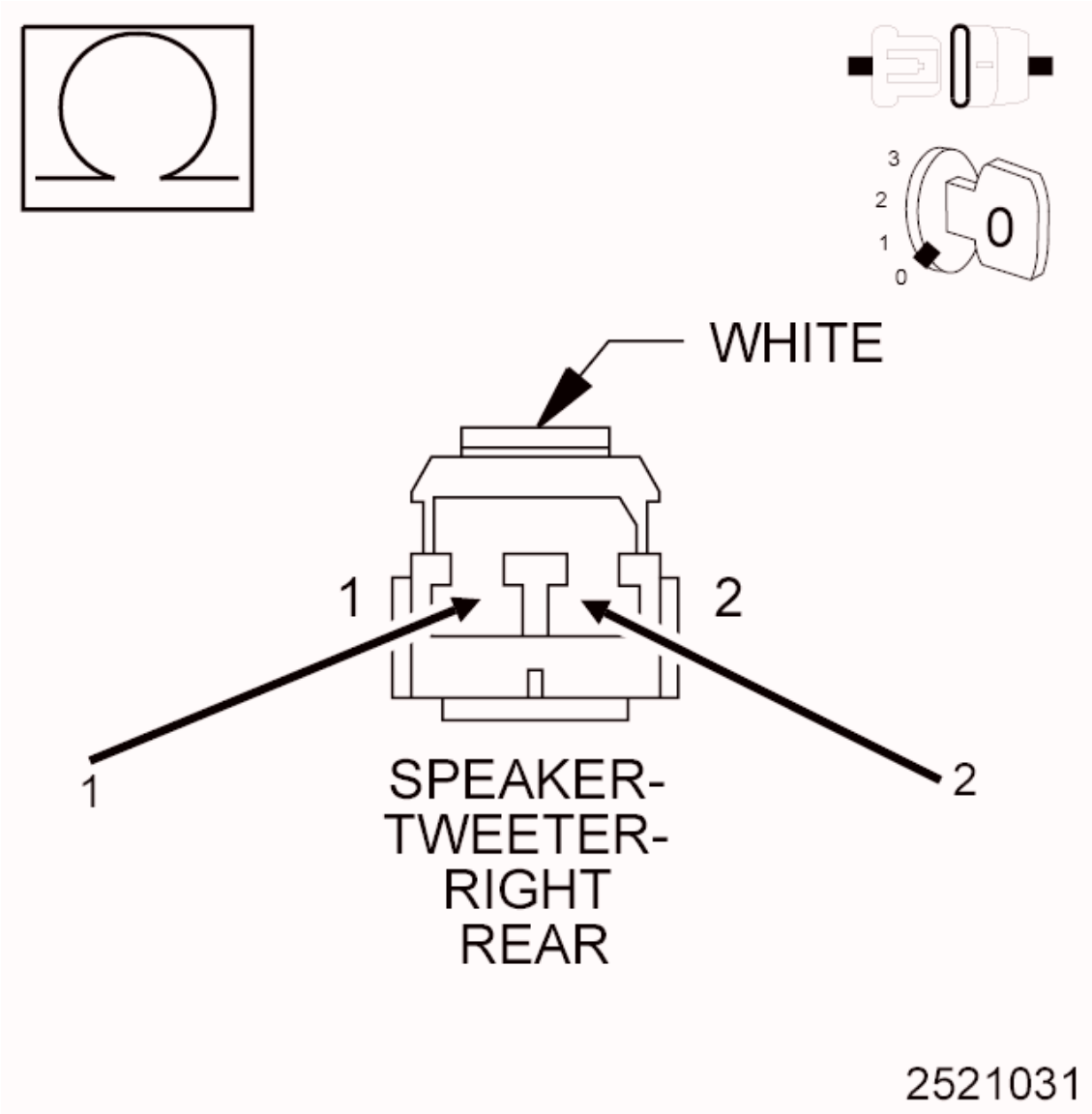

Fig. 153: Checking The Operation Of The Right Rear Speaker
Courtesy of CHRYSLER GROUP, LLC

1. Turn the ignition off.
2. Disconnect the Right Rear Speaker.
3. Measure the resistance of the speaker between the two terminals.

NOTE: The graphic shows the connector for reference only. Measure at the

speaker terminals.

Is the resistance of the speaker less than 1 Ohm?

Yes

- Replace the Right Rear Speaker in accordance with the service information.
- Perform the BODY VERIFICATION TEST. Refer to **BODY VERIFICATION TEST** .

No

- Go To 3.

3. **CHECK THE (X304) RIGHT REAR SPEAKER (+) CIRCUIT, AND THE (X394) RIGHT REAR SPEAKER (-) CIRCUITS FOR A SHORT TOGETHER**

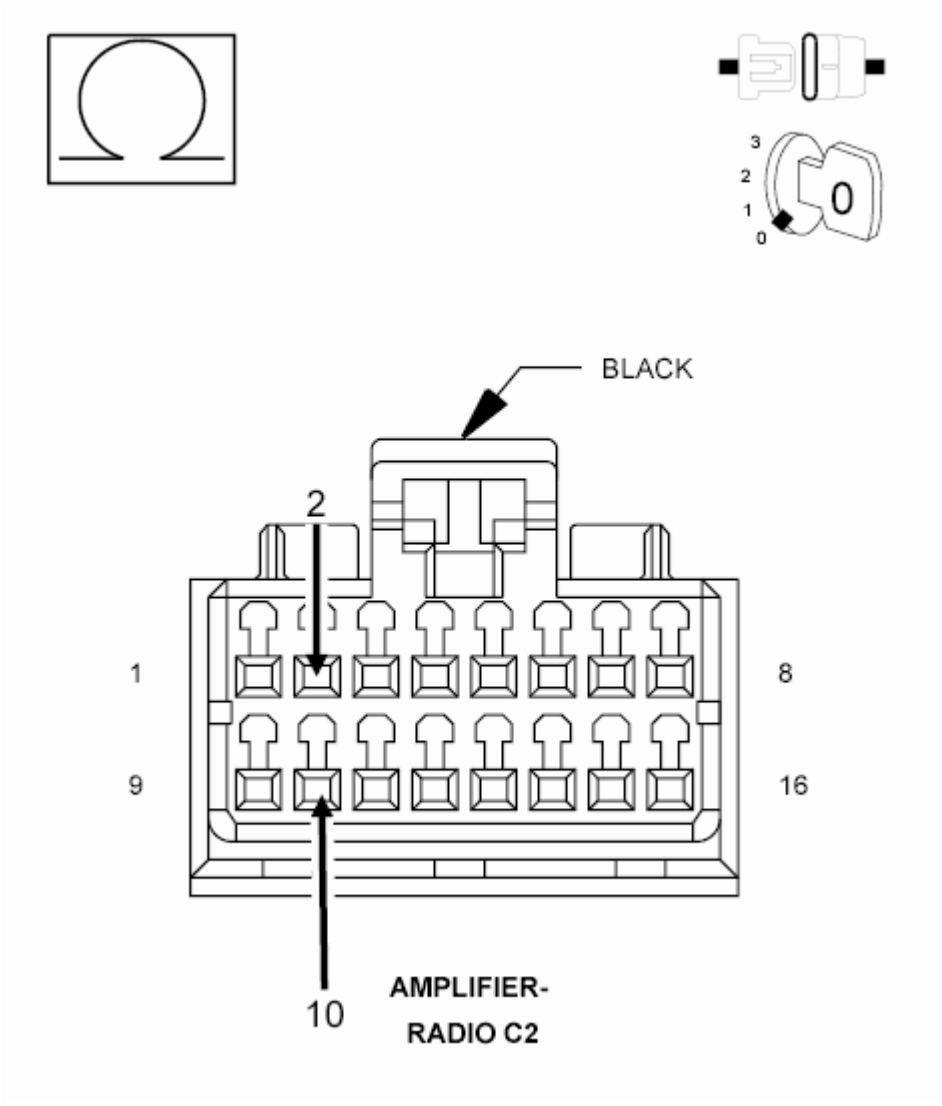

Fig. 154: Checking Right Rear Speaker (+) Circuit, And The Right Rear Speaker (-) Circuits For A

Short Together
Courtesy of CHRYSLER GROUP, LLC

1. Turn the ignition off.
2. Disconnect the Amplifier C2 harness connector.
3. Measure the resistance between the (X304) Right Rear Speaker (+) circuit, and the (X394) Right Rear Speaker (-) circuit.

   Is the resistance below 10K Ohms?

   Yes

   - Repair the (X304) Right Rear Speaker (+) circuit, and the (X394) Right Rear Speaker (-) circuit for a short together.
   - Perform the BODY VERIFICATION TEST. Refer to **BODY VERIFICATION TEST** .

   No

   - Replace the Amplifier in accordance with the Service Information.
   - Perform the BODY VERIFICATION TEST. Refer to **BODY VERIFICATION TEST** .

B210D-BATTERY VOLTAGE LOW

For a complete wiring diagram, **refer to appropriate SYSTEM WIRING DIAGRAMS article** .

WHEN MONITORED:

With the ignition on.

SET CONDITION:

If the module detects that the battery voltage is less than 9.0 volts for one second.

POSSIBLE CAUSES

Possible Causes
VEHICLE CHARGING SYSTEM RADIO

DIAGNOSTIC TEST

1. **CHECK FOR AN INTERMITTENT CONDITION**
   1. Turn the ignition on, then off, and then on again.
   2. With the scan tool, read the Radio DTC's.

      Does the scan tool display active: B210D-BATTERY VOLTAGE LOW?

Yes

- Go To 2.

No

- The conditions that caused this code to set are not present at this time. Using the wiring diagram/schematic as a guide, inspect the wiring and connectors.
- Perform the BODY VERIFICATION TEST. Refer to **BODY VERIFICATION TEST** .

2. **CHECK THE BATTERY VOLTAGE TO THE RADIO**
   1. With the scan tool in Data Display, read the Radio battery voltage.

      Is the battery voltage less than 9.0 volts?

      Yes

      - Go To 3.

      No

      - Replace the Radio in accordance with the Service Information.
      - Perform the BODY VERIFICATION TEST. Refer to **BODY VERIFICATION TEST** .
3. **CHECK FOR CHARGING SYSTEM RELATED DTC's IN THE POWERTRAIN CONTROL MODULE (PCM)**
   1. With the scan tool in ECU View, select PCM and check for any Charging System related DTC's.

      Does the scan tool display any Charging System related DTC's?

      Yes

      - Refer to **DIAGNOSIS AND TESTING - CHARGING SYSTEM** and perform the appropriate charging system or battery DTC diagnostic procedure.

      No

      - Replace the Radio in accordance with the Service Information.
      - Perform the BODY VERIFICATION TEST. Refer to **BODY VERIFICATION TEST** .

B210E-BATTERY VOLTAGE HIGH

For a complete wiring diagram, **refer to appropriate SYSTEM WIRING DIAGRAMS article** .

WHEN MONITORED:

With the ignition on.

SET CONDITION:

If the module detects that the battery voltage is greater 16.5 volts for one second.

POSSIBLE CAUSES

Possible Causes
VEHICLE CHARGING SYSTEM AMPLIFIER

DIAGNOSTIC TEST

1. **CHECK FOR AN INTERMITTENT CONDITION**
    1. Turn the ignition on, then off, and then on again.
    2. With the scan tool, read the Amplifier DTC's.

    Does the scan tool display active: B210E-BATTERY VOLTAGE HIGH?

    Yes

    - Go To 2.

    No

    - The conditions that caused this code to set are not present at this time. Using the wiring diagram/schematic as a guide, inspect the wiring and connectors.
    - Perform the BODY VERIFICATION TEST. Refer to **BODY VERIFICATION TEST** .
2. **CHECK THE BATTERY VOLTAGE TO THE AMPLIFIER**
    1. With the scan tool in Data Display, read the Amplifier battery voltage.

    Is the battery voltage greater than 16.5 volts?

    Yes

    - Go To 3.

    No

    - Replace the Amplifier in accordance with the Service Information.
    - Perform the BODY VERIFICATION TEST. Refer to **BODY VERIFICATION TEST** .
3. **CHECK FOR CHARGING SYSTEM RELATED DTC's IN THE POWERTRAIN CONTROL MODULE (PCM)**
    1. With the scan tool in ECU View, select PCM and check for any Charging System related DTC's.

    Does the scan tool display any Charging System related DTC's?

Yes

- Refer to **DIAGNOSIS AND TESTING - CHARGING SYSTEM** and perform the appropriate charging system or battery DTC diagnostic procedure.

No

- Replace the Amplifier in accordance with the Service Information.
- Perform the BODY VERIFICATION TEST. Refer to **BODY VERIFICATION TEST** .

B221F-AMPLIFIER INTERNAL

For a complete wiring diagram, **refer to appropriate SYSTEM WIRING DIAGRAMS article** .

WHEN MONITORED:

With the ignition on.

SET CONDITION:

The Amplifier detects a software checksum test failure.

POSSIBLE CAUSES

Possible Causes
AMPLIFIER

DIAGNOSTIC TEST

1. **REPLACE THE AMPLIFIER**
    1. When this code is set, the Amplifier must be replaced.

    Repair

    - Replace the Amplifier in accordance with the Service Information.
    - Perform the BODY VERIFICATION TEST. Refer to **BODY VERIFICATION TEST** .

B222C-VEHICLE CONFIGURATION NOT PROGRAMMED

For a complete wiring diagram, **refer to appropriate SYSTEM WIRING DIAGRAMS article** .

WHEN MONITORED:

With the ignition on.

SET CONDITION:

Vehicle configuration information not programmed into the Instrument Cluster.

POSSIBLE CAUSES

POSSIBLE CAUSES
NO COMMUNICATION WITH TOTALLY INTEGRATED POWER MODULE (TIPM)
ACTIVE TIPM DTC's
INSTRUMENT CLUSTER
TOTALLY INTEGRATED POWER MODULE (TIPM)

DIAGNOSTIC TEST

1. **TEST FOR AN INTERMITTENT CONDITION**
    1. Turn the ignition on.
    2. With the scan tool, record and erase any Instrument Cluster DTC's.
    3. Turn the ignition off, wait ten seconds then turn the ignition on.
    4. With the scan tool, read DTC's.

    Does the scan tool display: B222C-VEHICLE CONFIGURATION NOT PROGRAMMED?

    Yes

    - Go To 2.

    No

    - The condition that caused this code to set is not present at this time. Using the wiring diagram as a guide, inspect the wiring and connectors for an intermittent condition. Operate the system several times and recheck for active DTC's.
    - Perform the BODY VERIFICATION TEST. Refer to **BODY VERIFICATION TEST** .
2. **VERIFY COMMUNICATION WITH TIPM**
    1. With the scan tool in ECU VIEW, read active modules on the bus.

    Does the scan tool show the TIPM active on the bus?

    Yes

    - Go To 3.

    No

    - Refer to **COMMUNICATION - DIAGNOSIS AND TESTING** and perform the No Response From TIPM diagnostic procedure.
3. **CHECK TIPM FOR ACTIVE DTC's**

1. With the scan tool, erase TIPM DTC's.
2. Turn the ignition off. Wait approximately ten seconds.
3. Turn the ignition on.
4. With the scan tool, read TIPM DTC's.

   Are any active DTC's present?

   Yes

   - Refer to **TIPM - DIAGNOSIS AND TESTING** and perform the appropriate diagnostic procedure.

   No

   - Go To 4.

4. **CHECK CLUSTER VEHICLE INFORMATION WITH SCAN TOOL**
   1. With the scan tool in Cluster ECU Identification, read the Original and Current VINs, and the Body Style of the vehicle.

      Does the information displayed match the vehicle?

      Yes

      - Replace the Instrument Cluster in accordance with the Service Information.
      - Perform the BODY VERIFICATION TEST. Refer to **BODY VERIFICATION TEST** .

      No

      - Replace the TIPM in accordance with the Service Information.
      - Perform the BODY VERIFICATION TEST. Refer to **BODY VERIFICATION TEST** .

U0010-CAN INTERIOR BUS

For a complete wiring diagram, **refer to appropriate SYSTEM WIRING DIAGRAMS article** .

WHEN MONITORED:

Continuously when the ignition is on.

Battery voltage between 10 and 16 volts.

Ignition Off Draw (IOD) fuse installed.

SET CONDITION:

The controller detects a short to ground on the CAN Interior Bus (125K) (+) circuit or a short to voltage on the CAN Interior Bus (125K) (-) circuit.

POSSIBLE CAUSES

Possible Causes
(D265) CAN INTERIOR BUS(+) (125k) CIRCUIT SHORTED TO VOLTAGE
(D264) CAN INTERIOR BUS(-) (125k) CIRCUIT SHORTED TO GROUND
(D264) CAN INTERIOR BUS(-) (125k) CIRCUIT SHORTED TO THE (D265) CAN INTERIOR BUS (+) (125k) CIRCUIT
TOTALLY INTEGRATED POWER MODULE (TIPM)
ANY CAN INTERIOR BUS MODULE

DIAGNOSTIC TEST

1. **VERIFY DIAGNOSTIC TROUBLE CODE (DTC) IS ACTIVE**

   NOTE: Make sure the IOD fuse is installed and battery voltage is between 10 and 16 volts before proceeding.

   1. Using the scan tool, read active DTC's.

      Is this DTC active?

      Yes

      - **Refer to U0010-CAN INTERIOR BUS** and perform the diagnostic procedure.

      No

      - **Refer to STORED LOST COMMUNICATION DTC's** and perform the diagnostic procedure.

U0011-CAN INTERIOR BUS OFF PERFORMANCE

For a complete wiring diagram, **refer to appropriate SYSTEM WIRING DIAGRAMS article** .

WHEN MONITORED:

Continuously when the ignition is on.

Battery voltage between 10 and 16 volts.

Ignition Off Draw (IOD) fuse installed.

SET CONDITION:

The controller detects a short to ground on the CAN Interior Bus (125K) (+) circuit or a short to voltage on the CAN Interior Bus (125K) (-) circuit.

POSSIBLE CAUSES

Possible Causes
(D265) CAN INTERIOR BUS(+) (125k) CIRCUIT SHORTED TO VOLTAGE
(D264) CAN INTERIOR BUS(-) (125k) CIRCUIT SHORTED TO GROUND
(D264) CAN INTERIOR BUS(-) (125k) CIRCUIT SHORTED TO THE (D265) CAN INTERIOR BUS (+) (125k) CIRCUIT
TOTALLY INTEGRATED POWER MODULE (TIPM)
ANY CAN INTERIOR BUS MODULE

DIAGNOSTIC TEST

1. **VERIFY DIAGNOSTIC TROUBLE CODE (DTC) IS ACTIVE**

   NOTE: Make sure the IOD fuse is installed and battery voltage is between 10 and 16 volts before proceeding.

   1. Using the scan tool, read active DTC's.

      Is this DTC active?

      Yes

      - **Refer to U0011-CAN INTERIOR BUS OFF PERFORMANCE** and perform the diagnostic procedure.

      No

      - **Refer to STORED LOST COMMUNICATION DTC's** and perform the diagnostic procedure.

U0141-LOST COMMUNICATION WITH IPM (FCM/TIPM)

For a complete wiring diagram, **refer to appropriate SYSTEM WIRING DIAGRAMS article** .

WHEN MONITORED:

Continuously when the ignition is on.

The battery voltage between 10.0 and 16.0 Volts.

Ignition Off Draw (IOD) fuse installed.

Totally Integrated Power Module (TIPM) is configured correctly.

SET CONDITION:

Bus messages not received from the Totally Integrated Power Module (TIPM) for approximately two to five seconds.

POSSIBLE CAUSES

Possible Causes
CAN BUS CIRCUITS OPEN OR SHORTED
DTC's RELATED TO BATTERY VOLTAGE, IGNITION, OR VIN MESSAGES
TOTALLY INTEGRATED POWER MODULE POWER AND GROUND
TIPM NOT CONFIGURED CORRECTLY
TOTALLY INTEGRATED POWER MODULE (TIPM)
MODULE THAT SET THIS DTC

DIAGNOSTIC TEST

1. **VERIFY DTC IS ACTIVE**

   NOTE: Make sure the IOD fuse is installed and the battery is fully charged before proceeding.

   1. Turn the ignition on.
   2. With the scan tool, read active DTC's.

      Is this DTC active?

      Yes

      - **Refer to U0141-LOST COMMUNICATION WITH IPM (FCM/TIPM)** and perform the diagnostic procedure.

      No

      - **Refer to STORED LOST COMMUNICATION DTC's** and perform the diagnostic procedure.

U0184-LOST COMMUNICATION WITH RADIO

For a complete wiring diagram, **refer to appropriate SYSTEM WIRING DIAGRAMS article** .

WHEN MONITORED:

Continuously when the ignition is on.

Battery voltage between 10 and 16 volts.

Ignition Off Draw (IOD) fused installed.

Totally Integrated Power Module (TIPM) is configured correctly.

SET CONDITION:

Bus messages not received from the Radio for approximately two to five seconds.

POSSIBLE CAUSES

Possible Causes
CAN BUS CIRCUITS OPEN OR SHORTED
DTC's RELATED TO BATTERY VOLTAGE, IGNITION, OR VIN MESSAGES
RADIO POWER AND GROUND
TIPM NOT CONFIGURED CORRECTLY
RADIO
MODULE THAT SET THIS DTC

DIAGNOSTIC TEST

1. **VERIFY THE DIAGNOSTIC TROUBLE CODE (DTC) IS ACTIVE**

   NOTE: Make sure the IOD fuse is installed and the battery is fully charged before proceeding.

   1. Turn the ignition on.
   2. With the scan tool, read the active DTC's.

      Is this DTC active?

      Yes

      - **Refer to U0184-LOST COMMUNICATION WITH RADIO** and perform the diagnostic procedure.

      No

      - **Refer to STORED LOST COMMUNICATION DTC's** and perform the diagnostic procedure.

DESCRIPTION

DESCRIPTION

Several combinations of radio receivers and speaker systems are offered. The audio system uses an ignition switched source of battery current so that the system will only operate when the ignition switch is in the RUN or ACCESSORY positions.

A optional navigation radio (RB4) is available on this vehicle. With this system, the operator has the option of choosing a street address, point of interest, trip itinerary as well as other features.

The audio system includes the following components:

- Antenna (radio, satellite)
- Power amplifier (with premium speaker system only)
- Radio noise suppression components
- Radio receiver
- Remote radio switches (if equipped)
- Satellite receiver (if equipped)
- Speakers

Certain functions and features of the audio system rely upon resources shared with other electronic modules in the vehicle over the Controller Area Network (CAN) bus network. The data bus network allows the sharing of sensor information. For diagnosis of these electronic modules or of the data bus network, the use of a scan tool and the proper Diagnostic Procedures information is recommended.

OPERATION

OPERATION

The audio system components are designed to provide audio entertainment and information through the reception, tuning and amplification of locally broadcast or satellite, (if equipped) radio signals in both the Amplitude Modulating (AM) and Frequency Modulating (FM) commercial frequency ranges.

The audio system components operate on battery current received through a fuse in the Totally Integrated Power Module (TIPM) on a fused ignition switch output (run-acc) circuit so that the system will only operate when the ignition switch is in the Run or Accessory positions.

The optional navigation radio system receives GPS signals from up to eight satellites to display the position and direction of the vehicle. Map information is supplied through a DVD-ROM. An electronic gyro-sensor and the vehicle's speed sensor enable the system to display the present vehicle position even in locations where GPS

signals may be blocked.

When a destination is selected, the navigation system uses information from the map to quickly calculate a route. As the vehicle is driven along the chosen route, the operator is guided with pictorial displays and voice prompts.

On vehicles that are equipped with the optional remote radio switches, the Instrument Cluster receives hard wired resistor multiplexed inputs from the remote radio switches. The programming in the Instrument Cluster allows it to process those inputs and send the proper messages to the radio receiver over the CAN network to control the radio volume up or down, station seek up or down, preset station advance, and mode advance functions.

DIAGNOSIS AND TESTING

DIAGNOSIS AND TESTING - VIDEO

Any diagnosis of the video system should begin with the use of a scan tool. For information on the use of the scan tool, refer to the appropriate Diagnostic Service information.

Refer to the appropriate wiring information.

VIDEO SYSTEM DIAGNOSIS TABLE

CONDITION	POSSIBLE CAUSES	CORRECTION
DVD SCREEN DOES NOT POWER ON AND CAN NOT BE ACCESSED ON THE CAN NETWORK WITH THE SCAN TOOL	1. Power and or CAN circuit maybe open.	1. Check for battery voltage at the VES connector. Repair wiring as necessary.
DVD SCREEN DOES NOT POWER ON AND CAN BE ACCESSED ON THE CAN NETWORK WITH THE SCAN TOOL	1. Screen software issue.	1. Refer to appropriate Service information. Reflash the VES
DVD DOES NOT AUTO PLAY.	1. DVD in the wrong player on two screen system.	1. Insert DVD into the DVD (RD9) player.
	2. DVD damaged	2. Insert known good DVD and test operation.
	3. Foreign material on DVD.	3. Clean DVD and test operation.
	4. Condensation on DVD or optics.	4. Allow temperature of vehicle interior to stabilize and test operation.
	5. Incorrect TIPM settings	5. Update the TIPM with the correct region and options.
RADIO DISPLAYS LIST OF CHANNELS BUT SECOND ROW SAYS UPDATING CHANNELS	1. GCI tables (Channel List) needs to be updated.	1. Mode all screens in to FM radio mode. With the vehicle outside and clear line of site to the sky. Pull IOD fuse for half an hour. Connect the

		IOD fuse and wait five minutes, turn on the radio. Channel listing will update.
UNABLE TO CHANGE MODES	1. TIPM not configured correctly.	1. Update the TIPM with the correct region and options.
REMOTE CONTROL DOES NOT WORK.	1. Batteries may be low or dead.	1. Replace the batteries.
	2. Screen not powered on.	2. With vehicle running close and open the screen to power up the screen.
HEADPHONES DON'T WORK.	1. Batteries may be low or dead.	1. Replace the batteries.
	2. Headphone power is off.	2. Switch the headphone power on.
	3. Headphones on wrong channel.	3. Switch to the other channel on the side of the headphones.
	4. Volume on headphones turned off.	4. Turn up the volume on the headphones.
RADIO DOESN'T SHOW RD9, AUX1 OR AUX2 VIDEO.	1. Video/Audio circuit damaged.	1. Check for loose/broke, pinched, cut or corroded Vehicle Entertainment System (VES) wires. Repair as necessary.
BLACK SCREEN.	1. Video circuit damaged.	1. Check for loose/broke, pinched, cut or corroded Vehicle Entertainment System (VES) wires. Repair as necessary.
	2. Screen is on the buss but VES screen doesn't power ON, or have IR transmitter is ON (on second row screen).	2. Refer to appropriate service information to reflash the VES

DIAGNOSIS AND TESTING - AUDIO

Any diagnosis of the Audio system should begin with the use of a scan tool. Check for any Diagnostic Trouble Codes (DTCs). If there are any DTCs, refer to the appropriate Electrical Diagnostic article before proceeding.

Refer to the appropriate wiring information.

WARNING: **Disable the airbag system before attempting any steering wheel, steering column, seat belt tensioner, side airbag or instrument panel component diagnosis or service. Refer to WARNING . Disconnect and isolate the negative battery (ground) cable. Wait two minutes for the airbag system capacitor to discharge before performing further diagnosis or service. This is the only sure way to disable the airbag system. Failure to follow these instructions may result in accidental airbag deployment and possible serious or fatal injury.**

AUDIO SYSTEM DIAGNOSTIC TABLE

CONDITION	POSSIBLE CAUSES	CORRECTION
RADIO INOPERATIVE	1. Fuse inoperative.	Check radio fuse and Ignition-Off Draw (IOD) fuse in the Totally Integrated Power Module (TIPM). Replace fuses, if required.
	2. Open wiring.	Check "No Response from Radio". Refer to **NO RESPONSE FROM RADIO** .
NO AUDIO - BUT RADIO LIGHTS UP	1. Antenna problem.	Perform the "Poor or No AM/FM Audio Reception" test. Refer to **POOR OR NO AM/FM AUDIO RECEPTION** .
	2. Radio or Amplifier (if equipped) connector damaged.	Check for loose or corroded radio/amplifier connector. Repair, as required.
	3. Wiring damaged.	Check for shorted or open wires. Repair wiring as required.
	4. Radio or Amplifier (if equipped) ground damaged.	Check for continuity between radio chassis and a known good ground. There should be continuity. Repair ground as required.
	5. Amplifier (if equipped) inoperative.	Refer to **DIAGNOSIS AND TESTING** .
	6. Speakers inoperative.	or if equipped. Refer to **DIAGNOSIS AND TESTING** and **DIAGNOSIS AND TESTING** .
NO RADIO DISPLAY	1. Fuse inoperative.	Check radio fuse and Ignition-Off Draw (IOD) fuse in Totally Integrated Power Module (TIPM). Replace fuses as required.
	2. Radio connector damaged.	Check for loose or corroded radio connector. Repair as required.
	3. Wiring damaged.	Check for battery voltage at radio connector. Repair wiring as required.
	4. Radio ground circuit damaged.	Check for continuity between radio chassis and a known good ground. There should be continuity. Repair ground as required.
	5. Radio inoperative.	Check "No Response from Radio". Refer to **NO RESPONSE FROM RADIO** .
POOR AM/FM RADIO RECEPTION	1. Antenna inoperative.	Perform the "Poor or No AM/FM Audio Reception" test. Refer to **POOR OR NO AM/FM AUDIO RECEPTION** .

	2. Radio ground damaged.	Check for continuity between radio chassis and a known good ground. There should be continuity. Repair ground as required.
	3. Radio inoperative.	Refer to **DIAGNOSIS AND TESTING** or **DIAGNOSIS AND TESTING** .
POOR SDAR AUDIO RECEPTION	1. SDAR Antenna Inoperative.	Perform the "Poor or No Satellite Audio Reception" test. Refer to **POOR OR NO SATELLITE AUDIO RECEPTION** .
SOUND DISTORTION (VIBRATION FROM SPEAKER AREA, BUZZING - HUMMING)	1. Door trim panel loose or missing fasteners.	Inspect door trim panel and correct as necessary. Replace any missing fasteners.
	2. Water shield loose or misaligned.	Inspect water shield and adjust as required.
	3. Items placed in door trim panel map pockets vibrating or moving from side to side.	Remove items from door trim panel. Ensure that vibration is no longer present.
NO COMPACT DISC OPERATION	1. CD damaged.	Insert known good CD and test operation.
	2. Foreign material on CD.	Clean CD and test operation.
	3. Condensation on CD or optics.	Allow temperature of vehicle interior to stabilize and test operation.
	4. Radio inoperative.	Refer to **DIAGNOSIS AND TESTING** or **DIAGNOSIS AND TESTING** .

STANDARD PROCEDURE

STANDARD PROCEDURE - RADIO BACKUP

The radio's internal hard disk drive (HDD) can be backed up using an external hard disk drive to save customer data in the event that a radio replacement is required. **This procedure can only be performed with radios equipped with a hard disk drive (RER, REN, RHR, RHB, RBZ & REU).**

1. Turn the ignition to RUN, engine OFF.
2. Power on the external HDD.
3. Connect the external HDD to the radio using the USB (Universal Serial Bus) cable. The radio display will change to the "Manage My Files" screen.
4. Connect the scan tool and perform the following steps to place the radio into "Dealership Mode":
    - ECU View
    - Radio
    - Misc. Functions

- Service Mode
- Start
- Next

5. Follow the on screen instructions on the radio to back up and restore the radio HDD.

AMPLIFIER

DESCRIPTION

DESCRIPTION

The optional Infinity premium speaker system includes a separate Infinity audio power amplifier. The amplifier is an eight-channel unit rated at 368 total output watts. The amplifier is located behind the glove box. If equipped, an additional amplifier rated at 140 watts is located under the center passenger seat.

REMOVAL

REMOVAL

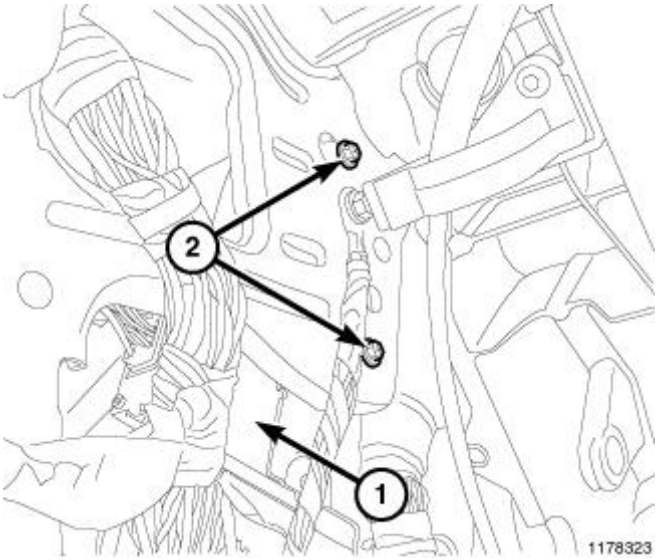

Fig. 1: Amplifier Mounting Screws
Courtesy of CHRYSLER GROUP, LLC

1. Disconnect and isolate the negative battery cable.
2. Remove the steering column cover. Refer to **COVER, STEERING COLUMN OPENING, REMOVAL** .
3. Loosen the two amplifier (1) mounting screws (2).

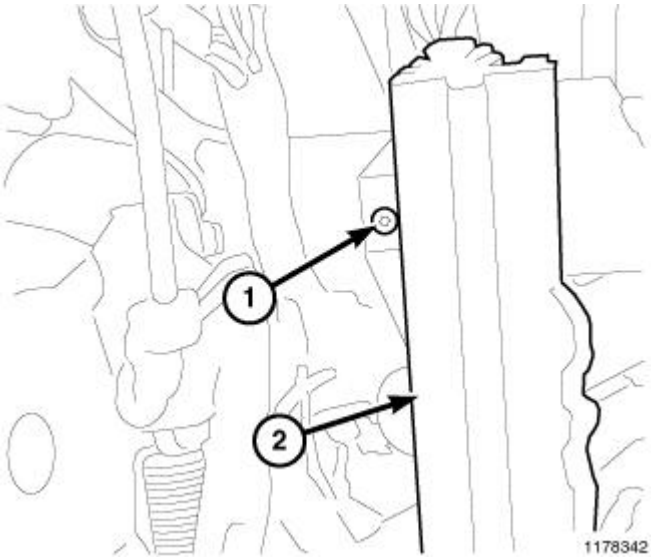

Fig. 2: Amplifier Mounting Bracket Screw
Courtesy of CHRYSLER GROUP, LLC

4. Remove the amplifier (2) mounting bracket screw (1).

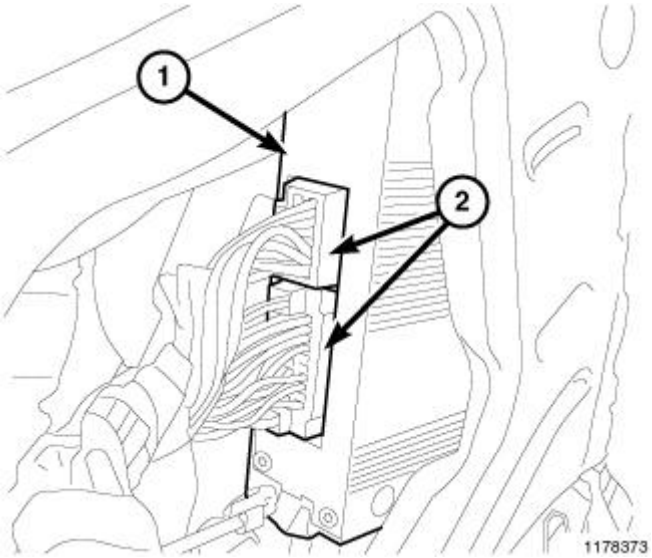

Fig. 3: Amplifier Electrical Connectors
Courtesy of CHRYSLER GROUP, LLC

5. Disconnect the two amplifier (1) electrical connectors (2).
6. Pull the amplifier towards the rear of the vehicle to remove.
7. Remove the amplifier mounting bracket from the amplifier.

INSTALLATION

INSTALLATION

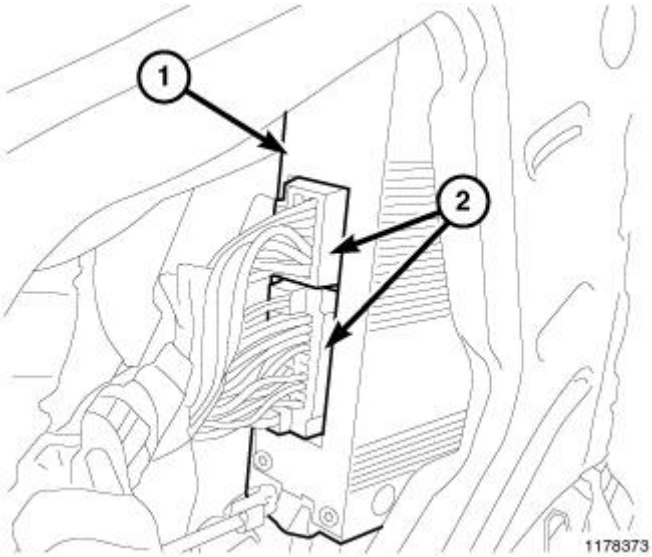

Fig. 4: Amplifier Electrical Connectors
Courtesy of CHRYSLER GROUP, LLC

1. Install the mounting bracket on the amplifier.
2. Install the amplifier into the vehicle.
3. Connect the two amplifier (1) electrical connectors (2).

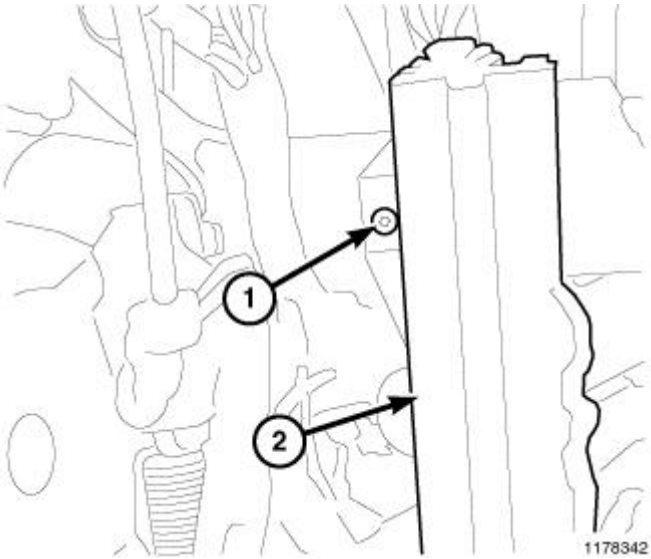

Fig. 5: Amplifier Mounting Bracket Screw
Courtesy of CHRYSLER GROUP, LLC

4. Install the amplifier (2) mounting bracket screw (1).

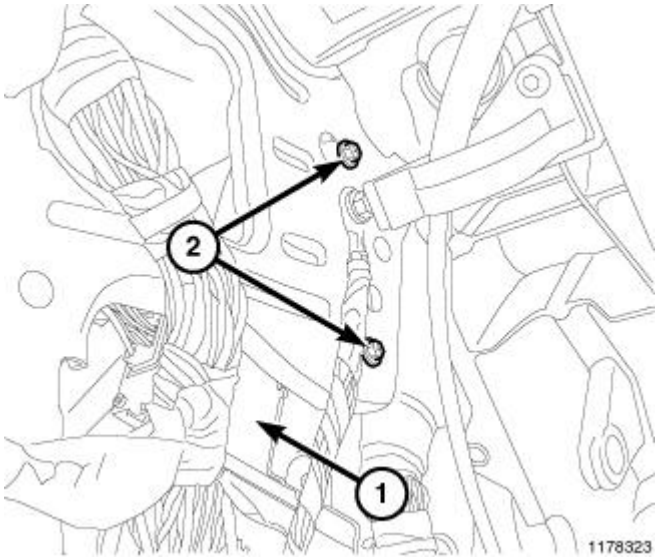

Fig. 6: Amplifier Mounting Screws
Courtesy of CHRYSLER GROUP, LLC

5. Tighten the two screws amplifier mounting screws (2).
6. Install the steering column cover. Refer to **COVER, STEERING COLUMN OPENING, INSTALLATION** .
7. Connect the negative battery cable.

ANTENNA, SATELLITE, AUDIO

DESCRIPTION

DESCRIPTION

The satellite radio antenna cable connects the roof mounted antenna to the satellite receiver. It has two connectors at each end and is routed above the headliner, then down the right side of the vehicle floor below the carpet.

OPERATION

OPERATION

The satellite radio antenna receives signals from orbiting satellites and sends these signals to the satellite receiver module. The satellite radio antenna must have open space in which to operate. Items carried on the roof, parking inside etc. can have an effect on the antenna's ability to receive signals.

REMOVAL

REMOVAL

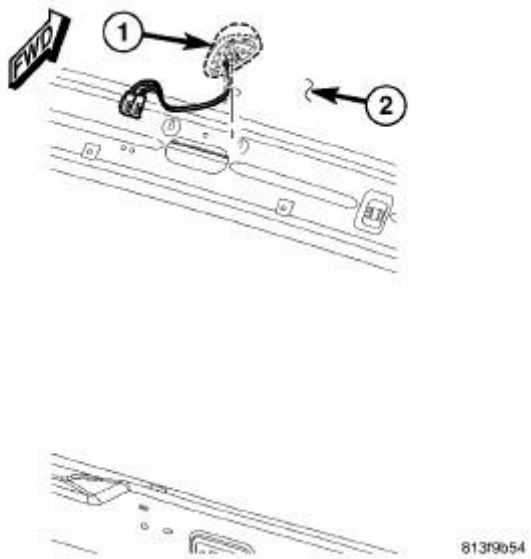

Fig. 7: Identifying Satellite Radio Antenna
Courtesy of CHRYSLER GROUP, LLC

1. Disconnect and isolate the battery negative cable.
2. Lower the rear portion of the headliner as necessary to access underside of antenna (1). Refer to **HEADLINER, REMOVAL** .
3. Disconnect the antenna cables.
4. Remove retaining fastener.
5. From inside the vehicle, and using a flat bladed tool, depress one of the retaining tabs on the antenna. Push up the one side of the antenna connector through the roof panel. Depress the other side of the connector and remove the antenna.

INSTALLATION

INSTALLATION

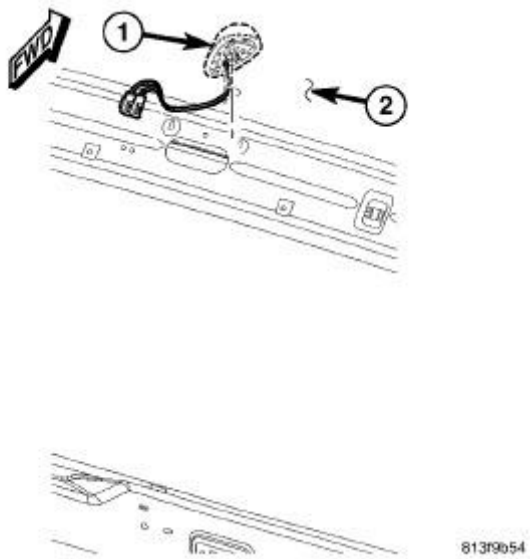

Fig. 8: Identifying Satellite Radio Antenna
Courtesy of CHRYSLER GROUP, LLC

1. Insert wire harness through hole in roof panel (2). Press antenna (1) into position until both retainers snap into place.
2. Install and tighten mounting fastener.
3. Connect antenna cables.
4. Install headliner. Refer to **HEADLINER, INSTALLATION** .
5. Connect battery negative cable.

CABLE, ANTENNA, SATELLITE

DESCRIPTION

DESCRIPTION

The satellite coaxial antenna cables runs from the radio to the roof mounted antenna.

There are two coaxial cables that run in series, the first cable runs from the back of the radio through the instrument panel harness to the right cowl area. The second coaxial runs from the right cowl area down along the right scuff area to the rear of the cab. The coaxial continues up the right C-pillar and across the rear roof support.

For more information on testing the coaxial cables, refer to **DIAGNOSIS AND TESTING** .

CABLE, ANTENNA, AUDIO

DESCRIPTION

DESCRIPTION

The AM/FM audio coaxial antenna cables runs from the radio to the right front fender.

The coaxial cable runs from the back of the radio through the instrument panel harness to the right cowl area. The second part of the antenna is the coaxial pigtail to the wip antenna, mounted to the right front fender. The coaxial cable then runs from the cowl through the right inner front fender.

For more information on testing the coaxial cables, refer to **DIAGNOSIS AND TESTING** .

CAMERA, REAR

DESCRIPTION

DESCRIPTION

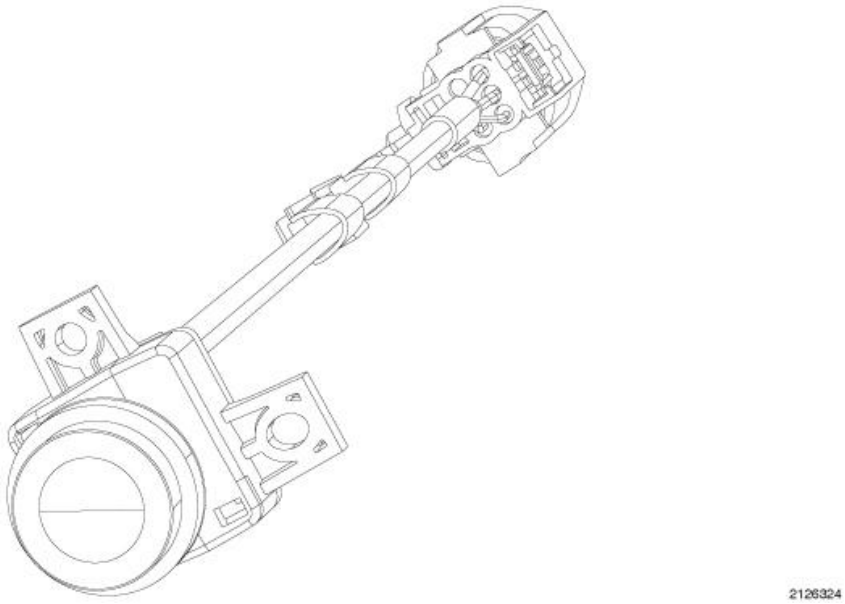

Fig. 9: Rear View Camera
Courtesy of CHRYSLER GROUP, LLC

The Rear View Camera (RVC) (4) (also known as ParkView™), is a camera on chip device utilizing Complementary Metal Oxide Semiconductor (CMOS) technology. CMOS technology is used for a wide variety of digital or analog circuits. In this application, it supports the analog image sensor of the RVC. The RVC function is to provide a wide angle video image of the area behind the vehicle, including areas that might not be normally visible from the seated position of the vehicle operator, only while the transaxle gear selector is in the Reverse position. This video image then displays to the vehicle operator within the display screen of the audio system receiver unit near the center of the instrument panel.

The RVC is intended to be an auxiliary viewing aid and is not promoted as an obstacle detection or safety device. It does not remove vehicle operator responsibility to recognize and obey official traffic laws or regulations or to take sensible precautions and care to avoid pedestrians, other vehicle traffic or both fixed and

moving obstacles through the habitual use of safe and defensive driving techniques.

The RVC is located within the tailgate handle. The camera lens is visible just to the left of the tailgate release handle, while the body of the camera and the camera connections are concealed within the tailgate.

Hardwired circuitry connects the RVC to the electrical system of the vehicle. These hardwired circuits are integral to several wire harnesses, which routes throughout the vehicle and retained by many different methods. These circuits may be connected to each other and to the vehicle electrical system through the use of a combination of soldered splices, splice block connectors, and many different types of wire harness terminal connectors and insulators. Refer to the appropriate wiring information. The wiring information includes wiring diagrams, proper wire and connector repair procedures, further details on wire harness routing and retention, as well as pin-out and location views for the various wire harness connectors, splices and grounds.

The RVC cannot be adjusted or repaired. If the RVC is damaged or ineffective, it must be replaced.

OPERATION

OPERATION

The Rear View Camera (RVC) is powered by a battery feed received through the backup lamp switch output circuit from the Totally Integrated Power Module (TIPM) so that is only active when the transaxle is shifted into the REVERSE position. In addition, the radio receiver monitors messages on the Controller Area Network (CAN) data bus to determine the selected transaxle gear and overrides any other display to show the RVC video output, whenever it detects that the transaxle is in REVERSE. A momentary blank video display screen immediately following the gearshift transition into the REVERSE position is considered normal operation. The camera electronics receive a path to ground at all times through a takeout and eyelet terminal of the liftgate wire harness that is secured by a ground screw to the right side of the liftgate inner panel.

The output of the camera is a video signal compatible to the National Television System Committee (NTSC) standard composite video M format, or NTSC-M. The video signal is delivered to the radio video display unit through the entire length of the vehicle by camera signal and the camera return circuits that are arranged as a twisted pair, with an additional grounded foil jacket to protect the video signal from corruption due to stray radiated signals within the vehicle environment. The ground shield is terminated only at the video display (radio) end, not at the camera. Portions of these video signal wires are contained within the liftgate lightbar wire harness, the liftgate wire harness, the body wire harness and a jumper harness located between the radio and the body harness connector below the instrument panel at the right cowl side inner panel.

DIAGNOSIS AND TESTING

DIAGNOSIS AND TESTING - REAR CAMERA

The hardwired circuits of the Rear View Camera (RVC) and those between the RVC and the radio receiver may be diagnosed using conventional diagnostic tools and procedures. Refer to the appropriate wiring information. The wiring information includes wiring diagrams, proper wire and connector repair procedures, details of wire harness routing and retention, connector pin-out information and location views for the various wire harness connectors, splices and grounds.

However, conventional diagnostic methods will not prove conclusive in the diagnosis of the RVC or the radio

receiver. The most reliable, efficient and accurate means to diagnose the electronic controls and communication related to radio receiver operation, as well as the retrieval or erasure of a DTC requires the use of a diagnostic scan tool. Refer to the appropriate diagnostic information.

WARNING: To avoid serious or fatal injury on vehicles equipped with airbags, disable the Supplemental Restraint System (SRS) before attempting any steering wheel, steering column, airbag, seat belt tensioner, impact sensor, or instrument panel component diagnosis or service. Refer to WARNING . Disconnect and isolate the battery negative (ground) cable, then wait two minutes for the system capacitor to discharge before performing further diagnosis or service. This is the only sure way to disable the SRS. Failure to take the proper precautions could result in accidental airbag deployment.

NOTE: Be certain to confirm both of the following prior to attempting any further diagnosis or testing of the RVC. Use a diagnostic scan tool to confirm the rear view camera is setup in the vehicle configuration. From the initial start up screen of the diagnostic scan tool, navigate to ECU VIEW , select TIPMCGW CENTRAL GATEWAY , MORE OPTIONS , ECU DETAILS and then CONFIG INFO . Verify that REAR CAMERA PRESET - - - - SET is present. If not, the Sales Code XAC (Park View Rear Back-Up Camera) will have to be added to the vehicle configuration to enable the RVC, in vehicles equipped with a MyGIG multimedia entertainment system (Sales Codes RE1, REN, REP, RER, REU, REW, REX or REZ), be certain that the RVC is set to ENABLED using the CAMERA SETUP option in the MyGIG system settings.

CONDITION	POSSIBLE CAUSES	CORRECTION
NO VIDEO DISPLAY IN RADIO - DOES NOT DISPLAY **CHECK ENTIRE SURROUNDINGS** MESSAGE BRIEFLY AFTER SHIFTING INTO REVERSE	1. Incorrect radio software.	1. Check to be certain that the radio has the latest software update installed. Install the radio software update if required.
	2. Ineffective radio fuse.	2. Test and replace the radio fuses if required.
	3. Ineffective radio ground circuit.	3. Check for loose or damaged wiring connections at the radio. Test and repair the open radio ground circuit if required.
	4. Ineffective radio feed circuit.	4. Check for loose or damaged wiring connections at the radio. Test and repair the open radio feed circuit if required.
	5. Ineffective radio inputs or outputs.	5. Use a diagnostic scan tool to test the radio inputs and outputs including those received over the CAN data bus. Refer to the appropriate diagnostic information.

	6. Ineffective radio.	6. Use a diagnostic scan tool to test the radio. Refer to the appropriate diagnostic information.
NO CAMERA IMAGE IN RADIO VIDEO DISPLAY AND NO BACKUP LAMPS IN REVERSE	1. Left backup lamp inoperative, right backup lamp okay.	1. Test and repair the open backup lamp switch output circuit between the right and left tail lamps if required.
	2. Both backup lamps inoperative.	2. Test and repair the open backup lamp switch output circuit between the Totally Integrated Power Module (TIPM) and the tail lamps if required.
	3. Ineffective TIPM inputs or outputs.	3. Use a diagnostic scan tool to test the TIPM inputs and outputs. Refer to the appropriate diagnostic information.
NO CAMERA IMAGE IN RADIO VIDEO DISPLAY - DOES DISPLAY **CHECK ENTIRE SURROUNDINGS** MESSAGE BRIEFLY AFTER SHIFTING INTO REVERSE AND BACKUP LAMPS DO OPERATE	1. Ineffective camera ground circuit.	1. Check for loose or damaged wiring connections at the camera, liftgate light bar and liftgate. Test and repair the open camera ground circuit if required.
	2. Ineffective camera feed (backup lamp switch output) circuit.	2. Check for loose or damaged wiring connections at the camera, liftgate light bar and upper liftgate opening header. Test and repair the open camera feed (backup lamp switch output) circuit if required.
	3. Ineffective camera shield circuit.	3. Check for loose or damaged wiring connections at the camera, liftgate light bar, upper liftgate opening header, right cowl side inner panel and radio. Test and repair the open or shorted camera shield circuit if required.
	4. Ineffective camera return circuit.	4. Check for loose or damaged wiring connections at the camera, liftgate light bar, upper liftgate opening header, right cowl side inner panel and radio. Test and repair the open or shorted camera feed circuit if required.
	5. Ineffective camera signal circuit.	5. Check for loose or damaged wiring connections at the camera, liftgate light bar, upper liftgate opening header, right cowl side inner panel and radio. Test and repair the open or shorted camera

		signal circuit if required.
	6. Ineffective camera.	6. Replace the ineffective camera if required.

REMOVAL

REMOVAL

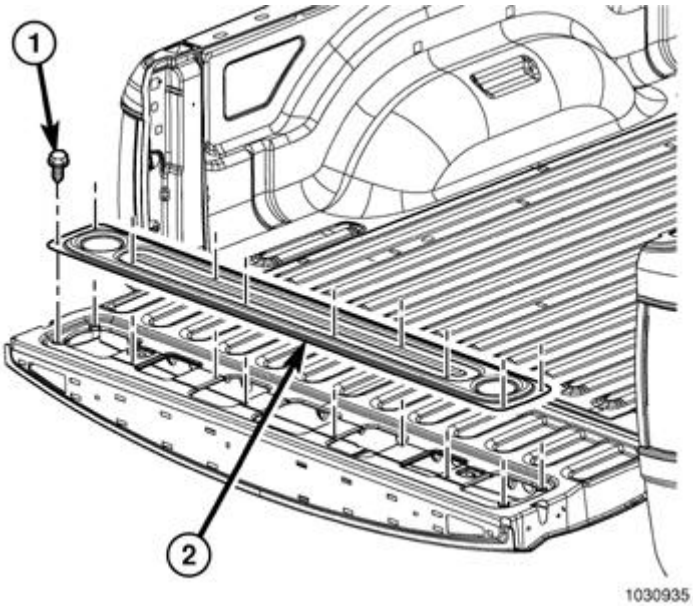

Fig. 10: Tailgate Cover
Courtesy of CHRYSLER GROUP, LLC

1. Disconnect and isolate the negative battery cable.
2. Open the tailgate.
3. Remove the tailgate cover. Refer to **COVER, TAILGATE, REMOVAL** .

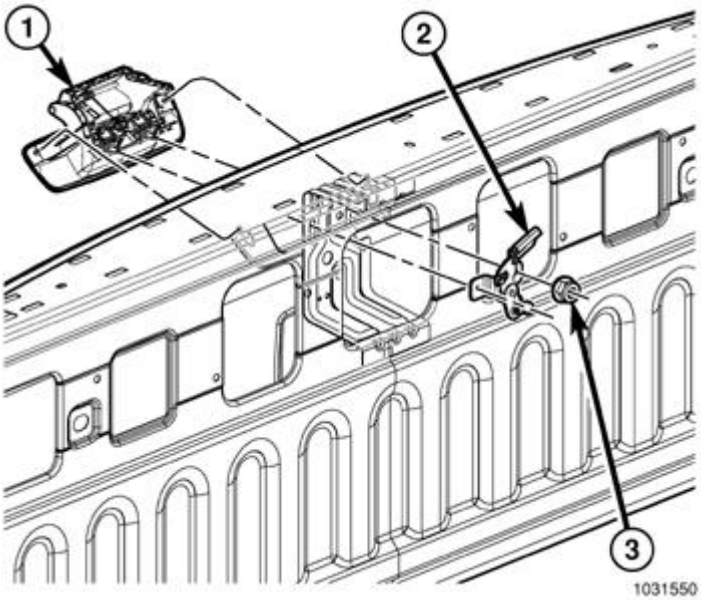

Fig. 11: Tailgate Release Handle & Actuator Rods
Courtesy of CHRYSLER GROUP, LLC

4. Disconnect the rear camera electrical harness.
5. Remove the tailgate release handle. Refer to **HANDLE, LATCH RELEASE, REMOVAL** .
6. Remove the rear camera from the tailgate handle.

INSTALLATION

INSTALLATION

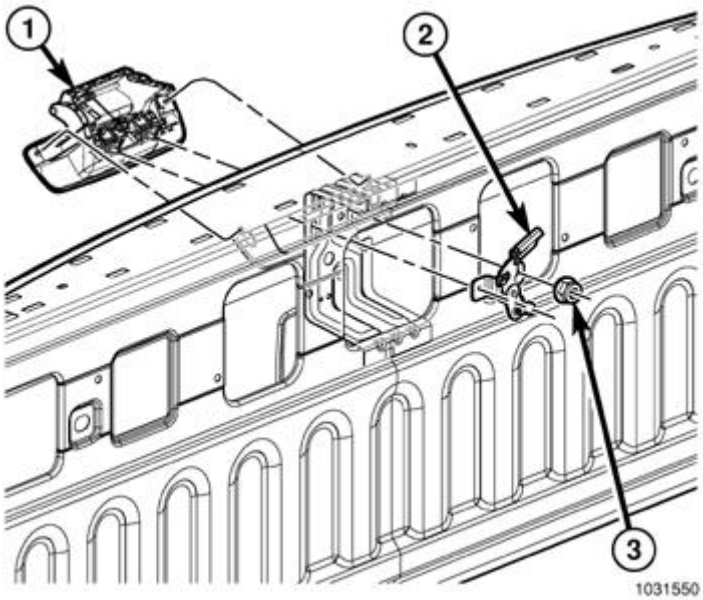

Fig. 12: Tailgate Release Handle & Actuator Rods
Courtesy of CHRYSLER GROUP, LLC

1. Install the rear camera into the tailgate handle.
2. Install the tailgate release handle. Refer to **HANDLE, LATCH RELEASE, INSTALLATION** .
3. Connect the rear camera electrical harness.

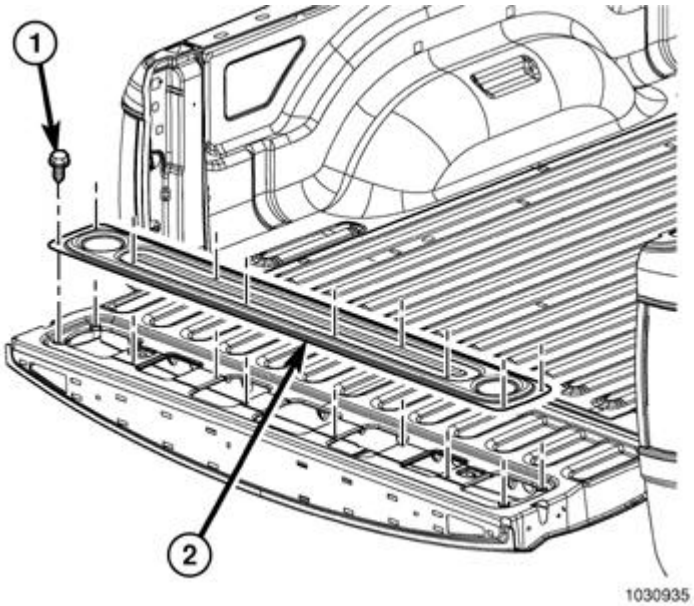

Fig. 13: Tailgate Cover
Courtesy of CHRYSLER GROUP, LLC

4. Install the tailgate cover. Refer to **COVER, TAILGATE, INSTALLATION** .
5. Close the tailgate.
6. Connect the negative battery cable.

COMPONENTS, RADIO NOISE SUPPRESSION

DESCRIPTION

DESCRIPTION

Radio noise suppression devices are Installed on this vehicle. Radio Frequency Interference (RFI) and ElectroMagnetic Interference (EMI) can be produced by any on-board or external source of electromagnetic energy. These electromagnetic energy sources can radiate electromagnetic signals through the air, or conduct them through the vehicle electrical system.

When the audio system converts RFI or EMI to an audible acoustic wave form, it is referred to as radio noise. This undesirable radio noise is generally manifested in the form of "buzzing," "hissing," "popping," "clicking," "crackling," and/or "whirring" sounds. In most cases, RFI and EMI radio noise can be suppressed using a combination of vehicle and component grounding, filtering and shielding techniques. This vehicle is equipped with factory-installed radio noise suppression devices that were designed to minimize exposure to typical sources of RFI and EMI; thereby, minimizing radio noise complaints.

Factory-installed radio noise suppression is accomplished primarily through circuitry or devices that are integral to the factory-installed radios, audio power amplifiers and other on-board electrical components such as generators, wiper motors, blower motors, and fuel pumps that have been found to be potential sources of RFI or EMI. External radio noise suppression devices that are used on this vehicle to control RFI or EMI, and can be serviced, include the following:

- **Engine-to-body ground strap** - This length of braided ground strap has an eyelet terminal connector crimped to each end. One end is secured to the engine cylinder head(s). The other is secured to the plenum at the exhaust heat shield forward/outer attaching stud.
- **Resistor-type spark plugs** - This type of spark plug has an internal resistor connected in series between the spark plug terminal and the center electrode to help reduce the production of electromagnetic radiation that can result in radio noise.

OPERATION

OPERATION

There are two common strategies that can be used to suppress Radio Frequency Interference (RFI) and ElectroMagnetic Interference (EMI) radio noise. The first suppression strategy involves preventing the production of RFI and EMI electromagnetic signals at their sources. The second suppression strategy involves preventing the reception of RFI and EMI electromagnetic signals by the audio system components.

The use of braided ground straps in key locations is part of the RFI and EMI prevention strategy. These ground straps ensure adequate ground paths, particularly for high current components such as many of those found in the starting, charging, ignition, engine control and transmission control systems. An insufficient ground path for any of these high current components may result in radio noise caused by induced voltages created as the high current seeks alternative ground paths through components or circuits intended for use by, or in close proximity to the audio system components or circuits.

Preventing the reception of RFI and EMI is accomplished by ensuring that the audio system components are correctly installed in the vehicle. Loose, corroded or improperly soldered wire harness connections, improperly routed wiring and inadequate audio system component grounding can all contribute to the reception of RFI and EMI. A properly grounded antenna body and radio chassis, as well as a shielded antenna coaxial cable with clean and tight connections will each help reduce the potential for reception of RFI and EMI.

REMOVAL

REMOVAL

BED TO CAB	Refer to **BED TO CAB**.
ENGINE TO HEAT SHIELD - 3.7L ENGINE	Refer to **ENGINE TO HEAT SHIELD - 3.7L ENGINE**.
ENGINE TO HEAT SHIELD - 4.7L AND 5.7L ENGINE	Refer to **ENGINE TO HEAT SHIELD - 4.7L AND 5.7L ENGINE**.

BED TO CAB

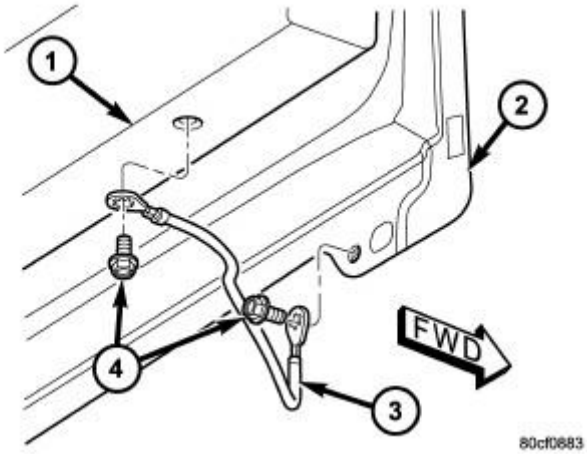

Fig. 14: Bed To Cab Ground Strap
Courtesy of CHRYSLER GROUP, LLC

1. Disconnect and isolate the battery negative cable.
2. Remove the attaching bolts and strap.

ENGINE TO HEAT SHIELD - 3.7L ENGINE

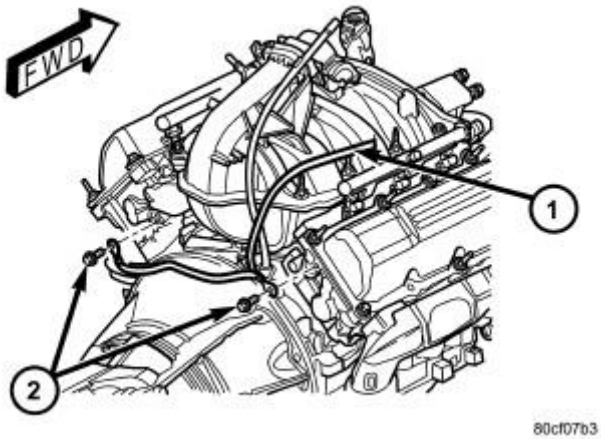

Fig. 15: Engine To Heat Shield Ground Strap (Engine Side - 3.7L
Courtesy of CHRYSLER GROUP, LLC

1. Disconnect and isolate the battery negative cable.
2. Remove the attaching bolts (2) from the cylinder heads.

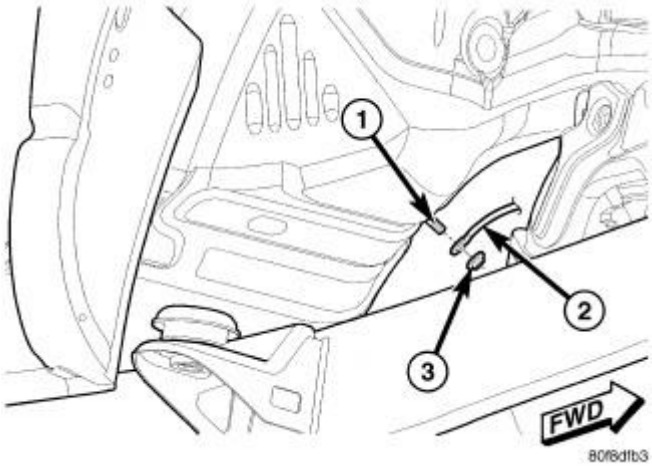

Fig. 16: Heat Shield
Courtesy of CHRYSLER GROUP, LLC

3. Remove nut (3) from heat shield (1) and remove strap (2).

ENGINE TO HEAT SHIELD - 4.7L AND 5.7L ENGINE

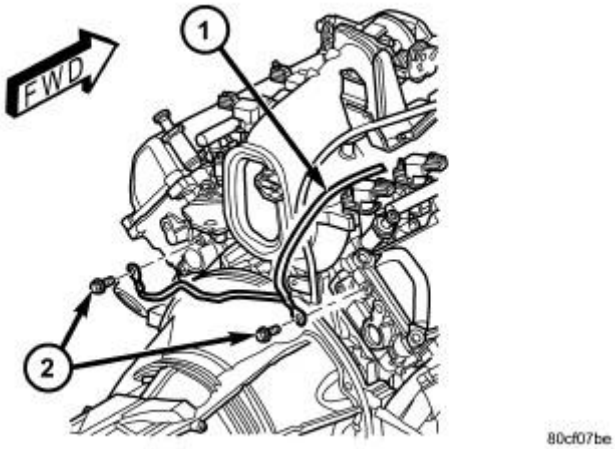

Fig. 17: Engine To Heat Shield Ground Strap (Engine Side - 4.7L & 5.7L
Courtesy of CHRYSLER GROUP, LLC

1. Disconnect and isolate the battery negative cable.
2. Remove the attaching bolts (2) from the cylinder heads.

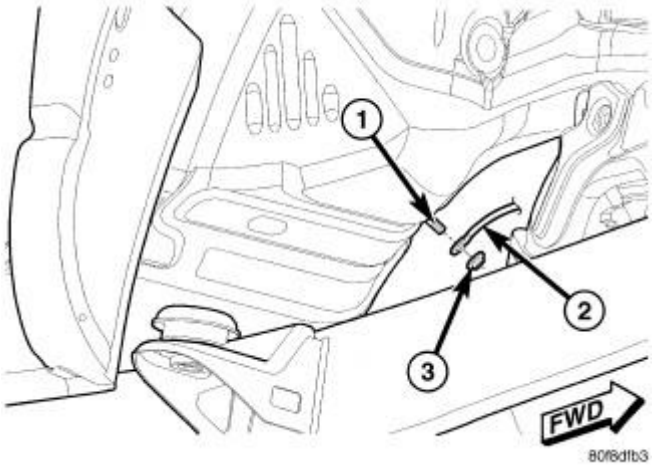

Fig. 18: Heat Shield
Courtesy of CHRYSLER GROUP, LLC

3. Remove nut (3) from heat shield (1) and remove strap (2).

INSTALLATION

INSTALLATION

BED TO CAB	Refer to **BED TO CAB**.
ENGINE TO HEAT SHIELD	Refer to **ENGINE TO HEAT SHIELD**.

BED TO CAB

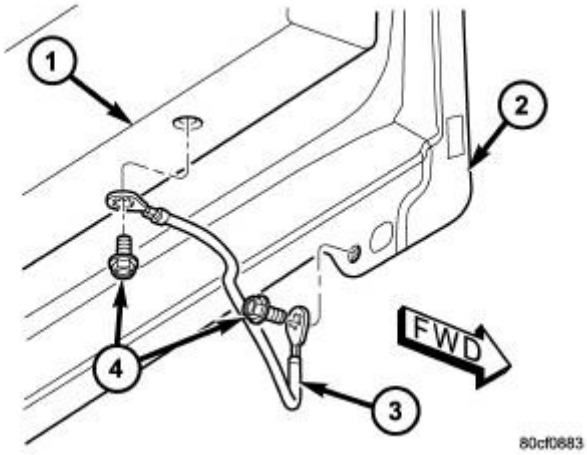

Fig. 19: Ground Strap & Mounting Fasteners
Courtesy of CHRYSLER GROUP, LLC

1. Install the ground strap (3) and mounting fasteners (4).
2. Tighten mounting fasteners.

3. Connect the battery negative cable.

ENGINE TO HEAT SHIELD

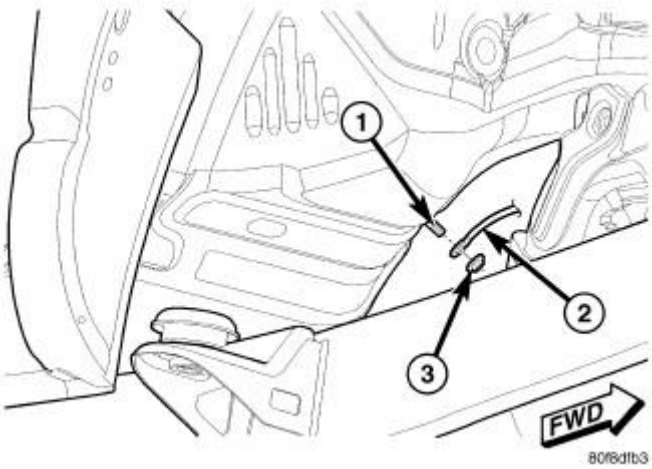

Fig. 20: Heat Shield
Courtesy of CHRYSLER GROUP, LLC

1. Install the mounting fastener (3) and ground strap (2) to the heat shield (1).
2. Tighten mounting fastener.

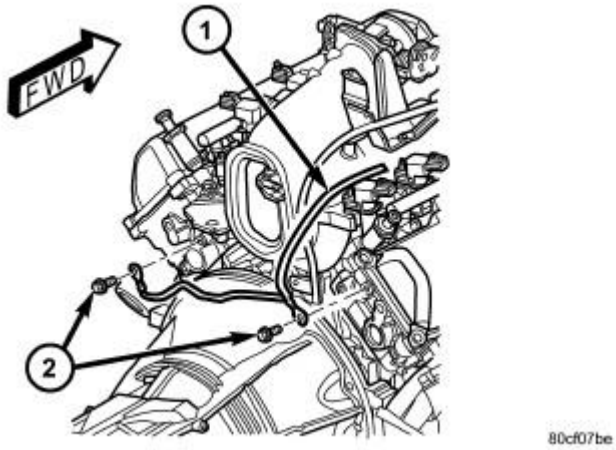

Fig. 21: Engine To Heat Shield Ground Strap (Engine Side - 4.7L & 5.7L
Courtesy of CHRYSLER GROUP, LLC

3. Install the retaining bolt and ground strap to the engine cylinder heads.
4. Tighten the retaining bolts.
5. Connect the battery negative cable.

MAST, ANTENNA

DESCRIPTION

DESCRIPTION

The antenna mast cable is secured below the fender panel by the antenna cap nut through a mounting hole in the passenger front fender. The coaxial antenna cable is then routed beneath the fender sheet metal and through an entry hole in the passenger side cowl panel into the interior of the vehicle.

Inside the vehicle, the coaxial cable is connected to an instrument panel antenna coaxial cable with an in-line connector that is located behind the passenger side cowl trim panel. The coaxial cable is then routed behind the instrument panel to the back of the radio.

For more information on testing the coaxial cables, refer to **DIAGNOSIS AND TESTING** .

OPERATION

OPERATION

The antenna body and cable connects the antenna mast to the radio. The radio antenna is an electromagnetic circuit component used to capture radio frequency signals that are broadcast by local commercial radio stations in both the Amplitude Modulating (AM) and Frequency Modulating (FM) frequency ranges. These electromagnetic radio frequency signals induce small electrical modulations into the antenna as they move past the mast. The antenna body transfers the weak electromagnetic radio waves induced into the rigid antenna mast into the center conductor of the flexible primary antenna coaxial cable. The braided outer shield of the antenna coaxial cable is grounded through both the antenna body and the radio chassis, effectively shielding the radio waves as they are conducted to the radio. The radio then tunes and amplifies the weak radio signals into stronger electrical signals in order to operate the audio system speakers.

REMOVAL

REMOVAL

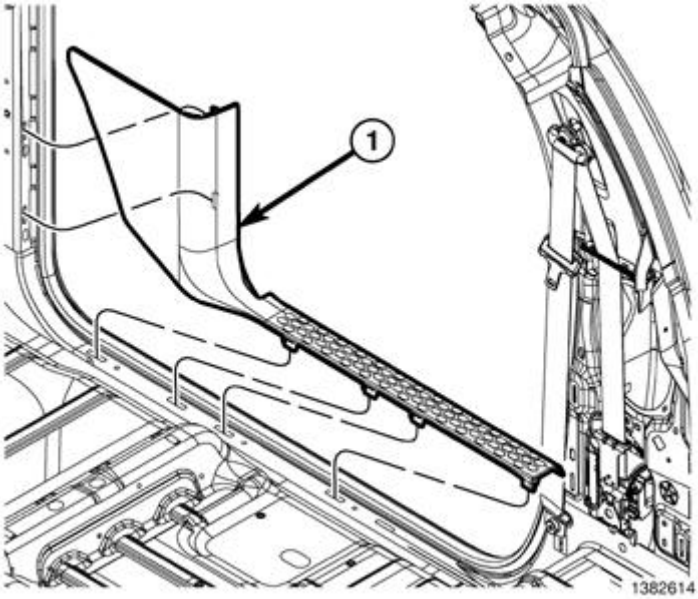

Fig. 22: Cowl Trim Panel
Courtesy of CHRYSLER GROUP, LLC

1. Disconnect and isolate the negative battery cable.
2. Remove the passenger side cowl trim panel (1). Refer to **PANEL, COWL TRIM, REMOVAL** .

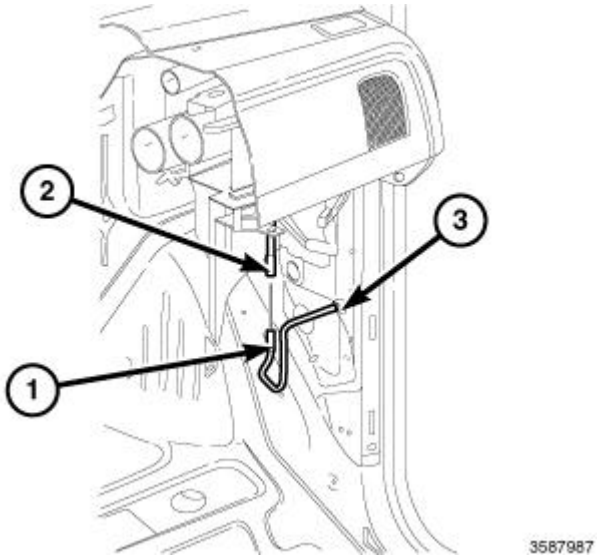

Fig. 23: Instrument Panel Antenna Connector & Antenna Mast Connector
Courtesy of CHRYSLER GROUP, LLC

3. Disconnect the antenna mast connector (2) from the instrument panel antenna connector (1).

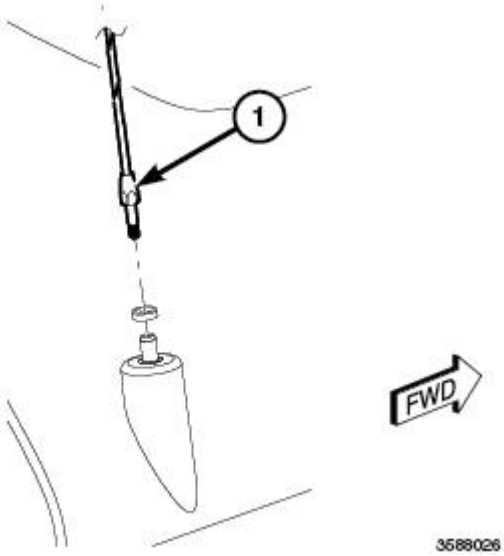

Fig. 24: Antenna Mast
Courtesy of CHRYSLER GROUP, LLC

4. Securely tie a suitable length of cord or twine to the antenna half of the coaxial cable connector. This cord will be used to pull the cable back into position during installation.
5. Remove the antenna mast (1).

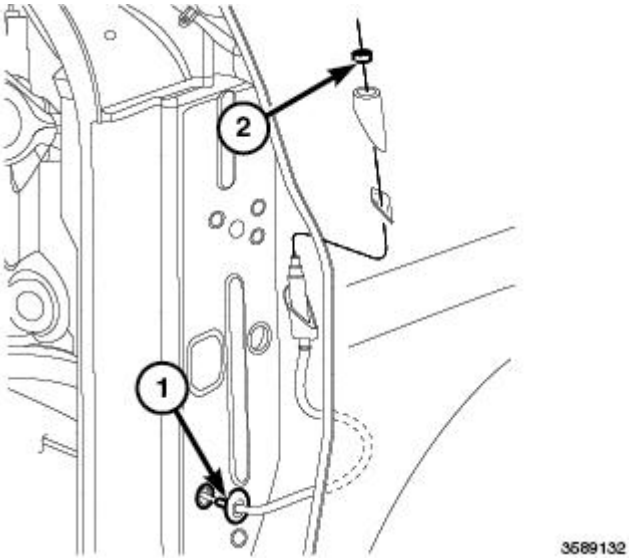

Fig. 25: Grommet & Antenna Cap Nut
Courtesy of CHRYSLER GROUP, LLC

6. Remove the antenna cap nut (2) using the (special tool #C-4816, Socket, Antenna).
7. Remove the antenna adapter (4).
8. With the passenger door open, pull the antenna body assembly out through the opening between the fender and body.

INSTALLATION

INSTALLATION

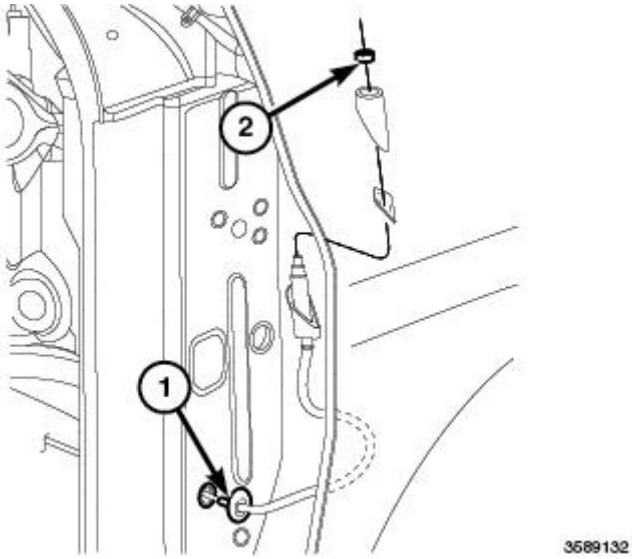

Fig. 26: Grommet & Antenna Cap Nut
Courtesy of CHRYSLER GROUP, LLC

1. Tie the cord that was used during the removal procedure to the cable being installed.
2. Using the cord, pull the antenna cable through the hole in the door opening and seat grommet into place (1).
3. Insert the antenna body through the hole in the fender and install adapter.
4. Install and tighten the antenna cap nut (2) with the (special tool #C-4816, Socket, Antenna).

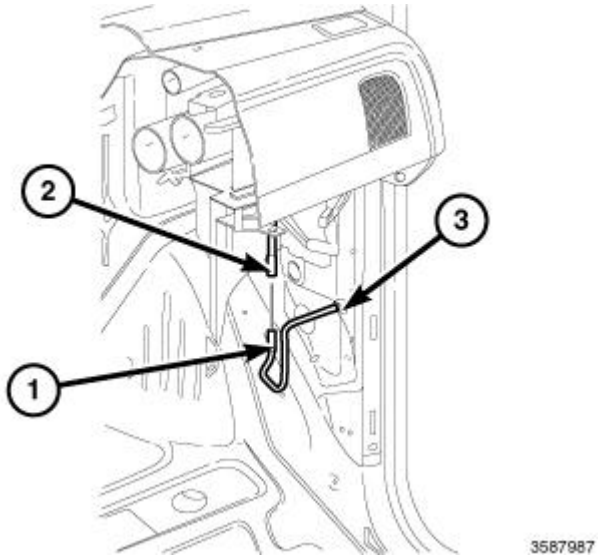

Fig. 27: Instrument Panel Antenna Connector & Antenna Mast Connector
Courtesy of CHRYSLER GROUP, LLC

5. Verify that the antenna grommet is fully seated (3).

6. Connect the antenna mast connector (2) to the instrument panel antenna cable (1).

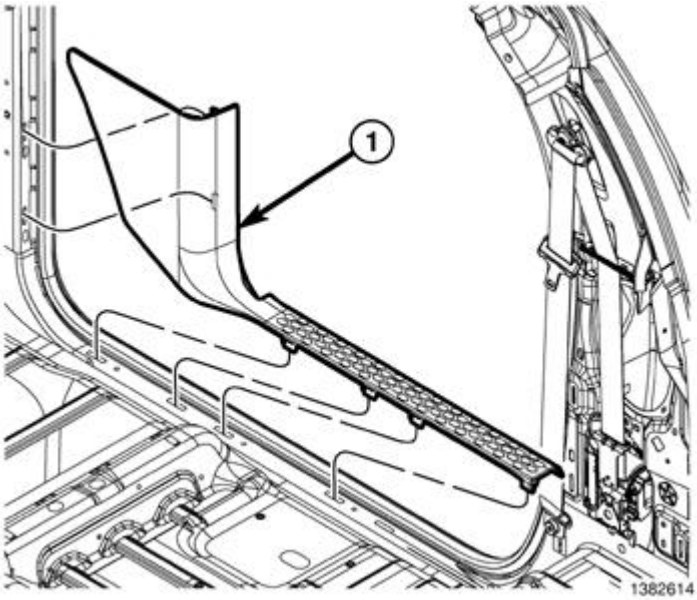

Fig. 28: Cowl Trim Panel
Courtesy of CHRYSLER GROUP, LLC

7. Install the passenger cowl trim panel (1). Refer to **PANEL, COWL TRIM, INSTALLATION** .

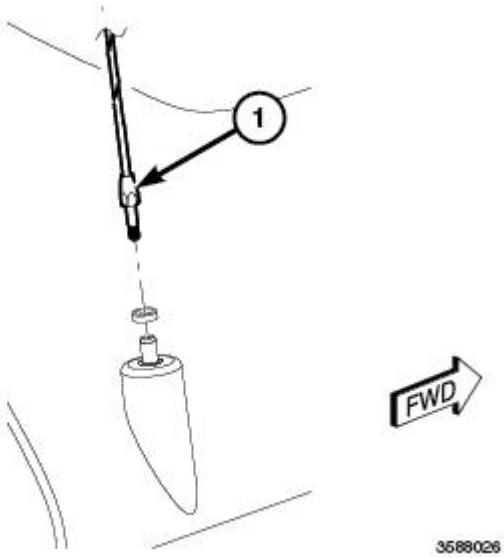

Fig. 29: Antenna Mast
Courtesy of CHRYSLER GROUP, LLC

8. Install the antenna mast (1).
9. Connect the battery negative cable.

MONITOR, MEDIA SYSTEM

DESCRIPTION

DESCRIPTION

The video entertainment system, consist of:

- Battery powered remote control
- Two headsets
- Video monitor/DVD Player located on the headliner.

In addition to video DVDs, the system will play audio DVDs, audio CDs, MP3 audio disc, and video CDs. There are plug-in jacks on the monitor/player to show video directly from a video camera, connect video games for display on the screen, and play music directly from a MP3 player.

OPERATION

OPERATION

A seven inch (diagonal measurement) liquid crystal display (LCD) screen supports both 3 X 4 and 6 X 9 video formats. The hinged screen latches in the closed position and swings down for viewing.

REMOVAL

REMOVAL

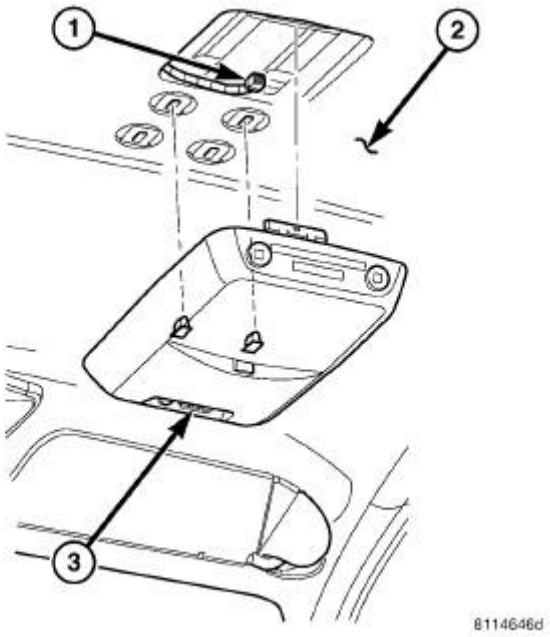

Fig. 30: DVD Player
Courtesy of CHRYSLER GROUP, LLC

1. Disconnect and isolate the battery negative cable.
2. Remove the two mounting fasteners.
3. Using a trim stick, press the retaining clip at the rear of the monitor (3). Move the monitor from side to side to release from headliner (2).
4. Disconnect electrical harness connector (1) and remove monitor.

INSTALLATION

INSTALLATION

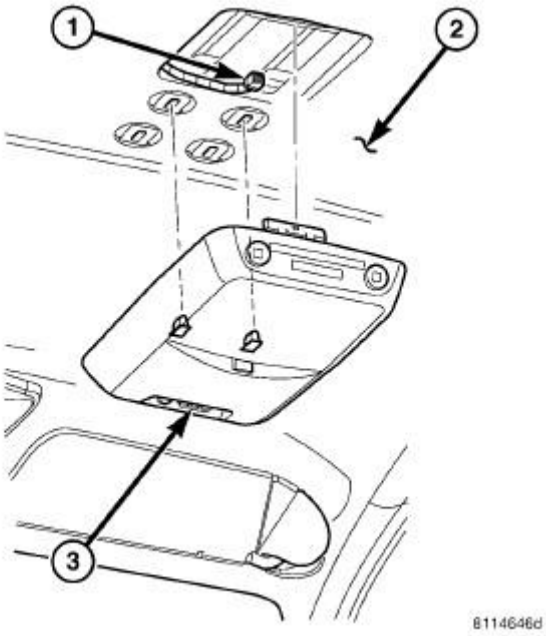

Fig. 31: DVD Player
Courtesy of CHRYSLER GROUP, LLC

1. Connect electrical harness connector (1) to monitor (3).
2. Position monitor and press into place.
3. Install and tighten mounting fasteners.
4. Connect battery negative cable.

RADIO

DESCRIPTION

DESCRIPTION

Interaction with the radio features is done through the ISC screen module and switch bank located in the center stack of the instrument panel.

RADIO ANTI-THEFT CODE PROCEDURE

For the vehicles that are equipped with power net or NTG4 radios. If the TGM or the radio have been removed or replaced. A four digit security code is required in order for the radio to function:

1. The key must be in the "RUN" position.
2. Press the "ON/VOL" control button.
3. The word "CODE" or " Please enter Anti-Theft Code" will appear on the display.
4. Enter the 4-digit code by pressing the corresponding preset buttons in sequence.

NOTE: **If three consecutive attempts are made to enter an invalid anti-theft code the radio will enter a 'WAIT' state. While in this state the radio display will read 'WAIT'. To exit the 'WAIT' state the radio must remain powered with the ignition in the run position for a continuous 30 minutes (the vehicle may be driven during this time). After exiting the 'WAIT' state the radio will again display 'CODE' and a valid anti-theft code may be entered.**

OPERATION

OPERATION

The radio receiver operates on ignition switched battery current that is available only when the ignition switch is in the On or Accessory positions. The electronic digital clock function of the radio operates on fused battery current supplied through the IOD fuse, regardless of the ignition switch position.

NOTE: **USB devices (e.g., camera memory USB adaptors, etc.) must comply with the MSD (Mass Storage Device) standard. This USB terminal can provide power to the inserted device. The devices current limitation must be less or equal to 500mA.**

REMOVAL

REMOVAL

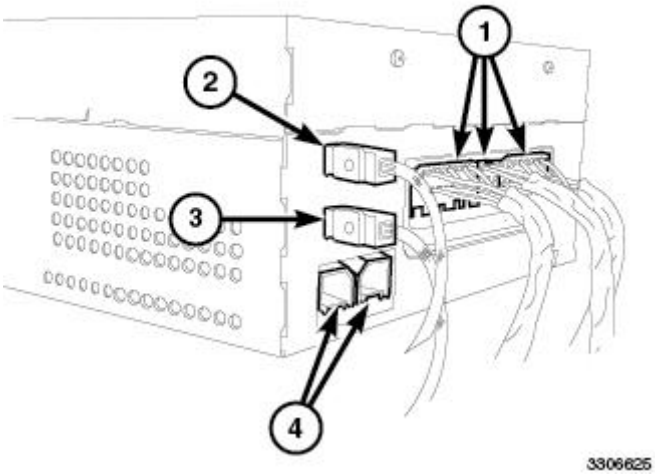

Fig. 32: Electrical Connectors, AM/FM Antenna Connectors, Navigation Antenna Connector & USB Connector Port
Courtesy of CHRYSLER GROUP, LLC

NOTE: **For REQ radios, turn ignition to RUN and press the SET + SCAN buttons simultaneously to place the radio into transportation mode. The radio will display "Transportation" on the display within 5 seconds. If the radio is inoperative or not REQ, skip this step.**

1. If radio is equipped with an internal hard disk drive (HDD), perform a complete backup of user data. Refer to **STANDARD PROCEDURE**.
2. Disconnect the negative battery cable.
3. Remove the center trim bezel from the instrument panel. Refer to **BEZEL, INSTRUMENT PANEL, CENTER, REMOVAL** .

CAUTION: Pulling the antenna cable straight out of the radio without pulling on the locking antenna connector could damage the cable or radio.

4. Remove the fasteners securing the radio to the instrument panel.
5. Pull the radio out far enough to access the back of the radio.
6. Disconnect the AM/FM antenna (2) and electrical connectors (1).
7. If equipped, disconnect the navigation antenna (3).
8. If equipped, disconnect the USB connectors (4).
9. Remove the radio from the instrument panel.

INSTALLATION

INSTALLATION

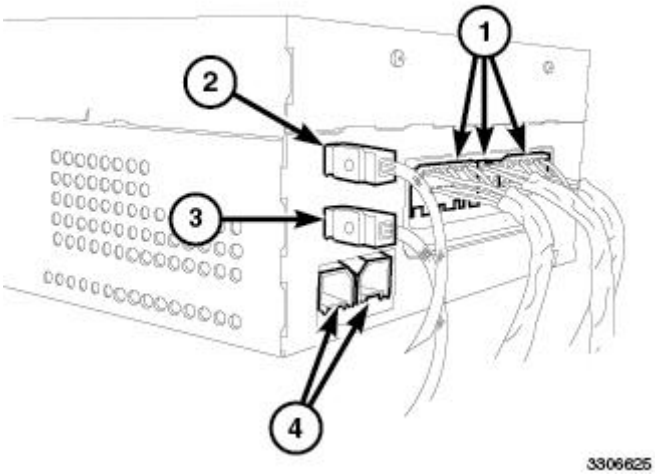

Fig. 33: Electrical Connectors, AM/FM Antenna Connectors, Navigation Antenna Connector & USB Connector Port
Courtesy of CHRYSLER GROUP, LLC

1. Position the new radio near the instrument panel.
2. Connect the AM/FM antenna (2) and electrical connectors (1).
3. Connect the satellite/navigation antenna (3).
4. If equipped, connect the USB connectors (4).
5. Seat the radio into the cavity in the instrument panel.
6. Install the fasteners securing the radio to the instrument panel. Tighten the fasteners securely.
7. Install the instrument panel center bezel. Refer to **BEZEL, INSTRUMENT PANEL, CENTER, INSTALLATION** .
8. Connect the battery negative cable.
9. If radio is equipped with an internal hard disk drive (HDD), restore user data from backup. Refer to **STANDARD PROCEDURE**.

SPEAKER

DESCRIPTION

DESCRIPTION

STANDARD

The standard equipment speaker system includes speakers in four locations. One 15.2 X 22.8 centimeter (6 X 9 inch) full-range speaker is located in each front door. There is also one full-range 13.3 centimeter (5.25 inch) diameter full-range speaker located in each rear door (quad cab) or B-pillar (regular cab).

PREMIUM

The optional premium speaker system features eleven Premium model speakers in seven locations. Each of the standard speakers is replaced with Premium model speakers. One 8.8 centimeter (3.50 inch) diameter speaker is located on each end of the instrument panel top pad. One 6.3 centimeter (2.50 inch) diameter speaker is located in the center of the instrument panel top pad. One 15.2 X 22.8 centimeter (6 X 9 inch) Premium speaker is located in each front door. There is also one coaxial 13.3 centimeter (5.25 inch) diameter Premium full-range speaker located in each rear door (quad cab) or B-pillar (regular cab). The premium speaker system also includes a power amplifier mounted behind the glove box. The total available power of the premium speaker system is 368 watts. If equipped, a 25.4 centimeter (10 inch) subwoofer is located behind the center passenger seat along with a amplifier (rated at 150 watts) located under the center passenger seat. The total available power if equipped with the subwoofer and second power amplifier is 518 watts.

OPERATION

OPERATION

Two wires connected to each speaker, one feed circuit (+) and one return circuit (-), allow the audio output signal electrical current to flow through the voice coil. For complete circuit diagrams, refer to the appropriate wiring information. The wiring information includes wiring diagrams, proper wire and connector repair procedures, details of wire harness routing and retention, connector pin-out information and location views for the various wire harness connectors, splices and grounds.

DIAGNOSIS AND TESTING

DIAGNOSIS AND TESTING - SPEAKER

Any diagnosis of the Audio system should begin with the use of a scan tool. For information on the use of the scan tool, refer to the appropriate Diagnostic Service information.

Refer to the appropriate wiring information.

WARNING: **Disable the airbag system before attempting any steering wheel, steering column, seat belt tensioner, side airbag or instrument panel component diagnosis or service. Refer to WARNING . Disconnect and isolate the negative battery (ground) cable. Wait two minutes for the airbag system capacitor to discharge before performing further diagnosis or service. This is the only sure way to disable the airbag system. Failure to follow these instructions may result in accidental airbag deployment and possible serious or fatal injury.**

CAUTION: **The speaker output of the radio is a "floating ground" system. Do not allow any speaker lead to short to ground, as damage to the radio and/or amplifier may result.**

1. If all speakers are inoperative, check the fuses in the Totally Integrated Power Module (TIPM). If OK, go to Step 2. If not OK, repair the shorted circuit or component as required and replace the faulty fuse.
2. Check the amplifier fuse (if equipped) in the TIPM. If OK, go to Step 3. If not OK, repair the shorted circuit or component as required and replace the faulty fuse.

3. Turn the ignition switch to the ON position. Turn the radio receiver ON. Adjust the balance and fader control controls to check the performance of each individual speaker. Note the speaker locations that are not performing correctly. Go to Step 4.
4. Turn the radio receiver OFF. Turn the ignition OFF. Disconnect and isolate the battery negative cable. If vehicle is **not** equipped with an amplifier, remove the radio receiver. If vehicle is equipped with an amplifier, disconnect wire harness connector at output side of amplifier. Go to Step 5.
5. Check both the speaker feed (+) circuit and return (-) circuit cavities for the inoperative speaker at the radio receiver wire harness connector for continuity to ground. There should be no continuity. If OK, go to Step 6. If not OK, repair the shorted speaker feed (+) and/or return (-) circuits(s) to the speaker as required.
6. Disconnect wire harness connector at the inoperative speaker. Check for continuity between the speaker feed (+) circuit cavities of the radio receiver wire harness connector or if equipped, the amplifier wire harness connector and the speaker wire harness connector. Repeat the check between the speaker return (-) circuit cavities of the radio receiver wire harness connector and the speaker wire harness connector. In each case, there should be continuity. If OK, replace the faulty speaker. If not OK, repair the open speaker feed (+) and/or return (-) circuits(s) as required.

REMOVAL

REMOVAL

FRONT DOOR SPEAKER	Refer to **FRONT DOOR SPEAKER**.
INSTRUMENT PANEL CENTER SPEAKER	Refer to **INSTRUMENT PANEL CENTER SPEAKER**.
INSTRUMENT PANEL END SPEAKER	Refer to **INSTRUMENT PANEL END SPEAKER**.
REAR CAB SIDE SPEAKER	Refer to **REAR CAB SIDE SPEAKER**.
REAR DOOR SPEAKER	Refer to **REAR DOOR SPEAKER**.
SUBWOOFER - REGULAR CAB	Refer to **SUBWOOFER - REGULAR CAB**.
SUBWOOFER - QUAD CAB	Refer to **SUBWOOFER - QUAD CAB**.
HEADLINER - QUAD CAB	Refer to **HEADLINER MOUNTED SPEAKER - QUAD CAB**.

FRONT DOOR SPEAKER

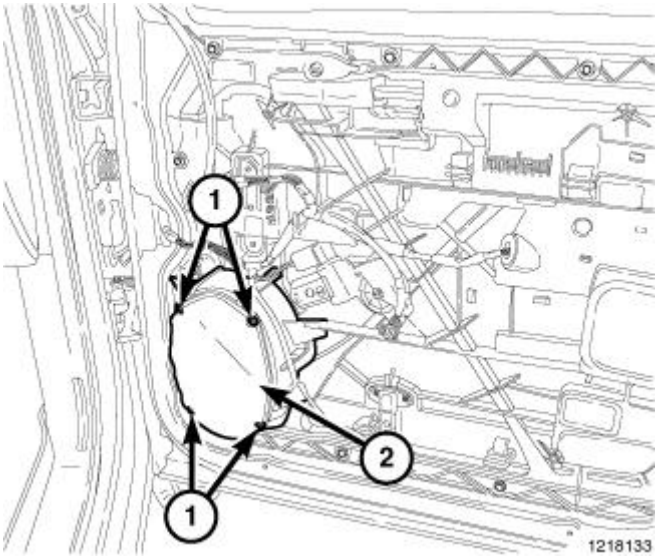

Fig. 34: Front Door Speaker
Courtesy of CHRYSLER GROUP, LLC

1. Disconnect and isolate the battery negative cable.
2. Remove the front door trim panel. Refer to **PANEL, DOOR TRIM, REMOVAL** .
3. Remove speaker mounting fasteners.
4. Disconnect the electrical connector and remove the speaker.

INSTRUMENT PANEL CENTER SPEAKER

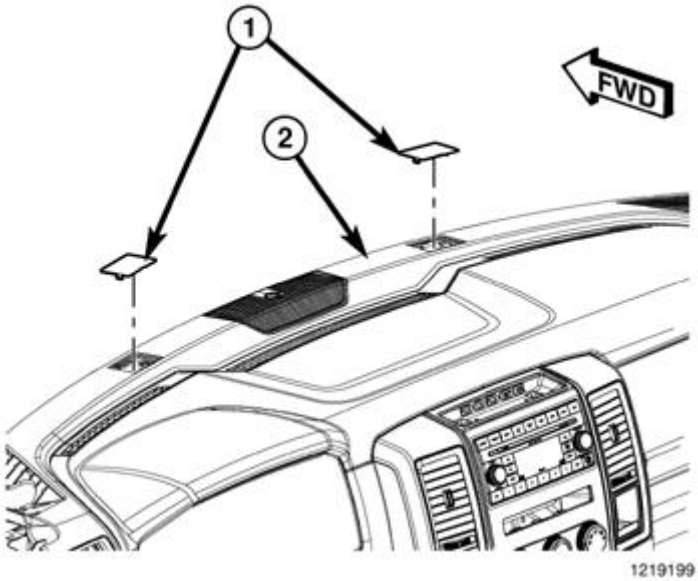

Fig. 35: Instrument Panel Top Cover Screw Covers
Courtesy of CHRYSLER GROUP, LLC

1. Disconnect and isolate the battery negative cable.

2. Remove the instrument panel top cover screw covers.
3. Remove the instrument panel top cover screws.
4. Remove the instrument panel top cover.

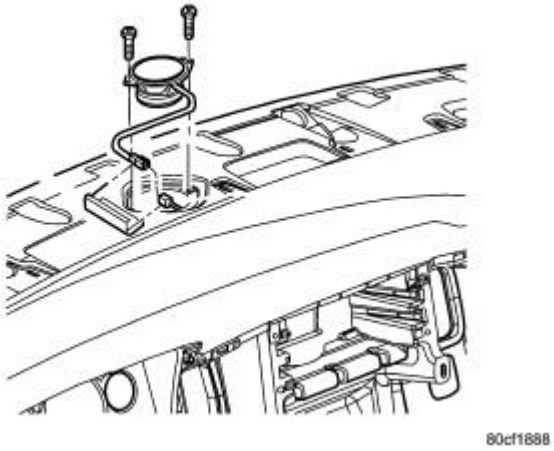

Fig. 36: Instrument Panel Center Speaker
Courtesy of CHRYSLER GROUP, LLC

5. Remove the speaker mounting fasteners.
6. Disconnect the electrical connector and remove the speaker.

INSTRUMENT PANEL END SPEAKER

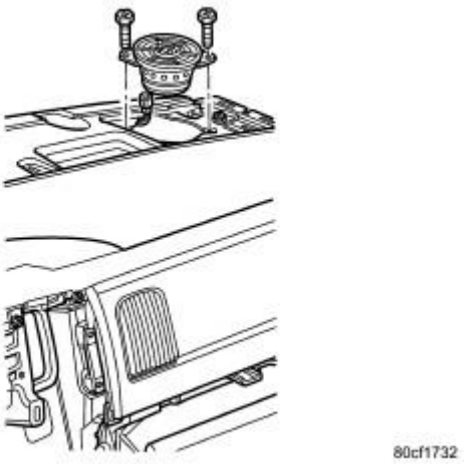

Fig. 37: Instrument Panel End Speaker
Courtesy of CHRYSLER GROUP, LLC

1. Disconnect and isolate the battery negative cable.
2. Remove the instrument panel top cover. Refer to **COVER, INSTRUMENT PANEL, REMOVAL** .
3. Remove the speaker mounting fasteners.

4. Disconnect the electrical connector and remove the speaker.

REAR CAB SIDE SPEAKER

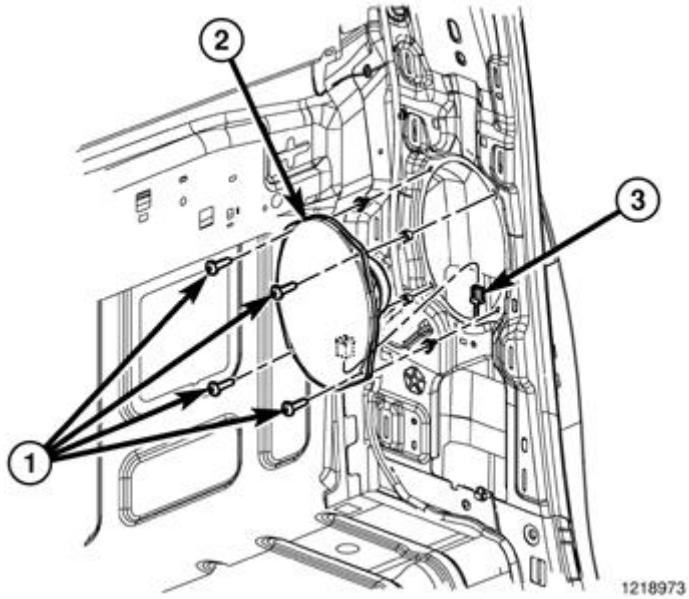

Fig. 38: Rear Cab Side Speaker
Courtesy of CHRYSLER GROUP, LLC

1. Disconnect and isolate the battery negative cable.
2. Remove the B-pillar lower trim. Refer to **PANEL, B-PILLAR TRIM, LOWER, REMOVAL** .
3. Remove the speaker mounting fasteners.
4. Disconnect the electrical connector and remove the speaker.

REAR DOOR SPEAKER

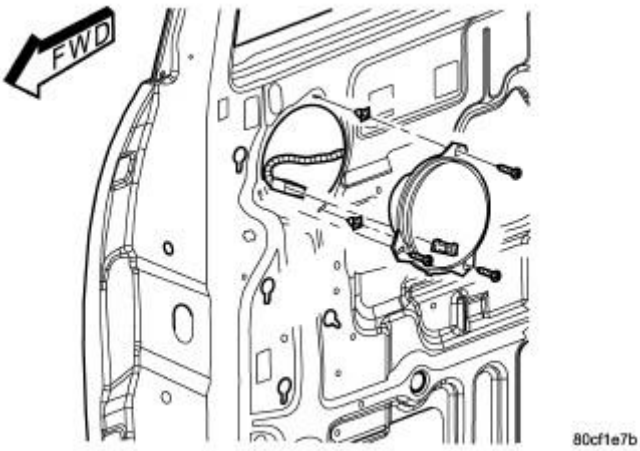

Fig. 39: Rear Door Speaker
Courtesy of CHRYSLER GROUP, LLC

1. Disconnect and isolate the battery negative cable.
2. Remove the rear door trim panel. Refer to **PANEL, REAR DOOR TRIM, REMOVAL** .
3. Remove the speaker mounting fasteners.
4. Disconnect the electrical connector and remove the speaker.

SUBWOOFER - REGULAR CAB

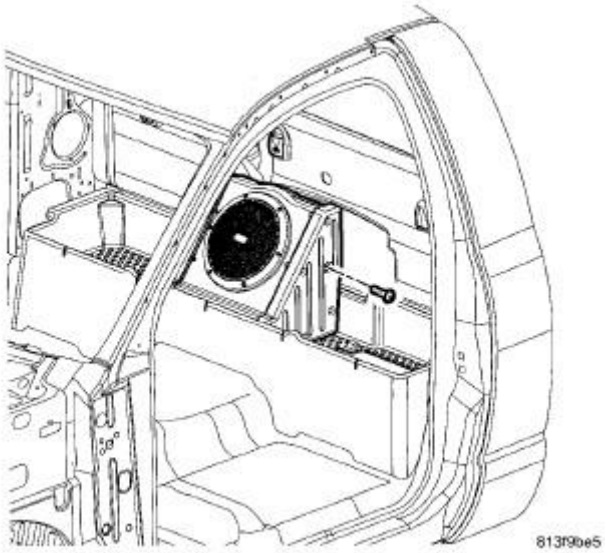

Fig. 40: Regular Cab Subwoofer Housing Fasteners
Courtesy of CHRYSLER GROUP, LLC

1. Disconnect and isolate the battery negative cable.
2. Remove the mounting fasteners to the subwoofer housing.

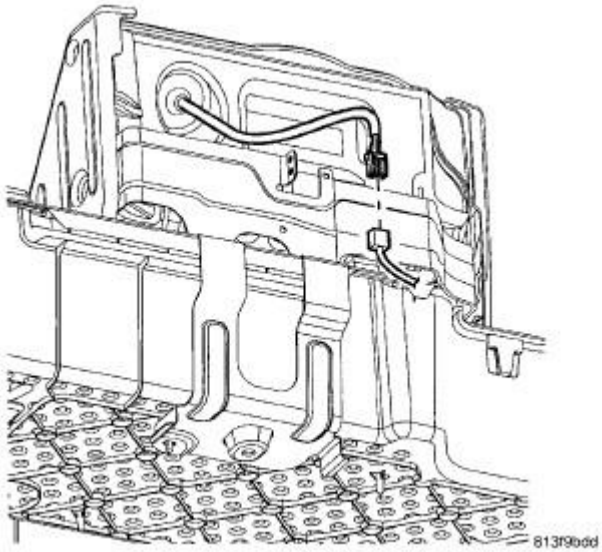

Fig. 41: Regular Cab Subwoofer Harness Connector
Courtesy of CHRYSLER GROUP, LLC

3. Disconnect the electrical connector.

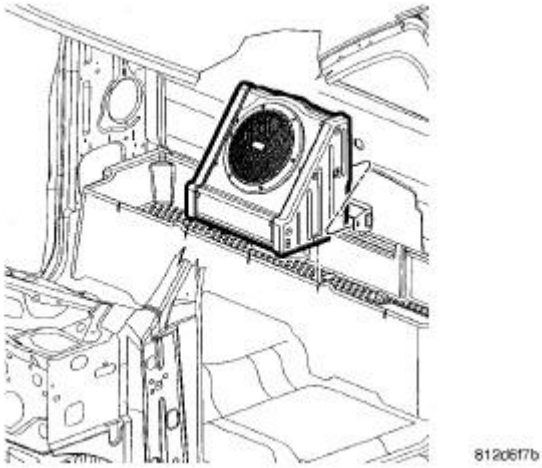

Fig. 42: Subwoofer
Courtesy of CHRYSLER GROUP, LLC

4. Remove subwoofer from vehicle.

SUBWOOFER - QUAD CAB

1. Disconnect and isolate the battery negative cable.
2. Raise right rear seat to access the subwoofer.

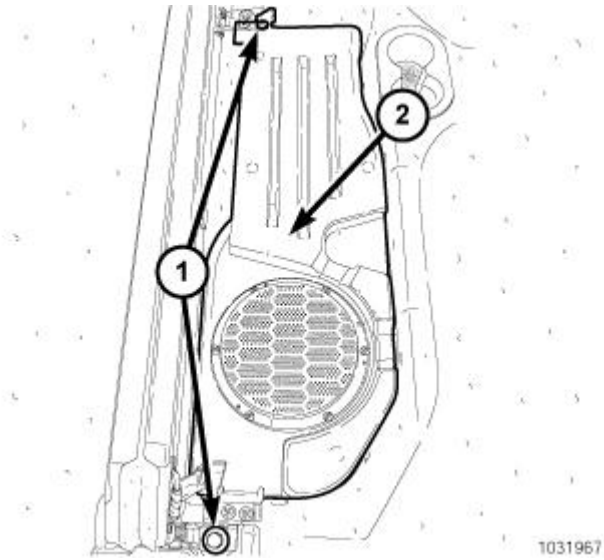

Fig. 43: Subwoofer (Quad Cab)
Courtesy of CHRYSLER GROUP, LLC

3. Remove the mounting fasteners.
4. Disconnect the electrical connector and remove the subwoofer.

HEADLINER MOUNTED SPEAKER - QUAD CAB

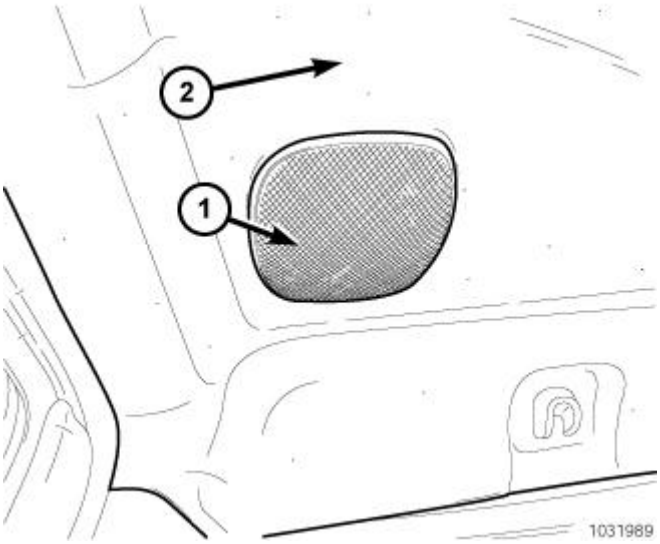

Fig. 44: Headliner Mounted Speaker Cover (Quad Cab)
Courtesy of CHRYSLER GROUP, LLC

1. Disconnect and isolate the battery negative cable.
2. Using a trim stick, remove the speaker cover (1) from the headliner (2).

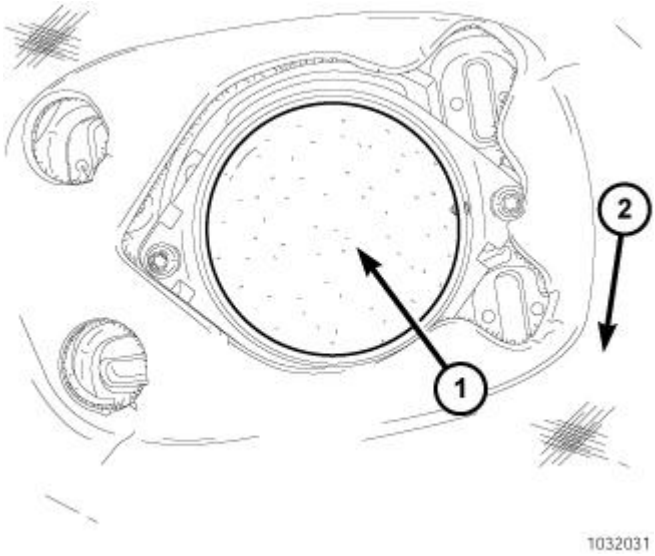

Fig. 45: Headliner Mounted Speaker (Quad Cab)
Courtesy of CHRYSLER GROUP, LLC

3. Remove the two retainers holding the speaker (1) into the headliner (2).

4. Disconnect the electrical connector and remove the speaker.

INSTALLATION

INSTALLATION

FRONT DOOR SPEAKER	Refer to **FRONT DOOR SPEAKER**.
INSTRUMENT PANEL CENTER SPEAKER	Refer to **INSTRUMENT PANEL CENTER SPEAKER**.
INSTRUMENT PANEL END SPEAKER	Refer to **INSTRUMENT PANEL END SPEAKER**.
REAR CAB SIDE SPEAKER	Refer to **REAR CAB SIDE SPEAKER**.
REAR DOOR SPEAKER	Refer to **REAR DOOR SPEAKER**.
SUBWOOFER - REGULAR CAB	Refer to **SUBWOOFER - REGULAR CAB**.
SUBWOOFER - QUAD CAB	Refer to **SUBWOOFER - QUAD CAB**.
HEADLINER MOUNTED SPEAKER - QUAD CAB	Refer to **HEADLINER MOUNTED SPEAKER - QUAD CAB**.

FRONT DOOR SPEAKER

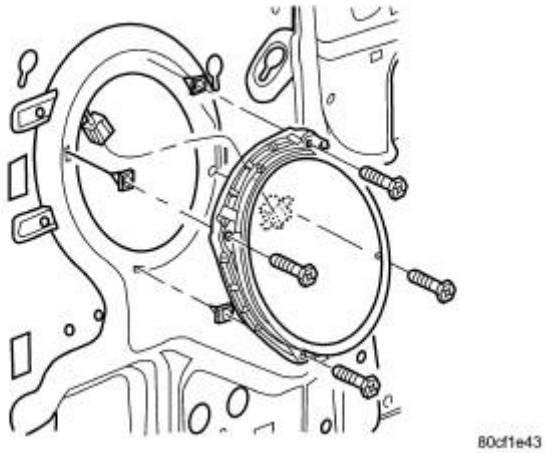

Fig. 46: Front Door Speaker
Courtesy of CHRYSLER GROUP, LLC

1. Connect the electrical connector and install the speaker.
2. Install and tighten the mounting fasteners.
3. Install the front door trim panel. Refer to **PANEL, DOOR TRIM, INSTALLATION** .
4. Connect the battery negative cable.

INSTRUMENT PANEL CENTER SPEAKER

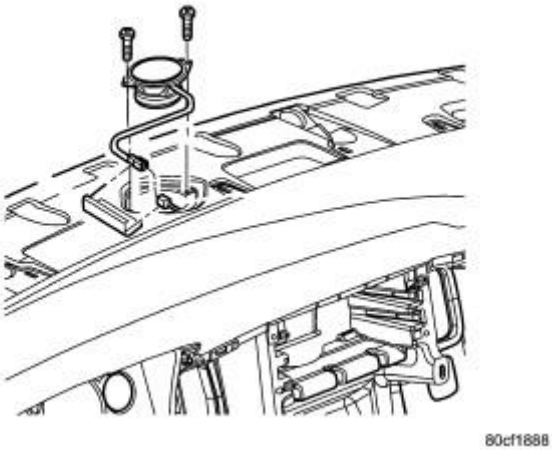

Fig. 47: Instrument Panel Center Speaker
Courtesy of CHRYSLER GROUP, LLC

1. Connect the electrical harness connector and install the speaker.
2. Install and tighten the mounting fasteners.
3. Install the instrument panel top cover. Refer to **COVER, INSTRUMENT PANEL, INSTALLATION** .
4. Connect the battery negative cable.

INSTRUMENT PANEL END SPEAKER

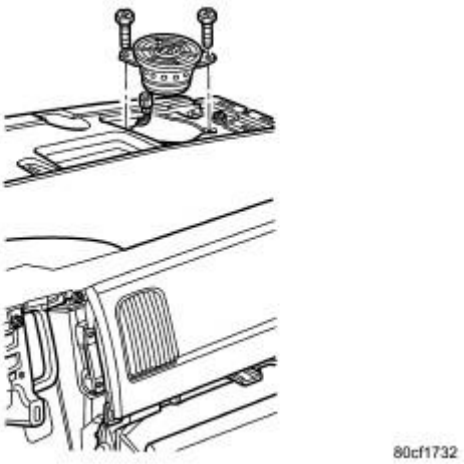

Fig. 48: Instrument Panel End Speaker
Courtesy of CHRYSLER GROUP, LLC

1. Connect the electrical connector and install the speaker.
2. Install and tighten the mounting fasteners.
3. Install the instrument panel top cover. Refer to **COVER, INSTRUMENT PANEL, INSTALLATION** .
4. Connect the battery negative cable.

REAR CAB SIDE SPEAKER

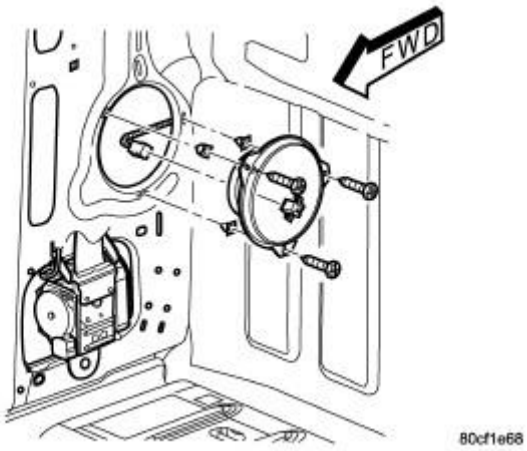

Fig. 49: Rear Cab Side Speaker
Courtesy of CHRYSLER GROUP, LLC

1. Connect the electrical connector and install the speaker.
2. Install and tighten the mounting fasteners.
3. Install the B-pillar lower trim. Refer to **PANEL, B-PILLAR TRIM, LOWER, INSTALLATION** .
4. Connect the battery negative cable.

REAR DOOR SPEAKER

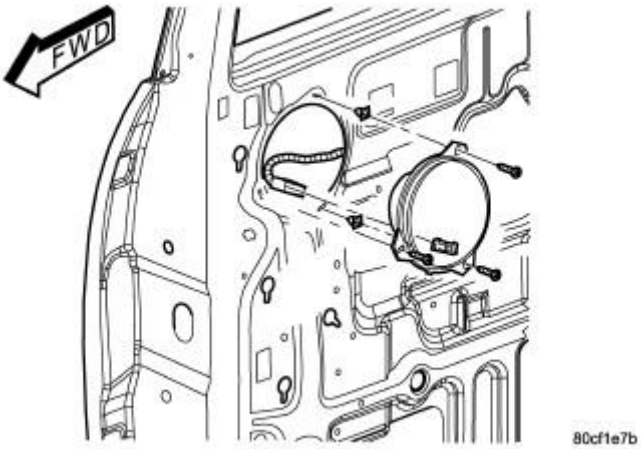

Fig. 50: Rear Door Speaker
Courtesy of CHRYSLER GROUP, LLC

1. Connect the electrical connector and install the speaker.
2. Install and tighten the mounting fasteners.
3. Install the rear door trim panel. Refer to **PANEL, REAR DOOR TRIM, INSTALLATION** .

4. Connect the battery negative cable.

SUBWOOFER - REGULAR CAB

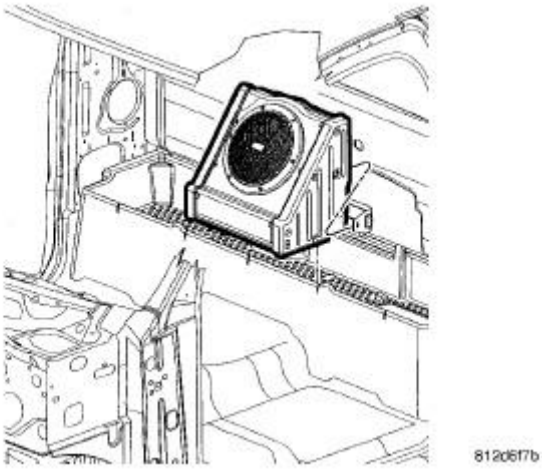

Fig. 51: Subwoofer (Regular Cab)
Courtesy of CHRYSLER GROUP, LLC

1. Position the subwoofer housing into the vehicle.

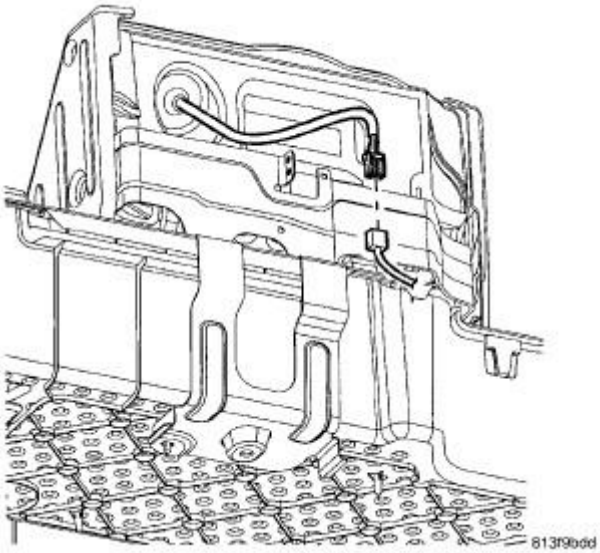

Fig. 52: Regular Cab Subwoofer Harness Connector
Courtesy of CHRYSLER GROUP, LLC

2. Connect the electrical connector.

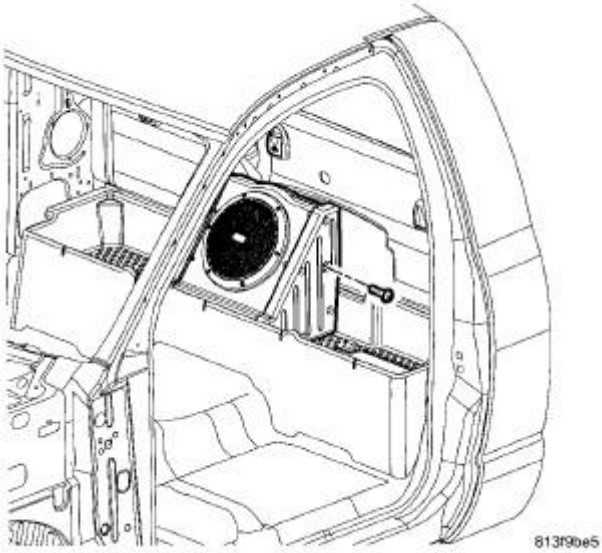

Fig. 53: Regular Cab Subwoofer Fasteners
Courtesy of CHRYSLER GROUP, LLC

3. Install the mounting fasteners.
4. Connect the battery negative cable.

SUBWOOFER - QUAD CAB

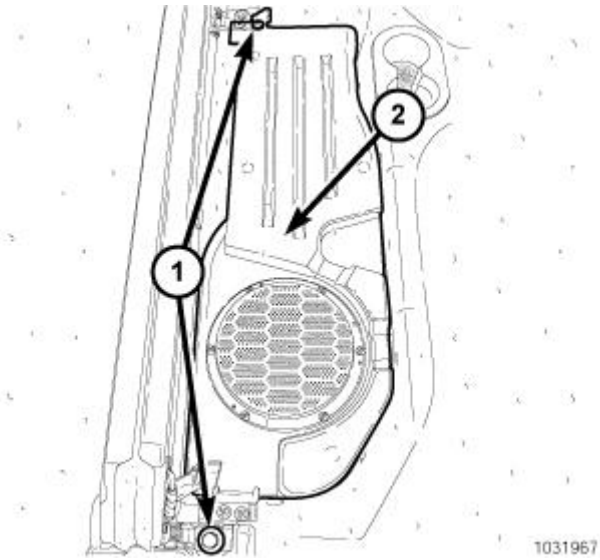

Fig. 54: Subwoofer (Quad Cab)
Courtesy of CHRYSLER GROUP, LLC

1. Position the subwoofer to vehicle.
2. Connect the electrical connector.
3. Install and tighten the mounting fasteners (1).

4. Lower the seat.
5. Connect the battery negative cable.

HEADLINER MOUNTED SPEAKER - QUAD CAB

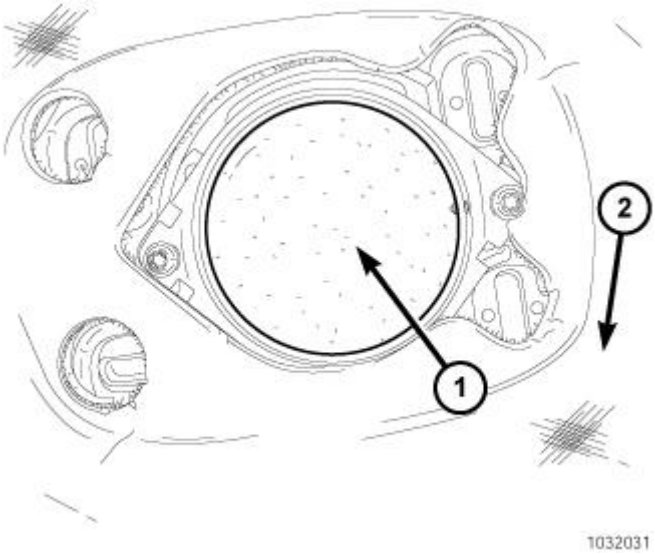

Fig. 55: Headliner Mounted Speaker (Quad Cab)
Courtesy of CHRYSLER GROUP, LLC

1. Connect the electrical connector and install the speaker (1) into the headliner (2).
2. Connect the battery negative cable.

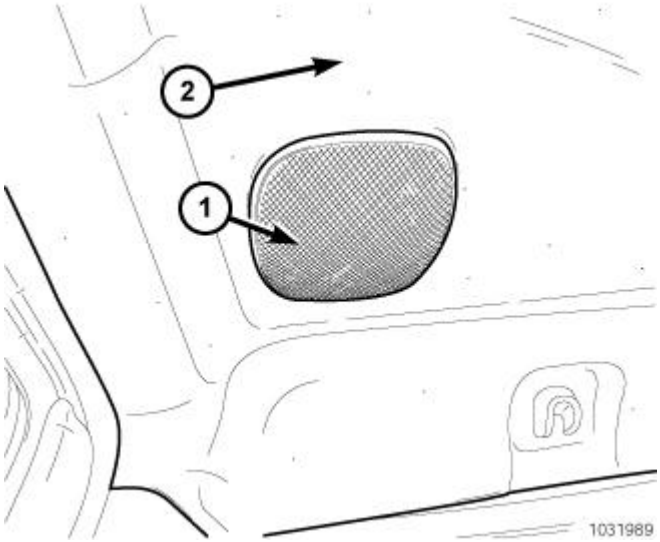

Fig. 56: Headliner Mounted Speaker Cover (Quad Cab)
Courtesy of CHRYSLER GROUP, LLC

3. Install the speaker cover (1) onto the headliner (2).

4. Connect the battery negative cable.

SWITCH, REMOTE RADIO

OPERATION

OPERATION

The six switches in the two remote radio switch units are normally open, resistor multiplexed momentary switches that are hard wired to the Totally Integrated Power Module (TIPM) through the clockspring. The TIPM sends a five volt reference signal to both switch units on one circuit, and senses the status of all of the switches by reading the voltage drop on a second circuit.

When the TIPM senses an input (voltage drop) from any one of the remote radio switches, it sends the proper switch status messages on the Controller Area Network (CAN) data bus network to the radio receiver. The electronic circuitry within the radio receiver is programmed to respond to these remote radio switch status messages by adjusting the radio settings as requested. For diagnosis of the TIPM or the CAN data bus, the use of a scan tool and the proper Diagnostic Procedures information is recommended.

DIAGNOSIS AND TESTING

DIAGNOSIS AND TESTING - REMOTE SWITCHES

Any diagnosis of the Audio system should begin with the use of scan tool. For information on the use of the scan tool, refer to the appropriate Diagnostic Service information.

For complete circuit diagrams, refer to the appropriate wiring information.

WARNING: **Disable the airbag system before attempting any steering wheel, steering column, seat belt tensioner, side airbag or instrument panel component diagnosis or service. Refer to WARNING . Disconnect and isolate the negative battery (ground) cable. Wait two minutes for the airbag system capacitor to discharge before performing further diagnosis or service. This is the only sure way to disable the airbag system. Failure to follow these instructions may result in accidental airbag deployment and possible serious or fatal injury.**

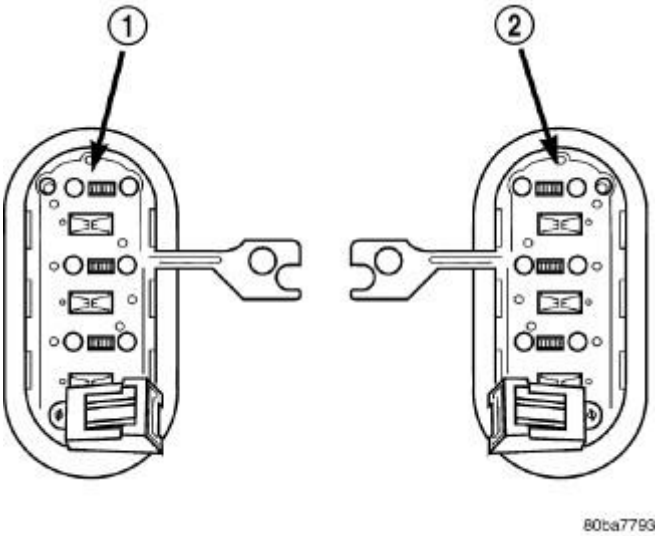

Fig. 57: Identifying Remote Radio Switches
Courtesy of CHRYSLER GROUP, LLC

1. Disconnect and isolate the battery negative cable.
2. Remove the remote radio switch(es) from the steering wheel. Refer to **SWITCH, REMOTE RADIO, REMOVAL**.
3. Use an ohmmeter to check the switch resistances as shown in the Remote Radio Switch Test chart. If the remote radio switch resistances check OK, refer to 4. If not OK, replace the faulty switch.

REMOTE RADIO SWITCH TEST

Switch	Switch Position	Minimum Resistance	Nominal Resistance	Maximum Resistance
Right (White)	Volume Up	6.732 ohms	6.8 ohms	6.868 ohms
Right (White)	Volume Down	14.850 ohms	15 ohms	15.151 ohms
Right (White)	Mode Advance	0 ohms	0 ohms	0 ohms
Left (Black)	Seek Up	1.188 ohms	1.2 ohms	1.212 ohms
Left (Black)	Seek Down	3.267 ohms	3.3 ohms	3.333 ohms
Left (Black)	Pre-Set Station Advance	.465 ohms	.47 ohms	.474 ohms

4. Connect the battery negative cable. Turn the ignition switch to the On position. Check for 5 volts at the radio control mux circuit cavities of the steering wheel wire harness connectors for both remote radio switches. If OK, refer to 5. If not OK, repair the open or shorted radio control mux circuit to the Totally Integrated Power Module (TIPM) as required.

5. Disconnect and isolate the battery negative cable. Disconnect the 22-way instrument panel wire harness connector from the TIPM. Check for continuity between the remote radio switch ground circuit cavities of the steering wheel wire harness connectors for both remote radio switches and a good ground. There should be no continuity. If OK, refer to 6. If not OK, repair the shorted remote radio switch ground circuit to the TIPM as required.
6. Check for continuity between the remote radio switch ground circuit cavities of the steering wheel wire harness connectors for both remote radio switches and the 22-way instrument panel wire harness connector for the TIPM. There should be continuity. If OK, refer to the appropriate Diagnostic information to test the TIPM and the CAN data bus. If not OK, repair the open remote radio switch ground circuit as required.

REMOVAL

REMOVAL

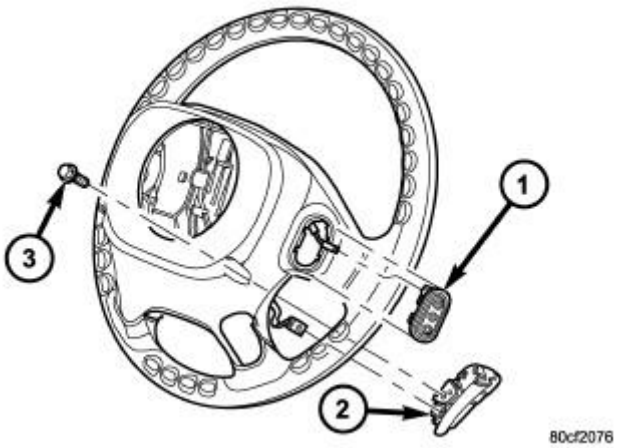

Fig. 58: Remote Radio Switch & Speed Control Switch
Courtesy of CHRYSLER GROUP, LLC

WARNING: **Disable the airbag system before attempting any steering wheel, steering column, seat belt tensioner, side airbag or instrument panel component diagnosis or service. Refer to WARNING . Disconnect and isolate the negative battery (ground) cable. Wait two minutes for the airbag system capacitor to discharge before performing further diagnosis or service. This is the only sure way to disable the airbag system. Failure to follow these instructions may result in accidental airbag deployment and possible serious or fatal injury.**

1. Disconnect and isolate the battery negative cable.
2. Remove the driver airbag. Refer to **AIR BAG, DRIVER, REMOVAL** .
3. Remove the speed control switches (2). Refer to **SWITCH, SPEED CONTROL, REMOVAL** .
4. Unplug the wire harness connector from the remote radio switch (1).
5. Depress the tabs on each side of each switch and push the switch through the rear steering wheel cover.

INSTALLATION

INSTALLATION

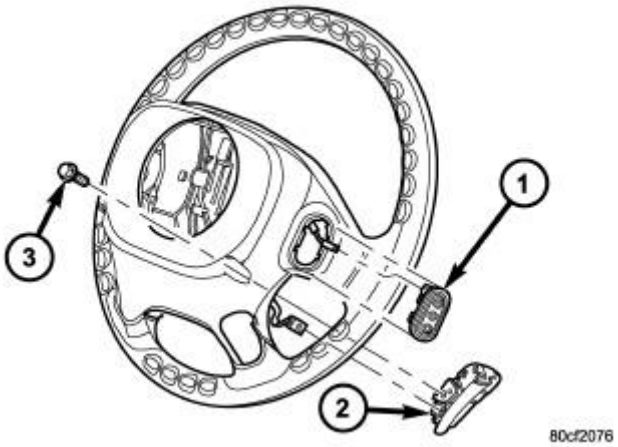

Fig. 59: Remote Radio Switch & Speed Control Switch
Courtesy of CHRYSLER GROUP, LLC

WARNING: Disable the airbag system before attempting any steering wheel, steering column, seat belt tensioner, side airbag or instrument panel component diagnosis or service. Refer to WARNING . Disconnect and isolate the negative battery (ground) cable. Wait two minutes for the airbag system capacitor to discharge before performing further diagnosis or service. This is the only sure way to disable the airbag system. Failure to follow these instructions may result in accidental airbag deployment and possible serious or fatal injury.

1. Install remote radio switch (1) to the steering wheel.
2. Connect the wire harness to the remote radio switch.
3. Install the speed control switches (2). Refer to **SWITCH, SPEED CONTROL, INSTALLATION** .
4. Install the driver airbag. Refer to **AIR BAG, DRIVER, INSTALLATION** .
5. Connect the battery negative cable.

DIAGNOSTIC CODE INDEX

DIAGNOSTIC CODE INDEX

DTC	Description
B1401	FRONT LEFT AUDIO SPEAKER OUTPUT CIRCUIT LOW
B1402	FRONT LEFT AUDIO SPEAKER OUTPUT CIRCUIT HIGH
B1403	FRONT LEFT AUDIO SPEAKER OUTPUT CIRCUIT FOR AN OPEN
B1405	FRONT RIGHT AUDIO SPEAKER OUTPUT CIRCUIT LOW
B1406	FRONT RIGHT AUDIO SPEAKER OUTPUT CIRCUIT HIGH
B1407	FRONT RIGHT AUDIO SPEAKER OUTPUT CIRCUIT FOR AN OPEN
B1409	REAR LEFT AUDIO SPEAKER OUTPUT CIRCUIT LOW - BASE
B1409	REAR LEFT AUDIO SPEAKER OUTPUT CIRCUIT LOW - PREMIUM
B140A	REAR LEFT AUDIO SPEAKER OUTPUT CIRCUIT HIGH - BASE
B140A	REAR LEFT AUDIO SPEAKER OUTPUT CIRCUIT HIGH - PREMIUM
B140B	REAR LEFT AUDIO SPEAKER OUTPUT CIRCUIT FOR AN OPEN - BASE
B140B	REAR LEFT AUDIO SPEAKER OUTPUT CIRCUIT FOR AN OPEN - PREMIUM
B140D	REAR RIGHT AUDIO SPEAKER OUTPUT CIRCUIT LOW - BASE
B140D	REAR RIGHT AUDIO SPEAKER OUTPUT CIRCUIT LOW - PREMIUM
B140E	REAR RIGHT AUDIO SPEAKER OUTPUT CIRCUIT HIGH - BASE
B140E	REAR RIGHT AUDIO SPEAKER OUTPUT CIRCUIT HIGH - PREMIUM
B140F	REAR RIGHT AUDIO SPEAKER OUTPUT CIRCUIT FOR AN OPEN - BASE
B140F	REAR RIGHT AUDIO SPEAKER OUTPUT CIRCUIT FOR AN OPEN - PREMIUM
B1420	AUDIO CASSETTE ERROR/INOPERABLE CASSETTE
B1421	AUDIO CD READ ERROR/INOPERABLE DISC
B1422	AUDIO DVD READ ERROR/INOPERABLE DISC
B1424	IMPROPER DVD-WRONG REGION
B1429	RADIO DISPLAY HIGH TEMPERATURE
B142A	RADIO UNIT HIGH TEMPERATURE
B142D	AUDIO ANTENNA NOT CONNECTED
B142E	GPS ANTENNA NOT CONNECTED
B142F	SATELLITE RADIO ANTENNA NOT CONNECTED
B1430	B1430(2.5)-SATELLITE RADIO ANTENNA INTERNAL PERFORMANCE
B1430	B1430(4.0)-SATELLITE RADIO ANTENNA INTERNAL PERFORMANCE
B143A	MICROPHONE 1 CIRCUIT PERFORMANCE
B143B	MICROPHONE 1 CIRCUIT LOW
B143C	MICROPHONE 1 CIRCUIT HIGH

B143D	MICROPHONE 2 CIRCUIT PERFORMANCE
B143E	MICROPHONE 2 CIRCUIT LOW
B143F	MICROPHONE 2 CIRCUIT HIGH
B156B	SATELLITE RADIO ANTENNA CIRCUIT
B210D	BATTERY VOLTAGE LOW
B210E	BATTERY VOLTAGE HIGH
B221E	RADIO INTERNAL
B222C	VEHICLE CONFIGURATION NOT PROGRAMMED
U0010	CAN INTERIOR BUS
U0011	CAN INTERIOR BUS OFF PERFORMANCE
U0141	LOST COMMUNICATION WITH IPM (FCM/TIPM)
U0155	LOST COMMUNICATION WITH CLUSTER/CCN
U0159	LOST COMMUNICATION WITH PARKING ASSIST CONTROL MODULE
U0168	LOST COMMUNICATION WITH VEHICLE SECURITY CONTROL MODULE (WIN)
U0186	LOST COMMUNICATION WITH AUDIO AMPLIFIER
U0197	LOST COMMUNICATION WITH HANDS FREE PHONE MODULE
U0249	LOST COMMUNICATION WITH VEHICLE ENTERTAINMENT CONTROL MODULE - LAST ROW
U1158	LOST COMMUNICATION WITH SATELLITE VIDEO RECEIVER (SDARV)

DIAGNOSIS AND TESTING

B1401-FRONT LEFT AUDIO SPEAKER OUTPUT CIRCUIT LOW

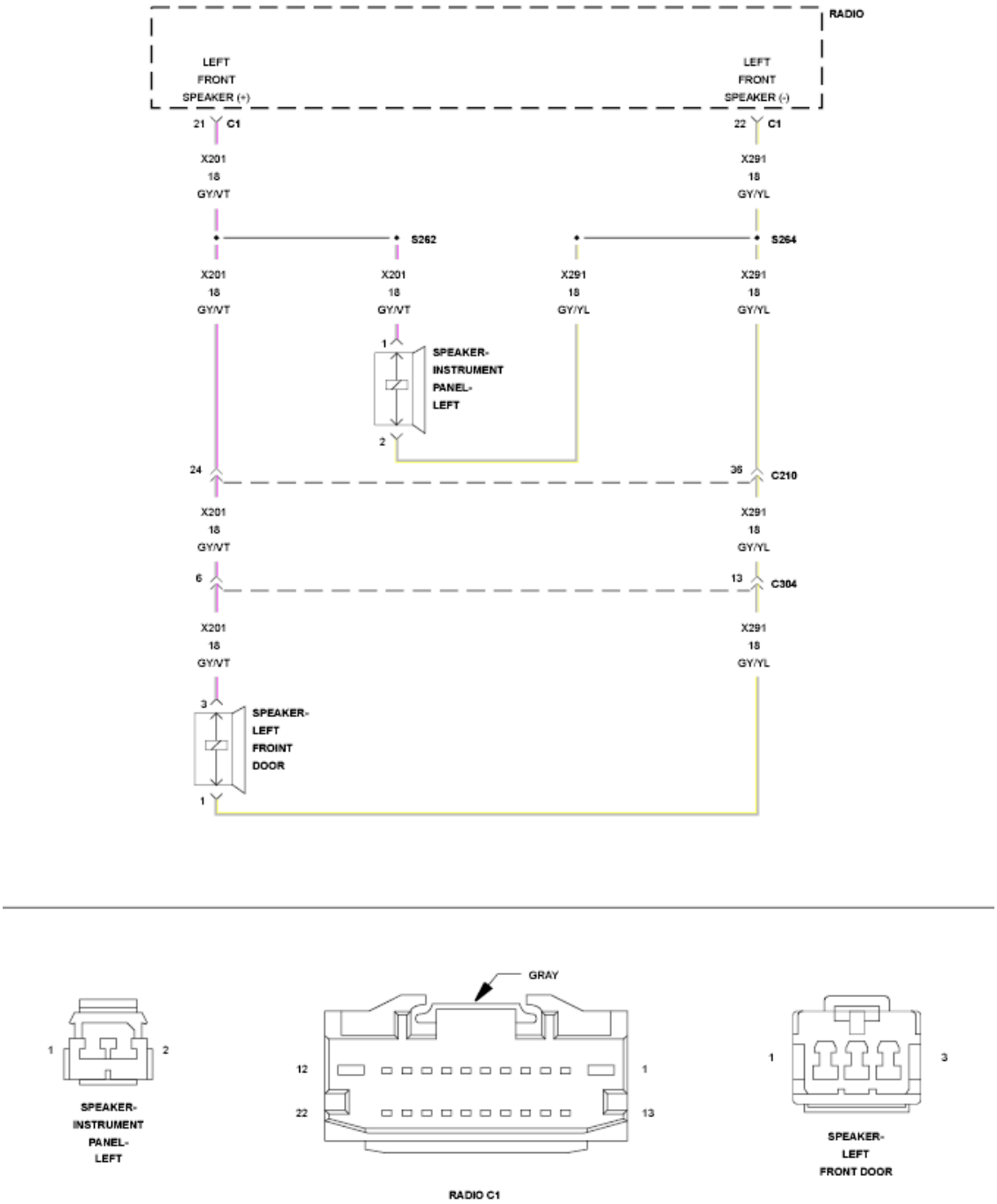

Fig. 1: Front Left Audio Speaker Wiring Diagram
Courtesy of CHRYSLER GROUP, LLC

For a complete wiring diagram, **refer to appropriate SYSTEM WIRING DIAGRAMS article** .

THEORY OF OPERATION

The (X201) Left Front Speaker (+) circuit and the (X291) Left Front Speaker (-) circuit are outputs of the

Radio. The Radio controls and monitors these circuits for a concern.

For a detailed description of the Audio System. Refer to **DESCRIPTION** .

For additional information regarding the operation of the Audio System. Refer to **OPERATION** .

WHEN MONITORED:

With the Radio on.

SET CONDITION:

The Radio detects a short to ground condition on the speaker output circuit.

POSSIBLE CAUSES

Possible Causes
(X201) LEFT FRONT SPEAKER (+) CIRCUIT FOR A SHORT TO GROUND
(X291) LEFT FRONT SPEAKER (-) CIRCUIT FOR A SHORT TO GROUND
LEFT FRONT SPEAKER
LEFT FRONT INSTRUMENT PANEL (I/P) SPEAKER
RADIO

DIAGNOSTIC TEST

1. **CHECK FOR AN INTERMITTENT CONDITION**

   NOTE: This vehicle has a Front I/P Speaker wired in parallel with the Front Door Speaker.

   1. Turn the ignition on and open one of the front doors.

      NOTE: A front door must remain open whenever checking or erasing Radio DTC's.

   2. Using the scan tool, record and erase the Radio DTC's.
   3. Turn the Radio on.
   4. Adjust the speakers to the front and center.
   5. Using the scan tool, read the active Radio DTC's.

      Does the scan tool read: B1401-FRONT LEFT AUDIO SPEAKER OUTPUT CIRCUIT LOW?

      Yes

      - Go To 2.

No

- Test complete, the condition or conditions that originally set this DTC are not present at this time. Using the wiring diagrams as a guide, check all related splices and connectors for signs of water intrusion, corrosion, pushed out or bent terminals and correct pin tension.
- Perform the BODY VERIFICATION TEST. Refer to **BODY VERIFICATION TEST** .

2. **CHECK THE LEFT FRONT SPEAKERS**
   1. Make sure one of the front doors is still open.
   2. Using the scan tool, erase the DTC's.
   3. Turn the ignition off.
   4. Disconnect the Left Front Speaker harness connector from the Left Front Speaker.
   5. Disconnect the Left Front I/P Speaker harness connector from the Left Front I/P Speaker.
   6. Turn the ignition on.
   7. Turn the radio on.
   8. Using the scan tool, read the active Radio DTC's.

   Does the scan tool read: B1401-FRONT LEFT AUDIO SPEAKER OUTPUT CIRCUIT LOW?

   Yes

   - Go To 4.

   No

   - Go To 3.

3. **CHECK THE LEFT FRONT I/P SPEAKER**
   1. Make sure one of the front doors is still open.
   2. Using the scan tool, erase the DTC's.
   3. Turn the ignition off.
   4. Re-connect the Left Front Speaker harness connector to the Left Front Speaker.
   5. Turn the ignition on.
   6. Turn the radio on.
   7. Using the scan tool, read the active Radio DTC's.

   Does the scan tool read: B1401-FRONT LEFT AUDIO SPEAKER OUTPUT CIRCUIT LOW?

   Yes

   - Replace the Left Front Speaker in accordance with the Service Information.
   - Perform the BODY VERIFICATION TEST. Refer to **BODY VERIFICATION TEST** .

   No

- Replace the Left Front I/P Speaker in accordance with the Service Information.
- Perform the BODY VERIFICATION TEST. Refer to **BODY VERIFICATION TEST** .

4. **CHECK THE (X201) LEFT FRONT SPEAKER (+) CIRCUIT FOR A SHORT TO GROUND**

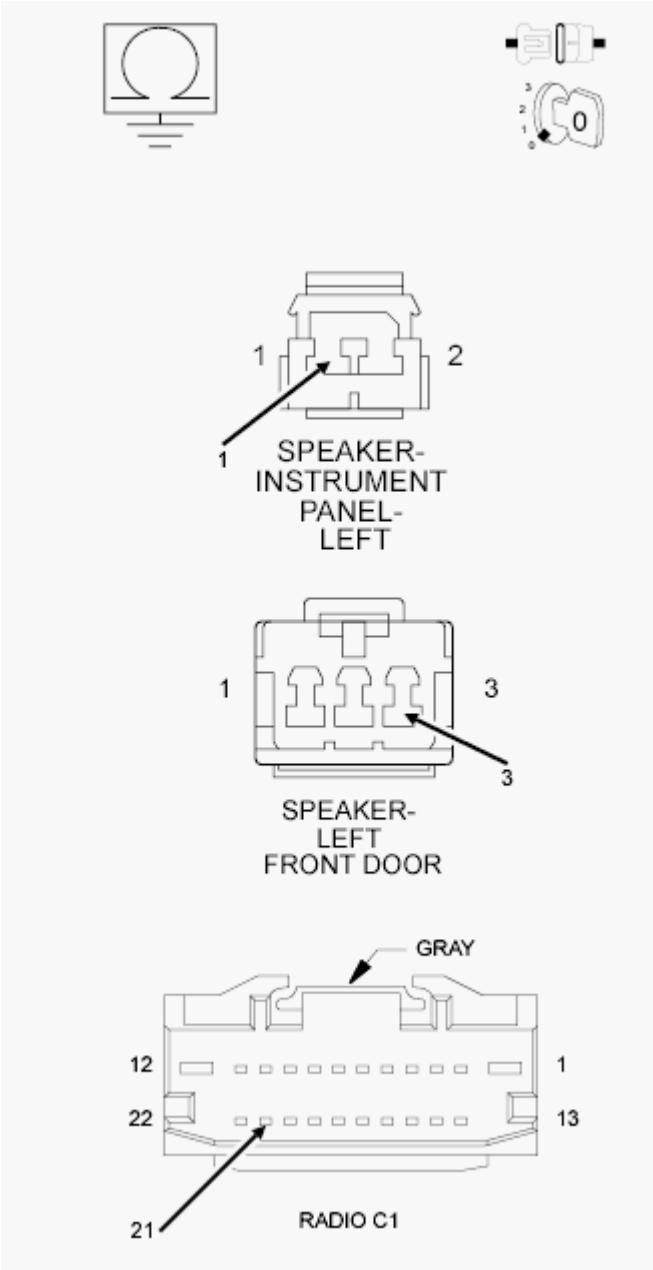

Fig. 2: Checking Left Front Speaker (+) Circuit For A Short To Ground
Courtesy of CHRYSLER GROUP, LLC

1. Turn the ignition off.
2. Disconnect the Radio C1 harness connector.
3. Measure the resistance between ground and the (X201) Left Front Speaker (+) circuit.

Is the resistance below 5.0 Ohms?

Yes

- Repair the (X201) Left Front Speaker (+) circuit for a short to ground.
- Perform the BODY VERIFICATION TEST. Refer to **BODY VERIFICATION TEST** .

No

- Go To 5.

5. **CHECK THE (X291) LEFT FRONT SPEAKER (-) CIRCUIT FOR A SHORT TO GROUND**

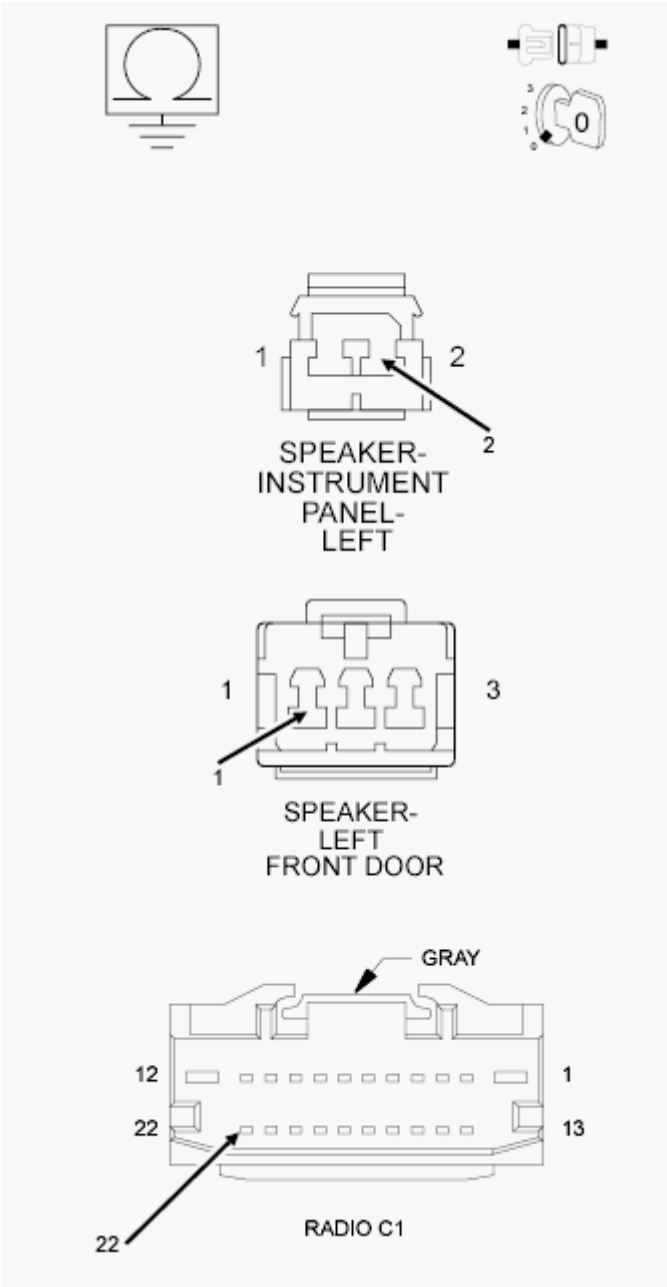

Fig. 3: Checking Left Front Speaker (-) Circuit For A Short To Ground
Courtesy of CHRYSLER GROUP, LLC

1. Measure the resistance between ground and the (X291) Left Rear Speaker (-) circuit.

   Is the resistance below 5.0 Ohms?

   Yes

   - Repair the (X291) Left Rear Speaker (-) circuit for a short to ground.
   - Perform the BODY VERIFICATION TEST. Refer to **BODY VERIFICATION TEST** .

No

- Replace the Radio in accordance with the Service Information.
- Perform the BODY VERIFICATION TEST. Refer to **BODY VERIFICATION TEST** .

B1402-FRONT LEFT AUDIO SPEAKER OUTPUT CIRCUIT HIGH

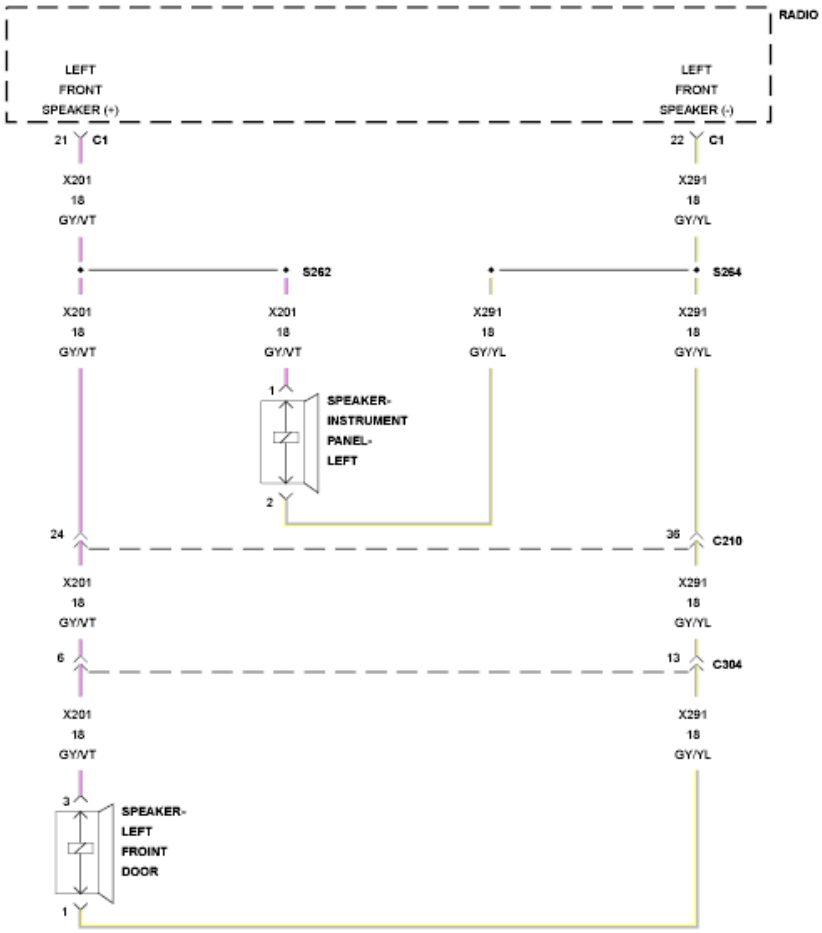

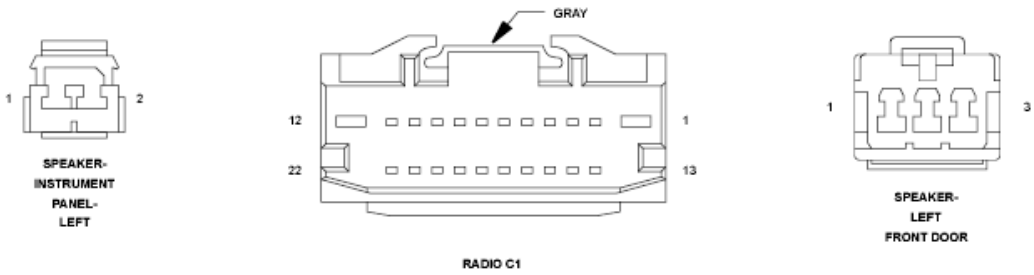

Fig. 4: Front Left Audio Speaker Wiring Diagram
Courtesy of CHRYSLER GROUP, LLC

For a complete wiring diagram, **refer to appropriate SYSTEM WIRING DIAGRAMS article** .

THEORY OF OPERATION

The (X201) Left Front Speaker (+) circuit and the (X291) Left Front Speaker (-) circuit are outputs of the Radio. The Radio controls and monitors these circuits for a concern.

For a detailed description of the Audio System. Refer to **DESCRIPTION** .

For additional information regarding the operation of the Audio System. Refer to **OPERATION** .

WHEN MONITORED:

With the Radio on.

SET CONDITION:

The Radio detects a short to battery condition on the speaker output circuit.

POSSIBLE CAUSES

Possible Causes
(X201) LEFT FRONT SPEAKER (+) CIRCUIT FOR A SHORT TO VOLTAGE
(X291) LEFT FRONT SPEAKER (-) CIRCUIT FOR A SHORT TO VOLTAGE
RADIO

DIAGNOSTIC TEST

1. **CHECK FOR AN INTERMITTENT CONDITION**

NOTE: **This vehicle has a Front I/P Speaker wired in parallel with the Front Door Speaker.**

1. Turn the ignition on and open one of the front doors.

NOTE: **A front door must remain open whenever checking or erasing Radio DTC's.**

2. Using the scan tool, record and erase the Radio DTC's.
3. Turn the Radio on.
4. Adjust the speakers to the front and center.
5. Using the scan tool, read the active Radio DTC's.

Does the scan tool read: B1402-FRONT LEFT AUDIO SPEAKER OUTPUT CIRCUIT HIGH?

Yes

- Go To 2.

No

- Test complete, the condition or conditions that originally set this DTC are not present at this time. Using the wiring diagrams as a guide, check all related splices and connectors for signs of water intrusion, corrosion, pushed out or bent terminals and correct pin tension.
- Perform the BODY VERIFICATION TEST. Refer to **BODY VERIFICATION TEST** .

2. **CHECK FOR VOLTAGE ON THE (X201) LEFT FRONT SPEAKER (+) CIRCUIT**

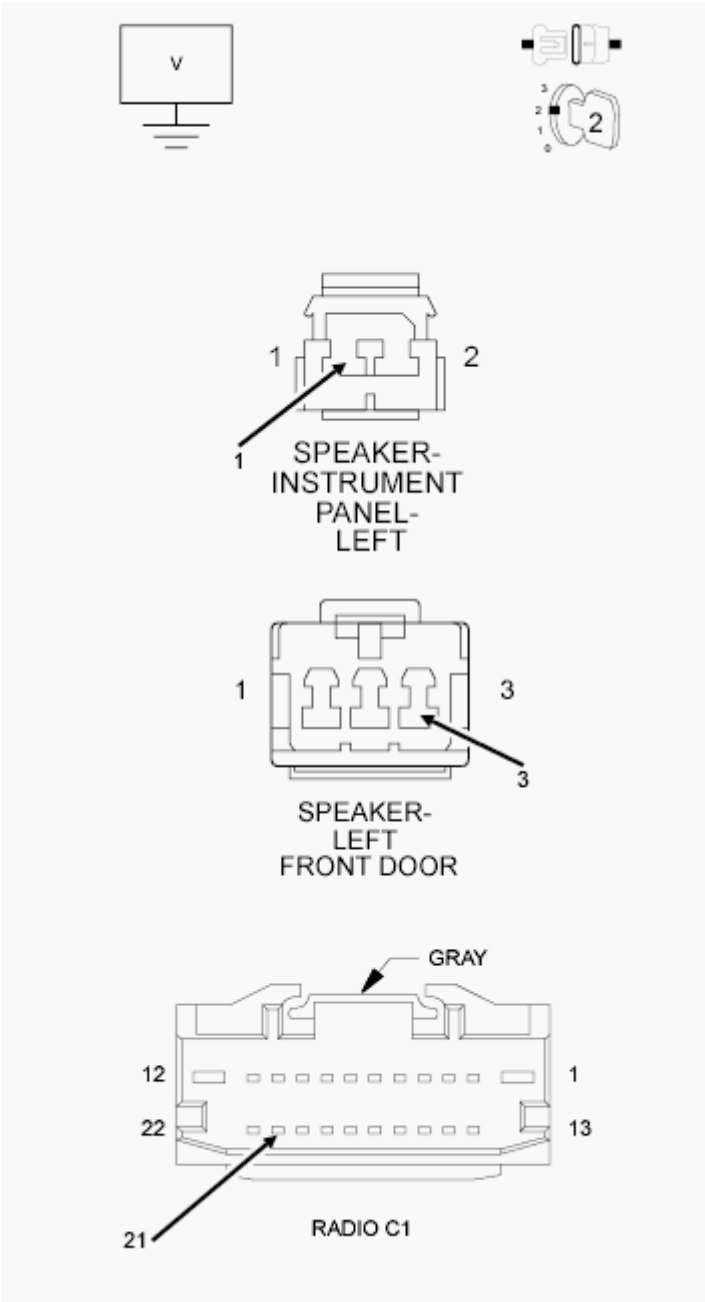

Fig. 5: Measuring Voltage Between Ground & Left Front Speaker (+) Circuit
Courtesy of CHRYSLER GROUP, LLC

1. Turn the ignition off.
2. Disconnect the Radio C1 harness connector.
3. Disconnect the Left Front Door Speaker harness connector.
4. Disconnect the Left Front I/P Speaker harness connector.
5. Turn the ignition on.
6. Measure the voltage between ground and the (X201) Left Front Speaker (+) circuit.

Is there any voltage present?

Yes

- Repair the (X201) Left Front Speaker (+) CIRCUIT FOR A SHORT TO VOLTAGE.
- Perform the BODY VERIFICATION TEST. Refer to **BODY VERIFICATION TEST** .

No

- Go To 3.

3. **CHECK FOR VOLTAGE ON THE (X291) LEFT FRONT SPEAKER (-) CIRCUIT**

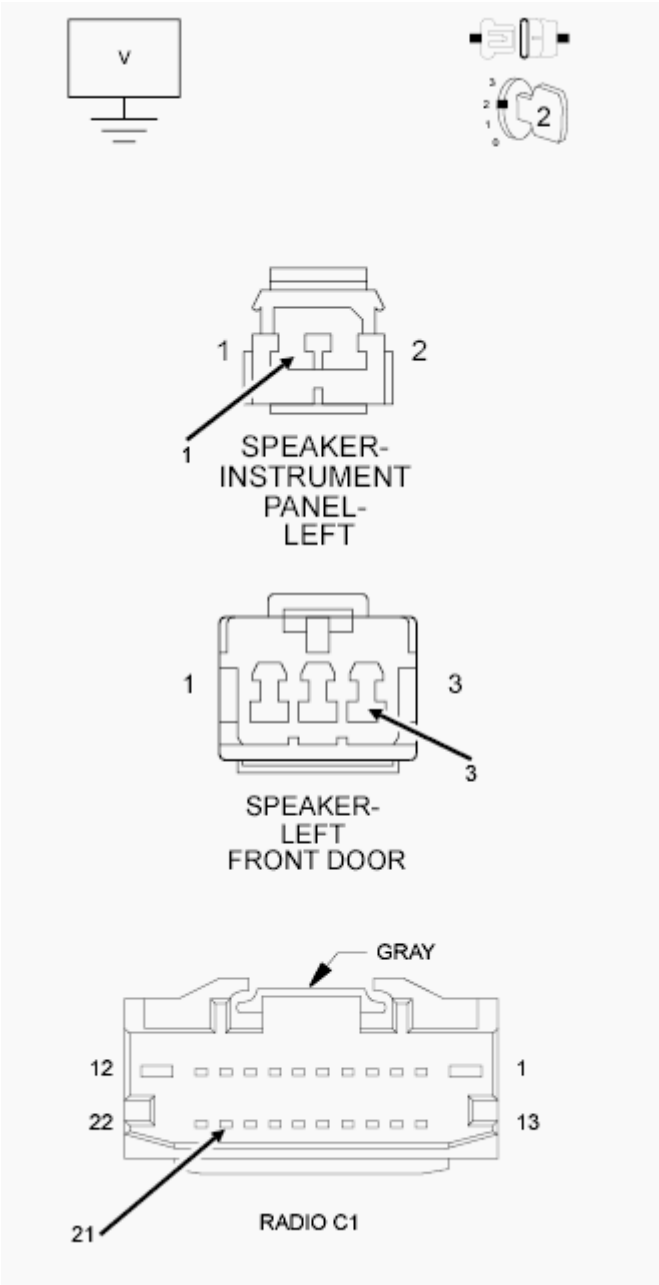

Fig. 6: Measuring Voltage Between Ground & Left Front Speaker (-) Circuit
Courtesy of CHRYSLER GROUP, LLC

1. Measure the voltage between ground and the (X291) Left Front Speaker (-) circuit.

   Is there any voltage present?

   Yes

   - Repair the (X291) Left Front Speaker (-) CIRCUIT FOR A SHORT TO VOLTAGE.
   - Perform the BODY VERIFICATION TEST. Refer to **BODY VERIFICATION TEST** .

No

- Replace the Radio in accordance with the Service Information.
- Perform the BODY VERIFICATION TEST. Refer to **BODY VERIFICATION TEST** .

B1403-FRONT LEFT AUDIO SPEAKER OUTPUT CIRCUIT FOR AN OPEN

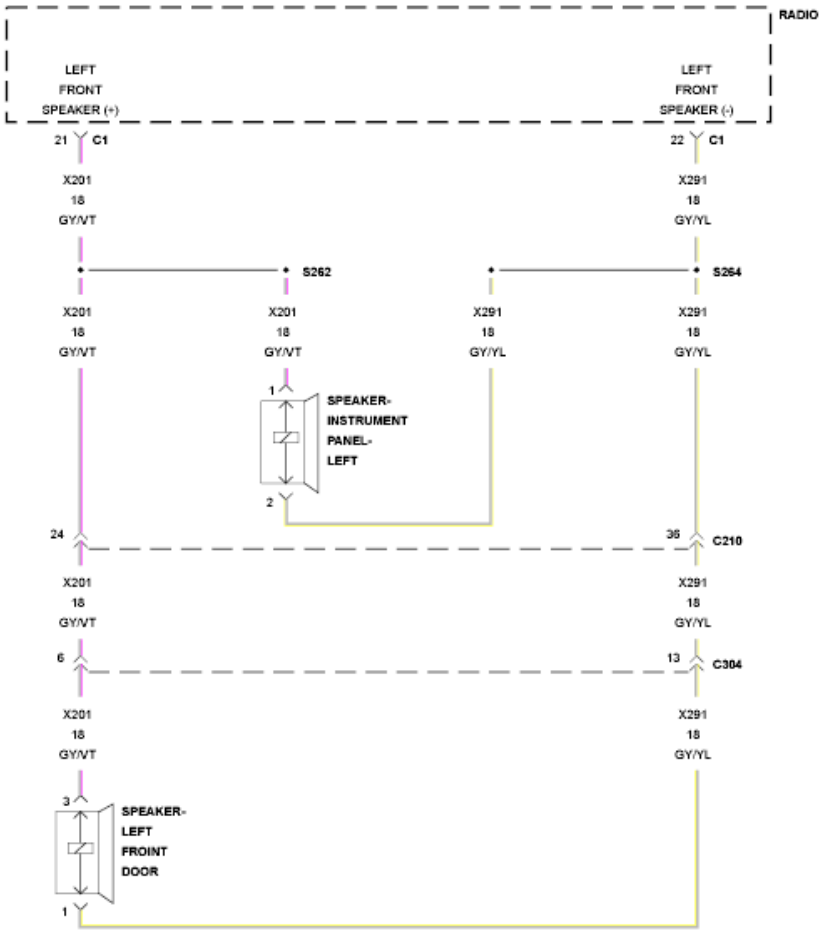

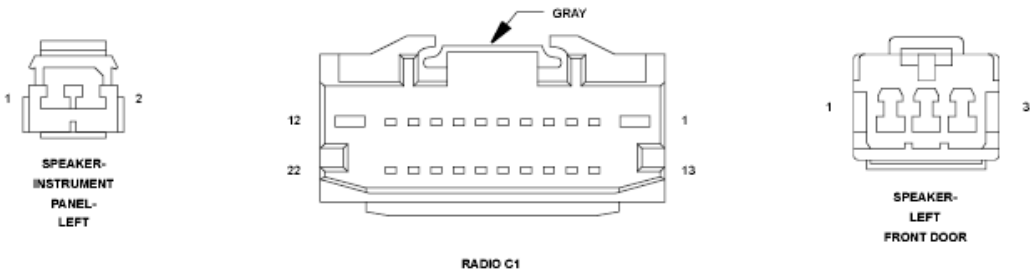

Fig. 7: Front Left Audio Speaker Wiring Diagram
Courtesy of CHRYSLER GROUP, LLC

For a complete wiring diagram, **refer to appropriate SYSTEM WIRING DIAGRAMS article** .

THEORY OF OPERATION

The (X201) Left Front Speaker (+) circuit and the (X291) Left Front Speaker (-) circuit are outputs of the Radio. The Radio controls and monitors these circuits for a concern.

For a detailed description of the Audio System. Refer to **DESCRIPTION** .

For additional information regarding the operation of the Audio System. Refer to **OPERATION** .

WHEN MONITORED:

With the Radio on.

SET CONDITION:

The Radio detects an open condition on the speaker output circuit.

POSSIBLE CAUSES

Possible Causes
(X201) LEFT FRONT SPEAKER (+) CIRCUIT FOR AN OPEN
(X291) LEFT FRONT SPEAKER (-) CIRCUIT FOR AN OPEN
LEFT FRONT SPEAKER
LEFT FRONT INSTRUMENT PANEL (I/P) SPEAKER
RADIO

DIAGNOSTIC TEST

1. **CHECK FOR AN INTERMITTENT CONDITION**

NOTE: **This vehicle has a Front I/P Speaker wired in parallel with the Front Door Speaker.**

1. Turn the ignition on and open one of the front doors.

NOTE: **A front door must remain open whenever checking or erasing Radio DTC's.**

2. Using the scan tool, record and erase the Radio DTC's.
3. Turn the Radio on.
4. Adjust the speakers to the front and center.

5. Using the scan tool, read the active Radio DTC's.

   Does the scan tool read: B1403-FRONT LEFT AUDIO SPEAKER OUTPUT CIRCUIT FOR AN OPEN?

   Yes

   - Go To 2.

   No

   - Test complete, the condition or conditions that originally set this DTC are not present at this time. Using the wiring diagrams as a guide, check all related splices and connectors for signs of water intrusion, corrosion, pushed out or bent terminals and correct pin tension.
   - Perform the BODY VERIFICATION TEST. Refer to **BODY VERIFICATION TEST** .

2. **CHECK THE LEFT FRONT SPEAKER**

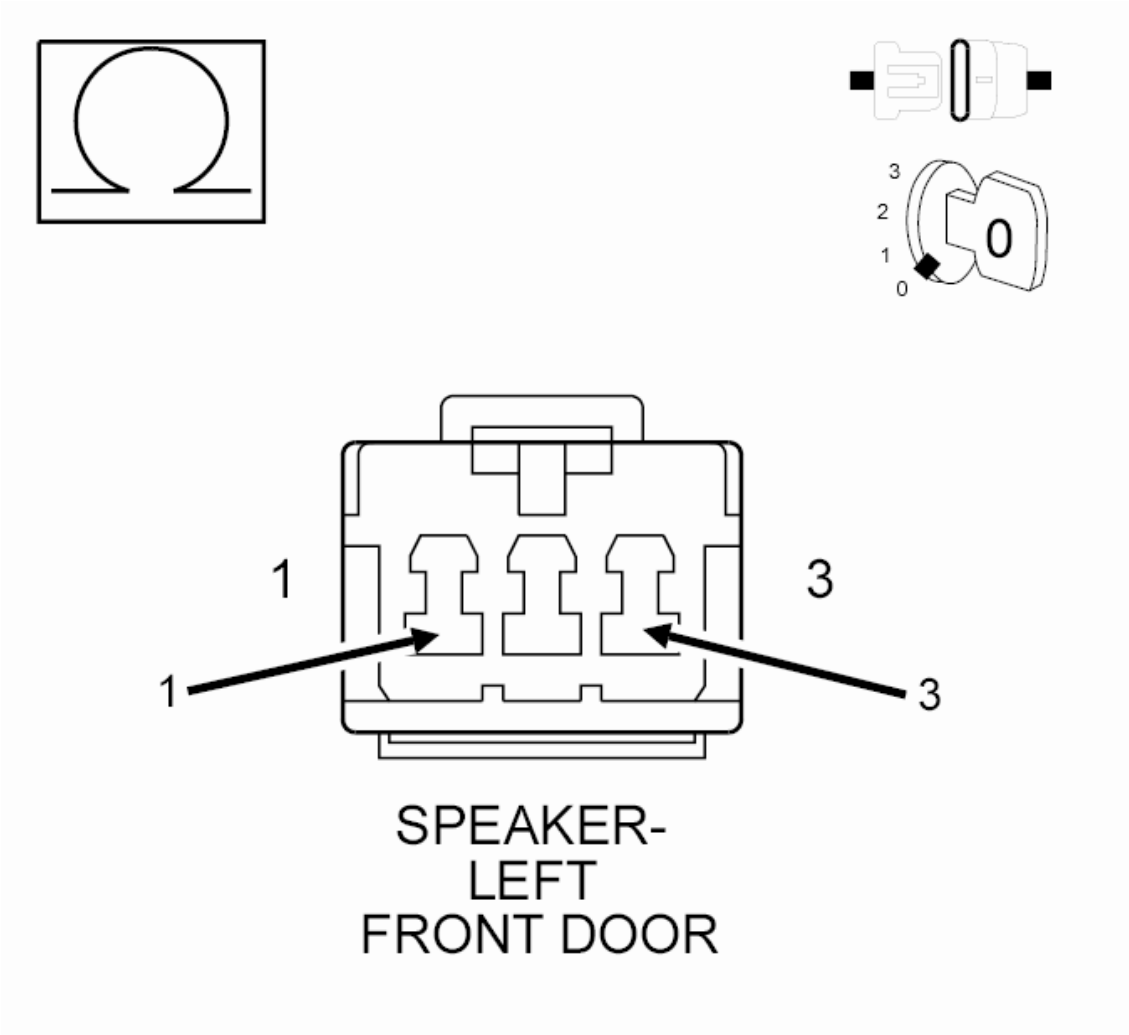

Fig. 8: Checking The Left Front Speaker

Courtesy of CHRYSLER GROUP, LLC

1. Turn the ignition off.
2. Disconnect the Left Front Speaker.
3. Measure the resistance of the speaker between the two terminals.

NOTE: **The graphic shows the connector for reference only. Measure between the speaker terminals.**

Is the resistance above 5.0 Ohms?

Yes

- Replace the Left Front Speaker in accordance with the Service Information.
- Perform the BODY VERIFICATION TEST. Refer to **BODY VERIFICATION TEST** .

No

- Go To 3.

3. **CHECK THE LEFT FRONT I/P SPEAKER**

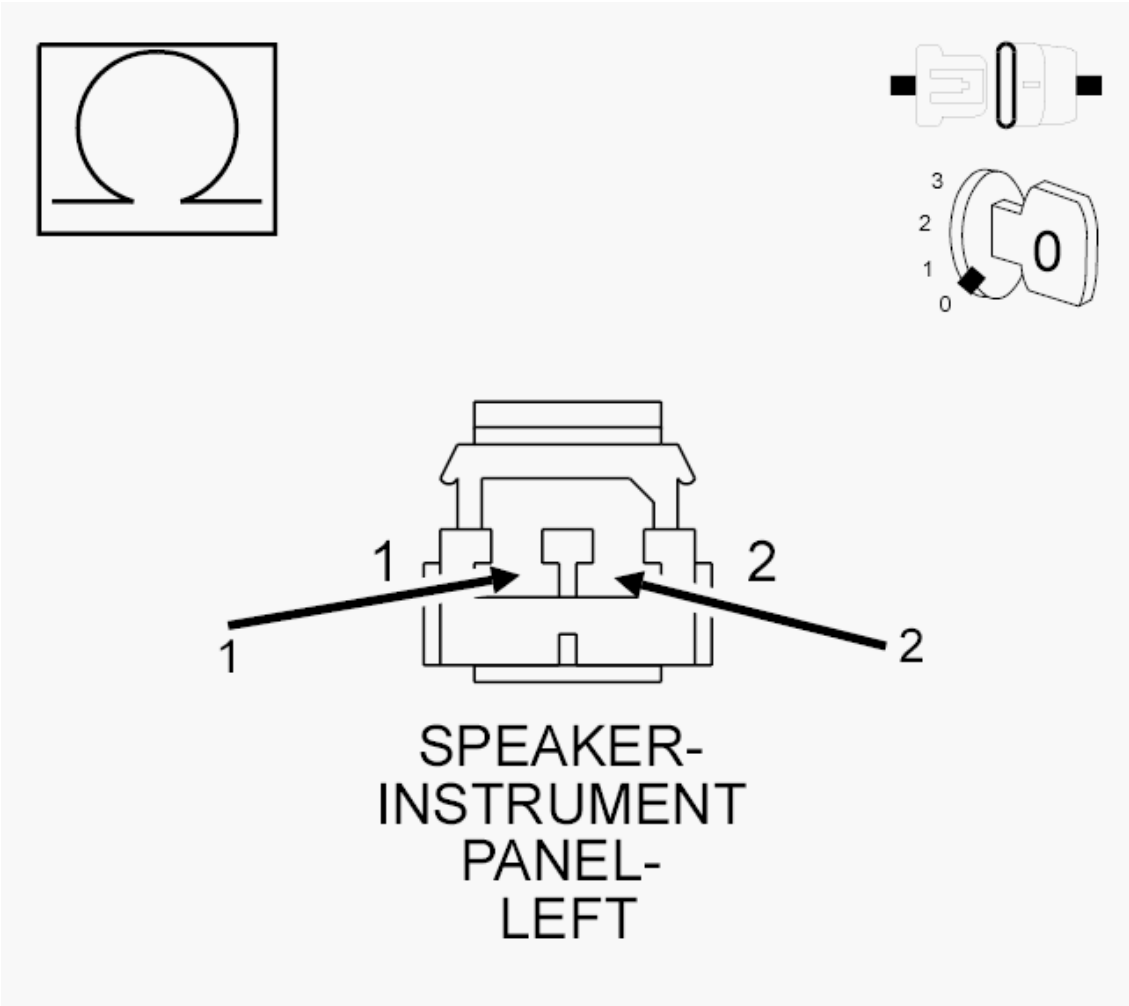

Fig. 9: Checking The Left Front I/P Speaker
Courtesy of CHRYSLER GROUP, LLC

1. Turn the ignition off.
2. Disconnect the Left Front I/P Speaker.
3. Measure the resistance of the speaker between the two terminals.

NOTE: **The graphic shows the connector for reference only. Measure between the speaker terminals.**

Is the resistance above 5.0 Ohms?

Yes

- Replace the Left Front I/P Speaker in accordance with the Service Information.
- Perform the BODY VERIFICATION TEST. Refer to **BODY VERIFICATION TEST** .

No

- Go To 4.

4. **CHECK THE (X201) LEFT FRONT SPEAKER (+) CIRCUIT FOR AN OPEN**

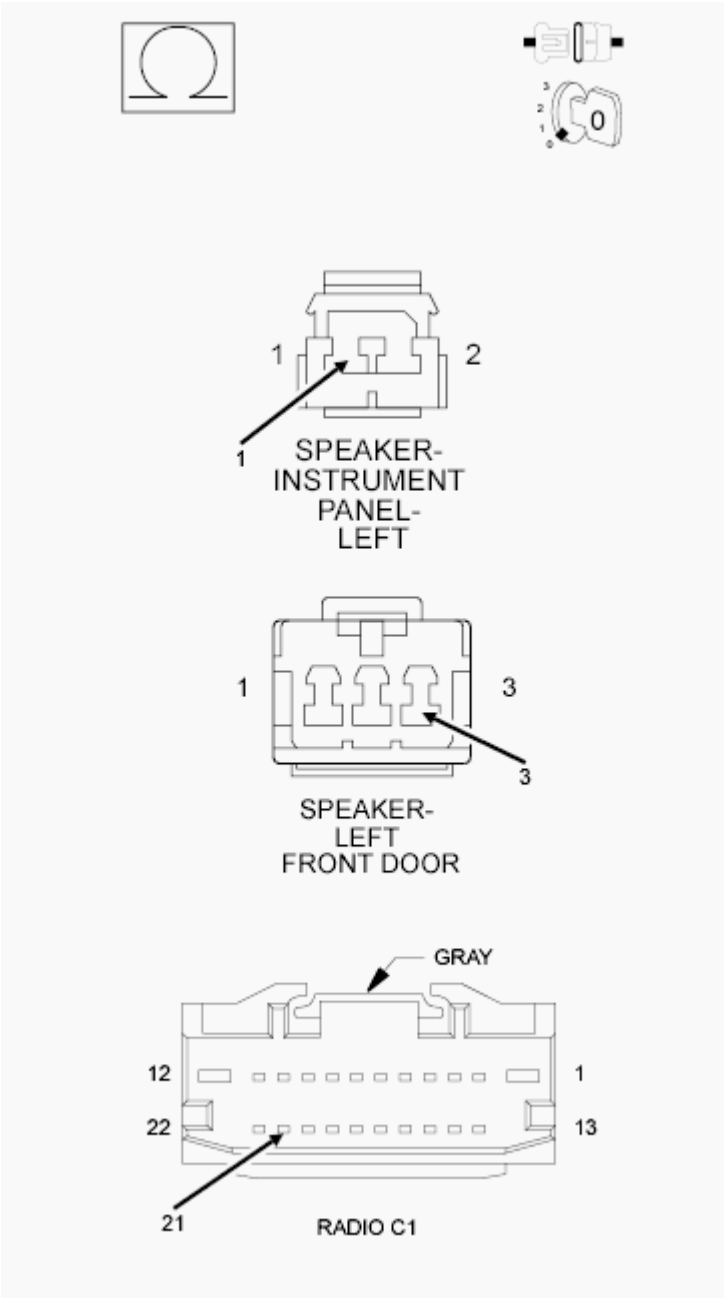

Fig. 10: Checking Left Front Speaker (+) Circuit For An Open
Courtesy of CHRYSLER GROUP, LLC

1. Turn the ignition off.
2. Disconnect the Radio C1 harness connector.
3. Measure the resistance of the (X201) Left Front Speaker (+) circuit between the Radio C1 connector, and the Left Front Speaker harness connector and the Left Front I/P Speaker harness.

Is the resistance below 5.0 Ohms?

Yes

- Go To 5.

No

- Repair an open in the (X201) Left Front Speaker (+) circuit.
- Perform the BODY VERIFICATION TEST. Refer to **BODY VERIFICATION TEST** .

5. **CHECK THE (X291) LEFT FRONT SPEAKER (-) CIRCUIT FOR AN OPEN**

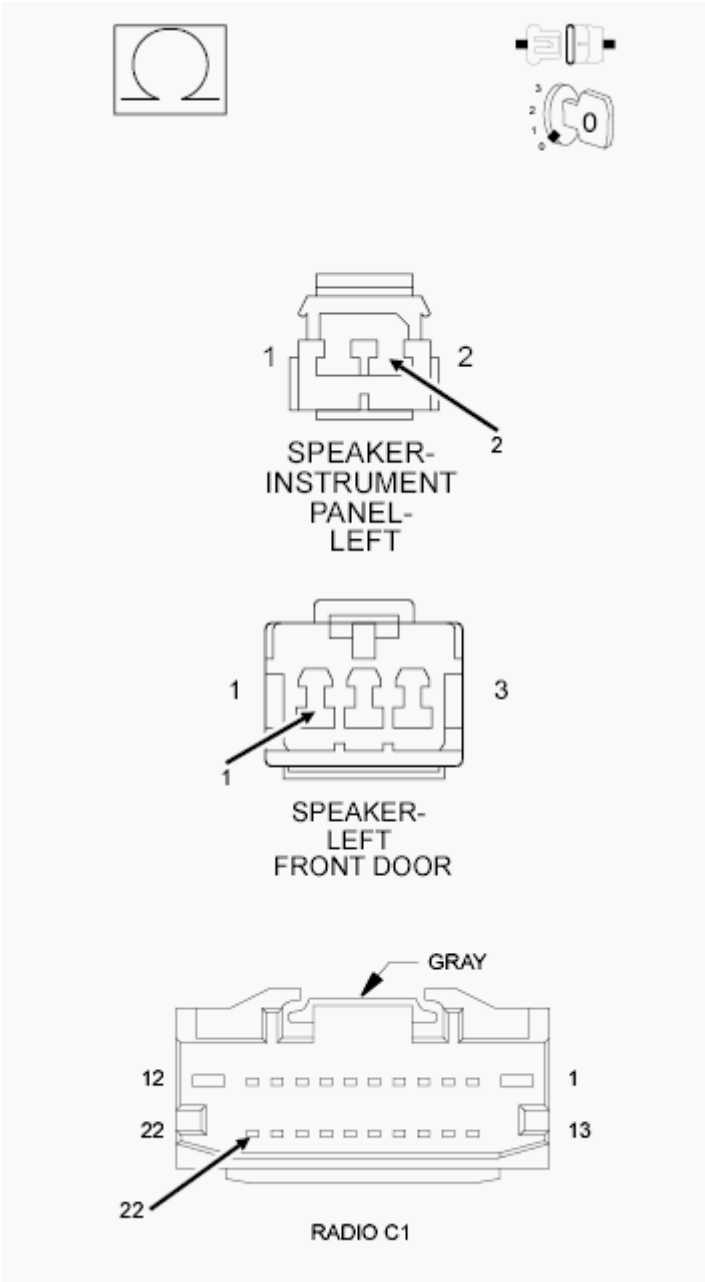

Fig. 11: Checking Left Front Speaker (-) Circuit For An Open
Courtesy of CHRYSLER GROUP, LLC

1. Measure the resistance of the (X291) Left Front Speaker (-) circuit between the Radio C1 connector, and the Left Front Speaker harness connector and the Left Front I/P Speaker harness.

   Is the resistance below 5.0 Ohms?

   Yes

   - Replace the Radio in accordance with the Service Information.

- Perform the BODY VERIFICATION TEST. Refer to **BODY VERIFICATION TEST** .

No

- Repair an open in the (X291) Left Front Speaker (-) circuit.
- Perform the BODY VERIFICATION TEST. Refer to **BODY VERIFICATION TEST** .

B1405-FRONT RIGHT AUDIO SPEAKER OUTPUT CIRCUIT LOW

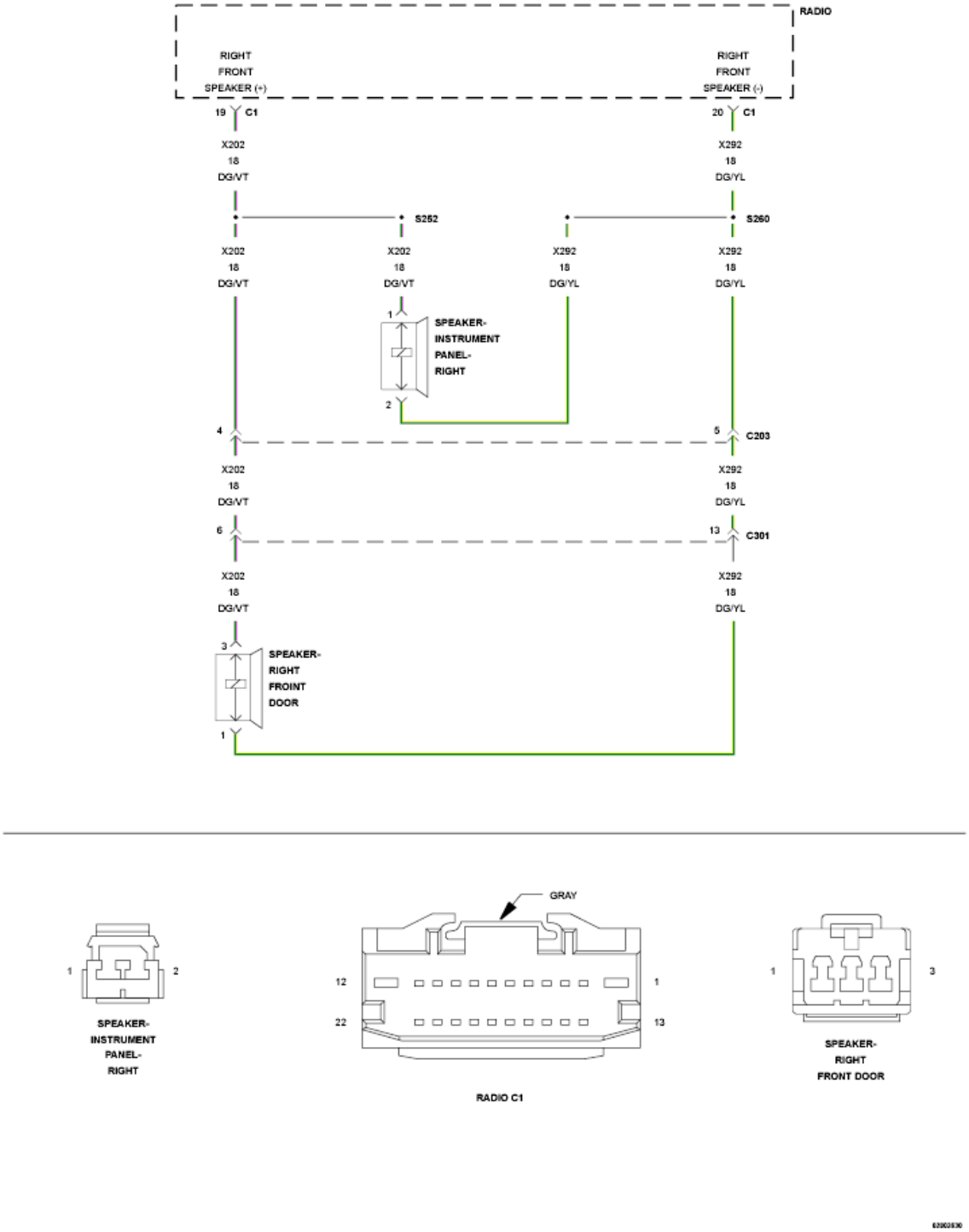

Fig. 12: Front Right Audio Speaker Wiring Diagram
Courtesy of CHRYSLER GROUP, LLC

For a complete wiring diagram, **refer to appropriate SYSTEM WIRING DIAGRAMS article** .

THEORY OF OPERATION

The (X202) Right Front Speaker (+) circuit and the (X292) Right Front Speaker (-) circuit are outputs of the Radio. The Radio controls and monitors these circuits for a concern.

For a detailed description of the Audio System. Refer to **DESCRIPTION** .

For additional information regarding the operation of the Audio System. Refer to **OPERATION** .

WHEN MONITORED:

With the Radio on.

SET CONDITION:

The Radio detects a short to ground condition on the speaker output circuit.

POSSIBLE CAUSES

Possible Causes
(X202) RIGHT FRONT DOOR SPEAKER (+) CIRCUIT FOR A SHORT TO GROUND
(X292) RIGHT FRONT DOOR SPEAKER (-) CIRCUIT FOR A SHORT TO GROUND
RIGHT FRONT SPEAKER
RIGHT FRONT INSTRUMENT PANEL (I/P) SPEAKER
RADIO

DIAGNOSTIC TEST

1. **CHECK FOR AN INTERMITTENT CONDITION**

   NOTE: This vehicle has a Front I/P Speaker wired in parallel with the Front Door Speaker.

   1. Turn the ignition on and open one of the front doors.

      NOTE: A front door must remain open whenever checking or erasing Radio DTC's.

   2. Using the scan tool, record and erase the Radio DTC's.
   3. Turn the Radio on.
   4. Adjust the speakers to the front and center.
   5. Using the scan tool, read the active Radio DTC's.

      Does the scan tool read: B1405-FRONT RIGHT AUDIO SPEAKER OUTPUT CIRCUIT LOW?

      Yes

- Go To 2.

No

- Test complete, the condition or conditions that originally set this DTC are not present at this time. Using the wiring diagrams as a guide, check all related splices and connectors for signs of water intrusion, corrosion, pushed out or bent terminals and correct pin tension.
- Perform the BODY VERIFICATION TEST. Refer to **BODY VERIFICATION TEST** .

2. **CHECK THE RIGHT FRONT SPEAKERS**
   1. Make sure one of the front doors is still open.
   2. Using the scan tool, erase the DTC's.
   3. Turn the ignition off.
   4. Disconnect the Right Front Speaker harness connector from the Right Front Speaker.
   5. Disconnect the Right Front I/P Speaker harness connector from the Right Front I/P Speaker.
   6. Turn the ignition on.
   7. Turn the radio on.
   8. Using the scan tool, read the active Radio DTC's.

   Does the scan tool read: B1405-FRONT RIGHT AUDIO SPEAKER OUTPUT CIRCUIT LOW?

   Yes

   - Go To 4.

   No

   - Go To 3.

3. **CHECK THE RIGHT FRONT I/P SPEAKER**
   1. Make sure one of the front doors is still open.
   2. Using the scan tool, erase the DTC's.
   3. Turn the ignition off.
   4. Re-connect the Right Front Speaker harness connector to the Right Front Speaker.
   5. Turn the ignition on.
   6. Turn the radio on.
   7. Using the scan tool, read the active Radio DTC's.

   Does the scan tool read: B1405-FRONT RIGHT AUDIO SPEAKER OUTPUT CIRCUIT LOW?

   Yes

   - Replace the Right Front Speaker in accordance with the Service Information.
   - Perform the BODY VERIFICATION TEST. Refer to **BODY VERIFICATION TEST** .

No

- Replace the Right Front I/P Speaker in accordance with the Service Information.
- Perform the BODY VERIFICATION TEST. Refer to **BODY VERIFICATION TEST** .

4. **CHECK THE (X202) RIGHT FRONT DOOR SPEAKER (+) CIRCUIT FOR A SHORT TO GROUND**

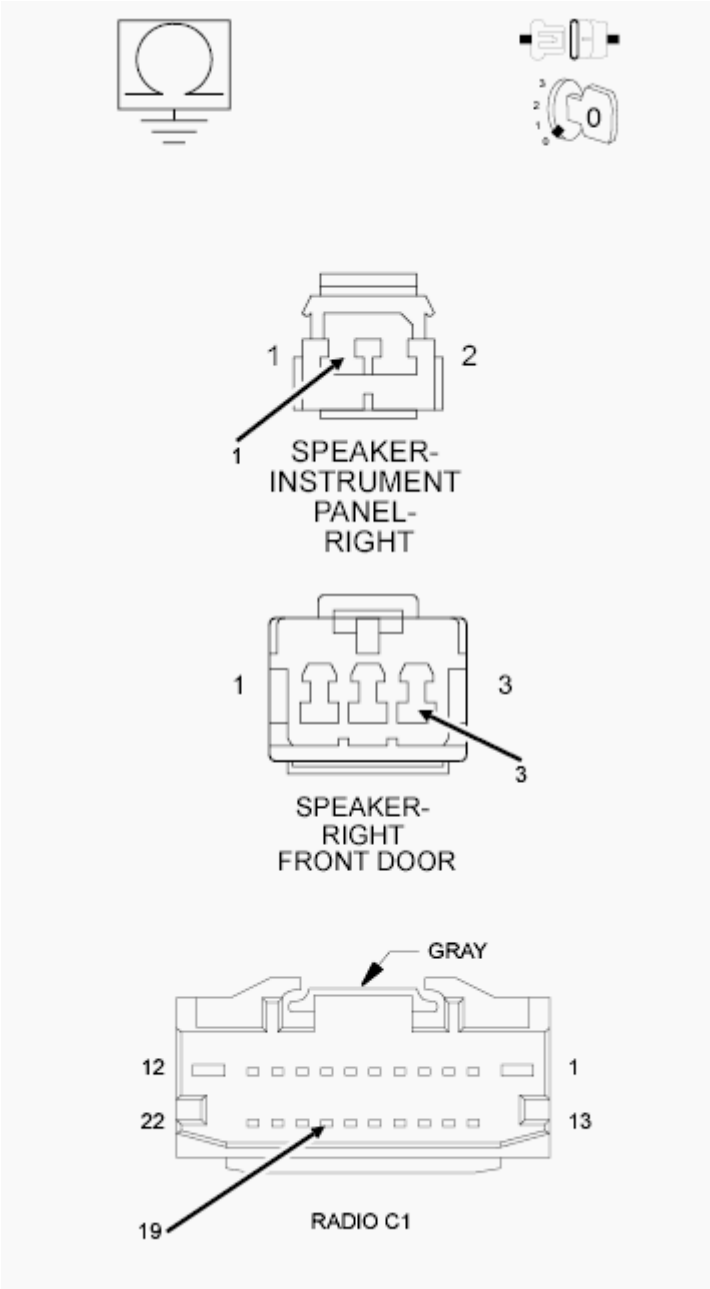

Fig. 13: Checking Right Front Door Speaker (+) Circuit For A Short To Ground
Courtesy of CHRYSLER GROUP, LLC

1. Turn the ignition off.

2. Disconnect the Radio C1 harness connector.
3. Measure the resistance between ground and the (X202) Right Front Door Speaker (+) circuit

   Is the resistance below 5.0 Ohms?

   Yes

   - Repair the (X202) Right Front Door Speaker (+) circuit for a short to ground.
   - Perform the BODY VERIFICATION TEST. Refer to **BODY VERIFICATION TEST** .

   No

   - Go To 5.

5. **CHECK THE (X292) RIGHT FRONT DOOR SPEAKER (-) CIRCUIT FOR A SHORT TO GROUND**

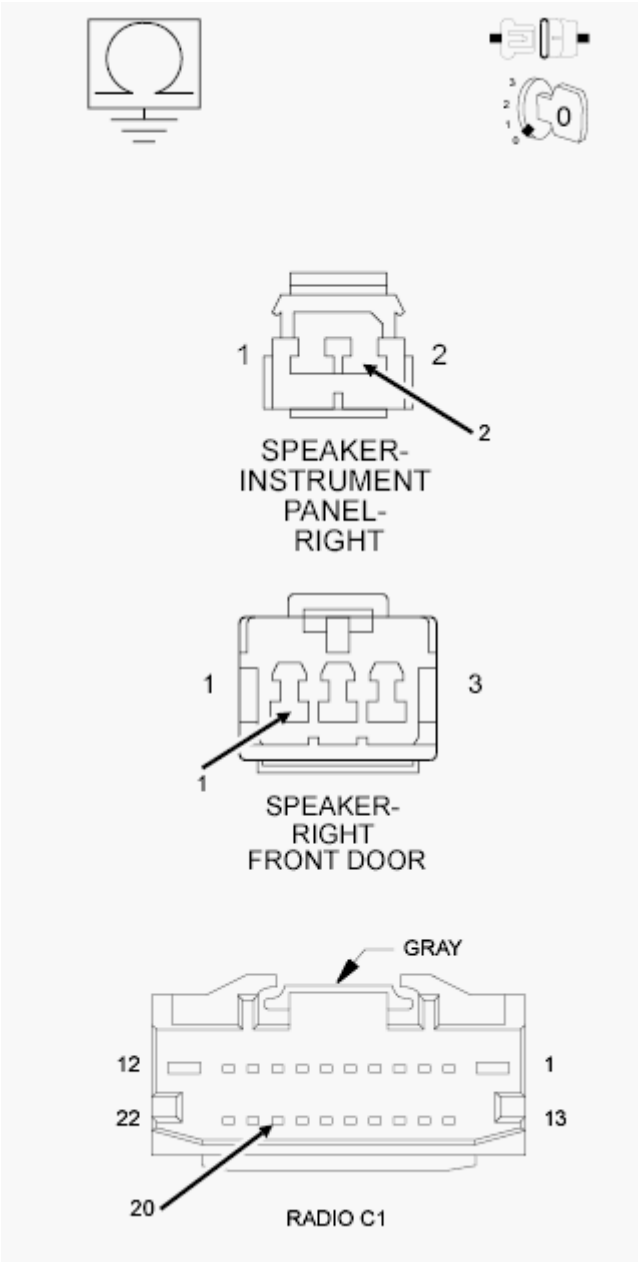

Fig. 14: Checking Right Front Door Speaker (-) Circuit For A Short To Ground
Courtesy of CHRYSLER GROUP, LLC

1. Measure the resistance between ground and the (X292) Right Front Door Speaker (-) circuit.

   Is the resistance below 5.0 Ohms?

   Yes

   - Repair the (X292) Right Front Door Speaker (-) circuit for a short to ground.
   - Perform the BODY VERIFICATION TEST. Refer to **BODY VERIFICATION TEST** .

No

- Replace the Radio in accordance with the Service Information.
- Perform the BODY VERIFICATION TEST. Refer to **BODY VERIFICATION TEST** .

B1406-FRONT RIGHT AUDIO SPEAKER OUTPUT CIRCUIT HIGH

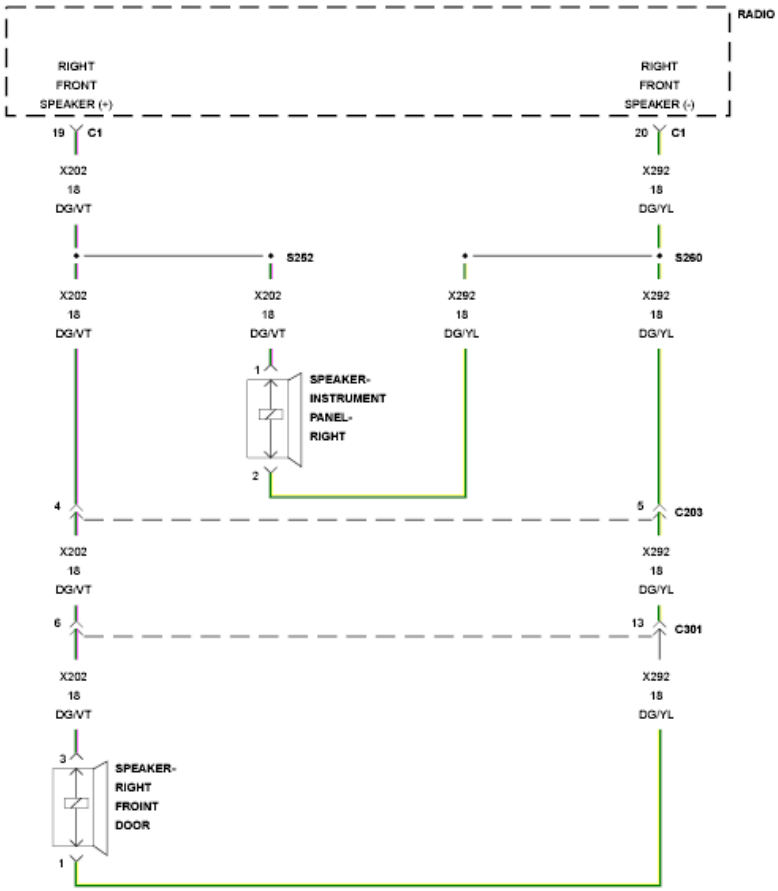

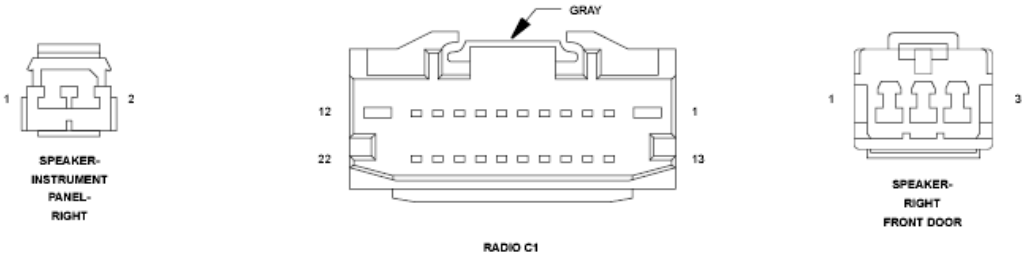

Fig. 15: Front Right Audio Speaker Wiring Diagram
Courtesy of CHRYSLER GROUP, LLC

For a complete wiring diagram, **refer to appropriate SYSTEM WIRING DIAGRAMS article** .

THEORY OF OPERATION

The (X202) Right Front Speaker (+) circuit and the (X292) Right Front Speaker (-) circuit are outputs of the Radio. The Radio controls and monitors these circuits for a concern.

For a detailed description of the Audio System. Refer to **DESCRIPTION** .

For additional information regarding the operation of the Audio System. Refer to **OPERATION** .

WHEN MONITORED:

With the Radio on.

SET CONDITION:

The Radio detects a short to battery condition on the speaker output circuit.

POSSIBLE CAUSES

Possible Causes
(X202) RIGHT FRONT DOOR SPEAKER (+) SHORTED TO VOLTAGE
(X292) RIGHT FRONT DOOR SPEAKER (-) SHORTED TO VOLTAGE
RADIO

DIAGNOSTIC TEST

1. **CHECK FOR AN INTERMITTENT CONDITION**

NOTE: This vehicle has a Front I/P Speaker wired in parallel with the Front Door Speaker.

1. Turn the ignition on and open one of the front doors.

NOTE: A front door must remain open whenever checking or erasing Radio DTC's.

2. Using the scan tool, record and erase the Radio DTC's.
3. Turn the Radio on.
4. Adjust the speakers to the front and center.
5. Using the scan tool, read the active Radio DTC's.

Does the scan tool display active: B1406-FRONT RIGHT AUDIO SPEAKER OUTPUT CIRCUIT HIGH?

Yes

- Go To 2.

No

- Test complete, the condition or conditions that originally set this DTC are not present at this time. Using the wiring diagrams as a guide, check all related splices and connectors for signs of water intrusion, corrosion, pushed out or bent terminals and correct pin tension.
- Perform the BODY VERIFICATION TEST. Refer to **BODY VERIFICATION TEST** .

2. **CHECK FOR VOLTAGE ON THE (X202) RIGHT FRONT DOOR SPEAKER (+) CIRCUIT**

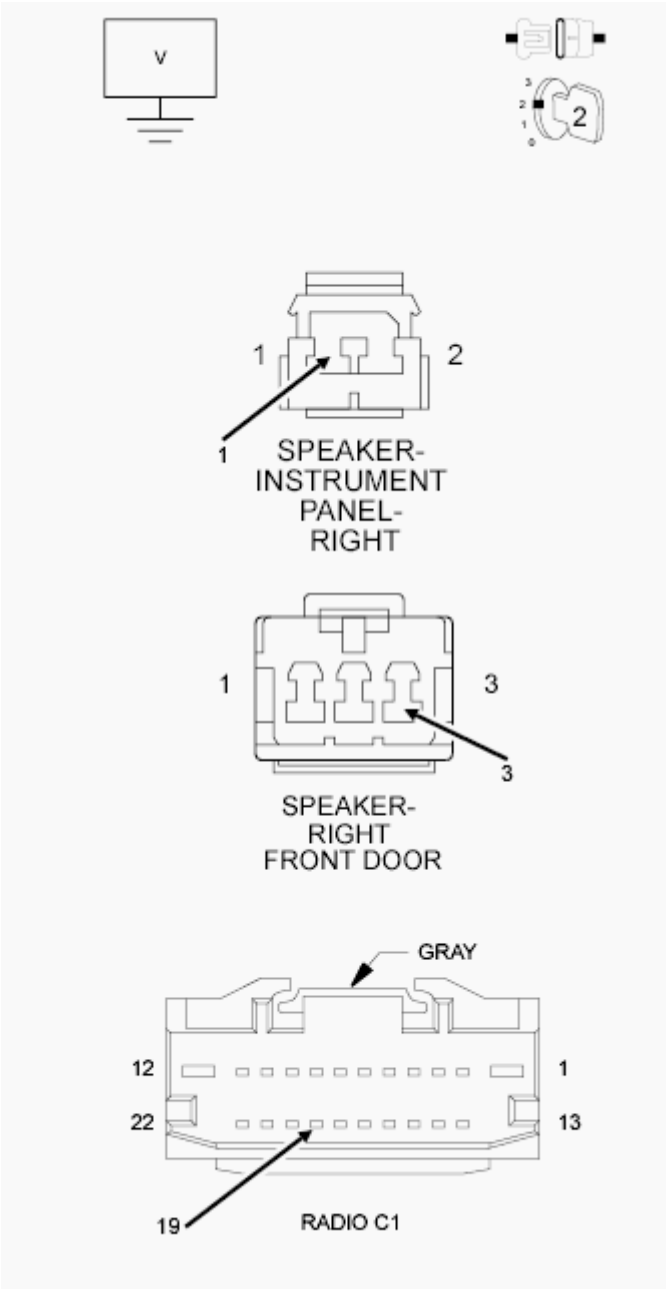

Fig. 16: Measuring Voltage Between Ground & Right Front Door Speaker (+) Circuit
Courtesy of CHRYSLER GROUP, LLC

1. Turn the ignition off.
2. Disconnect the Radio C1 harness connector.
3. Disconnect the Right Front Door Speaker harness connector.
4. Disconnect the Right Front I/P Speaker harness connector.
5. Turn the ignition on.
6. Measure the voltage between ground and the (X202) Right Front Door Speaker (+) circuit.

Is there any voltage present?

Yes

- Repair the (X202) Right Front Door Speaker (+) CIRCUIT FOR A SHORT TO VOLTAGE.
- Perform the BODY VERIFICATION TEST. Refer to **BODY VERIFICATION TEST** .

No

- Go To 3.

3. **CHECK FOR VOLTAGE ON THE (X292) RIGHT FRONT DOOR SPEAKER (-) CIRCUIT**

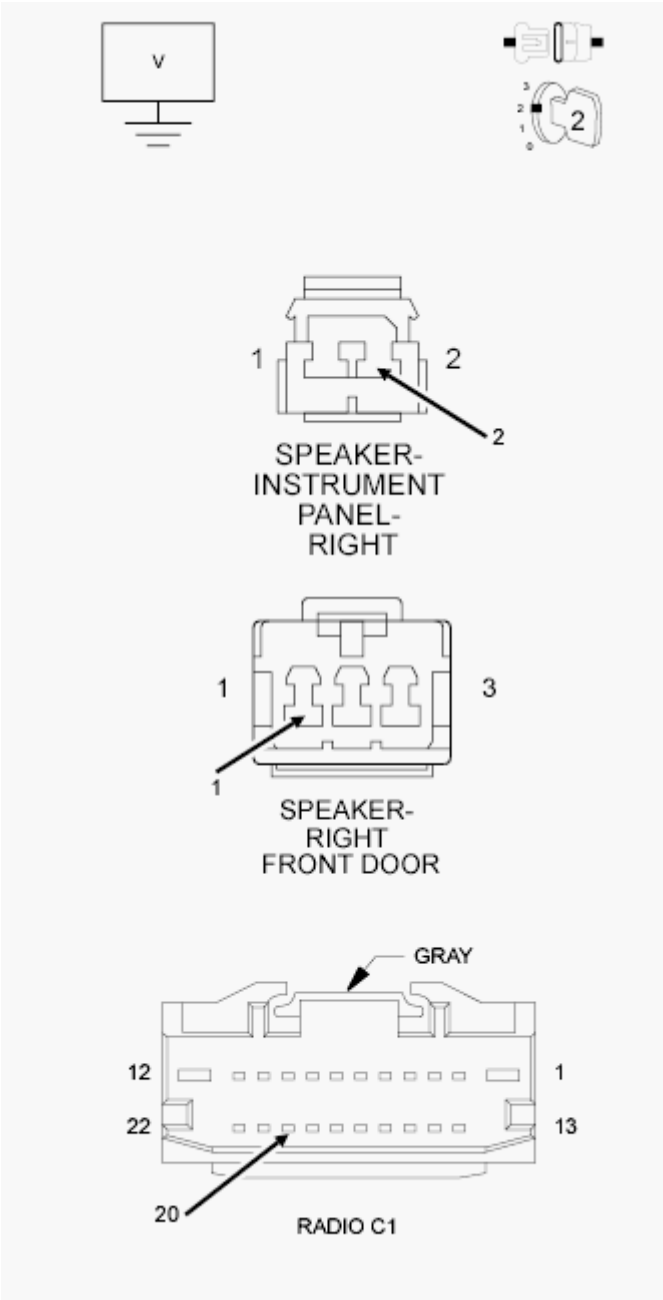

Fig. 17: Measuring Voltage Between Ground & Right Front Door Speaker (-) Circuit
Courtesy of CHRYSLER GROUP, LLC

1. Measure the voltage between ground and the (X292) Right Front Door Speaker (-) circuit.

   Is there any voltage present?

   Yes

   - Repair the (X292) Right Front Door Speaker (-) CIRCUIT FOR A SHORT TO VOLTAGE.
   - Perform the BODY VERIFICATION TEST. Refer to **BODY VERIFICATION TEST** .

No

- Replace the Radio in accordance with the Service Information.
- Perform the BODY VERIFICATION TEST. Refer to **BODY VERIFICATION TEST** .

B1407-FRONT RIGHT AUDIO SPEAKER OUTPUT CIRCUIT FOR AN OPEN

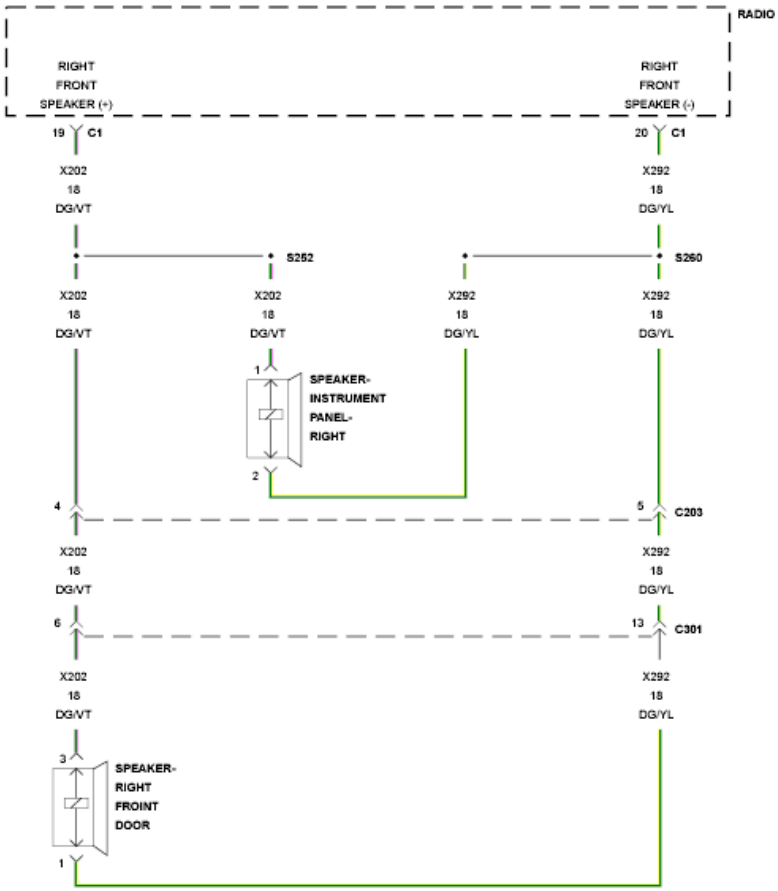

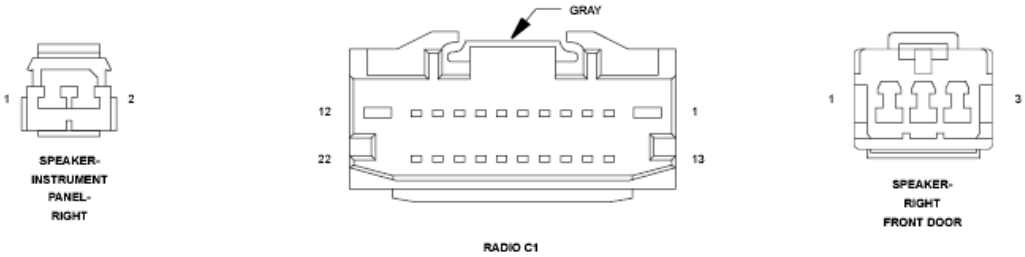

Fig. 18: Front Right Audio Speaker Wiring Diagram
Courtesy of CHRYSLER GROUP, LLC

For a complete wiring diagram, **refer to appropriate SYSTEM WIRING DIAGRAMS article** .

THEORY OF OPERATION

The (X202) Right Front Speaker (+) circuit and the (X292) Right Front Speaker (-) circuit are outputs of the Radio. The Radio controls and monitors these circuits for a concern.

For a detailed description of the Audio System. Refer to **DESCRIPTION** .

For additional information regarding the operation of the Audio System. Refer to **OPERATION** .

WHEN MONITORED:

With the Radio on.

SET CONDITION:

The Radio detects an open condition on the speaker output circuit.

POSSIBLE CAUSES

Possible Causes
(X202) RIGHT FRONT DOOR SPEAKER (+) CIRCUIT FOR AN OPEN
(X292) RIGHT FRONT DOOR SPEAKER (-) CIRCUIT FOR AN OPEN
RIGHT FRONT SPEAKER
RIGHT FRONT INSTRUMENT PANEL (I/P) SPEAKER
RADIO

DIAGNOSTIC TEST

1. **CHECK FOR AN INTERMITTENT CONDITION**

NOTE: **This vehicle has a Front I/P Speaker wired in parallel with the Front Door Speaker.**

1. Turn the ignition on and open one of the front doors.

NOTE: **A front door must remain open whenever checking or erasing Radio DTC's.**

2. Using the scan tool, record and erase the Radio DTC's.
3. Turn the Radio on.
4. Adjust the speakers to the front and center.

5. Using the scan tool, read the active Radio DTC's.

   Does the scan tool read: B1407-FRONT RIGHT AUDIO SPEAKER OUTPUT CIRCUIT FOR AN OPEN?

   Yes

   - Go To 2.

   No

   - Test complete, the condition or conditions that originally set this DTC are not present at this time. Using the wiring diagrams as a guide, check all related splices and connectors for signs of water intrusion, corrosion, pushed out or bent terminals and correct pin tension.
   - Perform the BODY VERIFICATION TEST. Refer to **BODY VERIFICATION TEST** .

2. **CHECK THE RIGHT FRONT SPEAKER**

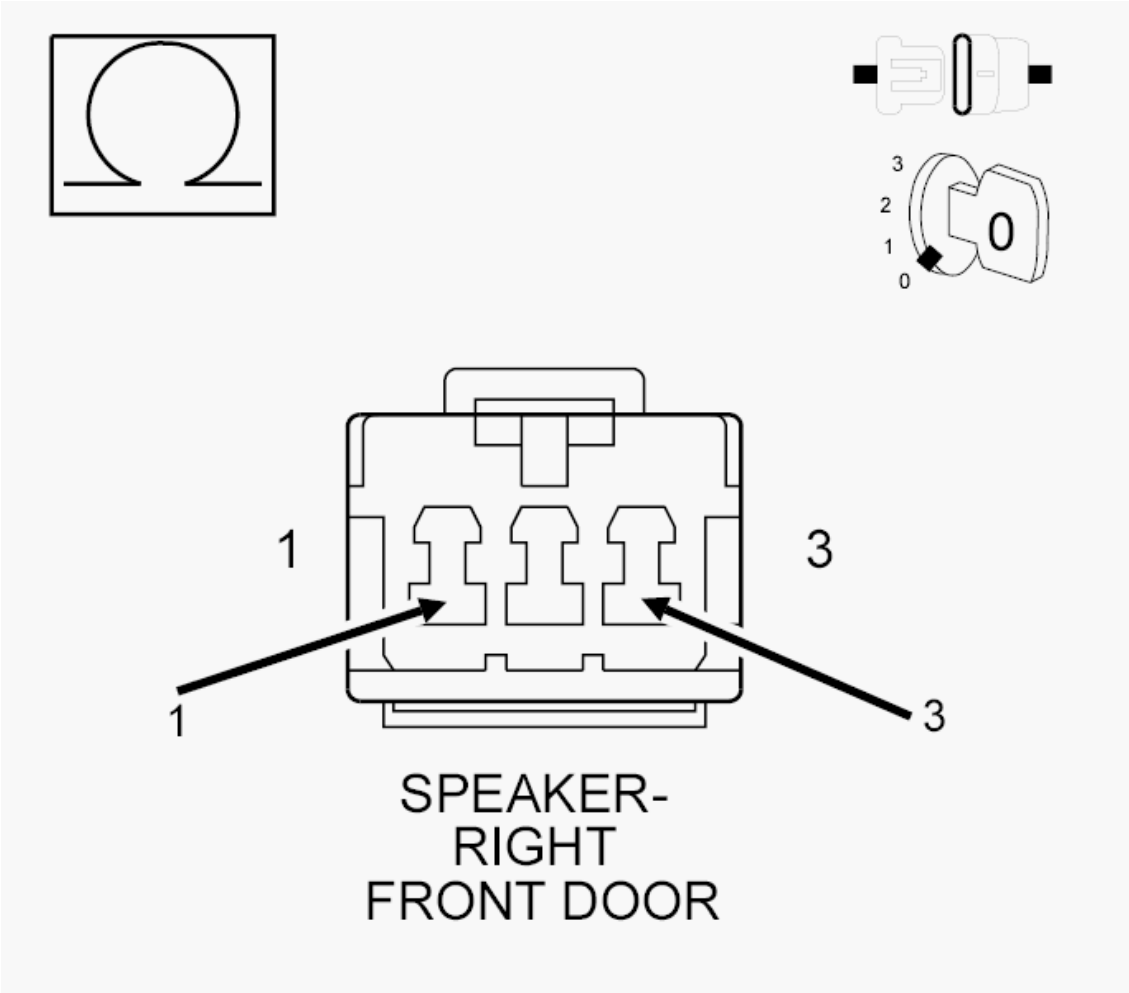

Fig. 19: Checking The Right Front Speaker
Courtesy of CHRYSLER GROUP, LLC

1. Turn the ignition off.
2. Disconnect the Right Front Speaker.
3. Measure the resistance of the speaker between the two terminals.

NOTE: **The graphic shows the connector for reference only. Measure between the speaker terminals.**

Is the resistance above 5.0 Ohms?

Yes

- Replace the Right Front Speaker in accordance with the Service Information.
- Perform the BODY VERIFICATION TEST. Refer to **BODY VERIFICATION TEST** .

No

- Go To 3.

3. **CHECK THE RIGHT FRONT I/P SPEAKER**

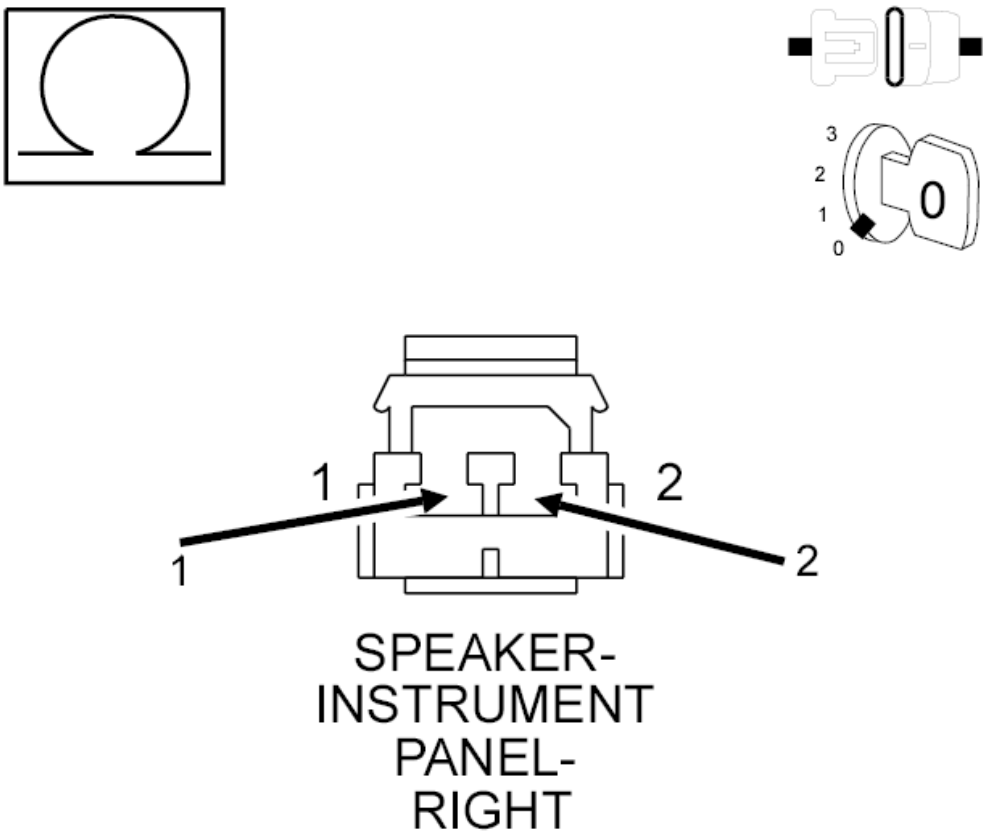

Fig. 20: Checking The Right Front I/P Speaker

Courtesy of CHRYSLER GROUP, LLC

1. Turn the ignition off.
2. Disconnect the Right Front I/P Speaker.
3. Measure the resistance of the speaker between the two terminals.

NOTE: **The graphic shows the connector for reference only. Measure between the speaker terminals.**

Is the resistance above 5.0 Ohms?

Yes

- Replace the Right Front I/P Speaker in accordance with the Service Information.
- Perform the BODY VERIFICATION TEST. Refer to **BODY VERIFICATION TEST** .

No

- Go To 4.

4. **CHECK THE (X202) RIGHT FRONT DOOR SPEAKER (+) FOR AN OPEN**

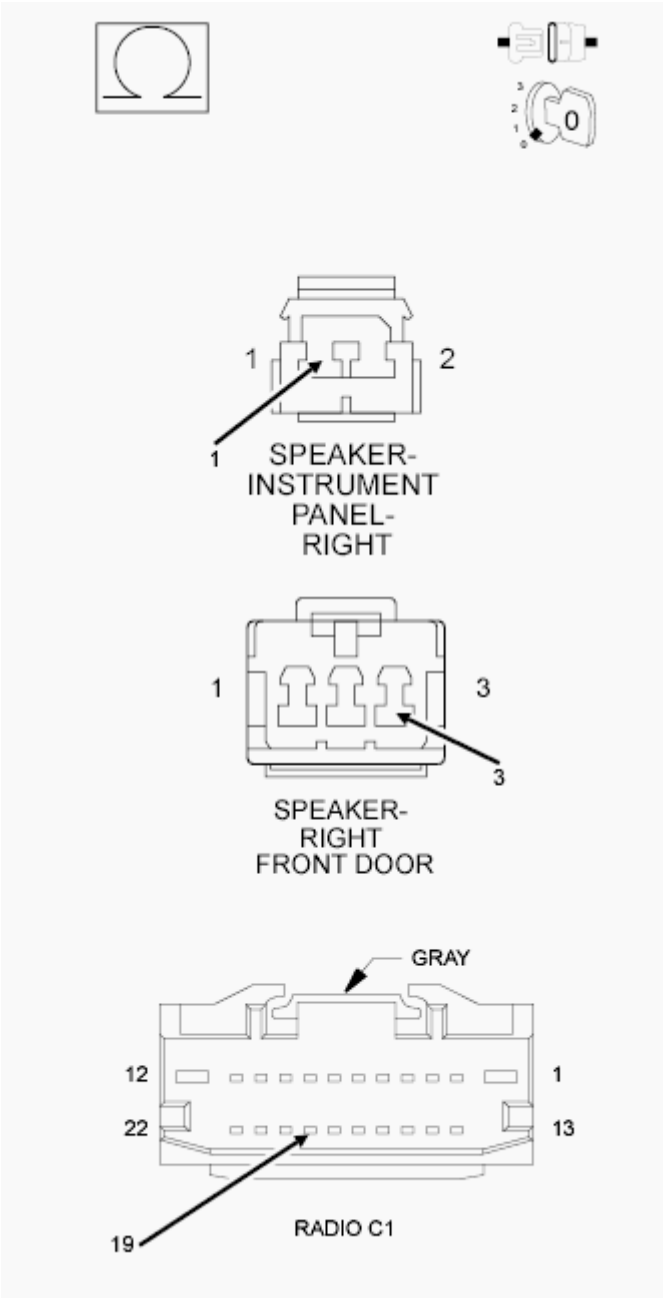

Fig. 21: Checking Right Front Door Speaker (+) For An Open
Courtesy of CHRYSLER GROUP, LLC

1. Turn the ignition off.
2. Disconnect the Radio C1 harness connector.
3. Measure the resistance of the (X202) Right Front Door Speaker (+) circuit between the Radio C1 connector and the Right Front Door Speaker harness connector and the Right Front I/P Speaker harness connector.

   Is the resistance below 5.0 Ohms?

Yes

- Go To 5.

No

- Repair an open in the (X202) Right Front Door Speaker (+) circuit.
- Perform the BODY VERIFICATION TEST. Refer to **BODY VERIFICATION TEST** .

5. **CHECK THE (X292) RIGHT FRONT DOOR SPEAKER (-) CIRCUIT FOR AN OPEN**

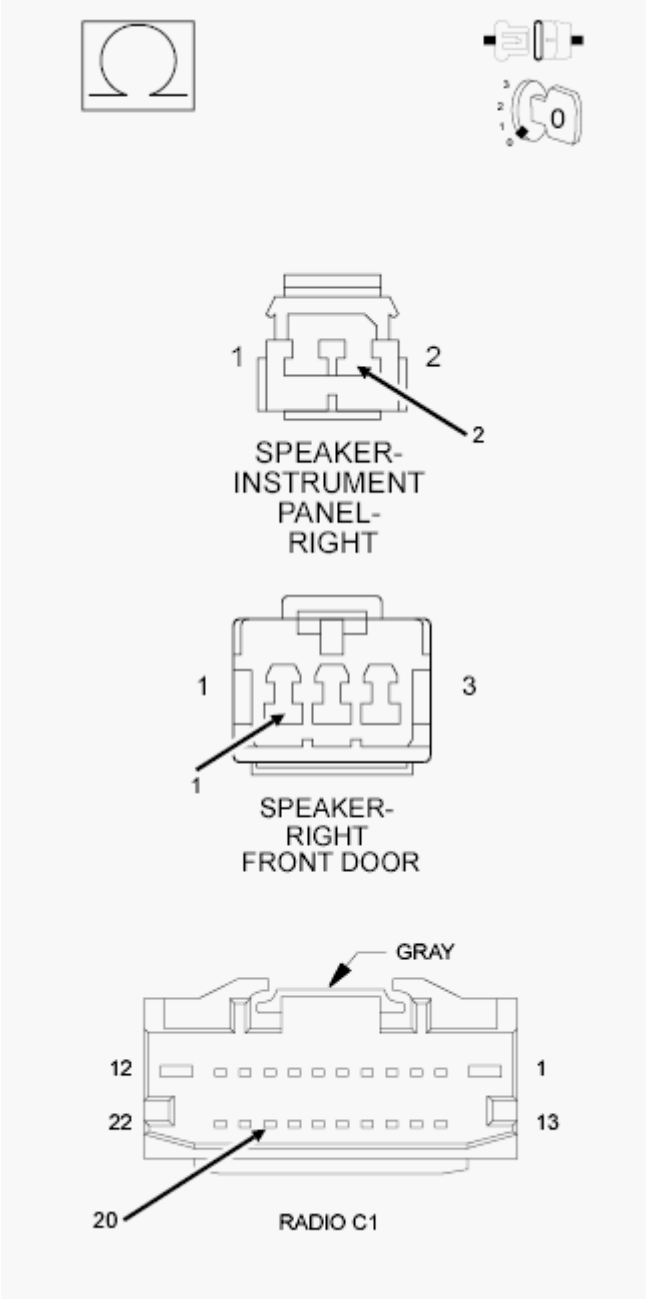

Fig. 22: Checking Right Front Door Speaker (-) Circuit For An Open

Courtesy of CHRYSLER GROUP, LLC

1. Measure the resistance of the (X292) Right Front Door Speaker (-) circuit between the Radio C1 connector and the Right Front Door Speaker harness connector and the Right Front I/P Speaker harness connector.

   Is the resistance below 5.0 Ohms?

   Yes

   - Replace the Radio in accordance with the Service Information.
   - Perform the BODY VERIFICATION TEST. Refer to **BODY VERIFICATION TEST** .

   No

   - Repair an open in the (X292) Right Front Door Speaker (-) circuit.
   - Perform the BODY VERIFICATION TEST. Refer to **BODY VERIFICATION TEST** .

B1409-REAR LEFT AUDIO SPEAKER OUTPUT CIRCUIT LOW - BASE

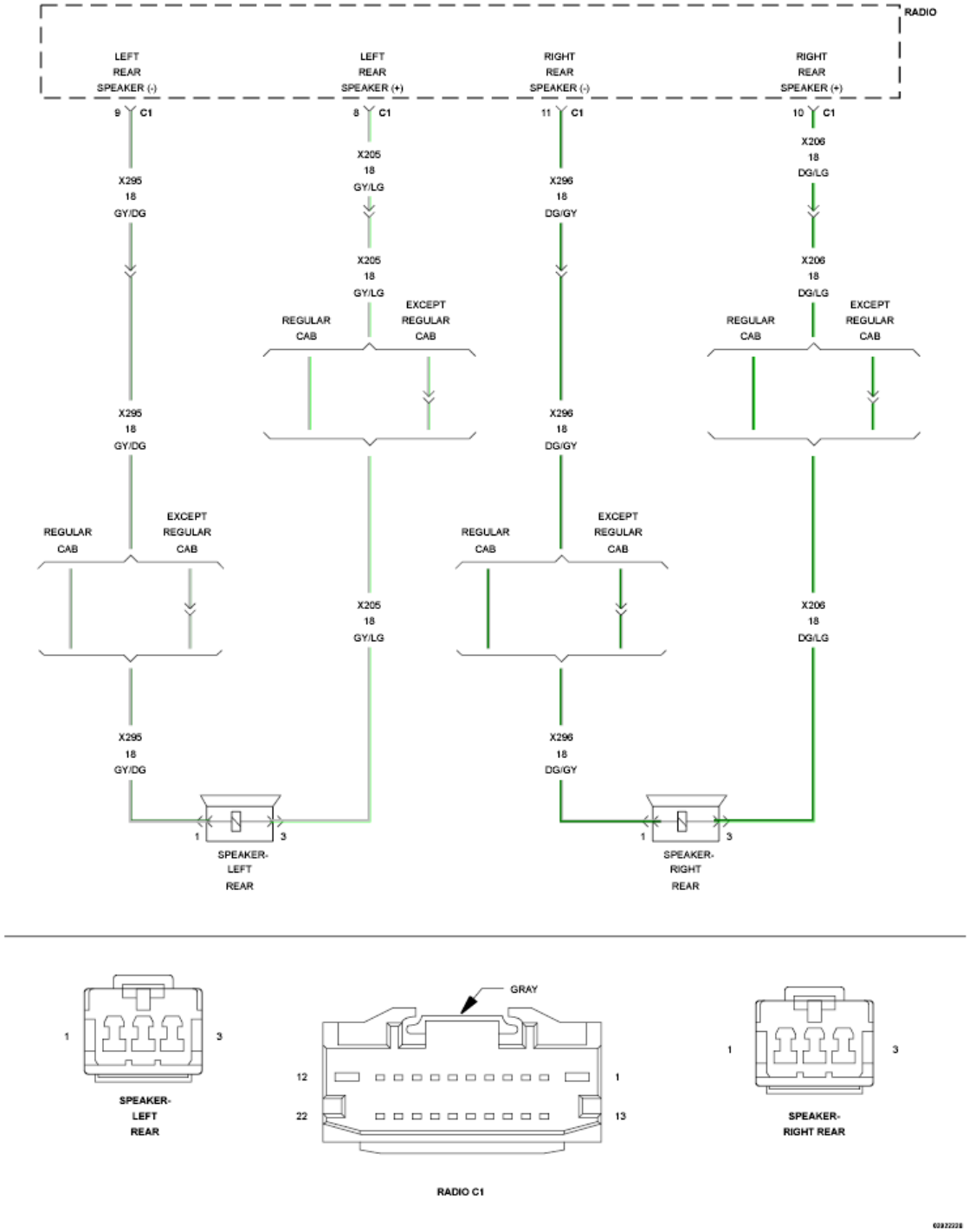

Fig. 23: Rear Left Audio Speaker Wiring Diagram
Courtesy of CHRYSLER GROUP, LLC

For a complete wiring diagram, **refer to appropriate SYSTEM WIRING DIAGRAMS article** .

NOTE: **There are two versions of the B1409 DTC test. In order to select the proper test you must know if the vehicle is equipped with an Amplifier. If the vehicle is equipped with an Amplifier use the B1409-PREMIUM test. If the vehicle is not**

equipped with an Amplifier use the B1409-BASE test.

THEORY OF OPERATION

The (X205) Left Rear Speaker (+) circuit and the (X295) Left Rear Speaker (-) circuit are outputs of the Radio. The Radio controls and monitors these circuits for a concern.

For a detailed description of the Audio System. Refer to **DESCRIPTION** .

For additional information regarding the operation of the Audio System. Refer to **OPERATION** .

WHEN MONITORED:

With the Radio on.

SET CONDITION:

The Radio detects a short to ground condition on the speaker output circuit.

POSSIBLE CAUSES

Possible Causes
(X205) LEFT REAR SPEAKER (+) CIRCUIT FOR A SHORT TO GROUND
(X295) LEFT REAR SPEAKER (-) CIRCUIT FOR A SHORT TO GROUND
LEFT REAR SPEAKER
RADIO

DIAGNOSTIC TEST

1. **CHECK FOR AN INTERMITTENT CONDITION**
    1. Turn the ignition on and open one of the front doors.

       NOTE: A front door must remain open whenever checking or erasing Radio DTC's.

    2. Using the scan tool, record and erase the Radio DTC's.
    3. Turn the Radio on.
    4. Adjust the speakers to the rear and center.
    5. Using the scan tool, read the active Radio DTC's.

       Does the scan tool read: B1409-REAR LEFT AUDIO SPEAKER OUTPUT CIRCUIT LOW?

       Yes

       - Go To 2.

No

- Test complete, the condition or conditions that originally set this DTC are not present at this time. Using the wiring diagrams as a guide, check all related splices and connectors for signs of water intrusion, corrosion, pushed out or bent terminals and correct pin tension.
- Perform the BODY VERIFICATION TEST. Refer to **BODY VERIFICATION TEST** .

2. **CHECK LEFT REAR SPEAKER**
   1. Make sure one of the front doors is still open.
   2. Using the scan tool, erase the DTC's.
   3. Turn the ignition off.
   4. Disconnect the Left Rear Speaker harness connector from the Left Rear Speaker.
   5. Turn the ignition on.
   6. Turn the radio on.
   7. Using the scan tool, read the active Radio DTC's.

   Does the scan tool read: B1401-FRONT LEFT AUDIO SPEAKER OUTPUT CIRCUIT LOW?

   Yes

   - Go To 3.

   No

   - Replace the Left Rear Speaker in accordance with the Service Information. Refer to **SPEAKER, REMOVAL** .
   - Perform the BODY VERIFICATION TEST. Refer to **BODY VERIFICATION TEST** .

3. **CHECK THE (X205) LEFT REAR SPEAKER (+) CIRCUIT FOR A SHORT TO GROUND**

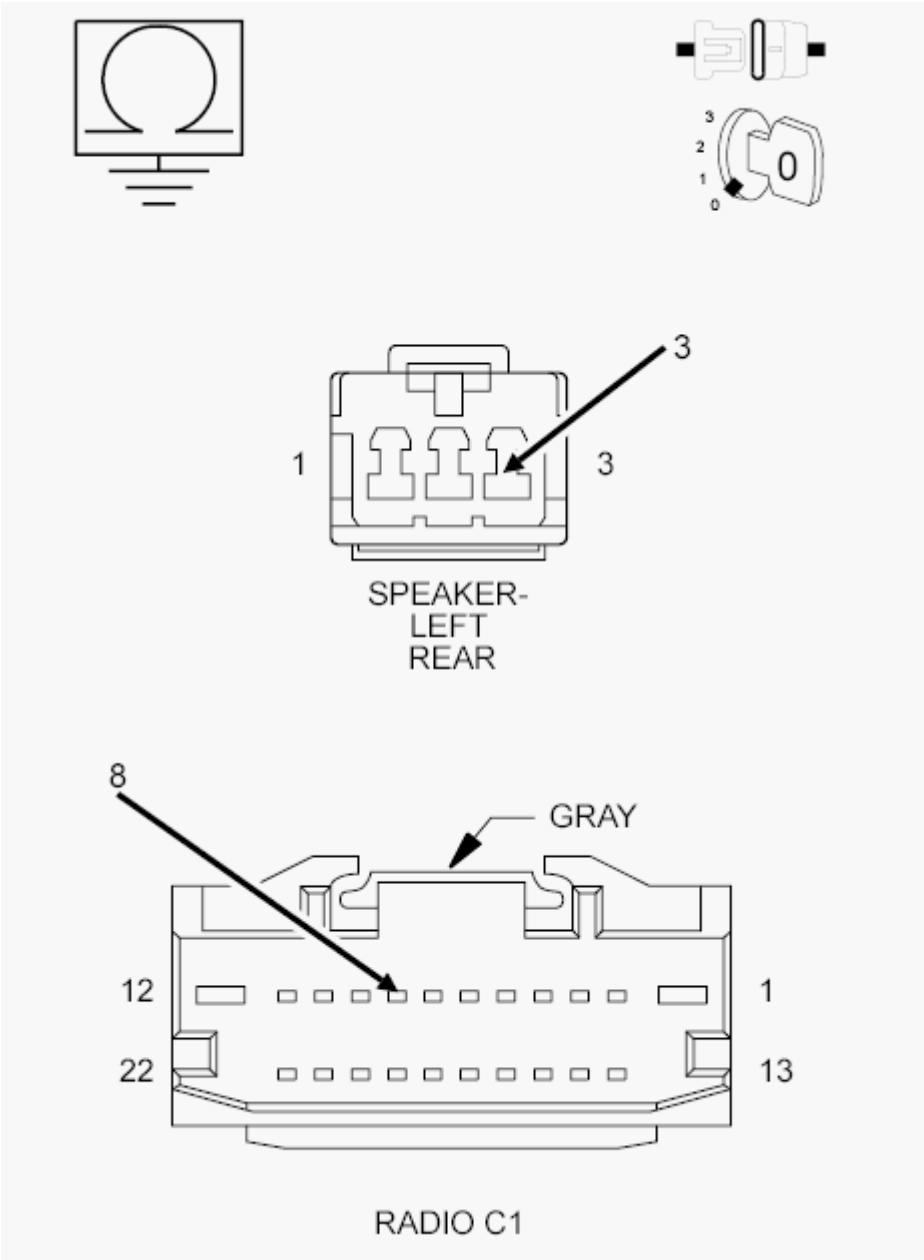

Fig. 24: Checking Left Rear Speaker (+) Circuit For A Short To Ground
Courtesy of CHRYSLER GROUP, LLC

1. Turn the ignition off.
2. Disconnect the Radio C1 harness connector.
3. Measure the resistance between ground and the (X205) Left Rear Speaker (+) circuit.

   Is the resistance below 5.0 Ohms?

   Yes

   - Repair the (X205) Left Rear Speaker (+) circuit for a short to ground.

- Perform the BODY VERIFICATION TEST. Refer to **BODY VERIFICATION TEST** .

No

- Go To 4.

4. **CHECK THE (X295) LEFT REAR SPEAKER (-) CIRCUIT FOR A SHORT TO GROUND**

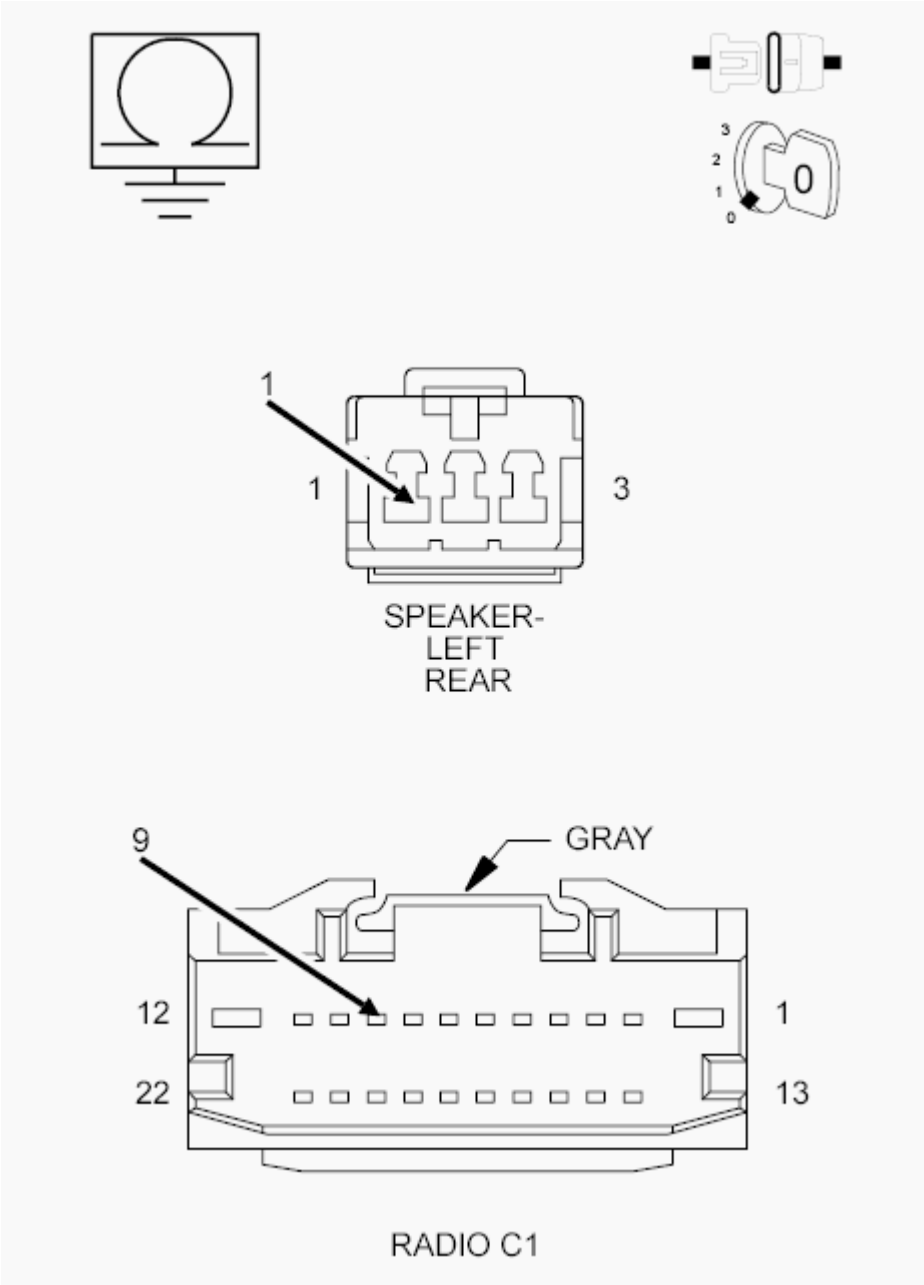

Fig. 25: Checking Left Rear Speaker (-) Circuit For A Short To Ground
Courtesy of CHRYSLER GROUP, LLC

1. Measure the resistance between ground and the (X295) Left Rear Speaker (-) circuit.

Is the resistance below 5.0 Ohms?

Yes

- Repair the (X295) Left Rear Speaker (-) circuit for a short to ground.
- Perform the BODY VERIFICATION TEST. Refer to **BODY VERIFICATION TEST** .

No

- Replace the Radio in accordance with the Service Information.
- Perform the BODY VERIFICATION TEST. Refer to **BODY VERIFICATION TEST** .

B1409-REAR LEFT AUDIO SPEAKER OUTPUT CIRCUIT LOW - PREMIUM

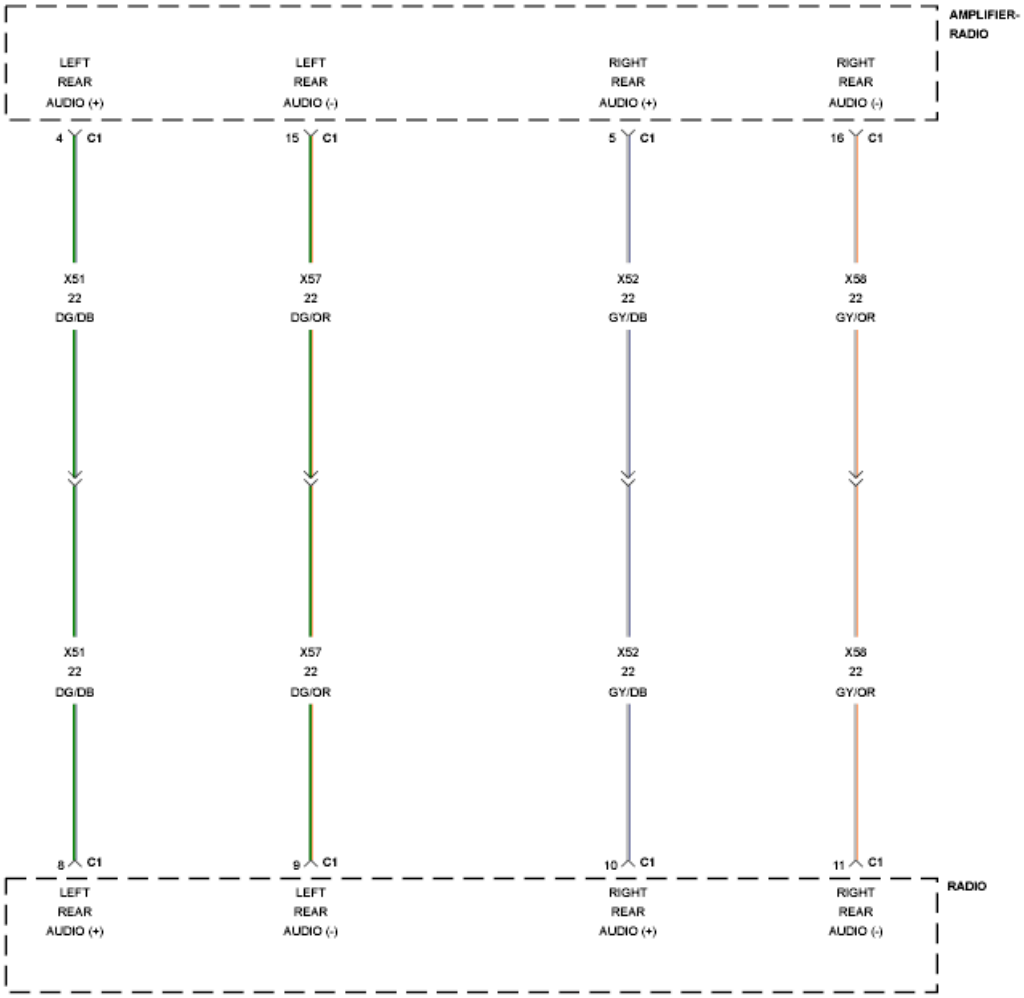

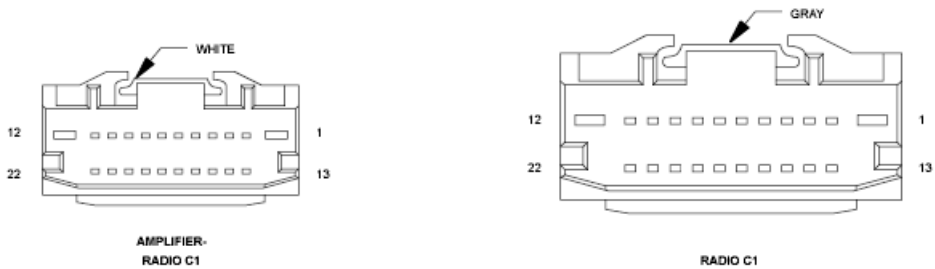

Fig. 26: Rear Left Audio Speaker Circuit Wiring Diagram - Premium
Courtesy of CHRYSLER GROUP, LLC

For a complete wiring diagram, **refer to appropriate SYSTEM WIRING DIAGRAMS article** .

NOTE: **There are two versions of the B1409 DTC test. In order to select the proper test you must know if the vehicle is equipped with an Amplifier. If the vehicle is**

equipped with an Amplifier use the B1409-PREMIUM test. If the vehicle is not equipped with an Amplifier use the B1409-BASE test.

THEORY OF OPERATION

The (X51) Left Rear Audio (+) circuit and the (X57) Left Rear Audio (-) circuit are outputs of the Radio. The Radio controls and monitors these circuits for a concern.

For a detailed description of the Audio System. Refer to **DESCRIPTION** .

For additional information regarding the operation of the Audio System. Refer to **OPERATION** .

WHEN MONITORED:

With the Radio on.

SET CONDITION:

The Radio detects a short to ground condition on the audio output circuit.

POSSIBLE CAUSES

Possible Causes
(X51) LEFT REAR AUDIO (+) CIRCUIT FOR A SHORT TO GROUND
(X57) LEFT REAR AUDIO (-) CIRCUIT FOR A SHORT TO GROUND
AMPLIFIER
RADIO

DIAGNOSTIC TEST

1. **CHECK FOR AN INTERMITTENT CONDITION**
    1. Turn the ignition on and open one of the front doors.

    NOTE: A front door must remain open whenever checking or erasing Radio DTC's.

    2. Using the scan tool, record and erase the Radio DTC's.
    3. Turn the Radio on.
    4. Adjust the speakers to the rear and center.
    5. Using the scan tool, read the active Radio DTC's.

    Does the scan tool read: B1409-REAR LEFT AUDIO SPEAKER OUTPUT CIRCUIT LOW?

    Yes

- Go To 2.

No

- Test complete, the condition or conditions that originally set this DTC are not present at this time. Using the wiring diagrams as a guide, check all related splices and connectors for signs of water intrusion, corrosion, pushed out or bent terminals and correct pin tension.
- Perform the BODY VERIFICATION TEST. Refer to **BODY VERIFICATION TEST** .

2. **CHECK THE AMPLIFIER**

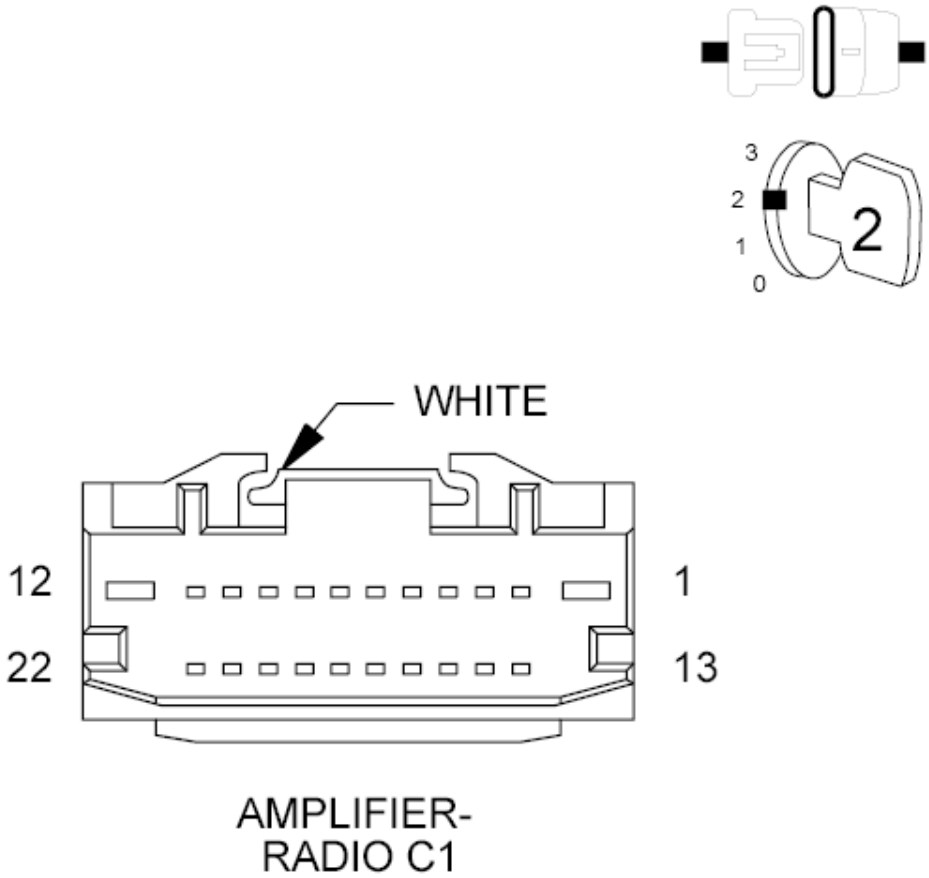

Fig. 27: Amplifier Connector End View
Courtesy of CHRYSLER GROUP, LLC

1. Make sure one of the front doors is still open.
2. Using the scan tool, erase the DTC's.
3. Turn the ignition off.
4. Disconnect the Amplifier C1 harness connector from the Amplifier.

5. Turn the ignition on.
6. Turn the radio on.
7. Using the scan tool, read the active Radio DTC's.

   Does the scan tool read: B1409-REAR LEFT AUDIO SPEAKER OUTPUT CIRCUIT LOW?

   Yes

   - Go To 3.

   No

   - Replace the Amplifier in accordance with the Service Information.
   - Perform the BODY VERIFICATION TEST. Refer to **BODY VERIFICATION TEST** .

3. **CHECK THE (X51) LEFT REAR AUDIO (+) CIRCUIT FOR A SHORT TO GROUND**

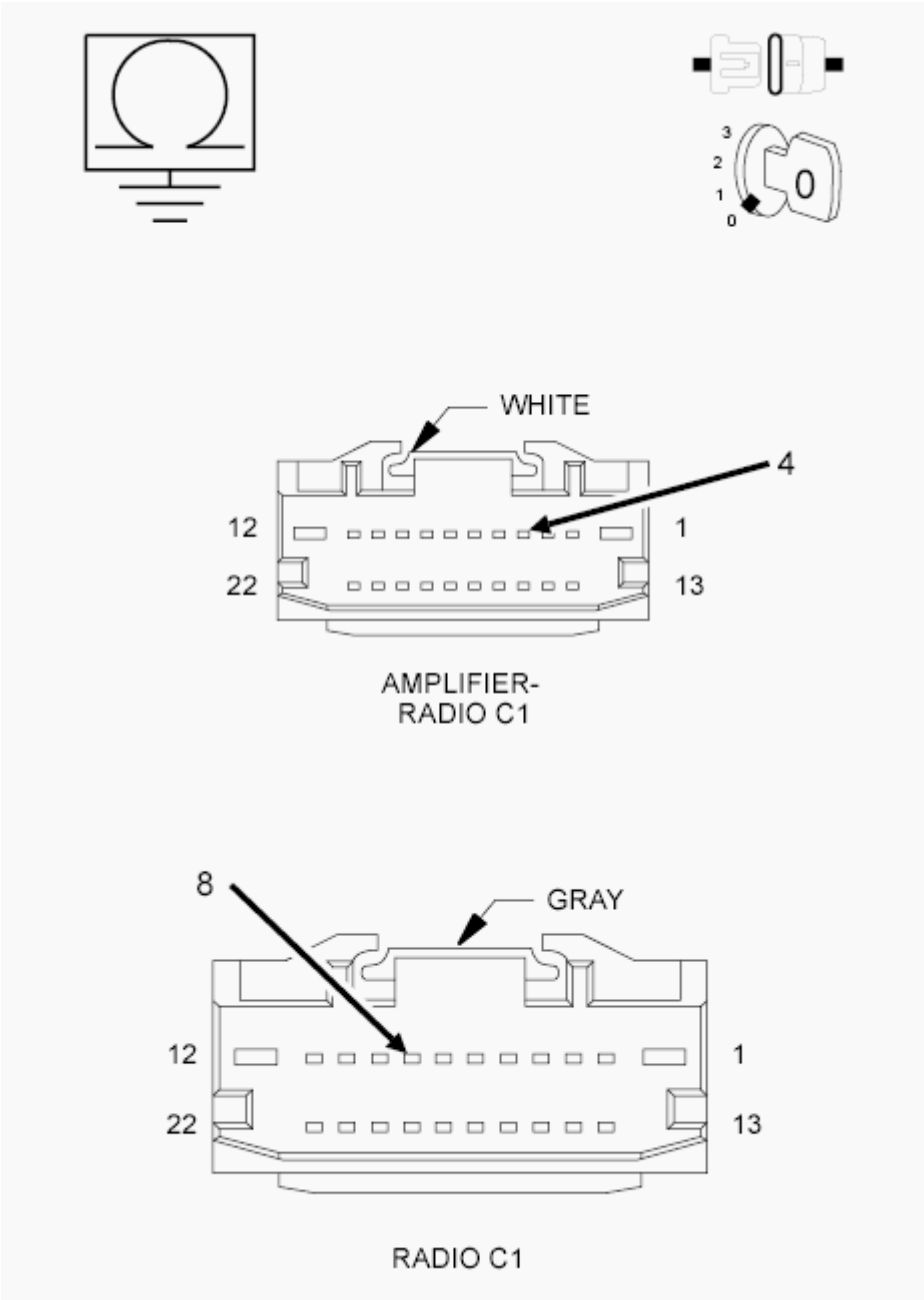

Fig. 28: Checking Left Rear Audio (+) Circuit For A Short To Ground
Courtesy of CHRYSLER GROUP, LLC

1. Turn the ignition off.
2. Disconnect the Radio C1 harness connector.
3. Measure the resistance between ground and the (X51) Left Rear Audio (+) circuit.

   Is the resistance below 5.0 Ohms?

   Yes

- Repair the (X51) Left Rear Audio (+) circuit for a short to ground.
- Perform the BODY VERIFICATION TEST. Refer to **BODY VERIFICATION TEST** .

No

- Go To 4.

4. **CHECK THE (X57) LEFT REAR AUDIO (-) CIRCUIT FOR A SHORT TO GROUND**

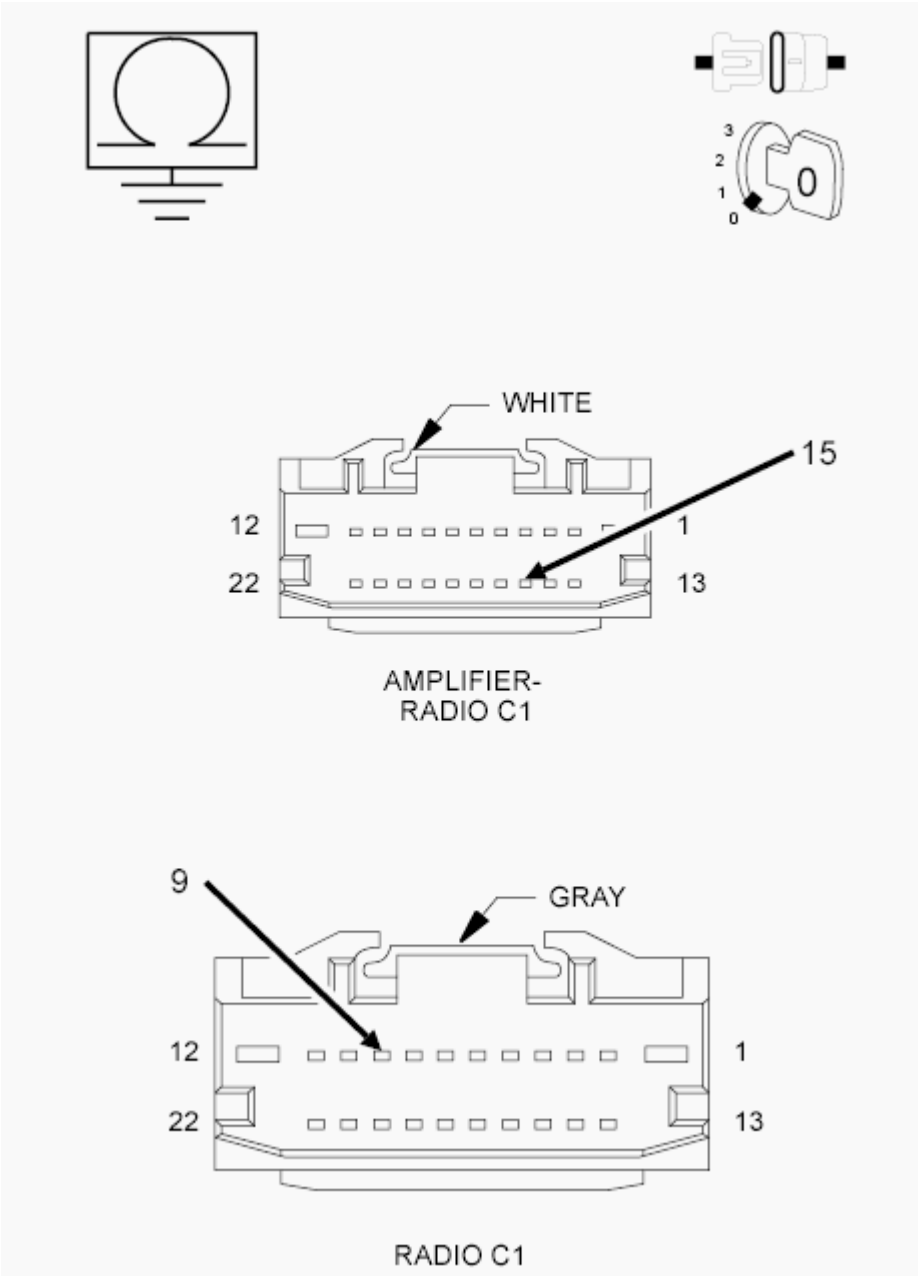

Fig. 29: Checking Left Rear Audio (-) Circuit For A Short To Ground
Courtesy of CHRYSLER GROUP, LLC

1. Measure the resistance between ground and the (X57) Left Rear Audio (-) circuit.

   Is the resistance below 5.0 Ohms?

   Yes

   - Repair the (X57) Left Rear Audio (-) circuit for a short to ground.
   - Perform the BODY VERIFICATION TEST. Refer to **BODY VERIFICATION TEST** .

   No

   - Replace the Radio in accordance with the Service Information.
   - Perform the BODY VERIFICATION TEST. Refer to **BODY VERIFICATION TEST** .

B140A-REAR LEFT AUDIO SPEAKER OUTPUT CIRCUIT HIGH - BASE

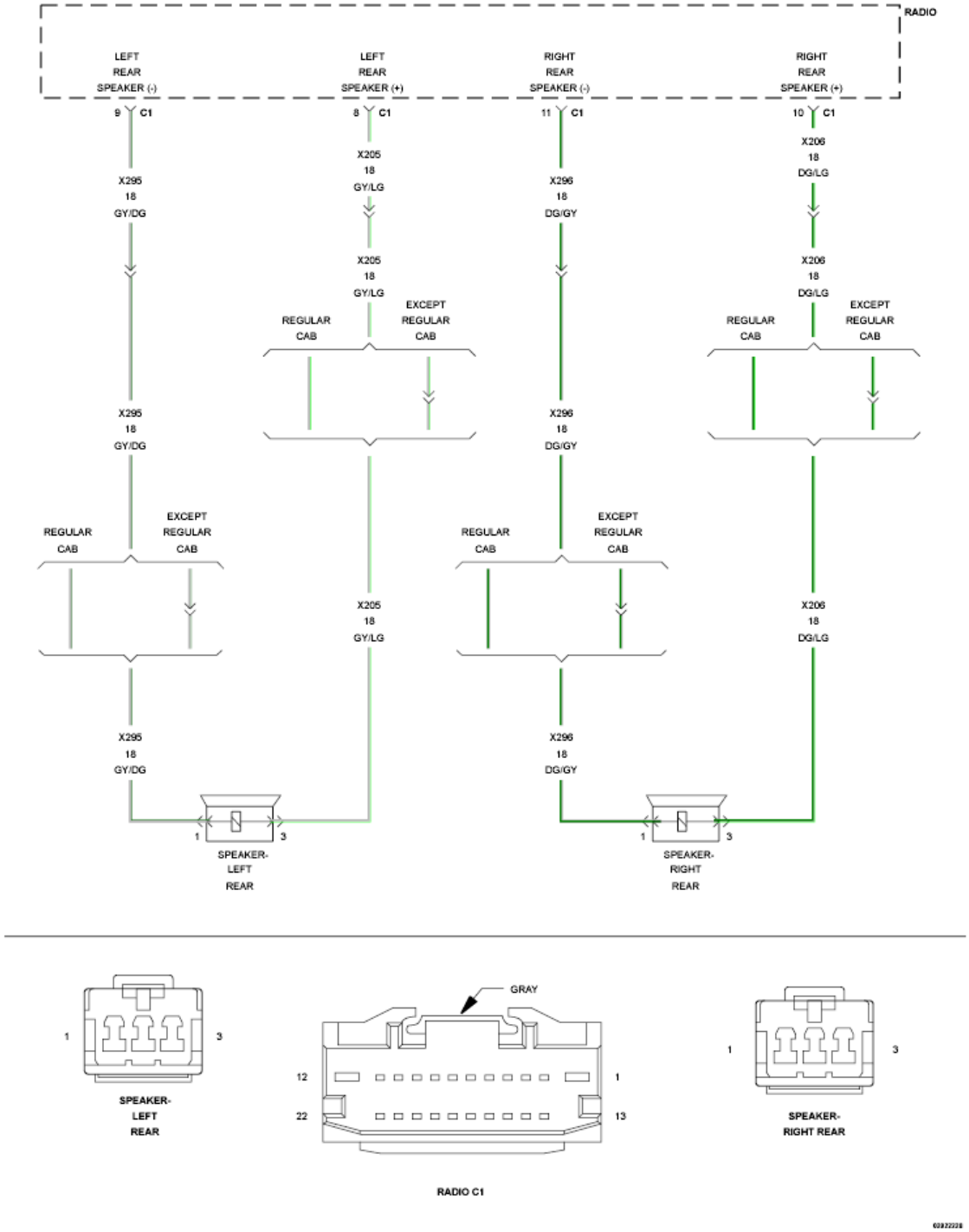

Fig. 30: Rear Left Audio Speaker Wiring Diagram
Courtesy of CHRYSLER GROUP, LLC

For a complete wiring diagram, **refer to appropriate SYSTEM WIRING DIAGRAMS article** .

NOTE: **There are two versions of the B140A DTC test. In order to select the proper test you must know if the vehicle is equipped with an Amplifier. If the vehicle is equipped with an Amplifier use the B140A-PREMIUM test. If the vehicle is not**

equipped with an Amplifier use the B140A-BASE test.

THEORY OF OPERATION

The (X205) Left Rear Speaker (+) circuit and the (X295) Left Rear Speaker (-) circuit are outputs of the Radio. The Radio controls and monitors these circuits for a concern.

For a detailed description of the Audio System. Refer to **DESCRIPTION** .

For additional information regarding the operation of the Audio System. Refer to **OPERATION** .

WHEN MONITORED:

With the Radio on.

SET CONDITION:

The Radio detects a short to battery condition on the speaker output circuit.

POSSIBLE CAUSES

Possible Causes
(X205) LEFT REAR SPEAKER (+) CIRCUIT FOR A SHORT TO VOLTAGE
(X295) LEFT REAR SPEAKER (-) CIRCUIT FOR A SHORT TO VOLTAGE
RADIO

DIAGNOSTIC TEST

1. **CHECK FOR AN INTERMITTENT CONDITION**
    1. Turn the ignition on and open one of the front doors.

       NOTE: A front door must remain open whenever checking or erasing Radio DTC's.

    2. Using the scan tool, record and erase the Radio DTC's.
    3. Turn the Radio on.
    4. Adjust the speakers to the rear and center.
    5. Using the scan tool, read the active Radio DTC's.

       Does the scan tool read: B140A-REAR LEFT AUDIO SPEAKER OUTPUT CIRCUIT HIGH?

       Yes

       - Go To 2.

No

- Test complete, the condition or conditions that originally set this DTC are not present at this time. Using the wiring diagrams as a guide, check all related splices and connectors for signs of water intrusion, corrosion, pushed out or bent terminals and correct pin tension.
- Perform the BODY VERIFICATION TEST. Refer to **BODY VERIFICATION TEST** .

2. **CHECK FOR VOLTAGE ON THE (X205) LEFT REAR SPEAKER (+) CIRCUIT**

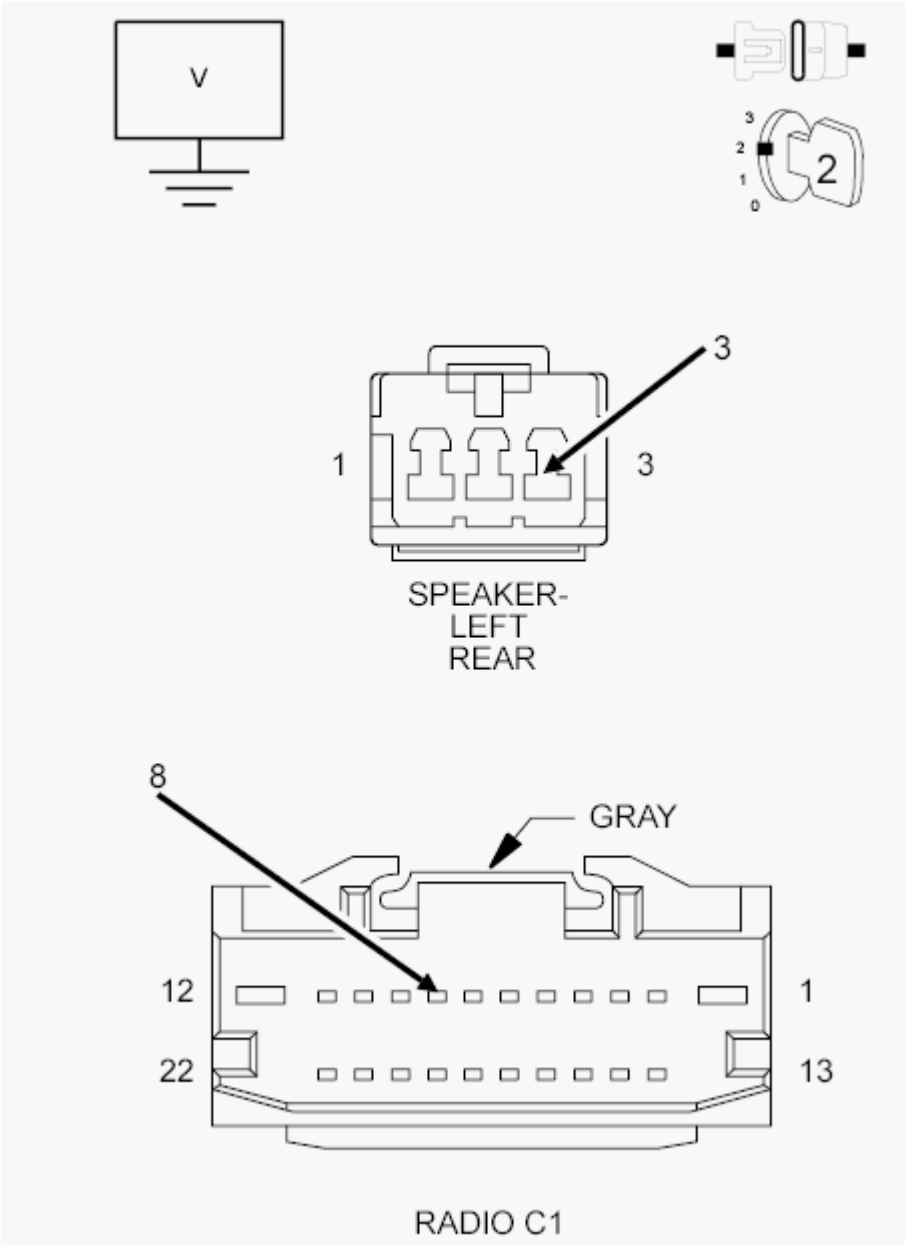

Fig. 31: Measuring Voltage On The Left Rear Speaker (+) Circuit
Courtesy of CHRYSLER GROUP, LLC

1. Turn the ignition off.

2. Disconnect the Radio C1 harness connector.
3. Disconnect the Left Rear Speaker harness connector.
4. Turn the ignition on.
5. Measure the voltage between ground and the (X205) Left Rear Speaker (+) circuit.

   Is there any voltage present?

   Yes

   - Repair the (X205) Left Rear Speaker (+) CIRCUIT FOR A SHORT TO VOLTAGE.
   - Perform the BODY VERIFICATION TEST. Refer to **BODY VERIFICATION TEST** .

   No

   - Go To 3.

3. **CHECK FOR VOLTAGE ON THE (X295) LEFT REAR SPEAKER (-) CIRCUIT**

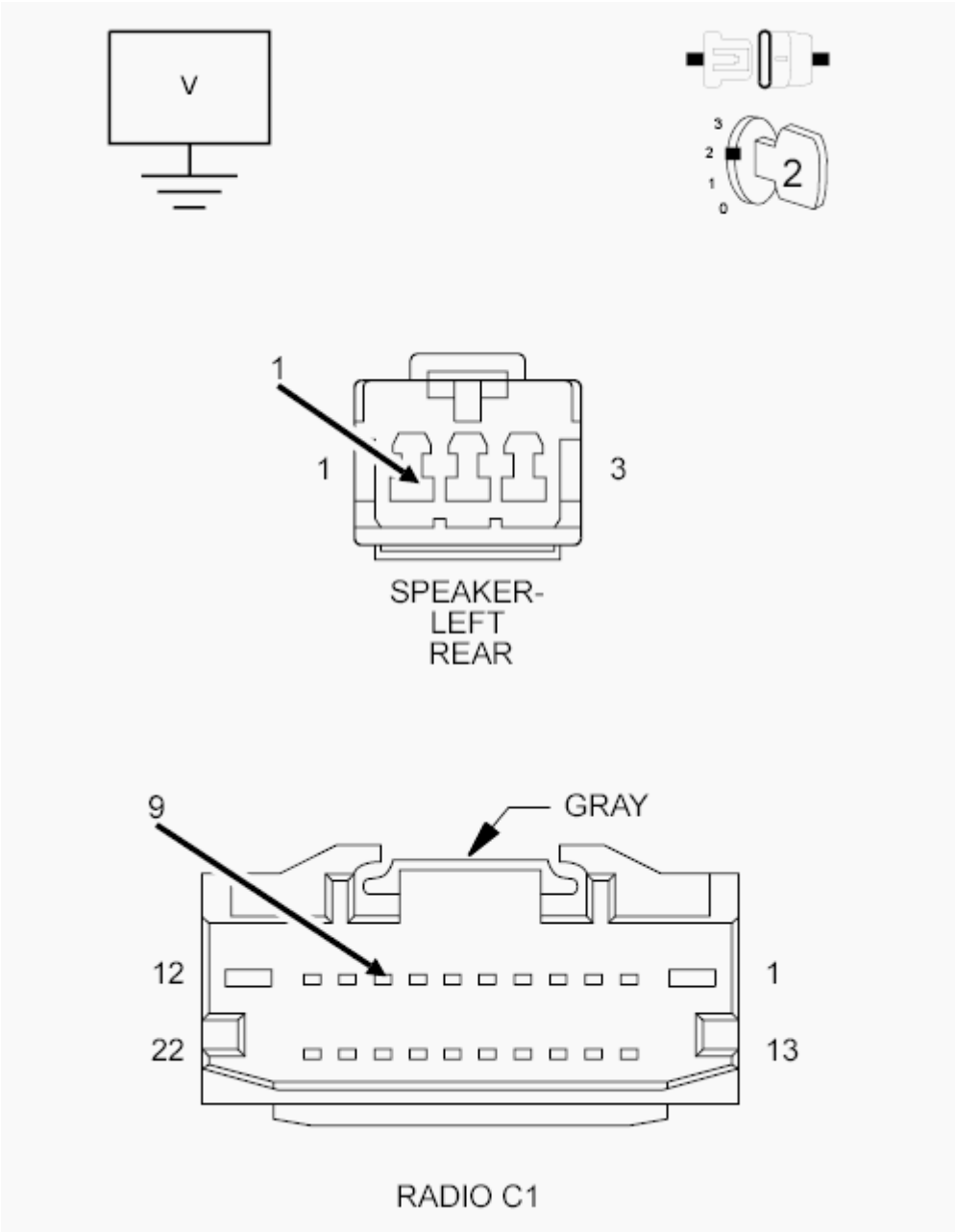

Fig. 32: Measuring Voltage On The Left Rear Speaker (-) Circuit
Courtesy of CHRYSLER GROUP, LLC

1. Measure the voltage between ground and the (X295) Left Rear Speaker (-) circuit.

   Is there any voltage present?

   Yes

   - Repair the (X295) Left Rear Speaker (-) CIRCUIT FOR A SHORT TO VOLTAGE.
   - Perform the BODY VERIFICATION TEST. Refer to **BODY VERIFICATION TEST** .

No

- Replace the Radio in accordance with the Service Information.
- Perform the BODY VERIFICATION TEST. Refer to **BODY VERIFICATION TEST** .

B140A-REAR LEFT AUDIO SPEAKER OUTPUT CIRCUIT HIGH - PREMIUM

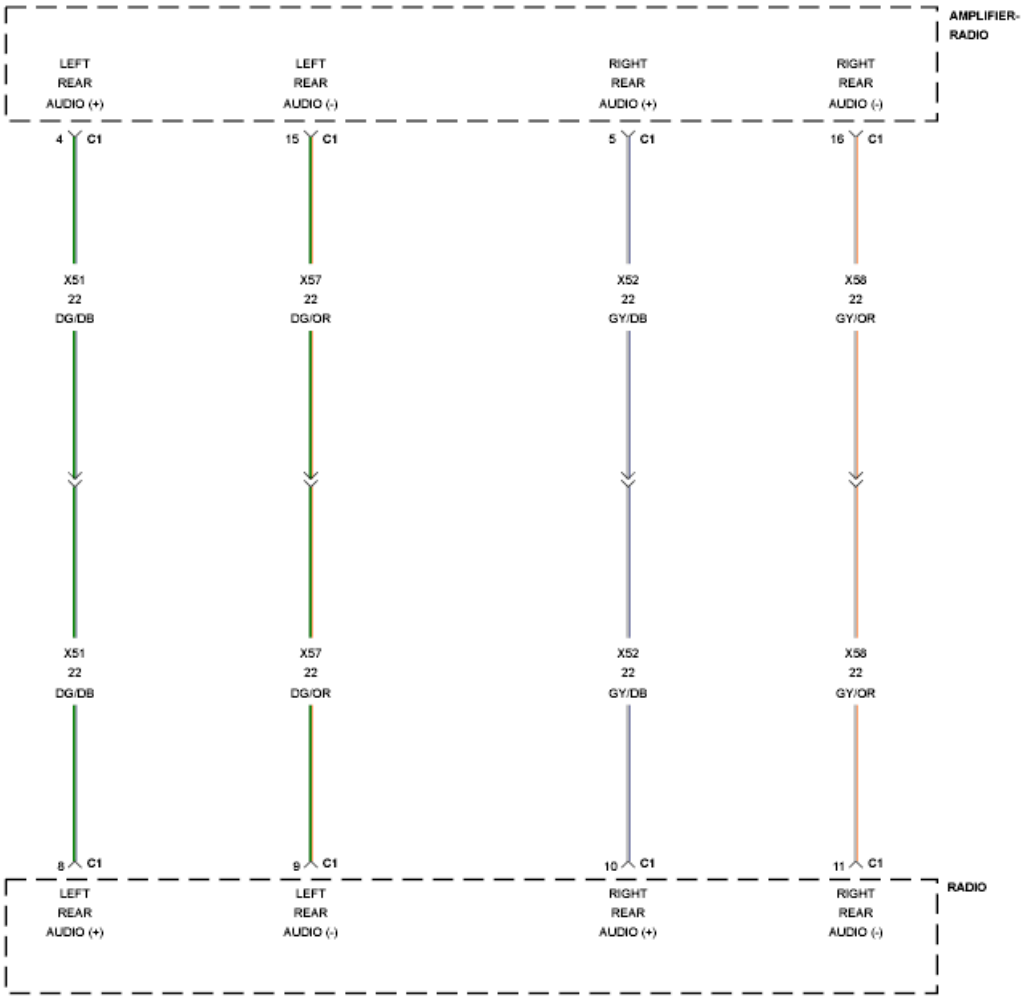

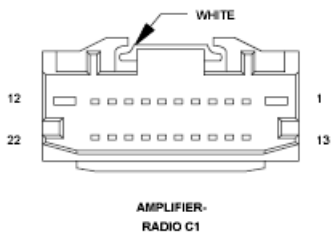

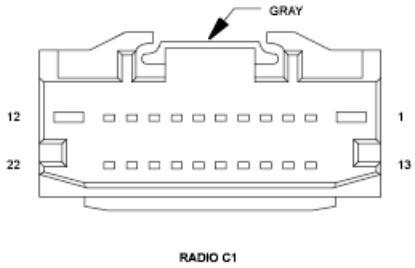

Fig. 33: Rear Left Audio Speaker Circuit Wiring Diagram - Premium
Courtesy of CHRYSLER GROUP, LLC

For a complete wiring diagram, **refer to appropriate SYSTEM WIRING DIAGRAMS article** .

NOTE: **There are two versions of the B140A DTC test. In order to select the proper test you must know if the vehicle is equipped with an Amplifier. If the vehicle is equipped with an Amplifier use the B140A-PREMIUM test. If the vehicle is not equipped with an Amplifier use the B140A-BASE test.**

THEORY OF OPERATION

The (X51) Left Rear Audio (+) circuit and the (X57) Left Rear Audio (-) circuit are outputs of the Radio. The Radio controls and monitors these circuits for a concern.

For a detailed description of the Audio System. Refer to **DESCRIPTION** .

For additional information regarding the operation of the Audio System. Refer to **OPERATION** .

WHEN MONITORED:

With the Radio on.

SET CONDITION:

The Radio detects a short to battery condition on the audio output circuit.

POSSIBLE CAUSES

Possible Causes
(X51) LEFT REAR AUDIO (+) CIRCUIT FOR A SHORT TO VOLTAGE
(X57) LEFT REAR AUDIO (-) CIRCUIT FOR A SHORT TO VOLTAGE
RADIO

DIAGNOSTIC TEST

1. **CHECK FOR AN INTERMITTENT CONDITION**
    1. Turn the ignition on and open one of the front doors.

        NOTE: **A front door must remain open whenever checking or erasing Radio DTC's.**

    2. Using the scan tool, record and erase the Radio DTC's.
    3. Turn the Radio on.
    4. Adjust the speakers to the rear and center.

5. Using the scan tool, read the active Radio DTC's.

   Does the scan tool read: B140A-REAR LEFT AUDIO SPEAKER OUTPUT CIRCUIT HIGH?

   Yes

   - Go To 2.

   No

   - Test complete, the condition or conditions that originally set this DTC are not present at this time. Using the wiring diagrams as a guide, check all related splices and connectors for signs of water intrusion, corrosion, pushed out or bent terminals and correct pin tension.
   - Perform the BODY VERIFICATION TEST. Refer to **BODY VERIFICATION TEST** .

2. **CHECK THE AMPLIFIER**

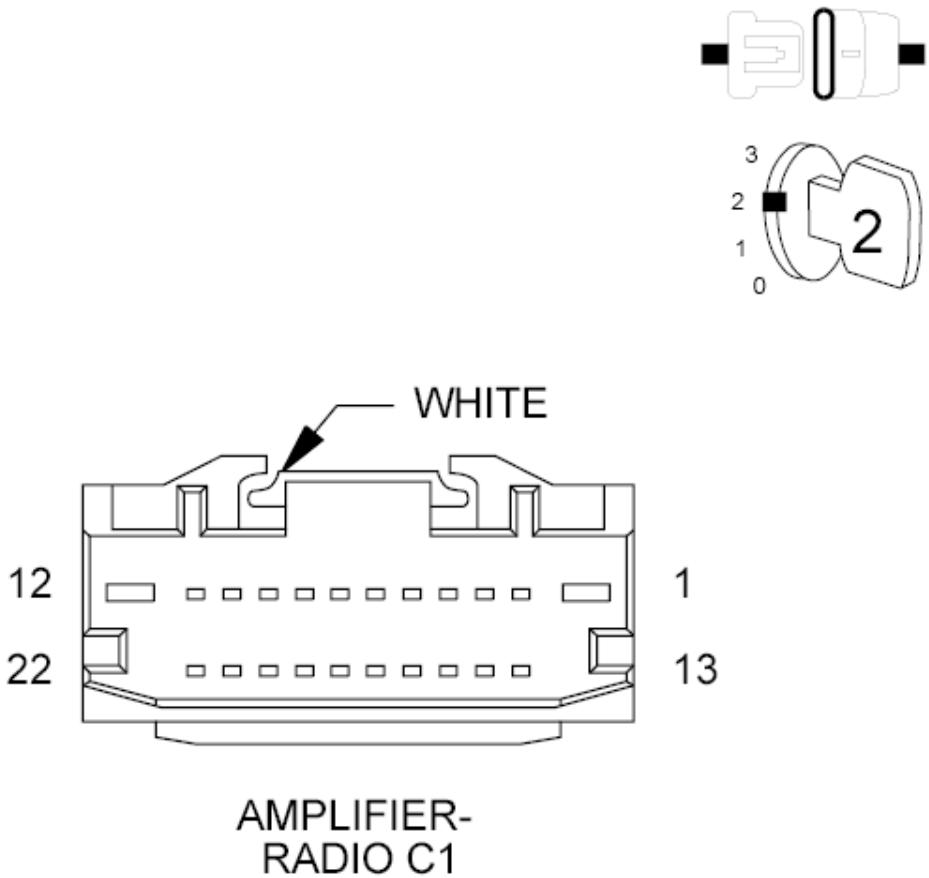

Fig. 34: Amplifier Connector End View
Courtesy of CHRYSLER GROUP, LLC

1. Make sure one of the front doors is still open.
2. Using the scan tool, erase the DTC's.
3. Turn the ignition off.
4. Disconnect the Amplifier C1 harness connector from the Amplifier.
5. Turn the ignition on.
6. Turn the radio on.
7. Using the scan tool, read the active Radio DTC's.

   Does the scan tool read: B140A-REAR LEFT AUDIO SPEAKER OUTPUT CIRCUIT HIGH?

   Yes

   - Go To 3.

   No

   - Replace the Amplifier in accordance with the Service Information.
   - Perform the BODY VERIFICATION TEST. Refer to **BODY VERIFICATION TEST** .

3. **CHECK FOR VOLTAGE ON THE (X51) LEFT REAR AUDIO (+) CIRCUIT**

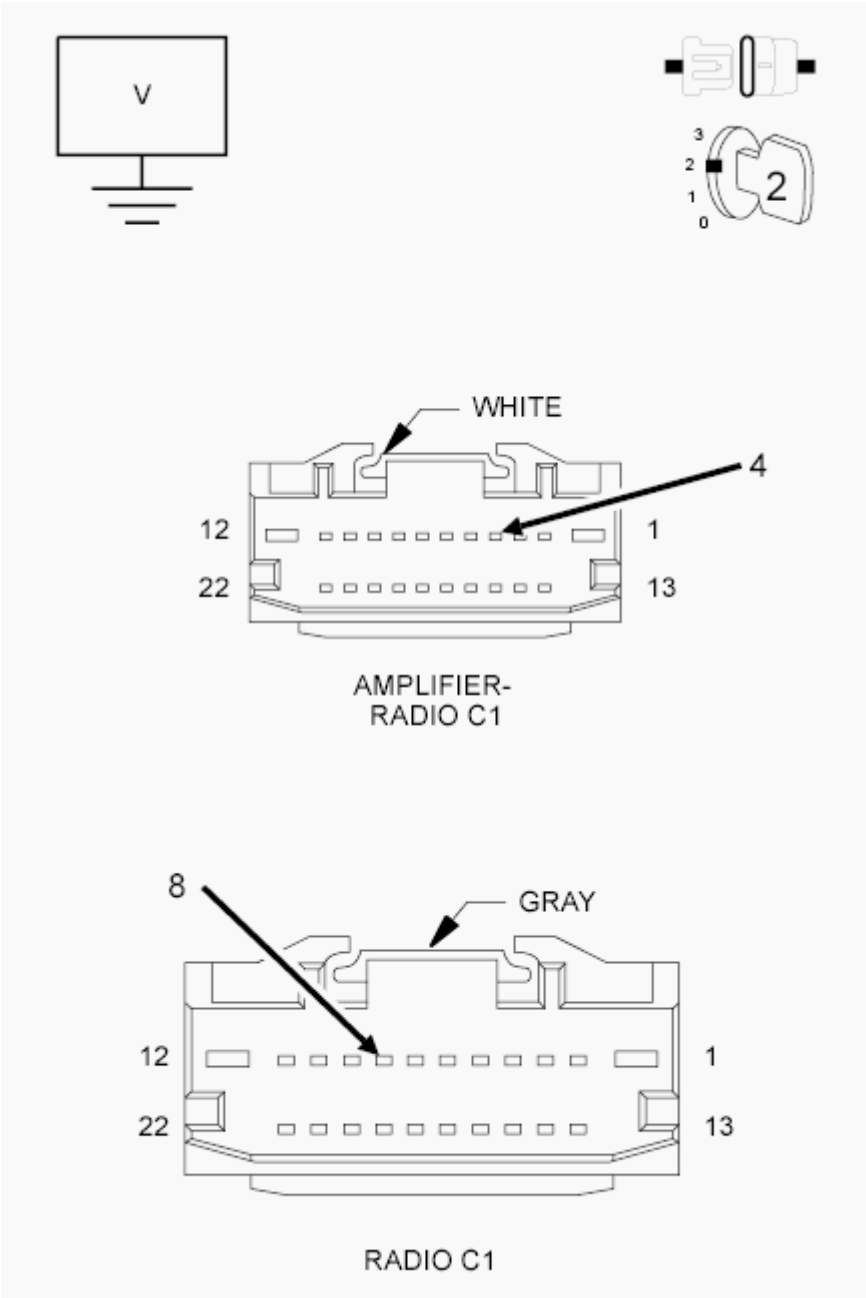

Fig. 35: Measuring Voltage Between Ground & Left Rear Audio (+) Circuit
Courtesy of CHRYSLER GROUP, LLC

1. Turn the ignition off.
2. Disconnect the Radio C1 harness connector.
3. Turn the ignition on.
4. Measure the voltage between ground and the (X51) Left Rear Audio (+) circuit.

   Is there any voltage present?

Yes

- Repair the (X51) Left Rear Audio (+) CIRCUIT FOR A SHORT TO VOLTAGE.
- Perform the BODY VERIFICATION TEST. Refer to **BODY VERIFICATION TEST** .

No

- Go To 4.

4. **CHECK FOR VOLTAGE ON THE (X57) LEFT REAR AUDIO (-) CIRCUIT**

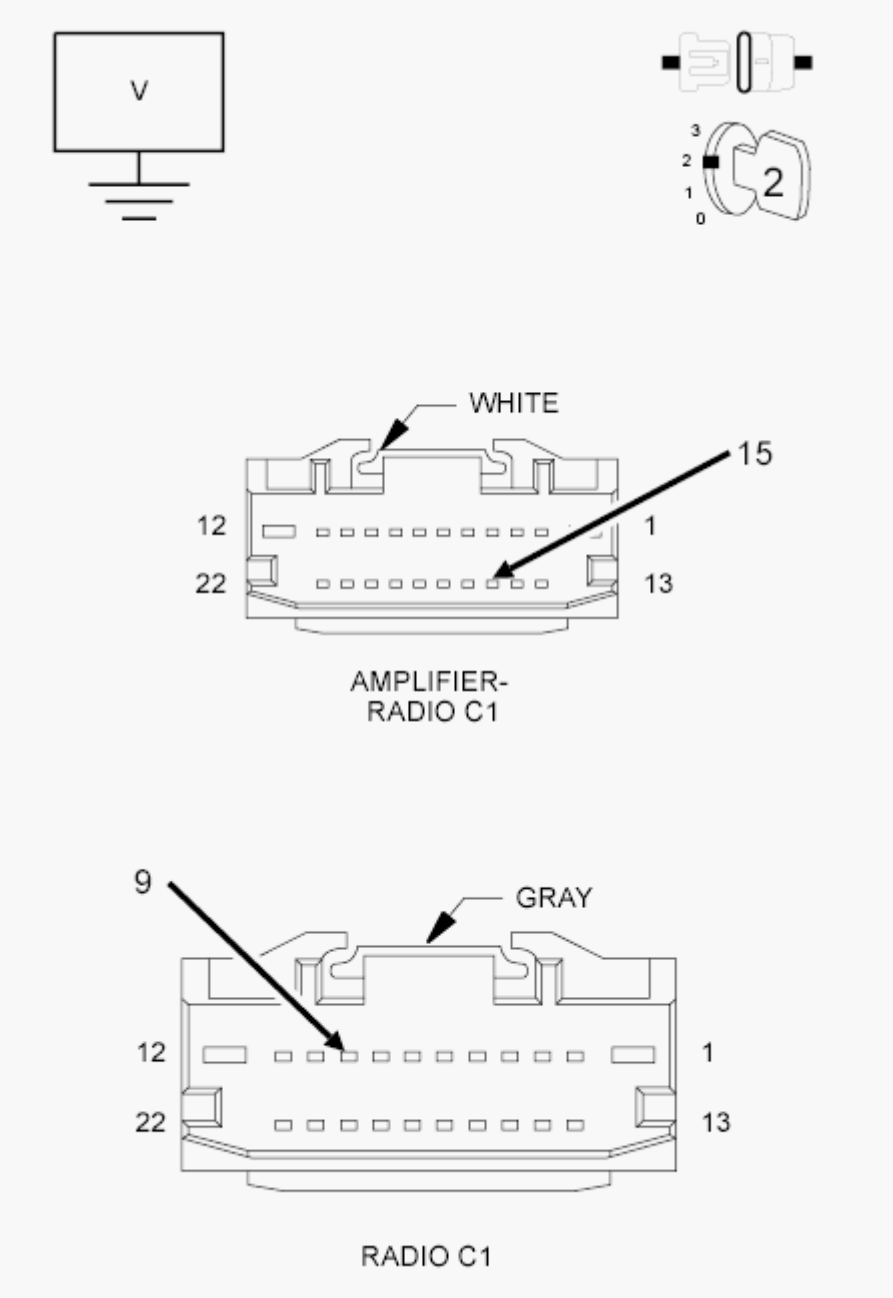

Fig. 36: Measuring Voltage Between Ground & Left Rear Audio (-) Circuit

Courtesy of CHRYSLER GROUP, LLC

1. Measure the voltage between ground and the (X57) Left Rear Audio (-) circuit.

   Is there any voltage present?

   Yes

   - Repair the (X57) Left Rear Audio (-) CIRCUIT FOR A SHORT TO VOLTAGE.
   - Perform the BODY VERIFICATION TEST. Refer to **BODY VERIFICATION TEST** .

   No

   - Replace the Radio in accordance with the Service Information.
   - Perform the BODY VERIFICATION TEST. Refer to **BODY VERIFICATION TEST** .

B140B-REAR LEFT AUDIO SPEAKER OUTPUT CIRCUIT FOR AN OPEN - BASE

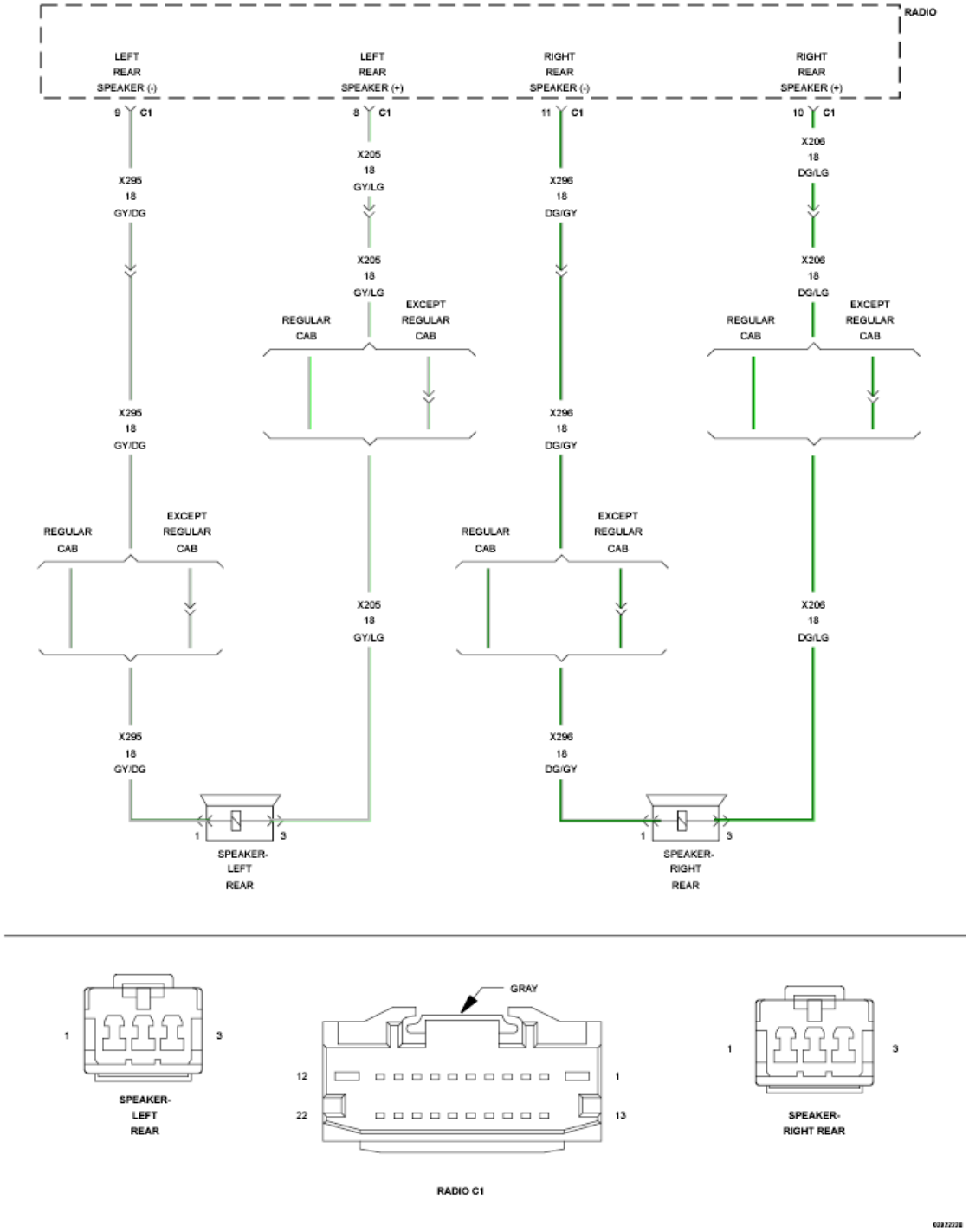

Fig. 37: Rear Left Audio Speaker Wiring Diagram
Courtesy of CHRYSLER GROUP, LLC

For a complete wiring diagram, **refer to appropriate SYSTEM WIRING DIAGRAMS article** .

NOTE: **There are two versions of the B140B DTC test. In order to select the proper test you must know if the vehicle is equipped with an Amplifier. If the vehicle is equipped with an Amplifier use the B140B-PREMIUM test. If the vehicle is not**

equipped with an Amplifier use the B140B-BASE test.

THEORY OF OPERATION

The (X205) Left Rear Speaker (+) circuit and the (X295) Left Rear Speaker (-) circuit are outputs of the Radio. The Radio controls and monitors these circuits for a concern.

For a detailed description of the Audio System. Refer to **DESCRIPTION** .

For additional information regarding the operation of the Audio System. Refer to **OPERATION** .

WHEN MONITORED:

With the Radio on.

SET CONDITION:

The Radio detects an open condition on the speaker output circuit.

POSSIBLE CAUSES

Possible Causes
(X205) LEFT REAR SPEAKER (+) CIRCUIT FOR AN OPEN
(X295) LEFT REAR SPEAKER (-) CIRCUIT FOR AN OPEN
LEFT REAR SPEAKER
RADIO

DIAGNOSTIC TEST

1. **CHECK FOR AN INTERMITTENT CONDITION**
    1. Turn the ignition on and open one of the front doors.

        NOTE: A front door must remain open whenever checking or erasing Radio DTC's.

    2. Using the scan tool, record and erase the Radio DTC's.
    3. Turn the Radio on.
    4. Adjust the speakers to the rear and center.
    5. Using the scan tool, read the active Radio DTC's.

        Does the scan tool read: B140B-REAR LEFT AUDIO SPEAKER OUTPUT CIRCUIT FOR AN OPEN?

        Yes

- Go To 2.

No

- Test complete, the condition or conditions that originally set this DTC are not present at this time. Using the wiring diagrams as a guide, check all related splices and connectors for signs of water intrusion, corrosion, pushed out or bent terminals and correct pin tension.
- Perform the BODY VERIFICATION TEST. Refer to **BODY VERIFICATION TEST** .

2. **CHECK THE LEFT REAR SPEAKER**

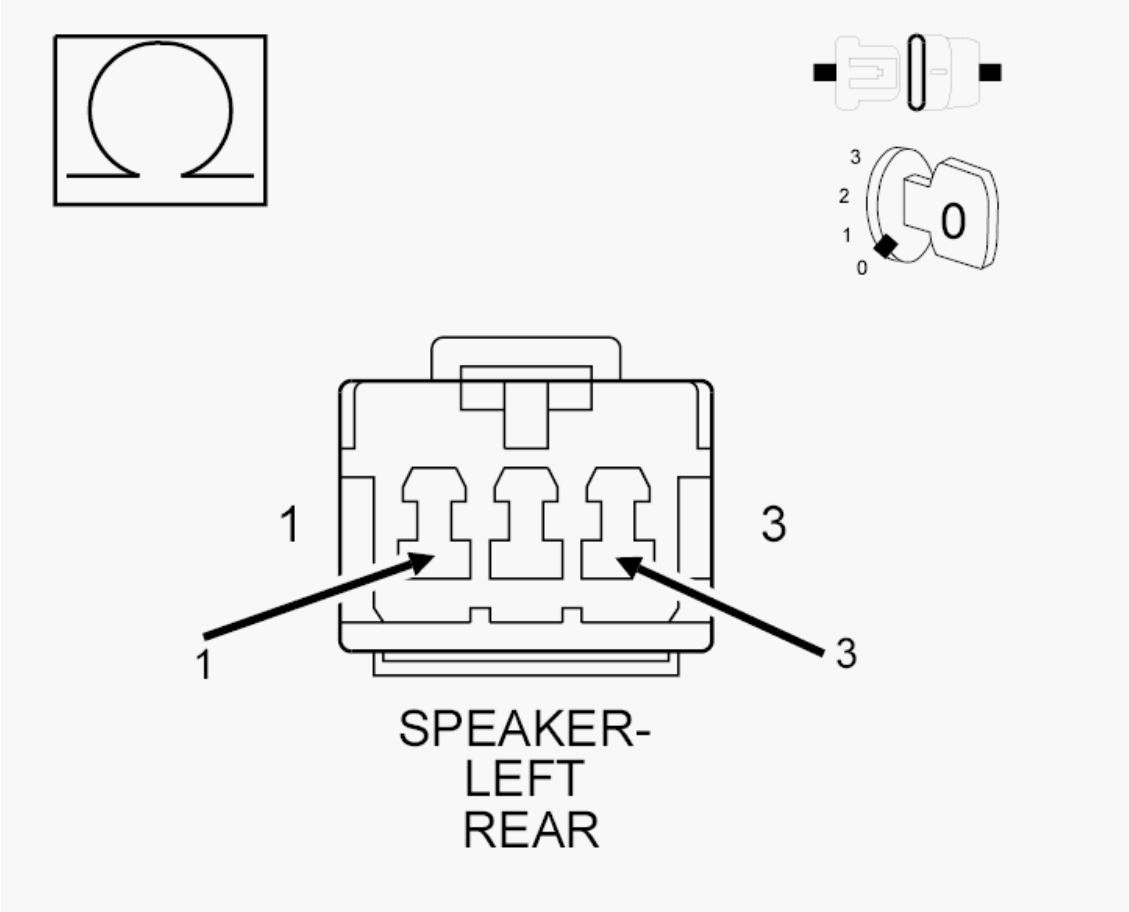

Fig. 38: Checking The Left Rear Speaker
Courtesy of CHRYSLER GROUP, LLC

1. Turn the ignition off.
2. Disconnect the Left Rear Speaker.
3. Measure the resistance of the speaker between the two terminals.

NOTE: **The graphic shows the connector for reference only. Measure between the speaker terminals.**

Is the resistance above 5.0 Ohms?

Yes

- Replace the Left Rear Speaker in accordance with the Service Information.
- Perform the BODY VERIFICATION TEST. Refer to **BODY VERIFICATION TEST** .

No

- Go To 3.

3. **CHECK THE (X205) LEFT REAR SPEAKER (+) CIRCUIT FOR AN OPEN**

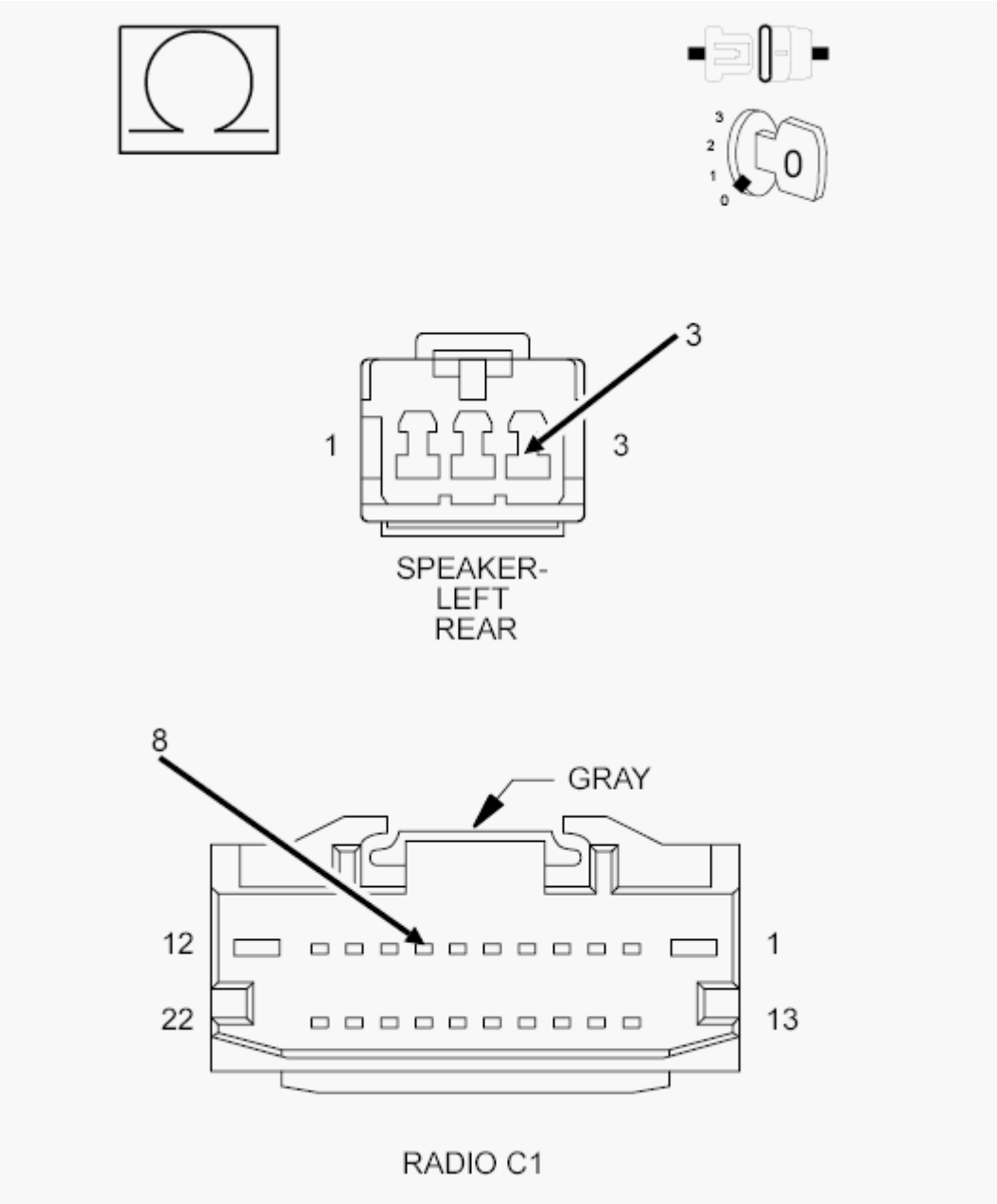

Fig. 39: Checking Left Rear Speaker (+) Circuit For An Open
Courtesy of CHRYSLER GROUP, LLC

1. Disconnect the Radio C1 harness connector.
2. Measure the resistance of (X205) Left Rear Speaker (+) circuit between the Radio C1 connector, and the Left Rear Speaker harness connector.

   Is the resistance below 5.0 Ohms?

   Yes

   - Go To 4.

   No

   - Repair an open in the (X205) Left Rear Speaker (+) circuit.
   - Perform the BODY VERIFICATION TEST. Refer to **BODY VERIFICATION TEST** .

4. **CHECK THE (X295) LEFT REAR SPEAKER (-) CIRCUIT FOR AN OPEN**

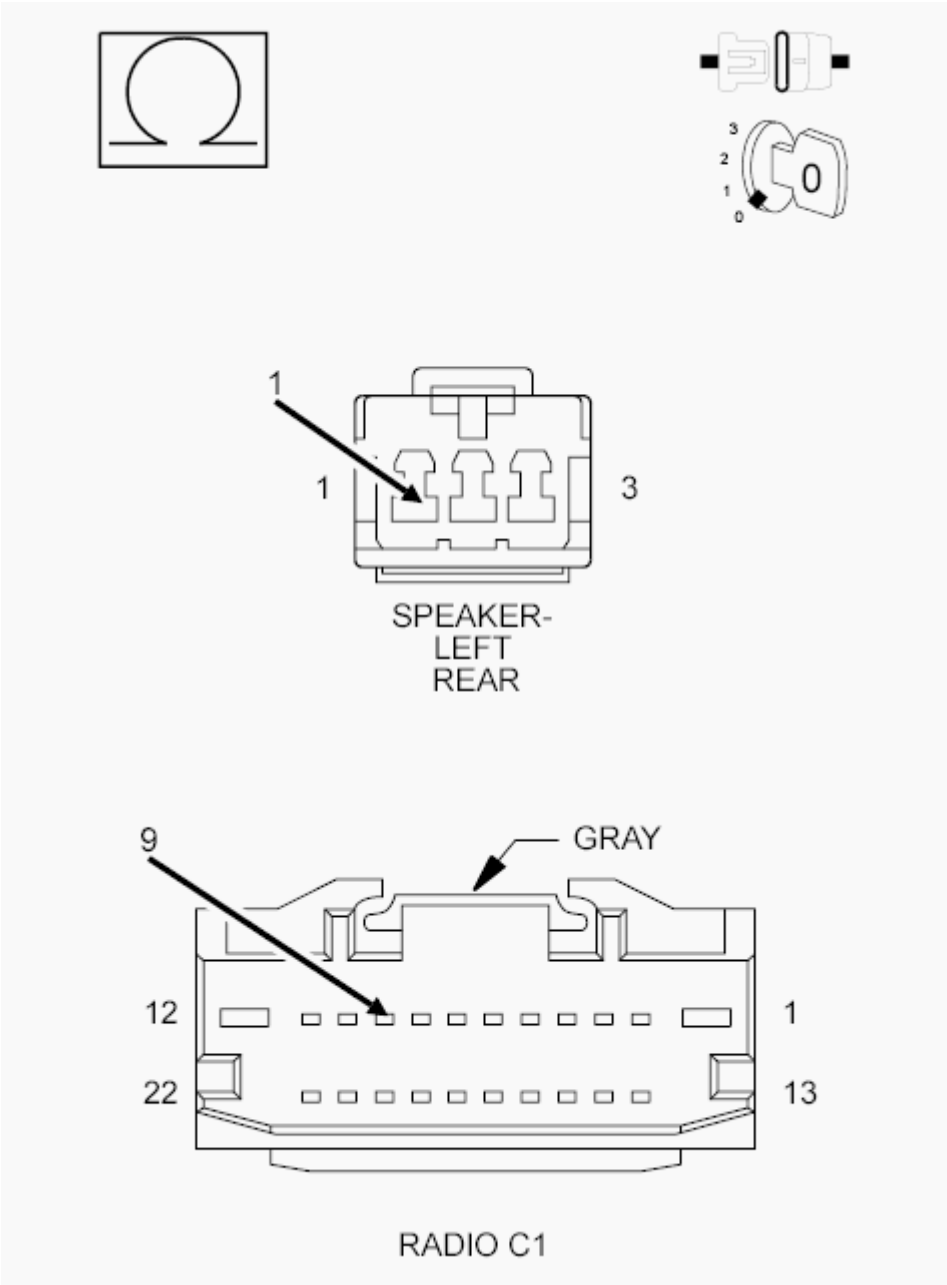

Fig. 40: Checking Left Rear Speaker (-) Circuit For An Open
Courtesy of CHRYSLER GROUP, LLC

1. Measure the resistance of (X295) Left Rear Speaker (-) circuit between the Radio C1 connector, and the Left Rear Speaker harness connector.

   Is the resistance below 5.0 Ohms?

   Yes

   - Replace the Radio in accordance with the Service Information.

- Perform the BODY VERIFICATION TEST. Refer to **BODY VERIFICATION TEST** .

No

- Repair an open in the (X295) Left Rear Speaker (-) circuit.
- Perform the BODY VERIFICATION TEST. Refer to **BODY VERIFICATION TEST** .

B140B-REAR LEFT AUDIO SPEAKER OUTPUT CIRCUIT FOR AN OPEN - PREMIUM

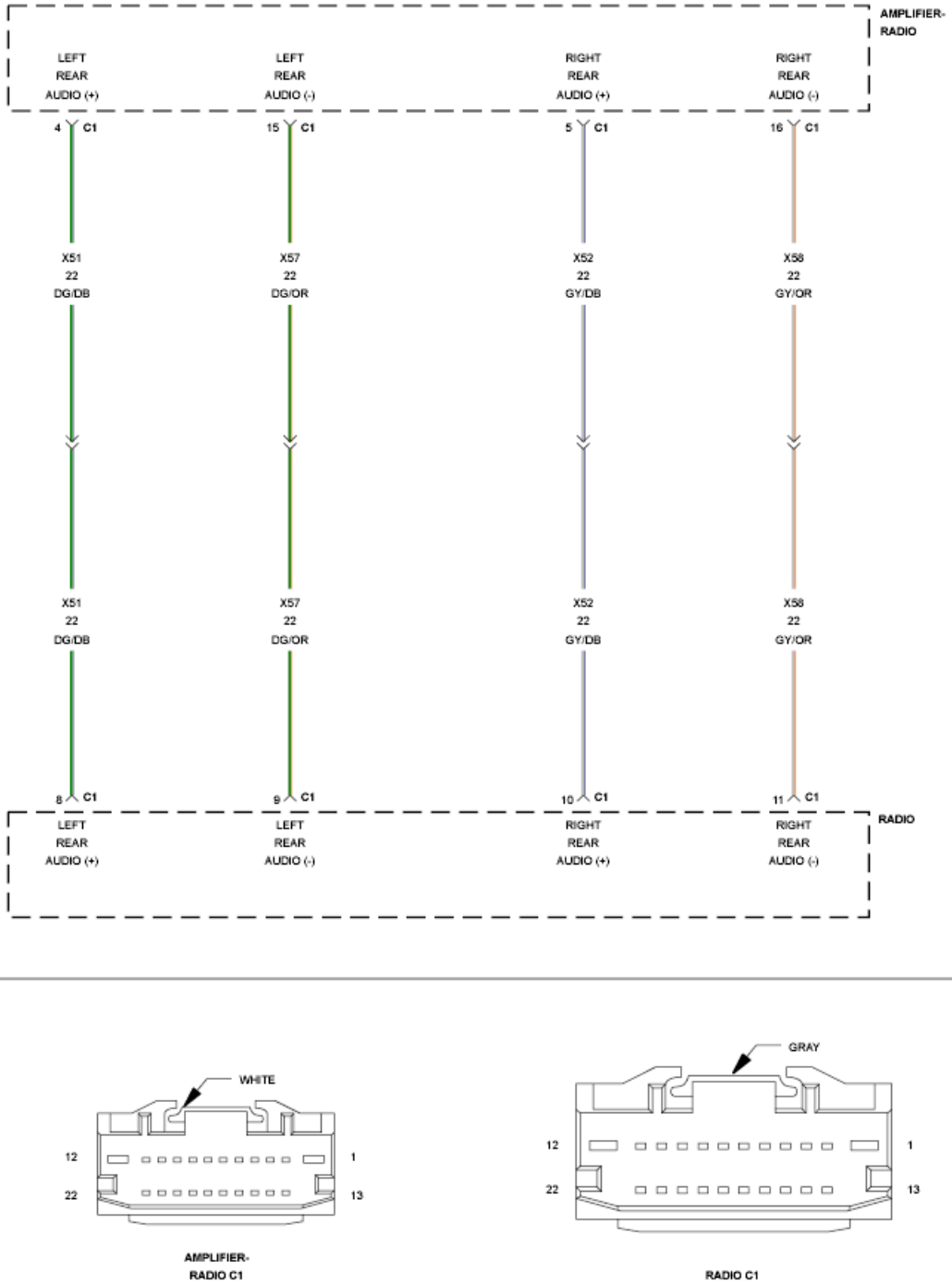

Fig. 41: Rear Left Audio Speaker Circuit Wiring Diagram - Premium
Courtesy of CHRYSLER GROUP, LLC

For a complete wiring diagram, **refer to appropriate SYSTEM WIRING DIAGRAMS article** .

NOTE: **There are two versions of the B140B DTC test. In order to select the proper test you must know if the vehicle is equipped with an Amplifier. If the vehicle is**

equipped with an Amplifier use the B140B-PREMIUM test. If the vehicle is not equipped with an Amplifier use the B140B-BASE test.

THEORY OF OPERATION

The (X51) Left Rear Audio (+) circuit and the (X57) Left Rear Audio (-) circuit are outputs of the Radio. The Radio controls and monitors these circuits for a concern.

For a detailed description of the Audio System. Refer to **DESCRIPTION** .

For additional information regarding the operation of the Audio System. Refer to **OPERATION** .

WHEN MONITORED:

With the Radio on.

SET CONDITION:

The Radio detects an open condition on the audio output circuit.

POSSIBLE CAUSES

Possible Causes
(X51) LEFT REAR AUDIO (+) CIRCUIT FOR AN OPEN
(X57) LEFT REAR AUDIO (-) CIRCUIT FOR AN OPEN
AMPLIFIER
RADIO

DIAGNOSTIC TEST

1. **CHECK FOR AN INTERMITTENT CONDITION**
    1. Turn the ignition on and open one of the front doors.

        NOTE: A front door must remain open whenever checking or erasing Radio DTC's.

    2. Using the scan tool, record and erase the Radio DTC's.
    3. Turn the Radio on.
    4. Adjust the speakers to the rear and center.
    5. Using the scan tool, read the active Radio DTC's.

        Does the scan tool read: B140B-REAR LEFT AUDIO SPEAKER OUTPUT CIRCUIT FOR AN OPEN?

        Yes

- Go To 2.

No

- Test complete, the condition or conditions that originally set this DTC are not present at this time. Using the wiring diagrams as a guide, check all related splices and connectors for signs of water intrusion, corrosion, pushed out or bent terminals and correct pin tension.
- Perform the BODY VERIFICATION TEST. Refer to **BODY VERIFICATION TEST** .

2. **CHECK THE AMPLIFIER**

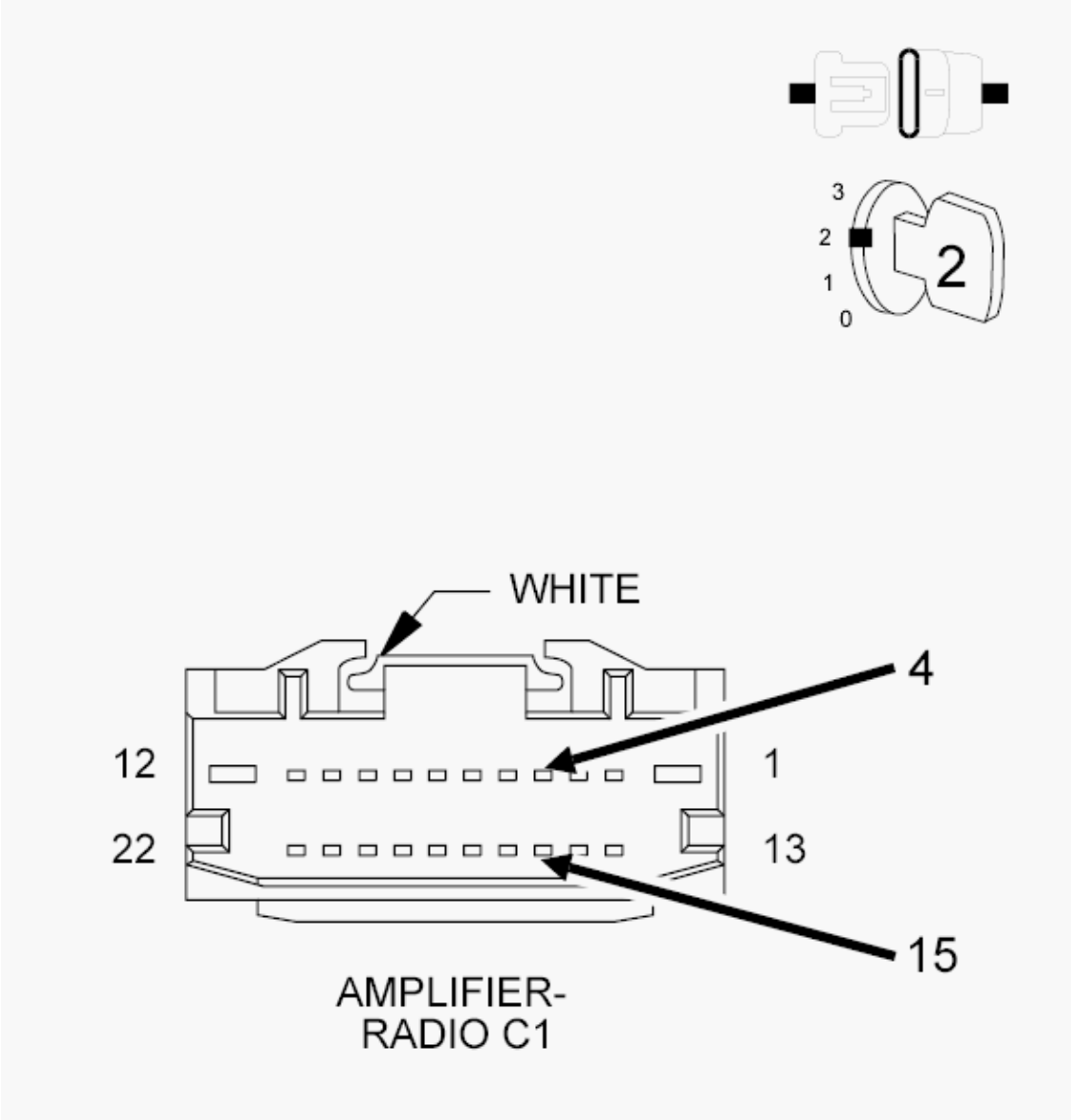

Fig. 42: Checking The Amplifier
Courtesy of CHRYSLER GROUP, LLC

1. Turn the ignition off.

2. Disconnect the Amplifier C1 harness connector.
3. Connect a jumper wire between the (X51) Left Rear Audio (+) circuit and the (X57) Left Rear Audio (-) circuits.
4. Turn the ignition on.
5. Turn the Radio on.
6. Adjust the speakers to the rear and center.
7. Using the scan tool, read the active Radio DTC's.

   Does the scan tool read: B140B-REAR LEFT AUDIO SPEAKER OUTPUT CIRCUIT FOR AN OPEN?

   Yes

   - Go To 3.

   No

   - Replace the Amplifier in accordance with the Service Information.
   - Perform the BODY VERIFICATION TEST. Refer to **BODY VERIFICATION TEST** .

3. **CHECK THE (X51) LEFT REAR AUDIO (+) CIRCUIT FOR AN OPEN**

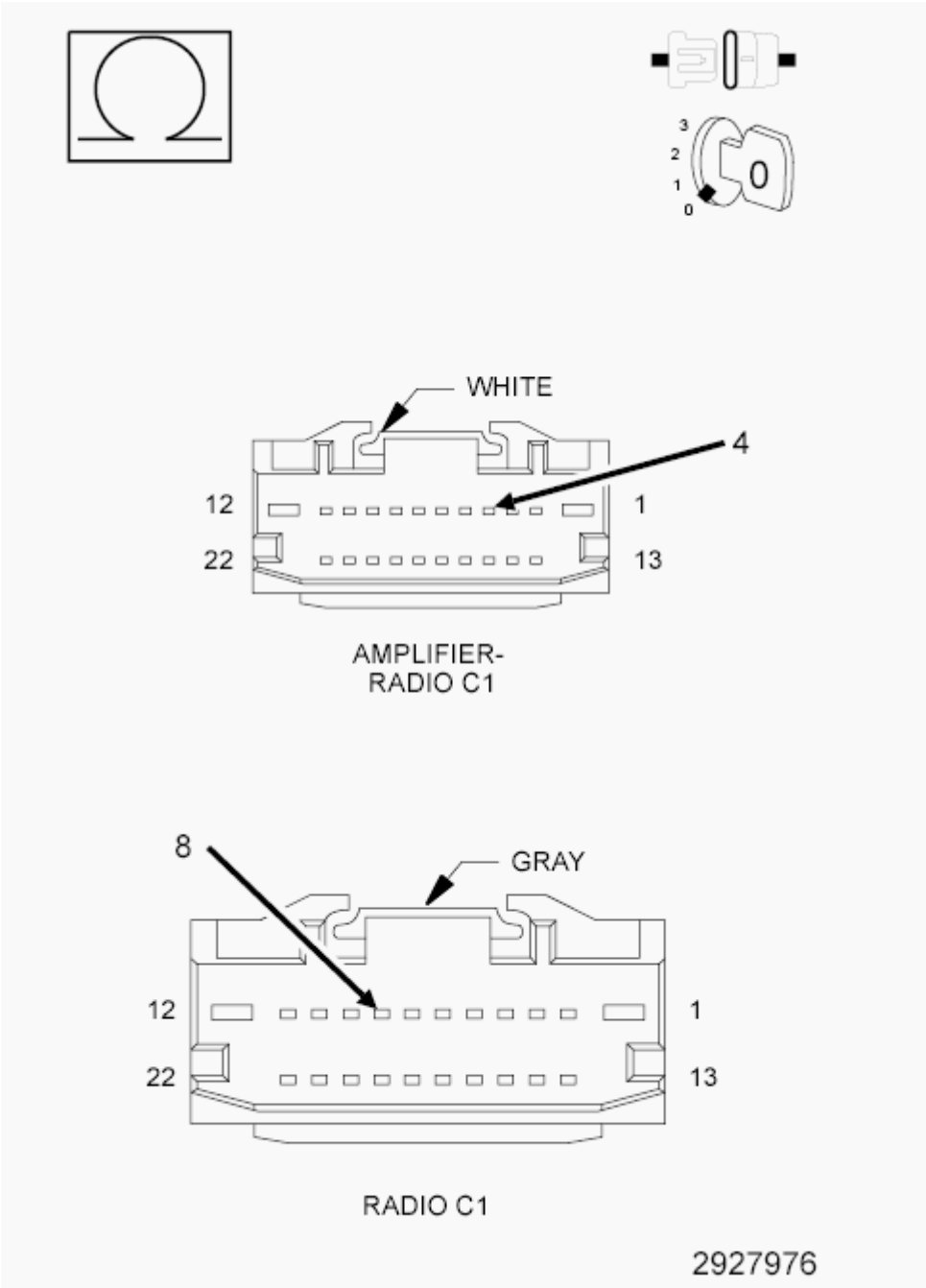

Fig. 43: Checking Left Rear Audio (+) Circuit For An Open
Courtesy of CHRYSLER GROUP, LLC

1. Turn the ignition off.
2. Disconnect the Radio C1 harness connector.
3. Measure the resistance of (X51) Left Rear Audio (+) circuit between the Radio C1 connector and the Amplifier C1 harness connector.

   Is the resistance below 5.0 Ohms?

Yes

- Go To 4.

No

- Repair open in the (X51) Left Rear Audio (+) circuit.
- Perform the BODY VERIFICATION TEST. Refer to **BODY VERIFICATION TEST** .

4. **CHECK THE (X57) LEFT REAR AUDIO (-) CIRCUIT FOR AN OPEN**

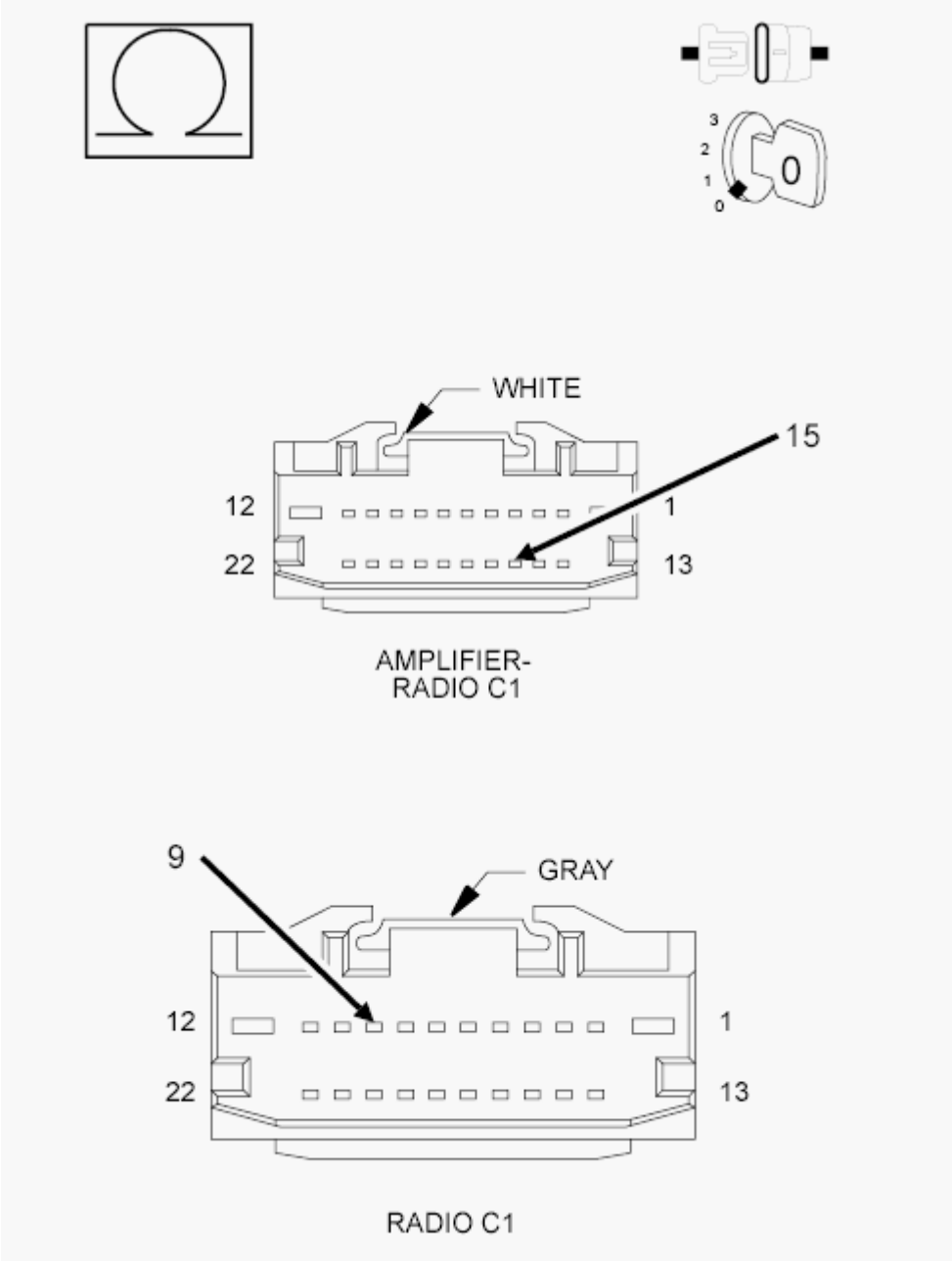

Fig. 44: Checking Left Rear Audio (-) Circuit For An Open

Courtesy of CHRYSLER GROUP, LLC

1. Measure the resistance of (X57) Left Rear Audio (-) circuit between the Radio C1 connector, and the Amplifier C1 harness connector.

   Is the resistance below 5.0 Ohms?

   Yes

   - Replace the Radio in accordance with the Service Information.
   - Perform the BODY VERIFICATION TEST. Refer to **BODY VERIFICATION TEST** .

   No

   - Repair open in the (X57) Left Rear Audio (-) circuit.
   - Perform the BODY VERIFICATION TEST. Refer to **BODY VERIFICATION TEST** .

B140D-REAR RIGHT AUDIO SPEAKER OUTPUT CIRCUIT LOW - BASE

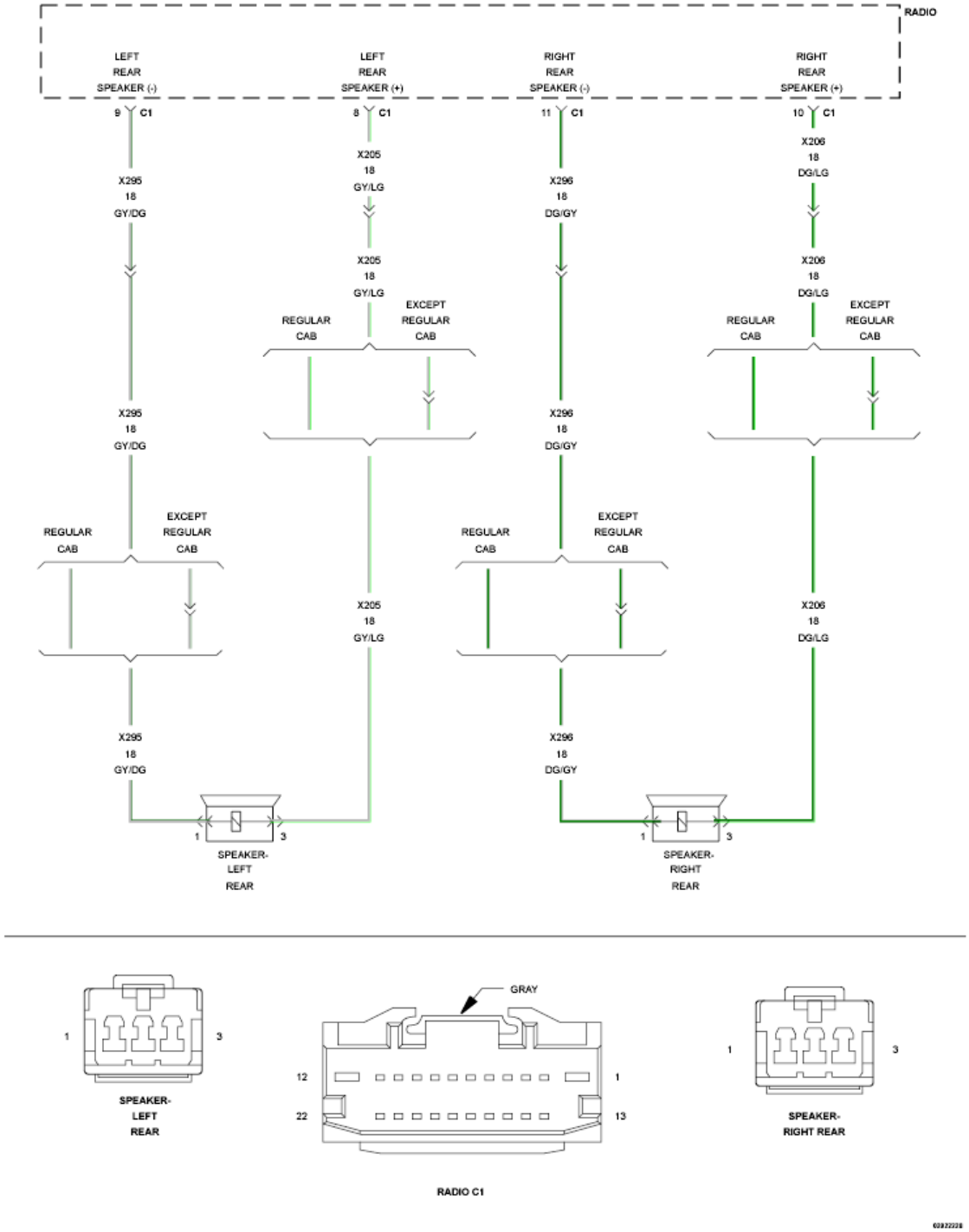

Fig. 45: Rear Right Audio Speaker Wiring Diagram
Courtesy of CHRYSLER GROUP, LLC

For a complete wiring diagram, **refer to appropriate SYSTEM WIRING DIAGRAMS article** .

NOTE: **There are two versions of the B140D DTC test. In order to select the proper test you must know if the vehicle is equipped with an Amplifier. If the vehicle is equipped with an Amplifier use the B140D-PREMIUM test. If the vehicle is not**

equipped with an Amplifier use the B140D-BASE test.

THEORY OF OPERATION

The (X206) Right Rear Speaker (+) circuit and the (X296) Right Rear Speaker (-) circuit are outputs of the Radio. The Radio controls and monitors these circuits for a concern.

For a detailed description of the Audio System. Refer to **DESCRIPTION** .

For additional information regarding the operation of the Audio System. Refer to **OPERATION** .

WHEN MONITORED:

With the Radio on.

SET CONDITION:

The Radio detects a short to ground condition on the speaker output circuit.

POSSIBLE CAUSES

Possible Causes
(X206) RIGHT REAR SPEAKER (+) CIRCUIT FOR A SHORT TO GROUND
(X296) RIGHT REAR SPEAKER (-) CIRCUIT FOR A SHORT TO GROUND
RIGHT REAR SPEAKER
RADIO

DIAGNOSTIC TEST

1. **CHECK FOR AN INTERMITTENT CONDITION**
    1. Turn the ignition on and open one of the front doors.

       NOTE: A front door must remain open whenever checking or erasing Radio DTC's.

    2. Using the scan tool, record and erase the Radio DTC's.
    3. Turn the Radio on.
    4. Adjust the speakers to the rear and center.
    5. Using the scan tool, read the active Radio DTC's.

       Does the scan tool read: B140D-REAR RIGHT AUDIO SPEAKER OUTPUT CIRCUIT LOW?

       Yes

       - Go To 2.

No

- Test complete, the condition or conditions that originally set this DTC are not present at this time. Using the wiring diagrams as a guide, check all related splices and connectors for signs of water intrusion, corrosion, pushed out or bent terminals and correct pin tension.
- Perform the BODY VERIFICATION TEST. Refer to **BODY VERIFICATION TEST** .

2. **CHECK RIGHT REAR SPEAKER**
   1. Make sure one of the front doors is still open.
   2. Using the scan tool, erase the DTC's.
   3. Turn the ignition off.
   4. Disconnect the Right Rear Speaker harness connector from the Right Rear Speaker.
   5. Turn the ignition on.
   6. Turn the radio on.
   7. Using the scan tool, read the active Radio DTC's.

   Does the scan tool read: B140D-FRONT RIGHT AUDIO SPEAKER OUTPUT CIRCUIT LOW?

   Yes

   - Go To 3.

   No

   - Replace the Right Rear Speaker in accordance with the Service Information.
   - Perform the BODY VERIFICATION TEST. Refer to **BODY VERIFICATION TEST** .
3. **CHECK THE (X206) RIGHT REAR SPEAKER (+) CIRCUIT FOR A SHORT TO GROUND**

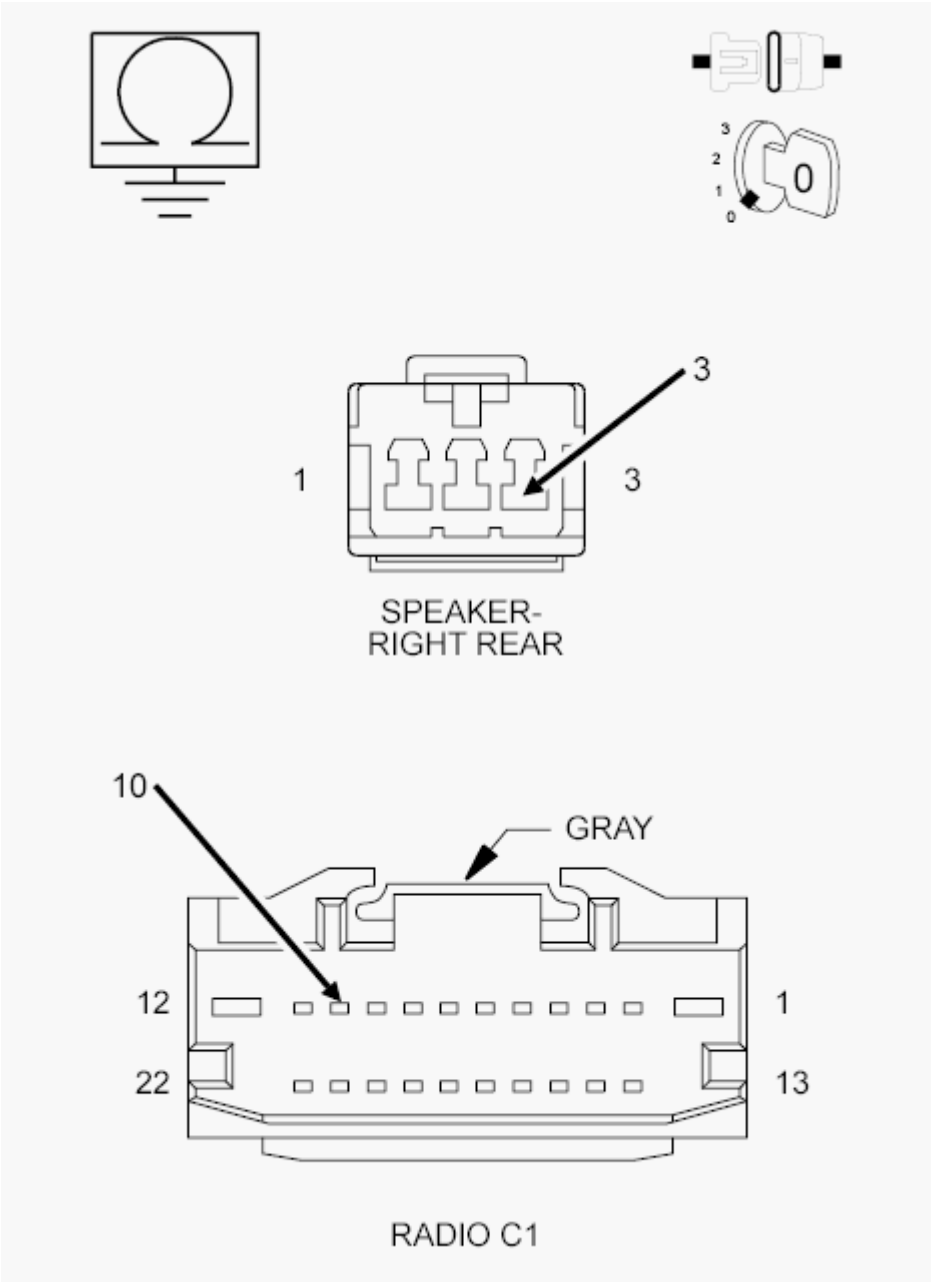

Fig. 46: Checking Right Rear Speaker (+) Circuit For A Short To Ground
Courtesy of CHRYSLER GROUP, LLC

1. Turn the ignition off.
2. Disconnect the Radio C1 harness connector.
3. Measure the resistance between ground and the (X206) Right Rear Speaker (+) circuit.

   Is the resistance below 5.0 Ohms?

   Yes

- Repair the (X206) Right Rear Speaker (+) circuit for a short to ground.
- Perform the BODY VERIFICATION TEST. Refer to **BODY VERIFICATION TEST** .

No

- Go To 4.

4. **CHECK THE (X296) RIGHT REAR SPEAKER (-) CIRCUIT FOR A SHORT TO GROUND**

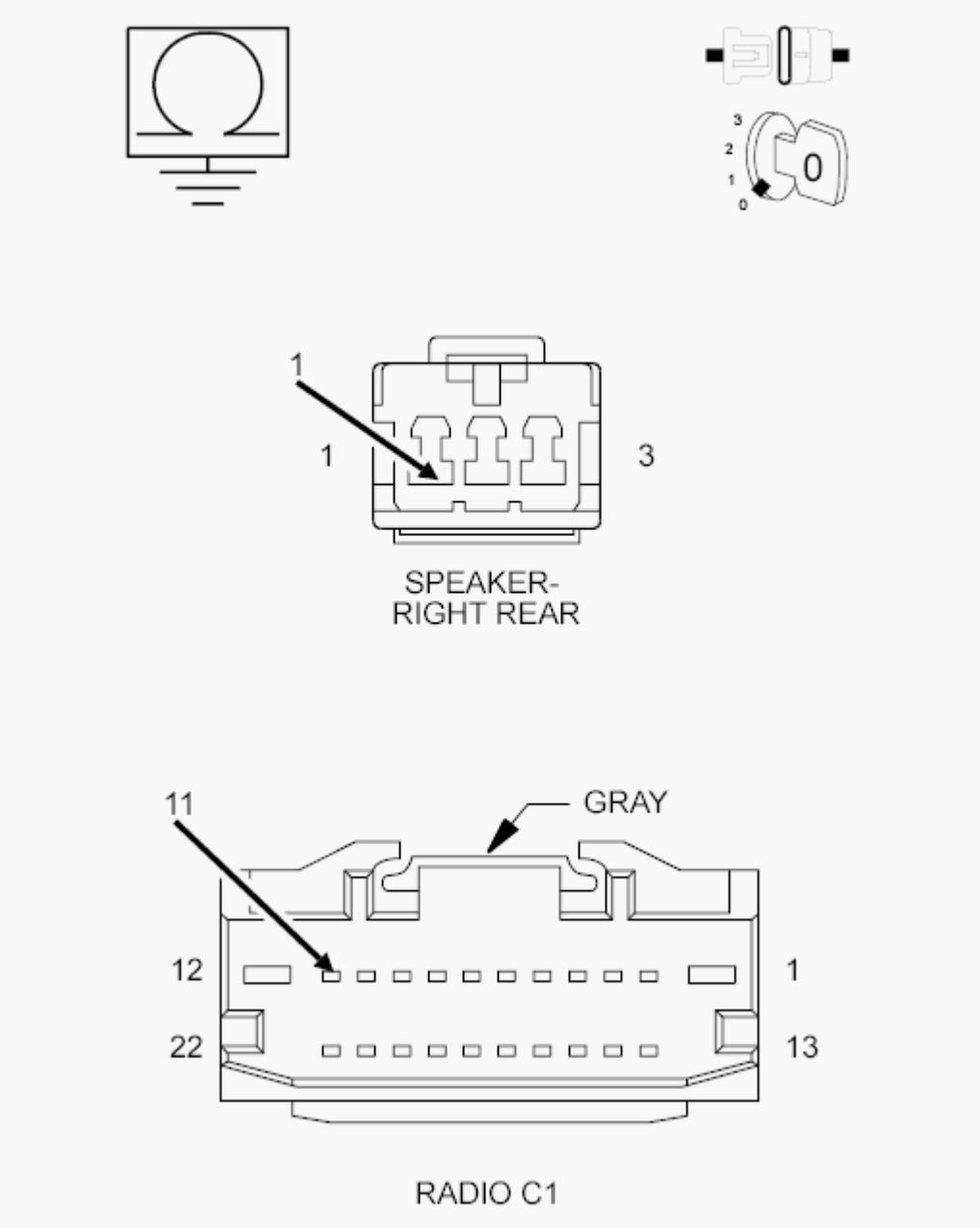

Fig. 47: Checking Right Rear Speaker (-) Circuit For A Short To Ground
Courtesy of CHRYSLER GROUP, LLC

1. Measure the resistance between ground and the (X296) Right Rear Speaker (-) circuit.

   Is the resistance below 5.0 Ohms?

   Yes

   - Repair the (X296) Right Rear Speaker (-) circuit for a short to ground.
   - Perform the BODY VERIFICATION TEST. Refer to **BODY VERIFICATION TEST** .

   No

   - Replace the Radio in accordance with the Service Information.
   - Perform the BODY VERIFICATION TEST. Refer to **BODY VERIFICATION TEST** .

B140D-REAR RIGHT AUDIO SPEAKER OUTPUT CIRCUIT LOW - PREMIUM

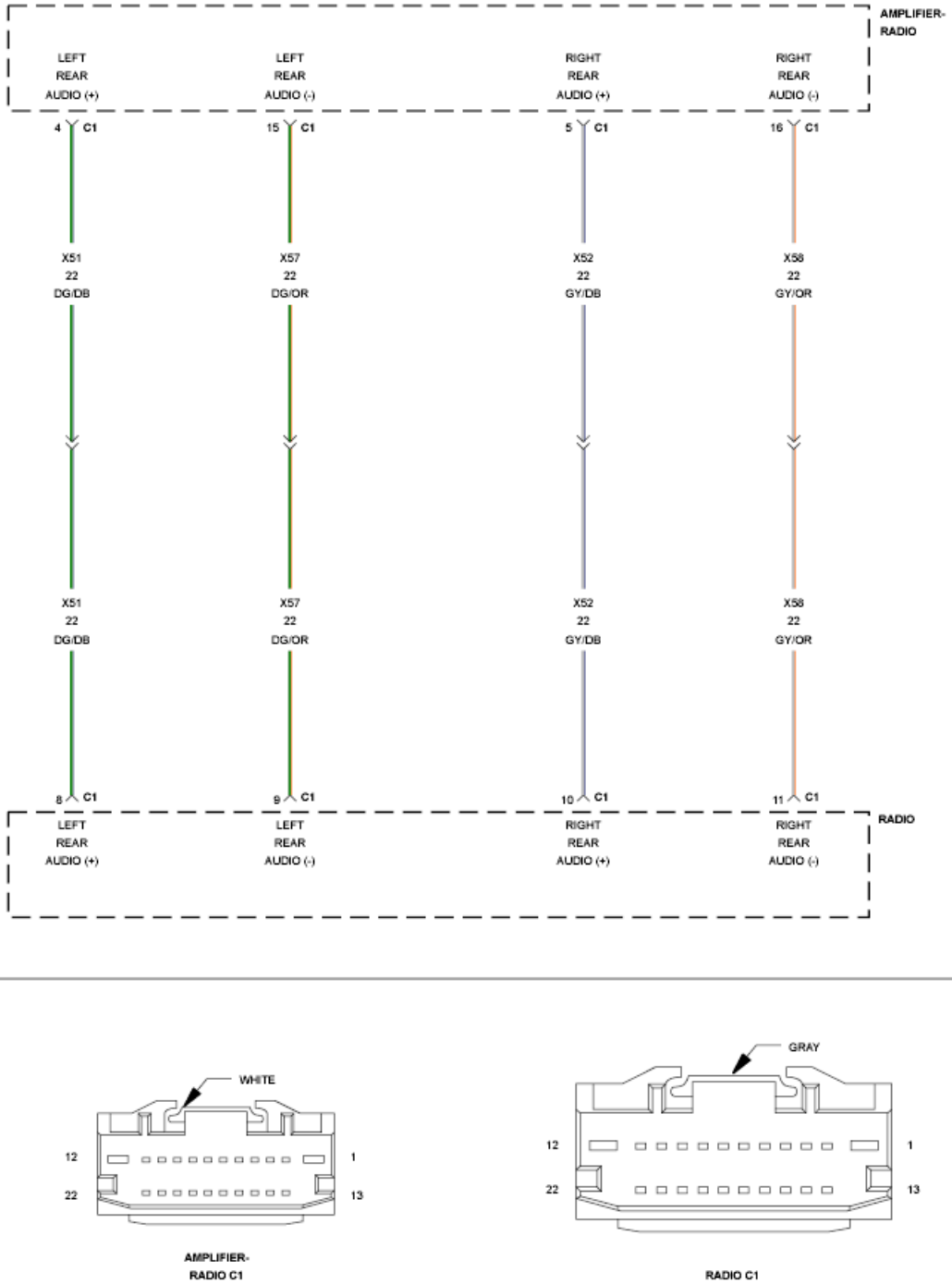

Fig. 48: Rear Right Audio Speaker Circuit Wiring Diagram - Premium
Courtesy of CHRYSLER GROUP, LLC

NOTE: **There are two versions of the B140D DTC test. In order to select the proper test you must know if the vehicle is equipped with an Amplifier. If the vehicle is equipped with an Amplifier use the B140D-PREMIUM test. If the vehicle is not equipped with an Amplifier use the B140D-BASE test.**

For a complete wiring diagram, **refer to appropriate SYSTEM WIRING DIAGRAMS article** .

THEORY OF OPERATION

The (X52) Right Rear Audio (+) circuit and the (X58) Right Rear Audio (-) circuit are outputs of the Radio. The Radio controls and monitors these circuits for a concern.

For a detailed description of the Audio System. Refer to **DESCRIPTION** .

For additional information regarding the operation of the Audio System. Refer to **OPERATION** .

WHEN MONITORED:

With the Radio on.

SET CONDITION:

The Radio detects a short to ground condition on the audio output circuit.

POSSIBLE CAUSES

Possible Causes
(X52) RIGHT REAR AUDIO(+) CIRCUIT FOR A SHORT TO GROUND
(X58) RIGHT REAR AUDIO(-) CIRCUIT FOR A SHORT TO GROUND
AMPLIFIER
RADIO

DIAGNOSTIC TEST

1. **CHECK FOR AN INTERMITTENT CONDITION**
    1. Turn the ignition on and open one of the front doors.

        NOTE: A front door must remain open whenever checking or erasing Radio DTC's.

    2. Using the scan tool, record and erase the Radio DTC's.
    3. Turn the Radio on.
    4. Adjust the speakers to the rear and center.
    5. Using the scan tool, read the active Radio DTC's.

        Does the scan tool read: B140D-REAR RIGHT AUDIO SPEAKER OUTPUT CIRCUIT LOW?

        Yes

        - Go To 2.

No

- Test complete, the condition or conditions that originally set this DTC are not present at this time. Using the wiring diagrams as a guide, check all related splices and connectors for signs of water intrusion, corrosion, pushed out or bent terminals and correct pin tension.
- Perform the BODY VERIFICATION TEST. Refer to **BODY VERIFICATION TEST** .

2. **CHECK THE AMPLIFIER**

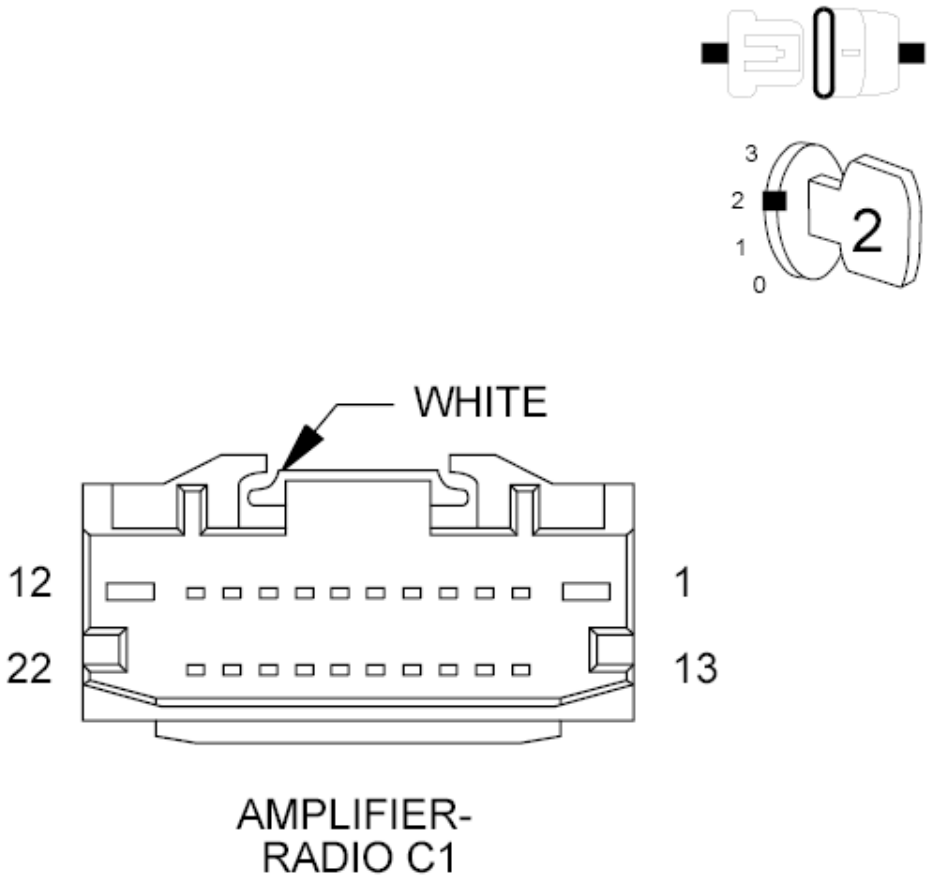

Fig. 49: Amplifier Connector End View
Courtesy of CHRYSLER GROUP, LLC

1. Make sure one of the front doors is still open.
2. Using the scan tool, erase the DTC's.
3. Turn the ignition off.
4. Disconnect the Amplifier C1 harness connector.
5. Turn the ignition on.
6. Turn the radio on.

7. Using the scan tool, read the active Radio DTC's.

   Does the scan tool read: B140D-FRONT RIGHT AUDIO SPEAKER OUTPUT CIRCUIT LOW?

   Yes

   - Go To 3.

   No

   - Replace the Amplifier in accordance with the Service Information.
   - Perform the BODY VERIFICATION TEST. Refer to **BODY VERIFICATION TEST** .

3. **CHECK THE (X52) RIGHT REAR AUDIO (+) CIRCUIT FOR A SHORT TO GROUND**

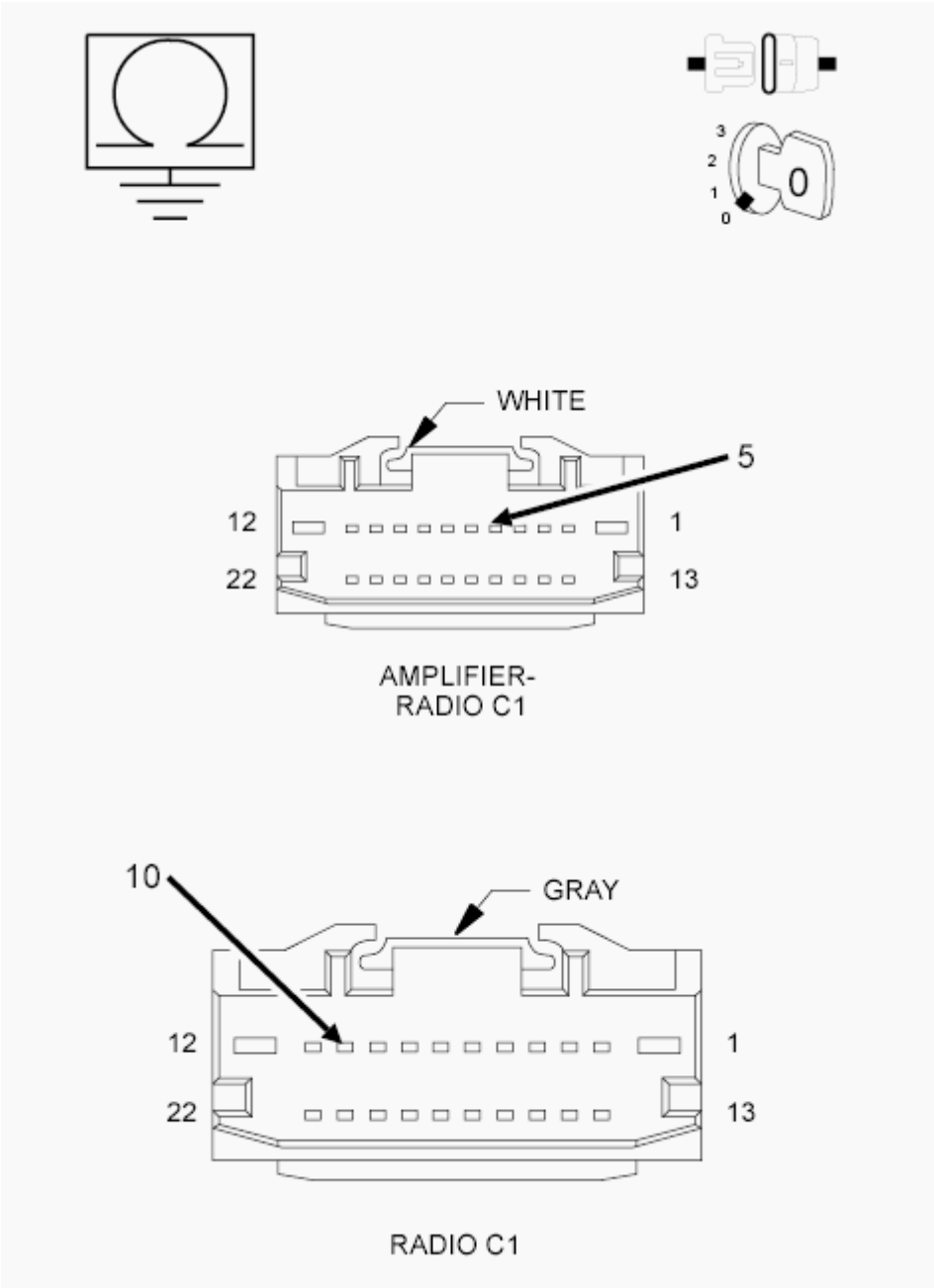

Fig. 50: Checking Right Rear Audio (+) Circuit For A Short To Ground
Courtesy of CHRYSLER GROUP, LLC

1. Turn the ignition off.
2. Disconnect the Radio C1 harness connector.
3. Measure the resistance between ground and the (X52) Right Rear Speaker (+) circuit.

   Is the resistance below 5.0 Ohms?

   Yes

- Repair the (X52) Right Rear Audio (+) circuit for a short to ground.
- Perform the BODY VERIFICATION TEST. Refer to **BODY VERIFICATION TEST** .

No

- Go To 4.

4. **CHECK THE (X58) RIGHT REAR AUDIO (-) CIRCUIT FOR A SHORT TO GROUND**

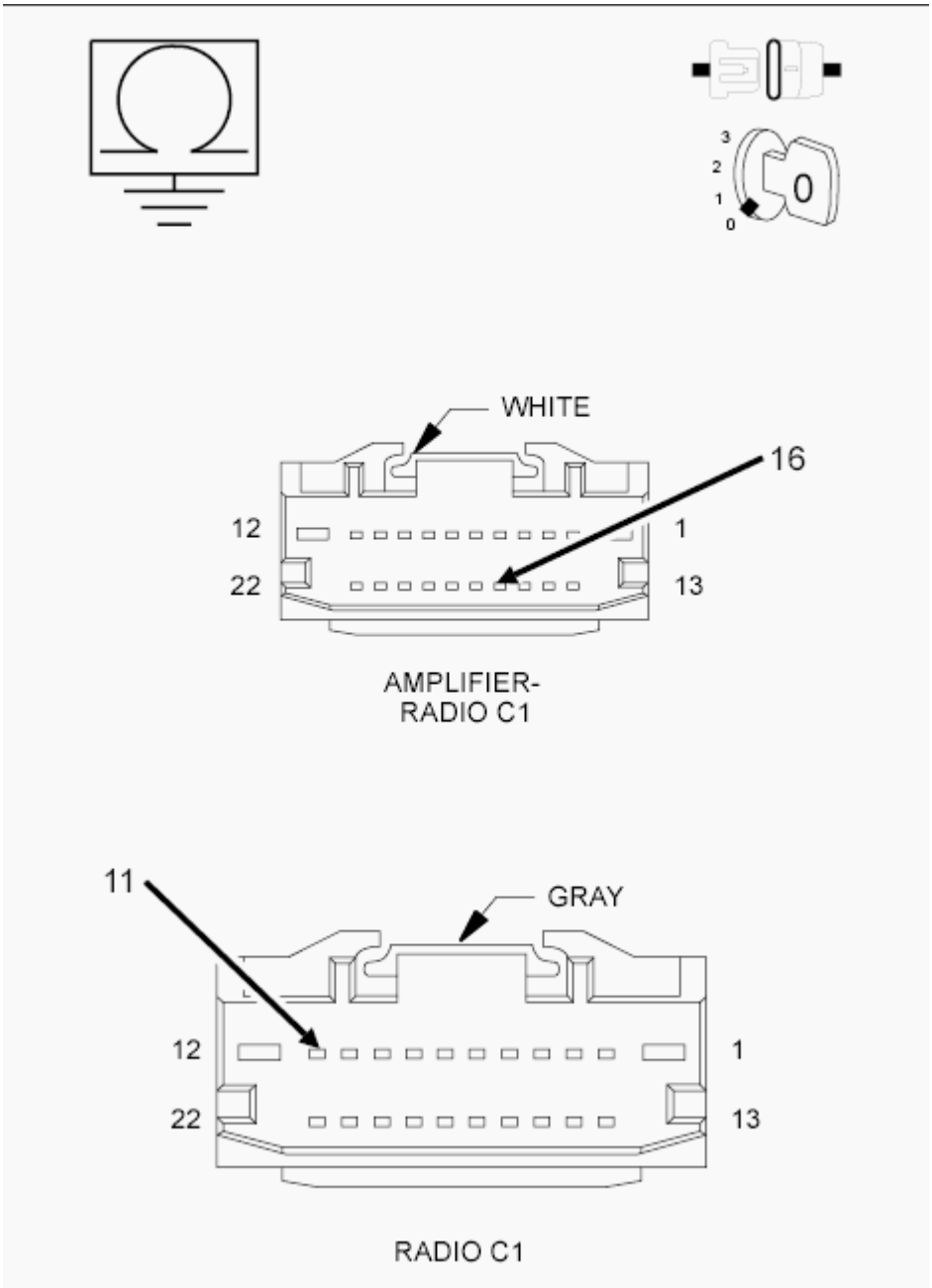

Fig. 51: Checking Right Rear Audio (-) Circuit For A Short To Ground
Courtesy of CHRYSLER GROUP, LLC

1. Measure the resistance between ground and the (X58) Right Rear Audio (-) circuit.

   Is the resistance below 5.0 Ohms?

   Yes

   - Repair the (X58) Right Rear Audio (-) circuit for a short to ground.
   - Perform the BODY VERIFICATION TEST. Refer to **BODY VERIFICATION TEST** .

   No

   - Replace the Radio in accordance with the Service Information.
   - Perform the BODY VERIFICATION TEST. Refer to **BODY VERIFICATION TEST** .

B140E-REAR RIGHT AUDIO SPEAKER OUTPUT CIRCUIT HIGH - BASE

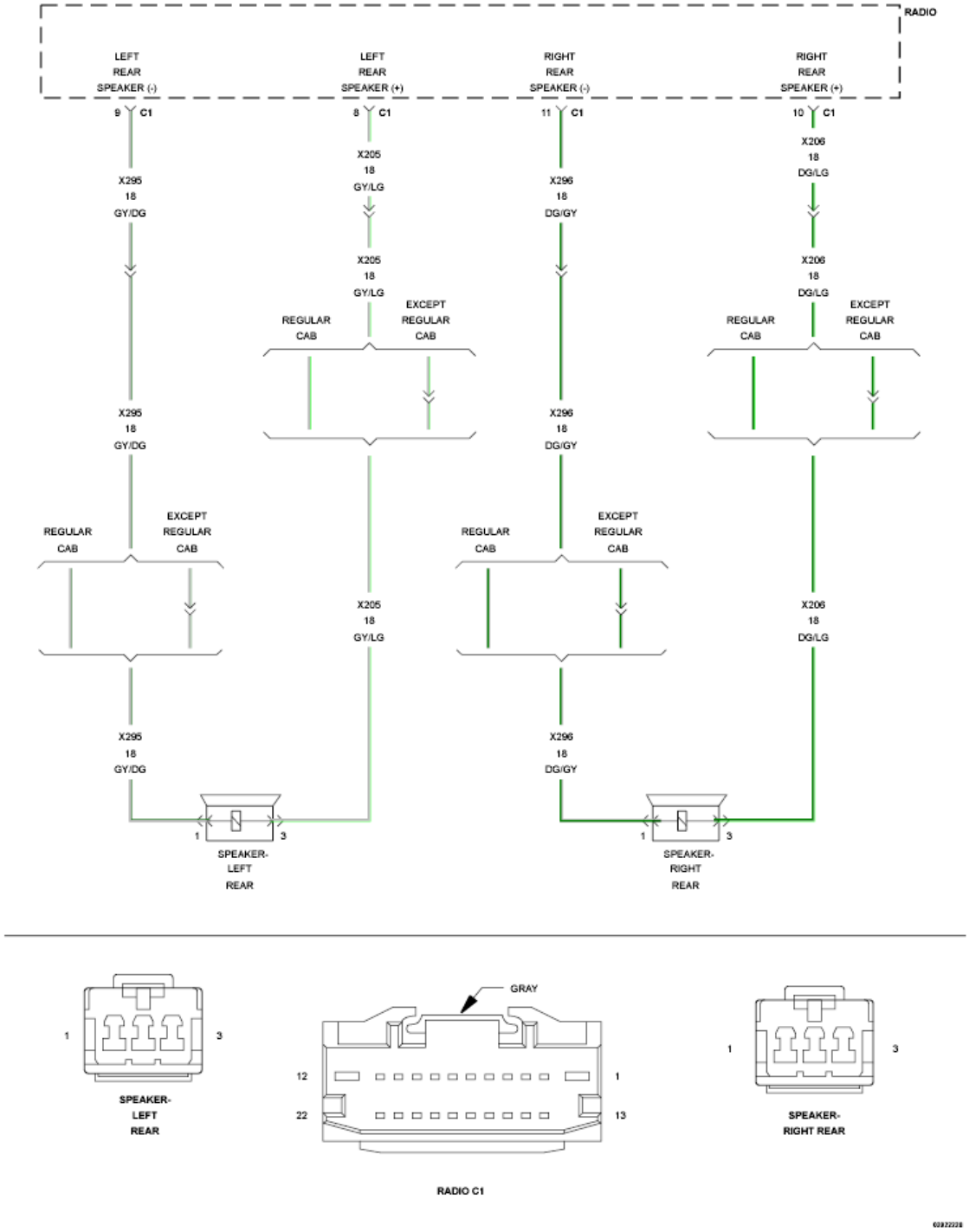

Fig. 52: Rear Right Audio Speaker Wiring Diagram
Courtesy of CHRYSLER GROUP, LLC

For a complete wiring diagram, **refer to appropriate SYSTEM WIRING DIAGRAMS article** .

NOTE: **There are two versions of the B140E DTC test. In order to select the proper test you must know if the vehicle is equipped with an Amplifier. If the vehicle is equipped an with Amplifier use the B140E-PREMIUM test. If the vehicle is not**

equipped with an Amplifier use the B140E-BASE test.

THEORY OF OPERATION

The (X206) Right Rear Speaker (+) circuit and the (X296) Right Rear Speaker (-) circuit are outputs of the Radio. The Radio controls and monitors these circuits for a concern.

For a detailed description of the Audio System. Refer to **DESCRIPTION** .

For additional information regarding the operation of the Audio System. Refer to **OPERATION** .

WHEN MONITORED:

With the Radio on.

SET CONDITION:

The Radio detects a short to battery condition on the speaker output circuit.

POSSIBLE CAUSES

Possible Causes
(X206) RIGHT REAR SPEAKER (+) CIRCUIT FOR A SHORT TO VOLTAGE
(X296) RIGHT REAR SPEAKER (-) CIRCUIT FOR A SHORT TO VOLTAGE
RADIO

DIAGNOSTIC TEST

1. **CHECK FOR AN INTERMITTENT CONDITION**
    1. Turn the ignition on and open one of the front doors.

       NOTE: A front door must remain open whenever checking or erasing Radio DTC's.

    2. Using the scan tool, record and erase the Radio DTC's.
    3. Turn the Radio on.
    4. Adjust the speakers to the rear and center.
    5. Using the scan tool, read the active Radio DTC's.

       Does the scan tool read: B140E-REAR RIGHT AUDIO SPEAKER OUTPUT CIRCUIT HIGH?

       Yes

       - Go To 2.

No

- Test complete, the condition or conditions that originally set this DTC are not present at this time. Using the wiring diagrams as a guide, check all related splices and connectors for signs of water intrusion, corrosion, pushed out or bent terminals and correct pin tension.
- Perform the BODY VERIFICATION TEST. Refer to **BODY VERIFICATION TEST** .

2. **CHECK FOR VOLTAGE ON THE (X206) RIGHT REAR SPEAKER (+) CIRCUIT**

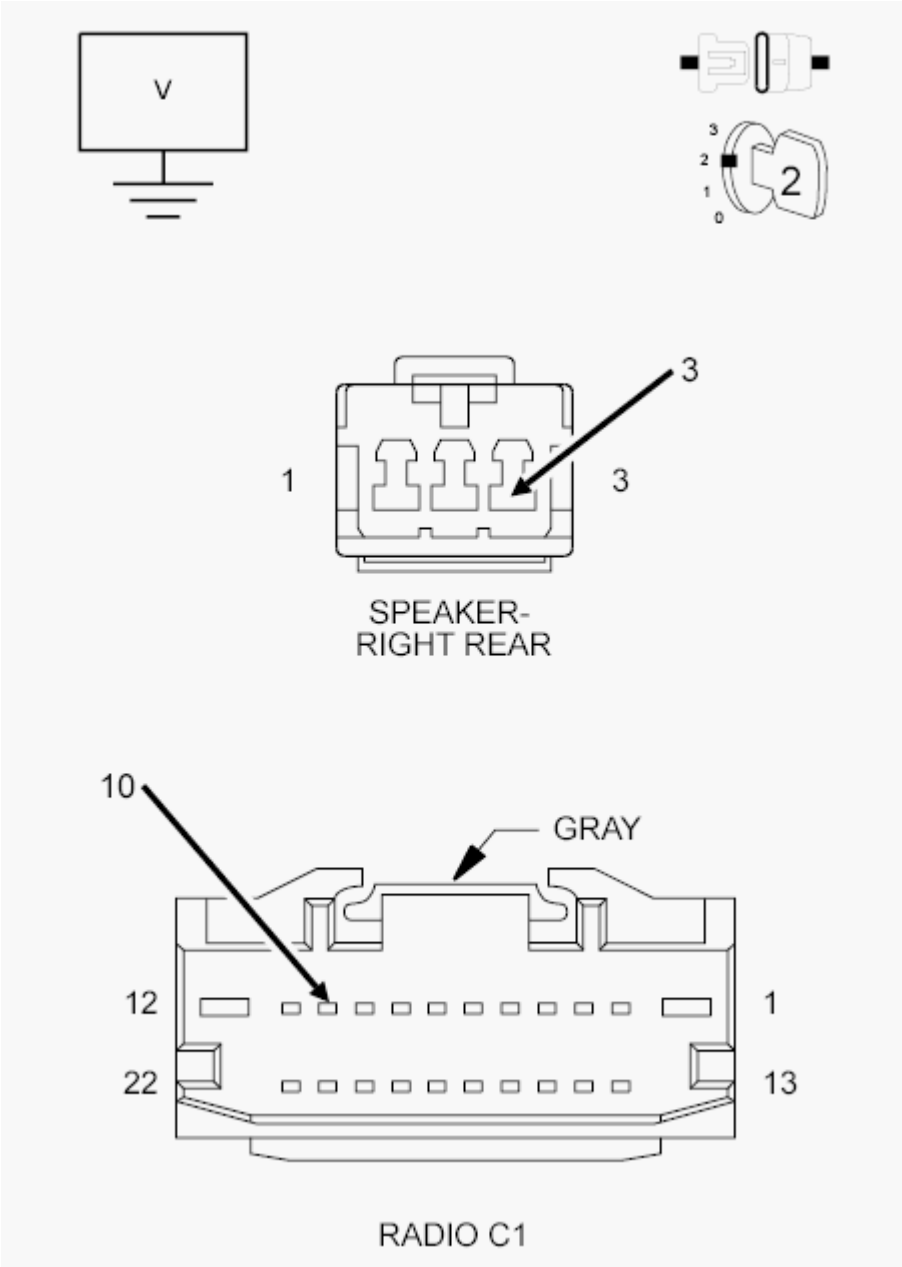

Fig. 53: Measuring Voltage On The Right Rear Speaker (+) Circuit
Courtesy of CHRYSLER GROUP, LLC

1. Turn the ignition off.

2. Disconnect the Radio C1 harness connector.
3. Turn the ignition on.
4. Measure the voltage between ground and the (X206) Right Rear Speaker (+) circuit.

   Is there any voltage present?

   Yes

   - Repair the (X206) Right Rear Speaker (+) CIRCUIT FOR A SHORT TO VOLTAGE.
   - Perform the BODY VERIFICATION TEST. Refer to **BODY VERIFICATION TEST** .

   No

   - Go To 3.

3. **CHECK FOR VOLTAGE ON THE (X296) RIGHT REAR SPEAKER (-) CIRCUIT**

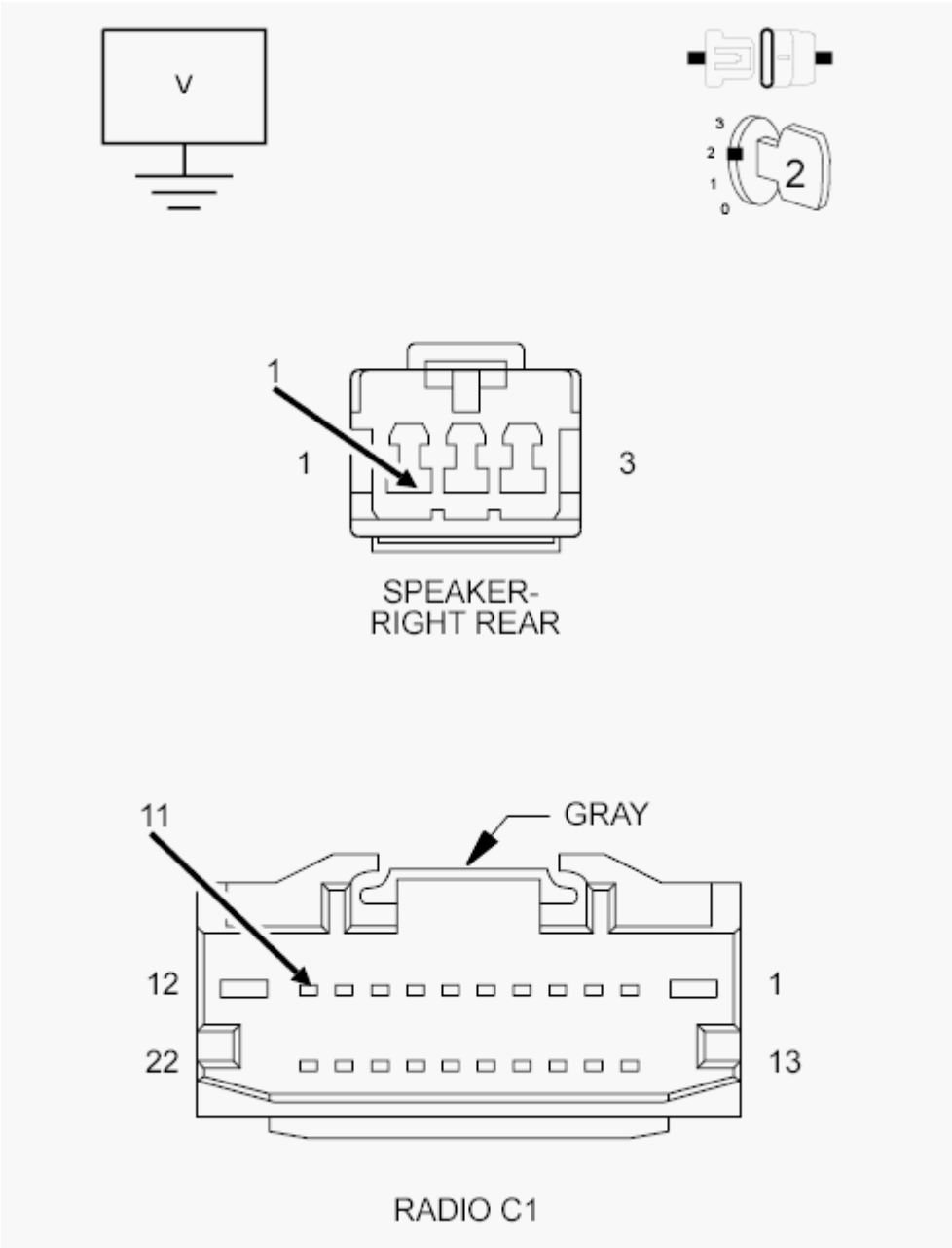

Fig. 54: Measuring Voltage Between Ground & Right Rear Speaker (-) Circuit
Courtesy of CHRYSLER GROUP, LLC

1. Measure the voltage between ground and the (X296) Right Rear Speaker (-) circuit.

   Is there any voltage present?

   Yes

   - Repair the (X296) Right Rear Speaker (-) CIRCUIT FOR A SHORT TO VOLTAGE.
   - Perform the BODY VERIFICATION TEST. Refer to **BODY VERIFICATION TEST** .

No

- Replace the Radio in accordance with the Service Information.
- Perform the BODY VERIFICATION TEST. Refer to **BODY VERIFICATION TEST** .

B140E-REAR RIGHT AUDIO SPEAKER OUTPUT CIRCUIT HIGH - PREMIUM

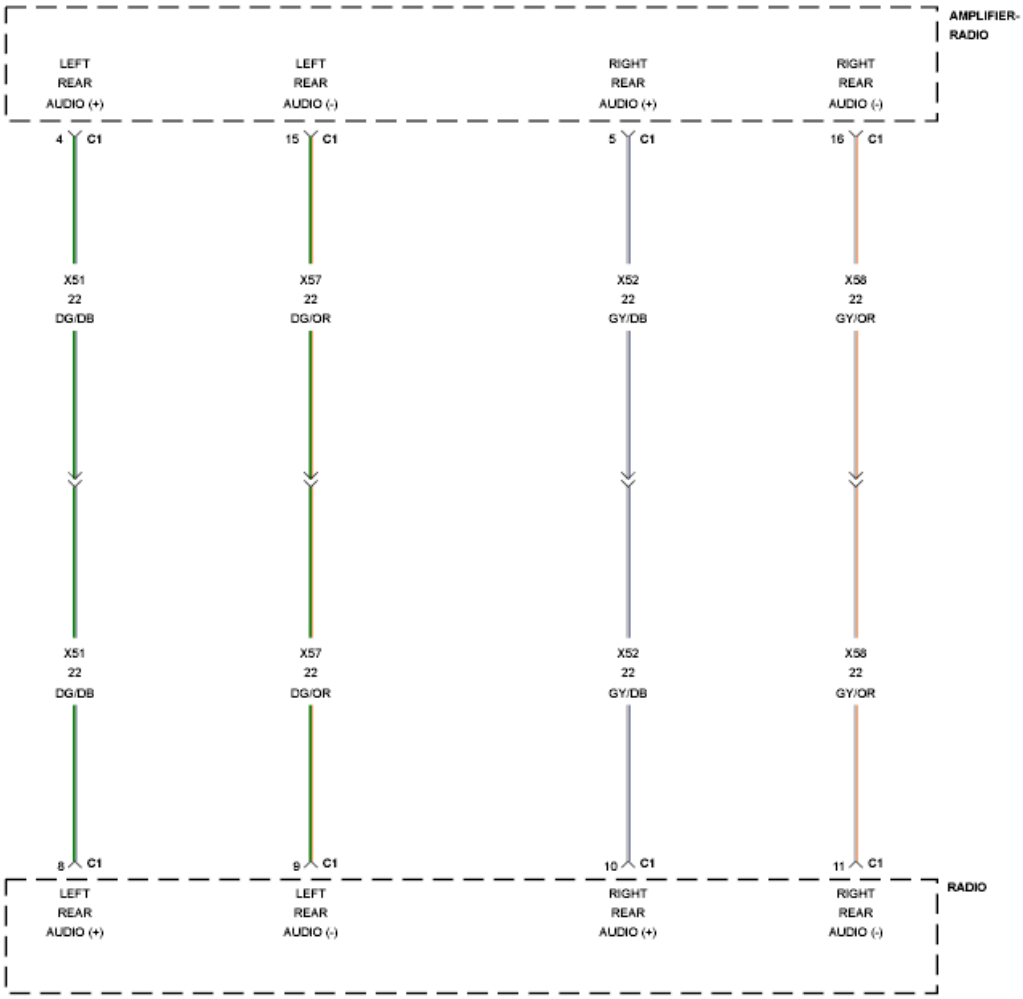

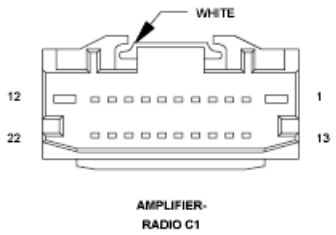

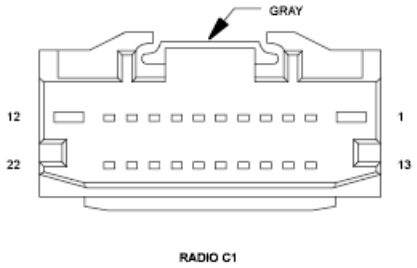

Fig. 55: Rear Right Audio Speaker Circuit Wiring Diagram - Premium
Courtesy of CHRYSLER GROUP, LLC

For a complete wiring diagram, **refer to appropriate SYSTEM WIRING DIAGRAMS article** .

NOTE: **There are two versions of the B140E DTC test. In order to select the proper test you must know if the vehicle is equipped with an Amplifier. If the vehicle is equipped with an Amplifier use the B140E-PREMIUM test. If the vehicle is not equipped with an Amplifier use the B140E-BASE test.**

THEORY OF OPERATION

The (X52) Right Rear Audio (+) circuit and the (X58) Right Rear Audio (-) circuit are outputs of the Radio. The Radio controls and monitors these circuits for a concern.

For a detailed description of the Audio System. Refer to **DESCRIPTION** .

For additional information regarding the operation of the Audio System. Refer to **OPERATION** .

WHEN MONITORED:

With the Radio on.

SET CONDITION:

The Radio detects a short to battery condition on the audio output circuit.

POSSIBLE CAUSES

Possible Causes
(X52) RIGHT REAR AUDIO (+) CIRCUIT FOR A SHORT TO VOLTAGE
(X58) RIGHT REAR AUDIO (-) CIRCUIT FOR A SHORT TO VOLTAGE
RADIO

DIAGNOSTIC TEST

1. **CHECK FOR AN INTERMITTENT CONDITION**
    1. Turn the ignition on and open one of the front doors.

        NOTE: **A front door must remain open whenever checking or erasing Radio DTC's.**

    2. Using the scan tool, record and erase the Radio DTC's.
    3. Turn the Radio on.
    4. Adjust the speakers to the rear and center.

5. Using the scan tool, read the active Radio DTC's.

   Does the scan tool read: B140E-REAR RIGHT AUDIO SPEAKER OUTPUT CIRCUIT HIGH?

   Yes

   - Go To 3.

   No

   - Test complete, the condition or conditions that originally set this DTC are not present at this time. Using the wiring diagrams as a guide, check all related splices and connectors for signs of water intrusion, corrosion, pushed out or bent terminals and correct pin tension.
   - Perform the BODY VERIFICATION TEST. Refer to **BODY VERIFICATION TEST** .

2. **CHECK THE AMPLIFIER**

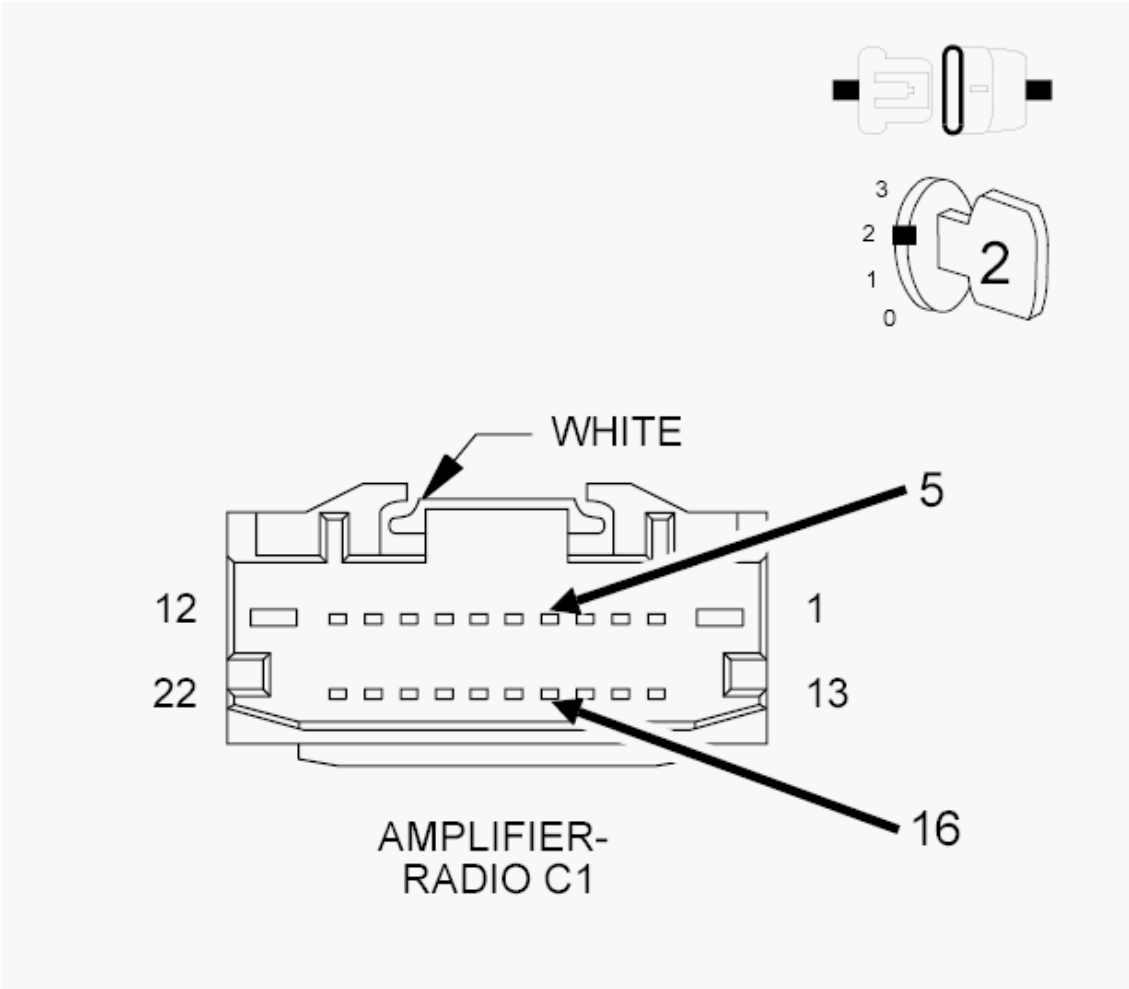

Fig. 56: Checking The Amplifier
Courtesy of CHRYSLER GROUP, LLC

1. Make sure one of the front doors is still open.
2. Using the scan tool, erase the DTC's.
3. Turn the ignition off.
4. Disconnect the Amplifier C1 harness connector from the Amplifier.
5. Turn the ignition on.
6. Turn the radio on.
7. Using the scan tool, read the active Radio DTC's.

   Does the scan tool read: B140E-REAR RIGHT AUDIO SPEAKER OUTPUT CIRCUIT HIGH?

   Yes

   - Go To 3.

   No

   - Replace the Amplifier in accordance with the Service Information.
   - Perform the BODY VERIFICATION TEST. Refer to **BODY VERIFICATION TEST** .

3. **CHECK FOR VOLTAGE ON THE (X52) RIGHT REAR AUDIO (+) CIRCUIT**

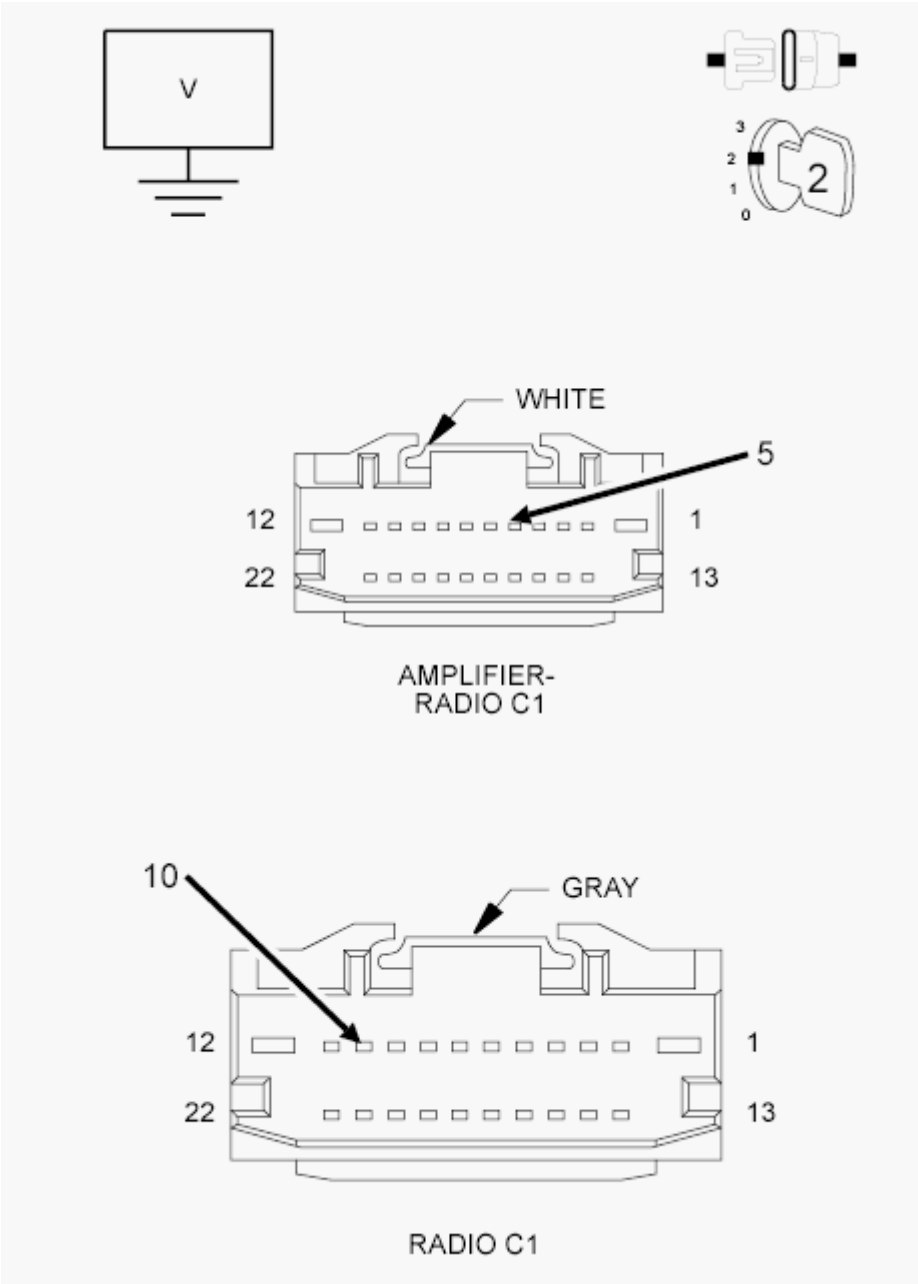

Fig. 57: Measuring Voltage Between Ground & Right Rear Audio (+) Circuit
Courtesy of CHRYSLER GROUP, LLC

1. Turn the ignition off.
2. Disconnect the Radio C1 harness connector.
3. Turn the ignition on.
4. Measure the voltage between ground and the (X52) Right Rear Audio (+) circuit.

   Is there any voltage present?

   Yes

- Repair the (X52) Right Rear Audio (+) CIRCUIT FOR A SHORT TO VOLTAGE.
- Perform the BODY VERIFICATION TEST. Refer to **BODY VERIFICATION TEST** .

No

- Go To 4.

4. **CHECK FOR VOLTAGE ON THE (X58) RIGHT REAR AUDIO (-) CIRCUIT**

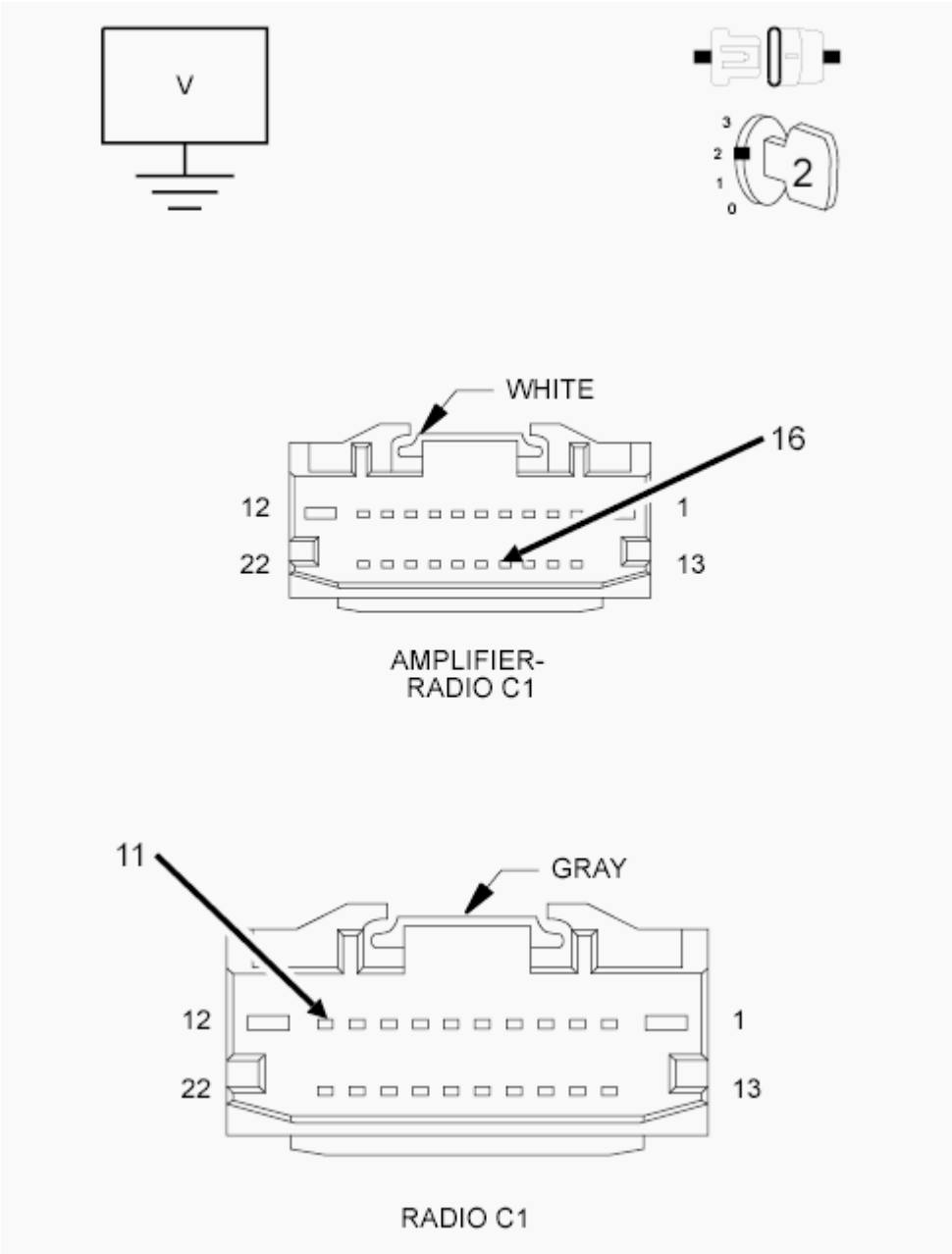

Fig. 58: Measuring Voltage Between Ground & Right Rear Audio (-) Circuit
Courtesy of CHRYSLER GROUP, LLC

1. Measure the voltage between ground and the (X58) Right Rear Audio (-) circuit.

   Is there any voltage present?

   Yes

   - Repair the (X58) Right Rear Audio (-) CIRCUIT FOR A SHORT TO VOLTAGE.
   - Perform the BODY VERIFICATION TEST. Refer to **BODY VERIFICATION TEST** .

   No

   - Replace the Radio in accordance with the Service Information.
   - Perform the BODY VERIFICATION TEST. Refer to **BODY VERIFICATION TEST** .

B140F-REAR RIGHT AUDIO SPEAKER OUTPUT CIRCUIT FOR AN OPEN - BASE

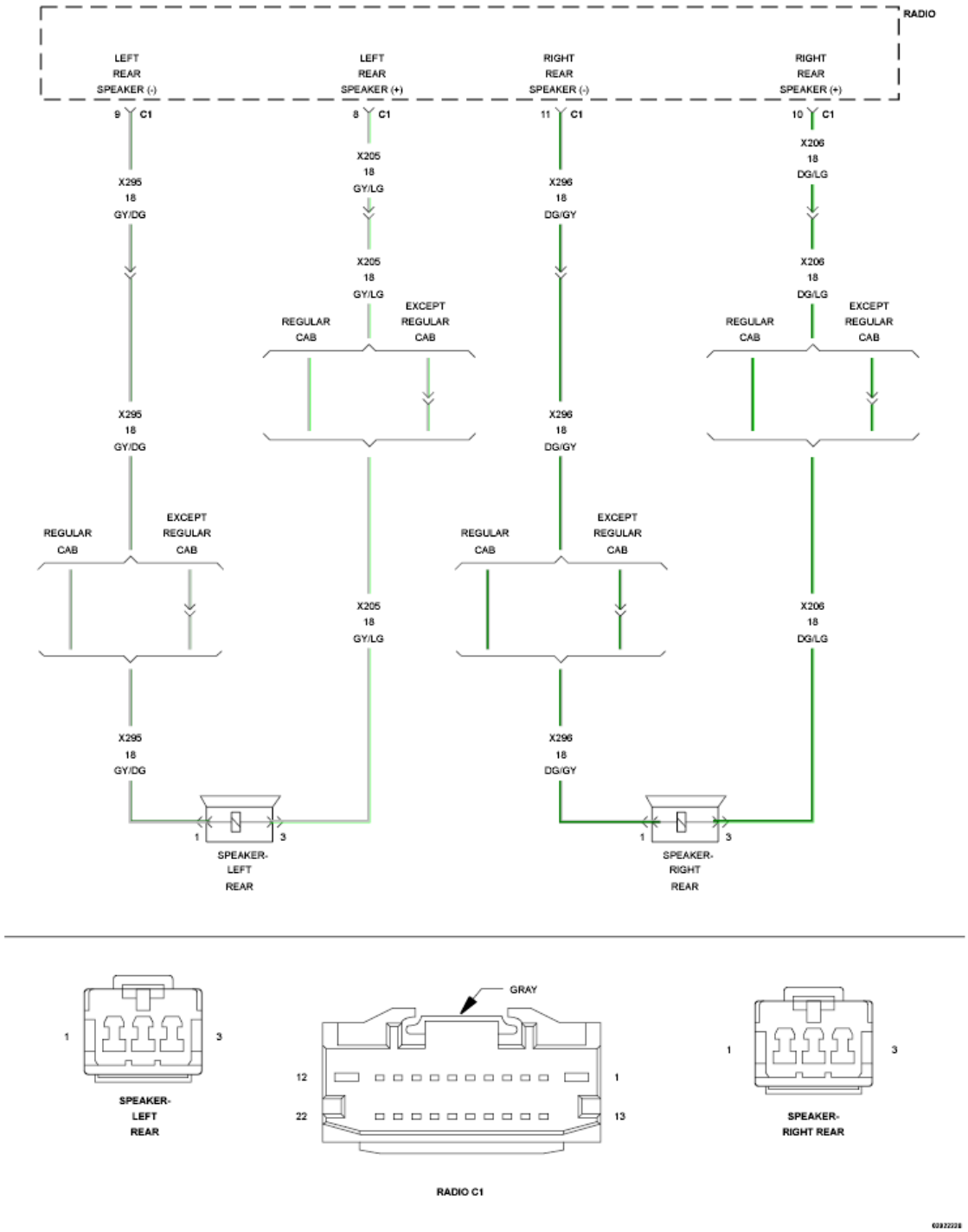

Fig. 59: Rear Right Audio Speaker Wiring Diagram
Courtesy of CHRYSLER GROUP, LLC

For a complete wiring diagram, **refer to appropriate SYSTEM WIRING DIAGRAMS article** .

NOTE: **There are two versions of the B140F DTC test. In order to select the proper test you must know if the vehicle is equipped with an Amplifier. If the vehicle is equipped with an Amplifier use the B140F-PREMIUM test. If the vehicle is not**

equipped with an Amplifier use the B140F-BASE test.

THEORY OF OPERATION

The (X206) Right Rear Speaker (+) circuit and the (X296) Right Rear Speaker (-) circuit are outputs of the Radio. The Radio controls and monitors these circuits for a concern.

For a detailed description of the Audio System. Refer to **DESCRIPTION** .

For additional information regarding the operation of the Audio System. Refer to **OPERATION** .

WHEN MONITORED:

With the Radio on.

SET CONDITION:

The Radio detects an open condition on the speaker output circuit.

POSSIBLE CAUSES

Possible Causes
(X206) RIGHT REAR SPEAKER (+) CIRCUIT FOR AN OPEN (X296) RIGHT REAR SPEAKER (-) CIRCUIT FOR AN OPEN RIGHT REAR SPEAKER

DIAGNOSTIC TEST

1. **CHECK FOR AN INTERMITTENT CONDITION**
    1. Turn the ignition on and open one of the front doors.

       NOTE: A front door must remain open whenever checking or erasing Radio DTC's.

    2. Using the scan tool, record and erase the Radio DTC's.
    3. Turn the Radio on.
    4. Adjust the speakers to the rear and center.
    5. Using the scan tool, read the active Radio DTC's.

       Does the scan tool read: B140F-REAR RIGHT AUDIO SPEAKER OUTPUT CIRCUIT LOW?

       Yes

       - Go To 2.

No

- Test complete, the condition or conditions that originally set this DTC are not present at this time. Using the wiring diagrams as a guide, check all related splices and connectors for signs of water intrusion, corrosion, pushed out or bent terminals and correct pin tension.
- Perform the BODY VERIFICATION TEST. Refer to **BODY VERIFICATION TEST** .

2. **CHECK THE RIGHT REAR SPEAKER**

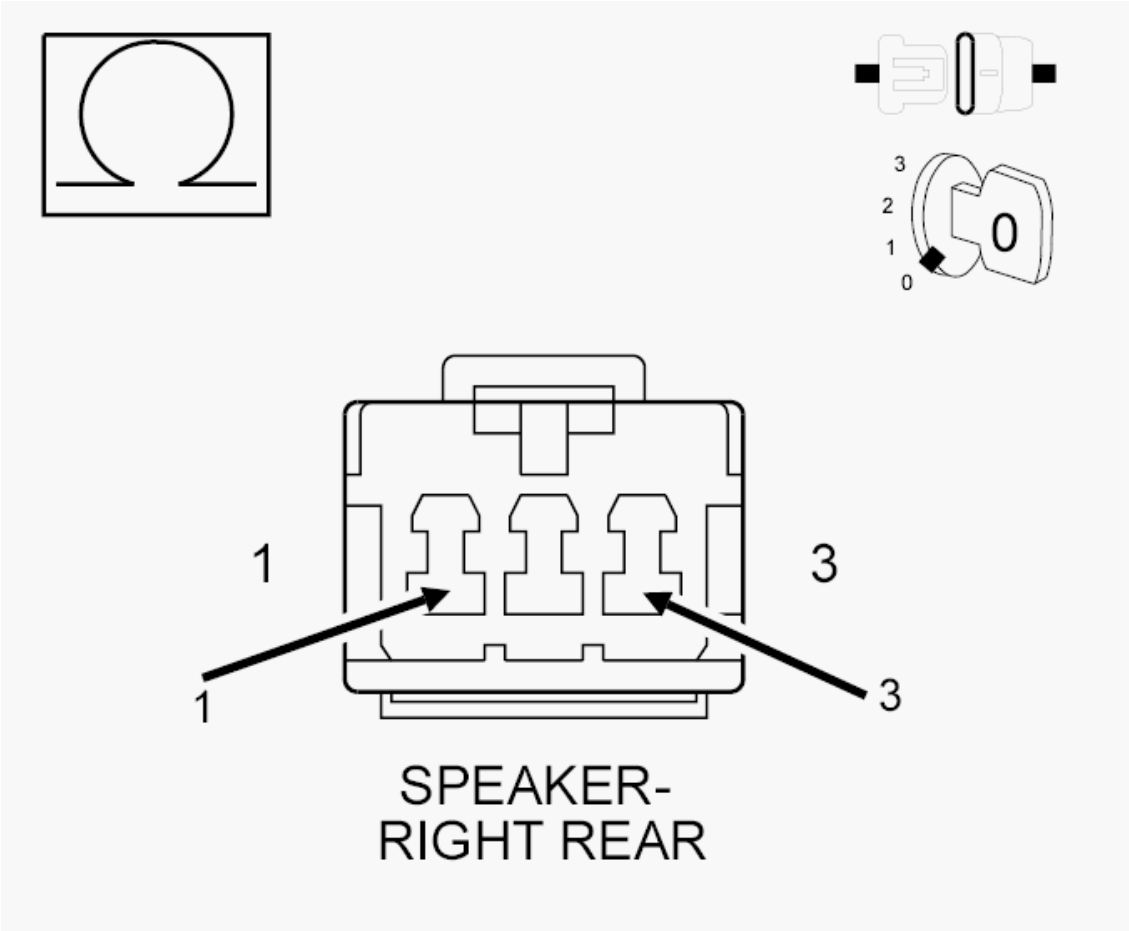

Fig. 60: Checking The Right Rear Speaker
Courtesy of CHRYSLER GROUP, LLC

1. Turn the ignition off.
2. Disconnect the Right Rear Speaker.
3. Measure the resistance of the speaker between the two terminals.

NOTE: **The graphic shows the connector for reference only. Measure between the speaker terminals.**

Is the resistance above 5.0 Ohms?

Yes

- Replace the Right Rear Speaker in accordance with the Service Information.
- Perform the BODY VERIFICATION TEST. Refer to **BODY VERIFICATION TEST** .

No

- Go To 3.

3. **CHECK THE (X206) RIGHT REAR SPEAKER (+) CIRCUIT FOR AN OPEN**

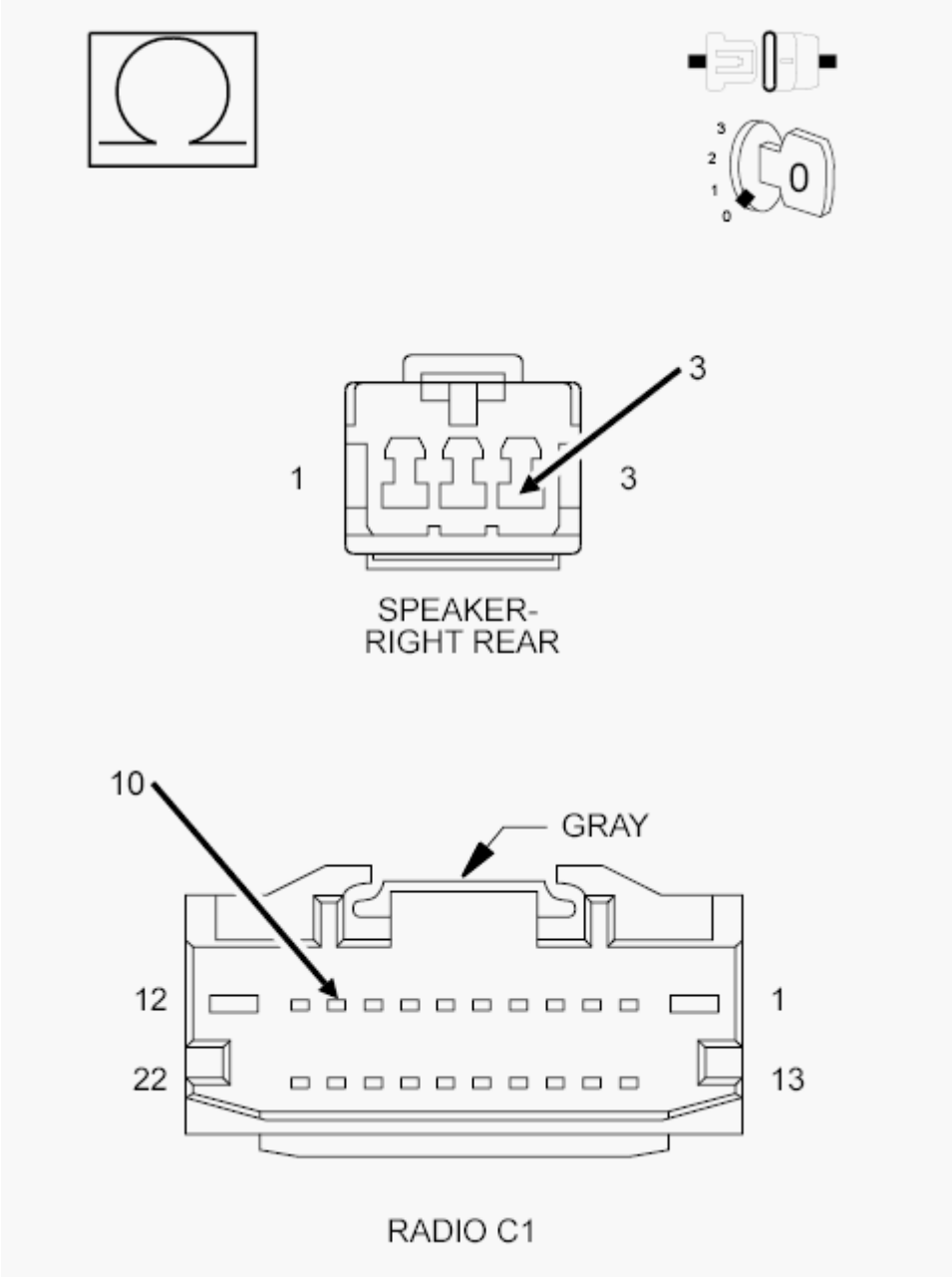

Fig. 61: Checking Right Rear Speaker (+) Circuit For An Open

Courtesy of CHRYSLER GROUP, LLC

1. Disconnect the Radio C1 harness connector.
2. Measure the resistance of the (X206) Right Rear Speaker (+) circuit between the Radio C1 connector and the Right Rear Speaker harness connector.

   Is the resistance below 5.0 Ohms?

   Yes

   - Go To 4.

   No

   - Repair an open in the (X206) Right Rear Speaker (+) circuit.
   - Perform the BODY VERIFICATION TEST. Refer to **BODY VERIFICATION TEST** .

4. **CHECK THE (X296) RIGHT REAR SPEAKER (-) CIRCUIT FOR AN OPEN**

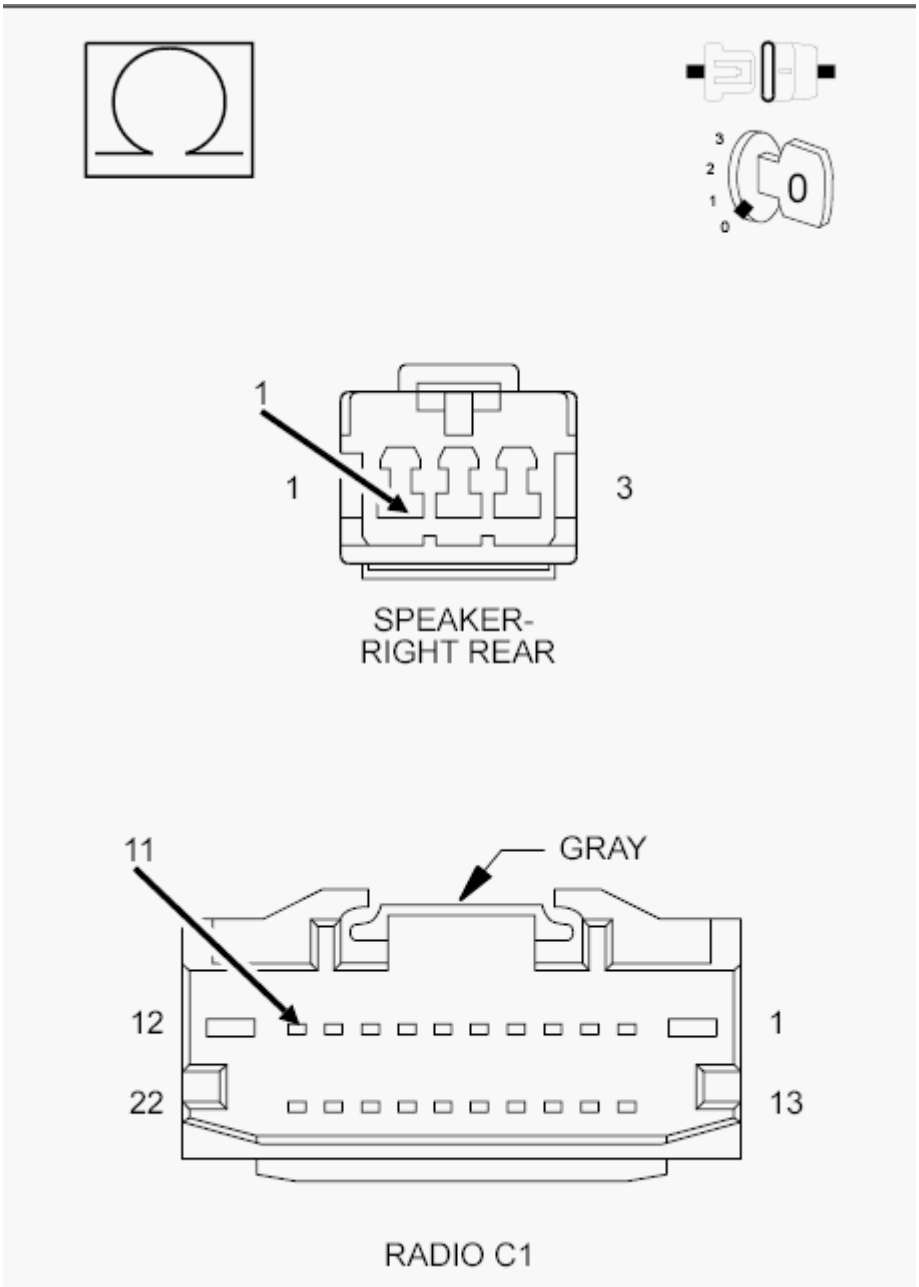

Fig. 62: Checking Right Rear Speaker (-) Circuit For An Open
Courtesy of CHRYSLER GROUP, LLC

1. Measure the resistance of the (X296) Right Rear Speaker (-) circuit between the Radio C1 connector, and the Right Rear Speaker harness connector.

   Is the resistance below 5.0 Ohms?

   Yes

   - Replace the Radio in accordance with the Service Information.

- Perform the BODY VERIFICATION TEST. Refer to **BODY VERIFICATION TEST** .

No

- Repair an open in the (X296) Right Rear Speaker (-) circuit.
- Perform the BODY VERIFICATION TEST. Refer to **BODY VERIFICATION TEST** .

B140F-REAR RIGHT AUDIO SPEAKER OUTPUT CIRCUIT FOR AN OPEN - PREMIUM

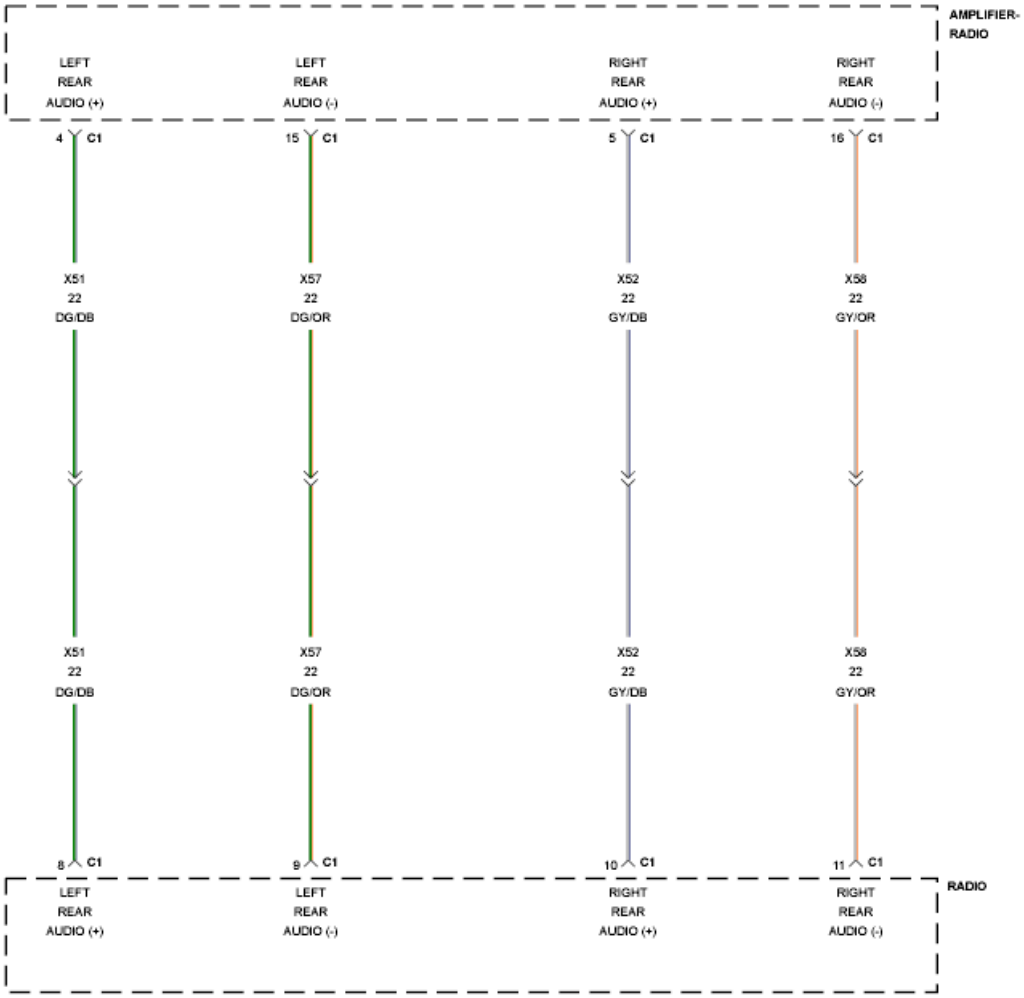

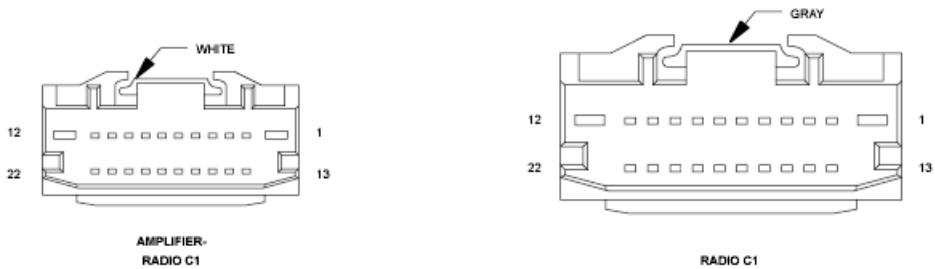

Fig. 63: Rear Right Audio Speaker Circuit Wiring Diagram - Premium
Courtesy of CHRYSLER GROUP, LLC

For a complete wiring diagram, **refer to appropriate SYSTEM WIRING DIAGRAMS article** .

NOTE: **There are two versions of the B140F DTC test. In order to select the proper test you must know if the vehicle is equipped with an Amplifier. If the vehicle is**

equipped with an Amplifier use the B140F-PREMIUM test. If the vehicle is not equipped with an Amplifier use the B140F-BASE test.

THEORY OF OPERATION

The (X52) Right Rear Audio (+) circuit and the (X58) Right Rear Audio (-) circuit are outputs of the Radio. The Radio controls and monitors these circuits for a concern.

For a detailed description of the Audio System. Refer to **DESCRIPTION** .

For additional information regarding the operation of the Audio System. Refer to **OPERATION** .

WHEN MONITORED:

With the Radio on.

SET CONDITION:

The Radio detects an open condition on the audio output circuit.

POSSIBLE CAUSES

Possible Causes
(X52) RIGHT REAR AUDIO (+) CIRCUIT FOR AN OPEN
(X58) RIGHT REAR AUDIO (-) CIRCUIT FOR AN OPEN
AMPLIFIER
RADIO

DIAGNOSTIC TEST

1. **CHECK FOR AN INTERMITTENT CONDITION**
    1. Turn the ignition on and open one of the front doors.

    NOTE: A front door must remain open whenever checking or erasing Radio DTC's.

    2. Using the scan tool, record and erase the Radio DTC's.
    3. Turn the Radio on.
    4. Adjust the speakers to the rear and center.
    5. Using the scan tool, read the active Radio DTC's.

    Does the scan tool read: B140F-REAR RIGHT AUDIO SPEAKER OUTPUT CIRCUIT LOW?

    Yes

- Go To 2.

No

- Test complete, the condition or conditions that originally set this DTC are not present at this time. Using the wiring diagrams as a guide, check all related splices and connectors for signs of water intrusion, corrosion, pushed out or bent terminals and correct pin tension.
- Perform the BODY VERIFICATION TEST. Refer to **BODY VERIFICATION TEST** .

2. **CHECK THE AMPLIFIER**

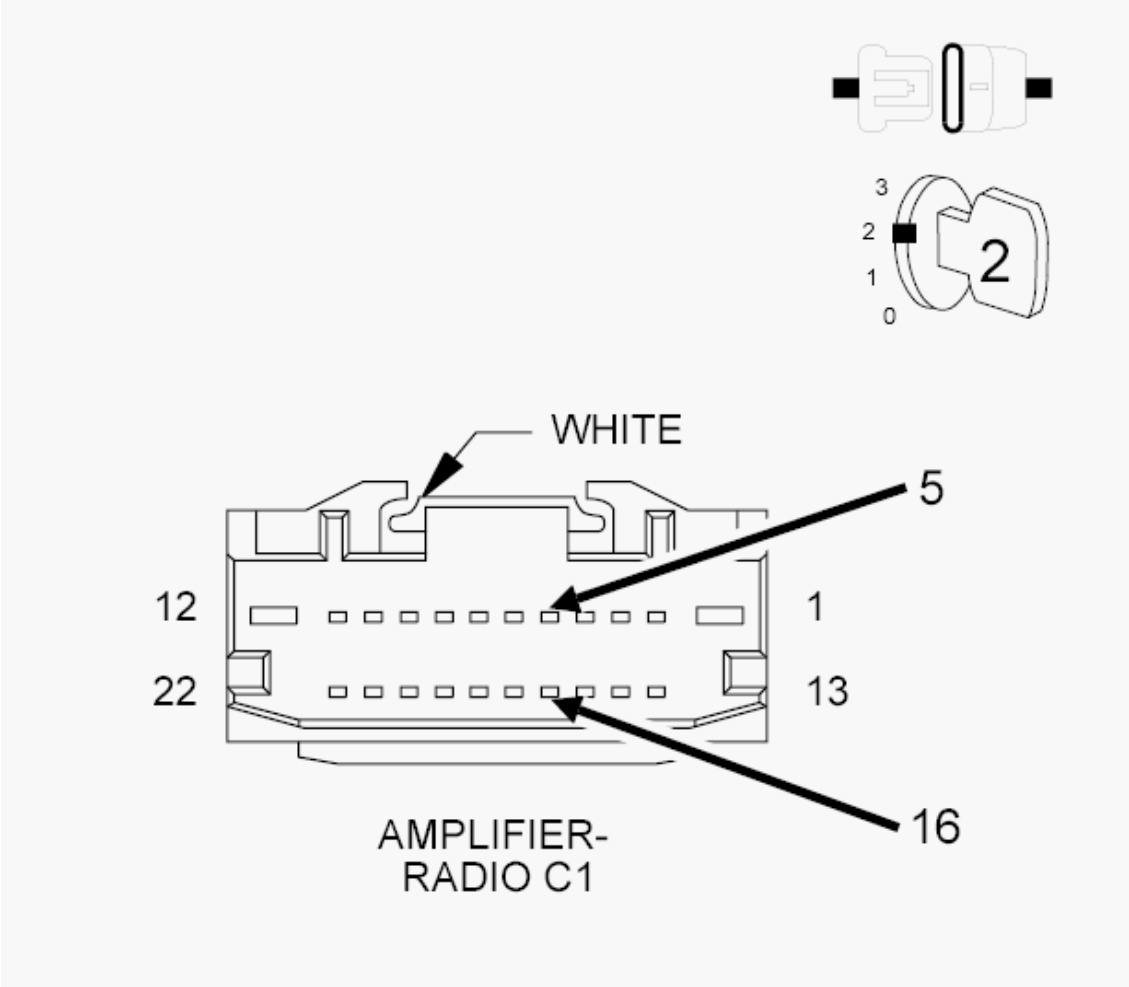

Fig. 64: Checking The Amplifier
Courtesy of CHRYSLER GROUP, LLC

1. Turn the ignition off.
2. Disconnect the Amplifier C1 harness connector.
3. Connect a jumper wire between the (X52) Left Rear Audio (+) circuit and the (X58) Left Rear Audio (-) circuits.
4. Turn the ignition on.

5. Turn the Radio on.
6. Adjust the speakers to the rear and center.
7. Using the scan tool, read the active Radio DTC's.

   Does the scan tool read: B140F-REAR RIGHT AUDIO SPEAKER OUTPUT CIRCUIT FOR AN OPEN?

   Yes

   - Go To 3.

   No

   - Replace the Amplifier in accordance with the Service Information.
   - Perform the BODY VERIFICATION TEST. Refer to **BODY VERIFICATION TEST** .

3. **CHECK THE (X52) RIGHT REAR AUDIO (+) CIRCUIT FOR AN OPEN**

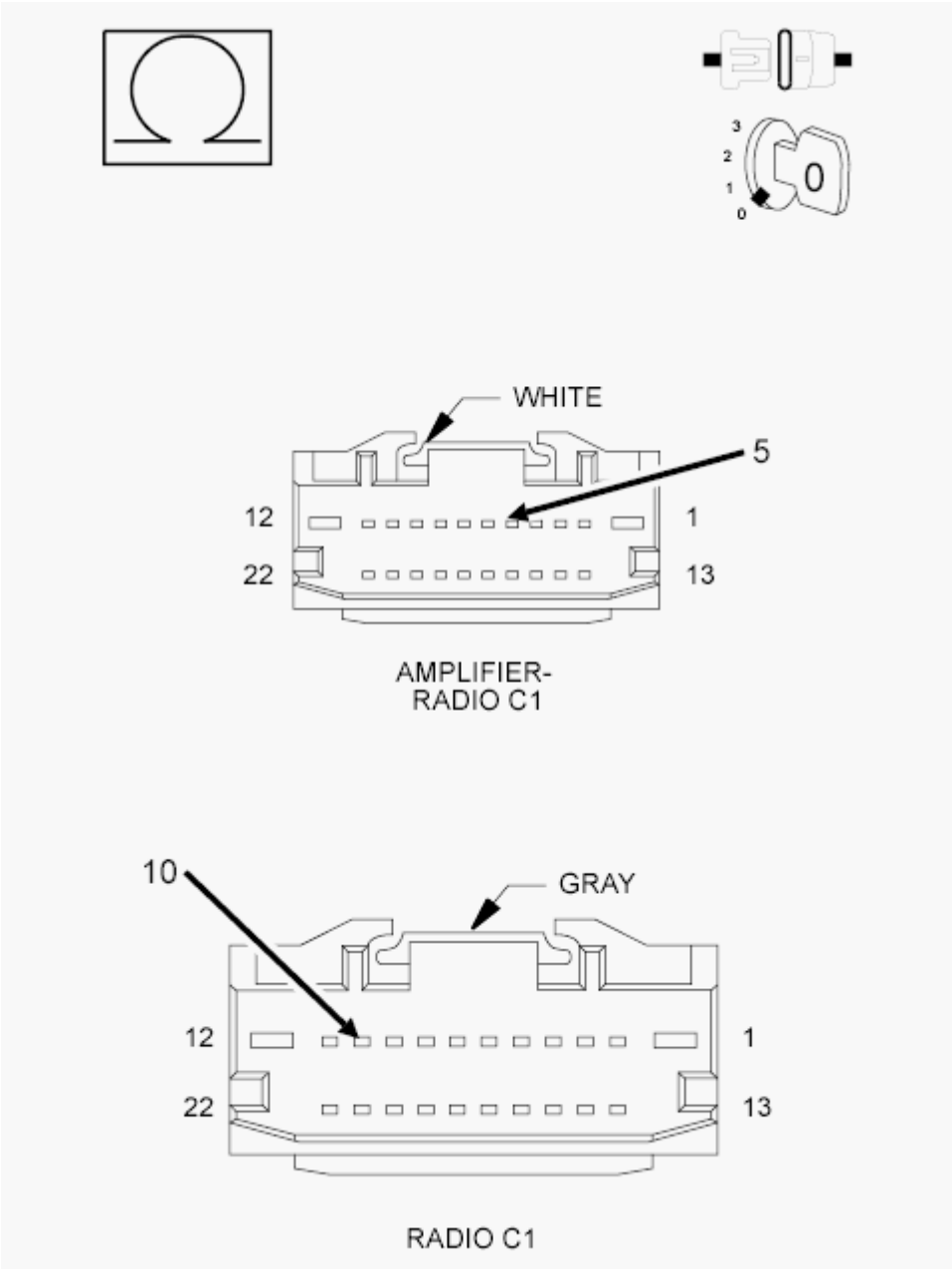

Fig. 65: Checking Right Rear Audio (+) Circuit For An Open
Courtesy of CHRYSLER GROUP, LLC

1. Turn the ignition off.
2. Disconnect the Radio C1 harness connector.
3. Measure the resistance of the (X52) Right Rear Audio (+) circuit between the Radio C1 connector and the Amplifier C1 harness connector.

   Is the resistance below 5.0 Ohms?

   Yes

- Go To 4.

No

- Repair an open in the (X52) Right Rear Audio (+) circuit.
- Perform the BODY VERIFICATION TEST. Refer to **BODY VERIFICATION TEST** .

4. **CHECK THE (X58) RIGHT REAR AUDIO (-) CIRCUIT FOR AN OPEN**

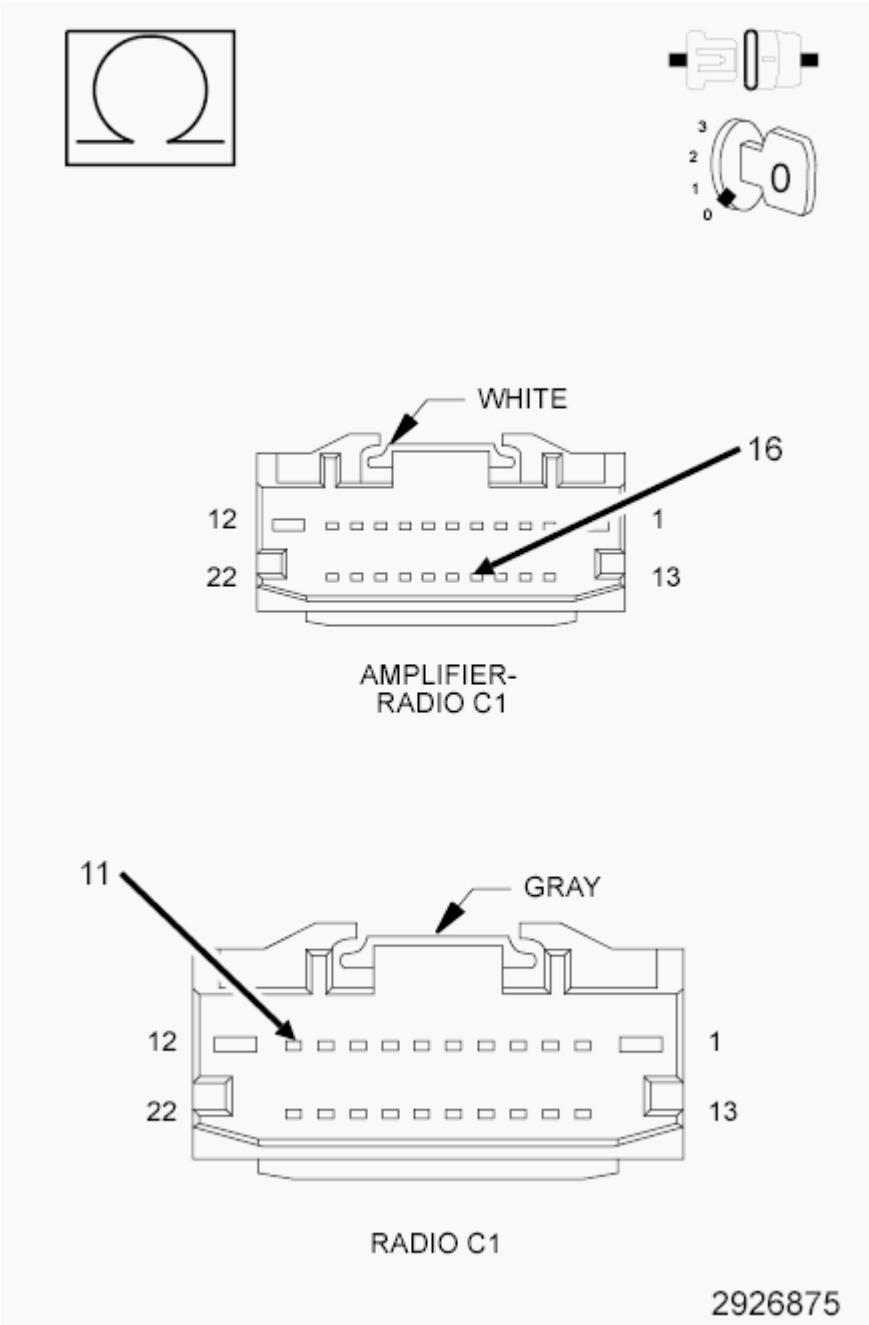

Fig. 66: Checking Right Rear Audio (-) Circuit For An Open
Courtesy of CHRYSLER GROUP, LLC

1. Measure the resistance of the (X58) Right Rear Audio (-) circuit between the Radio C1 harness connector, and the Amplifier C1 harness connector.

   Is the resistance below 5.0 Ohms?

   Yes

   - Replace the Radio in accordance with the Service Information.
   - Perform the BODY VERIFICATION TEST. Refer to **BODY VERIFICATION TEST** .

   No

   - Repair an open in the (X58) Right Rear Audio (-) circuit.
   - Perform the BODY VERIFICATION TEST. Refer to **BODY VERIFICATION TEST** .

B1420-AUDIO CASSETTE ERROR/INOPERABLE CASSETTE

For a complete wiring diagram, **refer to appropriate SYSTEM WIRING DIAGRAMS article** .

WHEN MONITORED:

Continuously with the ignition on and the radio Cassette player turned on.

SET CONDITION:

The code will set when a damaged Cassette is placed in the Cassette Player.

POSSIBLE CAUSES

Possible Causes
CASSETTE READ FAILURE

DIAGNOSTIC TEST

1. **RADIO**
   1. Replace the problem Cassette with a good, clean, undamaged, cassette.
   2. Turn the radio cassette player on.
   3. With the scan tool, read DTC's.

      Does the scan tool display: B1420: AUDIO CASSETTE ERROR/INOPERABLE CASSETTE?

      Yes

      - Eject the inoperative cassette and replace the Radio/Cassette Player in accordance with the service information. Refer to **RADIO, REMOVAL** .

- Perform the BODY VERIFICATION TEST. Refer to **BODY VERIFICATION TEST** .

No

- Test Complete.

B1421-AUDIO CD READ ERROR/INOPERABLE DISC

For a complete wiring diagram, **refer to appropriate SYSTEM WIRING DIAGRAMS article** .

WHEN MONITORED:

Continuously with the ignition on and the radio CD player turned on.

SET CONDITION:

The code will set if a CD is scratched, damaged, or contains corrupt data.

POSSIBLE CAUSES

Possible Causes
CD READ FAILURE

DIAGNOSTIC TEST

1. **RADIO**
    1. Replace the problem CD with a good, clean, unscratched, music CD.
    2. Turn the Radio on.
    3. With the scan tool, read DTC's.

    Does the scan tool display: B1421 Audio CD Read Error/Inoperable Disc?

    Yes

    - Eject the inoperative CD and replace the Radio in accordance with the Service Information. Refer to **RADIO, REMOVAL** .
    - Perform the BODY VERIFICATION TEST. Refer to **BODY VERIFICATION TEST** .

    No

    - Test Complete.

B1422-AUDIO DVD READ ERROR/INOPERABLE DISC

For a complete wiring diagram, **refer to appropriate SYSTEM WIRING DIAGRAMS article** .

WHEN MONITORED:

Continuously with the ignition on and the Radio/DVD player turned on.

SET CONDITION:

The code will set if a DVD is scratched, damaged, or contains corrupt data.

POSSIBLE CAUSES

Possible Causes
DVD READ FAILURE

DIAGNOSTIC TEST

1. **RADIO/DVD PLAYER**
    1. Replace the problem DVD with a good, clean, unscratched DVD.
    2. Turn the Radio/DVD player on.
    3. With the scan tool, read DTC's.

    Does the scan tool display active: B1422-AUDIO DVD READ ERROR/INOPERABLE DISC?

    Yes

    - Eject the inoperative DVD and replace the Radio/DVD player in accordance with the Service Information. Refer to **RADIO, REMOVAL** .
    - Perform the BODY VERIFICATION TEST. Refer to **BODY VERIFICATION TEST** .

    No

    - Test Complete.

B1424-IMPROPER DVD-WRONG REGION

For a complete wiring diagram, **refer to appropriate SYSTEM WIRING DIAGRAMS article** .

WHEN MONITORED:

Continuously with the ignition on and the Radio/DVD player turned on.

SET CONDITION:

The code will set if a DVD is not formatted for the proper region or the Radio/DVD player is programmed for the incorrect region.

POSSIBLE CAUSES

Possible Causes
DVD READ FAILURE

DIAGNOSTIC TEST

1. **CHECK THE DVD**
    1. Replace the problem DVD with a DVD formatted for the proper region.
    2. Turn the Radio/DVD player on.
    3. With the scan tool, read DTC's.

    Does the scan tool display active: B1424-IMPROPER DVD-WRONG REGION?

    Yes

    - Go To 2.

    No

    - Test Complete.
2. **RADIO/DVD PLAYER**
    1. With the scan tool, verify the Radio/DVD player is programmed for the proper region.
    2. With the scan tool, read DTC's.

    Does the scan tool display active: B1424-IMPROPER DVD-WRONG REGION?

    Yes

    - Eject the inoperative DVD and replace the Radio/DVD player in accordance with the Service Information. Refer to **RADIO, REMOVAL** .
    - Perform the BODY VERIFICATION TEST. Refer to **BODY VERIFICATION TEST** .

    No

    - Test Complete.

B1429-RADIO DISPLAY HIGH TEMPERATURE

For a complete wiring diagram, **refer to appropriate SYSTEM WIRING DIAGRAMS article** .

WHEN MONITORED:

Continuously with the ignition and Navigation Radio on.

SET CONDITION:

The code will set if the temperature inside the display exceeds 70°C (158°F)

POSSIBLE CAUSES

Possible Causes
HIGH TEMPERATURE FAILURE

DIAGNOSTIC TEST

1. **VERIFY THAT DTC B1429-RADIO DISPLAY HIGH TEMPERATURE IS ACTIVE**
    1. With the scan tool, erase the Audio DTC's.
    2. Start the engine and allow the engine to reach normal operating temperature.
    3. If the vehicle has been in the hot sunlight or extreme cold, move the vehicle indoors and open the doors to allow the inside temperature to stabilize.
    4. The radio display should operate to 70°C (158°F).
    5. With the scan tool, read the DTC's.

    Does the scan tool display, B1429-Radio Display High Temperature?

    Yes

    - Replace the Radio in accordance with the Service Information.
    - Perform the BODY VERIFICATION TEST. Refer to **BODY VERIFICATION TEST** .

    No

    - Test Complete.

B142A-RADIO UNIT HIGH TEMPERATURE

For a complete wiring diagram, **refer to appropriate SYSTEM WIRING DIAGRAMS article** .

WHEN MONITORED:

Continuously with the ignition and Radio on.

SET CONDITION:

The code will set if the temperature inside the radio is above 65°C (149°F).

POSSIBLE CAUSES

Possible Causes
HIGH TEMPERATURE FAILURE

DIAGNOSTIC TEST

1. **VERIFY THAT DTC B142A-RADIO UNIT HIGH TEMPERATURE IS ACTIVE.**
    1. With the scan tool, erase the Audio DTC's.
    2. Start the engine and allow the engine to reach normal operating temperature.
    3. If the vehicle has been in the hot sunlight or extreme cold, move the vehicle indoors and open the doors to allow the inside temperature to stabilize.
    4. The Radio should operate between -23°C and 65°C (-10°F and 149°F).
    5. With the scan tool, read the DTC's.

    Does the scan tool display, B142A-Radio Unit High Temperature?

    Yes

    - Replace the Radio in accordance with the Service Information.
    - Perform the BODY VERIFICATION TEST. Refer to **BODY VERIFICATION TEST** .

    No

    - Test Complete.

B142D-AUDIO ANTENNA NOT CONNECTED

For a complete wiring diagram, **refer to appropriate SYSTEM WIRING DIAGRAMS article** .

WHEN MONITORED:

With the ignition on and the Radio in seek mode.

SET CONDITION:

With the Radio in seek mode for two minutes and the Radio does not detect an Antenna connection or does not receive a Radio station signal.

POSSIBLE CAUSES

Possible Causes
BAD ANTENNA CONNECTION OPEN ANTENNA CABLE RADIO

DIAGNOSTIC TEST

1. **CHECK THE ANTENNA CONNECTIONS**
    1. Turn the ignition off.

2. Disconnect the Radio Antenna connector.
3. Inspect the Radio Antenna connection.

   Was the Antenna connection clean and secure?

   Yes

   - Go To 2.

   No

   - Repair the Antenna connection as needed.
   - Perform the BODY VERIFICATION TEST. Refer to **BODY VERIFICATION TEST** .

2. **CHECK THE ANTENNA AND CABLE**
   1. Connect the Radio Diagnostic Tool (special tool #9977-6-FM, Antenna) to the Antenna connection on the back of the Radio.
   2. Make sure one of the front doors is still open.
   3. Using the scan tool, erase the DTC's.
   4. Turn the ignition on.
   5. Turn the Radio on.
   6. Using the scan tool, read the active Radio DTC's.

      Does this DTC display as active?

      Yes

      - Go To 3.

      No

      - Repair or replace the Radio in accordance with the Service Information.
      - Perform the BODY VERIFICATION TEST. Refer to **BODY VERIFICATION TEST** .

3. **TEST THE ANTENNA CABLE**
   1. Turn the ignition off.
   2. Disconnect the Antenna cable at the base.
   3. Connect the appropriate Radio Diagnostic Tool (special tool #9977-6-1, Adapter) or (special tool #9977-6-3, Adapter) to the Antenna cable at the back of the Radio.
   4. Connect the appropriate Radio Diagnostic Tool (special tool #9977-6-4, Jumper) or (special tool #9977-6-2, Jumper) to the Antenna cable at the Antenna base.
   5. Measure the Resistance across the tool terminals.

      Is the resistance above 52.5 Ohms?

Yes

- Use the Radio Diagnostic Tool (special tool #9977-6, Kit, Radio Antenna Diagnostic) to locate the open circuit, repair or replace the Antenna cable as necessary.
- Perform the BODY VERIFICATION TEST. Refer to **BODY VERIFICATION TEST** .

No

- Replace the Antenna base in accordance with the Service Information.
- Perform the BODY VERIFICATION TEST. Refer to **BODY VERIFICATION TEST** .

B142E-GPS ANTENNA NOT CONNECTED

For a complete wiring diagram, **refer to appropriate SYSTEM WIRING DIAGRAMS article** .

WHEN MONITORED:

With the ignition on and the Radio in navigation mode.

SET CONDITION:

The Radio does not detect a Global Positioning System (GPS) Antenna connection.

POSSIBLE CAUSES

Possible Causes
BAD ANTENNA CONNECTION RADIO

DIAGNOSTIC TEST

1. **TEST ANTENNA**
    1. Turn the ignition off.
    2. Disconnect the GPS Antenna connector.
    3. Inspect the GPS Antenna connection.

    Was the Antenna connection clean and secure?

    Yes

    - Go To 2.

    No

    - Repair the Antenna connection as needed.

- Perform the BODY VERIFICATION TEST. Refer to **BODY VERIFICATION TEST** .

2. **ANTENNA**
    1. Refer to the Audio System in the service information and test the Antenna in accordance with the service procedure.

       Is the Antenna OK?

       Yes

       - Go To 3.

       No

       - Repair or replace the Antenna assembly as necessary.
       - Perform the BODY VERIFICATION TEST. Refer to **BODY VERIFICATION TEST** .
3. **RADIO**

   NOTE: Reconnect all previously disconnected components.

   NOTE: Move vehicle outside approximately 9.14 m (30 ft.) from any structure.

   1. Turn the ignition and Radio on.
   2. With the scan tool, erase the audio DTC's and operate the navigation system.
   3. With the scan tool, read the audio DTC's.

      Did this DTC reset?

      Yes

      - Replace the Radio in accordance with the Service Information.
      - Perform the BODY VERIFICATION TEST. Refer to **BODY VERIFICATION TEST** .

      No

      - Test Complete.

B142F-SATELLITE RADIO ANTENNA NOT CONNECTED

For a complete wiring diagram, **refer to appropriate SYSTEM WIRING DIAGRAMS article** .

WHEN MONITORED:

With the ignition on and the Radio in satellite mode.

SET CONDITION:

This DTC sets when the Radio does not detect a Satellite Antenna connection.

POSSIBLE CAUSES

Possible Causes
BAD ANTENNA CONNECTION OPEN SATELLITE RADIO ANTENNA CABLE OPEN SATELLITE RADIO ANTENNA SATELLITE RADIO RECEIVER

DIAGNOSTIC TEST

1. **CHECK THE ANTENNA CONNECTION**
    1. Turn the ignition off.
    2. Disconnect the Satellite Radio Antenna connector at the rear of the Radio.
    3. Inspect the Satellite Radio Antenna connection.

    Was the antenna connection clean and secure?

    Yes

    - Go To 2.

    No

    - Clean and secure the antenna connection as necessary.
    - Perform the BODY VERIFICATION TEST. Refer to **BODY VERIFICATION TEST** .
2. **CHECK THE ANTENNA AND CABLE**
    1. Connect the Radio Diagnostic Tool (special tool #9977-6-SAT, Antenna) to the Satellite Antenna connection on the back of the Radio.
    2. Make sure one of the front doors is still open.
    3. Using the scan tool, erase the DTC's.
    4. Turn the ignition on.
    5. Turn the Radio on.
    6. Using the scan tool, read the active Radio DTC's.

    Does the scan tool display: B142F Satellite Radio Antenna Not Connected as Active?

    Yes

    - Replace the Satellite Radio in accordance with the Service Information.
    - Perform the BODY VERIFICATION TEST. Refer to **BODY VERIFICATION TEST** .

    No

- Go To 3.

3. **TEST THE SATELLITE ANTENNA CABLE**
    1. Disconnect the Satellite Antenna cable at the Satellite Antenna.
    2. Connect the appropriate Radio Diagnostic Tool (special tool #9977-6-1, Adapter) or (special tool #9977-6-3, Adapter) to the Satellite Antenna cable at the back of the Radio.
    3. Connect the appropriate Radio Diagnostic Tool (special tool #9977-6-4, Jumper) or (special tool #9977-6-2, Jumper) to the Satellite Antenna cable at the Satellite Antenna.
    4. Measure the Resistance across the terminals on the tool.

    Is the resistance above 52.5 Ohms?

    No

    - Use the Radio Diagnostic Tool (special tool #9977-6, Kit, Radio Antenna Diagnostic) to locate the open circuit, repair or replace the Satellite Antenna cable as necessary.
    - Perform the BODY VERIFICATION TEST. Refer to **BODY VERIFICATION TEST** .

    Yes

    - Replace the Satellite Antenna in accordance with the Service Information.
    - Perform the BODY VERIFICATION TEST. Refer to **BODY VERIFICATION TEST** .

B1430(2.5)-SATELLITE RADIO ANTENNA INTERNAL PERFORMANCE

For a complete wiring diagram, **refer to appropriate SYSTEM WIRING DIAGRAMS article** .

NOTE: **There are two versions of the B1430 DTC tests. In order to select the proper test you must know the Sales (model) Code of the radio. The Sales Code is on the face of the radio or if necessary use the scan tool and select Radio, More options and ECU Details.**

NOTE: **This version of the B1430 test is only applicable for the GEN 2.5 radios (2007/2008 RES, REQ, and 2007 and later RER, REU and REN). For the GEN 4.0 radios (2009 and later RES, REQ and RBZ) refer to B1430(4.0)-SATELLITE RADIO ANTENNA INTERNAL PERFORMANCE.**

WHEN MONITORED:

With the ignition on and the radio in Satellite mode.

SET CONDITION:

When the Satellite Radio does not detect a proper antenna signal, this code will set

POSSIBLE CAUSES

Possible Causes
SHORTED ANTENNA CABLE SHORTED ANTENNA SATELLITE RADIO RECEIVER

DIAGNOSTIC TEST

1. **TEST ANTENNA**
    1. With the scan tool, record the DTC's.
    2. Erase the DTC's.
    3. Turn the ignition off.
    4. Disconnect the Satellite Radio Antenna connector at the back of the Radio.
    5. Turn the ignition on and the radio in Satellite mode.
    6. With the scan tool, erase the DTC's again.
    7. Put the satellite radio in seek up mode for two loops around the band cycle.
    8. With the scan tool, read the active DTC's.

    What Active DTC(s) are displayed?

    B142F-Satellite Radio Antenna Not Connected and B1430-Satellite Radio Antenna Internal Performance.

    - Replace the Satellite Radio in accordance with the Service Information.
    - Perform the BODY VERIFICATION TEST. Refer to **BODY VERIFICATION TEST** .

    B142F-Satellite Radio Antenna Not Connected only.

    - Go To 2.

    B1430-Satellite Radio Antenna Internal Performance only.

    - Replace the Satellite Radio in accordance with the Service Information.
    - Perform the BODY VERIFICATION TEST. Refer to **BODY VERIFICATION TEST** .
2. **CHECK CONNECTOR**
    1. Turn the ignition off.
    2. Inspect the Satellite Radio Antenna connection at the Radio.

    Was the antenna connection clean and secure?

    Yes

    - Go To 3.

No

- Clean and secure the antenna connection as necessary.
- Perform the BODY VERIFICATION TEST. Refer to **BODY VERIFICATION TEST** .

3. **SATELLITE RADIO**
    1. Re-connect the antenna cable to the Radio.
    2. Disconnect the Satellite Radio Antenna connector at the Antenna.
    3. Turn the ignition on.
    4. With the scan tool, record, then erase the radio DTC's.
    5. Turn the radio on and put the Satellite Radio in Satellite Mode.
    6. Put the satellite radio in seek up mode for two loops around the band cycle.
    7. With the scan tool, read the active DTC's.

    What Active DTC(s) are displayed?

    B142F-Satellite Radio Antenna Not Connected

    - Replace the Satellite Radio Antenna in accordance with the Service Information.
    - Perform the BODY VERIFICATION TEST. Refer to **BODY VERIFICATION TEST** .

    B1430-Satellite Radio Antenna Internal Performance

    - Go To 4.

4. **SATELLITE RADIO ANTENNA CABLE**
    1. Turn the ignition off.
    2. Locate the intermediate Satellite Radio Antenna connector.
    3. Disconnect and inspect the intermediate Satellite Radio Antenna connector.

    Was the connector clean and secure?

    No

    - Clean and secure the Satellite Radio Antenna intermediate connector.
    - Perform the BODY VERIFICATION TEST. Refer to **BODY VERIFICATION TEST** .

    Yes

    - Replace the Satellite Radio Antenna Cable as necessary.
    - Perform the BODY VERIFICATION TEST. Refer to **BODY VERIFICATION TEST** .

B1430(4.0)-SATELLITE RADIO ANTENNA INTERNAL PERFORMANCE

For a complete wiring diagram, **refer to appropriate SYSTEM WIRING DIAGRAMS article** .

NOTE: **There are two versions of the B1430 DTC tests. In order to select the proper test you must know the Sales (model) Code of the radio. The Sales Code is on the face of the radio or if necessary use the scan tool and select Radio, More options and ECU Details.**

NOTE: **This version of the B1430 test is only applicable for the GEN 4.0 radios (2009 and later RES, REQ and RBZ). For the GEN 2.5 radios (2007/2008 RES, REQ, and 2007 and later RER, REU and REN) refer to B1430(2.5)-SATELLITE RADIO ANTENNA INTERNAL PERFORMANCE.**

WHEN MONITORED:

With the ignition on and the radio in Satellite mode.

SET CONDITION:

When the Satellite Radio does not detect a proper antenna signal, this code will set

POSSIBLE CAUSES

Possible Causes
SATELLITE RADIO RECEIVER

DIAGNOSTIC TEST

1. **TEST RADIO**
    1. With the scan tool, record the DTC's.
    2. Erase the DTC's.
    3. Turn the ignition off.
    4. Turn the ignition on and the radio in Satellite mode.
    5. With the scan tool, erase the DTC's again.
    6. Put the satellite radio in seek up mode for two loops around the band cycle.
    7. With the scan tool, read the active DTC's.

    Does the scan display: B1430-Satellite Radio Antenna Internal Performance as Active?

    Yes

    - Replace the Satellite Radio in accordance with the Service Information.
    - Perform the BODY VERIFICATION TEST. Refer to **BODY VERIFICATION TEST** .

    No

    - Test complete, the condition or conditions that originally set this DTC are not present at this time. Using the wiring diagrams as a guide check all related splices and connectors for signs

of water intrusion, corrosion, pushed out or bent terminals and poor fit.

- Perform the BODY VERIFICATION TEST. Refer to **BODY VERIFICATION TEST** .

B143A- MICROPHONE 1 CIRCUIT PERFORMANCE

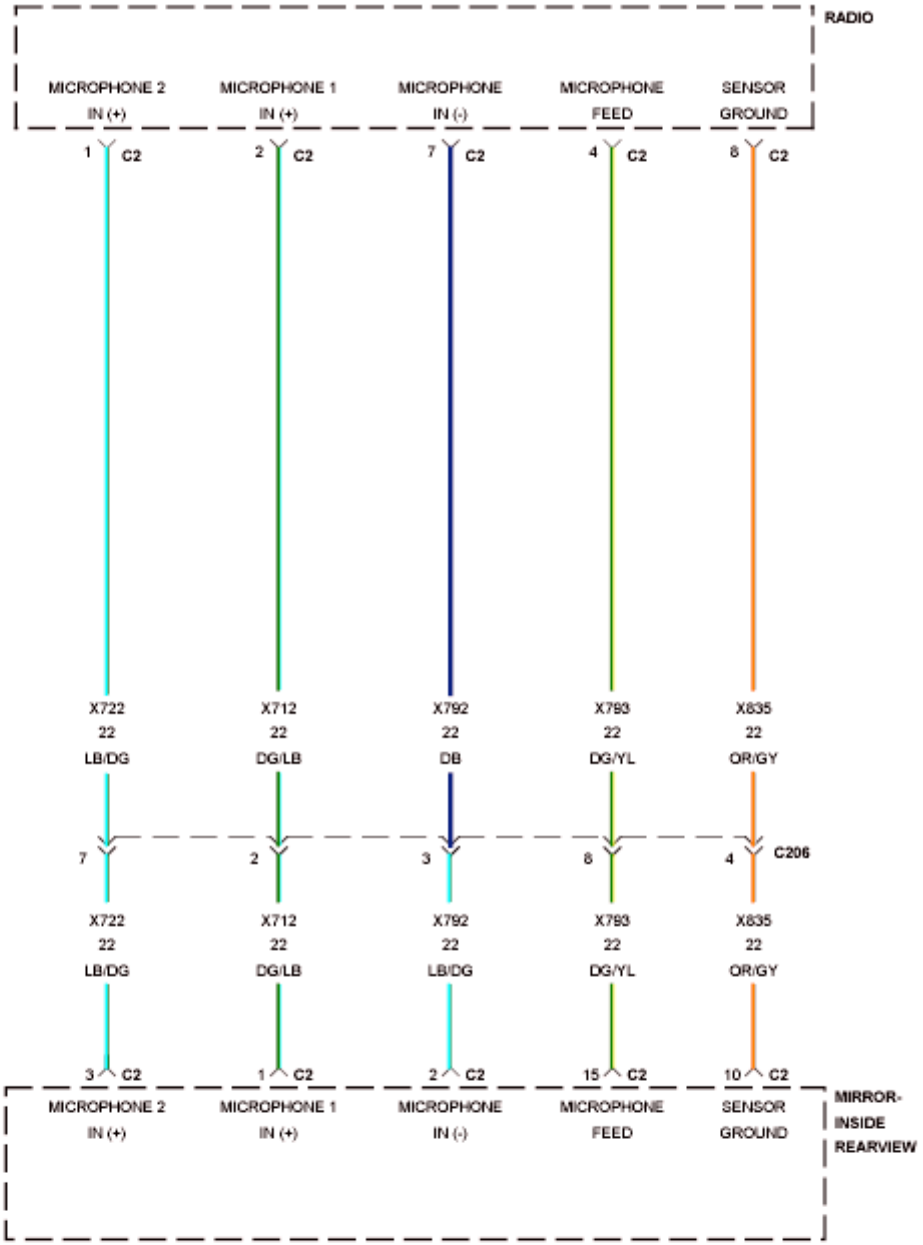

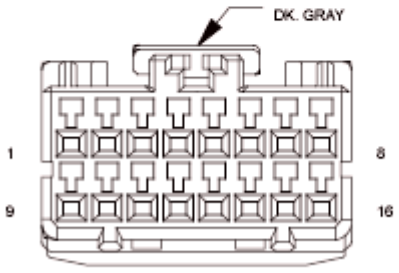

MIRROR-INSIDE REARVIEW C2

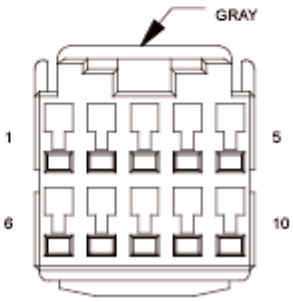

RADIO C2

Fig. 67: Microphone Wiring Diagram
Courtesy of CHRYSLER GROUP, LLC

For a complete wiring diagram, **refer to appropriate SYSTEM WIRING DIAGRAMS article** .

WHEN MONITORED:

With the ignition on.

SET CONDITION:

The Radio detects a fault in any of the microphone circuits.

POSSIBLE CAUSES

Possible Causes
(X712) MICROPHONE 1 IN (+) CIRCUIT FOR A SHORT TO GROUND
(X712) MICROPHONE 1 IN (+) CIRCUIT FOR AN OPEN
(X712) MICROPHONE 1 IN (+) CIRCUITS SHORTED TO VOLTAGE
INSIDE REARVIEW MIRROR
RADIO

DIAGNOSTIC TEST

1. **CHECK FOR ACTIVE DTC**
    1. Turn the ignition on.
    2. With the scan tool, read the active DTC's.

       Does the scan tool display this DTC as active?

       Yes

       - Go To 2.

       No

       - If the DTC is stored, check for an intermittent condition. Visually inspect the related wiring harness connectors. Look for broken, bent, pushed out, or corroded terminals.
       - Perform the BODY VERIFICATION TEST. Refer to **BODY VERIFICATION TEST** .
2. **INSIDE REARVIEW MIRROR**
    1. Turn the ignition off.
    2. Disconnect the Rearview Mirror C2 harness connector.
    3. Turn the ignition on.
    4. With the scan tool, read the active DTC's.

Does the scan tool display this DTC as active?

Yes

- Go To 3.

No

- Replace the Rearview Mirror in accordance with the Service Information.
- Perform the BODY VERIFICATION TEST. Refer to **BODY VERIFICATION TEST** .

3. **(X712) MICROPHONE 1 IN (+) CIRCUIT FOR A SHORT TO GROUND**

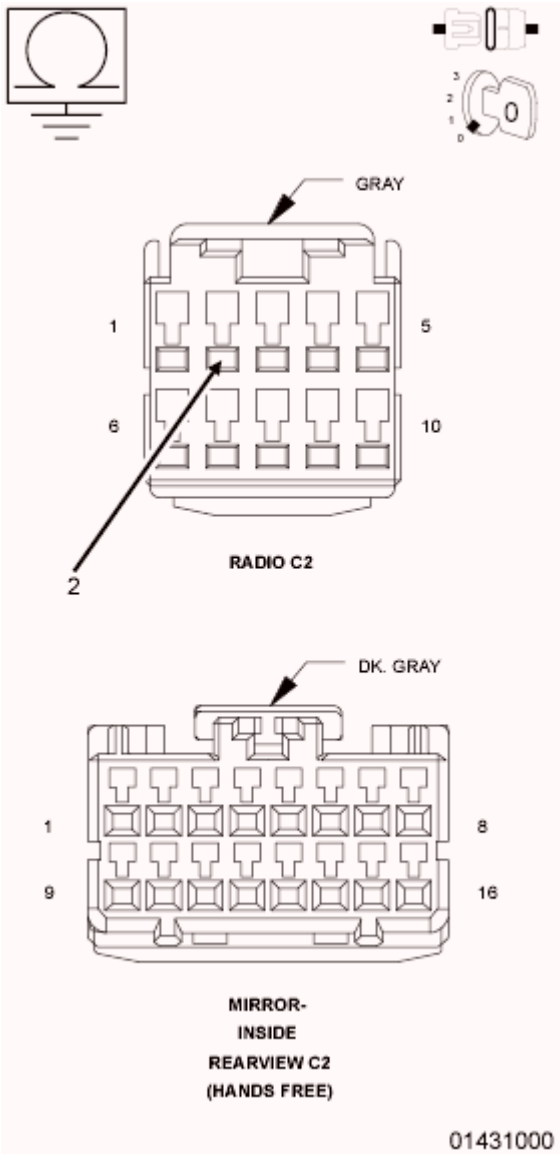

Fig. 68: Checking Microphone 1 In (+) Circuit For A Short To Ground
Courtesy of CHRYSLER GROUP, LLC

1. Turn the ignition off.
2. Disconnect the Radio C2 harness connector.
3. Measure the resistance between ground and the (X712) Microphone 1 (+) circuit.

   Is the resistance below 10K Ohms?

   Yes

   - Repair the (X712) Microphone 1 circuit for short to ground.
   - Perform the BODY VERIFICATION TEST. Refer to **BODY VERIFICATION TEST** .

   No

   - Go To 4.

4. **(X712) MICROPHONE 1 IN (+) CIRCUIT FOR A SHORT TO VOLTAGE**

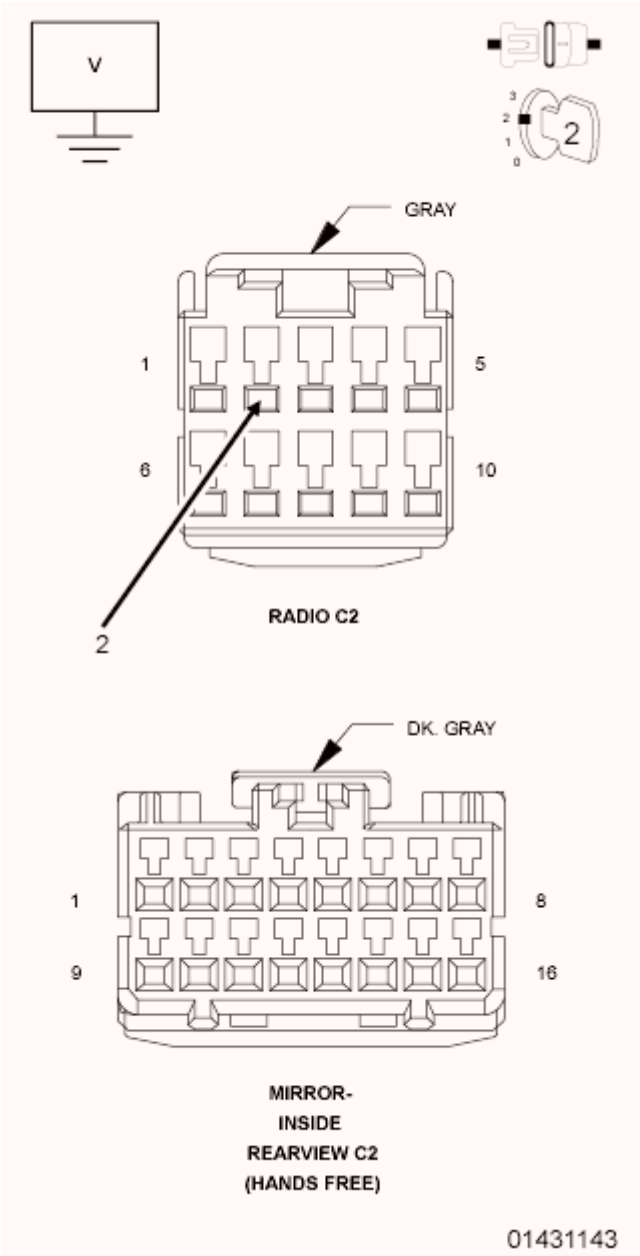

Fig. 69: Checking Microphone 1 In (+) Circuit For A Short To Voltage
Courtesy of CHRYSLER GROUP, LLC

1. Turn the ignition off.
2. Disconnect the Radio C2 harness connector.
3. Turn the ignition on.
4. Measure the voltage of the (X712) Microphone circuit.

   Is the voltage above 1.0 volt?

   Yes

- Repair The (X712) Microphone Circuit For A Short To Voltage.
- Perform the BODY VERIFICATION TEST. Refer to **BODY VERIFICATION TEST** .

No

- Go To 5.

5. **(X712) MICROPHONE 1 IN (+) CIRCUIT FOR AN OPEN**

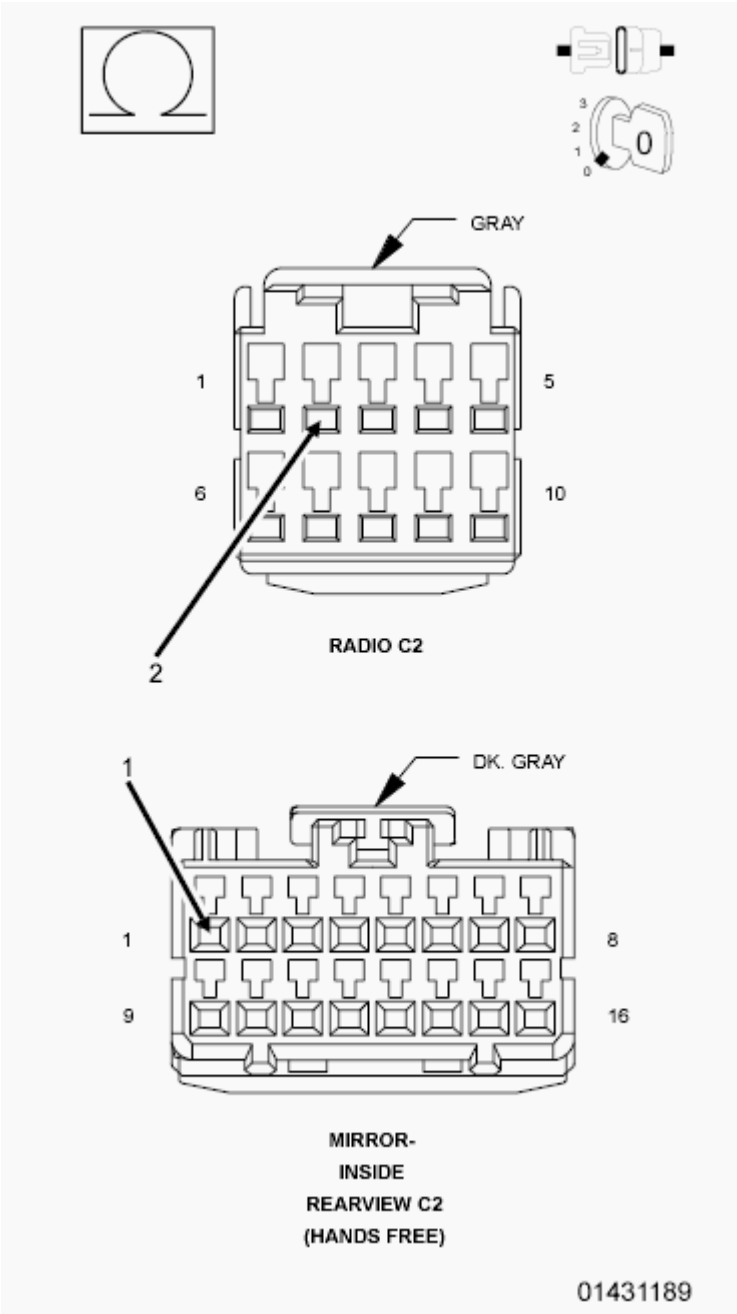

Fig. 70: Checking Microphone Circuit For An Open
Courtesy of CHRYSLER GROUP, LLC

1. Turn the ignition off.
2. Measure the resistance of the (X712) Microphone 1 IN (+) circuit.

   Is the resistance below 5.0 Ohms?

   Yes

   - Replace the Radio in accordance with the Service Information.
   - Perform the BODY VERIFICATION TEST. Refer to **BODY VERIFICATION TEST** .

   No

   - Repair the (X712) Microphone 1 IN (+) circuit for an open.
   - Perform the BODY VERIFICATION TEST. Refer to **BODY VERIFICATION TEST** .

B143B-MICROPHONE 1 CIRCUIT LOW

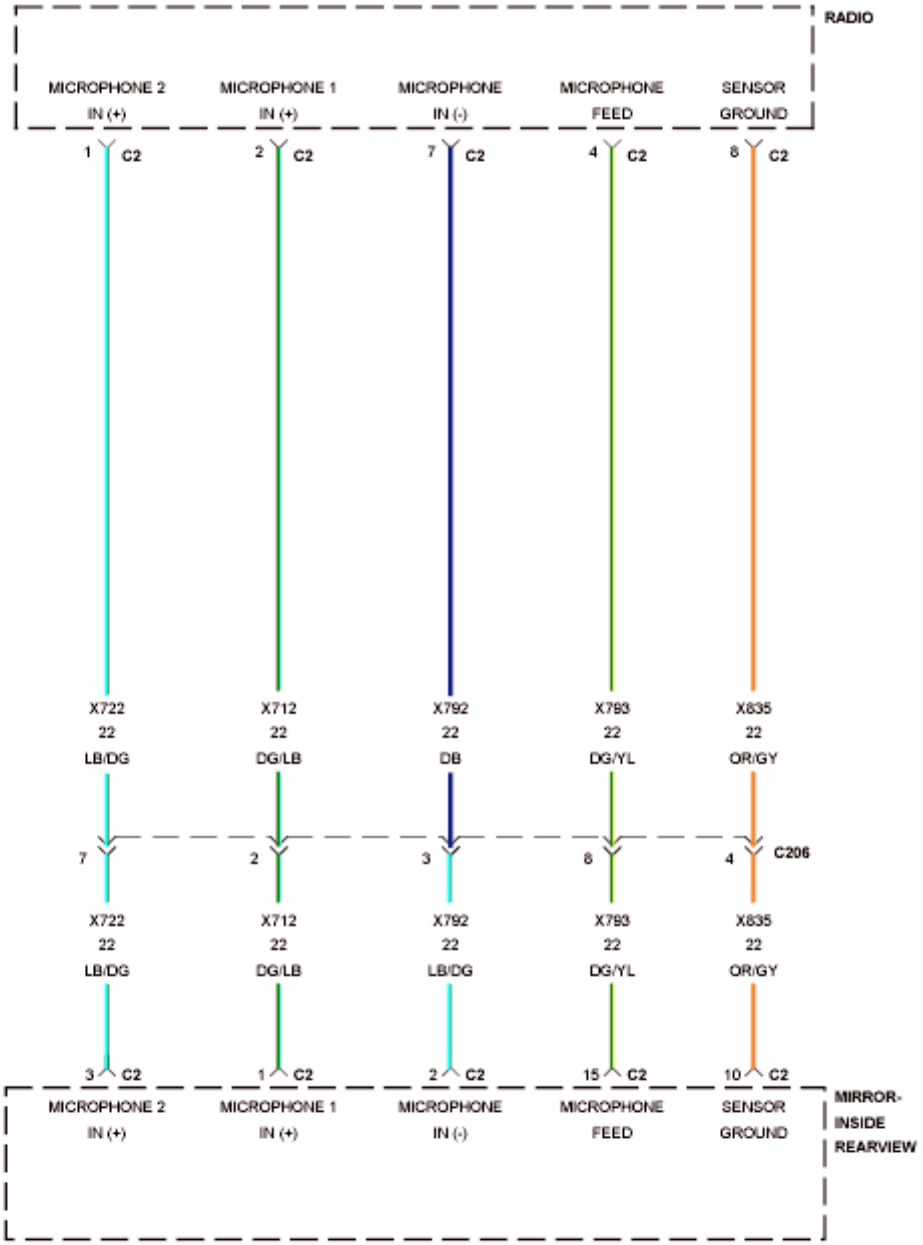

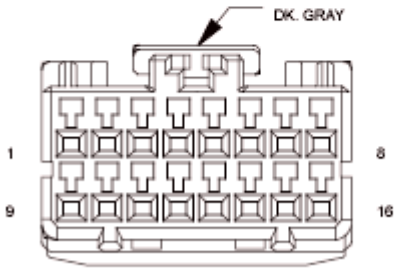

MIRROR-INSIDE REARVIEW C2

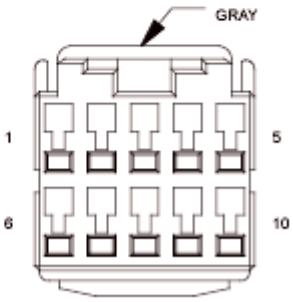

RADIO C2

Fig. 71: Microphone Wiring Diagram
Courtesy of CHRYSLER GROUP, LLC

For a complete wiring diagram, **refer to appropriate SYSTEM WIRING DIAGRAMS article** .

WHEN MONITORED:

With the ignition on.

SET CONDITION:

The Radio detects a short to ground or open on the (X712) Microphone 1 IN (+) circuit.

POSSIBLE CAUSES

Possible Causes
(X712) MICROPHONE 1 IN (+) CIRCUIT FOR AN OPEN
(X712) MICROPHONE 1 IN (+) CIRCUIT FOR A SHORT TO GROUND
(X793) MICROPHONE FEED CIRCUIT FOR AN OPEN
INSIDE REARVIEW MIRROR
RADIO

DIAGNOSTIC TEST

1. **CHECK FOR ACTIVE DTC**

   NOTE: Verify the connection of the Inside Rearview Mirror harness connector.

   1. Turn the ignition on.
   2. With the scan tool, read the active DTC's.

      Does the scan tool display B143B-MICROPHONE 1 CIRCUIT LOW as active?

      Yes

      - Go To 2.

      No

      - Test complete, the condition or conditions that originally set this DTC are not present at this time. Using the wiring diagrams as a guide, check all related splices and connectors for signs of water intrusion, corrosion, pushed out or bent terminals and correct pin tension.
      - Perform the BODY VERIFICATION TEST. Refer to **BODY VERIFICATION TEST** .
2. **CHECK FOR ACTIVE DTC B143E**
   1. With the scan tool, read the active DTC's.

Does the scan tool display B143E-MICROPHONE 2 CIRCUIT LOW also as active?

Yes

- Go To 3.

No

- Go To 6.

3. **CHECK FOR VOLTAGE AT THE INSIDE REARVIEW MIRROR**

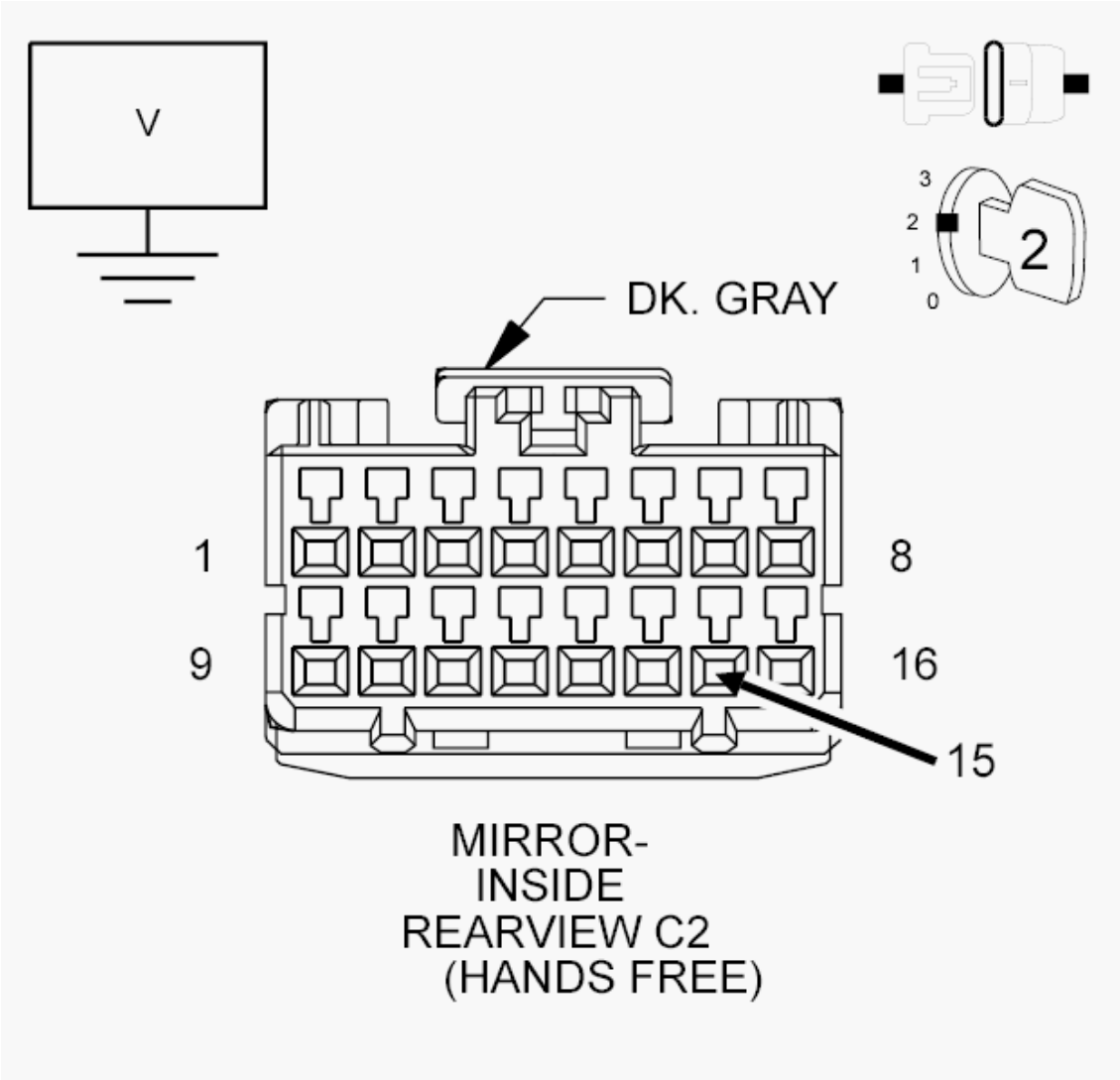

Fig. 72: Measuring Voltage Between Microphone Feed Circuit & Ground
Courtesy of CHRYSLER GROUP, LLC

1. Turn the ignition off.
2. Disconnect the Inside Rearview Mirror harness connector.

3. Turn the ignition on.
4. Measure the voltage between the (X793) Microphone Feed circuit and ground.

   Is the voltage above 10.0 volts?

   Yes

   - Go To 6.

   No

   - Go To 4.

4. **CHECK FOR VOLTAGE AT THE RADIO**

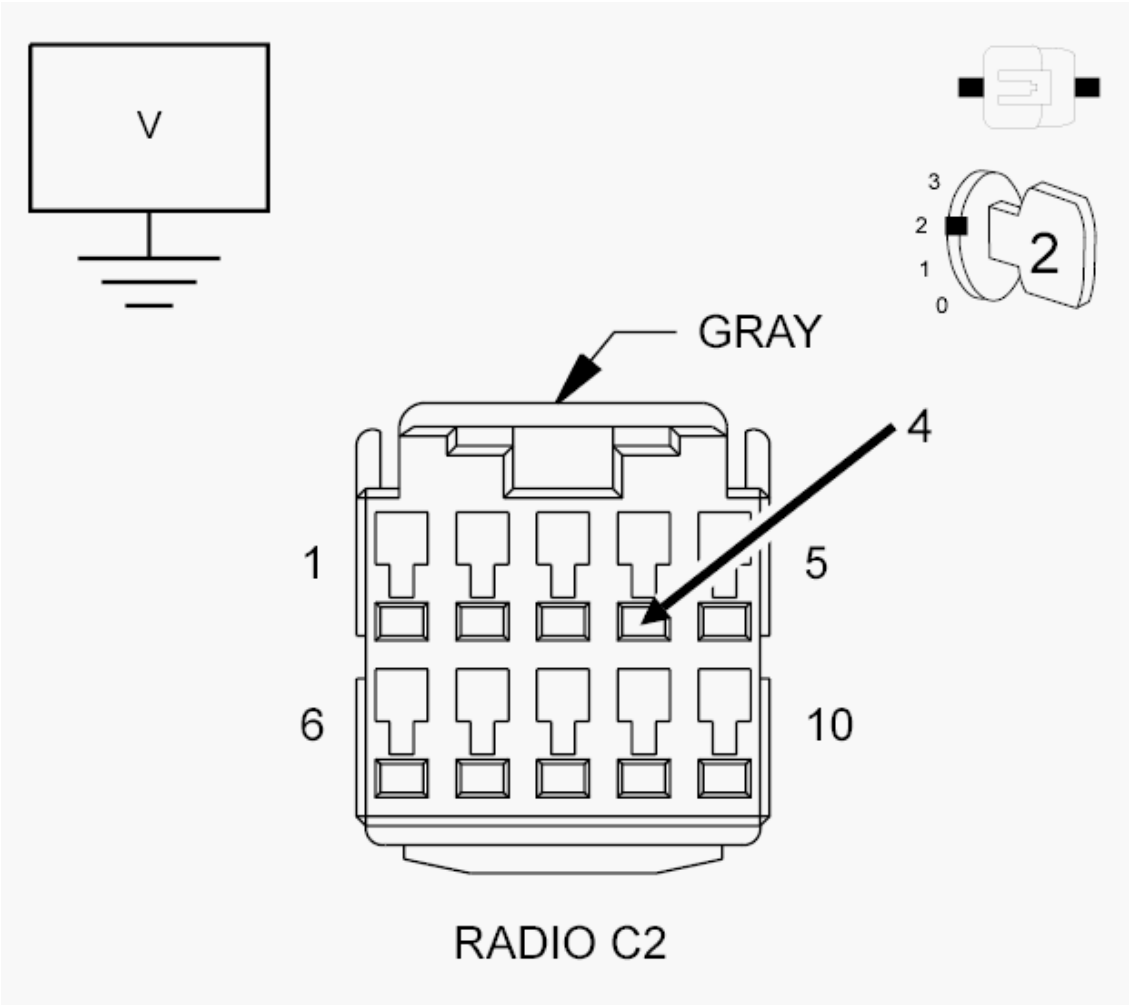

Fig. 73: Checking Microphone Feed Circuit For Voltage At Radio
Courtesy of CHRYSLER GROUP, LLC

1. While back probing, measure the voltage between the (X793) Microphone Feed circuit and ground at the Radio C2 harness connector.

NOTE: **The graphic shows the connector for reference only. Back probe the harness connector.**

Is the voltage above 10.0 volts?

Yes

- Repair the (X793) Microphone Feed circuit for an open.
- Perform the BODY VERIFICATION TEST. Refer to **BODY VERIFICATION TEST** .

No

- Go To 5.

5. **RESTORE THE VEHICLE CONFIGURATION**
   1. With the scan tool, restore the vehicle configuration.
   2. Turn the ignition off, then back on.
   3. With the scan tool, read the active DTC's.

   Does the scan tool display B143B-MICROPHONE 1 CIRCUIT LOW as active?

   Yes

   - Replace the Radio in accordance with the Service Information.
   - Perform the BODY VERIFICATION TEST. Refer to **BODY VERIFICATION TEST** .

   No

   - Test complete, the condition or conditions that originally set this DTC are not present at this time. Using the wiring diagrams as a guide, check all related splices and connectors for signs of water intrusion, corrosion, pushed out or bent terminals and correct pin tension.
   - Perform the BODY VERIFICATION TEST. Refer to **BODY VERIFICATION TEST** .

6. **CHECK THE INSIDE REARVIEW MIRROR**

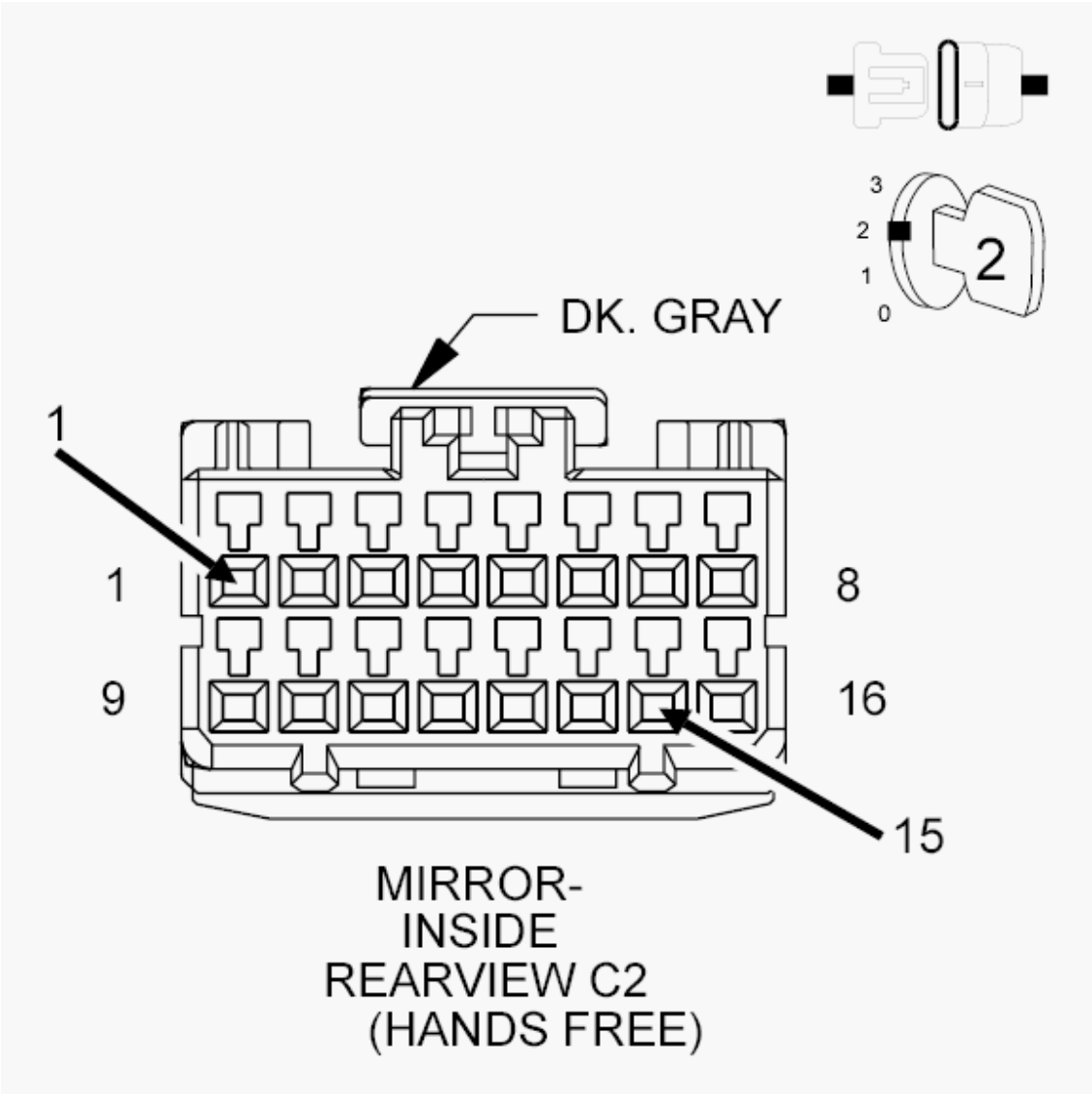

Fig. 74: Checking Inside Rearview Mirror Circuit
Courtesy of CHRYSLER GROUP, LLC

1. Turn the ignition off.
2. Disconnect the Inside Rearview Mirror C2 harness connector.
3. Connect a jumper wire between the (X793) Microphone Feed and the (X712) Microphone 1 IN (+) circuits.
4. Turn the ignition on.
5. With the scan tool, read the DTC's.

NOTE: **DTC B143C-MICROPHONE 1 CIRCUIT HIGH should display as active as a result of this test.**

Does the scan tool display B143B-MICROPHONE 1 CIRCUIT LOW as active?

Yes

- Go To 7.

No

- Replace the Inside Rearview Mirror in accordance with the Service Information.
- Perform the BODY VERIFICATION TEST. Refer to **BODY VERIFICATION TEST** .

7. **CHECK FOR THE (X712) MICROPHONE 1 IN (+) CIRCUIT FOR AN OPEN**

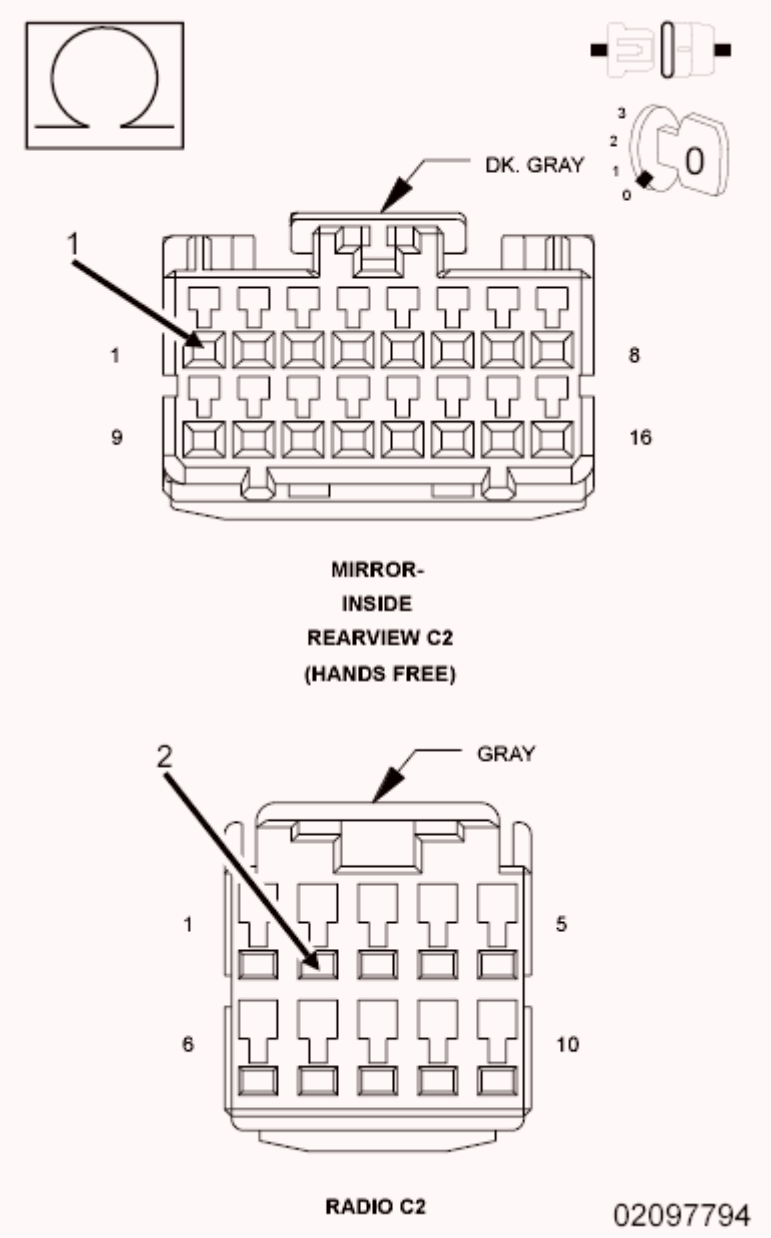

Fig. 75: Checking Microphone 1 In (+) Circuit For An Open
Courtesy of CHRYSLER GROUP, LLC

1. Turn the ignition off.
2. Disconnect the Radio C2 harness connector.
3. Measure the resistance of the (X712) Microphone 1 IN (+) circuit between the Inside Rearview Mirror and Radio C2 harness connectors.

   Is the resistance above 10K Ohms?

   Yes

   - Repair the (X712) Microphone 1 IN (+) circuit for an open.
   - Perform the BODY VERIFICATION TEST. Refer to **BODY VERIFICATION TEST** .

   No

   - Go To 8.

8. **CHECK FOR THE (X712) MICROPHONE 1 IN (+) CIRCUIT FOR A SHORT TO GROUND**

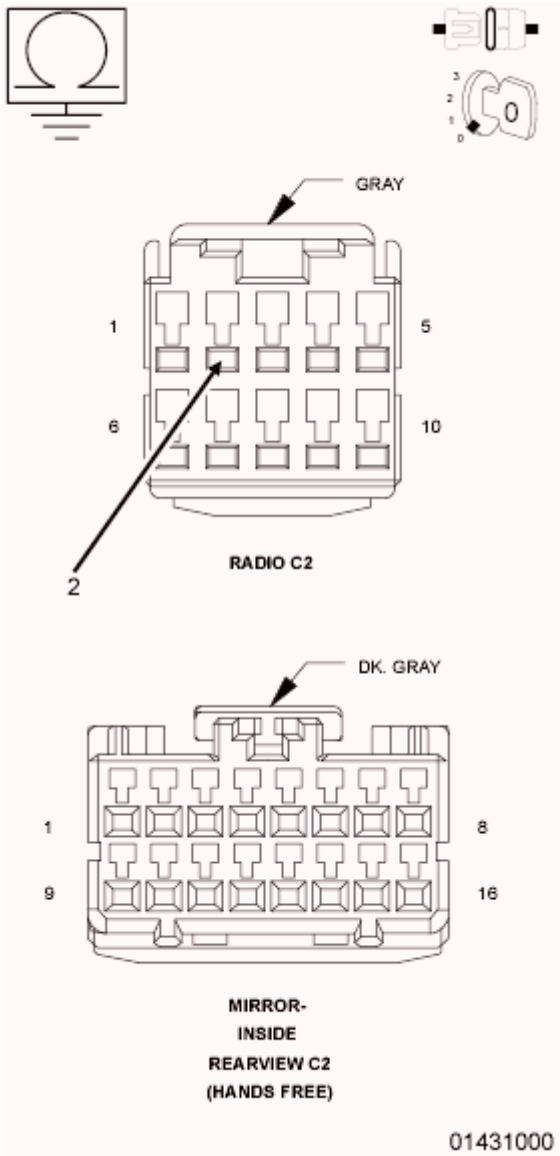

Fig. 76: Checking Microphone 1 In (+) Circuit For A Short To Ground
Courtesy of CHRYSLER GROUP, LLC

1. Measure the resistance between ground and the (X712) Microphone 1 IN (+) circuit.

   Is the resistance below 10K Ohms?

   Yes

   - Repair the (X712) Microphone 1 IN (+) circuit for short to ground.
   - Perform the BODY VERIFICATION TEST. Refer to **BODY VERIFICATION TEST** .

   No

   - Replace the Radio in accordance with the Service Information.

- Perform the BODY VERIFICATION TEST. Refer to **BODY VERIFICATION TEST** .

B143C-MICROPHONE 1 CIRCUIT HIGH

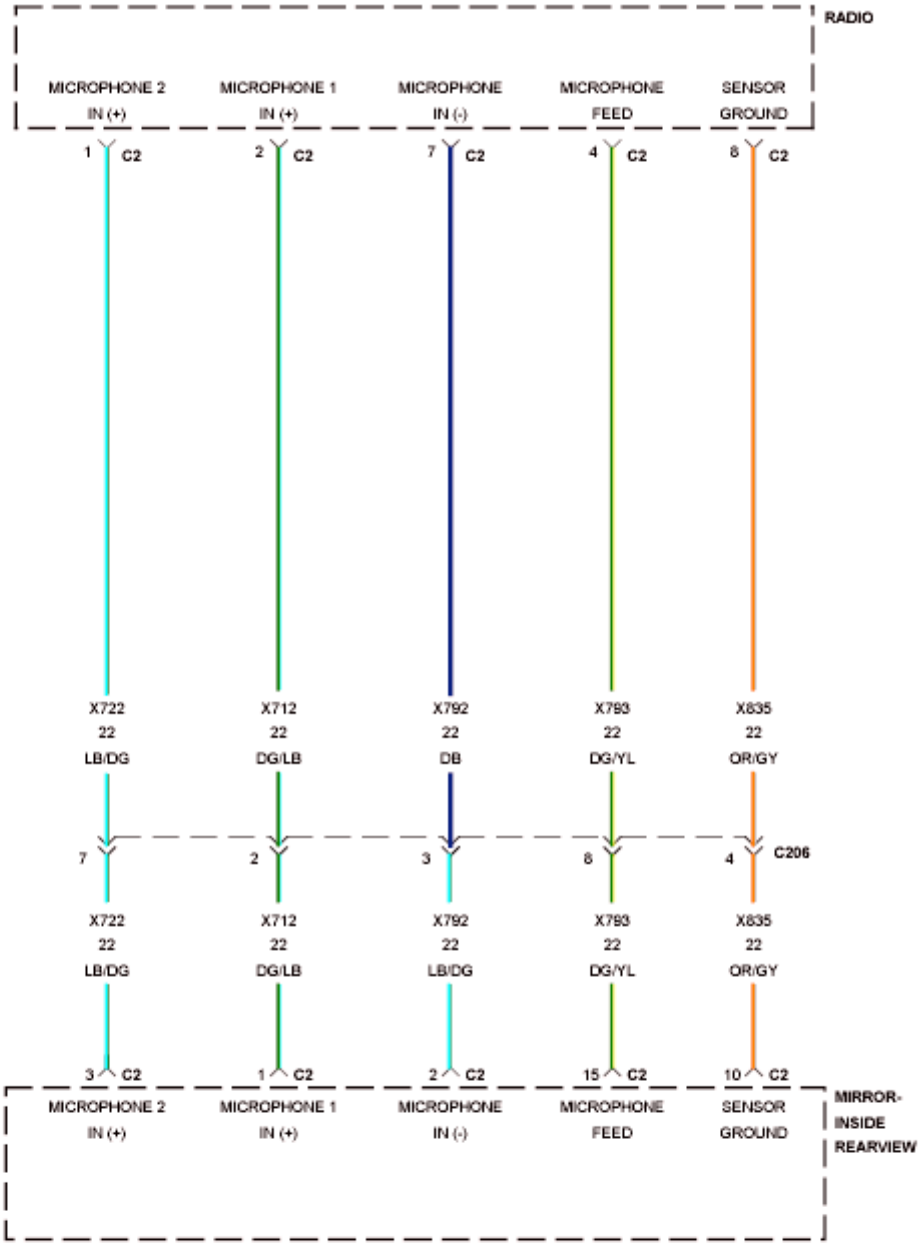

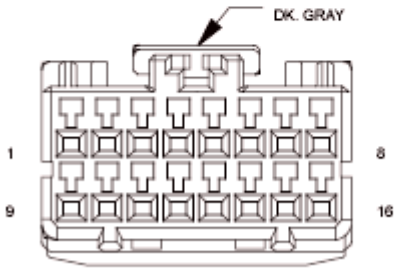

MIRROR-INSIDE REARVIEW C2

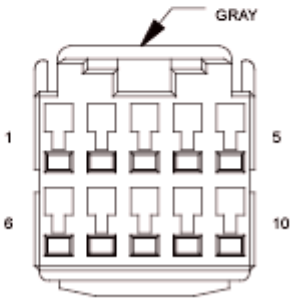

RADIO C2

Fig. 77: Microphone Wiring Diagram
Courtesy of CHRYSLER GROUP, LLC

For a complete wiring diagram, **refer to appropriate SYSTEM WIRING DIAGRAMS article** .

WHEN MONITORED:

With the ignition on.

SET CONDITION:

The Radio detects a short to voltage on the (X712) Microphone 1 IN (+) circuit.

POSSIBLE CAUSES

Possible Causes
(X712) MICROPHONE 1 IN (+) CIRCUITS SHORTED TO VOLTAGE
INSIDE REARVIEW MIRROR
RADIO

DIAGNOSTIC TEST

1. **CHECK FOR ACTIVE DTC**

   NOTE: Verify the connection of the Rearview Mirror harness connector.

   1. Turn the ignition on.
   2. With the scan tool, read the active DTC's.

      Does the scan tool display this DTC as active?

      Yes

      - Go To 2.

      No

      - If the DTC is stored, check for an intermittent condition. Visually inspect the related wiring harness connectors. Look for broken, bent, pushed out, or corroded terminals.
      - Perform the BODY VERIFICATION TEST. Refer to **BODY VERIFICATION TEST** .
2. **INSIDE REARVIEW MIRROR**
   1. Turn the ignition off.
   2. Disconnect the Rearview Mirror C2 harness connector.
   3. Turn the ignition on.
   4. With the scan tool, read the active DTC's.

Does the scan tool display this DTC as active?

Yes

- Go To 3.

No

- Replace the Rearview Mirror in accordance with the Service Information.
- Perform the BODY VERIFICATION TEST. Refer to **BODY VERIFICATION TEST** .

3. **(X712) MICROPHONE 1 IN (+) CIRCUIT FOR A SHORT TO VOLTAGE**

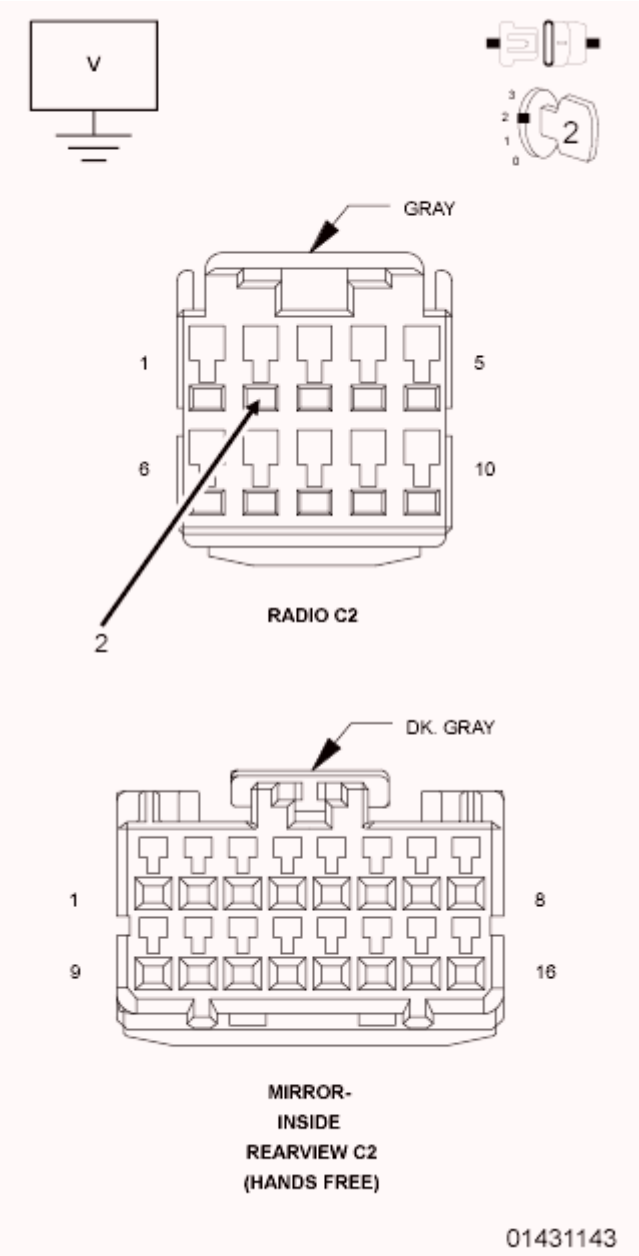

Fig. 78: Checking Microphone 1 In (+) Circuit For A Short To Voltage
Courtesy of CHRYSLER GROUP, LLC

1. Turn the ignition off.
2. Disconnect the Radio C2 harness connector.
3. Turn the ignition on.
4. Measure the voltage of the (X712) Microphone 1 IN (+) circuit.

   Is the voltage above 1.0 volt?

   Yes

   - Repair the (X712) Microphone 1 IN (+) CIRCUIT FOR A SHORT TO VOLTAGE.
   - Perform the BODY VERIFICATION TEST. Refer to **BODY VERIFICATION TEST** .

   No

   - Replace the Radio in accordance with the Service Information.
   - Perform the BODY VERIFICATION TEST. Refer to **BODY VERIFICATION TEST** .

B143D-MICROPHONE 2 CIRCUIT PERFORMANCE

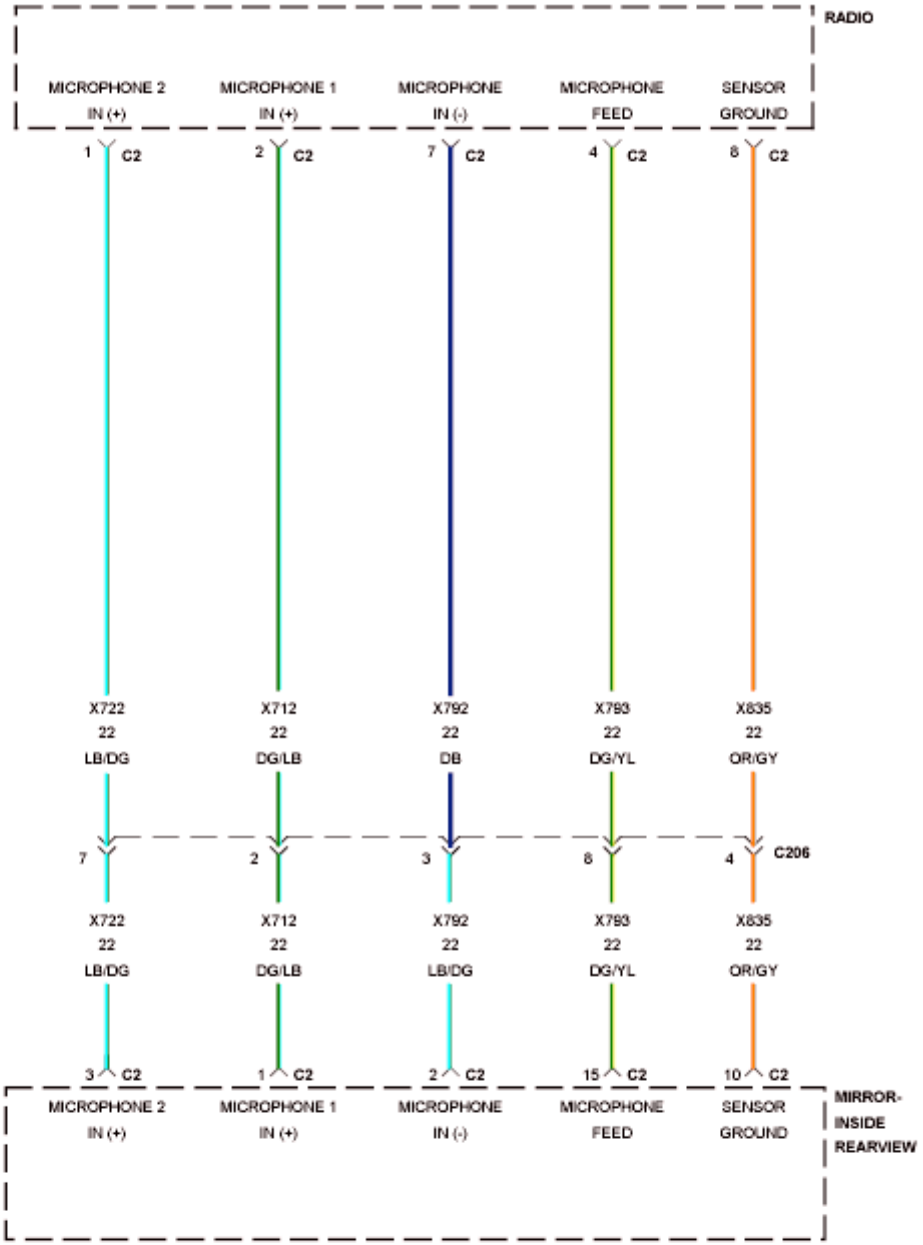

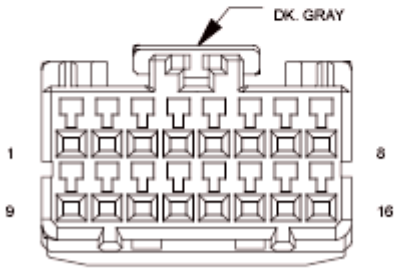

MIRROR-INSIDE REARVIEW C2

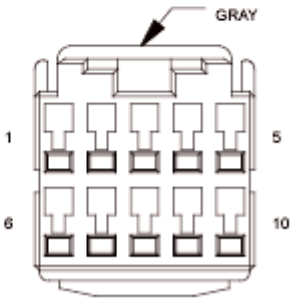

RADIO C2

Fig. 79: Microphone Wiring Diagram
Courtesy of CHRYSLER GROUP, LLC

For a complete wiring diagram, **refer to appropriate SYSTEM WIRING DIAGRAMS article** .

WHEN MONITORED:

With the ignition on.

SET CONDITION:

The Radio detects a fault in any of the microphone circuits.

POSSIBLE CAUSES

Possible Causes
(X722) MICROPHONE 2 IN (+) CIRCUIT FOR A SHORT TO GROUND
(X722) MICROPHONE 2 IN (+) CIRCUIT FOR AN OPEN
(X722) MICROPHONE 2 IN (+) CIRCUITS SHORTED TO VOLTAGE
INSIDE REARVIEW MIRROR
RADIO

DIAGNOSTIC TEST

1. **CHECK FOR ACTIVE DTC**
    1. Turn the ignition on.
    2. With the scan tool, read the active DTC's.

       Does the scan tool display this DTC as active?

       Yes

       - Go To 2.

       No

       - If the DTC is stored, check for an intermittent condition. Visually inspect the related wiring harness connectors. Look for broken, bent, pushed out, or corroded terminals.
       - Perform the BODY VERIFICATION TEST. Refer to **BODY VERIFICATION TEST** .
2. **INSIDE REARVIEW MIRROR**
    1. Turn the ignition off.
    2. Disconnect the Inside Rearview Mirror C2 harness connector.
    3. Turn the ignition on.
    4. With the scan tool, read the active DTC's.

Does the scan tool display this DTC as active?

Yes

- Go To 3.

No

- Replace the Rearview Mirror in accordance with the Service Information.
- Perform the BODY VERIFICATION TEST. Refer to **BODY VERIFICATION TEST** .

3. **(X722) MICROPHONE 2 IN (+) CIRCUIT FOR A SHORT TO GROUND**

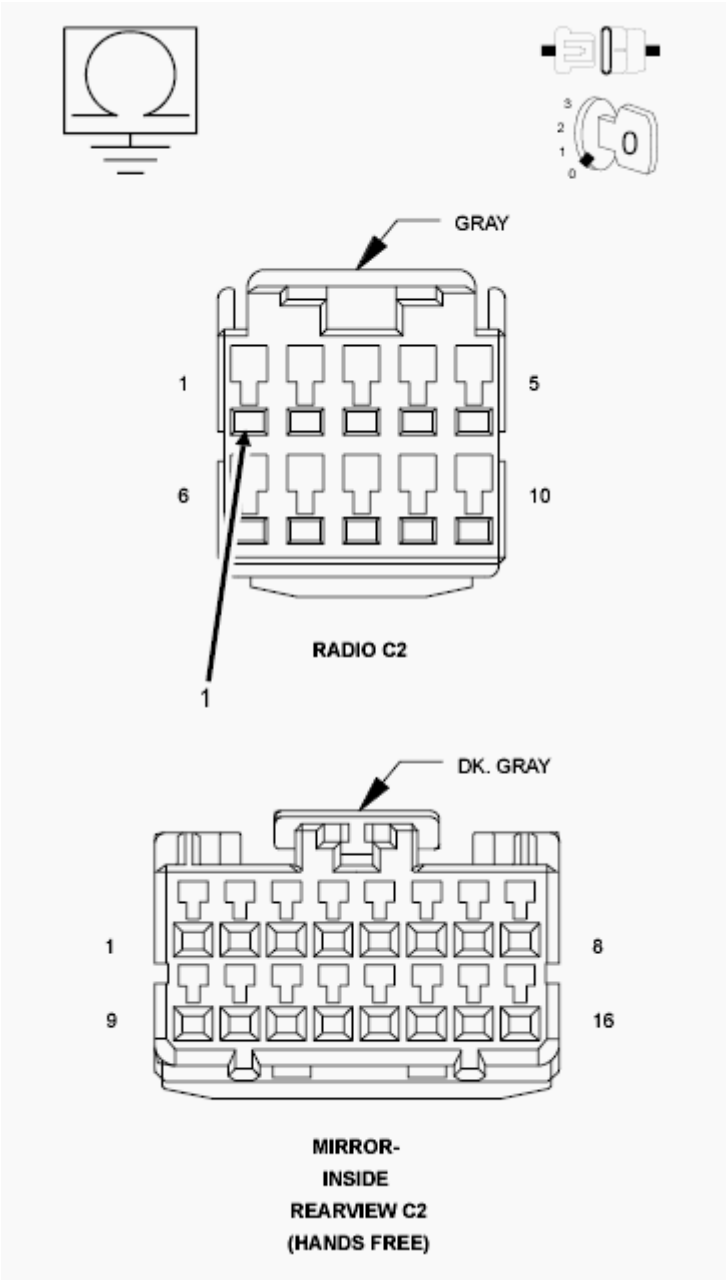

Fig. 80: Checking Microphone 2 In (+) Circuit For A Short To Ground
Courtesy of CHRYSLER GROUP, LLC

1. Turn the ignition off.
2. Disconnect the Radio C2 harness connector.
3. Measure the resistance between ground and the (X722) Microphone 2 IN (+) circuit.

   Is the resistance below 10K Ohms?

   Yes

- Repair the (X722) Microphone 2 IN (+) circuit for short to ground.
- Perform the BODY VERIFICATION TEST. Refer to **BODY VERIFICATION TEST** .

No

- Go To 4.

4. **(X722) MICROPHONE CIRCUITS SHORTED TO VOLTAGE**

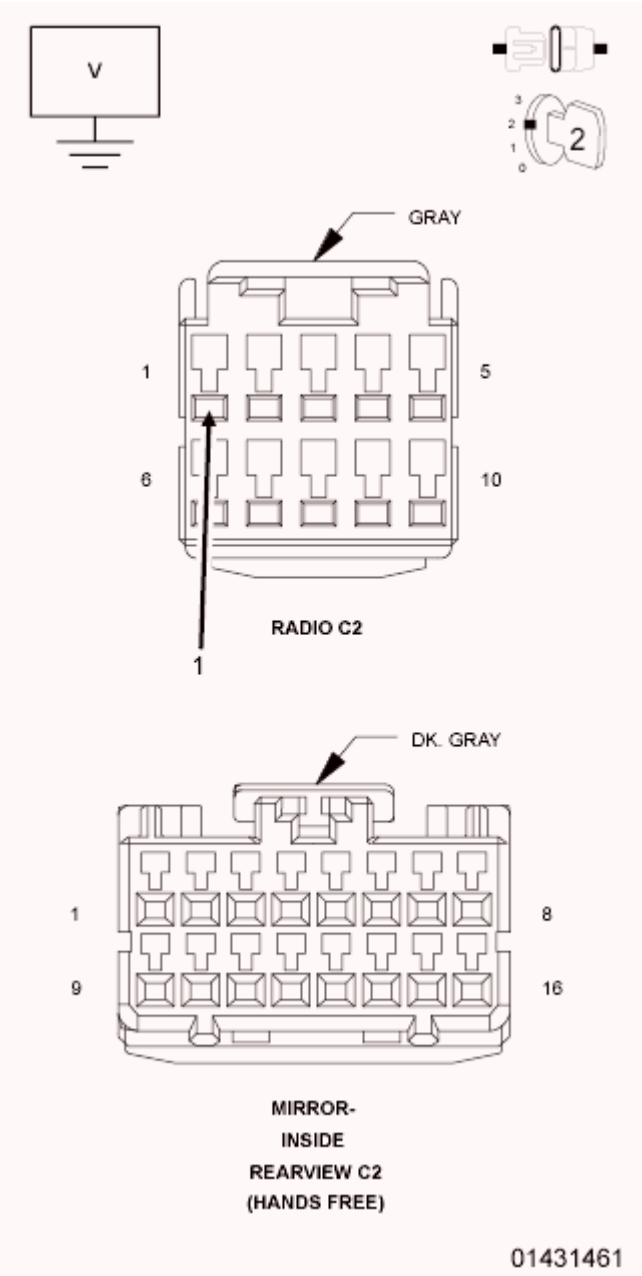

Fig. 81: Checking Microphone Circuit For A Short To Voltage
Courtesy of CHRYSLER GROUP, LLC

1. Turn the ignition off.
2. Disconnect the Radio C2 harness connector.
3. Turn the ignition on.
4. Measure the voltage of the (X722) Microphone circuit.

   Is the voltage above 1.0 volt?

   Yes

   - Repair the (X722) Microphone CIRCUIT FOR A SHORT TO VOLTAGE.
   - Perform the BODY VERIFICATION TEST. Refer to **BODY VERIFICATION TEST** .

   No

   - Go To 5.

5. **(X722) MICROPHONE 2 IN (+) CIRCUIT FOR AN OPEN**

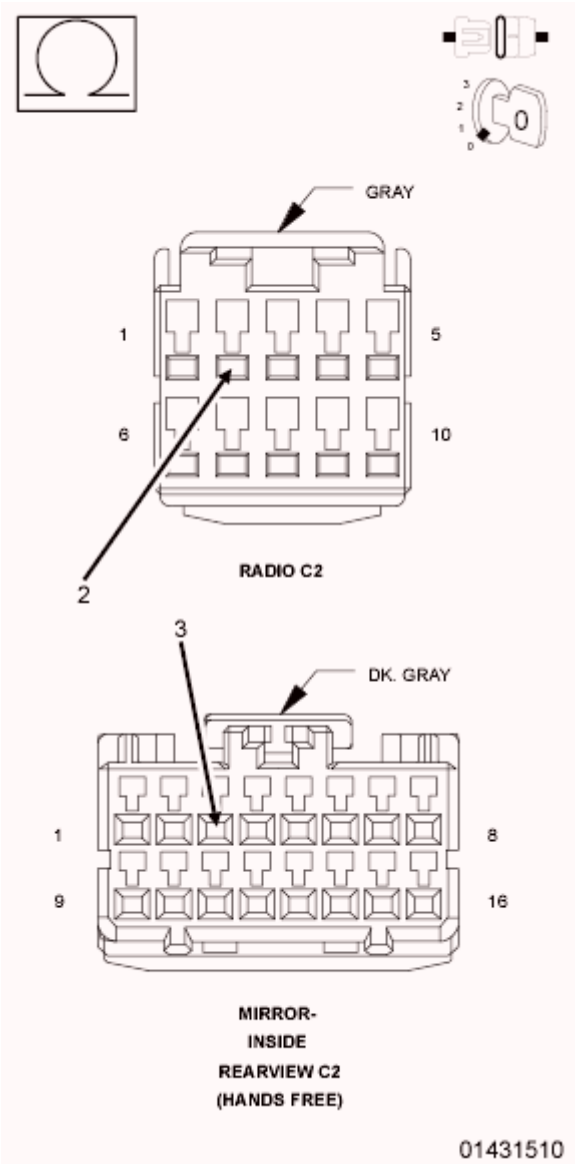

Fig. 82: Checking Microphone 2 In (+) Circuit For An Open
Courtesy of CHRYSLER GROUP, LLC

1. Turn the ignition off.
2. Measure the resistance of the (X722) Microphone 2 IN (+) circuit.

   Is the resistance below 5.0 Ohms?

   Yes

   - Replace the Radio in accordance with the Service Information.
   - Perform the BODY VERIFICATION TEST. Refer to **BODY VERIFICATION TEST** .

   No

- Repair the (X722) Microphone 2 IN (+) circuit for an open.
- Perform the BODY VERIFICATION TEST. Refer to **BODY VERIFICATION TEST** .

B143E-MICROPHONE 2 CIRCUIT LOW

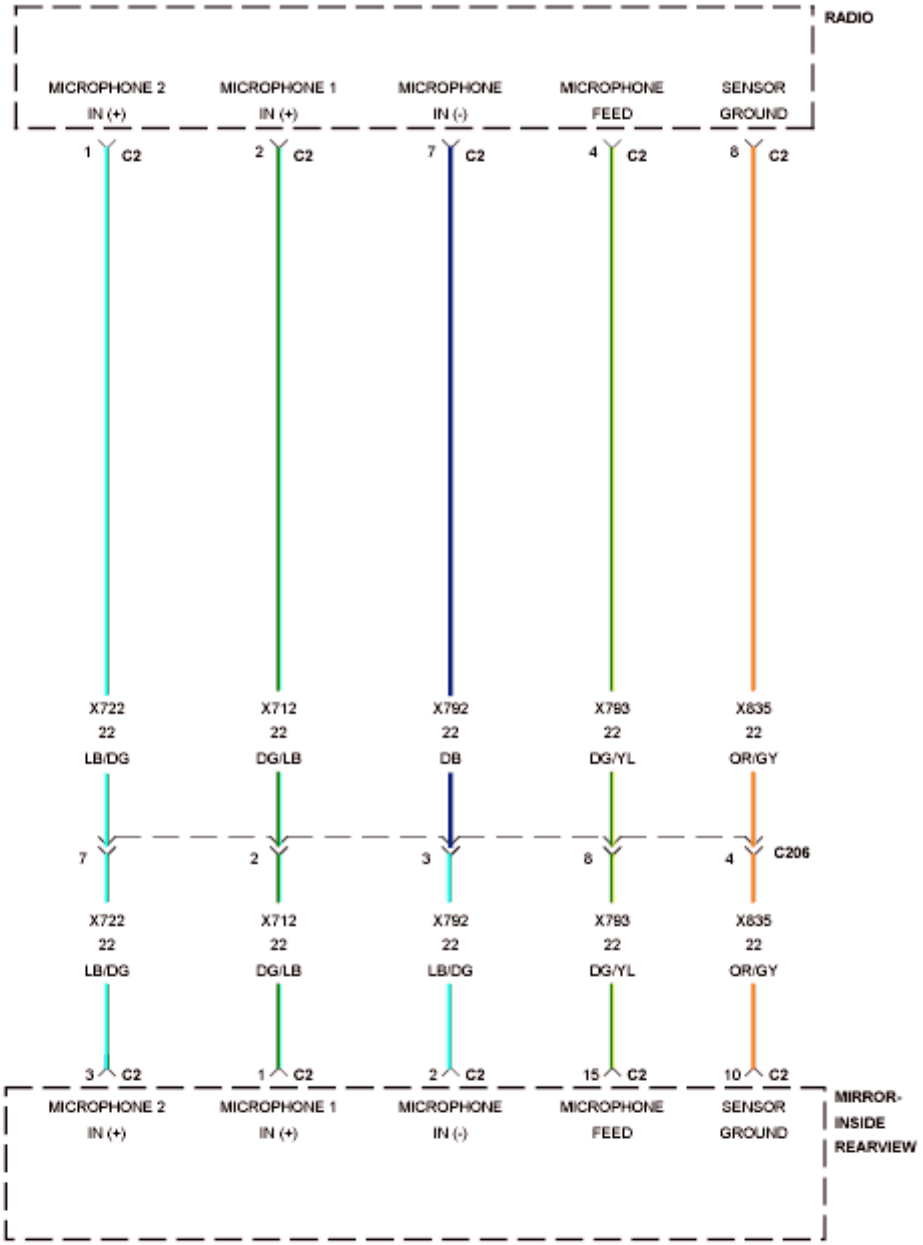

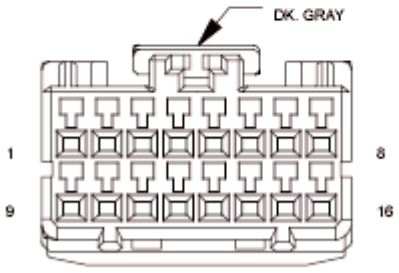

MIRROR-INSIDE REARVIEW C2

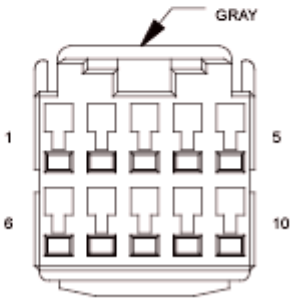

RADIO C2

Fig. 83: Microphone Wiring Diagram
Courtesy of CHRYSLER GROUP, LLC

For a complete wiring diagram, **refer to appropriate SYSTEM WIRING DIAGRAMS article** .

WHEN MONITORED:

With the ignition on.

SET CONDITION:

The Radio detects a short to ground or an open on the (X722) Microphone 2 IN (+) circuit.

POSSIBLE CAUSES

Possible Causes
(X722) MICROPHONE 2 IN (+) CIRCUIT FOR AN OPEN
(X722) MICROPHONE 2 IN (+) CIRCUIT FOR A SHORT TO GROUND
(X793) MICROPHONE FEED CIRCUIT FOR AN OPEN
INSIDE REARVIEW MIRROR
RADIO

DIAGNOSTIC TEST

1. **CHECK FOR ACTIVE DTC**

   NOTE: Verify the connection of the Inside Rearview Mirror harness connector.

   1. Turn the ignition on.
   2. With the scan tool, read the active DTC's.

      Does the scan tool display B143E-MICROPHONE 2 CIRCUIT LOW as active?

      Yes

      - Go To 2.

      No

      - Test complete, the condition or conditions that originally set this DTC are not present at this time. Using the wiring diagrams as a guide, check all related splices and connectors for signs of water intrusion, corrosion, pushed out or bent terminals and correct pin tension.
      - Perform the BODY VERIFICATION TEST. Refer to **BODY VERIFICATION TEST** .
2. **CHECK FOR ACTIVE DTC B143B**
   1. With the scan tool, read the active DTC's.

Does the scan tool display B143B-MICROPHONE 1 CIRCUIT LOW also as active?

Yes

- Go To 3.

No

- Go To 6.

3. **CHECK FOR VOLTAGE AT THE INSIDE REARVIEW MIRROR**

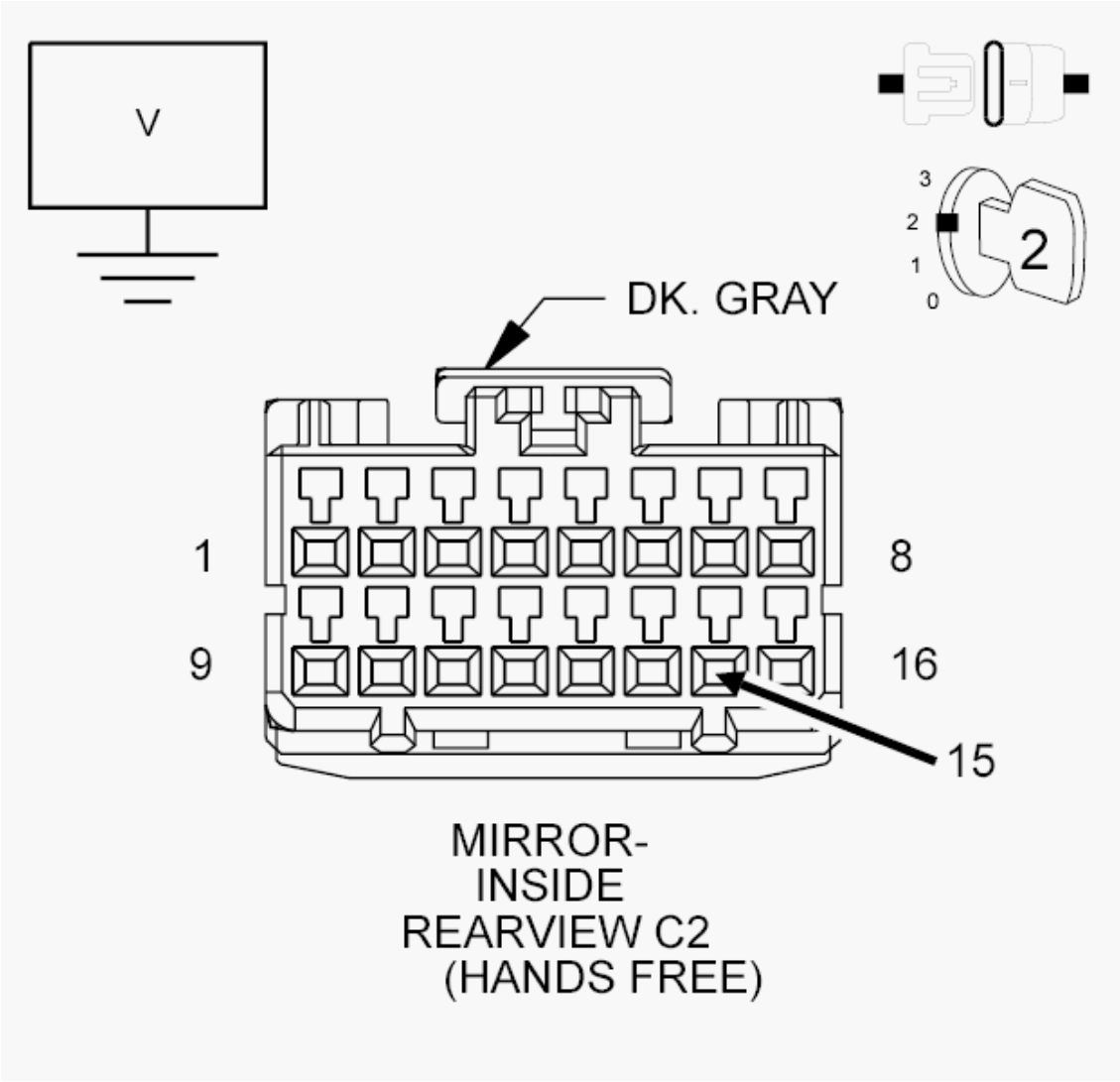

Fig. 84: Measuring Voltage Between Microphone Feed Circuit & Ground
Courtesy of CHRYSLER GROUP, LLC

1. Turn the ignition off.
2. Disconnect the Inside Rearview Mirror harness connector.

3. Turn the ignition on.
4. Measure the voltage between the (X793) Microphone Feed circuit and ground.

   Is the voltage above 10.0 volts?

   Yes

   - Go To 6.

   No

   - Go To 4.

4. **CHECK FOR VOLTAGE AT THE RADIO**

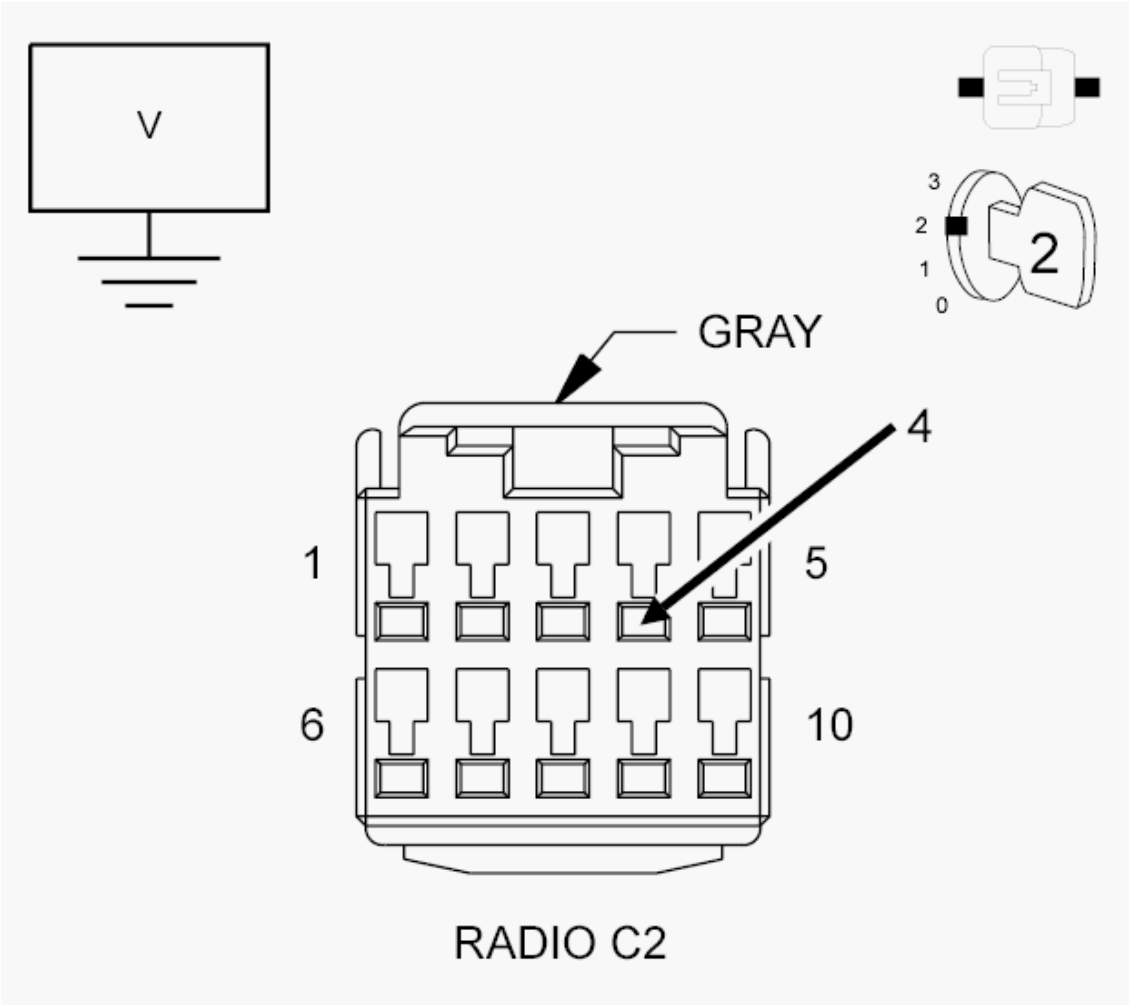

Fig. 85: Checking Microphone Feed Circuit For Voltage At Radio
Courtesy of CHRYSLER GROUP, LLC

1. While back probing, measure the voltage between the (X793) Microphone Feed circuit and ground at the Radio C2 harness connector.

NOTE: **The graphic shows the connector for reference only. Back probe the harness connector.**

Is the voltage above 10.0 volts?

Yes

- Repair the (X793) Microphone Feed circuit for an open.
- Perform the BODY VERIFICATION TEST. Refer to **BODY VERIFICATION TEST** .

No

- Go To 5.

5. **RESTORE THE VEHICLE CONFIGURATION**
   1. With the scan tool, restore the vehicle configuration.
   2. Turn the ignition off, then back on.
   3. With the scan tool, read the active DTC's.

   Does the scan tool display B143E-MICROPHONE 2 CIRCUIT LOW as active?

   Yes

   - Replace the Radio in accordance with the Service Information.
   - Perform the BODY VERIFICATION TEST. Refer to **BODY VERIFICATION TEST** .

   No

   - Test complete, the condition or conditions that originally set this DTC are not present at this time. Using the wiring diagrams as a guide, check all related splices and connectors for signs of water intrusion, corrosion, pushed out or bent terminals and correct pin tension.
   - Perform the BODY VERIFICATION TEST. Refer to **BODY VERIFICATION TEST** .

6. **CHECK THE INSIDE REARVIEW MIRROR**

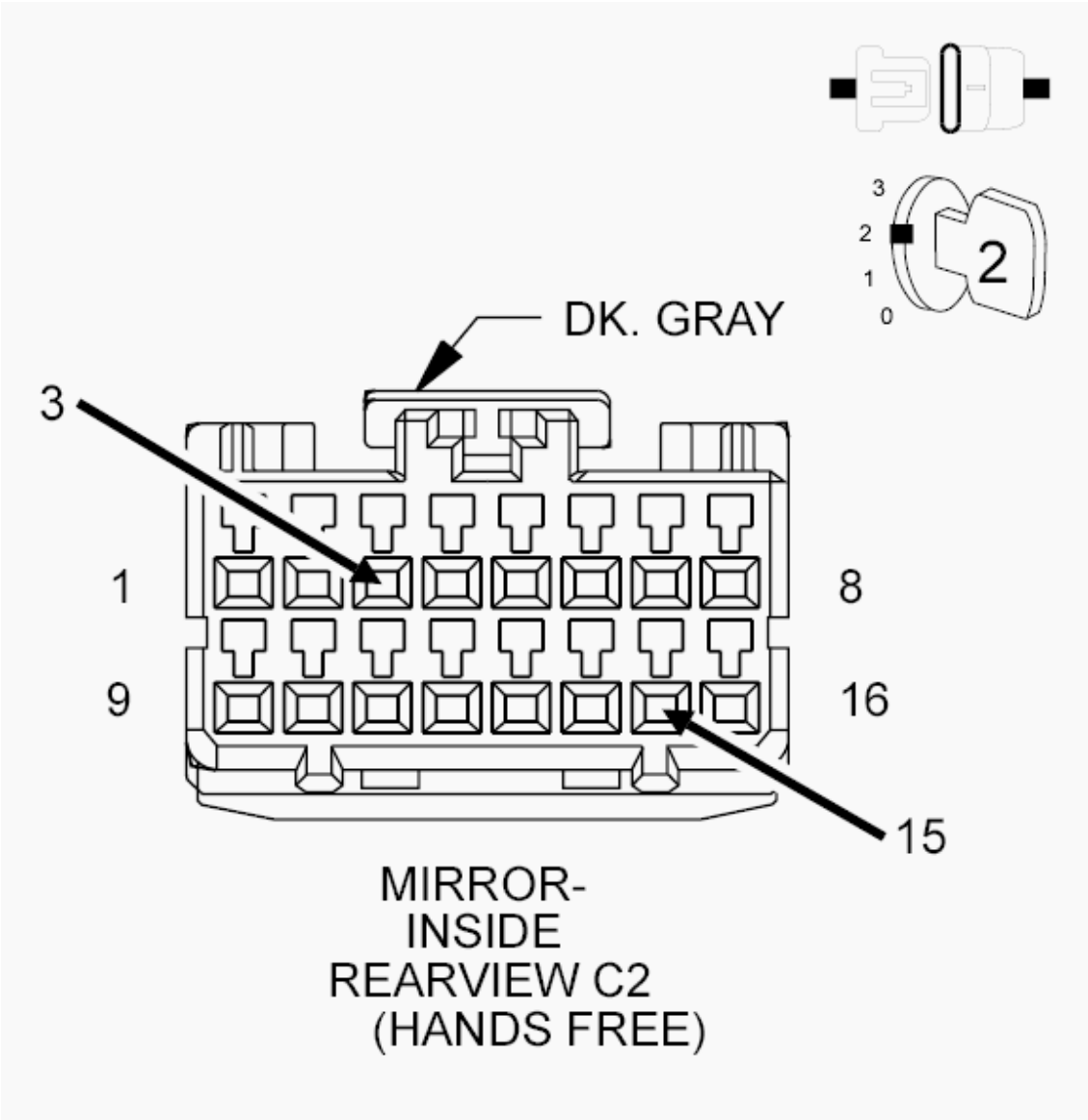

Fig. 86: Checking Microphone Circuit
Courtesy of CHRYSLER GROUP, LLC

1. Turn the ignition off.
2. Disconnect the Inside Rearview Mirror harness connector.
3. Connect a jumper wire between the (X793) Microphone Feed and the (X722) Microphone 2 IN (+) circuits.
4. Turn the ignition on.
5. With the scan tool, read the DTC's.

NOTE: **DTC B143F-MICROPHONE 2 CIRCUIT HIGH should display as active as a result of this test.**

Does the scan tool display B143E-MICROPHONE 2 CIRCUIT LOW as active?

Yes

- Go To 7.

No

- Replace the Inside Rearview Mirror in accordance with the Service Information.
- Perform the BODY VERIFICATION TEST. Refer to **BODY VERIFICATION TEST** .

7. **CHECK FOR THE (X722) MICROPHONE 2 IN (+) CIRCUIT FOR AN OPEN**

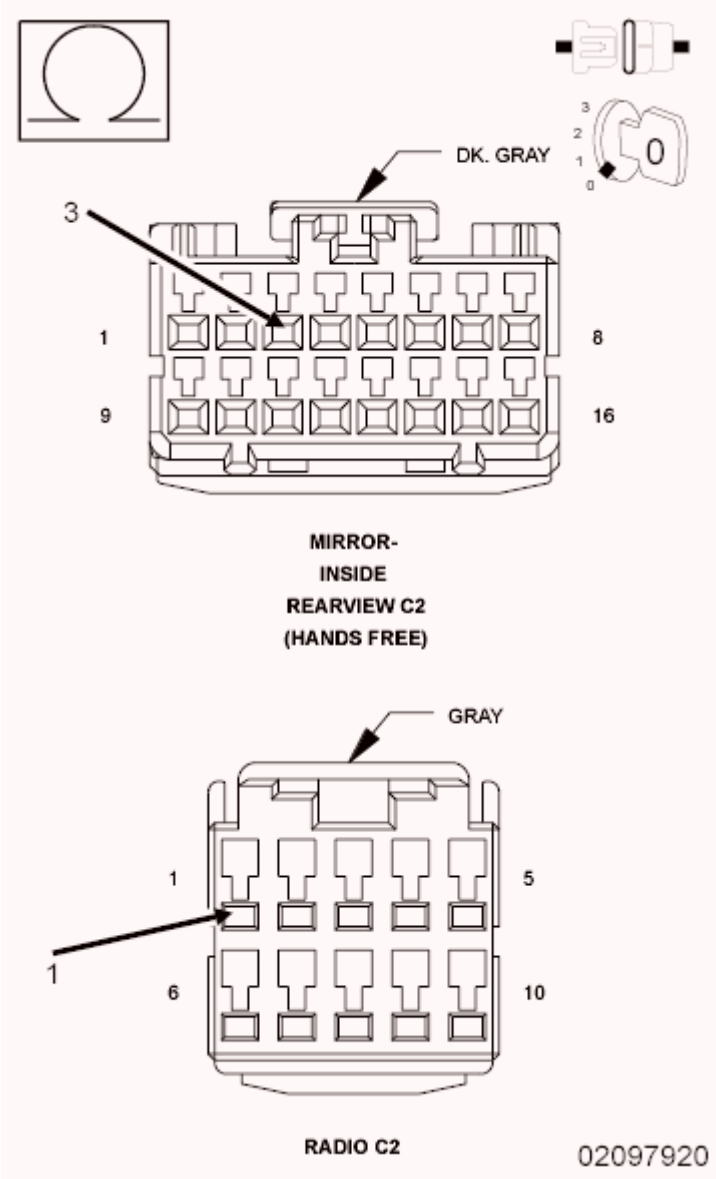

Fig. 87: Checking Microphone 2 In (+) Circuit For An Open
Courtesy of CHRYSLER GROUP, LLC

1. Turn the ignition off.

2. Disconnect the Radio C2 harness connector.
3. Measure the resistance of the (X722) Microphone 2 IN (+) circuit between the Inside Rearview Mirror and Radio C2 harness connectors.

   Is the resistance above 10K Ohms?

   Yes

   - Repair the (X722) Microphone 2 IN (+) circuit for an open.
   - Perform the BODY VERIFICATION TEST. Refer to **BODY VERIFICATION TEST** .

   No

   - Go To 8.

8. **CHECK FOR THE (X722) MICROPHONE 2 IN (+) CIRCUIT FOR A SHORT TO GROUND**

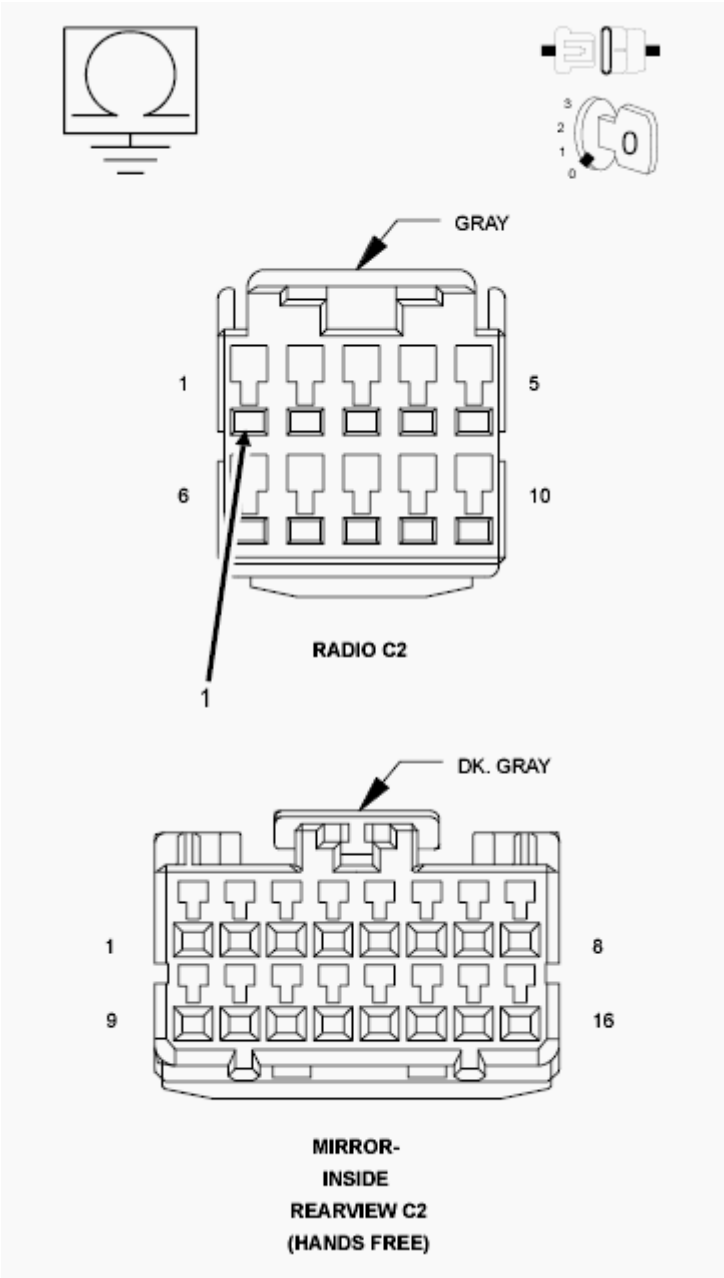

Fig. 88: Checking Microphone 2 In (+) Circuit For A Short To Ground
Courtesy of CHRYSLER GROUP, LLC

1. Measure the resistance between ground and the (X722) Microphone 2 IN (+) circuit.

   Is the resistance below 10K Ohms?

   Yes

   - Repair the (X722) Microphone 2 IN (+) circuit for short to ground.
   - Perform the BODY VERIFICATION TEST. Refer to **BODY VERIFICATION TEST** .

No

- Replace the Radio in accordance with the Service Information.
- Perform the BODY VERIFICATION TEST. Refer to **BODY VERIFICATION TEST** .

B143F-MICROPHONE 2 CIRCUIT HIGH

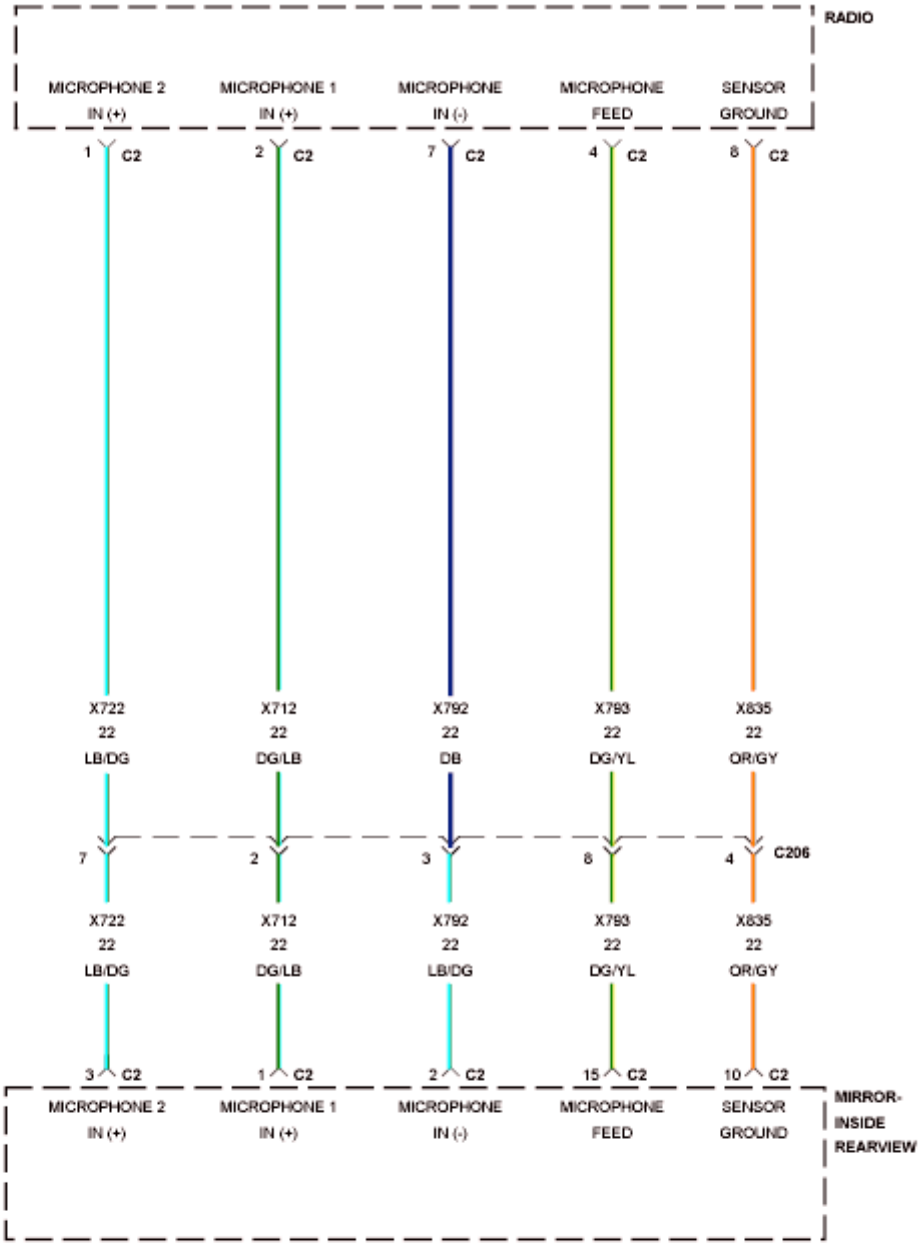

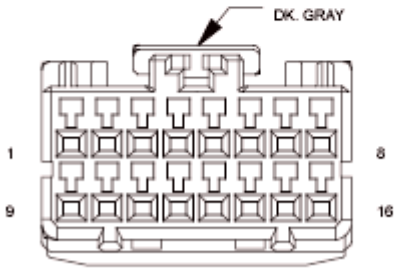

MIRROR-INSIDE REARVIEW C2

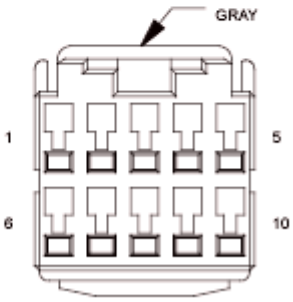

RADIO C2

Fig. 89: Microphone Wiring Diagram
Courtesy of CHRYSLER GROUP, LLC

For a complete wiring diagram, **refer to appropriate SYSTEM WIRING DIAGRAMS article** .

WHEN MONITORED:

With the ignition on.

SET CONDITION:

The Radio detects a short to voltage on the (X722) Microphone 2 IN (+) circuit.

POSSIBLE CAUSES

Possible Causes
(X722) MICROPHONE 2 IN (+) CIRCUITS SHORTED TO VOLTAGE
INSIDE REARVIEW MIRROR
RADIO

DIAGNOSTIC TEST

1. **CHECK FOR ACTIVE DTC**

   NOTE: Verify the connection of the Rearview Mirror harness connector.

   1. Turn the ignition on.
   2. With the scan tool, read the active DTC's.

      Does the scan tool display this DTC as active?

      Yes

      - Go To 2.

      No

      - If the DTC is stored, check for an intermittent condition. Visually inspect the related wiring harness connectors. Look for broken, bent, pushed out, or corroded terminals.
      - Perform the BODY VERIFICATION TEST. Refer to **BODY VERIFICATION TEST** .
2. **INSIDE REARVIEW MIRROR**
   1. Turn the ignition off.
   2. Disconnect the Rearview Mirror C2 harness connector.
   3. Turn the ignition on.
   4. With the scan tool, read the active DTC's.

Does the scan tool display this DTC as active?

Yes

- Go To 3.

No

- Replace the Rearview Mirror in accordance with the Service Information.
- Perform the BODY VERIFICATION TEST. Refer to **BODY VERIFICATION TEST** .

3. **(X722) MICROPHONE CIRCUITS SHORTED TO VOLTAGE**

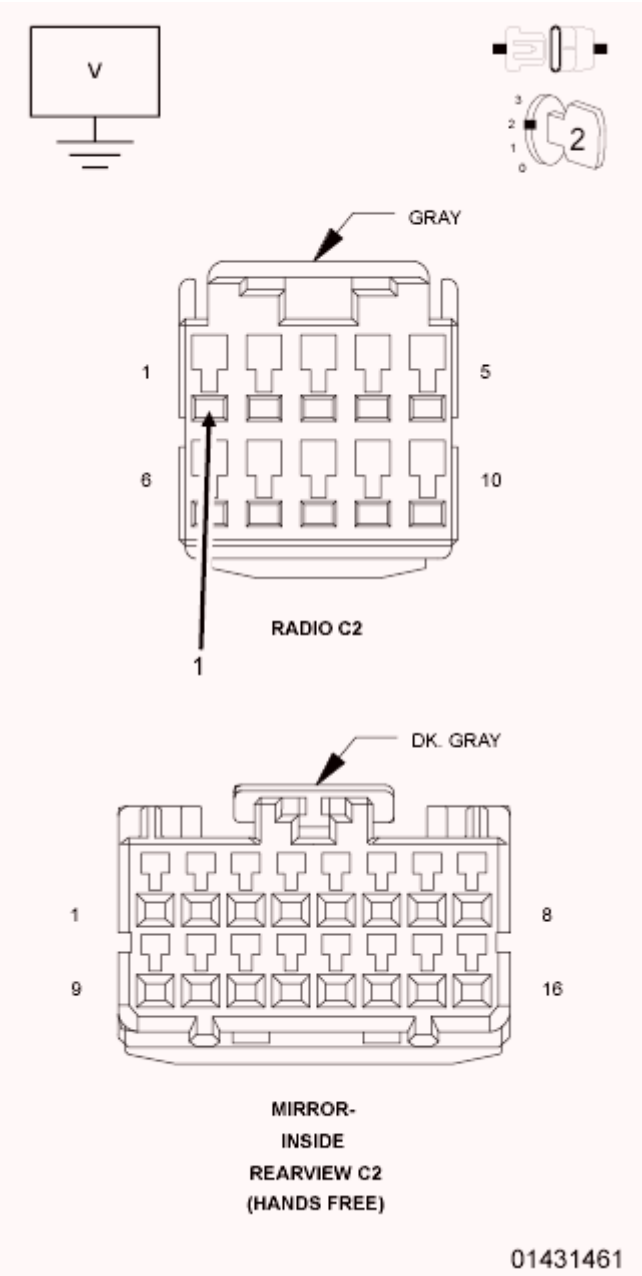

Fig. 90: Checking Microphone Circuit For A Short To Voltage
Courtesy of CHRYSLER GROUP, LLC

1. Turn the ignition off.
2. Disconnect the Radio C2 harness connector.
3. Turn the ignition on.
4. Measure the voltage of the (X722) Microphone circuit.

   Is the voltage above 1.0 volt?

   Yes

- Repair The (X722) Microphone Circuit For A Short To Voltage.
- Perform the BODY VERIFICATION TEST. Refer to **BODY VERIFICATION TEST** .

No

- Replace the Radio in accordance with the Service Information.
- Perform the BODY VERIFICATION TEST. Refer to **BODY VERIFICATION TEST** .

B156B-SATELLITE RADIO ANTENNA CIRCUIT

For a complete wiring diagram, **refer to appropriate SYSTEM WIRING DIAGRAMS article** .

WHEN MONITORED:

With the ignition on and the Satellite Radio in seek mode.

SET CONDITION:

This DTC sets when the radio is in satellite mode and detects a shorted or open antenna circuit for more than five milliseconds.

POSSIBLE CAUSES

Possible Causes
SHORTED OR OPEN ANTENNA CABLE
SHORTED OR OPEN ANTENNA
SATELLITE RADIO RECEIVER

DIAGNOSTIC TEST

1. **TEST FOR INTERMITTENT CONDITION**
    1. Turn the ignition on.
    2. With the scan tool, erase all Satellite Radio DTC's.
    3. Turn the ignition and radio on.
    4. Put the satellite radio in seek up mode for two loops around the band cycle.
    5. With the scan tool, read the DTC's.

    Does the scan tool display active: B156B-Satellite Radio Antenna Circuit?

    Yes

    - Go To 2.

    No

- Test complete, the condition or conditions that originally set this DTC are not present at this time. Using the wiring diagrams as a guide, check all related splices and connectors for signs of water intrusion, corrosion, pushed out or bent terminals and correct pin tension. Repair as necessary.
- Perform the BODY VERIFICATION TEST. Refer to **BODY VERIFICATION TEST** .

2. **CHECK THE ANTENNA AND CABLE**
   1. Disconnect the Satellite Radio Antenna connector at the rear of the Radio.
   2. Connect the Radio Diagnostic Tool (special tool #9977-6-SAT, Antenna) to the Satellite Antenna connection on the back of the Radio.
   3. Make sure one of the front doors is still open.
   4. Using the scan tool, erase the DTC's.
   5. Turn the ignition on.
   6. Turn the Radio on.
   7. Using the scan tool, read the active Radio DTC's.

   Does the scan tool display active: B156B-Satellite Radio Antenna Circuit?

   Yes

   - Replace the Satellite Radio in accordance with the Service Information.
   - Perform the BODY VERIFICATION TEST. Refer to **BODY VERIFICATION TEST** .

   No

   - Go To 3.

3. **TEST THE SATELLITE ANTENNA CABLE**
   1. Disconnect the Satellite Antenna cable at the Satellite Antenna.
   2. Connect the appropriate Radio Diagnostic Tool (special tool #9977-6-1, Adapter) or (special tool #9977-6-3, Adapter) to the Satellite Antenna cable at the back of the Radio.
   3. Connect the appropriate Radio Diagnostic Tool (special tool #9977-6-4, Jumper) or (special tool #9977-6-2, Jumper) to the Satellite Antenna cable at the Satellite Antenna.
   4. Measure the Resistance across the terminals on the tool.

   Is the resistance above 52.5 Ohms or below 47.5 Ohms?

   No

   - Use the Radio Diagnostic Tool (special tool #9977-6, Kit, Radio Antenna Diagnostic) to locate the open or short circuit, repair or replace the Satellite Antenna cable as necessary.
   - Perform the BODY VERIFICATION TEST. Refer to **BODY VERIFICATION TEST** .

   Yes

- Replace the Satellite Antenna in accordance with the Service Information.
- Perform the BODY VERIFICATION TEST. Refer to **BODY VERIFICATION TEST** .

B210D-BATTERY VOLTAGE LOW

For a complete wiring diagram, **refer to appropriate SYSTEM WIRING DIAGRAMS article** .

WHEN MONITORED:

With the ignition on.

SET CONDITION:

If the module detects that the battery voltage is less than 9.0 volts for one second.

POSSIBLE CAUSES

Possible Causes
VEHICLE CHARGING SYSTEM RADIO

DIAGNOSTIC TEST

1. **CHECK FOR AN INTERMITTENT CONDITION**
    1. Turn the ignition on, then off, and then on again.
    2. With the scan tool, read the Radio DTC's.

    Does the scan tool display active: B210D-BATTERY VOLTAGE LOW?

    Yes

    - Go To 2.

    No

    - The conditions that caused this code to set are not present at this time. Using the wiring diagram/schematic as a guide, inspect the wiring and connectors.
    - Perform the BODY VERIFICATION TEST. Refer to **BODY VERIFICATION TEST** .
2. **CHECK THE BATTERY VOLTAGE TO THE RADIO**
    1. With the scan tool in Data Display, read the Radio battery voltage.

    Is the battery voltage less than 9.0 volts?

    Yes

- Go To 3.

No

- Replace the Radio in accordance with the Service Information.
- Perform the BODY VERIFICATION TEST. Refer to **BODY VERIFICATION TEST** .

3. **CHECK FOR CHARGING SYSTEM RELATED DTC's IN THE POWERTRAIN CONTROL MODULE (PCM)**
   1. With the scan tool in ECU View, select PCM and check for any Charging System related DTC's.

      Does the scan tool display any Charging System related DTC's?

      Yes

      - Refer to **DIAGNOSIS AND TESTING - CHARGING SYSTEM** and perform the appropriate charging system or battery DTC diagnostic procedure.

      No

      - Replace the Radio in accordance with the Service Information.
      - Perform the BODY VERIFICATION TEST. Refer to **BODY VERIFICATION TEST** .

B210E-BATTERY VOLTAGE HIGH

For a complete wiring diagram, **refer to appropriate SYSTEM WIRING DIAGRAMS article** .

WHEN MONITORED:

With the ignition on.

SET CONDITION:

If the module detects that the battery voltage is greater 16.5 volts for one second.

POSSIBLE CAUSES

Possible Causes
VEHICLE CHARGING SYSTEM RADIO

DIAGNOSTIC TEST

1. **CHECK FOR AN INTERMITTENT CONDITION**
   1. Turn the ignition on, then off, and then on again.
   2. With the scan tool, read the Radio DTC's.

Does the scan tool display active: B210E-BATTERY VOLTAGE HIGH?

Yes

- Go To 2.

No

- The conditions that caused this code to set are not present at this time. Using the wiring diagram/schematic as a guide, inspect the wiring and connectors.
- Perform the BODY VERIFICATION TEST. Refer to **BODY VERIFICATION TEST** .

2. **CHECK THE BATTERY VOLTAGE TO THE RADIO**
   1. With the scan tool in Data Display, read the Radio battery voltage.

      Is the battery voltage greater than 16.5 volts?

      Yes

      - Go To 3.

      No

      - Replace the Radio in accordance with the Service Information.
      - Perform the BODY VERIFICATION TEST. Refer to **BODY VERIFICATION TEST** .
3. **CHECK FOR CHARGING SYSTEM RELATED DTC's IN THE POWERTRAIN CONTROL MODULE (PCM)**
   1. With the scan tool in ECU View, select PCM and check for any Charging System related DTC's.

      Does the scan tool display any Charging System related DTC's?

      Yes

      - Refer to **DIAGNOSIS AND TESTING - CHARGING SYSTEM** and perform the appropriate charging system or battery DTC diagnostic procedure.

      No

      - Replace the Radio in accordance with the Service Information.
      - Perform the BODY VERIFICATION TEST. Refer to **BODY VERIFICATION TEST** .

B221E-RADIO INTERNAL

For a complete wiring diagram, **refer to appropriate SYSTEM WIRING DIAGRAMS article** .

WHEN MONITORED:

Continuously with the ignition on and Radio turned on.

SET CONDITION:

The code will set if the Radio detects a Radio internal failure.

POSSIBLE CAUSES

Possible Causes
RADIO INTERNAL FAILURE

DIAGNOSTIC TEST

1. **REPLACE THE RADIO**
    1. When this DTC is active, replace the Radio.

       Repair

       - Replace the Radio in accordance with the Service Information. Refer to **RADIO, REMOVAL** .
       - Perform the BODY VERIFICATION TEST. Refer to **BODY VERIFICATION TEST** .

B222C-VEHICLE CONFIGURATION NOT PROGRAMMED

For a complete wiring diagram, **refer to appropriate SYSTEM WIRING DIAGRAMS article** .

WHEN MONITORED:

With the ignition on.

SET CONDITION:

Vehicle configuration information not programmed into the TIPM.

POSSIBLE CAUSES

POSSIBLE CAUSES
NO COMMUNICATION WITH TOTALLY INTEGRATED POWER MODULE (TIPM)
ACTIVE TIPM DTC's
TOTALLY INTEGRATED POWER MODULE (TIPM)

DIAGNOSTIC TEST

1. **TEST FOR AN INTERMITTENT CONDITION**
    1. Turn the ignition on.
    2. Turn the ignition off, wait ten seconds then turn the ignition on.

3. With the scan tool, read DTC's.

   Does the scan tool display: B222C-VEHICLE CONFIGURATION NOT PROGRAMMED?

   Yes

   - Go To 2.

   No

   - Test complete, the condition or conditions that originally set this DTC are not present at this time. Using the wiring diagrams as a guide, check all related splices and connectors for signs of water intrusion, corrosion, pushed out or bent terminals and correct pin tension.
   - Perform the BODY VERIFICATION TEST. Refer to **BODY VERIFICATION TEST** .

2. **VERIFY COMMUNICATION WITH TIPM**
   1. With the scan tool, read the active modules on the bus.

      Does the scan tool show the TIPM active on the bus?

      Yes

      - Go To 3.

      No

      - Refer to **NO RESPONSE FROM TIPM (TOTALLY INTEGRATED POWER MODULE)** and perform the diagnostic procedure.

3. **CHECK TIPM FOR ACTIVE DTC's**
   1. With the scan tool, erase TIPM DTC's.
   2. Turn the ignition off. Wait approximately ten seconds.
   3. Turn the ignition on.
   4. With the scan tool, read TIPM DTC's.

      Are any active DTC's present?

      Yes

      - Refer to **TIPM - DIAGNOSIS AND TESTING** and perform the appropriate diagnostic procedure.

      No

      - Go To 4.

4. **CHECK THE VEHICLE CONFIGURATION INFORMATION WITH SCAN TOOL**

1. With the scan tool run an ECU Details Report, read the Original and Current VINs, and the Body Style of the vehicle.

   Does the information displayed match the vehicle?

   Yes

   - Replace the Totally Integrated Power Module (TIPM) in accordance with the Service Information.
   - Perform the BODY VERIFICATION TEST. Refer to **BODY VERIFICATION TEST** .

   No

   - Go To 5.

5. **RESTORE THE VEHICLE CONFIGURATION**
   1. With the scan tool, restore the vehicle configuration.
   2. Turn the ignition off, then back on.
   3. With the scan tool, read the active DTC's.

      Does the scan tool display B222C-VEHICLE CONFIGURATION NOT PROGRAMMED as active?

      Yes

      - Replace the Totally Integrated Power Module (TIPM) in accordance with the Service Information.
      - Perform the BODY VERIFICATION TEST. Refer to **BODY VERIFICATION TEST** .

      No

      - Test complete, the condition or conditions that originally set this DTC are not present at this time. Using the wiring diagrams as a guide, check all related splices and connectors for signs of water intrusion, corrosion, pushed out or bent terminals and correct pin tension.
      - Perform the BODY VERIFICATION TEST. Refer to **BODY VERIFICATION TEST** .

U0010-CAN INTERIOR BUS

For a complete wiring diagram, **refer to appropriate SYSTEM WIRING DIAGRAMS article** .

WHEN MONITORED:

Continuously when the ignition is on.

Battery voltage between 10 and 16 volts.

Ignition Off Draw (IOD) fuse installed.

SET CONDITION:

The controller detects a short to ground on the CAN Interior Bus (125K) (+) circuit or a short to voltage on the CAN Interior Bus (125K) (-) circuit.

POSSIBLE CAUSES

Possible Causes
(D265) CAN INTERIOR BUS(+) (125k) CIRCUIT FOR A SHORT TO VOLTAGE
(D264) CAN INTERIOR BUS(-) (125k) CIRCUIT FOR A SHORT TO GROUND
(D264) CAN INTERIOR BUS(-) (125k) CIRCUIT SHORTED TO THE (D265) CAN INTERIOR BUS (+) (125k) CIRCUIT
TOTALLY INTEGRATED POWER MODULE (TIPM)
ANY CAN INTERIOR BUS MODULE

DIAGNOSTIC TEST

1. **VERIFY DIAGNOSTIC TROUBLE CODE (DTC) IS ACTIVE**

   NOTE: Make sure the IOD fuse is installed and battery voltage is between 10 and 16 volts before proceeding.

   1. Using the scan tool, read active DTC's.

      Is this DTC active?

      Yes

      - **Refer to U0010-CAN INTERIOR BUS** and perform the diagnostic procedure.

      No

      - **Refer to STORED LOST COMMUNICATION DTC's** and perform the diagnostic procedure.

U0011-CAN INTERIOR BUS OFF PERFORMANCE

For a complete wiring diagram, **refer to appropriate SYSTEM WIRING DIAGRAMS article** .

WHEN MONITORED:

Continuously when the ignition is on.

Battery voltage between 10 and 16 volts.

Ignition Off Draw (IOD) fuse installed.

SET CONDITION:

The controller detects a short to ground on the CAN Interior Bus (125K) (+) circuit or a short to voltage on the CAN Interior Bus (125K) (-) circuit.

POSSIBLE CAUSES

Possible Causes
(D265) CAN INTERIOR BUS(+) (125k) CIRCUIT FOR A SHORT TO VOLTAGE
(D264) CAN INTERIOR BUS(-) (125k) CIRCUIT FOR A SHORT TO GROUND
(D264) CAN INTERIOR BUS(-) (125k) CIRCUIT SHORTED TO THE (D265) CAN INTERIOR BUS (+) (125k) CIRCUIT
TOTALLY INTEGRATED POWER MODULE (TIPM)
ANY CAN INTERIOR BUS MODULE

DIAGNOSTIC TEST

1. **VERIFY DIAGNOSTIC TROUBLE CODE (DTC) IS ACTIVE**

   NOTE: Make sure the IOD fuse is installed and battery voltage is between 10 and 16 volts before proceeding.

   1. Using the scan tool, read active DTC's.

      Is this DTC active?

      Yes

      - **Refer to U0011-CAN INTERIOR BUS OFF PERFORMANCE** and perform the diagnostic procedure.

      No

      - **Refer to STORED LOST COMMUNICATION DTC's** and perform the diagnostic procedure.

U0141-LOST COMMUNICATION WITH IPM (FCM/TIPM)

For a complete wiring diagram, **refer to appropriate SYSTEM WIRING DIAGRAMS article** .

WHEN MONITORED:

Continuously when the ignition is on.

The battery voltage between 10.0 and 16.0 Volts.

Ignition Off Draw (IOD) fuse installed.

Totally Integrated Power Module (TIPM) is configured correctly.

SET CONDITION:

Bus messages not received from the Totally Integrated Power Module (TIPM) for approximately two to five seconds.

POSSIBLE CAUSES

Possible Causes
CAN BUS CIRCUITS OPEN OR SHORTED
DTC's RELATED TO BATTERY VOLTAGE, IGNITION, OR VIN MESSAGES
TOTALLY INTEGRATED POWER MODULE POWER AND GROUND
TIPM NOT CONFIGURED CORRECTLY
TOTALLY INTEGRATED POWER MODULE (TIPM)
MODULE THAT SET THIS DTC

DIAGNOSTIC TEST

1. **VERIFY DTC IS ACTIVE**

   NOTE: Make sure the IOD fuse is installed and the battery is fully charged before proceeding.

   1. Turn the ignition on.
   2. With the scan tool, read active DTC's.

      Is this DTC active?

      Yes

      - **Refer to U0141-LOST COMMUNICATION WITH IPM (FCM/TIPM)** and perform the diagnostic procedure.

      No

      - **Refer to STORED LOST COMMUNICATION DTC's** and perform the diagnostic procedure.

U0155-LOST COMMUNICATION WITH CLUSTER/CCN

For a complete wiring diagram, **refer to appropriate SYSTEM WIRING DIAGRAMS article** .

WHEN MONITORED:

Continuously when the ignition is on.

The battery voltage is between 10 and 16 volts.

Ignition Off Draw (IOD) fuse installed.

Totally Integrated Power Module (TIPM) is configured correctly.

SET CONDITION:

Bus messages not received from the Instrument Cluster (CCN) for approximately two to five seconds.

POSSIBLE CAUSES

Possible Causes
CAN BUS CIRCUITS OPEN OR SHORTED
DTC's RELATED TO BATTERY VOLTAGE, IGNITION, OR VIN MESSAGES
INSTRUMENT CLUSTER POWER AND GROUND
TIPM NOT CONFIGURED CORRECTLY
INSTRUMENT CLUSTER (CCN)
MODULE THAT SET THIS DTC

DIAGNOSTIC TEST

1. **VERIFY THE DIAGNOSTIC TROUBLE CODE (DTC) IS ACTIVE**

   NOTE: Make sure the IOD fuse is installed and the battery is fully charged before proceeding.

   1. Turn the ignition on.
   2. With the scan tool, read active DTC's.

      Is this DTC active?

      Yes

      - **Refer to U0155-LOST COMMUNICATION WITH CLUSTER/CCN** and perform the diagnostic procedure.

      No

      - **Refer to STORED LOST COMMUNICATION DTC's** and perform the diagnostic procedure.

U0159-LOST COMMUNICATION WITH PARKING ASSIST CONTROL MODULE

For a complete wiring diagram, **refer to appropriate SYSTEM WIRING DIAGRAMS article** .

WHEN MONITORED:

Continuously when the ignition is on.

Battery voltage between 10 and 16 volts.

Ignition Off Draw (IOD) fused installed.

Totally Integrated Power Module (TIPM) is configured correctly.

SET CONDITION:

Bus messages not received from the Parking Assist Control Module for approximately two to five seconds.

POSSIBLE CAUSES

Possible Causes
CAN BUS CIRCUITS OPEN OR SHORTED
DTC's RELATED TO BATTERY VOLTAGE, IGNITION, OR VIN MESSAGES
PARK ASSIST MODULE POWER AND GROUND
TIPM NOT CONFIGURED CORRECTLY
PARK ASSIST MODULE
MODULE THAT SET THIS DTC

DIAGNOSTIC TEST

1. **VERIFY THE DIAGNOSTIC TROUBLE CODE (DTC) IS ACTIVE**

   NOTE: Make sure the IOD fuse is installed and the battery is fully charged before proceeding.

   1. Turn the ignition on.
   2. With the scan tool, read active DTC's.

      Is this DTC active?

      Yes

      - **Refer to U0159-LOST COMMUNICATION WITH PARK ASSIST MODULE (PTS)** and perform the diagnostic procedure.

      No

- **Refer to STORED LOST COMMUNICATION DTC's** and perform the diagnostic procedure.

U0168-LOST COMMUNICATION WITH VEHICLE SECURITY CONTROL MODULE (WIN)

For a complete wiring diagram, **refer to appropriate SYSTEM WIRING DIAGRAMS article** .

WHEN MONITORED:

With the ignition on.

Battery voltage between 10 and 16 volts.

Ignition Off Draw (IOD) fuse installed.

Totally Integrated Power Module (TIPM) is configured correctly.

SET CONDITION:

Bus messages not received from the Wireless Ignition Node (WIN) for approximately two to five seconds.

POSSIBLE CAUSES

Possible Causes
CAN BUS CIRCUITS OPEN OR SHORTED
DTC's RELATED TO BATTERY VOLTAGE, IGNITION, OR VIN MESSAGES
WIRELESS IGNITION NODE POWER AND GROUND
TIPM NOT CONFIGURED CORRECTLY
WIRELESS IGNITION NODE (WIN)
MODULE THAT SET THIS DTC

DIAGNOSTIC TEST

1. **VERIFY DTC IS ACTIVE**

   NOTE: Make sure the IOD fuse is installed and the battery is fully charged before proceeding.

   1. Turn the ignition on.
   2. With the scan tool, read active DTC's.

      Is this DTC active?

      Yes

      - **Refer to U0168-LOST COMMUNICATION WITH VEHICLE SECURITY**

CONTROL MODULE (WIRELESS IGNITION NODE OR WIN) and perform the diagnostic procedure.

No

- **Refer to STORED LOST COMMUNICATION DTC's** and perform the diagnostic procedure.

U0186-LOST COMMUNICATION WITH AUDIO AMPLIFIER

For a complete wiring diagram, **refer to appropriate SYSTEM WIRING DIAGRAMS article** .

WHEN MONITORED:

Continuously when the ignition is on.

The battery voltage is between 10 and 16 volts.

Ignition Off Draw (IOD) fused installed.

Totally Integrated Power Module (TIPM) is configured correctly.

SET CONDITION:

Bus messages not received from the Audio Amplifier for approximately two to five seconds.

POSSIBLE CAUSES

Possible Causes
CAN BUS CIRCUITS OPEN OR SHORTED
DTC's RELATED TO BATTERY VOLTAGE, IGNITION, OR VIN MESSAGES
AMPLIFIER POWER AND GROUND
TIPM NOT CONFIGURED CORRECTLY
AMPLIFIER
MODULE THAT SET THIS DTC

DIAGNOSTIC TEST

1. **VERIFY THE DIAGNOSTIC TROUBLE CODE (DTC) IS ACTIVE**

NOTE: **Make sure the IOD fuse is installed and the battery is fully charged before proceeding.**

1. Turn the ignition on.
2. With the scan tool, read the active DTC's.

Is this DTC active?

Yes

- **Refer to U0186-LOST COMMUNICATION WITH AUDIO AMPLIFIER (AMP)** and perform the diagnostic procedure.

No

- **Refer to STORED LOST COMMUNICATION DTC's** and perform the diagnostic procedure.

U0197-LOST COMMUNICATION WITH HANDS FREE PHONE MODULE

For a complete wiring diagram, **refer to appropriate SYSTEM WIRING DIAGRAMS article** .

WHEN MONITORED:

Continuously when the ignition is on.

The battery voltage is between 10 and 16 volts.

Ignition Off Draw (IOD) fused installed.

Totally Integrated Power Module (TIPM) is configured correctly.

SET CONDITION:

Bus messages not received from the Hands Free Module (HFM) for approximately two to five seconds.

POSSIBLE CAUSES

Possible Causes
CAN BUS CIRCUITS OPEN OR SHORTED
DTC's RELATED TO BATTERY VOLTAGE, IGNITION, OR VIN MESSAGES
HANDS FREE MODULE POWER AND GROUND
TIPM NOT CONFIGURED CORRECTLY
HANDS FREE MODULE
MODULE THAT SET THIS DTC

DIAGNOSTIC TEST

1. **VERIFY THE DIAGNOSTIC TROUBLE CODE (DTC) IS ACTIVE**

NOTE: **Make sure the IOD fuse is installed and the battery is fully charged before proceeding.**

1. Turn the ignition on.
2. With the scan tool, read the active DTC's.

   Is this DTC active?

   Yes

   - **Refer to U0197-LOST COMMUNICATION WITH HANDS FREE PHONE MODULE (HFM)** and perform the diagnostic procedure.

   No

   - **Refer to STORED LOST COMMUNICATION DTC's** and perform the diagnostic procedure.

U0249-LOST COMMUNICATION WITH VEHICLE ENTERTAINMENT CONTROL MODULE - LAST ROW

For a complete wiring diagram, **refer to appropriate SYSTEM WIRING DIAGRAMS article** .

WHEN MONITORED:

Continuously when the ignition is on.

Battery voltage between 10 and 16 volts.

Ignition Off Draw (IOD) fuse installed.

Totally Integrated Power Module (TIPM) is configured correctly.

SET CONDITION:

Bus messages not received from the Vehicle Entertainment Control Module - Last Row for approximately two to five seconds.

POSSIBLE CAUSES

Possible Causes
CAN BUS CIRCUITS OPEN OR SHORTED
DTC's RELATED TO BATTERY VOLTAGE, IGNITION, OR VIN MESSAGES
VEHICLE ENTERTAINMENT CONTROL MODULE - LAST ROW POWER AND GROUND
TIPM NOT CONFIGURED CORRECTLY
VEHICLE ENTERTAINMENT CONTROL MODULE - LAST ROW
MODULE THAT SET THIS DTC

DIAGNOSTIC TEST

1. **VERIFY DIAGNOSTIC TROUBLE CODE (DTC) IS ACTIVE**

NOTE: **Make sure the IOD fuse is installed and the battery is fully charged before proceeding.**

1. Turn the ignition on.
2. With the scan tool, read active DTC's.

   Is this DTC active?

   Yes

   - **Refer to U0249-LOST COMMUNICATION WITH VEHICLE ENTERTAINMENT CONTROL MODULE - LAST ROW (VES3)** and perform the diagnostic procedure.

   No

   - **Refer to STORED LOST COMMUNICATION DTC's** and perform the diagnostic procedure.

U1158-LOST COMMUNICATION WITH SATELLITE VIDEO RECEIVER (SDARV)

For a complete wiring diagram, **refer to appropriate SYSTEM WIRING DIAGRAMS article** .

WHEN MONITORED:

With the ignition on.

Battery voltage between 10 and 16 volts.

Ignition Off Draw (IOD) fuse installed.

Totally Integrated Power Module (TIPM) is configured correctly.

SET CONDITION:

Bus messages not received from the Satellite Video Receiver (SDARV) for approximately two to five seconds.

POSSIBLE CAUSES

Possible Causes
CAN BUS CIRCUITS OPEN OR SHORTED
DTC's RELATED TO BATTERY VOLTAGE, IGNITION, OR VIN MESSAGES
SATELLITE VIDEO RECEIVER POWER AND GROUND
TIPM NOT CONFIGURED CORRECTLY
SATELLITE VIDEO RECEIVER

MODULE THAT SET THE DTC

DIAGNOSTIC TEST

1. **VERIFY DTC IS ACTIVE**

NOTE: Make sure the IOD fuse is installed and the battery is fully charged before proceeding.

1. Turn the ignition on.
2. With the scan tool, read active DTC's.

Is this DTC active?

Yes

- **Refer to U1158-LOST COMMUNICATION WITH SATELLITE VIDEO RECEIVER (SDARV)** and perform the diagnostic procedure.

No

- **Refer to STORED LOST COMMUNICATION DTC's** and perform the diagnostic procedure.

DIAGNOSIS AND TESTING

DIAGNOSIS AND TESTING - AUDIO

Any diagnosis of the Audio system should begin with the use of a scan tool. Check for any Diagnostic Trouble Codes (DTCs) in AUDIO - DIAGNOSTIC CODE INDEX . If there are any DTCs, perform the appropriate diagnostic procedure before proceeding in this information.

Refer to the appropriate wiring information.

WARNING: **Disable the airbag system before attempting any steering wheel, steering column, seat belt tensioner, side airbag or instrument panel component diagnosis or service. Disconnect and isolate the negative battery (ground) cable. Wait two minutes for the airbag system capacitor to discharge before performing further diagnosis or service. This is the only sure way to disable the airbag system. Failure to follow these instructions may result in accidental airbag deployment and possible serious or fatal injury.**

AUDIO SYSTEM DIAGNOSTIC TABLE

CONDITION	POSSIBLE CAUSES	CORRECTION
RADIO INOPERATIVE	1. Fuse inoperative.	Check radio fuse and Ignition-Off Draw (IOD) fuse in the Totally Integrated Power Module (TIPM). Replace fuses, if required.
	2. Open wiring.	Check "No Response from Radio". Refer to **COMMUNICATION - DIAGNOSIS AND TESTING** .
NO AUDIO - BUT RADIO LIGHTS UP	1. Antenna problem.	Perform the "Poor or No AM/FM Audio Reception" test. Refer to **DIAGNOSIS AND TESTING**.
	2. Radio or Amplifier (if equipped) connector damaged.	Check for loose or corroded radio/amplifier connector. Repair, as required.
	3. Wiring damaged.	Check for shorted or open wires. Repair wiring as required.
	4. Radio or Amplifier (if equipped) ground damaged.	Check for continuity between radio chassis and a known good ground. There should be continuity. Repair ground as required.
	5. Amplifier (if equipped) inoperative.	Refer to **COMMUNICATION - DIAGNOSIS AND TESTING** .
	6. Speakers inoperative.	or if equipped. Refer to **AUDIO - DIAGNOSIS AND TESTING** . Refer to

		AMP - DIAGNOSIS AND TESTING .
NO RADIO DISPLAY	1. Fuse inoperative.	Check radio fuse and Ignition-Off Draw (IOD) fuse in Totally Integrated Power Module (TIPM). Replace fuses as required.
	2. Radio connector damaged.	Check for loose or corroded radio connector. Repair as required.
	3. Wiring damaged.	Check for battery voltage at radio connector. Repair wiring as required.
	4. Radio ground circuit damaged.	Check for continuity between radio chassis and a known good ground. There should be continuity. Repair ground as required.
	5. Radio inoperative.	Check "No Response from Radio". Refer to **COMMUNICATION - DIAGNOSIS AND TESTING** .
POOR AM/FM RADIO RECEPTION	1. Antenna inoperative.	Perform the "Poor or No AM/FM Audio Reception" test. Refer to **DIAGNOSIS AND TESTING**.
	2. Radio ground damaged.	Check for continuity between radio chassis and a known good ground. There should be continuity. Repair ground as required.
	3. Radio inoperative.	or. Refer to **AUDIO - DIAGNOSIS AND TESTING** . Refer to **AMP - DIAGNOSIS AND TESTING** .
POOR SDAR AUDIO RECEPTION	1. SDAR Antenna Inoperative.	Perform the "Poor or No Satellite Audio Reception" test. Refer to **DIAGNOSIS AND TESTING**.
SOUND DISTORTION (VIBRATION FROM SPEAKER AREA, BUZZING - HUMMING)	1. Door trim panel loose or missing fasteners.	Inspect door trim panel and correct as necessary. Replace any missing fasteners.
	2. Water shield loose or misaligned.	Inspect water shield and adjust as required.
	3. Items placed in door trim panel map pockets vibrating or moving from side to side.	Remove items from door trim panel. Ensure that vibration is no longer present.
NO COMPACT DISC OPERATION	1. CD damaged.	Insert known good CD and test operation.
	2. Foreign material on CD.	Clean CD and test operation.
	3. Condensation on CD or optics.	Allow temperature of vehicle interior to stabilize and test operation.
	4. Radio inoperative.	or. Refer to **AUDIO - DIAGNOSIS AND TESTING** . Refer to **AMP - DIAGNOSIS AND TESTING** .

POOR OR NO AM/FM AUDIO RECEPTION

For a complete wiring diagram, **refer to appropriate SYSTEM WIRING DIAGRAMS article** .

POSSIBLE CAUSES

Possible Causes
ANTENNA CONNECTION OPEN OR SHORTED ANTENNA CABLE ANTENNA RADIO

DIAGNOSTIC TEST

1. **CHECK THE ANTENNA CONNECTION**
    1. Turn the ignition off.
    2. Disconnect the Radio C4 harness connector.
    3. Inspect the Audio Antenna harness connection.

    Is the Antenna connection clean and secure?

    Yes

    - Go To 2.

    No

    - Repair the Antenna connection as needed.
    - Perform the BODY VERIFICATION TEST. Refer to **STANDARD PROCEDURE** .
2. **RADIO**
    1. Connect the (special tool #9977-6-FM, Antenna) to the Radio C4 component connector.
    2. Place the test antenna base on the roof of the vehicle.
    3. Turn the ignition on.
    4. Drive the vehicle outside to an un-obstructed area.
    5. Turn the Radio on and select several different known good stations from the AM and FM bands.

    Is the audio reception still poor or not available?

    Yes

    - Replace the Radio in accordance with the Service Information.
    - Perform the BODY VERIFICATION TEST. Refer to **STANDARD PROCEDURE** .

    No

    - Go To 3.

3. **ANTENNA**
    1. Turn the ignition off.
    2. Reconnect the Radio C4 harness connector.
    3. Disconnect the Radio Antenna harness connector.
    4. Connect the (special tool #9977-6-FM, Antenna) to the Radio Antenna harness connector.
    5. Turn the Radio on and select several different known good stations from the AM and FM bands.

    Is the audio reception still poor or not available?

    Yes

    - Go To 4.

    No

    - Replace the Radio Antenna in accordance with the Service Information.
    - Perform the BODY VERIFICATION TEST. Refer to **STANDARD PROCEDURE** .
4. **ANTENNA CABLE**

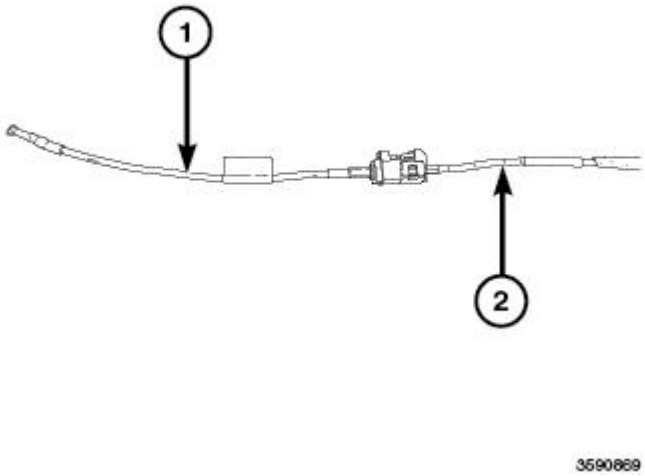

Fig. 1: Special Tool And AM/FM Fakra Connector
Courtesy of CHRYSLER GROUP, LLC

1. Turn the ignition off.
2. Disconnect the (special tool #9977-6-FM, Antenna) from the Radio Antenna harness connector.
3. Connect the appropriate (special tool #9977-6-4, Jumper) (1) or (special tool #9977-6-2, Jumper) (1) to the Radio Antenna harness connector (2) at the Antenna.

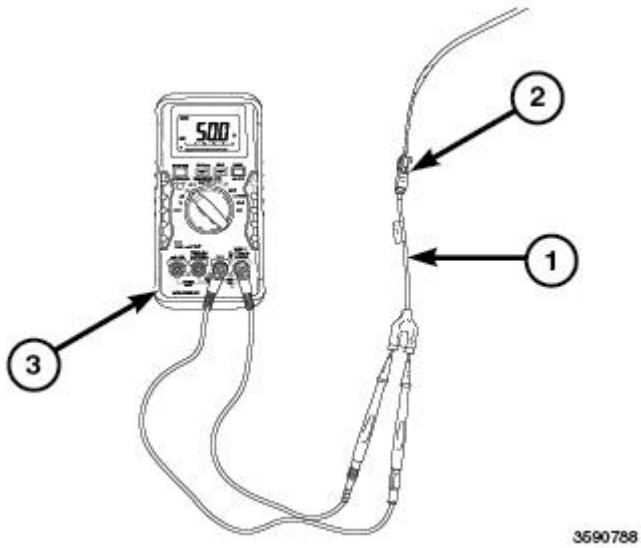

Fig. 2: Special Tool, AM/FM Fakra Connector And DVOM
Courtesy of CHRYSLER GROUP, LLC

4. Disconnect the Radio C4 harness connector.
5. Connect the appropriate (special tool #9977-6-1, Adapter) (1) or (special tool #9977-6-3, Adapter) (1) to the Radio C4 harness connector (2).
6. Measure the resistance across the tool terminals.

   Is the resistance between 47.5 and 52.5 Ohms?

   Yes

   - The source of the poor reception is not caused by the Radio, Antenna Cable or Radio Antenna.
   - Perform the BODY VERIFICATION TEST. Refer to **STANDARD PROCEDURE** .

   No

   - Replace the Antenna Cable in accordance with the Service Information.
   - Perform the BODY VERIFICATION TEST. Refer to **STANDARD PROCEDURE** .

POOR OR NO SATELLITE AUDIO RECEPTION

For a complete wiring diagram, **refer to appropriate SYSTEM WIRING DIAGRAMS article** .

POSSIBLE CAUSES

Possible Causes
SATELLITE AUDIO ANTENNA CONNECTION OPEN OR SHORTED SATELLITE AUDIO ANTENNA

SATELLITE AUDIO ANTENNA
RADIO

DIAGNOSTIC TEST

1. **CHECK THE ANTENNA CONNECTION**
    1. Turn the ignition off.
    2. Disconnect the Radio C7 harness connector.
    3. Inspect the Satellite Audio Antenna harness connection.

    Is the Antenna connection clean and secure?

    Yes

    - Go To 2.

    No

    - Repair the Satellite Audio Antenna connection as needed.
    - Perform the BODY VERIFICATION TEST. Refer to **STANDARD PROCEDURE** .
2. **RADIO**

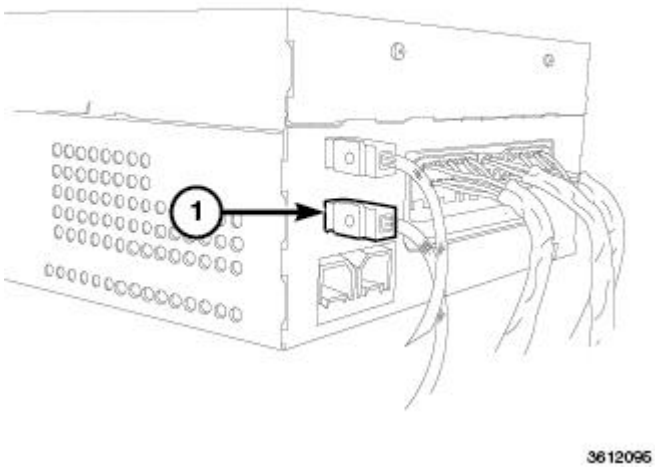

Fig. 3: Identifying Radio & Antenna Connector
Courtesy of CHRYSLER GROUP, LLC

1. Connect the (special tool #9977-6-SAT, Antenna) (1) to the Radio C7 component connector.
2. Place the test antenna base on the roof of the vehicle.
3. Turn the ignition on.
4. Drive the vehicle outside to an un-obstructed area.

5. Turn the Satellite Radio on and select several different known good stations.

   Is the reception still poor or not available?

   Yes

   - Replace the Radio in accordance with the Service Information.
   - Perform the BODY VERIFICATION TEST. Refer to **STANDARD PROCEDURE** .

   No

   - Go To 3.

3. **ANTENNA**

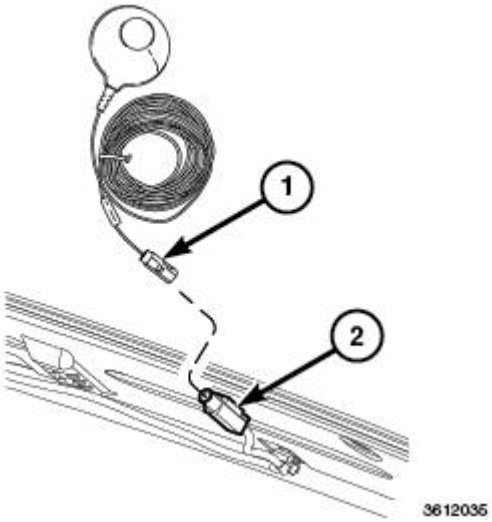

Fig. 4: Identifying Antenna & Satellite Audio Antenna Harness Connector
Courtesy of CHRYSLER GROUP, LLC

1. Turn the ignition off.
2. Reconnect the Radio C7 harness connector.
3. Disconnect the Satellite Audio Antenna harness connector.
4. Connect the (special tool #9977-6-SAT, Antenna) (1) to the Satellite Audio Antenna harness connector (2).
5. Turn the Satellite Radio on and select several different known good stations.

   Is the reception still poor or not available?

   Yes

   - Go To 4.

No

- Replace the Satellite Audio Antenna in accordance with the Service Information.
- Perform the BODY VERIFICATION TEST. Refer to **STANDARD PROCEDURE** .

4. **ANTENNA CABLE**

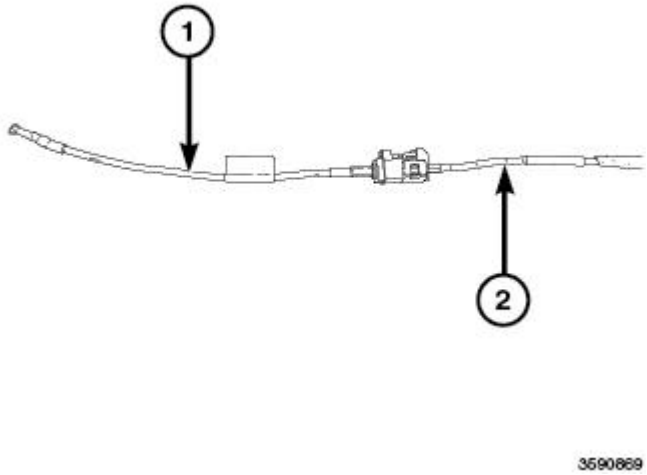

Fig. 5: Special Tool And AM/FM Fakra Connector
Courtesy of CHRYSLER GROUP, LLC

1. Turn the ignition off.
2. Disconnect the (special tool #9977-6-SAT, Antenna) from the Satellite Audio Antenna harness connector.
3. Connect the appropriate (special tool #9977-6-4, Jumper) (1) or (special tool #9977-6-2, Jumper) (1) to the Satellite Audio Antenna harness connector (2) at the Antenna.

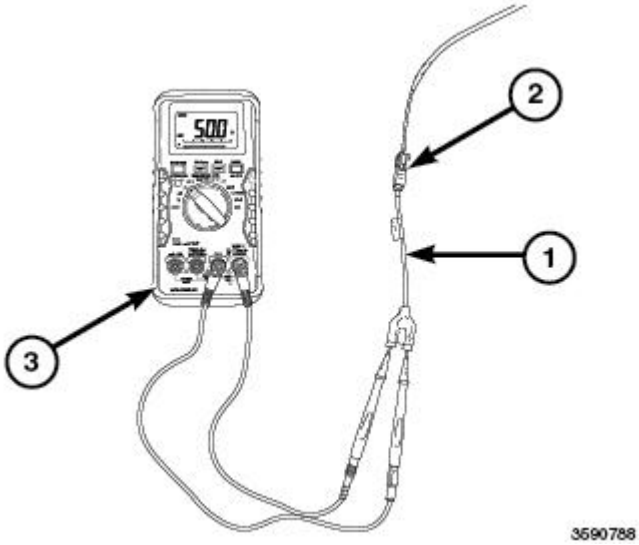

Fig. 6: Special Tool, AM/FM Fakra Connector And DVOM
Courtesy of CHRYSLER GROUP, LLC

4. Connect the appropriate (special tool #9977-6-1, Adapter) (1) or (special tool #9977-6-3, Adapter) (1) to the Radio C7 harness connector (2).
5. Measure the resistance across the tool terminals.

   Is the resistance between 47.5 and 52.5 Ohms?

   Yes

   - The source of the poor reception is not caused by the Radio, Satellite Antenna Cable or Satellite Antenna.
   - Perform the BODY VERIFICATION TEST. Refer to **STANDARD PROCEDURE** .

   No

   - Replace the Satellite Audio Antenna Cable in accordance with the Service Information.
   - Perform the BODY VERIFICATION TEST. Refer to **STANDARD PROCEDURE** .

DIAGNOSIS AND TESTING - REAR CAMERA

The hardwired circuits of the Rear View Camera (RVC) and those between the RVC and the radio receiver may be diagnosed using conventional diagnostic tools and procedures. Refer to the appropriate wiring information. The wiring information includes wiring diagrams, proper wire and connector repair procedures, details of wire harness routing and retention, connector pin-out information and location views for the various wire harness connectors, splices and grounds.

However, conventional diagnostic methods will not prove conclusive in the diagnosis of the RVC or the radio receiver. The most reliable, efficient and accurate means to diagnose the electronic controls and communication related to radio receiver operation, as well as the retrieval or erasure of a DTC requires the use of a diagnostic scan tool. Refer to the appropriate diagnostic information.

WARNING: **To avoid serious or fatal injury on vehicles equipped with airbags, disable the Supplemental Restraint System (SRS) before attempting any steering wheel, steering column, airbag, seat belt tensioner, impact sensor, or instrument panel component diagnosis or service. Disconnect and isolate the battery negative (ground) cable, then wait two minutes for the system capacitor to discharge before performing further diagnosis or service. This is the only sure way to disable the SRS. Failure to take the proper precautions could result in accidental airbag deployment.**

NOTE: **Be certain to confirm both of the following prior to attempting any further diagnosis or testing of the RVC. Use a diagnostic scan tool to confirm the rear view camera is setup in the vehicle configuration. From the initial start up screen of the diagnostic scan tool, navigate to ECU VIEW , select TIPMCGW**

CENTRAL GATEWAY , MORE OPTIONS , ECU DETAILS and then CONFIG INFO . Verify that REAR CAMERA PRESET - - - - SET is present. If not, the Sales Code XAC (Park View Rear Back-Up Camera) will have to be added to the vehicle configuration to enable the RVC, in vehicles equipped with a MyGIG multimedia entertainment system (Sales Codes RE1, REN, REP, RER, REU, REW, REX or REZ), be certain that the RVC is set to ENABLED using the CAMERA SETUP option in the MyGIG system settings.

CONDITION	POSSIBLE CAUSES	CORRECTION
NO VIDEO DISPLAY IN RADIO - DOES NOT DISPLAY **CHECK ENTIRE SURROUNDINGS** MESSAGE BRIEFLY AFTER SHIFTING INTO REVERSE	1. Incorrect radio software.	1. Check to be certain that the radio has the latest software update installed. Install the radio software update if required.
	2. Ineffective radio fuse.	2. Test and replace the radio fuses if required.
	3. Ineffective radio ground circuit.	3. Check for loose or damaged wiring connections at the radio. Test and repair the open radio ground circuit if required.
	4. Ineffective radio feed circuit.	4. Check for loose or damaged wiring connections at the radio. Test and repair the open radio feed circuit if required.
	5. Ineffective radio inputs or outputs.	5. Use a diagnostic scan tool to test the radio inputs and outputs including those received over the CAN data bus. Refer to the appropriate diagnostic information.
	6. Ineffective radio.	6. Use a diagnostic scan tool to test the radio. Refer to the appropriate diagnostic information.
NO CAMERA IMAGE IN RADIO VIDEO DISPLAY AND NO BACKUP LAMPS IN REVERSE	1. Left backup lamp inoperative, right backup lamp okay.	1. Test and repair the open backup lamp switch output circuit between the right and left tail lamps if required.
	2. Both backup lamps inoperative.	2. Test and repair the open backup lamp switch output circuit between the Totally Integrated Power Module (TIPM) and the tail lamps if required.
	3. Ineffective TIPM inputs or outputs.	3. Use a diagnostic scan tool to test the TIPM inputs and outputs. Refer to the appropriate diagnostic information.
NO CAMERA IMAGE IN RADIO VIDEO DISPLAY - DOES DISPLAY	1. Ineffective camera ground circuit.	1. Check for loose or damaged wiring connections at the camera,

CHECK ENTIRE SURROUNDINGS MESSAGE BRIEFLY AFTER SHIFTING INTO REVERSE AND BACKUP LAMPS DO OPERATE		liftgate light bar and liftgate. Test and repair the open camera ground circuit if required.
	2. Ineffective camera feed (backup lamp switch output) circuit.	2. Check for loose or damaged wiring connections at the camera, liftgate light bar and upper liftgate opening header. Test and repair the open camera feed (backup lamp switch output) circuit if required.
	3. Ineffective camera shield circuit.	3. Check for loose or damaged wiring connections at the camera, liftgate light bar, upper liftgate opening header, right cowl side inner panel and radio. Test and repair the open or shorted camera shield circuit if required.
	4. Ineffective camera return circuit.	4. Check for loose or damaged wiring connections at the camera, liftgate light bar, upper liftgate opening header, right cowl side inner panel and radio. Test and repair the open or shorted camera feed circuit if required.
	5. Ineffective camera signal circuit.	5. Check for loose or damaged wiring connections at the camera, liftgate light bar, upper liftgate opening header, right cowl side inner panel and radio. Test and repair the open or shorted camera signal circuit if required.
	6. Ineffective camera.	6. Replace the ineffective camera if required.

DIAGNOSIS AND TESTING - REAR CAMERA INOPERATIVE

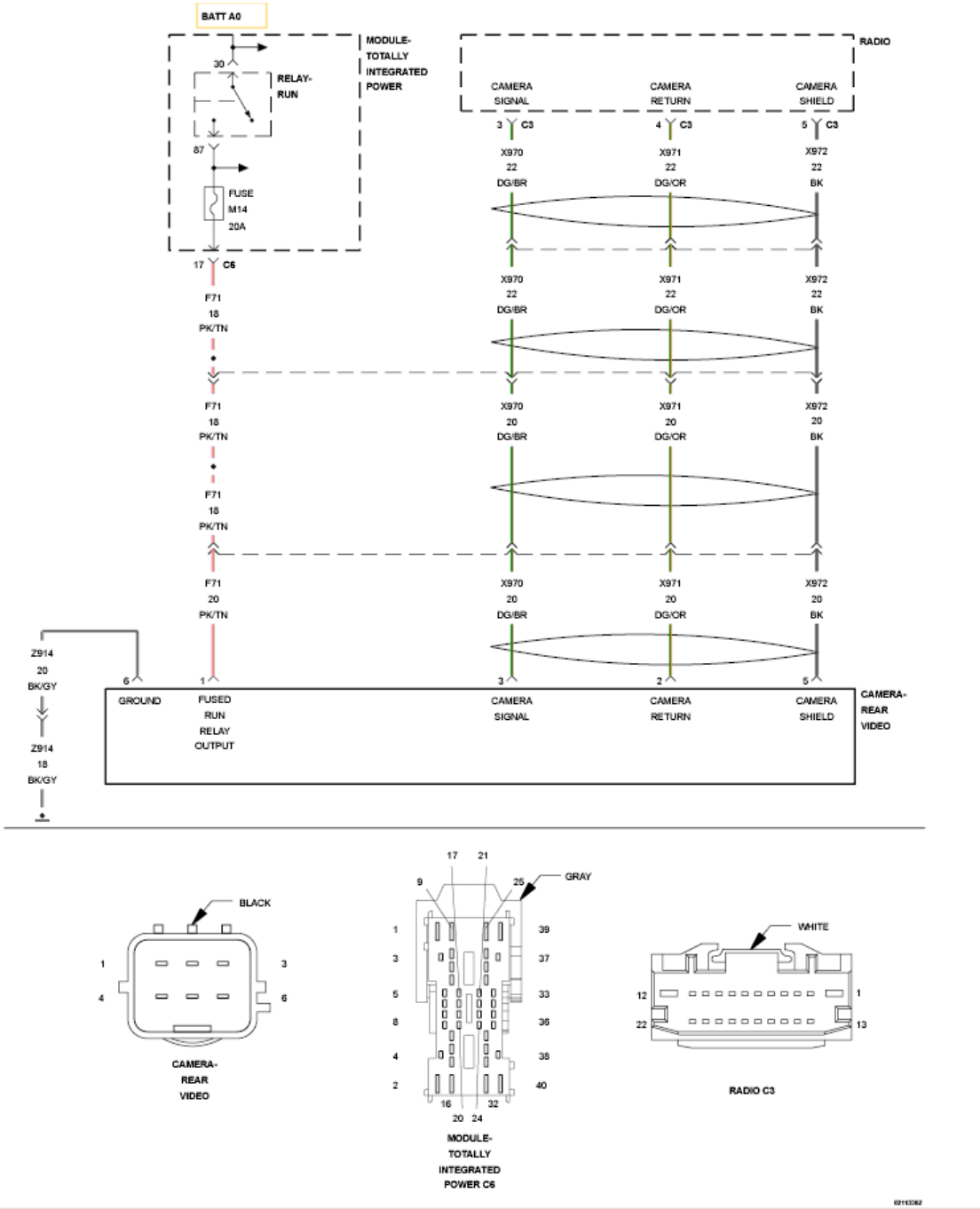

Fig. 7: Rear Video Camera Wiring Diagram
Courtesy of CHRYSLER GROUP, LLC

For a complete wiring diagram, **refer to appropriate SYSTEM WIRING DIAGRAMS article** .

THEORY OF OPERATION

The Camera is activated when the ignition switch is in the RUN position. The (F71) circuit supplies power to the camera. The camera sends a video signal (std. NTSC i.e. TV) to the navigation radio, using circuits (X970) camera signal, (X971) signal return and (X972) camera shield, which displays on the navigation screen. The

screen toggles functions displaying only one kind of image at a time. And in reverse, the rear camera has priority. The (Z914) circuit is ground for the system.

WHEN MONITORED:

Ignition on, vehicle in reverse.

SET CONDITION:

No rear picture is displayed on radio with the vehicle in reverse.

POSSIBLE CAUSES

Possible Causes
(F71) FUSED RUN RELAY OUTPUT CIRCUIT
(Z914) GROUND CIRCUIT
(X970) CAMERA SIGNAL CIRCUIT
(X971) CAMERA RETURN CIRCUIT
(X972) CAMERA SHIELD
REAR VIDEO CAMERA ASSEMBLY

DIAGNOSTIC TEST

1. **VERIFY OPERATION OF THE RADIO AND BACKUP LAMPS**
    1. Verify the operation of the Radio and Backup Lamps.

       Do the Radio and Backup Lamps operate correctly?

       Yes

       - Go To 2.

       No

       - Diagnose any problems with the Radio and Backup Lamps.
       - Perform the BODY VERIFICATION TEST. Refer to **STANDARD PROCEDURE** .
2. **CHECK THE (F71) FUSED RUN RELAY OUTPUT CIRCUIT**

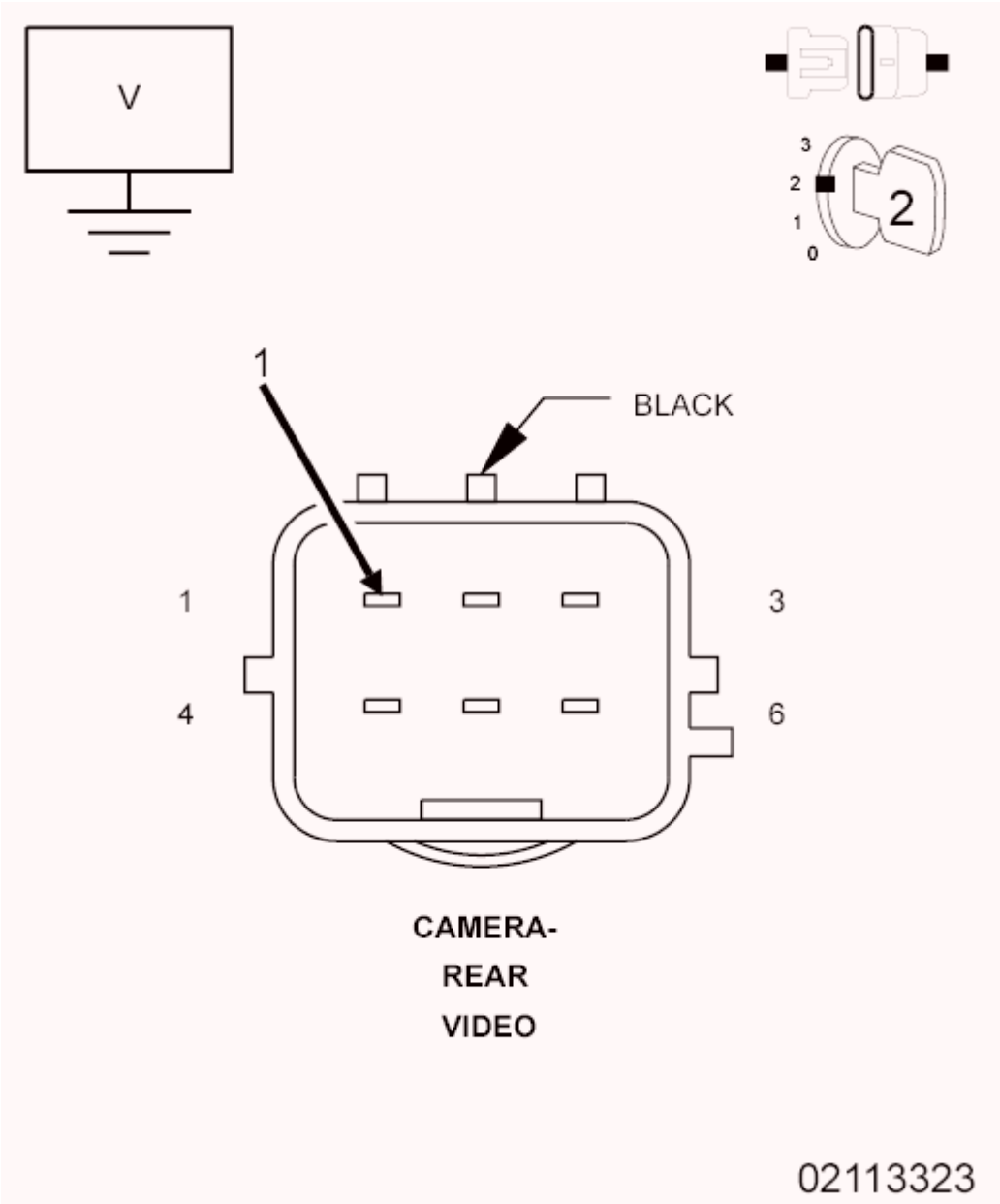

Fig. 8: Measuring Voltage Of Backup Lamp Feed Circuit
Courtesy of CHRYSLER GROUP, LLC

1. Turn the ignition off.
2. Apply the parking brake.
3. Disconnect the Rear Video Camera Assembly Harness Connector.
4. Turn the ignition on.
5. Measure the voltage between the (F71) Fused Run Relay Output circuit and ground.

   Is battery voltage present?

   Yes

- Go To 3.

No

- Repair the (F71) Fused Run Relay Output circuit for an open or short to ground.
- Perform the BODY VERIFICATION TEST. Refer to **STANDARD PROCEDURE** .

3. **CHECK THE (Z914) GROUND CIRCUIT**

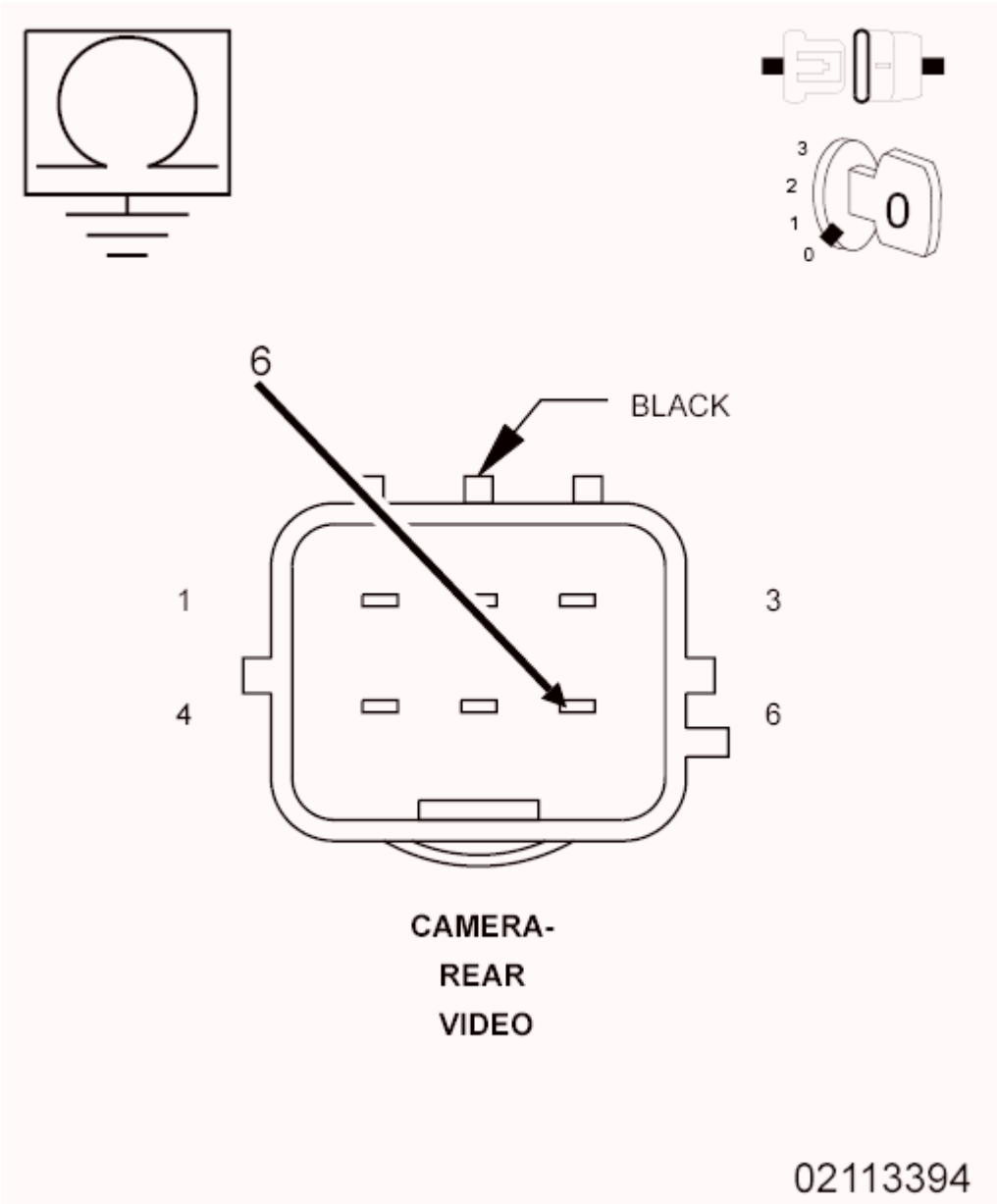

Fig. 9: Measuring Resistance Between Ground And Ground Circuit
Courtesy of CHRYSLER GROUP, LLC

1. Turn the ignition off.

2. Measure the resistance between ground and the (Z914) Ground Circuit.

   Is the resistance below 5.0 Ohms?

   Yes

   - Go To 4.

   No

   - Repair the (Z914) Ground circuit for an open.
   - Perform the BODY VERIFICATION TEST. Refer to **STANDARD PROCEDURE** .

4. **CHECK THE (X970) CAMERA SIGNAL, THE (X971) RETURN, AND THE (X972) SHIELD CIRCUITS FOR AN OPEN CIRCUIT**

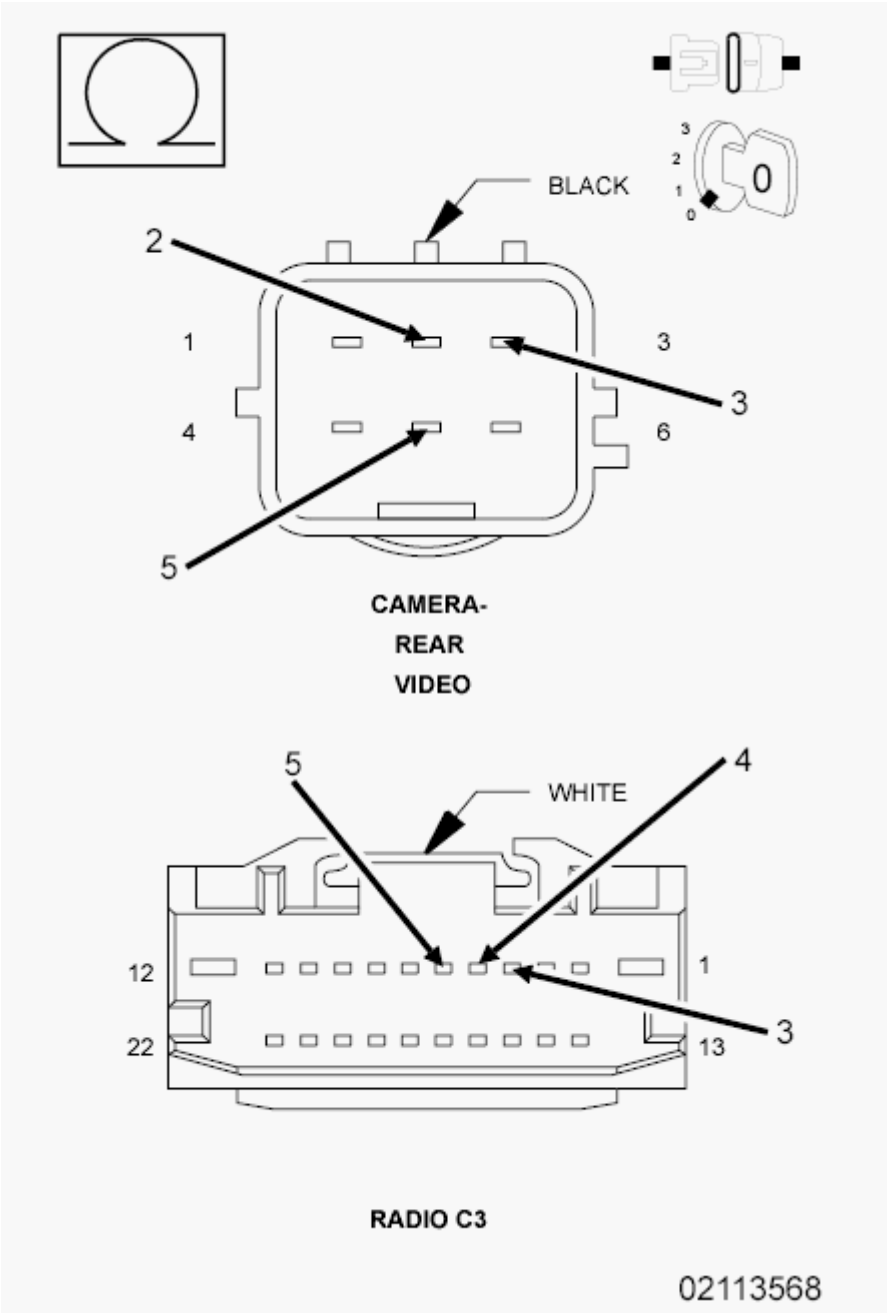

Fig. 10: Checking Camera Signal, The Return, And The Shield Circuits For An Open Circuit
Courtesy of CHRYSLER GROUP, LLC

1. Disconnect the Radio C3 harness connector.
2. Measure the resistance of the (X970) (X971) and (X972) circuits between the Rear Camera harness connector and Radio C3 harness connectors.

   Is the resistance below 5.0 Ohms on the (X970) (X971) or (X972) circuits?

   Yes

- Go To 5.

No

- Repair the appropriate circuit for an open.
- Perform the BODY VERIFICATION TEST. Refer to **STANDARD PROCEDURE** .

5. **CHECK THE (X970) CAMERA SIGNAL, THE (X971) RETURN, AND THE (X972) SHIELD CIRCUITS SHORTED TO GROUND**

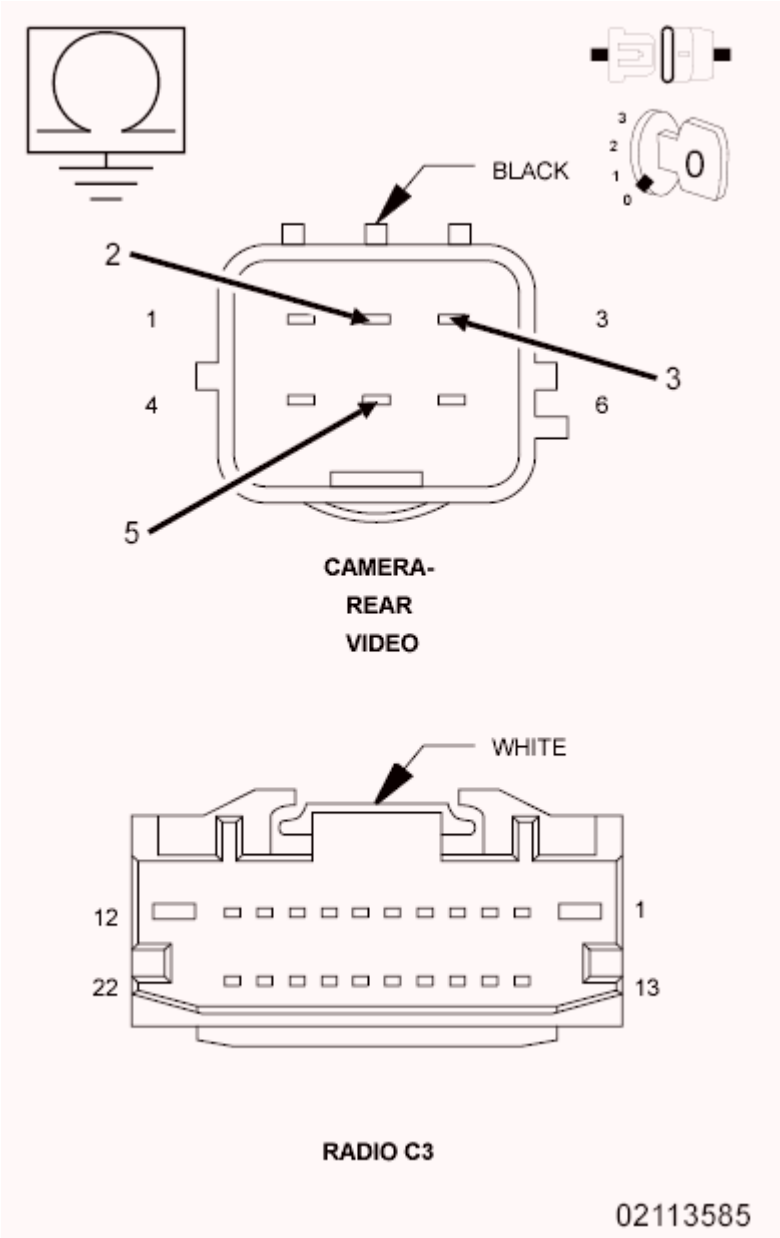

Fig. 11: Checking Camera Signal, The Return, And The Shield Circuits Shorted To Ground
Courtesy of CHRYSLER GROUP, LLC

1. Measure the resistance between ground and the (X970) (X971) and (X972) circuits.

   Is the resistance below 5.0 Ohms on the (X970) (X971) or (X972) circuits?

   Yes

   - Repair the appropriate circuit for a short to ground.
   - Perform the BODY VERIFICATION TEST. Refer to **STANDARD PROCEDURE** .

   No

   - Replace the Rear Camera Assembly in accordance with the Service Information.
   - Perform the BODY VERIFICATION TEST. Refer to **STANDARD PROCEDURE** .

DIAGNOSIS AND TESTING - REMOTE SWITCHES

Any diagnosis of the Audio system should begin with the use of scan tool. For information on the use of the scan tool, refer to the appropriate Diagnostic Service information.

For complete circuit diagrams, refer to the appropriate wiring information.

WARNING: **Disable the airbag system before attempting any steering wheel, steering column, seat belt tensioner, side airbag or instrument panel component diagnosis or service. Disconnect and isolate the negative battery (ground) cable. Wait two minutes for the airbag system capacitor to discharge before performing further diagnosis or service. This is the only sure way to disable the airbag system. Failure to follow these instructions may result in accidental airbag deployment and possible serious or fatal injury.**

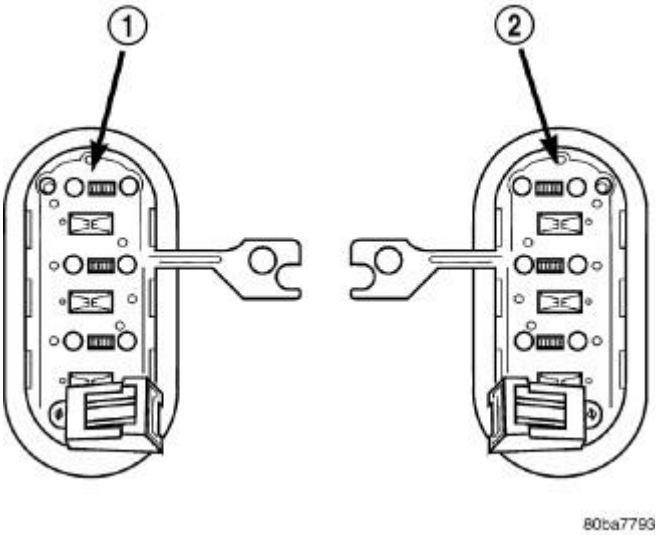

Fig. 12: Identifying Remote Radio Switches

Courtesy of CHRYSLER GROUP, LLC

1. Disconnect and isolate the battery negative cable.
2. Remove the remote radio switch(es) from the steering wheel. Refer to **SWITCH, REMOTE RADIO, REMOVAL** .
3. Use an ohmmeter to check the switch resistances as shown in the Remote Radio Switch Test chart. If the remote radio switch resistances check OK, go to 4. If not OK, replace the faulty switch.

REMOTE RADIO SWITCH TEST

Switch	Switch Position	Minimum Resistance	Nominal Resistance	Maximum Resistance
Right (White)	Volume Up	6.732 ohms	6.8 ohms	6.868 ohms
Right (White)	Volume Down	14.850 ohms	15 ohms	15.151 ohms
Right (White)	Mode Advance	0 ohms	0 ohms	0 ohms
Left (Black)	Seek Up	1.188 ohms	1.2 ohms	1.212 ohms
Left (Black)	Seek Down	3.267 ohms	3.3 ohms	3.333 ohms
Left (Black)	Pre-Set Station Advance	.465 ohms	.47 ohms	.474 ohms

4. Connect the battery negative cable. Turn the ignition switch to the On position. Check for 5 volts at the radio control mux circuit cavities of the steering wheel wire harness connectors for both remote radio switches. If OK, go to 5. If not OK, repair the open or shorted radio control mux circuit to the Totally Integrated Power Module (TIPM) as required.
5. Disconnect and isolate the battery negative cable. Disconnect the 22-way instrument panel wire harness connector from the TIPM. Check for continuity between the remote radio switch ground circuit cavities of the steering wheel wire harness connectors for both remote radio switches and a good ground. There should be no continuity. If OK, go to 6. If not OK, repair the shorted remote radio switch ground circuit to the TIPM as required.
6. Check for continuity between the remote radio switch ground circuit cavities of the steering wheel wire harness connectors for both remote radio switches and the 22-way instrument panel wire harness connector for the TIPM. There should be continuity. If OK, refer to the proper Diagnostic Procedures Information to test the TIPM and the CAN data bus. If not OK, repair the open remote radio switch ground circuit as required.

DIAGNOSIS AND TESTING - VIDEO

Any diagnosis of the video system should begin with the use of a scan tool. For information on the use of the scan tool, refer to the appropriate Diagnostic Service information.

Refer to the appropriate wiring information.

VIDEO SYSTEM DIAGNOSIS TABLE

CONDITION	POSSIBLE CAUSES	CORRECTION
DVD SCREEN DOES NOT POWER ON AND CAN NOT BE ACCESSED ON THE CAN NETWORK WITH THE SCAN TOOL	1. Power and or CAN circuit maybe open.	1. Check for battery voltage at the VES connector. Repair wiring as necessary.
DVD SCREEN DOES NOT POWER ON AND CAN BE ACCESSED ON THE CAN NETWORK WITH THE SCAN TOOL	1. Screen software issue.	1. Refer to appropriate Service information. Reflash the VES
DVD DOES NOT AUTO PLAY.	1. DVD in the wrong player on two screen system.	1. Insert DVD into the DVD (RD9) player.
	2. DVD damaged	2. Insert known good DVD and test operation.
	3. Foreign material on DVD.	3. Clean DVD and test operation.
	4. Condensation on DVD or optics.	4. Allow temperature of vehicle interior to stabilize and test operation.
	5. Incorrect TIPM settings	5. Update the TIPM with the correct region and options.
RADIO DISPLAYS LIST OF CHANNELS BUT SECOND ROW SAYS UPDATING CHANNELS	1. GCI tables (Channel List) needs to be updated.	1. Mode all screens in to FM radio mode. With the vehicle outside and clear line of site to the sky. Pull IOD fuse for half an hour. Connect the IOD fuse and wait five minutes, turn on the radio. Channel listing will update.
UNABLE TO CHANGE MODES	1. TIPM not configured correctly.	1. Update the TIPM with the correct region and options.
REMOTE CONTROL DOES NOT WORK.	1. Batteries may be low or dead.	1. Replace the batteries.
	2. Screen not powered on.	2. With vehicle running close and open the screen to power up the screen.
HEADPHONES DON'T WORK.	1. Batteries may be low or dead.	1. Replace the batteries.
	2. Headphone power is off.	2. Switch the headphone power on.
	3. Headphones on wrong channel.	3. Switch to the other channel on the side of the headphones.
	4. Volume on headphones turned off.	4. Turn up the volume on the headphones.
		1. Check for loose/broke, pinched,

RADIO DOESN'T SHOW RD9, AUX1 OR AUX2 VIDEO.	1. Video/Audio circuit damaged.	cut or corroded Vehicle Entertainment System (VES) wires. Repair as necessary.
BLACK SCREEN.	1. Video circuit damaged. 2. Screen is on the buss but VES screen doesn't power ON, or have IR transmitter is ON (on second row screen).	1. Check for loose/broke, pinched, cut or corroded Vehicle Entertainment System (VES) wires. Repair as necessary. 2. Refer to appropriate service information to reflash the VES

DESCRIPTION

CHIME WARNING SYSTEM

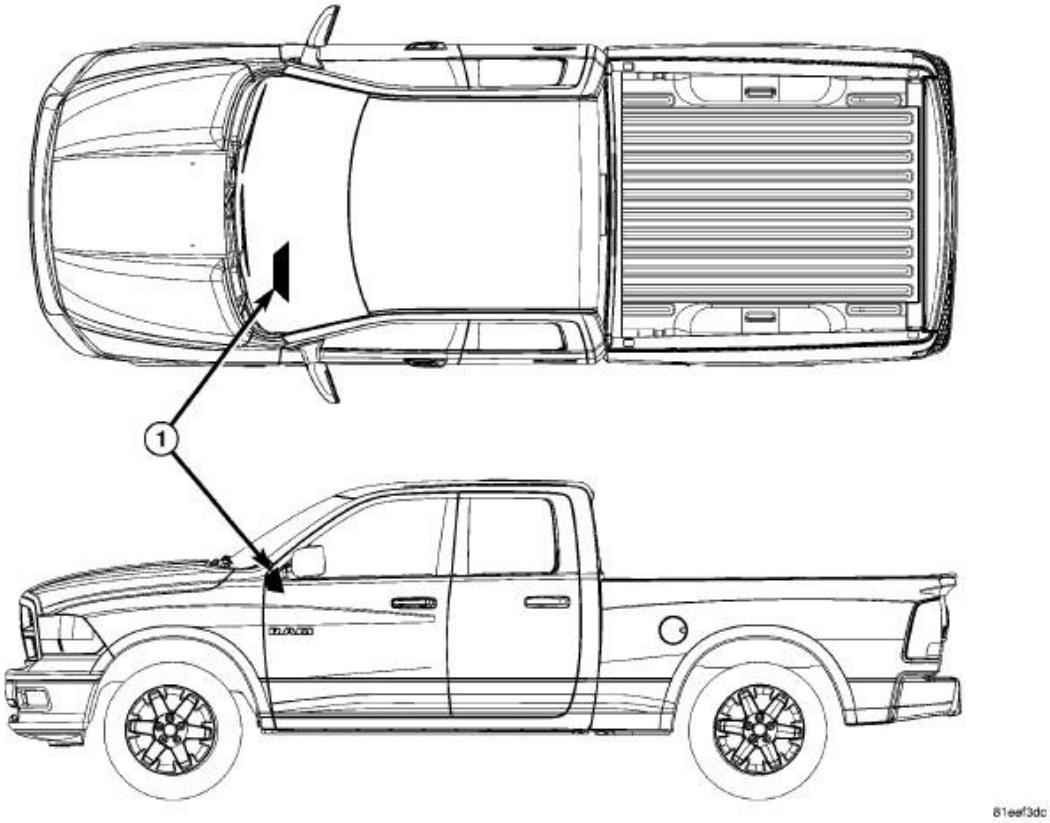

Fig. 1: Chime Warning System
Courtesy of CHRYSLER GROUP, LLC

A chime warning system is standard factory-installed equipment. The chime warning system uses an electromechanical transducer attached to the electronic circuit board inside of the instrument cluster (1) to provide audible indications of various vehicle conditions that may require the attention of the vehicle operator or occupants. The instrument cluster also includes the hardware and software necessary to serve as the electronic body control module and is sometimes referred to as the Cab Compartment Node (CCN).

The electromechanical transducer generates beep tones, chime tones and click tones to emulate the sounds associated with conventional turn signal and hazard warning flasher operation. The microprocessor-based instrument cluster utilizes electronic **chime request** messages received from other modules in the vehicle over the Controller Area Network (CAN) data bus along with hardwired inputs to monitor many sensors and switches throughout the vehicle. In response to those inputs, the circuitry and programming of the CCN allow it to control the audible outputs that are produced through its on-board transducer.

The CCN is capable of producing the following audible outputs:

- **Slow Rate Repetitive Click** - Repeated **click** tones that are issued at a slow rate of about 50 clicks per minute.
- **Fast Rate Repetitive Click** - Repeated **click** tones that are issued at a fast rate of more than about 100 clicks per minute.
- **Fixed Duration Beep** - A short, sharp, single tactile **beep** tone.
- **Single Chime Tone** - A single **chime** tone.
- **Slow Rate Repetitive Chime** - Repeated **chime** tones that are issued at a slow rate of about 50 chimes per minute.
- **Fast Rate Repetitive Chime** - Repeated **chime** tones that are issued at a fast rate of about 180 chimes per minute.

Hardwired circuitry connects the CCN and the various chime warning system switch and sensor inputs to their modules and to each other through the electrical system of the vehicle. These hard wired circuits are integral to several wire harnesses, which are routed throughout the vehicle and retained by many different methods. These circuits may be connected to each other, to the vehicle electrical system and to the CCN through the use of a combination of soldered splices, splice block connectors, and many different types of wire harness terminal connectors and insulators. Refer to the appropriate wiring information. The wiring information includes wiring diagrams, proper wire and connector repair procedures, further details on wire harness routing and retention, as well as pin-out and location views for the various wire harness connectors, splices and grounds.

The instrument cluster chime warning system circuits and components cannot be adjusted or repaired. If the CCN circuitry or the on-board transducer are damaged or inoperative, the complete unit must be replaced.

PARK ASSIST SYSTEM

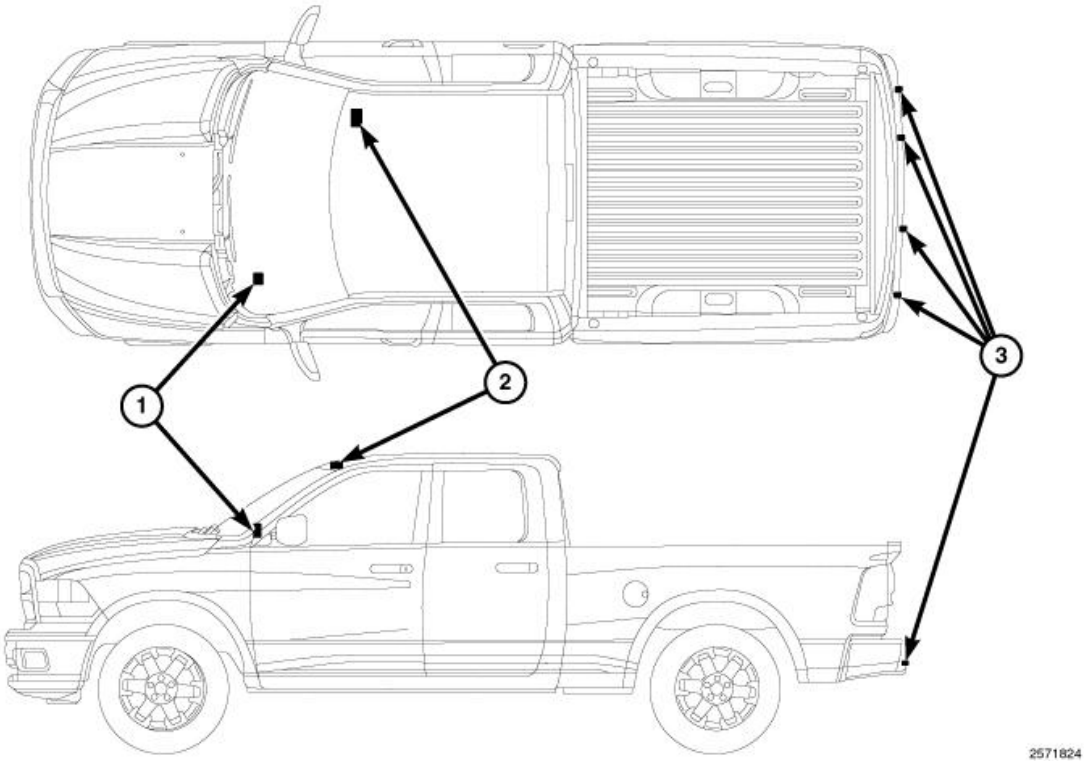

Fig. 2: Electronic Vehicle Information Center, Park Assist Module & Park Assist Sensors
Courtesy of CHRYSLER GROUP, LLC

A park assist system is an optional factory-installed electronic parking aid. During parking and other similar vehicle maneuvers this system alerts the vehicle operator to obstacles located in the path immediately behind the vehicle which, due to the surrounding rear vehicle structure, might be otherwise difficult to perceive. When an object is detected, the system displays a textual message within the Electronic Vehicle Information Center (EVIC) display unit to provide the vehicle operator with visual and audible indications of the presence and proximity of such objects.

The park assist system includes the following major components, which are described in further detail elsewhere in this service information:

- **Electronic Vehicle Information Center (1) -** In vehicles equipped with the optional park assist system, the optional EVIC in the instrument cluster displays textual warnings and error messages, and emits audible warnings related to the current operating status of the park assist system. The display also provides an interface that allows the vehicle operator to manually disable or enable the system using the customer programmable features option.
- **Park Assist Module (2) -** Vehicles equipped with the park assist system include a park assist module which is secured to a mounting bracket by two fasteners and is concealed above the headliner.
- **Park Assist Sensors (3) -** Vehicles equipped with the park assist system have four ultrasonic park assist sensors that are concealed behind the rear bumper. Each sensor is snapped into an individual molded plastic mounting bracket located at horizontal intervals along the back side of the rear bumper.

Hardwired circuitry connects the various park assist system components to each other through the electrical system of the vehicle. These hardwired circuits are integral to several wire harnesses, which are routed

throughout the vehicle and retained by many different methods. These circuits may be connected to each other and to the vehicle electrical system through the use of a combination of soldered splices, splice block connectors, and many different types of wire harness terminal connectors and insulators. Refer to the appropriate wiring information. The wiring information includes wiring diagrams, proper wire and connector repair procedures, further details on wire harness routing and retention, as well as pin-out and location views for the various wire harness connectors, splices and grounds.

The park assist system components cannot be adjusted or repaired. If any of the park assist system components is damaged or ineffective, that component must be replaced.

OPERATION

CHIME WARNING SYSTEM

The chime warning system operates on battery voltage received through a fuse in the Totally Integrated Power Module (TIPM) on a non-switched fused B(+) circuit so that the system may operate regardless of the ignition switch position. The chime warning system also monitors the ignition switch position so that some chime features are functional only with the ignition switch in the ON position, while others are functional regardless of the ignition switch position.

The chime warning system provides an audible indication to the vehicle operator or occupants under the following conditions:

- **Airbag Indicator Warning -** The instrument cluster, also known as the Cab Compartment Node (CCN) transducer will generate one short chime when the ignition switch is in the ON position, and an electronic message is received over the Controller Area Network (CAN) data bus from the Occupant Restraint Controller (ORC) requesting airbag indicator illumination. This warning will only occur following completion of the airbag indicator bulb test, and will only occur once during any ignition cycle.
- **Door Ajar Warning -** The CCN will generate one short chime when the ignition switch is in the ON position, when the door ajar indicator is illuminated, or when a **DOOR(S) OPEN** textual message is displayed in the odometer Vacuum Fluorescent Display (VFD) unit of the instrument cluster. This warning indicates that a door is, or multiple doors are not closed or completely latched while the vehicle is moving.
- **Electronic Stability Control Warning -** The CCN transducer will generate one short chime when the Electronic Stability Control (ESC) has been manually disabled by the vehicle operator using the ESC traction control switch on the instrument panel.
- **Electronic Stability Control Fault Warning -** The CCN transducer will generate one short chime each time the ESC indicator is illuminated in the instrument cluster. This warning indicates a failure condition has been monitored affecting the operation of the ESC related components or circuits. This warning will only occur following completion of the ESC indicator bulb test, and will only occur once during any ignition cycle.
- **Fasten Seat Belt Indicator Warning -** The CCN transducer will generate repetitive chimes at a slow rate to announce that the seat belt switch and the ignition switch indicate that the driver side front seat belt is not fastened with the ignition switch in the ON position. The chime warning system also supports the enhanced seatbelt reminder (beltminder) when this feature is enabled, For more information, refer to **INDICATORS, INSTRUMENT CLUSTER, OPERATION** .

- **Head/Park Lamps-On Warning** - The CCN transducer will generate repetitive chimes at a fast rate to indicate that inputs from the driver door ajar switch, the headlamp switch, and the ignition switch indicate that the exterior lamps are turned ON with the driver side front door opened and the ignition switch in the OFF position. The chimes will continue to sound until the exterior lamps are turned OFF, the driver side front door is closed, or the ignition switch is turned to the ON position, whichever occurs first.
- **Key-In-Ignition Warning** - The CCN transducer will generate repetitive chimes at a fast rate to indicate that inputs from the driver side front door ajar switch, the ignition switch and the key-in ignition circuitry of the Wireless Ignition Node (WIN) indicate that the key is in the ignition with the driver side front door open and the ignition switch in the OFF position. The chimes will continue to sound until the key is removed from the ignition switch, the driver side front door is closed, or the ignition switch is turned to the ON position, whichever occurs first.
- **Low Fuel Indicator Warning** - The CCN transducer will generate one short chime when the low fuel indicator is illuminated in the instrument cluster. This warning indicates that the monitored fuel level in the fuel tank is low. This chime will only occur once during any ignition cycle.
- **Low Wash Indicator Warning** - The CCN transducer will generate one short chime when the low washer fluid indicator is illuminated in the instrument cluster. This chime will only occur once during any ignition cycle.
- **Overspeed Warning** - The CCN transducer will generate one short chime when the vehicle speed is over a pre-programmed speed value. This feature is only enabled on vehicles that have been configured for sale in a Middle East Gulf Coast Country (GCC).
- **Park Brake Reminder** - The CCN transducer will generate one short chime to announce that the hardwired input from the park brake switch and an electronic **vehicle speed** message received over the CAN data bus indicate that the park brake is applied and the vehicle is moving. This chime will repeat each time the input conditions are met.
- **Sentry Key Customer Learn Mode Announcement** - The CCN transducer will generate one short chime to confirm that an electronic **Customer Learn** mode message has been received over the CAN data bus to indicate that the Wireless Ignition Node (WIN) is prepared for programming additional Sentry Key transponders. This chime feature is only active on vehicles sold in a market where Customer Learn programming is an allowed feature.
- **Turn Signal/Hazard Warning Flasher Emulation** - The CCN relay will generate repetitive clicks at a slow rate to emulate an electromechanical flasher when the turn signal or hazard warning system are operating. The relay will generate repetitive clicks at a fast rate to indicate that the right or left turn signals are operating with one or more bulbs ineffective. In either case, the clicks will continue until the turn signal and hazard warning systems are turned OFF.
- **Turn Signal On Warning** - The CCN transducer will generate repetitive chimes at a slow rate to indicate that a turn signal has been active continuously for 1.6 kilometers (1 mile) with the vehicle speed greater than 22 kilometers-per-hour (15 miles-per hour). Vehicles built for markets other than the United States and Canada have a revised distance threshold of 4 kilometers (2.49 miles) for this feature. The chime will continue until the turn signal input becomes inactive or until the electronic **vehicle speed** message indicates that the speed is less than 22 kilometers-per-hour (15 miles-per-hour), whichever occurs first. The hazard warning flashers will not activate this chime feature.
- **Warning Indicator Announcement** - The CCN transducer will generate one short chime each time the Malfunction Indicator Lamp (MIL) lamp or certain other indicators are illuminated by the instrument cluster circuitry. The MIL and certain other indicators may be illuminated when any critical engine or transmission systems are operating outside of their normal parameters. The instrument cluster monitors

electronic messages received over the CAN data bus to determine when to illuminate these indicators.

The CCN provides chime service for all available features in the chime warning system. The CCN relies upon its internal programming, numerous hardwired inputs, and electronic message inputs received from other modules over the CAN and the Local Interface Network (LIN) data buses to provide the chime warning system features. The internal programming of the CCN determines the priority of each chime request input that is received, as well as the rate and duration of each chime that is to be generated.

The hardwired circuits between components related to the chime warning system may be diagnosed using conventional diagnostic tools and procedures. Refer to the appropriate wiring information. The wiring information includes wiring diagrams, proper wire and connector repair procedures, details of wire harness routing and retention, connector pin-out information and location views for the various wire harness connectors, splices and grounds.

However, conventional diagnostic methods will not prove conclusive in the diagnosis of the chime warning system or the electronic controls or communication between modules and other devices that provide some features of the chime warning system. The most reliable, efficient, and accurate means to diagnose the chime warning system or the electronic controls and communication related to chime warning system operation requires the use of a diagnostic scan tool. Refer to the appropriate diagnostic information.

PARK ASSIST SYSTEM

The park assist system is active only when the ignition switch is in the ON or START positions, the parking brake is released, the transmission gear selector lever is in either the REVERSE position and the vehicle speed is less than 16 kph (10 mph) or, the DRIVE position and the vehicle speed is less than 14 kph (8 mph) on deceleration, or 18 kph (12 mph) on acceleration. The park assist system is enabled from the factory as a default but can be disabled or enabled using either the manual cut-off switch, integral to the instrument panel switch pod, or by using the personal settings menu of the Electronic Vehicle Information Center (EVIC), if equipped. For more information on EVIC operation, refer to **CENTER, ELECTRONIC VEHICLE INFORMATION, OPERATION** .

Reasons for disabling the system include trailer towing, off road use and driving conditions where the tailgate is in the down position. With a trailer attached to the vehicle the audible and visible park assist alerts would be incessant whenever the gear selector lever was in the REVERSE position due to the proximity of the trailer to the rear of the vehicle, as well as operating the vehicle at low speeds with the tailgate in the down position and the gear selector in the DRIVE position. Similarly, operating the vehicle off road may cause the park assist alerts to become distracting due to the proximity of large trees or boulders and the extreme rear approach angles that may be encountered while maneuvering on off road trails or terrain. When the system is disabled, a **PARK ASSIST OFF** textual message will appear in the Electronic Vehicle Information Center (EVIC) display, if equipped whenever the gear selector lever is in the REVERSE position.

The microprocessor based park assist module is the central component of the park assist system. It supplies voltage to the park assist sensors, receives and analyzes data from the sensors, calculates and communicates the proper display information to the Cab Compartment Node (CCN), performs system diagnostics, and communicates with other electronic modules in the vehicle or with a diagnostic scan tool over the Controller Area Network (CAN) data bus. The module operates on battery voltage received through a fuse in the Junction Block (JB), and is grounded through a take out and eyelet terminal of the body wire harness that is secured by a screw to the left inner D-pillar.

Four ultrasonic park assist sensors in the rear bumper allow the park assist system to locate and identify the proximity of nearby obstacles. These sensors each generate ultrasonic sound pulses when triggered by the park assist module, then signal the module when an echo of the reflected sound pulses is received. The detection distance range from the rear of the vehicle is about 0.3 meters (11.8 inches) to about 2.0 meters (80 inches), and the detection height range from the ground is about 0.2 meters (7.8 inches) to about 0.8 meters (31 inches). The detection area extends somewhat around both rear sides (corners) of the vehicle.

The park assist display, located within the EVIC unit, provides the vehicle operator with a visual and audible warning if the vehicle comes to within about 40 centimeters (31 inches) of a detected object, when the "Sound and Display" are ON. The display is visible to the vehicle operator only when looking forward and an object is detected within the detection zone. The system will also emit a series of short, intermittent, audible beeps and automatically mute the audio system while the park assist audible warning is being generated. The audible warning changes from intermittent beeps to a continuous tone as the vehicle comes to within 30.5 centimeters (12 inches) of a detected object.

When the park assist module monitors a problem in any of the park assist system circuits or components, it stores a fault code or Diagnostic Trouble Code (DTC) in its memory circuit and, sends an electronic message to the EVIC. When a message from the park assist module is received by the EVIC for a fault condition, a **SERVICE PARK ASSIST SYSTEM** textual message is displayed within the EVIC display.

The hardwired circuits between components related to the park assist system may be diagnosed using conventional diagnostic tools and procedures. Refer to the appropriate wiring information. The wiring information includes wiring diagrams, proper wire and connector repair procedures, details of wire harness routing and retention, connector pin-out information and location views for the various wire harness connectors, splices and grounds.

However, conventional diagnostic methods will not prove conclusive in the diagnosis of the park assist system or the electronic controls or communication between modules and other devices that provide some features of the park assist system. The most reliable, efficient, and accurate means to diagnose the park assist system or the electronic controls and communication related to park assist system operation requires the use of a diagnostic scan tool. Refer to the appropriate diagnostic information.

DIAGNOSIS AND TESTING

CHIME WARNING SYSTEM

WARNING: **To avoid serious or fatal injury on vehicles equipped with airbags, disable the Supplemental Restraint System (SRS) before attempting any steering wheel, steering column, airbag, seat belt tensioner, impact sensor or instrument panel component diagnosis or service. Disconnect and isolate the battery negative (ground) cable, then wait two minutes for the system capacitor to discharge before performing further diagnosis or service. This is the only sure way to disable the SRS. Failure to take the proper precautions could result in accidental airbag deployment.**

The hard wired circuits between components related to the chime warning system may be diagnosed using conventional diagnostic tools and procedures. Refer to the appropriate wiring information. The wiring

information includes wiring diagrams, proper wire and connector repair procedures, details of wire harness routing and retention, connector pin-out information and location views for the various wire harness connectors, splices and grounds.

However, conventional diagnostic methods will not prove conclusive in the diagnosis of the chime warning system or the electronic controls or communication between modules and other devices that provide some features of the chime warning system. The most reliable, efficient, and accurate means to diagnose the chime warning system or the electronic controls and communication related to chime warning system operation requires the use of a diagnostic scan tool. Refer to the appropriate diagnostic information.

PARK ASSIST SYSTEM

WARNING: **To avoid serious or fatal injury on vehicles equipped with airbags, disable the Supplemental Restraint System (SRS) before attempting any steering wheel, steering column, airbag, seat belt tensioner, impact sensor, or instrument panel component diagnosis or service. Disconnect and isolate the battery negative (ground) cable, then wait two minutes for the system capacitor to discharge before performing further diagnosis or service. This is the only sure way to disable the SRS. Failure to take the proper precautions could result in accidental airbag deployment.**

The following textual messages May appear in the Electronic Vehicle Information Center (EVIC):

1. **SERVICE PARK ASSIST -** If a service park assist textual message appears in the EVIC display, be certain to confirm the following:
   - The parking brake is not applied.
   - The rear bumper is free of ice, snow, mud or other obstructions that will prevent the system from operating properly.

     The park assist system is self correcting, please verify that the area of the rear bumper where the sensors are located is not blocked by ice, snow, mud or other obstructions. If the area is blocked, remove the blockage, shift the transmission selector lever into reverse and verify the message is no longer present in the EVIC display. The system may also be corrected when the vehicle is driven at a speed greater than 14 kph (8 mph).

     NOTE: **The presence of jackhammers, large trucks, and other vibrations in the vicinity of the vehicle could impact the performance of the system.**

2. **PARK ASSIST OFF -** If a park assist off textual message appears in the EVIC display, the system may either be manually cut-off or have a hard fault. If the manual cut-off switch is not illuminated further investigation may be needed.

The hard wired circuits between components related to the park assist system may be diagnosed using conventional diagnostic tools and procedures. Refer to the appropriate wiring information. The wiring information includes wiring diagrams, proper wire and connector repair procedures, details of wire harness

routing and retention, connector pin-out information and location views for the various wire harness connectors, splices and grounds.

However, conventional diagnostic methods will not prove conclusive in the diagnosis of the park assist system or the electronic controls or communication between modules and other devices that provide some features of the park assist system. The most reliable, efficient, and accurate means to diagnose the park assist system or the electronic controls and communication related to park assist system operation requires the use of a diagnostic scan tool. Refer to the appropriate diagnostic information.

DISPLAY, PARK ASSIST

DESCRIPTION

DESCRIPTION

The Park Assist display is an integral part of the Electronic Vehicle Information Center (EVIC). The park assist **ICON** , for image information, is only displayed when an object is detected. Refer to **INTERNATIONAL VEHICLE CONTROL AND DISPLAY SYMBOLS, DESCRIPTION** . An electronic message is sent to the Cab Compartment Node (CCN) from the park assist module, over the Controller Area Network (CAN) Data Bus when an object is within the detection area. The CCN then displays the object detection icon with the corresponding alert bar for the distance and location of the object within the EVIC display.

Depending on market and system capabilities, the display icon has as many as 24 different variations with the corresponding alert bars, depending on size, location and distance of the object being detected. The image will display three solid bars followed by a single tone for maximum distance then will flash and reduce the amount of bars as the proximity to the object is reduced followed by a repetitive tone, down to a single bar with a continuous tone.

The EVIC display is only serviced as a complete unit with the instrument cluster. It cannot be adjusted or repaired. If ineffective or damaged, the entire display unit must be replaced, For more information, refer to **CENTER, ELECTRONIC VEHICLE INFORMATION, DESCRIPTION** .

OPERATION

OPERATION

The Park Assist system for this vehicle is only available on vehicles equipped with an Electronic Vehicle Information Center (EVIC). The park assist display is an integrated part of the EVIC and receives battery current and ground from, and is completely controlled by, the Cab Compartment Node (CCN). The CCN will display the park assist **ICON** whenever an object is detected and a signal is received from the park assist module, over the Controller Area Network (CAN) data bus. The icon image displayed has as many as 24 different variations depending on size, distance and location of the object being detected. The microprocessor in the park assist module continually monitors the display status, and will store a Diagnostic Trouble Code (DTC) in memory for any monitored fault it detects in the park assist display.

The hard-wired circuits between components related to the park assist display may be diagnosed using conventional diagnostic tools and procedures. Refer to the appropriate wiring information. The wiring information includes wiring diagrams, proper wire and connector repair procedures, details of wire harness

routing and retention, connector pin-out information and location views for the various wire harness connectors, splices and grounds.

However, conventional diagnostic methods will not prove conclusive in the diagnosis of the park assist display or the electronic controls or communication between modules and other devices that provide some features of the park assist system. The most reliable, efficient, and accurate means to diagnose the park assist display or the electronic controls and communication related to park assist display operation requires the use of a diagnostic scan tool. Refer to the appropriate diagnostic information.

MODULE, PARK ASSIST

DESCRIPTION

DESCRIPTION

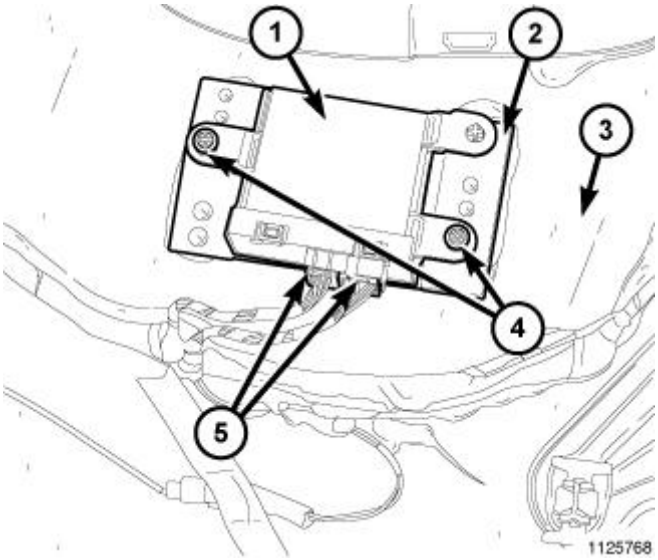

Fig. 3: Park Assist Module, Connectors & Fasteners
Courtesy of CHRYSLER GROUP, LLC

The Park Assist Module (1) is secured to a mounting bracket (2) that is bonded to the upper side of the vehicles headliner (3) above the right sun visor and secured by two fasteners (4). Concealed within the molded plastic park assist module housing is a microprocessor and the other electronic circuitry of the module. The module housing is sealed to enclose and protect the internal electronic circuitry. The module software is flash programmable.

Two connector receptacles (5) containing terminal pins are integral to the forward-facing side of the housing. The module is connected to the vehicle electrical system through two dedicated take outs and connectors of the body wire harness.

The park assist module cannot be adjusted or repaired and, if damaged or inoperative, it must be replaced.

OPERATION

OPERATION

The microprocessor in the park assist module contains the park assist system logic circuits. The module uses On-Board Diagnostics (OBD) and can communicate with other electronic modules in the vehicle as well as with the diagnostic scan tool using the Controller Area Network (CAN) data bus. This method of communication is also used for park assist system diagnosis and testing through the 16-way data link connector located on the driver side lower edge of the instrument panel.

The module provides voltage to the four park assist sensors located behind the rear bumper fascia. The park assist display is integral to the Electronic Vehicle Information Center (EVIC) and is provided voltage from the Cab Compartment Node (CCN). The module monitors return inputs from each of the sensors on dedicated hard wired data communication circuits and from the CCN over the CAN data bus. The sensor inputs allow the module to determine when an obstacle is in the rear path of the vehicle and enables the module to calculate the relative location of the obstacle, and whether the distance to that obstacle is increasing or decreasing.

Pre-programmed decision algorithms and calibrations allow the module microprocessor to determine the appropriate park assist system outputs based upon the inputs received from the park assist sensors and electronic messages received from other modules in the vehicle over the CAN data bus. When the programmed conditions are met the module sends electronic messages to the CCN over the CAN data bus to obtain the proper park assist system visual and audible outputs. The module also broadcasts electronic messages over the CAN data bus to enable the other electronic features of the park assist system.

The park assist module microprocessor continuously monitors all of the park assist system electrical circuits and components to determine the system readiness. If the module detects a monitored system fault, it sets a Diagnostic Trouble Code (DTC) and sends the appropriate electronic messages to the CCN over the CAN data bus to control operation of certain park assist system audible warnings and textual messages displayed in the Electronic Vehicle Information Center (EVIC) of the instrument cluster.

The park assist module receives battery current on a fused ignition switch output (run-start) circuit through a fuse in the Totally Integrated Power Module (TIPM). The module receives ground through a ground circuit and take out of the body wire harness connected to the body sheet metal. These connections allow the module to be operational whenever the ignition switch is in the START or ON positions.

The hard wired circuits between components related to the park assist module may be diagnosed using conventional diagnostic tools and procedures. Refer to the appropriate wiring information. The wiring information includes wiring diagrams, proper wire and connector repair procedures, details of wire harness routing and retention, connector pin-out information and location views for the various wire harness connectors, splices and grounds.

However, conventional diagnostic methods will not prove conclusive in the diagnosis of the park assist module or the electronic controls or communication between modules and other devices that provide some features of the park assist system. The most reliable, efficient, and accurate means to diagnose the park assist module or the electronic controls and communication related to park assist module operation requires the use of a diagnostic scan tool. Refer to the appropriate diagnostic information.

REMOVAL

REMOVAL

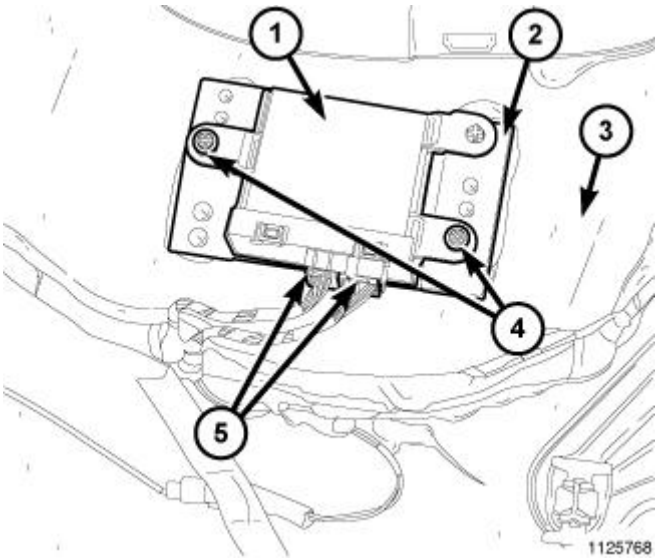

Fig. 4: Park Assist Module, Connectors & Fasteners
Courtesy of CHRYSLER GROUP, LLC

1. lower the headliner to access the module. Refer to **HEADLINER, REMOVAL** .
2. Disconnect the two body wire harness connectors (5) from the park assist module connector receptacles.
3. Remove the two fasteners (4) that secure the module to the mounting bracket.
4. Remove the module from behind the headliner.

INSTALLATION

INSTALLATION

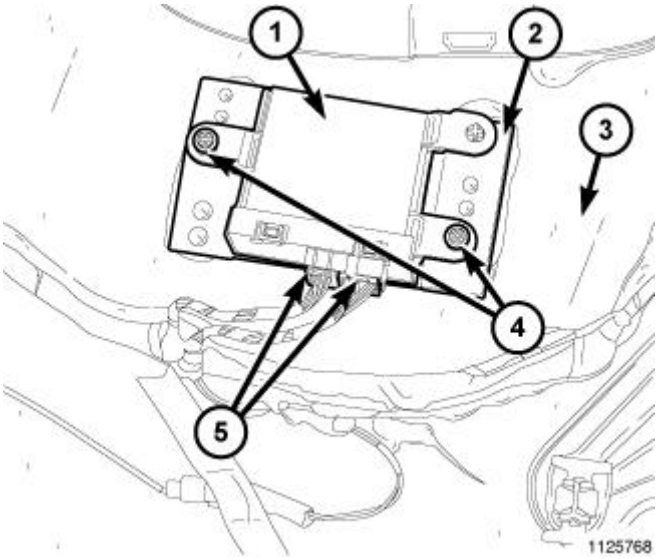

Fig. 5: Park Assist Module, Connectors & Fasteners
Courtesy of CHRYSLER GROUP, LLC

1. Position the park assist module (1) at the mounting bracket (2) bonded to the back of the headliner (3).

2. Secure the module to the bracket with two fasteners (4).
3. Reconnect the two body wire harness connectors (5) to the module connector receptacles.
4. Reinstall the vehicle headliner. Refer to **HEADLINER, INSTALLATION** .
5. Reconnect the battery negative cable.

SENSOR, PARK ASSIST

DESCRIPTION

DESCRIPTION

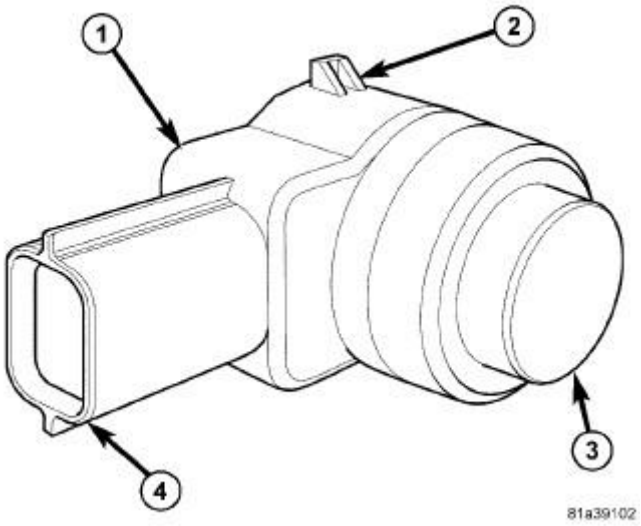

Fig. 6: Park Assist Sensor
Courtesy of CHRYSLER GROUP, LLC

Vehicles equipped with the park assist system have four park assist sensors (1) installed on the rear bumper. Only the membrane (3) of each sensor is visible through a hole in the outer vertical surface of the bumper. The remainder of each sensor including the sensor mounting bracket, the sensor spacer and the sensor wiring connection is concealed behind the bumper. A sensor wire harness behind the bumper connects the sensors to the vehicle electrical system.

Each of the four sensors is identical in construction and is interchangeable. The electronic circuitry and a communication chip for each sensor is enclosed and protected within the molded black plastic sensor housing. The housing includes an integral connector receptacle (4) and two integral latch tabs (2). The sensor membrane extends from the surface of the sensor housing, and is finished to match or contrast with the outer surface of the bumper.

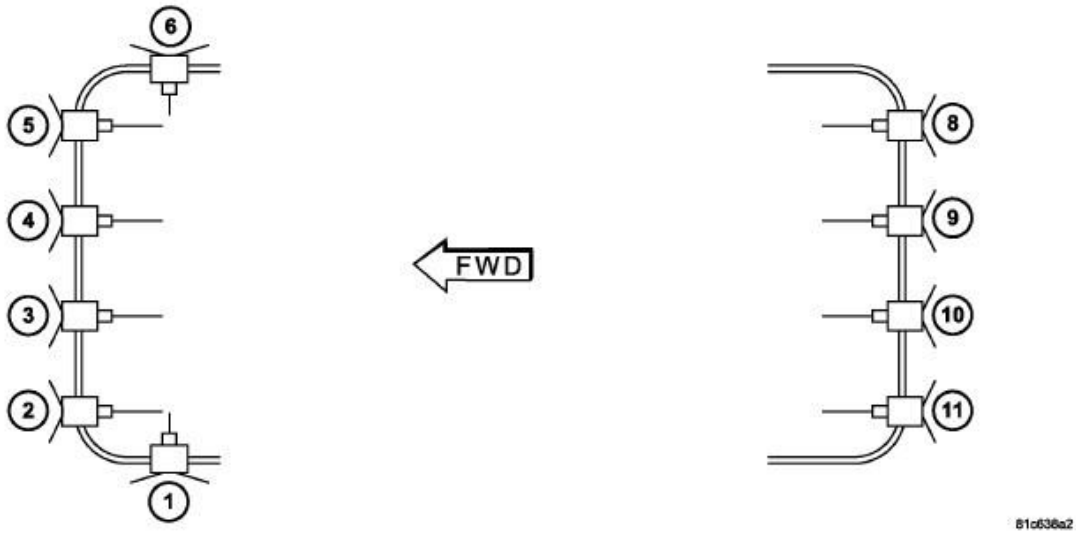

Fig. 7: Numbering System For Park Assist Sensors
Courtesy of CHRYSLER GROUP, LLC

The numbering system for the park assist sensors allows for up to twelve sensors on the vehicle, six front and six rear. The sensors are numbered in a clockwise manner starting at the left front bumper. The left front sensor (if equipped with front park assist) is the number 1 sensor. The numbering continues in a clockwise direction around the vehicle. Since this vehicle uses only four rear sensors, sensor numbers 7 and 12 are omitted, so the left rear sensor is the number 11 sensor.

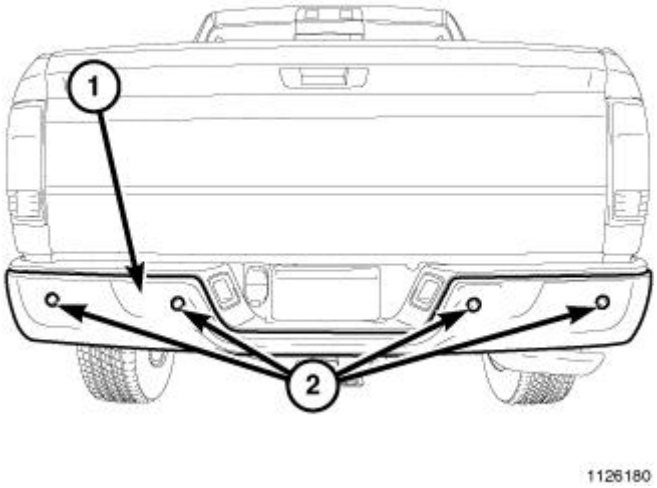

Fig. 8: Rear Park Assist Sensors
Courtesy of CHRYSLER GROUP, LLC

A resilient O-ring spacer around the circumference of each of the four sensor membranes (2) isolates the membrane from the openings in the fascia (1). Each sensor is snapped into its own dedicated molded plastic mounting bracket.

The park assist sensors cannot be adjusted or repaired. If inoperative or damaged they must be replaced. The

sensors and the spacers are each available for individual service replacement.

OPERATION

OPERATION

The park assist sensors are ultrasonic transceivers that are completely controlled by the park assist module. The sensors transmit and receive ultrasonic signals. The sensors each receive battery current and ground in parallel from the module, but are each connected to individual dedicated serial bus communication circuits to the module.

Each sensor membrane is oscillated, then quieted by the module in a pulsing fashion. While the sensor membrane oscillates, it emits an ultrasonic signal. This signal will bounce or echo off of objects in the path of the vehicle. While quieted, each membrane receives the echoes of the ultrasonic signals it and the other sensors have transmitted. The sensors then communicate this echo data over the serial bus lines back to the module. The microprocessor in the module uses the intervals between the ultrasonic transmission and reception data from the sensors to calculate the distance to any obstacles identified by the ultrasonic echoes.

The hard wired circuits between components related to the park assist sensors may be diagnosed using conventional diagnostic tools and procedures. Refer to the appropriate wiring information. The wiring information includes wiring diagrams, proper wire and connector repair procedures, details of wire harness routing and retention, connector pin-out information and location views for the various wire harness connectors, splices and grounds.

However, conventional diagnostic methods will not prove conclusive in the diagnosis of the park assist sensors or the electronic controls or communication between modules and other devices that provide some features of the park assist system. The most reliable, efficient, and accurate means to diagnose the park assist sensors or the electronic controls and communication related to park assist sensor operation requires the use of a diagnostic scan tool. Refer to the appropriate diagnostic information.

REMOVAL

REMOVAL

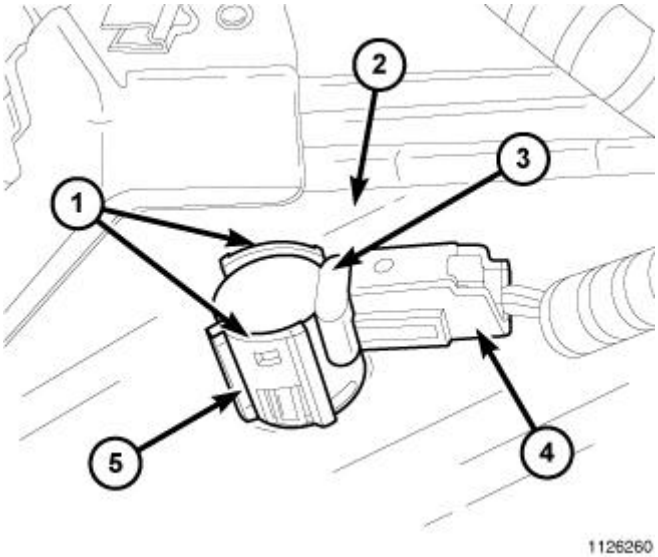

Fig. 9: Park Assist Sensor, Connector & Latch Features
Courtesy of CHRYSLER GROUP, LLC

NOTE: The park assist sensors (3) and the sensor spacers (O-rings) are each available for separate service replacement.

1. Disconnect and isolate the battery negative cable.
2. From the back of the bumper (2), disconnect the wire harness connector (4) from the park assist sensor (3) connector receptacle.
3. Carefully pry the sensor bracket (5) latch features (1) away from the top and bottom latch tabs of the sensor far enough to disengage the sensor from the bracket.
4. Disengage the O-ring spacer from around the circumference of the sensor membrane protrusion.
5. If required, depress the four locking tabs and remove the sensor brackets from the bumper.

INSTALLATION

INSTALLATION

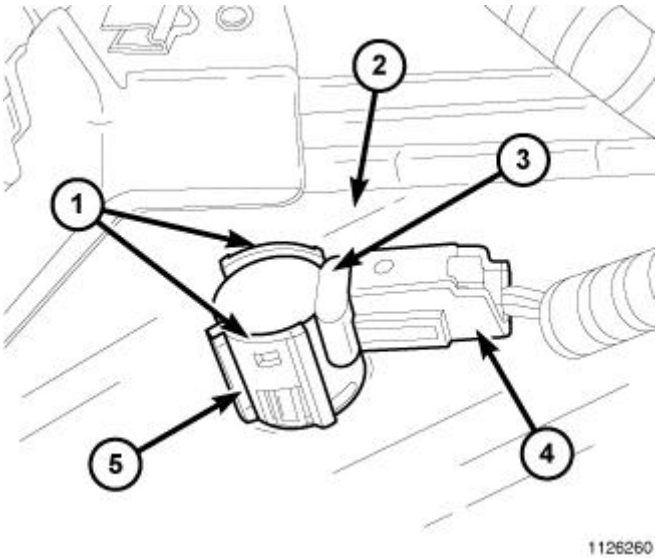

Fig. 10: Park Assist Sensor, Connector & Latch Features
Courtesy of CHRYSLER GROUP, LLC

NOTE: The park assist sensors (3) and the sensor spacers (O-rings) are each available for separate service replacement.

1. If removed, insert the sensor mounting bracket into the opening in the bumper face, until all locking tabs engage.
2. Engage the O-ring spacer around the circumference of the sensor membrane protrusion.

   NOTE: Production and all service replacement O-ring spacers are tapered. The wide side (base) of the O-ring should be seated against the sensor housing and the narrow side should be oriented toward the outer surface of the sensor membrane and the rear bumper.

3. Align and insert the sensor (3) into the sensor bracket (5) on the back of the rear bumper (2) until the bracket latch features (1) are fully engaged over the top and bottom latch tabs of the sensor. Be certain that the sensor membrane is flush with the outer surface of the bumper.

   NOTE: Be certain that each sensor membrane is properly centered in the openings of the rear fascia and that the O-ring spacers are not pinched. Improper centering or pinched O-rings can be detrimental to proper park assist sensor operation.

4. From the back of the bumper, reconnect the wire harness connector (4) to the sensor connector receptacle.
5. Reconnect the battery negative cable.

DIAGNOSIS AND TESTING

BOTH DIAGNOSTIC CAN C (+) AND DIAGNOSTIC CAN C (-) CIRCUITS OPEN

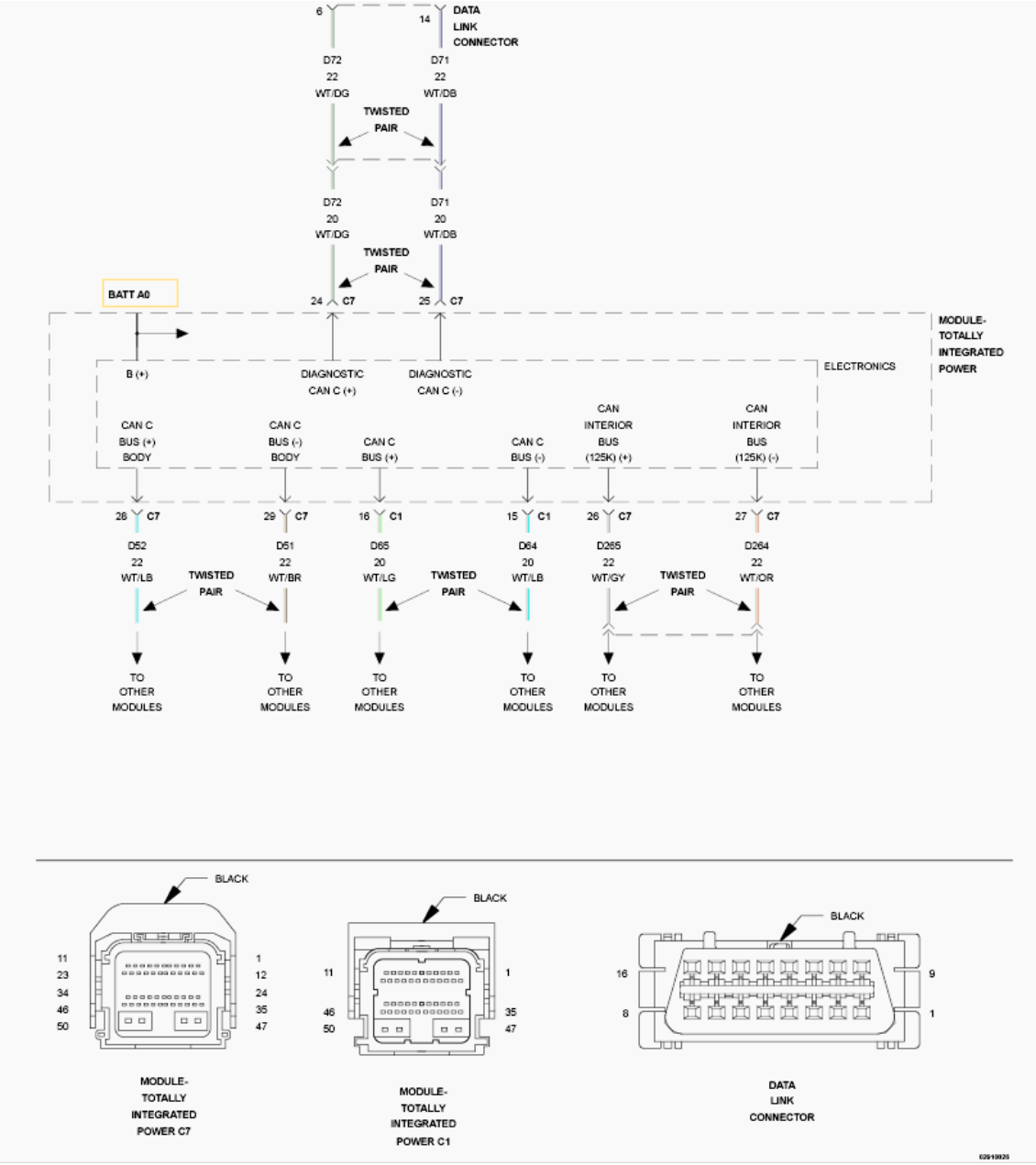

Fig. 1: Diagnostic CAN C (+) And Diagnostic CAN C (-) Circuits Wiring Diagram
Courtesy of CHRYSLER GROUP, LLC

For a complete wiring diagram, **refer to appropriate SYSTEM WIRING DIAGRAMS article** .

WHEN MONITORED:

When the scan tool queries the Totally Integrated Power Module (TIPM).

SET CONDITION:

The scan tool has detected an open condition on both Diagnostic CAN C circuits.

POSSIBLE CAUSES

Possible Causes
(D72) DIAGNOSTIC CAN C (+) CIRCUIT OPEN
(D71) DIAGNOSTIC CAN C (-) CIRCUIT OPEN
TOTALLY INTEGRATED POWER MODULE (TIPM)

DIAGNOSTIC TEST

1. **CHECK THE STATUS OF THE ERROR MESSAGE**

   NOTE: Make sure the vehicle being tested is a CAN BUS VEHICLE. If not, false error messages may be displayed.

   NOTE: Make sure the scan tool is updated to the latest software.

   1. With the scan tool, record the error message.
   2. Disconnect the scan tool from the DLC.
   3. Cycle the ignition from on to off three times.
   4. Reconnect the scan tool.
   5. Turn the ignition on.

   Does the scan tool display this same error message?

   Yes

   - Go To 2.

   No

   - The conditions that caused this error message to set are not present at this time. Using the wiring diagrams as a guide, check all related splices and connectors for signs of water intrusion, corrosion, pushed out or bent terminals, and correct pin tension.
2. **(D72) DIAGNOSTIC CAN C (+) CIRCUIT OPEN**

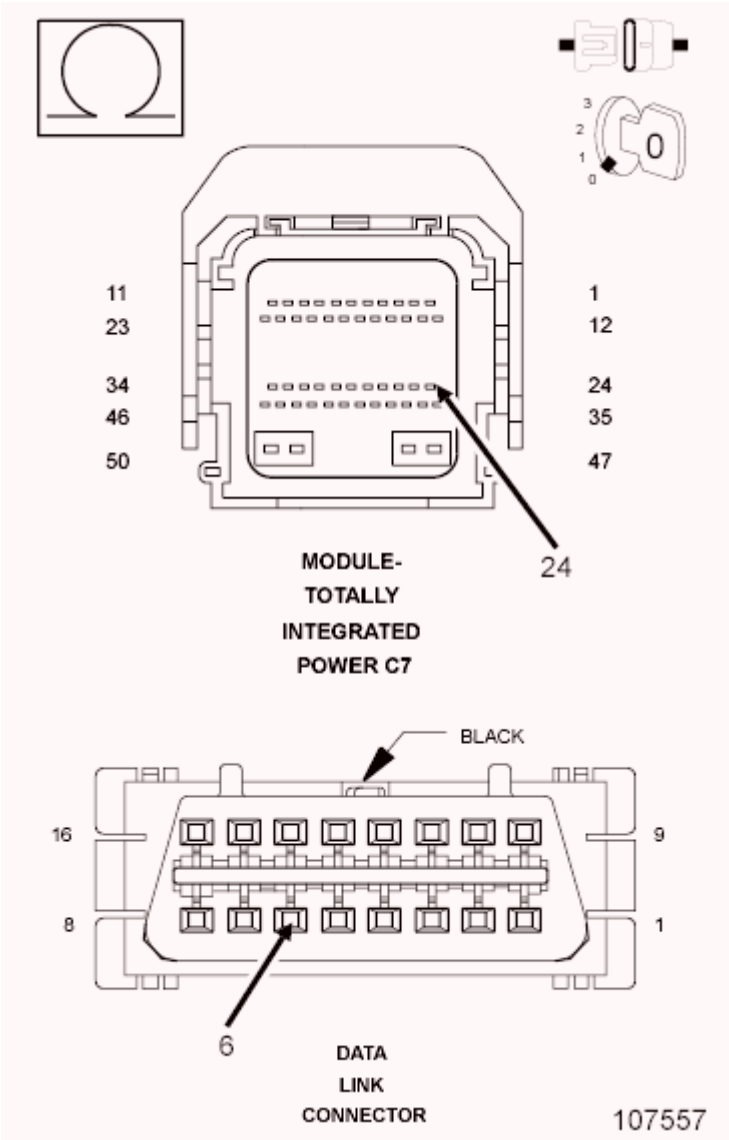

Fig. 2: Checking Diagnostic Can C (+) Circuit For Open
Courtesy of CHRYSLER GROUP, LLC

1. Turn the ignition off.
2. Disconnect the TIPM C7 harness connector.
3. Disconnect the scan tool from the DLC.

NOTE: Check the connectors at both the DLC and the TIPM.

4. Measure the resistance of the (D72) Diagnostic CAN C (+) circuit between the TIPM C7 harness connector and the DLC.

   Is the resistance below 5.0 Ohms?

   Yes

- Go To 3.

No

- Repair the open in the (D72) Diagnostic CAN C (+) circuit.
- Refer to **STANDARD PROCEDURE** and perform the BODY VERIFICATION TEST.

3. **(D71) DIAGNOSTIC CAN C (-) CIRCUIT OPEN**

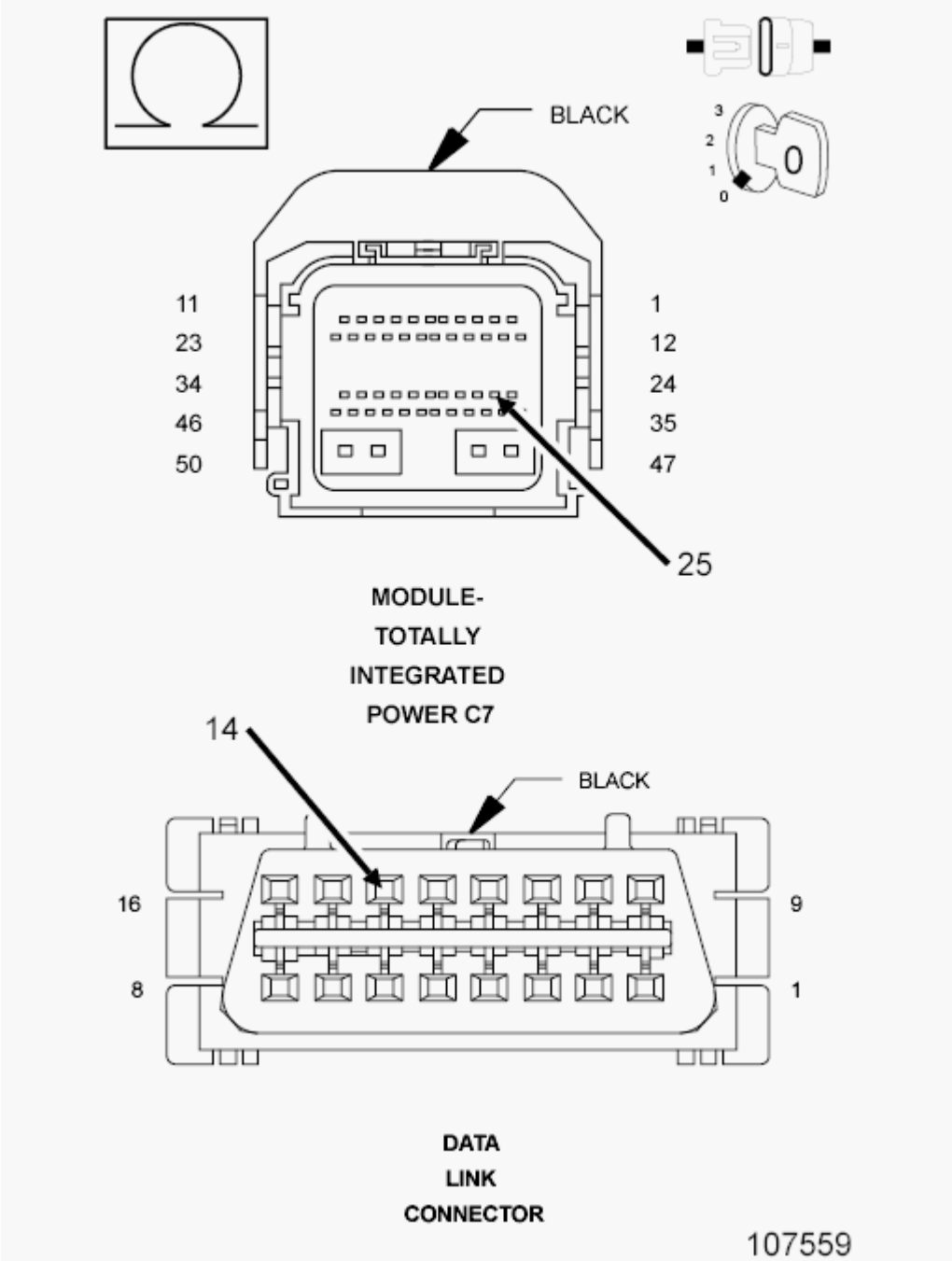

Fig. 3: Checking Diagnostic CAN C (-) Circuit For Open
Courtesy of CHRYSLER GROUP, LLC

1. Measure the resistance of the (D71) Diagnostic CAN C (-) circuit between the TIPM C7 harness connector and the DLC.

   Is the resistance below 5.0 Ohms?

   Yes

   - Inspect the wiring and connectors for damage or shorted circuits. If OK, replace the TIPM in accordance with the Service Information. Refer to **MODULE, TOTALLY INTEGRATED POWER (TIPM), REMOVAL** .
   - Refer to **STANDARD PROCEDURE** and perform the BODY VERIFICATION TEST.

   No

   - Repair the open in the (D71) Diagnostic CAN C (-) circuit.
   - Refer to **STANDARD PROCEDURE** and perform the BODY VERIFICATION TEST.

DIAGNOSTIC CAN C (+) AND/OR DIAGNOSTIC CAN C (-) CIRCUITS HIGH

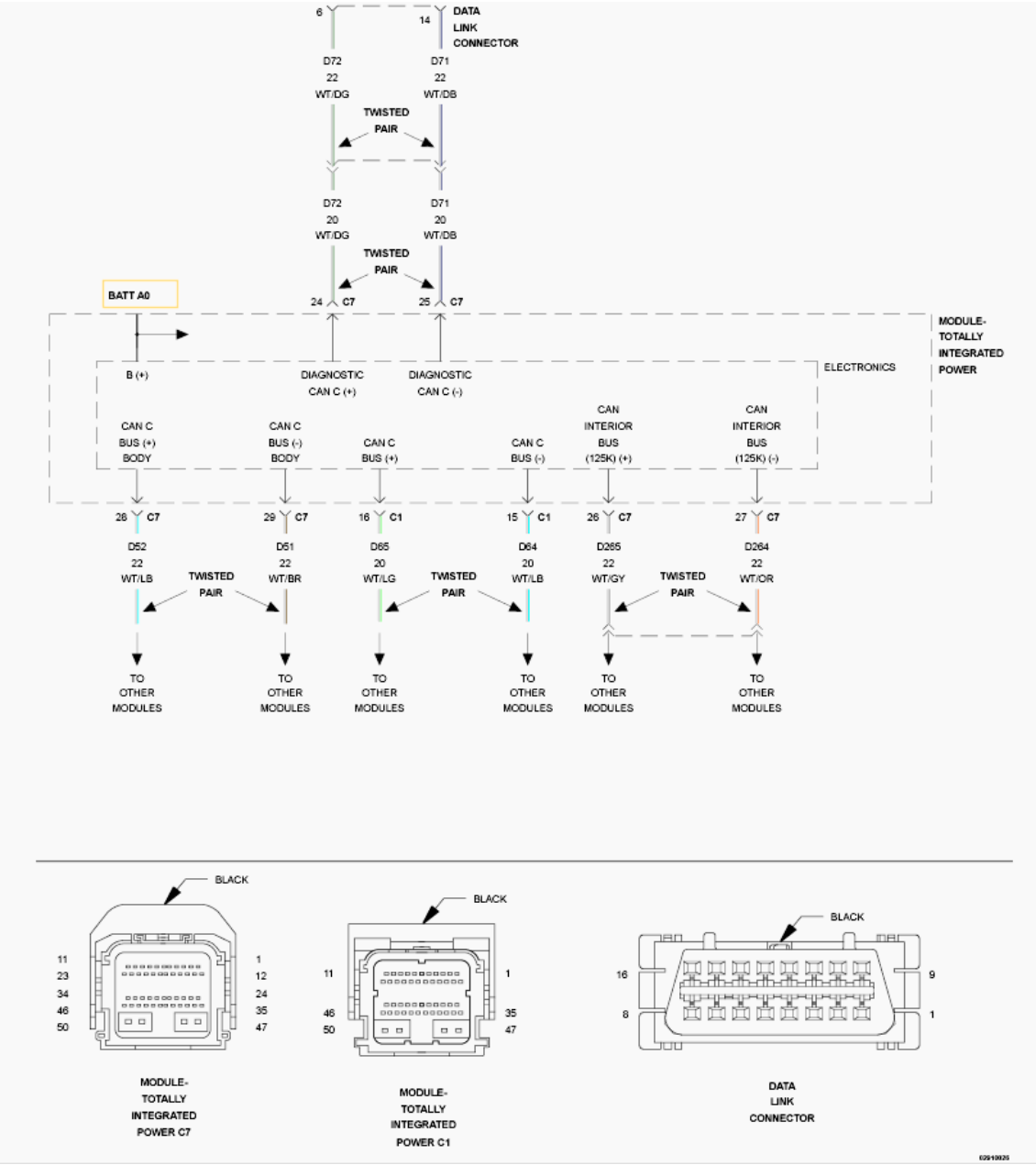

Fig. 4: Diagnostic CAN C (+) And Diagnostic CAN C (-) Circuits Wiring Diagram
Courtesy of CHRYSLER GROUP, LLC

For a complete wiring diagram, **refer to appropriate SYSTEM WIRING DIAGRAMS article** .

WHEN MONITORED:

When the scan tool queries the Totally Integrated Power Module (TIPM).

SET CONDITION:

The scan tool has detected a shorted high condition on either or both Diagnostic CAN C circuits.

POSSIBLE CAUSES

Possible Causes
(D72) DIAGNOSTIC CAN C (+) CIRCUIT SHORTED TO VOLTAGE
(D71) DIAGNOSTIC CAN C (-) CIRCUIT SHORTED TO VOLTAGE
TOTALLY INTEGRATED POWER MODULE (TIPM)

DIAGNOSTIC TEST

1. **CHECK THE STATUS OF THE ERROR MESSAGE**

   NOTE: Make sure the vehicle being tested is a CAN BUS VEHICLE. If not, false error messages may be displayed.

   NOTE: Make sure the scan tool is updated to the latest software.

   1. With the scan tool, record the error message.
   2. Disconnect the scan tool from the DLC.
   3. Cycle the ignition from on to off three times.
   4. Reconnect the scan tool.
   5. Turn the ignition on.

   Does the scan tool display this same error message?

   Yes

   - Go To 2.

   No

   - The conditions that caused this error message to set are not present at this time. Using the wiring diagrams as a guide, check all related splices and connectors for signs of water intrusion, corrosion, pushed out or bent terminals, and correct pin tension.

2. **DIAGNOSTIC CAN C CIRCUITS SHORTED TO VOLTAGE**

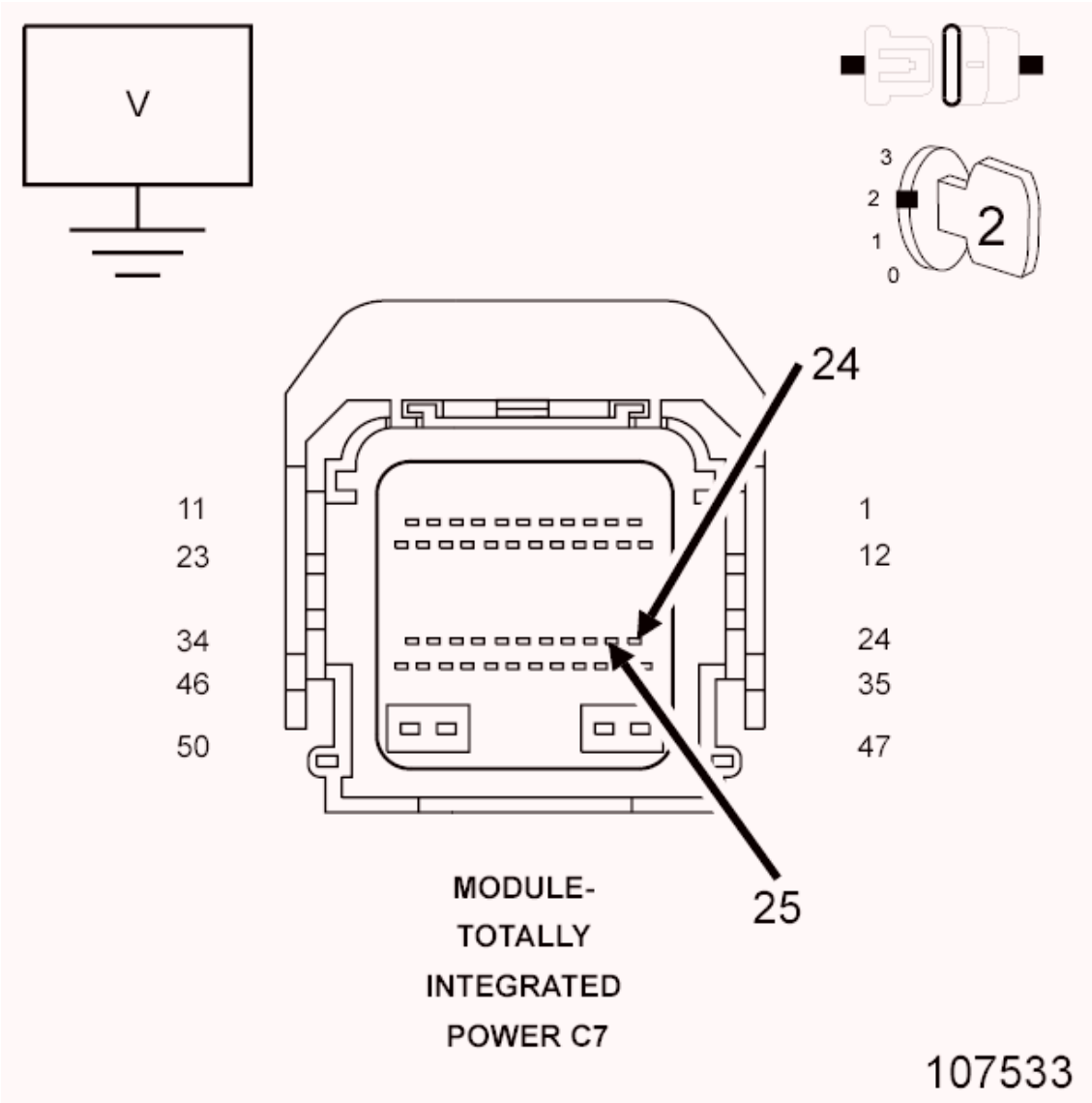

Fig. 5: Checking Diagnostic CAN C Circuits Shorted To Voltage
Courtesy of CHRYSLER GROUP, LLC

1. Turn the ignition off.
2. Disconnect the TIPM C7 harness connector.
3. Disconnect the scan tool from the DLC.
4. Turn the ignition on.
5. Measure the voltage of the Diagnostic CAN C circuits.

   Is the voltage above 6.0 volts for either circuit?

   Yes

   - Repair the short to voltage in the Diagnostic CAN C circuits.

- Refer to **STANDARD PROCEDURE** and perform the BODY VERIFICATION TEST.

No

- Inspect the wiring and connectors for damage or shorted circuits. If OK, replace the TIPM in accordance with the Service Information. Refer to **MODULE, TOTALLY INTEGRATED POWER (TIPM), REMOVAL** .
- Refer to **STANDARD PROCEDURE** and perform the BODY VERIFICATION TEST.

DIAGNOSTIC CAN C (+) CIRCUIT LOW

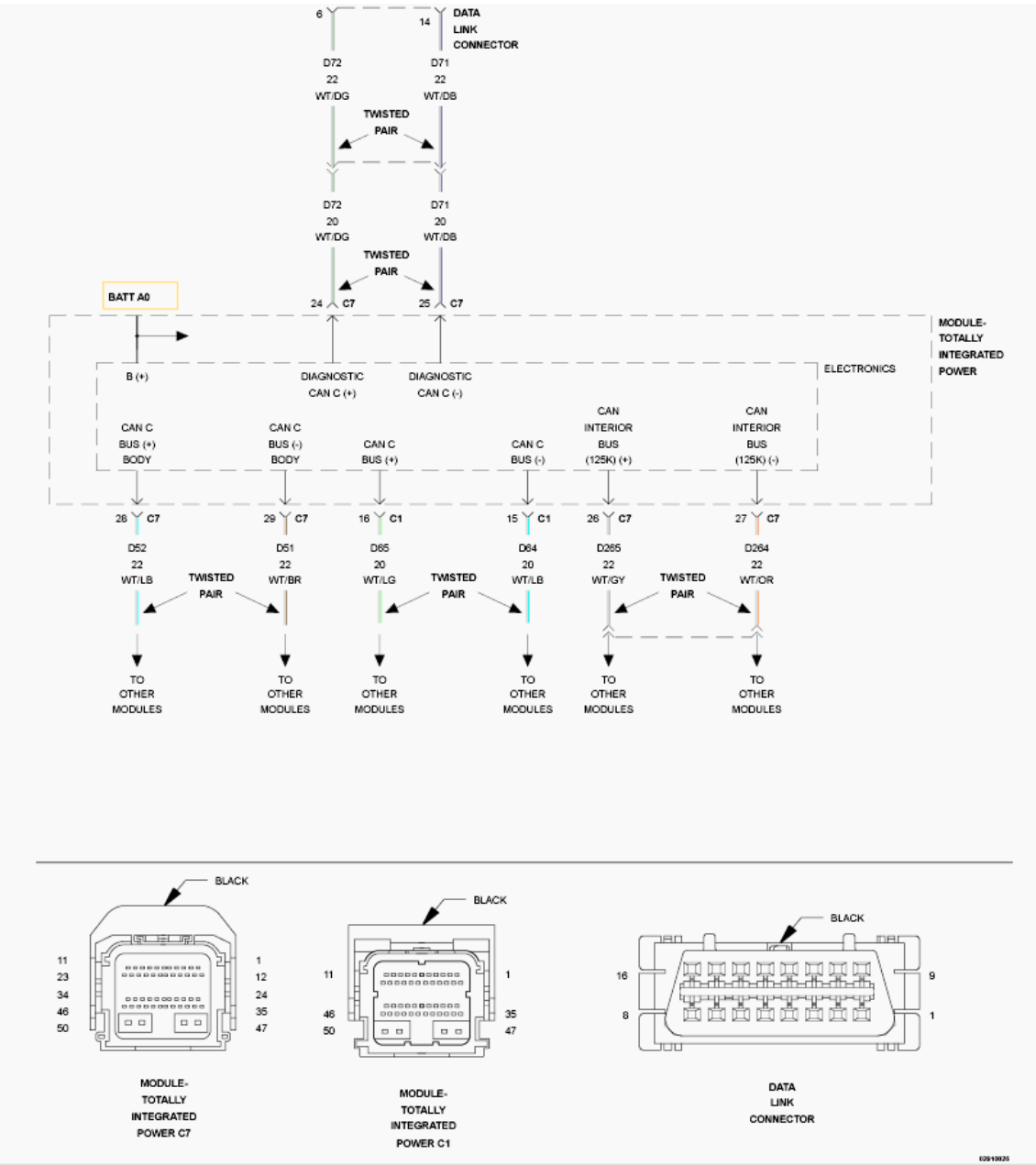

Fig. 6: Diagnostic CAN C (+) And Diagnostic CAN C (-) Circuits Wiring Diagram

Courtesy of CHRYSLER GROUP, LLC

For a complete wiring diagram, **refer to appropriate SYSTEM WIRING DIAGRAMS article** .

WHEN MONITORED:

When the scan tool queries the Totally Integrated Power Module (TIPM).

SET CONDITION:

The scan tool has detected a shorted low condition on the (D72) Diagnostic CAN C (+) circuit.

POSSIBLE CAUSES

Possible Causes
(D72) DIAGNOSTIC CAN C (+) CIRCUIT SHORTED TO GROUND TOTALLY INTEGRATED POWER MODULE (TIPM)

DIAGNOSTIC TEST

1. **CHECK THE STATUS OF THE ERROR MESSAGE**

   NOTE: Make sure the vehicle being tested is a CAN BUS VEHICLE. If not, false error messages may be displayed.

   NOTE: Make sure the scan tool is updated to the latest software.

   1. With the scan tool, record the error message.
   2. Disconnect the scan tool from the DLC.
   3. Cycle the ignition from on to off three times.
   4. Reconnect the scan tool.
   5. Turn the ignition on.

   Does the scan tool display this same error message?

   Yes

   - Go To 2.

   No

   - The conditions that caused this error message to set are not present at this time. Using the wiring diagrams as a guide, check all related splices and connectors for signs of water intrusion, corrosion, pushed out or bent terminals, and correct pin tension.
2. **(D72) DIAGNOSTIC CAN C (+) CIRCUIT SHORTED TO GROUND**

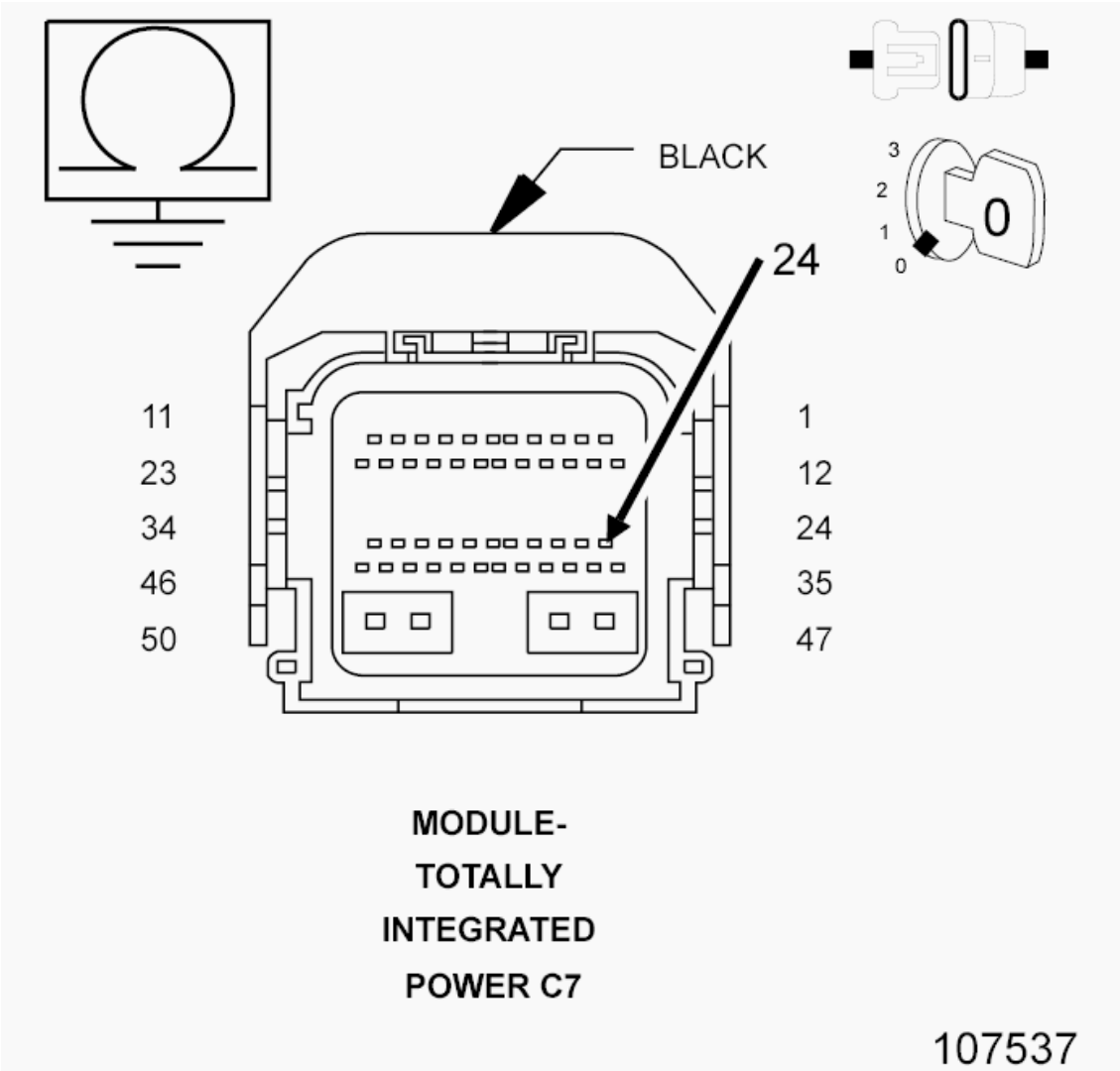

Fig. 7: Checking Diagnostic CAN C (+) Circuit Short To Ground
Courtesy of CHRYSLER GROUP, LLC

1. Turn the ignition off.
2. Disconnect the TIPM C7 harness connector.
3. Disconnect the scan tool from the DLC.
4. Measure the resistance between ground and the (D72) Diagnostic CAN C (+) circuit.

   Is the resistance below 100.0 Ohms?

   Yes

   - Repair the short to ground in the (D72) Diagnostic CAN C (+) circuit.
   - Refer to **STANDARD PROCEDURE** and perform the BODY VERIFICATION TEST.

   No

- Inspect the wiring and connectors for damage or shorted circuits. If OK, replace the TIPM in accordance with the Service Information. Refer to **MODULE, TOTALLY INTEGRATED POWER (TIPM), REMOVAL** .
- Refer to **STANDARD PROCEDURE** and perform the BODY VERIFICATION TEST.

DIAGNOSTIC CAN C (+) CIRCUIT OPEN

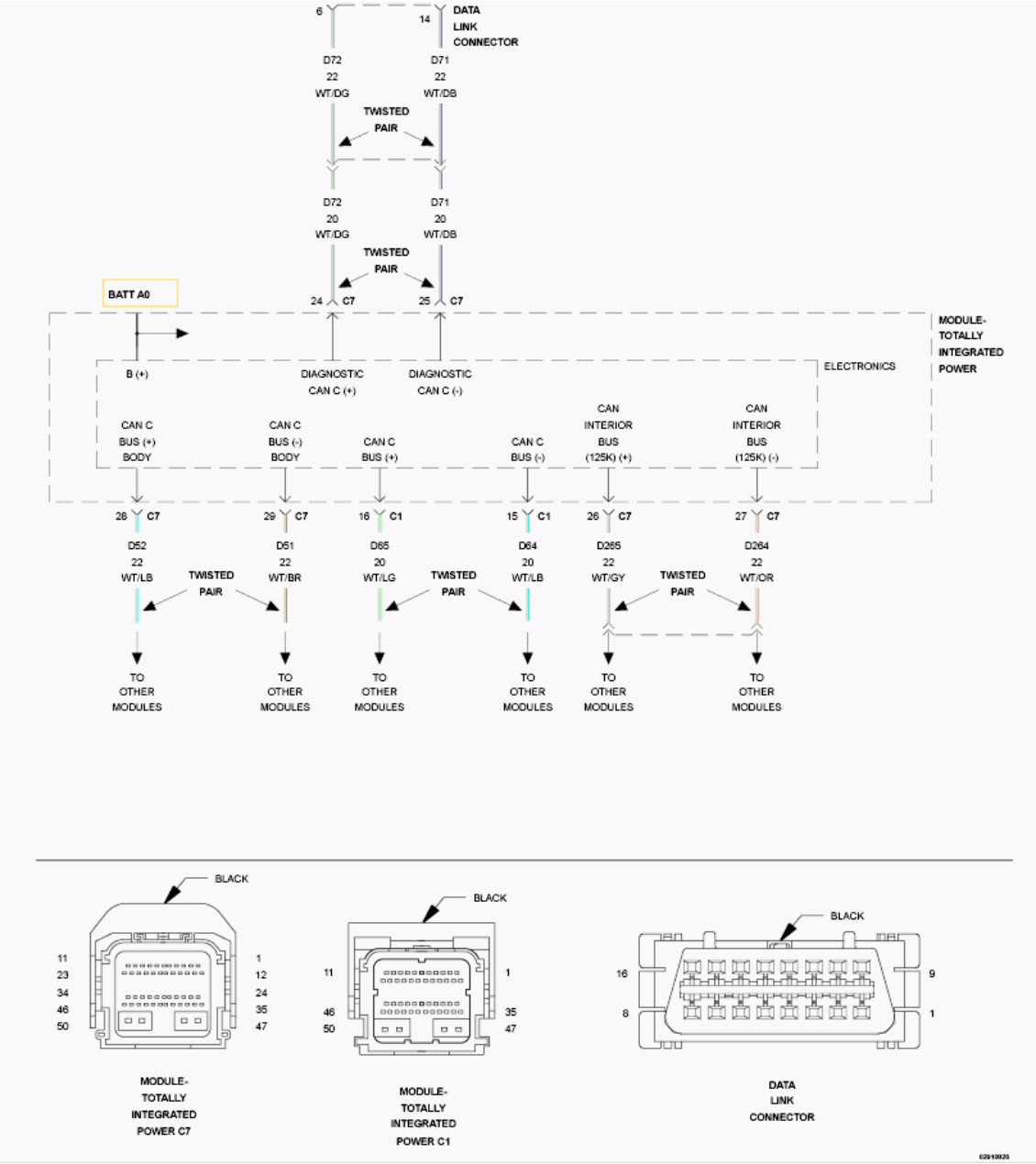

Fig. 8: Diagnostic CAN C (+) And Diagnostic CAN C (-) Circuits Wiring Diagram
Courtesy of CHRYSLER GROUP, LLC

For a complete wiring diagram, **refer to appropriate SYSTEM WIRING DIAGRAMS article** .

WHEN MONITORED:

When the scan tool queries the Totally Integrated Power Module (TIPM).

SET CONDITION:

The scan tool has detected an open condition on the (D72) Diagnostic CAN C (+) circuit.

POSSIBLE CAUSES

Possible Causes
(D72) DIAGNOSTIC CAN C (+) CIRCUIT OPEN TOTALLY INTEGRATED POWER MODULE (TIPM)

DIAGNOSTIC TEST

1. **CHECK THE STATUS OF THE ERROR MESSAGE**

   NOTE: Make sure the vehicle being tested is a CAN BUS VEHICLE. If not, false error messages may be displayed.

   NOTE: Make sure the scan tool is updated to the latest software.

   1. With the scan tool, record the error message.
   2. Disconnect the scan tool from the DLC.
   3. Cycle the ignition from on to off three times.
   4. Reconnect the scan tool.
   5. Turn the ignition on.

   Does the scan tool display this same error message?

   Yes

   - Go To 2.

   No

   - The conditions that caused this error message to set are not present at this time. Using the wiring diagrams as a guide, check all related splices and connectors for signs of water intrusion, corrosion, pushed out or bent terminals, and correct pin tension.
2. **(D72) DIAGNOSTIC CAN C (+) CIRCUIT OPEN**

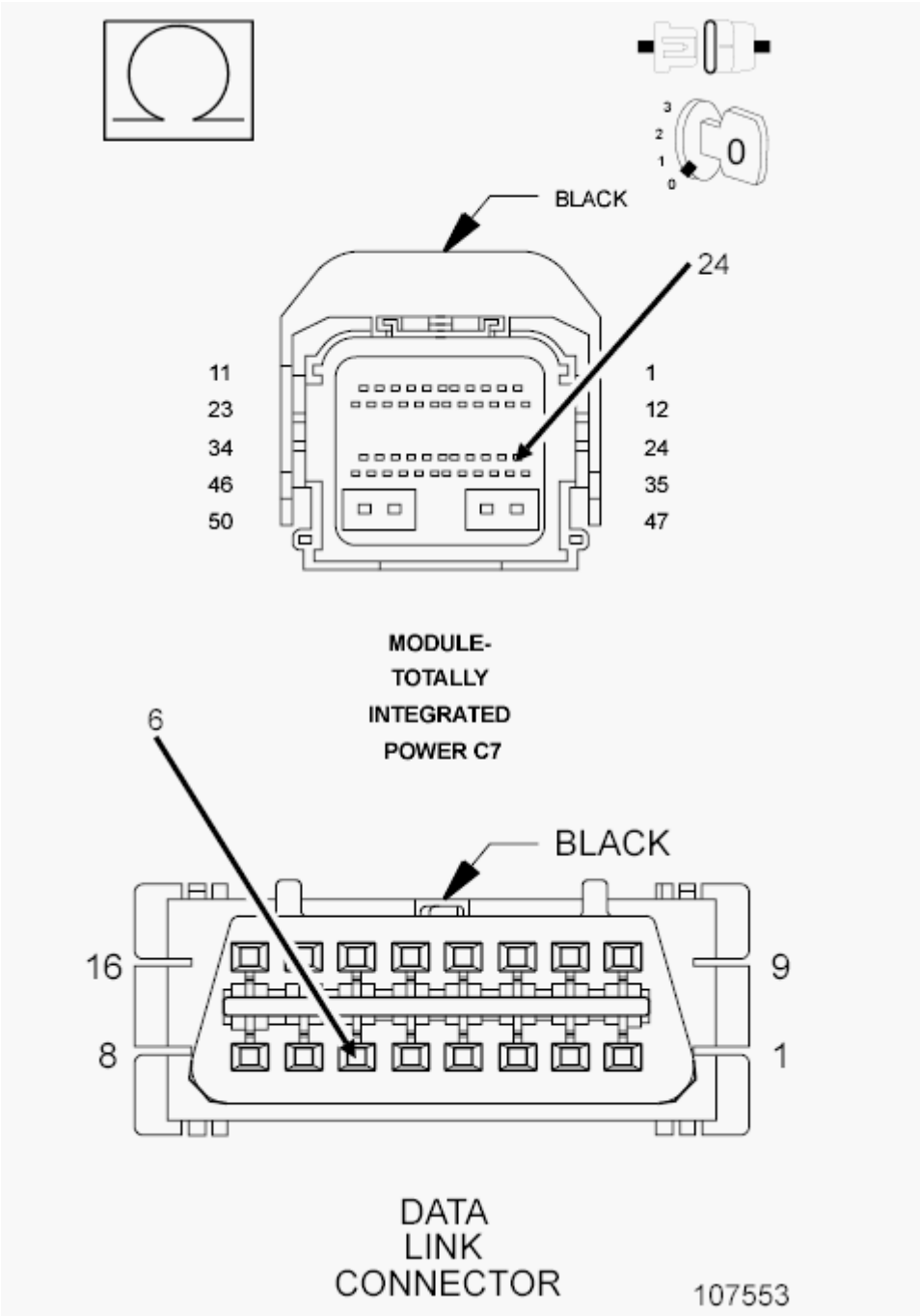

Fig. 9: Checking Diagnostic CAN C (+) Circuit For Open
Courtesy of CHRYSLER GROUP, LLC

1. Turn the ignition off.
2. Disconnect the TIPM C7 harness connector.
3. Disconnect the scan tool from the DLC.
4. Measure the resistance of the (D72) Diagnostic CAN C (+) circuit between the TIPM C7 harness connector and the DLC.

Is the resistance below 5.0 Ohms?

Yes

- Inspect the wiring and connectors for damage or shorted circuits. If OK, replace the TIPM in accordance with the Service Information. Refer to **MODULE, TOTALLY INTEGRATED POWER (TIPM), REMOVAL** .
- Refer to **STANDARD PROCEDURE** and perform the BODY VERIFICATION TEST.

No

- Repair the open in the (D72) Diagnostic CAN C (+) circuit.
- Refer to **STANDARD PROCEDURE** and perform the BODY VERIFICATION TEST.

DIAGNOSTIC CAN C (-) CIRCUIT LOW

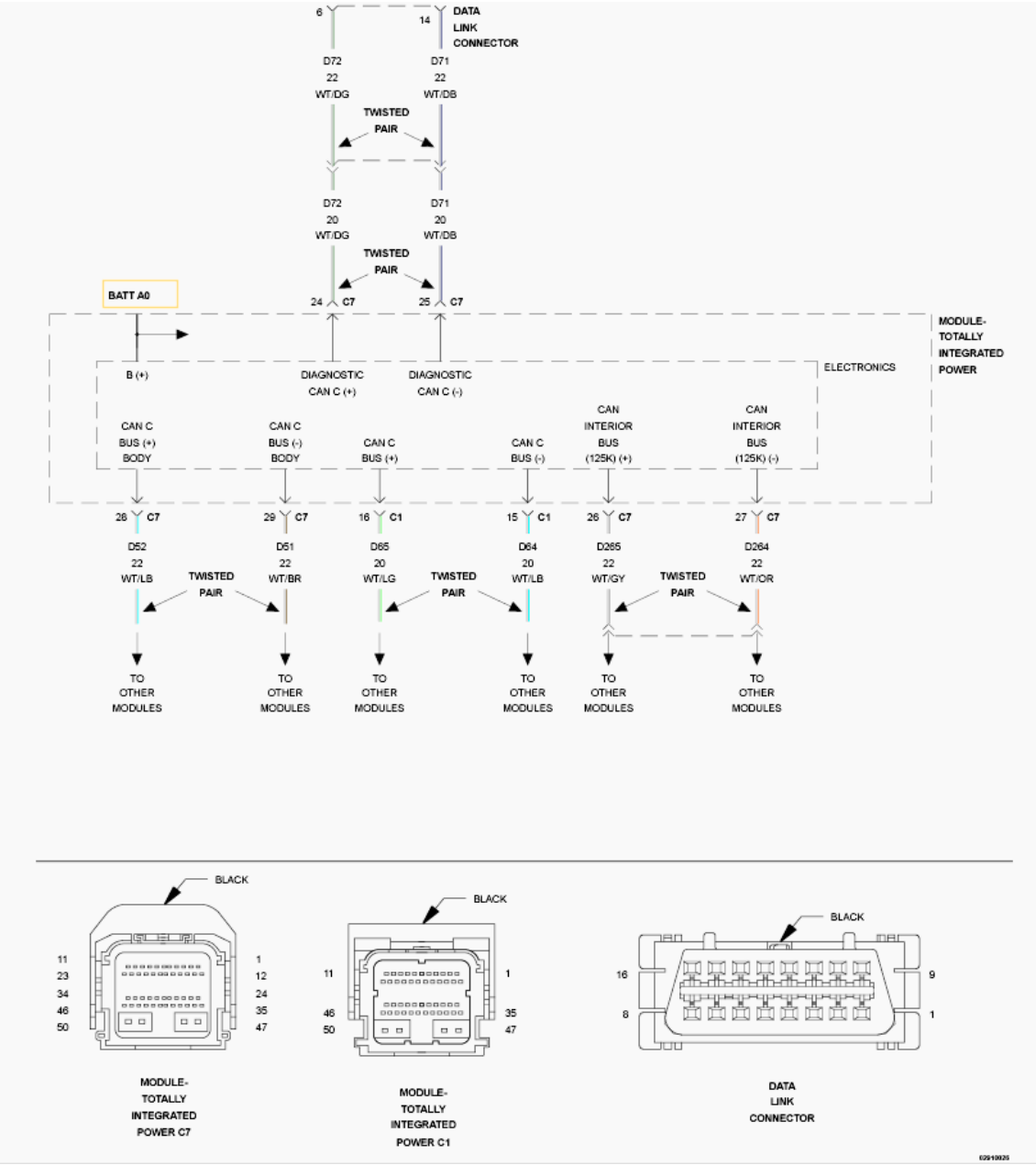

Fig. 10: Diagnostic CAN C (+) And Diagnostic CAN C (-) Circuits Wiring Diagram
Courtesy of CHRYSLER GROUP, LLC

For a complete wiring diagram, **refer to appropriate SYSTEM WIRING DIAGRAMS article** .

WHEN MONITORED:

When the scan tool queries the Totally Integrated Power Module (TIPM).

SET CONDITION:

The scan tool has detected a shorted low condition on the (D71) Diagnostic CAN C (-) circuit.

POSSIBLE CAUSES

Possible Causes
(D71) DIAGNOSTIC CAN C (-) CIRCUIT SHORTED TO GROUND TOTALLY INTEGRATED POWER MODULE (TIPM)

DIAGNOSTIC TEST

1. **CHECK THE STATUS OF THE ERROR MESSAGE**

   NOTE: Make sure the vehicle being tested is a CAN BUS VEHICLE. If not, false error messages may be displayed.

   NOTE: Make sure the scan tool is updated to the latest software.

   1. With the scan tool, record the error message.
   2. Disconnect the scan tool from the DLC.
   3. Cycle the ignition from on to off three times.
   4. Reconnect the scan tool.
   5. Turn the ignition on.

   Does the scan tool display this same error message?

   Yes

   - Go To 2.

   No

   - The conditions that caused this error message to set are not present at this time. Using the wiring diagrams as a guide, check all related splices and connectors for signs of water intrusion, corrosion, pushed out or bent terminals, and correct pin tension.
2. **(D71) DIAGNOSTIC CAN C (-) CIRCUIT SHORTED TO GROUND**

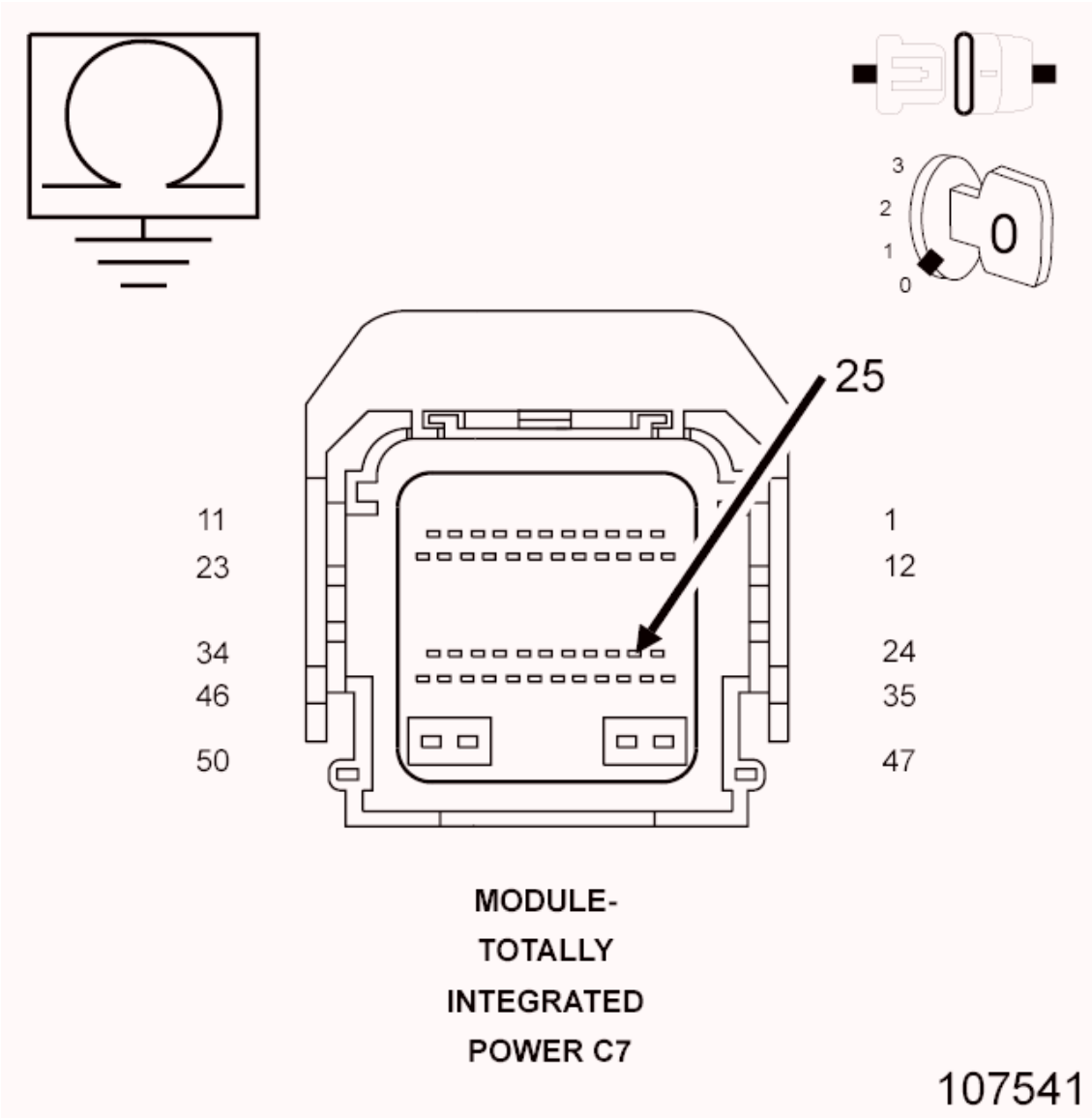

Fig. 11: Checking Diagnostic CAN C (-) Circuit For Short To Ground
Courtesy of CHRYSLER GROUP, LLC

1. Turn the ignition off.
2. Disconnect the TIPM C7 harness connector.
3. Disconnect the scan tool from the DLC.
4. Measure the resistance between ground and the (D71) Diagnostic CAN C (-) circuit.

   Is the resistance below 100.0 Ohms?

   Yes

   - Repair the short to ground in the (D71) Diagnostic CAN C (-) circuit.
   - Refer to **STANDARD PROCEDURE** and perform the BODY VERIFICATION TEST.

No

- Inspect the wiring and connectors for damage or shorted circuits. If OK, replace the TIPM in accordance with the Service Information. Refer to **MODULE, TOTALLY INTEGRATED POWER (TIPM), REMOVAL** .
- Refer to **STANDARD PROCEDURE** and perform the BODY VERIFICATION TEST.

DIAGNOSTIC CAN C (-) CIRCUIT OPEN

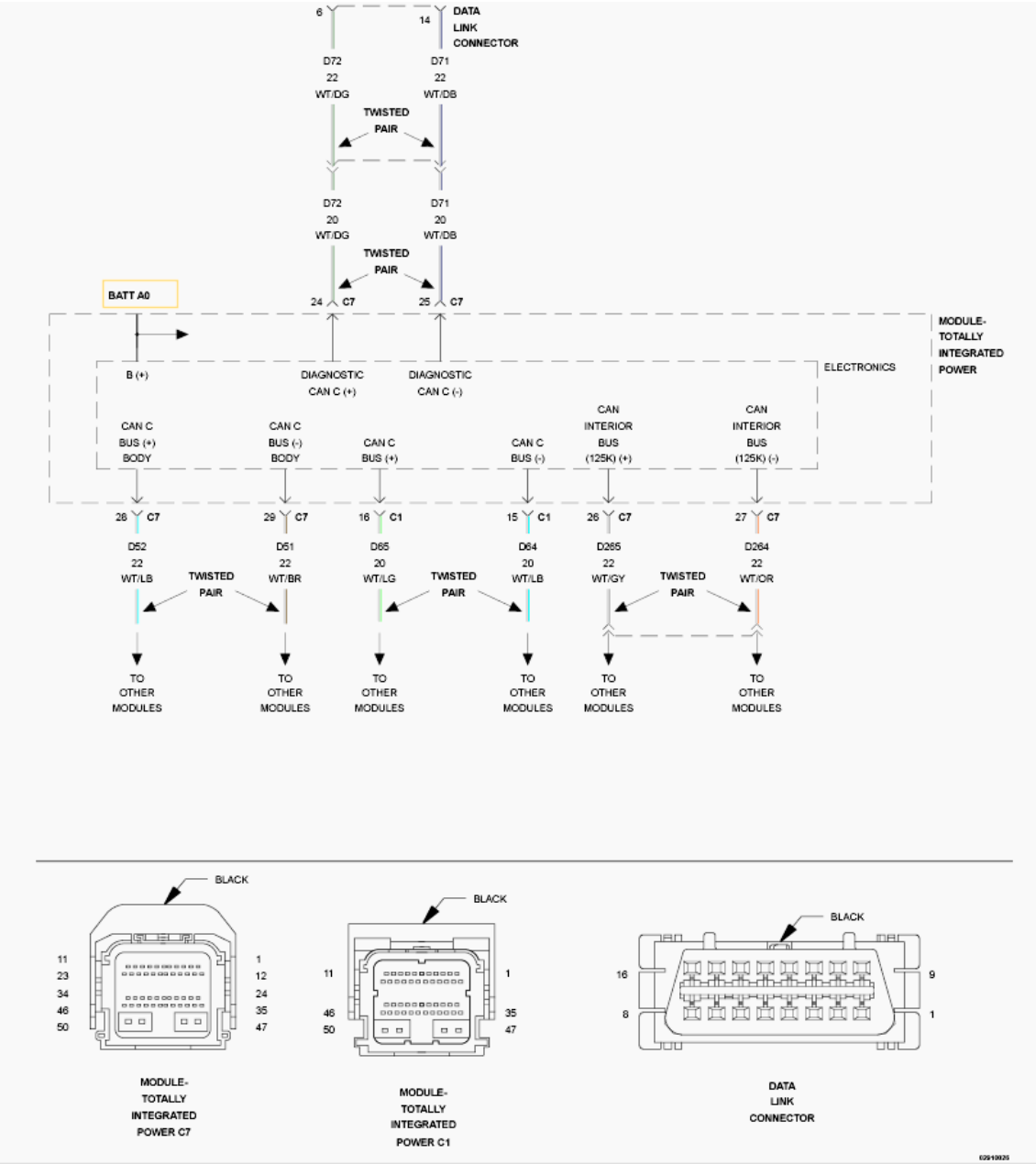

Fig. 12: Diagnostic CAN C (+) And Diagnostic CAN C (-) Circuits Wiring Diagram
Courtesy of CHRYSLER GROUP, LLC

For a complete wiring diagram, **refer to appropriate SYSTEM WIRING DIAGRAMS article** .

WHEN MONITORED:

When the scan tool queries the Totally Integrated Power Module (TIPM).

SET CONDITION:

The scan tool has detected an open condition on the (D71) Diagnostic CAN C (-) circuit.

POSSIBLE CAUSES

Possible Causes
(D71) DIAGNOSTIC CAN C (-) CIRCUIT OPEN TOTALLY INTEGRATED POWER MODULE (TIPM)

DIAGNOSTIC TEST

1. **CHECK THE STATUS OF THE ERROR MESSAGE**

   NOTE: Make sure the vehicle being tested is a CAN BUS VEHICLE. If not, false error messages may be displayed.

   NOTE: Make sure the scan tool is updated to the latest software.

   1. With the scan tool, record the error message.
   2. Disconnect the scan tool from the DLC.
   3. Cycle the ignition from on to off three times.
   4. Reconnect the scan tool.
   5. Turn the ignition on.

   Does the scan tool display this same error message?

   Yes

   - Go To 2.

   No

   - The conditions that caused this error message to set are not present at this time. Using the wiring diagrams as a guide, check all related splices and connectors for signs of water intrusion, corrosion, pushed out or bent terminals, and correct pin tension.
2. **(D71) DIAGNOSTIC CAN C (-) CIRCUIT OPEN**

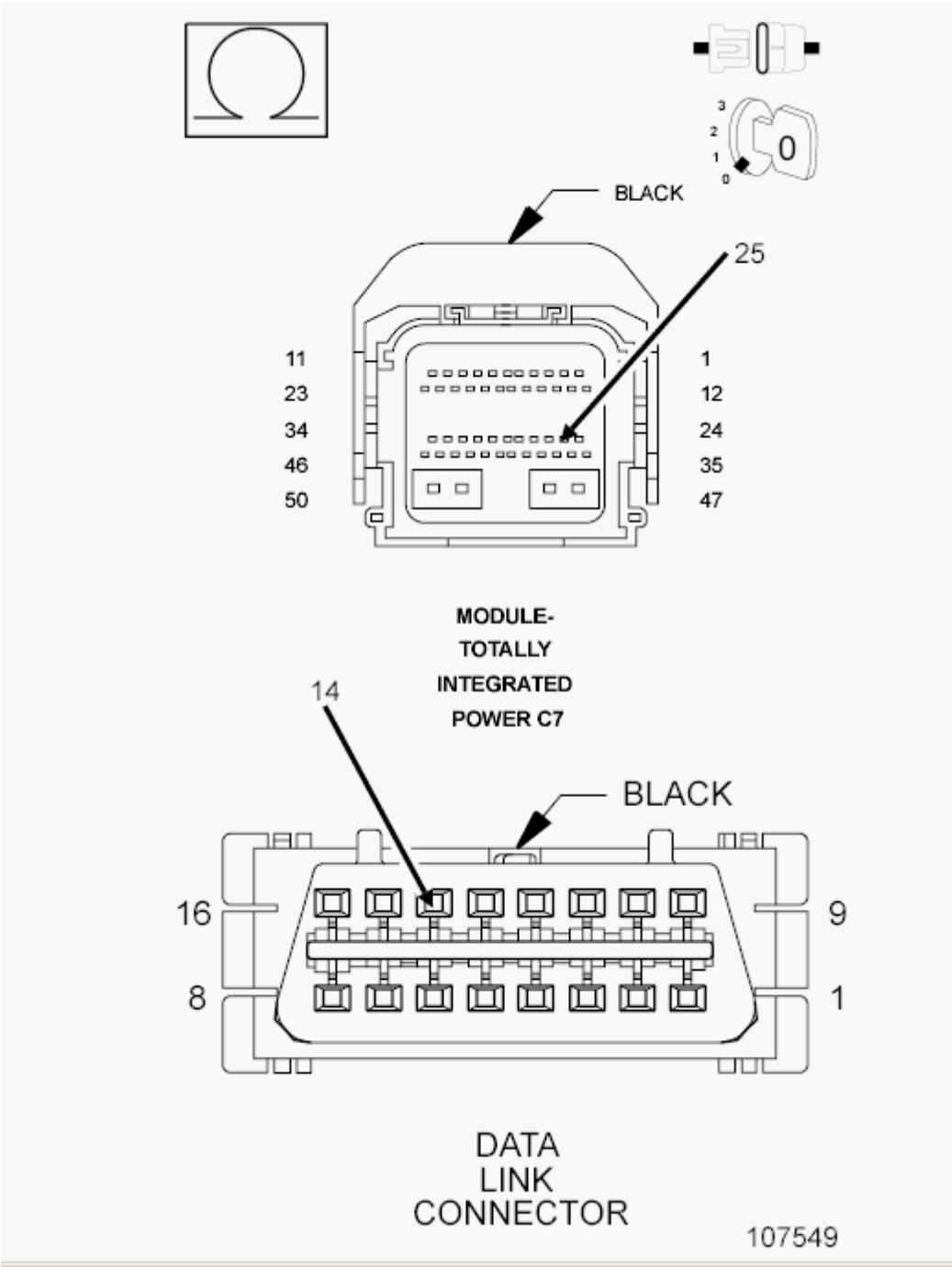

Fig. 13: Checking Diagnostic CAN C (-) Circuit For Open
Courtesy of CHRYSLER GROUP, LLC

1. Turn the ignition off.
2. Disconnect the TIPM C7 harness connector.
3. Disconnect the scan tool from the DLC.
4. Measure the resistance of the (D71) Diagnostic CAN C (-) circuit between the TIPM C7 harness connector and the DLC.

Is the resistance below 5.0 Ohms?

Yes

- Inspect the wiring and connectors for damage or shorted circuits. If OK, replace the TIPM in accordance with the Service Information. Refer to **MODULE, TOTALLY INTEGRATED POWER (TIPM), REMOVAL** .
- Refer to **STANDARD PROCEDURE** and perform the BODY VERIFICATION TEST.

No

- Repair the open in the (D71) Diagnostic CAN C (-) circuit.
- Refer to **STANDARD PROCEDURE** and perform the BODY VERIFICATION TEST.

DIAGNOSTIC CAN C (+) SHORTED TO DIAGNOSTIC CAN C (-)

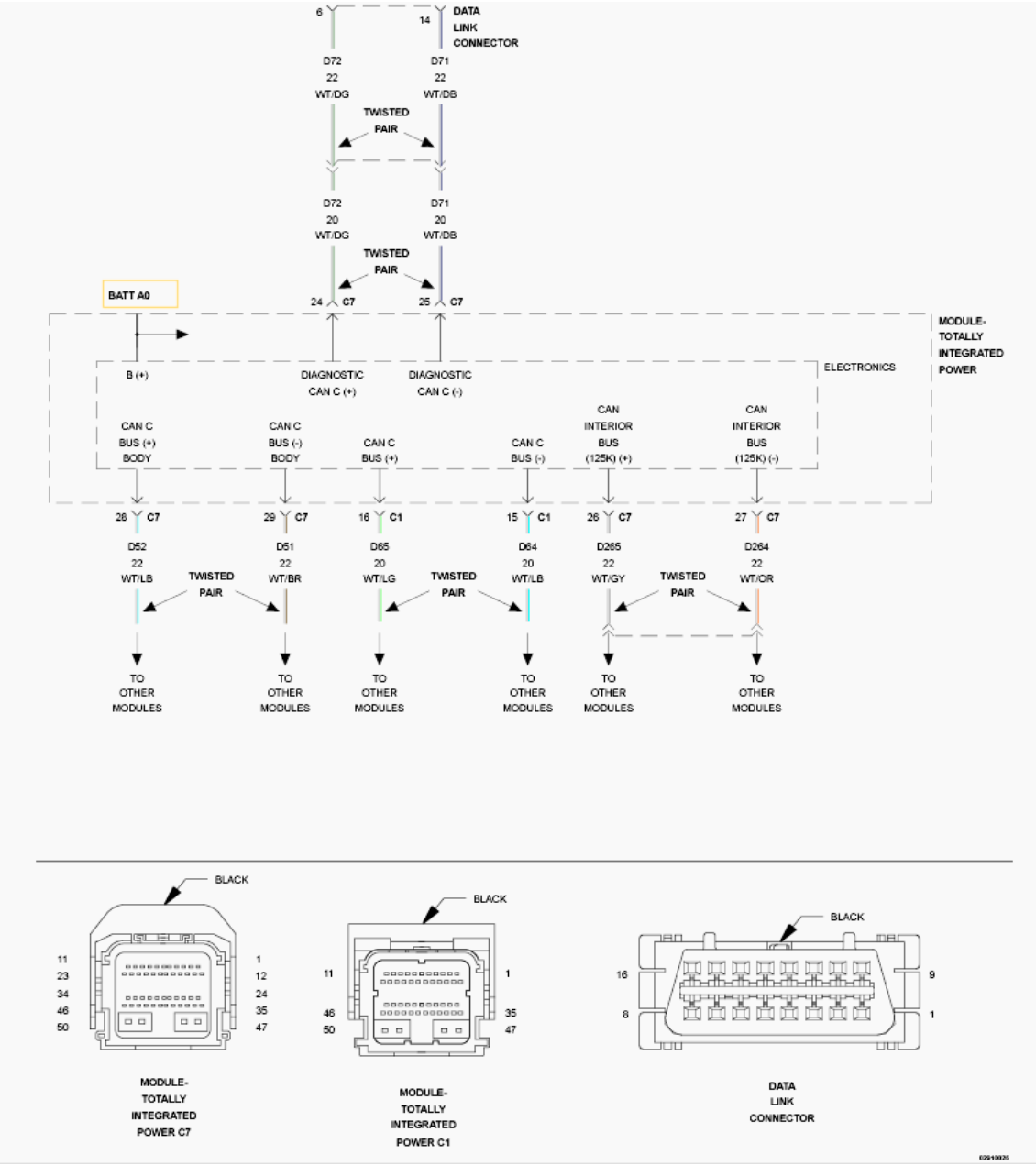

Fig. 14: Diagnostic CAN C (+) And Diagnostic CAN C (-) Circuits Wiring Diagram
Courtesy of CHRYSLER GROUP, LLC

For a complete wiring diagram, **refer to appropriate SYSTEM WIRING DIAGRAMS article** .

WHEN MONITORED:

When the scan tool queries the Totally Integrated Power Module (TIPM).

SET CONDITION:

The scan tool has detected a shorted together condition on the Diagnostic CAN C circuits.

POSSIBLE CAUSES

Possible Causes
(D72) DIAGNOSTIC CAN C (+) CIRCUIT SHORTED TO THE (D71) DIAGNOSTIC CAN C (-) CIRCUIT TOTALLY INTEGRATED POWER MODULE (TIPM)

DIAGNOSTIC TEST

1. **CHECK THE STATUS OF THE ERROR MESSAGE**

   NOTE: Make sure the vehicle being tested is a CAN BUS VEHICLE. If not, false error messages may be displayed.

   NOTE: Make sure the scan tool is updated to the latest software.

   1. With the scan tool, record the error message.
   2. Disconnect the scan tool from the DLC.
   3. Cycle the ignition from on to off three times.
   4. Reconnect the scan tool.
   5. Turn the ignition on.

   Does the scan tool display this same error message?

   Yes

   - Go To 2.

   No

   - The conditions that caused this error message to set are not present at this time. Using the wiring diagrams as a guide, check all related splices and connectors for signs of water intrusion, corrosion, pushed out or bent terminals, and correct pin tension.

2. **(D72) DIAGNOSTIC CAN C (+) CIRCUIT SHORTED TO (D71) DIAGNOSTIC CAN C (-) CIRCUIT**

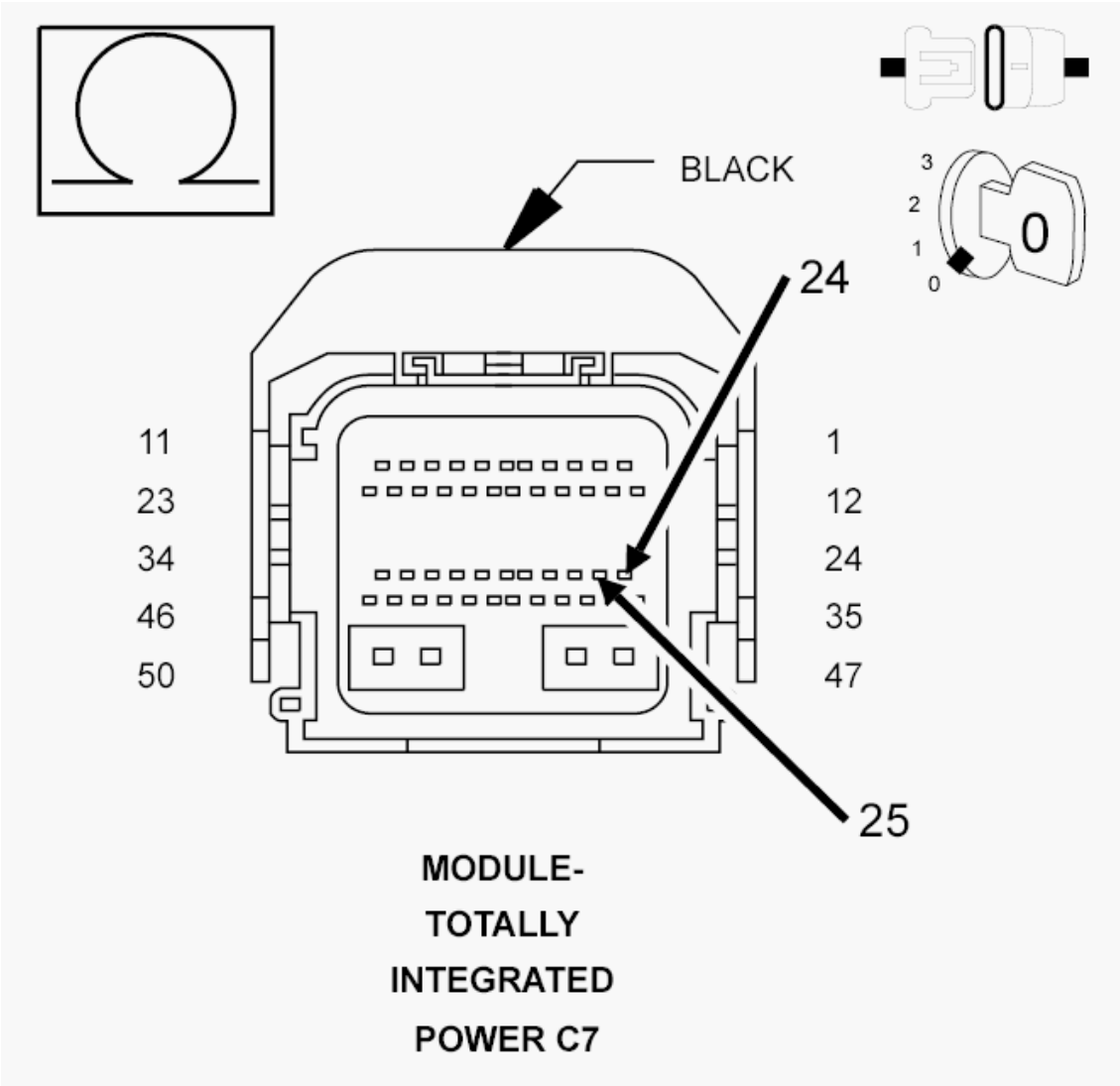

Fig. 15: Checking Diagnostic CAN C (+) Circuit For Short To Diagnostic CAN C (-) Circuit
Courtesy of CHRYSLER GROUP, LLC

1. Turn the ignition off.
2. Disconnect the TIPM C7 harness connector.
3. Disconnect the scan tool from the DLC.
4. Measure the resistance between the (D72) Diagnostic CAN C (+) circuit and the (D71) Diagnostic CAN C (-) circuit.

   Is the resistance below 100.0 Ohms?

   Yes

   - Repair the short between the (D72) Diagnostic CAN C (+) and (D71) Diagnostic CAN C (-) circuits.
   - Refer to **STANDARD PROCEDURE** and perform the BODY VERIFICATION TEST.

No

- Inspect the wiring and connectors for damage or shorted circuits. If OK, replace the TIPM in accordance with the Service Information. Refer to **MODULE, TOTALLY INTEGRATED POWER (TIPM), REMOVAL** .
- Refer to **STANDARD PROCEDURE** and perform the BODY VERIFICATION TEST.

NO RESPONSE FROM ABS (ANTILOCK BRAKE MODULE)

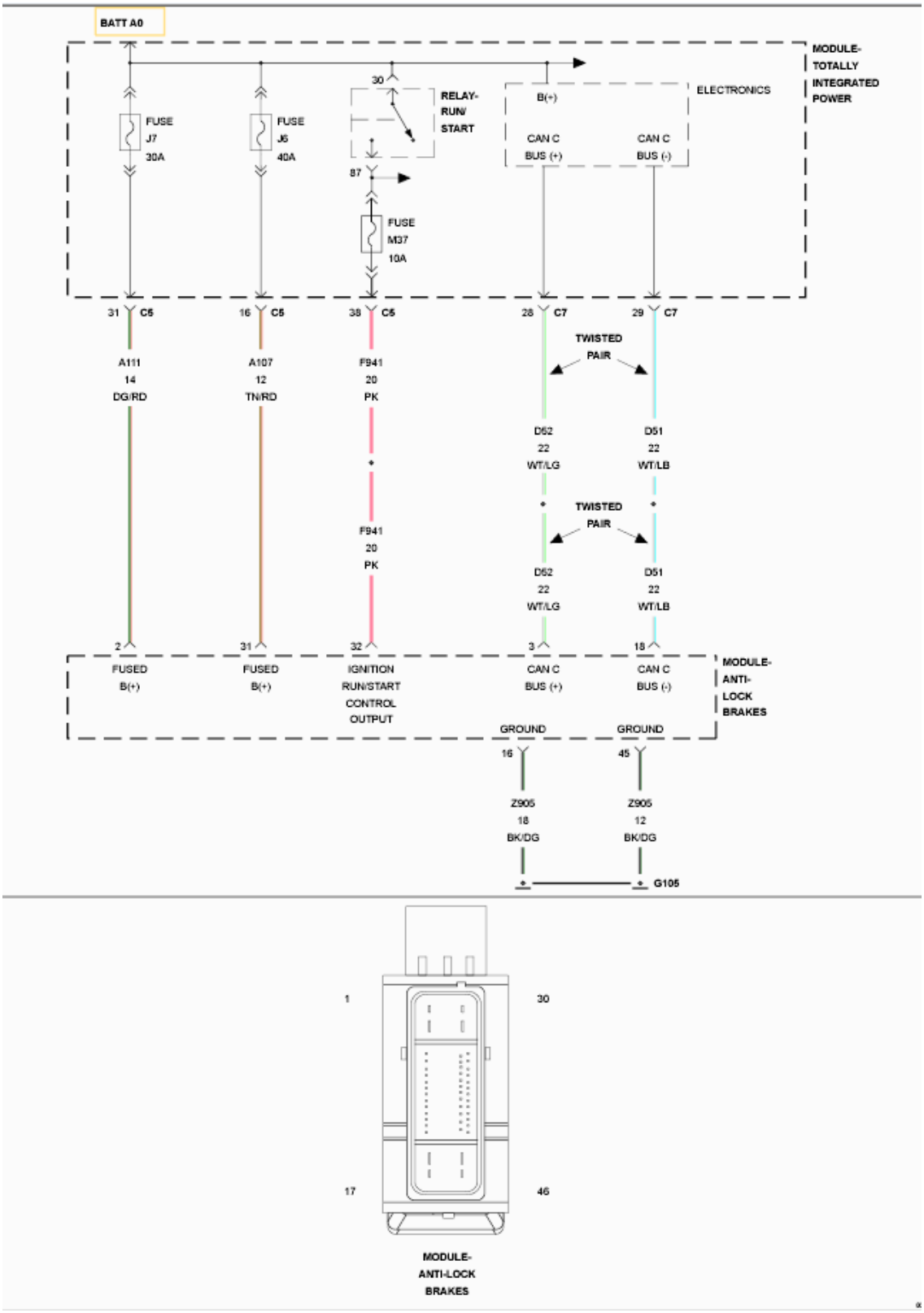

Fig. 16: ABS Module Communication Wiring Diagram
Courtesy of CHRYSLER GROUP, LLC

For a complete wiring diagram, **refer to appropriate SYSTEM WIRING DIAGRAMS article** .

POSSIBLE CAUSES

Possible Causes
(A107) (A111) FUSED B(+) CIRCUIT OPEN OR SHORTED
(Z905) GROUND CIRCUIT OPEN
(F941) IGNITION RUN/START CONTROL OUTPUT CIRCUIT OPEN OR SHORTED
(D52) CAN C BUS (+) CIRCUIT OPEN
(D51) CAN C BUS (-) CIRCUIT OPEN
ANTILOCK BRAKE MODULE (ABS)

DIAGNOSTIC TEST

1. **TEST FOR INTERMITTENT CONDITION**

   NOTE: Check for any TSB(s) related to the condition. If a TSB applies, perform the procedure outlined in the TSB before continuing.

   1. Turn the ignition on.

      NOTE: Make sure the IOD fuse is installed and battery voltage is between 10.0 and 16.0 volts.

   2. With the scan tool, read the module status.

      NOTE: Check the TIPM for any active CAN C hardware DTCs, perform DTC before proceeding.

      Does the scan tool indicate that the module is active on the bus?

      Yes

      - The no response condition is not present at this time. Using the wiring diagrams as a guide, check all related splices and connectors for signs of water intrusion, corrosion, pushed out or bent terminals, and correct pin tension.

      No

      - Go To 2.

2. **(A107) (A111) FUSED B(+) CIRCUIT OPEN OR SHORTED**

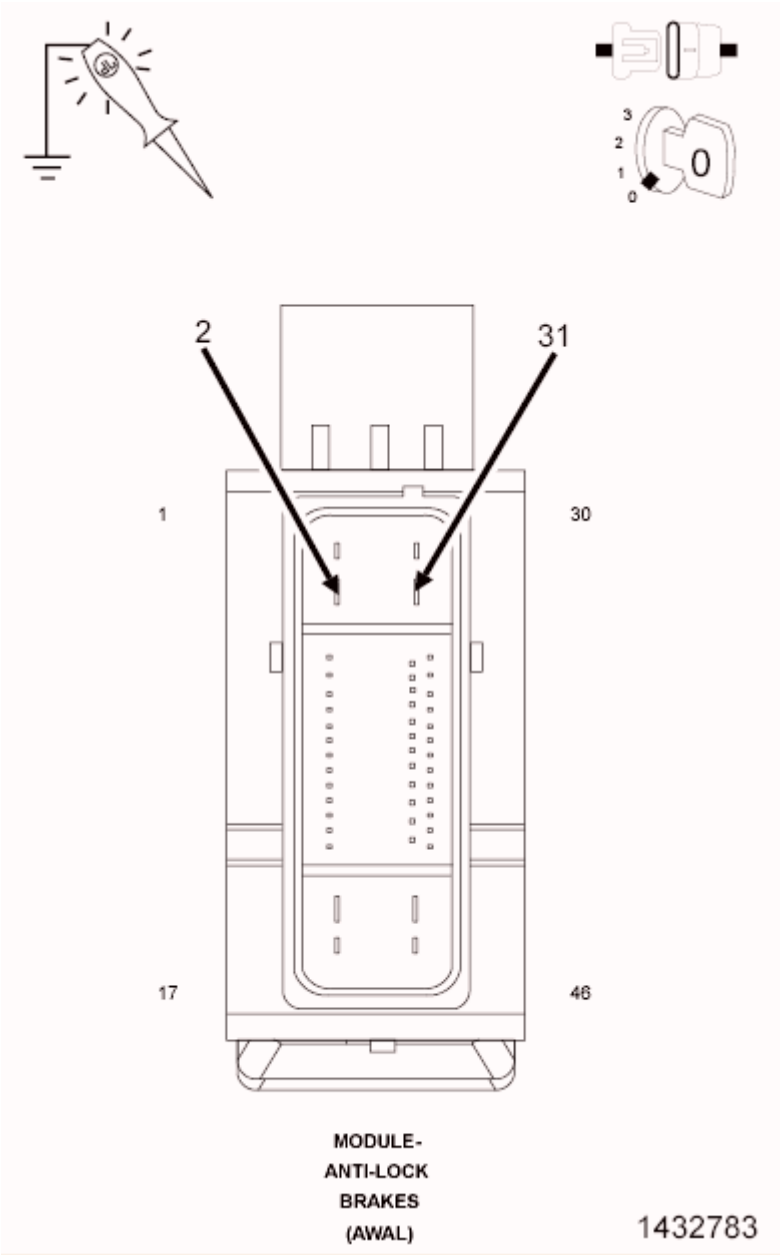

Fig. 17: Checking Fused B(+) Circuit For Open Or Short
Courtesy of CHRYSLER GROUP, LLC

1. Turn the ignition off.
2. Disconnect the Antilock Brake Module harness connector.
3. Using a 12-volt test light connected to ground, check the (A107) and (A111) Fused B(+) circuits.

   Does the test light illuminate brightly for each circuit?

   Yes

   - Go To 3.

No

- Repair the open or short in the (A107) or (A111) Fused B(+) circuit.
- Refer to **STANDARD PROCEDURE** for 1500, 2500 & 3500 or **STANDARD PROCEDURE** for 3500 Cab & Chassis, 4500 & 5500 and perform the ABS VERIFICATION TEST.

3. **(Z905) GROUND CIRCUIT OPEN**

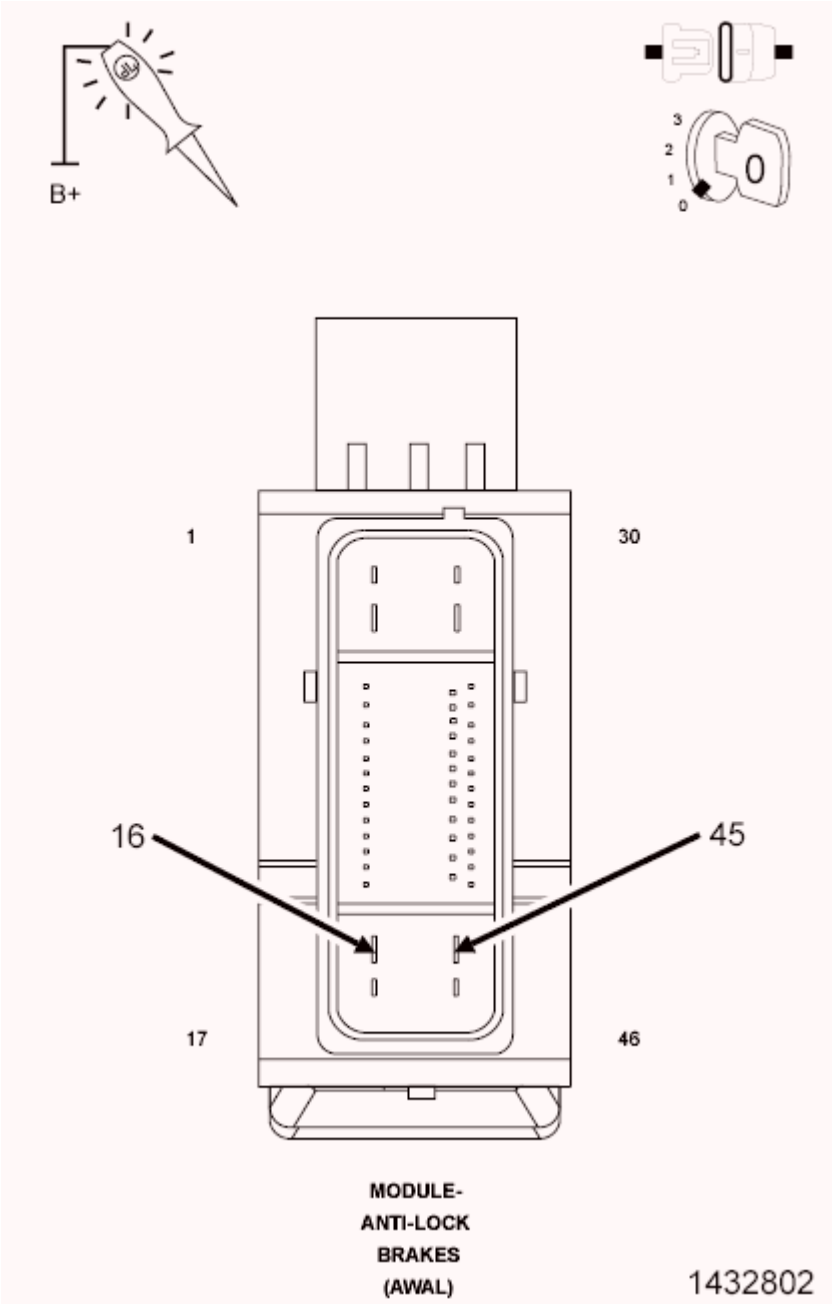

Fig. 18: Checking Ground Circuit For Open
Courtesy of CHRYSLER GROUP, LLC

1. Using a 12-volt test light connected to 12-volts, check the (Z905) Ground circuits.

   Does the test light illuminate brightly for each circuit?

   Yes

   - Go To 4.

   No

   - Repair the open in the (Z905) Ground circuit.
   - Refer to **STANDARD PROCEDURE** for 1500, 2500 & 3500 or **STANDARD PROCEDURE** for 3500 Cab & Chassis, 4500 & 5500 and perform the ABS VERIFICATION TEST.

4. **(F941) IGNITION RUN/START CONTROL OUTPUT CIRCUIT OPEN OR SHORTED**

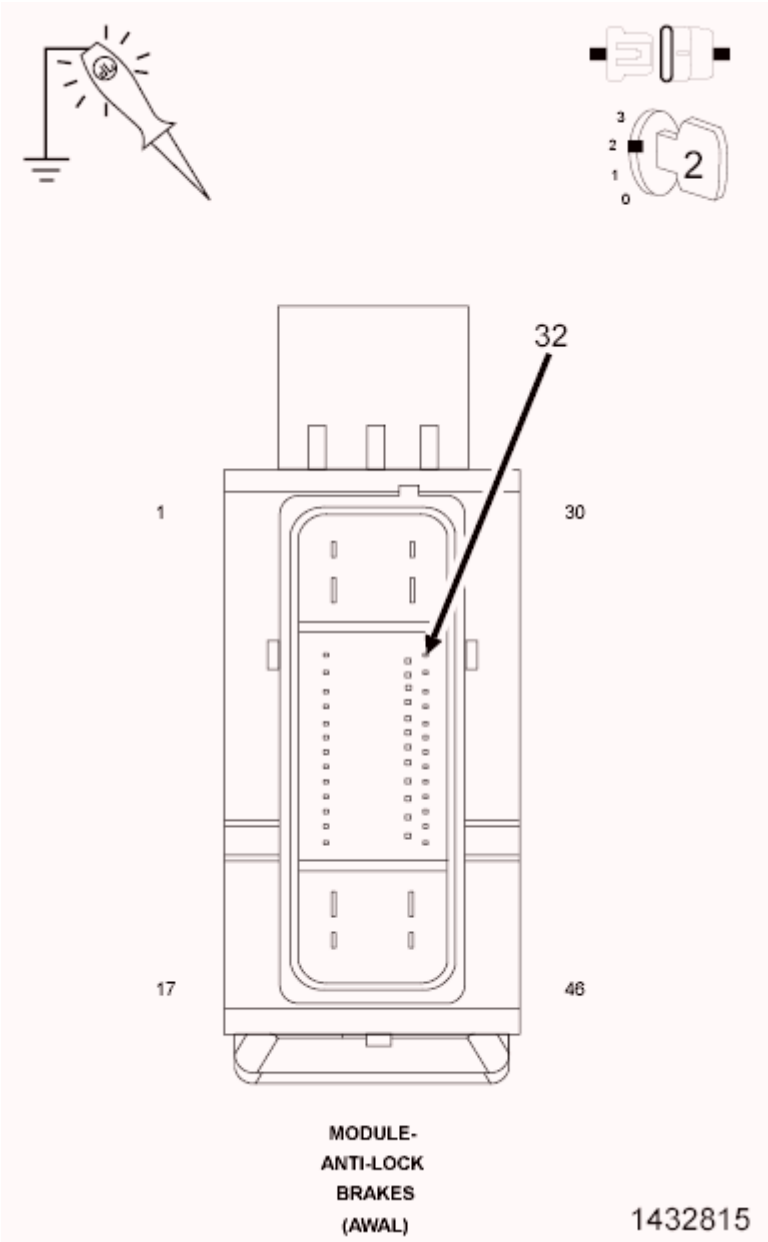

Fig. 19: Checking Ignition Run/Start Control Output Circuit For Open Or Short
Courtesy of CHRYSLER GROUP, LLC

1. Turn the ignition on.
2. Using a 12-volt test light connected to ground, check the (F941) Ignition Run/Start Control Output circuit.

   Does the test light illuminate brightly?

   Yes

   - Go To 5.

No

- Repair the open or short in the (F941) Ignition Run/Start Control Output circuit.
- Refer to **STANDARD PROCEDURE** for 1500, 2500 & 3500 or **STANDARD PROCEDURE** for 3500 Cab & Chassis, 4500 & 5500 and perform the ABS VERIFICATION TEST.

5. **(D52) CAN C BUS (+) CIRCUIT OPEN**

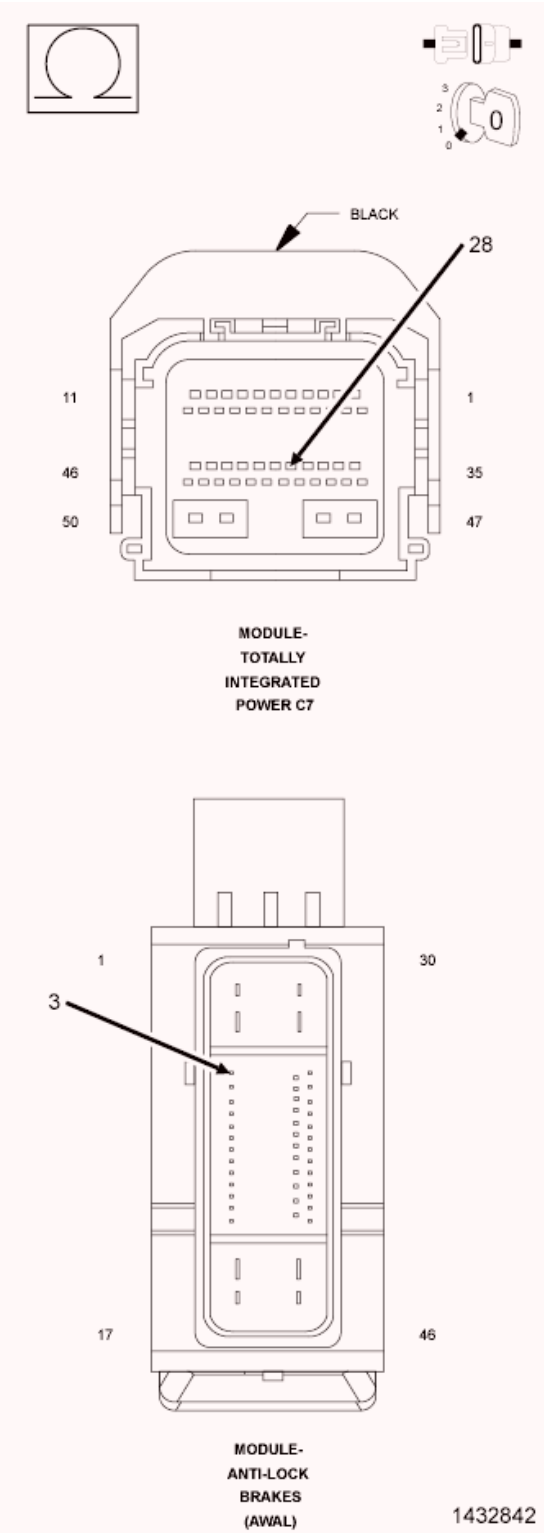

Fig. 20: Checking CAN C Bus (+) Circuit For Open
Courtesy of CHRYSLER GROUP, LLC

1. Turn the ignition off.
2. Disconnect the TIPM C7 harness connector.

3. Measure the resistance of the (D52) CAN C Bus (+) circuit between the TIPM C7 harness connector and the Antilock Brake Module connector.

   Is resistance below 5.0 Ohms?

   Yes

   - Go To 6.

   No

   - Repair the open in the (D52) CAN C Bus (+) circuit.
   - Refer to **STANDARD PROCEDURE** for 1500, 2500 & 3500 or **STANDARD PROCEDURE** for 3500 Cab & Chassis, 4500 & 5500 and perform the ABS VERIFICATION TEST.

6. **(D51) CAN C BUS (-) CIRCUIT OPEN**

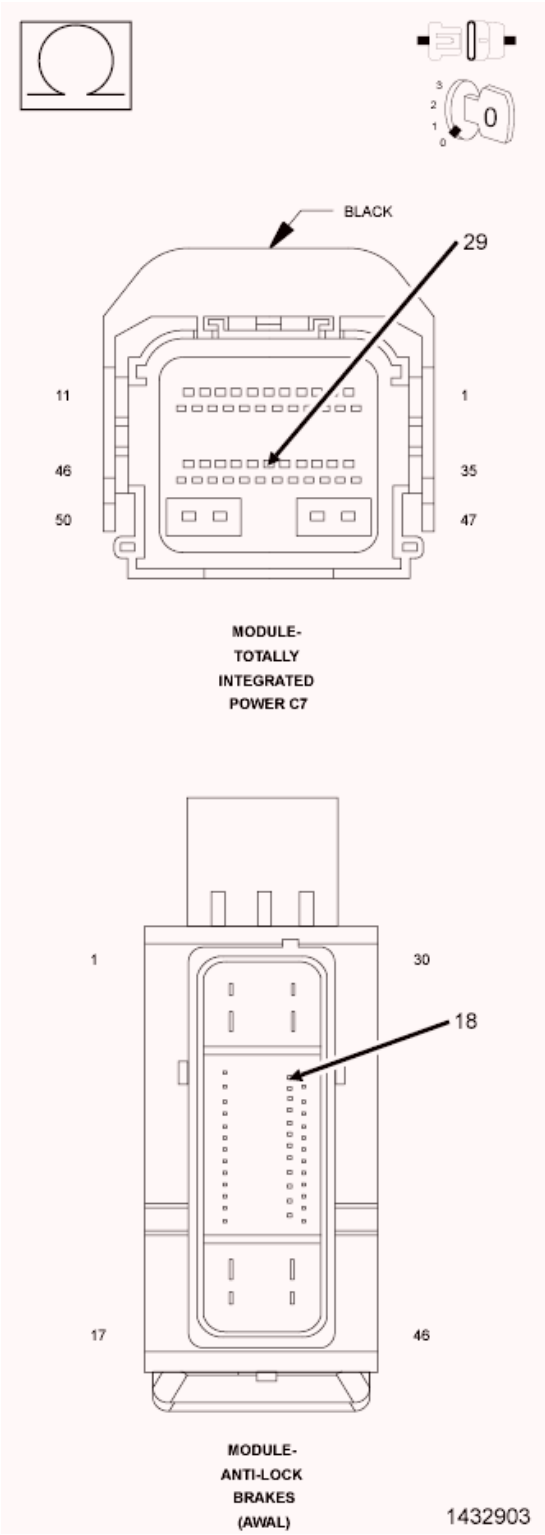

Fig. 21: Checking CAN C BUS (-) Circuit For Open
Courtesy of CHRYSLER GROUP, LLC

1. Measure the resistance of the (D51) CAN C Bus (-) circuit between the TIPM C1 harness connector and the Antilock Brake Module connector.

Is resistance below 5.0 Ohms?

Yes

- Replace the Antilock Brake Module in accordance with the Service Information. Refer to **MODULE, ANTI-LOCK BRAKE SYSTEM, REMOVAL** .
- Refer to **STANDARD PROCEDURE** for 1500, 2500 & 3500 or **STANDARD PROCEDURE** for 3500 Cab & Chassis, 4500 & 5500 and perform the ABS VERIFICATION TEST.

No

- Repair the open in the (D51) CAN C Bus (-) circuit.
- Refer to **STANDARD PROCEDURE** for 1500, 2500 & 3500 or **STANDARD PROCEDURE** for 3500 Cab & Chassis, 4500 & 5500 and perform the ABS VERIFICATION TEST.

NO RESPONSE FROM AMP (AMPLIFIER)

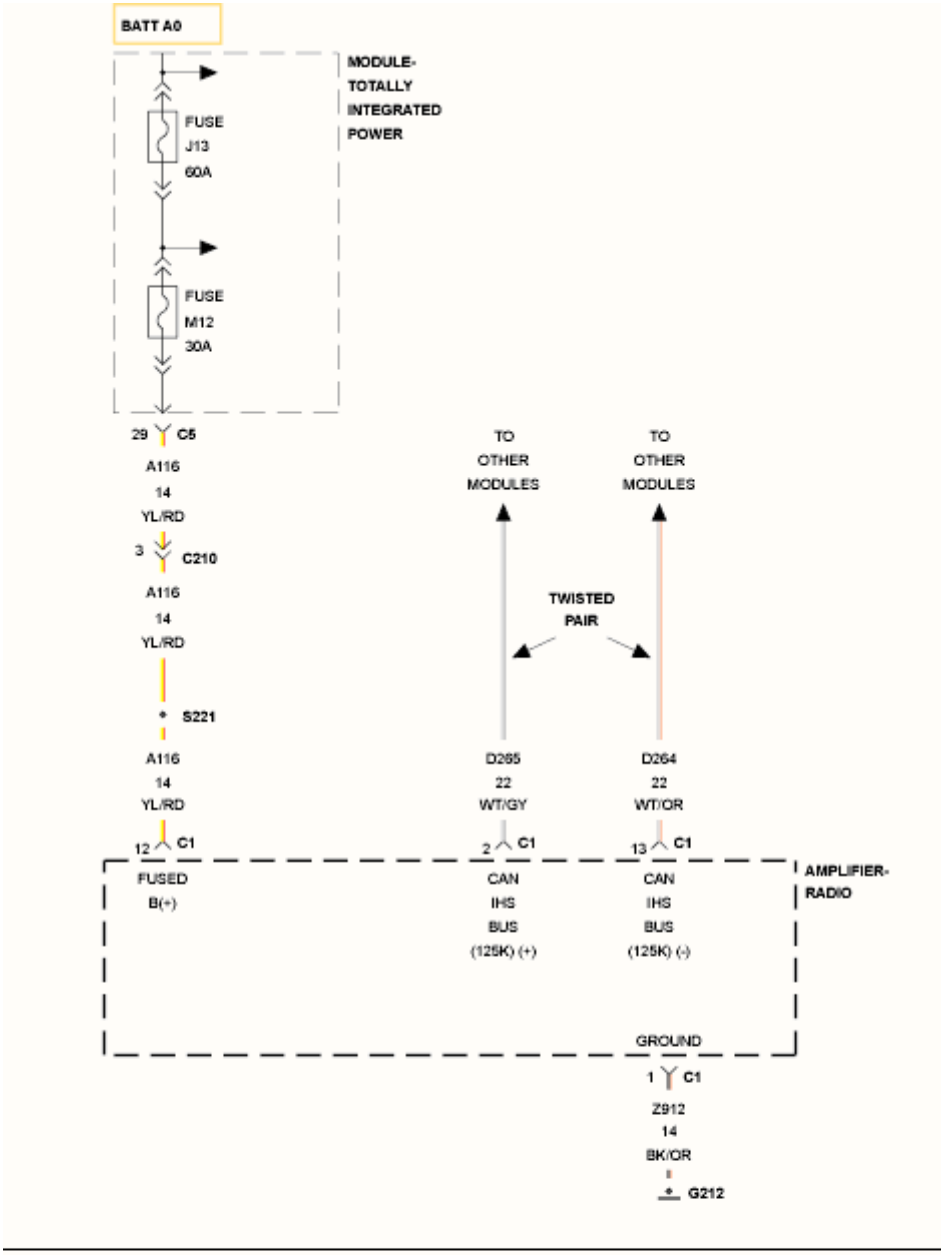

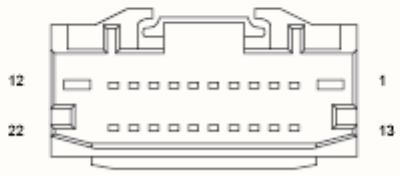

AMPLIFIER-
RADIO C1

Fig. 22: Amplifier Fused B(+) Wiring Diagram
Courtesy of CHRYSLER GROUP, LLC

For a complete wiring diagram, **refer to appropriate SYSTEM WIRING DIAGRAMS article** .

POSSIBLE CAUSES

Possible Causes
(A116) FUSED B(+) CIRCUIT OPEN OR SHORTED
(Z912) GROUND CIRCUIT OPEN
(D264) OR (D265) CAN INTERIOR BUS (125K) CIRCUIT OPEN
AMPLIFIER

DIAGNOSTIC TEST

1. **TEST FOR INTERMITTENT CONDITION**

   NOTE: Check for any TSB(s) related to the condition. If a TSB applies, perform the procedure outlined in the TSB before continuing.

   1. Turn the ignition on.

      NOTE: Make sure the IOD fuse is installed and battery voltage is between 10.0 and 16.0 volts.

   2. With the scan tool, read the module status.

      NOTE: Check the TIPM for any active CAN hardware DTCs, perform DTC before proceeding.

      Does the scan tool indicate that the module is active on the bus?

      Yes

      - The no response condition is not present at this time. Using the wiring diagrams as a guide, check all related splices and connectors for signs of water intrusion, corrosion, pushed out or bent terminals, and correct pin tension.

      No

      - Go To 2.

2. **CHECK THE (A116) FUSED B(+) CIRCUIT FOR AN OPEN OR SHORT**

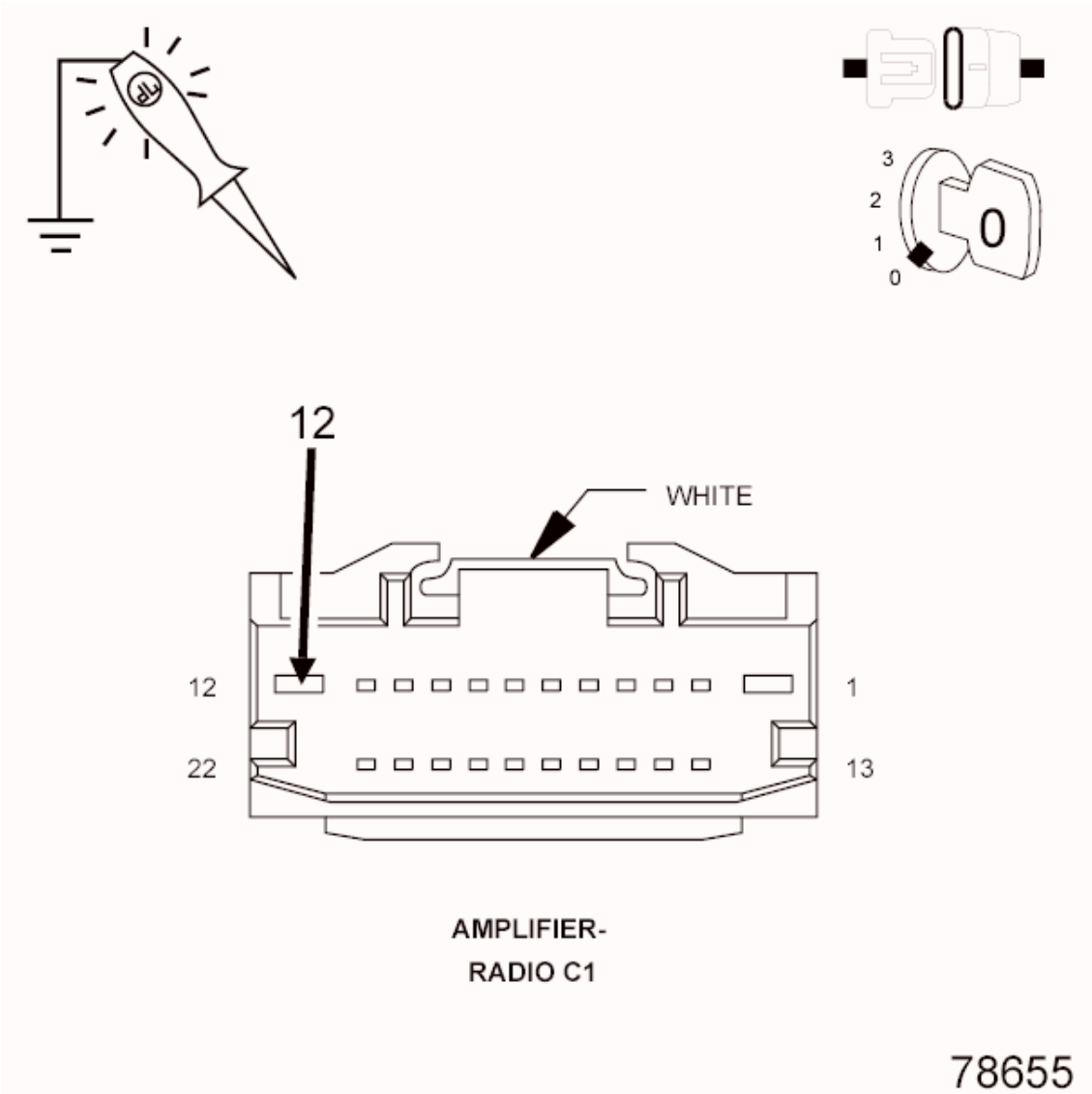

Fig. 23: Checking The Fused B(+) Circuit For An Open Or Short
Courtesy of CHRYSLER GROUP, LLC

1. Turn the ignition off.
2. Disconnect the Radio Amplifier C1 harness connector.
3. Using a 12-volt test light connected to ground, check the (A116) Fused B(+) circuit.

   Does the test light illuminate brightly?

   Yes

   - Go To 3.

   No

- Repair the open or short in the (A116) Fused B(+) circuit.
- Refer to **STANDARD PROCEDURE** and perform the BODY VERIFICATION TEST.

3. **CHECK THE (Z912) GROUND CIRCUIT FOR AN OPEN**

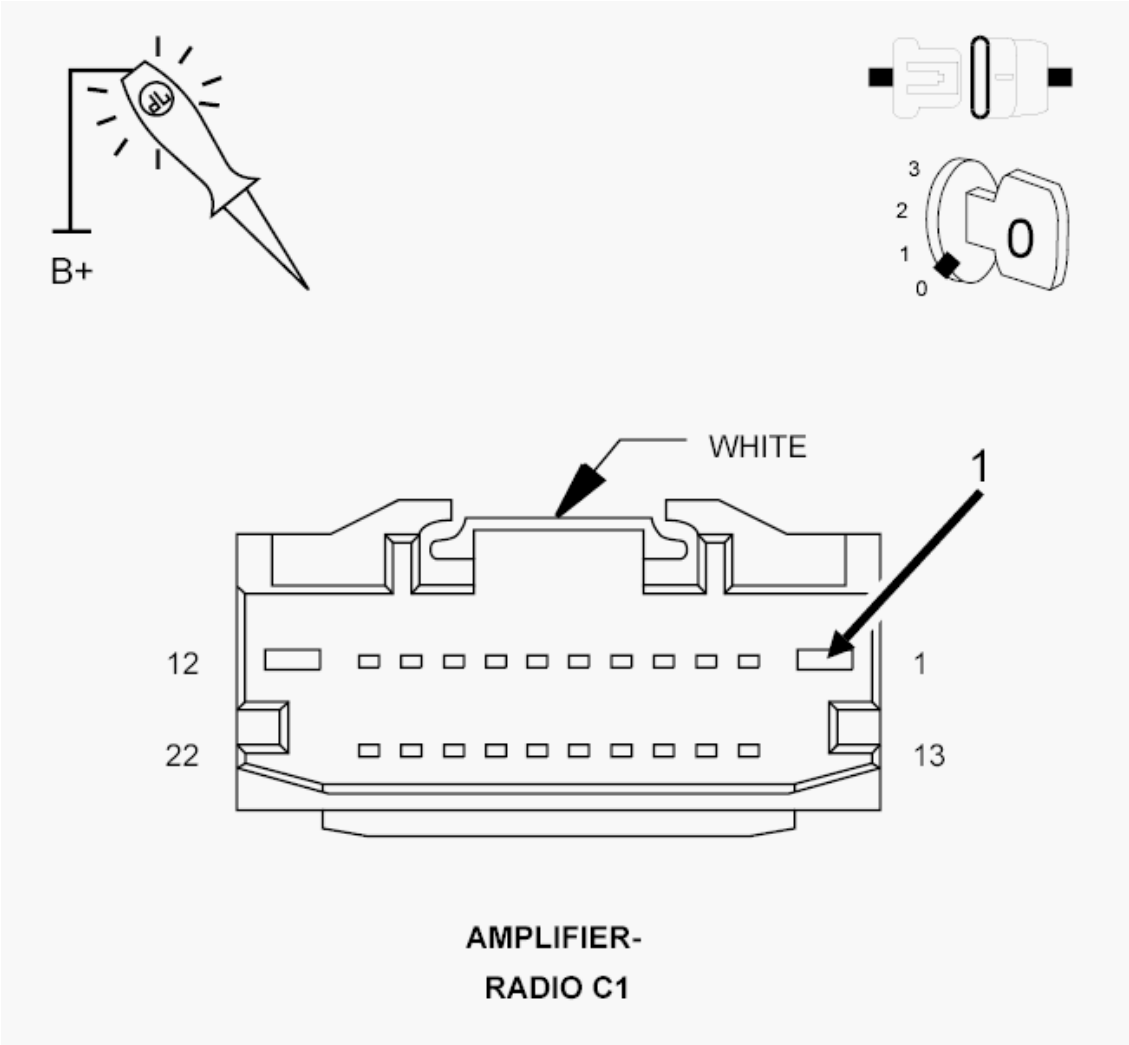

Fig. 24: Checking Ground Circuit For Open
Courtesy of CHRYSLER GROUP, LLC

1. Using a 12-volt test light connected to 12-volts, check the (Z912) ground circuit.

   Does the test light illuminate brightly for each circuit?

   Yes

   - Go To 4.

   No

- Repair the open in the (Z912) Ground circuit.
- Refer to **STANDARD PROCEDURE** and perform the BODY VERIFICATION TEST.

4. **CHECK THE (D265) AND (D264) CAN INTERIOR BUS (125K) CIRCUITS FOR AN OPEN**

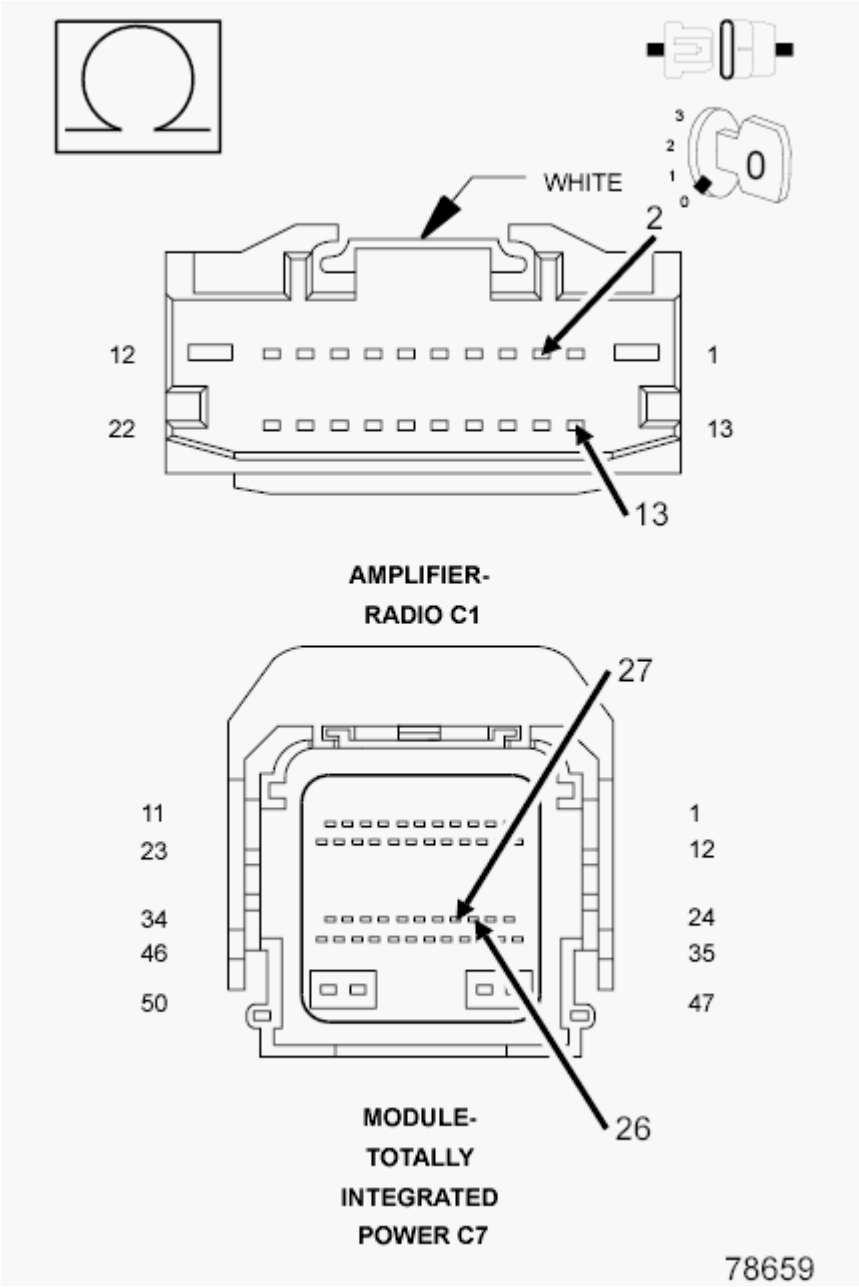

Fig. 25: Checking CAN Interior Bus Circuit For Open
Courtesy of CHRYSLER GROUP, LLC

1. Measure the resistance of the (D264) CAN Interior Bus (125K) (-) circuit between the TIPM C7 harness connector and the Radio Amplifier C1 harness connector.
2. Measure the resistance of the (D265) CAN Interior Bus (125K) (+) circuit between the TIPM C7 harness connector and the Radio Amplifier C1 harness connector.

Are the resistances below 5.0 Ohms?

Yes

- Replace the Radio Amplifier in accordance with the Service Information. Refer to **AMPLIFIER, REMOVAL** .
- Refer to **STANDARD PROCEDURE** and perform the BODY VERIFICATION TEST.

No

- Repair the open in the (D265) or (D264) CAN Interior Bus (125K) circuit.
- Refer to **STANDARD PROCEDURE** and perform the BODY VERIFICATION TEST.

NO RESPONSE FROM CCN (CLUSTER)

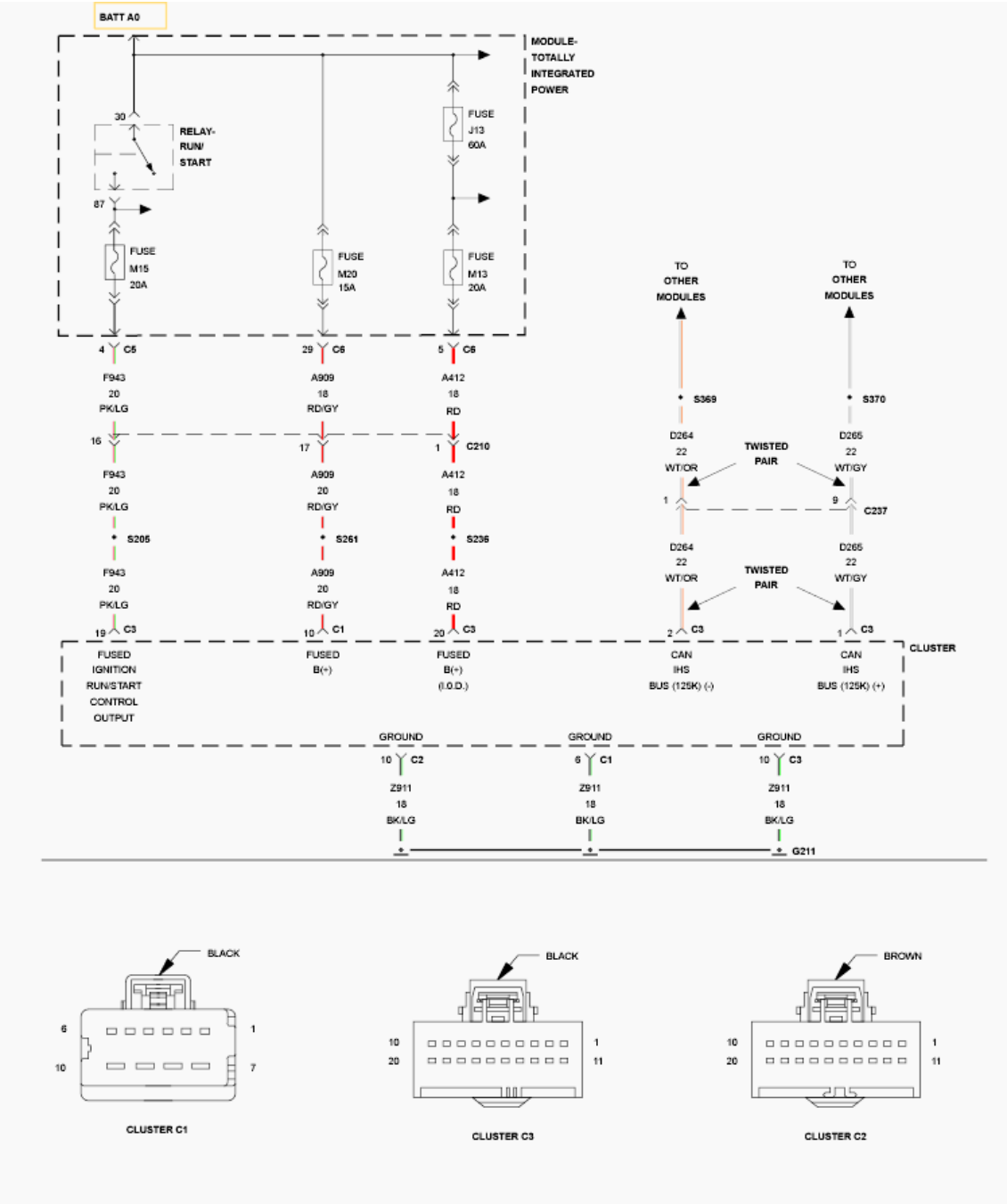

Fig. 26: CCN Cluster Wiring Diagram
Courtesy of CHRYSLER GROUP, LLC

For a complete wiring diagram, **refer to appropriate SYSTEM WIRING DIAGRAMS article** .

POSSIBLE CAUSES

Possible Causes
(A909) (A412) FUSED B(+) CIRCUITS OPEN OR SHORTED

(Z911) GROUND CIRCUITS OPEN
(F943) FUSED IGNITION RUN/START CONTROL OUTPUT CIRCUIT OPEN OR SHORTED
(D264) OR (D265) CAN INTERIOR BUS (125K) CIRCUIT OPEN
CLUSTER (CCN)

DIAGNOSTIC TEST

1. **TEST FOR INTERMITTENT CONDITION**

   NOTE: Check for any TSB(s) related to the condition. If a TSB applies, perform the procedure outlined in the TSB before continuing.

   1. Turn the ignition on.

      NOTE: Make sure the IOD fuse is installed and battery voltage is between 10.0 and 16.0 volts.

   2. With the scan tool, read the module status.

      NOTE: Check the TIPM for any active CAN hardware DTCs, perform DTC before proceeding.

      Does the scan tool indicate that the module is active on the bus?

      Yes

      - The no response condition is not present at this time. Using the wiring diagrams as a guide, check all related splices and connectors for signs of water intrusion, corrosion, pushed out or bent terminals, and correct pin tension.

      No

      - Go To 2.

2. **CHECK THE (A909) AND (A412) FUSED B(+) CIRCUITS FOR AN OPEN OR SHORT**

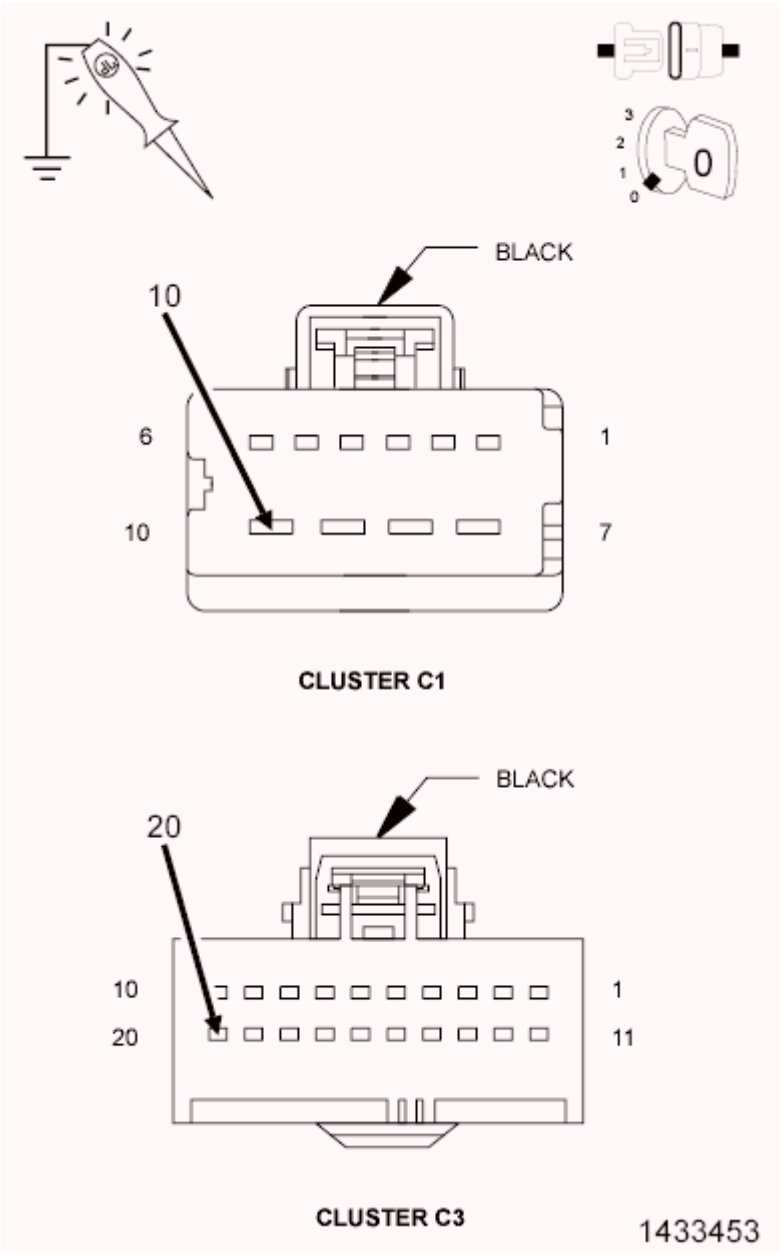

Fig. 27: Checking Fused B(+) Circuits For An Open Or Short
Courtesy of CHRYSLER GROUP, LLC

1. Turn the ignition off.
2. Disconnect the Cluster C1 and C3 harness connectors.
3. Using a 12-volt test light connected to ground, check the (A909) and (A412) Fused B(+) circuit.

   Does the test light illuminate brightly for each circuit?

   Yes

   - Go To 3.

No

- Repair the open or short in the Fused B(+) circuit.
- Refer to **STANDARD PROCEDURE** and perform the BODY VERIFICATION TEST.

3. **CHECK THE (Z911) GROUND CIRCUITS FOR AN OPEN**

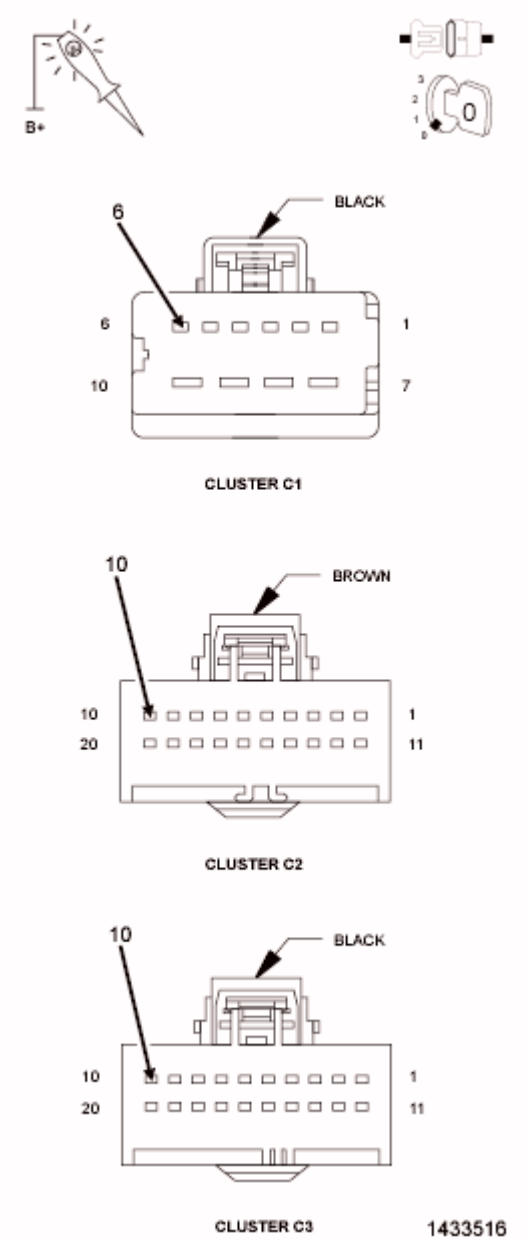

Fig. 28: Checking Ground Circuits For An Open
Courtesy of CHRYSLER GROUP, LLC

1. Disconnect the Cluster C2 harness connector.
2. Using a 12-volt test light connected to 12-volts, check the (Z911) Ground circuits.

Does the test light illuminate brightly for each circuit?

Yes

- Go To 4.

No

- Repair the open in the (Z911) Ground circuit.
- Refer to **STANDARD PROCEDURE** and perform the BODY VERIFICATION TEST.

4. **CHECK THE (F943) FUSED IGNITION RUN/START CONTROL OUTPUT CIRCUIT FOR AN OPEN OR SHORT**

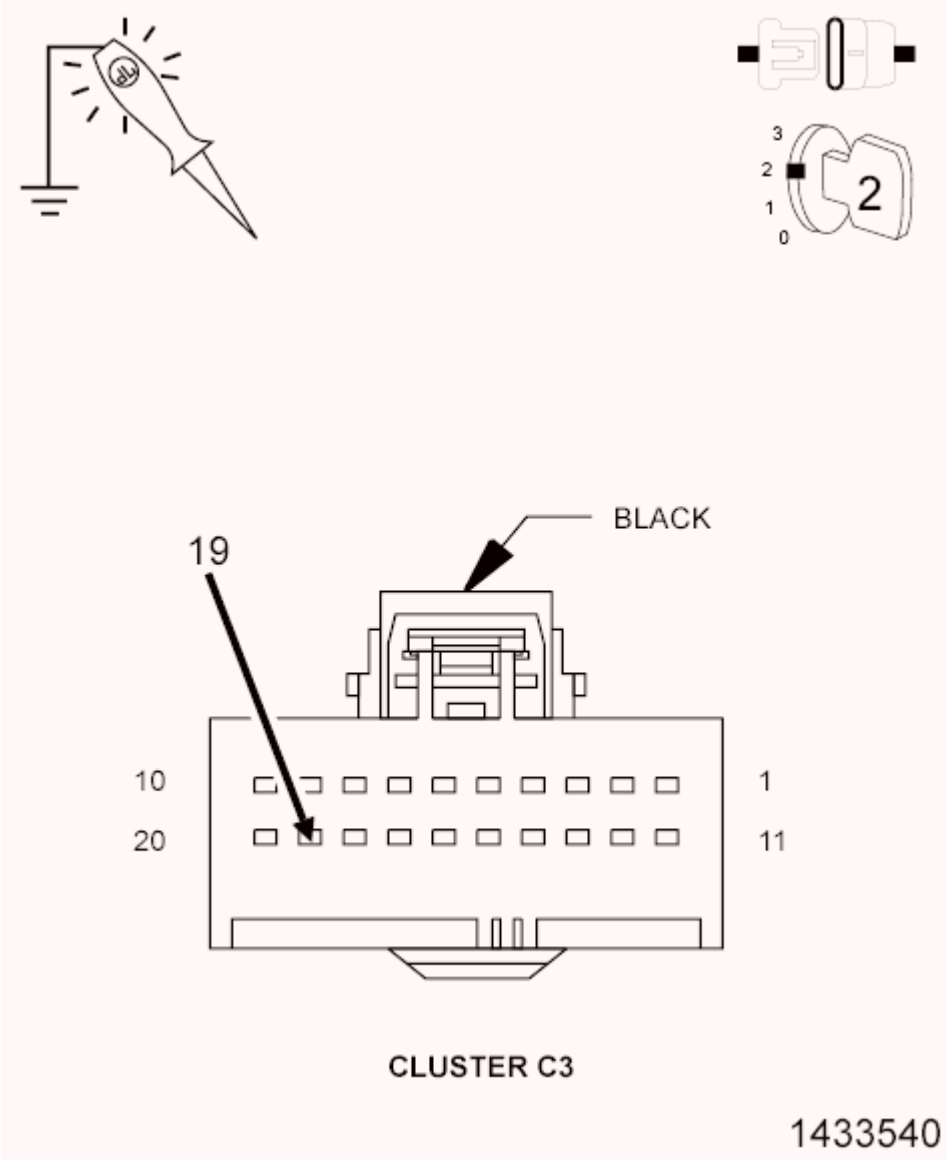

Fig. 29: Checking Fused Ignition Run/Start Control Output Circuit For An Open Or Short

Courtesy of CHRYSLER GROUP, LLC

1. Turn the ignition on.
2. Using a 12-volt test light connected to ground, check the (F943) Fused Ignition Run/Start Control Output circuit.

   Does the test light illuminate brightly?

   Yes

   - Go To 5.

   No

   - Repair the open or short in the (F943) Fused Ignition Run/Start Control Output circuit.
   - Refer to **STANDARD PROCEDURE** and perform the BODY VERIFICATION TEST.

5. **CHECK THE (D265) AND (D264) CAN INTERIOR BUS (125K) CIRCUITS FOR AN OPEN**

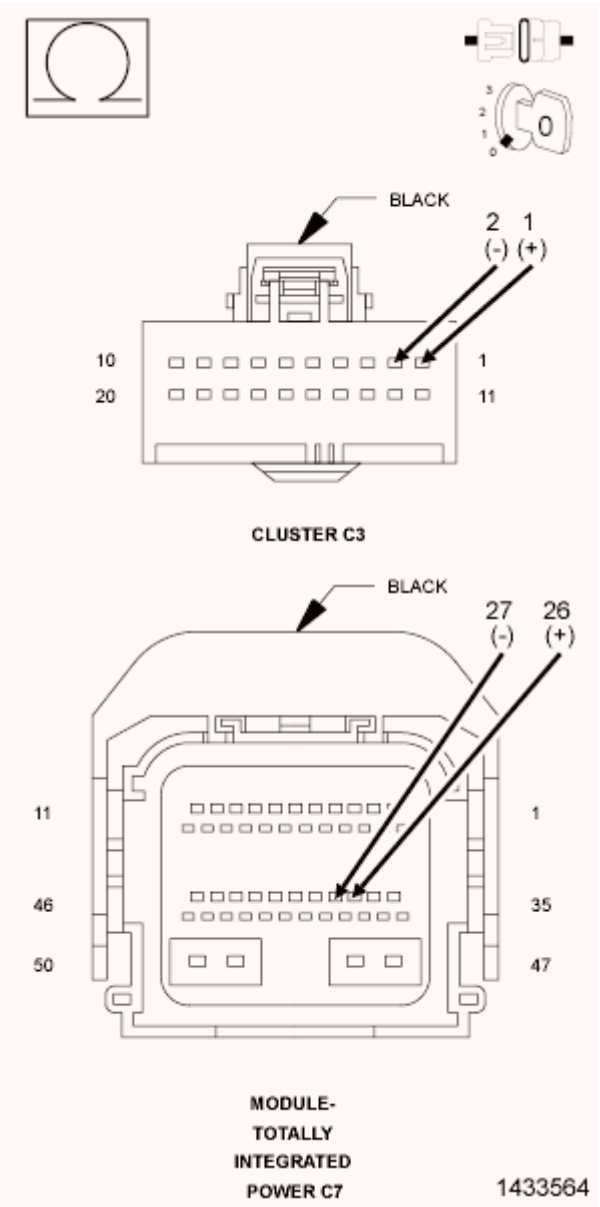

Fig. 30: Checking CAN Interior BUS Circuits For An Open
Courtesy of CHRYSLER GROUP, LLC

1. Measure the resistance of the (D264) CAN Interior Bus (125K) (-) circuit between the TIPM C7 harness connector and the Cluster C3 harness connector.
2. Measure the resistance of the (D265) CAN Interior Bus (125K) (+) circuit between the TIPM C7 harness connector and the Cluster C3 harness connector.

   Are the resistances below 5.0 Ohms?

   Yes

   - Replace the Cluster in accordance with the Service Information. Refer to **REMOVAL** .

- Refer to **STANDARD PROCEDURE** and perform the BODY VERIFICATION TEST.

No

- Repair the open in the (D265) or (D264) CAN Interior Bus (125K) circuit.
- Refer to **STANDARD PROCEDURE** and perform the BODY VERIFICATION TEST.

NO RESPONSE FROM DDM (DMLF) (DRIVER DOOR MODULE)

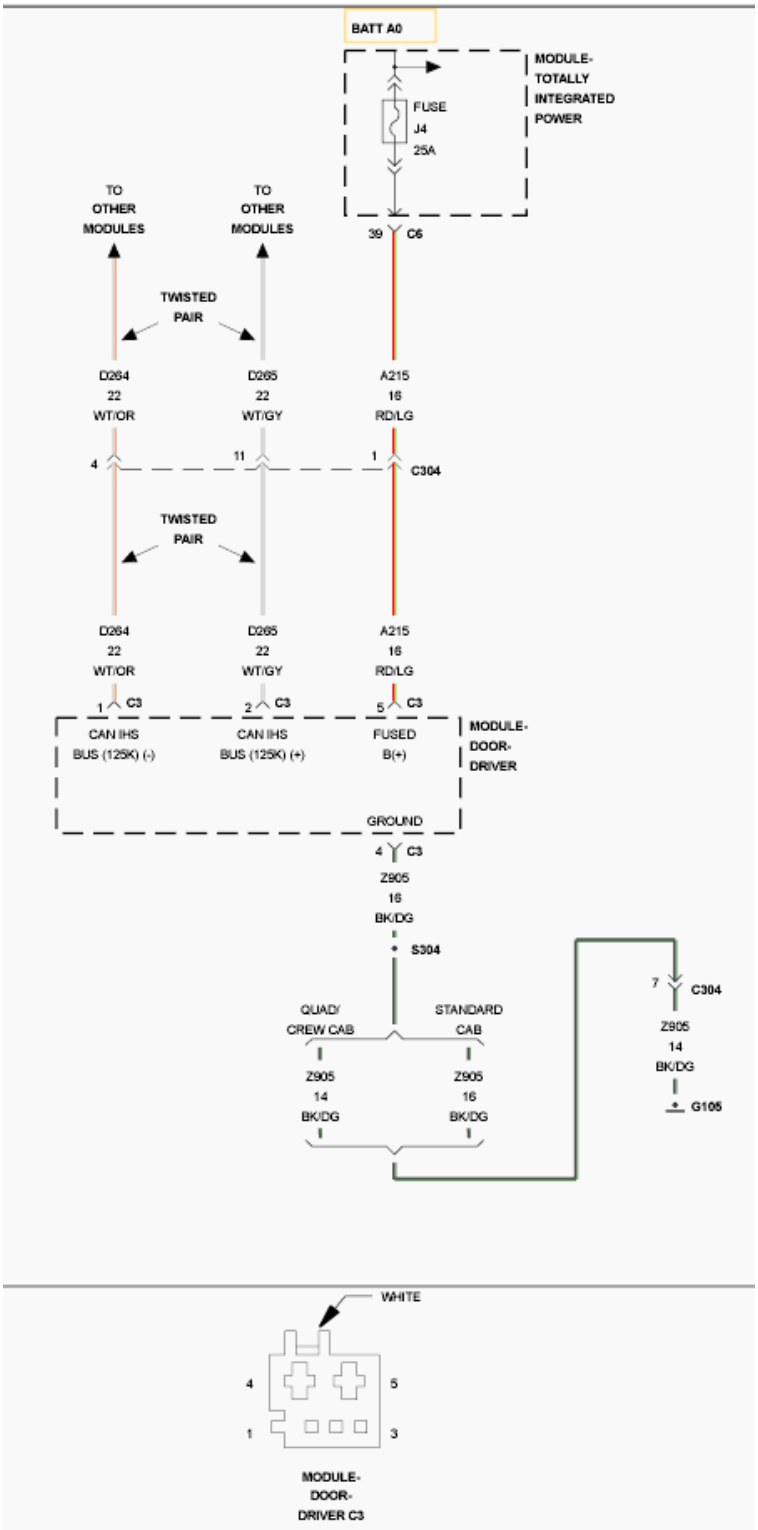

Fig. 31: Driver Door Module Fused B(+) Wiring Diagram
Courtesy of CHRYSLER GROUP, LLC

For a complete wiring diagram, **refer to appropriate SYSTEM WIRING DIAGRAMS article** .

POSSIBLE CAUSES

Possible Causes
(A215) FUSED B(+) CIRCUIT OPEN OR SHORTED
(Z905) GROUND CIRCUIT OPEN
(D264) OR (D265) CAN INTERIOR BUS (125K) CIRCUITS OPEN
DRIVER DOOR MODULE (DDM)

DIAGNOSTIC TEST

1. **TEST FOR INTERMITTENT CONDITION**

   NOTE: Check for any TSB(s) related to the condition. If a TSB applies, perform the procedure outlined in the TSB before continuing.

   1. Turn the ignition on.

      NOTE: Make sure the IOD fuse is installed and battery voltage is between 10.0 and 16.0 volts.

   2. With the scan tool, read the module status.

      NOTE: Check the TIPM for any active CAN hardware DTCs, perform DTC before proceeding.

      Does the scan tool indicate that the module is active on the bus?

      Yes

      - The no response condition is not present at this time. Using the wiring diagrams as a guide, check all related splices and connectors for signs of water intrusion, corrosion, pushed out or bent terminals, and correct pin tension.

      No

      - Go To 2.

2. **CHECK THE (A215) FUSED B(+) CIRCUIT FOR AN OPEN OR SHORT**

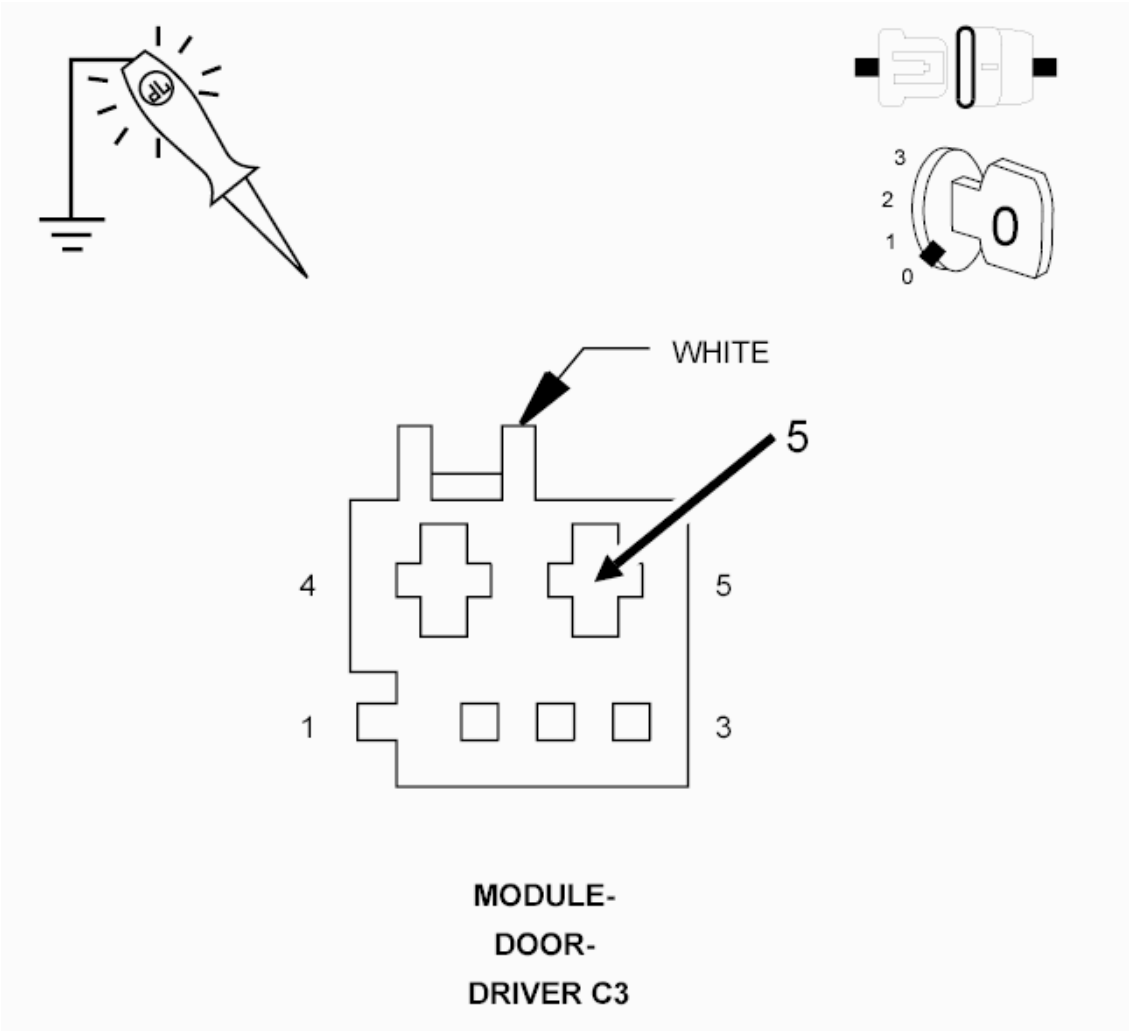

Fig. 32: Checking Fused B(+) Circuit For An Open Or Short
Courtesy of CHRYSLER GROUP, LLC

1. Turn the ignition off.
2. Disconnect the Driver Door Module C3 harness connector.
3. Using a 12-volt test light connected to ground, check the (A215) Fused B(+) circuit.

   Does the test light illuminate brightly?

   Yes

   - Go To 3.

   No

   - Repair the open or short in the (A215) Fused B(+) circuit.
   - Refer to **STANDARD PROCEDURE** and perform the BODY VERIFICATION TEST.

3. **CHECK THE (Z905) GROUND CIRCUIT FOR AN OPEN**

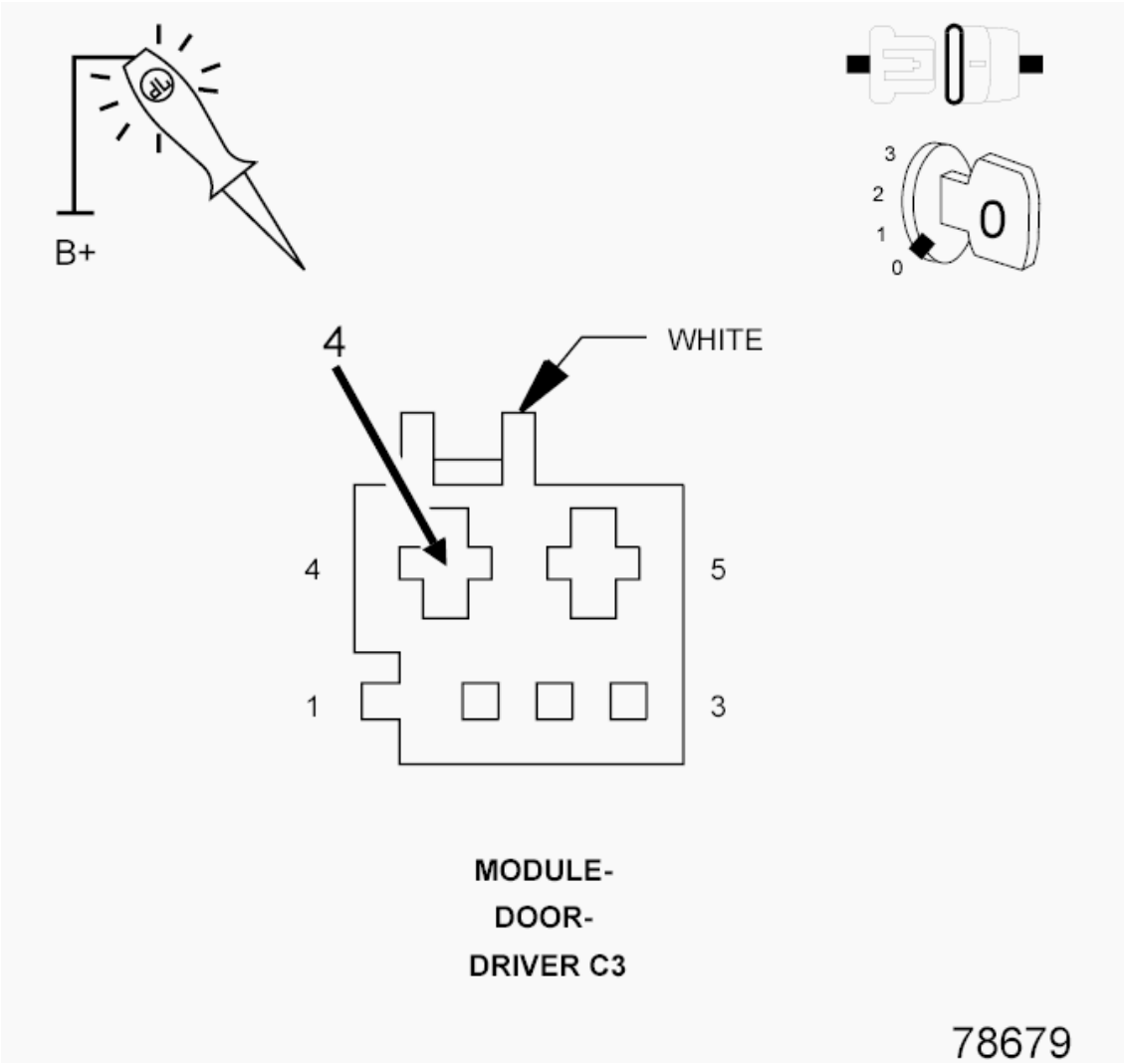

Fig. 33: Checking Ground Circuit For An Open
Courtesy of CHRYSLER GROUP, LLC

1. Using a 12-volt test light connected to 12-volts, check the (Z905) Ground circuit.

   Does the test light illuminate brightly?

   Yes

   - Go To 4.

   No

   - Repair the open in the (Z905) Ground circuit.
   - Refer to **STANDARD PROCEDURE** and perform the BODY VERIFICATION TEST.

4. **CHECK THE (D265) AND (D264) CAN INTERIOR BUS (125K) CIRCUITS FOR AN OPEN**

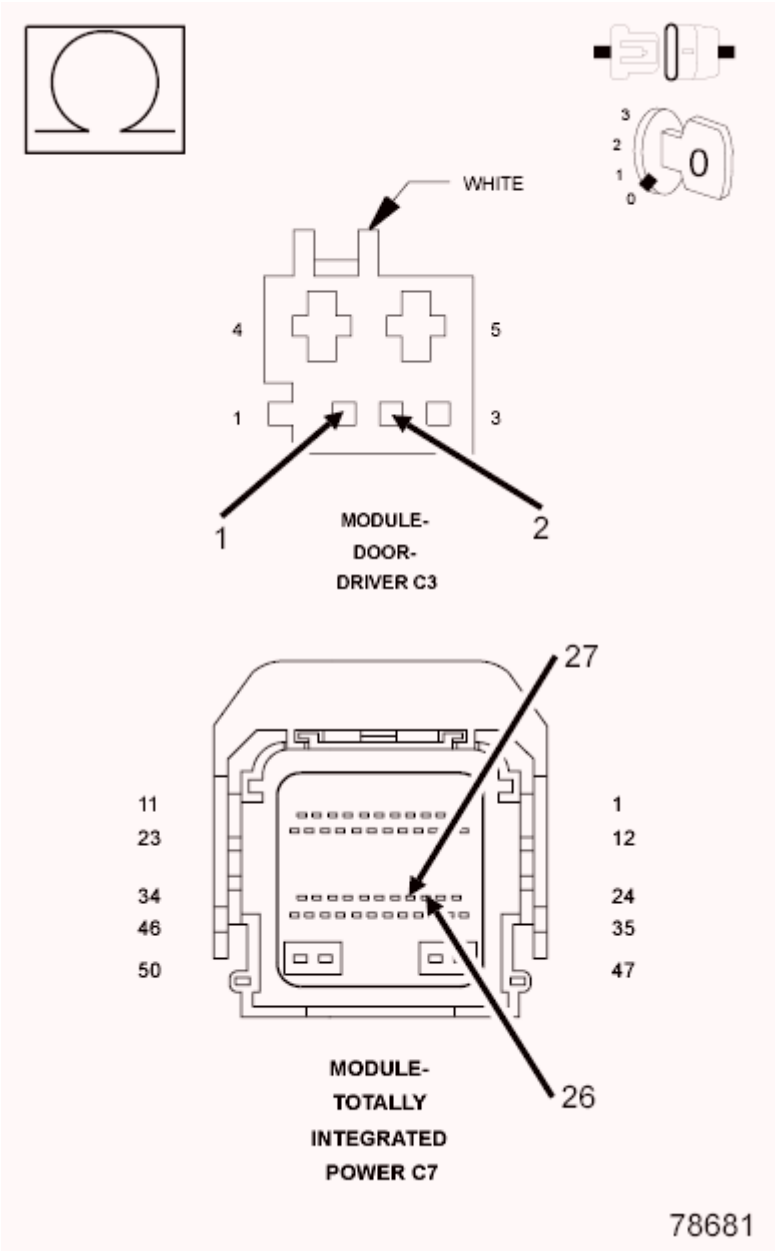

Fig. 34: Checking CAN Interior Bus Circuit For Open
Courtesy of CHRYSLER GROUP, LLC

1. Measure the resistance of the (D264) CAN Interior Bus (125K) (-) circuit between the TIPM C7 harness connector and the Driver Door Module C3 harness connector.
2. Measure the resistance of the (D265) CAN Interior Bus (125K) (+) circuit between the TIPM C7 harness connector and the Driver Door Module C3 harness connector.

   Are the resistances below 5.0 Ohms?

   Yes

- Replace the Driver Door Module in accordance with the Service Information. Refer to **MODULE, DOOR, REMOVAL** .
- Refer to **STANDARD PROCEDURE** and perform the BODY VERIFICATION TEST.

No

- Repair the open in the (D265) or (D264) CAN Interior Bus (125K) circuit.
- Refer to **STANDARD PROCEDURE** and perform the BODY VERIFICATION TEST.

NO RESPONSE FROM DTCM (DRIVETRAIN CONTROL MODULE)

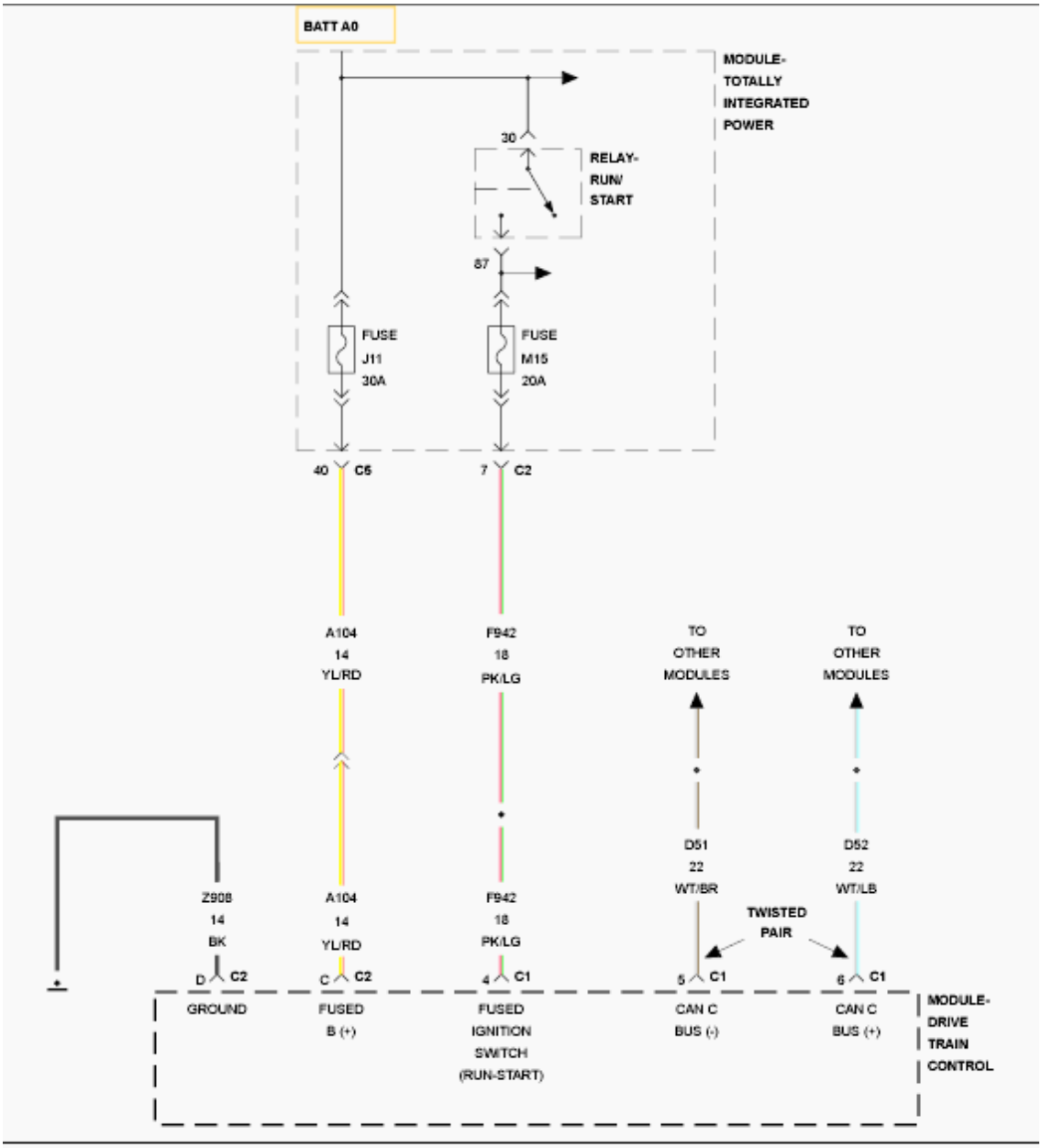
BATT A0
MODULE-
TOTALLY
INTEGRATED
POWER
30
RELAY-
RUN/
START
87
FUSE
J11
30A
FUSE
M15
20A
40
C5
7
C2
A104
14
YL/RD
F942
18
PK/LG
TO
OTHER
MODULES
TO
OTHER
MODULES
D51
22
WT/BR
D52
22
WT/LB
TWISTED
PAIR
Z908
14
BK
A104
14
YL/RD
F942
18
PK/LG
D
C2
C
C2
4
C1
5
C1
6
C1
GROUND
FUSED
B (+)
FUSED
IGNITION
SWITCH
(RUN-START)
CAN C
BUS (-)
CAN C
BUS (+)
MODULE-
DRIVE
TRAIN
CONTROL

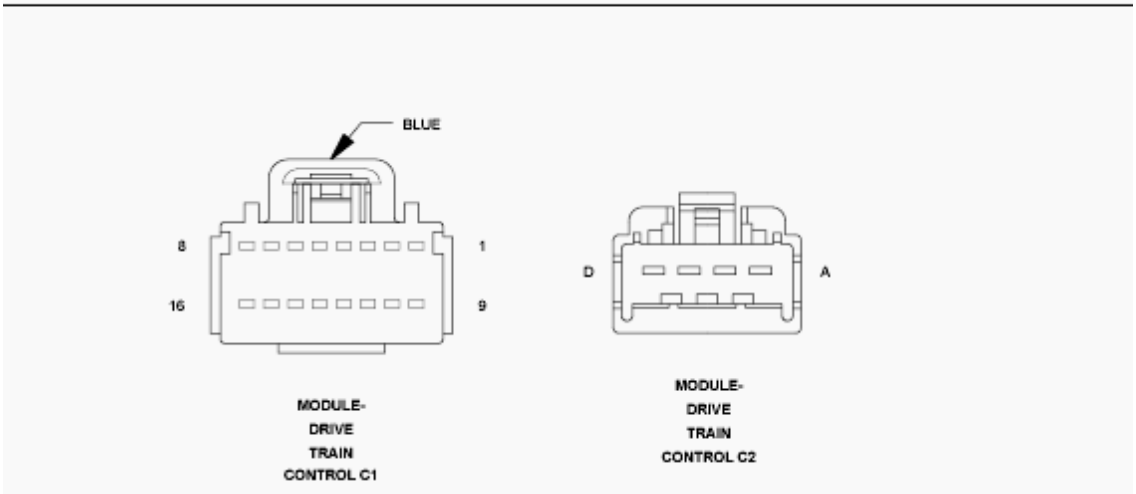
BLUE
8
1
16
9
MODULE-
DRIVE
TRAIN
CONTROL C1
D
A
MODULE-
DRIVE
TRAIN
CONTROL C2

Fig. 35: Fused Drivetrain Control Module Wiring Diagram
Courtesy of CHRYSLER GROUP, LLC

For a complete wiring diagram, **refer to appropriate SYSTEM WIRING DIAGRAMS article** .

POSSIBLE CAUSES

Possible Causes
(A104) FUSED B(+) CIRCUIT OPEN OR SHORTED
(Z908) GROUND CIRCUIT OPEN
(F942) FUSED IGNITION SWITCH OUTPUT (RUN-START) CIRCUIT OPEN OR SHORTED
(D52) CAN C BUS (+) CIRCUIT OPEN
(D51) CAN C BUS (-) CIRCUIT OPEN
DRIVETRAIN CONTROL MODULE

DIAGNOSTIC TEST

1. **TEST FOR INTERMITTENT CONDITION**

   NOTE: Check for any TSB(s) related to the condition. If a TSB applies, perform the procedure outlined in the TSB before continuing.

   1. Turn the ignition on.

      NOTE: Make sure the IOD fuse is installed and battery voltage is between 10.0 and 16.0 volts.

   2. With the scan tool, read the module status.

      NOTE: Check the TIPM for any active CAN hardware DTCs, perform DTC before proceeding.

      Does the scan tool indicate that the module is active on the bus?

      Yes

      - The no response condition is not present at this time. Using the wiring diagrams as a guide, check all related splices and connectors for signs of water intrusion, corrosion, pushed out or bent terminals, and correct pin tension.

      No

      - Go To 2.

2. **CHECK THE (A104) FUSED B(+) CIRCUIT FOR AN OPEN OR SHORT**

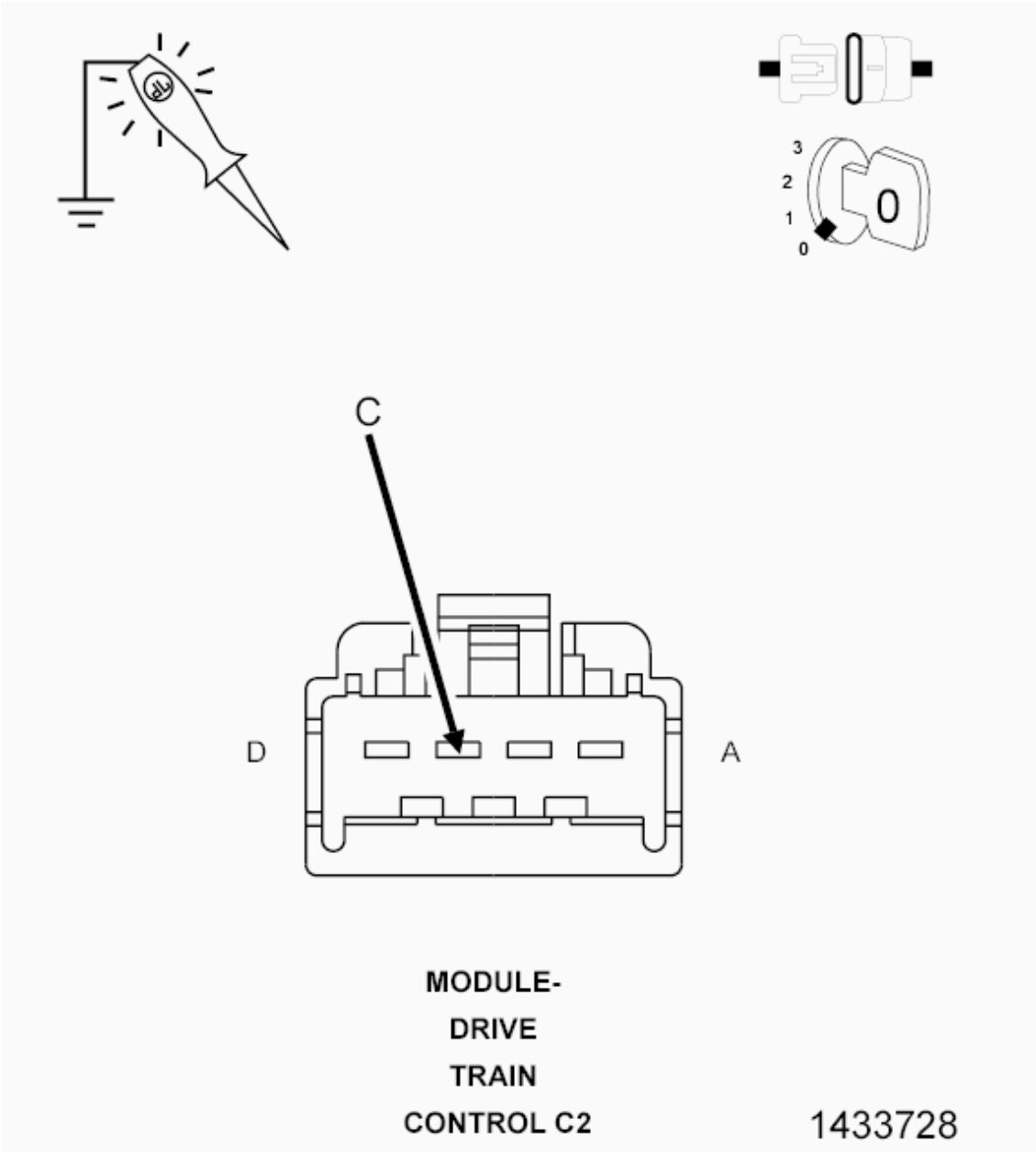

Fig. 36: Checking Fused B(+) Circuit For An Open Or Short
Courtesy of CHRYSLER GROUP, LLC

1. Turn the ignition off.
2. Disconnect the Drivetrain Control Module C1 and C2 harness connectors.
3. Using a 12-volt test light connected to ground, check the (A104) Fused B(+) circuit.

   Does the test light illuminate brightly?

   Yes

   - Go To 3.

No

- Repair the open or short in the (A104) Fused B(+) circuit.
- Refer to **STANDARD PROCEDURE** for 1500, 2500 & 3500 or **STANDARD PROCEDURE** for 3500 Cab & Chassis, 4500 & 5500 and perform the DTCM VERIFICATION TEST.

3. **CHECK THE (Z908) GROUND CIRCUIT FOR AN OPEN**

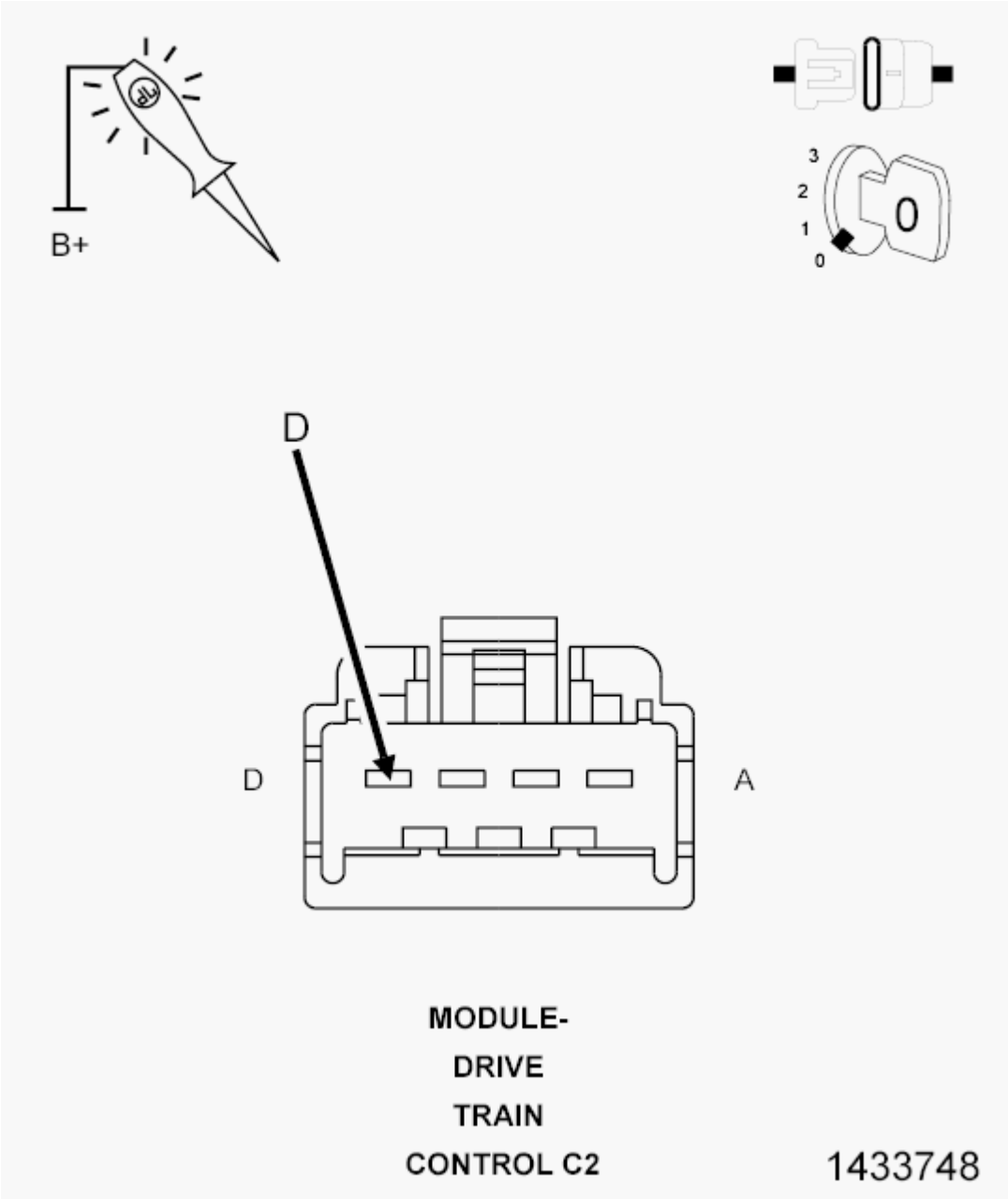

Fig. 37: Checking Ground Circuit For An Open
Courtesy of CHRYSLER GROUP, LLC

1. Using a 12-volt test light connected to 12-volts, check the (Z908) Ground circuit.

   Does the test light illuminate brightly?

   Yes

   - Go To 4.

   No

   - Repair the open in the (Z908) Ground circuit.
   - Refer to **STANDARD PROCEDURE** for 1500, 2500 & 3500 or **STANDARD PROCEDURE** for 3500 Cab & Chassis, 4500 & 5500 and perform the DTCM VERIFICATION TEST.

4. **CHECK THE (F942) FUSED IGNITION SWITCH OUTPUT (RUN-START) CIRCUIT FOR AN OPEN OR SHORT**

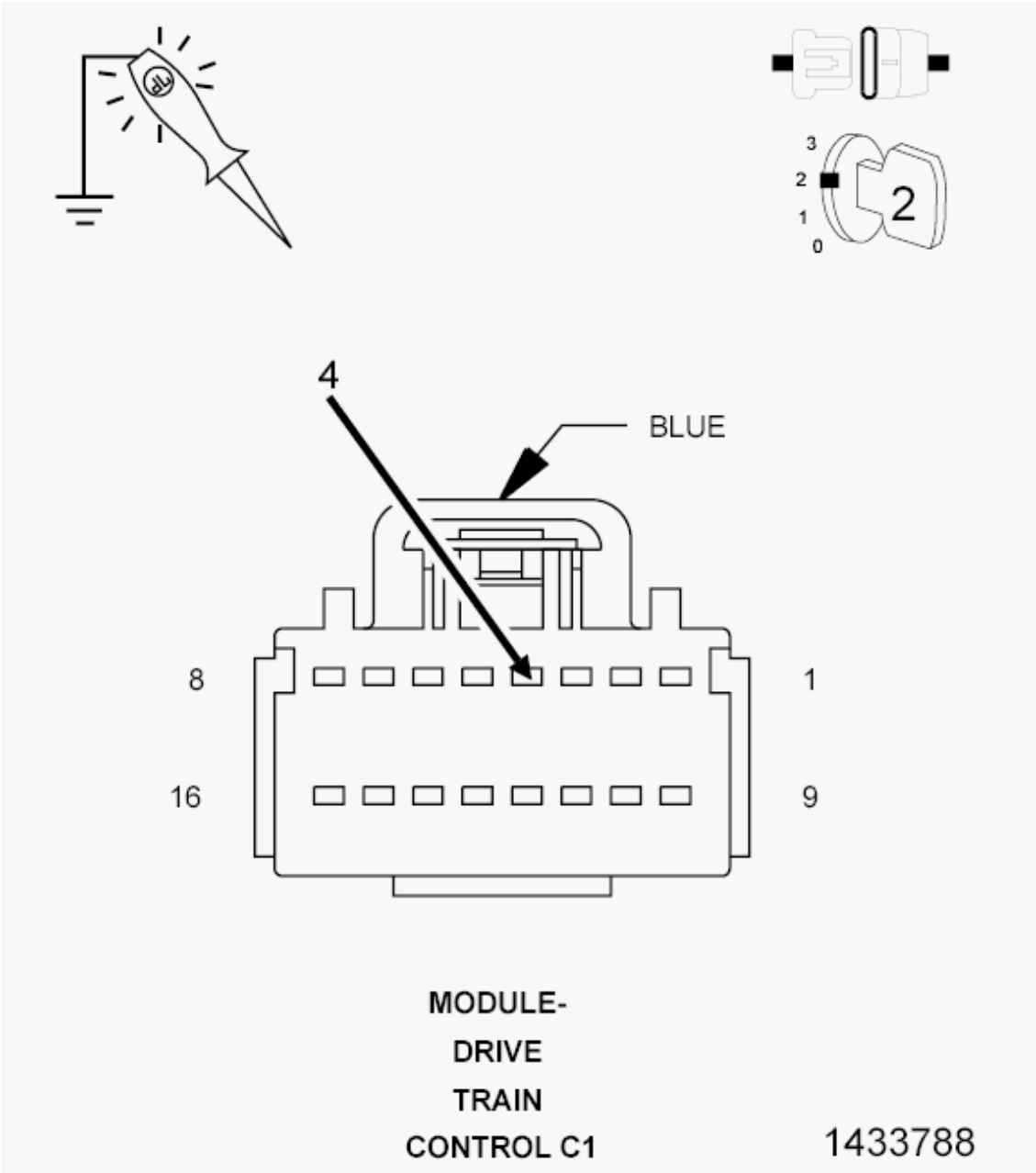

Fig. 38: Checking Fused Ignition Switch Output (Run-Start) Circuit For An Open Or Short
Courtesy of CHRYSLER GROUP, LLC

1. Turn the ignition on.
2. Using a 12-volt test light connected to ground, check the (F942) Fused Ignition Switch Output (Run-Start) circuit.

   Does the test light illuminate brightly?

   Yes

   - Go To 5.

No

- Repair the open or short in the (F942) Fused Ignition Switch Output (Run-Start) circuit.
- Refer to **STANDARD PROCEDURE** for 1500, 2500 & 3500 or **STANDARD PROCEDURE** for 3500 Cab & Chassis, 4500 & 5500 and perform the DTCM VERIFICATION TEST.

5. **CHECK THE (D51) AND (D52) CAN C BUS CIRCUITS FOR AN OPEN**

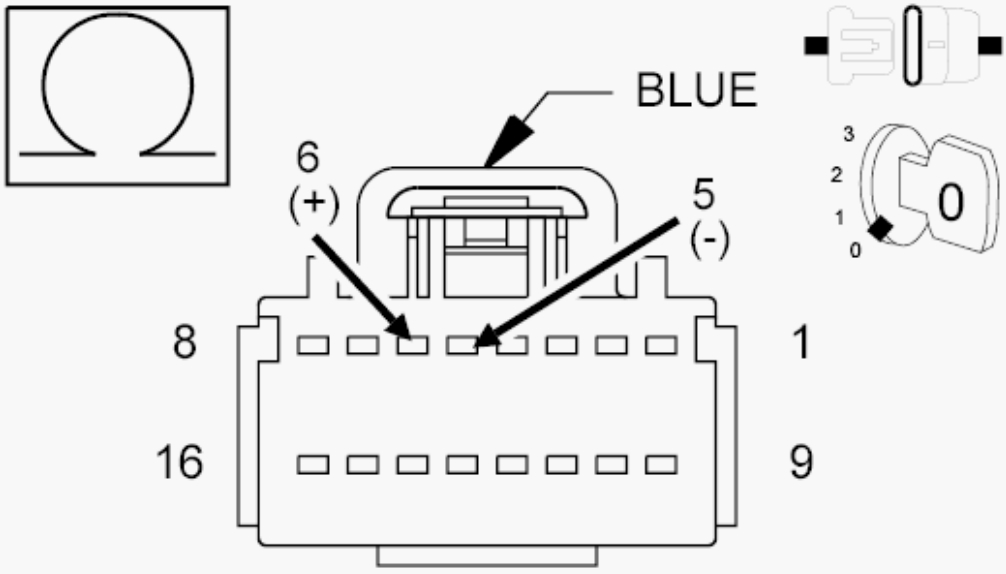

MODULE-
DRIVE
TRAIN
CONTROL C1

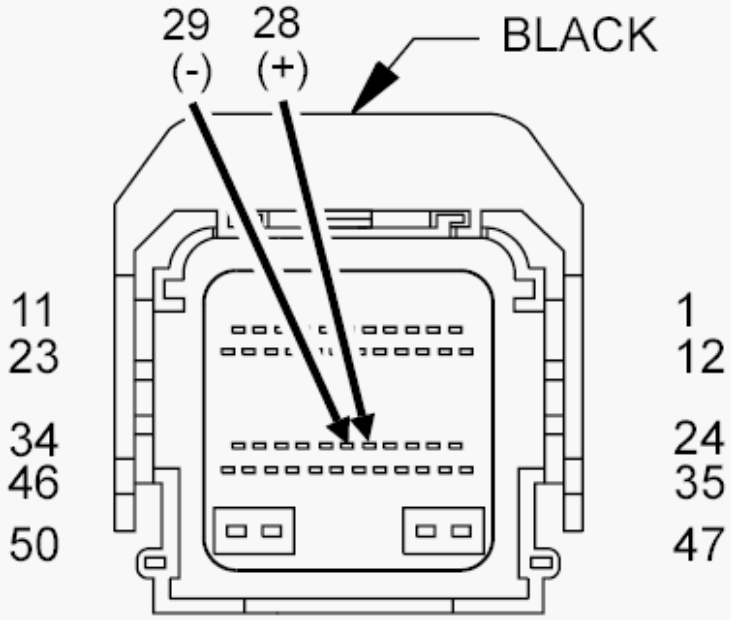

MODULE-
TOTALLY
INTEGRATED
POWER C7

2862767

Fig. 39: Checking Can C Bus Circuits For An Open
Courtesy of CHRYSLER GROUP, LLC

1. Turn the ignition off.
2. Disconnect the TIPM C7 harness connector.
3. Measure the resistance of the (D52) CAN C Bus (+) circuit between the TIPM C7 harness connector and the DTCM C1 harness connector.
4. Measure the resistance of the (D51) CAN C Bus (-) circuit between the TIPM C7 harness connector and the DTCM C1 harness connector.

   Are the resistances below 5.0 Ohms?

   Yes

   - Replace the Drivetrain Control Module in accordance with the Service Information. Refer to **MODULE, DRIVETRAIN CONTROL, REMOVAL** .
   - Refer to **STANDARD PROCEDURE** for 1500, 2500 & 3500 or **STANDARD PROCEDURE** for 3500 Cab & Chassis, 4500 & 5500 and perform the DTCM VERIFICATION TEST.

   No

   - Repair the open in the (D52) or (D51) CAN C Bus circuit.
   - Refer to **STANDARD PROCEDURE** for 1500, 2500 & 3500 or **STANDARD PROCEDURE** for 3500 Cab & Chassis, 4500 & 5500 and perform the DTCM VERIFICATION TEST.

NO RESPONSE FROM FDCM (FINAL DRIVE CONTROL MODULE)

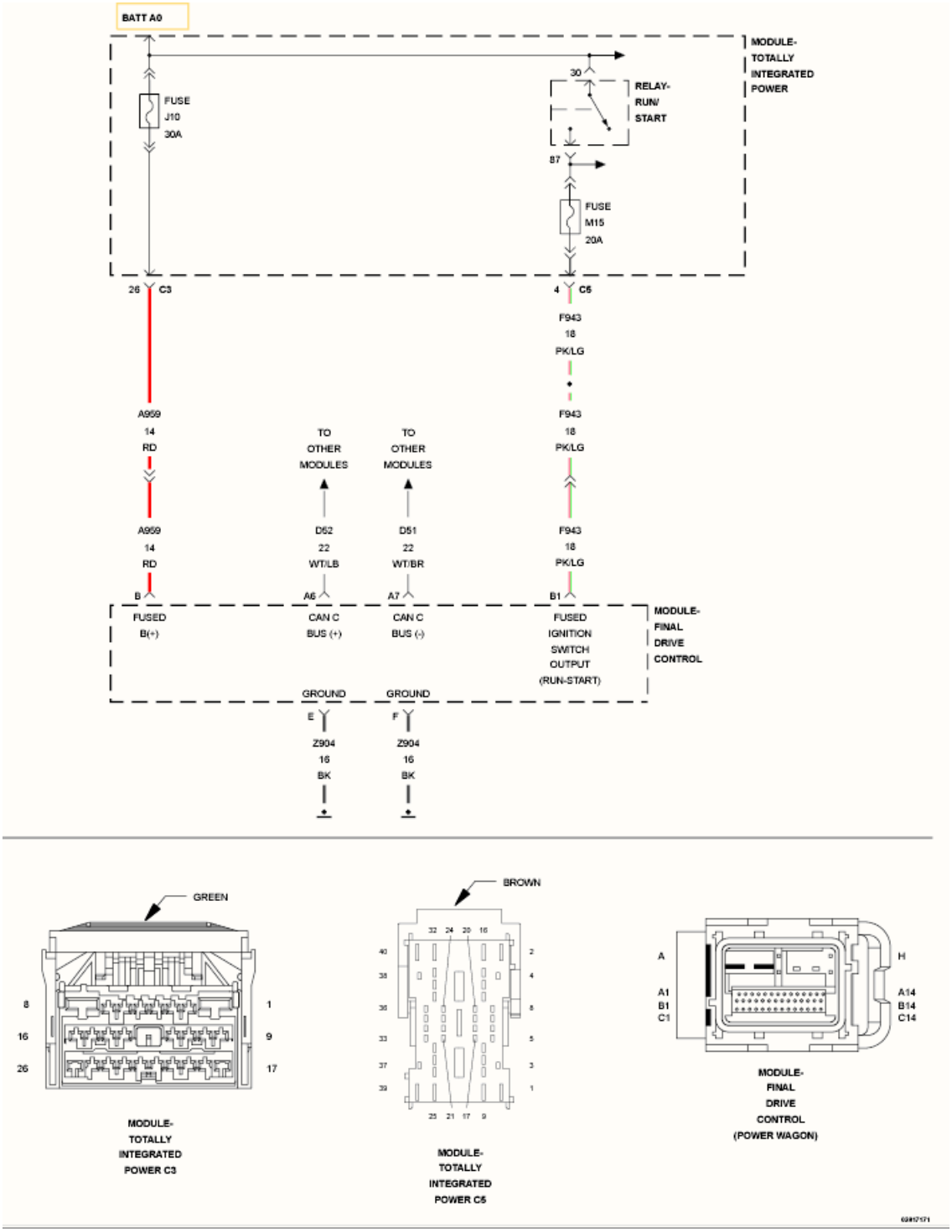

Fig. 40: Fused Final Drive Control Module Wiring Diagram
Courtesy of CHRYSLER GROUP, LLC

For a complete wiring diagram, **refer to appropriate SYSTEM WIRING DIAGRAMS article** .

POSSIBLE CAUSES

Possible Causes
(A959) FUSED B(+) CIRCUIT OPEN OR SHORTED
(Z904) GROUND CIRCUIT OPEN
(F943) FUSED IGNITION SWITCH OUTPUT (RUN-START) CIRCUIT OPEN OR SHORTED
(D52) CAN C BUS (+) CIRCUIT OPEN
(D51) CAN C BUS (-) CIRCUIT OPEN
FINAL DRIVE CONTROL MODULE (FDCM)

DIAGNOSTIC TEST

1. **TEST FOR INTERMITTENT CONDITION**

   NOTE: Check for any TSB(s) related to the condition. If a TSB applies, perform the procedure outlined in the TSB before continuing.

   1. Turn the ignition on.

      NOTE: Make sure the IOD fuse is installed and battery voltage is between 10.0 and 16.0 volts.

   2. With the scan tool, read the module status.

      NOTE: Check the TIPM for any active CAN hardware DTCs, perform DTC before proceeding.

      Does the scan tool indicate that the module is active on the bus?

      Yes

      - The no response condition is not present at this time. Using the wiring diagrams as a guide, check all related splices and connectors for signs of water intrusion, corrosion, pushed out or bent terminals, and correct pin tension.

      No

      - Go To 2.

2. **(A959) FUSED B(+) CIRCUIT OPEN OR SHORTED**

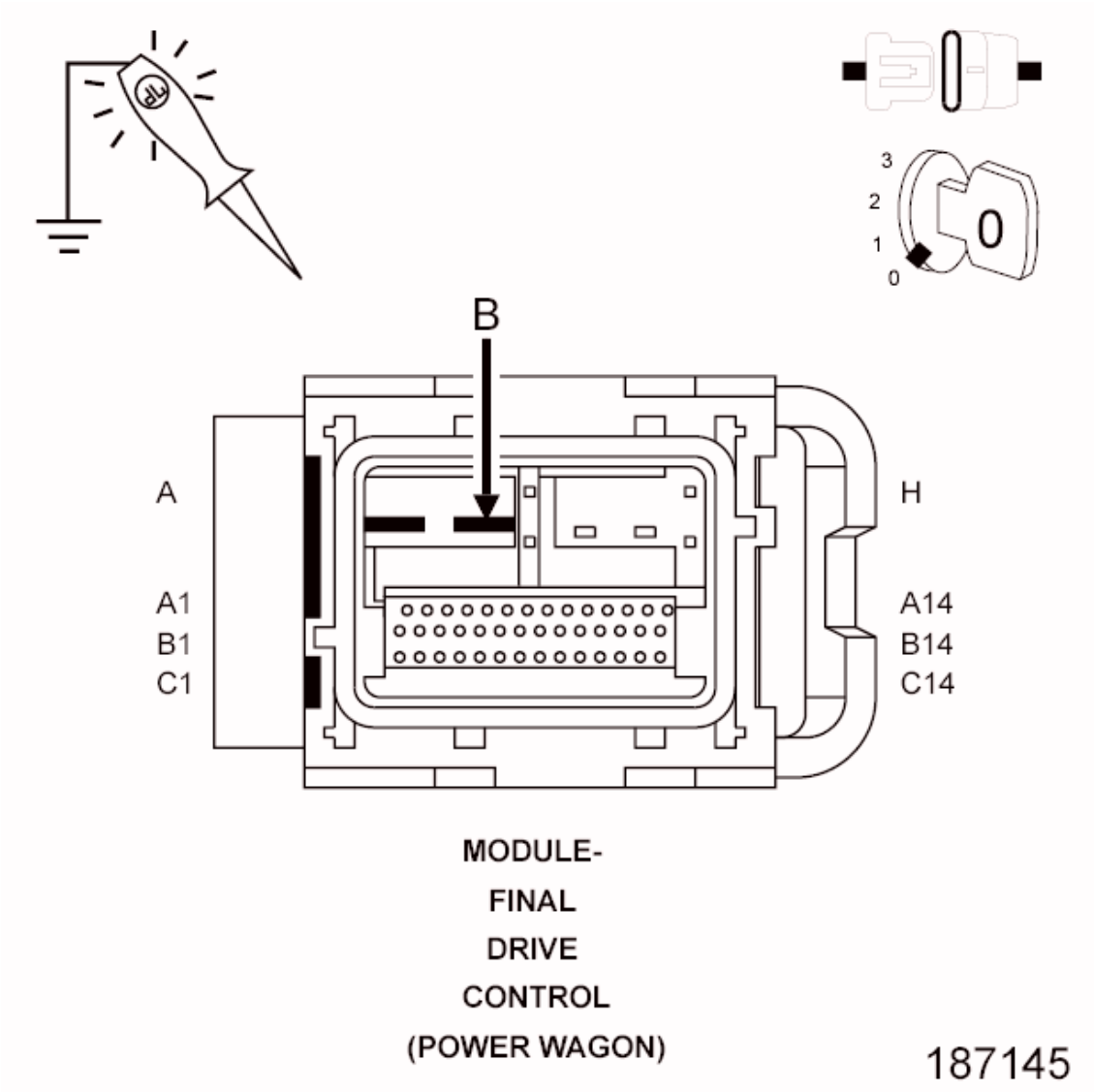

Fig. 41: Checking Fused B(+) Circuit For Open Or Short
Courtesy of CHRYSLER GROUP, LLC

1. Turn the ignition off.
2. Disconnect the Final Drive Control Module harness connector.
3. Using a 12-volt test light connected to ground, check the (A959) Fused B(+) circuit.

   Does the test light illuminate brightly?

   Yes

   - Go To 3.

   No

- Repair the open or short (A959) Fused B(+) circuit.
- Refer to **STANDARD PROCEDURE** and perform the FDCM VERIFICATION TEST.

3. **(Z904) GROUND CIRCUIT OPEN**

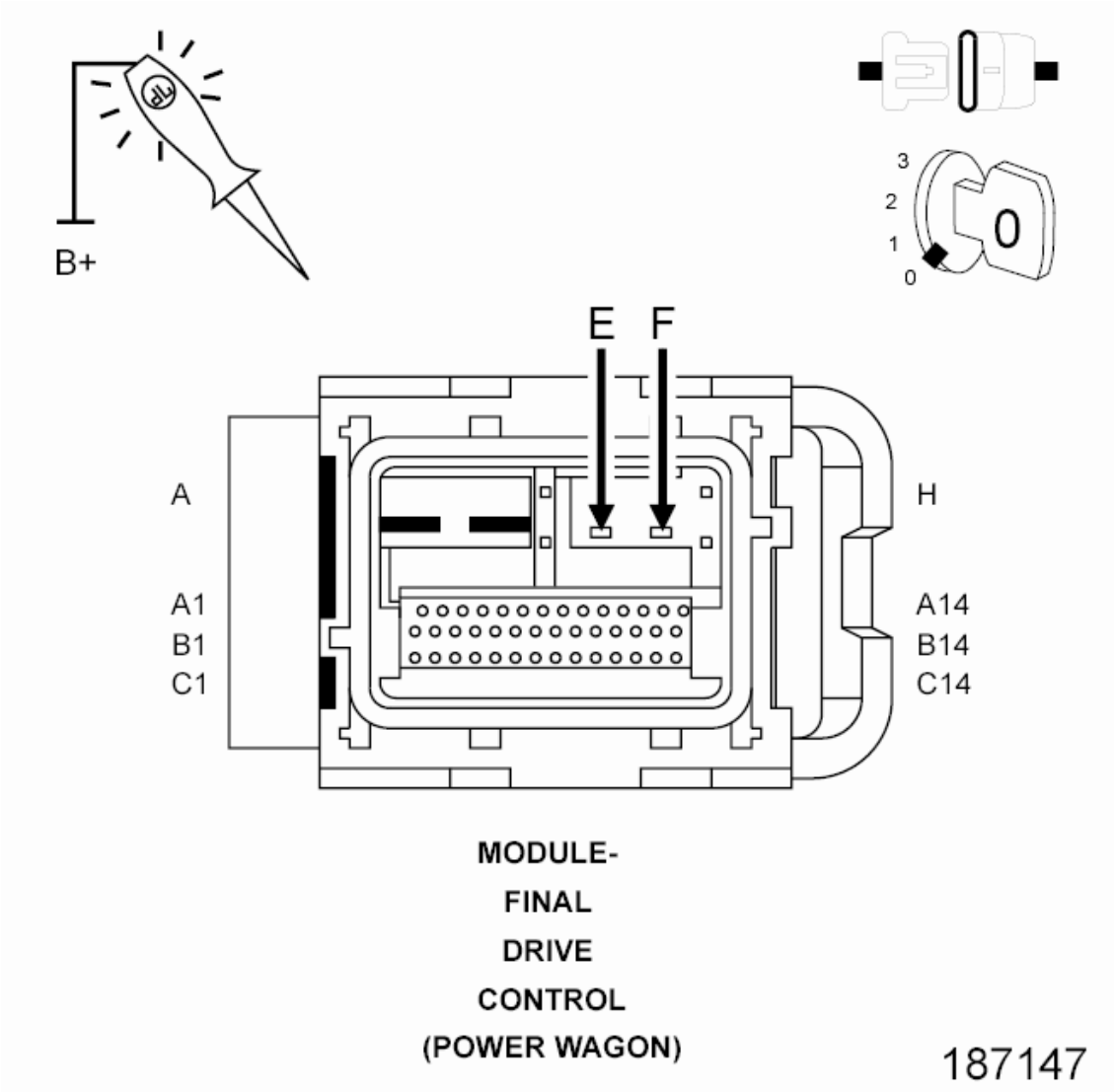

Fig. 42: Checking Ground Circuit For Open
Courtesy of CHRYSLER GROUP, LLC

1. Using a 12-volt test light connected to 12-volts, check the (Z904) Ground circuits.

   Does the test light illuminate brightly for each circuit?

   Yes

   - Go To 4.

   No

- Repair the open in the (Z904) Ground circuit.
- Refer to **STANDARD PROCEDURE** and perform the FDCM VERIFICATION TEST.

4. **(F943) FUSED IGNITION SWITCH OUTPUT (RUN-START) CIRCUIT OPEN OR SHORTED**

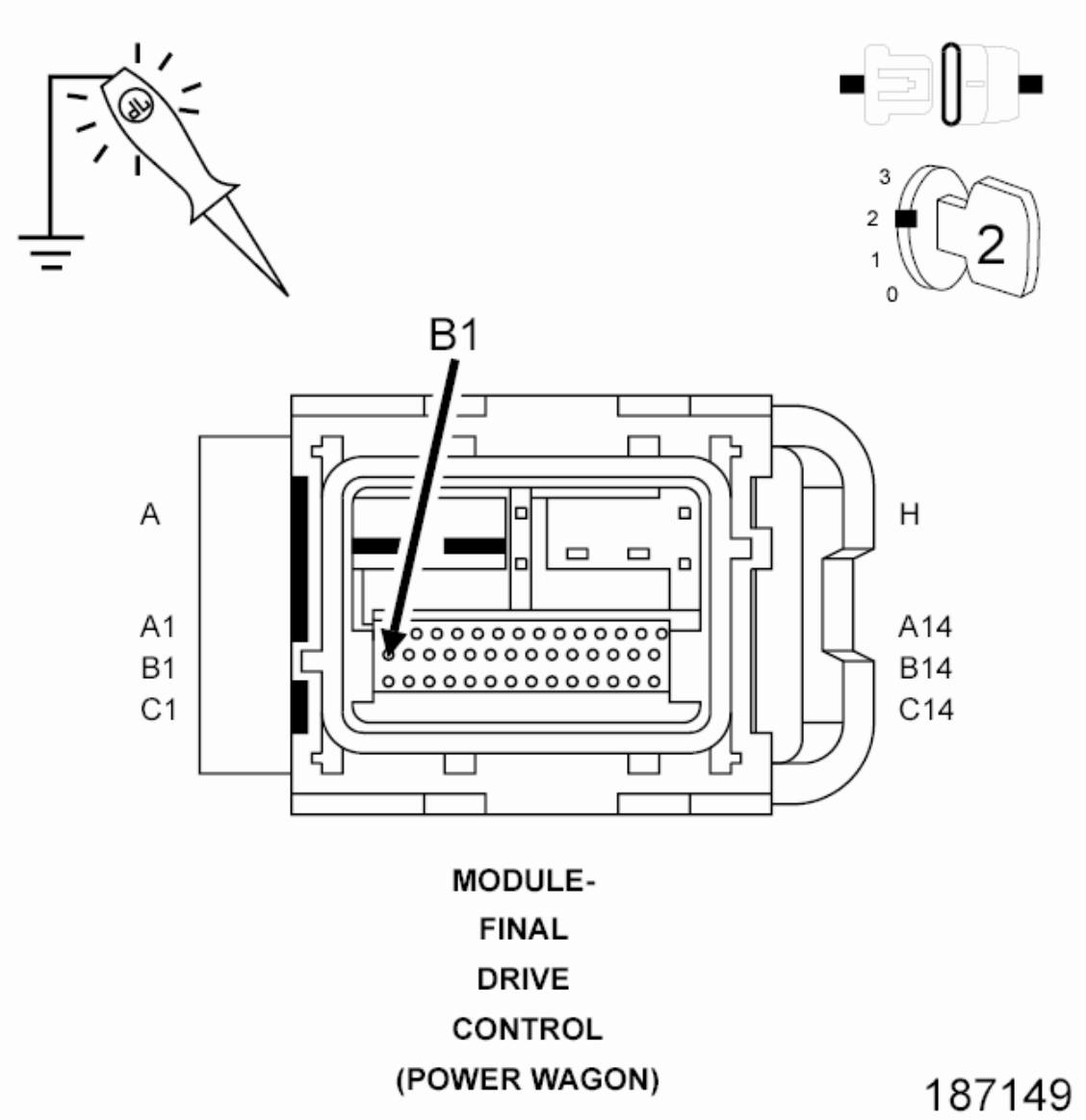

Fig. 43: Checking Fused Ignition Switch Output Circuit For Open Or Short
Courtesy of CHRYSLER GROUP, LLC

1. Turn the ignition on.
2. Using a 12-volt test light connected to ground, check the (F943) Fused Ignition Switch Output (Run-Start) circuit.

   Does the test light illuminate brightly?

   Yes

- Go To 5.

No

- Repair the open or short in the (F943) Fused Ignition Switch Output (Run-Start) circuit.
- Refer to **STANDARD PROCEDURE** and perform the FDCM VERIFICATION TEST.

5. **(D52) CAN C BUS (+) CIRCUIT OPEN**

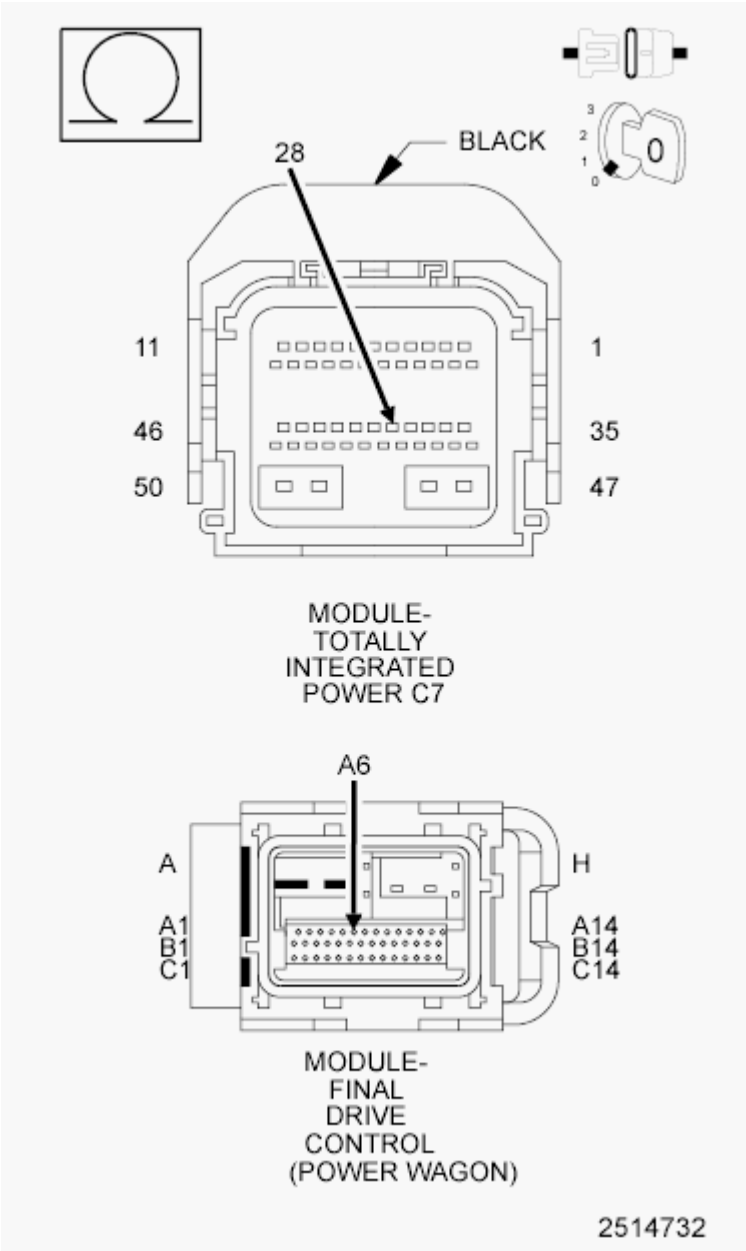

Fig. 44: Measuring Resistance Of CAN C Bus (+) Circuit Between TIPM Harness Connector & FDCM Harness Connector
Courtesy of CHRYSLER GROUP, LLC

1. Turn the ignition off.
2. Disconnect the TIPM C7 harness connector.
3. Measure the resistance of the (D52) CAN C Bus (+) circuit between the TIPM C7 harness connector and the FDCM harness connector.

   Is resistance below 5.0 Ohms?

   Yes

   - Go To 6.

   No

   - Repair the open in the (D52) CAN C Bus (+) circuit.
   - Refer to **STANDARD PROCEDURE** and perform the FDCM VERIFICATION TEST.

6. **(D51) CAN C BUS (-) CIRCUIT OPEN**

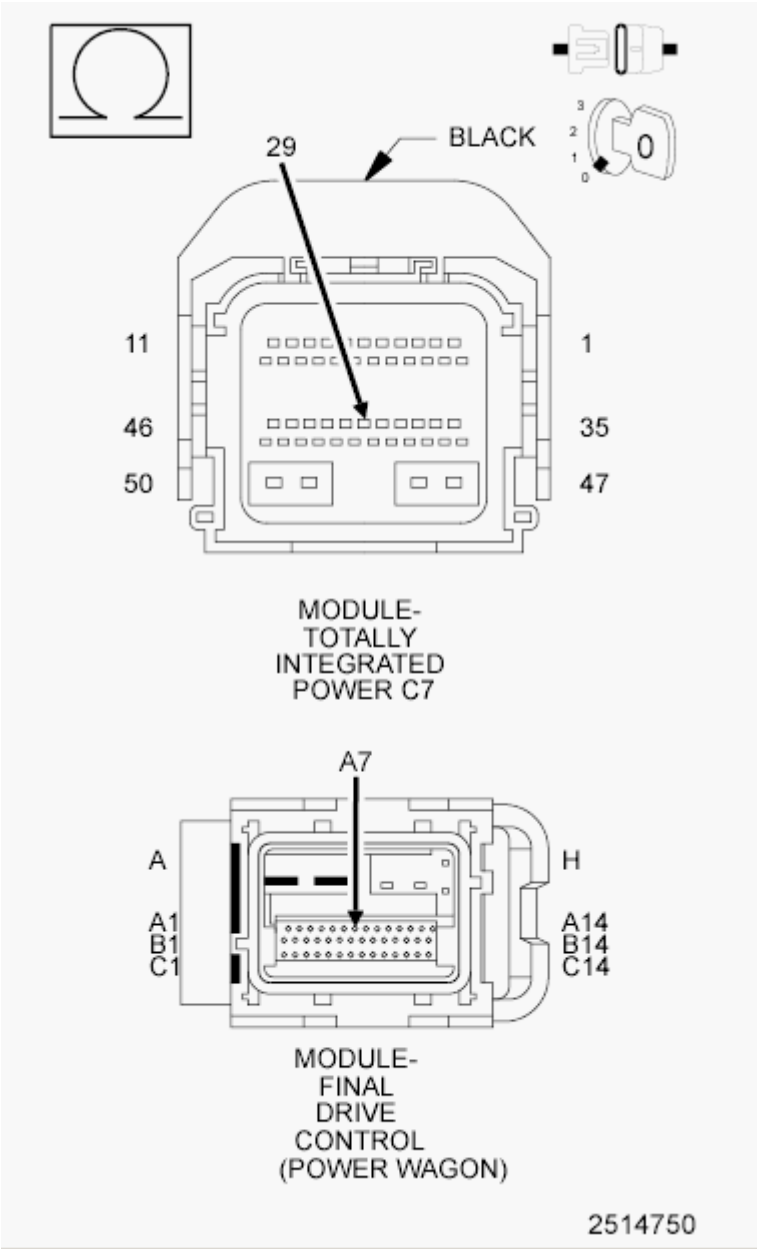

Fig. 45: Measuring Resistance Of CAN C Bus (-) Circuit Between TIPM Harness Connector & FDCM Harness Connector
Courtesy of CHRYSLER GROUP, LLC

1. Measure the resistance of the (D51) CAN C Bus (-) circuit between the TIPM C7 harness connector and the FDCM harness connector.

   Is resistance below 5.0 Ohms?

   Yes

   - Replace the FDCM in accordance with the Service Information. Refer to **ACTUATOR, STABILIZER BAR, REMOVAL** .

- Refer to **STANDARD PROCEDURE** and perform the FDCM VERIFICATION TEST.

No

- Repair the open in the (D51) CAN C Bus (-) circuit.
- Refer to **STANDARD PROCEDURE** and perform the FDCM VERIFICATION TEST.

NO RESPONSE FROM HFM (HANDS FREE MODULE)

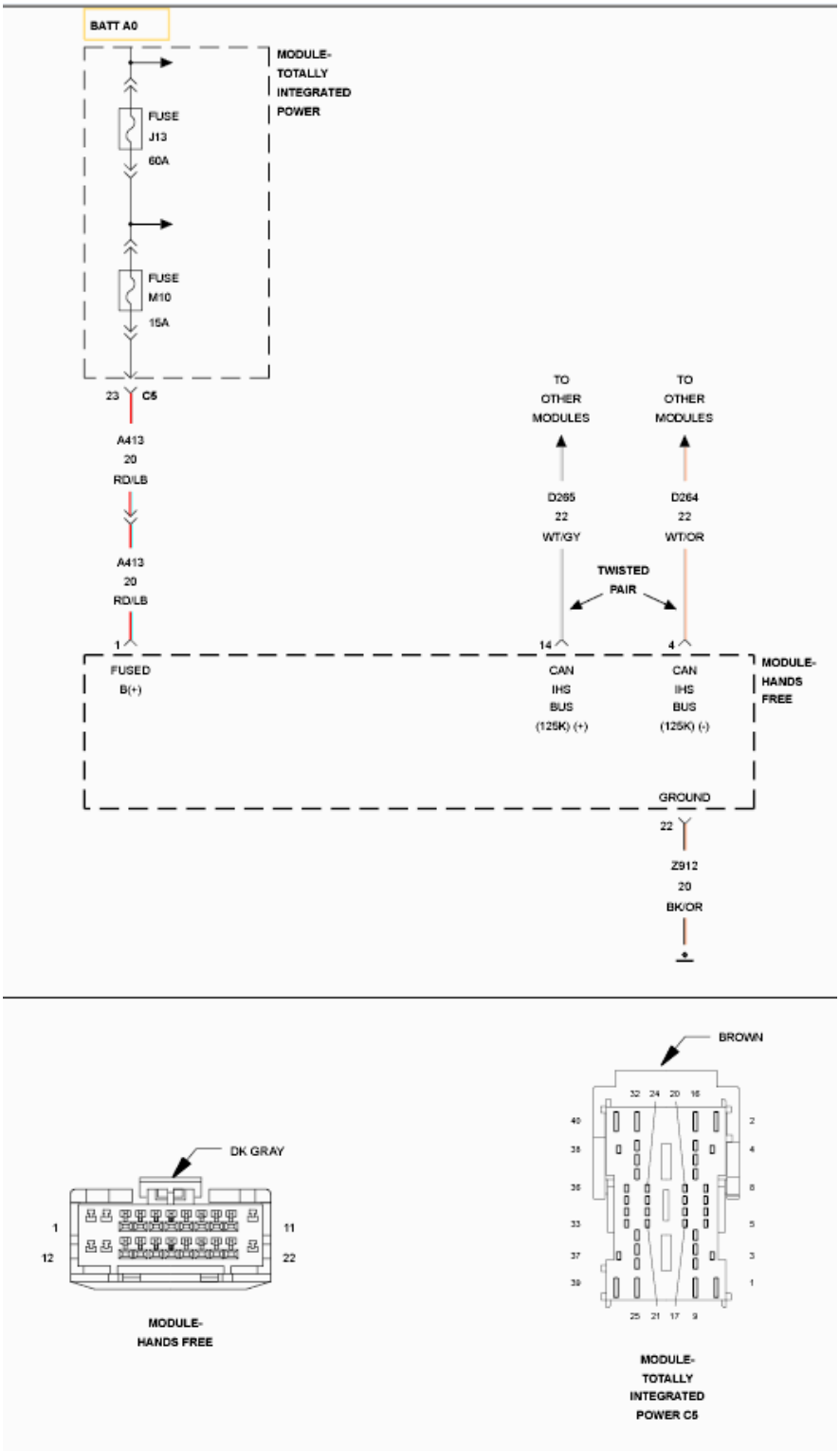

Fig. 46: Hands Free Module Fused B (+) Wiring Diagram
Courtesy of CHRYSLER GROUP, LLC

For a complete wiring diagram, **refer to appropriate SYSTEM WIRING DIAGRAMS article** .

POSSIBLE CAUSES

Possible Causes
(A413) FUSED B(+) CIRCUIT OPEN OR SHORTED
(Z912) GROUND CIRCUIT OPEN
(D264) OR (D265) CAN INTERIOR BUS (125K) CIRCUIT OPEN
HANDS FREE MODULE (HFM)

DIAGNOSTIC TEST

1. **TEST FOR INTERMITTENT CONDITION**

   NOTE: Check for any TSB(s) related to the condition. If a TSB applies, perform the procedure outlined in the TSB before continuing.

   1. Turn the ignition on.

      NOTE: Make sure the IOD fuse is installed and battery voltage is between 10.0 and 16.0 volts.

   2. With the scan tool, read the module status.

      NOTE: Check the TIPM for any active CAN hardware DTCs, perform DTC before proceeding.

      Does the scan tool indicate that the module is active on the bus?

      Yes

      - The no response condition is not present at this time. Using the wiring diagrams as a guide, check all related splices and connectors for signs of water intrusion, corrosion, pushed out or bent terminals, and correct pin tension.

      No

      - Go To 2.

2. **CHECK THE (A413) FUSED B(+) CIRCUIT FOR AN OPEN OR SHORT**

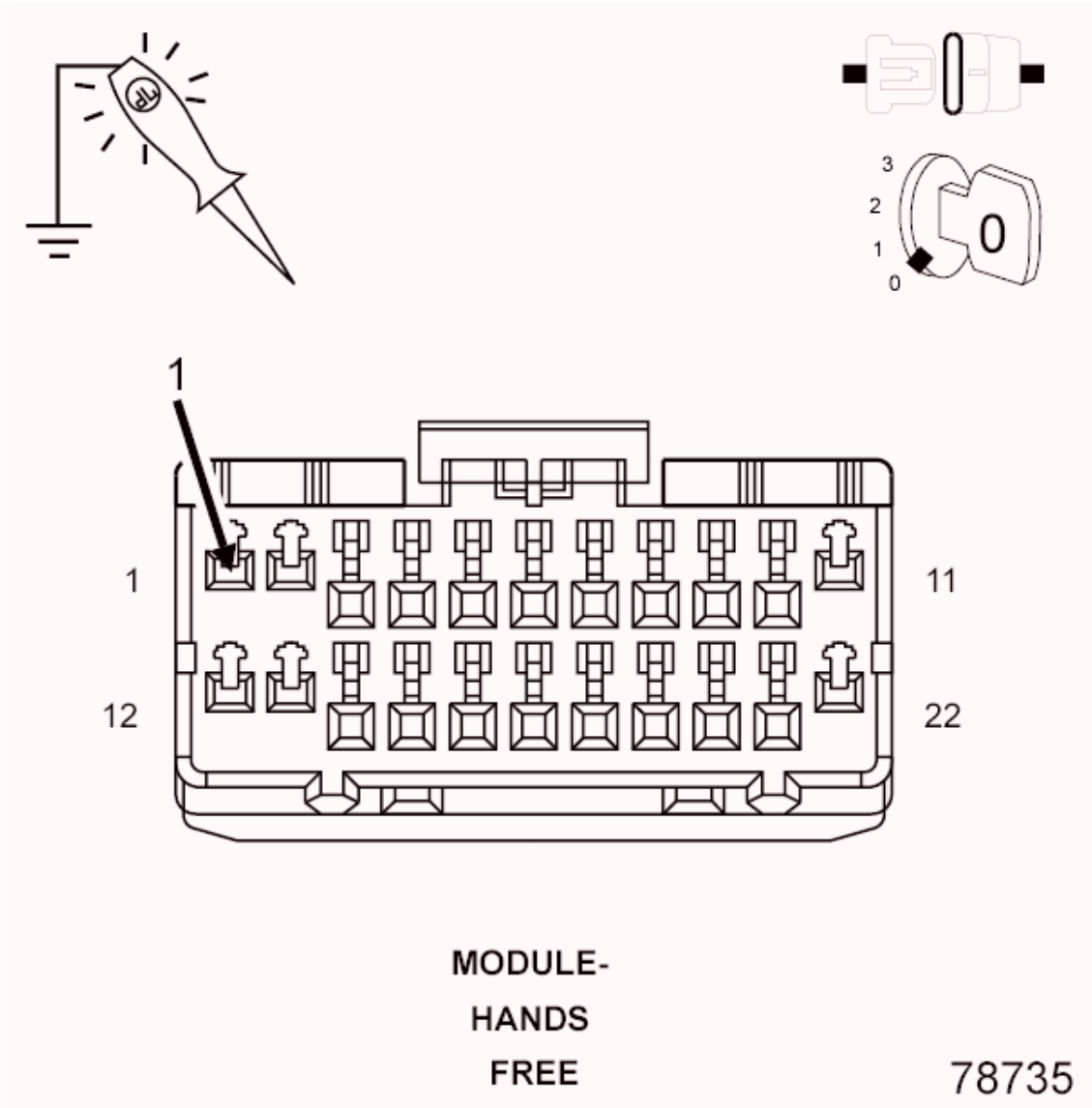

Fig. 47: Checking Fused B(+) Circuit For An Open Or Short
Courtesy of CHRYSLER GROUP, LLC

1. Turn the ignition off.
2. Disconnect the Hands Free Module harness connector.
3. Using a 12-volt test light connected to ground, check the (A413) Fused B(+) circuit.

   Does the test light illuminate brightly?

   Yes

   - Go To 3.

   No

- Repair the open or short in the (A413) Fused B(+) circuit.
- Refer to **STANDARD PROCEDURE** and perform the BODY VERIFICATION TEST.

3. **CHECK THE (Z912) GROUND CIRCUIT FOR AN OPEN**

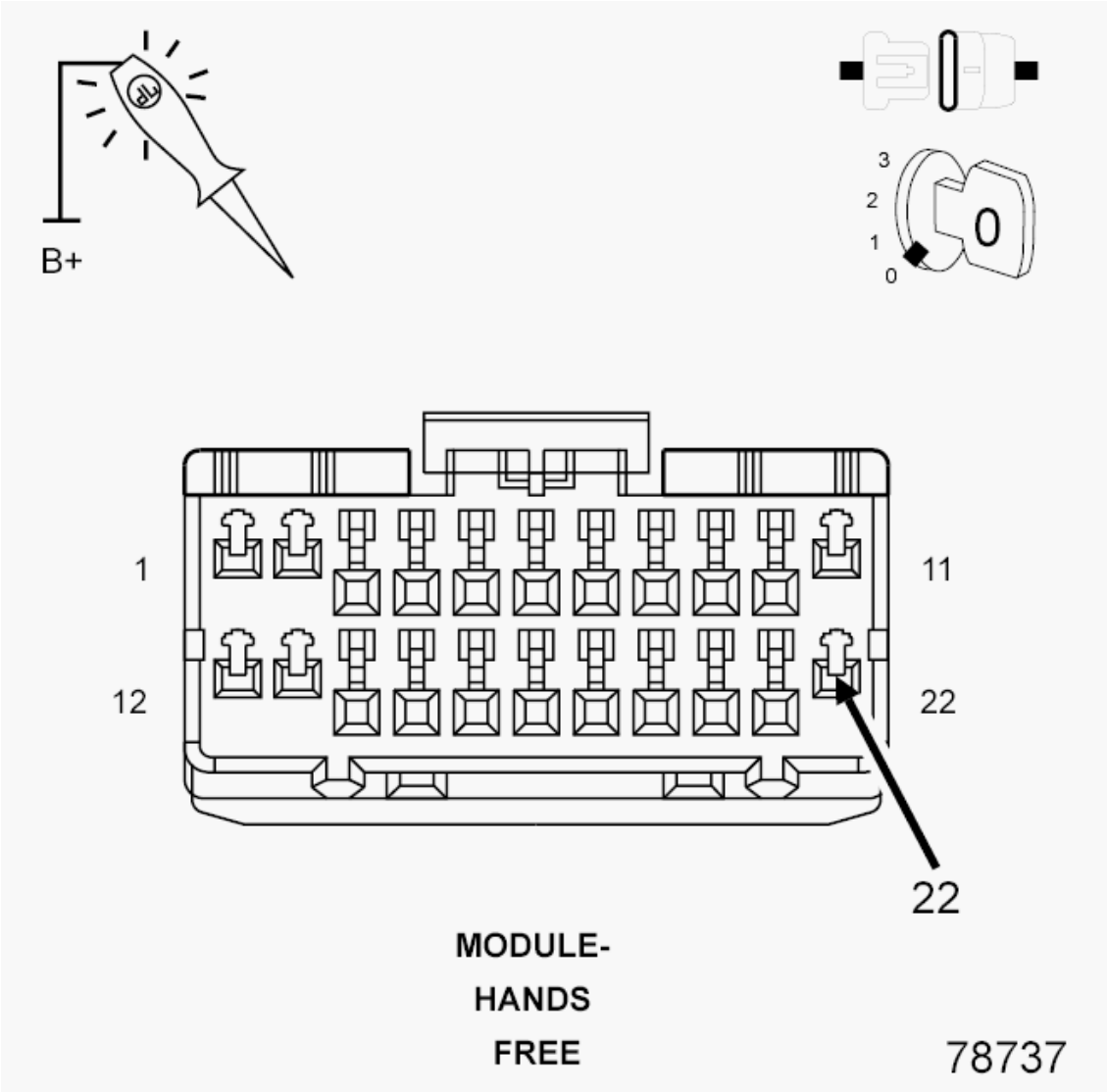

Fig. 48: Checking Ground Circuit For An Open
Courtesy of CHRYSLER GROUP, LLC

1. Using a 12-volt test light connected to 12-volts, check the (Z912) Ground circuit.

   Does the test light illuminate brightly?

   Yes

   - Go To 4.

No

- Repair the open in the (Z912) Ground circuit.
- Refer to **STANDARD PROCEDURE** and perform the BODY VERIFICATION TEST.

4. **CHECK THE (D265) AND (D264) CAN INTERIOR BUS (125K) CIRCUITS FOR AN OPEN**

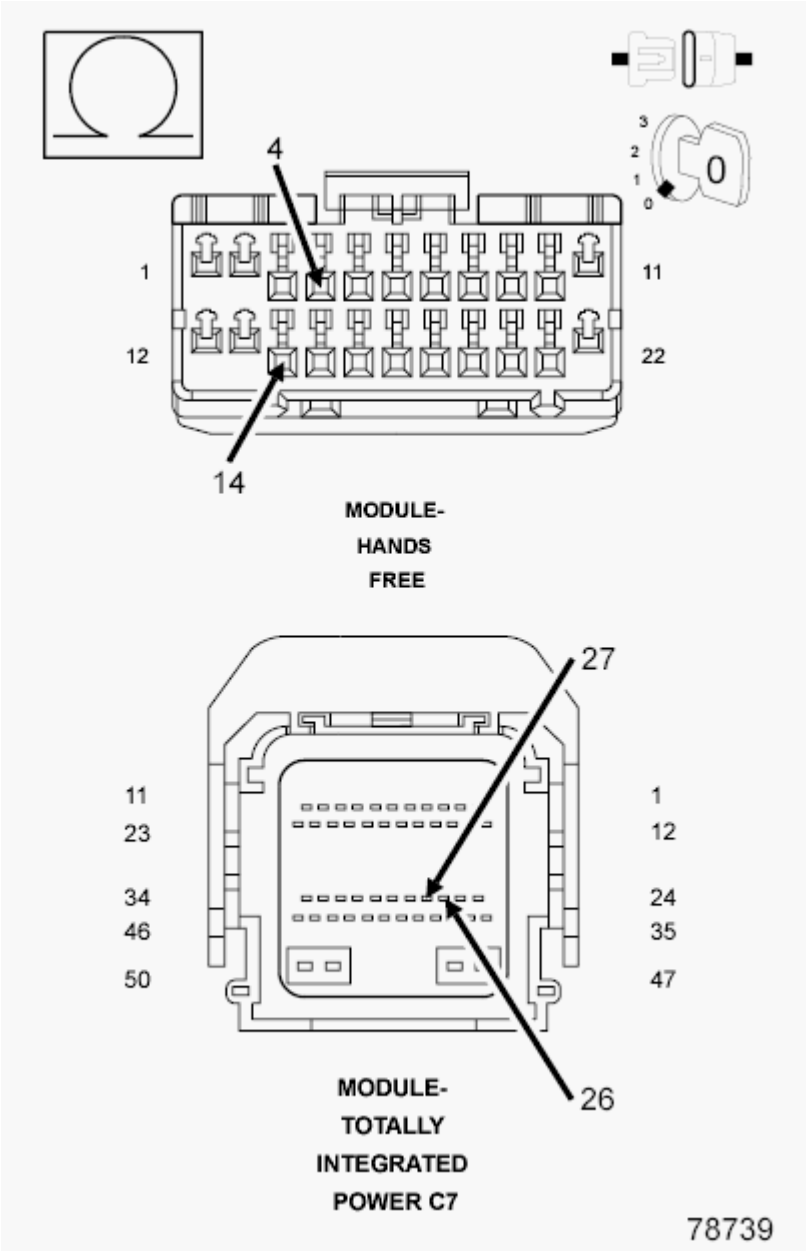

Fig. 49: Checking CAN Interior Bus Circuit For Open
Courtesy of CHRYSLER GROUP, LLC

1. Measure the resistance of the (D264) CAN Interior Bus (125K) (-) circuit between the TIPM C7 harness connector and the Hands Free Module harness connector.
2. Measure the resistance of the (D265) CAN Interior Bus (125K) (+) circuit between the TIPM C7

harness connector and the Hands Free Module harness connector.

Are the resistances below 5.0 Ohms?

Yes

- Replace the Hands Free Module in accordance with the Service Information. Refer to **MODULE, HANDS FREE (HFM), REMOVAL** .
- Refer to **STANDARD PROCEDURE** and perform the BODY VERIFICATION TEST.

No

- Repair the open in the (D265) or (D264) CAN Interior Bus (125K) circuit.
- Refer to **STANDARD PROCEDURE** and perform the BODY VERIFICATION TEST.

NO RESPONSE FROM HSM (HEATED SEAT MODULE)

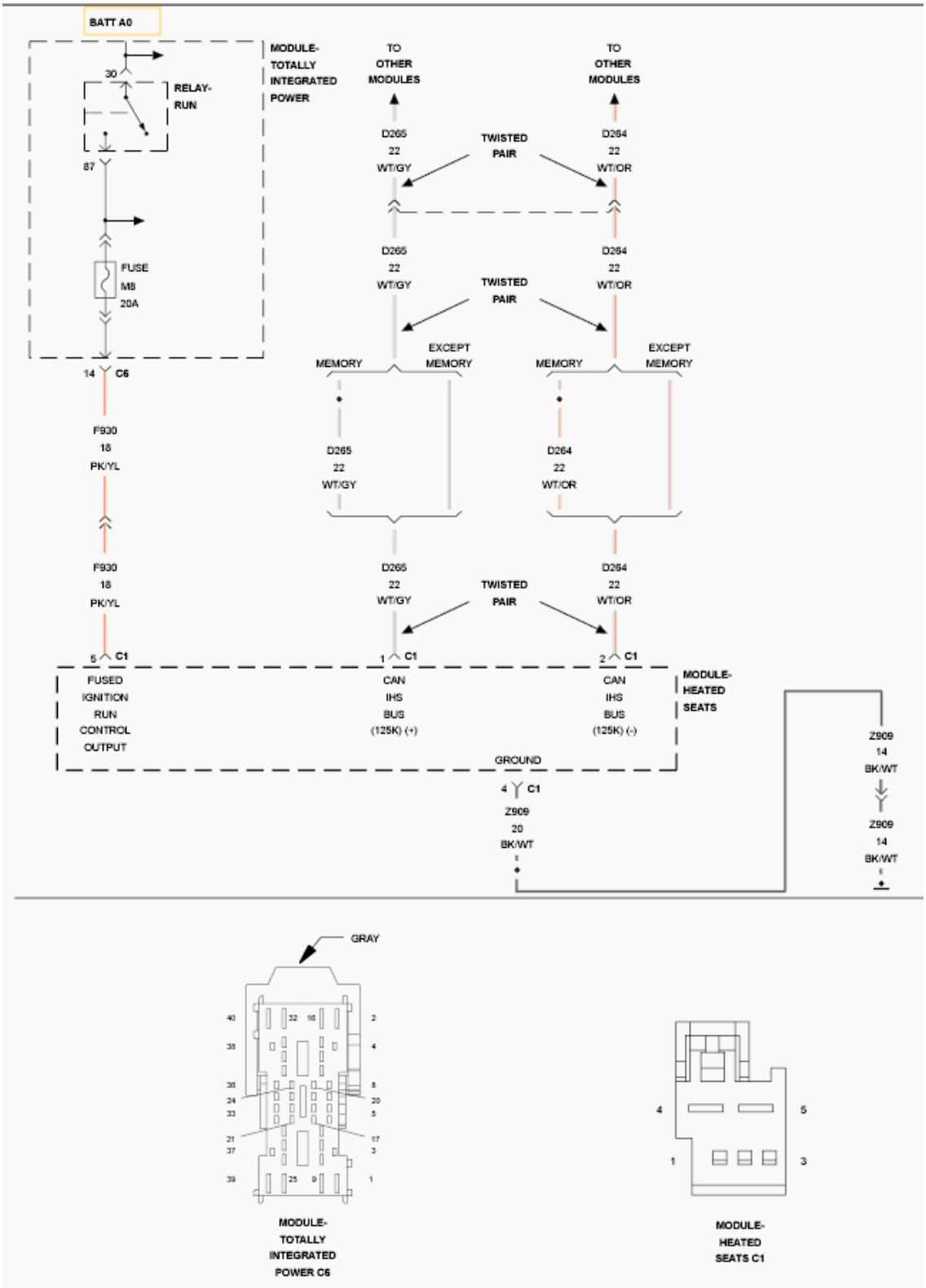

Fig. 50: Heated Seat Module Wiring Diagram
Courtesy of CHRYSLER GROUP, LLC

For a complete wiring diagram, **refer to appropriate SYSTEM WIRING DIAGRAMS article** .

POSSIBLE CAUSES

Possible Causes
(F930) FUSED IGNITION RUN CONTROL OUTPUT CIRCUIT OPEN OR SHORTED
(Z909) GROUND CIRCUIT OPEN
(D264) OR (D265) CAN INTERIOR BUS (125K) CIRCUIT OPEN
HEATED SEAT MODULE

DIAGNOSTIC TEST

1. **TEST FOR INTERMITTENT CONDITION**

   NOTE: Check for any TSB(s) related to the condition. If a TSB applies, perform the procedure outlined in the TSB before continuing.

   1. Turn the ignition on.

      NOTE: Make sure the IOD fuse is installed and battery voltage is between 10.0 and 16.0 volts.

   2. With the scan tool, read the module status.

      NOTE: Check the TIPM for any active CAN hardware DTCs, perform DTC before proceeding.

      Does the scan tool indicate that the module is active on the bus?

      Yes

      - The no response condition is not present at this time. Using the wiring diagrams as a guide, check all related splices and connectors for signs of water intrusion, corrosion, pushed out or bent terminals, and correct pin tension.

      No

      - Go To 2.

2. **CHECK THE (F930) FUSED IGNITION RUN CONTROL OUTPUT CIRCUIT FOR AN OPEN OR SHORT**

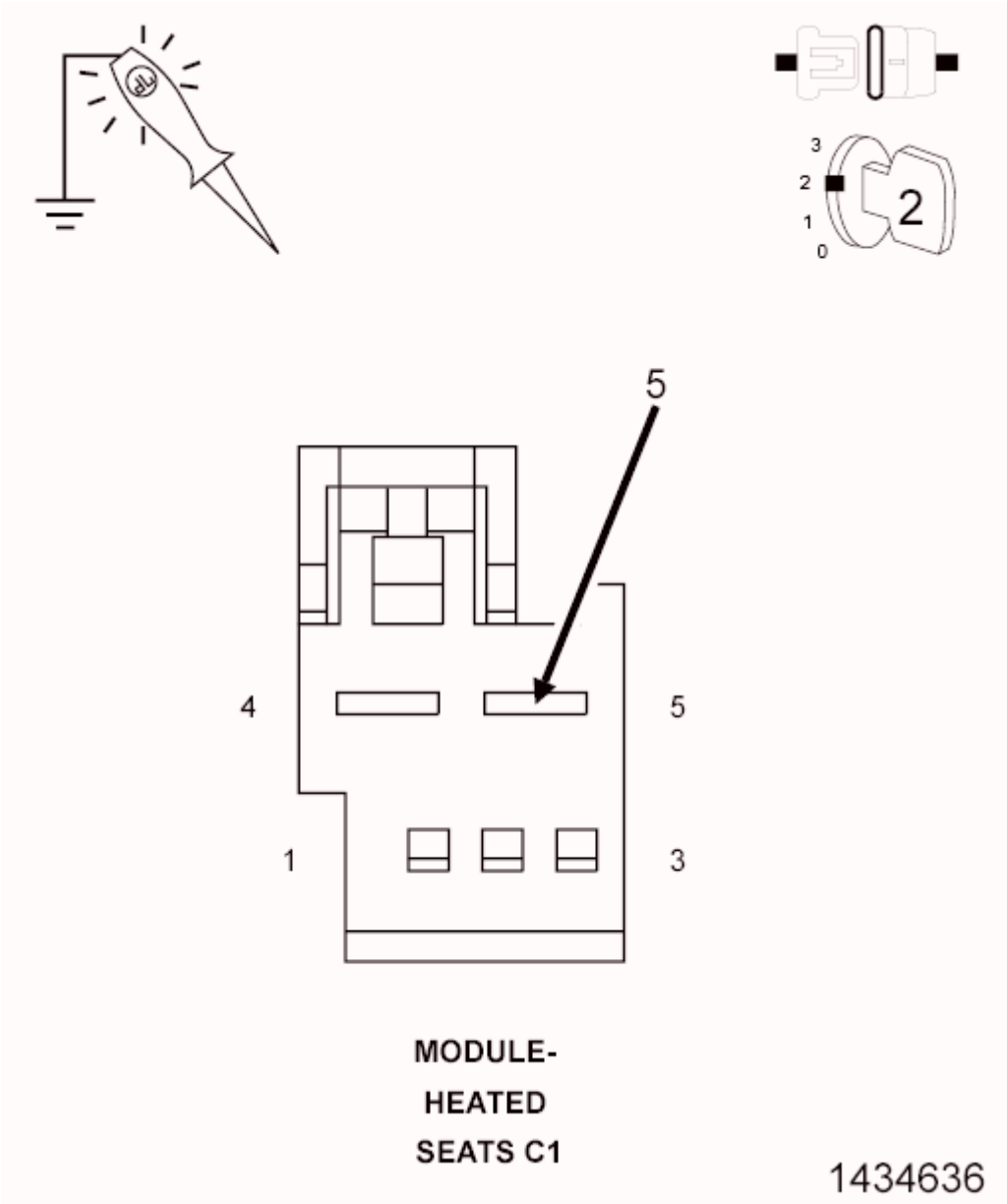

Fig. 51: Checking Fused Ignition Run Control Output Circuit For An Open Or Short
Courtesy of CHRYSLER GROUP, LLC

1. Turn the ignition off.
2. Disconnect the Heated Seat Module C1 harness connector.
3. Turn the ignition on.
4. Using a 12-volt test light connected to ground, check the (F930) Fused Ignition Run Control Output circuit.

   Does the test light illuminate brightly?

   Yes

- Go To 3.

No

- Repair the open or short in the (F930) Fused Ignition Run Control Output circuit.
- Refer to **STANDARD PROCEDURE** and perform the BODY VERIFICATION TEST.

3. **CHECK THE (Z909) GROUND CIRCUIT FOR AN OPEN**

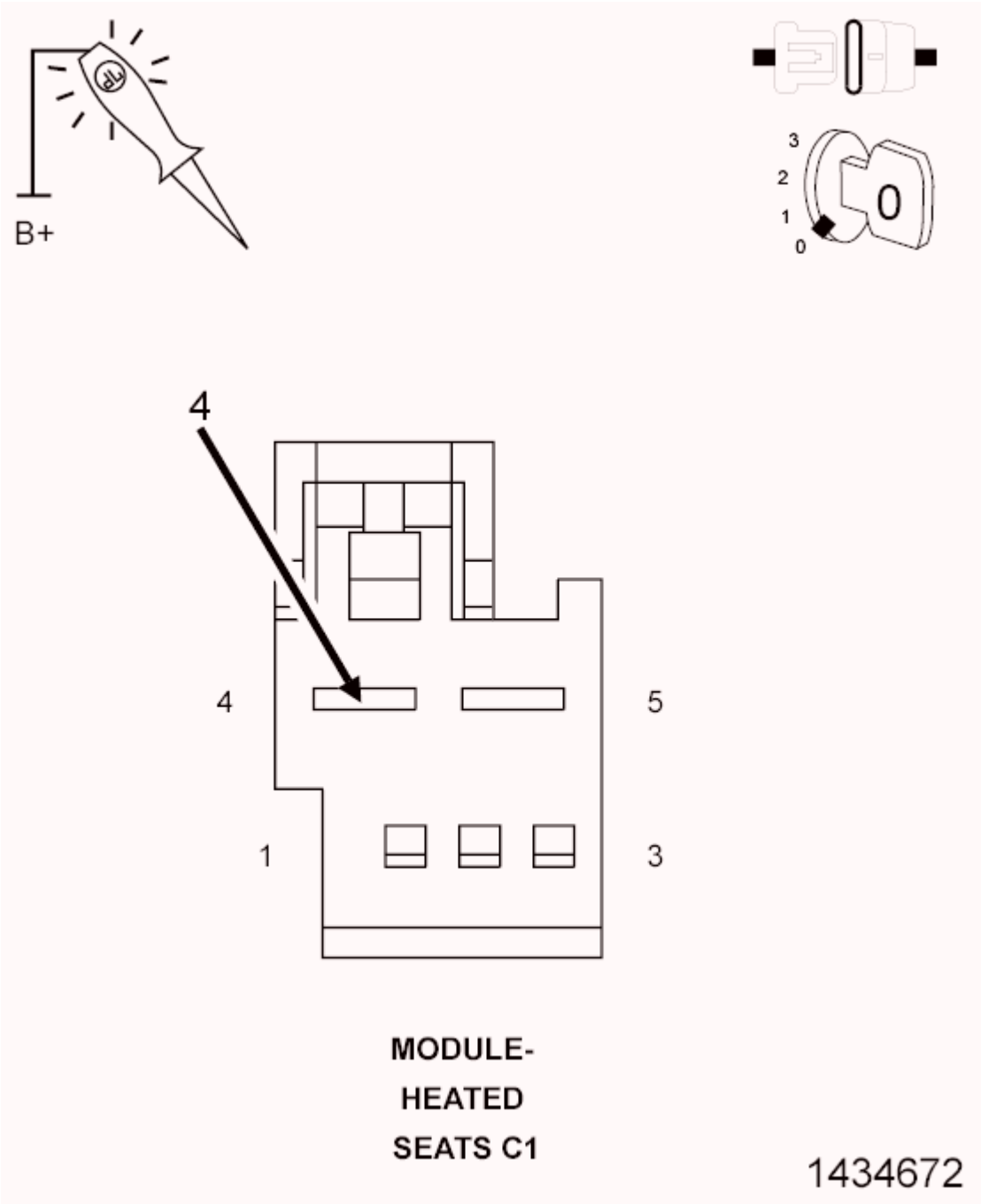

Fig. 52: Checking Ground Circuit For An Open

Courtesy of CHRYSLER GROUP, LLC

1. Turn the ignition off.
2. Using a 12-volt test light connected to 12-volts, check the (Z909) Ground circuit.

   Does the test light illuminate brightly?

   Yes

   - Go To 4.

   No

   - Repair the open in the (Z909) Ground circuit.
   - Refer to **STANDARD PROCEDURE** and perform the BODY VERIFICATION TEST.

4. **CHECK THE (D265) AND (D264) CAN INTERIOR BUS (125K) CIRCUITS FOR AN OPEN**

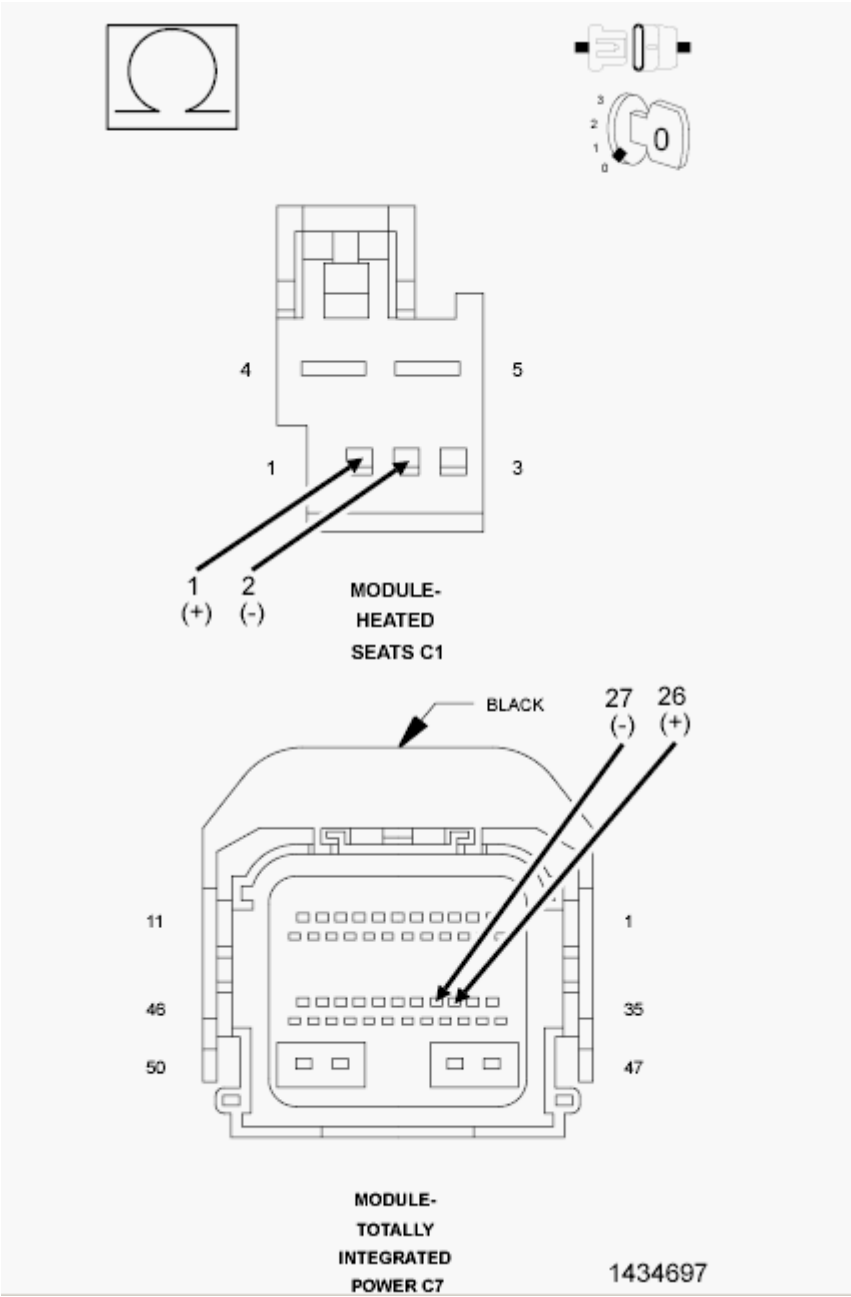

Fig. 53: Checking CAN Interior BUS Circuits For An Open
Courtesy of CHRYSLER GROUP, LLC

1. Disconnect the TIPM C7 harness connector.
2. Measure the resistance of the (D264) CAN Interior Bus (125K) (-) circuit between the TIPM C7 harness connector and the Heated Seat Module C1 harness connector.
3. Measure the resistance of the (D265) CAN Interior Bus (125K) (+) circuit between the TIPM C7 harness connector and the Heated Seat Module C1 harness connector.

   Are the resistances below 5.0 Ohms?

Yes

- Replace the Heated Seat Module in accordance with the Service Information. Refer to **MODULE, HEATED SEAT, REMOVAL** .
- Refer to **STANDARD PROCEDURE** and perform the BODY VERIFICATION TEST.

No

- Repair the open in the (D265) or (D264) CAN Interior Bus (125K) circuit.
- Refer to **STANDARD PROCEDURE** and perform the BODY VERIFICATION TEST.

NO RESPONSE FROM HVAC (A/C HEATER CONTROL MODULE)

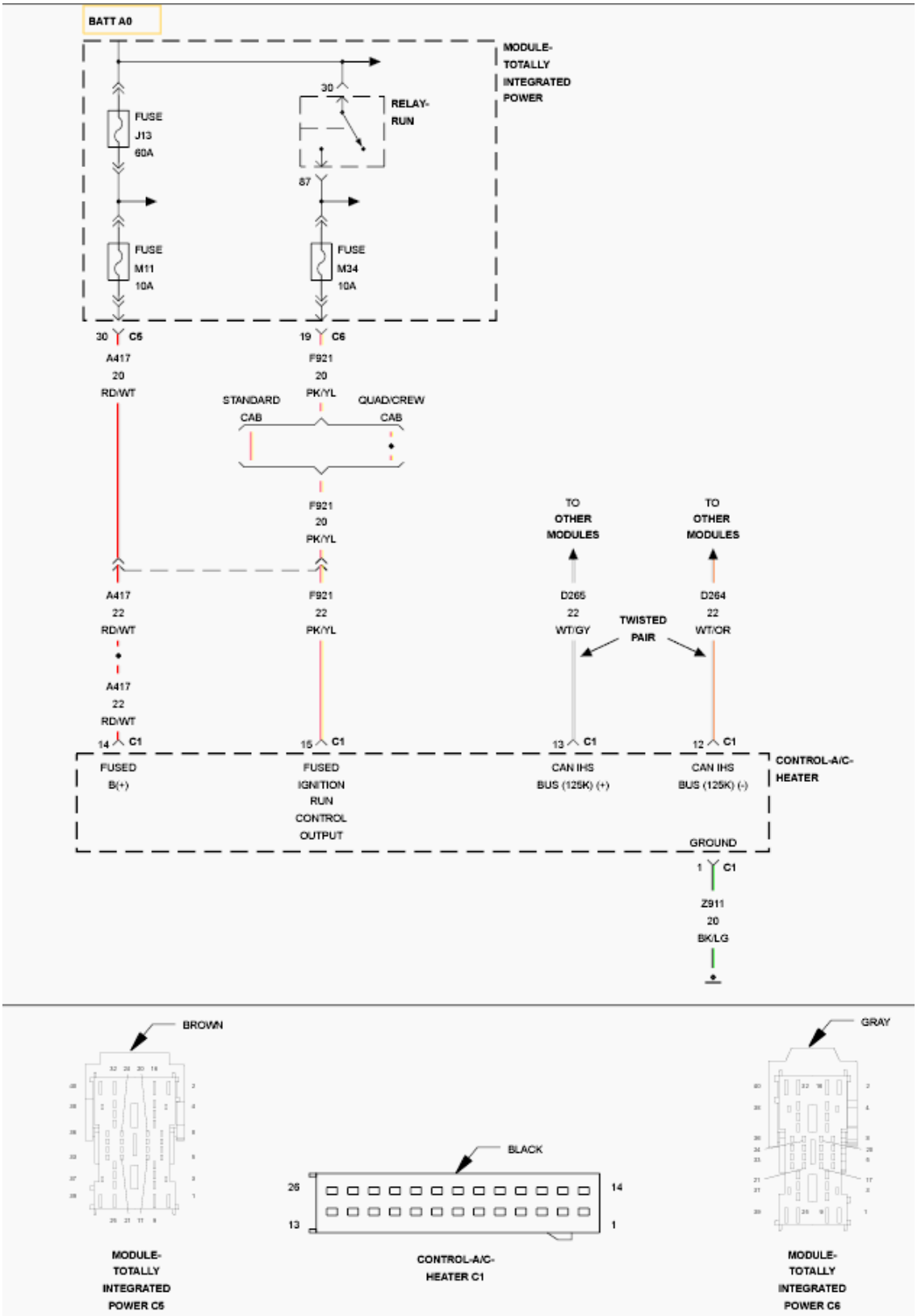

Fig. 54: Fused A//C Heater Control Module Wiring Diagram
Courtesy of CHRYSLER GROUP, LLC

For a complete wiring diagram, **refer to appropriate SYSTEM WIRING DIAGRAMS article** .

POSSIBLE CAUSES

Possible Causes
(A417) FUSED B(+) CIRCUIT OPEN OR SHORTED
(Z911) GROUND CIRCUIT OPEN
(F921) FUSED RUN RELAY OUTPUT CIRCUIT OPEN OR SHORTED
(D264) AND (D265) CAN INTERIOR BUS (125K) CIRCUITS OPEN
A/C HEATER CONTROL MODULE (HVAC)

DIAGNOSTIC TEST

1. **TEST FOR INTERMITTENT CONDITION**

   NOTE: Check for any TSB(s) related to the condition. If a TSB applies, perform the procedure outlined in the TSB before continuing.

   1. Turn the ignition on.

      NOTE: Make sure the IOD fuse is installed and battery voltage is between 10.0 and 16.0 volts.

   2. With the scan tool, read the module status.

      NOTE: Check the TIPM for any active CAN hardware DTCs, perform DTC before proceeding.

      Does the scan tool indicate that the module is active on the bus?

      Yes

      - The no response condition is not present at this time. Using the wiring diagrams as a guide, check all related splices and connectors for signs of water intrusion, corrosion, pushed out or bent terminals, and correct pin tension.

      No

      - Go To 2.

2. **CHECK THE (A417) FUSED B(+) CIRCUIT FOR AN OPEN OR SHORT**

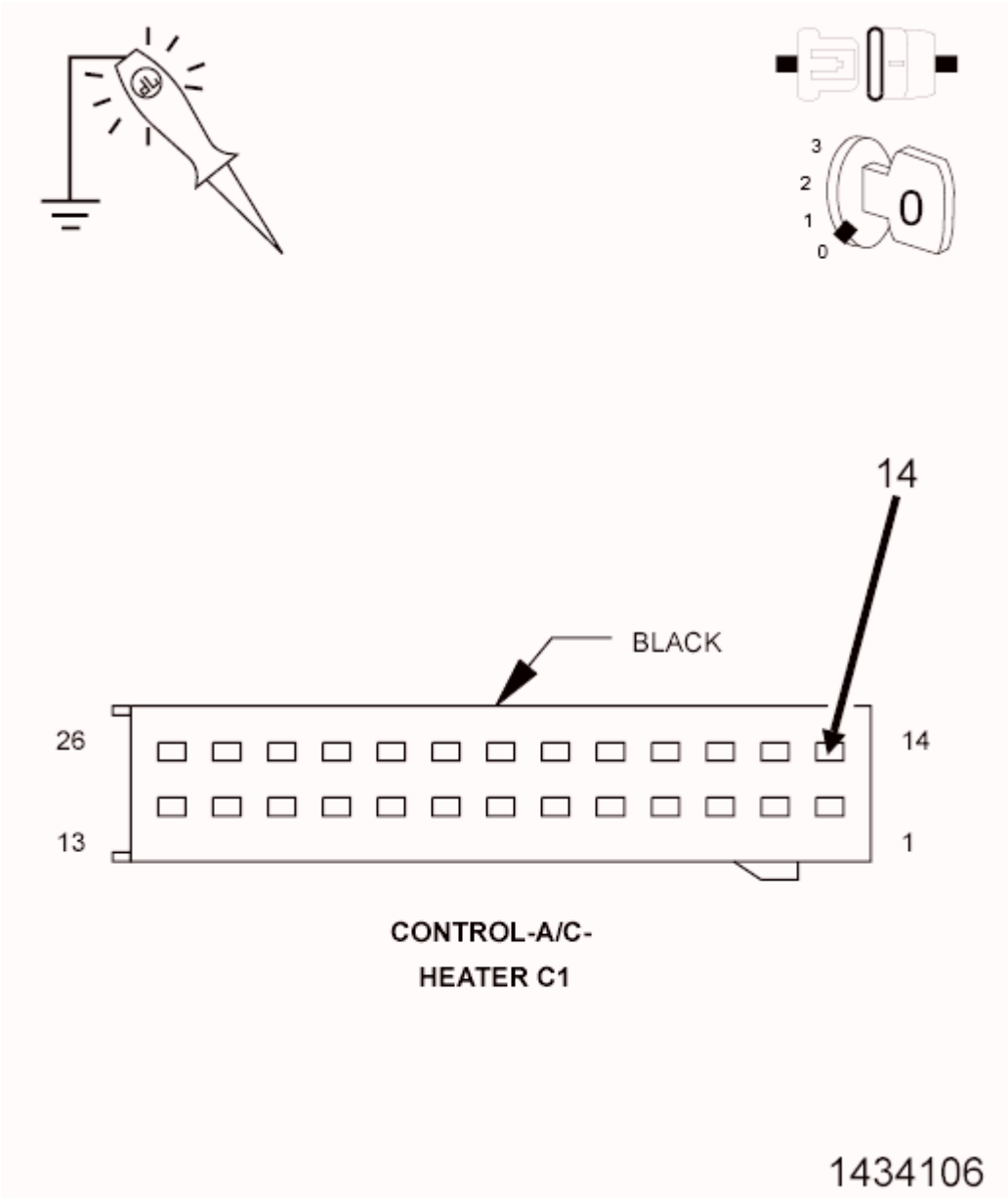

Fig. 55: Checking Fused B(+) Circuit For An Open Or Short
Courtesy of CHRYSLER GROUP, LLC

1. Turn the ignition off.
2. Disconnect the A/C Heater Control harness connector.
3. Using a 12-volt test light connected to ground, check the (A417) Fused B(+) circuit.

   Does the test light illuminate brightly?

   Yes

   - Go To 3.

No

- Repair the open or short in the (A417) Fused B(+) circuit.
- Refer to **STANDARD PROCEDURE** and perform the BODY VERIFICATION TEST.

3. **CHECK THE (Z911) GROUND CIRCUIT FOR AN OPEN**

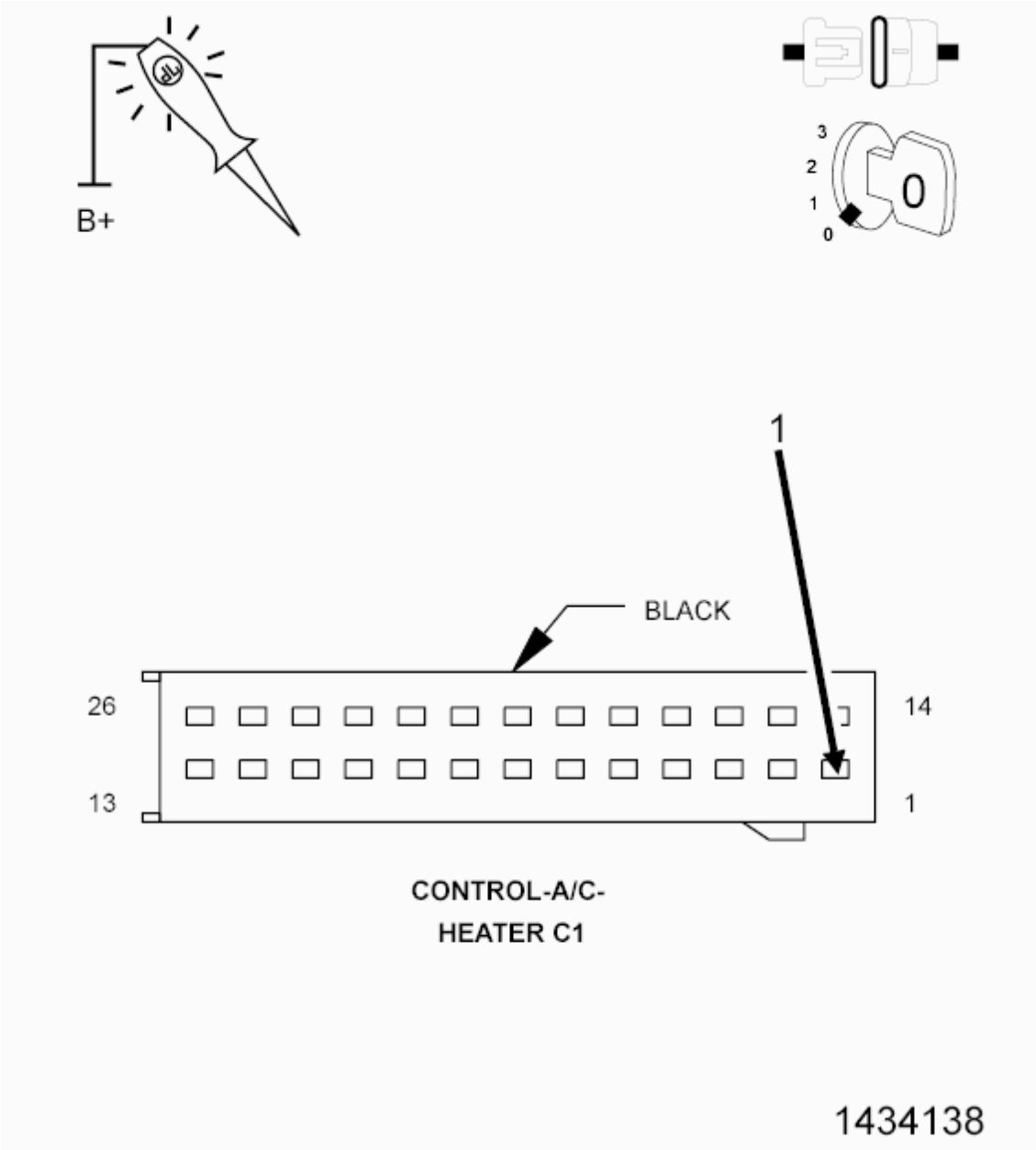

Fig. 56: Checking Ground Circuit For An Open
Courtesy of CHRYSLER GROUP, LLC

1. Using a 12-volt test light connected to 12-volts, check the (Z911) Ground circuit.

   Does the test light illuminate brightly?

Yes

- Go To 4.

No

- Repair the open in the (Z911) Ground circuit.
- Refer to **STANDARD PROCEDURE** and perform the BODY VERIFICATION TEST.

4. **CHECK THE (F921) FUSED RUN RELAY OUTPUT CIRCUIT FOR AN OPEN OR SHORT**

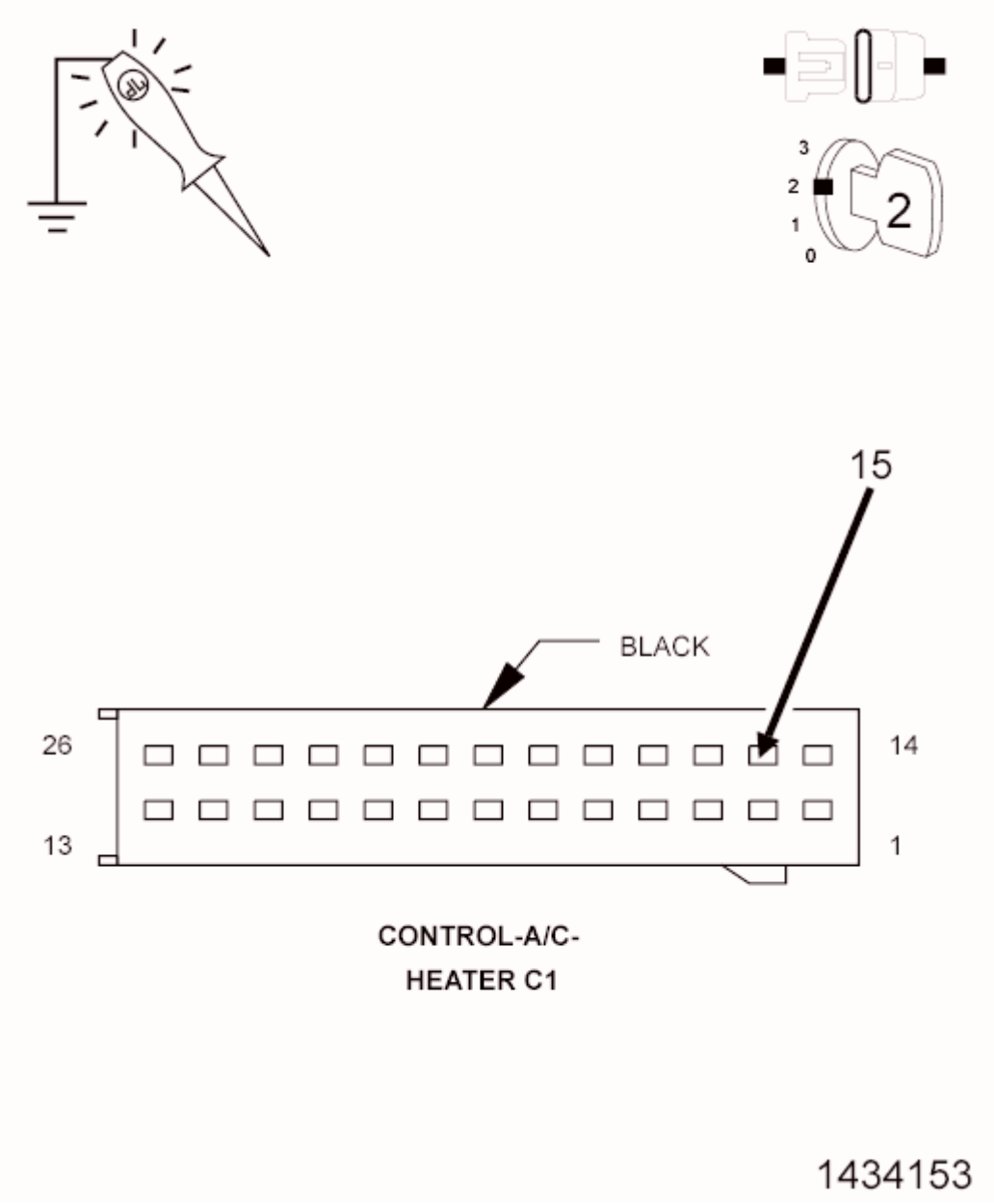

Fig. 57: Checking Fused Run Relay Output Circuit For An Open Or Short
Courtesy of CHRYSLER GROUP, LLC

1. Turn the ignition on.
2. Using a 12-volt test light connected to ground, check the (F921) Fused Run Relay Output circuit.

   Does the test light illuminate brightly?

   Yes

   - Go To 5.

   No

   - Repair the open or short in the (F921) Fused Run Relay Output circuit.
   - Refer to **STANDARD PROCEDURE** and perform the BODY VERIFICATION TEST.

5. **CHECK THE (D265) AND (D264) CAN INTERIOR BUS (125K) CIRCUITS FOR AN OPEN**

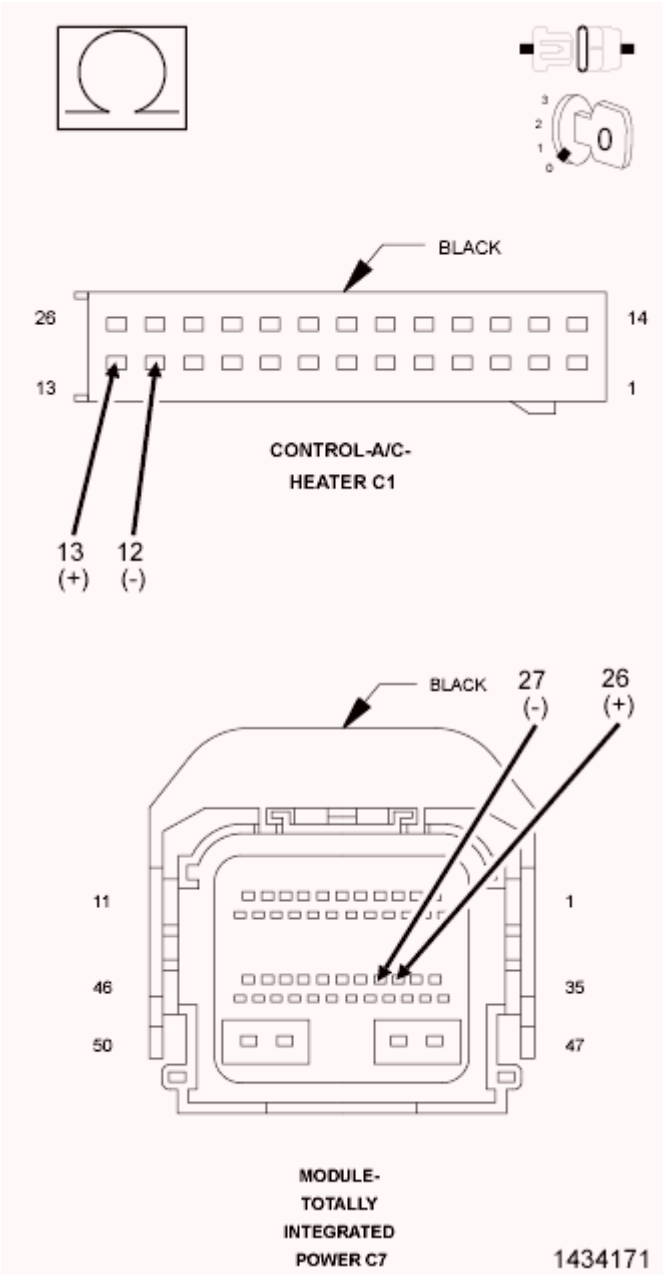

Fig. 58: Checking CAN Interior BUS Circuits For An Open
Courtesy of CHRYSLER GROUP, LLC

1. Measure the resistance of the (D264) CAN Interior Bus (125K) (-) circuit between the TIPM C7 harness connector and the A/C Heater Control harness connector.
2. Measure the resistance of the (D265) CAN Interior Bus (125K) (+) circuit between the TIPM C7 harness connector and the A/C Heater Control harness connector.

   Are the resistances below 5.0 Ohms?

   Yes

- Replace the A/C Heater Control Module in accordance with the Service Information. Refer to **CONTROL, A/C AND HEATER, REMOVAL** .
- Refer to **STANDARD PROCEDURE** and perform the BODY VERIFICATION TEST.

No

- Repair the open in the (D265) or (D264) CAN Interior Bus (125K) circuit.
- Refer to **STANDARD PROCEDURE** and perform the BODY VERIFICATION TEST.

NO RESPONSE FROM ITBM (INTEGRATED TRAILER BRAKE MODULE)

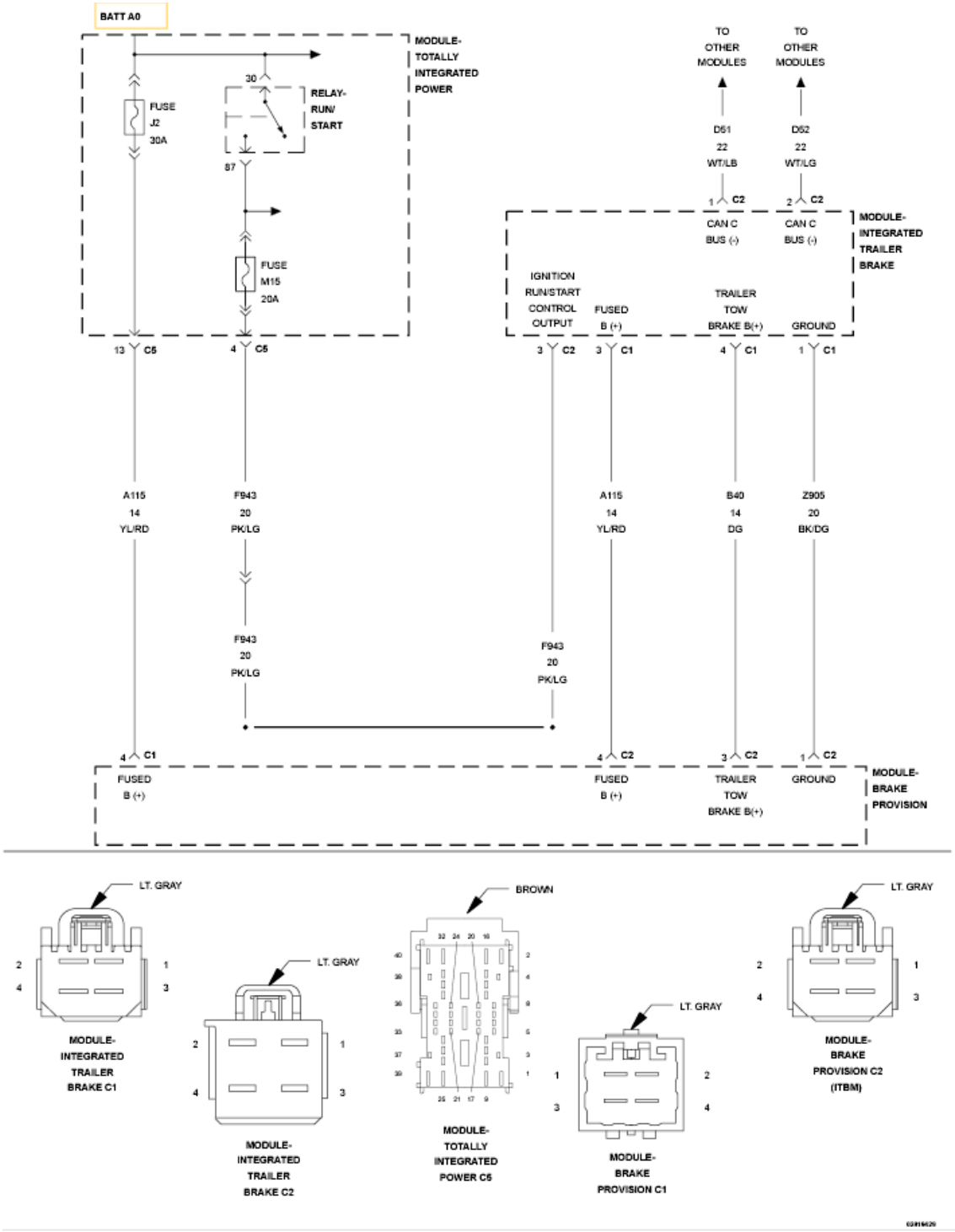

Fig. 59: Integrated Trailer Brake Module Wiring Diagram
Courtesy of CHRYSLER GROUP, LLC

For a complete wiring diagram, **refer to appropriate SYSTEM WIRING DIAGRAMS article** .

POSSIBLE CAUSES

Possible Causes
(A115) FUSED B(+) CIRCUIT OPEN OR SHORTED
(Z905) GROUND CIRCUIT OPEN
(F943) FUSED IGNITION RUN/START CONTROL OUTPUT CIRCUIT OPEN OR SHORTED
(D52) CAN C BUS (+) CIRCUIT OPEN
(D51) CAN C BUS (-) CIRCUIT OPEN
INTEGRATED TRAILER BRAKE MODULE (ITBM)

DIAGNOSTIC TEST

1. **TEST FOR INTERMITTENT CONDITION**

   NOTE: Check for any TSB(s) related to the condition. If a TSB applies, perform the procedure outlined in the TSB before continuing.

   1. Turn the ignition on.

      NOTE: Make sure the IOD fuse is installed and battery voltage is between 10.0 and 16.0 volts.

   2. With the scan tool, read the module status.

      NOTE: Check the TIPM for any active CAN hardware DTCs, perform DTC before proceeding.

      Does the scan tool indicate that the module is active on the bus?

      Yes

      - The no response condition is not present at this time. Using the wiring diagrams as a guide, check all related splices and connectors for signs of water intrusion, corrosion, pushed out or bent terminals, and correct pin tension.

      No

      - Go To 2.

2. **(A115) FUSED B(+) CIRCUIT OPEN OR SHORTED**

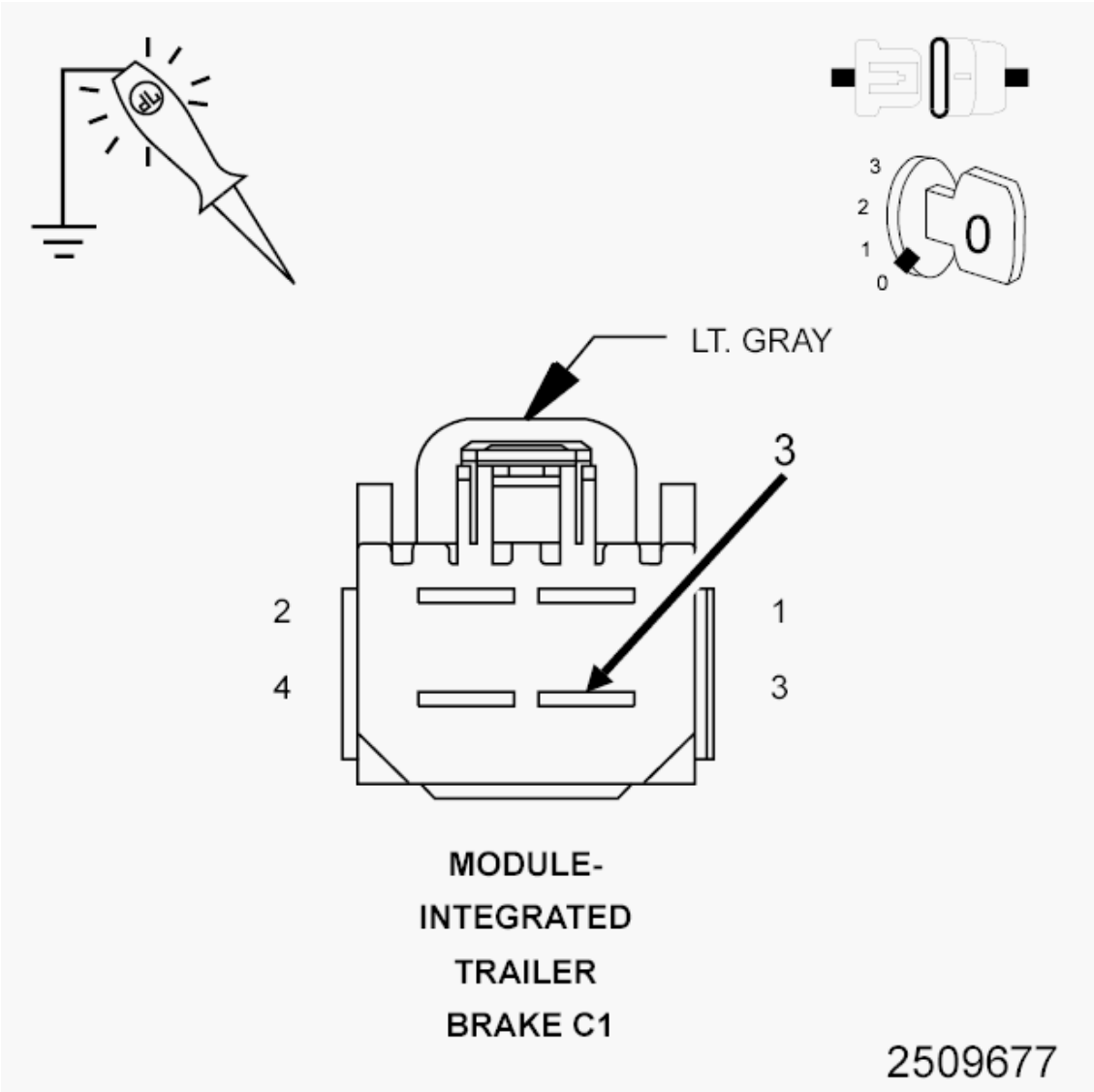

Fig. 60: Checking Fused B(+) Circuit Open Or Short
Courtesy of CHRYSLER GROUP, LLC

1. Turn the ignition off.
2. Disconnect the ITBM C1 harness connector.
3. Using a 12-volt test light connected to ground, check the (A115) Fused B(+) circuit.

   Does the test light illuminate brightly?

   Yes

   - Go To 3.

   No

- Repair the open or short in the (A115) Fused B(+) circuit.
- Refer to **STANDARD PROCEDURE** for 1500, 2500 & 3500 or **STANDARD PROCEDURE** for 3500 Cab & Chassis, 4500 & 5500 and perform the ITBM VERIFICATION TEST.

3. **(Z905) GROUND CIRCUIT OPEN**

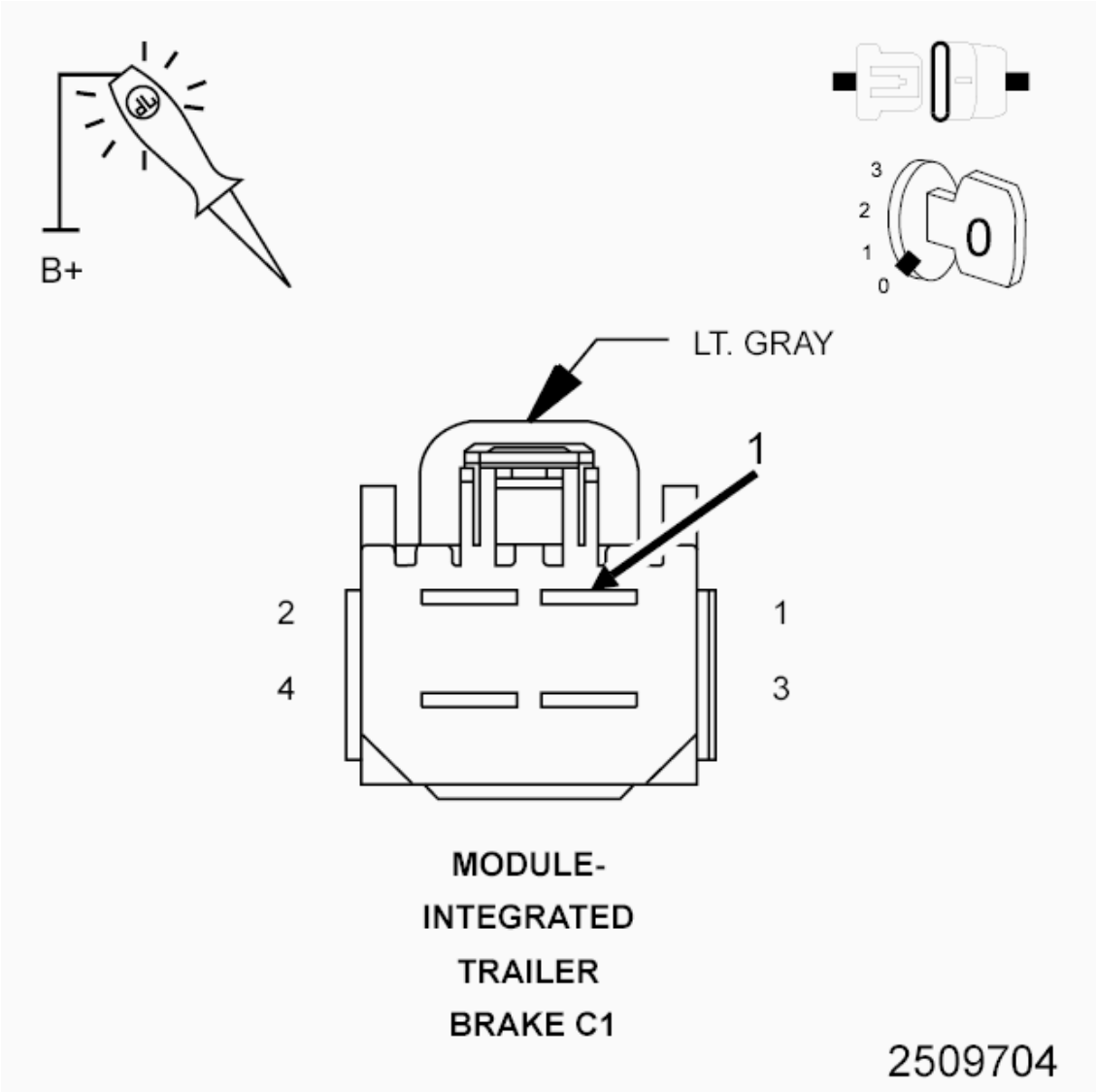

Fig. 61: Checking Ground Circuit For Open
Courtesy of CHRYSLER GROUP, LLC

1. Using a 12-volt test light connected to 12-volts, check the (Z905) Ground circuit.

   Does the test light illuminate brightly?

   Yes

- Go To 4.

No

- Repair the open in the (Z905) Ground circuit.
- Refer to **STANDARD PROCEDURE** for 1500, 2500 & 3500 or **STANDARD PROCEDURE** for 3500 Cab & Chassis, 4500 & 5500 and perform the ITBM VERIFICATION TEST.

4. **(F943) FUSED IGNITION RUN/START CONTROL OUTPUT CIRCUIT OPEN OR SHORTED**

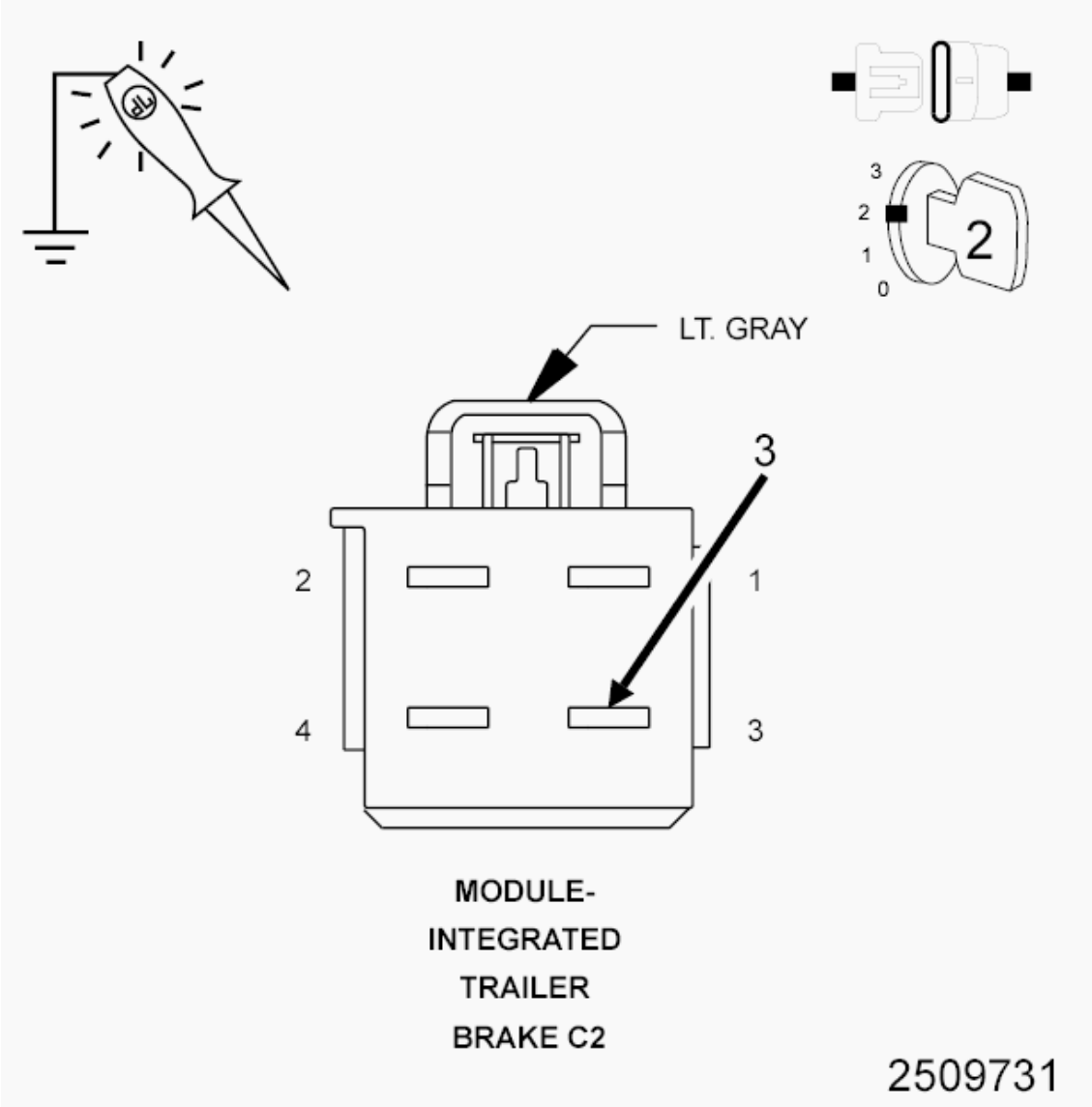

Fig. 62: Checking Fused Ignition Run/Start Control Output Circuit Open Or Short
Courtesy of CHRYSLER GROUP, LLC

1. Turn the ignition on.

2. Using a 12-volt test light connected to ground, check the (F943) Fused Ignition Run/Start Control Output circuit.

   Does the test light illuminate brightly?

   Yes

   - Go To 5.

   No

   - Repair the open or short in the (F943) Fused Ignition Run/Start Control Output circuit.
   - Refer to **STANDARD PROCEDURE** for 1500, 2500 & 3500 or **STANDARD PROCEDURE** for 3500 Cab & Chassis, 4500 & 5500 and perform the ITBM VERIFICATION TEST.

5. **(D52) CAN C BUS (+) CIRCUIT OPEN**

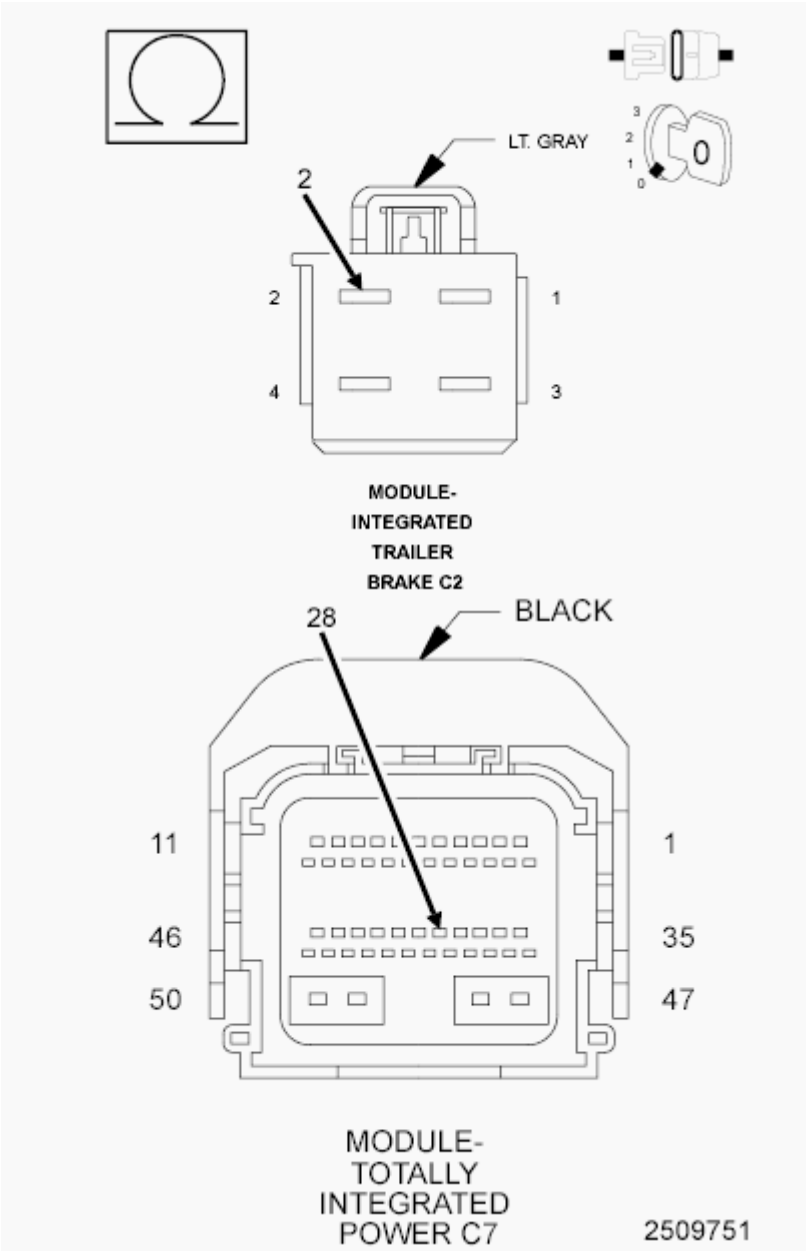

Fig. 63: Checking CAN C BUS (+) Circuit For Open
Courtesy of CHRYSLER GROUP, LLC

1. Turn the ignition off.
2. Disconnect the TIPM C7 harness connector.
3. Measure the resistance of the (D52) CAN C Bus (+) circuit between the TIPM C7 harness connector and the ITBM C2 harness connector.

   Is resistance below 5.0 Ohms?

   Yes

- Go To 6.

No

- Repair the open in the (D52) CAN C Bus (+) circuit.
- Refer to **STANDARD PROCEDURE** for 1500, 2500 & 3500 or **STANDARD PROCEDURE** for 3500 Cab & Chassis, 4500 & 5500 and perform the ITBM VERIFICATION TEST.

6. **(D51) CAN C BUS (-) CIRCUIT OPEN**

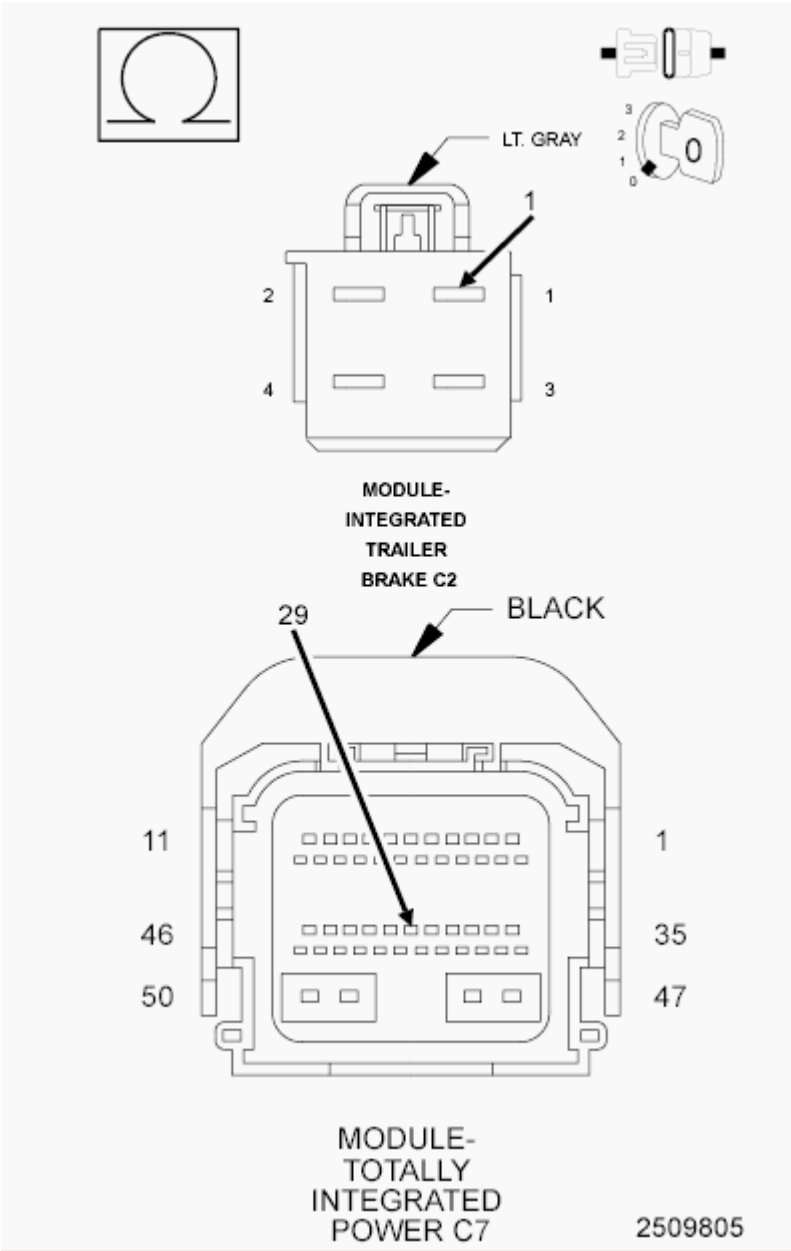

Fig. 64: Measuring Resistance Of CAN C Bus (-) Circuit Between TIPM Harness Connector & ITBM Harness Connector

Courtesy of CHRYSLER GROUP, LLC

1. Measure the resistance of the (D51) CAN C Bus (-) circuit between the TIPM C7 harness connector and the ITBM C2 harness connector.

   Is resistance below 5.0 Ohms?

   Yes

   - Replace the ITBM in accordance with the Service Information. Refer to **MODULE, INTEGRATED TRAILER BRAKE (ITBM), REMOVAL** .
   - Refer to **STANDARD PROCEDURE** for 1500, 2500 & 3500 or **STANDARD PROCEDURE** for 3500 Cab & Chassis, 4500 & 5500 and perform the ITBM VERIFICATION TEST.

   No

   - Repair the open in the (D51) CAN C Bus (-) circuit.
   - Refer to **STANDARD PROCEDURE** for 1500, 2500 & 3500 or **STANDARD PROCEDURE** for 3500 Cab & Chassis, 4500 & 5500 and perform the ITBM VERIFICATION TEST.

NO RESPONSE FROM MSMD (MEMORY SEAT MODULE)

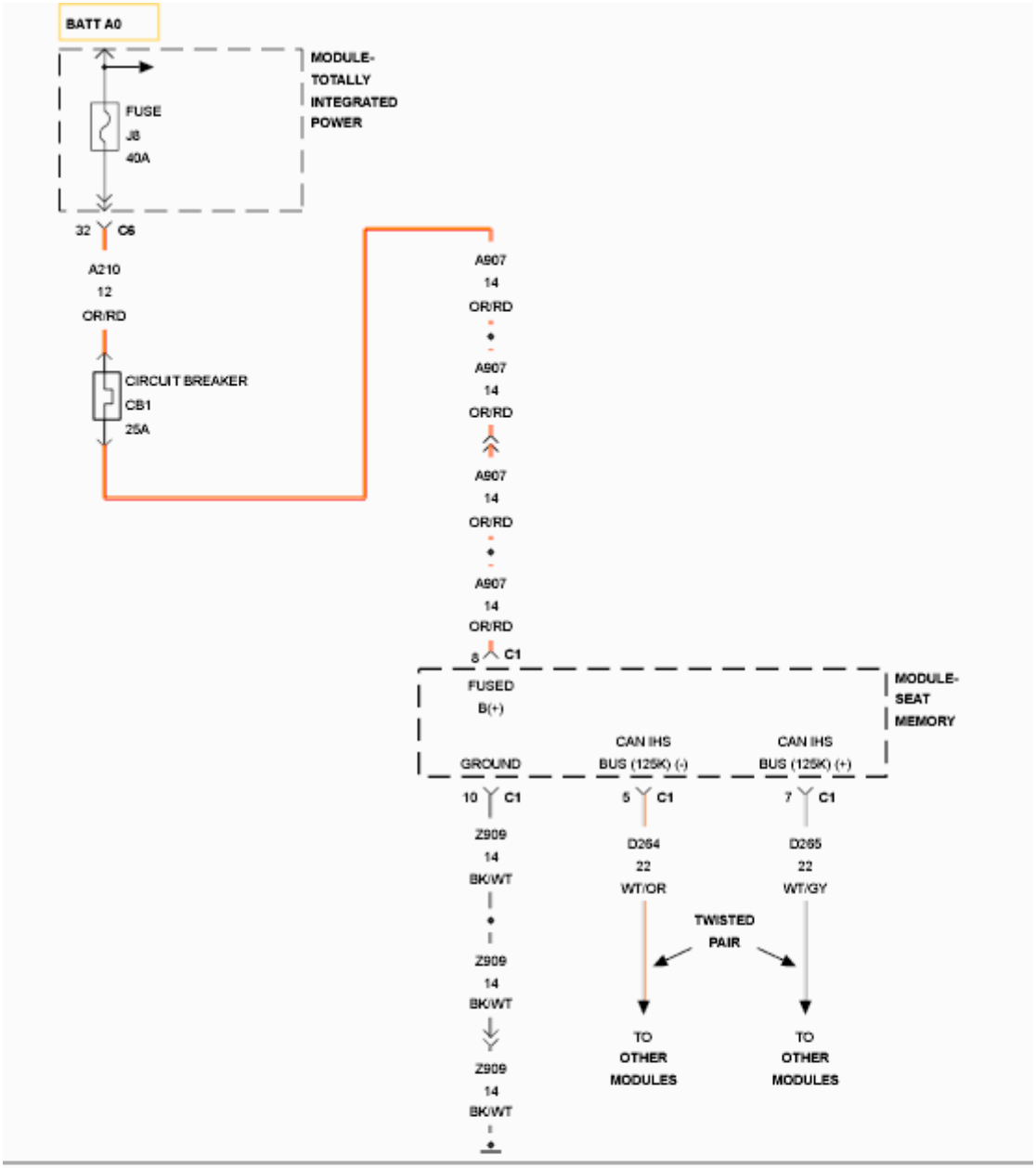
BATT A0
MODULE-
TOTALLY
INTEGRATED
POWER
FUSE
J8
40A
32
C6
A210
12
OR/RD
CIRCUIT BREAKER
CB1
25A
A907
14
OR/RD
A907
14
OR/RD
A907
14
OR/RD
A907
14
OR/RD
8
C1
FUSED
B(+)
MODULE-
SEAT
MEMORY
GROUND
CAN IHS
BUS (125K) (-)
CAN IHS
BUS (125K) (+)
10
C1
5
C1
7
C1
Z909
14
BK/WT
D264
22
WT/OR
D265
22
WT/GY
TWISTED
PAIR
Z909
14
BK/WT
TO
OTHER
MODULES
TO
OTHER
MODULES
Z909
14
BK/WT

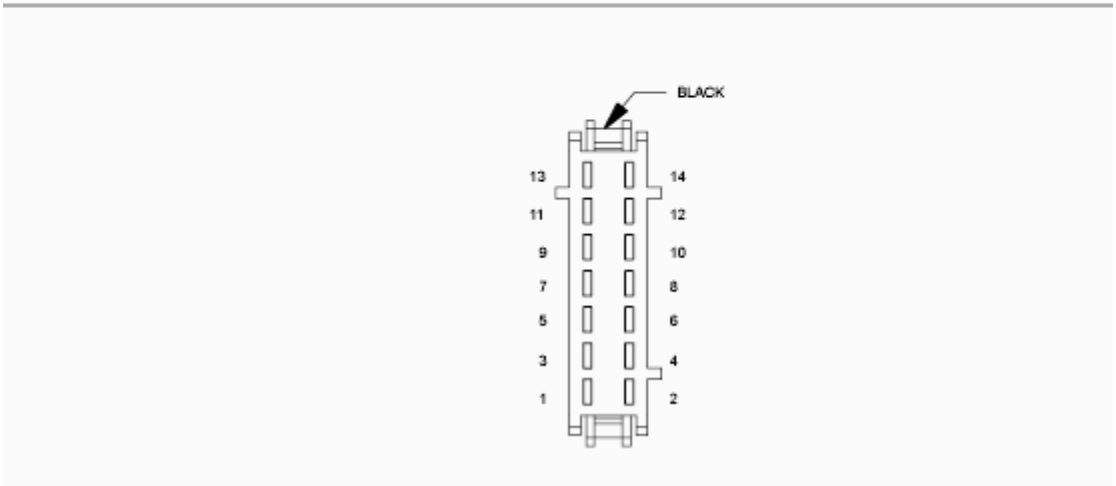
BLACK
13
14
11
12
9
10
7
8
5
6
3
4
1
2

Fig. 65: Memory Seat Module Fused B (+) Wiring Diagram
Courtesy of CHRYSLER GROUP, LLC

For a complete wiring diagram, **refer to appropriate SYSTEM WIRING DIAGRAMS article** .

POSSIBLE CAUSES

Possible Causes
(A907) FUSED B(+) CIRCUIT OPEN OR SHORTED
(Z909) GROUND CIRCUIT OPEN
(D264) OR (D265) CAN INTERIOR BUS (125K) CIRCUIT OPEN
MEMORY SEAT MODULE

DIAGNOSTIC TEST

1. **TEST FOR INTERMITTENT CONDITION**

   NOTE: Check for any TSB(s) related to the condition. If a TSB applies, perform the procedure outlined in the TSB before continuing.

   1. Turn the ignition on.

      NOTE: Make sure the IOD fuse is installed and battery voltage is between 10.0 and 16.0 volts.

   2. With the scan tool, read the module status.

      NOTE: Check the TIPM for any active CAN hardware DTCs, perform DTC before proceeding.

      Does the scan tool indicate that the module is active on the bus?

      Yes

      - The no response condition is not present at this time. Using the wiring diagrams as a guide, check all related splices and connectors for signs of water intrusion, corrosion, pushed out or bent terminals, and correct pin tension.

      No

      - Go To 2.

2. **CHECK THE (A907) FUSED B(+) CIRCUIT FOR AN OPEN OR SHORT**

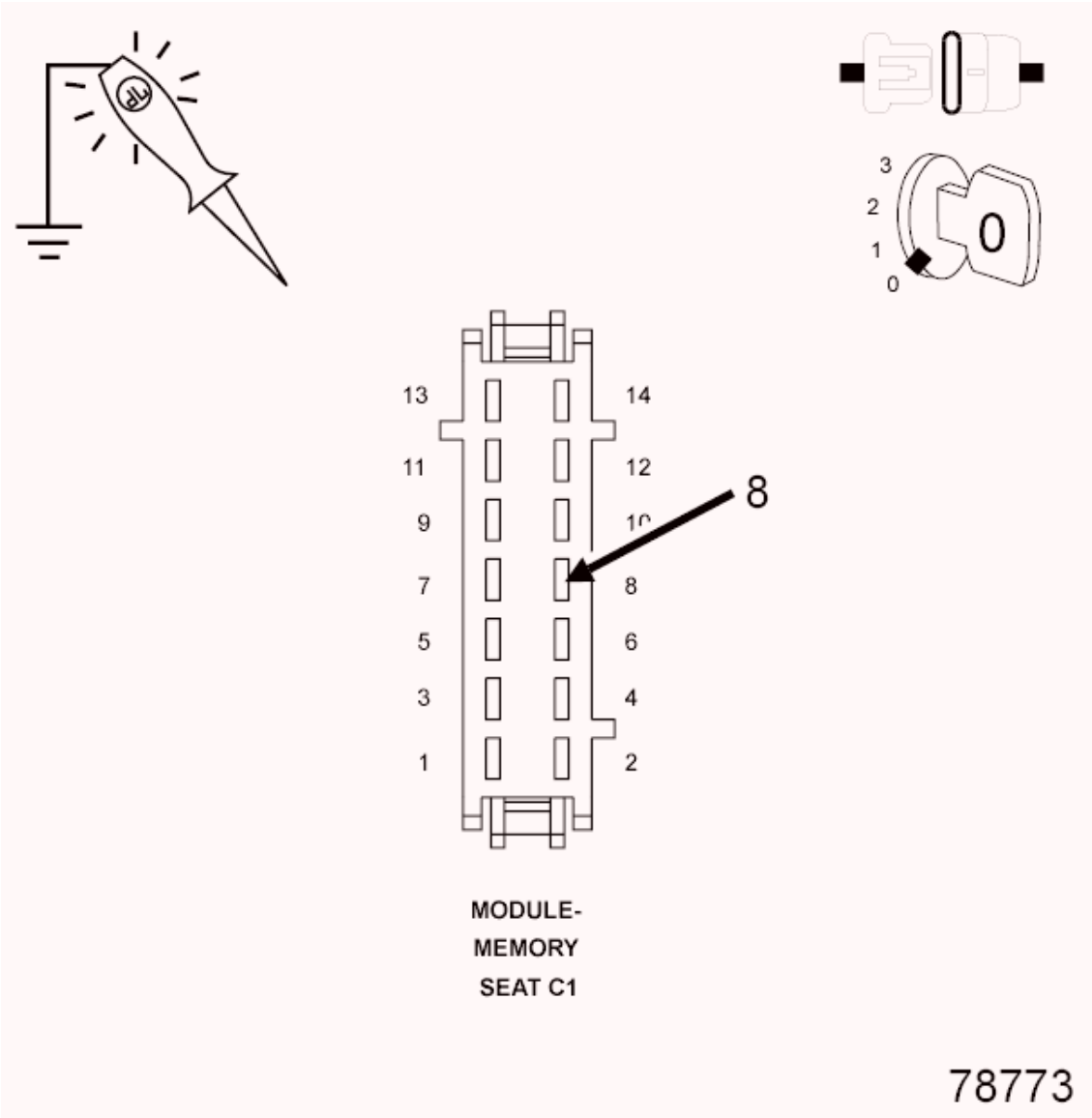

Fig. 66: Checking Fused B(+) Circuit For An Open Or Short
Courtesy of CHRYSLER GROUP, LLC

1. Turn the ignition off.
2. Disconnect the Memory Seat Module C1 harness connector.
3. Using a 12-volt test light connected to ground, check the (A907) Fused B(+) circuit.

   Does the test light illuminate brightly?

   Yes

   - Go To 3.

   No

- Repair the open or short in the (A907) Fused B(+) circuit.
- Refer to **STANDARD PROCEDURE** and perform the BODY VERIFICATION TEST.

3. **CHECK THE (Z909) GROUND CIRCUIT FOR AN OPEN**

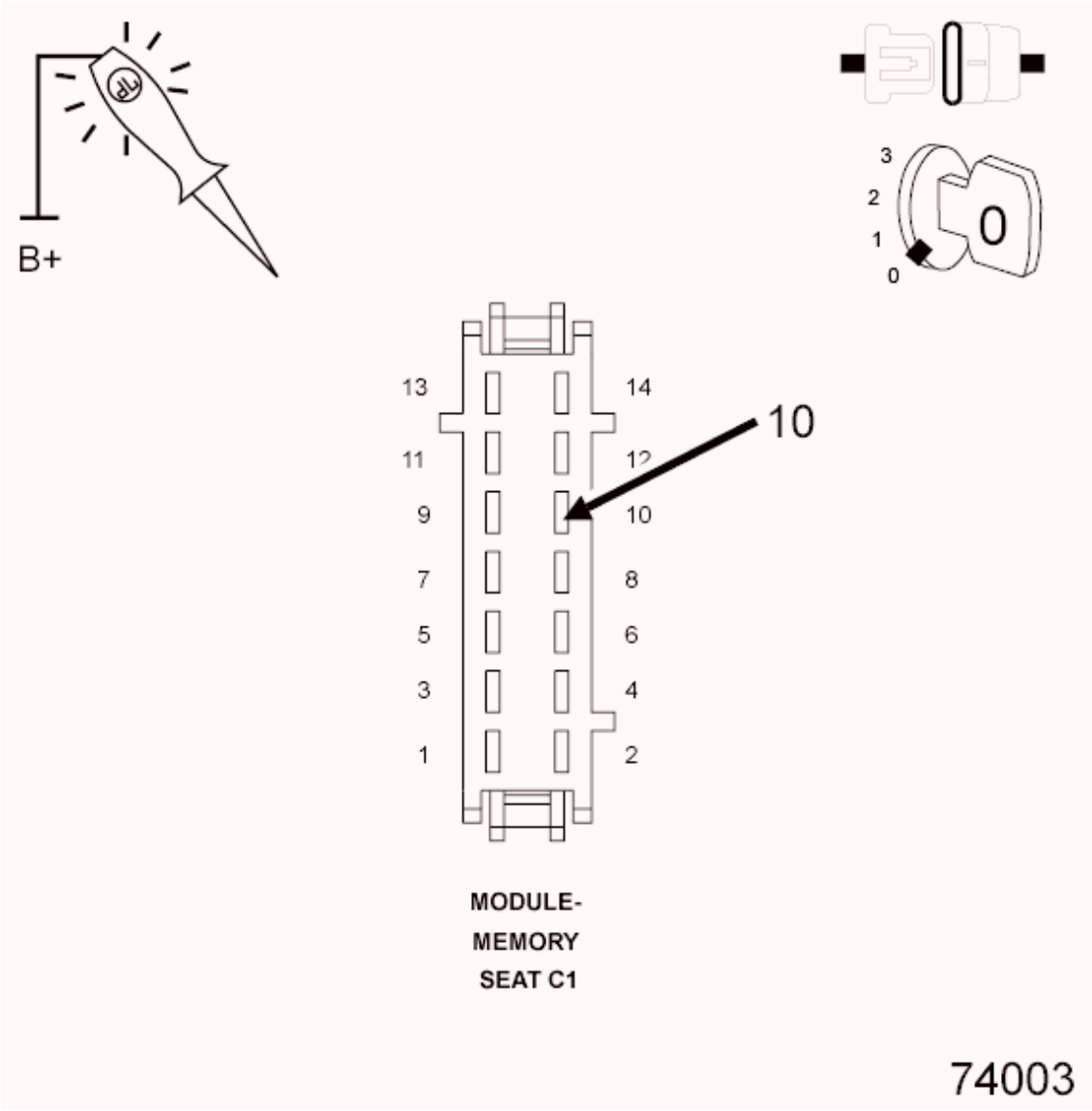

Fig. 67: Checking Ground Circuit For An Open
Courtesy of CHRYSLER GROUP, LLC

1. Using a 12-volt test light connected to 12-volts, check the (Z909) Ground circuit.

   Does the test light illuminate brightly?

   Yes

   - Go To 4.

No

- Repair the open in the (Z909) Ground circuit.
- Refer to **STANDARD PROCEDURE** and perform the BODY VERIFICATION TEST.

4. **CHECK THE (D265) AND (D264) CAN INTERIOR BUS (125K) CIRCUITS FOR AN OPEN**

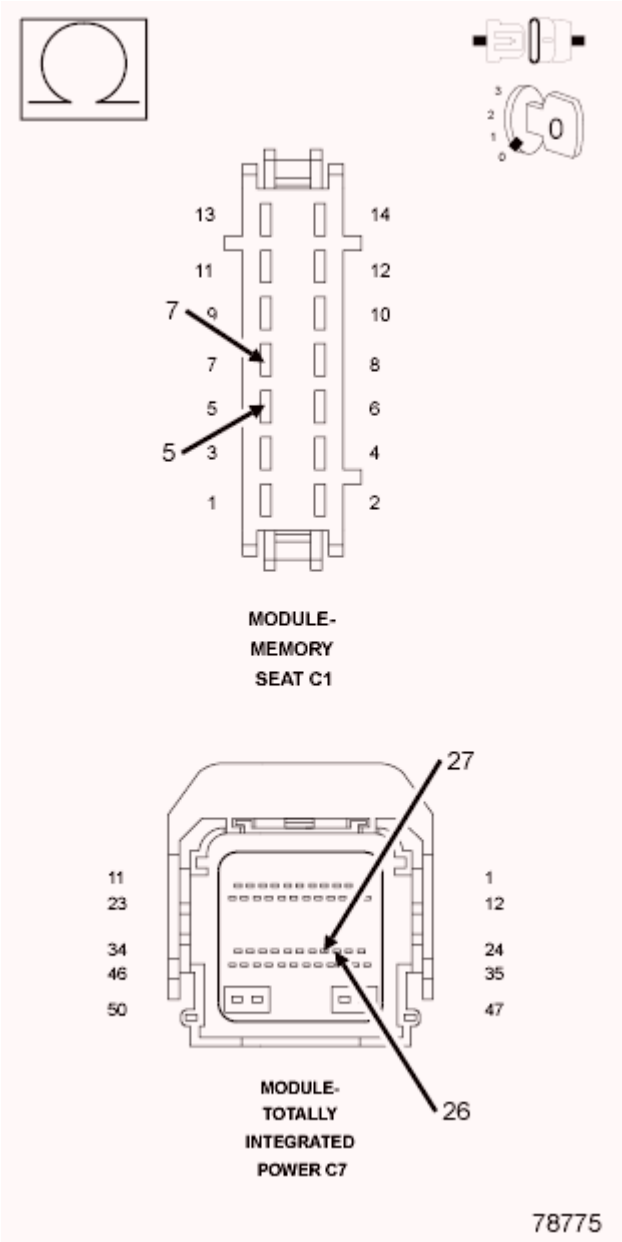

Fig. 68: Checking CAN Interior Bus Circuit For Open
Courtesy of CHRYSLER GROUP, LLC

1. Disconnect the TIPM C7 harness connector.
2. Measure the resistance of the (D264) CAN Interior Bus (125K) (-) circuit between the TIPM C7 harness connector and the Memory Seat Module C1 harness connector.

3. Measure the resistance of the (D265) CAN Interior Bus (125K) (+) circuit between the TIPM C7 harness connector and the Memory Seat Module C1 harness connector.

   Are the resistances below 5.0 Ohms?

   Yes

   - Replace the Memory Seat Module in accordance with the Service Information. Refer to **MODULE, MEMORY, REMOVAL** .
   - Refer to **STANDARD PROCEDURE** and perform the BODY VERIFICATION TEST.

   No

   - Repair the open in the (D265) or (D264) CAN Interior Bus (125K) circuit.
   - Refer to **STANDARD PROCEDURE** and perform the BODY VERIFICATION TEST.

NO RESPONSE FROM ORC (OCCUPANT RESTRAINT CONTROLLER)

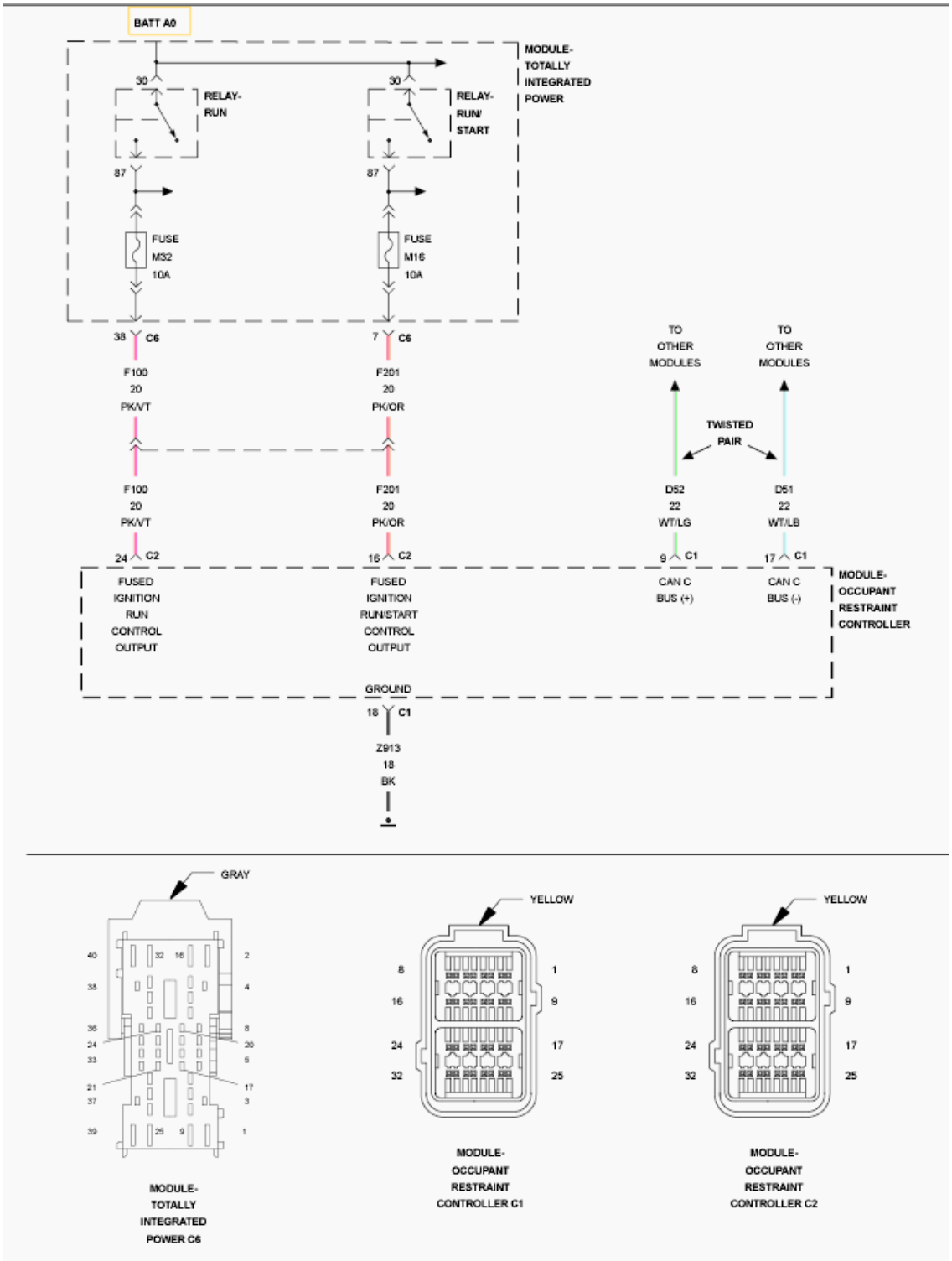

Fig. 69: Fused Occupant Restraint Controller Wiring Diagram
Courtesy of CHRYSLER GROUP, LLC

For a complete wiring diagram, **refer to appropriate SYSTEM WIRING DIAGRAMS article** .

POSSIBLE CAUSES

Possible Causes
(Z913) GROUND CIRCUIT OPEN
(F100) FUSED IGNITION RUN CONTROL OUTPUT CIRCUIT OPEN OR SHORTED
(F201) FUSED IGNITION RUN/START CONTROL OUTPUT CIRCUIT OPEN OR SHORTED
(D51) CAN C BUS (-) CIRCUIT OPEN
(D52) CAN C BUS (+) CIRCUIT OPEN
OCCUPANT RESTRAINT CONTROLLER (ORC)

DIAGNOSTIC TEST

1. **TEST FOR INTERMITTENT CONDITION**

   NOTE: Check for any TSB(s) related to the condition. If a TSB applies, perform the procedure outlined in the TSB before continuing.

   1. Turn the ignition on.

      NOTE: Make sure the IOD fuse is installed and battery voltage is between 10.0 and 16.0 volts.

   2. With the scan tool, read the module status.

      NOTE: Check the TIPM for any active CAN hardware DTCs, perform DTC before proceeding.

      Does the scan tool indicate that the module is active on the bus?

      Yes

      - The no response condition is not present at this time. Using the wiring diagrams as a guide, check all related splices and connectors for signs of water intrusion, corrosion, pushed out or bent terminals, and correct pin tension.

      No

      - Go To 2.

2. **CHECK THE (Z913) GROUND CIRCUIT FOR AN OPEN**

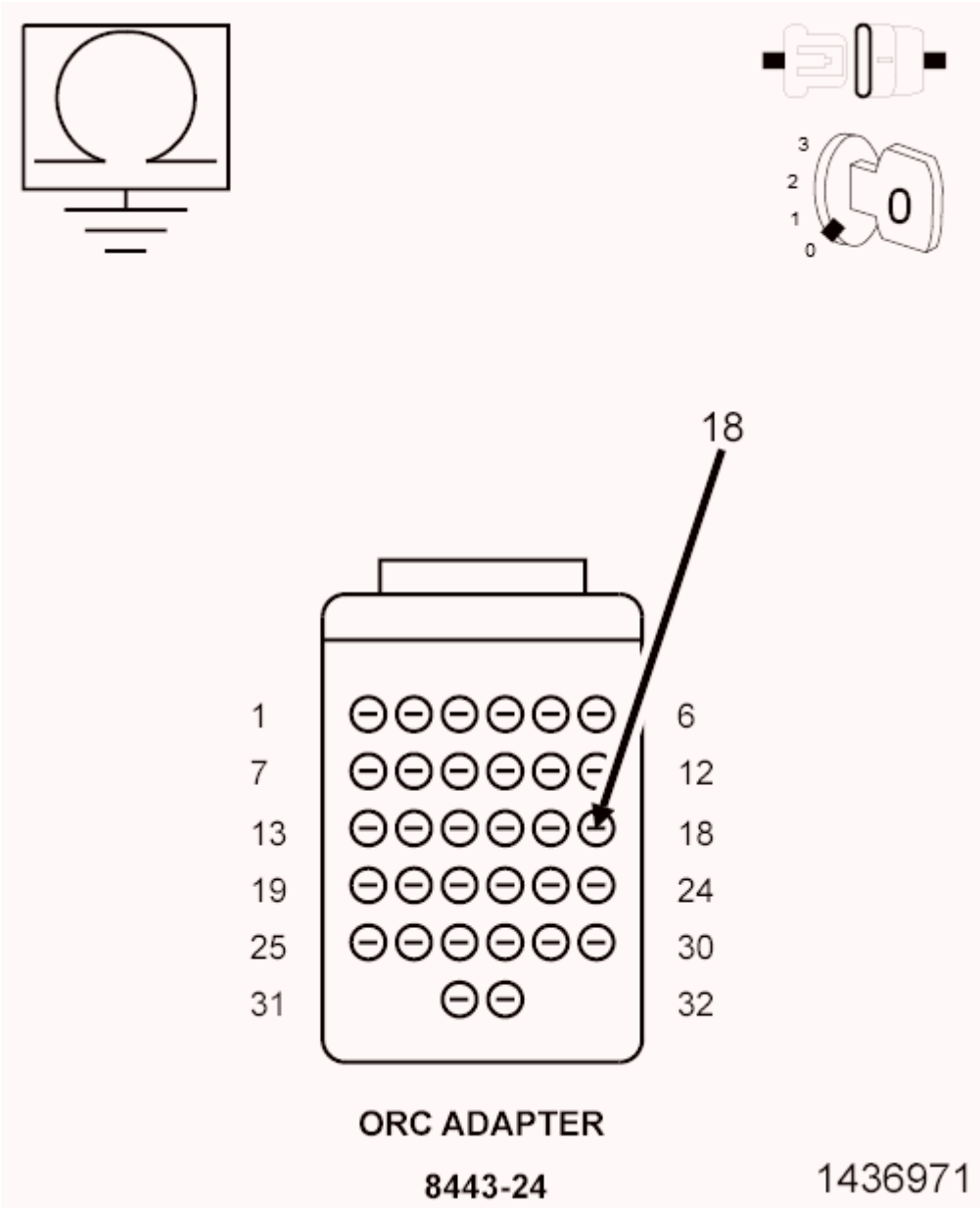

Fig. 70: Measuring Resistance Between Ground And Ground Circuit
Courtesy of CHRYSLER GROUP, LLC

WARNING: To avoid possible serious or fatal injury, turn the ignition off, disconnect the battery and wait two minutes before proceeding.

1. Disconnect the Occupant Restraint Controller Module harness connectors.
2. Connect the SRS Load Tool Adapter (special tool #8443-24, 32-Way Adapter) to the ORC connectors.
3. Measure the resistance between ground and the (Z913) Ground circuit.

   Is the resistance below 5.0 Ohms?

Yes

- Go To 3.

No

- Repair the open in the (Z913) Ground circuit.
- Refer to **STANDARD PROCEDURE** and perform the RESTRAINTS SYSTEM VERIFICATION TEST.

3. **CHECK THE (F100) FUSED IGNITION RUN CONTROL OUTPUT CIRCUIT FOR AN OPEN OR SHORT**

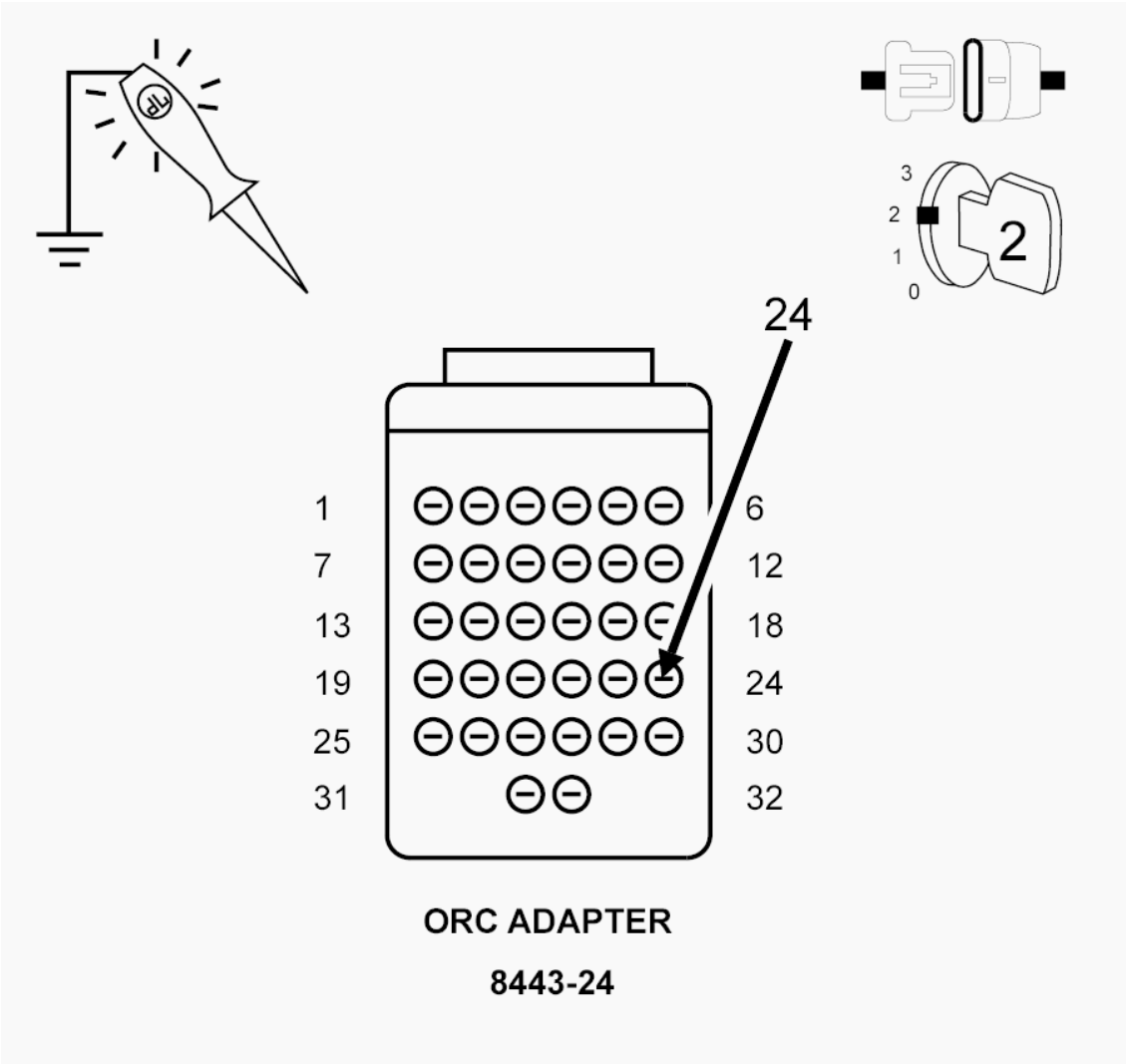

Fig. 71: Check Fused Ignition Run Control Output Circuit For Open
Courtesy of CHRYSLER GROUP, LLC

NOTE: **Check the TIPM for any ignition related DTCs before proceeding. If set. Refer to DIAGNOSIS AND TESTING .**

WARNING: Turn the ignition on, then reconnect the 12-volt battery and wait two minutes before proceeding. Failure to follow these instructions may result in possible serious or fatal injury.

1. Using a 12-volt test light connected to ground, check the (F100) Fused Ignition Run Control Output circuit.

   Does the test light illuminate brightly?

   Yes

   - Go To 4.

   No

   - Repair the open or short in the (F100) Fused Ignition Run Control Output circuit.
   - Refer to **STANDARD PROCEDURE** and perform the RESTRAINTS SYSTEM VERIFICATION TEST.

4. **CHECK THE (F201) FUSED IGNITION RUN/START CONTROL OUTPUT CIRCUIT FOR AN OPEN OR SHORT**

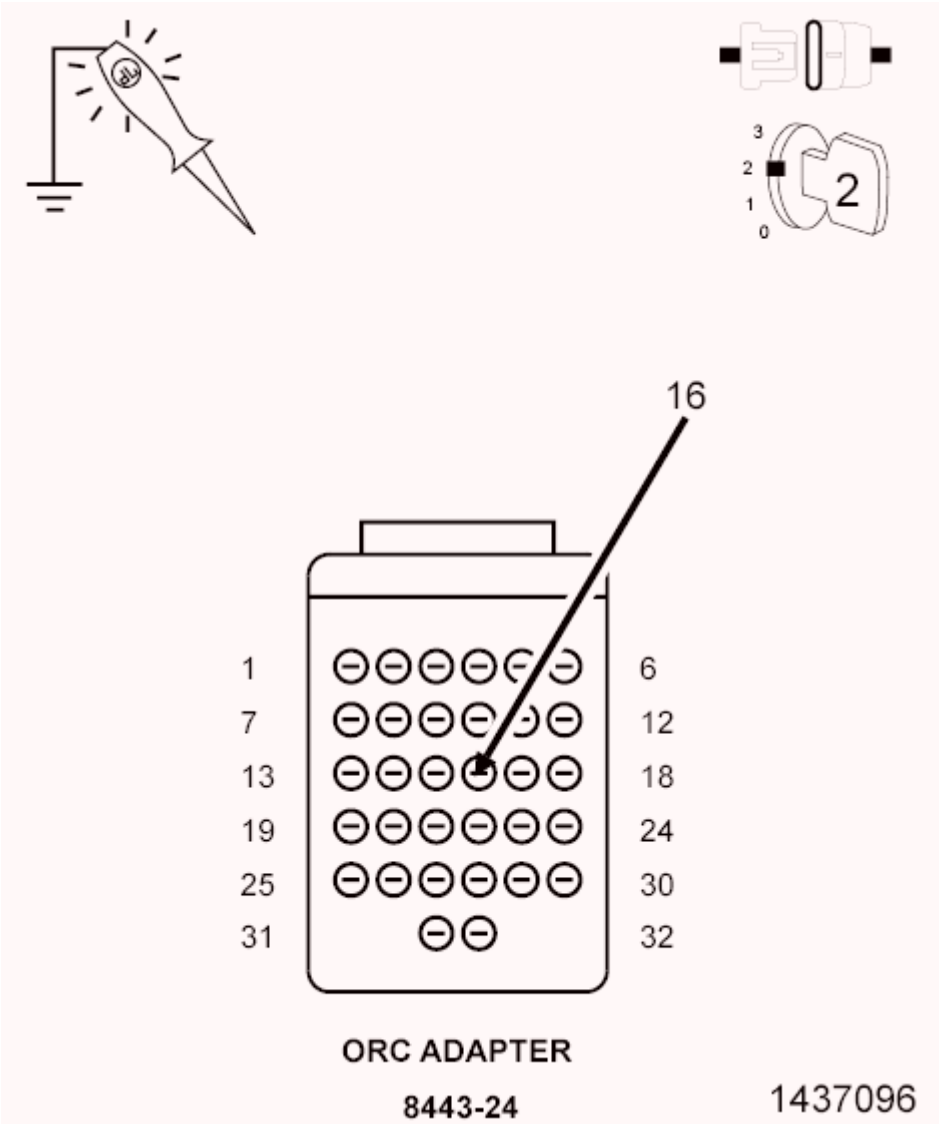

Fig. 72: Checking Fused Run/Start Relay Output Circuit For An Open Or Short
Courtesy of CHRYSLER GROUP, LLC

1. Using a 12-volt test light connected to ground, check the (F201) Fused Ignition Run/Start Control Output circuit.

   Does the test light illuminate brightly?

   Yes

   - Go To 5.

   No

   - Repair the open or short in the (F201) Fused Ignition Run/Start Control Output circuit.
   - Refer to **STANDARD PROCEDURE** and perform the RESTRAINTS SYSTEM

VERIFICATION TEST.

5. **CHECK THE (D52) AND (D51) CAN C BUS CIRCUITS FOR AN OPEN**

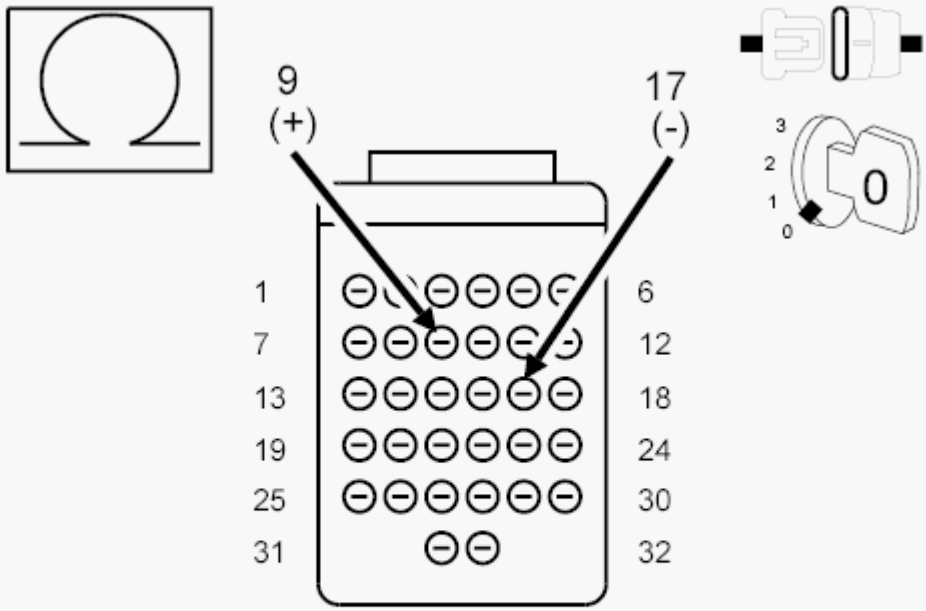

ORC ADAPTER

8443-24

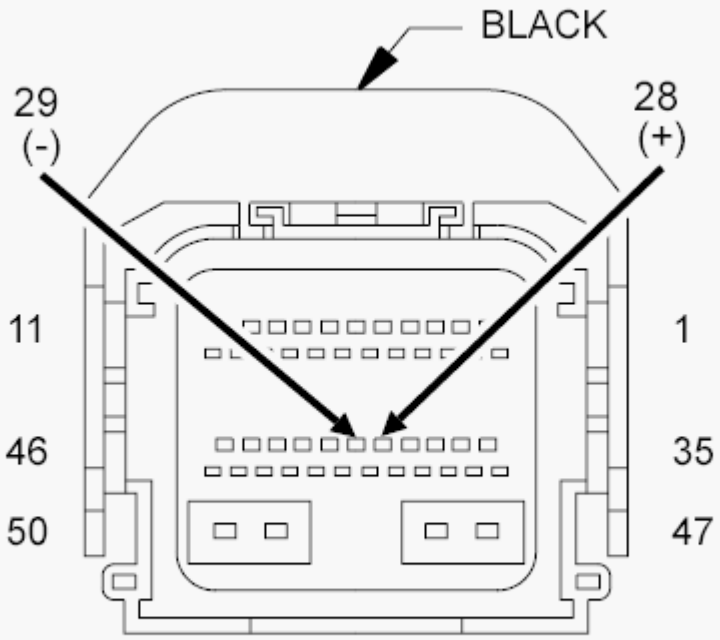

MODULE-
TOTALLY

Fig. 73: Checking CAN C BUS Circuits For An Open
Courtesy of CHRYSLER GROUP, LLC

1. Turn the ignition off.
2. Disconnect the TIPM C7 harness connector.
3. Measure the resistance of the (D52) CAN C Bus (+) circuit between the TIPM C7 harness connector and the Occupant Restraint Controller C1 harness connector.
4. Measure the resistance of the (D51) CAN C Bus (-) circuit between the TIPM C7 harness connector and the Occupant Restraint Controller C1 harness connector.

   Are the resistances below 5.0 Ohms?

   Yes

   - Replace the Occupant Restraint Controller Module in accordance with the Service Information. Refer to **CONTROLLER, OCCUPANT RESTRAINT, REMOVAL** .
   - Refer to **STANDARD PROCEDURE** and perform the RESTRAINTS SYSTEM VERIFICATION TEST.

   No

   - Repair the open in the (D52) or (D51) CAN C Bus circuit.
   - Refer to **STANDARD PROCEDURE** and perform the RESTRAINTS SYSTEM VERIFICATION TEST.

NO RESPONSE FROM PCM (POWERTRAIN CONTROL MODULE) - GAS

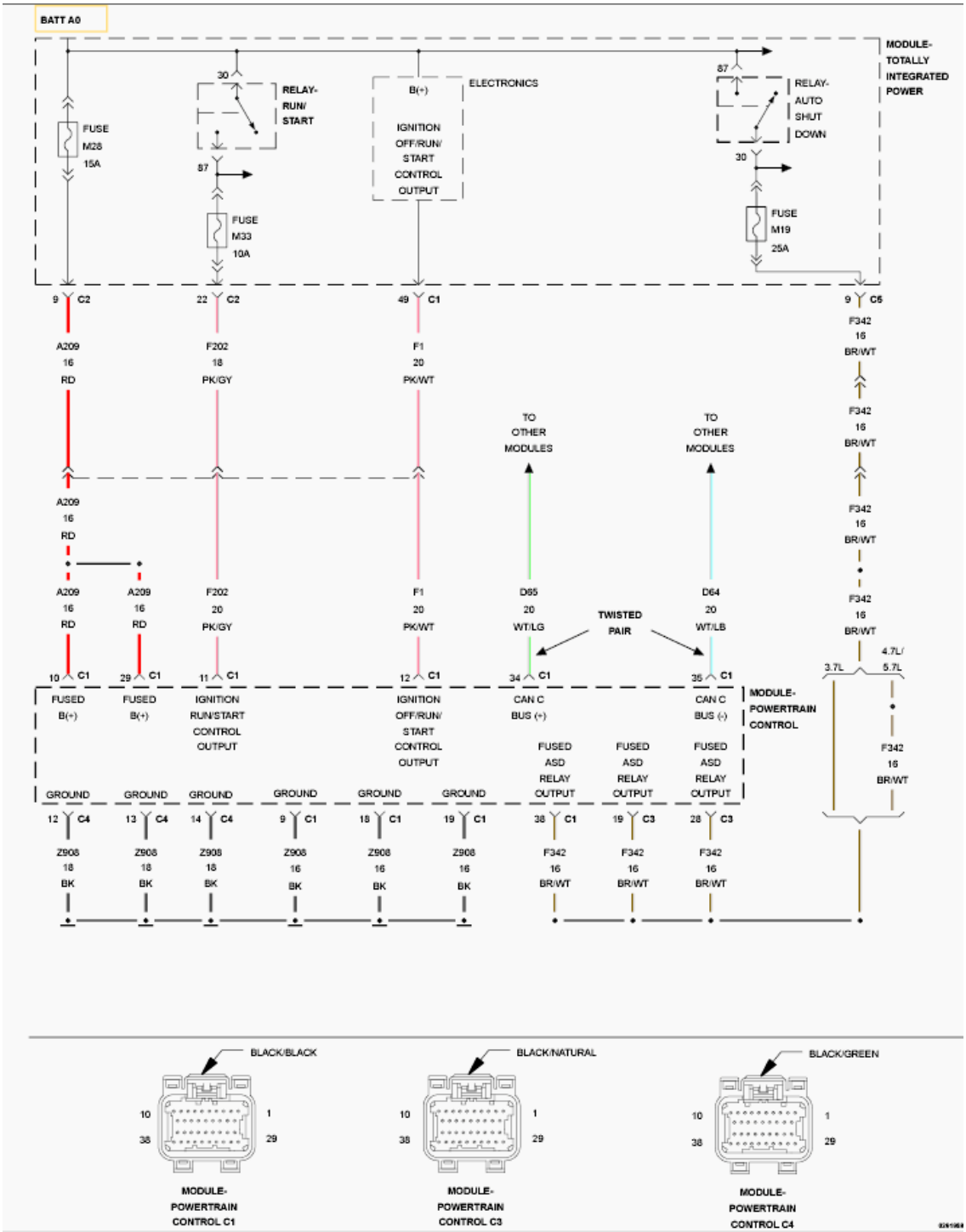

Fig. 74: Powertrain Control Module Wiring Diagram
Courtesy of CHRYSLER GROUP, LLC

For a complete wiring diagram, **refer to appropriate SYSTEM WIRING DIAGRAMS article** .

POSSIBLE CAUSES

Possible Causes
(A209) FUSED B(+) CIRCUITS OPEN OR SHORTED
(Z908) GROUND CIRCUITS OPEN
(F202) IGNITION RUN/START CONTROL OUTPUT CIRCUIT OPEN OR SHORTED
(F1) FUSED IGNITION OFF/RUN/START CONTROL OUTPUT CIRCUIT OPEN OR SHORTED
(F342) FUSED ASD RELAY OUTPUT CIRCUIT OPEN OR SHORTED
(D65) CAN C BUS (+) CIRCUIT OPEN
(D64) CAN C BUS (-) CIRCUIT OPEN
POWERTRAIN CONTROL MODULE (PCM)

DIAGNOSTIC TEST

1. **TEST FOR INTERMITTENT CONDITION**

   NOTE: Check for any TSB(s) related to the condition. If a TSB applies, perform the procedure outlined in the TSB before continuing.

   1. Turn the ignition on.

      NOTE: Make sure the IOD fuse is installed and battery voltage is between 10.0 and 16.0 volts.

   2. With the scan tool, read the module status.

      NOTE: Check the TIPM for any active CAN hardware DTCs, perform DTC before proceeding.

      Does the scan tool indicate that the module is active on the bus?

      Yes

      - The no response condition is not present at this time. Using the wiring diagrams as a guide, check all related splices and connectors for signs of water intrusion, corrosion, pushed out or bent terminals, and correct pin tension.

      No

      - Go To 2.

2. **CHECK THE (A209) FUSED B(+) CIRCUITS FOR AN OPEN OR SHORT**

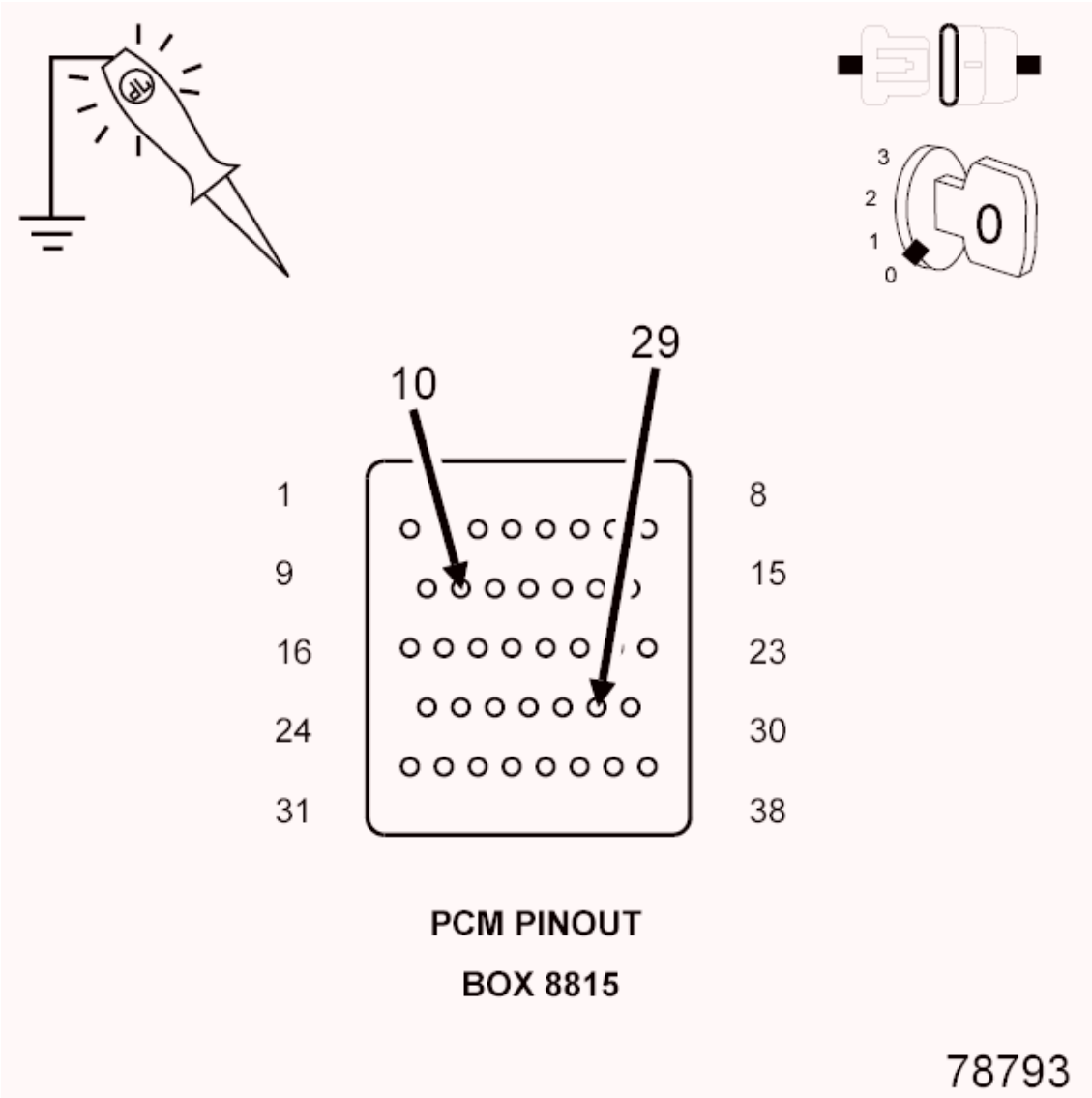

Fig. 75: Checking Fused B(+) Circuits For An Open Or Short
Courtesy of CHRYSLER GROUP, LLC

1. Turn the ignition off.
2. Disconnect the PCM C1 harness connector.

CAUTION: Do not probe the PCM harness connectors. Probing the PCM harness connectors will damage the PCM terminals resulting in poor terminal to pin connection. Install the PCM Pinout Box (special tool #8815A, Kit, NGC, 38 Position) to perform diagnosis.

3. Using a 12-volt test light connected to ground, check the (A209) Fused B(+) circuits.

   Does the test light illuminate brightly for each circuit?

Yes

- Go To 3.

No

- Repair the open or short in the (A209) Fused B(+) circuit.
- Refer to **1500 & 2500 - 3.7L, 4.7L & 5.7L - POWERTRAIN VERIFICATION TEST** or **3500 CAB & CHASSIS - POWERTRAIN VERIFICATION TEST** or **2500 & 3500 - POWERTRAIN VERIFICATION TEST - 6.7L** and perform the POWERTRAIN VERIFICATION TEST.

3. **CHECK THE (Z908) GROUND CIRCUITS FOR AN OPEN**

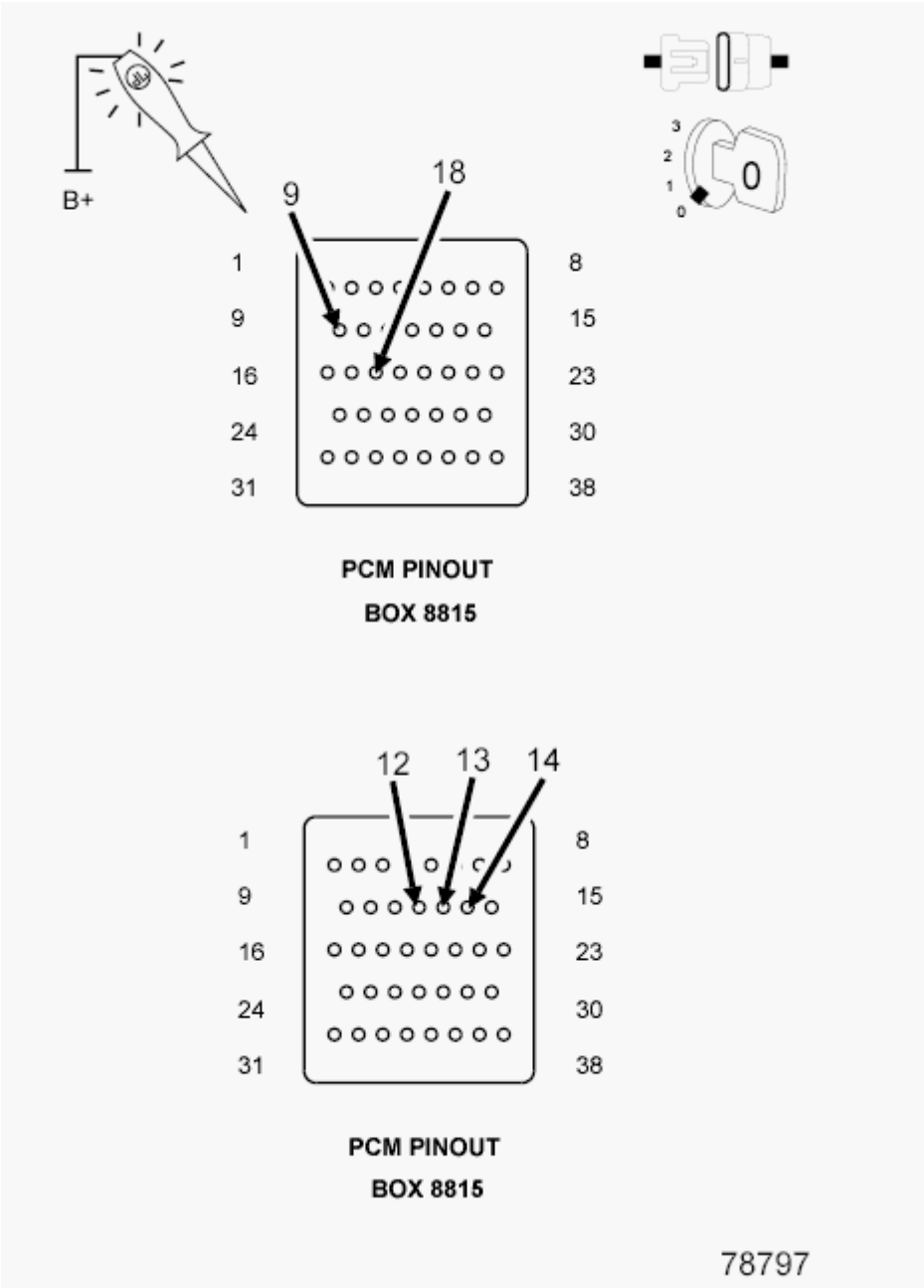

Fig. 76: Checking Ground Circuits For An Open
Courtesy of CHRYSLER GROUP, LLC

1. Disconnect the PCM C4 harness connector.
2. Using a 12-volt test light connected to 12-volts, check the (Z908) Ground circuits in PCM C1 harness connector.
3. Using a 12-volt test light connected to 12-volts, check the (Z908) Ground circuits in PCM C4 harness connector.

   Does the test light illuminate brightly for each circuit?

Yes

- Go To 4.

No

- Repair the open in the (Z908) Ground circuit.
- Refer to **1500 & 2500 - 3.7L, 4.7L & 5.7L - POWERTRAIN VERIFICATION TEST** or **3500 CAB & CHASSIS - POWERTRAIN VERIFICATION TEST** or **2500 & 3500 - POWERTRAIN VERIFICATION TEST - 6.7L** and perform the POWERTRAIN VERIFICATION TEST.

4. **CHECK THE (F202) IGNITION RUN/START CONTROL OUTPUT CIRCUIT FOR AN OPEN OR SHORT**

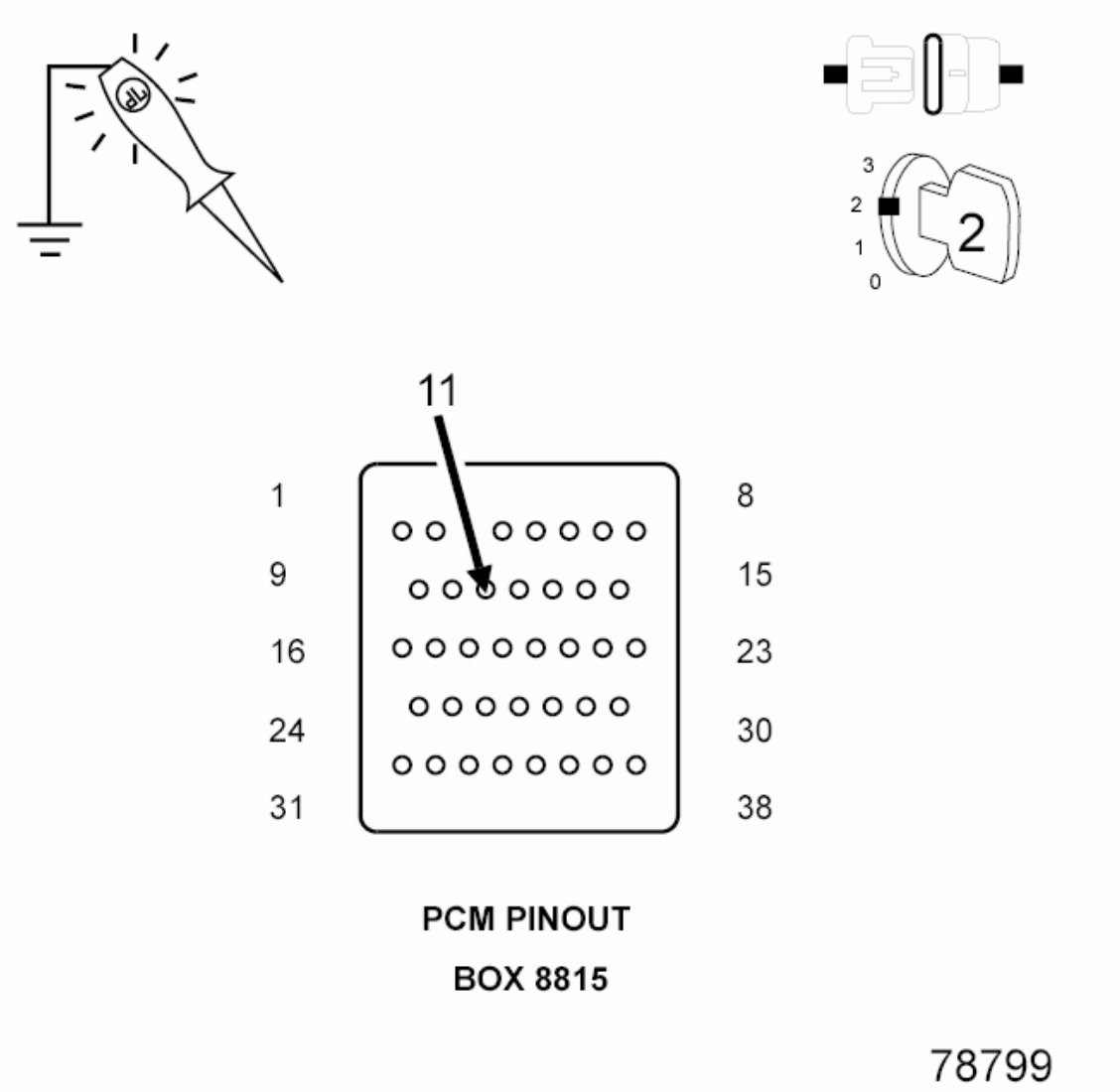

Fig. 77: Checking Fused Ignition Switch Output Circuit For Open Or Short
Courtesy of CHRYSLER GROUP, LLC

1. Turn the ignition on.
2. Using a 12-volt test light connected to ground, check the (F202) Ignition Run/Start Control Output circuit.

   Does the test light illuminate brightly?

   Yes

   - Go To 5.

   No

   - Repair the open or short in the (F202) Ignition Run/Start Control Output circuit.
   - Refer to **1500 & 2500 - 3.7L, 4.7L & 5.7L - POWERTRAIN VERIFICATION TEST** or **3500 CAB & CHASSIS - POWERTRAIN VERIFICATION TEST** or **2500 & 3500 - POWERTRAIN VERIFICATION TEST - 6.7L** and perform the POWERTRAIN VERIFICATION TEST.

5. **CHECK THE (F1) FUSED IGNITION OFF/RUN/START CONTROL OUTPUT CIRCUIT FOR AN OPEN OR SHORT**

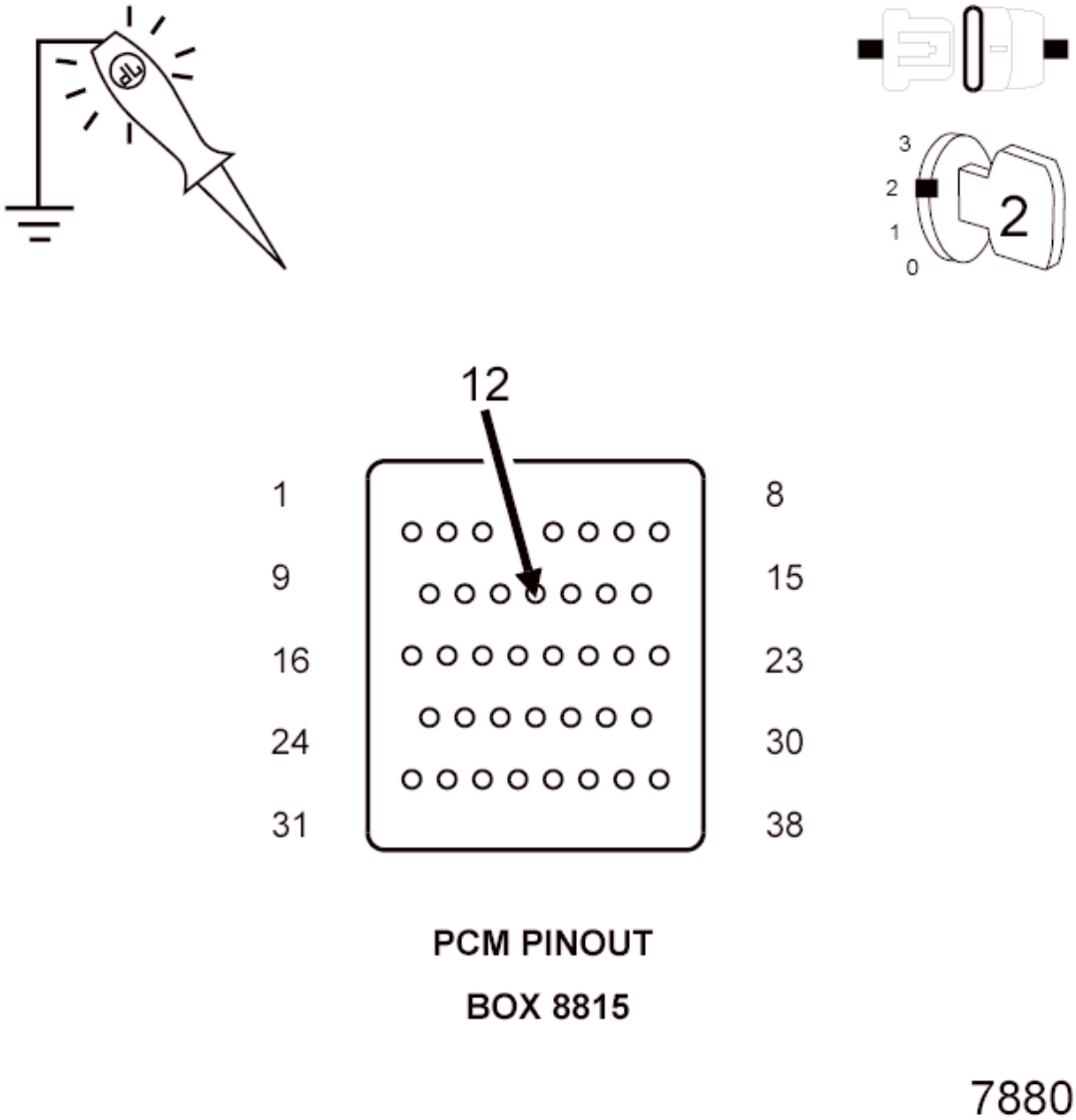

Fig. 78: Checking Fused Ignition Switch (Off/Run/Start) Output Circuit For Open Or Short
Courtesy of CHRYSLER GROUP, LLC

1. Using a 12-volt test light connected to ground, check the (F1) Fused Ignition Off/Run/Start Control Output Circuit.

   Does the test light illuminate brightly?

   Yes

   - Go To 6.

   No

   - Repair the open or short in the (F1) Fused Ignition Off/Run/Start Control Output Circuit.

- Refer to **1500 & 2500 - 3.7L, 4.7L & 5.7L - POWERTRAIN VERIFICATION TEST** or **3500 CAB & CHASSIS - POWERTRAIN VERIFICATION TEST** or **2500 & 3500 - POWERTRAIN VERIFICATION TEST - 6.7L** and perform the POWERTRAIN VERIFICATION TEST.

6. **CHECK THE (F342) FUSED ASD RELAY OUTPUT CIRCUIT FOR AN OPEN OR SHORT**

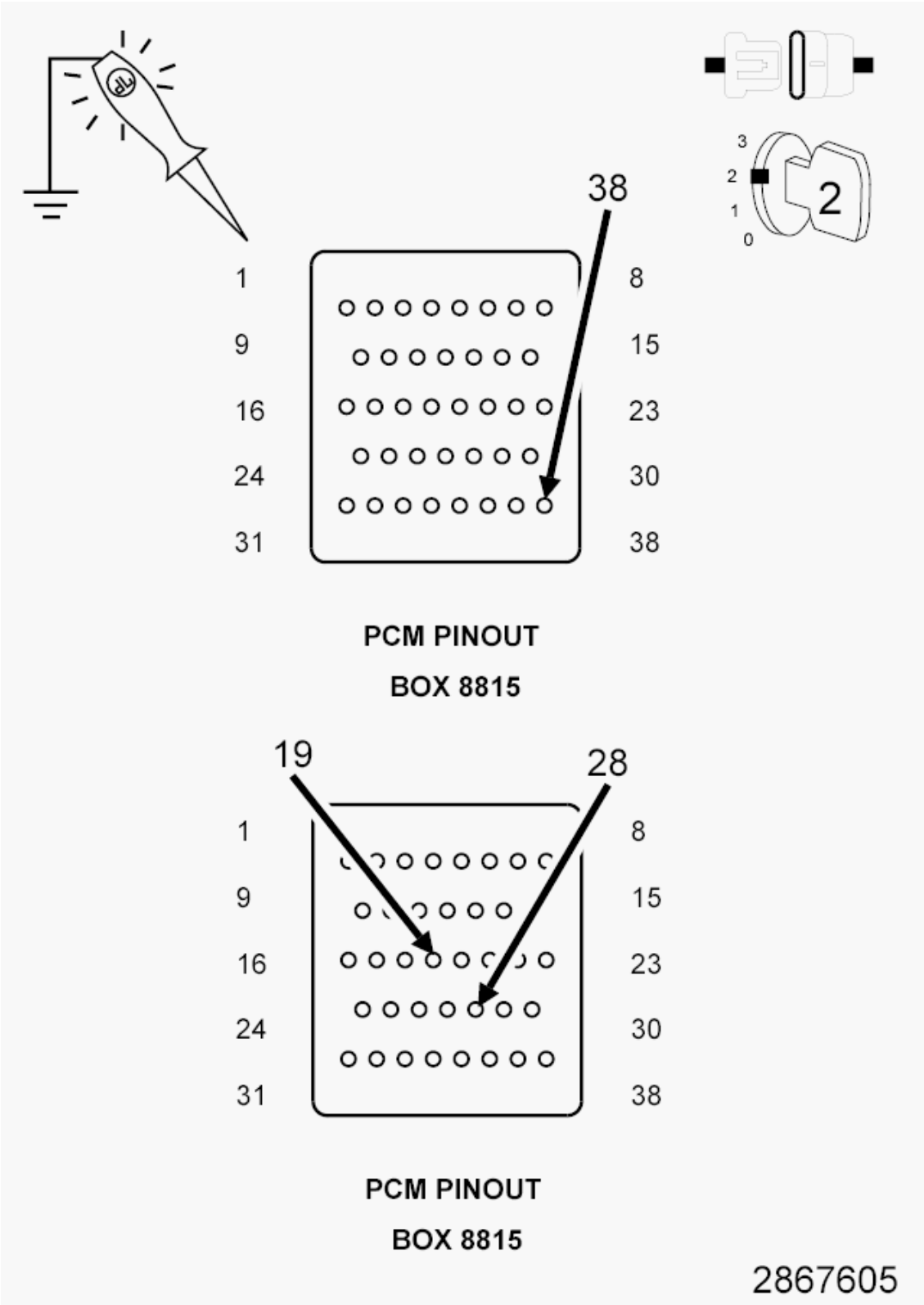

Fig. 79: Checking Fused ASD Relay Output Circuit For An Open
Courtesy of CHRYSLER GROUP, LLC

1. Disconnect the PCM C3 harness connector.
2. Turn the ignition on.
3. Using a 12-volt test light connected to ground, check the (F342) Fused ASD Relay Output circuits.

   Does the test light illuminate brightly for each circuit?

   Yes

   - Go To 7.

   No

   - Repair the open or short in the (F342) Fused ASD Relay Output circuit.
   - Refer to **1500 & 2500 - 3.7L, 4.7L & 5.7L - POWERTRAIN VERIFICATION TEST** or **3500 CAB & CHASSIS - POWERTRAIN VERIFICATION TEST** or **2500 & 3500 - POWERTRAIN VERIFICATION TEST - 6.7L** and perform the POWERTRAIN VERIFICATION TEST.

7. **CHECK THE (D65) CAN C BUS (+) CIRCUIT FOR AN OPEN**

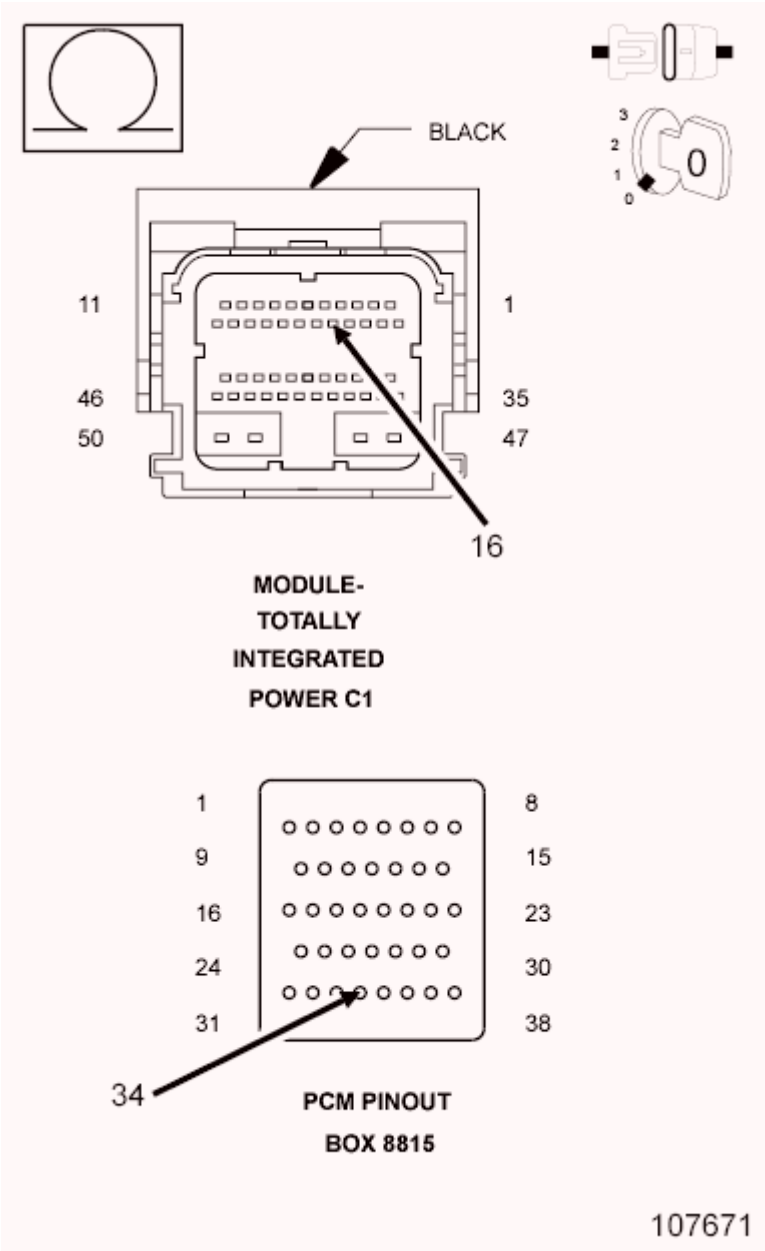

Fig. 80: Checking CAN C Bus (+) Circuit For Open
Courtesy of CHRYSLER GROUP, LLC

1. Turn the ignition off.
2. Disconnect the TIPM C1 harness connector.
3. Measure the resistance of the (D65) CAN C Bus (+) circuit between the TIPM C1 harness connector and the PCM C1 connector.

   Is resistance below 5.0 Ohms?

   Yes

- Go To 8.

No

- Repair the open in the (D65) CAN C Bus (+) circuit.
- Refer to **1500 & 2500 - 3.7L, 4.7L & 5.7L - POWERTRAIN VERIFICATION TEST** or **3500 CAB & CHASSIS - POWERTRAIN VERIFICATION TEST** or **2500 & 3500 - POWERTRAIN VERIFICATION TEST - 6.7L** and perform the POWERTRAIN VERIFICATION TEST.

8. **CHECK THE (D64) CAN C BUS (-) CIRCUIT FOR AN OPEN**

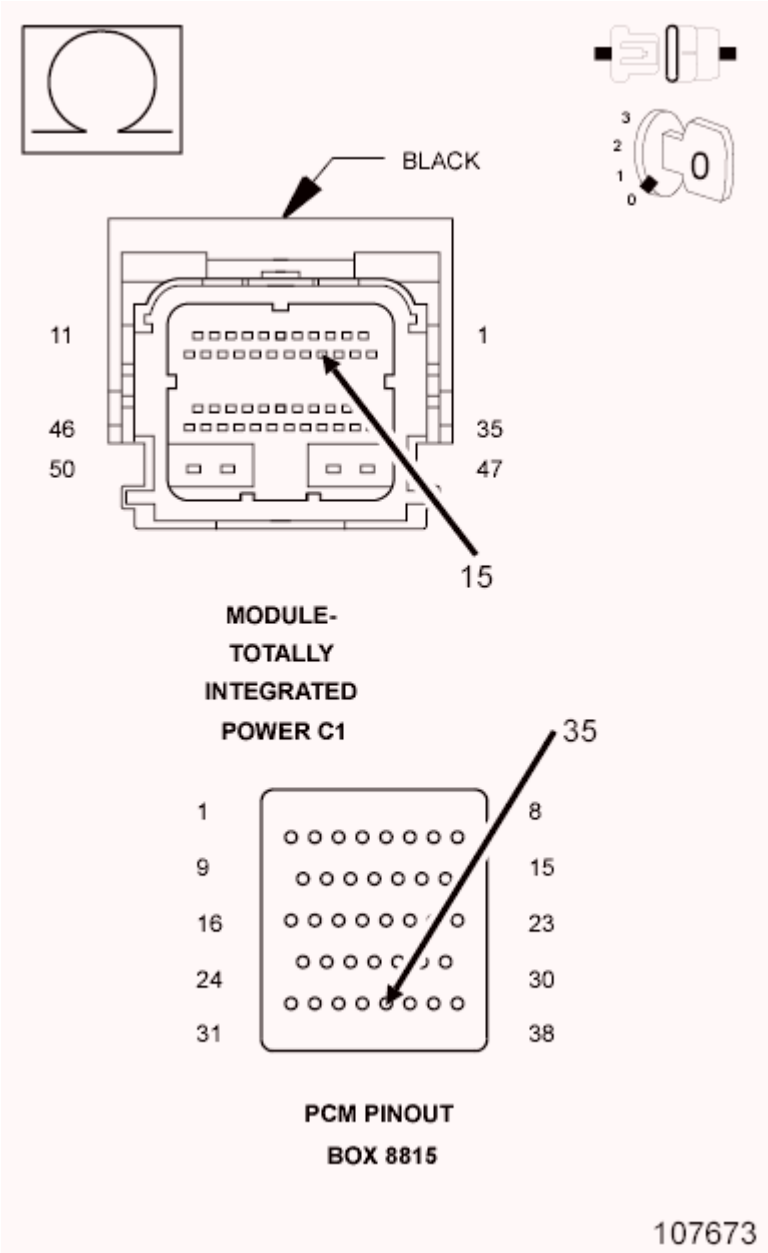

Fig. 81: Checking Can C Bus (-) Circuit For An Open

Courtesy of CHRYSLER GROUP, LLC

1. Measure the resistance of the (D64) CAN C Bus (-) circuit between the TIPM C1 harness connector and the PCM C1 connector.

   Is resistance below 5.0 Ohms?

   Yes

   - Replace the Powertrain Control Module in accordance with the Service Information. Refer to **MODULE, POWERTRAIN CONTROL, REMOVAL** or **MODULE, POWERTRAIN CONTROL, 6.7L DIESEL [ETJ], REMOVAL** .
   - Refer to **3500 CAB & CHASSIS - POWERTRAIN VERIFICATION TEST** or **3500 CAB & CHASSIS, 4500 & 5500 - POWERTRAIN VERIFICATION TEST - 6.7L** and perform the POWERTRAIN VERIFICATION TEST.

   No

   - Repair the open in the (D64) CAN C Bus (-) circuit.
   - Refer to **3500 CAB & CHASSIS - POWERTRAIN VERIFICATION TEST** or **3500 CAB & CHASSIS, 4500 & 5500 - POWERTRAIN VERIFICATION TEST - 6.7L** and perform the POWERTRAIN VERIFICATION TEST.

NO RESPONSE FROM PCM (POWERTRAIN CONTROL MODULE) - 6.7L

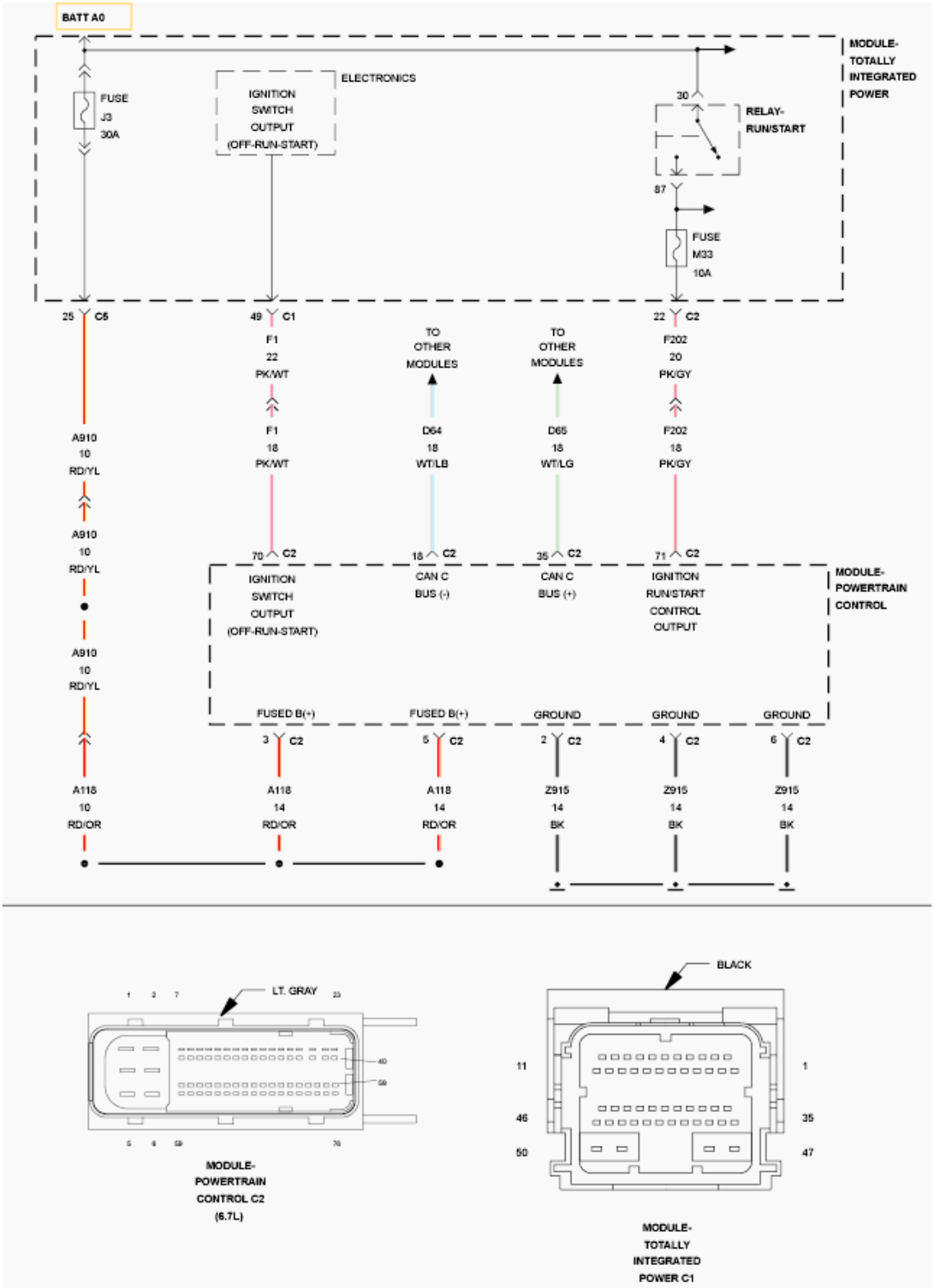

Fig. 82: Powertrain Control Module - 6.7L Wiring Diagram
Courtesy of CHRYSLER GROUP, LLC

For a complete wiring diagram, **refer to appropriate SYSTEM WIRING DIAGRAMS article** .

POSSIBLE CAUSES

Possible Causes
(A910/A118) FUSED B(+) CIRCUITS OPEN OR SHORTED
(Z915) GROUND CIRCUITS OPEN
(F202) IGNITION RUN/START CONTROL OUTPUT CIRCUIT OPEN OR SHORTED
(F1) IGNITION SWITCH OUTPUT (OFF-RUN-START) CIRCUIT OPEN OR SHORTED
(D65) CAN C BUS (+) CIRCUIT OPEN
(D64) CAN C BUS (-) CIRCUIT OPEN
POWERTRAIN CONTROL MODULE (PCM)

DIAGNOSTIC TEST

1. **TEST FOR INTERMITTENT CONDITION**

   NOTE: Check for any TSB(s) related to the condition. If a TSB applies, perform the procedure outlined in the TSB before continuing.

   1. Turn the ignition on.

      NOTE: Make sure the IOD fuse is installed and battery voltage is between 10.0 and 16.0 volts.

   2. With the scan tool, read the module status.

      NOTE: Check the TIPM for any active CAN hardware DTCs, perform DTC before proceeding.

      Does the scan tool indicate that the module is active on the bus?

      Yes

      - Test complete, the condition or conditions that originally set this DTC are not present at this time. Using the wiring diagrams as a guide, check all related splices and connectors for signs of water intrusion, corrosion, pushed out or bent terminals, and correct pin tension.

      No

      - Go To 2.

2. **(A910/A118) FUSED B(+) CIRCUITS OPEN OR SHORTED**

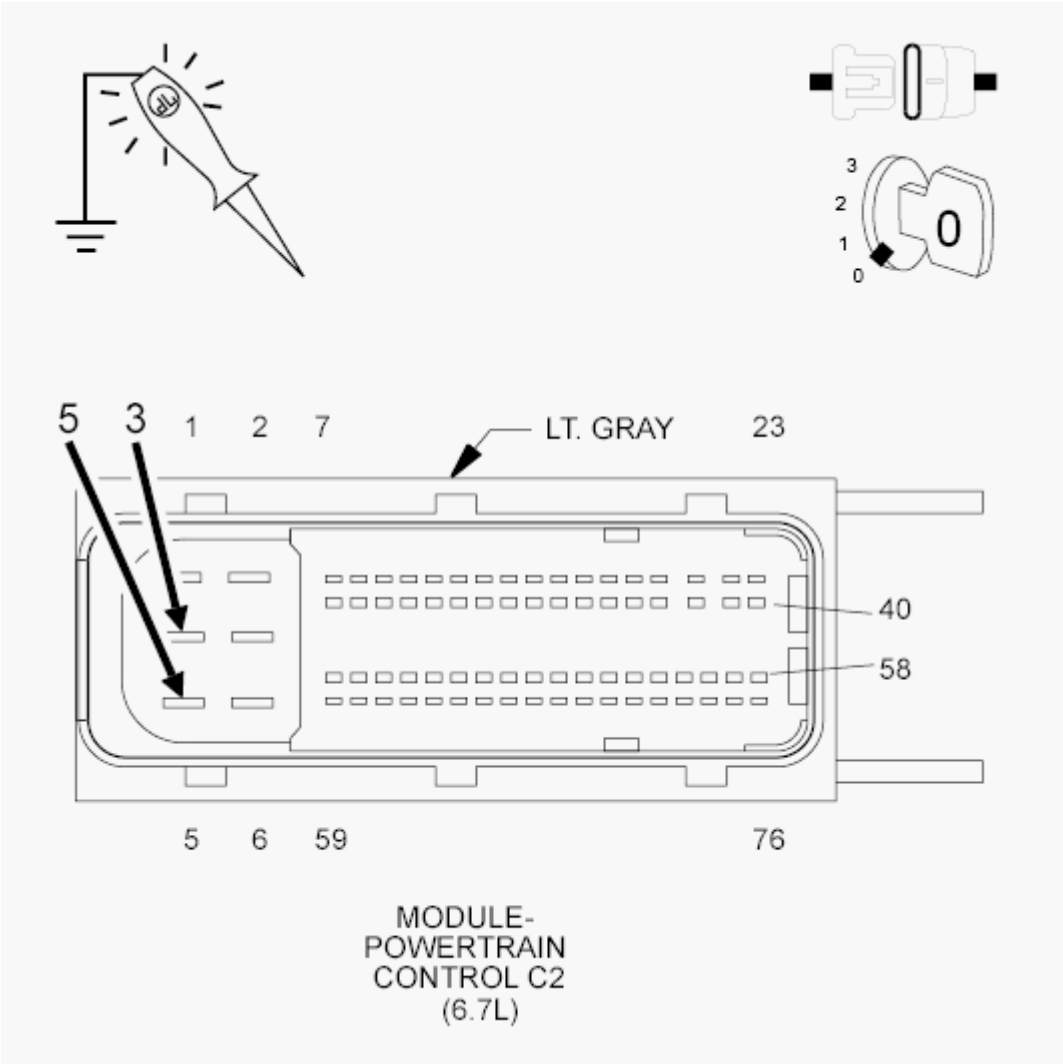

Fig. 83: Checking Fused B(+) Circuits For Open Or Short
Courtesy of CHRYSLER GROUP, LLC

1. Turn the ignition off.
2. Disconnect the PCM C2 harness connector.
3. Using a 12-volt test light connected to ground, check the (A910/A118) Fused B(+) circuits.

   Does the test light illuminate brightly for each circuit?

   Yes

   - Go To 3.

   No

   - Repair the open or short in the (A910/A118) Fused B(+) circuit.
   - Refer to **3500 CAB & CHASSIS - POWERTRAIN VERIFICATION TEST** or **3500**

CAB & CHASSIS, 4500 & 5500 - POWERTRAIN VERIFICATION TEST - 6.7L and perform the POWERTRAIN VERIFICATION TEST.

3. **(Z915) GROUND CIRCUITS OPEN**

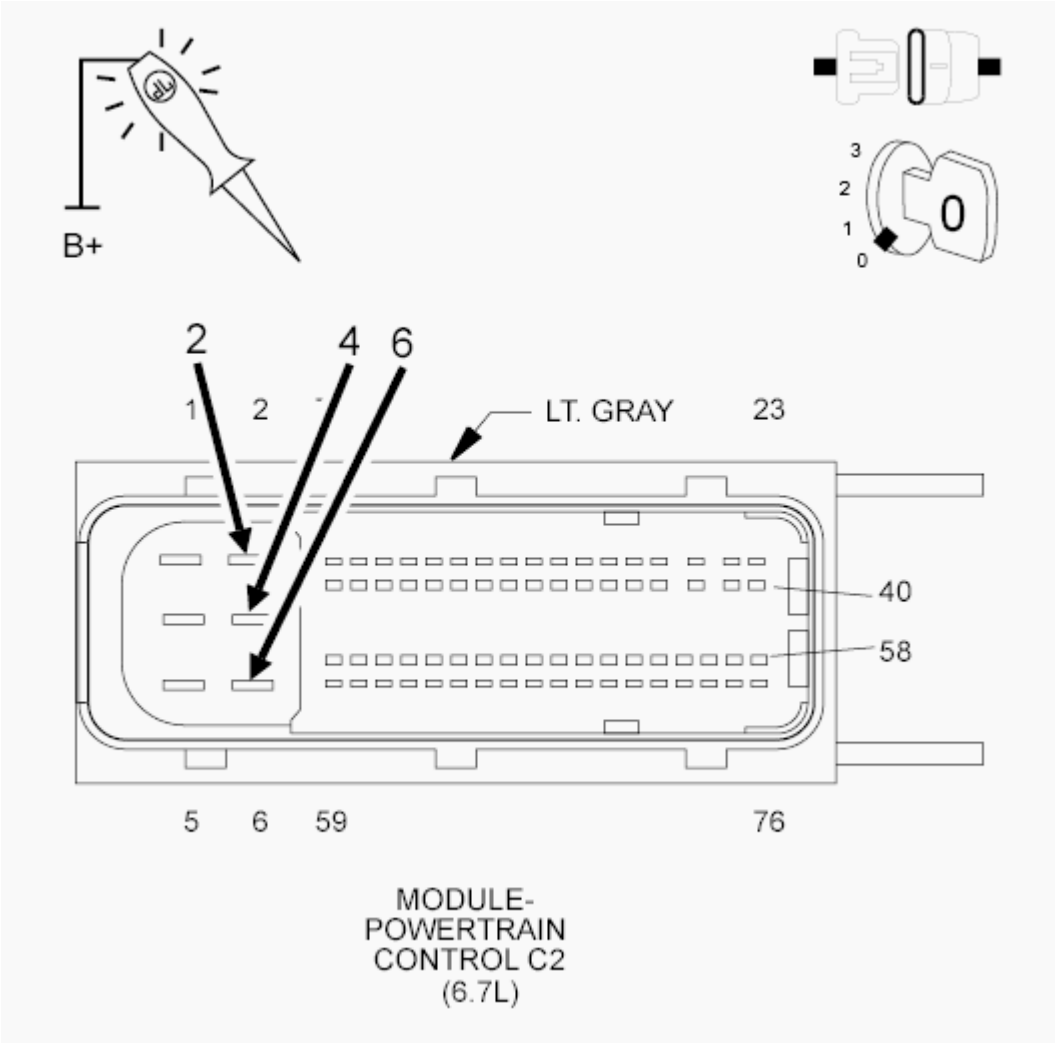

Fig. 84: Checking Ground Circuits For Open
Courtesy of CHRYSLER GROUP, LLC

1. Using a 12-volt test light connected to 12-volts, check the (Z915) Ground circuits.

   Does the test light illuminate brightly for each circuit?

   Yes

   - Go To 4.

   No

   - Repair the open in the (Z915) Ground circuit.

- Refer to **3500 CAB & CHASSIS - POWERTRAIN VERIFICATION TEST** or **3500 CAB & CHASSIS, 4500 & 5500 - POWERTRAIN VERIFICATION TEST - 6.7L** and perform the POWERTRAIN VERIFICATION TEST - 6.7L.

4. **(F202) IGNITION RUN/START CONTROL OUTPUT CIRCUIT OPEN OR SHORTED**

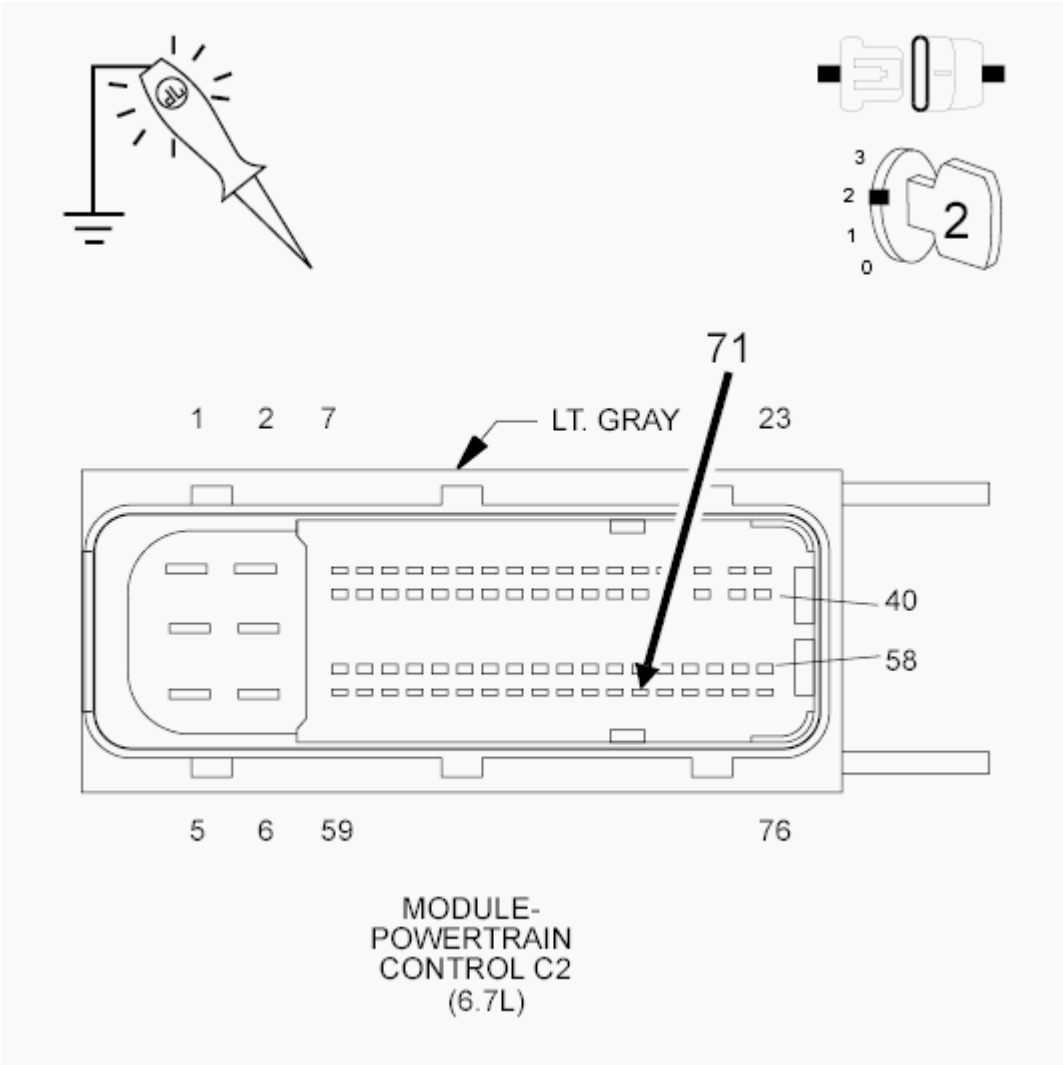

Fig. 85: Checking Ignition Run/Start Control Output Circuit For Open Or Short
Courtesy of CHRYSLER GROUP, LLC

1. Turn the ignition on.
2. Using a 12-volt test light connected to ground, check the (F202) Ignition Run/Start Control Output circuit.

   Does the test light illuminate brightly?

   Yes

   - Go To 5.

No

- Repair the open or short in the (F202) Ignition Run/Start Control Output circuit.
- Refer to **3500 CAB & CHASSIS - POWERTRAIN VERIFICATION TEST** or **3500 CAB & CHASSIS, 4500 & 5500 - POWERTRAIN VERIFICATION TEST - 6.7L** and perform the POWERTRAIN VERIFICATION TEST - 6.7L.

5. **(F1) IGNITION SWITCH OUTPUT (OFF-RUN-START) CIRCUIT OPEN OR SHORTED**

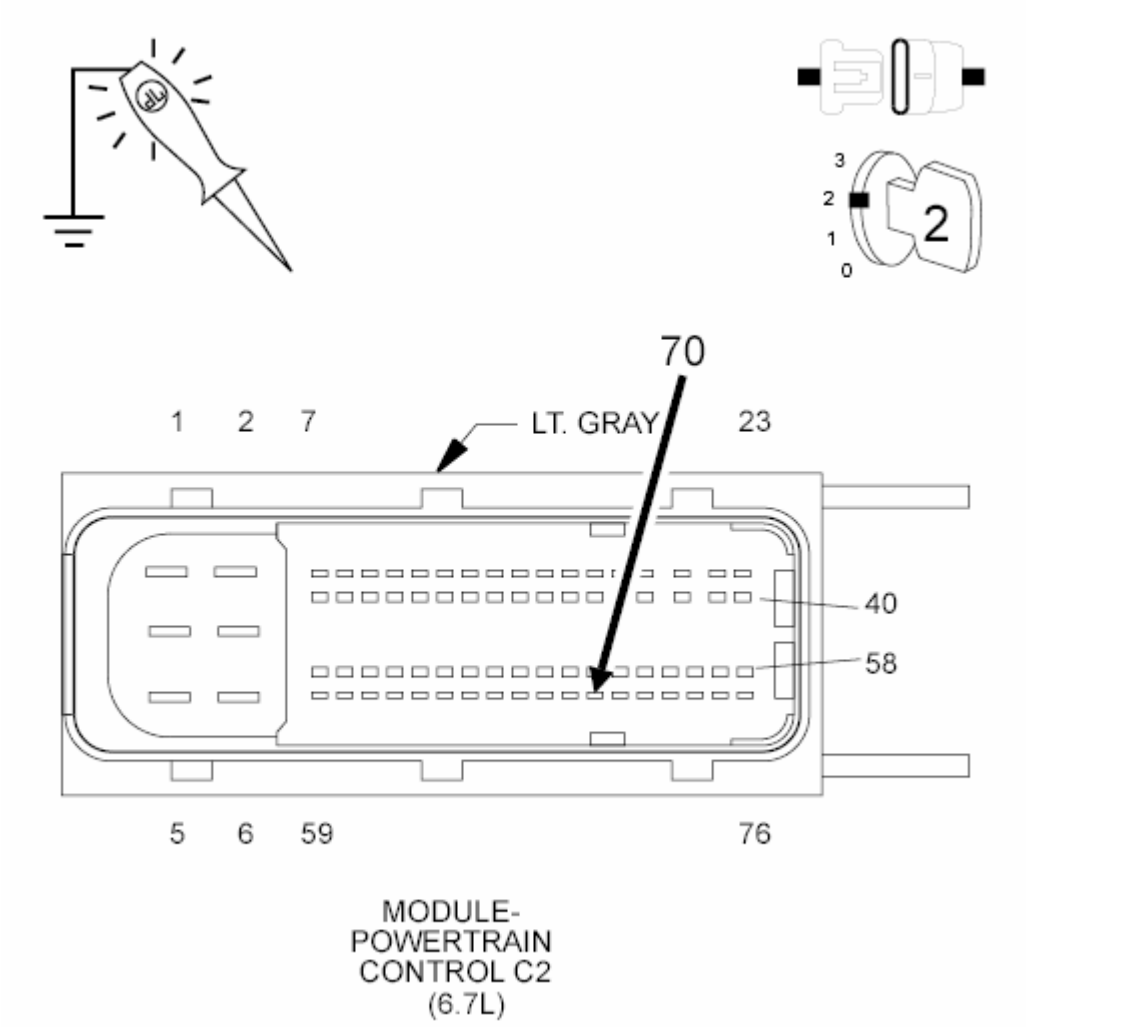

Fig. 86: Checking Ignition Switch Output (Off-Run-Start) Circuit For Open Or Short
Courtesy of CHRYSLER GROUP, LLC

1. Using a 12-volt test light connected to ground, check the (F1) Ignition Switch Output (Off-Run-Start) circuit.

   Does the test light illuminate brightly?

   Yes

- Go To 6.

No

- Repair the open or short in the (F1) Ignition Switch Output (Off-Run-Start) circuit.
- Refer to **3500 CAB & CHASSIS - POWERTRAIN VERIFICATION TEST** or **3500 CAB & CHASSIS, 4500 & 5500 - POWERTRAIN VERIFICATION TEST - 6.7L** and perform the POWERTRAIN VERIFICATION TEST - 6.7L.

6. **(D65) CAN C BUS (+) CIRCUIT OPEN**

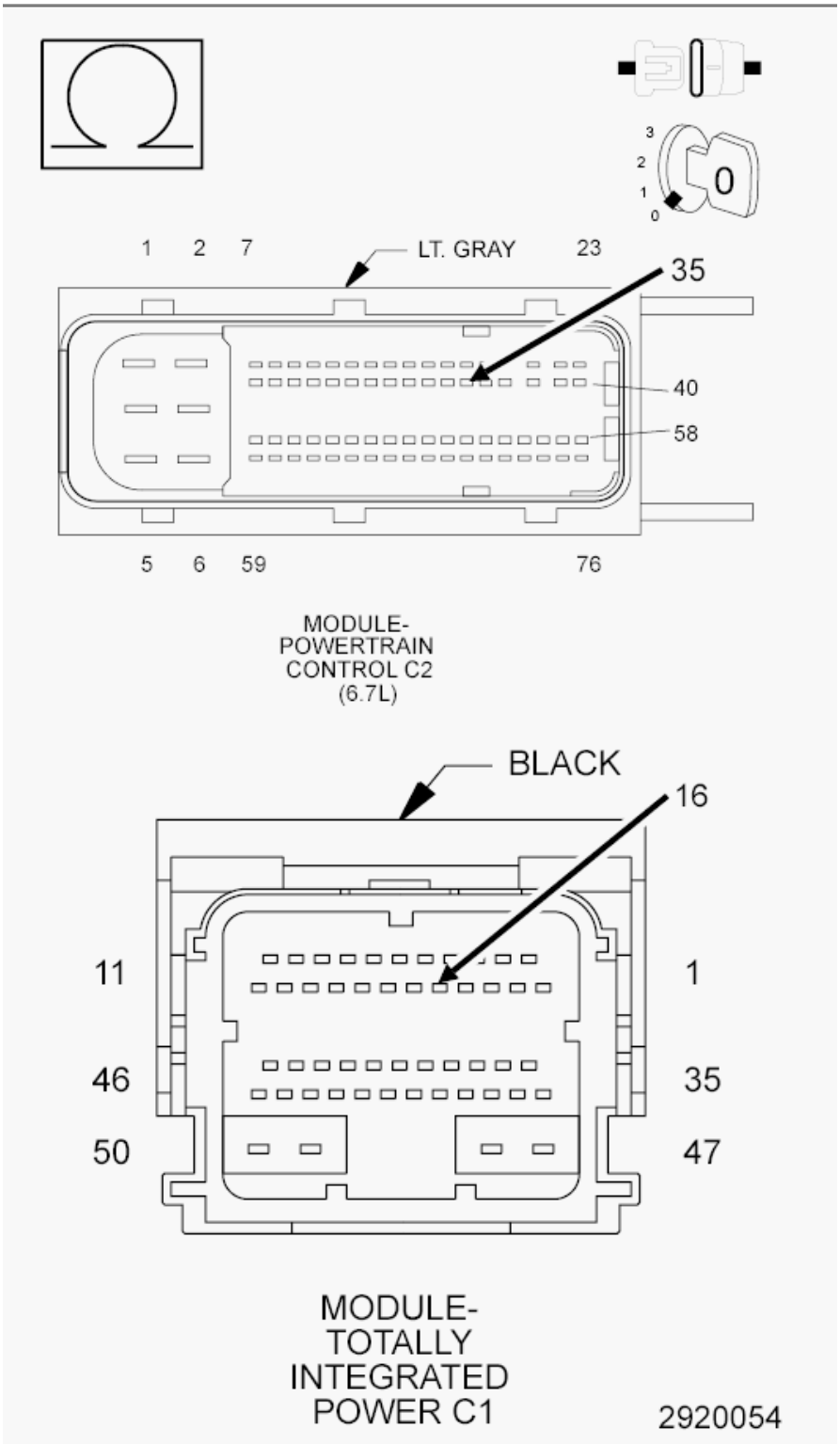

Fig. 87: Measuring Resistance Of CAN C Bus (+) Circuit Between TIPM Harness Connector And PCM Harness Connector
Courtesy of CHRYSLER GROUP, LLC

1. Turn the ignition off.

2. Disconnect the TIPM C1 harness connector.
3. Measure the resistance of the (D65) CAN C Bus (+) circuit between the TIPM C1 harness connector and the PCM C2 harness connector.

   Is resistance below 5.0 Ohms?

   Yes

   - Go To 7.

   No

   - Repair the open in the (D65) CAN C Bus (+) circuit.
   - Refer to **3500 CAB & CHASSIS - POWERTRAIN VERIFICATION TEST** or **3500 CAB & CHASSIS, 4500 & 5500 - POWERTRAIN VERIFICATION TEST - 6.7L** and perform the POWERTRAIN VERIFICATION TEST - 6.7L.

7. **(D64) CAN C BUS (-) CIRCUIT OPEN**

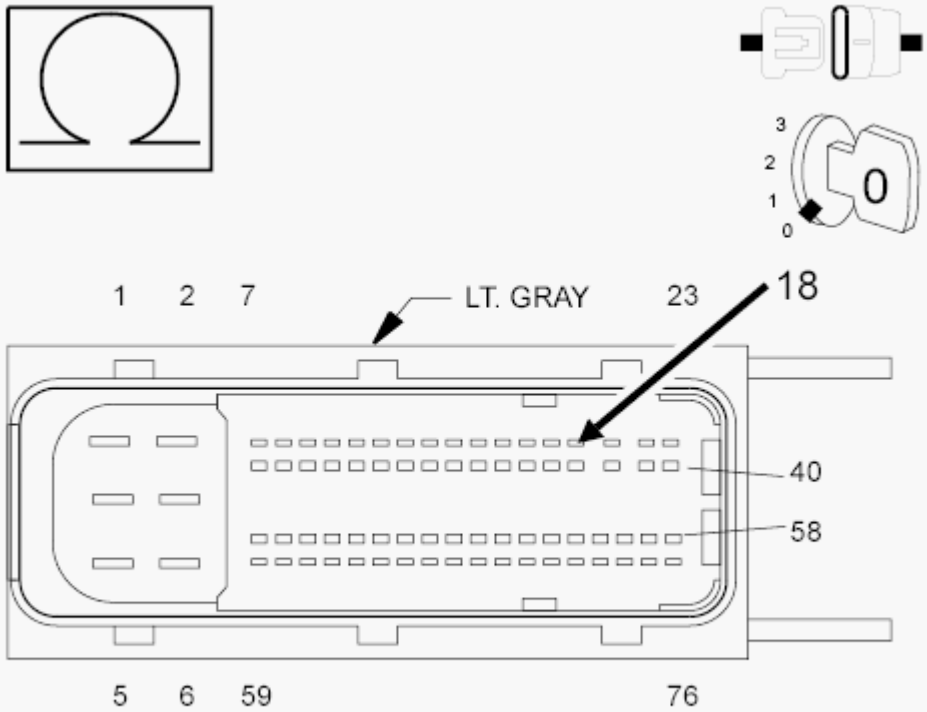

MODULE-
POWERTRAIN
CONTROL C2
(6.7L)

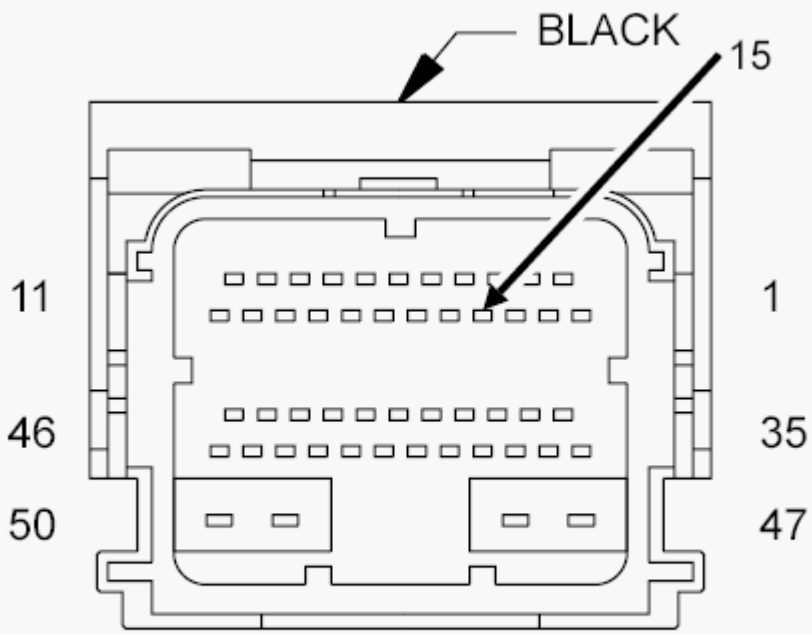

MODULE-
TOTALLY

Fig. 88: Measuring Resistance Of CAN C Bus (-) Circuit Between TIPM Harness Connector And PCM Harness Connector
Courtesy of CHRYSLER GROUP, LLC

1. Measure the resistance of the (D64) CAN C Bus (-) circuit between the TIPM C1 harness connector and the PCM C2 harness connector.

   Is resistance below 5.0 Ohms?

   Yes

   - Replace the PCM in accordance with the Service Information. Refer to **MODULE, POWERTRAIN CONTROL, REMOVAL** or **MODULE, POWERTRAIN CONTROL, 6.7L DIESEL [ETJ], REMOVAL** .
   - Refer to **3500 CAB & CHASSIS - POWERTRAIN VERIFICATION TEST** or **3500 CAB & CHASSIS, 4500 & 5500 - POWERTRAIN VERIFICATION TEST - 6.7L** and perform the POWERTRAIN VERIFICATION TEST - 6.7L.

   No

   - Repair the open in the (D64) CAN C Bus (-) circuit.
   - Refer to **3500 CAB & CHASSIS - POWERTRAIN VERIFICATION TEST** or **3500 CAB & CHASSIS, 4500 & 5500 - POWERTRAIN VERIFICATION TEST - 6.7L** and perform the POWERTRAIN VERIFICATION TEST - 6.7L.

NO RESPONSE FROM PDM (DMRF) (PASSENGER DOOR MODULE)

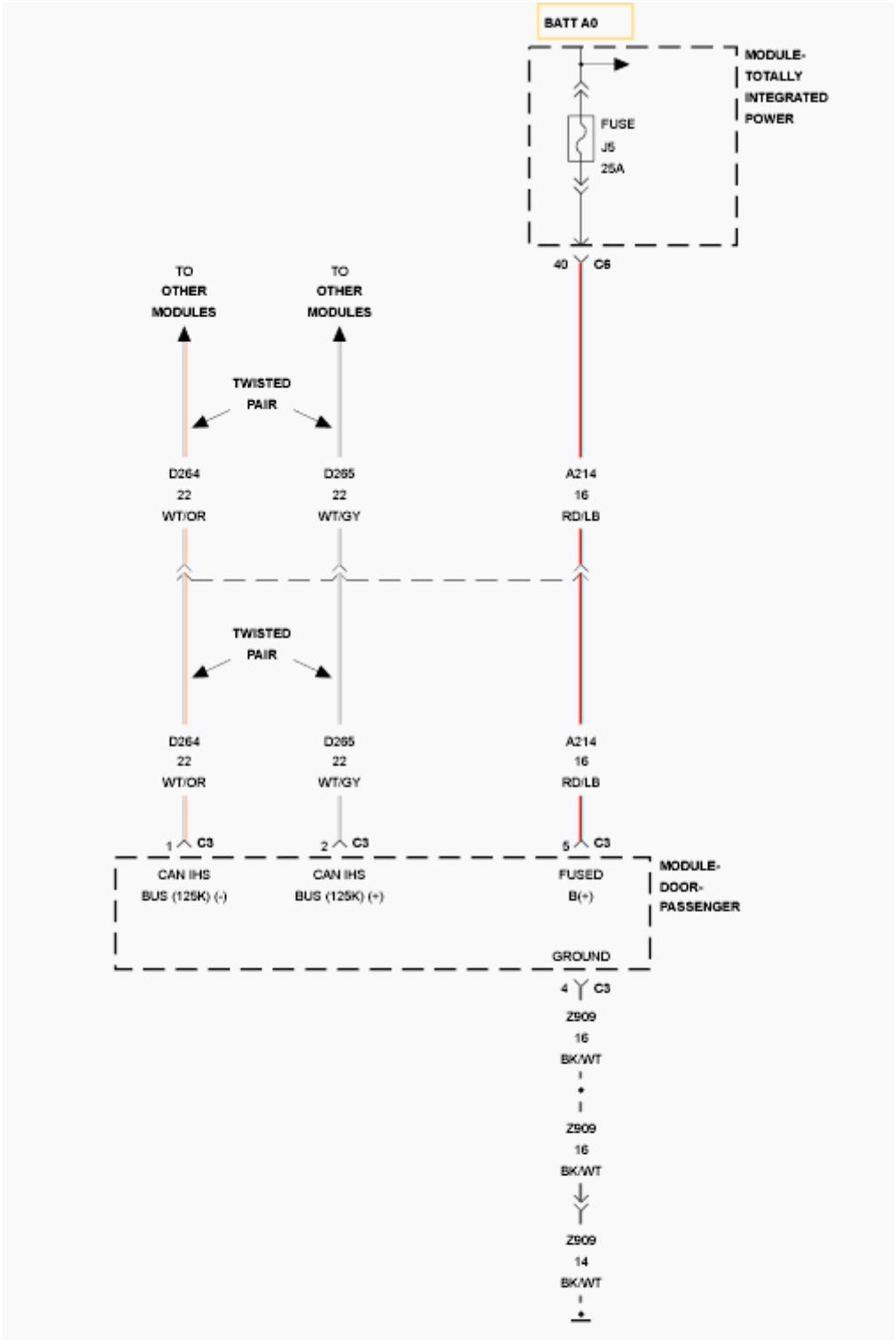
BATT A0
MODULE-
TOTALLY
INTEGRATED
POWER
FUSE
J5
25A
40
C6
TO
OTHER
MODULES
TO
OTHER
MODULES
TWISTED
PAIR
D264
22
WT/OR
D265
22
WT/GY
A214
16
RD/LB
TWISTED
PAIR
D264
22
WT/OR
D265
22
WT/GY
A214
16
RD/LB
1
C3
2
C3
5
C3
CAN IHS
BUS (125K) (-)
CAN IHS
BUS (125K) (+)
FUSED
B(+)
MODULE-
DOOR-
PASSENGER
GROUND
4
C3
Z909
16
BK/WT
Z909
16
BK/WT
Z909
14
BK/WT

WHITE
4
5
1
3

Fig. 89: Passenger Door Module Wiring Diagram
Courtesy of CHRYSLER GROUP, LLC

For a complete wiring diagram, **refer to appropriate SYSTEM WIRING DIAGRAMS article** .

POSSIBLE CAUSES

Possible Causes
(A214) FUSED B(+) CIRCUIT OPEN OR SHORTED
(Z909) GROUND CIRCUIT OPEN
(D264) OR (D265) CAN INTERIOR BUS (125K) CIRCUIT OPEN
PASSENGER DOOR MODULE

DIAGNOSTIC TEST

1. **TEST FOR INTERMITTENT CONDITION**

   NOTE: Check for any TSB(s) related to the condition. If a TSB applies, perform the procedure outlined in the TSB before continuing.

   1. Turn the ignition on.

      NOTE: Make sure the IOD fuse is installed and battery voltage is between 10.0 and 16.0 volts.

   2. With the scan tool, read the module status.

      NOTE: Check the TIPM for any active CAN hardware DTCs, perform DTC before proceeding.

      Does the scan tool indicate that the module is active on the bus?

      Yes

      - The no response condition is not present at this time. Using the wiring diagrams as a guide, check all related splices and connectors for signs of water intrusion, corrosion, pushed out or bent terminals, and correct pin tension.

      No

      - Go To 2.

2. **CHECK THE (A214) FUSED B(+) CIRCUIT FOR AN OPEN OR SHORT**

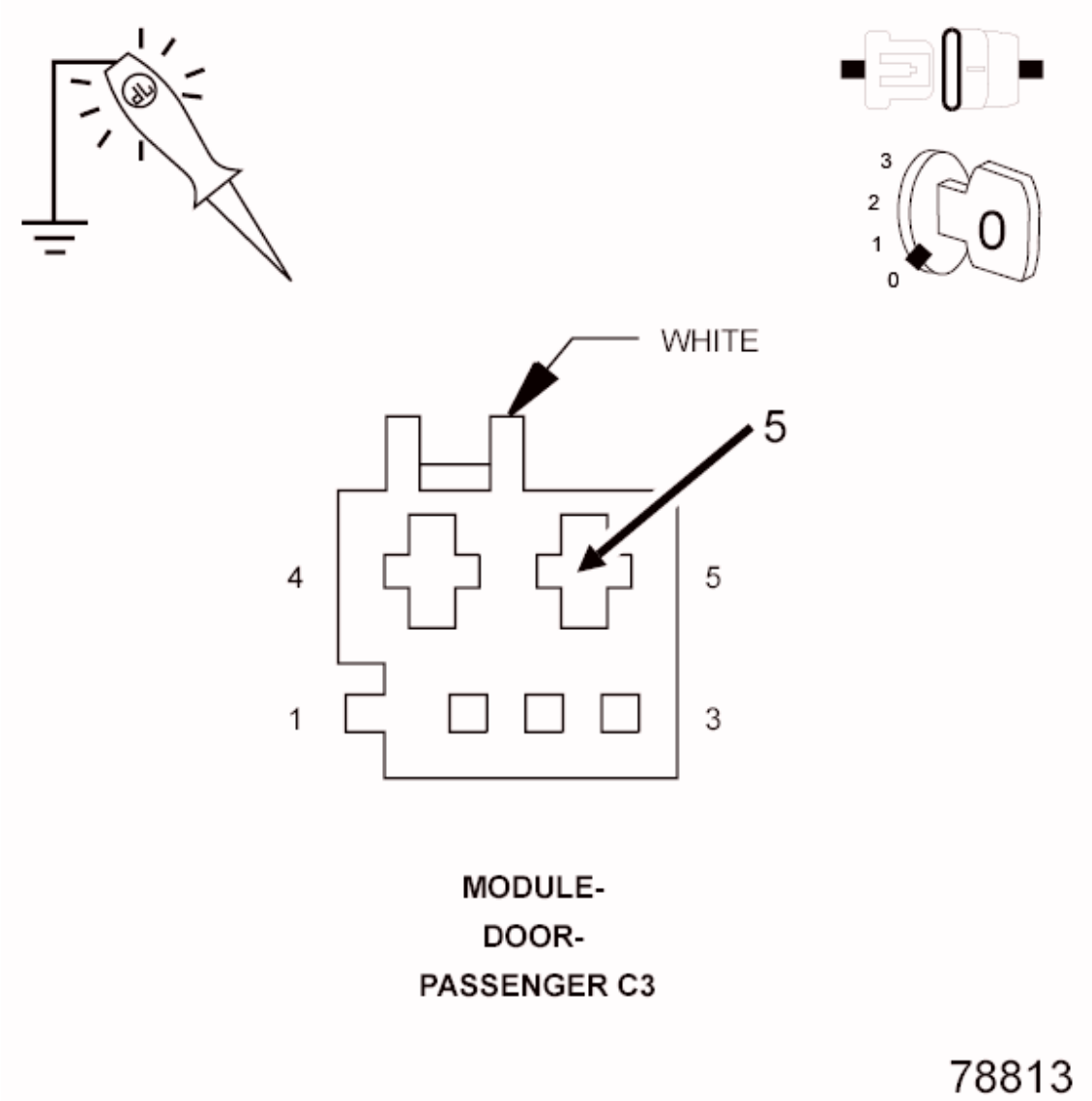

Fig. 90: Checking Fused B(+) Circuit For Open Or Short
Courtesy of CHRYSLER GROUP, LLC

1. Turn the ignition off.
2. Disconnect the Passenger Door Module C3 harness connector.
3. Using a 12-volt test light connected to ground, check the (A214) Fused B(+) circuit.

   Does the test light illuminate brightly?

   Yes

   - Go To 3.

   No

- Repair the open or short in the (A214) Fused B(+) circuit.
- Refer to **STANDARD PROCEDURE** and perform the BODY VERIFICATION TEST.

3. **CHECK THE (Z909) GROUND CIRCUIT FOR AN OPEN**

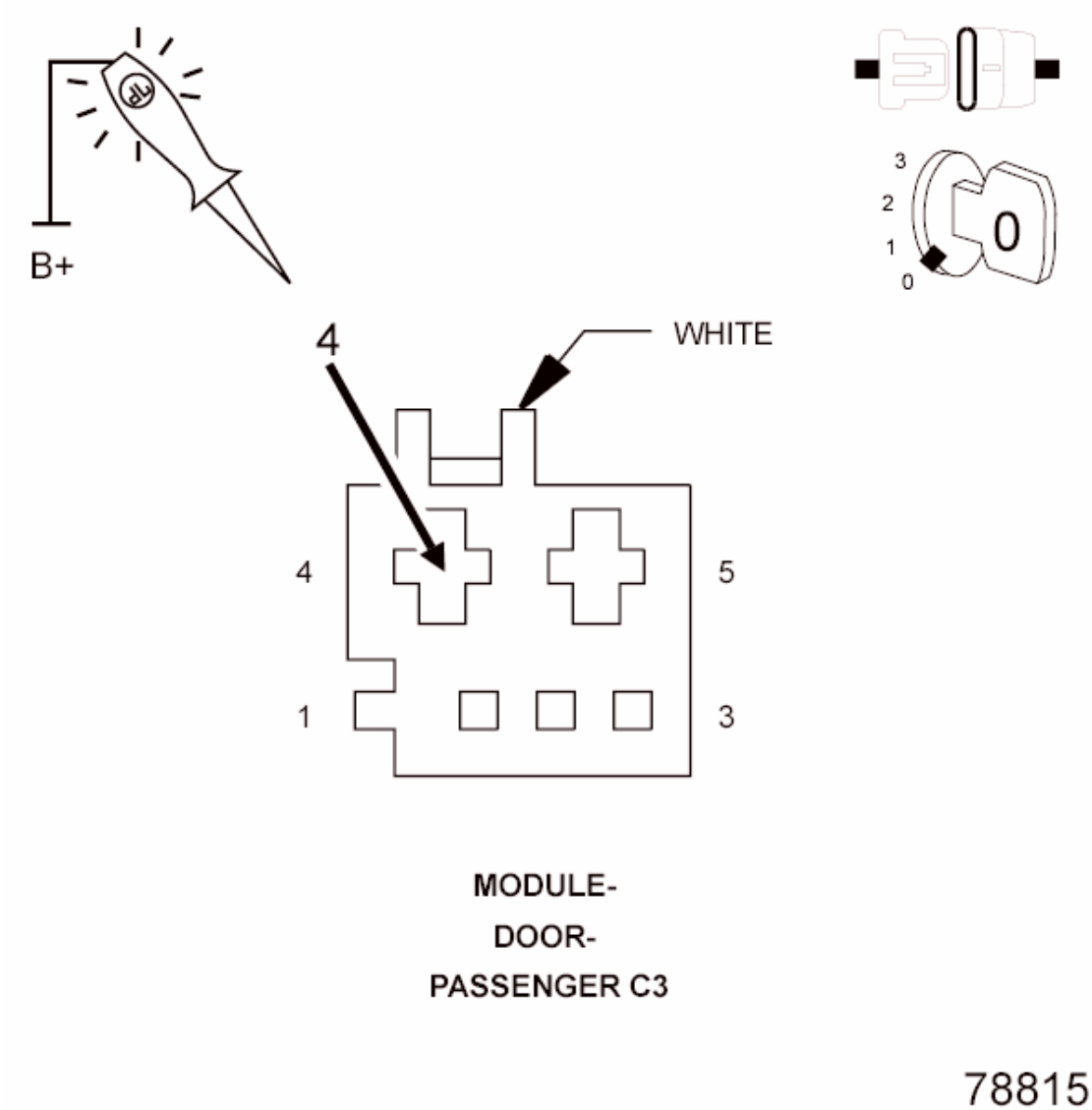

Fig. 91: Checking Ground Circuit For An Open
Courtesy of CHRYSLER GROUP, LLC

1. Using a 12-volt test light connected to 12-volts, check the (Z909) Ground circuit.

   Does the test light illuminate brightly?

   Yes

   - Go To 4.

No

- Repair the open in the (Z909) Ground circuit.
- Refer to **STANDARD PROCEDURE** and perform the BODY VERIFICATION TEST.

4. **CHECK THE (D265) AND (D264) CAN INTERIOR BUS (125K) CIRCUITS FOR AN OPEN**

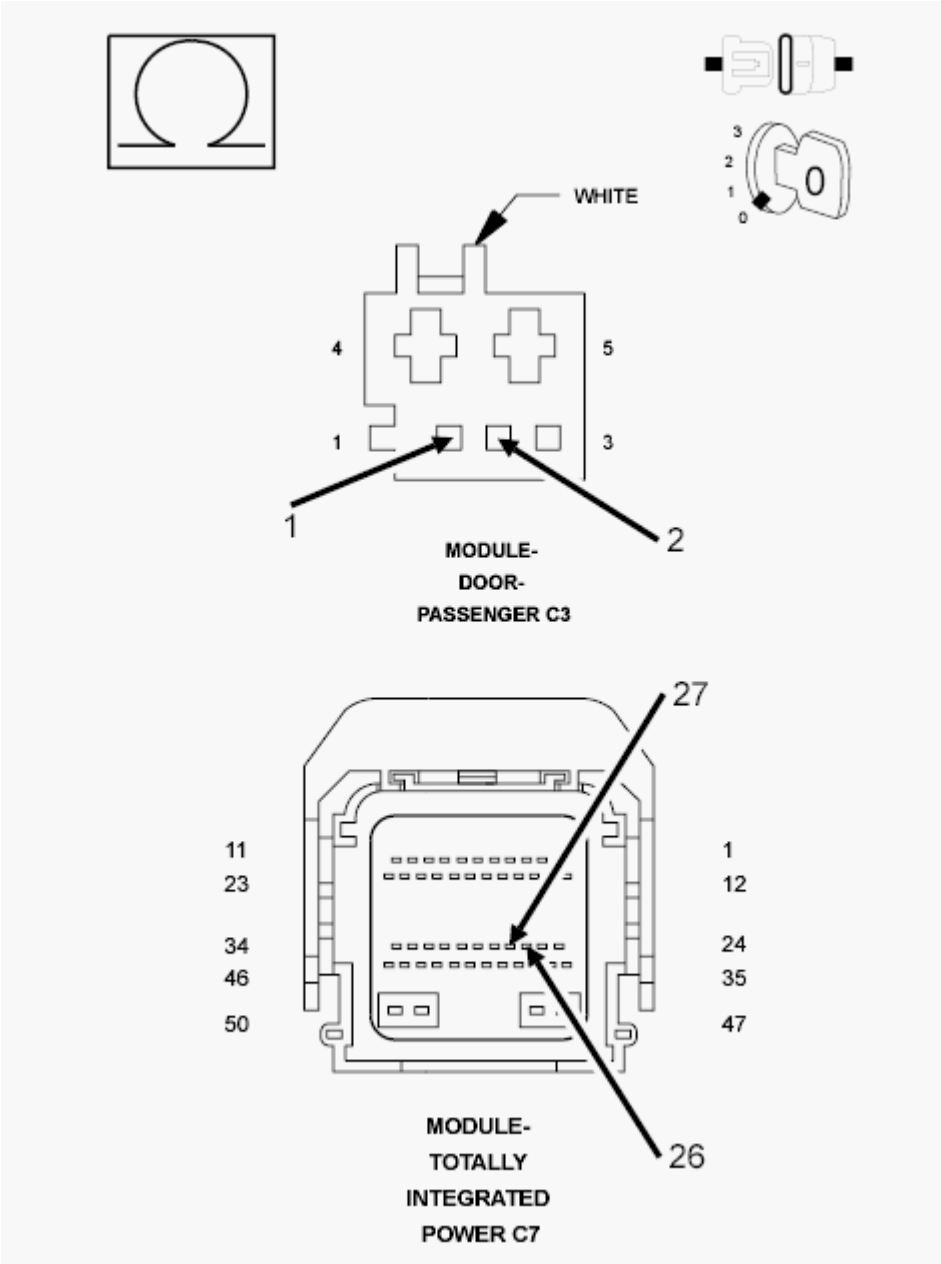

Fig. 92: Checking CAN Interior Bus Circuit For Open
Courtesy of CHRYSLER GROUP, LLC

1. Measure the resistance of the (D264) CAN Interior Bus (125K) (-) circuit between the TIPM C7 harness connector and the Passenger Door Module C3 harness connector.

2. Measure the resistance of the (D265) CAN Interior Bus (125K) (+) circuit between the TIPM C7 harness connector and the Passenger Door Module C3 harness connector.

   Are the resistances below 5.0 Ohms?

   Yes

   - Replace the Passenger Door Module in accordance with the Service Information. Refer to **MODULE, DOOR, REMOVAL** .
   - Refer to **STANDARD PROCEDURE** and perform the BODY VERIFICATION TEST.

   No

   - Repair the open in the (D265) or (D264) CAN Interior Bus (125K) circuit.
   - Refer to **STANDARD PROCEDURE** and perform the BODY VERIFICATION TEST.

NO RESPONSE FROM PTS (PARK ASSIST MODULE)

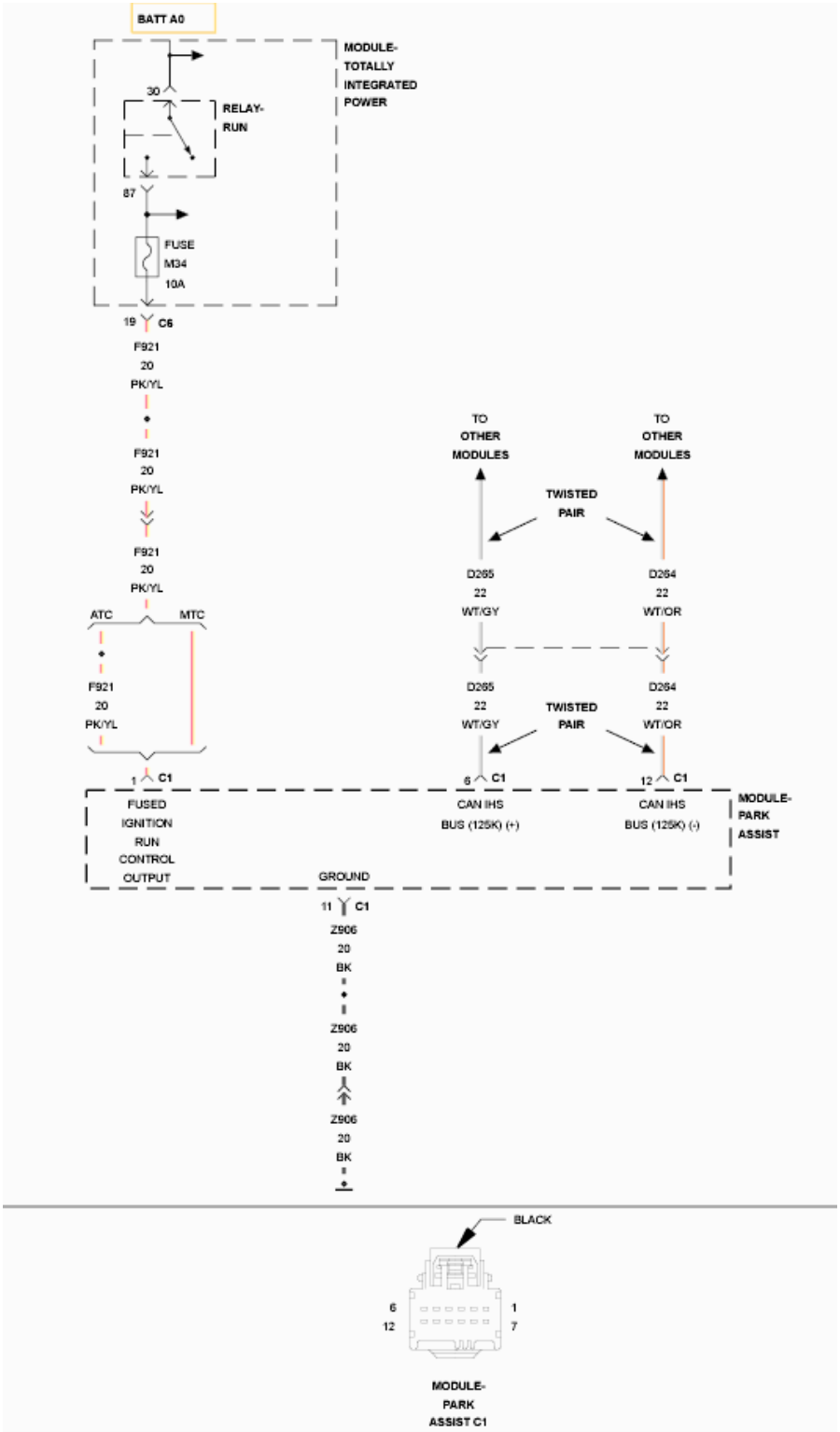

Fig. 93: Park Assist Module Wiring Diagram
Courtesy of CHRYSLER GROUP, LLC

For a complete wiring diagram, **refer to appropriate SYSTEM WIRING DIAGRAMS article** .

POSSIBLE CAUSES

Possible Causes
(F921) FUSED RUN RELAY OUTPUT CIRCUIT OPEN OR SHORTED
(Z906) GROUND CIRCUIT OPEN
(D264) OR (D265) CAN INTERIOR BUS (125K) CIRCUIT OPEN
PARK ASSIST MODULE

DIAGNOSTIC TEST

1. **TEST FOR INTERMITTENT CONDITION**

   NOTE: Check for any TSB(s) related to the condition. If a TSB applies, perform the procedure outlined in the TSB before continuing.

   1. Turn the ignition on.

      NOTE: Make sure the IOD fuse is installed and battery voltage is between 10.0 and 16.0 volts.

   2. With the scan tool, read the module status.

      NOTE: Check the TIPM for any active CAN hardware DTCs, perform DTC before proceeding.

      Does the scan tool indicate that the module is active on the bus?

      Yes

      - The no response condition is not present at this time. Using the wiring diagrams as a guide, check all related splices and connectors for signs of water intrusion, corrosion, pushed out or bent terminals, and correct pin tension.

      No

      - Go To 2.

2. **CHECK THE (F921) FUSED RUN RELAY OUTPUT CIRCUIT FOR AN OPEN OR SHORT**

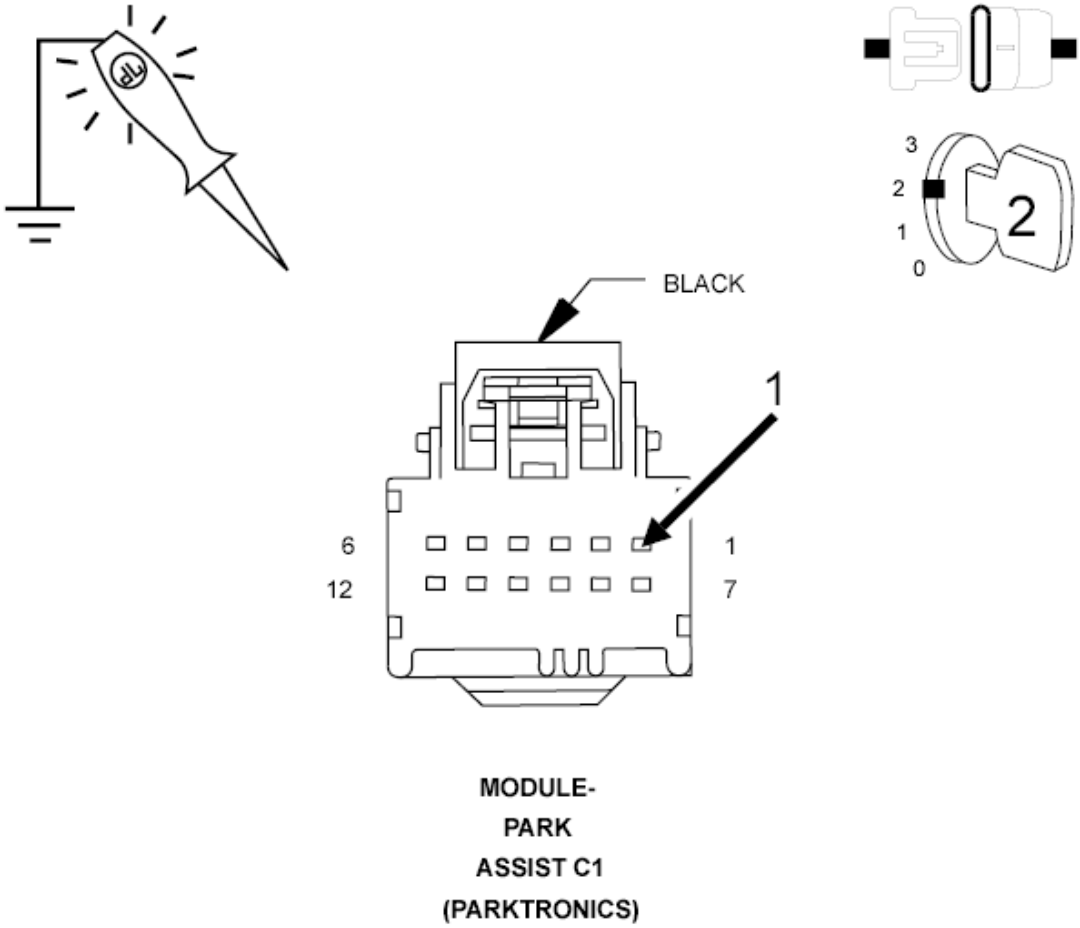

Fig. 94: Checking Fused Run Relay Output Circuit For An Open Or Short
Courtesy of CHRYSLER GROUP, LLC

1. Disconnect the Park Assist Module C1 harness connector.
2. Using a 12-volt test light connected to ground, check the (F921) Fused Run Relay Output circuit.

   Does the test light illuminate brightly?

   Yes

   - Go To 3.

   No

   - Repair the open or short in the (F921) Fused Run Relay Output circuit.
   - Refer to **STANDARD PROCEDURE** and perform the BODY VERIFICATION TEST.

3. **CHECK THE (Z906) GROUND CIRCUIT FOR AN OPEN**

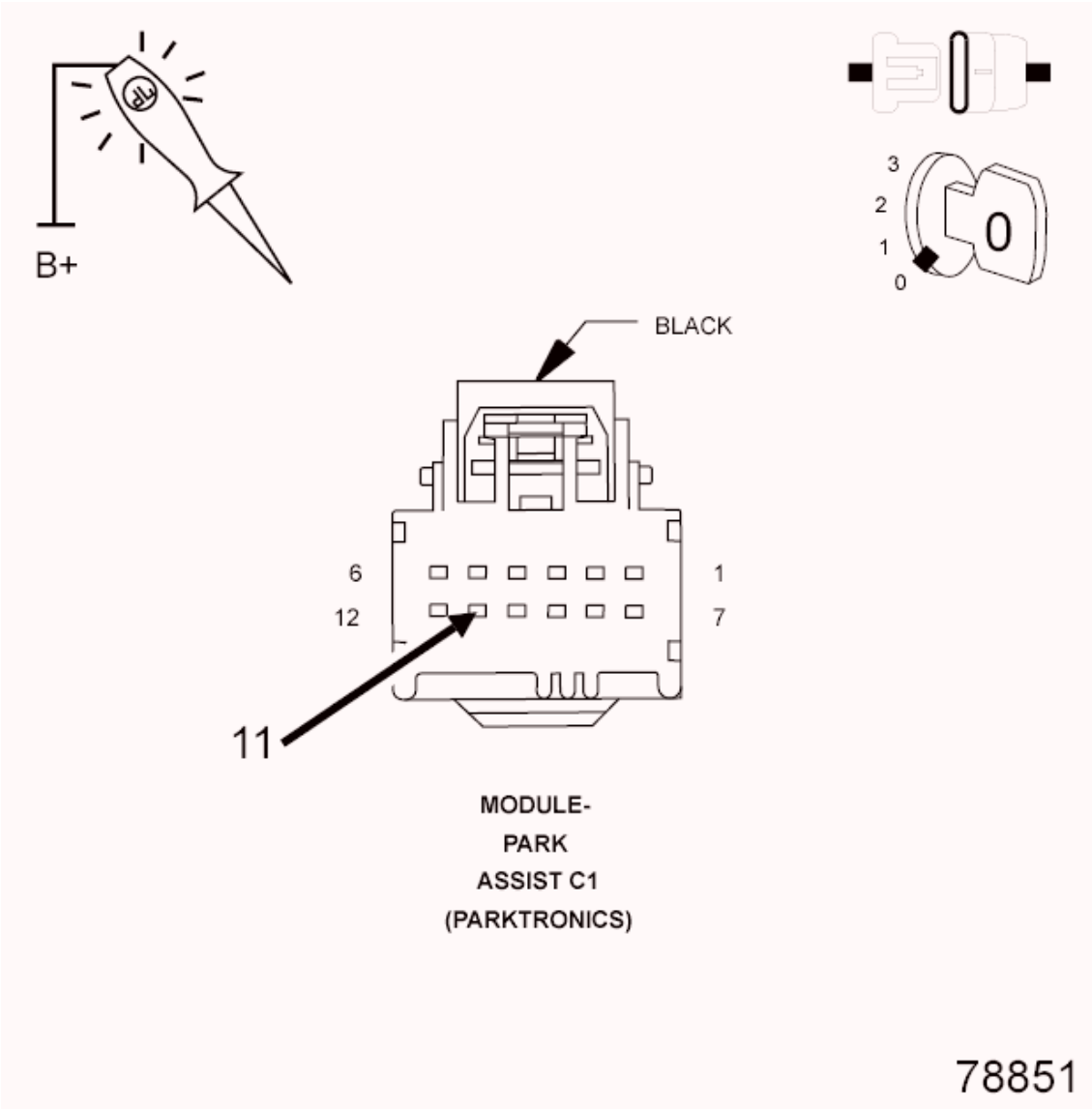

Fig. 95: Checking Ground Circuit For An Open
Courtesy of CHRYSLER GROUP, LLC

1. Turn the ignition off.
2. Using a 12-volt test light connected to 12-volts, check the (Z906) Ground circuit.

   Does the test light illuminate brightly?

   Yes

   - Go To 4.

   No

   - Repair the open in the (Z906) Ground circuit.

- Refer to **STANDARD PROCEDURE** and perform the BODY VERIFICATION TEST.

4. **CHECK THE (D265) AND (D264) CAN INTERIOR BUS (125K) CIRCUITS FOR AN OPEN**

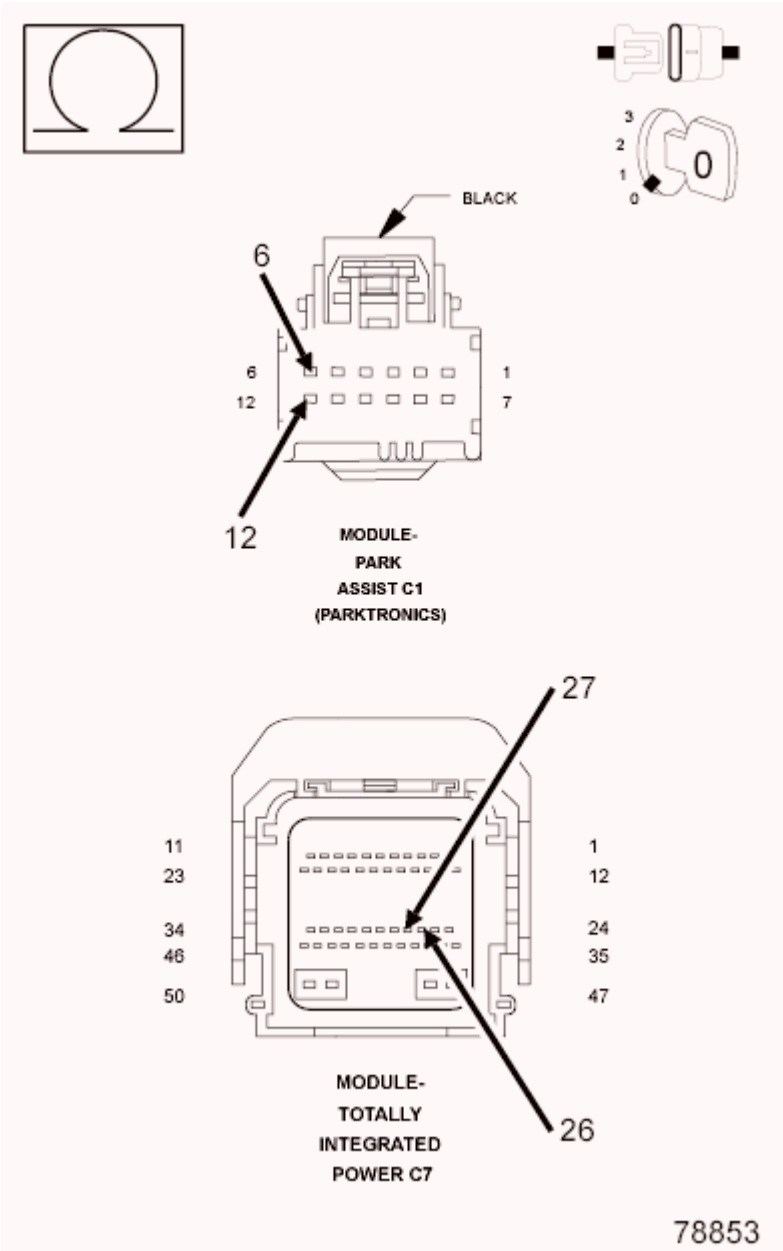

Fig. 96: Checking CAN Interior BUS Circuits For An Open
Courtesy of CHRYSLER GROUP, LLC

1. Disconnect the TIPM C7 harness connector.
2. Measure the resistance of the (D264) CAN Interior Bus (125K) (-) circuit between the TIPM C7 harness connector and the Park Assist Module C1 harness connector.
3. Measure the resistance of the (D265) CAN Interior Bus (125K) (+) circuit between the TIPM C7 harness connector and the Park Assist Module C1 harness connector.

Are the resistances below 5.0 Ohms?

Yes

- Replace the Park Assist Module in accordance with the Service Information. Refer to **MODULE, PARK ASSIST, REMOVAL** .
- Refer to **STANDARD PROCEDURE** and perform the BODY VERIFICATION TEST.

No

- Repair the open in the (D265) or (D264) CAN Interior Bus (125K) circuit.
- Refer to **STANDARD PROCEDURE** and perform the BODY VERIFICATION TEST.

NO RESPONSE FROM RADIO

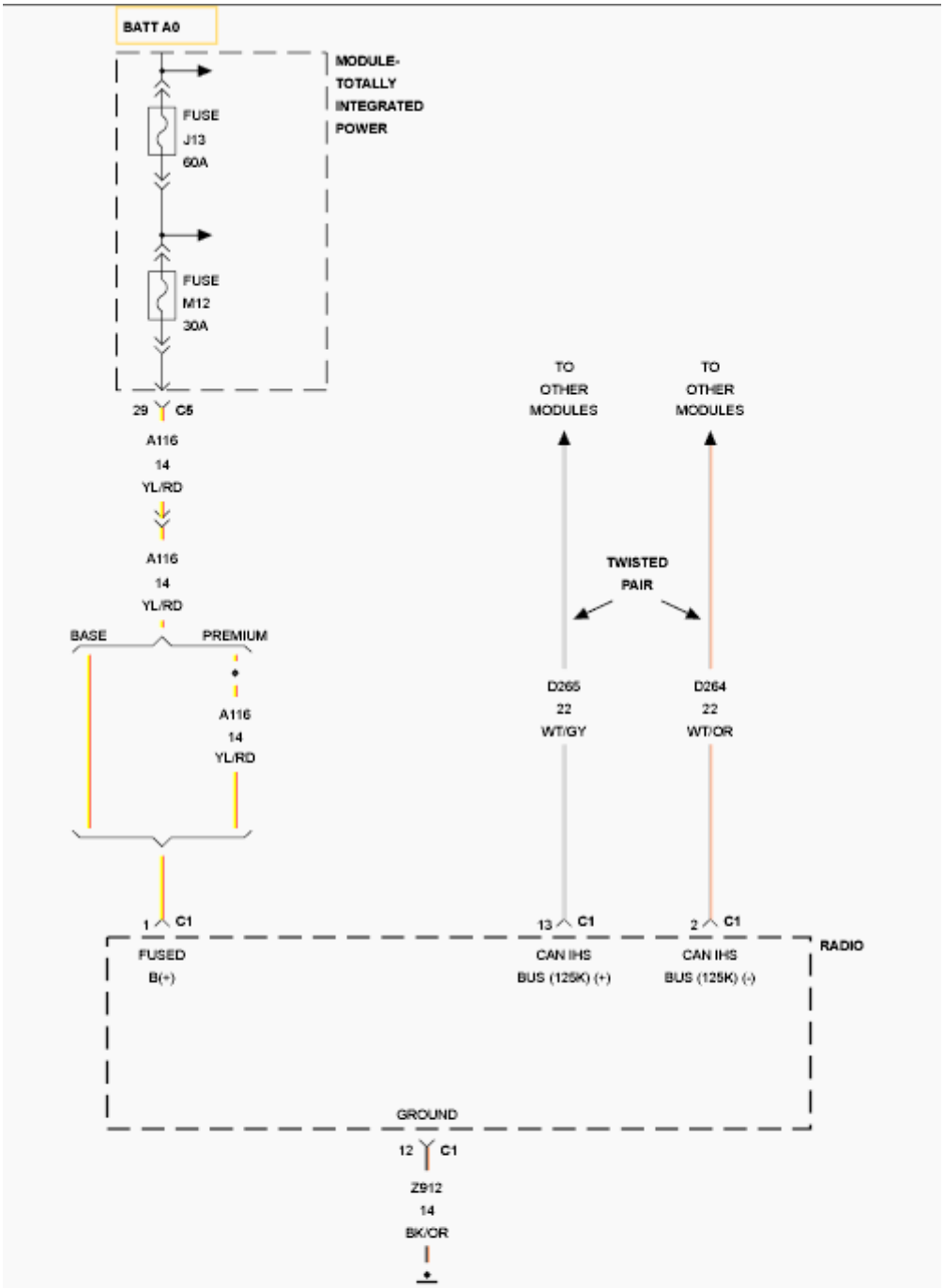
BATT A0
MODULE-
TOTALLY
INTEGRATED
POWER
FUSE
J13
60A
FUSE
M12
30A
29
C5
A116
14
YL/RD
A116
14
YL/RD
BASE
PREMIUM
A116
14
YL/RD
TO
OTHER
MODULES
TO
OTHER
MODULES
TWISTED
PAIR
D265
22
WT/GY
D264
22
WT/OR
1
C1
FUSED
B(+)
13
C1
CAN IHS
BUS (125K) (+)
2
C1
CAN IHS
BUS (125K) (-)
RADIO
GROUND
12
C1
Z912
14
BK/OR

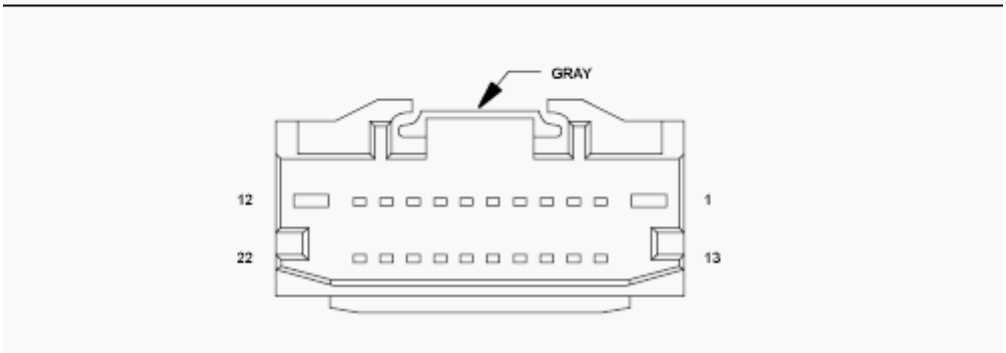
GRAY
12
1
22
13

Fig. 97: Fused B (+) Radio Wiring Diagram
Courtesy of CHRYSLER GROUP, LLC

For a complete wiring diagram, **refer to appropriate SYSTEM WIRING DIAGRAMS article** .

POSSIBLE CAUSES

Possible Causes
(A116) FUSED B(+) CIRCUIT OPEN OR SHORTED
(Z912) GROUND CIRCUIT OPEN
(D264) OR (D265) CAN INTERIOR BUS (125K) CIRCUIT OPEN
RADIO

DIAGNOSTIC TEST

1. **TEST FOR INTERMITTENT CONDITION**

   NOTE: Check for any TSB(s) related to the condition. If a TSB applies, perform the procedure outlined in the TSB before continuing.

   1. Turn the ignition on.

      NOTE: Make sure the IOD fuse is installed and battery voltage is between 10.0 and 16.0 volts.

   2. With the scan tool, read the module status.

      NOTE: Check the TIPM for any active CAN hardware DTCs, perform DTC before proceeding.

      Does the scan tool indicate that the module is active on the bus?

      Yes

      - The no response condition is not present at this time. Using the wiring diagrams as a guide, check all related splices and connectors for signs of water intrusion, corrosion, pushed out or bent terminals, and correct pin tension.

      No

      - Go To 2.

2. **CHECK THE (A116) FUSED B(+) CIRCUIT FOR AN OPEN OR SHORT**

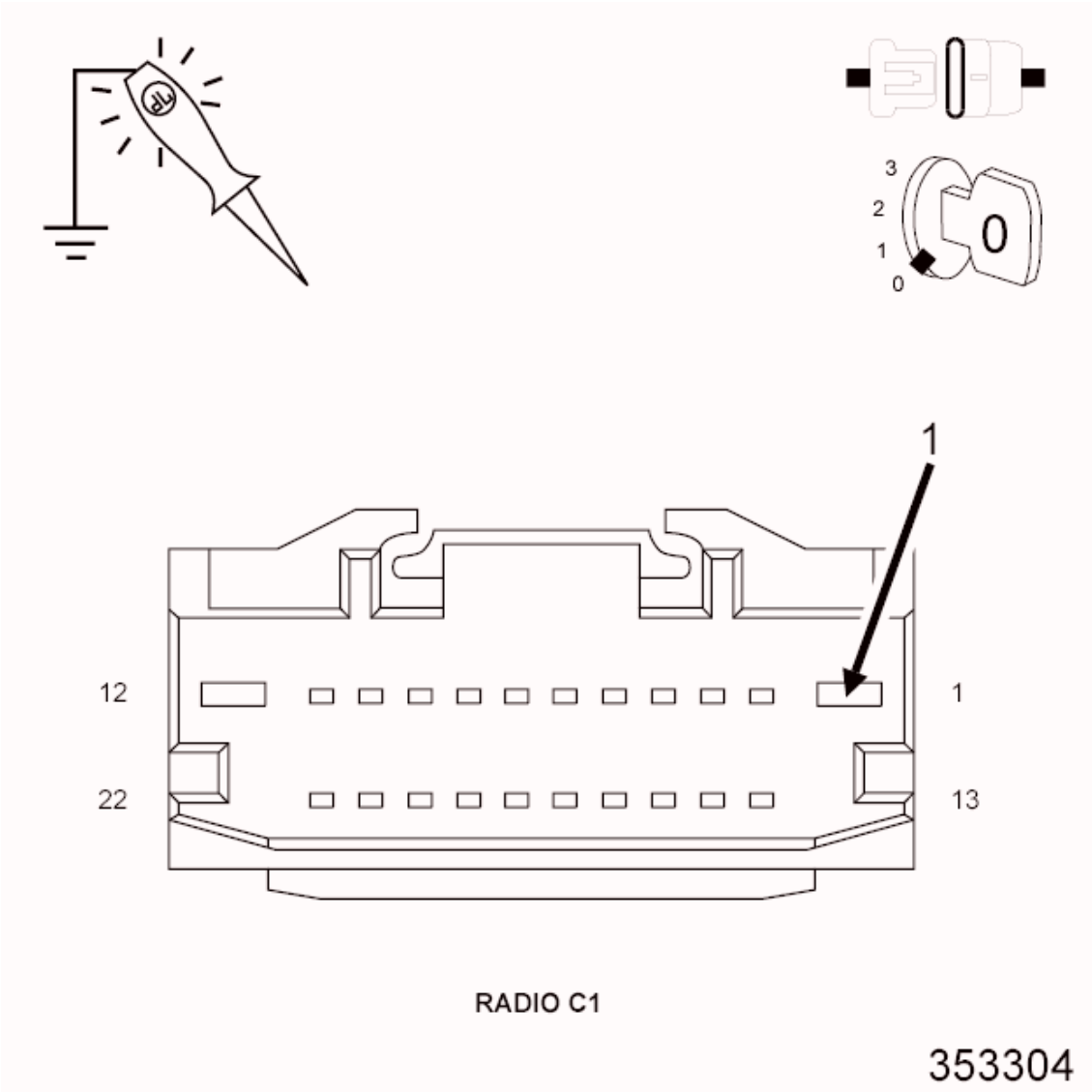

Fig. 98: Checking Fused B(+) Circuit For Open Or Short
Courtesy of CHRYSLER GROUP, LLC

1. Turn the ignition off.
2. Disconnect the Radio C1 harness connector.
3. Using a 12-volt test light connected to ground, check the (A116) Fused B(+) circuit.

   Does the test light illuminate brightly?

   Yes

   - Go To 3.

   No

- Repair the open or short in the (A116) Fused B(+) circuit.
- Refer to **STANDARD PROCEDURE** and perform the BODY VERIFICATION TEST.

3. **CHECK THE (Z912) GROUND CIRCUIT FOR AN OPEN**

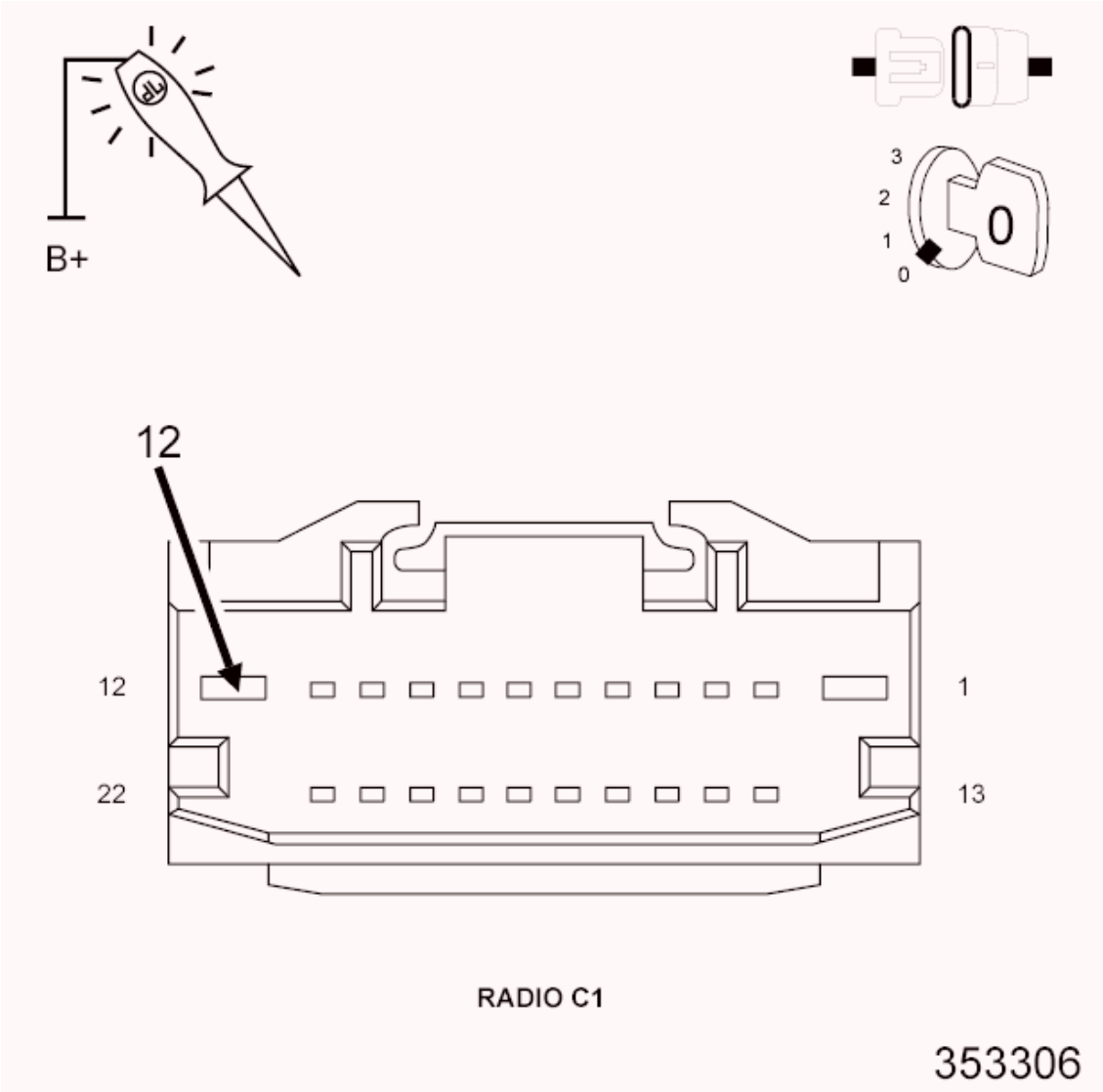

Fig. 99: Checking Ground Circuit For Open
Courtesy of CHRYSLER GROUP, LLC

1. Using a 12-volt test light connected to 12-volts, check the (Z912) Ground circuit.

   Does the test light illuminate brightly?

   Yes

   - Go To 4.

No

- Repair the open in the (Z912) Ground circuit.
- Refer to **STANDARD PROCEDURE** and perform the BODY VERIFICATION TEST.

4. **CHECK THE (D265) AND (D264) CAN INTERIOR BUS (125K) CIRCUITS FOR AN OPEN**

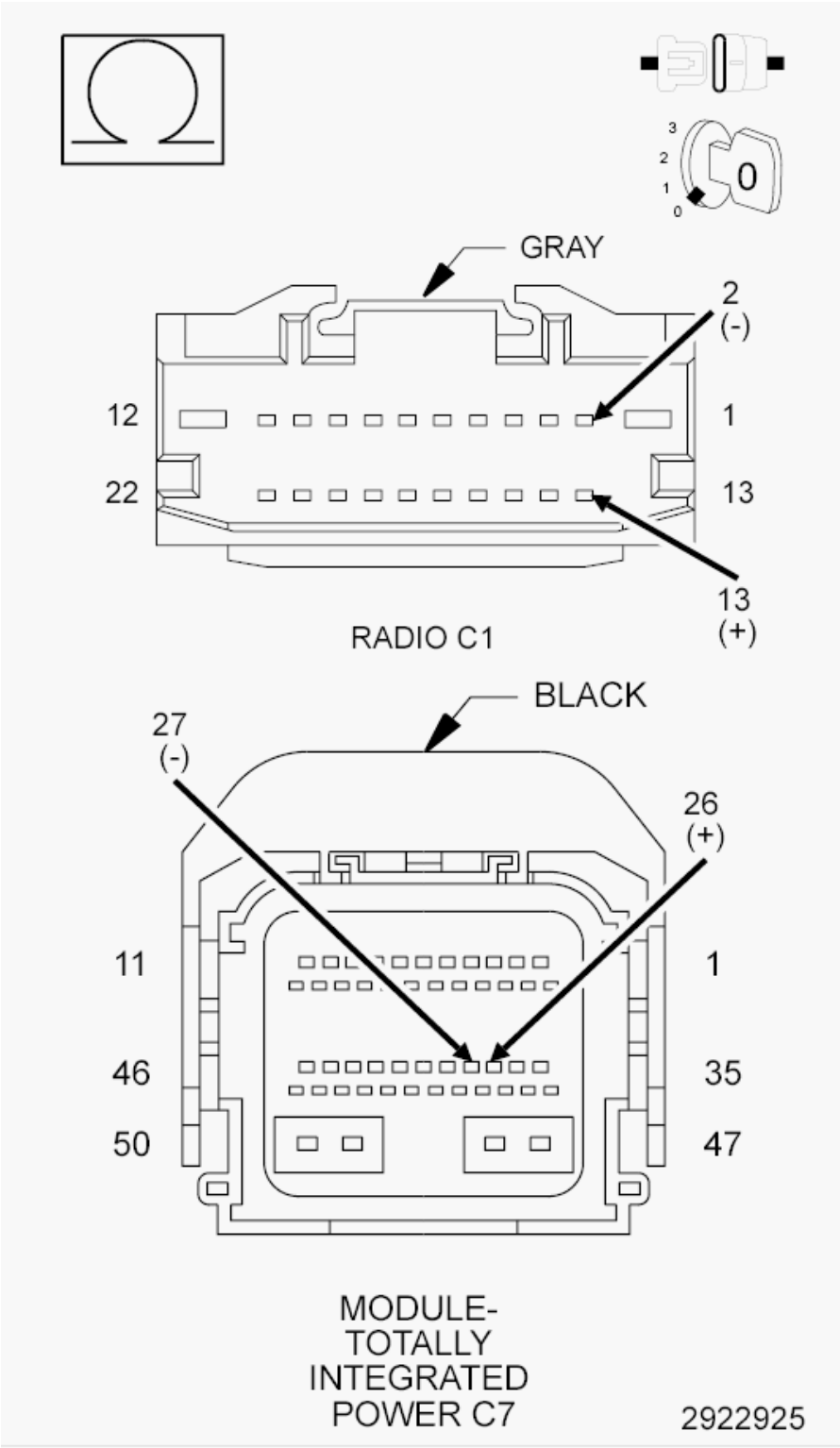

Fig. 100: Measure Resistance Of CAN Interior Bus (-) Circuit Between TIPM Harness Connector And Radio Harness connector
Courtesy of CHRYSLER GROUP, LLC

1. Disconnect the TIPM C7 harness connector.

2. Measure the resistance of the (D264) CAN Interior Bus (125K) (-) circuit between the TIPM C7 harness connector and the Radio C1 harness connector.
3. Measure the resistance of the (D265) CAN Interior Bus (125K) (+) circuit between the TIPM C7 harness connector and the Radio C1 harness connector.

   Are the resistances below 5.0 Ohms?

   Yes

   - Replace the Radio in accordance with the Service Information. Refer to **RADIO, REMOVAL** .
   - Refer to **STANDARD PROCEDURE** and perform the BODY VERIFICATION TEST.

   No

   - Repair the open in the (D265) or (D264) CAN Interior Bus (125K) circuit.
   - Refer to **STANDARD PROCEDURE** and perform the BODY VERIFICATION TEST.

NO RESPONSE FROM THE STEERING ANGLE SENSOR (SAS)

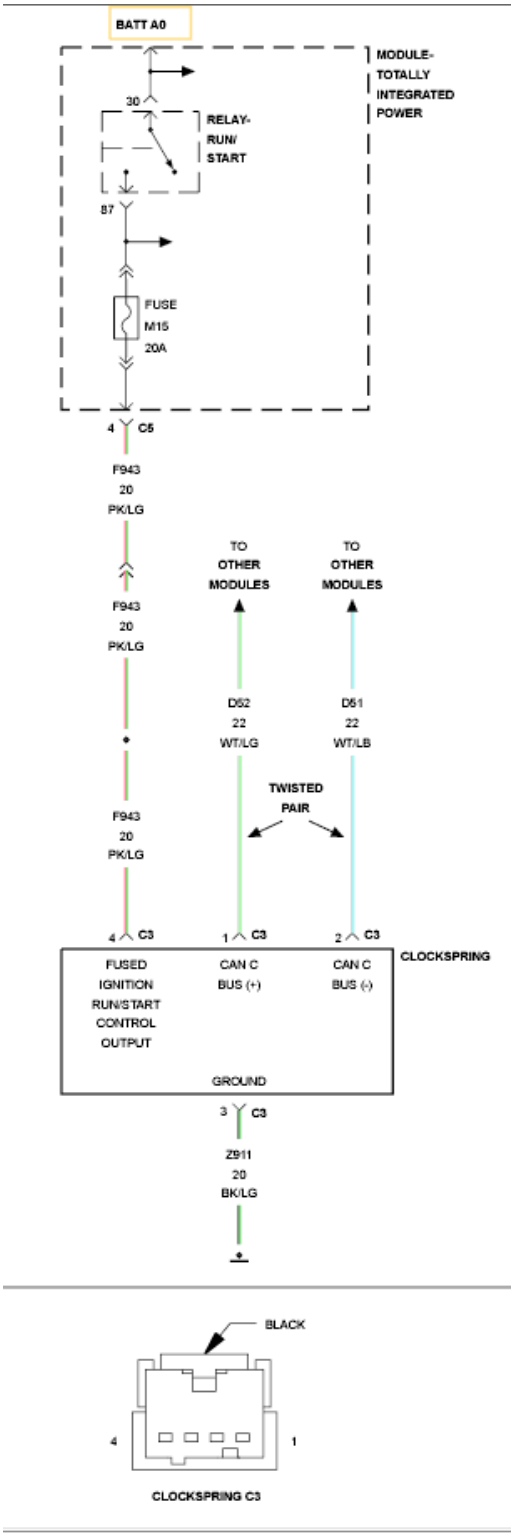

Fig. 101: Steering Angle Sensor Wiring Diagram
Courtesy of CHRYSLER GROUP, LLC

For a complete wiring diagram, **refer to appropriate SYSTEM WIRING DIAGRAMS article** .

POSSIBLE CAUSES

Possible Causes
(F943) FUSED IGNITION RUN/START CONTROL OUTPUT CIRCUIT OPEN OR SHORTED
(Z911) GROUND CIRCUIT OPEN
(D51) CAN C BUS (-) CIRCUIT OPEN
(D52) CAN C BUS (+) CIRCUIT OPEN
CLOCKSPRING/STEERING ANGLE SENSOR

DIAGNOSTIC TEST

1. **TEST FOR INTERMITTENT CONDITION**

   NOTE: Check for any TSB(s) related to the condition. If a TSB applies, perform the procedure outlined in the TSB before continuing.

   1. Turn the ignition on.

      NOTE: Make sure the IOD fuse is installed and battery voltage is between 10.0 and 16.0 volts.

   2. With the scan tool, read the module status.

      NOTE: Check the TIPM for any active CAN hardware DTCs, perform DTC before proceeding.

      Does the scan tool indicate that the module is active on the bus?

      Yes

      - The no response condition is not present at this time. Using the wiring diagrams as a guide, check all related splices and connectors for signs of water intrusion, corrosion, pushed out or bent terminals, and correct pin tension.

      No

      - Go To 2.

2. **(F943) FUSED IGNITION RUN/START CONTROL OUTPUT CIRCUIT OPEN OR SHORTED**

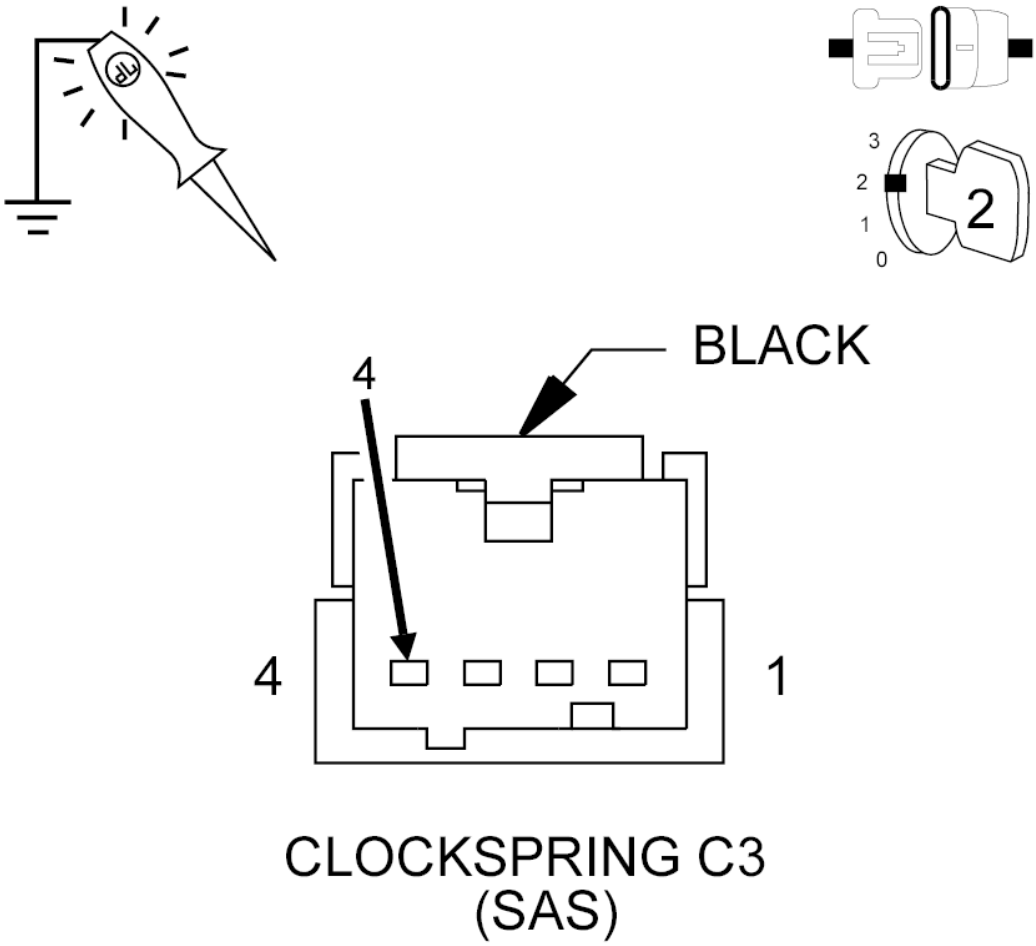

Fig. 102: Check Fused Ignition Run/Start Control Output Circuit For Open
Courtesy of CHRYSLER GROUP, LLC

1. Turn the ignition off.
2. Disconnect the Clockspring C3 harness connector.
3. Turn the ignition on.
4. Using a 12-volt test light connected to ground, check the (F943) Fused Ignition Run/Start Control Output circuit.

   Does the test light illuminate brightly?

   Yes

   - Go To 3.

   No

   - Repair the open or short in the (F943) Fused Ignition Run/Start Control Output circuit.

- Refer to **STANDARD PROCEDURE** and perform the BODY VERIFICATION TEST.

3. **(Z911) GROUND CIRCUIT OPEN**

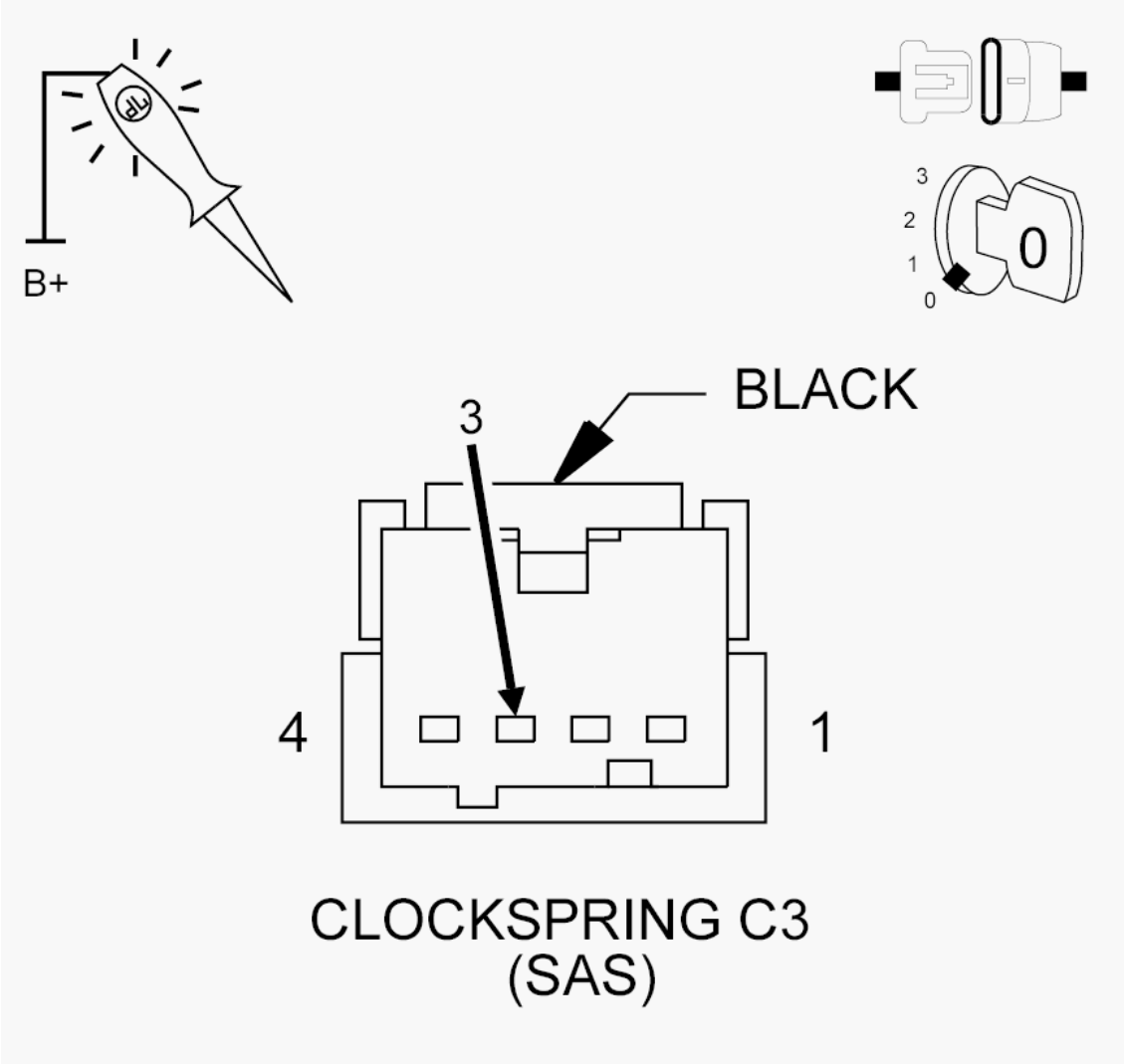

Fig. 103: Checking Ground Circuit For Open
Courtesy of CHRYSLER GROUP, LLC

1. Turn the ignition off.
2. Using a 12-volt test light connected to 12-volts, check the (Z911) Ground circuit.

   Does the test light illuminate brightly?

   Yes

   - Go To 4.

   No

- Repair the open in the (Z911) Ground circuit.
- Refer to **STANDARD PROCEDURE** and perform the BODY VERIFICATION TEST.

4. **(D52) CAN C BUS (+) CIRCUIT OPEN**

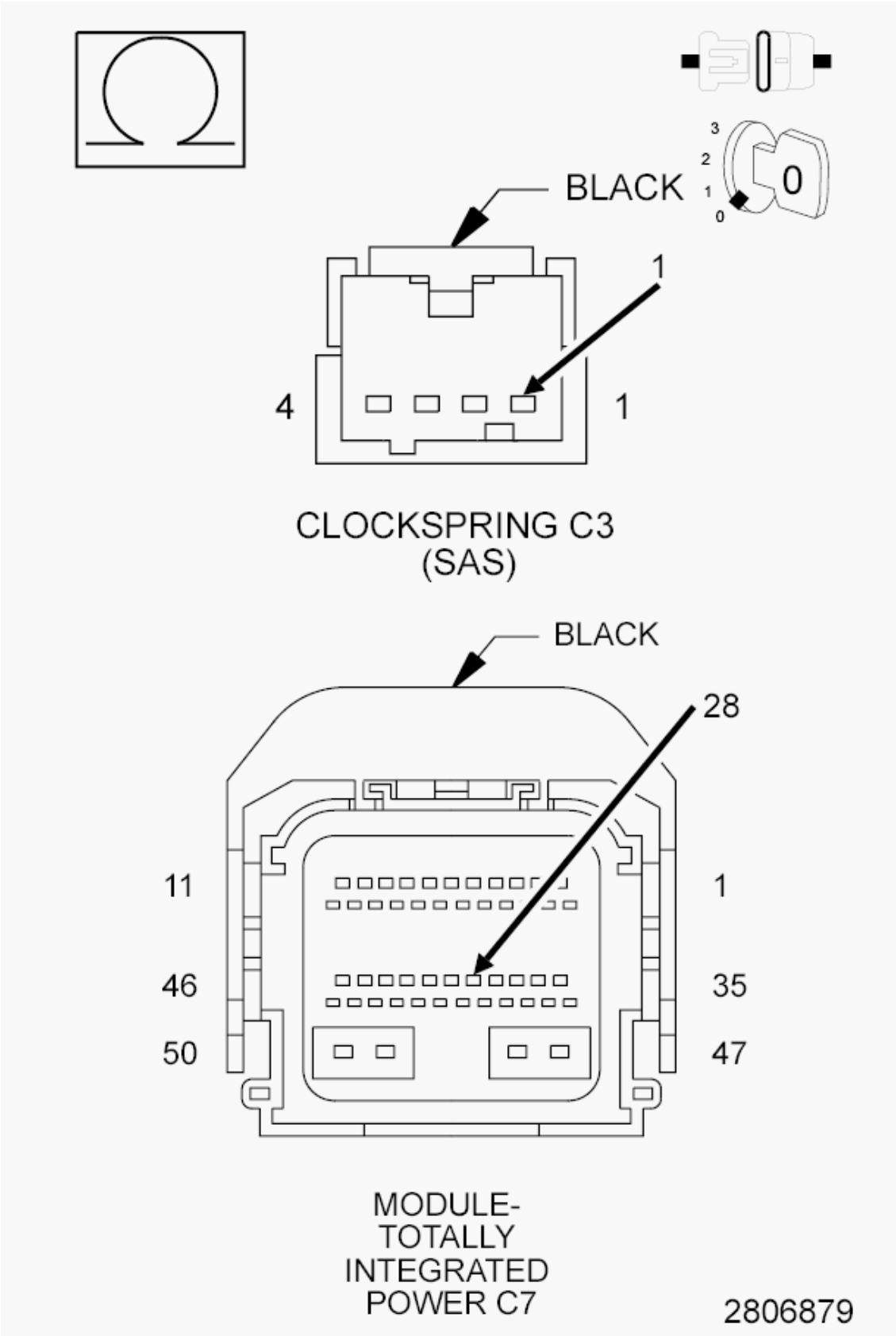

Fig. 104: Checking Can C Bus (+) Circuit For An Open

Courtesy of CHRYSLER GROUP, LLC

1. Turn the ignition off.
2. Disconnect the TIPM C7 harness connector.
3. Measure the resistance of the (D52) CAN C Bus (+) circuit between the TIPM C7 harness connector and the Clockspring C3 connector.

   Is resistance below 5.0 Ohms?

   Yes

   - Go To 5.

   No

   - Repair the open in the (D52) CAN C Bus (+) circuit.
   - Refer to **STANDARD PROCEDURE** and perform the BODY VERIFICATION TEST.

5. **(D51) CAN C BUS (-) CIRCUIT OPEN**

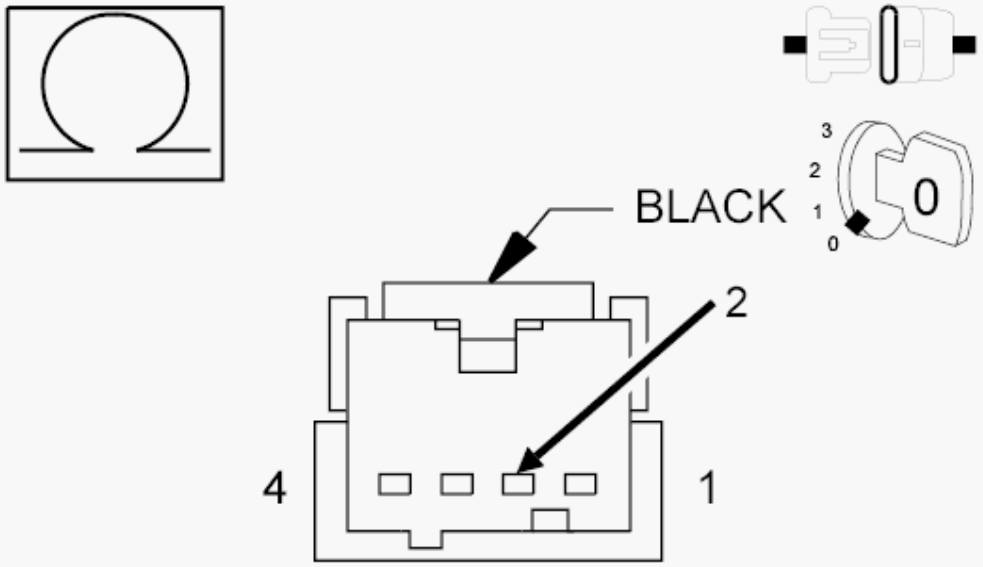

CLOCKSPRING C3
(SAS)

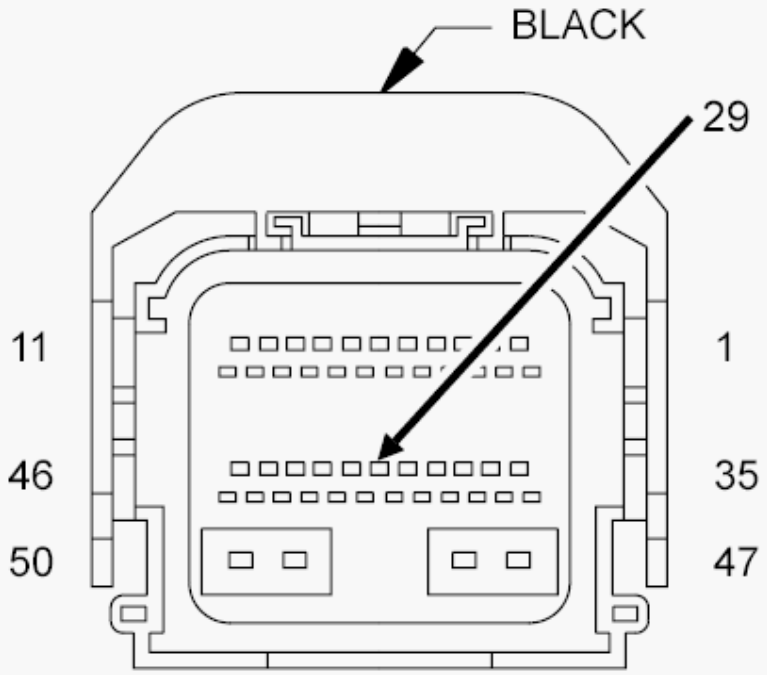

MODULE-
TOTALLY
INTEGRATED
POWER C7

2806906

Fig. 105: Checking Can C Bus (-) Circuit For An Open
Courtesy of CHRYSLER GROUP, LLC

1. Measure the resistance of the (D51) CAN C Bus (-) circuit between the TIPM C7 harness connector and the Clockspring C3 connector.

   Is resistance below 5.0 Ohms?

   Yes

   - Replace the Clockspring/Steering Angle Sensor in accordance with the Service Information. Refer to **CLOCKSPRING, REMOVAL** .
   - Refer to **STANDARD PROCEDURE** and perform the BODY VERIFICATION TEST.

   No

   - Repair the open in the (D51) CAN C Bus (-) circuit.
   - Refer to **STANDARD PROCEDURE** and perform the BODY VERIFICATION TEST.

NO RESPONSE FROM TCM (POWERTRAIN CONTROL MODULE) - GAS

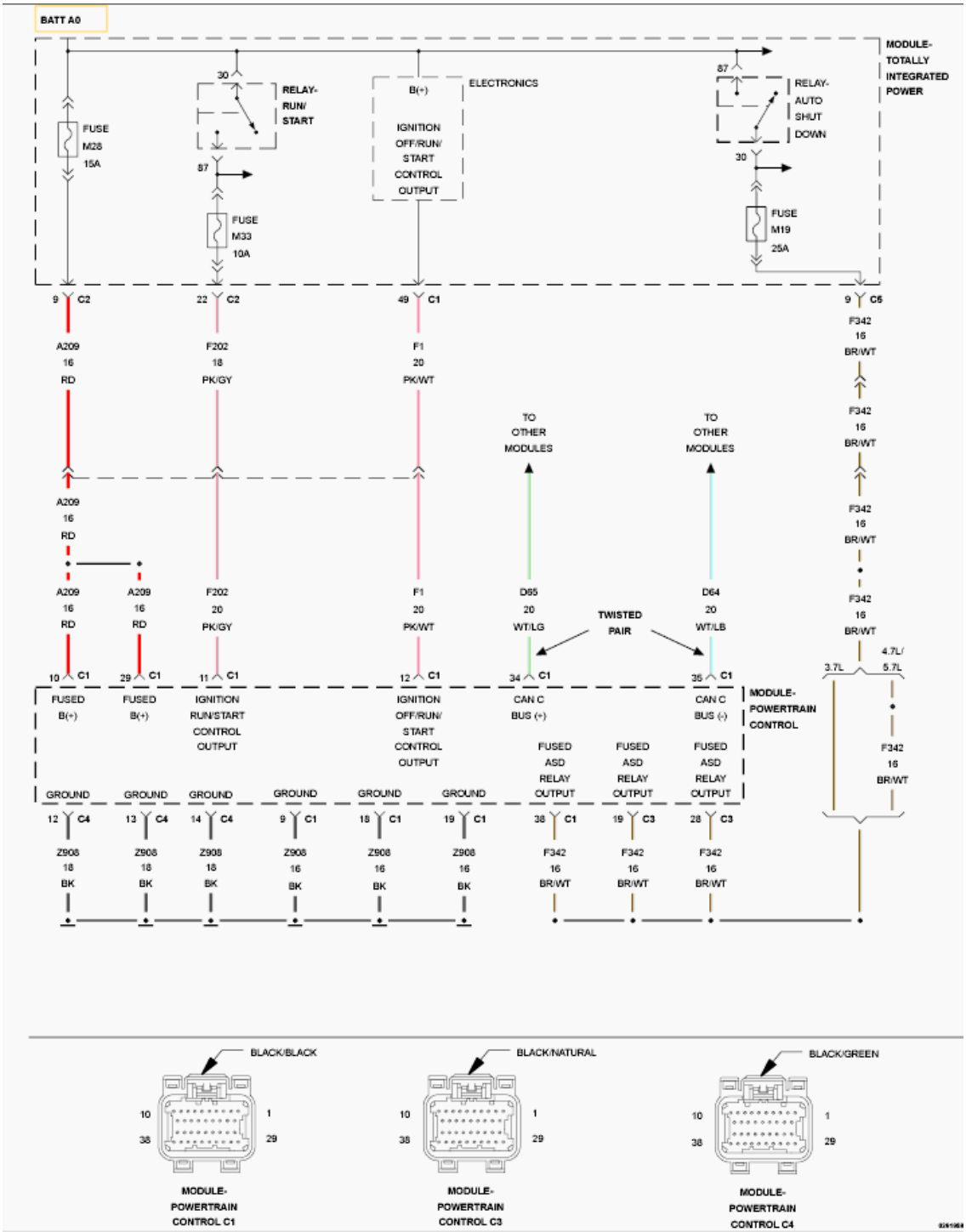

Fig. 106: Powertrain Control Module Wiring Diagram
Courtesy of CHRYSLER GROUP, LLC

For a complete wiring diagram, **refer to appropriate SYSTEM WIRING DIAGRAMS article** .

POSSIBLE CAUSES

Possible Causes
(A209) FUSED B(+) CIRCUITS OPEN OR SHORTED
(Z908) GROUND CIRCUITS OPEN
(F202) IGNITION RUN/START CONTROL OUTPUT CIRCUIT OPEN OR SHORTED
(F1) FUSED IGNITION OFF/RUN/START CONTROL OUTPUT CIRCUIT OPEN OR SHORTED
(F342) FUSED ASD RELAY OUTPUT CIRCUIT OPEN OR SHORTED
(D65) CAN C BUS (+) CIRCUIT OPEN
(D64) CAN C BUS (-) CIRCUIT OPEN
POWERTRAIN CONTROL MODULE (PCM)

DIAGNOSTIC TEST

1. **TEST FOR INTERMITTENT CONDITION**

   NOTE: Check for any TSB(s) related to the condition. If a TSB applies, perform the procedure outlined in the TSB before continuing.

   1. Turn the ignition on.

      NOTE: Make sure the IOD fuse is installed and battery voltage is between 10.0 and 16.0 volts.

   2. With the scan tool, read the module status.

      NOTE: Check the TIPM for any active CAN hardware DTCs, perform DTC before proceeding.

      Does the scan tool indicate that the module is active on the bus?

      Yes

      - The no response condition is not present at this time. Using the wiring diagrams as a guide, check all related splices and connectors for signs of water intrusion, corrosion, pushed out or bent terminals, and correct pin tension.

      No

      - Go To 2.

2. **CHECK FOR LOSS OF COMMUNICATION WITH PCM**

   1. With the scan tool, read the active DTCs.

      Does the scan tool display U0100-LOST COMMUNICATION WITH ECM/PCM?

      Yes

- Refer to **DIAGNOSIS AND TESTING** and perform the NO RESPONSE FROM PCM diagnostic procedure.

No

- Go To 3.

3. **CHECK THE (Z908) GROUND CIRCUITS FOR AN OPEN**

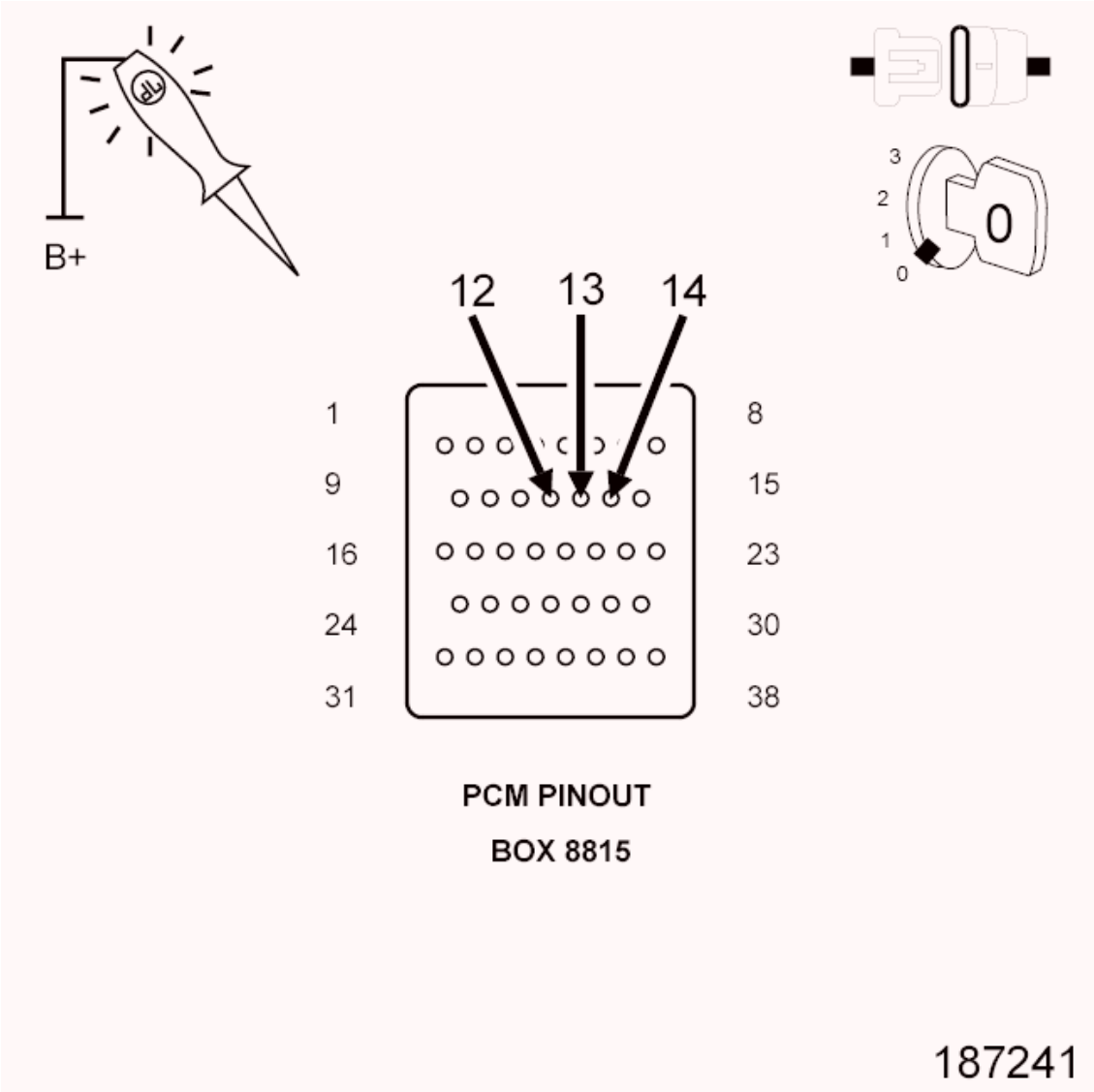

Fig. 107: Checking Ground Circuits For An Open
Courtesy of CHRYSLER GROUP, LLC

1. Turn the ignition off.
2. Disconnect the PCM C4 harness connector.

CAUTION: Do not probe the PCM harness connectors. Probing the PCM

harness connectors will damage the PCM terminals resulting in poor terminal to pin connection. Install the PCM Pinout Box (special tool #8815A, Kit, NGC, 38 Position) to perform diagnosis.

3. Using a 12-volt test light connected to 12-volts, check the (Z908) Ground circuits.

   Does the test light illuminate brightly for each circuit?

   Yes

   - Replace the Powertrain Control Module in accordance with the Service Information. Refer to **MODULE, POWERTRAIN CONTROL, REMOVAL** or **MODULE, POWERTRAIN CONTROL, 6.7L DIESEL [ETJ], REMOVAL** .
   - Refer to **3500 CAB & CHASSIS - POWERTRAIN VERIFICATION TEST** or **3500 CAB & CHASSIS, 4500 & 5500 - POWERTRAIN VERIFICATION TEST - 6.7L** and perform the POWERTRAIN VERIFICATION TEST - 6.7L.

   No

   - Repair the open in the (Z908) Ground circuit.
   - Refer to **3500 CAB & CHASSIS - POWERTRAIN VERIFICATION TEST** or **3500 CAB & CHASSIS, 4500 & 5500 - POWERTRAIN VERIFICATION TEST - 6.7L** and perform the POWERTRAIN VERIFICATION TEST - 6.7L.

NO RESPONSE FROM TCM (TRANSMISSION CONTROL MODULE) - 6.7L

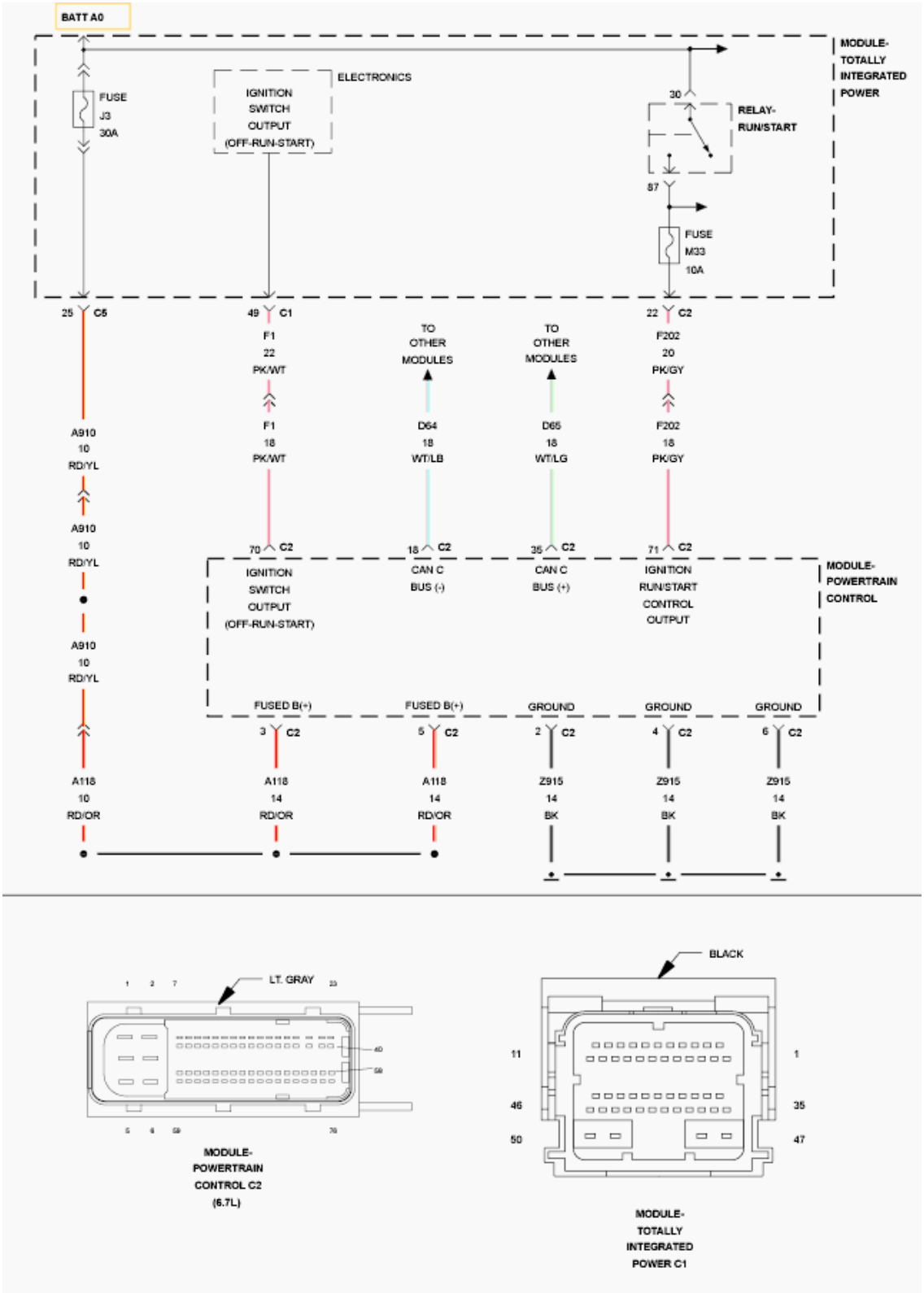

Fig. 108: Transmission Control Module - 6.7L Wiring Diagram
Courtesy of CHRYSLER GROUP, LLC

For a complete wiring diagram, **refer to appropriate SYSTEM WIRING DIAGRAMS article** .

POSSIBLE CAUSES

Possible Causes
(A910/A118) FUSED B(+) CIRCUITS OPEN OR SHORTED
(Z915) GROUND CIRCUITS OPEN
(F202) IGNITION RUN/START CONTROL OUTPUT CIRCUIT OPEN OR SHORTED
(F1) IGNITION SWITCH OUTPUT (OFF-RUN-START) CIRCUIT OPEN OR SHORTED
(D65) CAN C BUS (+) CIRCUIT OPEN
(D64) CAN C BUS (-) CIRCUIT OPEN
POWERTRAIN CONTROL MODULE (PCM)

DIAGNOSTIC TEST

1. **TEST FOR INTERMITTENT CONDITION**

   NOTE: Check for any TSB(s) related to the condition. If a TSB applies, perform the procedure outlined in the TSB before continuing.

   1. Turn the ignition on.

      NOTE: Make sure the IOD fuse is installed and battery voltage is between 10.0 and 16.0 volts.

   2. With the scan tool, read the module status.

      NOTE: Check the TIPM for any active CAN hardware DTCs, perform DTC before proceeding.

      Does the scan tool indicate that the module is active on the bus?

      Yes

      - Test complete, the condition or conditions that originally set this DTC are not present at this time. Using the wiring diagrams as a guide, check all related splices and connectors for signs of water intrusion, corrosion, pushed out or bent terminals, and correct pin tension.

      No

      - Go To 2.

2. **(A910/A118) FUSED B(+) CIRCUITS OPEN OR SHORTED**

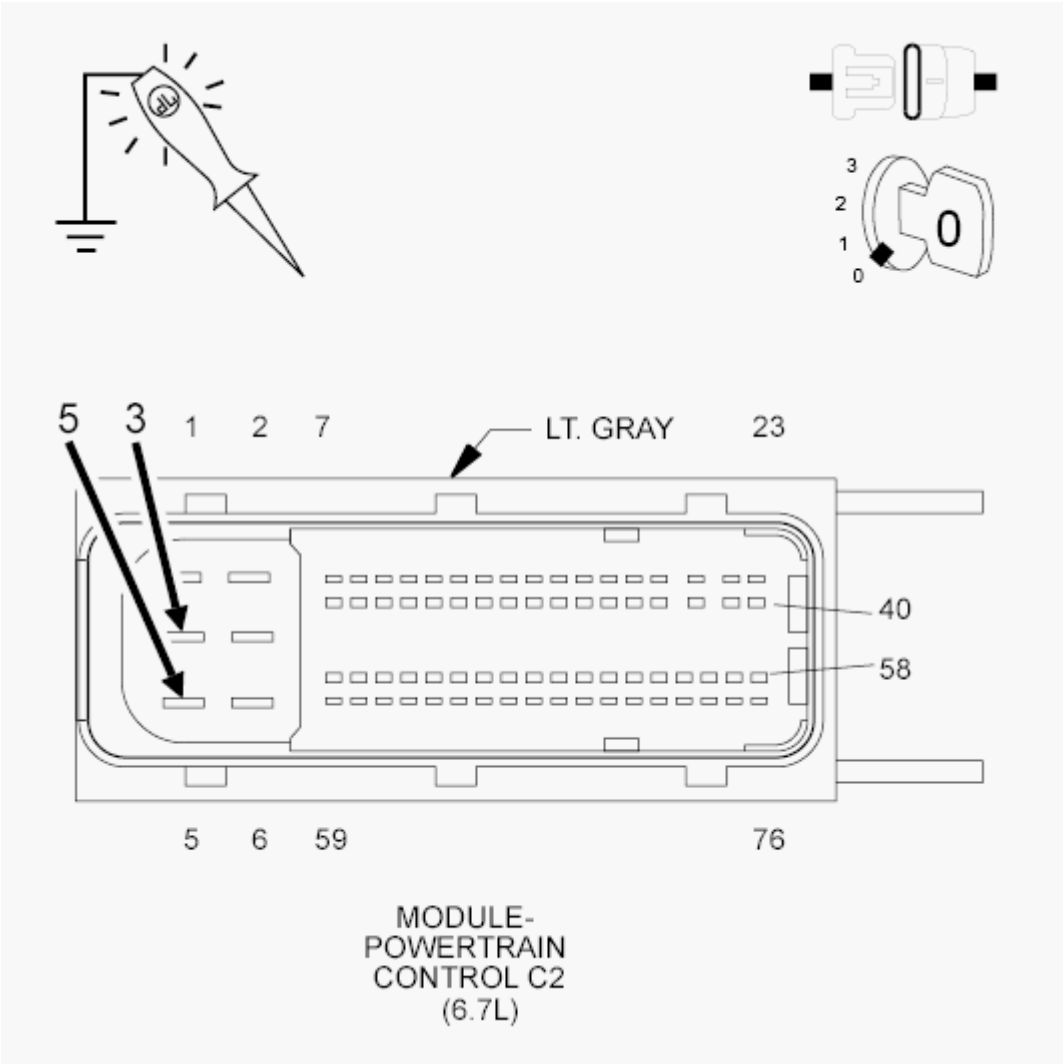

Fig. 109: Checking Fused B(+) Circuits For Open Or Short
Courtesy of CHRYSLER GROUP, LLC

1. Turn the ignition off.
2. Disconnect the PCM C2 harness connector.
3. Using a 12-volt test light connected to ground, check the (A910/A118) Fused B(+) circuits.

   Does the test light illuminate brightly for each circuit?

   Yes

   - Go To 3.

   No

   - Repair the open or short in the (A910/A118) Fused B(+) circuit.
   - Refer to **3500 CAB & CHASSIS - POWERTRAIN VERIFICATION TEST** or **3500**

CAB & CHASSIS, 4500 & 5500 - POWERTRAIN VERIFICATION TEST - 6.7L and perform the POWERTRAIN VERIFICATION TEST - 6.7L.

3. **(Z915) GROUND CIRCUITS OPEN**

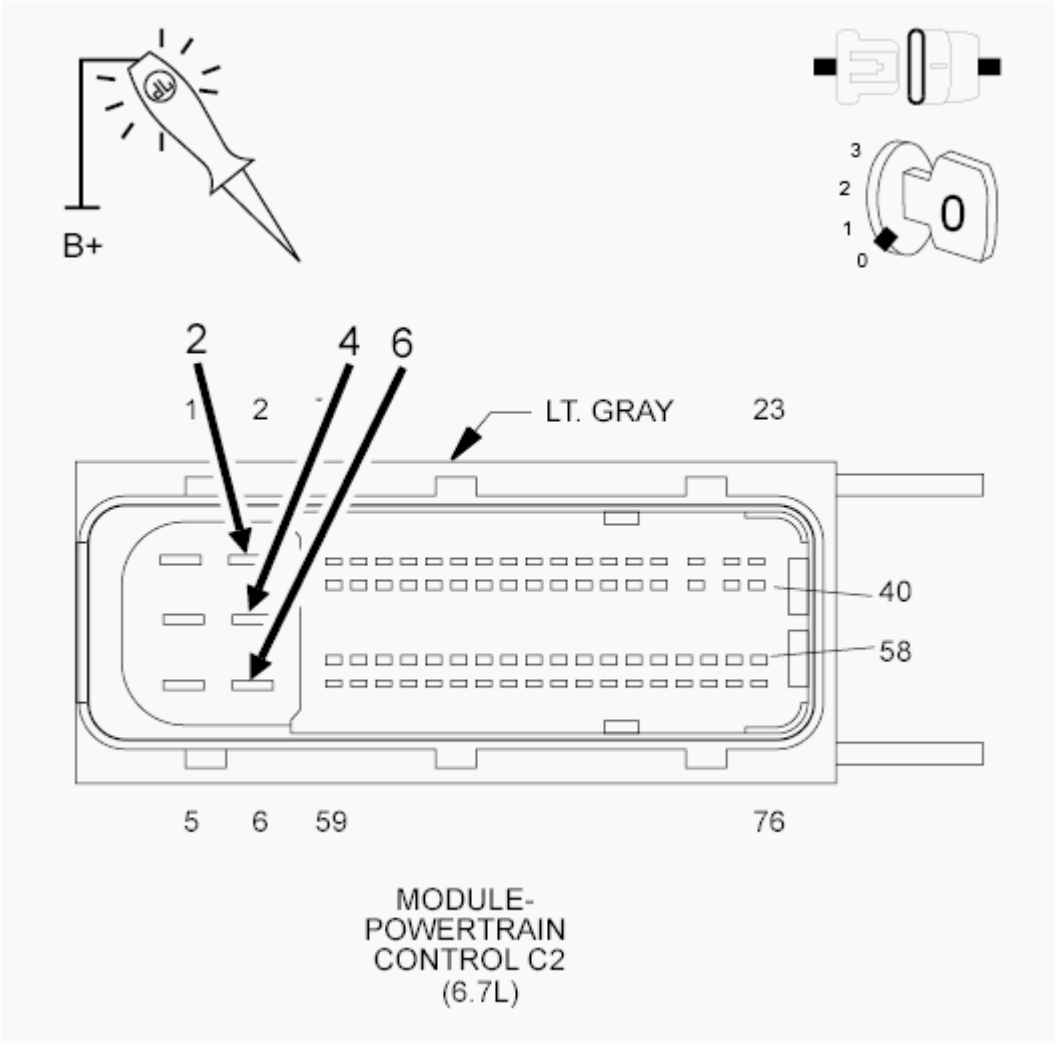

Fig. 110: Checking Ground Circuits For Open
Courtesy of CHRYSLER GROUP, LLC

1. Using a 12-volt test light connected to 12-volts, check the (Z915) Ground circuits.

   Does the test light illuminate brightly for each circuit?

   Yes

   - Go To 4.

   No

   - Repair the open in the (Z915) Ground circuit.

- Refer to **3500 CAB & CHASSIS - POWERTRAIN VERIFICATION TEST** or **3500 CAB & CHASSIS, 4500 & 5500 - POWERTRAIN VERIFICATION TEST - 6.7L** and perform the POWERTRAIN VERIFICATION TEST - 6.7L.

4. **(F202) IGNITION RUN/START CONTROL OUTPUT CIRCUIT OPEN OR SHORTED**

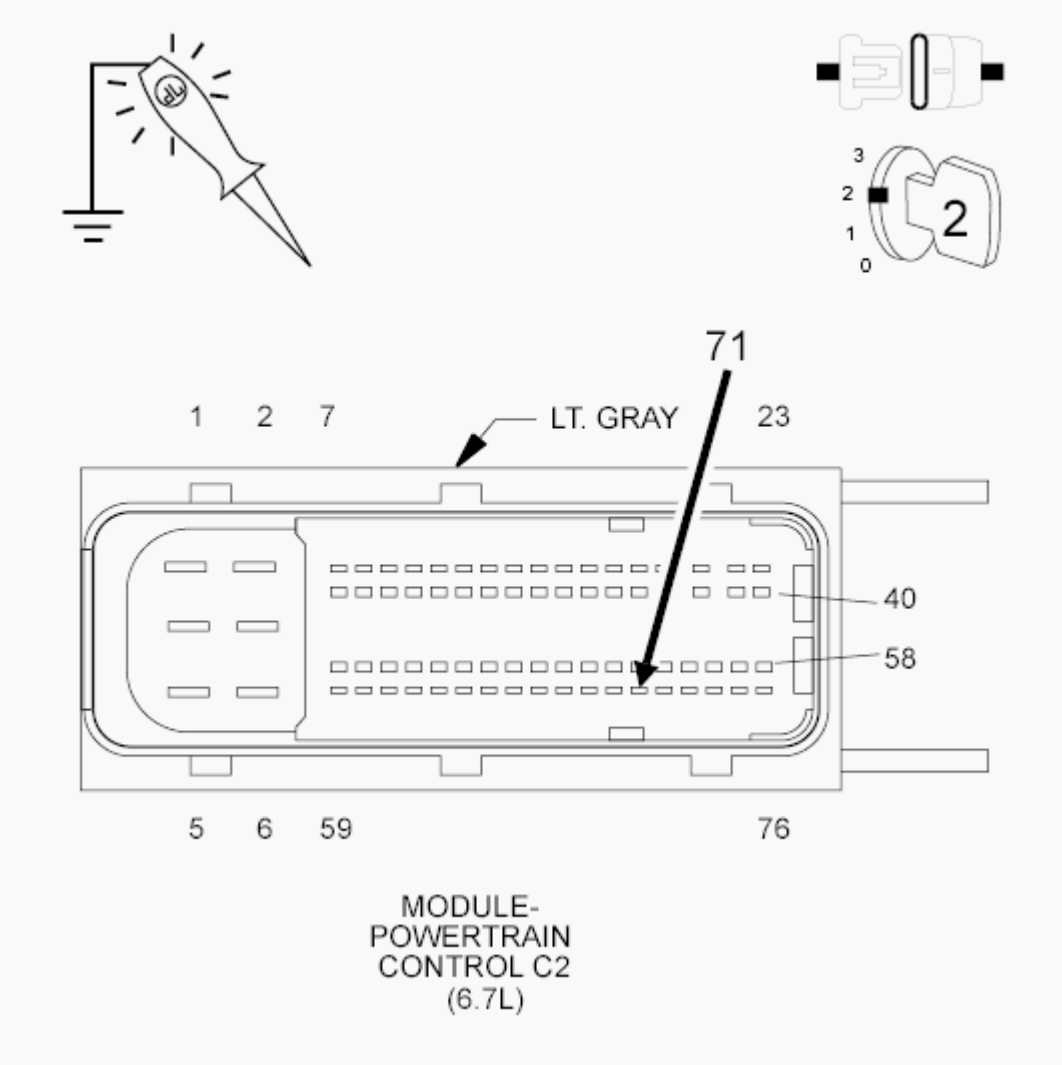

Fig. 111: Checking Ignition Run/Start Control Output Circuit For Open Or Short
Courtesy of CHRYSLER GROUP, LLC

1. Turn the ignition on.
2. Using a 12-volt test light connected to ground, check the (F202) Ignition Run/Start Control Output circuit.

   Does the test light illuminate brightly?

   Yes

   - Go To 5.

No

- Repair the open or short in the (F202) Ignition Run/Start Control Output circuit.
- Refer to **3500 CAB & CHASSIS - POWERTRAIN VERIFICATION TEST** or **3500 CAB & CHASSIS, 4500 & 5500 - POWERTRAIN VERIFICATION TEST - 6.7L** and perform the POWERTRAIN VERIFICATION TEST - 6.7L.

5. **(F1) IGNITION SWITCH OUTPUT (OFF-RUN-START) CIRCUIT OPEN OR SHORTED**

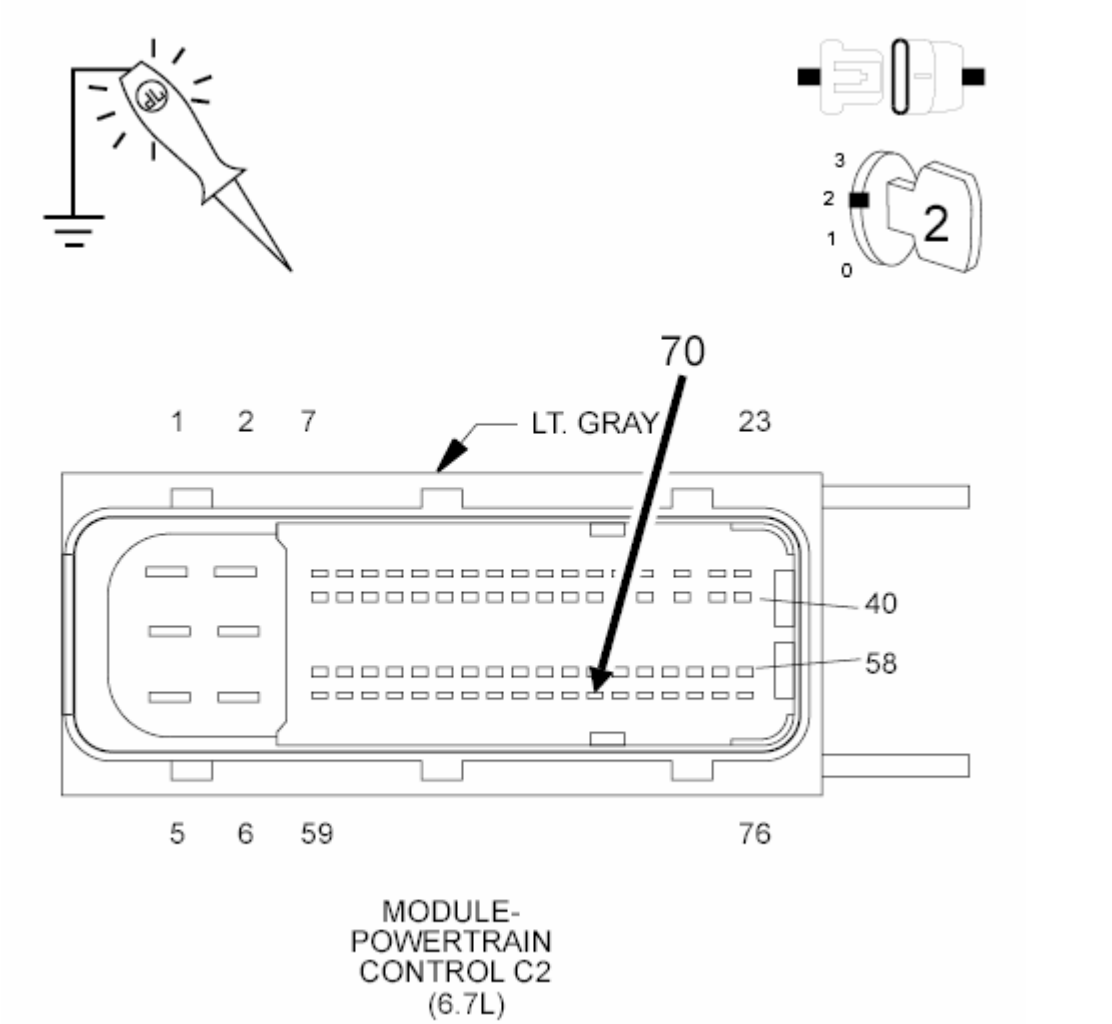

Fig. 112: Checking Ignition Switch Output (Off-Run-Start) Circuit For Open Or Short
Courtesy of CHRYSLER GROUP, LLC

1. Using a 12-volt test light connected to ground, check the (F1) Ignition Switch Output (Off-Run-Start) circuit.

   Does the test light illuminate brightly?

   Yes

- Go To 6.

No

- Repair the open or short in the (F1) Ignition Switch Output (Off-Run-Start) circuit.
- Refer to **3500 CAB & CHASSIS - POWERTRAIN VERIFICATION TEST** or **3500 CAB & CHASSIS, 4500 & 5500 - POWERTRAIN VERIFICATION TEST - 6.7L** and perform the POWERTRAIN VERIFICATION TEST - 6.7L.

6. **(D65) CAN C BUS (+) CIRCUIT OPEN**

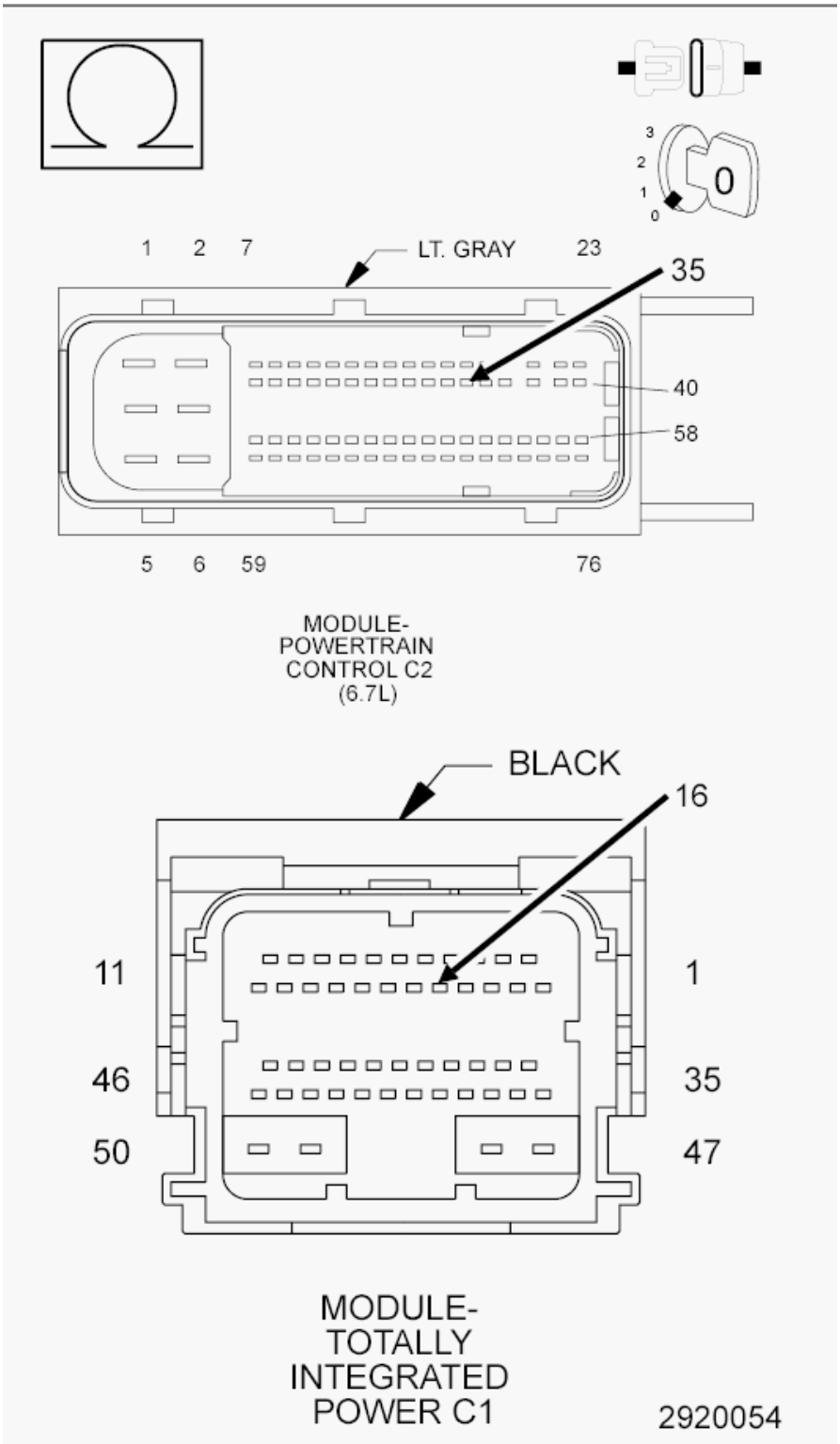

Fig. 113: Checking CAN C BUS (+) Circuit For Open
Courtesy of CHRYSLER GROUP, LLC

1. Turn the ignition off.
2. Disconnect the TIPM C1 harness connector.

3. Measure the resistance of the (D65) CAN C Bus (+) circuit between the TIPM C1 harness connector and the PCM C2 harness connector.

   Is resistance below 5.0 Ohms?

   Yes

   - Go To 7.

   No

   - Repair the open in the (D65) CAN C Bus (+) circuit.
   - Refer to **3500 CAB & CHASSIS - POWERTRAIN VERIFICATION TEST** or **3500 CAB & CHASSIS, 4500 & 5500 - POWERTRAIN VERIFICATION TEST - 6.7L** and perform the POWERTRAIN VERIFICATION TEST - 6.7L.

7. **(D64) CAN C BUS (-) CIRCUIT OPEN**

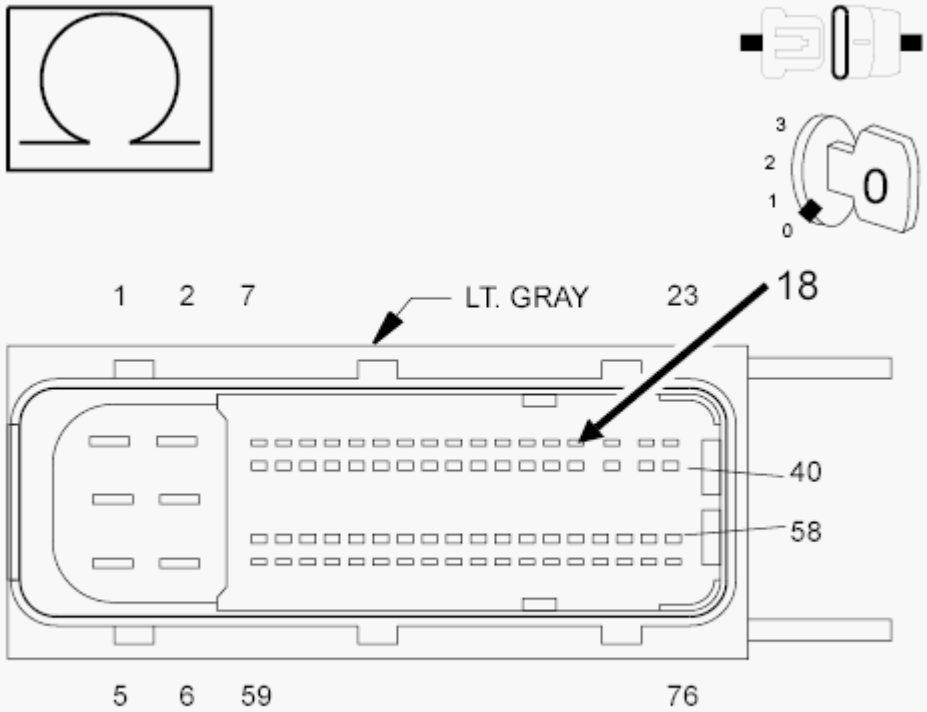

MODULE-
POWERTRAIN
CONTROL C2
(6.7L)

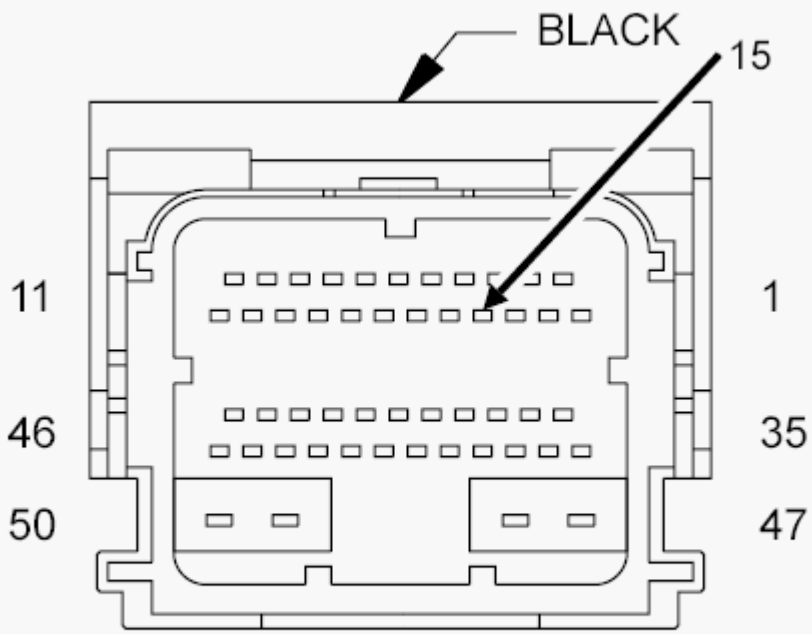

MODULE-
TOTALLY

Fig. 114: Measuring Resistance Of CAN C Bus (-) Circuit Between TIPM Harness Connector And PCM Harness Connector
Courtesy of CHRYSLER GROUP, LLC

1. Measure the resistance of the (D64) CAN C Bus (-) circuit between the TIPM C1 harness connector and the PCM C2 harness connector.

   Is resistance below 5.0 Ohms?

   Yes

   - Replace the PCM in accordance with the Service Information. Refer to **MODULE, POWERTRAIN CONTROL, REMOVAL** or **MODULE, POWERTRAIN CONTROL, 6.7L DIESEL [ETJ], REMOVAL** .
   - Refer to **3500 CAB & CHASSIS - POWERTRAIN VERIFICATION TEST** or **3500 CAB & CHASSIS, 4500 & 5500 - POWERTRAIN VERIFICATION TEST - 6.7L** and perform the POWERTRAIN VERIFICATION TEST - 6.7L.

   No

   - Repair the open in the (D64) CAN C Bus (-) circuit.
   - Refer to **3500 CAB & CHASSIS - POWERTRAIN VERIFICATION TEST** or **3500 CAB & CHASSIS, 4500 & 5500 - POWERTRAIN VERIFICATION TEST - 6.7L** and perform the POWERTRAIN VERIFICATION TEST - 6.7L.

NO RESPONSE FROM TCM (TRANSMISSION CONTROL MODULE) - AS68RC

For a complete wiring diagram, **refer to appropriate SYSTEM WIRING DIAGRAMS article** .

POSSIBLE CAUSES

Possible Causes
(A209) FUSED B(+) CIRCUITS OPEN OR SHORTED
(Z906) GROUND CIRCUITS OPEN
(D52) CAN C BUS (+) CIRCUIT OPEN
(D51) CAN C BUS (-) CIRCUIT OPEN
TRANSMISSION CONTROL MODULE (TCM)

DIAGNOSTIC TEST

1. **TEST FOR INTERMITTENT CONDITION**

   NOTE: Check for any TSB(s) related to the condition. If a TSB applies, perform the procedure outlined in the TSB before continuing.

   1. Turn the ignition on.

NOTE: **Make sure the IOD fuse is installed and battery voltage is between 10.0 and 16.0 volts.**

2. With the scan tool, read the module status.

NOTE: **Check the TIPM for any active CAN hardware DTCs, perform DTC before proceeding.**

Does the scan tool indicate that the module is active on the bus?

Yes

- The no response condition is not present at this time. Using the wiring diagrams as a guide, check all related splices and connectors for signs of water intrusion, corrosion, pushed out or bent terminals, and correct pin tension.

No

- Go To 2.

2. **CHECK THE (A209) FUSED B(+) CIRCUIT FOR AN OPEN OR SHORT**

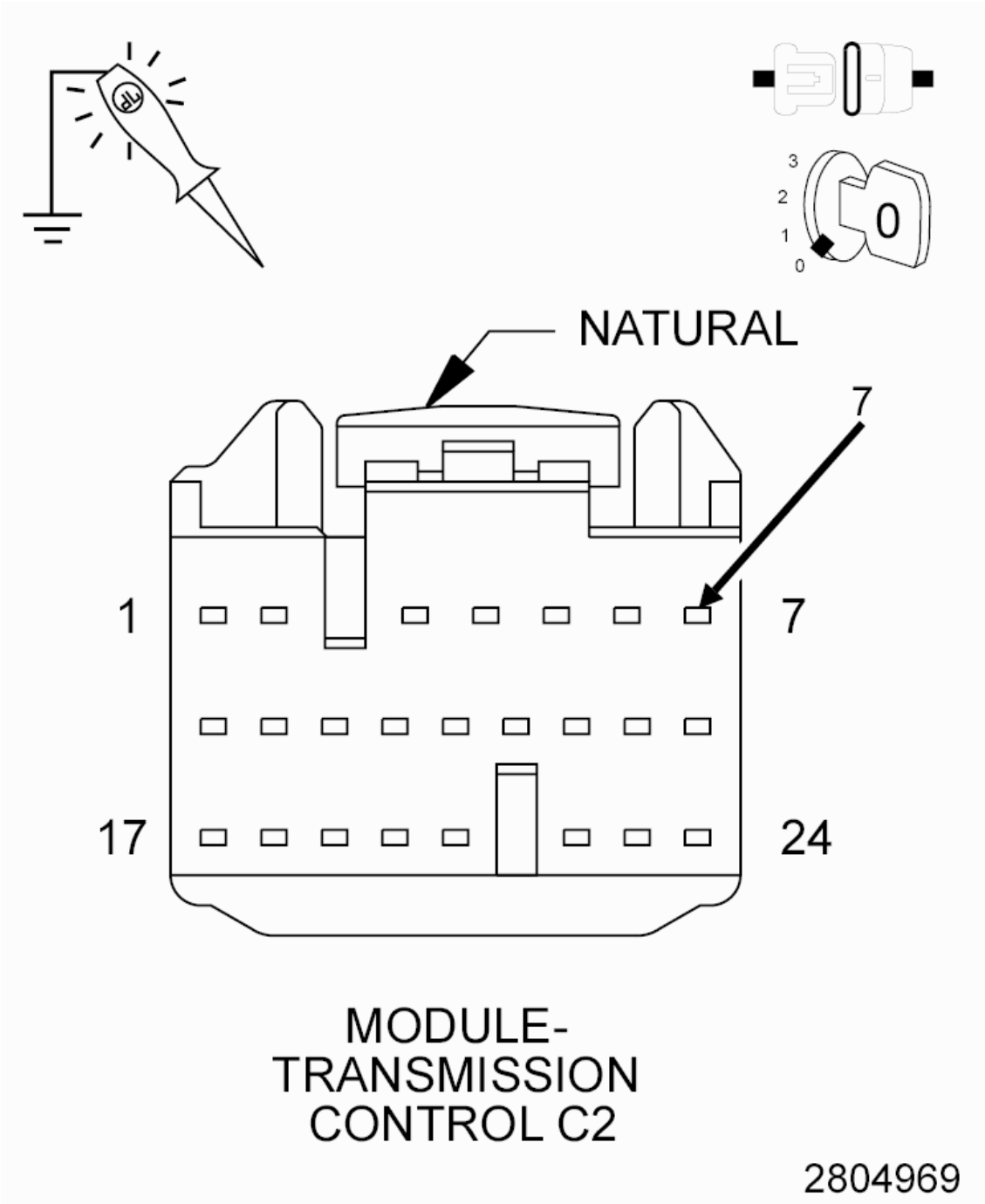

Fig. 115: Checking Fused B(+) Circuit For Open Or Short
Courtesy of CHRYSLER GROUP, LLC

1. Turn the ignition off.
2. Disconnect the TCM C2 harness connector.
3. Using a 12-volt test light connected to ground, check the (A209) Fused B(+) circuit.

   Does the test light illuminate brightly?

Yes

- Go To 3.

No

- Repair the open or short to ground in the (A209) Fused B(+) circuit.
- Refer to **STANDARD PROCEDURE** and perform the AS68RC TRANSMISSION VERIFICATION TEST.

3. **CHECK THE (Z906) GROUND CIRCUITS FOR AN OPEN**

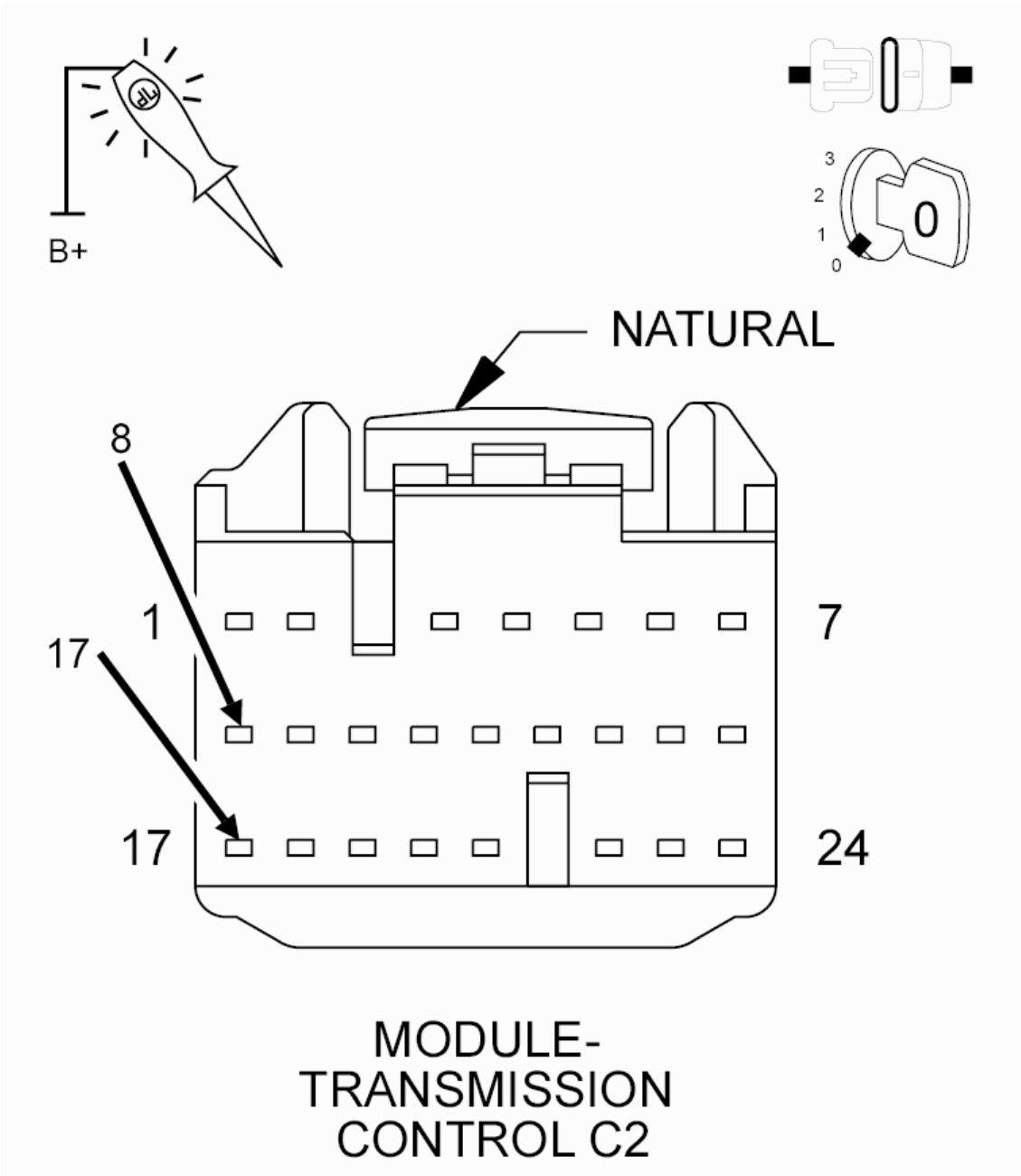

Fig. 116: Checking Ground Circuits For Open
Courtesy of CHRYSLER GROUP, LLC

1. Using a 12-volt test light connected to 12-volts, check the (Z906) Ground circuits.

   Does the test light illuminate brightly for each circuit?

   Yes

   - Go To 4.

   No

   - Repair the open in the (Z906) Ground circuit.
   - Refer to **STANDARD PROCEDURE** and perform the AS68RC TRANSMISSION VERIFICATION TEST.

4. **CHECK THE (D52) CAN C BUS (+) CIRCUIT OPEN**

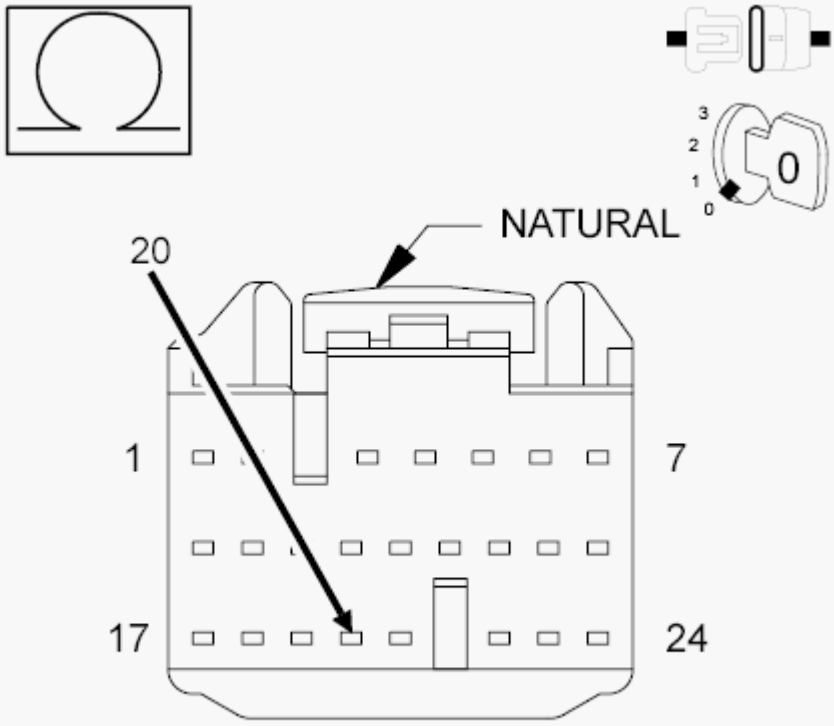

MODULE-
TRANSMISSION
CONTROL C2

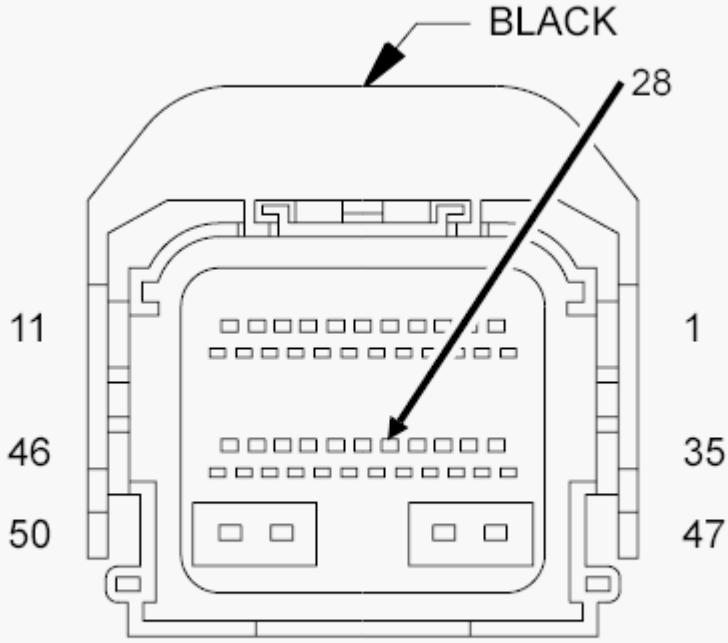

MODULE-
TOTALLY

Fig. 117: Measuring Resistance CAN C Bus (+) Circuit Between TIPM Harness Connector And TCM Harness Connector
Courtesy of CHRYSLER GROUP, LLC

1. Disconnect the TIPM C7 harness connector.
2. Measure the resistance of the (D52) CAN C Bus (+) circuit between the TIPM C7 harness connector and the TCM C2 harness connector.

   Is resistance below 5.0 Ohms?

   Yes

   - Go To 5.

   No

   - Repair the open in the (D52) CAN C Bus (+) circuit.
   - Refer to **STANDARD PROCEDURE** and perform the AS68RC TRANSMISSION VERIFICATION TEST.

5. **CHECK THE (D51) CAN C BUS (-) CIRCUIT FOR AN OPEN**

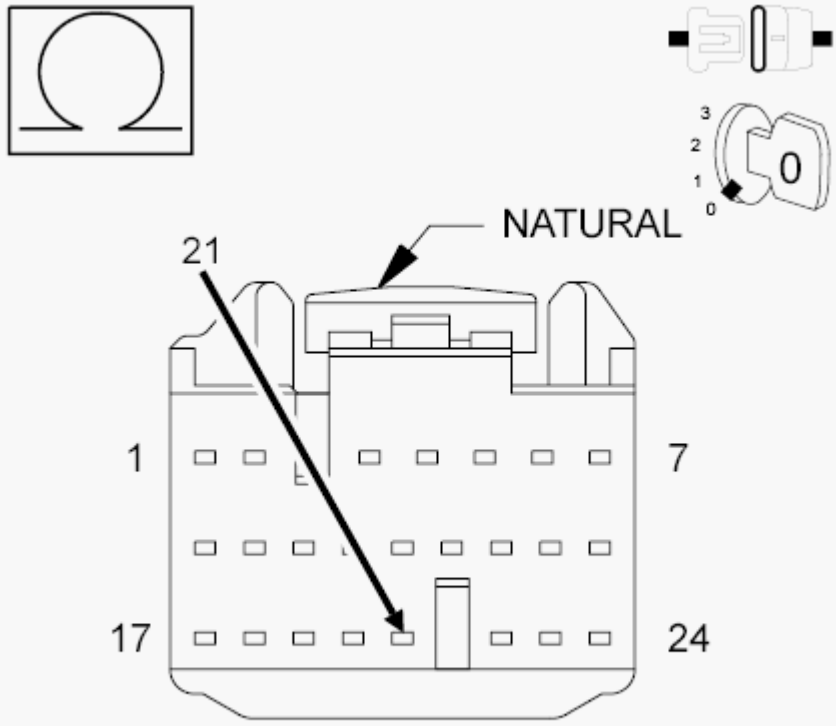

MODULE-
TRANSMISSION
CONTROL C2

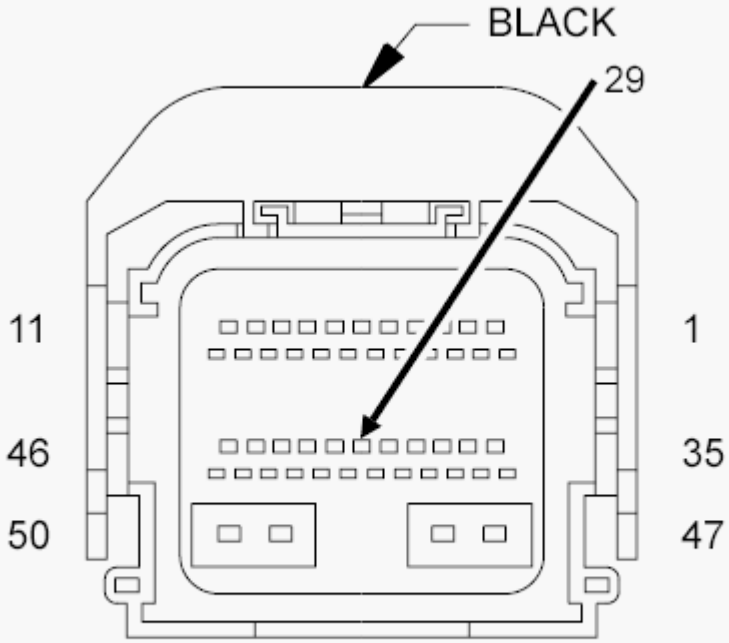

MODULE-
TOTALLY

Fig. 118: Measuring Resistance CAN C Bus (-) Circuit Between TIPM Harness Connector And TCM Harness Connector
Courtesy of CHRYSLER GROUP, LLC

1. Measure the resistance of the (D51) CAN C Bus (-) circuit between the TIPM C7 harness connector and the TCM C2 harness connector.

   Is resistance below 5.0 Ohms?

   Yes

   - Replace the TCM in accordance with the Service Information. Refer to **MODULE, TRANSMISSION CONTROL, DESCRIPTION** .
   - Refer to **STANDARD PROCEDURE** and perform the AS68RC TRANSMISSION VERIFICATION TEST.

   No

   - Repair the open in the (D51) CAN C Bus (-) circuit.
   - Refer to **STANDARD PROCEDURE** and perform the AS68RC TRANSMISSION VERIFICATION TEST.

NO RESPONSE FROM TIPM (TOTALLY INTEGRATED POWER MODULE)

For a complete wiring diagram, **refer to appropriate SYSTEM WIRING DIAGRAMS article** .

POSSIBLE CAUSES

Possible Causes
FUSED B(+) CIRCUITS OPEN
FUSED IGNITION SWITCH OUTPUT CIRCUITS OPEN
GROUND CIRCUITS OPEN
DIAGNOSTIC CAN C CIRCUITS OPEN
DIAGNOSTIC CAN C CIRCUITS SHORTED TO GROUND
DIAGNOSTIC CAN C CIRCUITS SHORTED TOGETHER
TOTALLY INTEGRATED POWER MODULE (TIPM)

DIAGNOSTIC TEST

1. **TEST FOR INTERMITTENT CONDITION**
   1. Turn the ignition on.

      NOTE: Make sure the IOD fuse is installed and battery voltage is between 10.0 and 16.0 volts.

NOTE: **Make sure the scan tool is updated to the latest software.**

NOTE: **If the scan tool displays any error messages involving the Diagnostic CAN C circuits, diagnose and repair the error message before proceeding.**

2. With the scan tool, attempt to communicate with the TIPM.

   Does the scan tool communicate with the TIPM?

   Yes

   - The no response condition is not present at this time. Using the wiring diagram/schematic as a guide, inspect the wiring for chafed, pierced, pinched, and partially broken wires and the wiring harness connectors for broken, bent, pushed out, and corroded terminals.

   No

   - Go To 2.

2. **FUSED B(+) CIRCUITS OPEN AT TIPM**
   1. Disconnect the scan tool from the DLC.
   2. Using a 12-volt test light connected to ground, and using the wiring diagram as a guide, check all Fused B(+) circuits at the TIPM.

      Does the test light illuminate brightly for each circuit?

      Yes

      - Go To 3.

      No

      - Repair the open or short in the Fused B(+) circuit.
      - Refer to **STANDARD PROCEDURE** and perform the BODY VERIFICATION TEST.

3. **FUSED IGNITION SWITCH OUTPUT CIRCUITS OPEN AT TIPM**
   1. Turn the ignition on.
   2. Using a 12-volt test light connected to ground, and using the wiring diagram as a guide, check each Fused Ignition Switch Output circuit at the TIPM.

      Does the test light illuminate brightly for each circuit?

      Yes

      - Go To 4.

No

- Repair the open in the Fused Ignition Switch Output circuit.
- Refer to **STANDARD PROCEDURE** and perform the BODY VERIFICATION TEST.

4. **GROUND CIRCUITS OPEN AT TIPM**
   1. Turn the ignition off.
   2. Using a 12-volt test light connected to 12-volts, and using the wiring diagram as a guide, check all ground circuits at the TIPM.

      Does the test light illuminate brightly on each circuit?

      Yes

      - Go To 5.

      No

      - Repair the open in the ground circuit that did not light the test light.
      - Refer to **STANDARD PROCEDURE** and perform the BODY VERIFICATION TEST.
5. **CHECK THE (D72) DIAGNOSTIC CAN C (+) CIRCUIT FOR AN OPEN**

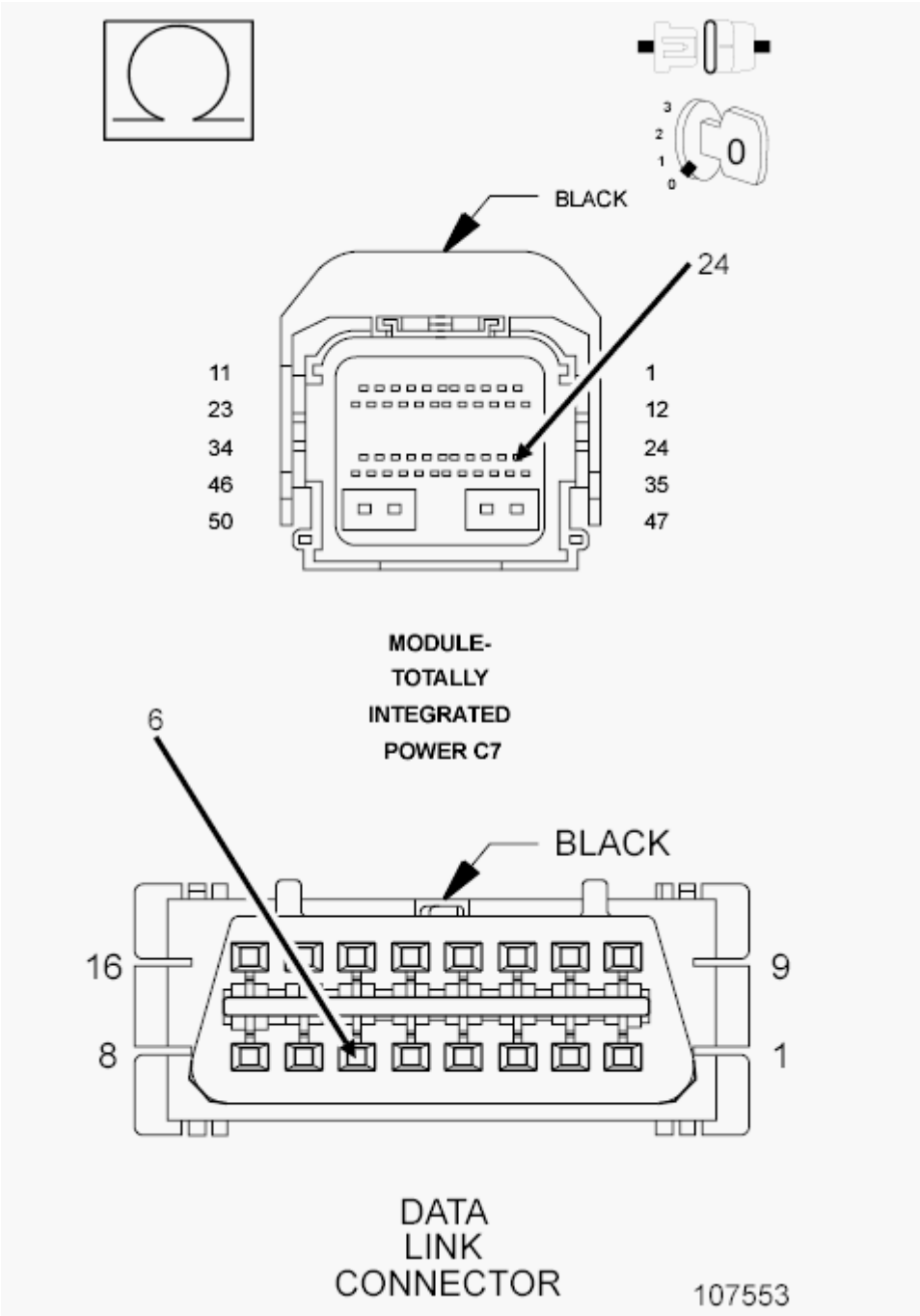

Fig. 119: Checking Diagnostic CAN C (+) Circuit For Open
Courtesy of CHRYSLER GROUP, LLC

1. Disconnect the TIPM C7 harness connector.
2. Measure the resistance of the (D72) Diagnostic CAN C (+) circuit between the TIPM C7 harness connector and the DLC.

   Is the resistance below 5.0 Ohms?

Yes

- Go To 6.

No

- Repair the open in the (D72) Diagnostic CAN C (+) circuit.
- Refer to **STANDARD PROCEDURE** and perform the BODY VERIFICATION TEST.

6. **CHECK THE (D71) DIAGNOSTIC CAN C (-) CIRCUIT FOR AN OPEN**

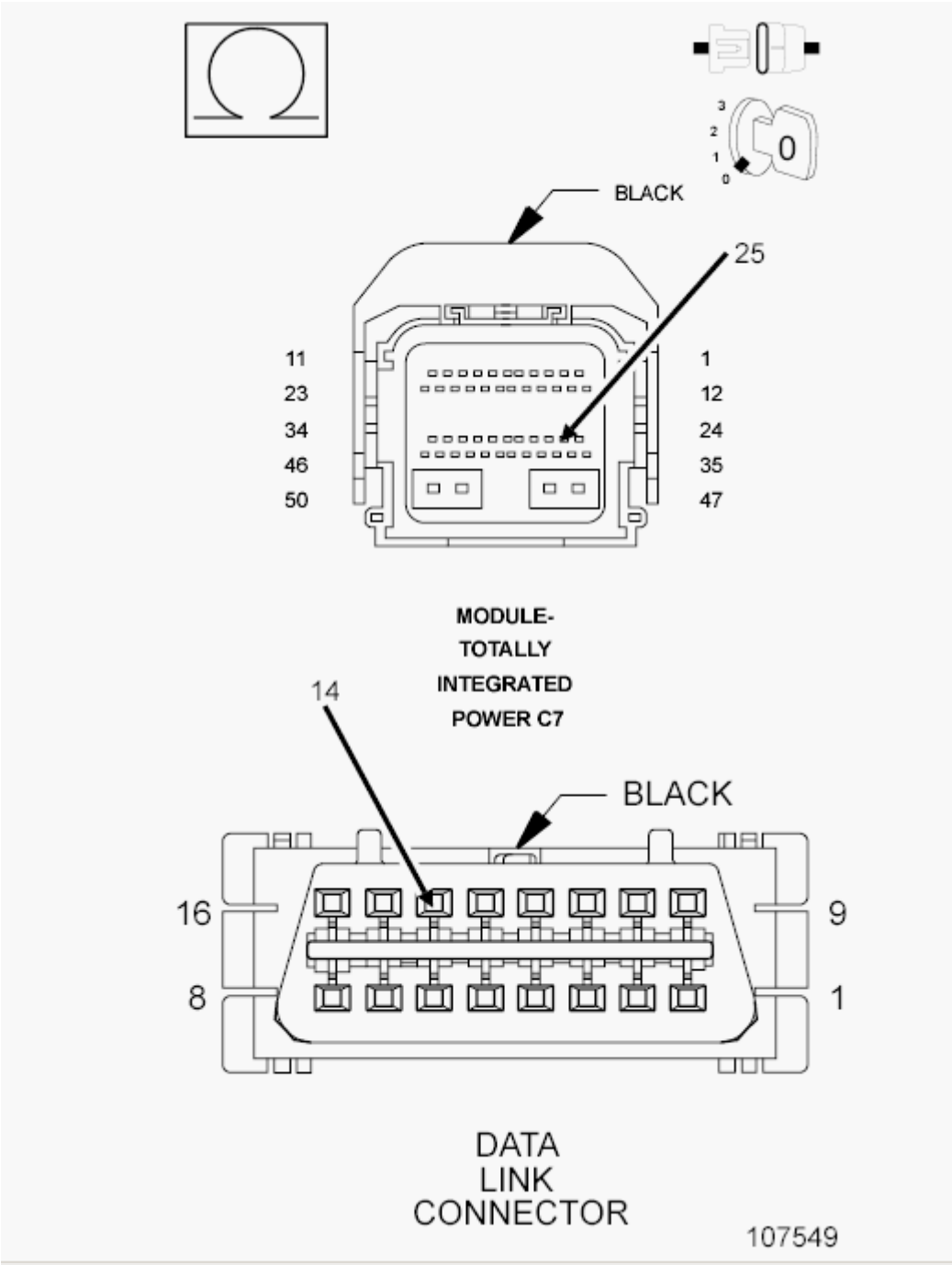

Fig. 120: Checking Diagnostic CAN C (-) Circuit For Open
Courtesy of CHRYSLER GROUP, LLC

1. Measure the resistance of the (D71) Diagnostic CAN C (-) circuit between the TIPM C7 harness connector and the DLC.

   Is the resistance below 5.0 Ohms?

   Yes

- Go To 7.

No

- Repair the open in the (D71) Diagnostic CAN C (-) circuit.
- Refer to **STANDARD PROCEDURE** and perform the BODY VERIFICATION TEST.

7. **CHECK THE DIAGNOSTIC CAN C CIRCUITS FOR A SHORT TOGETHER**

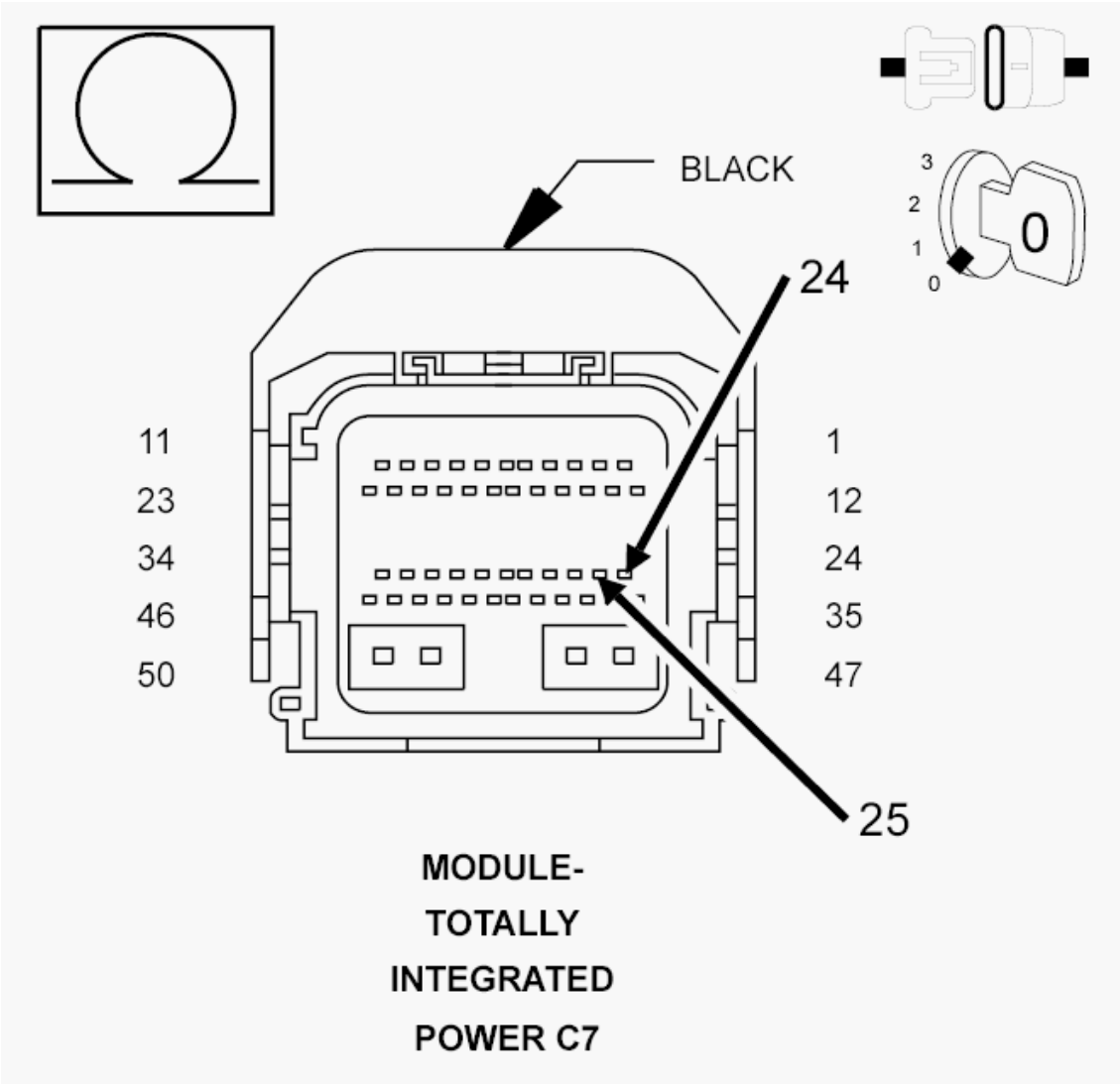

Fig. 121: Checking Diagnostic CAN C (+) Circuit For Short To Diagnostic CAN C (-) Circuit
Courtesy of CHRYSLER GROUP, LLC

1. Measure the resistance between the (D72) Diagnostic CAN C (+) circuit and the (D71) Diagnostic CAN C (-) circuit at the TIPM C7 harness connector.

   Is the resistance above 10k Ohms?

Yes

- Replace the Totally Integrated Power Module in accordance with the Service Information. Refer to **MODULE, TOTALLY INTEGRATED POWER (TIPM), REMOVAL** .
- Refer to **STANDARD PROCEDURE** and perform the BODY VERIFICATION TEST.

No

- Repair the short between the (D72) Diagnostic CAN C (+) circuit and the (D71) Diagnostic CAN C (-) circuit.
- Refer to **STANDARD PROCEDURE** and perform the BODY VERIFICATION TEST.

NO RESPONSE FROM TPM (TIRE PRESSURE MONITORING) MODULE

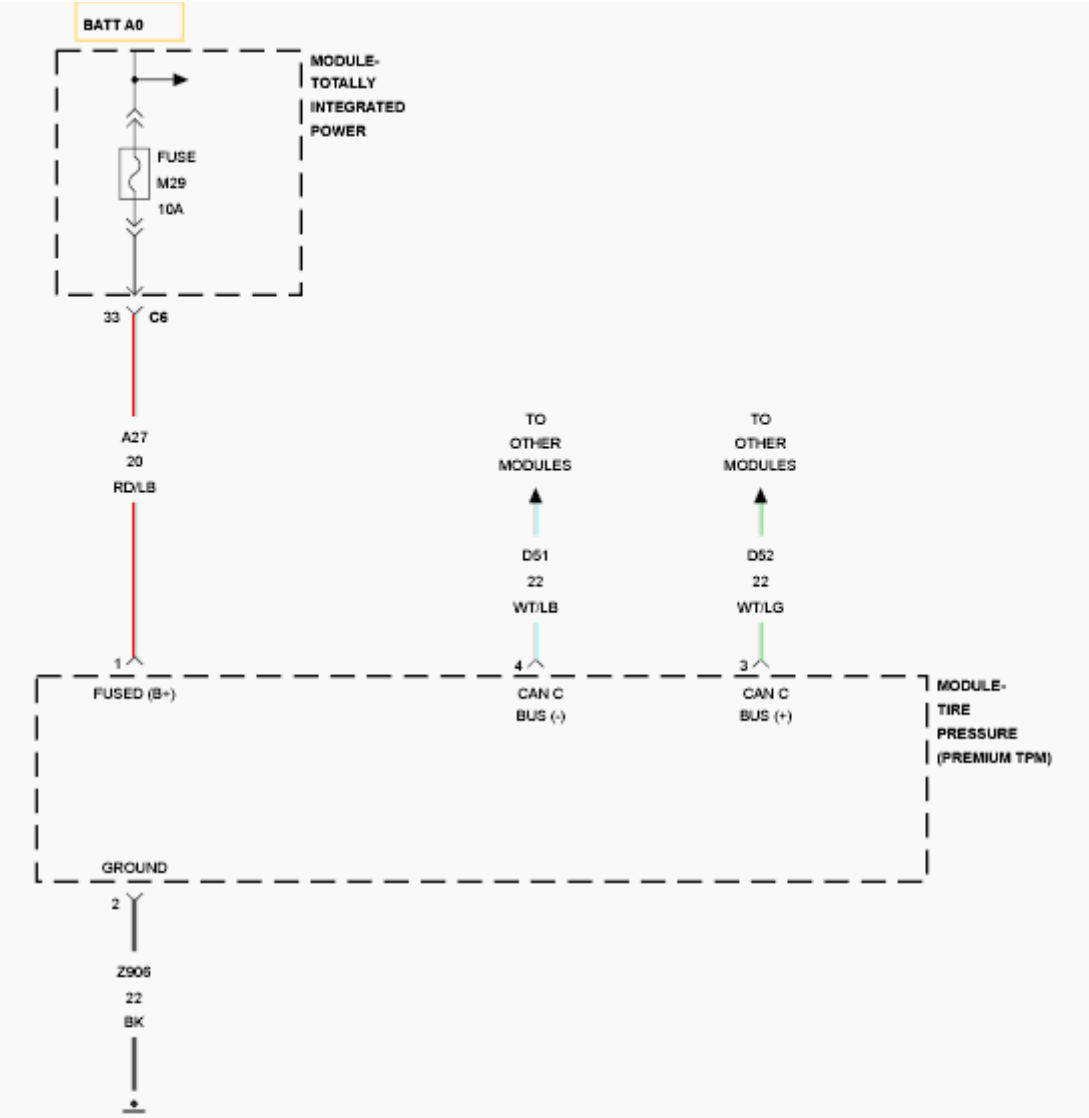
BATT A0
MODULE-
TOTALLY
INTEGRATED
POWER
FUSE
M29
10A
33
C6
A27
20
RD/LB
TO
OTHER
MODULES
TO
OTHER
MODULES
D51
22
WT/LB
D52
22
WT/LG
1
FUSED (B+)
4
CAN C
BUS (-)
3
CAN C
BUS (+)
MODULE-
TIRE
PRESSURE
(PREMIUM TPM)
GROUND
2
Z906
22
BK

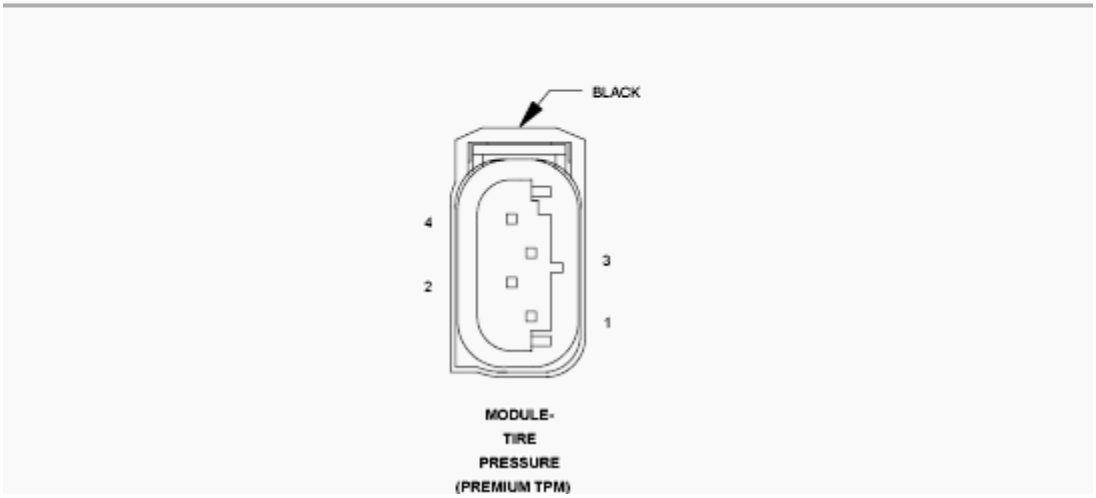
BLACK
4
2
3
1
MODULE-
TIRE
PRESSURE
(PREMIUM TPM)

Fig. 122: Tire Pressure Monitoring Module Wiring Diagram
Courtesy of CHRYSLER GROUP, LLC

For a complete wiring diagram, **refer to appropriate SYSTEM WIRING DIAGRAMS article** .

POSSIBLE CAUSES

Possible Causes
(A27) FUSED B(+) CIRCUIT OPEN OR SHORTED
(Z906) GROUND CIRCUIT OPEN
(D52) CAN C BUS (+) CIRCUIT OPEN
(D51) CAN C BUS (-) CIRCUIT OPEN
TIRE PRESSURE MONITORING (TPM) MODULE

DIAGNOSTIC TEST

1. **TEST FOR INTERMITTENT CONDITION**

   NOTE: Check for any TSB(s) related to the condition. If a TSB applies, perform the procedure outlined in the TSB before continuing.

   1. Turn the ignition on.

      NOTE: Make sure the IOD fuse is installed and battery voltage is between 10.0 and 16.0 volts.

   2. With the scan tool, read the module status.

      NOTE: Check the TIPM for any active CAN hardware DTCs, perform DTC before proceeding.

      Does the scan tool indicate that the module is active on the bus?

      Yes

      - The no response condition is not present at this time. Using the wiring diagrams as a guide, check all related splices and connectors for signs of water intrusion, corrosion, pushed out or bent terminals, and correct pin tension.

      No

      - Go To 2.

2. **CHECK THE (A27) FUSED B(+) CIRCUIT FOR AN OPEN OR SHORT**

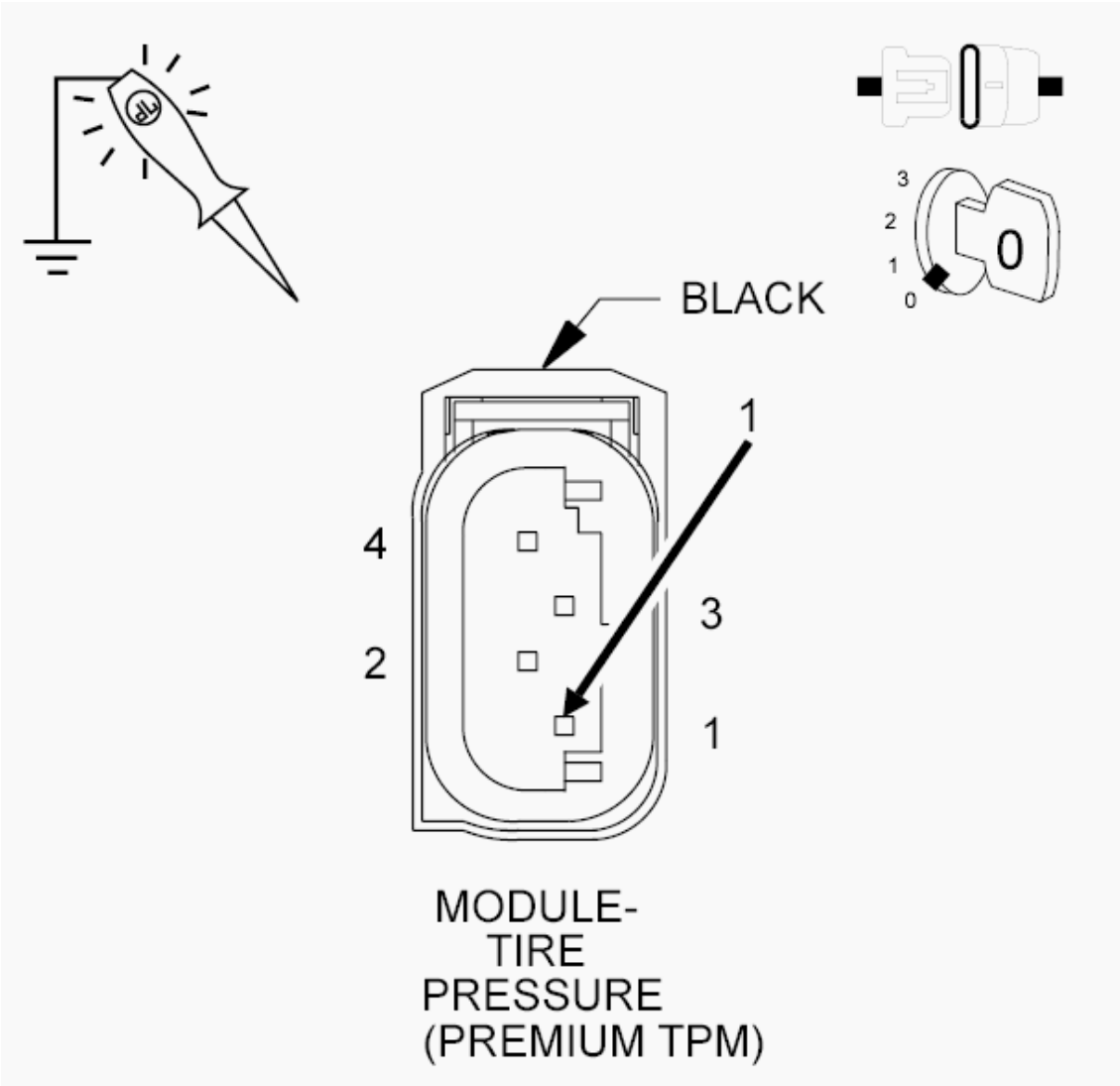

Fig. 123: Checking Fused B(+) Circuit For An Open Or Short
Courtesy of CHRYSLER GROUP, LLC

1. Turn the ignition off.
2. Disconnect the Tire Pressure Module harness connector.
3. Using a 12-volt test light connected to ground, check the (A27) Fused B(+) circuit.

   Does the test light illuminate brightly?

   Yes

   - Go To 3.

   No

   - Repair the open or short in the (A27) Fused B(+) circuit.

- Refer to **STANDARD PROCEDURE** and perform the TPM VERIFICATION TEST.

3. **CHECK THE (Z906) GROUND CIRCUIT FOR AN OPEN**

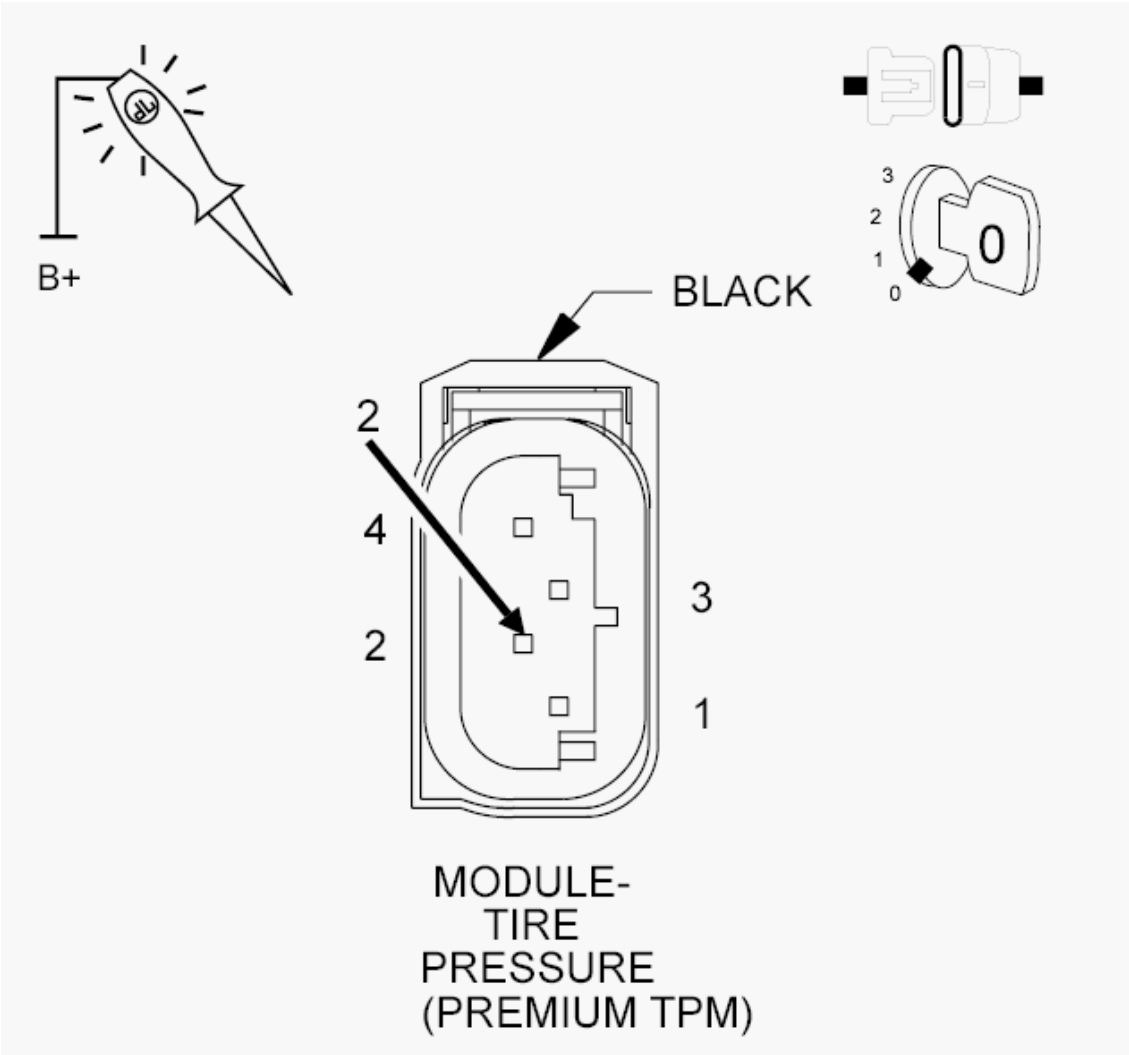

Fig. 124: Checking Ground Circuit For An Open
Courtesy of CHRYSLER GROUP, LLC

1. Using a 12-volt test light connected to 12-volts, check the (Z906) Ground circuit.

   Does the test light illuminate brightly?

   Yes

   - Go To 4.

   No

   - Repair the open in the (Z906) Ground circuit.

- Refer to **STANDARD PROCEDURE** and perform the TPM VERIFICATION TEST.

4. **CHECK THE (D52) CAN C BUS (+) CIRCUIT FOR AN OPEN**

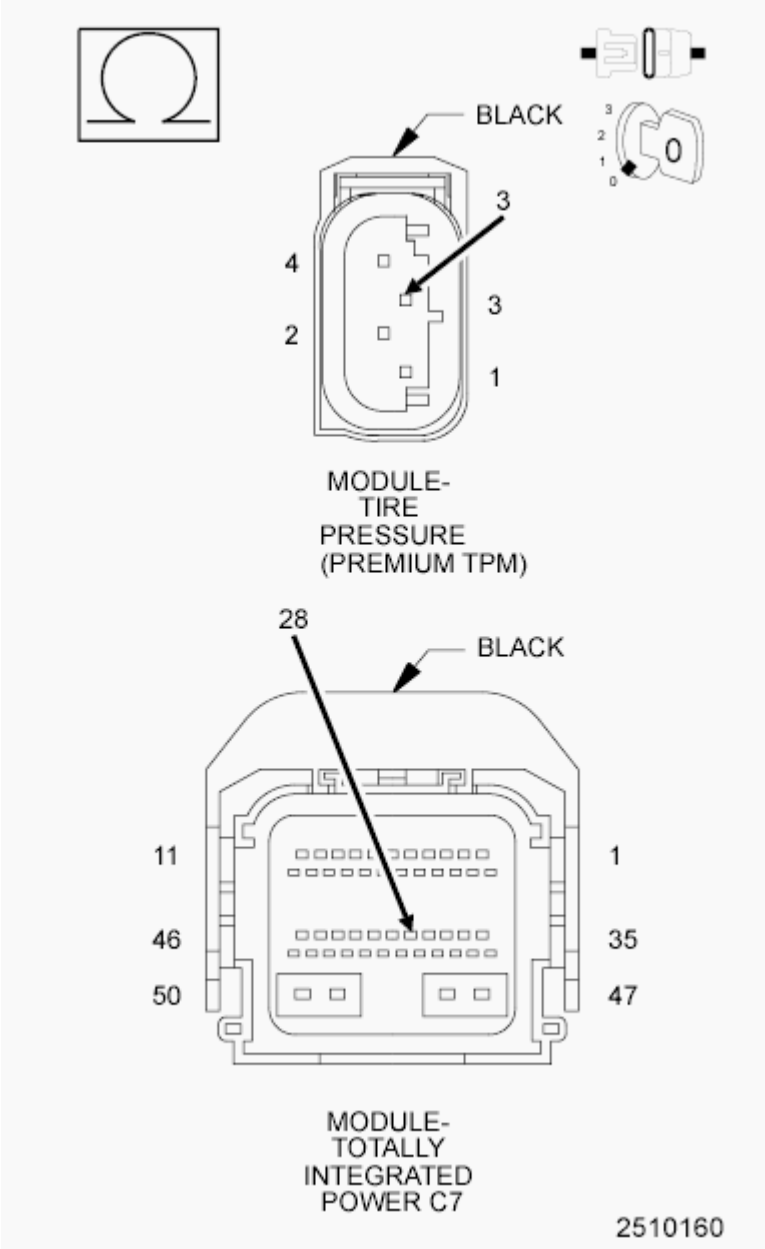

Fig. 125: Checking Can C Bus (+) Circuit For An Open
Courtesy of CHRYSLER GROUP, LLC

1. Disconnect the TIPM C7 harness connector.
2. Measure the resistance of the (D52) CAN C Bus (+) circuit between the TIPM C7 harness connector and the Tire Pressure Module harness connector.

   Is resistance below 5.0 Ohms?

Yes

- Go To 5.

No

- Repair the open in the (D52) CAN C Bus (+) circuit.
- Refer to **STANDARD PROCEDURE** and perform the TPM VERIFICATION TEST.

5. **CHECK THE (D51) CAN C BUS (-) CIRCUIT FOR AN OPEN**

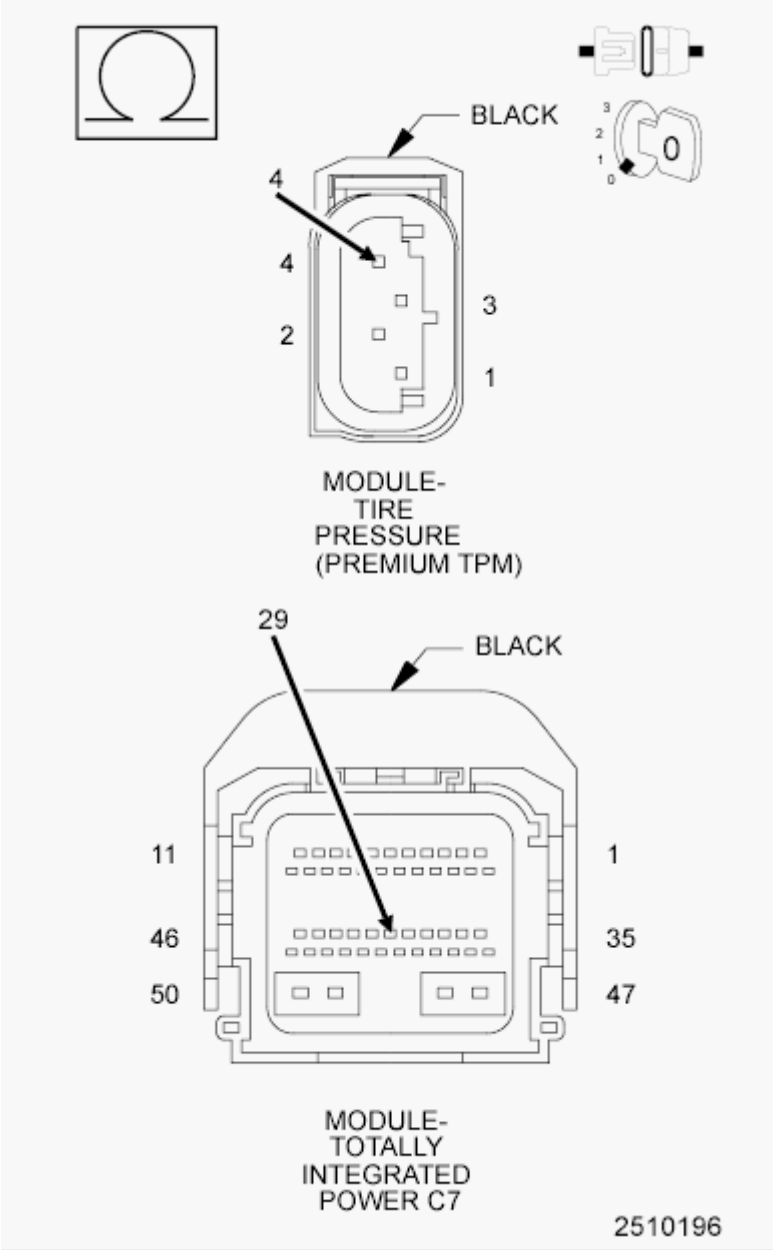

Fig. 126: Checking Can C Bus (-) Circuit For An Open
Courtesy of CHRYSLER GROUP, LLC

1. Measure the resistance of the (D51) CAN C Bus (-) circuit between the TIPM C7 harness connector and the Tire Pressure Module harness connector.

   Is resistance below 5.0 Ohms?

   Yes

   - Replace the TPM module in accordance with the Service Information. Refer to **MODULE, TIRE PRESSURE MONITORING (TPM), REMOVAL** .
   - Refer to **STANDARD PROCEDURE** and perform the TPM VERIFICATION TEST.

   No

   - Repair the open in the (D51) CAN C Bus (-) circuit.
   - Refer to **STANDARD PROCEDURE** and perform the TPM VERIFICATION TEST.

NO RESPONSE FROM VES3 (VIDEO SCREEN MODULE)

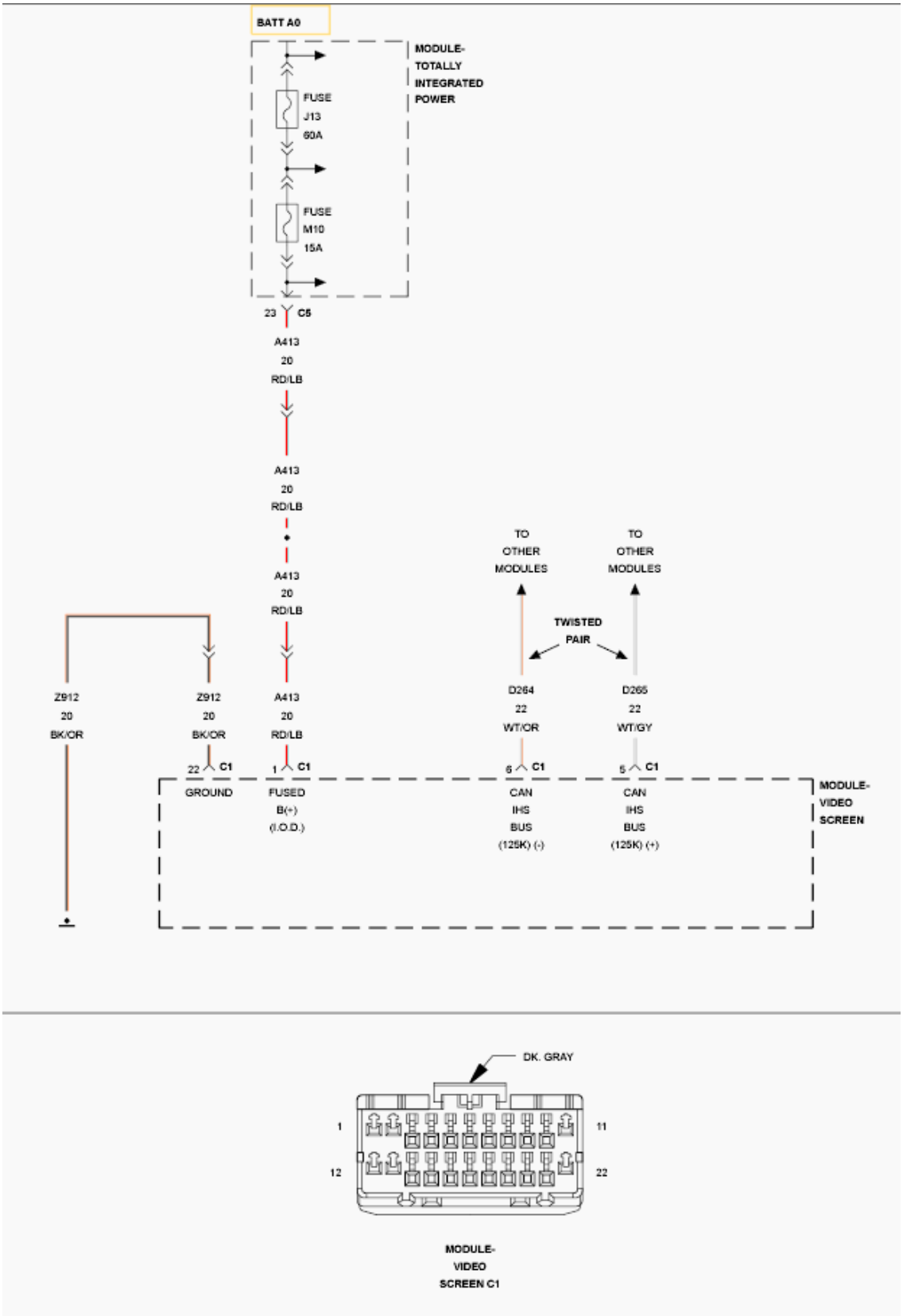

Fig. 127: Video Screen Module Circuit Wiring Diagram

Courtesy of CHRYSLER GROUP, LLC

For a complete wiring diagram, **refer to appropriate SYSTEM WIRING DIAGRAMS article** .

POSSIBLE CAUSES

Possible Causes
(A413) FUSED B(+) CIRCUIT OPEN OR SHORTED
(Z912) GROUND CIRCUIT OPEN
(D264) OR (D265) CAN INTERIOR BUS (125K) CIRCUIT OPEN
VIDEO SCREEN MODULE

DIAGNOSTIC TEST

1. **TEST FOR INTERMITTENT CONDITION**

   NOTE: Check for any TSB(s) related to the condition. If a TSB applies, perform the procedure outlined in the TSB before continuing.

   1. Turn the ignition on.

      NOTE: Make sure the IOD fuse is installed and battery voltage is between 10.0 and 16.0 volts.

   2. With the scan tool, read the module status.

      NOTE: Check the TIPM for any active CAN hardware DTCs, perform DTC before proceeding.

      Does the scan tool indicate that the module is active on the bus?

      Yes

      - The no response condition is not present at this time. Using the wiring diagrams as a guide, check all related splices and connectors for signs of water intrusion, corrosion, pushed out or bent terminals, and correct pin tension.

      No

      - Go To 2.

2. **CHECK THE (A413) FUSED B(+) CIRCUIT FOR AN OPEN OR SHORT**

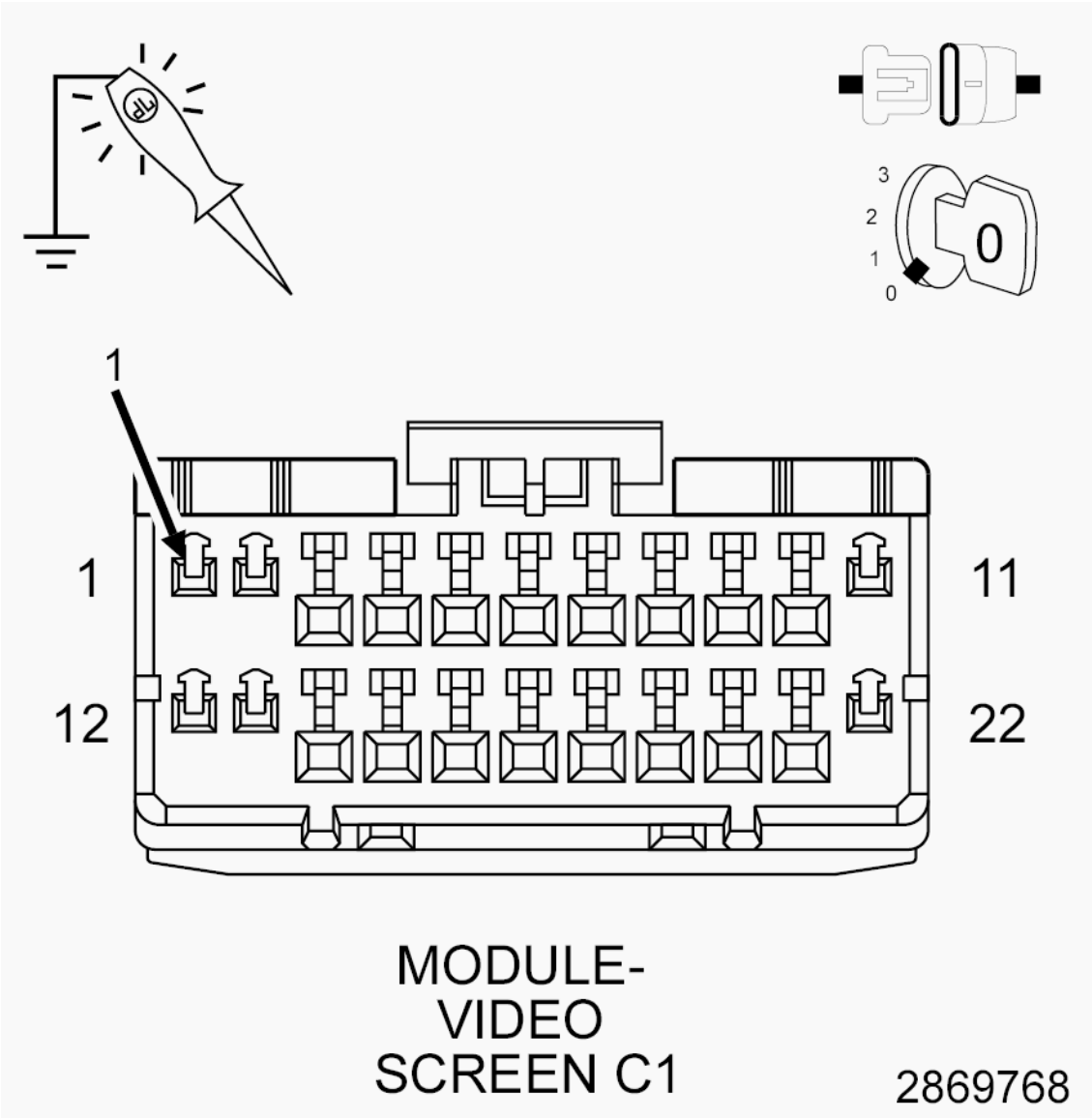

Fig. 128: Checking Fused B(+) Circuit For An Open Or Short
Courtesy of CHRYSLER GROUP, LLC

1. Turn the ignition off.
2. Disconnect the Video Screen Module C1 harness connector.
3. Using a 12-volt test light connected to ground, check the (A413) Fused B(+) circuit.

   Does the test light illuminate brightly?

   Yes

   - Go To 3.

   No

- Repair the open or short in the (A413) Fused B(+) circuit.
- Refer to **STANDARD PROCEDURE** and perform the BODY VERIFICATION TEST.

3. **CHECK THE (Z912) GROUND CIRCUIT FOR AN OPEN**

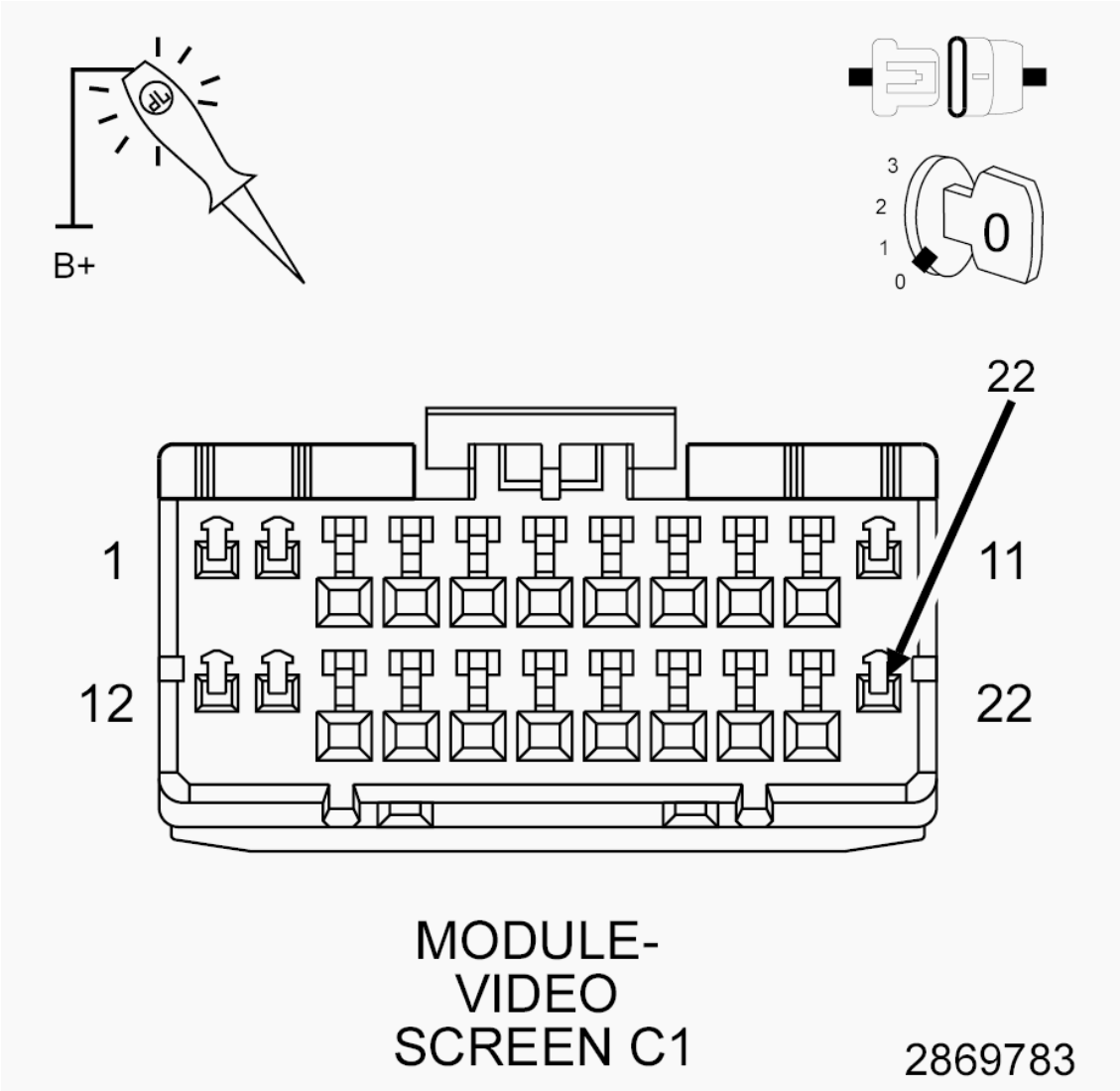

Fig. 129: Checking Ground Circuit For An Open
Courtesy of CHRYSLER GROUP, LLC

1. Using a 12-volt test light connected to 12-volts, check the (Z912) Ground circuit.

   Does the test light illuminate brightly?

   Yes

   - Go To 4.

   No

- Repair the open in the (Z912) Ground circuit.
- Refer to **STANDARD PROCEDURE** and perform the BODY VERIFICATION TEST.

4. **CHECK THE (D265) AND (D264) CAN INTERIOR BUS (125K) CIRCUITS FOR AN OPEN**

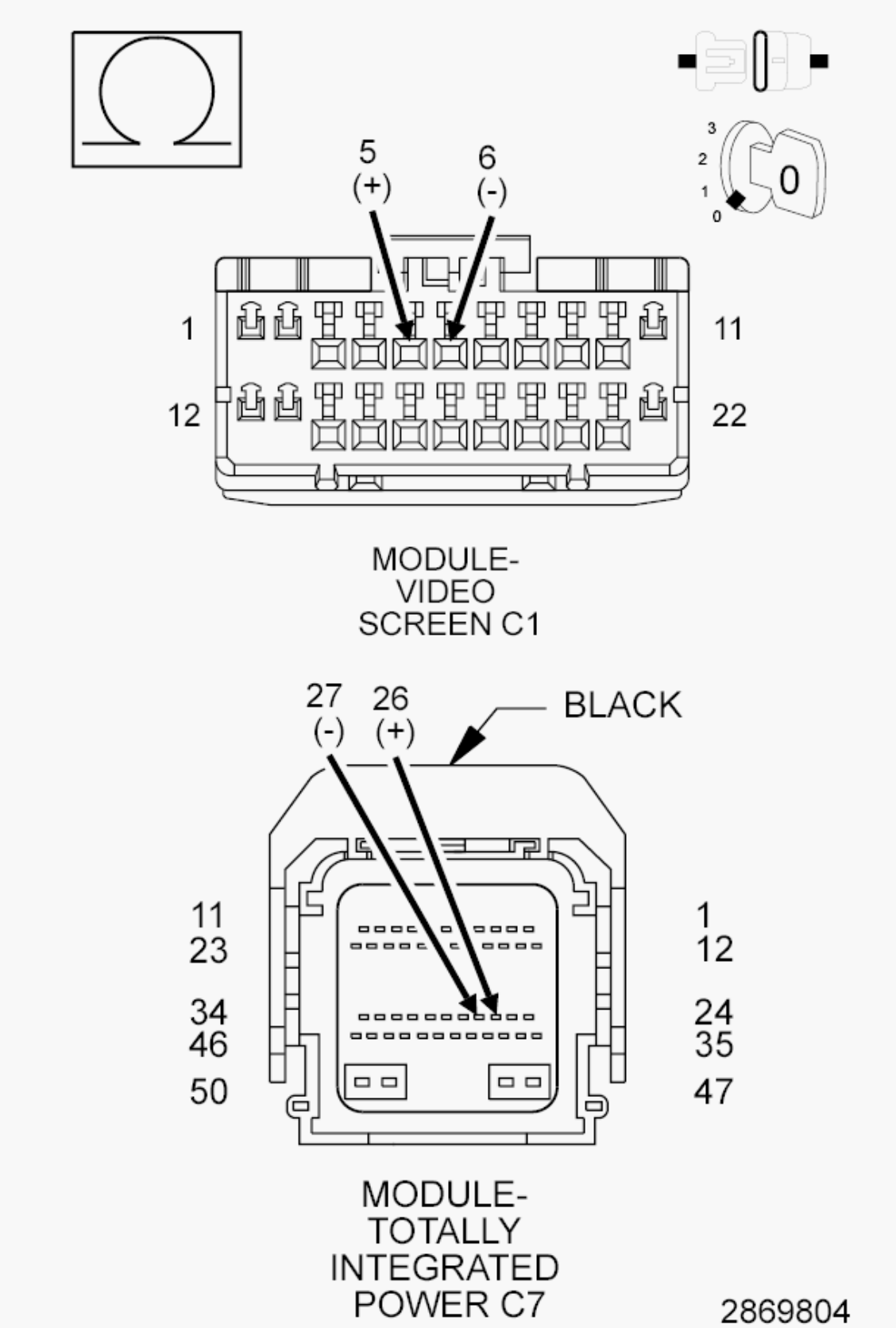

Fig. 130: Checking CAN Interior BUS Circuits For An Open

Courtesy of CHRYSLER GROUP, LLC

1. Measure the resistance of the (D264) CAN Interior Bus (125K) (-) circuit between the TIPM C7 harness connector and the Video Screen Module C1 harness connector.
2. Measure the resistance of the (D265) CAN Interior Bus (125K) (+) circuit between the TIPM C7 harness connector and the Video Screen Module C1 harness connector.

   Are the resistances below 5.0 Ohms?

   Yes

   - Replace the Video Screen Module in accordance with the Service Information. Refer to **MONITOR, MEDIA SYSTEM, REMOVAL** .
   - Refer to **STANDARD PROCEDURE** and perform the BODY VERIFICATION TEST.

   No

   - Repair the open in the (D265) or (D264) CAN Interior Bus (125K) circuit.
   - Refer to **STANDARD PROCEDURE** and perform the BODY VERIFICATION TEST.

NO RESPONSE FROM WIN (WIRELESS IGNITION NODE)

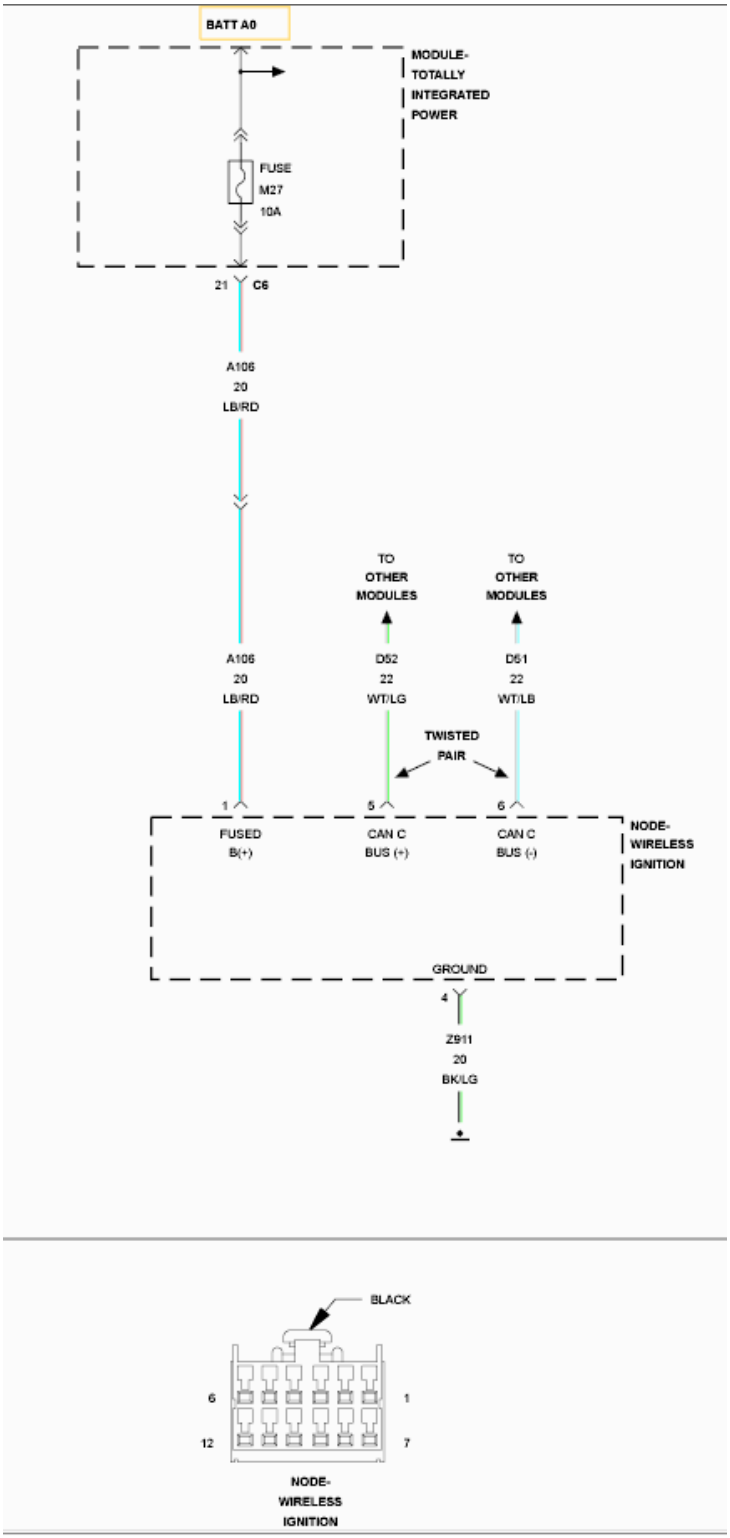

Fig. 131: Wireless Ignition Node Wiring Diagram
Courtesy of CHRYSLER GROUP, LLC

For a complete wiring diagram, **refer to appropriate SYSTEM WIRING DIAGRAMS article** .

POSSIBLE CAUSES

Possible Causes
(A106) FUSED B(+) CIRCUIT OPEN OR SHORTED
(Z911) GROUND CIRCUIT OPEN
(D51) CAN C BUS (-) CIRCUIT OPEN
(D52) CAN C BUS (+) CIRCUIT OPEN
WIRELESS IGNITION NODE (WIN)

DIAGNOSTIC TEST

1. **TEST FOR INTERMITTENT CONDITION**

   NOTE: Check for any TSB(s) related to the condition. If a TSB applies, perform the procedure outlined in the TSB before continuing.

   1. Turn the ignition on.

      NOTE: Make sure the IOD fuse is installed and battery voltage is between 10.0 and 16.0 volts.

   2. With the scan tool, read the module status.

      NOTE: Check the TIPM for any active CAN hardware DTCs, perform DTC before proceeding.

      Does the scan tool indicate that the module is active on the bus?

      Yes

      - The no response condition is not present at this time. Using the wiring diagrams as a guide, check all related splices and connectors for signs of water intrusion, corrosion, pushed out or bent terminals, and correct pin tension.

      No

      - Go To 2.

2. **CHECK THE (A106) FUSED B(+) CIRCUIT FOR AN OPEN OR SHORT**

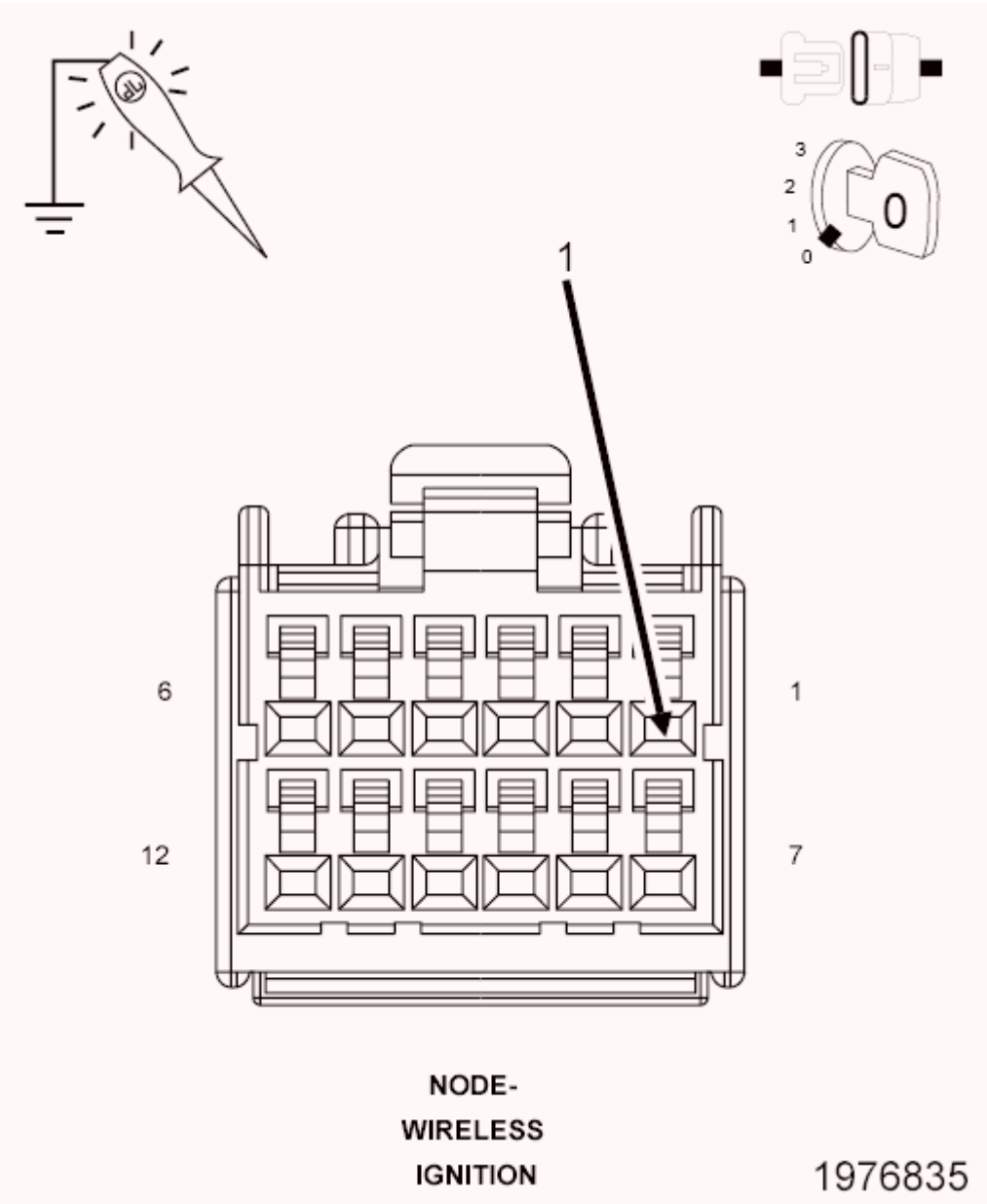

Fig. 132: Checking Fused B(+) Circuit For An Open Or Short
Courtesy of CHRYSLER GROUP, LLC

1. Turn the ignition off.
2. Disconnect the Wireless Ignition Node harness connector.
3. Using a 12-volt test light connected to ground, check the (A106) Fused B(+) circuit.

   Does the test light illuminate brightly?

   Yes

   - Go To 3.

No

- Repair the open or short in the (A106) Fused B(+) circuit.
- Refer to **STANDARD PROCEDURE** and perform the WIN VERIFICATION TEST.

3. **CHECK THE (Z911) GROUND CIRCUIT FOR AN OPEN**

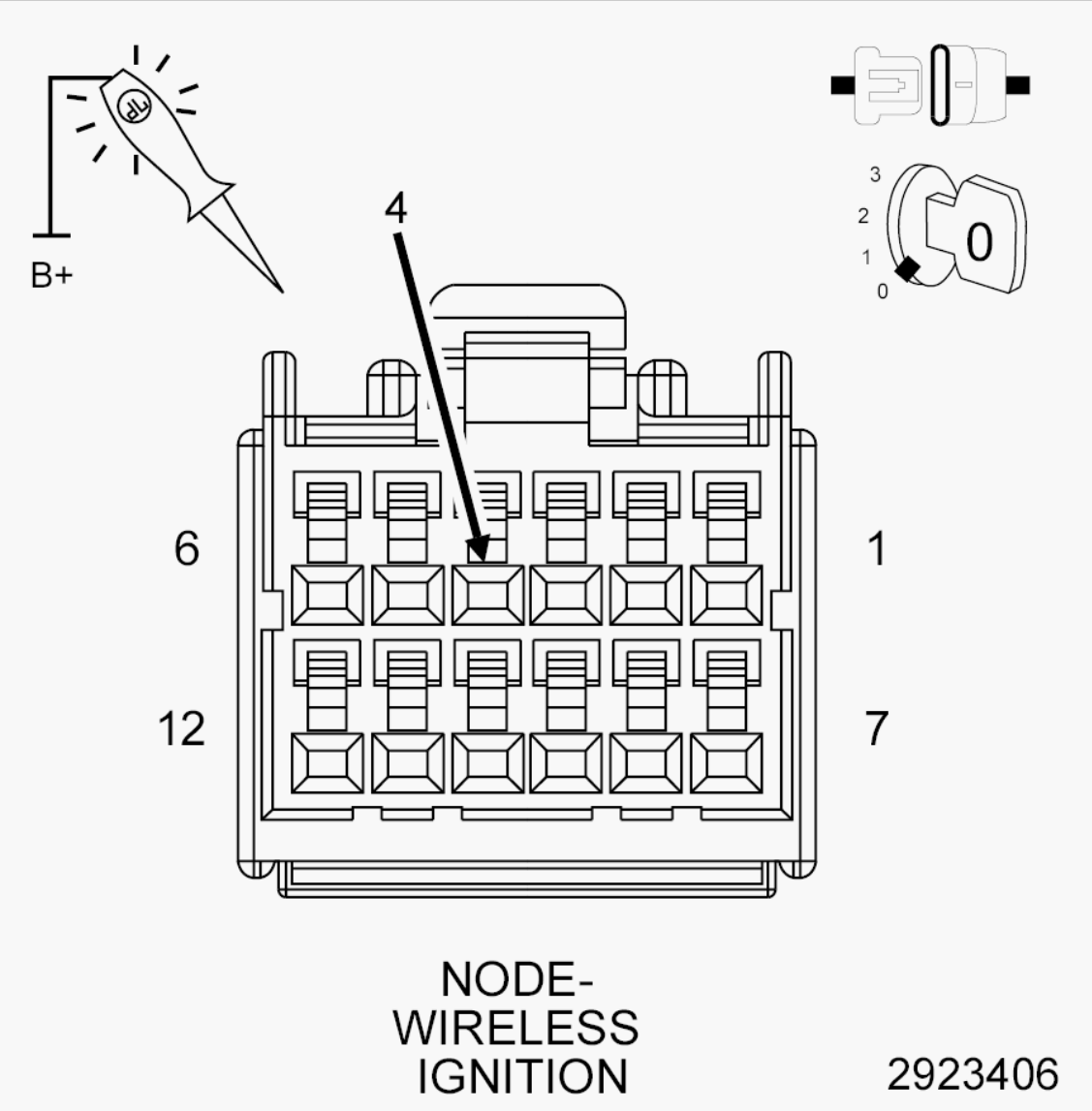

Fig. 133: Checking Ground Circuit For An Open
Courtesy of CHRYSLER GROUP, LLC

1. Using a 12-volt test light connected to 12-volts, check the (Z911) Ground circuit.

   Does the test light illuminate brightly?

   Yes

- Go To 4.

No

- Repair the open in the (Z911) Ground circuit.
- Refer to **STANDARD PROCEDURE** and perform the WIN VERIFICATION TEST.

4. **CHECK THE (D52) CAN C BUS (+) CIRCUIT FOR AN OPEN**

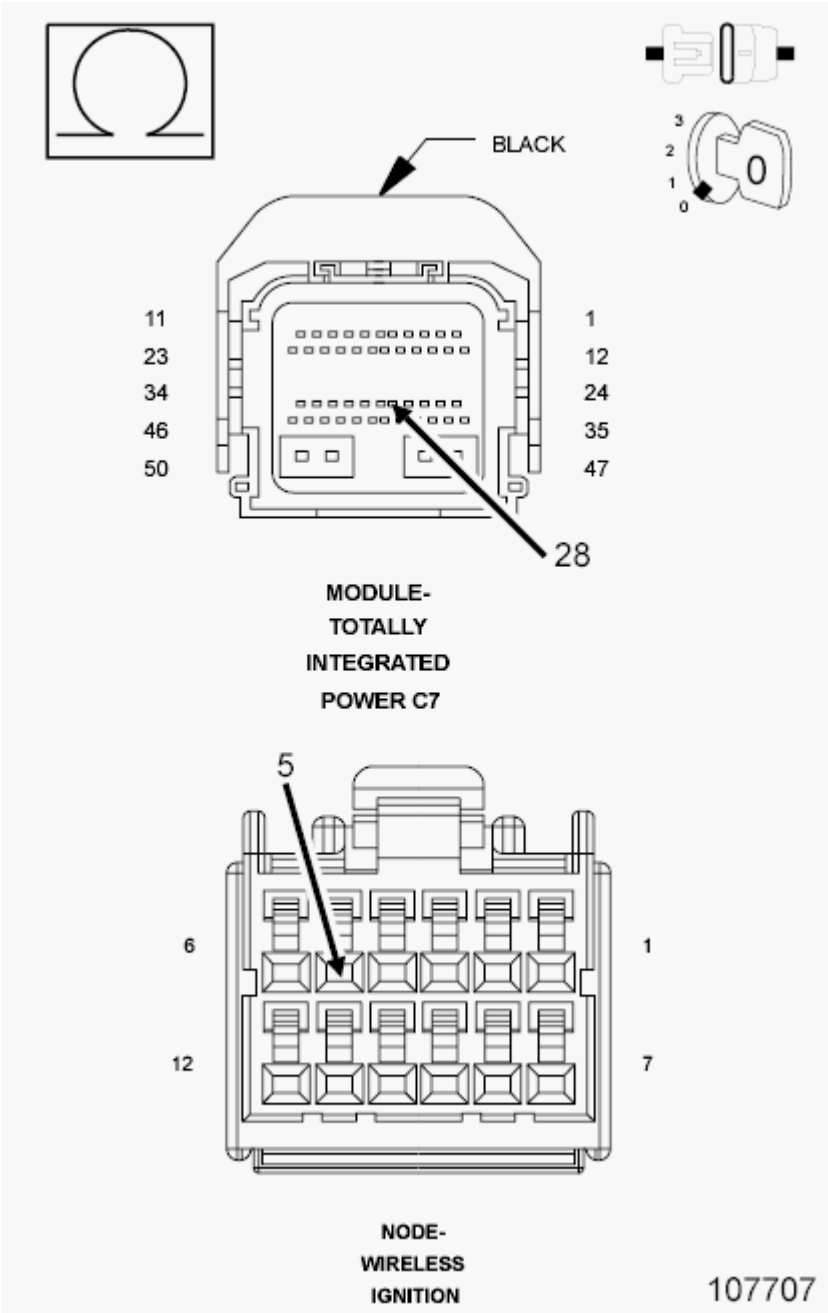

Fig. 134: Checking CAN C Bus (+) Circuit For Open
Courtesy of CHRYSLER GROUP, LLC

1. Disconnect the TIPM C7 harness connector.
2. Measure the resistance of the (D52) CAN C Bus (+) circuit between the TIPM C7 harness connector and the Wireless Ignition Node harness connector.

   Is resistance below 5.0 Ohms?

   Yes

   - Go To 5.

   No

   - Repair the open in the (D52) CAN C Bus (+) circuit.
   - Refer to **STANDARD PROCEDURE** and perform the BODY VERIFICATION TEST.

5. **CHECK THE (D51) CAN C BUS (-) CIRCUIT FOR AN OPEN**

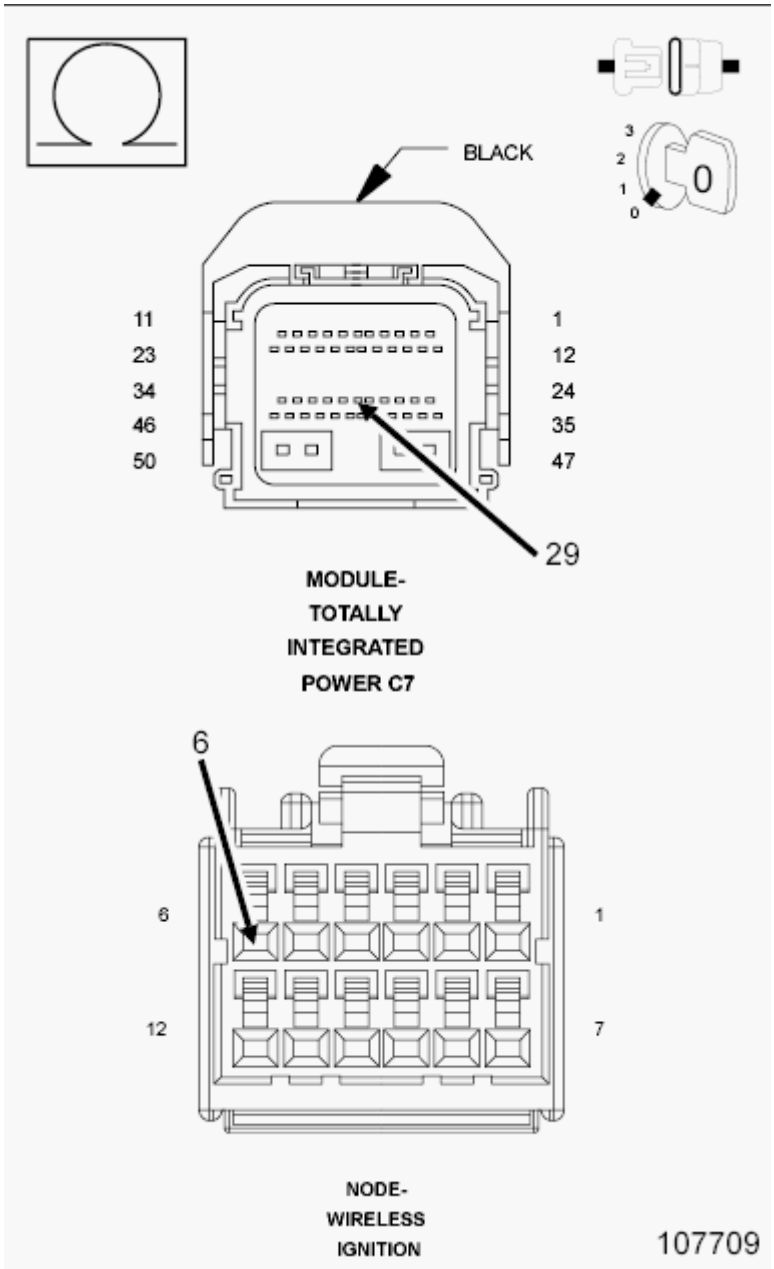

Fig. 135: Checking CAN C Bus (-) Circuit For Open
Courtesy of CHRYSLER GROUP, LLC

1. Measure the resistance of the (D51) CAN C Bus (-) circuit between the TIPM C7 harness connector and the Wireless Ignition Node harness connector.

   Is resistance below 5.0 Ohms?

   Yes

   - Replace the Wireless Ignition Node in accordance with the Service Information. Refer to **RECEIVER, WIRELESS IGNITION NODE, REMOVAL** .

- Refer to **STANDARD PROCEDURE** and perform the BODY VERIFICATION TEST.

No

- Repair the open in the (D51) CAN C Bus (-) circuit.
- Refer to **STANDARD PROCEDURE** and perform the BODY VERIFICATION TEST.

STORED LOST COMMUNICATION DTCS

For a complete wiring diagram, **refer to appropriate SYSTEM WIRING DIAGRAMS article** .

WHEN MONITORED:

With the ignition on.

Battery voltage between 10 and 16 volts.

Ignition Off Draw (IOD) fuse installed.

Totally Integrated Power Module (TIPM) is configured correctly.

SET CONDITION:

Bus messages not received for approximately two to five seconds.

POSSIBLE CAUSES

Possible Causes
CAN C BUS CIRCUITS OPEN OR SHORT
CAN INTERIOR BUS CIRCUITS OPEN OR SHORT
DTCS RELATED TO BATTERY VOLTAGE, IGNITION, OR VIN MESSAGES
TIPM NOT CONFIGURED CORRECTLY
POWER OR GROUND FROM THE REPORTING MODULE
MODULE THAT SET THIS DTC
PREVIOUS SERVICE PERFORMED WITHIN THE LAST 100 KEY CYCLES (FUSE/RELAYS REMOVED, WIRING SERVICE, BATTERY DISCONNECT)
LOW BATTERY/JUMP START CONDITION
IOD FUSE WAS REMOVED DURING SHIPPING
CHECK FOR RELATED TSBS

DIAGNOSTIC TEST

1. **VERIFY DIAGNOSTIC TROUBLE CODE (DTC) IS STORED**

NOTE: Stored faults may indicate a customer perceived intermittent condition.

NOTE: **Make sure the IOD fuse is installed and battery voltage is between 10 and 16 volts before proceeding.**

1. Turn the ignition on.
2. With the scan tool, read stored DTCs.

   Is this DTC stored?

   Yes

   - Go To 2.

   No

   - Refer to **DIAGNOSIS AND TESTING** and perform the appropriate diagnostic procedure.

2. **CHECK THE ENVIRONMENTAL DATA**
   1. With the scan tool, read the loss of communication environmental data.

      Does the loss of communication environmental odometer data match up to any of the previous service procedures listed in the possible causes or are there any stored CAN C hardware electrical, battery, ignition voltage, VIN missing/mismatch, or TIPM configuration DTCs present with matching environmental data?

      Yes

      - These DTCs may have been the result of other service procedures performed. Clear the DTCs.
      - Refer to **STANDARD PROCEDURE** and perform the BODY VERIFICATION TEST.

      No

      - Go To 3.

3. **VERIFY INTERMITTENT LOST COMMUNICATION DTC - WIRING CONCERNS**
   1. With the scan tool, read all DTCs.

      Is there more than one ECU with stored DTCs "Logged Against" the module and one or more lost communication DTCs stored in the offending module?

      Yes

      - Verify if the vehicle was recently in for this type of service. Otherwise, using the wiring diagrams as a guide, check all related splices and connectors for signs of water intrusion, corrosion, pushed out or bent terminals, and correct pin tension. Repair as necessary.

      No

- Go To 4.

4. **VERIFY INTERMITTENT LOST COMMUNICATION DTC - OFFENDING MODULE**
    1. With the scan tool, read all DTCs.

       Is there more than one ECU with stored DTCs "Logged Against" the module and NO lost communication DTCs stored in the offending module?

       Yes

       - Check for a TSB related to this offending module.

       No

       - Go To 5.

5. **VERIFY INTERMITTENT LOST COMMUNICATION DTC - REPORTING MODULE**
    1. With the scan tool, read all DTCs.

       Is there ONLY ONE ECU with stored DTCs "Logged Against" the module?

       Yes

       - Check for a TSB related to the module that set this DTC.

       No

       - Verify if the vehicle was recently in for this type of service. Otherwise, using the wiring diagrams as a guide, check all related splices and connectors for signs of water intrusion, corrosion, pushed out or bent terminals, and correct pin tension. Repair as necessary.

DIAGNOSTIC CODE INDEX

DIAGNOSTIC CODE INDEX

DTC	Description
B164A-11	DRIVER MIRROR SIGNAL LAMP CONTROL - CIRCUIT SHORT TO GROUND
B164A-15	DRIVER MIRROR SIGNAL LAMP CONTROL - CIRCUIT SHORT TO BATTERY OR OPEN
B1800-2A	DRIVER DOOR LOCK/UNLOCK SWITCH - SIGNAL STUCK IN RANGE
B1853-11	DRIVER WINDOW CONTROL - CIRCUIT SHORT TO GROUND
B1853-13	DRIVER WINDOW CONTROL - CIRCUIT FOR AN OPEN
B1857-11	DRIVER WINDOW POSITION SENSOR POWER SUPPLY - CIRCUIT SHORT TO GROUND
B1857-15	DRIVER WINDOW POSITION SENSOR POWER SUPPLY - CIRCUIT SHORT TO BATTERY OR OPEN - EXPRESS MOTOR ONLY
B185A-31	DRIVER WINDOW POSITION SENSOR - NO SIGNAL
B18B5-00	MASTER SWITCH - FRONT LEFT WINDOW SWITCH
B18B-	B18B-00-MASTER SWITCH - FRONT RIGHT WINDOW SWITCH
B18B7-00	MASTER SWITCH - REAR LEFT WINDOW SWITCH
B18B8-00	MASTER SWITCH - REAR RIGHT WINDOW SWITCH
B1D00-2A	MIRROR FOLD SWITCH INPUT STUCK
B1D04-2A	MIRROR ADJUST SWITCH INPUT - SIGNAL STUCK IN RANGE
B1D08-11	DRIVER MIRROR POSITION SENSOR POWER SUPPLY - CIRCUIT SHORT TO GROUND
B1D0B-11	DRIVER MIRROR VERTICAL POSITION SENSOR INPUT - CIRCUIT SHORT TO GROUND
B1D0B-12	DRIVER MIRROR VERTICAL POSITION SENSOR INPUT - CIRCUIT SHORT TO BATTERY
B1D0E-11	DRIVER MIRROR HORIZONTAL POSITION SENSOR INPUT - CIRCUIT SHORT TO GROUND
B1D0E-12	DRIVER MIRROR HORIZONTAL POSITION SENSOR INPUT - CIRCUIT SHORT TO BATTERY
B1D1E-11	DRIVER MIRROR VERTICAL MOTOR CONTROL - CIRCUIT SHORT TO GROUND
B1D22-11	DRIVER MIRROR HORIZONTAL MOTOR CONTROL - CIRCUIT SHORT TO GROUND
B1D32-11	DRIVER MIRROR HEATER CONTROL - CIRCUIT SHORT TO GROUND
B1D32-15	DRIVER MIRROR HEATER CONTROL - CIRCUIT SHORT TO BATTERY OR OPEN

B1D4A-2A	MEMORY SWITCH INPUT - SIGNAL STUCK IN RANGE
B1E64-00	LEFT MIRROR SELECT SWITCH STUCK
B1E65-00	RIGHT MIRROR SELECT SWITCH STUCK
B1E66-11	DRIVER MIRROR FOLD CONTROL CIRCUIT SHORT TO GROUND
B1E66-15	DRIVER MIRROR FOLD CONTROL CIRCUIT SHORT TO BATTERY OR OPEN
B210C-16	BATTERY VOLTAGE INPUT - CIRCUIT VOLTAGE BELOW THRESHOLD - DD/DP
B210C-16	BATTERY VOLTAGE INPUT - CIRCUIT VOLTAGE BELOW THRESHOLD - DS/DJ/D2
B210C-17	BATTERY VOLTAGE INPUT - CIRCUIT VOLTAGE ABOVE THRESHOLD - DD/DP
B210C-17	BATTERY VOLTAGE INPUT - CIRCUIT VOLTAGE ABOVE THRESHOLD - DS/DJ/D2
B21A1-00	ECU RESET/RECOVERY OCCURRED
B21DD-84	SYSTEM VOLTAGE - SIGNAL BELOW ALLOWABLE RANGE
B21DD-85	SYSTEM VOLTAGE - SIGNAL ABOVE ALLOWABLE RANGE
B2598-54	DOOR MODULE FRONT LEFT - MISSING CALIBRATION - QUAD/CREW CAB ONLY
B2598-96	DOOR MODULE FRONT LEFT - COMPONENT INTERNAL FAILURE
B282E-11	DRIVER PUDDLE LAMP CONTROL - CIRCUIT SHORT TO GROUND
B282E-15	DRIVER PUDDLE LAMP CONTROL - CIRCUIT SHORT TO BATTERY OR OPEN
U0010-00	CAN INTERIOR BUS
U0037-11	LIN BUS - CIRCUIT SHORT TO GROUND - DD/DP
U0037-11	LIN BUS - CIRCUIT SHORT TO GROUND - DS/DJ/D2
U0141-00	LOST COMMUNICATION WITH IPM (FCM/TIPM)
U0155-00	LOST COMMUNICATION WITH CLUSTER/CCN
U0164-00	LOST COMMUNICATION WITH HVAC CONTROL MODULE
U0203-00	LOST COMMUNICATION WITH DOOR MODULE FRONT LEFT
U0204-00	LOST COMMUNICATION WITH DOOR MODULE FRONT RIGHT
U0209-00	LOST COMMUNICATION WITH MEMORY SEAT CONTROL MODULE
U113D	LOST COMMUNICATION WITH MASTER POWER WINDOW SWITCH - DD/DP
U113D	LOST COMMUNICATION WITH MASTER POWER WINDOW SWITCH - DS/DJ/D2

DIAGNOSIS AND TESTING

B164A-11-DRIVER MIRROR SIGNAL LAMP CONTROL - CIRCUIT SHORT TO GROUND

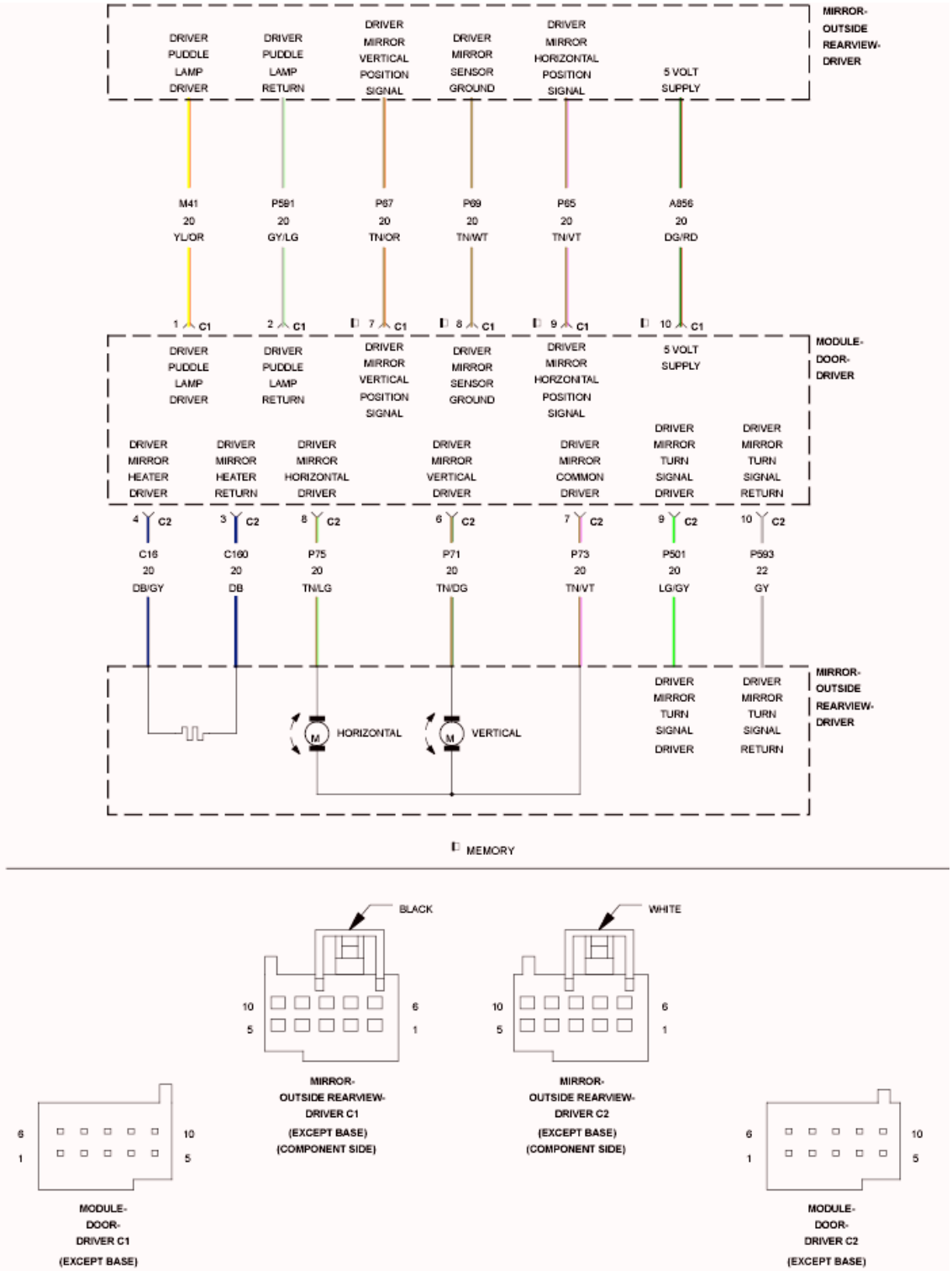

Fig. 1: Driver Mirror Signal Lamp Control Wiring Diagram
Courtesy of CHRYSLER GROUP, LLC

For a complete wiring diagram, **refer to appropriate SYSTEM WIRING DIAGRAMS article** .

WHEN MONITORED:

Continuously.

SET CONDITION:

The Door Module senses a short low on the (P501) Driver Mirror Turn Signal Driver circuit for more than two seconds with the turn signal switched on.

POSSIBLE CAUSES

Possible Causes
(P501) DRIVER MIRROR TURN SIGNAL DRIVER CIRCUIT FOR A SHORT TO GROUND
(P501) DRIVER MIRROR TURN SIGNAL DRIVER CIRCUIT FOR A SHORT TO THE (P71) DRIVER MIRROR VERTICAL DRIVER CIRCUIT
(P501) DRIVER MIRROR TURN SIGNAL DRIVER CIRCUIT FOR A SHORT TO THE (P73) DRIVER MIRROR COMMON DRIVER CIRCUIT
(P501) DRIVER MIRROR TURN SIGNAL DRIVER CIRCUIT FOR A SHORT TO THE (P75) DRIVER MIRROR HORIZONTAL DRIVER CIRCUIT
(P501) DRIVER MIRROR TURN SIGNAL DRIVER CIRCUIT FOR A SHORT TO THE (C160) DRIVER MIRROR HEATER RETURN CIRCUIT
(P501) DRIVER MIRROR TURN SIGNAL DRIVER CIRCUIT FOR A SHORT TO THE (P593) DRIVER MIRROR TURN SIGNAL RETURN CIRCUIT
(P501) DRIVER MIRROR TURN SIGNAL DRIVER CIRCUIT FOR A SHORT TO THE (P69) DRIVER MIRROR SENSOR GROUND CIRCUIT
(P501) DRIVER MIRROR TURN SIGNAL DRIVER CIRCUIT FOR A SHORT TO THE (P591) DRIVER PUDDLE LAMP RETURN CIRCUIT
DRIVER OUTSIDE REARVIEW MIRROR SHORTED
DOOR MODULE

DIAGNOSTIC TEST

1. **TEST FOR INTERMITTENT CONDITION**
    1. Turn the ignition on.
    2. With the scan tool, record and erase DTC's.
    3. Turn the turn signal on.
    4. Turn the puddle lamps on, if equipped with puddle lamp mirror.
    5. Turn the rear defogger on, if equipped with heated mirror.
    6. Press and release the Mirror Select switch to select the Driver Outside Rearview Mirror.
    7. Operate the Mirror Adjust switch in all directions several times while monitoring the scan tool for DTC's.

NOTE: **After adjusting the mirror in one direction wait at least two seconds before adjusting the mirror in the opposite direction, as this will allow time for an active fault to set if present.**

Does the scan tool display B164A-11-DRIVER MIRROR SIGNAL LAMP CONTROL - CIRCUIT SHORT TO GROUND?

Yes

- Go To 2.

No

- Test complete, the condition or conditions that originally set this DTC are not present at this time. Using the wiring diagrams as a guide, check all related splices and connectors for signs of water intrusion, corrosion, pushed out or bent terminals, and correct pin tension. For vehicle's equipped with folding outside rearview mirrors, repeat test with mirror folded. If DTC is now active, go to 2.
- Perform the BODY VERIFICATION TEST. Refer to **BODY VERIFICATION TEST** .

2. **CHECK (P501) DRIVER MIRROR TURN SIGNAL DRIVER CIRCUIT FOR A SHORT TO GROUND**

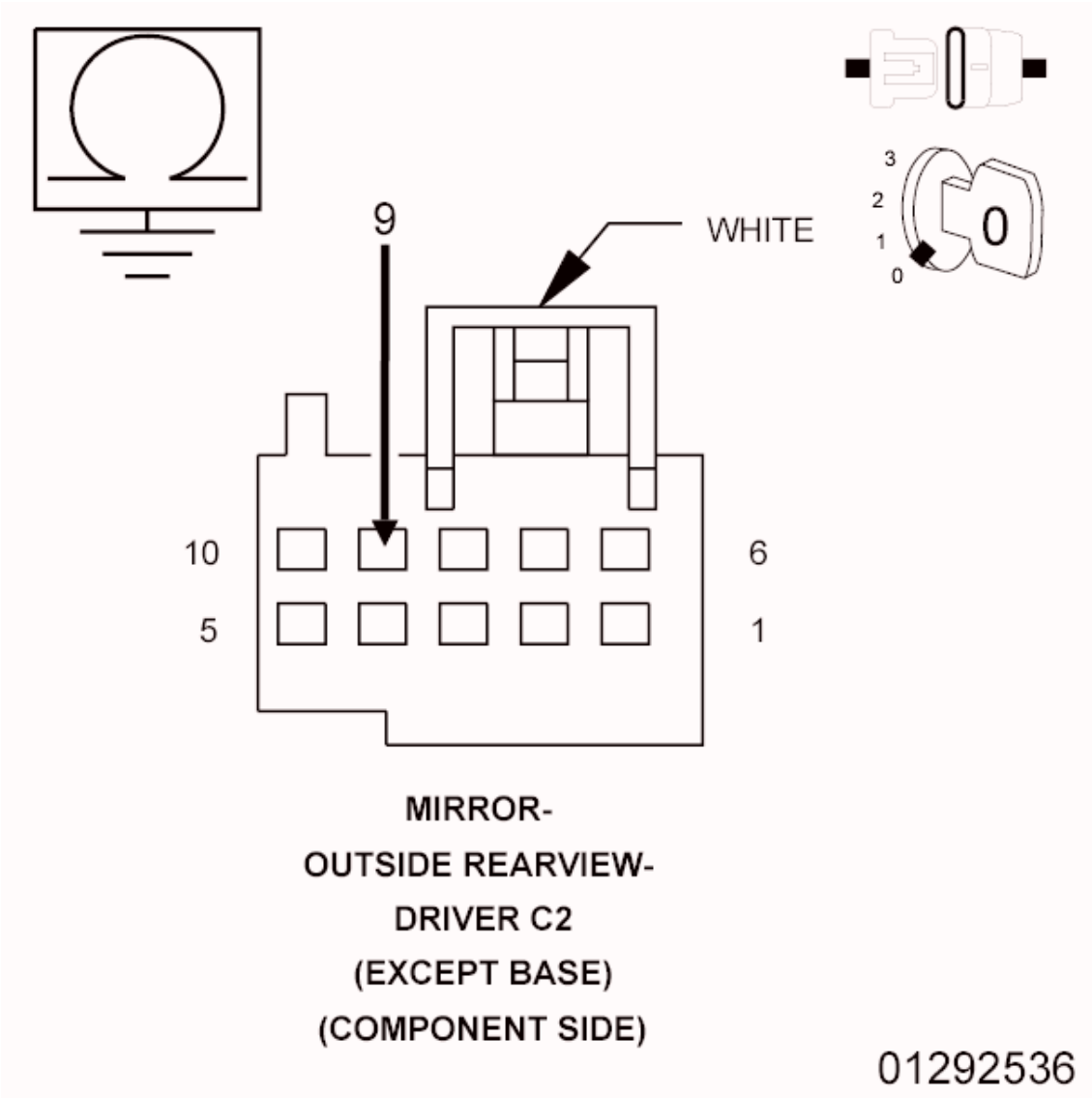

Fig. 2: Checking Driver Mirror Turn Signal Driver Circuit For A Short To Ground
Courtesy of CHRYSLER GROUP, LLC

1. Turn the ignition off.
2. Disconnect the Driver Outside Rearview Mirror C2 (Component Side) harness connector from the Door Module.
3. Measure the resistance between ground and the (P501) Driver Mirror Turn Signal Driver circuit.

   Is the resistance below 10K Ohms?

   Yes

   - Repair the short to ground in the (P501) Driver Mirror Turn Signal Driver circuit. If the wiring harness and harness connector are okay, replace the Driver Outside Rearview Mirror in accordance with the Service Information.

- Perform the BODY VERIFICATION TEST. Refer to **BODY VERIFICATION TEST** .

No

- Go To 3.

3. **CHECK (P501) DRIVER MIRROR TURN SIGNAL DRIVER CIRCUIT FOR A SHORT TO THE (P71) DRIVER MIRROR VERTICAL DRIVER CIRCUIT, (P73) DRIVER MIRROR COMMON DRIVER CIRCUIT, OR TO THE (P75) DRIVER MIRROR HORIZONTAL DRIVER CIRCUIT**

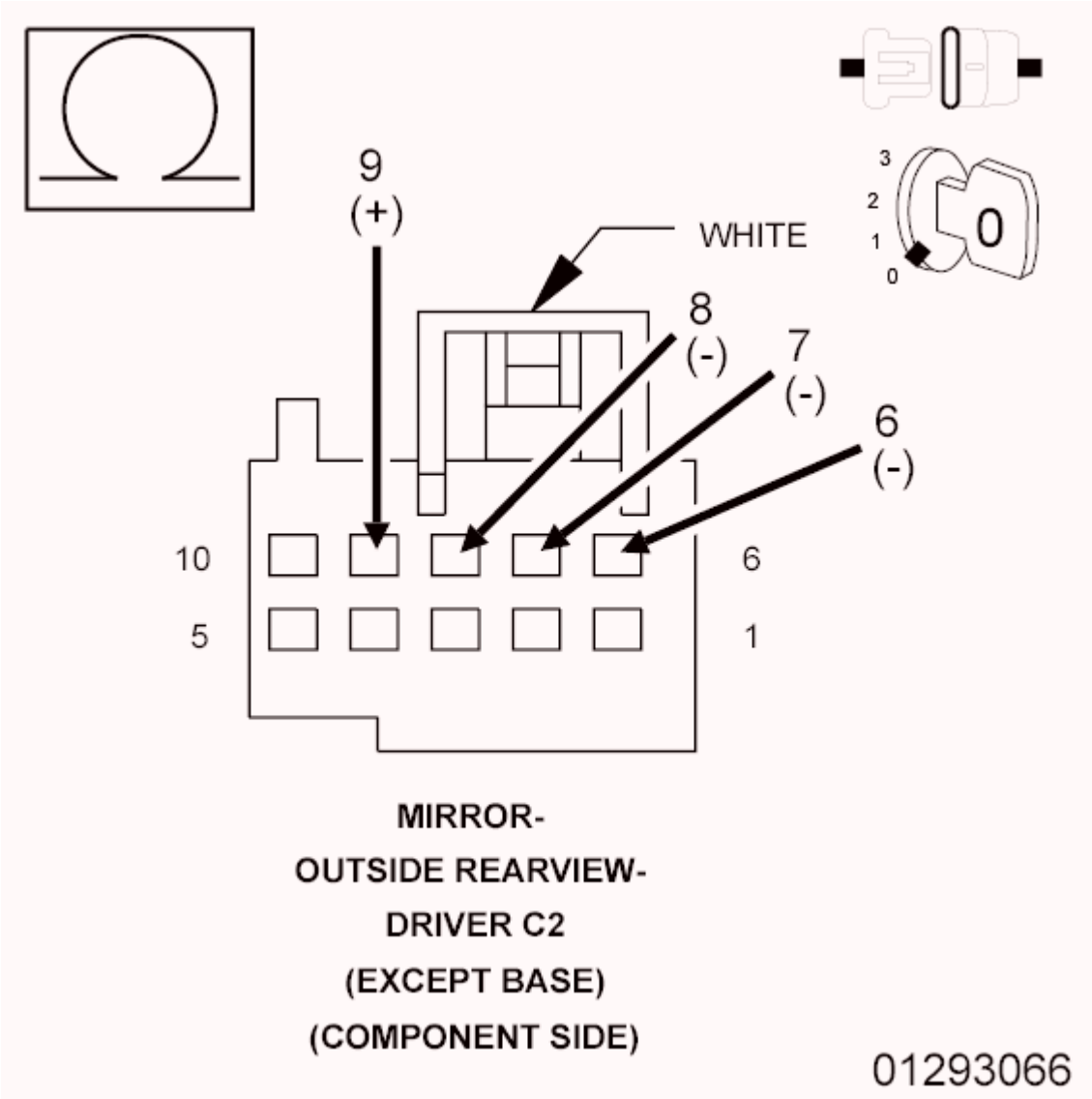

Fig. 3: Checking Driver Mirror Turn Signal Driver Circuit For A Short To Other Circuits
Courtesy of CHRYSLER GROUP, LLC

1. Measure the resistance between the (P501) Driver Mirror Turn Signal Driver circuit and the (P71) Driver Mirror Vertical Driver circuit in the Driver Outside Rearview Mirror C2 (Component Side) harness connector.

2. Measure the resistance between the (P501) Driver Mirror Turn Signal Driver circuit and the (P73) Driver Mirror Common Driver circuit in the Driver Outside Rearview Mirror C2 (Component Side) harness connector.
3. Measure the resistance between the (P501) Driver Mirror Turn Signal Driver circuit and the (P75) Driver Mirror Horizontal Driver circuit in the Driver Outside Rearview Mirror C2 (Component Side) harness connector.

   Is the resistance below 10K Ohms for any measurement?

   Yes

   - Repair all circuits with a resistance below 10K Ohms for a short to the (P501) Driver Mirror Turn Signal Driver circuit. If the wiring harness and harness connector are okay, replace the Driver Outside Rearview Mirror in accordance with the Service Information.
   - Perform the BODY VERIFICATION TEST. Refer to **BODY VERIFICATION TEST** .

   No, with Heated Mirror

   - Go To 4.

   No, without Heated Mirror

   - Go To 5.

4. **CHECK (P501) DRIVER MIRROR TURN SIGNAL DRIVER CIRCUIT FOR A SHORT TO THE (C160) DRIVER MIRROR HEATER RETURN CIRCUIT**

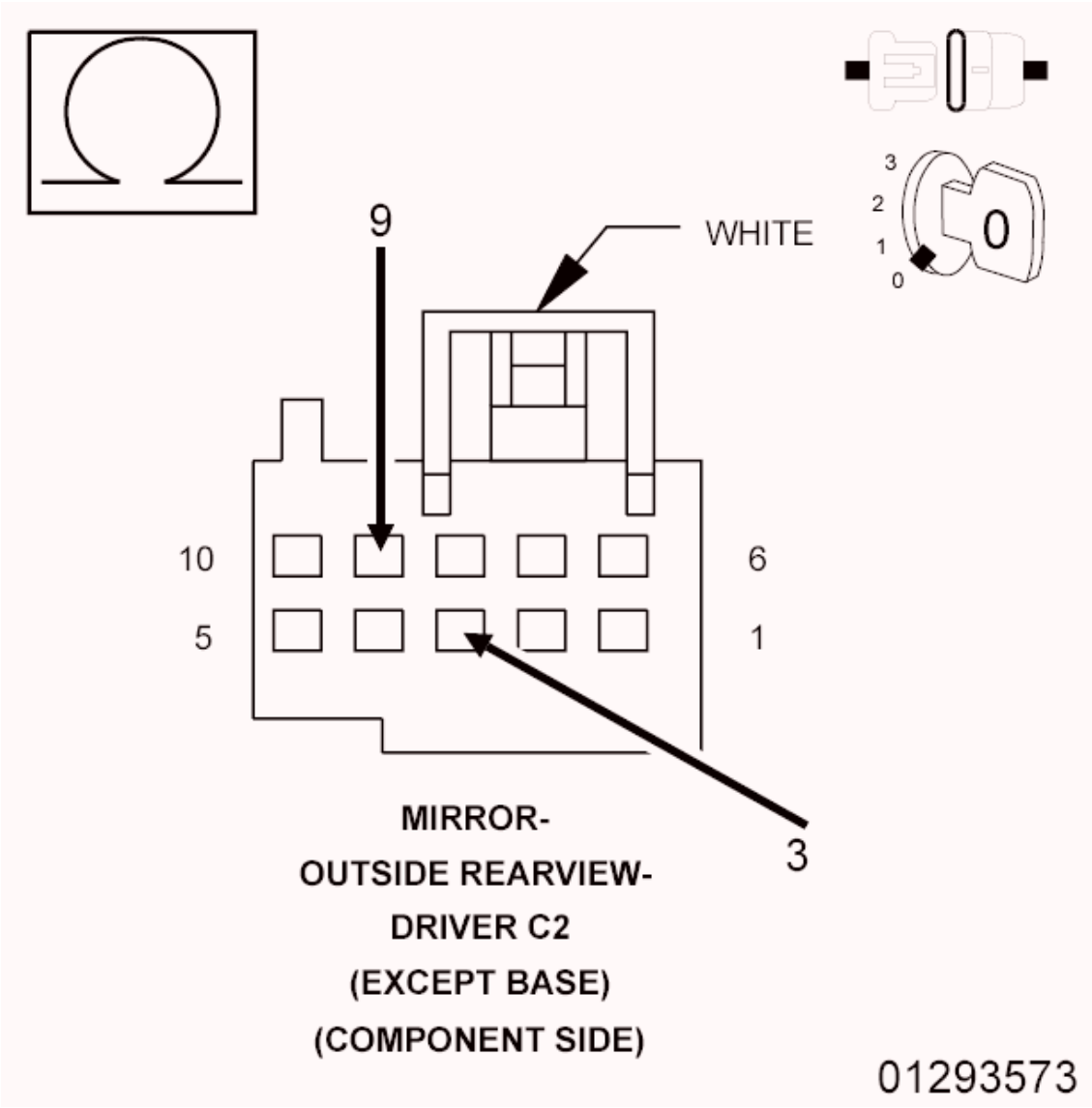

Fig. 4: Checking Driver Mirror Turn Signal Driver Circuit For A Short To The Driver Mirror Heater Return Circuit
Courtesy of CHRYSLER GROUP, LLC

1. Measure the resistance between the (P501) Driver Mirror Turn Signal Driver circuit and the (C160) Driver Mirror Heater Return circuit in the Driver Outside Rearview Mirror C2 (Component Side) harness connector.

   Is the resistance below 10K Ohms?

   Yes

   - Repair the (P501) Driver Mirror Turn Signal Driver circuit for a short to the (C160) Driver Mirror Heater Return circuit. If the wiring harness and harness connector are okay, replace the Driver Outside Rearview Mirror in accordance with the Service Information.

- Perform the BODY VERIFICATION TEST. Refer to **BODY VERIFICATION TEST** .

No

- Go To 5.

5. **CHECK (P501) DRIVER MIRROR TURN SIGNAL DRIVER CIRCUIT FOR A SHORT TO THE (P593) DRIVER MIRROR TURN SIGNAL RETURN CIRCUIT**

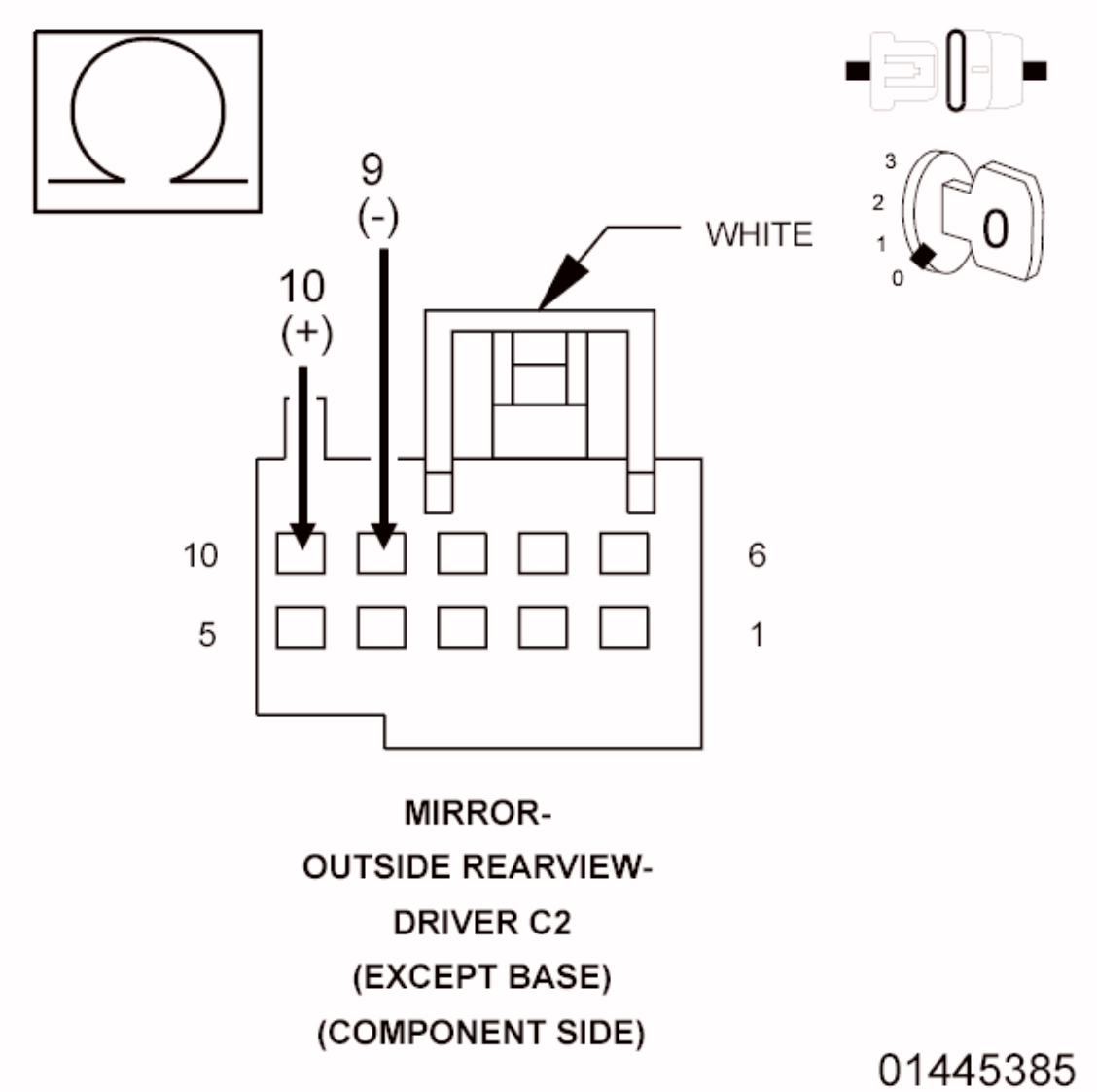

Fig. 5: Checking Driver Mirror Turn Signal Driver Circuit For A Short To The Driver Mirror Turn Signal Return Circuit
Courtesy of CHRYSLER GROUP, LLC

NOTE: **The Ohmmeter positive lead must be connected to the (P593) Driver Mirror Turn Signal Return circuit and the negative lead to the (P501) Driver Mirror Turn Signal Driver circuit for the test results to be valid.**

1. Measure the resistance between the (P501) Driver Mirror Turn Signal Driver circuit and the (P593) Driver Mirror Turn Signal Return circuit in the Driver Outside Rearview Mirror C2 (Component Side) harness connector.

   Is there any resistance present?

   Yes

   - Repair the (P501) Driver Mirror Turn Signal Driver circuit for a short to the (P593) Driver Mirror Turn Signal Return circuit. If the wiring harness and harness connector are okay, replace the Driver Outside Rearview Mirror in accordance with the Service Information.
   - Perform the BODY VERIFICATION TEST. Refer to **BODY VERIFICATION TEST** .

   No

   - Go To 6.

6. **CHECK (P501) DRIVER MIRROR TURN SIGNAL DRIVER CIRCUIT FOR A SHORT TO THE (P69) DRIVER MIRROR SENSOR GROUND CIRCUIT**

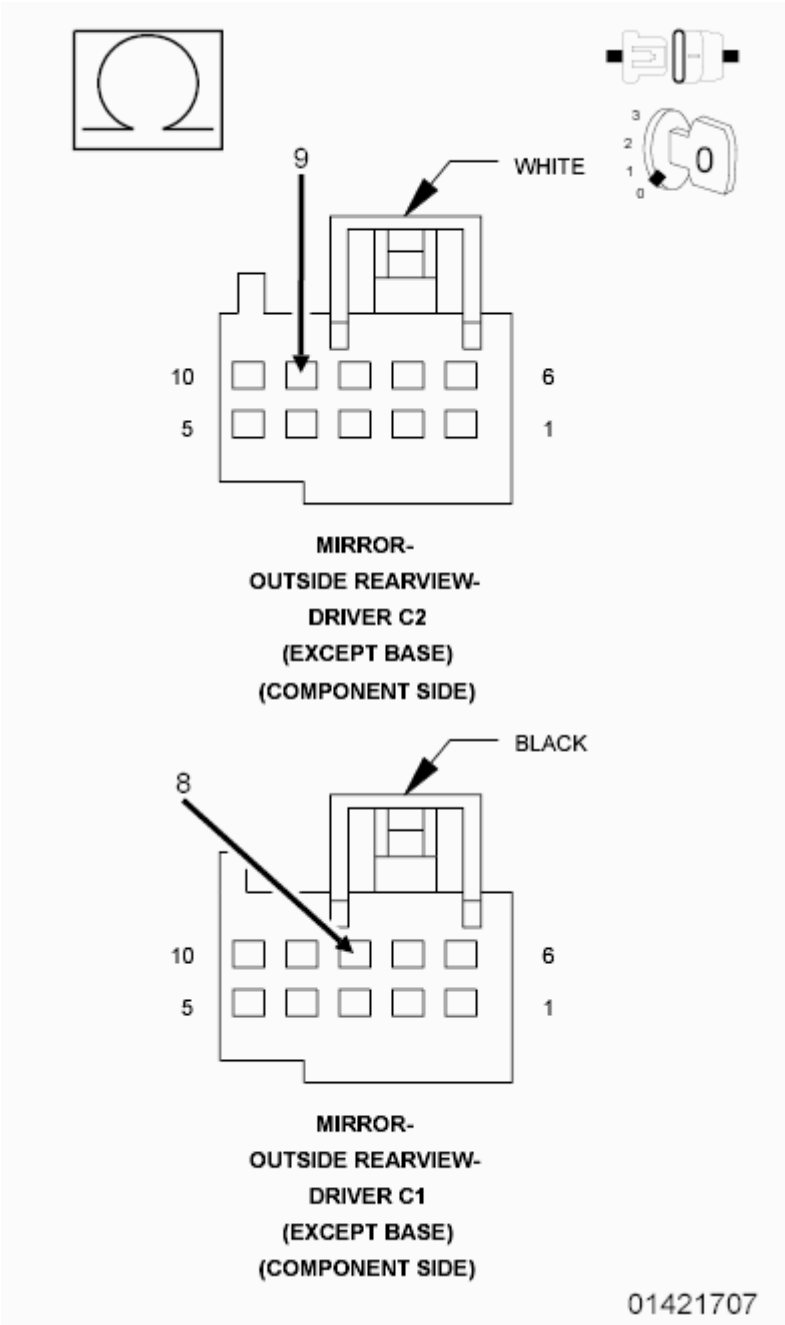

Fig. 6: Checking Driver Mirror Turn Signal Driver Circuit For A Short To The Driver Mirror Sensor Ground Circuit
Courtesy of CHRYSLER GROUP, LLC

1. Disconnect the Driver Outside Rearview Mirror C1 (Component Side) harness connector from the Door Module.
2. Measure the resistance between the (P501) Driver Mirror Turn Signal Driver circuit and the (P69) Driver Mirror Sensor Ground circuit in the Driver Outside Rearview Mirror C2 and C1 (Component Side) harness connectors.

Is the resistance below 10K Ohms?

Yes

- Repair the (P501) Driver Mirror Turn Signal Driver circuit for a short to the (P69) Driver Mirror Sensor Ground circuit. If the wiring harness and harness connector are okay, replace the Driver Outside Rearview Mirror in accordance with the Service Information.
- Perform the BODY VERIFICATION TEST. Refer to **BODY VERIFICATION TEST** .

No, with Puddle Lamp Mirror

- Go To 7.

No, without Puddle Lamp Mirror

- Inspect the wiring harness and harness connectors for damage and repair as necessary. If the wiring harness and harness connectors are okay, replace the Door Module in accordance with the Service Information.
- Perform the BODY VERIFICATION TEST. Refer to **BODY VERIFICATION TEST** .

7. **CHECK (P501) DRIVER MIRROR TURN SIGNAL DRIVER CIRCUIT FOR A SHORT TO THE (P591) DRIVER PUDDLE LAMP RETURN CIRCUIT**

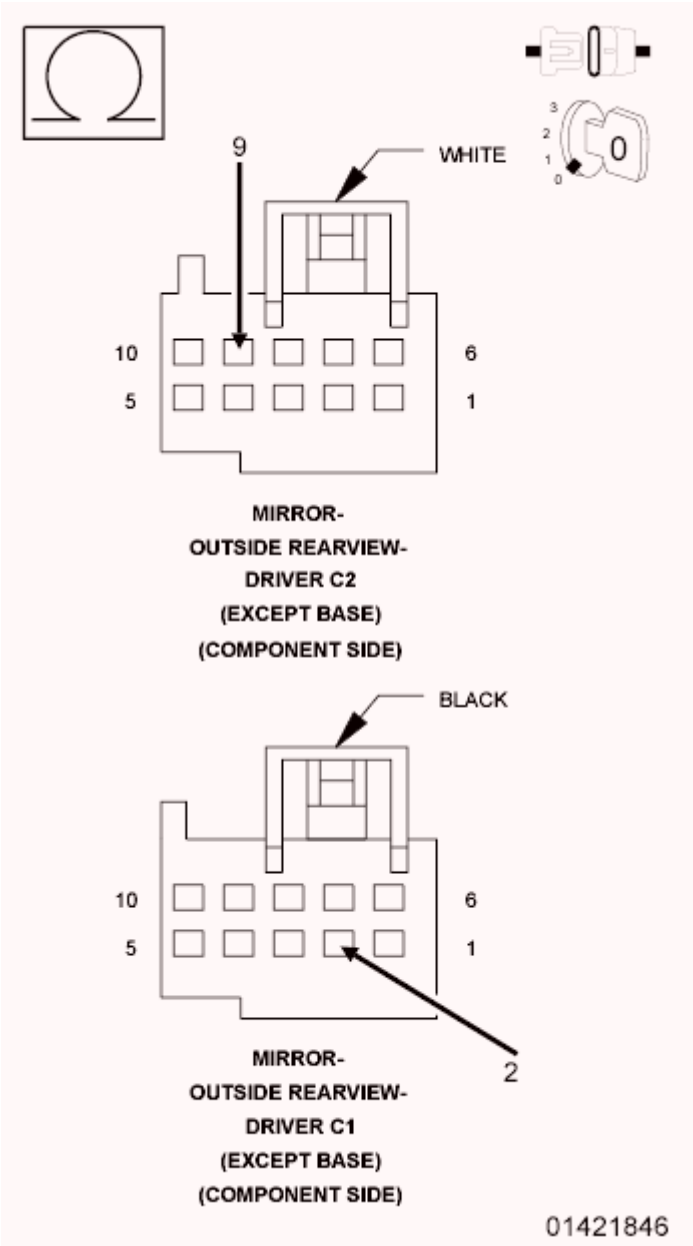

Fig. 7: Checking Driver Mirror Turn Signal Driver Circuit For A Short To The Driver Puddle Lamp Return Circuit
Courtesy of CHRYSLER GROUP, LLC

1. Measure the resistance between the (P501) Driver Mirror Turn Signal Driver circuit and the (P591) Driver Puddle Lamp Return circuit in the Driver Outside Rearview Mirror C2 and C1 (Component Side) harness connectors.

   Is the resistance below 10K Ohms?

   Yes

   - Repair the (P501) Driver Mirror Turn Signal Driver circuit for a short to the (P591) Driver

Puddle Lamp Return circuit. If the wiring harness and harness connector are okay, replace the Driver Outside Rearview Mirror in accordance with the Service Information.

- Perform the BODY VERIFICATION TEST. Refer to **BODY VERIFICATION TEST** .

No

- Inspect the wiring harness and harness connectors for damage and repair as necessary. If the wiring harness and harness connectors are okay, replace the Door Module in accordance with the Service Information.
- Perform the BODY VERIFICATION TEST. Refer to **BODY VERIFICATION TEST** .

B164A-15-DRIVER MIRROR SIGNAL LAMP CONTROL - CIRCUIT SHORT TO BATTERY OR OPEN

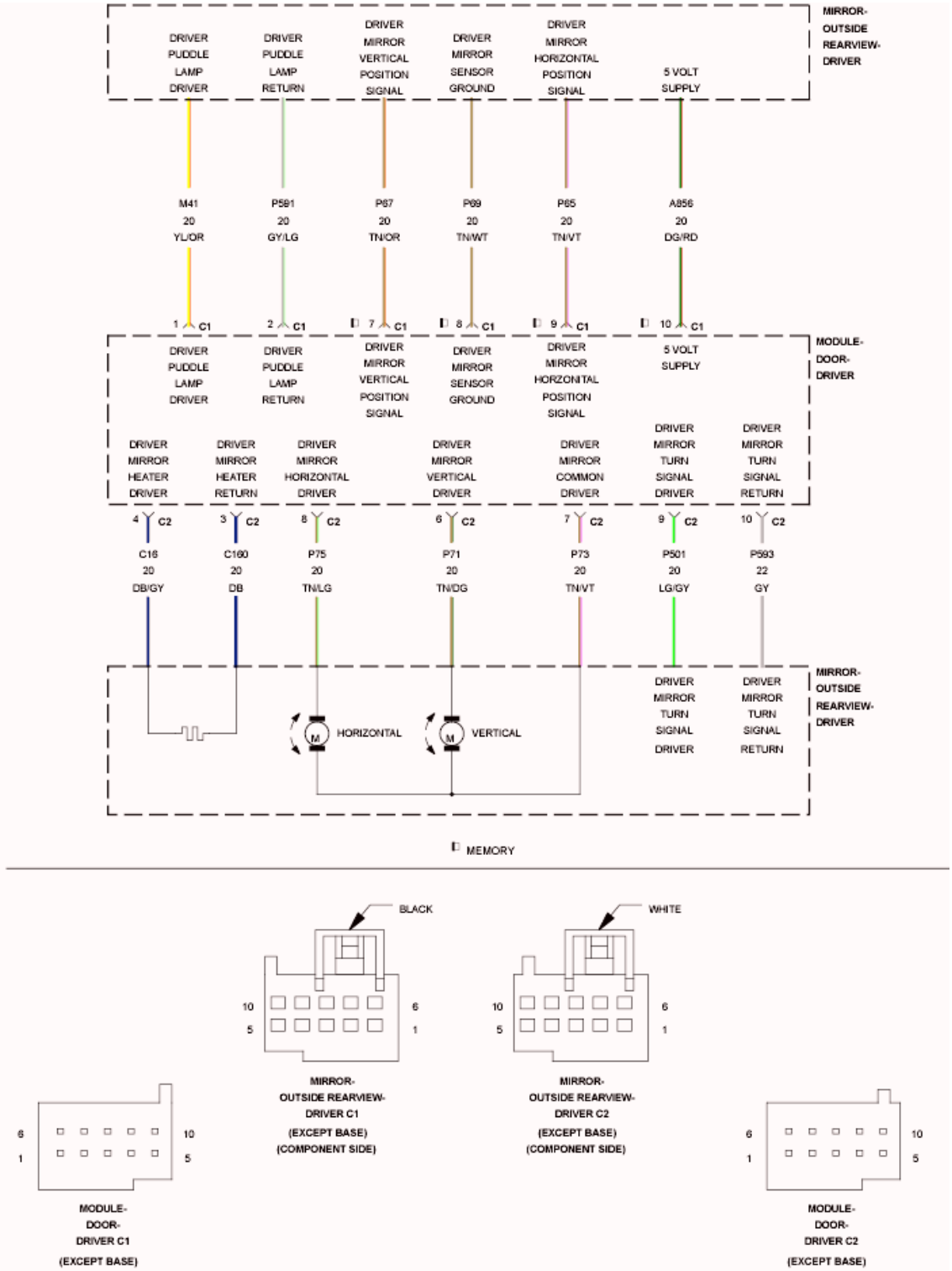

Fig. 8: Driver Mirror Signal Lamp Control Wiring Diagram
Courtesy of CHRYSLER GROUP, LLC

For a complete wiring diagram, **refer to appropriate SYSTEM WIRING DIAGRAMS article** .

WHEN MONITORED:

Continuously.

SET CONDITION:

The Door Module senses current greater than 100 mA or an open on the (P501) Driver Mirror Turn Signal Driver circuit for more than two seconds with the turn signal switched on.

POSSIBLE CAUSES

Possible Causes
(P501) DRIVER MIRROR TURN SIGNAL DRIVER CIRCUIT FOR A SHORT TO VOLTAGE
(P501) DRIVER MIRROR TURN SIGNAL DRIVER CIRCUIT FOR A SHORT TO THE (P71) DRIVER MIRROR VERTICAL DRIVER CIRCUIT
(P501) DRIVER MIRROR TURN SIGNAL DRIVER CIRCUIT FOR A SHORT TO THE (P73) DRIVER MIRROR COMMON DRIVER CIRCUIT
(P501) DRIVER MIRROR TURN SIGNAL DRIVER CIRCUIT FOR A SHORT TO THE (P75) DRIVER MIRROR HORIZONTAL DRIVER CIRCUIT
(P501) DRIVER MIRROR TURN SIGNAL DRIVER CIRCUIT FOR A SHORT TO THE (C16) DRIVER MIRROR HEATER DRIVER CIRCUIT
(P501) DRIVER MIRROR TURN SIGNAL DRIVER CIRCUIT FOR AN OPEN
(P593) DRIVER MIRROR TURN SIGNAL RETURN CIRCUIT FOR AN OPEN
(P501) DRIVER MIRROR TURN SIGNAL DRIVER CIRCUIT FOR A SHORT TO THE (M41) DRIVER PUDDLE LAMP DRIVER CIRCUIT
DRIVER OUTSIDE REARVIEW MIRROR
DOOR MODULE

DIAGNOSTIC TEST

1. **TEST FOR INTERMITTENT CONDITION**
    1. Turn the ignition on.
    2. Using a scan tool, record and erase Diagnostic Trouble Codes (DTC's).
    3. Turn the turn signal on.
    4. Turn the puddle lamps on, if equipped with puddle lamp mirror.
    5. Turn the rear defogger on, if equipped with heated mirror.
    6. Press and release the Mirror Select switch to select the Driver Outside Rearview Mirror.
    7. Operate the Mirror Adjust switch in all directions several times while monitoring the scan tool for DTC's.

    NOTE: **After adjusting the mirror in one direction wait at least two seconds before adjusting the mirror in the opposite direction, as this will allow time for an active fault to set if present.**

    Is the DTC active?

Yes

- Go To 2.

No

- The conditions that caused this code to set are not present at this time. For vehicle's equipped with folding outside rearview mirrors, repeat test with mirror folded. If DTC is now active, go to 2. Otherwise, use the wiring diagram/schematic as a guide and inspect the wiring and connectors.
- Perform the BODY VERIFICATION TEST. Refer to **BODY VERIFICATION TEST** .

2. **CHECK (P501) DRIVER MIRROR TURN SIGNAL DRIVER CIRCUIT FOR A SHORT TO VOLTAGE**

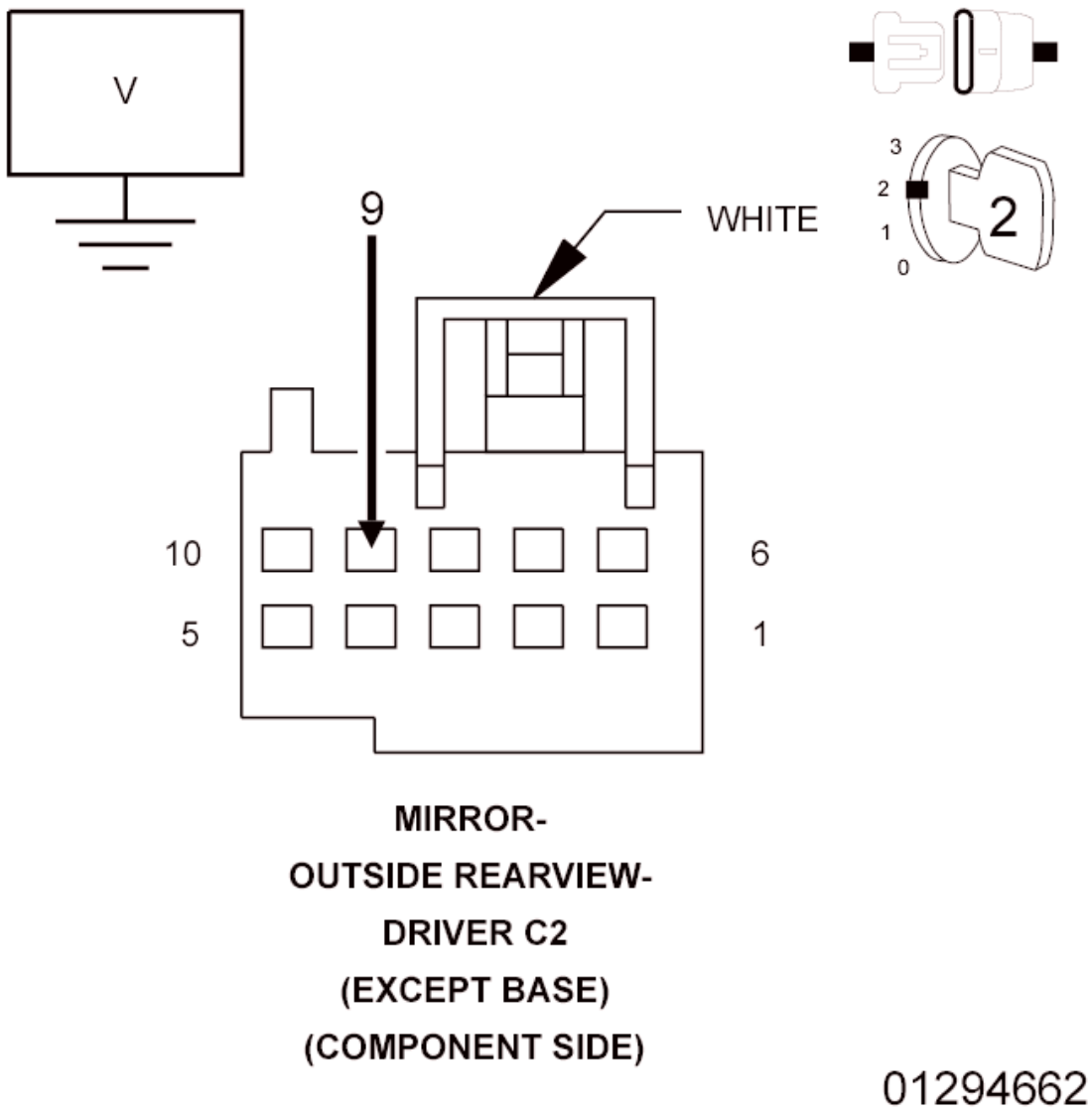

Fig. 9: Checking Driver Mirror Turn Signal Driver Circuit For A Short To Voltage

Courtesy of CHRYSLER GROUP, LLC

1. Turn the ignition off.
2. Disconnect the Driver Outside Rearview Mirror C2 (Component Side) connector from the Door Module C2 connector.
3. Turn the ignition on.
4. Measure the voltage of the (P501) Driver Mirror Turn Signal Driver circuit between the Driver Outside Rearview Mirror C2 (Component Side) connector and ground.

   Is there any voltage present?

   Yes

   - Repair the (P501) Driver Mirror Turn Signal Driver circuit for a short to voltage. If the wiring harness and connector are okay, replace the Driver Outside Rearview Mirror in accordance with the Service Information.
   - Perform the BODY VERIFICATION TEST. Refer to **BODY VERIFICATION TEST** .

   No

   - Go To 3.

3. **CHECK (P501) DRIVER MIRROR TURN SIGNAL DRIVER CIRCUIT FOR A SHORT TO THE (P71) DRIVER MIRROR VERTICAL DRIVER CIRCUIT, (P73) DRIVER MIRROR COMMON DRIVER CIRCUIT, OR TO THE (P75) DRIVER MIRROR HORIZONTAL DRIVER CIRCUIT**

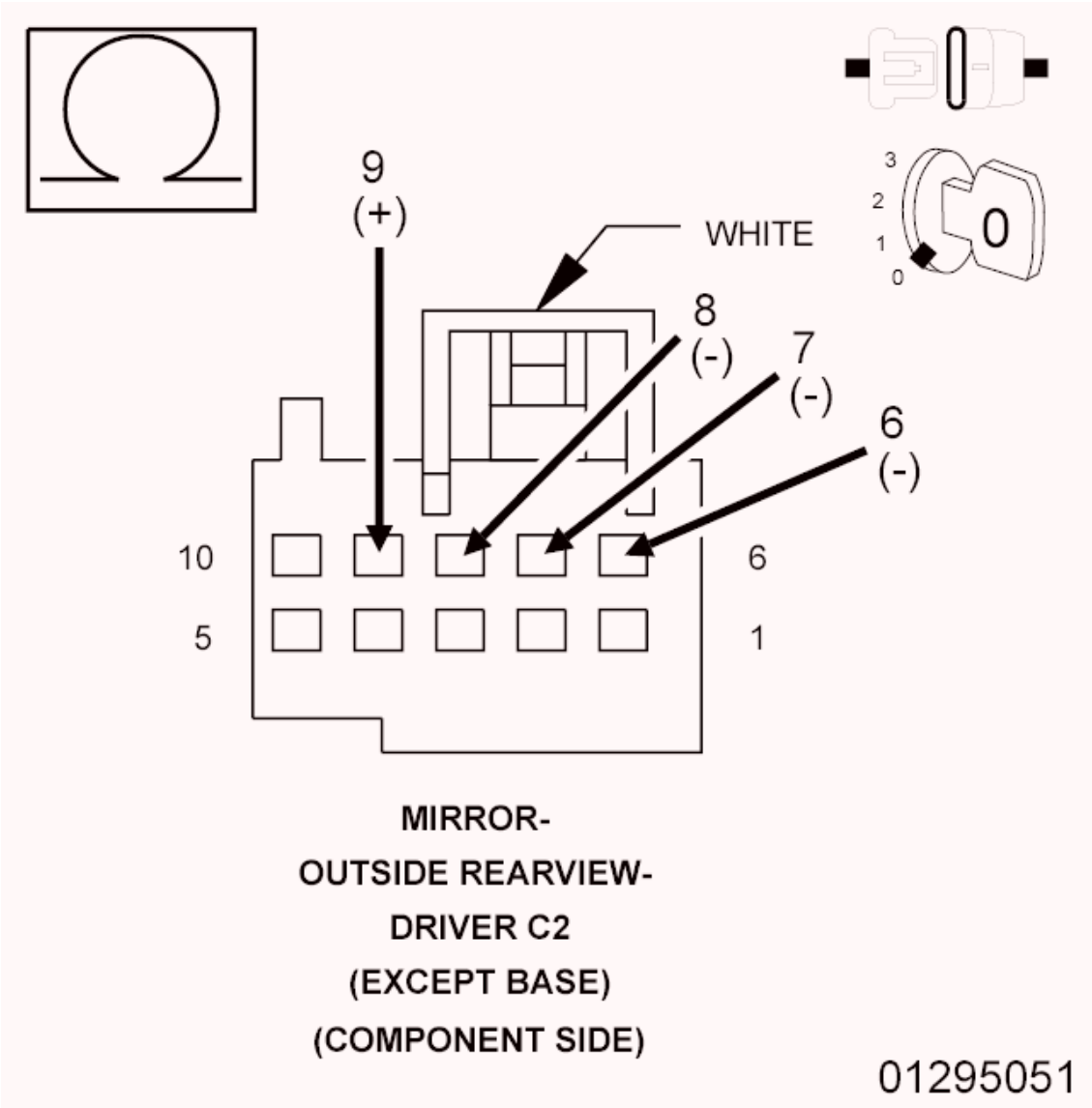

Fig. 10: Checking Driver Mirror Turn Signal Driver Circuit For A Short To Other Circuits
Courtesy of CHRYSLER GROUP, LLC

1. Turn the ignition off.
2. Measure the resistance between the (P501) Driver Mirror Turn Signal Driver circuit and the (P71) Driver Mirror Vertical Driver circuit at the Driver Outside Rearview Mirror C2 (Component Side) connector.
3. Measure the resistance between the (P501) Driver Mirror Turn Signal Driver circuit and the (P73) Driver Mirror Common Driver circuit at the Driver Outside Rearview Mirror C2 (Component Side) connector.
4. Measure the resistance between the (P501) Driver Mirror Turn Signal Driver circuit and the (P75) Driver Mirror Horizontal Driver circuit at the Driver Outside Rearview Mirror C2 (Component Side) connector.

   Is the resistance below 10K Ohms for any measurement?

Yes

- Repair all circuits with a resistance below 10K Ohms for a short to the (P501) Driver Mirror Turn Signal Driver circuit. If the wiring harness and connector are okay, replace the Driver Outside Rearview Mirror in accordance with the Service Information.
- Perform the BODY VERIFICATION TEST. Refer to **BODY VERIFICATION TEST** .

No, with Heated Mirror

- Go To 4.

No, without Heated Mirror

- Go To 5.

4. **CHECK (P501) DRIVER MIRROR TURN SIGNAL DRIVER CIRCUIT FOR A SHORT TO THE (C16) DRIVER MIRROR HEATER DRIVER CIRCUIT**

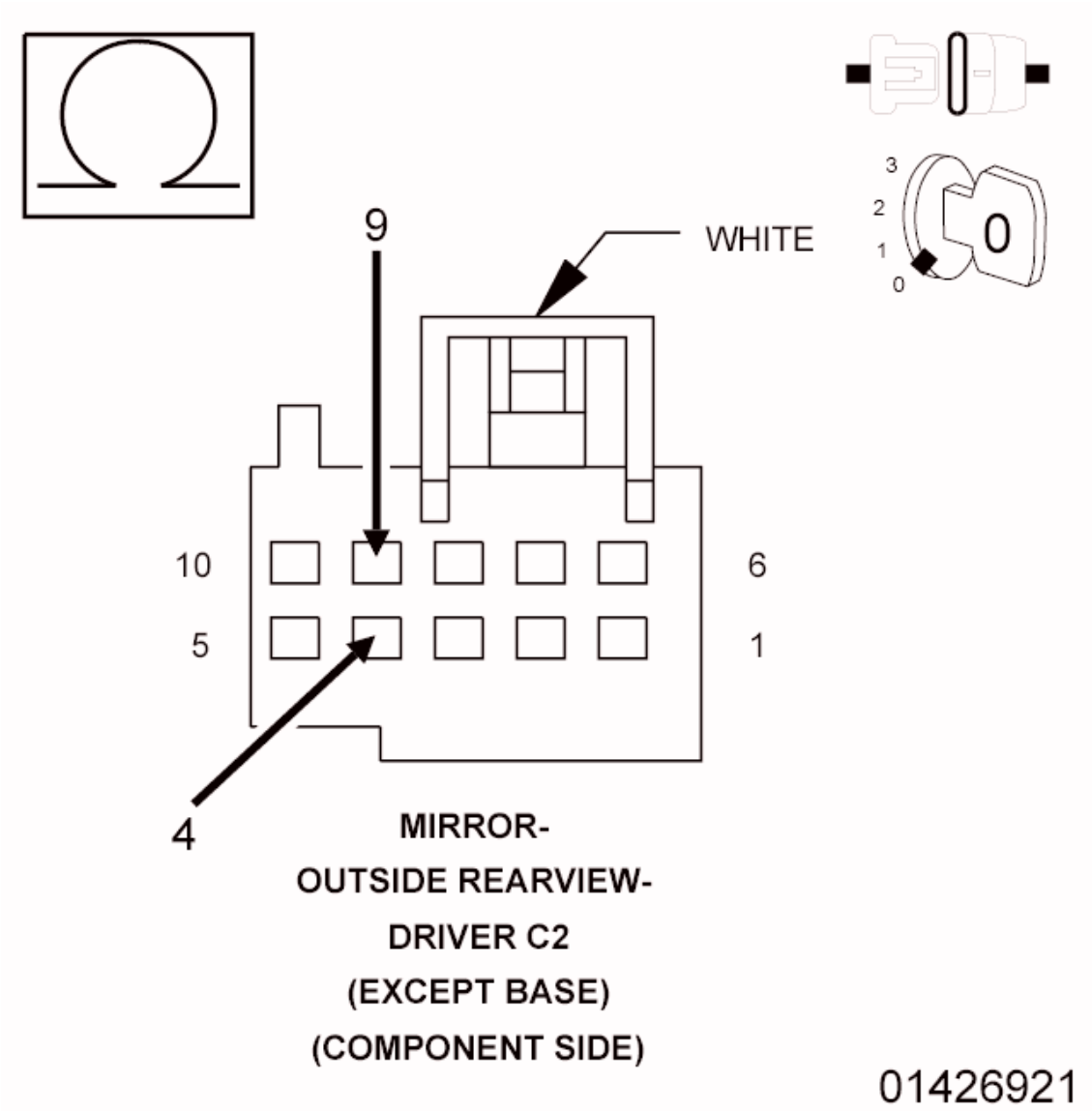

Fig. 11: Checking Driver Mirror Turn Signal Driver Circuit For A Short To The Driver Mirror Heater Driver Circuit
Courtesy of CHRYSLER GROUP, LLC

1. Measure the resistance between the (P501) Driver Mirror Turn Signal Driver circuit and the (C16) Driver Mirror Heater Driver circuit at the Driver Outside Rearview Mirror C2 (Component Side) connector.

   Is the resistance below 10K Ohms?

   Yes

   - Repair the (P501) Driver Mirror Turn Signal Driver circuit for a short to the (C16) Driver Mirror Heater Driver circuit. If the wiring harness and connector are okay, replace the Driver Outside Rearview Mirror in accordance with the Service Information.

- Perform the BODY VERIFICATION TEST. Refer to **BODY VERIFICATION TEST** .

No

- Go To 5.

5. **CHECK (P501) DRIVER MIRROR TURN SIGNAL DRIVER CIRCUIT AND (P593) DRIVER MIRROR TURN SIGNAL RETURN CIRCUIT FOR AN OPEN**

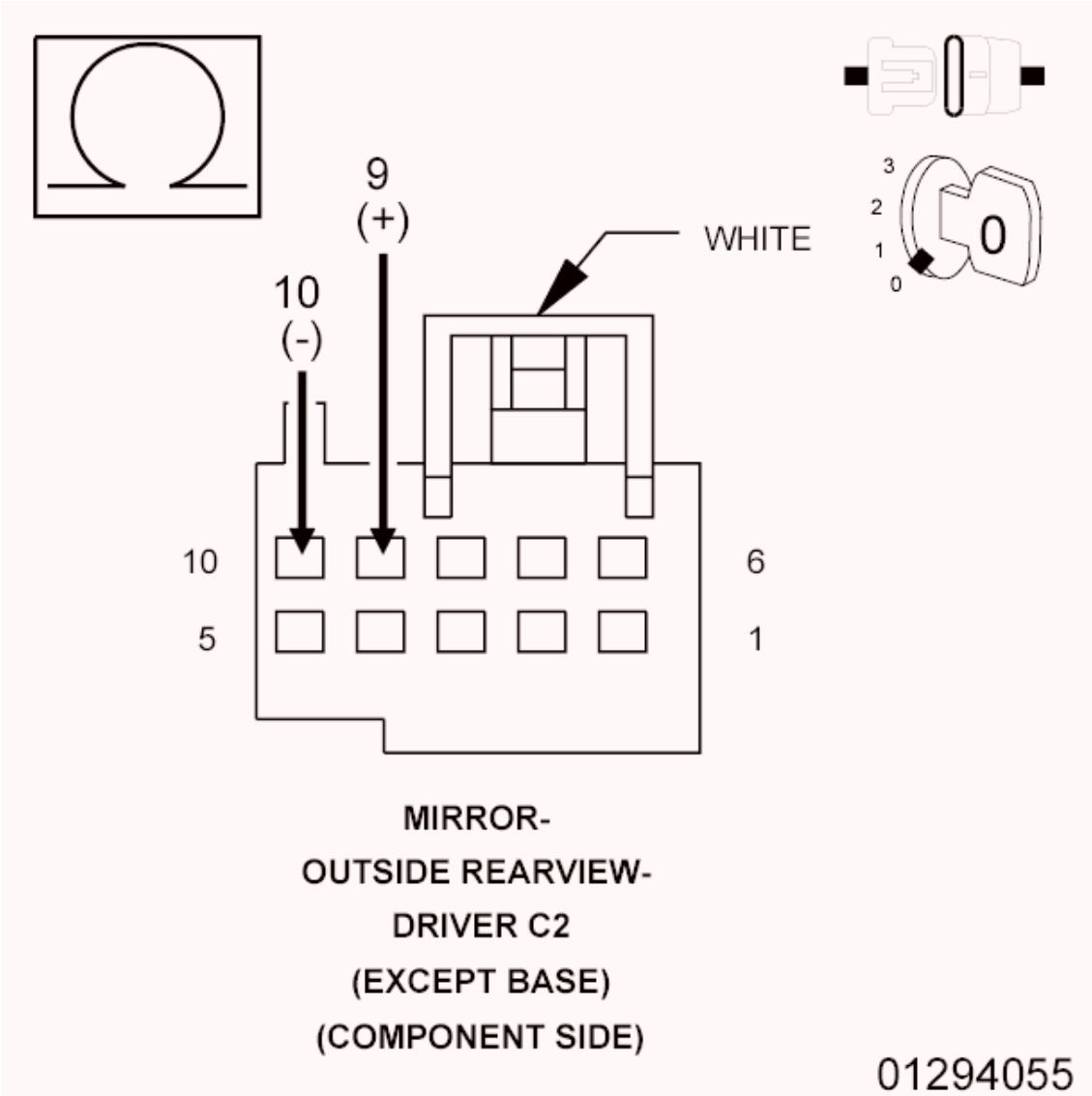

Fig. 12: Checking Driver Mirror Turn Signal Driver Circuit And Driver Mirror Turn Signal Return Circuit For An Open
Courtesy of CHRYSLER GROUP, LLC

NOTE: **The Ohmmeter positive lead must be connected to the (P501) Driver Mirror Turn Signal Driver circuit and the negative lead to the (P593) Driver Mirror Turn Signal Return circuit for the test results to be valid.**

1. Measure the resistance between the (P501) Driver Mirror Turn Signal Driver circuit and the (P593) Driver Mirror Turn Signal Return circuit at the Driver Outside Rearview Mirror C2 (Component Side) connector.

   Is the resistance above 1K Ohm?

   Yes

   - Repair the (P501) Driver Mirror Turn Signal Driver circuit or the (P593) Driver Mirror Turn Signal Return circuit for an open. If the wiring harness and connector are okay, replace the Driver Outside Rearview Mirror in accordance with the Service Information.
   - Perform the BODY VERIFICATION TEST. Refer to **BODY VERIFICATION TEST** .

   No, with Puddle Lamp Mirror

   - Go To 6.

   No, without Puddle Lamp Mirror

   - Inspect the wiring and connectors for damage and repair as necessary. If the wiring and connectors are okay, replace the Door Module in accordance with the Service Information.
   - Perform the BODY VERIFICATION TEST. Refer to **BODY VERIFICATION TEST** .

6. **CHECK (P501) DRIVER MIRROR TURN SIGNAL DRIVER CIRCUIT FOR A SHORT TO THE (M41) DRIVER PUDDLE LAMP DRIVER CIRCUIT**

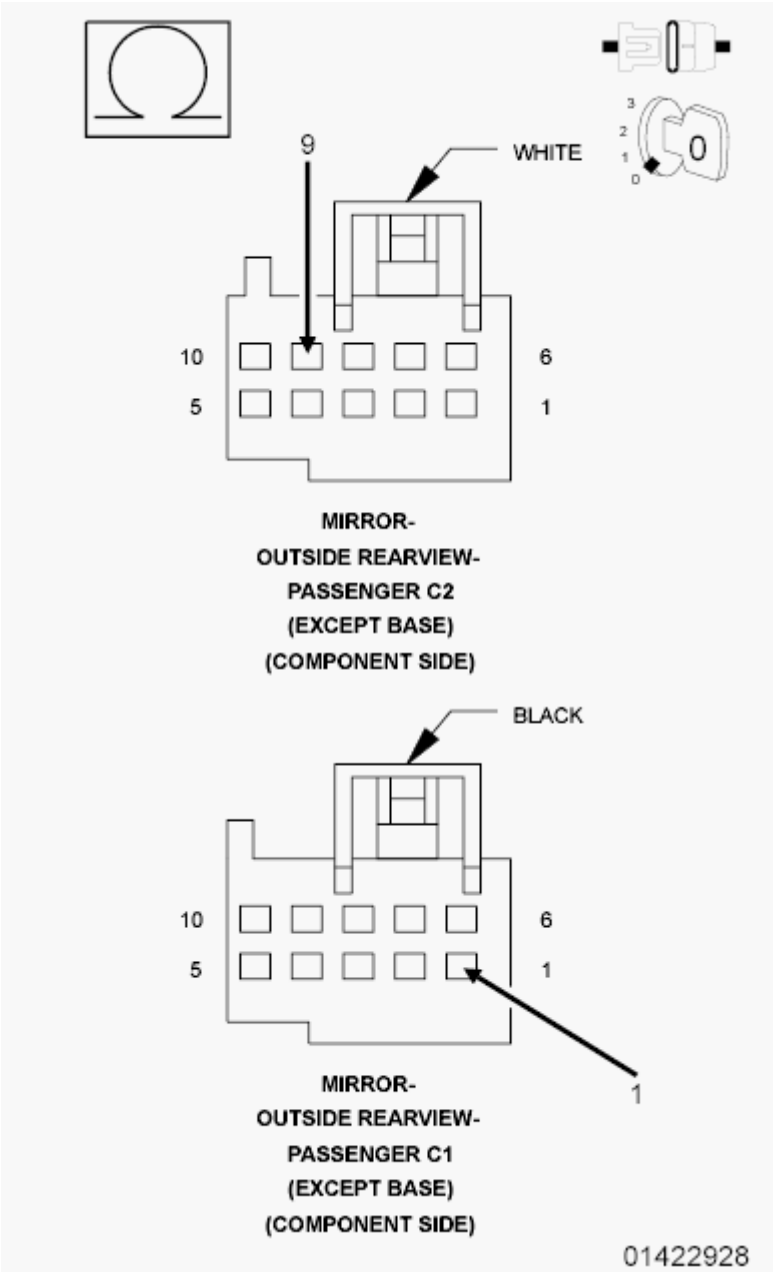

Fig. 13: Checking Driver Mirror Turn Signal Driver Circuit For A Short To The Driver Puddle Lamp Driver Circuit
Courtesy of CHRYSLER GROUP, LLC

1. Disconnect the Driver Outside Rearview Mirror C1 (Component Side) connector from the Door Module C1 connector.
2. Measure the resistance between the (P501) Driver Mirror Turn Signal Driver circuit and the (M41) Driver Puddle Lamp Driver circuit at the Driver Outside Rearview Mirror C2 and C1 (Component Side) connectors.

   Is the resistance below 10K Ohms?

Yes

- Repair the (P501) Driver Mirror Turn Signal Driver circuit for a short to the (M41) Driver Puddle Lamp Driver circuit. If the wiring harness and connector are okay, replace the Driver Outside Rearview Mirror in accordance with the Service Information.
- Perform the BODY VERIFICATION TEST. Refer to **BODY VERIFICATION TEST** .

No

- Inspect the wiring and connectors for damage and repair as necessary. If the wiring and connectors are okay, replace the Door Module in accordance with the Service Information.
- Perform the BODY VERIFICATION TEST. Refer to **BODY VERIFICATION TEST** .

B1800-2A-DRIVER DOOR LOCK/UNLOCK SWITCH - SIGNAL STUCK IN RANGE

For a complete wiring diagram, **refer to appropriate SYSTEM WIRING DIAGRAMS article** .

WHEN MONITORED:

Continuously

SET CONDITION:

When the Door Lock/Unlock Switch is stuck for over 30 seconds, this code will set.

POSSIBLE CAUSES

Possible Causes
OBSTRUCTION IN SWITCH
DOOR LOCK SWITCH

DIAGNOSTIC TEST

1. **TEST FOR INTERMITTENT CONDITION**
    1. With the scan tool, record and erase the DTC's.
    2. Operate the Driver Door Lock Switch in all positions several times.
    3. Cycle the ignition from on to off.
    4. Turn the ignition on.
    5. With the scan tool, read the DTC's.

    Does the scan tool display B1800-2A-DRIVER DOOR LOCK/UNLOCK SWITCH - SIGNAL STUCK IN RANGE?

    Yes

- Go To 2.

No

- The conditions that caused this code to set are not present at this time. Using the wiring diagram/schematic as a guide, inspect the wiring and connectors.
- Perform the BODY VERIFICATION TEST. Refer to **BODY VERIFICATION TEST** .

2. **DOOR LOCK SWITCH**
   1. Check the switch for any objects that could cause a sticking condition.

      Was anything found that could cause a sticking condition?

      Yes

      - Clean or remove the object as necessary.
      - Perform the BODY VERIFICATION TEST. Refer to **BODY VERIFICATION TEST** .

      No

      - Replace the Door Lock Switch.
      - Perform the BODY VERIFICATION TEST. Refer to **BODY VERIFICATION TEST** .

B1853-11-DRIVER WINDOW CONTROL - CIRCUIT SHORT TO GROUND

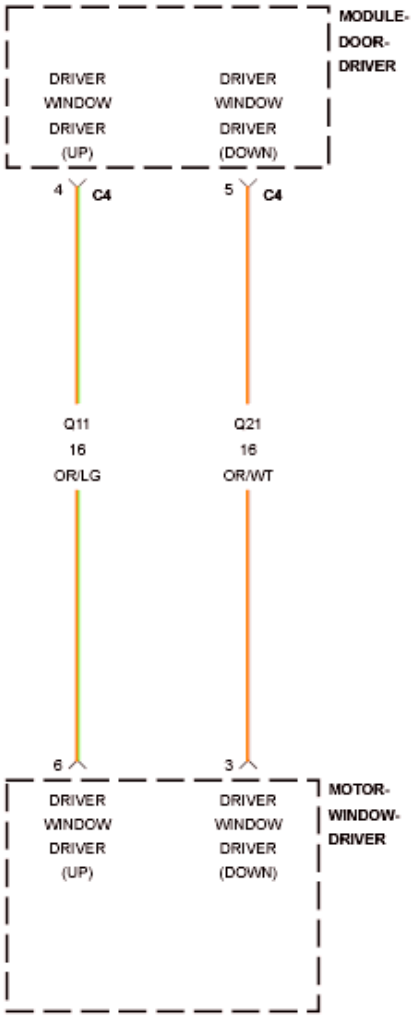

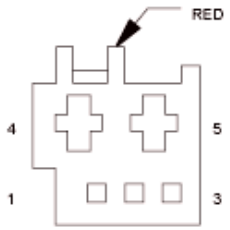

MODULE-
DOOR-
DRIVER C4

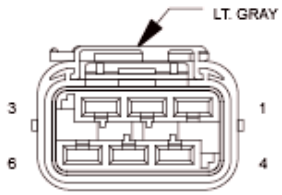

MOTOR-
WINDOW-
DRIVER

Fig. 14: Driver Window Control Wiring Diagram
Courtesy of CHRYSLER GROUP, LLC

For a complete wiring diagram, **refer to appropriate SYSTEM WIRING DIAGRAMS article** .

WHEN MONITORED:

Whenever the module is awake.

SET CONDITION:

When both Driver Window Driver circuits (Up and Down) are grounded during a window movement command, this code will set.

POSSIBLE CAUSES

Possible Causes
(Q21) DRIVER WINDOW DRIVER (DOWN) CIRCUIT FOR A SHORT TO GROUND
(Q11) DRIVER WINDOW DRIVER (UP) CIRCUIT FOR A SHORT TO GROUND
(Q21) DRIVER WINDOW DRIVER (DOWN) CIRCUIT FOR A SHORT TO THE (Q11) DRIVER WINDOW DRIVER (UP) CIRCUIT
WINDOW MOTOR SHORTED
DRIVER DOOR MODULE (DDM)

DIAGNOSTIC TEST

1. **TEST FOR INTERMITTENT CONDITION**
    1. Turn the ignition on.
    2. With the scan tool, record and erase the DTC's
    3. Try to operate the Driver Window up and down several times.
    4. Wait 30 seconds.
    5. With the scan tool, read the DTC's.

    Does the scan tool display B1853-11-DRIVER WINDOW CONTROL - CIRCUIT SHORT TO GROUND?

    Yes

    - Go To 2.

    No

    - The conditions that caused this code to set are not present at this time. Using the wiring diagram/schematic as a guide, inspect the wiring and connectors.
    - Perform the BODY VERIFICATION TEST. Refer to **BODY VERIFICATION TEST** .

2. **WINDOW MOTOR SHORTED**

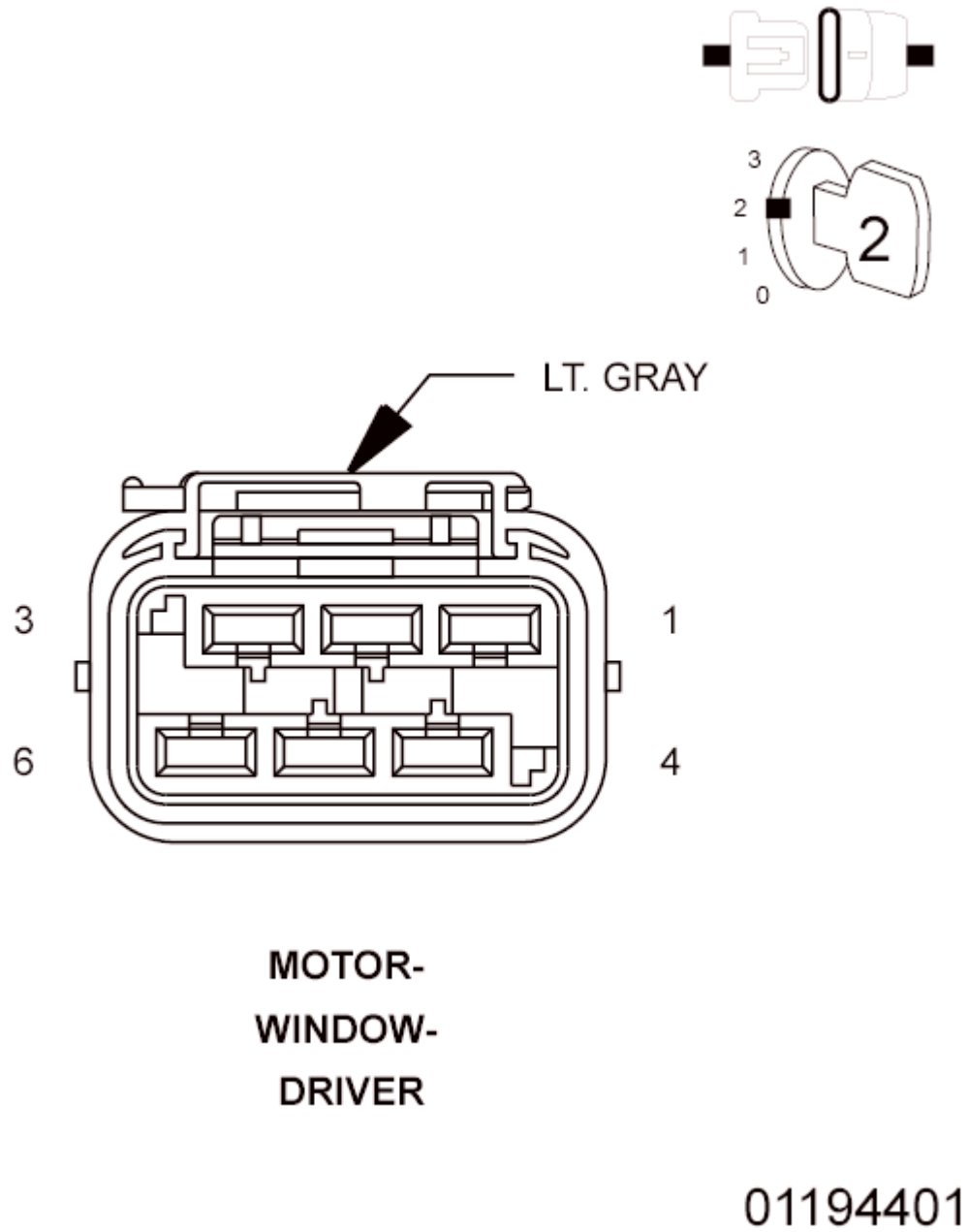

Fig. 15: Driver Window Motor Connector End View
Courtesy of CHRYSLER GROUP, LLC

1. With the scan tool, erase the DTC's.
2. Turn the ignition off.
3. Disconnect the Driver Window Motor connector.
4. Turn the ignition on.
5. Operate the driver window switch up and down several times.

6. With the scan tool, read the DTC's.

   Does the scan tool display B1853-11-DRIVER WINDOW CONTROL - CIRCUIT SHORT TO GROUND?

   No

   - Replace the Driver Window Motor in accordances with the Service Information.
   - Perform the BODY VERIFICATION TEST. Refer to **BODY VERIFICATION TEST** .

   Yes

   - Go To 3.

3. **(Q21) DRIVER WINDOW DRIVER (DOWN) CIRCUIT FOR A SHORT TO GROUND**

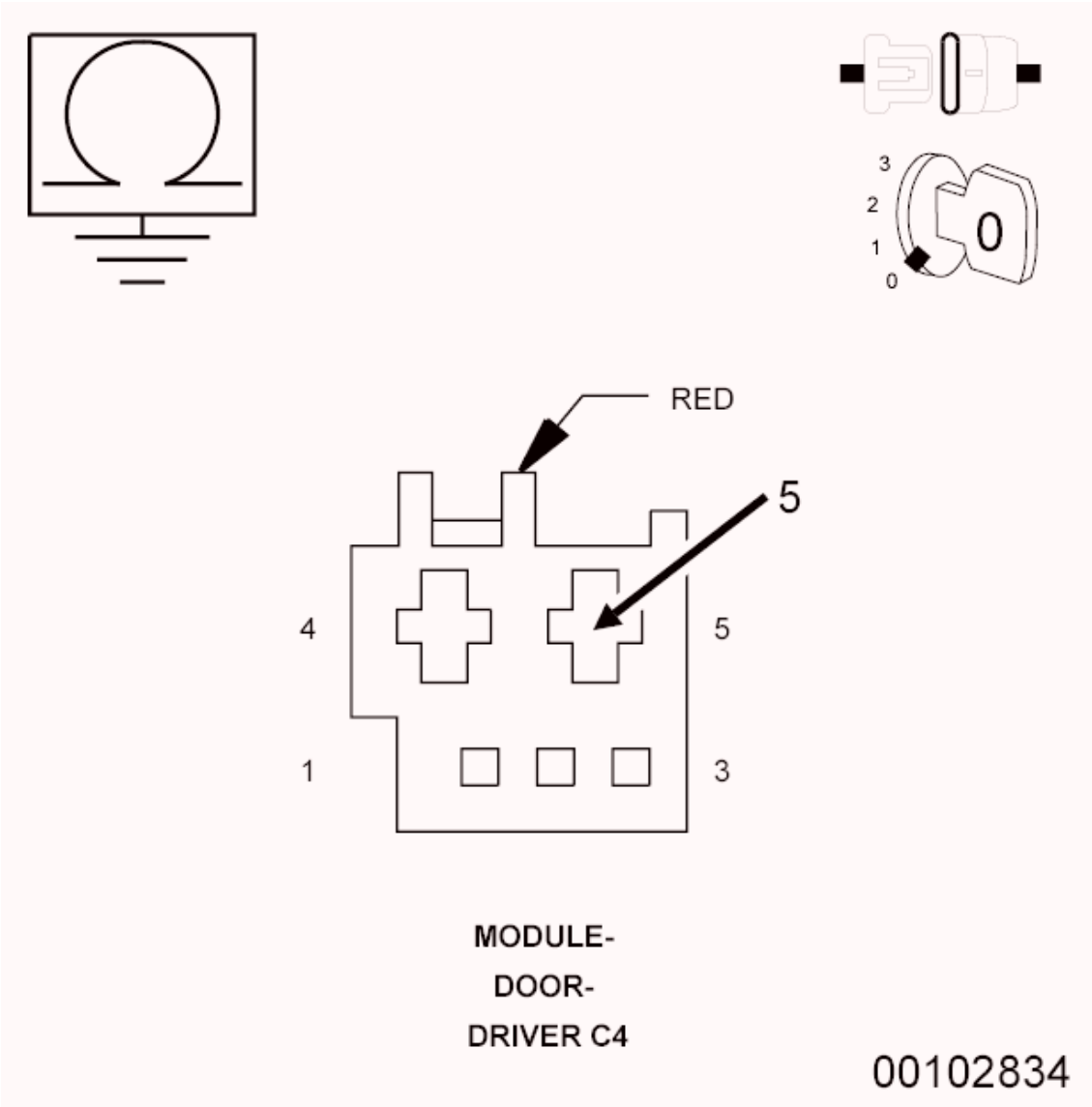

Fig. 16: Checking Driver Window Driver (Down) Circuit For A Short To Ground
Courtesy of CHRYSLER GROUP, LLC

1. Turn the ignition off.
2. Disconnect the Driver Door Module C4 connector.
3. Measure the resistance between Ground and the (Q21) Driver Window Driver Down circuit.

   Is the resistance below 10, 000 Ohms?

   Yes

   - Repair the (Q21) Driver Window Driver Down circuit for a short to ground.
   - Perform the BODY VERIFICATION TEST. Refer to **BODY VERIFICATION TEST** .

   No

   - Go To 4.

4. **(Q11) DRIVER WINDOW DRIVER (UP) CIRCUIT FOR A SHORT TO GROUND**

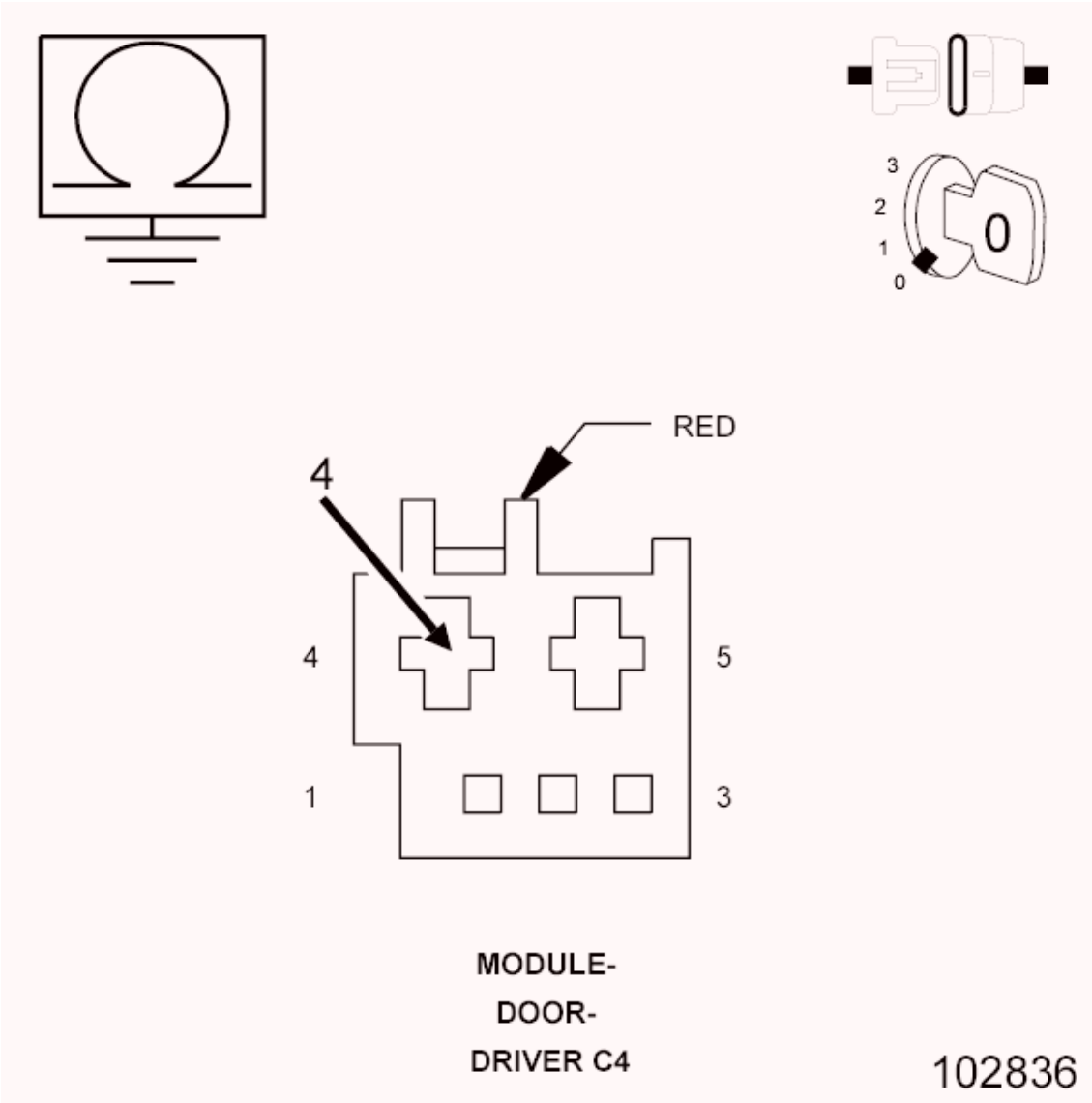

Fig. 17: Checking Driver Window Driver (Up) Circuit For A Short To Ground
Courtesy of CHRYSLER GROUP, LLC

1. Measure the resistance between Ground and the (Q11) Driver Window Driver Up circuit.

   Is the resistance below 10, 000 Ohms?

   Yes

   - Repair the (Q11) Driver Window Driver (Up) circuit for a short to ground.
   - Perform the BODY VERIFICATION TEST. Refer to **BODY VERIFICATION TEST** .

   No

   - Go To 5.

5. **(Q21) DRIVER WINDOW DRIVER (DOWN) CIRCUIT FOR A SHORT TO THE (Q11) DRIVER WINDOW DRIVER (UP) CIRCUIT**

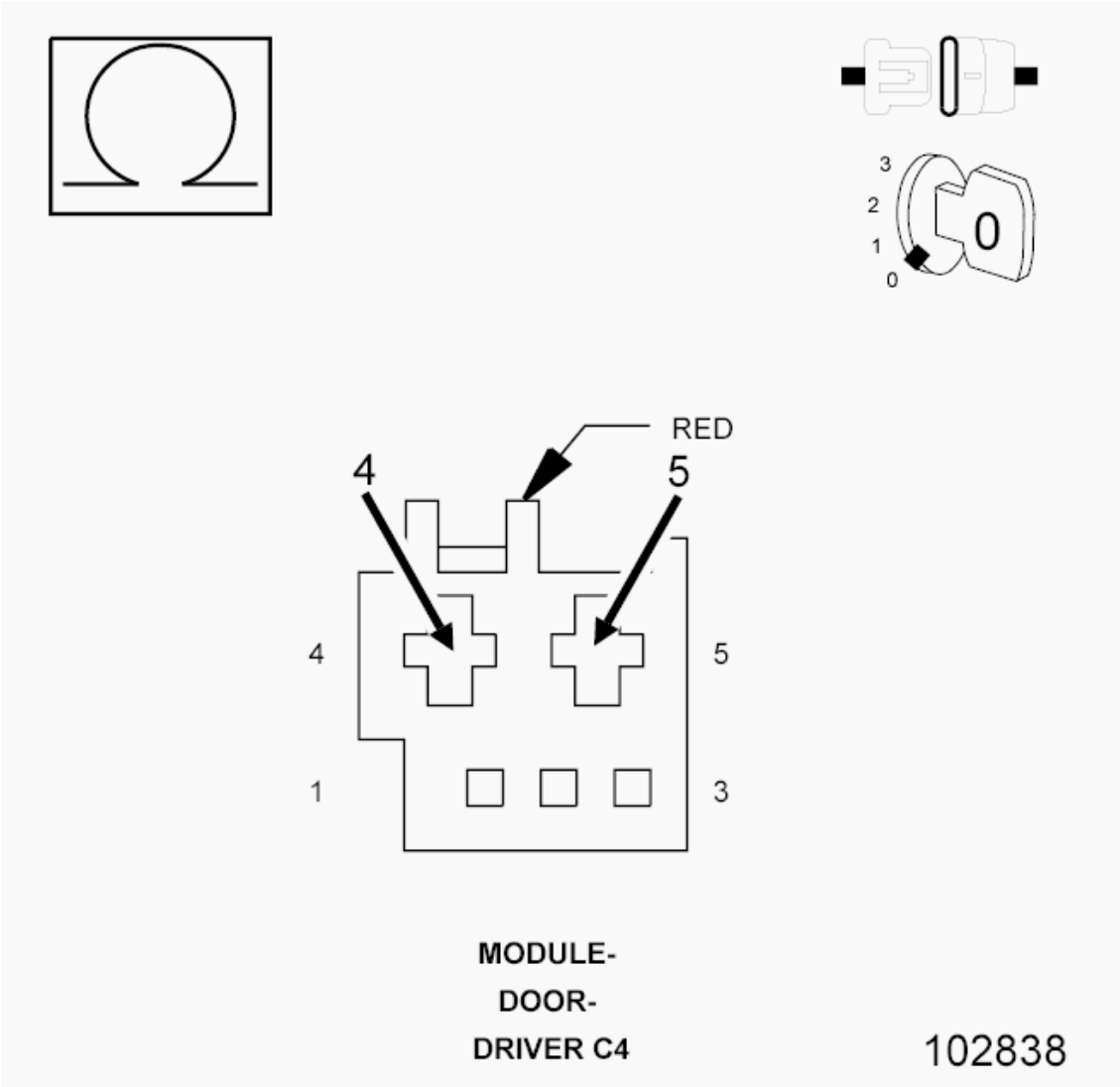

<u>Fig. 18: Checking Driver Window Driver (Down) Circuit For A Short To The Driver Window Driver (Up) Circuit</u>
Courtesy of CHRYSLER GROUP, LLC

1. Measure the resistance between the (Q21) Driver Window Driver (Down) circuit and the (Q11) Driver Window Driver (Up) circuit.

   Is the resistance below 10, 000 Ohms?

   Yes

   - Repair the (Q21) Driver Window Driver (Down) circuit for a short to the (Q11) Driver Window Driver (Up) circuit.

- Perform the BODY VERIFICATION TEST. Refer to **BODY VERIFICATION TEST** .

No

- Replace the Driver Door Module in accordance with the Service Information.
- Perform the BODY VERIFICATION TEST. Refer to **BODY VERIFICATION TEST** .

B1853-13-DRIVER WINDOW CONTROL - CIRCUIT FOR AN OPEN

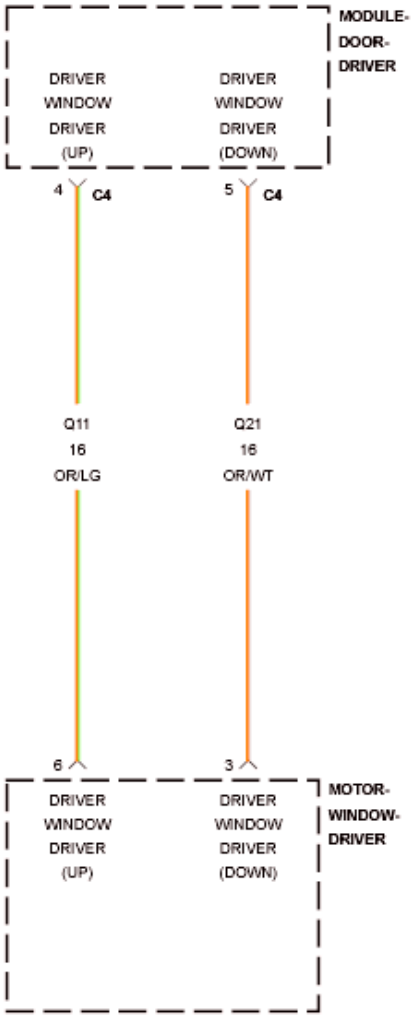

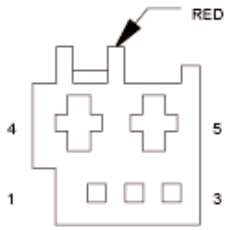

MODULE-
DOOR-
DRIVER C4

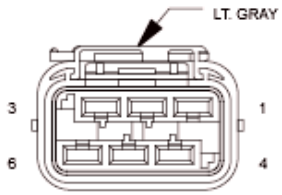

MOTOR-
WINDOW-
DRIVER

Fig. 19: Driver Window Control Wiring Diagram
Courtesy of CHRYSLER GROUP, LLC

For a complete wiring diagram, **refer to appropriate SYSTEM WIRING DIAGRAMS article** .

WHEN MONITORED:

Whenever the module is awake.

SET CONDITION:

When one or both Driver Window Driver circuits (Up and Down) are not supplied with voltage, when they should be, during a window movement command for more than 2000 ms.

POSSIBLE CAUSES

Possible Causes
(Q21) DRIVER WINDOW DRIVER (DOWN) CIRCUIT FOR AN OPEN
(Q11) DRIVER WINDOW DRIVER (UP) CIRCUIT FOR AN OPEN
WINDOW MOTOR (REGULATOR)
DRIVER DOOR MODULE (DDM)

DIAGNOSTIC TEST

1. **TEST FOR INTERMITTENT CONDITION**
    1. Turn the ignition on.
    2. With the scan tool, record and erase DTC's.
    3. Operate the Driver Window switch up and down several times.
    4. Wait 30 seconds.
    5. With the scan tool, read the active DTC's.

    Does the scan tool display B1853-13-DRIVER WINDOW CONTROL - CIRCUIT FOR AN OPEN?

    Yes

    - Go To 2.

    No

    - Test complete, the condition or conditions that originally set this DTC are not present at this time. Using the wiring diagrams as a guide, check all related splices and connectors for signs of water intrusion, corrosion, pushed out or bent terminals, and correct pin tension.
    - Perform the BODY VERIFICATION TEST. Refer to **BODY VERIFICATION TEST** .
2. **WINDOW MOTOR OR CIRCUIT FOR AN OPEN**

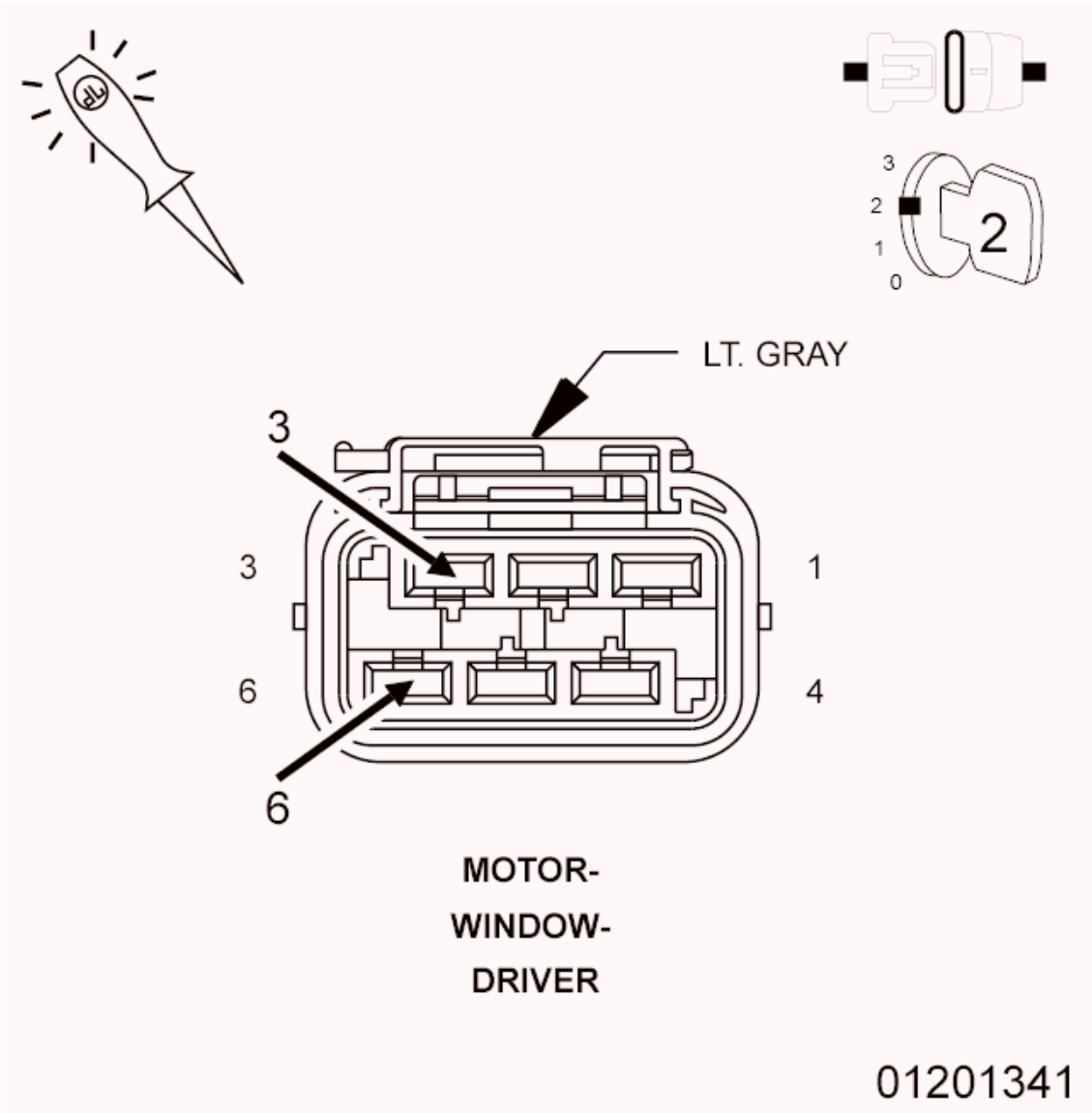

Fig. 20: Checking Window Motor Or Circuit For An Open
Courtesy of CHRYSLER GROUP, LLC

1. Turn the ignition off.
2. Disconnect the Driver Window Motor harness connector.
3. Connect a test light between the (Q11) Driver Window Driver (Up) circuit and the (Q21) Driver Window Driver (Down) circuit.
4. Turn the ignition on.
5. Trip the driver door latch to the closed position.
6. Operate the driver window switch up and down several times while observing the test light.

   Does the test light illuminate brightly when the switch is pressed in both directions? With the express up window, the test light will only flash momentarily each time the switch is activated.

Yes

- Replace the Driver Window Motor (regulator) in accordance with the Service Information.
- Perform the BODY VERIFICATION TEST. Refer to **BODY VERIFICATION TEST** .

No

- Go To 3.

3. **(Q21) DRIVER WINDOW DRIVER (DOWN) CIRCUIT FOR AN OPEN**

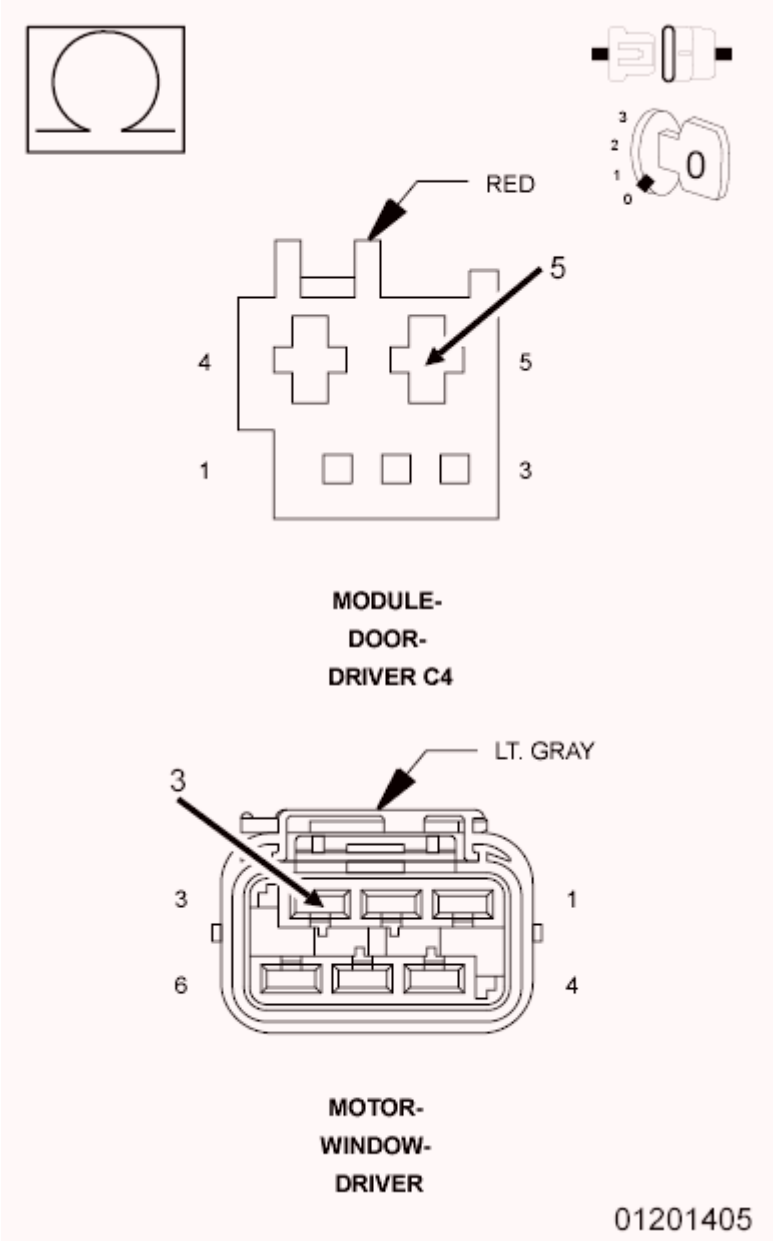

Fig. 21: Checking Driver Window Driver (Down) Circuit For An Open
Courtesy of CHRYSLER GROUP, LLC

1. Turn the ignition off.
2. Disconnect the Driver Door Module C4 harness connector.
3. Measure the resistance of the (Q21) Driver Window Driver (Down) circuit between the Driver Door Module C4 harness connector and the Driver Window Motor harness connector.

   Is the resistance above 2.0 Ohms?

   Yes

   - Repair the open in the (Q21) Driver Window Driver (Down) circuit.
   - Perform the BODY VERIFICATION TEST. Refer to **BODY VERIFICATION TEST** .

   No

   - Go To 4.

4. **(Q11) DRIVER WINDOW DRIVER (UP) CIRCUIT FOR AN OPEN**

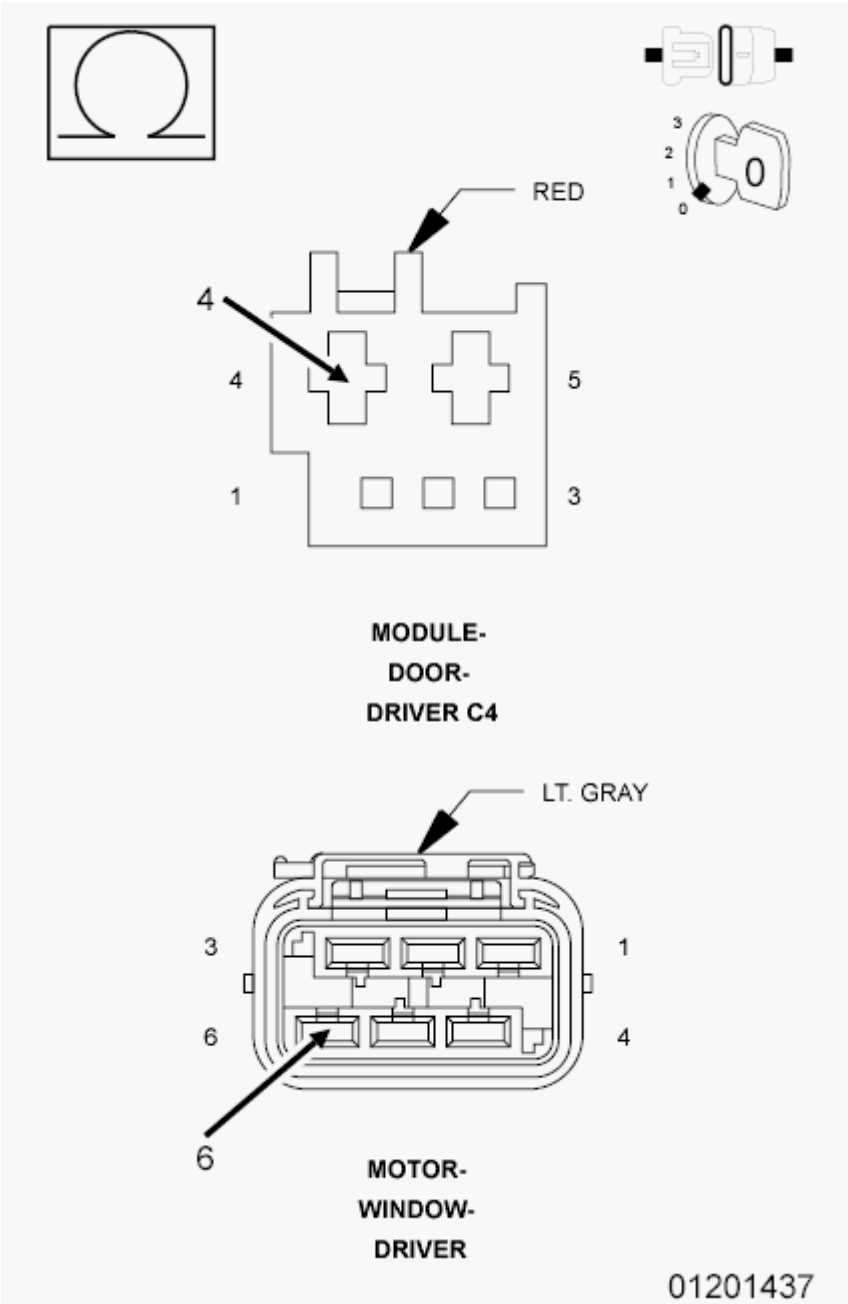

Fig. 22: Checking Driver Window Driver (Up) Circuit For An Open
Courtesy of CHRYSLER GROUP, LLC

1. Measure the resistance of the (Q11) Driver Window Driver (Up) circuit between the Driver Door Module C4 harness connector and the Driver Window Motor harness connector.

   Is the resistance above 2.0 Ohms?

   Yes

   - Repair the open in the (Q11) Driver Window Driver (Up) circuit.

- Perform the BODY VERIFICATION TEST. Refer to **BODY VERIFICATION TEST** .

No

- Replace the Driver Door Module in accordance with the Service Information.
- Perform the BODY VERIFICATION TEST. Refer to **BODY VERIFICATION TEST** .

B1857-11-DRIVER WINDOW POSITION SENSOR POWER SUPPLY - CIRCUIT SHORT TO GROUND

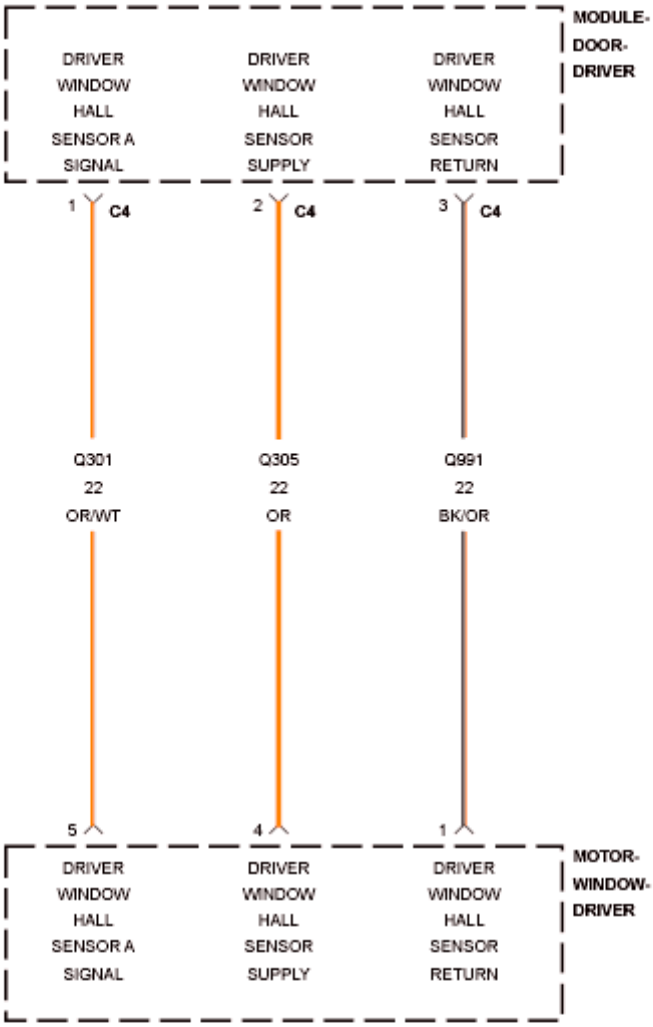

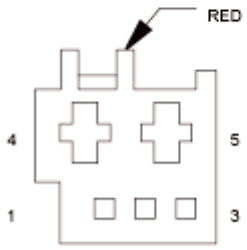

MODULE-
DOOR-
DRIVER C4

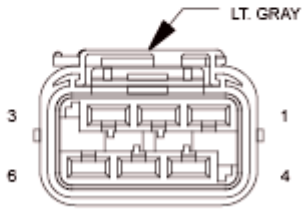

MOTOR-
WINDOW-
DRIVER

Fig. 23: Driver Window Position Sensor Power Supply Wiring Diagram
Courtesy of CHRYSLER GROUP, LLC

For a complete wiring diagram, **refer to appropriate SYSTEM WIRING DIAGRAMS article** .

WHEN MONITORED:

Whenever the module is awake.

SET CONDITION:

When the Driver Window Hall Sensor Supply circuit falls below 0.8 of a Volt for over 480 ms.

POSSIBLE CAUSES

Possible Causes
(Q305) DRIVER WINDOW HALL SENSOR SUPPLY CIRCUIT FOR A SHORT TO GROUND
WINDOW MOTOR SHORTED
DRIVER DOOR MODULE (DDM)

DIAGNOSTIC TEST

1. **TEST FOR INTERMITTENT CONDITION**
    1. Turn the ignition on.
    2. With the scan tool, record and erase DTC's.
    3. Operate the Driver Window switch up and down several times.
    4. Wait 30 seconds.
    5. With the scan tool, read the active DTC's.

    Does the scan tool display B1857-11-DRIVER WINDOW POSITION SENSOR POWER SUPPLY - CIRCUIT SHORT TO GROUND?

    Yes

    - Go To 2.

    No

    - Test complete, the condition or conditions that originally set this DTC are not present at this time. Using the wiring diagrams as a guide, check all related splices and connectors for signs of water intrusion, corrosion, pushed out or bent terminals, and correct pin tension.
    - Perform the BODY VERIFICATION TEST. Refer to **BODY VERIFICATION TEST** .
2. **WINDOW MOTOR SHORTED**

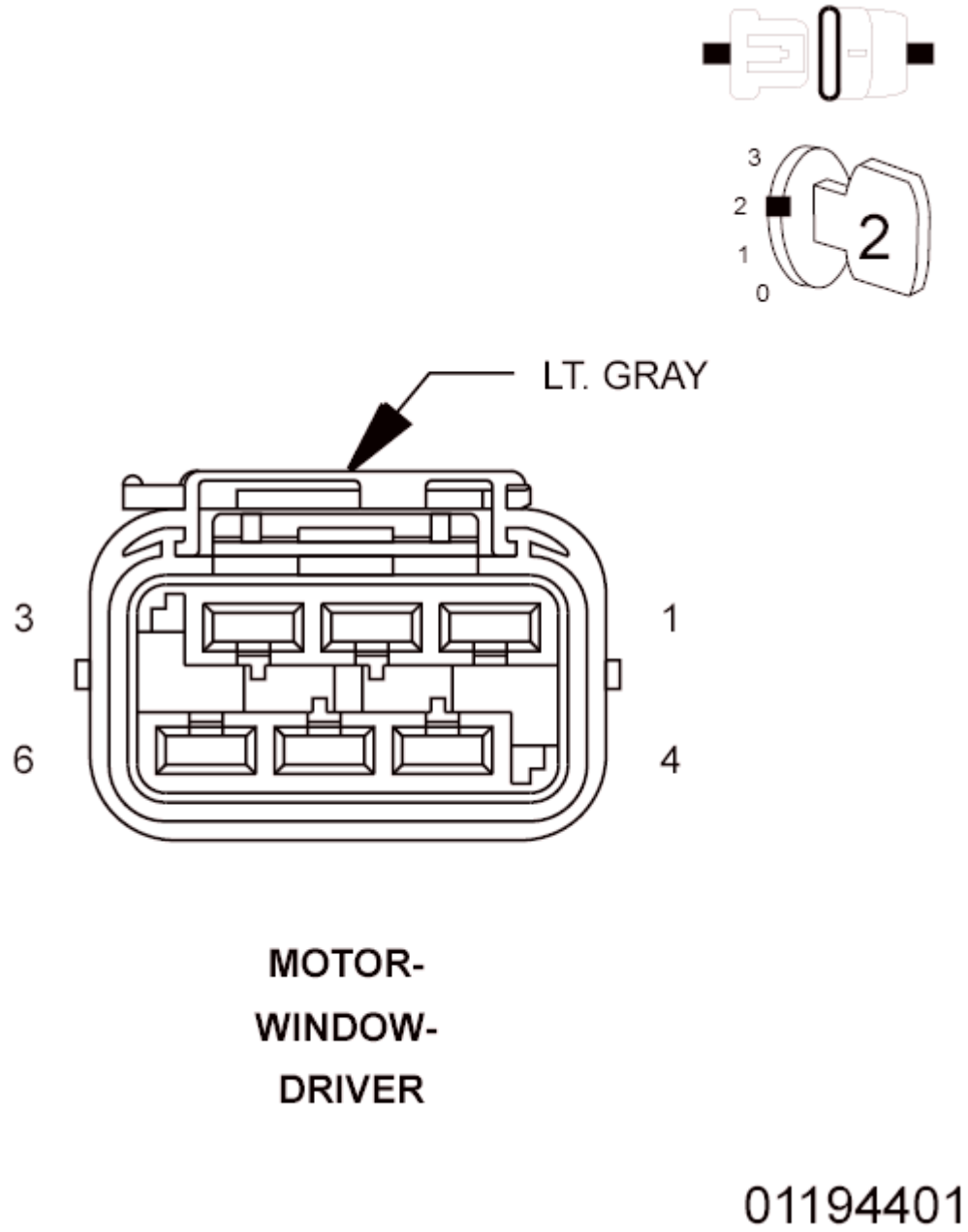

Fig. 24: Driver Window Motor Connector End View
Courtesy of CHRYSLER GROUP, LLC

1. With the scan tool, erase DTC's.
2. Turn the ignition off.
3. Disconnect the Driver Window Motor harness connector.
4. Turn the ignition on.
5. Operate the Driver Window switch up and down several times.
6. With the scan tool, read the active DTC's.

Does the scan tool display B1857-11-DRIVER WINDOW POSITION SENSOR POWER SUPPLY - CIRCUIT SHORT TO GROUND?

Yes

- Go To 3.

No

- Replace the Window Motor (regulator) in accordance with the Service Information.
- Perform the BODY VERIFICATION TEST. Refer to **BODY VERIFICATION TEST** .

3. **(Q305) DRIVER WINDOW HALL SENSOR SUPPLY CIRCUIT FOR A SHORT TO GROUND**

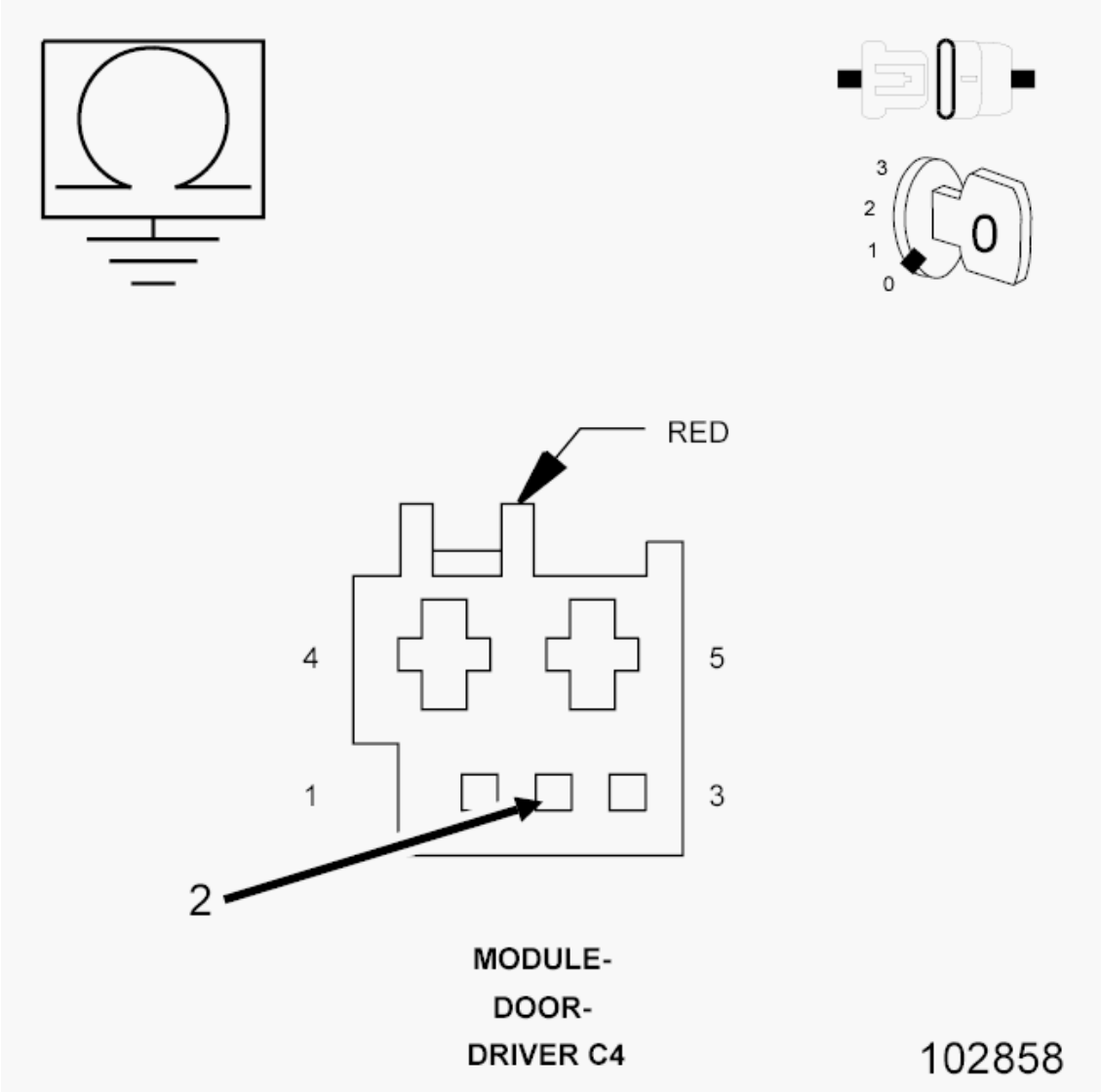

Fig. 25: Checking Driver Window Hall Sensor Supply Circuit For A Short To Ground
Courtesy of CHRYSLER GROUP, LLC

1. Turn the ignition off.
2. Disconnect the Driver Door Module C4 harness connector.
3. Measure the resistance between ground and the (Q305) Driver Window Hall Sensor Supply circuit.

   Is the resistance below 10, 000 Ohms?

   Yes

   - Repair the short to ground in the (Q305) Driver Window Hall Sensor Supply circuit.
   - Perform the BODY VERIFICATION TEST. Refer to **BODY VERIFICATION TEST** .

   No

   - Replace the Driver Door Module in accordance with the Service Information.
   - Perform the BODY VERIFICATION TEST. Refer to **BODY VERIFICATION TEST** .

B1857-15-DRIVER WINDOW POSITION SENSOR POWER SUPPLY - CIRCUIT SHORT TO BATTERY OR OPEN - EXPRESS MOTOR ONLY

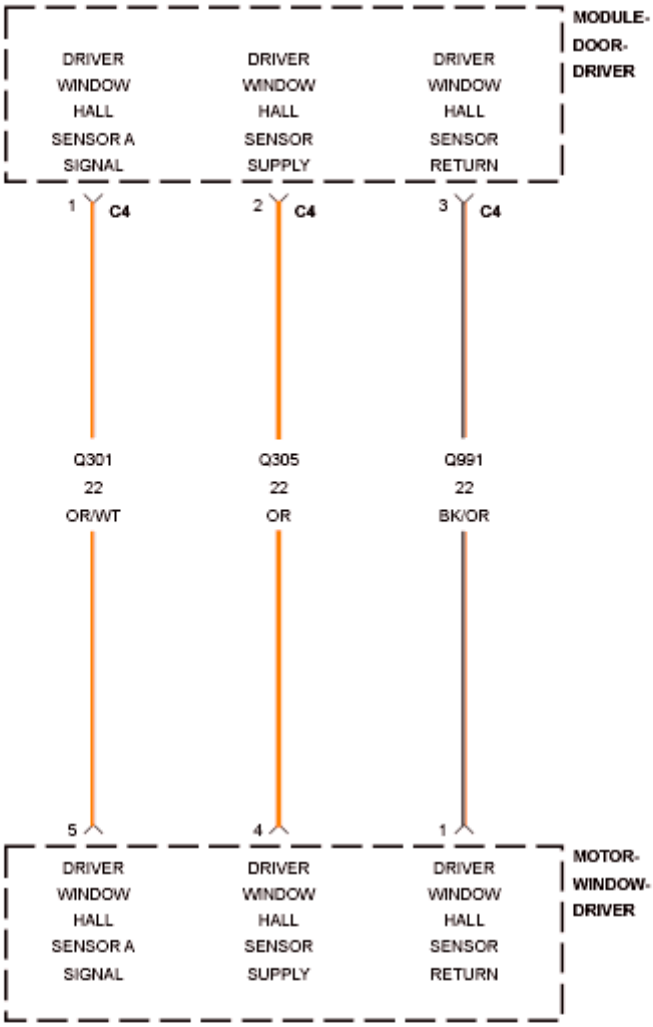

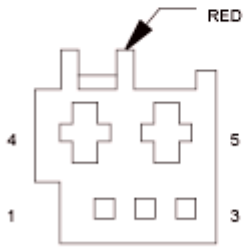

MODULE-
DOOR-
DRIVER C4

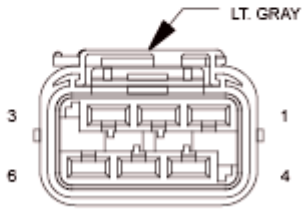

MOTOR-
WINDOW-
DRIVER

Fig. 26: Driver Window Position Sensor Power Supply Wiring Diagram
Courtesy of CHRYSLER GROUP, LLC

For a complete wiring diagram, **refer to appropriate SYSTEM WIRING DIAGRAMS article** .

WHEN MONITORED:

Whenever the module is awake.

SET CONDITION:

When the Driver Window Hall Sensor Supply circuit is above 1.5 Volts for over 2000 ms. and the power to the module has been turned off.

POSSIBLE CAUSES

Possible Causes
(Q305) DRIVER WINDOW HALL SENSOR SUPPLY CIRCUIT FOR A SHORT TO VOLTAGE
(Q305) DRIVER WINDOW HALL SENSOR SUPPLY CIRCUIT FOR AN OPEN
(Q991) DRIVER WINDOW HALL SENSOR RETURN CIRCUIT FOR AN OPEN
DRIVER WINDOW MOTOR
DRIVER DOOR MODULE (DDM)

DIAGNOSTIC TEST

1. **TEST FOR INTERMITTENT CONDITION**
    1. Turn the ignition on.
    2. With the scan tool, record and erase DTC's.
    3. Wait 30 seconds.
    4. Operate the Driver Window switch up and down several times.
    5. With the scan tool, read the active DTC's.

    Does the scan tool display B1857-15-DRIVER WINDOW POSITION SENSOR POWER SUPPLY - CIRCUIT SHORT TO BATTERY OR OPEN?

    Yes

    - Go To 2.

    No

    - Test complete, the condition or conditions that originally set this DTC are not present at this time. Using the wiring diagrams as a guide, check all related splices and connectors for signs of water intrusion, corrosion, pushed out or bent terminals, and correct pin tension.
    - Perform the BODY VERIFICATION TEST. Refer to **BODY VERIFICATION TEST** .

2. **(Q305) DRIVER WINDOW HALL SENSOR SUPPLY CIRCUIT FOR A SHORT TO VOLTAGE**

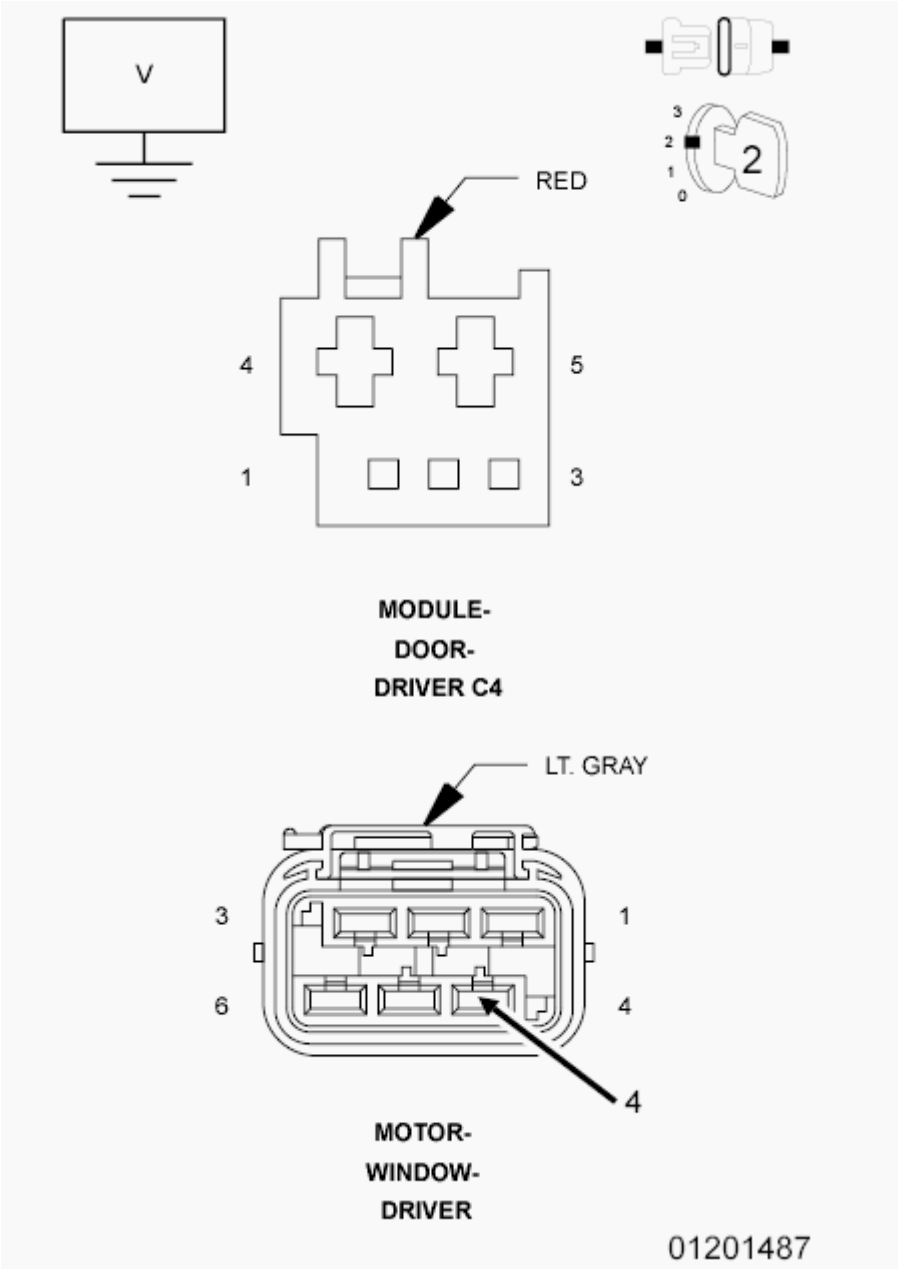

Fig. 27: Checking Driver Window Hall Sensor Supply Circuit For A Short To Voltage
Courtesy of CHRYSLER GROUP, LLC

1. Turn the ignition off.
2. Disconnect the Driver Door Module C4 harness connector.
3. Disconnect the Driver Window Motor harness connector.
4. Turn the ignition on.
5. Measure the voltage between ground and the (Q305) Driver Window Hall Sensor Supply circuit in the Driver Window Motor harness connector and ground.

Is there any voltage present?

Yes

- Repair the short to voltage in the (Q305) Driver Window Hall Sensor Supply circuit.
- Perform the BODY VERIFICATION TEST. Refer to **BODY VERIFICATION TEST** .

No

- Go To 3.

3. **(Q305) DRIVER WINDOW HALL SENSOR SUPPLY CIRCUIT FOR AN OPEN**

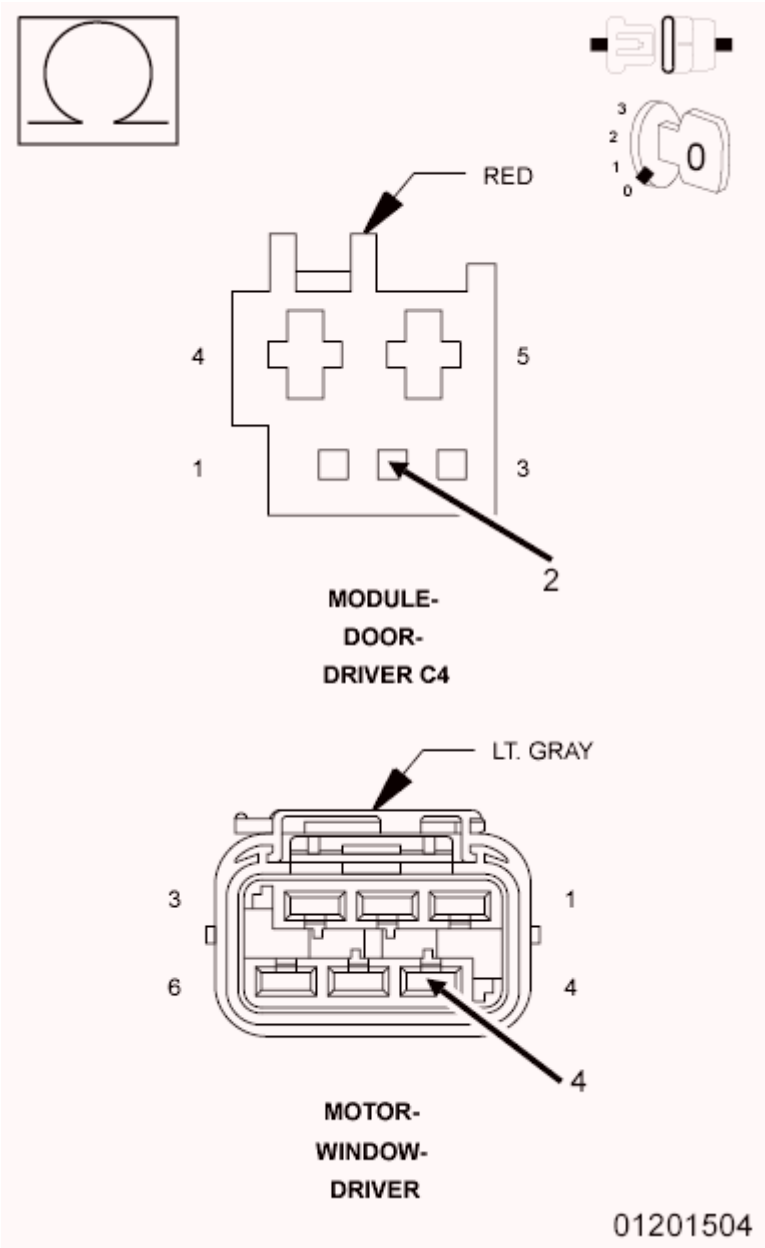

Fig. 28: Checking Driver Window Hall Sensor Supply Circuit For An Open
Courtesy of CHRYSLER GROUP, LLC

1. Turn the ignition off.
2. Measure the resistance of the (Q305) Driver Window Hall Sensor Supply circuit from the Driver Door Module C4 harness connector to the Driver Window Motor harness connector.

   Is the resistance above 2.0 Ohms?

   Yes

   - Repair the open in the (Q305) Driver Window Hall Sensor Supply circuit.
   - Perform the BODY VERIFICATION TEST. Refer to **BODY VERIFICATION TEST** .

   No

   - Go To 4.

4. **(Q991) DRIVER WINDOW HALL SENSOR RETURN CIRCUIT FOR AN OPEN**

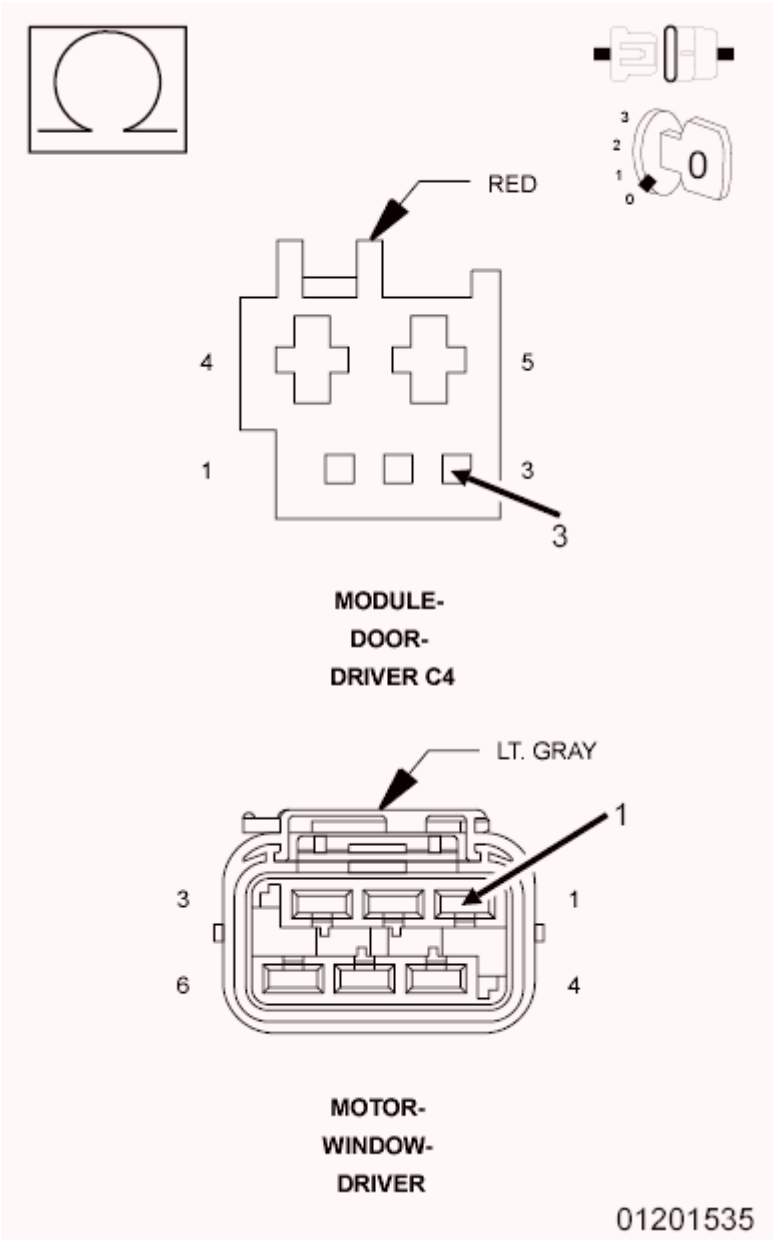

Fig. 29: Checking Driver Window Hall Sensor Return Circuit For An Open
Courtesy of CHRYSLER GROUP, LLC

1. Measure the resistance of the (Q991) Driver Window Hall Sensor Return circuit from the Driver Door Module C4 harness connector to the Driver Window Motor harness connector.

   Is the resistance above 2.0 Ohms?

   Yes

   - Repair the open in the (Q991) Driver Window Hall Sensor Return circuit.
   - Perform the BODY VERIFICATION TEST. Refer to **BODY VERIFICATION TEST** .

No

- Go To 5.

5. **DRIVER WINDOW HALL SENSOR OPEN**

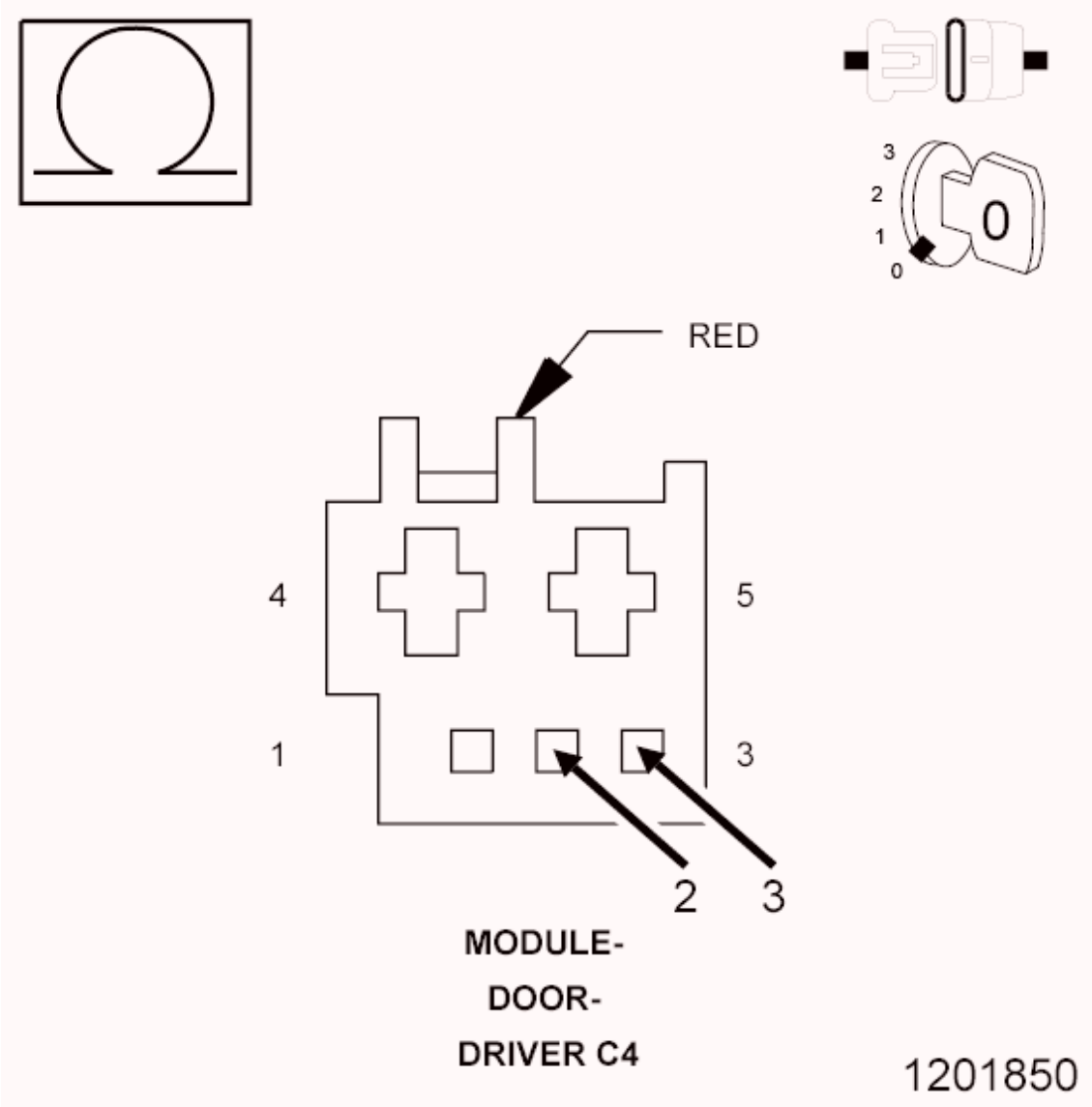

Fig. 30: Checking Driver Window Hall Sensor For An Open
Courtesy of CHRYSLER GROUP, LLC

1. Reconnect the Drive Window Motor harness connector.
2. Measure the resistance between the (Q991) Driver Window Hall Sensor Return circuit and the (Q305) Driver Window Hall Sensor Supply circuit in the Driver Door Module C4 harness connector.

NOTE: **If the Ohmmeter displays "OL", reconnect the Driver Door Module C4 harness connector and move the motor to a different position.**

Disconnect the Driver Door Module C4 harness connector and check the resistance again. If the Ohmmeter still displays "OL", re-try moving the motor again and re-check.

Is the resistance between 500, 000 and 650, 000 (500k and 650k) Ohms?

Yes

- Replace the Door Module in accordance with the Service Information
- Perform the BODY VERIFICATION TEST. Refer to **BODY VERIFICATION TEST** .

No

- Replace the Window Motor in accordance with the Service Information.
- Perform the BODY VERIFICATION TEST. Refer to **BODY VERIFICATION TEST** .

B185A-31-DRIVER WINDOW POSITION SENSOR - NO SIGNAL

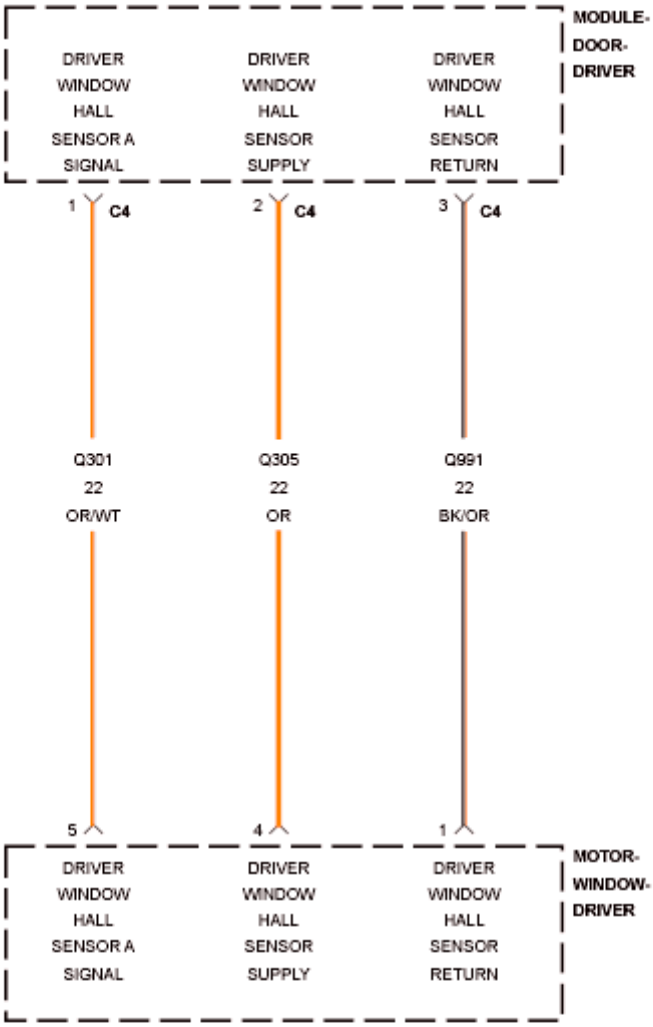

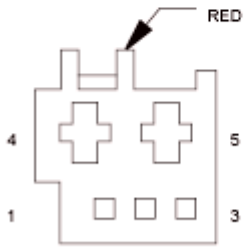

MODULE-
DOOR-
DRIVER C4

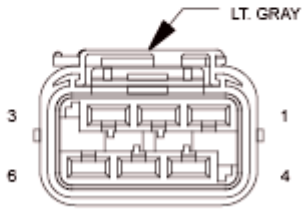

MOTOR-
WINDOW-
DRIVER

Fig. 31: Driver Window Position Sensor Power Supply Wiring Diagram
Courtesy of CHRYSLER GROUP, LLC

For a complete wiring diagram, **refer to appropriate SYSTEM WIRING DIAGRAMS article** .

WHEN MONITORED:

Whenever the module is awake.

SET CONDITION:

When one of the window motor hall sensors does not generate a signal during a window movement.

POSSIBLE CAUSES

Possible Causes
(Q301) DRIVER WINDOW HALL SENSOR A SIGNAL CIRCUIT FOR A SHORT TO GROUND
(Q991) DRIVER WINDOW HALL SENSOR RETURN CIRCUIT FOR AN OPEN
(Q301) DRIVER WINDOW HALL SENSOR A SIGNAL CIRCUIT FOR A SHORT TO THE (Q991) DRIVER WINDOW HALL SENSOR RETURN CIRCUIT
(Q301) DRIVER WINDOW HALL SENSOR A SIGNAL CIRCUIT FOR AN OPEN
WINDOW MOTOR MALFUNCTION

DIAGNOSTIC TEST

1. **TEST FOR INTERMITTENT CONDITION**
    1. Turn the ignition on.
    2. With the scan tool, record and erase DTC's.
    3. Operate the Driver Window switch up and down several times.
    4. Wait 30 seconds.
    5. With the scan tool, read the active DTC's.

    Does the scan tool display B185A-31-DRIVER WINDOW POSITION SENSOR - NO SIGNAL?

    Yes

    - Go To 2.

    No

    - Test complete, the condition or conditions that originally set this DTC are not present at this time. Using the wiring diagrams as a guide, check all related splices and connectors for signs of water intrusion, corrosion, pushed out or bent terminals, and correct pin tension.
    - Perform the BODY VERIFICATION TEST. Refer to **BODY VERIFICATION TEST** .
2. **(Q301) DRIVER WINDOW HALL SENSOR A SIGNAL SHORTED TO GROUND**

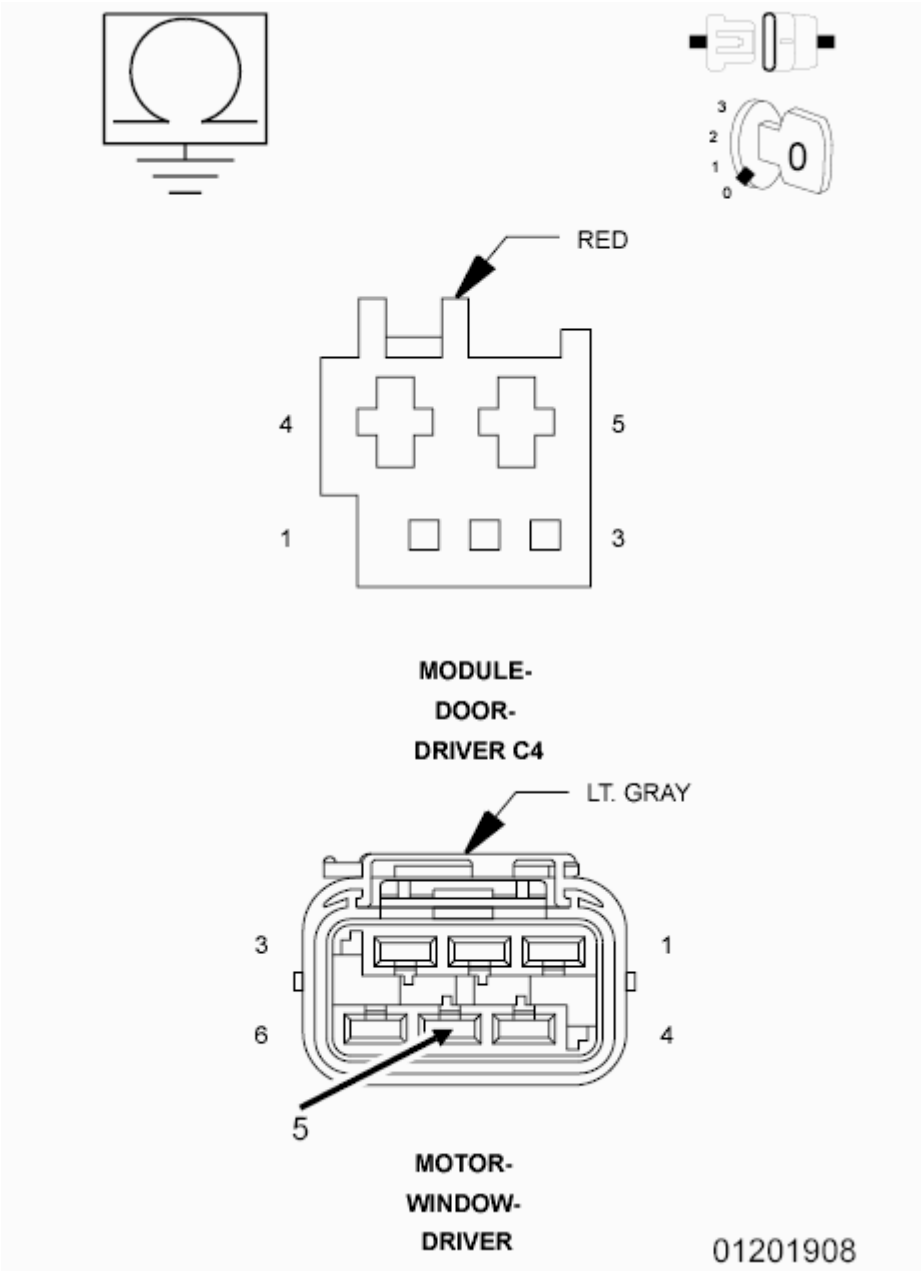

Fig. 32: Checking Driver Window Hall Sensor A Signal For A Short To Ground
Courtesy of CHRYSLER GROUP, LLC

1. Turn the ignition off.
2. Disconnect the Driver Window Motor harness connector.
3. Disconnect the Driver Door Module C4 harness connector.
4. Measure the resistance between ground and the (Q301) Driver Window Hall Sensor A Signal circuit in the Driver Window Motor harness connector.

   Is the resistance below 10, 000 Ohms?

Yes

- Repair the short to ground in the Driver Window Hall Sensor A signal circuit.
- Perform the BODY VERIFICATION TEST. Refer to **BODY VERIFICATION TEST** .

No

- Go To 3.

3. **(Q991) DRIVER WINDOW HALL SENSOR RETURN CIRCUIT FOR AN OPEN**

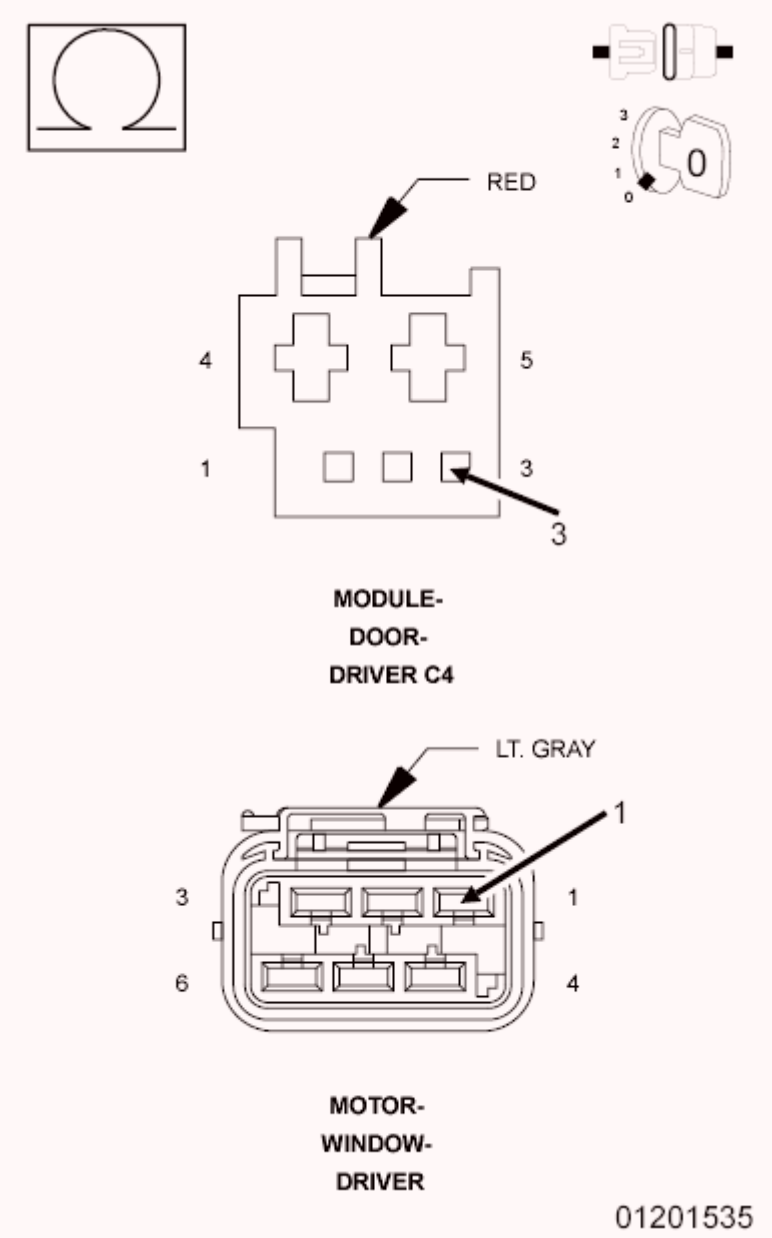

Fig. 33: Checking Driver Window Hall Sensor Return Circuit For An Open
Courtesy of CHRYSLER GROUP, LLC

1. Measure the resistance of the (Q991) Driver Window Hall Sensor Return circuit between the Driver Door Module C4 harness connector and the Driver Window Motor harness connector.

   Is the resistance above 2.0 Ohms?

   Yes

   - Repair the open in the (Q991) Driver Window Hall Sensor Return circuit.
   - Perform the BODY VERIFICATION TEST. Refer to **BODY VERIFICATION TEST** .

   No

   - Go To 4.

4. **(Q301) DRIVER WINDOW HALL SENSOR A SIGNAL CIRCUIT FOR AN OPEN**

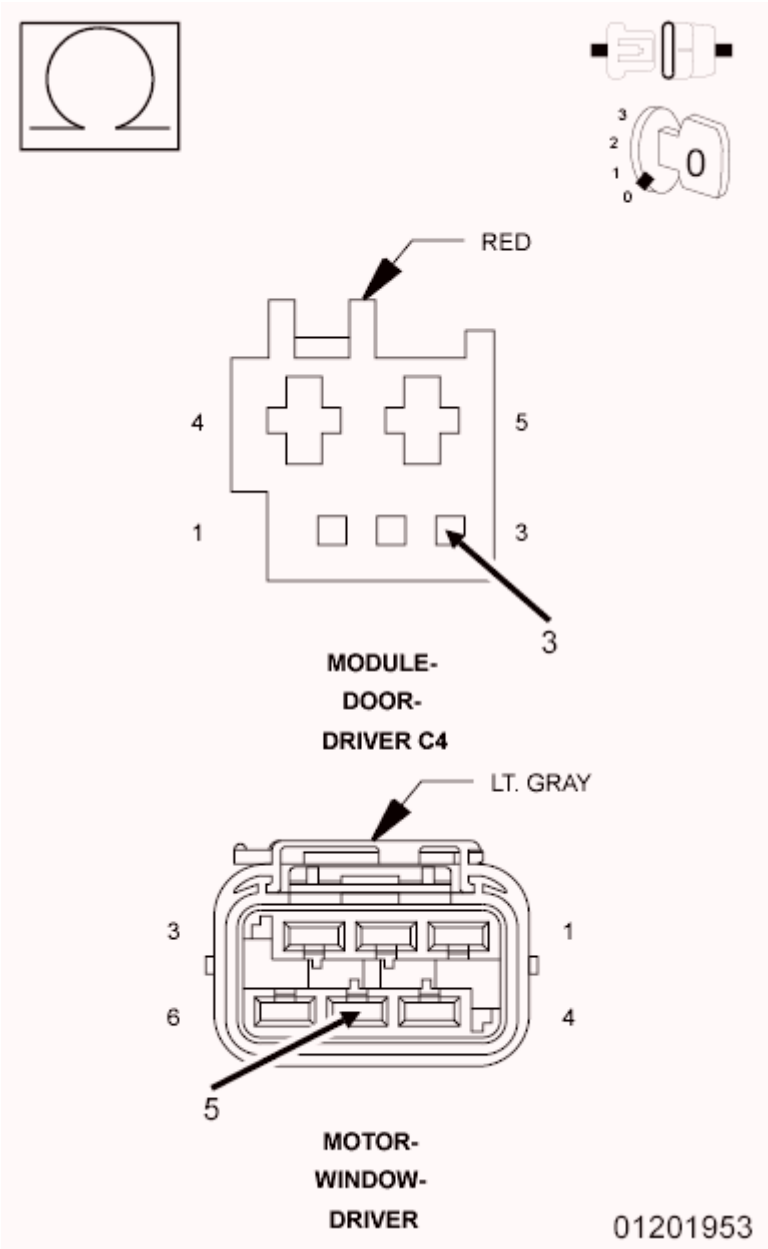

Fig. 34: Checking Driver Window Hall Sensor A Signal Circuit For An Open
Courtesy of CHRYSLER GROUP, LLC

1. Measure the resistance of the (Q301) Driver Window Hall Sensor A Signal circuit between the Driver Door Module C4 harness connector and the Driver Window Motor harness connector.

   Is the resistance above 2.0 Ohms?

   Yes

   - Repair the open in the (Q301) Driver Window Hall Sensor A Signal circuit.
   - Perform the BODY VERIFICATION TEST. Refer to **BODY VERIFICATION TEST** .

No

- Go To 5.

5. **(Q301) DRIVER WINDOW HALL SENSOR A SIGNAL CIRCUIT FOR A SHORT TO THE (Q991) DRIVER WINDOW HALL SENSOR RETURN CIRCUIT**

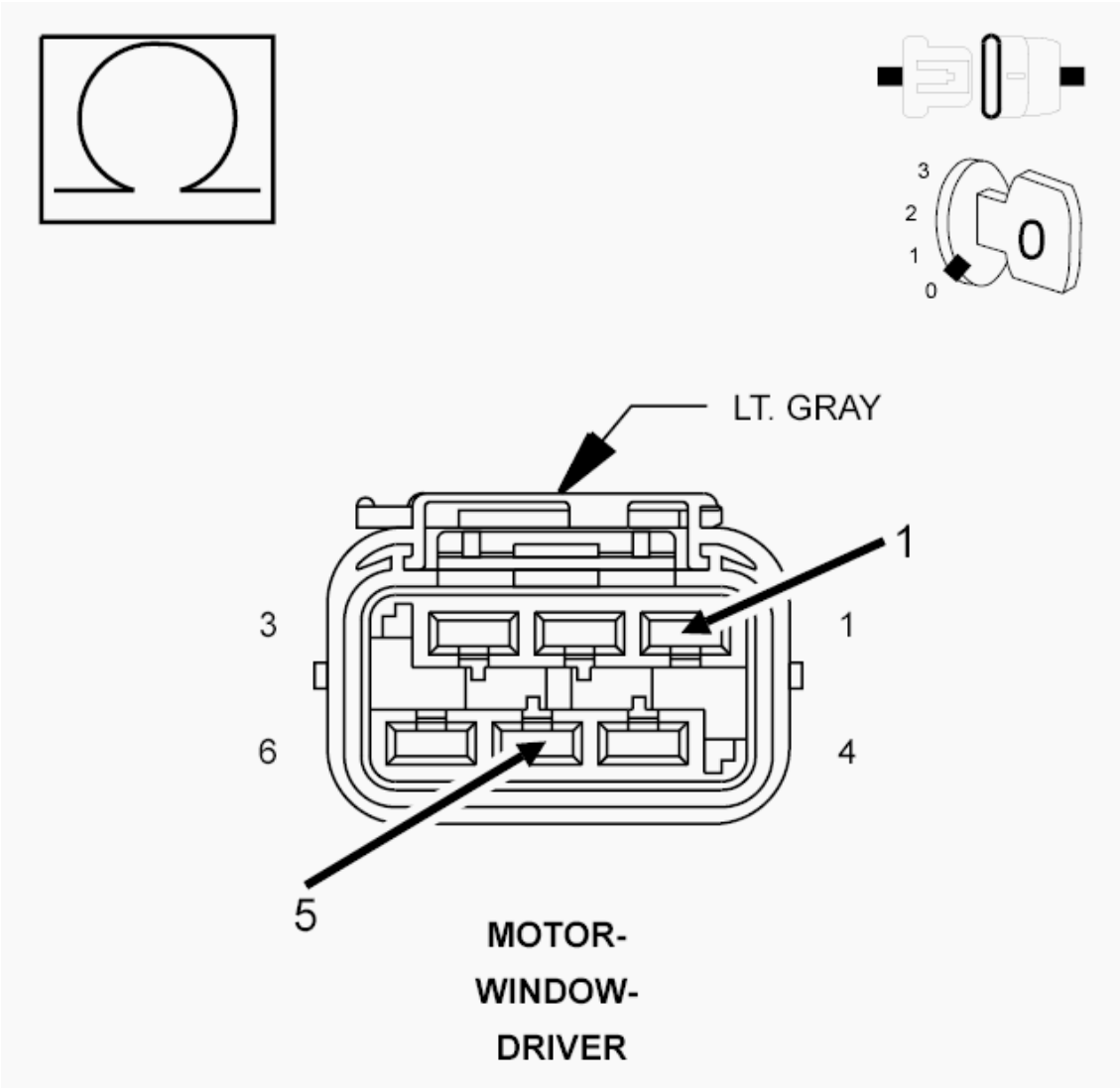

Fig. 35: Checking Driver Window Hall Sensor A Signal Circuit For A Short To The Driver Window Hall Sensor Return Circuit
Courtesy of CHRYSLER GROUP, LLC

1. Measure the resistance between the (Q301) Driver Window Hall Sensor A Signal circuit and the (Q991) Driver Window Hall Sensor Return circuit in the Driver Window Motor harness connector.

   Is the resistance below 10, 000 Ohms?

   Yes

- Repair the (Q301) Driver Window Hall Sensor A Signal circuit for a short to the (Q991) Driver Window Hall Sensor Return circuit.
- Perform the BODY VERIFICATION TEST. Refer to **BODY VERIFICATION TEST** .

No

- Replace the Window Motor in accordance with the Service Information.
- Perform the BODY VERIFICATION TEST. Refer to **BODY VERIFICATION TEST** .

B18B5-00-MASTER SWITCH - FRONT LEFT WINDOW SWITCH

For a complete wiring diagram, **refer to appropriate SYSTEM WIRING DIAGRAMS article** .

WHEN MONITORED:

At all times.

SET CONDITION:

Whenever the module detects a Front Left Window signal from the master power window switch, for over 30 seconds, this code will set.

POSSIBLE CAUSES

POSSIBLE CAUSES
MASTER POWER WINDOW SWITCH

DIAGNOSTIC TEST

1. **TEST FOR INTERMITTENT CONDITION**
    1. Turn the ignition on.
    2. With the scan tool, record and erase the DTC's.
    3. Operate the Front Left Window up and down several times.
    4. Wait 30 seconds.
    5. With the scan tool, read the active DTC's.

    Does the scan tool display B18B5-00-MASTER SWITCH-FRONT LEFT WINDOW SWITCH as active?

    Yes

    - Go To 2.

    No

- The conditions that caused this code to set are not present at this time. Operate the switch several more times. If the switch ever sticks, replace it.
- Perform the BODY VERIFICATION TEST. Refer to **BODY VERIFICATION TEST** .

2. **MASTER POWER WINDOW/DOOR LOCK SWITCH**

NOTE: Anytime this code is active, the switch must be replaced.

Repair

- Replace the Driver Window/Door Lock Switch in accordance with the Service Information.
- Perform the BODY VERIFICATION TEST. Refer to **BODY VERIFICATION TEST** .

B18B-00-MASTER SWITCH - FRONT RIGHT WINDOW SWITCH

For a complete wiring diagram, **refer to appropriate SYSTEM WIRING DIAGRAMS article** .

WHEN MONITORED:

At all times.

SET CONDITION:

Whenever the module detects a Front Right Window signal from the master power window switch, for over 30 seconds, this code will set.

POSSIBLE CAUSES

POSSIBLE CAUSES
MASTER POWER WINDOW SWITCH

DIAGNOSTIC TEST

1. **TEST FOR INTERMITTENT CONDITION**
   1. Turn the ignition on.
   2. With the scan tool, record and erase the DTC's.
   3. Operate the Front Right Window from the master switch up and down several times.
   4. Wait 30 seconds.
   5. With the scan tool, read the active DTC's.

   Does the scan tool display B18B6-00-MASTER SWITCH-FRONT RIGHT WINDOW SWITCH as active?

   Yes

   - Go To 2.

No

- The conditions that caused this code to set are not present at this time. Operate the switch several more times. If the switch ever sticks, replace it.
- Perform the BODY VERIFICATION TEST. Refer to **BODY VERIFICATION TEST** .

2. **MASTER POWER WINDOW/DOOR LOCK SWITCH**

NOTE: Anytime this code is active, the switch must be replaced.

Repair

- Replace the Driver Window/Door Lock Switch in accordance with the Service Information.
- Perform the BODY VERIFICATION TEST. Refer to **BODY VERIFICATION TEST** .

B18B7-00-MASTER SWITCH - REAR LEFT WINDOW SWITCH

For a complete wiring diagram, **refer to appropriate SYSTEM WIRING DIAGRAMS article** .

WHEN MONITORED:

At all times.

SET CONDITION:

Whenever the module detects a Rear Left Window signal from the master power window switch, for over 30 seconds, this code will set.

POSSIBLE CAUSES

POSSIBLE CAUSES
MASTER POWER WINDOW SWITCH

DIAGNOSTIC TEST

1. **TEST FOR INTERMITTENT CONDITION**
    1. Turn the ignition on.
    2. With the scan tool, record and erase the DTC's.
    3. Operate the Rear Left Window, from the master switch, up and down several times.
    4. Wait 30 seconds.
    5. With the scan tool, read the active DTC's.

    Does the scan tool display B18B7-00-MASTER SWITCH-REAR LEFT WINDOW SWITCH as active?

    Yes

- Go To 2.

No

- The conditions that caused this code to set are not present at this time. Operate the switch several more times. If the switch ever sticks, replace it.
- Perform the BODY VERIFICATION TEST. Refer to **BODY VERIFICATION TEST** .

2. **MASTER POWER WINDOW/DOOR LOCK SWITCH**

NOTE: Anytime this code is active, the switch must be replaced.

Repair

- Replace the Driver Window/Door Lock Switch in accordance with the Service Information.
- Perform the BODY VERIFICATION TEST. Refer to **BODY VERIFICATION TEST** .

B18B8-00-MASTER SWITCH - REAR RIGHT WINDOW SWITCH

For a complete wiring diagram, **refer to appropriate SYSTEM WIRING DIAGRAMS article** .

WHEN MONITORED:

At all times.

SET CONDITION:

Whenever the module detects a Rear Right Window signal from the master power window switch, for over 30 seconds, this code will set.

POSSIBLE CAUSES

POSSIBLE CAUSES
MASTER POWER WINDOW SWITCH

DIAGNOSTIC TEST

1. **TEST FOR INTERMITTENT CONDITION**
   1. Turn the ignition on.
   2. With the scan tool, record and erase the DTC's.
   3. Operate the Front Left Window up and down several times.
   4. Wait 30 seconds.
   5. With the scan tool, read the active DTC's.

   Does the scan tool display B18B8-00-MASTER SWITCH-REAR RIGHT WINDOW SWITCH as active?

Yes

- Go To 2.

No

- The conditions that caused this code to set are not present at this time. Operate the switch several more times. If the switch ever sticks, replace it.
- Perform the BODY VERIFICATION TEST. Refer to **BODY VERIFICATION TEST** .

2. **MASTER POWER WINDOW/DOOR LOCK SWITCH**

NOTE: Anytime this code is active, the switch must be replaced.

Repair

- Replace the Driver Window/Door Lock Switch in accordance with the Service Information.
- Perform the BODY VERIFICATION TEST. Refer to **BODY VERIFICATION TEST** .

B1D00-2A-MIRROR FOLD SWITCH INPUT STUCK

For a complete wiring diagram, **refer to appropriate SYSTEM WIRING DIAGRAMS article** .

WHEN MONITORED:

When the mirror fold operation is requested.

SET CONDITION:

If the Driver Door Module detects that the Mirror Switch is stuck in the same position for more than 30 seconds.

POSSIBLE CAUSES

Possible Causes
MIRROR SWITCH

DIAGNOSTIC TEST

1. **VERIFY IF DTC B1D00-2A MIRROR FOLD SWITCH INPUT STUCK IS ACTIVE**
    1. Turn the ignition on.
    2. With the scan tool, erase the DTC's.
    3. Press the Mirror Fold Switch in both directions several times.
    4. Cycle the ignition from on to off three times.
    5. Turn the ignition on.
    6. With the scan tool, read the active DTC's.

Does the scan tool display active: B1D00-2A MIRROR FOLD SWITCH INPUT STUCK?

Yes

- Replace the Drivers Door Window/Mirror Switch Assembly in accordance with the Service Information.
- Perform the BODY VERIFICATION TEST. Refer to **BODY VERIFICATION TEST** .

No

- Test complete, the condition or conditions that originally set this DTC are not present at this time. Using the wiring diagrams as a guide, check all related splices and connectors for signs of water intrusion, corrosion, pushed out or bent terminals and poor pin fit. Repair as necessary.
- Perform the BODY VERIFICATION TEST. Refer to **BODY VERIFICATION TEST** .

B1D04-2A-MIRROR ADJUST SWITCH INPUT - SIGNAL STUCK IN RANGE

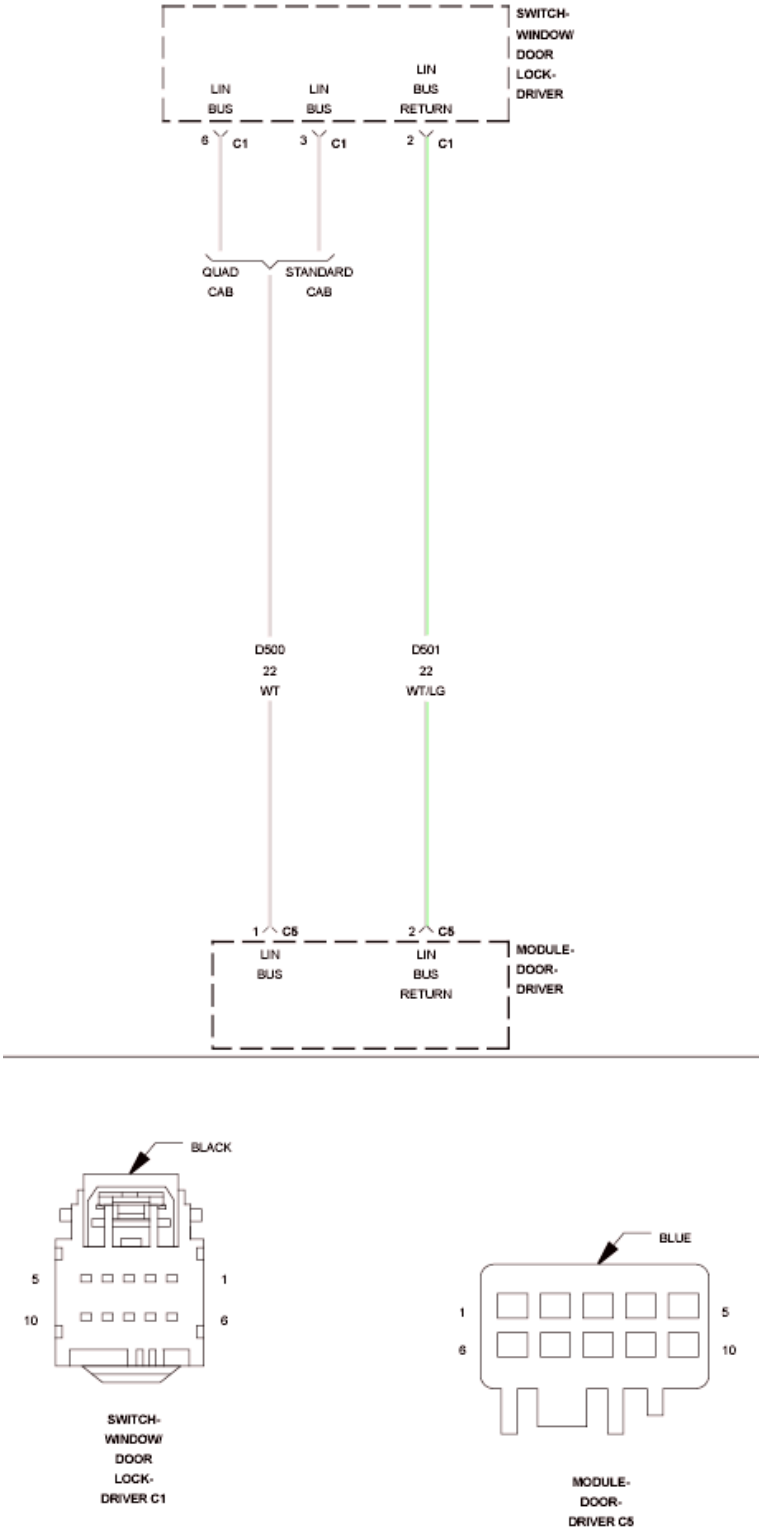

Fig. 36: Left Mirror Select Switch Wiring Diagram
Courtesy of CHRYSLER GROUP, LLC

For a complete wiring diagram, **refer to appropriate SYSTEM WIRING DIAGRAMS article** .

WHEN MONITORED:

Continuously.

SET CONDITION:

The Door Module senses the Mirror Adjust switch input for more than 30 seconds.

POSSIBLE CAUSES

Possible Causes
OBJECT HOLDING MIRROR ADJUST SWITCH IN A PUSHED POSITION
SUBSTANCE CAUSING MIRROR ADJUST SWITCH TO GET STUCK IN A PUSHED POSITION
DRIVER DOOR SWITCH ASSEMBLY

DIAGNOSTIC TEST

1. **INSPECT DRIVER DOOR SWITCH ASSEMBLY FOR DAMAGE**

   NOTE: Diagnose and repair all LIN Bus related Diagnostic Trouble Codes (DTC's) before performing this test procedure.

   1. Turn the ignition off.
   2. Inspect the Driver Door switch assembly for damage.

      Is the switch assembly damaged?

      Yes

      - Replace the Driver Door switch assembly in accordance with the Service Information.
      - Perform the BODY VERIFICATION TEST. Refer to **BODY VERIFICATION TEST** .

      No

      - Go To 2.
2. **INSPECT FOR OBJECT OR SUBSTANCE CAUSING MIRROR ADJUST SWITCH TO STAY OR STICK IN A PUSHED POSITION**
   1. Inspect the Mirror Adjust switch for anything that would cause it to stay or stick in a pushed position.

      Is anything present that would cause the Mirror Adjust switch to stay or stick in a pushed position?

      Yes

      - Repair as necessary.

- Perform the BODY VERIFICATION TEST. Refer to **BODY VERIFICATION TEST** .

No

- Go To 3.

3. **TEST FOR INTERMITTENT CONDITION**
   1. Turn the ignition on.
   2. Using a scan tool, record and erase DTC's.
   3. Press and release either Mirror Select switch.
   4. Operate the Mirror Adjust switch in all positions several times and then wait 30 seconds.
   5. Using a scan tool, read DTC's.

   Is the same DTC active?

   Yes

   - Replace the Driver Door switch assembly in accordance with the Service Information.
   - Perform the BODY VERIFICATION TEST. Refer to **BODY VERIFICATION TEST** .

   No

   - The conditions that caused this code to set are not present at this time.
   - Perform the BODY VERIFICATION TEST. Refer to **BODY VERIFICATION TEST** .

B1D08-11-DRIVER MIRROR POSITION SENSOR POWER SUPPLY - CIRCUIT SHORT TO GROUND

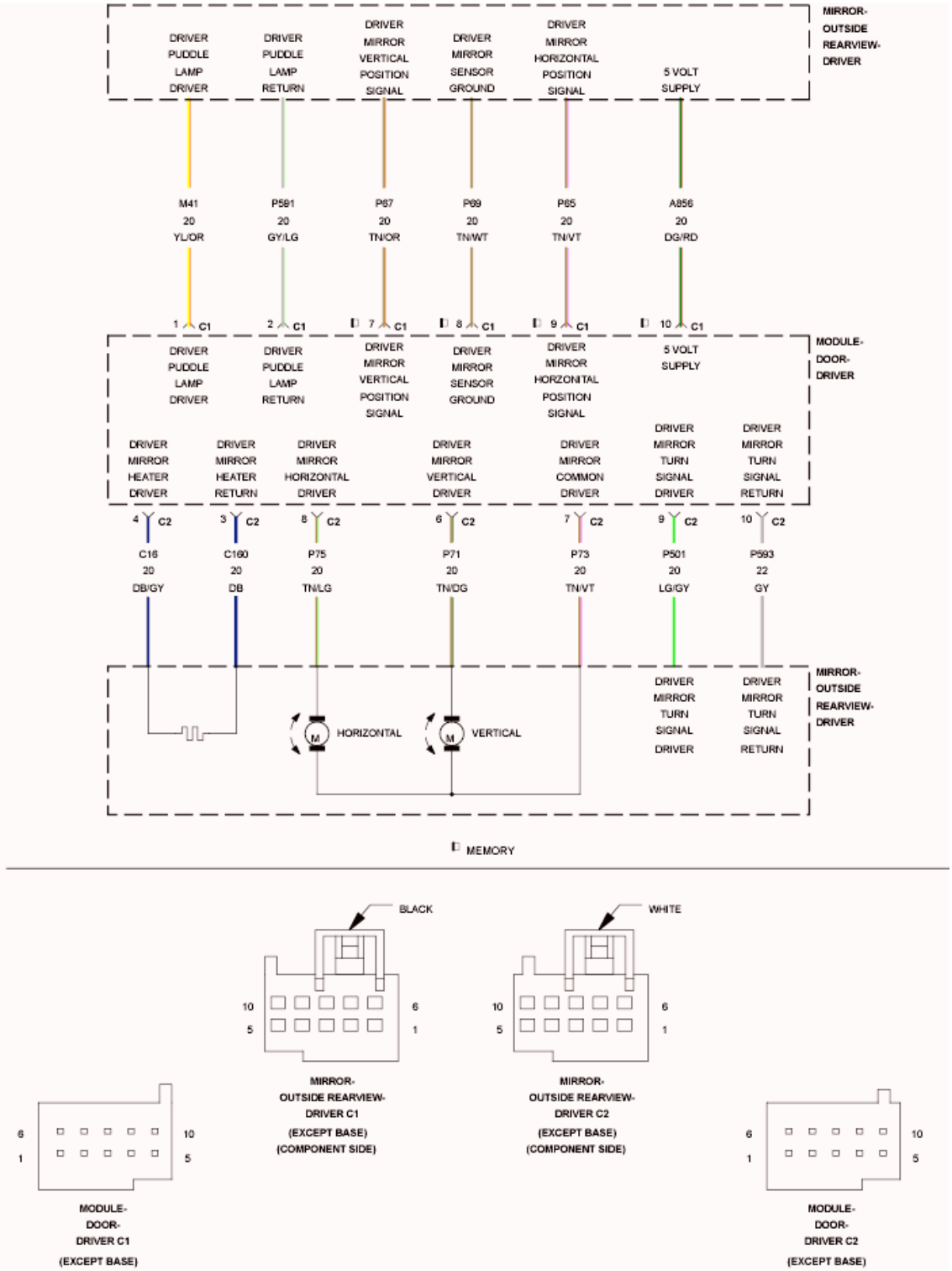

Fig. 37: Driver Mirror Signal Lamp Control Wiring Diagram
Courtesy of CHRYSLER GROUP, LLC

For a complete wiring diagram, **refer to appropriate SYSTEM WIRING DIAGRAMS article** .

WHEN MONITORED:

Continuously.

SET CONDITION:

The Door Module senses a short low on the (A856) 5-Volt Supply circuit for more than two seconds with the output turned on.

POSSIBLE CAUSES

Possible Causes
(A856) 5-VOLT SUPPLY CIRCUIT FOR A SHORT TO GROUND
(A856) 5-VOLT SUPPLY CIRCUIT FOR A SHORT TO THE (P69) DRIVER MIRROR SENSOR GROUND CIRCUIT
(A856) 5-VOLT SUPPLY CIRCUIT FOR A SHORT TO THE (P591) DRIVER PUDDLE LAMP RETURN CIRCUIT
(A856) 5-VOLT SUPPLY CIRCUIT FOR A SHORT TO THE (P71) DRIVER MIRROR VERTICAL DRIVER CIRCUIT
(A856) 5-VOLT SUPPLY CIRCUIT FOR A SHORT TO THE (P73) DRIVER MIRROR COMMON DRIVER CIRCUIT
(A856) 5-VOLT SUPPLY CIRCUIT FOR A SHORT TO THE (P75) DRIVER MIRROR HORIZONTAL DRIVER CIRCUIT
(A856) 5-VOLT SUPPLY CIRCUIT FOR A SHORT TO THE (C160) DRIVER MIRROR HEATER RETURN CIRCUIT
(A856) 5-VOLT SUPPLY CIRCUIT FOR A SHORT TO THE (P593) DRIVER MIRROR TURN SIGNAL RETURN CIRCUIT
DRIVER OUTSIDE REARVIEW MIRROR SHORTED
DOOR MODULE

DIAGNOSTIC TEST

1. **TEST FOR INTERMITTENT CONDITION**
    1. Turn the ignition on.
    2. Using a scan tool, record and erase Diagnostic Trouble Codes (DTC's).
    3. Turn the turn signal on, if equipped with turn signal mirror.
    4. Turn the puddle lamps on, if equipped with puddle lamp mirror.
    5. Turn the rear defogger on, if equipped with heated mirror.
    6. Press and release the Mirror Select switch to select the Driver Outside Rearview Mirror.
    7. Operate the Mirror Adjust switch in all directions several times while monitoring the scan tool for DTC's.

NOTE: **After adjusting the mirror in one direction wait at least two seconds before adjusting the mirror in the opposite direction, as this will allow time for an active fault to set if present.**

Is the DTC active?

Yes

- Go To 2.

No

- The conditions that caused this code to set are not present at this time. For vehicle's equipped with folding outside rearview mirrors, repeat test with mirror folded. If DTC is now active, go to 2. Otherwise, use the wiring diagram/schematic as a guide and inspect the wiring and connectors.
- Perform the BODY VERIFICATION TEST. Refer to **BODY VERIFICATION TEST** .

2. **CHECK (A856) 5-VOLT SUPPLY CIRCUIT FOR A SHORT TO GROUND**

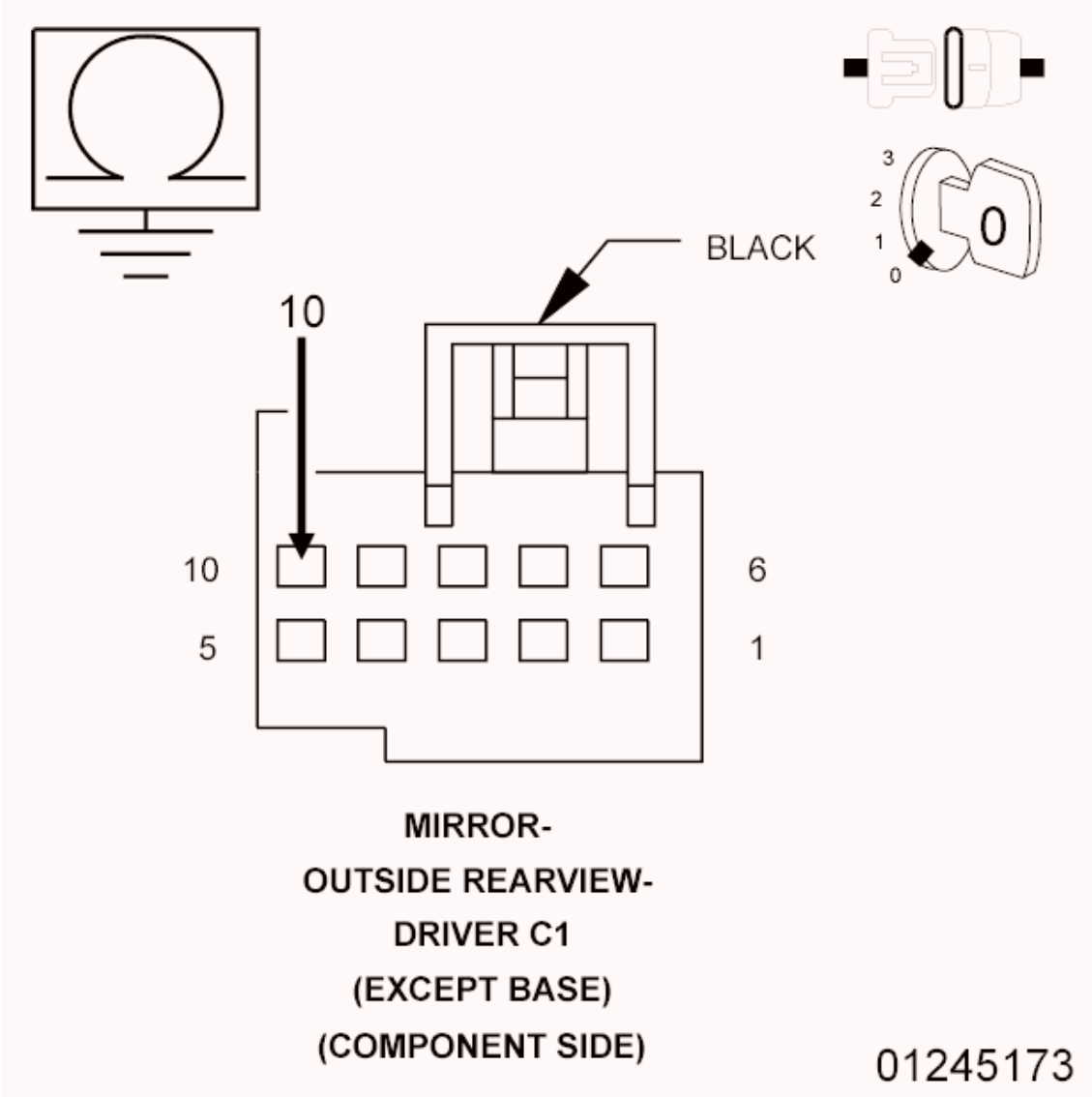

Fig. 38: Checking 5-Volt Supply Circuit For A Short To Ground
Courtesy of CHRYSLER GROUP, LLC

1. Turn the ignition off.
2. Disconnect the Driver Outside Rearview Mirror C1 (Component Side) connector from the Door Module C1 connector.
3. Measure the resistance of the (A856) 5-Volt Supply circuit between ground and the Driver Outside Rearview Mirror C1 (Component Side) connector.

   Is the resistance below 10K Ohms?

   Yes

   - Repair the (A856) 5-Volt Supply circuit for a short to ground. If the wiring harness and connector are okay, replace the Driver Outside Rearview Mirror in accordance with the Service Information
   - Perform the BODY VERIFICATION TEST. Refer to **BODY VERIFICATION TEST** .

   No

   - Go To 3.

3. **CHECK (A856) 5-VOLT SUPPLY CIRCUIT FOR A SHORT TO (P69) DRIVER MIRROR SENSOR GROUND CIRCUIT**

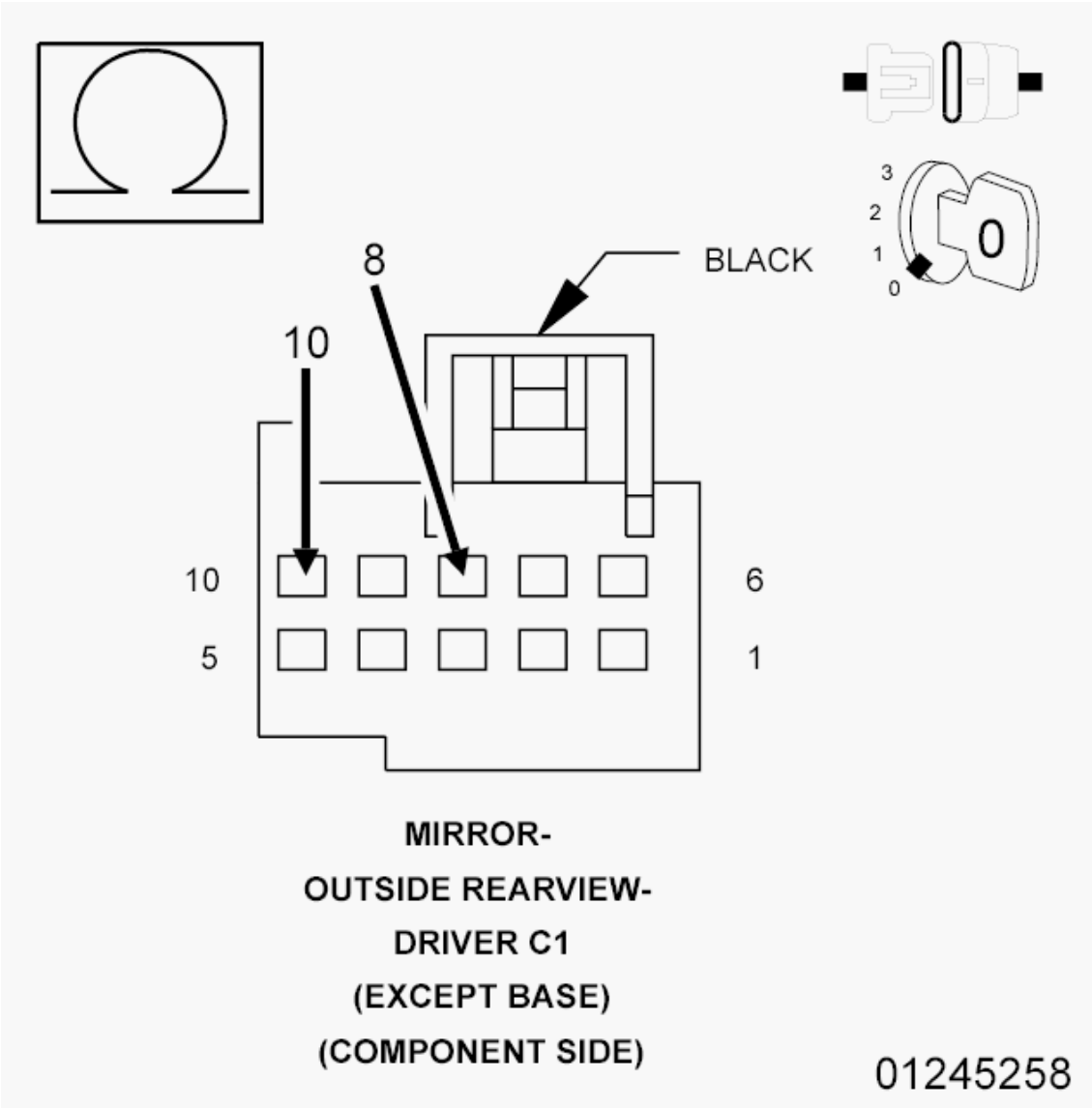

Fig. 39: Checking 5-Volt Supply Circuit For A Short To Driver Mirror Sensor Ground Circuit
Courtesy of CHRYSLER GROUP, LLC

1. Measure the residence between the (A856) 5-Volt Supply circuit and the (P69) Driver Mirror Sensor Ground circuit at the Driver Outside Rearview Mirror C1 (Component Side) connector.

   Is the resistance below 1.0 Ohm?

   Yes

   - Repair the (A856) 5-Volt Supply circuit for a short to the (P69) Driver Mirror Sensor Ground circuit. If the wiring harness and connector are okay, replace the Driver Outside Rearview Mirror in accordance with the Service Information.
   - Perform the BODY VERIFICATION TEST. Refer to **BODY VERIFICATION TEST** .

No, with Puddle Lamp Mirror

- Go To 4.

No, without Puddle Lamp Mirror

- Go To 5.

4. **CHECK (A856) 5-VOLT SUPPLY CIRCUIT FOR A SHORT TO (P591) DRIVER PUDDLE LAMP RETURN CIRCUIT**

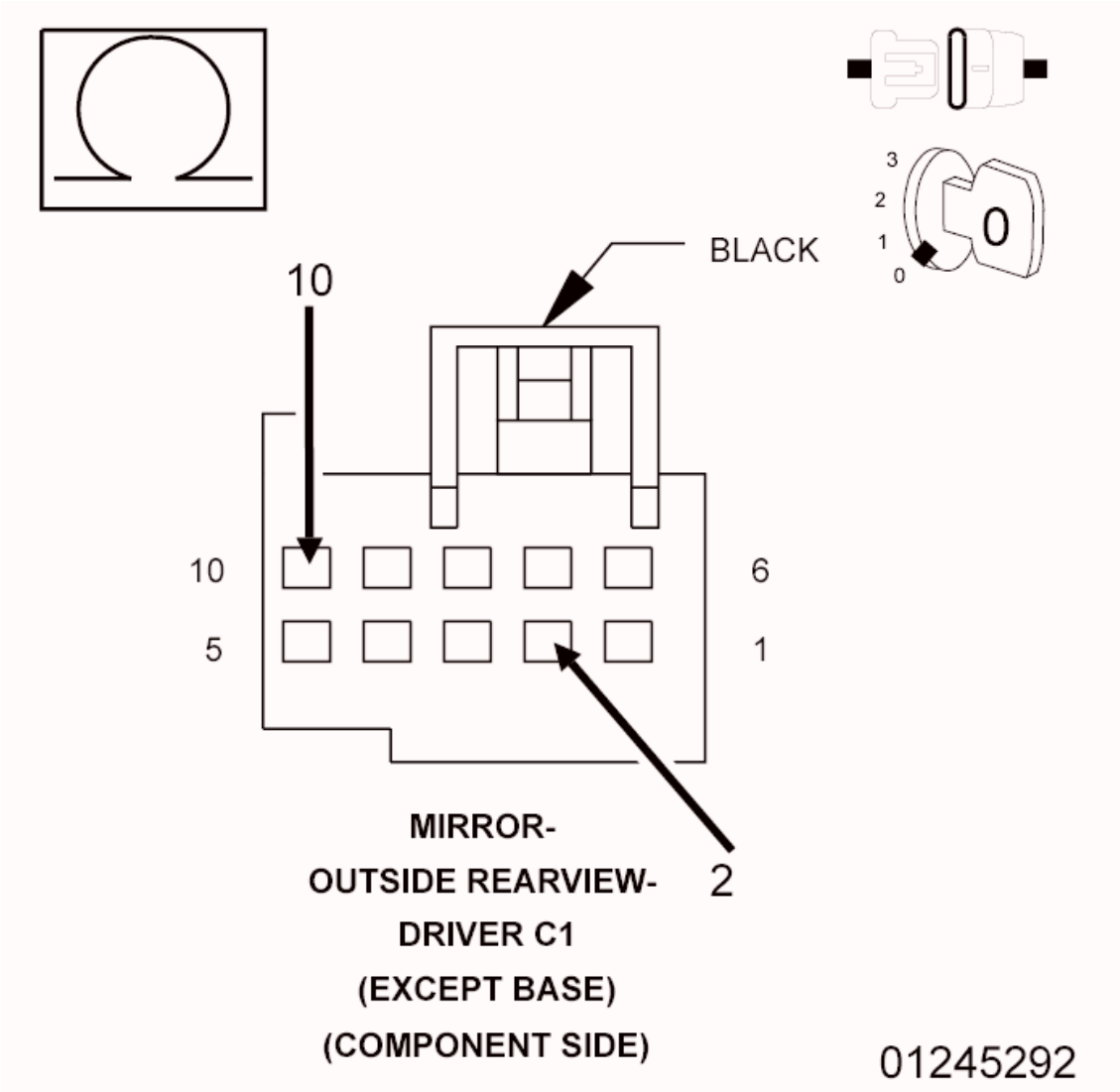

Fig. 40: Checking 5-Volt Supply Circuit For A Short To Driver Puddle Lamp Return Circuit
Courtesy of CHRYSLER GROUP, LLC

1. Measure the residence between the (A856) 5-Volt Supply circuit and the (P591) Driver Puddle Lamp Return circuit at the Driver Outside Rearview Mirror C1 (Component Side) connector.

Is the resistance below 10K Ohms?

Yes

- Repair the (A856) 5-Volt Supply circuit for a short to the (P591) Driver Puddle Lamp Return circuit. If the wiring harness and connector are okay, replace the Driver Outside Rearview Mirror in accordance with the Service Information.
- Perform the BODY VERIFICATION TEST. Refer to **BODY VERIFICATION TEST** .

No

- Go To 5.

5. **CHECK (A856) 5-VOLT SUPPLY CIRCUIT FOR A SHORT TO (P71) DRIVER MIRROR VERTICAL DRIVER CIRCUIT, (P73) DRIVER MIRROR COMMON DRIVER CIRCUIT, OR TO (P75) DRIVER MIRROR HORIZONTAL DRIVER CIRCUIT**

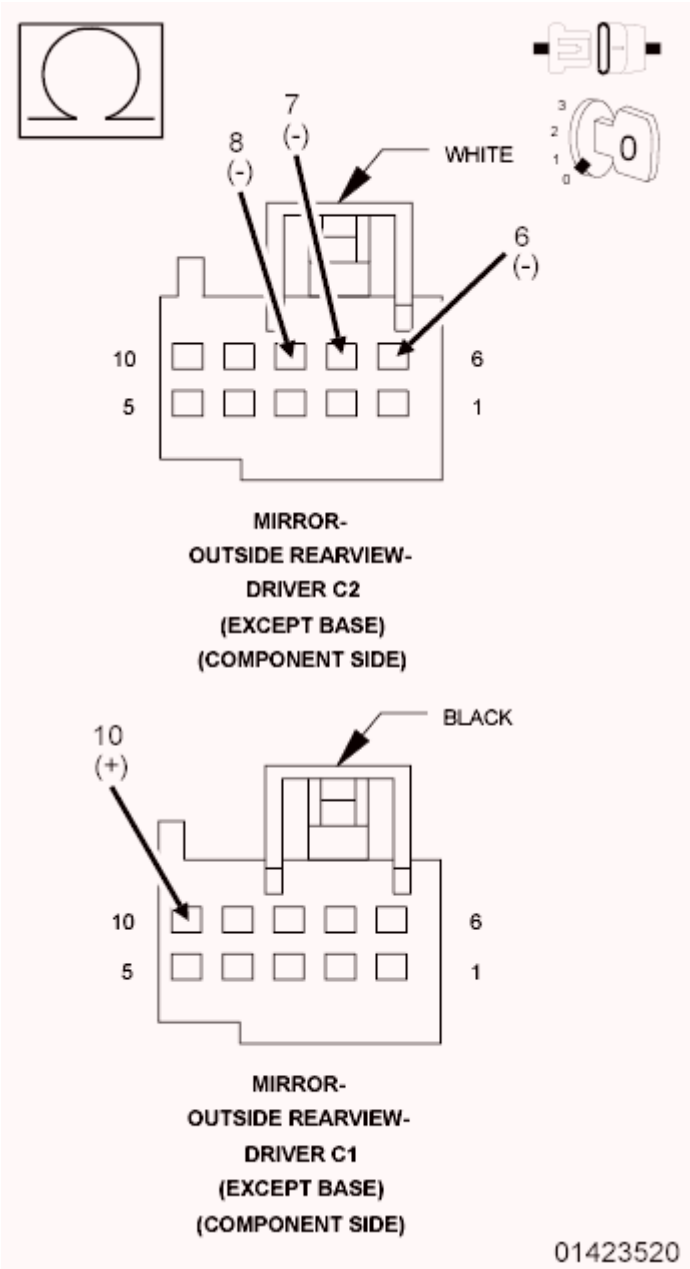

Fig. 41: Checking 5-Volt Supply Circuit For A Short To Other Circuits
Courtesy of CHRYSLER GROUP, LLC

1. Disconnect the Driver Outside Rearview Mirror C2 (Component Side) connector from the Door Module C2 connector.
2. Measure the resistance between the (A856) 5-Volt Supply circuit and the (P71) Driver Mirror Vertical Driver circuit at the Driver Outside Rearview Mirror C1 and C2 (Component Side) connectors.
3. Measure the resistance between the (A856) 5-Volt Supply circuit and the (P73) Driver Mirror Common Driver circuit at the Driver Outside Rearview Mirror C1 and C2 (Component Side) connectors.

4. Measure the resistance between the (A856) 5-Volt Supply circuit and the (P75) Driver Mirror Horizontal Driver circuit at the Driver Outside Rearview Mirror C1 and C2 (Component Side) connectors.

   Is the resistance below 10K Ohms for any measurement?

   Yes

   - Repair all circuits with a resistance below 10K Ohms for a short to the (A856) 5-Volt Supply circuit. If the wiring harness and connector are okay, replace the Driver Outside Rearview Mirror in accordance with the Service Information.
   - Perform the BODY VERIFICATION TEST. Refer to **BODY VERIFICATION TEST** .

   No, with Heated/Turn Signal Mirror

   - Go To 6.

   No, without Heated/Turn Signal Mirror

   - Inspect the wiring and connectors for damage and repair as necessary. If the wiring and connectors are okay, replace the Door Module in accordance with the Service Information.
   - Perform the BODY VERIFICATION TEST. Refer to **BODY VERIFICATION TEST** .

6. **CHECK (A856) 5-VOLT SUPPLY CIRCUIT FOR A SHORT TO (C160) DRIVER MIRROR HEATER RETURN CIRCUIT OR TO (P593) DRIVER MIRROR TURN SIGNAL RETURN CIRCUIT**

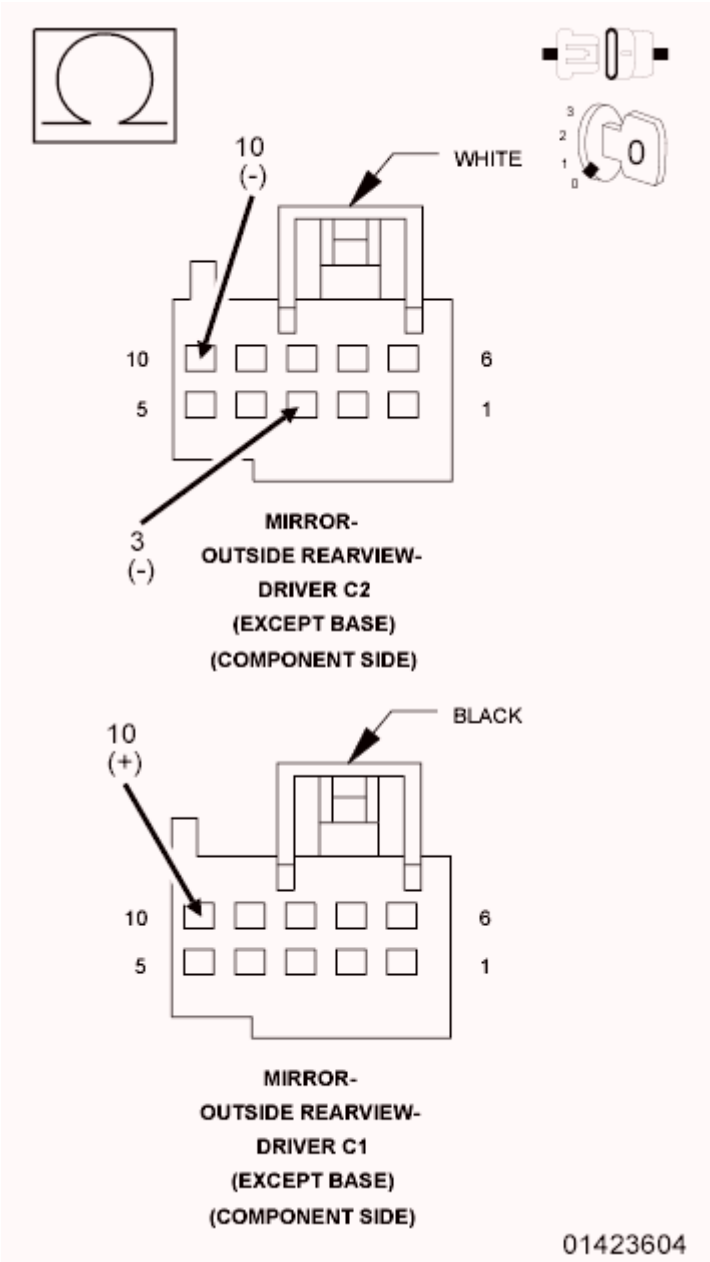

Fig. 42: Checking 5-Volt Supply Circuit For A Short To Other Circuits
Courtesy of CHRYSLER GROUP, LLC

1. For Heated Mirror, measure the resistance between the (A856) 5-Volt Supply circuit and the (C160) Driver Mirror Heater Return circuit at the Driver Outside Rearview Mirror C1 and C2 (Component Side) connectors.
2. For Turn Signal Mirror, measure the resistance between the (A856) 5-Volt Supply circuit and the (P593) Driver Mirror Turn Signal Return circuit at the Driver Outside Rearview Mirror C1 and C2 (Component Side) connectors.

   Is the resistance below 10K Ohms for either measurement?

Yes

- Repair all circuits with a resistance below 10K Ohms for a short to the (A856) 5-Volt Supply circuit. If the wiring harness and connector are okay, replace the Driver Outside Rearview Mirror in accordance with the Service Information.
- Perform the BODY VERIFICATION TEST. Refer to **BODY VERIFICATION TEST** .

No

- Inspect the wiring and connectors for damage and repair as necessary. If the wiring and connectors are okay, replace the Door Module in accordance with the Service Information.
- Perform the BODY VERIFICATION TEST. Refer to **BODY VERIFICATION TEST** .

B1D0B-11-DRIVER MIRROR VERTICAL POSITION SENSOR INPUT - CIRCUIT SHORT TO GROUND

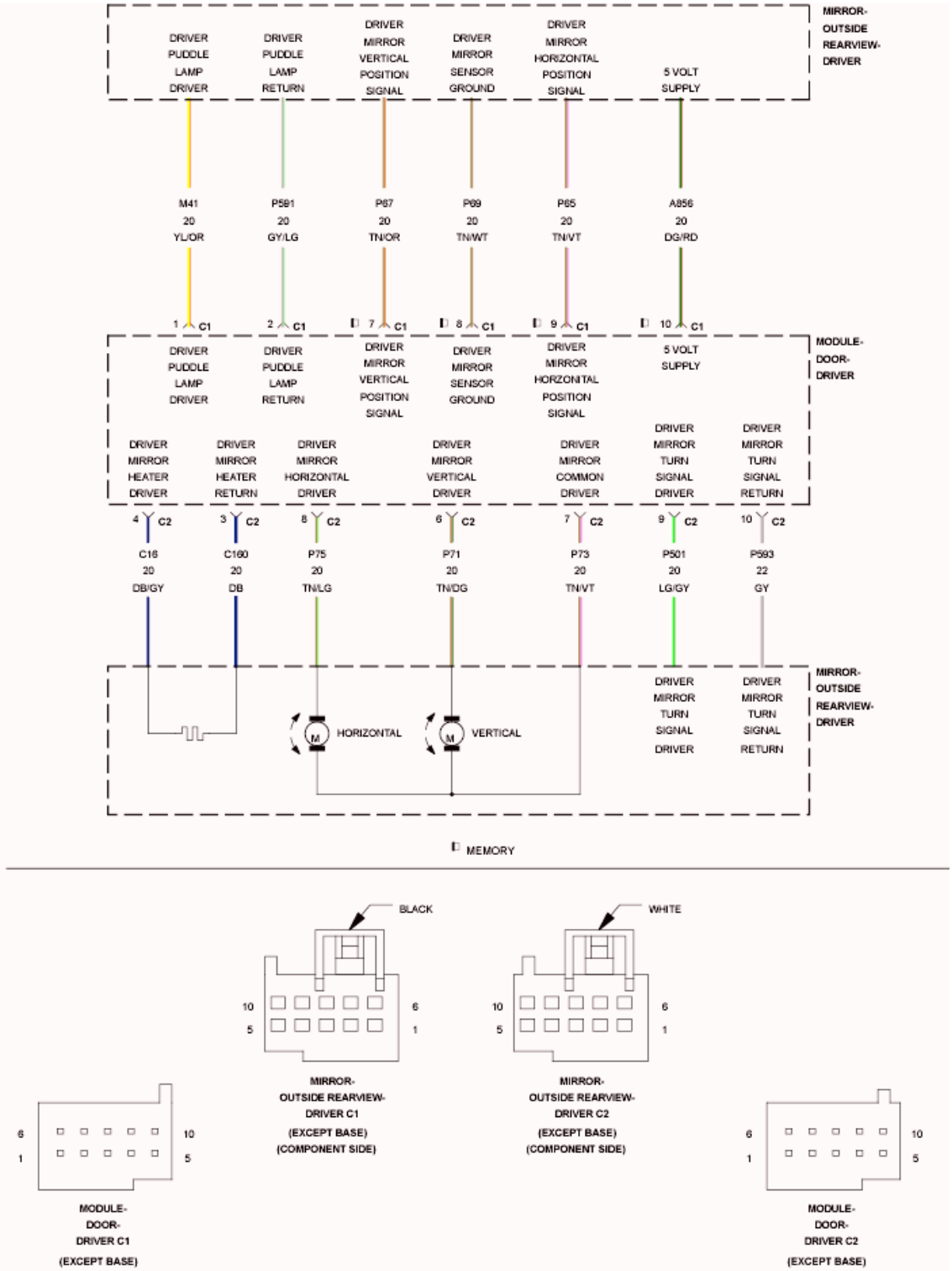

Fig. 43: Driver Mirror Signal Lamp Control Wiring Diagram
Courtesy of CHRYSLER GROUP, LLC

For a complete wiring diagram, **refer to appropriate SYSTEM WIRING DIAGRAMS article** .

WHEN MONITORED:

Continuously.

SET CONDITION:

The Door Module senses a short low on the (P67) Driver Mirror Vertical Position Signal circuit for more than two seconds.

POSSIBLE CAUSES

Possible Causes
(P67) DRIVER MIRROR VERTICAL POSITION SIGNAL CIRCUIT FOR A SHORT TO GROUND
(P67) DRIVER MIRROR VERTICAL POSITION SIGNAL CIRCUIT FOR A SHORT TO THE (P69) DRIVER MIRROR SENSOR GROUND CIRCUIT
(P67) DRIVER MIRROR VERTICAL POSITION SIGNAL CIRCUIT FOR A SHORT TO THE (P591) DRIVER PUDDLE LAMP RETURN CIRCUIT
(P67) DRIVER MIRROR VERTICAL POSITION SIGNAL CIRCUIT FOR A SHORT TO THE (P71) DRIVER MIRROR VERTICAL DRIVER CIRCUIT
(P67) DRIVER MIRROR VERTICAL POSITION SIGNAL CIRCUIT FOR A SHORT TO THE (P73) DRIVER MIRROR COMMON DRIVER CIRCUIT
(P67) DRIVER MIRROR VERTICAL POSITION SIGNAL CIRCUIT FOR A SHORT TO THE (P75) DRIVER MIRROR HORIZONTAL DRIVER CIRCUIT
(P67) DRIVER MIRROR VERTICAL POSITION SIGNAL CIRCUIT FOR A SHORT TO THE (C160) DRIVER MIRROR HEATER RETURN CIRCUIT
(P67) DRIVER MIRROR VERTICAL POSITION SIGNAL CIRCUIT FOR A SHORT TO THE (P593) DRIVER MIRROR TURN SIGNAL RETURN CIRCUIT
DRIVER OUTSIDE REARVIEW MIRROR SHORTED
DOOR MODULE

DIAGNOSTIC TEST

1. **TEST FOR INTERMITTENT CONDITION**
    1. Turn the ignition on.
    2. Using a scan tool, record and erase Diagnostic Trouble Codes (DTC's).
    3. Turn the turn signal on, if equipped with turn signal mirror.
    4. Turn the puddle lamps on, if equipped with puddle lamp mirror.
    5. Turn the rear defogger on, if equipped with heated mirror.
    6. Press and release the Mirror Select switch to select the Driver Outside Rearview Mirror.
    7. Operate the Mirror Adjust switch in all directions several times while monitoring the scan tool for DTC's.

    NOTE: **After adjusting the mirror in one direction wait at least two seconds before adjusting the mirror in the opposite direction, as this will allow time for an active fault to set if present.**

Is the DTC active?

Yes

- Go To 2.

No

- The conditions that caused this code to set are not present at this time. For vehicle's equipped with folding outside rearview mirrors, repeat test with mirror folded. If DTC is now active, go to 2. Otherwise, use the wiring diagram/schematic as a guide and inspect the wiring and connectors.
- Perform the BODY VERIFICATION TEST. Refer to **BODY VERIFICATION TEST** .

2. **CHECK (P67) DRIVER MIRROR VERTICAL POSITION SIGNAL CIRCUIT FOR A SHORT TO GROUND**

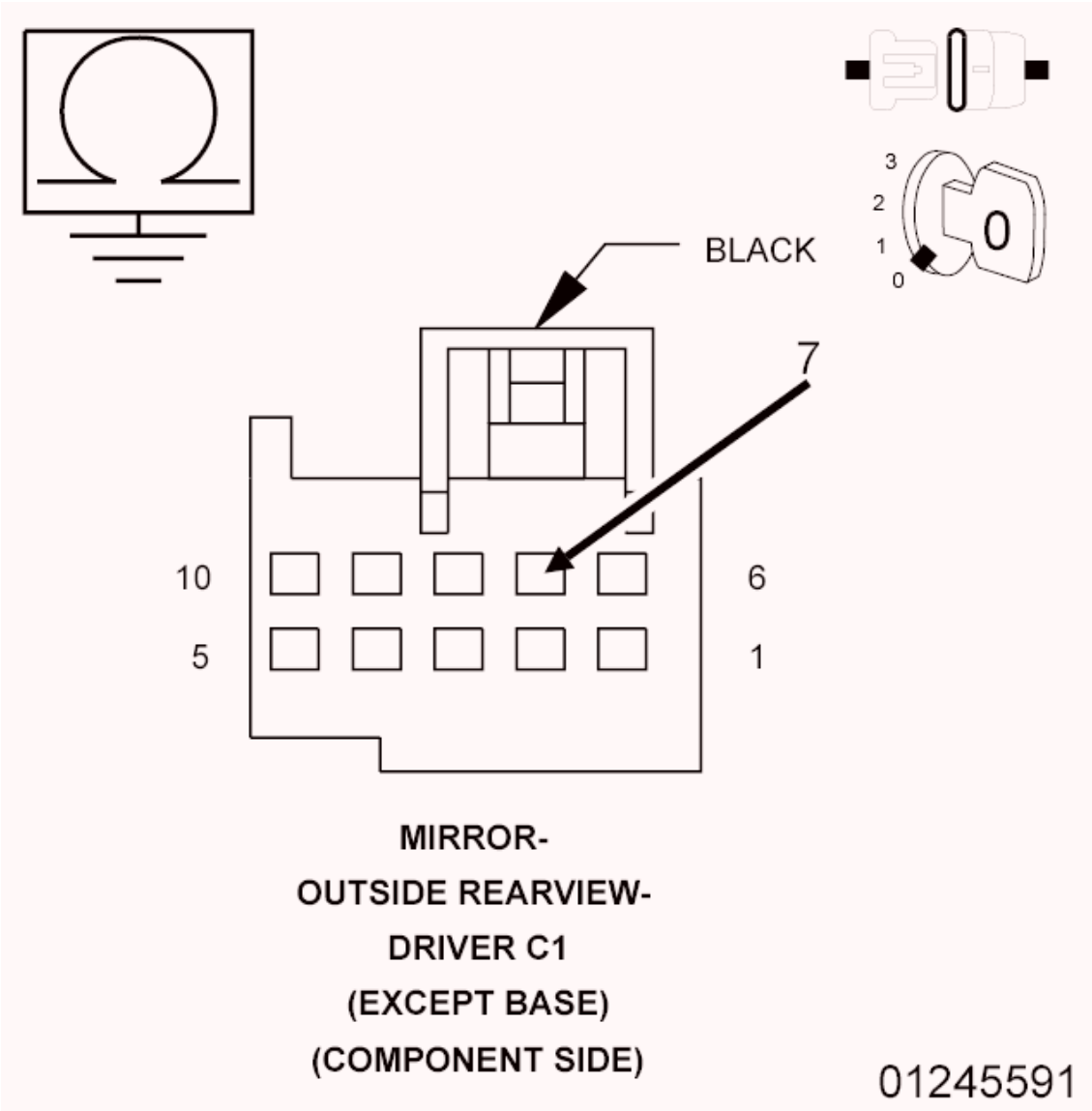

Fig. 44: Checking Driver Mirror Vertical Position Signal Circuit For A Short To Ground
Courtesy of CHRYSLER GROUP, LLC

1. Turn the ignition off.
2. Disconnect the Driver Outside Rearview Mirror C1 (Component Side) connector from the Door Module C1 connector.
3. Measure the resistance of the (P67) Driver Mirror Vertical Position Signal circuit between ground and the Driver Outside Rearview Mirror C1 (Component Side) connector.

   Is the resistance below 10K Ohms?

   Yes

   - Repair the (P67) Driver Mirror Vertical Position Signal circuit for a short to ground. If the wiring harness and connector are okay, replace the Driver Outside Rearview Mirror in

accordance with the Service Information.

- Perform the BODY VERIFICATION TEST. Refer to **BODY VERIFICATION TEST** .

No

- Go To 3.

3. **CHECK (P67) DRIVER MIRROR VERTICAL POSITION SIGNAL CIRCUIT FOR A SHORT TO (P69) DRIVER MIRROR SENSOR GROUND CIRCUIT**

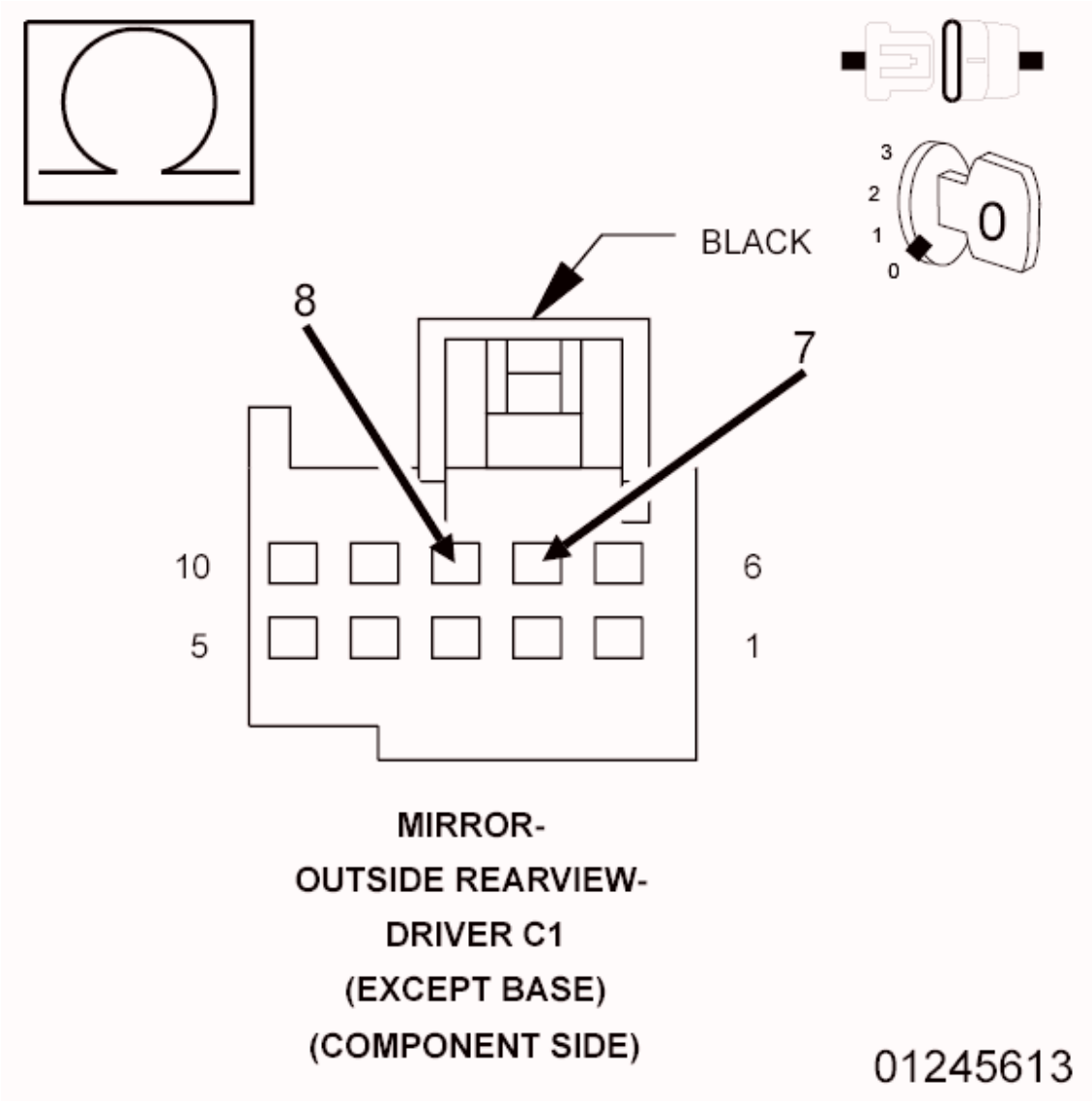

Fig. 45: Checking Driver Mirror Vertical Position Signal Circuit For A Short To Driver Mirror Sensor Ground Circuit
Courtesy of CHRYSLER GROUP, LLC

1. Measure the residence between the (P67) Driver Mirror Vertical Position Signal circuit and the (P69) Driver Mirror Sensor Ground circuit at the Driver Outside Rearview Mirror C1 (Component

Side) connector.

Is the resistance below 1.0 Ohm?

Yes

- Repair the (P67) Driver Mirror Vertical Position Signal circuit for a short to the (P69) Driver Mirror Sensor Ground circuit. If the wiring harness and connector are okay, replace the Driver Outside Rearview Mirror in accordance with the Service Information.
- Perform the BODY VERIFICATION TEST. Refer to **BODY VERIFICATION TEST** .

No, with Puddle Lamp Mirror

- Go To 4.

No, without Puddle Lamp Mirror

- Go To 5.

4. **CHECK (P67) DRIVER MIRROR VERTICAL POSITION SIGNAL CIRCUIT FOR A SHORT TO (P591) DRIVER PUDDLE LAMP RETURN CIRCUIT**

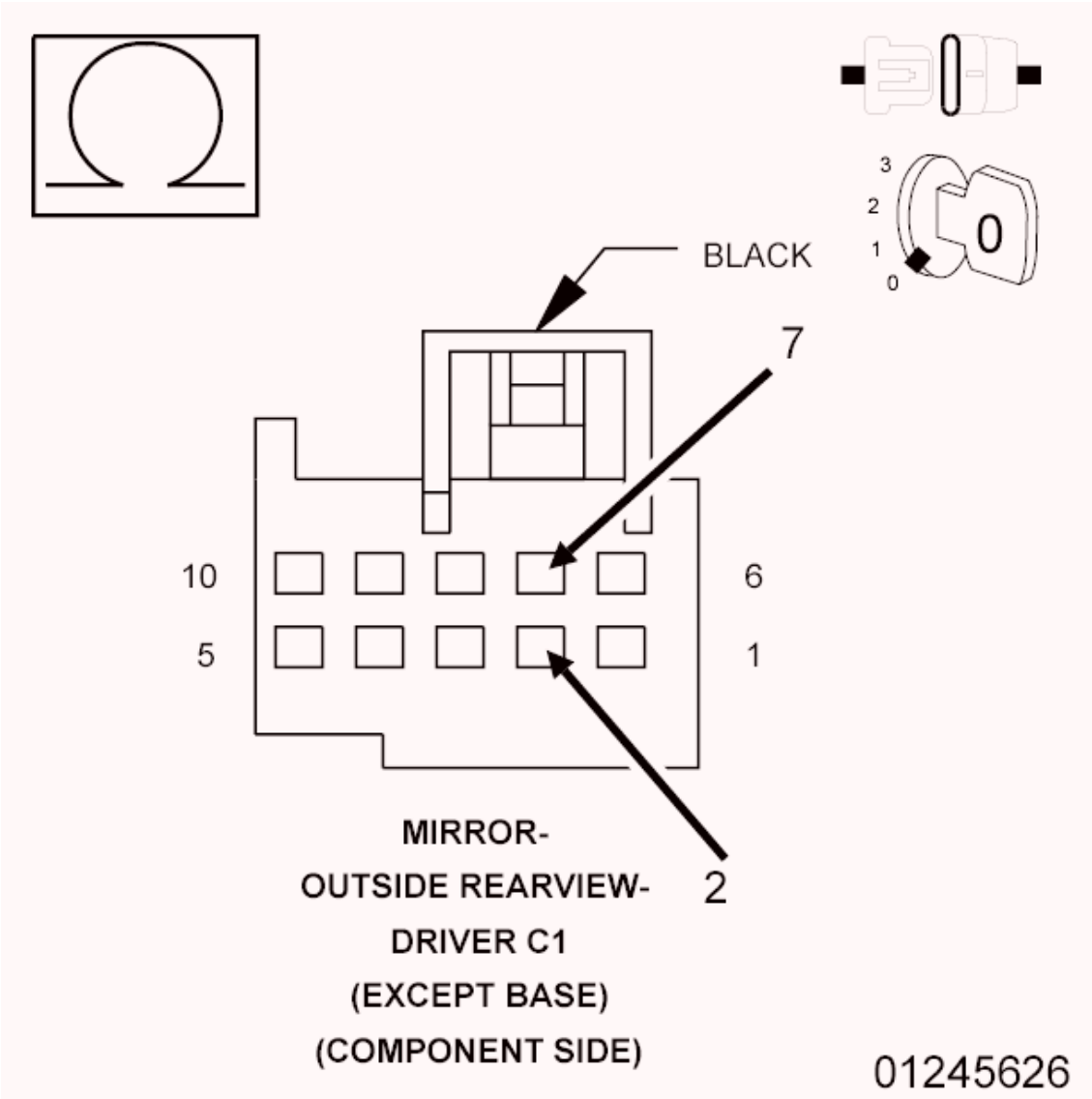

Fig. 46: Checking Driver Mirror Vertical Position Signal Circuit For A Short To Driver Puddle Lamp Return Circuit
Courtesy of CHRYSLER GROUP, LLC

1. Measure the residence between the (P67) Driver Mirror Vertical Position Signal circuit and the (P591) Driver Puddle Lamp Return circuit at the Driver Outside Rearview Mirror C1 (Component Side) connector.

   Is the resistance below 10K Ohms?

   Yes

   - Repair the (P67) Driver Mirror Vertical Position Signal circuit for a short to the (P591) Driver Puddle Lamp Return circuit. If the wiring harness and connector are okay, replace the Driver Outside Rearview Mirror in accordance with the Service Information.
   - Perform the BODY VERIFICATION TEST. Refer to **BODY VERIFICATION TEST** .

No

- Go To 5.

5. **CHECK (P67) DRIVER MIRROR VERTICAL POSITION SIGNAL CIRCUIT FOR A SHORT TO (P71) DRIVER MIRROR VERTICAL DRIVER CIRCUIT, (P73) DRIVER MIRROR COMMON DRIVER CIRCUIT, OR TO (P75) DRIVER MIRROR HORIZONTAL DRIVER CIRCUIT**

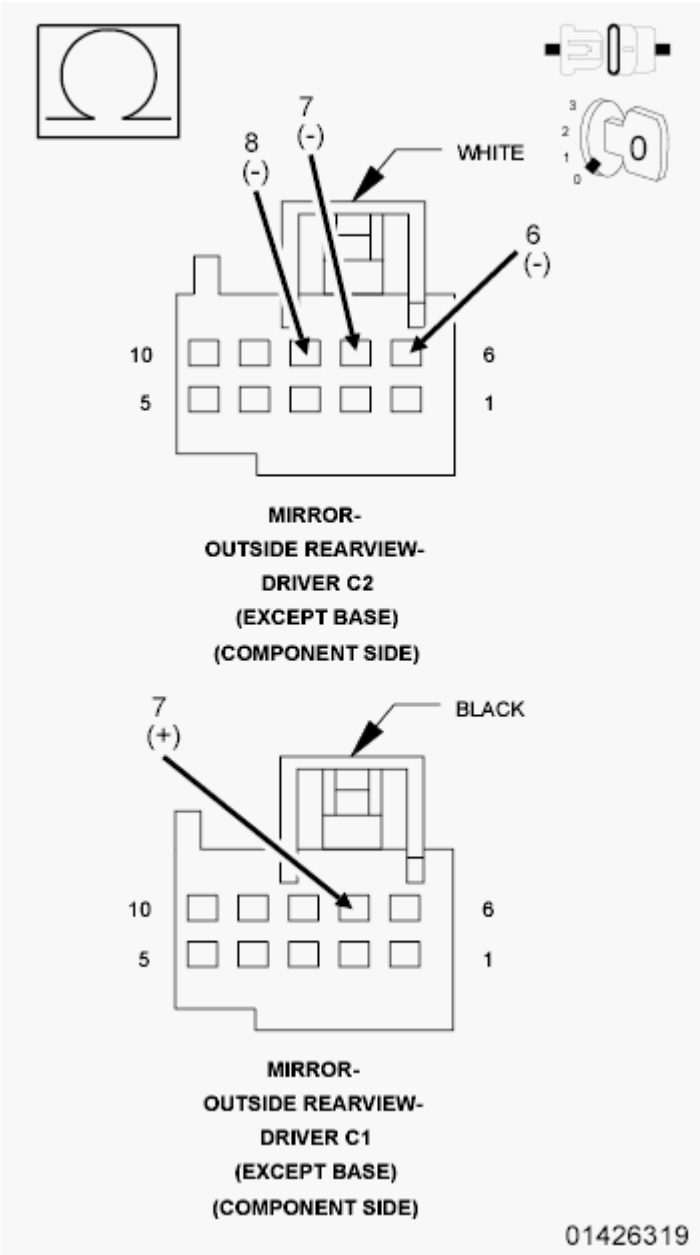

Fig. 47: Checking Driver Mirror Vertical Position Signal Circuit For A Short To Other Circuits
Courtesy of CHRYSLER GROUP, LLC

1. Disconnect the Driver Outside Rearview Mirror C2 (Component Side) connector from the Door

Module C2 connector.

2. Measure the resistance between the (P67) Driver Mirror Vertical Position Signal circuit and the (P71) Driver Mirror Vertical Driver circuit at the Driver Outside Rearview Mirror C1 and C2 (Component Side) connectors.
3. Measure the resistance between the (P67) Driver Mirror Vertical Position Signal circuit and the (P73) Driver Mirror Common Driver circuit at the Driver Outside Rearview Mirror C1 and C2 (Component Side) connectors.
4. Measure the resistance between the (P67) Driver Mirror Vertical Position Signal circuit and the (P75) Driver Mirror Horizontal Driver circuit at the Driver Outside Rearview Mirror C1 and C2 (Component Side) connectors.

Is the resistance below 10K Ohms for any measurement?

Yes

- Repair all circuits with a resistance below 10K Ohms for a short to the (P67) Driver Mirror Vertical Position Signal circuit. If the wiring harness and connector are okay, replace the Driver Outside Rearview Mirror in accordance with the Service Information.
- Perform the BODY VERIFICATION TEST. Refer to **BODY VERIFICATION TEST** .

No, with Heated/Turn Signal Mirror

- Go To 6.

No, without Heated/Turn Signal Mirror

- Inspect the wiring and connectors for damage and repair as necessary. If the wiring and connectors are okay, replace the Door Module in accordance with the Service Information.
- Perform the BODY VERIFICATION TEST. Refer to **BODY VERIFICATION TEST** .

6. **CHECK (P67) DRIVER MIRROR VERTICAL POSITION SIGNAL CIRCUIT FOR A SHORT TO (C160) DRIVER MIRROR HEATER RETURN CIRCUIT OR TO (P593) DRIVER MIRROR TURN SIGNAL RETURN CIRCUIT**

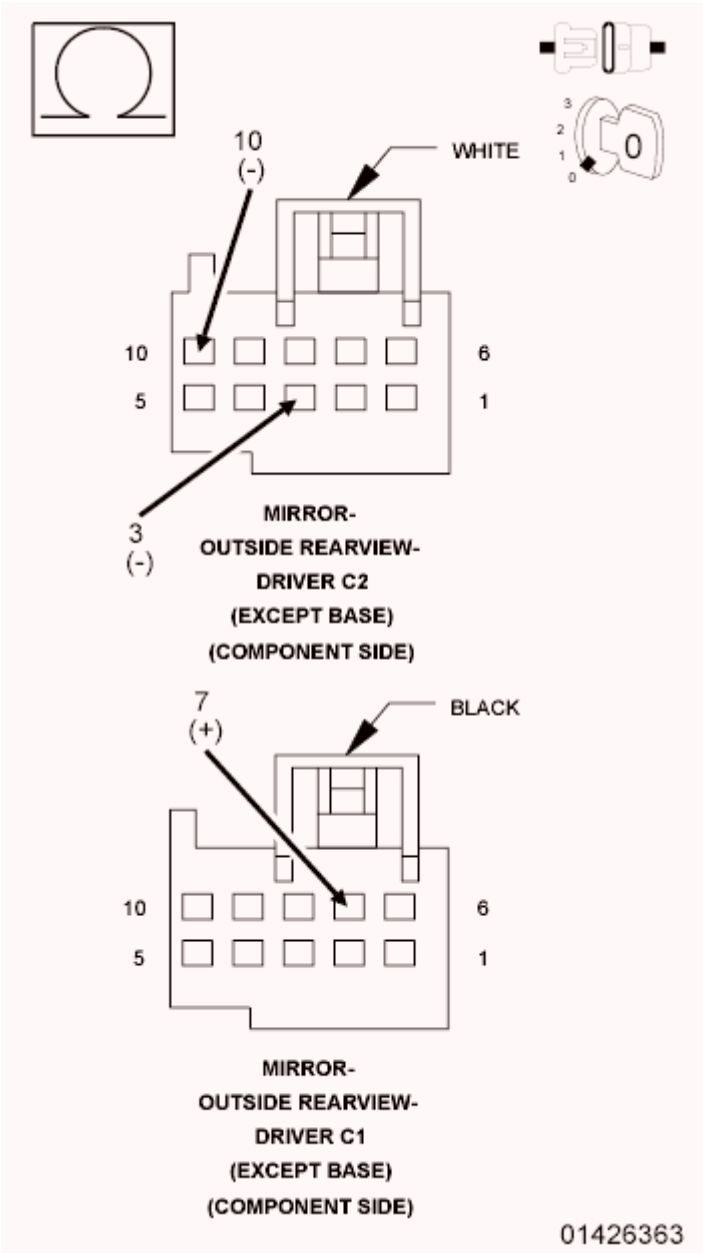

Fig. 48: Checking Driver Mirror Vertical Position Signal Circuit For A Short To Other Circuits
Courtesy of CHRYSLER GROUP, LLC

1. For Heated Mirror, measure the resistance between the (P67) Driver Mirror Vertical Position Signal circuit and the (C160) Driver Mirror Heater Return circuit at the Driver Outside Rearview Mirror C1 and C2 (Component Side) connectors.
2. For Turn Signal Mirror, measure the resistance between the (P67) Driver Mirror Vertical Position Signal circuit and the (P593) Driver Mirror Turn Signal Return circuit at the Driver Outside Rearview Mirror C1 and C2 (Component Side) connectors.

   Is the resistance below 10K Ohms for either measurement?

Yes

- Repair all circuits with a resistance below 10K Ohms for a short to the (P67) Driver Mirror Vertical Position Signal circuit. If the wiring harness and connector are okay, replace the Driver Outside Rearview Mirror in accordance with the Service Information.
- Perform the BODY VERIFICATION TEST. Refer to **BODY VERIFICATION TEST** .

No

- Inspect the wiring and connectors for damage and repair as necessary. If the wiring and connectors are okay, replace the Door Module in accordance with the Service Information.
- Perform the BODY VERIFICATION TEST. Refer to **BODY VERIFICATION TEST** .

B1D0B-12-DRIVER MIRROR VERTICAL POSITION SENSOR INPUT - CIRCUIT SHORT TO BATTERY

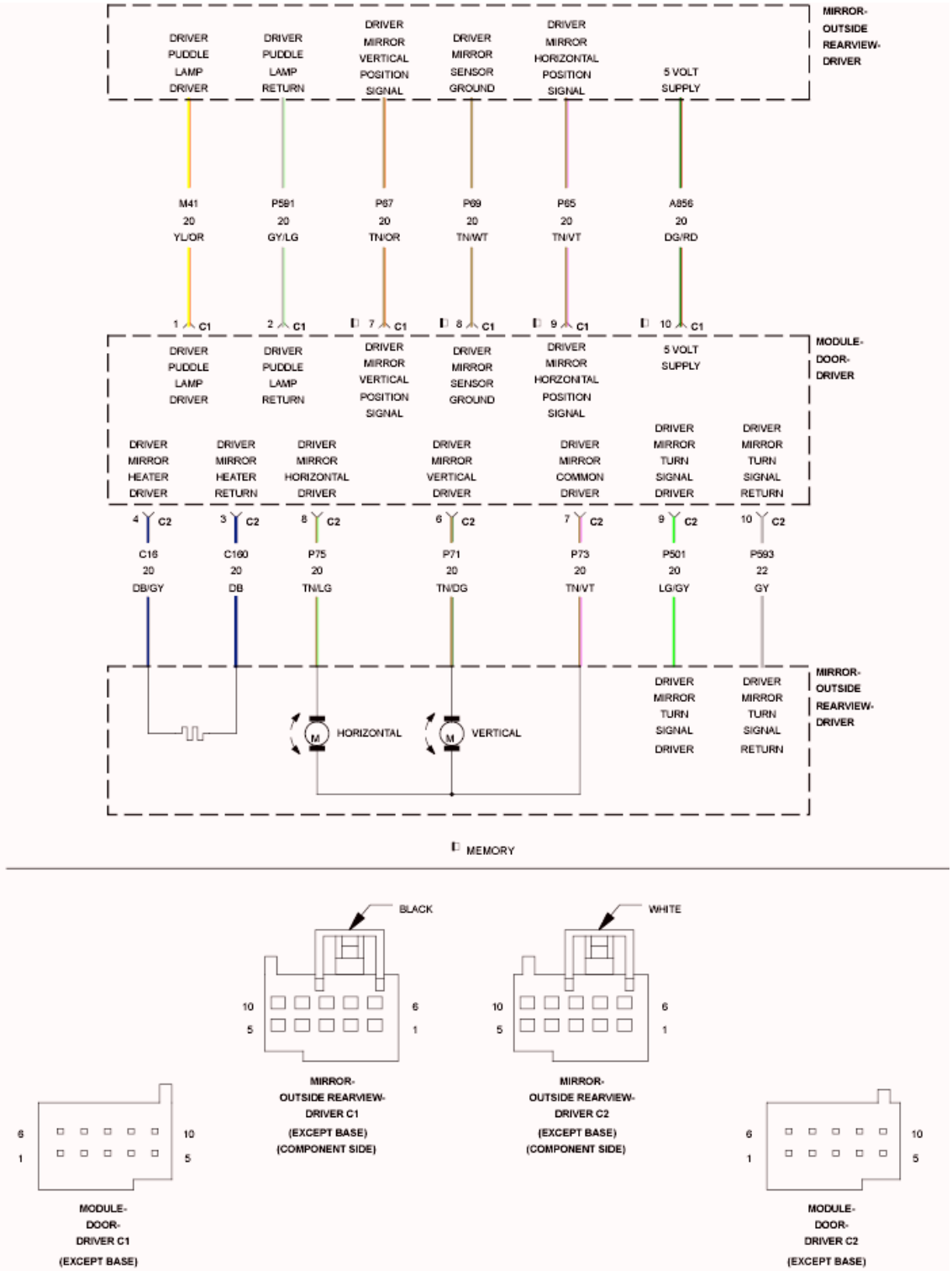

Fig. 49: Driver Mirror Signal Lamp Control Wiring Diagram
Courtesy of CHRYSLER GROUP, LLC

For a complete wiring diagram, **refer to appropriate SYSTEM WIRING DIAGRAMS article** .

WHEN MONITORED:

Continuously.

SET CONDITION:

The Door Module senses more than 400 mA current on the (A856) 5-volt Supply circuit or an open or a short high on the (P67) Driver Mirror Vertical Position Signal circuit for more than two seconds.

POSSIBLE CAUSES

Possible Causes
(P67) DRIVER MIRROR VERTICAL POSITION SIGNAL CIRCUIT FOR A SHORT TO VOLTAGE
(P67) DRIVER MIRROR VERTICAL POSITION SIGNAL CIRCUIT FOR A SHORT TO (M41) DRIVER PUDDLE LAMP DRIVER CIRCUIT
(P67) DRIVER MIRROR VERTICAL POSITION SIGNAL CIRCUIT FOR AN OPEN
(P69) DRIVER MIRROR SENSOR GROUND CIRCUIT FOR AN OPEN
(P67) DRIVER MIRROR VERTICAL POSITION SIGNAL CIRCUIT FOR A SHORT TO (P71) DRIVER MIRROR VERTICAL DRIVER CIRCUIT
(P67) DRIVER MIRROR VERTICAL POSITION SIGNAL CIRCUIT FOR A SHORT TO (P73) DRIVER MIRROR COMMON DRIVER CIRCUIT
(P67) DRIVER MIRROR VERTICAL POSITION SIGNAL CIRCUIT FOR A SHORT TO (P75) DRIVER MIRROR HORIZONTAL DRIVER CIRCUIT
(P67) DRIVER MIRROR VERTICAL POSITION SIGNAL CIRCUIT FOR A SHORT TO (C16) DRIVER MIRROR HEATER DRIVER CIRCUIT
(P67) DRIVER MIRROR VERTICAL POSITION SIGNAL CIRCUIT FOR A SHORT TO (P501) DRIVER MIRROR TURN SIGNAL DRIVER CIRCUIT
(A856) 5-VOLT SUPPLY CIRCUIT FOR A SHORT TO VOLTAGE
(A856) 5-VOLT SUPPLY CIRCUIT FOR A SHORT TO (M41) DRIVER PUDDLE LAMP DRIVER CIRCUIT
(A856) 5-VOLT SUPPLY CIRCUIT FOR A SHORT TO (P71) DRIVER MIRROR VERTICAL DRIVER CIRCUIT
(A856) 5-VOLT SUPPLY CIRCUIT FOR A SHORT TO (P73) DRIVER MIRROR COMMON DRIVER CIRCUIT
(A856) 5-VOLT SUPPLY CIRCUIT FOR A SHORT TO (P75) DRIVER MIRROR HORIZONTAL DRIVER CIRCUIT
(A856) 5-VOLT SUPPLY CIRCUIT FOR A SHORT TO (C16) DRIVER MIRROR HEATER DRIVER CIRCUIT
(A856) 5-VOLT SUPPLY CIRCUIT FOR A SHORT TO (P501) DRIVER MIRROR TURN SIGNAL DRIVER CIRCUIT
DRIVER OUTSIDE REARVIEW MIRROR SHORTED
DOOR MODULE

DIAGNOSTIC TEST

1. **TEST FOR INTERMITTENT CONDITION**
    1. Turn the ignition on.

2. Using a scan tool, record and erase Diagnostic Trouble Codes (DTC's).
3. Turn the turn signal on, if equipped with turn signal mirror.
4. Turn the puddle lamps on, if equipped with puddle lamp mirror.
5. Turn the rear defogger on, if equipped with heated mirror.
6. Press and release the Mirror Select switch to select the Driver Outside Rearview Mirror.
7. Operate the Mirror Adjust switch in all directions several times while monitoring the scan tool for DTC's.

NOTE: **After adjusting the mirror in one direction wait at least two seconds before adjusting the mirror in the opposite direction, as this will allow time for an active fault to set if present.**

Is the DTC active?

Yes

- Go To 2.

No

- The conditions that caused this code to set are not present at this time. For vehicle's equipped with folding outside rearview mirrors, repeat test with mirror folded. If DTC is now active, go to 2. Otherwise, use the wiring diagram/schematic as a guide and inspect the wiring and connectors.
- Perform the BODY VERIFICATION TEST. Refer to **BODY VERIFICATION TEST** .

2. **CHECK (P67) DRIVER MIRROR VERTICAL POSITION SIGNAL CIRCUIT AND (A856) 5-VOLT SUPPLY CIRCUIT FOR A SHORT TO VOLTAGE**

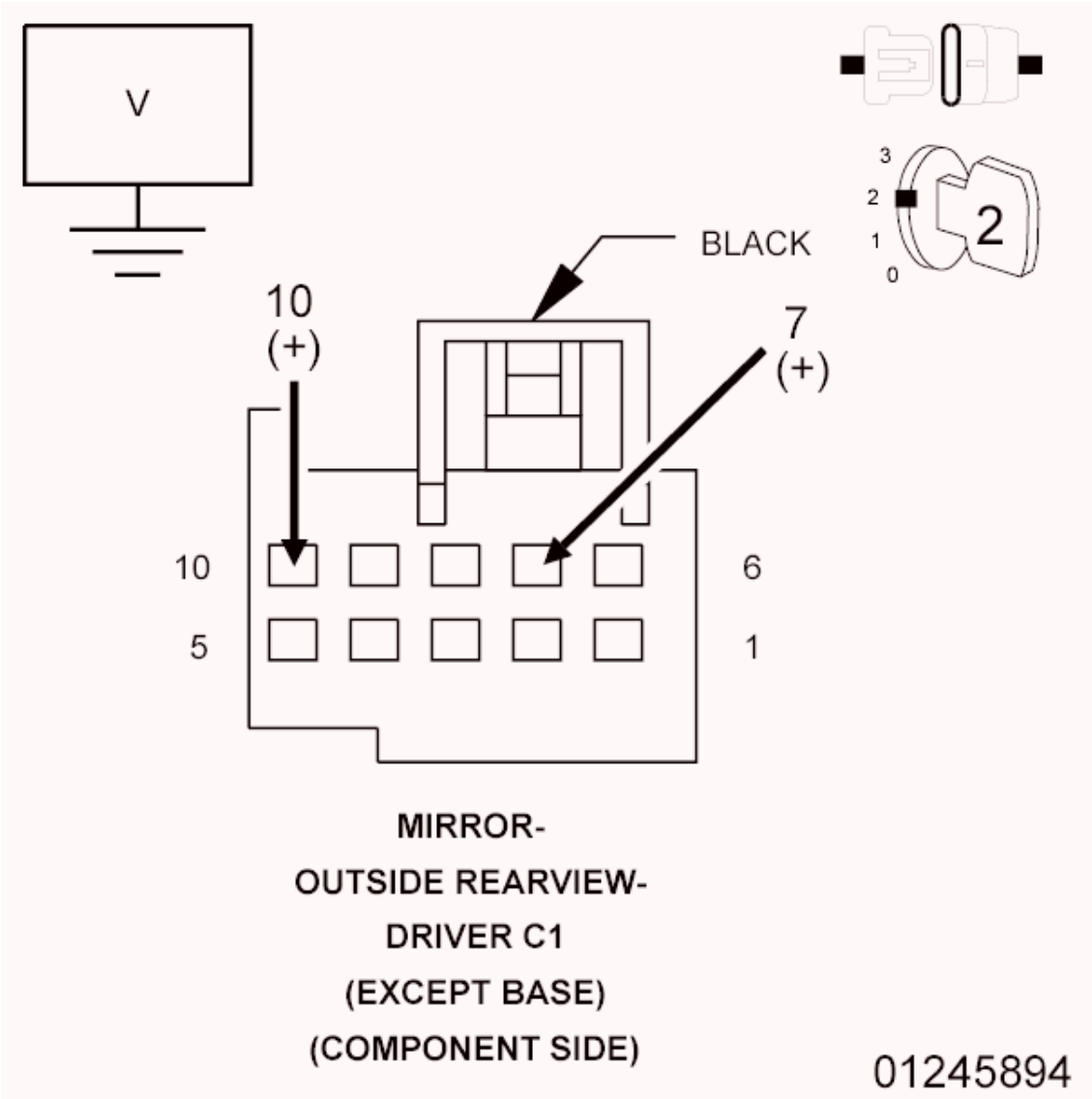

Fig. 50: Checking Driver Mirror Vertical Position Signal Circuit And 5-Volt Supply Circuit For A Short To Voltage
Courtesy of CHRYSLER GROUP, LLC

1. Turn the ignition off.
2. Disconnect the Driver Outside Rearview Mirror C1 (Component Side) connector from the Door Module C1 connector.
3. Turn the ignition on.
4. Measure the voltage of the (P67) Driver Mirror Vertical Position Signal circuit between the Driver Outside Rearview Mirror C1 (Component Side) connector and ground.
5. Measure the voltage of the (A856) 5-volt Supply circuit between the Driver Outside Rearview Mirror C1 (Component Side) connector and ground.

   Is there any Voltage present on either circuit?

Yes

- Repair all circuits with Voltage present for a short to Voltage. If the wiring harness and connector are okay, replace the Driver Outside Rearview Mirror in accordance with the Service Information.
- Perform the BODY VERIFICATION TEST. Refer to **BODY VERIFICATION TEST** .

No, with Puddle Lamp Mirror

- Go To 3.

No, without Puddle Lamp Mirror

- Go To 4.

3. **CHECK (P67) DRIVER MIRROR VERTICAL POSITION SIGNAL CIRCUIT AND (A856) 5-VOLT SUPPLY CIRCUIT FOR A SHORT TO (M41) DRIVER PUDDLE LAMP DRIVER CIRCUIT**

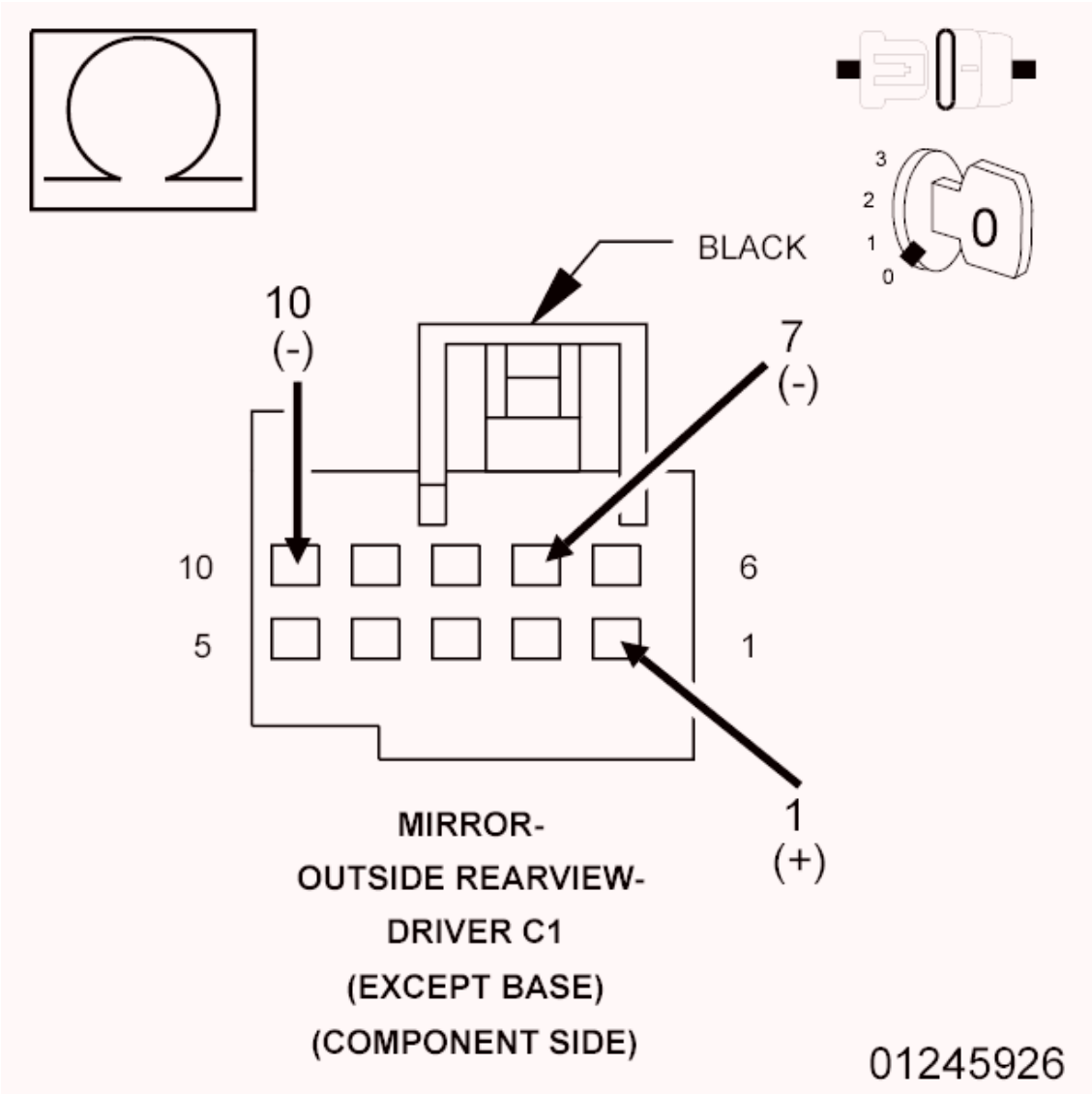

Fig. 51: Checking Driver Mirror Vertical Position Signal Circuit And 5-Volt Supply Circuit For A Short To Driver Puddle Lamp Driver Circuit
Courtesy of CHRYSLER GROUP, LLC

1. Turn the ignition off.
2. Measure the resistance between the (M41) Driver Puddle Lamp Driver circuit and the (P67) Driver Mirror Vertical Position Signal circuit at the Driver Outside Rearview Mirror C1 (Component Side) connector.
3. Measure the resistance between the (M41) Driver Puddle Lamp Driver circuit and the (A856) 5-volt Supply circuit at the Driver Outside Rearview Mirror C1 (Component Side) connector.

   Is the resistance below 10K Ohms for either measurement?

   Yes

- Repair all circuits with a resistance below 10K Ohms for a short to the (M41) Driver Puddle Lamp Driver circuit. If the wiring harness and connector are okay, replace the Driver Outside Rearview Mirror in accordance with the Service Information.
- Perform the BODY VERIFICATION TEST. Refer to **BODY VERIFICATION TEST** .

No

- Go To 4.

4. **CHECK (P67) DRIVER MIRROR VERTICAL POSITION SIGNAL CIRCUIT AND (P69) DRIVER MIRROR SENSOR GROUND CIRCUIT FOR AN OPEN**

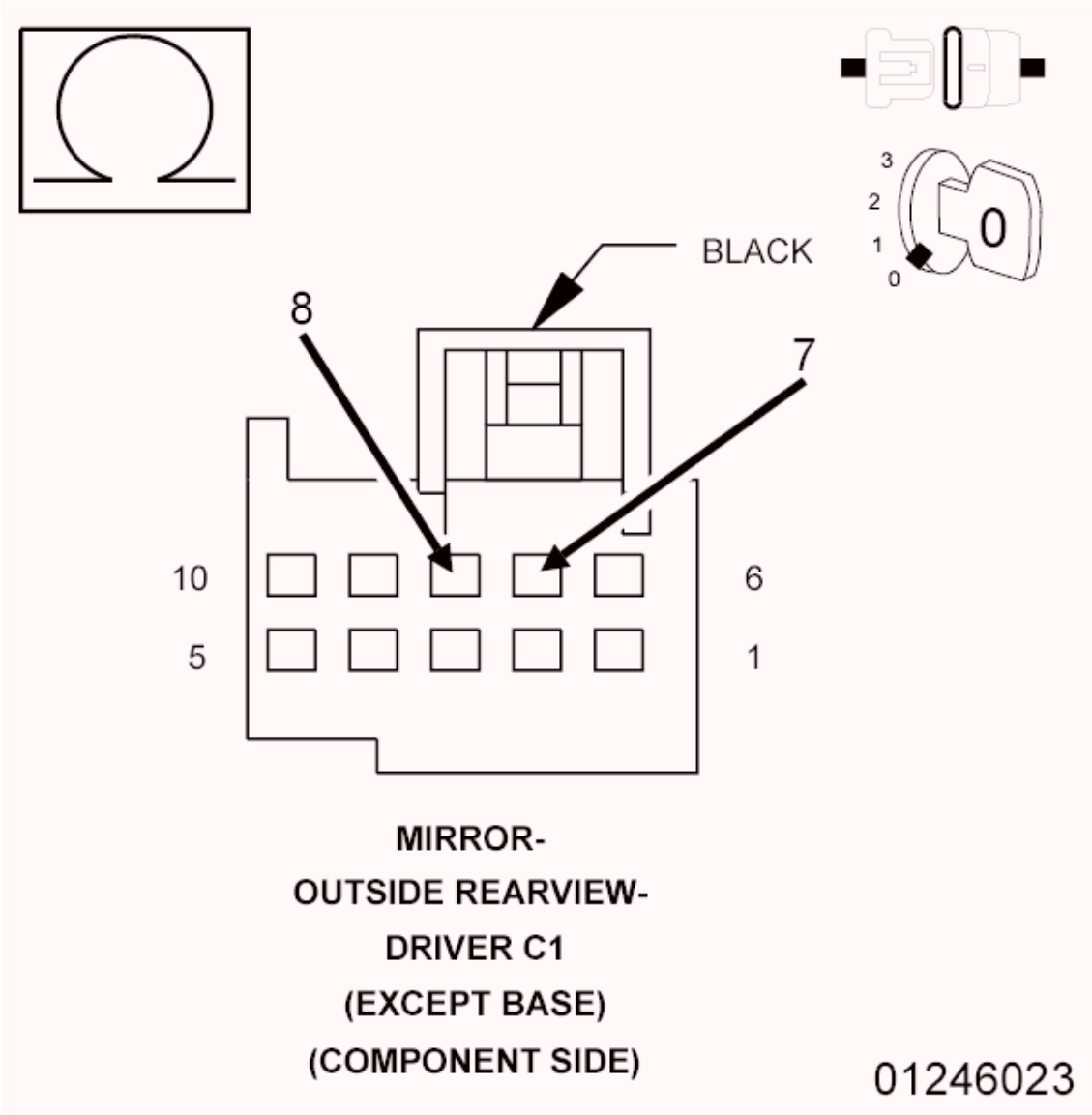

Fig. 52: Checking Driver Mirror Vertical Position Signal Circuit And Driver Mirror Sensor Ground Circuit For An Open
Courtesy of CHRYSLER GROUP, LLC

1. If not done previously, turn the ignition off.
2. Measure the resistance between the (P67) Driver Mirror Vertical Position Signal circuit and the (P69) Driver Mirror Sensor Ground circuit at the Driver Outside Rearview Mirror C1 (Component Side) connector.

   Is the resistance below 3.0 Ohms?

   Yes

   - Go To 5.

   No

   - Repair (P67) Driver Mirror Vertical Position Signal circuit or the (P69) Driver Mirror Sensor Ground circuit for an open. If the wiring harness and connector are okay, replace the Driver Outside Rearview Mirror in accordance with the Service Information.
   - Perform the BODY VERIFICATION TEST. Refer to **BODY VERIFICATION TEST** .

5. **CHECK (P67) DRIVER MIRROR VERTICAL POSITION SIGNAL CIRCUIT FOR A SHORT TO (P71) DRIVER MIRROR VERTICAL DRIVER CIRCUIT, (P73) DRIVER MIRROR COMMON DRIVER CIRCUIT, OR TO (P75) DRIVER MIRROR HORIZONTAL DRIVER CIRCUIT**

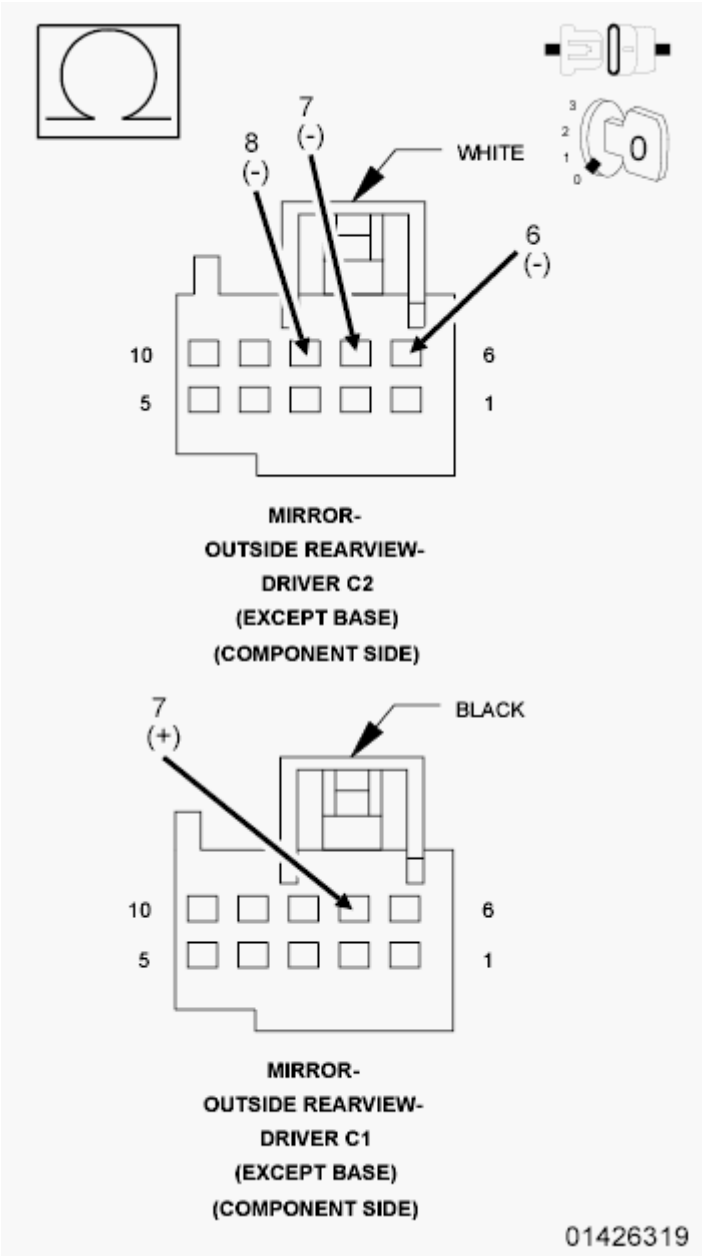

Fig. 53: Checking Driver Mirror Vertical Position Signal Circuit For A Short To Other Circuits
Courtesy of CHRYSLER GROUP, LLC

1. Disconnect the Driver Outside Rearview Mirror C2 (Component Side) connector from the Door Module C2 connector.
2. Measure the resistance between the (P67) Driver Mirror Vertical Position Signal circuit and the (P71) Driver Mirror Vertical Driver circuit at the Driver Outside Rearview Mirror C1 and C2 (Component Side) connectors.
3. Measure the resistance between the (P67) Driver Mirror Vertical Position Signal circuit and the (P73) Driver Mirror Common Driver circuit at the Driver Outside Rearview Mirror C1 and C2 (Component Side) connectors.
4. Measure the resistance between the (P67) Driver Mirror Vertical Position Signal circuit and the

(P75) Driver Mirror Horizontal Driver circuit at the Driver Outside Rearview Mirror C1 and C2 (Component Side) connectors.

Is the resistance below 10K Ohms for any measurement?

Yes

- Repair all circuits with a resistance below 10K Ohms for a short to the (P67) Driver Mirror Vertical Position Signal circuit. If the wiring harness and connector are okay, replace the Driver Outside Rearview Mirror in accordance with the Service Information.
- Perform the BODY VERIFICATION TEST. Refer to **BODY VERIFICATION TEST** .

No, with Heated/Turn Signal Mirror

- Go To 6.

No, without Heated/Turn Signal Mirror

- Go To 7.

6. **CHECK (P67) DRIVER MIRROR VERTICAL POSITION SIGNAL CIRCUIT FOR A SHORT TO (C16) DRIVER MIRROR HEATER DRIVER CIRCUIT OR TO (P501) DRIVER MIRROR TURN SIGNAL DRIVER CIRCUIT**

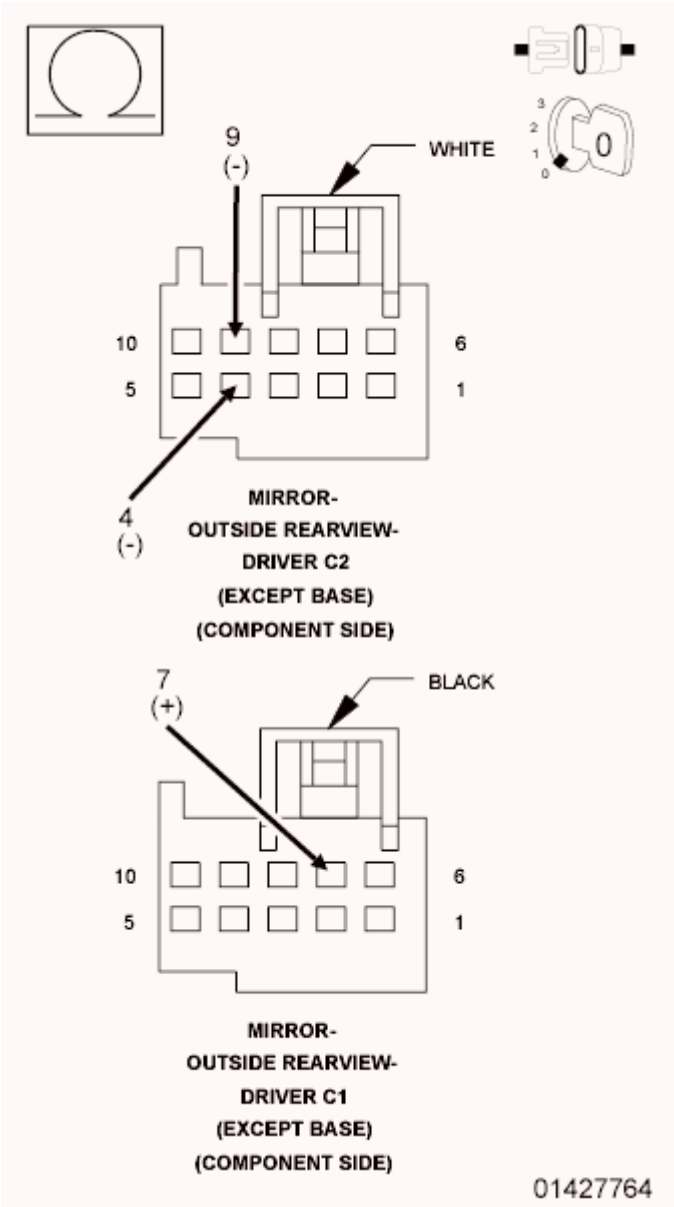

Fig. 54: Checking Driver Mirror Vertical Position Signal Circuit For A Short To Other Circuits
Courtesy of CHRYSLER GROUP, LLC

1. For Heated Mirror, measure the resistance between the (P67) Driver Mirror Vertical Position Signal circuit and the (C16) Driver Mirror Heater Driver circuit at the Driver Outside Rearview Mirror C1 and C2 (Component Side) connectors.
2. For Turn Signal Mirror, measure the resistance between the (P67) Driver Mirror Vertical Position Signal circuit and the (P501) Driver Mirror Turn Signal Driver circuit at the Driver Outside Rearview Mirror C1 and C2 (Component Side) connectors.

   Is the resistance below 10K Ohms for either measurement?

   Yes

- Repair all circuits with a resistance below 10K Ohms for a short to the (P67) Driver Mirror Vertical Position Signal circuit. If the wiring harness and connector are okay, replace the Driver Outside Rearview Mirror in accordance with the Service Information.
- Perform the BODY VERIFICATION TEST. Refer to **BODY VERIFICATION TEST** .

No

- Go To 7.

7. **CHECK (A856) 5-VOLT SUPPLY CIRCUIT FOR A SHORT TO (P71) DRIVER MIRROR VERTICAL DRIVER CIRCUIT, (P73) DRIVER MIRROR COMMON DRIVER CIRCUIT, OR TO (P75) DRIVER MIRROR HORIZONTAL DRIVER CIRCUIT**

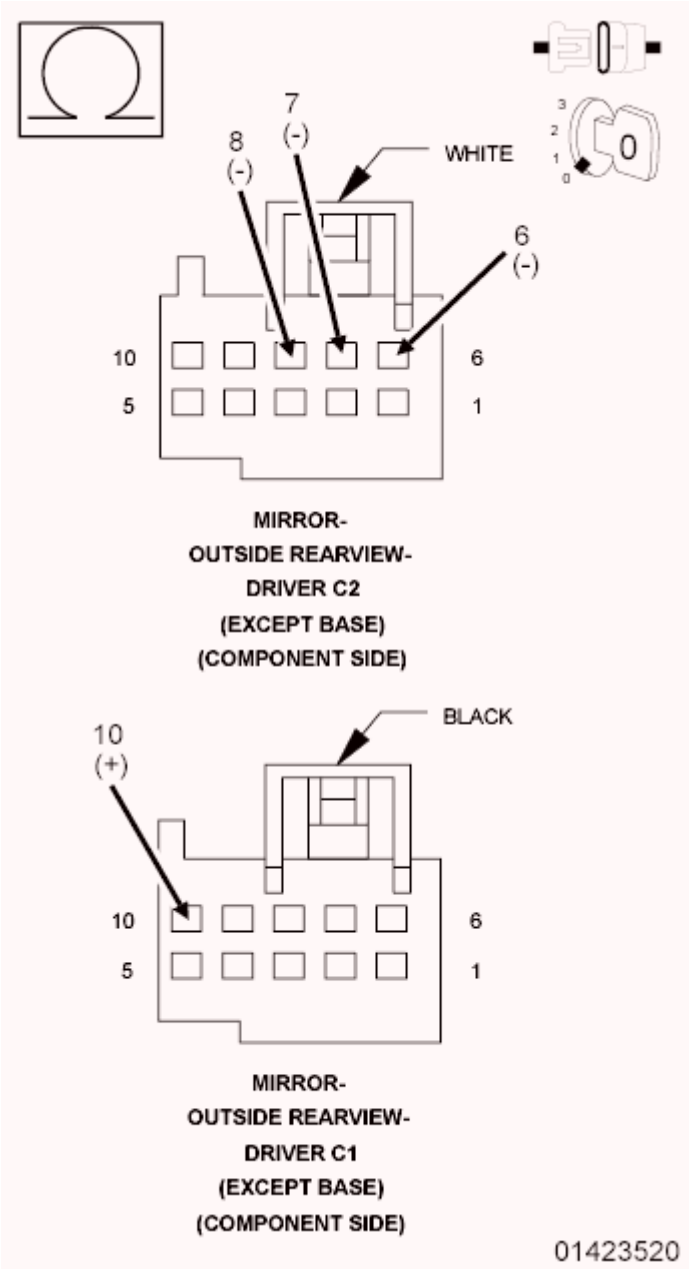

Fig. 55: Checking 5-Volt Supply Circuit For A Short To Other Circuits
Courtesy of CHRYSLER GROUP, LLC

1. Measure the resistance between the (A856) 5-volt Supply circuit and the (P71) Driver Mirror Vertical Driver circuit at the Driver Outside Rearview Mirror C1 and C2 (Component Side) connectors.
2. Measure the resistance between the (A856) 5-volt Supply circuit and the (P73) Driver Mirror Common Driver circuit at the Driver Outside Rearview Mirror C1 and C2 (Component Side) connectors.
3. Measure the resistance between the (A856) 5-volt Supply circuit and the (P75) Driver Mirror Horizontal Driver circuit at the Driver Outside Rearview Mirror C1 and C2 (Component Side) connectors.

   Is the resistance below 10K Ohms for any measurement?

   Yes

   - Repair all circuits with a resistance below 10K Ohms for a short to the (A856) 5-volt Supply circuit. If the wiring harness and connector are okay, replace the Driver Outside Rearview Mirror in accordance with the Service Information.
   - Perform the BODY VERIFICATION TEST. Refer to **BODY VERIFICATION TEST** .

   No, with Heated/Turn Signal Mirror

   - Go To 8.

   No, without Heated/Turn Signal Mirror

   - Inspect the wiring and connectors for damage and repair as necessary. If the wiring and connectors are okay, replace the Door Module in accordance with the Service Information.
   - Perform the BODY VERIFICATION TEST. Refer to **BODY VERIFICATION TEST** .

8. **CHECK (A856) 5-VOLT SUPPLY CIRCUIT FOR A SHORT TO (C16) DRIVER MIRROR HEATER DRIVER CIRCUIT OR TO (P501) DRIVER MIRROR TURN SIGNAL DRIVER CIRCUIT**

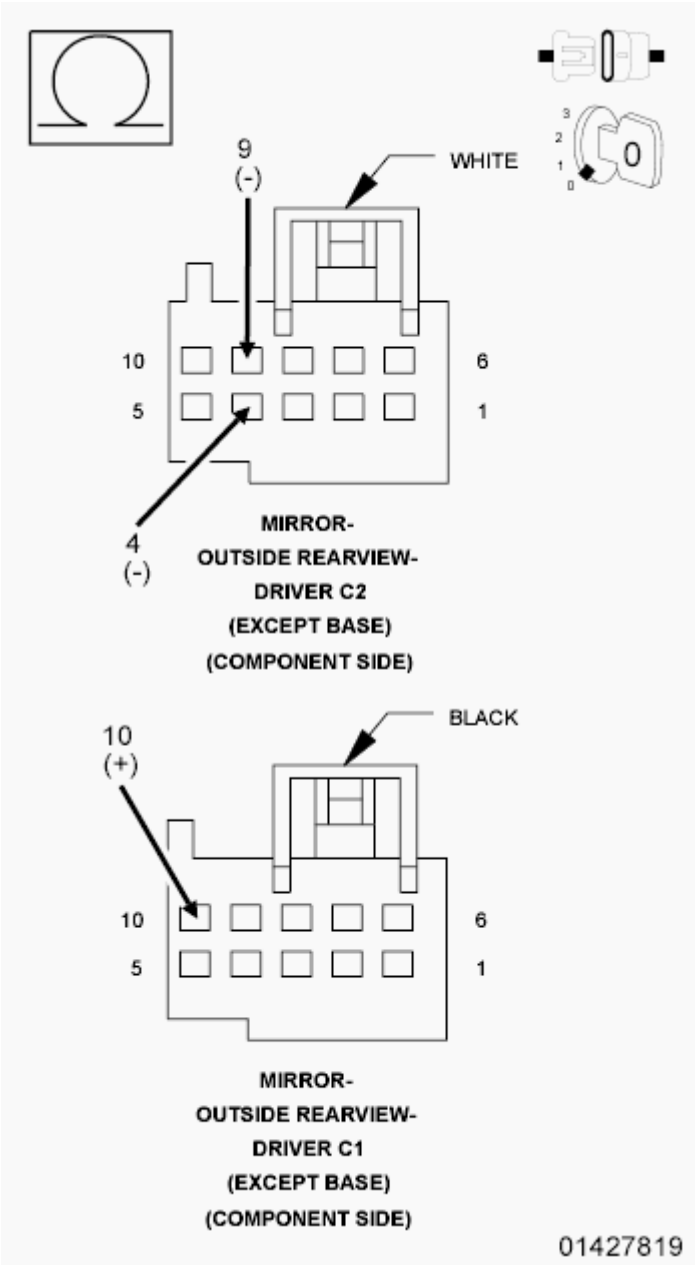

Fig. 56: Checking 5-Volt Supply Circuit For A Short To Driver Mirror Heater Driver Circuit Or To Driver Mirror Turn Signal Driver Circuit
Courtesy of CHRYSLER GROUP, LLC

1. For Heated Mirror, measure the resistance between the (A856) 5-volt Supply circuit and the (C16) Driver Mirror Heater Driver circuit at the Driver Outside Rearview Mirror C1 and C2 (Component Side) connectors.
2. For Turn Signal Mirror, measure the resistance between the (A856) 5-volt Supply circuit and the (P501) Driver Mirror Turn Signal Driver circuit at the Driver Outside Rearview Mirror C1 and C2 (Component Side) connectors.

   Is the resistance below 10K Ohms for either measurement?

Yes

- Repair all circuits with a resistance below 10K Ohms for a short to the (A856) 5-volt Supply circuit. If the wiring harness and connector are okay, replace the Driver Outside Rearview Mirror in accordance with the Service Information.
- Perform the BODY VERIFICATION TEST. Refer to **BODY VERIFICATION TEST** .

No

- Inspect the wiring and connectors for damage and repair as necessary. If the wiring and connectors are okay, replace the Door Module in accordance with the Service Information.
- Perform the BODY VERIFICATION TEST. Refer to **BODY VERIFICATION TEST** .

B1D0E-11-DRIVER MIRROR HORIZONTAL POSITION SENSOR INPUT - CIRCUIT SHORT TO GROUND

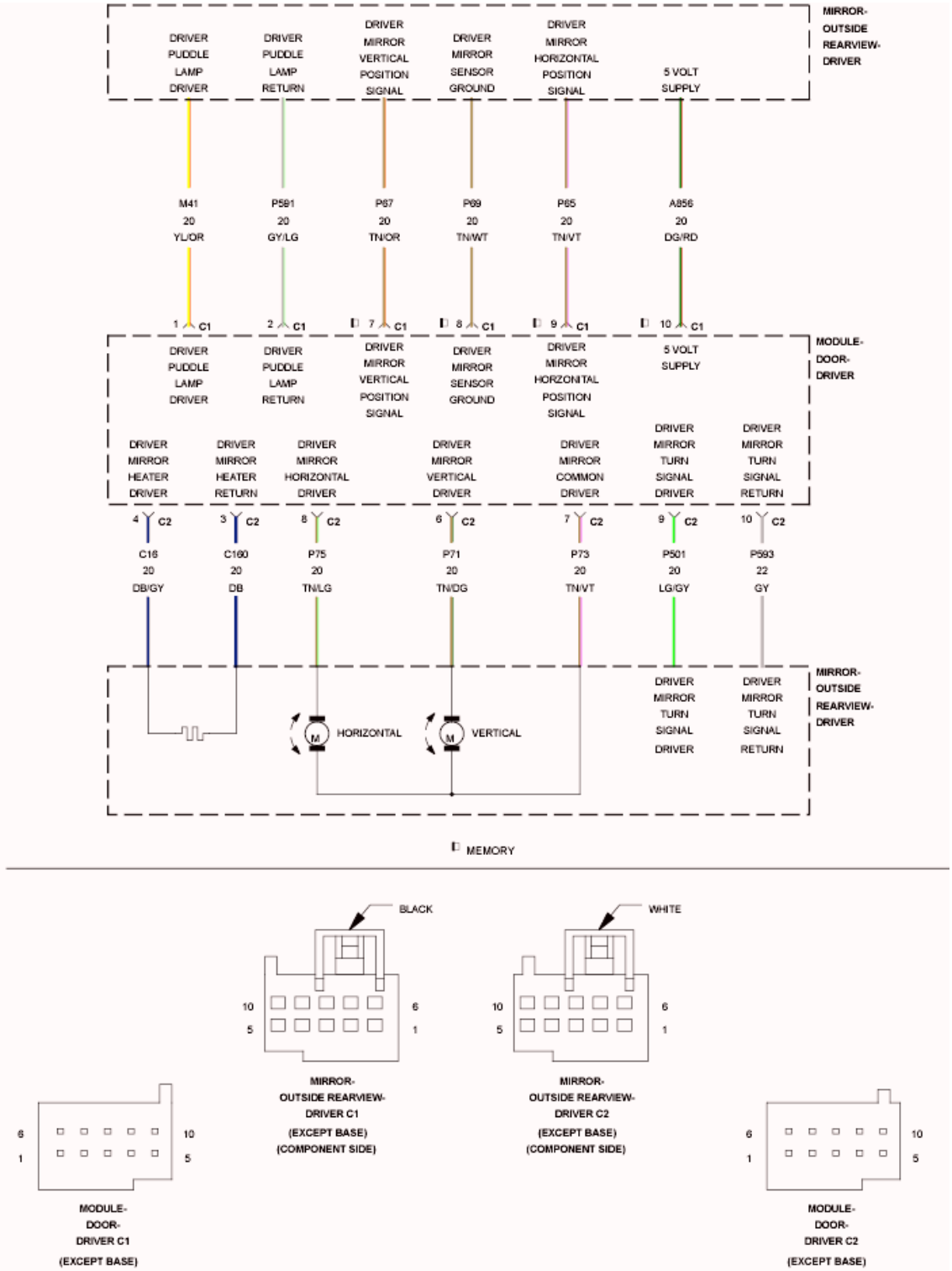

Fig. 57: Driver Mirror Signal Lamp Control Wiring Diagram
Courtesy of CHRYSLER GROUP, LLC

For a complete wiring diagram, **refer to appropriate SYSTEM WIRING DIAGRAMS article** .

WHEN MONITORED:

Continuously.

SET CONDITION:

The Door Module senses a short low on the (P65) Driver Mirror Horizontal Position Signal circuit for more than two seconds.

POSSIBLE CAUSES

Possible Causes
(P65) DRIVER MIRROR HORIZONTAL POSITION SIGNAL CIRCUIT FOR A SHORT TO GROUND
(P65) DRIVER MIRROR HORIZONTAL POSITION SIGNAL CIRCUIT FOR A SHORT TO THE (P69) DRIVER MIRROR SENSOR GROUND CIRCUIT
(P65) DRIVER MIRROR HORIZONTAL POSITION SIGNAL CIRCUIT FOR A SHORT TO THE (P591) DRIVER PUDDLE LAMP RETURN CIRCUIT
(P65) DRIVER MIRROR HORIZONTAL POSITION SIGNAL CIRCUIT FOR A SHORT TO THE (P71) DRIVER MIRROR VERTICAL DRIVER CIRCUIT
(P65) DRIVER MIRROR HORIZONTAL POSITION SIGNAL CIRCUIT FOR A SHORT TO THE (P73) DRIVER MIRROR COMMON DRIVER CIRCUIT
(P65) DRIVER MIRROR HORIZONTAL POSITION SIGNAL CIRCUIT FOR A SHORT TO THE (P75) DRIVER MIRROR HORIZONTAL DRIVER CIRCUIT
(P65) DRIVER MIRROR HORIZONTAL POSITION SIGNAL CIRCUIT FOR A SHORT TO THE (C160) DRIVER MIRROR HEATER RETURN CIRCUIT
(P65) DRIVER MIRROR HORIZONTAL POSITION SIGNAL CIRCUIT FOR A SHORT TO THE (P593) DRIVER MIRROR TURN SIGNAL RETURN CIRCUIT
DRIVER OUTSIDE REARVIEW MIRROR SHORTED
DOOR MODULE

DIAGNOSTIC TEST

1. **TEST FOR INTERMITTENT CONDITION**
    1. Turn the ignition on.
    2. Using a scan tool, record and erase Diagnostic Trouble Codes (DTC's).
    3. Turn the turn signal on, if equipped with turn signal mirror.
    4. Turn the puddle lamps on, if equipped with puddle lamp mirror.
    5. Turn the rear defogger on, if equipped with heated mirror.
    6. Press and release the Mirror Select switch to select the Driver Outside Rearview Mirror.
    7. Operate the Mirror Adjust switch in all directions several times while monitoring the scan tool for DTC's.

    NOTE: **After adjusting the mirror in one direction wait at least two seconds before adjusting the mirror in the opposite direction, as this will allow time for an active fault to set if present.**

Is the DTC active?

Yes

- Go To 2.

No

- The conditions that caused this code to set are not present at this time. For vehicle's equipped with folding outside rearview mirrors, repeat test with mirror folded. If DTC is now active, go to 2. Otherwise, use the wiring diagram/schematic as a guide and inspect the wiring and connectors.
- Perform the BODY VERIFICATION TEST. Refer to **BODY VERIFICATION TEST** .

2. **CHECK (P65) DRIVER MIRROR HORIZONTAL POSITION SIGNAL CIRCUIT FOR A SHORT TO GROUND**

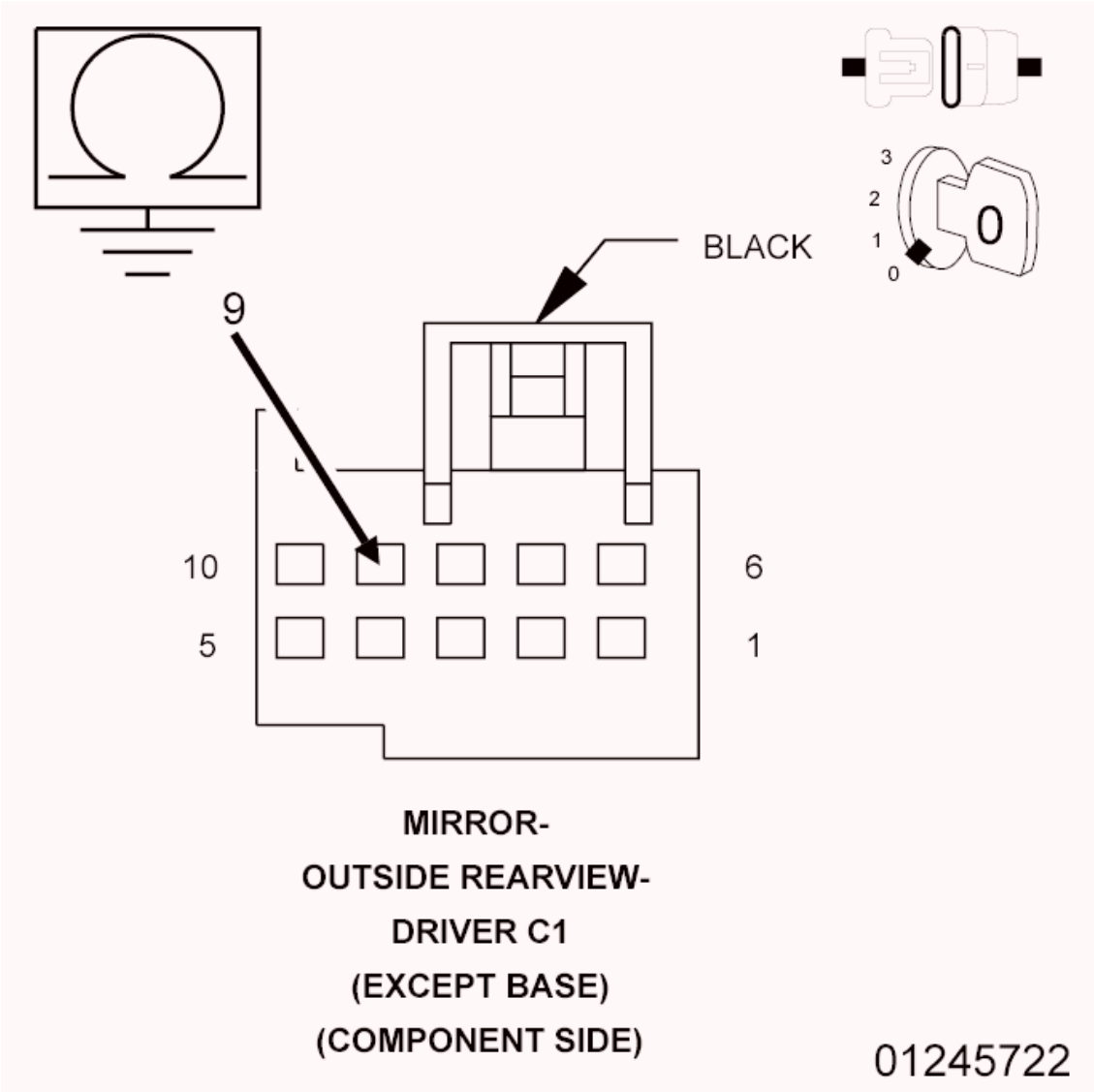

Fig. 58: Checking Driver Mirror Horizontal Position Signal Circuit For A Short To Ground
Courtesy of CHRYSLER GROUP, LLC

1. Turn the ignition off.
2. Disconnect the Driver Outside Rearview Mirror C1 (Component Side) connector from the Door Module C1 connector.
3. Measure the resistance of the (P65) Driver Mirror Horizontal Position Signal circuit between ground and the Driver Outside Rearview Mirror C1 (Component Side) connector.

   Is the resistance below 10K Ohms?

   Yes

   - Repair the (P65) Driver Mirror Horizontal Position Signal circuit for a short to ground. If the wiring harness and connector are okay, replace the Driver Outside Rearview Mirror in accordance with the Service Information.
   - Perform the BODY VERIFICATION TEST. Refer to **BODY VERIFICATION TEST** .

   No

   - Go To 3.

3. **CHECK (P65) DRIVER MIRROR HORIZONTAL POSITION SIGNAL CIRCUIT FOR A SHORT TO (P69) DRIVER MIRROR SENSOR GROUND CIRCUIT**

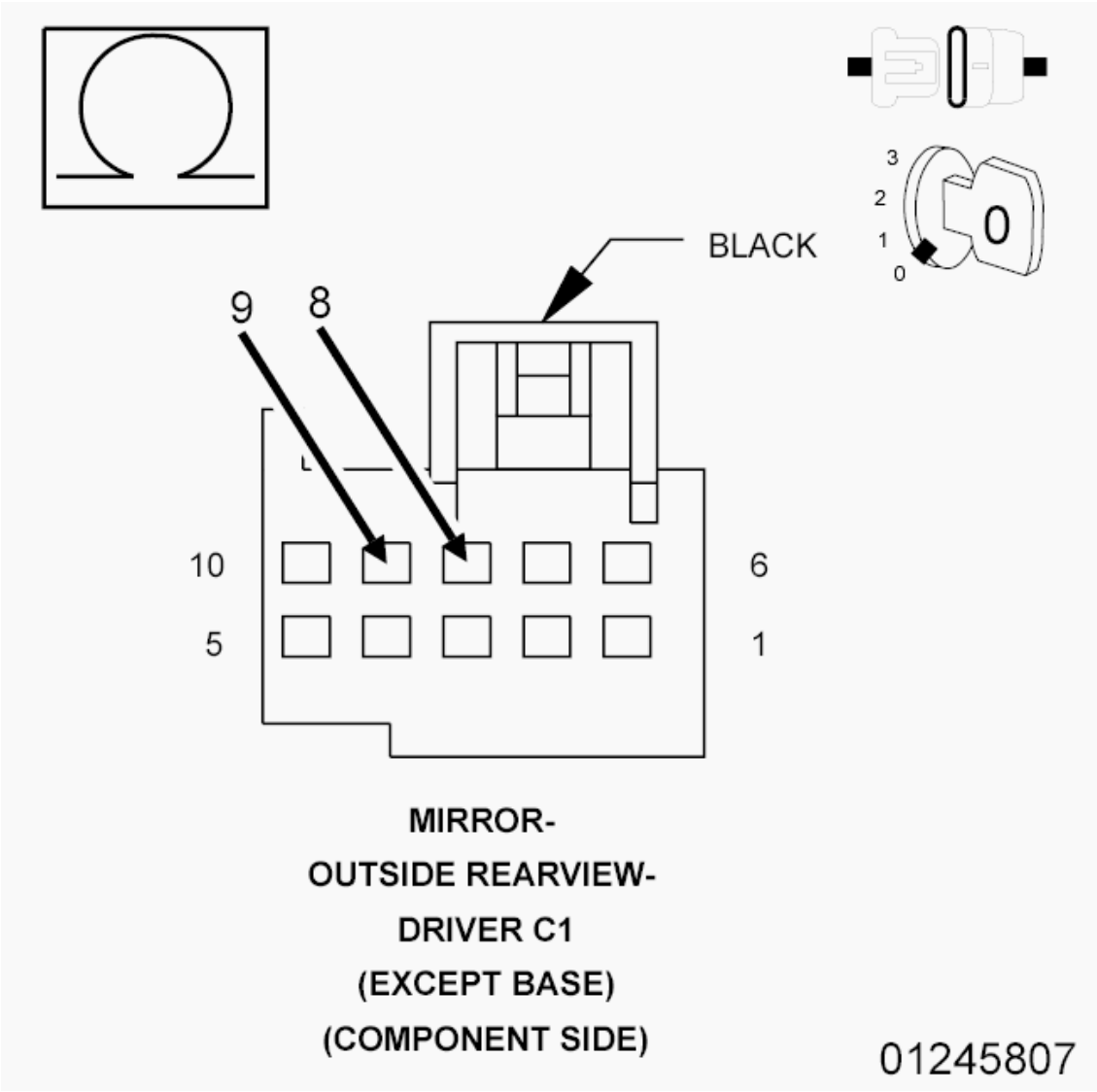

Fig. 59: Checking Driver Mirror Horizontal Position Signal Circuit For A Short To Driver Mirror Sensor Ground Circuit
Courtesy of CHRYSLER GROUP, LLC

1. Measure the residence between the (P65) Driver Mirror Horizontal Position Signal circuit and the (P69) Driver Mirror Sensor Ground circuit at the Driver Outside Rearview Mirror C1 (Component Side) connector.

   Is the resistance below 1.0 Ohm?

   Yes

   - Repair the (P65) Driver Mirror Horizontal Position Signal circuit for a short to the (P69) Driver Mirror Sensor Ground circuit. If the wiring harness and connector are okay, replace the Driver Outside Rearview Mirror in accordance with the Service Information.
   - Perform the BODY VERIFICATION TEST. Refer to **BODY VERIFICATION TEST** .

No, with Puddle Lamp Mirror

- Go To 4.

No, without Puddle Lamp Mirror

- Go To 5.

4. **CHECK (P65) DRIVER MIRROR HORIZONTAL POSITION SIGNAL CIRCUIT FOR A SHORT TO (P591) DRIVER PUDDLE LAMP RETURN CIRCUIT**

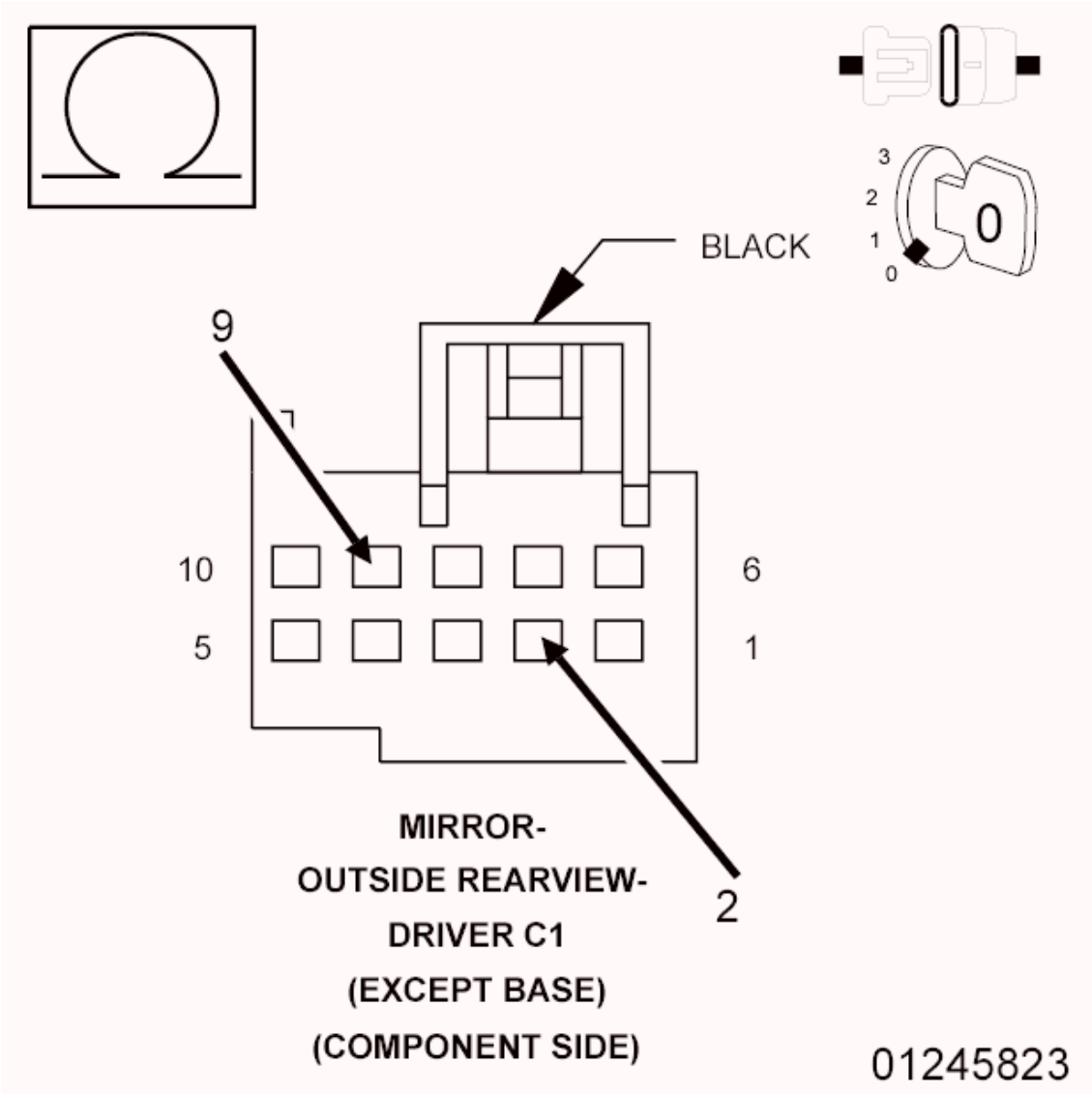

Fig. 60: Checking Driver Mirror Horizontal Position Signal Circuit For A Short To Driver Puddle Lamp Return Circuit
Courtesy of CHRYSLER GROUP, LLC

1. Measure the residence between the (P65) Driver Mirror Horizontal Position Signal circuit and the (P591) Driver Puddle Lamp Return circuit at the Driver Outside Rearview Mirror C1 (Component

Side) connector.

Is the resistance below 10K Ohms?

Yes

- Repair the (P65) Driver Mirror Horizontal Position Signal circuit for a short to the (P591) Driver Puddle Lamp Return circuit. If the wiring harness and connector are okay, replace the Driver Outside Rearview Mirror in accordance with the Service Information.
- Perform the BODY VERIFICATION TEST. Refer to **BODY VERIFICATION TEST** .

No

- Go To 5.

5. **CHECK (P65) DRIVER MIRROR HORIZONTAL POSITION SIGNAL CIRCUIT FOR A SHORT TO (P71) DRIVER MIRROR VERTICAL DRIVER CIRCUIT, (P73) DRIVER MIRROR COMMON DRIVER CIRCUIT, OR TO (P75) DRIVER MIRROR HORIZONTAL DRIVER CIRCUIT**

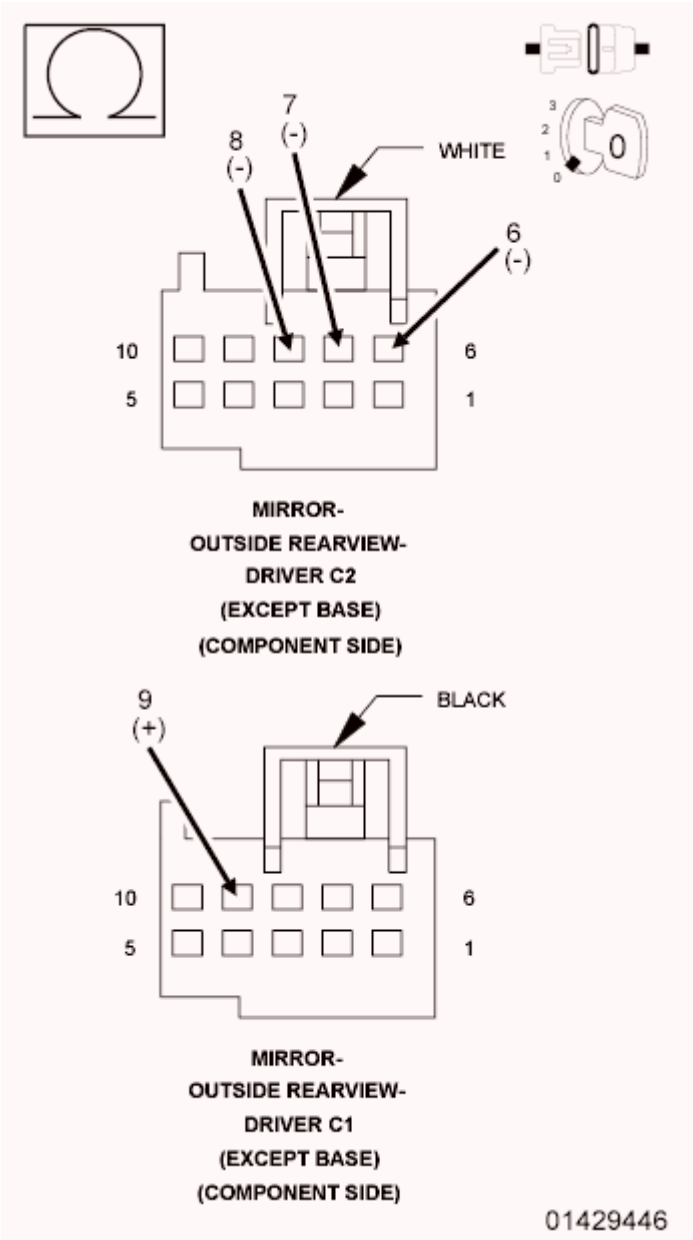

Fig. 61: Checking Driver Mirror Horizontal Position Signal Circuit For A Short To Other Circuits
Courtesy of CHRYSLER GROUP, LLC

1. Disconnect the Driver Outside Rearview Mirror C2 (Component Side) connector from the Door Module C2 connector.
2. Measure the resistance between the (P65) Driver Mirror Horizontal Position Signal circuit and the (P71) Driver Mirror Vertical Driver circuit at the Driver Outside Rearview Mirror C1 and C2 (Component Side) connectors.
3. Measure the resistance between the (P65) Driver Mirror Horizontal Position Signal circuit and the (P73) Driver Mirror Common Driver circuit at the Driver Outside Rearview Mirror C1 and C2 (Component Side) connectors.
4. Measure the resistance between the (P65) Driver Mirror Horizontal Position Signal circuit and the

(P75) Driver Mirror Horizontal Driver circuit at the Driver Outside Rearview Mirror C1 and C2 (Component Side) connectors.

Is the resistance below 10K Ohms for any measurement?

Yes

- Repair all circuits with a resistance below 10K Ohms for a short to the (P65) Driver Mirror Horizontal Position Signal circuit. If the wiring harness and connector are okay, replace the Driver Outside Rearview Mirror in accordance with the Service Information.
- Perform the BODY VERIFICATION TEST. Refer to **BODY VERIFICATION TEST** .

No, with Heated/Turn Signal Mirror

- Go To 6.

No, without Heated/Turn Signal Mirror

- Inspect the wiring and connectors for damage and repair as necessary. If the wiring and connectors are okay, replace the Door Module in accordance with the Service Information.
- Perform the BODY VERIFICATION TEST. Refer to **BODY VERIFICATION TEST** .

6. **CHECK (P65) DRIVER MIRROR HORIZONTAL POSITION SIGNAL CIRCUIT FOR A SHORT TO (C160) DRIVER MIRROR HEATER RETURN CIRCUIT OR TO (P593) DRIVER MIRROR TURN SIGNAL RETURN CIRCUIT**

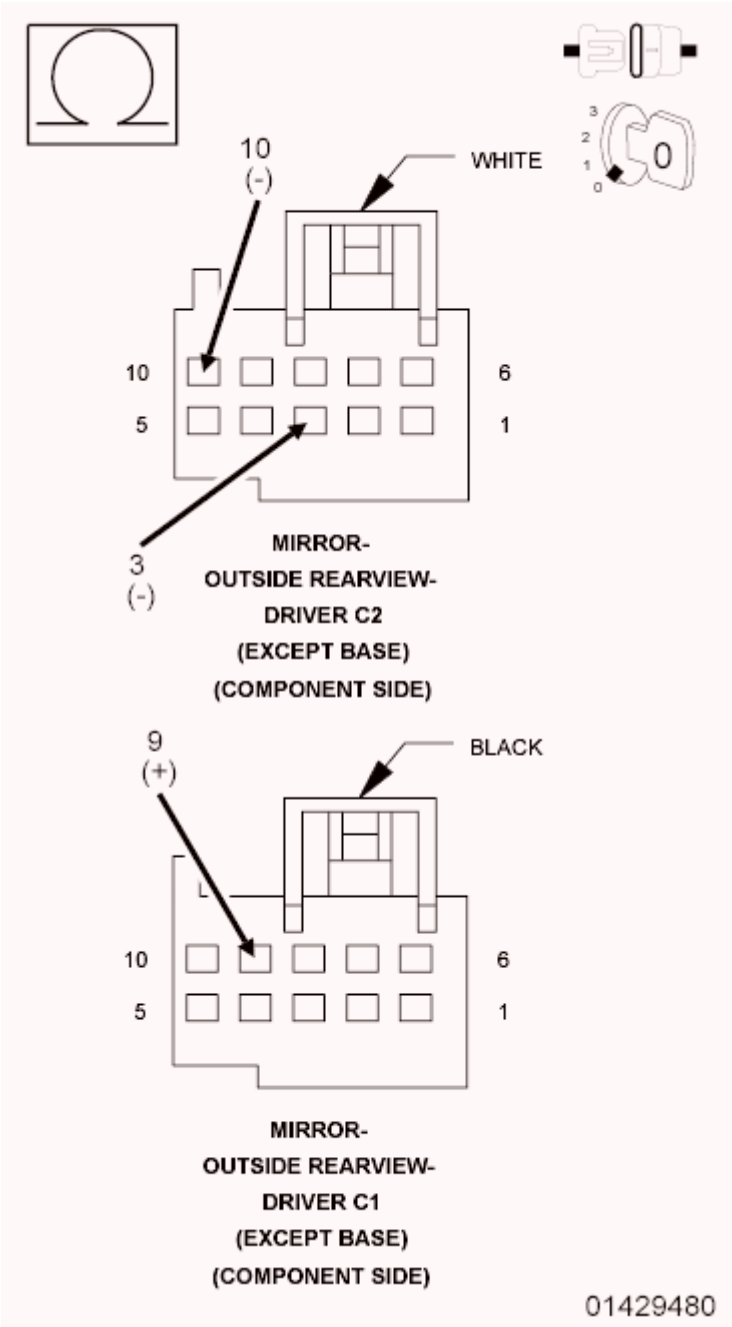

Fig. 62: Checking Driver Mirror Horizontal Position Signal Circuit For A Short To Driver Mirror Heater Return Circuit Or To Driver Mirror Turn Signal Return Circuit
Courtesy of CHRYSLER GROUP, LLC

1. For Heated Mirror, measure the resistance between the (P65) Driver Mirror Horizontal Position Signal circuit and the (C160) Driver Mirror Heater Return circuit at the Driver Outside Rearview Mirror C1 and C2 (Component Side) connectors.
2. For Turn Signal Mirror, measure the resistance between the (P65) Driver Mirror Horizontal Position Signal circuit and the (P593) Driver Mirror Turn Signal Return circuit at the Driver Outside Rearview Mirror C1 and C2 (Component Side) connectors.

Is the resistance below 10K Ohms for either measurement?

Yes

- Repair all circuits with a resistance below 10K Ohms for a short to the (P65) Driver Mirror Horizontal Position Signal circuit. If the wiring harness and connector are okay, replace the Driver Outside Rearview Mirror in accordance with the Service Information.
- Perform the BODY VERIFICATION TEST. Refer to **BODY VERIFICATION TEST** .

No

- Inspect the wiring and connectors for damage and repair as necessary. If the wiring and connectors are okay, replace the Door Module in accordance with the Service Information.
- Perform the BODY VERIFICATION TEST. Refer to **BODY VERIFICATION TEST** .

B1D0E-12-DRIVER MIRROR HORIZONTAL POSITION SENSOR INPUT - CIRCUIT SHORT TO BATTERY

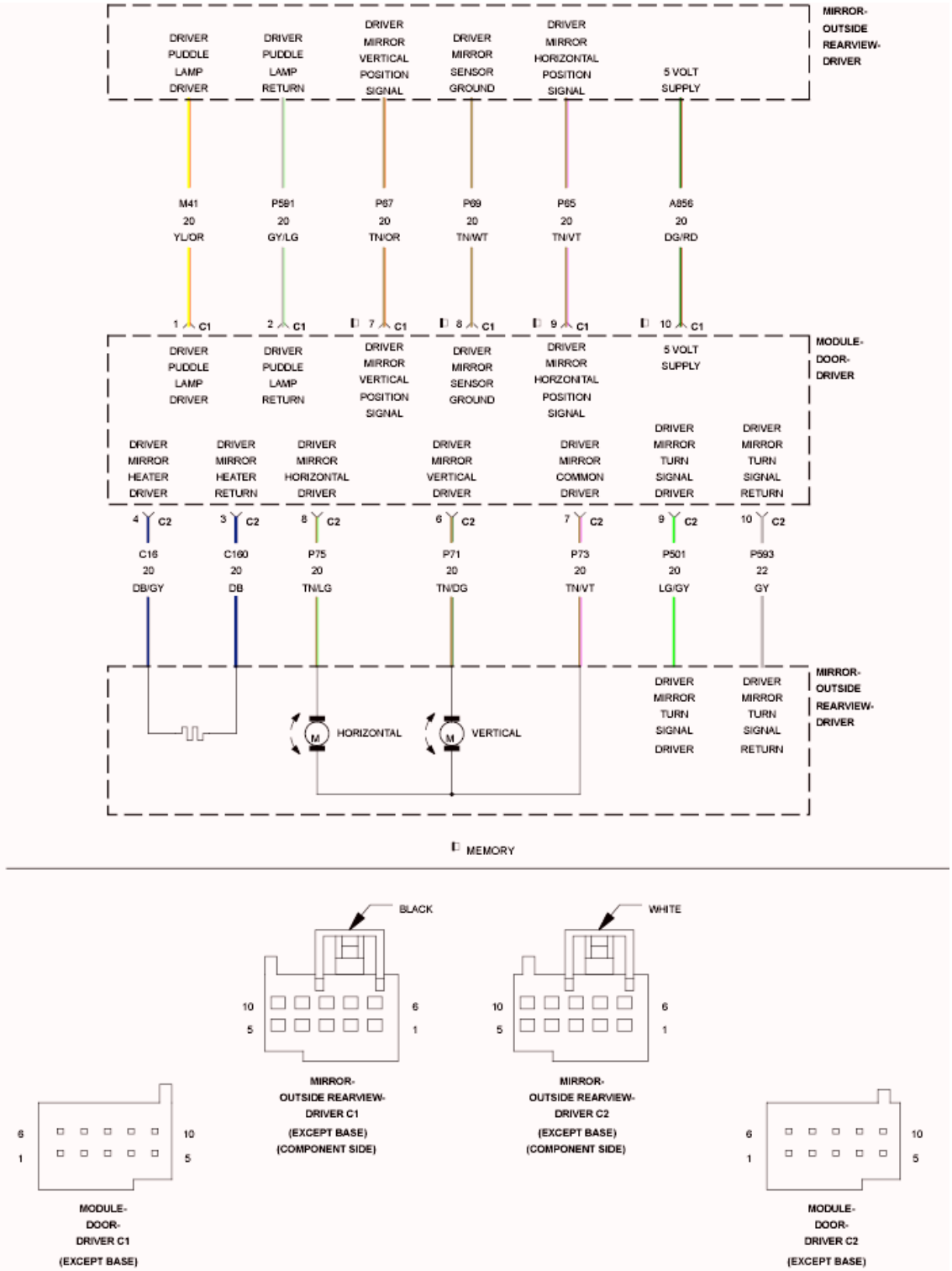

Fig. 63: Driver Mirror Signal Lamp Control Wiring Diagram
Courtesy of CHRYSLER GROUP, LLC

For a complete wiring diagram, **refer to appropriate SYSTEM WIRING DIAGRAMS article** .

WHEN MONITORED:

Continuously.

SET CONDITION:

The Door Module senses more than 400 mA current on the (A856) 5-volt Supply circuit or an open or a short high on the (P65) Driver Mirror Horizontal Position Signal circuit for more than two seconds.

POSSIBLE CAUSES

Possible Causes
(P65) DRIVER MIRROR HORIZONTAL POSITION SIGNAL CIRCUIT FOR A SHORT TO VOLTAGE
(P65) DRIVER MIRROR HORIZONTAL POSITION SIGNAL CIRCUIT FOR A SHORT TO THE (M41) DRIVER PUDDLE LAMP DRIVER CIRCUIT
(P65) DRIVER MIRROR HORIZONTAL POSITION SIGNAL CIRCUIT FOR AN OPEN
(P69) DRIVER MIRROR SENSOR GROUND CIRCUIT FOR AN OPEN
(P65) DRIVER MIRROR HORIZONTAL POSITION SIGNAL CIRCUIT FOR A SHORT TO THE (P71) DRIVER MIRROR VERTICAL DRIVER CIRCUIT
(P65) DRIVER MIRROR HORIZONTAL POSITION SIGNAL CIRCUIT FOR A SHORT TO THE (P73) DRIVER MIRROR COMMON DRIVER CIRCUIT
(P65) DRIVER MIRROR HORIZONTAL POSITION SIGNAL CIRCUIT FOR A SHORT TO THE (P75) DRIVER MIRROR HORIZONTAL DRIVER CIRCUIT
(P65) DRIVER MIRROR HORIZONTAL POSITION SIGNAL CIRCUIT FOR A SHORT TO THE (C16) DRIVER MIRROR HEATER DRIVER CIRCUIT
(P65) DRIVER MIRROR HORIZONTAL POSITION SIGNAL CIRCUIT FOR A SHORT TO THE (P501) DRIVER MIRROR TURN SIGNAL DRIVER CIRCUIT
(A856) 5-VOLT SUPPLY CIRCUIT FOR A SHORT TO VOLTAGE
(A856) 5-VOLT SUPPLY CIRCUIT FOR A SHORT TO THE (M41) DRIVER PUDDLE LAMP DRIVER CIRCUIT
(A856) 5-VOLT SUPPLY CIRCUIT FOR A SHORT TO THE (P71) DRIVER MIRROR VERTICAL DRIVER CIRCUIT
(A856) 5-VOLT SUPPLY CIRCUIT FOR A SHORT TO THE (P73) DRIVER MIRROR COMMON DRIVER CIRCUIT
(A856) 5-VOLT SUPPLY CIRCUIT FOR A SHORT TO THE (P75) DRIVER MIRROR HORIZONTAL DRIVER CIRCUIT
(A856) 5-VOLT SUPPLY CIRCUIT FOR A SHORT TO THE (C16) DRIVER MIRROR HEATER DRIVER CIRCUIT
(A856) 5-VOLT SUPPLY CIRCUIT FOR A SHORT TO THE (P501) DRIVER MIRROR TURN SIGNAL DRIVER CIRCUIT
DRIVER OUTSIDE REARVIEW MIRROR SHORTED
DOOR MODULE

DIAGNOSTIC TEST

1. **TEST FOR INTERMITTENT CONDITION**

1. Turn the ignition on.
2. Using a scan tool, record and erase Diagnostic Trouble Codes (DTC's).
3. Turn the turn signal on, if equipped with turn signal mirror.
4. Turn the puddle lamps on, if equipped with puddle lamp mirror.
5. Turn the rear defogger on, if equipped with heated mirror.
6. Press and release the Mirror Select switch to select the Driver Outside Rearview Mirror.
7. Operate the Mirror Adjust switch in all directions several times while monitoring the scan tool for DTC's.

NOTE: **After adjusting the mirror in one direction wait at least two seconds before adjusting the mirror in the opposite direction, as this will allow time for an active fault to set if present.**

Is the DTC active?

Yes

- Go To 2.

No

- The conditions that caused this code to set are not present at this time. For vehicle's equipped with folding outside rearview mirrors, repeat test with mirror folded. If DTC is now active, go to 2. Otherwise, use the wiring diagram/schematic as a guide and inspect the wiring and connectors.
- Perform the BODY VERIFICATION TEST. Refer to **BODY VERIFICATION TEST** .

2. **CHECK (P65) DRIVER MIRROR HORIZONTAL POSITION SIGNAL CIRCUIT AND (A856) 5-VOLT SUPPLY CIRCUIT FOR A SHORT TO VOLTAGE**

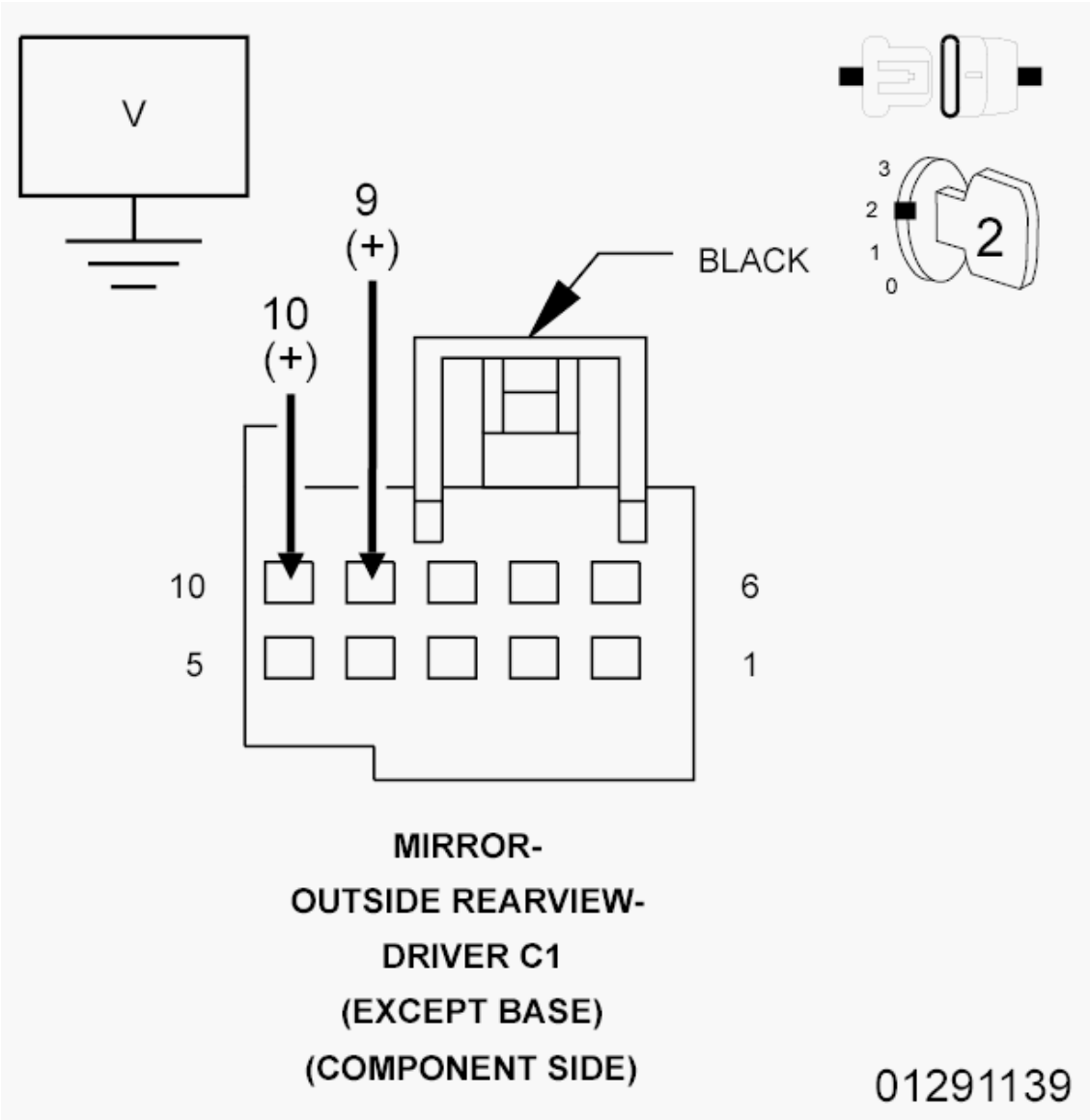

Fig. 64: Checking Driver Mirror Horizontal Position Signal Circuit And 5-Volt Supply Circuit For A Short To Voltage
Courtesy of CHRYSLER GROUP, LLC

1. Turn the ignition off.
2. Disconnect the Driver Outside Rearview Mirror C1 (Component Side) connector from the Door Module C1 connector.
3. Turn the ignition on.
4. Measure the Voltage of the (P65) Driver Mirror Horizontal Position Signal circuit between the Driver Outside Rearview Mirror C1 (Component Side) connector and ground.
5. Measure the voltage of the (A856) 5-volt Supply circuit between the Driver Outside Rearview Mirror C1 (Component Side) connector and ground.

   Is there any Voltage present on either circuit?

Yes

- Repair all circuits with Voltage present for a short to Voltage. If the wiring harness and connector are okay, replace the Driver Outside Rearview Mirror in accordance with the Service Information.
- Perform the BODY VERIFICATION TEST. Refer to **BODY VERIFICATION TEST** .

No, with Puddle Lamp Mirror

- Go To 3.

No, without Puddle Lamp Mirror

- Go To 4.

3. **CHECK (P65) DRIVER MIRROR HORIZONTAL POSITION SIGNAL CIRCUIT AND (A856) 5-VOLT SUPPLY CIRCUIT FOR A SHORT TO (M41) DRIVER PUDDLE LAMP DRIVER CIRCUIT**

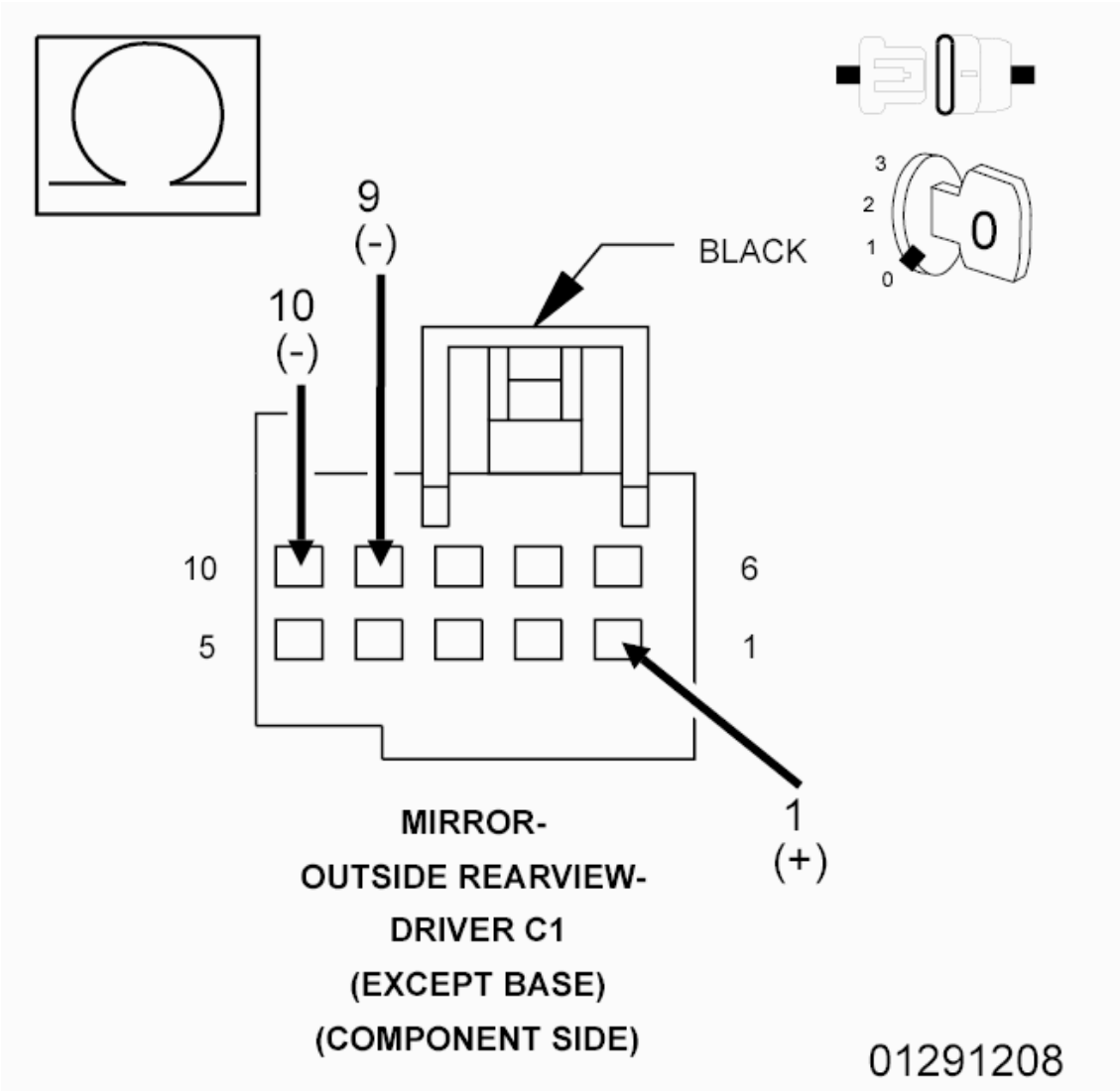

Fig. 65: Checking Driver Mirror Horizontal Position Signal Circuit And 5-Volt Supply Circuit For A Short To Driver Puddle Lamp Driver Circuit
Courtesy of CHRYSLER GROUP, LLC

1. Turn the ignition off.
2. Measure the resistance between the (M41) Driver Puddle Lamp Driver circuit and the (P65) Driver Mirror Horizontal Position Signal circuit at the Driver Outside Rearview Mirror C1 (Component Side) connector.
3. Measure the resistance between the (M41) Driver Puddle Lamp Driver circuit and the (A856) 5-volt Supply circuit at the Driver Outside Rearview Mirror C1 (Component Side) connector.

   Is the resistance below 10K Ohms for either measurement?

   Yes

   - Repair all circuits with a resistance below 10K Ohms for a short to the (M41) Driver Puddle

Lamp Driver circuit. If the wiring harness and connector are okay, replace the Driver Outside Rearview Mirror in accordance with the Service Information.

- Perform the BODY VERIFICATION TEST. Refer to **BODY VERIFICATION TEST** .

No

- Go To 4.

4. **CHECK (P65) DRIVER MIRROR HORIZONTAL POSITION SIGNAL CIRCUIT AND (P69) DRIVER MIRROR SENSOR GROUND CIRCUIT FOR AN OPEN**

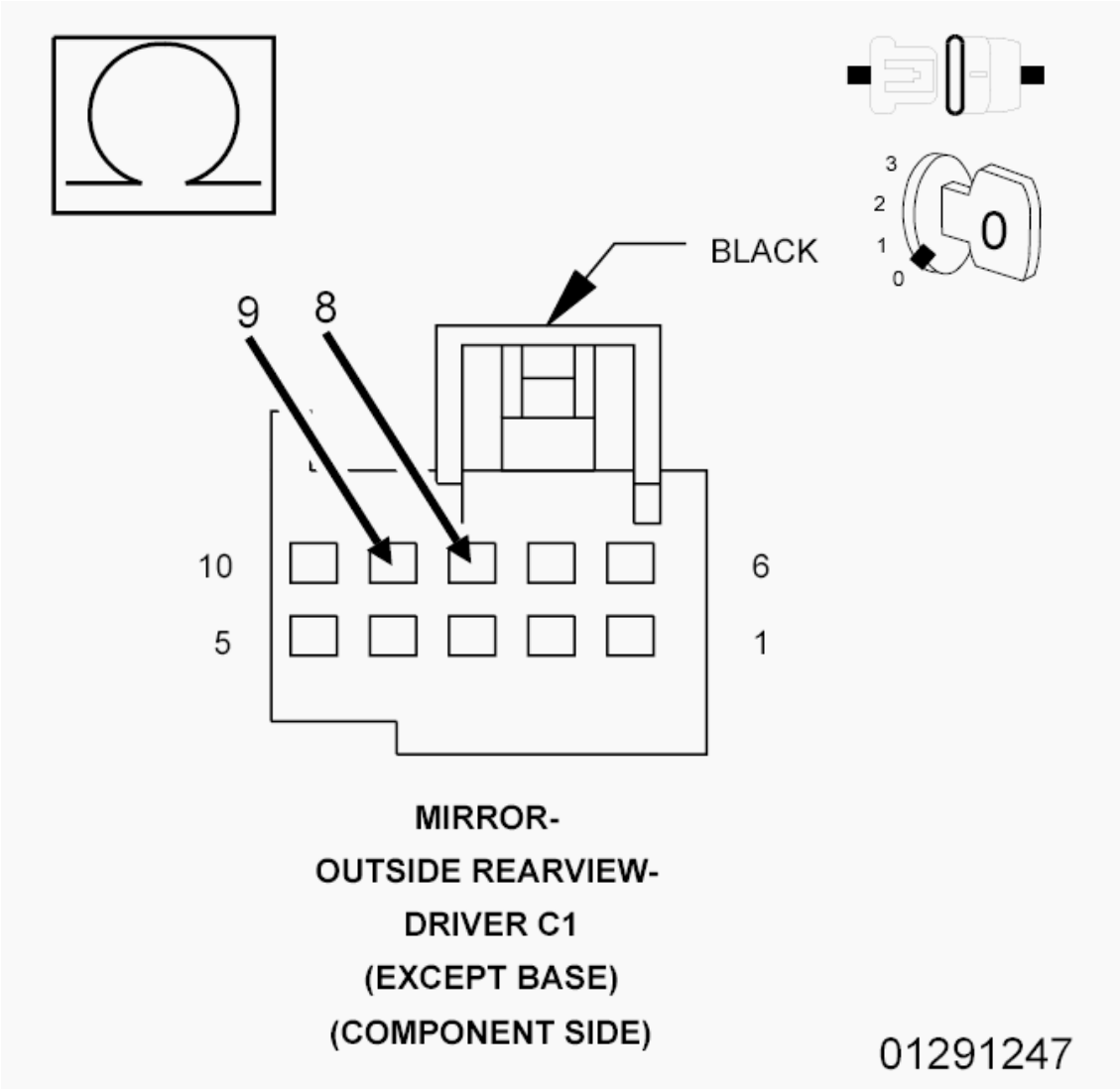

Fig. 66: Checking Driver Mirror Horizontal Position Signal Circuit And Driver Mirror Sensor Ground Circuit For An Open
Courtesy of CHRYSLER GROUP, LLC

1. If not done previously, turn the ignition off.
2. Measure the resistance between the (P65) Driver Mirror Horizontal Position Signal circuit and the

(P69) Driver Mirror Sensor Ground circuit at the Driver Outside Rearview Mirror C1 (Component Side) connector.

Is the resistance below 3.0 Ohms?

Yes

- Go To 5.

No

- Repair the (P65) Driver Mirror Horizontal Position Signal circuit or the (P69) Driver Mirror Sensor Ground circuit for an open. If the wiring harness and connector are okay, replace the Driver Outside Rearview Mirror in accordance with the Service Information.
- Perform the BODY VERIFICATION TEST. Refer to **BODY VERIFICATION TEST** .

5. **CHECK (P65) DRIVER MIRROR HORIZONTAL POSITION SIGNAL CIRCUIT FOR A SHORT TO (P71) DRIVER MIRROR VERTICAL DRIVER CIRCUIT, (P73) DRIVER MIRROR COMMON DRIVER CIRCUIT, OR TO (P75) DRIVER MIRROR HORIZONTAL DRIVER CIRCUIT**

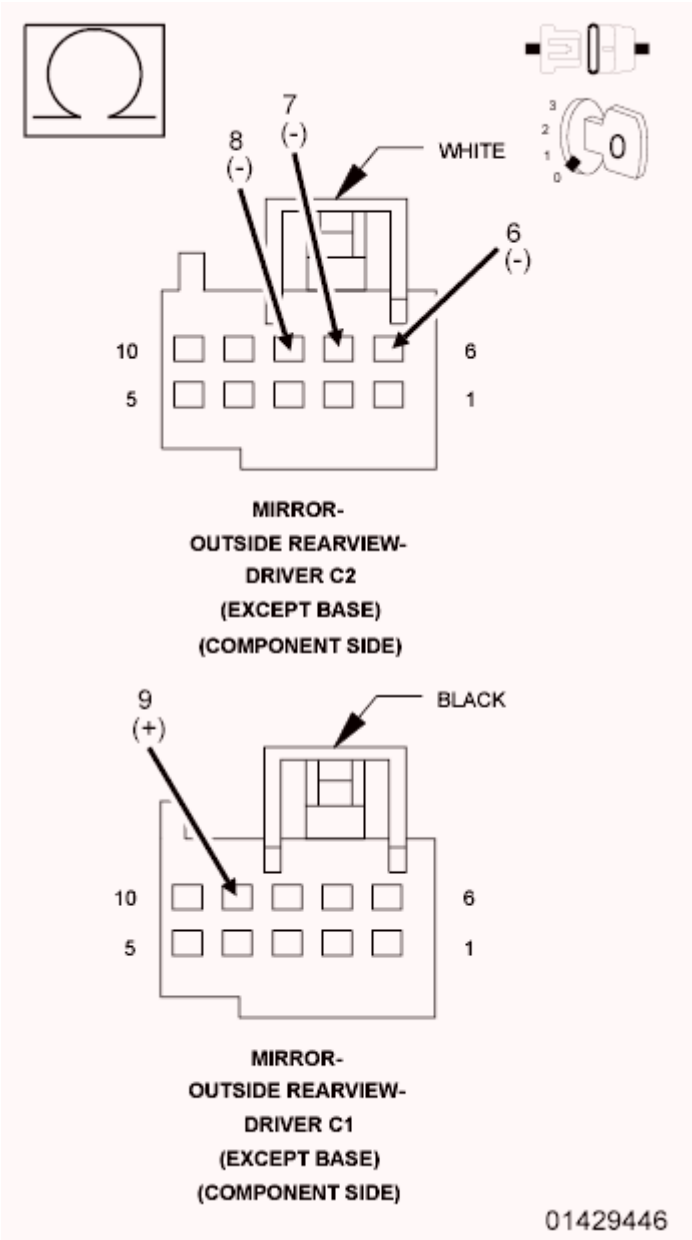

Fig. 67: Checking Driver Mirror Horizontal Position Signal Circuit For A Short To Other Circuits
Courtesy of CHRYSLER GROUP, LLC

1. Disconnect the Driver Outside Rearview Mirror C2 (Component Side) connector from the Door Module C2 connector.
2. Measure the resistance between the (P65) Driver Mirror Horizontal Position Signal circuit and the (P71) Driver Mirror Vertical Driver circuit at the Driver Outside Rearview Mirror C1 and C2 (Component Side) connectors.
3. Measure the resistance between the (P65) Driver Mirror Horizontal Position Signal circuit and the (P73) Driver Mirror Common Driver circuit at the Driver Outside Rearview Mirror C1 and C2 (Component Side) connectors.
4. Measure the resistance between the (P65) Driver Mirror Horizontal Position Signal circuit and the

(P75) Driver Mirror Horizontal Driver circuit at the Driver Outside Rearview Mirror C1 and C2 (Component Side) connectors.

Is the resistance below 10K Ohms for any measurement?

Yes

- Repair all circuits with a resistance below 10K Ohms for a short to the (P65) Driver Mirror Horizontal Position Signal circuit. If the wiring harness and connector are okay, replace the Driver Outside Rearview Mirror in accordance with the Service Information.
- Perform the BODY VERIFICATION TEST. Refer to **BODY VERIFICATION TEST** .

No, with Heated/Turn Signal Mirror

- Go To 6.

No, without Heated/Turn Signal Mirror

- Go To 7.

6. **CHECK (P65) DRIVER MIRROR HORIZONTAL POSITION SIGNAL CIRCUIT FOR A SHORT TO (C16) DRIVER MIRROR HEATER DRIVER CIRCUIT OR TO (P501) DRIVER MIRROR TURN SIGNAL DRIVER CIRCUIT**

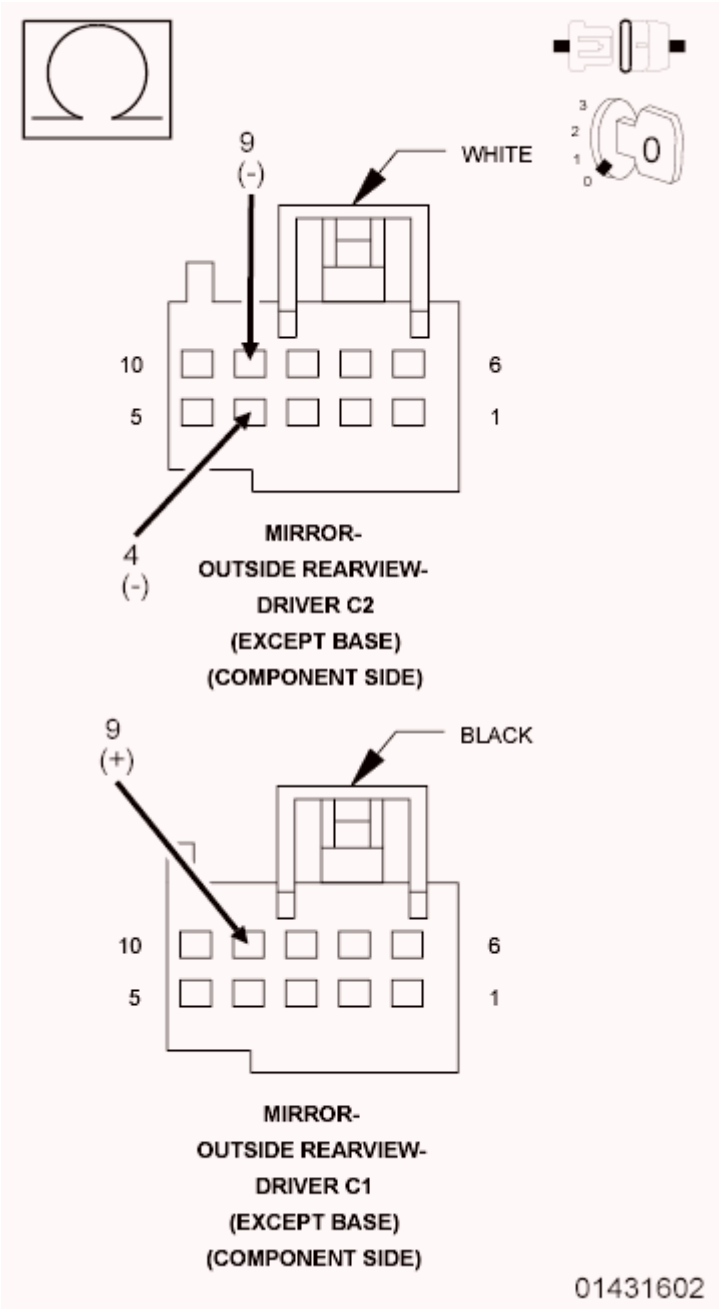

Fig. 68: Checking Driver Mirror Horizontal Position Signal Circuit For A Short To Driver Mirror Heater Driver Circuit Or To Driver Mirror Turn Signal Driver Circuit
Courtesy of CHRYSLER GROUP, LLC

1. For Heated Mirror, measure the resistance between the (P65) Driver Mirror Horizontal Position Signal circuit and the (C16) Driver Mirror Heater Driver circuit at the Driver Outside Rearview Mirror C1 and C2 (Component Side) connectors.
2. For Turn Signal Mirror, measure the resistance between the (P65) Driver Mirror Horizontal Position Signal circuit and the (P501) Driver Mirror Turn Signal Driver circuit at the Driver Outside Rearview Mirror C1 and C2 (Component Side) connectors.

Is the resistance below 10K Ohms for either measurement?

Yes

- Repair all circuits with a resistance below 10K Ohms for a short to the (P65) Driver Mirror Horizontal Position Signal circuit. If the wiring harness and connector are okay, replace the Driver Outside Rearview Mirror in accordance with the Service Information.
- Perform the BODY VERIFICATION TEST. Refer to **BODY VERIFICATION TEST** .

No

- Go To 7.

7. **CHECK (A856) 5-VOLT SUPPLY CIRCUIT FOR A SHORT TO (P71) DRIVER MIRROR VERTICAL DRIVER CIRCUIT, (P73) DRIVER MIRROR COMMON DRIVER CIRCUIT, OR TO (P75) DRIVER MIRROR HORIZONTAL DRIVER CIRCUIT**

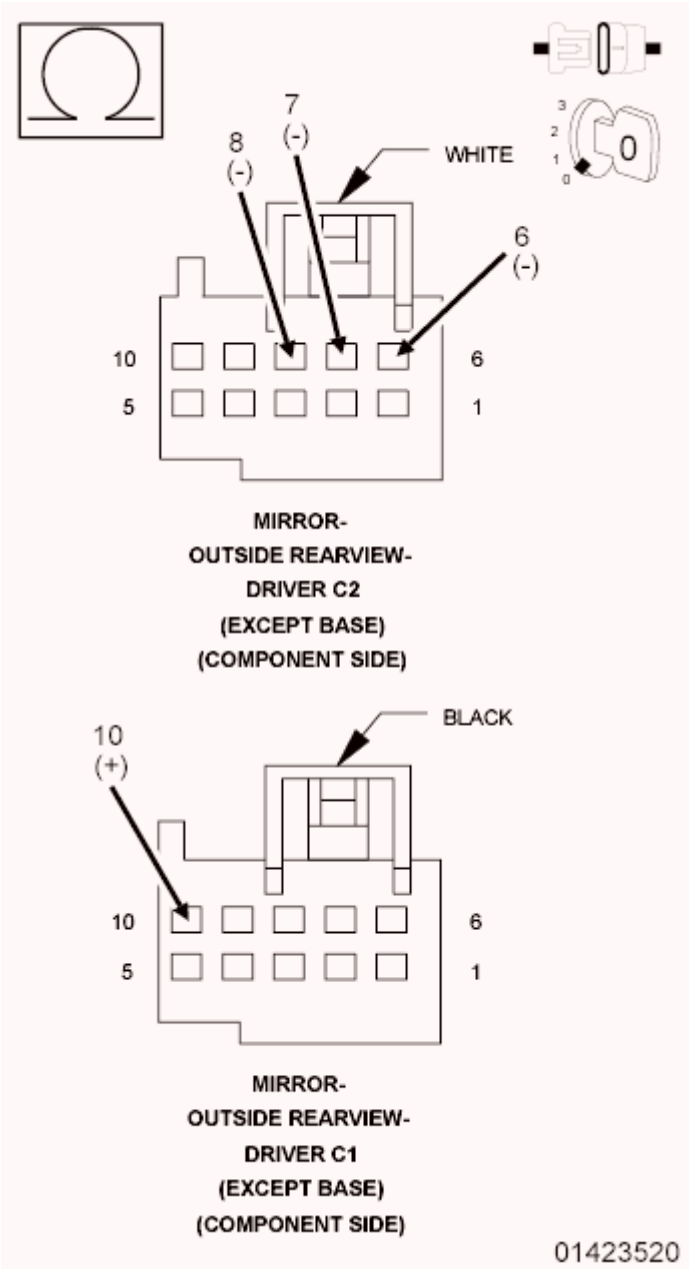

Fig. 69: Checking 5-Volt Supply Circuit For A Short To Other Circuits
Courtesy of CHRYSLER GROUP, LLC

1. Measure the resistance between the (A856) 5-volt Supply circuit and the (P71) Driver Mirror Vertical Driver circuit at the Driver Outside Rearview Mirror C1 and C2 (Component Side) connectors.
2. Measure the resistance between the (A856) 5-volt Supply circuit and the (P73) Driver Mirror Common Driver circuit at the Driver Outside Rearview Mirror C1 and C2 (Component Side) connectors.
3. Measure the resistance between the (A856) 5-volt Supply circuit and the (P75) Driver Mirror Horizontal Driver circuit at the Driver Outside Rearview Mirror C1 and C2 (Component Side) connectors.

Is the resistance below 10K Ohms for any measurement?

Yes

- Repair all circuits with a resistance below 10K Ohms for a short to the (A856) 5-volt Supply circuit. If the wiring harness and connector are okay, replace the Driver Outside Rearview Mirror in accordance with the Service Information.
- Perform the BODY VERIFICATION TEST. Refer to **BODY VERIFICATION TEST** .

No, with Heated/Turn Signal Mirror

- Go To 8.

No, without Heated/Turn Signal Mirror

- Inspect the wiring and connectors for damage and repair as necessary. If the wiring and connectors are okay, replace the Door Module in accordance with the Service Information.
- Perform the BODY VERIFICATION TEST. Refer to **BODY VERIFICATION TEST** .

8. **CHECK (A856) 5-VOLT SUPPLY CIRCUIT FOR A SHORT TO (C16) DRIVER MIRROR HEATER DRIVER CIRCUIT OR TO (P501) DRIVER MIRROR TURN SIGNAL DRIVER CIRCUIT**

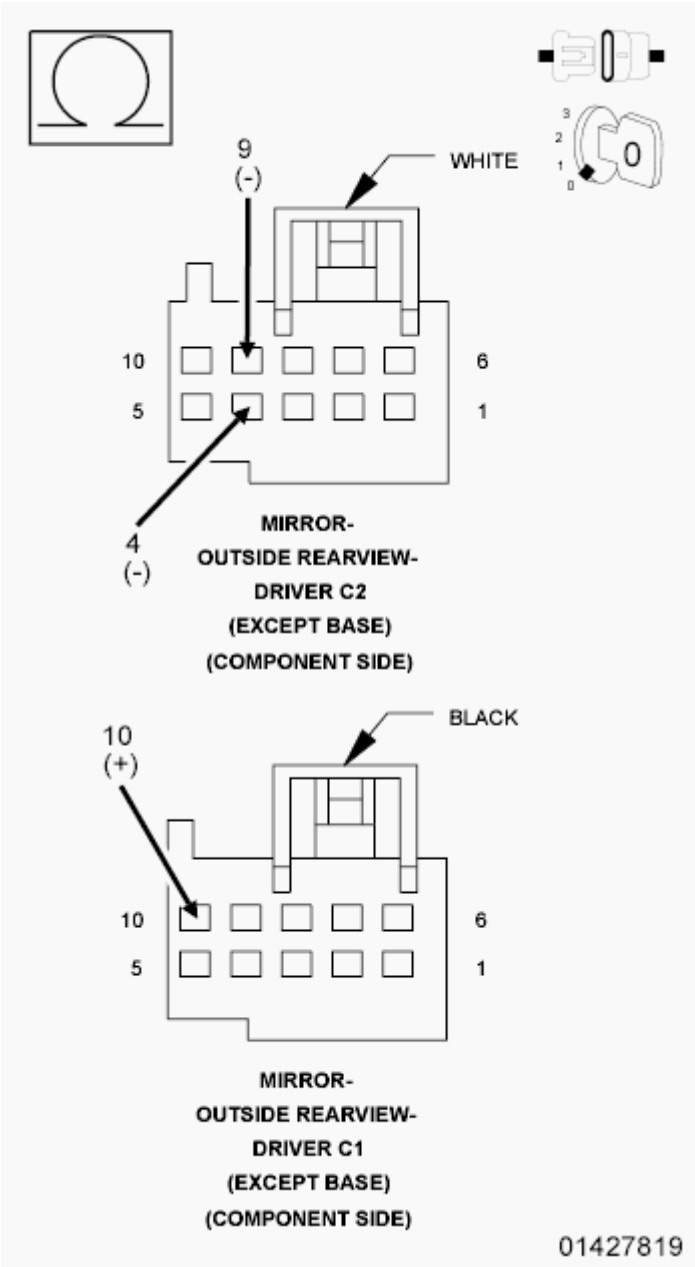

Fig. 70: Checking 5-Volt Supply Circuit For A Short To Driver Mirror Heater Driver Circuit Or To Driver Mirror Turn Signal Driver Circuit
Courtesy of CHRYSLER GROUP, LLC

1. For Heated Mirror, measure the resistance between the (A856) 5-volt Supply circuit and the (C16) Driver Mirror Heater Driver circuit at the Driver Outside Rearview Mirror C1 and C2 (Component Side) connectors.
2. For Turn Signal Mirror, measure the resistance between the (A856) 5-volt Supply circuit and the (P501) Driver Mirror Turn Signal Driver circuit at the Driver Outside Rearview Mirror C1 and C2 (Component Side) connectors.

   Is the resistance below 10K Ohms for either measurement?

Yes

- Repair all circuits with a resistance below 10K Ohms for a short to the (A856) 5-volt Supply circuit. If the wiring harness and connector are okay, replace the Driver Outside Rearview Mirror in accordance with the Service Information.
- Perform the BODY VERIFICATION TEST. Refer to **BODY VERIFICATION TEST** .

No

- Inspect the wiring and connectors for damage and repair as necessary. If the wiring and connectors are okay, replace the Door Module in accordance with the Service Information.
- Perform the BODY VERIFICATION TEST. Refer to **BODY VERIFICATION TEST** .

B1D1E-11-DRIVER MIRROR VERTICAL MOTOR CONTROL - CIRCUIT SHORT TO GROUND

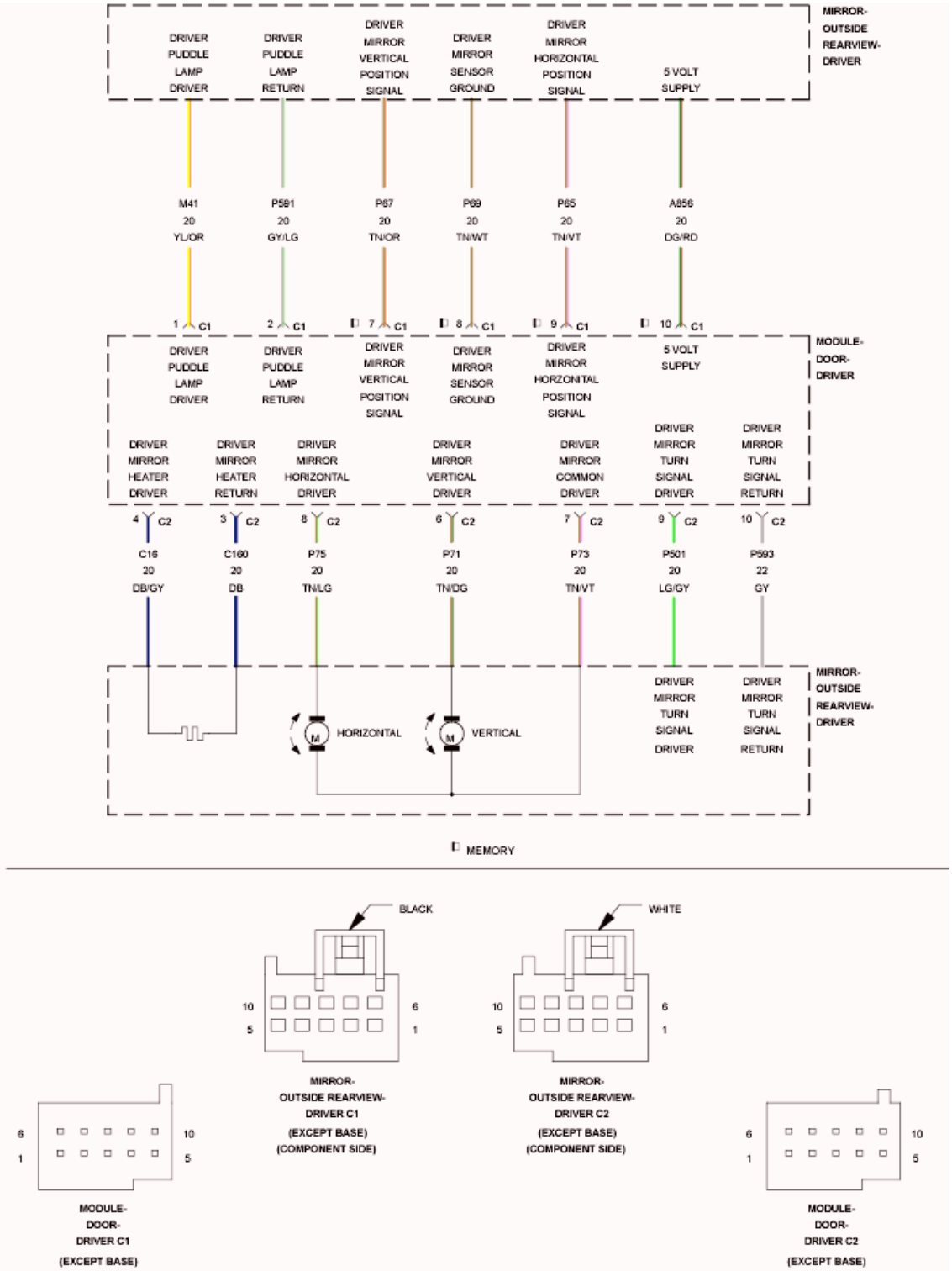

Fig. 71: Driver Mirror Signal Lamp Control Wiring Diagram
Courtesy of CHRYSLER GROUP, LLC

For a complete wiring diagram, **refer to appropriate SYSTEM WIRING DIAGRAMS article** .

WHEN MONITORED:

Continuously.

SET CONDITION:

The Door Module senses a short low on the (P71) Driver Mirror Vertical Driver circuit for more than two seconds.

POSSIBLE CAUSES

Possible Causes
(P71) DRIVER MIRROR VERTICAL DRIVER CIRCUIT FOR A SHORT TO GROUND
(P71) DRIVER MIRROR VERTICAL DRIVER CIRCUIT FOR A SHORT TO THE (C160) DRIVER MIRROR HEATER RETURN CIRCUIT
(P71) DRIVER MIRROR VERTICAL DRIVER CIRCUIT FOR A SHORT TO THE (P593) DRIVER MIRROR TURN SIGNAL RETURN CIRCUIT
(P71) DRIVER MIRROR VERTICAL DRIVER CIRCUIT FOR A SHORT TO THE (P69) DRIVER MIRROR SENSOR GROUND CIRCUIT
(P71) DRIVER MIRROR VERTICAL DRIVER CIRCUIT FOR A SHORT TO THE (P591) DRIVER PUDDLE LAMP RETURN CIRCUIT
DRIVER OUTSIDE REARVIEW MIRROR SHORTED
DOOR MODULE

DIAGNOSTIC TEST

1. **TEST FOR INTERMITTENT CONDITION**
    1. Turn the ignition on.
    2. Using a scan tool, record and erase Diagnostic Trouble Codes (DTC's).
    3. Turn the turn signal on, if equipped with turn signal mirror.
    4. Turn the puddle lamps on, if equipped with puddle lamp mirror.
    5. Turn the rear defogger on, if equipped with heated mirror.
    6. Press and release the Mirror Select switch to select the Driver Outside Rearview Mirror.
    7. Operate the Mirror Adjust switch in all directions several times while monitoring the scan tool for DTC's.

    NOTE: **After adjusting the mirror in one direction wait at least two seconds before adjusting the mirror in the opposite direction, as this will allow time for an active fault to set if present.**

    Is the DTC active?

    Yes

    - Go To 2.

No

- The conditions that caused this code to set are not present at this time. For vehicle's equipped with folding outside rearview mirrors, repeat test with mirror folded. If DTC is now active, go to 2. Otherwise, use the wiring diagram/schematic as a guide and inspect the wiring and connectors.
- Perform the BODY VERIFICATION TEST. Refer to **BODY VERIFICATION TEST** .

2. **CHECK (P71) DRIVER MIRROR VERTICAL DRIVER CIRCUIT FOR A SHORT TO GROUND**

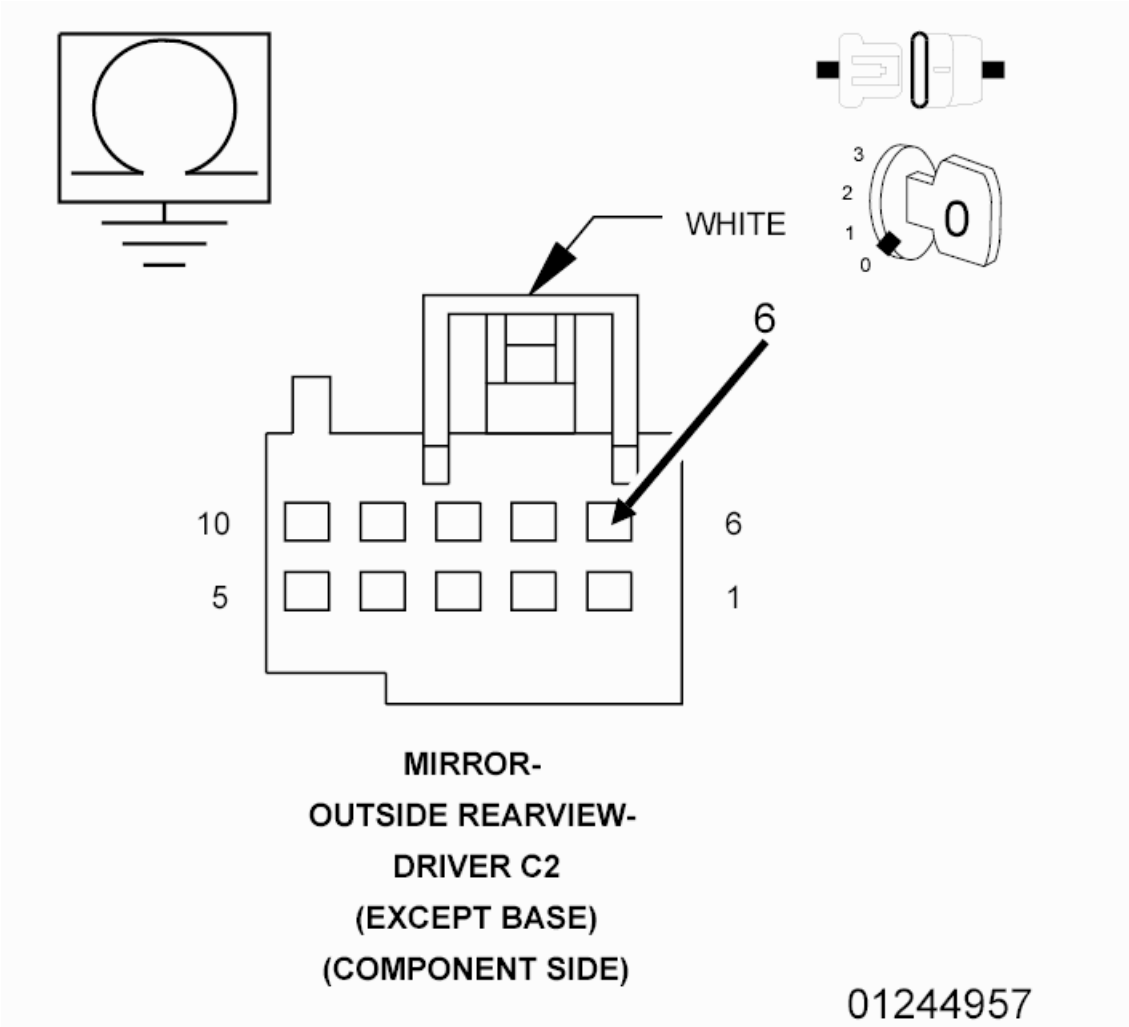

Fig. 72: Checking Driver Mirror Vertical Driver Circuit For A Short To Ground
Courtesy of CHRYSLER GROUP, LLC

1. Turn the ignition off.
2. Disconnect the Driver Outside Rearview Mirror C2 (Component Side) connector from the Door Module C2 connector.
3. Measure the resistance of the (P71) Driver Mirror Vertical Driver circuit between ground and the Driver Outside Rearview Mirror C2 (Component Side) connector.

Is the resistance below 10K Ohms?

Yes

- Repair the (P71) Driver Mirror Vertical Driver circuit for a short to ground. If the wiring harness and connector are okay, replace the Driver Outside Rearview Mirror in accordance with the Service Information.
- Perform the BODY VERIFICATION TEST. Refer to **BODY VERIFICATION TEST** .

No, with Heated/Turn Signal Mirror

- Go To 3.

No, without Heated/Turn Signal Mirror

- Go To 4.

3. **CHECK (P71) DRIVER MIRROR VERTICAL DRIVER CIRCUIT FOR A SHORT TO (C160) DRIVER MIRROR HEATER RETURN CIRCUIT OR TO (P593) DRIVER MIRROR TURN SIGNAL RETURN CIRCUIT**

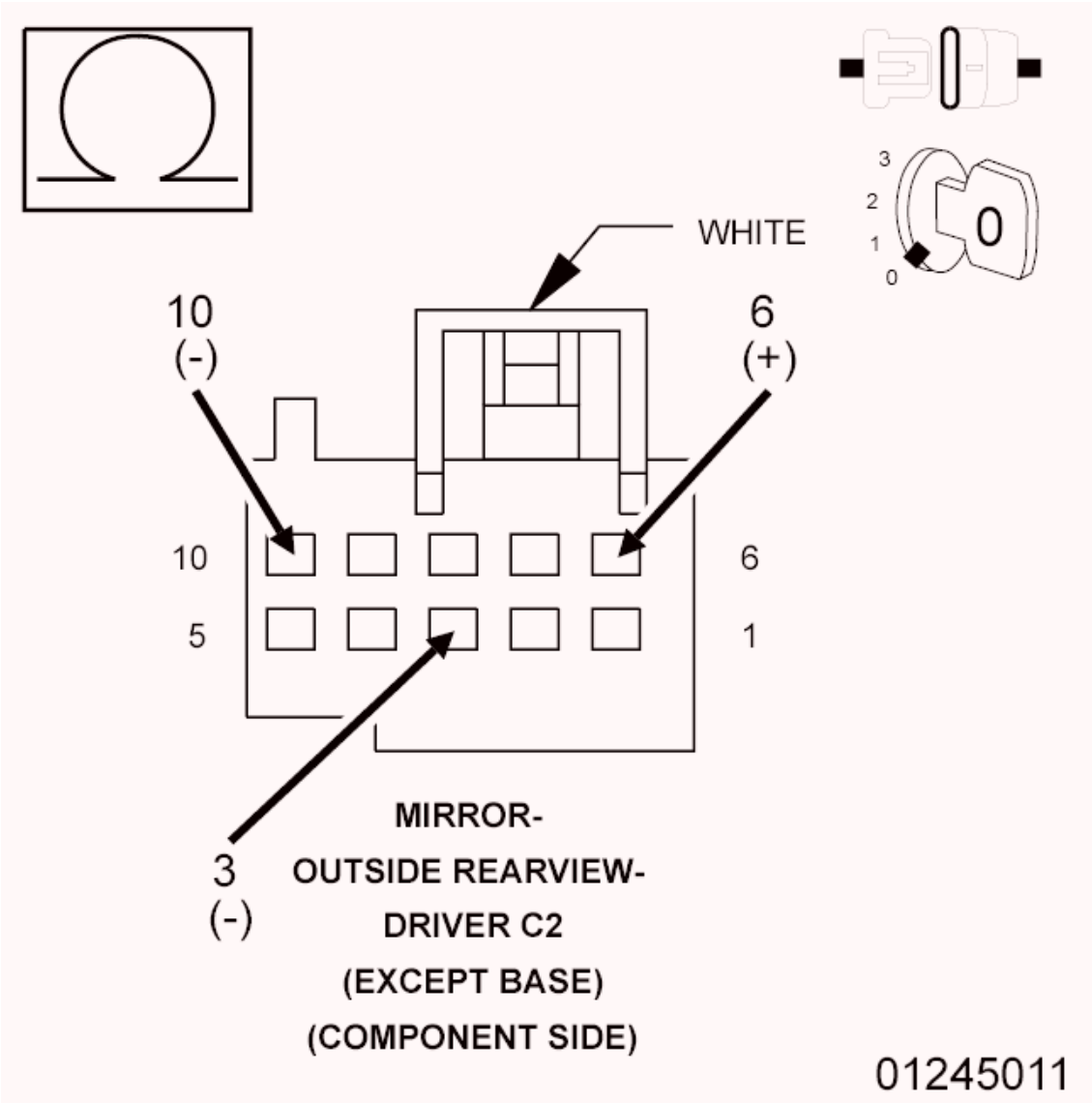

Fig. 73: Checking Driver Mirror Vertical Driver Circuit For A Short To Driver Mirror Heater Return Circuit Or To Driver Mirror Turn Signal Return Circuit
Courtesy of CHRYSLER GROUP, LLC

1. For heated mirror, measure the resistance between the (P71) Driver Mirror Vertical Driver circuit and the (C160) Driver Mirror Heater Return circuit at the Driver Outside Rearview Mirror C2 (Component Side) connector.
2. For turn signal mirror, measure the resistance between the (P71) Driver Mirror Vertical Driver circuit and the (P593) Driver Mirror Turn Signal Return circuit at the Driver Outside Rearview Mirror C2 (Component Side) connector.

   Is the resistance below 10K Ohms for either measurement?

   Yes

- Repair all circuits with a resistance below 10K Ohms for a short to the (P71) Driver Mirror Vertical Driver circuit. If the wiring harness and connector are okay, replace the Driver Outside Rearview Mirror in accordance with the Service Information.
- Perform the BODY VERIFICATION TEST. Refer to **BODY VERIFICATION TEST** .

No

- Go To 4.

4. **CHECK (P71) DRIVER MIRROR VERTICAL DRIVER CIRCUIT FOR A SHORT TO (P69) DRIVER MIRROR SENSOR GROUND CIRCUIT**

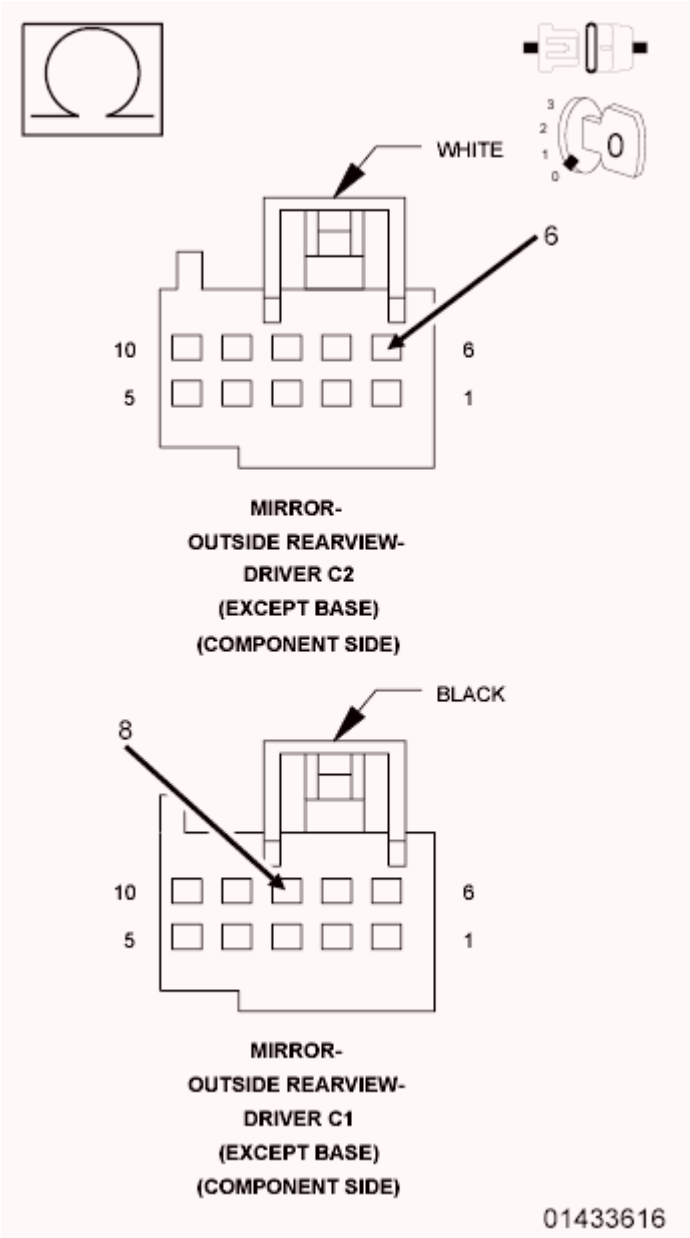

Fig. 74: Checking Driver Mirror Vertical Driver Circuit For A Short To Driver Mirror Sensor

Ground Circuit
Courtesy of CHRYSLER GROUP, LLC

1. Disconnect the Driver Outside Rearview Mirror C1 (Component Side) connector from the Door Module C1 connector.
2. Measure the resistance between the (P71) Driver Mirror Vertical Driver circuit and the (P69) Driver Mirror Sensor Ground circuit at the Driver Outside Rearview Mirror C2 and C1 (Component Side) connectors.

   Is the resistance below 10K Ohms?

   Yes

   - Repair the (P71) Driver Mirror Vertical Driver circuit for a short to the (P69) Driver Mirror Sensor Ground circuit. If the wiring harness and connector are okay, replace the Driver Outside Rearview Mirror in accordance with the Service Information.
   - Perform the BODY VERIFICATION TEST. Refer to **BODY VERIFICATION TEST** .

   No, with Puddle Lamp Mirror

   - Go To 5.

   No, without Puddle Lamp Mirror

   - Inspect the wiring and connectors for damage and repair as necessary. If the wiring and connectors are okay, replace the Door Module in accordance with the Service Information.
   - Perform the BODY VERIFICATION TEST. Refer to **BODY VERIFICATION TEST** .

5. **CHECK (P71) DRIVER MIRROR VERTICAL DRIVER CIRCUIT FOR A SHORT TO (P591) DRIVER PUDDLE LAMP RETURN CIRCUIT**

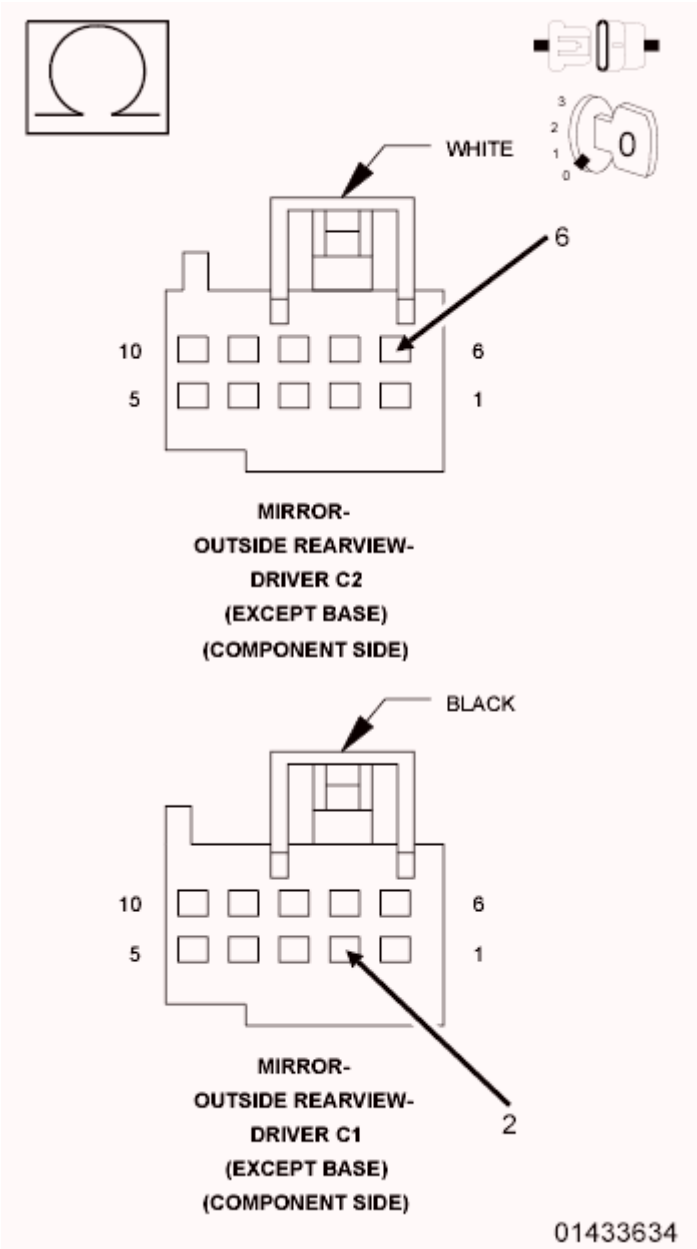

Fig. 75: Checking Driver Mirror Vertical Driver Circuit For A Short To Driver Puddle Lamp Return Circuit
Courtesy of CHRYSLER GROUP, LLC

1. Measure the resistance between the (P71) Driver Mirror Vertical Driver circuit and the (P591) Driver Puddle Lamp Return circuit at the Driver Outside Rearview Mirror C2 and C1 (Component Side) connectors.

   Is the resistance below 10K Ohms?

   Yes

   - Repair the (P71) Driver Mirror Vertical Driver circuit for a short to the (P591) Driver Puddle

Lamp Return circuit. If the wiring harness and connector are okay, replace the Driver Outside Rearview Mirror in accordance with the Service Information.

- Perform the BODY VERIFICATION TEST. Refer to **BODY VERIFICATION TEST** .

No

- Inspect the wiring and connectors for damage and repair as necessary. If the wiring and connectors are okay, replace the Door Module in accordance with the Service Information.
- Perform the BODY VERIFICATION TEST. Refer to **BODY VERIFICATION TEST** .

B1D22-11-DRIVER MIRROR HORIZONTAL MOTOR CONTROL - CIRCUIT SHORT TO GROUND

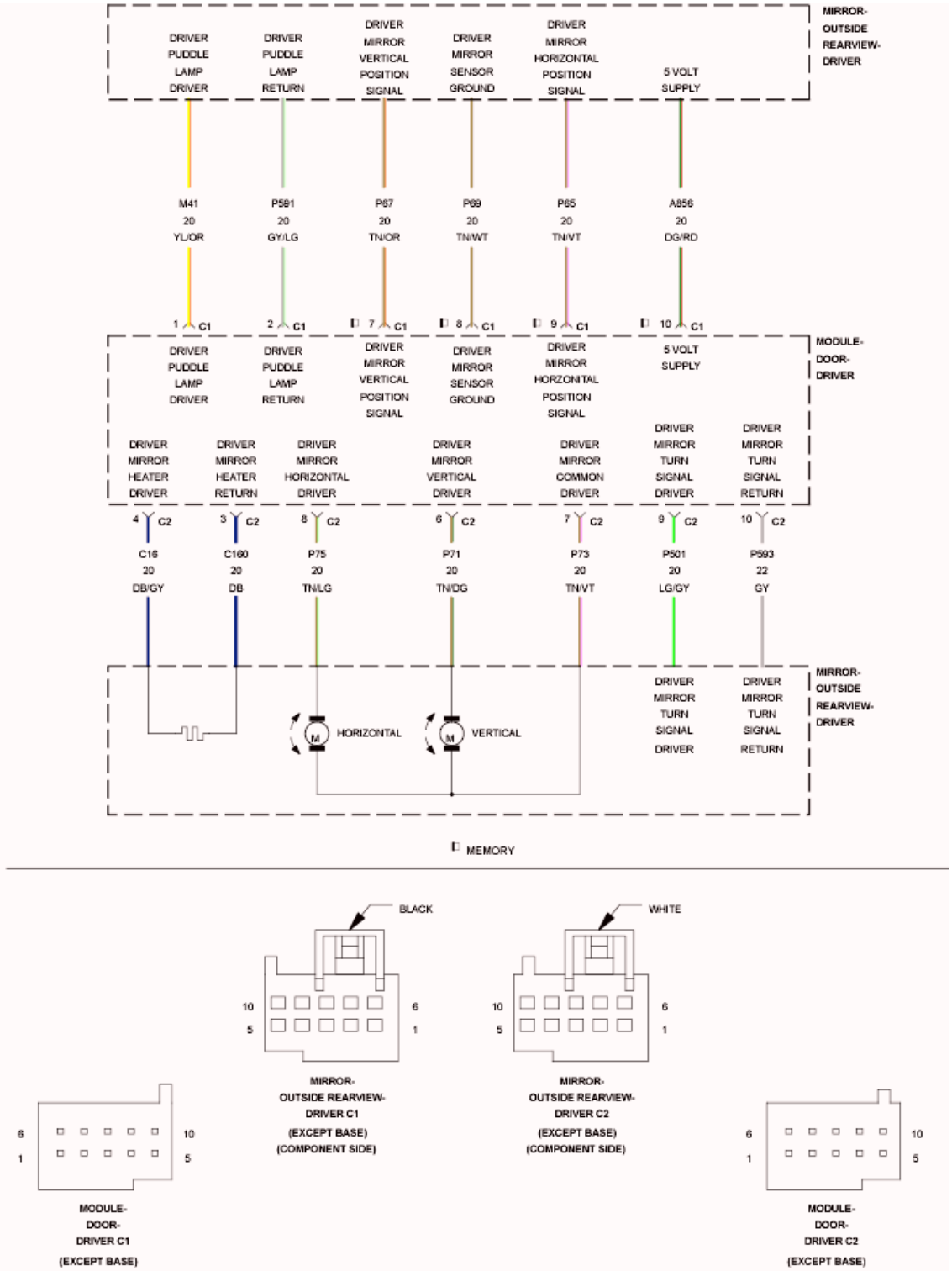

Fig. 76: Driver Mirror Signal Lamp Control Wiring Diagram
Courtesy of CHRYSLER GROUP, LLC

For a complete wiring diagram, **refer to appropriate SYSTEM WIRING DIAGRAMS article** .

WHEN MONITORED:

Continuously.

SET CONDITION:

The Door Module senses a short low on the (P75) Driver Mirror Horizontal Driver circuit for more than two seconds.

POSSIBLE CAUSES

Possible Causes
(P75) DRIVER MIRROR HORIZONTAL DRIVER CIRCUIT FOR A SHORT TO GROUND
(P75) DRIVER MIRROR HORIZONTAL DRIVER CIRCUIT FOR A SHORT TO THE (C160) DRIVER MIRROR HEATER RETURN CIRCUIT
(P75) DRIVER MIRROR HORIZONTAL DRIVER CIRCUIT FOR A SHORT TO THE (P593) DRIVER MIRROR TURN SIGNAL RETURN CIRCUIT
(P75) DRIVER MIRROR HORIZONTAL DRIVER CIRCUIT FOR A SHORT TO THE (P69) DRIVER MIRROR SENSOR GROUND CIRCUIT
(P75) DRIVER MIRROR HORIZONTAL DRIVER CIRCUIT FOR A SHORT TO THE (P591) DRIVER PUDDLE LAMP RETURN CIRCUIT
DRIVER OUTSIDE REARVIEW MIRROR SHORTED
DOOR MODULE

DIAGNOSTIC TEST

1. **TEST FOR INTERMITTENT CONDITION**
    1. Turn the ignition on.
    2. With a scan tool, record and erase DTC's.
    3. Turn the turn signal on, if equipped with turn signal mirror.
    4. Turn the puddle lamps on, if equipped with puddle lamp mirror.
    5. Turn the rear defogger on, if equipped with heated mirror.
    6. Press and release the Mirror Select switch to select the Driver Outside Rearview Mirror.
    7. Operate the Mirror Adjust switch in all directions several times while monitoring the scan tool for DTC's.

    NOTE: **After adjusting the mirror in one direction wait at least two seconds before adjusting the mirror in the opposite direction, as this will allow time for an active fault to set if present.**

    Does the scan tool display B1D22-11-DRIVER MIRROR HORIZONTAL MOTOR CONTROL - CIRCUIT SHORT TO GROUND?

    Yes

    - Go To 2.

No

- Test complete, the condition or conditions that originally set this DTC are not present at this time. Using the wiring diagrams as a guide, check all related splices and connectors for signs of water intrusion, corrosion, pushed out or bent terminals, and correct pin tension. For vehicle's equipped with folding outside rearview mirrors, repeat test with mirror folded. If DTC is now active, go to 2.
- Perform the BODY VERIFICATION TEST. Refer to **BODY VERIFICATION TEST** .

2. **CHECK (P75) DRIVER MIRROR HORIZONTAL DRIVER CIRCUIT FOR A SHORT TO GROUND**

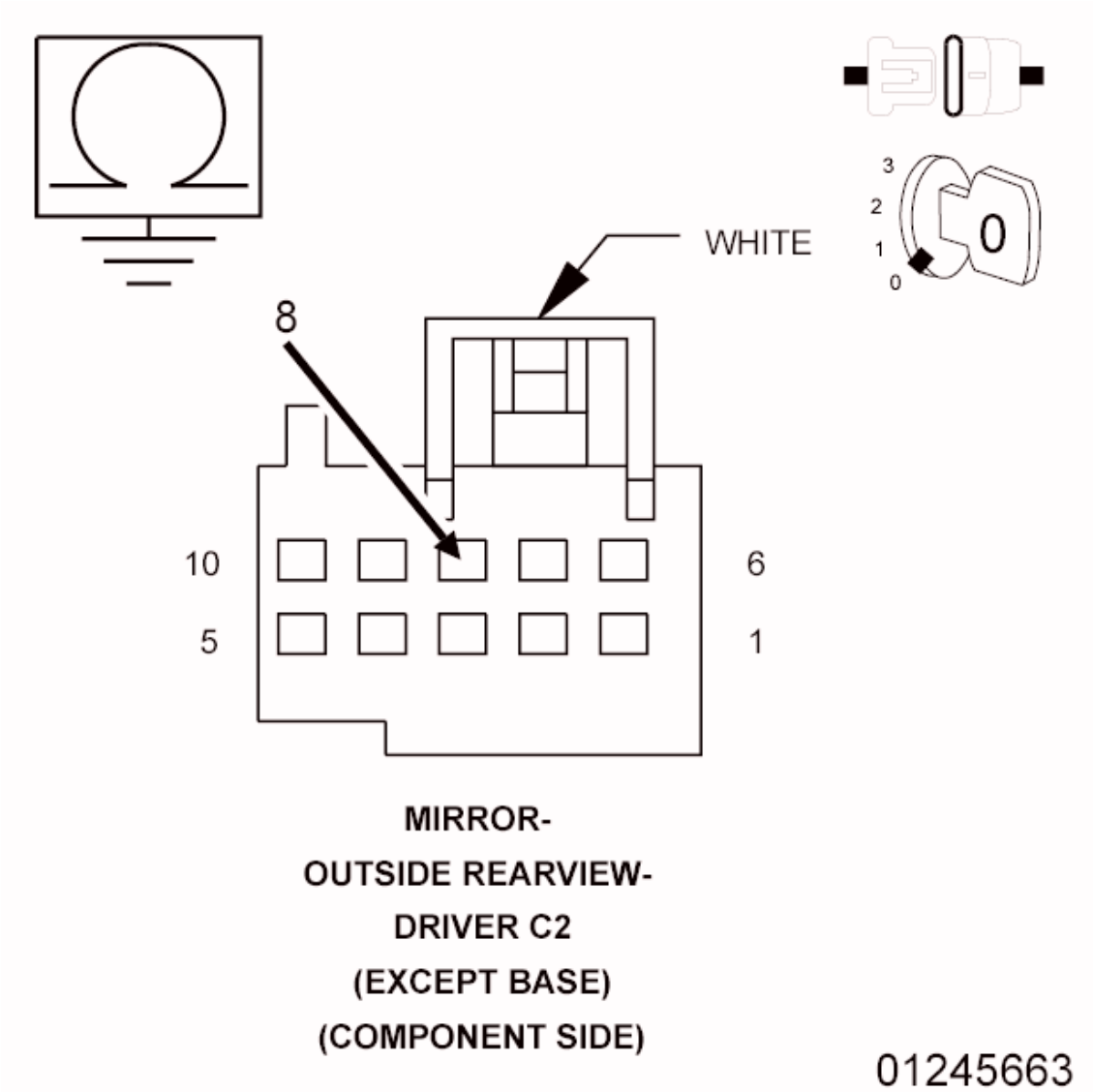

Fig. 77: Checking Driver Mirror Horizontal Driver Circuit For A Short To Ground
Courtesy of CHRYSLER GROUP, LLC

1. Turn the ignition off.

2. Disconnect the Driver Outside Rearview Mirror C2 (Component Side) harness connector from the Door Module.
3. Measure the resistance between ground and the (P75) Driver Mirror Horizontal Driver circuit.

   Is the resistance below 10K Ohms?

   Yes

   - Repair the short to ground in the (P75) Driver Mirror Horizontal Driver circuit. If the wiring harness and harness connector are okay, replace the Driver Outside Rearview Mirror in accordance with the Service Information.
   - Perform the BODY VERIFICATION TEST. Refer to **BODY VERIFICATION TEST** .

   No, with Heated/Turn Signal Mirror

   - Go To 3.

   No, without Heated/Turn Signal Mirror

   - Go To 4.

3. **CHECK (P75) DRIVER MIRROR HORIZONTAL DRIVER CIRCUIT FOR A SHORT TO (C160) DRIVER MIRROR HEATER RETURN CIRCUIT OR TO (P593) DRIVER MIRROR TURN SIGNAL RETURN CIRCUIT**

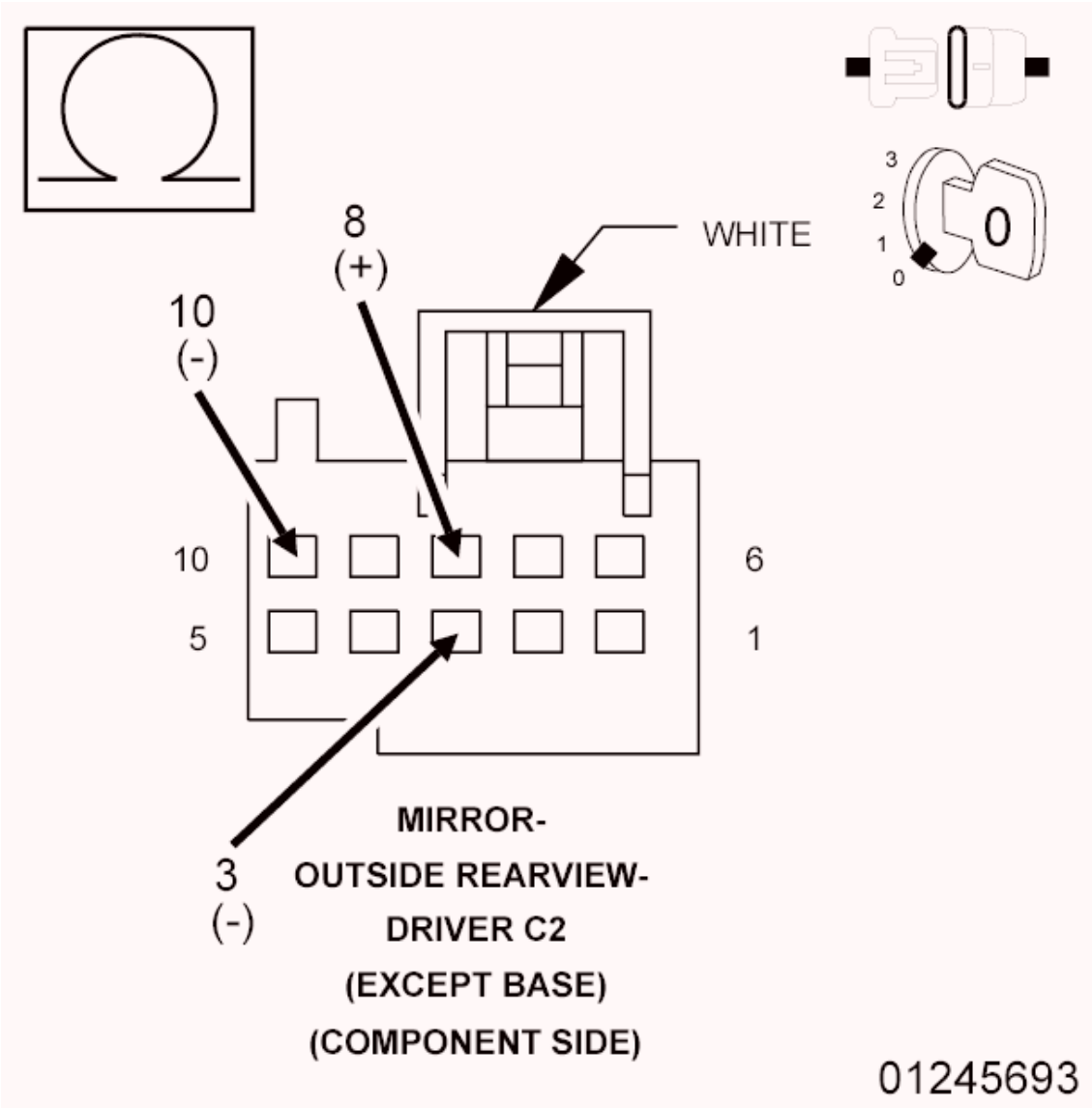

Fig. 78: Checking Driver Mirror Horizontal Driver Circuit For A Short To Driver Mirror Heater Return Circuit Or To Driver Mirror Turn Signal Return Circuit
Courtesy of CHRYSLER GROUP, LLC

1. For heated mirror, measure the resistance between the (P75) Driver Mirror Horizontal Driver circuit and the (C160) Driver Mirror Heater Return circuit at the Driver Outside Rearview Mirror C2 (Component Side) harness connector.
2. For turn signal mirror, measure the resistance between the (P75) Driver Mirror Horizontal Driver circuit and the (P593) Driver Mirror Turn Signal Return circuit at the Driver Outside Rearview Mirror C2 (Component Side) harness connector.

   Is the resistance below 10K Ohms for any measurement?

   Yes

- Repair all circuits with a resistance below 10K Ohms for a short to the (P75) Driver Mirror Horizontal Driver circuit. If the wiring harness and harness connector are okay, replace the Driver Outside Rearview Mirror in accordance with the Service Information.
- Perform the BODY VERIFICATION TEST. Refer to **BODY VERIFICATION TEST** .

No

- Go To 4.

4. **CHECK (P75) DRIVER MIRROR HORIZONTAL DRIVER CIRCUIT FOR A SHORT TO (P69) DRIVER MIRROR SENSOR GROUND CIRCUIT**

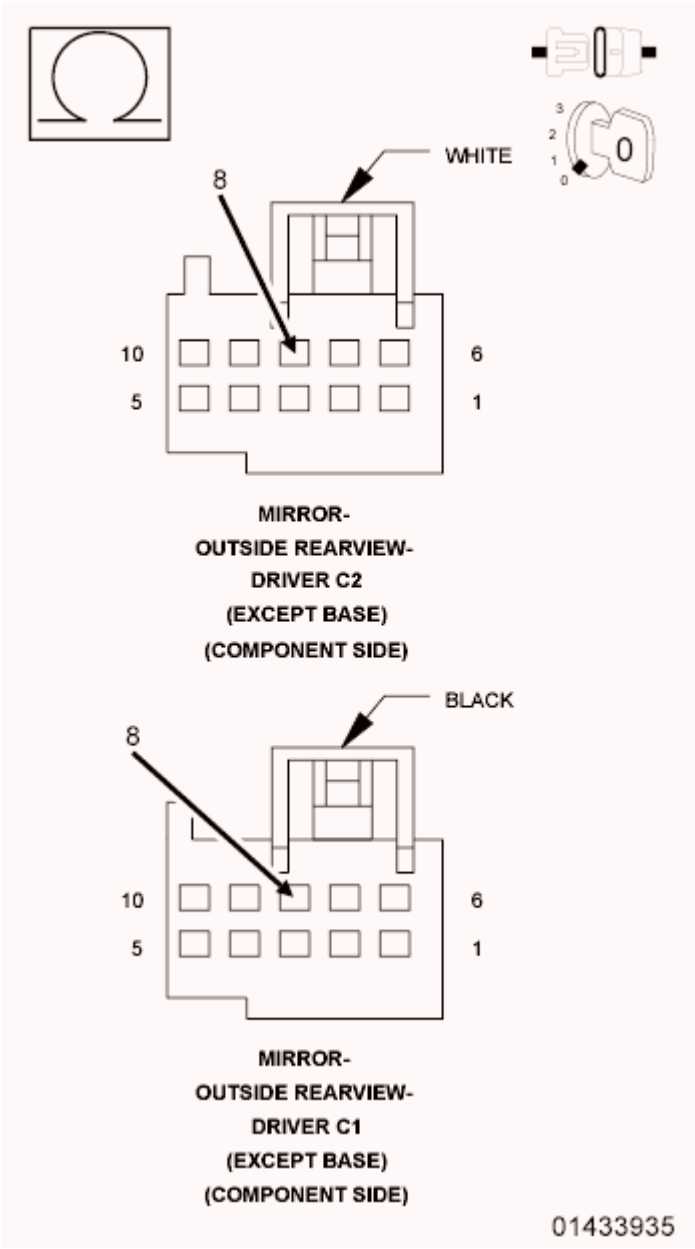

Fig. 79: Checking Driver Mirror Horizontal Driver Circuit For A Short To Driver Mirror Sensor

Ground Circuit
Courtesy of CHRYSLER GROUP, LLC

1. Disconnect the Driver Outside Rearview Mirror C1 (Component Side) harness connector from the Door Module.
2. Measure the resistance between the (P75) Driver Mirror Horizontal Driver circuit and the (P69) Driver Mirror Sensor Ground circuit at the Driver Outside Rearview Mirror C2 and C1 (Component Side) harness connectors.

   Is the resistance below 10K Ohms?

   Yes

   - Repair the (P75) Driver Mirror Horizontal Driver circuit for a short to the (P69) Driver Mirror Sensor Ground circuit. If the wiring harness and harness connector are okay, replace the Driver Outside Rearview Mirror in accordance with the Service Information.
   - Perform the BODY VERIFICATION TEST. Refer to **BODY VERIFICATION TEST** .

   No, with Puddle Lamp Mirror

   - Go To 5.

   No, without Puddle Lamp Mirror

   - Inspect the wiring harness and harness connector for damage and repair as necessary. If the wiring harness and harness connector are okay, replace the Door Module in accordance with the Service Information.
   - Perform the BODY VERIFICATION TEST. Refer to **BODY VERIFICATION TEST** .

5. **CHECK (P75) DRIVER MIRROR HORIZONTAL DRIVER CIRCUIT FOR A SHORT TO (P591) DRIVER PUDDLE LAMP RETURN CIRCUIT**

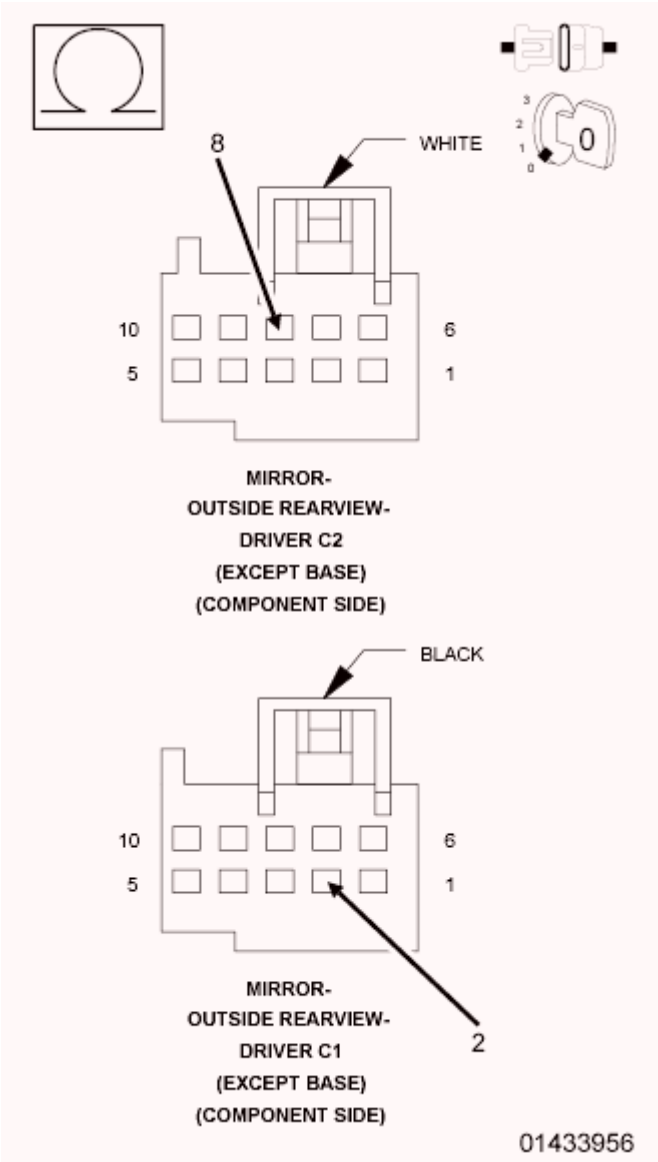

Fig. 80: Checking Driver Mirror Horizontal Driver Circuit For A Short To Driver Puddle Lamp Return Circuit
Courtesy of CHRYSLER GROUP, LLC

1. Measure the resistance between the (P75) Driver Mirror Horizontal Driver circuit and the (P591) Driver Puddle Lamp Return circuit at the Driver Outside Rearview Mirror C2 and C1 (Component Side) harness connectors.

   Is the resistance below 10K Ohms?

   Yes

   - Repair the (P75) Driver Mirror Horizontal Driver circuit for a short to the (P591) Driver Puddle Lamp Return circuit. If the wiring harness and harness connector are okay, replace the Driver Outside Rearview Mirror in accordance with the Service Information.

- Perform the BODY VERIFICATION TEST. Refer to **BODY VERIFICATION TEST** .

No

- Inspect the wiring harness and harness connector for damage and repair as necessary. If the wiring harness and harness connector are okay, replace the Door Module in accordance with the Service Information.
- Perform the BODY VERIFICATION TEST. Refer to **BODY VERIFICATION TEST** .

B1D32-11-DRIVER MIRROR HEATER CONTROL - CIRCUIT SHORT TO GROUND

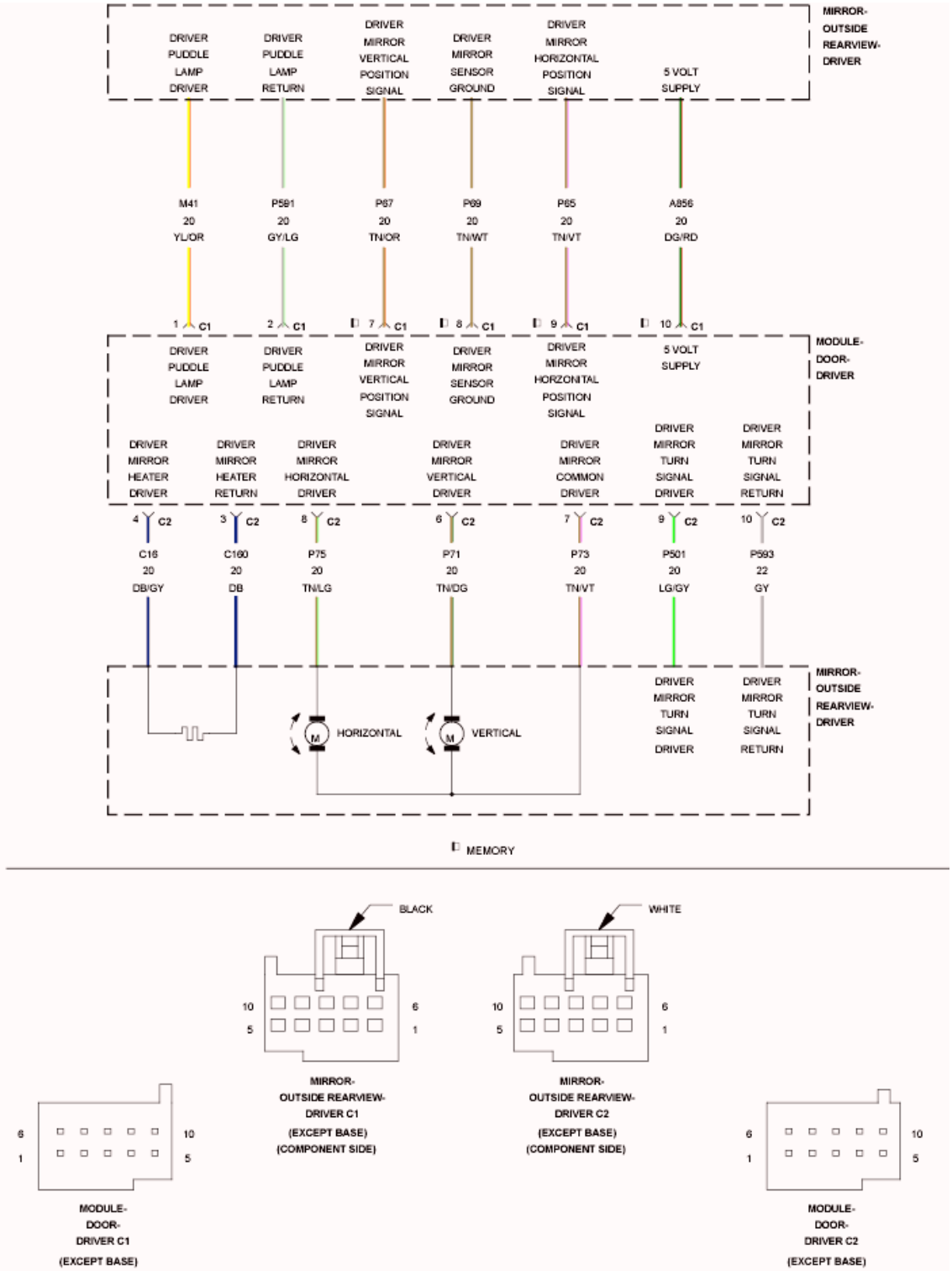

Fig. 81: Driver Mirror Signal Lamp Control Wiring Diagram
Courtesy of CHRYSLER GROUP, LLC

For a complete wiring diagram, **refer to appropriate SYSTEM WIRING DIAGRAMS article** .

WHEN MONITORED:

Continuously.

SET CONDITION:

The Door Module senses a short low on the (C16) Driver Mirror Heater Driver circuit for more than two seconds with the heater switched on.

POSSIBLE CAUSES

Possible Causes
(C16) DRIVER MIRROR HEATER DRIVER CIRCUIT FOR A SHORT TO GROUND
(C16) DRIVER MIRROR HEATER DRIVER CIRCUIT FOR A SHORT TO THE (P75) DRIVER MIRROR HORIZONTAL DRIVER CIRCUIT
(C16) DRIVER MIRROR HEATER DRIVER CIRCUIT FOR A SHORT TO THE (P71) DRIVER MIRROR VERTICAL DRIVER CIRCUIT
(C16) DRIVER MIRROR HEATER DRIVER CIRCUIT FOR A SHORT TO THE (P73) DRIVER MIRROR COMMON DRIVER CIRCUIT
(C16) DRIVER MIRROR HEATER DRIVER CIRCUIT FOR A SHORT TO THE (P593) DRIVER MIRROR TURN SIGNAL RETURN CIRCUIT
(C16) DRIVER MIRROR HEATER DRIVER CIRCUIT FOR A SHORT TO THE (C160) DRIVER MIRROR HEATER RETURN CIRCUIT
(C16) DRIVER MIRROR HEATER DRIVER CIRCUIT FOR A SHORT TO THE (69) DRIVER MIRROR SENSOR GROUND CIRCUIT
(C16) DRIVER MIRROR HEATER DRIVER CIRCUIT FOR A SHORT TO THE (P591) DRIVER PUDDLE LAMP RETURN CIRCUIT
DRIVER OUTSIDE REARVIEW MIRROR SHORTED
DOOR MODULE

DIAGNOSTIC TEST

1. **TEST FOR INTERMITTENT CONDITION**
    1. Turn the ignition on.
    2. Using a scan tool, record and erase Diagnostic Trouble Codes (DTC's).
    3. Turn the turn signal on, if equipped with turn signal mirror.
    4. Turn the puddle lamps on, if equipped with puddle lamp mirror.
    5. Turn the rear defogger on.
    6. Press and release the Mirror Select switch to select the Driver Outside Rearview Mirror.
    7. Operate the Mirror Adjust switch in all directions several times while monitoring the scan tool for DTC's.

NOTE: **After adjusting the mirror in one direction wait at least two seconds before adjusting the mirror in the opposite direction, as this will allow time for an active fault to set if present.**

Is the DTC active?

Yes

- Go To 2.

No

- The conditions that caused this code to set are not present at this time. For vehicle's equipped with folding outside rearview mirrors, repeat test with mirror folded. If DTC is now active, go to 2. Otherwise, use the wiring diagram/schematic as a guide and inspect the wiring and connectors.
- Perform the BODY VERIFICATION TEST. Refer to **BODY VERIFICATION TEST** .

2. **CHECK (C16) DRIVER MIRROR HEATER DRIVER CIRCUIT FOR A SHORT TO GROUND**

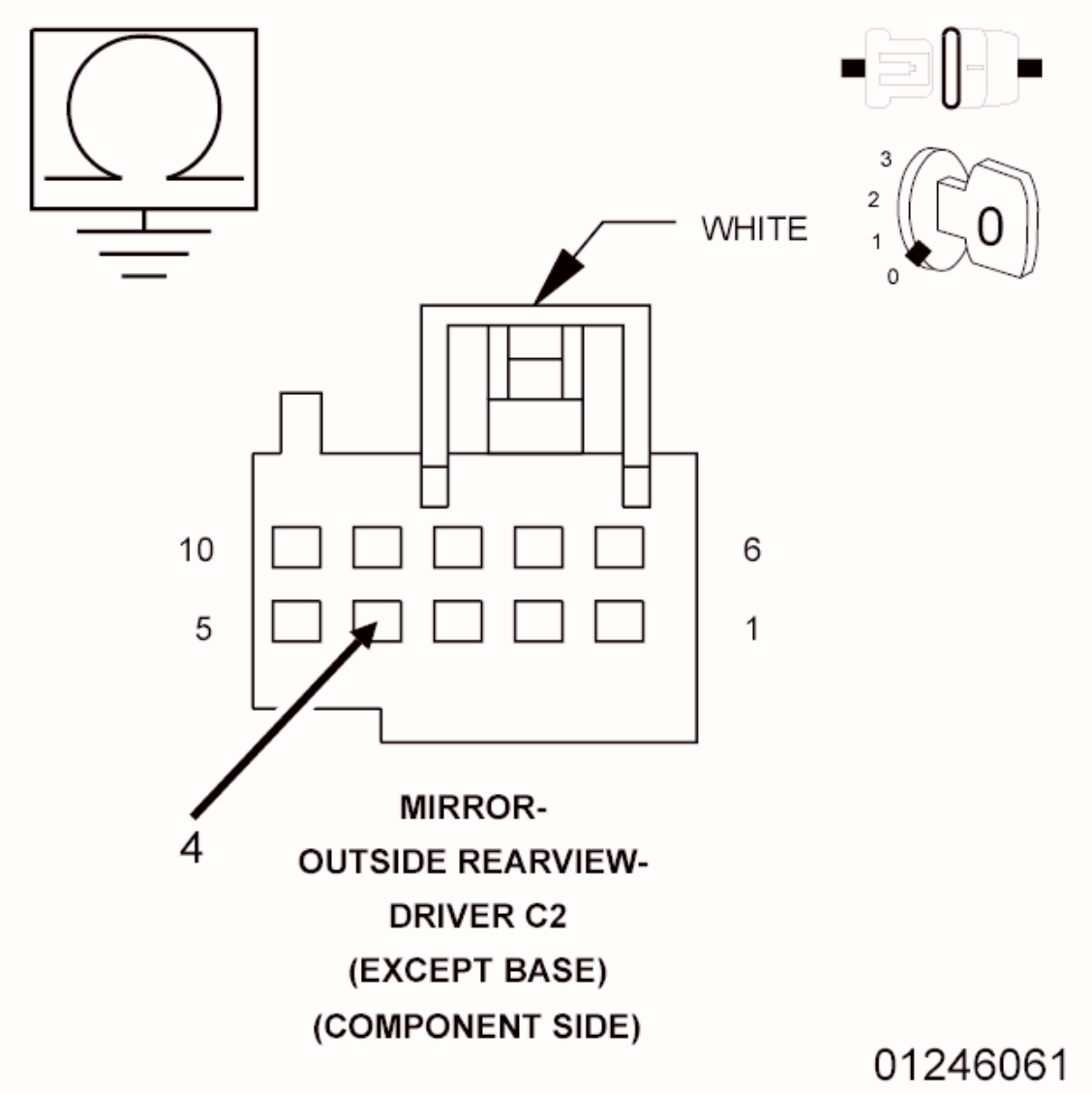

Fig. 82: Checking Driver Mirror Heater Driver Circuit For A Short To Ground
Courtesy of CHRYSLER GROUP, LLC

1. Turn the ignition off.
2. Disconnect the Driver Outside Rearview Mirror C2 (Component Side) connector from the Door Module C2 connector.
3. Measure the resistance of the (C16) Driver Mirror Heater Driver circuit between ground and the Driver Outside Rearview Mirror C2 (Component Side) connector.

   Is the resistance below 10K Ohms?

   Yes

   - Repair the (C16) Driver Mirror Heater Driver circuit for a short to ground. If the wiring harness and connector are okay, replace the Driver Outside Rearview Mirror in accordance with the Service Information.
   - Perform the BODY VERIFICATION TEST. Refer to **BODY VERIFICATION TEST** .

   No

   - Go To 3.

3. **CHECK (C16) DRIVER MIRROR HEATER DRIVER CIRCUIT FOR A SHORT TO (P75) DRIVER MIRROR HORIZONTAL DRIVER CIRCUIT, (P71) DRIVER MIRROR VERTICAL DRIVER CIRCUIT, OR TO (P73) DRIVER MIRROR COMMON DRIVER CIRCUIT**

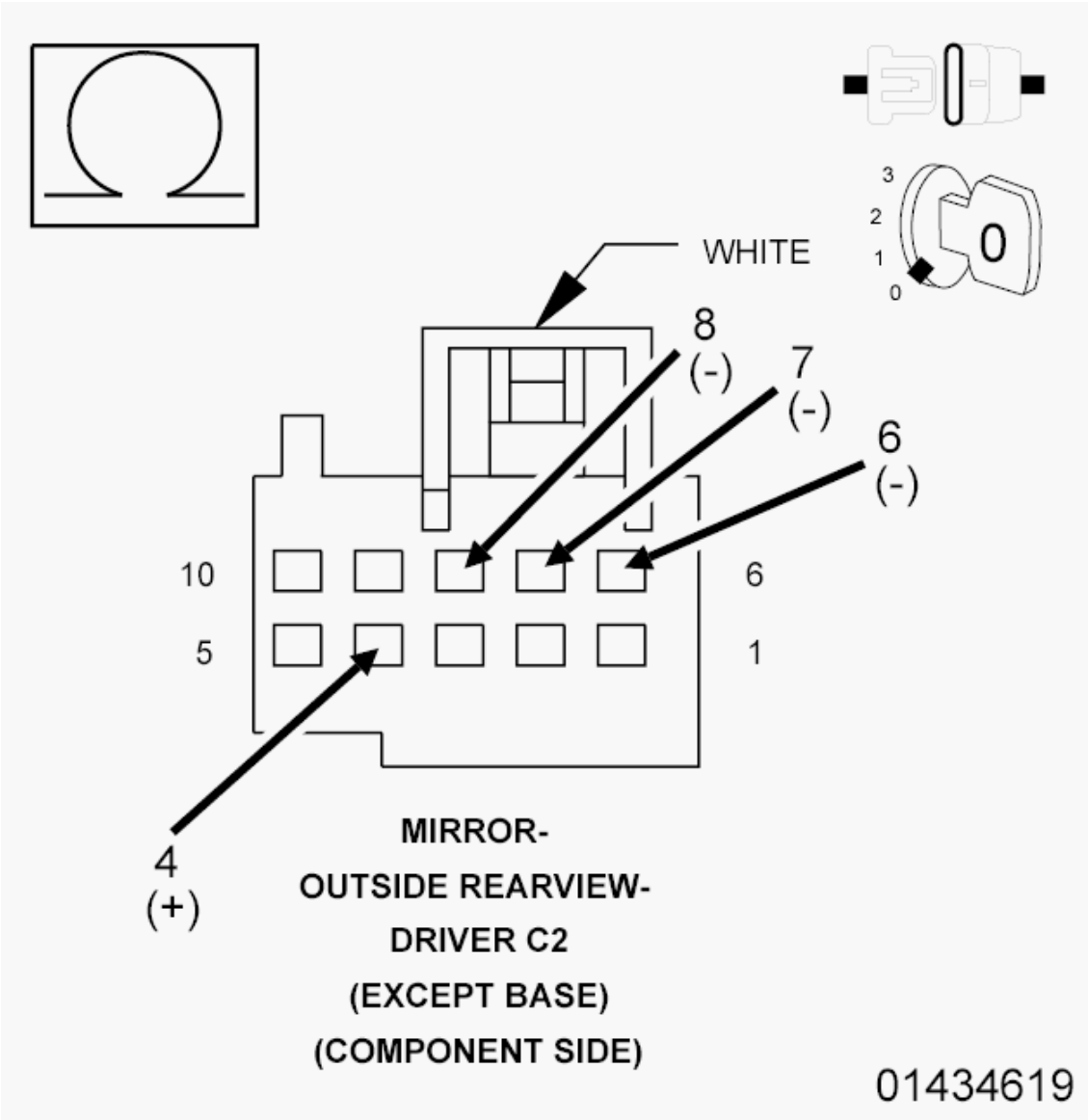

Fig. 83: Checking Driver Mirror Heater Driver Circuit For A Short To Other Circuits
Courtesy of CHRYSLER GROUP, LLC

1. Measure the resistance between the (C16) Driver Mirror Heater Driver circuit and the (P75) Driver Mirror Horizontal Driver circuit at the Driver Outside Rearview Mirror C2 (Component Side) connector.
2. Measure the resistance between the (C16) Driver Mirror Heater Driver circuit and the (P71) Driver Mirror Vertical Driver circuit at the Driver Outside Rearview Mirror C2 (Component Side) connector.
3. Measure the resistance between the (C16) Driver Mirror Heater Driver circuit and the (P73) Driver Mirror Common Driver circuit at the Driver Outside Rearview Mirror C2 (Component Side) connector.

   Is the resistance below 10K Ohms for any measurement?

Yes

- Repair all circuits with a resistance below 10K Ohms for a short to the (C16) Driver Mirror Heater Driver circuit. If the wiring harness and connector are okay, replace the Driver Outside Rearview Mirror in accordance with the Service Information.
- Perform the BODY VERIFICATION TEST. Refer to **BODY VERIFICATION TEST** .

No, with Turn Signal Mirror

- Go To 4.

No, without Turn Signal Mirror

- Go To 5.

4. **CHECK (C16) DRIVER MIRROR HEATER DRIVER CIRCUIT FOR A SHORT TO (P593) DRIVER MIRROR TURN SIGNAL RETURN CIRCUIT**

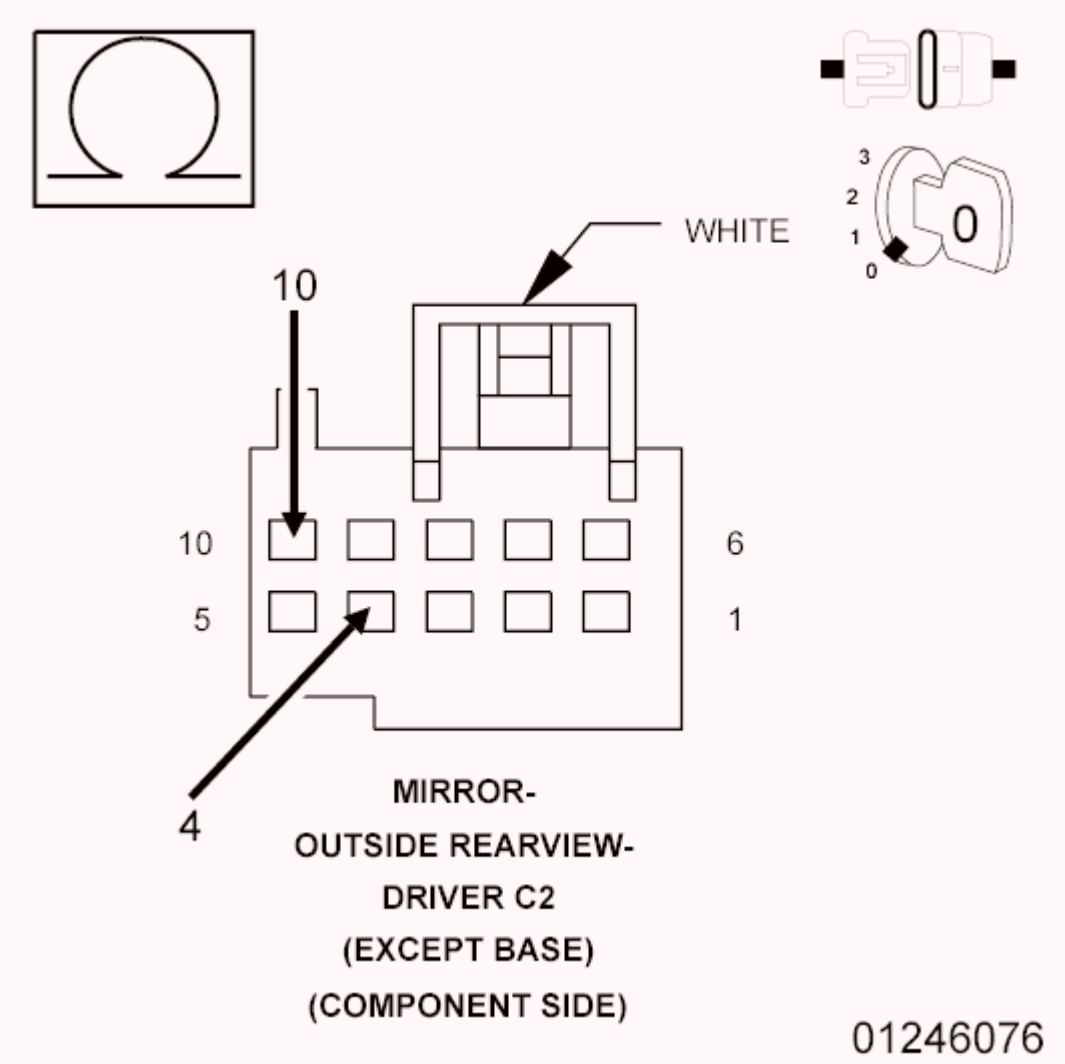

Fig. 84: Checking Driver Mirror Heater Driver Circuit For A Short To Driver Mirror Turn Signal Return Circuit
Courtesy of CHRYSLER GROUP, LLC

1. Measure the resistance between the (C16) Driver Mirror Heater Driver circuit and the (P593) Driver Mirror Turn Signal Return circuit at the Driver Outside Rearview Mirror C2 (Component Side) connector.

   Is the resistance below 10K Ohms?

   Yes

   - Repair the (C16) Driver Mirror Heater Driver circuit for a short to the (P593) Driver Mirror Turn Signal Return circuit. If the wiring harness and connector are okay, replace the Driver Outside Rearview Mirror in accordance with the Service Information.
   - Perform the BODY VERIFICATION TEST. Refer to **BODY VERIFICATION TEST** .

   No

   - Go To 5.

5. **CHECK (C16) DRIVER MIRROR HEATER DRIVER CIRCUIT FOR A SHORT TO (C160) DRIVER MIRROR HEATER RETURN CIRCUIT**

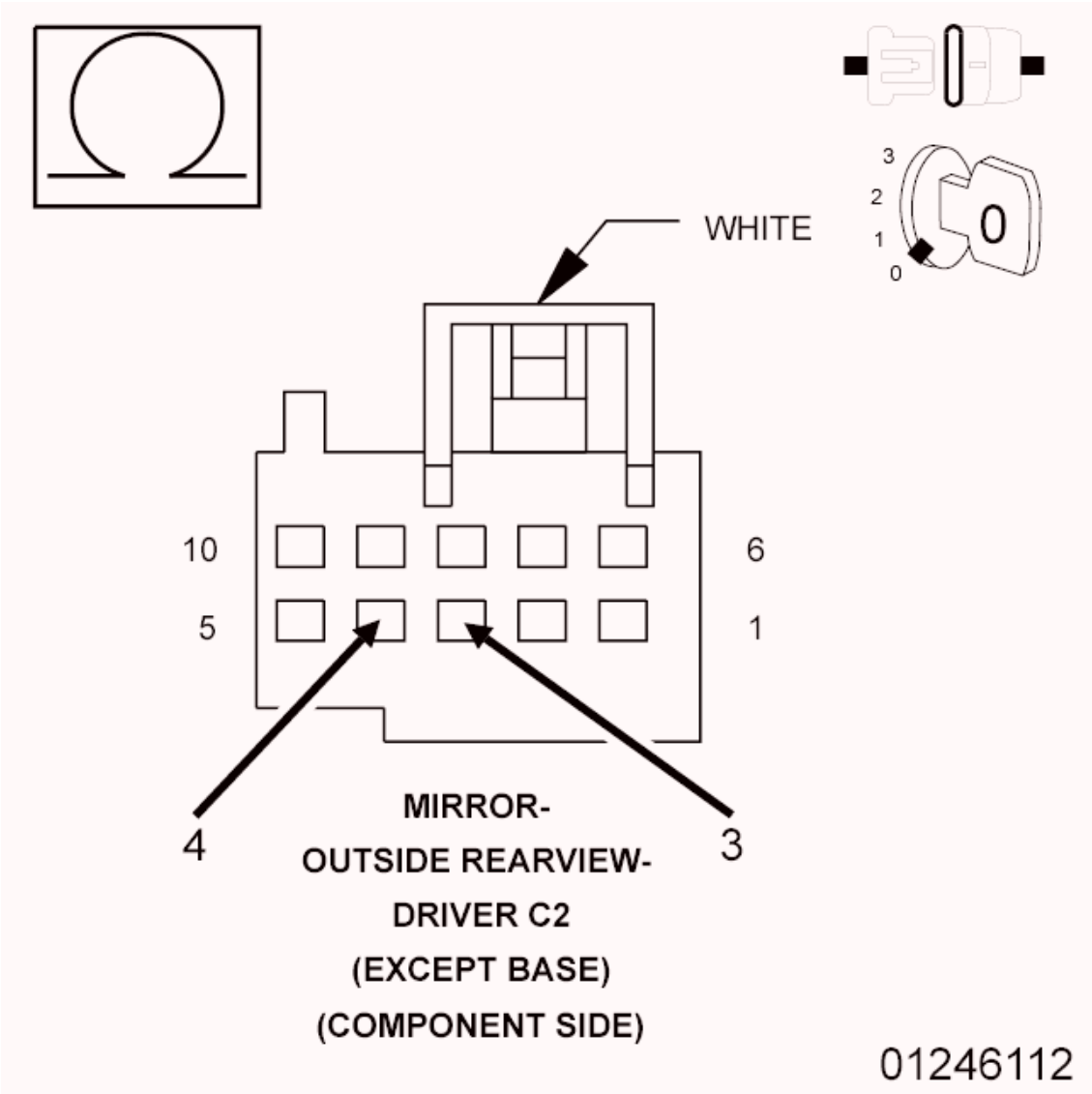

Fig. 85: Checking Driver Mirror Heater Driver Circuit For A Short To Driver Mirror Heater Return Circuit
Courtesy of CHRYSLER GROUP, LLC

1. Measure the resistance between the (C16) Driver Mirror Heater Driver circuit and the (C160) Driver Mirror Heater Return circuit at the Driver Outside Rearview Mirror C2 (Component Side) connector.

   Is the resistance below 1.0 Ohm?

   Yes

   - Repair the (C16) Driver Mirror Heater Driver circuit for a short to the (C160) Driver Mirror Heater Return circuit. If the wiring harness and connector are okay, replace the Driver Outside Rearview Mirror in accordance with the Service Information.
   - Perform the BODY VERIFICATION TEST. Refer to **BODY VERIFICATION TEST** .

No

- Go To 6.

6. **CHECK (C16) DRIVER MIRROR HEATER DRIVER CIRCUIT FOR A SHORT TO (69) DRIVER MIRROR SENSOR GROUND CIRCUIT**

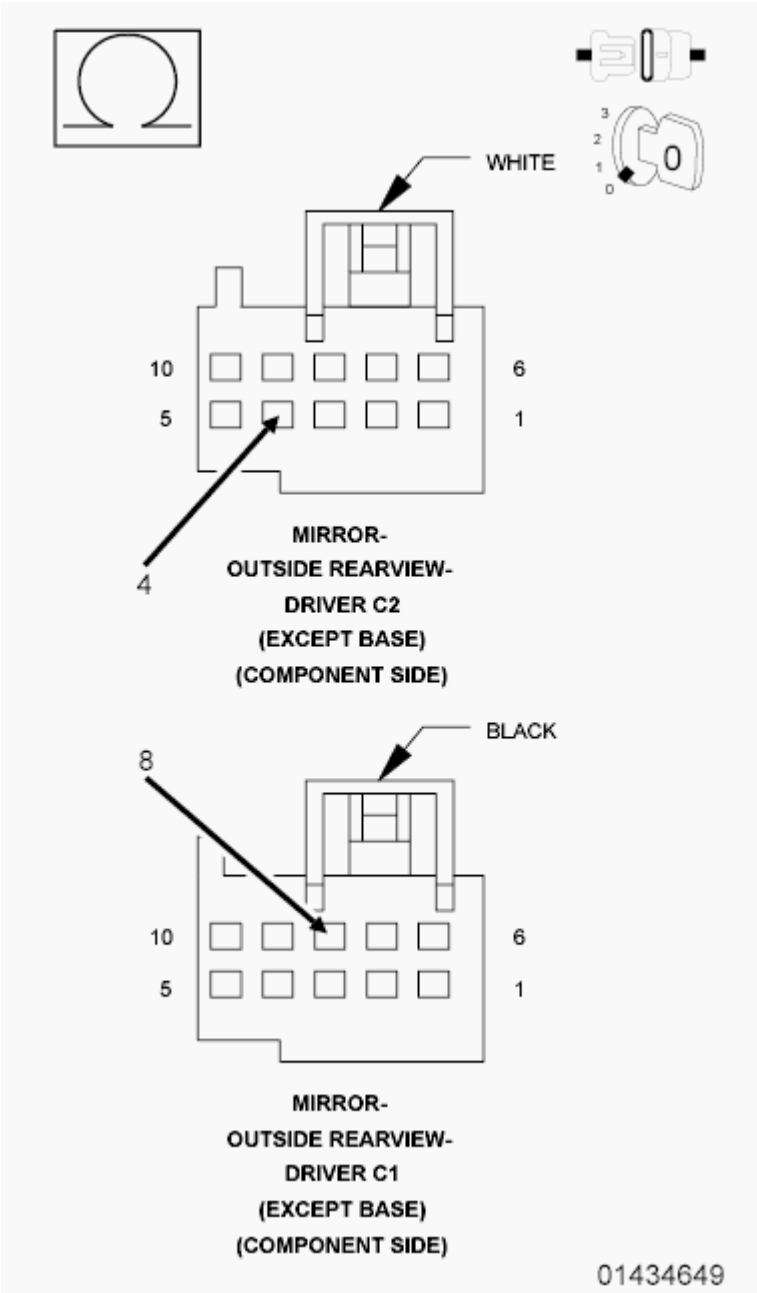

Fig. 86: Checking Driver Mirror Heater Driver Circuit For A Short To Driver Mirror Sensor Ground Circuit
Courtesy of CHRYSLER GROUP, LLC

1. Disconnect the Driver Outside Rearview Mirror C1 (Component Side) connector from the Door

Module C1 connector.

2. Measure the resistance between the (C16) Driver Mirror Heater Driver circuit and the (P69) Driver Mirror Sensor Ground circuit at the Driver Outside Rearview Mirror C2 and C1 (Component Side) connectors.

   Is the resistance below 10K Ohms?

   Yes

   - Repair the (C16) Driver Mirror Heater Driver circuit for a short to the (P69) Driver Mirror Sensor Ground circuit. If the wiring harness and connector are okay, replace the Driver Outside Rearview Mirror in accordance with the Service Information.
   - Perform the BODY VERIFICATION TEST. Refer to **BODY VERIFICATION TEST** .

   No, with Puddle Lamp Mirror

   - Go To 7.

   No, without Puddle Lamp Mirror

   - Inspect the wiring and connectors for damage and repair as necessary. If the wiring and connectors are okay, replace the Door Module in accordance with the Service Information.
   - Perform the BODY VERIFICATION TEST. Refer to **BODY VERIFICATION TEST** .

7. **CHECK (C16) DRIVER MIRROR HEATER DRIVER CIRCUIT FOR A SHORT TO (P591) DRIVER PUDDLE LAMP RETURN CIRCUIT**

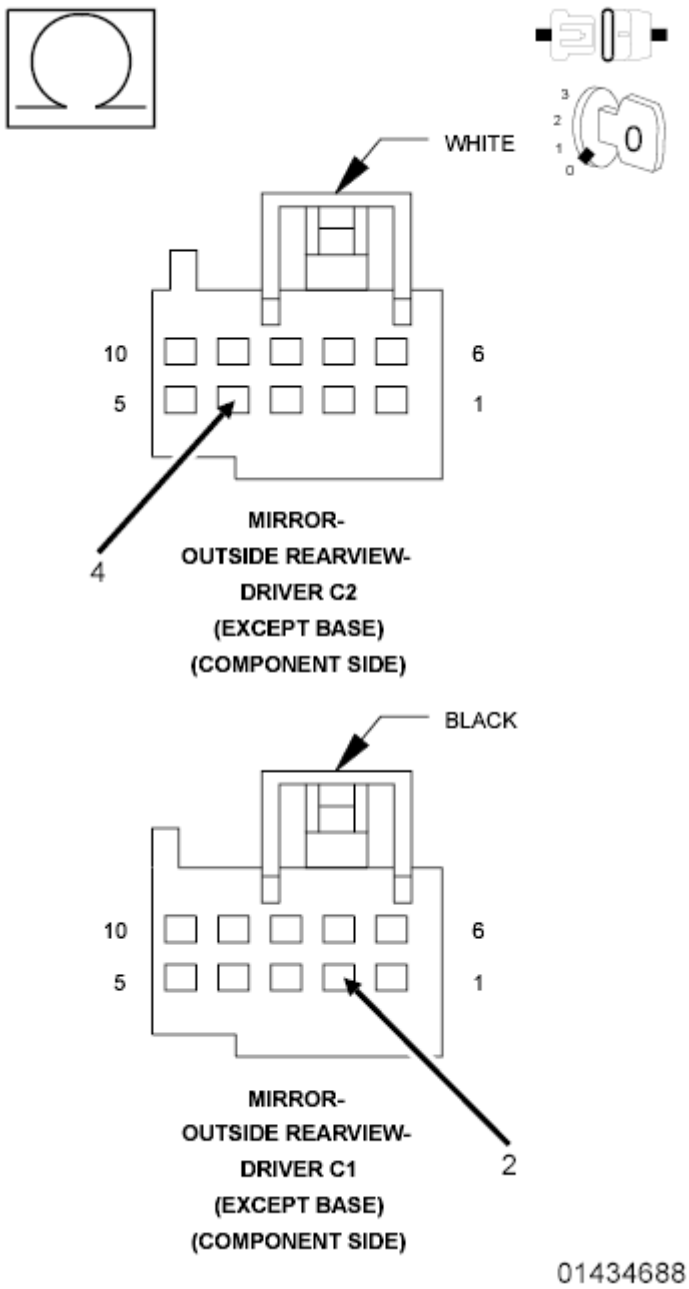

Fig. 87: Checking Driver Mirror Heater Driver Circuit For A Short To Driver Puddle Lamp Return Circuit
Courtesy of CHRYSLER GROUP, LLC

1. Measure the resistance between the (C16) Driver Mirror Heater Driver circuit and the (P591) Driver Puddle Lamp Return circuit at the Driver Outside Rearview Mirror C2 and C1 (Component Side) connectors.

   Is the resistance below 10K Ohms?

   Yes

- Repair the (C16) Driver Mirror Heater Driver circuit for a short to the (P591) Driver Puddle Lamp Return circuit. If the wiring harness and connector are okay, replace the Driver Outside Rearview Mirror in accordance with the Service Information.
- Perform the BODY VERIFICATION TEST. Refer to **BODY VERIFICATION TEST** .

No

- Inspect the wiring and connectors for damage and repair as necessary. If the wiring and connectors are okay, replace the Door Module in accordance with the Service Information.
- Perform the BODY VERIFICATION TEST. Refer to **BODY VERIFICATION TEST** .

B1D32-15-DRIVER MIRROR HEATER CONTROL - CIRCUIT SHORT TO BATTERY OR OPEN

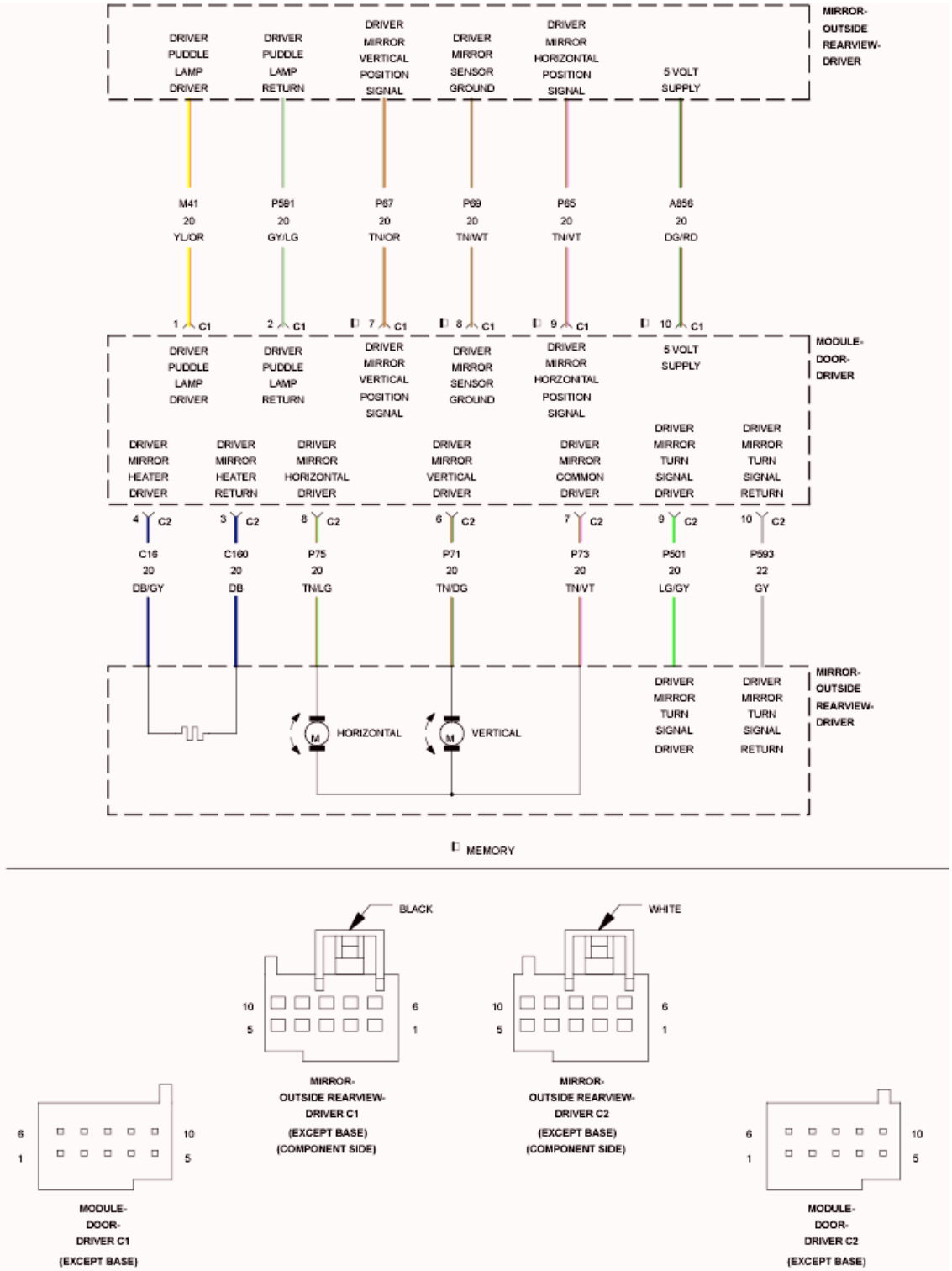

Fig. 88: Driver Mirror Signal Lamp Control Wiring Diagram
Courtesy of CHRYSLER GROUP, LLC

For a complete wiring diagram, **refer to appropriate SYSTEM WIRING DIAGRAMS article** .

WHEN MONITORED:

Continuously.

SET CONDITION:

The Door Module senses an open or a short high on the (C16) Driver Mirror Heater Driver circuit for more than two seconds.

POSSIBLE CAUSES

Possible Causes
(C16) DRIVER MIRROR HEATER DRIVER CIRCUIT FOR A SHORT TO VOLTAGE
(C16) DRIVER MIRROR HEATER DRIVER CIRCUIT FOR AN OPEN
(C160) DRIVER MIRROR HEATER RETURN CIRCUIT FOR AN OPEN
(C16) DRIVER MIRROR HEATER DRIVER CIRCUIT FOR A SHORT TO THE (P75) DRIVER MIRROR HORIZONTAL DRIVER CIRCUIT
(C16) DRIVER MIRROR HEATER DRIVER CIRCUIT FOR A SHORT TO THE (P71) DRIVER MIRROR VERTICAL DRIVER CIRCUIT
(C16) DRIVER MIRROR HEATER DRIVER CIRCUIT FOR A SHORT TO THE (P73) DRIVER MIRROR COMMON DRIVER CIRCUIT
(C16) DRIVER MIRROR HEATER DRIVER CIRCUIT FOR A SHORT TO THE (P501) DRIVER MIRROR TURN SIGNAL DRIVER CIRCUIT
(C16) DRIVER MIRROR HEATER DRIVER CIRCUIT FOR A SHORT TO THE (M41) DRIVER PUDDLE LAMP DRIVER CIRCUIT
DRIVER OUTSIDE REARVIEW MIRROR
DOOR MODULE

DIAGNOSTIC TEST

1. **TEST FOR INTERMITTENT CONDITION - HEATER OFF**
    1. Turn the ignition on.
    2. Using a scan tool, record and erase Diagnostic Trouble Codes (DTC's).
    3. Turn the turn signal on, if equipped with turn signal mirror.
    4. Turn the puddle lamps on, if equipped with puddle lamp mirror.
    5. Press and release the Mirror Select switch to select the Driver Outside Rearview Mirror.
    6. Operate the Mirror Adjust switch in all directions several times while monitoring the scan tool for DTC's.

    NOTE: **After adjusting the mirror in one direction wait at least two seconds before adjusting the mirror in the opposite direction, as this will allow time for an active fault to set if present.**

    Is the DTC active?

    Yes

- Go To 3.

No

- Go To 2.

2. **TEST FOR INTERMITTENT CONDITION - HEATER ON**
   1. Turn the rear defogger on.
   2. Operate the Mirror Adjust switch in all directions several times while monitoring the scan tool for DTC's.

NOTE: **After adjusting the mirror in one direction wait at least two seconds before adjusting the mirror in the opposite direction, as this will allow time for an active fault to set if present.**

Is the DTC active?

Yes

- Go To 3.

No

- The conditions that caused this code to set are not present at this time. For vehicle's equipped with folding outside rearview mirrors, repeat test with mirror folded. If DTC is now active, go to 3. Otherwise, use the wiring diagram/schematic as a guide and inspect the wiring and connectors.
- Perform the BODY VERIFICATION TEST. Refer to **BODY VERIFICATION TEST** .

3. **CHECK (C16) DRIVER MIRROR HEATER DRIVER CIRCUIT FOR A SHORT TO VOLTAGE**

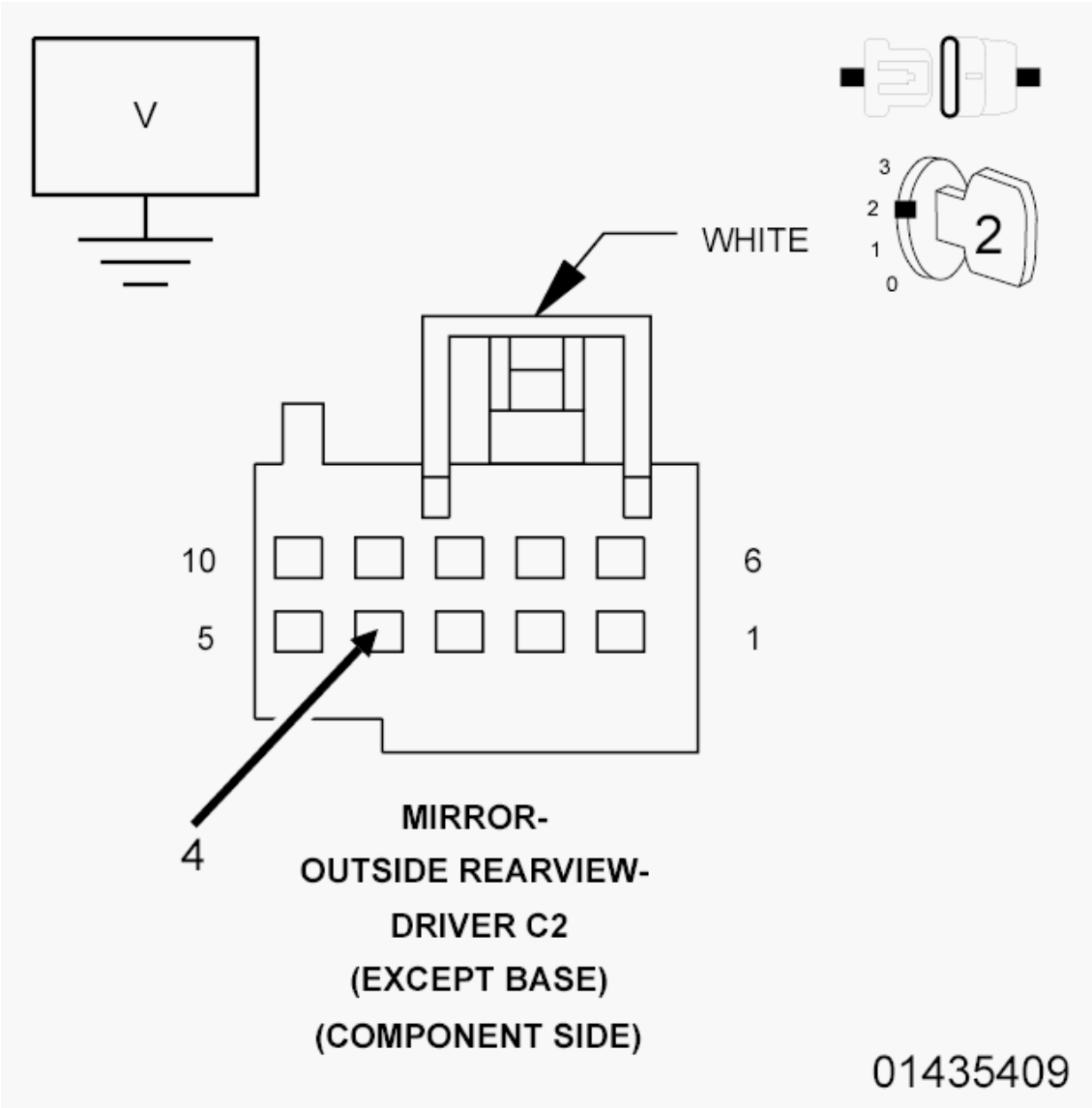

Fig. 89: Checking Driver Mirror Heater Driver Circuit For A Short To Voltage
Courtesy of CHRYSLER GROUP, LLC

1. Turn the ignition off.
2. Disconnect the Driver Outside Rearview Mirror C2 (Component Side) connector from the Door Module C2 connector.
3. Turn the ignition on.
4. Measure the voltage of the (C16) Driver Mirror Heater Driver circuit between the Driver Outside Rearview Mirror C2 (Component Side) connector and ground.

   Is there any voltage present?

   Yes

   - Repair the (C16) Driver Mirror Heater Driver circuit for a short to voltage. If the wiring

harness and connector are okay, replace the Driver Outside Rearview Mirror in accordance with the Service Information.

- Perform the BODY VERIFICATION TEST. Refer to **BODY VERIFICATION TEST** .

No

- Go To 4.

4. **CHECK (C16) DRIVER MIRROR HEATER DRIVER CIRCUIT AND (C160) DRIVER MIRROR HEATER RETURN CIRCUIT FOR AN OPEN**

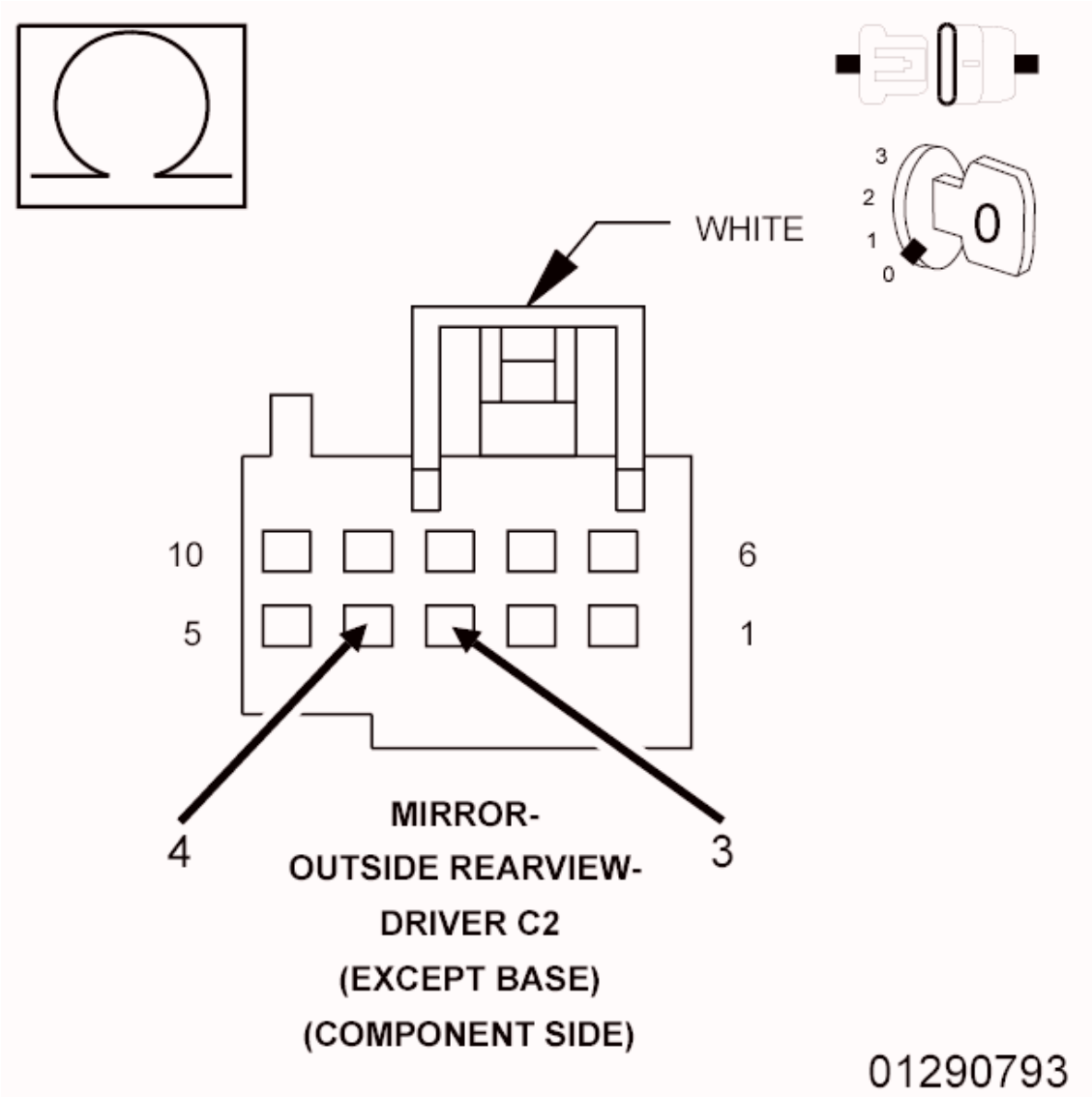

Fig. 90: Checking Driver Mirror Heater Driver Circuit And Driver Mirror Heater Return Circuit For An Open
Courtesy of CHRYSLER GROUP, LLC

1. Turn the ignition off.

2. Measure the resistance between the (C16) Driver Mirror Heater Driver circuit and the (C160) Driver Mirror Heater Return circuit at the Driver Outside Rearview Mirror C2 (Component Side) connector.

   Is the resistance below 9.0 Ohms?

   Yes

   - Go To 5.

   No

   - Repair the (C16) Driver Mirror Heater Driver circuit or the (C160) Driver Mirror Heater Return circuit for an open. If the wiring harness and connector are okay, replace the Driver Outside Rearview Mirror in accordance with the Service Information.
   - Perform the BODY VERIFICATION TEST. Refer to **BODY VERIFICATION TEST** .

5. **CHECK (C16) DRIVER MIRROR HEATER DRIVER CIRCUIT FOR A SHORT TO (P75) DRIVER MIRROR HORIZONTAL DRIVER CIRCUIT, (P71) DRIVER MIRROR VERTICAL DRIVER CIRCUIT, OR TO (P73) DRIVER MIRROR COMMON DRIVER CIRCUIT**

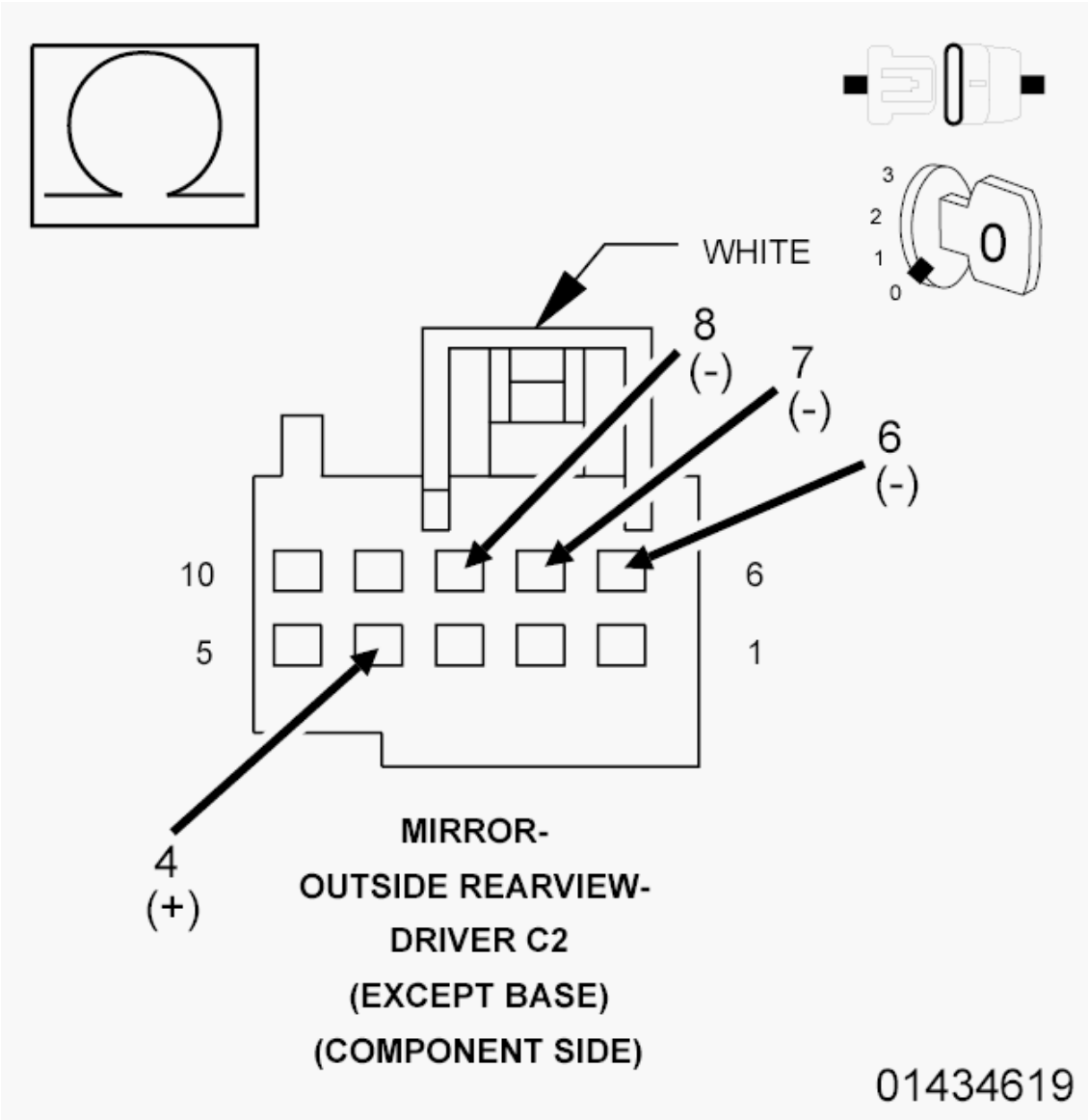

Fig. 91: Checking Driver Mirror Heater Driver Circuit For A Short To Other Circuits
Courtesy of CHRYSLER GROUP, LLC

1. Measure the resistance between the (C16) Driver Mirror Heater Driver circuit and the (P75) Driver Mirror Horizontal Driver circuit at the Driver Outside Rearview Mirror C2 (Component Side) connector.
2. Measure the resistance between the (C16) Driver Mirror Heater Driver circuit and the (P71) Driver Mirror Vertical Driver circuit at the Driver Outside Rearview Mirror C2 (Component Side) connector.
3. Measure the resistance between the (C16) Driver Mirror Heater Driver circuit and the (P73) Driver Mirror Common Driver circuit at the Driver Outside Rearview Mirror C2 (Component Side) connector.

   Is the resistance below 10K Ohms for any measurement?

Yes

- Repair all circuits with a resistance below 10K Ohms for a short to the (C16) Driver Mirror Heater Driver circuit. If the wiring harness and connector are okay, replace the Driver Outside Rearview Mirror in accordance with the Service Information.
- Perform the BODY VERIFICATION TEST. Refer to **BODY VERIFICATION TEST** .

No, with Turn Signal Mirror

- Go To 6.

No, without Turn Signal Mirror

- Go To 7.

6. **CHECK (C16) DRIVER MIRROR HEATER DRIVER CIRCUIT FOR A SHORT TO (P501) DRIVER MIRROR TURN SIGNAL DRIVER CIRCUIT**

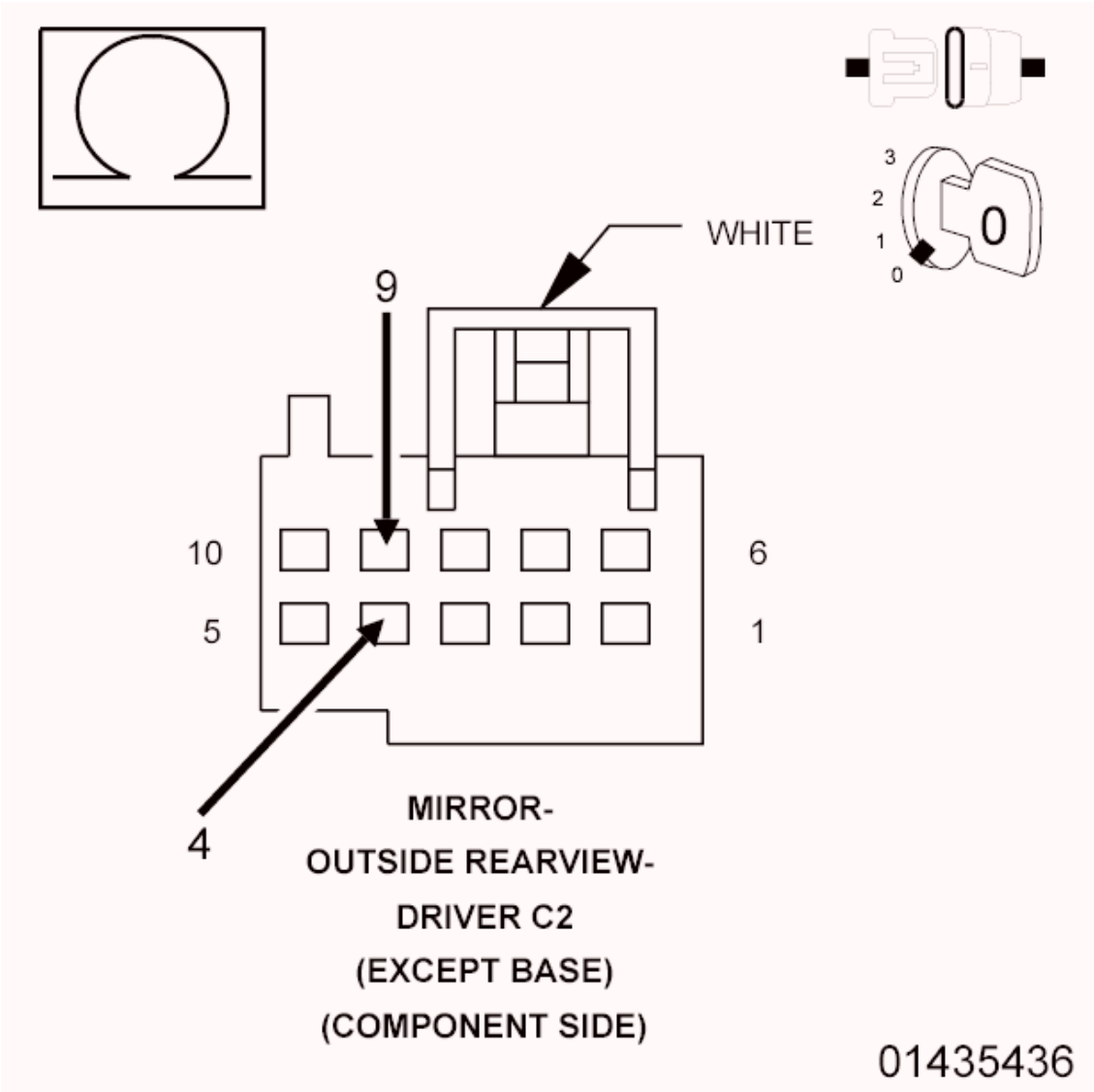

Fig. 92: Checking Driver Mirror Heater Driver Circuit For A Short To Driver Mirror Turn Signal Driver Circuit
Courtesy of CHRYSLER GROUP, LLC

1. Measure the resistance between the (C16) Driver Mirror Heater Driver circuit and the (P501) Driver Mirror Turn Signal Driver circuit at the Driver Outside Rearview Mirror C2 (Component Side) connector.

   Is the resistance below 10K Ohms?

   Yes

   - Repair the (C16) Driver Mirror Heater Driver circuit for a short to the (P501) Driver Mirror Turn Signal Driver circuit. If the wiring harness and connector are okay, replace the Driver Outside Rearview Mirror in accordance with the Service Information.
   - Perform the BODY VERIFICATION TEST. Refer to **BODY VERIFICATION TEST** .

No, with Puddle Lamp Mirror

- Go To 7.

No, without Puddle Lamp Mirror

- Inspect the wiring and connectors for damage and repair as necessary. If the wiring and connectors are okay, replace the Door Module in accordance with the Service Information.
- Perform the BODY VERIFICATION TEST. Refer to **BODY VERIFICATION TEST** .

7. **CHECK (C16) DRIVER MIRROR HEATER DRIVER CIRCUIT FOR A SHORT TO (M41) DRIVER PUDDLE LAMP DRIVER CIRCUIT**

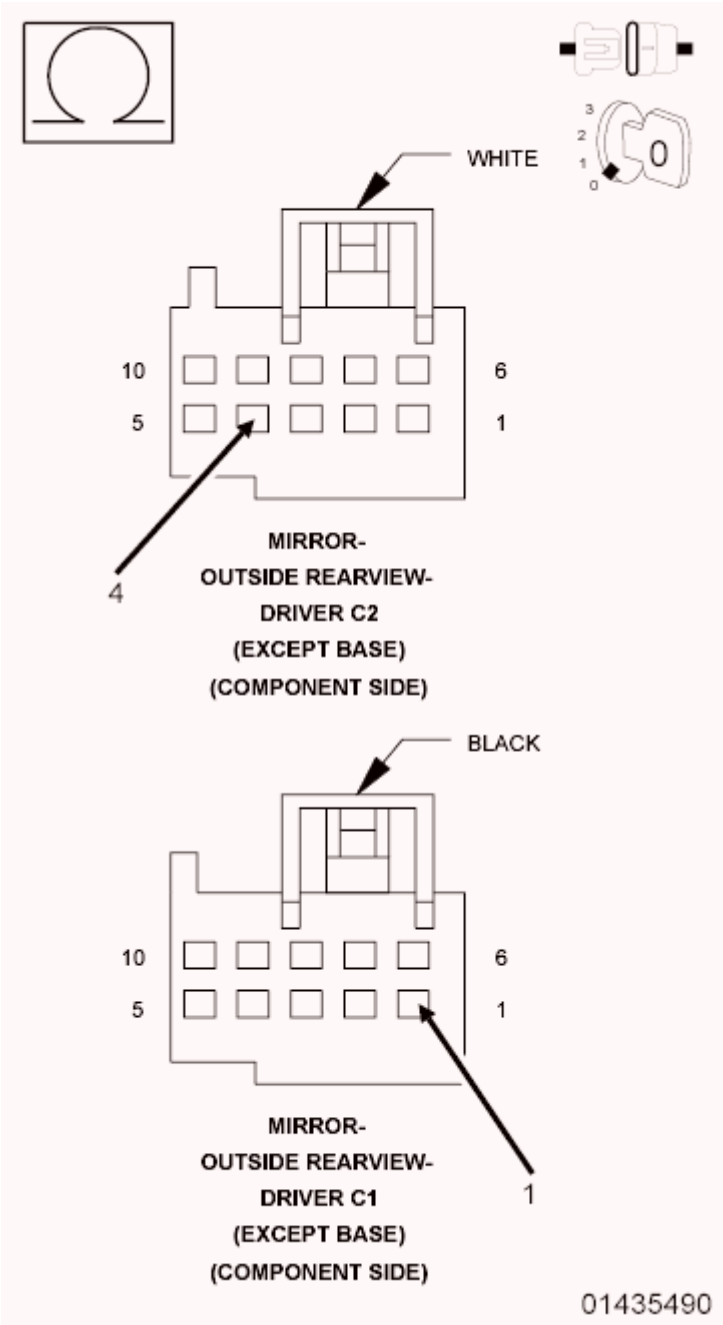

Fig. 93: Checking Driver Mirror Heater Driver Circuit For A Short To Driver Puddle Lamp Driver Circuit
Courtesy of CHRYSLER GROUP, LLC

1. Disconnect the Driver Outside Rearview Mirror C1 (Component Side) connector from the Door Module C1 connector.
2. Measure the resistance between the (C16) Driver Mirror Heater Driver circuit and the (M41) Driver Puddle Lamp Driver circuit at the Driver Outside Rearview Mirror C2 and C1 (Component Side) connectors.

Is the resistance below 10K Ohms?

Yes

- Repair the (C16) Driver Mirror Heater Driver circuit for a short to the (M41) Driver Puddle Lamp Driver circuit. If the wiring harness and connector are okay, replace the Driver Outside Rearview Mirror in accordance with the Service Information.
- Perform the BODY VERIFICATION TEST. Refer to **BODY VERIFICATION TEST** .

No

- Inspect the wiring and connectors for damage and repair as necessary. If the wiring and connectors are okay, replace the Door Module in accordance with the Service Information.
- Perform the BODY VERIFICATION TEST. Refer to **BODY VERIFICATION TEST** .

B1D4A-2A-MEMORY SWITCH INPUT - SIGNAL STUCK IN RANGE

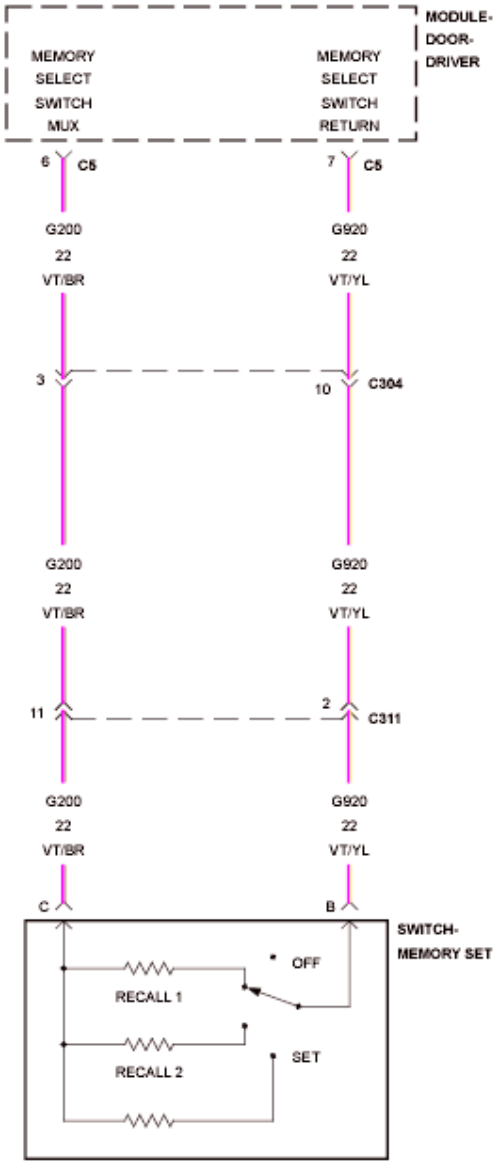

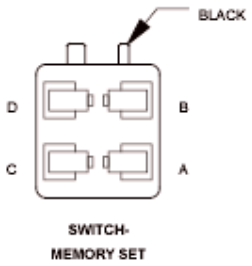

SWITCH-
MEMORY SET

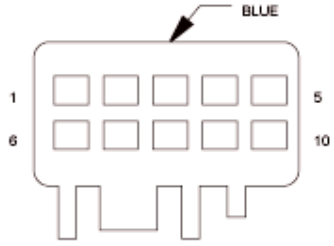

MODULE-
DOOR-
DRIVER C5

Fig. 94: Memory Switch Input Wiring Diagram
Courtesy of CHRYSLER GROUP, LLC

For a complete wiring diagram, **refer to appropriate SYSTEM WIRING DIAGRAMS article** .

WHEN MONITORED:

Continuously.

SET CONDITION:

The Door Module receives a conflicting input from the (G200) Memory Select Switch Mux circuit for more than 30 seconds.

POSSIBLE CAUSES

Possible Causes
OBJECT HOLDING MEMORY SET SWITCH IN A PUSHED POSITION
SUBSTANCE CAUSING MEMORY SET SWITCH TO GET STUCK IN A PUSHED POSITION
(G200) MEMORY SELECT SWITCH MUX CIRCUIT FOR A SHORT TO GROUND
(G200) MEMORY SELECT SWITCH MUX CIRCUIT FOR A SHORT TO THE (G920) MEMORY SELECT SWITCH MUX RETURN CIRCUIT
MEMORY SET SWITCH
DOOR MODULE

DIAGNOSTIC TEST

1. **INSPECT MEMORY SET SWITCH FOR DAMAGE**
    1. Turn the ignition off.
    2. Inspect the Memory Set switch for damage.

       Is the switch damaged?

       Yes

       - Replace the Memory Set switch in accordance with the Service Information.
       - Perform the BODY VERIFICATION TEST. Refer to **BODY VERIFICATION TEST** .

       No

       - Go To 2.
2. **INSPECT FOR OBJECT OR SUBSTANCE CAUSING MEMORY SET SWITCH TO STAY OR STICK IN A PUSHED POSITION**
    1. Inspect the Memory Set switch for anything that would cause it to stay or stick in a pushed position.

Is anything present that would cause the Memory Set switch to stay or stick in a pushed position?

Yes

- Repair as necessary.
- Perform the BODY VERIFICATION TEST. Refer to **BODY VERIFICATION TEST** .

No

- Go To 3.

3. **TEST FOR INTERMITTENT CONDITION**
   1. Turn the ignition on.
   2. Using a scan tool, record and erase Diagnostic Trouble Codes (DTC's).
   3. Press the Memory Set switch several times in all positions.
   4. Cycle the ignition from on to off three times.
   5. Turn the ignition on then wait 30 seconds.
   6. Using a scan tool, read DTC's.

   Is the DTC active?

   Yes

   - Go To 4.

   No

   - The conditions that caused this code to set are not present at this time. Verify seat harness is routed correctly. Using the wiring diagram/schematic as a guide, inspect the wiring and connectors. Attempt to reproduce condition by adjusting the seat.
   - Perform the BODY VERIFICATION TEST. Refer to **BODY VERIFICATION TEST** .
4. **CHECK MEMORY SET SWITCH FOR A SHORT TO GROUND**

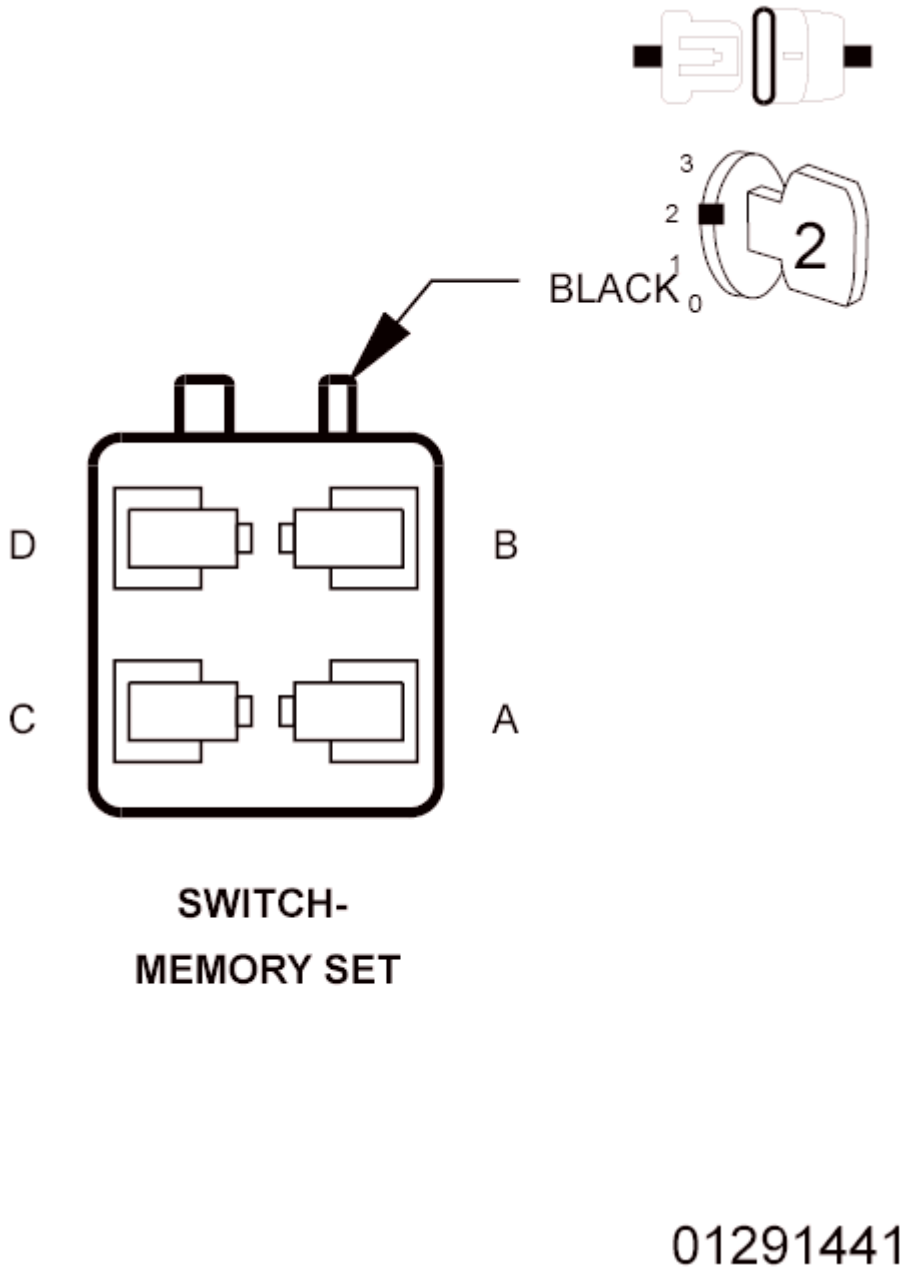

Fig. 95: Memory Set Switch Connector End View
Courtesy of CHRYSLER GROUP, LLC

1. Using a scan tool, erase DTC's.
2. Turn the ignition off.
3. Disconnect the Memory Set switch connector.
4. Cycle the ignition three times.
5. Turn the ignition on and then wait 30 seconds.
6. Using a scan tool, read DTC's.

Is the same DTC active?

Yes

- Go To 5.

No

- Replace the Memory Set switch in accordance with the Service Information.
- Perform the BODY VERIFICATION TEST. Refer to **BODY VERIFICATION TEST** .

5. **CHECK (G200) MEMORY SELECT SWITCH MUX CIRCUIT FOR A SHORT TO GROUND**

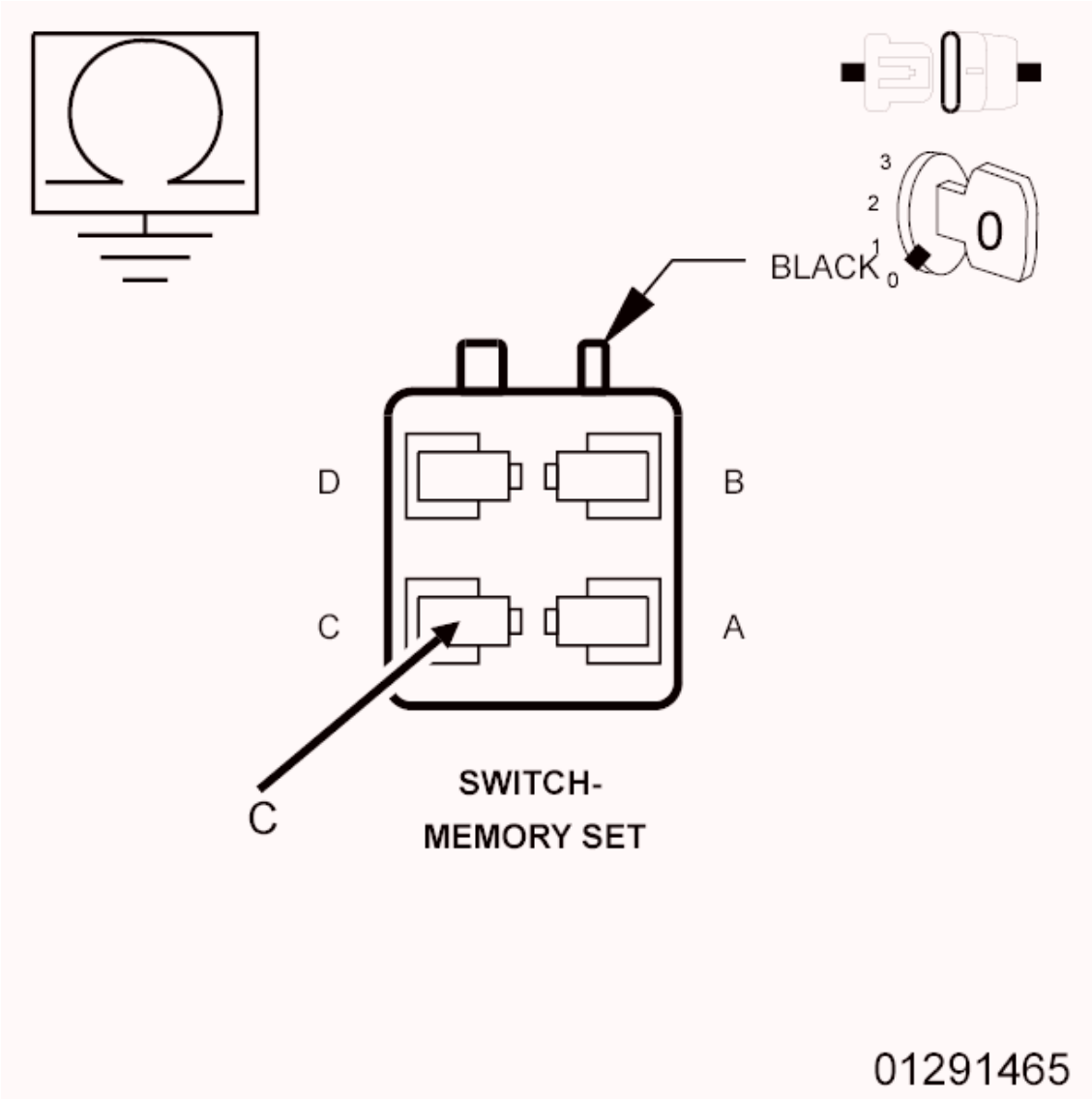

Fig. 96: Checking Memory Select Switch MUX Circuit For A Short To Ground
Courtesy of CHRYSLER GROUP, LLC

1. Disconnect the Door Module C5 connector.
2. Measure the resistance between ground and the (G200) Memory Select Switch Mux circuit at the Memory Set switch connector.

   Is the resistance below 10K Ohms?

   Yes

   - Repair the (G200) Memory Select Switch Mux circuit for a short to ground.
   - Perform the BODY VERIFICATION TEST. Refer to **BODY VERIFICATION TEST** .

   No

   - Go To 6.

6. **CHECK (G200) MEMORY SELECT SWITCH MUX CIRCUIT FOR A SHORT TO THE (G920) MEMORY SELECT SWITCH RETURN CIRCUIT**

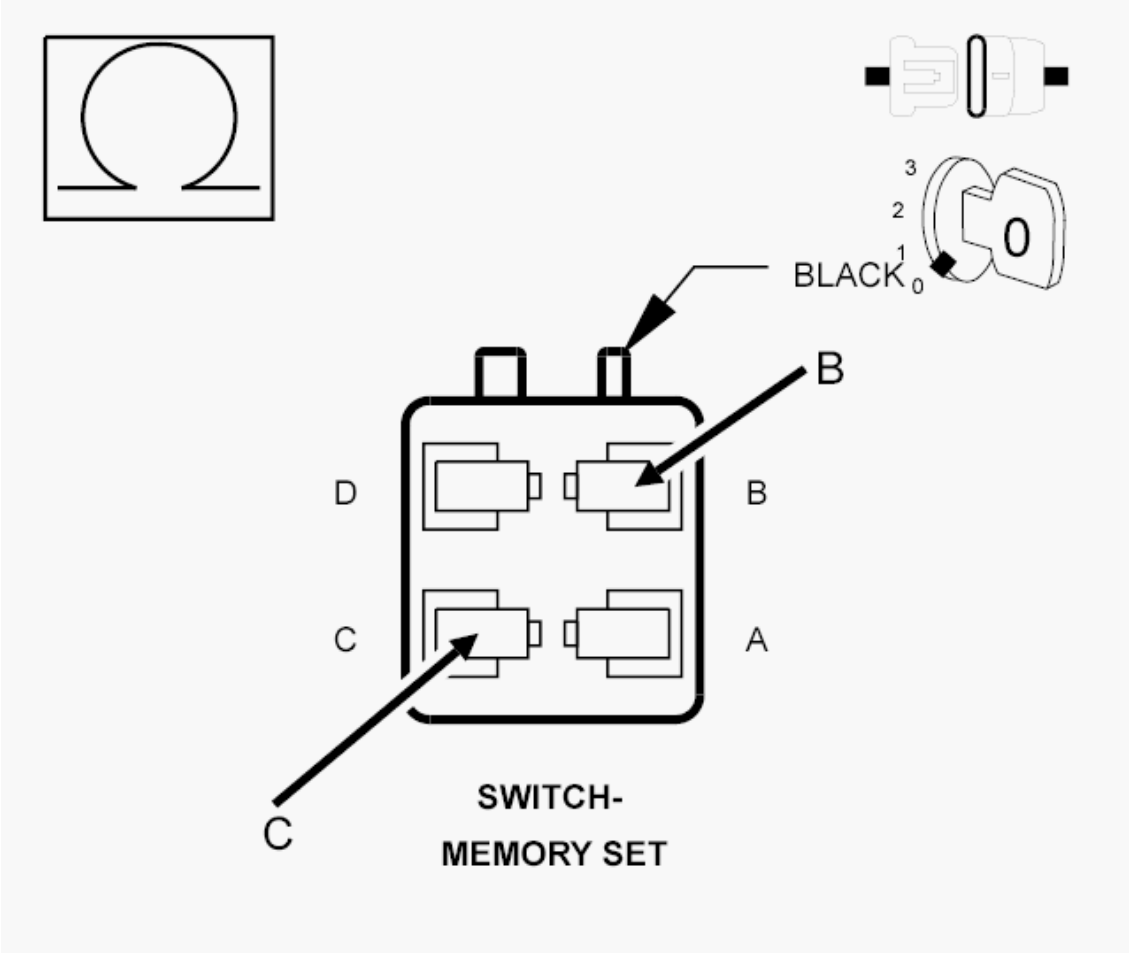

Fig. 97: Checking Memory Select Switch MUX Circuit For A Short To The Memory Select Switch Return Circuit
Courtesy of CHRYSLER GROUP, LLC

1. Measure the resistance between the (G200) Memory Select Switch Mux circuit and the (G920) Memory Select Switch Return circuit at the Memory Set switch connector.

   Is the resistance below 10K Ohms?

   Yes

   - Repair the (G200) Memory Select Switch Mux circuit for a short to the (G920) Memory Select Switch return circuit.
   - Perform the BODY VERIFICATION TEST. Refer to **BODY VERIFICATION TEST** .

   No

   - Replace the Door Module in accordance with the Service Information.
   - Perform the BODY VERIFICATION TEST. Refer to **BODY VERIFICATION TEST** .

B1E64-00-LEFT MIRROR SELECT SWITCH STUCK

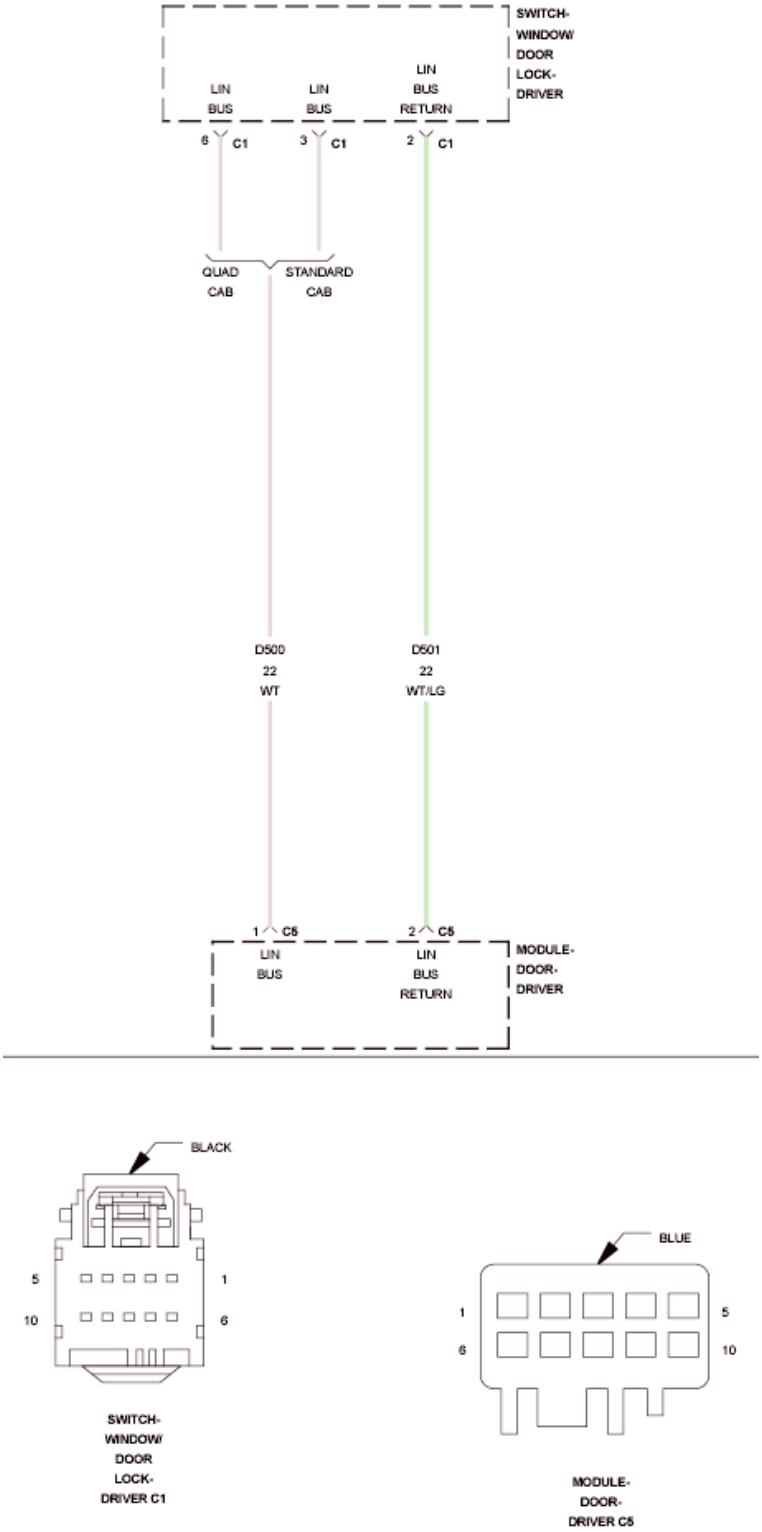

Fig. 98: Left Mirror Select Switch Wiring Diagram
Courtesy of CHRYSLER GROUP, LLC

For a complete wiring diagram, **refer to appropriate SYSTEM WIRING DIAGRAMS article** .

WHEN MONITORED:

Continuously.

SET CONDITION:

The Door Module senses the Left Mirror Select switch input for more than 30 seconds.

POSSIBLE CAUSES

Possible Causes
OBJECT HOLDING LEFT MIRROR SELECT SWITCH IN A PUSHED POSITION
SUBSTANCE CAUSING LEFT MIRROR SELECT SWITCH TO GET STUCK IN A PUSHED POSITION
DRIVER DOOR SWITCH ASSEMBLY

DIAGNOSTIC TEST

1. **INSPECT DRIVER DOOR SWITCH ASSEMBLY FOR DAMAGE**

   NOTE: Diagnose and repair all LIN Bus related Diagnostic Trouble Codes (DTC's) before performing this test procedure.

   1. Turn the ignition off.
   2. Inspect the Driver Door switch assembly for damage.

      Is the switch assembly damaged?

      Yes

      - Replace the Driver Door switch assembly in accordance with the Service Information.
      - Perform the BODY VERIFICATION TEST. Refer to **BODY VERIFICATION TEST** .

      No

      - Go To 2.
2. **INSPECT FOR OBJECT OR SUBSTANCE CAUSING LEFT MIRROR SELECT SWITCH TO STAY OR STICK IN A PUSHED POSITION**
   1. Inspect the Left Mirror Select switch for anything that would cause it to stay or stick in a pushed position.

      Is anything present that would cause the Left Mirror Select switch to stay or stick in a pushed position?

      Yes

- Repair as necessary.
- Perform the BODY VERIFICATION TEST. Refer to **BODY VERIFICATION TEST** .

No

- Go To 3.

3. **TEST FOR INTERMITTENT CONDITION**
   1. Turn the ignition on.
   2. Using a scan tool, record and erase DTC's.
   3. Press and release the Left Mirror Select switch several times and then wait 30 seconds.
   4. Using a scan tool, read DTC's.

   Is the same DTC active?

   Yes

   - Replace the Driver Door switch assembly in accordance with the Service Information.
   - Perform the BODY VERIFICATION TEST. Refer to **BODY VERIFICATION TEST** .

   No

   - The conditions that caused this code to set are not present at this time.
   - Perform the BODY VERIFICATION TEST. Refer to **BODY VERIFICATION TEST** .

B1E65-00-RIGHT MIRROR SELECT SWITCH STUCK

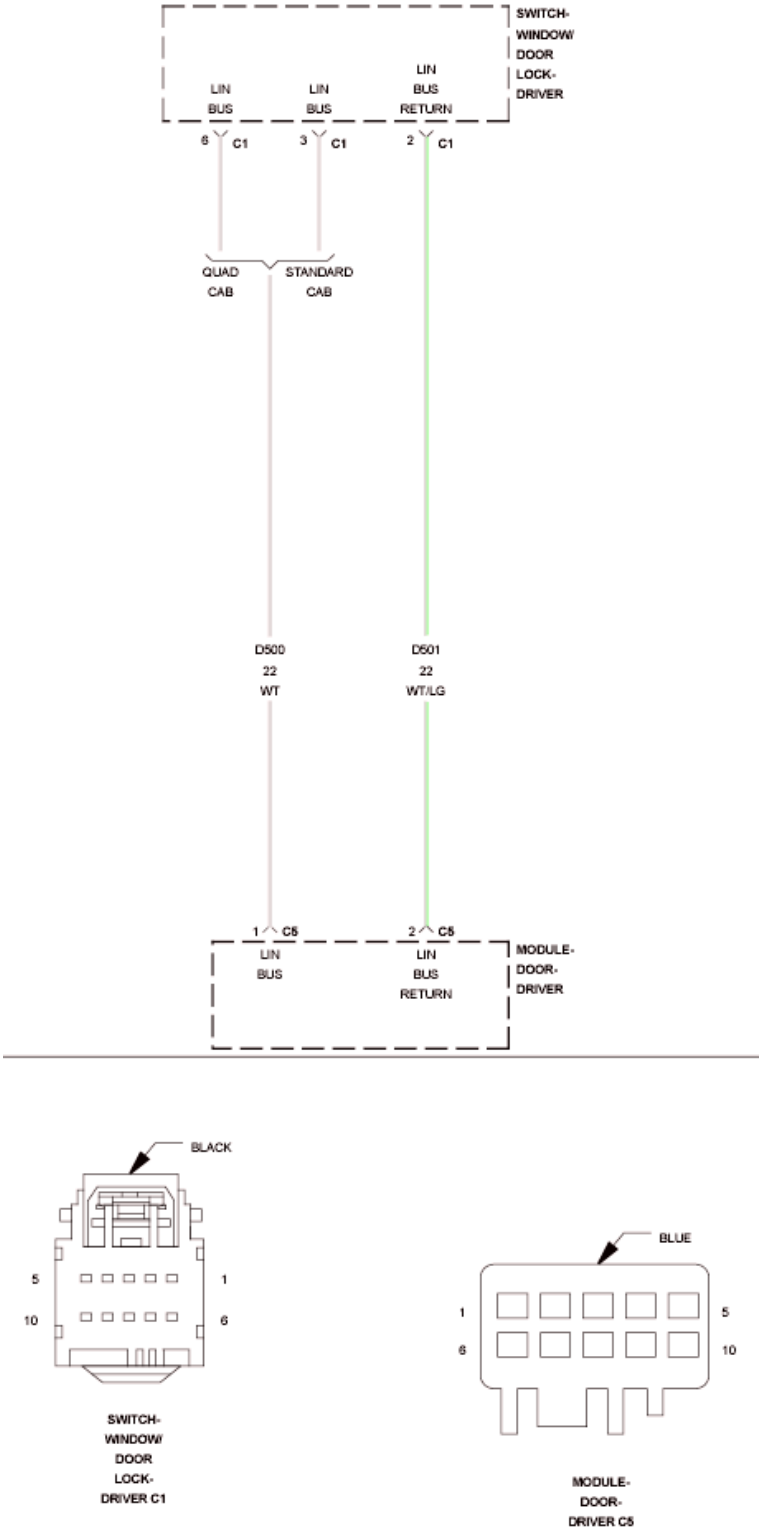

Fig. 99: Left Mirror Select Switch Wiring Diagram
Courtesy of CHRYSLER GROUP, LLC

For a complete wiring diagram, **refer to appropriate SYSTEM WIRING DIAGRAMS article** .

WHEN MONITORED:

Continuously.

SET CONDITION:

The Door Module senses the Right Mirror Select switch input for more than 30 seconds.

POSSIBLE CAUSES

Possible Causes
OBJECT HOLDING RIGHT MIRROR SELECT SWITCH IN A PUSHED POSITION
SUBSTANCE CAUSING RIGHT MIRROR SELECT SWITCH TO GET STUCK IN A PUSHED POSITION
DRIVER DOOR SWITCH ASSEMBLY

DIAGNOSTIC TEST

1. **INSPECT DRIVER DOOR SWITCH ASSEMBLY FOR DAMAGE**

   NOTE: Diagnose and repair all LIN Bus related Diagnostic Trouble Codes (DTC's) before performing this test procedure.

   1. Turn the ignition off.
   2. Inspect the Driver Door switch assembly for damage.

      Is the switch assembly damaged?

      Yes

      - Replace the Driver Door switch assembly in accordance with the Service Information.
      - Perform the BODY VERIFICATION TEST. Refer to **BODY VERIFICATION TEST** .

      No

      - Go To 2.
2. **INSPECT FOR OBJECT OR SUBSTANCE CAUSING RIGHT MIRROR SELECT SWITCH TO STAY OR STICK IN A PUSHED POSITION**
   1. Inspect the Right Mirror Select switch for anything that would cause it to stay or stick in a pushed position.

      Is anything present that would cause the Right Mirror Select switch to stay or stick in a pushed position?

      Yes

- Repair as necessary.
- Perform the BODY VERIFICATION TEST. Refer to **BODY VERIFICATION TEST** .

No

- Go To 3.

3. **TEST FOR INTERMITTENT CONDITION**
   1. Turn the ignition on.
   2. Using a scan tool, record and erase DTC's.
   3. Press and release the Right Mirror Select switch several times and then wait 30 seconds.
   4. Using a scan tool, read DTC's.

   Is the same DTC active?

   Yes

   - Replace the Driver Door switch assembly in accordance with the Service Information.
   - Perform the BODY VERIFICATION TEST. Refer to **BODY VERIFICATION TEST** .

   No

   - The conditions that caused this code to set are not present at this time.
   - Perform the BODY VERIFICATION TEST. Refer to **BODY VERIFICATION TEST** .

B1E66-11-DRIVER MIRROR FOLD CONTROL CIRCUIT SHORT TO GROUND

For a complete wiring diagram, **refer to appropriate SYSTEM WIRING DIAGRAMS article** .

WHEN MONITORED:

Continuously.

SET CONDITION:

When one of the Mirror Fold or Unfold driver circuits are shorted to ground for approximately 30 seconds.

POSSIBLE CAUSES

Possible Causes
DRIVER FOLDING MIRROR ASSEMBLY
DRIVER DOOR MODULE (DDM)

DIAGNOSTIC TEST

1. **TEST FOR INTERMITTENT CONDITION**

1. Turn the ignition on.
2. With the scan tool, erase the DTC's.
3. Cycle the ignition from on to off three times.
4. Turn the ignition on.
5. Operate the Mirror Fold switch in both directions three times.
6. Wait 30 seconds.
7. With the scan tool, read the active DTC's.

   Does the scan tool display: B1E66-11-DRIVER MIRROR FOLD CONTROL CIRCUIT SHORT TO GROUND as active?

   Yes

   - Go To 2.

   No

   - Test complete, the condition or conditions that originally set this DTC are not present at this time. Using the wiring diagrams as a guide, check all related splices and connectors for signs of water intrusion, corrosion, pushed out or bent terminals and poor pin fit. Repair as necessary.
   - Perform the BODY VERIFICATION TEST. Refer to **BODY VERIFICATION TEST** .

2. **INSPECT MIRROR CONNECTIONS**

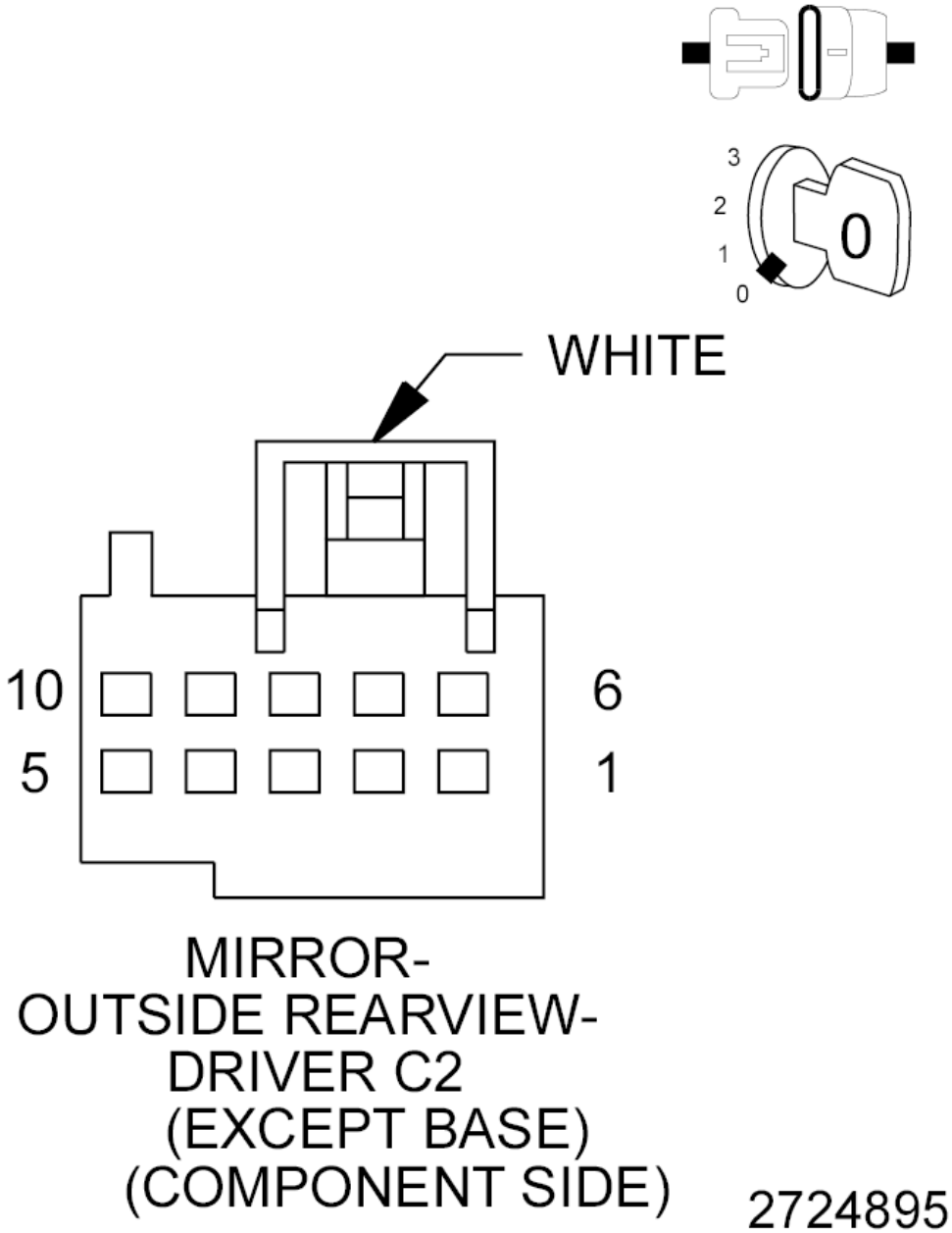

Fig. 100: Driver Outside Rearview Mirror Connector End View
Courtesy of CHRYSLER GROUP, LLC

1. Turn the ignition off.
2. Disconnect the Driver Outside Rearview Mirror connector at the Drivers Door Module C2 harness connector.
3. Inspect the wiring and connectors between the mirror and the Drivers Door Module.

   Were there any problems found?

Yes

- Repair as necessary.
- Perform the BODY VERIFICATION TEST. Refer to **BODY VERIFICATION TEST** .

No

- Go To 3.

3. **MIRROR ASSEMBLY**
   1. Turn the ignition on
   2. With the scan tool, erase the DTC's.
   3. Cycle the ignition from on to off three times.
   4. Turn the ignition on.
   5. Operate the Mirror Fold switch in both directions three times.
   6. Wait 30 seconds.
   7. With the scan tool, read the active DTC's.

   Does the scan tool display: B1E66-11-DRIVER MIRROR FOLD CONTROL CIRCUIT SHORT TO GROUND as active?

   Yes

   - Replace the Drivers Door Module in accordance with the Service Information.
   - Perform the BODY VERIFICATION TEST. Refer to **BODY VERIFICATION TEST** .

   No

   - Replace the Drivers Folding Mirror assembly in accordance with the Service Information.
   - Perform the BODY VERIFICATION TEST. Refer to **BODY VERIFICATION TEST** .

B1E66-15-DRIVER MIRROR FOLD CONTROL CIRCUIT SHORT TO BATTERY OR OPEN

For a complete wiring diagram, **refer to appropriate SYSTEM WIRING DIAGRAMS article** .

WHEN MONITORED:

Continuously.

SET CONDITION:

When one of the Mirror Fold or Unfold Driver circuits are shorted to battery voltage or the circuit is open for approximately 30 seconds.

POSSIBLE CAUSES

Possible Causes
DRIVER POWER FOLDING MIRROR ASSEMBLY
DRIVER DOOR MODULE (DDM)

DIAGNOSTIC TEST

1. **TEST FOR INTERMITTENT CONDITION**
    1. Turn the ignition on.
    2. With the scan tool, erase the DTC's.
    3. Operate the Mirror Fold switch in both directions three times.
    4. Cycle the ignition from on to off three times.
    5. Turn the ignition on.
    6. With the scan tool, read the active DTC's.

    Does the scan tool display: B1E66-15-DRIVER MIRROR FOLD CONTROL CIRCUIT SHORT TO BATTERY OR OPEN as active?

    Yes

    - Go To 2.

    No

    - Test complete, the condition or conditions that originally set this DTC are not present at this time. Using the wiring diagrams as a guide, check all related splices and connectors for signs of water intrusion, corrosion, pushed out or bent terminals and poor pin fit. Repair as necessary.
    - Perform the BODY VERIFICATION TEST. Refer to **BODY VERIFICATION TEST** .
2. **INSPECT MIRROR CONNECTIONS**

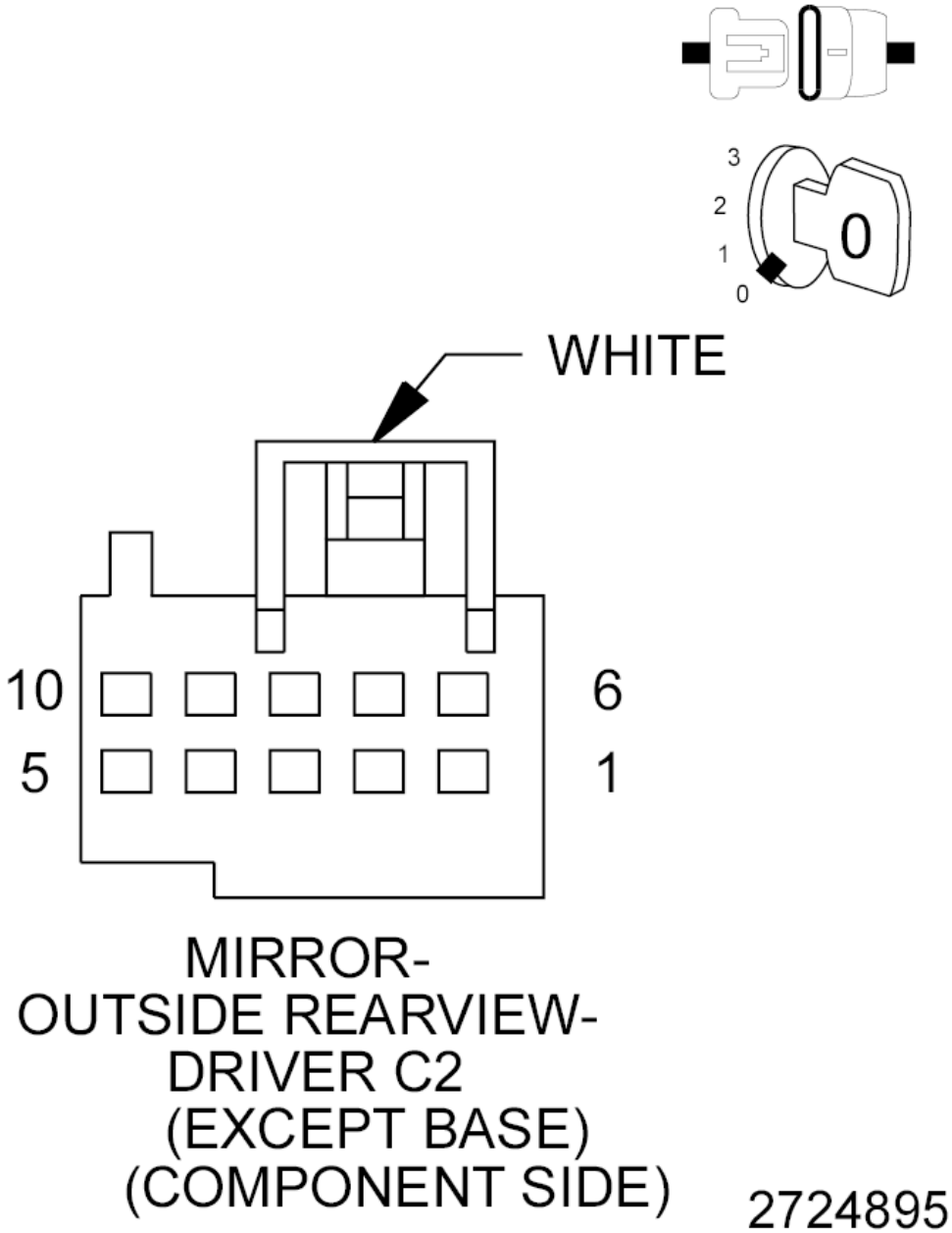

Fig. 101: Driver Outside Rearview Mirror Connector End View
Courtesy of CHRYSLER GROUP, LLC

1. Turn the ignition off.
2. Disconnect the Driver Outside Rearview Mirror connector at the Drivers Door Module C2 harness connector.
3. Inspect the wiring and connectors between the mirror and the Drivers Door Module.

   Were there any problems found?

Yes

- Repair as necessary.
- Perform the BODY VERIFICATION TEST. Refer to **BODY VERIFICATION TEST** .

No

- Go To 3.

3. **MIRROR ASSEMBLY**
    1. Turn the ignition off.
    2. Replace the Drivers Power Folding Mirror Assembly.
    3. Turn the ignition on
    4. With the scan tool, erase the DTC's.
    5. Cycle the ignition from on to off three times.
    6. Turn the ignition on.
    7. Operate the Mirror Fold switch in both directions three times.
    8. Wait 30 seconds.
    9. With the scan tool, read the active DTC's.

    Does the scan tool display: B1E66-15-DRIVER MIRROR FOLD CONTROL CIRCUIT SHORT TO BATTERY OR OPEN as active?

    Yes

    - Replace the Drivers Door Module in accordance with the Service Information.
    - Perform the BODY VERIFICATION TEST. Refer to **BODY VERIFICATION TEST** .

    No

    - Test Complete.
    - Perform the BODY VERIFICATION TEST. Refer to **BODY VERIFICATION TEST** .

B210C-16-BATTERY VOLTAGE INPUT - CIRCUIT VOLTAGE BELOW THRESHOLD - DD/DP

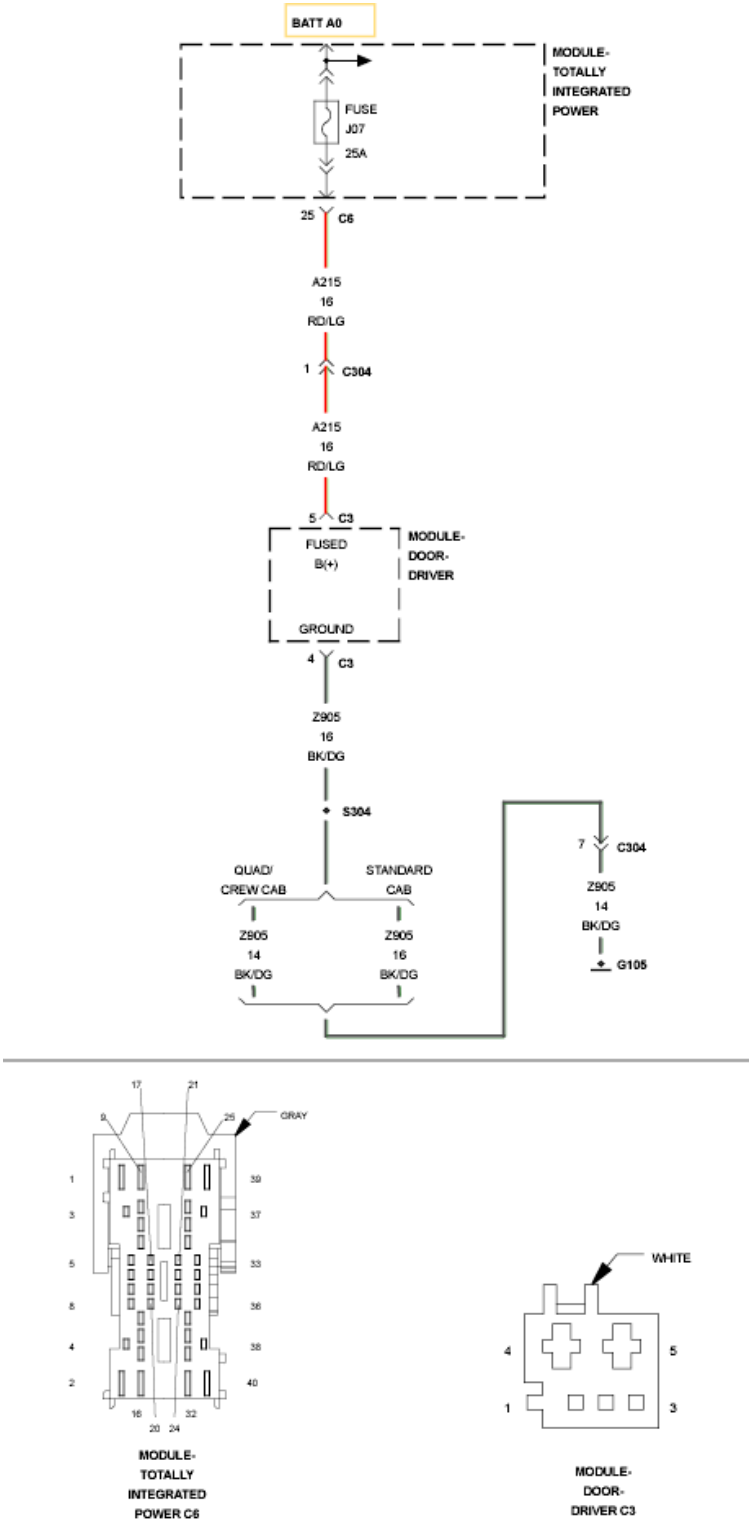

Fig. 102: DDM Power Supply Wiring Diagram
Courtesy of CHRYSLER GROUP, LLC

For a complete wiring diagram, **refer to appropriate SYSTEM WIRING DIAGRAMS article** .

WHEN MONITORED:

At all times.

SET CONDITION:

Anytime the module senses voltage input below 8.0 volts for more than four seconds, this code will set.

POSSIBLE CAUSES

POSSIBLE CAUSES
LOW VOLTAGE ENGINE DTC (A215) FUSED B(+) CIRCUIT HAS HIGH RESISTANCE (Z905) GROUND CIRCUIT HAS HIGH RESISTANCE DRIVER DOOR MODULE (DDM)

DIAGNOSTIC TEST

1. **CHECK ENGINE DTC's**
    1. With the scan tool, read the Powertrain Control Module DTC's

       Are there any Charging or Battery DTC's present?

       No

       - Go To 2.

       Yes

       - Refer to **DIAGNOSIS AND TESTING** and perform the appropriate charging system or battery DTC diagnostic procedures.
2. **TEST FOR INTERMITTENT CONDITION**
    1. With the scan tool, record and erase the DTC's.
    2. Start the engine and run for two minutes.
    3. With the scan tool, read the active DTC's in the Door Module.

       Does the scan tool display B210C-16-BATTERY VOLTAGE INPUT - CIRCUIT VOLTAGE BELOW THRESHOLD?

       Yes

       - Go To 3.

       No

       - Test complete, the condition or conditions that originally set this DTC are not present at this

time. Using the wiring diagrams as a guide, check all related splices and connectors for signs of water intrusion, corrosion, pushed out or bent terminals and correct pin tension.

- Perform the BODY VERIFICATION TEST. Refer to **BODY VERIFICATION TEST** .

3. **(A215) FUSED B(+) OR (Z905) GROUND CIRCUITS RESISTED**

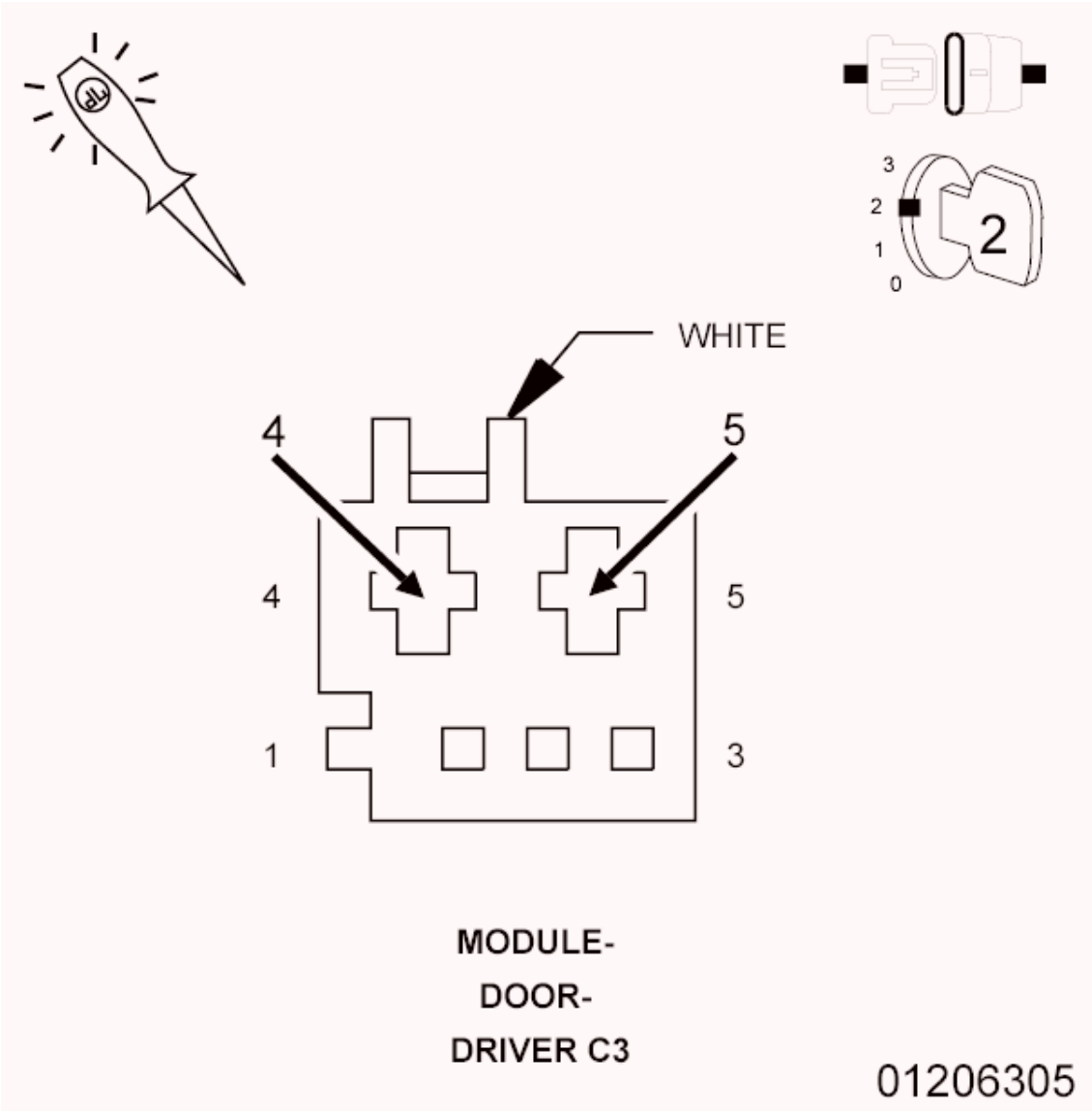

Fig. 103: Checking Fused B(+) Or Ground Circuits For Resistance
Courtesy of CHRYSLER GROUP, LLC

1. Turn the ignition off.
2. Disconnect the Driver Door Module C3 connector.
3. Turn the ignition on.
4. Test the (A215) Fused B(+) circuits by connecting a 12-volt test light between the Fused B(+) circuit and the (Z905) Ground circuits in the door module C3 connector. The test light must illuminate brightly. Compare the brightness to that of a direct connection to the battery.

Does the test light illuminate brightly?

Yes

- Replace the Driver Door Module in accordance with the Service Information.
- Perform the BODY VERIFICATION TEST. Refer to **BODY VERIFICATION TEST** .

No

- Test the (A215) Fused B(+) and the (Z905) Ground circuits to determine which one has the high resistance. Repair the necessary circuit for high resistance.
- Perform the BODY VERIFICATION TEST. Refer to **BODY VERIFICATION TEST** .

B210C-16-BATTERY VOLTAGE INPUT - CIRCUIT VOLTAGE BELOW THRESHOLD - DS/DJ/D2

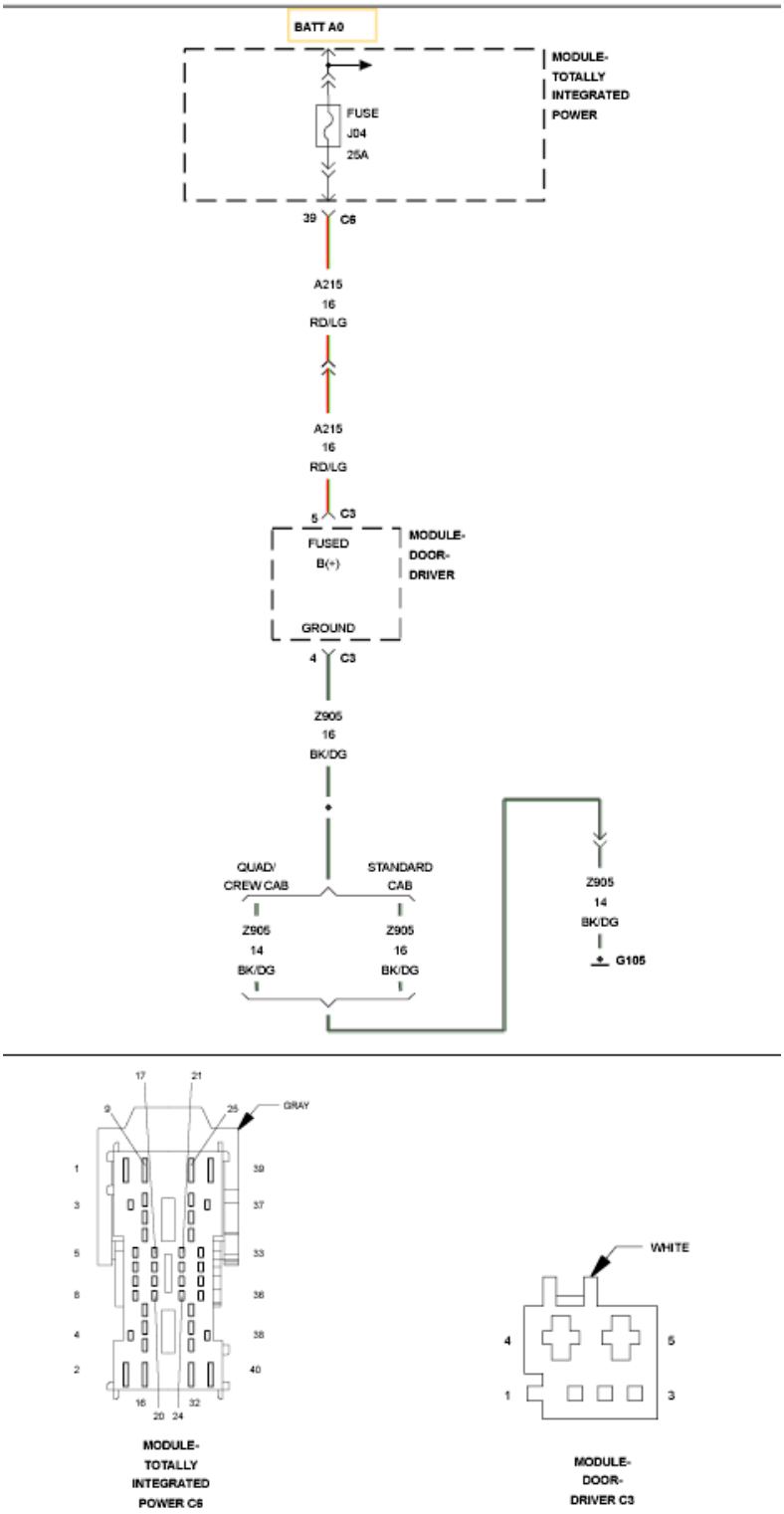

Fig. 104: DDM Power Supply Wiring Diagram
Courtesy of CHRYSLER GROUP, LLC

For a complete wiring diagram, **refer to appropriate SYSTEM WIRING DIAGRAMS article** .

WHEN MONITORED:

At all times.

SET CONDITION:

Anytime the module senses voltage input below 8.0 volts for more than four seconds, this code will set.

POSSIBLE CAUSES

POSSIBLE CAUSES
LOW VOLTAGE ENGINE DTC (A215) FUSED B(+) CIRCUIT HAS HIGH RESISTANCE (Z905) GROUND CIRCUIT HAS HIGH RESISTANCE DRIVER DOOR MODULE (DDM)

DIAGNOSTIC TEST

1. **CHECK ENGINE DTC's**
    1. With the scan tool, read the Powertrain Control Module DTC's

       Are there any Charging or Battery DTC's present?

       No

       - Go To 2.

       Yes

       - Refer to **DIAGNOSIS AND TESTING** and perform the appropriate charging system or battery DTC diagnostic procedures.
2. **TEST FOR INTERMITTENT CONDITION**
    1. With the scan tool, record and erase the DTC's.
    2. Start the engine and run for two minutes.
    3. With the scan tool, read the active DTC's in the Door Module.

       Does the scan tool display; B210C-16-BATTERY VOLTAGE INPUT - CIRCUIT VOLTAGE BELOW THRESHOLD?

       Yes

       - Go To 3.

       No

       - Test complete, the condition or conditions that originally set this DTC are not present at this

time. Using the wiring diagrams as a guide, check all related splices and connectors for signs of water intrusion, corrosion, pushed out or bent terminals and correct pin tension.

- Perform the BODY VERIFICATION TEST. Refer to **BODY VERIFICATION TEST** .

3. **(A215) FUSED B(+) OR (Z905) GROUND CIRCUITS RESISTED**

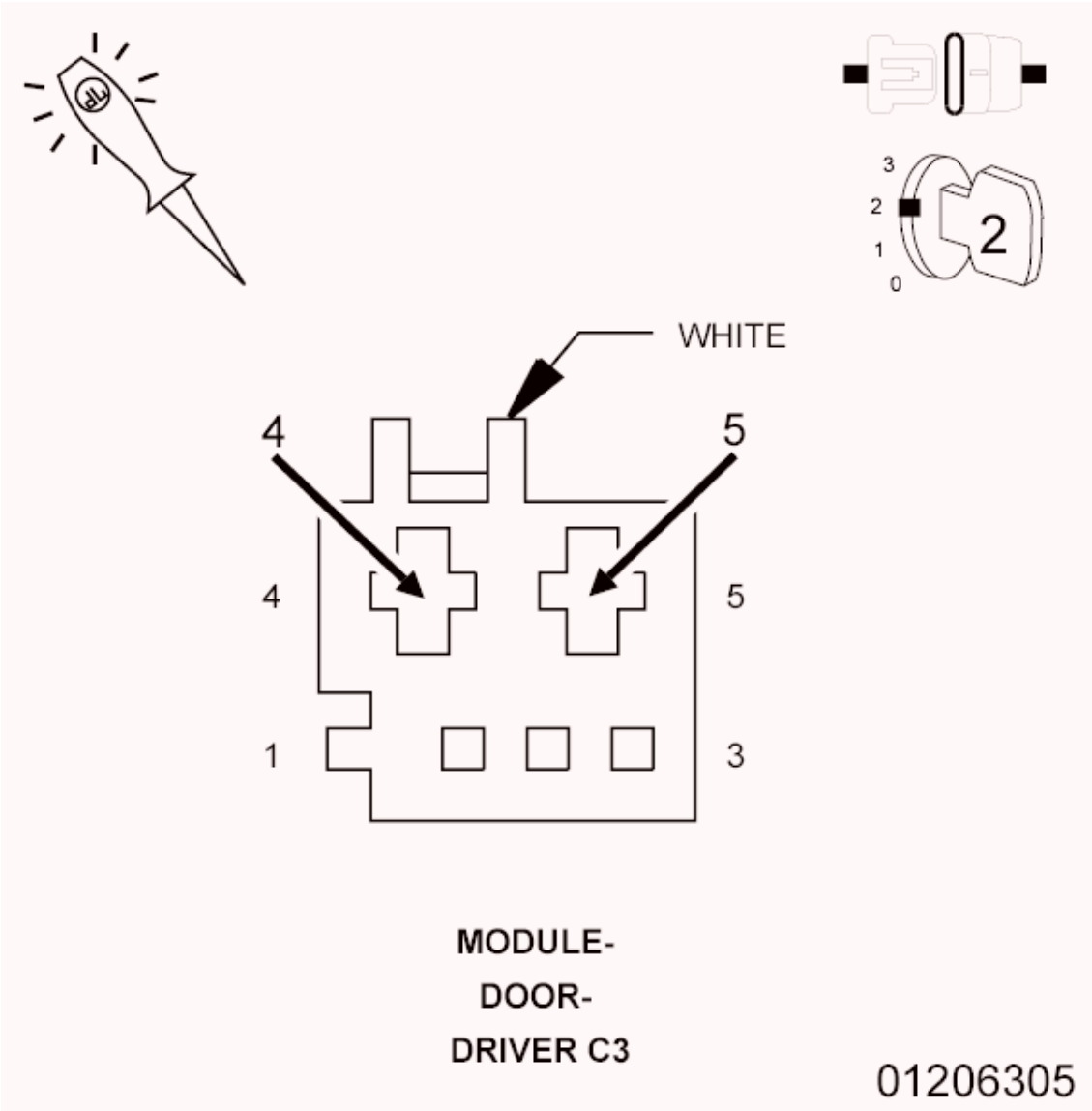

Fig. 105: Checking Fused B(+) Or Ground Circuits For Resistance
Courtesy of CHRYSLER GROUP, LLC

1. Turn the ignition off.
2. Disconnect the Driver Door Module C3 connector.
3. Turn the ignition on.
4. Test the (A215) Fused B(+) circuits by connecting a 12-volt test light between the Fused B(+) circuit and the (Z905) Ground circuits in the door module C3 connector. The test light must illuminate brightly. Compare the brightness to that of a direct connection to the battery.

Does the test light illuminate brightly?

Yes

- Replace the Driver Door Module in accordance with the Service Information.
- Perform the BODY VERIFICATION TEST. Refer to **BODY VERIFICATION TEST** .

No

- Test the (A215) Fused B(+) and the (Z905) Ground circuits to determine which one has the high resistance. Repair the necessary circuit for high resistance.
- Perform the BODY VERIFICATION TEST. Refer to **BODY VERIFICATION TEST** .

B210C-17-BATTERY VOLTAGE INPUT - CIRCUIT VOLTAGE ABOVE THRESHOLD - DD/DP

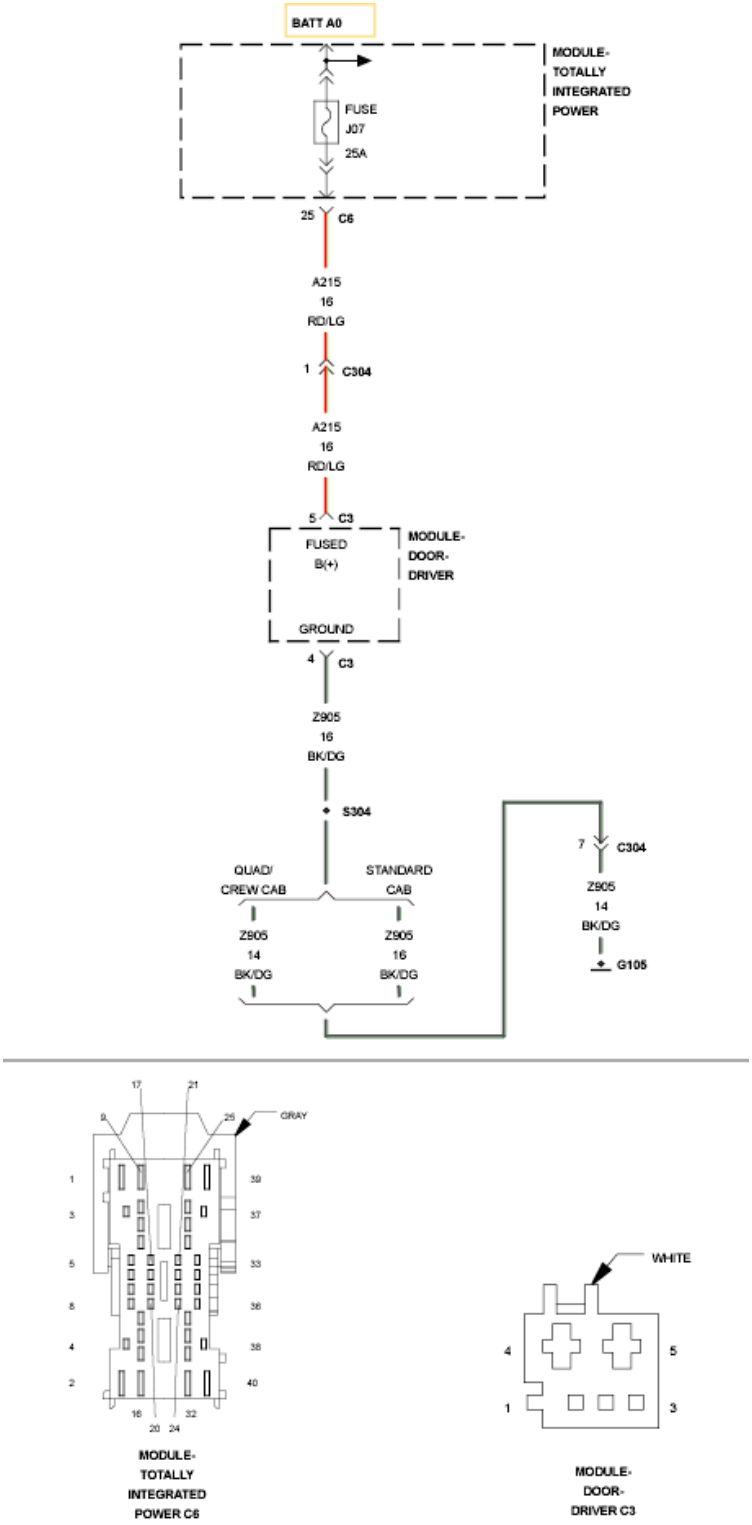

Fig. 106: DDM Power Supply Wiring Diagram
Courtesy of CHRYSLER GROUP, LLC

For a complete wiring diagram, **refer to appropriate SYSTEM WIRING DIAGRAMS article** .

WHEN MONITORED:

At all times.

SET CONDITION:

Anytime the module senses voltage input above 16.0 volts for more than four seconds, this code will set.

POSSIBLE CAUSES

POSSIBLE CAUSES
HIGH VOLTAGE ENGINE DTC DRIVER DOOR MODULE (DDM)

DIAGNOSTIC TEST

1. **CHECK ENGINE DTC's**
    1. With the scan tool, read Powertrain Control Module DTC's.

       Are there any active Charging or Battery DTC's present?

       No

       - Go To 2.

       Yes

       - Refer to **DIAGNOSIS AND TESTING** and perform the appropriate charging system or battery DTC diagnostic procedure.
2. **TEST FOR INTERMITTENT CONDITION**
    1. With the scan tool, record and erase the DTC's.
    2. Start the engine and run for two minutes.
    3. With the scan tool, read the active door module DTC's.

       Does the scan tool display B210C-17-BATTERY VOLTAGE INPUT - CIRCUIT VOLTAGE ABOVE THRESHOLD?

       Yes

       - Replace the Driver Door Module in accordance with the Service Information.
       - Perform the BODY VERIFICATION TEST. Refer to **BODY VERIFICATION TEST** .

       No

       - Test complete, the condition or conditions that originally set this DTC are not present at this time. Using the wiring diagrams as a guide, check all related splices and connectors for signs

of water intrusion, corrosion, pushed out or bent terminals and correct pin tension.

- Perform the BODY VERIFICATION TEST. Refer to **BODY VERIFICATION TEST** .

B210C-17-BATTERY VOLTAGE INPUT - CIRCUIT VOLTAGE ABOVE THRESHOLD - DS/DJ/D2

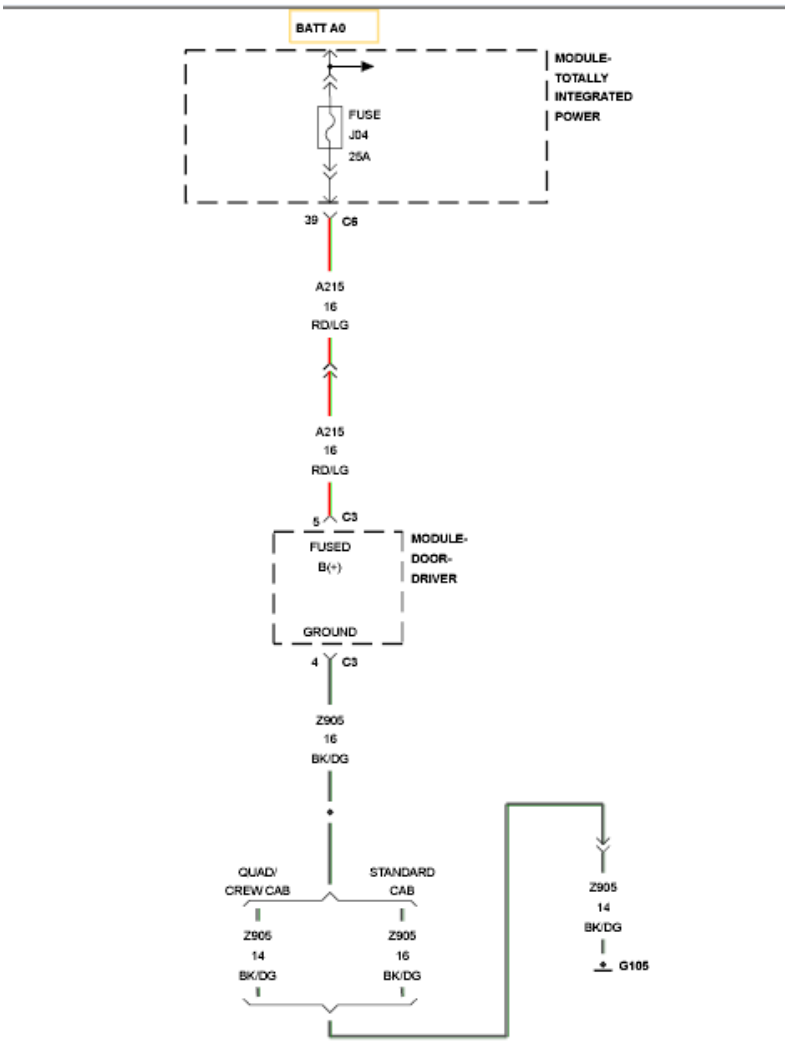

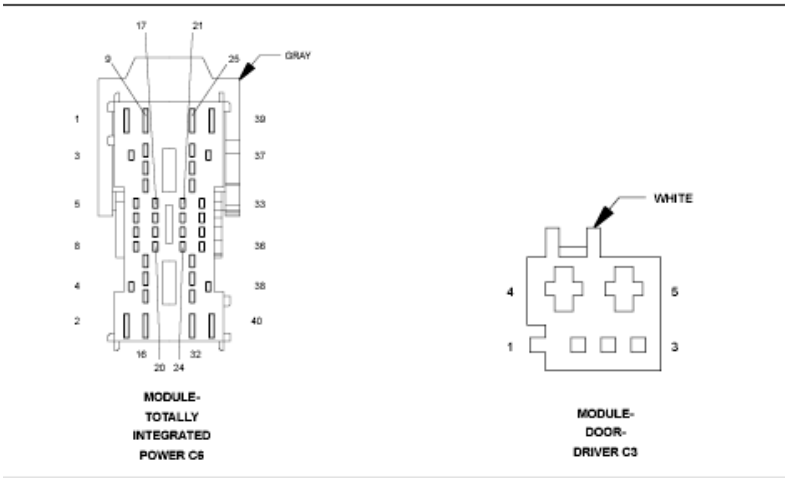

Fig. 107: DDM Power Supply Wiring Diagram
Courtesy of CHRYSLER GROUP, LLC

For a complete wiring diagram, **refer to appropriate SYSTEM WIRING DIAGRAMS article** .

WHEN MONITORED:

At all times.

SET CONDITION:

Anytime the module senses voltage input above 16.0 volts for more than four seconds, this code will set.

POSSIBLE CAUSES

POSSIBLE CAUSES
HIGH VOLTAGE ENGINE DTC DRIVER DOOR MODULE (DDM)

DIAGNOSTIC TEST

1. **CHECK ENGINE DTC's**
    1. With the scan tool, read Powertrain Control Module DTC's.

       Are there any active Charging or Battery DTC's present?

       No

       - Go To 2.

       Yes

       - Refer to **DIAGNOSIS AND TESTING** and perform the appropriate charging system or battery DTC diagnostic procedure.
2. **TEST FOR INTERMITTENT CONDITION**
    1. With the scan tool, record and erase the DTC's.
    2. Start the engine and run for two minutes.
    3. With the scan tool, read the active door module DTC's.

       Does the scan tool display B210C-17-BATTERY VOLTAGE INPUT - CIRCUIT VOLTAGE ABOVE THRESHOLD?

       Yes

       - Replace the Driver Door Module in accordance with the Service Information.
       - Perform the BODY VERIFICATION TEST. Refer to **BODY VERIFICATION TEST** .

No

- Test complete, the condition or conditions that originally set this DTC are not present at this time. Using the wiring diagrams as a guide, check all related splices and connectors for signs of water intrusion, corrosion, pushed out or bent terminals and correct pin tension.
- Perform the BODY VERIFICATION TEST. Refer to **BODY VERIFICATION TEST** .

B21A1-00-ECU RESET/RECOVERY OCCURRED

For a complete wiring diagram, **refer to appropriate SYSTEM WIRING DIAGRAMS article** .

WHEN MONITORED:

At all times.

SET CONDITION:

Whenever the module detects a power on reset or a reflash, this code will set. This code is for information only. No repair is necessary.

POSSIBLE CAUSES

POSSIBLE CAUSES
MODULE WAS RE-FLASHED
MODULE WAS RESET

DIAGNOSTIC TEST

This DTC is for information only. At some time the module was re-flashed or was reset during a power on operation. No repair is necessary.

B21DD-84-SYSTEM VOLTAGE - SIGNAL BELOW ALLOWABLE RANGE

For a complete wiring diagram, **refer to appropriate SYSTEM WIRING DIAGRAMS article** .

WHEN MONITORED:

At all times.

SET CONDITION:

This is a CAN message that the battery voltage was below 10.0 volts for over four seconds.

POSSIBLE CAUSES

POSSIBLE CAUSES
LOW SYSTEM VOLTAGE

BATTERY OR CHARGING SYSTEM

DIAGNOSTIC TEST

1. **CHECK ENGINE DTC's**
    1. With the scan tool, read Powertrain Control Module DTC's

       Are there any Charging or Battery DTC's present?

       Yes

       - Perform the appropriate diagnostic procedure. Refer to **DIAGNOSIS AND TESTING** and perform the active charging system or battery DTC diagnostic procedure..

       No

       - This code is for information only. At some time there was a low battery system voltage. Check the battery and charging system in accordance with the Service Information.

B21DD-85-SYSTEM VOLTAGE - SIGNAL ABOVE ALLOWABLE RANGE

For a complete wiring diagram, **refer to appropriate SYSTEM WIRING DIAGRAMS article** .

WHEN MONITORED:

At all times.

SET CONDITION:

This is a CAN message that the system voltage was above 16.0 volts for over four seconds.

POSSIBLE CAUSES

POSSIBLE CAUSES
HIGH BATTERY SYSTEM VOLTAGE CHARGING SYSTEM

DIAGNOSTIC TEST

1. **CHECK ENGINE DTC's**
    1. With the scan tool, read Powertrain Control Module DTC's

       Are there any Charging or Battery DTC's present?

       Yes

- Refer to **DIAGNOSIS AND TESTING** and perform the active charging system or battery DTC diagnostic procedure.

No

- This code is a CAN system message for information only. Check the charging system in accordance with the Service Information.

B2598-54-DOOR MODULE FRONT LEFT - MISSING CALIBRATION - QUAD/CREW CAB ONLY

For a complete wiring diagram, **refer to appropriate SYSTEM WIRING DIAGRAMS article** .

THEORY OF OPERATION

This code can set anytime the battery or the door module connector is disconnected.

WHEN MONITORED:

Whenever the window motor is operating.

SET CONDITION:

When the Door Module has lost the parameters for window travel.

POSSIBLE CAUSES

Possible Causes
MODULE NOT CALIBRATED
EXPRESS WINDOW SWITCH
DRIVER DOOR MODULE (DDM)

NOTE: If there are any other Power Window DTC's, repair them before continuing.

DIAGNOSTIC TEST

1. **TEST FOR INTERMITTENT CONDITION**
    1. Turn the ignition on.
    2. With the scan tool, record and erase DTC's.
    3. Operate the Driver Window switch up and down several times.
    4. Wait 30 seconds.
    5. With the scan tool, read the active DTC's.

    Does the scan tool display B2598-54-DOOR MODULE FRONT LEFT - MISSING CALIBRATION?

Yes

- Go To 2.

No

- Test complete, the condition or conditions that originally set this DTC are not present at this time. Using the wiring diagrams as a guide, check all related splices and connectors for signs of water intrusion, corrosion, pushed out or bent terminals, and correct pin tension.
- Perform the BODY VERIFICATION TEST. Refer to **BODY VERIFICATION TEST** .

2. **WINDOW MODULE NOT CALIBRATED**
   1. Activate the window to the full up position and continue to hold the switch for an additional two seconds.
   2. Activate the window to the full down position and continue to hold the switch for an additional two seconds.
   3. Again activate the window to the full up position and continue to hold the switch for an additional two seconds.
   4. Lower the window all the way down then press and release the switch to the express up position.

   Did the window move to the full up position?

   Yes

   - Test complete.
   - Perform the BODY VERIFICATION TEST. Refer to **BODY VERIFICATION TEST** .

   No

   - Go To 3.
3. **EXPRESS WINDOW SWITCH**
   1. Turn the ignition off.
   2. Move the Driver Express Window Switch from the idle position to the up position and then to the express up position.

   Is there two definite detent positions felt?

   Yes

   - Replace the Driver Door Module in accordance with the Service Information.
   - Perform the BODY VERIFICATION TEST. Refer to **BODY VERIFICATION TEST** .

   No

   - Replace the Driver Express Window Switch.

- Perform the BODY VERIFICATION TEST. Refer to **BODY VERIFICATION TEST** .

B2598-96-DOOR MODULE FRONT LEFT - COMPONENT INTERNAL FAILURE

For a complete wiring diagram, **refer to appropriate SYSTEM WIRING DIAGRAMS article** .

WHEN MONITORED:

At all times.

SET CONDITION:

When the door module senses an internal fault, this code will set.

POSSIBLE CAUSES

Possible Causes
DRIVER DOOR MODULE (DDM)

DIAGNOSTIC TEST

1. **TEST FOR INTERMITTENT CONDITION**
    1. Turn the ignition on.
    2. With the scan tool, record and erase the DTC's.
    3. Operate the Driver Window up and down several times.
    4. Wait 30 seconds.
    5. With the scan tool, read the active DTC's.

    Does the scan tool display B2598-96-DOOR MODULE FRONT LEFT - COMPONENT INTERNAL FAILURE?

    Yes

    - Replace the Door Module in accordance with the Service Information.
    - Perform the BODY VERIFICATION TEST. Refer to **BODY VERIFICATION TEST** .

    No

    - The conditions that caused this code to set are not present at this time. If this code ever repeats, replace the door module in accordance with the Service Information.
    - Perform the BODY VERIFICATION TEST. Refer to **BODY VERIFICATION TEST** .

B282E-11-DRIVER PUDDLE LAMP CONTROL - CIRCUIT SHORT TO GROUND

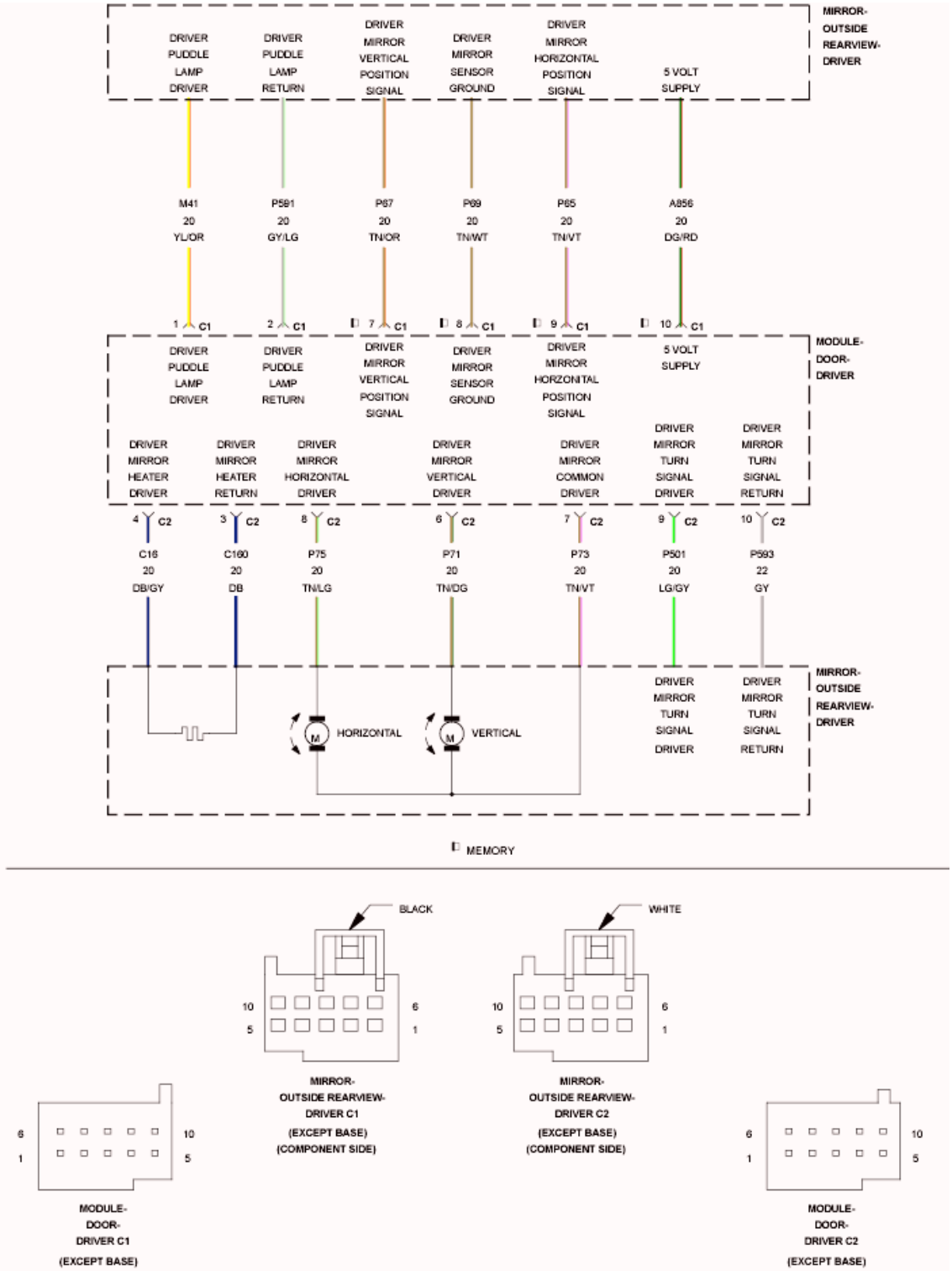

Fig. 108: Driver Mirror Signal Lamp Control Wiring Diagram
Courtesy of CHRYSLER GROUP, LLC

For a complete wiring diagram, **refer to appropriate SYSTEM WIRING DIAGRAMS article** .

WHEN MONITORED:

Continuously.

SET CONDITION:

The Door Module senses a short low on the (M41) Driver Puddle Lamp Driver circuit for more than two seconds with the lamp switched on.

POSSIBLE CAUSES

Possible Causes
(M41) DRIVER PUDDLE LAMP DRIVER CIRCUIT FOR A SHORT TO GROUND
(M41) DRIVER PUDDLE LAMP DRIVER CIRCUIT FOR A SHORT TO THE (P69) DRIVER MIRROR SENSOR GROUND CIRCUIT
(M41) DRIVER PUDDLE LAMP DRIVER CIRCUIT FOR A SHORT TO THE (P591) DRIVER PUDDLE LAMP RETURN CIRCUIT
(M41) DRIVER PUDDLE LAMP DRIVER CIRCUIT FOR A SHORT TO THE (P71) DRIVER MIRROR VERTICAL DRIVER CIRCUIT
(M41) DRIVER PUDDLE LAMP DRIVER CIRCUIT FOR A SHORT TO THE (P73) DRIVER MIRROR COMMON DRIVER CIRCUIT
(M41) DRIVER PUDDLE LAMP DRIVER CIRCUIT FOR A SHORT TO THE (P75) DRIVER MIRROR HORIZONTAL DRIVER CIRCUIT
(M41) DRIVER PUDDLE LAMP DRIVER CIRCUIT FOR A SHORT TO THE (C160) DRIVER MIRROR HEATER RETURN CIRCUIT
(M41) DRIVER PUDDLE LAMP DRIVER CIRCUIT FOR A SHORT TO THE (P593) DRIVER MIRROR TURN SIGNAL RETURN CIRCUIT
DRIVER OUTSIDE REARVIEW MIRROR SHORTED
DOOR MODULE

DIAGNOSTIC TEST

1. **TEST FOR INTERMITTENT CONDITION**
    1. Turn the ignition on.
    2. Using a scan tool, record and erase Diagnostic Trouble Codes (DTC's).
    3. Turn the turn signal on, if equipped with turn signal mirror.
    4. Turn the puddle lamps on.

    NOTE: Verify the panel lamps dimmer switch is not in the defeat (off) position.

    5. Turn the rear defogger on, if equipped with heated mirror.
    6. Press and release the Mirror Select switch to select the Driver Outside Rearview Mirror.
    7. Operate the Mirror Adjust switch in all directions several times while monitoring the scan tool for DTC's.

NOTE: **After adjusting the mirror in one direction wait at least two seconds before adjusting the mirror in the opposite direction, as this will allow time for an active fault to set if present.**

Is the DTC active?

Yes

- Go To 2.

No

- The conditions that caused this code to set are not present at this time. For vehicle's equipped with folding outside rearview mirrors, repeat test with mirror folded. If DTC is now active, go to 2. Otherwise, use the wiring diagram/schematic as a guide and inspect the wiring and connectors.
- Perform the BODY VERIFICATION TEST. Refer to **BODY VERIFICATION TEST** .

2. **CHECK (M41) DRIVER PUDDLE LAMP DRIVER CIRCUIT FOR A SHORT TO GROUND**

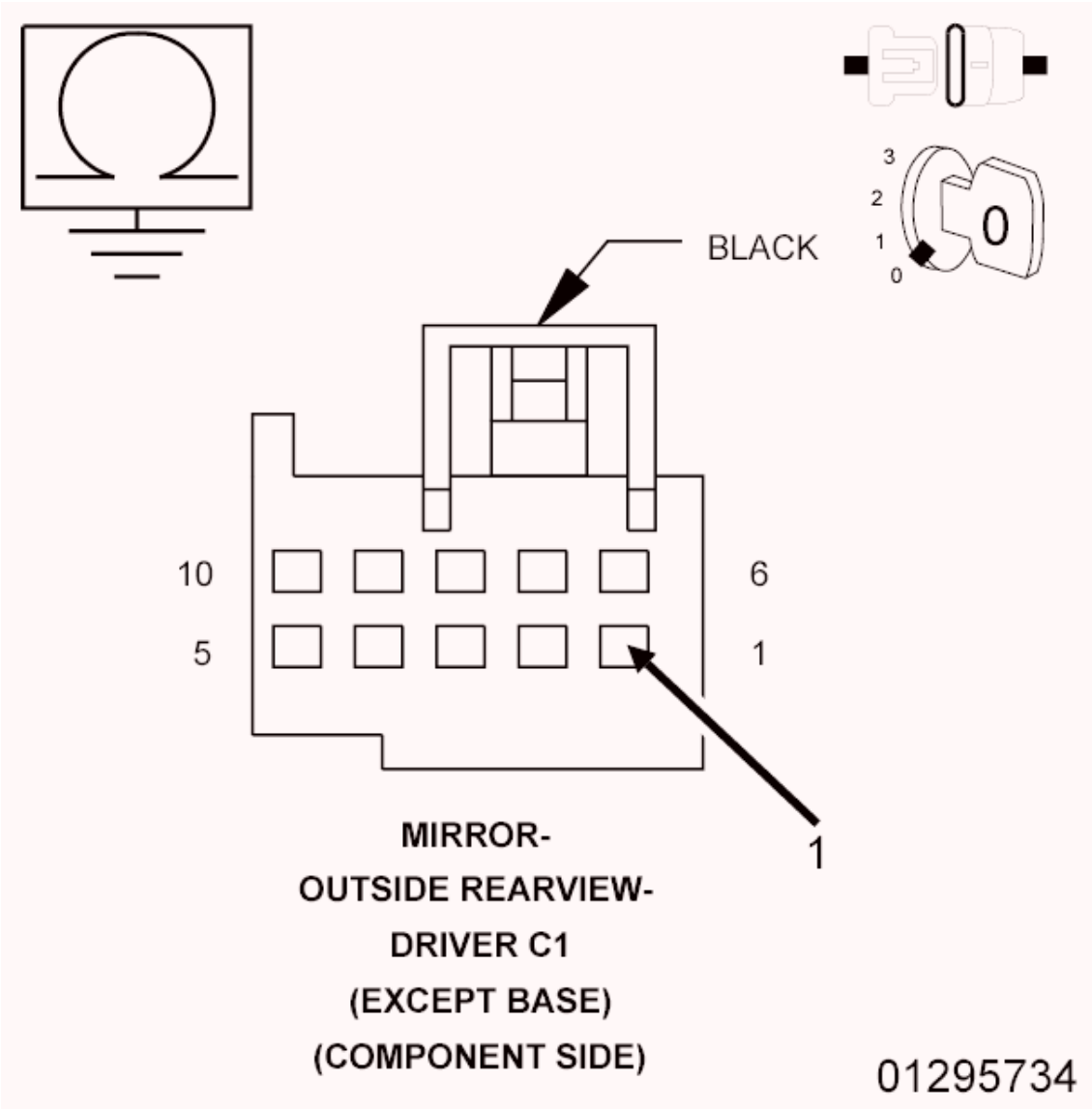

Fig. 109: Checking Driver Puddle Lamp Driver Circuit For A Short To Ground
Courtesy of CHRYSLER GROUP, LLC

1. Turn the ignition off.
2. Disconnect the Driver Outside Rearview Mirror C1 (Component Side) connector from the Door Module C1 connector.
3. Measure the resistance of the (M41) Driver Puddle Lamp Driver circuit between ground and the Driver Outside Rearview Mirror C1 (Component Side) connector.

   Is the resistance below 10K Ohms?

   Yes

   - Repair the (M41) Driver Puddle Lamp Driver circuit for a short to ground. If the wiring harness and connector are okay, replace the Driver Outside Rearview Mirror in accordance

with the Service Information.

- Perform the BODY VERIFICATION TEST. Refer to **BODY VERIFICATION TEST** .

No

- Go To 3.

3. **CHECK (M41) DRIVER PUDDLE LAMP DRIVER CIRCUIT FOR A SHORT TO THE (P69) DRIVER MIRROR SENSOR GROUND CIRCUIT**

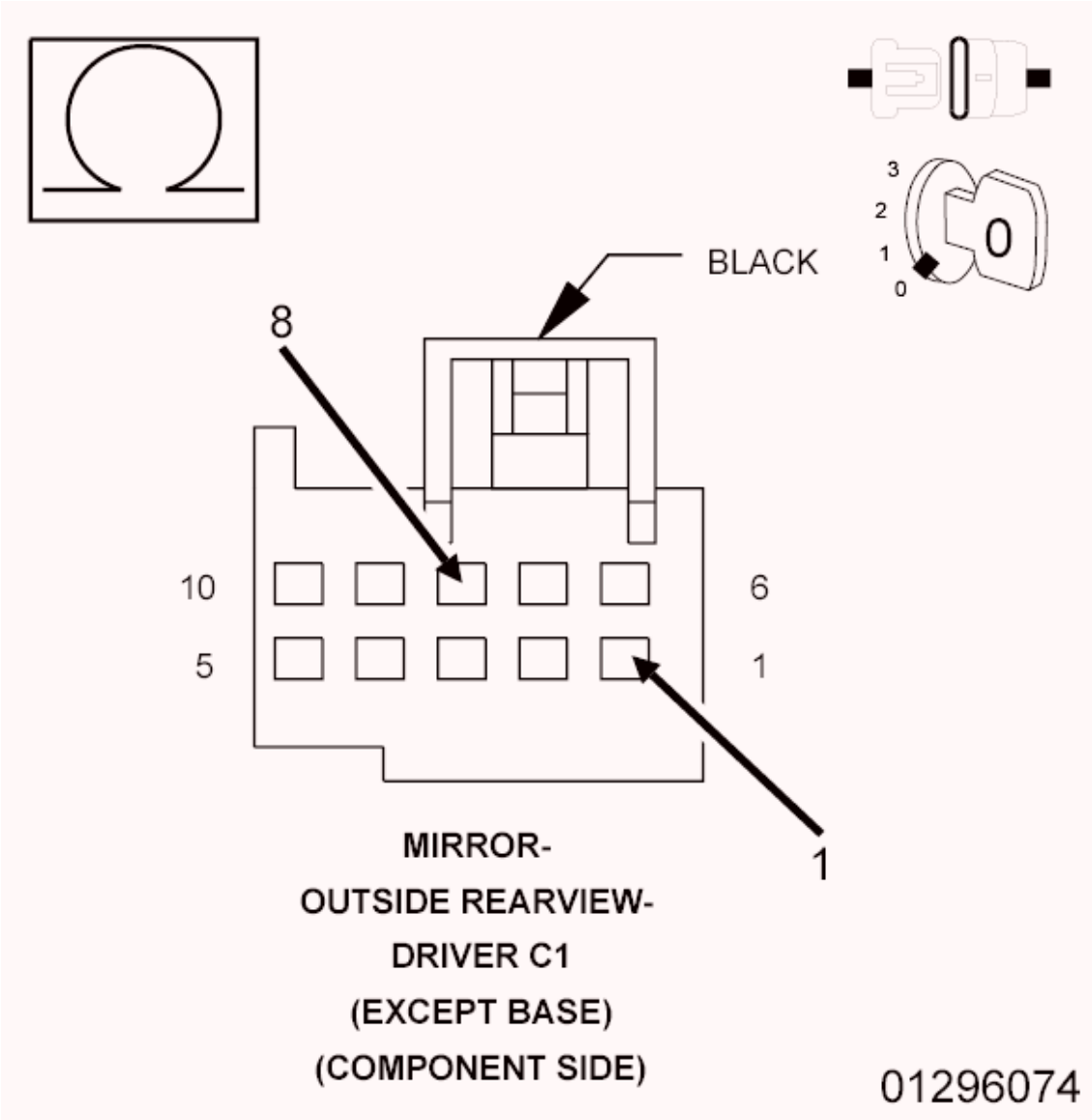

Fig. 110: Checking Driver Puddle Lamp Driver Circuit For A Short To The Driver Mirror Sensor Ground Circuit
Courtesy of CHRYSLER GROUP, LLC

1. Measure the resistance between the (M41) Driver Puddle Lamp Driver circuit and the (P69) Driver Mirror Sensor Ground circuit at the Driver Outside Rearview Mirror C1 (Component Side)

connector.

Is the resistance below 10K Ohms?

Yes

- Repair the (M41) Driver Puddle Lamp Driver circuit for a short to the (P69) Driver Mirror Sensor Ground circuit. If the wiring harness and connector are okay, replace the Driver Outside Rearview Mirror in accordance with the Service Information.
- Perform the BODY VERIFICATION TEST. Refer to **BODY VERIFICATION TEST** .

No

- Go To 4.

4. **CHECK (M41) DRIVER PUDDLE LAMP DRIVER CIRCUIT FOR A SHORT TO THE (P591) DRIVER PUDDLE LAMP RETURN CIRCUIT**

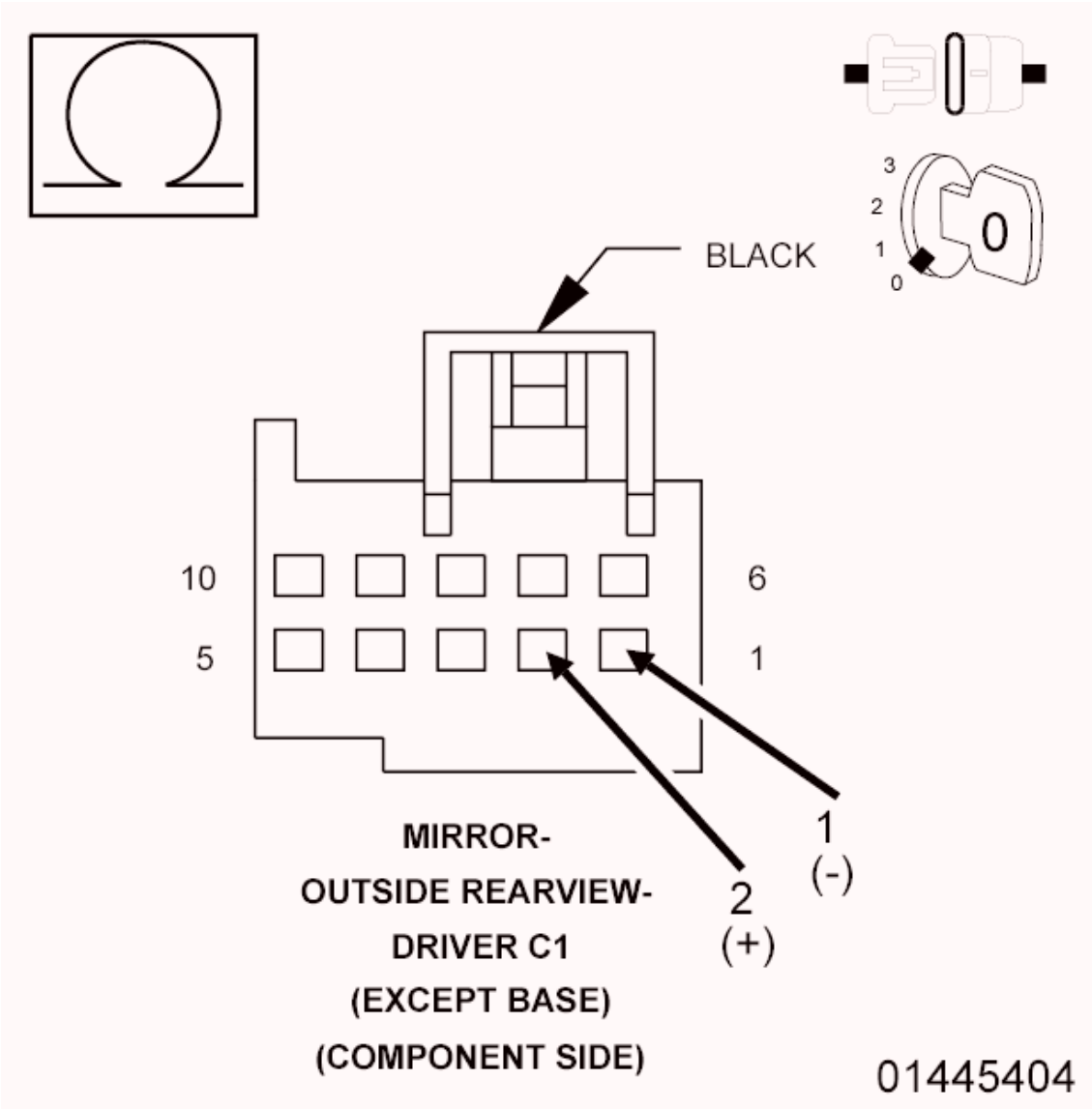

Fig. 111: Checking Driver Puddle Lamp Driver Circuit For A Short To The Driver Puddle Lamp Return Circuit
Courtesy of CHRYSLER GROUP, LLC

NOTE: **The Ohmmeter positive lead must be connected to the (P591) Driver Puddle Lamp Return circuit and the negative lead to the (M41) Driver Puddle Lamp Driver circuit for the test results to be valid.**

1. Measure the resistance between the (M41) Driver Puddle Lamp Driver circuit and the (P591) Driver Puddle Lamp Return circuit at the Driver Outside Rearview Mirror C1 (Component Side) connector.

   Is there any resistance present?

   Yes

- Repair the (M41) Driver Puddle Lamp Driver circuit for a short to the (P591) Driver Puddle Lamp Return circuit. If the wiring harness and connector are okay, replace the Driver Outside Rearview Mirror in accordance with the Service Information.
- Perform the BODY VERIFICATION TEST. Refer to **BODY VERIFICATION TEST** .

No

- Go To 5.

5. **CHECK (M41) DRIVER PUDDLE LAMP DRIVER CIRCUIT FOR A SHORT TO THE (P71) DRIVER MIRROR VERTICAL DRIVER CIRCUIT, (P73) DRIVER MIRROR COMMON DRIVER CIRCUIT, OR TO (P75) DRIVER MIRROR HORIZONTAL DRIVER CIRCUIT**

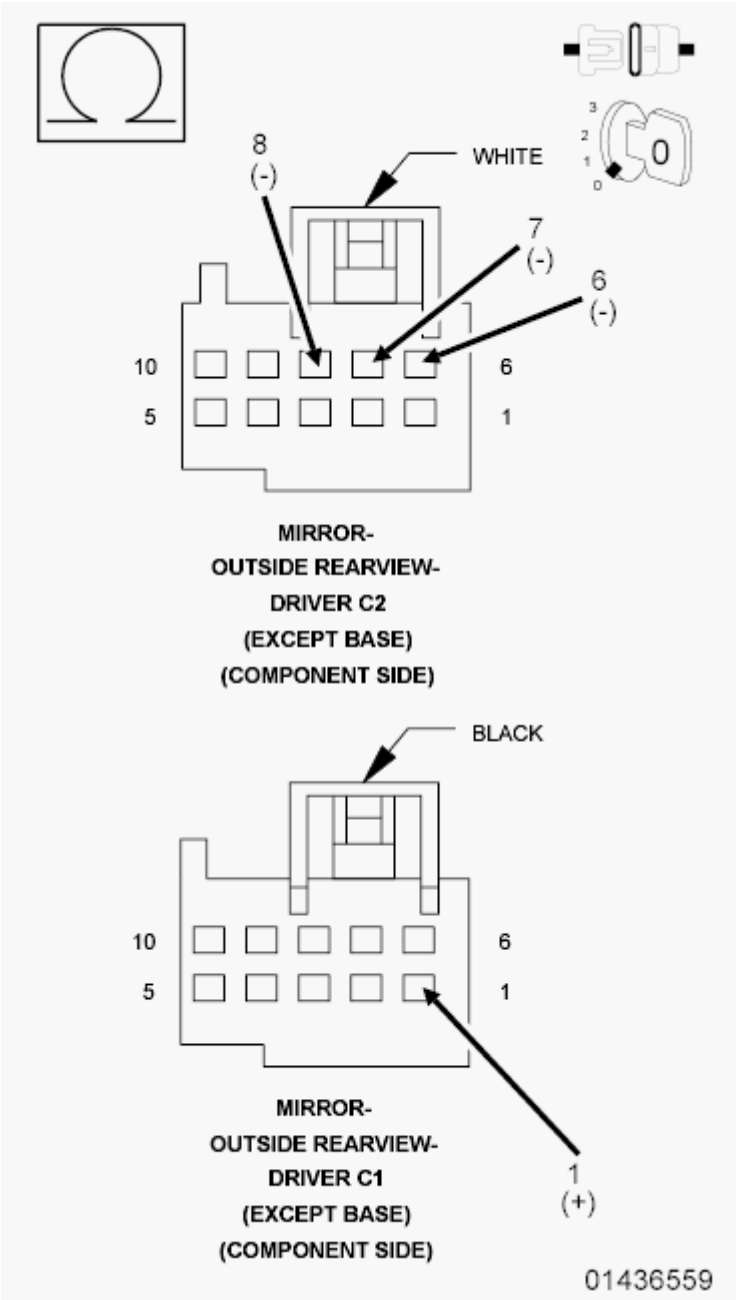

Fig. 112: Checking Driver Puddle Lamp Driver Circuit For A Short To Other Circuits
Courtesy of CHRYSLER GROUP, LLC

1. Disconnect the Driver Outside Rearview Mirror C2 (Component Side) connector from the Door Module C2 connector.
2. Measure the resistance between the (M41) Driver Puddle Lamp Driver circuit and the (P71) Driver Mirror Vertical Driver circuit at the Driver Outside Rearview Mirror C1 and C2 (Component Side) connectors.
3. Measure the resistance between the (M41) Driver Puddle Lamp Driver circuit and the (P73) Driver Mirror Common Driver circuit at the Driver Outside Rearview Mirror C1 and C2 (Component Side) connectors.

4. Measure the resistance between the (M41) Driver Puddle Lamp Driver circuit and the (P75) Driver Mirror Horizontal Driver circuit at the Driver Outside Rearview Mirror C1 and C2 (Component Side) connectors.

   Is the resistance below 10K Ohms for any measurement?

   Yes

   - Repair all circuits with a resistance below 10K Ohms for a short to the (M41) Driver Puddle Lamp Driver circuit. If the wiring harness and connector are okay, replace the Driver Outside Rearview Mirror in accordance with the Service Information.
   - Perform the BODY VERIFICATION TEST. Refer to **BODY VERIFICATION TEST** .

   No, with Heated/Turn Signal Mirror

   - Go To 6.

   No, without Heated/Turn Signal Mirror

   - Inspect the wiring and connectors for damage and repair as necessary. If the wiring and connectors are okay, replace the Door Module in accordance with the Service Information.
   - Perform the BODY VERIFICATION TEST. Refer to **BODY VERIFICATION TEST** .

6. **CHECK (M41) DRIVER PUDDLE LAMP DRIVER CIRCUIT FOR A SHORT TO THE (C160) DRIVER MIRROR HEATER RETURN CIRCUIT OR TO THE (P593) DRIVER MIRROR TURN SIGNAL RETURN CIRCUIT**

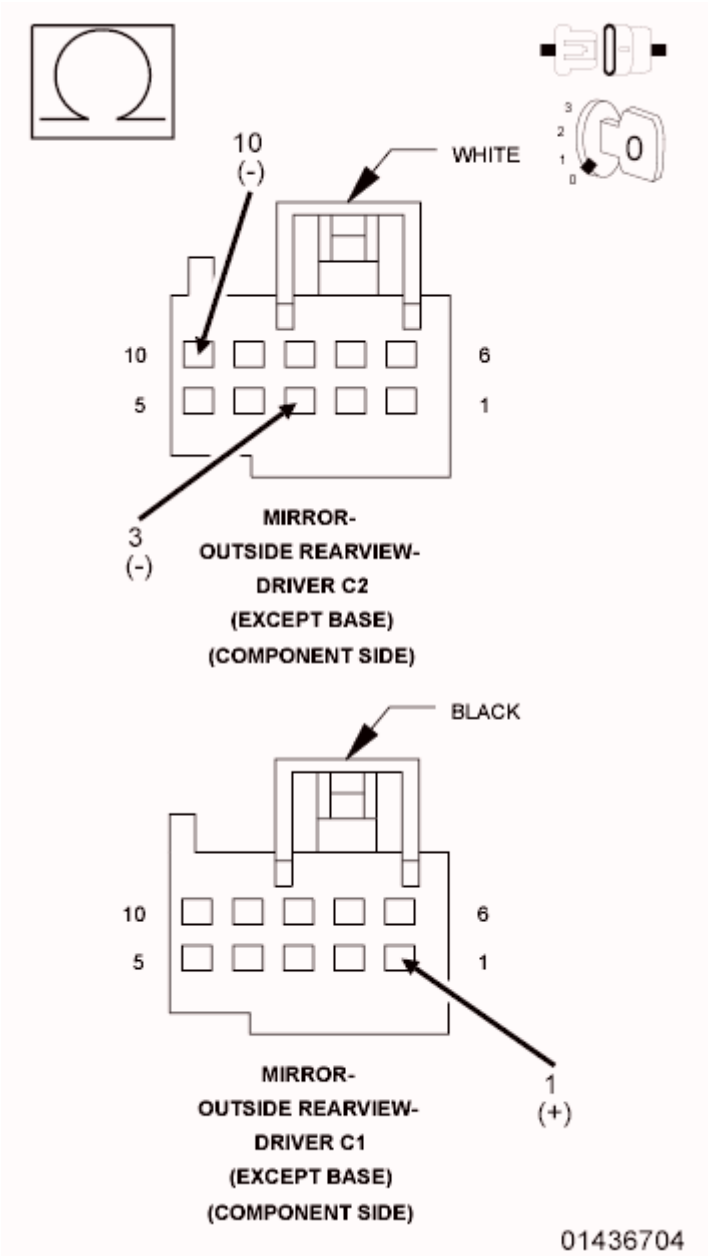

Fig. 113: Checking Driver Puddle Lamp Driver Circuit For A Short To The Driver Mirror Heater Return Circuit Or To The Driver Mirror Turn Signal Return Circuit
Courtesy of CHRYSLER GROUP, LLC

1. For Heated Mirror, measure the resistance between the (M41) Driver Puddle Lamp Driver circuit and the (C160) Driver Mirror Heater Return circuit at the Driver Outside Rearview Mirror C1 and C2 (Component Side) connectors.
2. For Turn Signal Mirror, measure the resistance between the (M41) Driver Puddle Lamp Driver circuit and the (P593) Driver Mirror Turn Signal Return circuit at the Driver Outside Rearview Mirror C1 and C2 (Component Side) connectors.

   Is the resistance below 10K Ohms for either measurement?

Yes

- Repair all circuits with a resistance below 10K Ohms for a short to the (M41) Driver Puddle Lamp Driver circuit. If the wiring harness and connector are okay, replace the Driver Outside Rearview Mirror in accordance with the Service Information.
- Perform the BODY VERIFICATION TEST. Refer to **BODY VERIFICATION TEST** .

No

- Inspect the wiring and connectors for damage and repair as necessary. If the wiring and connectors are okay, replace the Door Module in accordance with the Service Information.
- Perform the BODY VERIFICATION TEST. Refer to **BODY VERIFICATION TEST** .

B282E-15-DRIVER PUDDLE LAMP CONTROL - CIRCUIT SHORT TO BATTERY OR OPEN

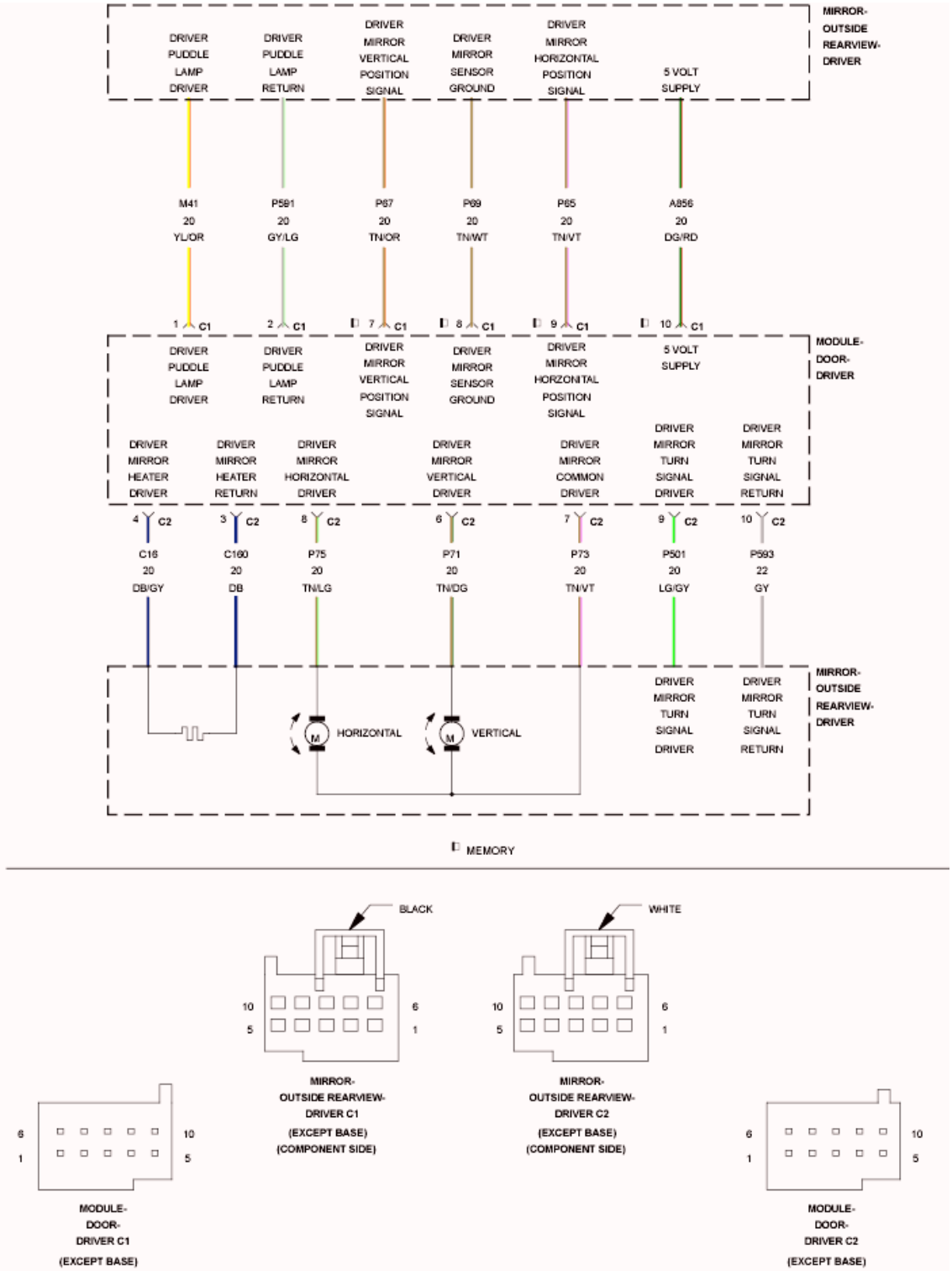

Fig. 114: Driver Mirror Signal Lamp Control Wiring Diagram
Courtesy of CHRYSLER GROUP, LLC

For a complete wiring diagram, **refer to appropriate SYSTEM WIRING DIAGRAMS article** .

WHEN MONITORED:

Continuously.

SET CONDITION:

The Door Module senses a short high or an open on the (M41) Driver Puddle Lamp Driver circuit for more than two seconds with the lamp switched on.

POSSIBLE CAUSES

Possible Causes
(M41) DRIVER PUDDLE LAMP DRIVER CIRCUIT FOR A SHORT TO VOLTAGE
(M41) DRIVER PUDDLE LAMP DRIVER CIRCUIT FOR AN OPEN
(P591) DRIVER PUDDLE LAMP RETURN CIRCUIT FOR AN OPEN
(M41) DRIVER PUDDLE LAMP DRIVER CIRCUIT FOR A SHORT TO THE (P71) DRIVER MIRROR VERTICAL DRIVER CIRCUIT
(M41) DRIVER PUDDLE LAMP DRIVER CIRCUIT FOR A SHORT TO THE (P73) DRIVER MIRROR COMMON DRIVER CIRCUIT
(M41) DRIVER PUDDLE LAMP DRIVER CIRCUIT FOR A SHORT TO THE (P75) DRIVER MIRROR HORIZONTAL DRIVER CIRCUIT
(M41) DRIVER PUDDLE LAMP DRIVER CIRCUIT FOR A SHORT TO THE (C16) DRIVER MIRROR HEATER DRIVER CIRCUIT
(M41) DRIVER PUDDLE LAMP DRIVER CIRCUIT FOR A SHORT TO THE (P501) DRIVER MIRROR TURN SIGNAL DRIVER CIRCUIT
DRIVER OUTSIDE REARVIEW MIRROR
DOOR MODULE

DIAGNOSTIC TEST

1. **TEST FOR INTERMITTENT CONDITION**
    1. Turn the ignition on.
    2. Using a scan tool, record and erase Diagnostic Trouble Codes (DTC's).
    3. Turn the turn signal on, if equipped with turn signal mirror.
    4. Turn the puddle lamps on.

    NOTE: Verify the panel lamps dimmer switch is not in the defeat (off) position.

    5. Turn the rear defogger on, if equipped with heated mirror.
    6. Press and release the Mirror Select switch to select the Driver Outside Rearview Mirror.
    7. Operate the Mirror Adjust switch in all directions several times while monitoring the scan tool for DTC's.

    NOTE: After adjusting the mirror in one direction wait at least two seconds before adjusting the mirror in the opposite direction, as this will allow

time for an active fault to set if present.

Is the DTC active?

Yes

- Go To 2.

No

- The conditions that caused this code to set are not present at this time. For vehicle's equipped with folding outside rearview mirrors, repeat test with mirror folded. If DTC is now active, go to 2. Otherwise, use the wiring diagram/schematic as a guide and inspect the wiring and connectors.
- Perform the BODY VERIFICATION TEST. Refer to **BODY VERIFICATION TEST** .

2. **CHECK (M41) DRIVER PUDDLE LAMP DRIVER CIRCUIT FOR A SHORT TO VOLTAGE**

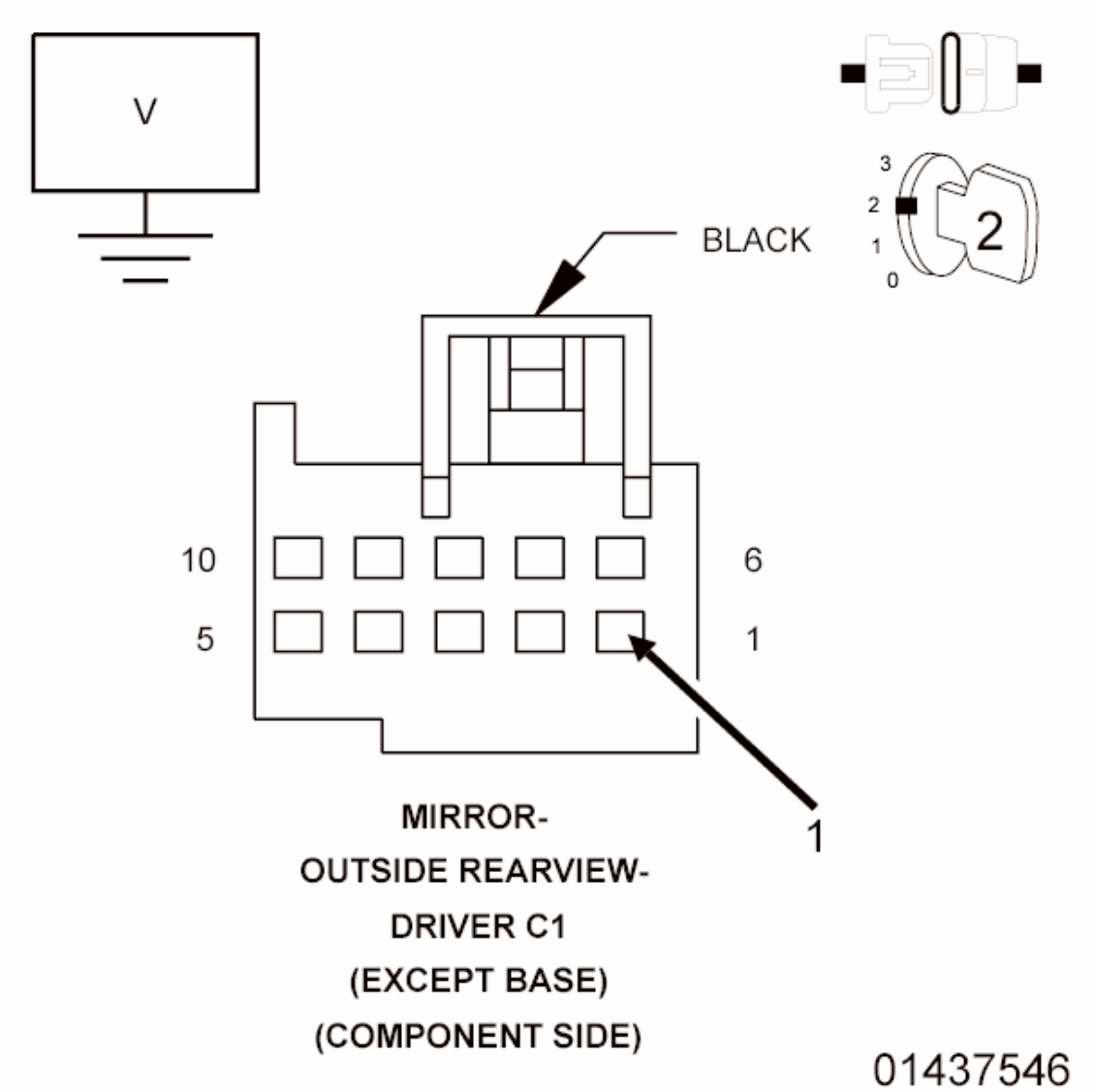

Fig. 115: Checking Driver Puddle Lamp Driver Circuit For A Short To Voltage
Courtesy of CHRYSLER GROUP, LLC

1. Turn the ignition off.
2. Disconnect Driver Outside Rearview Mirror C1 (Component Side) connector from the Door Module C1 connector.
3. Turn the ignition on.
4. Measure the voltage of the (M41) Driver Puddle Lamp Driver circuit between the Driver Outside Rearview Mirror C1 (Component Side) connector and ground.

   Is there any voltage present?

   Yes

   - Repair the (M41) Driver Puddle Lamp Driver circuit for a short to voltage. If the wiring

harness and connector are okay, replace the Driver Outside Rearview Mirror in accordance with the Service Information.

- Perform the BODY VERIFICATION TEST. Refer to **BODY VERIFICATION TEST** .

No

- Go To 3.

3. **CHECK (M41) DRIVER PUDDLE LAMP DRIVER CIRCUIT AND (P591) DRIVER PUDDLE LAMP RETURN CIRCUIT FOR AN OPEN**

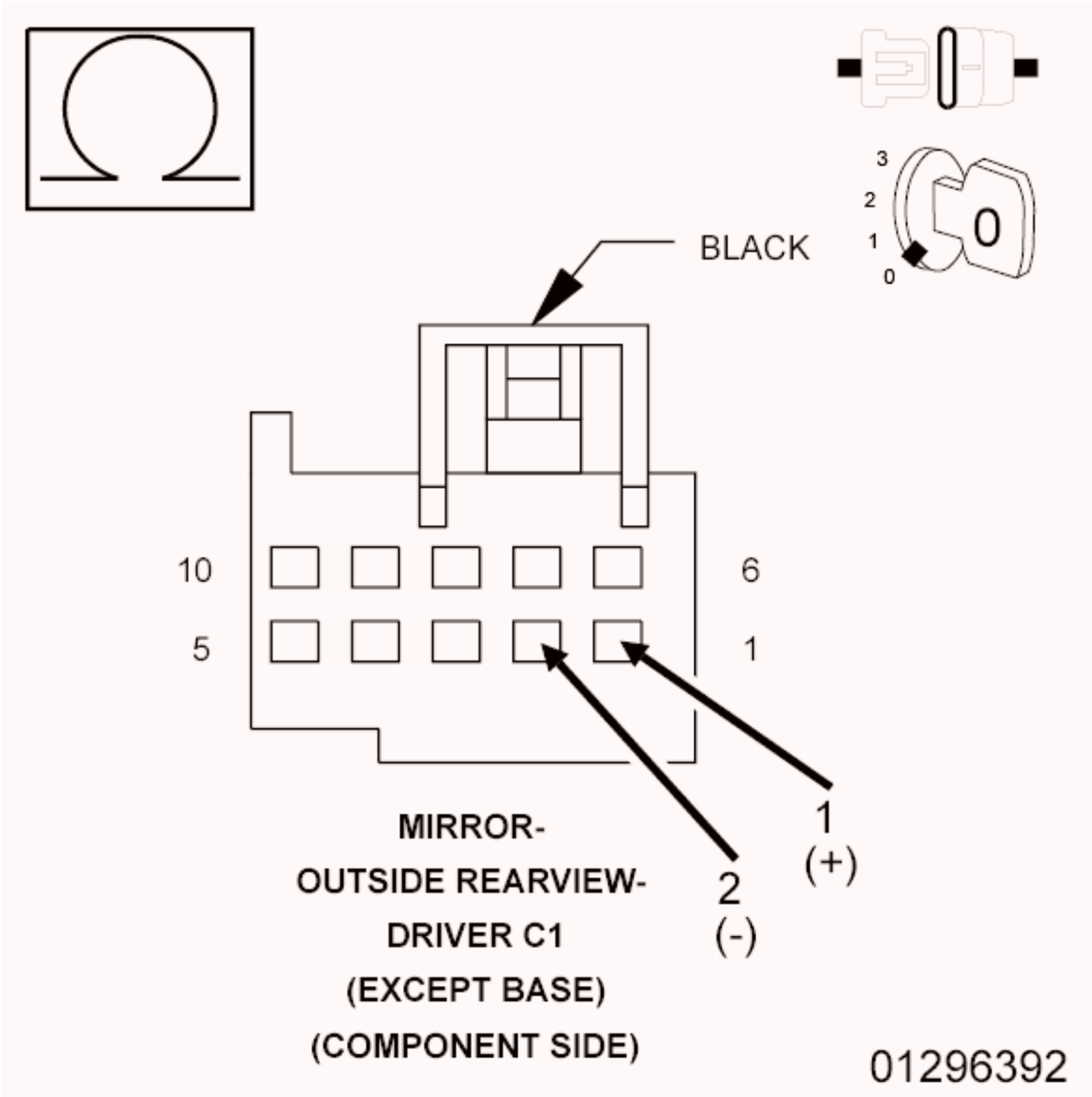

Fig. 116: Checking Driver Puddle Lamp Driver Circuit And Driver Puddle Lamp Return Circuit For An Open
Courtesy of CHRYSLER GROUP, LLC

1. Turn the ignition off.

NOTE: **The Ohmmeter positive lead must be connected to the (M41) Driver Puddle Lamp Driver circuit and the negative lead to the (P591) Driver Puddle Lamp Return circuit for the test results to be valid.**

2. Measure the resistance between the (M41) Driver Puddle Lamp Driver circuit and the (P591) Driver Puddle Lamp Return circuit at the Driver Outside Rearview Mirror C1 (Component Side) connector.

   Is the resistance above 1000 Ohms?

   Yes

   - Repair the (M41) Driver Puddle Lamp Driver circuit or the (P591) Driver Puddle Lamp Return circuit for an open. If the wiring harness and connector are okay, replace the Driver Outside Rearview Mirror in accordance with the Service Information.
   - Perform the BODY VERIFICATION TEST. Refer to **BODY VERIFICATION TEST** .

   No

   - Go To 4.

4. **CHECK (M41) DRIVER PUDDLE LAMP DRIVER CIRCUIT FOR A SHORT TO (P71) DRIVER MIRROR VERTICAL DRIVER CIRCUIT, (P73) DRIVER MIRROR COMMON DRIVER CIRCUIT, OR TO (P75) DRIVER MIRROR HORIZONTAL DRIVER CIRCUIT**

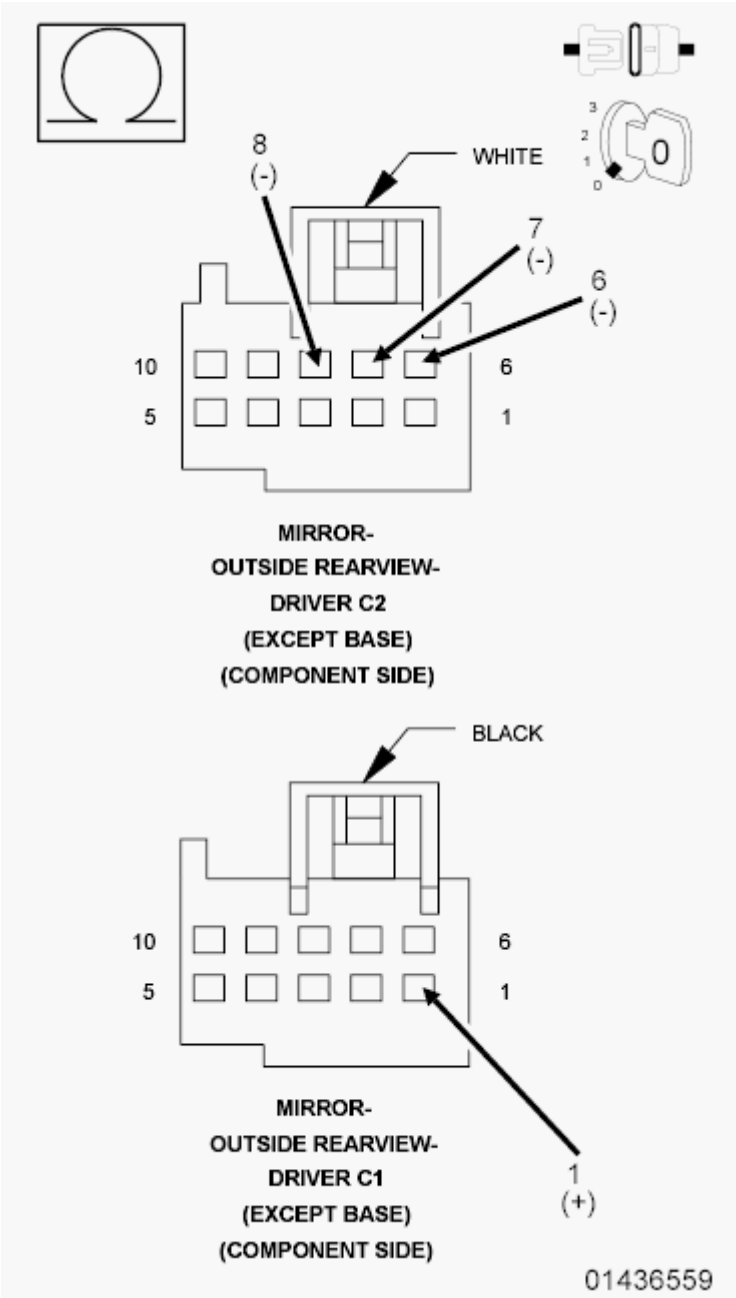

Fig. 117: Checking Driver Puddle Lamp Driver Circuit For A Short To Other Circuits
Courtesy of CHRYSLER GROUP, LLC

1. Disconnect the Driver Outside Rearview Mirror C2 (Component Side) connector from the Door Module C2 connector.
2. Measure the resistance between the (M41) Driver Puddle Lamp Driver circuit and the (P71) Driver Mirror Vertical Driver circuit at the Driver Outside Rearview Mirror C1 and C2 (Component Side) connectors.
3. Measure the resistance between the (M41) Driver Puddle Lamp Driver circuit and the (P73) Driver Mirror Common Driver circuit at the Driver Outside Rearview Mirror C1 and C2 (Component Side) connectors.

4. Measure the resistance between the (M41) Driver Puddle Lamp Driver circuit and the (P75) Driver Mirror Horizontal Driver circuit at the Driver Outside Rearview Mirror C1 and C2 (Component Side) connectors.

   Is the resistance below 10K Ohms for any measurement?

   Yes

   - Repair all circuits with a resistance below 10K Ohms for a short to the (M41) Driver Puddle Lamp Driver circuit. If the wiring harness and connector are okay, replace the Driver Outside Rearview Mirror in accordance with the Service Information.
   - Perform the BODY VERIFICATION TEST. Refer to **BODY VERIFICATION TEST** .

   No, with Heated/Turn Signal Mirror

   - Go To 5.

   No, without Heated/Turn Signal Mirror

   - Inspect the wiring and connectors for damage and repair as necessary. If the wiring and connectors are okay, replace the Door Module in accordance with the Service Information.
   - Perform the BODY VERIFICATION TEST. Refer to **BODY VERIFICATION TEST** .

5. **CHECK (M41) DRIVER PUDDLE LAMP DRIVER CIRCUIT FOR A SHORT TO (C16) DRIVER MIRROR HEATER DRIVER CIRCUIT OR TO (P501) DRIVER MIRROR TURN SIGNAL DRIVER CIRCUIT**

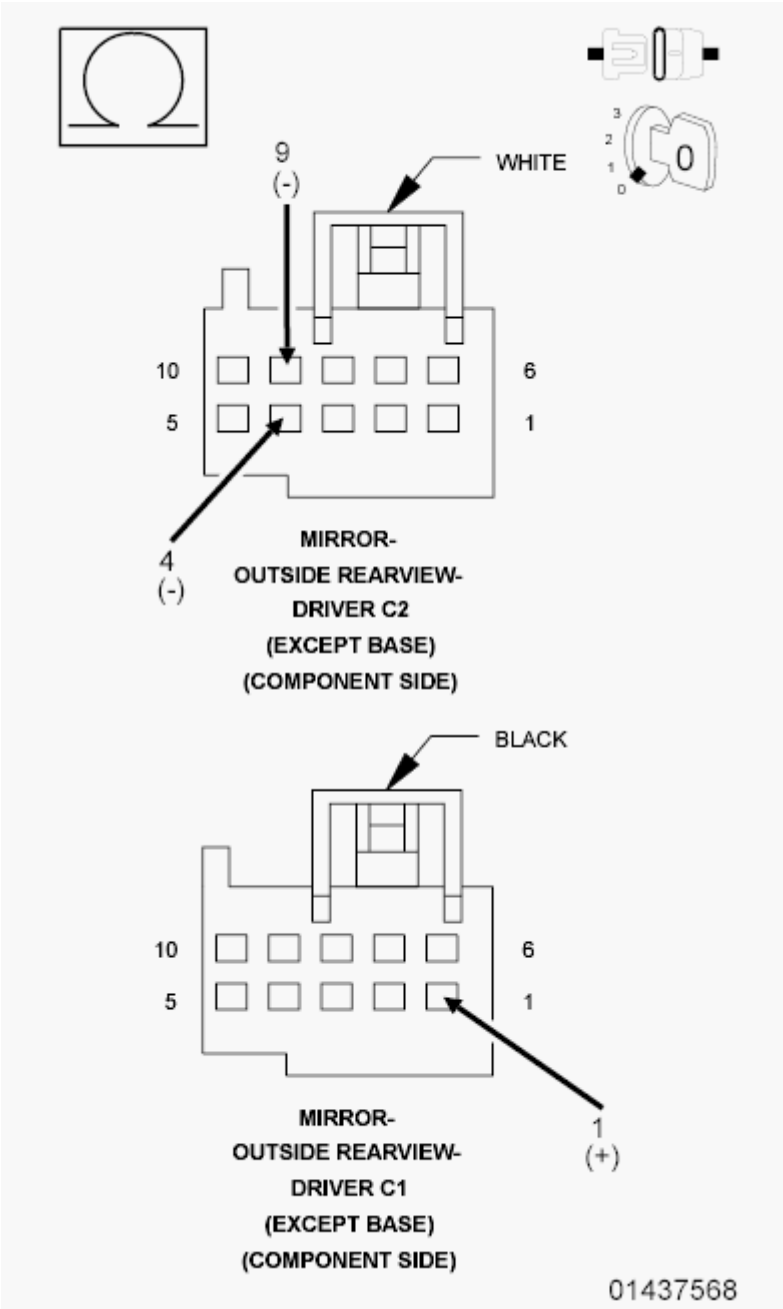

Fig. 118: Checking Driver Puddle Lamp Driver Circuit For A Short To Driver Mirror Heater Driver Circuit Or To Driver Mirror Turn Signal Driver Circuit
Courtesy of CHRYSLER GROUP, LLC

1. For Heated Mirror, measure the resistance between the (M41) Driver Puddle Lamp Driver circuit and the (C16) Driver Mirror Heater Driver circuit at the Driver Outside Rearview Mirror C1 and C2 (Component Side) connectors.
2. For Turn Signal Mirror, measure the resistance between the (M41) Driver Puddle Lamp Driver circuit and the (P501) Driver Mirror Turn Signal Driver circuit at the Driver Outside Rearview Mirror C1 and C2 (Component Side) connectors.

Is the resistance below 10K Ohms for either measurement?

Yes

- Repair all circuits with a resistance below 10K Ohms for a short to the (M41) Driver Puddle Lamp Driver circuit. If the wiring harness and connector are okay, replace the Driver Outside Rearview Mirror in accordance with the Service Information.
- Perform the BODY VERIFICATION TEST. Refer to **BODY VERIFICATION TEST** .

No

- Inspect the wiring and connectors for damage and repair as necessary. If the wiring and connectors are okay, replace the Door Module in accordance with the Service Information.
- Perform the BODY VERIFICATION TEST. Refer to **BODY VERIFICATION TEST** .

U0010-00-CAN INTERIOR BUS

For a complete wiring diagram, **refer to appropriate SYSTEM WIRING DIAGRAMS article** .

WHEN MONITORED:

Continuously when the ignition is on.

Battery voltage between 10 and 16 volts.

Ignition Off Draw (IOD) fuse installed.

SET CONDITION:

The Totally Integrated Power Module (TIPM) detects a short to ground on the CAN Interior Bus (125K) (+) circuit or a short to voltage on the CAN Interior Bus (125K) (-) circuit.

POSSIBLE CAUSES

Possible Causes
(D265) CAN INTERIOR BUS(+) (125k) CIRCUIT FOR A SHORT TO VOLTAGE
(D264) CAN INTERIOR BUS(-) (125k) CIRCUIT FOR A SHORT TO GROUND
(D264) CAN INTERIOR BUS(-) (125k) CIRCUIT FOR A SHORT TO THE (D265) CAN INTERIOR BUS(+) (125k) CIRCUIT
TOTALLY INTEGRATED POWER MODULE (TIPM)
ANY CAN INTERIOR BUS MODULE

DIAGNOSTIC TEST

1. **VERIFY DTC IS ACTIVE**

NOTE: **Make sure the IOD fuse is installed and the battery is fully charged before proceeding.**

1. Turn the ignition on.
2. With the scan tool, read active DTC's.

   Is this DTC active?

   Yes

   - **Refer to U0010-CAN INTERIOR BUS** and perform the diagnostic procedure.

   No

   - **Refer to STORED LOST COMMUNICATION DTC's** and perform the diagnostic procedure.

U0037-11-LIN BUS - CIRCUIT SHORT TO GROUND - DD/DP

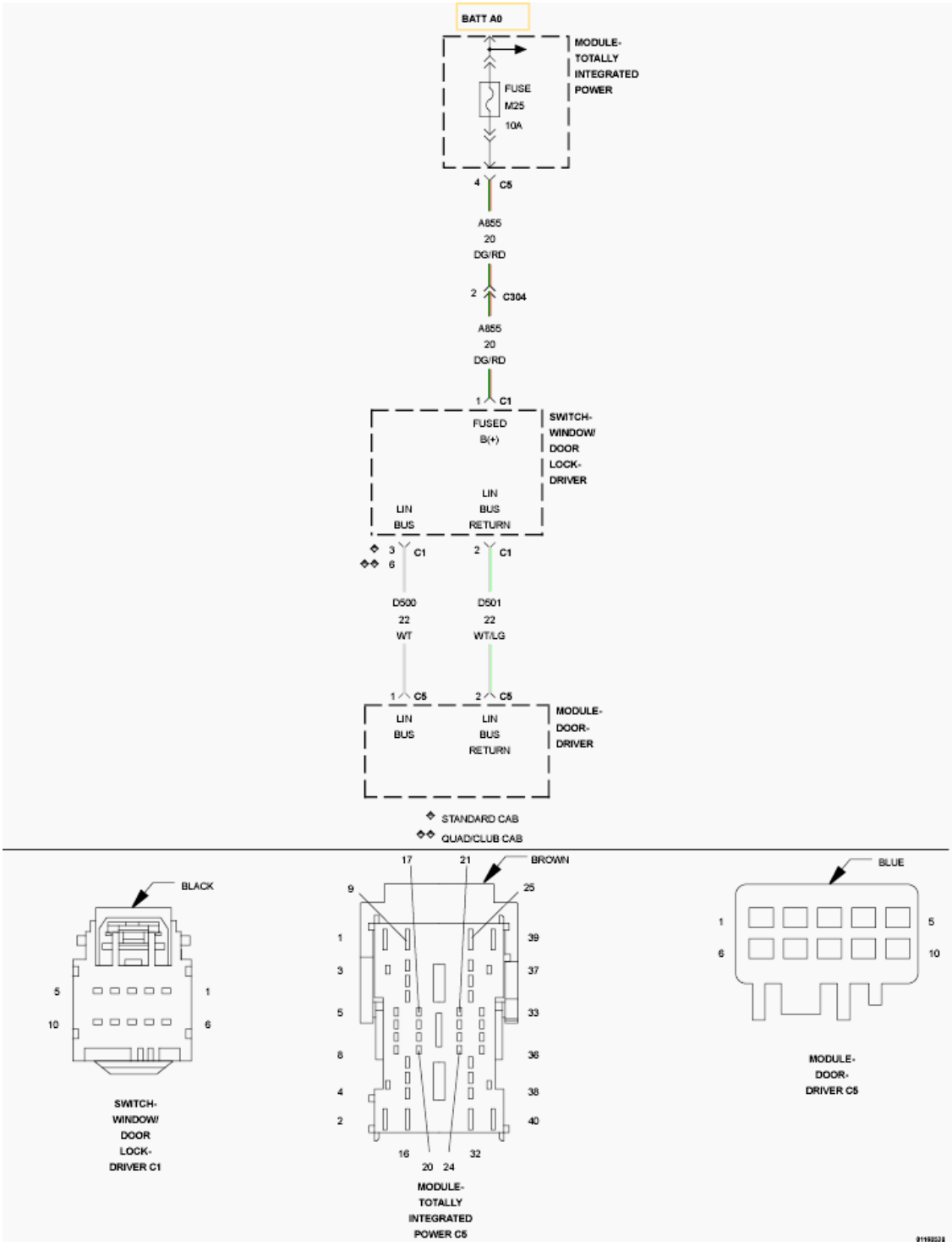

Fig. 119: LIN BUS Wiring Diagram
Courtesy of CHRYSLER GROUP, LLC

For a complete wiring diagram, **refer to appropriate SYSTEM WIRING DIAGRAMS article** .

WHEN MONITORED:

Continuously when the ignition is on.

SET CONDITION:

The module detects a short to ground on the LIN Bus circuit.

POSSIBLE CAUSES

Possible Causes
(D500) LIN BUS CIRCUIT FOR A SHORT TO GROUND
(D500) LIN BUS CIRCUIT FOR A SHORT TO THE (D501) LIN BUS RETURN CIRCUIT
DRIVER WINDOW/DOOR LOCK SWITCH
DRIVER DOOR MODULE (DDM)

DIAGNOSTIC TEST

1. **VERIFY DIAGNOSTIC TROUBLE CODE (DTC) IS ACTIVE**
    1. Turn the ignition on.
    2. With the scan tool, read the active DTC's.

    Does the scan tool display U0037-11-LIN BUS - CIRCUIT SHORT TO GROUND?

    Yes

    - Go To 2.

    No

    - **Refer to STORED LOST COMMUNICATION DTC's** and perform the diagnostic procedure.
2. **CHECK THE LIN BUS CIRCUIT**

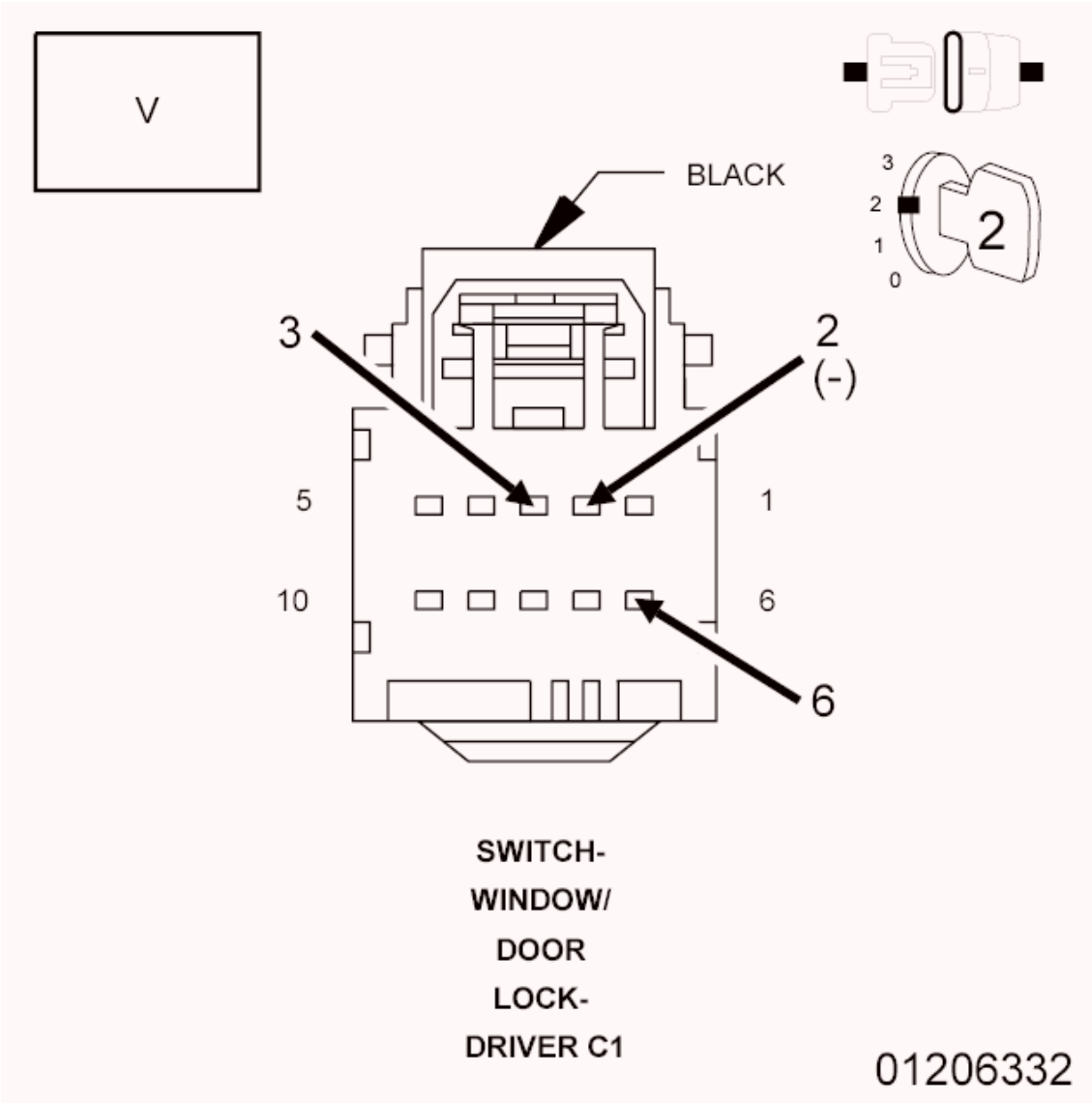

Fig. 120: Measuring Voltage Of Lin Bus Circuit
Courtesy of CHRYSLER GROUP, LLC

1. Turn the ignition off.
2. Disconnect the Driver Window/Door Lock Switch C1 harness connector.
3. Turn the ignition on.
4. Measure the voltage between the (D500) LIN Bus circuit and the (D501) LIN Bus Return circuit.

   Is the voltage below 7.0 Volts?

   Yes

   - Go To 3.

   No

- Replace the Driver Window/Door Lock Switch.
- Perform the BODY VERIFICATION TEST. Refer to **BODY VERIFICATION TEST** .

3. **(D500) LIN BUS CIRCUIT FOR A SHORT TO GROUND**

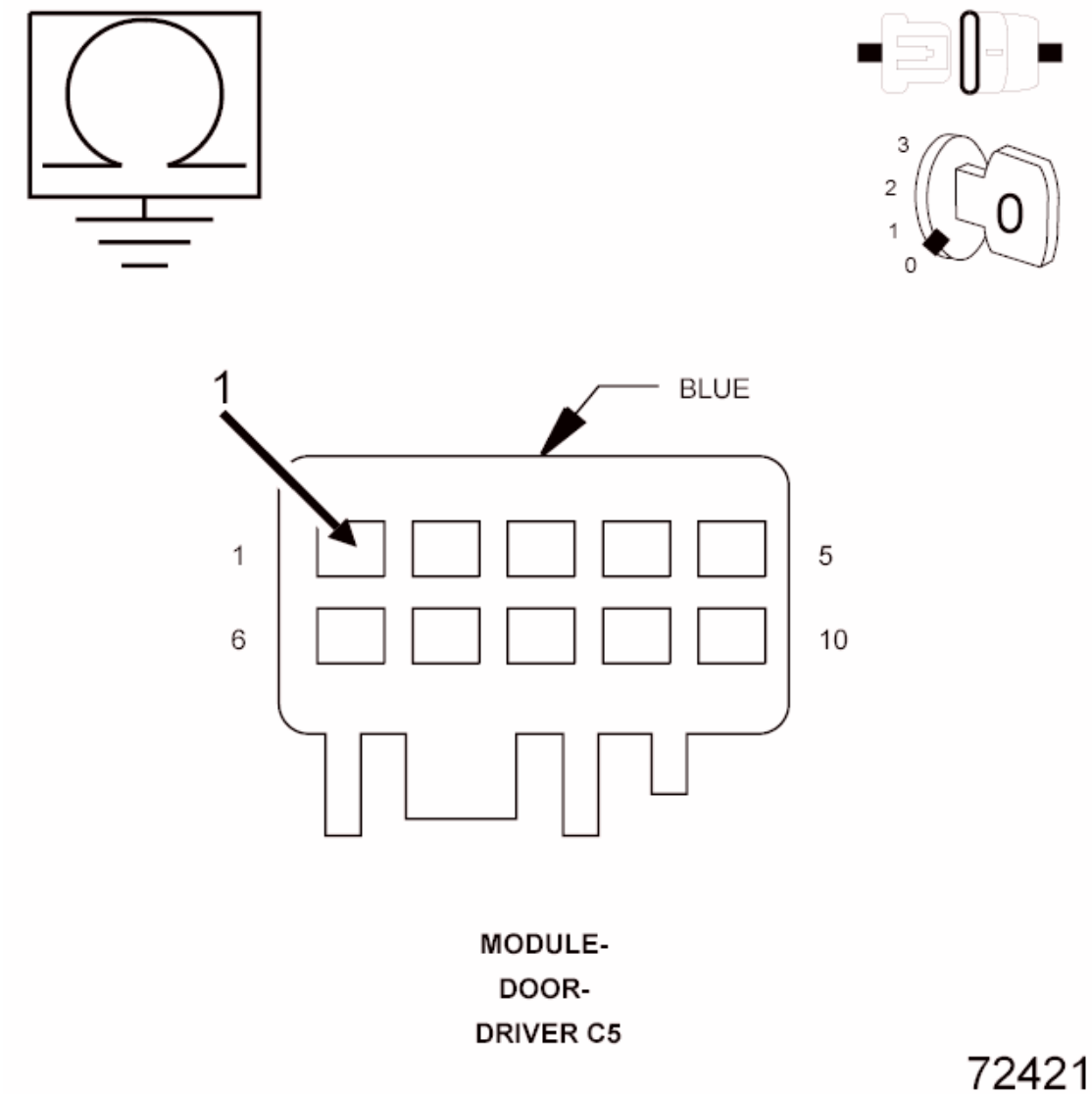

Fig. 121: Checking LIN BUS Circuit For A Short To Ground
Courtesy of CHRYSLER GROUP, LLC

1. Turn the ignition off.
2. Disconnect the Driver Door Module C5 harness connector.
3. Measure the resistance between ground and the (D500) LIN Bus circuit in the Door Module C5 harness connector.

   Is the resistance below 10, 000 Ohms?

Yes

- Repair the short to ground in the (D500) LIN Bus circuit.
- Perform the BODY VERIFICATION TEST. Refer to **BODY VERIFICATION TEST** .

No

- Go To 4.

4. **(D500) LIN BUS CIRCUIT FOR A SHORT TO THE (D501) LIN BUS RETURN CIRCUIT**

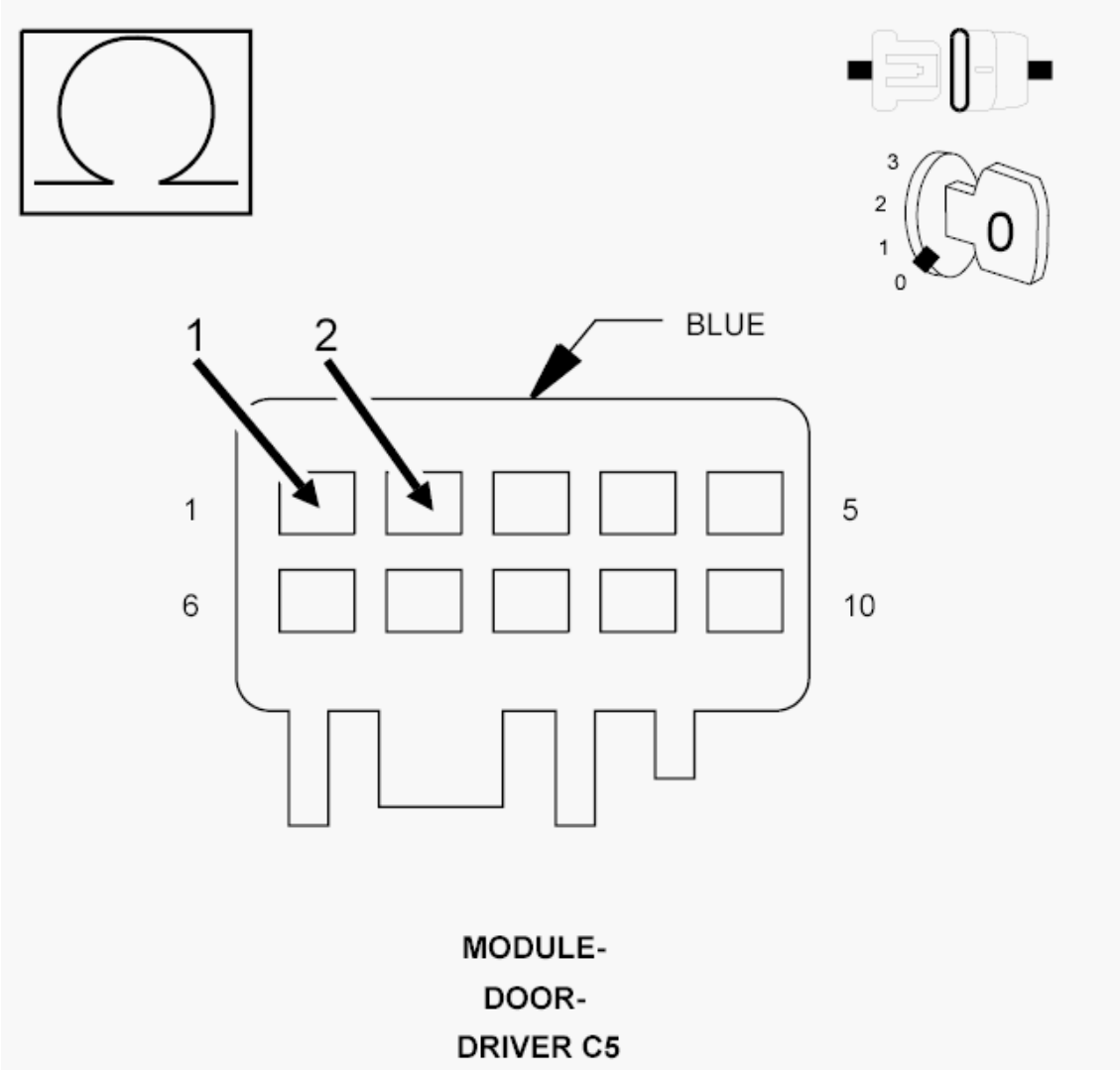

Fig. 122: Checking LIN BUS Circuit For A Short To The LIN BUS Return Circuit
Courtesy of CHRYSLER GROUP, LLC

1. Measure the resistance between the (D500) LIN Bus circuit and the (D501) LIN Bus Return circuit in the Door Module C5 harness connector.

   Is the resistance below 10, 000 Ohms?

Yes

- Repair the (D500) LIN Bus circuit for a short to the (D501) LIN Bus Return circuit.
- Perform the BODY VERIFICATION TEST. Refer to **BODY VERIFICATION TEST** .

No

- Replace the Driver Door Module in accordance with the Service Information.
- Perform the BODY VERIFICATION TEST. Refer to **BODY VERIFICATION TEST** .

U0037-11-LIN BUS - CIRCUIT SHORT TO GROUND - DS/DJ/D2

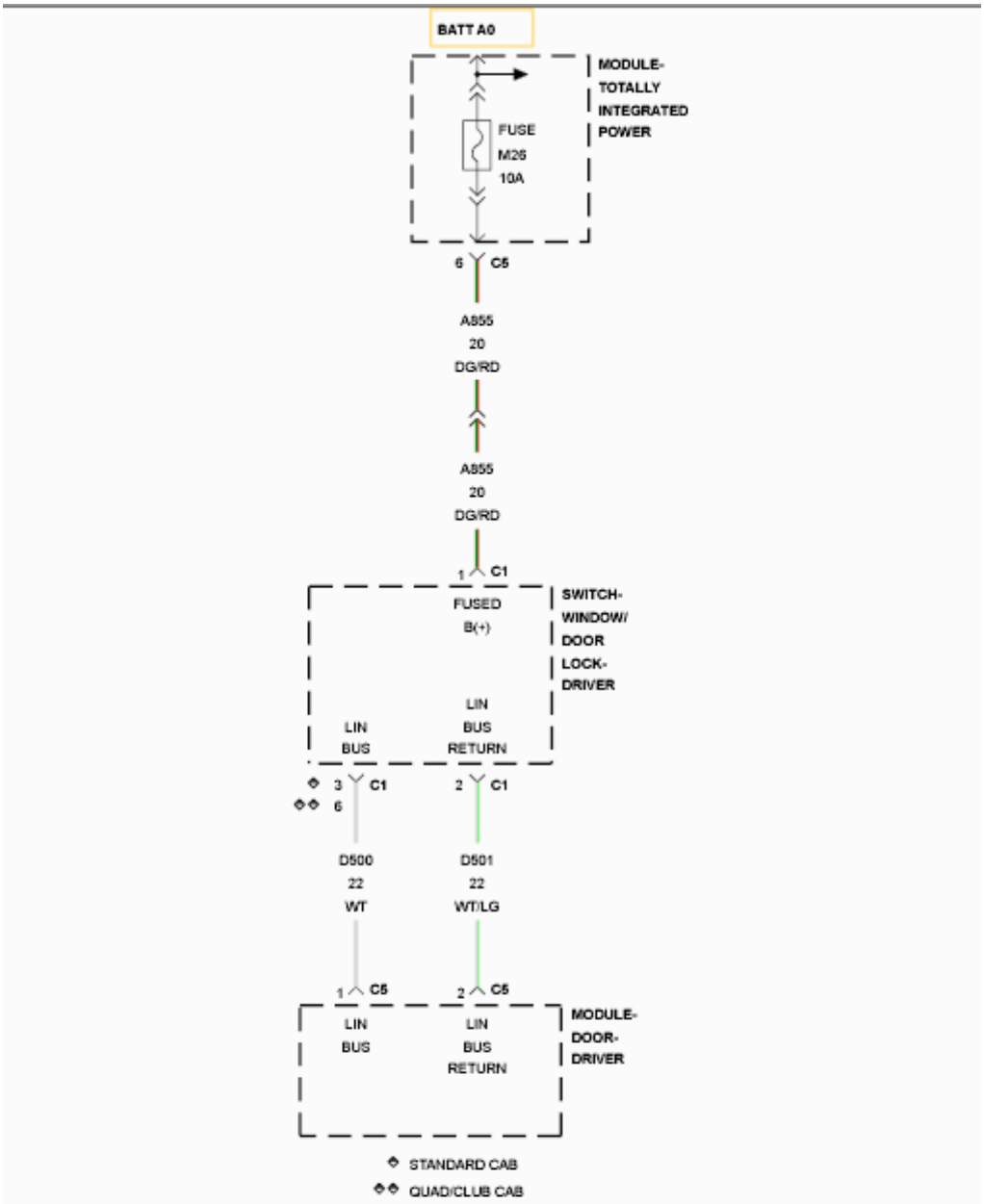

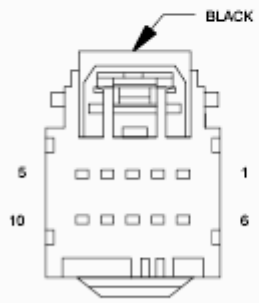

SWITCH-
WINDOW/
DOOR
LOCK-
DRIVER C1

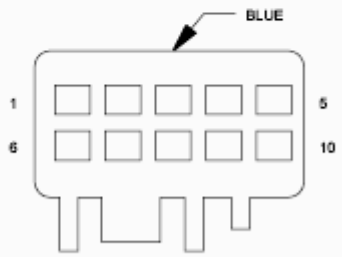

MODULE-
DOOR-
DRIVER C5

Fig. 123: LIN BUS Wiring Diagram
Courtesy of CHRYSLER GROUP, LLC

For a complete wiring diagram, **refer to appropriate SYSTEM WIRING DIAGRAMS article** .

WHEN MONITORED:

Continuously when the ignition is on.

SET CONDITION:

The module detects a short to ground on the LIN Bus circuit.

POSSIBLE CAUSES

Possible Causes
(D500) LIN BUS CIRCUIT FOR A SHORT TO GROUND
(D500) LIN BUS CIRCUIT FOR A SHORT TO THE (D501) LIN BUS RETURN CIRCUIT
DRIVER WINDOW/DOOR LOCK SWITCH
DRIVER DOOR MODULE (DDM)

DIAGNOSTIC TEST

1. **VERIFY DIAGNOSTIC TROUBLE CODE (DTC) IS ACTIVE**
    1. Turn the ignition on.
    2. With the scan tool, read the active DTC's.

    Does the scan tool display U0037-11-LIN BUS - CIRCUIT SHORT TO GROUND?

    Yes

    - Go To 2.

    No

    - **Refer to STORED LOST COMMUNICATION DTC's** and perform the diagnostic procedure.
2. **CHECK THE LIN BUS CIRCUIT**

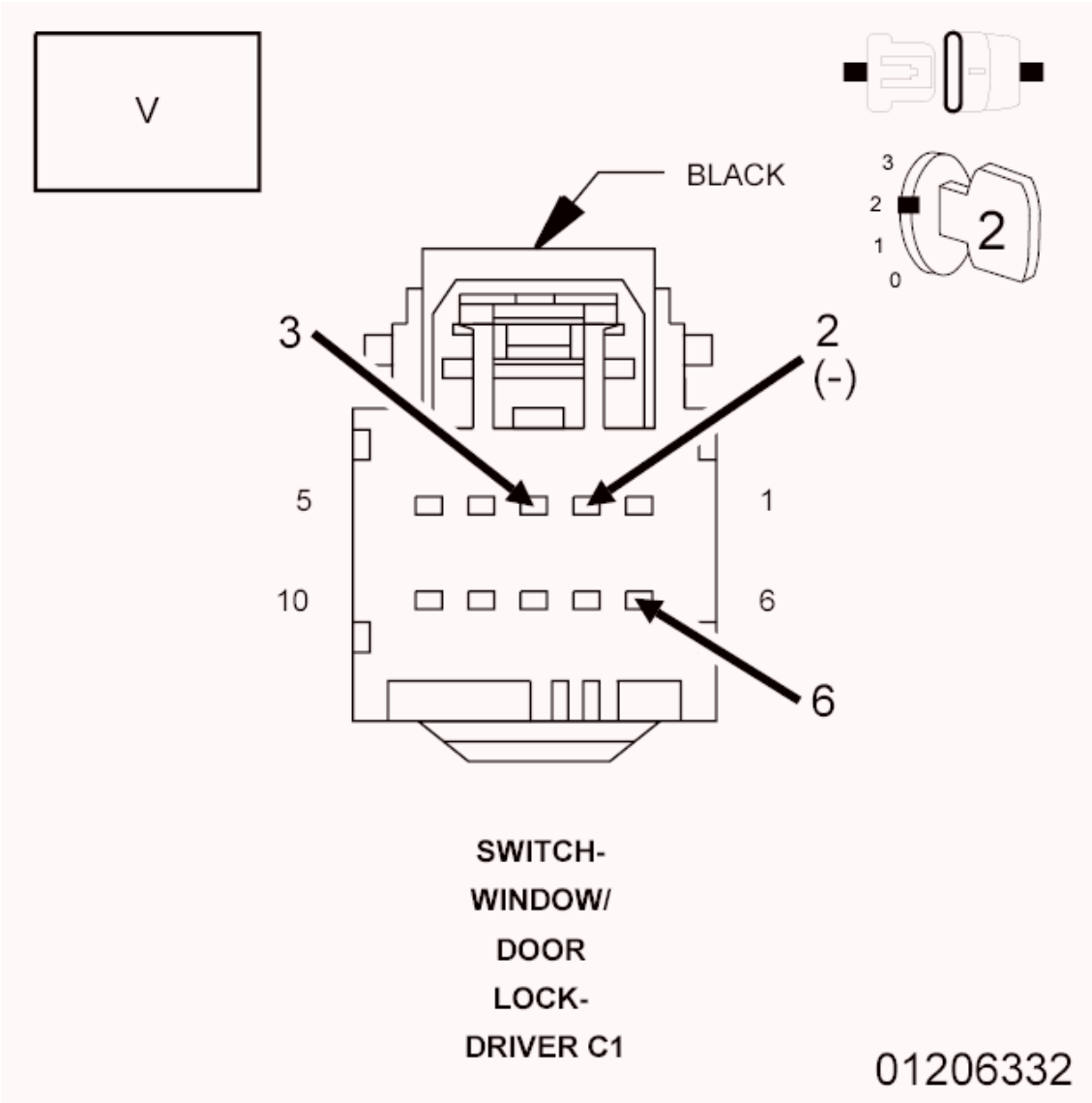

Fig. 124: Measuring Voltage Of Lin Bus Circuit
Courtesy of CHRYSLER GROUP, LLC

1. Turn the ignition off.
2. Disconnect the Driver Window/Door Lock Switch C1 harness connector.
3. Turn the ignition on.
4. Measure the voltage between the (D500) LIN Bus circuit (2 Door cavity 3 - 4 Door cavity 6) and the (D501) LIN Bus Return circuit.

   Is the voltage below 7.0 Volts?

   Yes

   - Go To 3.

No

- Replace the Driver Window/Door Lock Switch.
- Perform the BODY VERIFICATION TEST. Refer to **BODY VERIFICATION TEST** .

3. **(D500) LIN BUS CIRCUIT FOR A SHORT TO GROUND**

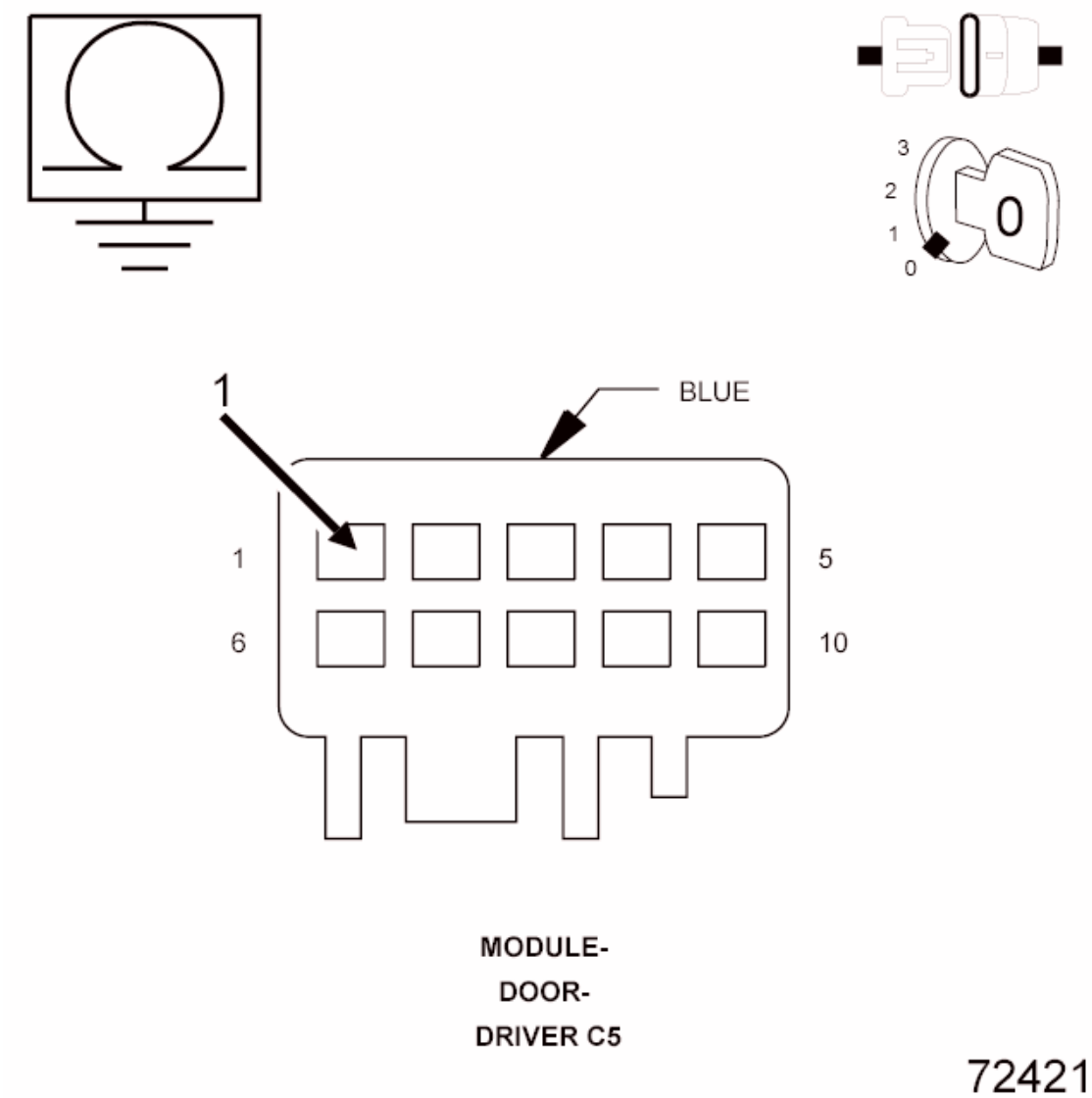

Fig. 125: Checking LIN BUS Circuit For A Short To Ground
Courtesy of CHRYSLER GROUP, LLC

1. Turn the ignition off.
2. Disconnect the Driver Door Module C5 harness connector.
3. Measure the resistance between ground and the (D500) LIN Bus circuit in the Door Module C5 harness connector.

   Is the resistance below 10, 000 Ohms?

Yes

- Repair the short to ground in the (D500) LIN Bus circuit.
- Perform the BODY VERIFICATION TEST. Refer to **BODY VERIFICATION TEST** .

No

- Go To 4.

4. **(D500) LIN BUS CIRCUIT FOR A SHORT TO THE (D501) LIN BUS RETURN CIRCUIT**

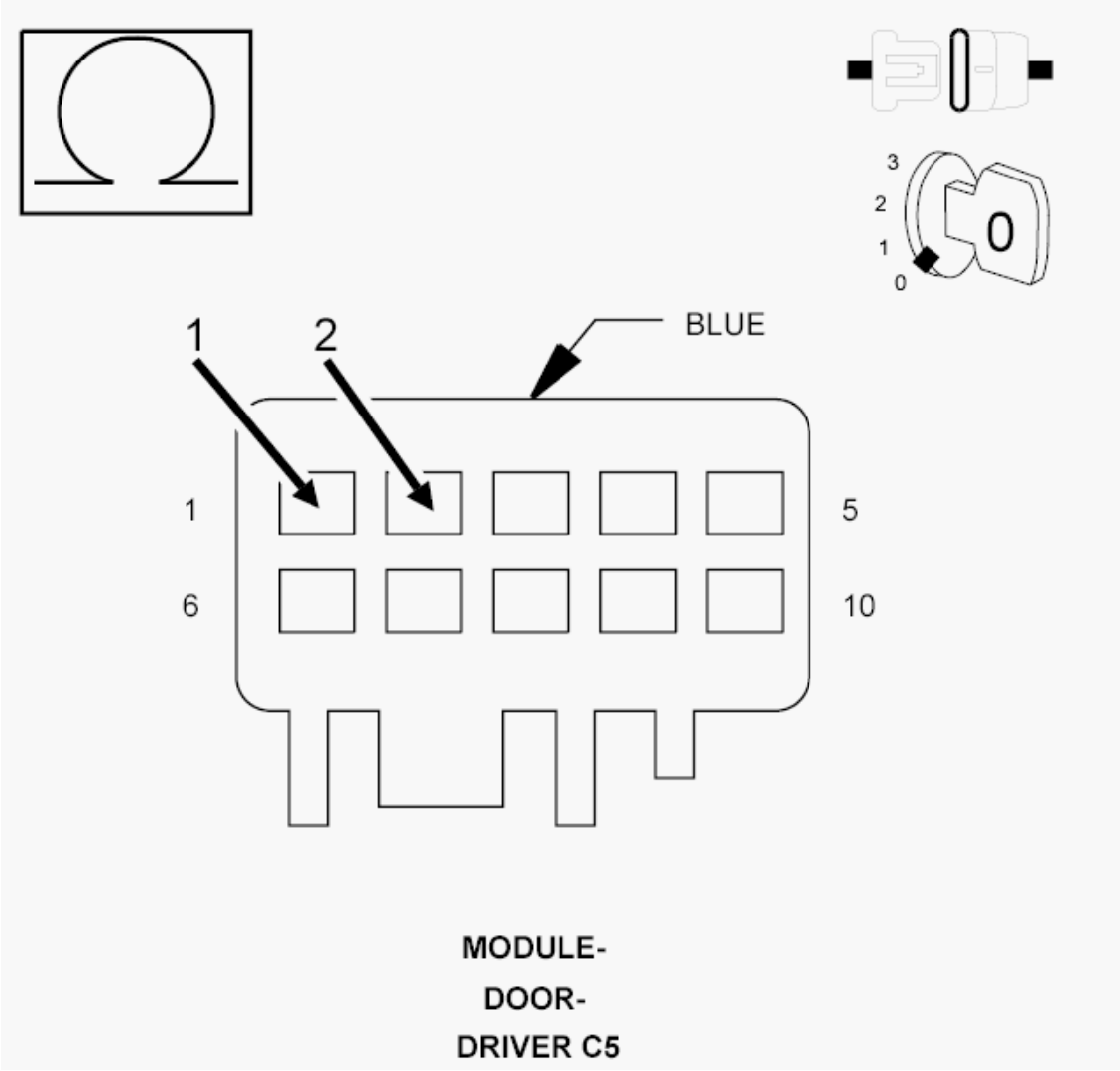

Fig. 126: Checking LIN BUS Circuit For A Short To The LIN BUS Return Circuit
Courtesy of CHRYSLER GROUP, LLC

1. Measure the resistance between the (D500) LIN Bus circuit and the (D501) LIN Bus Return circuit in the Door Module C5 harness connector.

   Is the resistance below 10, 000 Ohms?

Yes

- Repair the (D500) LIN Bus circuit for a short to the (D501) LIN Bus Return circuit.
- Perform the BODY VERIFICATION TEST. Refer to **BODY VERIFICATION TEST** .

No

- Replace the Driver Door Module in accordance with the Service Information.
- Perform the BODY VERIFICATION TEST. Refer to **BODY VERIFICATION TEST** .

U0141-00-LOST COMMUNICATION WITH IPM (FCM/TIPM)

For a complete wiring diagram, **refer to appropriate SYSTEM WIRING DIAGRAMS article** .

WHEN MONITORED:

Continuously when the ignition is on.

Battery voltage between 10 and 16 volts.

Ignition Off Draw (IOD) fuse installed.

Totally Integrated Power Module (TIPM) is configured correctly.

SET CONDITION:

Bus messages not received from the Integrated Power Module (TIPM) for approximately two to five seconds.

POSSIBLE CAUSES

Possible Causes
(D65) CAN C BUS(+) CIRCUIT FOR A SHORT TO VOLTAGE
(D64) CAN C BUS(-) CIRCUIT FOR A SHORT TO GROUND
TOTALLY INTEGRATED POWER MODULE (TIPM) POWER AND GROUND
TIPM NOT CONFIGURED CORRECTLY
TOTALLY INTEGRATED POWER MODULE (TIPM)
MODULE THAT SET THIS DTC

DIAGNOSTIC TEST

1. **VERIFY THE DTC IS ACTIVE**

NOTE: Make sure the IOD fuse is installed and the battery is fully charged before proceeding.

1. Turn the ignition on.

2. With the scan tool, read active DTC's.

   Is the DTC active at this time?

   Yes

   - Perform the U0141-Lost Communication with IPM (FCM/TIPM) diagnostic procedure. **Refer to U0141-LOST COMMUNICATION WITH IPM (FCM/TIPM)** .

   No

   - Perform the Stored Lost Communication DTC's diagnostic procedure. **Refer to STORED LOST COMMUNICATION DTC's** .

U0155-00-LOST COMMUNICATION WITH CLUSTER/CCN

For a complete wiring diagram, **refer to appropriate SYSTEM WIRING DIAGRAMS article** .

WHEN MONITORED:

Continuously when the ignition is on.

Battery voltage between 10 and 16 volts.

Ignition Off Draw (IOD) fuse installed.

Totally Integrated Power Module (TIPM) is configured correctly.

SET CONDITION:

Bus messages not received from the Instrument Cluster (CCN) for approximately two to five seconds.

POSSIBLE CAUSES

Possible Causes
(D265) CAN INTERIOR BUS(+) (125k) CIRCUIT FOR A SHORT TO VOLTAGE
(D264) CAN INTERIOR BUS(-) (125k) CIRCUIT FOR A SHORT TO GROUND
INSTRUMENT CLUSTER POWER AND GROUND
TIPM NOT CONFIGURED CORRECTLY
INSTRUMENT CLUSTER (CCN)
MODULE THAT SET THIS DTC

DIAGNOSTIC TEST

1. **VERIFY DTC IS ACTIVE**

NOTE: **Make sure the IOD fuse is installed and the battery is fully charged before proceeding.**

1. Turn the ignition on.
2. With the scan tool, read active DTC's.

   Is this DTC active?

   Yes

   - **Refer to U0155-LOST COMMUNICATION WITH CLUSTER/CCN** and perform the diagnostic procedure.

   No

   - **Refer to STORED LOST COMMUNICATION DTC's** and perform the diagnostic procedure.

U0164-00-LOST COMMUNICATION WITH HVAC CONTROL MODULE

For a complete wiring diagram, **refer to appropriate SYSTEM WIRING DIAGRAMS article** .

WHEN MONITORED:

Continuously when the ignition is on.

Battery voltage between 10 and 16 volts.

Ignition Off Draw (IOD) fuse installed.

SET CONDITION:

Bus messages not received from the HVAC Control Module for approximately two to five seconds.

POSSIBLE CAUSES

Possible Causes
(D265) CAN INTERIOR BUS(+) (125k) CIRCUIT FOR A SHORT TO VOLTAGE
(D264) CAN INTERIOR BUS(-) (125k) CIRCUIT FOR A SHORT TO GROUND
DTC's RELATED TO BATTERY VOLTAGE, IGNITION, OR VIN MESSAGES
TIPM NOT CONFIGURED CORRECTLY
HVAC POWER AND GROUND
HVAC CONTROL MODULE
MODULE THAT SET THE DTC

DIAGNOSTIC TEST

1. **VERIFY DTC IS ACTIVE**

NOTE: Make sure the IOD fuse is installed and the battery is fully charged before proceeding.

1. Turn the ignition on.
2. With the scan tool, read active DTC's.

   Is this DTC active?

   Yes

   - **Refer to U0164-LOST COMMUNICATION WITH HVAC CONTROL MODULE** and perform the diagnostic procedure.

   No

   - **Refer to STORED LOST COMMUNICATION DTC's** and perform the diagnostic procedure.

U0203-00-LOST COMMUNICATION WITH DOOR MODULE FRONT LEFT

For a complete wiring diagram, **refer to appropriate SYSTEM WIRING DIAGRAMS article** .

WHEN MONITORED:

Continuously when the ignition is on.

Battery voltage between 10 and 16 volts.

Ignition Off Draw (IOD) fuse installed.

SET CONDITION:

Bus messages not received from the Left Front Door Module (DMFL) for approximately two to five seconds.

POSSIBLE CAUSES

Possible Causes
(D265) CAN INTERIOR BUS(+) (125k) CIRCUIT FOR A SHORT TO VOLTAGE
(D264) CAN INTERIOR BUS(-) (125k) CIRCUIT FOR A SHORT TO GROUND
DTC's RELATED TO BATTERY VOLTAGE, IGNITION, OR VIN MESSAGES
TIPM NOT CONFIGURED CORRECTLY
DOOR MODULE POWER AND GROUND
LEFT FRONT DOOR MODULE

CONTROL MODULE THAT SET THE DTC

DIAGNOSTIC TEST

1. **VERIFY DTC IS ACTIVE**

   NOTE: Make sure the IOD fuse is installed and the battery is fully charged before proceeding.

   1. Turn the ignition on.
   2. With the scan tool, read active DTC's.

      Is this DTC active?

      Yes

      - **Refer to U0203-LOST COMMUNICATION WITH DOOR MODULE FRONT LEFT (DMFL) (DRIVER DOOR MODULE)** and perform the diagnostic procedure.

      No

      - **Refer to STORED LOST COMMUNICATION DTC's** and perform the diagnostic procedure.

U0204-00-LOST COMMUNICATION WITH DOOR MODULE FRONT RIGHT

For a complete wiring diagram, **refer to appropriate SYSTEM WIRING DIAGRAMS article** .

WHEN MONITORED:

Continuously when the ignition is on.

Battery voltage between 10 and 16 volts.

Ignition Off Draw (IOD) fuse installed.

SET CONDITION:

Bus messages not received from the Right Front Door Module (DMFR) for approximately two to five seconds.

POSSIBLE CAUSES

Possible Causes
(D265) CAN INTERIOR BUS(+) (125k) CIRCUIT FOR A SHORT TO VOLTAGE
(D264) CAN INTERIOR BUS(-) (125k) CIRCUIT FOR A SHORT TO GROUND
DTC's RELATED TO BATTERY VOLTAGE, IGNITION, OR VIN MESSAGES

TIPM NOT CONFIGURED CORRECTLY
DOOR MODULE POWER AND GROUND
RIGHT FRONT DOOR MODULE
CONTROL MODULE THAT SET THE DTC

DIAGNOSTIC TEST

1. **VERIFY DTC IS ACTIVE**

   NOTE: Make sure the IOD fuse is installed and the battery is fully charged before proceeding.

   1. Turn the ignition on.
   2. With the scan tool, read active DTC's.

      Is this DTC active?

      Yes

      - **Refer to U0204-LOST COMMUNICATION WITH DOOR MODULE FRONT RIGHT (DMFR) (PASSENGER DOOR MODULE)** and perform the diagnostic procedure.

      No

      - **Refer to STORED LOST COMMUNICATION DTC's** and perform the diagnostic procedure.

U0209-00-LOST COMMUNICATION WITH MEMORY SEAT CONTROL MODULE

For a complete wiring diagram, **refer to appropriate SYSTEM WIRING DIAGRAMS article** .

WHEN MONITORED:

Continuously when the ignition is on.

Battery voltage between 10 and 16 volts.

Ignition Off Draw (IOD) fuse installed.

Totally Integrated Power Module (TIPM) is configured correctly.

SET CONDITION:

Bus messages not received from the Memory Seat Module for approximately two to five seconds.

POSSIBLE CAUSES

Possible Causes
(D265) CAN INTERIOR BUS(+) (125k) CIRCUIT FOR A SHORT TO VOLTAGE
(D264) CAN INTERIOR BUS(-) (125k) CIRCUIT FOR A SHORT TO GROUND
MEMORY SEAT MODULE POWER AND GROUND
TIPM NOT CONFIGURED CORRECTLY
MEMORY SEAT MODULE
MODULE THAT SET THIS DTC

DIAGNOSTIC TEST

1. **VERIFY DTC IS ACTIVE**

   NOTE: Make sure the IOD fuse is installed and the battery is fully charged before proceeding.

   1. Turn the ignition on.
   2. With the scan tool, read active DTC's.

      Is this DTC active?

      Yes

      - **Refer to U0209-LOST COMMUNICATION WITH MEMORY SEAT CONTROL MODULE (MSMD)** and perform the diagnostic procedure.

      No

      - **Refer to STORED LOST COMMUNICATION DTC's** and perform the diagnostic procedure.

U113D-LOST COMMUNICATION WITH MASTER POWER WINDOW SWITCH - DD/DP

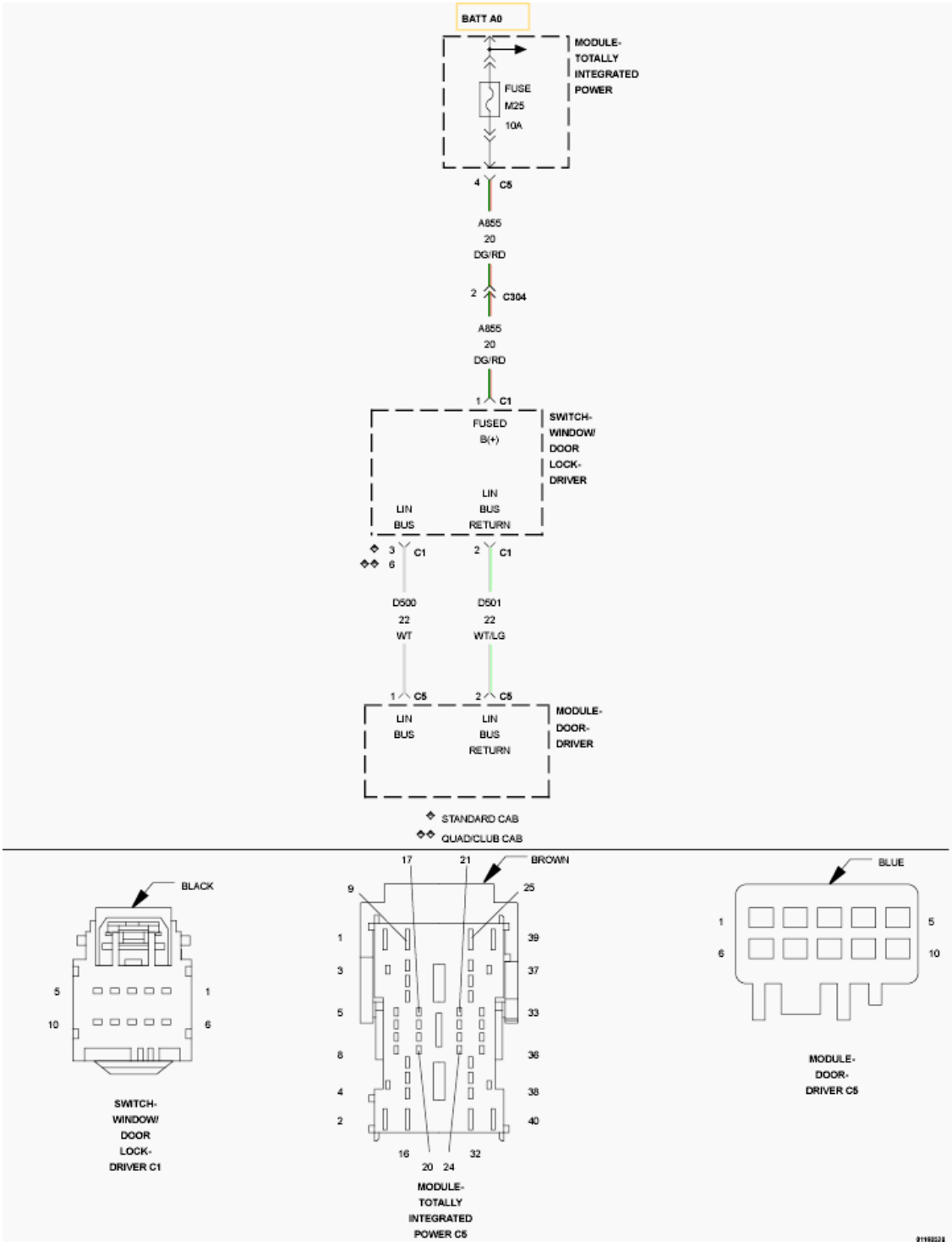

Fig. 127: LIN BUS Wiring Diagram
Courtesy of CHRYSLER GROUP, LLC

For a complete wiring diagram, **refer to appropriate SYSTEM WIRING DIAGRAMS article** .

WHEN MONITORED:

Whenever the module is awake.

SET CONDITION:

When the driver door module has lost communication with the Driver Window/Door Lock Switch.

POSSIBLE CAUSES

Possible Causes
FUSE M25 IN THE TIPM OPEN
(A855) FUSED B(+) CIRCUIT FOR AN OPEN
(D500) LIN BUS CIRCUIT FOR A SHORT TO GROUND
(D500) LIN BUS CIRCUIT FOR A SHORT TO VOLTAGE
(D500) LIN BUS CIRCUIT FOR AN OPEN
(D501) LIN BUS RETURN CIRCUIT FOR AN OPEN
DRIVER WINDOW/DOOR LOCK SWITCH
DRIVER DOOR MODULE (DDM)

DIAGNOSTIC TEST

1. **TEST FOR INTERMITTENT CONDITION**

   NOTE: Make sure the battery is fully charged before proceeding.

   1. Turn the ignition on.
   2. With the scan tool, record and erase DTC's
   3. Operate the Front Window switches up and down several times.
   4. Wait 30 seconds.
   5. With the scan tool, read the active DTC's.

      Does the scan tool display U113D-LOST COMMUNICATION WITH MASTER POWER WINDOW SWITCH?

      Yes

      - Go To 2.

      No

      - Test complete, the condition or conditions that originally set this DTC are not present at this time. Using the wiring diagrams as a guide, check all related splices and connectors for signs of water intrusion, corrosion, pushed out or bent terminals, and correct pin tension.
      - Perform the BODY VERIFICATION TEST. Refer to **BODY VERIFICATION TEST** .

2. **(A855) FUSED B(+) CIRCUIT FOR AN OPEN**

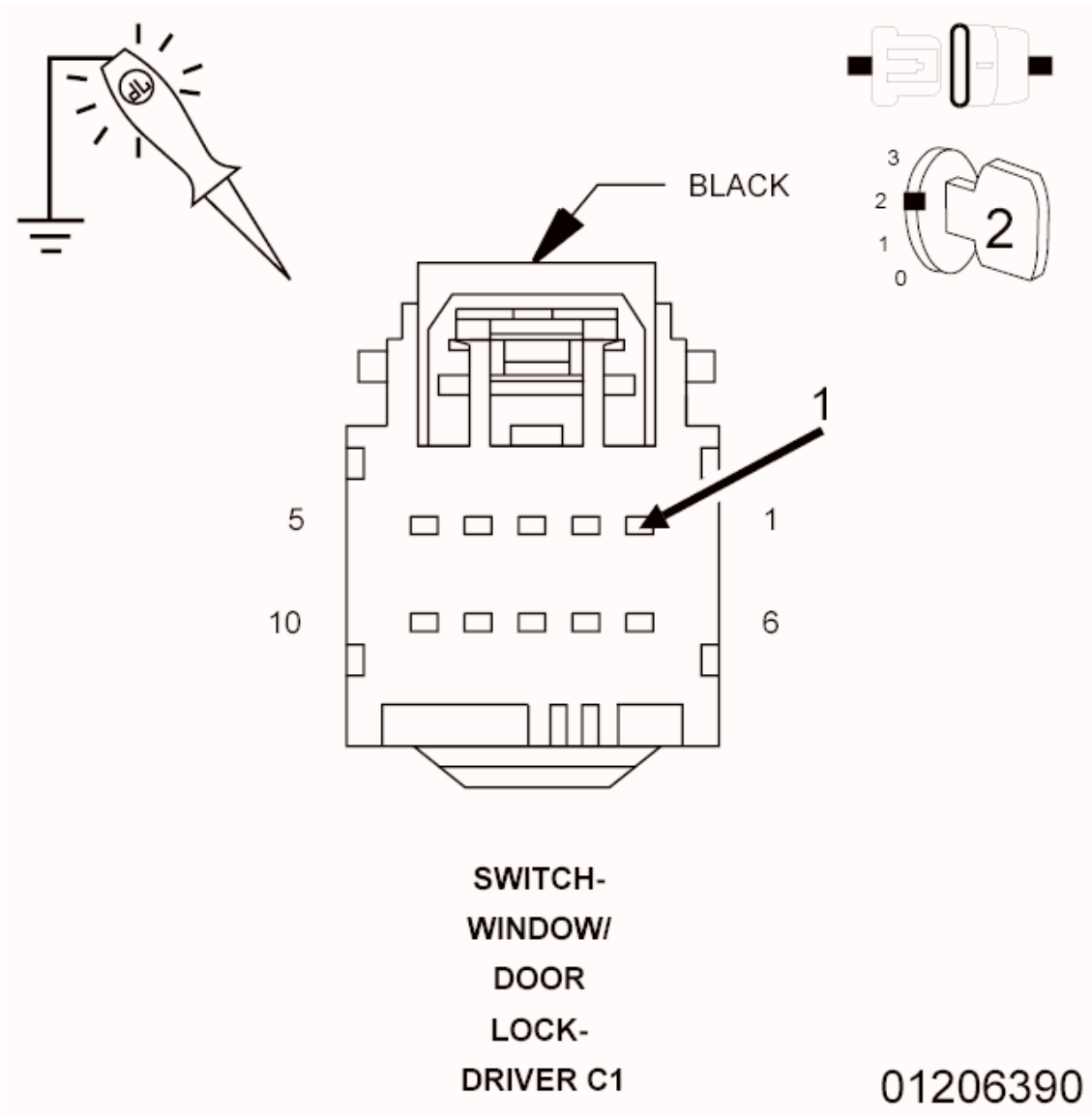

Fig. 128: Checking Fused B(+) Circuit For An Open
Courtesy of CHRYSLER GROUP, LLC

NOTE: Make sure Fuse M25 in the TIPM is good before proceeding.

1. With the scan tool, erase DTC's.
2. Turn the ignition off.
3. Disconnect the Driver Window/Door Lock Switch C1 harness connector.
4. Turn the ignition on.
5. Using a 12-volt test light connected to Ground, check the (A855) Fused B(+) circuit.

   Does the test light illuminate brightly?

   Yes

- Go To 3.

No

- Repair the open in the (A855) Fused B(+) circuit. If the fuse is open, make sure to check for a short to ground.
- Perform the BODY VERIFICATION TEST. Refer to **BODY VERIFICATION TEST** .

3. **CHECK THE LIN BUS CIRCUIT**

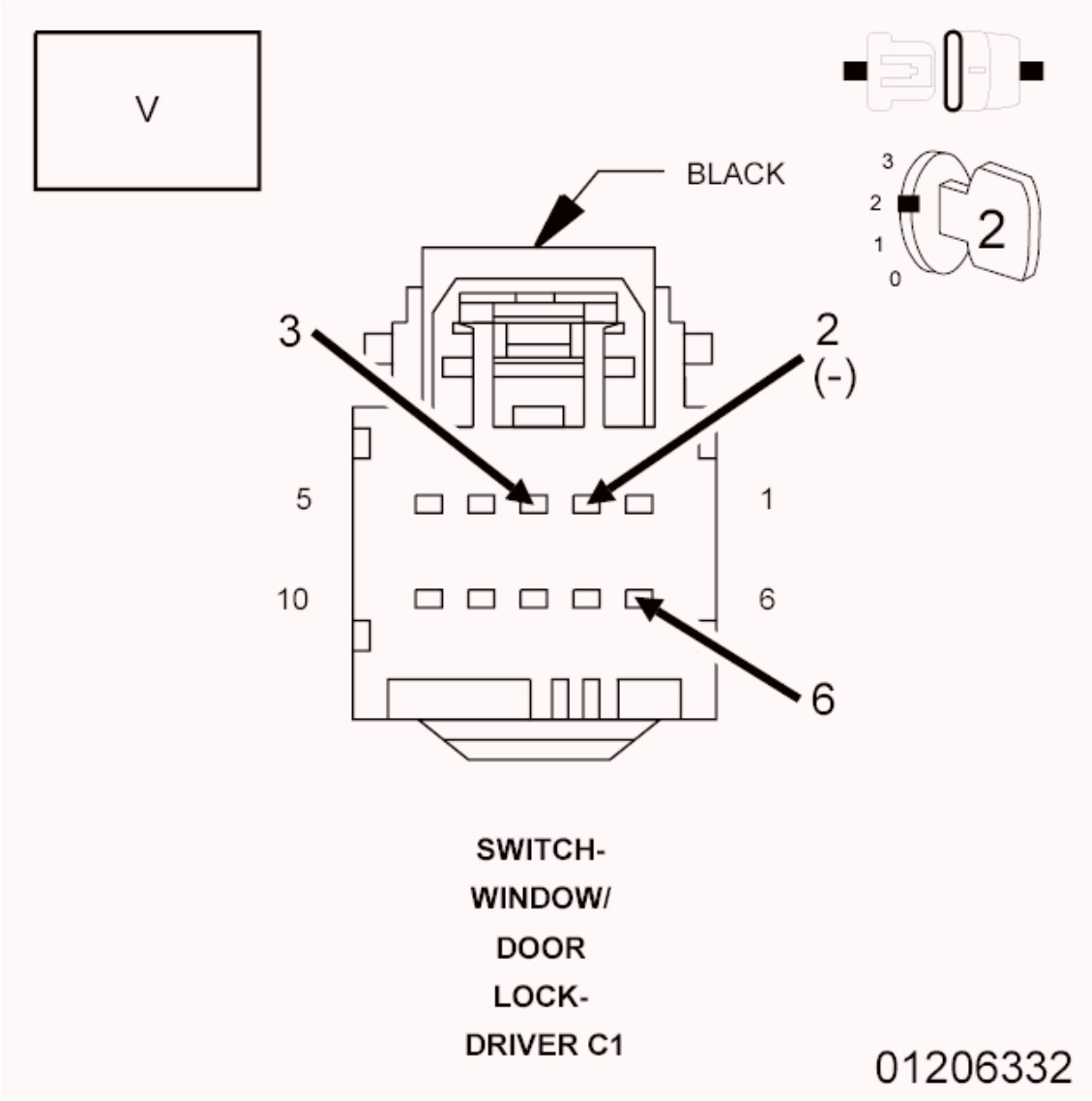

Fig. 129: Measuring Voltage Of Lin Bus Circuit
Courtesy of CHRYSLER GROUP, LLC

1. Measure the voltage between the (D500) LIN Bus circuit and the (D501) LIN Bus Return circuit.

   Is the voltage below 7.0 Volts?

Yes

- Go To 5.

No

- Go To 4.

4. **(D500) LIN BUS CIRCUIT FOR A SHORT TO VOLTAGE**

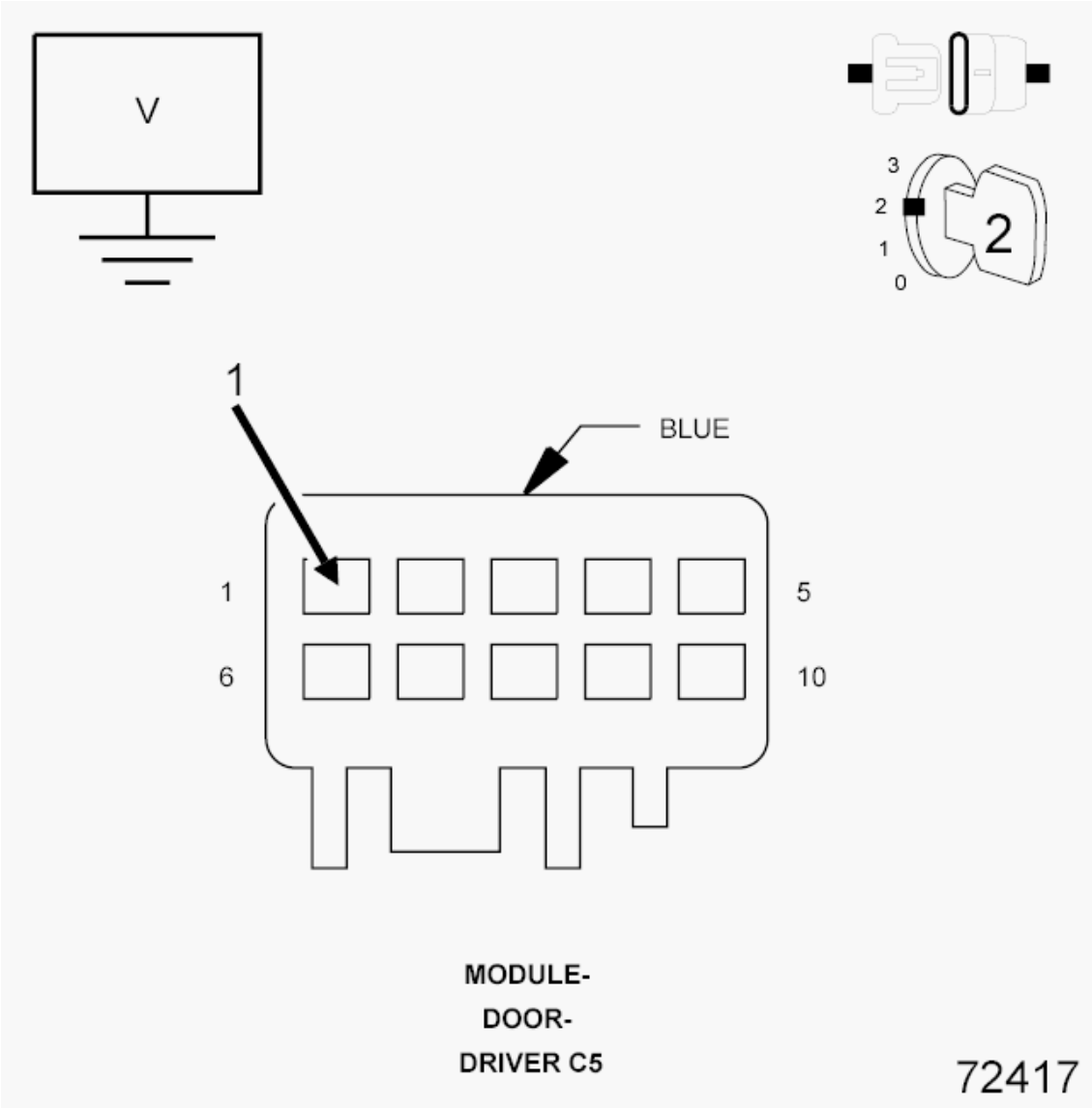

Fig. 130: Checking LIN BUS Circuit For A Short To Voltage
Courtesy of CHRYSLER GROUP, LLC

1. Turn the ignition off.
2. Disconnect the Driver Door Module C5 harness connector.
3. Turn the ignition on.

4. Measure the voltage between ground and the (D500) LIN Bus circuit.

   Is there any voltage present?

   Yes

   - Repair the short to voltage in the (D500) LIN Bus circuit.
   - Perform the BODY VERIFICATION TEST. Refer to **BODY VERIFICATION TEST** .

   No

   - Replace the Driver Window/Door Lock Switch in accordance with the Service Information.
   - Perform the BODY VERIFICATION TEST. Refer to **BODY VERIFICATION TEST** .

5. **(D501) LIN BUS RETURN CIRCUIT FOR AN OPEN**

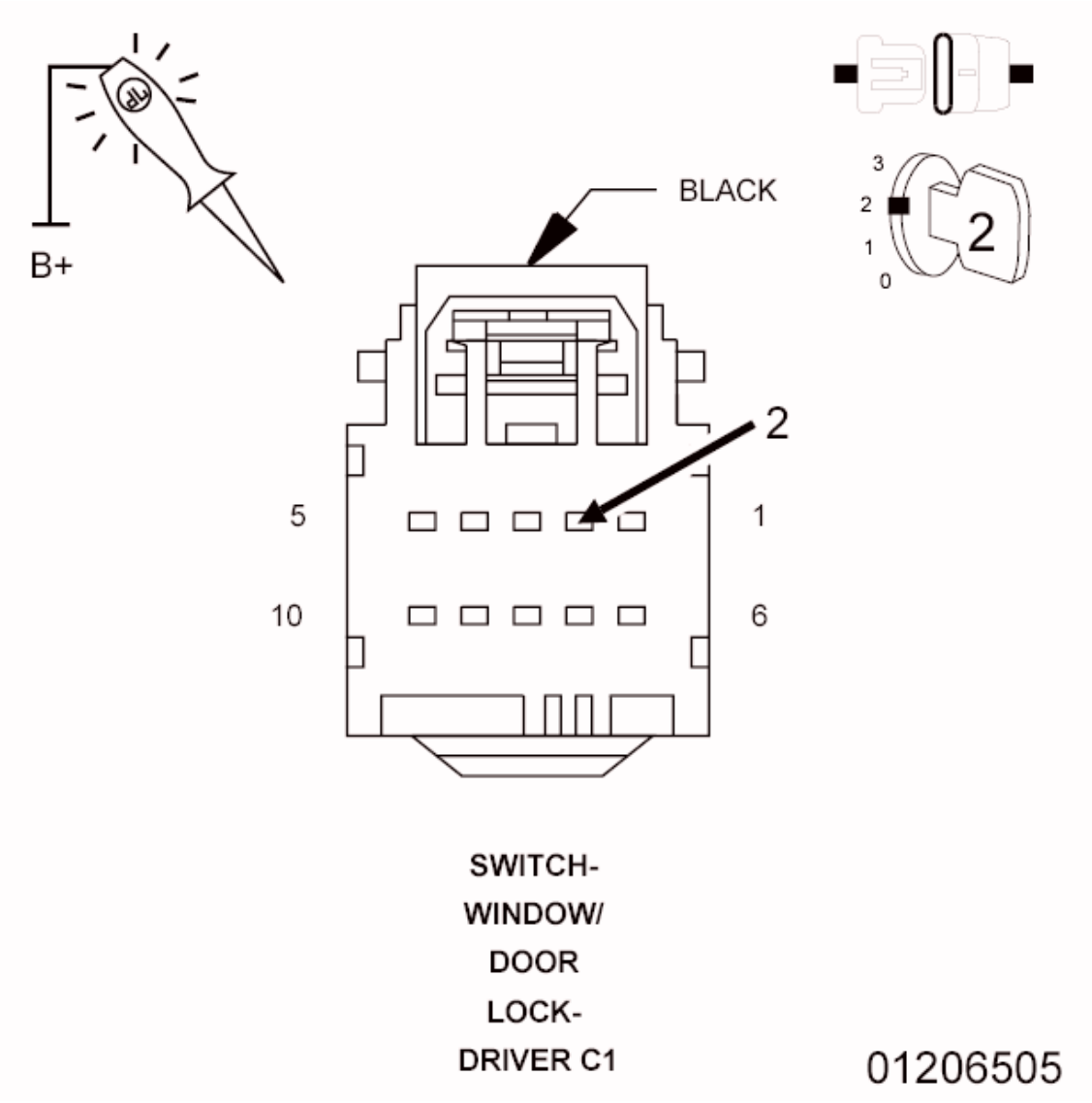

Fig. 131: Checking Lin Bus Circuit For An Open
Courtesy of CHRYSLER GROUP, LLC

1. Using a 12-volt test light connected to 12-volts, check the (D501) LIN Bus Return circuit.

   Does the test light illuminate brightly?

   Yes

   - Go To 6.

   No

   - Repair the open in the (D501) LIN Bus Return circuit.
   - Perform the BODY VERIFICATION TEST. Refer to **BODY VERIFICATION TEST** .

6. **(D500) LIN BUS CIRCUIT FOR A SHORT TO GROUND**

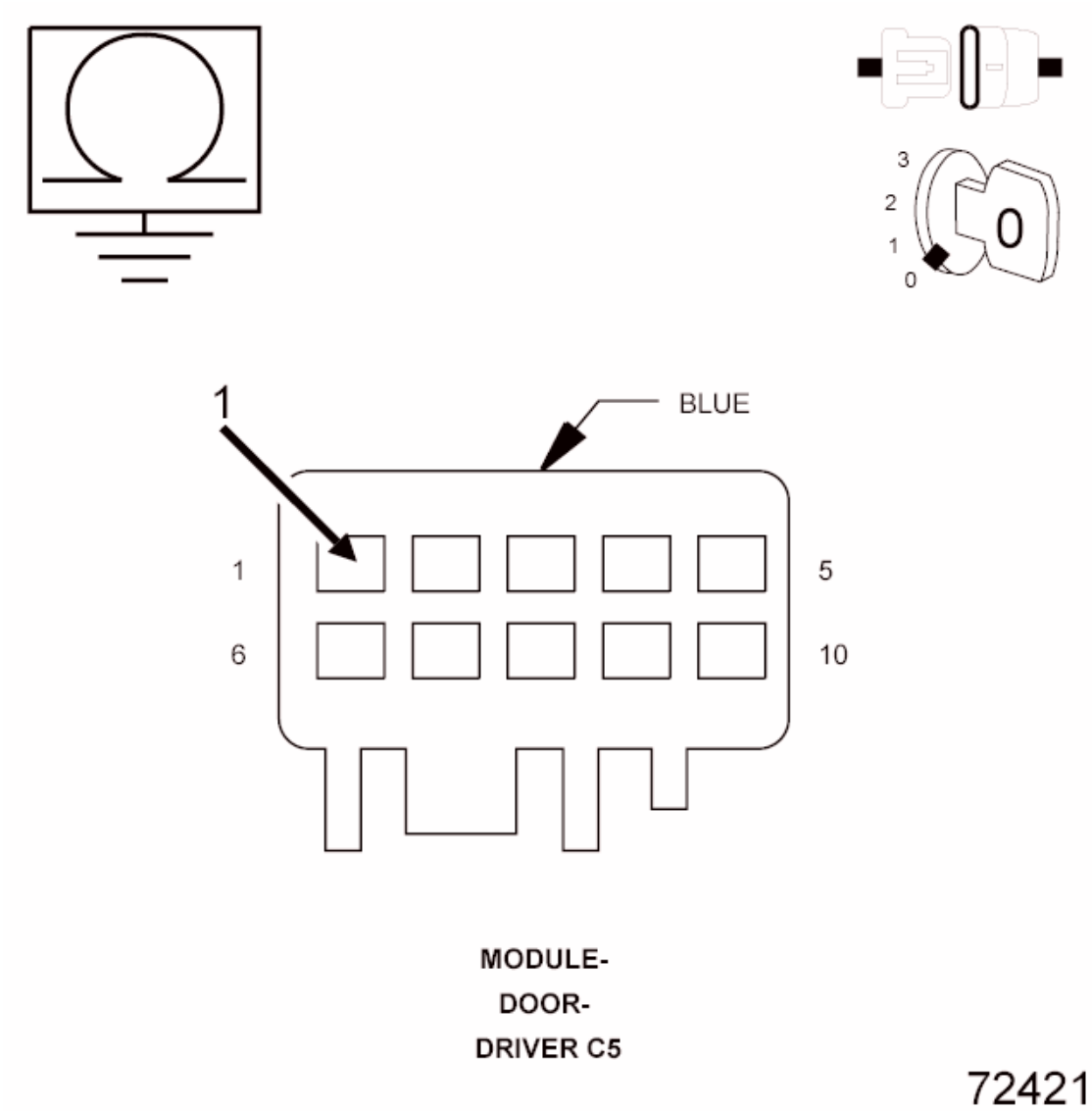

Fig. 132: Checking LIN BUS Circuit For A Short To Ground
Courtesy of CHRYSLER GROUP, LLC

1. Turn the ignition off.
2. Disconnect the Driver Door Module C5 harness connector.
3. Measure the resistance between ground and the (D500) LIN Bus circuit in the Driver Door Module C5 harness connector.

   Is the resistance below 10, 000 Ohms?

   Yes

   - Repair the short to ground in the (D500) LIN Bus circuit.
   - Perform the BODY VERIFICATION TEST. Refer to **BODY VERIFICATION TEST** .

No

- Go To 7.

7. **(D500) LIN BUS CIRCUIT FOR AN OPEN**

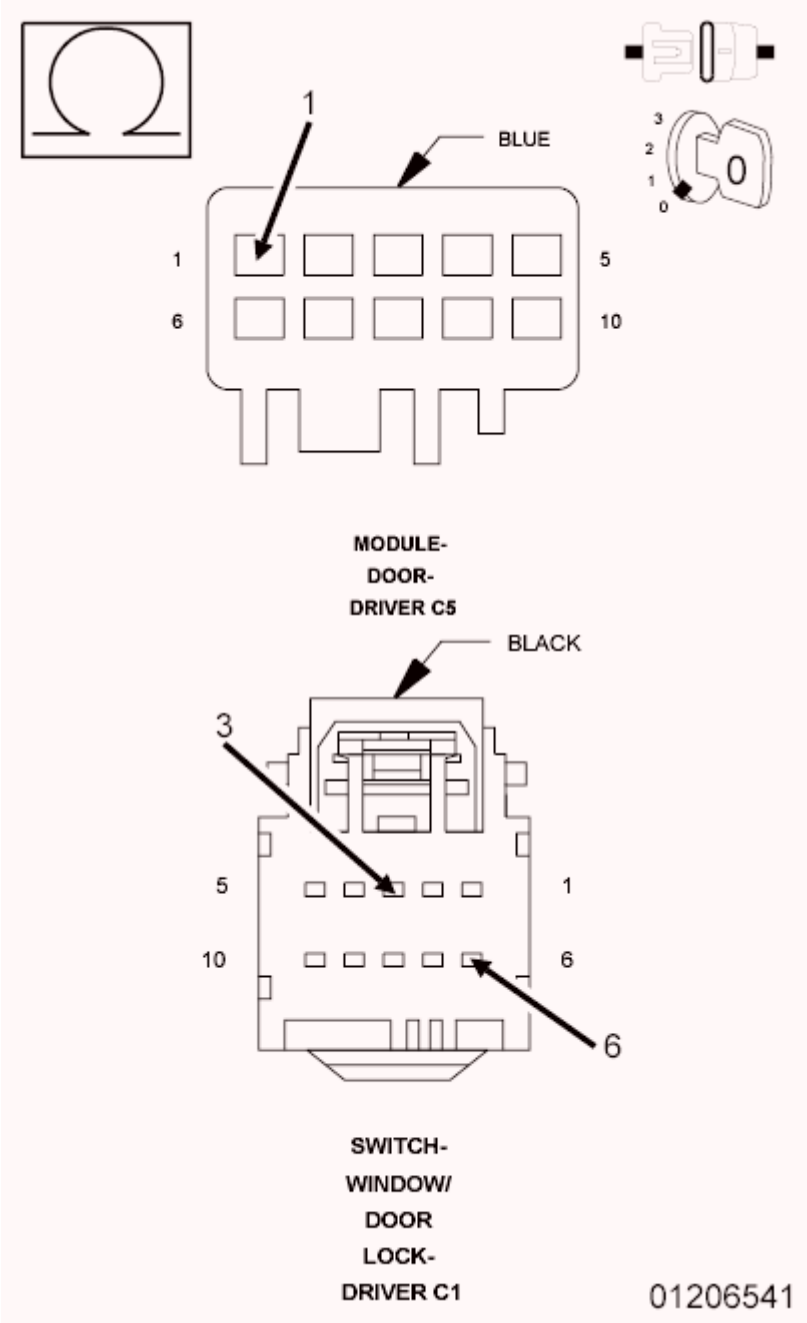

Fig. 133: Checking Lin Bus Circuit For An Open
Courtesy of CHRYSLER GROUP, LLC

1. Measure the resistance of the (D500) LIN Bus circuit between the Door Module C5 harness connector and the Driver Window/Door Lock Switch C1 harness connector.

Is the resistance above 2.0 Ohms?

Yes

- Repair the open in the (D500) LIN Bus circuit.
- Perform the BODY VERIFICATION TEST. Refer to **BODY VERIFICATION TEST** .

No

- Replace the Driver Door Module in accordance with the Service Information.
- Perform the BODY VERIFICATION TEST. Refer to **BODY VERIFICATION TEST** .

U113D-LOST COMMUNICATION WITH MASTER POWER WINDOW SWITCH - DS/DJ/D2

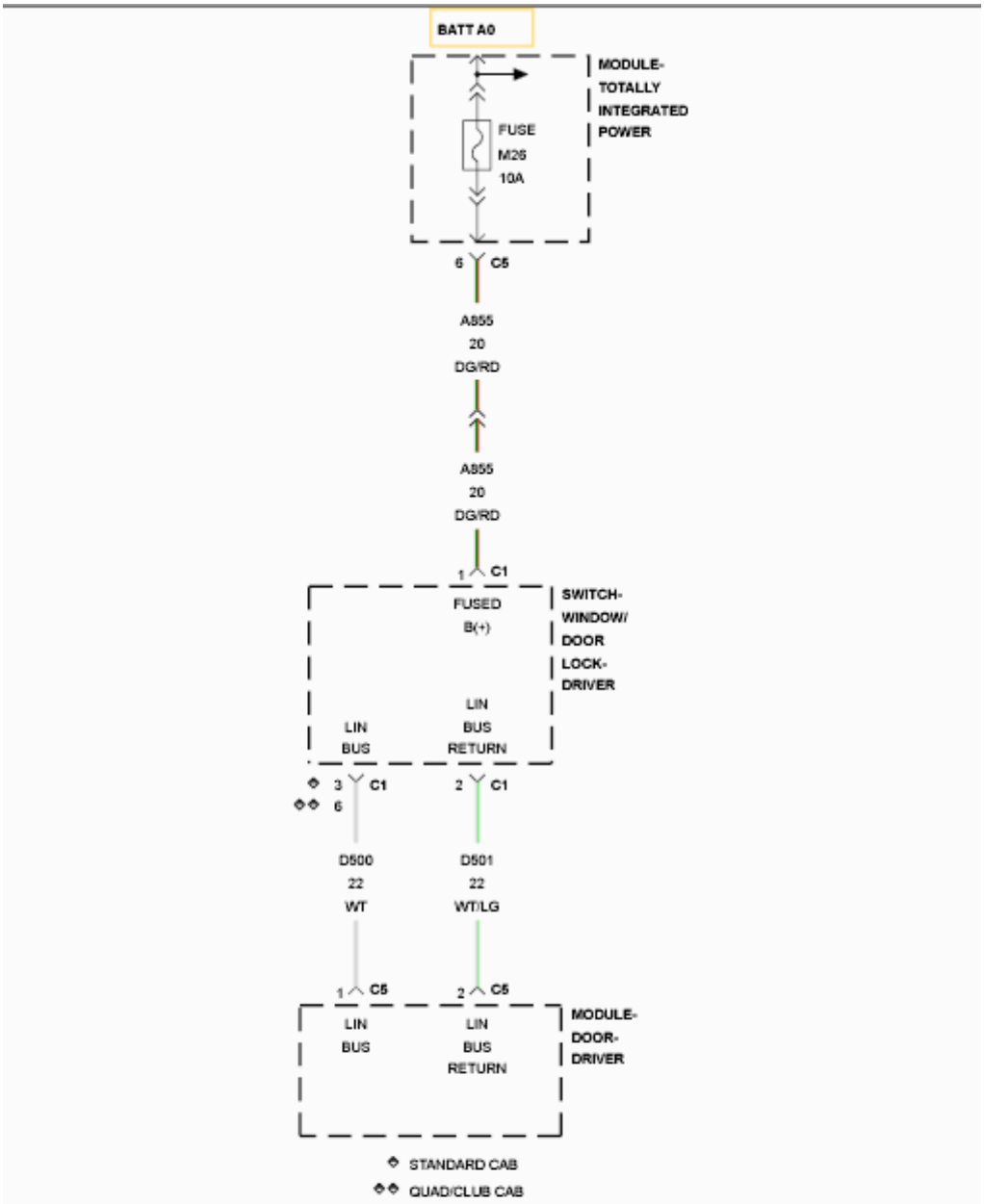

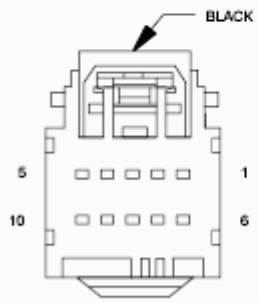

SWITCH-
WINDOW/
DOOR
LOCK-
DRIVER C1

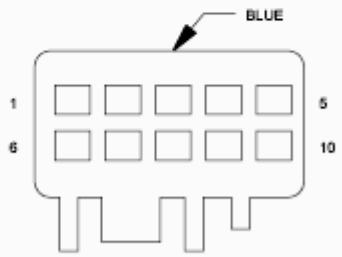

MODULE-
DOOR-
DRIVER C5

Fig. 134: LIN BUS Wiring Diagram
Courtesy of CHRYSLER GROUP, LLC

For a complete wiring diagram, **refer to appropriate SYSTEM WIRING DIAGRAMS article** .

WHEN MONITORED:

Whenever the module is awake.

SET CONDITION:

When the driver door module has lost communication with the Driver Window/Door Lock Switch.

POSSIBLE CAUSES

Possible Causes
FUSE M26 IN THE TIPM OPEN
(A855) FUSED B(+) CIRCUIT FOR AN OPEN
(D500) LIN BUS CIRCUIT FOR A SHORT TO GROUND
(D500) LIN BUS CIRCUIT FOR A SHORT TO VOLTAGE
(D500) LIN BUS CIRCUIT FOR AN OPEN
(D501) LIN BUS RETURN CIRCUIT FOR AN OPEN
DRIVER WINDOW/DOOR LOCK SWITCH
DRIVER DOOR MODULE (DDM)

DIAGNOSTIC TEST

1. **TEST FOR INTERMITTENT CONDITION**

   NOTE: Make sure the battery is fully charged before proceeding.

   1. Turn the ignition on.
   2. With the scan tool, record and erase DTC's
   3. Operate the Front Window switches up and down several times.
   4. Wait 30 seconds.
   5. With the scan tool, read the active DTC's.

      Does the scan tool display U113D-LOST COMMUNICATION WITH MASTER POWER WINDOW SWITCH?

      Yes

      - Go To 2.

      No

- Test complete, the condition or conditions that originally set this DTC are not present at this time. Using the wiring diagrams as a guide, check all related splices and connectors for signs of water intrusion, corrosion, pushed out or bent terminals, and correct pin tension.
- Perform the BODY VERIFICATION TEST. Refer to **BODY VERIFICATION TEST** .

2. **(A855) FUSED B(+) CIRCUIT FOR AN OPEN**

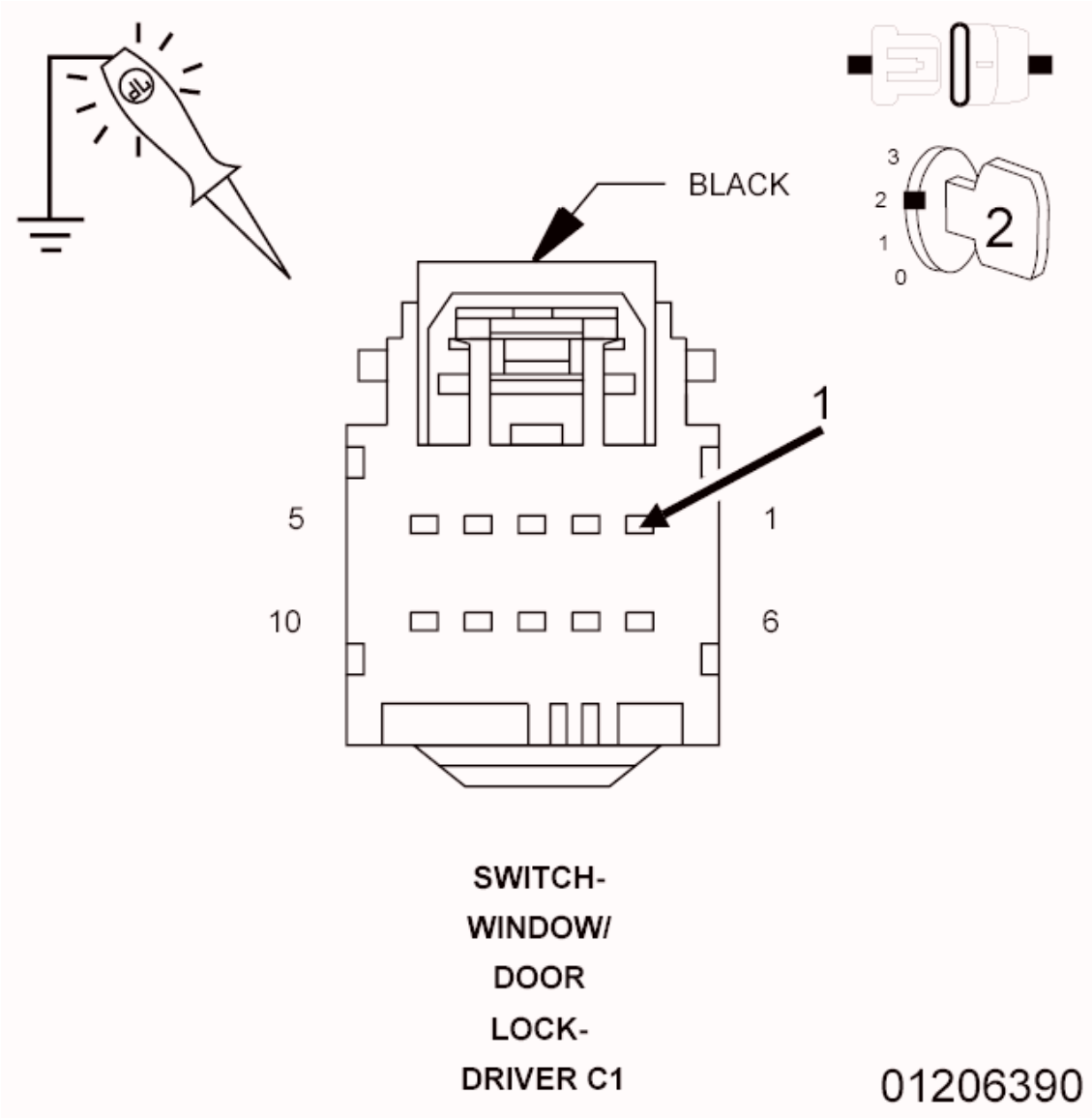

Fig. 135: Checking Fused B(+) Circuit For An Open
Courtesy of CHRYSLER GROUP, LLC

NOTE: Make sure Fuse M26 in the TIPM is good before proceeding.

1. With the scan tool, erase DTC's.
2. Turn the ignition off.
3. Disconnect the Driver Window/Door Lock Switch C1 harness connector.

4. Turn the ignition on.
5. Using a 12-volt test light connected to Ground, check the (A855) Fused B(+) circuit.

   Does the test light illuminate brightly?

   Yes

   - Go To 3.

   No

   - Repair the open in the (A855) Fused B(+) circuit. If the fuse is open, make sure to check for a short to ground.
   - Perform the BODY VERIFICATION TEST. Refer to **BODY VERIFICATION TEST** .

3. **CHECK THE LIN BUS CIRCUIT**

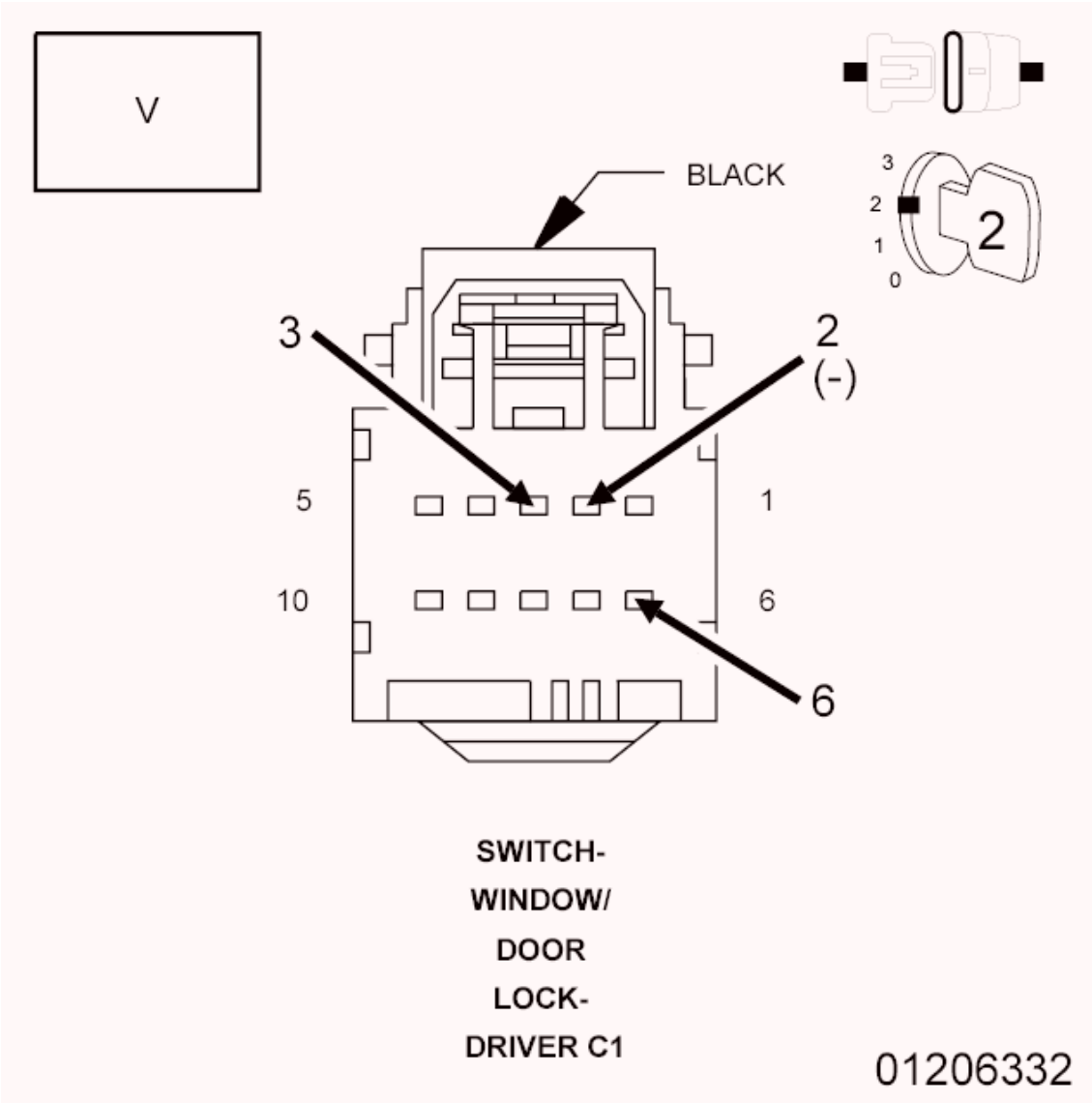

Fig. 136: Measuring Voltage Of Lin Bus Circuit
Courtesy of CHRYSLER GROUP, LLC

1. Measure the voltage between the (D500) LIN Bus circuit (2 Door cavity 3 - 4 Door cavity 6) and the (D501) LIN Bus Return circuit.

   Is the voltage below 7.0 Volts?

   Yes

   - Go To 5.

   No

   - Go To 4.

4. **(D500) LIN BUS CIRCUIT FOR A SHORT TO VOLTAGE**

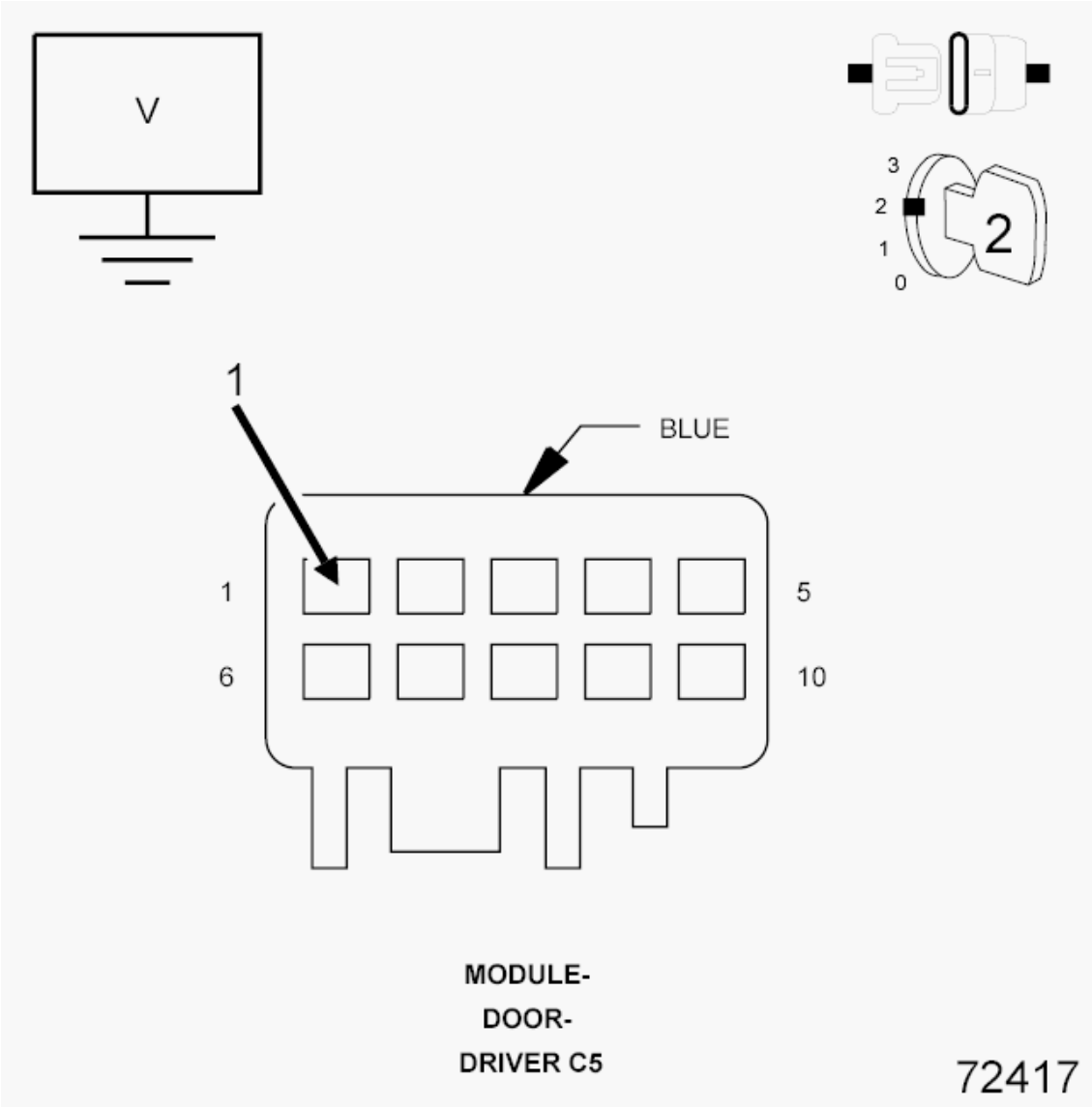

Fig. 137: Checking LIN BUS Circuit For A Short To Voltage
Courtesy of CHRYSLER GROUP, LLC

1. Turn the ignition off.
2. Disconnect the Driver Door Module C5 harness connector.
3. Turn the ignition on.
4. Measure the voltage between ground and the (D500) LIN Bus circuit.

   Is there any voltage present?

   Yes

- Repair the short to voltage in the (D500) LIN Bus circuit.
- Perform the BODY VERIFICATION TEST. Refer to **BODY VERIFICATION TEST** .

No

- Replace the Driver Window/Door Lock Switch in accordance with the Service Information.
- Perform the BODY VERIFICATION TEST. Refer to **BODY VERIFICATION TEST** .

5. **(D501) LIN BUS RETURN CIRCUIT FOR AN OPEN**

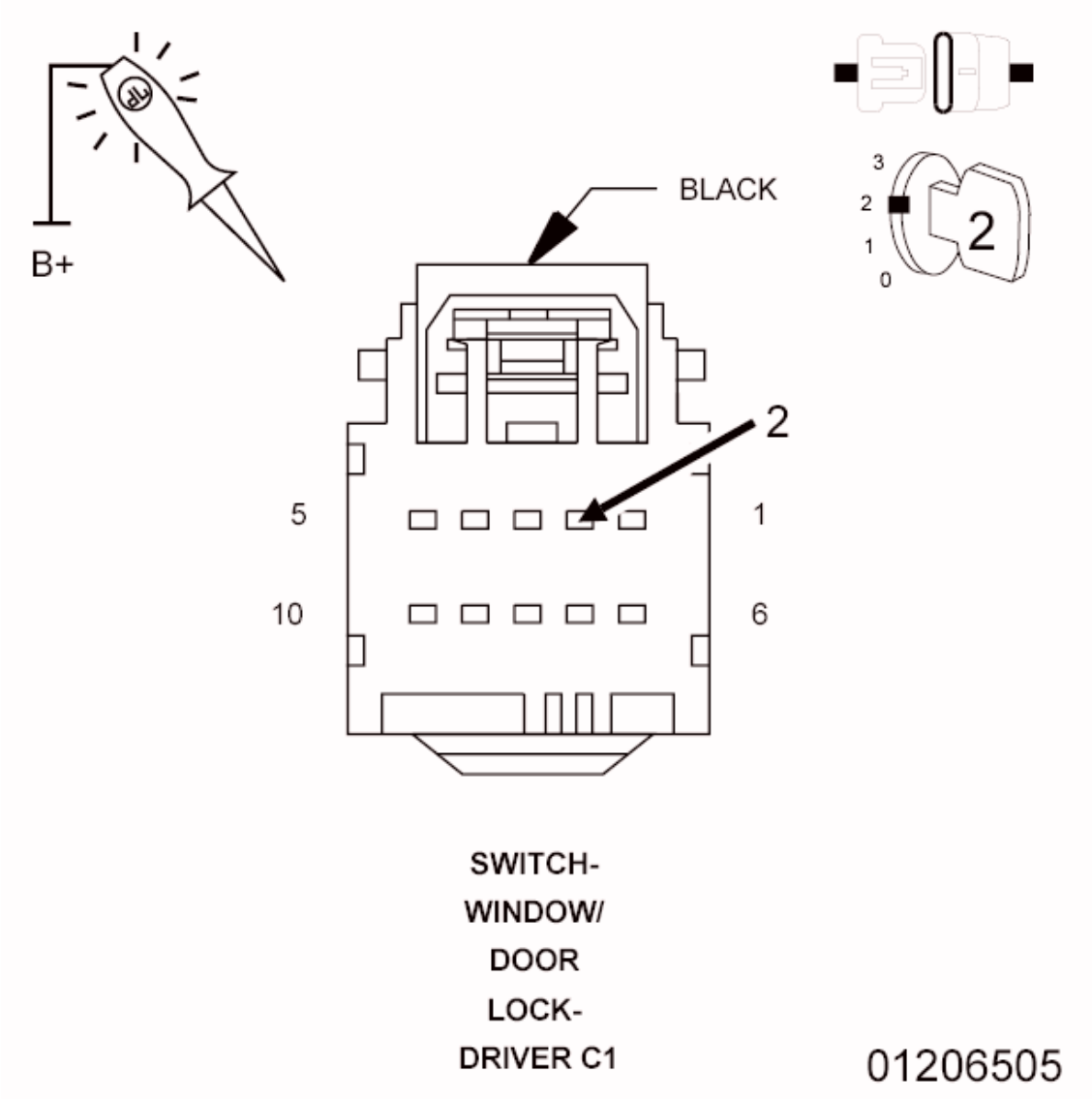

Fig. 138: Checking Lin Bus Circuit For An Open
Courtesy of CHRYSLER GROUP, LLC

1. Using a 12-volt test light connected to 12-volts, check the (D501) LIN Bus Return circuit.

   Does the test light illuminate brightly?

Yes

- Go To 6.

No

- Repair the open in the (D501) LIN Bus Return circuit.
- Perform the BODY VERIFICATION TEST. Refer to **BODY VERIFICATION TEST** .

6. **(D500) LIN BUS CIRCUIT FOR A SHORT TO GROUND**

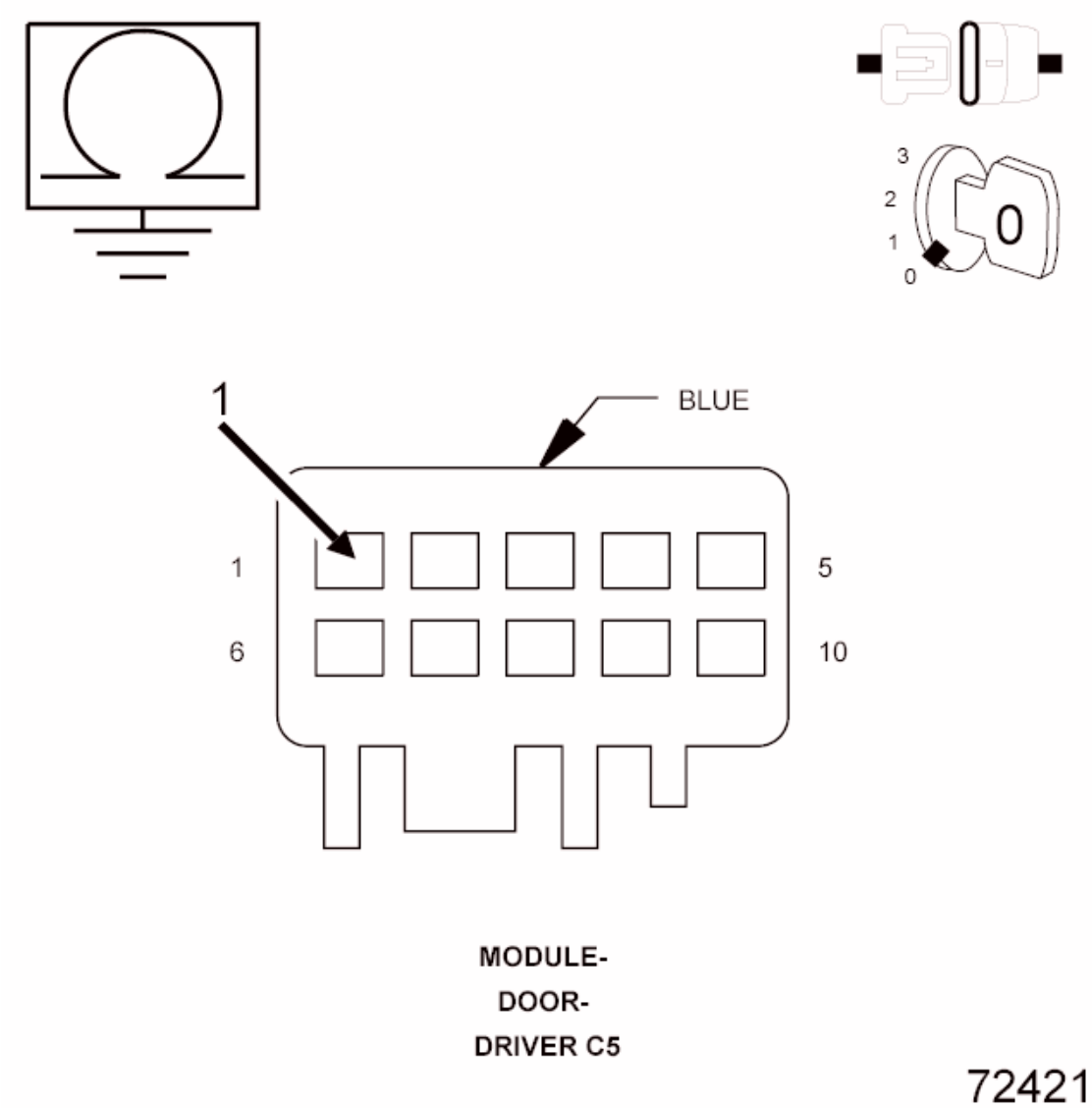

Fig. 139: Checking LIN BUS Circuit For A Short To Ground
Courtesy of CHRYSLER GROUP, LLC

1. Turn the ignition off.
2. Disconnect the Driver Door Module C5 harness connector.

3. Measure the resistance between ground and the (D500) LIN Bus circuit in the Driver Door Module C5 harness connector.

   Is the resistance below 10, 000 Ohms?

   Yes

   - Repair the short to ground in the (D500) LIN Bus circuit.
   - Perform the BODY VERIFICATION TEST. Refer to **BODY VERIFICATION TEST** .

   No

   - Go To 7.

7. **(D500) LIN BUS CIRCUIT FOR AN OPEN**

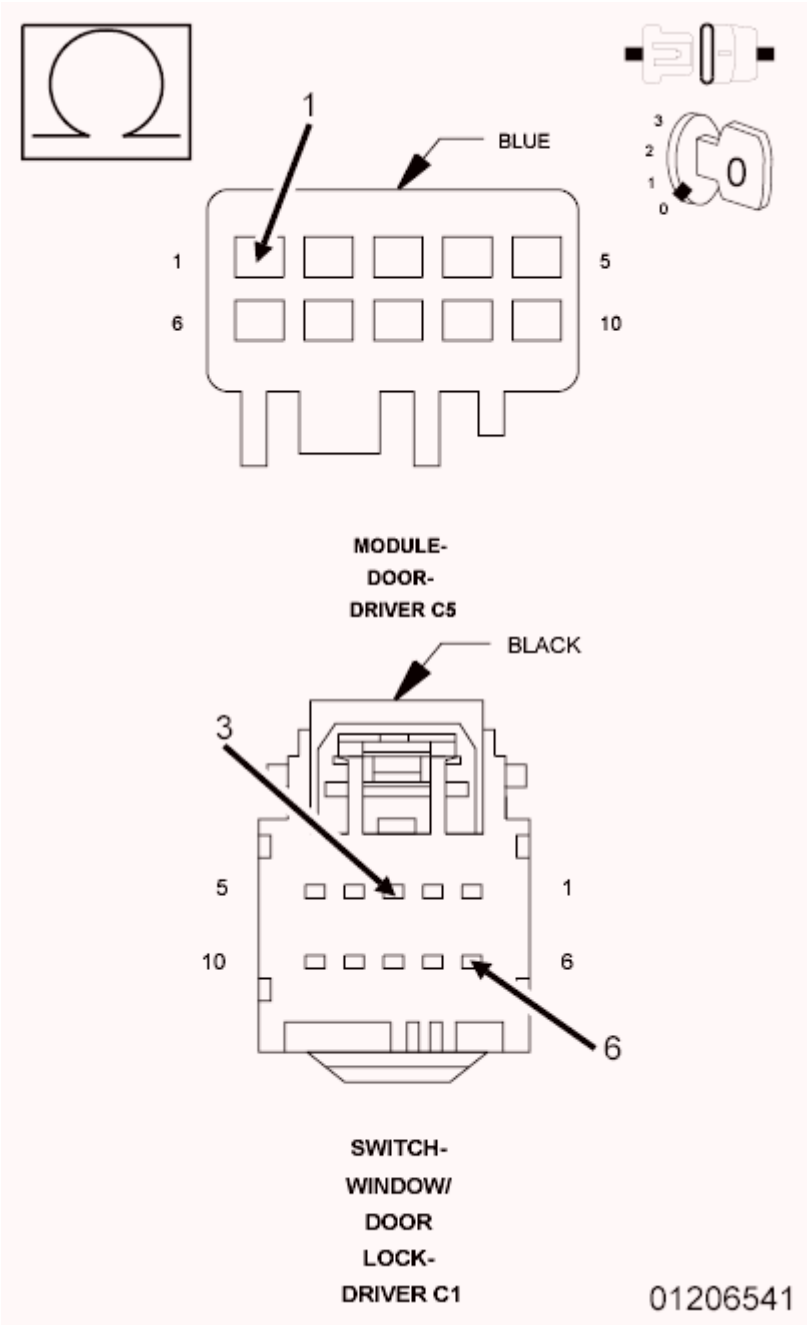

Fig. 140: Checking Lin Bus Circuit For An Open
Courtesy of CHRYSLER GROUP, LLC

1. Measure the resistance of the (D500) LIN Bus circuit (2 Door cavity 3 - 4 Door cavity 6) between the Door Module C5 harness connector and the Driver Window/Door Lock Switch C1 harness connector.

   Is the resistance above 2.0 Ohms?

   Yes

- Repair the open in the (D500) LIN Bus circuit.
- Perform the BODY VERIFICATION TEST. Refer to **BODY VERIFICATION TEST** .

No

- Replace the Driver Door Module in accordance with the Service Information.
- Perform the BODY VERIFICATION TEST. Refer to **BODY VERIFICATION TEST** .

STANDARD PROCEDURE

FLASH PROGRAMMING

NOTE: **The wiTECH diagnostic application is the preferred method for flashing ECUs.**

NOTE: **Help using the wiTECH diagnostic application for flashing an ECU is available by selecting "Help" then "Help Contents" at the top of the wiTECH diagnostic application window.**

NOTE: **The wiTECH software level must be at the latest release to perform this procedure.**

NOTE: **The StarMobile Desktop Client may also be used to perform this flash procedure.**

PCM, WIN, FOBIKS MODULE/PROGRAMMING ORDER REPLACEMENT GUIDE

Match the module row with the condition that applies, after module replacement follow the chart down and program the modules in the chart order.

Module	MODULE REPLACEMENT GUIDE (PCM, WIN, FOBiKs)						
	Condition 1	Condition 2	Condition 3	Condition 4	Condition 5	Condition 6	Condition 7
PCM	Existing	New	Existing	Existing	New	New	New
WCM/WIN (and ELV/ESCL if equipped)	Existing	Existing	New	New	Existing	New	New
FOBiKs	New	Existing	Existing	New	New	Existing	New
PROGRAMMING ORDER	ASSOCIATED MODULE MISC. FUNCTION						
1	Program Ignition Keys or Key FOBs	PCM Replaced	WIN Replaced	WIN Replaced	PCM Replaced	Attempt to avoid this situation. If possible, try to execute condition 2	Check PCM VIN
2	----	----	Program Ignition Keys or Key FOBs	Program Ignition Keys or Key FOBs	Program Ignition Keys or Key FOBs		WIN Replaced
			ELV/ESCL	ELV/ESCL			

3	----	----	Replaced (if ELV/ESCL equipped) (ignition ON)	Replaced (if ELV/ESCL equipped) (ignition ON)	----	or 3. Otherwise, keys must be replaced also (Condition 7).	Program Ignition Keys or Key FOBs
4	----	----	----	----	----		ELV/ESCL Replaced (if ELV/ESCL equipped) (ignition ON)

STANDARD PROCEDURE - MODULE PROGRAMMING

The Wireless Ignition Node (WIN) controls the Vehicle Theft Security System (VTSS), Remote Keyless Entry (RKE). When a Powertrain Control Module (PCM) is in need of replacement, perform the following steps in order:

NOTE: The PCM and the WIN should never be replaced at the same time. They should be replaced independently of each other.

1. If applicable, first replace the PCM with the original WIN still connected to the vehicle.
2. Using a scan tool program the new PCM. (This will ensure the transfer of the Secret Key data from the original WIN into the new PCM).
3. Replace the WIN, using the scan tool program the new WIN module. This will transfer the Secret Key data from the PCM into the new WIN.
4. With the scan tool reprogram the key FOBIK to the new WIN.
5. Ensure all the customer's keys have been programmed to the new module.

NOTE: If the original keys do not successfully program to the new WIN after the proper procedures are followed correctly, programming new keys will be necessary.

PROGRAMMING THE SECRET KEY TO THE WIN

The secret key is an ID code that is unique to each WIN. This code is programmed and stored in the WIN, the PCM, and each ignition key transponder chip. When the PCM or WIN is replaced, it is necessary to program the Secret Key Code into the new module using a diagnostic scan tool. Follow the programming steps outlined in the diagnostic scan tool for **PCM REPLACED** , **WIN REPLACED** , or **TIPM REPLACED** under **MISCELLANEOUS FUNCTIONS** for the **WIRELESS CONTROL MODULE** menu item as appropriate.

NOTE: Programming the PCM or WIN is done using a diagnostic scan tool and a PIN to enter secure access mode. If three attempts are made to enter secure access mode using an incorrect PIN, secure access mode will be locked out for one hour. To exit this lockout mode, turn the ignition to the RUN position for one hour and then enter the correct PIN. Be certain that all accessories are turned

OFF. Also, monitor the battery state and connect a battery charger if necessary.

PCM/WIN PROGRAMMING

When an PCM and the WIN are replaced at the same time, perform the following steps in order:

1. Program the new WIN.
2. Replace all ignition keys and program them to the new WIN.

PROGRAMMING THE WIN

CAUTION: Read all notes and cautions for programming procedures.

1. Connect a battery charger to the vehicle.
2. Connect the scan tool.

NOTE: Have a unique vehicle PIN readily available before running the routine

CAUTION: If the PCM and WIN are replaced at the same time, the PCM MUST be programmed before the WIN.

3. Select "ECU View."
4. Select "WIN".
5. Select "Miscellaneous Functions."
6. Select "WIN Replaced".
7. Enter the PIN when prompted.
8. Cycle ignition key after the successful routine completion.

NOTE: If the PCM and the WIN are replaced at the same time, all vehicle keys will need to be replaced and programmed to the new WIN.

PROGRAMMING IGNITION KEYS TO THE WIN

Each FOBIK has a unique ID code that is assigned at the time the key is manufactured. When a key is programmed into the WIN, the module learns the transponder ID code and the transponder acquires the unique Secret Key ID code from the WIN.

CAUTION: Read all notes and cautions for programming procedures.

1. Connect a battery charger to the vehicle.

2. Connect the scan tool.
3. Have a unique vehicle PIN readily available before running the routine.
4. Ignition key should be in RUN position.
5. Select "ECU View".
6. Select "WIN Wireless Control".
7. Select "Miscellaneous Functions."
8. Select "Program Ignition Keys or Key FOBs", Start
9. Enter the PIN when prompted.
10. Verify the correct information.
11. Cycle ignition key after the successful routine completion.

NOTE: **If the original keys do not successfully program to the new WIN after the proper procedures are followed correctly, programming new keys will be necessary.**

NOTE: **A maximum of eight keys can be learned by the WIN. Once a key is learned by a WIN, that key has acquired the Secret Key for that WIN and cannot be transferred to any other WIN or vehicle.**

PROGRAMMING THE PCM

CAUTION: Read all notes and cautions for programming procedures.

1. Connect a battery charger to the vehicle.
2. Connect the scan tool.
3. Have a unique vehicle PIN readily available before running the routine.
4. Ignition key should be in RUN position.

CAUTION: If the PCM and WIN are replaced at the same time, the PCM MUST be programmed before the WIN.

5. Select "ECU View".
6. Select "WIN Wireless Control".
7. Select "Miscellaneous Functions."
8. Select "PCM Replaced".
9. Enter the PIN when prompted.
10. Verify the correct information.
11. Cycle ignition key after the successful routine completion.

COMMUNICATION

DESCRIPTION

DESCRIPTION

The primary on-board communication network between microprocessor-based electronic control modules in this vehicle is the Controller Area Network (CAN) data bus system. A data bus network minimizes redundant wiring connections; and, at the same time, reduces wire harness complexity, sensor current loads and controller hardware by allowing each sensing device to be connected to only one module (also referred to as a node). Each node reads, then broadcasts its sensor data over the bus for use by all other nodes requiring that data. Each node ignores the messages on the bus that it cannot use.

The CAN bus is a two-wire multiplex system. Multiplexing is any system that enables the transmission of multiple messages over a single channel or circuit. The CAN bus is used for communication between most vehicle nodes. However, in addition to the CAN bus network, certain nodes may also be equipped with a Local Interface Network (LIN) data bus. The LIN data bus is a single wire low-speed (9.6 Kbps) serial link bus used to provide direct communication between a LIN master module and certain switch or sensor inputs.

There are actually three separate CAN bus systems used in the vehicle. They are designated: the CAN-Interior (also known as CAN Interior High Speed/IHS), the CAN-C and the Diagnostic CAN-C. The CAN-Interior and CAN-C systems provide on-board communication between all nodes in the vehicle. The CAN-C is the faster of the two systems providing near real-time communication (500 Kbps). The CAN-C is used typically for communications between more critical nodes, while the slower (125 Kbps) CAN-Interior system is used for communications between less critical nodes.

The added speed of the CAN data bus is many times faster than previous data bus systems. This added speed facilitates the addition of more electronic control modules or nodes and the incorporation of many new electrical and electronic features in the vehicle.

The Diagnostic CAN-C bus is also capable of 500 Kbps communication, and is sometimes informally referred to as the CAN-D system to differentiate it from the other high speed CAN-C bus. The Diagnostic CAN-C is used exclusively for the transmission of diagnostic information between the Totally Integrated Power Module/Central GateWay (TIPM or TIPMCGW) and a diagnostic scan tool connected to the industry-standard 16-way Data Link Connector (DLC) located beneath the instrument panel on the driver side of the vehicle.

The TIPM is located in the engine compartment near the battery. The central CAN gateway or hub module integral to the TIPM is connected to all three CAN buses. This gateway physically and electrically isolates the CAN buses from each other and coordinates the bi-directional transfer of messages between them.

OPERATION

OPERATION

The Controller Area Network (CAN) data bus allows all electronic modules or nodes connected to the bus to share information with each other. Regardless of whether a message originates from a module on the lower speed CAN-Interior (also known as CAN Interior High Speed/IHS) bus or on the higher speed CAN-C or CAN-D bus, the message structure and layout is similar, which allows the Totally Integrated Power Module/Central GateWay (TIPM or TIPMCGW) to process and transfer messages between the CAN buses. The TIPM also stores a Diagnostic Trouble Code (DTC) for certain bus network faults.

All modules (also referred to as nodes) transmit and receive messages over one of these buses. Data exchange between nodes is achieved by serial transmission of encoded data messages. Each node can both send and receive serial data simultaneously. Each digital bit of a CAN bus message is carried over the bus as a voltage differential between the two bus circuits which, when strung together, form a message. Each node uses arbitration to sort the message priority if two competing messages are attempting to be broadcast at the same time.

The Cluster (also known as the Cabin Compartment Node/CCN) is the Local Interface Network (LIN) master module in this vehicle and it gathers information from the compass module, the instrument panel switch bank, the Steering Control Module (SCM), and the Heated Seat Module (HSM) through the LIN data bus. There is also LIN bus communication between the individual Tire Pressure Monitor (TPM) transponders and the Wireless Ignition Node (WIN). Both the EMIC and the WIN either act directly upon the information received through the LIN data bus, relay the information to other nodes in the vehicle using electronic messages placed on the CAN bus, or both.

The voltage network used to transmit messages requires biasing and termination. Each module on the CAN bus network provides its own biasing and termination. There are two types of nodes used in the CAN bus network. On the CAN-C or the IHS bus, a dominant node has a 120 ohm termination resistance while a non-dominant (or recessive) node has about a 2500 to 3000 ohm (2.5 to 3.0 kilohm) termination resistance. The dominant nodes on the CAN-C bus are the WIN and the Powertrain Control Module (PCM). The dominant nodes on the IHS bus are the Cluster and the TIPM.

The termination resistance of two dominant nodes is combined in parallel to provide a total of about 60 ohms. This resistance value may vary somewhat by application, depending upon the number of non-dominant nodes on the bus. On the CAN-D bus (or Diagnostic CAN-C) all of the 60 ohm termination resistance is present in the Central GateWay (TIPMCGW).

NOTE: All measurement of termination resistance is done with the vehicle battery disconnected.

The communication protocol being used for the CAN data bus is a non-proprietary, open standard adopted from the Bosch CAN Specification 2.0b. The CAN-C is the faster of the two primary buses in the CAN bus system, providing near real-time communication (500 Kbps).

The CAN bus nodes are connected in parallel to the two-wire bus using a twisted pair, where the wires are wrapped around each other to provide shielding from unwanted electromagnetic induction, thus preventing interference with the relatively low voltage signals being carried through them. The twisted pairs have between 33 and 50 twists per meter (yard). While the CAN bus is operating (active), one of the bus wires will carry a higher voltage and is referred to as the CAN High or CAN bus (+) wire, while the other bus wire will carry a lower voltage and is referred to as the CAN Low or CAN bus (-) wire. Refer to the CAN Bus Voltages table.

CAN Bus Voltages (Normal Operation)								
CAN-C Bus Circuits	**Sleep**	**Recessive (Bus Idle)**	**Dominant (Bus Active)**	**CAN-L Short to Ground**	**CAN-H Short to Ground**	**CAN-L Short to Battery**	**CAN-H Short to Battery**	**CAN-H Short to CAN-L**
						Battery	Battery Voltage	

CAN-L (-)	0 V	2.4 - 2.5 V	1.3 - 2.3 V	0 V	0.3 - 0.5V	Voltage	Less 0.75 V	2.45 V
CAN-H (+)	0 V	2.4 - 2.5 V	2.6 - 3.5 V	0.02 V	0 V	Battery Voltage Less 0.75 V	Battery Voltage	2.45 V
CAN-Interior Bus Circuits	**Key-Off (Bus Asleep)**		**Key-On (Bus Active)**	**CAN-L Short to Ground**	**CAN-H Short to Ground**	**CAN-L Short to Battery**	**CAN-H Short to Battery**	**CAN-H Short to CAN-L**
CAN-L (-)	0.0 V		1.3 - 2.3 V	0 V	0.3 - 0.5 V	Battery Voltage	Battery Voltage Less 0.75 V	2.45 V
CAN-H (+)	0.0 V		2.6 - 3.5 V	0.02 V	0 V	Battery Voltage Less 0.75 V	Battery Voltage	2.45 V
Notes								
All measurements taken between node ground and CAN terminal with a standard DVOM. DVOM will display average network voltage. Total resistance of CAN-C network can also be measured (60 ohms). Total resistance of CAN-Interior network varies, depending upon the number of optional non-dominant nodes on the bus. CAN-Interior total resistance should range between about 60 ohms with the minimal number of nodes, to about 42 ohms with the maximum number of nodes.								

In order to minimize the potential effects of Ignition-OFF Draw (IOD), the CAN-Interior network employs a sleep strategy. However, a network sleep strategy should not be confused with the sleep strategy of the individual nodes on that network, as they may differ. For example: The CAN-C bus network is awake only when the ignition switch is in the ON or START positions; however, the TIPM, which is on the CAN-C bus, may still be awake with the ignition switch in the ACCESSORY or UNLOCK positions. The integrated circuitry of an individual node may be capable of processing certain sensor inputs and outputs without the need to utilize network resources.

The CAN-Interior bus network remains active until all nodes on that network are ready for sleep. This is determined by the network using tokens in a manner similar to polling. When the last node that is active on the network is ready for sleep, and it has already received a token indicating that all other nodes on the bus are ready for sleep, it broadcasts a **bus sleep acknowledgment** message that causes the network to sleep. Once the CAN-Interior bus network is asleep, any node on the bus can awaken it by transmitting a message on the network. The TIPM will keep either the CAN-Interior or the CAN-C bus awake for a timed interval after it receives a diagnostic message for that bus over the Diagnostic CAN-C bus.

In the CAN system, available options are configured into the TIPM at the assembly plant, but additional options can be added in the field using the diagnostic scan tool. The configuration settings are stored in non-volatile memory. The TIPM also has two 64-bit registers, which track each of the **as-built** and **currently responding** nodes on the CAN-Interior and CAN-C buses. The TIPM stores a Diagnostic Trouble Code (DTC) in one of two caches for any detected active or stored faults in the order in which they occur. One cache stores powertrain (P-Code), chassis (C-Code) and body (B-Code) DTCs, while the second cache is dedicated to storing network

(U-Code) DTCs.

If there are intermittent or active faults in the CAN network, a diagnostic scan tool connected to the Diagnostic CAN-C bus through the 16-way Data Link Connector (DLC) may only be able to communicate with the TIPM. To aid in CAN network diagnosis, the TIPM will provide CAN-Interior and CAN-C network status information to the scan tool using certain diagnostic signals. In addition, the transceiver in each node on the CAN-C bus will identify a **bus off hardware failure** , while the transceiver in each node on the CAN-Interior bus will identify a **general bus hardware failure** . The transceivers for some CAN-Interior nodes will also identify certain failures for both CAN-Interior bus signal wires.

CONNECTOR, DATA LINK

DESCRIPTION

DESCRIPTION

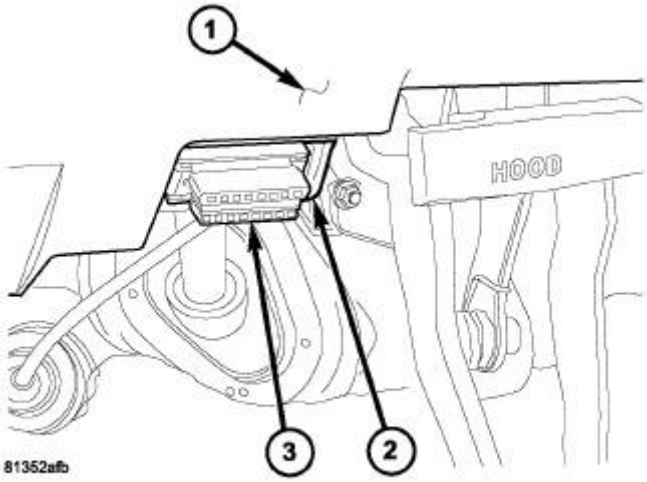

Fig. 1: Identifying Data Link Connector
Courtesy of CHRYSLER GROUP, LLC

The Data Link Connector (DLC) (3) is a 16-way molded plastic connector insulator on a dedicated take out of the instrument panel wire harness. This connector is located at the lower edge of the instrument panel, outboard of the steering column. The connector insulator is retained by integral snap features within a rectangular cutout in the lower instrument panel reinforcement (2), just below the lower edge of the instrument panel steering column opening cover (1).

OPERATION

OPERATION

The Data Link Connector (DLC) is an industry-standard 16-way connector that permits the connection of a diagnostic scan tool to the Controller Area Network (CAN) data bus for interfacing with, configuring, and

retrieving Diagnostic Trouble Code (DTC) data from the electronic modules that reside on the data bus network of the vehicle.

MODULE, ANTI-LOCK BRAKE SYSTEM

DESCRIPTION

DESCRIPTION

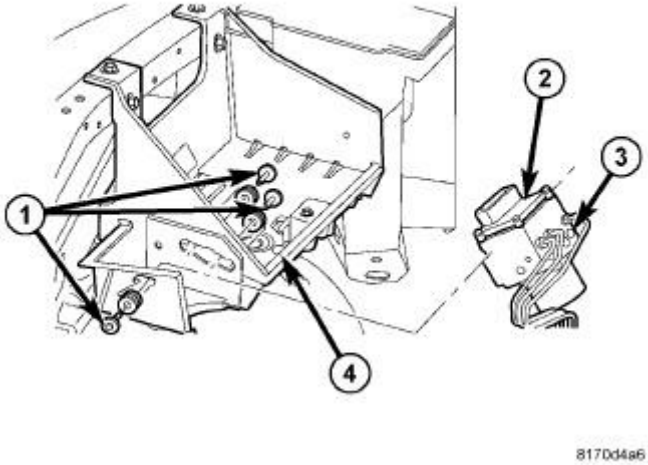

Fig. 2: HCU/ABM & Mounting Bolts
Courtesy of CHRYSLER GROUP, LLC

The Antilock Brake Module (ABM) (2) is mounted to the Hydraulic Control Unit (HCU) (3) and operates the ABS system.

OPERATION

OPERATION

The ABM voltage source is through the ignition switch in the RUN position. The ABM contains a self check program that illuminates the ABS warning light when a system fault is detected. Faults are stored in a diagnostic program memory and are accessible with the scan tool. ABS faults remain in memory until cleared, or until after the vehicle is started approximately 50 times. Stored faults are **not** erased if the battery is disconnected.

NOTE: If the ABM is being replaced with a new ABM is must be reprogrammed with the use of a scan tool.

REMOVAL

REMOVAL

CAUTION: When removing ABM from HCU, be sure to completely separate the two components (approximately 38 mm (1.5 in.) before removing ABM. Otherwise, damage to the pressure sensor or Pump Motor connection may result requiring HCU replacement. Do not to touch the sensor terminals on the HCU side or the contact pads on the ABM side as this may result in contamination and issues in the future.

1. Remove the negative battery cable from the battery.
2. Pull up on the ABM harness connector release and remove connector.
3. Remove the ABM mounting bolts.
4. Remove the pump connector from the ABM.
5. Remove the ABM from the HCU.

INSTALLATION

INSTALLATION

CAUTION: When removing ABM from HCU, be sure to completely separate the two components (approximately 38 mm (1.5 in.) before removing ABM. Otherwise, damage to the pressure sensor or Pump Motor connection may result requiring HCU replacement. Do not to touch the sensor terminals on the HCU side or the contact pads on the ABM side as this may result in contamination and issues in the future.

NOTE: If the ABM is being replaced with a new ABM is must be reprogrammed with the use of a scan tool.

1. Install ABM to the HCU.
2. Install the pump connector to the ABM.
3. Install mounting bolts. Tighten to 2 N.m (16 in. lbs.).
4. Install the wiring harness connector to the ABM and push down on the release to secure the connector.
5. Install negative battery cable to the battery.
6. Connect the scan tool and initialize the ABM by performing the ABS Verification Test. Refer to **ABS VERIFICATION TEST** . .

MODULE, COMPASS

DESCRIPTION

DESCRIPTION

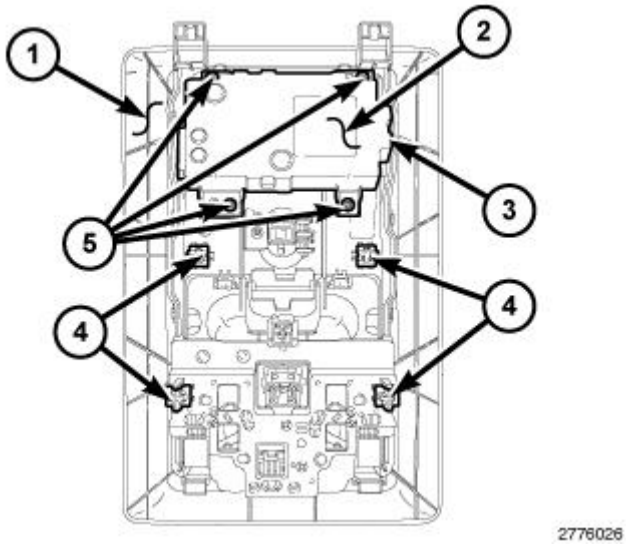

Fig. 3: Remote Compass Module
Courtesy of CHRYSLER GROUP, LLC

The Remote Compass Module (RCM) (2) is a separate stand alone module located within the overhead console (1). The RCM can be accessed by removing the overhead console from the vehicle. Some vehicles are equipped with a Universal Garage Door Opener (UGDO) also known as a HomeLink® transceiver. Both the RCM and the HomeLink® transceiver for this vehicle are one in the same and sometimes referred to as the Electronic Overhead Module (EOM).

The HomeLink® transceiver or UGDO is equipped with three push buttons switches that are visible from the front face of the overhead console. The buttons are marked with one, two or three dash marks, respectively, for identification of each channel. For more information on the HomeLink® transceiver. Refer to **DESCRIPTION** .

The RCM or the HomeLink® transceiver cannot be repaired. If either the compass position sensor or the HomeLink® transceiver are inoperative and require replacement, the EOM must be replaced as a complete assembly. For more information on servicing the EOM go to the message center section for the appropriate procedure.

REMOVAL

REMOVAL

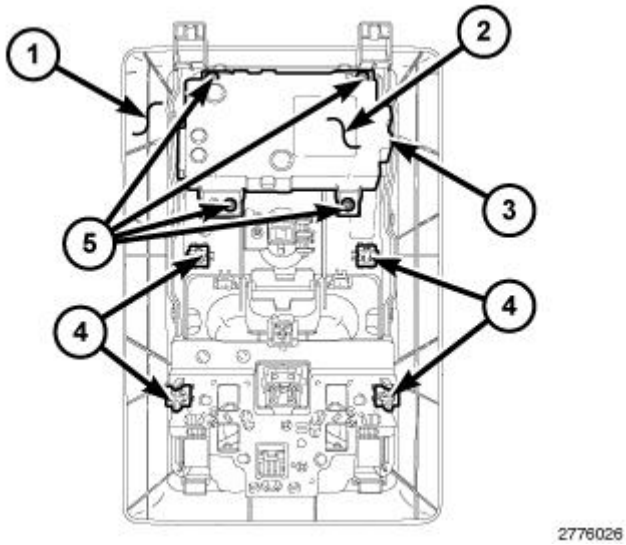

Fig. 4: Remote Compass Module
Courtesy of CHRYSLER GROUP, LLC

1. Disconnect and isolate the negative battery cable.
2. Remove the overhead console assembly (1). Refer to **CONSOLE, OVERHEAD, FRONT, REMOVAL** .
3. Remove the four fasteners (5) that secure the Remote Compass Module (RCM) (2) to the overhead console.
4. Remove the module from the console.

INSTALLATION

INSTALLATION

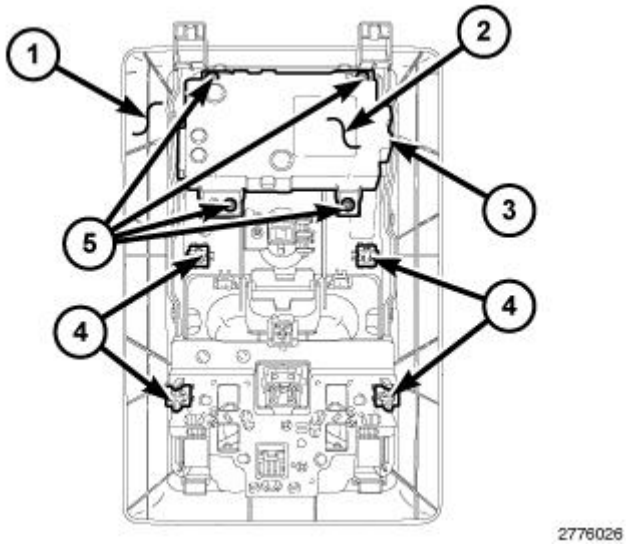

Fig. 5: Remote Compass Module
Courtesy of CHRYSLER GROUP, LLC

1. Position the Remote Compass Module (RCM) (2) in the console.
2. Install the four fasteners (5) that secure the RCM to the overhead console (1).
3. Install the overhead console assembly. Refer to **CONSOLE, OVERHEAD, FRONT, INSTALLATION** .
4. Connect the negative battery cable.
5. Perform the Compass Variance Adjustment. Refer to **MODULE, COMPASS, STANDARD PROCEDURE** .
6. Perform the Manual Compass Calibration. Refer to **MODULE, COMPASS, STANDARD PROCEDURE** .
7. Verify proper compass operation.

MODULE, DOOR

DESCRIPTION

DESCRIPTION

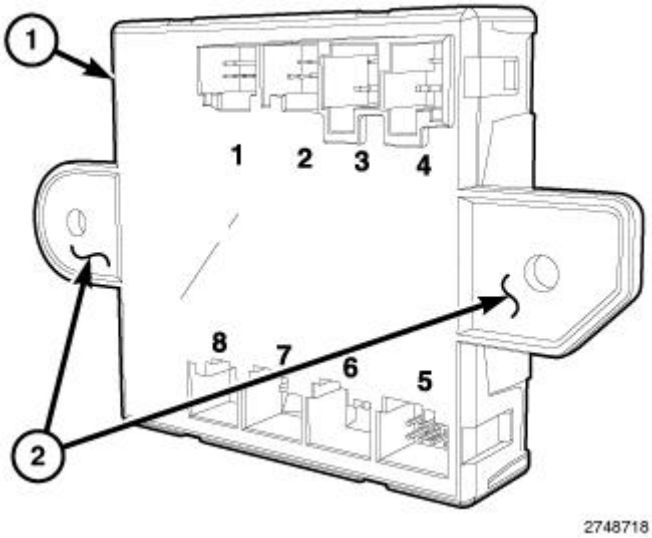

Fig. 6: Front Door Control Module
Courtesy of CHRYSLER GROUP, LLC

This vehicle is equipped with two electronic front door control modules (1) (also known as a Driver Door Module/DDM, a Passenger Door Module/PDM or Front Door Multiplex/MUX Modules), one each on both the driver and passenger front doors. Each door control module is concealed behind the front door trim panel where it is secured through two integral mounting tabs (2) to the door hardware module carrier by two screws. The front door control modules are located in the upper front corner of the front door hardware carriers, just below the mirror flag area of the front door.

Each door control module contains a microprocessor and is connected to the various switches on that door. In the case of the driver side module, it communicates with some switches over a Local Interface Network (LIN) data bus. Both the driver and passenger side module also receive various hard wired switch inputs and provide

numerous hard wired outputs to various devices located on their respective doors. In addition, both front door control modules communicate with each other and with other electronic modules in the vehicle over the Controller Area Network (CAN) Interior High Speed (IHS) data bus system.

Concealed and protected within the molded plastic door control module housing is the printed circuit board and the other electronic circuitry of the module. The front door control modules are connected to the vehicle electrical system through up to eight connector receptacles that are integral to the module housing.

A door control module cannot be adjusted or repaired and, if damaged or ineffective, it must be replaced. The door control module software is flash programmable.

OPERATION

OPERATION

The microprocessor-based electronic front door control modules (also known as a Driver Door Module/DDM, a Passenger Door Module/PDM or Front Door Multiplex/MUX Modules) contain logic circuits that monitor various hard wired low current, multiplexed inputs from the power window, power lock, power mirror and memory switches on their respective door. They also receive Controller Area Network (CAN) Interior High Speed (IHS) data bus electronic message-based external inputs from the opposing front door control module as well as from other electronic modules in the vehicle. The front door control modules also monitor hard wired power window motor Hall effect sensors and memory mirror position sensor inputs.

In addition, the front door control module on the driver side front door receives electronic message inputs from the driver side front door switch module over the Local Interface Network (LIN) data bus network. The program logic within the front door control module allows the microprocessor to prioritize all of these inputs and determine the tasks it needs to perform. These tasks are then completed either by controlling hard wired outputs to the various motors, actuators or lamps on its own or the rear doors, or by sending electronic message requests over the CAN-IHS bus to the appropriate electronic module in the vehicle.

The front door control modules are powered by a fused B(+) circuit and are grounded at all times so that they can operate regardless of the ignition switch position. Both driver and passenger door control modules provide active and stored Diagnostic Trouble Codes (DTC) through On-Board Diagnostics (OBD) and communicate with a diagnostic scan tool using the CAN data bus.

The hard wired inputs and outputs of the front door control module may be diagnosed using conventional diagnostic tools and procedures. Refer to the appropriate wiring information. However, conventional diagnostic methods will not prove conclusive in the diagnosis of the electronic controls and communication between modules and other devices that provide some features of the power window, power lock, memory, interior lighting or exterior lighting system features the front door control modules provide. The most reliable, efficient and accurate means to diagnose the front door control modules or the electronic controls and communication related to operation of these systems requires the use of a diagnostic scan tool. Refer to the appropriate diagnostic information.

DIAGNOSIS AND TESTING

DIAGNOSIS AND TESTING - DOOR MODULES

Any diagnosis of the door modules should begin with the use of a scan tool and the appropriate Diagnostic information. Refer to DIAGNOSIS AND TESTING .

Refer to the appropriate wiring information.

REMOVAL

REMOVAL

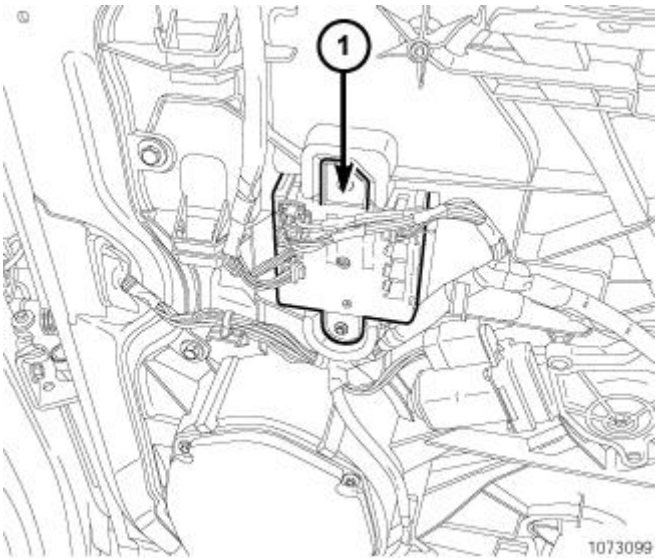

Fig. 7: Door Module
Courtesy of CHRYSLER GROUP, LLC

1. Disconnect and isolate the battery negative cable.
2. Remove the trim panel from the inside of the front door. Refer to **PANEL, DOOR TRIM, REMOVAL** .
3. Disconnect each of the electrical connectors from the connector receptacles of the door control module (1).
4. Remove the two screws that secure the door control module to the front door hardware module carrier.
5. Remove the door control module from the door hardware module carrier.

INSTALLATION

INSTALLATION

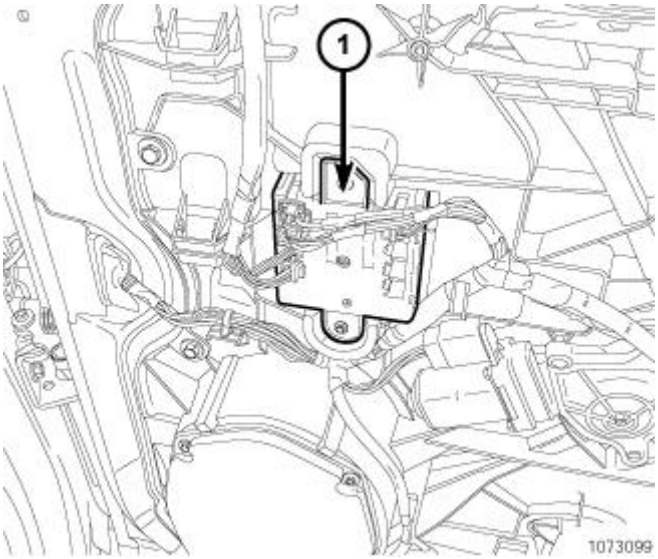

Fig. 8: Door Module
Courtesy of CHRYSLER GROUP, LLC

1. Position the door control module (1) to the front door hardware module carrier.
2. Install and tighten the two screws that secure the door control module to the front door hardware module carrier. Tighten the screws securely.
3. Reconnect each of the electrical connectors to the connector receptacles of the door control module.
4. Reinstall the trim panel to the inside of the front door. Refer to **PANEL, DOOR TRIM, INSTALLATION** .
5. Reconnect the battery negative cable.
6. The Clear/Relearn procedure should be performed following service of a door control module so that the module can learn the correct hard stops of the power window regulator. Refer to **STANDARD PROCEDURE** .

MODULE, DRIVETRAIN CONTROL

DESCRIPTION

DESCRIPTION

The Drivetrain Control Module (DTCM) controls the 4X4 transfer case shift functions via the actuation of a shift motor and utilizing the feedback of a mode sensor assembly. Communication is handled through the CAN bus. The user selectable transfer case modes include the following: 2WD, 4WD AUTO, 4WD LOCK, 4WD LOW, and Neutral (selections vary with the specific transfer case).

The DTCM is located in the passenger footwell, below the HVAC blower.

OPERATION

OPERATION

During normal operation of an active transfer case the Drive Train Control Module (DTCM) control module learns and remembers the Clutch Engagement Point (Kiss Point), the position in the motor actuator's travel where torque begins to be transferred to the front wheels. The position is read out using the encoder as a 0 to 5 volt signal. This information is written into the module's EEPROM area at Ignition OFF. Over time the clutch pack wears and the Kiss Point changes in one direction (going from a lower voltage to a higher value).

POWER UP/DOWN

The DTCM will power up with an OFF/ON transition of the hard wired ignition switch input.

The DTCM will power down when the vehicle ignition switch transitions from ON to OFF, or there are no system requirements that dictate the controller to remain active

START-UP DIAGNOSTICS

When the DTCM is activated, the internal circuitry will undergo a diagnostic procedure. The controller will examine all inputs and outputs for short circuits to ground, short circuits to battery and open circuits and will also verify proper CPU and memory operation. If a fault is detected, a message will be sent out over the CAN C bus to the Cluster indicating that service is recommended.

After passing all diagnostic tests, the controller will receive and process inputs and produce the appropriate outputs. Proper monitoring of the controller inputs and outputs performance will continue.

INPUTS/OUTPUTS

The following are inputs to the DTCM:

- Transfer Case Mode Sensor Signal
- 1 Direct Battery Feed
- Ignition RUN Sense
- Sensor Ground
- Module Ground
- CAN C Bus

The following are outputs of the DTCM:

- Transfer Case Motor Brake Control
- 5V Sensor Supply
- Transfer Case Bi-directional Motor Control (A AND B)
- Switched B+ Solenoid Supply
- Transfer Case Motor Brake Control

TRANSFER CASE RANGE SELECT SWITCH INPUT (2WD, 4WD AUTO, 4WD LOCK, AND 4WD LOW SELECT SWITCH)

The transfer case range select switch is hardwired directly to the Cluster (CCN). The switch position is read by the CCN and is communicated to the TIPM (Gateway) via the CAN-B bus. The TIPM then rebroadcasts this

information onto the CAN-C bus where the DTCM is a receiver.

The Cluster (CCN) will support circuitry which interfaces to the system's Transfer Case Range Select Switch, including a Transfer Case Range Select Switch voltage supply and a Transfer Case Range Select Switch input. The purpose of this circuitry is to determine the mode currently being requested by the operator via the resistance ladder network in the shifter assembly, where the Transfer Case Range Select Switch is packaged.

The NEUTRAL Select Switch Input will provide the operator with the ability to place the Transfer Case in Neutral. The Transfer Case Range Switch input will provide the operator with the ability to place the transfer case in 2WD, 4WD AUTO, 4WD LOCK, and 4WD LOW. The NEUTRAL Select Switch is a momentary pushpin switch; the Transfer Case Range Select Switch is a 4-position rotary contact switch; both of these switches are provided through a resistor network for diagnostic purposes. The input will have an internal 1.0K +/- 1% pull-up resistor to 5V.

As the selected position in the switch varies and/or the NEUTRAL Switch is depressed or not, the resistance between the Cluster (CCN) voltage supply and Transfer Case Range Select Switches input will vary. Hardware, software, and calibrations within the Cluster will be provided that interpret the external resistance between the module's Transfer Case Range Select Switches voltage supply and Transfer Case Range Select Switches inputs as given in the table below:

NOTE: There is no requirement for the DTCM to distinguish between a neutral request from the 4WD AUTO or the 4WD LOW position. Resistances in these ranges will be represented as a Neutral Switch Activation.

TRANSFER CASE MODE SENSOR SIGNAL

The Transfer Case Mode Sensor Signal Input will provide the DTCM feedback about the position of the transfer case. The mode sensor is a linear analog position sensor with a 1.4K +/- 20% potentiometer and a 1 K +/- 20% wiper resistor that converts the motor shaft position into a multiplexed voltage. The mode sensor (on the active transfer case) is an active device where the sensor's current changes as the motor shaft position changes

TRANSFER CASE BI-DIRECTIONAL MOTOR CONTROL (A AND B)

This output will control a Bi-directional DC motor that controls a clutch pack in the Transfer Case that varies the torque transfer between the front and rear axles.

MODES OF OPERATION

NORMAL OPERATION

This mode is achieved by the ignition being switched in the RUN position, which powers up the 5V regulator and generates the appropriate RESET for the microprocessor. This mode also includes any required power-up system checks.

SHUT DOWN MODE

This mode is activated when the ignition switch turned to the off position. The DTCM will perform any required Shut Down tasks prior to turning off the 5V regulator.

LIMP-IN MODE

This mode is entered when the DTCM has detected an error condition that prevents the system from performing its required task. The DTCM operation will vary depending from modified operation to total system shut down based on the failure that has occurred.

REMOVAL

REMOVAL

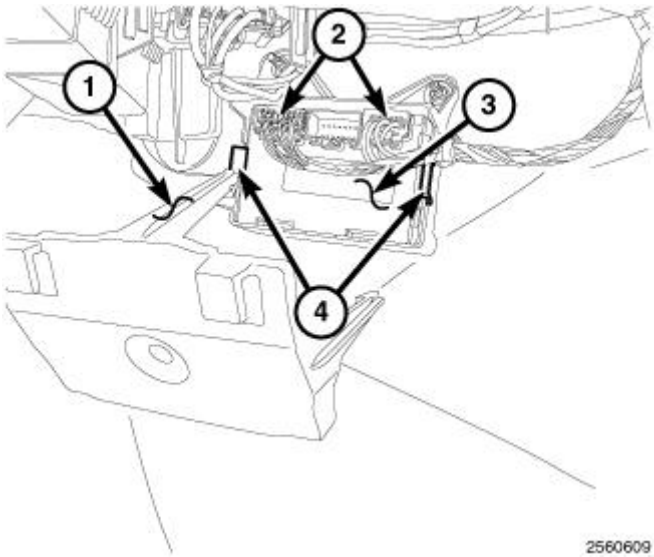

Fig. 9: Drivetrain Control Module
Courtesy of CHRYSLER GROUP, LLC

1. Disconnect and isolate the battery negative cable.
2. To gain access to the Drive Train Control Module (DTCM), position the carpet that is located at the passenger side, away from the dash panel.
3. Remove cover on the DTCM by pulling up on the upper rear tab (1), and rotating down and away from the module (3).
4. Disconnect the module electrical connectors (2).
5. Using trim stick - (special tool #C-4755, Trim Stick) or equivalent, gently pry back on the retaining tabs on the mounting plate (4) and remove module (3).

INSTALLATION

INSTALLATION

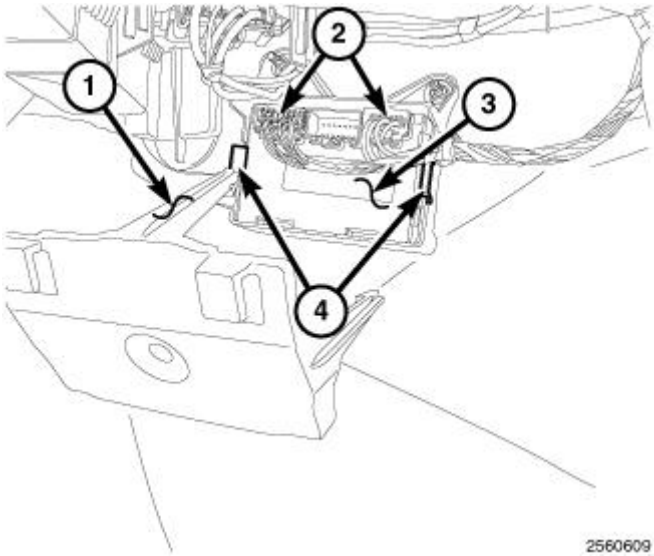

Fig. 10: Drivetrain Control Module
Courtesy of CHRYSLER GROUP, LLC

1. Place the Drive Train Control Module (3) in its location on the mounting plate (4) and firmly snap into place.
2. Connect the electrical connectors (2).
3. Install cover back onto the DTCM by snapping into place.
4. Install carpeting back into its proper location.
5. Connect the battery negative cable.

MODULE, HEATED SEAT

DESCRIPTION

DESCRIPTION

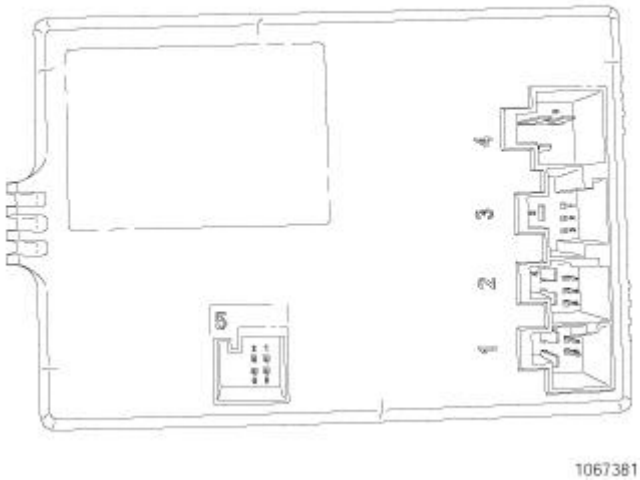

Fig. 11: Heated Seat Module
Courtesy of CHRYSLER GROUP, LLC

The Heated Seat Module (HSM), also referred to as the Comfort Seat Wheel Module (CSWM), is a time based controller for all the functions of the vented seats, heated seats and the heated steering wheel, as equipped. The HSM is black in color, rectangular in shape and has a total of five electrical connectors based on the number of components being controlled. The HSM is attached to the bottom of the driver seat.

OPERATION

OPERATION

The Heated Seat Module (HSM) is used to control the functions of the following systems:

- Vented Seats. Refer to **VENTED SEATS** .
- Heated Seats. Refer to **OPERATION** .
- Heated Steering Wheel. Refer to **OPERATION** .

CAUTION: When equipped with a leather wrapped heated steering wheel and replacement of a Heated Seat Module (HSM) is required, the new HSM must be manually configured with a scan tool. Refer to STANDARD PROCEDURE . Failure to follow these instruction may result in damage to the heated steering wheel.

The HSM will automatically configure itself to the heated and vented systems that are installed on the vehicle, with one exception. When equipped with a leather wrapped heated steering wheel, the HSM must be manually configured to the leather steering wheel option, using a scan tool. Refer to **STANDARD PROCEDURE** .

The HSM will only be on with the engine running. Therefore the heated seats, vented seats, and heated steering wheel will only operate with the engine running. Seat heating and seat venting are independent systems; however, they cannot be actuated at the same time. Turning the vented seats on when the heated seat are already

on will turn off the heated seats and vice versa. The heated steering wheel can be on at the same time as either the heated or the vented seats.

DIAGNOSIS AND TESTING

DIAGNOSIS AND TESTING - HEATED SEAT MODULE

CAUTION: When equipped with a leather wrapped heated steering wheel and replacement of a Heated Seat Module (HSM) is required, the new HSM must be manually configured with a scan tool. Refer to STANDARD PROCEDURE . Failure to follow these instruction may result in damage to the heated steering wheel.

NOTE: Vehicles equipped with the heated seat option utilize a low voltage cut-off feature. This feature turns off power to the heated seat system anytime vehicle voltage is below 11.7 volts or above 15.5 volts. Be certain to check the vehicle electrical system for proper voltage anytime the heated seat system appears inoperative.

NOTE: If a Diagnostic Trouble Code (DTC) can not be verified, it is a good indication that an INTERMITTENT fault condition may be present. To help find an intermittent problem, sit in the seat in question and move around the heating elements within the seat while testing continuity. also wiggle the heated seat wire harness and electrical connectors while testing continuity.

NOTE: For complete circuit diagrams, refer to appropriate Wiring Information. Wiring Information includes wiring diagrams, connector pin-out and location views, details of wire harness routing and retention, splice and ground locations and proper wire and connector repair procedures.

1. Check the ignition switch fuse in the Totally Integrated Power Module. Repair as necessary.
2. Check the vehicles battery open-circuit voltage and charging system performance. If the vehicle's electrical system is defective or weak it may not be suppling sufficient energy to operate the heated seat or heated steering wheel system.
3. Using a scan tool, check for any Diagnostic Trouble Codes (DTCs) related to the Heated Seat Module (HSM). If any DTCs are found, repair as necessary. Refer to **DIAGNOSIS AND TESTING** .
4. If there are no DTCs and the heated seat, vented seat or heated steering wheel system does not operate, refer to appropriate wiring information and repair as necessary.
5. If wiring is OK, replace the HSM.
6. When equipped with a leather wrapped heated steering wheel, verify the HSM is configured to the leather steering wheel option with a scan tool. Refer to **STANDARD PROCEDURE** .

REMOVAL

REMOVAL

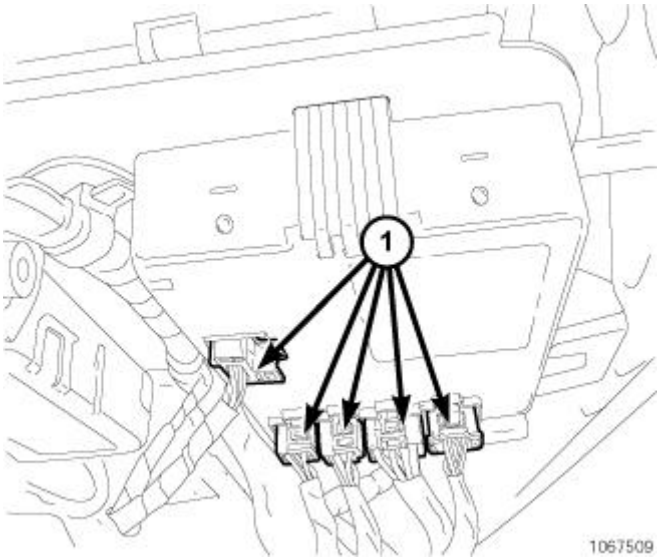

Fig. 12: Heated Seat Module Connectors
Courtesy of CHRYSLER GROUP, LLC

1. Disconnect the negative battery cable.
2. Disconnect the five electrical connectors (1) from the Heated Seat Module (HSM) located under the driver seat.

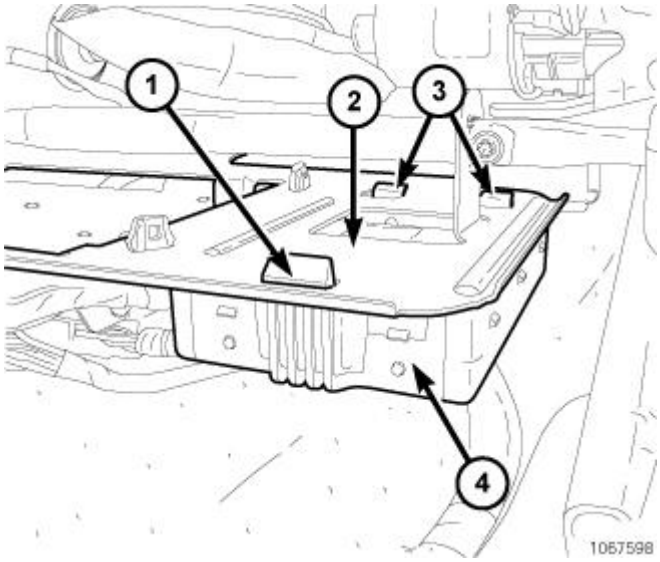

Fig. 13: Heated Seat Module & Tabs
Courtesy of CHRYSLER GROUP, LLC

3. Remove the HSM (4) from the seat frame (2). Push the lock tab (1) toward the rear of the seat, then slightly lower the front of the HSM and pull it forward to disengage the rear retaining tabs (3).

INSTALLATION

INSTALLATION

CAUTION: When equipped with a leather wrapped heated steering wheel and replacement of a Heated Seat Module (HSM) is required, the new HSM must be manually configured with a scan tool. Refer to STANDARD PROCEDURE . Failure to follow these instruction may result in damage to the heated steering wheel.

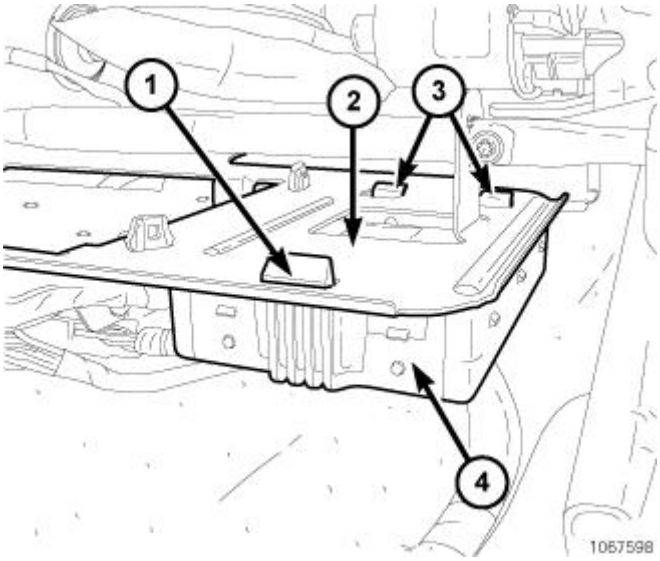

Fig. 14: Heated Seat Module & Tabs
Courtesy of CHRYSLER GROUP, LLC

1. Install the Heated Seat Module (HSM) (4) to the seat frame (2). Position the two rear retaining tabs (3) into the slots in the seat frame, then push the HSM upward until the lock tab (1) engages the seat frame.

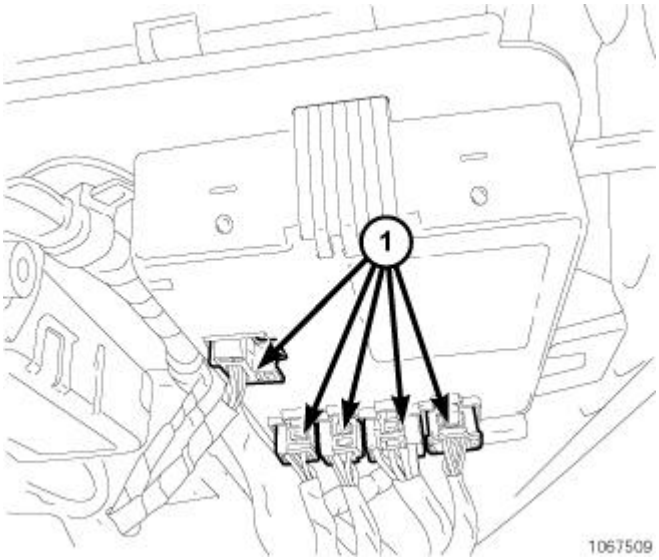

Fig. 15: Heated Seat Module Connectors
Courtesy of CHRYSLER GROUP, LLC

2. Connect the electrical connectors (1) to the HSM.

3. Reconnect the negative battery cable.
4. When equipped with leather wrapped heated steering wheel, use a scan tool and configure the HSM. Refer to **STANDARD PROCEDURE** .

MODULE, INTEGRATED TRAILER BRAKE (ITBM)

DESCRIPTION

DESCRIPTION

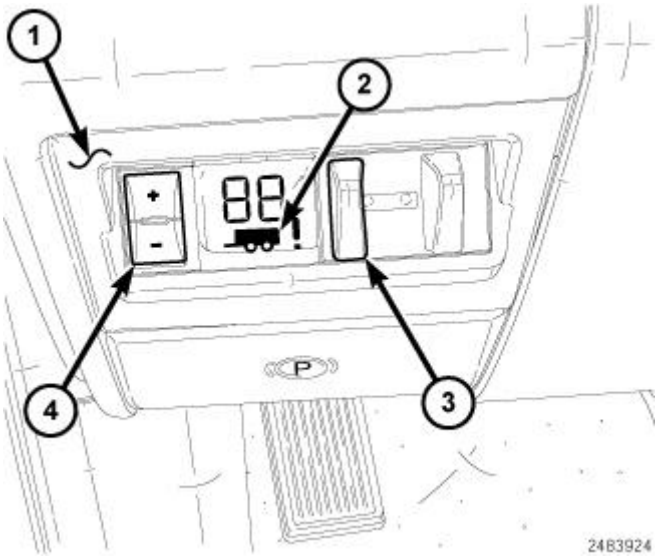

Fig. 16: Integrated Trailer Brake Module (ITBM)
Courtesy of CHRYSLER GROUP, LLC

The Integrated Trailer Brake Module (ITBM) (1) is located in the instrument panel to the left of the steering column above the park brake release handle. Near the center of the ITBM is a numerical LED and trailer icon (2) which illuminate for three seconds when the ignition switch is placed in the RUN position. There is also an adjustment switch (4) and a trailer manual sliding brake lever/switch (3) on the face of the ITBM.

OPERATION

OPERATION

NOTE: The Integrated Trailer Brake Module (ITBM) does not control the trailer lights or the vehicle lights.

Automatic Braking

The Integrated Trailer Brake Module (ITBM) is powered with an ignition ON voltage source and has a single ground connection. The ITBM communicates on the CAN Bus for vehicle speed signal, Electronic Stability Control (ESC) active signal and the VIN information. There is also a hard wired brake switch input into the ITBM. The ITBM uses this information along with an internal accelerometer to determine how much braking to

apply to the trailer brakes. The output is a Pulse Width Modulated (PWM) circuit for control of trailer braking intensity during stops. The ratio between vehicle braking and trailer braking is adjusted by the user with the plus/minus (±) switch on the face of the module. The ITBM is used to control the trailer brakes based on the deceleration reading of the vehicle and will send the output to control the trailer brakes only when a trailer connection is recognized. If a trailer is not connected to the vehicle, the ITBM output will be disabled.

Manual Trailer Braking

In addition to automatic trailer braking, the user can manually apply the trailer brakes prior to or without the vehicle brakes by sliding the ITBM manual sliding brake lever/switch to the right at any time. In this circumstance the accelerometer and other trailer braking inputs are ignored and trailer braking intensity is controlled by the user.

REMOVAL

REMOVAL

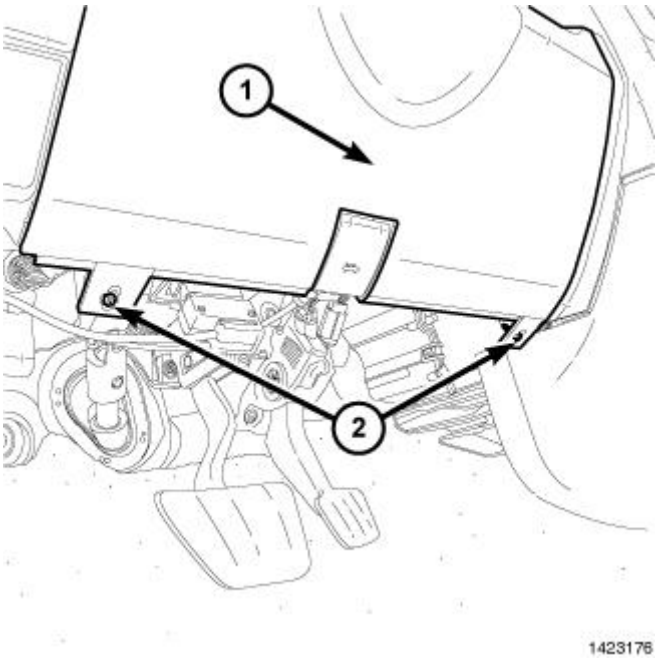

Fig. 17: Steering Column Opening Cover & Fasteners
Courtesy of CHRYSLER GROUP, LLC

1. Disconnect and isolate the battery negative cable.
2. Remove the steering column opening cover retaining screws (2).
3. Using a trim stick, remove the steering column opening cover (1) from the instrument panel and position aside.

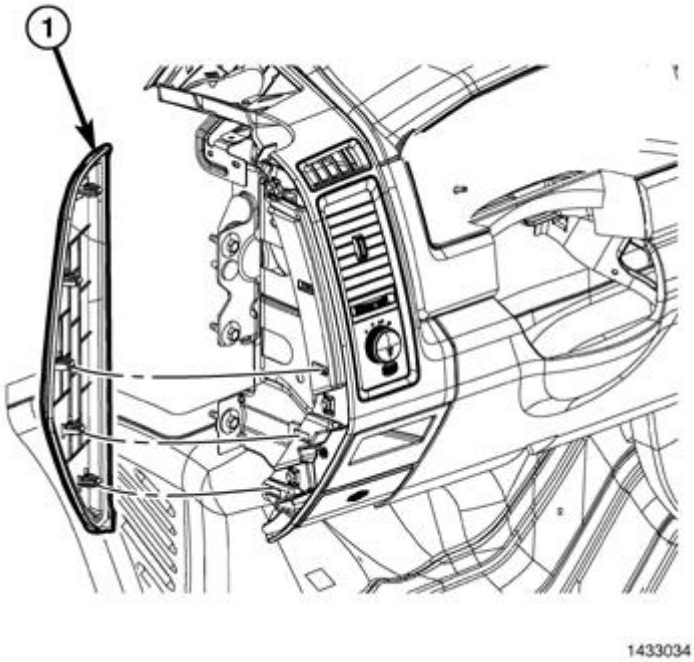

Fig. 18: Instrument Panel Side Cover
Courtesy of CHRYSLER GROUP, LLC

4. Using a trim stick, from the notch on the bottom, remove the left instrument panel side cover (1).

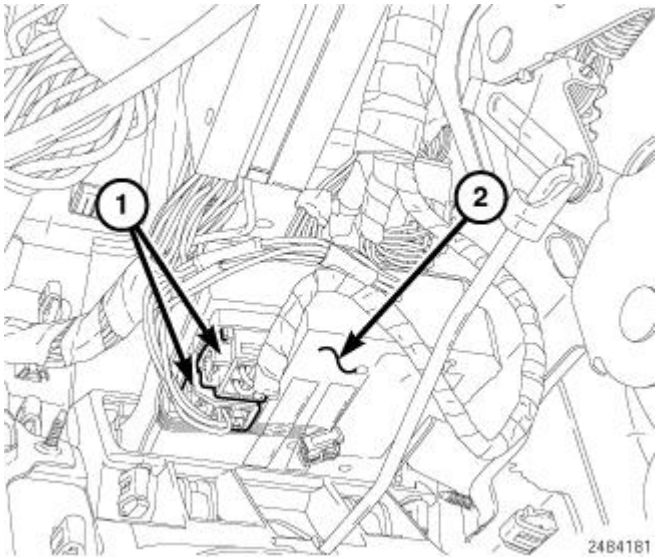

Fig. 19: Identifying Integrated Trailer Brake Module (ITBM) Electrical Connectors
Courtesy of CHRYSLER GROUP, LLC

5. From under the instrument panel, disconnect the integrated trailer brake module (ITBM) electrical connectors (1).

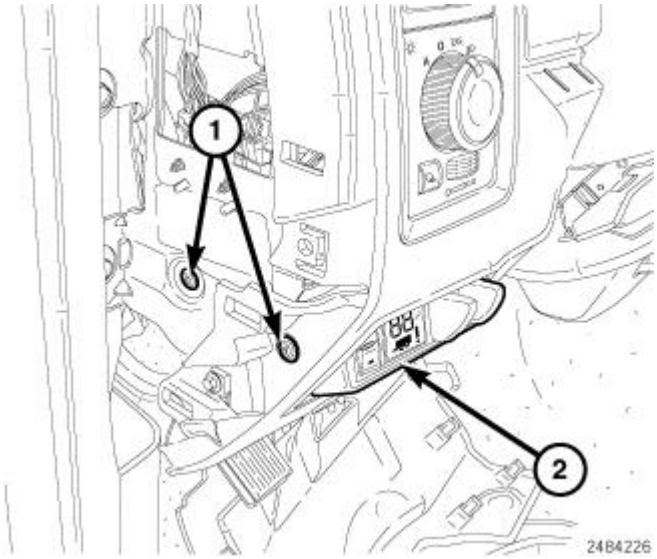

Fig. 20: Identifying ITBM Retainer Screws
Courtesy of CHRYSLER GROUP, LLC

NOTE: One screw on the right front of the ITBM not shown in illustration.

6. Remove the three ITBM retainer screws (1).

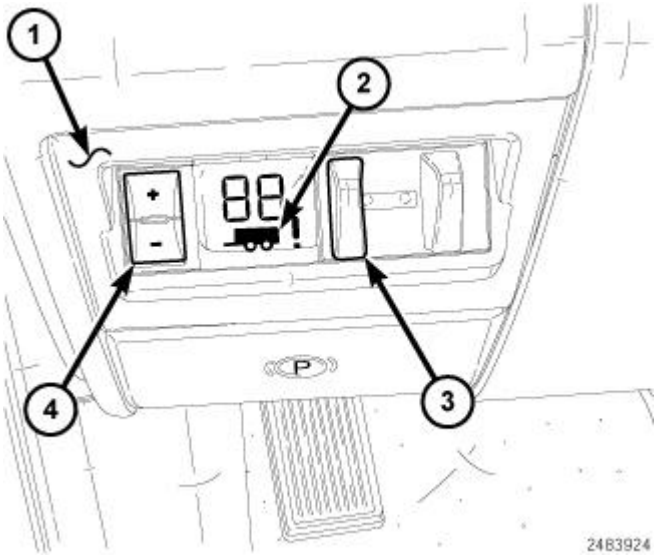

Fig. 21: Integrated Trailer Brake Module (ITBM)
Courtesy of CHRYSLER GROUP, LLC

NOTE: There is a retainer clip on each side of the ITBM near the bottom.

7. Using a trim stick, remove the ITBM (1) from the IP.

INSTALLATION

INSTALLATION

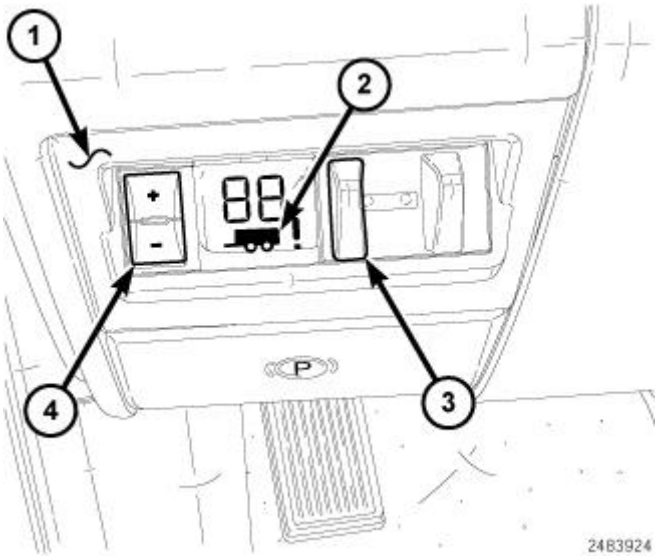

Fig. 22: Integrated Trailer Brake Module (ITBM)
Courtesy of CHRYSLER GROUP, LLC

1. Position the Integrated Trailer Brake Module (ITBM) (1) and snap the bottom retainer clips into place.

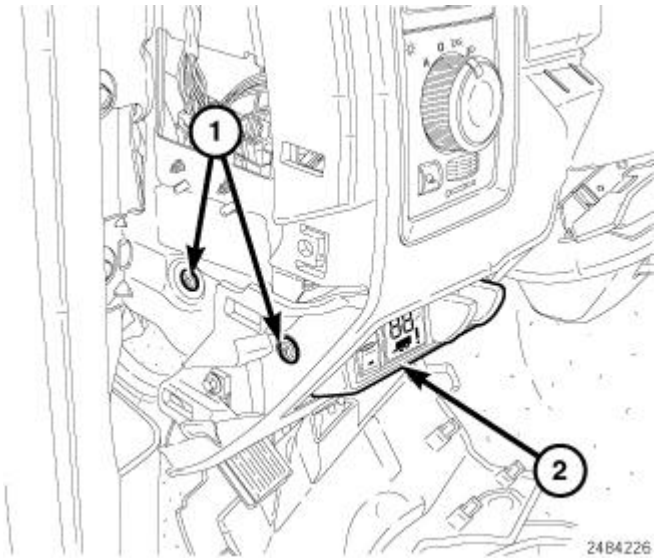

Fig. 23: Identifying ITBM Retainer Screws
Courtesy of CHRYSLER GROUP, LLC

NOTE: One screw on the right front of the ITBM not shown in illustration.

2. Install the three ITBM retainer screws (1).

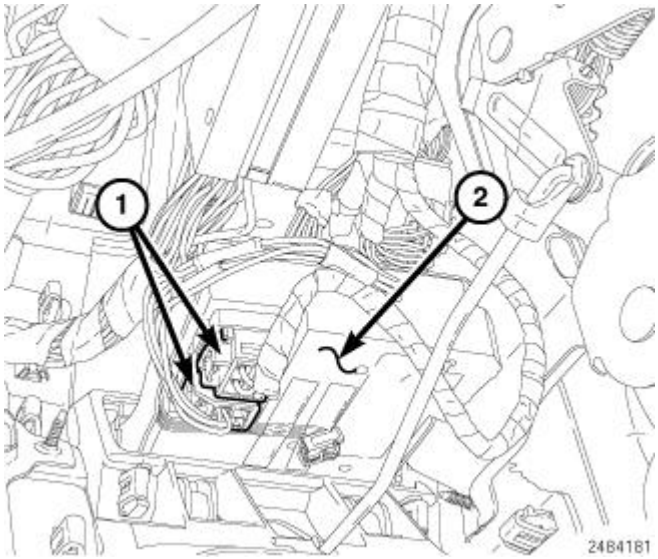

Fig. 24: Identifying Integrated Trailer Brake Module (ITBM) Electrical Connectors
Courtesy of CHRYSLER GROUP, LLC

3. Connect the ITBM electrical connectors (1).

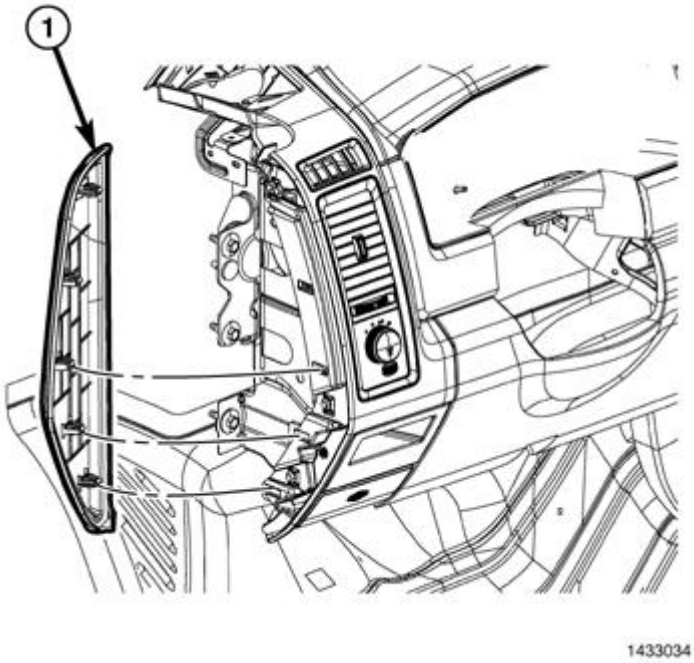

Fig. 25: Instrument Panel Side Cover
Courtesy of CHRYSLER GROUP, LLC

4. Position the left instrument panel side cover (1) and press the retainers into place in the IP.

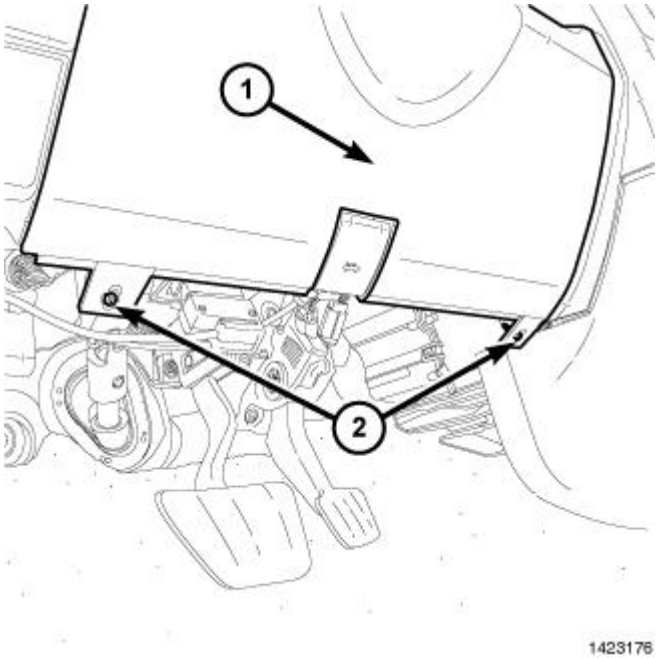

Fig. 26: Steering Column Opening Cover & Fasteners
Courtesy of CHRYSLER GROUP, LLC

5. Position the steering column opening cover (1) and press the upper retainers into place in the IP.
6. Install the steering column opening cover retaining screws (2).
7. Connect the battery negative cable.

MODULE, MEMORY

DESCRIPTION

DESCRIPTION

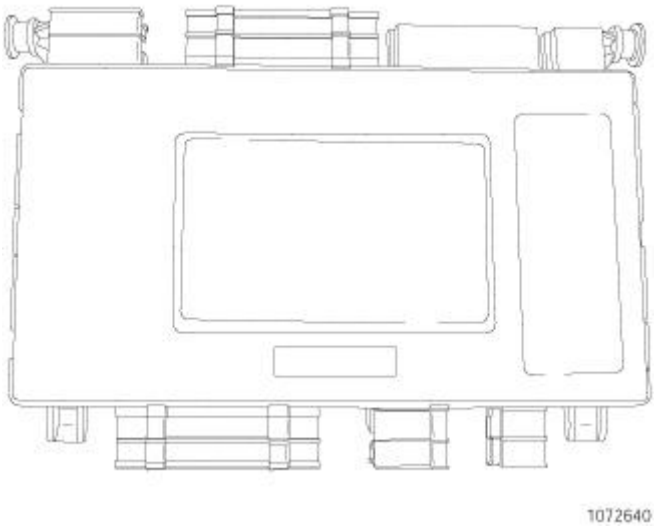

Fig. 27: Memory Module
Courtesy of CHRYSLER GROUP, LLC

NOTE: The scan tool standardization process must be performed on the Memory Module (1) any time a new module is installed or the existing module is reflashed.

The Memory Seat Module (MSM), also know as Memory Module (MM) (1) is located underneath the driver seat. It is used in conjunction with the other modules in the memory system to recall the driver seat to one of two preset seat positions (horizontal, vertical, and recliner). The switch for the memory seat programming and selection mounts on the side of the driver seat. The memory system is able to store and recall all driver side power seat positions except for lumber, outside mirror positions and power adjustable pedal position. The system can be set for two different drivers. On vehicles with a factory installed radio connected to the Controller Area Network (CAN) data bus network, the memory system is also able to store and recall up to twelve radio station presets (six AM and six FM), also for two drivers. The memory system will also store and recall the last station listened to for each driver, even if it is not one of the twelve preset stations.

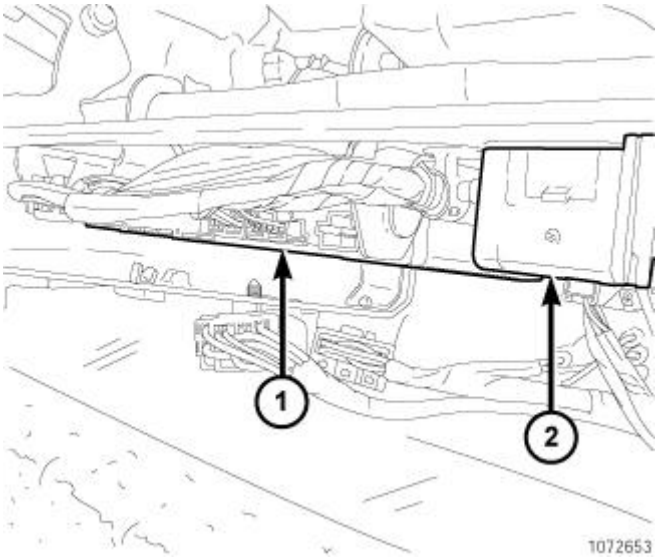

Fig. 28: Locating Memory Module
Courtesy of CHRYSLER GROUP, LLC

The memory system will automatically recall all of these settings when a button of the memory switch is depressed, or when the doors are unlocked using the FOBIK (if the "FOBIK Linked to Memory" feature is enabled). If the vehicle has more than two drivers the FOBIK transmitter recall of memory features can be disabled. This is a customer programmable feature of the Electronic Vehicle Information Center (EVIC).

OPERATION

OPERATION

The Memory Seat Module (MSM), also referred to as Memory Module (MM) receives battery current through a 25 amp Max Fuse in the Totally Integrated Power Module (TIPM) so that the memory system remains operational, regardless of the ignition switch position. When the driver memory switch button is pushed, a

resistance signal is sent to the MSM via the Controller Area Network (CAN) bus circuit. The MSM is responsible for the 12v battery feed and ground path to the power seat adjuster motor and other memory system components.

The MSM receives memory set/position switch input through the CAN bus circuit. The MSM also receives hard wired input from the hall effect sensors, mounted on each of the driver power seat adjuster motors, the driver side view mirror motor, and adjustable pedals. The programmed software in the module allows it to know where the seat and adjustable pedals are located in its designed travel by a pulse count generated from the hall effect sensors. This way, when the memory switch is depressed the module will power these components until the correct preset location is achieved. The module will prevent the seat memory recall function from being initiated, if the transmission gear selector lever is not in the Park position, or if the vehicle is moving. These inputs are monitored over the Controller Area Network (CAN) bus circuit by the MSM.

A memory setting is saved by pressing the "set" button, then pressing either the memory "1" or "2" button within 5 seconds of pressing the "set" button.

A memory setting is recalled by pressing either the memory "1" or "2" button, or by pressing the unlock button on a "linked" FOBIK transmitter.

For driver safety, memorized settings can not be recalled if the transmission is in a position other than Park.

The MSM performs the following functions:

- Positions the driver power seat (vertical, horizontal, and recliner positions).
- Positions the power adjustable pedals.
- Sends the memory save or recall (number 1 or number 2) command over the CAN data bus circuit to the other memory system components, radio station pre-sets and power mirror positions.
- Provides for the easy entry/exit feature.

When a memory button is pressed (number 1 or number 2) on the memory switch, it provides resistive signal/input to the MSM. The MSM will then position the memory system components to the preprogramming location/setting. FOBIK Transmitter button is pressed, depending on which transmitter (number 1 or number 2), the WIN/SKIM Receiver sends the recall request and FOBIK number (number 1 or number 2) data message. This FOBIK transmitter function depends on if the MSM is programmed to trigger the recall (linked FOBIKs).

A FOBIK is "linked" to a memory setting by pressing the "set" button and then pressing either the memory "1" or "2" button within 5 seconds of pressing the set button, then by pressing the "lock" button on the selected FOBIK.

The memory system "Easy Entry and /Exit" feature provides the driver with more room to enter or exit the vehicle. When the seat is in a memorized position, it will move rearward 55 millimeters or to the end of its travel, whichever occurs first, when the key is removed from the ignition switch lock cylinder. This is a customer programmable feature in the EVIC. The seat will return to the memory position when the driver turns the vehicle's ignition switch out of the LOCK position.

The memory system "learns" the seat and adjustable pedal motor maximum end positions when the motor reaches the limit of travel in any direction and stalls. Subsequently, movement will stop just short of that

position to avoid extra stress on the motors and mechanisms. If the system learned a maximum position as a result of an obstruction, as for instance if a large object was placed on the floor behind the seat, the system can relearn the "true" maximum position through manually operating the power seat after the obstruction is removed.

NOTE: **It is normal for the power accessories contained in the memory system to stop at the maximum "learned" position and then continue to the "true" maximum position when the control switch is released and then applied in the same direction a second time.**

Certain functions and features of the memory system rely upon resources shared with other electronic modules in the vehicle over the Controller Area Network (CAN) bus. The CAN bus allows the sharing of sensor information. This helps to reduce wire harness complexity, internal controller hardware, and component sensor current loads. At the same time, this system provides increased reliability, enhanced diagnostics, and allows the addition of many new feature capabilities. For diagnosis of these electronic modules or of the CAN bus, the use of a scan tool and the proper diagnostic information are needed.

DIAGNOSIS AND TESTING

DIAGNOSIS AND TESTING - MEMORY SEAT MODULE (MSM)

In order to obtain conclusive testing of the memory system, the Controller Area Network (CAN) data bus, and all of the electronic modules that provide inputs to, or receive outputs from the memory system components must be checked. **Any diagnosis of the memory system/module should begin with, the use of a scan tool and the appropriate diagnostic service information.** . Refer to **DIAGNOSIS AND TESTING** .

Refer to the appropriate wiring information for complete circuit schematic or connector pin-out information.

NOTE: **Vehicles equipped with the memory/heated seat option utilize a low voltage cut-off feature. This feature turns off the 12v power to the power seat system anytime vehicle voltage is below 11.7v. Be certain to check the vehicle electrical system for proper voltage anytime the power seat system appears inoperative.**

Before any testing of the power seat system is attempted, the battery should be fully-charged.

REMOVAL

REMOVAL

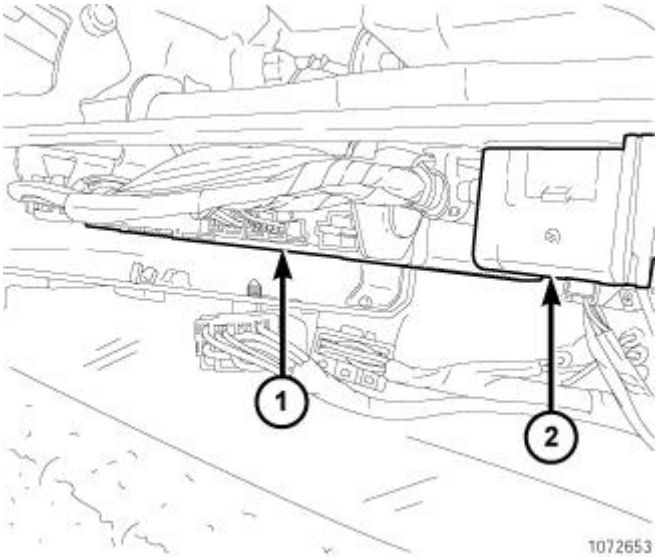

Fig. 29: Locating Memory Module
Courtesy of CHRYSLER GROUP, LLC

1. Disconnect and isolate the battery negative cable.
2. Disconnect the four electrical connectors from the front of the module (1) and the one in the back.
3. Push up on the module (1) to release side tabs.
4. Pull module forward to remove from bracket.

INSTALLATION

INSTALLATION

CAUTION: The Memory Seat Module (MSM) mounting tabs can be damaged during module installation. Use care to properly align tabs to prevent binding that could result in tab breakage.

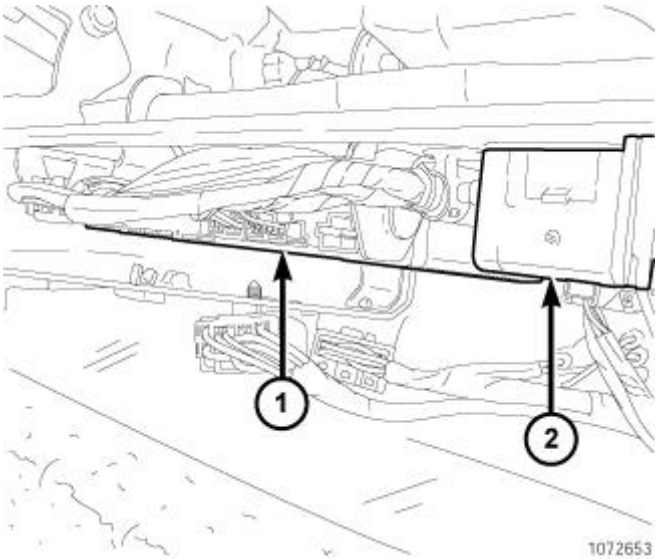

Fig. 30: Locating Memory Module
Courtesy of CHRYSLER GROUP, LLC

1. Place the module (1) into position making sure the mounting tabs are properly aligned with the front bracket.
2. Push down on the front of the module (1) snapping the tabs into place in the side brackets.
3. Connect the electrical connectors to the MSM. Four in the front and one in the back.
4. Connect the battery negative cable.
5. Using an appropriate scan tool go to the MSM miscellaneous functions and perform the standardization routine.
6. Verify system and vehicle operation.

MODULE, OXYGEN SENSOR, 6.7L DIESEL

DESCRIPTION

DESCRIPTION

PICK UP MODELS

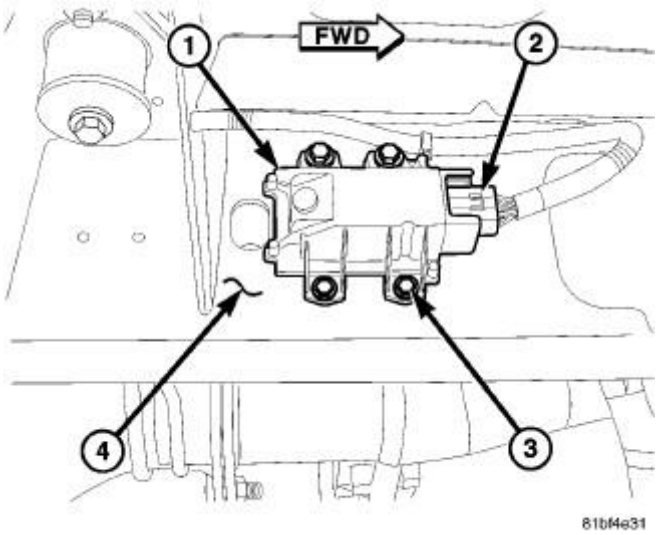

Fig. 31: Identifying O2 Sensor Module
Courtesy of CHRYSLER GROUP, LLC

The oxygen sensor module (1) is located under the vehicle. It is bolted to the outer side of right frame rail (4).

OPERATION

OPERATION

PICK UP MODELS

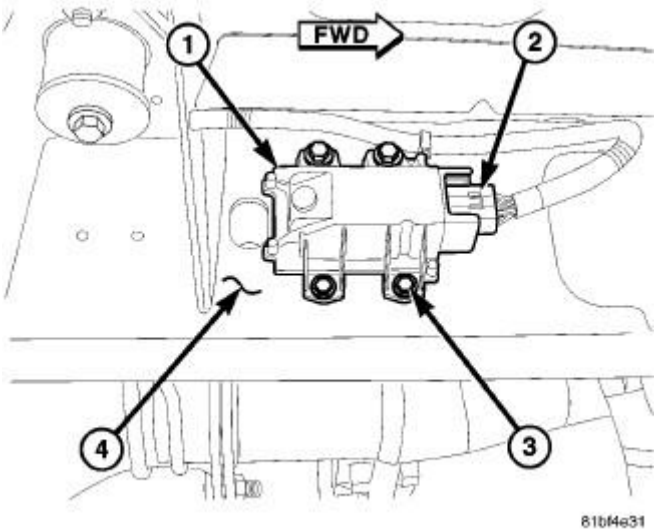

Fig. 32: Identifying O2 Sensor Module
Courtesy of CHRYSLER GROUP, LLC

Two different six-wire Oxygen (O2) sensors are used. These sensors are titled 1/1 upstream, and 1/2 downstream. A separate O2 sensor module (1) is also used.

The engine aftertreatment system monitors the O2 content in the diesel engine exhaust. The Powertrain Control Module (PCM) monitors the exhaust gases for oxygen content and varies the rich/lean fuel mixture of the intake air fuel mixture to adjust the system. This diagnostic monitors the status message broadcast by the O2 Sensor Module (1) for the upstream O2 sensor's internal heater circuit. The PCM will set the fault if it receives a Failure Mode Indicator (FMI) message from the O2 Sensor Module. The PCM will illuminate the MIL lamp immediately when the diagnostic runs and fails. The PCM will turn off the MIL lamp diagnostic runs and passes in four consecutive drive cycles.

REMOVAL

REMOVAL

PICK UP MODELS

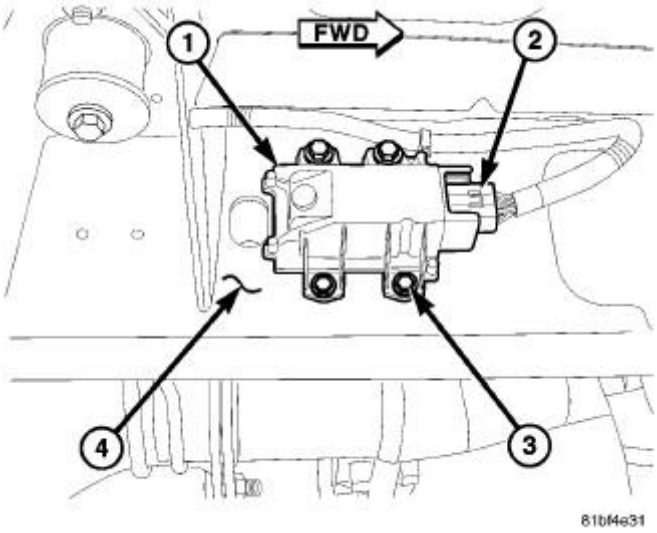

Fig. 33: Identifying O2 Sensor Module
Courtesy of CHRYSLER GROUP, LLC

1. Disconnect both negative battery cables.
2. Raise and support vehicle.
3. Disconnect the Oxygen (O2) sensor module (1) harness connector (2).
4. Remove bolts (3) and the O2 sensor module (1) from frame rail.

INSTALLATION

INSTALLATION

PICK UP MODELS

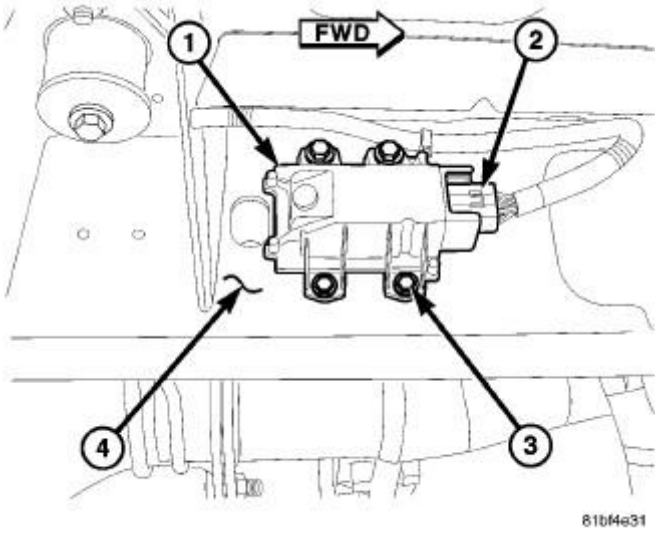

Fig. 34: Identifying O2 Sensor Module
Courtesy of CHRYSLER GROUP, LLC

1. Install the Oxygen (O2) sensor module (1) to frame rail (4). Tighten bolts (3) to 6 N.m (53 in. lbs.).
2. Connect the O2 sensor module (1) harness connector (2).
3. Lower vehicle.
4. Connect both negative battery cables.

MODULE, PARK ASSIST

DESCRIPTION

DESCRIPTION

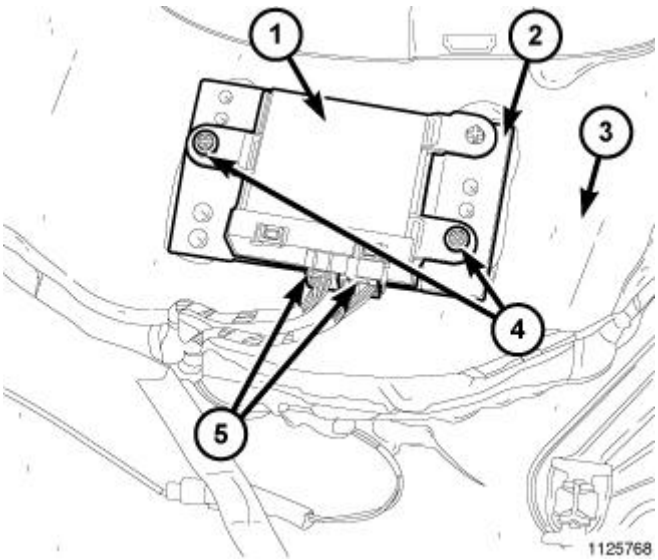

Fig. 35: Park Assist Module
Courtesy of CHRYSLER GROUP, LLC

The Park Assist Module (1) is secured to a mounting bracket (2) that is bonded to the upper side of the vehicles headliner (3) above the right sun visor and secured by two fasteners (4). Concealed within the molded plastic park assist module housing is a microprocessor and the other electronic circuitry of the module. The module housing is sealed to enclose and protect the internal electronic circuitry. The module software is flash programmable.

Two connector receptacles (5) containing terminal pins are integral to the forward-facing side of the housing. The module is connected to the vehicle electrical system through two dedicated take outs and connectors of the body wire harness.

The park assist module cannot be adjusted or repaired and, if damaged or inoperative, it must be replaced. For more information on the park assist module and operation, refer to **MODULE, PARK ASSIST, OPERATION** .

REMOVAL

REMOVAL

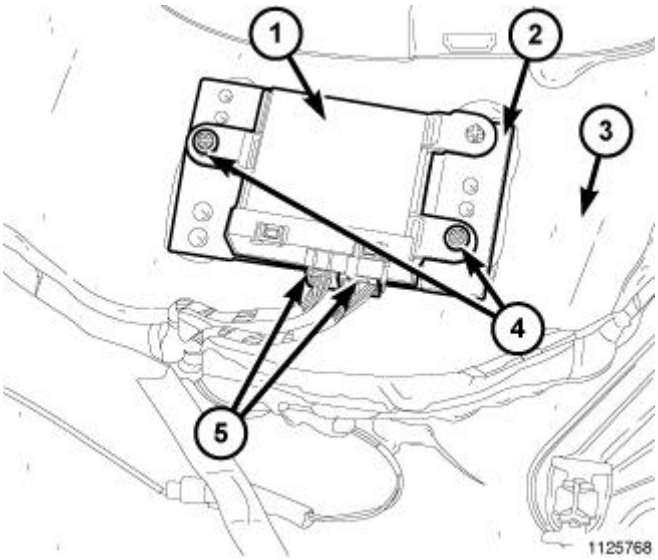

Fig. 36: Park Assist Module
Courtesy of CHRYSLER GROUP, LLC

1. Lower the headliner to access the module. Refer to **HEADLINER, REMOVAL** .
2. Disconnect the two body wire harness connectors (5) from the park assist module connector receptacles.
3. Remove the two fasteners (4) that secure the module to the mounting bracket.
4. Remove the module from behind the headliner.

INSTALLATION

INSTALLATION

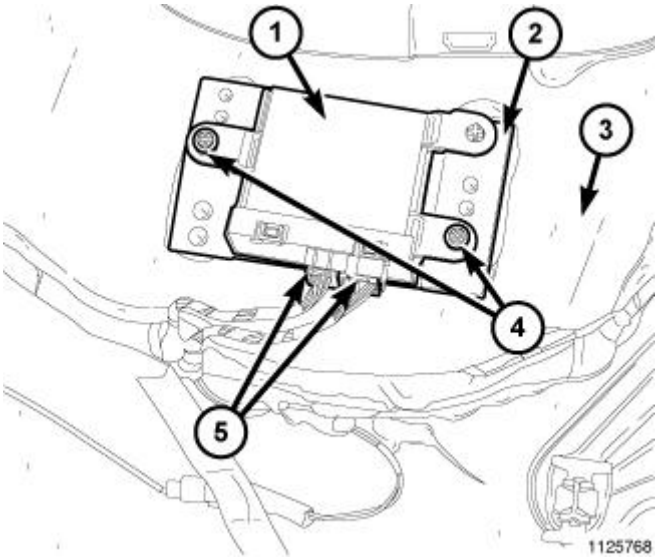

Fig. 37: Park Assist Module
Courtesy of CHRYSLER GROUP, LLC

1. Position the park assist module (1) at the mounting bracket (2) bonded to the back of the headliner (3).
2. Secure the module to the bracket with two fasteners (4).
3. Reconnect the two body wire harness connectors (5) to the module connector receptacles.
4. Reinstall the vehicle headliner. Refer to **HEADLINER, INSTALLATION** .
5. Reconnect the battery negative cable.

MODULE, POWERTRAIN CONTROL

DESCRIPTION

POWERTRAIN CONTROL MODULE (PCM)

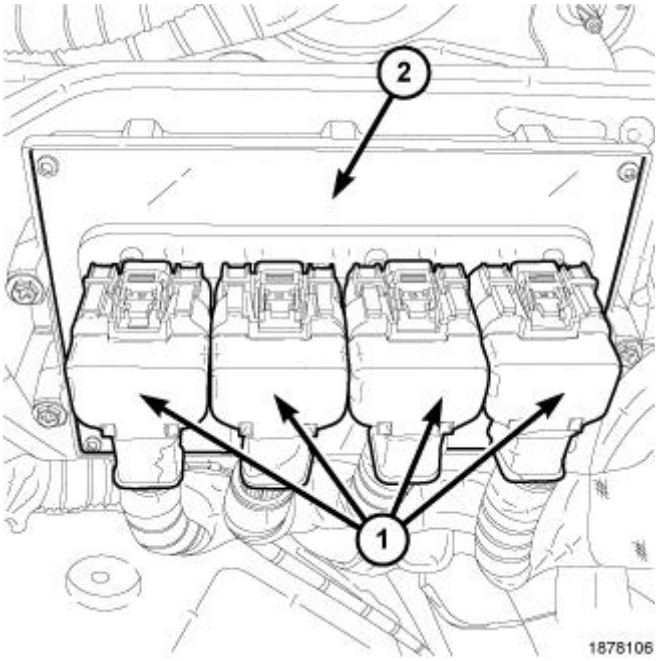

Fig. 38: Powertrain Control Module & Connectors
Courtesy of CHRYSLER GROUP, LLC

The Powertrain Control Module (PCM) is located in the right-rear section of the engine compartment under the cowl.

MODES OF OPERATION

As input signals to the Powertrain Control Module (PCM) change, the PCM adjusts its response to the output devices. For example, the PCM must calculate different injector pulse width and ignition timing for idle than it does for wide open throttle (WOT).

The PCM will operate in two different modes: **Open Loop and Closed Loop** .

During Open Loop modes, the PCM receives input signals and responds only according to preset PCM programming. Input from the oxygen (O2S) sensors is not monitored during Open Loop modes.

During Closed Loop modes, the PCM will monitor the oxygen (O2S) sensors input. This input indicates to the PCM whether or not the calculated injector pulse width results in the ideal air-fuel ratio. This ratio is 14.7 parts air-to-1 part fuel. By monitoring the exhaust oxygen content through the O2S sensor, the PCM can fine tune the injector pulse width. This is done to achieve optimum fuel economy combined with low emission engine performance.

The fuel injection system has the following modes of operation:

- Ignition switch ON
- Engine start-up (crank)
- Engine warm-up

- Idle
- Cruise
- Acceleration
- Deceleration
- Wide open throttle (WOT)
- Ignition switch OFF

The ignition switch On, engine start-up (crank), engine warm-up, acceleration, deceleration and wide open throttle modes are Open Loop modes. The idle and cruise modes, (with the engine at operating temperature) are Closed Loop modes.

IGNITION SWITCH (KEY-ON) MODE

This is an Open Loop mode. When the fuel system is activated by the ignition switch, the following actions occur:

- The PCM pre-positions the idle air control (IAC) motor.
- The PCM determines atmospheric air pressure from the MAP sensor input to determine basic fuel strategy.
- The PCM monitors the engine coolant temperature sensor input. The PCM modifies fuel strategy based on this input.
- Intake manifold air temperature sensor input is monitored.
- Throttle position sensor (TPS) is monitored.
- The auto shutdown (ASD) relay is energized by the PCM for approximately three seconds.
- The fuel pump is energized through the fuel pump relay by the PCM. The fuel pump will operate for approximately three seconds unless the engine is operating or the starter motor is engaged.
- The O2S sensor heater element is energized via the ASD or O2S heater relay. The O2S sensor input is not used by the PCM to calibrate air-fuel ratio during this mode of operation.

ENGINE START-UP MODE

This is an Open Loop mode. The following actions occur when the starter motor is engaged.

The PCM receives inputs from:

- Battery voltage
- Engine coolant temperature sensor
- Crankshaft position sensor
- Intake manifold air temperature sensor
- Manifold absolute pressure (MAP) sensor
- Throttle position sensor (TPS)
- Camshaft position sensor signal

The PCM monitors the crankshaft position sensor. If the PCM does not receive a crankshaft position sensor signal within 3 seconds of cranking the engine, it will shut down the fuel injection system.

The fuel pump is activated by the PCM through the fuel pump relay.

Voltage is applied to the fuel injectors with the ASD relay via the PCM. The PCM will then control the injection sequence and injector pulse width by turning the ground circuit to each individual injector on and off.

The PCM determines the proper ignition timing according to input received from the crankshaft position sensor.

ENGINE WARM-UP MODE

This is an Open Loop mode. During engine warm-up, the PCM receives inputs from:

- Battery voltage
- Crankshaft position sensor
- Engine coolant temperature sensor
- Intake manifold air temperature sensor
- Manifold absolute pressure (MAP) sensor
- Throttle position sensor (TPS)
- Camshaft position sensor signal
- Park/neutral switch (gear indicator signal-auto. trans. only)
- Air conditioning select signal (if equipped)
- Air conditioning request signal (if equipped)

Based on these inputs the following occurs:

- Voltage is applied to the fuel injectors with the ASD relay via the PCM. The PCM will then control the injection sequence and injector pulse width by turning the ground circuit to each individual injector on and off.
- The PCM adjusts engine idle speed through the idle air control (IAC) motor and adjusts ignition timing.
- The PCM operates the A/C compressor clutch through the A/C compressor clutch relay. This is done if A/C has been selected by the vehicle operator and specified pressures are met at the high and low-pressure A/C switches. For additional information, refer to **OPERATION** .
- When the heating element has reached operating temperature located in the O2S, the PCM will begin monitoring O2 sensor output readings. The system will then leave the warm-up (open loop) mode and go into closed loop operation.

IDLE MODE

When the engine is at operating temperature, this is a Closed Loop mode. At idle speed, the PCM receives inputs from:

- Air conditioning select signal (if equipped)

- Air conditioning request signal (if equipped)
- Battery voltage
- Crankshaft position sensor
- Engine coolant temperature sensor
- Intake manifold air temperature sensor
- Manifold absolute pressure (MAP) sensor
- Throttle position sensor (TPS)
- Camshaft position sensor signal
- Battery voltage
- Park/neutral switch (gear indicator signal-auto. trans. only)
- Oxygen sensors

Based on these inputs, the following occurs:

- Voltage is applied to the fuel injectors with the ASD relay via the PCM. The PCM will then control injection sequence and injector pulse width by turning the ground circuit to each individual injector on and off.
- The PCM monitors the O2S sensor input and adjusts air-fuel ratio by varying injector pulse width. It also adjusts engine idle speed through the idle air control (IAC) motor.
- The PCM adjusts ignition timing by increasing and decreasing spark advance.
- The PCM operates the A/C compressor clutch through the A/C compressor clutch relay. This is done if A/C has been selected by the vehicle operator and specified pressures are met at the high and low-pressure A/C switches. For additional information, refer to **OPERATION** .

CRUISE MODE

When the engine is at operating temperature, this is a Closed Loop mode. At cruising speed, the PCM receives inputs from:

- Air conditioning select signal (if equipped)
- Air conditioning request signal (if equipped)
- Battery voltage
- Engine coolant temperature sensor
- Crankshaft position sensor
- Intake manifold air temperature sensor
- Manifold absolute pressure (MAP) sensor
- Throttle position sensor (TPS)
- Camshaft position sensor signal
- Park/neutral switch (gear indicator signal-auto. trans. only)
- Oxygen (O2S) sensors

Based on these inputs, the following occurs:

- Voltage is applied to the fuel injectors with the ASD relay via the PCM. The PCM will then adjust the injector pulse width by turning the ground circuit to each individual injector on and off.
- The PCM monitors the O2S sensor input and adjusts air-fuel ratio. It also adjusts engine idle speed through the idle air control (IAC) motor.
- The PCM adjusts ignition timing by turning the ground path to the coil(s) on and off.
- The PCM operates the A/C compressor clutch through the clutch relay. This happens if A/C has been selected by the vehicle operator and requested by the A/C thermostat.

ACCELERATION MODE

This is an Open Loop mode. The PCM recognizes an abrupt increase in throttle position or MAP pressure as a demand for increased engine output and vehicle acceleration. The PCM increases injector pulse width in response to increased throttle opening.

DECELERATION MODE

When the engine is at operating temperature, this is an Open Loop mode. During hard deceleration, the PCM receives the following inputs.

- Air conditioning select signal (if equipped)
- Air conditioning request signal (if equipped)
- Battery voltage
- Engine coolant temperature sensor
- Crankshaft position sensor
- Intake manifold air temperature sensor
- Manifold absolute pressure (MAP) sensor
- Throttle position sensor (TPS)
- Camshaft position sensor signal
- Park/neutral switch (gear indicator signal-auto. trans. only)
- Vehicle speed

If the vehicle is under hard deceleration with the proper rpm and closed throttle conditions, the PCM will ignore the oxygen sensor input signal. The PCM will enter a fuel cut-off strategy in which it will not supply a ground to the injectors. If a hard deceleration does not exist, the PCM will determine the proper injector pulse width and continue injection.

Based on the above inputs, the PCM will adjust engine idle speed through the idle air control (IAC) motor.

The PCM adjusts ignition timing by turning the ground path to the coil on and off.

WIDE OPEN THROTTLE MODE

This is an Open Loop mode. During wide open throttle operation, the PCM receives the following inputs.

- Battery voltage
- Crankshaft position sensor
- Engine coolant temperature sensor
- Intake manifold air temperature sensor
- Manifold absolute pressure (MAP) sensor
- Throttle position sensor (TPS)
- Camshaft position sensor signal

During wide open throttle conditions, the following occurs:

- Voltage is applied to the fuel injectors with the ASD relay via the PCM. The PCM will then control the injection sequence and injector pulse width by turning the ground circuit to each individual injector on and off. The PCM ignores the oxygen sensor input signal and provides a predetermined amount of additional fuel. This is done by adjusting injector pulse width.
- The PCM adjusts ignition timing by turning the ground path to the coil(s) on and off.

IGNITION SWITCH OFF MODE

When ignition switch is turned to OFF position, the PCM stops operating the injectors, ignition coil, ASD relay and fuel pump relay.

5 VOLT SUPPLIES

Two different Powertrain Control Module (PCM) five volt supply circuits are used; primary and secondary.

IGNITION CIRCUIT SENSE

This circuit ties the ignition switch to the Powertrain Control Module (PCM).

POWER GROUNDS

The Powertrain Control Module (PCM) has 2 main grounds. Both of these grounds are referred to as power grounds. All of the high-current, noisy, electrical devices are connected to these grounds as well as all of the sensor returns. The sensor return comes into the sensor return circuit, passes through noise suppression, and is then connected to the power ground.

The power ground is used to control ground circuits for the following PCM loads:

- Generator field winding
- Fuel injectors
- Ignition coil(s)
- Certain relays/solenoids
- Certain sensors

SENSOR RETURN

The Sensor Return circuits are internal to the Powertrain Control Module (PCM).

Sensor Return provides a low-noise ground reference for all engine control system sensors. For more information, refer to the appropriate diagnostic information.

OPERATION

POWERTRAIN CONTROL MODULE (PCM)

The PCM operates the fuel system. The PCM is a pre-programmed, triple microprocessor digital computer. It regulates ignition timing, air-fuel ratio, emission control devices, charging system, certain transmission features, speed control, air conditioning compressor clutch engagement and idle speed. The PCM can adapt its programming to meet changing operating conditions.

The PCM receives input signals from various switches and sensors. Based on these inputs, the PCM regulates various engine and vehicle operations through different system components. These components are referred to as Powertrain Control Module (PCM) Outputs. The sensors and switches that provide inputs to the PCM are considered Powertrain Control Module (PCM) Inputs.

The PCM adjusts ignition timing based upon inputs it receives from sensors that react to: engine rpm, manifold absolute pressure, engine coolant temperature, throttle position, transmission gear selection (automatic transmission), vehicle speed, power steering pump pressure, and the brake switch.

The PCM adjusts idle speed based on inputs it receives from sensors that react to: throttle position, vehicle speed, transmission gear selection, engine coolant temperature and from inputs it receives from the air conditioning clutch switch and brake switch.

Based on inputs that it receives, the PCM adjusts ignition coil dwell. The PCM also adjusts the generator charge rate through control of the generator field and provides speed control operation.

NOTE: PCM Inputs:

- ABS module (if equipped)
- A/C request (if equipped with factory A/C)
- A/C select (if equipped with factory A/C)
- A/C pressure transducer
- Auto shutdown (ASD) sense
- Battery temperature sensor
- Battery voltage
- Brake switch
- CAN C BUS (+) circuits
- CAN C BUS (-) circuits
- Camshaft position sensor signal
- Crankshaft position sensor

- Data link connection for a scan tool
- EATX module (if equipped)
- Engine coolant temperature sensor
- Fuel level
- Generator (battery voltage) output
- Ignition circuit sense (ignition switch in on/off/crank/run position)
- Intake manifold air temperature sensor
- Knock sensors (2 on 3.7L engine)
- Leak detection pump (switch) sense (if equipped)
- Manifold absolute pressure (MAP) sensor
- Oil pressure
- Oxygen sensors
- Park/neutral switch (auto. trans. only)
- Power ground
- Power steering pressure switch (if equipped)
- Sensor return
- Signal ground
- Speed control multiplexed single wire input
- Throttle position sensor
- Transfer case switch (4WD range position)
- Vehicle speed signal

NOTE: PCM Outputs:

- A/C clutch relay
- Auto shutdown (ASD) relay
- CAN C BUS (+/-) circuits for: speedometer, voltmeter, fuel gauge, oil pressure gauge/lamp, engine temp. gauge and speed control warn. lamp
- Data link connection for diagnostic scan tool
- EGR valve control solenoid (if equipped)
- EVAP canister purge solenoid
- Five volt sensor supply (primary)
- Five volt sensor supply (secondary)
- Fuel injectors
- Fuel pump relay
- Generator field driver (-)
- Generator field driver (+)
- Idle air control (IAC) motor

- Ignition coil(s)
- Leak detection pump (if equipped)
- Malfunction indicator lamp (Check engine lamp).
- Oxygen sensor heater relays
- Oxygen sensors (pulse width modulated)
- Radiator cooling fan relay (pulse width modulated)
- Speed control vacuum solenoid
- Speed control vent solenoid
- Tachometer (if equipped).
- Transmission convertor clutch circuit.

5 VOLT SUPPLIES

Primary 5-volt supply:

- supplies the required 5 volt power source to the Crankshaft Position (CKP) sensor.
- supplies the required 5 volt power source to the Camshaft Position (CMP) sensor.
- supplies a reference voltage for the Manifold Absolute Pressure (MAP) sensor.
- supplies a reference voltage for the Throttle Position Sensor (TPS) sensor.

Secondary 5-volt supply:

- supplies the required 5 volt power source to the oil pressure sensor.
- supplies the required 5 volt power source for the Vehicle Speed Sensor (VSS) (if equipped).
- supplies the 5 volt power source to the transmission pressure sensor (certain automatic transmissions).

IGNITION CIRCUIT SENSE

The ignition circuit sense input tells the PCM the ignition switch has energized the ignition circuit.

Battery voltage is also supplied to the PCM through the ignition switch when the ignition is in the RUN or START position. This is referred to as the "ignition sense" circuit and is used to "wake up" the PCM. Voltage on the ignition input can be as low as 6 volts and the PCM will still function. Voltage is supplied to this circuit to power the PCM's 8-volt regulator and to allow the PCM to perform fuel, ignition and emissions control functions.

STANDARD PROCEDURE

STANDARD PROCEDURE - PCM/ECM REPROGRAMMING - GAS

Perform the PCM/TCM PROGRAMMING procedure. Refer to appropriate Electrical Diagnostic article. .

REMOVAL

REMOVAL

CAUTION: Certain ABS systems rely on having the Powertrain Control Module (PCM) broadcast the Vehicle Identification Number (VIN) over the bus network. To prevent problems of DTCs and other items related to the VIN broadcast, it is recommend that you disconnect the ABS CAB (controller) temporarily when replacing the PCM. Once the PCM is replaced, write the VIN to the PCM using a scan tool. This is done from the engine main menu. Arrow over to the second page to "1. Miscellaneous". Select "Check VIN" from the choices. Make sure it has the correct VIN entered before continuing. When the VIN is complete, turn off the ignition key and reconnect the ABS module connector. This will prevent the setting of DTCs and other items associated with the lack of a VIN detected when you turn the key ON after replacing the PCM.

CAUTION: Use the scan tool to reprogram the new PCM with the vehicles original identification number (VIN) and the vehicles original mileage. If this step is not done, a Diagnostic Trouble Code (DTC) may be set.

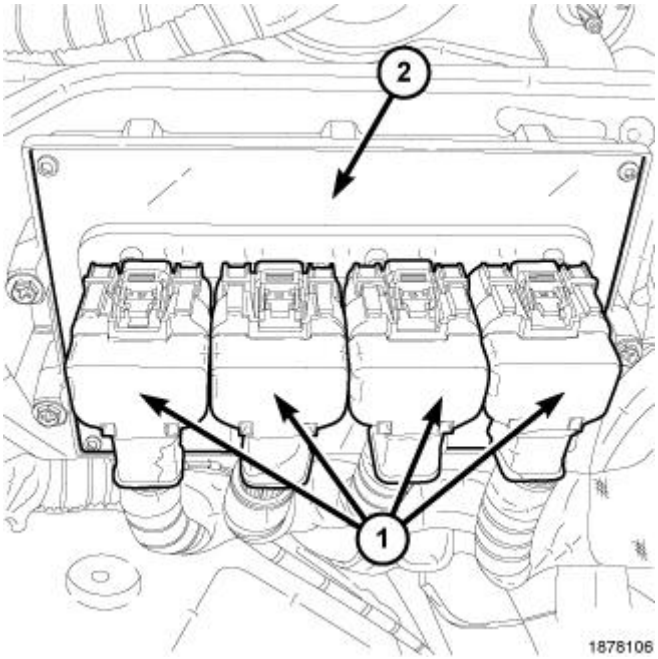

Fig. 39: Powertrain Control Module & Connectors
Courtesy of CHRYSLER GROUP, LLC

The PCM (2) is located in the engine compartment attached to the passenger side dash panel.

To avoid possible voltage spike damage to the PCM, ignition key must be off, and negative battery cable must be disconnected before unplugging PCM connectors.

1. Disconnect and isolator the negative battery cable.

2. Carefully unplug the four 38-way connectors from the PCM (1).
3. Remove the four PCM mounting bolts and remove the PCM (2) from vehicle.

INSTALLATION

INSTALLATION

CAUTION: Certain ABS systems rely on having the Powertrain Control Module (PCM) broadcast the Vehicle Identification Number (VIN) over the bus network. To prevent problems of DTCs and other items related to the VIN broadcast, it is recommend that you disconnect the ABS CAB (controller) temporarily when replacing the PCM. Once the PCM is replaced, write the VIN to the PCM using a scan tool. This is done from the engine main menu. Arrow over to the second page to "1. Miscellaneous". Select "Check VIN" from the choices. Make sure it has the correct VIN entered before continuing. When the VIN is complete, turn off the ignition key and reconnect the ABS module connector. This will prevent the setting of DTCs and other items associated with the lack of a VIN detected when you turn the key ON after replacing the PCM.

CAUTION: Use the scan tool to reprogram the new PCM with the vehicles original identification number (VIN) and the vehicles original mileage. If this step is not done, a Diagnostic Trouble Code (DTC) may be set.

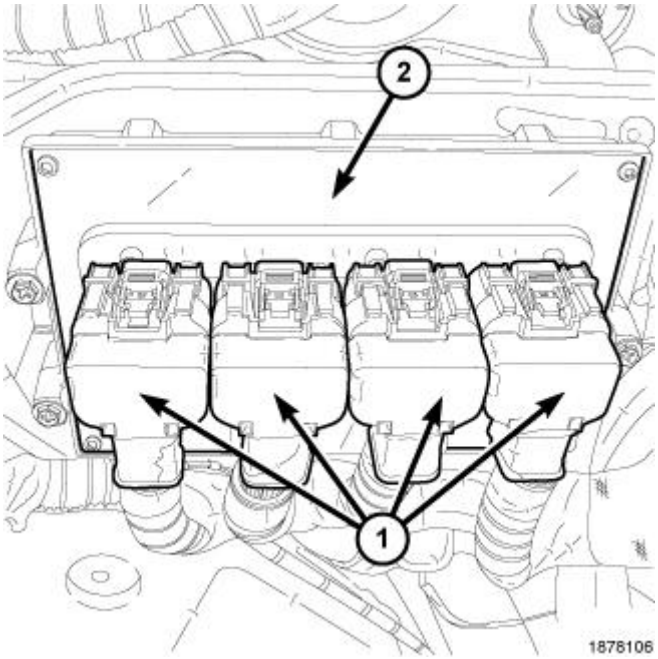

Fig. 40: Powertrain Control Module & Connectors
Courtesy of CHRYSLER GROUP, LLC

1. Install the PCM (2) and 4 mounting bolts to vehicle.

2. Check pin connectors in the PCM and the three 32-way connectors (four 38-way connectors if equipped with NGC) for corrosion or damage. Also, the pin heights in connectors should all be same. Repair as necessary before installing connectors.
3. Install the three 32-way connectors (four 38-way connectors if equipped with NGC).
4. **The 5.7L V-8 engine is equipped with a fully electronic accelerator pedal position sensor. If equipped with a 5.7L, also perform the following 3 steps:**
    1. Connect the negative battery cable.
    2. Turn the ignition switch ON, but do not crank the engine.
    3. Leave the ignition switch ON for a minimum of 10 seconds. This will allow the PCM to learn the electrical parameters.
    4. The scan tool may also be used to learn electrical parameters. Go to the Miscellaneous menu, and then select ETC Learn.
5. If the previous step is not performed, a Diagnostic Trouble Code (DTC) will be set.
6. If necessary, use a scan tool to erase any Diagnostic Trouble Codes (DTC's) from PCM. Also use the scan tool to reprogram new PCM with vehicles original Vehicle Identification Number (VIN) and original vehicle mileage.

MODULE, POWERTRAIN CONTROL, 6.7L DIESEL

DESCRIPTION

DESCRIPTION

The Powertrain Control Module (PCM) is used to control the functions of the engine and transmission. The PCM is bolted to the left side of the engine below the intake manifold.

OPERATION

OPERATION

The main function of the Powertrain Control Module (PCM) is to electrically control the fuel system. The PCM also controls the functions of transmission.

The PCM can adapt its programming to meet changing operating conditions.

The PCM receives input signals from various switches and sensors. Based on these inputs, the PCM regulates various engine and vehicle operations through different system components. These components are referred to as **PCM Outputs.** The sensors and switches that provide inputs to the PCM are considered **PCM Inputs.**

NOTE: PCM Inputs:

- Accelerator Pedal Position Sensor (APPS) Signals No. 1 and No. 2
- AC system pressure
- Auto shutdown (ASD) sense

- Battery voltage
- Brake switch
- Camshaft Position Sensor (CMP)
- Crankshaft Position Sensor (CKP)
- Data link connection for a scan tool
- EGR Air Flow Control
- EGR Valve
- Engine Coolant Temperature (ECT) sensor
- Exhaust Gas Temperature sensor
- EATX module (if equipped)
- Fuel level
- Fuel pressure sensor
- Fan speed (engine cooling fan)
- Generator (battery voltage) output
- Governor pressure (Auto. trans.)
- Ground circuits
- Inlet air temperature sensor/pressure sensor
- Intake air temperature sensor/MAP sensor
- CAN C BUS (+) circuits
- CAN C BUS (-) circuits
- Key switch (ignition)
- Oil Pressure switch
- Overdrive switch (automatic transmission only)
- Park/neutral switch (auto. trans. only)
- Power ground
- SCI datalink bus (+) circuits
- SCI datalink bus (-) circuits
- Sensor return
- Signal ground
- Speed control multiplexed single wire input
- Transfer case switch (4WD range position)
- Transmission governor psi (automatic transmission only)
- Transmission OSS (automatic transmission only)
- Transmission oil pressure (automatic transmission only)
- Transmission oil temperature (automatic transmission only)
- Transmission throttle valve position (automatic transmission only)
- Vehicle speed signal
- Water-In-Fuel (WIF) sensor

NOTE: PCM Outputs:

After inputs are received by the PCM, certain sensors, switches and components are controlled or regulated by the PCM. These are considered **PCM Outputs.** These outputs are for:

- A/C clutch relay
- Auto shutdown (ASD) relay
- Data link connection for diagnostic scan tool
- EGR air flow control
- EGR valve
- Fan clutch PWM
- Five volt sensor supply (primary)
- Five volt sensor supply (secondary)
- Fuel control actuator
- Fuel injector driver circuits
- Fuel transfer (lift) pump
- Generator field driver (-)
- Generator field driver (+)
- Governor pressure (VFS solenoid)
- Intake manifold air heater relays No. 1 and No. 2 control circuits
- CAN C BUS (+/-) circuits for: speedometer, voltmeter, fuel gauge, oil pressure gauge/lamp, engine temp. gauge and speed control warn. lamp
- Malfunction indicator lamp (Check engine lamp). Driven through J1850 circuits.
- Oil pressure switch/warning lamp (databus)
- Overdrive/3-4 shift solenoid (automatic transmission only)
- SC source
- SCI datalink bus (+) circuits
- SCI datalink bus (-) circuits
- Speed control vacuum solenoid
- Speed control vent solenoid
- Tachometer (if equipped). Driven through J1850 circuits.
- TCC solenoid (automatic transmission only)
- Transmission battery relay (automatic transmission only)
- Transmission throttle valve actuator (automatic transmission only)
- Transmission governor solenoid (automatic transmission only)
- Wait-to-start warning lamp (databus)
- Turbo wastegate solenoid
- Water-In-Fuel (WIF) warning lamp (databus)

REMOVAL

REMOVAL

NOTE: **To avoid possible voltage spike damage to the Powertrain Control Module (PCM), ignition key must be off, and both negative battery cables must be disconnected before unplugging PCM harness connectors.**

1. Record any Diagnostic Trouble Codes (DTC's) found in the (PCM).

   NOTE: **For automatic transmission vehicles, disconnecting the battery before the 10 minute power down will result in the Fault Code P2509. This fault code will need to be cleared before returning to the customer. Also, same for manual transmissions but the time limit is 75 seconds.**

2. Disconnect both negative battery cables.

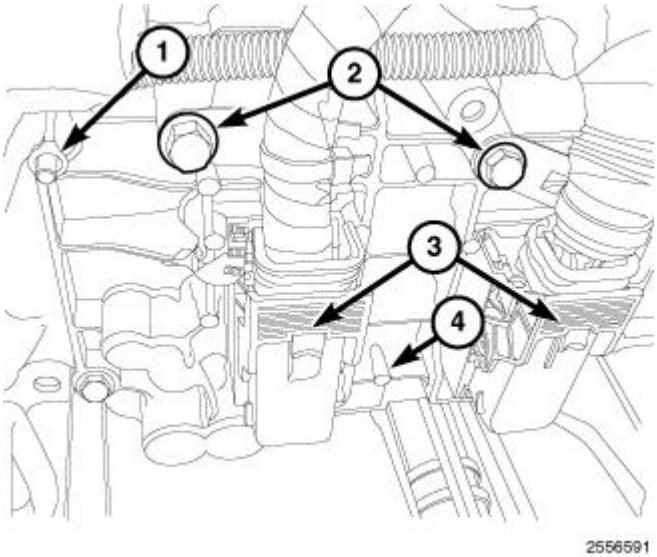

Fig. 41: PCM, Harness Connectors & Harness Retainer
Courtesy of CHRYSLER GROUP, LLC

CAUTION: **If the connector latch is packed with dirt or debris, clean connector latch first with electrical contact cleaner otherwise damage to the connector housing may result when trying to open a dirty connector.**

3. Disconnect the PCM harness connectors (3) and harness retainer (1) from PCM (4).

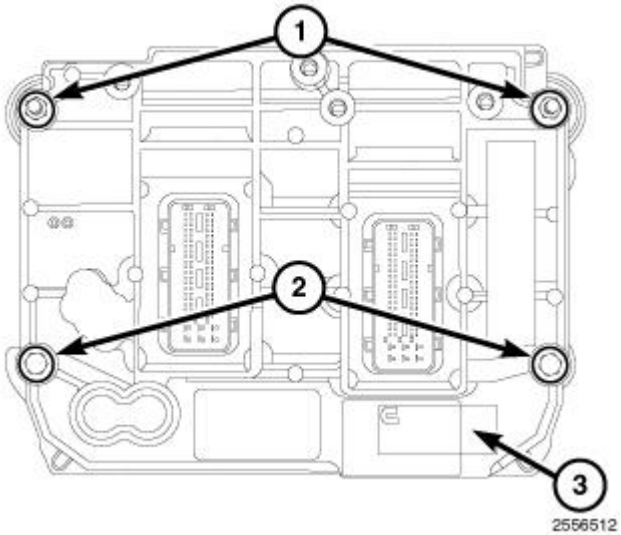

Fig. 42: PCM & Bolts
Courtesy of CHRYSLER GROUP, LLC

4. Remove bolts (1 and 2), and the PCM (3) from engine.

INSTALLATION

INSTALLATION

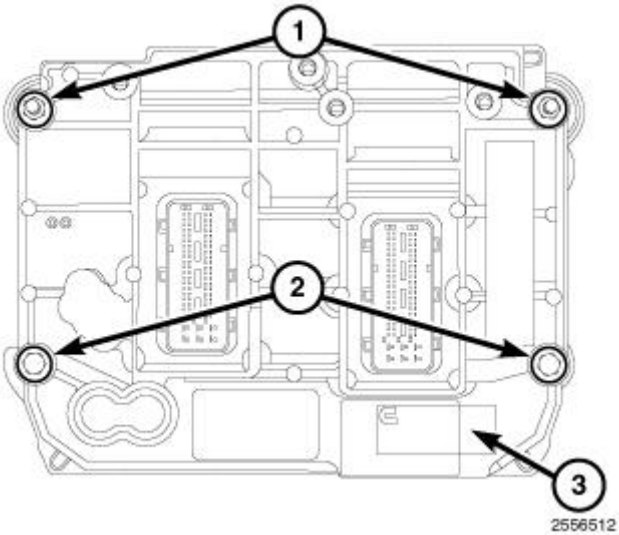

Fig. 43: PCM & Bolts
Courtesy of CHRYSLER GROUP, LLC

NOTE: **Do not apply paint to Powertrain Control Module (PCM) or a poor ground will result.**

1. Install PCM (3) to the engine block. Tighten bolts (1 and 2). to 24 N.m (18 ft. lbs.).

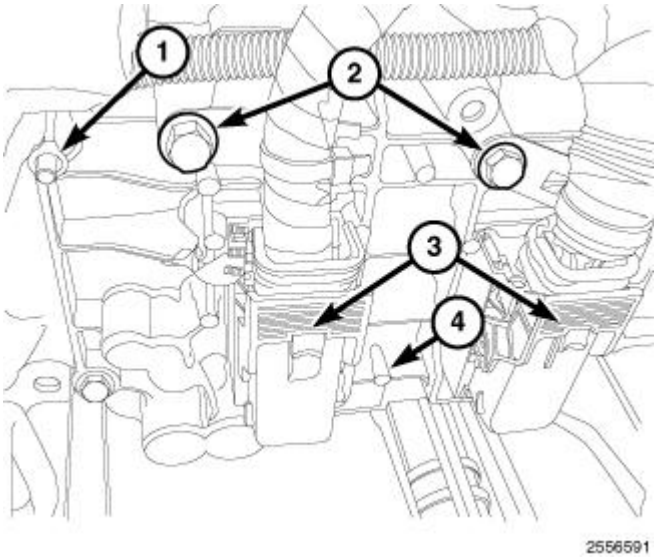

Fig. 44: PCM, Harness Connectors & Harness Retainer
Courtesy of CHRYSLER GROUP, LLC

2. Check pins in electrical connectors for corrosion, damage or dirt intrusion. Also, check all the PCM pins for being bent. Repair as necessary. **Damaged, dirty, bent or corroded pins could result in poor conductivity, causing intermittent electrical issues or DTC's.**
3. Clean pins in electrical connectors with an electrical contact cleaner.
4. Install PCM harness connectors (3) and harness retainer (1) to PCM (4).
5. Connect both negative battery cables.
6. Program the PCM. Refer to **STANDARD PROCEDURE**.
7. After programming the PCM, allow the module to fully power down. This process will require 10 minutes for automatic transmission vehicles, or 75 seconds for manual transmission vehicles.

NOTE: **Vehicles having 6.7L diesel engine with automatic transmissions will require a transmission quick learn after programming the PCM.**

8. Use a diagnostic scan tool to erase any Diagnostic Trouble Codes (DTC's) from PCM.

FUEL INJECTOR ID CORRECTION CODES:

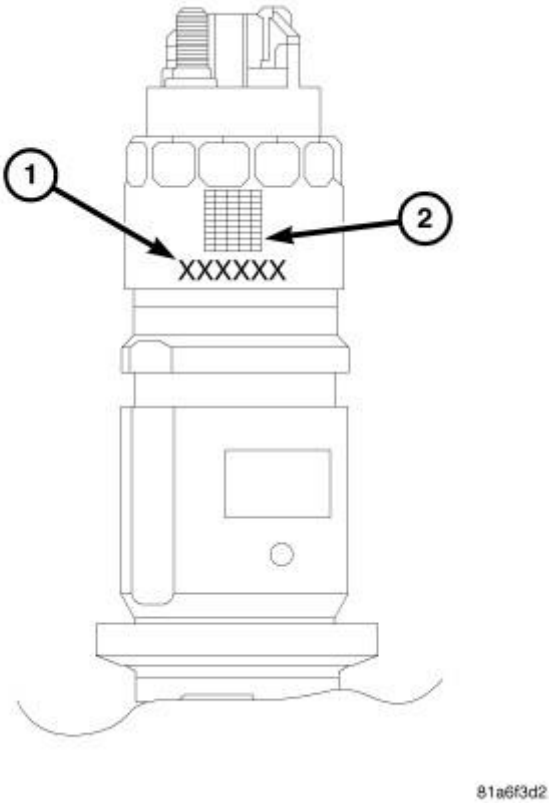

Fig. 45: Fuel Injector ID Correction Code
Courtesy of CHRYSLER GROUP, LLC

Each fuel injector has a six-digit alphanumeric correction code. The correction code is printed on the intake side of the fuel injector (1) and is used to identify injector calibration. When replacing any fuel injectors, this code must be entered into the vehicles Powertrain Control Module (PCM) using a diagnostic scan tool. In addition, if a new PCM is installed, use a diagnostic scan tool to program all six of the injector codes from the original fuel injectors into the new PCM.

MODULE, STEERING COLUMN

DESCRIPTION

DESCRIPTION

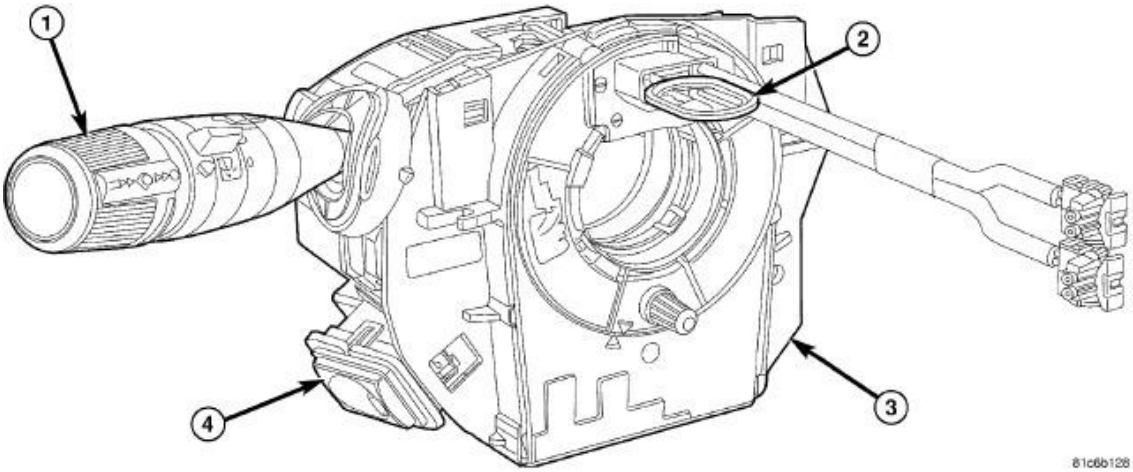

Fig. 46: Steering Control Module
Courtesy of CHRYSLER GROUP, LLC

This vehicle is equipped with a Steering Control Module (SCM), which is an electronic circuit board with a microprocessor that is internal to the multi-function switch (1) housing. The SCM is a Local Interface Network (LIN) slave and communicates over a dedicated LIN bus circuit with the ElectroMechanical Instrument Cluster (EMIC) (also known as the Cab Compartment Node/CCN), which is the LIN master and also provides a gateway to the Controller Area Network (CAN) data bus.

The multi-function switch is located on the left side of the steering column, just below the steering wheel. The multi-function switch provides the primary controls for the front wiper and washer systems, the turn signals and for headlamp beam selection. The only visible component of the switch is the control stalk, which includes a control knob that extends through the shrouds on the left side of the steering column. The remainder of the switch including its mounting provisions, its electrical connection and a turn signal cancel actuator are concealed beneath the shrouds.

The switch housing and controls are constructed of molded black plastic. A single integral latch feature and slide tabs on the switch housing engage channels and a striker that are integral to the left side of the mounting bracket that is integral to the clockspring (3) to secure the switch to the steering column. Each of the switches within the multi-function switch is internally connected to the SCM. A single connector receptacle integral to the back of the switch housing connects the SCM to the vehicle electrical system through a dedicated takeout and connector of the instrument panel wire harness.

The SCM cannot be adjusted or repaired, and is not flash update capable. If ineffective or damaged the entire multi-function switch must be replaced. Refer to **SWITCH, MULTIFUNCTION, REMOVAL** . The clockspring (with the multi-function switch mounting bracket) and the multi-function switch (with the SCM) are each available for separate service replacement.

OPERATION

OPERATION

The microprocessor-based Steering Control Module (SCM) utilizes integrated circuitry to monitor hard wired analog and multiplexed inputs from the individual switches within the multi-function switch. In response to those inputs, the internal circuitry of the SCM allows it to transmit electronic message outputs to the

ElectroMechanical Instrument Cluster (EMIC) (also known as the Cab Compartment Node/CCN) over the Local Interface Network (LIN) data bus.

In response to those LIN messages the internal circuitry and programming of the EMIC, which is also the LIN master module in the vehicle, allow it to control and integrate many electronic functions and features of the vehicle through both hard wired outputs and the transmission of electronic message outputs to other electronic modules in the vehicle over the Controller Area Network (CAN) data bus. Refer to **COMMUNICATION, DESCRIPTION**.

The SCM is connected to both a fused B(+) circuit and a fused ignition switch output (run-start) circuit. It receives a path to ground at all times. These connections allow it to remain functional regardless of the ignition switch position. Any input to the SCM that controls a vehicle system function that does not require that the ignition switch be in the ON position such as flashing the high beam headlamps, prompts the SCM to wake up and transmit on the LIN data bus.

The hard wired circuits between components related to the SCM may be diagnosed using conventional diagnostic tools and procedures. Refer to the appropriate wiring information. The wiring information includes wiring diagrams, proper wire and connector repair procedures, details of wire harness routing and retention, connector pin-out information and location views for the various wire harness connectors, splices and grounds.

However, conventional diagnostic methods will not prove conclusive in the diagnosis of the SCM or the electronic controls or communication between modules and other devices that provide some features of the SCM. The most reliable, efficient, and accurate means to diagnose the SCM or the electronic controls and communication related to SCM operation requires the use of a diagnostic scan tool. Refer to the appropriate diagnostic information.

DIAGNOSIS AND TESTING

DIAGNOSIS AND TESTING - STEERING CONTROL MODULE

WARNING: **To avoid serious or fatal injury on vehicles equipped with airbags, disable the Supplemental Restraint System (SRS) before attempting any steering wheel, steering column, airbag, seat belt tensioner, impact sensor or instrument panel component diagnosis or service. Refer to WARNING . Disconnect and isolate the battery negative (ground) cable, then wait two minutes for the system capacitor to discharge before performing further diagnosis or service. This is the only sure way to disable the SRS. Failure to take the proper precautions could result in accidental airbag deployment.**

The hard wired circuits between components related to the Steering Control Module (SCM) may be diagnosed using conventional diagnostic tools and procedures. Refer to the appropriate wiring information. The wiring information includes wiring diagrams, proper wire and connector repair procedures, details of wire harness routing and retention, connector pin-out information and location views for the various wire harness connectors, splices and grounds.

However, conventional diagnostic methods will not prove conclusive in the diagnosis of the SCM or the

electronic controls or communication between modules and other devices that provide some features of the SCM. The most reliable, efficient, and accurate means to diagnose the SCM or the electronic controls and communication related to SCM operation requires the use of a diagnostic scan tool. Refer to the appropriate diagnostic information.

MODULE, TRANSMISSION CONTROL

DESCRIPTION

DESCRIPTION

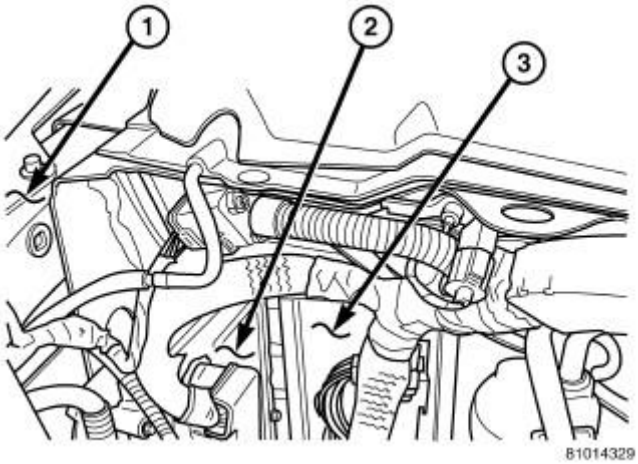

Fig. 47: Identifying PCM/TCM
Courtesy of CHRYSLER GROUP, LLC

On gasoline vehicles the Transmission Control Module (TCM) (2) may be sub-module within the Powertrain Control Module (PCM) (3).

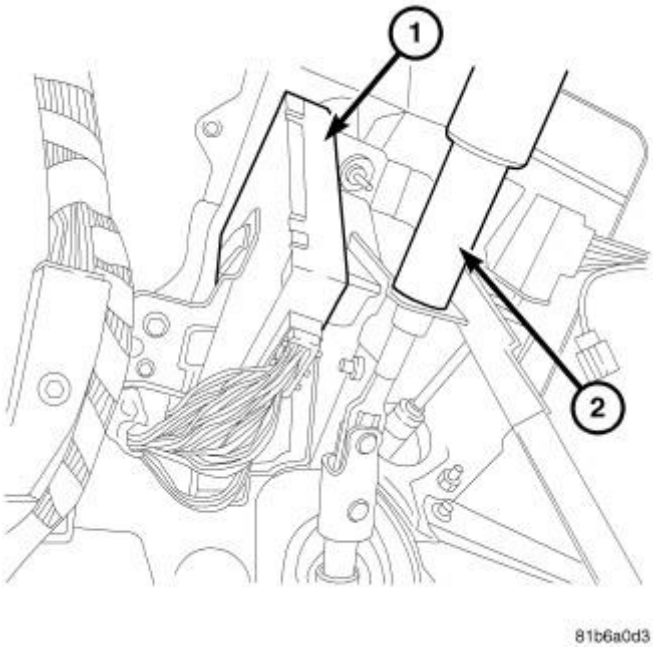

Fig. 48: AS68RC TCM Location
Courtesy of CHRYSLER GROUP, LLC

On Cab Chassis models equipped with the AS68RC transmission, the Transmission Control Module (TCM) has three electrical connectors and is located in the passenger compartment, underneath the left side of the dash panel.

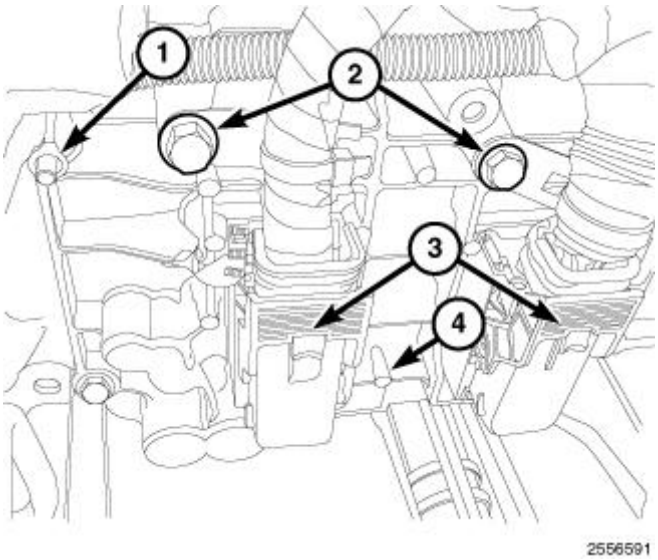

Fig. 49: PCM, Harness Connectors & Harness Retainer
Courtesy of CHRYSLER GROUP, LLC

On models equipped with the 68RFE transmission, the TCM is incorporated into the Powertrain Control Module (PCM).

OPERATION

OPERATION

RLE AND RFE TRANSMISSIONS

The Transmission Control Module (TCM) controls all electronic operations of the transmission. The TCM receives information regarding vehicle operation from both direct and indirect inputs, and selects the operational mode of the transmission. Direct inputs are hard wired to, and used specifically by the TCM. Indirect inputs are shared with the TCM via the vehicle communication bus.

Some examples of **direct inputs** to the TCM are:

- Battery (B+) voltage
- Ignition "ON" voltage
- Transmission Control Relay (Switched B+) (if equipped)
- Throttle Position Sensor
- Crankshaft Position Sensor
- Transmission Range Sensor
- Pressure Switches
- Transmission Temperature Sensor
- Input Shaft Speed Sensor
- Output Shaft Speed Sensor
- Line Pressure Sensor

Some examples of **indirect inputs** to the TCM are:

- Target Idle
- Torque Reduction Confirmation
- Engine Coolant Temperature
- Ambient/Battery Temperature
- Scan Tool Communication

Based on the information received from these various inputs, the TCM determines the appropriate shift schedule and shift points, depending on the present operating conditions and driver demand. This is possible through the control of various direct and indirect outputs.

Some examples of TCM **direct outputs** are:

- Transmission Control Relay
- Solenoids
- Torque Reduction Request

Some examples of TCM **indirect outputs** are:

- Transmission Temperature (to PCM)
- PRNDL Position (to cluster/CCN)

In addition to monitoring inputs and controlling outputs, the TCM has other important responsibilities and functions:

- Storing and maintaining Clutch Volume Indexes (CVI)
- Storing and selecting appropriate Shift Schedules
- System self-diagnostics
- Diagnostic capabilities (with scan tool)

NOTE: If the TCM has been replaced, the "Quick Learn Procedure" must be performed. Refer to MODULE, TRANSMISSION CONTROL, STANDARD PROCEDURE.

BATTERY FEED

A fused, direct battery feed to the TCM is used for continuous power. This battery voltage is necessary to retain memory in the TCM. When the battery (B+) is disconnected, this memory is lost. When the battery (B+) is restored, this memory loss is detected by the TCM and a Diagnostic Trouble Code (DTC) is set.

CLUTCH VOLUME INDEXES (CVI)

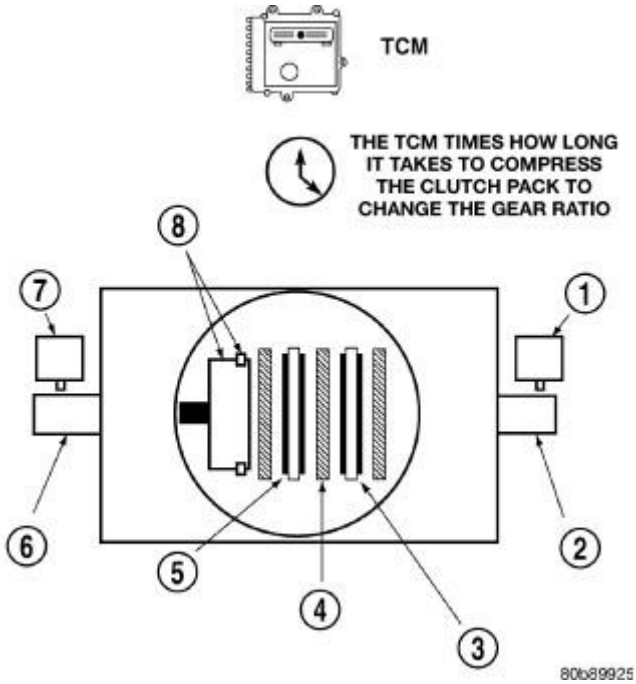

Fig. 50: Identifying Clutch Volume Indexes (CVI)
Courtesy of CHRYSLER GROUP, LLC

1 - OUTPUT SPEED SENSOR
2 - OUTPUT SHAFT

3 - CLUTCH PACK
4 - SEPARATOR PLATE
5 - FRICTION DISCS
6 - INPUT SHAFT
7 - INPUT SPEED SENSOR
8 - PISTON AND SEAL

An important function of the TCM is to monitor Clutch Volume Indexes (CVI). CVIs represent the volume of fluid needed to compress a clutch pack.

The TCM monitors gear ratio changes by monitoring the Input and Output Speed Sensors. The Input, or Turbine Speed Sensor sends an electrical signal to the TCM that represents input shaft rpm. The Output Speed Sensor provides the TCM with output shaft speed information.

By comparing the two inputs, the TCM can determine transmission gear position. This is important to the CVI calculation because the TCM determines CVIs by monitoring how long it takes for a gear change to occur.

Gear ratios can be determined by using the Scan Tool and reading the Input/Output Speed Sensor values in the "Monitors" display. Gear ratio can be obtained by dividing the Input Speed Sensor value by the Output Speed Sensor value.

For example, if the input shaft is rotating at 1000 rpm and the output shaft is rotating at 500 rpm, then the TCM can determine that the gear ratio is 2:1. In direct drive (3rd gear), the gear ratio changes to 1:1. The gear ratio changes as clutches are applied and released. By monitoring the length of time it takes for the gear ratio to change following a shift request, the TCM can determine the volume of fluid used to apply or release a friction element.

The volume of transmission fluid needed to apply the friction elements are continuously updated for adaptive controls. As friction material wears, the volume of fluid need to apply the element increases.

Certain mechanical problems within the input clutch assembly can cause inadequate or out-of-range element volumes. Also, defective Input/Output Speed Sensors and wiring can cause these conditions. The following charts identifies the appropriate clutch volumes and when they are monitored/updated:

42RLE

CLUTCH VOLUMES				
Clutch	When Updated			**Proper Clutch Volume**
	Shift Sequence	**Oil Temperature**	**Throttle Angle**	
L/R	2-1 or 3-1 coast downshift	> 21° C (70° F)	< 5°	35 to 83
2/4	1-2 shift	> 43° C (110° F)	5 - 54°	20 to 77
OD	2-3 shift			48 to 150
UD	4-3 or 4-2 shift		> 5°	24 to 70

545RFE

CLUTCH VOLUMES		
Clutch	**When Updated**	**Proper Clutch Volume**
L/R	2-1 or 3-1 downshift	45 to 134
2C	3-2 kickdown shift	25 to 85
2C Alternate	4-4 prime upshift	25 to 85
OD	2-3 upshift	30 to 100
4C	3-4 upshift	30 to 85
4C Alternate	2-2 prime upshift	30 to 85
UD	4-3 kickdown shift	30 to 100

SHIFT SCHEDULES

As mentioned earlier, the TCM has programming that allows it to select a variety of shift schedules. Shift schedule selection is dependent on the following:

- Shift lever position
- Throttle position
- Engine load
- Fluid temperature
- Software level

As driving conditions change, the TCM appropriately adjusts the shift schedule. Refer to the following chart to determine the appropriate operation expected, depending on driving conditions.

Schedule	Condition	Expected Operation
Extreme Cold	Oil temperature below -27° C (16° F)	-Park, Reverse, Neutral and 1st and 3rd gear only in D position, 2nd gear only in Manual 2 or L -No EMCC
Super Cold	Oil temperature between -24° C (-12° F) and -12° C (10° F)	- Delayed 2-3 upshift - Delayed 3-4 upshift - Early 4-3 coastdown shift - High speed 4-2, 3-2, 2-1 kickdown shifts are prevented -Shifts at high throttle openings willl be early. - No EMCC
Cold	Oil temperature between -12° C (10° F) and 2° C (36° F)	-Shift schedule is the same as Super Cold except that the 2-3 upshifts are not delayed.
Warm	Oil temperature between 4° C (40° F) and 27° C (80° F)	- Normal operation (upshift, kickdowns, and coastdowns) - No EMCC

Hot	Oil temperature between 27° C (80° F) and 115° C (240° F)	- Normal operation (upshift, kickdowns, and coastdowns) - Normal EMCC operation
Overheat	Oil temperature above 115° C (240° F) or engine coolant temperature above 118° C (244° F)	- Delayed 2-3 upshift - Delayed 3-4 upshift - 3rd gear FEMCC from 30-48 mph - 3rd gear PEMCC above 35 mph - Above 25 mph the torque converter will not unlock unless the throttle is closed or if a wide open throttle 2nd PEMCC to 1 kickdown is made

AISIN AS68RC TRANSMISSION

The Transmission Control Module (TCM) controls all electronic operations of the transmission. The TCM receives information regarding vehicle operation from both direct and indirect inputs, and selects the operational mode of the transmission. Direct inputs are hard wired to, and used specifically by the TCM. Indirect inputs are shared with the TCM via the vehicle communication bus.

Some examples of **direct inputs** to the TCM are:

- Battery (B+) voltage
- Ignition "ON" voltage
- Transmission Range Sensor
- Pressure Switches
- Transmission Temperature Sensor
- Input Speed Sensor
- Output Speed Sensor

Some examples of **indirect inputs** to the TCM are:

- Engine/Body Identification
- Manifold Pressure
- Throttle position
- Torque Reduction Confirmation
- Engine Coolant Temperature
- Exhaust Brake Status (if equipped)
- PTO Request (if equipped)
- Scan Tool Communication

Based on the information received from these various inputs, the TCM determines the appropriate shift schedule

and shift points, depending on the present operating conditions and driver demand. This is possible through the control of various direct and indirect outputs.

Some examples of TCM **direct outputs** are:

- Exhaust Brake Cut Request (if equipped).
- Solenoids.
- Torque Reduction Request.

Some examples of TCM.**indirect outputs** are:

- Transmission Temperature (to PCM).
- PRNDL Position (to cluster/CCN).
- PTO Status.

In addition to monitoring inputs and controlling outputs, the TCM has other important responsibilities and functions:

- Storing and maintaining Clutch Volume Indexes (CVI).
- Storing and selecting appropriate Shift Schedules.
- System self-diagnostics.
- Diagnostic capabilities (with scan tool).

Clutch filling time is continuously maintained when the vehicle is running.

TRANSMISSION SHIFT FUNCTION		
Temperature	Sump	Action
Extreme Cold	Below -20°C (-4°F)	Park, Reverse, Neutral, 3rd Gear (no lock-up)
Super Cold	Below -10°C (14°F)	Park, Reverse, Neutral, up to 4th gear (No Over drive and No lock-up)
Cold	Below 5°C (41°F)	Park, Reverse, Neutral, up to 4th gear (No Over drive and No lock-up)
Warm	Below 25°C (77°F)	No lock-up, up to 6th gear
Hot	Between 25°C - 140C (77 - 284°F)	Normal operation
Overheat	Above 140°C (284°F)	Enlarge the lock-up area to reduce the heat generation.

STANDARD PROCEDURE

TCM QUICK LEARN - AS68RC TRANSMISSION

NOTE: **The ignition switch must be cycled to the OFF position after the AS68RC TCM quick learn procedure in order to initialize the TCM.**

The quick learn procedure requires the use of the scan tool. Always check for and clear any codes after a quick learn is preformed. For scan tool step by step instructions, reference the ECM/PCM/TCM Programming. Refer to the appropriate Electrical Diagnostic article.

This program allows the electronic transmission system to recalibrate itself. This will provide the proper transmission operation. The quick learn procedure should be performed if any of the following procedures are performed:

- Transmission Assembly Replacement.
- Transmission Control Module Replacement.
- Clutch Plate and/or Seal Replacement.
- Valve Body / Oil Pump Replacement.

To perform the Quick Learn Procedure, the following conditions must be met:

- Turn off any electrical loads to insure the engine is at idle speed.
- The transmission fluid temperature must be at or above 104°F (40°C).
- Shift the lever from NEUTRAL to DRIVE and NEUTRAL to REVERSE three to five times to bleed off trapped in the transmission clutches and brakes.
- The shift lever position must stay in PARK until prompted to shift to another gear.
- The parking brake must be applied and chock the rear wheels.
- Both feet on the brake pedal.
- PTO is inactive.

TCM QUICK LEARN - RLE AND RFE TRANSMISSIONS

The quick learn procedure requires the use of the scan tool. For scan tool step by step instructions, reference the ECM/PCM/TCM Programming. Refer to the appropriate Electrical Diagnostic article.

This program allows the electronic transmission system to recalibrate itself. This will provide the proper transmission operation. The quick learn procedure should be performed if any of the following procedures are performed:

- Transmission Assembly Replacement.
- Transmission Control Module Replacement.
- Engine Control Module Replacement or Reprogramming.
- Solenoid Pack Replacement.
- Clutch Plate and/or Seal Replacement.
- Valve Body Replacement or Recondition.

To perform the Quick Learn Procedure, the following conditions must be met:

- The brakes must be applied.
- The engine speed must be above 500 rpm.

- The throttle angle (TPS) must be less than 3 degrees.
- The shift lever position must stay in PARK until prompted to shift to overdrive.
- The shift lever position must stay in overdrive after the Shift to Overdrive prompt until the scan tool indicates the procedure is complete.
- The calculated oil temperature must be above 60° and below 200°.

DRIVE LEARN - RFE TRANSMISSIONS

When a transmission is repaired and a Quick Learn procedure has been performed on the Transmission Control Module (TCM), the following Drive Learn procedure can be performed to fine tune any shifts which are particularly objectionable.

NOTE: It is not necessary to perform the complete Drive Learn procedure every time the TCM is Quick Learned. Perform only the portions which target the objectionable shift.

LEARN A SMOOTH 1ST NEUTRAL TO DRIVE SHIFT

Perform this procedure only if the complaint is for a delayed or harsh shift the first time the transmission is put into gear after the vehicle is allowed to set with the engine not running for at least 10 minutes. Use the following steps to have the TCM learn the 1st N-D UD CVI.

NOTE: The transmission oil temperature must be between 80 - 110°F (27 - 43°C).

1. Start the engine only when the engine and ignition have been off for at least ten (10) minutes.
2. With the vehicle at a stop and the service brake applied, record the 1st N-D UD CVI while performing a Neutral to Drive shift. The 1st N-D UD CVI accounts for air entrapment in the UD clutch that may occur after the engine has been off for a period of time.
3. Repeat until the recorded 1st N-D UD CVI value stabilizes. Refer to 1 and 2.

NOTE: It is important that this procedure be performed when the transmission temperature is between 80 - 110°F (27 - 43°C). If this procedure takes too long to complete fully for the allowed transmission oil temperature, the vehicle may be returned to the customer with an explanation that the shift will improve daily during normal vehicle usage. The TCM also learns at higher oil temperatures, but these values (line pressure correction values) are not available for viewing on the scan tool.

LEARN A SMOOTH NEUTRAL TO DRIVE GARAGE SHIFT

Perform this procedure if the complaint is for a delayed or harsh shift when the transmission is put into gear after the vehicle has had its first shift. Use the following steps to have the TCM learn the Norm N-D UD CVI.

NOTE: The transmission oil temperature must be between 80 - 110°F (27 - 43°C) to learn the UD CVI. Additional learning occurs at temperatures as low as 0°F and

as high as 200°F. This procedure may be performed at any temperature that experiences poor shift quality. Although the UD CVI may not change, shift quality should improve.

1. Start the vehicle engine and shift to drive.
2. Move the vehicle forward to a speed of at least 16 km/h (10 MPH) and come to a stop. This ensures no air is present in the UD hydraulic circuit.
3. Perform repeated N-D shifts at a stop while pausing in Neutral for at least 2-3 seconds and monitor Norm N-D UD CVI volume until the value stabilizes. The value will change during the N-D shift. This is normal since the UD value is different for the N-D shift then the normal value shown which is used for 4-3 coastdown and kickdowns. Perform repeated shifts in this temperature range until the Norm N-D UD CVI value stabilizes and the N-D shifts become smooth.

LEARN THE 1ST 2-3 SHIFT AFTER A RESTART OR SHIFT TO REVERSE

Use the following steps to have the TCM learn the 1st 2-3 shift OD CVI.

NOTE: The transmission oil temperature must be above 80°F (27°C).

1. With the vehicle engine running, select reverse gear for over 2 seconds.
2. Shift the transmission to Drive and accelerate the vehicle from a stop at a steady 15 degree throttle opening and perform a 2-3 shift while noting the 1st 2-3 OD CVI.
3. Repeat until the 1st 2-3 upshift becomes smooth and the 1st 2-3 OD CVI stabilizes. Refer to 1 and 2.

LEARN A SMOOTH 2-3 AND 3-4 UPSHIFT

NOTE: The transmission oil temperature must be above 110°F (43°C).

Use the following steps to have the TCM learn the OD and 4C CVI's.

1. Accelerate the vehicle from a stop at a steady 15 degree throttle opening and perform multiple 1-2, 2-3, and 3-4 upshifts. The 2nd 2-3 shift following a restart or shift to reverse will be shown during the shift as a value between the 1st 2-3 OD CVI and the normal OD CVI. Updates to the normal OD CVI will occur after the 2nd shift into 3rd gear, following a restart or shift to reverse.
2. Repeat until the 2-3 and 3-4 shifts become smooth and the OD and 4C CVI become stable. Refer to 1.

LEARN A SMOOTH 4-3 COASTDOWN AND PART THROTTLE 4-3 KICKDOWN

NOTE: The transmission oil temperature must be above 110°F (43°C).

Use the following steps to have the TCM learn the UD shift volume.

1. At a vehicle speed between 64-97 km/h (40-60 MPH), perform repeated 4-3 kickdown shifts.
2. Repeat until the UD volume becomes somewhat stable and the shift becomes smooth. Refer to 1.

LEARN A SMOOTH 1-2 UPSHIFT AND 3-2 KICKDOWN

Use the following steps to have the TCM learn the 2C shift volume.

NOTE: The transmission oil temperature must be above 110°F (43°C).

1. With a vehicle speed below 48 km/h (30 MPH) and the transmission in 3rd gear, perform multiple 3-2 kickdowns.
2. Repeat until the 3-2 kickdowns become smooth and the 2C CVI becomes stable. Refer to 1.

LEARN A SMOOTH MANUAL 2-1 PULLDOWN SHIFT AS WELL AS A NEUTRAL TO REVERSE SHIFT

NOTE: The transmission oil temperature must be above 110°F (43°C).

Use the following steps to have the TCM learn the LR volume.

1. With the vehicle speed around 40-48 km/h (25-30 MPH) in Manual 2nd, perform manual pulldowns to Low or 1st gear at closed throttle.
2. Repeat until the LR CVI becomes stable and the manual 2-1 becomes smooth. Refer to 1.

LEARN A SMOOTH NEUTRAL TO REVERSE SHIFT

NOTE: The transmission oil temperature must be above 110°F (43°C).

1. With the vehicle at a stop, perform Neutral to Reverse shifts until the shift is smooth. An unlearned Neutral to Reverse shift may be harsh or exhibit a double bump.
2. If any of the shifts are still not smooth after the clutch volume stabilizes, an internal transmission problem may be present.

LEARN A SMOOTH 4-5 UPSHIFT

NOTE: The transmission oil temperature must be above 110°F (43°C).

Use the following steps to have the TCM learn the Alt 2C CVI.

1. Accelerate the vehicle through 88 km/h (55mph) at a steady 10-15 degree throttle opening and perform multiple 4-5 upshifts.
2. Repeat until the 4-5 shift become smooth and the Alt 2C CVI become stable. Refer to 1. There is a separate 2C volume used and learned for 4-5 shifts, 2CA. It is independent of the 2C CVI learned on 3-2 kickdowns.

RECEIVER, WIRELESS IGNITION NODE

DESCRIPTION

DESCRIPTION

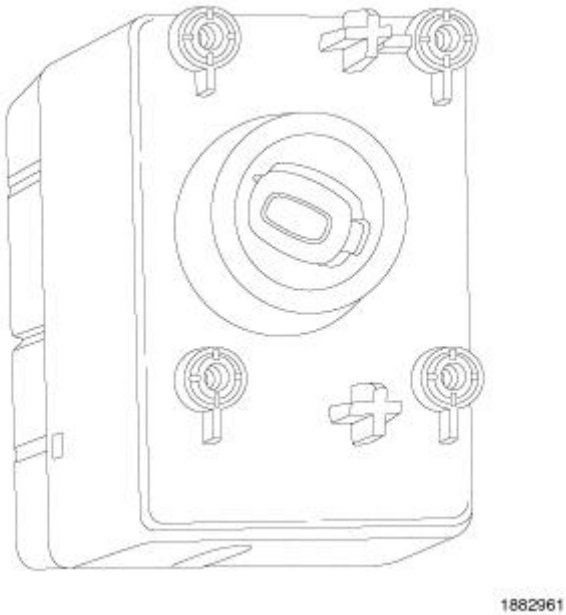

Fig. 51: Wireless Ignition Node Receiver
Courtesy of CHRYSLER GROUP, LLC

This vehicle is equipped with a Wireless Ignition Node (WIN). The WIN and the FOB with Integrated Key (FOBIK) are the primary components of the keyless ignition system. The only visible component of the WIN is the ignition switch located on the face of the instrument panel just to the inboard side of the steering column.

The WIN housing is constructed of molded black plastic and it includes four integral mounting bosses, which are secured to the instrument panel structure with screws. Two connector receptacles are integral to the back of the switch housing. One connects the WIN to the vehicle electrical system through a dedicated takeout and connector of the instrument panel wire harness. The other is a dedicated connector for the coaxial cable input from the optional remote start system external antenna module.

The WIN is an integrated electronic receiver that replaces the ignition switch. The WIN communicates with other electronic modules in the vehicle over the Controller Area Network (CAN) data bus.

The WIN interfaces with the Remote Keyless Entry (RKE) FOBIK and the Tire Pressure Monitor (TPM) sensors (if equipped) using Radio Frequency (RF) communication. It also communicates with the TPM trigger transponders (if equipped) and steering column lock module (if equipped) using a Local Interface Network (LIN) data bus connection.

The WIN provides a switched 12-volt source through an isolated switch for the steering column lock module required for certain export market vehicles. It also contains a key removal inhibit solenoid, an electronic Brake Transmission Shift Interlock (BTSI) solenoid, a key-in warning contact and it serves as the real time vehicle clock by transmitting the clock information to other electronic modules over the CAN data bus.

The WIN cannot be adjusted or repaired, but is flash update capable. If ineffective or damaged, the entire WIN

must be replaced. When replacing the WIN, you must also replace the steering column lock module (if equipped).

OPERATION

OPERATION

Following are brief descriptions of the systems that the WIN controls.

IGNITION SWITCH

The Wireless Ignition Node (WIN) incorporates an integral ignition switch that consists of four rotary positions with three detent positions and one spring-loaded position. The one extreme clockwise position is a spring-loaded momentary contact **"START"** position. When released from the **"START"** position, the switch will automatically return to the detent **"ON"** position. The other position includes a detent **"ACCESSORY"** position and a detent **"LOCK"** position.

The WIN reads the position of the ignition switch and transmits the data via the CAN data bus. These positions include **"LOCK"** with ignition key-out, **"LOCK"** with ignition key-in, **"ACCESSORY," "RUN,"** and **"START."**

SENTRY KEY IMMOBILIZER SYSTEM (SKIS)

Upon failure of proper Sentry Key Immobilizer (SKIS) communication to the Powertrain Control Module, (PCM), the PCM will not allow the vehicle to crank. The engine will not re-crank on the key cycle that the failure occurred, a full key down sequence must be performed for the engine to crank again. Refer to **OPERATION** .

REMOTE KEYLESS ENTRY (RKE)

The Remote Keyless Entry (RKE), transmitter uses Radio Frequency (RF) signals to communicate with the WIN, and the WIN relays the RKE requests to other modules in the vehicle over the CAN data bus. Refer to **OPERATION** .

TIRE PRESSURE MONITORING (TPM)

The Tire Pressure Monitoring (TPM) system uses radio and sensor technology to monitor tire air pressure levels. Refer to **TIRE PRESSURE MONITORING, OPERATION** .

REMOTE START WITH/EXTENDED RANGE ANTENNA

Further information concerning the Remote Start System, refer to **OPERATION** .

BRAKE TRANSMISSION SHIFTER INTERLOCK (BTSI)

The Brake Transmission Shifter/Ignition Interlock (BTSI) is controlled by the WIN. The BTSI prevents the transmission gear shifter from being moved out of PARK without a driver in place. For more information view the Brake Transmission Shift Interlock Mechanism for the related transmission.

PARK SHIFT INTERLOCK

The key removal inhibit solenoid internal to the WIN prevents the FOB with Integrated KEY (FOBIK) from being rotated in the ignition switch to the LOCK position for all vehicles with an automatic transmission unless the transmission shift lever is in the PARK position. The WIN module monitors a hard wired input from a switch integral to the automatic transmission shifter module to control this feature. The key removal inhibit solenoid is electronically disabled internally by the WIN on vehicles with a manual transmission.

DIAGNOSIS AND TESTING

DIAGNOSIS AND TESTING - FOBIK TRAPPED IN WIN

For more information, refer to **TRANSMITTER, INTEGRATED KEY FOB, DIAGNOSIS AND TESTING** .

REMOVAL

REMOVAL

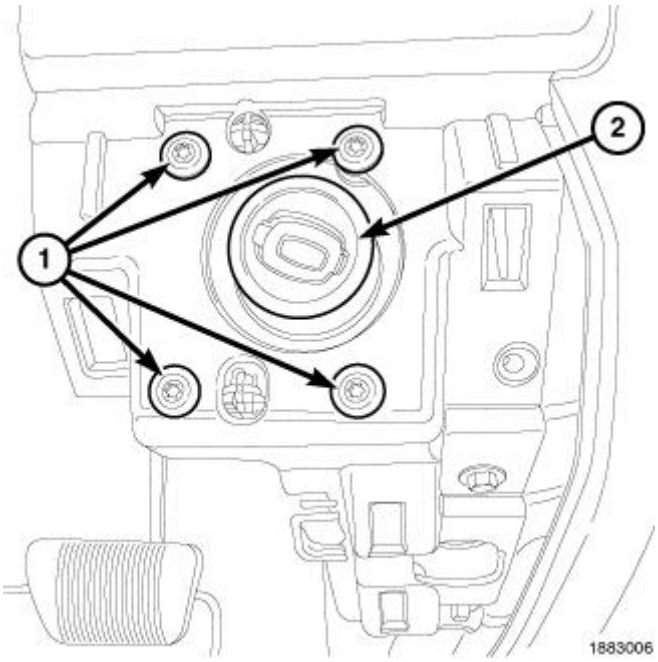

Fig. 52: WIN Module & Retainers
Courtesy of CHRYSLER GROUP, LLC

1. Disconnect and isolate the battery negative cable.
2. Remove the steering column cover opening. Refer to **COVER, STEERING COLUMN OPENING, REMOVAL** .
3. Remove the four Wireless Ignition Node (WIN) retainers (1).
4. Disconnect the WIN electrical connector.
5. If equipped, remove the WIN antenna connector.

6. Remove the WIN from the instrument panel opening.

INSTALLATION

INSTALLATION

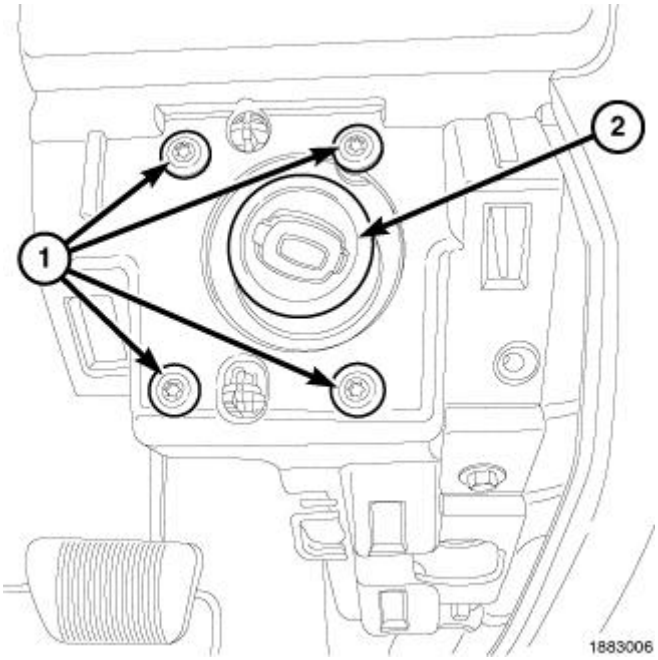

Fig. 53: WIN Module & Retainers
Courtesy of CHRYSLER GROUP, LLC

1. Connect the WIN electrical connector.
2. If equipped, connect the antenna connector to the WIN.
3. Install the WIN (2) into the to instrument panel.
4. Install the steering column cover opening. Refer to **COVER, STEERING COLUMN OPENING, INSTALLATION** .
5. Connect the negative battery cable.
6. Program the WIN following the Module/Programming Order Replacement Guide and Module Programming procedures. Refer to **STANDARD PROCEDURE**.

DIAGNOSTIC CODE INDEX

DIAGNOSTIC CODE INDEX

DTC	Description
B143B	MICROPHONE 1 CIRCUIT LOW
B143C	MICROPHONE 1 CIRCUIT HIGH
B143E	MICROPHONE 2 CIRCUIT LOW
B143F	MICROPHONE 2 CIRCUIT HIGH
U0010	CAN INTERIOR BUS
U0141	LOST COMMUNICATION WITH IPM (FCM/TIPM)
U0155	LOST COMMUNICATION WITH CLUSTER/CCN
U0184	LOST COMMUNICATION WITH RADIO

DIAGNOSIS AND TESTING

B143B-MICROPHONE 1 CIRCUIT LOW

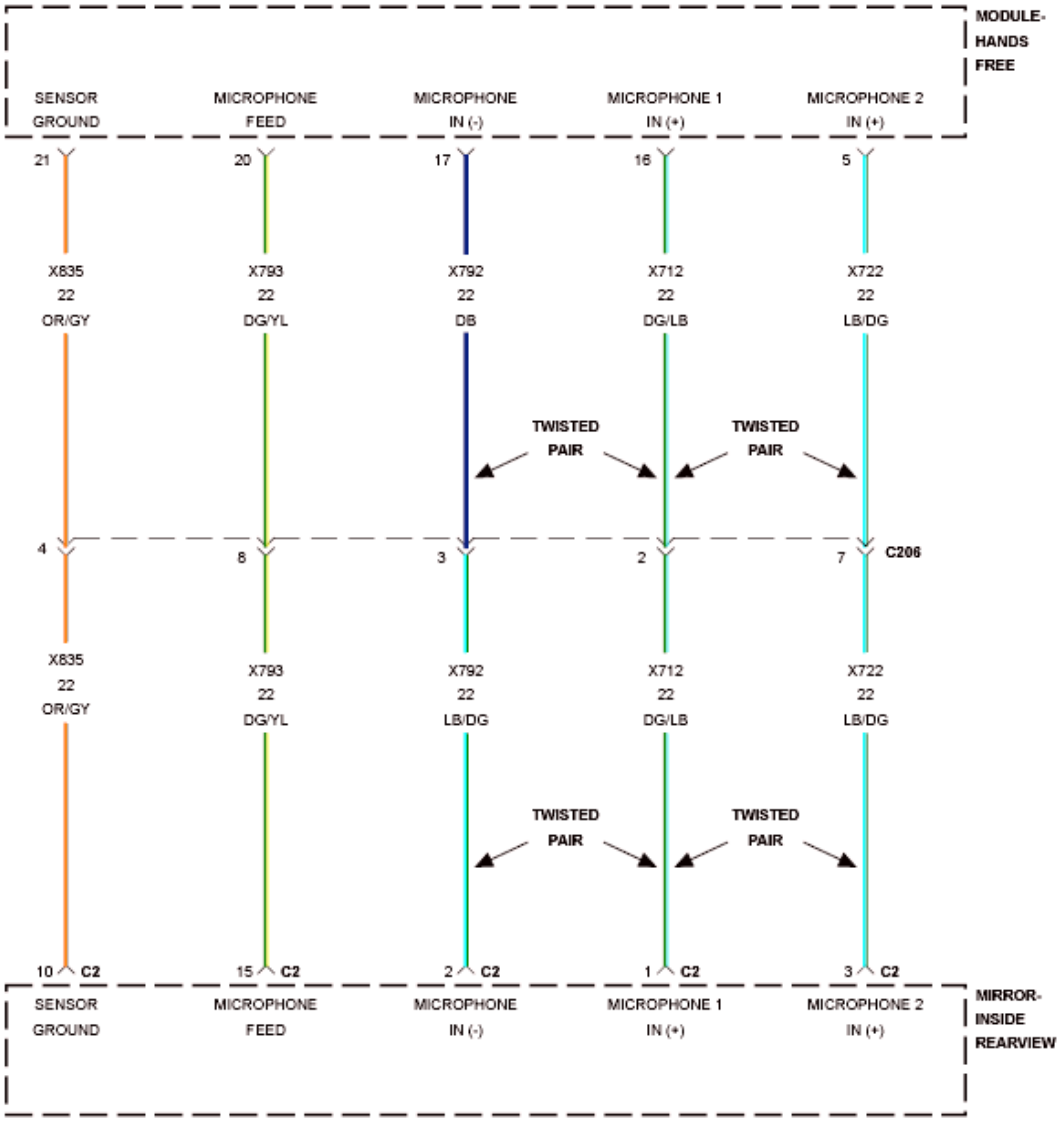

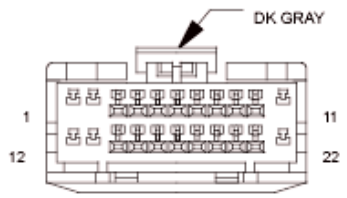

MODULE-
HANDS FREE

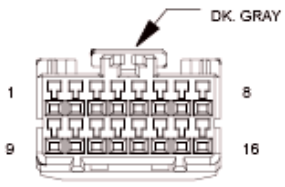

MIRROR-
INSIDE
REARVIEW C2
(HANDS FREE)

Fig. 1: Hands Free Module (HFM) Wiring Diagram
Courtesy of CHRYSLER GROUP, LLC

For a complete wiring diagram, **refer to appropriate SYSTEM WIRING DIAGRAMS article** .

WHEN MONITORED:

With the ignition on.

SET CONDITION:

The Hands Free Module (HFM) detects a short to ground or open on the (X712) Microphone 1 IN (+) circuit.

POSSIBLE CAUSES

Possible Causes
(X712) MICROPHONE 1 IN (+) CIRCUIT OPEN
(X712) MICROPHONE 1 IN (+) CIRCUIT SHORTED TO GROUND
INSIDE REARVIEW MIRROR
HANDS FREE MODULE (HFM)

DIAGNOSTIC TEST

1. **CHECK FOR ACTIVE DTC**

   NOTE: Verify the connection of the Rearview Mirror harness connector.

   1. Turn the ignition on.
   2. With the scan tool, read the active DTCs.

      Does the scan tool display this DTC as active?

      Yes

      - Go To 2.

      No

      - If the DTC is stored, check for an intermittent condition. Visually inspect the related wiring harness connectors. Look for broken, bent, pushed out, or corroded terminals.
      - Perform the BODY VERIFICATION TEST. Refer to **STANDARD PROCEDURE** .
2. **INSIDE REARVIEW MIRROR**

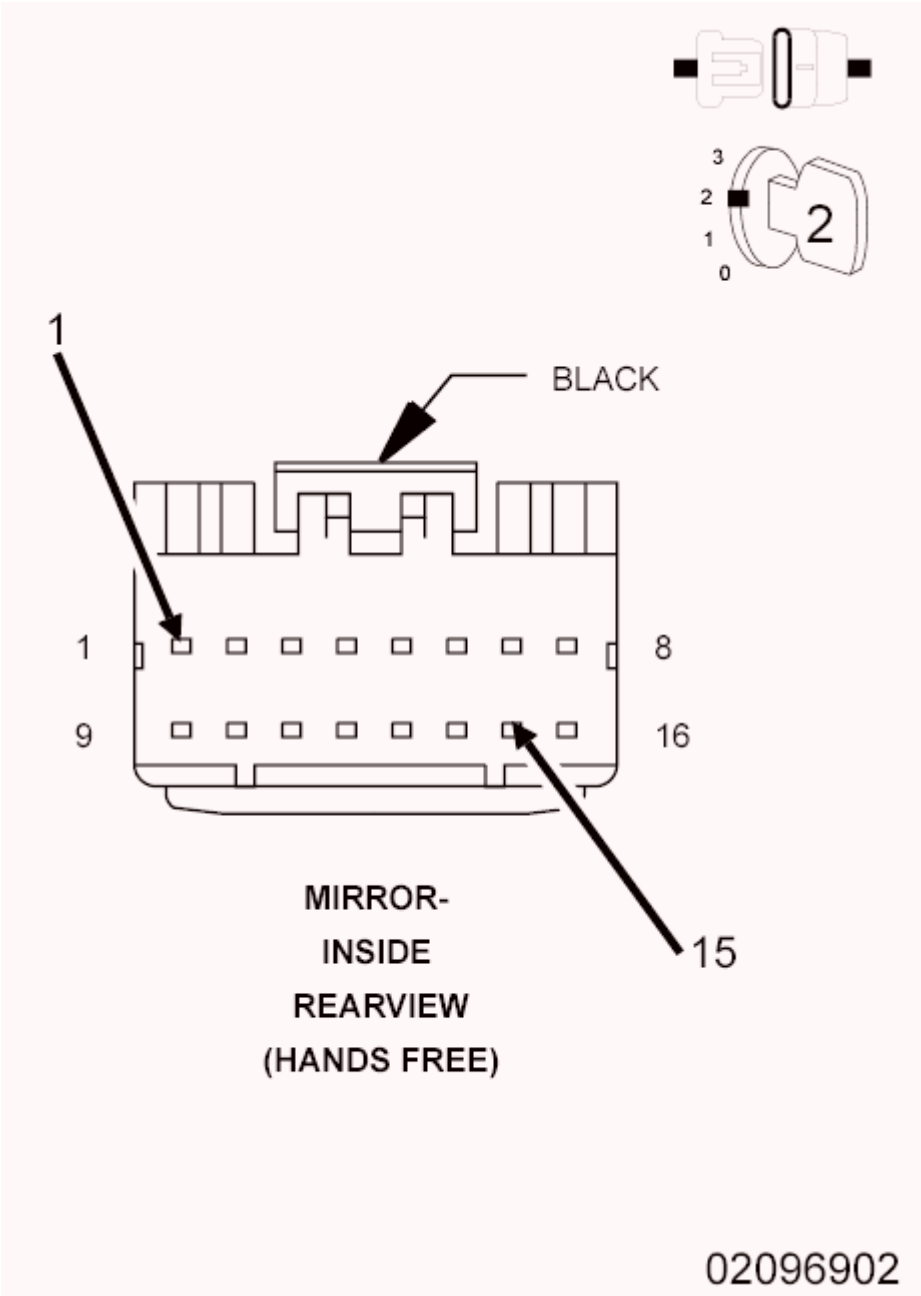

Fig. 2: Inside Rearview Mirror Harness Connector End View
Courtesy of CHRYSLER GROUP, LLC

1. Turn the ignition off.
2. Disconnect the Inside Rearview Mirror harness connector.
3. Connect a jumper wire between the (X793) Microphone Feed and the (X712) Microphone 1 IN (+) circuits.
4. Turn the ignition on.
5. With the scan tool, read the DTCs.

Does the scan tool display this DTC as active?

Yes

- Go To 3.

No

- Replace the Inside Rearview Mirror in accordance with the Service Information.
- Perform the BODY VERIFICATION TEST. Refer to **STANDARD PROCEDURE** .

3. **(X712) MICROPHONE 1 IN (+) CIRCUIT OPEN**

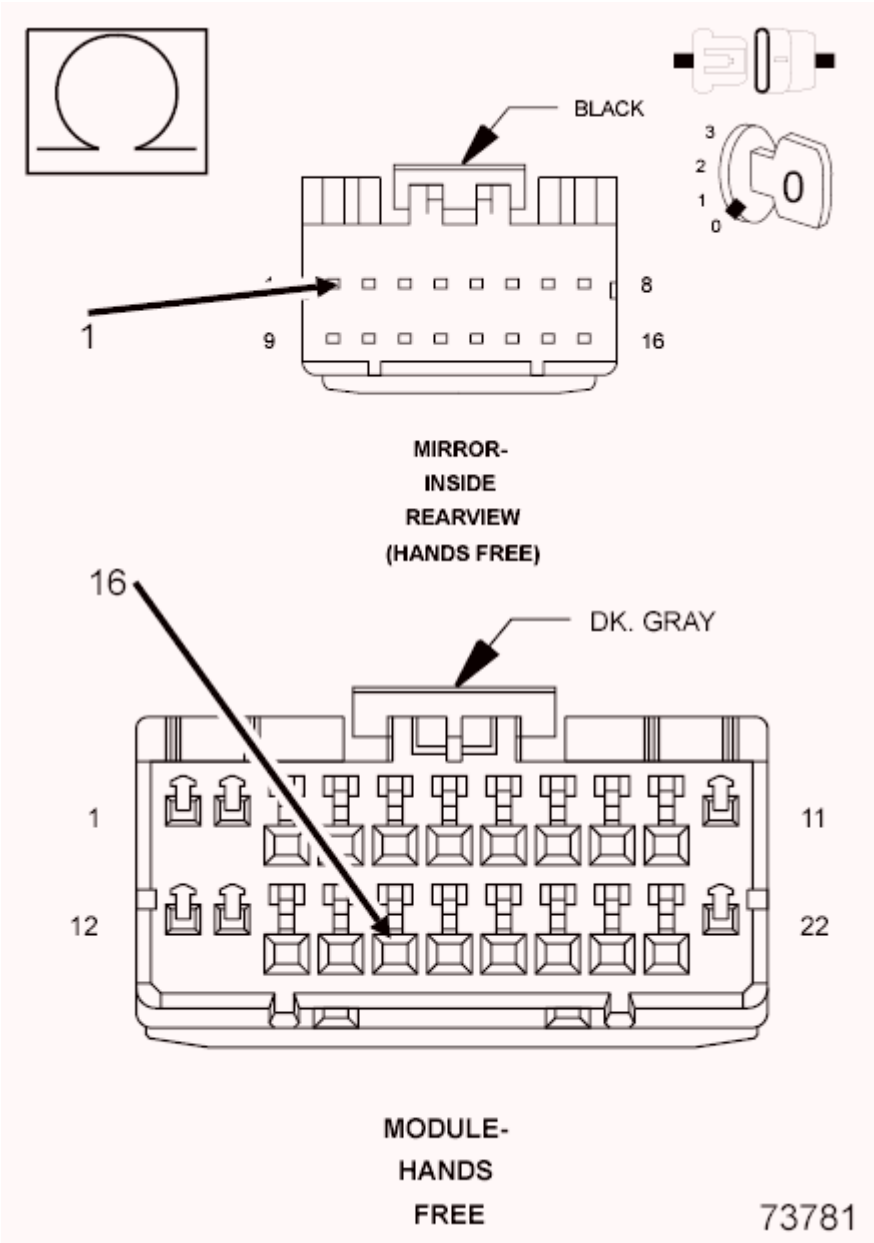

Fig. 3: Checking Microphone 1 In (+) Circuit For An Open
Courtesy of CHRYSLER GROUP, LLC

1. Turn the ignition off.
2. Disconnect the Hands Free Module harness connector.
3. Measure the resistance of the (X712) Microphone 1 IN (+) circuit between the Inside Rearview Mirror and Hands Free Module harness connectors.

   Is the resistance above 10K Ohms?

   Yes

   - Repair the (X712) Microphone 1 IN (+) circuit for an open.
   - Perform the BODY VERIFICATION TEST. Refer to **STANDARD PROCEDURE** .

   No

   - Go To 4.

4. **(X712) MICROPHONE 1 IN (+) CIRCUIT SHORTED TO GROUND**

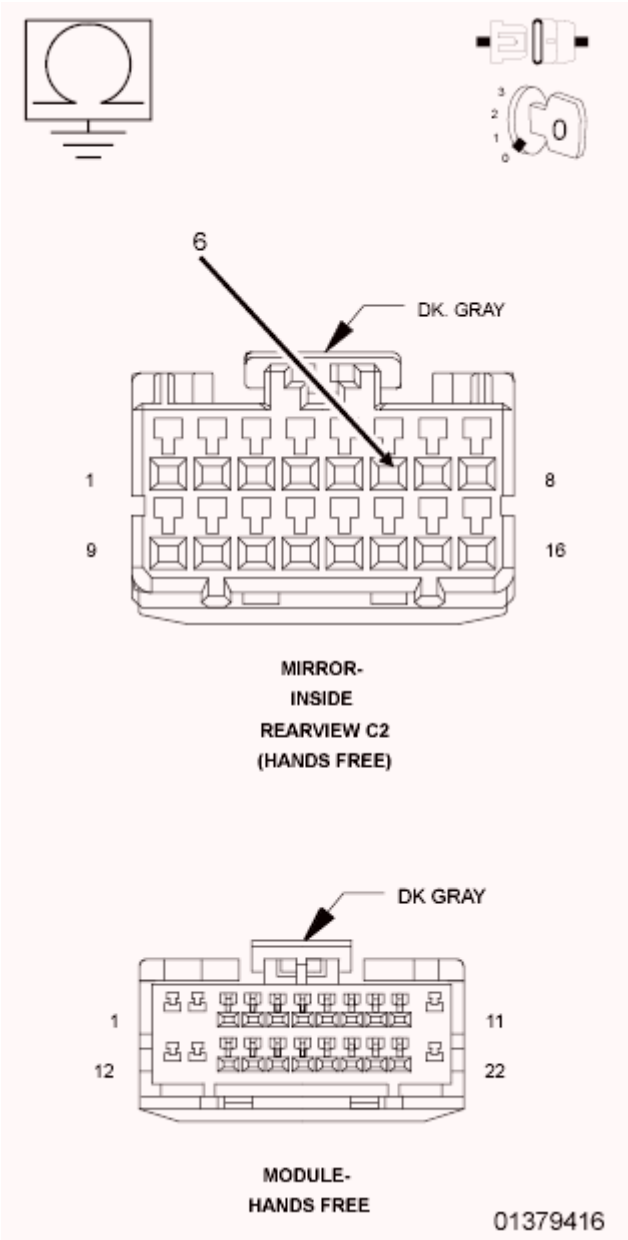

Fig. 4: Checking Microphone 1 In (+) Circuit For A Short To Ground
Courtesy of CHRYSLER GROUP, LLC

1. Turn the ignition off.
2. Disconnect the Hands Free Module harness connector.
3. Measure the resistance between ground and the (X712) Microphone 1 IN (+) circuit.

   Is the resistance below 10K Ohms?

   Yes

   - Repair the (X712) Microphone 1 IN (+) circuit for short to ground.

- Perform the BODY VERIFICATION TEST. Refer to **STANDARD PROCEDURE** .

No

- Replace the Hands Free Module in accordance with the Service Information.
- Perform the BODY VERIFICATION TEST. Refer to **STANDARD PROCEDURE** .

B143C-MICROPHONE 1 CIRCUIT HIGH

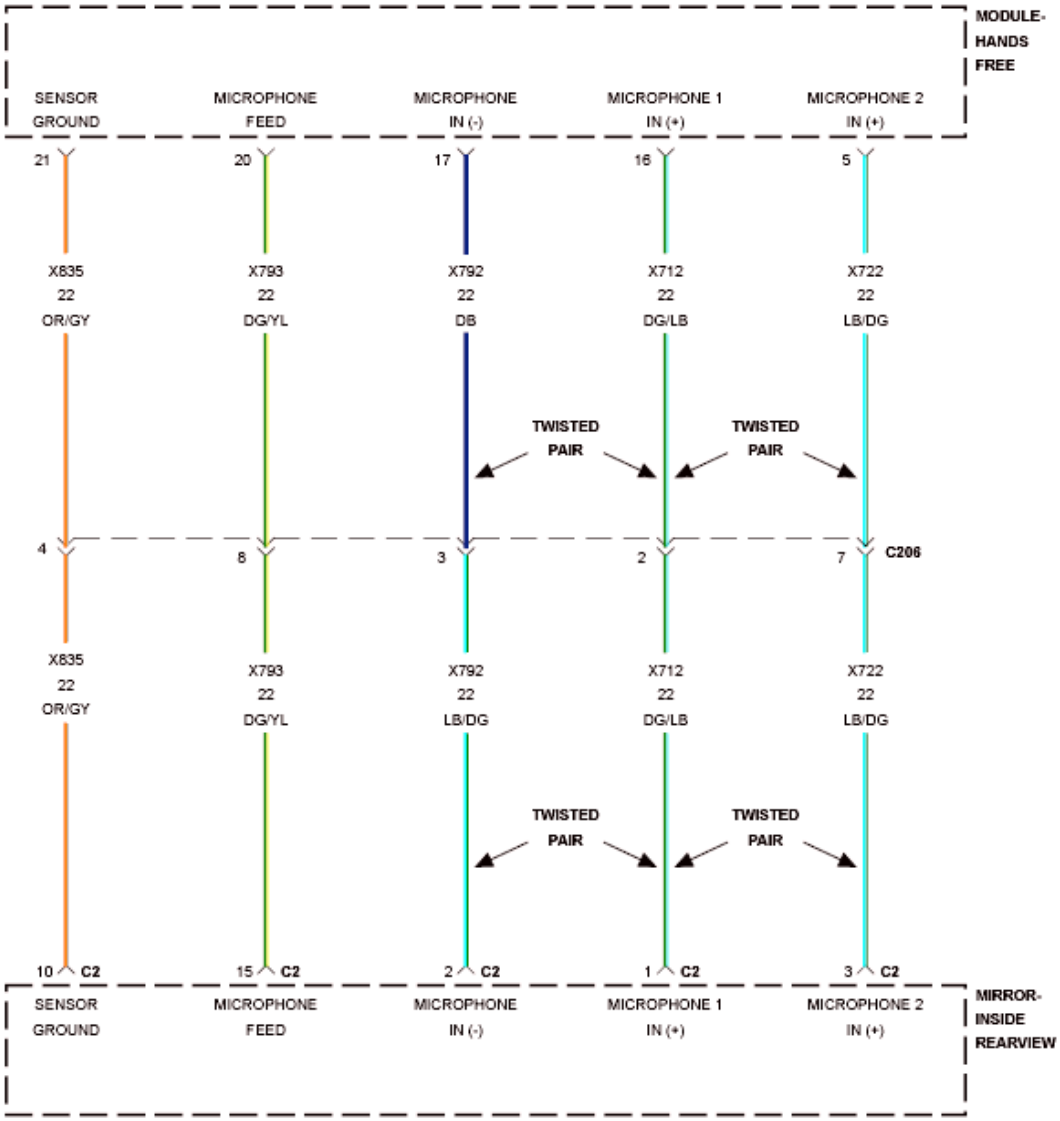

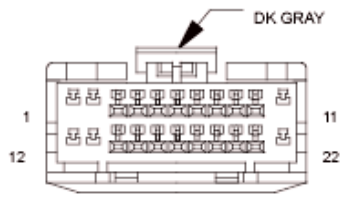

MODULE-
HANDS FREE

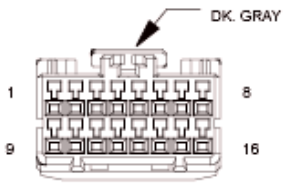

MIRROR-
INSIDE
REARVIEW C2
(HANDS FREE)

Fig. 5: Hands Free Module (HFM) Wiring Diagram
Courtesy of CHRYSLER GROUP, LLC

For a complete wiring diagram, **refer to appropriate SYSTEM WIRING DIAGRAMS article** .

WHEN MONITORED:

With the ignition on.

SET CONDITION:

The Hands Free Module (HFM) detects a short to voltage on the (X712) Microphone 1 IN (+) circuit.

POSSIBLE CAUSES

Possible Causes
(X712) MICROPHONE 1 IN (+) CIRCUITS SHORTED TO VOLTAGE
INSIDE REARVIEW MIRROR
HANDS FREE MODULE (HFM)

DIAGNOSTIC TEST

1. **CHECK FOR ACTIVE DTC**

   NOTE: Verify the connection of the Rearview Mirror harness connector.

   1. Turn the ignition on.
   2. With the scan tool, read the active DTCs.

      Does the scan tool display this DTC as active?

      Yes

      - Go To 2.

      No

      - If the DTC is stored, check for an intermittent condition. Visually inspect the related wiring harness connectors. Look for broken, bent, pushed out, or corroded terminals.
      - Perform the BODY VERIFICATION TEST. Refer to **STANDARD PROCEDURE** .
2. **INSIDE REARVIEW MIRROR**
   1. Turn the ignition off.
   2. Disconnect the Rearview Mirror C2 harness connector.
   3. Turn the ignition on.
   4. With the scan tool, read the active DTCs.

Does the scan tool display this DTC as active?

Yes

- Go To 3.

No

- Replace the Rearview Mirror in accordance with the Service Information.
- Perform the BODY VERIFICATION TEST. Refer to **STANDARD PROCEDURE** .

3. **(X712) MICROPHONE 1 IN (+) CIRCUIT SHORTED TO VOLTAGE**

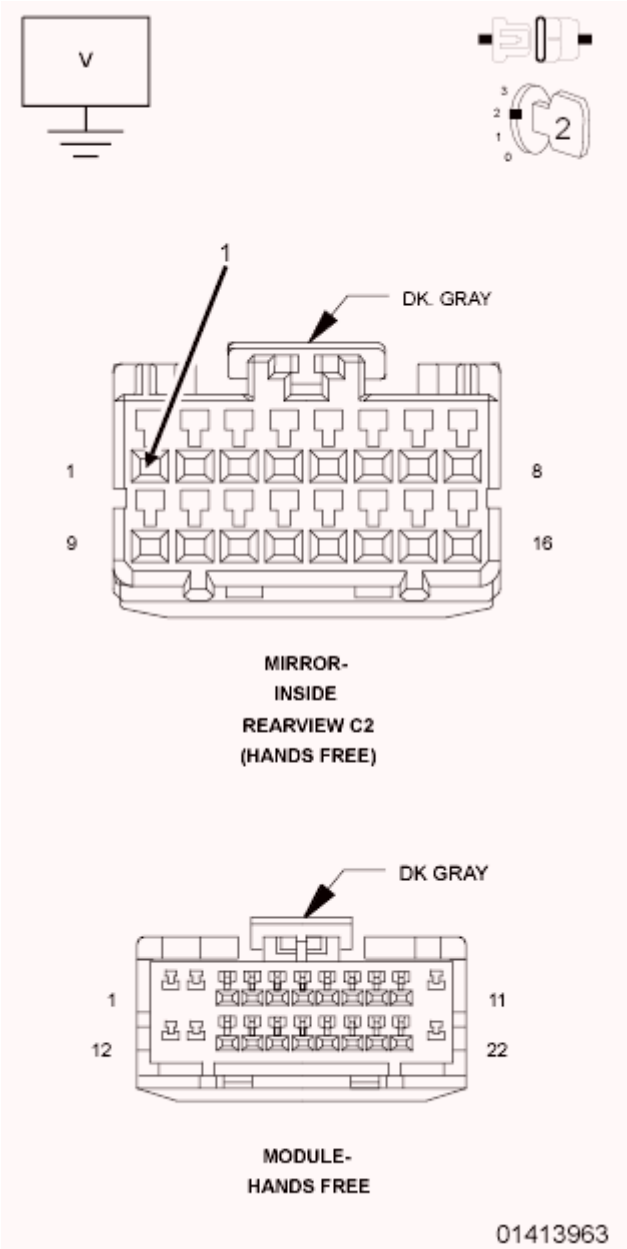

Fig. 6: Checking Microphone 1 In (+) Circuit For A Short To Voltage
Courtesy of CHRYSLER GROUP, LLC

1. Turn the ignition off.
2. Disconnect the Hands Free Module harness connector.
3. Turn the ignition on.
4. Measure the voltage of the (X712) Microphone circuit.

   Is the voltage above 1.0 volt?

   Yes

   - Repair the (X712) Microphone circuit for a short to voltage.
   - Perform the BODY VERIFICATION TEST. Refer to **STANDARD PROCEDURE** .

   No

   - Replace the Hands Free Module in accordance with the Service Information.
   - Perform the BODY VERIFICATION TEST. Refer to **STANDARD PROCEDURE** .

B143E-MICROPHONE 2 CIRCUIT LOW

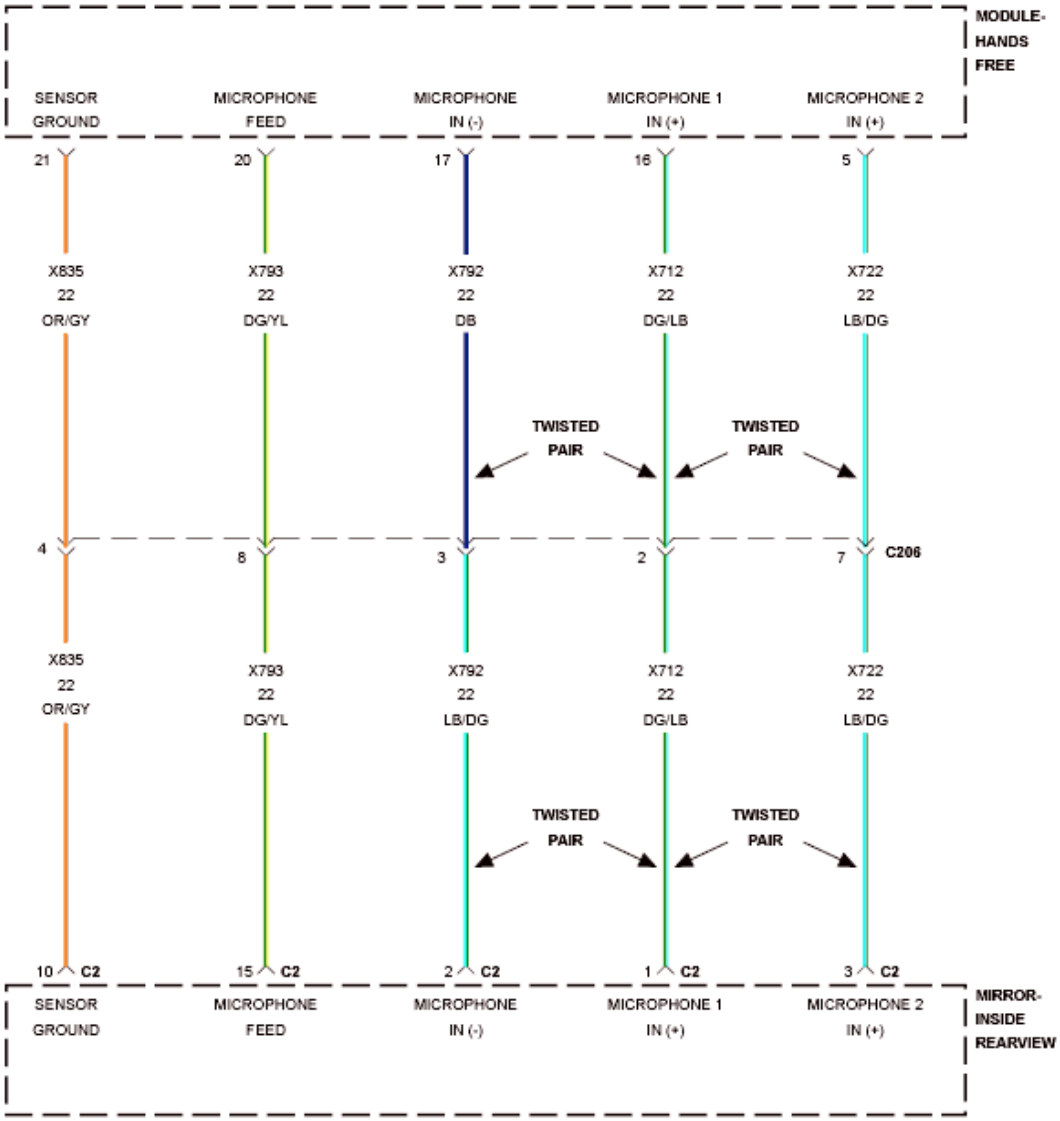

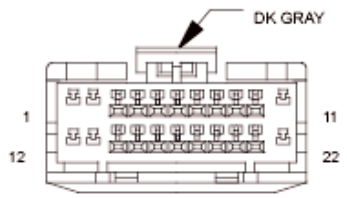

MODULE-
HANDS FREE

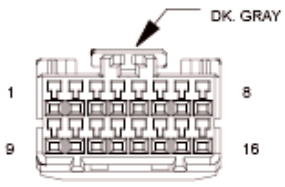

MIRROR-
INSIDE
REARVIEW C2
(HANDS FREE)

Fig. 7: Hands Free Module (HFM) Wiring Diagram
Courtesy of CHRYSLER GROUP, LLC

For a complete wiring diagram, **refer to appropriate SYSTEM WIRING DIAGRAMS article** .

WHEN MONITORED:

With the ignition on.

SET CONDITION:

The Hands Free Module (HFM) detects a short to ground or open on the (X722) Microphone 2 IN (+) circuit.

POSSIBLE CAUSES

Possible Causes
(X722) MICROPHONE 2 IN (+) CIRCUIT OPEN
(X722) MICROPHONE 2 IN (+) CIRCUIT SHORTED TO GROUND
INSIDE REARVIEW MIRROR
HANDS FREE MODULE (HFM)

DIAGNOSTIC TEST

1. **CHECK FOR ACTIVE DTC**

   NOTE: Verify the connection of the Rearview Mirror harness connector.

   1. Turn the ignition on.
   2. With the scan tool, read the active DTCs.

      Does the scan tool display this DTC as active?

      Yes

      - Go To 2.

      No

      - If the DTC is stored, check for an intermittent condition. Visually inspect the related wiring harness connectors. Look for broken, bent, pushed out, or corroded terminals.
      - Perform the BODY VERIFICATION TEST. Refer to **STANDARD PROCEDURE** .
2. **INSIDE REARVIEW MIRROR**

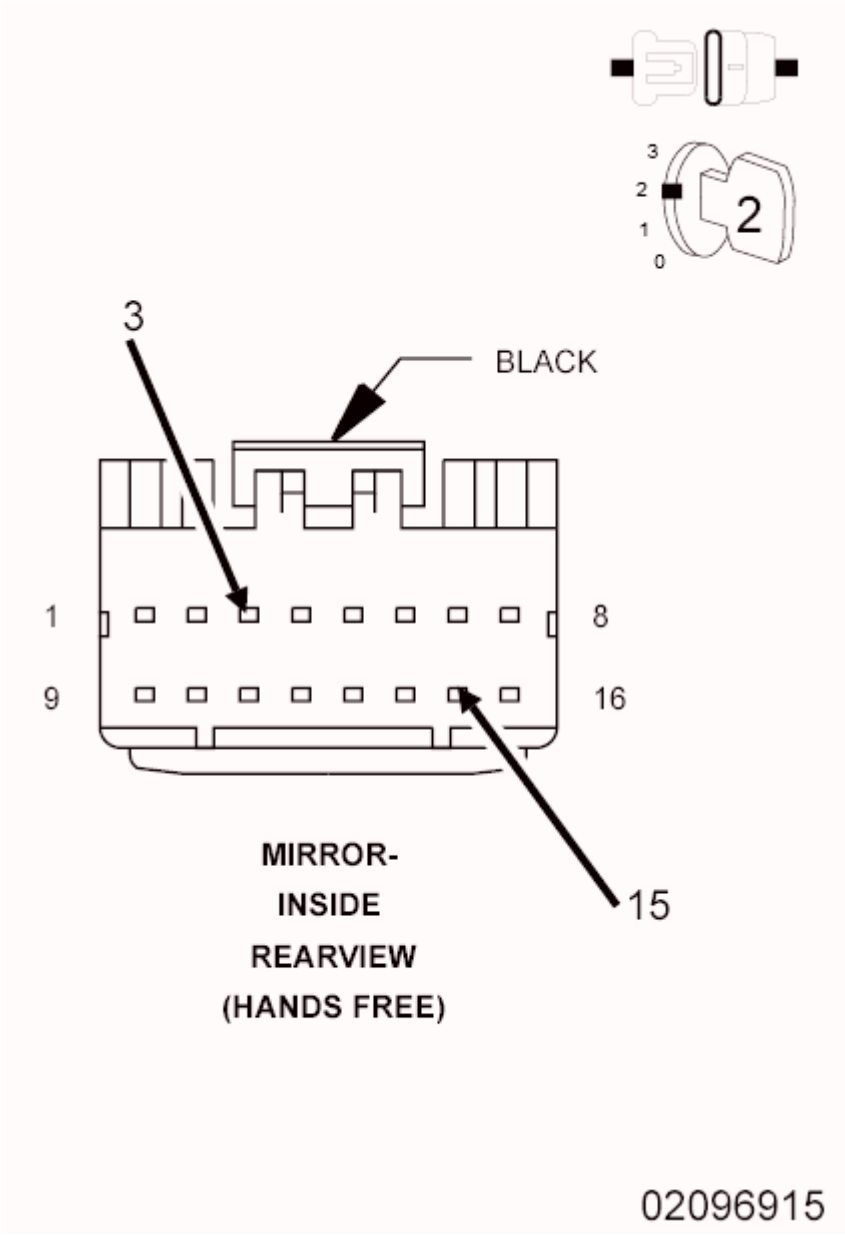

Fig. 8: Inside Rearview Mirror Harness Connector End View
Courtesy of CHRYSLER GROUP, LLC

1. Turn the ignition off.
2. Disconnect the Inside Rearview Mirror harness connector.
3. Connect a jumper wire between the (X793) Microphone Feed and the (X722) Microphone 2 IN (+) circuits.
4. Turn the ignition on.
5. With the scan tool, read the DTCs.

   Does the scan tool display this DTC as active?

Yes

- Go To 3.

No

- Replace the Inside Rearview Mirror in accordance with the Service Information.
- Perform the BODY VERIFICATION TEST. Refer to **STANDARD PROCEDURE** .

3. **(X722) MICROPHONE 2 IN (+) CIRCUIT OPEN**

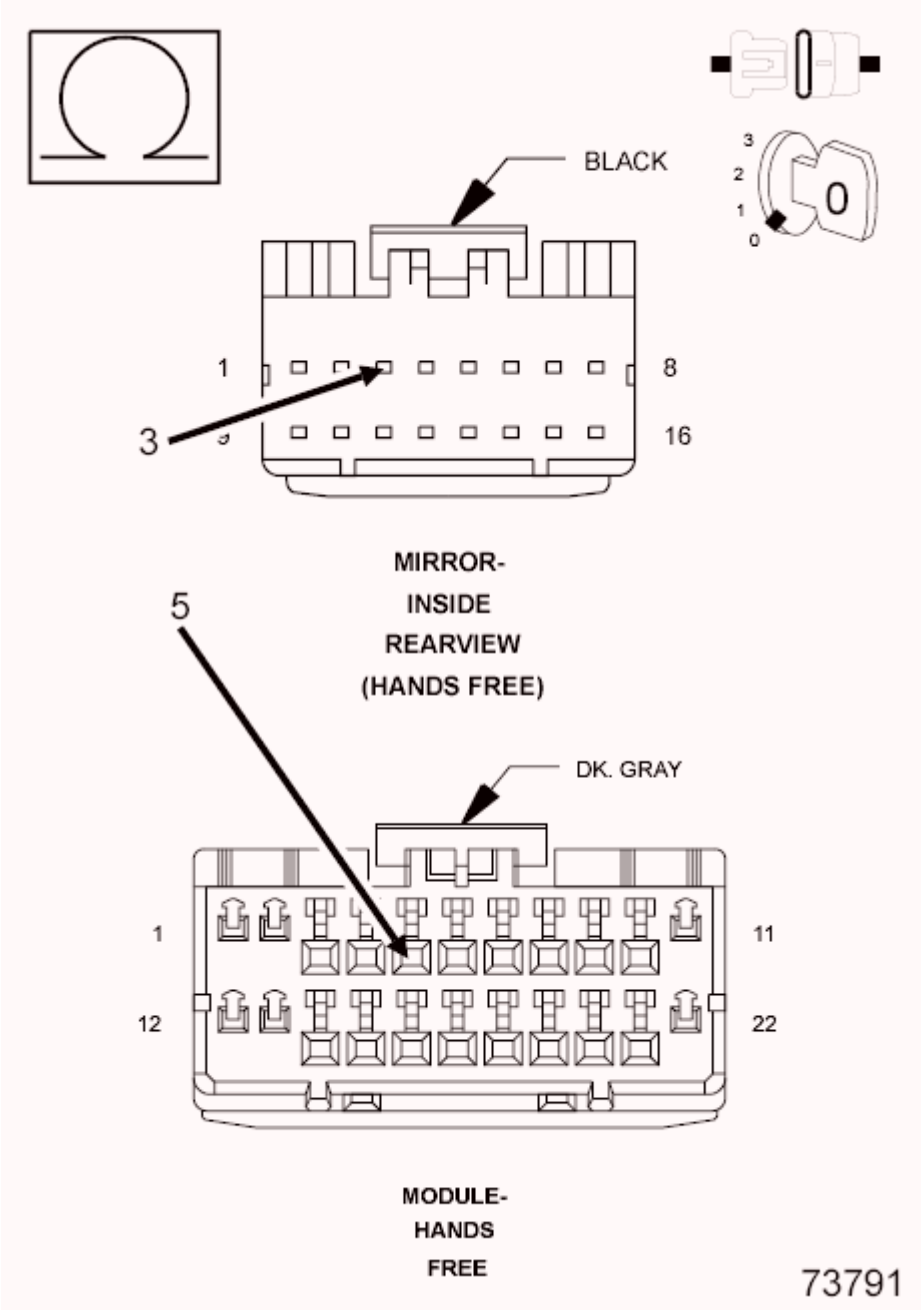

Fig. 9: Checking Microphone 2 In (+) Circuit For An Open
Courtesy of CHRYSLER GROUP, LLC

1. Turn the ignition off.
2. Disconnect the Hands Free Module harness connector.
3. Measure the resistance of the (X722) Microphone 2 IN (+) circuit between the Inside Rearview Mirror and Hands Free Module harness connectors.

   Is the resistance above 10K Ohms?

   Yes

   - Repair the (X722) Microphone 2 IN (+) circuit for an open.
   - Perform the BODY VERIFICATION TEST. Refer to **STANDARD PROCEDURE** .

   No

   - Go To 4.

4. **(X722) MICROPHONE 2 IN (+) CIRCUIT SHORTED TO GROUND**

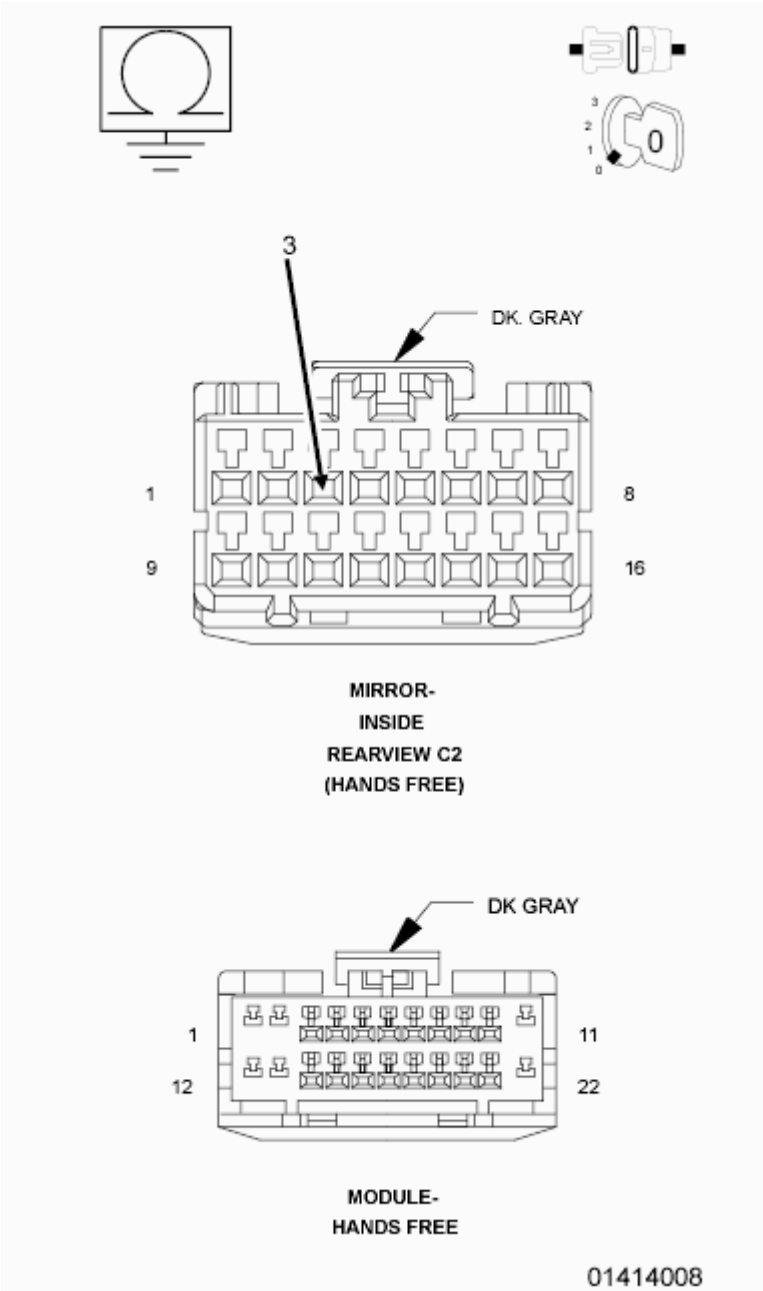

Fig. 10: Checking Microphone 2 In (+) Circuit For A Short To Ground
Courtesy of CHRYSLER GROUP, LLC

1. Turn the ignition off.
2. Disconnect the Hands Free Module harness connector.
3. Measure the resistance between ground and the (X722) Microphone 2 IN (+) circuit.

   Is the resistance below 10K Ohms?

   Yes

- Repair the (X722) Microphone 2 IN (+) circuit for short to ground.
- Perform the BODY VERIFICATION TEST. Refer to **STANDARD PROCEDURE** .

No

- Replace the Hands Free Module in accordance with the Service Information.
- Perform the BODY VERIFICATION TEST. Refer to **STANDARD PROCEDURE** .

B143F-MICROPHONE 2 CIRCUIT HIGH

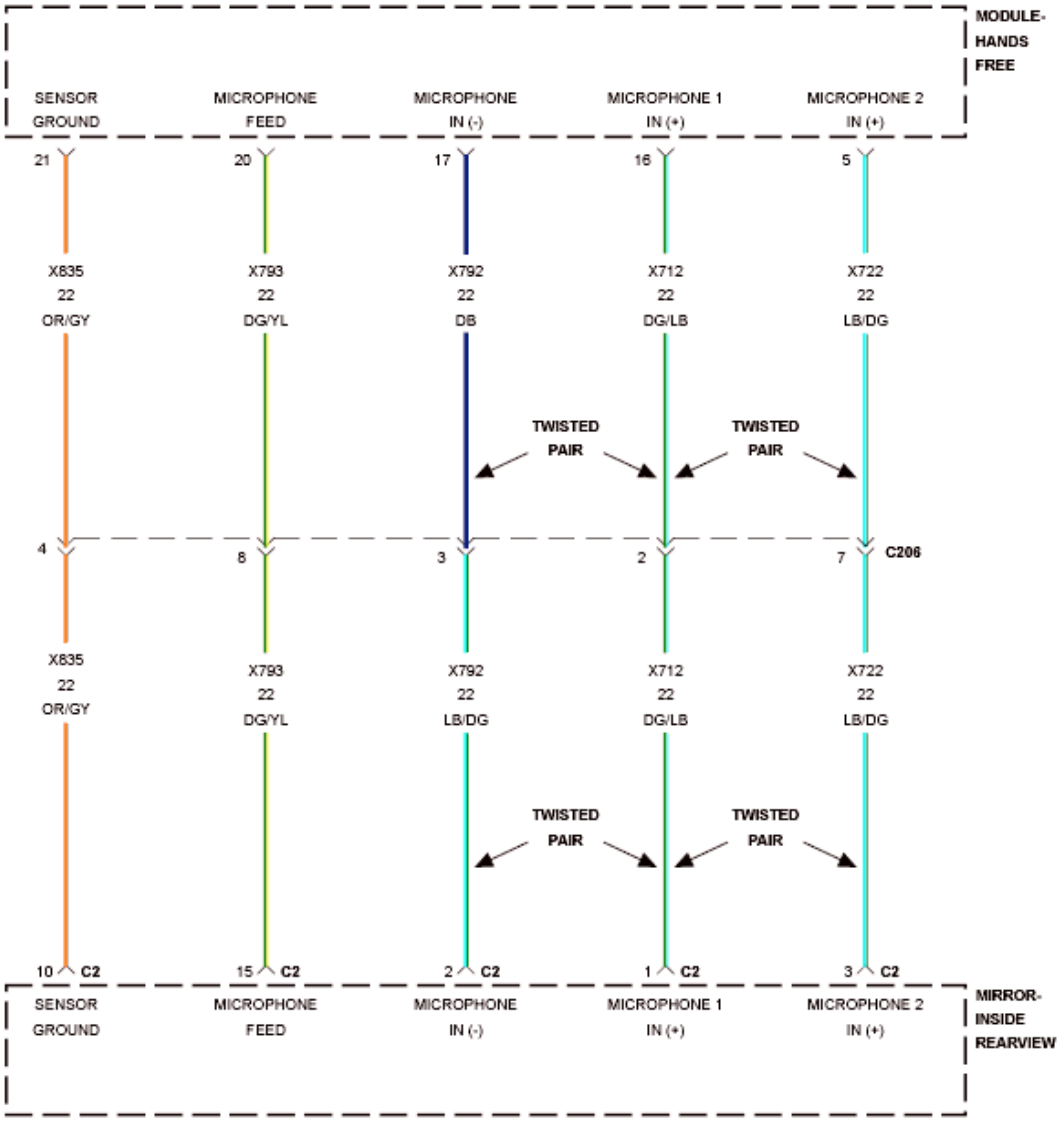

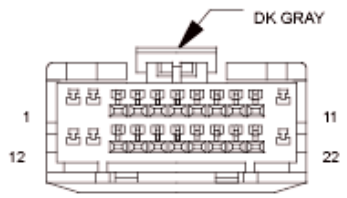

MODULE-
HANDS FREE

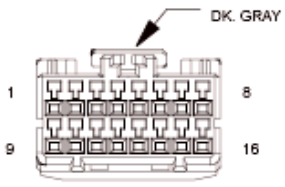

MIRROR-
INSIDE
REARVIEW C2
(HANDS FREE)

Fig. 11: Hands Free Module (HFM) Wiring Diagram
Courtesy of CHRYSLER GROUP, LLC

For a complete wiring diagram, **refer to appropriate SYSTEM WIRING DIAGRAMS article** .

WHEN MONITORED:

With the ignition on.

SET CONDITION:

The Hands Free Module (HFM) detects a short to voltage on the (X722) Microphone 2 IN (+) circuit.

POSSIBLE CAUSES

Possible Causes
(X722) MICROPHONE 2 IN (+) CIRCUITS SHORTED TO VOLTAGE
INSIDE REARVIEW MIRROR
HANDS FREE MODULE (HFM)

DIAGNOSTIC TEST

1. **CHECK FOR ACTIVE DTC**

   NOTE: Verify the connection of the Rearview Mirror harness connector.

   1. Turn the ignition on.
   2. With the scan tool, read the active DTCs.

      Does the scan tool display this DTC as active?

      Yes

      - Go To 2.

      No

      - If the DTC is stored, check for an intermittent condition. Visually inspect the related wiring harness connectors. Look for broken, bent, pushed out, or corroded terminals.
      - Perform the BODY VERIFICATION TEST. Refer to **STANDARD PROCEDURE** .
2. **INSIDE REARVIEW MIRROR**
   1. Turn the ignition off.
   2. Disconnect the Rearview Mirror C2 harness connector.
   3. Turn the ignition on.
   4. With the scan tool, read the active DTCs.

Does the scan tool display this DTC as active?

Yes

- Go To 3.

No

- Replace the Rearview Mirror in accordance with the Service Information.
- Perform the BODY VERIFICATION TEST. Refer to **STANDARD PROCEDURE** .

3. **(X722) MICROPHONE CIRCUITS SHORTED TO VOLTAGE**

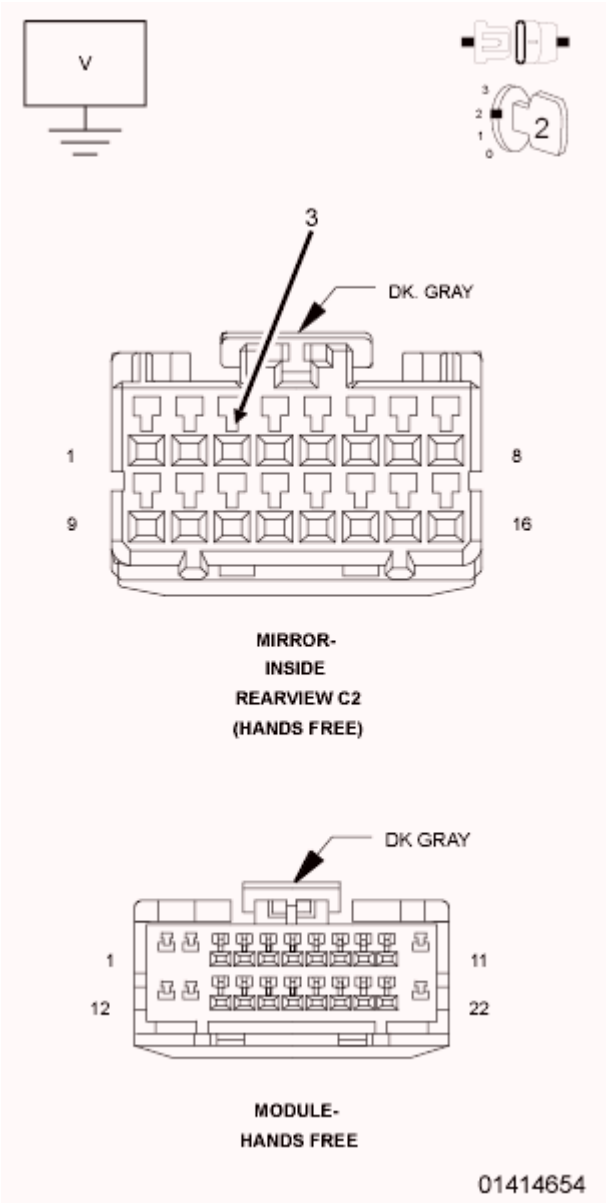

Fig. 12: Checking Microphone Circuits For A Short To Voltage

Courtesy of CHRYSLER GROUP, LLC

1. Turn the ignition off.
2. Disconnect the Hands Free Module harness connector.
3. Turn the ignition on.
4. Measure the voltage of the (X722) Microphone circuit.

   Is the voltage above 1.0 volt?

   Yes

   - Repair the (X722) Microphone circuit for a short to voltage.
   - Perform the BODY VERIFICATION TEST. Refer to **STANDARD PROCEDURE** .

   No

   - Replace the Hands Free Module in accordance with the Service Information.
   - Perform the BODY VERIFICATION TEST. Refer to **STANDARD PROCEDURE** .

U0010-CAN INTERIOR BUS

For a complete wiring diagram, **refer to appropriate SYSTEM WIRING DIAGRAMS article** .

WHEN MONITORED:

Continuously when the ignition is on.

Battery voltage between 10 and 16 volts.

Ignition Off Draw (IOD) fuse installed.

SET CONDITION:

The controller detects a short to ground on the CAN Interior Bus (125K) (+) circuit or a short to voltage on the CAN Interior Bus (125K) (-) circuit.

POSSIBLE CAUSES

Possible Causes
(D265) CAN INTERIOR BUS(+) (125k) CIRCUIT SHORTED TO VOLTAGE
(D264) CAN INTERIOR BUS(-) (125k) CIRCUIT SHORTED TO GROUND
(D264) CAN INTERIOR BUS(-) (125k) CIRCUIT SHORTED TO THE (D265) CAN INTERIOR BUS (+) (125k) CIRCUIT
TOTALLY INTEGRATED POWER MODULE (TIPM)
ANY CAN INTERIOR BUS MODULE

DIAGNOSTIC TEST

1. **VERIFY DIAGNOSTIC TROUBLE CODE (DTC) IS ACTIVE**

   NOTE: Make sure the IOD fuse is installed and battery voltage is between 10 and 16 volts before proceeding.

   1. Using the scan tool, read active DTCs.

      Is this DTC active?

      Yes

      - **Refer to TIPM - DIAGNOSIS AND TESTING** and perform the U0010-CAN Interior Bus diagnostic procedure.

      No

      - **Refer to COMMUNICATION - DIAGNOSIS AND TESTING** and perform the Stored Lost Communication DTCs diagnostic procedure.

U0141-LOST COMMUNICATION WITH IPM (FCM/TIPM)

For a complete wiring diagram, **refer to appropriate SYSTEM WIRING DIAGRAMS article** .

WHEN MONITORED:

Continuously when the ignition is on.

The battery voltage between 10.0 and 16.0 Volts.

Ignition Off Draw (IOD) fuse installed.

Totally Integrated Power Module (TIPM) is configured correctly.

SET CONDITION:

Bus messages not received from the Totally Integrated Power Module (TIPM) for approximately two to five seconds.

POSSIBLE CAUSES

Possible Causes
CAN BUS CIRCUITS OPEN OR SHORTED
DTCS RELATED TO BATTERY VOLTAGE, IGNITION, OR VIN MESSAGES
TOTALLY INTEGRATED POWER MODULE POWER AND GROUND

TIPM NOT CONFIGURED CORRECTLY
TOTALLY INTEGRATED POWER MODULE (TIPM)
MODULE THAT SET THIS DTC

DIAGNOSTIC TEST

1. **VERIFY DTC IS ACTIVE**

   NOTE: Make sure the IOD fuse is installed and the battery is fully charged before proceeding.

   1. Turn the ignition on.
   2. With the scan tool, read active DTCs.

      Is this DTC active?

      Yes

      - **Refer to TIPM - DIAGNOSIS AND TESTING** and perform the U0141-Lost Communication with IPM (FCM/TIPM) diagnostic procedure.

      No

      - **Refer to COMMUNICATION - DIAGNOSIS AND TESTING** and perform the Stored Lost Communication DTCs diagnostic procedure.

U0155-LOST COMMUNICATION WITH CLUSTER/CCN

For a complete wiring diagram, **refer to appropriate SYSTEM WIRING DIAGRAMS article** .

WHEN MONITORED:

Continuously when the ignition is on.

The battery voltage is between 10 and 16 volts.

Ignition Off Draw (IOD) fuse installed.

Totally Integrated Power Module (TIPM) is configured correctly.

SET CONDITION:

Bus messages not received from the Instrument Cluster (CCN) for approximately two to five seconds.

POSSIBLE CAUSES

Possible Causes
CAN BUS CIRCUITS OPEN OR SHORTED
DTCS RELATED TO BATTERY VOLTAGE, IGNITION, OR VIN MESSAGES
INSTRUMENT CLUSTER POWER AND GROUND
TIPM NOT CONFIGURED CORRECTLY
INSTRUMENT CLUSTER (CCN)
MODULE THAT SET THIS DTC

DIAGNOSTIC TEST

1. **VERIFY THE DIAGNOSTIC TROUBLE CODE (DTC) IS ACTIVE**

   NOTE: Make sure the IOD fuse is installed and the battery is fully charged before proceeding.

   1. Turn the ignition on.
   2. With the scan tool, read active DTCs.

      Is this DTC active?

      Yes

      - **Refer to TIPM - DIAGNOSIS AND TESTING** and perform the U0155-Lost Communication with Cluster/CCN diagnostic procedure.

      No

      - **Refer to COMMUNICATION - DIAGNOSIS AND TESTING** and perform the Stored Lost Communication DTCs diagnostic procedure.

U0184-LOST COMMUNICATION WITH RADIO

For a complete wiring diagram, **refer to appropriate SYSTEM WIRING DIAGRAMS article** .

WHEN MONITORED:

Continuously when the ignition is on.

Battery voltage between 10 and 16 volts.

Ignition Off Draw (IOD) fused installed.

Totally Integrated Power Module (TIPM) is configured correctly.

SET CONDITION:

Bus messages not received from the Radio for approximately two to five seconds.

POSSIBLE CAUSES

Possible Causes
CAN BUS CIRCUITS OPEN OR SHORTED
DTCS RELATED TO BATTERY VOLTAGE, IGNITION, OR VIN MESSAGES
RADIO POWER AND GROUND
TIPM NOT CONFIGURED CORRECTLY
RADIO
MODULE THAT SET THIS DTC

DIAGNOSTIC TEST

1. **VERIFY THE DIAGNOSTIC TROUBLE CODE (DTC) IS ACTIVE**

   NOTE: Make sure the IOD fuse is installed and the battery is fully charged before proceeding.

   1. Turn the ignition on.
   2. With the scan tool, read the active DTCs.

      Is this DTC active?

      Yes

      - **Refer to <u>TIPM - DIAGNOSIS AND TESTING</u>** and perform the U0184-Lost Communication with Radio diagnostic procedure.

      No

      - **Refer to <u>COMMUNICATION - DIAGNOSIS AND TESTING</u>** and perform the Stored Lost Communication DTCs diagnostic procedure.

DESCRIPTION

HEATED STEERING WHEEL

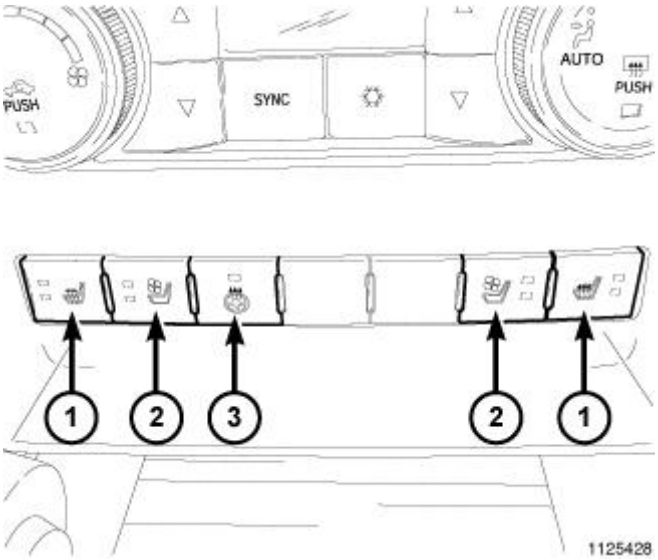

Fig. 1: Heated Steering Wheel Switch
Courtesy of CHRYSLER GROUP, LLC

The heated steering wheel system is designed to enhance the thermal comfort of the driver by heating the steering wheel.

The heated steering wheel is an option only available on vehicles that have heated seats.

The heating element is made of copper wire and located between the covering and substrate material of the steering wheel.

A vehicle with a heated steering wheel can easily be identified by the heated steering wheel switch (3) located on the switch pod in the instrument panel center bezel. The heated steering wheel switch has one Light-Emitting Diode (LED) indicator lamp that illuminates when the heated steering wheel system is on.

The heated steering wheel system consists of the following major components

- Heated Steering Wheel Switch. Refer to **SWITCH, HEATED STEERING WHEEL, DESCRIPTION**.
- Heated Seat Module (HSM). Refer to **MODULE, HEATED SEAT, DESCRIPTION** .
- Heated Steering Wheel. Refer to **OPERATION**.

VENTED SEATS

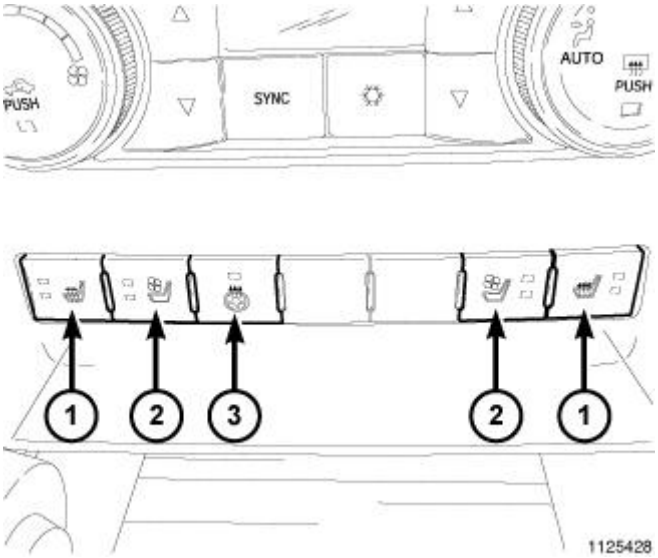

Fig. 2: Vented Seat Switches
Courtesy of CHRYSLER GROUP, LLC

The vented seat system is designed to enhance the thermal comfort of the seat occupant.

The front vented seats are an option only available on vehicles that have heated seats.

A vehicle with vented seats can easily be identified by the vented seat switches (2) located on the switch pod in the instrument panel center bezel. Each vented seat switch has two Light-Emitting Diode (LED) indicator lamps that illuminate when the vented seat system is on, depending on the operating speed selected.

The vented seat system consist of the following major components:

- Vented Seat Switches. Refer to **SWITCH, VENTED SEAT, DESCRIPTION**.
- Heated Seat Module (HSM). Refer to **MODULE, HEATED SEAT, DESCRIPTION** .
- Vented Seat Motors. Refer to **MOTOR, VENTED SEAT, DESCRIPTION**.
- Vented Seat Pads. Refer to **PAD, VENTED SEAT, DESCRIPTION**.

OPERATION

HEATED STEERING WHEEL

The heated steering wheel has two selectable settings, On and Off. The heated steering wheel only operates with the vehicle ignition is in the Run position, and will always stay in the off setting unless the heated seat switch is pressed. Once the switch is pressed the Light Emitting Diode (LED) on the face of the switch will illuminate, indicating that the heating element in the steering wheel is operating. Pressing the switch while the heated steering wheel is on, will turn the heating steering wheel and the LED on the switch off.

CAUTION: When equipped with a leather wrapped heated steering wheel and replacement of a Heated Seat Module (HSM) is required, the new HSM must be manually configured with a scan tool. Refer to STANDARD

PROCEDURE . Failure to follow these instruction may result in damage to the heated steering wheel.

Normal heating of the steering wheel will last a minimum of 52 minutes, unless the switch is pressed or a system fault has been set. Heating of the element is controlled by the Heated Seat Module (HSM), also know as the Comfort Seat Wheel Module (CSWM), and a temperature sensor integrated into the steering wheel heating element. The integrated temperature sensor sends the temperature of the steering wheel to the HSM, which adjusts the internal heat setting accordingly.

The heated steering wheel will automatically shut off if the heating element reaches a temperature greater than 50 degrees Celsius (122 degrees Fahrenheit).

The steering wheel heating element is not serviced separately from the steering wheel. if a heated steering wheel becomes inoperative, the steering wheel assembly must be replaced. Refer to **WHEEL, STEERING, REMOVAL** .

VENTED SEATS

The Vented Seat assembly is located internally to the front seats and are intended to enhance the thermal comfort of the seat occupant by ventilating seat to occupant interface. Occupant comfort is achieved by pulling air from the seat surface to the back and underside under side of the seat.

The vented seats are controlled by the heated seat module (HSM) (also know as the Comfort Seat Wheel Module or CSWM) which provides variable analog voltages driving the 12V vented seat motors in the seats. The vented seats have 2 selectable speeds with a hidden intermediate speed for the fans. For seat venting, each press of the vented seat switch will cause the vented seat to change venting modes. From OFF to HI, from HI to LO and from LO to OFF. The HSM shall turn on the vented seats only with the engine running. Both vented seats operate separately from each other, and will not operate at the same time as the heated seats.

DIAGNOSIS AND TESTING

HEATED STEERING WHEEL

CAUTION: When equipped with a leather wrapped heated steering wheel and replacement of a Heated Seat Module (HSM) is required, the new HSM must be manually configured with a scan tool. Refer to STANDARD PROCEDURE . Failure to follow these instruction may result in damage to the heated steering wheel.

NOTE: Vehicles equipped with the heated steering wheel option utilize a low voltage cut-off feature. This feature turns off power to the heated steering wheel anytime vehicle voltage is below 11.7 volts or above 15.5 volts. Be certain to check the vehicle electrical system for proper voltage anytime the heated steering wheel appears inoperative.

NOTE: If a Diagnostic Trouble Code (DTC) can not be verified, it is a good indication

that an INTERMITTENT fault condition may be present. To help find an intermittent problem, move the steering wheel around while testing continuity. also wiggle the heated steering wheel wire harness and electrical connectors while testing continuity.

NOTE: **For complete circuit diagrams, refer to appropriate wiring information. Wiring Information includes wiring diagrams, connector pin-out and location views, details of wire harness routing and retention, splice and ground locations and proper wire and connector repair procedures.**

Before testing any individual components in the heated steering wheel system, check the following:

1. Check the fuse located in the Totally Integrated Power Module (TIPM). The fuse must be OK and tight in the receptacle.
2. Using a scan tool, check for any Diagnostic Trouble Codes (DTCs) related to the Heated Seat Module (HSM) and the heated steering wheel switch. Refer to **DIAGNOSIS AND TESTING** . If any DTCs are found, repair as necessary.
3. When equipped with a leather wrapped heated steering wheel, verify the HSM is configured to the leather steering wheel option using a scan tool. Refer to **STANDARD PROCEDURE** .
4. Check the vehicles battery open-circuit voltage and charging system performance. If the vehicle's electrical system is defective or weak it may not be suppling sufficient energy to operate the heated steering wheel system.
5. If there are no DTCs and the heated steering wheel system functions properly, but the Light Emitting Diode (LED) indicator in the switch does not illuminate, replace the instrument panel switch pod. Refer to **SWITCH, HEATED STEERING WHEEL, REMOVAL**.

VENTED SEATS

Diagnosis of the vented seat system requires the use of a scan tool. If a fault is present in the vented seat system a DTC will be set and the vented seat switch will illuminate for 2 seconds and then go out. For further diagnosis, refer to the appropriate diagnostic information.

MOTOR, VENTED SEAT

DESCRIPTION

DESCRIPTION

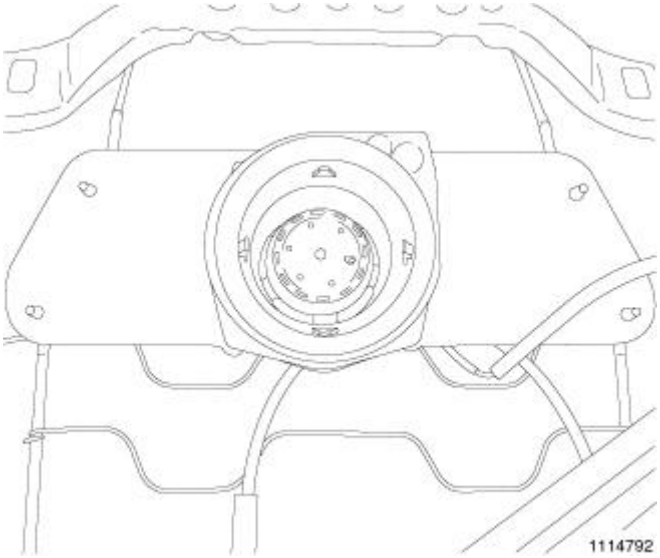

Fig. 3: Vented Seat Motor
Courtesy of CHRYSLER GROUP, LLC

The vented seat motor assemblies are black with a metal support bracket and are mounted inside of the seat assemblies. The motors can be easily be seen once the seat cushions and covers have been removed.

The vented seat motors are located within the front seat assemblies. There are two vented seat motors per seat on vehicles equipped with the vented seat option. One vented seat motors is mounted to the seat back frame and the second motor is mounted to the seat bottom frame. Each motor is secured by 4 retaining clips and have a vented seat pad that attaches to it for seat ventilation.

OPERATION

OPERATION

The vented seat motors will only operate with the engine running and will not operate at the same time as the heated seats are operating. The vented seat motors are controlled by the Heated Seat Module (HSM) (also know as the Comfort Seat Wheel Module or CSWM). The HSM provides the vented seat motors with variable analog voltages giving the motors 2 selectable speeds. These speeds are selected by the driver and/or front passenger by pressing the vented seat switches. Switching the vented seats on while the heated seats are already operating will disable the heating of the seat and start the venting of the seat. Both front vented seats work independently from each other, meaning that the driver and front passenger can choose there own settings for seat venting.

REMOVAL

REMOVAL

NOTE: Seat back shown in illustration. Seat bottom similar.

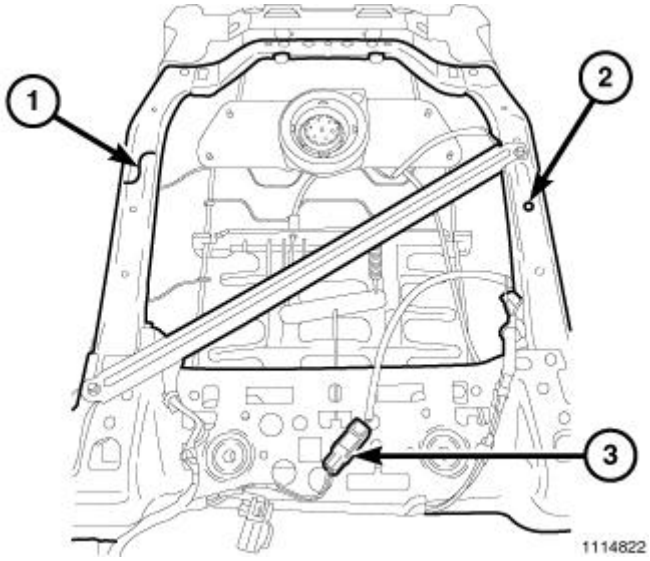

Fig. 4: Seat Frame, Pin-Type Retainer & Connector
Courtesy of CHRYSLER GROUP, LLC

1. Disconnect the negative battery cable.
2. Remove the seat cushion or seat back cover.
3. Disconnect the vented seat motor electrical connector (3) and remove the electrical harness pin-type retainer (2) from the seat frame (1).

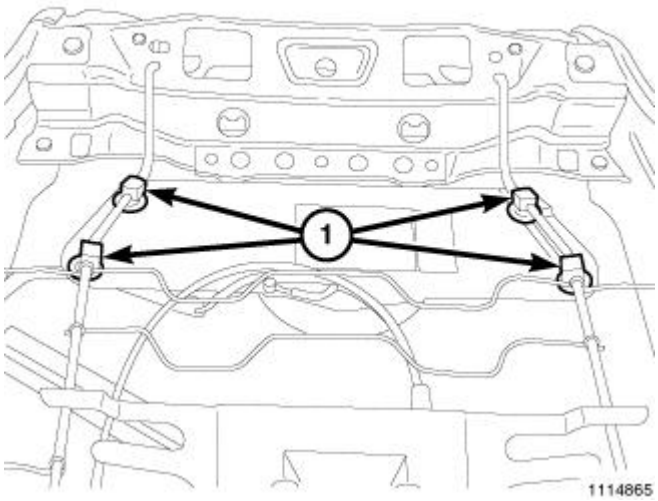

Fig. 5: Vented Seat Motor Retaining Clips
Courtesy of CHRYSLER GROUP, LLC

4. Remove the vented motor assembly by releasing the 4 retaining clips (1) from the seat assembly.

INSTALLATION

INSTALLATION

NOTE: **Seat back shown in illustration. Seat bottom similar.**

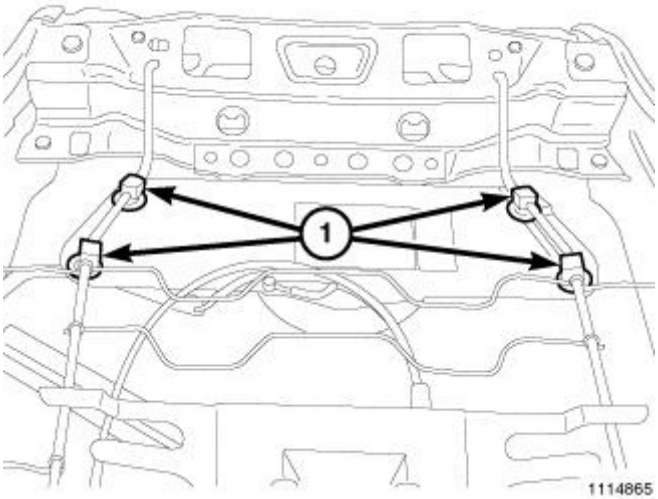

Fig. 6: Vented Seat Motor Retaining Clips
Courtesy of CHRYSLER GROUP, LLC

1. Install the vented motor assembly by securing the 4 retaining clips (1) to the seat assembly.

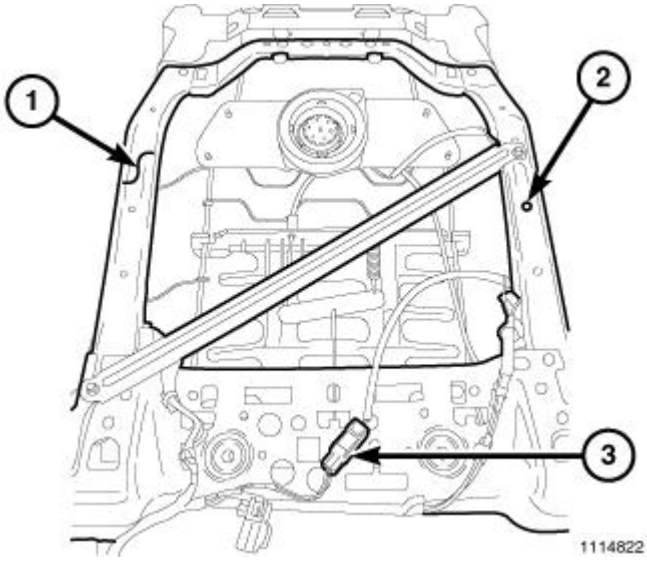

Fig. 7: Seat Frame, Pin-Type Retainer & Connector
Courtesy of CHRYSLER GROUP, LLC

2. Connect the vented seat motor electrical connector (3) and install the electrical harness pin-type retainer (2) to the seat frame (1).
3. Install the seat cushion or seat back cover.
4. Reconnect the negative battery cable.
5. Verify vented seat system operation.

PAD, VENTED SEAT

DESCRIPTION

DESCRIPTION

The vented seat pads and heated seat pads are a one piece assembly on vehicles equipped with vented seats. The vented pads are located between the seat bottom and seat back covers and cushions. The vented seat pads are adhered to the seat bottom and seat back foam cushions, and have a flange that is routed through an opening in the seat back and seat bottom cushions. The vented seat pad flange attaches the vented pad to the vented seat motor, for seat ventilation.

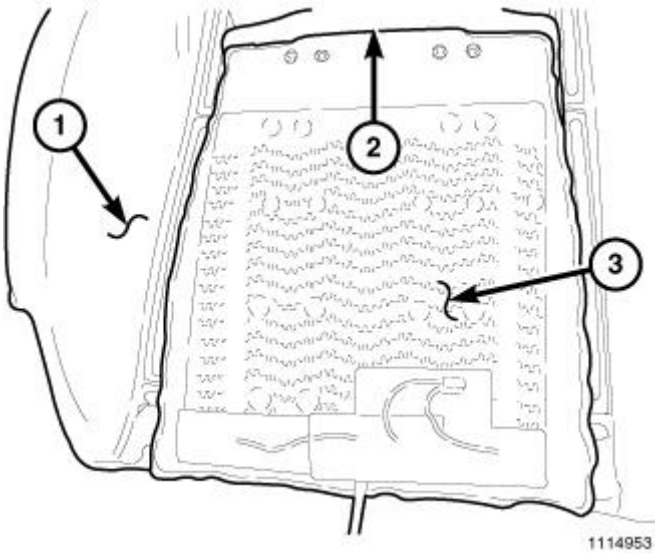

Fig. 8: Vented Seat & Heated Seat Pads
Courtesy of CHRYSLER GROUP, LLC

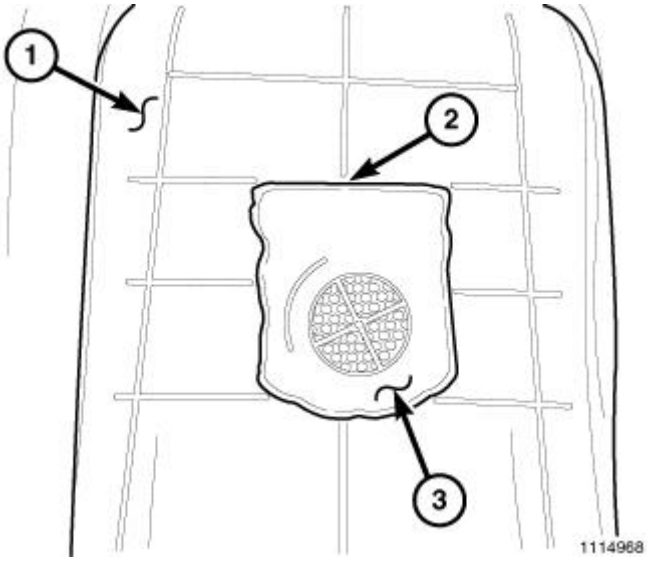

Fig. 9: Vented Seat Pad Flange

Courtesy of CHRYSLER GROUP, LLC

OPERATION

OPERATION

The vented seat pads provide a path for the air to be pulled away from the seat bottom and seat back surfaces for seat ventilation.

REMOVAL

REMOVAL

NOTE: Seat back shown in illustration. Seat bottom similar.

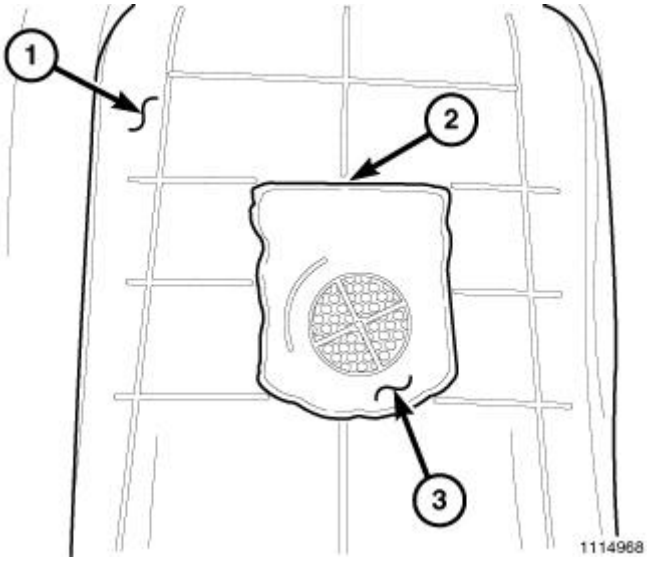

Fig. 10: Vented Seat Pad Flange
Courtesy of CHRYSLER GROUP, LLC

1. Disconnect and isolate the negative battery cable.
2. Remove the seat cushion or seat back cover.
3. Disconnect the heated seat electrical connector.
4. Carefully guide the vented seat pad flange (3) through the opening (2) in the seat foam (1).

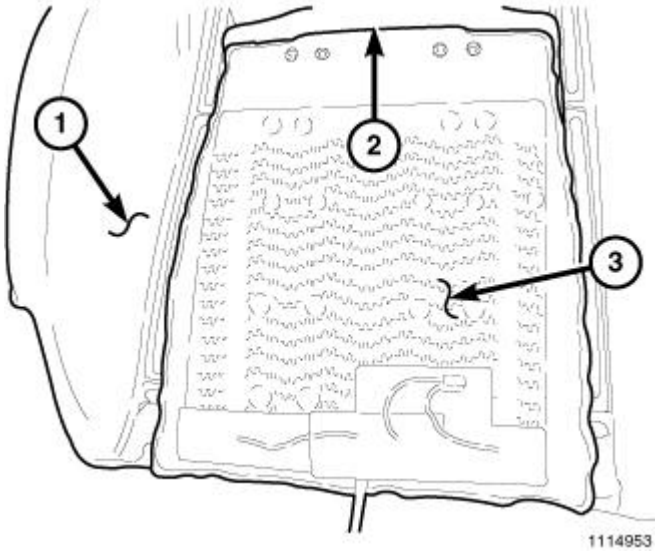

Fig. 11: Vented Seat & Heated Seat Pads
Courtesy of CHRYSLER GROUP, LLC

5. Remove the vented seat pad (3) by peeling the pad away from the cushion (1). Be careful not to remove excessive foam from the cushion.

INSTALLATION

INSTALLATION

NOTE: Seat back shown in illustration. Seat bottom similar.

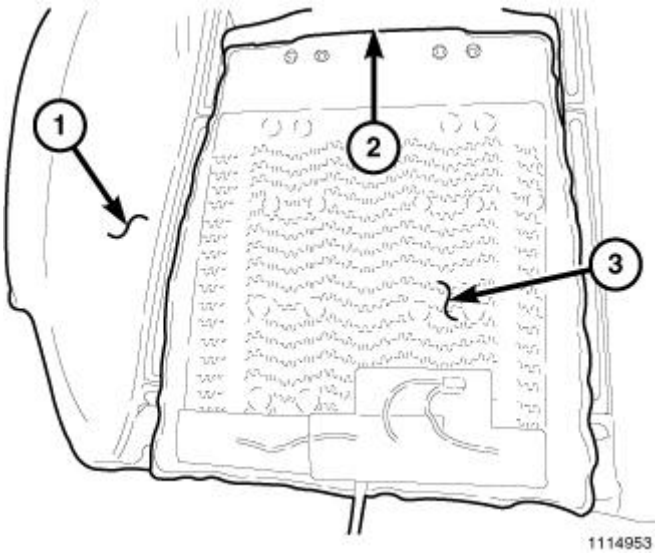

Fig. 12: Vented Seat & Heated Seat Pads
Courtesy of CHRYSLER GROUP, LLC

1. Install the replacement vented/heated seat pad (3) to the seat cushion (1) by placing it directly where the

original pad was removed from.

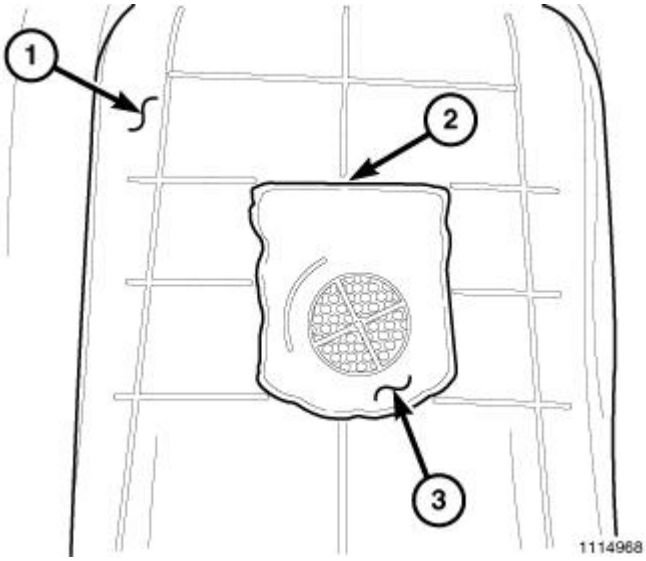

Fig. 13: Vented Seat Pad Flange
Courtesy of CHRYSLER GROUP, LLC

2. Carefully guide the vented seat pad flange (3) through the opening (2) in the seat back or seat bottom foam.
3. Connect the heated seat electrical connector.
4. Install the seat cushion or seat back cover.
5. Reconnect the negative battery cable.
6. Verify vented seat system operation.

SWITCH, HEATED STEERING WHEEL

DESCRIPTION

DESCRIPTION

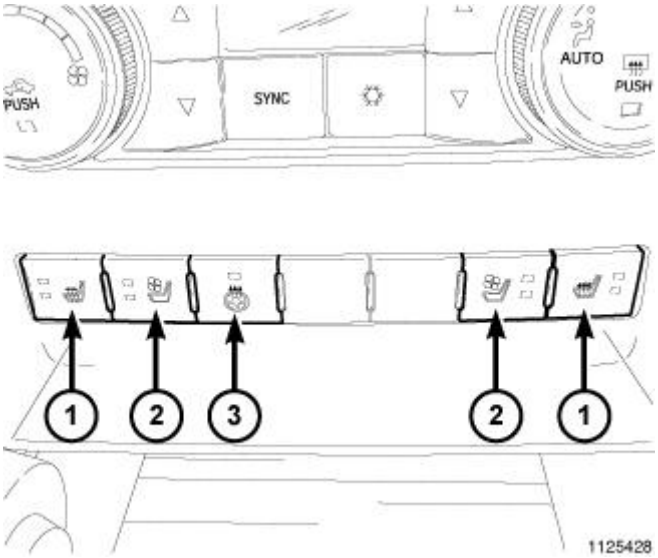

Fig. 14: Heated Steering Wheel Switch
Courtesy of CHRYSLER GROUP, LLC

The heated steering wheel switch (3) is a momentary contact push button switch mounted in the instrument panel center bezel that operates the heated steering wheel system. The heated steering wheel switch has one Light-Emitting Diode (LED) indicator lamps, which indicate when the heated steering wheel is on or off.

OPERATION

OPERATION

The heated steering wheel switch allows the driver to turn on and off the heated steering wheel. The heated steering wheel will remain off until the driver presses the switch. Once the switch is pressed the Light Emitting Diode (LED) on the face of the switch will illuminate, indicating that the heating element in the steering wheel is operating. Pressing the switch while the heated steering wheel is on, will turn the heating steering wheel and the LED on the switch off.

The heated steering wheel switch also functions as a visual indicator for a fault with the heated steering wheel system. When the heated seat switch is pressed and a fault is present in the heated steering wheel system the LED on the switch will illuminate for 2 seconds, and then immediately turn off.

REMOVAL

REMOVAL

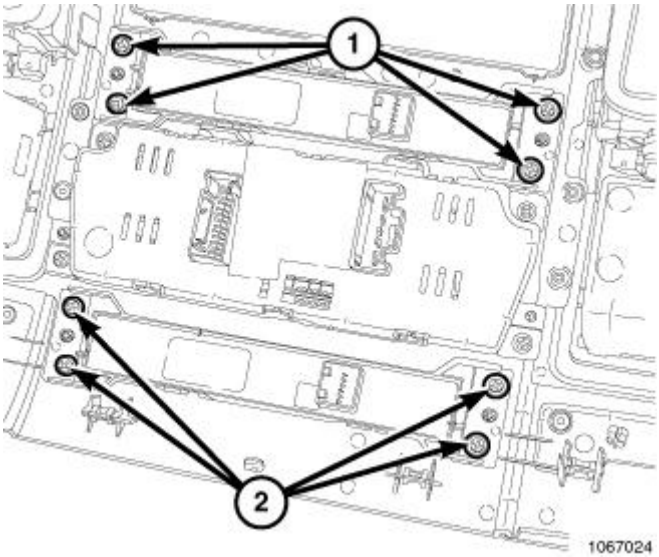

Fig. 15: Switch Pod Fasteners
Courtesy of CHRYSLER GROUP, LLC

1. Disconnect and isolate the battery negative cable.
2. Remove the instrument panel center bezel. Refer to **BEZEL, INSTRUMENT PANEL, CENTER, REMOVAL** .
3. Disconnect the lower switch pod electrical connector.
4. Remove the lower switch pod fasteners (2) from the center bezel.
5. Remove the switch pod from the center bezel.

INSTALLATION

INSTALLATION

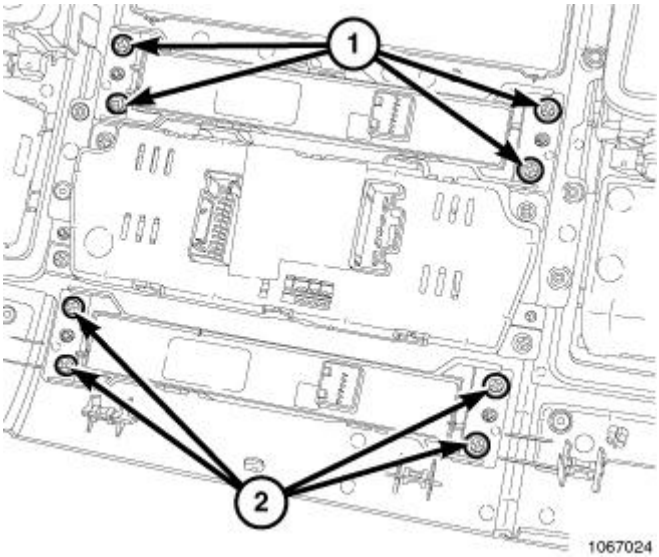

Fig. 16: Switch Pod Fasteners

Courtesy of CHRYSLER GROUP, LLC

1. Align the switch pod to the instrument panel center bezel.
2. Install the lower switch pod fasteners (2) to the center bezel.
3. Connect the switch pod electrical connector.
4. Install the instrument panel center bezel. Refer to **BEZEL, INSTRUMENT PANEL, CENTER, INSTALLATION** .
5. Connect the battery negative cable.

SWITCH, VENTED SEAT

DESCRIPTION

DESCRIPTION

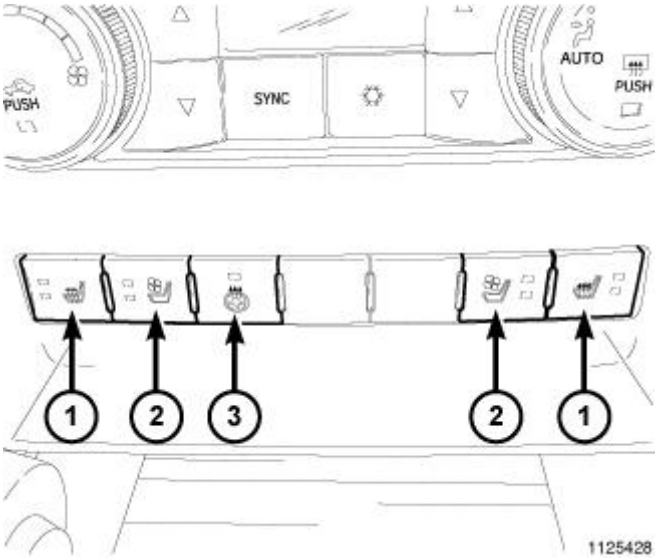

Fig. 17: Vented Seat Switches
Courtesy of CHRYSLER GROUP, LLC

The Vented Seat Switches (2) are momentary contact push button switches mounted in the instrument panel center bezel that operate the vented seat system. Each vented seat switch has two Light-Emitting Diode (LED) indicator lamps, which indicate the selected level (Low or High) of the vented seats.

The LED indicator lamps in each vented seat switch cannot be repaired. If the LED lamps are faulty or damaged, or the switch is inoperative or damaged the switch pod assembly must be replaced. for the switch pod replacement procedure. Refer to **SWITCH, VENTED SEAT, REMOVAL**.

OPERATION

OPERATION

The vented seat switches are a momentary push button type switch used to control the vented seat settings.

There are 3 settings for the vented seats, OFF, HI, and LO. The vented seats start in the OFF setting, where none of the LEDs on the switch are illuminated. Pressing the switch once will change the setting from the OFF setting to the HI setting, and will illuminate both LEDs on the switch. Pressing the vented seat switch again will change the setting from the HI setting to the LO setting and only one LED on the switch will be lit. Pressing the switch once again will change the setting from the LO setting to the OFF setting again.

If the switch LED illuminates and shuts off again after only 2 seconds of being lit, a fault with the vented seat system is present and diagnosis of the vented seat system will be necessary. Refer to **DIAGNOSIS AND TESTING**.

REMOVAL

REMOVAL

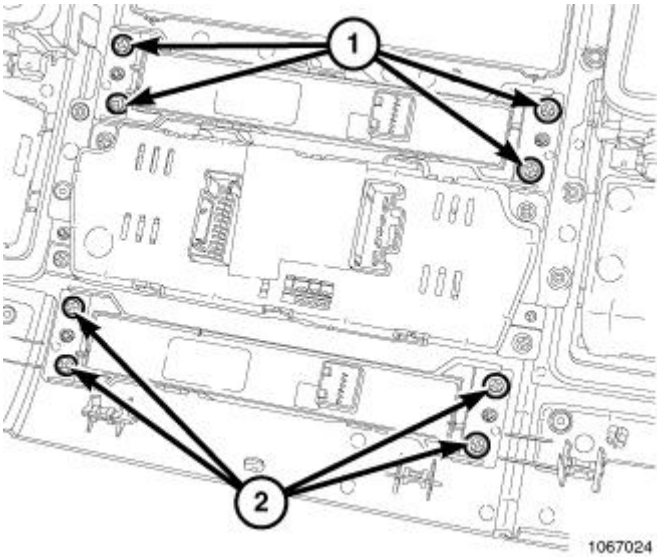

Fig. 18: Switch Pod Fasteners
Courtesy of CHRYSLER GROUP, LLC

1. Disconnect and isolate the battery negative cable.
2. Remove the instrument panel center bezel. Refer to **BEZEL, INSTRUMENT PANEL, CENTER, REMOVAL** .
3. Disconnect the lower switch pod electrical connector.
4. Remove the lower switch pod fasteners (2) from the center bezel.
5. Remove the switch pod from the center bezel.

INSTALLATION

INSTALLATION

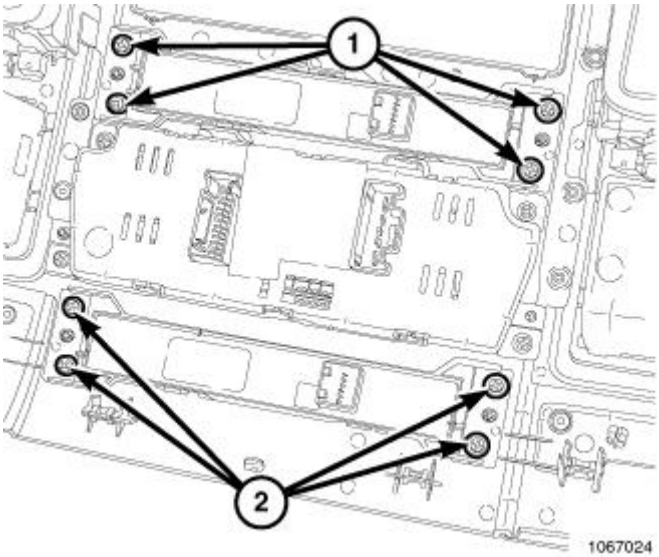

Fig. 19: Switch Pod Fasteners
Courtesy of CHRYSLER GROUP, LLC

1. Align the switch pod to the instrument panel center bezel.
2. Install the lower switch pod fasteners (2) to the center bezel.
3. Connect the switch pod electrical connector.
4. Install the instrument panel center bezel. Refer to **BEZEL, INSTRUMENT PANEL, CENTER, INSTALLATION** .
5. Connect the battery negative cable.

Heated Glass - Service Information - Ram Pickup

DESCRIPTION

DESCRIPTION

CAUTION: Grid lines can be damaged or scraped off with sharp instruments. Care should be taken when cleaning or removing foreign materials, decals or stickers from the rear glass. Normal glass cleaning solvents or hot water used with soft toweling is recommended.

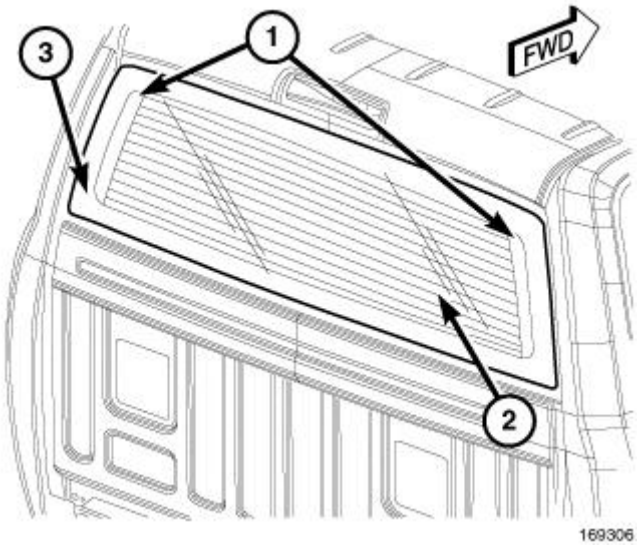

Fig. 1: Rear Window, Bus Bars & Grid Lines
Courtesy of CHRYSLER GROUP, LLC

The optional rear window defogger system, also known as electric backlight (EBL), consists of two vertical bus bars (1) linked by a series of grid lines (2) fired onto the inside surface of the rear window (3).

The EBL system is turned on or off by a switch located in the A/C-heater control at the center of the instrument panel.

OPERATION

OPERATION

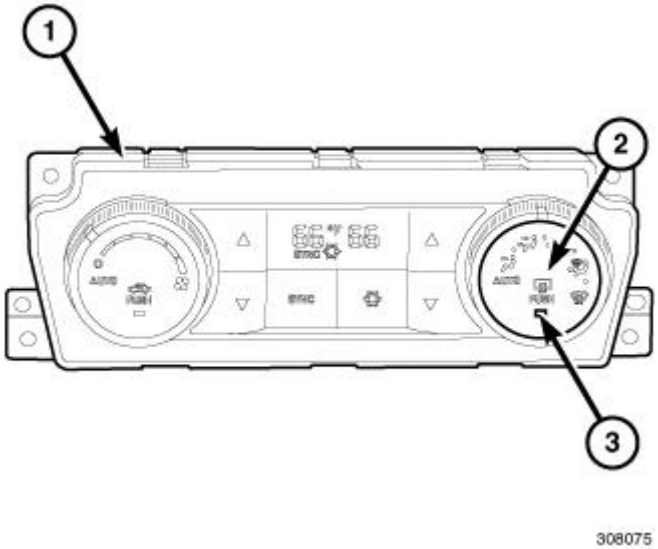

Fig. 2: ATC Control
Courtesy of CHRYSLER GROUP, LLC

NOTE: ATC control shown in illustration. MTC control similar.

When equipped, the electric backlight (EBL) system is controlled by a momentary switch (2) located in the A/C-heater control (1) in the instrument panel. When the rear window defogger switch is pressed to ON with the ignition switch in RUN, the switch sends a request signal over the CAN Bus to the totally integrated power module (TIPM) to energize the internal EBL high side driver. When energized, the EBL high side driver provides battery current to the rear window defogger grid lines and/or the heated side view mirrors, as equipped. The grid lines heat the glass to help clear the rear window and side mirror surfaces of fog or frost.

An amber indicator (3) in the rear window defogger switch will illuminate to indicate when the EBL system is turned on.

NOTE: The EBL system turns off automatically after 15 minutes of initial operation. Each following activation cycle of the EBL system will last 10 minutes.

The EBL system will automatically turn off after an initial programmed time interval of about 15 minutes, as long as the ignition switch is in RUN. After the initial time interval has expired, if the rear window defogger switch is pressed to ON again during the same ignition cycle, the EBL system will automatically turn off after about 10 minutes. The EBL system will also turn off if the ignition switch is turned to any position other than RUN or by manually pressing the rear window defogger switch a second time.

Repair of the rear window defogger grid lines, bus bars, terminals or pigtail wires can be accomplished using the Mopar® Rear Window Defogger Repair Kit (Part Number 04549275) or equivalent. Refer to **GRID, DEFOGGER, REAR, STANDARD PROCEDURE**.

The EBL control system is diagnosed using a scan tool. Refer to appropriate Electrical Diagnostic article. .

DIAGNOSIS AND TESTING

DIAGNOSIS AND TESTING - ELECTRIC BACKLIGHT (EBL) AND HEATED MIRROR SYSTEM

NOTE: **Illumination of the defogger switch indicator lamp does not necessarily mean that electrical current is reaching the rear window glass and/or the outside rear view mirror heating grids.**

NOTE: **Refer to appropriate Wiring Information for circuit descriptions and diagrams of the rear window defogger (EBL) and heated mirror systems.**

Operation of the Electrical Back Light (EBL) and heated mirror systems can be confirmed by the following:

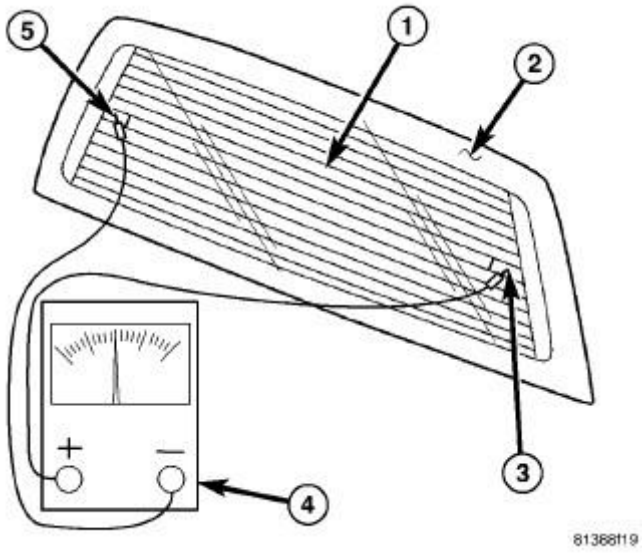

Fig. 3: Testing EBL Grid Lines
Courtesy of CHRYSLER GROUP, LLC

1. Use a scan tool and check for Diagnostic Trouble Codes (DTCs) related to the A/C-heater control and the Totally Integrated Power Module (TIPM). If no DTCs are found, refer to 2. If any DTCs are found, repair as required, then refer to 2.
2. Turn the ignition switch to RUN. Set the rear window defogger switch to ON. Rear window defogger operation can be checked by feeling the rear window glass, or the heated outside rear view mirror glass. A distinct difference in temperature between the grid lines (1) and the adjacent clear glass (2) or the heated mirror glass should be detected within 3 to 4 minutes of operation.
3. If a rear window glass temperature difference is not detected, use a 12-volt DC voltmeter (4) and contact the rear glass heating grid power feed terminal A (3) with the positive lead, and the ground terminal B (5) with the negative lead. The voltmeter should read battery voltage. If the voltmeter does not read battery voltage, check the following:
   - Confirm the ignition switch is in RUN.
   - Confirm the rear window defogger switch is ON.
   - Confirm the EBL feed wire is connected to the heating grid positive terminal and that there is continuity between the TIPM and the heating grid.

- Confirm the EBL ground wire is connected to the heating grid negative terminal and that there is continuity to ground.
- When diagnosing a heated mirror concern, check the heated mirror circuit fuse located in the TIPM. The fuse must be tight in the receptacle and all electrical connections must be secure.

4. If broken defogger grid lines or bus bars are suspected, use a 12-volt DC voltmeter and contact the rear glass heating grid ground terminal B with the negative lead and each rear glass heating grid line at its mid-point with the positive lead. The voltmeter should read approximately 6 volts at each grid line mid-point. If the voltmeter does not read approximately 6 volts, repair the open grid line(s) or bus bar(s). Refer to **GRID, DEFOGGER, REAR, STANDARD PROCEDURE**.
5. If the operation of the EBL system and/or the heated mirror system has been verified but the defogger LED indicator does not illuminate, replace the A/C-heater control. Refer to **CONTROL, A/C AND HEATER, REMOVAL** .

GRID, DEFOGGER, REAR

STANDARD PROCEDURE

STANDARD PROCEDURE - GRID LINE AND TERMINAL REPAIR

WARNING: Materials contained in the Repair Kit (Part Number 04549275) may cause skin or eye irritation. The kit contains epoxy resin and amine type hardener, which are harmful if swallowed. Avoid contact with the skin and eyes. For skin contact, wash the affected areas with soap and water. For contact with the eyes, flush with plenty of water. Do not take internally. If taken internally, induce vomiting and call a physician immediately. Use with adequate ventilation. Do not use near fire or flame. Contains flammable solvents. Keep out of the reach of children. Failure to follow these instructions may result in serious or fatal injury.

Repair of the rear glass heating grid lines, bus bars, terminals or pigtail wires can be accomplished using the Mopar® Rear Window Defogger Repair Kit (Part Number 04549275) or equivalent.

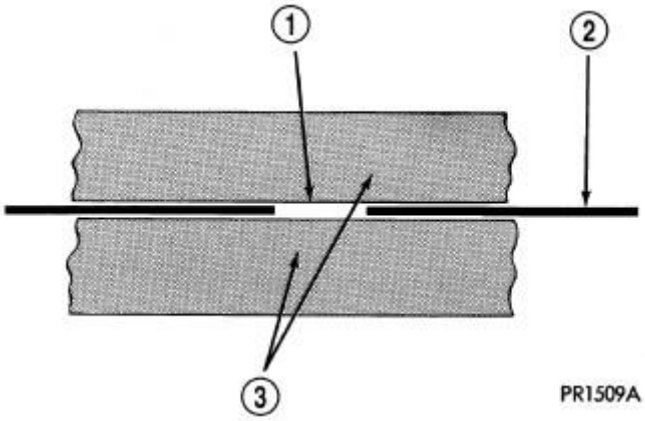

Fig. 4: Grid Line Repair
Courtesy of CHRYSLER GROUP, LLC

1. Mask the repair area with masking tape (3) so that the conductive epoxy can be applied neatly. Extend the epoxy application onto the grid line (2) or the bus bar on each side of the break (1).
2. Follow the instructions in the repair kit for preparing the damaged area.
3. Remove the package separator clamp and mix the two conductive epoxy components thoroughly within the packaging. Fold the package in half and cut the center corner to dispense the epoxy.
4. Apply the epoxy through the slit in the masking tape or template. Overlap both ends of the break by at least 19 millimeters (0.75 inch).
5. For a terminal or pigtail wire replacement, mask the adjacent areas so the epoxy can be extended onto the adjacent grid line as well as the bus bar. Apply a thin layer of epoxy to the area where the terminal or pigtail wire was fastened and onto the adjacent grid line.
6. Apply a thin layer of conductive epoxy to the terminal or bare wire end of the pigtail and place it in the proper location on the bus bar. To prevent the terminal or pigtail wire from moving while the epoxy is curing, it must be wedged or clamped.
7. Carefully remove the masking tape or template.

CAUTION: Do not allow the glass surface to exceed 204° C (400° F) when using a heat gun, or the glass may fracture.

8. Allow the epoxy to cure 24 hours at room temperature or carefully use a heat gun for 15 minutes. When using a heat gun, hold it approximately 25.4 centimeters (10 inches) from the repair and do not allow the glass surface to exceed 204° C (400° F).
9. After the conductive epoxy is properly cured, remove the wedge or clamp from the terminal or pigtail wire.
10. Connect the wire harness leads to the grid terminals or pigtail wires and verify EBL operation.

SWITCH, DEFOGGER, REAR

DESCRIPTION

DESCRIPTION

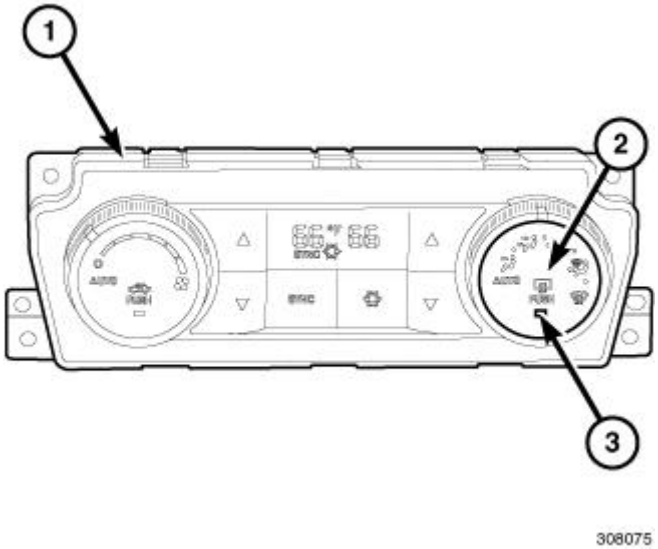

Fig. 5: ATC Control
Courtesy of CHRYSLER GROUP, LLC

The switch for the rear window defogger (Electric Back Light) (EBL) system (2) is integrated into the A/C-heater control (1), located in the center of the instrument panel. When the rear window defogger switch is pressed to ON, a request signal is sent on the CAN Bus to the Totally Integrated Power Module (TIPM) to operate the EBL system.

When the high side driver in the TIPM is energized, current is directed to the rear defogger grid lines and to the heated side view mirrors, as equipped. An amber indicator (3) illuminates in the switch to indicate when the EBL system is turned on. The grid lines heat the glass to help clear the surface of fog or frost.

OPERATION

OPERATION

An amber indicator will illuminate when the rear window defogger switch is activated. When activated, the switch sends a request signal to the to the Totally Integrated Power Module (TIPM) to energize the internal EBL high side driver to provide battery current to the rear window defogger grid lines and to the heated side view mirrors, as equipped.

NOTE: The EBL system turns off automatically after 15 minutes of initial operation. Each following activation cycle of the EBL system will last 10 minutes.

The EBL system will be automatically turned off after an initial programmed time interval of about 15 minutes, as long as the ignition switch is in RUN. After the initial time interval has expired, if the rear window defogger switch is pressed to ON again during the same ignition cycle, the EBL system will automatically turn off after about 10 minutes. The EBL system will automatically shut off if the ignition switch is turned to any position other than RUN, or it can be turned off manually by pressing the rear window defogger switch a second time.

The rear window defogger switch is diagnosed using a scan tool. Refer to appropriate Electrical Diagnostic article. .

The rear window defogger switch and the rear window defogger indicator cannot be repaired and the A/C-heater control must be replaced if inoperative or damaged. Refer to **CONTROL, A/C AND HEATER, REMOVAL** .

Heated Mirrors - Service Information - Ram Pickup

DESCRIPTION

DESCRIPTION

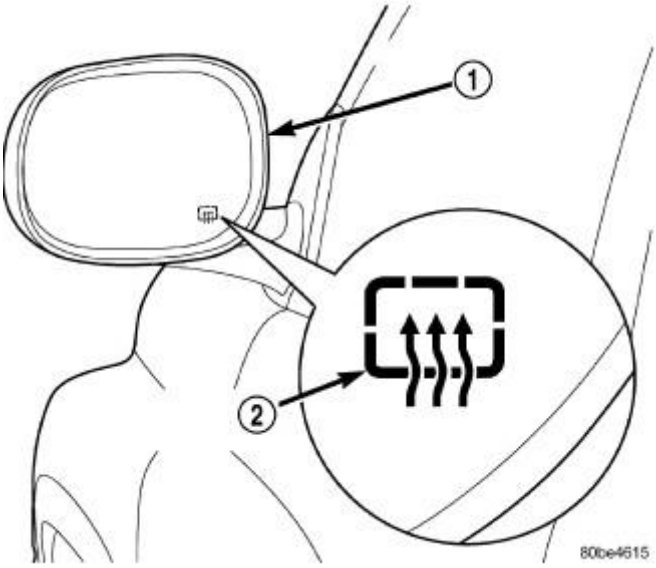

Fig. 1: Window Defogger Icon
Courtesy of CHRYSLER GROUP, LLC

Electrically heated outside rear view mirrors (1) are optional on some models. Vehicles with this option can be visually identified by the International Control and Display Symbol icon for rear window defogger (2), which appears on the lower inboard corner of each outside rear view mirror glass.

The heated mirror system operates in concert with the rear window defogger (EBL) system and is controlled by the rear window defogger switch located on the A/C-heater control in the instrument panel. An amber indicator lamp in the rear window defogger switch will illuminate to indicate when the system is ON.

The heated mirror system will automatically turn off after an initial programmed time interval of about 15 minutes, as long as the ignition switch is in RUN. After the initial time interval has expired, if the rear window defogger switch is pressed to ON again during the same ignition cycle, the heated mirror system will automatically turn off after about 10 minutes. The heated mirror system will also turn off if the ignition switch is turned to any position other than RUN or by manually pressing the rear window defogger switch a second time.

Circuit protection for the heated mirror system is provided by a fuse located in the totally integrated power module (TIPM).

OPERATION

OPERATION

When equipped, the heated mirror system is activated when the rear window defogger (EBL) system is turned on. Refer to **OPERATION** . When the heated mirror system is activated, an electric heater grid located behind the glass of each of the outside rear view mirror becomes energized and produces heat to help clear the mirror of ice, snow, or fog.

If the outside mirror heating grids are both inoperative, refer to **DIAGNOSIS AND TESTING** . If only one of the outside mirror heating grid is inoperative. Refer to **DIAGNOSIS AND TESTING** .

The heating grid behind each outside mirror glass cannot be repaired and the mirror glass must be replaced if inoperative or damaged. Refer to **MIRROR, OUTSIDE REARVIEW, REMOVAL** and **MIRROR, OUTSIDE REARVIEW, GLASS, REMOVAL** .

DIAGNOSTIC CODE INDEX

DIAGNOSTIC CODE INDEX

DTC	Description
B10C4-11	HEATED STEERING WHEEL CONTROL - CIRCUIT SHORT TO GROUND
B10C4-12	HEATED STEERING WHEEL CONTROL - CIRCUIT SHORT TO BATTERY
B10C4-13	HEATED STEERING WHEEL CONTROL - CIRCUIT OPEN
B10C4-1E	HEATED STEERING WHEEL CONTROL - CIRCUIT RESISTANCE OUT OF RANGE
B11C1-13	STEERING WHEEL HEATER POWER SUPPLY - CIRCUIT OPEN
B11DC-13	REAR HEATED SEATS POWER SUPPLY - CIRCUIT OPEN
B1E99-11	FRONT LEFT HEATER CONTROL CIRCUIT - CIRCUIT SHORT TO GROUND
B1E99-12	FRONT LEFT HEATER CONTROL CIRCUIT - CIRCUIT SHORT TO BATTERY
B1E99-13	FRONT LEFT HEATER CONTROL CIRCUIT - CIRCUIT OPEN
B1E99-1E	FRONT LEFT HEATER CONTROL CIRCUIT - CIRCUIT RESISTANCE OUT OF RANGE
B1E9A-11	FRONT RIGHT HEATER CONTROL CIRCUIT - CIRCUIT SHORT TO GROUND
B1E9A-12	FRONT RIGHT HEATER CONTROL CIRCUIT - CIRCUIT SHORT TO BATTERY
B1E9A-13	FRONT RIGHT HEATER CONTROL CIRCUIT - CIRCUIT OPEN
B1E9A-1E	FRONT RIGHT HEATER CONTROL CIRCUIT - CIRCUIT RESISTANCE OUT OF RANGE
B1E9B-11	REAR LEFT HEATER CONTROL CIRCUIT - CIRCUIT SHORT TO GROUND
B1E9B-12	REAR LEFT HEATER CONTROL CIRCUIT - CIRCUIT SHORT TO BATTERY
B1E9B-13	REAR LEFT HEATER CONTROL CIRCUIT - CIRCUIT OPEN
B1E9B-1E	REAR LEFT HEATER CONTROL CIRCUIT - CIRCUIT RESISTANCE OUT OF RANGE
B1E9C-11	REAR RIGHT HEATER CONTROL CIRCUIT - CIRCUIT SHORT TO GROUND
B1E9C-12	REAR RIGHT HEATER CONTROL CIRCUIT - CIRCUIT SHORT TO BATTERY
B1E9C-13	REAR RIGHT HEATER CONTROL CIRCUIT - CIRCUIT OPEN
B1E9C-1E	REAR RIGHT HEATER CONTROL CIRCUIT - CIRCUIT RESISTANCE OUT OF RANGE
B1E9D-11	FRONT LEFT VENT CONTROL CIRCUIT - CIRCUIT SHORT TO GROUND
B1E9D-12	FRONT LEFT VENT CONTROL CIRCUIT - CIRCUIT SHORT TO BATTERY
B1E9E-13	FRONT RIGHT VENT CONTROL CIRCUIT - CIRCUIT OPEN
B1E9D-13	FRONT LEFT VENT CONTROL CIRCUIT - CIRCUIT OPEN

B1E9E-11	FRONT RIGHT VENT CONTROL CIRCUIT - CIRCUIT SHORT TO GROUND
B1E9E-12	FRONT RIGHT VENT CONTROL CIRCUIT - CIRCUIT SHORT TO BATTERY
B1EB1-1A	FRONT LEFT SEAT HEATER SENSOR - CIRCUIT RESISTANCE BELOW THRESHOLD
B1EB1-1B	FRONT LEFT SEAT HEATER SENSOR - CIRCUIT RESISTANCE ABOVE THRESHOLD
B1EB2-1A	FRONT RIGHT SEAT HEATER SENSOR - CIRCUIT RESISTANCE BELOW THRESHOLD
B1EB2-1B	FRONT RIGHT SEAT HEATER SENSOR - CIRCUIT RESISTANCE ABOVE THRESHOLD
B1EB3-1A	REAR LEFT SEAT HEATER SENSOR - CIRCUIT RESISTANCE BELOW THRESHOLD
B1EB3-1B	REAR LEFT SEAT HEATER SENSOR - CIRCUIT RESISTANCE ABOVE THRESHOLD
B1EB4-1A	REAR RIGHT SEAT HEATER SENSOR - CIRCUIT RESISTANCE BELOW THRESHOLD
B1EB4-1B	REAR RIGHT SEAT HEATER SENSOR - CIRCUIT RESISTANCE ABOVE THRESHOLD
B210C-17	BATTERY VOLTAGE INPUT - CIRCUIT VOLTAGE ABOVE THRESHOLD
B210C-18	BATTERY VOLTAGE INPUT - CIRCUIT BELOW THRESHOLD
B21DD-84	SYSTEM VOLTAGE - SIGNAL BELOW ALLOWABLE RANGE
B21DD-85	SYSTEM VOLTAGE - SIGNAL ABOVE ALLOWABLE RANGE
B221A-00	(HSM) HEATED SEAT MODULE INTERNAL
U0011-00	CAN B BUS PERFORMANCE
U0141-00	LOST COMMUNICATION WITH IPM (FCM/TIPM)
U0155-00	LOST COMMUNICATION WITH CLUSTER/CCN
U1446-00	IMPLAUSIBLE HEATED STEERING WHEEL TEMPERATURE MESSAGE RECEIVED (CCN)

DIAGNOSIS AND TESTING

B10C4-11-HEATED STEERING WHEEL CONTROL - CIRCUIT SHORT TO GROUND

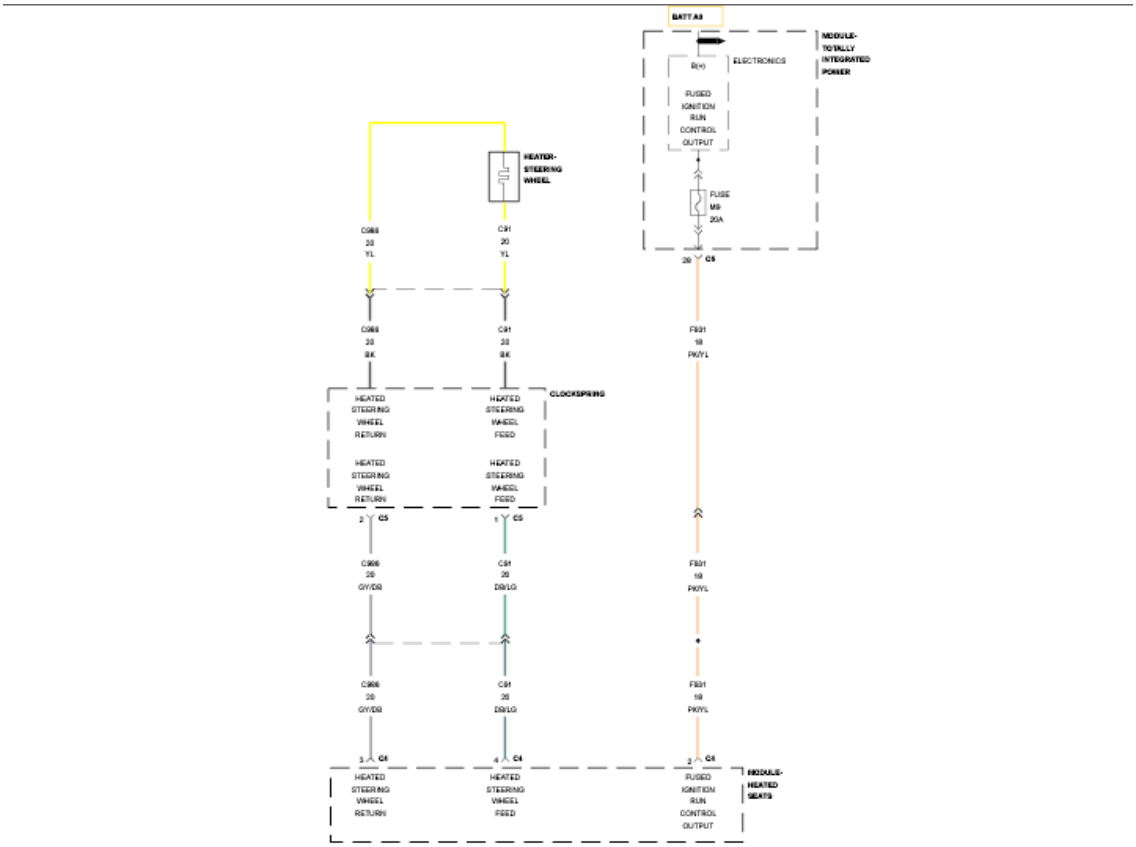

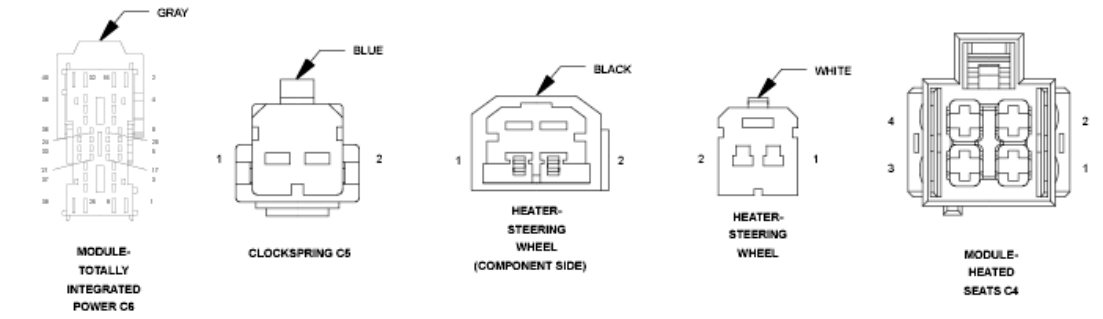

<u>Fig. 1: Heated Steering Wheel Control Wiring Diagram</u>
Courtesy of CHRYSLER GROUP, LLC

For a complete wiring diagram, **refer to appropriate SYSTEM WIRING DIAGRAMS article** .

WHEN MONITORED:

With the engine running.

SET CONDITION:

The Heated Seat Module (HSM) detects voltage below threshold on the (C91) Heated Steering Wheel Feed circuit for more than two seconds when the output is turned on.

POSSIBLE CAUSES

Possible Causes
(C91) HEATED STEERING WHEEL FEED CIRCUIT SHORTED TO GROUND
(C91) HEATED STEERING WHEEL FEED CIRCUIT SHORTED TO THE (C986) HEATED STEERING WHEEL RETURN CIRCUIT
HEATED STEERING WHEEL (HSW)
CLOCKSPRING
HEATED SEAT MODULE (HSM)

DIAGNOSTIC TEST

1. **TEST FOR INTERMITTENT CONDITION**

NOTE: **Make sure the battery is fully charged and the charging system is operating properly before proceeding.**

1. Turn the ignition on.
2. With the scan tool, record and erase Diagnostic Trouble Codes (DTCs).
3. Turn the ignition off.
4. Start the engine and let it run.
5. Turn the HSW on.
6. With the scan tool, read DTCs.

Is the DTC active?

Yes

- Go To 2.

No

- The conditions that caused this code to set are not present at this time. Verify seat harness is routed correctly to the HSM. Using the wiring diagram/schematic as a guide, inspect the wiring and connectors. Look for chafed, pierced, pinched, or partially broken wires and broken, bent, pushed out, spread, corroded, or contaminated terminals. Attempt to reproduce condition by rotating the steering wheel. Attempt to reproduce condition by adjusting the seat.
- Perform the BODY VERIFICATION TEST. Refer to **BODY VERIFICATION TEST** .

2. **CHECK FOR SHORTED (C91) HEATED STEERING WHEEL FEED CIRCUIT BETWEEN CLOCKSPRING AND HSM**

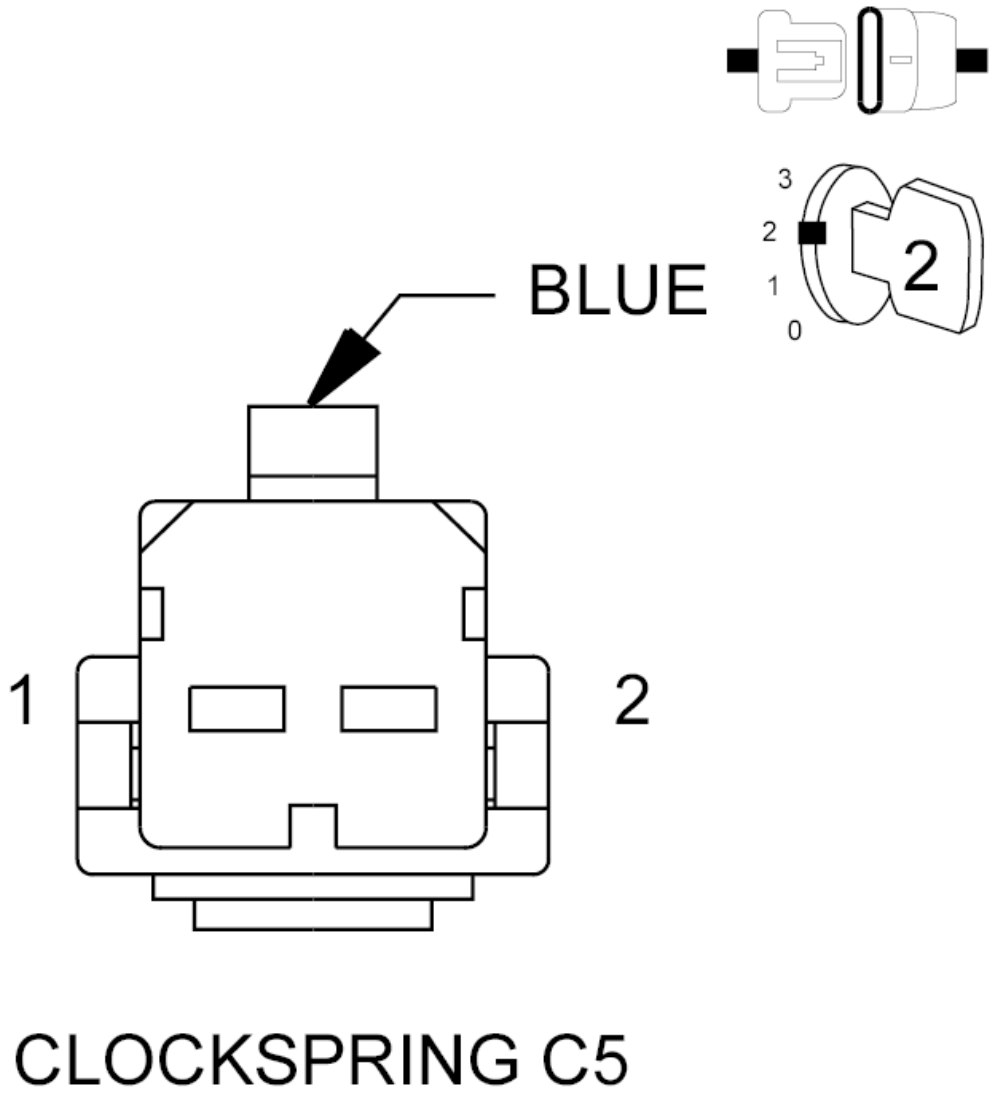

Fig. 2: Check For Shorted Heated Steering Wheel Feed Circuit Between Clockspring And HSM
Courtesy of CHRYSLER GROUP, LLC

WARNING: **Turn the ignition off, disconnect the 12-volt battery and wait two minutes before proceeding. Failure to follow these instructions may result in possible serious or fatal injury.**

1. Disconnect the Clockspring C5 harness connector.

WARNING: **Turn the ignition on, then reconnect the 12-volt battery and wait**

two minutes before proceeding. Failure to follow these instructions may result in possible serious or fatal injury.

2. With the scan tool, erase DTCs.
3. Start the engine and let it run.
4. Turn the HSW on.
5. With the scan tool, read DTCs.

   Is the same DTC active?

   Yes

   - Go To 3.

   No

   - Go To 5.

3. **CHECK (C91) HEATED STEERING WHEEL FEED CIRCUIT FOR A SHORT TO GROUND**

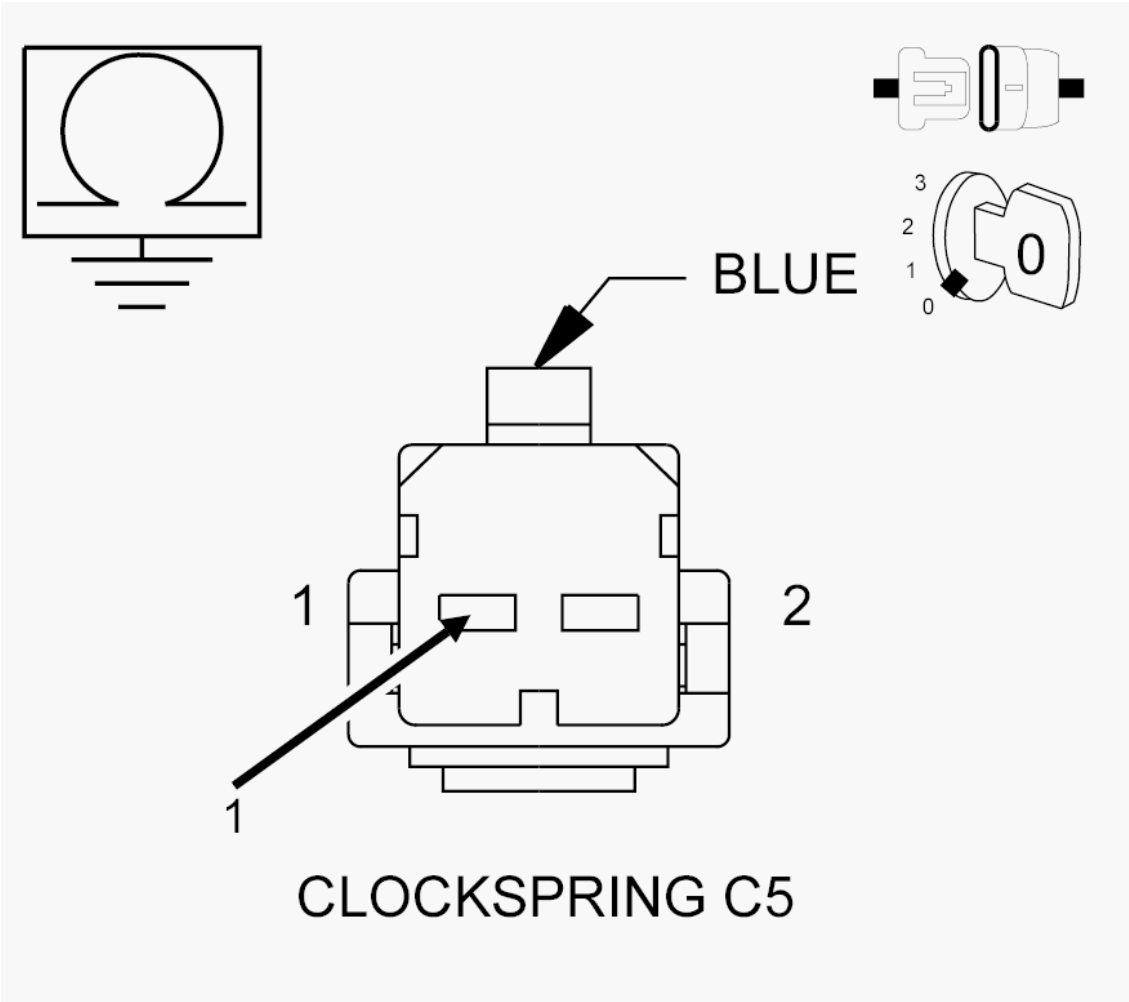

Fig. 3: Check Heated Steering Wheel Feed Circuit For A Short To Ground
Courtesy of CHRYSLER GROUP, LLC

1. Turn the ignition off.
2. Disconnect the HSM C4 harness connector.

   NOTE: Check connectors. Clean and repair as necessary.

3. Measure the resistance of the (C91) Heated Steering Wheel Feed circuit between ground and the Clockspring C5 harness connector.

   Is the resistance below 10k Ohms?

   Yes

   - Repair the short to ground in the (C91) Heated Steering Wheel Feed circuit.
   - Perform the BODY VERIFICATION TEST. Refer to **BODY VERIFICATION TEST** .

   No

- Go To 4.

4. **CHECK (C91) HEATED STEERING WHEEL FEED CIRCUIT FOR A SHORT TO THE (C986) HEATED STEERING WHEEL RETURN CIRCUIT**

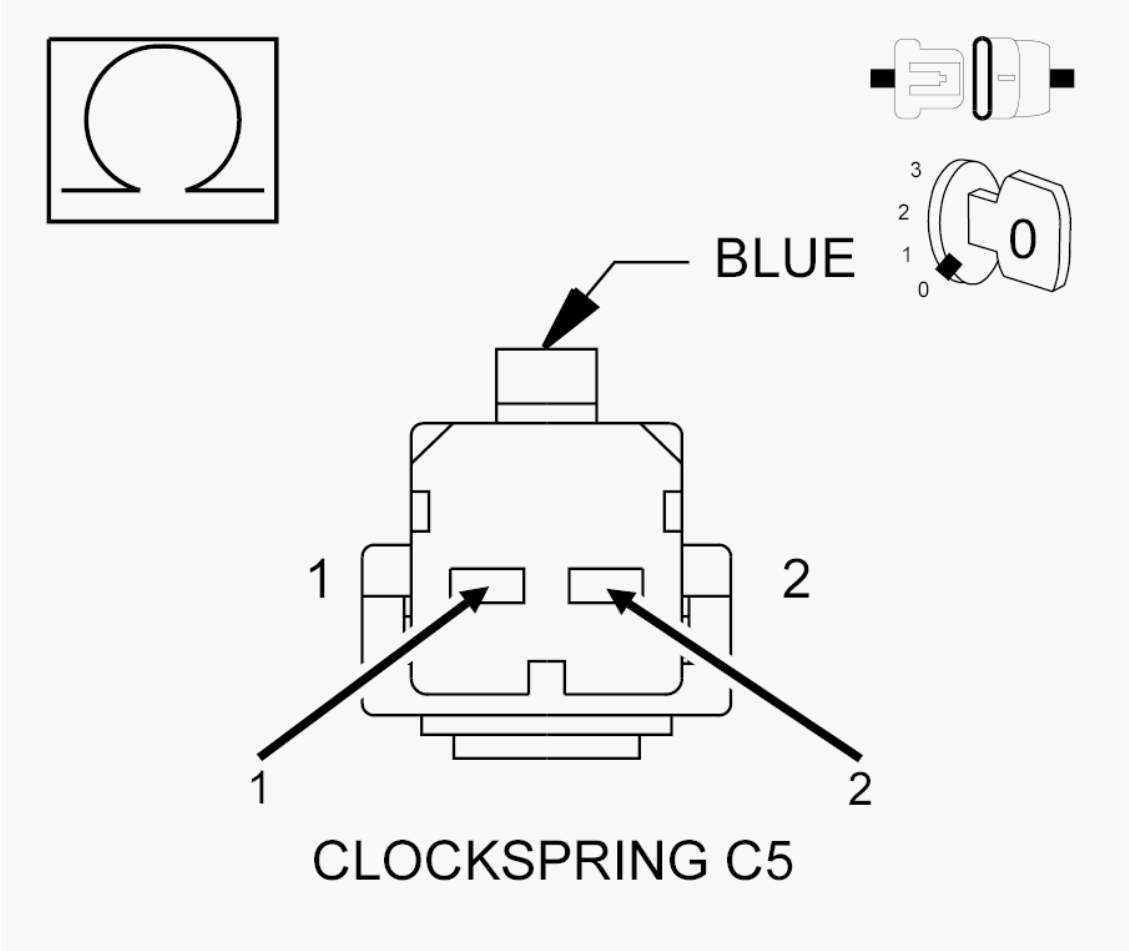

Fig. 4: Check Heated Steering Wheel Feed Circuit For A Short To The Heated Steering Wheel Return Circuit
Courtesy of CHRYSLER GROUP, LLC

1. Measure the resistance between the (C91) Heated Steering Wheel Feed circuit and the (C986) Heated Steering Wheel Return circuit at the Clockspring C5 harness connector.

   Is the resistance below 10k Ohms?

   Yes

   - Repair the short between the (C91) Heated Steering Wheel Feed circuit and the (C986) Heated Steering Wheel Return circuit.
   - Perform the BODY VERIFICATION TEST. Refer to **BODY VERIFICATION TEST** .

   No

- Replace the Heated Seat Module (HSM) in accordance with the Service Information.
- Perform the BODY VERIFICATION TEST. Refer to **BODY VERIFICATION TEST** .

5. **CHECK FOR A SHORTED HSW**

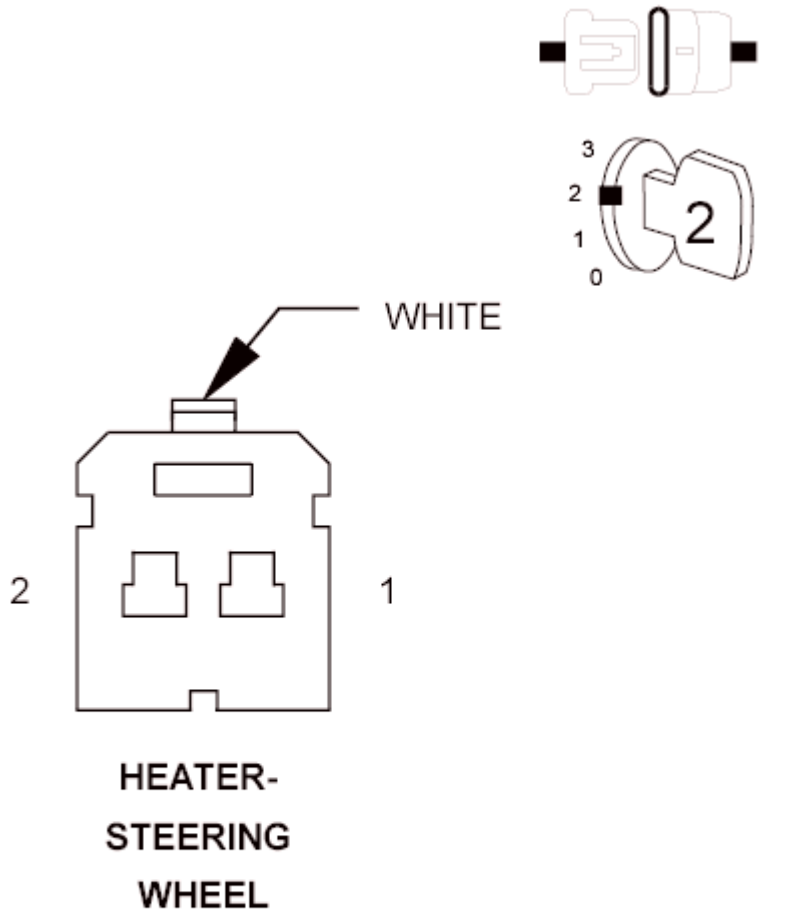

Fig. 5: Checking HSW For Short
Courtesy of CHRYSLER GROUP, LLC

WARNING: **Turn the ignition off, disconnect the 12-volt battery and wait two minutes before proceeding. Failure to follow these instructions may result in possible serious or fatal injury.**

1. Remove the Driver Airbag in accordance with the Service Information.
2. Disconnect the CLOCKSPRING C5 connector.

NOTE: **Before proceeding, thoroughly inspect the wiring harness and connectors between the HSW and the Clockspring. Look for chafed, pierced, pinched, or partially broken wires and broken, bent, pushed out, spread, corroded, or contaminated terminals.**

3. Reconnect the CLOCKSPRING C5 harness connector.

WARNING: **Turn the ignition on, then reconnect the 12-volt battery and wait two minutes before proceeding. Failure to follow these instructions may result in possible serious or fatal injury.**

4. With the scan tool, erase DTCs.
5. Turn the ignition off.
6. Start the engine and let it run.
7. Turn the HSW on.
8. With the scan tool, read DTCs.

Is the same DTC active?

Yes

- Replace the Clockspring in accordance with the Service Information.
- Perform the BODY VERIFICATION TEST. Refer to **BODY VERIFICATION TEST** .

No

- Replace the Heated Steering Wheel (HSW) in accordance with the Service Information.
- Perform the BODY VERIFICATION TEST. Refer to **BODY VERIFICATION TEST** .

B10C4-12-HEATED STEERING WHEEL CONTROL - CIRCUIT SHORT TO BATTERY

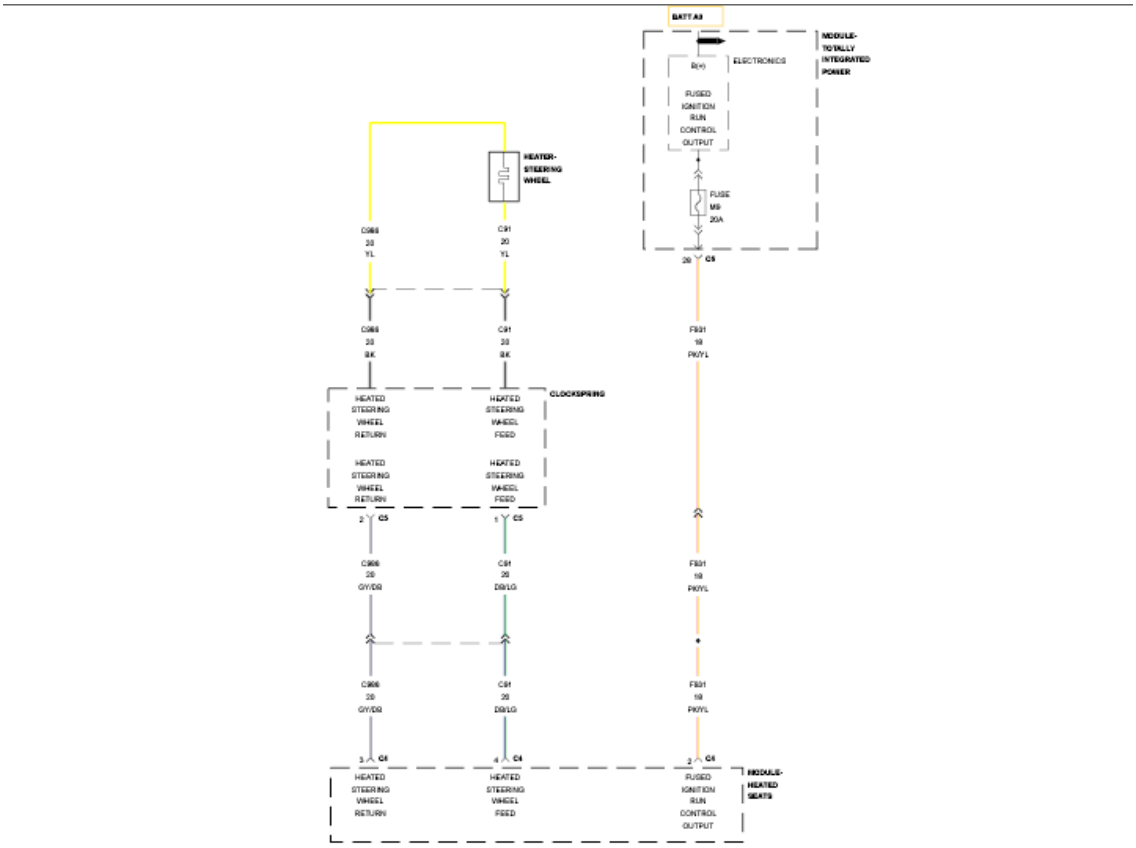

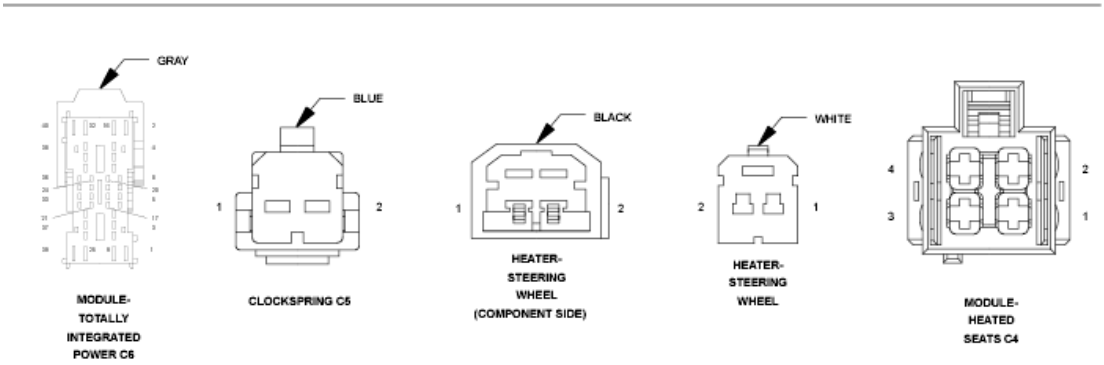

Fig. 6: Heated Steering Wheel Control Wiring Diagram
Courtesy of CHRYSLER GROUP, LLC

For a complete wiring diagram, **refer to appropriate SYSTEM WIRING DIAGRAMS article** .

WHEN MONITORED:

With the engine running.

SET CONDITION:

The Heated Seat Module (HSM) detects voltage on the (C91) Heated Steering Wheel Feed circuit for more than two seconds with the output turned off.

POSSIBLE CAUSES

Possible Causes
(C91) HEATED STEERING WHEEL FEED CIRCUIT SHORTED TO VOLTAGE
(C91) HEATED STEERING WHEEL FEED CIRCUIT SHORTED TO THE (F931) FUSED IGNITION RUN CONTROL OUTPUT
HEATED STEERING WHEEL (HSW)
CLOCKSPRING
HEATED SEAT MODULE (HSM)

DIAGNOSTIC TEST

1. **TEST FOR INTERMITTENT CONDITION**

   NOTE: Make sure the battery is fully charged and the charging system is operating properly before proceeding.

   1. Turn the ignition on.
   2. With the scan tool, record and erase Diagnostic Trouble Codes (DTCs).
   3. Turn the ignition off.
   4. Start the engine and let it run.
   5. With the scan tool, read DTCs.

   Is the DTC active?

   Yes

   - Go To 2.

   No

   - The conditions that caused this code to set are not present at this time. Verify seat harness is routed correctly to the HSM. Using the wiring diagram/schematic as a guide, inspect the wiring and connectors. Look for chafed, pierced, pinched, or partially broken wires and broken, bent, pushed out, spread, corroded, or contaminated terminals. Attempt to reproduce condition by operating all HSM functions one at a time, except for the HSW. Attempt to reproduce condition by rotating the steering wheel. Attempt to reproduce condition by adjusting the seat.
   - Perform the BODY VERIFICATION TEST. Refer to **BODY VERIFICATION TEST** .

2. **CHECK FOR SHORTED (C91) HEATED STEERING WHEEL FEED CIRCUIT BETWEEN**

CLOCKSPRING AND HSM

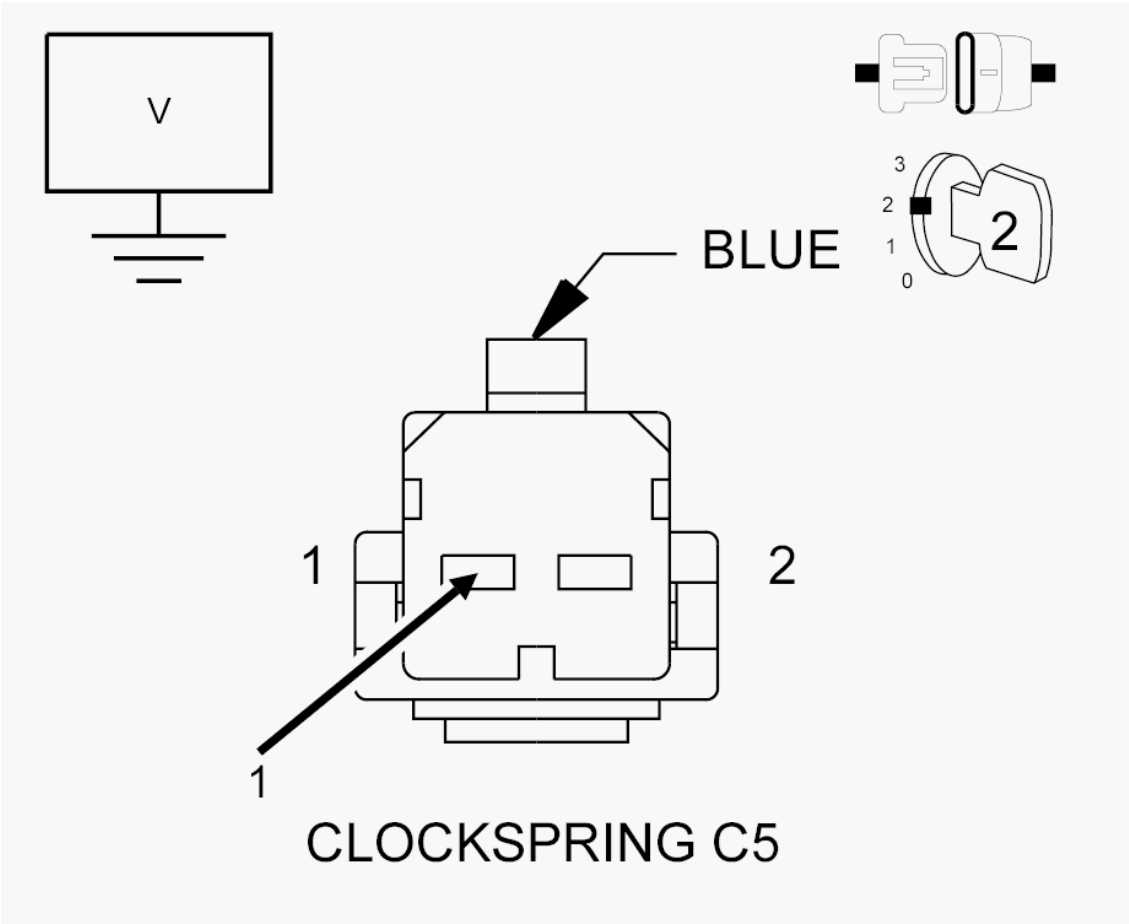

Fig. 7: Check For Shorted Heated Steering Wheel Feed Circuit Between Clockspring And HSM
Courtesy of CHRYSLER GROUP, LLC

WARNING: Turn the ignition off, disconnect the 12-volt battery and wait two minutes before proceeding. Failure to follow these instructions may result in possible serious or fatal injury.

1. Disconnect the Clockspring C5 harness connector.

NOTE: Check connectors. Clean and repair as necessary.

WARNING: Turn the ignition on, then reconnect the 12-volt battery and wait two minutes before proceeding. Failure to follow these instructions may result in possible serious or fatal injury.

2. Measure the voltage between ground and the (C91) Heated Steering Wheel Feed circuit at the Clockspring C5 harness connector.

   Is there any voltage present?

Yes

- Go To 3.

No

- Go To 5.

3. **CHECK (C91) HEATED STEERING WHEEL FEED CIRCUIT FOR A SHORT TO THE (F931) FUSED IGNITION RUN CONTROL OUTPUT**

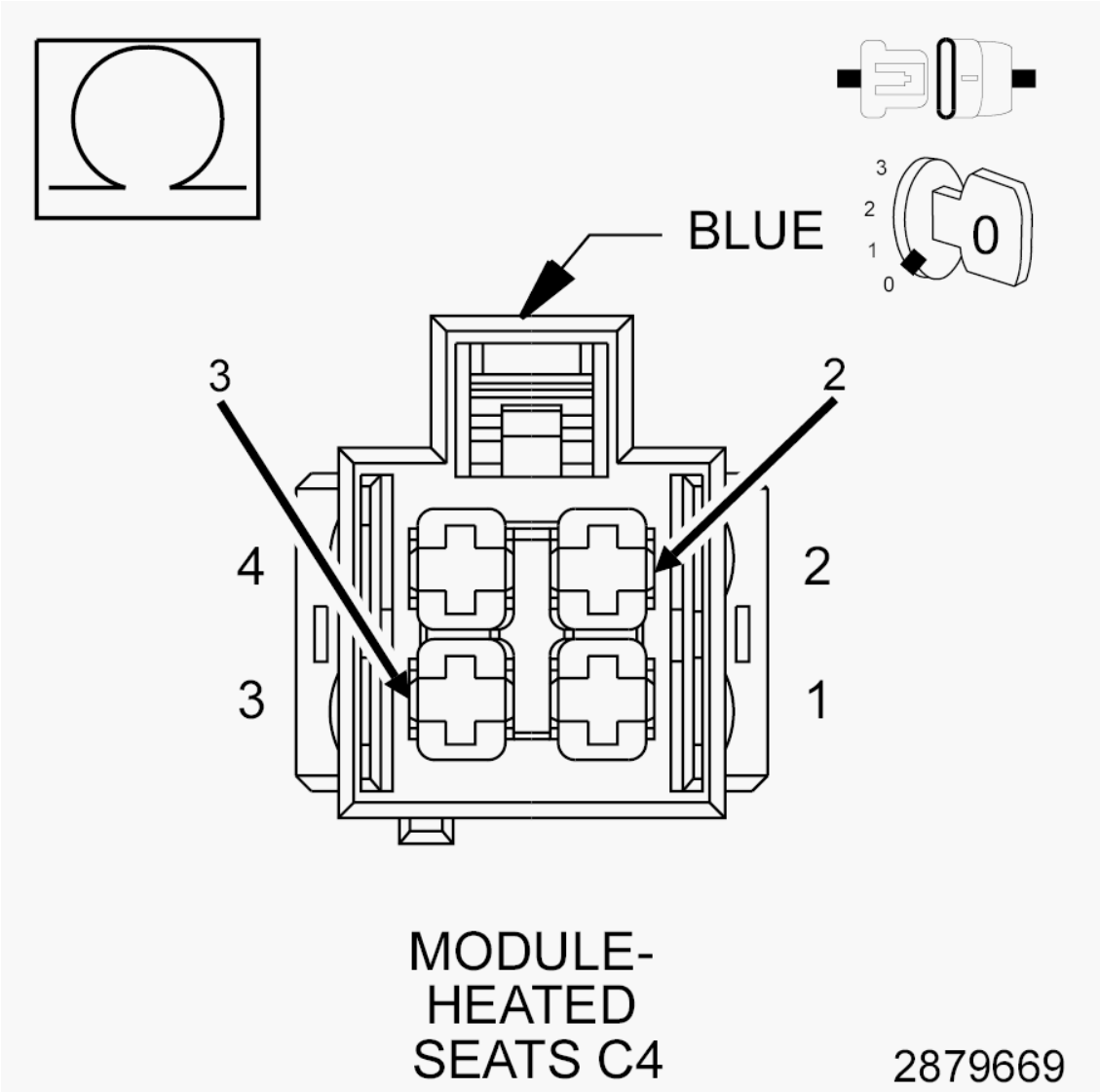

Fig. 8: Checking Heated Steering Wheel Feed Circuit For Short To Fused Ignition Run Control Output
Courtesy of CHRYSLER GROUP, LLC

1. Turn the ignition off.
2. Disconnect the HSM C4 harness connector.

NOTE: Check connectors. Clean and repair as necessary.

3. Measure the resistance between the (C91) Heated Steering Wheel Feed circuit and the (F931) Fused Ignition Run Control Output circuit at the HSM C4 harness connector.

   Is the resistance below 10k Ohms?

   Yes

   - Repair the short between the (C91) Heated Steering Wheel Feed circuit and the (F931) Fused Ignition Run Control Output circuit.
   - Perform the BODY VERIFICATION TEST. Refer to **BODY VERIFICATION TEST** .

   No

   - Go To 4.

4. **CHECK (C91) HEATED STEERING WHEEL FEED CIRCUIT FOR A SHORT TO VOLTAGE**

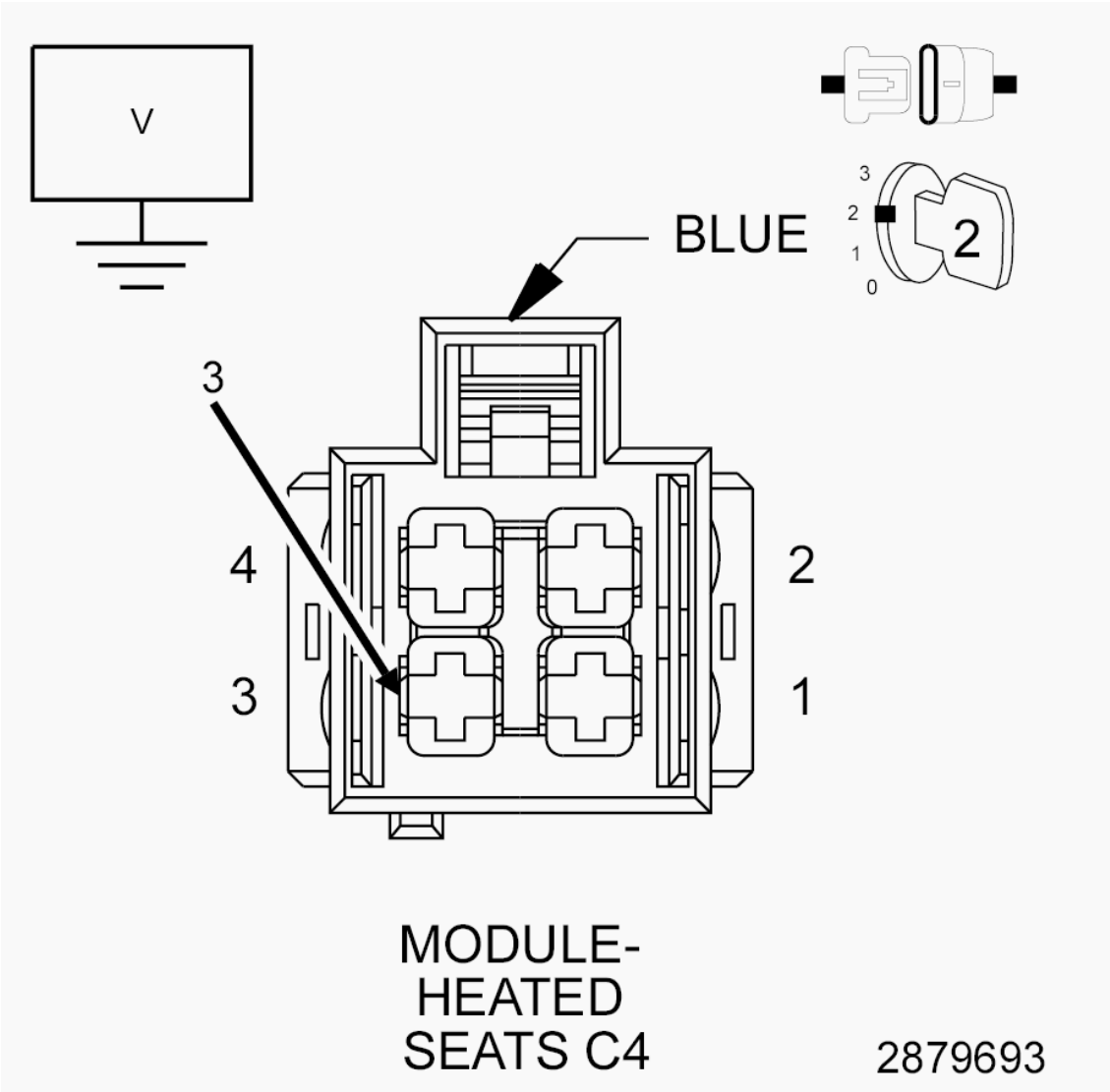

Fig. 9: Checking Heated Steering Wheel Feed Circuit For Short To Voltage
Courtesy of CHRYSLER GROUP, LLC

1. Turn the ignition on.
2. Measure the voltage of the (C91) Heated Steering Wheel Feed circuit between the HSM C4 harness connector and ground.

   Is there any voltage present?

   Yes

   - Repair the short to voltage in the (C91) Heated Steering Wheel Feed circuit.
   - Perform the BODY VERIFICATION TEST. Refer to **BODY VERIFICATION TEST** .

   No

- Replace the Heated Seat Module (HSM) in accordance with the Service Information.
- Perform the BODY VERIFICATION TEST. Refer to **BODY VERIFICATION TEST** .

5. **CHECK FOR A SHORTED CLOCKSPRING**

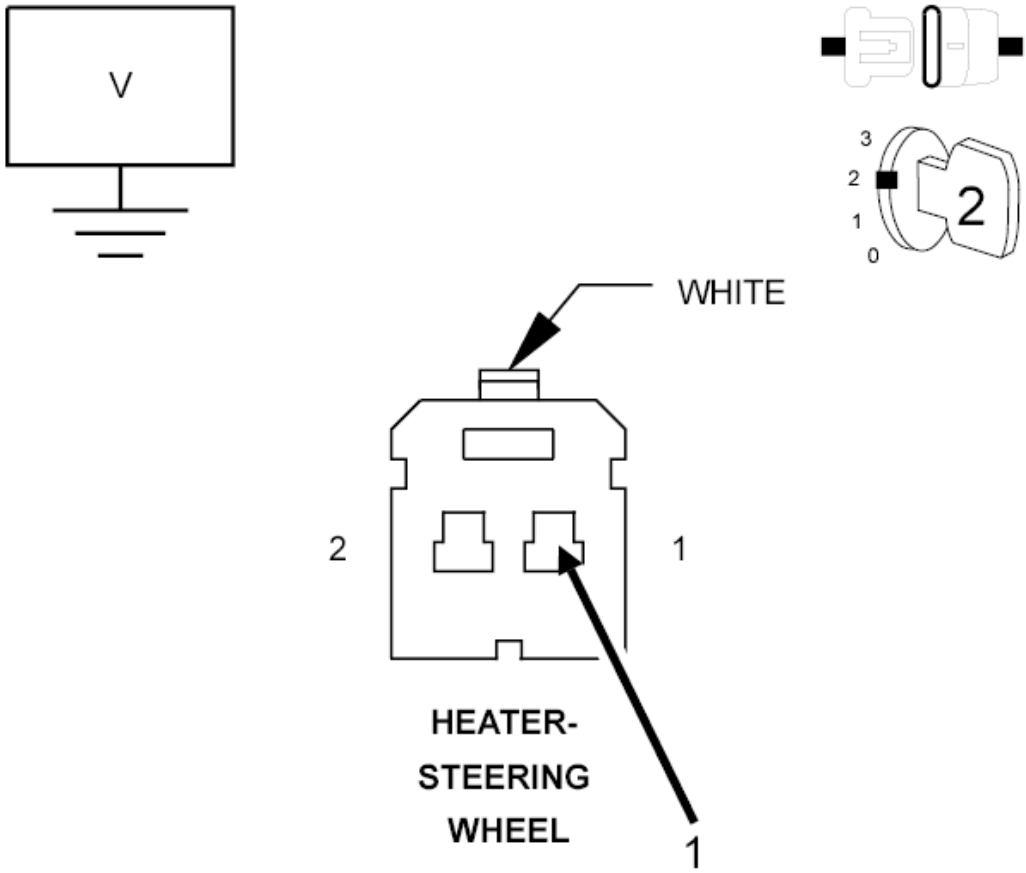

Fig. 10: Checking For Short
Courtesy of CHRYSLER GROUP, LLC

WARNING: **Turn the ignition off, disconnect the 12-volt battery and wait two minutes before proceeding. Failure to follow these instructions may result in possible serious or fatal injury.**

1. Remove the Driver Airbag in accordance with the Service Information.
2. Disconnect the Steering Wheel Heater connector.

NOTE: **Before proceeding, thoroughly inspect the wiring harness and connectors between the HSW and the Clockspring. Look for chafed, pierced, pinched, or partially broken wires and broken, bent, pushed out, spread, corroded, or contaminated terminals.**

3. Reconnect the Clockspring C5 harness connector.

WARNING: Turn the ignition on, then reconnect the 12-volt battery and wait two minutes before proceeding. Failure to follow these instructions may result in possible serious or fatal injury.

4. Turn the ignition on.
5. Measure the voltage of the (C91) Heated Steering Wheel Feed circuit between the Steering Wheel Heater connector and ground.

   Is there any voltage present?

   Yes

   - Replace the Clockspring in accordance with the Service Information.
   - Perform the BODY VERIFICATION TEST. Refer to **BODY VERIFICATION TEST** .

   No

   - Replace the Heated Steering Wheel (HSW) in accordance with the Service Information.
   - Perform the BODY VERIFICATION TEST. Refer to **BODY VERIFICATION TEST** .

B10C4-13-HEATED STEERING WHEEL CONTROL - CIRCUIT OPEN

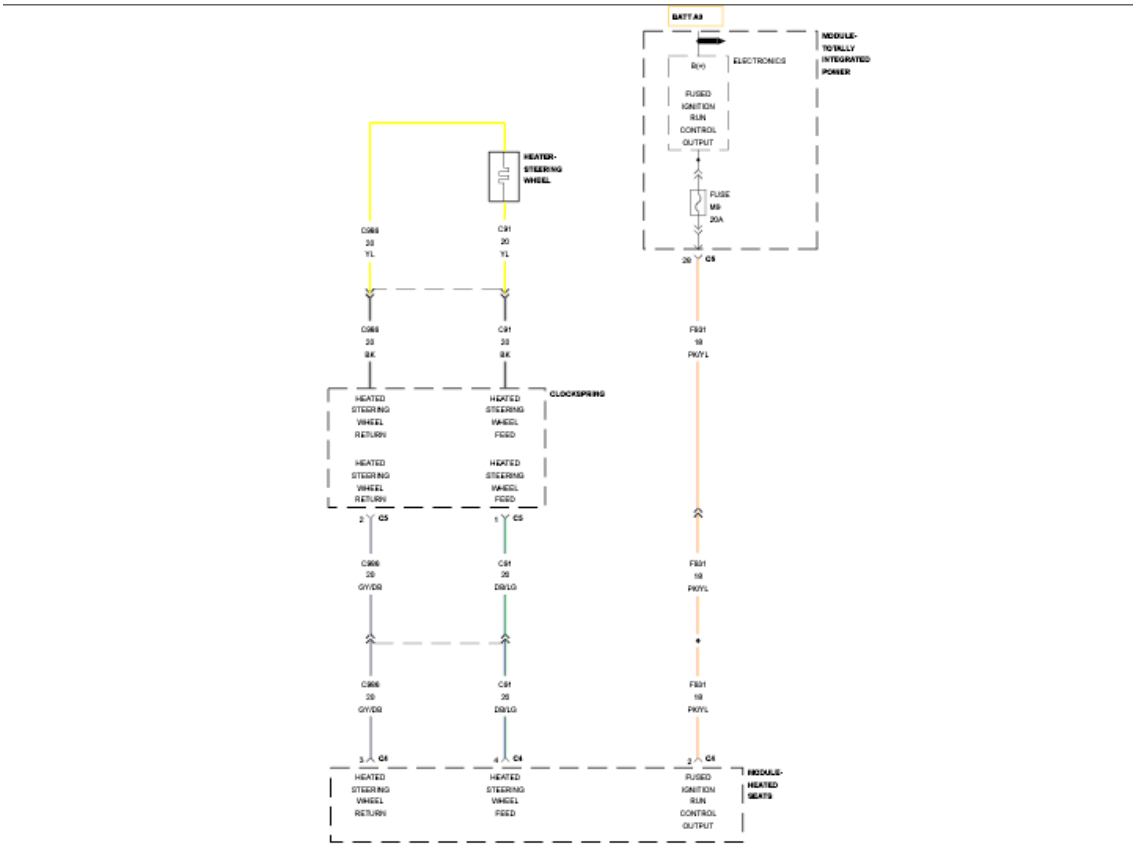

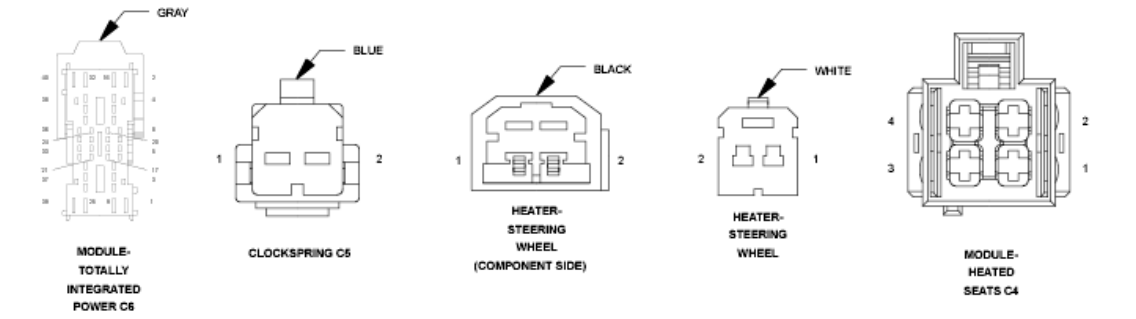

<u>Fig. 11: Heated Steering Wheel Control Wiring Diagram</u>
Courtesy of CHRYSLER GROUP, LLC

For a complete wiring diagram, **refer to appropriate SYSTEM WIRING DIAGRAMS article** .

WHEN MONITORED:

With the engine running.

SET CONDITION:

The Heated Seat Module (HSM) detects current below threshold on the (C91) Heated Steering Wheel Feed circuit for more than two seconds when the output is turned on.

POSSIBLE CAUSES

Possible Causes
(C91) HEATED STEERING WHEEL FEED CIRCUIT OPEN
(C986) HEATED STEERING WHEEL RETURN CIRCUIT OPEN
HEATED STEERING WHEEL (HSW)
CLOCKSPRING
HEATED SEAT MODULE (HSM)

DIAGNOSTIC TEST

1. **TEST FOR INTERMITTENT CONDITION**

   NOTE: Make sure the battery is fully charged and the charging system is operating properly before proceeding.

   1. Turn the ignition on.
   2. With the scan tool, record and erase Diagnostic Trouble Codes (DTCs).
   3. Turn the ignition off.
   4. Start the engine and let it run.
   5. Turn the HSW on.
   6. With the scan tool, read DTCs.

   Is the DTC active?

   Yes

   - Go To 2.

   No

   - The conditions that caused this code to set are not present at this time. Verify seat harness is routed correctly to the HSM. Using the wiring diagram/schematic as a guide, inspect the wiring and connectors. Look for chafed, pierced, pinched, or partially broken wires and broken, bent, pushed out, spread, corroded, or contaminated terminals. Attempt to reproduce condition by rotating the steering wheel. Attempt to reproduce condition by adjusting the seat.
   - Perform the BODY VERIFICATION TEST. Refer to **BODY VERIFICATION TEST** .

2. **CHECK (C91) HEATED STEERING WHEEL FEED CIRCUIT FOR AN OPEN BETWEEN**

CLOCKSPRING AND HSM

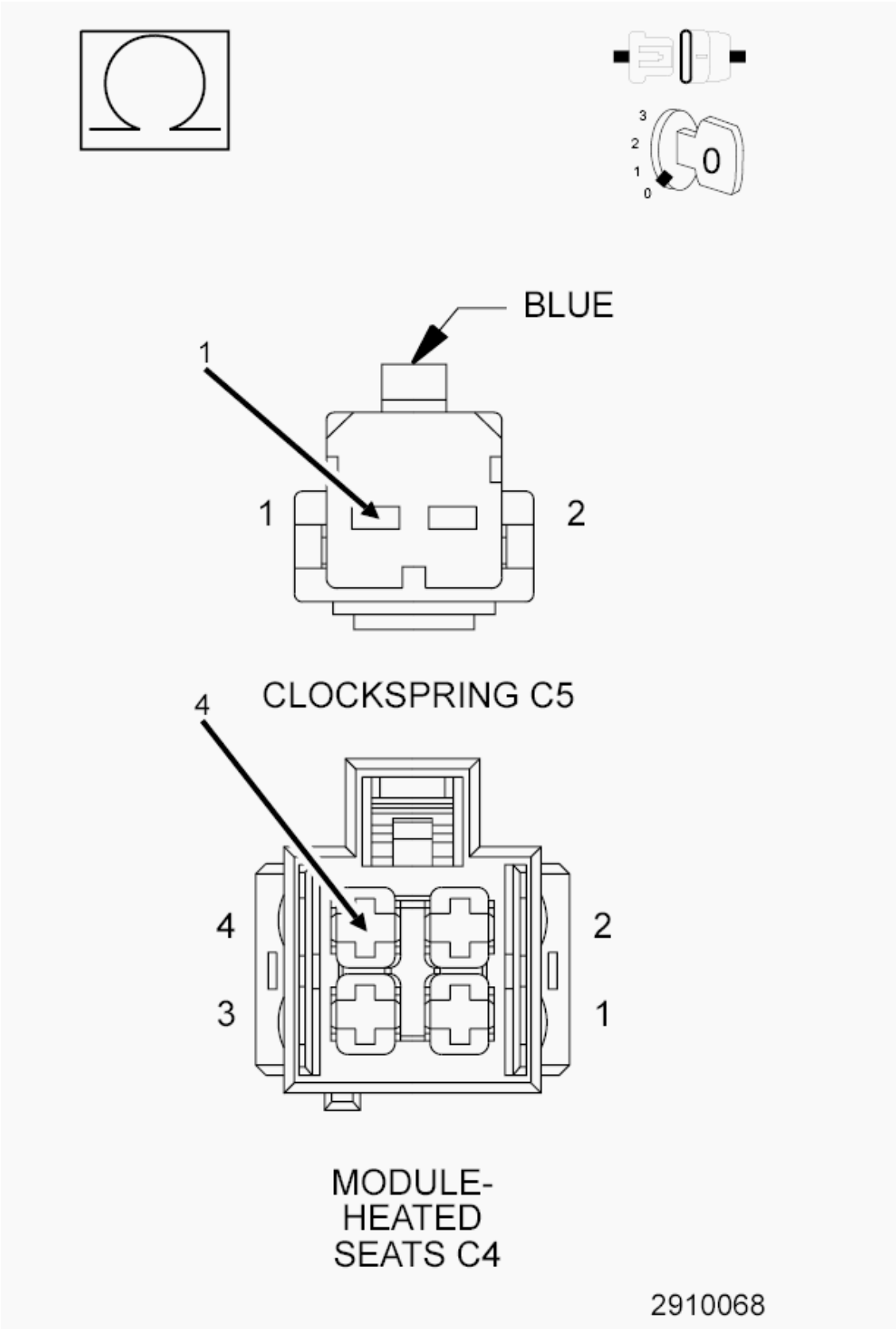

Fig. 12: Check Heated Steering Wheel Feed Circuit For An Open Between Clockspring And HSM

WARNING: Turn the ignition off, disconnect the 12-volt battery and wait two minutes before proceeding. Failure to follow these instructions may result in possible serious or fatal injury.

1. Disconnect the Clockspring C5 harness connector.
2. Disconnect the HSM C4 harness connector.

NOTE: Check connectors. Clean and repair as necessary.

3. Measure the resistance of the (C91) Heated Steering Wheel Feed circuit between the Clockspring C5 harness connector and the HSM C4 harness connector.

   Is the resistance below 5.0 Ohms?

   Yes

   - Go To 3.

   No

   - Repair the open in the (C91) Heated Steering Wheel Feed circuit.
   - Perform the BODY VERIFICATION TEST. Refer to **BODY VERIFICATION TEST** .

3. **CHECK THE (C986) HEATED STEERING WHEEL RETURN CIRCUIT FOR AN OPEN BETWEEN CLOCKSPRING AND HSM**

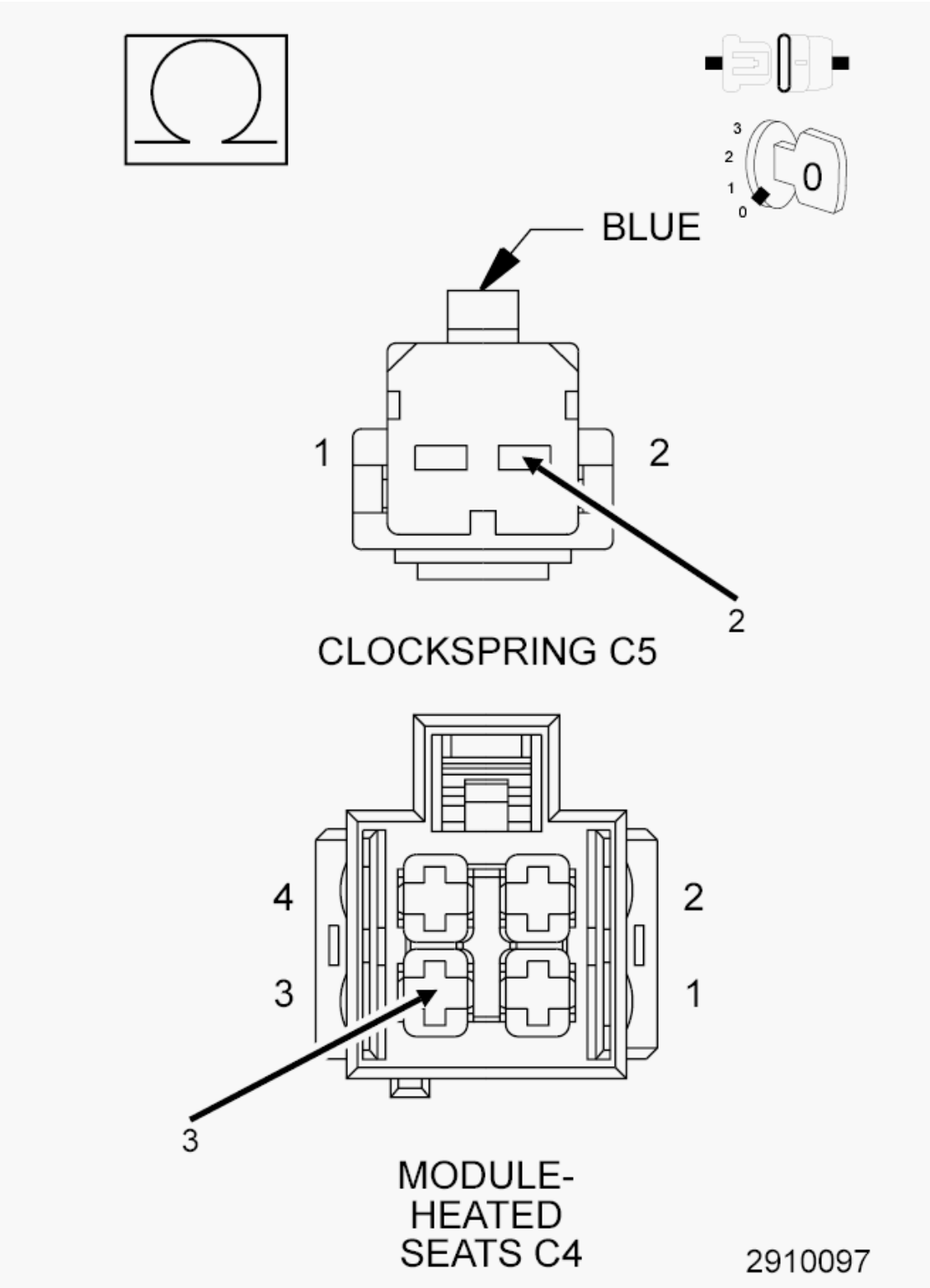

Fig. 13: Check The Heated Steering Wheel Return Circuit For An Open Between Clockspring And HSM

Courtesy of CHRYSLER GROUP, LLC

1. Measure the resistance of the (C986) Heated Steering Wheel Return circuit between the Clockspring C5 harness connector and the HSM C4 harness connector.

   Is the resistance below 5.0 Ohms?

   Yes

   - Go To 4.

   No

   - Repair the open in the (C986) Heated Steering Wheel Return circuit.
   - Perform the BODY VERIFICATION TEST. Refer to **BODY VERIFICATION TEST** .

4. **CHECK FOR AN OPEN IN THE STEERING WHEEL**

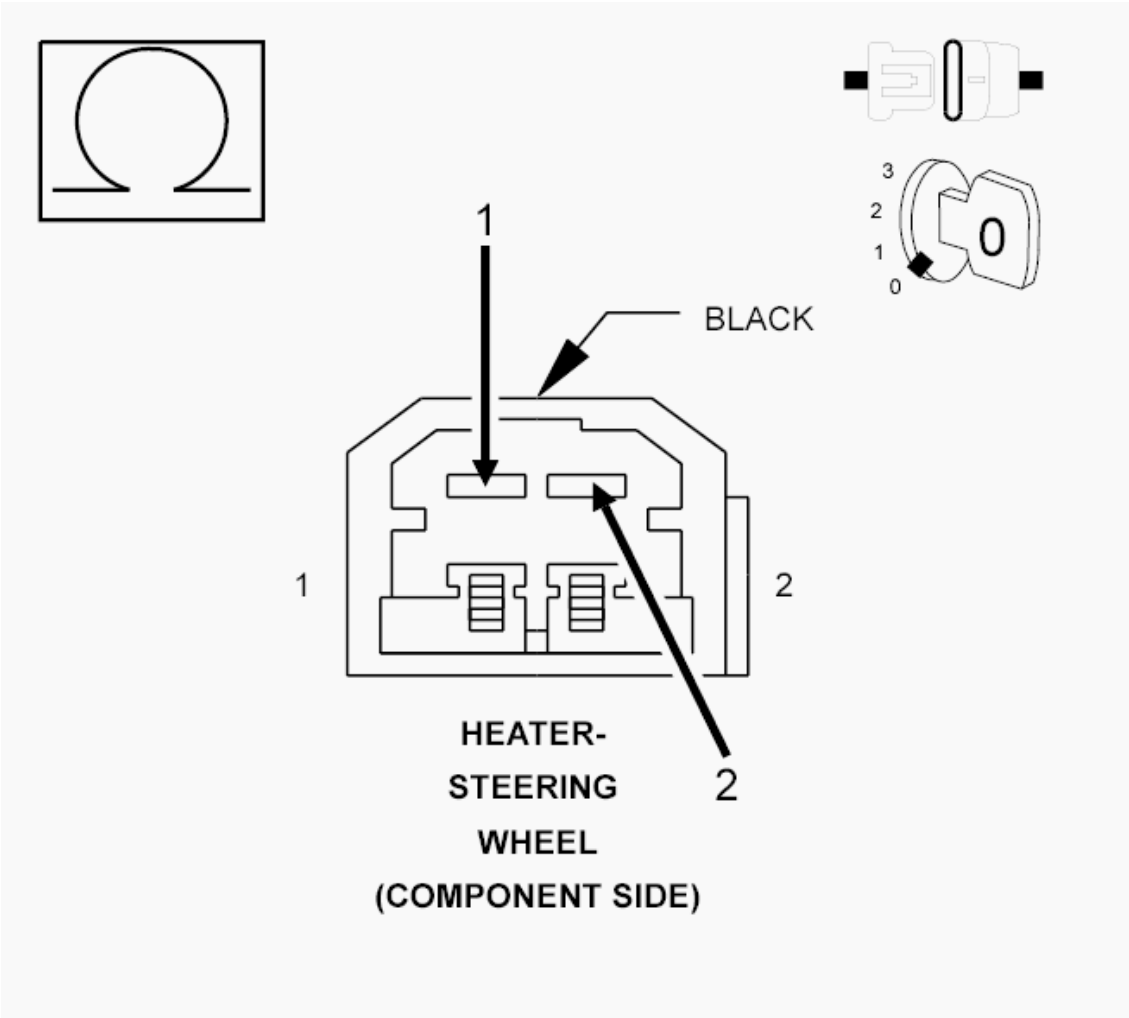

Fig. 14: Checking Resistance On Heated Steering Wheel Feed Circuit
Courtesy of CHRYSLER GROUP, LLC

1. Remove the Driver Airbag in accordance with the Service Information.
2. Disconnect the Steering Wheel Heater connector.

NOTE: **Before proceeding, thoroughly inspect the wiring harness and connectors between the HSW and the Clockspring. Look for chafed, pierced, pinched, or partially broken wires and broken, bent, pushed out, spread, corroded, or contaminated terminals.**

3. Measure the resistance between the (C91) Heated Steering Wheel Feed circuit and the (C986) Heated Steering Wheel Return circuit at the Steering Wheel Heater (component side) connector.

   Is the resistance 1.85 ± 0.2 Ohms?

   Yes

   - Go To 5.

   No

   - Replace the Heated Steering Wheel (HSW) in accordance with the Service Information.
   - Perform the BODY VERIFICATION TEST. Refer to **BODY VERIFICATION TEST** .

5. **CHECK (C91) HEATED STEERING WHEEL FEED CIRCUIT FOR AN OPEN IN THE CLOCKSPRING**

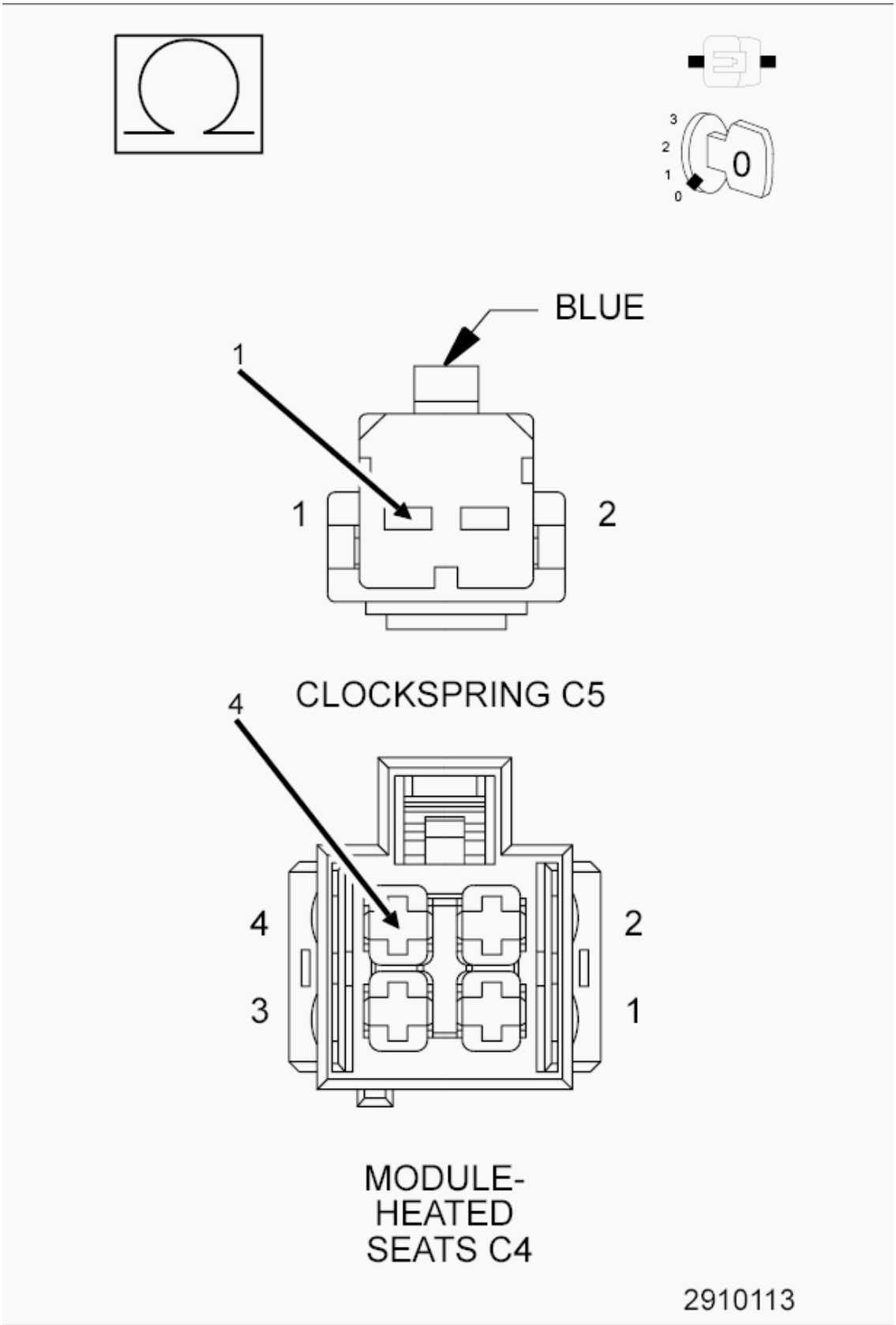

Fig. 15: Check Heated Steering Wheel Feed Circuit For An Open In The Clockspring

Courtesy of CHRYSLER GROUP, LLC

1. Reconnect the Clockspring C5 harness connector.
2. Measure the resistance of the (C91) Heated Steering Wheel Feed circuit between the Clockspring C5 component connector and the HSM C4 harness connector.

   Is the resistance below 5.0 Ohms?

   Yes

   - Go To 6.

   No

   - Replace the Clockspring in accordance with the Service Information.
   - Perform the BODY VERIFICATION TEST. Refer to **BODY VERIFICATION TEST** .

6. **CHECK (C986) HEATED STEERING WHEEL RETURN CIRCUIT OPEN FOR AN OPEN IN THE CLOCKSPRING**

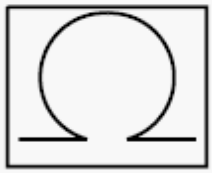

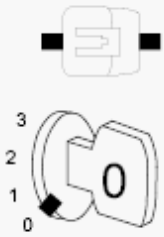
3
2
1
0
0

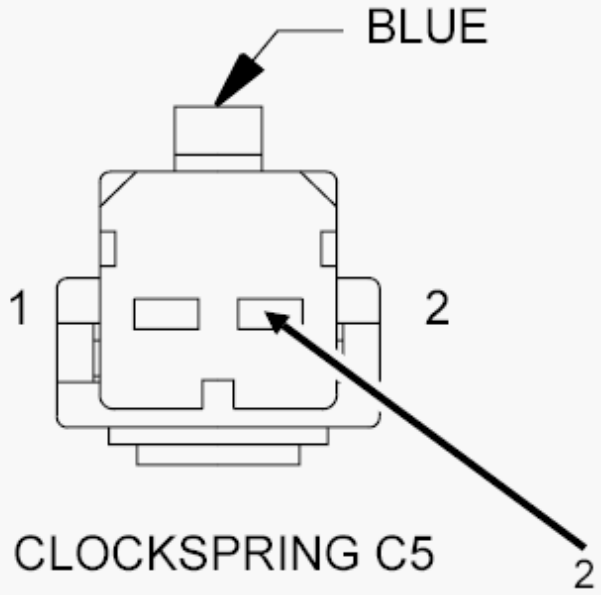
BLUE
1
2
CLOCKSPRING C5
2

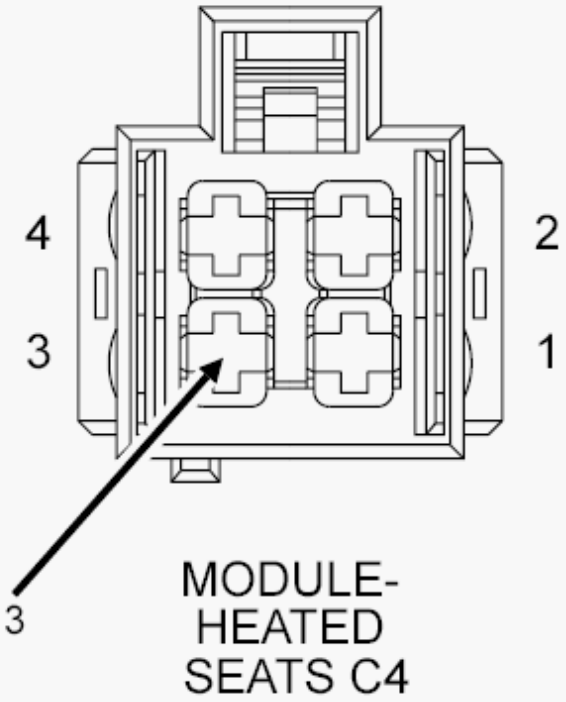
4
2
3
1
3
MODULE-
HEATED
SEATS C4

Fig. 16: Check Heated Steering Wheel Return Circuit Open For An Open In The Clockspring
Courtesy of CHRYSLER GROUP, LLC

1. Measure the resistance of the (C986) Heated Steering Wheel Return circuit between the Clockspring C5 component connector and the HSM C4 harness connector.

   Is the resistance below 5.0 Ohms?

   Yes

   - Replace the Heated Seat Module (HSM) in accordance with the Service Information.
   - Perform the BODY VERIFICATION TEST. Refer to **BODY VERIFICATION TEST** .

   No

   - Replace the Clockspring in accordance with the Service Information.
   - Perform the BODY VERIFICATION TEST. Refer to **BODY VERIFICATION TEST** .

B10C4-1E-HEATED STEERING WHEEL CONTROL - CIRCUIT RESISTANCE OUT OF RANGE

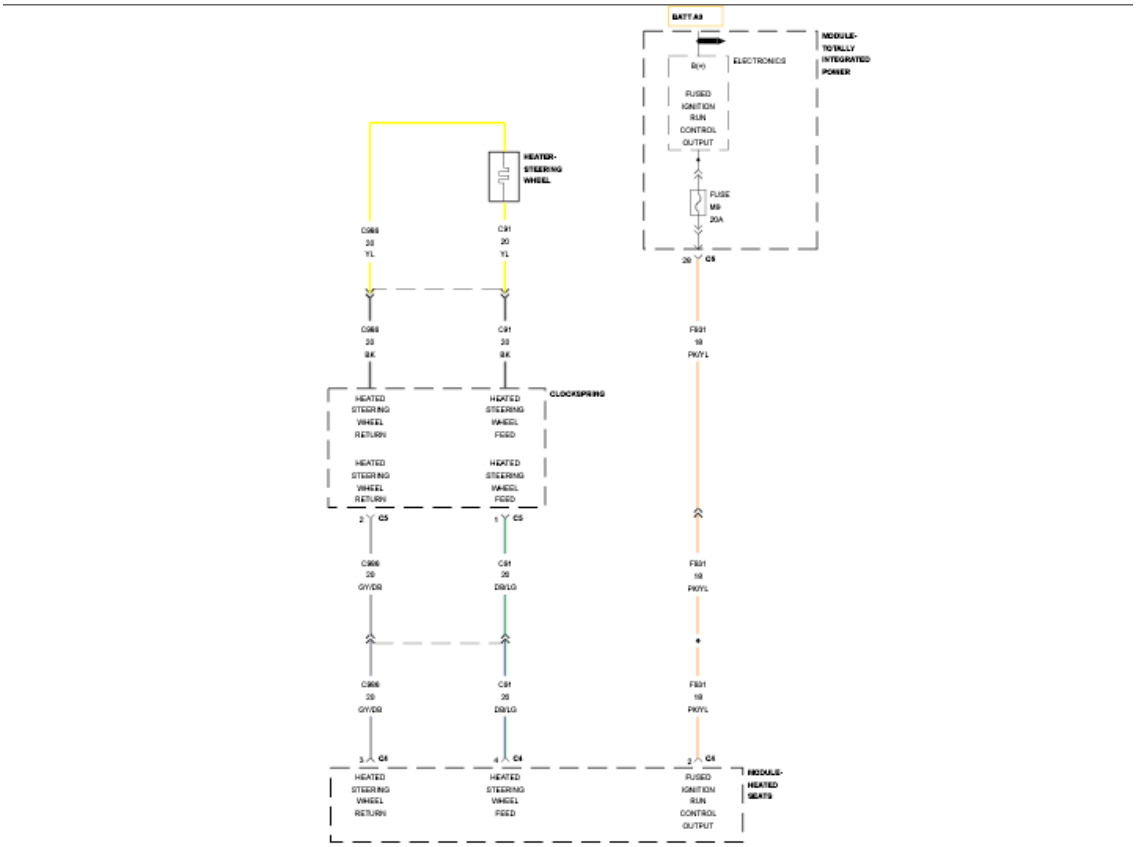

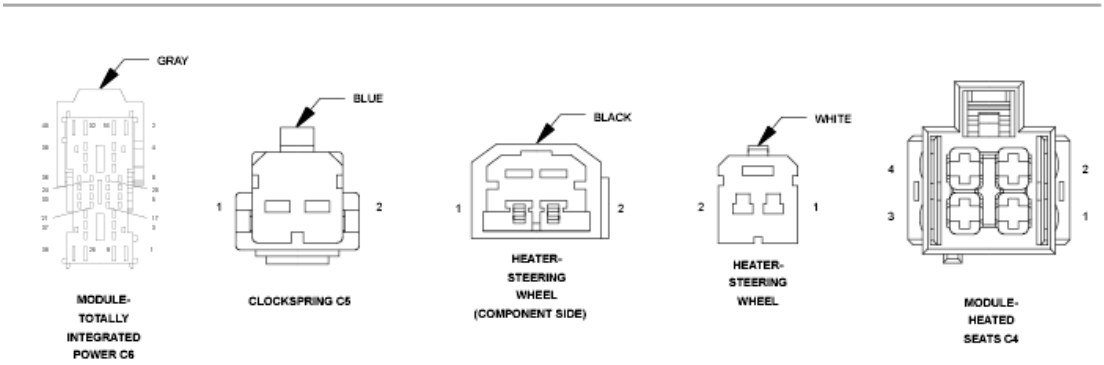

Fig. 17: Heated Steering Wheel Control Wiring Diagram
Courtesy of CHRYSLER GROUP, LLC

For a complete wiring diagram, **refer to appropriate SYSTEM WIRING DIAGRAMS article** .

WHEN MONITORED:

With the engine running.

SET CONDITION:

The Heated Seat Module (HSM) detects current between 0.5 and 1.0 amp on the (C91) Heated Steering Wheel Feed circuit for more than two seconds when the output is turned on.

POSSIBLE CAUSES

Possible Causes
(C91) HEATED STEERING WHEEL FEED CIRCUIT RESISTANCE HIGH
(C986) HEATED STEERING WHEEL RETURN CIRCUIT RESISTANCE HIGH
HEATED STEERING WHEEL (HSW)
CLOCKSPRING
HEATED SEAT MODULE (HSM)

DIAGNOSTIC TEST

1. **TEST FOR INTERMITTENT CONDITION**

NOTE: **Before proceeding, verify the battery is fully charged, the charging system is operating properly, no Battery or System Voltage Diagnostic Trouble Codes (DTCs) are set, and the HSM Power and Ground circuits are clean and tight.**

1. Turn the ignition on.
2. With the scan tool, record and erase Diagnostic Trouble Codes (DTCs).
3. Turn the ignition off.
4. Start the engine and let it run.
5. Turn the HSW on.
6. With the scan tool, read DTCs.

Is the DTC active?

Yes

- Go To 2.

No

- The conditions that caused this code to set are not present at this time. Verify seat harness is routed correctly to the HSM. Using the wiring diagram/schematic as a guide, inspect the wiring and connectors. Look for chafed, pierced, pinched, or partially broken wires and broken, bent, pushed out, spread, corroded, or contaminated terminals. Attempt to reproduce condition by rotating the steering wheel. Attempt to reproduce condition by adjusting the seat.
- Perform the BODY VERIFICATION TEST. Refer to **BODY VERIFICATION TEST** .

2. **STEERING WHEEL HEATER RESISTANCE**

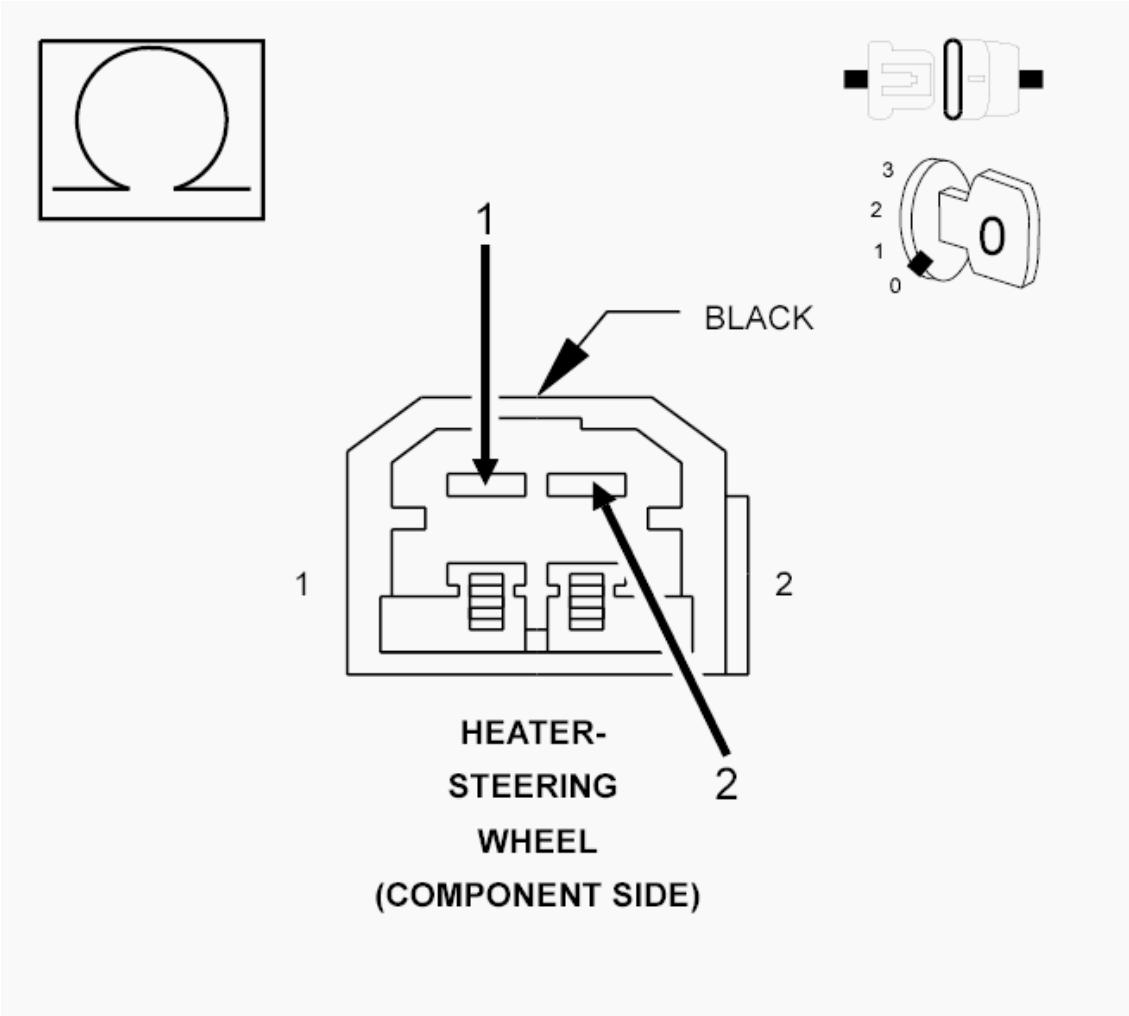

Fig. 18: Checking Resistance On Heated Steering Wheel Feed Circuit
Courtesy of CHRYSLER GROUP, LLC

WARNING: **Turn the ignition off, disconnect the 12-volt battery and wait two minutes before proceeding. Failure to follow these instructions may result in possible serious or fatal injury.**

1. Remove the Driver Airbag in accordance with the Service Information.
2. Disconnect the Steering Wheel Heater harness connector.

NOTE: **Before proceeding, thoroughly inspect the wiring harness and connectors between the HSW and the Clockspring. Look for chafed, pierced, pinched, or partially broken wires and broken, bent, pushed out, spread, corroded, or contaminated terminals.**

3. Measure the resistance between the (C91) Heated Steering Wheel Feed circuit and the (C986)

Heated Steering Wheel Return circuit at the Steering Wheel Heater (component side) connector.

Is the resistance 1.85 ± 0.2 Ohms?

Yes

- Go To 3.

No

- Replace the Heated Steering Wheel in accordance with the Service Information.
- Perform the BODY VERIFICATION TEST. Refer to **BODY VERIFICATION TEST** .

3. **CHECK (C91) HEATED STEERING WHEEL FEED CIRCUIT FOR HIGH RESISTANCE**

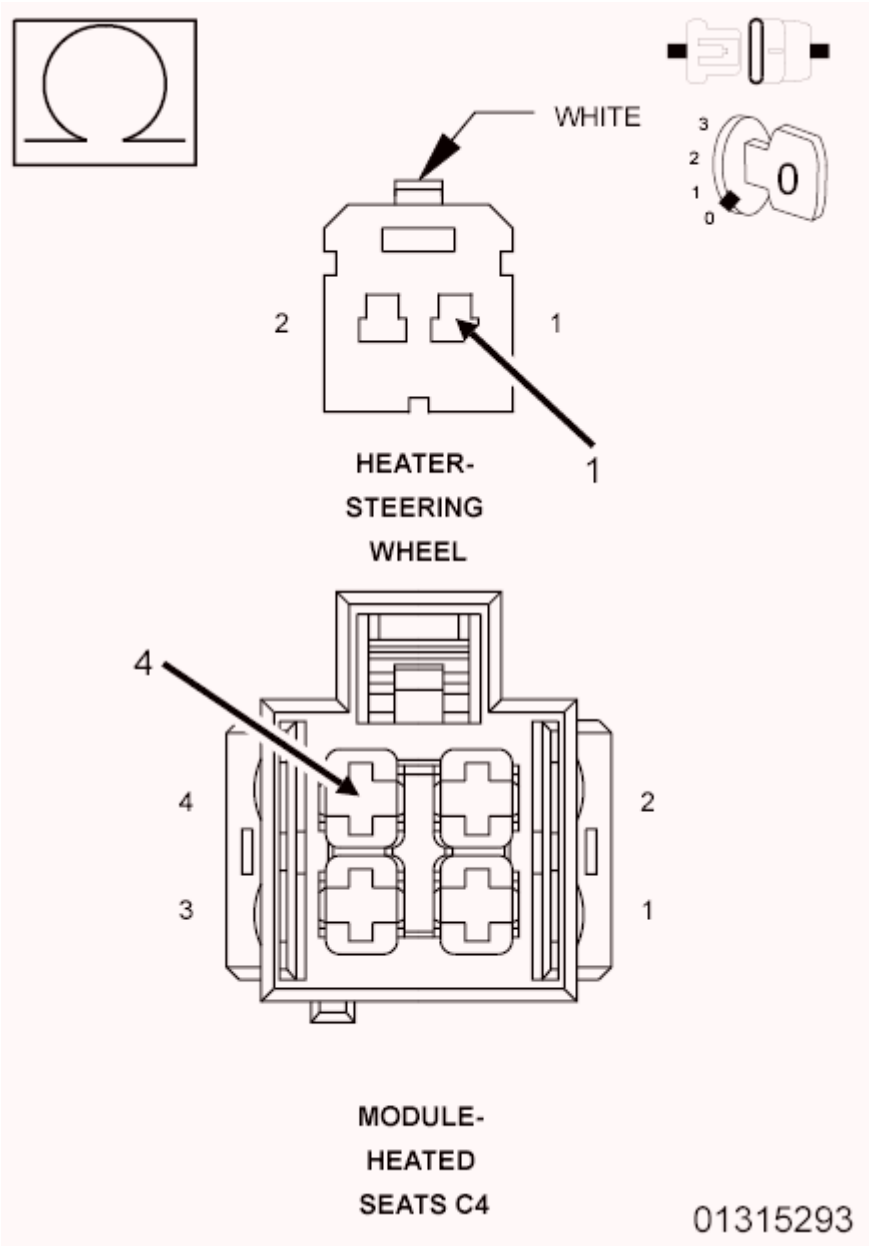

Fig. 19: Checking Heated Steering Wheel Feed Circuit For High Resistance
Courtesy of CHRYSLER GROUP, LLC

1. Disconnect the HSM C4 harness connector.

   NOTE: Check connectors. Clean and repair as necessary.

2. Measure the resistance of the (C91) Heated Steering Wheel Feed circuit between the Heated Steering Wheel connector and the HSM C4 harness connector.

   Is the resistance below 5.0 Ohms?

Yes

- Go To 4.

No

- Go To 5.

4. **CHECK (C986) HEATED STEERING WHEEL RETURN CIRCUIT FOR A HIGH RESISTANCE**

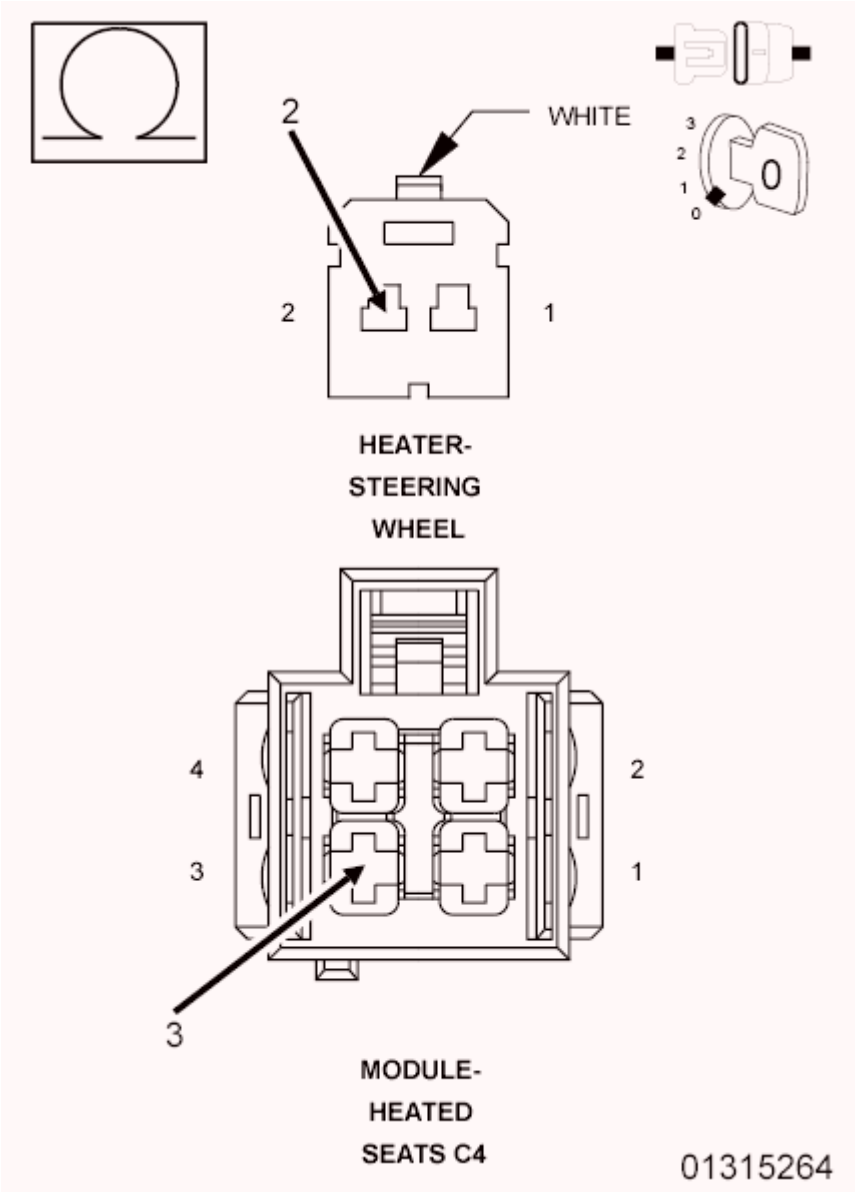

Fig. 20: Checking Heated Steering Wheel Return Circuit For A High Resistance
Courtesy of CHRYSLER GROUP, LLC

1. Measure the resistance of the (C986) Heated Steering Wheel Return circuit between the Steering

Wheel Heater connector and the HSM C4 harness connector.

Is the resistance below 5.0 Ohms?

Yes

- Replace the Heated Seat Module (HSM) in accordance with the Service Information.
- Perform the BODY VERIFICATION TEST. Refer to **BODY VERIFICATION TEST** .

No

- Go To 6.

5. **CHECK (C91) HEATED STEERING WHEEL FEED CIRCUIT FOR HIGH RESISTANCE BETWEEN CLOCKSPRING AND HSM**

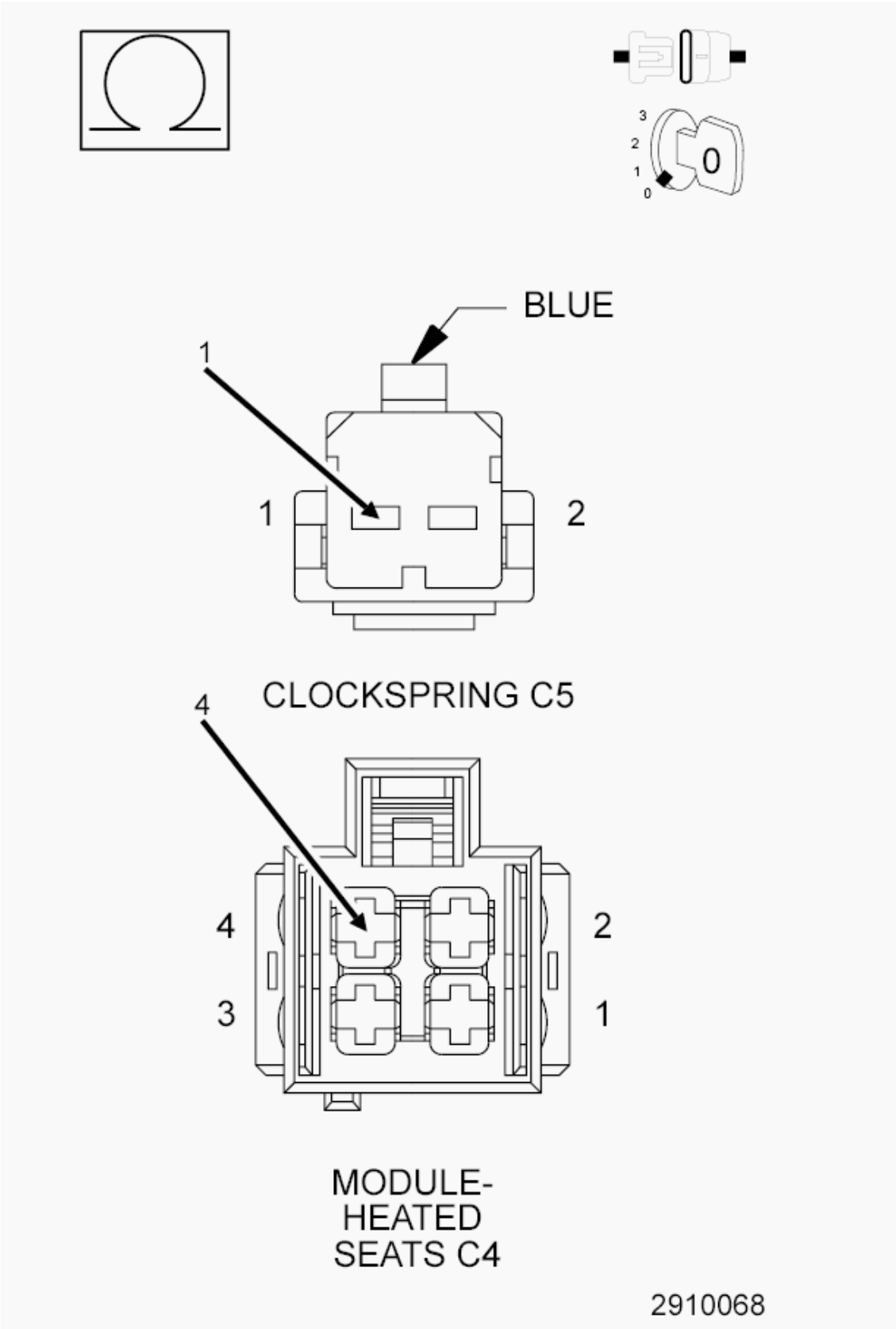

Fig. 21: Check Heated Steering Wheel Feed Circuit For An Open Between Clockspring And HSM

Courtesy of CHRYSLER GROUP, LLC

1. Disconnect the Clockspring C5 harness connector.

   NOTE: Check connectors. Clean and repair as necessary.

2. Measure the resistance of the (C91) Heated Steering Wheel Feed circuit between the Clockspring C5 harness connector and the HSM C4 harness connector.

   Is the resistance below 5.0 Ohms?

   Yes

   - Replace the Clockspring in accordance with the Service Information.
   - Perform the BODY VERIFICATION TEST. Refer to **BODY VERIFICATION TEST** .

   No

   - Repair the high resistance in the (C91) Heated Steering Wheel Feed circuit.
   - Perform the BODY VERIFICATION TEST. Refer to **BODY VERIFICATION TEST** .

6. **CHECK (C986) HEATED STEERING WHEEL RETURN CIRCUIT FOR HIGH RESISTANCE BETWEEN CLOCKSPRING AND HSM**

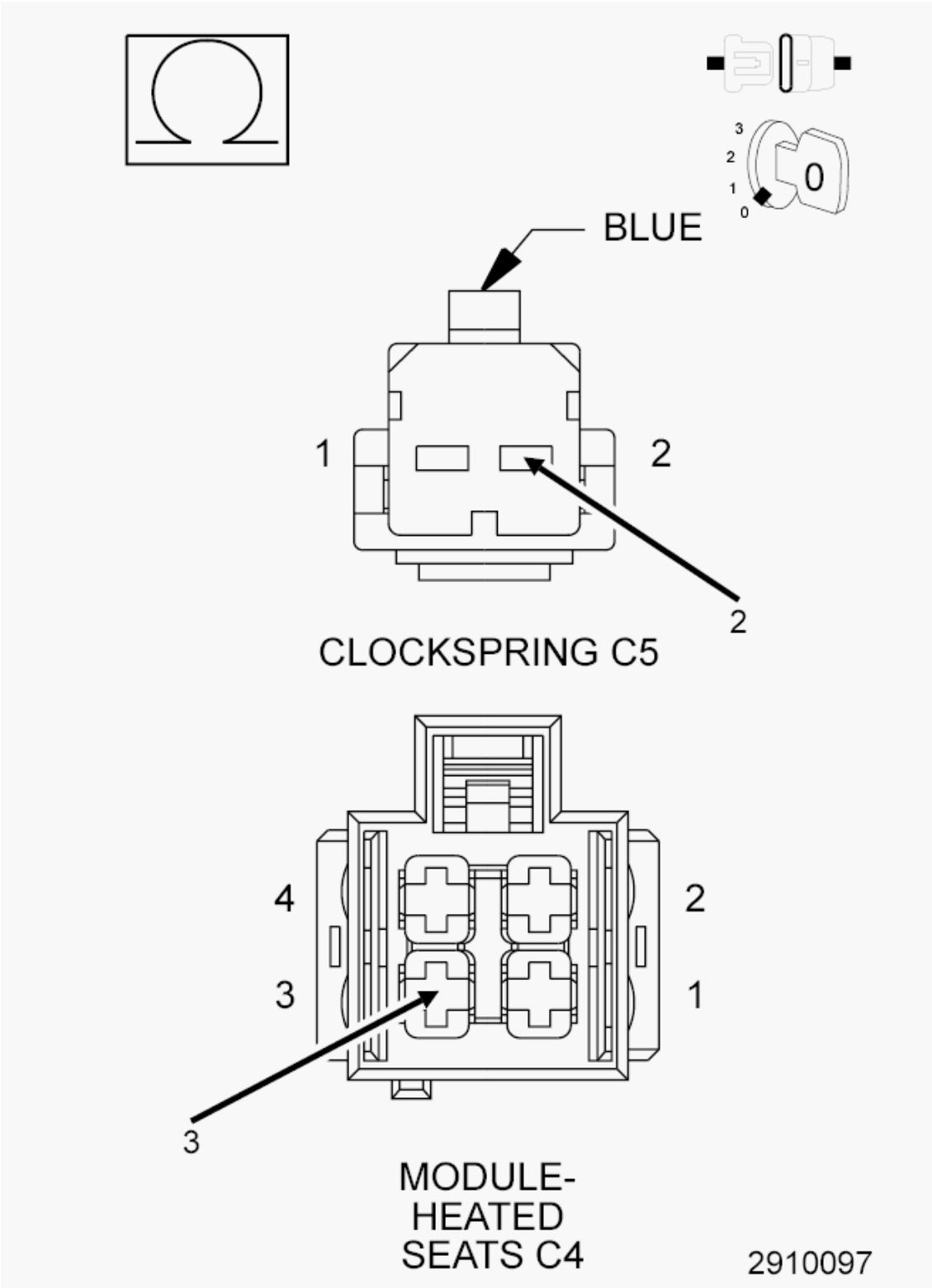

Fig. 22: Check The Heated Steering Wheel Return Circuit For An Open Between Clockspring And HSM

Courtesy of CHRYSLER GROUP, LLC

1. Disconnect the Clockspring C5 harness connector.

   NOTE: Check connectors. Clean and repair as necessary.

2. Measure the resistance of the (C986) Heated Steering Wheel Return circuit between the Clockspring C5 harness connector and the HSM C4 harness connector.

   Is the resistance below 5.0 Ohms?

   Yes

   - Replace the Clockspring in accordance with the Service Information.
   - Perform the BODY VERIFICATION TEST. Refer to **BODY VERIFICATION TEST** .

   No

   - Repair the high resistance in the (C986) Heated Steering Wheel Return circuit.
   - Perform the BODY VERIFICATION TEST. Refer to **BODY VERIFICATION TEST** .

B11C1-13-STEERING WHEEL HEATER POWER SUPPLY - CIRCUIT OPEN

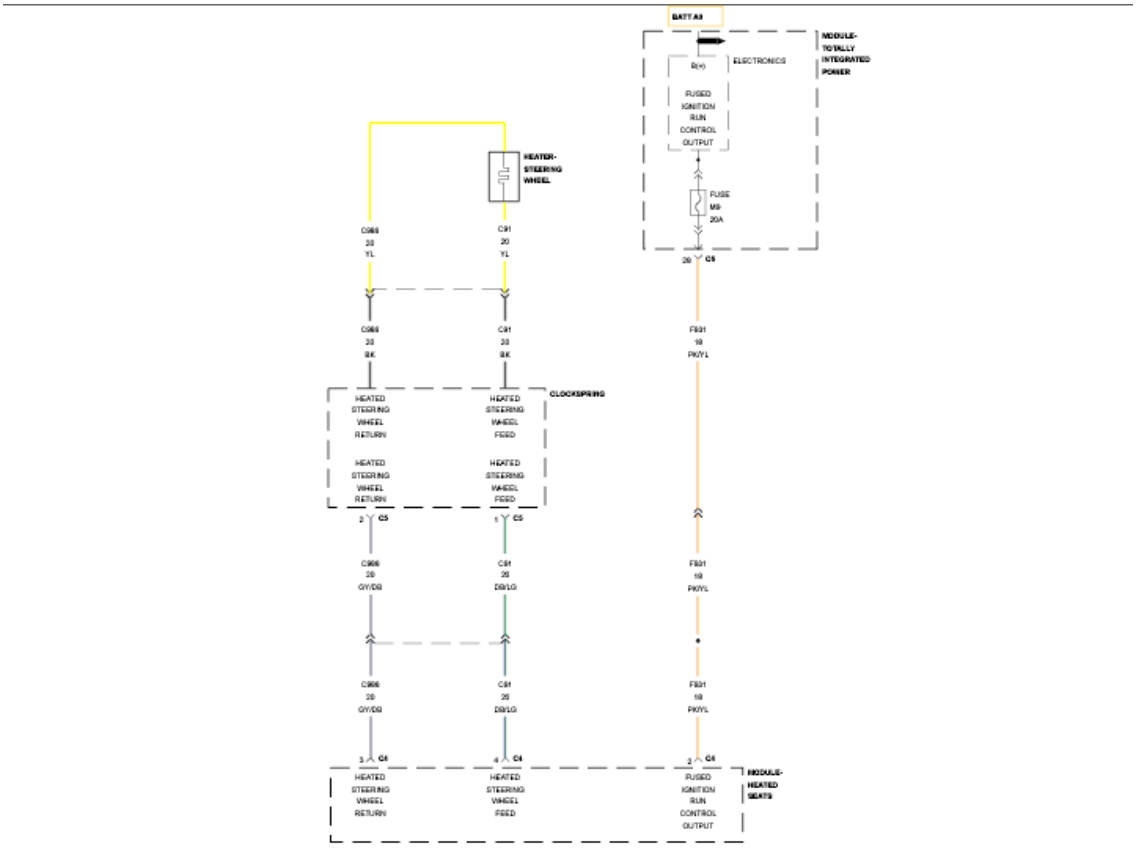

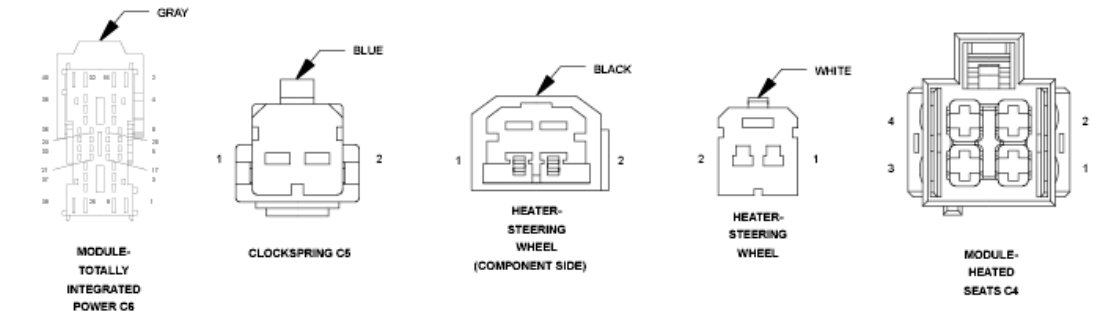

Fig. 23: Heated Steering Wheel Control Wiring Diagram
Courtesy of CHRYSLER GROUP, LLC

For a complete wiring diagram, **refer to appropriate SYSTEM WIRING DIAGRAMS article** .

WHEN MONITORED:

With the engine running.

SET CONDITION:

The Heated Seat Module (HSM) detects no voltage on the (F931) Fused Ignition Run Control Output circuit for more than two seconds.

POSSIBLE CAUSES

Possible Causes
(F931) FUSED IGNITION RUN CONTROL OUTPUT CIRCUIT OPEN OR SHORTED TO GROUND
HEATED SEAT MODULE (HSM)

DIAGNOSTIC TEST

1. **TEST FOR INTERMITTENT CONDITION**

   NOTE: Make sure the battery is fully charged and the charging system is operating properly before proceeding.

   1. Turn the ignition on.
   2. With the scan tool, record and erase Diagnostic Trouble Codes (DTCs).
   3. Turn the ignition off.
   4. Start the engine and let it run.
   5. With the scan tool, read DTCs.

   Is the DTC active?

   Yes

   - Go To 2.

   No

   - The conditions that caused this code to set are not present at this time. Verify seat harness is routed correctly to the HSM. Using the wiring diagram/schematic as a guide, inspect the wiring and connectors. Look for chafed, pierced, pinched, or partially broken wires and broken, bent, pushed out, spread, corroded, or contaminated terminals. Attempt to reproduce condition by adjusting the seat.
   - Perform the BODY VERIFICATION TEST. Refer to **BODY VERIFICATION TEST** .

2. **CHECK THE (F931) FUSED IGNITION RUN CONTROL OUTPUT CIRCUIT FOR AN OPEN OR SHORT**

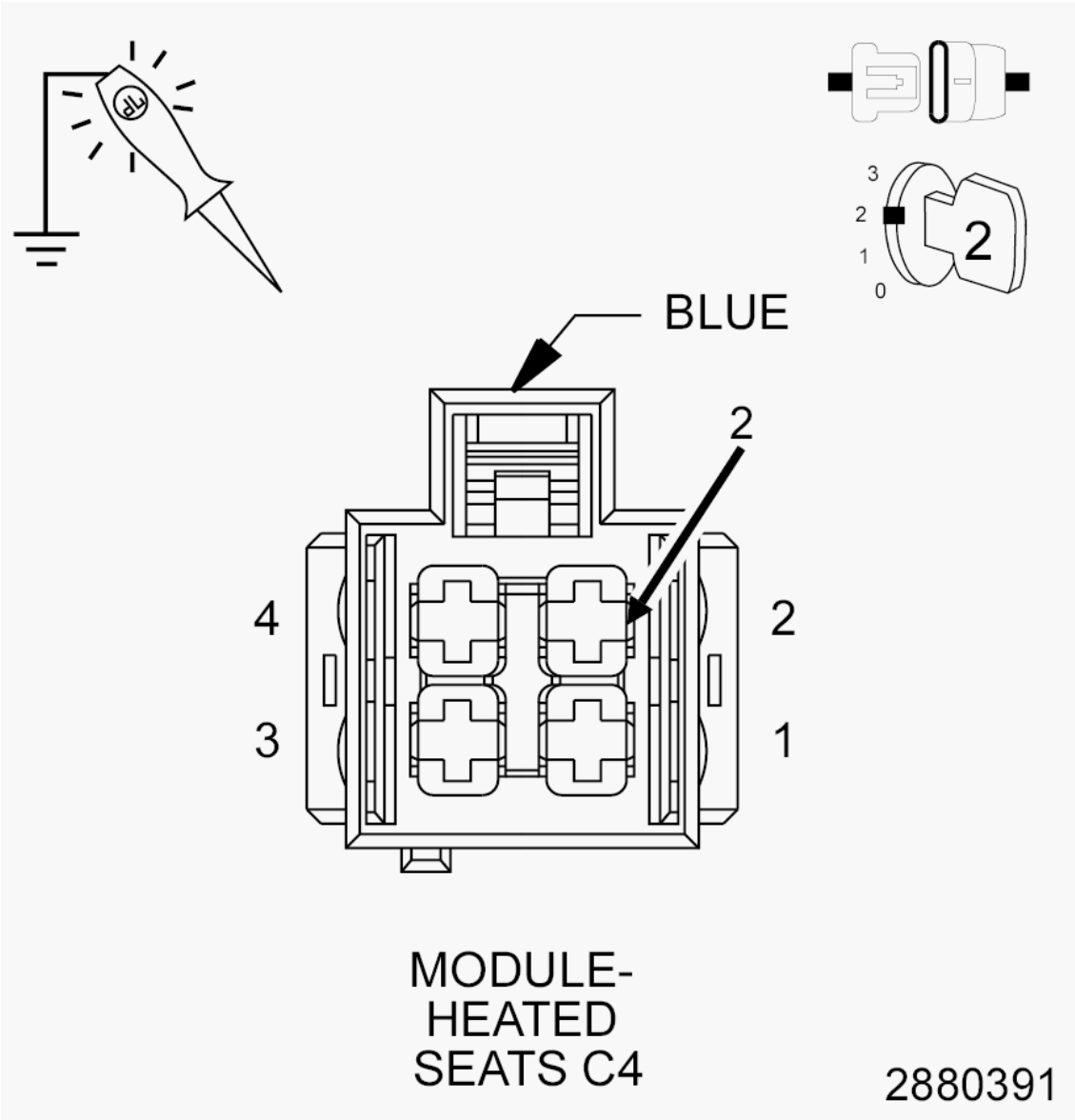

Fig. 24: Checking Fused Ignition Run Control Output Circuit For Open Or Short
Courtesy of CHRYSLER GROUP, LLC

1. Turn the ignition off.
2. Disconnect the HSM C4 harness connector.
3. Turn the ignition on.
4. Using a 12-volt test light connected to ground, check the (F931) Fused Ignition Run Control Output circuit.

   Does the test light illuminate brightly?

   Yes

   - Replace the Heated Seat Module (HSM) in accordance with the Service Information.

- Perform the BODY VERIFICATION TEST. Refer to **BODY VERIFICATION TEST** .

No

- Repair the open or short in the (F931) Fused Ignition Run Control Output circuit.
- Perform the BODY VERIFICATION TEST. Refer to **BODY VERIFICATION TEST** .

B11DC-13-REAR HEATED SEATS POWER SUPPLY - CIRCUIT OPEN

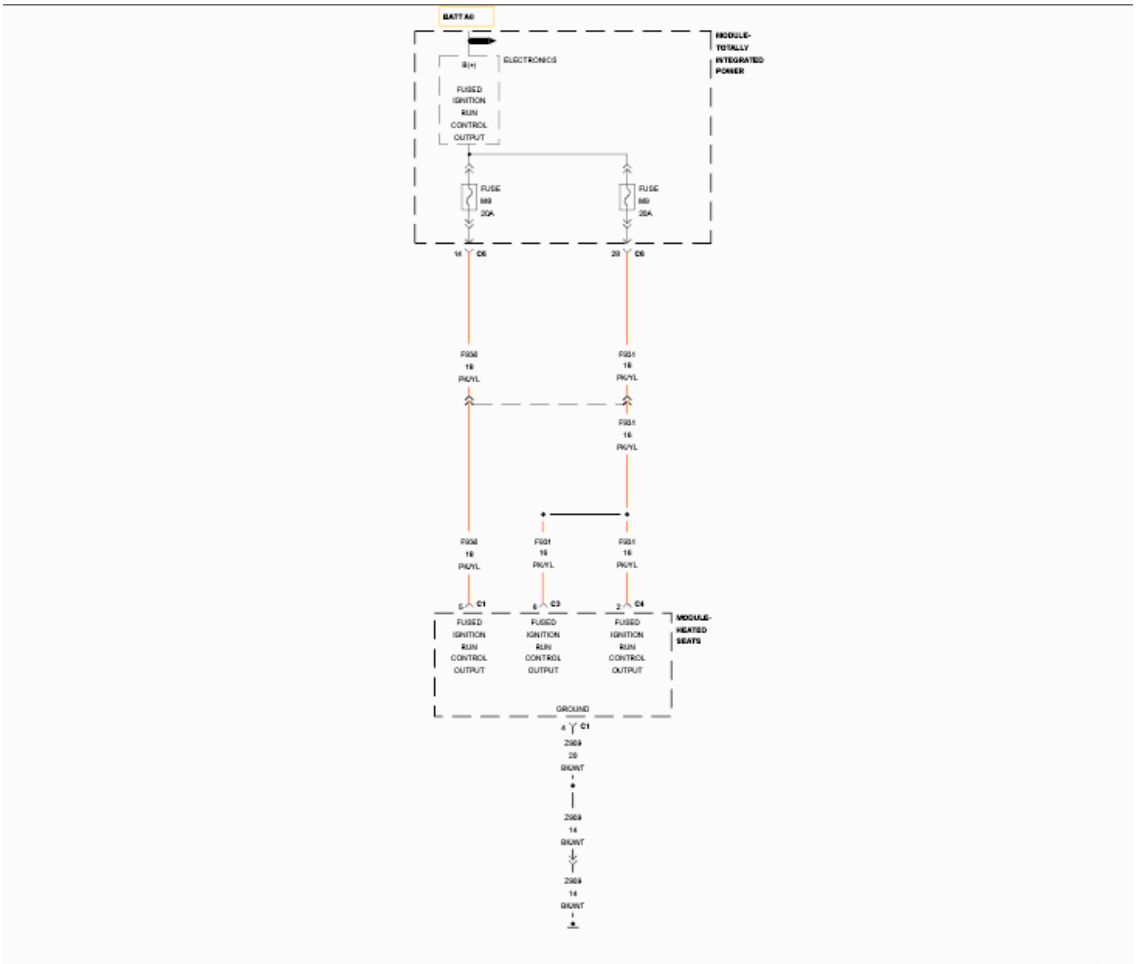

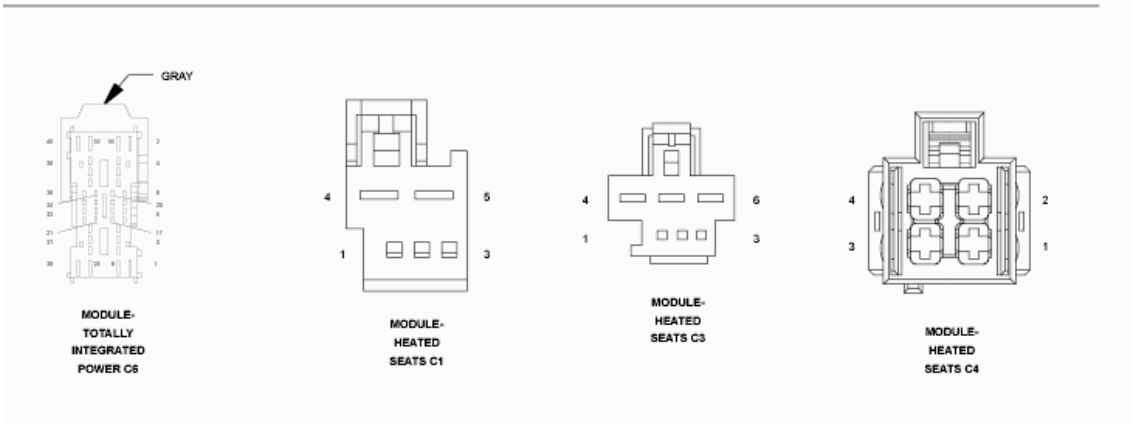

Fig. 25: Rear Heated Seats Power Supply Wiring Diagram
Courtesy of CHRYSLER GROUP, LLC

For a complete wiring diagram, **refer to appropriate SYSTEM WIRING DIAGRAMS article** .

WHEN MONITORED:

With the engine running.

SET CONDITION:

The Heated Seat Module (HSM) detects no voltage on the (F931) Fused Ignition Run Control Output circuit for more than two seconds.

POSSIBLE CAUSES

Possible Causes
OPEN FUSE
(F931) FUSED IGNITION RUN CONTROL OUTPUT CIRCUIT SHORTED TO GROUND
(F931) FUSED IGNITION RUN CONTROL OUTPUT CIRCUIT OPEN
TOTALLY INTEGRATED POWER MODULE (TIPM)
HEATED SEAT MODULE (HSM)

DIAGNOSTIC TEST

1. **TEST FOR INTERMITTENT CONDITION**

   NOTE: Make sure the battery is fully charged and the charging system is operating properly before proceeding.

   1. Turn the ignition on.
   2. Using a scan tool, record and erase Diagnostic Trouble Codes (DTCs).
   3. Turn the ignition off.
   4. Start the engine and let it run.
   5. Using a scan tool, read DTCs.

   Is the DTC active?

   Yes

   - Go To 2.

   No

   - The conditions that caused this code to set are not present at this time. Verify seat harness is

routed correctly to the HSM. Using the wiring diagram/schematic as a guide, inspect the wiring and connectors. Look for chafed, pierced, pinched, or partially broken wires and broken, bent, pushed out, spread, corroded, or contaminated terminals. Attempt to reproduce condition by adjusting the seat.

- Perform the BODY VERIFICATION TEST. Refer to **BODY VERIFICATION TEST** .

2. **CHECK TIPM FUSE**
   1. Using a 12-volt test light connected to ground, check for power on both sides of TIPM Fuse M9.

      Choose the applicable result?

      No Power To Fuse

      - Replace the Totally Integrated Power Module (TIPM) in accordance with the Service Information.
      - Perform the BODY VERIFICATION TEST. Refer to **BODY VERIFICATION TEST** .

      Fuse Open

      - Go To 3.

      Fuse Ok

      - Go To 6.

3. **REPLACE AND RECHECK TIPM FUSE M9**
   1. Turn the ignition off.
   2. Install a new TIPM Fuse.
   3. Turn the ignition on.
   4. Using a scan tool, erase DTCs.
   5. Turn the ignition off.
   6. Start the engine and let it run.
   7. Operate each of the Heated Seats and the HSW, if equipped.
   8. Inspect TIPM Fuse.

      Is the fuse open?

      Yes

      - Go To 4.

      No

      - Using the wiring diagram/schematic as a guide, inspect the wiring and connectors. Verify seat harness is routed correctly. Look for chafed, pierced, pinched, or partially broken wires and broken, bent, pushed out, spread, corroded, or contaminated terminals. Attempt to

reproduce condition by adjusting the seat.

- Perform the BODY VERIFICATION TEST. Refer to **BODY VERIFICATION TEST** .

4. **CHECK (F931) FUSED IGNITION RUN CONTROL OUTPUT CIRCUIT INSIDE TIPM FOR SHORT TO GROUND**
   1. If not done previously, turn the ignition off.
   2. Remove TIPM Fuse M9.
   3. Disconnect the TIPM C6 harness connector.

      NOTE: Check connectors. Clean and repair as necessary.

   4. Measure the resistance of the (F931) Fused Ignition Run Control Output circuit between ground and the TIPM Fuse M9 (output side) connector.

      Is the resistance below 10K Ohms?

      Yes

      - Replace the Totally Integrated Power Module (TIPM) and Fuse M9 in accordance with the Service Information.
      - Perform the BODY VERIFICATION TEST. Refer to **BODY VERIFICATION TEST** .

      No

      - Go To 5.

5. **CHECK (F931) FUSED IGNITION RUN CONTROL OUTPUT CIRCUIT FOR A SHORT TO GROUND BETWEEN TIPM AND HSM**

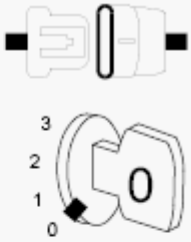

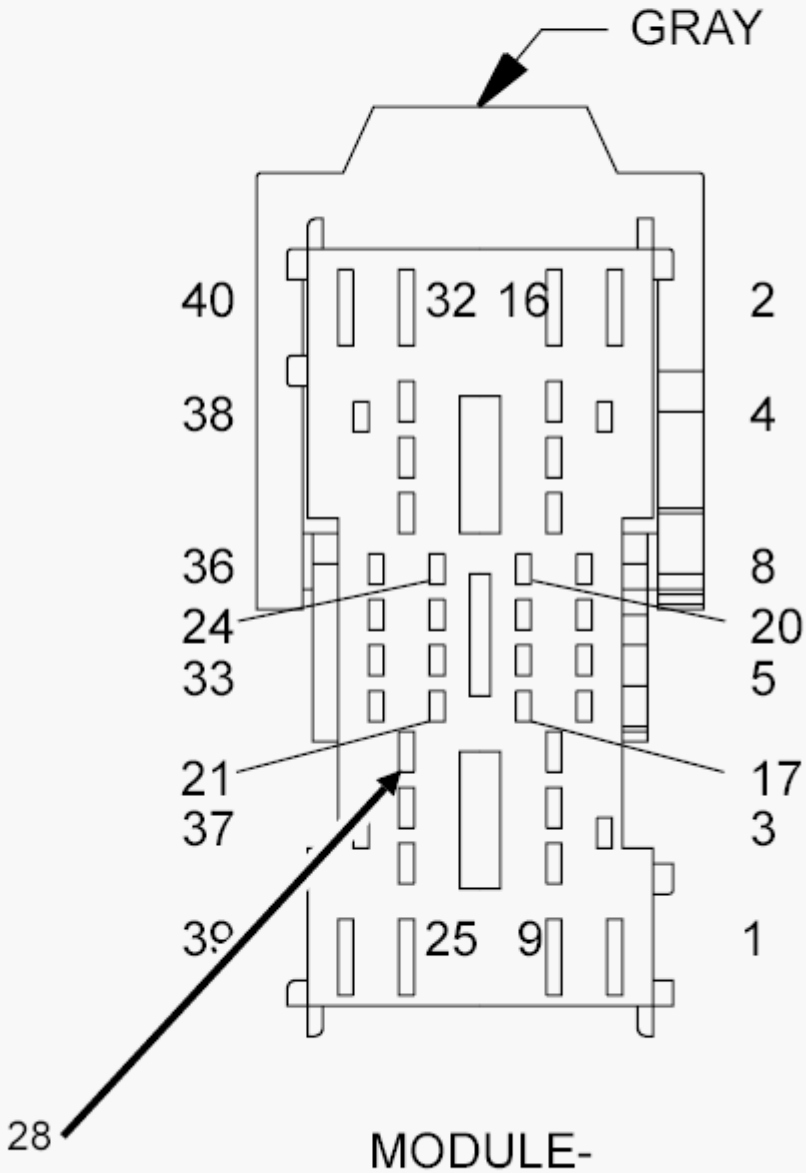

MODULE-
TOTALLY
INTEGRATED
POWER C6

Fig. 26: Checking Fused Ignition Run Control Output Circuit For A Short To Ground Between TIPM & HSM
Courtesy of CHRYSLER GROUP, LLC

1. Disconnect the HSM C3 harness connector.
2. Disconnect the HSM C4 harness connector, if equipped.

NOTE: Check connectors. Clean and repair as necessary.

3. Measure the resistance of the (F931) Fused Ignition Run Control Output circuit between ground and the TIPM C6 harness connector.

   Is the resistance below 10K Ohms?

   Yes

   - Repair the (F931) Fused Ignition Run Control Output circuit for a short to ground. Replace Fuse M9 in accordance with the Service Information.
   - Perform the BODY VERIFICATION TEST. Refer to **BODY VERIFICATION TEST** .

   No

   - Replace the Heated Seat Module (HSM) and Fuse M9 in accordance with the Service Information.
   - Perform the BODY VERIFICATION TEST. Refer to **BODY VERIFICATION TEST** .

6. **CHECK (F931) FUSED IGNITION RUN CONTROL OUTPUT CIRCUIT INSIDE TIPM FOR AN OPEN**

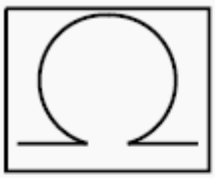

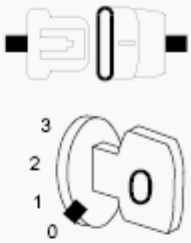

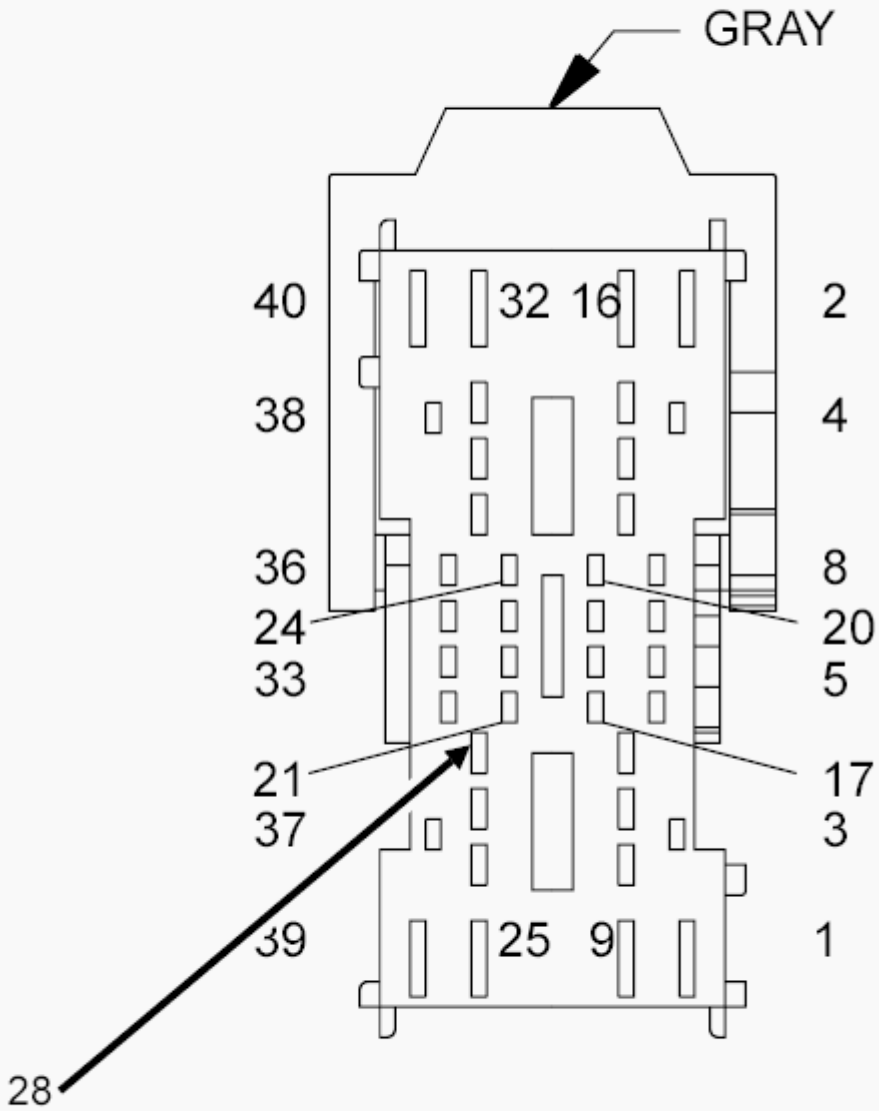

MODULE-
TOTALLY
INTEGRATED
POWER C6

Fig. 27: Checking Fused Ignition Run Control Output Circuit Inside TIPM For An Open
Courtesy of CHRYSLER GROUP, LLC

NOTE: TIPM C6 harness connector shown in illustration. Mirror image for TIPM C6 component side connector.

1. If not done previously, turn the ignition off.
2. Remove TIPM Fuse M9.

NOTE: Check connectors. Clean and repair as necessary.

3. Measure the resistance of the (F931) Fused Ignition Run Control Output circuit between the TIPM Fuse M9 (output side) connector and the TIPM C6 (component side) connector.

NOTE: The graphic shows the connector end. Measure at the component side of the TIPM.

Is the resistance below 5.0 Ohms?

Yes

- Go To 7.

No

- Replace the Totally Integrated Power Module (TIPM) in accordance with the Service Information.
- Perform the BODY VERIFICATION TEST. Refer to **BODY VERIFICATION TEST** .

7. **CHECK (F931) FUSED IGNITION RUN CONTROL OUTPUT CIRCUIT FOR AN OPEN BETWEEN TIPM AND HSM**

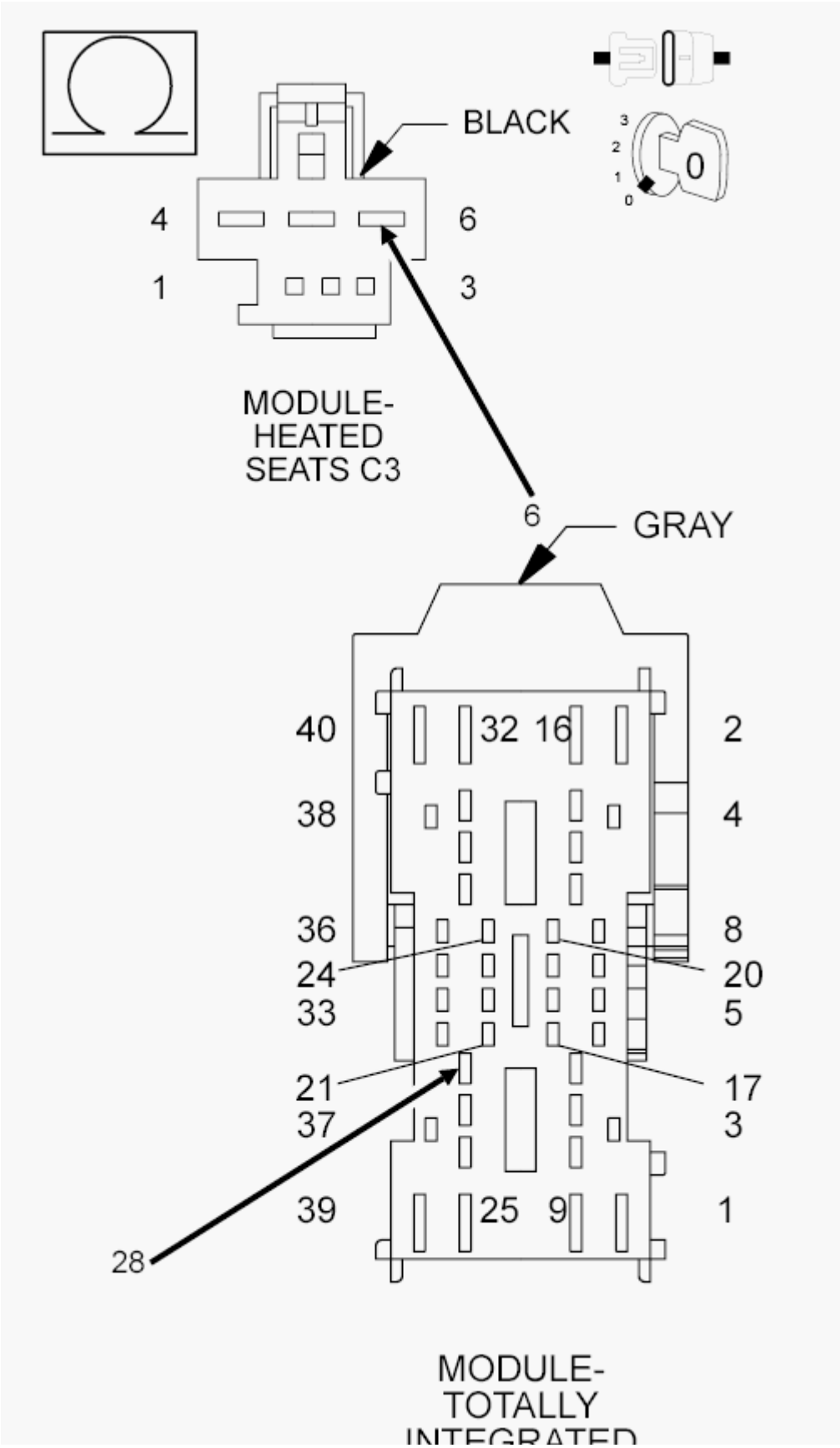
BLACK
3
2
1
0
0
4
6
1
3
MODULE-
HEATED
SEATS C3
6
GRAY
40
32
16
2
38
4
36
8
24
20
33
5
21
17
37
3
39
25
9
1
28
MODULE-
TOTALLY
INTEGRATED

Fig. 28: Checking Fused Ignition Run Control Output Circuit For An Open Between TIPM & HSM
Courtesy of CHRYSLER GROUP, LLC

1. Disconnect the HSM C3 harness connector.

   NOTE: Check connectors. Clean and repair as necessary.

2. Measure the resistance of the (F931) Fused Ignition Run Control Output circuit between the TIPM C6 harness connector and the HSM C3 harness connector.

   Is the resistance below 5.0 Ohms?

   Yes

   - Replace the Heated Seat Module (HSM) in accordance with the Service Information.
   - Perform the BODY VERIFICATION TEST. Refer to **BODY VERIFICATION TEST** .

   No

   - Repair the (F931) Fused Ignition Run Control Output circuit for an open.
   - Perform the BODY VERIFICATION TEST. Refer to **BODY VERIFICATION TEST** .

B1E99-11-FRONT LEFT HEATER CONTROL CIRCUIT - CIRCUIT SHORT TO GROUND

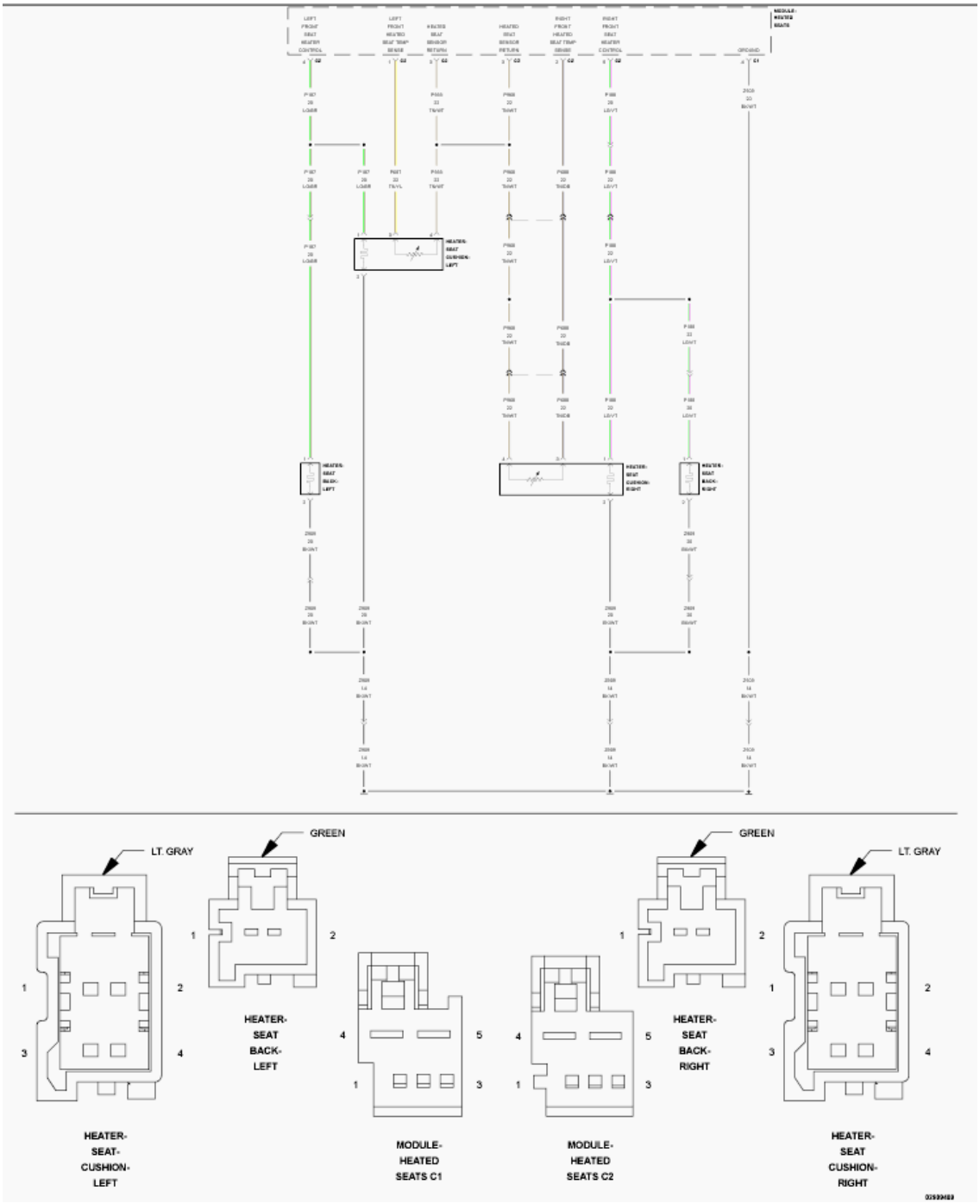

Fig. 29: Heated Seat Control Wiring Diagram
Courtesy of CHRYSLER GROUP, LLC

For a complete wiring diagram, **refer to appropriate SYSTEM WIRING DIAGRAMS article** .

WHEN MONITORED:

With the engine running.

SET CONDITION:

The Heated Seat Module (HSM) detects Voltage below 1.0 Volt or current above 10.0 amps on the (P187) Left Front Seat Heater Control circuit for more than two seconds with the output turned on.

POSSIBLE CAUSES

Possible Causes
(P187) LEFT FRONT SEAT HEATER CONTROL CIRCUIT SHORTED TO GROUND
(P187) LEFT FRONT SEAT HEATER CONTROL CIRCUIT SHORTED TO THE (Z909) GROUND CIRCUIT
(P187) LEFT FRONT SEAT HEATER CONTROL CIRCUIT SHORTED TO THE (P968) HEATED SEAT SENSOR RETURN CIRCUIT
SEAT CUSHION HEATER ELEMENT SHORTED
SEAT BACK HEATER ELEMENT SHORTED
HEATED SEAT MODULE (HSM)

DIAGNOSTIC TEST

1. **TEST FOR INTERMITTENT CONDITION**

NOTE: **Make sure the battery is fully charged and the charging system is operating properly before proceeding.**

1. Turn the ignition on.
2. Using a scan tool, record and erase Diagnostic Trouble Codes (DTCs).
3. Turn the ignition off.
4. Start the engine and let it run.
5. Turn the Heated Seat on and operate in all modes.
6. Using a scan tool, read DTCs.

Is the DTC active?

Yes

- Go To 2.

No

- The conditions that caused this code to set are not present at this time. Verify seat harness is routed correctly to the HSM. Using the wiring diagram/schematic as a guide, inspect the wiring and connectors. Look for chafed, pierced, pinched, or partially broken wires and broken, bent, pushed out, spread, corroded, or contaminated terminals. Attempt to reproduce condition by adjusting the seat.
- Perform the BODY VERIFICATION TEST. Refer to **BODY VERIFICATION TEST** .

2. **CHECK (P187) LEFT FRONT SEAT HEATER CONTROL CIRCUIT IN BODY HARNESS FOR A SHORT TO GROUND**

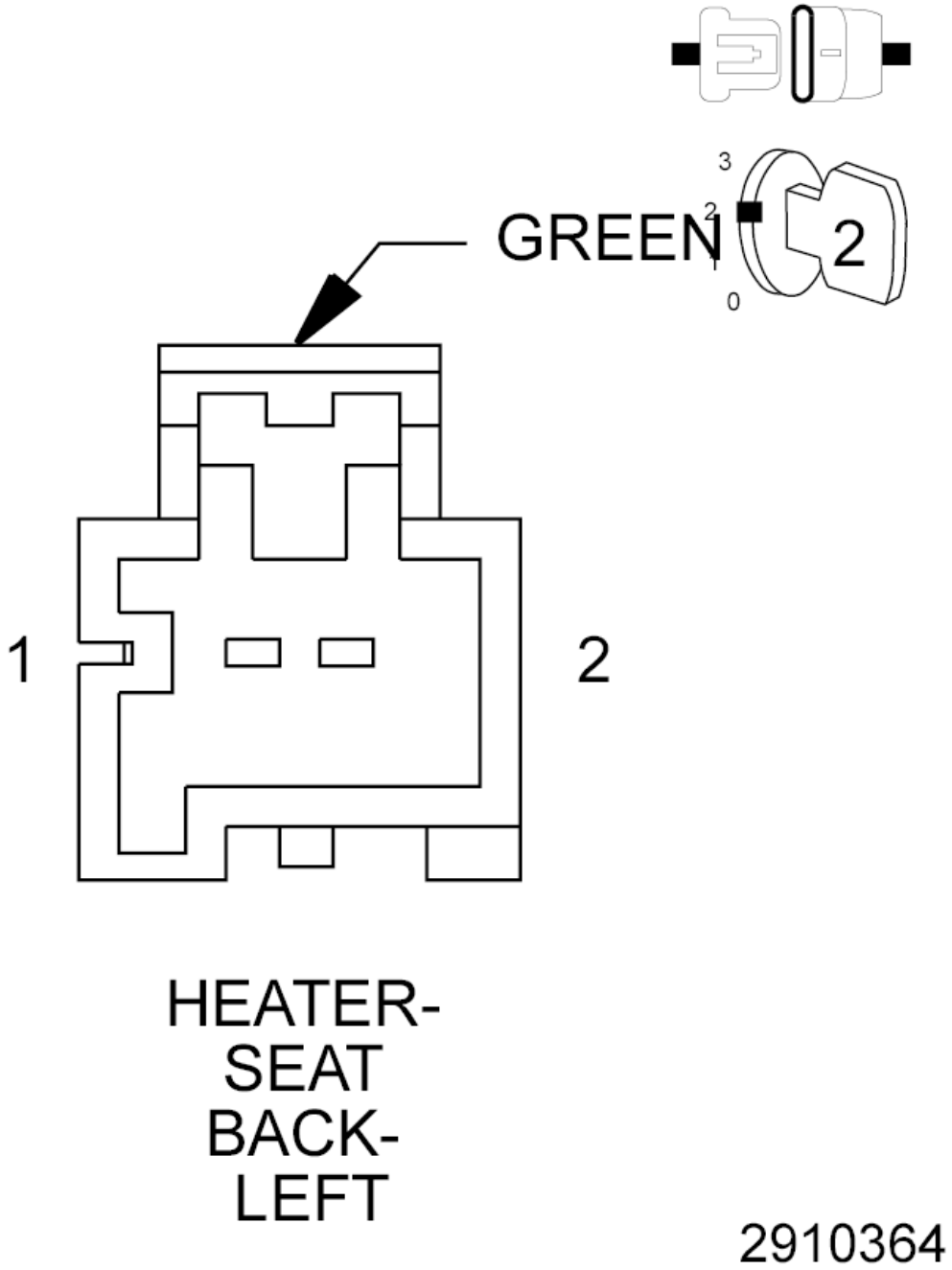

Fig. 30: Check Left Front Seat Heater Control Circuit In Body Harness For A Short To Ground
Courtesy of CHRYSLER GROUP, LLC

1. Turn the ignition off.
2. Disconnect the Left Seat Back Heater harness connector.

3. Disconnect the Left Seat Cushion Heater harness connector.

NOTE: Check connectors. Clean and repair as necessary.

4. Turn the ignition on.
5. Using a scan tool, erase DTCs.
6. Turn the ignition off.
7. Start the engine and let it run.
8. Turn the Heated Seat on and operate in all modes.
9. Using a scan tool, read DTCs.

Is the same DTC active?

Yes

- Go To 3.

No

- Go To 5.

3. **CHECK (P187) LEFT FRONT SEAT HEATER CONTROL CIRCUIT FOR A SHORT TO GROUND**

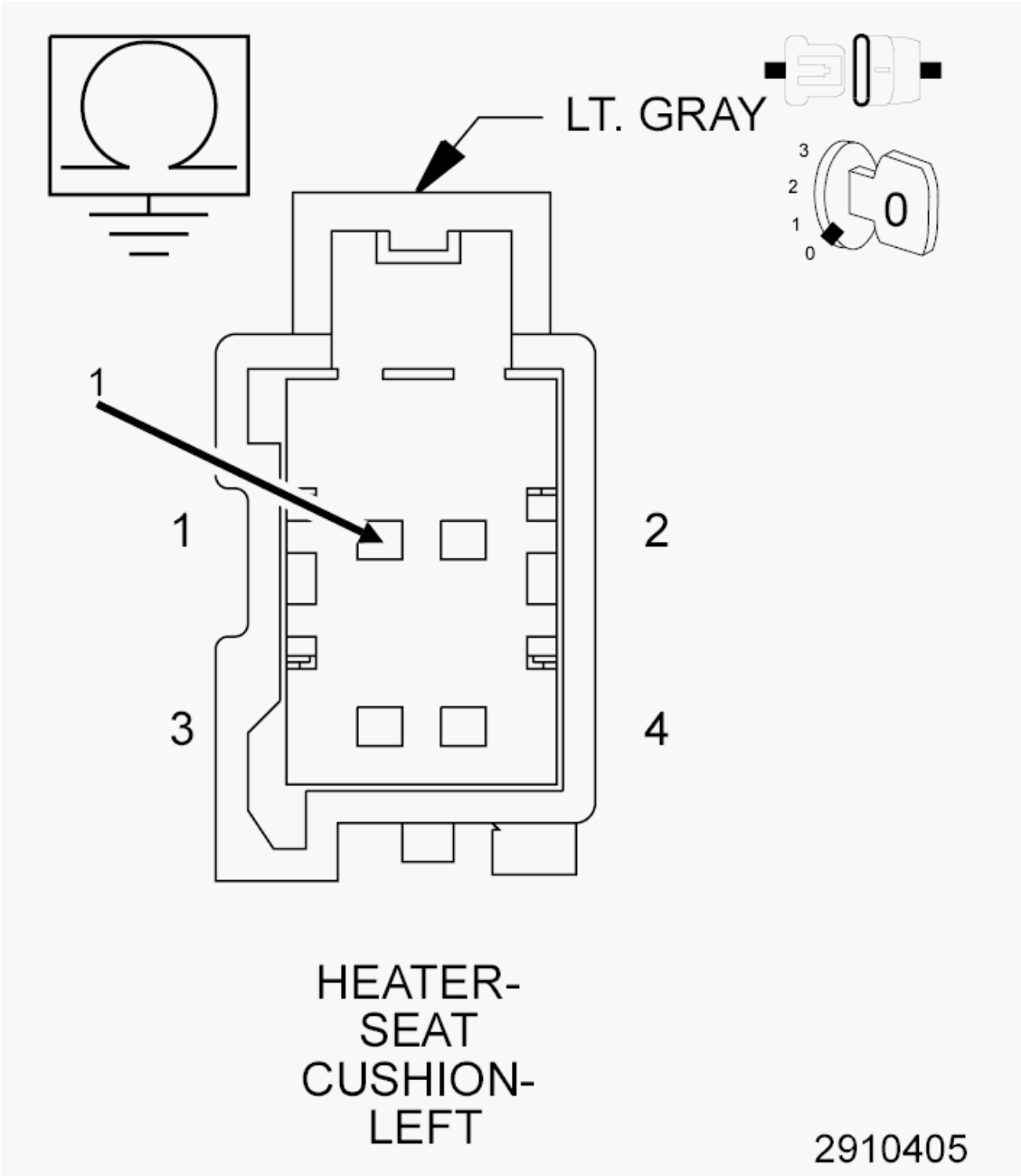

Fig. 31: Check Left Front Seat Heater Control Circuit For A Short To Ground
Courtesy of CHRYSLER GROUP, LLC

1. Turn the ignition off.
2. Disconnect the HSM C2 harness connector.

NOTE: Check connectors. Clean and repair as necessary.

3. Measure the resistance between ground and the (P187) Left Front Seat Heater Control circuit at the Left Seat Cushion Heater harness connector.

Is the resistance below 10K Ohms?

Yes

- Repair the (P187) Left Front Seat Heater Control circuit for a short to ground.
- Perform the BODY VERIFICATION TEST. Refer to **BODY VERIFICATION TEST** .

No

- Go To 4.

4. **CHECK (P187) LEFT FRONT SEAT HEATER CONTROL CIRCUIT FOR A SHORT TO THE (Z909) GROUND CIRCUIT OR TO (P968) HEATED SEAT SENSOR RETURN CIRCUIT**

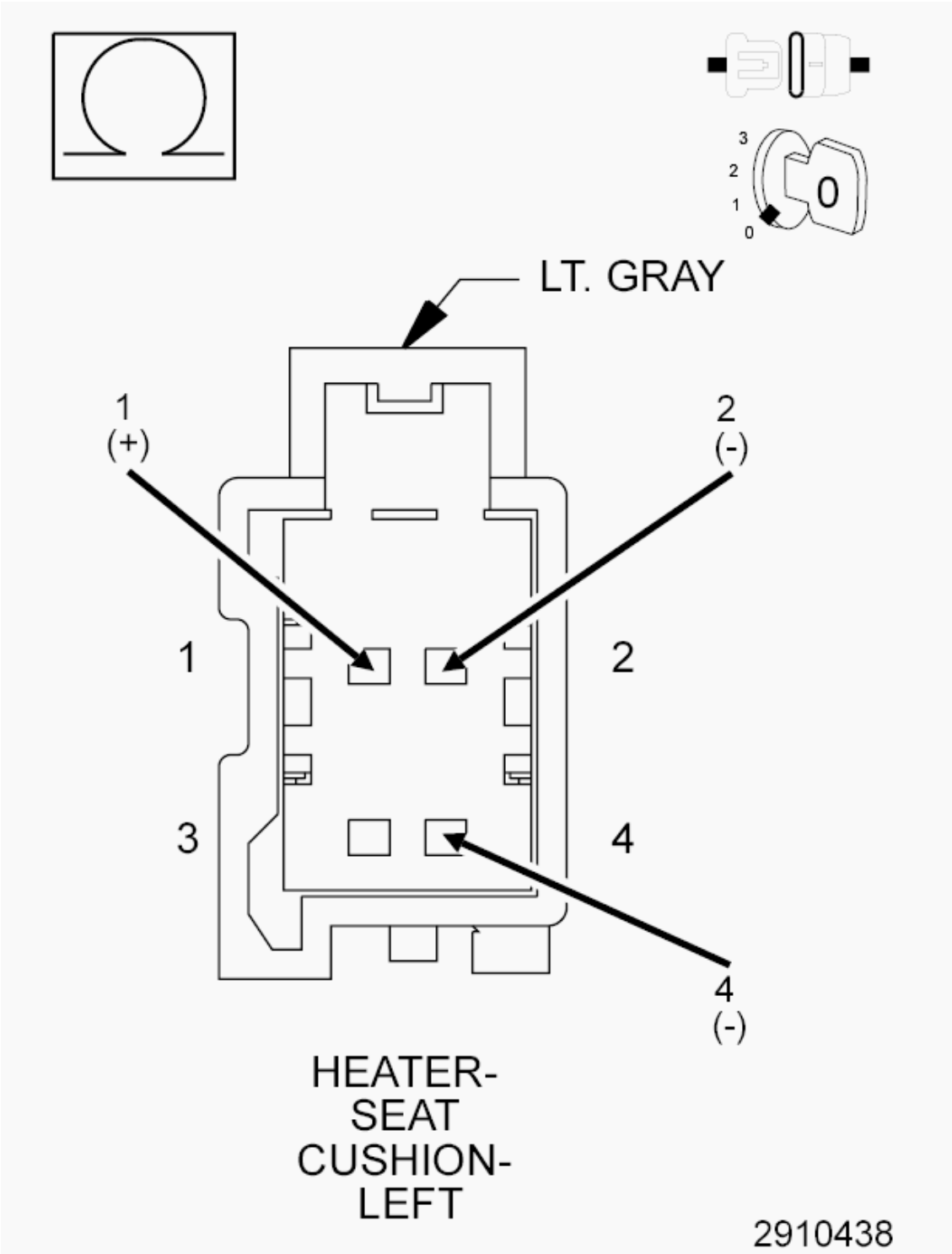

Fig. 32: Check Left Front Seat Heater Control Circuit For A Short To The Ground Circuit Or To Heated Seat Sensor Return Circuit
Courtesy of CHRYSLER GROUP, LLC

1. Measure the resistance between the (P187) Left Front Seat Heater Control circuit and the (Z909) Ground circuit at the Left Seat Cushion Heater connector (harness side).

2. Measure the resistance between the (P187) Left Front Seat Heater Control circuit and the (P968) Heated Seat Sensor Return circuit at the Left Seat Cushion Heater connector (harness side).

   Is the resistance below 10K Ohms for either measurement?

   Yes

   - Repair all circuits with a resistance below 10K Ohms for a short to the (P187) Left Front Seat Heater Control circuit.
   - Perform the BODY VERIFICATION TEST. Refer to **BODY VERIFICATION TEST** .

   No

   - Replace the Heated Seat Module (HSM) in accordance with the Service Information.
   - Perform the BODY VERIFICATION TEST. Refer to **BODY VERIFICATION TEST** .

5. **CHECK (P187) LEFT FRONT SEAT HEATER CONTROL CIRCUIT IN PIGTAIL HARNESS AND LEFT SEAT BACK HEATER ELEMENT FOR A SHORT TO GROUND**

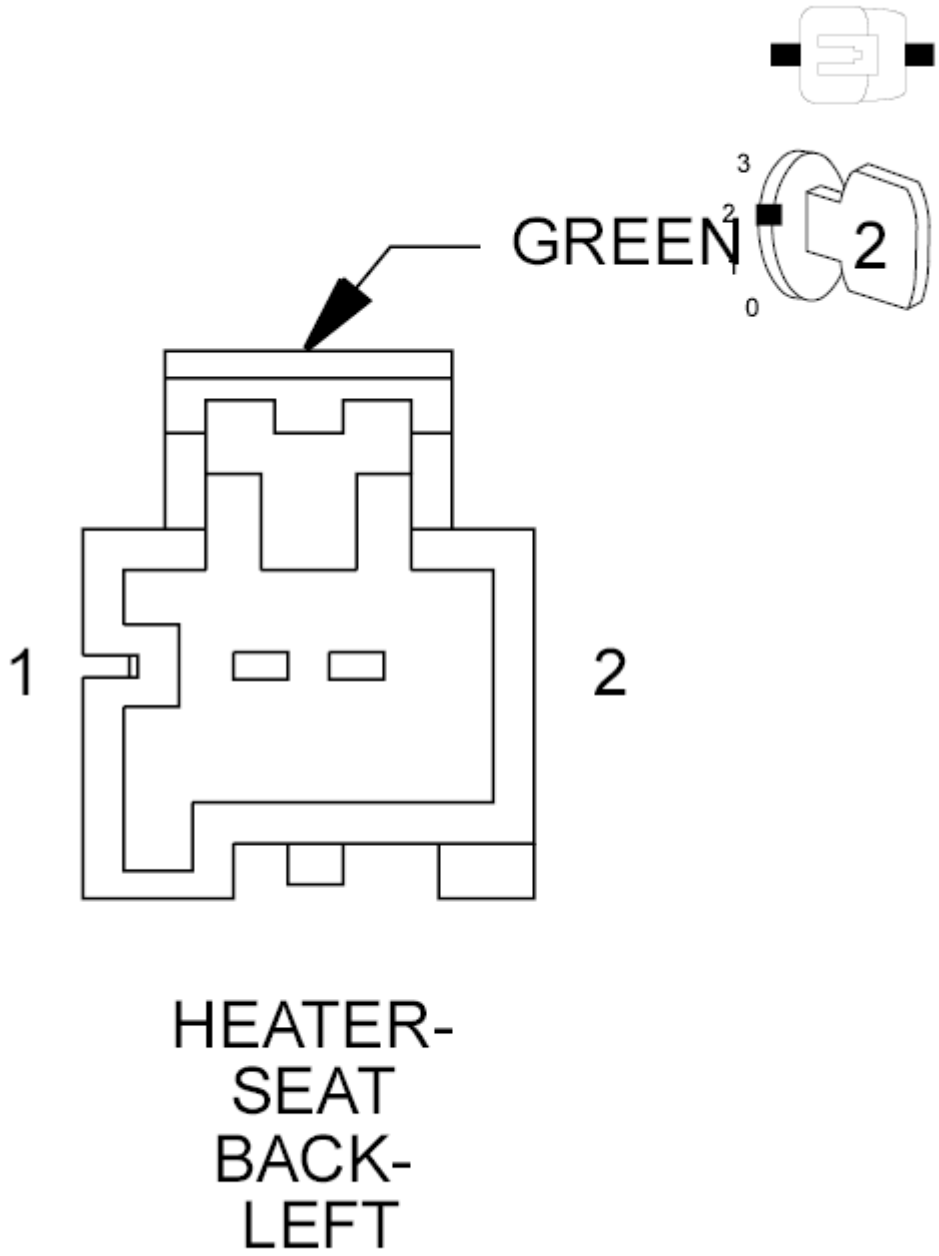

Fig. 33: Check Left Front Seat Heater Control Circuit In Pigtail Harness And Left Seat Back Heater Element For A Short To Ground
Courtesy of CHRYSLER GROUP, LLC

1. Turn the ignition off.
2. Reconnect the Left Seat Back Heater harness connector.
3. Turn the ignition on.
4. Using a scan tool, erase DTCs.

5. Turn the ignition off.
6. Start the engine and let it run.
7. Turn the Heated Seat on and operate in all modes.
8. Using a scan tool, read DTCs.

   Is the same DTC active?

   Yes

   - Repair or replace the pigtail harness for a short to ground or replace the shorted Seat Back Heater Element in accordance with the Service Information.
   - Perform the BODY VERIFICATION TEST. Refer to **BODY VERIFICATION TEST** .

   No

   - Replace the Seat Cushion Heater Element in accordance with the Service Information.
   - Perform the BODY VERIFICATION TEST. Refer to **BODY VERIFICATION TEST** .

B1E99-12-FRONT LEFT HEATER CONTROL CIRCUIT - CIRCUIT SHORT TO BATTERY

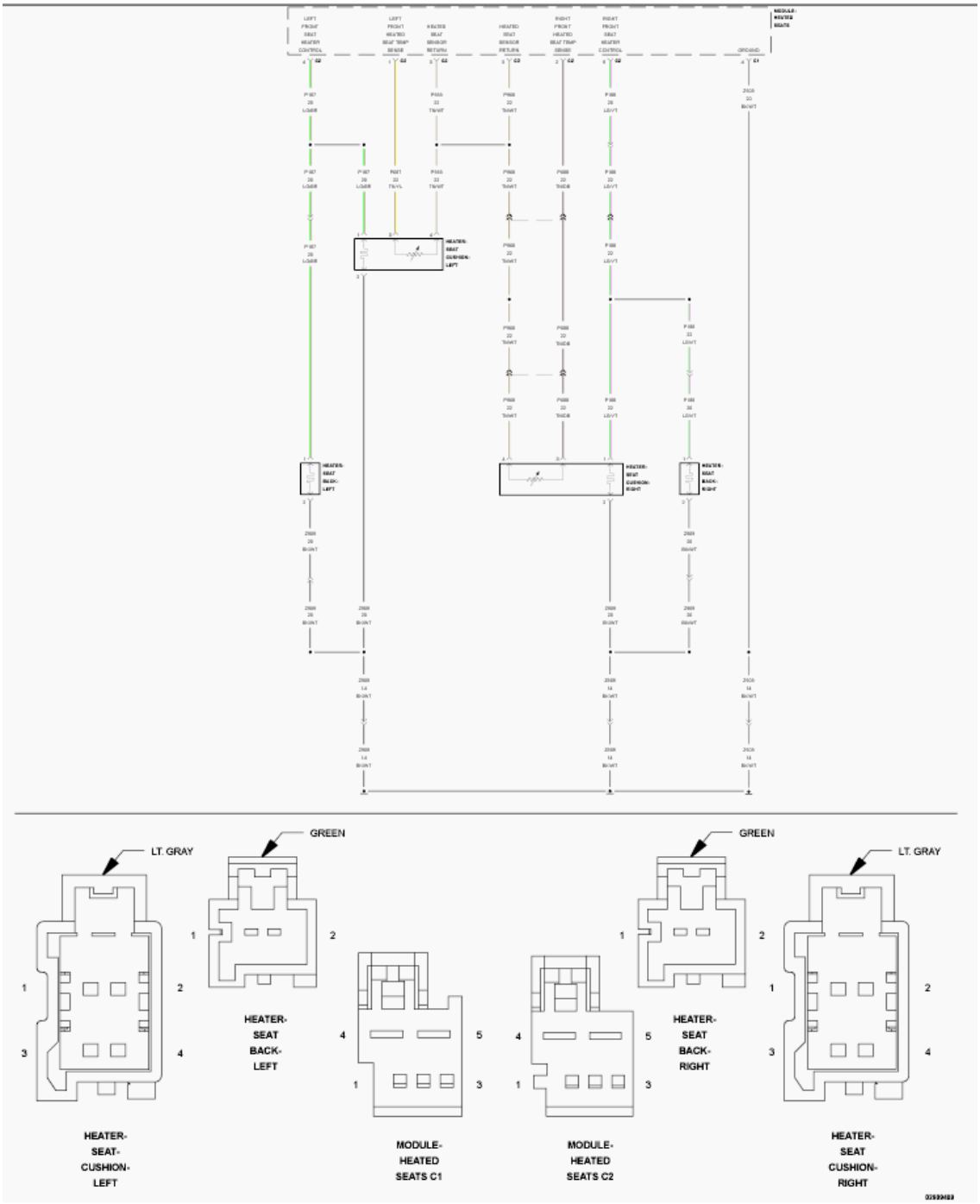

Fig. 34: Heated Seat Control Wiring Diagram
Courtesy of CHRYSLER GROUP, LLC

For a complete wiring diagram, **refer to appropriate SYSTEM WIRING DIAGRAMS article** .

WHEN MONITORED:

With the engine running.

SET CONDITION:

The Heated Seat Module (HSM) detects Voltage above 5.0 volts on the (P187) Left Front Seat Heater Control circuit for more than two seconds with the output turned off.

POSSIBLE CAUSES

Possible Causes
(P187) LEFT FRONT SEAT HEATER CONTROL CIRCUIT SHORTED TO VOLTAGE
(P187) LEFT FRONT SEAT HEATER CONTROL CIRCUIT SHORTED TO THE (P188) RIGHT FRONT SEAT HEATER CONTROL CIRCUIT
HEATED SEAT MODULE (HSM)

DIAGNOSTIC TEST

1. **TEST FOR INTERMITTENT CONDITION**

   NOTE: Make sure the battery is fully charged and the charging system is operating properly before proceeding.

   1. Turn the ignition on.
   2. Using a scan tool, record and erase Diagnostic Trouble Codes (DTCs).
   3. Turn the ignition off.
   4. Start the engine and let it run.
   5. Using a scan tool, read DTCs.

   Is the DTC active?

   Yes

   - Go To 2.

   No

   - The conditions that caused this code to set are not present at this time. Verify seat harness is routed correctly to the HSM. Using the wiring diagram/schematic as a guide, inspect the wiring and connectors. Look for chafed, pierced, pinched, or partially broken wires and broken, bent, pushed out, spread, corroded, or contaminated terminals. Attempt to reproduce condition by operating all HSM functions one at a time, except for the Left Front Heated Seat. Attempt to reproduce condition by adjusting the seat.
   - Perform the BODY VERIFICATION TEST. Refer to **BODY VERIFICATION TEST** .

2. **CHECK (P187) LEFT FRONT SEAT HEATER CONTROL CIRCUIT FOR A SHORT TO VOLTAGE**

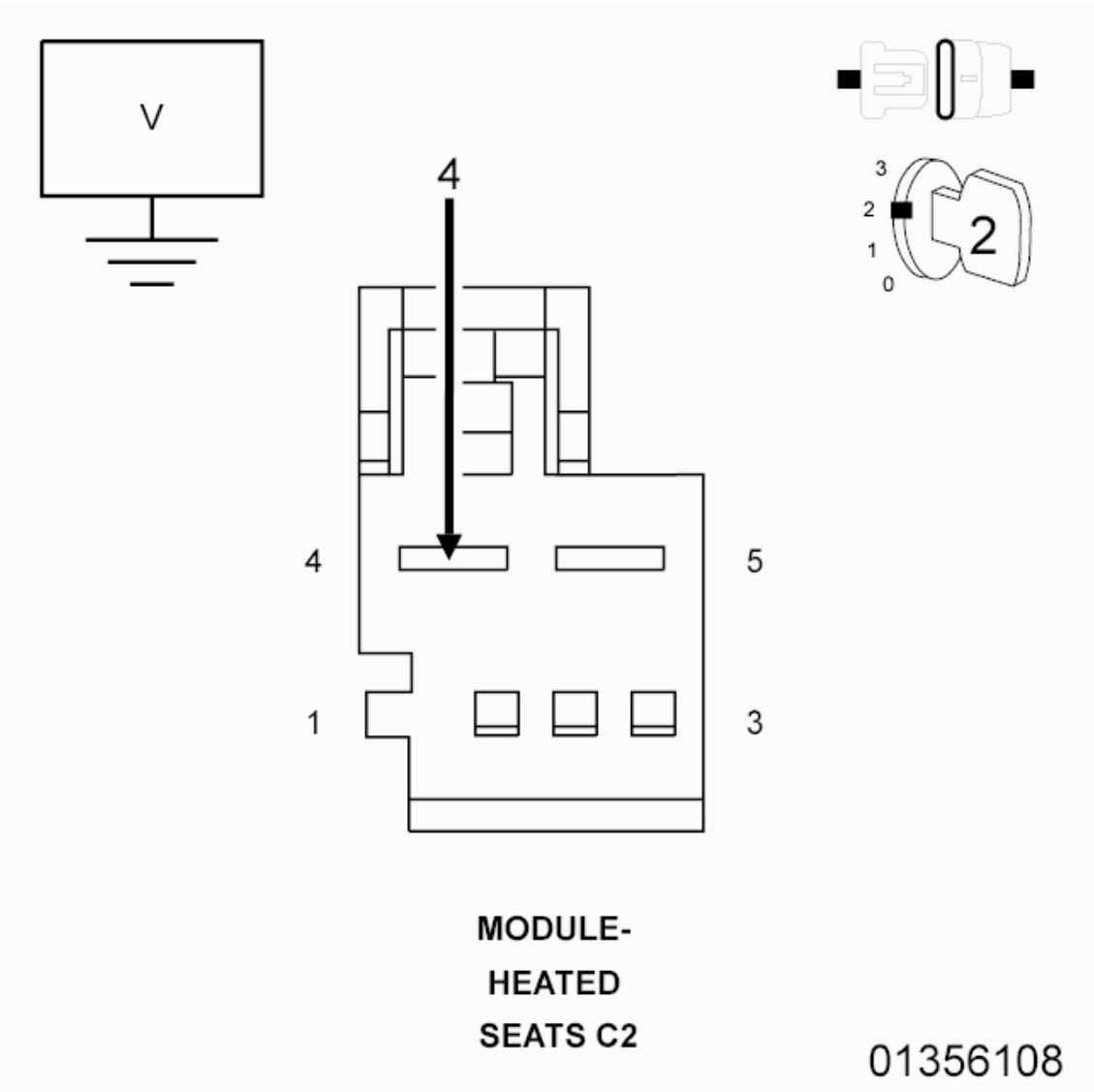

Fig. 35: Checking Left Front Seat Heater Control Circuit For A Short To Voltage
Courtesy of CHRYSLER GROUP, LLC

1. Turn the ignition off.
2. Disconnect the HSM C2 harness connector.

NOTE: Check connectors. Clean and repair as necessary.

3. Start the engine and let it run.
4. Measure the voltage of the (P187) Left Front Seat Heater Control circuit between the HSM C2 harness connector and ground.

   Is there any voltage present?

   Yes

- Repair the (P187) Left Front Seat Heater Control circuit for a short to voltage.
- Perform the BODY VERIFICATION TEST. Refer to **BODY VERIFICATION TEST** .

No

- Go To 3.

3. **CHECK (P187) LEFT FRONT SEAT HEATER CONTROL CIRCUIT FOR A SHORT TO VOLTAGE DURING SEAT ADJUSTMENT**

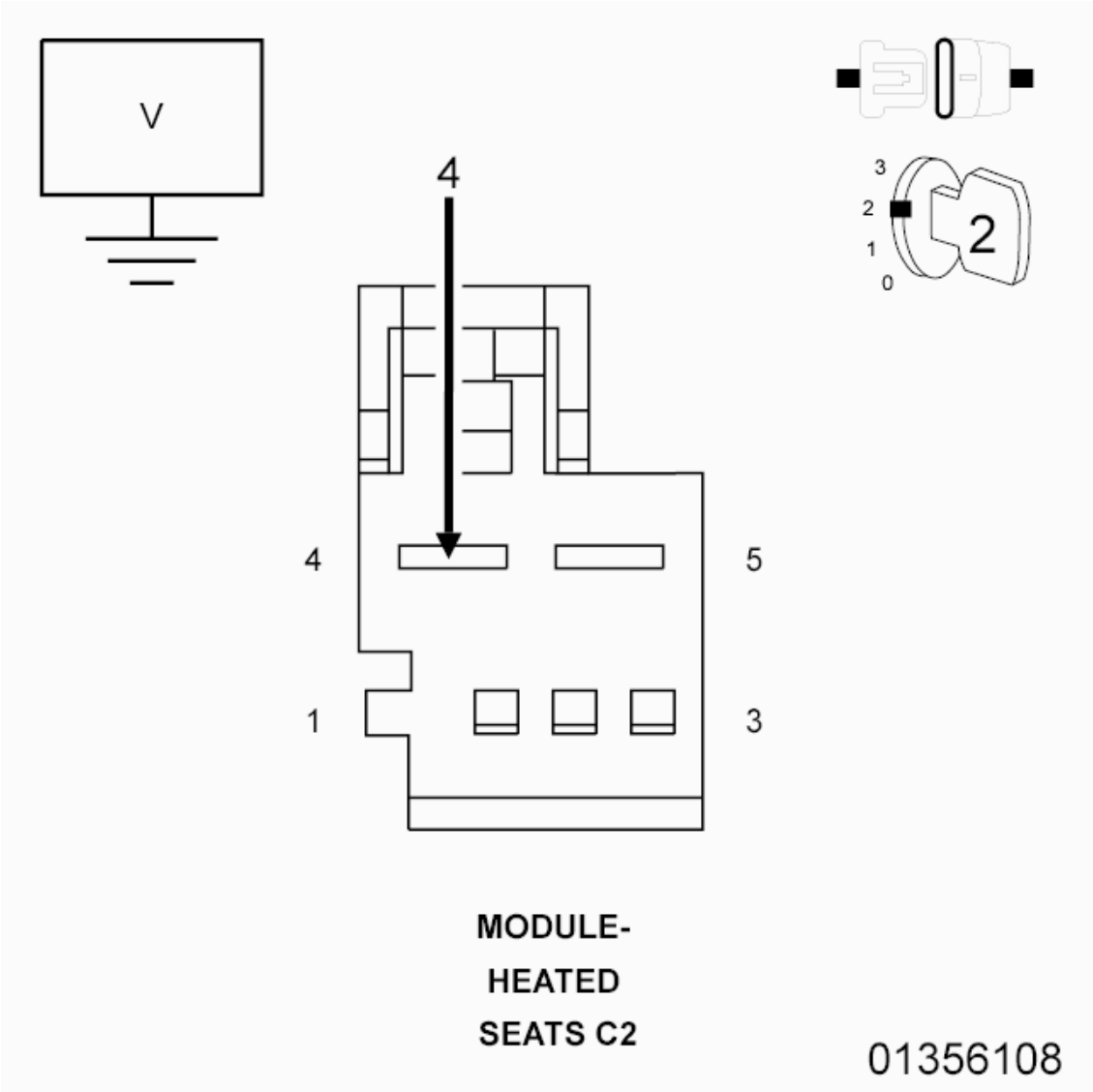

Fig. 36: Checking Left Front Seat Heater Control Circuit For A Short To Voltage
Courtesy of CHRYSLER GROUP, LLC

1. Measure the voltage of the (P187) Left Front Seat Heater Control circuit between the HSM C2 harness connector and ground while adjusting the seat in all positions.

Is there any voltage present during the seat adjustment?

Yes

- Repair the (P187) Left Front Seat Heater Control circuit for a short to voltage.
- Perform the BODY VERIFICATION TEST. Refer to **BODY VERIFICATION TEST** .

No

- Go To 4.

4. **CHECK (P187) LEFT FRONT SEAT HEATER CONTROL CIRCUIT FOR A SHORT TO THE (P188) RIGHT FRONT SEAT HEATER CONTROL CIRCUIT**

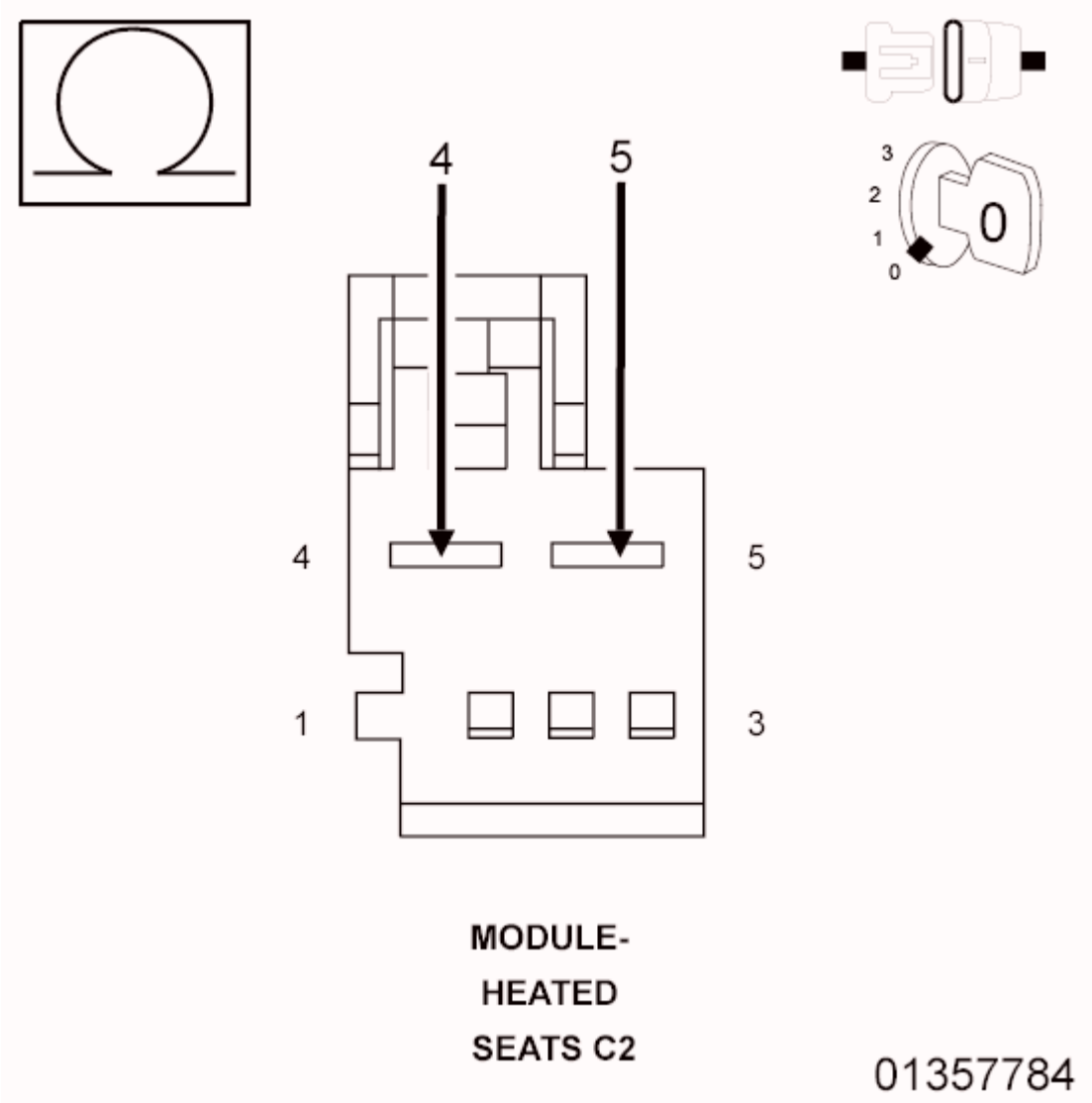

Fig. 37: Checking Front Seat Heater Control Circuit For A Short To The Right Front Seat Heater Control
Courtesy of CHRYSLER GROUP, LLC

1. Turn the ignition off.
2. Disconnect the C214 and C213 in-line harness connectors.
3. Disconnect the Left Seat Cushion Heater harness connector.
4. Measure the resistance between the (P187) Left Front Seat Heater Control circuit and the (P188) Right Front Seat Heater Control circuit at HSM C2 harness connector.

   Is the resistance below 10K Ohms?

   Yes

   - Repair the (P187) Left Front Seat Heater Control circuit for a short to the (P188) Right Front Seat Heater Control circuit.
   - Perform the BODY VERIFICATION TEST. Refer to **BODY VERIFICATION TEST** .

   No

   - Replace the Heated Seat Module (HSM) in accordance with the Service Information.
   - Perform the BODY VERIFICATION TEST. Refer to **BODY VERIFICATION TEST** .

B1E99-13-FRONT LEFT HEATER CONTROL CIRCUIT - CIRCUIT OPEN

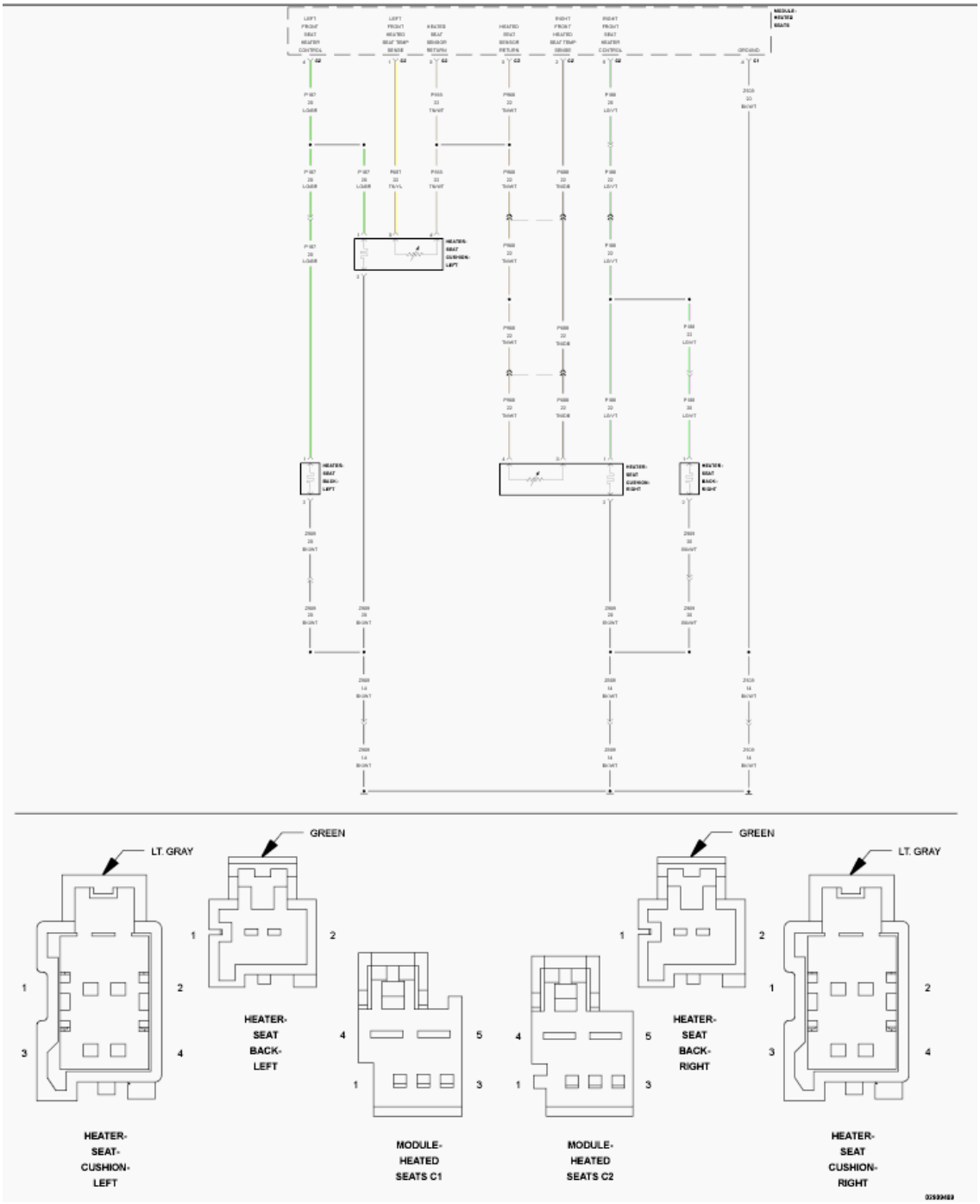

Fig. 38: Heated Seat Control Wiring Diagram
Courtesy of CHRYSLER GROUP, LLC

For a complete wiring diagram, **refer to appropriate SYSTEM WIRING DIAGRAMS article** .

WHEN MONITORED:

With the engine running.

SET CONDITION:

The Heated Seat Module (HSM) detects current below 0.5 of an amp on the (P187) Left Front Seat Heater Control circuit for more than two seconds with the output turned on.

POSSIBLE CAUSES

Possible Causes
(P187) LEFT FRONT SEAT HEATER CONTROL CIRCUIT OPEN
(Z909) GROUND CIRCUIT OPEN
SEAT CUSHION HEATER ELEMENT OPEN
SEAT BACK HEATER ELEMENT OPEN
HEATED SEAT MODULE (HSM)

DIAGNOSTIC TEST

1. **TEST FOR INTERMITTENT CONDITION**

   NOTE: Make sure the battery is fully charged and the charging system is operating properly before proceeding.

   1. Turn the ignition on.
   2. Using a scan tool, record and erase Diagnostic Trouble Codes (DTCs).
   3. Turn the ignition off.
   4. Start the engine and let it run.
   5. Turn the Heated Seat on and operate in all modes.
   6. Using a scan tool, read DTCs.

   Is the DTC active?

   Yes

   - Go To 2.

   No

   - The conditions that caused this code to set are not present at this time. Verify seat harness is routed correctly to the HSM. Using the wiring diagram/schematic as a guide, inspect the wiring and connectors. Look for chafed, pierced, pinched, or partially broken wires and broken, bent, pushed out, spread, corroded, or contaminated terminals. Attempt to reproduce condition by adjusting the seat.
   - Perform the BODY VERIFICATION TEST. Refer to **BODY VERIFICATION TEST** .

2. **CHECK (P187) LEFT FRONT SEAT HEATER CONTROL CIRCUIT FOR AN OPEN**

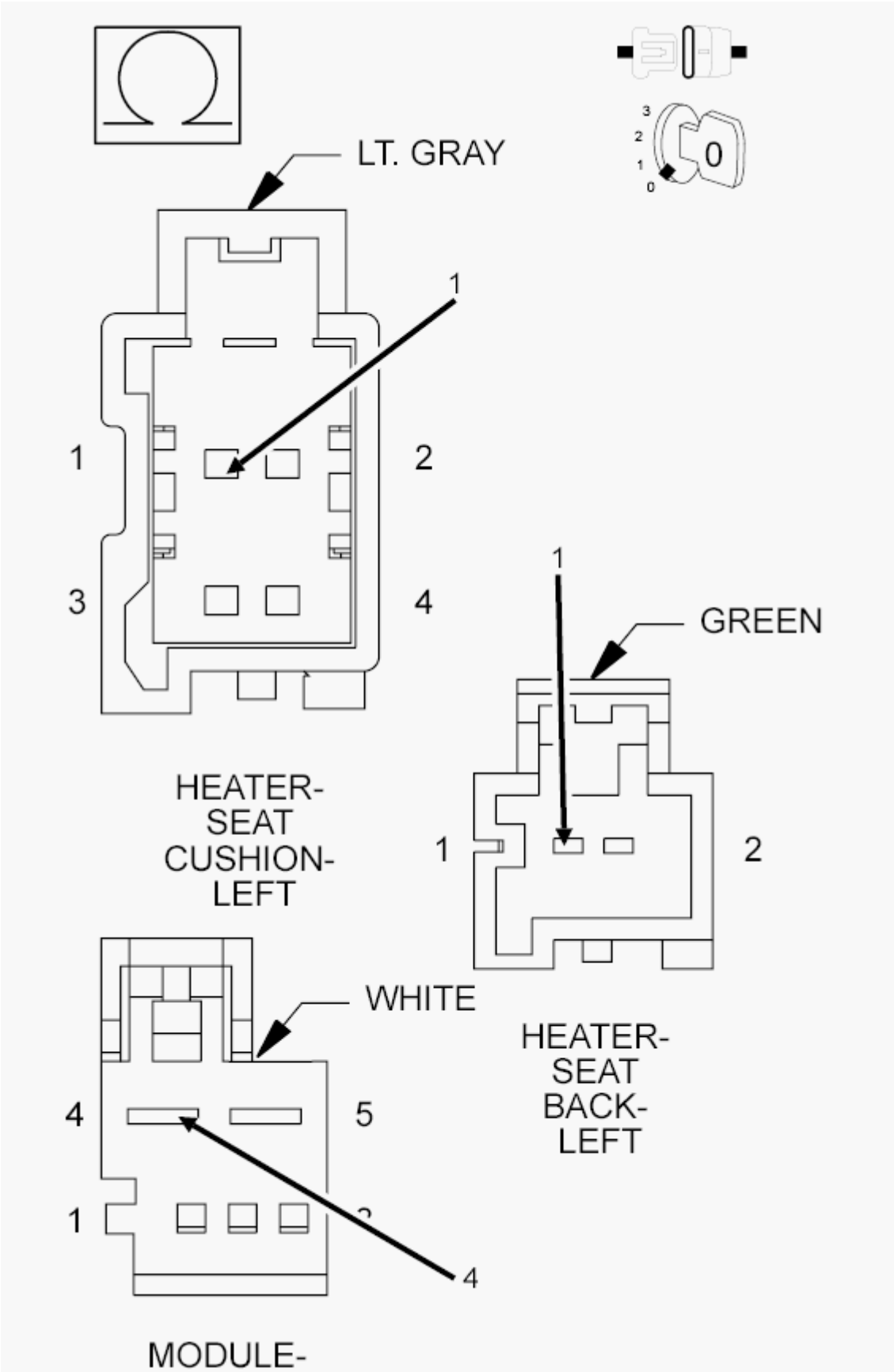
LT. GRAY
1
1
2
3
4
HEATER-
SEAT
CUSHION-
LEFT
1
GREEN
1
2
HEATER-
SEAT
BACK-
LEFT
WHITE
4
5
1
4
MODULE-

Fig. 39: Check Left Front Seat Heater Control Circuit For An Open
Courtesy of CHRYSLER GROUP, LLC

1. Turn the ignition off.
2. Disconnect the HSM C2 harness connector.
3. Disconnect the Left Seat Cushion Heater harness connector.
4. Disconnect the Left Seat Back Heater harness connector.

NOTE: Check connectors. Clean and repair as necessary.

5. Measure the resistance of the (P187) Left Front Seat Heater Control circuit between the HSM C2 harness connector and the Left Seat Cushion Heater harness connector.
6. Measure the resistance of the (P187) Left Front Seat Heater Control circuit between the HSM C2 harness connector and the Left Seat Back Heater harness connector.

Is the resistance below 5.0 Ohms for both measurements?

Yes

- Go To 3.

No

- Repair the (P187) Left Front Seat Heater Control circuit for an open.
- Perform the BODY VERIFICATION TEST. Refer to **BODY VERIFICATION TEST** .

3. **CHECK (Z909) GROUND CIRCUIT FOR AN OPEN**

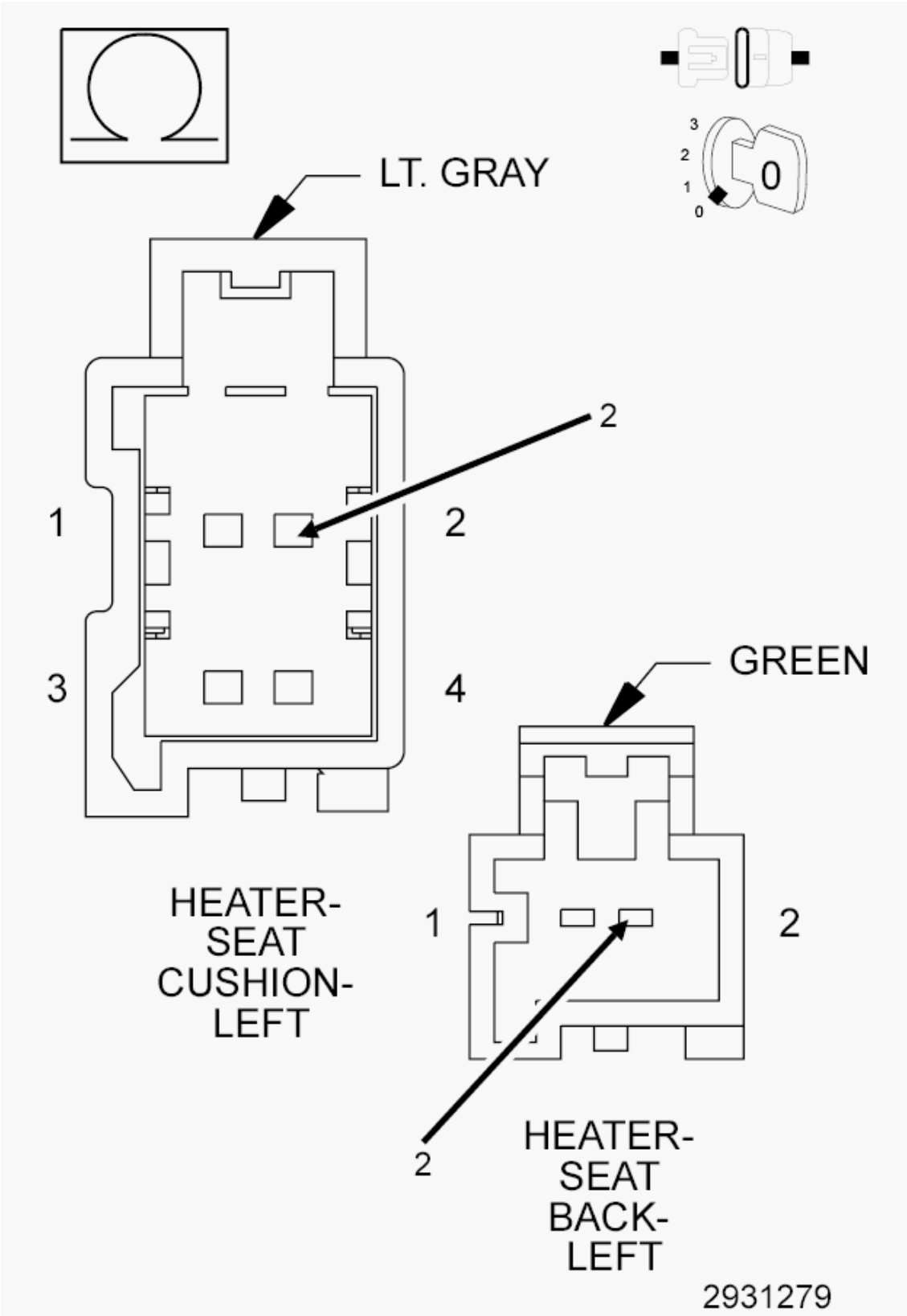

Fig. 40: Check Ground Circuit For An Open
Courtesy of CHRYSLER GROUP, LLC

1. Measure the resistance of the (Z909) Ground circuit between ground and the Left Seat Cushion Heater harness connector.
2. Measure the resistance of the (Z909) Ground circuit between ground and the Left Seat Back Heater harness connector.

   Is the resistance below 5.0 Ohms for both measurements?

   Yes

   - Go To 4.

   No

   - Repair the (Z909) Ground circuit for an open.
   - Perform the BODY VERIFICATION TEST. Refer to **BODY VERIFICATION TEST** .

4. **CHECK FOR AN OPEN LEFT SEAT CUSHION HEATER ELEMENT**

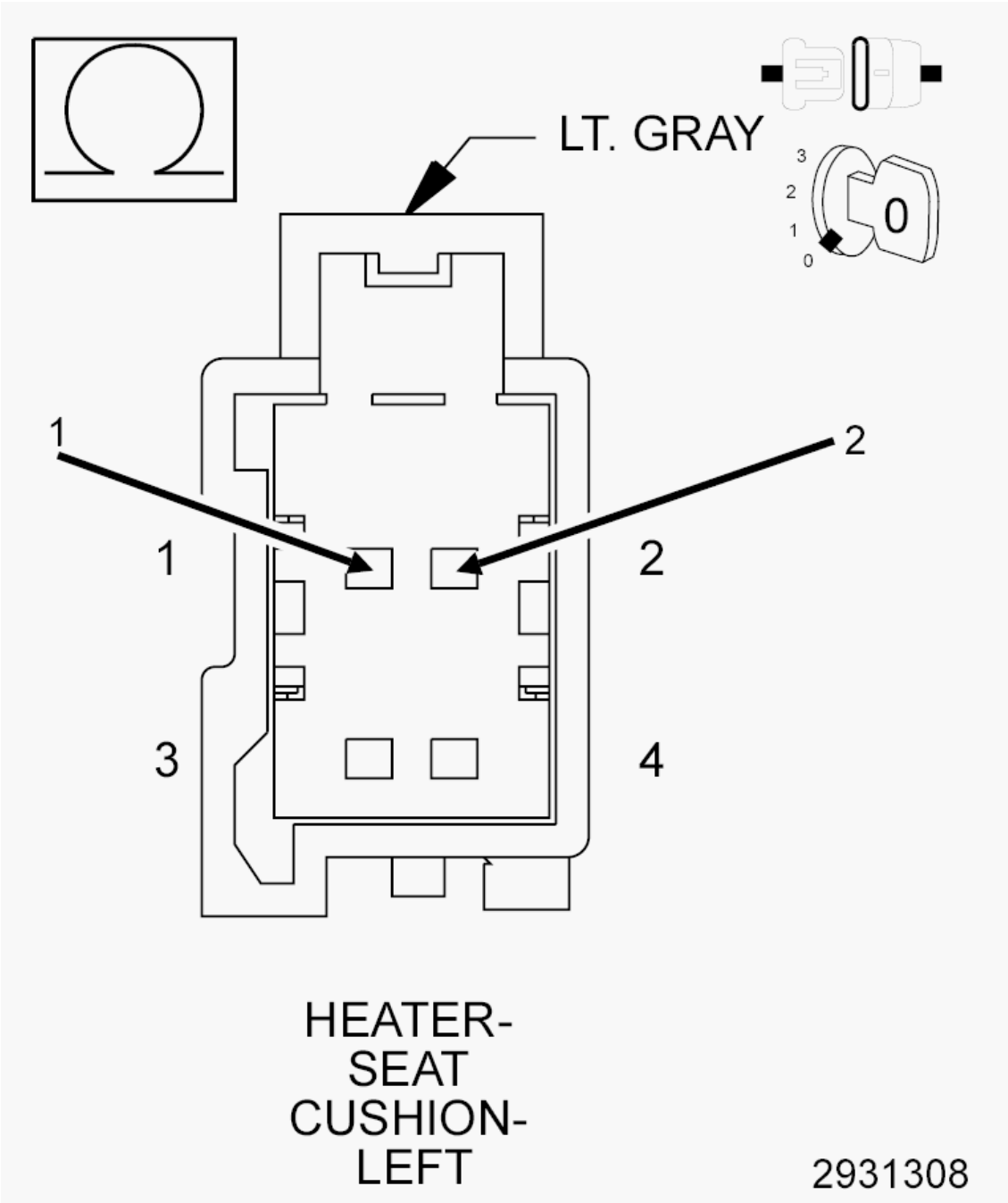

Fig. 41: Check For An Open Left Seat Cushion Heater Element
Courtesy of CHRYSLER GROUP, LLC

1. Measure the resistance between the (P187) Left Front Seat Heater Control circuit and the (Z909) Ground circuit at the Left Seat Cushion Heater harness connector.

   Is the resistance above 4.8 Ohms (without vented seats) or 9.8 Ohms (with vented seats)?

   Yes

- Replace the Seat Cushion Heater Element in accordance with the Service Information.
- Perform the BODY VERIFICATION TEST. Refer to **BODY VERIFICATION TEST** .

No

- Go To 5.

5. **CHECK FOR AN OPEN LEFT SEAT BACK HEATER ELEMENT**

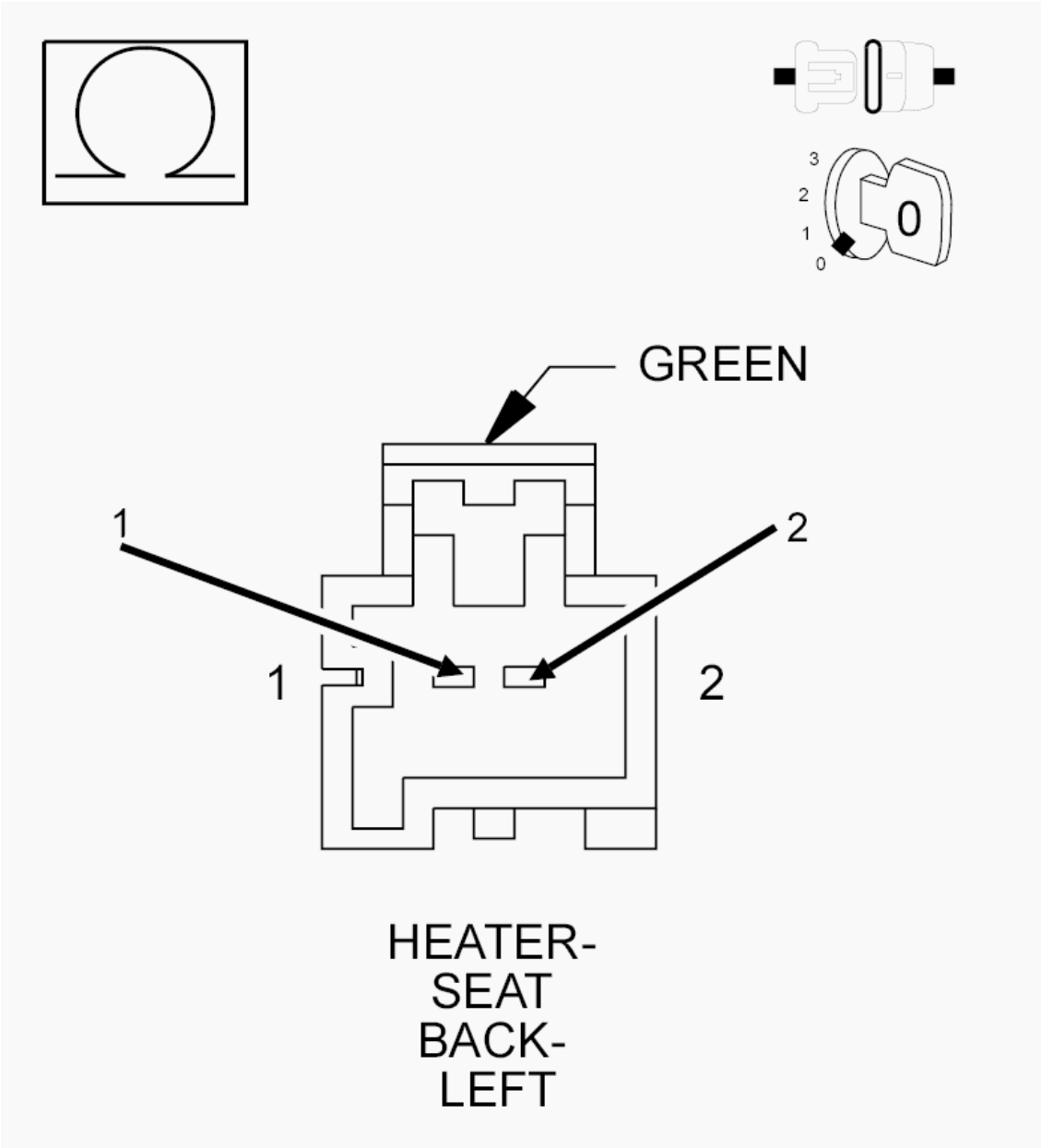

Fig. 42: Check For An Open Left Seat Back Heater Element
Courtesy of CHRYSLER GROUP, LLC

1. Measure the resistance between the (P187) Left Front Seat Heater Control circuit and the (Z909)

Ground circuit at the Left Seat Back Heater harness connector.

Is the resistance above 4.8 Ohms (without vented seats) or 11.6 Ohms (with vented seats)?

Yes

- Repair or replace the pigtail harness for an open or replace the open Seat Back Heater Element in accordance with the Service Information.
- Perform the BODY VERIFICATION TEST. Refer to **BODY VERIFICATION TEST** .

No

- Repair or replace the pigtail harness for an open or replace the open Seat Back Heater Element in accordance with the Service Information. Refer to **COVER, SEAT BACK, MEGA CAB REAR, REMOVAL** .
- Perform the BODY VERIFICATION TEST. Refer to **BODY VERIFICATION TEST** .

B1E99-1E-FRONT LEFT HEATER CONTROL CIRCUIT - CIRCUIT RESISTANCE OUT OF RANGE

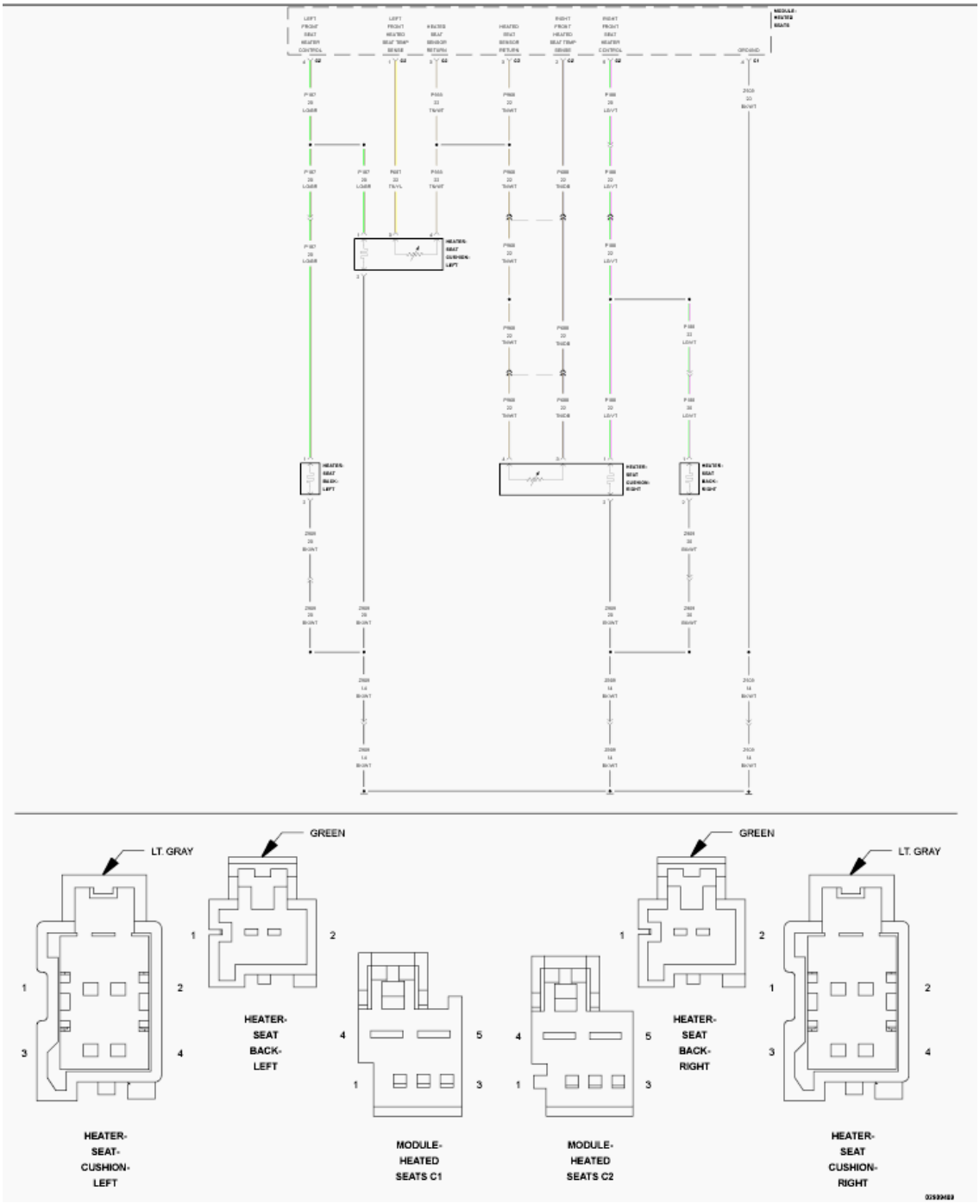

Fig. 43: Heated Seat Control Wiring Diagram
Courtesy of CHRYSLER GROUP, LLC

For a complete wiring diagram, **refer to appropriate SYSTEM WIRING DIAGRAMS article** .

WHEN MONITORED:

With the engine running.

SET CONDITION:

The Heated Seat Module (HSM) detects impedance above threshold on the (P187) Left Front Seat Heater Control circuit for more than two seconds with the output turned on.

POSSIBLE CAUSES

Possible Causes
(P187) LEFT FRONT SEAT HEATER CONTROL CIRCUIT RESISTANCE HIGH
(Z909) GROUND CIRCUIT RESISTANCE HIGH
SEAT CUSHION HEATER ELEMENT
SEAT BACK HEATER ELEMENT
HEATED SEAT MODULE (HSM)

DIAGNOSTIC TEST

1. **TEST FOR INTERMITTENT CONDITION**

NOTE: **Before proceeding, verify the battery is fully charged, the charging system is operating properly, no Battery or System Voltage Diagnostic Trouble Codes (DTCs) are set, and the HSM Power and Ground circuits are clean and tight.**

1. Turn the ignition on.
2. Using a scan tool, record and erase Diagnostic Trouble Codes (DTCs).
3. Turn the ignition off.
4. Start the engine and let it run.
5. Turn the Heated Seat on and operate in all modes.
6. Using a scan tool, read DTCs.

Is the DTC active?

Yes

- Go To 2.

No

- The conditions that caused this code to set are not present at this time. Verify seat harness is routed correctly to the HSM. Using the wiring diagram/schematic as a guide, inspect the wiring and connectors. Look for chafed, pierced, pinched, or partially broken wires and broken, bent, pushed out, spread, corroded, or contaminated terminals. Attempt to reproduce condition by adjusting the seat.
- Perform the BODY VERIFICATION TEST. Refer to **BODY VERIFICATION TEST** .

2. **CHECK (P187) LEFT FRONT SEAT HEATER CONTROL CIRCUIT FOR HIGH RESISTANCE**

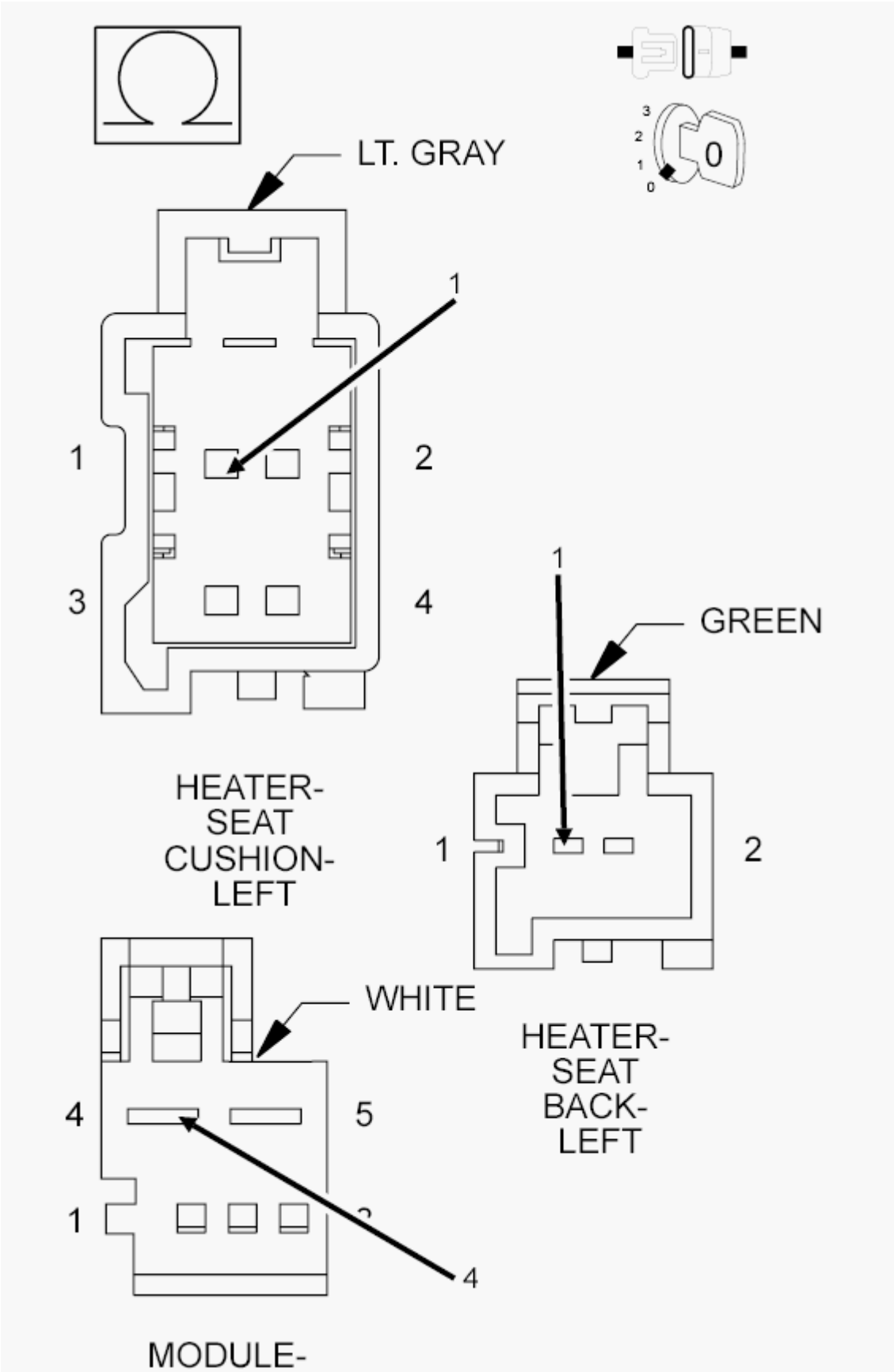
LT. GRAY
1
1
2
3
4
HEATER-
SEAT
CUSHION-
LEFT
1
GREEN
1
2
HEATER-
SEAT
BACK-
LEFT
WHITE
4
5
1
4
MODULE-

Fig. 44: Check Left Front Seat Heater Control Circuit For An Open
Courtesy of CHRYSLER GROUP, LLC

1. Turn the ignition off.
2. Disconnect the HSM C2 harness connector.
3. Disconnect the Left Seat Cushion Heater harness connector.
4. Disconnect the Left Seat Back Heater harness connector.

NOTE: Check connectors. Clean and repair as necessary.

5. Measure the resistance of the (P187) Left Front Seat Heater Control circuit between the HSM C2 harness connector and the Left Seat Cushion Heater harness connector.
6. Measure the resistance of the (P187) Left Front Seat Heater Control circuit between the HSM C2 connector and the Left Seat Back Heater harness connector.

Is the resistance below 5.0 Ohms for both measurements?

Yes

- Go To 3.

No

- Repair the (P187) Left Front Seat Heater Control circuit for high resistance.
- Perform the BODY VERIFICATION TEST. Refer to **BODY VERIFICATION TEST** .

3. **CHECK (Z909) GROUND CIRCUIT FOR HIGH RESISTANCE**

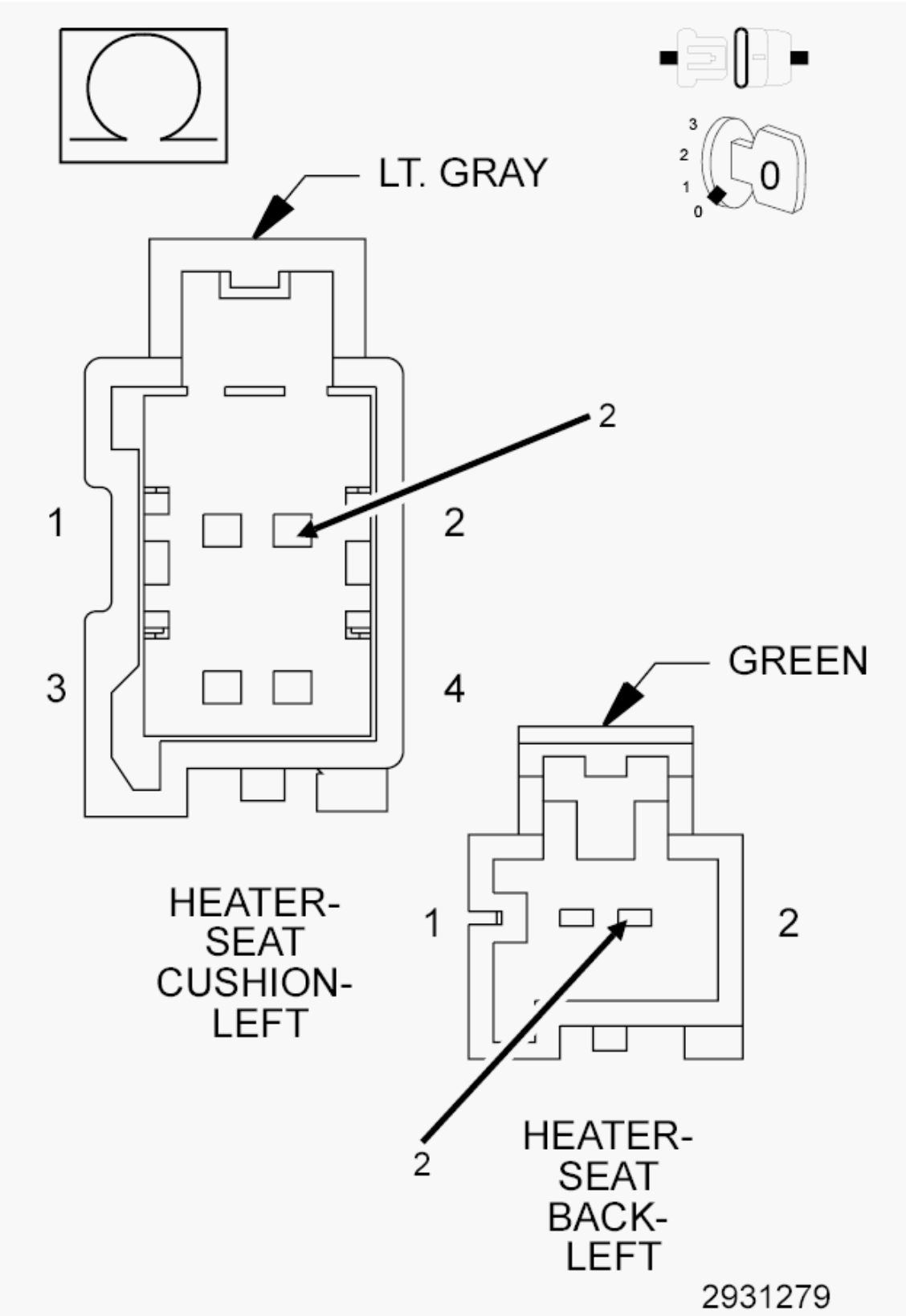

Fig. 45: Check Ground Circuit For An Open
Courtesy of CHRYSLER GROUP, LLC

1. Measure the resistance of the (Z909) Ground circuit between ground and the Left Seat Cushion Heater harness connector.
2. Measure the resistance of the (Z909) Ground circuit between ground and the Left Seat Back Heater harness connector.

   Is the resistance below 5.0 Ohms for both measurements?

   Yes

   - Go To 4.

   No

   - Repair the (Z909) Ground circuit for high resistance.
   - Perform the BODY VERIFICATION TEST. Refer to **BODY VERIFICATION TEST** .

4. **CHECK LEFT SEAT CUSHION HEATER ELEMENT RESISTANCE**

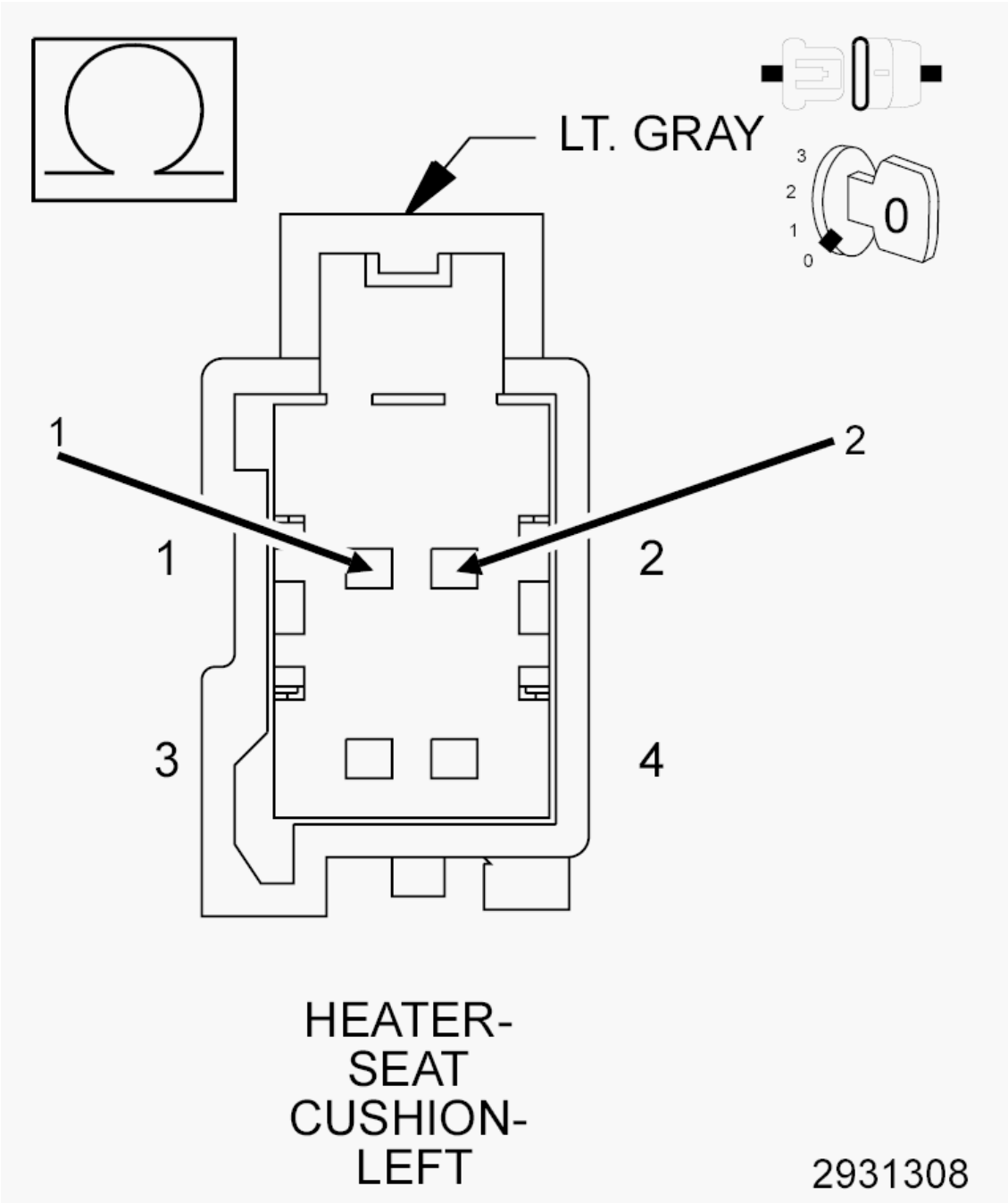

Fig. 46: Check For An Open Left Seat Cushion Heater Element
Courtesy of CHRYSLER GROUP, LLC

1. Measure the resistance between the (P187) Left Front Seat Heater Control circuit and the (Z909) Ground circuit at the Left Seat Cushion Heater connector.

   Is the resistance above 4.8 Ohms (without vented seats) or 9.8 Ohms (with vented seats)?

   Yes

- Replace the Seat Cushion Heater Element in accordance with the Service Information.
- Perform the BODY VERIFICATION TEST. Refer to **BODY VERIFICATION TEST** .

No

- Go To 5.

5. **CHECK LEFT SEAT BACK HEATER ELEMENT RESISTANCE**

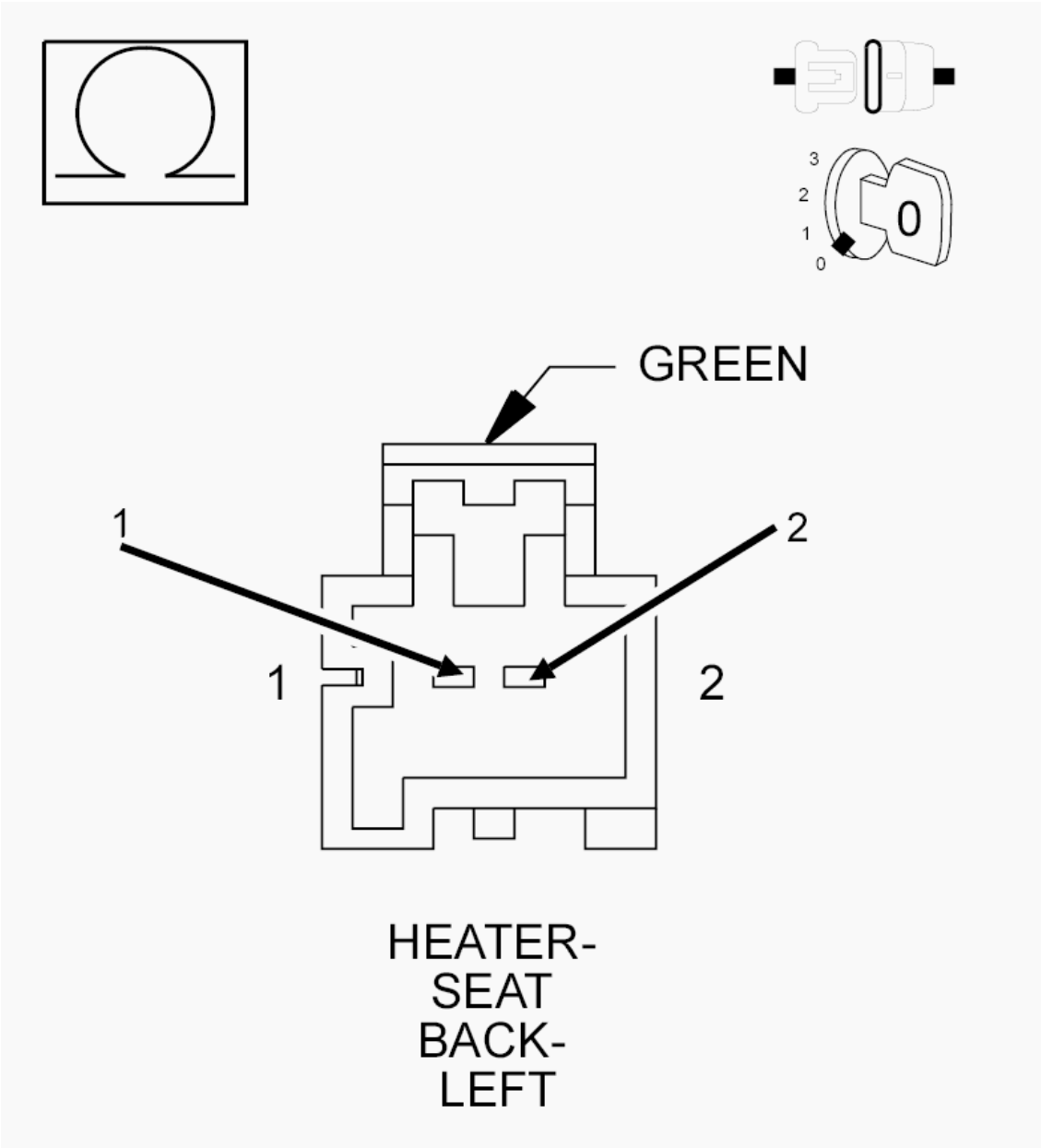

Fig. 47: Check For An Open Left Seat Back Heater Element
Courtesy of CHRYSLER GROUP, LLC

1. Measure the resistance between the (P187) Left Front Seat Heater Control circuit and the (Z909)

Ground circuit at the Left Seat Back Heater harness connector.

Is the resistance above 4.8 Ohms (without vented seats) or 11.6 Ohms (with vented seats)?

Yes

- Repair or replace the pigtail harness for high resistance or replace the Seat Back Heater Element in accordance with the Service Information.
- Perform the BODY VERIFICATION TEST. Refer to **BODY VERIFICATION TEST** .

No

- Replace the Heated Seat Module (HSM) in accordance with the Service Information.
- Perform the BODY VERIFICATION TEST. Refer to **BODY VERIFICATION TEST** .

B1E9A-11-FRONT RIGHT HEATER CONTROL CIRCUIT - CIRCUIT SHORT TO GROUND

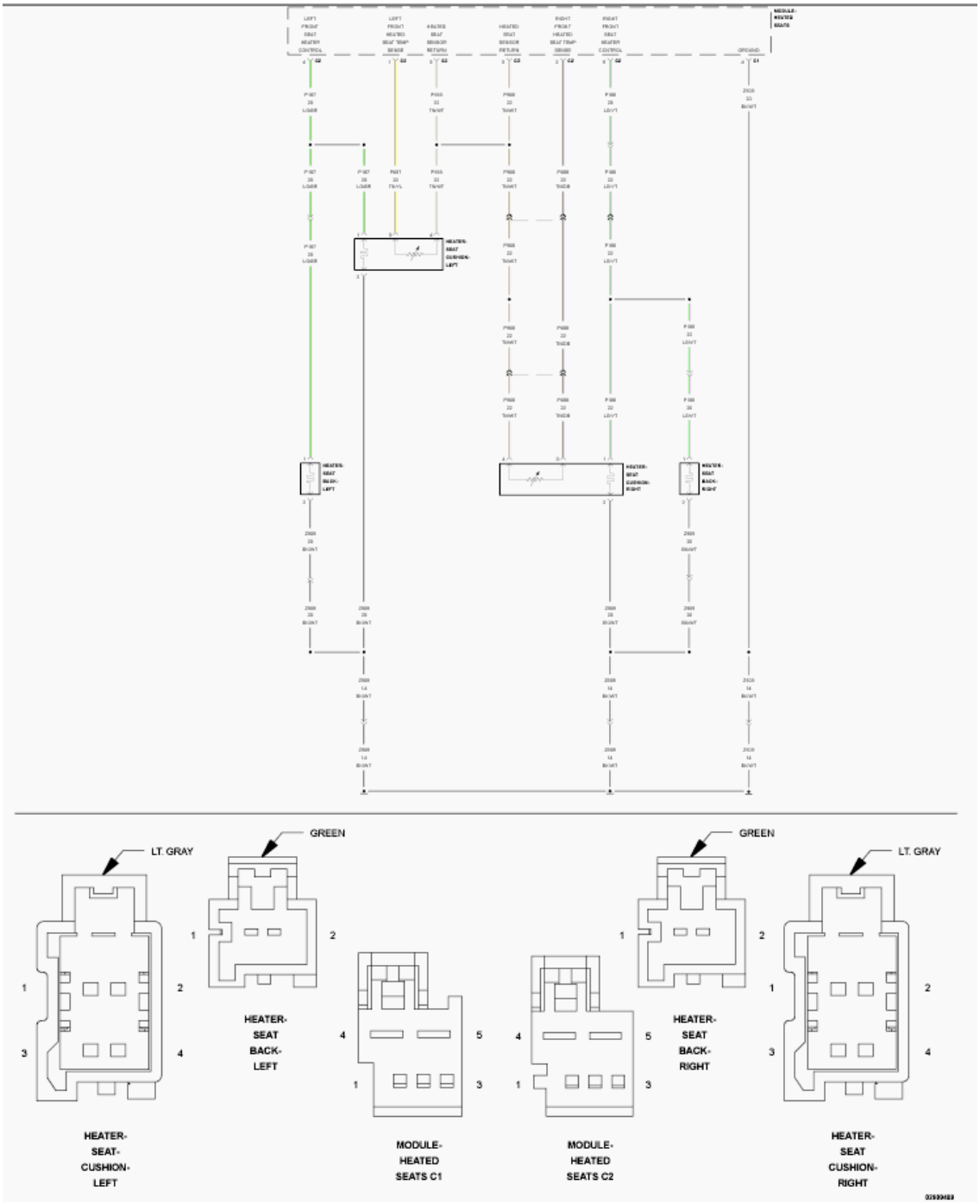

Fig. 48: Heated Seat Control Wiring Diagram
Courtesy of CHRYSLER GROUP, LLC

For a complete wiring diagram, **refer to appropriate SYSTEM WIRING DIAGRAMS article** .

WHEN MONITORED:

With the engine running.

SET CONDITION:

The Heated Seat Module (HSM) detects Voltage below 1.0 volt or current above 10.0 amps on the (P188) Right Front Seat Heater Control circuit for more than two seconds with the output turned on.

POSSIBLE CAUSES

Possible Causes
(P188) RIGHT FRONT SEAT HEATER CONTROL CIRCUIT SHORTED TO GROUND
(P188) RIGHT FRONT SEAT HEATER CONTROL CIRCUIT SHORTED TO THE (Z909) GROUND CIRCUIT
(P188) RIGHT FRONT SEAT HEATER CONTROL CIRCUIT SHORTED TO THE (P968) HEATED SEAT SENSOR RETURN CIRCUIT
SEAT CUSHION HEATER ELEMENT SHORTED
SEAT BACK HEATER ELEMENT SHORTED
HEATED SEAT MODULE (HSM)

DIAGNOSTIC TEST

1. **TEST FOR INTERMITTENT CONDITION**

NOTE: **Make sure the battery is fully charged and the charging system is operating properly before proceeding.**

1. Turn the ignition on.
2. Using a scan tool, record and erase Diagnostic Trouble Codes (DTCs).
3. Turn the ignition off.
4. Start the engine and let it run.
5. Turn the Heated Seat on and operate in all modes.
6. Using a scan tool, read DTCs.

Is the DTC active?

Yes

- Go To 2.

No

- The conditions that caused this code to set are not present at this time. Verify seat harness is routed correctly to the HSM. Using the wiring diagram/schematic as a guide, inspect the wiring and connectors. Look for chafed, pierced, pinched, or partially broken wires and broken, bent, pushed out, spread, corroded, or contaminated terminals. Attempt to reproduce condition by adjusting the seat.
- Perform the BODY VERIFICATION TEST. Refer to **BODY VERIFICATION TEST** .

2. **CHECK (P188) RIGHT FRONT SEAT HEATER CONTROL CIRCUIT IN BODY HARNESS FOR A SHORT TO GROUND**

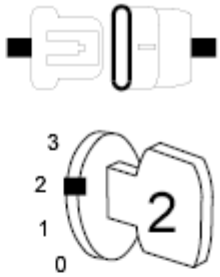

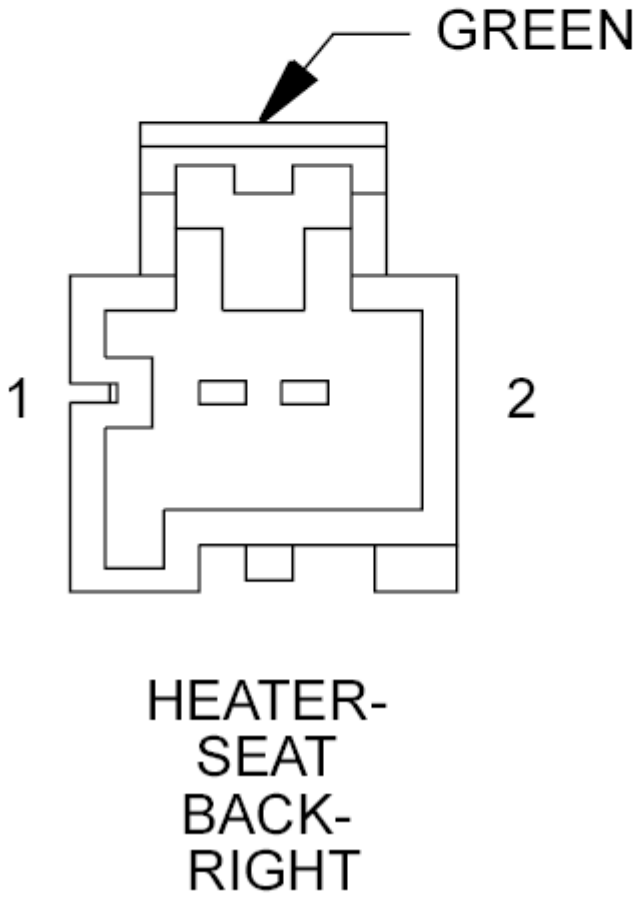

Fig. 49: Check Right Front Seat Heater Control Circuit In Body Harness For A Short To Ground
Courtesy of CHRYSLER GROUP, LLC

1. Turn the ignition off.
2. Disconnect the Right Seat Back Heater harness connector.
3. Disconnect the Right Seat Cushion Heater harness connector.

NOTE: Check connectors. Clean and repair as necessary.

4. Turn the ignition on.
5. Using a scan tool, erase DTCs.
6. Turn the ignition off.
7. Start the engine and let it run.
8. Turn the Heated Seat on and operate in all modes.
9. Using a scan tool, read DTCs.

Is the same DTC active?

Yes

- Go To 3.

No

- Go To 5.

3. **CHECK (P188) RIGHT FRONT SEAT HEATER CONTROL CIRCUIT FOR A SHORT TO GROUND**

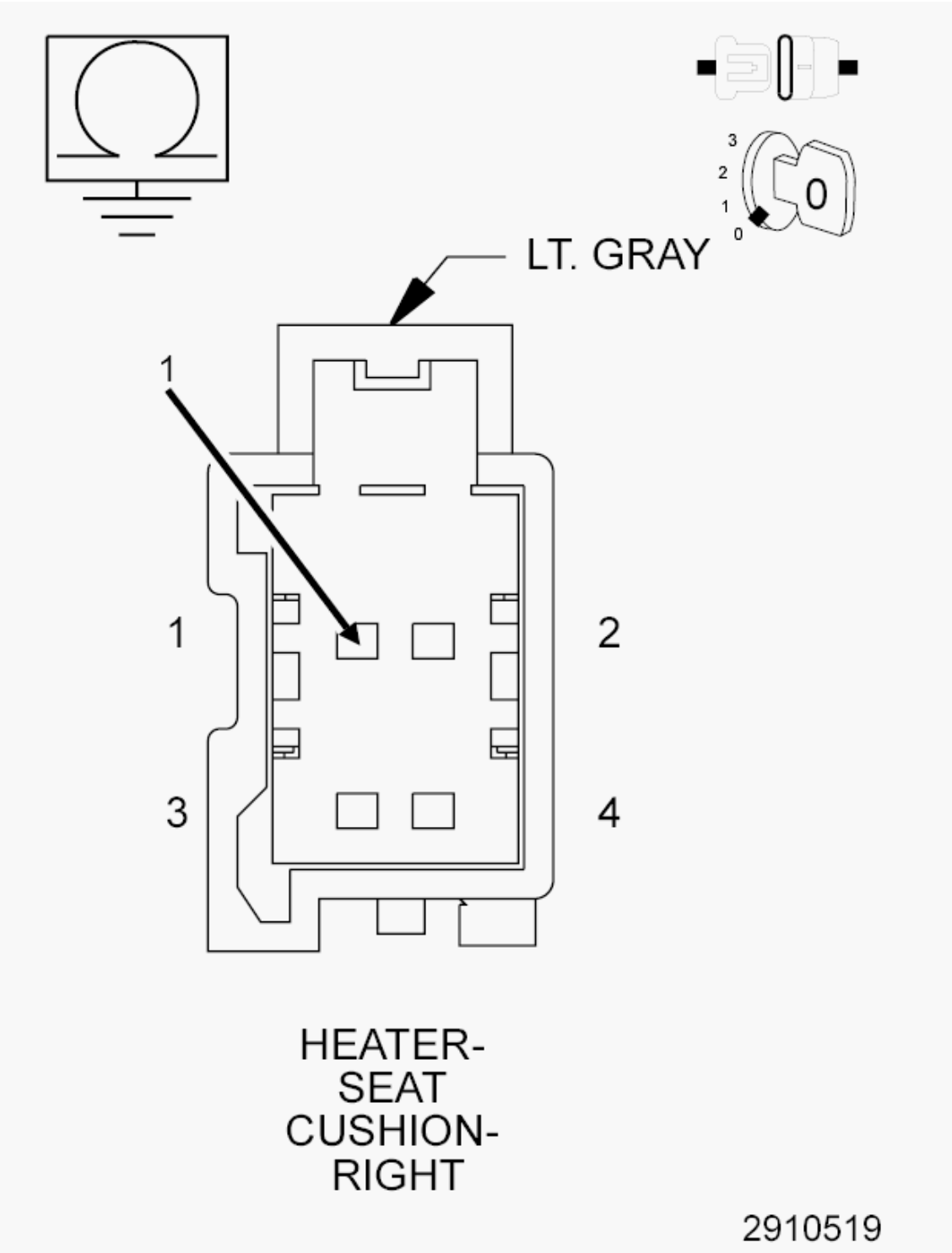

Fig. 50: Check Right Front Seat Heater Control Circuit For A Short To Ground
Courtesy of CHRYSLER GROUP, LLC

1. Turn the ignition off.
2. Disconnect the HSM C2 harness connector.

NOTE: Check connectors. Clean and repair as necessary.

3. Measure the resistance of the (P188) Right Front Seat Heater Control circuit between ground and the Right Seat Cushion Heater harness connector.

   Is the resistance below 10K Ohms?

   Yes

   - Repair the (P188) Right Front Seat Heater Control circuit for a short to ground.
   - Perform the BODY VERIFICATION TEST. Refer to **BODY VERIFICATION TEST** .

   No

   - Go To 4.

4. **CHECK (P188) RIGHT FRONT SEAT HEATER CONTROL CIRCUIT FOR A SHORT TO THE (Z909) GROUND CIRCUIT OR TO (P968) HEATED SEAT SENSOR RETURN CIRCUIT**

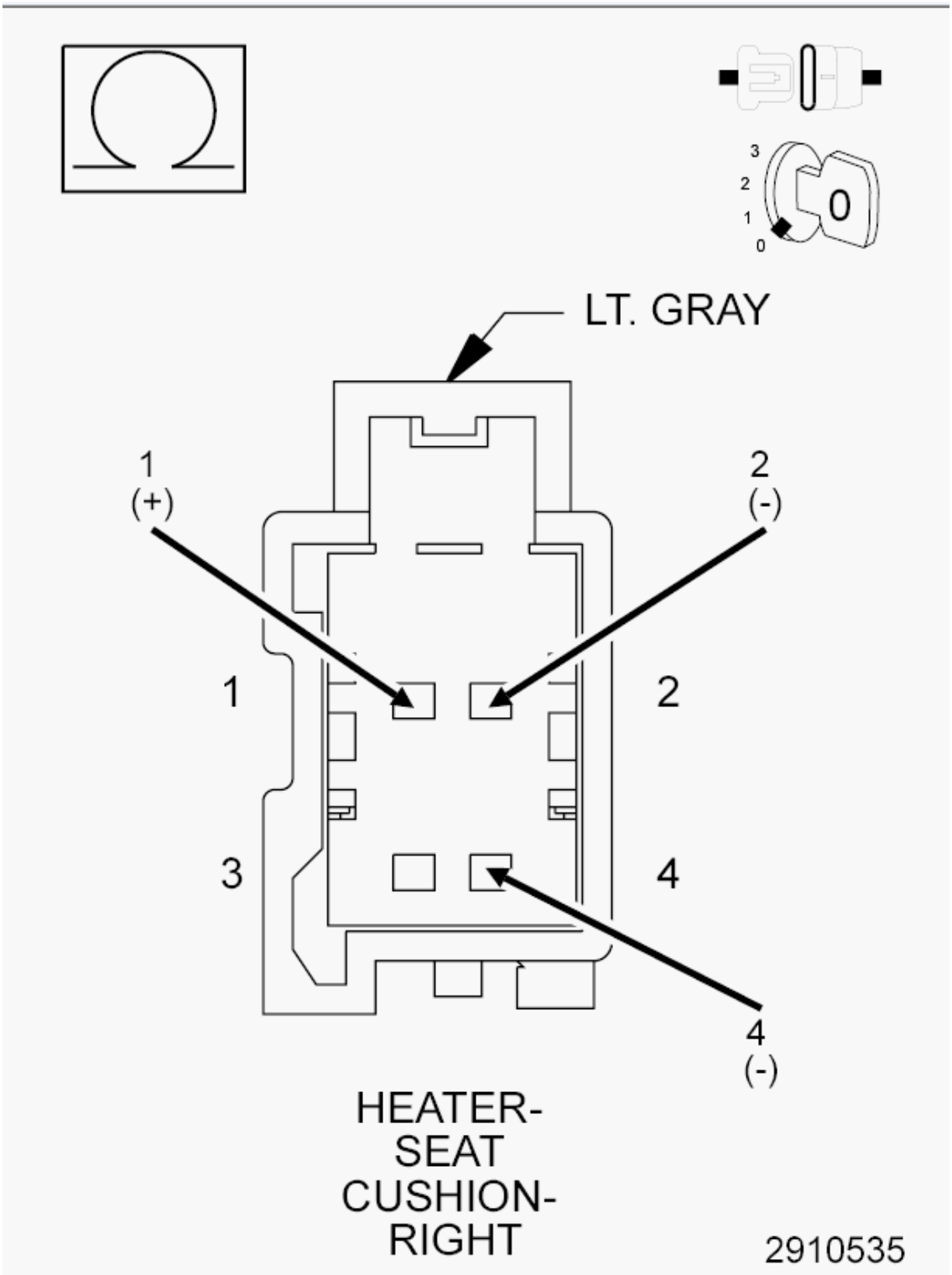

Fig. 51: Check Right Front Seat Heater Control Circuit For A Short To The Ground Circuit Or To Heated Seat Sensor Return Circuit
Courtesy of CHRYSLER GROUP, LLC

1. Measure the resistance between the (P188) Right Front Seat Heater Control circuit and the (Z909)

Ground circuit at the Right Seat Cushion Heater connector (harness side).

2. Measure the resistance between the (P188) Right Front Seat Heater Control circuit and the (P968) Heated Seat Sensor Return circuit at the Right Seat Cushion Heater connector (harness side).

   Is the resistance below 10K Ohms for either measurement?

   Yes

   - Repair all circuits with a resistance below 10K Ohms for a short to the (P188) Right Front Seat Heater Control circuit.
   - Perform the BODY VERIFICATION TEST. Refer to **BODY VERIFICATION TEST** .

   No

   - Replace the Heated Seat Module (HSM) in accordance with the Service Information.
   - Perform the BODY VERIFICATION TEST. Refer to **BODY VERIFICATION TEST** .

5. **CHECK (P188) RIGHT FRONT SEAT HEATER CONTROL CIRCUIT IN PIGTAIL HARNESS AND RIGHT SEAT BACK HEATER ELEMENT FOR A SHORT TO GROUND**

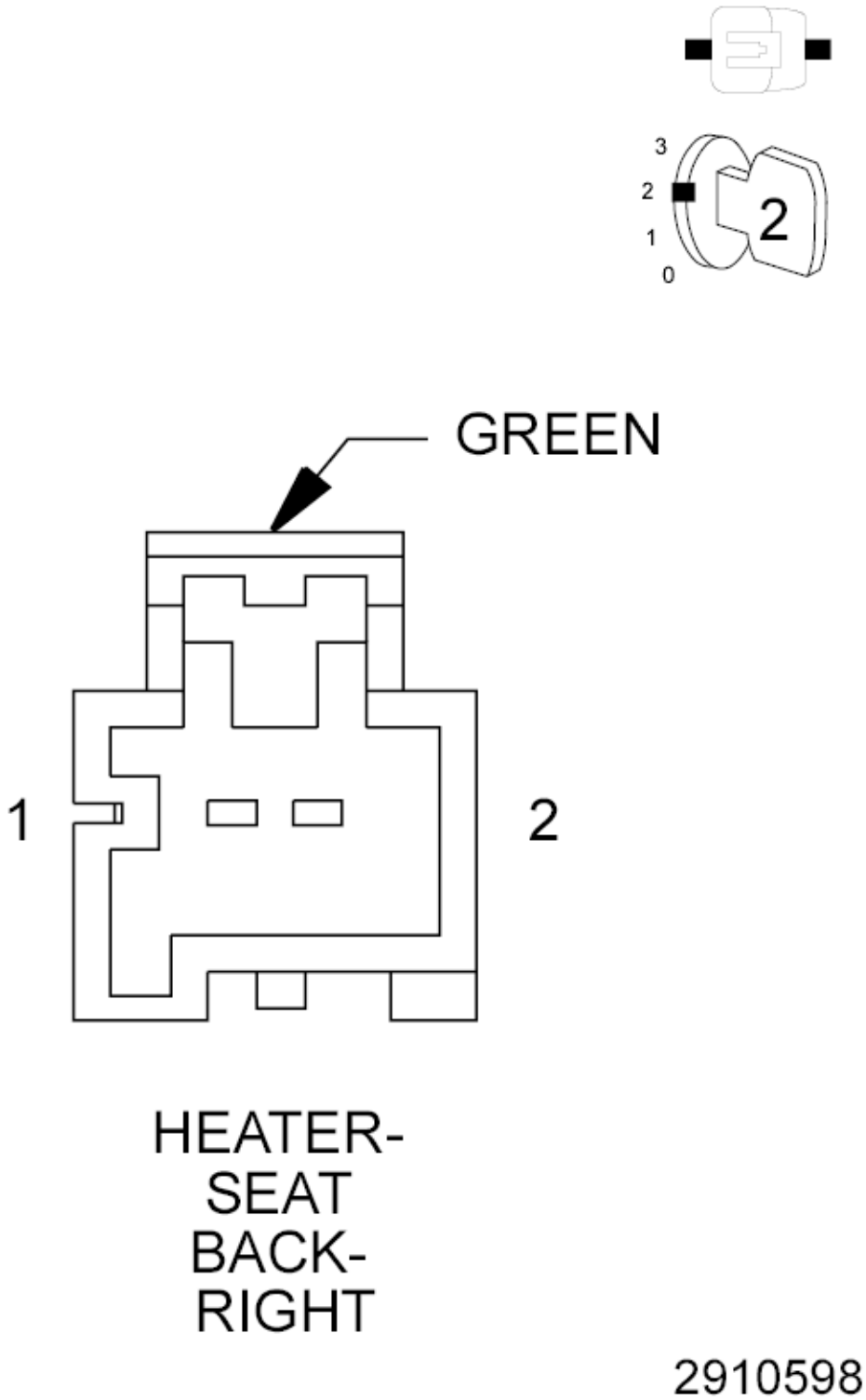

Fig. 52: Check Right Front Seat Heater Control Circuit In Pigtail Harness And Right Seat Back Heater Element For A Short To Ground
Courtesy of CHRYSLER GROUP, LLC

1. Turn the ignition off.
2. Reconnect the Right Seat Back Heater harness connector.
3. Turn the ignition on.
4. Using a scan tool, erase DTCs.
5. Turn the ignition off.
6. Start the engine and let it run.
7. Turn the Heated Seat on and operate in all modes.
8. Using a scan tool, read DTCs.

Is the same DTC active?

Yes

- Repair or replace the pigtail harness for a short to ground or replace the shorted Seat Back Heater Element in accordance with the Service Information.
- Perform the BODY VERIFICATION TEST. Refer to **BODY VERIFICATION TEST** .

No

- Replace the shorted Seat Cushion Heater Element in accordance with the Service Information.
- Perform the BODY VERIFICATION TEST. Refer to **BODY VERIFICATION TEST** .

B1E9A-12-FRONT RIGHT HEATER CONTROL CIRCUIT - CIRCUIT SHORT TO BATTERY

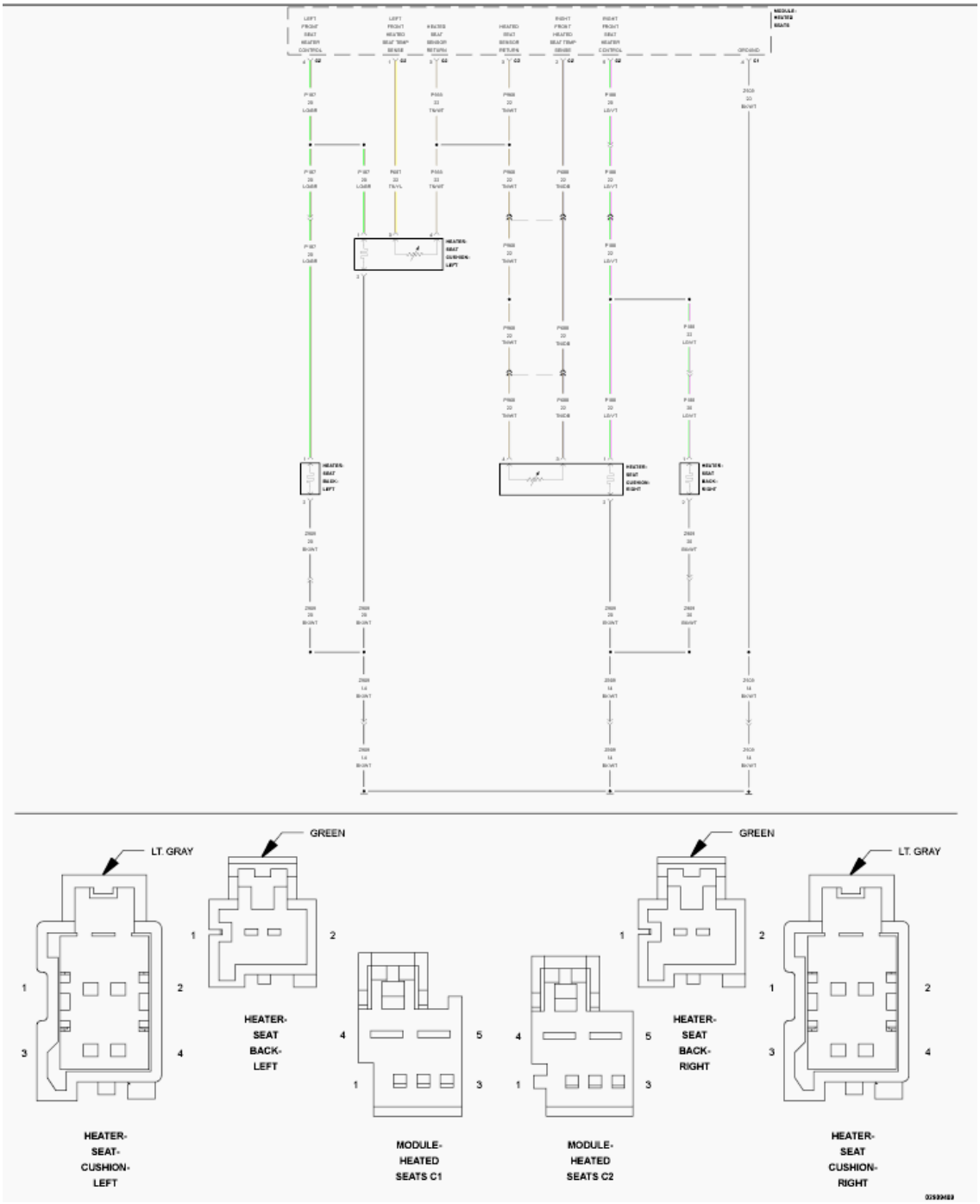

Fig. 53: Heated Seat Control Wiring Diagram
Courtesy of CHRYSLER GROUP, LLC

For a complete wiring diagram, **refer to appropriate SYSTEM WIRING DIAGRAMS article** .

WHEN MONITORED:

With the engine running.

SET CONDITION:

The Heated Seat Module (HSM) detects Voltage above 5.0 volts on the (P188) Right Front Seat Heater Control circuit for more than two seconds with the output turned off.

POSSIBLE CAUSES

Possible Causes
(P188) RIGHT FRONT SEAT HEATER CONTROL CIRCUIT SHORTED TO VOLTAGE
(P188) RIGHT FRONT SEAT HEATER CONTROL CIRCUIT SHORTED TO THE (P187) LEFT FRONT SEAT HEATER CONTROL CIRCUIT
HEATED SEAT MODULE (HSM)

DIAGNOSTIC TEST

1. **TEST FOR INTERMITTENT CONDITION**

   NOTE: Make sure the battery is fully charged and the charging system is operating properly before proceeding.

   1. Turn the ignition on.
   2. Using a scan tool, record and erase Diagnostic Trouble Codes (DTCs).
   3. Turn the ignition off.
   4. Start the engine and let it run.
   5. Using a scan tool, read DTCs.

   Is the DTC active?

   Yes

   - Go To 2.

   No

   - The conditions that caused this code to set are not present at this time. Verify seat harness is routed correctly to the HSM. Using the wiring diagram/schematic as a guide, inspect the wiring and connectors. Look for chafed, pierced, pinched, or partially broken wires and broken, bent, pushed out, spread, corroded, or contaminated terminals. Attempt to reproduce condition by operating all HSM functions one at a time, except for the Right Front Heated Seat. Attempt to reproduce condition by adjusting the seat.
   - Perform the BODY VERIFICATION TEST. Refer to **BODY VERIFICATION TEST** .

2. **CHECK (P188) RIGHT FRONT SEAT HEATER CONTROL CIRCUIT FOR A SHORT TO VOLTAGE**

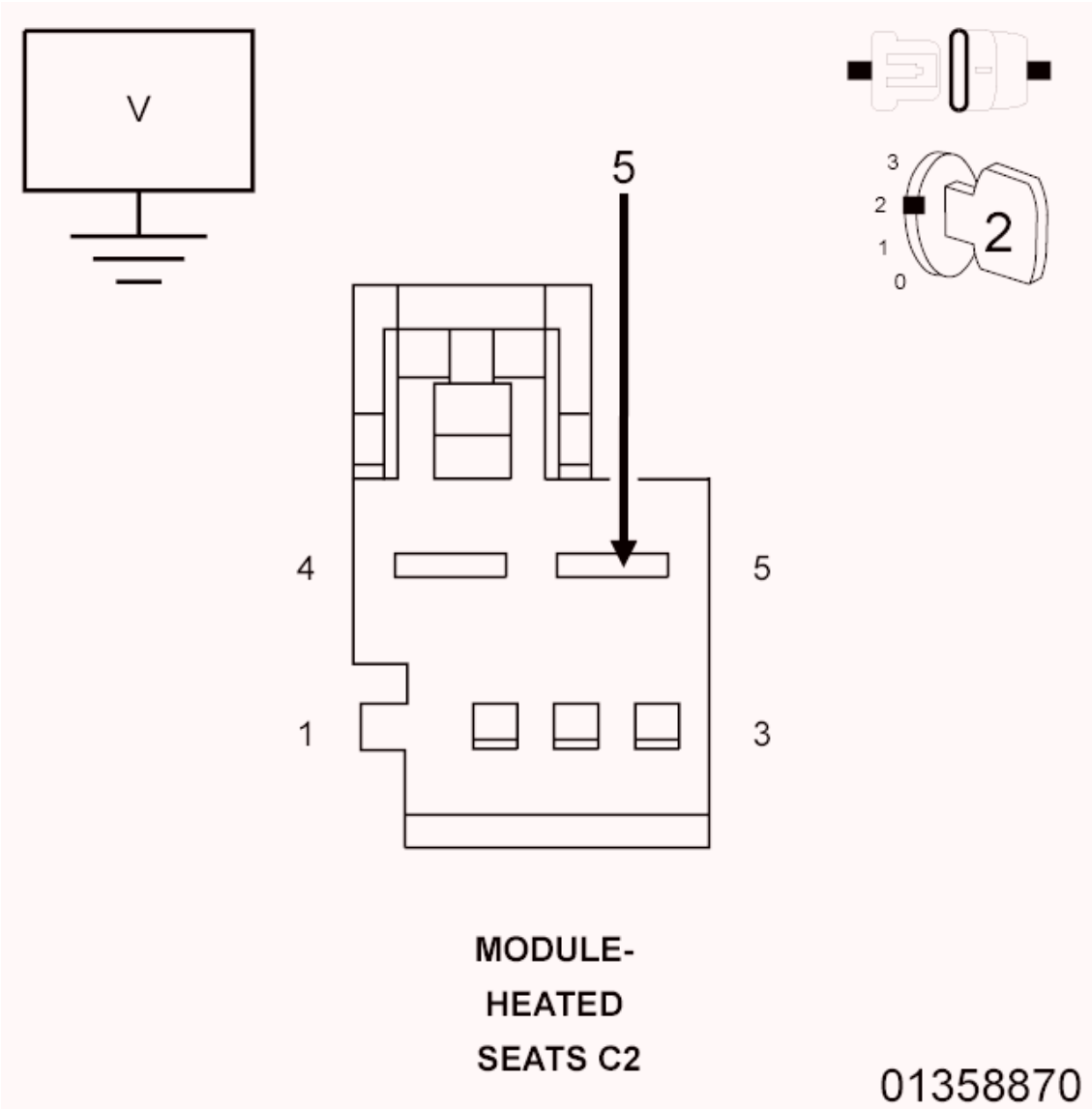

Fig. 54: Checking Right Front Seat Heater Control Circuit For A Short To Voltage
Courtesy of CHRYSLER GROUP, LLC

1. Turn the ignition off.
2. Disconnect the HSM C2 harness connector.

NOTE: Check connectors. Clean and repair as necessary.

3. Start the engine and let it run.
4. Measure the voltage of the (P188) Right Front Seat Heater Control circuit between the HSM C2 harness connector and ground.

   Is there any voltage present?

   Yes

- Repair the (P188) Right Front Seat Heater Control circuit for a short to voltage.
- Perform the BODY VERIFICATION TEST. Refer to **BODY VERIFICATION TEST** .

No

- Go To 3.

3. **CHECK (P188) RIGHT FRONT SEAT HEATER CONTROL CIRCUIT FOR A SHORT TO VOLTAGE DURING SEAT ADJUSTMENT**

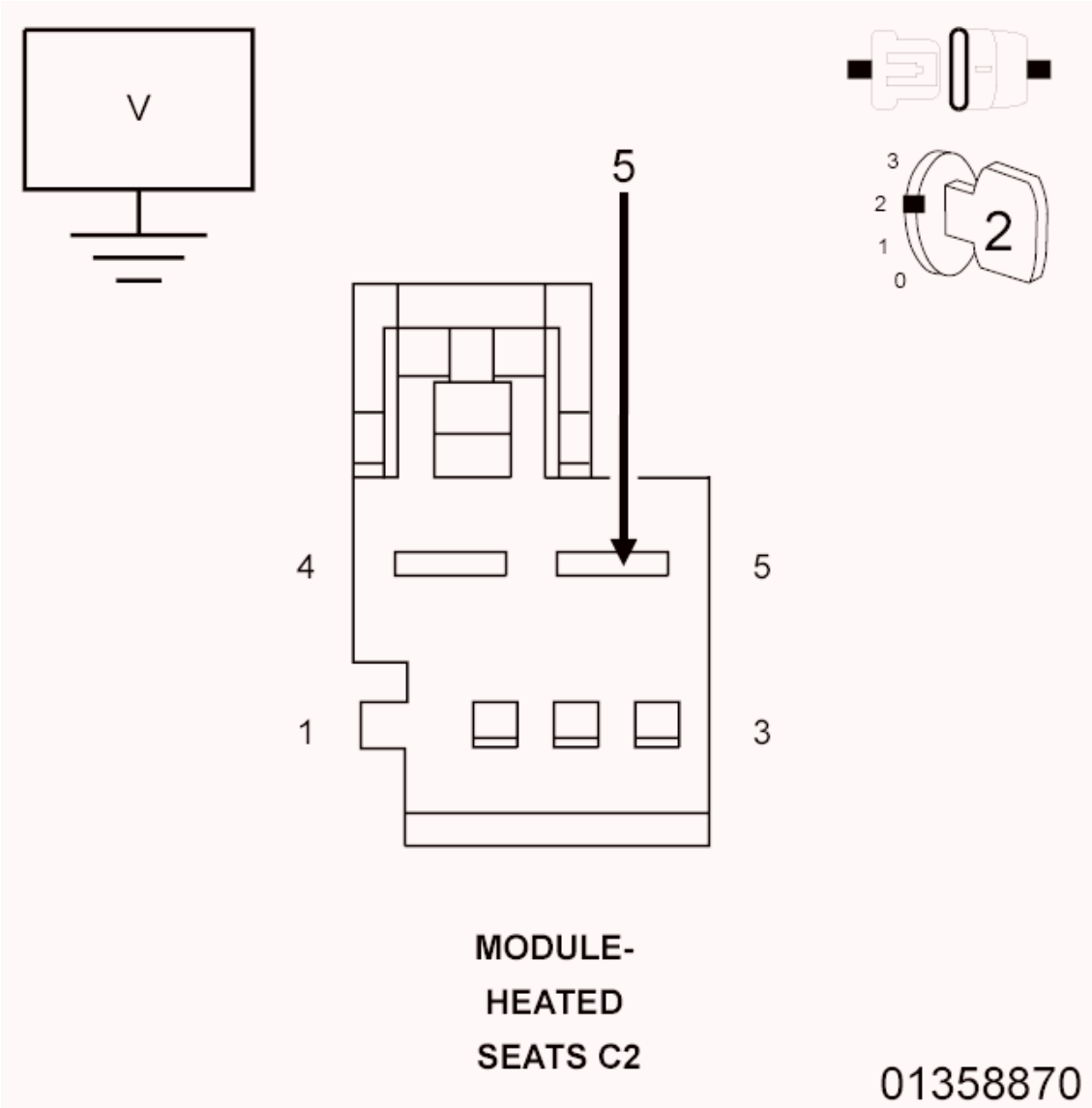

Fig. 55: Checking Right Front Seat Heater Control Circuit For A Short To Voltage
Courtesy of CHRYSLER GROUP, LLC

1. Measure the voltage of the (P188) Right Front Seat Heater Control circuit between the HSM C2 harness connector and ground while adjusting the seat in all positions.

Is there any voltage present during the seat adjustment?

Yes

- Repair the (P188) Right Front Seat Heater Control circuit for a short to voltage.
- Perform the BODY VERIFICATION TEST. Refer to **BODY VERIFICATION TEST** .

No

- Go To 4.

4. **CHECK (P188) RIGHT FRONT SEAT HEATER CONTROL CIRCUIT FOR A SHORT TO THE (P187) LEFT FRONT SEAT HEATER CONTROL CIRCUIT**

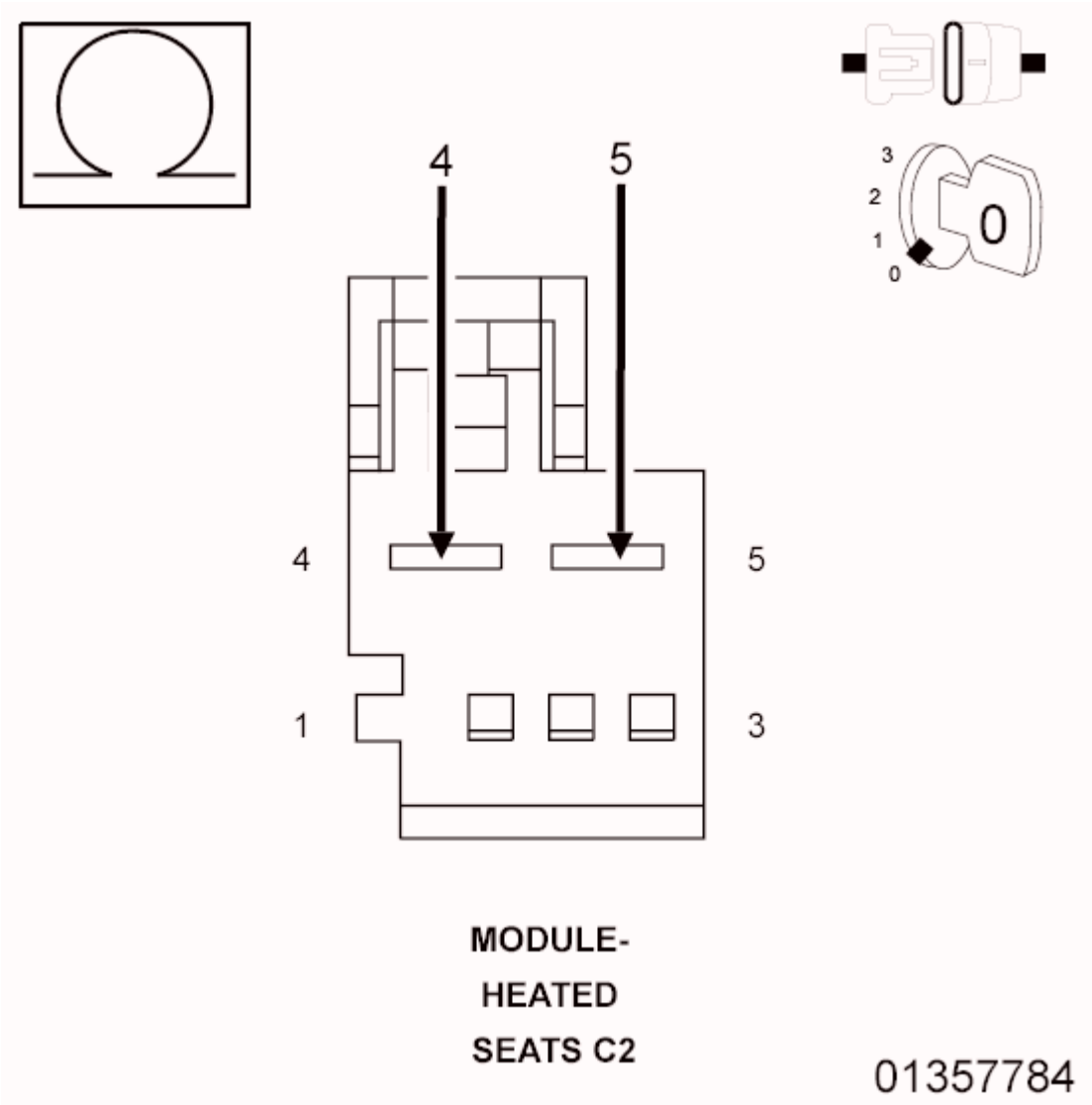

Fig. 56: Checking Front Seat Heater Control Circuit For A Short To The Right Front Seat Heater Control
Courtesy of CHRYSLER GROUP, LLC

1. Turn the ignition off.
2. Disconnect the Left Seat Back Heater harness connector in the Left Front Seat.
3. Disconnect the Right Seat Back Heater harness connector in the Right Front Seat.
4. Disconnect the Right Seat Cushion Heater harness connector.
5. Measure the resistance between the (P188) Right Front Seat Heater Control circuit and (P187) Left Front Seat Heater Control circuit at HSM C2 harness connector.

   Is the resistance below 10K Ohms?

   Yes

   - Repair the (P188) Right Front Seat Heater Control circuit for a short to the (P187) Left Front Seat Heater Control circuit.
   - Perform the BODY VERIFICATION TEST. Refer to **BODY VERIFICATION TEST** .

   No

   - Replace the Heated Seat Module (HSM) in accordance with the Service Information. Refer to **PAD, HEATER, REMOVAL** .
   - Perform the BODY VERIFICATION TEST. Refer to **BODY VERIFICATION TEST** .

B1E9A-13-FRONT RIGHT HEATER CONTROL CIRCUIT - CIRCUIT OPEN

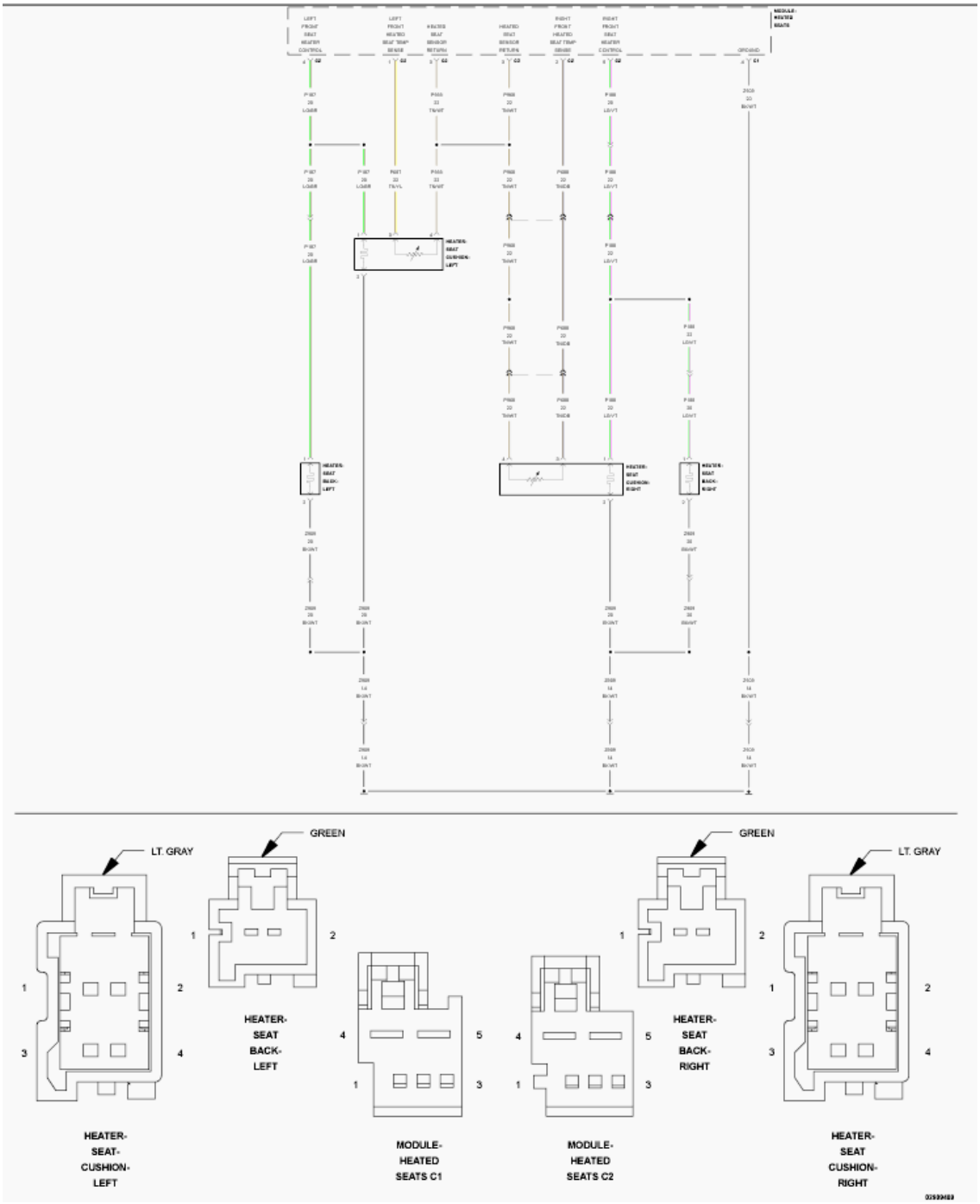

Fig. 57: Heated Seat Control Wiring Diagram
Courtesy of CHRYSLER GROUP, LLC

For a complete wiring diagram, **refer to appropriate SYSTEM WIRING DIAGRAMS article** .

WHEN MONITORED:

With the engine running.

SET CONDITION:

The Heated Seat Module (HSM) detects current below 0.5 of amp on the (P188) Right Front Seat Heater Control circuit for more than two seconds with the output turned on.

POSSIBLE CAUSES

Possible Causes
(P188) RIGHT FRONT SEAT HEATER CONTROL CIRCUIT OPEN
(Z909) GROUND CIRCUIT OPEN
SEAT CUSHION HEATER ELEMENT OPEN
SEAT BACK HEATER ELEMENT OPEN
HEATED SEAT MODULE (HSM)

DIAGNOSTIC TEST

1. **TEST FOR INTERMITTENT CONDITION**

   NOTE: Make sure the battery is fully charged and the charging system is operating properly before proceeding.

   1. Turn the ignition on.
   2. Using a scan tool, record and erase Diagnostic Trouble Codes (DTCs).
   3. Turn the ignition off.
   4. Start the engine and let it run.
   5. Turn the Heated Seat on and operate in all modes.
   6. Using a scan tool, read DTCs.

   Is the DTC active?

   Yes

   - Go To 2.

   No

   - The conditions that caused this code to set are not present at this time. Verify seat harness is routed correctly to the HSM. Using the wiring diagram/schematic as a guide, inspect the wiring and connectors. Look for chafed, pierced, pinched, or partially broken wires and broken, bent, pushed out, spread, corroded, or contaminated terminals. Attempt to reproduce condition by adjusting the seat.
   - Perform the BODY VERIFICATION TEST. Refer to **BODY VERIFICATION TEST** .

2. **CHECK (P188) RIGHT FRONT SEAT HEATER CONTROL CIRCUIT FOR AN OPEN**

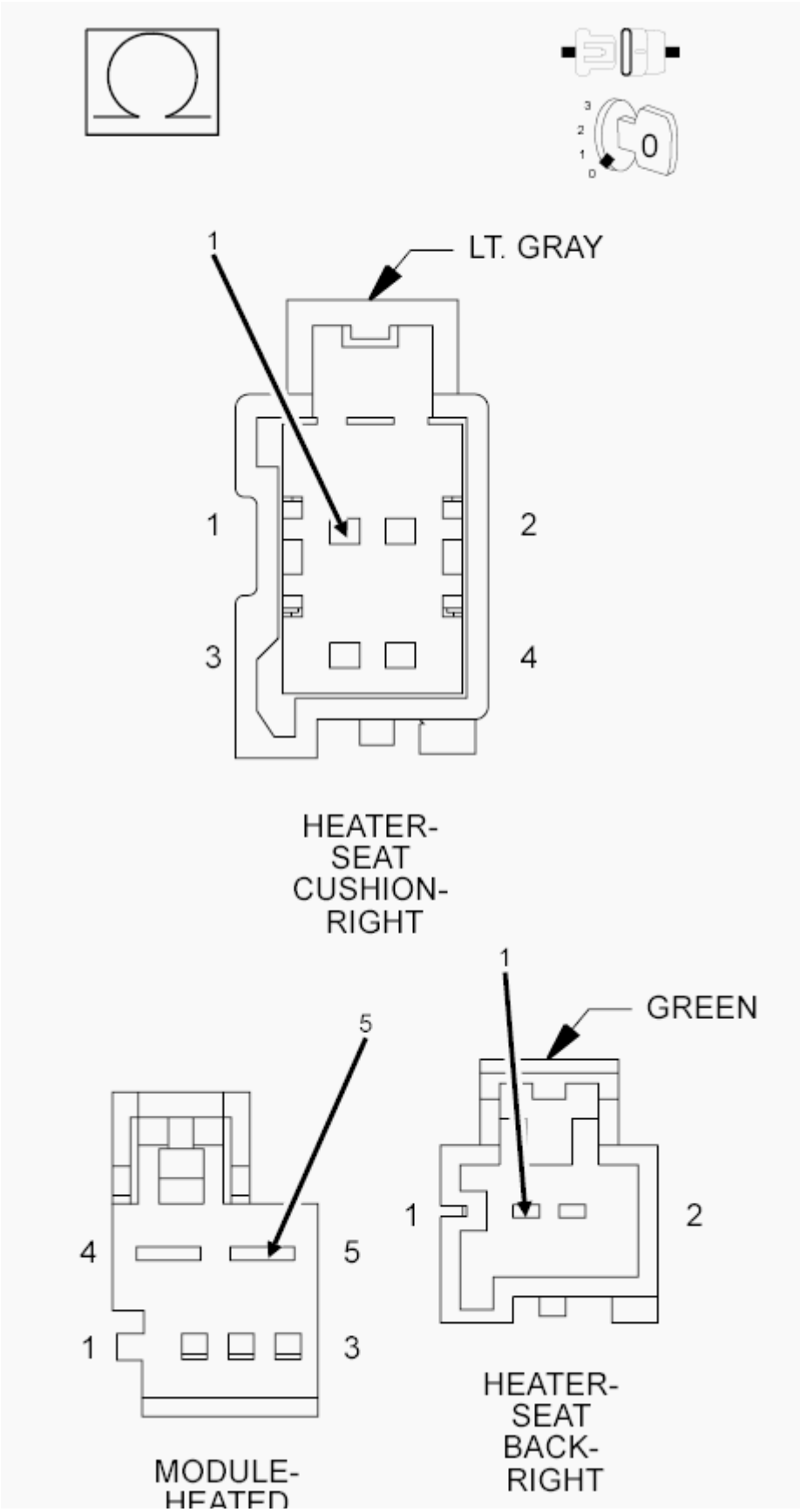
3
2
1
0
0
1
LT. GRAY
1
2
3
4
HEATER-
SEAT
CUSHION-
RIGHT
1
GREEN
5
1
2
4
5
1
3
HEATER-
SEAT
BACK-
RIGHT
MODULE-
HEATED

Fig. 58: Check Right Front Seat Heater Control Circuit For An Open
Courtesy of CHRYSLER GROUP, LLC

1. Turn the ignition off.
2. Disconnect the HSM C2 harness connector.
3. Disconnect the Right Seat Cushion Heater harness connector.
4. Disconnect the Right Seat Back Heater harness connector.

NOTE: Check connectors. Clean and repair as necessary.

5. Measure the resistance of the (P188) Right Front Seat Heater Control circuit between the HSM C2 harness connector and the Right Seat Cushion Heater connector (harness side).
6. Measure the resistance of the (P188) Right Front Seat Heater Control circuit between the HSM C2 harness connector and the Right Seat Back Heater harness connector (harness side).

Is the resistance below 5.0 Ohms for both measurements?

Yes

- Go To 3.

No

- Repair the (P188) Right Front Seat Heater Control circuit for an open.
- Perform the BODY VERIFICATION TEST. Refer to **BODY VERIFICATION TEST** .

3. **CHECK (Z909) GROUND CIRCUIT FOR AN OPEN**

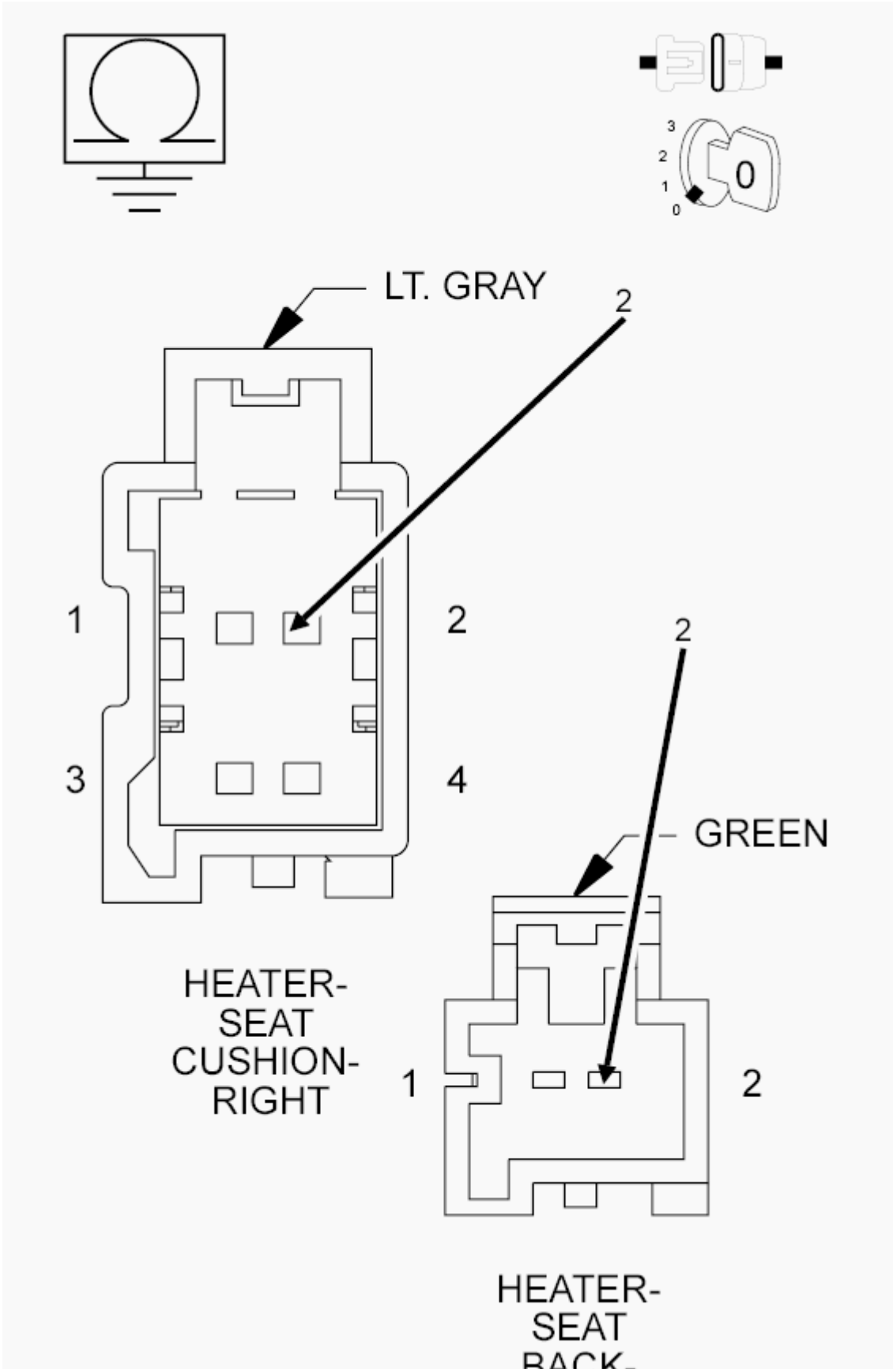
3
2
1
0
0
LT. GRAY
2
1
2
3
4
HEATER-
SEAT
CUSHION-
RIGHT
2
GREEN
1
2
HEATER-
SEAT

Fig. 59: Check Ground Circuit For An Open
Courtesy of CHRYSLER GROUP, LLC

1. Measure the resistance of the (Z909) Ground circuit between ground and the Right Seat Cushion Heater harness connector.
2. Measure the resistance of the (Z909) Ground circuit between ground and the Right Seat Back harness connector.

   Is the resistance below 5.0 Ohms for both measurements?

   Yes

   - Go To 4.

   No

   - Repair the (Z909) Ground circuit for an open.
   - Perform the BODY VERIFICATION TEST. Refer to **BODY VERIFICATION TEST** .

4. **CHECK FOR AN OPEN RIGHT SEAT CUSHION HEATER ELEMENT**

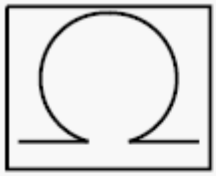

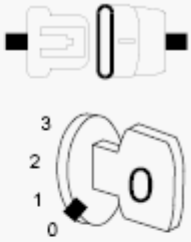

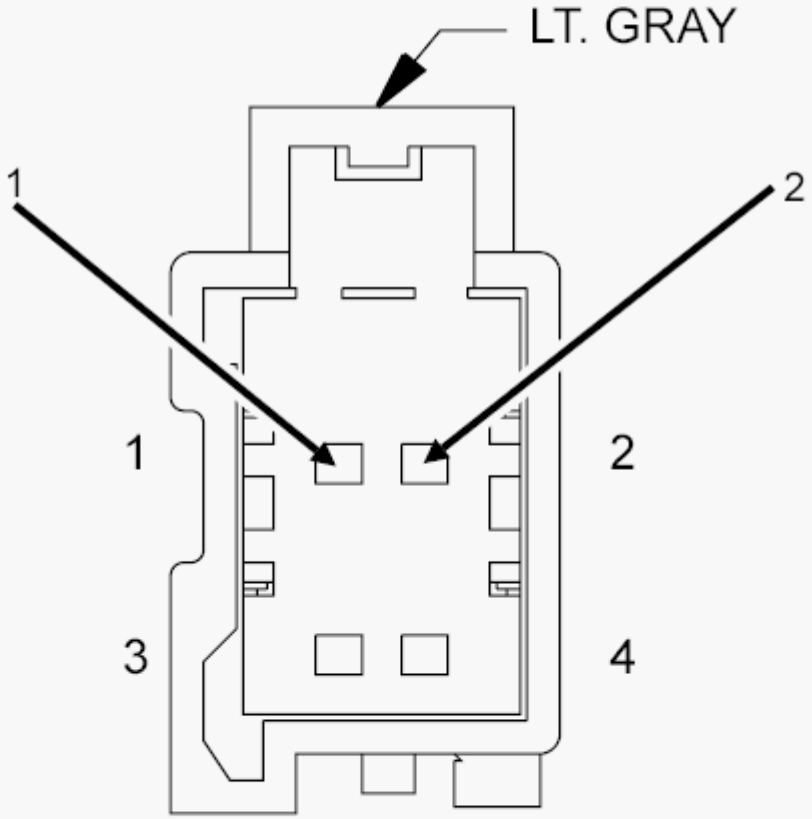

HEATER-
SEAT
CUSHION-
RIGHT

Fig. 60: Check For An Open Right Seat Cushion Heater Element
Courtesy of CHRYSLER GROUP, LLC

1. Measure the resistance between the (P188) Right Front Seat Heater Control circuit and the (Z909) Ground circuit at the Right Seat Cushion Heater connector (component side).

   Is the resistance above 4.8 Ohms (without vented seats) or 9.8 Ohms (with vented seats)?

   Yes

   - Replace the Seat Cushion Heater Element in accordance with the Service Information.
   - Perform the BODY VERIFICATION TEST. Refer to **BODY VERIFICATION TEST** .

   No

   - Go To 5.

5. **RIGHT SEAT BACK HEATER ELEMENT FOR AN OPEN**

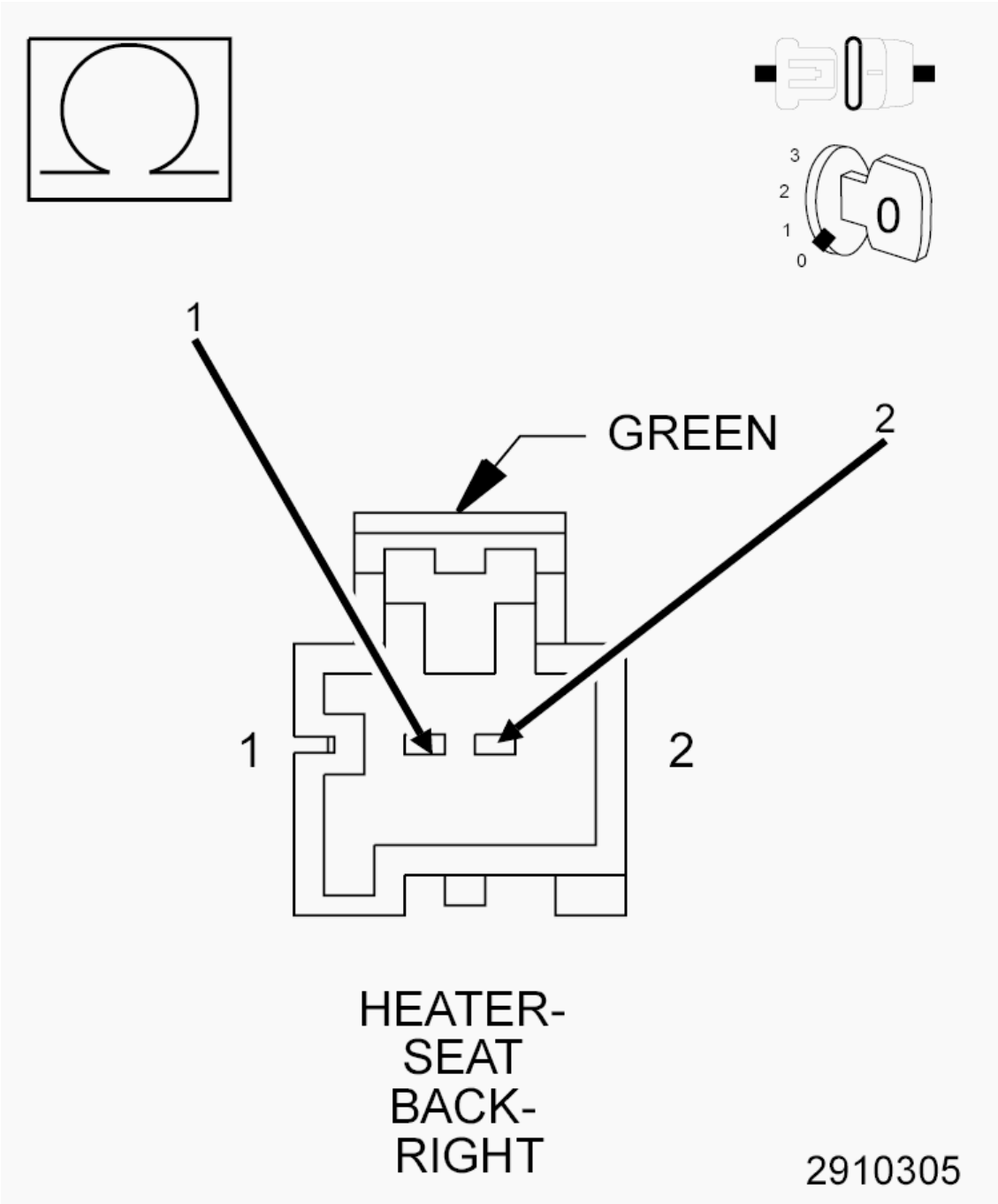

Fig. 61: Checking Right Seat Back Heater Element For An Open
Courtesy of CHRYSLER GROUP, LLC

1. Measure the resistance between the (P188) Right Front Seat Heater Control circuit and the (Z909) Ground circuit at the Right Seat Back harness connector (seat back side).

   Is the resistance above 4.8 Ohms (without vented seats) or 11.6 Ohms (with vented seats)?

   Yes

- Replace the open Seat Back Heater Element in accordance with the Service Information.
- Perform the BODY VERIFICATION TEST. Refer to **BODY VERIFICATION TEST** .

No

- Replace the Heated Seat Module (HSM) in accordance with the Service Information.
- Perform the BODY VERIFICATION TEST. Refer to **BODY VERIFICATION TEST** .

B1E9A-1E-FRONT RIGHT HEATER CONTROL CIRCUIT - CIRCUIT RESISTANCE OUT OF RANGE

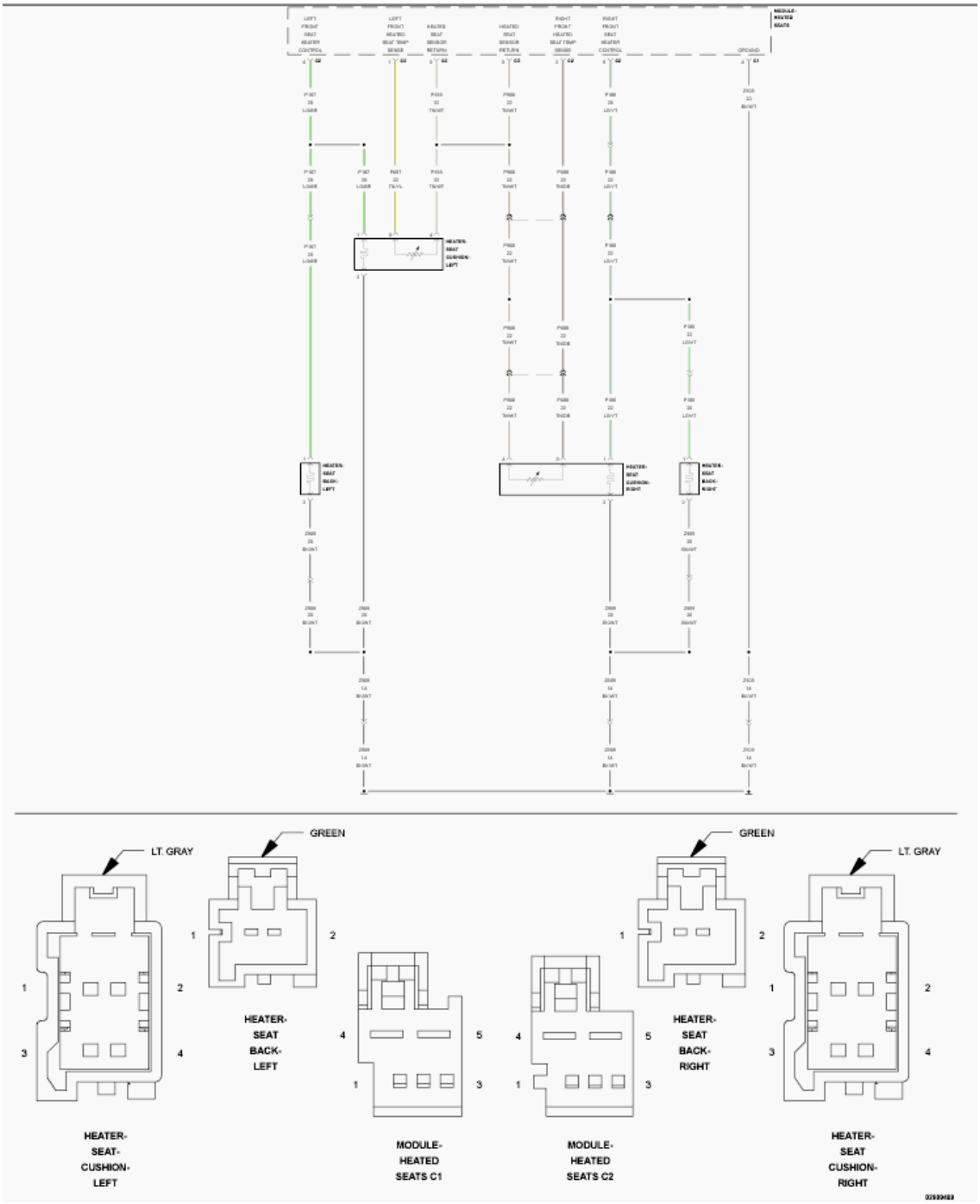

Fig. 62: Heated Seat Control Wiring Diagram
Courtesy of CHRYSLER GROUP, LLC

For a complete wiring diagram, **refer to appropriate SYSTEM WIRING DIAGRAMS article** .

WHEN MONITORED:

With the engine running.

SET CONDITION:

The Heated Seat Module (HSM) detects impedance above threshold on the (P188) Right Front Seat Heater Control circuit for more than two seconds with the output turned on.

POSSIBLE CAUSES

Possible Causes
(P188) RIGHT FRONT SEAT HEATER CONTROL CIRCUIT RESISTANCE HIGH
(Z909) GROUND CIRCUIT RESISTANCE HIGH
SEAT CUSHION HEATER ELEMENT
SEAT BACK HEATER ELEMENT
HEATED SEAT MODULE (HSM)

DIAGNOSTIC TEST

1. **TEST FOR INTERMITTENT CONDITION**

NOTE: **Before proceeding, verify the battery is fully charged, the charging system is operating properly, no Battery or System Voltage Diagnostic Trouble Codes (DTCs) are set, and the HSM Power and Ground circuits are clean and tight.**

1. Turn the ignition on.
2. Using a scan tool, record and erase Diagnostic Trouble Codes (DTCs).
3. Turn the ignition off.
4. Start the engine and let it run.
5. Turn the Heated Seat on and operate in all modes.
6. Using a scan tool, read DTCs.

Is the DTC active?

Yes

- Go To 2.

No

- The conditions that caused this code to set are not present at this time. Verify seat harness is routed correctly to the HSM. Using the wiring diagram/schematic as a guide, inspect the wiring and connectors. Look for chafed, pierced, pinched, or partially broken wires and broken, bent, pushed out, spread, corroded, or contaminated terminals. Attempt to reproduce condition by adjusting the seat.
- Perform the BODY VERIFICATION TEST. Refer to **BODY VERIFICATION TEST** .

2. **CHECK (P188) RIGHT FRONT SEAT HEATER CONTROL CIRCUIT FOR HIGH RESISTANCE**

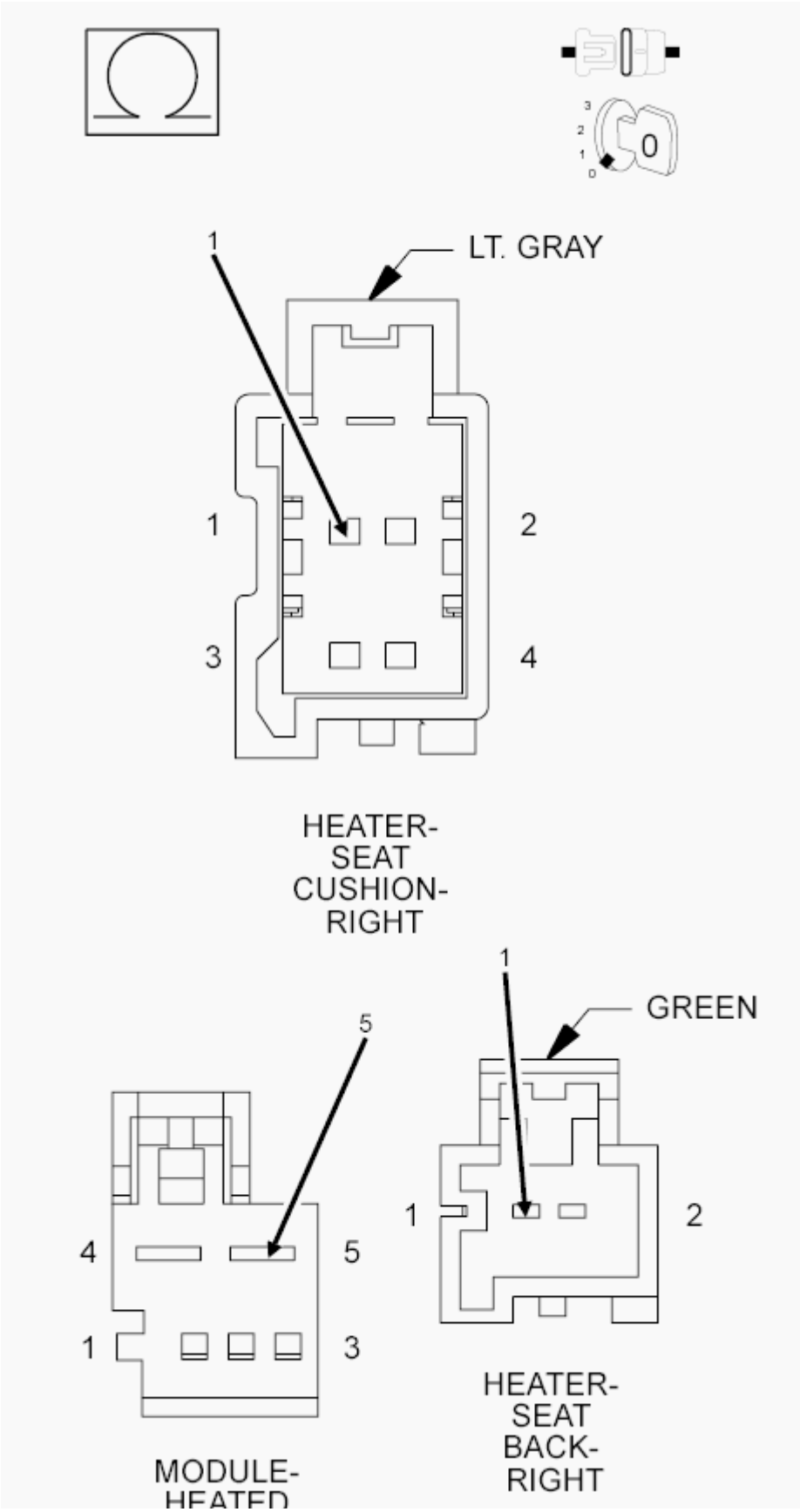
3
2
1
0
0
1
LT. GRAY
1
2
3
4
HEATER-
SEAT
CUSHION-
RIGHT
1
GREEN
5
1
2
4
5
1
3
HEATER-
SEAT
BACK-
RIGHT
MODULE-
HEATED

Fig. 63: Check Right Front Seat Heater Control Circuit For An Open
Courtesy of CHRYSLER GROUP, LLC

1. Turn the ignition off.
2. Disconnect the HSM C2 harness connector.
3. Disconnect the Right Seat Cushion Heater harness connector.
4. Disconnect the Right Seat Back harness connector.

NOTE: Check connectors. Clean and repair as necessary.

5. Measure the resistance of the (P188) Right Front Seat Heater Control circuit between the HSM C2 harness connector and the Right Seat Cushion Heater harness connector.
6. Measure the resistance of the (P188) Right Front Seat Heater Control circuit between the HSM C2 harness connector and the Right Seat Back Heater harness connector.

Is the resistance below 5.0 Ohms for both measurements?

Yes

- Go To 3.

No

- Repair the (P188) Right Front Seat Heater Control circuit for high resistance.
- Perform the BODY VERIFICATION TEST. Refer to **BODY VERIFICATION TEST** .

3. **CHECK (Z909) GROUND CIRCUIT FOR HIGH RESISTANCE**

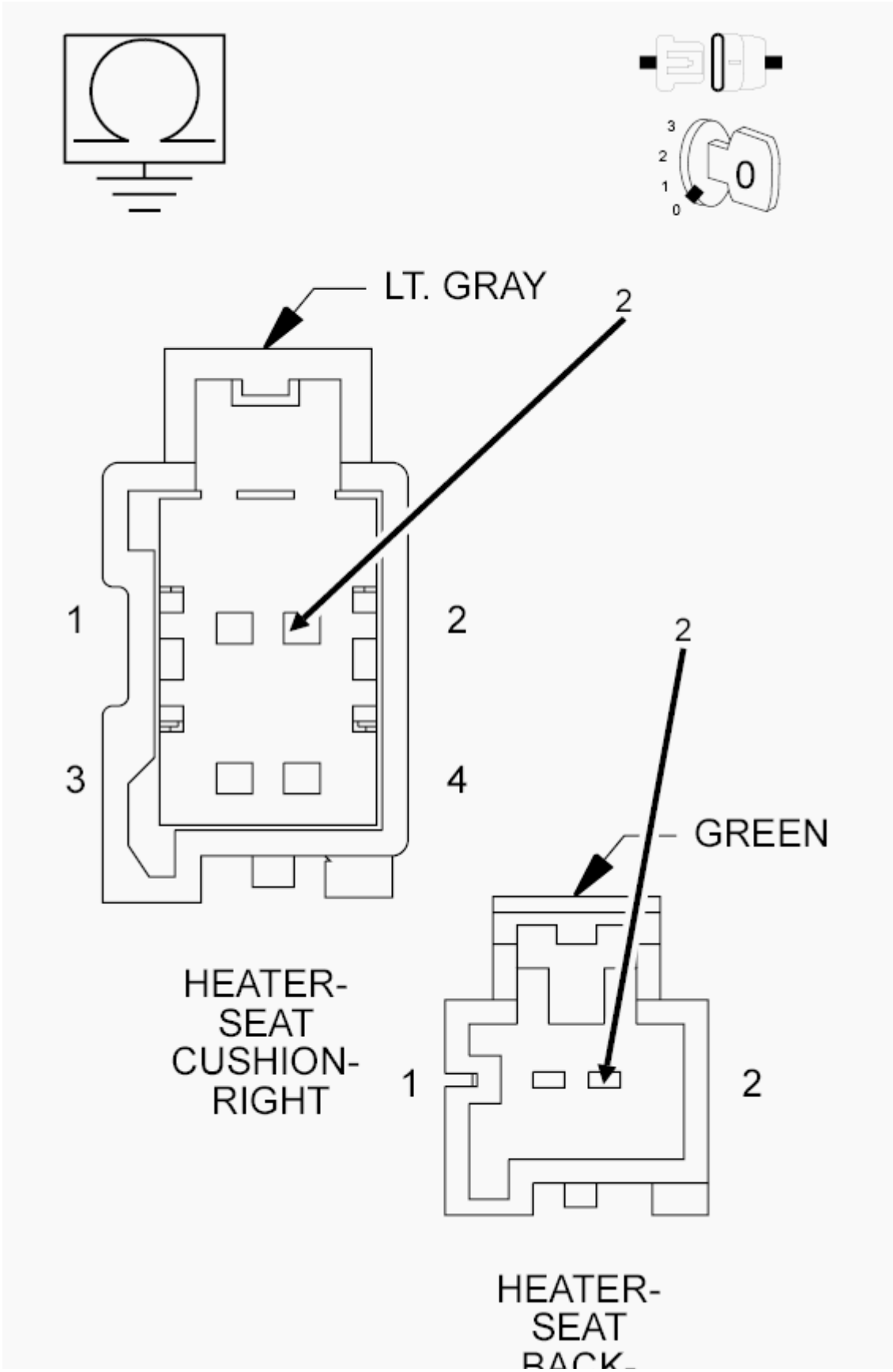
3
2
1
0
0
LT. GRAY
2
1
2
3
4
HEATER-
SEAT
CUSHION-
RIGHT
2
GREEN
1
2
HEATER-
SEAT

Fig. 64: Check Ground Circuit For An Open
Courtesy of CHRYSLER GROUP, LLC

1. Measure the resistance of the (Z909) Ground circuit between ground and the Right Seat Cushion Heater harness connector.
2. Measure the resistance of the (Z909) Ground circuit between ground and the Right Seat Back Heater harness connector.

   Is the resistance below 5.0 Ohms for both measurements?

   Yes

   - Go To 4.

   No

   - Repair the (Z909) Ground circuit for high resistance.
   - Perform the BODY VERIFICATION TEST. Refer to **BODY VERIFICATION TEST** .

4. **CHECK RIGHT SEAT CUSHION HEATER ELEMENT RESISTANCE**

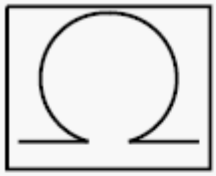

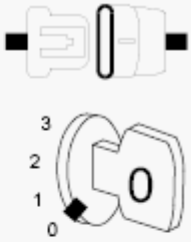

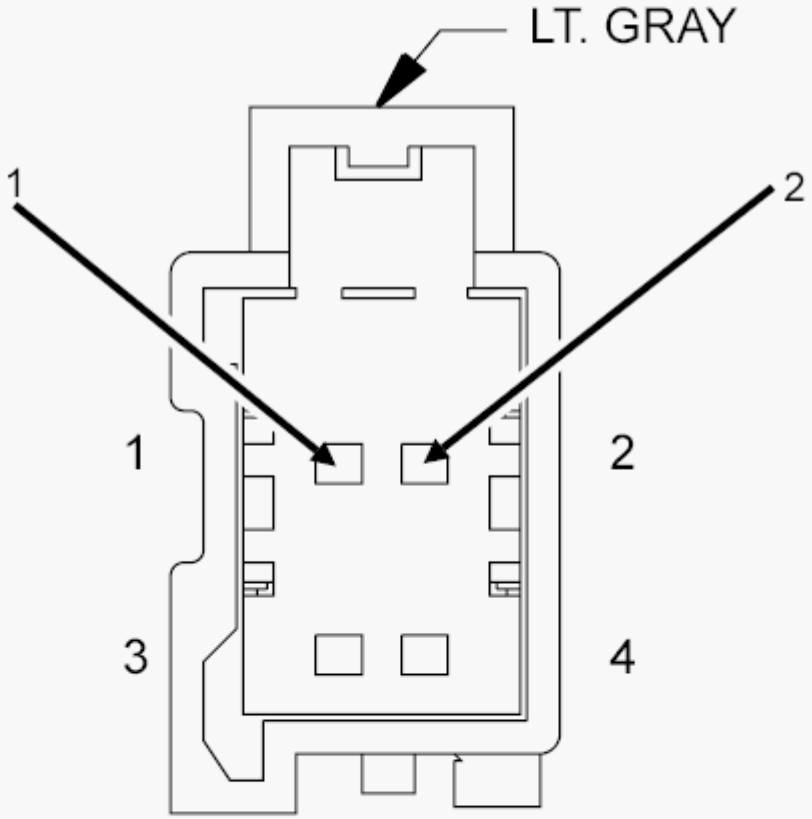

HEATER-
SEAT
CUSHION-
RIGHT

Fig. 65: Check For An Open Right Seat Cushion Heater Element
Courtesy of CHRYSLER GROUP, LLC

1. Measure the resistance between the (P188) Right Front Seat Heater Control circuit and the (Z909) Ground circuit at the Right Seat Cushion Heater connector (component side).

   Is the resistance above 4.8 Ohms (without vented seats) or 9.8 Ohms (with vented seats)?

   Yes

   - Replace the Seat Cushion Heater Element in accordance with the Service Information.
   - Perform the BODY VERIFICATION TEST. Refer to **BODY VERIFICATION TEST** .

   No

   - Go To 5.

5. **RIGHT SEAT BACK HEATER ELEMENT RESISTANCE**

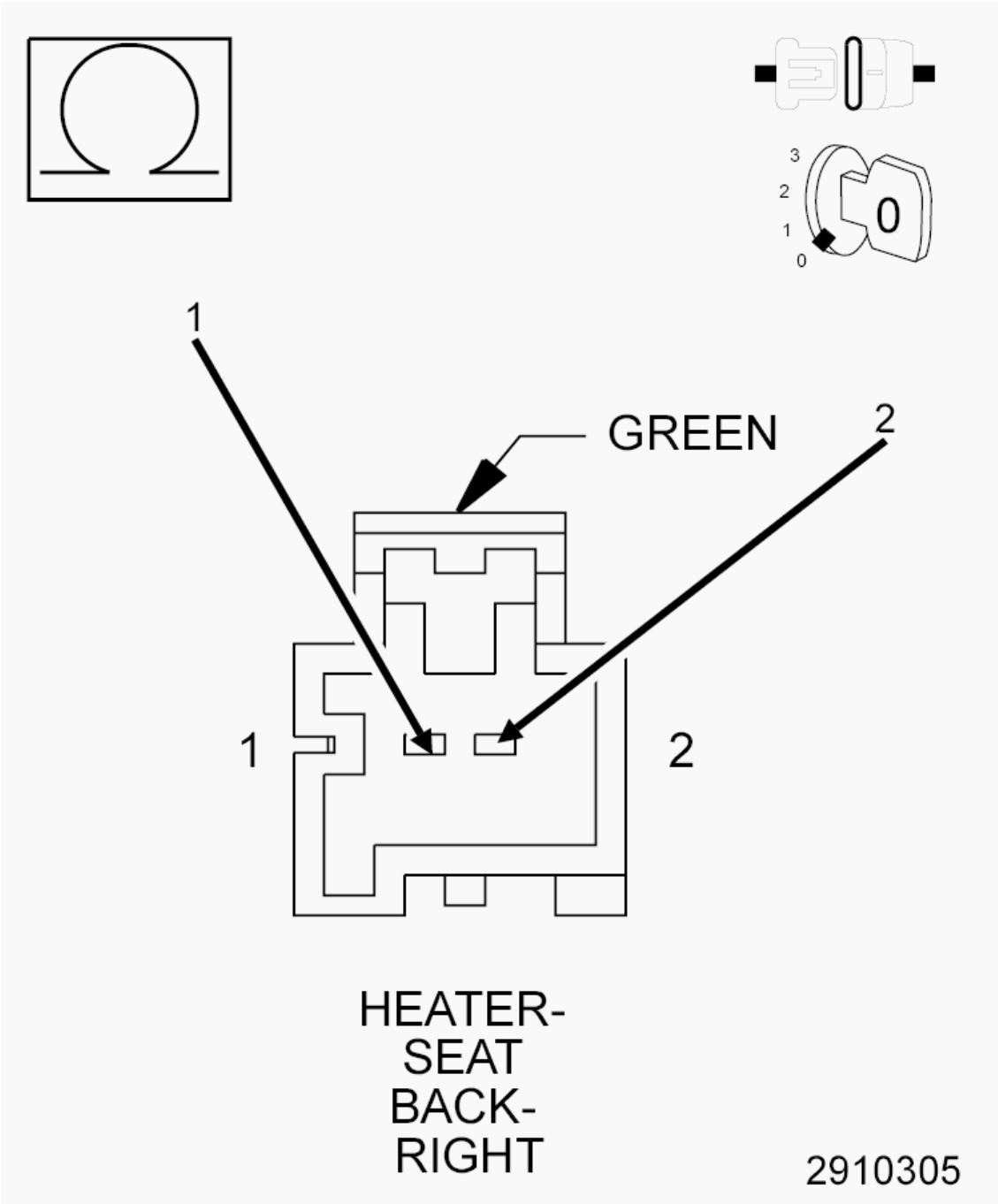

Fig. 66: Checking Right Seat Back Heater Element For An Open
Courtesy of CHRYSLER GROUP, LLC

1. Measure the resistance between the (P188) Right Front Seat Heater Control circuit and the (Z909) Ground circuit at the Right Seat Back Heater harness connector (seat back side).

   Is the resistance above 4.8 Ohms (without vented seats) or 11.6 Ohms (with vented seats)?

   Yes

- Repair or replace the pigtail harness for high resistance or replace the Seat Back Heater Element in accordance with the Service Information.
- Perform the BODY VERIFICATION TEST. Refer to **BODY VERIFICATION TEST** .

No

- Replace the Heated Seat Module (HSM) in accordance with the Service Information.
- Perform the BODY VERIFICATION TEST. Refer to **BODY VERIFICATION TEST** .

B1E9B-11-REAR LEFT HEATER CONTROL CIRCUIT - CIRCUIT SHORT TO GROUND

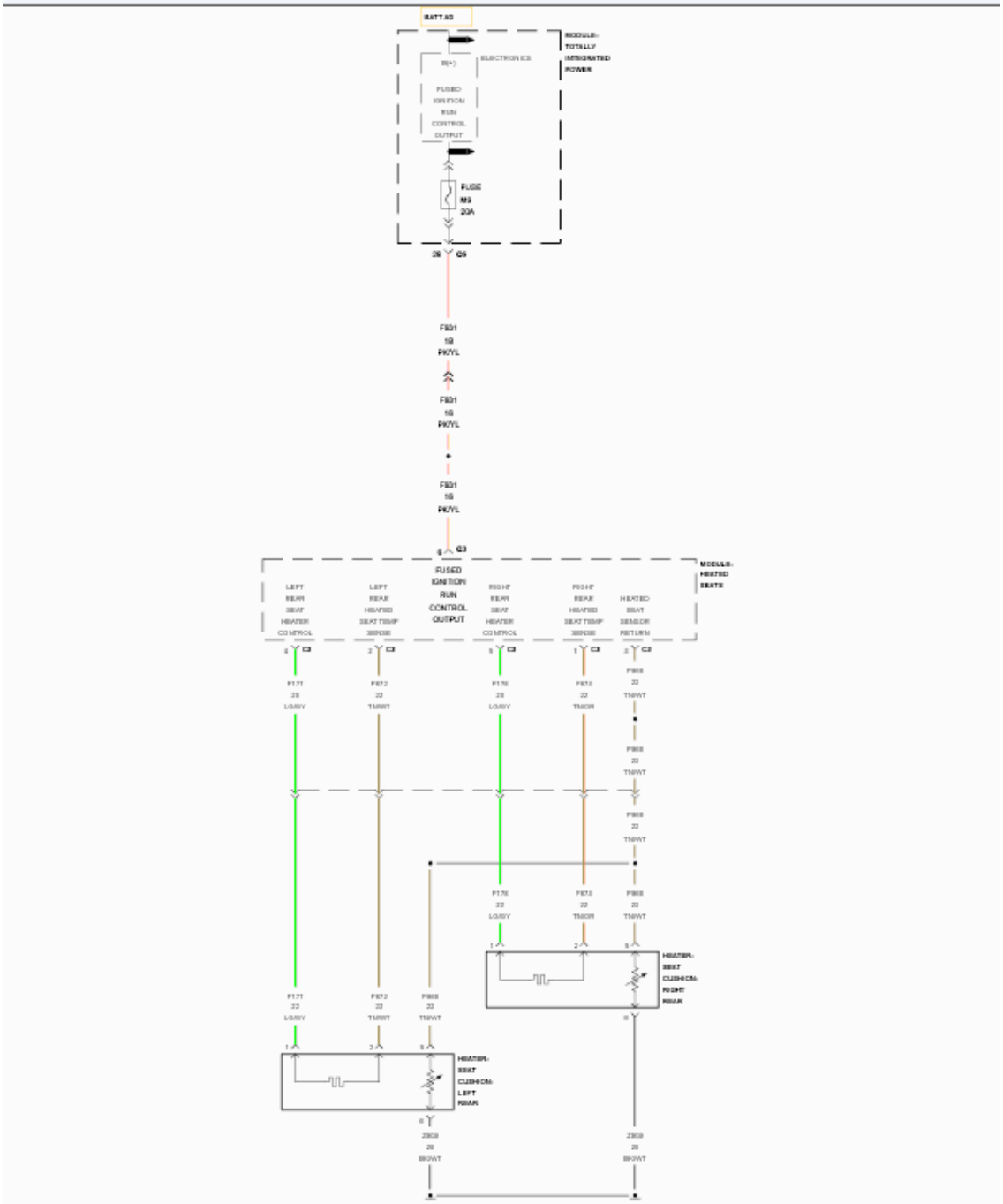
BATT A3
MODULE-
TOTALLY
INTEGRATED
POWER
ELECTRONICS
B(+)
FUSED
IGNITION
RUN
CONTROL
OUTPUT
FUSE
M9
20A
28
C5
F801
18
PK/YL
F801
18
PK/YL
F801
18
PK/YL
6
C3
FUSED
IGNITION
RUN
CONTROL
OUTPUT
MODULE-
HEATED
SEATS
LEFT
REAR
SEAT
HEATER
CONTROL
LEFT
REAR
HEATED
SEAT TEMP
SENSE
RIGHT
REAR
SEAT
HEATER
CONTROL
RIGHT
REAR
HEATED
SEAT TEMP
SENSE
HEATED
SEAT
SENSOR
RETURN
4
C3
2
C3
5
C3
1
C3
2
C3
P171
22
LG/BY
P872
22
TN/WT
P176
22
LG/BY
P872
22
TN/OR
P868
22
TN/WT
P868
22
TN/WT
P868
22
TN/WT
P176
22
LG/BY
P872
22
TN/OR
P868
22
TN/WT
1
2
5
HEATER-
SEAT
CUSHION-
RIGHT
REAR
P171
22
LG/BY
P872
22
TN/WT
P868
22
TN/WT
1
2
5
HEATER-
SEAT
CUSHION-
LEFT
REAR
6
Z909
20
BR/WT
6
Z909
20
BR/WT

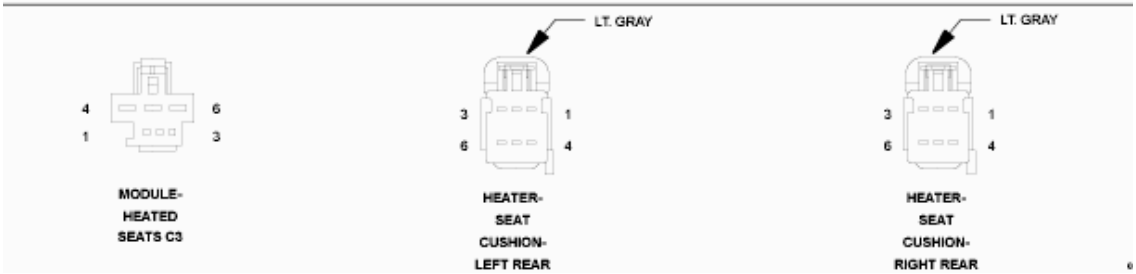
4
6
1
3
MODULE-
HEATED
SEATS C3
LT. GRAY
3
1
6
4
HEATER-
SEAT
CUSHION-
LEFT REAR
LT. GRAY
3
1
6
4
HEATER-
SEAT
CUSHION-
RIGHT REAR

Fig. 67: Rear Heater Control Wiring Diagram
Courtesy of CHRYSLER GROUP, LLC

For a complete wiring diagram, **refer to appropriate SYSTEM WIRING DIAGRAMS article** .

WHEN MONITORED:

With the engine running.

SET CONDITION:

The Heated Seat Module (HSM) detects Voltage below 1.0 volt or current above 10.0 amps on the (P177) Left Rear Seat Heater Control circuit for more than two seconds with the output turned on.

POSSIBLE CAUSES

Possible Causes
(P177) LEFT REAR SEAT HEATER CONTROL CIRCUIT SHORTED TO GROUND
(P177) LEFT REAR SEAT HEATER CONTROL CIRCUIT SHORTED TO THE (P968) HEATED SEAT SENSOR RETURN CIRCUIT
(P177) LEFT REAR SEAT HEATER CONTROL CIRCUIT SHORTED TO THE (Z909) GROUND CIRCUIT
SEAT CUSHION HEATER ELEMENT SHORTED
HEATED SEAT MODULE (HSM)

DIAGNOSTIC TEST

1. **TEST FOR INTERMITTENT CONDITION**

NOTE: **Make sure the battery is fully charged and the charging system is operating properly before proceeding.**

1. Turn the ignition on.
2. Using a scan tool, record and erase Diagnostic Trouble Codes (DTCs).
3. Turn the ignition off.
4. Start the engine and let it run.
5. Turn the Heated Seat on and operate in all modes.
6. Using a scan tool, read DTCs.

Is the DTC active?

Yes

- Go To 2.

No

- The conditions that caused this code to set are not present at this time. Verify seat harness is routed correctly to the HSM. Using the wiring diagram/schematic as a guide, inspect the wiring and connectors. Look for chafed, pierced, pinched, or partially broken wires and broken, bent, pushed out, spread, corroded, or contaminated terminals. Attempt to reproduce condition by adjusting the front seat.
- Perform the BODY VERIFICATION TEST. Refer to **BODY VERIFICATION TEST** .

2. **CHECK (P177) LEFT REAR SEAT HEATER CONTROL CIRCUIT IN BODY HARNESS FOR A SHORT TO GROUND**
   1. Turn the ignition off.
   2. Disconnect the Left Rear Seat Cushion Heater harness connector.

      NOTE: Check connectors. Clean and repair as necessary.

   3. Turn the ignition on.
   4. Using a scan tool, erase DTCs.
   5. Turn the ignition off.
   6. Start the engine and let it run.
   7. Turn the Heated Seat on and operate in all modes.
   8. Using a scan tool, read DTCs.

   Is the same DTC active?

   Yes

   - Go To 3.

   No

   - Replace the shorted Rear Seat Cushion Heater Element in accordance with the Service Information.
   - Perform the BODY VERIFICATION TEST. Refer to **BODY VERIFICATION TEST** .

3. **CHECK (P177) LEFT REAR SEAT HEATER CONTROL CIRCUIT FOR A SHORT TO GROUND**

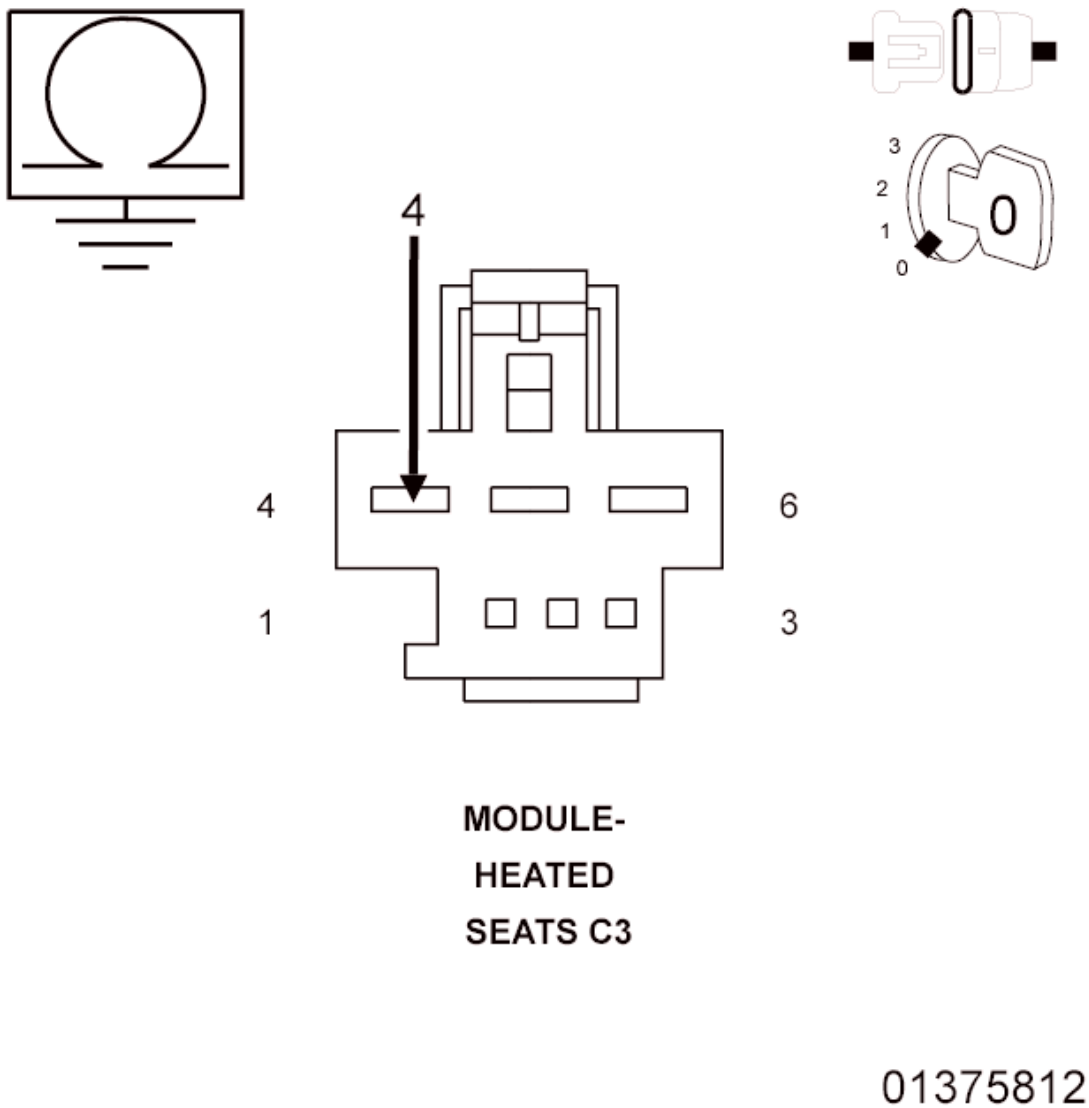

Fig. 68: Checking Left Rear Seat Heater Control Circuit For A Short To Ground
Courtesy of CHRYSLER GROUP, LLC

1. Turn the ignition off.
2. Disconnect the HSM C3 harness connector.

NOTE: Check connectors. Clean and repair as necessary.

3. Measure the resistance of the (P177) Left Rear Seat Heater Control circuit between ground and the HSM C3 harness connector.

   Is the resistance below 10K Ohms?

   Yes

- Repair the (P177) Left Rear Seat Heater Control circuit for a short to ground.
- Perform the BODY VERIFICATION TEST. Refer to **BODY VERIFICATION TEST** .

No

- Go To 4.

4. **CHECK (P177) LEFT REAR SEAT HEATER CONTROL CIRCUIT FOR A SHORT TO THE (P968) HEATED SEAT SENSOR RETURN CIRCUIT OR TO (Z909) GROUND CIRCUIT**

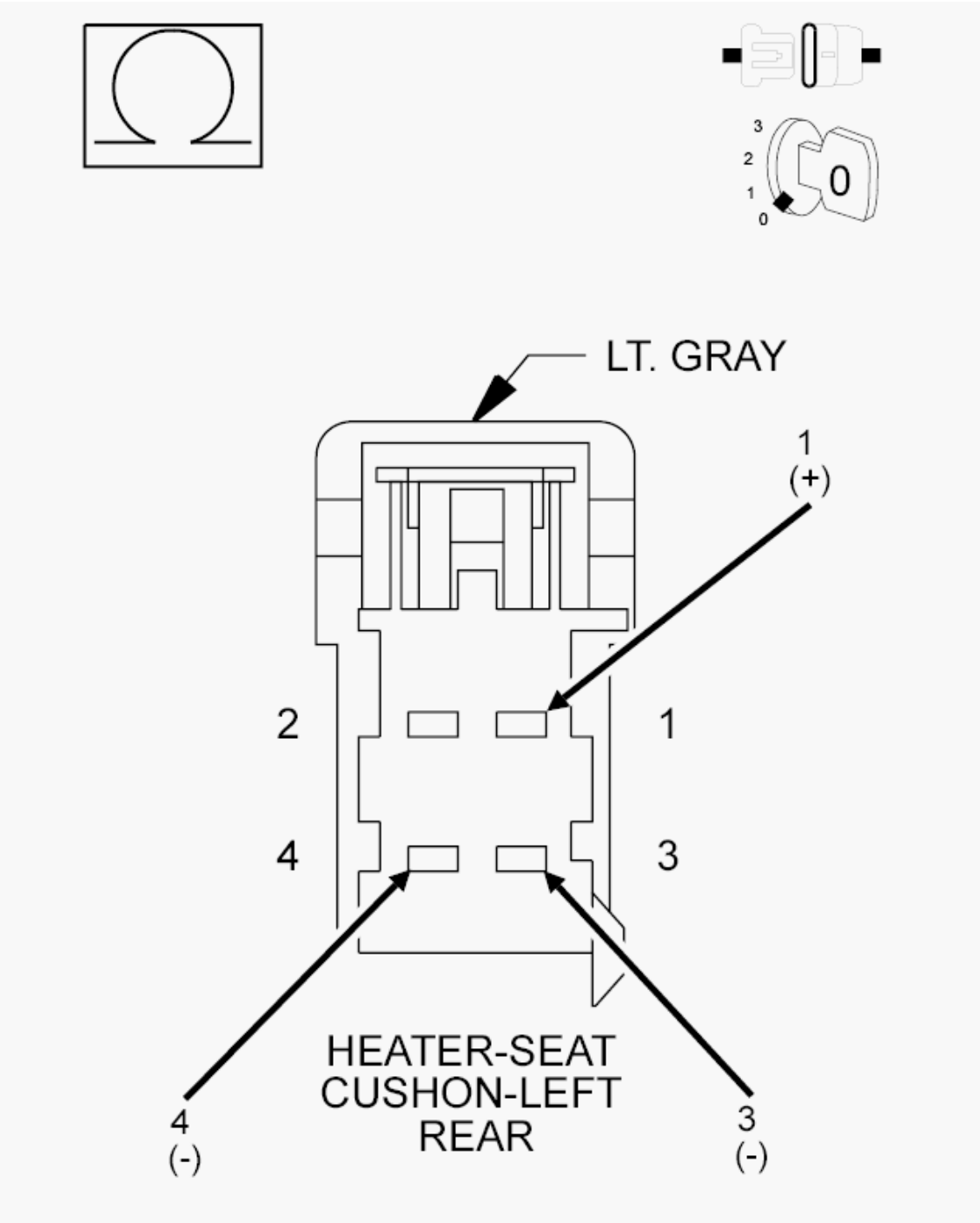

Fig. 69: Checking Left Rear Seat Heater Control Circuit For A Short To The Heated Seat Sensor Return Circuit Or To Ground Circuit
Courtesy of CHRYSLER GROUP, LLC

1. Measure the resistance between the (P177) Left Rear Seat Heater Control circuit and the (P968) Heated Seat Sensor Return circuit at the Left Rear Seat Cushion Heater harness connector.
2. Measure the resistance between the (P177) Left Rear Seat Heater Control circuit and the (Z909) Ground circuit at the Left Rear Seat Cushion Heater harness connector.

Is the resistance below 10K Ohms for either measurement?

Yes

- Repair all circuits with a resistance below 10K Ohms for a short to the (P177) Left Rear Seat Heater Control circuit.
- Perform the BODY VERIFICATION TEST. Refer to **BODY VERIFICATION TEST** .

No

- Replace the Heated Seat Module (HSM) in accordance with the Service Information.
- Perform the BODY VERIFICATION TEST. Refer to **BODY VERIFICATION TEST** .

B1E9B-12-REAR LEFT HEATER CONTROL CIRCUIT - CIRCUIT SHORT TO BATTERY

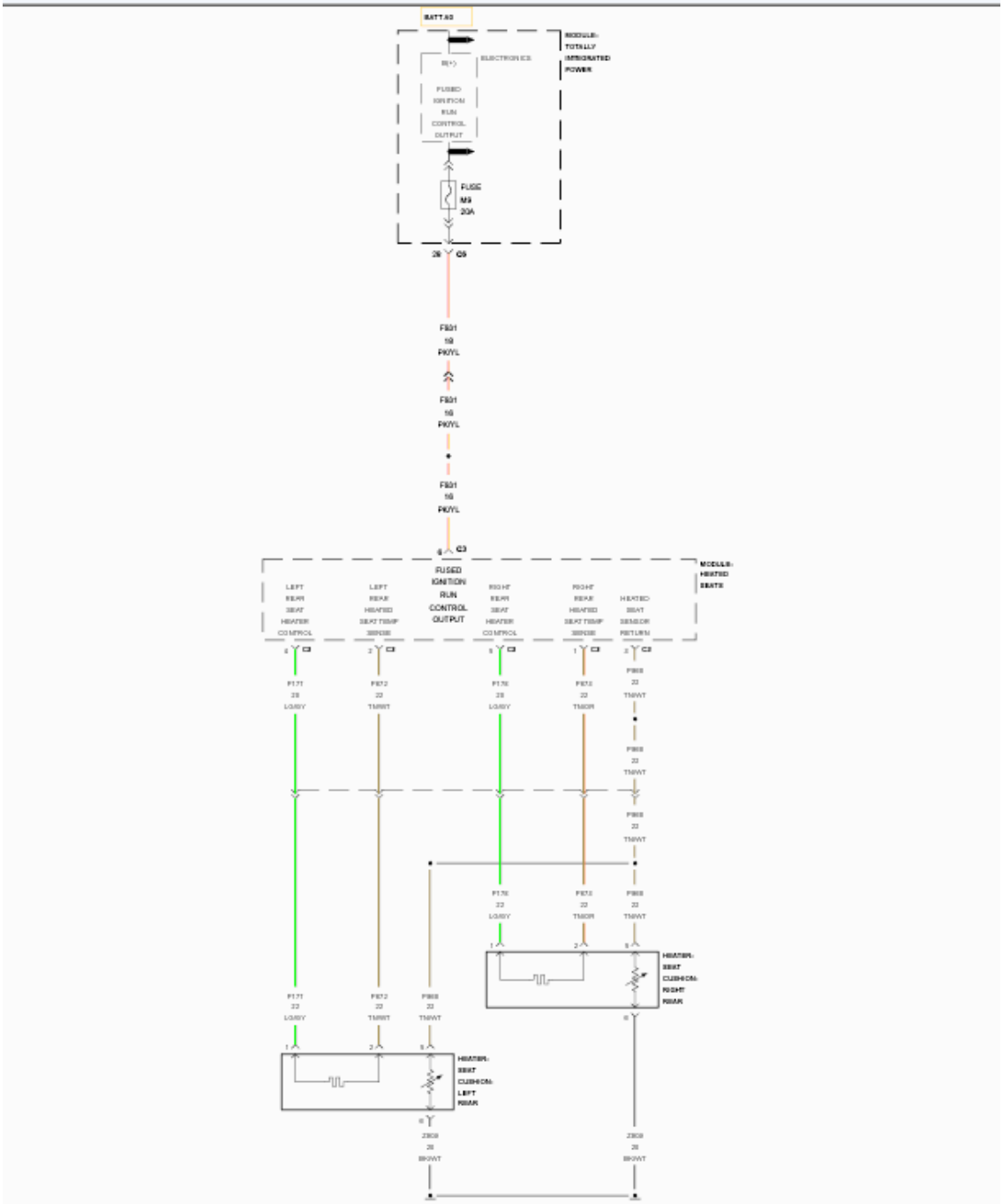
BATT A3
MODULE-
TOTALLY
INTEGRATED
POWER
ELECTRONICS
B(+)
FUSED
IGNITION
RUN
CONTROL
OUTPUT
FUSE
M9
20A
28
C5
F801
18
PK/YL
F801
18
PK/YL
F801
18
PK/YL
6
C3
FUSED
IGNITION
RUN
CONTROL
OUTPUT
MODULE-
HEATED
SEATS
LEFT
REAR
SEAT
HEATER
CONTROL
LEFT
REAR
HEATED
SEAT TEMP
SENSE
RIGHT
REAR
SEAT
HEATER
CONTROL
RIGHT
REAR
HEATED
SEAT TEMP
SENSE
HEATED
SEAT
SENSOR
RETURN
4
C3
2
C3
5
C3
1
C3
2
C3
P171
22
LG/BY
P872
22
TN/WT
P176
22
LG/BY
P872
22
TN/OR
P868
22
TN/WT
P868
22
TN/WT
P868
22
TN/WT
P176
22
LG/BY
P872
22
TN/OR
P868
22
TN/WT
1
2
5
HEATER-
SEAT
CUSHION-
RIGHT
REAR
P171
22
LG/BY
P872
22
TN/WT
P868
22
TN/WT
1
2
5
HEATER-
SEAT
CUSHION-
LEFT
REAR
6
Z909
20
BR/WT
6
Z909
20
BR/WT

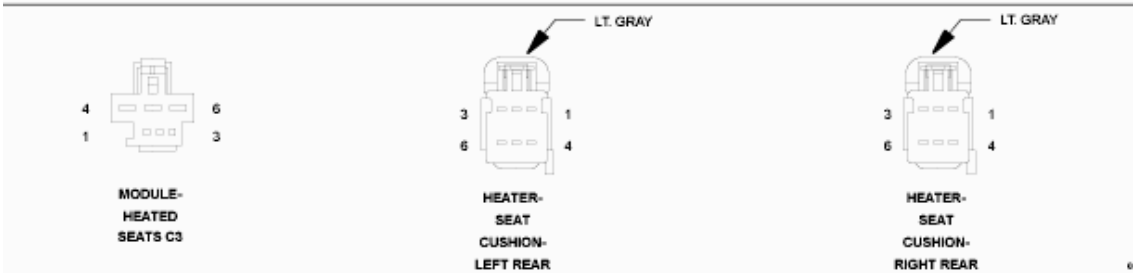
4
6
1
3
MODULE-
HEATED
SEATS C3
LT. GRAY
3
1
6
4
HEATER-
SEAT
CUSHION-
LEFT REAR
LT. GRAY
3
1
6
4
HEATER-
SEAT
CUSHION-
RIGHT REAR

Fig. 70: Rear Heater Control Wiring Diagram
Courtesy of CHRYSLER GROUP, LLC

For a complete wiring diagram, **refer to appropriate SYSTEM WIRING DIAGRAMS article** .

WHEN MONITORED:

With the engine running.

SET CONDITION:

The Heated Seat Module (HSM) detects Voltage above 5.0 Volts on the (P177) Left Rear Seat Heater Control circuit for more than two seconds with the output turned off.

POSSIBLE CAUSES

Possible Causes
(P177) LEFT REAR SEAT HEATER CONTROL CIRCUIT SHORTED TO VOLTAGE
(P177) LEFT REAR SEAT HEATER CONTROL CIRCUIT SHORTED TO THE (F931) FUSED IGNITION RUN CONTROL OUTPUT CIRCUIT
(P177) LEFT REAR SEAT HEATER CONTROL CIRCUIT SHORTED TO THE (P178) RIGHT REAR SEAT HEATER CONTROL CIRCUIT
HEATED SEAT MODULE (HSM)

DIAGNOSTIC TEST

1. **TEST FOR INTERMITTENT CONDITION**

NOTE: **Make sure the battery is fully charged and the charging system is operating properly before proceeding.**

1. Turn the ignition on.
2. Using a scan tool, record and erase Diagnostic Trouble Codes (DTCs).
3. Turn the ignition off.
4. Start the engine and let it run.
5. Using a scan tool, read DTCs.

Is the DTC active?

Yes

- Go To 2.

No

- The conditions that caused this code to set are not present at this time. Verify seat harness is routed correctly to the HSM. Using the wiring diagram/schematic as a guide, inspect the wiring and connectors. Look for chafed, pierced, pinched, or partially broken wires and broken, bent, pushed out, spread, corroded, or contaminated terminals. Attempt to reproduce condition by operating all HSM functions one at a time, except for the Left Rear Heated Seat. Attempt to reproduce condition by adjusting the front seat.
- Perform the BODY VERIFICATION TEST. Refer to **BODY VERIFICATION TEST** .

2. **CHECK (P177) LEFT REAR SEAT HEATER CONTROL CIRCUIT FOR A SHORT TO VOLTAGE**

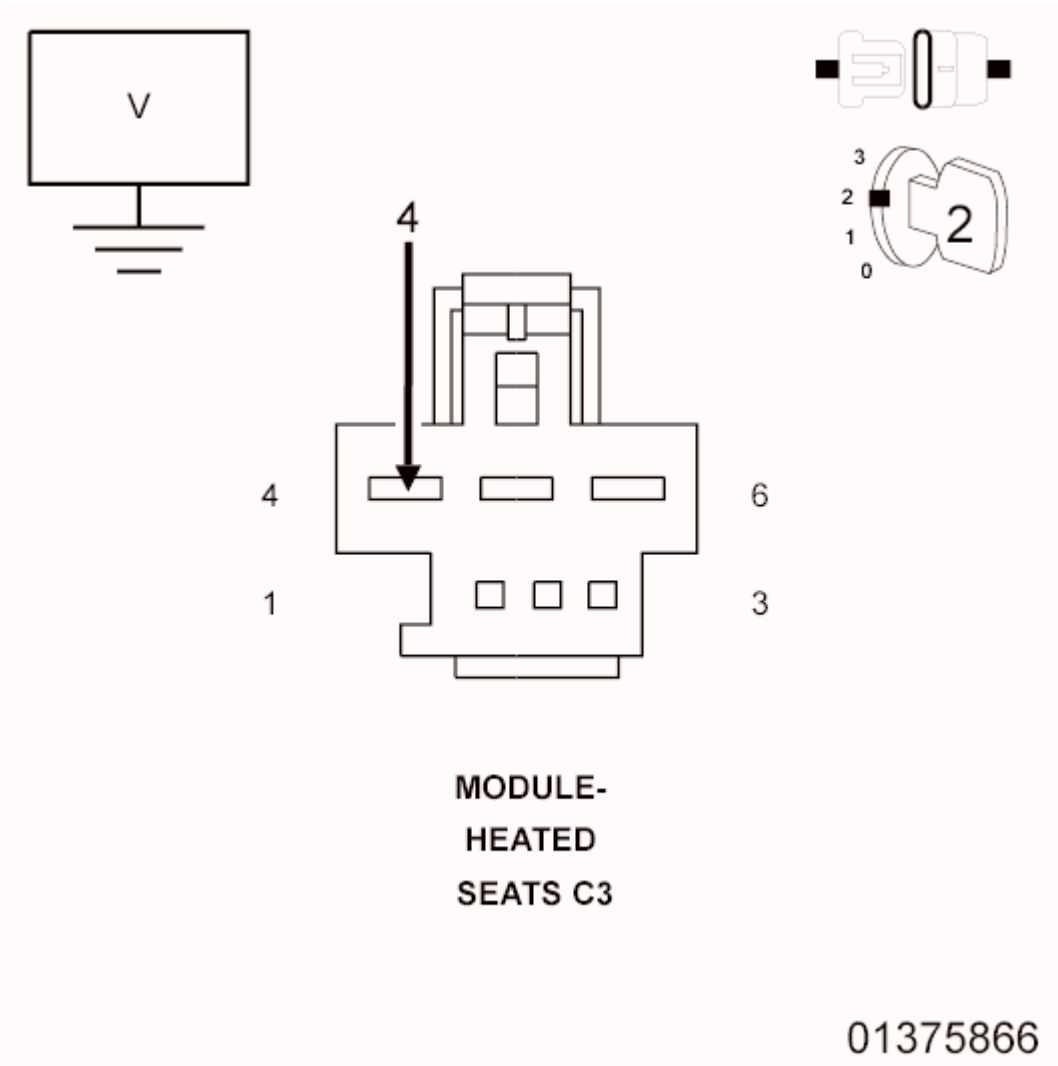

Fig. 71: Checking Left Rear Seat Heater Control Circuit For A Short To Voltage
Courtesy of CHRYSLER GROUP, LLC

1. Turn the ignition off.
2. Disconnect the HSM C3 harness connector.

NOTE: **Check connectors. Clean and repair as necessary.**

3. Start the engine and let it run.
4. Measure the voltage of the (P177) Left Rear Seat Heater Control circuit between the HSM C3 harness connector and ground.

   Is there any voltage present?

   Yes

   - Go To 3.

   No

   - Go To 4.

3. **CHECK (P177) LEFT REAR SEAT HEATER CONTROL CIRCUIT FOR A SHORT TO THE (F931) FUSED IGNITION RUN CONTROL OUTPUT CIRCUIT**

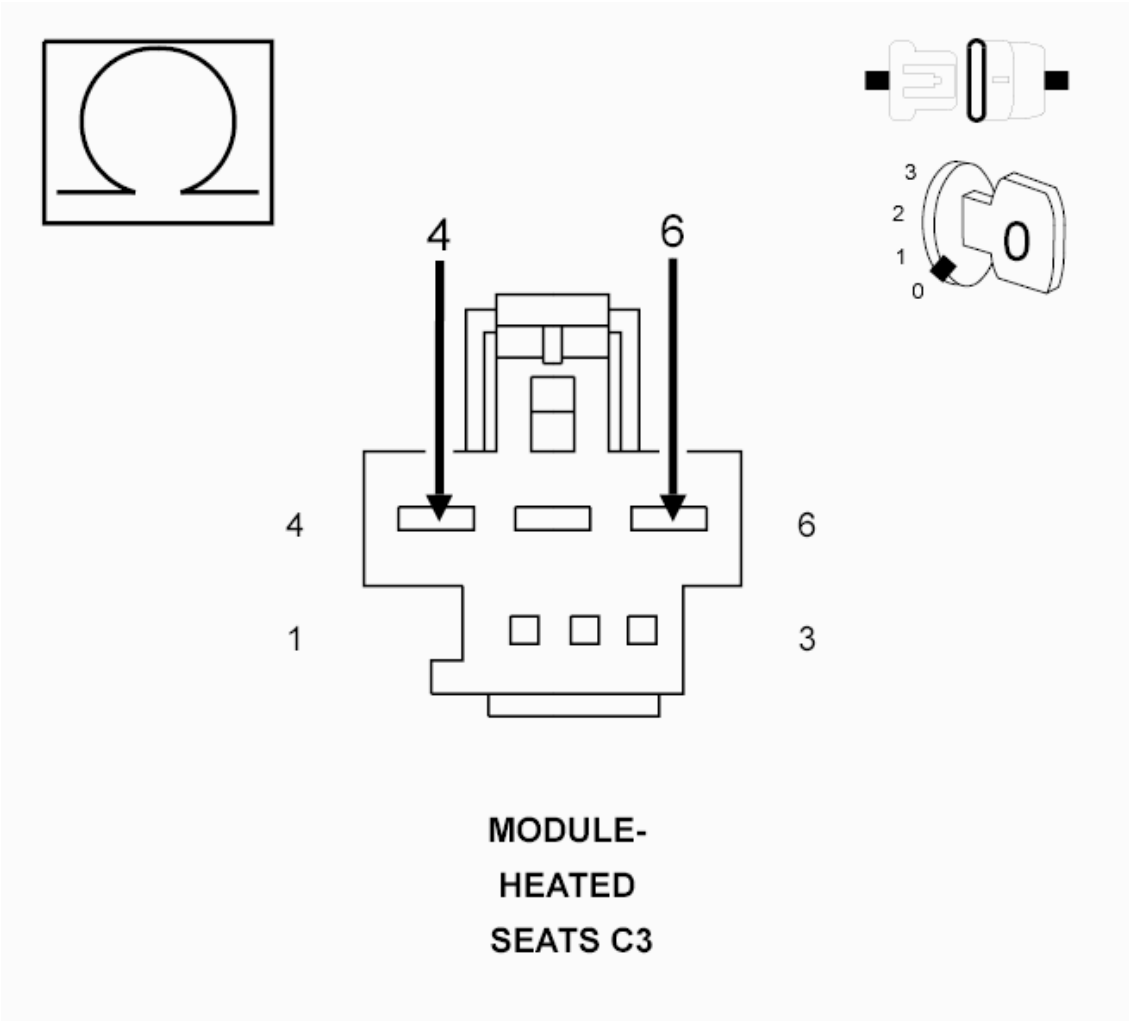

Fig. 72: Checking Left Rear Seat Heater Control Circuit For A Short To The Fused Ignition Run Control Output
Courtesy of CHRYSLER GROUP, LLC

1. Turn the ignition off.
2. Measure the resistance between the (P177) Left Rear Seat Heater Control circuit and the (F931) Fused Ignition Run Control Output circuit at HSM C3 harness connector.

   Is the resistance below 10K Ohms?

   Yes

   - Repair the (P177) Left Rear Seat Heater Control circuit for a short to the (F931) Fused Ignition Run Control Output circuit.
   - Perform the BODY VERIFICATION TEST. Refer to **BODY VERIFICATION TEST** .

   No

   - Repair the (P177) Left Rear Seat Heater Control circuit for a short to voltage.
   - Perform the BODY VERIFICATION TEST. Refer to **BODY VERIFICATION TEST** .

4. **CHECK (P177) LEFT REAR SEAT HEATER CONTROL CIRCUIT FOR A SHORT TO VOLTAGE DURING SEAT ADJUSTMENT**

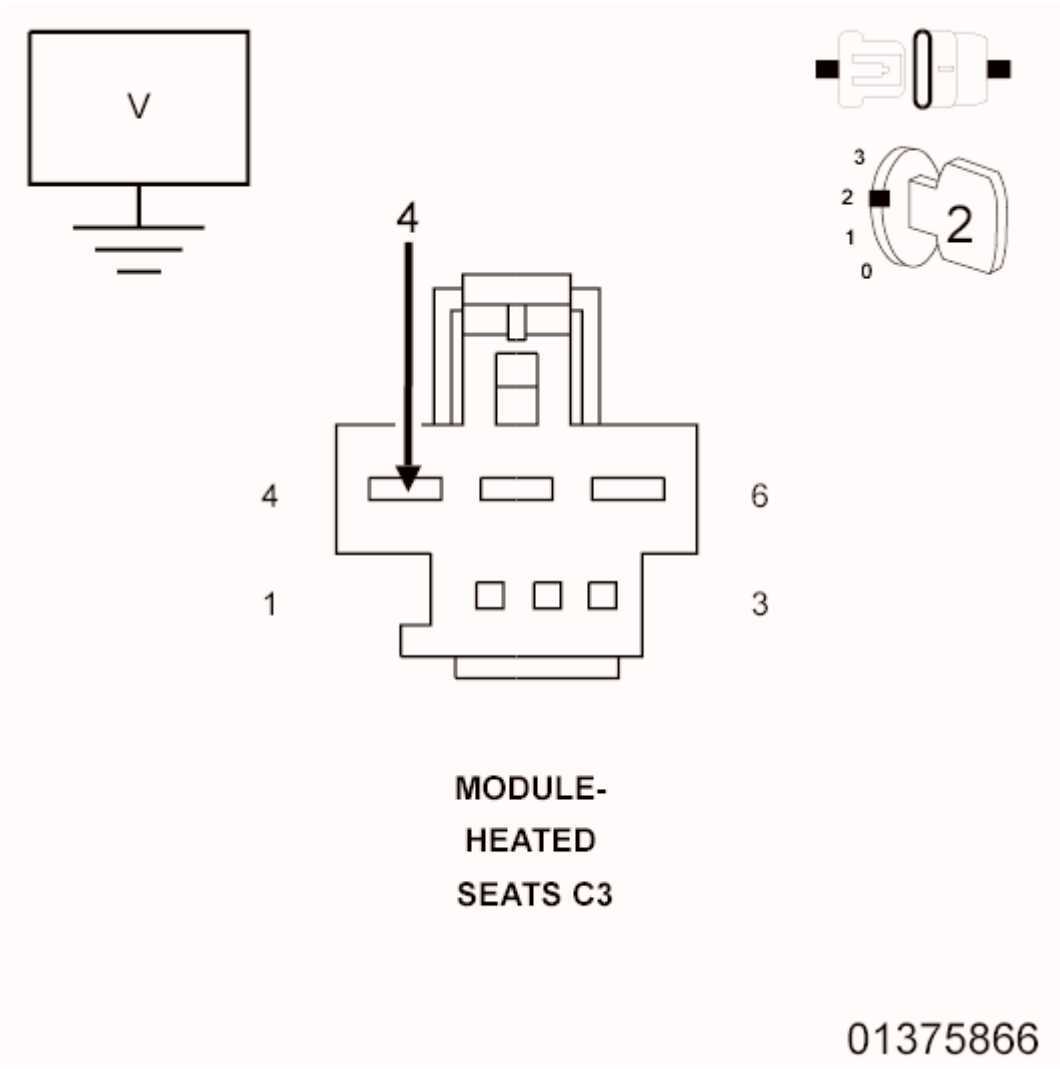

Fig. 73: Checking Left Rear Seat Heater Control Circuit For A Short To Voltage
Courtesy of CHRYSLER GROUP, LLC

1. Measure the Voltage of the (P177) Left Rear Seat Heater Control circuit between the HSM C3 harness connector and ground while adjusting the left front seat.

   Is there any Voltage present during the seat adjustment?

   Yes

   - Repair the (P177) Left Rear Seat Heater Control circuit for a short to voltage.
   - Perform the BODY VERIFICATION TEST. Refer to **BODY VERIFICATION TEST** .

   No

   - Go To 5.

5. **CHECK (P177) LEFT REAR SEAT HEATER CONTROL CIRCUIT FOR A SHORT TO THE**

(P178) RIGHT REAR SEAT HEATER CONTROL CIRCUIT

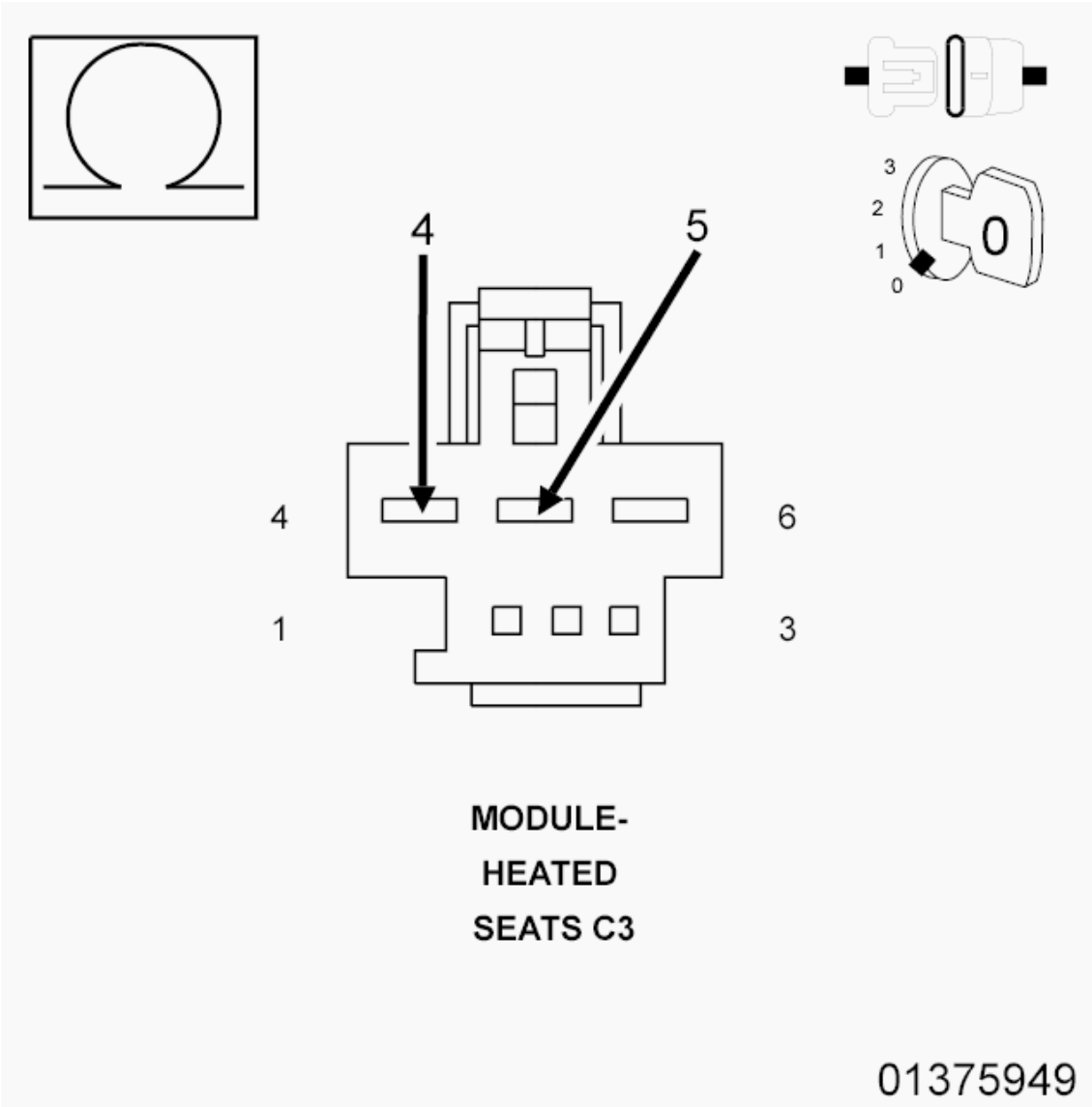

Fig. 74: Checking Left Rear Seat Heater Control Circuit For Short To Right Rear Heater Control Circuit
Courtesy of CHRYSLER GROUP, LLC

1. Turn the ignition off.
2. Disconnect the Left or Right Rear Seat Cushion Heater harness connector.
3. Measure the resistance between the (P177) Left Rear Seat Heater Control circuit and the (P178) Right Rear Seat Heater Control circuit at HSM C3 harness connector.

   Is the resistance below 10K Ohms?

   Yes

- Repair the (P177) Left Rear Seat Heater Control circuit for a short to the (P178) Right Rear Seat Heater Control circuit.
- Perform the BODY VERIFICATION TEST. Refer to **BODY VERIFICATION TEST** .

No

- Replace the Heated Seat Module (HSM) in accordance with the Service Information.
- Perform the BODY VERIFICATION TEST. Refer to **BODY VERIFICATION TEST** .

B1E9B-13-REAR LEFT HEATER CONTROL CIRCUIT - CIRCUIT OPEN

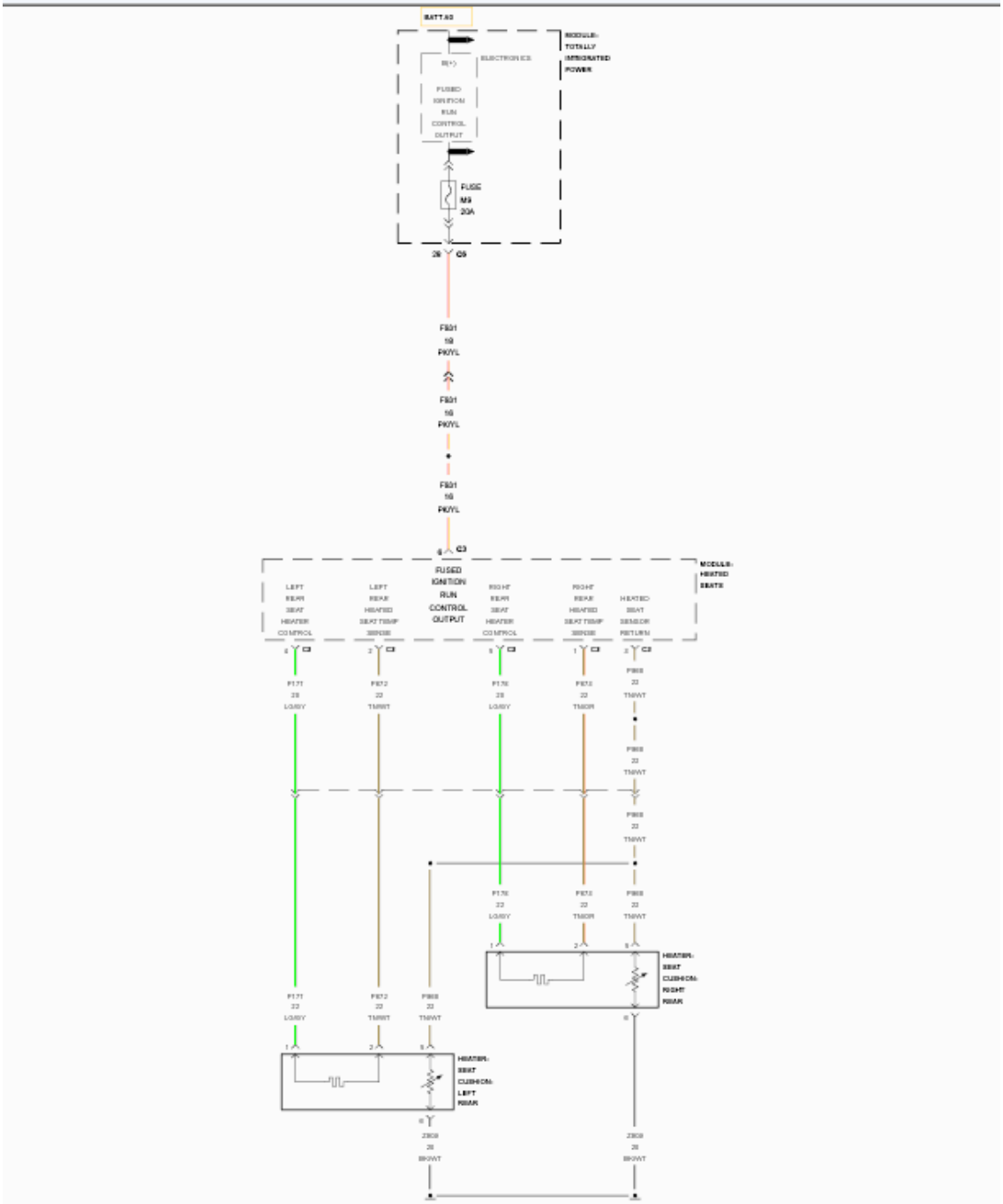
BATT A3
MODULE-
TOTALLY
INTEGRATED
POWER
ELECTRONICS
B(+)
FUSED
IGNITION
RUN
CONTROL
OUTPUT
FUSE
M9
20A
28
C5
F801
18
PK/YL
F801
18
PK/YL
F801
18
PK/YL
6
C3
FUSED
IGNITION
RUN
CONTROL
OUTPUT
MODULE-
HEATED
SEATS
LEFT
REAR
SEAT
HEATER
CONTROL
LEFT
REAR
HEATED
SEAT TEMP
SENSE
RIGHT
REAR
SEAT
HEATER
CONTROL
RIGHT
REAR
HEATED
SEAT TEMP
SENSE
HEATED
SEAT
SENSOR
RETURN
4
C3
2
C3
5
C3
1
C3
2
C3
P171
22
LG/BY
P872
22
TN/WT
P176
22
LG/BY
P872
22
TN/OR
P868
22
TN/WT
P868
22
TN/WT
P868
22
TN/WT
P176
22
LG/BY
P872
22
TN/OR
P868
22
TN/WT
1
2
5
HEATER-
SEAT
CUSHION-
RIGHT
REAR
P171
22
LG/BY
P872
22
TN/WT
P868
22
TN/WT
1
2
5
HEATER-
SEAT
CUSHION-
LEFT
REAR
6
Z909
20
BR/WT
6
Z909
20
BR/WT

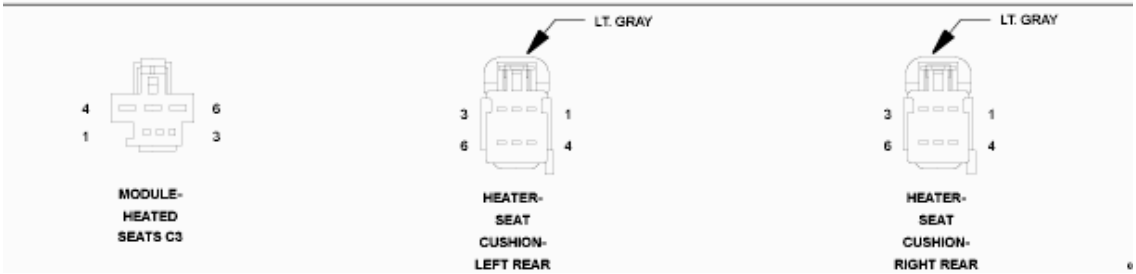
4
6
1
3
MODULE-
HEATED
SEATS C3
LT. GRAY
3
1
6
4
HEATER-
SEAT
CUSHION-
LEFT REAR
LT. GRAY
3
1
6
4
HEATER-
SEAT
CUSHION-
RIGHT REAR

Fig. 75: Rear Heater Control Wiring Diagram
Courtesy of CHRYSLER GROUP, LLC

For a complete wiring diagram, **refer to appropriate SYSTEM WIRING DIAGRAMS article** .

WHEN MONITORED:

With the engine running.

SET CONDITION:

The Heated Seat Module (HSM) detects current below 0.5 of an amp on the (P177) Left Rear Seat Heater Control circuit for more than two seconds with the output turned on.

POSSIBLE CAUSES

Possible Causes
(P177) LEFT REAR SEAT HEATER CONTROL CIRCUIT OPEN
(Z909) GROUND CIRCUIT OPEN
SEAT CUSHION HEATER ELEMENT OPEN
HEATED SEAT MODULE (HSM)

DIAGNOSTIC TEST

1. **TEST FOR INTERMITTENT CONDITION**

NOTE: **Make sure the battery is fully charged and the charging system is operating properly before proceeding.**

1. Turn the ignition on.
2. Using a scan tool, record and erase Diagnostic Trouble Codes (DTCs).
3. Turn the ignition off.
4. Start the engine and let it run.
5. Turn the Heated Seat on and operate in all modes.
6. Using a scan tool, read DTCs.

Is the DTC active?

Yes

- Go To 2.

No

- The conditions that caused this code to set are not present at this time. Verify seat harness is

routed correctly to the HSM. Using the wiring diagram/schematic as a guide, inspect the wiring and connectors. Look for chafed, pierced, pinched, or partially broken wires and broken, bent, pushed out, spread, corroded, or contaminated terminals. Attempt to reproduce condition by adjusting the front seat.

- Perform the BODY VERIFICATION TEST. Refer to **BODY VERIFICATION TEST** .

2. **CHECK FOR AN OPEN LEFT REAR SEAT CUSHION HEATER ELEMENT**

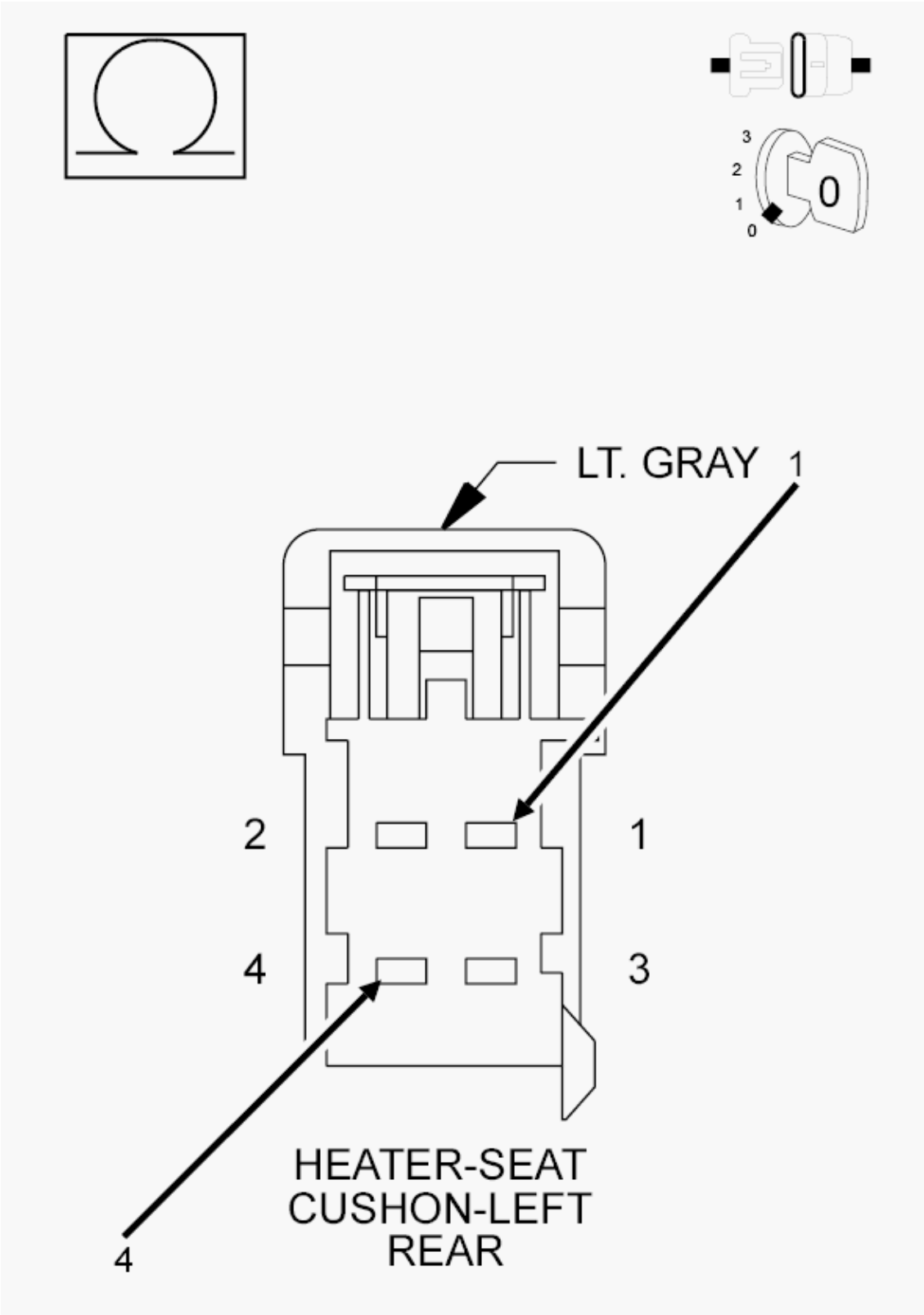

Fig. 76: Checking For An Open Left Rear Seat Cushion Heater Element
Courtesy of CHRYSLER GROUP, LLC

1. Turn the ignition off.
2. Disconnect the Left Rear Seat Cushion Heater harness connector.

NOTE: Check connectors. Clean and repair as necessary.

3. Measure the resistance between the (P177) Left Rear Seat Heater Control circuit and the (Z909) Ground circuit at the Left Rear Seat Cushion Heater harness connector (seat side).

   Is the resistance above 4.8 Ohms?

   Yes

   - Replace the Rear Seat Cushion Heater Element in accordance with the Service Information.
   - Perform the BODY VERIFICATION TEST. Refer to **BODY VERIFICATION TEST** .

   No

   - Go To 3.

3. **CHECK (P177) LEFT REAR SEAT HEATER CONTROL CIRCUIT FOR AN OPEN IN BODY HARNESS**

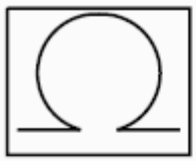

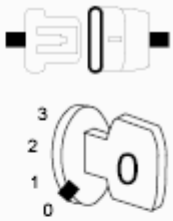

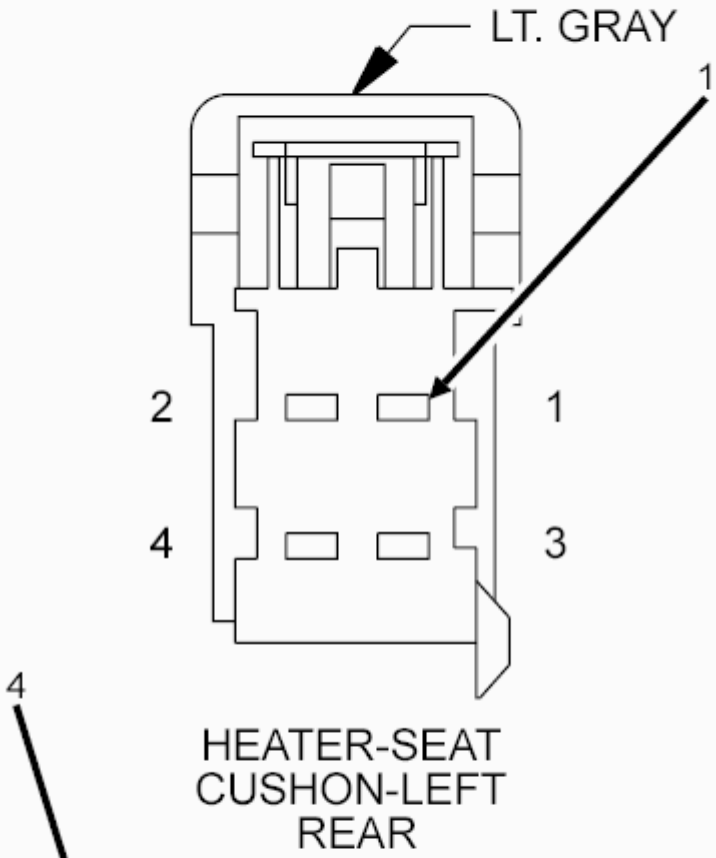

HEATER-SEAT CUSHON-LEFT REAR

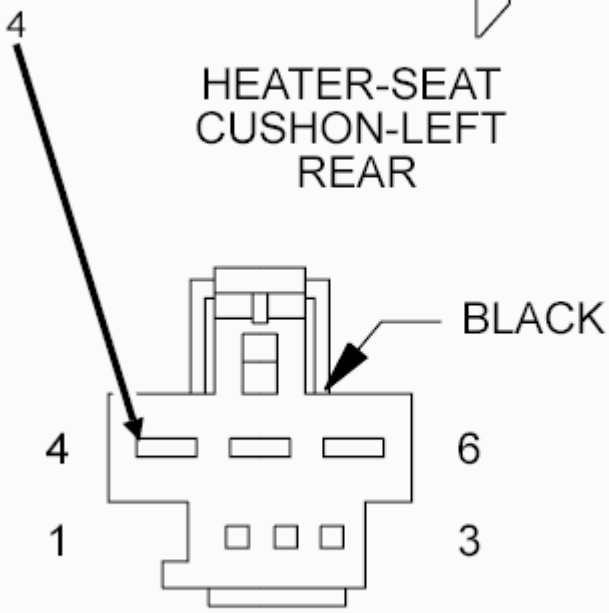

MODULE-HEATED

Fig. 77: Checking Left Rear Seat Heater Control Circuit For An Open In Body Harness
Courtesy of CHRYSLER GROUP, LLC

1. Disconnect the HSM C3 harness connector.

   NOTE: Check connectors. Clean and repair as necessary.

2. Measure the resistance of the (P177) Left Rear Seat Heater Control circuit between the HSM C3 harness connector and the Left Rear Seat Cushion Heater harness connector (harness side).

   Is the resistance below 5.0 Ohms?

   Yes

   - Go To 4.

   No

   - Repair the (P177) Left Rear Seat Heater Control circuit for an open.
   - Perform the BODY VERIFICATION TEST. Refer to **BODY VERIFICATION TEST** .

4. **CHECK (Z909) GROUND CIRCUIT FOR AN OPEN**

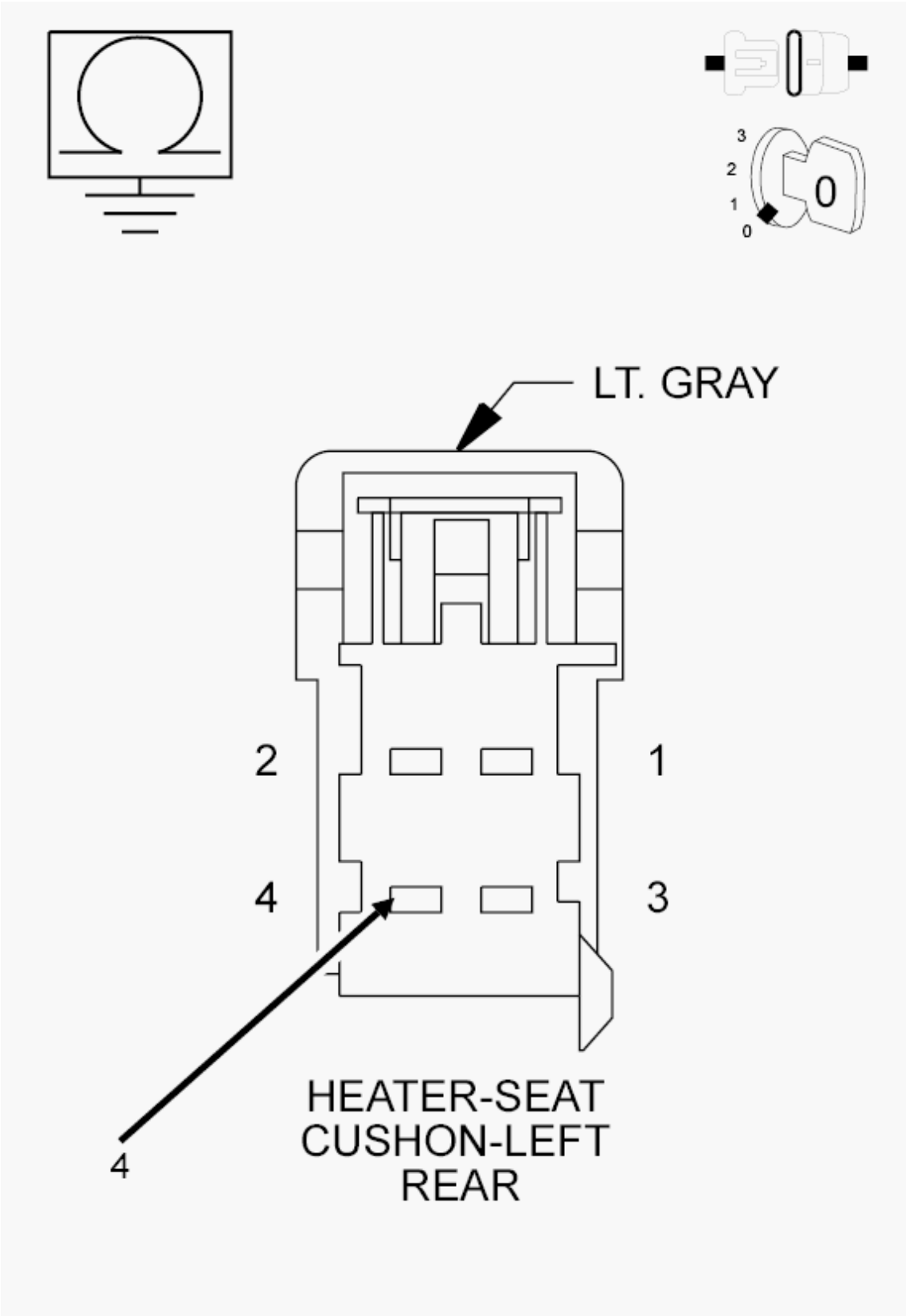

Fig. 78: Checking Ground Circuit For An Open Or High Resistance
Courtesy of CHRYSLER GROUP, LLC

1. Measure the resistance of the (Z909) Ground circuit between ground and the Left Rear Seat Cushion Heater harness connector (harness side).

   Is the resistance below 5.0 Ohms?

   Yes

   - Replace the Heated Seat Module (HSM) in accordance with the Service Information.
   - Perform the BODY VERIFICATION TEST. Refer to **BODY VERIFICATION TEST** .

   No

   - Repair the (Z909) Ground circuit for an open.
   - Perform the BODY VERIFICATION TEST. Refer to **BODY VERIFICATION TEST** .

B1E9B-1E-REAR LEFT HEATER CONTROL CIRCUIT - CIRCUIT RESISTANCE OUT OF RANGE

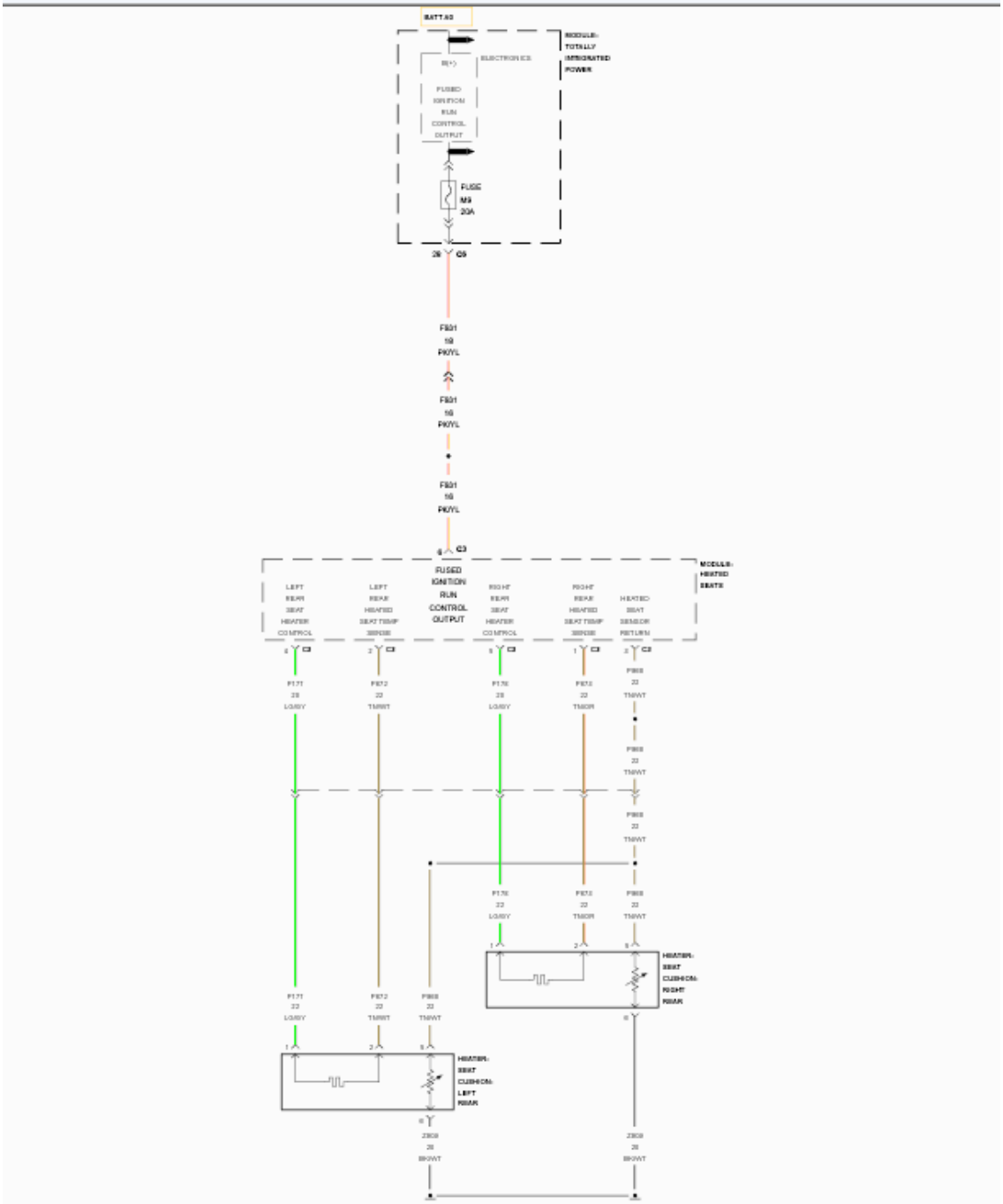
BATT A3
MODULE-
TOTALLY
INTEGRATED
POWER
ELECTRONICS
B(+)
FUSED
IGNITION
RUN
CONTROL
OUTPUT
FUSE
M9
20A
28
C5
F801
18
PK/YL
F801
18
PK/YL
F801
18
PK/YL
6
C3
FUSED
IGNITION
RUN
CONTROL
OUTPUT
MODULE-
HEATED
SEATS
LEFT
REAR
SEAT
HEATER
CONTROL
LEFT
REAR
HEATED
SEAT TEMP
SENSE
RIGHT
REAR
SEAT
HEATER
CONTROL
RIGHT
REAR
HEATED
SEAT TEMP
SENSE
HEATED
SEAT
SENSOR
RETURN
4
C3
2
C3
5
C3
1
C3
2
C3
P171
22
LG/BY
P872
22
TN/WT
P176
22
LG/BY
P872
22
TN/OR
P868
22
TN/WT
P868
22
TN/WT
P868
22
TN/WT
P176
22
LG/BY
P872
22
TN/OR
P868
22
TN/WT
1
2
5
HEATER-
SEAT
CUSHION-
RIGHT
REAR
P171
22
LG/BY
P872
22
TN/WT
P868
22
TN/WT
1
2
5
HEATER-
SEAT
CUSHION-
LEFT
REAR
6
Z909
20
BR/WT
6
Z909
20
BR/WT

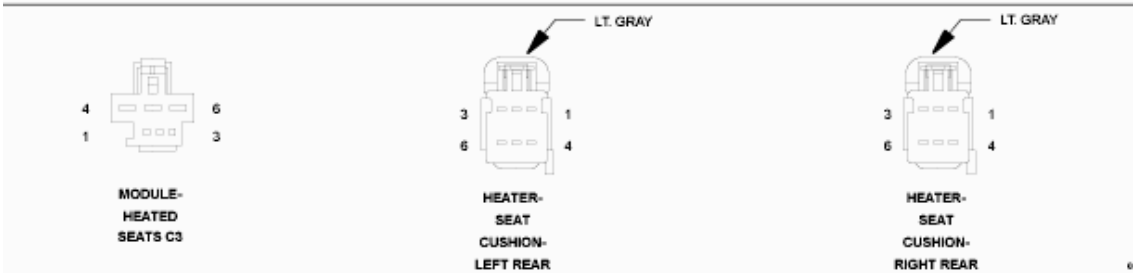
4
6
1
3
MODULE-
HEATED
SEATS C3
LT. GRAY
3
1
6
4
HEATER-
SEAT
CUSHION-
LEFT REAR
LT. GRAY
3
1
6
4
HEATER-
SEAT
CUSHION-
RIGHT REAR

Fig. 79: Rear Heater Control Wiring Diagram
Courtesy of CHRYSLER GROUP, LLC

For a complete wiring diagram, **refer to appropriate SYSTEM WIRING DIAGRAMS article** .

WHEN MONITORED:

With the engine running.

SET CONDITION:

The Heated Seat Module (HSM) detects impedance above threshold on the (P177) Left Rear Seat Heater Control circuit for more than two seconds with the output turned on.

POSSIBLE CAUSES

Possible Causes
(P177) LEFT REAR SEAT HEATER CONTROL CIRCUIT RESISTANCE HIGH
(Z909) GROUND CIRCUIT RESISTANCE HIGH
SEAT CUSHION HEATER ELEMENT
HEATED SEAT MODULE (HSM)

DIAGNOSTIC TEST

1. **TEST FOR INTERMITTENT CONDITION**

NOTE: **Before proceeding, verify the battery is fully charged, the charging system is operating properly, no Battery or System voltage Diagnostic Trouble Codes (DTCs) are set and the HSM Power and Ground circuits are clean and tight.**

1. Turn the ignition on.
2. Using a scan tool, record and erase Diagnostic Trouble Codes (DTCs).
3. Turn the ignition off.
4. Start the engine and let it run.
5. Turn the Heated Seat on and operate in all modes.
6. Using a scan tool, read DTCs.

Is the DTC active?

Yes

- Go To 2.

No

- The conditions that caused this code to set are not present at this time. Verify seat harness is routed correctly to the HSM. Using the wiring diagram/schematic as a guide, inspect the wiring and connectors. Look for chafed, pierced, pinched or partially broken wires and broken, bent, pushed out, spread, corroded or contaminated terminals. Attempt to reproduce condition by adjusting the front seat.
- Perform the BODY VERIFICATION TEST. Refer to **BODY VERIFICATION TEST** .

2. **CHECK LEFT REAR SEAT CUSHION HEATER ELEMENT RESISTANCE**

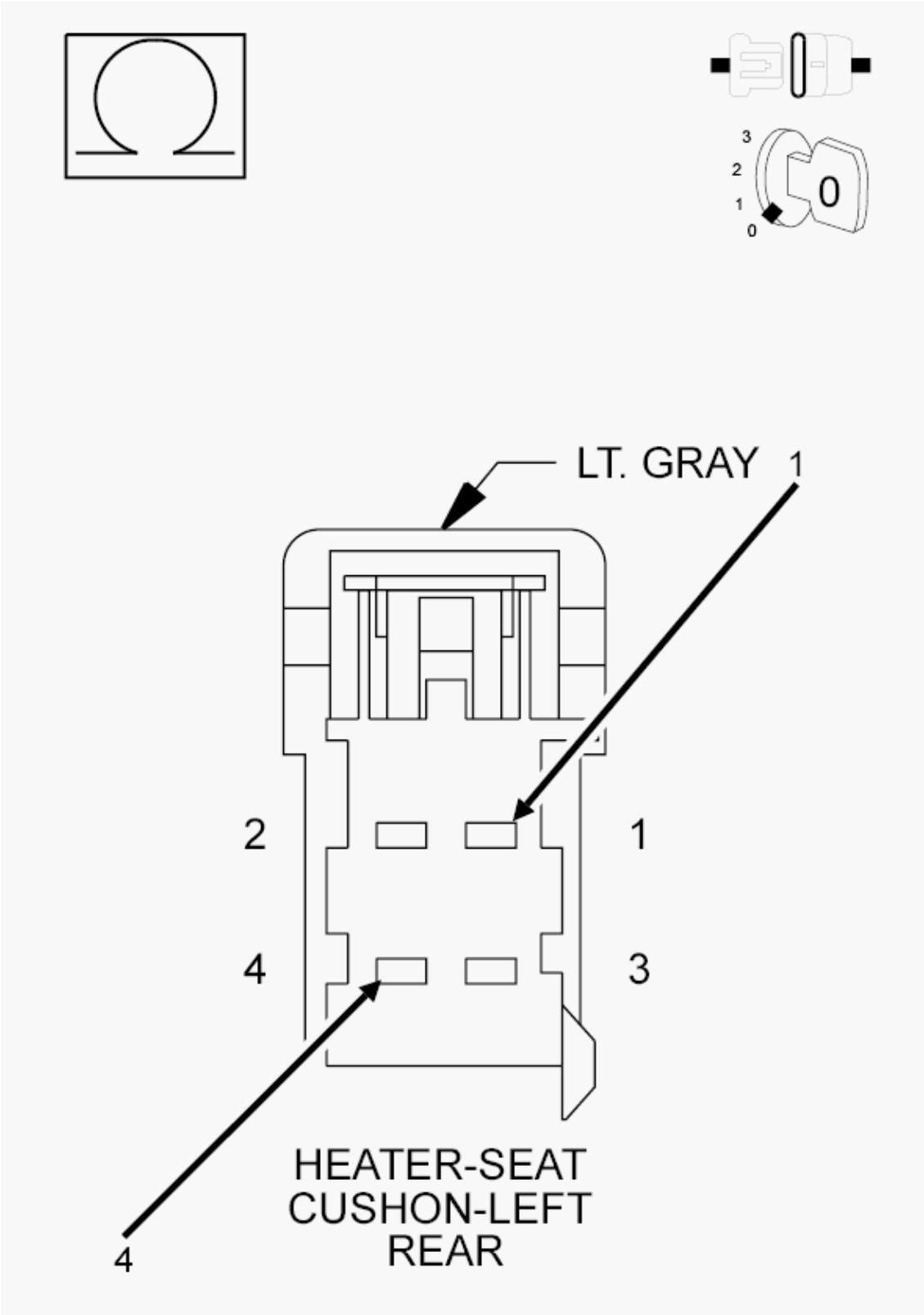

Fig. 80: Checking For An Open Left Rear Seat Cushion Heater Element
Courtesy of CHRYSLER GROUP, LLC

1. Turn the ignition off.
2. Disconnect the Left Rear Seat Cushion Heater harness connector.

NOTE: Check connectors. Clean and repair as necessary.

3. Measure the resistance between the (P177) Left Rear Seat Heater Control circuit and the (Z909) Ground circuit at the Left Rear Seat Cushion Heater harness connector (seat side).

   Is the resistance above 4.8 Ohms?

   Yes

   - Replace the Rear Seat Cushion Heater Element in accordance with the Service Information.
   - Perform the BODY VERIFICATION TEST. Refer to **BODY VERIFICATION TEST** .

   No

   - Go To 3.

3. **CHECK (P177) LEFT REAR SEAT HEATER CONTROL CIRCUIT FOR HIGH RESISTANCE IN BODY HARNESS**

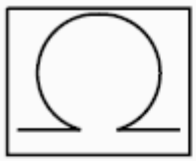

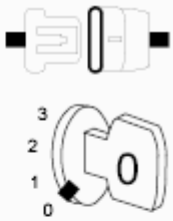

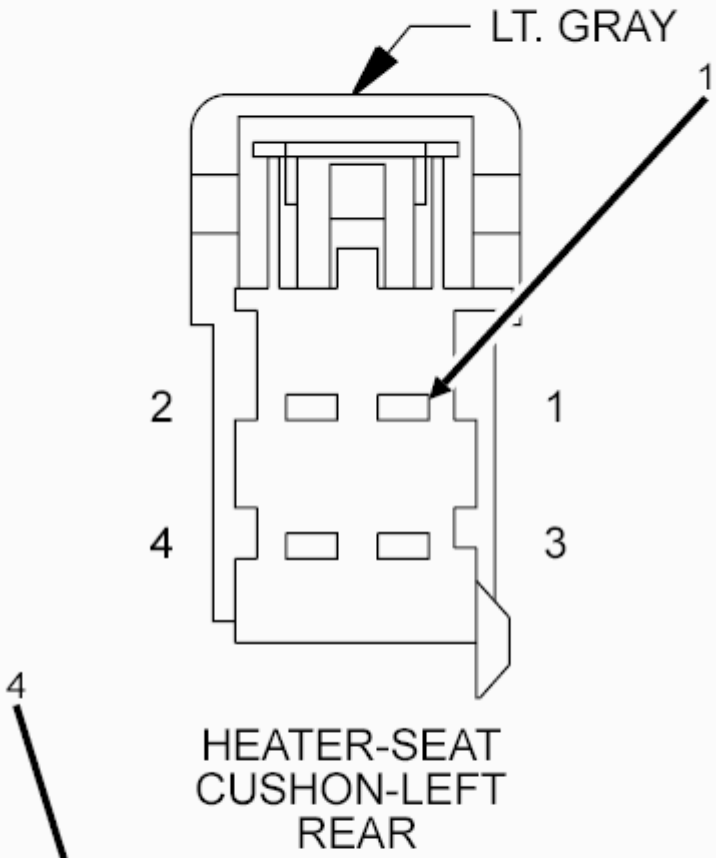

HEATER-SEAT CUSHON-LEFT REAR

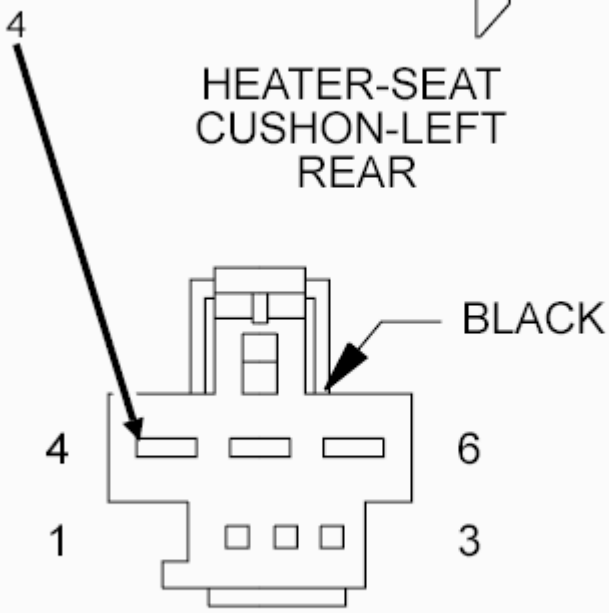

MODULE-HEATED

Fig. 81: Checking Left Rear Seat Heater Control Circuit For An Open In Body Harness
Courtesy of CHRYSLER GROUP, LLC

1. Disconnect the HSM C3 harness connector.

   NOTE: Check connectors. Clean and repair as necessary.

2. Measure the resistance of the (P177) Left Rear Seat Heater Control circuit between the HSM C3 harness connector and the Left Rear Seat Cushion Heater harness connector (harness side).

   Is the resistance below 5.0 Ohms?

   Yes

   - Go To 4.

   No

   - Repair the (P177) Left Rear Seat Heater Control circuit for high resistance.
   - Perform the BODY VERIFICATION TEST. Refer to **BODY VERIFICATION TEST** .

4. **CHECK (Z909) GROUND CIRCUIT FOR HIGH RESISTANCE**

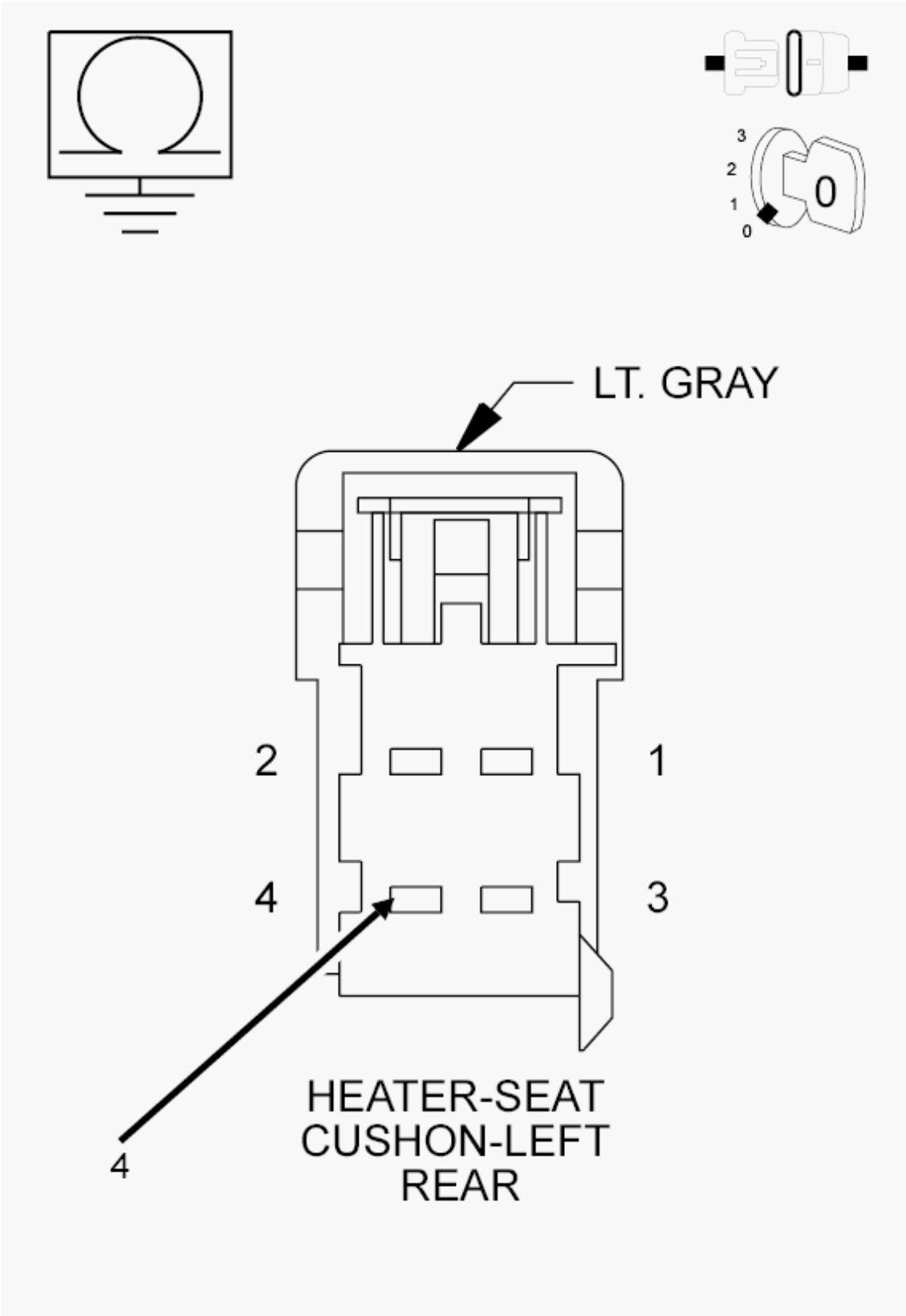

Fig. 82: Checking Ground Circuit For An Open Or High Resistance
Courtesy of CHRYSLER GROUP, LLC

1. Measure the resistance of the (Z909) Ground circuit between ground and the Left Rear Seat Cushion Heater harness connector (harness side).

   Is the resistance below 5.0 Ohms?

   Yes

   - Replace the Heated Seat Module (HSM) in accordance with the Service Information.
   - Perform the BODY VERIFICATION TEST. Refer to **BODY VERIFICATION TEST** .

   No

   - Repair the (Z909) Ground circuit for high resistance.
   - Perform the BODY VERIFICATION TEST. Refer to **BODY VERIFICATION TEST** .

B1E9C-11-REAR RIGHT HEATER CONTROL CIRCUIT - CIRCUIT SHORT TO GROUND

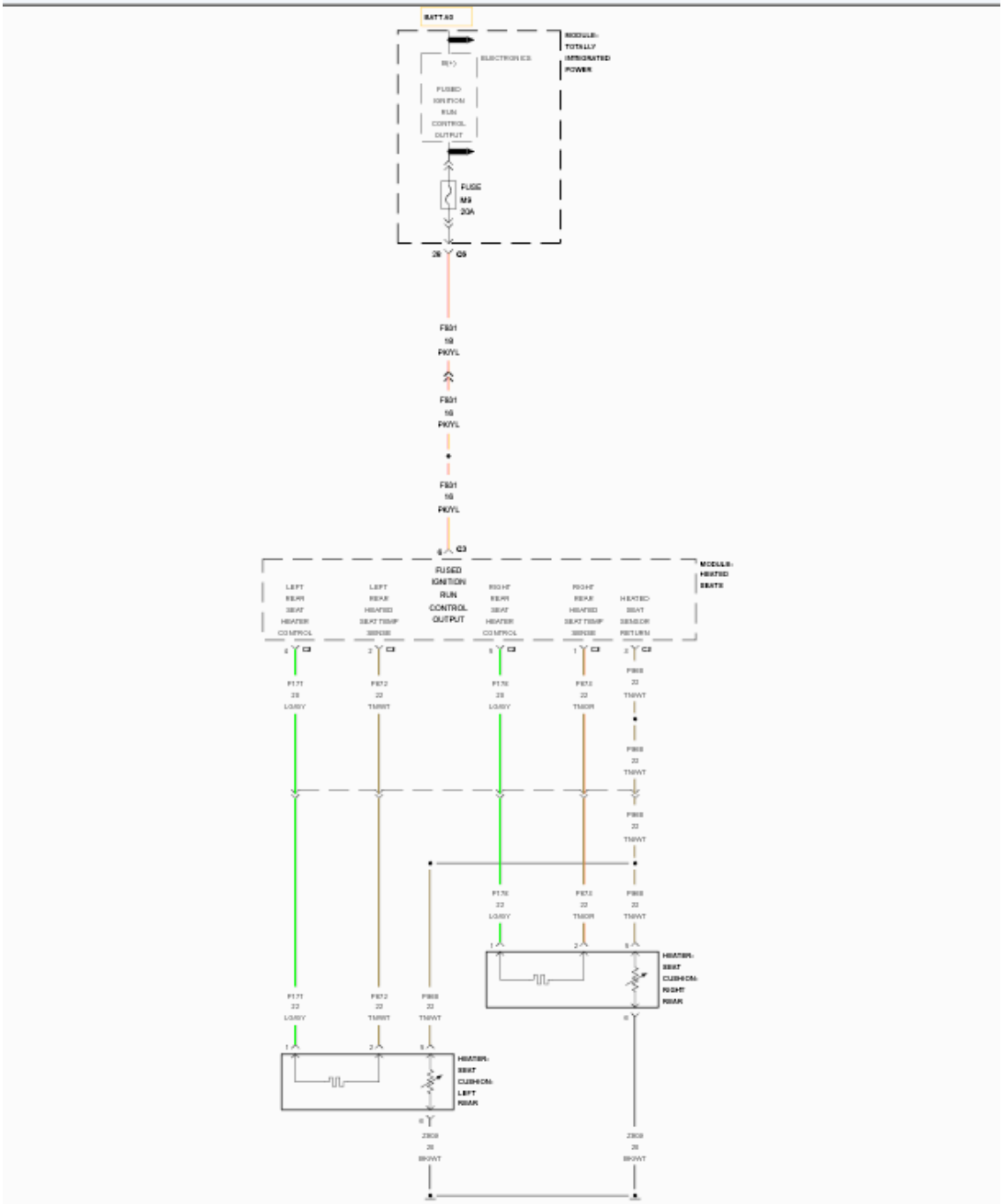
BATT A3
MODULE-
TOTALLY
INTEGRATED
POWER
ELECTRONICS
B(+)
FUSED
IGNITION
RUN
CONTROL
OUTPUT
FUSE
M9
20A
28
C5
F801
18
PK/YL
F801
18
PK/YL
F801
18
PK/YL
6
C3
FUSED
IGNITION
RUN
CONTROL
OUTPUT
MODULE-
HEATED
SEATS
LEFT
REAR
SEAT
HEATER
CONTROL
LEFT
REAR
HEATED
SEAT TEMP
SENSE
RIGHT
REAR
SEAT
HEATER
CONTROL
RIGHT
REAR
HEATED
SEAT TEMP
SENSE
HEATED
SEAT
SENSOR
RETURN
4
C3
2
C3
5
C3
1
C3
2
C3
P171
22
LG/BY
P872
22
TN/WT
P176
22
LG/BY
P872
22
TN/OR
P868
22
TN/WT
P868
22
TN/WT
P868
22
TN/WT
P176
22
LG/BY
P872
22
TN/OR
P868
22
TN/WT
1
2
5
HEATER-
SEAT
CUSHION-
RIGHT
REAR
P171
22
LG/BY
P872
22
TN/WT
P868
22
TN/WT
1
2
5
HEATER-
SEAT
CUSHION-
LEFT
REAR
6
Z909
20
BR/WT
6
Z909
20
BR/WT

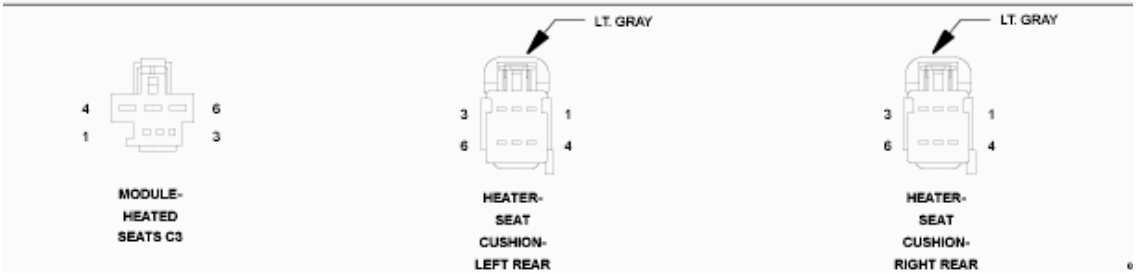
4
6
1
3
MODULE-
HEATED
SEATS C3
LT. GRAY
3
1
6
4
HEATER-
SEAT
CUSHION-
LEFT REAR
LT. GRAY
3
1
6
4
HEATER-
SEAT
CUSHION-
RIGHT REAR

Fig. 83: Rear Heater Control Wiring Diagram
Courtesy of CHRYSLER GROUP, LLC

For a complete wiring diagram, **refer to appropriate SYSTEM WIRING DIAGRAMS article** .

WHEN MONITORED:

With the engine running.

SET CONDITION:

The Heated Seat Module (HSM) detects Voltage below 1.0 volt or current above 10.0 amps on the (P178) Right Rear Seat Heater Control circuit for more than two seconds with the output turned on.

POSSIBLE CAUSES

Possible Causes
(P178) RIGHT REAR SEAT HEATER CONTROL CIRCUIT SHORTED TO GROUND
(P178) RIGHT REAR SEAT HEATER CONTROL CIRCUIT SHORTED TO THE (P968) HEATED SEAT SENSOR RETURN CIRCUIT
(P178) RIGHT REAR SEAT HEATER CONTROL CIRCUIT SHORTED TO THE (Z909) GROUND CIRCUIT
SEAT CUSHION HEATER ELEMENT SHORTED
HEATED SEAT MODULE (HSM)

DIAGNOSTIC TEST

1. **TEST FOR INTERMITTENT CONDITION**

NOTE: **Make sure the battery is fully charged and the charging system is operating properly before proceeding.**

1. Turn the ignition on.
2. Using a scan tool, record and erase Diagnostic Trouble Codes (DTCs).
3. Turn the ignition off.
4. Start the engine and let it run.
5. Turn the Heated Seat on and operate in all modes.
6. Using a scan tool, read DTCs.

Is the DTC active?

Yes

- Go To 2.

No

- The conditions that caused this code to set are not present at this time. Verify seat harness is routed correctly to the HSM. Using the wiring diagram/schematic as a guide, inspect the wiring and connectors. Look for chafed, pierced, pinched, or partially broken wires and broken, bent, pushed out, spread, corroded, or contaminated terminals. Attempt to reproduce condition by adjusting the front seat.
- Perform the BODY VERIFICATION TEST. Refer to **BODY VERIFICATION TEST** .

2. **CHECK (P178) RIGHT REAR SEAT HEATER CONTROL CIRCUIT IN BODY HARNESS FOR A SHORT TO GROUND**
   1. Turn the ignition off.
   2. Disconnect the Right Rear Seat Cushion Heater harness connector.

      NOTE: Check connectors. Clean and repair as necessary.

   3. Turn the ignition on.
   4. Using a scan tool, erase DTCs.
   5. Turn the ignition off.
   6. Start the engine and let it run.
   7. Turn the Heated Seat on and operate in all modes.
   8. Using a scan tool, read DTCs.

   Is the same DTC active?

   Yes

   - Go To 3.

   No

   - Replace the shorted Rear Seat Cushion Heater Element in accordance with the Service Information.
   - Perform the BODY VERIFICATION TEST. Refer to **BODY VERIFICATION TEST** .

3. **CHECK (P178) RIGHT REAR SEAT HEATER CONTROL CIRCUIT FOR A SHORT TO GROUND**

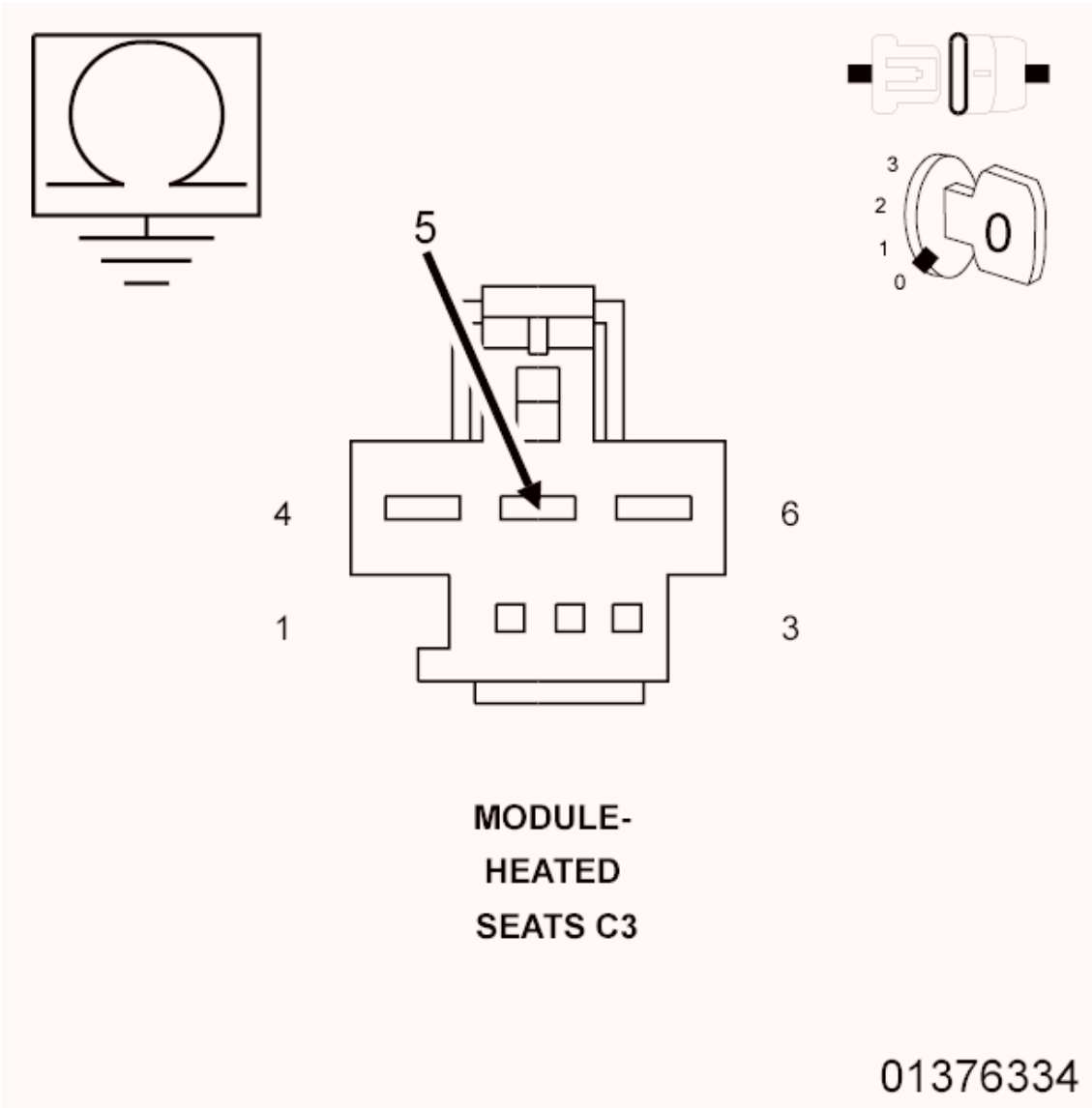

Fig. 84: Checking Right Rear Seat Heater Control Circuit For A Short To Ground
Courtesy of CHRYSLER GROUP, LLC

1. Turn the ignition off.
2. Disconnect the HSM C3 harness connector.

   NOTE: Check connectors. Clean and repair as necessary.

3. Measure the resistance of the (P178) Right Rear Seat Heater Control circuit between ground and the HSM C3 harness connector.

   Is the resistance below 10K Ohms?

   Yes

- Repair the (P178) Right Rear Seat Heater Control circuit for a short to ground.
- Perform the BODY VERIFICATION TEST. Refer to **BODY VERIFICATION TEST** .

No

- Go To 4.

4. **CHECK (P178) RIGHT REAR SEAT HEATER CONTROL CIRCUIT FOR A SHORT TO THE (P968) HEATED SEAT SENSOR RETURN CIRCUIT OR TO (Z909) GROUND CIRCUIT**

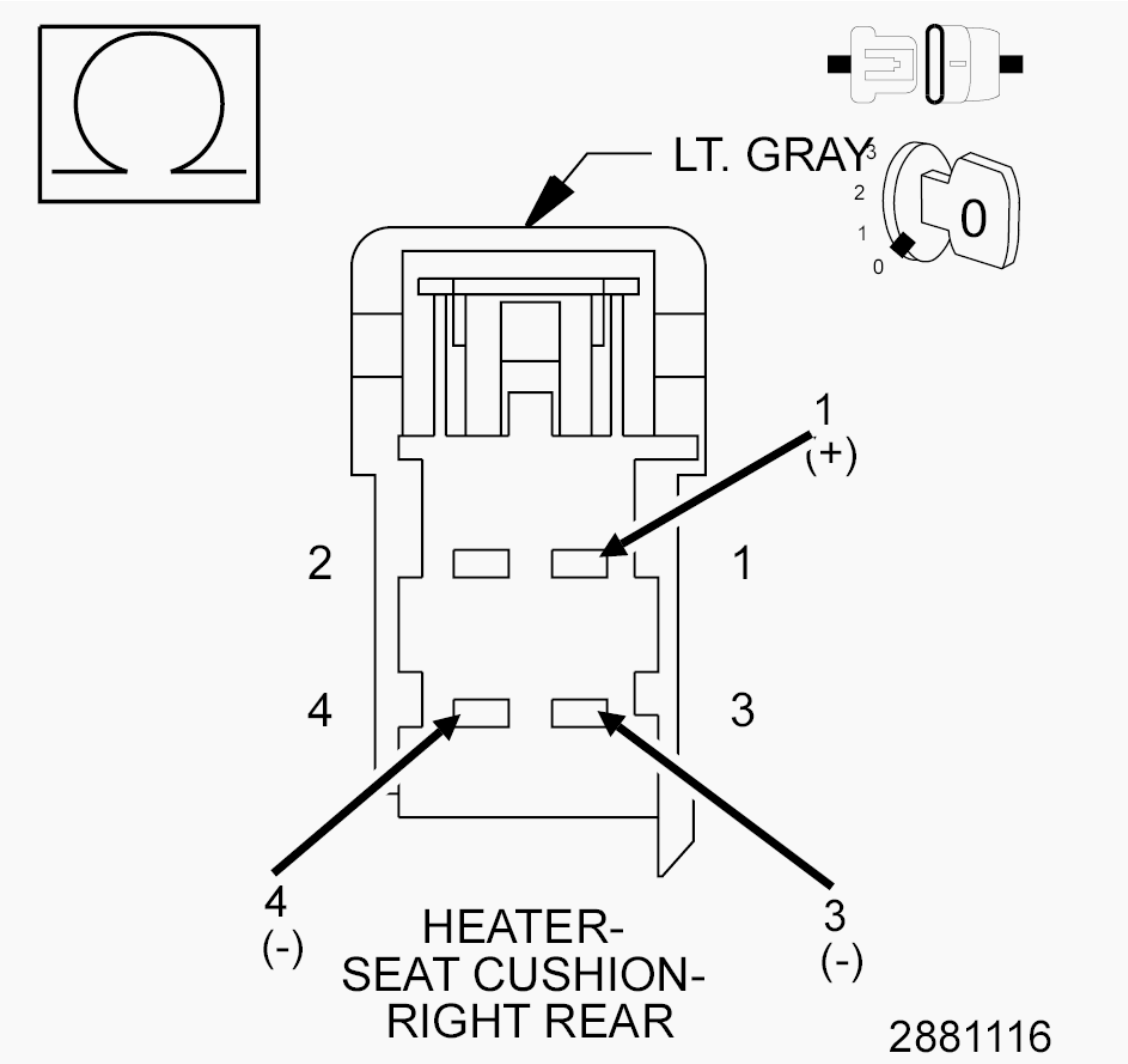

Fig. 85: Checking Right Rear Seat Heater Control Circuit For A Short To The Heated Seat Sensor Return Circuit Or To Ground Circuit
Courtesy of CHRYSLER GROUP, LLC

1. Measure the resistance between the (P178) Right Rear Seat Heater Control circuit and the (P968) Heated Seat Sensor Return circuit at the Right Rear Seat Cushion Heater harness connector.
2. Measure the resistance between the (P178) Right Rear Seat Heater Control circuit and the (Z909) Ground circuit at the Right Rear Seat Cushion Heater harness connector.

Is the resistance below 10K Ohms for either measurement?

Yes

- Repair all circuits with a resistance below 10K Ohms for a short to the (P178) Right Rear Seat Heater Control circuit.
- Perform the BODY VERIFICATION TEST. Refer to **BODY VERIFICATION TEST** .

No

- Replace the Heated Seat Module (HSM) in accordance with the Service Information.
- Perform the BODY VERIFICATION TEST. Refer to **BODY VERIFICATION TEST** .

B1E9C-12-REAR RIGHT HEATER CONTROL CIRCUIT - CIRCUIT SHORT TO BATTERY

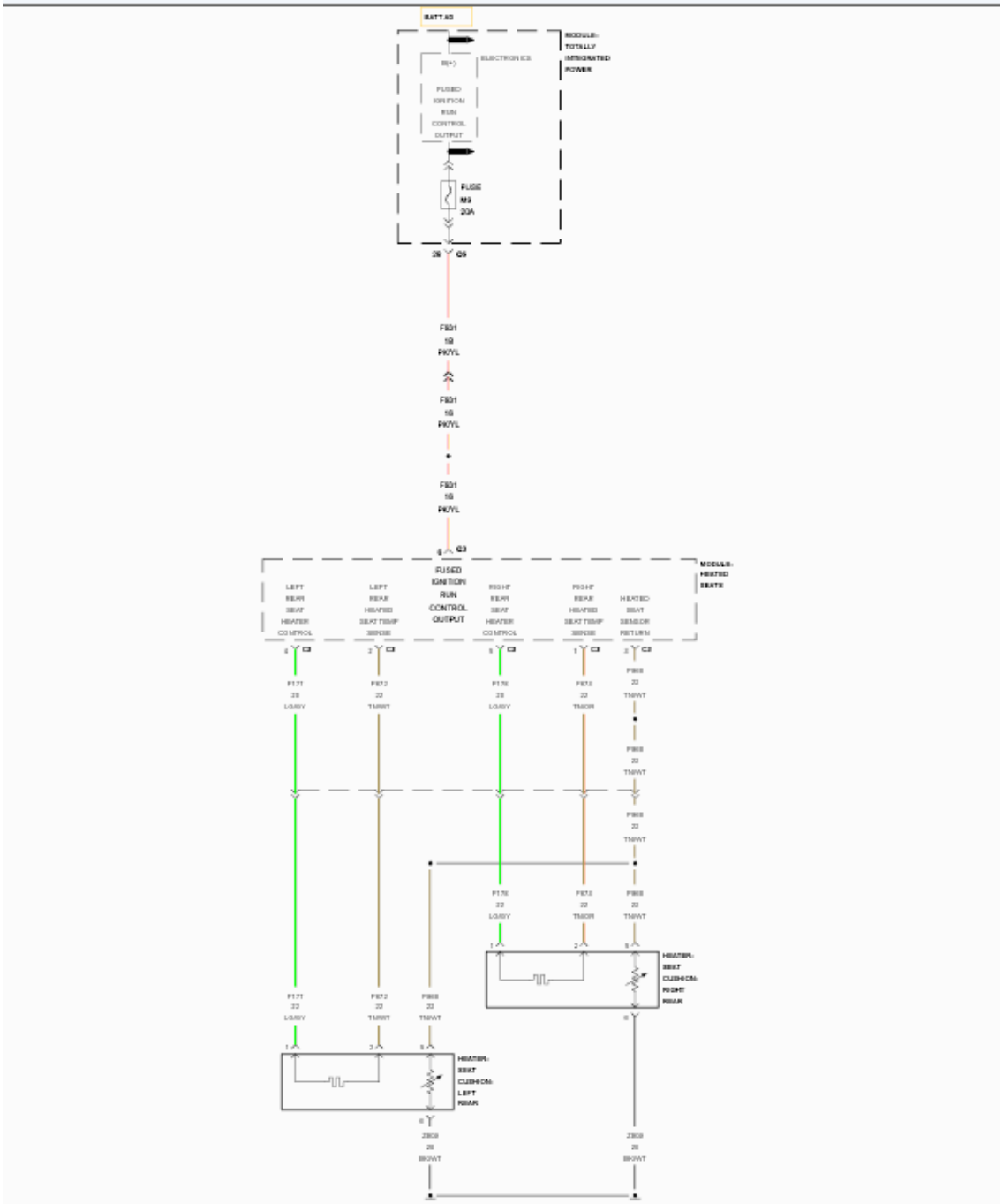
BATT A3
MODULE-
TOTALLY
INTEGRATED
POWER
ELECTRONICS
B(+)
FUSED
IGNITION
RUN
CONTROL
OUTPUT
FUSE
M9
20A
28
C5
F801
18
PK/YL
F801
18
PK/YL
F801
18
PK/YL
6
C3
FUSED
IGNITION
RUN
CONTROL
OUTPUT
MODULE-
HEATED
SEATS
LEFT
REAR
SEAT
HEATER
CONTROL
LEFT
REAR
HEATED
SEAT TEMP
SENSE
RIGHT
REAR
SEAT
HEATER
CONTROL
RIGHT
REAR
HEATED
SEAT TEMP
SENSE
HEATED
SEAT
SENSOR
RETURN
4
C3
2
C3
5
C3
1
C3
2
C3
P171
22
LG/BY
P872
22
TN/WT
P176
22
LG/BY
P872
22
TN/OR
P868
22
TN/WT
P868
22
TN/WT
P868
22
TN/WT
P176
22
LG/BY
P872
22
TN/OR
P868
22
TN/WT
1
2
5
HEATER-
SEAT
CUSHION-
RIGHT
REAR
P171
22
LG/BY
P872
22
TN/WT
P868
22
TN/WT
1
2
5
HEATER-
SEAT
CUSHION-
LEFT
REAR
6
Z909
20
BR/WT
6
Z909
20
BR/WT

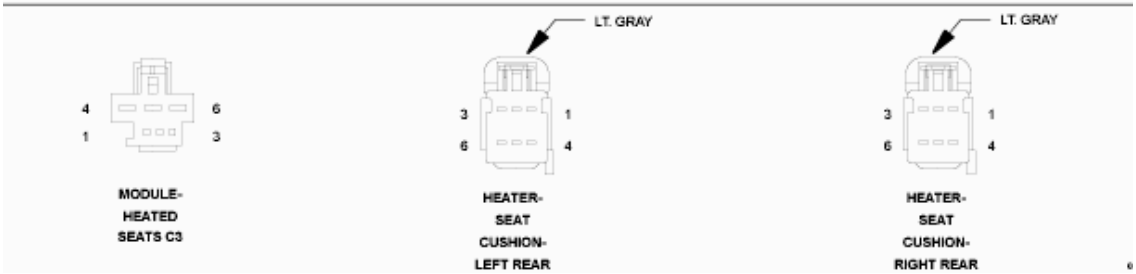
4
6
1
3
MODULE-
HEATED
SEATS C3
LT. GRAY
3
1
6
4
HEATER-
SEAT
CUSHION-
LEFT REAR
LT. GRAY
3
1
6
4
HEATER-
SEAT
CUSHION-
RIGHT REAR

Fig. 86: Rear Heater Control Wiring Diagram
Courtesy of CHRYSLER GROUP, LLC

For a complete wiring diagram, **refer to appropriate SYSTEM WIRING DIAGRAMS article** .

WHEN MONITORED:

With the engine running.

SET CONDITION:

The Heated Seat Module (HSM) detects voltage above 5.0 volts on the (P178) Right Rear Seat Heater Control circuit for more than two seconds with the output turned off.

POSSIBLE CAUSES

Possible Causes
(P178) RIGHT REAR SEAT HEATER CONTROL CIRCUIT SHORTED TO VOLTAGE
(P178) RIGHT REAR SEAT HEATER CONTROL CIRCUIT SHORTED TO THE (F931) FUSED IGNITION RUN CONTROL OUTPUT CIRCUIT
(P178) RIGHT REAR SEAT HEATER CONTROL CIRCUIT SHORTED TO THE (P177) LEFT REAR SEAT HEATER CONTROL CIRCUIT
HEATED SEAT MODULE (HSM)

DIAGNOSTIC TEST

1. **TEST FOR INTERMITTENT CONDITION**

NOTE: **Make sure the battery is fully charged and the charging system is operating properly before proceeding.**

1. Turn the ignition on.
2. Using a scan tool, record and erase Diagnostic Trouble Codes (DTCs).
3. Turn the ignition off.
4. Start the engine and let it run.
5. Using a scan tool, read DTCs.

Is the DTC active?

Yes

- Go To 2.

No

- The conditions that caused this code to set are not present at this time. Verify seat harness is routed correctly to the HSM. Using the wiring diagram/schematic as a guide, inspect the wiring and connectors. Look for chafed, pierced, pinched, or partially broken wires and broken, bent, pushed out, spread, corroded, or contaminated terminals. Attempt to reproduce condition by operating all HSM functions one at a time, except for the Right Rear Heated Seat. Attempt to reproduce condition by adjusting the front seat.
- Perform the BODY VERIFICATION TEST. Refer to **BODY VERIFICATION TEST** .

2. **CHECK (P178) RIGHT REAR SEAT HEATER CONTROL CIRCUIT FOR A SHORT TO VOLTAGE**

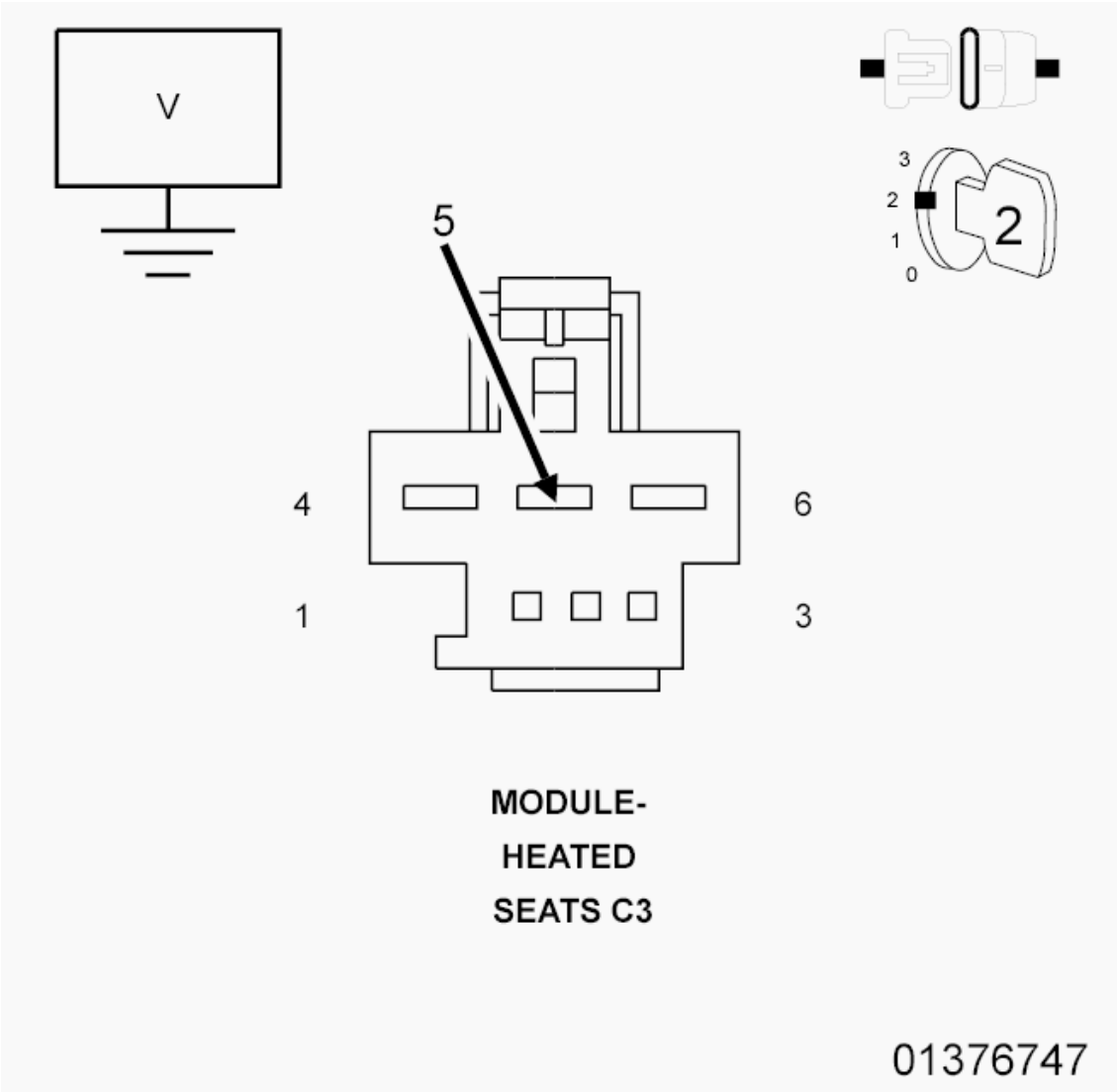

Fig. 87: Checking Right Rear Seat Heater Control Circuit For A Short To Voltage
Courtesy of CHRYSLER GROUP, LLC

1. Turn the ignition off.
2. Disconnect the HSM C3 harness connector.

NOTE: **Check connectors. Clean and repair as necessary.**

3. Start the engine and let it run.
4. Measure the voltage of the (P178) Right Rear Seat Heater Control circuit between the HSM C3 harness connector and ground.

   Is there any voltage present?

   Yes

   - Go To 3.

   No

   - Go To 4.

3. **CHECK (P178) RIGHT REAR SEAT HEATER CONTROL CIRCUIT FOR A SHORT TO THE (F931) FUSED IGNITION RUN CONTROL OUTPUT CIRCUIT**

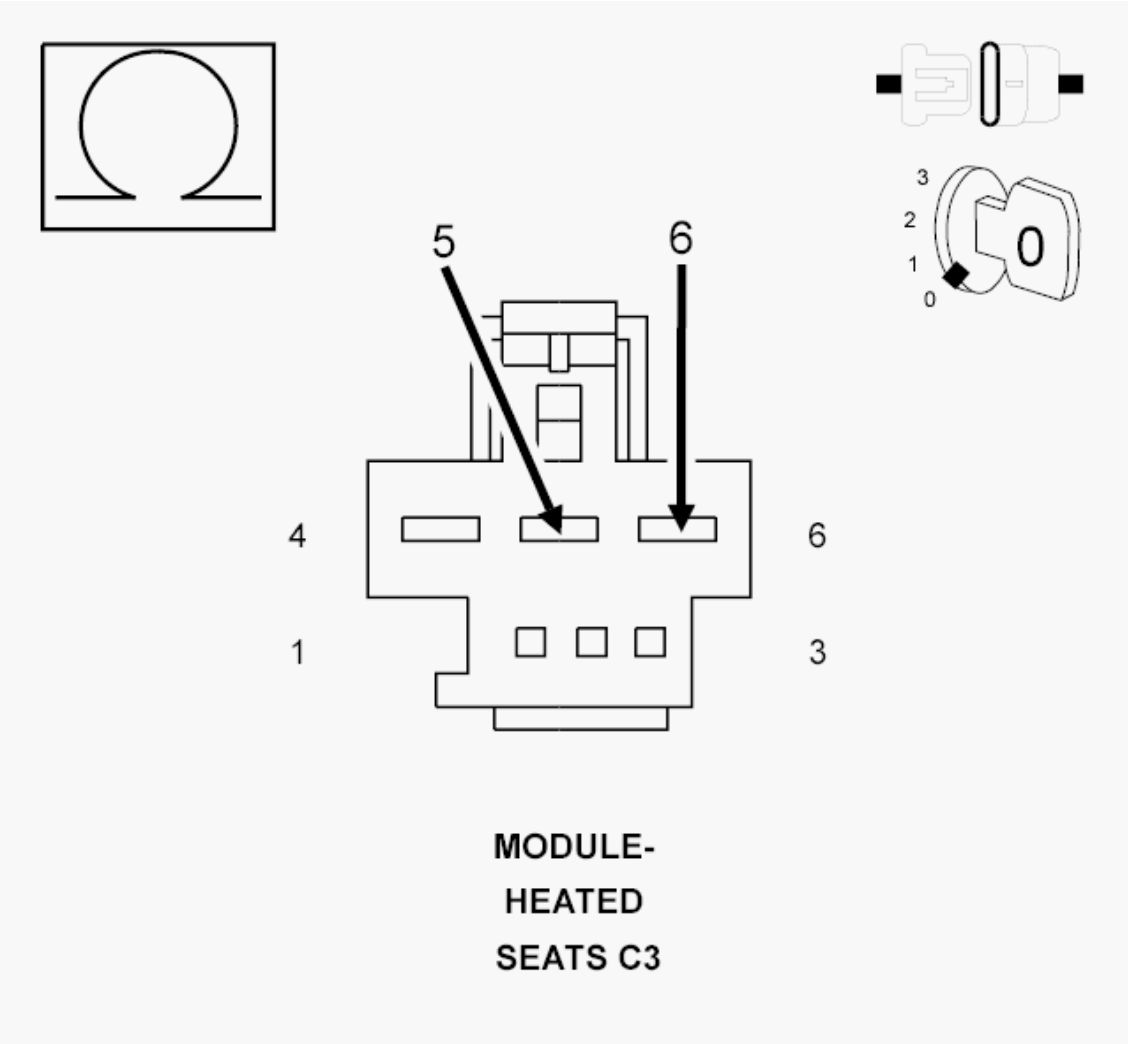

Fig. 88: Checking Right Rear Seat Heater Control Circuit For A Short To The Fused Ignition Run Control Output Circuit
Courtesy of CHRYSLER GROUP, LLC

1. Turn the ignition off.
2. Measure the resistance between the (P178) Right Rear Seat Heater Control circuit and the (F931) Fused Ignition Run Control Output circuit at the HSM C3 harness connector.

   Is the resistance below 10K Ohms?

   Yes

   - Repair the (P178) Right Rear Seat Heater Control circuit for a short to the (F931) Fused Ignition Run Control Output circuit.
   - Perform the BODY VERIFICATION TEST. Refer to **BODY VERIFICATION TEST** .

   No

   - Repair the (P178) Right Rear Seat Heater Control circuit for a short to voltage.
   - Perform the BODY VERIFICATION TEST. Refer to **BODY VERIFICATION TEST** .

4. **CHECK (P178) RIGHT REAR SEAT HEATER CONTROL CIRCUIT FOR A SHORT TO VOLTAGE DURING SEAT ADJUSTMENT**

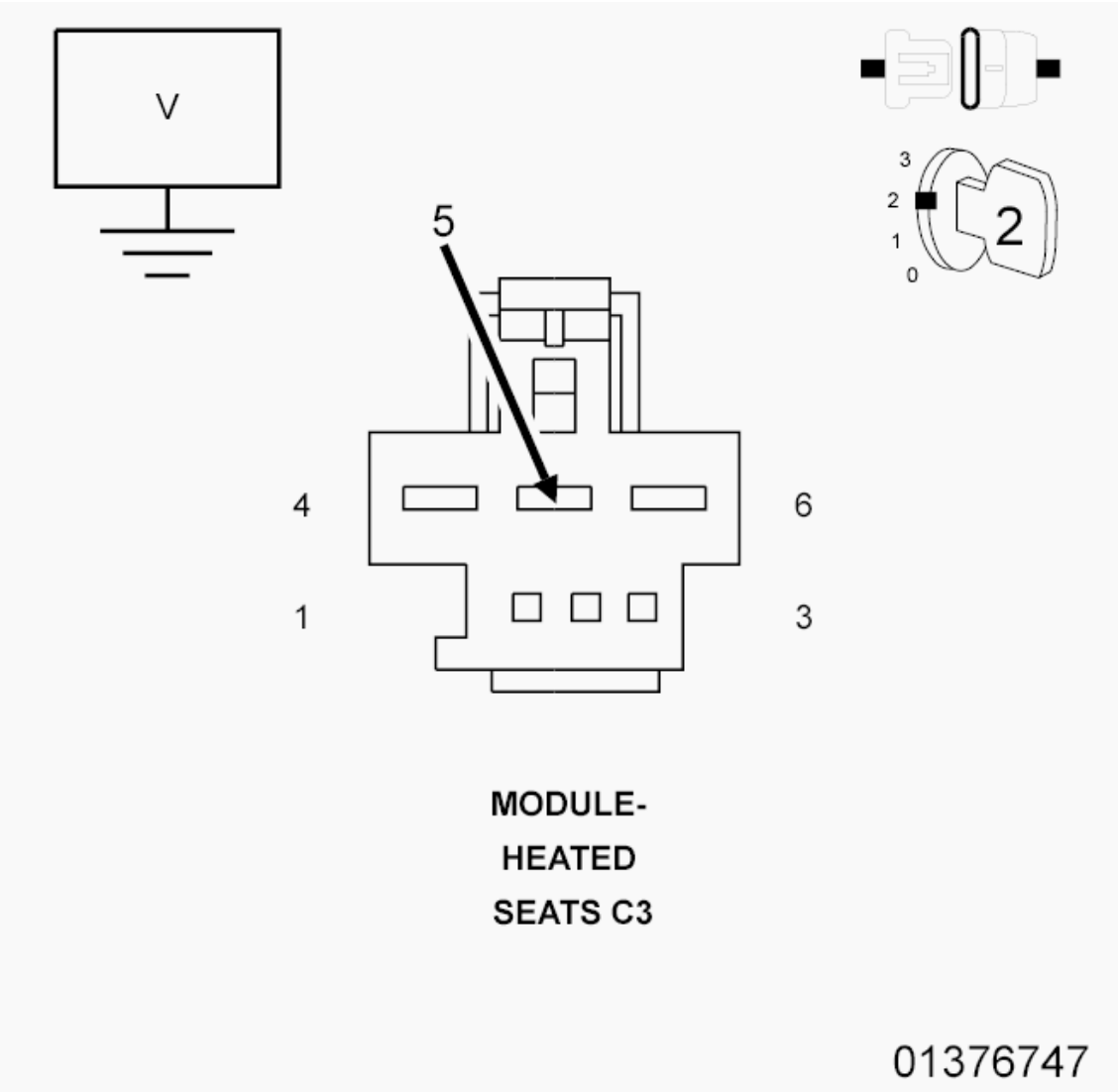

Fig. 89: Checking Right Rear Seat Heater Control Circuit For A Short To Voltage
Courtesy of CHRYSLER GROUP, LLC

1. Measure the voltage of the (P178) Right Rear Seat Heater Control circuit between the HSM C3 harness connector and ground while adjusting the front seat.

   Is there any voltage present during the seat adjustment?

   Yes

   - Repair the (P178) Right Rear Seat Heater Control circuit for a short to voltage.
   - Perform the BODY VERIFICATION TEST. Refer to **BODY VERIFICATION TEST** .

   No

   - Go To 5.

5. **CHECK (P178) RIGHT REAR SEAT HEATER CONTROL CIRCUIT FOR A SHORT TO THE (P177) LEFT REAR SEAT HEATER CONTROL CIRCUIT**

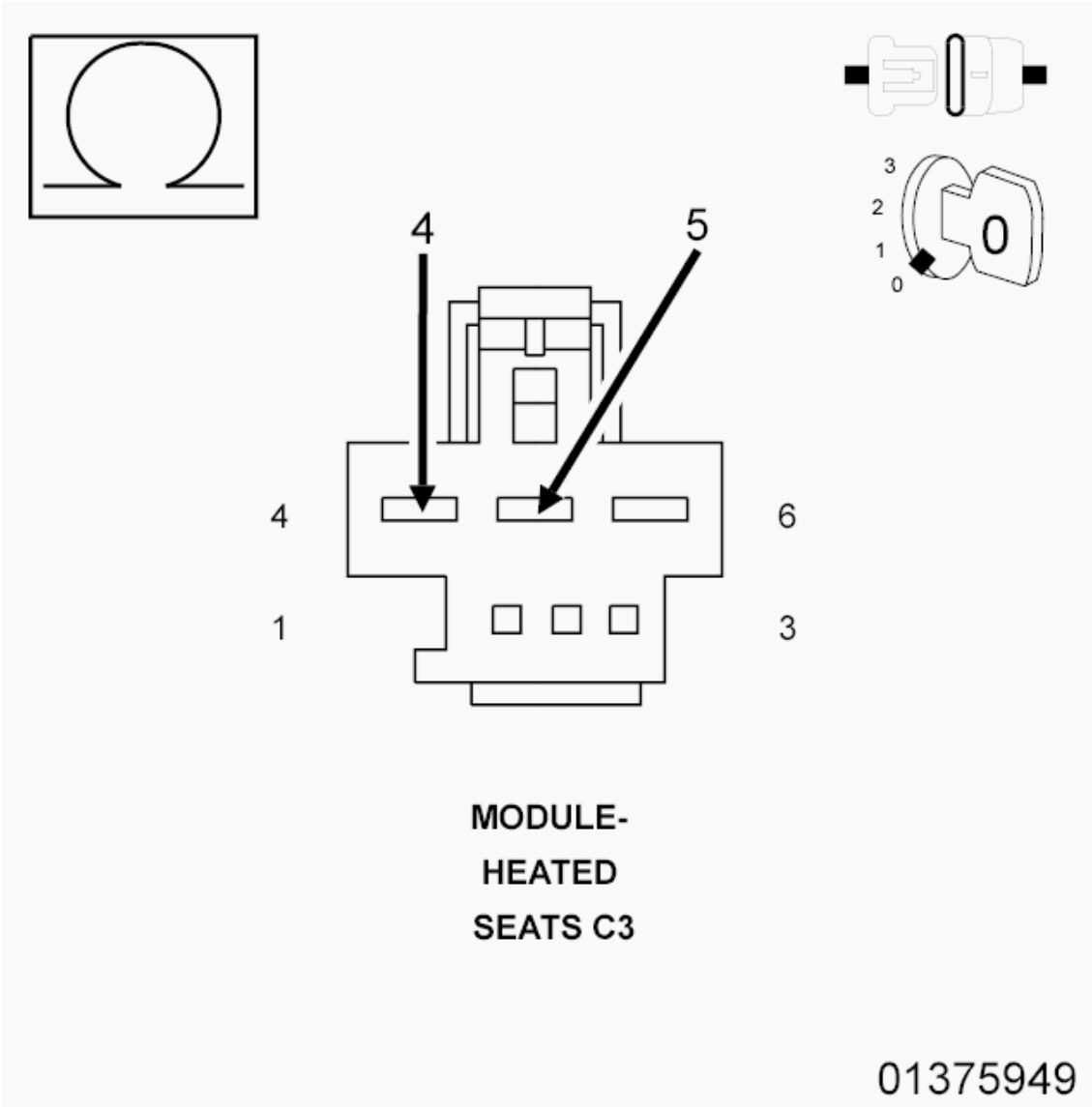

Fig. 90: Checking Left Rear Seat Heater Control Circuit For Short To Right Rear Heater Control Circuit
Courtesy of CHRYSLER GROUP, LLC

1. Turn the ignition off.
2. Disconnect the Left or Right Rear Seat Cushion Heater harness connector.
3. Measure the resistance between the (P178) Right Rear Seat Heater Control circuit and (P177) Left Rear Seat Heater Control circuit at HSM C3 harness connector.

   Is the resistance below 10K Ohms?

   Yes

- Repair the (P178) Right Rear Seat Heater Control circuit for a short to the (P177) Left Rear Seat Heater Control circuit.
- Perform the BODY VERIFICATION TEST. Refer to **BODY VERIFICATION TEST** .

No

- Replace the Heated Seat Module (HSM) in accordance with the Service Information.
- Perform the BODY VERIFICATION TEST. Refer to **BODY VERIFICATION TEST** .

B1E9C-13-REAR RIGHT HEATER CONTROL CIRCUIT - CIRCUIT OPEN

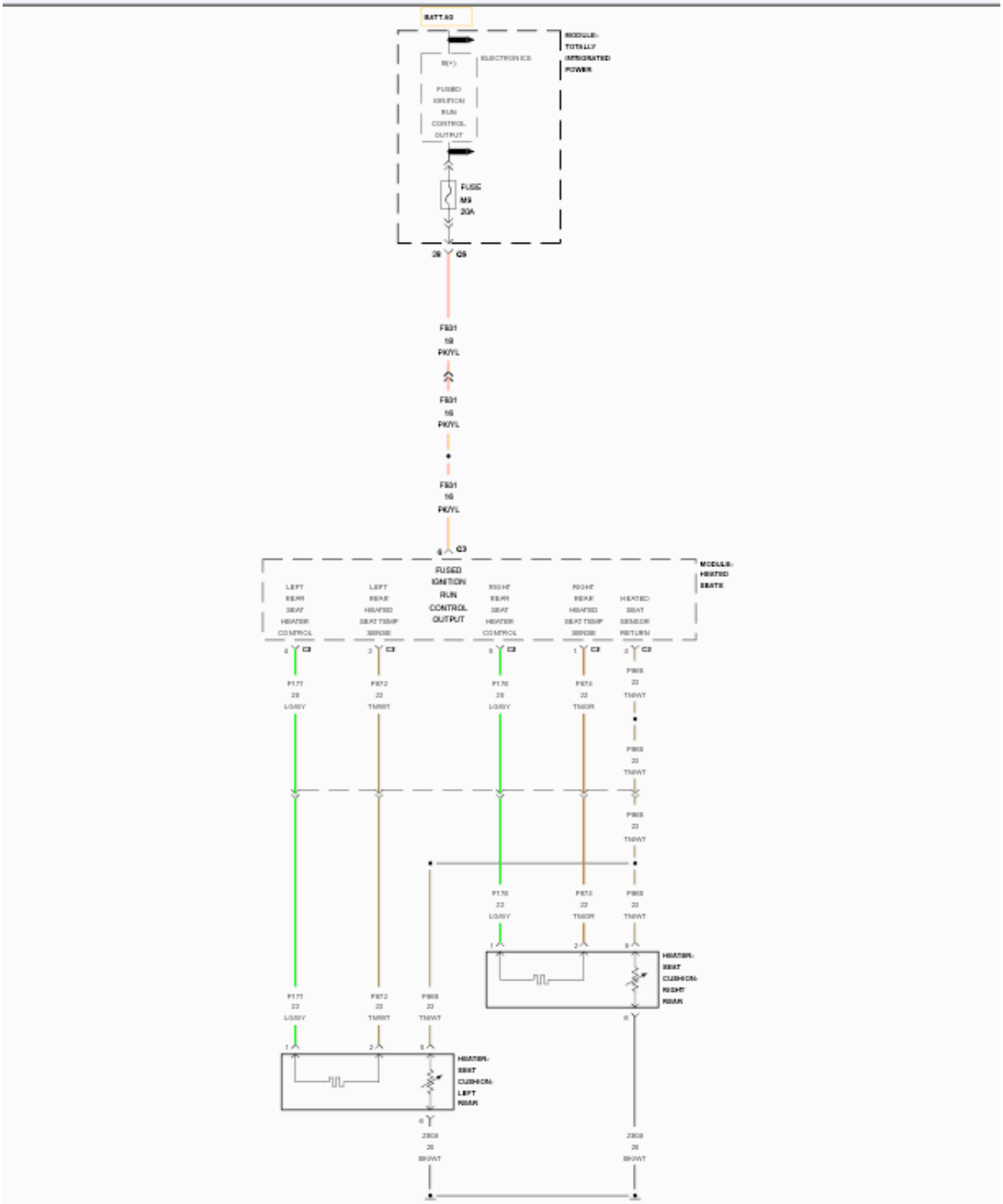
BATT A3
MODULE-
TOTALLY
INTEGRATED
POWER
ELECTRONICS
B(+)
FUSED
IGNITION
RUN
CONTROL
OUTPUT
FUSE
M9
20A
28
C5
F801
18
PK/YL
F801
18
PK/YL
F801
18
PK/YL
6
C3
FUSED
IGNITION
RUN
CONTROL
OUTPUT
MODULE-
HEATED
SEATS
LEFT
REAR
SEAT
HEATER
CONTROL
LEFT
REAR
HEATED
SEAT TEMP
SENSE
RIGHT
REAR
SEAT
HEATER
CONTROL
RIGHT
REAR
HEATED
SEAT TEMP
SENSE
HEATED
SEAT
SENSOR
RETURN
4
C3
2
C3
5
C3
1
C3
2
C3
P171
22
LG/BY
P872
22
TN/WT
P176
22
LG/BY
P872
22
TN/OR
P868
22
TN/WT
P868
22
TN/WT
P868
22
TN/WT
P176
22
LG/BY
P872
22
TN/OR
P868
22
TN/WT
1
2
5
HEATER-
SEAT
CUSHION-
RIGHT
REAR
P171
22
LG/BY
P872
22
TN/WT
P868
22
TN/WT
1
2
5
HEATER-
SEAT
CUSHION-
LEFT
REAR
6
Z909
20
BR/WT
6
Z909
20
BR/WT

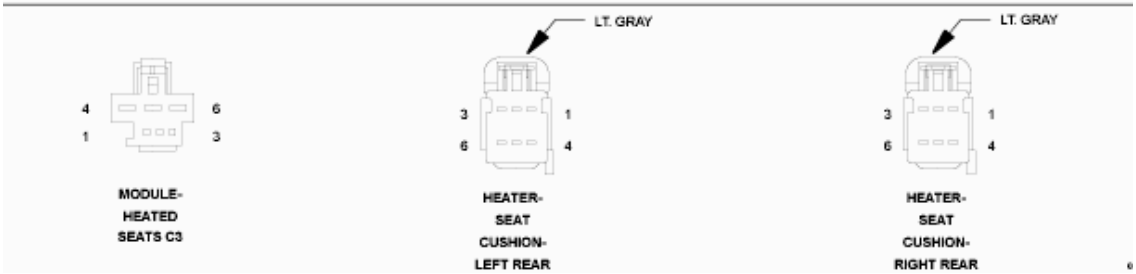
4
6
1
3
MODULE-
HEATED
SEATS C3
LT. GRAY
3
1
6
4
HEATER-
SEAT
CUSHION-
LEFT REAR
LT. GRAY
3
1
6
4
HEATER-
SEAT
CUSHION-
RIGHT REAR

Fig. 91: Rear Heater Control Wiring Diagram
Courtesy of CHRYSLER GROUP, LLC

For a complete wiring diagram, **refer to appropriate SYSTEM WIRING DIAGRAMS article** .

WHEN MONITORED:

With the engine running.

SET CONDITION:

The Heated Seat Module (HSM) detects current below 0.5 of an amp on the (P178) Right Rear Seat Heater Control circuit for more than two seconds with the output turned on.

POSSIBLE CAUSES

Possible Causes
(P178) RIGHT REAR SEAT HEATER CONTROL CIRCUIT OPEN
(Z909) GROUND CIRCUIT OPEN
SEAT CUSHION HEATER ELEMENT OPEN
HEATED SEAT MODULE (HSM)

DIAGNOSTIC TEST

1. **TEST FOR INTERMITTENT CONDITION**

NOTE: **Make sure the battery is fully charged and the charging system is operating properly before proceeding.**

1. Turn the ignition on.
2. Using a scan tool, record and erase Diagnostic Trouble Codes (DTCs).
3. Turn the ignition off.
4. Start the engine and let it run.
5. Turn the Heated Seat on and operate in all modes.
6. Using a scan tool, read DTCs.

Is the DTC active?

Yes

- Go To 2.

No

- The conditions that caused this code to set are not present at this time. Verify seat harness is

routed correctly. Using the wiring diagram/schematic as a guide, inspect the wiring and connectors. Look for chafed, pierced, pinched, or partially broken wires and broken, bent, pushed out, spread, corroded, or contaminated terminals. Attempt to reproduce condition by adjusting the front seat.

- Perform the BODY VERIFICATION TEST. Refer to **BODY VERIFICATION TEST** .

2. **CHECK FOR OPEN RIGHT REAR SEAT CUSHION HEATER ELEMENT**

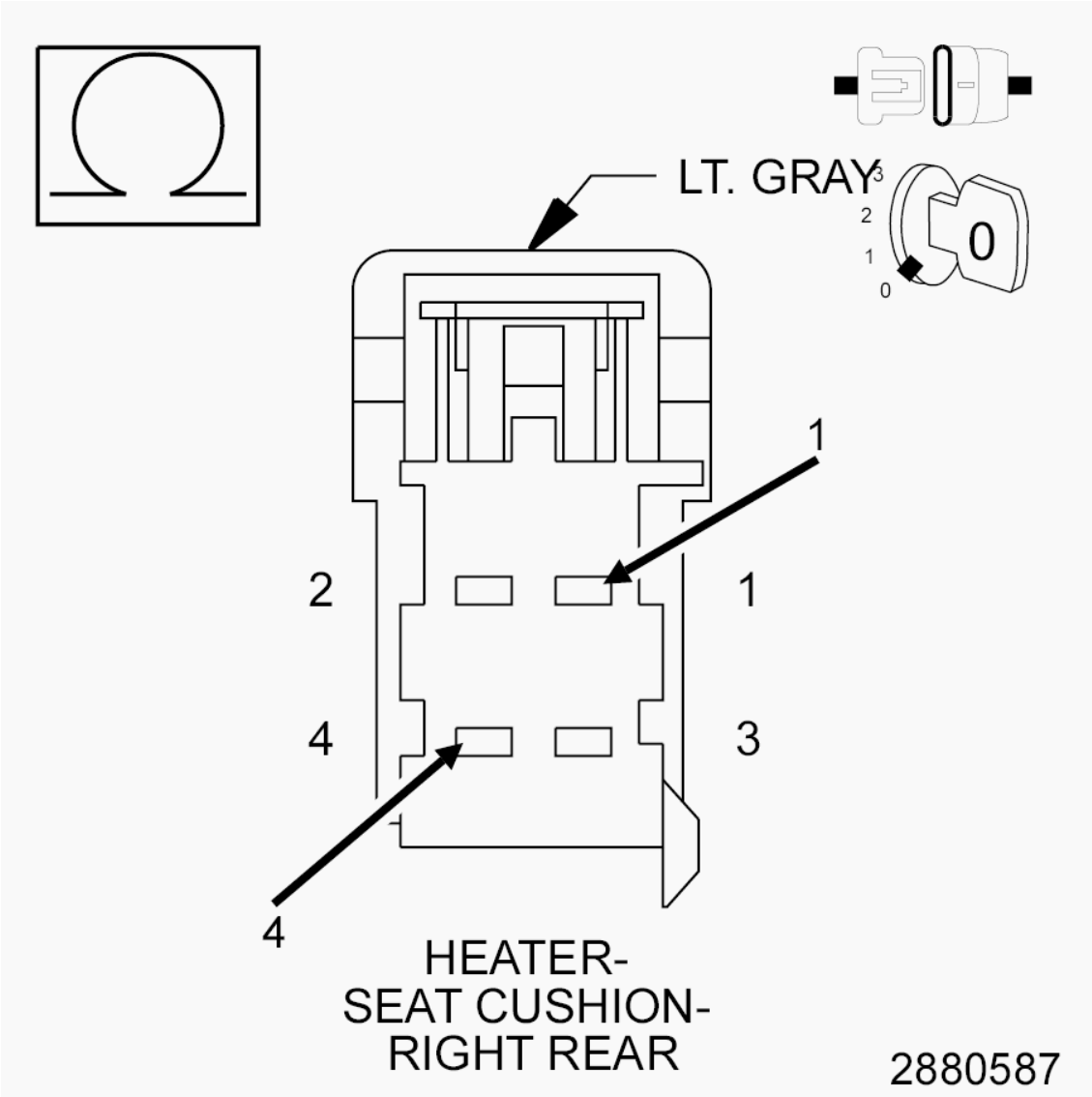

Fig. 92: Checking For Open Right Rear Seat Cushion Heater Element
Courtesy of CHRYSLER GROUP, LLC

1. Turn the ignition off.
2. Disconnect the Right Rear Seat Cushion Heater harness connector.

NOTE: Check connectors. Clean and repair as necessary.

3. Measure the resistance between the (P178) Right Rear Seat Heater Control circuit and the (Z909) Ground circuit at the Right Rear Seat Cushion Heater Connector (seat side).

   Is the resistance above 4.8 Ohms?

   Yes

   - Replace the Rear Seat Cushion Heater Element in accordance with the Service Information.
   - Perform the BODY VERIFICATION TEST. Refer to **BODY VERIFICATION TEST** .

   No

   - Go To 3.

3. **CHECK (P178) RIGHT REAR SEAT HEATER CONTROL CIRCUIT FOR AN OPEN IN BODY HARNESS**

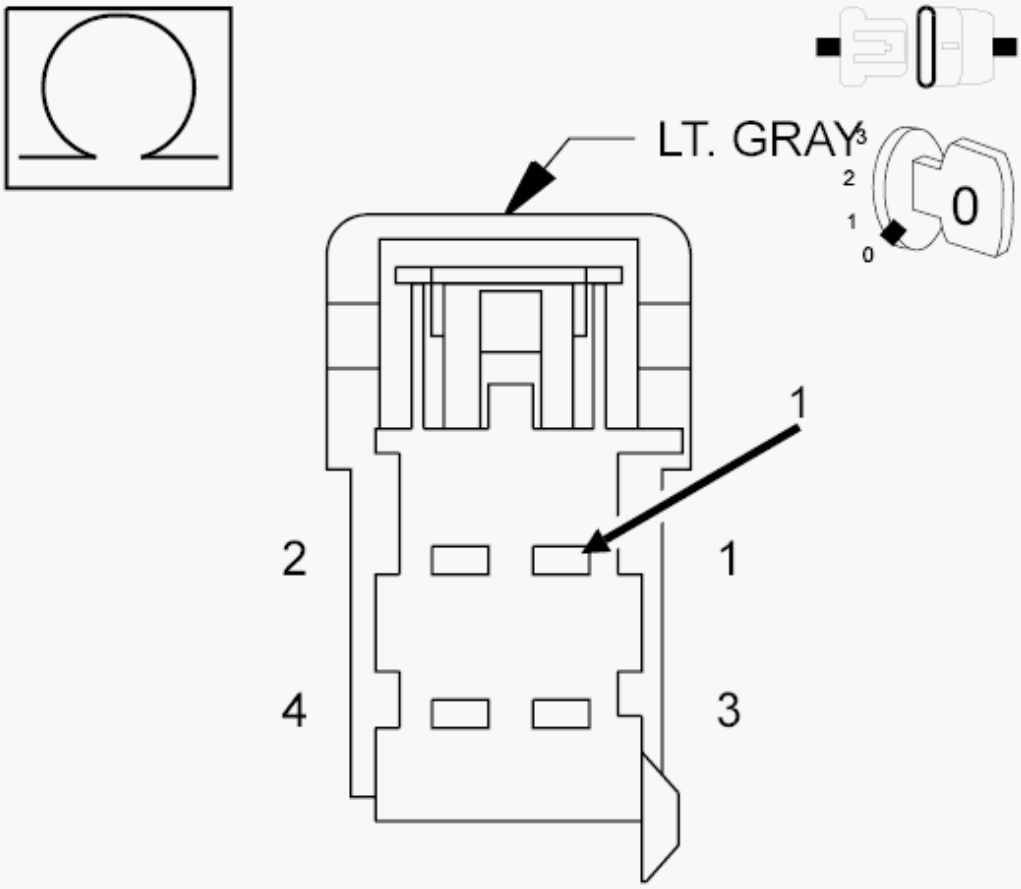

HEATER-
SEAT CUSHION-
RIGHT REAR

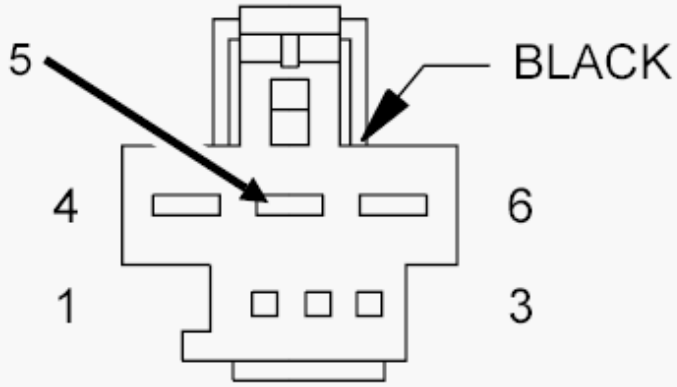

MODULE-
HEATED

Fig. 93: Checking Right Rear Seat Heater Control Circuit For An Open In Body Harness
Courtesy of CHRYSLER GROUP, LLC

1. Disconnect the HSM C3 harness connector.

   NOTE: Check connectors. Clean and repair as necessary.

2. Measure the resistance of the (P178) Right Rear Seat Heater Control circuit between the HSM C3 harness connector and the Right Rear Seat Cushion Heater harness connector (harness side).

   Is the resistance below 5.0 Ohms?

   Yes

   - Go To 4.

   No

   - Repair the (P178) Right Rear Seat Heater Control circuit for an open.
   - Perform the BODY VERIFICATION TEST. Refer to **BODY VERIFICATION TEST** .

4. **CHECK (Z909) GROUND CIRCUIT FOR AN OPEN**

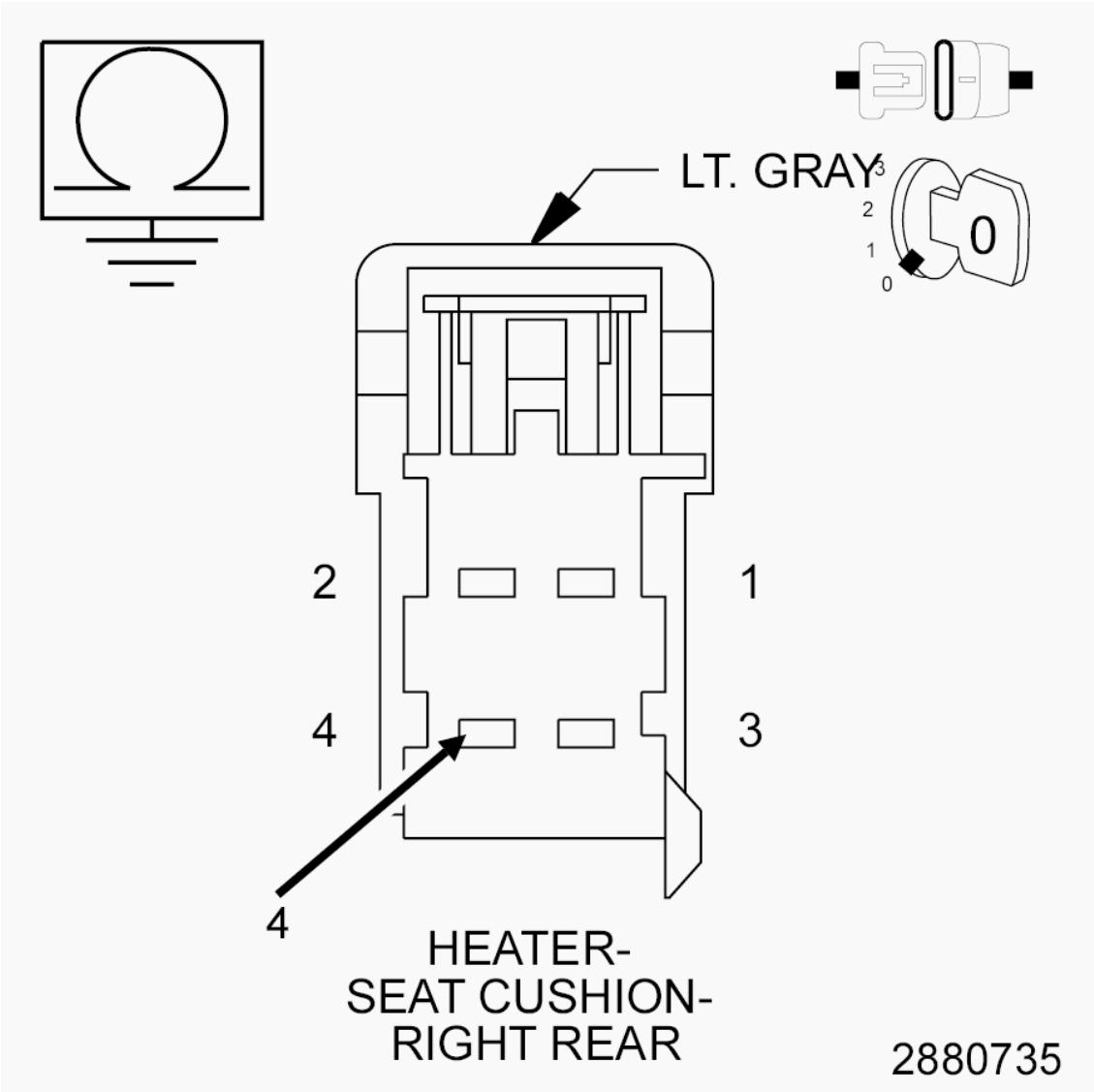

Fig. 94: Checking Ground Circuit For An Open
Courtesy of CHRYSLER GROUP, LLC

1. Measure the resistance of the (Z909) Ground circuit between ground and the Right Rear Seat Cushion Heater harness connector (harness side).

   Is the resistance below 5.0 Ohms?

   Yes

   - Replace the Heated Seat Module (HSM) in accordance with the Service Information.
   - Perform the BODY VERIFICATION TEST. Refer to **BODY VERIFICATION TEST** .

   No

   - Repair the (Z909) Ground circuit for an open.

- Perform the BODY VERIFICATION TEST. Refer to **BODY VERIFICATION TEST** .

B1E9C-1E-REAR RIGHT HEATER CONTROL CIRCUIT - CIRCUIT RESISTANCE OUT OF RANGE

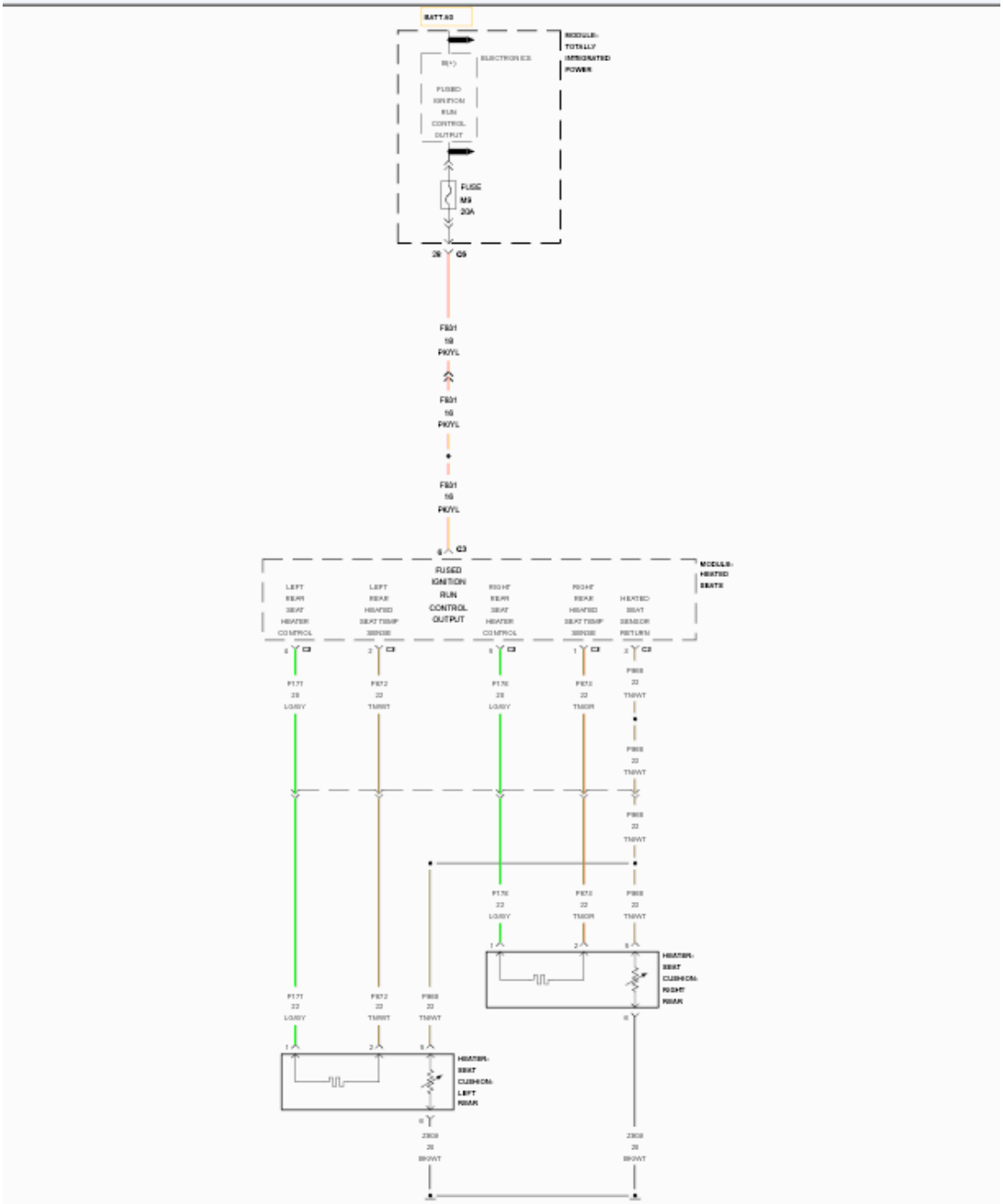
BATT A3
MODULE-
TOTALLY
INTEGRATED
POWER
ELECTRONICS
B(+)
FUSED
IGNITION
RUN
CONTROL
OUTPUT
FUSE
M9
20A
28
C5
F801
18
PK/YL
F801
18
PK/YL
F801
18
PK/YL
6
C3
FUSED
IGNITION
RUN
CONTROL
OUTPUT
MODULE-
HEATED
SEATS
LEFT
REAR
SEAT
HEATER
CONTROL
LEFT
REAR
HEATED
SEAT TEMP
SENSE
RIGHT
REAR
SEAT
HEATER
CONTROL
RIGHT
REAR
HEATED
SEAT TEMP
SENSE
HEATED
SEAT
SENSOR
RETURN
4
C3
2
C3
5
C3
1
C3
2
C3
P171
22
LG/BY
P872
22
TN/WT
P176
22
LG/BY
P872
22
TN/OR
P868
22
TN/WT
P868
22
TN/WT
P868
22
TN/WT
P176
22
LG/BY
P872
22
TN/OR
P868
22
TN/WT
1
2
5
HEATER-
SEAT
CUSHION-
RIGHT
REAR
P171
22
LG/BY
P872
22
TN/WT
P868
22
TN/WT
1
2
5
HEATER-
SEAT
CUSHION-
LEFT
REAR
6
Z909
20
BR/WT
6
Z909
20
BR/WT

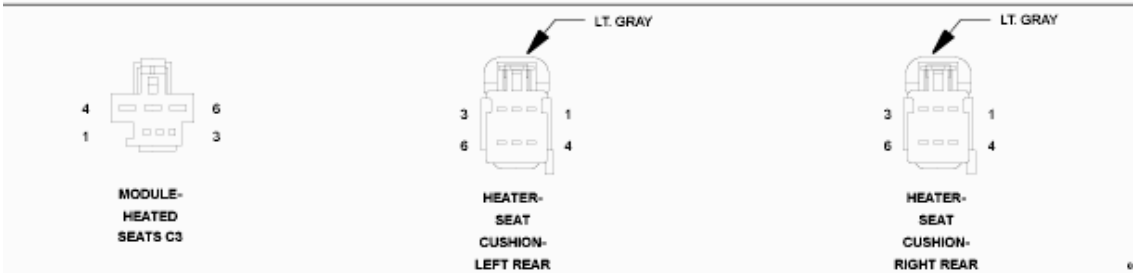
4
6
1
3
MODULE-
HEATED
SEATS C3
LT. GRAY
3
1
6
4
HEATER-
SEAT
CUSHION-
LEFT REAR
LT. GRAY
3
1
6
4
HEATER-
SEAT
CUSHION-
RIGHT REAR

Fig. 95: Rear Heater Control Wiring Diagram
Courtesy of CHRYSLER GROUP, LLC

For a complete wiring diagram, **refer to appropriate SYSTEM WIRING DIAGRAMS article** .

WHEN MONITORED:

With the engine running.

SET CONDITION:

The Heated Seat Module (HSM) detects impedance above threshold on the (P178) Right Rear Seat Heater Control circuit for more than two seconds with the output turned on.

POSSIBLE CAUSES

Possible Causes
(P178) RIGHT REAR SEAT HEATER CONTROL CIRCUIT RESISTANCE HIGH
(Z909) GROUND CIRCUIT RESISTANCE HIGH
SEAT CUSHION HEATER ELEMENT
HEATED SEAT MODULE (HSM)

DIAGNOSTIC TEST

1. **TEST FOR INTERMITTENT CONDITION**

NOTE: **Before proceeding, verify the battery is fully charged, the charging system is operating properly, no Battery or System Voltage Diagnostic Trouble Codes (DTCs) are set, and the HSM Power and Ground circuits are clean and tight.**

1. Turn the ignition on.
2. Using a scan tool, record and erase Diagnostic Trouble Codes (DTCs).
3. Turn the ignition off.
4. Start the engine and let it run.
5. Turn the Heated Seat on and operate in all modes.
6. Using a scan tool, read DTCs.

Is the DTC active?

Yes

- Go To 2.

No

- The conditions that caused this code to set are not present at this time. Verify seat harness is routed correctly. Using the wiring diagram/schematic as a guide, inspect the wiring and connectors. Look for chafed, pierced, pinched, or partially broken wires and broken, bent, pushed out, spread, corroded, or contaminated terminals. Attempt to reproduce condition by adjusting the front seat.
- Perform the BODY VERIFICATION TEST. Refer to **BODY VERIFICATION TEST** .

2. **CHECK REAR SEAT CUSHION HEATER ELEMENT RESISTANCE**

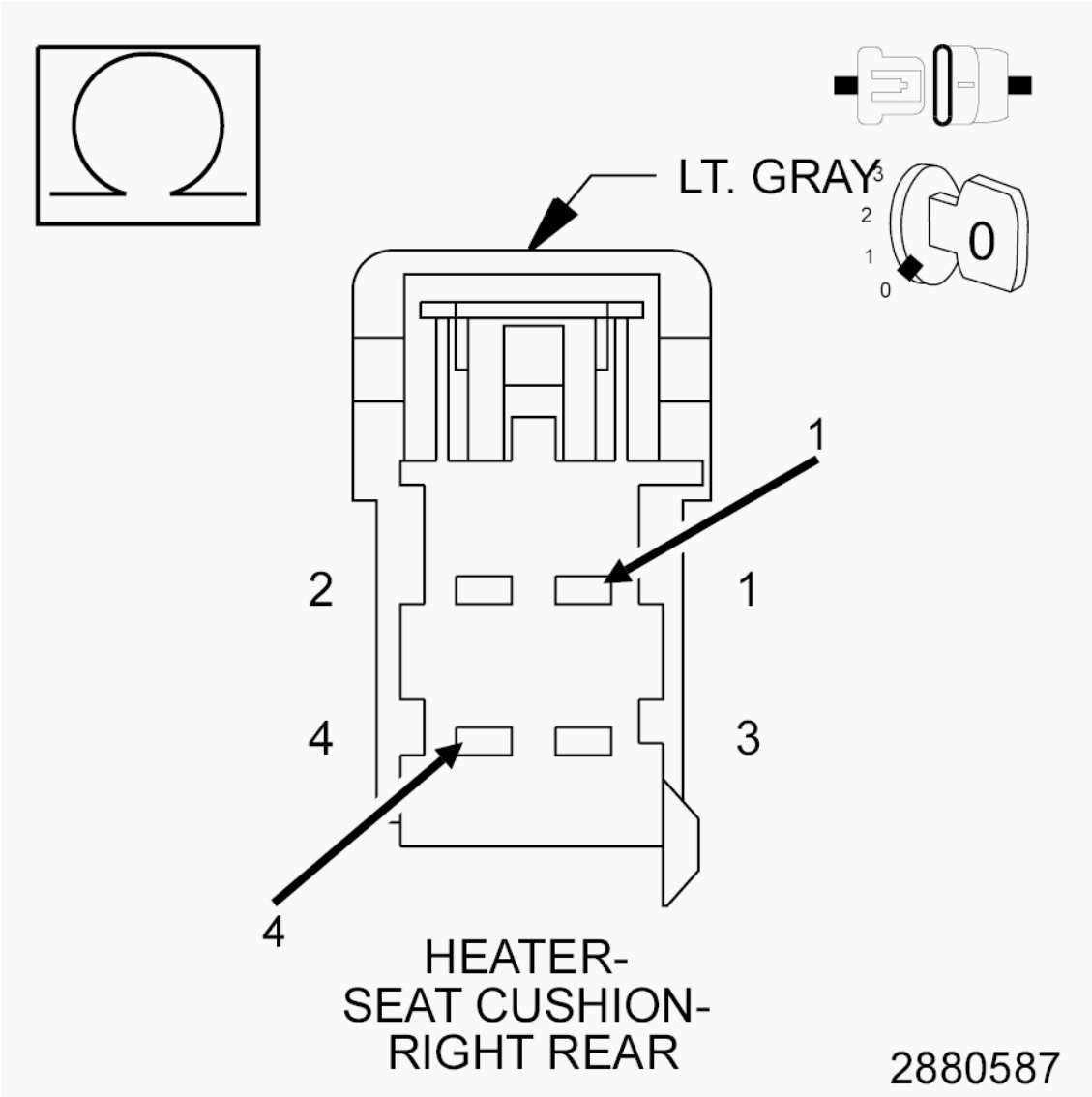

Fig. 96: Checking For Open Right Rear Seat Cushion Heater Element
Courtesy of CHRYSLER GROUP, LLC

1. Turn the ignition off.
2. Disconnect the Right Rear Seat Cushion Heater harness connector.

NOTE: Check connectors. Clean and repair as necessary.

3. Measure the resistance between the (P178) Right Rear Seat Heater Control circuit and the (Z909) Ground circuit at the Right Rear Seat Cushion Heater Connector (seat side).

   Is the resistance above 4.8 Ohms?

   Yes

   - Replace the Rear Seat Cushion Heater Element in accordance with the Service Information.
   - Perform the BODY VERIFICATION TEST. Refer to **BODY VERIFICATION TEST** .

   No

   - Go To 3.

3. **CHECK (P178) RIGHT REAR SEAT HEATER CONTROL CIRCUIT FOR HIGH RESISTANCE IN BODY HARNESS**

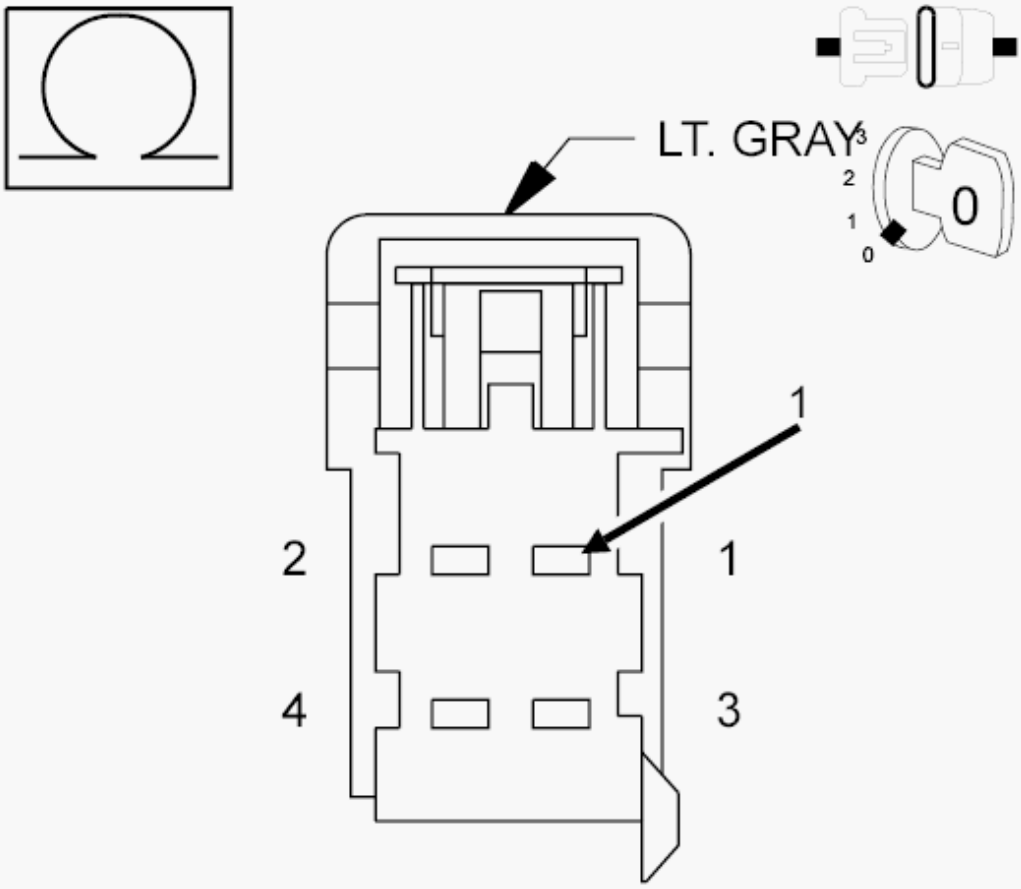

HEATER-
SEAT CUSHION-
RIGHT REAR

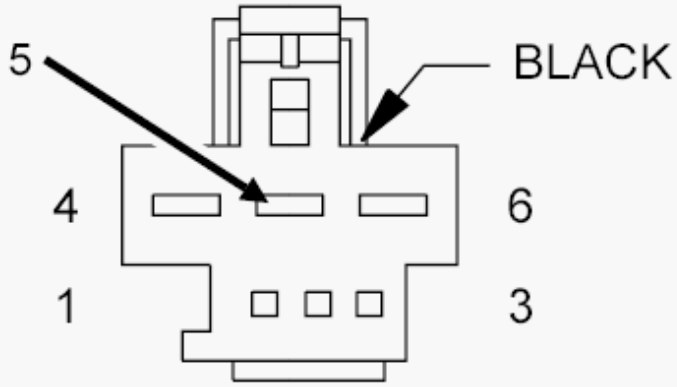

MODULE-
HEATED

Fig. 97: Checking Right Rear Seat Heater Control Circuit For An Open In Body Harness
Courtesy of CHRYSLER GROUP, LLC

1. Disconnect the HSM C3 harness connector.

   NOTE: Check connectors. Clean and repair as necessary.

2. Measure the resistance of the (P178) Right Rear Seat Heater Control circuit between the HSM C3 harness connector and the Right Rear Seat Cushion Heater harness connector (harness side).

   Is the resistance below 5.0 Ohms?

   Yes

   - Go To 4.

   No

   - Repair the (P178) Right Rear Seat Heater Control circuit for high resistance.
   - Perform the BODY VERIFICATION TEST. Refer to **BODY VERIFICATION TEST** .

4. **CHECK (Z909) GROUND CIRCUIT FOR HIGH RESISTANCE**

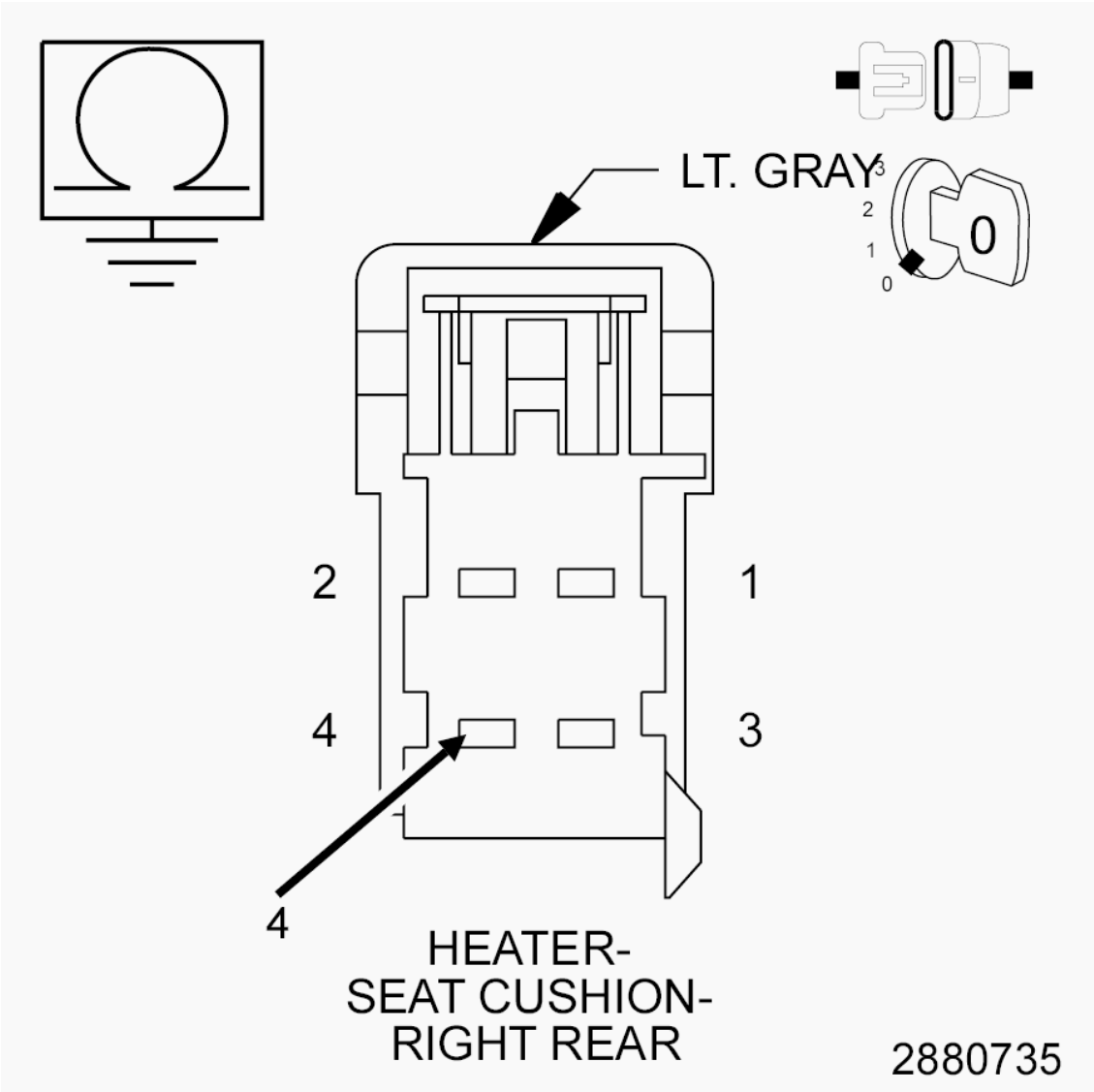

Fig. 98: Checking Ground Circuit For An Open
Courtesy of CHRYSLER GROUP, LLC

1. Measure the resistance of the (Z909) Ground circuit between ground and the Right Rear Seat Cushion Heater harness connector (harness side).

   Is the resistance below 5.0 Ohms?

   Yes

   - Replace the Heated Seat Module (HSM) in accordance with the Service Information.
   - Perform the BODY VERIFICATION TEST. Refer to **BODY VERIFICATION TEST** .

   No

   - Repair the (Z909) Ground circuit for high resistance.

- Perform the BODY VERIFICATION TEST. Refer to **BODY VERIFICATION TEST** .

B1E9D-11-FRONT LEFT VENT CONTROL CIRCUIT - CIRCUIT SHORT TO GROUND

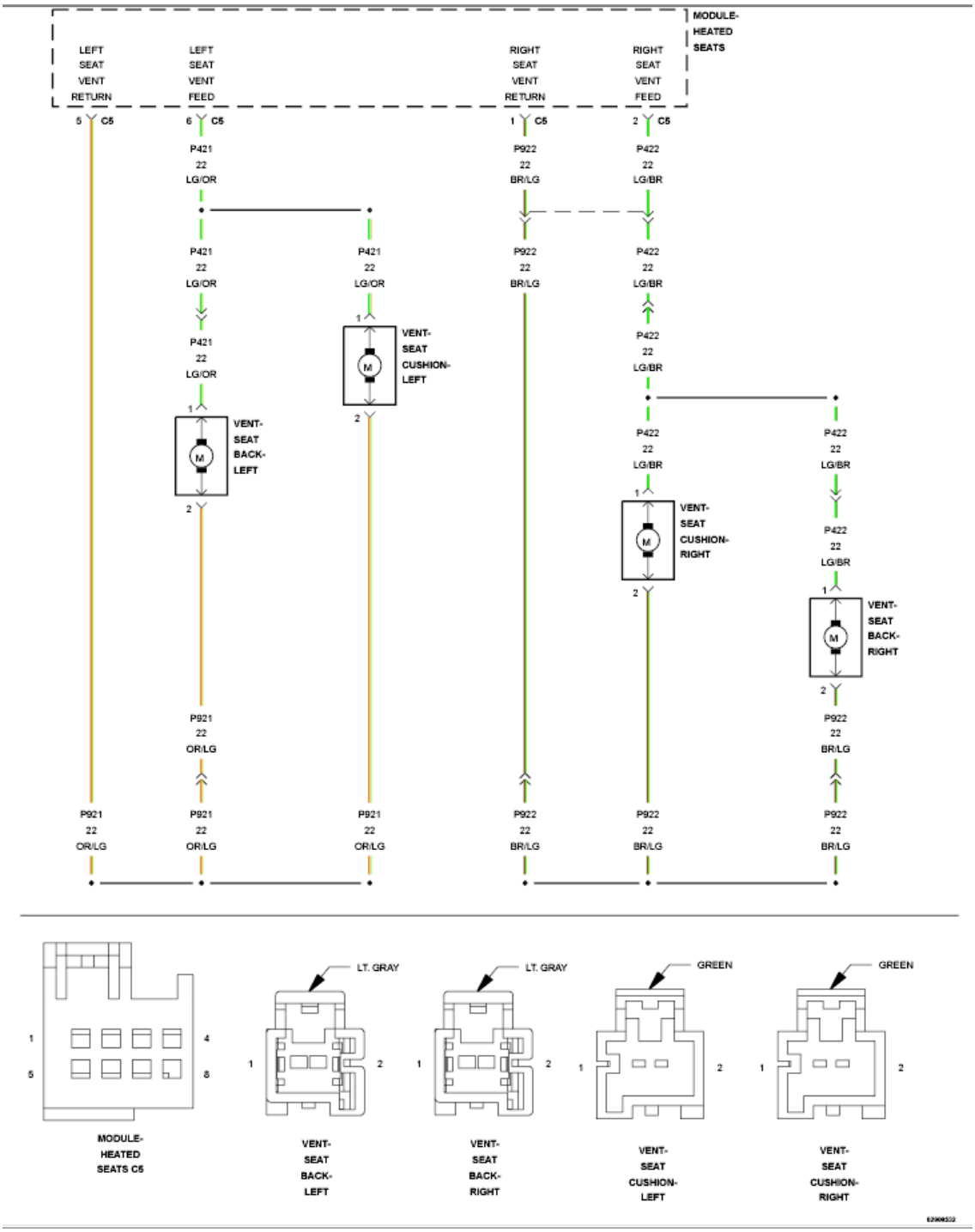

Fig. 99: Vent Control Wiring Diagram
Courtesy of CHRYSLER GROUP, LLC

For a complete wiring diagram, **refer to appropriate SYSTEM WIRING DIAGRAMS article** .

WHEN MONITORED:

With the engine running.

SET CONDITION:

The Heated Seat Module (HSM) detects Voltage below 1.0 volt or current above threshold on the (P421) Left Seat Vent Feed circuit for more than 12 seconds with the output turned on.

POSSIBLE CAUSES

Possible Causes
(P421) LEFT SEAT VENT FEED CIRCUIT SHORTED TO GROUND
(P421) LEFT SEAT VENT FEED CIRCUIT SHORTED TO THE (P921) LEFT SEAT VENT RETURN CIRCUIT
SEAT CUSHION VENT MOTOR SHORTED
SEAT BACK VENT MOTOR SHORTED
HEATED SEAT MODULE (HSM)

DIAGNOSTIC TEST

1. **TEST FOR INTERMITTENT CONDITION**

   NOTE: Make sure the battery is fully charged and the charging system is operating properly before proceeding.

   1. Turn the ignition on.
   2. Using a scan tool, record and erase Diagnostic Trouble Codes (DTCs).
   3. Turn the ignition off.
   4. Start the engine and let it run.
   5. Turn the Vented Seat on and wait at least 12 seconds before proceeding.
   6. Using a scan tool, read DTCs.

   Is the DTC active?

   Yes

   - Go To 2.

   No

   - The conditions that caused this code to set are not present at this time. Verify seat harness is routed correctly to the HSM. Using the wiring diagram/schematic as a guide, inspect the

wiring and connectors. Look for chafed, pierced, pinched, or partially broken wires and broken, bent, pushed out, spread, corroded, or contaminated terminals. Attempt to reproduce condition by adjusting the seat.

- Perform the BODY VERIFICATION TEST. Refer to **BODY VERIFICATION TEST** .

2. **CHECK (P421) LEFT SEAT VENT FEED CIRCUIT AND VENT MOTORS FOR A SHORT TO GROUND**

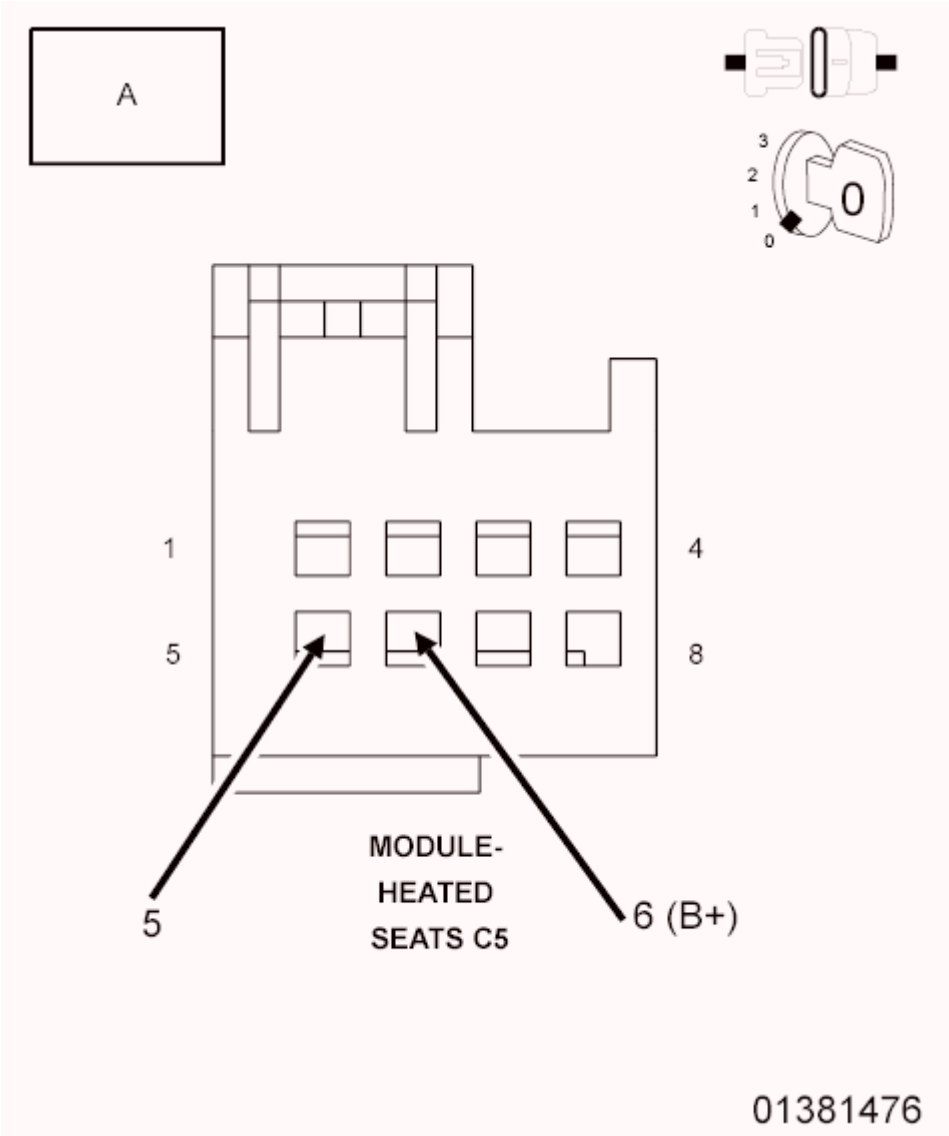

Fig. 100: Checking Left Seat Vent Feed Circuit For Short To Ground
Courtesy of CHRYSLER GROUP, LLC

1. Turn the ignition off.
2. Disconnect the HSM C5 harness connector.

NOTE: Check connectors. Clean and repair as necessary.

3. Connect an ammeter between the (P921) Left Seat Vent Return circuit and ground at the HSM C5 harness connector.
4. Connect one end a fused jumper wire to Battery voltage and the other end to the (P421) Left Seat Vent Feed circuit at the HSM C5 harness connector.

NOTE: Both vent motors should be operational and the ammeter should read 720 to 880 ma.

Does the ammeter read 720 ma to 1.2 amps?

Yes

- Disconnect the fused jumper wire and ammeter. Replace the Heated Seat Module (HSM) in accordance with the Service Information.
- Perform the BODY VERIFICATION TEST. Refer to **BODY VERIFICATION TEST** .

No

- Disconnect the fused jumper wire. Go To 3.

3. **CHECK (P421) LEFT SEAT VENT FEED CIRCUIT AND SEAT BACK VENT MOTOR FOR A SHORT TO GROUND**

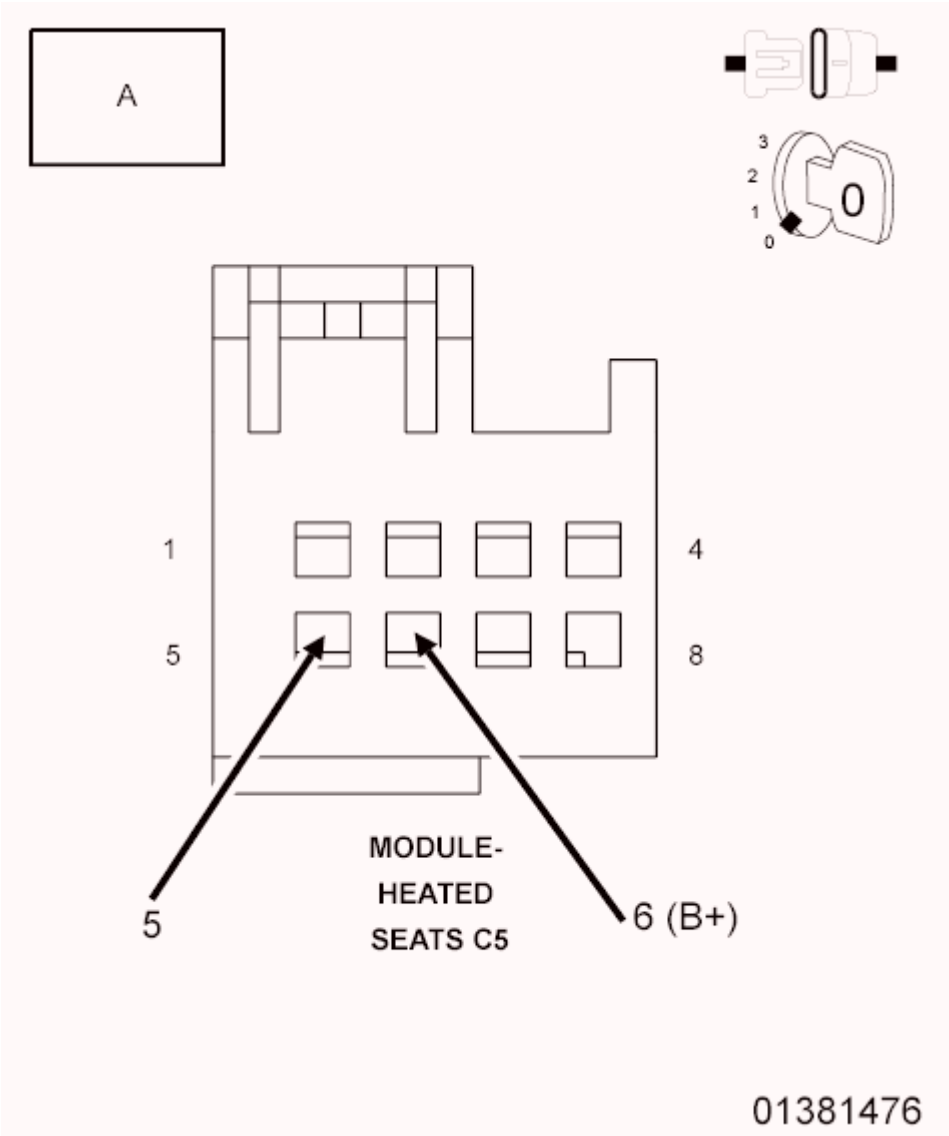

Fig. 101: Checking Left Seat Vent Feed Circuit For Short To Ground
Courtesy of CHRYSLER GROUP, LLC

1. Disconnect the Left Seat Cushion Vent harness connector.

   NOTE: Check connectors. Clean and repair as necessary.

2. Connect an ammeter between the (P921) Left Seat Vent Return circuit and ground at the HSM C5 harness connector.
3. Connect one end of a fused jumper wire to Battery voltage and the other end to the (P421) Left Seat Vent Feed circuit at the HSM C5 harness connector.

   NOTE: The seat back vent motor should be operational and the ammeter should read 320 to 480 ma.

Does the ammeter read 320 to 600 ma?

Yes

- Disconnect the fused jumper wire and ammeter. Replace the Seat Cushion Vent Motor in accordance with the Service Information.
- Perform the BODY VERIFICATION TEST. Refer to **BODY VERIFICATION TEST** .

No

- Disconnect the fused jumper wire and the ammeter. Go To 4.

4. **CHECK (P421) LEFT SEAT VENT FEED CIRCUIT FOR A SHORT TO GROUND**

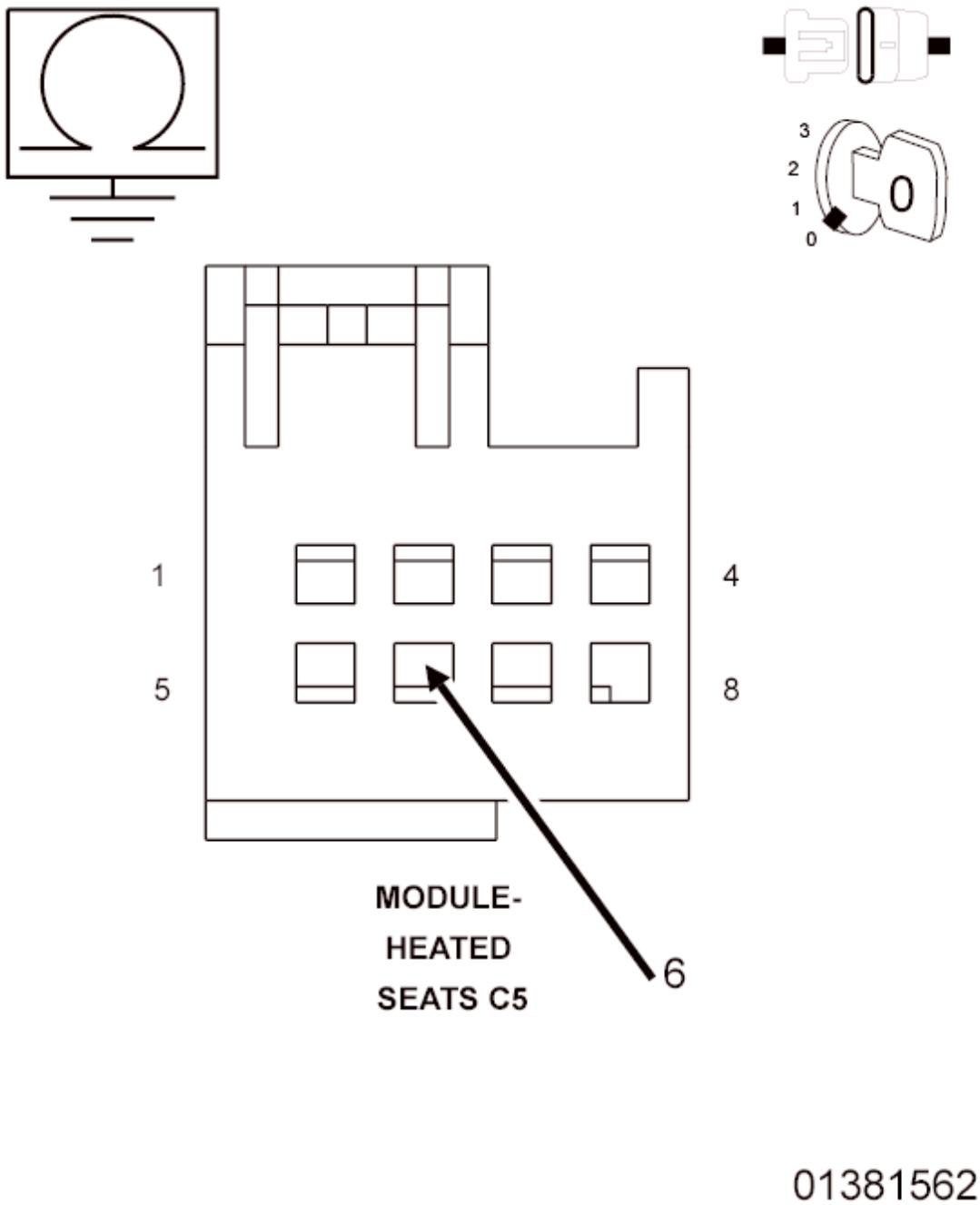

Fig. 102: Checking Left Seat Vent Feed Circuit For Short To Ground
Courtesy of CHRYSLER GROUP, LLC

1. Disconnect the Left Seat Cushion Vent harness connector.
2. Disconnect the Left Seat Back Vent harness connector.
3. Measure the resistance of the (P421) Left Seat Vent Feed circuit between ground at the HSM C5 harness connector.

   Is the resistance below 10K Ohms?

Yes

- Repair the (P421) Left Seat Vent Feed circuit for a short to ground.
- Perform the BODY VERIFICATION TEST. Refer to **BODY VERIFICATION TEST** .

No

- Go To 5.

5. **CHECK (P421) LEFT SEAT VENT FEED CIRCUIT FOR A SHORT TO THE (P921) LEFT SEAT VENT RETURN CIRCUIT**

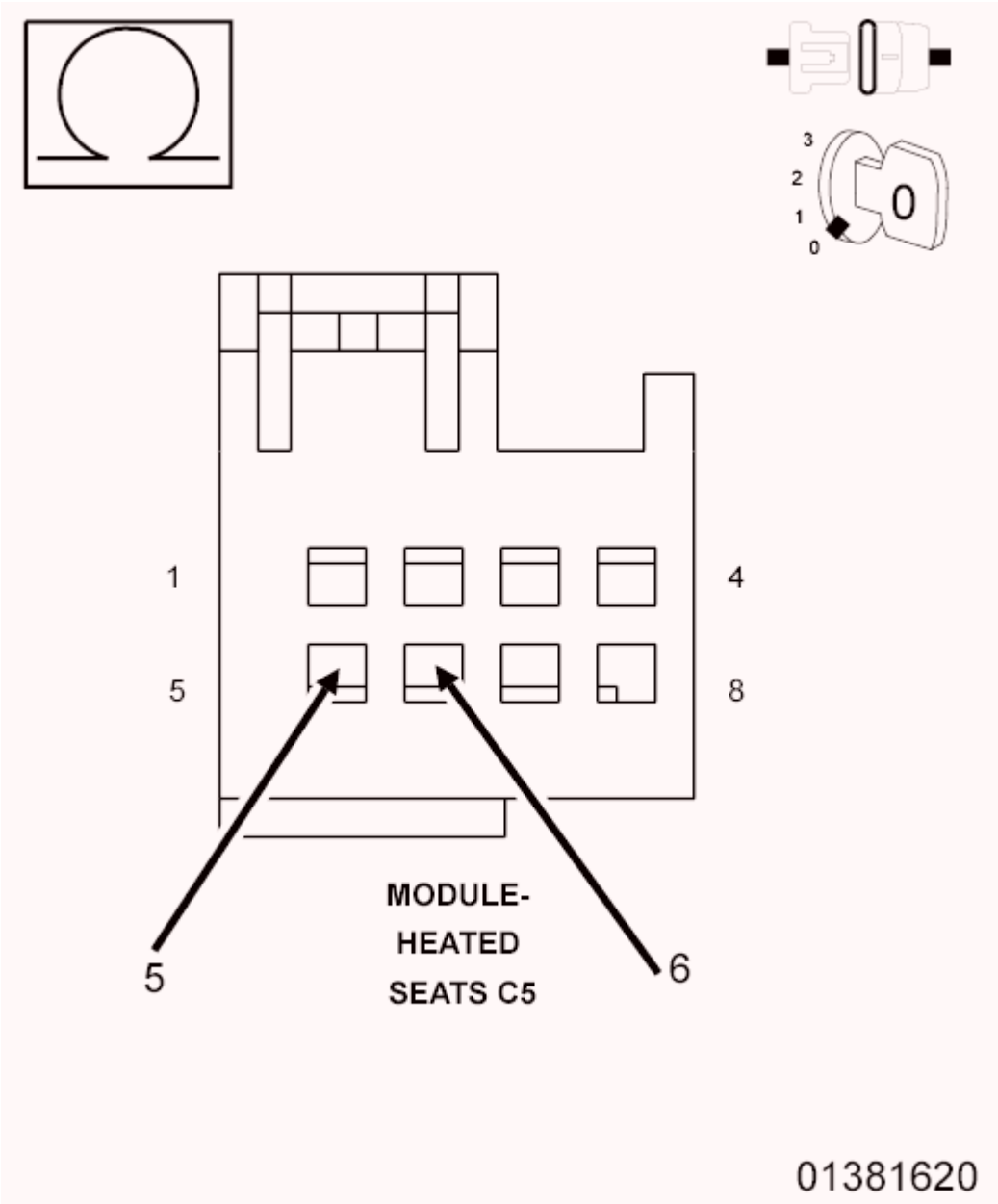

Fig. 103: Checking Left Seat Vent Feed Circuit For Short To Left Seat Vent Return Circuit

Courtesy of CHRYSLER GROUP, LLC

1. Measure the resistance between the (P421) Left Seat Vent Feed circuit and the (P921) Left Seat Vent Return circuit at the HSM C5 harness connector.

   Is the resistance below 10K Ohms?

   Yes

   - Repair the (P421) Left Seat Vent Feed circuit for a short to the (P921) Left Seat Vent Return circuit.
   - Perform the BODY VERIFICATION TEST. Refer to **BODY VERIFICATION TEST** .

   No

   - Repair or replace the pigtail harness for a short to ground or replace the shorted Seat Back Vent Motor in accordance with the Service Information.
   - Perform the BODY VERIFICATION TEST. Refer to **BODY VERIFICATION TEST** .

B1E9D-12-FRONT LEFT VENT CONTROL CIRCUIT - CIRCUIT SHORT TO BATTERY

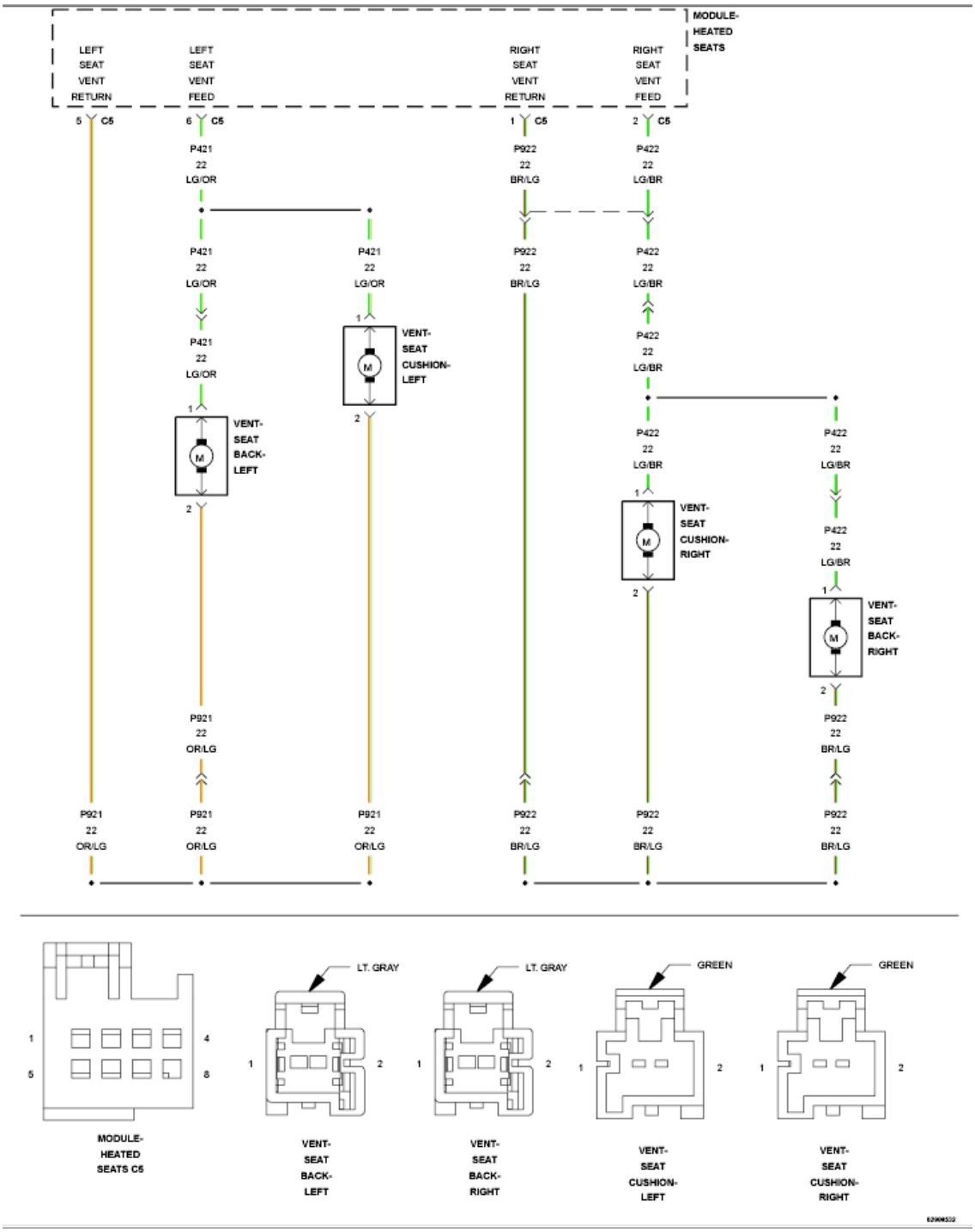

Fig. 104: Vent Control Wiring Diagram
Courtesy of CHRYSLER GROUP, LLC

For a complete wiring diagram, **refer to appropriate SYSTEM WIRING DIAGRAMS article** .

WHEN MONITORED:

With the engine running.

SET CONDITION:

The Heated Seat Module (HSM) detects Voltage above 5.0 volts on the (P421) Left Seat Vent Feed circuit for more than two seconds with the output turned off.

POSSIBLE CAUSES

Possible Causes
(P421) LEFT SEAT VENT FEED CIRCUIT SHORTED TO VOLTAGE
HEATED SEAT MODULE (HSM)

DIAGNOSTIC TEST

1. **TEST FOR INTERMITTENT CONDITION**

   NOTE: Make sure the battery is fully charged and the charging system is operating properly before proceeding.

   1. Turn the ignition on.
   2. Using a scan tool, record and erase Diagnostic Trouble Codes (DTCs).
   3. Turn the ignition off.
   4. Start the engine and let it run.
   5. Using a scan tool, read DTCs.

   Is the DTC active?

   Yes

   - Go To 2.

   No

   - The conditions that caused this code to set are not present at this time. Verify seat harness is routed correctly to the HSM. Using the wiring diagram/schematic as a guide, inspect the wiring and connectors. Look for chafed, pierced, pinched, or partially broken wires and broken, bent, pushed out, spread, corroded, or contaminated terminals. Attempt to reproduce condition by operating all HSM functions one at a time, except for the Left Front Vented Seat. Attempt to reproduce condition by adjusting the seat.
   - Perform the BODY VERIFICATION TEST. Refer to **BODY VERIFICATION TEST** .

2. **CHECK (P421) LEFT SEAT VENT FEED CIRCUIT FOR A SHORT TO VOLTAGE**

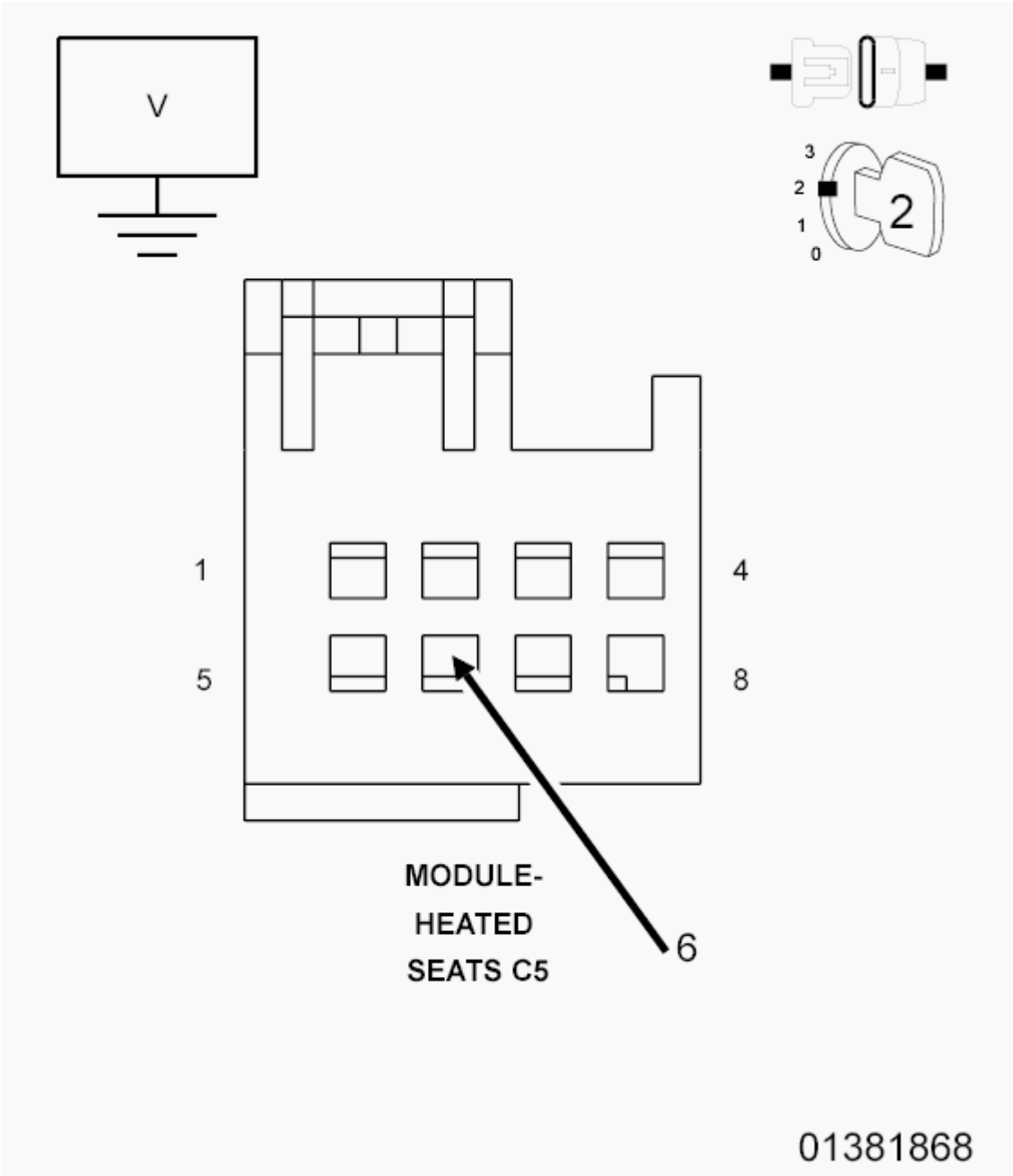

Fig. 105: Checking Left Seat Vent Feed Circuit For Short To Voltage
Courtesy of CHRYSLER GROUP, LLC

1. Turn the ignition off.
2. Disconnect the HSM C5 harness connector.

NOTE: Check connectors. Clean and repair as necessary.

3. Start the engine and let it run.
4. Measure the voltage of the (P421) Left Seat Vent Feed circuit between the HSM C5 harness

connector and ground.

Is there any voltage present?

Yes

- Repair the (P421) Left Seat Vent Feed circuit for a short to voltage.
- Perform the BODY VERIFICATION TEST. Refer to **BODY VERIFICATION TEST** .

No

- Go To 3.

3. **CHECK (P421) LEFT SEAT VENT FEED CIRCUIT FOR A SHORT TO VOLTAGE DURING SEAT ADJUSTMENT**

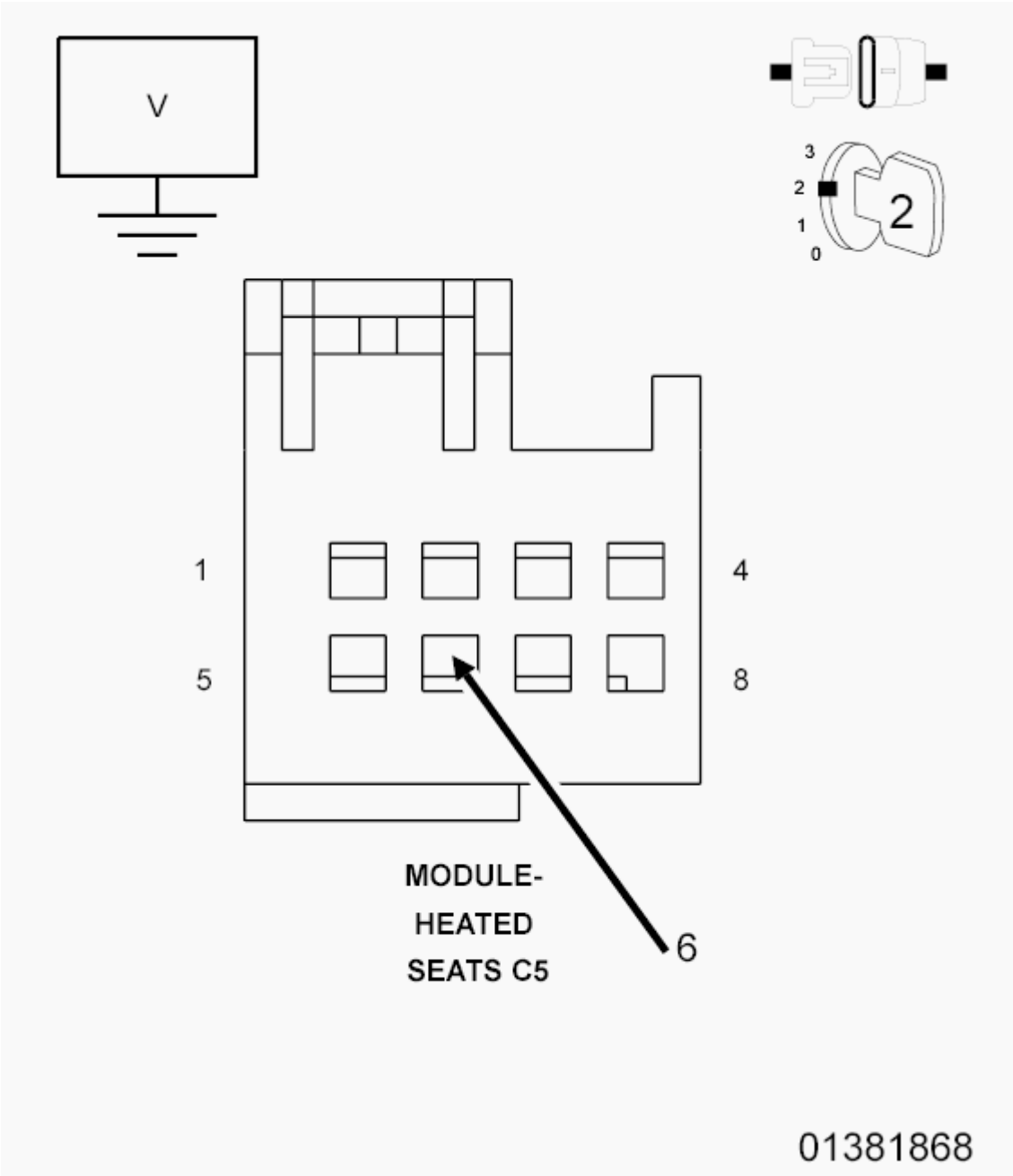

Fig. 106: Checking Left Seat Vent Feed Circuit For Short To Voltage
Courtesy of CHRYSLER GROUP, LLC

1. Measure the voltage of the (P421) Left Seat Vent Feed circuit between the HSM C5 harness connector and ground while adjusting the seat in all positions.

   Is there any voltage present during the seat adjustment?

   Yes

   - Repair the (P421) Left Seat Vent Feed circuit for a short to voltage.

- Perform the BODY VERIFICATION TEST. Refer to **BODY VERIFICATION TEST** .

No

- Replace the Heated Seat Module (HSM) in accordance with the Service Information.
- Perform the BODY VERIFICATION TEST. Refer to **BODY VERIFICATION TEST** .

B1E9E-13-FRONT RIGHT VENT CONTROL CIRCUIT - CIRCUIT OPEN

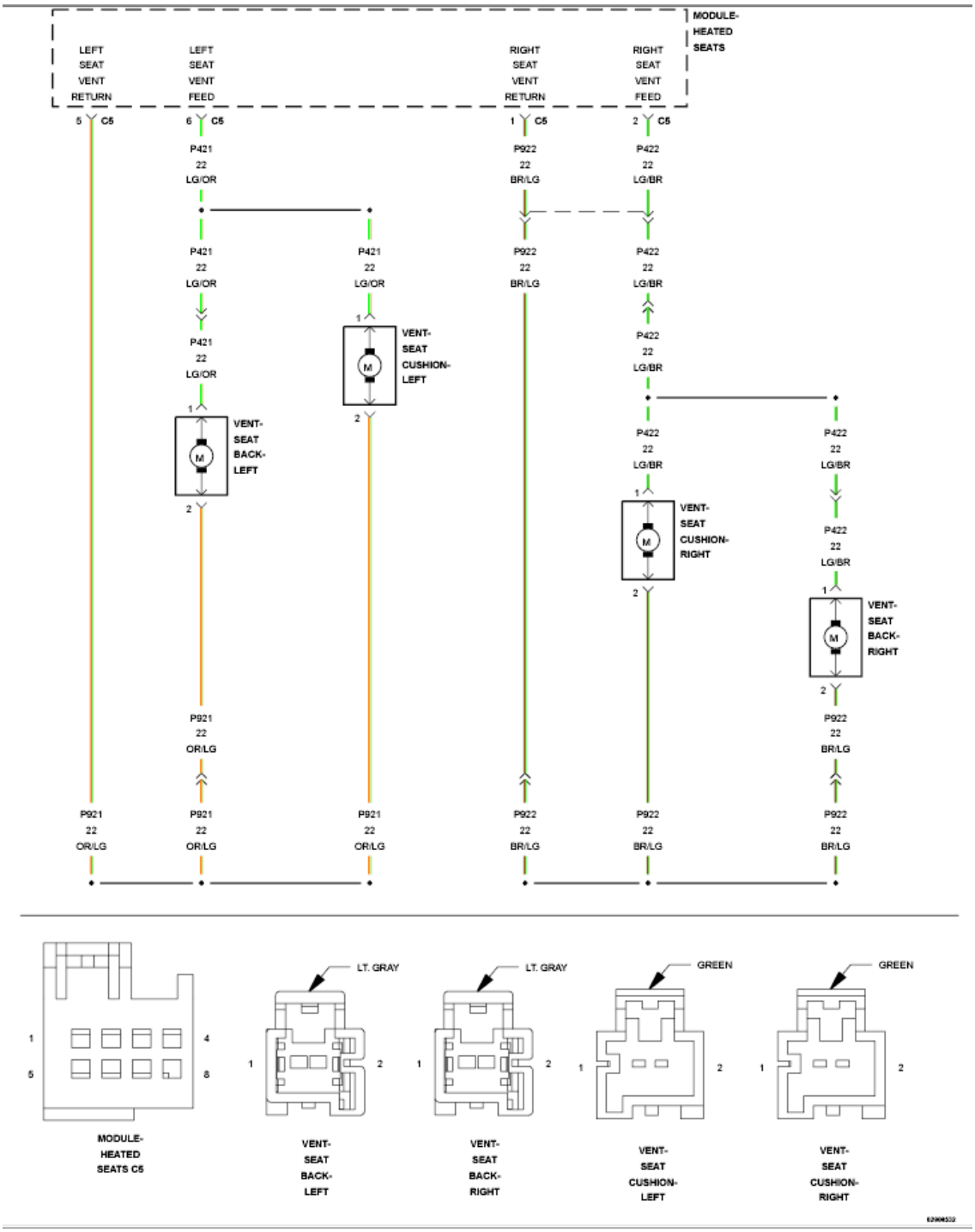

Fig. 107: Vent Control Wiring Diagram
Courtesy of CHRYSLER GROUP, LLC

For a complete wiring diagram, **refer to appropriate SYSTEM WIRING DIAGRAMS article** .

WHEN MONITORED:

With the engine running.

SET CONDITION:

The Heated Seat Module (HSM) detects current below threshold on the (P422) Right Seat Vent Feed circuit for more than 12 seconds with the output turned on.

POSSIBLE CAUSES

Possible Causes
(P422) RIGHT SEAT VENT FEED CIRCUIT OPEN
(P922) RIGHT SEAT VENT RETURN CIRCUIT OPEN
SEAT CUSHION VENT MOTOR OPEN
SEAT BACK VENT MOTOR OPEN
HEATED SEAT MODULE (HSM)

DIAGNOSTIC TEST

1. **TEST FOR INTERMITTENT CONDITION**

   NOTE: Make sure the battery is fully charged and the charging system is operating properly before proceeding.

   1. Turn the ignition on.
   2. Using a scan tool, record and erase Diagnostic Trouble Codes (DTCs).
   3. Turn the ignition off.
   4. Start the engine and let it run.
   5. Turn the Vented Seat on and wait at least 12 seconds before proceeding.
   6. Using a scan tool, read DTCs.

   Is the DTC active?

   Yes

   - Go To 2.

   No

   - The conditions that caused this code to set are not present at this time. Verify seat harness is routed correctly to the HSM. Using the wiring diagram/schematic as a guide, inspect the wiring and connectors. Look for chafed, pierced, pinched, or partially broken wires and broken, bent, pushed out, spread, corroded, or contaminated terminals. Attempt to reproduce condition by adjusting the seat.
   - Perform the BODY VERIFICATION TEST. Refer to **BODY VERIFICATION TEST** .

2. **CHECK RIGHT SEAT VENT MOTORS AND (P422) FEED AND (P922) RETURN CIRCUITS FOR AN OPEN**

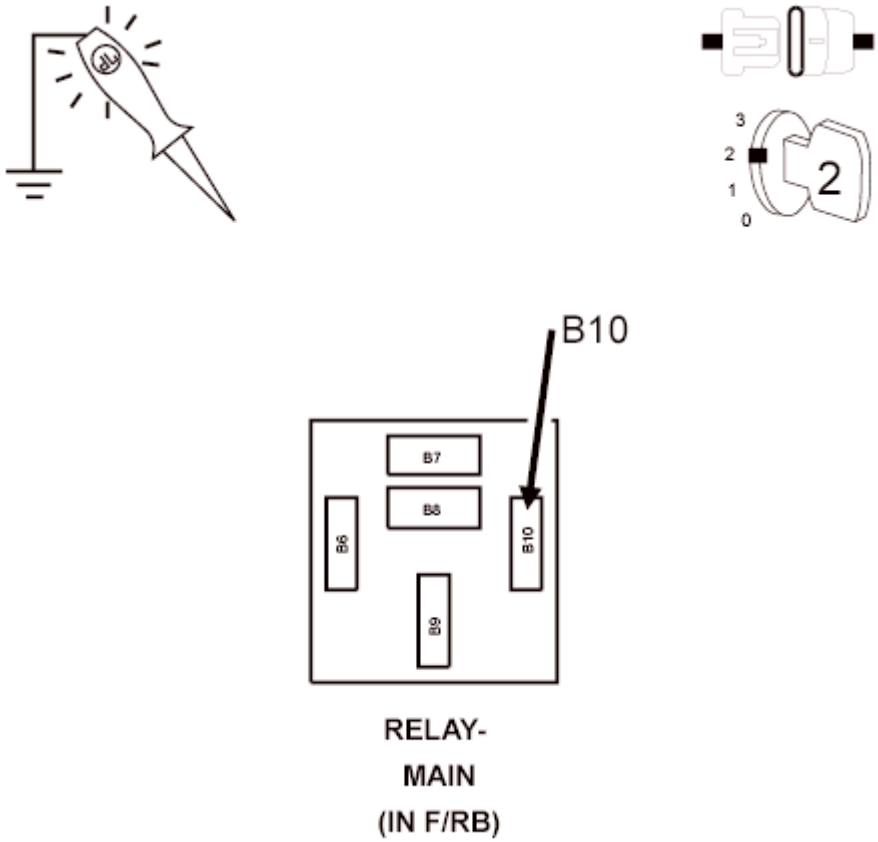

Fig. 108: Checking Right Seat Vent Return Circuit For Open
Courtesy of CHRYSLER GROUP, LLC

1. Turn the ignition off.
2. Disconnect the HSM C5 harness connector.

NOTE: Check connectors. Clean and repair as necessary.

3. Connect an ammeter between the (P922) Right Seat Vent Return circuit and ground at the HSM C5 harness connector.
4. Connect one end a fused jumper wire to Battery voltage and the other end to the (P422) Right Seat Vent Feed circuit at the HSM C5 harness connector.

NOTE: Both vent motors should be operational and the ammeter should read 720 to 880 ma.

Does the ammeter read 720 ma to 1.2 amps?

Yes

- Disconnect the fused jumper wire and ammeter. Replace the Heated Seat Module (HSM) in accordance with the Service Information.

- Perform the BODY VERIFICATION TEST. Refer to **BODY VERIFICATION TEST** .

No

- Disconnect the fused jumper wire. Go To 3.

3. **CHECK RIGHT SEAT BACK VENT MOTOR AND (P422) FEED AND (P922) RETURN CIRCUITS FOR AN OPEN**

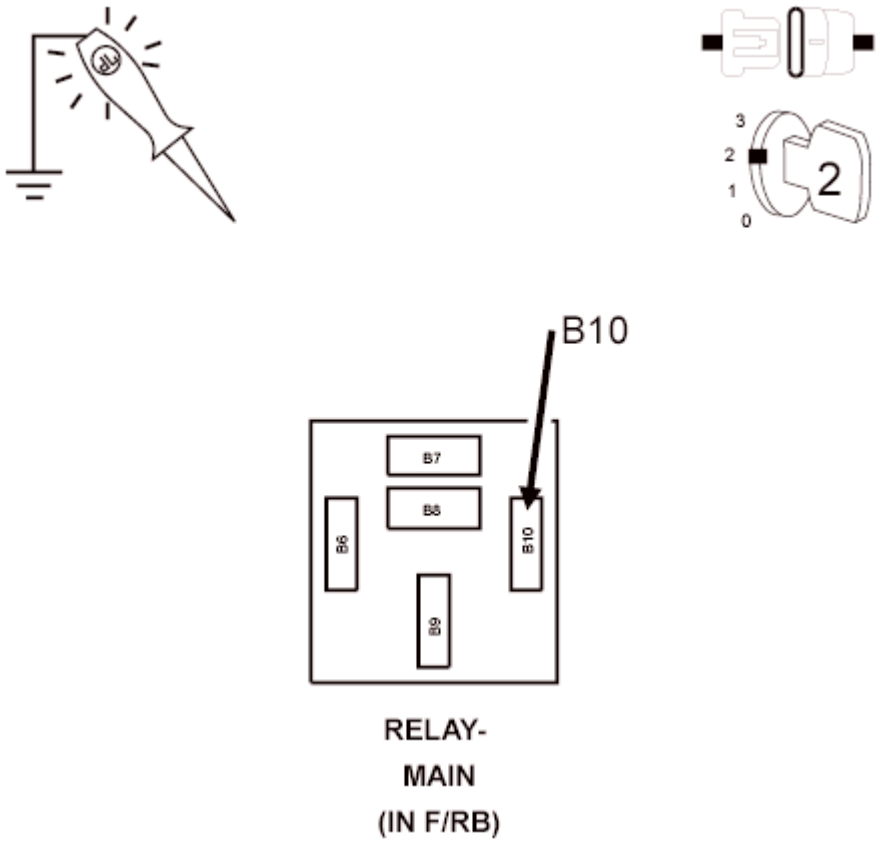

Fig. 109: Checking Right Seat Vent Return Circuit For Open
Courtesy of CHRYSLER GROUP, LLC

1. Disconnect the Right Seat Cushion Vent harness connector.

NOTE: Check connectors. Clean and repair as necessary.

2. Connect an ammeter between the (P922) Right Seat Vent Return circuit and ground at the HSM C5 harness connector.
3. Connect one end a fused jumper wire to Battery voltage and the other end to the (P422) Right Seat Vent Feed circuit at the HSM C5 harness connector.

NOTE: The seat back vent motor should be operational and the ammeter

should read 320 to 480 ma.

Does the ammeter read 320 to 600 ma?

Yes

- Disconnect the fused jumper wire and ammeter. Repair or replace the pigtail harness for an open or replace the open Seat Cushion Vent Motor in accordance with the Service Information.
- Perform the BODY VERIFICATION TEST. Refer to **BODY VERIFICATION TEST** .

No

- Disconnect the fused jumper wire and ammeter. Go To 4.

4. **CHECK (P422) RIGHT SEAT VENT FEED CIRCUIT FOR AN OPEN**

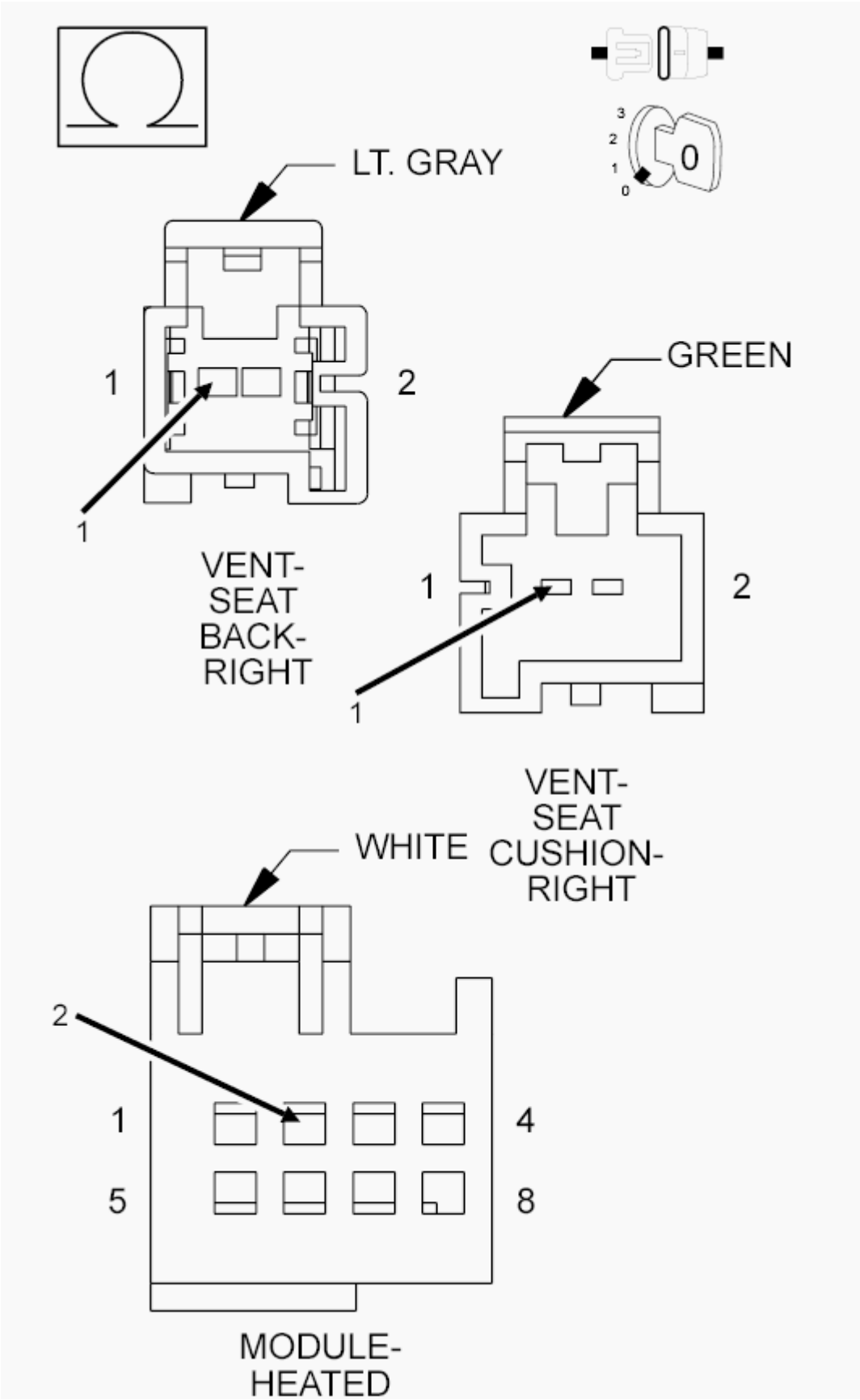
LT. GRAY
3
2
1
0
0
1
2
1
VENT-
SEAT
BACK-
RIGHT
GREEN
1
2
1
VENT-
SEAT
CUSHION-
RIGHT
WHITE
2
1
4
5
8
MODULE-
HEATED

Fig. 110: Check Right Seat Vent Feed Circuit For An Open
Courtesy of CHRYSLER GROUP, LLC

1. Disconnect the Right Seat Back Vent and the Right Seat Cushion Vent harness connectors.

   NOTE: Check connectors. Clean and repair as necessary.

2. Measure the resistance of the (P422) Right Seat Vent Feed circuit between the HSM C5 connector and the Right Seat Back Vent and the Right Seat Cushion Vent harness connectors.

   Are the resistances below 5.0 Ohms?

   Yes

   - Go To 5.

   No

   - Repair the (P422) Right Seat Vent Feed circuit for an open.
   - Perform the BODY VERIFICATION TEST. Refer to **BODY VERIFICATION TEST** .

5. **CHECK (P922) RIGHT SEAT VENT RETURN CIRCUIT FOR AN OPEN**

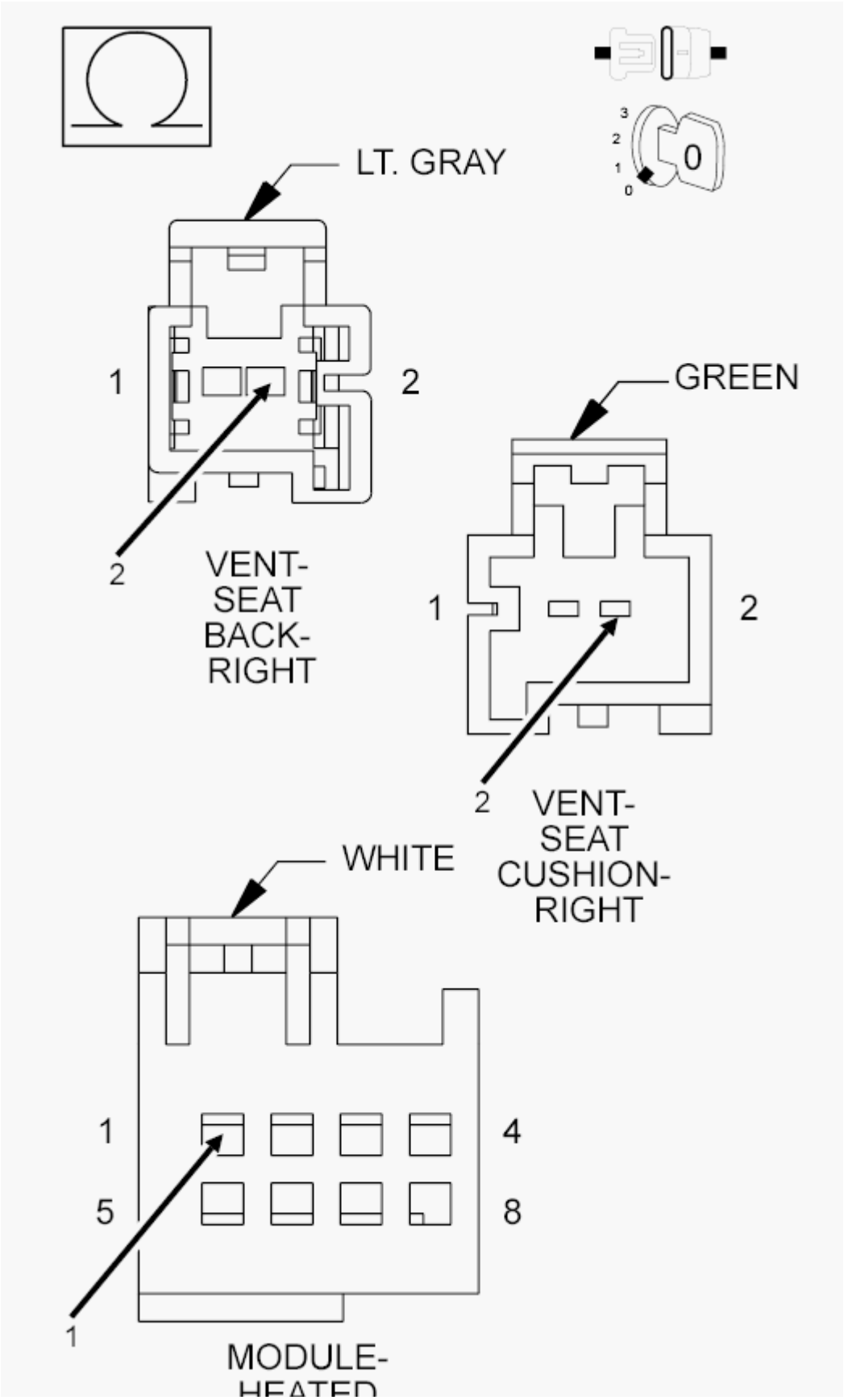
LT. GRAY
1
2
2
VENT-
SEAT
BACK-
RIGHT
GREEN
1
2
2
VENT-
SEAT
CUSHION-
RIGHT
WHITE
1
4
5
8
1
MODULE-
HEATED

Fig. 111: Check Right Seat Vent Return Circuit For An Open
Courtesy of CHRYSLER GROUP, LLC

1. Measure the resistance of the (P922) Right Seat Vent Return circuit between the HSM C5 connector and the Right Seat Back Vent and the Right Seat Cushion Vent harness connectors.

   Are the resistances below 5.0 Ohms?

   Yes

   - Repair or replace the pigtail harness for an open or replace the open Seat Back Vent Motor in accordance with the Service Information.
   - Perform the BODY VERIFICATION TEST. Refer to **BODY VERIFICATION TEST** .

   No

   - Repair the (P922) Right Seat Vent Return circuit for an open.
   - Perform the BODY VERIFICATION TEST. Refer to **BODY VERIFICATION TEST** .

B1E9D-13-FRONT LEFT VENT CONTROL CIRCUIT - CIRCUIT OPEN

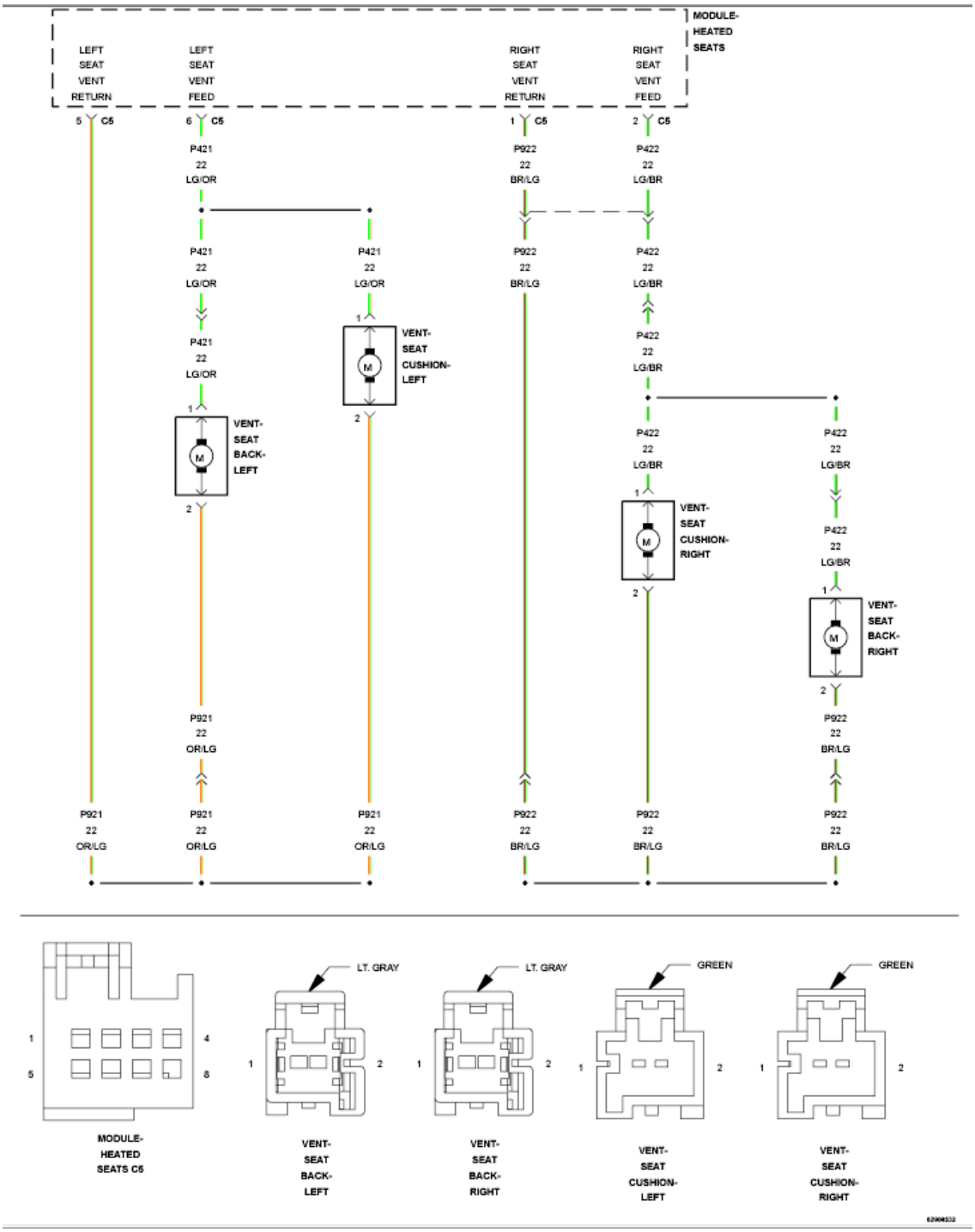

Fig. 112: Vent Control Wiring Diagram
Courtesy of CHRYSLER GROUP, LLC

For a complete wiring diagram, **refer to appropriate SYSTEM WIRING DIAGRAMS article** .

WHEN MONITORED:

With the engine running.

SET CONDITION:

The Heated Seat Module (HSM) detects current below threshold on the (P421) Left Seat Vent Feed circuit for more than 12 seconds with the output turned on.

POSSIBLE CAUSES

Possible Causes
(P421) LEFT SEAT VENT FEED CIRCUIT OPEN
(P921) LEFT SEAT VENT RETURN CIRCUIT OPEN
SEAT Cushion Vent MOTOR OPEN
SEAT BACK VENT MOTOR OPEN
HEATED SEAT MODULE (HSM)

DIAGNOSTIC TEST

1. **TEST FOR INTERMITTENT CONDITION**

   NOTE: Make sure the battery is fully charged and the charging system is operating properly before proceeding.

   1. Turn the ignition on.
   2. Using a scan tool, record and erase Diagnostic Trouble Codes (DTCs).
   3. Turn the ignition off.
   4. Start the engine and let it run.
   5. Turn the Vented Seat and wait at least 12 seconds before proceeding.
   6. Using a scan tool, read DTCs.

   Is the DTC active?

   Yes

   - Go To 2.

   No

   - The conditions that caused this code to set are not present at this time. Verify seat harness is routed correctly to the HSM. Using the wiring diagram/schematic as a guide, inspect the wiring and connectors. Look for chafed, pierced, pinched, or partially broken wires and broken, bent, pushed out, spread, corroded, or contaminated terminals. Attempt to reproduce condition by adjusting the seat.
   - Perform the BODY VERIFICATION TEST. Refer to **BODY VERIFICATION TEST** .

2. **CHECK LEFT SEAT VENT MOTORS AND (P421) FEED AND (P921) RETURN CIRCUITS FOR AN OPEN**

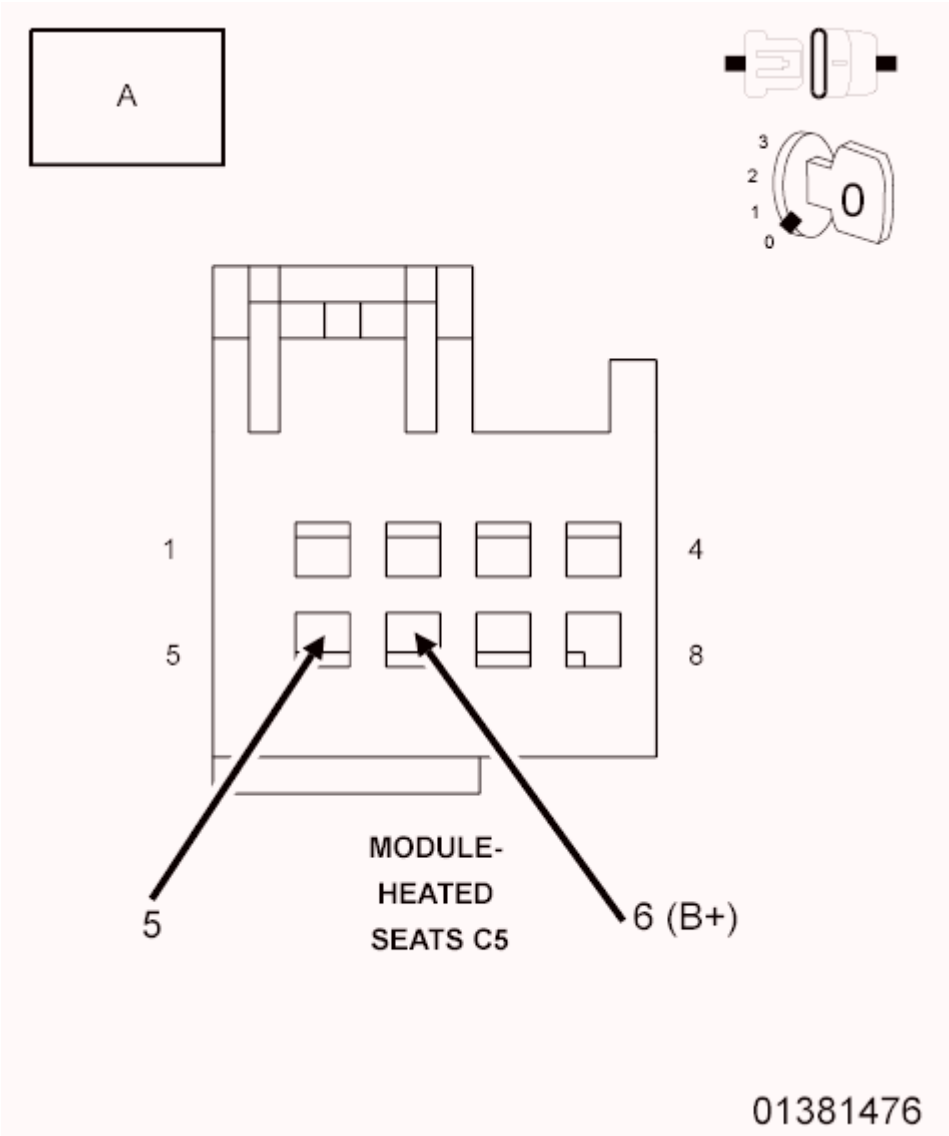

Fig. 113: Checking Left Seat Vent Feed Circuit For Short To Ground
Courtesy of CHRYSLER GROUP, LLC

1. Turn the ignition off.
2. Disconnect the HSM C5 harness connector.

NOTE: Check connectors. Clean and repair as necessary.

3. Connect an ammeter between the (P921) Left Seat Vent Return circuit and ground at the HSM C5 harness connector.
4. Connect one end a fused jumper wire to Battery Voltage and the other end to the (P421) Left Seat Vent Feed circuit at the HSM C5 harness connector.

NOTE: Both vent motors should be operational and the ammeter should read 720 to 880 ma.

Does the ammeter read 720 ma to 1.2 amps?

Yes

- Disconnect the ammeter and fused jumper wire. Replace the Heated Seat Module (HSM) in accordance with the Service Information.
- Perform the BODY VERIFICATION TEST. Refer to **BODY VERIFICATION TEST** .

No

- Disconnect the fused jumper wire. Go To 3.

3. **CHECK LEFT SEAT BACK VENT MOTOR AND (P421) FEED AND (P921) RETURN CIRCUITS FOR AN OPEN**

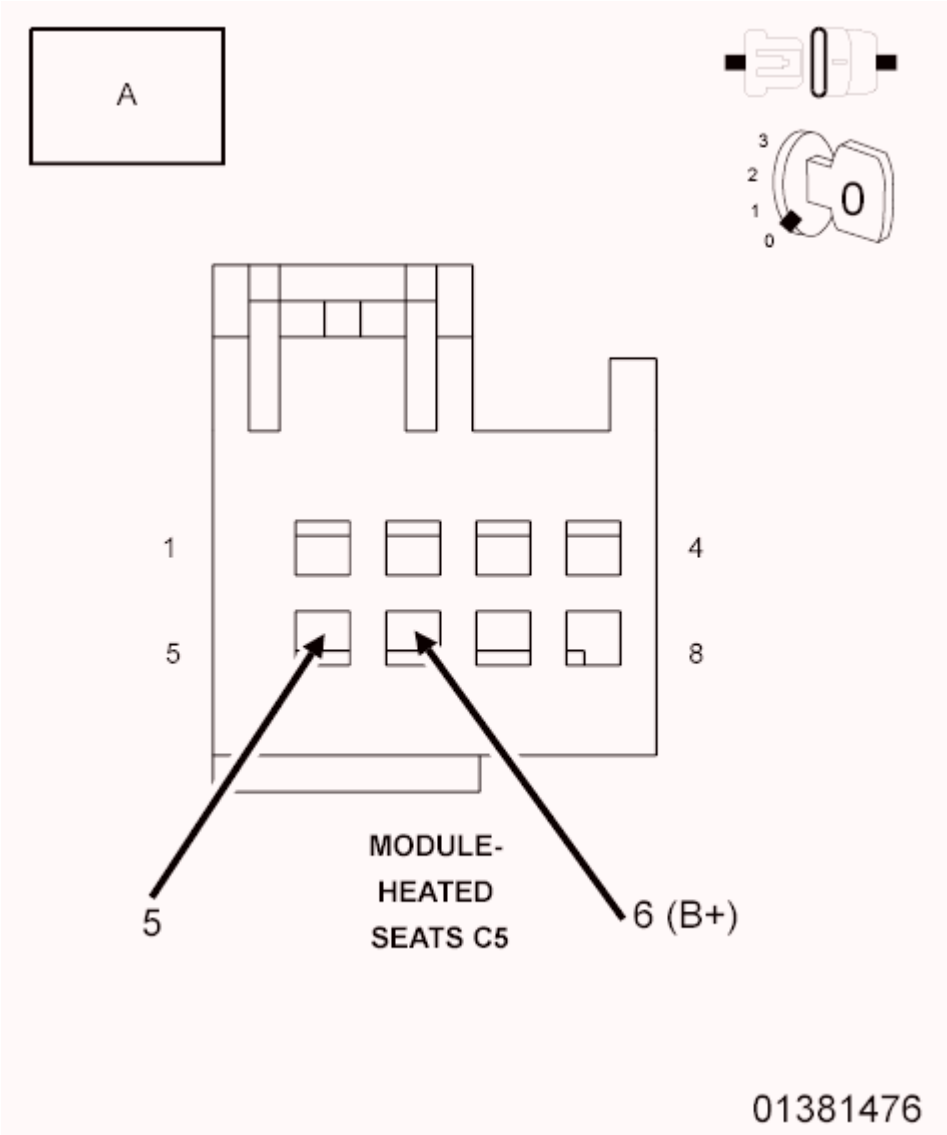

Fig. 114: Checking Left Seat Vent Feed Circuit For Short To Ground

Courtesy of CHRYSLER GROUP, LLC

1. Disconnect the Left Seat Cushion Vent harness connector.

   NOTE: Check connectors. Clean and repair as necessary.

2. Connect an ammeter between the (P921) Left Seat Vent Return circuit and ground at the HSM C5 harness connector.
3. Connect one end a fused jumper wire to Battery voltage and the other end to the (P421) Left Seat Vent Feed circuit at the HSM C5 harness connector.

   NOTE: The seat back vent motor should be operational and the ammeter should read 320 to 480 ma.

   Does the ammeter read 320 to 600 ma?

   Yes

   - Disconnect the ammeter and fused jumper wire. Repair or replace the pigtail harness for an open or replace the open Seat Cushion Vent Motor in accordance with the Service Information.
   - Perform the BODY VERIFICATION TEST. Refer to **BODY VERIFICATION TEST** .

   No

   - Disconnect the ammeter and fused jumper wire. Go To 4.

4. **CHECK (P421) LEFT SEAT VENT FEED CIRCUIT FOR AN OPEN**

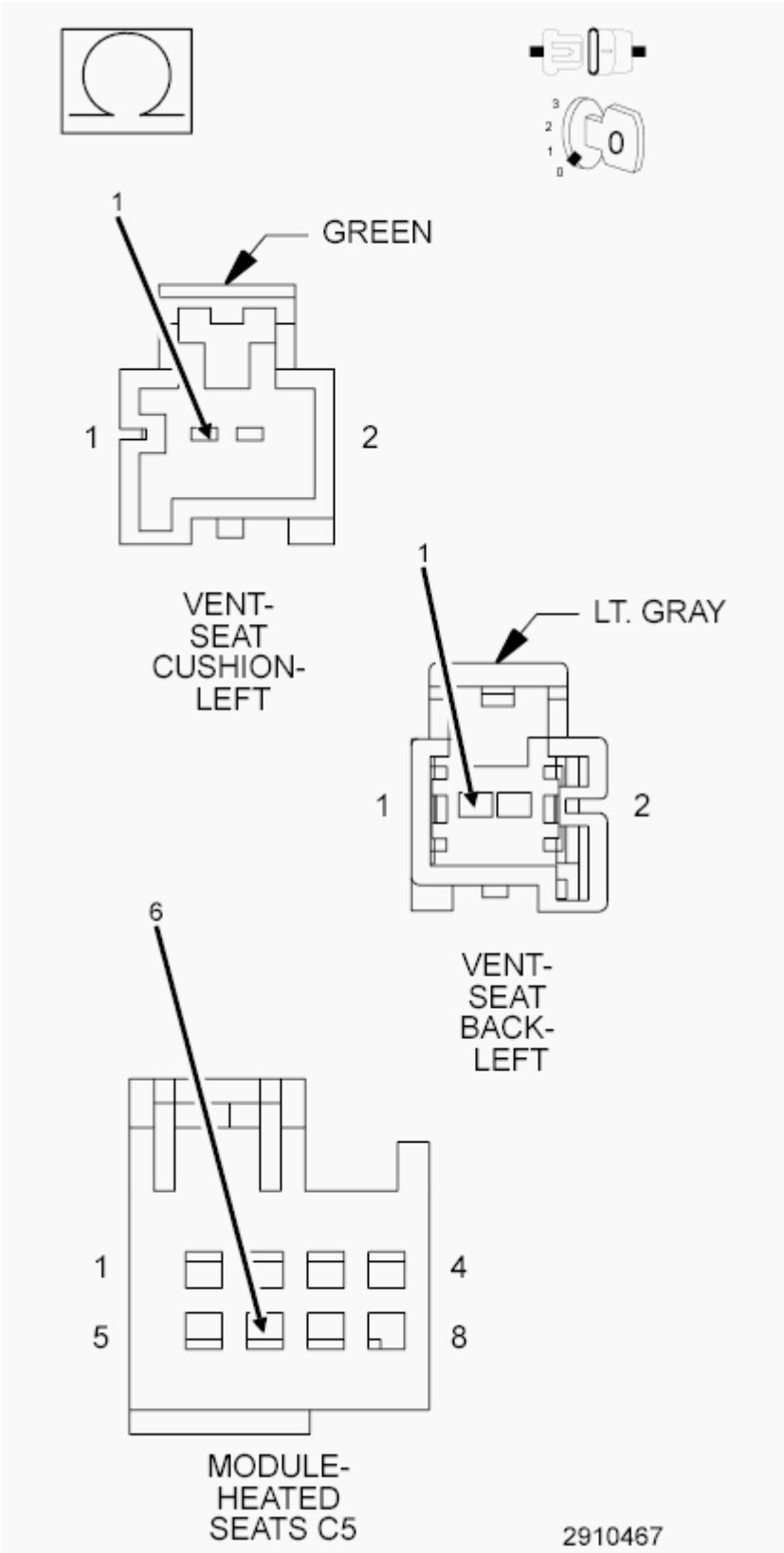

Fig. 115: Check Left Seat Vent Feed Circuit For An Open
Courtesy of CHRYSLER GROUP, LLC

1. Disconnect the Left Seat Back Vent harness connector.
2. Disconnect the Left Seat Cushion Vent harness connector.

NOTE: Check connectors. Clean and repair as necessary.

3. Measure the resistance of the (P421) Left Seat Vent Feed circuit between the HSM C5 harness connector and the Left Seat Back Vent harness connector.
4. Measure the resistance of the (P421) Left Seat Vent Feed circuit between the HSM C5 harness connector and the Left Seat Cushion Vent harness connector.

Is the resistance below 5.0 Ohms for both circuits?

Yes

- Go To 5.

No

- Repair the (P421) Left Seat Vent Feed circuit for an open.
- Perform the BODY VERIFICATION TEST. Refer to **BODY VERIFICATION TEST** .

5. **CHECK (P921) LEFT SEAT VENT RETURN CIRCUIT FOR AN OPEN**

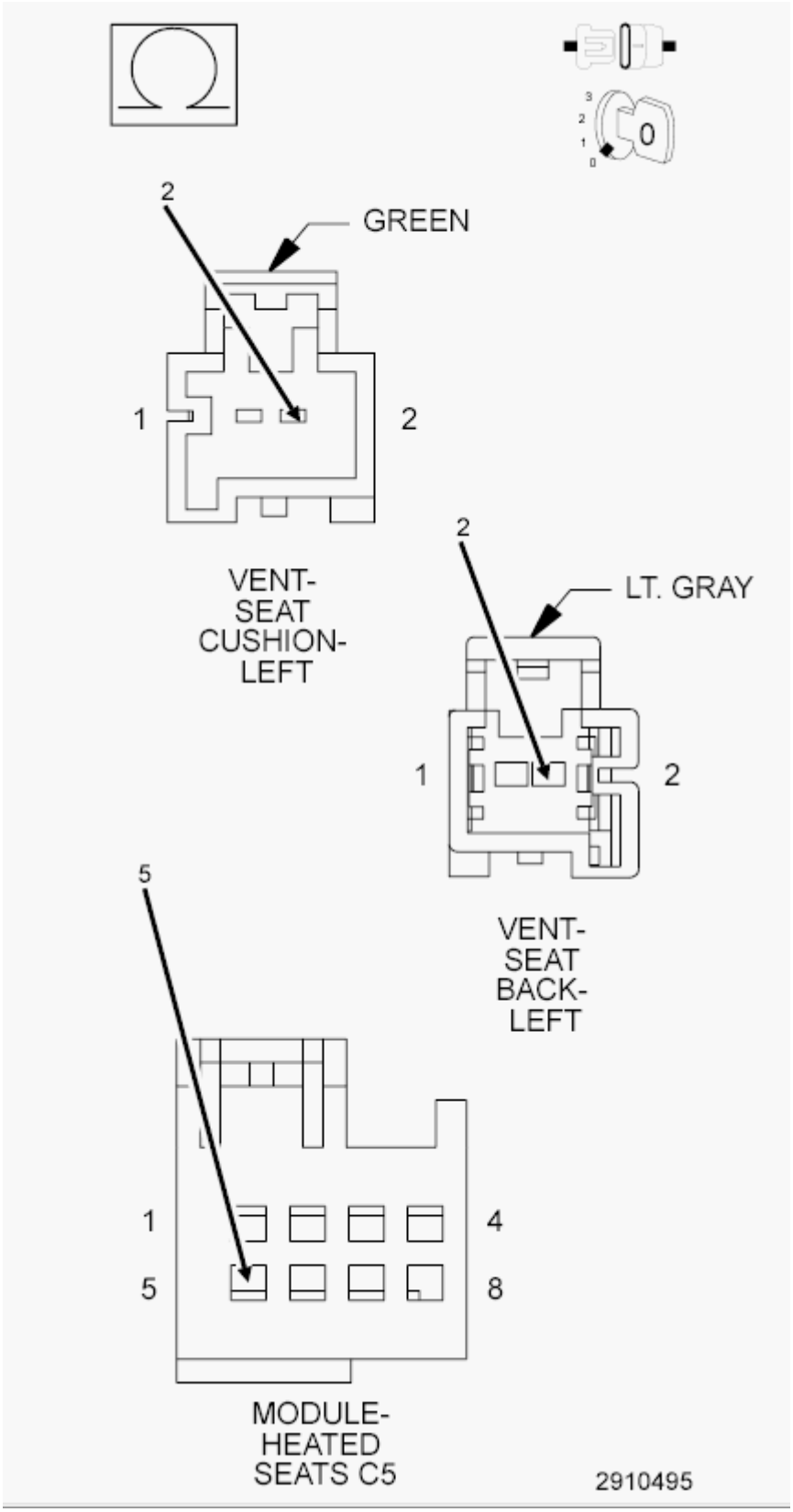

Fig. 116: Check Left Seat Vent Return Circuit For An Open
Courtesy of CHRYSLER GROUP, LLC

1. Measure the resistance of the (P921) Left Seat Vent Return circuit between the HSM C5 harness connector and the Left Seat Cushion Vent harness connector.
2. Measure the resistance of the (P921) Left Seat Vent Return circuit between the HSM C5 harness connector and the Left Seat Back Vent harness connector.

   Is the resistance below 5.0 Ohms?

   Yes

   - Repair or replace the harness for an open or replace the open Seat Back Vent Motor in accordance with the Service Information.
   - Perform the BODY VERIFICATION TEST. Refer to **BODY VERIFICATION TEST** .

   No

   - Repair the (P921) Left Seat Vent Return circuit for an open.
   - Perform the BODY VERIFICATION TEST. Refer to **BODY VERIFICATION TEST** .

B1E9E-11-FRONT RIGHT VENT CONTROL CIRCUIT - CIRCUIT SHORT TO GROUND

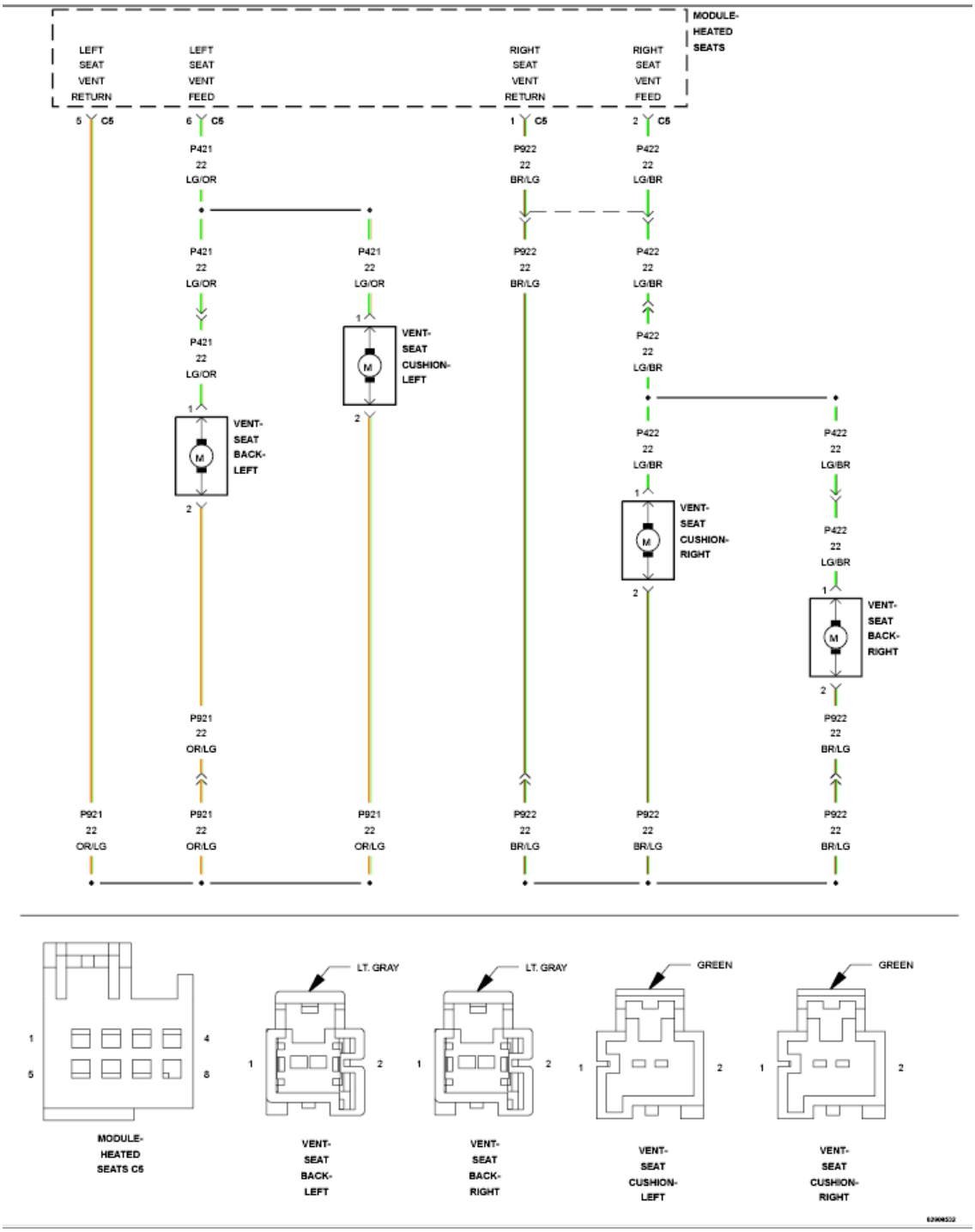

Fig. 117: Vent Control Wiring Diagram
Courtesy of CHRYSLER GROUP, LLC

For a complete wiring diagram, **refer to appropriate SYSTEM WIRING DIAGRAMS article** .

WHEN MONITORED:

With the engine running.

SET CONDITION:

The Heated Seat Module (HSM) detects voltage below 1.0 volt or current above threshold on the (P422) Right Seat Vent Feed circuit for more than 12 seconds with the output turned on.

POSSIBLE CAUSES

Possible Causes
(P422) RIGHT SEAT VENT FEED CIRCUIT SHORTED TO GROUND
(P422) RIGHT SEAT VENT FEED CIRCUIT SHORTED TO THE (P922) RIGHT SEAT VENT RETURN CIRCUIT
SEAT CUSHION VENT MOTOR SHORTED
SEAT BACK VENT MOTOR SHORTED
HEATED SEAT MODULE (HSM)

DIAGNOSTIC TEST

1. **TEST FOR INTERMITTENT CONDITION**

   NOTE: Make sure the battery is fully charged and the charging system is operating properly before proceeding.

   1. Turn the ignition on.
   2. Using a scan tool, record and erase Diagnostic Trouble Codes (DTCs).
   3. Turn the ignition off.
   4. Start the engine and let it run.
   5. Turn the Vented Seat on and wait at least 12 seconds before proceeding.
   6. Using a scan tool, read DTCs.

   Is the DTC active?

   Yes

   - Go To 2.

   No

   - The conditions that caused this code to set are not present at this time. Verify seat harness is routed correctly to the HSM. Using the wiring diagram/schematic as a guide, inspect the wiring and connectors. Look for chafed, pierced, pinched, or partially broken wires and broken, bent, pushed out, spread, corroded, or contaminated terminals. Attempt to reproduce condition by adjusting the seat.
   - Perform the BODY VERIFICATION TEST. Refer to **BODY VERIFICATION TEST** .

2. **CHECK (P422) RIGHT SEAT VENT FEED CIRCUIT AND VENT MOTORS FOR A SHORT**

TO GROUND

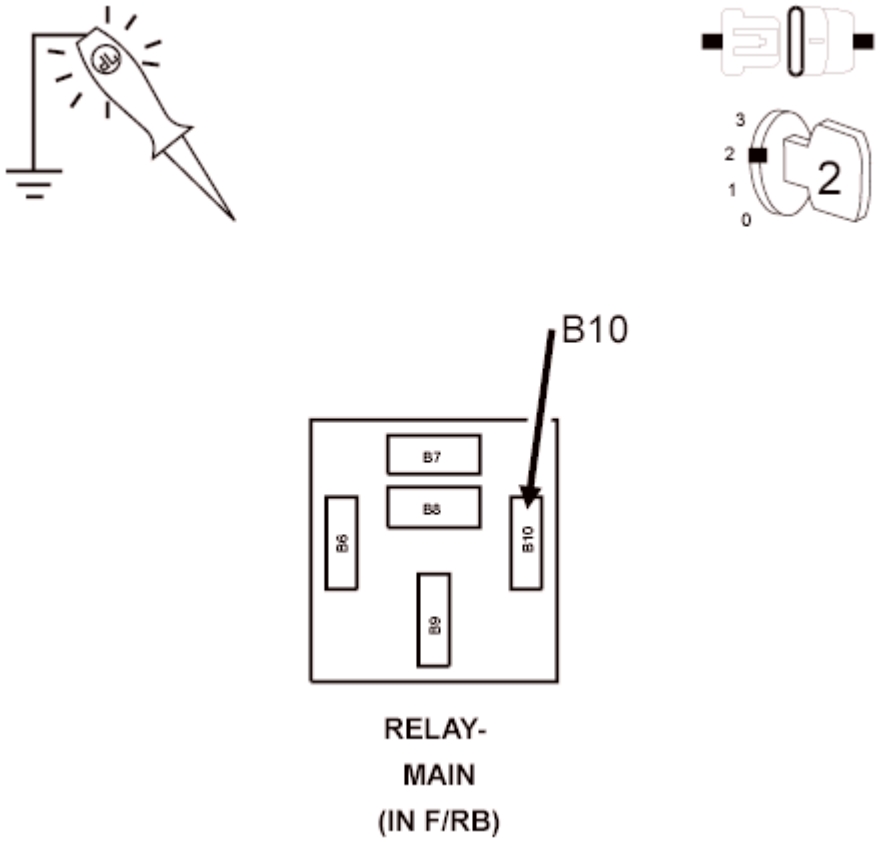

Fig. 118: Checking Right Seat Vent Return Circuit For Open
Courtesy of CHRYSLER GROUP, LLC

1. Turn the ignition off.
2. Disconnect the HSM C5 harness connector.

NOTE: Check connectors. Clean and repair as necessary.

3. Connect an ammeter between the (P922) Right Seat Vent Return circuit and ground at the HSM C5 harness connector.
4. Connect one end a fused jumper wire to Battery voltage and the other end to the (P422) Right Seat Vent Feed circuit at the HSM C5 harness connector.

NOTE: Both vent motors should be operational and the ammeter should read 720 to 880 ma.

Does the ammeter read 720 ma to 1.2 amps?

Yes

- Disconnect the fused jumper wire and ammeter. Replace the Heated Seat Module (HSM) in accordance with the Service Information.
- Perform the BODY VERIFICATION TEST. Refer to **BODY VERIFICATION TEST** .

No

- Disconnect the fused jumper wire. Go To 3.

3. **CHECK (P422) RIGHT SEAT VENT FEED CIRCUIT AND SEAT BACK VENT MOTOR FOR A SHORT TO GROUND**

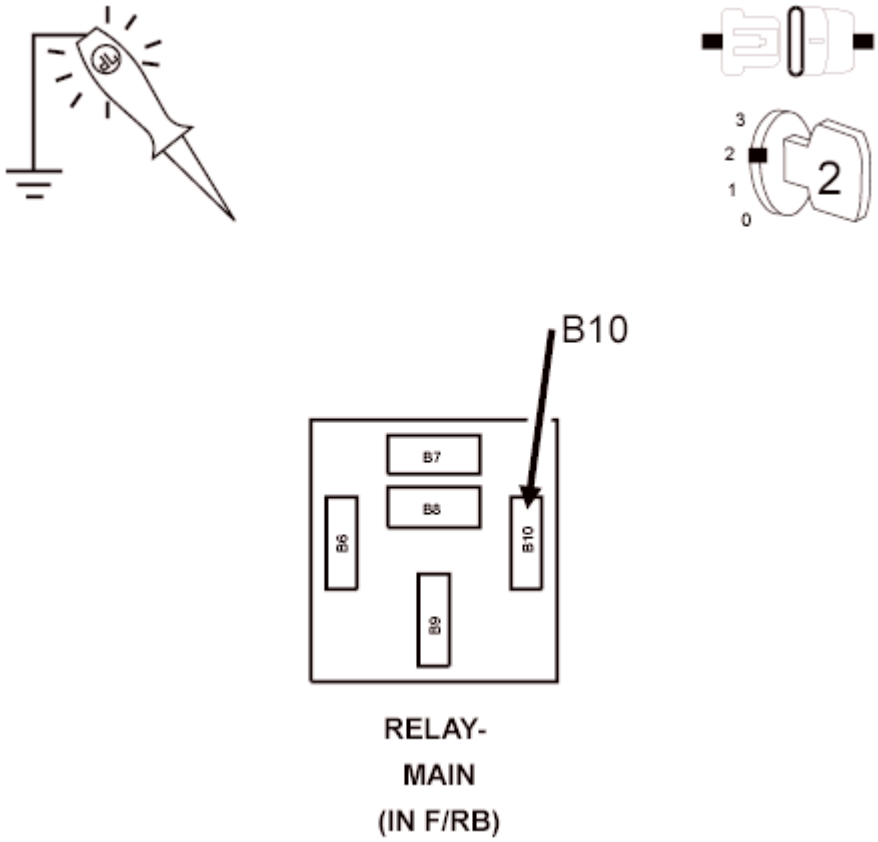

Fig. 119: Checking Right Seat Vent Return Circuit For Open
Courtesy of CHRYSLER GROUP, LLC

1. Disconnect the Right Seat Cushion Vent connector.

NOTE: Check connectors. Clean and repair as necessary.

2. Connect an ammeter between the (P922) Right Seat Vent Return circuit and ground at the HSM C5 connector.
3. Connect one end of a fused jumper wire to Battery Voltage and the other end to the (P422) Right Seat Vent Feed circuit at the HSM C5 connector.

NOTE: **The seat back vent motor should be operational and the ammeter should read 320 to 480 ma.**

Does the ammeter read 320 to 600 ma?

Yes

- Disconnect the fused jumper wire and ammeter. Replace the Seat Cushion Vent Motor in accordance with the Service Information.
- Perform the BODY VERIFICATION TEST. Refer to **BODY VERIFICATION TEST** .

No

- Disconnect the fused jumper wire and ammeter. Go To 4.

4. **CHECK (P422) RIGHT SEAT VENT FEED CIRCUIT FOR A SHORT TO GROUND**

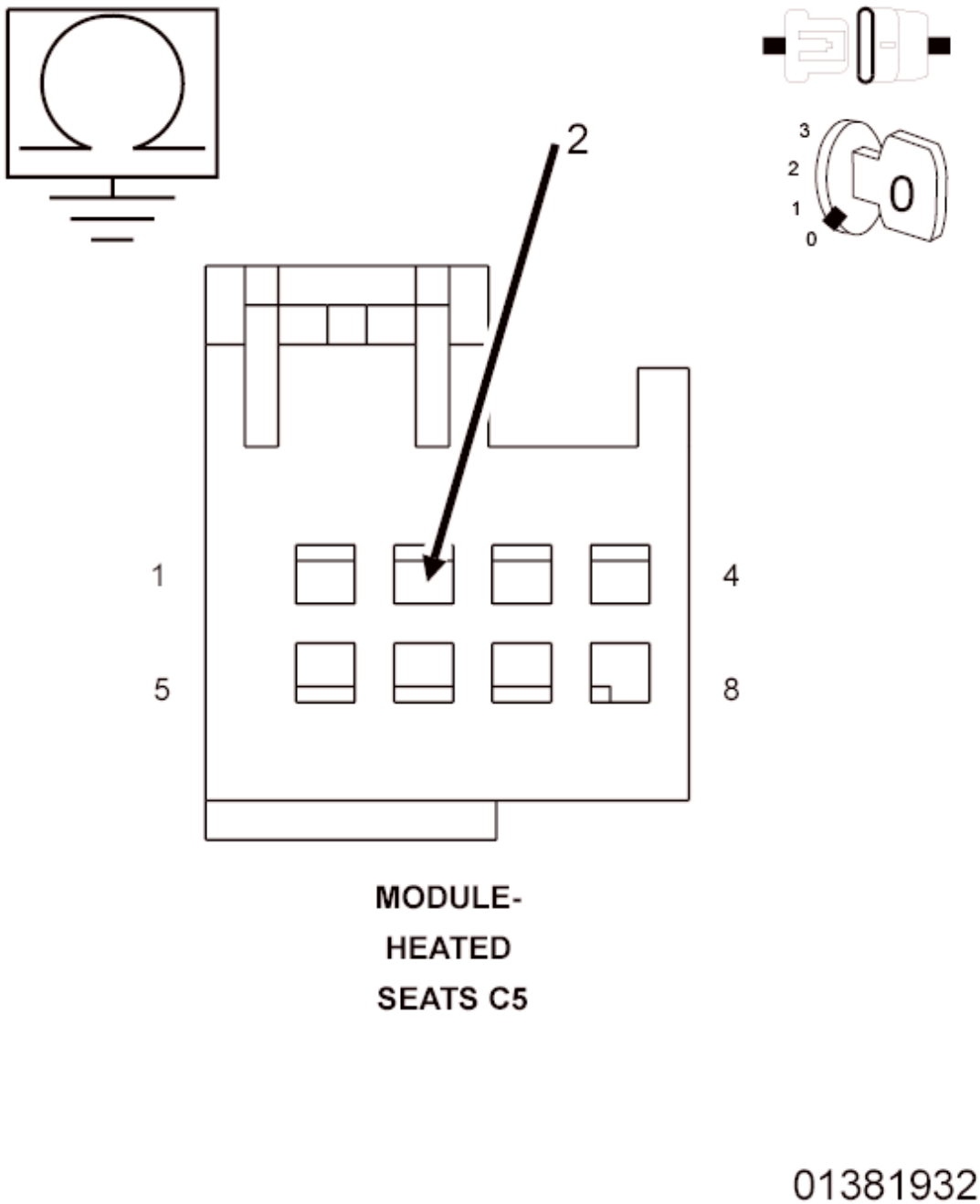

Fig. 120: Checking Right Seat Vent Feed Circuit For Short To Ground
Courtesy of CHRYSLER GROUP, LLC

1. Disconnect the Right Seat Cushion Vent harness connector.
2. Disconnect the Right Seat Back Vent harness connector.

NOTE: Check connectors. Clean and repair as necessary.

3. Measure the resistance of the (P422) Right Seat Vent Feed circuit between ground at the HSM C5

harness connector.

Is the resistance below 10K Ohms?

Yes

- Repair the (P422) Right Seat Vent Feed circuit for a short to ground.
- Perform the BODY VERIFICATION TEST. Refer to **BODY VERIFICATION TEST** .

No

- Go To 5.

5. **CHECK (P422) RIGHT SEAT VENT FEED CIRCUIT FOR A SHORT TO THE (P922) RIGHT SEAT VENT RETURN CIRCUIT**

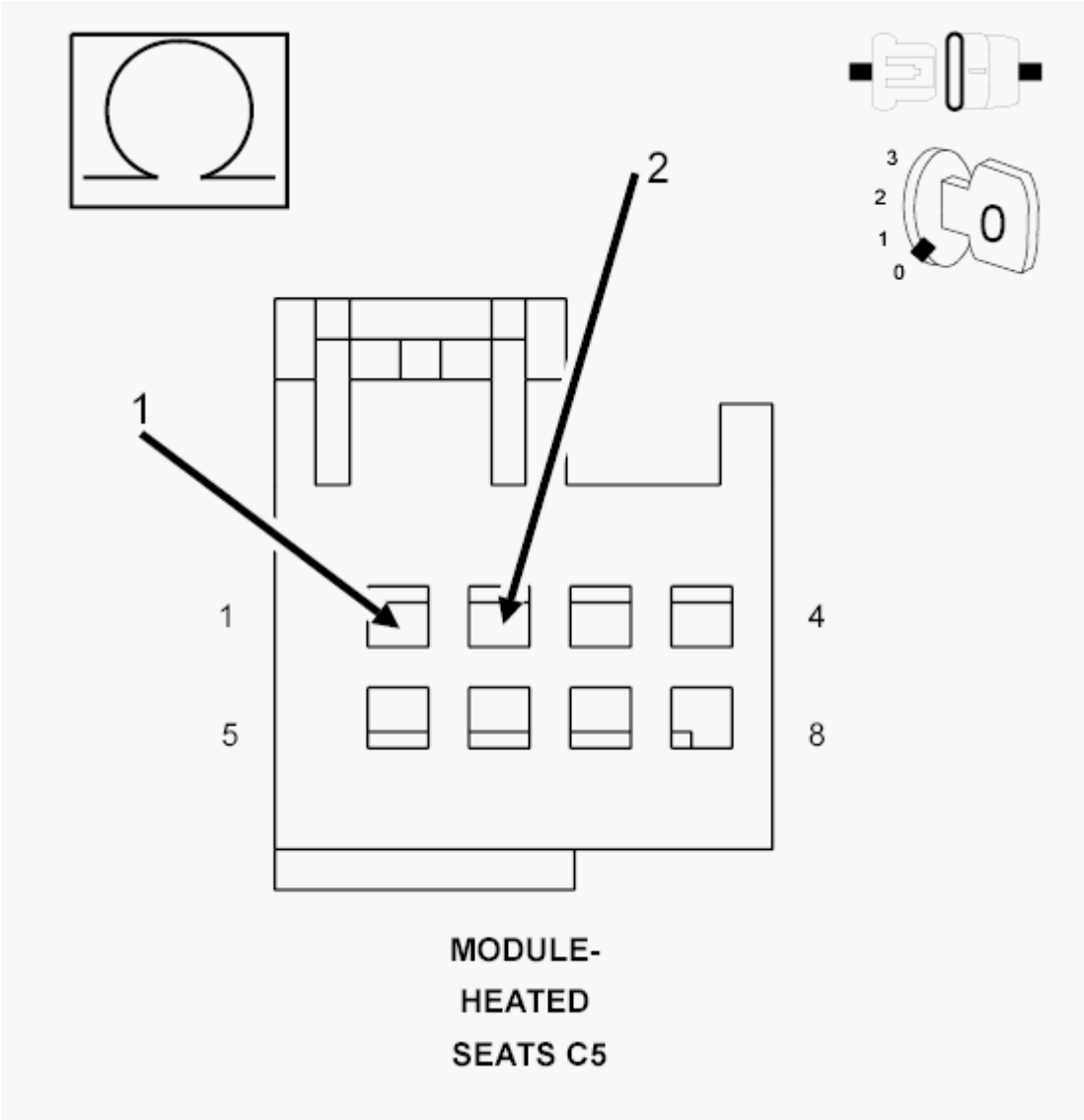

Fig. 121: Checking Right Seat Vent Feed Circuit For Short To Right Seat Vent Return Circuit
Courtesy of CHRYSLER GROUP, LLC

1. Measure the resistance between the (P422) Right Seat Vent Feed circuit and the (P922) Right Seat Vent Return circuit at the HSM C5 harness connector.

   Is the resistance below 10K Ohms?

   Yes

   - Repair the (P422) Right Seat Vent Feed circuit for a short to the (P922) Right Seat Vent Return circuit.
   - Perform the BODY VERIFICATION TEST. Refer to **BODY VERIFICATION TEST** .

   No

   - Repair or replace the pigtail harness for a short to ground or replace the shorted Seat Back Vent Motor in accordance with the Service Information.
   - Perform the BODY VERIFICATION TEST. Refer to **BODY VERIFICATION TEST** .

B1E9E-12-FRONT RIGHT VENT CONTROL CIRCUIT - CIRCUIT SHORT TO BATTERY

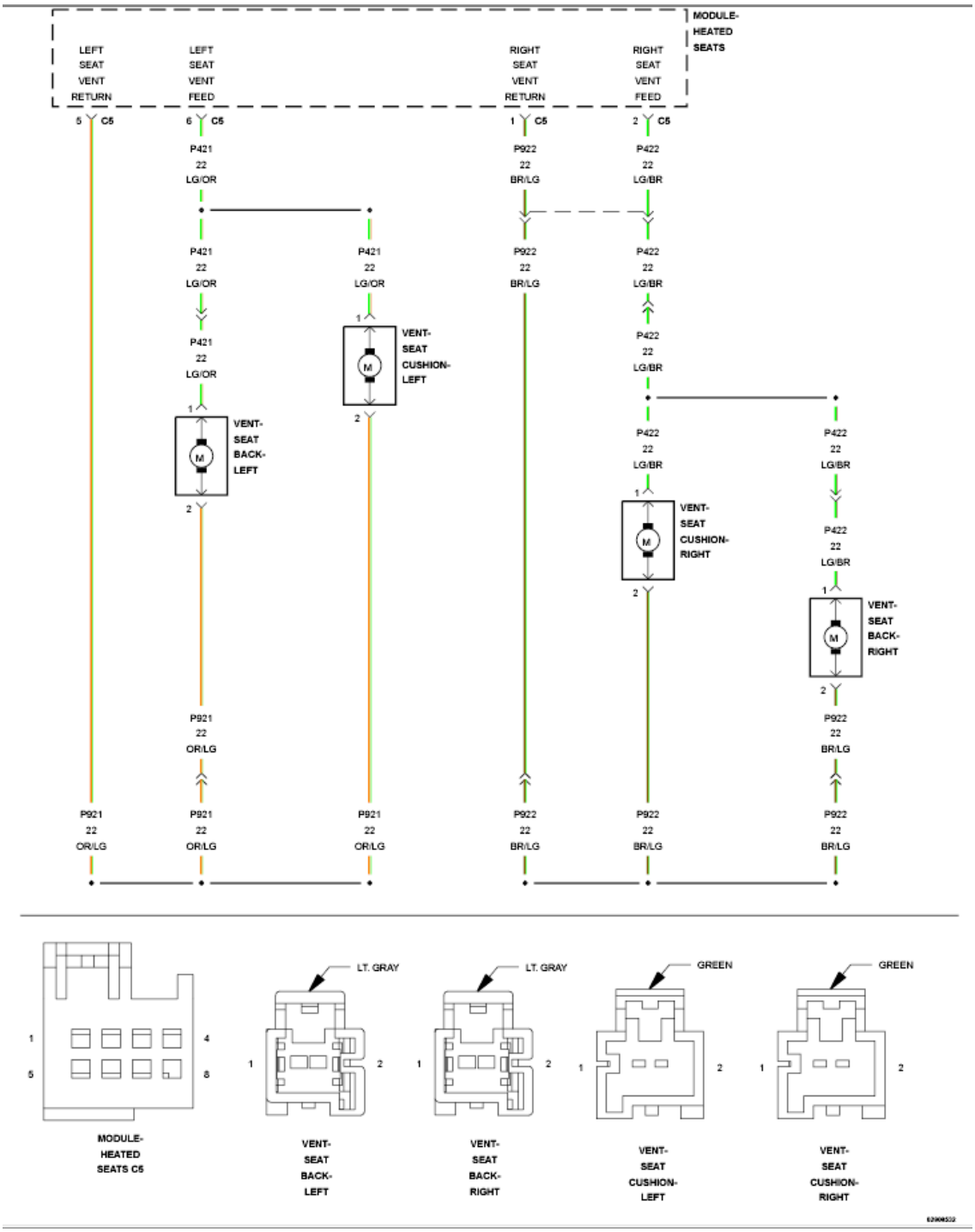

Fig. 122: Vent Control Wiring Diagram
Courtesy of CHRYSLER GROUP, LLC

For a complete wiring diagram, **refer to appropriate SYSTEM WIRING DIAGRAMS article** .

WHEN MONITORED:

With the engine running.

SET CONDITION:

The Heated Seat Module (HSM) detects Voltage above 5.0 Volts on the (P422) Right Seat Vent Feed circuit for more than two seconds with the output turned off.

POSSIBLE CAUSES

Possible Causes
(P422) RIGHT SEAT VENT FEED CIRCUIT SHORTED TO VOLTAGE
HEATED SEAT MODULE (HSM)

DIAGNOSTIC TEST

1. **TEST FOR INTERMITTENT CONDITION**

   NOTE: Make sure the battery is fully charged and the charging system is operating properly before proceeding.

   1. Turn the ignition on.
   2. Using a scan tool, record and erase Diagnostic Trouble Codes (DTCs).
   3. Turn the ignition off.
   4. Start the engine and let it run.
   5. Using a scan tool, read DTCs.

   Is the DTC active?

   Yes

   - Go To 2.

   No

   - The conditions that caused this code to set are not present at this time. Verify seat harness is routed correctly to the HSM. Using the wiring diagram/schematic as a guide, inspect the wiring and connectors. Look for chafed, pierced, pinched, or partially broken wires and broken, bent, pushed out, spread, corroded, or contaminated terminals. Attempt to reproduce condition by operating all HSM functions one at a time, except for the Right Front Vented Seat. Attempt to reproduce condition by adjusting the seat.
   - Perform the BODY VERIFICATION TEST. Refer to **BODY VERIFICATION TEST** .

2. **CHECK (P422) RIGHT SEAT VENT FEED CIRCUIT FOR A SHORT TO VOLTAGE**

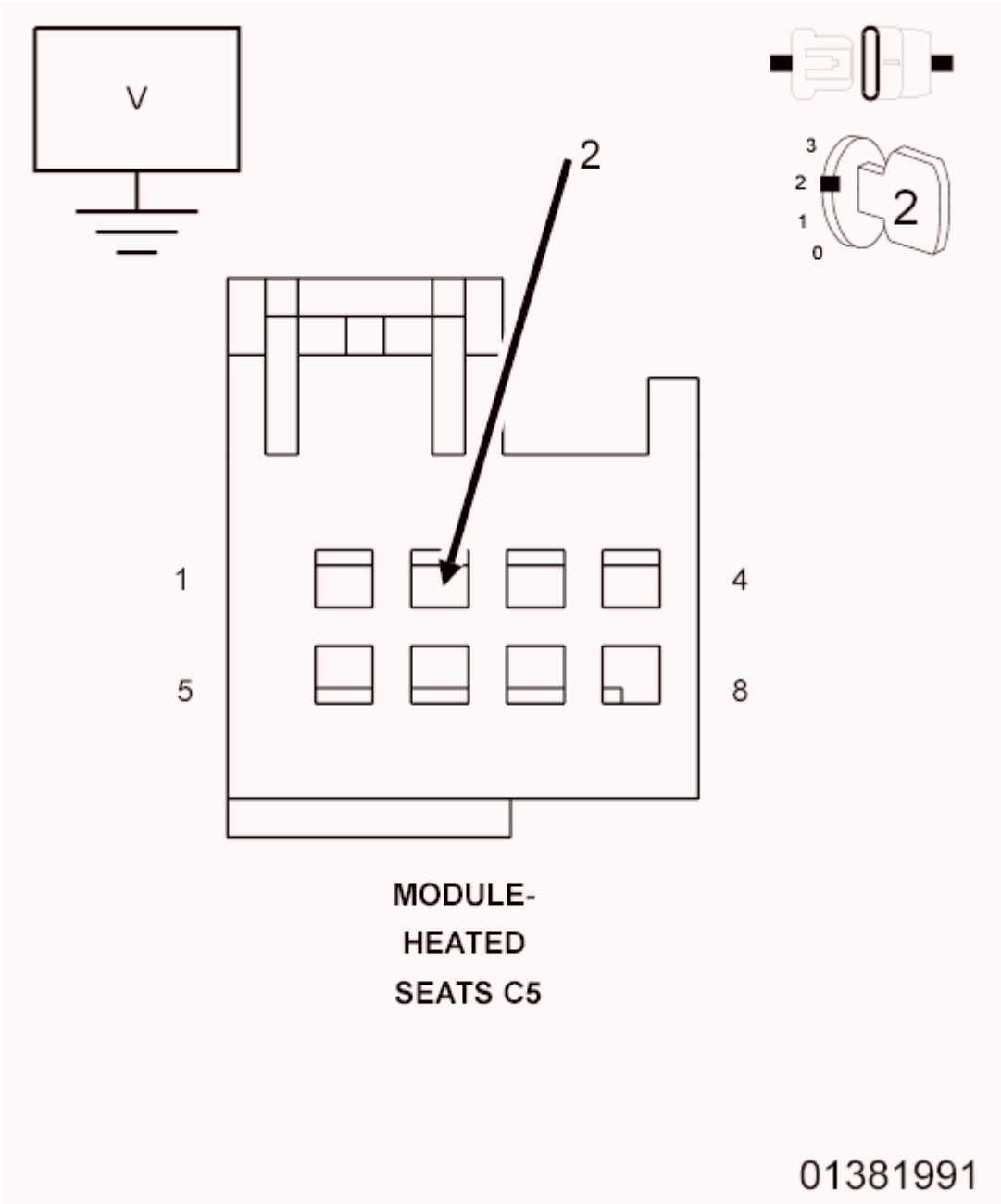

Fig. 123: Checking Right Seat Vent Feed Circuit For Short To Voltage
Courtesy of CHRYSLER GROUP, LLC

1. Turn the ignition off.
2. Disconnect the HSM C5 harness connector.

NOTE: Check connectors. Clean and repair as necessary.

3. Start the engine and let it run.
4. Measure the voltage between ground and the (P422) Right Seat Vent Feed circuit at the HSM C5

harness connector.

Is there any voltage present?

Yes

- Repair the (P422) Right Seat Vent Feed circuit for a short to voltage.
- Perform the BODY VERIFICATION TEST. Refer to **BODY VERIFICATION TEST** .

No

- Go To 3.

3. **CHECK (P422) RIGHT SEAT VENT FEED CIRCUIT FOR A SHORT TO VOLTAGE DURING SEAT ADJUSTMENT**

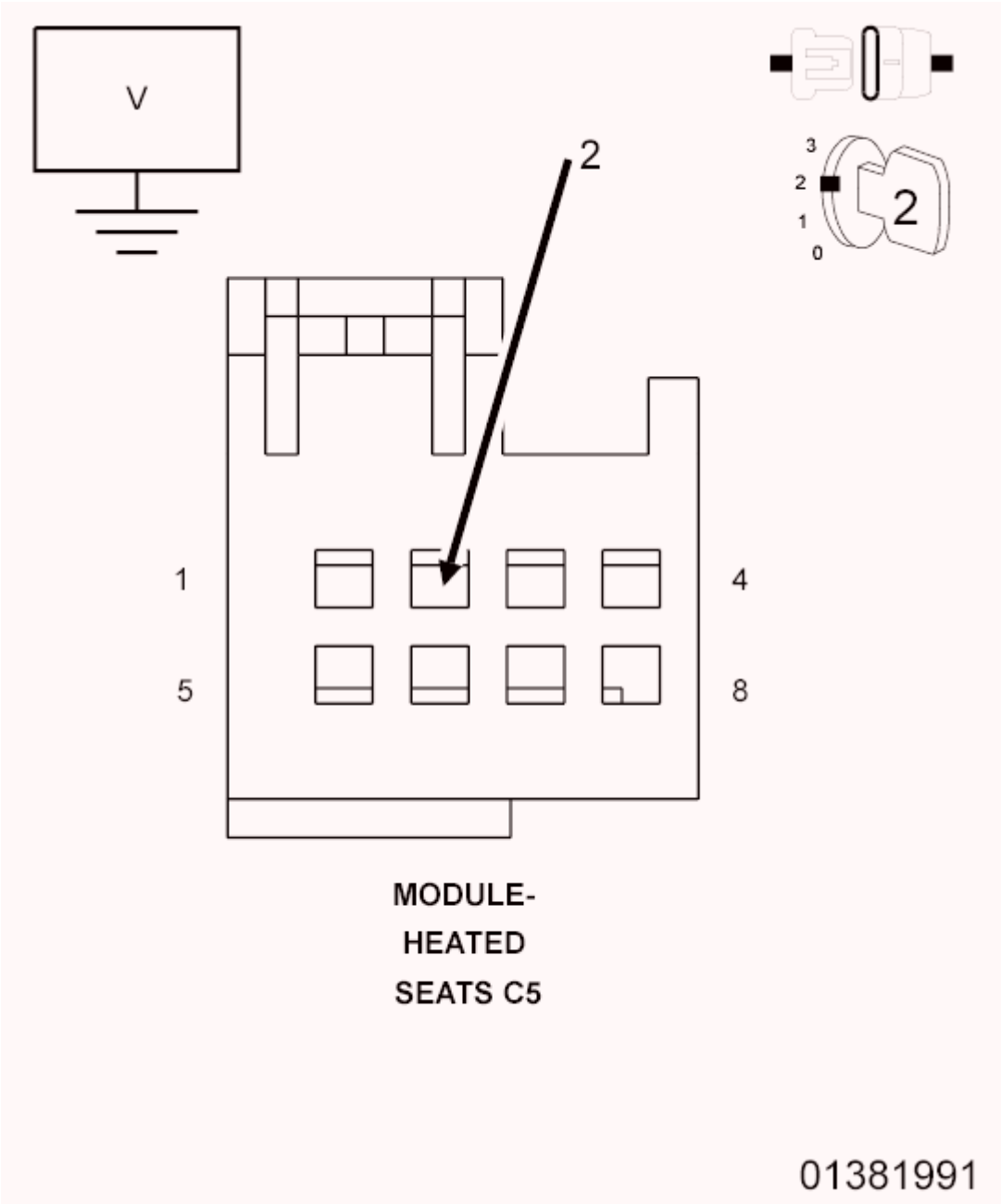

Fig. 124: Checking Right Seat Vent Feed Circuit For Short To Voltage
Courtesy of CHRYSLER GROUP, LLC

1. Measure the voltage of the (P422) Right Seat Vent Feed circuit between the HSM C5 harness connector and ground while adjusting the seat in all positions.

   Is there any voltage present during the seat adjustment?

   Yes

   - Repair the (P422) Right Seat Vent Feed circuit for a short to voltage.

- Perform the BODY VERIFICATION TEST. Refer to **BODY VERIFICATION TEST** .

No

- Replace the Heated Seat Module (HSM) in accordance with the Service Information.
- Perform the BODY VERIFICATION TEST. Refer to **BODY VERIFICATION TEST** .

B1EB1-1A-FRONT LEFT SEAT HEATER SENSOR - CIRCUIT RESISTANCE BELOW THRESHOLD

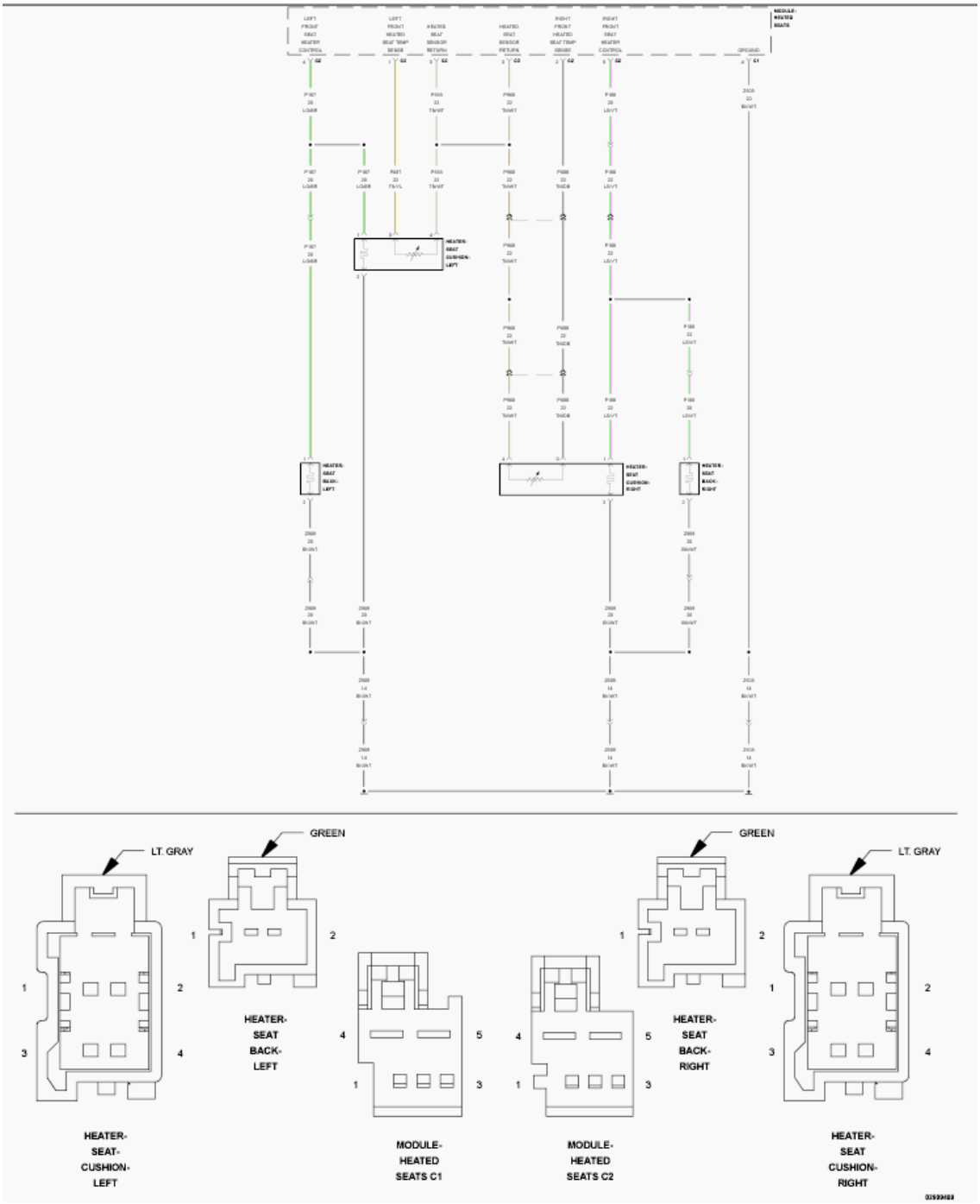

Fig. 125: Heated Seat Control Wiring Diagram
Courtesy of CHRYSLER GROUP, LLC

For a complete wiring diagram, **refer to appropriate SYSTEM WIRING DIAGRAMS article** .

WHEN MONITORED:

When Heated Seat Module (HSM) is powered.

SET CONDITION:

The Heated Seat Module (HSM) detects that the (P687) Left Front Heated Seat Temp Sense circuit NTC is below threshold for more than two seconds.

POSSIBLE CAUSES

Possible Causes
(P687) LEFT FRONT HEATED SEAT TEMP SENSE CIRCUIT SHORTED TO GROUND
(P687) LEFT FRONT HEATED SEAT TEMP SENSE CIRCUIT SHORTED TO THE (Z909) GROUND CIRCUIT
(P687) LEFT FRONT HEATED SEAT TEMP SENSE CIRCUIT SHORTED TO THE (P968) HEATED SEAT SENSOR RETURN CIRCUIT
SEAT CUSHION HEATER ELEMENT SHORTED
HEATED SEAT MODULE (HSM)

DIAGNOSTIC TEST

1. **TEST FOR INTERMITTENT CONDITION**

   NOTE: Make sure the battery is fully charged and the charging system is operating properly before proceeding.

   1. Turn the ignition on.
   2. Using a scan tool, record and erase Diagnostic Trouble Codes (DTCs).
   3. Turn the ignition off.
   4. Start the engine and let it run.
   5. Using a scan tool, read DTCs.

   Is the DTC active?

   Yes

   - Go To 2.

   No

   - The conditions that caused this code to set are not present at this time. Verify seat harness is routed correctly to the HSM. Using the wiring diagram/schematic as a guide, inspect the wiring and connectors. Look for chafed, pierced, pinched, or partially broken wires and broken, bent, pushed out, spread, corroded, or contaminated terminals. Attempt to reproduce condition by adjusting the seat.
   - Perform the BODY VERIFICATION TEST. Refer to **BODY VERIFICATION TEST** .

2. **CHECK (P687) LEFT FRONT HEATED SEAT TEMP SENSE CIRCUIT IN BODY HARNESS FOR A SHORT TO GROUND**

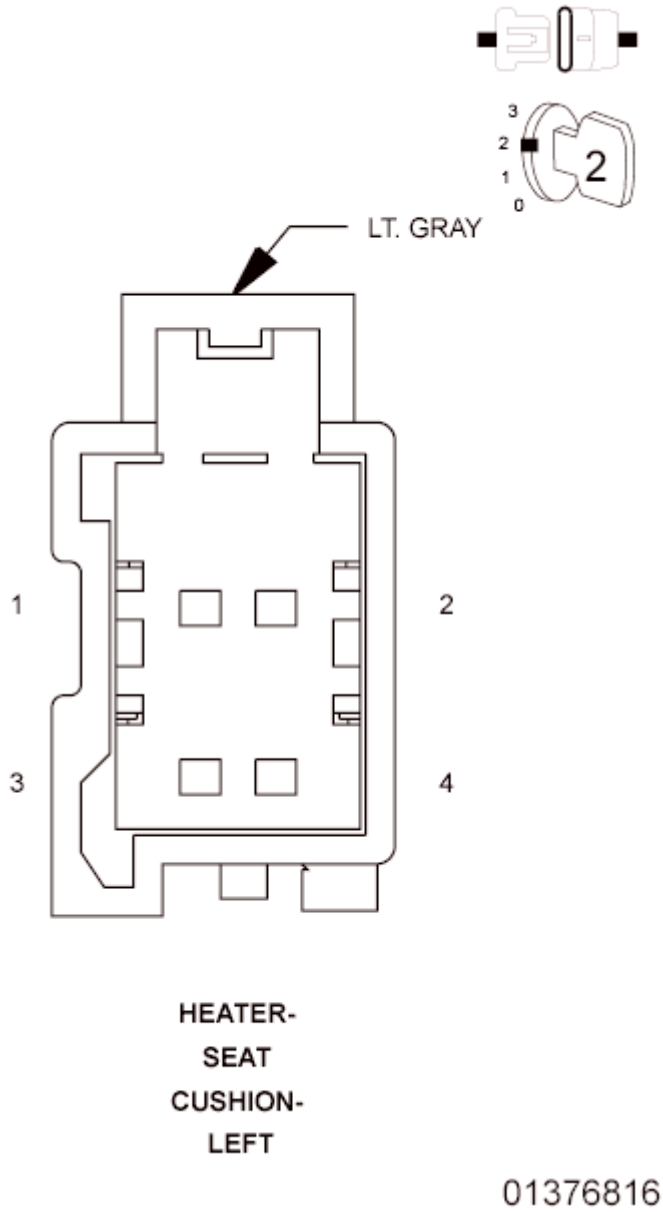

Fig. 126: Checking Left Front Heated Seat Temp Sense Circuit In Body Harness For A Short To Ground
Courtesy of CHRYSLER GROUP, LLC

1. Turn the ignition off.
2. Disconnect the Left Seat Cushion Heater harness connector.

NOTE: Check connectors. Clean and repair as necessary.

3. Turn the ignition on.
4. Using a scan tool, erase DTCs.
5. Turn the ignition off.

6. Start the engine and let it run.
7. Using a scan tool, read DTCs.

   Is the same DTC active?

   Yes

   - Go To 3.

   No

   - Replace the Seat Cushion Heater Element in accordance with the Service Information.
   - Perform the BODY VERIFICATION TEST. Refer to **BODY VERIFICATION TEST** .

3. **CHECK (P687) LEFT FRONT HEATED SEAT TEMP SENSE CIRCUIT FOR A SHORT TO GROUND**

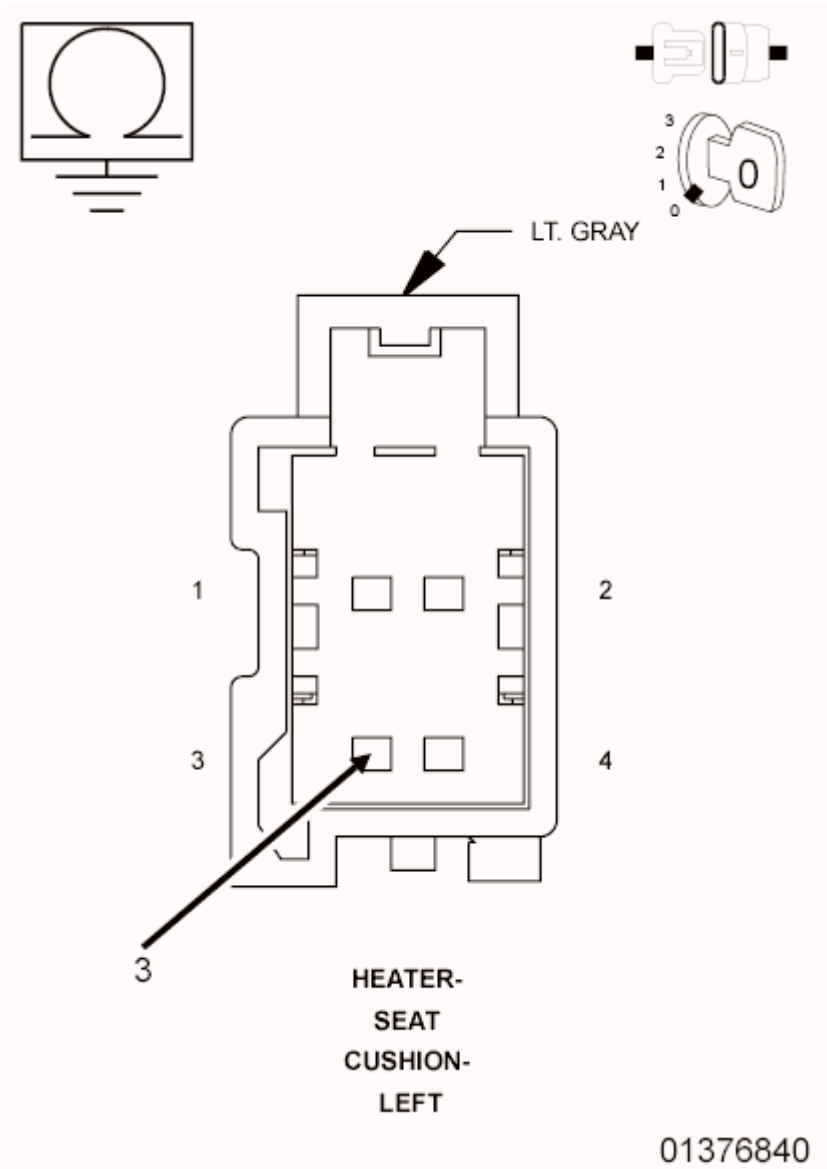

Fig. 127: Checking Left Front Heated Seat Temp Sense Circuit For A Short To Ground
Courtesy of CHRYSLER GROUP, LLC

1. Turn the ignition off.
2. Disconnect the HSM C2 harness connector.

NOTE: Check connectors. Clean and repair as necessary.

3. Measure the resistance of the (P687) Left Front Heated Seat Temp Sense circuit between ground and the Left Seat Cushion Heater connector (harness side).

   Is the resistance below 10K Ohms?

   Yes

- Repair the (P687) Left Front Heated Seat Temp Sense circuit for a short to ground.
- Perform the BODY VERIFICATION TEST. Refer to **BODY VERIFICATION TEST** .

No

- Go To 4.

4. **CHECK (P687) LEFT FRONT HEATED SEAT TEMP SENSE CIRCUIT FOR A SHORT TO THE (Z909) GROUND CIRCUIT OR TO (P968) HEATED SEAT SENSOR RETURN CIRCUIT**

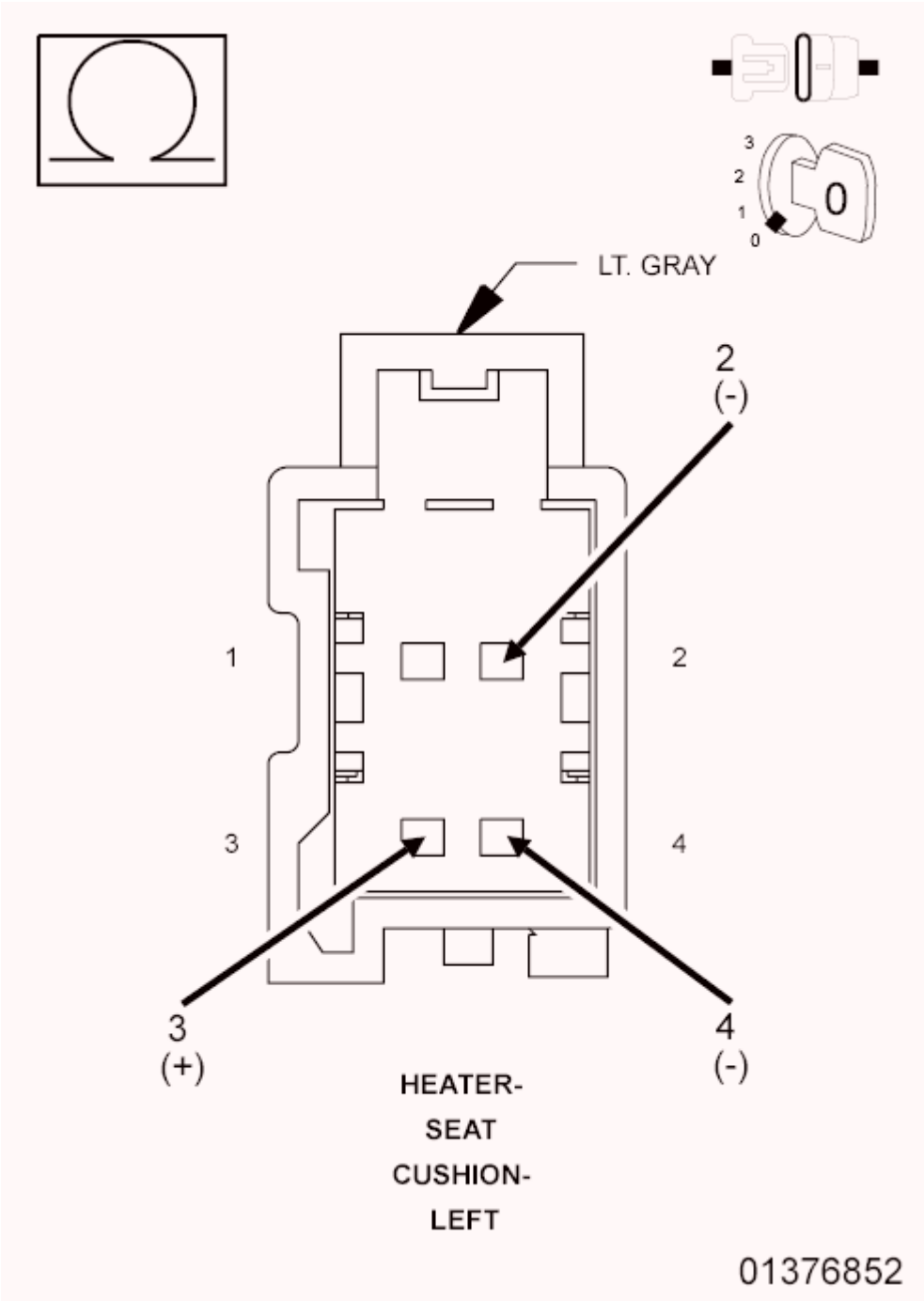

Fig. 128: Checking Left Front Heated Seat Temp Sense Circuit For A Short To The Ground Circuit Or To Heated Seat Sensor Return Circuit
Courtesy of CHRYSLER GROUP, LLC

1. Measure the resistance between the (P687) Left Front Heated Seat Temp Sense circuit and the (Z909) Ground circuit at the Left Seat Cushion Heater harness connector.
2. Measure the resistance between the (P687) Left Front Heated Seat Temp Sense circuit and the (P968) Heated Seat Sensor Return circuit at the Left Seat Cushion Heater harness connector.

Is the resistance below 10K Ohms for either measurement?

Yes

- Repair all circuits with a resistance below 10K Ohms for a short to the (P687) Left Front Heated Seat Temp Sense circuit.
- Perform the BODY VERIFICATION TEST. Refer to **BODY VERIFICATION TEST** .

No

- Replace the Seat Cushion Heater Element in accordance with the Service Information.
- Perform the BODY VERIFICATION TEST. Refer to **BODY VERIFICATION TEST** .

B1EB1-1B-FRONT LEFT SEAT HEATER SENSOR - CIRCUIT RESISTANCE ABOVE THRESHOLD

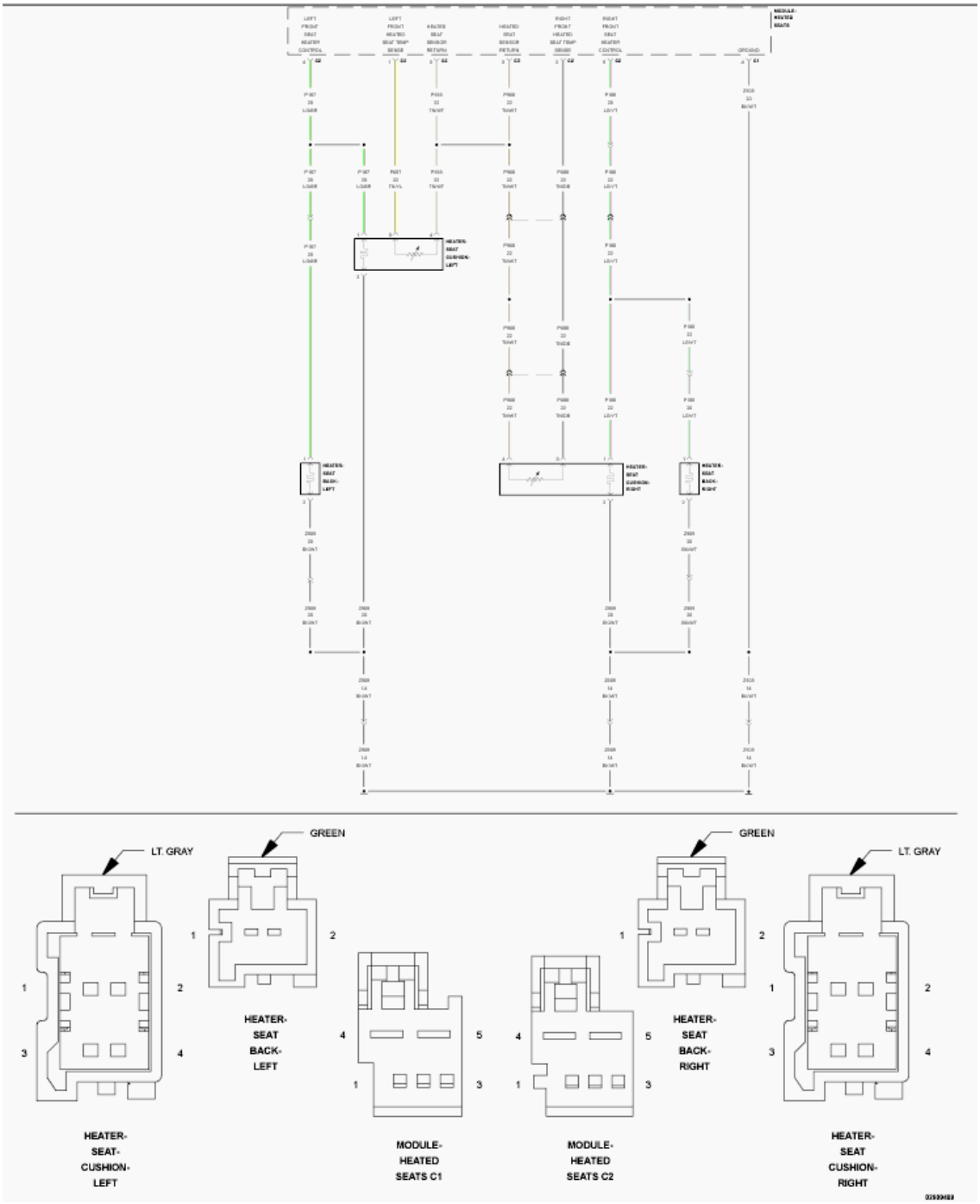

Fig. 129: Heated Seat Control Wiring Diagram
Courtesy of CHRYSLER GROUP, LLC

For a complete wiring diagram, **refer to appropriate SYSTEM WIRING DIAGRAMS article** .

WHEN MONITORED:

When Heated Seat Module (HSM) is powered.

SET CONDITION:

The Heated Seat Module (HSM) detects that the (P687) Left Front Heated Seat Temp Sense circuit NTC is above threshold for more than two seconds.

POSSIBLE CAUSES

Possible Causes
(P687) LEFT FRONT HEATED SEAT TEMP SENSE CIRCUIT SHORTED TO VOLTAGE
(P687) LEFT FRONT HEATED SEAT TEMP SENSE CIRCUIT SHORTED TO THE (P187) LEFT FRONT SEAT HEATER CONTROL CIRCUIT
(P687) LEFT FRONT HEATED SEAT TEMP SENSE CIRCUIT SHORTED TO THE (P188) RIGHT FRONT SEAT HEATER CONTROL CIRCUIT
(P687) LEFT FRONT HEATED SEAT TEMP SENSE CIRCUIT OPEN
(P968) HEATED SEAT SENSOR RETURN CIRCUIT OPEN
SEAT CUSHION HEATER ELEMENT OPEN
HEATED SEAT MODULE (HSM)

DIAGNOSTIC TEST

1. **TEST FOR INTERMITTENT CONDITION**

   NOTE: Make sure the battery is fully charged and the charging system is operating properly before proceeding.

   1. Turn the ignition on.
   2. Using a scan tool, record and erase Diagnostic Trouble Codes (DTCs).
   3. Turn the ignition off.
   4. Start the engine and let it run.
   5. Using a scan tool, read DTCs.

   Is the DTC active?

   Yes

   - Go To 2.

   No

   - The conditions that caused this code to set are not present at this time. Verify seat harness is routed correctly to the HSM. Using the wiring diagram/schematic as a guide, inspect the wiring and connectors. Look for chafed, pierced, pinched, or partially broken wires and broken, bent, pushed out, spread, corroded, or contaminated terminals. Attempt to reproduce condition by operating all HSM functions one at a time. Attempt to reproduce condition by adjusting the seat.

- Perform the BODY VERIFICATION TEST. Refer to **BODY VERIFICATION TEST** .

2. **CHECK (P687) LEFT FRONT HEATED SEAT TEMP SENSE CIRCUIT FOR A SHORT TO VOLTAGE**

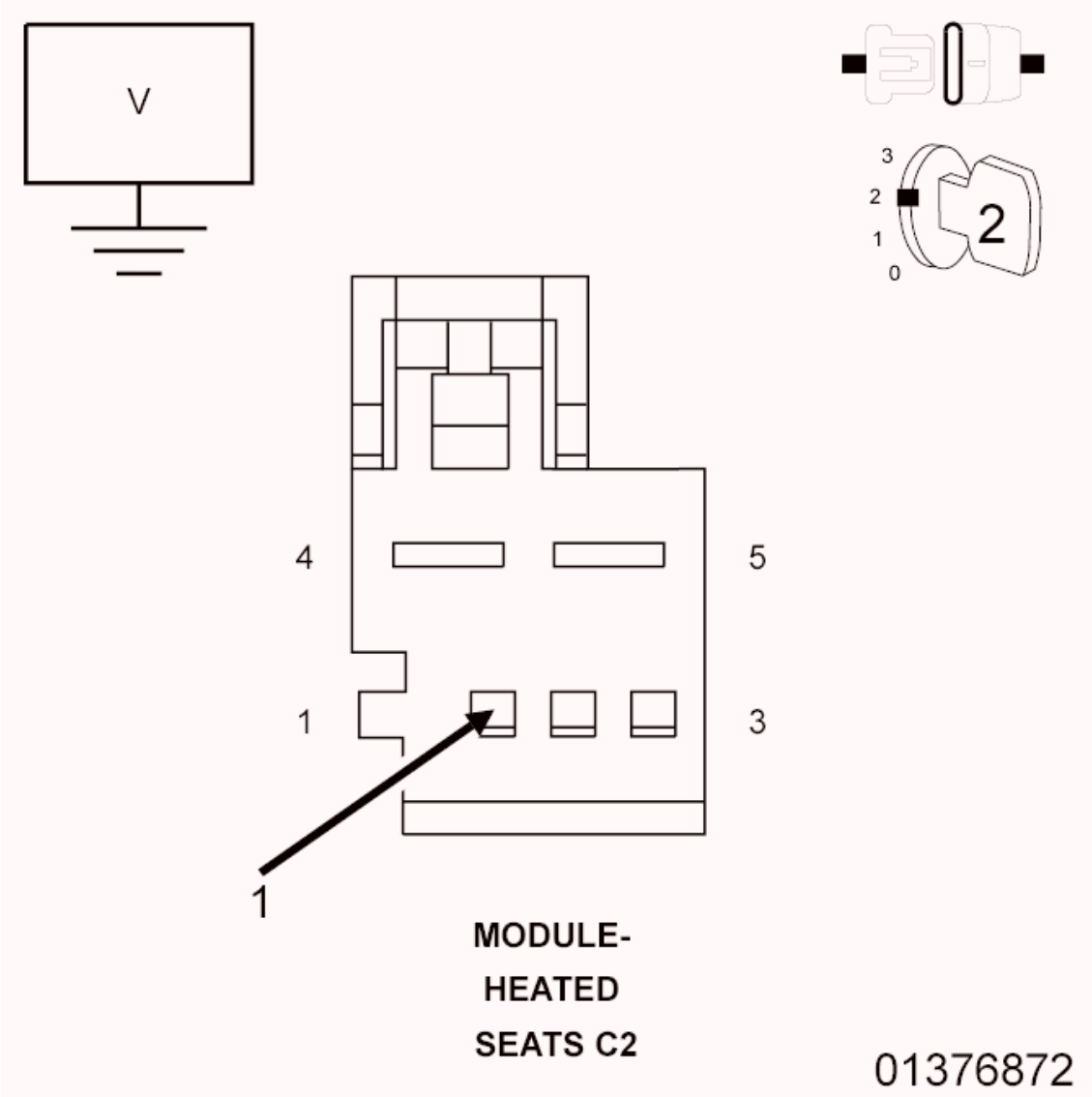

Fig. 130: Checking Left Front Heated Seat Temp Sense Circuit For A Short To Voltage
Courtesy of CHRYSLER GROUP, LLC

1. Turn the ignition off.
2. Disconnect the HSM C2 harness connector.

NOTE: Check connectors. Clean and repair as necessary.

3. Start the engine and let it run.
4. Measure the voltage of the (P687) Left Front Heated Seat Temp Sense circuit between the HSM C2

harness connector and ground.

Is there any voltage present?

Yes

- Repair the (P687) Left Front Heated Seat Temp Sense circuit for a short to voltage.
- Perform the BODY VERIFICATION TEST. Refer to **BODY VERIFICATION TEST** .

No

- Go To 3.

3. **CHECK (P687) LEFT FRONT HEATED SEAT TEMP SENSE CIRCUIT FOR A SHORT TO VOLTAGE DURING SEAT ADJUSTMENT**

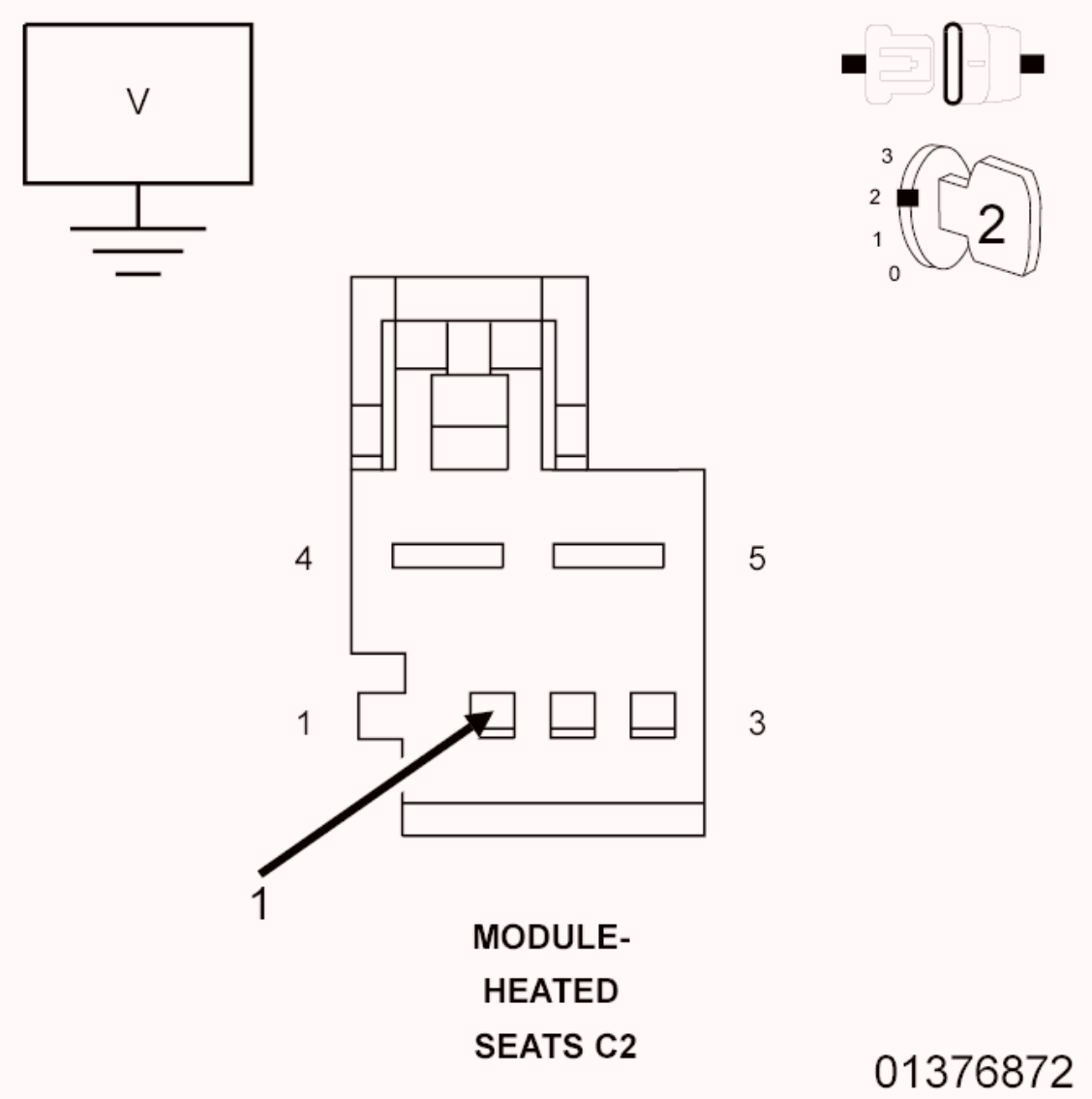

Fig. 131: Checking Left Front Heated Seat Temp Sense Circuit For A Short To Voltage
Courtesy of CHRYSLER GROUP, LLC

1. Measure the voltage of the (P687) Left Front Heated Seat Temp Sense circuit between the HSM C2 harness connector and ground while adjusting the seat in all positions.

   Is there any voltage present during the seat adjustment?

   Yes

   - Repair the (P687) Left Front Heated Seat Temp Sense circuit for a short to voltage.
   - Perform the BODY VERIFICATION TEST. Refer to **BODY VERIFICATION TEST** .

   No

   - Go To 4.

4. **CHECK (P687) LEFT FRONT HEATED SEAT TEMP SENSE CIRCUIT FOR A SHORT TO THE (P187) LEFT FRONT SEAT HEATER CONTROL CIRCUIT OR TO (P188) RIGHT FRONT SEAT HEATER CONTROL CIRCUIT**

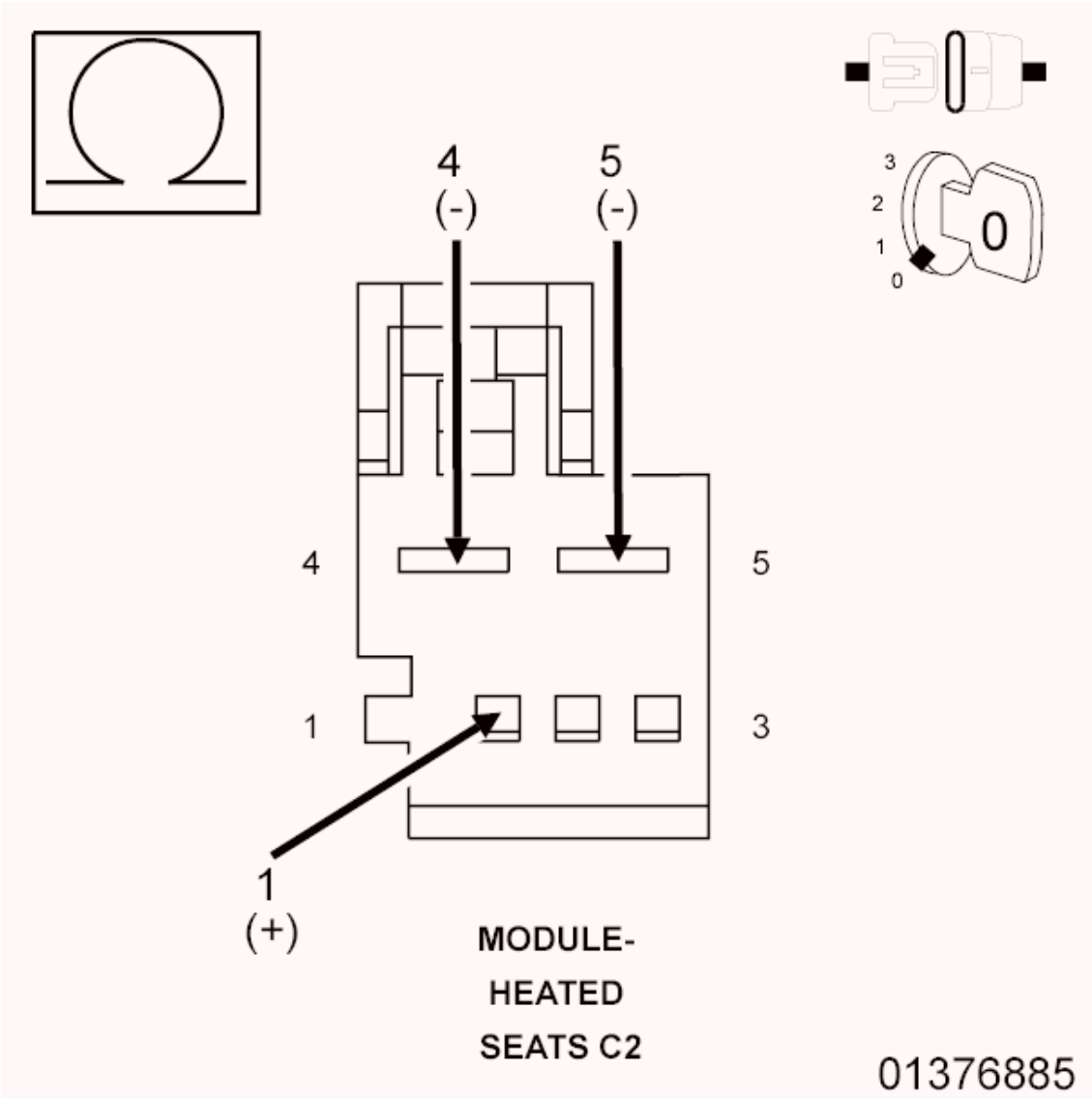

Fig. 132: Check Left Front Heated Seat Temp Sense Circuit For A Short To The Left Front Seat Heater Control Circuit Or To Right Front Seat Heater Control Circuit
Courtesy of CHRYSLER GROUP, LLC

1. Turn the ignition off.
2. Disconnect the Left Seat Cushion Heater connector.
3. Disconnect the Right Seat Cushion Heater connector.

NOTE: Check connectors. Clean and repair as necessary.

4. Measure the resistance between the (P687) Left Front Heated Seat Temp Sense circuit and the (P187) Left Front Seat Heater Control circuit at the HSM C2 harness connector.
5. Measure the resistance between the (P687) Left Front Heated Seat Temp Sense circuit and the (P188) Right Front Seat Heater Control circuit at the HSM C2 harness connector.

Is the resistance below 10K Ohms for either measurement?

Yes

- Repair all circuits with a resistance below 10K Ohms for a short to the (P687) Left Front Heated Seat Temp Sense circuit.
- Perform the BODY VERIFICATION TEST. Refer to **BODY VERIFICATION TEST** .

No

- Go To 5.

5. **CHECK (P687) LEFT FRONT HEATED SEAT TEMP SENSE CIRCUIT VOLTAGE TO LEFT SEAT CUSHION HEATER**

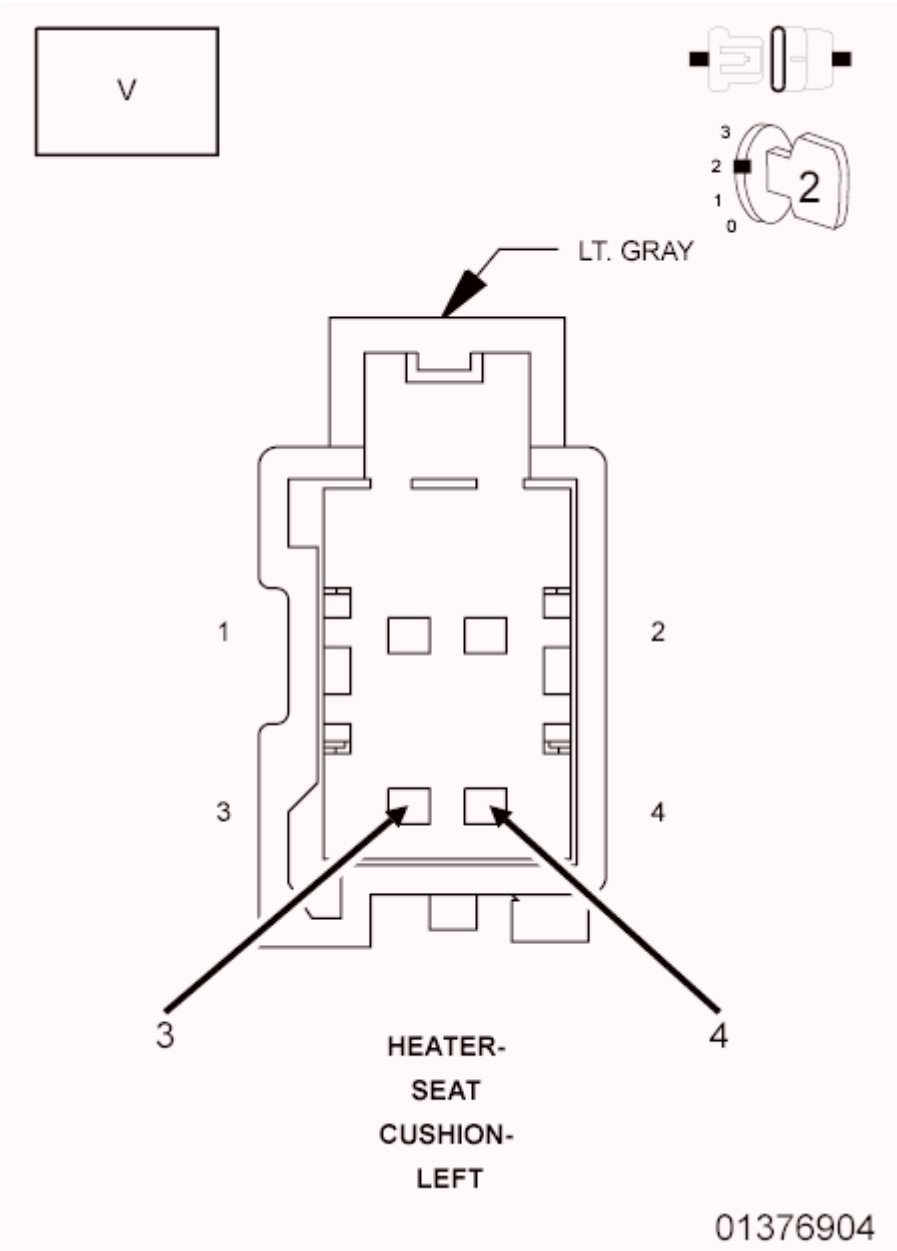

Fig. 133: Checking Left Front Heated Seat Temp Sense Circuit Voltage To Left Seat Cushion Heater
Courtesy of CHRYSLER GROUP, LLC

1. Reconnect the HSM C2 harness connector.
2. Start the engine and let it run.
3. Measure the voltage between the (P687) Left Front Heated Seat Temp Sense circuit and the (P968) Heated Seat Sensor Return circuit at the Left Seat Cushion Heater harness connector.

   Is the Voltage above 4.5 volts?

   Yes

- Replace the Seat Cushion Heater Element in accordance with the Service Information.
- Perform the BODY VERIFICATION TEST. Refer to **BODY VERIFICATION TEST** .

No

- Go To 6.

6. **CHECK (P687) LEFT FRONT HEATED SEAT TEMP SENSE CIRCUIT OR AN OPEN**

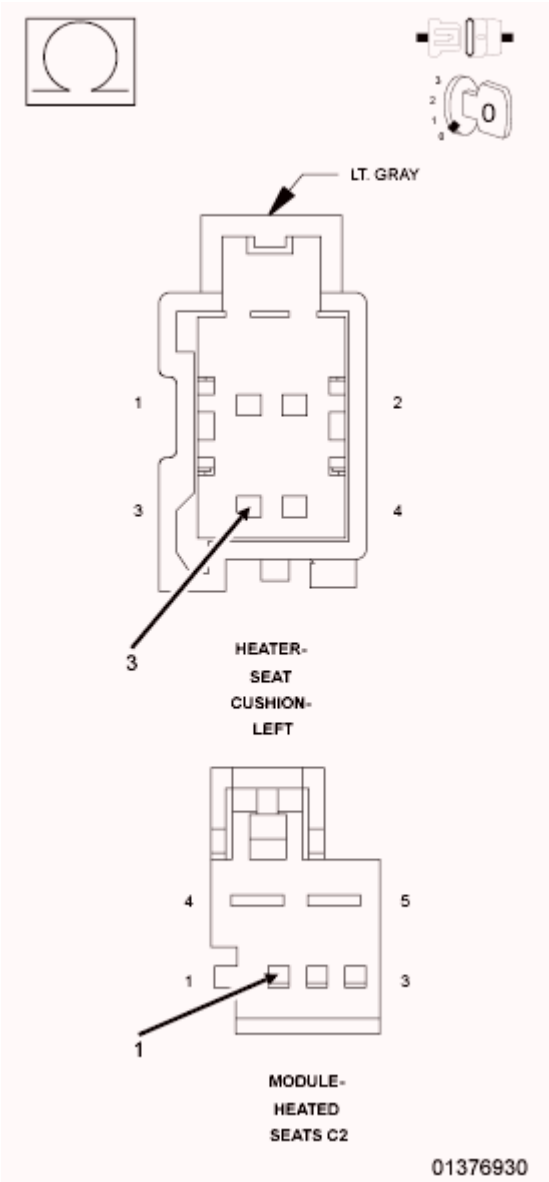

Fig. 134: Checking Left Front Heated Seat Temp Sense Circuit For An Open
Courtesy of CHRYSLER GROUP, LLC

1. Turn the ignition off.
2. Disconnect the HSM C2 harness connector.

3. Measure the resistance of the (P687) Left Front Heated Seat Temp Sense circuit between the HSM C2 harness connector and the Left Seat Cushion Heater harness connector (harness side).

   Is the resistance below 5.0 Ohms?

   Yes

   - Go To 7.

   No

   - Repair the (P687) Left Front Heated Seat Temp Sense circuit for an open.
   - Perform the BODY VERIFICATION TEST. Refer to **BODY VERIFICATION TEST** .

7. **CHECK (P968) HEATED SEAT SENSOR RETURN CIRCUIT FOR AN OPEN**

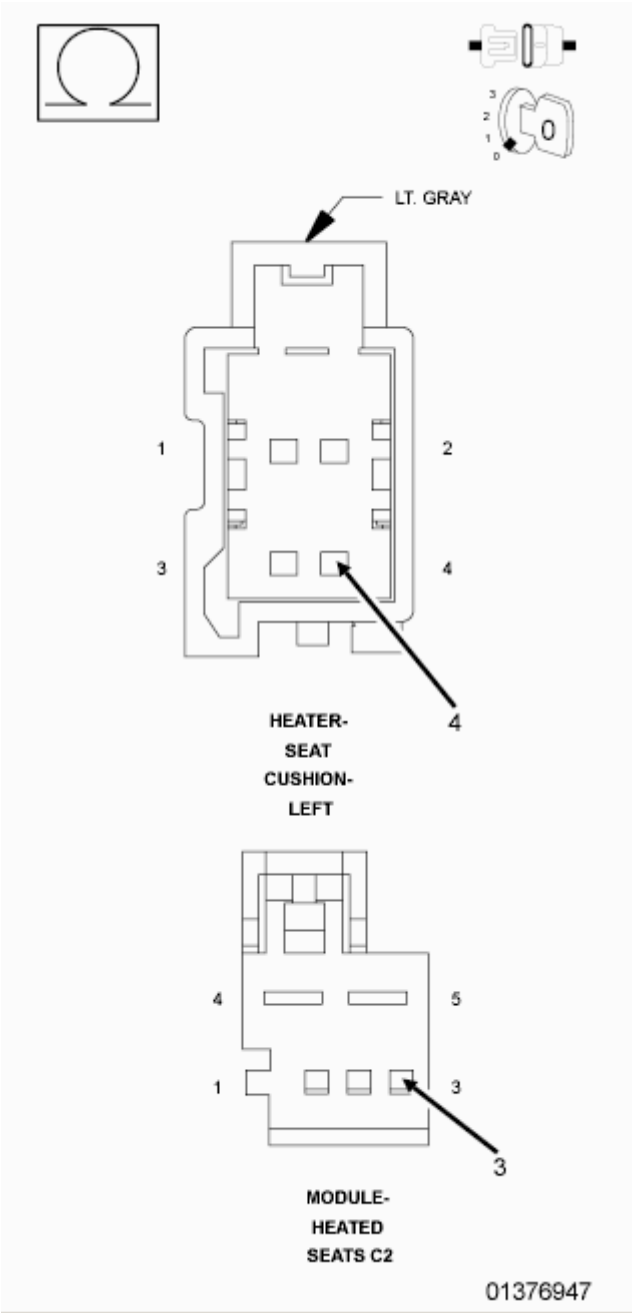

Fig. 135: Checking Heated Seat Temp Sensor Return Circuit For An Open
Courtesy of CHRYSLER GROUP, LLC

1. Measure the resistance of the (P968) Heated Seat Sensor Return circuit between the HSM C2 harness connector and the Left Seat Cushion Heater harness connector.

   Is the resistance below 5.0 Ohms?

   Yes

   - Replace the Heated Seat Module (HSM) in accordance with the Service Information.

- Perform the BODY VERIFICATION TEST. Refer to **BODY VERIFICATION TEST** .

No

- Repair the (P968) Heated Seat Sensor Return circuit for an open.
- Perform the BODY VERIFICATION TEST. Refer to **BODY VERIFICATION TEST** .

B1EB2-1A-FRONT RIGHT SEAT HEATER SENSOR - CIRCUIT RESISTANCE BELOW THRESHOLD

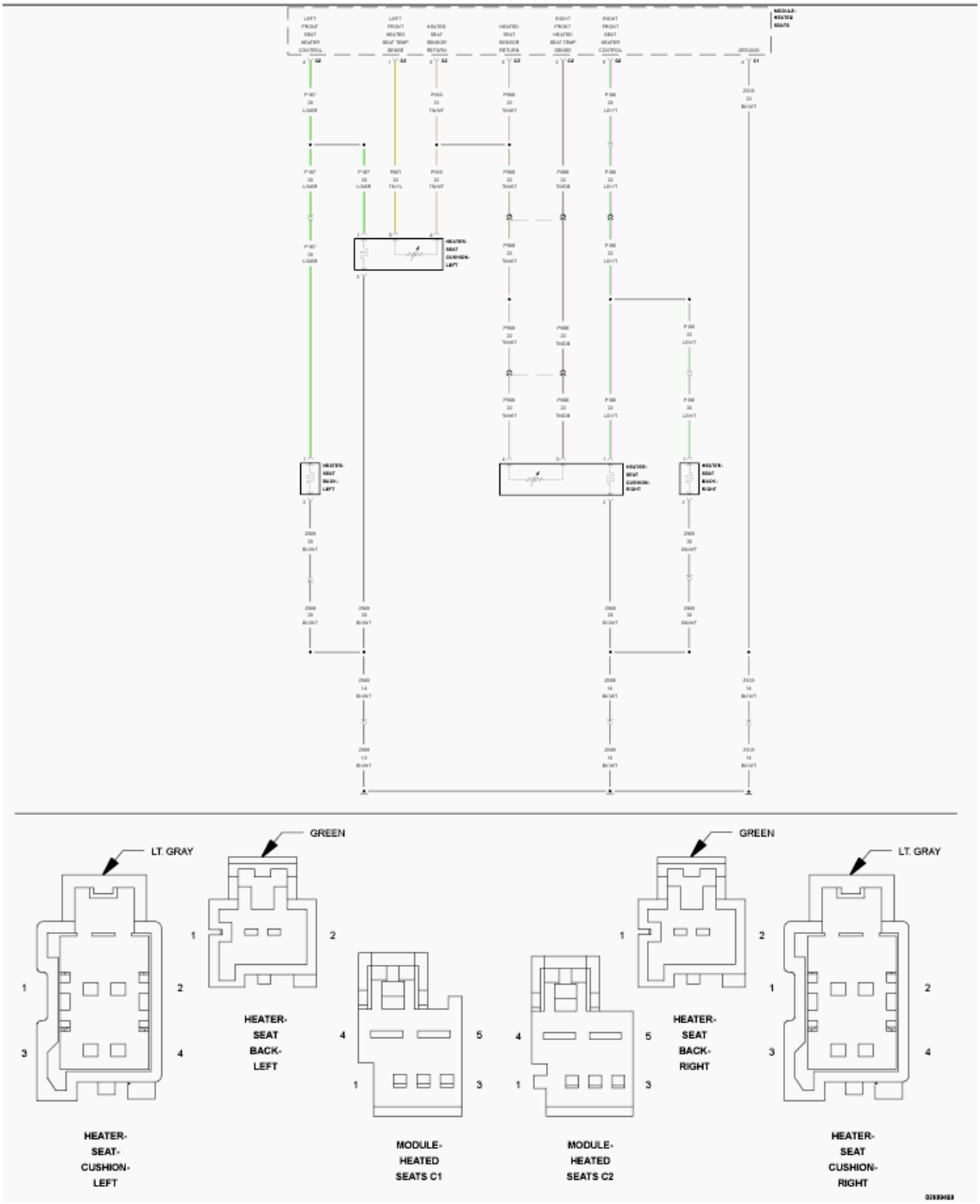

Fig. 136: Heated Seat Control Wiring Diagram
Courtesy of CHRYSLER GROUP, LLC

For a complete wiring diagram, **refer to appropriate SYSTEM WIRING DIAGRAMS article** .

WHEN MONITORED:

When Heated Seat Module (HSM) is powered.

SET CONDITION:

The Heated Seat Module (HSM) detects that the (P688) Right Front Heated Seat Temp Sense circuit NTC is below threshold for more than two seconds.

POSSIBLE CAUSES

Possible Causes
(P688) RIGHT FRONT HEATED SEAT TEMP SENSE CIRCUIT SHORTED TO GROUND
(P688) RIGHT FRONT HEATED SEAT TEMP SENSE CIRCUIT SHORTED TO THE (Z909) GROUND CIRCUIT
(P688) RIGHT FRONT HEATED SEAT TEMP SENSE CIRCUIT SHORTED TO THE (P968) HEATED SEAT SENSOR RETURN CIRCUIT
SEAT CUSHION HEATER ELEMENT SHORTED
HEATED SEAT MODULE (HSM)

DIAGNOSTIC TEST

1. **TEST FOR INTERMITTENT CONDITION**

   NOTE: Make sure the battery is fully charged and the charging system is operating properly before proceeding.

   1. Turn the ignition on.
   2. Using a scan tool, record and erase Diagnostic Trouble Codes (DTCs).
   3. Turn the ignition off.
   4. Start the engine and let it run.
   5. Using a scan tool, read DTCs.

   Is the DTC active?

   Yes

   - Go To 2.

   No

   - The conditions that caused this code to set are not present at this time. Verify seat harness is routed correctly to the HSM. Using the wiring diagram/schematic as a guide, inspect the wiring and connectors. Look for chafed, pierced, pinched, or partially broken wires and broken, bent, pushed out, spread, corroded, or contaminated terminals. Attempt to reproduce condition by adjusting the seat.
   - Perform the BODY VERIFICATION TEST. Refer to **BODY VERIFICATION TEST** .

2. **CHECK (P688) RIGHT FRONT HEATED SEAT TEMP SENSE CIRCUIT IN BODY HARNESS FOR A SHORT TO GROUND**

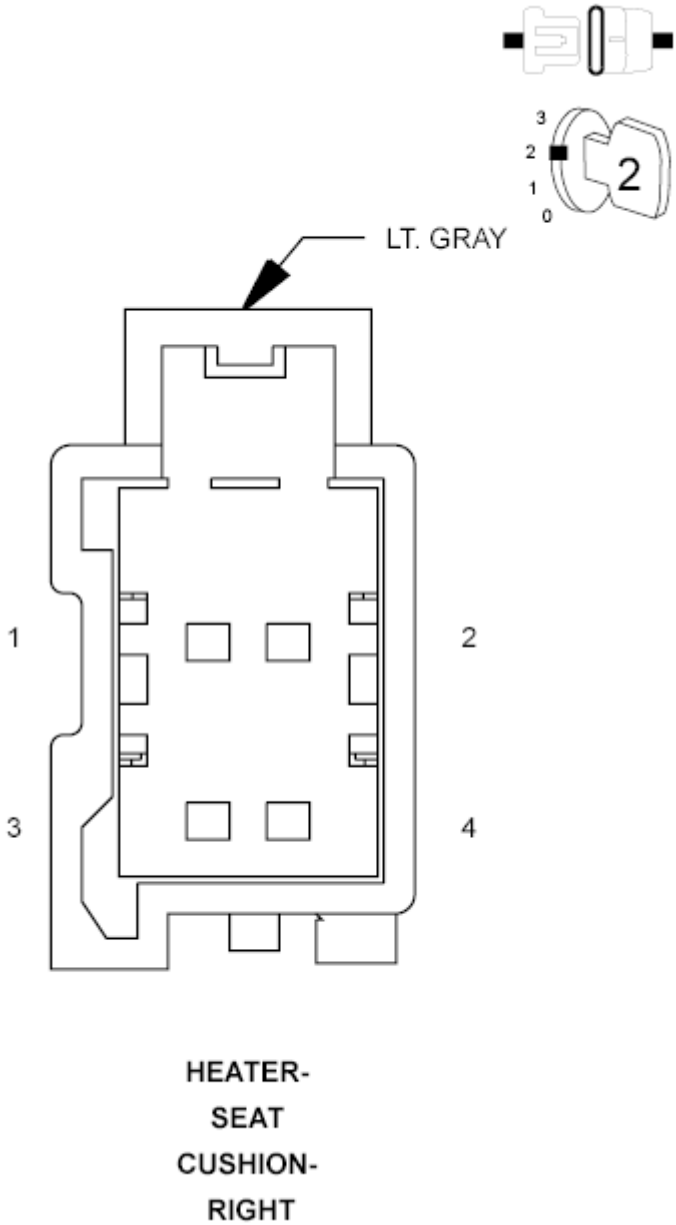

Fig. 137: Checking Right Front Heated Seat Temp Sense Circuit In Body Harness For A Short To Ground
Courtesy of CHRYSLER GROUP, LLC

1. Turn the ignition off.
2. Disconnect the Right Seat Cushion Heater harness connector.

NOTE: Check connectors. Clean and repair as necessary.

3. Turn the ignition on.
4. Using a scan tool, erase DTCs.

5. Turn the ignition off.
6. Start the engine and let it run.
7. Using a scan tool, read DTCs.

   Is the same DTC active?

   Yes

   - Go To 3.

   No

   - Replace the Seat Cushion Heater Element in accordance with the Service Information.
   - Perform the BODY VERIFICATION TEST. Refer to **BODY VERIFICATION TEST** .

3. **CHECK (P688) RIGHT FRONT HEATED SEAT TEMP SENSE CIRCUIT FOR A SHORT TO GROUND**

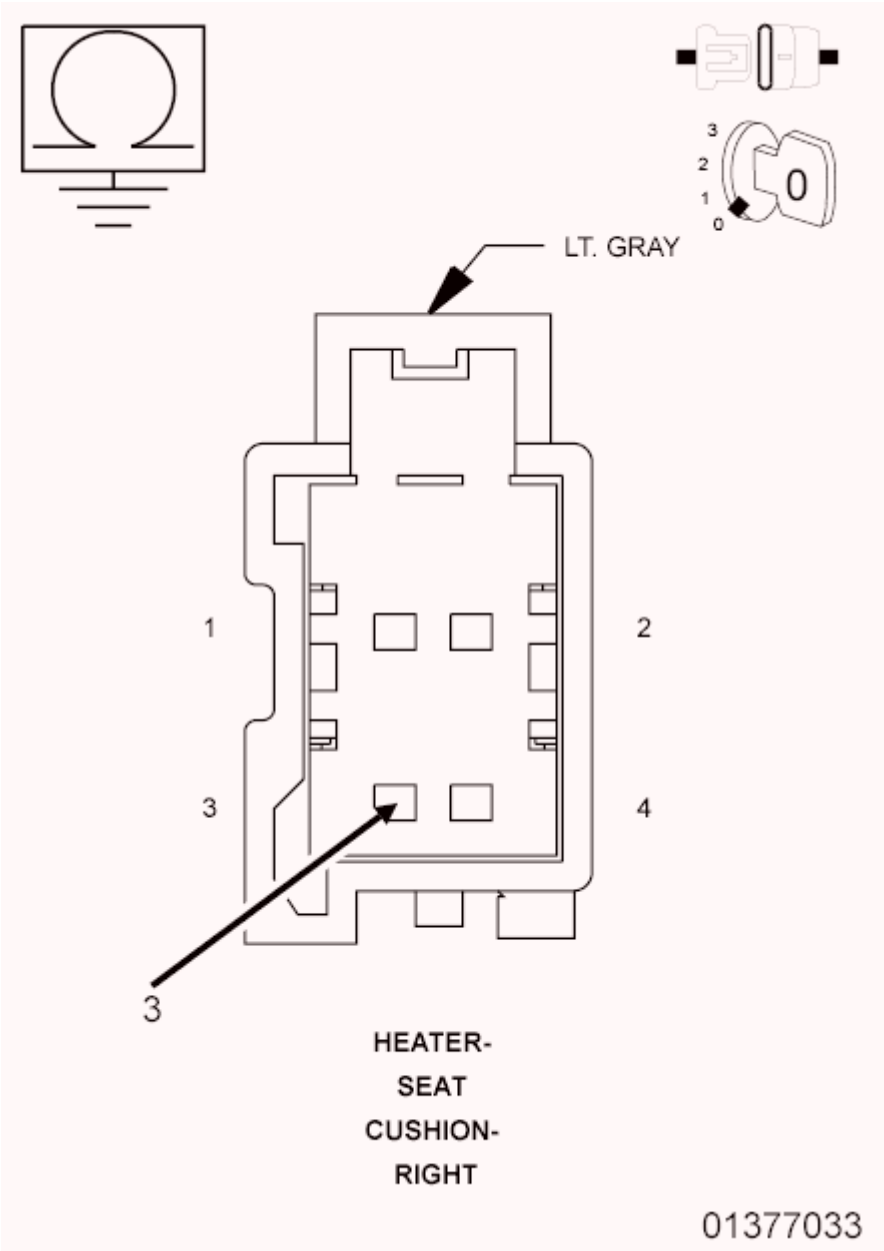

Fig. 138: Checking Right Front Heated Seat Temp Sense Circuit For A Short To Ground
Courtesy of CHRYSLER GROUP, LLC

1. Turn the ignition off.
2. Disconnect the HSM C2 harness connector.

NOTE: Check connectors. Clean and repair as necessary.

3. Measure the resistance of the (P688) Right Front Heated Seat Temp Sense circuit between ground and the Right Seat Cushion Heater connector (harness side).

   Is the resistance below 10K Ohms?

Yes

- Repair the (P688) Right Front Heated Seat Temp Sense circuit for a short to ground.
- Perform the BODY VERIFICATION TEST. Refer to **BODY VERIFICATION TEST** .

No

- Go To 4.

4. **CHECK (P688) RIGHT FRONT HEATED SEAT TEMP SENSE CIRCUIT FOR A SHORT TO THE (Z909) GROUND CIRCUIT OR TO (P968) HEATED SEAT SENSOR RETURN CIRCUIT**

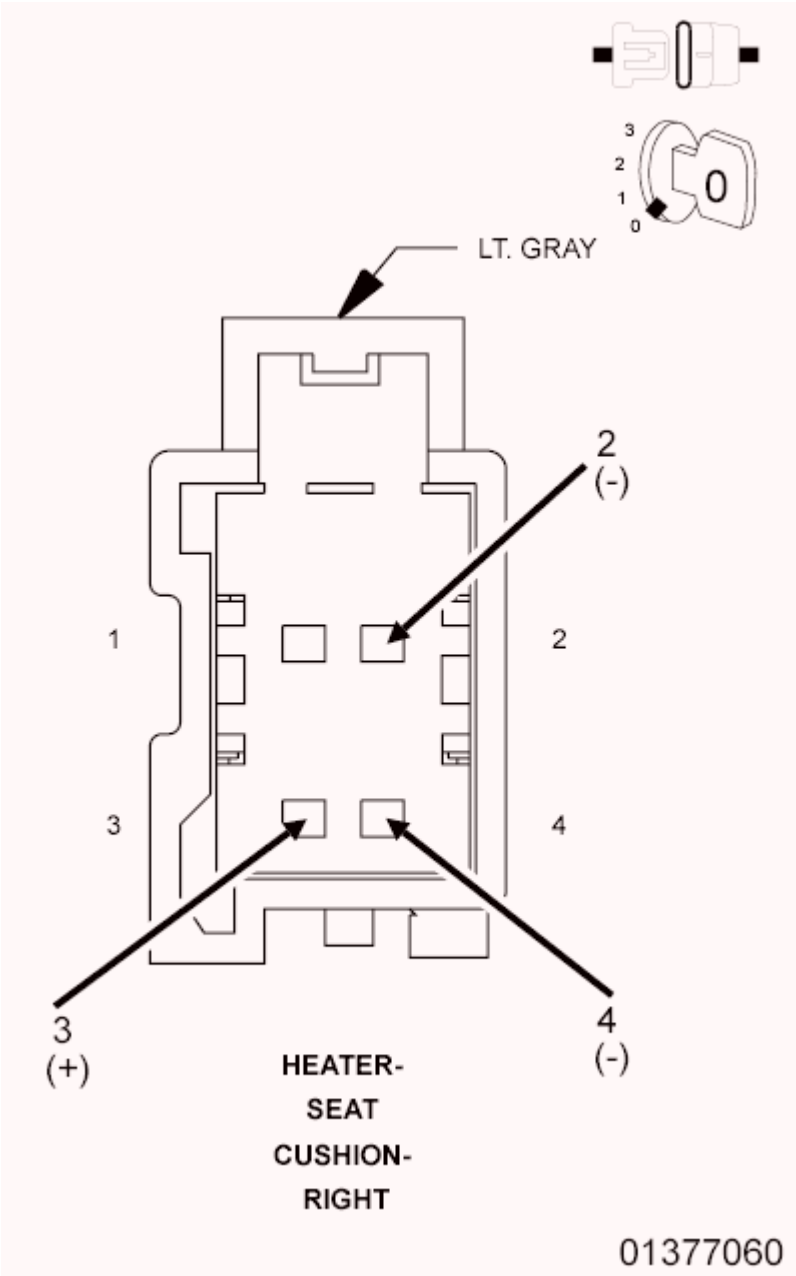

Fig. 139: Checking Right Front Heated Seat Temp Sense Circuit For A Short To The Ground Circuit Or To Heated Seat Sensor Return Circuit
Courtesy of CHRYSLER GROUP, LLC

1. Measure the resistance between the (P688) Right Front Heated Seat Temp Sense circuit and the (Z909) Ground circuit at the Right Seat Cushion Heater harness connector.
2. Measure the resistance between the (P688) Right Front Heated Seat Temp Sense circuit and the (P968) Heated Seat Sensor Return circuit at the Right Seat Cushion Heater harness connector.

   Is the resistance below 10K Ohms for either measurement?

   Yes

   - Repair all circuits with a resistance below 10K Ohms for a short to the (P688) Right Front Heated Seat Temp Sense circuit.
   - Perform the BODY VERIFICATION TEST. Refer to **BODY VERIFICATION TEST** .

   No

   - Replace the Heated Seat Module (HSM) in accordance with the Service Information.
   - Perform the BODY VERIFICATION TEST. Refer to **BODY VERIFICATION TEST** .

B1EB2-1B-FRONT RIGHT SEAT HEATER SENSOR - CIRCUIT RESISTANCE ABOVE THRESHOLD

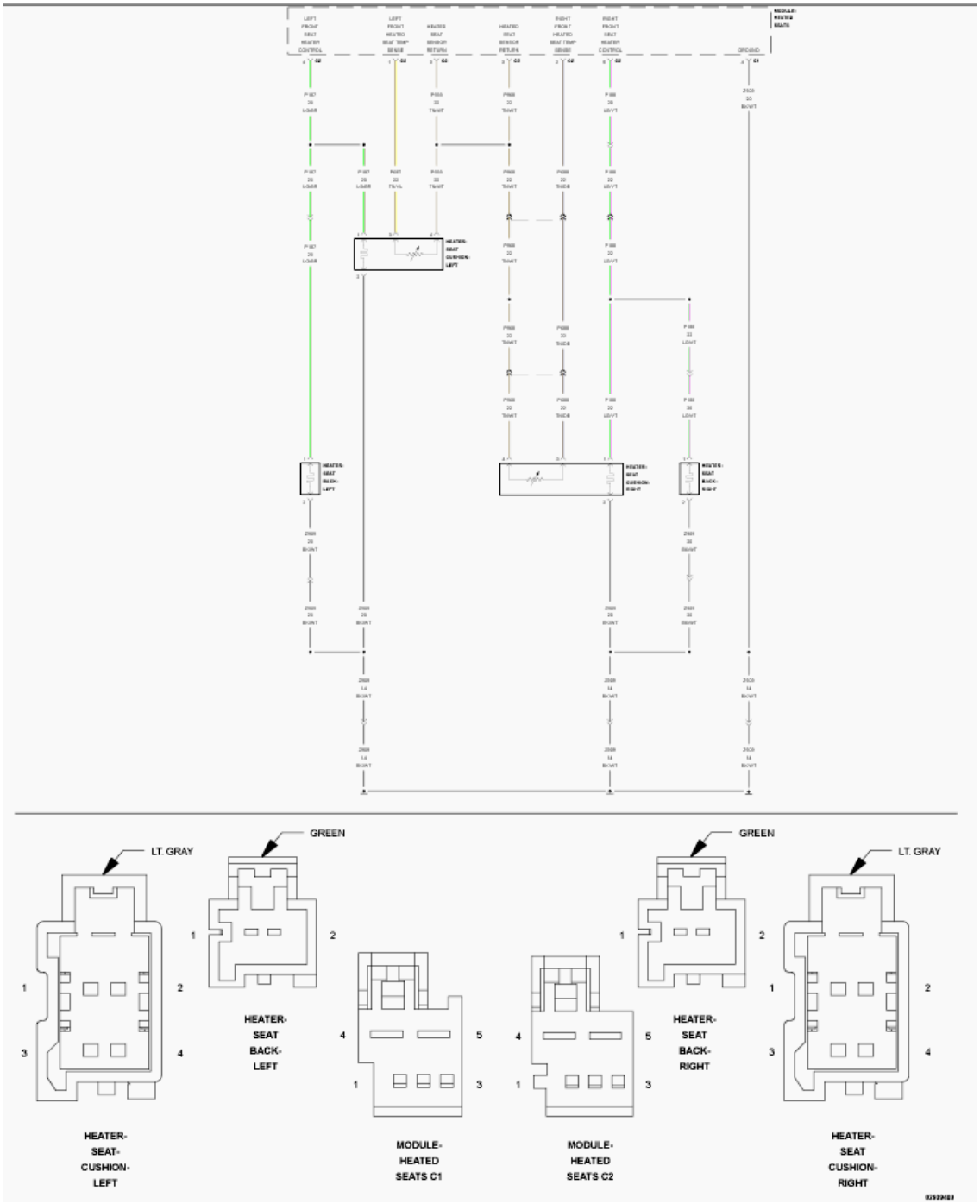

Fig. 140: Heated Seat Control Wiring Diagram
Courtesy of CHRYSLER GROUP, LLC

For a complete wiring diagram, **refer to appropriate SYSTEM WIRING DIAGRAMS article** .

WHEN MONITORED:

When Heated Seat Module (HSM) is powered.

SET CONDITION:

The Heated Seat Module (HSM) detects that the (P688) Right Front Heated Seat Temp Sense circuit NTC is above threshold for more than two seconds.

POSSIBLE CAUSES

Possible Causes
(P688) RIGHT FRONT HEATED SEAT TEMP SENSE CIRCUIT SHORTED TO VOLTAGE
(P688) RIGHT FRONT HEATED SEAT TEMP SENSE CIRCUIT SHORTED TO THE (P188) RIGHT FRONT SEAT HEATER CONTROL CIRCUIT
(P688) RIGHT FRONT HEATED SEAT TEMP SENSE CIRCUIT SHORTED TO THE (P187) LEFT FRONT SEAT HEATER CONTROL CIRCUIT
(P688) RIGHT FRONT HEATED SEAT TEMP SENSE CIRCUIT OPEN
(P968) HEATED SEAT SENSOR RETURN CIRCUIT OPEN
SEAT CUSHION HEATER ELEMENT OPEN
HEATED SEAT MODULE (HSM)

DIAGNOSTIC TEST

1. **TEST FOR INTERMITTENT CONDITION**

   NOTE: Make sure the battery is fully charged and the charging system is operating properly before proceeding.

   1. Turn the ignition on.
   2. Using a scan tool, record and erase Diagnostic Trouble Codes (DTCs).
   3. Turn the ignition off.
   4. Start the engine and let it run.
   5. Using a scan tool, read DTCs.

   Is the DTC active?

   Yes

   - Go To 2.

   No

   - The conditions that caused this code to set are not present at this time. Verify seat harness is routed correctly to the HSM. Using the wiring diagram/schematic as a guide, inspect the wiring and connectors. Look for chafed, pierced, pinched, or partially broken wires and broken, bent, pushed out, spread, corroded, or contaminated terminals. Attempt to reproduce condition by operating all HSM functions one at a time. Attempt to reproduce condition by adjusting the seat.

- Perform the BODY VERIFICATION TEST. Refer to **BODY VERIFICATION TEST** .

2. **CHECK (P688) RIGHT FRONT HEATED SEAT TEMP SENSE CIRCUIT FOR A SHORT TO VOLTAGE**

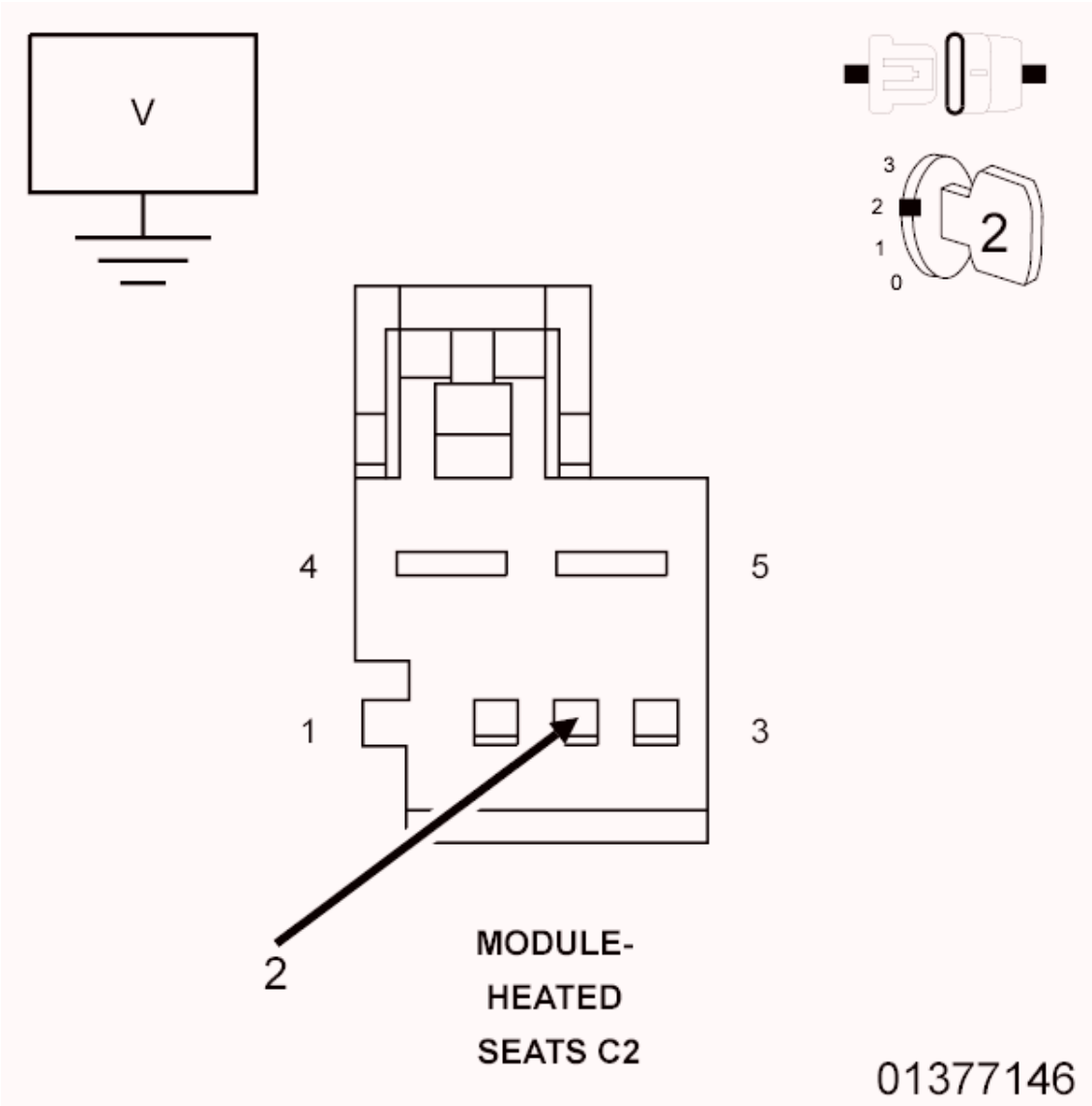

Fig. 141: Checking Right Front Heated Seat Temp Sense Circuit For A Short To Voltage
Courtesy of CHRYSLER GROUP, LLC

1. Turn the ignition off.
2. Disconnect the HSM C2 harness connector.

NOTE: Check connectors. Clean and repair as necessary.

3. Start the engine and let it run.
4. Measure the voltage of the (P688) Right Front Heated Seat Temp Sense circuit between the HSM

C2 harness connector and ground.

Is there any voltage present?

Yes

- Repair the (P688) Right Front Heated Seat Temp Sense circuit for a short to voltage.
- Perform the BODY VERIFICATION TEST. Refer to **BODY VERIFICATION TEST** .

No

- Go To 3.

3. **CHECK (P688) RIGHT FRONT HEATED SEAT TEMP SENSE CIRCUIT FOR A SHORT TO VOLTAGE DURING SEAT ADJUSTMENT**

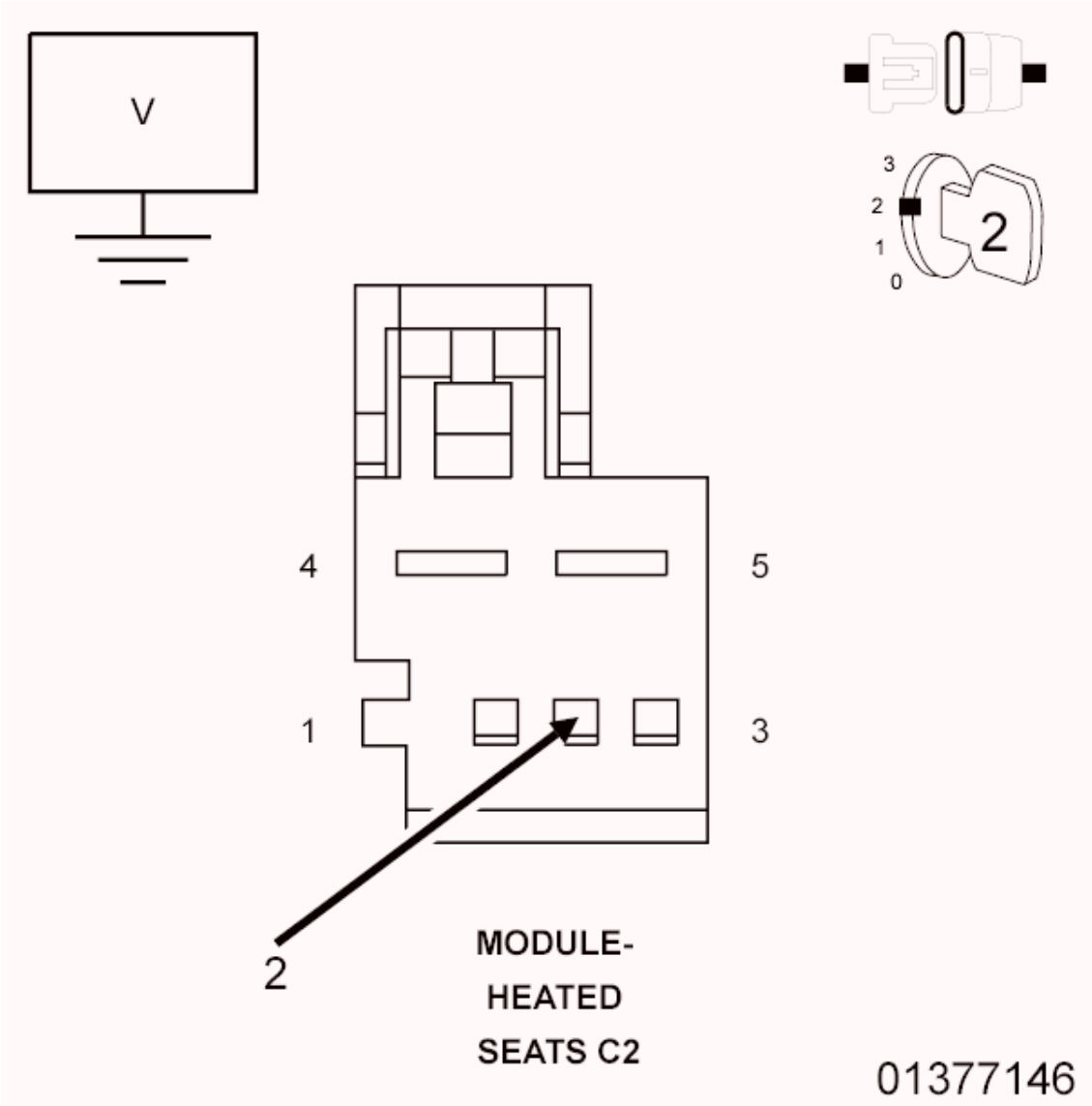

Fig. 142: Checking Right Front Heated Seat Temp Sense Circuit For A Short To Voltage
Courtesy of CHRYSLER GROUP, LLC

1. Measure the voltage of the (P688) Right Front Heated Seat Temp Sense circuit between the HSM C2 harness connector and ground while adjusting the seat in all positions.

   Is there any voltage present during the seat adjustment?

   Yes

   - Repair the (P688) Right Front Heated Seat Temp Sense circuit for a short to voltage.
   - Perform the BODY VERIFICATION TEST. Refer to **BODY VERIFICATION TEST** .

   No

   - Go To 4.

4. **CHECK (P688) RIGHT FRONT HEATED SEAT TEMP SENSE CIRCUIT FOR A SHORT TO THE (P188) RIGHT FRONT SEAT HEATER CONTROL CIRCUIT OR TO (P187) LEFT FRONT SEAT HEATER CONTROL CIRCUIT**

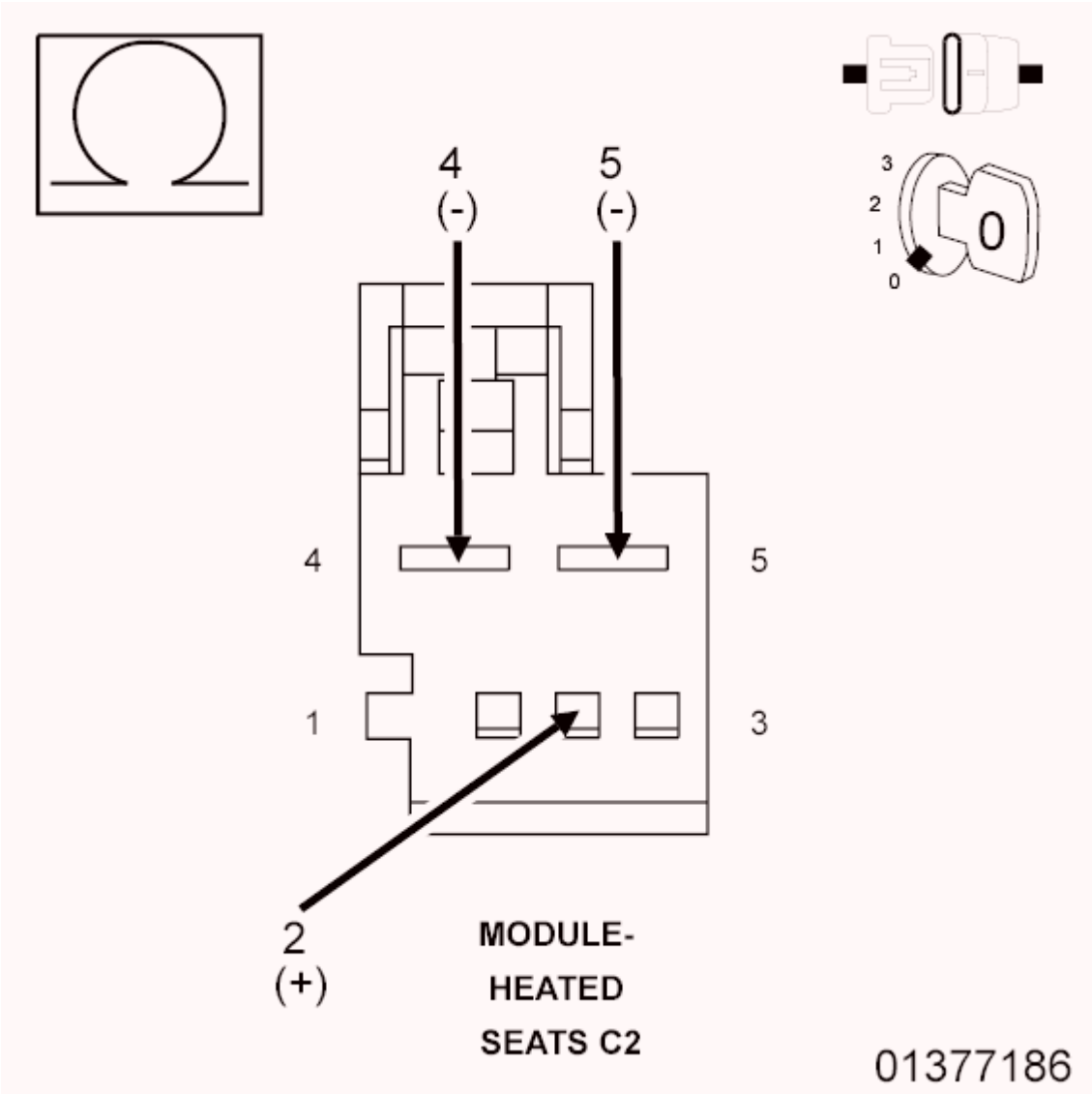

Fig. 143: Check Right Front Heated Seat Temp Sense Circuit For A Short To The Right Front Seat Heater Control Circuit Or To Left Front Seat Heater Control Circuit
Courtesy of CHRYSLER GROUP, LLC

1. Turn the ignition off.
2. Disconnect the Right Seat Cushion Heater harness connector.
3. Disconnect the Left Seat Cushion Heater harness connector.

NOTE: Check connectors. Clean and repair as necessary.

4. Measure the resistance between the (P688) Right Front Heated Seat Temp Sense circuit and the (P188) Right Front Seat Heater Control circuit at the HSM C2 connector.
5. Measure the resistance between the (P688) Right Front Heated Seat Temp Sense circuit and the (P187) Left Front Seat Heater Control circuit at the HSM C2 connector.

Is the resistance below 10K Ohms for either measurement?

Yes

- Repair all circuits with a resistance below 10K Ohms for a short to the (P688) Right Front Heated Seat Temp Sense circuit.
- Perform the BODY VERIFICATION TEST. Refer to **BODY VERIFICATION TEST** .

No

- Go To 5.

5. **CHECK (P688) RIGHT FRONT HEATED SEAT TEMP SENSE CIRCUIT VOLTAGE TO RIGHT SEAT CUSHION HEATER**

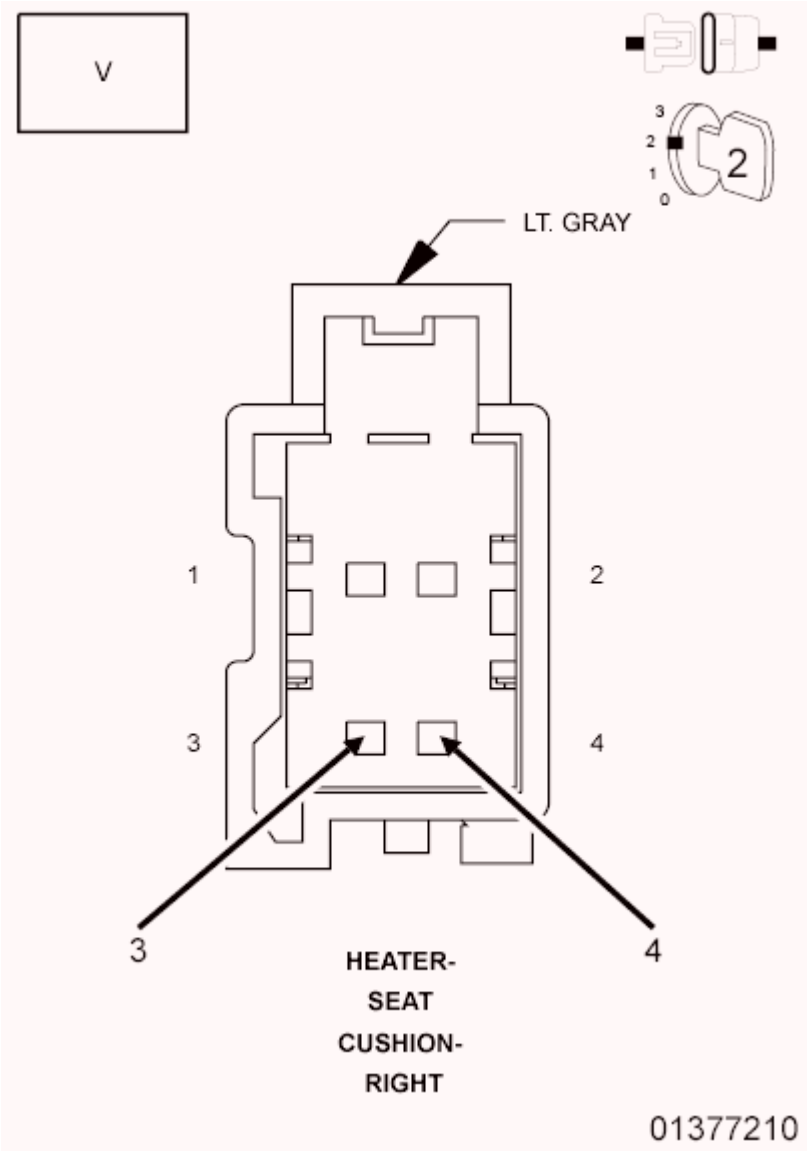

Fig. 144: Measuring Right Front Heated Seat Temp Sense Circuit Voltage

Courtesy of CHRYSLER GROUP, LLC

1. Reconnect the HSM C2 harness connector.
2. Start the engine and let it run.
3. Measure the voltage between the (P688) Right Front Heated Seat Temp Sense circuit and the (P968) Heated Seat Sensor Return circuit at the Right Seat Cushion Heater harness connector.

   Is the voltage above 4.5 volts?

   Yes

   - Replace the Seat Cushion Heater Element in accordance with the Service Information.
   - Perform the BODY VERIFICATION TEST. Refer to **BODY VERIFICATION TEST** .

   No

   - Go To 6.

6. **CHECK (P688) RIGHT FRONT HEATED SEAT TEMP SENSE CIRCUIT OR AN OPEN**

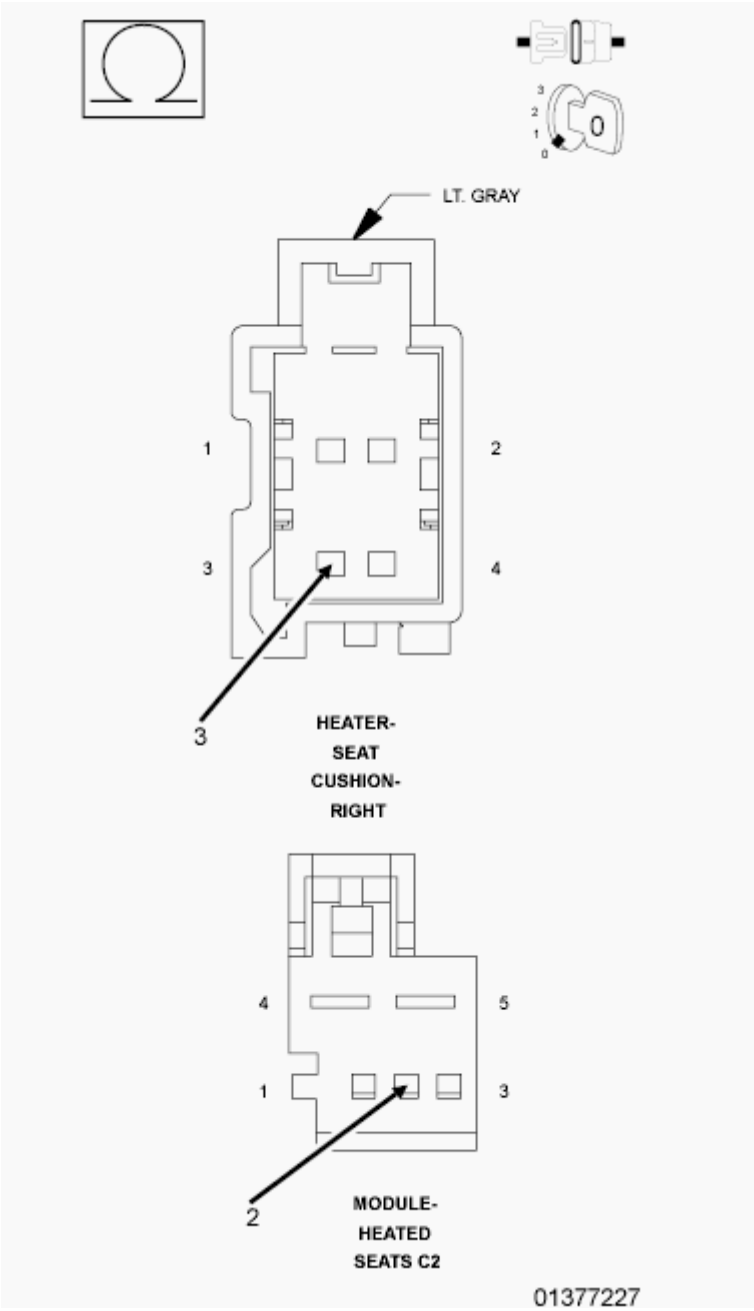

Fig. 145: Checking Right Front Heated Seat Temp Sense Circuit For An Open
Courtesy of CHRYSLER GROUP, LLC

1. Turn the ignition off.
2. Disconnect the HSM C2 harness connector.
3. Measure the resistance of the (P688) Right Front Heated Seat Temp Sense circuit between the HSM C2 connector and the Right Seat Cushion Heater harness connector.

   Is the resistance below 5.0 Ohms?

   Yes

- Go To 7.

No

- Repair the (P688) Right Front Heated Seat Temp Sense circuit for an open.
- Perform the BODY VERIFICATION TEST. Refer to **BODY VERIFICATION TEST** .

7. **CHECK (P968) HEATED SEAT SENSOR RETURN CIRCUIT FOR AN OPEN**

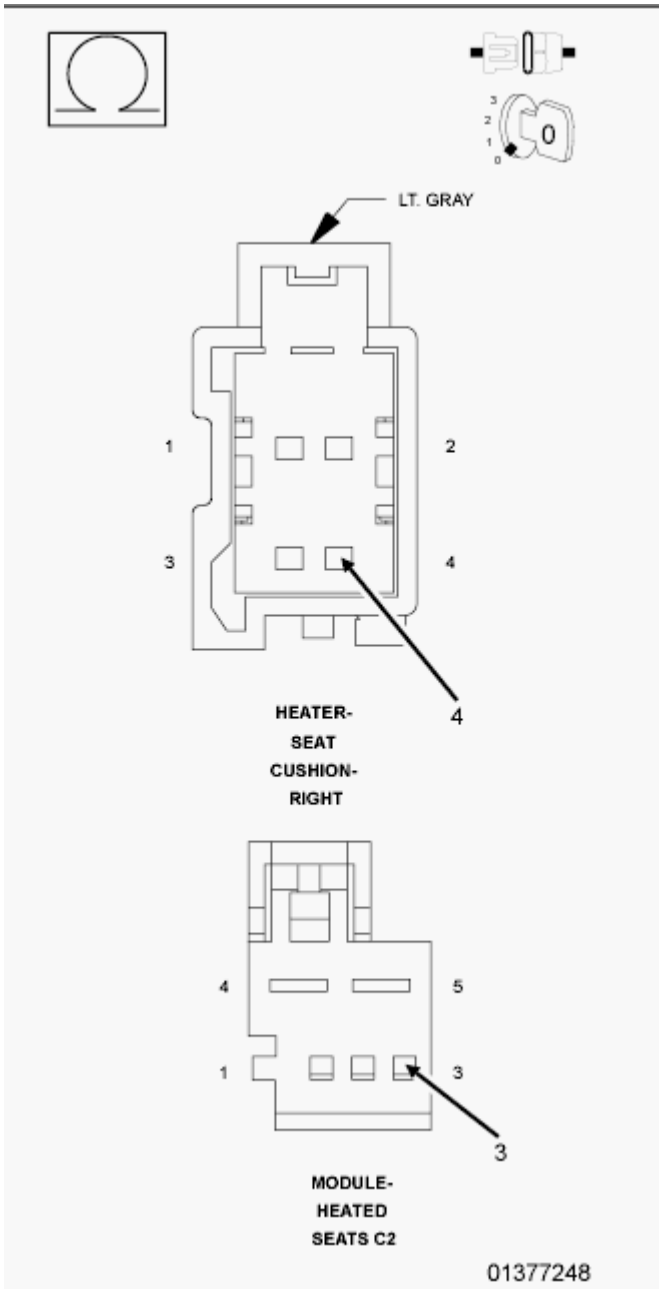

Fig. 146: Checking Heated Seat Sensor Return Circuit For An Open
Courtesy of CHRYSLER GROUP, LLC

1. Measure the resistance of the (P968) Heated Seat Sensor Return circuit between the HSM C2 harness connector and the Right Seat Cushion Heater harness connector.

   Is the resistance below 5.0 Ohms?

   Yes

   - Replace the Heated Seat Module (HSM) in accordance with the Service Information.
   - Perform the BODY VERIFICATION TEST. Refer to **BODY VERIFICATION TEST** .

   No

   - Repair the (P968) Heated Seat Sensor Return circuit for an open.
   - Perform the BODY VERIFICATION TEST. Refer to **BODY VERIFICATION TEST** .

B1EB3-1A-REAR LEFT SEAT HEATER SENSOR - CIRCUIT RESISTANCE BELOW THRESHOLD

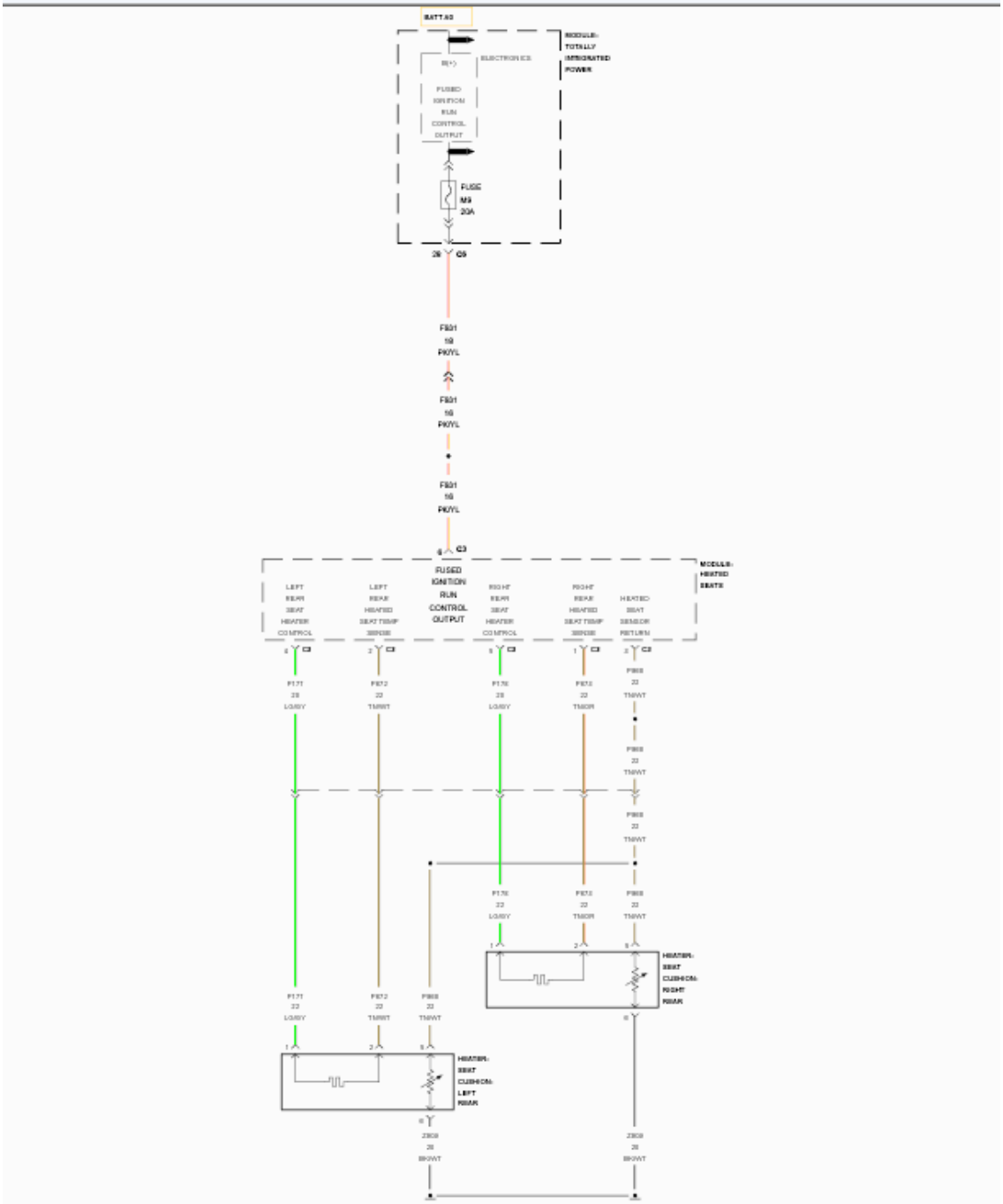
BATT A3
MODULE-
TOTALLY
INTEGRATED
POWER
ELECTRONICS
B(+)
FUSED
IGNITION
RUN
CONTROL
OUTPUT
FUSE
M9
20A
28
C5
F801
18
PK/YL
F801
18
PK/YL
F801
18
PK/YL
6
C3
FUSED
IGNITION
RUN
CONTROL
OUTPUT
MODULE-
HEATED
SEATS
LEFT
REAR
SEAT
HEATER
CONTROL
LEFT
REAR
HEATED
SEAT TEMP
SENSE
RIGHT
REAR
SEAT
HEATER
CONTROL
RIGHT
REAR
HEATED
SEAT TEMP
SENSE
HEATED
SEAT
SENSOR
RETURN
4
C3
2
C3
5
C3
1
C3
2
C3
P171
22
LG/BY
P872
22
TN/WT
P176
22
LG/BY
P872
22
TN/OR
P868
22
TN/WT
P868
22
TN/WT
P868
22
TN/WT
P176
22
LG/BY
P872
22
TN/OR
P868
22
TN/WT
1
2
5
HEATER-
SEAT
CUSHION-
RIGHT
REAR
P171
22
LG/BY
P872
22
TN/WT
P868
22
TN/WT
1
2
5
HEATER-
SEAT
CUSHION-
LEFT
REAR
6
Z909
20
BR/WT
6
Z909
20
BR/WT

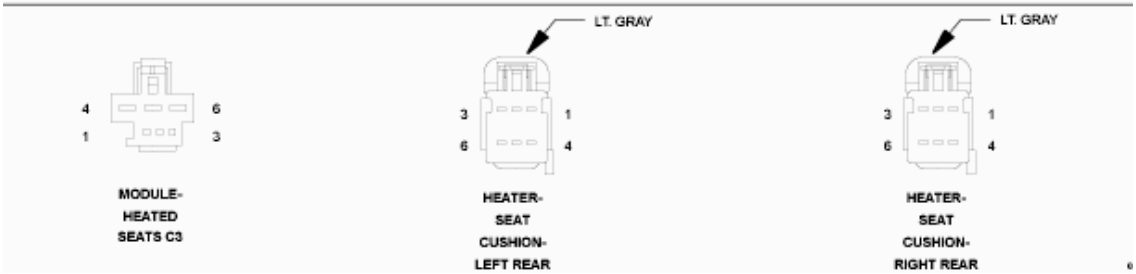
4
6
1
3
MODULE-
HEATED
SEATS C3
LT. GRAY
3
1
6
4
HEATER-
SEAT
CUSHION-
LEFT REAR
LT. GRAY
3
1
6
4
HEATER-
SEAT
CUSHION-
RIGHT REAR

Fig. 147: Rear Heater Control Wiring Diagram
Courtesy of CHRYSLER GROUP, LLC

For a complete wiring diagram, **refer to appropriate SYSTEM WIRING DIAGRAMS article** .

WHEN MONITORED:

When Heated Seat Module (HSM) is powered.

SET CONDITION:

The Heated Seat Module (HSM) detects that the (P672) Left Rear Heated Seat Temp Sense circuit NTC is below threshold for more than two seconds.

POSSIBLE CAUSES

Possible Causes
(P672) LEFT REAR HEATED SEAT TEMP SENSE CIRCUIT SHORTED TO GROUND
(P672) LEFT REAR HEATED SEAT TEMP SENSE CIRCUIT SHORTED TO THE (Z909) GROUND CIRCUIT
(P672) LEFT REAR HEATED SEAT TEMP SENSE CIRCUIT SHORTED TO THE (P968) HEATED SEAT SENSOR RETURN CIRCUIT
SEAT CUSHION HEATER ELEMENT SHORTED
HEATED SEAT MODULE (HSM)

DIAGNOSTIC TEST

1. **TEST FOR INTERMITTENT CONDITION**

NOTE: **Make sure the battery is fully charged and the charging system is operating properly before proceeding.**

1. Turn the ignition on.
2. Using a scan tool, record and erase Diagnostic Trouble Codes (DTCs).
3. Turn the ignition off.
4. Start the engine and let it run.
5. Using a scan tool, read DTCs.

Is the DTC active?

Yes

- Go To 2.

No

- The conditions that caused this code to set are not present at this time. Verify seat harness is routed correctly to the HSM. Using the wiring diagram/schematic as a guide, inspect the wiring and connectors. Look for chafed, pierced, pinched, or partially broken wires and broken, bent, pushed out, spread, corroded, or contaminated terminals. Attempt to reproduce condition by adjusting the front seat.
- Perform the BODY VERIFICATION TEST. Refer to **BODY VERIFICATION TEST** .

2. **CHECK (P672) LEFT REAR HEATED SEAT TEMP SENSE CIRCUIT IN BODY HARNESS FOR A SHORT TO GROUND**

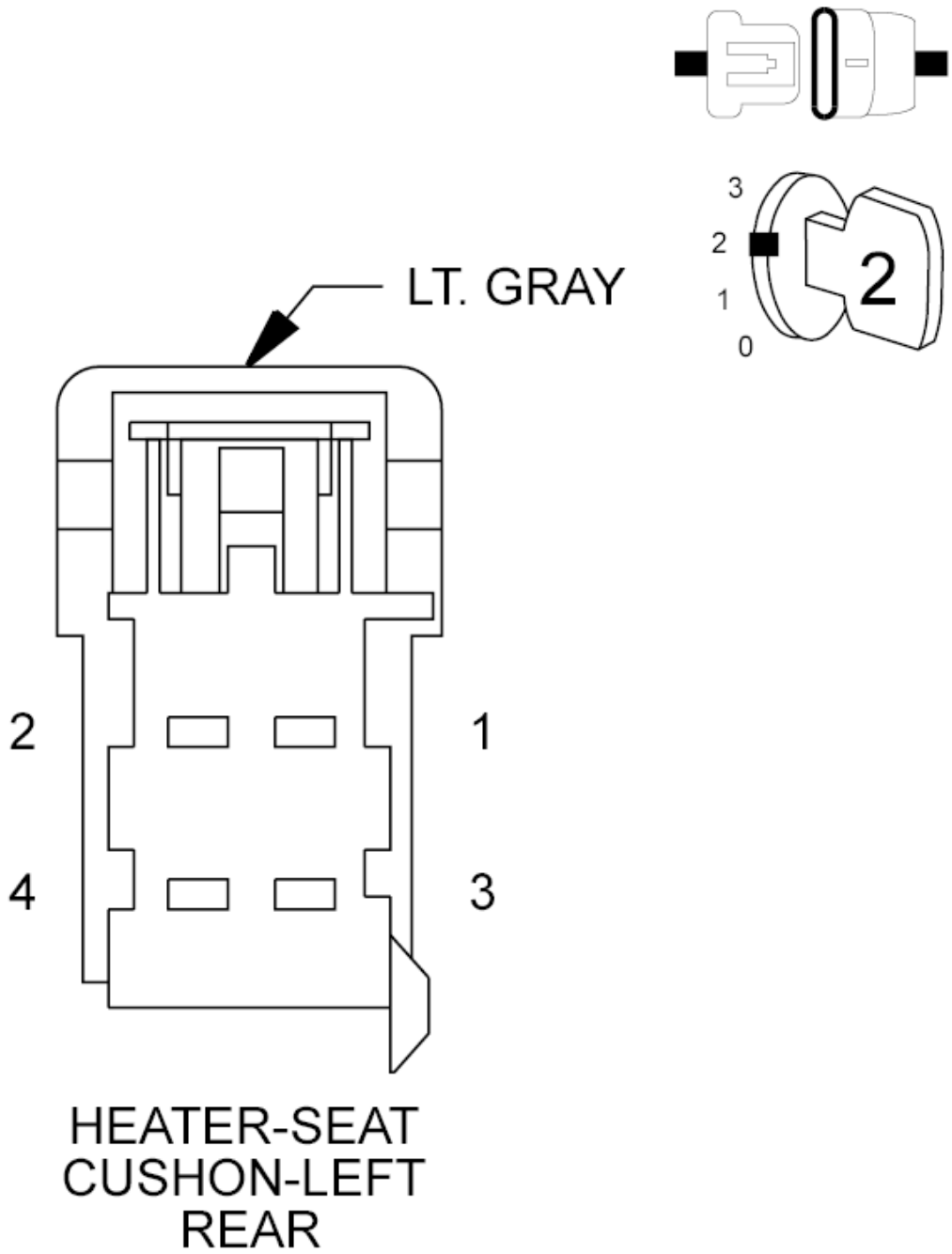

Fig. 148: Checking Left Rear Heated Seat Temp Sense Circuit In Body Harness For A Short To Ground
Courtesy of CHRYSLER GROUP, LLC

1. Turn the ignition off.
2. Disconnect the Left Rear Seat Cushion Heater connector.

NOTE: Check connectors. Clean and repair as necessary.

3. Turn the ignition on.
4. Using a scan tool, erase DTCs.
5. Turn the ignition off.
6. Start the engine and let it run.
7. Using a scan tool, read DTCs.

Is the same DTC active?

Yes

- Go To 3.

No

- Replace the Seat Cushion Heater Element in accordance with the Service Information.
- Perform the BODY VERIFICATION TEST. Refer to **BODY VERIFICATION TEST** .

3. **CHECK (P672) LEFT REAR HEATED SEAT TEMP SENSE CIRCUIT FOR A SHORT TO GROUND**

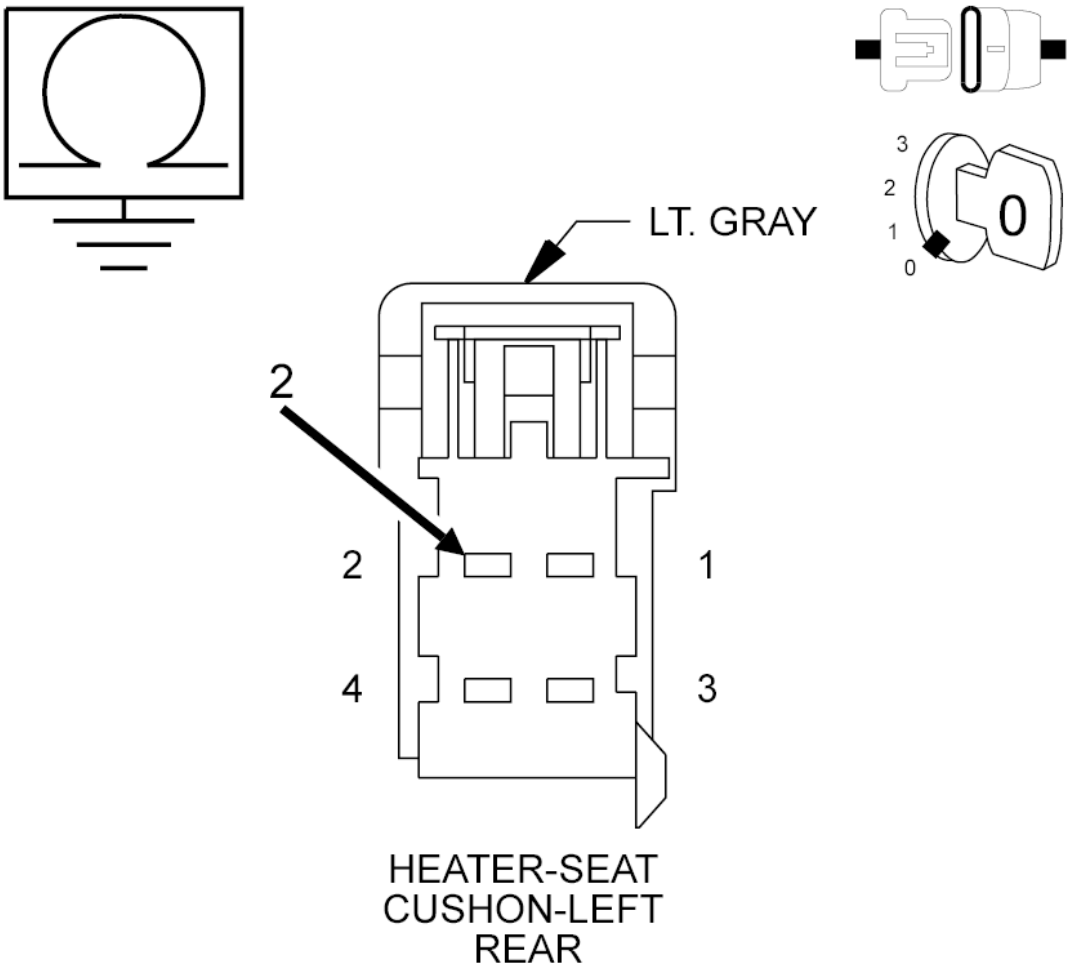

Fig. 149: Checking Left Rear Heated Seat Temp Sense Circuit For A Short To Ground
Courtesy of CHRYSLER GROUP, LLC

1. Turn the ignition off.
2. Disconnect the HSM C3 harness connector.

NOTE: Check connectors. Clean and repair as necessary.

3. Measure the resistance of the (P672) Left Rear Heated Seat Temp Sense circuit between ground and the Left Rear Seat Cushion Heater harness connector.

   Is the resistance below 10K Ohms?

   Yes

   - Repair the (P672) Left Rear Heated Seat Temp Sense circuit for a short to ground.
   - Perform the BODY VERIFICATION TEST. Refer to **BODY VERIFICATION TEST** .

No

- Go To 4.

4. **CHECK (P672) LEFT REAR HEATED SEAT TEMP SENSE CIRCUIT FOR A SHORT TO THE (Z909) GROUND CIRCUIT OR TO (P968) HEATED SEAT SENSOR RETURN CIRCUIT**

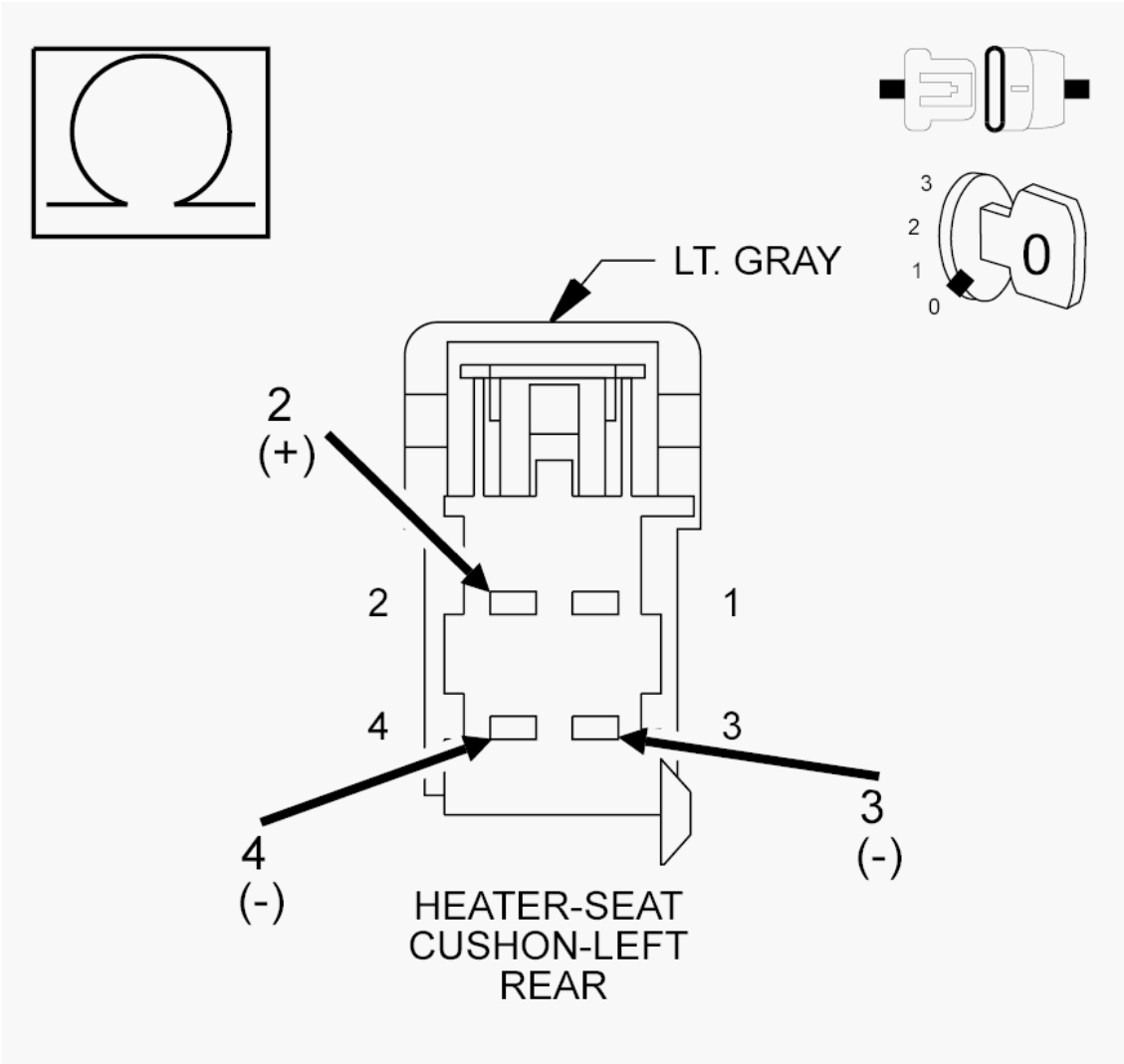

Fig. 150: Checking Left Rear Heated Seat Temp Sense Circuit For A Short To The Ground Circuit Or To Heated Seat Sensor Return Circuit
Courtesy of CHRYSLER GROUP, LLC

1. Measure the resistance between the (P672) Left Rear Heated Seat Temp Sense circuit and the (Z909) Ground circuit at the Left Rear Seat Cushion Heater connector (harness side).
2. Measure the resistance between the (P672) Left Rear Heated Seat Temp Sense circuit and the (P968) Heated Seat Sensor Return circuit at the Left Rear Seat Cushion Heater connector (harness side).

   Is the resistance below 10K Ohms for either measurement?

Yes

- Repair all circuits with a resistance below 10K Ohms for a short to the (P672) Left Rear Heated Seat Temp Sense circuit.
- Perform the BODY VERIFICATION TEST. Refer to **BODY VERIFICATION TEST** .

No

- Replace the Heated Seat Module (HSM) in accordance with the Service Information.
- Perform the BODY VERIFICATION TEST. Refer to **BODY VERIFICATION TEST** .

B1EB3-1B-REAR LEFT SEAT HEATER SENSOR - CIRCUIT RESISTANCE ABOVE THRESHOLD

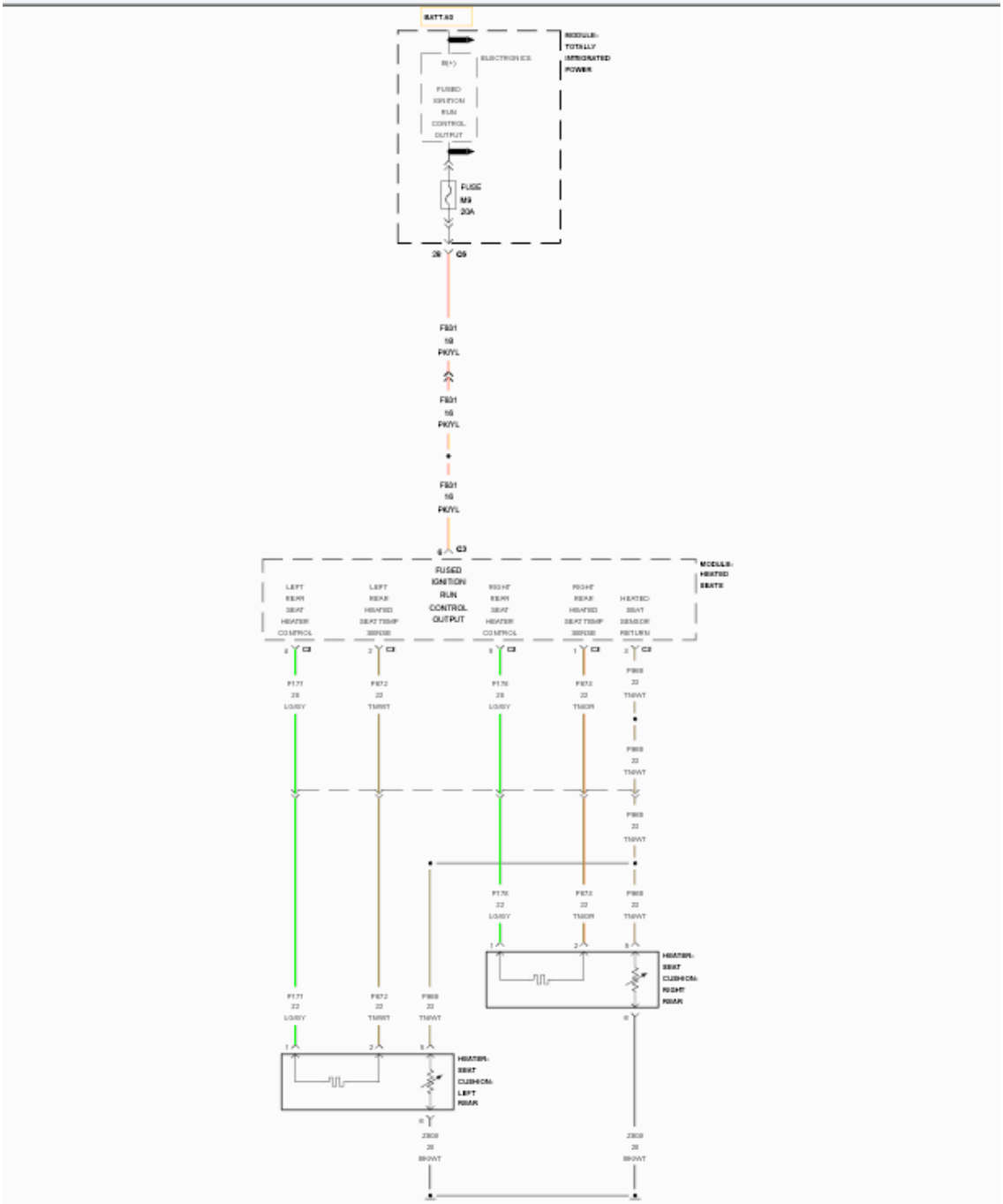
BATT A3
MODULE-
TOTALLY
INTEGRATED
POWER
ELECTRONICS
B(+)
FUSED
IGNITION
RUN
CONTROL
OUTPUT
FUSE
M9
20A
28
C5
F801
18
PK/YL
F801
18
PK/YL
F801
18
PK/YL
6
C3
FUSED
IGNITION
RUN
CONTROL
OUTPUT
MODULE-
HEATED
SEATS
LEFT
REAR
SEAT
HEATER
CONTROL
LEFT
REAR
HEATED
SEAT TEMP
SENSE
RIGHT
REAR
SEAT
HEATER
CONTROL
RIGHT
REAR
HEATED
SEAT TEMP
SENSE
HEATED
SEAT
SENSOR
RETURN
4
C3
2
C3
5
C3
1
C3
2
C3
P171
22
LG/BY
P872
22
TN/WT
P176
22
LG/BY
P872
22
TN/OR
P868
22
TN/WT
P868
22
TN/WT
P868
22
TN/WT
P176
22
LG/BY
P872
22
TN/OR
P868
22
TN/WT
1
2
5
HEATER-
SEAT
CUSHION-
RIGHT
REAR
P171
22
LG/BY
P872
22
TN/WT
P868
22
TN/WT
1
2
5
HEATER-
SEAT
CUSHION-
LEFT
REAR
6
Z909
20
BR/WT
6
Z909
20
BR/WT

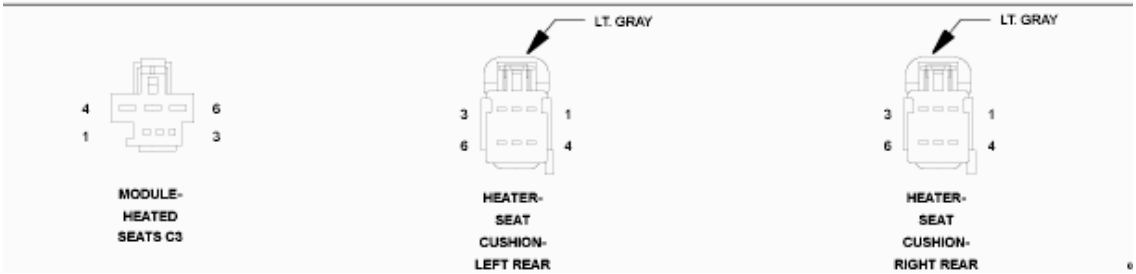
4
6
1
3
MODULE-
HEATED
SEATS C3
LT. GRAY
3
1
6
4
HEATER-
SEAT
CUSHION-
LEFT REAR
LT. GRAY
3
1
6
4
HEATER-
SEAT
CUSHION-
RIGHT REAR

Fig. 151: Rear Heater Control Wiring Diagram
Courtesy of CHRYSLER GROUP, LLC

For a complete wiring diagram, **refer to appropriate SYSTEM WIRING DIAGRAMS article** .

WHEN MONITORED:

When Heated Seat Module (HSM) is powered.

SET CONDITION:

The Heated Seat Module (HSM) detects that the (P672) Left Rear Heated Seat Temp Sense circuit NTC is above threshold for more than two seconds.

POSSIBLE CAUSES

Possible Causes
(P672) LEFT REAR HEATED SEAT TEMP SENSE CIRCUIT SHORTED TO VOLTAGE
(P672) LEFT REAR HEATED SEAT TEMP SENSE CIRCUIT SHORTED TO THE (F931) FUSED IGNITION RUN CONTROL OUTPUT CIRCUIT
(P672) LEFT REAR HEATED SEAT TEMP SENSE CIRCUIT SHORTED TO THE (P177) LEFT REAR SEAT HEATER CONTROL CIRCUIT
(P672) LEFT REAR HEATED SEAT TEMP SENSE CIRCUIT SHORTED TO THE (P178) RIGHT REAR SEAT HEATER CONTROL CIRCUIT
(P672) LEFT REAR HEATED SEAT TEMP SENSE CIRCUIT OPEN
(P968) HEATED SEAT SENSOR RETURN CIRCUIT OPEN
SEAT CUSHION HEATER ELEMENT OPEN
HEATED SEAT MODULE (HSM)

DIAGNOSTIC TEST

1. **TEST FOR INTERMITTENT CONDITION**

NOTE: **Make sure the battery is fully charged and the charging system is operating properly before proceeding.**

1. Turn the ignition on.
2. Using a scan tool, record and erase Diagnostic Trouble Codes (DTCs).
3. Turn the ignition off.
4. Start the engine and let it run.
5. Using a scan tool, read DTCs.

Is the DTC active?

Yes

- Go To 2.

No

- The conditions that caused this code to set are not present at this time. Verify seat harness is routed correctly to the HSM. Using the wiring diagram/schematic as a guide, inspect the wiring and connectors. Look for chafed, pierced, pinched, or partially broken wires and broken, bent, pushed out, spread, corroded, or contaminated terminals. Attempt to reproduce condition by operating all HSM functions one at a time. Attempt to reproduce condition by adjusting the front seat.
- Perform the BODY VERIFICATION TEST. Refer to **BODY VERIFICATION TEST** .

2. **CHECK (P672) LEFT REAR HEATED SEAT TEMP SENSE CIRCUIT FOR A SHORT TO VOLTAGE**

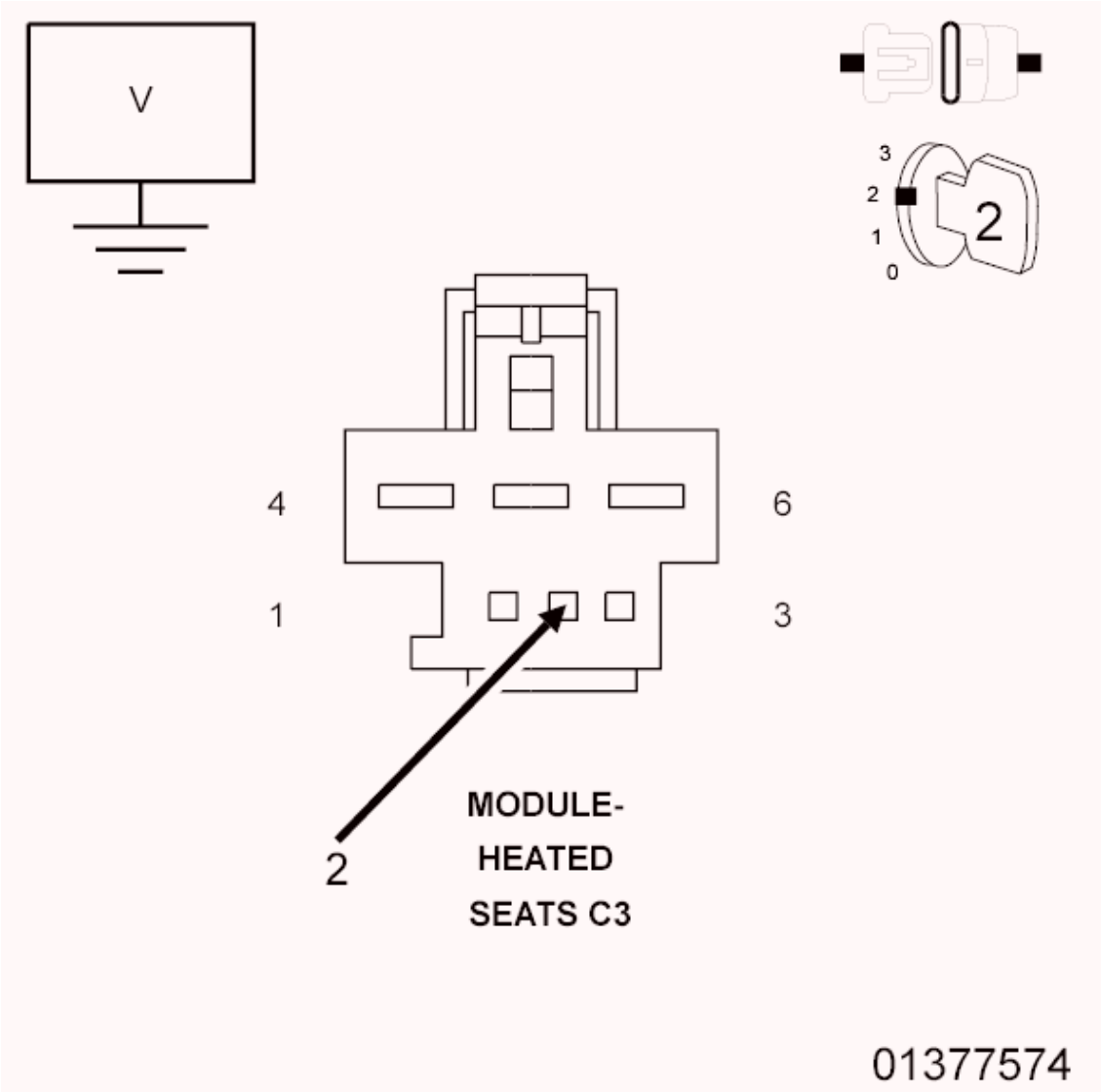

Fig. 152: Checking Left Rear Heated Seat Temp Sense Circuit For A Short To Voltage

Courtesy of CHRYSLER GROUP, LLC

1. Turn the ignition off.
2. Disconnect the HSM C3 harness connector.

   NOTE: Check connectors. Clean and repair as necessary.

3. Start the engine and let it run.
4. Measure the voltage of the (P672) Left Rear Heated Seat Temp Sense circuit between the HSM C3 harness connector and ground.

   Is there any voltage present?

   Yes

   - Go To 3.

   No

   - Go To 4.

3. **CHECK (P672) LEFT REAR HEATED SEAT TEMP SENSE CIRCUIT FOR A SHORT TO THE (F931) FUSED IGNITION RUN CONTROL OUTPUT CIRCUIT**

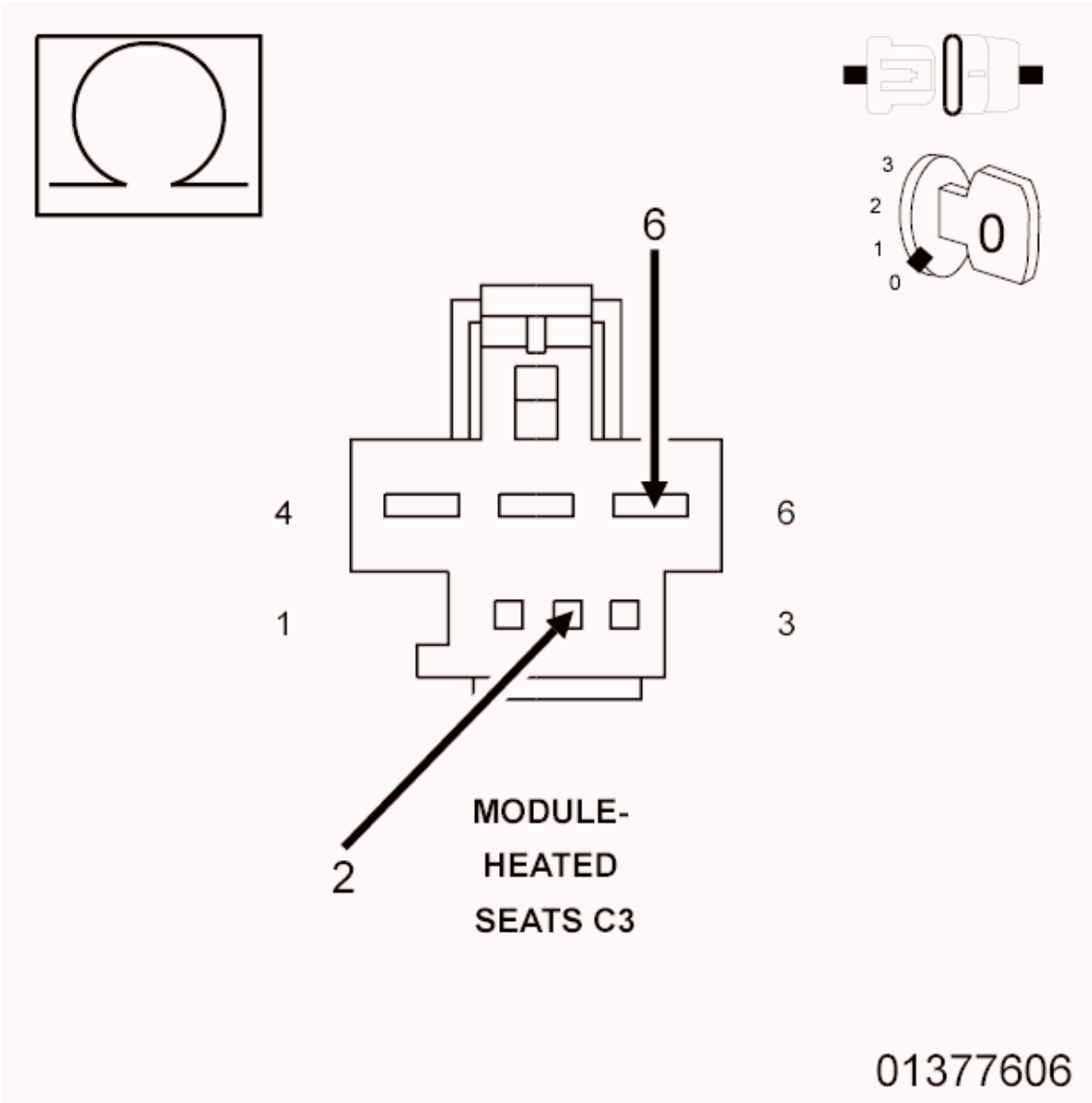

Fig. 153: Checking Left Rear Heated Seat Temp Sense Circuit For A Short To The Fused Ignition Run Control Output Circuit
Courtesy of CHRYSLER GROUP, LLC

1. Turn the ignition off.
2. Measure the resistance between the (P672) Left Rear Heated Seat Temp Sense circuit and the (F931) Fused Ignition Run Control Output circuit at HSM C3 harness connector.

   Is the resistance below 10K Ohms?

   Yes

   - Repair the (P672) Left Rear Heated Seat Temp Sense circuit for a short to the (F931) Fused Ignition Run Control Output circuit.
   - Perform the BODY VERIFICATION TEST. Refer to **BODY VERIFICATION TEST** .

No

- Repair the (P672) Left Rear Heated Seat Temp Sense circuit for a short to voltage.
- Perform the BODY VERIFICATION TEST. Refer to **BODY VERIFICATION TEST** .

4. **CHECK (P672) LEFT REAR HEATED SEAT TEMP SENSE CIRCUIT FOR A SHORT TO VOLTAGE DURING SEAT ADJUSTMENT**

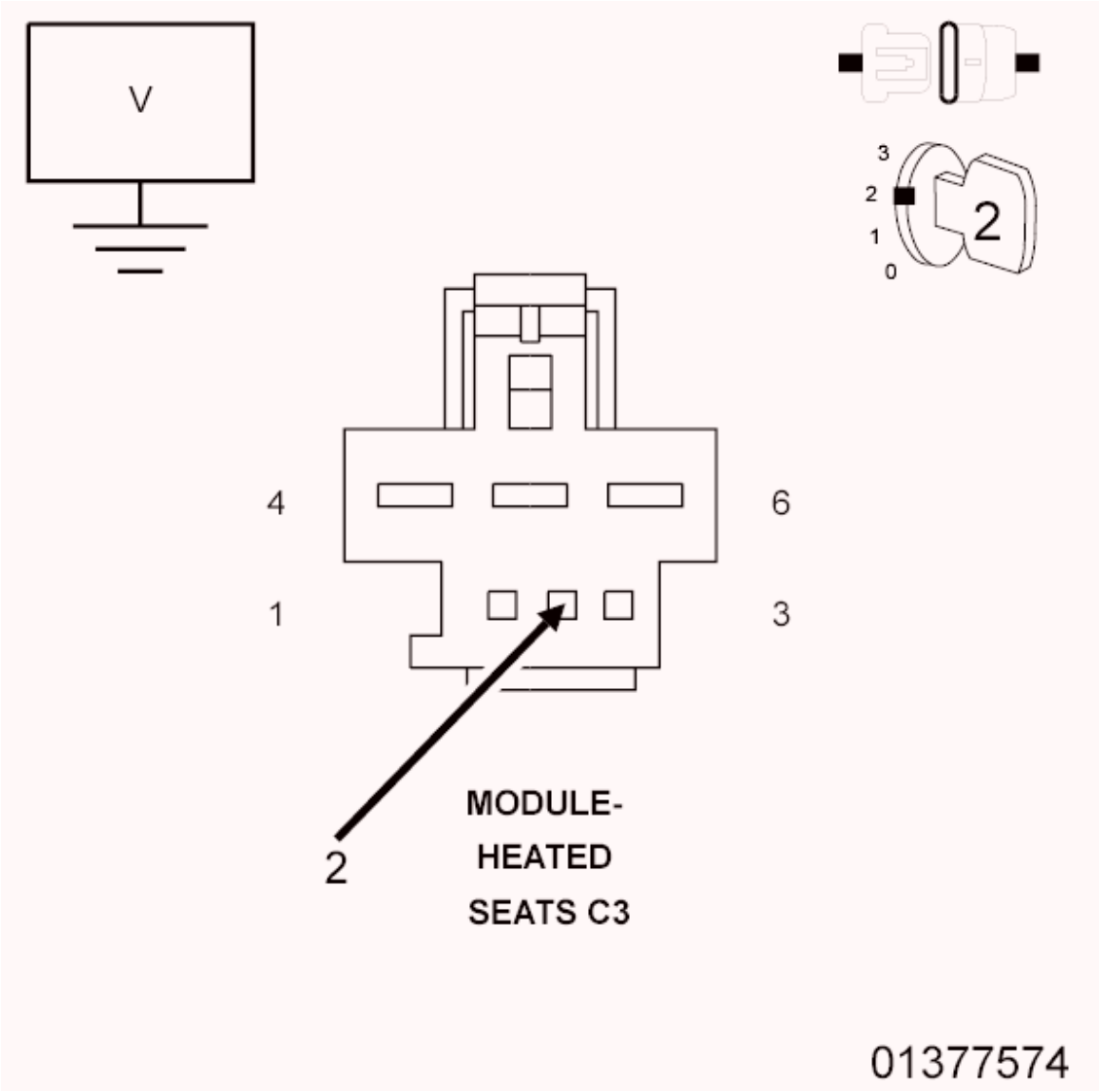

Fig. 154: Checking Left Rear Heated Seat Temp Sense Circuit For A Short To Voltage
Courtesy of CHRYSLER GROUP, LLC

1. Measure the voltage of the (P672) Left Rear Heated Seat Temp Sense circuit between the HSM C3 harness connector and ground while adjusting the front seat.

   Is there any voltage present during the seat adjustment?

   Yes

- Repair the (P672) Left Rear Heated Seat Temp Sense circuit for a short to voltage.
- Perform the BODY VERIFICATION TEST. Refer to **BODY VERIFICATION TEST** .

No

- Go To 5.

5. **CHECK (P672) LEFT REAR HEATED SEAT TEMP SENSE CIRCUIT FOR A SHORT TO THE (P177) LEFT REAR SEAT HEATER CONTROL CIRCUIT OR TO (P178) RIGHT REAR SEAT HEATER CONTROL CIRCUIT**

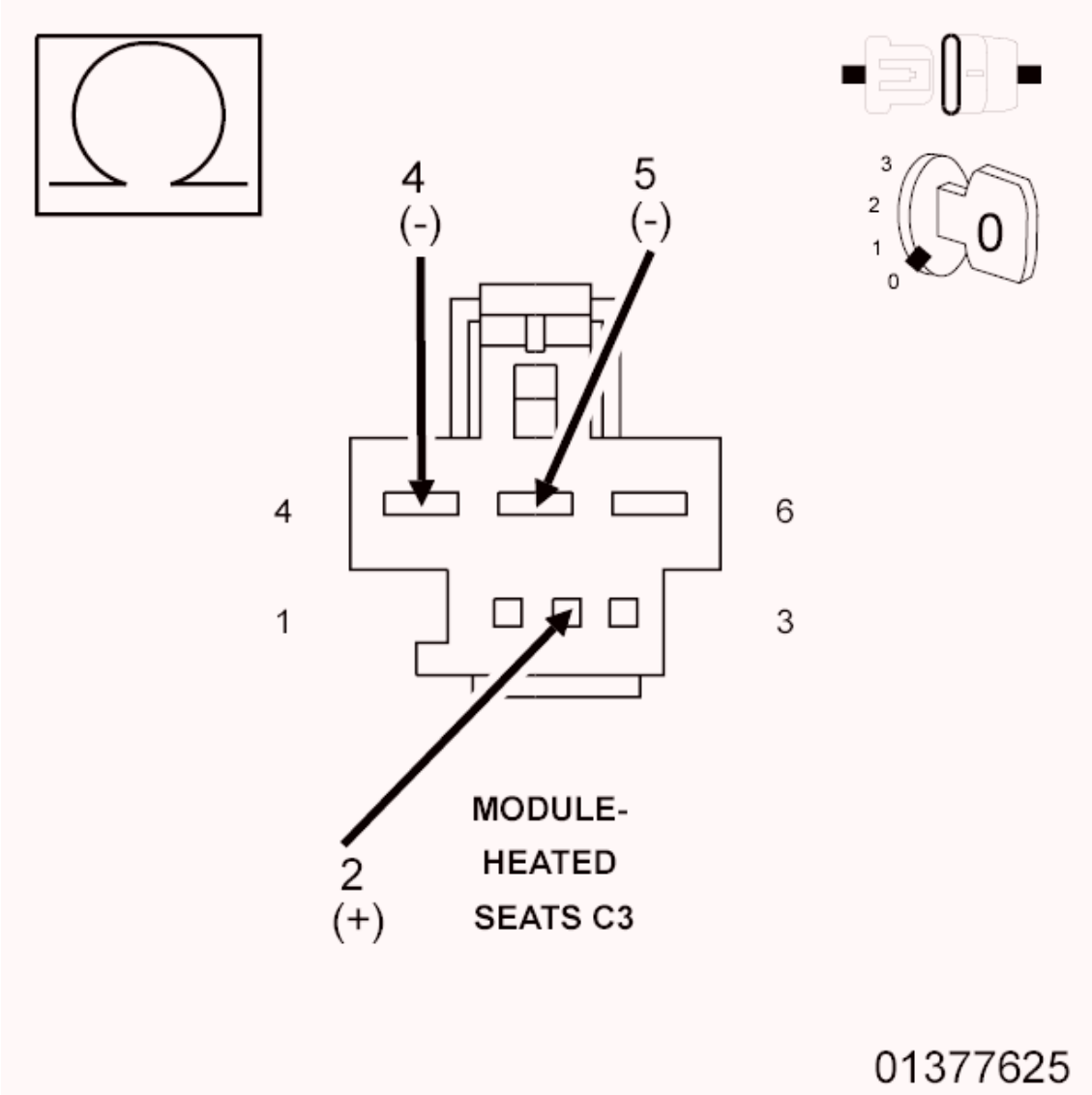

Fig. 155: Checking Left Rear Heated Seat Temp Sense Circuit For A Short To The Left Rear Seat Heater Control Circuit Or To Right Rear Seat Heater Control Circuit
Courtesy of CHRYSLER GROUP, LLC

1. Turn the ignition off.

2. Disconnect the Left Rear Seat Cushion Heater harness connector.
3. Disconnect the Right Rear Seat Cushion Heater harness connector.

NOTE: Check connectors. Clean and repair as necessary.

4. Measure the resistance between the (P672) Left Rear Heated Seat Temp Sense circuit and the (P177) Left Rear Seat Heater Control circuit at the HSM C3 harness connector.
5. Measure the resistance between the (P672) Left Rear Heated Seat Temp Sense circuit and the (P178) Right Rear Seat Heater Control circuit at the HSM C3 harness connector.

Is the resistance below 10K Ohms for either measurement?

Yes

- Repair all circuits with a resistance below 10K Ohms for a short to the (P672) Left Rear Heated Seat Temp Sense circuit.
- Perform the BODY VERIFICATION TEST. Refer to **BODY VERIFICATION TEST** .

No

- Go To 6.

6. **CHECK (P672) LEFT REAR HEATED SEAT TEMP SENSE CIRCUIT VOLTAGE TO LEFT REAR SEAT CUSHION HEATER**

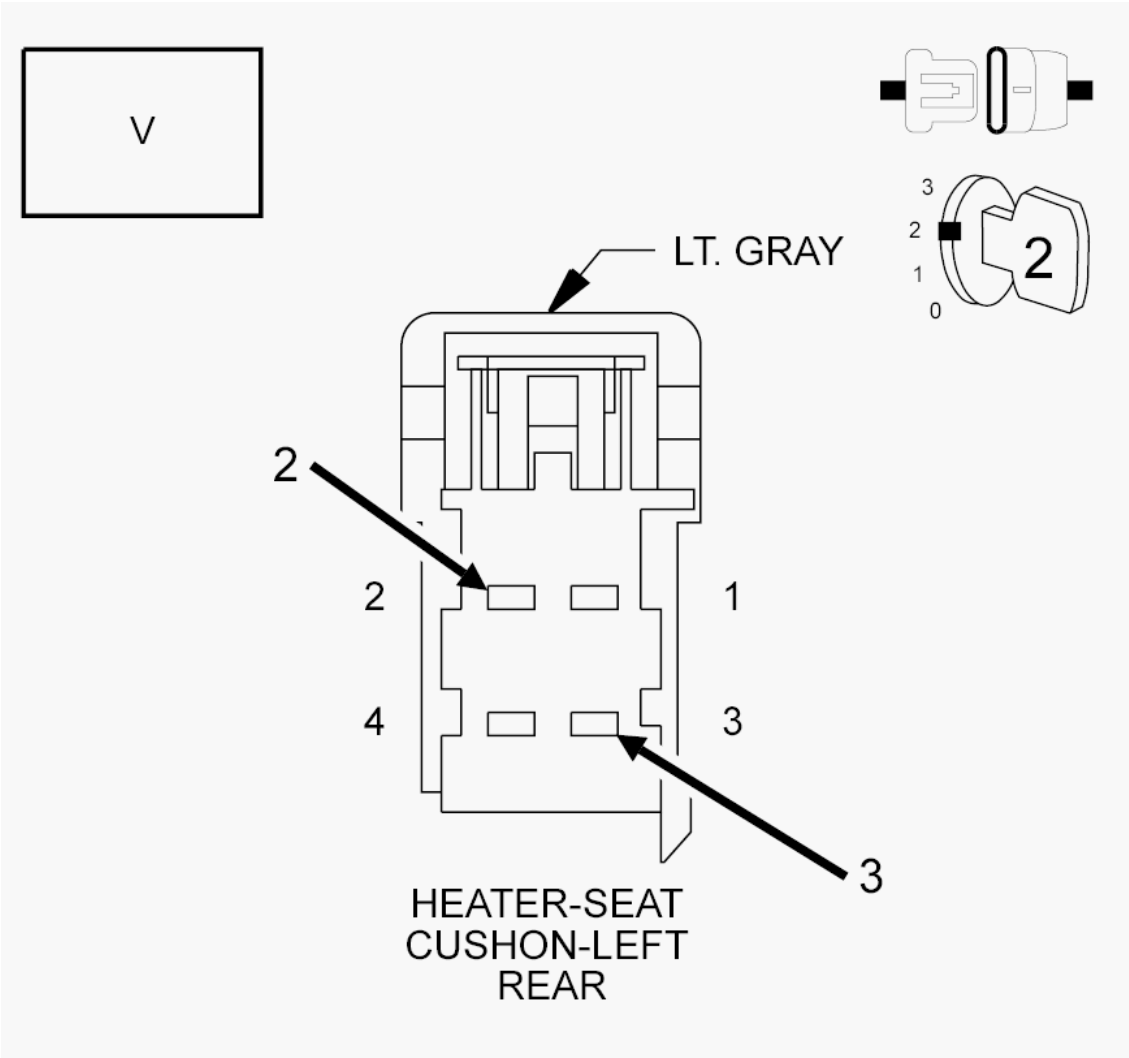

Fig. 156: Checking Left Rear Heated Seat Temp Sense Circuit Voltage To Left Rear Seat Cushion Heater
Courtesy of CHRYSLER GROUP, LLC

1. Reconnect the HSM C3 harness connector.
2. Start the engine and let it run.
3. Measure the voltage between the (P672) Left Rear Heated Seat Temp Sense circuit and the (P968) Heated Seat Sensor Return circuit at the Left Rear Seat Cushion Heater connector (harness side).

   Is the voltage above 4.5-volts?

   Yes

   - Replace the Seat Cushion Heater Element in accordance with the Service Information.
   - Perform the BODY VERIFICATION TEST. Refer to **BODY VERIFICATION TEST** .

   No

- Go To 7.

7. **CHECK (P672) LEFT REAR HEATED SEAT TEMP SENSE CIRCUIT OR AN OPEN**

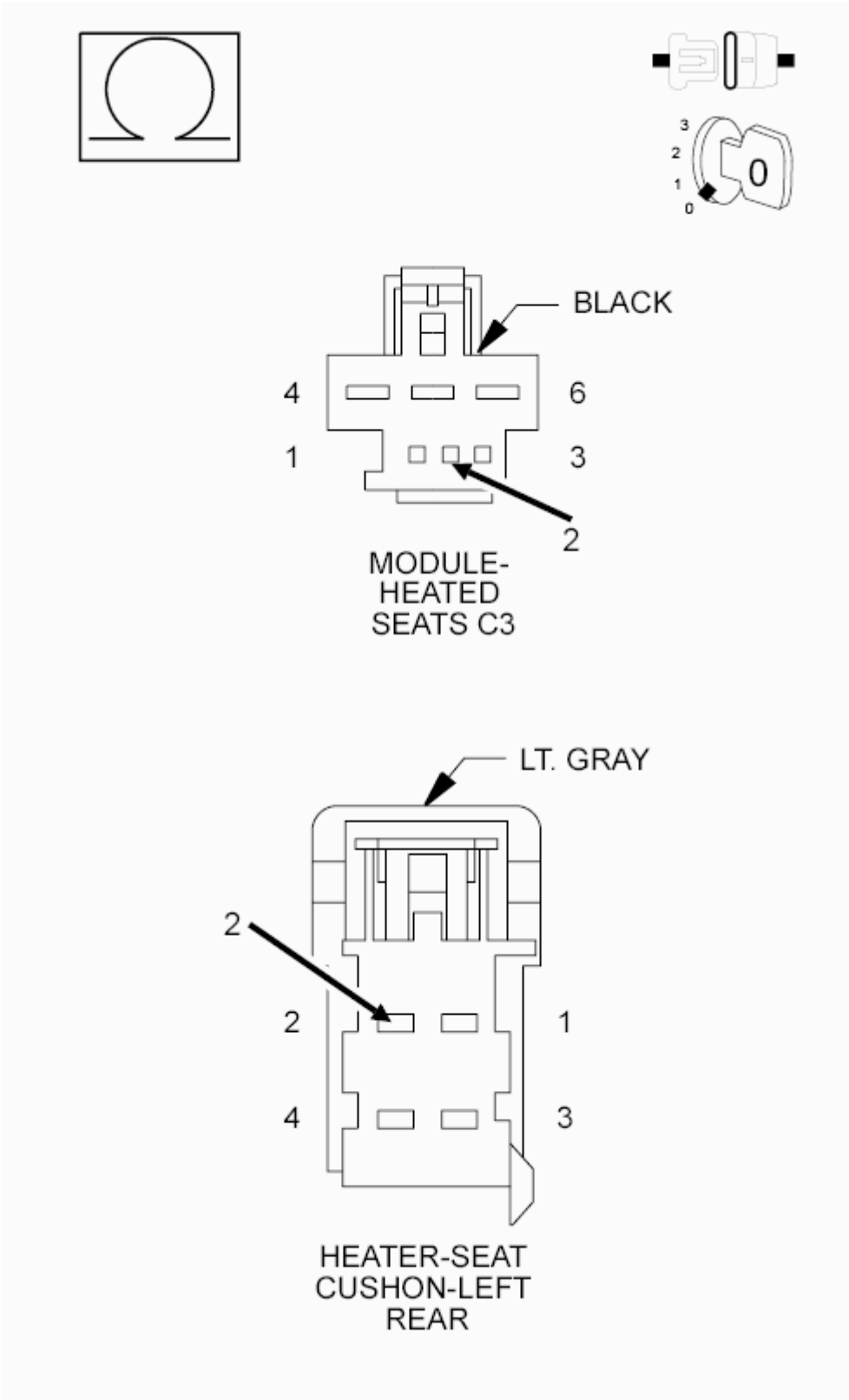

Fig. 157: Checking Left Rear Heated Seat Temp Sense Circuit For An Open
Courtesy of CHRYSLER GROUP, LLC

1. Turn the ignition off.
2. Disconnect the HSM C3 harness connector.
3. Measure the resistance of the (P672) Left Rear Heated Seat Temp Sense circuit between the HSM C3 harness connector and the Left Rear Seat Cushion Heater harness connector.

   Is the resistance below 5.0 Ohms?

   Yes

   - Go To 8.

   No

   - Repair the (P672) Left Rear Heated Seat Temp Sense circuit for an open.
   - Perform the BODY VERIFICATION TEST. Refer to **BODY VERIFICATION TEST** .

8. **CHECK (P968) HEATED SEAT SENSOR RETURN CIRCUIT FOR AN OPEN**

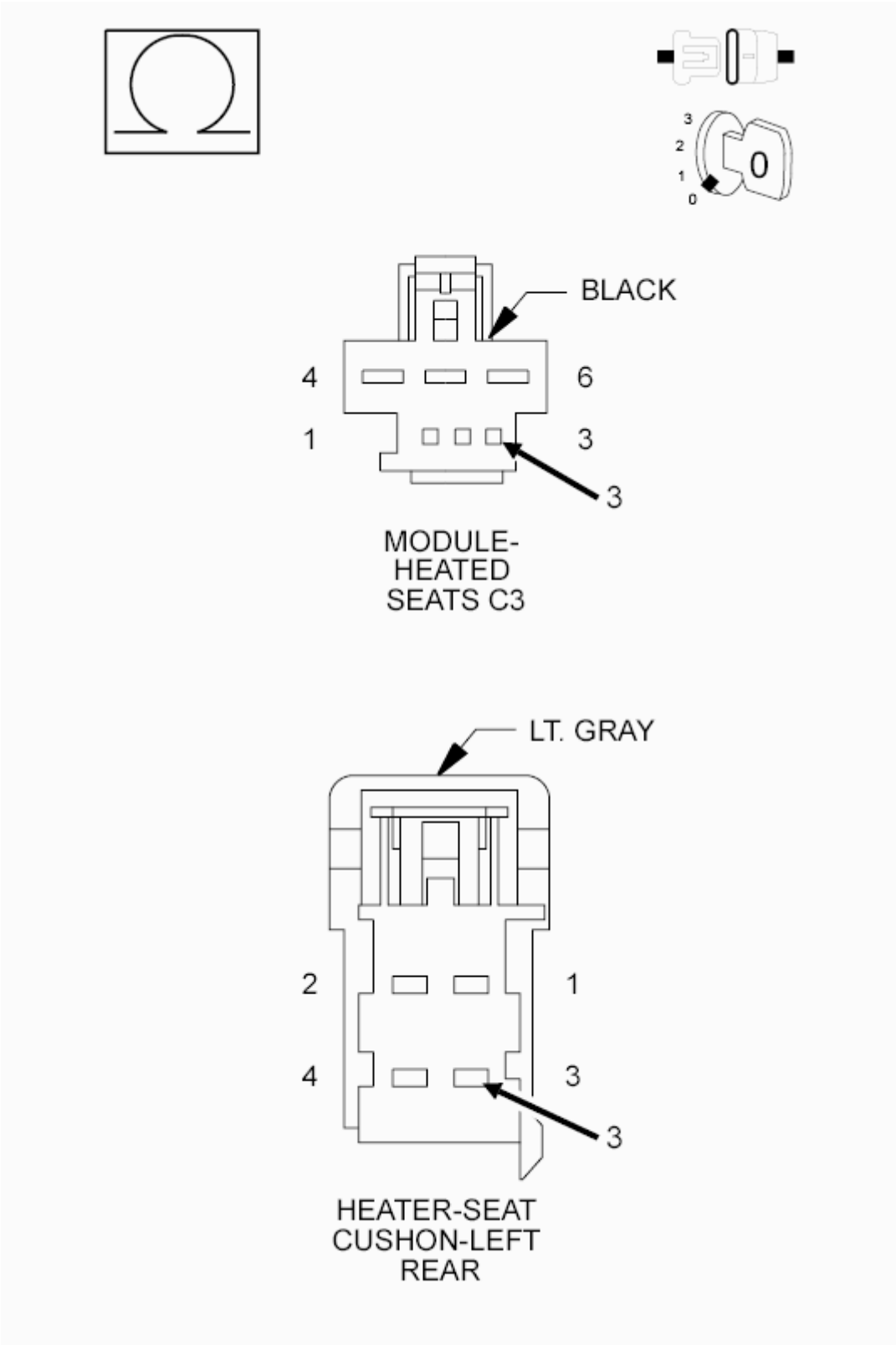

Fig. 158: Checking Heated Seat Sensor Return Circuit For An Open
Courtesy of CHRYSLER GROUP, LLC

1. Measure the resistance of the (P968) Heated Seat Sensor Return circuit between the HSM C3 connector and the Left Rear Seat Cushion Heater connector (harness side).

   Is the resistance below 5.0 Ohms?

   Yes

   - Replace the Heated Seat Module (HSM) in accordance with the Service Information.
   - Perform the BODY VERIFICATION TEST. Refer to **BODY VERIFICATION TEST** .

   No

   - Repair the (P968) Heated Seat Sensor Return circuit for an open.
   - Perform the BODY VERIFICATION TEST. Refer to **BODY VERIFICATION TEST** .

B1EB4-1A-REAR RIGHT SEAT HEATER SENSOR - CIRCUIT RESISTANCE BELOW THRESHOLD

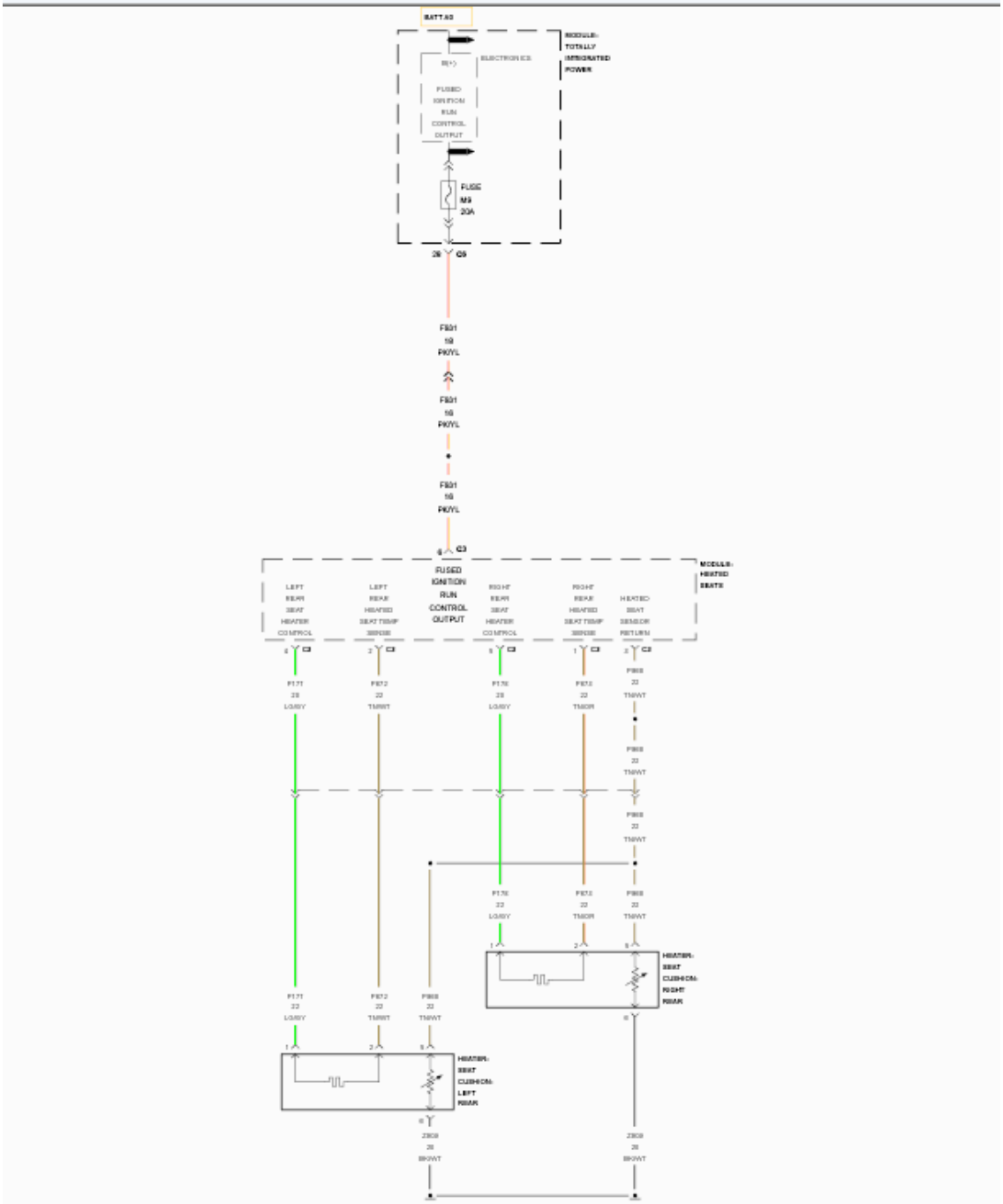
BATT A3
MODULE-
TOTALLY
INTEGRATED
POWER
ELECTRONICS
B(+)
FUSED
IGNITION
RUN
CONTROL
OUTPUT
FUSE
M9
20A
28
C5
F801
18
PK/YL
F801
18
PK/YL
F801
18
PK/YL
6
C3
FUSED
IGNITION
RUN
CONTROL
OUTPUT
MODULE-
HEATED
SEATS
LEFT
REAR
SEAT
HEATER
CONTROL
LEFT
REAR
HEATED
SEAT TEMP
SENSE
RIGHT
REAR
SEAT
HEATER
CONTROL
RIGHT
REAR
HEATED
SEAT TEMP
SENSE
HEATED
SEAT
SENSOR
RETURN
4
C3
2
C3
5
C3
1
C3
2
C3
P171
22
LG/BY
P872
22
TN/WT
P176
22
LG/BY
P872
22
TN/OR
P868
22
TN/WT
P868
22
TN/WT
P868
22
TN/WT
P176
22
LG/BY
P872
22
TN/OR
P868
22
TN/WT
1
2
5
HEATER-
SEAT
CUSHION-
RIGHT
REAR
P171
22
LG/BY
P872
22
TN/WT
P868
22
TN/WT
1
2
5
HEATER-
SEAT
CUSHION-
LEFT
REAR
6
Z909
20
BR/WT
6
Z909
20
BR/WT

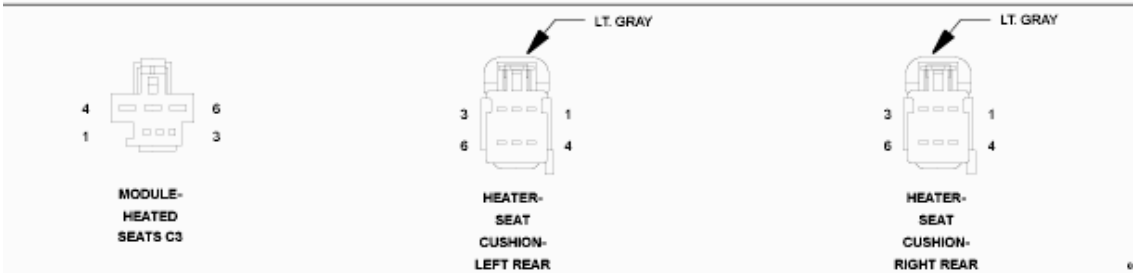
4
6
1
3
MODULE-
HEATED
SEATS C3
LT. GRAY
3
1
6
4
HEATER-
SEAT
CUSHION-
LEFT REAR
LT. GRAY
3
1
6
4
HEATER-
SEAT
CUSHION-
RIGHT REAR

Fig. 159: Rear Heater Control Wiring Diagram
Courtesy of CHRYSLER GROUP, LLC

For a complete wiring diagram, **refer to appropriate SYSTEM WIRING DIAGRAMS article** .

WHEN MONITORED:

When Heated Seat Module (HSM) is powered.

SET CONDITION:

The Heated Seat Module (HSM) detects that the (P673) Right Rear Heated Seat Temp Sense circuit NTC is below threshold for more than two seconds.

POSSIBLE CAUSES

Possible Causes
(P673) RIGHT REAR HEATED SEAT TEMP SENSE CIRCUIT SHORTED TO GROUND
(P673) RIGHT REAR HEATED SEAT TEMP SENSE CIRCUIT SHORTED TO THE (Z909) GROUND CIRCUIT
(P673) RIGHT REAR HEATED SEAT TEMP SENSE CIRCUIT SHORTED TO THE (P968) HEATED SEAT SENSOR RETURN CIRCUIT
SEAT CUSHION HEATER ELEMENT SHORTED
HEATED SEAT MODULE (HSM)

DIAGNOSTIC TEST

1. **TEST FOR INTERMITTENT CONDITION**

NOTE: **Make sure the battery is fully charged and the charging system is operating properly before proceeding.**

1. Turn the ignition on.
2. Using a scan tool, record and erase Diagnostic Trouble Codes (DTCs).
3. Turn the ignition off.
4. Start the engine and let it run.
5. Using a scan tool, read DTCs.

Is the DTC active?

Yes

- Go To 2.

No

- The conditions that caused this code to set are not present at this time. Verify seat harness is routed correctly to the HSM. Using the wiring diagram/schematic as a guide, inspect the wiring and connectors. Look for chafed, pierced, pinched, or partially broken wires and broken, bent, pushed out, spread, corroded, or contaminated terminals. Attempt to reproduce condition by adjusting the front seat.
- Perform the BODY VERIFICATION TEST. Refer to **BODY VERIFICATION TEST** .

2. **CHECK (P673) RIGHT REAR HEATED SEAT TEMP SENSE CIRCUIT IN BODY HARNESS FOR A SHORT TO GROUND**

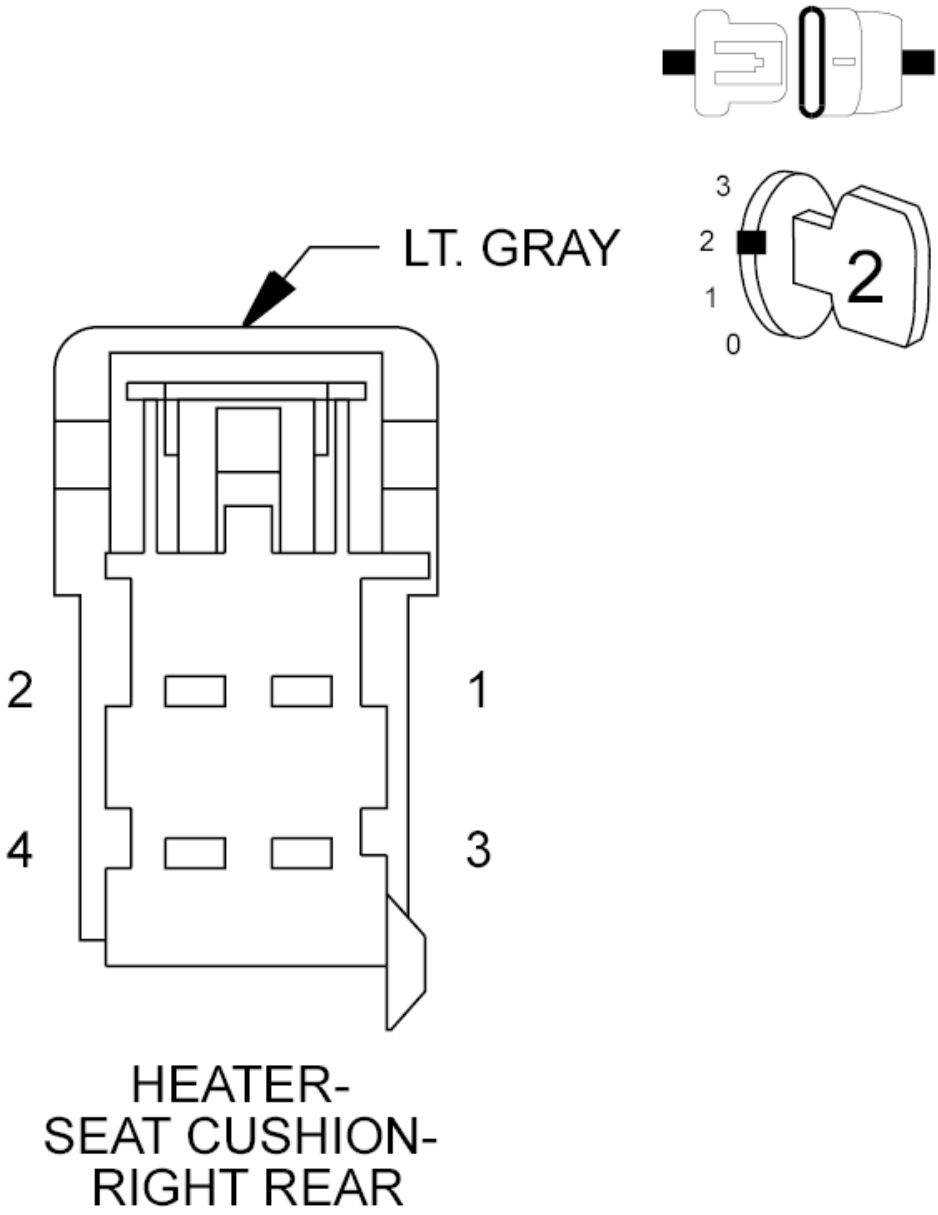

Fig. 160: Checking Right Rear Heated Seat Temp Sense Circuit In Body Harness For A Short To Ground
Courtesy of CHRYSLER GROUP, LLC

1. Turn the ignition off.
2. Disconnect the Right Rear Seat Cushion Heater harness connector.

NOTE: Check connectors. Clean and repair as necessary.

3. Turn the ignition on.
4. Using a scan tool, erase DTCs.
5. Turn the ignition off.
6. Start the engine and let it run.
7. Using a scan tool, read DTCs.

Is the same DTC active?

Yes

- Go To 3.

No

- Replace the shorted Rear Seat Cushion Heater Element in accordance with the Service Information.
- Perform the BODY VERIFICATION TEST. Refer to **BODY VERIFICATION TEST** .

3. **CHECK (P673) RIGHT REAR HEATED SEAT TEMP SENSE CIRCUIT FOR A SHORT TO GROUND**

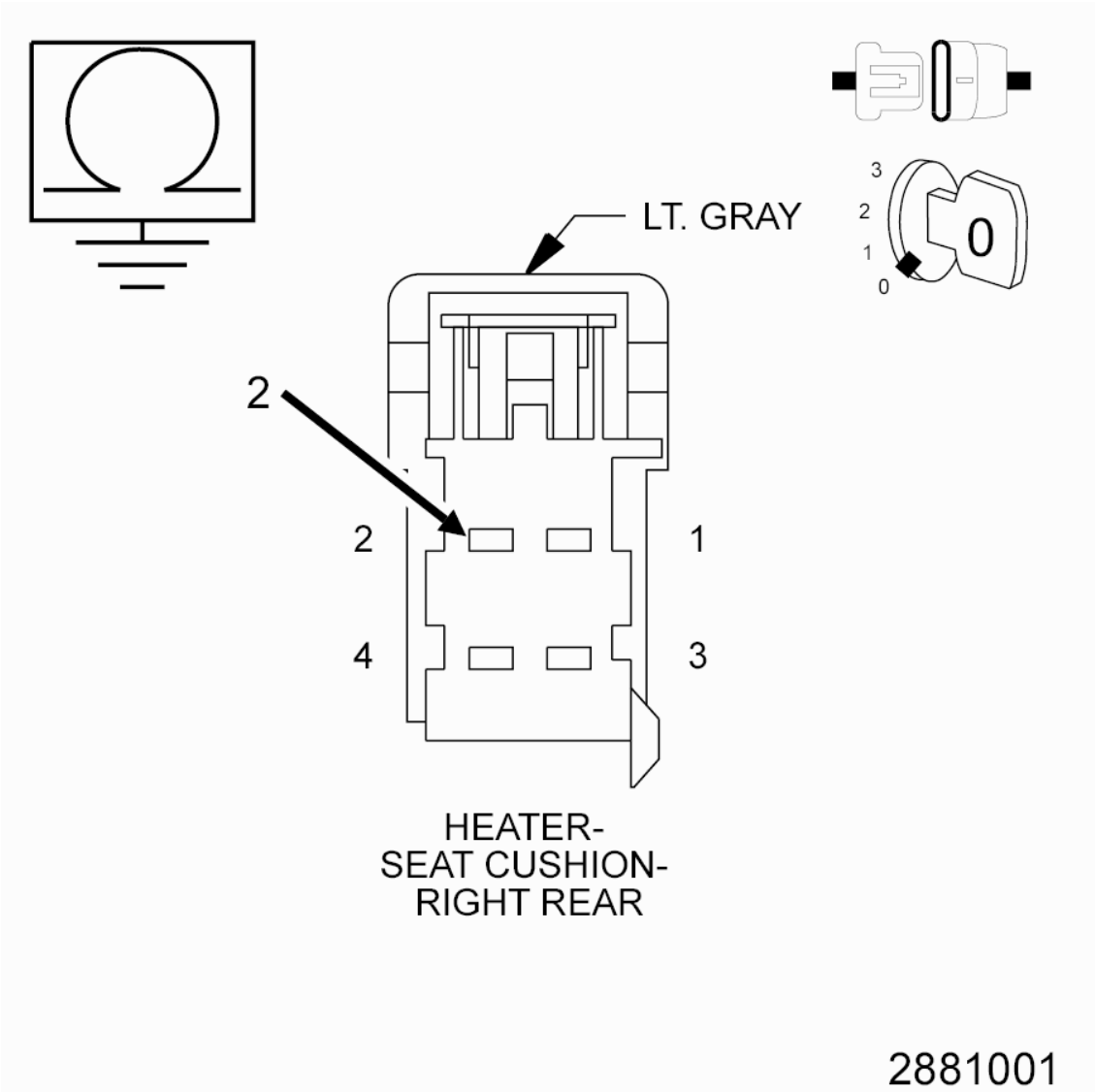

Fig. 161: Checking Right Rear Heated Seat Temp Sense Circuit For A Short To Ground
Courtesy of CHRYSLER GROUP, LLC

1. Turn the ignition off.
2. Disconnect the HSM C3 harness connector.

NOTE: Check connectors. Clean and repair as necessary.

3. Measure the resistance of the (P673) Right Rear Heated Seat Temp Sense circuit between ground and the Right Rear Seat Cushion Heater connector (harness side).

   Is the resistance below 10K Ohms?

   Yes

- Repair the (P673) Right Rear Heated Seat Temp Sense circuit for a short to ground.
- Perform the BODY VERIFICATION TEST. Refer to **BODY VERIFICATION TEST** .

No

- Go To 4.

4. **CHECK (P673) RIGHT REAR HEATED SEAT TEMP SENSE CIRCUIT FOR A SHORT TO THE (Z909) GROUND CIRCUIT OR TO (P968) HEATED SEAT SENSOR RETURN CIRCUIT**

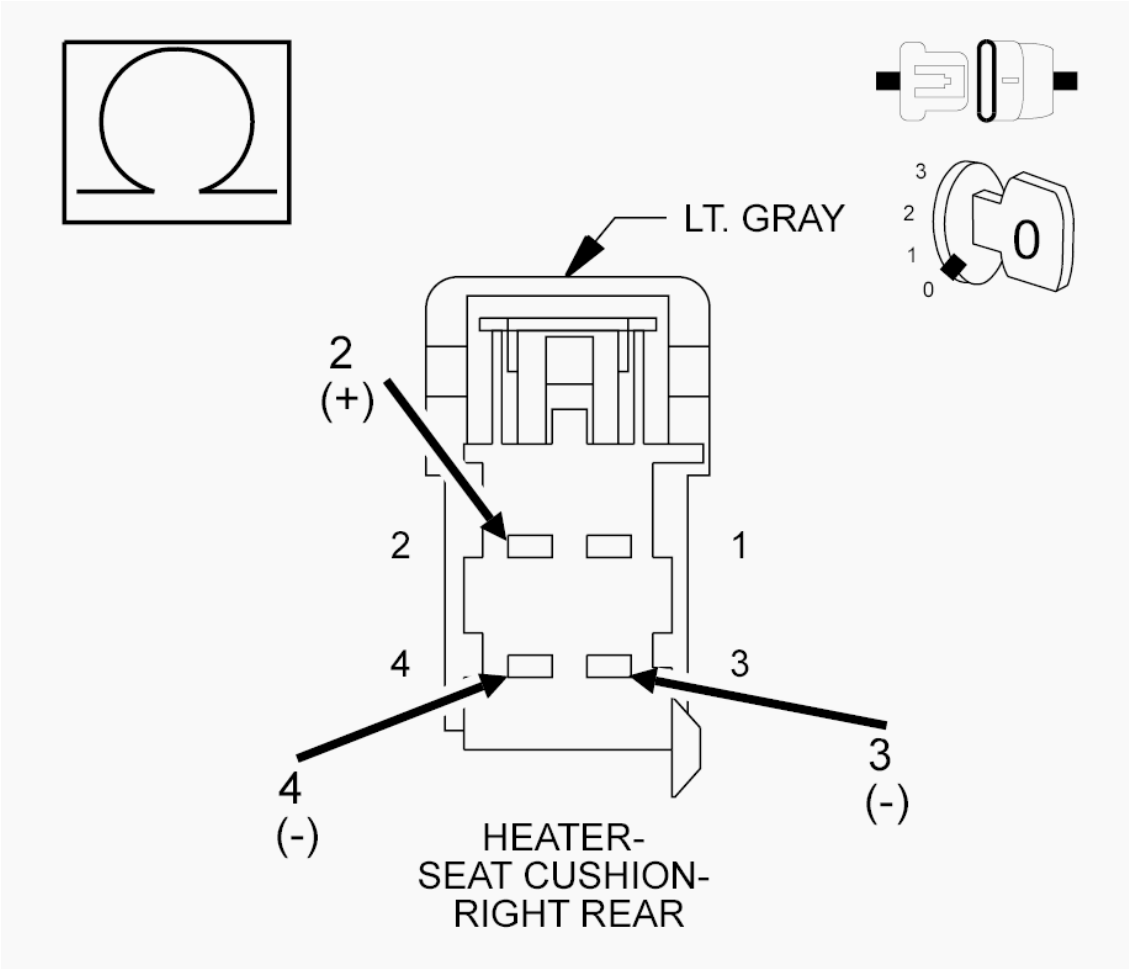

Fig. 162: Checking Right Rear Heated Seat Temp Sense Circuit For A Short To The Ground Circuit Or To Heated Seat Sensor Return Circuit
Courtesy of CHRYSLER GROUP, LLC

1. Measure the resistance between the (P673) Right Rear Heated Seat Temp Sense circuit and the (Z909) Ground circuit at the Right Rear Seat Cushion Heater connector (harness side).
2. Measure the resistance between the (P673) Right Rear Heated Seat Temp Sense circuit and the (P968) Heated Seat Sensor Return circuit at the Right Rear Seat Cushion Heater connector (harness side).

Is the resistance below 10K Ohms for either measurement?

Yes

- Repair all circuits with a resistance below 10K Ohms for a short to the (P673) Right Rear Heated Seat Temp Sense circuit.
- Perform the BODY VERIFICATION TEST. Refer to **BODY VERIFICATION TEST** .

No

- Replace the Heated Seat Module (HSM) in accordance with the Service Information.
- Perform the BODY VERIFICATION TEST. Refer to **BODY VERIFICATION TEST** .

B1EB4-1B-REAR RIGHT SEAT HEATER SENSOR - CIRCUIT RESISTANCE ABOVE THRESHOLD

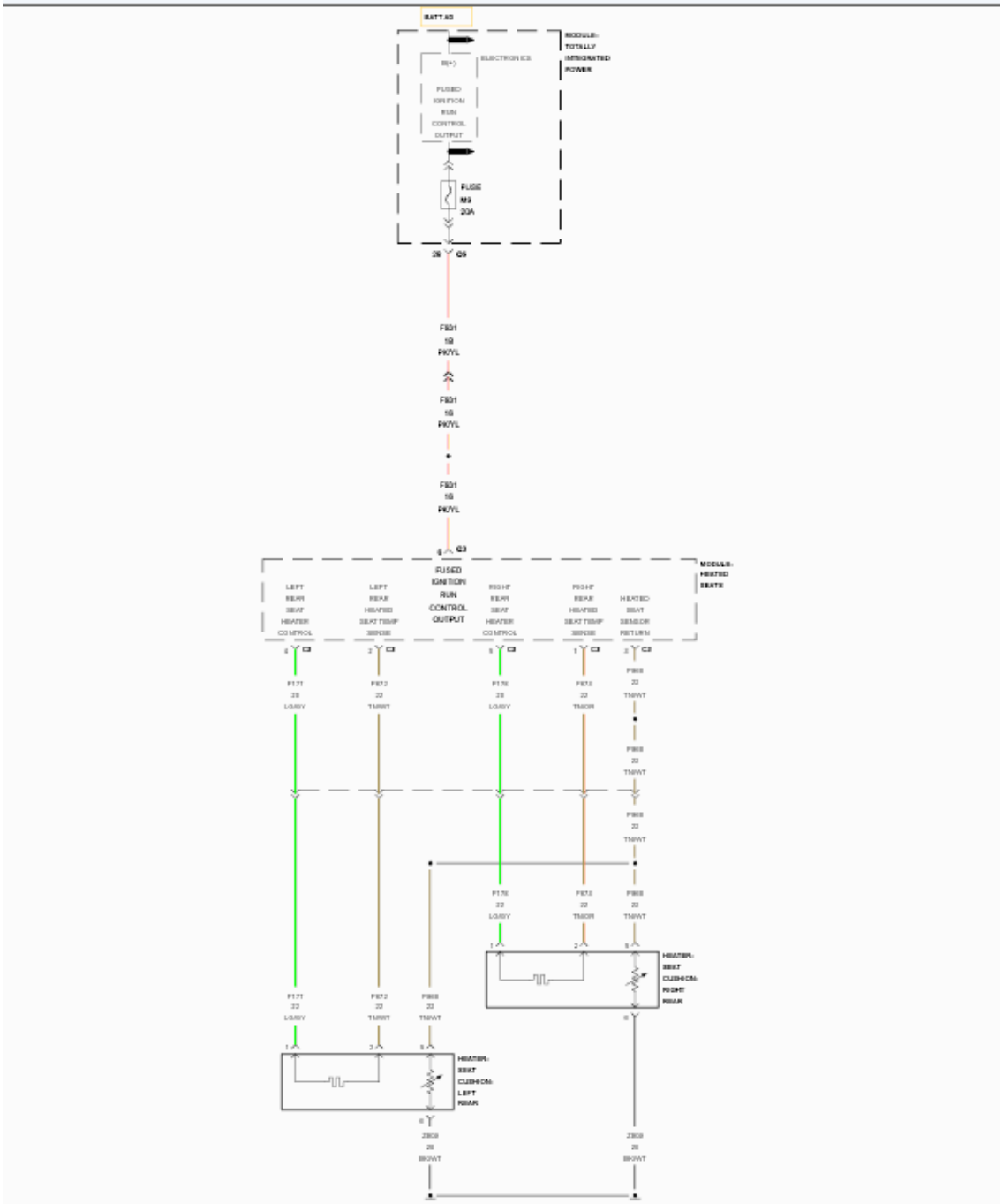
BATT A3
MODULE-
TOTALLY
INTEGRATED
POWER
ELECTRONICS
B(+)
FUSED
IGNITION
RUN
CONTROL
OUTPUT
FUSE
M9
20A
28
C5
F801
18
PK/YL
F801
18
PK/YL
F801
18
PK/YL
6
C3
FUSED
IGNITION
RUN
CONTROL
OUTPUT
MODULE-
HEATED
SEATS
LEFT
REAR
SEAT
HEATER
CONTROL
LEFT
REAR
HEATED
SEAT TEMP
SENSE
RIGHT
REAR
SEAT
HEATER
CONTROL
RIGHT
REAR
HEATED
SEAT TEMP
SENSE
HEATED
SEAT
SENSOR
RETURN
4
C3
2
C3
5
C3
1
C3
2
C3
P171
22
LG/BY
P872
22
TN/WT
P176
22
LG/BY
P872
22
TN/OR
P868
22
TN/WT
P868
22
TN/WT
P868
22
TN/WT
P176
22
LG/BY
P872
22
TN/OR
P868
22
TN/WT
1
2
5
HEATER-
SEAT
CUSHION-
RIGHT
REAR
P171
22
LG/BY
P872
22
TN/WT
P868
22
TN/WT
1
2
5
HEATER-
SEAT
CUSHION-
LEFT
REAR
6
Z909
20
BR/WT
6
Z909
20
BR/WT

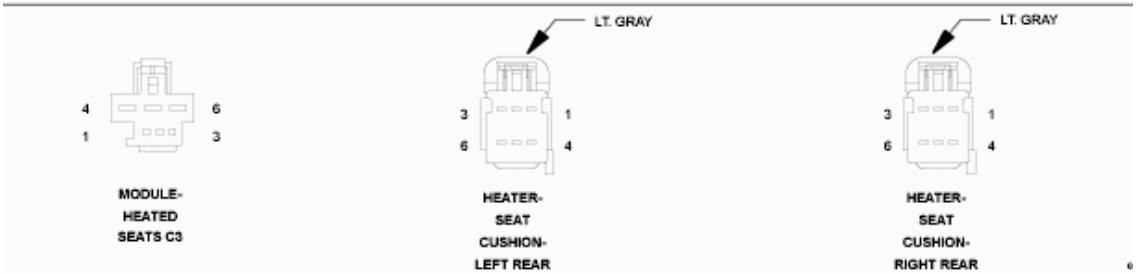
4
6
1
3
MODULE-
HEATED
SEATS C3
LT. GRAY
3
1
6
4
HEATER-
SEAT
CUSHION-
LEFT REAR
LT. GRAY
3
1
6
4
HEATER-
SEAT
CUSHION-
RIGHT REAR

Fig. 163: Rear Heater Control Wiring Diagram
Courtesy of CHRYSLER GROUP, LLC

For a complete wiring diagram, **refer to appropriate SYSTEM WIRING DIAGRAMS article** .

WHEN MONITORED:

When Heated Seat Module (HSM) is powered.

SET CONDITION:

The Heated Seat Module (HSM) detects that the (P673) Right Rear Heated Seat Temp Sense circuit NTC is above threshold for more than two seconds.

POSSIBLE CAUSES

Possible Causes
(P673) RIGHT REAR HEATED SEAT TEMP SENSE CIRCUIT SHORTED TO VOLTAGE
(P673) RIGHT REAR HEATED SEAT TEMP SENSE CIRCUIT SHORTED TO THE (F931) FUSED IGNITION RUN CONTROL OUTPUT CIRCUIT
(P673) RIGHT REAR HEATED SEAT TEMP SENSE CIRCUIT SHORTED TO THE (P178) RIGHT REAR SEAT HEATER CONTROL CIRCUIT
(P673) RIGHT REAR HEATED SEAT TEMP SENSE CIRCUIT SHORTED TO THE (P177) LEFT REAR SEAT HEATER CONTROL CIRCUIT
(P673) RIGHT REAR HEATED SEAT TEMP SENSE CIRCUIT OPEN
(P968) HEATED SEAT SENSOR RETURN CIRCUIT OPEN
SEAT CUSHION HEATER ELEMENT OPEN
HEATED SEAT MODULE (HSM)

DIAGNOSTIC TEST

1. **TEST FOR INTERMITTENT CONDITION**

NOTE: **Make sure the battery is fully charged and the charging system is operating properly before proceeding.**

1. Turn the ignition on.
2. Using a scan tool, record and erase Diagnostic Trouble Codes (DTCs).
3. Turn the ignition off.
4. Start the engine and let it run.
5. Using a scan tool, read DTCs.

Is the DTC active?

Yes

- Go To 2.

No

- The conditions that caused this code to set are not present at this time. Verify seat harness is routed correctly to the HSM. Using the wiring diagram/schematic as a guide, inspect the wiring and connectors. Look for chafed, pierced, pinched, or partially broken wires and broken, bent, pushed out, spread, corroded, or contaminated terminals. Attempt to reproduce condition by operating all HSM functions one at a time. Attempt to reproduce condition by adjusting the front seat.
- Perform the BODY VERIFICATION TEST. Refer to **BODY VERIFICATION TEST** .

2. **CHECK (P673) RIGHT REAR HEATED SEAT TEMP SENSE CIRCUIT FOR A SHORT TO VOLTAGE**

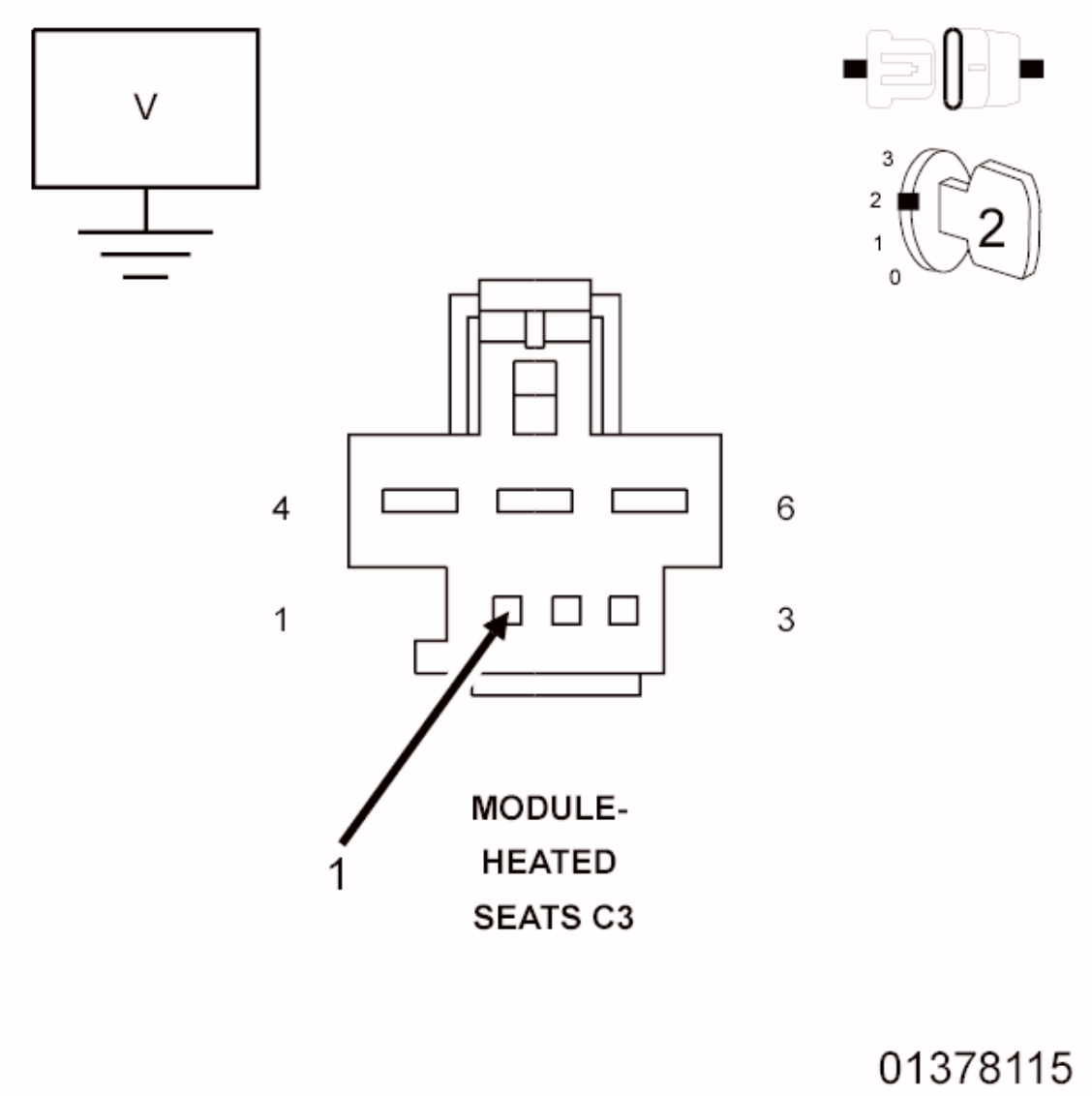

Fig. 164: Checking Right Rear Heated Seat Temp Sense Circuit For A Short To Voltage

Courtesy of CHRYSLER GROUP, LLC

1. Turn the ignition off.
2. Disconnect the HSM C3 harness connector.

   NOTE: Check connectors. Clean and repair as necessary.

3. Start the engine and let it run.
4. Measure the voltage of the (P673) Right Rear Heated Seat Temp Sense circuit between the HSM C3 harness connector and ground.

   Is there any voltage present?

   Yes

   - Go To 3.

   No

   - Go To 4.

3. **CHECK (P673) RIGHT REAR HEATED SEAT TEMP SENSE CIRCUIT FOR A SHORT TO THE (F931) FUSED IGNITION RUN CONTROL OUTPUT CIRCUIT**

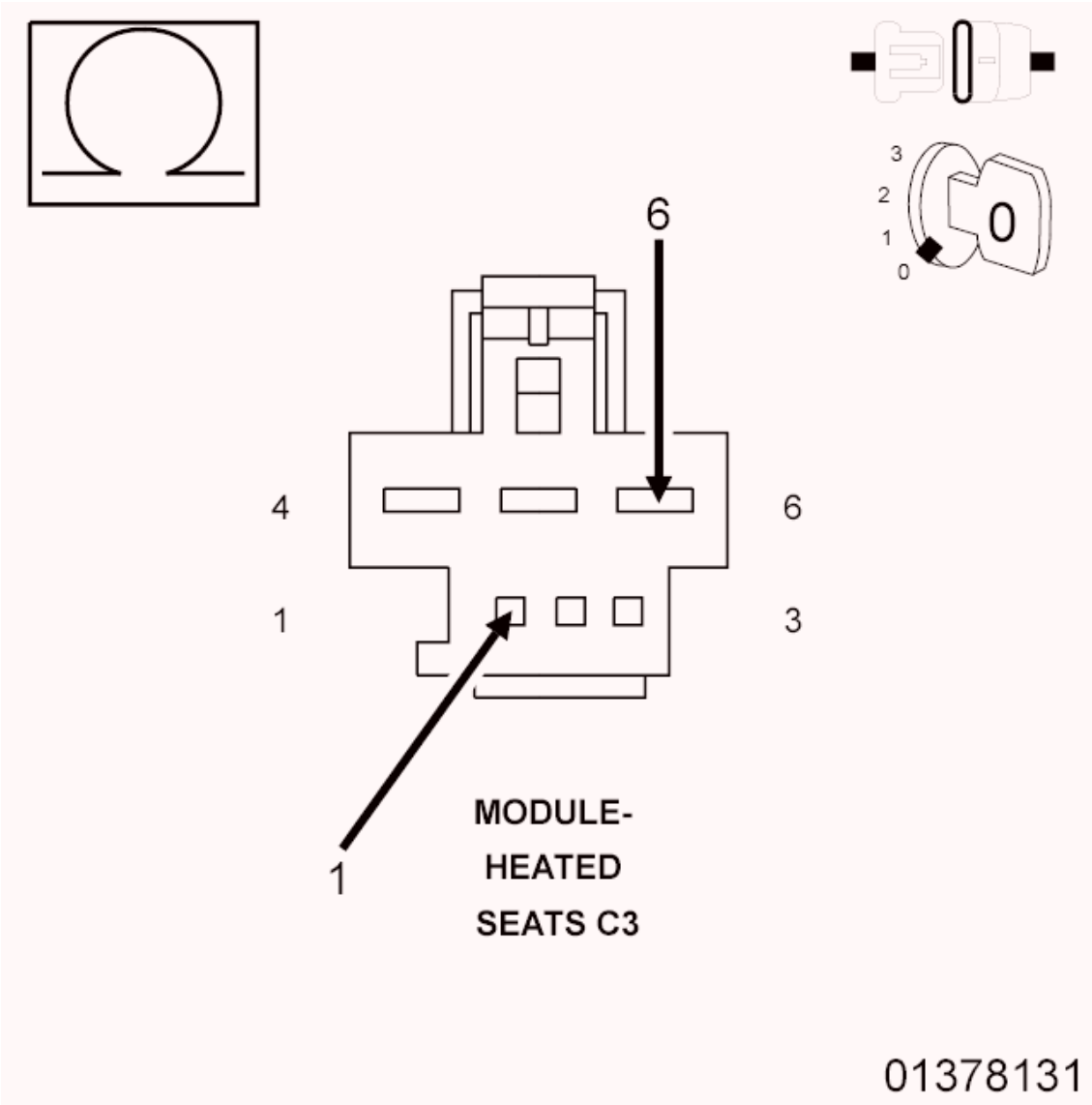

Fig. 165: Checking Right Rear Heated Seat Temp Sense Circuit For A Short To The Fused Ignition Run Control Output Circuit
Courtesy of CHRYSLER GROUP, LLC

1. Turn the ignition off.
2. Measure the resistance between the (P673) Right Rear Heated Seat Temp Sense circuit and the (F931) Fused Ignition Run Control Output circuit at HSM C3 harness connector.

   Is the resistance below 10K Ohms?

   Yes

   - Repair the (P673) Right Rear Heated Seat Temp Sense circuit for a short to the (F931) Fused Ignition Run Control Output circuit.
   - Perform the BODY VERIFICATION TEST. Refer to **BODY VERIFICATION TEST** .

No

- Repair the (P673) Right Rear Heated Seat Temp Sense circuit for a short to voltage.
- Perform the BODY VERIFICATION TEST. Refer to **BODY VERIFICATION TEST** .

4. **CHECK (P673) RIGHT REAR HEATED SEAT TEMP SENSE CIRCUIT FOR A SHORT TO VOLTAGE DURING SEAT ADJUSTMENT**

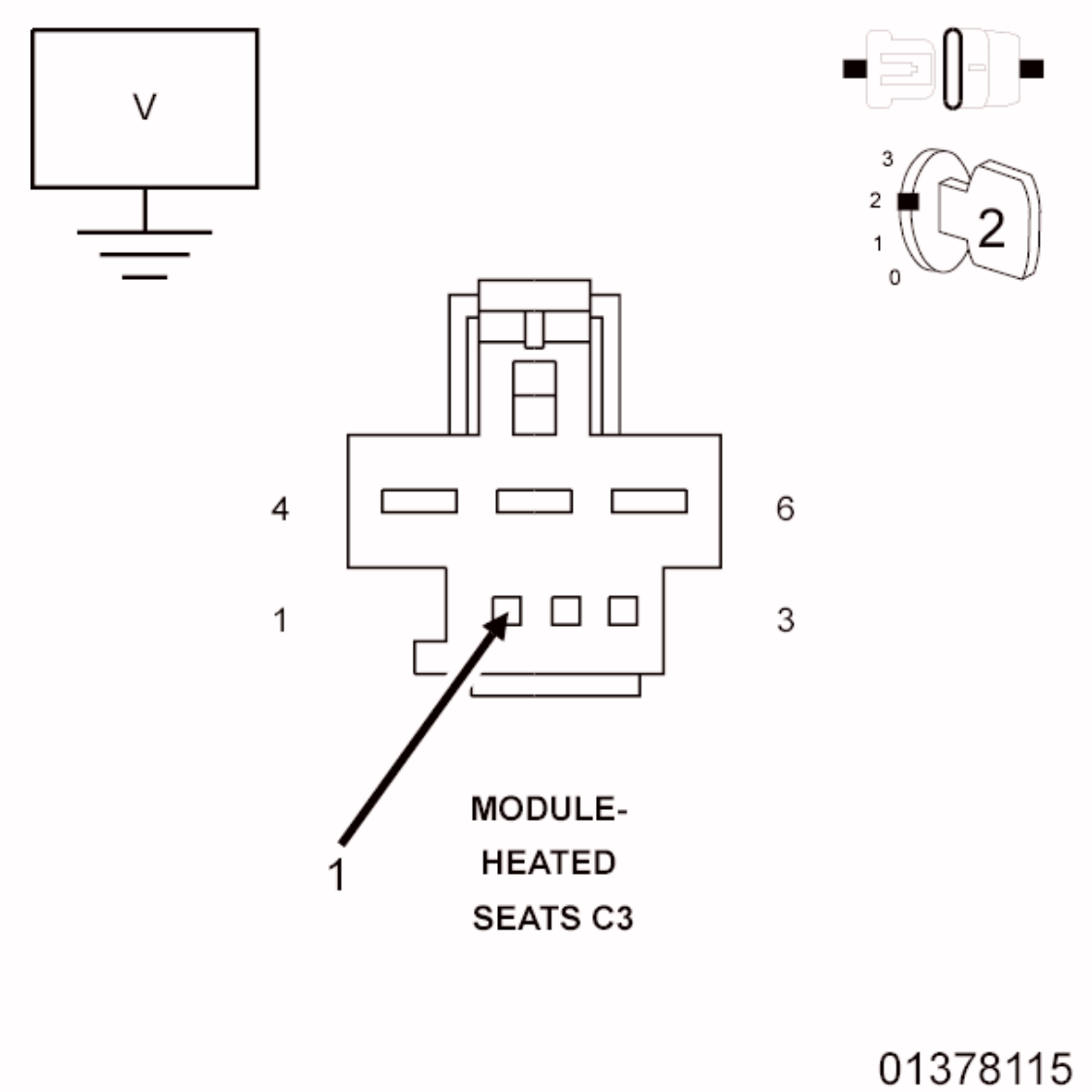

Fig. 166: Checking Right Rear Heated Seat Temp Sense Circuit For A Short To Voltage
Courtesy of CHRYSLER GROUP, LLC

1. Measure the Voltage of the (P673) Right Rear Heated Seat Temp Sense circuit between the HSM C3 harness connector and ground while adjusting the front seat.

   Is there any Voltage present during the seat adjustment?

Yes

- Repair the (P673) Right Rear Heated Seat Temp Sense circuit for a short to voltage.
- Perform the BODY VERIFICATION TEST. Refer to **BODY VERIFICATION TEST** .

No

- Go To 5.

5. **CHECK (P673) RIGHT REAR HEATED SEAT TEMP SENSE CIRCUIT FOR A SHORT TO (P178) RIGHT REAR SEAT HEATER CONTROL CIRCUIT OR TO (P177) LEFT REAR SEAT HEATER CONTROL CIRCUIT**

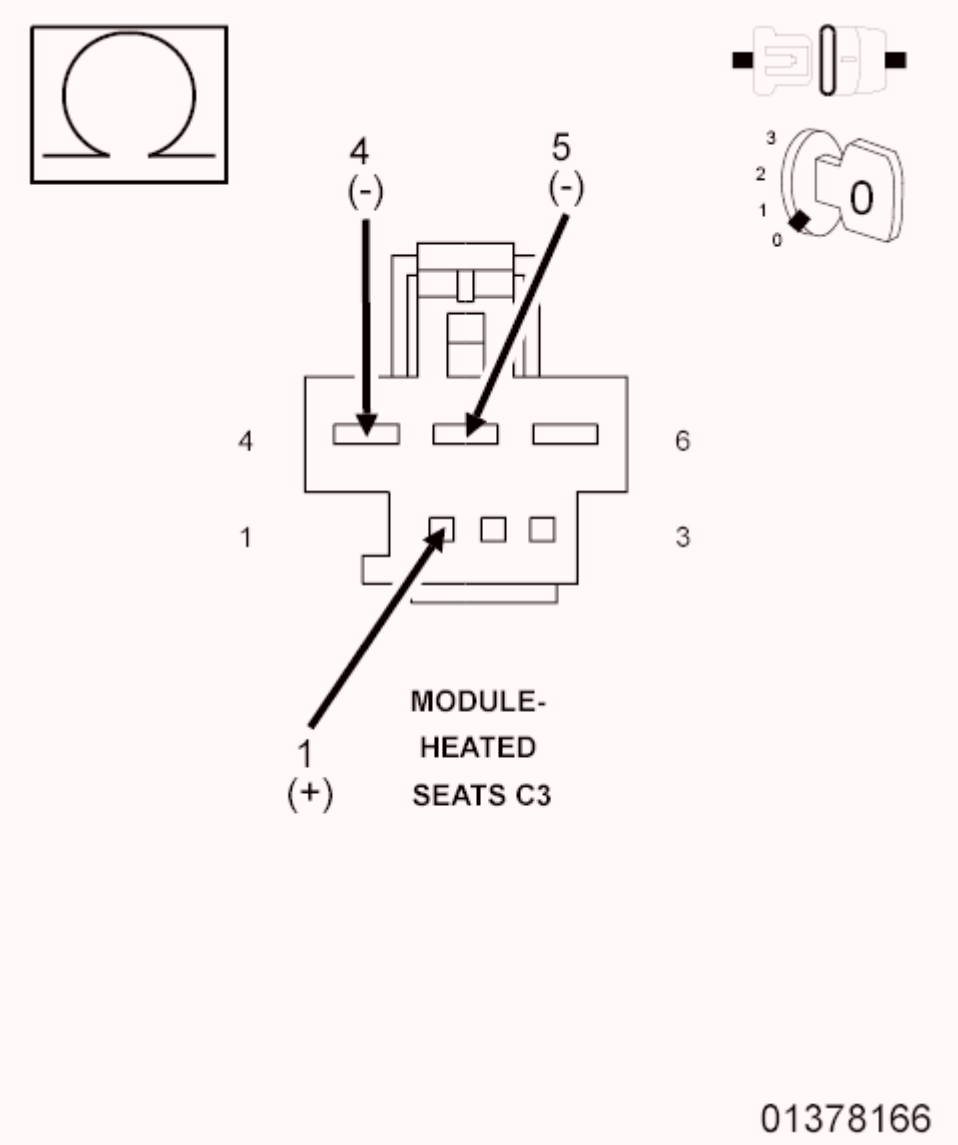

Fig. 167: Checking Right Rear Heated Seat Temp Sense Circuit For A Short To Right Rear Seat Heater Control Circuit Or To Left Rear Seat Heater Control Circuit
Courtesy of CHRYSLER GROUP, LLC

1. Turn the ignition off.
2. Disconnect the Right Rear Seat Cushion Heater connector.
3. Disconnect the Left Rear Seat Cushion Heater connector.

NOTE: Check connectors. Clean and repair as necessary.

4. Measure the resistance between the (P673) Right Rear Heated Seat Temp Sense circuit and the (P178) Right Rear Seat Heater Control circuit at the HSM C3 harness connector.
5. Measure the resistance between the (P673) Right Rear Heated Seat Temp Sense circuit and the (P177) Left Rear Seat Heater Control circuit at the HSM C3 harness connector.

Is the resistance below 10K Ohms for either measurement?

Yes

- Repair all circuits with a resistance below 10K Ohms for a short to the (P673) Right Rear Heated Seat Temp Sense circuit.
- Perform the BODY VERIFICATION TEST. Refer to **BODY VERIFICATION TEST** .

No

- Go To 6.

6. **CHECK (P673) RIGHT REAR HEATED SEAT TEMP SENSE CIRCUIT VOLTAGE TO RIGHT REAR SEAT CUSHION HEATER**

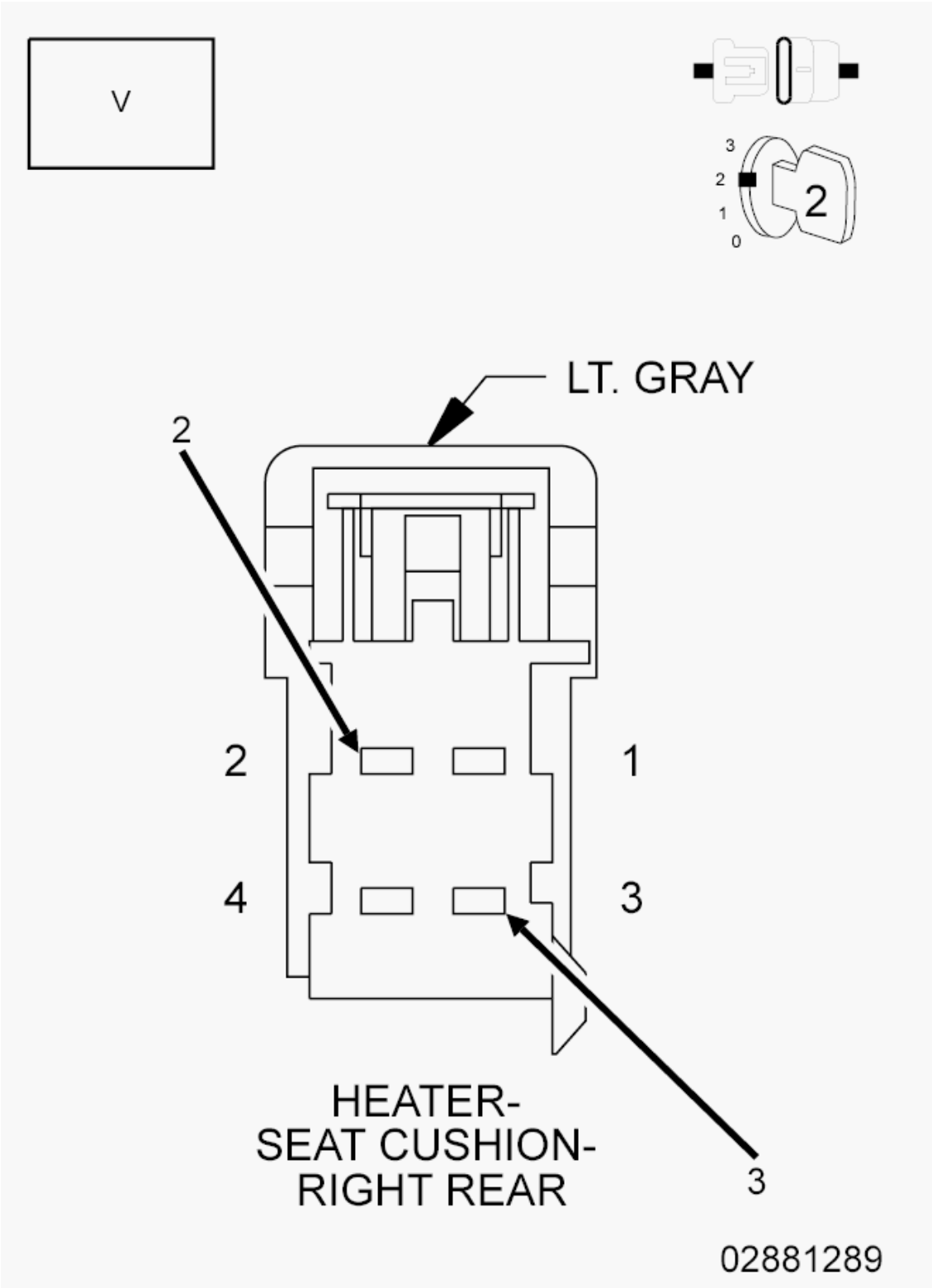

Fig. 168: Checking Right Rear Heated Seat Temp Sense Circuit Voltage To Right Rear Seat Cushion Heater
Courtesy of CHRYSLER GROUP, LLC

1. Reconnect the HSM C3 harness connector.
2. Start the engine and let it run.
3. Measure the voltage between the (P673) Right Rear Heated Seat Temp Sense circuit and the (P968) Heated Seat Sensor Return circuit at the Right Rear Seat Cushion Heater connector (harness side).

   Is the voltage above 4.5 Volts?

   Yes

   - Replace the Rear Seat Cushion Heater Element in accordance with the Service Information.
   - Perform the BODY VERIFICATION TEST. Refer to **BODY VERIFICATION TEST** .

   No

   - Go To 7.

7. **CHECK (P673) RIGHT REAR HEATED SEAT TEMP SENSE CIRCUIT FOR AN OPEN**

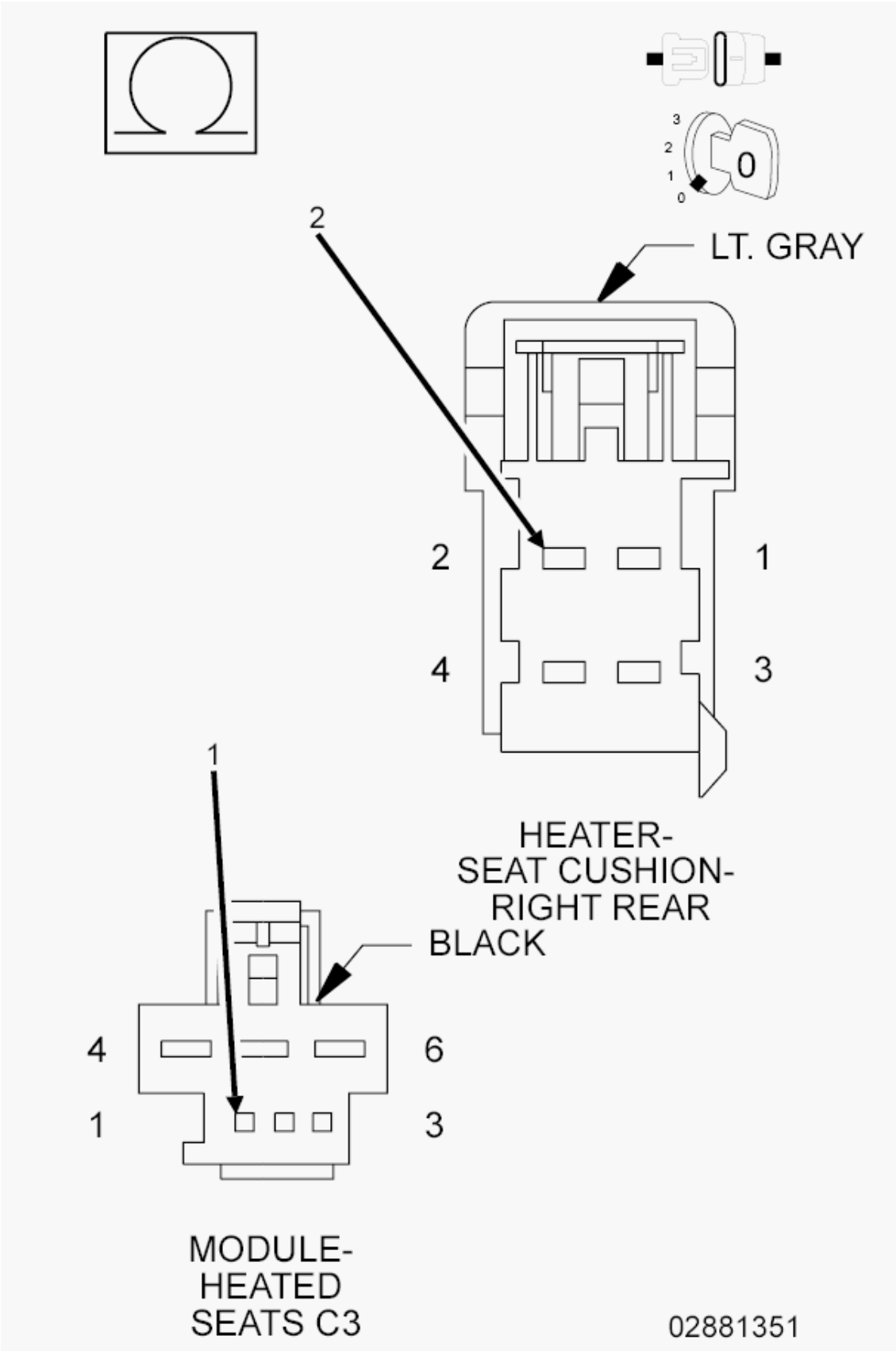
3
2
1
0
0
2
LT. GRAY
2
1
4
3
HEATER-
SEAT CUSHION-
RIGHT REAR
1
BLACK
4
6
1
3
MODULE-
HEATED
SEATS C3
02881351

Fig. 169: Checking Right Rear Heated Seat Temp Sense Circuit For An Open
Courtesy of CHRYSLER GROUP, LLC

1. Turn the ignition off.
2. Disconnect the HSM C3 harness connector.
3. Measure the resistance of the (P673) Right Rear Heated Seat Temp Sense circuit between the HSM C3 connector and the Right Rear Seat Cushion Heater connector (harness side).

   Is the resistance below 5.0 Ohms?

   Yes

   - Go To 8.

   No

   - Repair the (P673) Right Rear Heated Seat Temp Sense circuit for an open.
   - Perform the BODY VERIFICATION TEST. Refer to **BODY VERIFICATION TEST** .

8. **CHECK (P968) HEATED SEAT SENSOR RETURN CIRCUIT FOR AN OPEN**

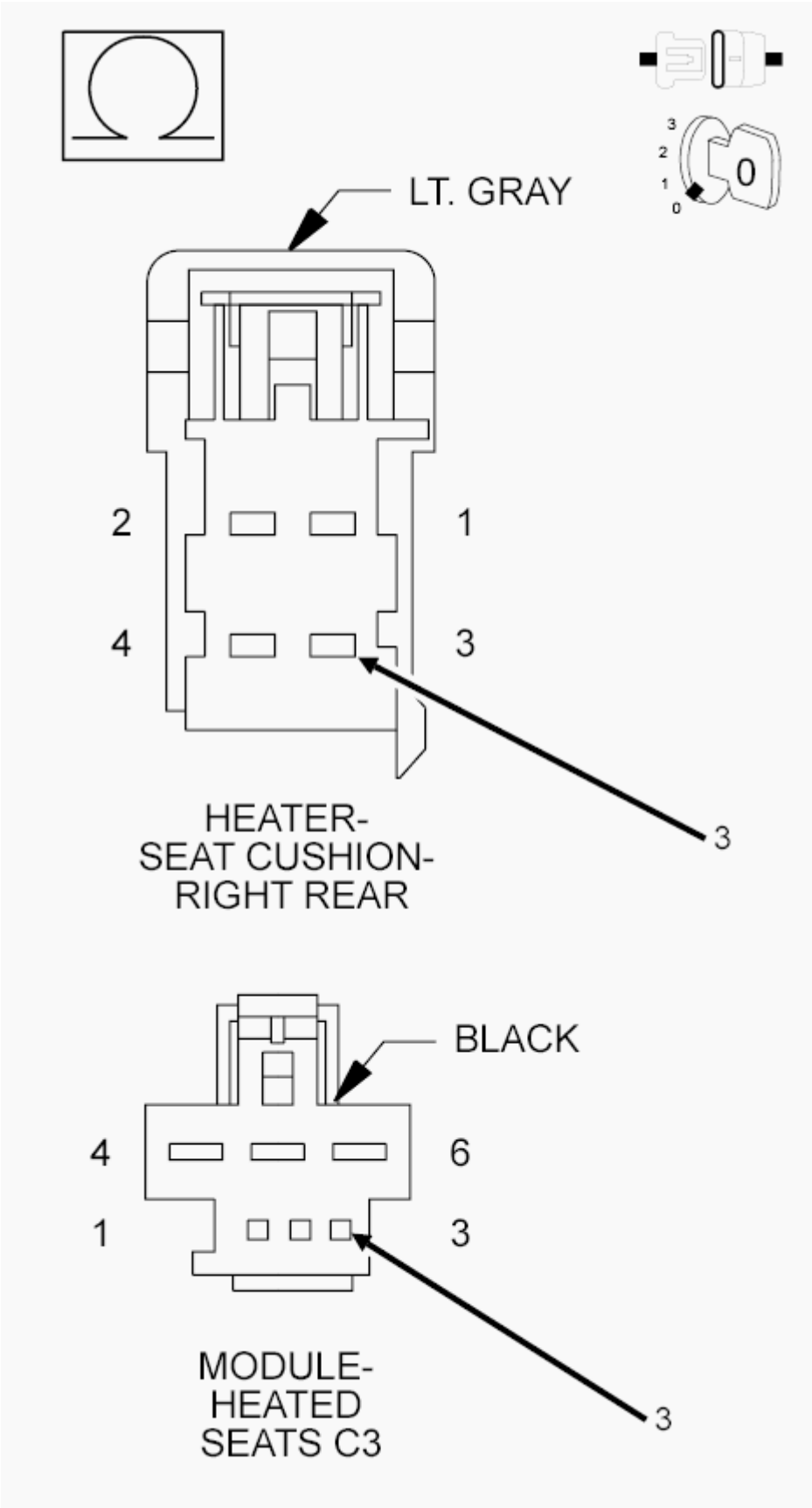
LT. GRAY
2
1
4
3
3
HEATER-
SEAT CUSHION-
RIGHT REAR
BLACK
4
6
1
3
3
MODULE-
HEATED
SEATS C3

Fig. 170: Checking Heated Seat Sensor Return Circuit For An Open
Courtesy of CHRYSLER GROUP, LLC

1. Measure the resistance of the (P968) Heated Seat Sensor Return circuit between the HSM C3 harness connector and the Right Rear Seat Cushion Heater connector (harness side).

   Is the resistance below 5.0 Ohms?

   Yes

   - Replace the Heated Seat Module (HSM) in accordance with the Service Information.
   - Perform the BODY VERIFICATION TEST. Refer to **BODY VERIFICATION TEST** .

   No

   - Repair the (P968) Heated Seat Sensor Return circuit for an open.
   - Perform the BODY VERIFICATION TEST. Refer to **BODY VERIFICATION TEST** .

B210C-17-BATTERY VOLTAGE INPUT - CIRCUIT VOLTAGE ABOVE THRESHOLD

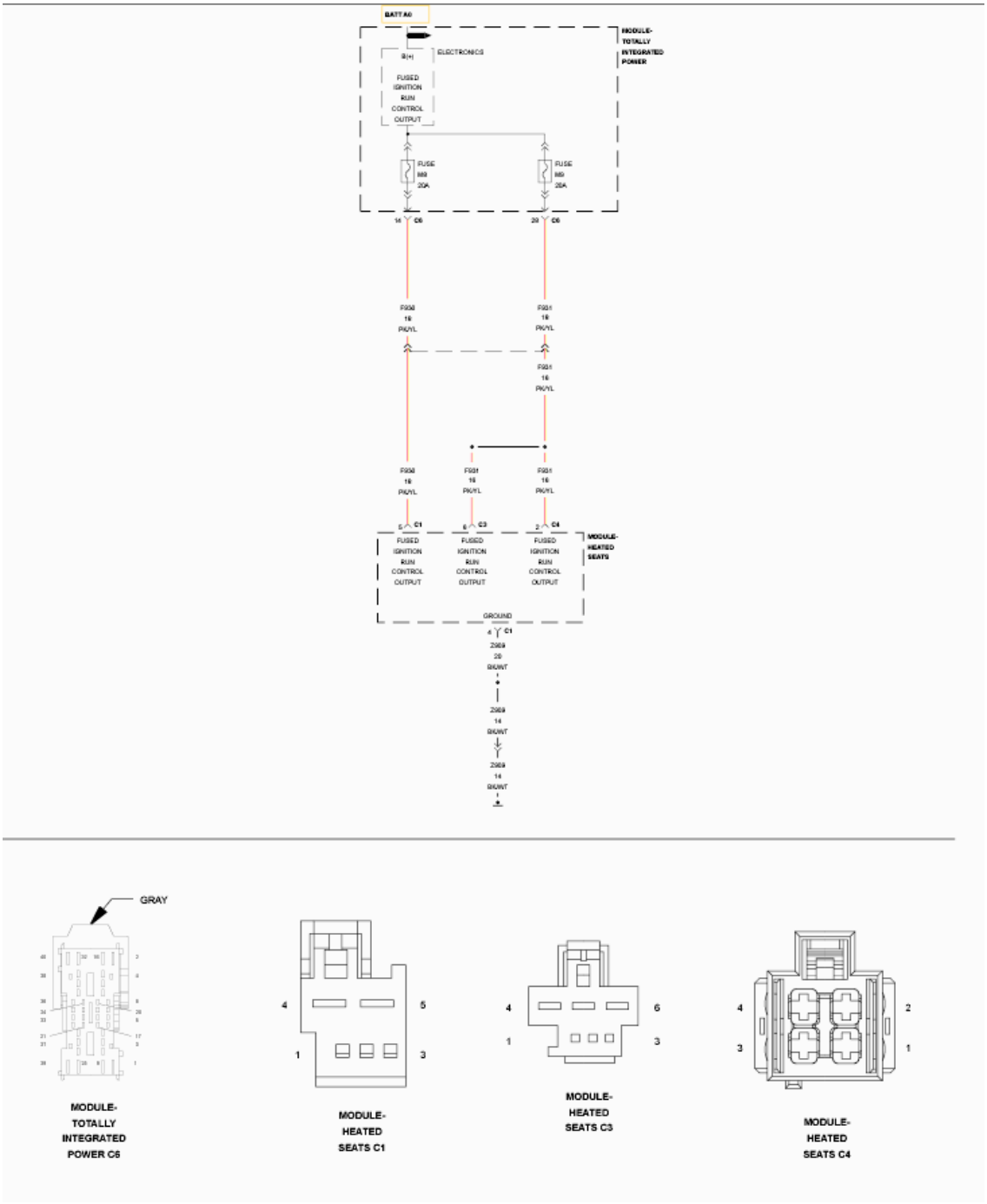

Fig. 171: Rear Heated Seats Power Supply Wiring Diagram
Courtesy of CHRYSLER GROUP, LLC

For a complete wiring diagram, **refer to appropriate SYSTEM WIRING DIAGRAMS article** .

WHEN MONITORED:

With the engine running.

SET CONDITION:

If the Heated Seat Module (HSM) detects Voltage above 16.0 volts on the (F930) Fused Ignition Run Control Output circuit.

POSSIBLE CAUSES

Possible Causes
CHARGING SYSTEM VOLTAGE HIGH
FUSED IGNITION RUN CONTROL OUTPUT CIRCUIT
HEATED SEAT MODULE (HSM)

DIAGNOSTIC TEST

1. **CHECK FOR CHARGING SYSTEM DIAGNOSTIC TROUBLE CODES (DTCs)**
    1. Turn the ignition on.
    2. Using a scan tool, read Powertrain Control Module (PCM) DTCs.

    Are there any Charging System DTCs set in the PCM?

    Yes

    - Refer to **CHARGING SYSTEM - DIAGNOSIS AND TESTING** for Charging System diagnostic procedures.

    No

    - Go To 2.
2. **VERIFY DTC IS ACTIVE**
    1. Using a scan tool, record and erase DTCs.
    2. Turn the ignition off.
    3. Start the engine and let run for one minute.
    4. Using a scan tool, read DTCs.

    Is the DTC active?

    Yes

    - Go To 3.

    No

    - The conditions that caused this code to set are not present at this time. Verify seat harness is routed correctly to the HSM. Using the wiring diagram/schematic as a guide, inspect the wiring and connectors.

- Perform the BODY VERIFICATION TEST. Refer to **BODY VERIFICATION TEST** .

3. **FUSED IGNITION RUN CONTROL OUTPUT CIRCUIT VOLTAGE**

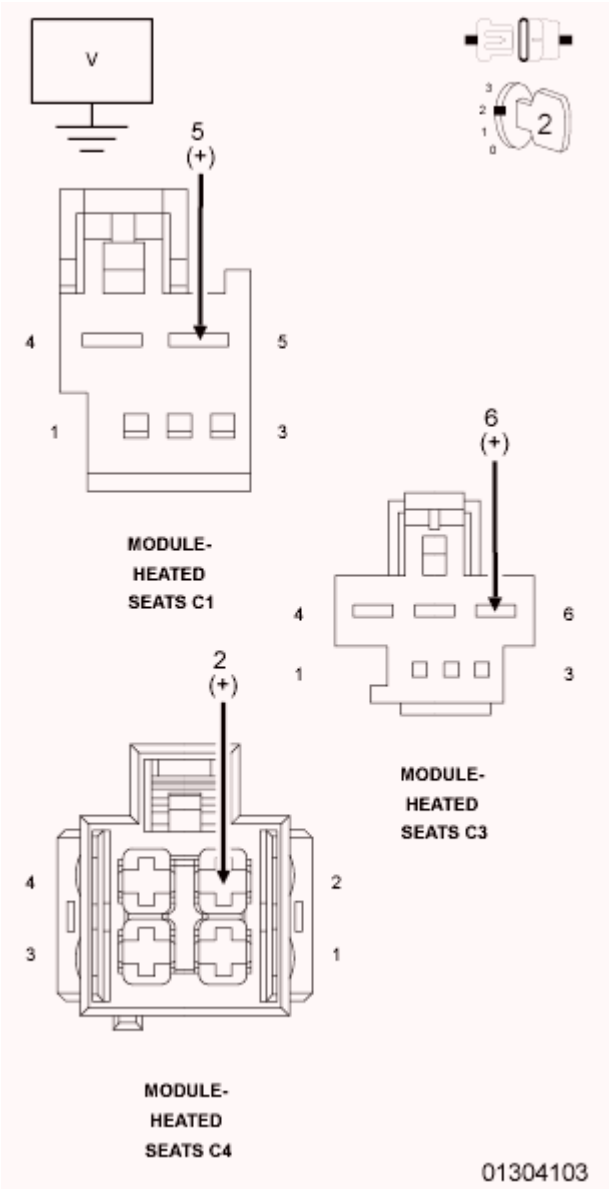

Fig. 172: Measuring Fused Ignition Run Control Output Circuit Voltage
Courtesy of CHRYSLER GROUP, LLC

1. Turn the ignition off.
2. Disconnect the HSM C1 harness connector.

NOTE: Check connectors. Clean and repair as necessary.

3. Start the engine and let idle.
4. Measure the voltage of the Fused Ignition Run Control Output circuit between the HSM C1 harness

connector and ground and compare it to the voltage at the vehicle battery.

Is the Voltage measured at the HSM C1 connector the same as the voltage measured at the battery?

Yes

- Replace the Heated Seat Module (HSM) in accordance with the Service Information.
- Perform the BODY VERIFICATION TEST. Refer to **BODY VERIFICATION TEST** .

No

- Repair the Fused Ignition Run Control Output circuit for the cause of the high voltage condition at the HSM.
- Perform the BODY VERIFICATION TEST. Refer to **BODY VERIFICATION TEST** .

B210C-18-BATTERY VOLTAGE INPUT - CIRCUIT BELOW THRESHOLD

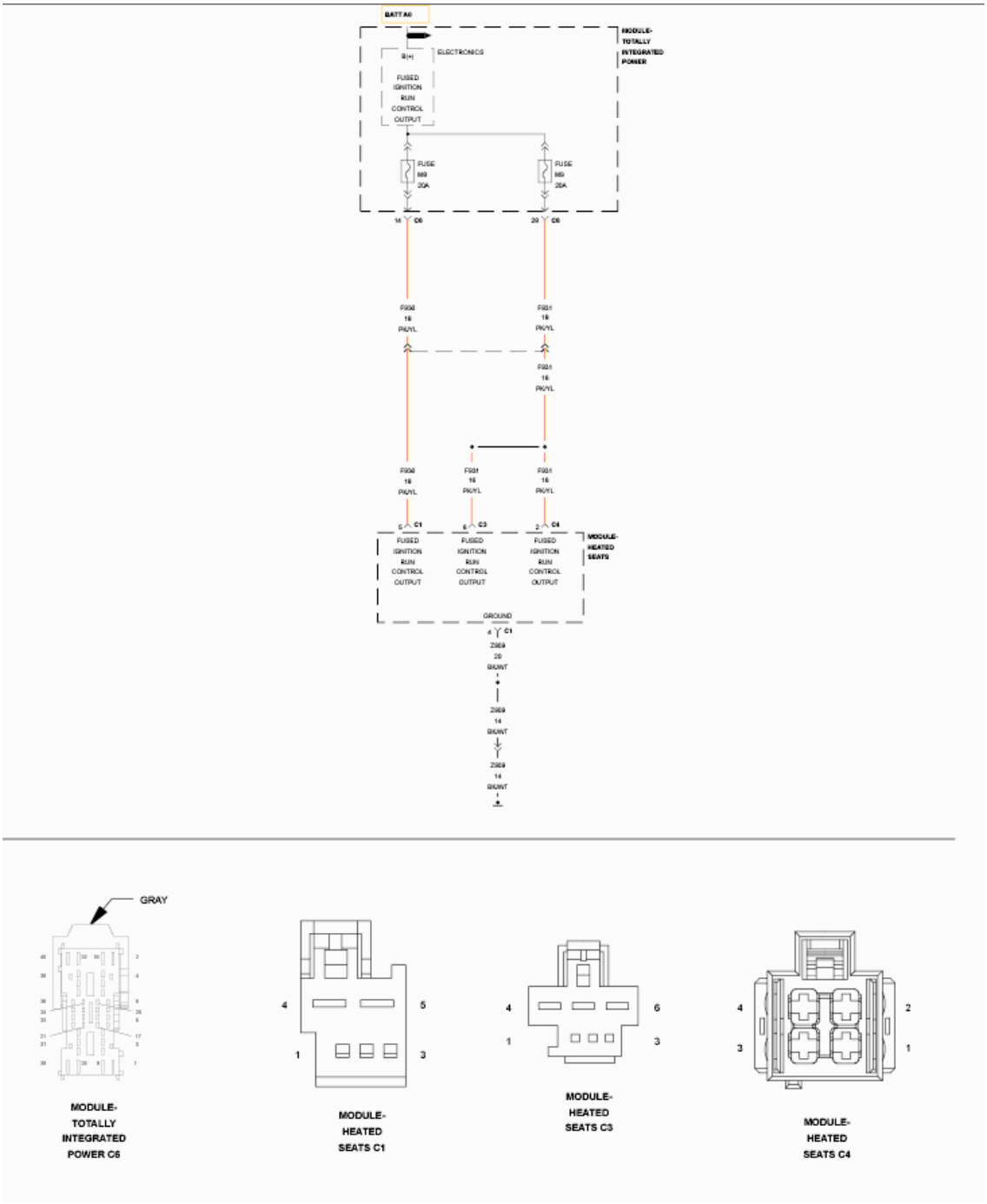

Fig. 173: Rear Heated Seats Power Supply Wiring Diagram
Courtesy of CHRYSLER GROUP, LLC

For a complete wiring diagram, **refer to appropriate SYSTEM WIRING DIAGRAMS article** .

WHEN MONITORED:

With engine running.

SET CONDITION:

The Heated Seat Module (HSM) detects Voltage below 10.0 volts on the (F930) Fused Ignition Run Control Output circuit.

POSSIBLE CAUSES

Possible Causes
CHARGING SYSTEM VOLTAGE LOW
FUSED IGNITION RUN CONTROL OUTPUT CIRCUIT
HEATED SEAT MODULE (HSM)

DIAGNOSTIC TEST

1. **CHECK FOR CHARGING SYSTEM DIAGNOSTIC TROUBLE CODES (DTCs)**
    1. Turn the ignition on.
    2. Using a scan tool, read Powertrain Control Module (PCM) DTCs.

    Are there any Charging System DTCs set in the PCM?

    Yes

    - Refer to **CHARGING SYSTEM - DIAGNOSIS AND TESTING** for Charging System diagnostic procedures.

    No

    - Go To 2.
2. **VERIFY DTC IS ACTIVE**
    1. Using a scan tool, record and erase DTCs.
    2. Turn the ignition off.
    3. Start the engine and let it run for one minute.
    4. Using a scan tool, read DTCs.

    Is the DTC active?

    Yes

    - Go To 3.

    No

    - The conditions that caused this code to set are not present at this time. Verify seat harness is routed correctly to the HSM. Using the wiring diagram/schematic as a guide, inspect the wiring and connectors. Look for chafed, pierced, pinched, or partially broken wires and

broken, bent, pushed out, spread, corroded, or contaminated terminals. Attempt to reproduce condition by adjusting the seat.

- Perform the BODY VERIFICATION TEST. Refer to **BODY VERIFICATION TEST** .

3. **CHECK (F930) FUSED IGNITION RUN CONTROL OUTPUT CIRCUIT VOLTAGE**

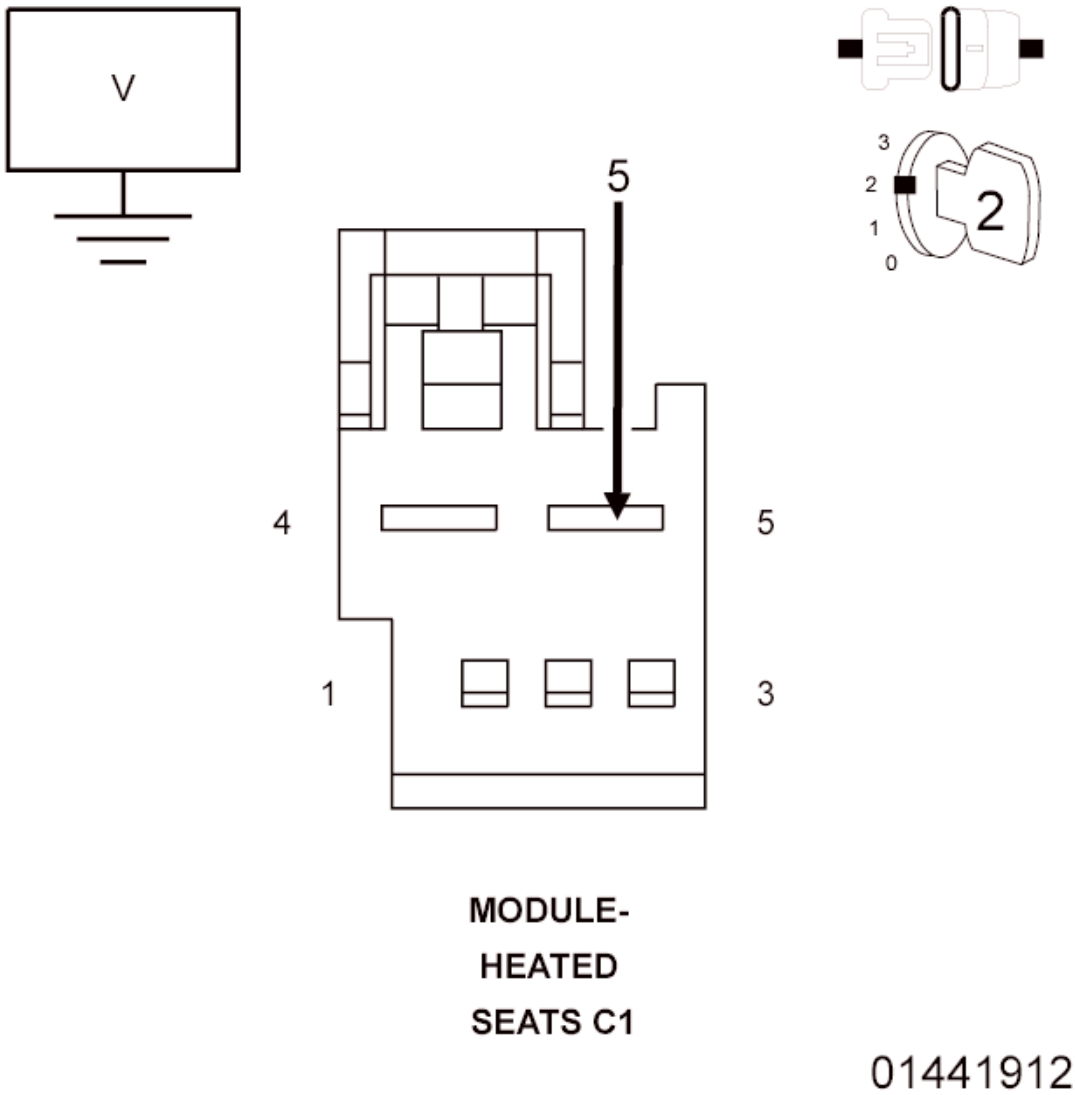

Fig. 174: Measuring Fused Ignition Run Control Output Circuit Voltage
Courtesy of CHRYSLER GROUP, LLC

1. Turn the ignition off.
2. Disconnect the HSM C1 harness connector.

NOTE: Check connectors. Clean and repair as necessary.

3. Start the engine and let idle.
4. Measure the voltage of the (F930) Fused Ignition Run Control Output circuit between the HSM C1

harness connector and ground and compare it to the voltage at the vehicle battery.

Is the voltage measured at the HSM C1 connector the same as the voltage measured at the battery?

Yes

- Replace the Heated Seat Module (HSM) in accordance with the Service Information.
- Perform the BODY VERIFICATION TEST. Refer to **BODY VERIFICATION TEST** .

No

- Repair the fused Ignition Run Control Output circuit for the cause of the low voltage condition at the HSM.
- Perform the BODY VERIFICATION TEST. Refer to **BODY VERIFICATION TEST** .

B21DD-84-SYSTEM VOLTAGE - SIGNAL BELOW ALLOWABLE RANGE

For a complete wiring diagram, **refer to appropriate SYSTEM WIRING DIAGRAMS article** .

WHEN MONITORED:

With the engine running.

SET CONDITION:

The Heated Seat Module (HSM) receives a battery Voltage below 10.0 volts status message through the CAN Bus.

POSSIBLE CAUSES

Possible Causes
CHARGING SYSTEM VOLTAGE LOW
TOTALLY INTEGRATED POWER MODULE (TIPM) DIAGNOSTIC TROUBLE CODES (DTCs) PRESENT
HEATED SEAT MODULE (HSM)

DIAGNOSTIC TEST

1. **CHECK FOR CHARGING SYSTEM DTCs**

NOTE: **If present, diagnose and repair DTC U0141-00 Lost Communication With IPM (FCM/TIPM) before proceeding with this diagnostic procedure.**

1. Turn the ignition on.
2. Using a scan tool, read Powertrain Control Module (PCM) DTCs.

Are there any Charging System DTCs set in the PCM?

Yes

- Refer to **CHARGING SYSTEM - DIAGNOSIS AND TESTING** for Charging System diagnostic procedures.

No

- Go To 2.

2. **CHECK FOR DTCs IN TIPM**
   1. Using a scan tool, read TIPM DTCs.

      Are there any DTCs set in the TIPM?

      Yes

      - Diagnose and repair the DTC(s). Refer to **TIPM - DIAGNOSIS AND TESTING** .

      No

      - Go To 3.

3. **CHECK FOR ACTIVE DTC B210C-18-BATTERY VOLTAGE INPUT - CIRCUIT BELOW THRESHOLD IN HSM**
   1. Using a scan tool, read HSM DTCs.

      Is DTC B210C-18-BATTERY VOLTAGE INPUT - CIRCUIT BELOW THRESHOLD active?

      Yes

      - Diagnose and repair the DTC. Refer to **DIAGNOSIS AND TESTING**.

      No

      - Go To 4.

4. **VERIFY THIS DTC IS ACTIVE**

NOTE:

- **Make sure the Battery is in good condition. Using a suitable Battery Tester, test the Battery before continuing.**
- **Make sure system voltage is in the normal operating range of approximately 12 to 14 volts before continuing.**
- **Inspect the vehicle for aftermarket accessories that may exceed the Generator System output.**
- **Make sure the generator drive belt is in good operating condition.**

- **Inspect the fuses. If an open fuse is found, use the wire diagram/schematic as a guide, inspect the wiring and connectors for damage.**

1. Using a scan tool, record and erase DTCs.
2. Turn the ignition off.
3. Start the engine and let it run for one minute.
4. Using a scan tool, read DTCs.

   Is the DTC active?

   Yes

   - Replace the Heated Seat Module (HSM) in accordance with the Service Information.
   - Perform the BODY VERIFICATION TEST. Refer to **BODY VERIFICATION TEST** .

   No

   - The conditions that caused this code to set are not present at this time.
   - Perform the BODY VERIFICATION TEST. Refer to **BODY VERIFICATION TEST** .

B21DD-85-SYSTEM VOLTAGE - SIGNAL ABOVE ALLOWABLE RANGE

For a complete wiring diagram, **refer to appropriate SYSTEM WIRING DIAGRAMS article** .

WHEN MONITORED:

With the engine running.

SET CONDITION:

The Heated Seat Module (HSM) receives a system Voltage above 16.0 volts status message through the CAN Bus.

POSSIBLE CAUSES

Possible Causes
CHARGING SYSTEM VOLTAGE HIGH
TIPM DIAGNOSTIC TROUBLE CODES (DTCs) PRESENT
HEATED SEAT MODULE (HSM)

DIAGNOSTIC TEST

1. **CHECK FOR CHARGING SYSTEM DTCs**

NOTE: **If present, diagnose and repair DTC U0141-00 Lost Communication With IPM (FCM/TIPM) before proceeding with this diagnostic procedure.**

1. Turn the ignition on.
2. Using a scan tool, read Powertrain Control Module (PCM) DTCs.

   Are there any Charging System DTCs set in the PCM?

   Yes

   - Refer to **CHARGING SYSTEM - DIAGNOSIS AND TESTING** for Charging System diagnostic procedures.

   No

   - Go To 2.

2. **CHECK FOR DTCs IN TIPM**
   1. Using a scan tool, read TIPM DTCs.

      Are there any DTCs set in the TIPM?

      Yes

      - Diagnose and repair the DTC(s). Refer to **TIPM - DIAGNOSIS AND TESTING** .

      No

      - Go To 3.

3. **CHECK FOR ACTIVE DTC B210C-17-BATTERY VOLTAGE INPUT - CIRCUIT ABOVE THRESHOLD IN HSM**
   1. Using a scan tool, read HSM DTCs.

      Is DTC B210C-17-BATTERY VOLTAGE INPUT - CIRCUIT ABOVE THRESHOLD active?

      Yes

      - Diagnose and repair the DTC. Refer to **DIAGNOSIS AND TESTING**.

      No

      - Go To 4.

4. **VERIFY THIS DTC IS ACTIVE**

NOTE:

- **Make sure the Battery is in good condition. Using a suitable Battery Tester, test the Battery before continuing.**

- **Make sure system voltage is in the normal operating range of approximately 12 to 14 volts before continuing.**
- **Inspect the vehicle for aftermarket accessories that may exceed the Generator System output.**
- **Make sure the generator drive belt is in good operating condition.**
- **Inspect the fuses. If an open fuse is found, use the wire diagram/schematic as a guide, inspect the wiring and connectors for damage.**

1. Using a scan tool, record and erase DTCs.
2. Turn the ignition Off.
3. Start the engine and let run for one minute.
4. Using a scan tool, read DTCs.

   Is the DTC active?

   Yes

   - Replace the Heated Seat Module (HSM) in accordance with the Service Information.
   - Perform BODY VERIFICATION TEST. Refer to **BODY VERIFICATION TEST** .

   No

   - The conditions that caused this code to set are not present at this time.
   - Perform BODY VERIFICATION TEST. Refer to **BODY VERIFICATION TEST** .

B221A-00-(HSM) HEATED SEAT MODULE INTERNAL

For a complete wiring diagram, **refer to appropriate SYSTEM WIRING DIAGRAMS article** .

WHEN MONITORED:

With the engine running.

SET CONDITION:

If the Heated Seat Module (HSM) detects an internal component failure.

POSSIBLE CAUSES

Possible Causes
HEATED SEAT MODULE (HSM)

DIAGNOSTIC TEST

1. **VERIFY DIAGNOSTIC TROUBLE CODE (DTC) IS ACTIVE**
    1. Turn the ignition on.
    2. Using a scan tool, record and erase DTCs.
    3. Turn the ignition off.
    4. Start the engine and let it run.
    5. Operate each of the heated and vented systems one at a time, as equipped.
    6. Using a scan tool, read DTCs.

    Is the DTC active?

    Yes

    - Replace the Heated Seat Module (HSM) in accordance with the Service Information.
    - Perform the BODY VERIFICATION TEST. Refer to **BODY VERIFICATION TEST** .

    No

    - The conditions that caused this code to set are not present at this time. Verify seat harness is routed correctly to the HSM. Using the wiring diagram/schematic as a guide, inspect the wiring and connectors. Look for chafed, pierced, pinched, or partially broken wires and broken, bent, pushed out, spread, corroded, or contaminated terminals. Attempt to reproduce condition by adjusting the seat.
    - Perform the BODY VERIFICATION TEST. Refer to **BODY VERIFICATION TEST** .

U0011-00-CAN B BUS PERFORMANCE

For a complete wiring diagram, **refer to appropriate SYSTEM WIRING DIAGRAMS article** .

WHEN MONITORED:

With the ignition on.

SET CONDITION:

The Heated Seat Module (HSM) detects that the (D265) CAN Interior Bus (125K) (+) circuit or (D264) CAN Interior Bus (125K) (-) circuit is shorted.

POSSIBLE CAUSES

Possible Causes
(D265) CAN INTERIOR BUS (125K) (+) CIRCUIT SHORTED TO GROUND
(D264) CAN INTERIOR BUS (125K) (-) CIRCUIT SHORTED TO VOLTAGE
(D265) CAN INTERIOR BUS (125K) (+) CIRCUIT SHORTED TO THE (D264) CAN INTERIOR BUS (125K) (-) CIRCUIT

ANY CAN INTERIOR BUS MODULE
TOTALLY INTEGRATED POWER MODULE (TIPM)

DIAGNOSTIC TEST

This module will not be able to communicate when this fault is active and therefore will only display this DTC as stored. To diagnose this fault, use a scan tool and check for DTCs in the TIPM. If DTCs are active, refer to **TIPM - DIAGNOSIS AND TESTING** and diagnose and repair the faults. If no DTCs are active, but there are stored Lost Communication DTCs set, refer to **STORED LOST COMMUNICATION DTCS** and diagnose and repair these faults. If no DTCs are set, refer to **STANDARD PROCEDURE** and perform BODY VERIFICATION TEST.

U0141-00-LOST COMMUNICATION WITH IPM (FCM/TIPM)

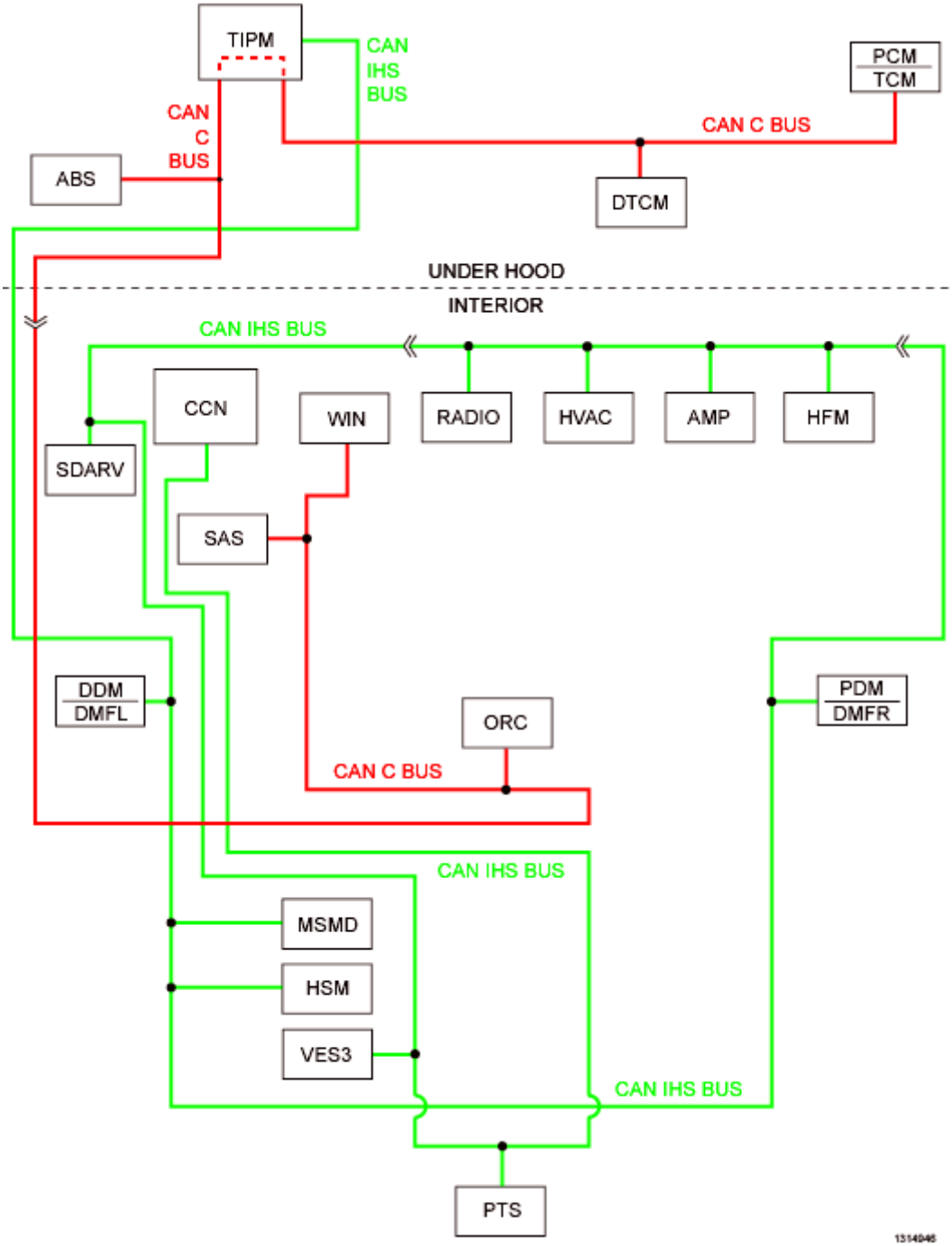

Fig. 175: CAN Ihs Bus & TIPM CAN C Bus Wiring Diagram
Courtesy of CHRYSLER GROUP, LLC

For a complete wiring diagram, **refer to appropriate SYSTEM WIRING DIAGRAMS article** .

WHEN MONITORED:

With the ignition on.

Battery Voltage between 10 and 16 Volts.

Ignition Off Draw (IOD) fuse installed.

Totally Integrated Power Module (TIPM) is configured correctly.

SET CONDITION:

Bus messages not received from the TIPM for approximately two to five seconds.

POSSIBLE CAUSES

Possible Causes
DIAGNOSTIC CAN C BUS CIRCUITS OPEN OR SHORTED
CAN INTERIOR BUS (125K) CIRCUITS OPEN OR SHORTED
DIAGNOSTIC TROUBLE CODES (DTCs) RELATED TO BATTERY VOLTAGE, IGNITION, OR VIN MESSAGES PRESENT
TIPM NOT CONFIGURED CORRECTLY
TIPM POWER AND GROUND
TOTALLY INTEGRATED POWER MODULE (TIPM)
HEATED SEAT MODULE (HSM)

DIAGNOSTIC TEST

1. **VERIFY DIAGNOSTIC TROUBLE CODE (DTC) IS ACTIVE**

   NOTE: Make sure the IOD fuse is installed and battery Voltage is between 10 and 16 Volts before proceeding.

   1. Turn the ignition on.
   2. Using a scan tool, read DTCs.

      Is the DTC active?

      Yes

      - Go To 2.

      No

      - **Refer to <u>STORED LOST COMMUNICATION DTCS</u>** and perform the diagnostic procedure.
2. **VERIFY TIPM IS COMMUNICATING WITH OTHER MODULES**
   1. Using a scan tool, read DTCs in all modules.

Is any other module reporting a loss of communication with the TIPM?

Yes

- **Refer to COMMUNICATION - DIAGNOSIS AND TESTING** and perform the No Response from TIPM diagnostic procedure.

No

- Replace the Heated Seat Module (HSM) in accordance with the Service Information.
- Perform the BODY VERIFICATION TEST. Refer to **BODY VERIFICATION TEST** .

U0155-00-LOST COMMUNICATION WITH CLUSTER/CCN

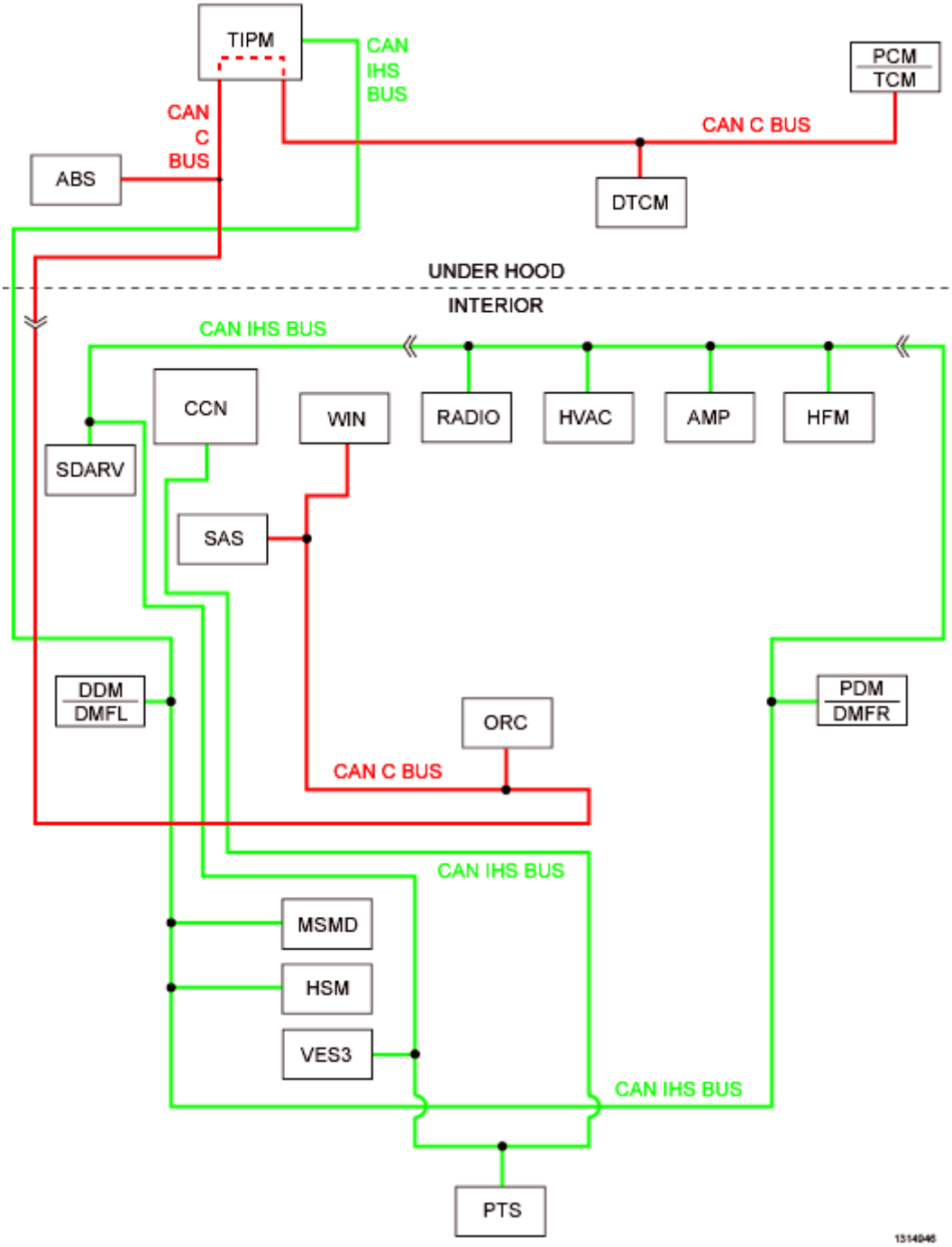

Fig. 176: CAN Ihs Bus & TIPM CAN C Bus Wiring Diagram
Courtesy of CHRYSLER GROUP, LLC

For a complete wiring diagram, **refer to appropriate SYSTEM WIRING DIAGRAMS article** .

WHEN MONITORED:

With the ignition on.

Battery Voltage between 10 and 16 Volts.

Ignition Off Draw (IOD) fuse installed.

Totally Integrated Power Module (TIPM) is configured correctly.

SET CONDITION:

Bus messages not received from the Cluster (CCN) for approximately two to five seconds.

POSSIBLE CAUSES

Possible Causes
DIAGNOSTIC CAN C BUS CIRCUITS OPEN OR SHORTED
CAN INTERIOR BUS (125K) CIRCUITS OPEN OR SHORTED
DIAGNOSTIC TROUBLE CODES (DTCs) RELATED TO BATTERY VOLTAGE, IGNITION, OR VIN MESSAGES PRESENT
TIPM NOT CONFIGURED CORRECTLY
CCN POWER AND GROUND
CCN
HEATED SEAT MODULE (HSM)

DIAGNOSTIC TEST

1. **VERIFY DIAGNOSTIC TROUBLE CODE (DTC) IS ACTIVE**

   NOTE: Make sure the IOD fuse is installed and battery Voltage is between 10 and 16 Volts before proceeding.

   1. Turn the ignition on.
   2. Using a scan tool, read DTCs.

      Is the DTC active?

      Yes

      - Go To 2.

      No

      - **Refer to <u>STORED LOST COMMUNICATION DTCS</u>** and perform the diagnostic procedure.
2. **VERIFY CCN IS COMMUNICATING WITH OTHER MODULES**
   1. Using a scan tool, read DTCs in all modules.

Is any other module reporting a loss of communication with the CCN?

Yes

- **Refer to COMMUNICATION - DIAGNOSIS AND TESTING** and perform the No Response from CCN diagnostic procedure.

No

- Replace the Heated Seat Module (HSM) in accordance with the Service Information.
- Perform the BODY VERIFICATION TEST. Refer to **BODY VERIFICATION TEST** .

U1446-00-IMPLAUSIBLE HEATED STEERING WHEEL TEMPERATURE MESSAGE RECEIVED (CCN)

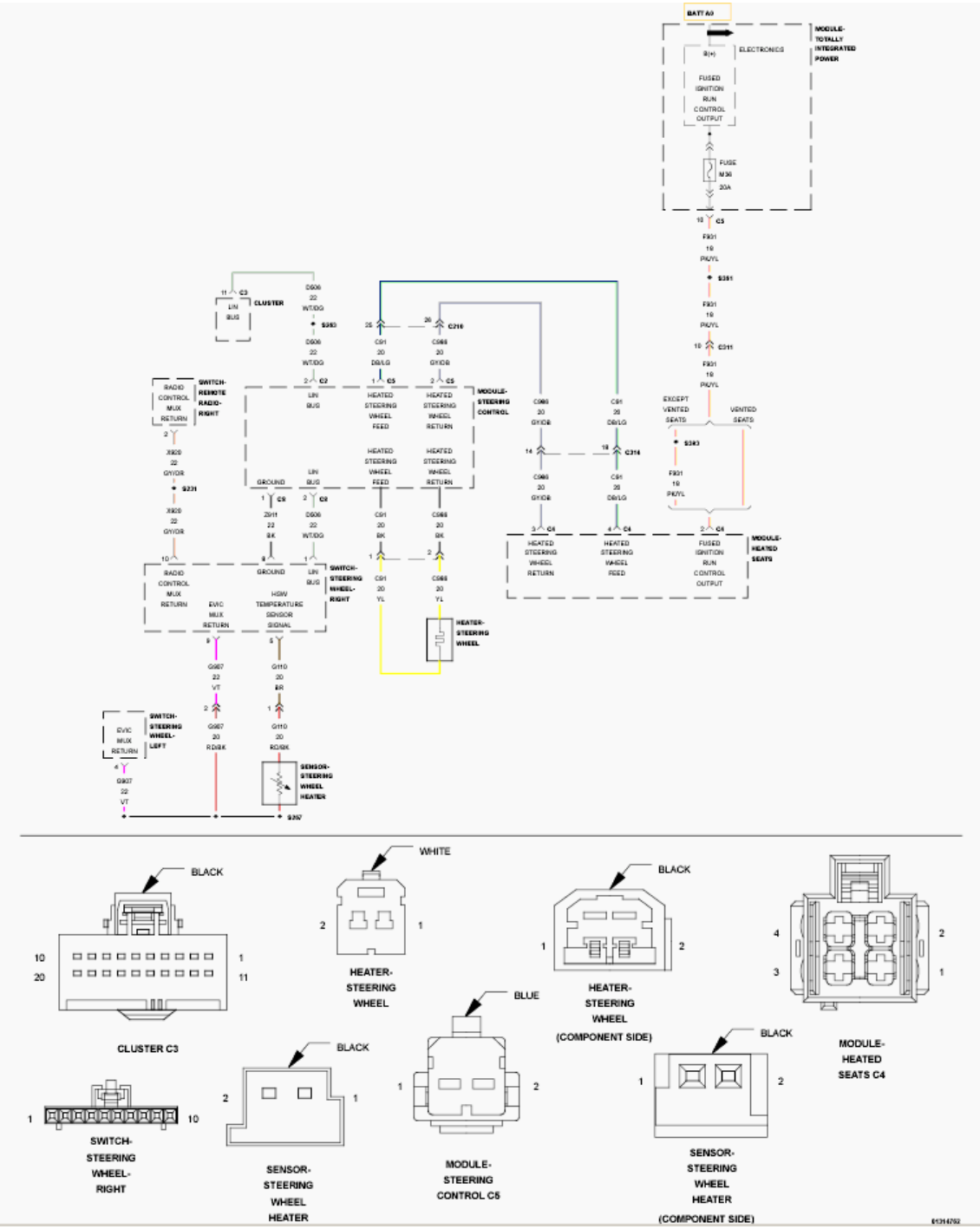

Fig. 177: Heated Steering Wheel Control Wiring Diagram
Courtesy of CHRYSLER GROUP, LLC

For a complete wiring diagram, **refer to appropriate SYSTEM WIRING DIAGRAMS article** .

THEORY OF OPERATION

The Heated Steering Wheel (HSW) Temperature Sensor is connected to the Right Steering Switch. The sensor

data is transferred from the Right Steering Switch to the Cluster (CCN) by way of the LIN bus, a serial sub-bus.

WHEN MONITORED:

With the engine running.

SET CONDITION:

The Heated Seat Module (HSM) does not receive the Heated Steering Wheel (HSW) Temperature Sensor Fault Signal from the Cluster (CCN) for more than two seconds.

POSSIBLE CAUSES

Possible Causes
(G110) HSW TEMPERATURE SENSOR SIGNAL CIRCUIT OPEN
(G110) HSW TEMPERATURE SENSOR SIGNAL CIRCUIT SHORTED TO GROUND
(G110) HSW TEMPERATURE SENSOR SIGNAL CIRCUIT SHORTED TO THE (G902) SWITCH MUX RETURN CIRCUIT
(G110) HSW TEMPERATURE SENSOR SIGNAL CIRCUIT SHORTED TO THE (G907) EVIC MUX RETURN CIRCUIT
(G110) HSW TEMPERATURE SENSOR SIGNAL CIRCUIT SHORTED TO THE (Z911) GROUND CIRCUIT
(G907) EVIC MUX RETURN CIRCUIT OPEN
HEATED STEERING WHEEL (HSW) TEMPERATURE SENSOR
RIGHT STEERING WHEEL SWITCH
STEERING CONTROL MODULE (SCM)

DIAGNOSTIC TEST

1. **TEST FOR INTERMITTENT CONDITION**

   NOTE: Diagnose and repair all active Bus related Diagnostic Trouble Codes (DTCs) including Lost Communication DTCs before diagnosing this DTC.

   1. Turn the ignition on.
   2. Using a scan tool, record and erase DTCs.
   3. Turn the ignition off.
   4. Start the engine and let it run.
   5. Using a scan tool, read DTCs.

      Is the DTC active?

      Yes

      - Go To 2.

No

- The conditions that caused this code to set are not present at this time. Using the wiring diagram/schematic as a guide, inspect the wiring and connectors. Look for chafed, pierced, pinched, or partially broken wires and broken, bent, pushed out, spread, corroded, or contaminated terminals. Attempt to reproduce condition by rotating the steering wheel.
- Perform the BODY VERIFICATION TEST. Refer to **BODY VERIFICATION TEST** .

2. **CHECK FOR AN OPEN OR SHORTED HSW TEMPERATURE SENSOR**

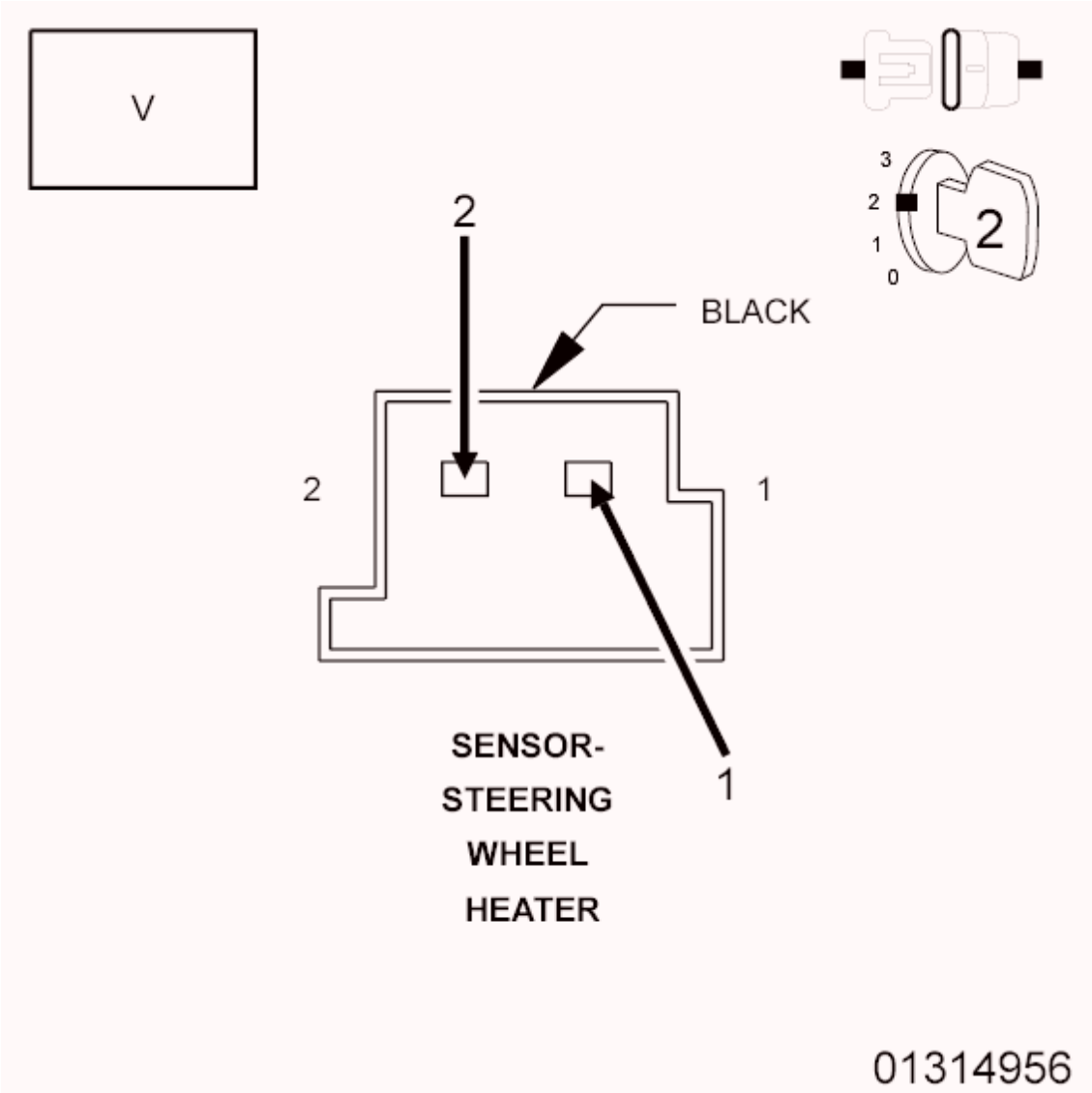

Fig. 178: Checking HSW Temperature Sensor For An Open Or Short
Courtesy of CHRYSLER GROUP, LLC

WARNING: **Turn the ignition off, disconnect the 12-volt battery and wait two minutes before proceeding. Failure to follow these instructions may result in possible serious or fatal injury.**

1. Remove the Driver Airbag in accordance with the Service Information.
2. Disconnect the Steering Wheel Heater Sensor connector.

NOTE: **Before proceeding, thoroughly inspect the wiring harness and connectors between the HSW and the Right Steering Wheel Switch. Look for chafed, pierced, pinched, or partially broken wires and broken, bent, pushed out, spread, corroded, or contaminated terminals.**

WARNING: **Turn the ignition on, then reconnect the 12-volt battery and wait two minutes before proceeding. Failure to follow these instructions may result in possible serious or fatal injury.**

3. Measure the Voltage between the (G110) HSW Temperature Sensor Signal circuit and the (G907) EVIC MUX Return circuit at the Steering Wheel Heater Sensor connector.

   Is the Voltage above 3.5-volts?

   Yes

   - Replace the Heated Steering Wheel (HSW) in accordance with the Service Information.
   - Perform the BODY VERIFICATION TEST. Refer to **BODY VERIFICATION TEST** .

   No

   - Go To 3.

3. **CHECK (G110) HSW TEMPERATURE SENSOR SIGNAL CIRCUIT FOR AN OPEN**

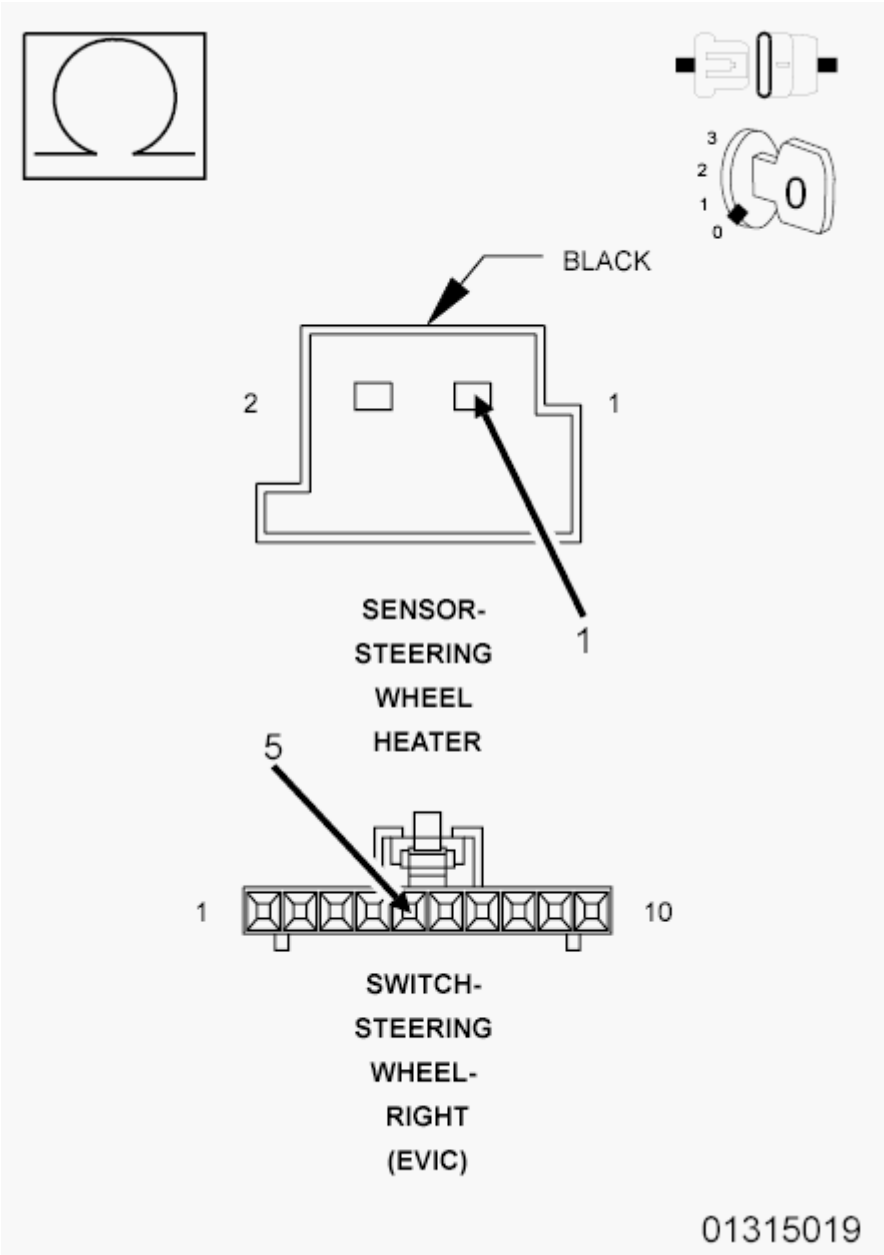

Fig. 179: Checking HSW Temperature Sensor Signal Circuit For An Open
Courtesy of CHRYSLER GROUP, LLC

1. Turn the ignition off.
2. Disconnect the Right Steering Wheel Switch connector.

NOTE: Check connectors. Clean and repair as necessary.

3. Measure the resistance of the (G110) HSW Temperature Sensor Signal circuit between the Steering Wheel Heater Sensor connector and the Right Steering Wheel Switch connector.

   Is the resistance below 5.0 Ohms?

Yes

- Go To 4.

Yes

- Repair the (G110) HSW Temperature Sensor Signal circuit for an open.
- Perform the BODY VERIFICATION TEST. Refer to **BODY VERIFICATION TEST** .

4. **CHECK (G110) HSW TEMPERATURE SENSOR SIGNAL CIRCUIT FOR A SHORT TO GROUND**

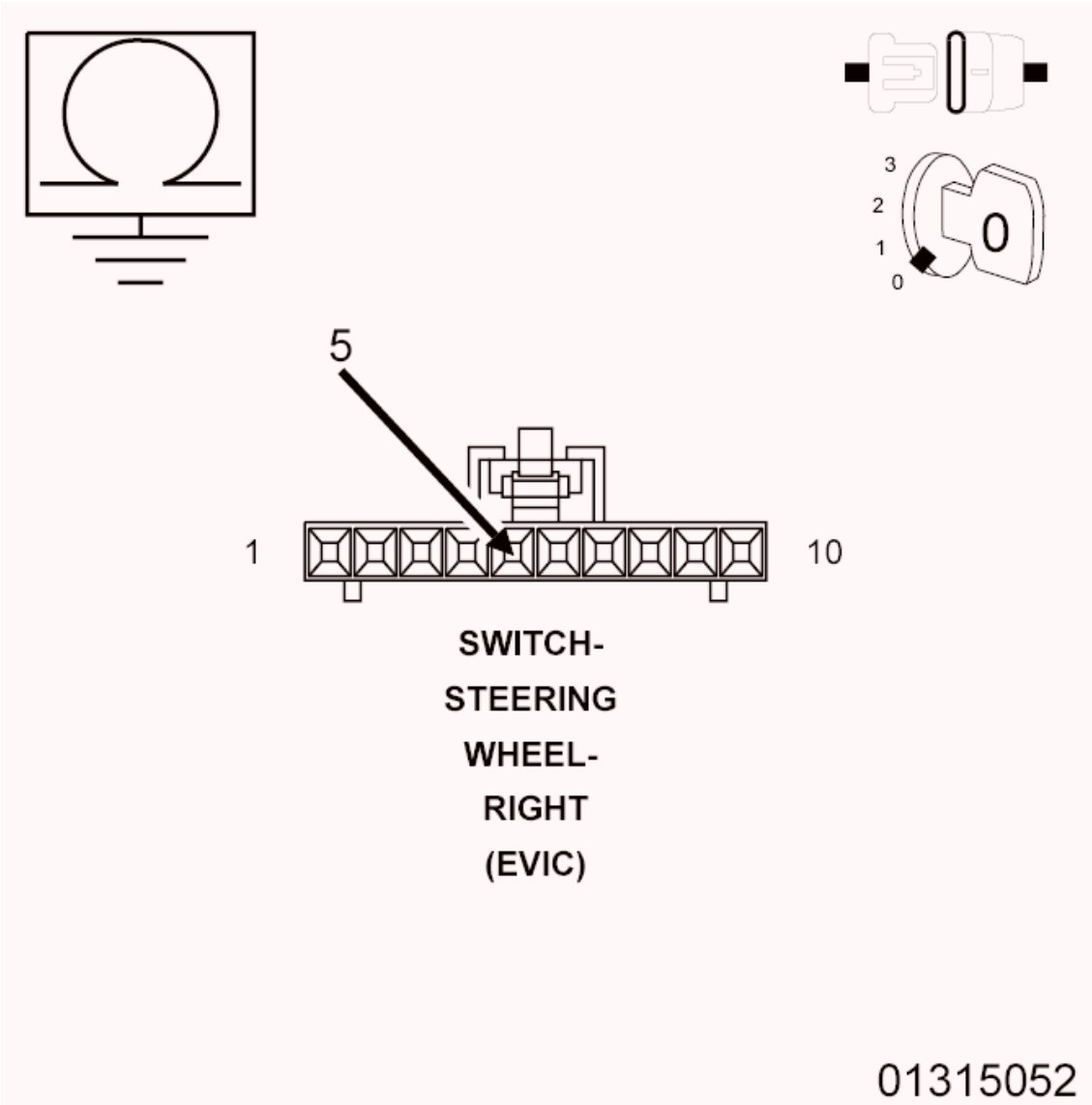

Fig. 180: Checking HSW Temperature Sensor Signal Circuit For Short To Ground
Courtesy of CHRYSLER GROUP, LLC

1. Measure the resistance of the (G110) HSW Temperature Sensor Signal circuit between ground and

the Right Steering Wheel Switch connector.

Is the resistance below 10K Ohms?

Yes

- Repair the (G110) HSW Temperature Sensor Signal circuit for a short to ground.
- Perform the BODY VERIFICATION TEST. Refer to **BODY VERIFICATION TEST** .

No

- Go To 5.

5. **CHECK (G110) HSW TEMPERATURE SENSOR SIGNAL CIRCUIT FOR A SHORT TO (G902) SWITCH MUX RETURN CIRCUIT, (G907) EVIC MUX RETURN CIRCUIT, AND (Z911) GROUND CIRCUIT**

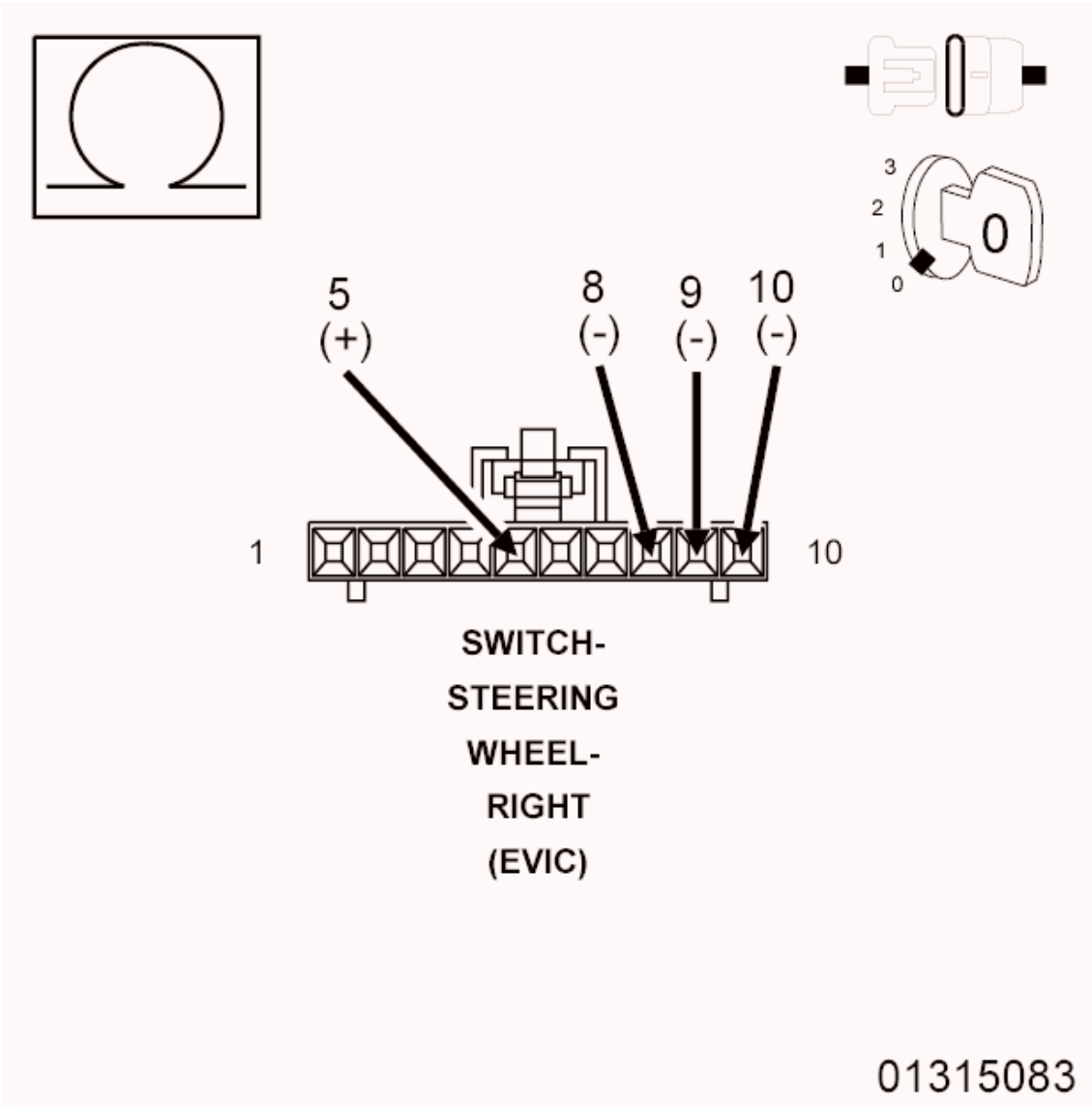

Fig. 181: Checking HSW Temperature Sensor Signal Circuit For A Short To Switch MUX Return Circuit, EVIC MUX Return Circuit, & Ground Circuit
Courtesy of CHRYSLER GROUP, LLC

1. Measure the resistance between the (G110) HSW Temperature Sensor Signal circuit and the (G902) Switch MUX Return circuit at the Right Steering Wheel Switch connector.
2. Measure the resistance between the (G110) HSW Temperature Sensor Signal circuit and the (G907) EVIC MUX Return circuit at the Right Steering Wheel Switch connector.
3. Measure the resistance between the (G110) HSW Temperature Sensor Signal circuit and the (Z911) Ground circuit at the Right Steering Wheel Switch connector.

   Is the resistance below 10K Ohms between the (G110) HSW Temperature Sensor Signal circuit and any of the other circuits?

   Yes

- Repair all circuits with a resistance below 10K Ohms for a short to the (G110) HSW Temperature Sensor Signal circuit.
- Perform the BODY VERIFICATION TEST. Refer to **BODY VERIFICATION TEST** .

No

- Go To 6.

6. **CHECK (G907) EVIC MUX RETURN CIRCUIT FOR AN OPEN**

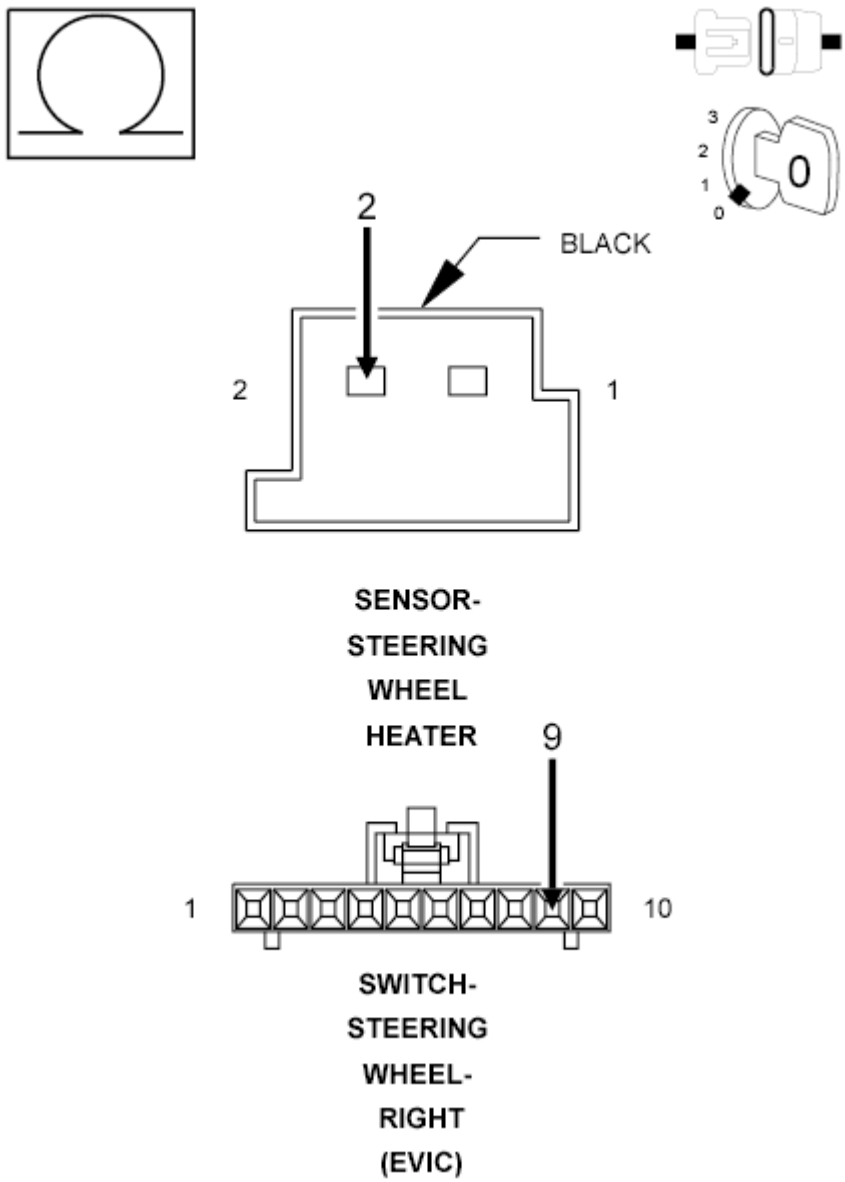

Fig. 182: Checking EVIC MUX Return Circuit For An Open
Courtesy of CHRYSLER GROUP, LLC

1. Measure the resistance of the (G907) EVIC MUX Return circuit between the Steering Wheel Heater Sensor connector and the Right Steering Wheel Switch connector.

   Is the resistance below 5.0 Ohms?

   Yes

   - Go To 7.

   No

   - Repair the (G907) EVIC MUX Return circuit for an open.
   - Perform the BODY VERIFICATION TEST. Refer to **BODY VERIFICATION TEST** .

7. **CHECK FOR AN OPEN OR SHORTED RIGHT STEERING WHEEL SWITCH**
   1. Replace the Right Steering Wheel Switch in accordance with the Service Information.
   2. Reconnect the Steering Wheel Heater Sensor connector.
   3. Turn the ignition on.
   4. Using a scan tool, erase DTCs.
   5. Turn the ignition off.
   6. Start the engine and let it run.
   7. Using a scan tool, read DTCs.

      Is the DTC active?

      Yes

      - Replace the Steering Control Module (SCM) in accordance with the Service Information.
      - Perform the BODY VERIFICATION TEST. Refer to **BODY VERIFICATION TEST** .

      No

      - Test complete.
      - Perform the BODY VERIFICATION TEST. Refer to **BODY VERIFICATION TEST** .

STANDARD PROCEDURE

HEATED STEERING WHEEL CONFIGURATION

DIAGNOSTIC TEST

1. **PERFORMING HEATED STEERING WHEEL CONFIGURATION PROCEDURE**
   1. Using the scan tool, perform the HEATED STEERING CONFIGURATION procedure under Misc Functions.

2. With the scan tool, select View DTCs in the HSM.

   Are there any DTCs present?

   Yes

   - Perform the appropriate diagnostic procedure(s).

   No

   - Test Complete

DESCRIPTION

DESCRIPTION

WARNING: **The front passenger seat assembly contains critical components that affect the front passenger airbag deployment. Correctly functioning front passenger seat components are critical for the Occupant Classification System (OCS) to properly classify the front passenger and calculate the proper airbag deployment. Unapproved modifications or service procedures to the front passenger seat assembly, its related components, or trim cover may inadvertently change the airbag deployment in case of a frontal crash. This could result in death or serious injury to the front seat passenger if the vehicle is involved in an accident. Refer to WARNING . The following requirements must be strictly adhered to:**

- **Do not modify the front passenger seat assembly or components in any way.**
- **Do not modify the front seat center console or center position seat in any way.**
- **Do not use prior or future model year seat trim covers not designated for the specific model being repaired. Always use the correct seat trim cover specified for the vehicle.**
- **Do not replace the seat trim cover with an aftermarket trim cover.**
- **Do not add a secondary trim cover other than those approved by Chrysler/Mopar.**
- **At no time should any Supplemental Restraint System (SRS) component or SRS related component or fastener be modified or replaced with any part except those which are approved by Chrysler/Mopar.**

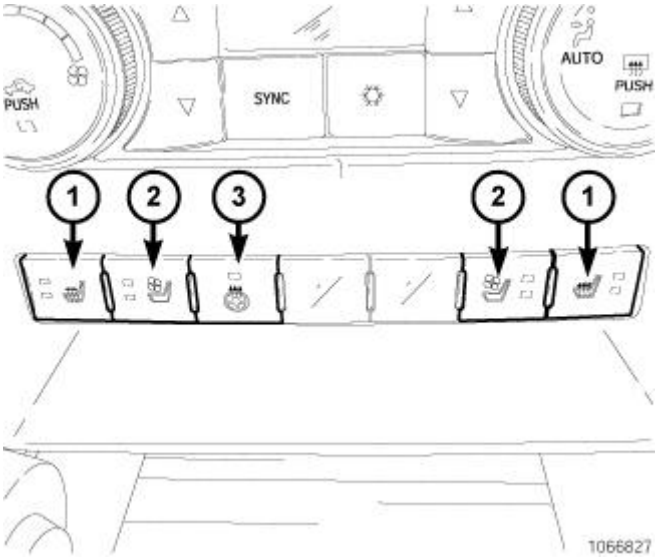

Fig. 1: Heated Seat Switches
Courtesy of CHRYSLER GROUP, LLC

Vehicles with the heated seat option can be visually identified by the two heated seat switches located in the center stack of the instrument panel, and the two heated seat switches located at the rear of the floor center console. The heated seat system allows the seat passenger to select from two different levels of electrical seat heating (HI/LO). The heated seat system for this vehicle includes the following major components:

- **Heated Seat Switches** - Up to four heated seat switches are used per vehicle, including two Light-Emitting Diode (LED) indicator lamps for heat level indication. Two switches for the front seats and two switches for the rear seats if equipped with rear heated seats. The front heated seat switches are mounted in the switchbank located on the instrument panel center bezel under the HVAC controls. If equipped the rear heated seat switches are located on the back side of the floor center console.
- **Heated Seat Elements** - Up to eight heated seat elements are used per vehicle, two for each seat. The elements are integral to the individual seat and seat back cushions.
- **Heated Seat Control Module (HSCM)** - One module located under the drivers front seat. The HSCM controls the functions of all the heated seats and if equipped the heated steering wheel and vented seats.

OPERATION

OPERATION

The heated seat system operates on battery current received through a fuse in the Totally Integrated Power Module (TIPM). Fused ignition switch output (run) circuits are used, so that the heated seat system will only operate when the ignition switch is in the On position. The heated seat system will turn Off automatically whenever the ignition switch is turned to any position except On.

A Heated Seat Control Module (HSCM) is used to control the heated seat system. The HSCM responds to heated seat switch input and ignition switch status inputs by controlling the 12v output to the seat heating elements through integral solid-state relays.

When any of the heated seat switches are depressed the heating elements for the selected seat are energized. Light Emitting Diodes (LEDS) on the switch indicate the level of heat in use: Two LEDs are illuminated for high, one for low, and none for off. Pressing the switch once will select high-level heating. Pressing the switch a second time will select low-level heating. Pressing the switch a third time will shut the heating elements off.

The HSCM energizes an integral solid-state relay, which supplies battery current to the heating elements. When high-temperature heating is selected, the heaters provide a boosted heat level during the first four minutes of operation after heating is activated. The heat output then drops to the normal high-temperature level. If high-level heating is selected, the control system will automatically switch to the low level after two hours of continuous operation. At that time, the number of illuminated LEDs changes from two to one, indicating the change. Operation on the low setting will continue indefinitely until the switch/module button is pushed to turn the system off.

The system will automatically turn off the heating elements if it detects an OPEN or LOW short in the heating element circuit.

DIAGNOSIS AND TESTING

DIAGNOSIS AND TESTING - HEATED SEAT SYSTEM

NOTE: **Vehicles equipped with the heated seat option utilize a low voltage cut-off feature. This feature turns off power to the heated seat system anytime vehicle voltage is below 11.7 volts or above 15.5 volts. Be certain to check the vehicle electrical system for proper voltage anytime the heated seat system appears inoperative.**

NOTE: **If a Diagnostic Trouble Code (DTC) can not be verified, it is a good indication that an INTERMITTENT fault condition may be present. To help find an intermittent problem, sit in the seat in question and move around the heating elements within the seat while testing continuity. also wiggle the heated seat wire harness and electrical connectors while testing continuity.**

NOTE: **For complete circuit diagrams, refer to appropriate Wiring Information. Wiring Information includes wiring diagrams, connector pin-out and location views, details of wire harness routing and retention, splice and ground locations and proper wire and connector repair procedures.**

Before testing any individual components in the heated seat system, check the following:

- Check to see if the concern is isolated to only one seat. Operate the other heated seat.
- Check the ignition fuse in the Totally integrated Power Module (TIPM). Repair as necessary.
- Using a scan tool, check for any Diagnostic Trouble Codes (DTCs) related to the Heated Seat Module (HSM), If any DTCs are found, repair as necessary. Refer to **DIAGNOSIS AND TESTING** .
- Check the vehicles battery open-circuit voltage and charging system performance. If the vehicle's electrical system is defective or weak it may not be suppling sufficient energy to operate the heated seat system.

- If there are no DTCs and the front heated seat system functions properly, but a heated seat switch indicator does not illuminate, the switch pod assembly in the instrument panel must be replaced. Refer to **SWITCH, HEATED SEAT, REMOVAL**.
- If there are no DTCs and the rear heated seat system functions properly, but one or both of the indicator lamps in a rear heated seat switch do not illuminate, check the rear heated switch circuits and repair as necessary. Refer to appropriate Wiring information. If the wiring is OK, replace the inoperative second row heated seat switch. Refer to **SWITCH, HEATED SEAT, REMOVAL**.

PAD, HEATER

DESCRIPTION

DESCRIPTION

Vehicles equipped with the optional heated seat system have up to four heated seats with two heated seat elements, located in each seat. One heating element is used for each seat cushion and another for each seat back.

Each of the heated seat elements consists of multiple heating circuits operating in parallel throughout the element. The heated seat elements are captured between the seat trim cover and the seat cushion assembly. If a malfunction occurs in one or more of the individual circuits, the others will continue to provide heat.

The heated seat elements cannot be repaired. If found to be damaged or inoperative, a new heating element assembly must be installed.

OPERATION

OPERATION

One end of the heated seat element is connected to ground at all times through a splice under the seat. Battery current is directed to the other end of the heated seat element by the Heated Seat Control Module (HSCM). The heated seat switch/module will energize the heated seat element when the heated seat switch/module button is depressed in the Low or High position.

As electrical current passes through the heated seat element, the resistance of the wire used in the element disperses some of the electrical current in the form of heat. The heat produced by the heated seat element then radiates through the underside of the seat cushion and seat back trim covers, warming the seat cover and its occupant.

DIAGNOSIS AND TESTING

HEATED SEAT ELEMENT

NOTE: **For complete circuit diagrams, refer to appropriate Wiring Information. Wiring Information includes wiring diagrams, connector pin-out and location views, details of wire harness routing and retention, splice and ground locations and proper wire and connector repair procedures.**

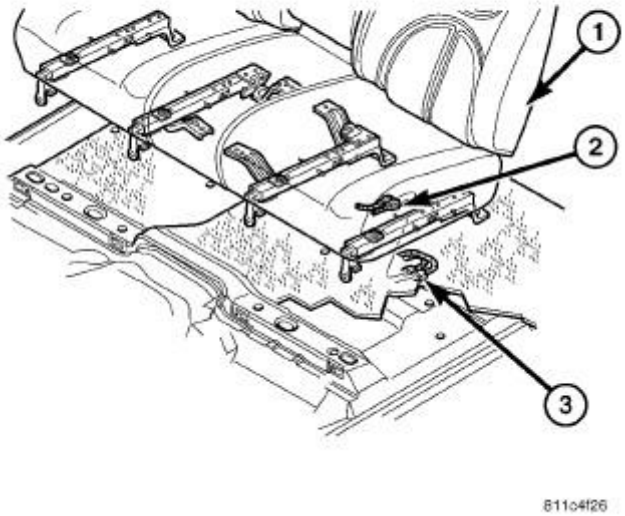

Fig. 2: Seat & Connectors
Courtesy of CHRYSLER GROUP, LLC

The wire harness connectors (2 and 3) for the heating elements are located under the seat (1).

NOTE: **When testing the heated seat elements for resistance, be certain to sit in the seat in question and move around the heating elements within the seat while testing. Moving the heating elements will help eliminate the possibility of an intermittent open in the element, which would only be evident in a certain position.**

1. Locate and disconnect the seat electrical connector.
2. Check the resistance between the circuits leading in and out of the suspect heated seat element. The resistance should be between the specifications listed in the following Heated Seat Element Resistance chart. If OK, refer to **DIAGNOSIS AND TESTING**. If not OK, replace the inoperative heated seat element. Refer to **PAD, HEATER, REMOVAL**.

HEATED SEAT ELEMENT RESISTANCE

Element Location	Acceptable Resistance Value
Seat Bottom Cushion	10.6 - 7.1 ohms
Seat Back Cushion	12.6 - 8.4 ohms

REMOVAL

REMOVAL

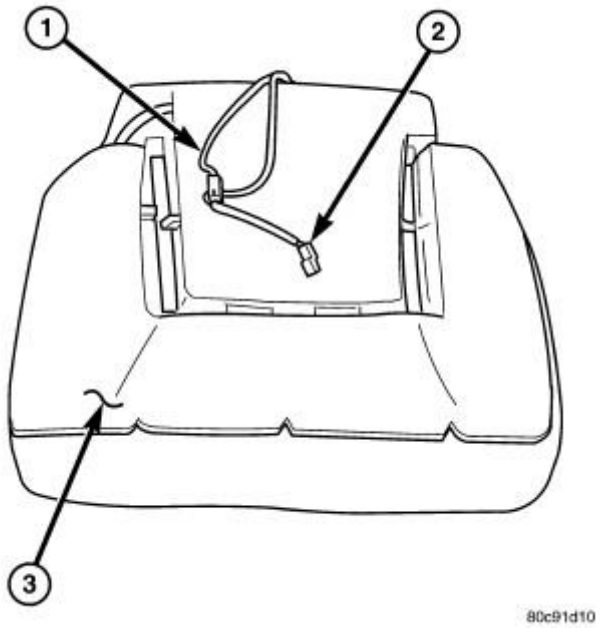

Fig. 3: Heated Seat Element & Electrical Connectors
Courtesy of CHRYSLER GROUP, LLC

NOTE: **The factory installed heating elements (3) can be removed from the seat or seat back cushions by carefully peeling the element off along the adhesive lines.**

NOTE: **Some vehicles come equipped with vented and heated seats front seats. The front seat elements of these vehicles have a one piece vented/heated pad assembly.**

NOTE: **On vehicles quipped with vented seats, the vented/heated pad will have to be routed through the seat cushion prior to removing the element.**

1. Disconnect and isolate the negative battery cable.
2. Remove the appropriate seat cushion or seat back cover.
3. Disconnect the inoperative heated seat cushion or seat back element electrical connectors (2).
4. Remove the heated seat element from the foam pad by peeling the element away from the cushion. Be careful not to remove excessive foam in the process.

INSTALLATION

INSTALLATION

CAUTION: **During the installation of the replacement heating element, be careful not to fold or crease the element assembly. Folds or creases will cause premature failure.**

NOTE: **Some model vehicles come equipped with both heated and vented seats front seats.**

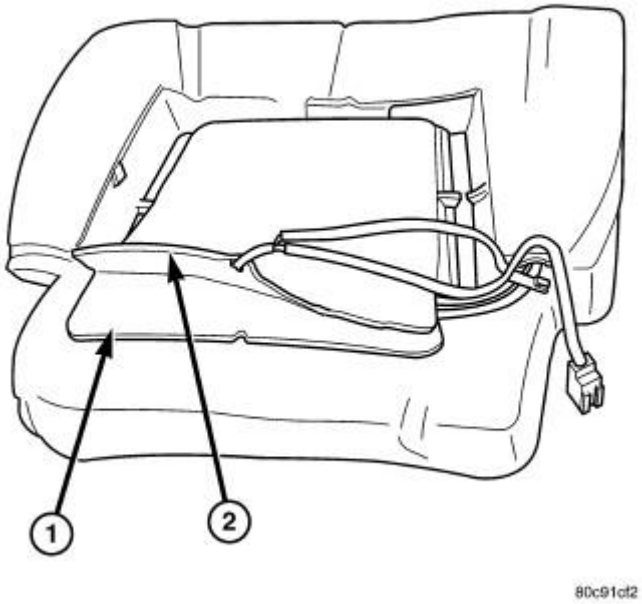

Fig. 4: Installing Heating Element
Courtesy of CHRYSLER GROUP, LLC

NOTE: **On vehicles equipped with vented seats, the vented seat pad will have to be routed through the seat cushion prior to installation of the seat cushion**

1. Peel off the adhesive backing from the replacement heater element (2) and stick on foam pad directly where the original heater element was positioned (1). There will be adhesive marks on the cushion outlining the factory installed location.

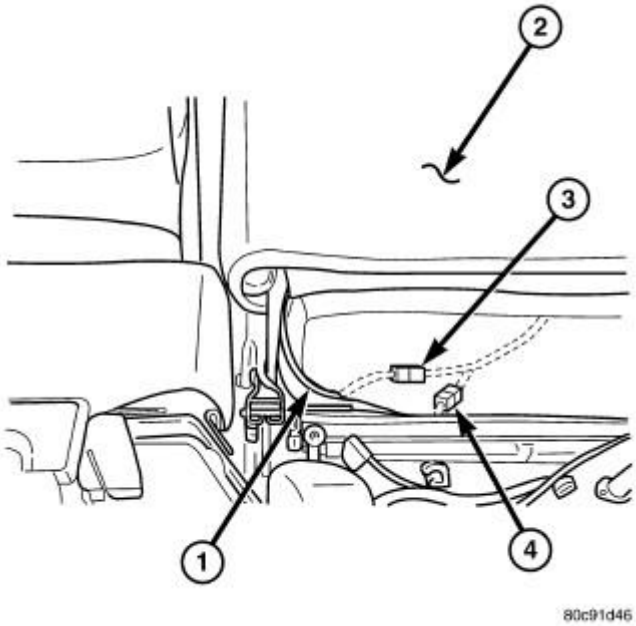

Fig. 5: Heating Element Electrical Connectors
Courtesy of CHRYSLER GROUP, LLC

NOTE: **Make certain the seat wire harness is correctly routed through the seat and seat back. The excess wire between the cushion and back elements should be securely tucked between the rear of the cushion foam and the rear seat cover flap.**

2. Connect the heater element electrical connectors (3 and 4).
3. Reconnect the negative battery cable.
4. Verify heated seat system operation.
5. Install the appropriate seat cushion or seat back cover.

SWITCH, HEATED SEAT

DESCRIPTION

FRONT

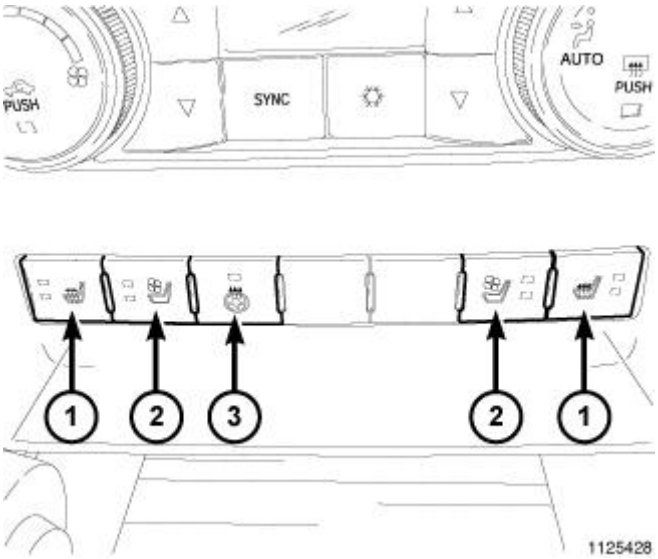

Fig. 6: Heated Seat Switches
Courtesy of CHRYSLER GROUP, LLC

The Heated Seat Switches (1) are momentary contact push button switches mounted in the instrument panel center bezel that operate the heated seat system. Each heated seat switch has two Light-Emitting Diode (LED) indicator lamps, which indicate the selected level (Low or High) of the seat heater. Pressing the switch initiates heat. Heat remains on until switched off or until the ignition is turned off. If switched off by the ignition, a switch must be pressed to restart heating.

The LED indicator lamps in each heated seat switch cannot be repaired. If the LED lamps are faulty or damaged, or the switch is inoperative or damaged the switchbank assembly must be replaced. for the switchbank replacement procedure. Refer to **SWITCH, HEATED SEAT, REMOVAL**.

REAR

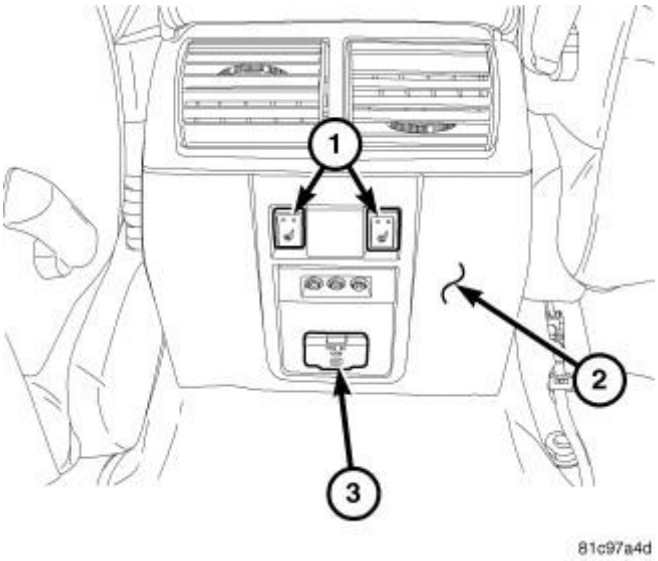

Fig. 7: Rear Center Floor Console & Heated Seat Switches
Courtesy of CHRYSLER GROUP, LLC

The heated seat switches (1) for the 2nd row seats are located in the rear center floor console (2). These switches allow the 2nd row seat passengers to select from two different levels of electrical seat heating (HI/LO). Amber Light Emitting Diodes (LEDS) in the top portion of each switch indicate the level of heat in use: Two LEDs are illuminated for high, one for low, and none for off. Pressing the switch once will select high-level heating. Pressing the switch a second time will select low-level heating. Pressing the switch a third time will shut the heating elements off. The 2nd row heated seat switches are available individually for service. If the switches are inoperative or damaged in any way they should be replaced. Refer to **SWITCH, HEATED SEAT, REMOVAL**.

The two momentary, push button-type heated seat switches provide a hardwired resistance signal to the Instrument Cluster (also known as the Cab Compartment Node/CCN). The instrument cluster then sends a message via the Controller Area Network (CAN) data bus network to the heated seat module, signaling the module to energize the heating element for the selected seat. Light Emitting Diodes (LED) in each switch indicate the level of heat in use. The switch LEDs are controlled by the instrument cluster.

The two LED indicator lamps and the incandescent bulb in each heated seat switch cannot be repaired. If the indicator lamps or back lighting bulb are inoperative or damaged, the individual heated seat switch must be replaced.

OPERATION

FRONT

A Heated Seat Control Module (HSCM) is used to control the heated seat system. The HSCM responds to heated seat switch input and ignition switch status inputs by controlling the 12v output to the seat heating elements through integral solid-state relays.

When any of the heated seat switches are depressed the heating elements for the selected seat are energized. Light Emitting Diodes (LEDS) on the switch indicate the level of heat in use: Two LEDs are illuminated for high, one for low, and none for off. Pressing the switch once will select high-level heating. Pressing the switch a second time will select low-level heating. Pressing the switch a third time will shut the heating elements off.

The HSCM energizes an integral solid-state relay, which supplies battery current to the heating elements. When high-temperature heating is selected, the heaters provide a boosted heat level during the first four minutes of operation after heating is activated. The heat output then drops to the normal high-temperature level. If high-level heating is selected, the control system will automatically switch to the low level after two hours of continuous operation. At that time, the number of illuminated LEDs changes from two to one, indicating the change. Operation on the low setting will continue indefinitely until the switch/module button is pushed to turn the system off.

The system will automatically turn off the heating elements if it detects an OPEN or LOW short in the heating element circuit.

REAR

The heated seat switches for the 2nd row seats are located in the rear center floor console. Amber Light Emitting Diodes (LEDS) in the top portion of each switch indicate the level of heat in use: Two LEDs are illuminated for high, one for low, and none for off. Pressing the switch once will select high-level heating.

Pressing the switch a second time will select low-level heating. Pressing the switch a third time will shut the heating elements off.

When either of the 2nd row heated seat switches are depressed a hardwired resistance signal is sent to the Instrument Cluster (also known as the Cab Compartment Node/CCN). The instrument cluster then sends a message via the Controller Area Network (CAN) data bus network to the heated seat module, signaling the module to energize the heating element for the selected seat. Light Emitting Diodes (LED) in each switch indicate the level of heat in use. The switch LEDs are controlled by the instrument cluster.

REMOVAL

FRONT

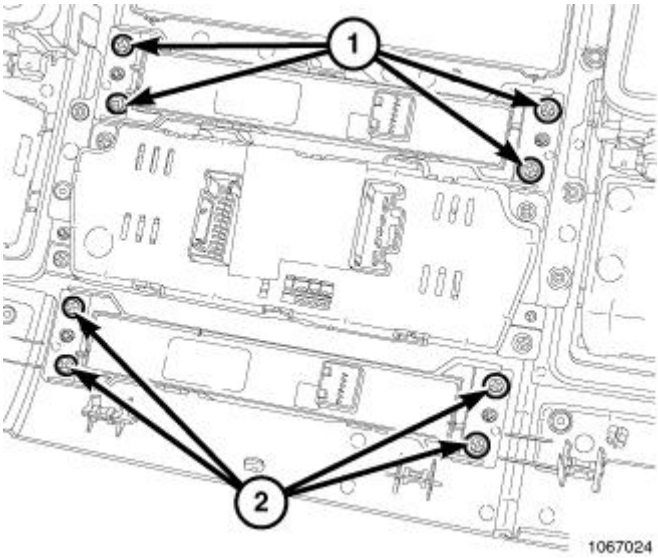

Fig. 8: Switch Pod Fasteners
Courtesy of CHRYSLER GROUP, LLC

1. Disconnect and isolate the battery negative cable.
2. Remove the instrument panel center bezel. Refer to **BEZEL, INSTRUMENT PANEL, CENTER, REMOVAL** .
3. Disconnect the lower switch pod electrical connector.
4. Remove the lower switch pod fasteners (2) from the center bezel.
5. Remove the switch pod from the center bezel.

REAR

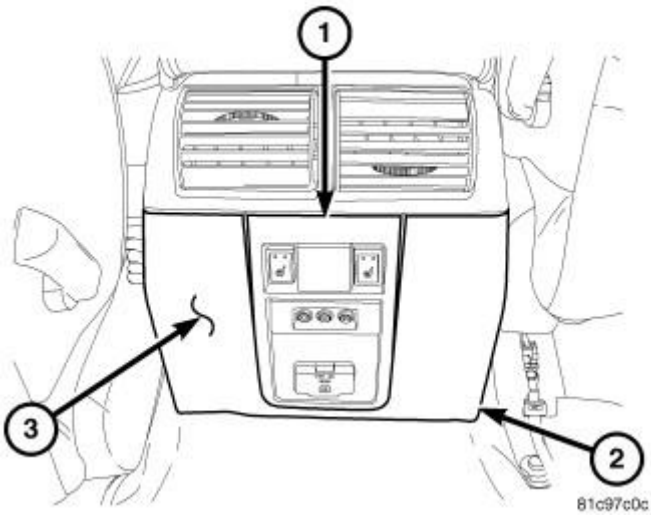

Fig. 9: Floor Console Rear Trim Panel
Courtesy of CHRYSLER GROUP, LLC

1. Disconnect and isolate the battery negative cable.
2. Using a trim stick (special tool # (special tool #C-4755, Trim Stick)) or equivalent, gently pry the upper edge of the floor console rear trim panel (1) to release the retaining clips at all of the locations around the floor console rear trim panel (3).
3. Lift up and rearward to release the panel lower tabs (2) from the floor console.

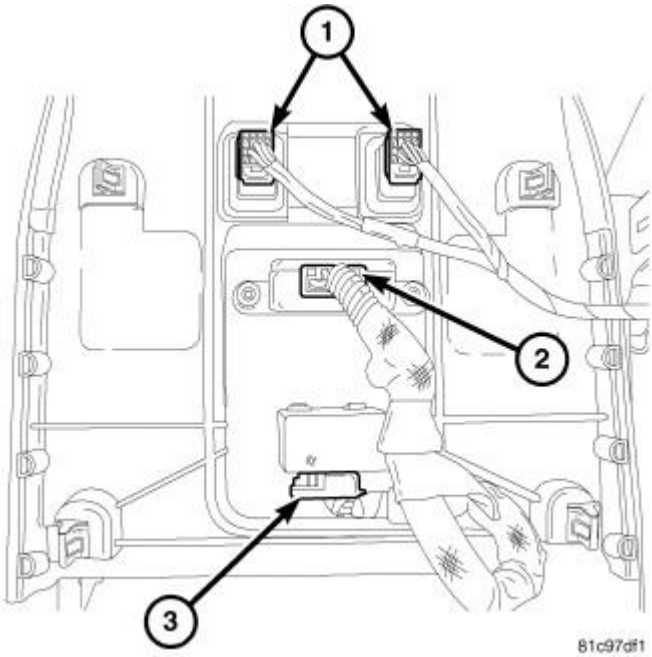

Fig. 10: Rear Heated Seat Switches & Auxiliary Jacks
Courtesy of CHRYSLER GROUP, LLC

4. If equipped, disconnect the 2nd row heated seat switches (1), 115 Volt power outlet (3) and the auxiliary

audio jacks (2) electrical connectors from the floor console rear trim panel.

5. Using a trim stick (special tool # (special tool #C-4755, Trim Stick)) or equivalent, gently pry the 2nd row heated seat switch assembly out of the trim panel.

INSTALLATION

FRONT

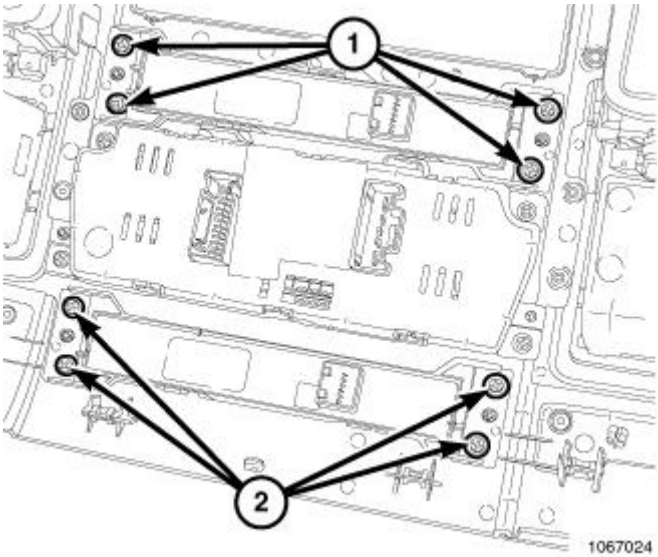

Fig. 11: Switch Pod Fasteners
Courtesy of CHRYSLER GROUP, LLC

1. Align the switch pod to the instrument panel center bezel.
2. Install the lower switch pod fasteners (2) to the center bezel.
3. Connect the switch pod electrical connector.
4. Install the instrument panel center bezel. Refer to **BEZEL, INSTRUMENT PANEL, CENTER, INSTALLATION** .
5. Connect the battery negative cable.

REAR

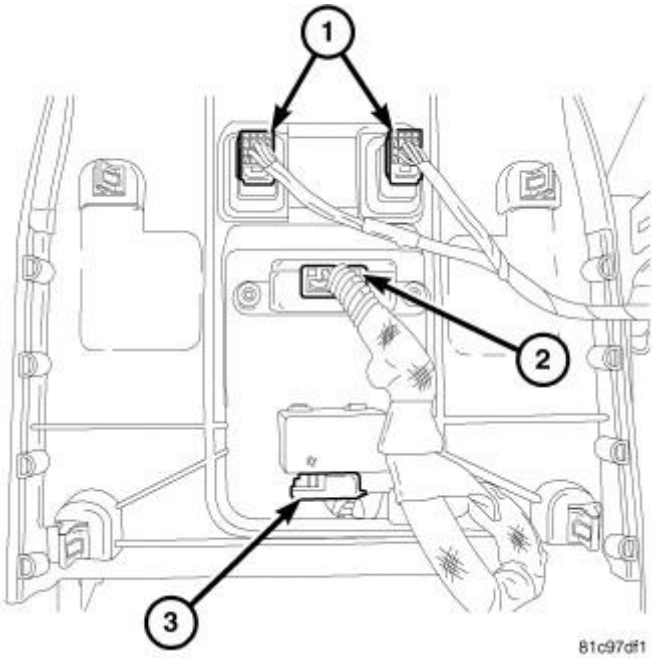

Fig. 12: Rear Heated Seat Switches & Auxiliary Jacks
Courtesy of CHRYSLER GROUP, LLC

1. Install the 2nd row heated seat switch assembly into the floor console rear trim panel. Push the switch firmly into the trim panel until the retaining tabs are fully seated.
2. If equipped, connect the 2nd row heated seat switches (1), 115 Volt power outlet (3) and the auxiliary audio jacks (2) electrical connectors to the floor console rear trim panel.

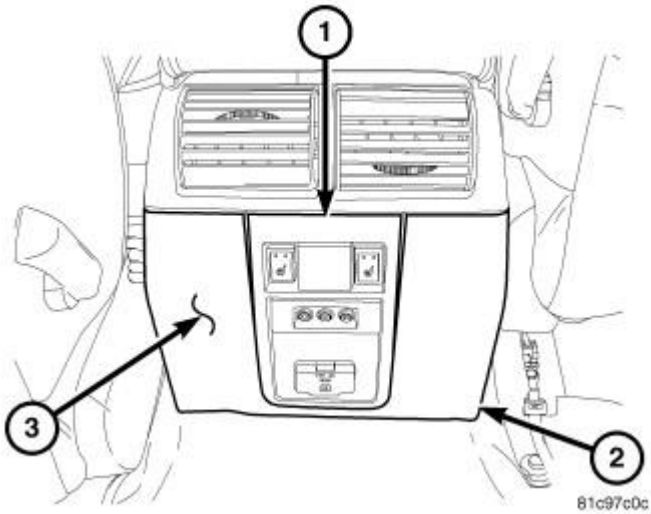

Fig. 13: Floor Console Rear Trim Panel
Courtesy of CHRYSLER GROUP, LLC

3. Align the trim panel (3) to the console and insert the bottom tabs into the mounting slots.
4. Tilt the upper edge of the trim panel (1) forward and apply hand pressure to seat all retaining clips.

5. Connect the battery negative cable.
6. Verify 2nd row heated seat system operation.

DIAGNOSIS AND TESTING

DIAGNOSIS AND TESTING - ELECTRIC BACKLIGHT (EBL) AND HEATED MIRROR SYSTEM

NOTE: **Illumination of the defogger switch indicator lamp does not necessarily mean that electrical current is reaching the rear window glass and/or the outside rear view mirror heating grids.**

NOTE: **See APPROPRIATE Wiring Information for circuit descriptions and diagrams of the rear window defogger (EBL) and heated mirror systems,**

Operation of the Electrical Back Light (EBL) and heated mirror systems can be confirmed by the following:

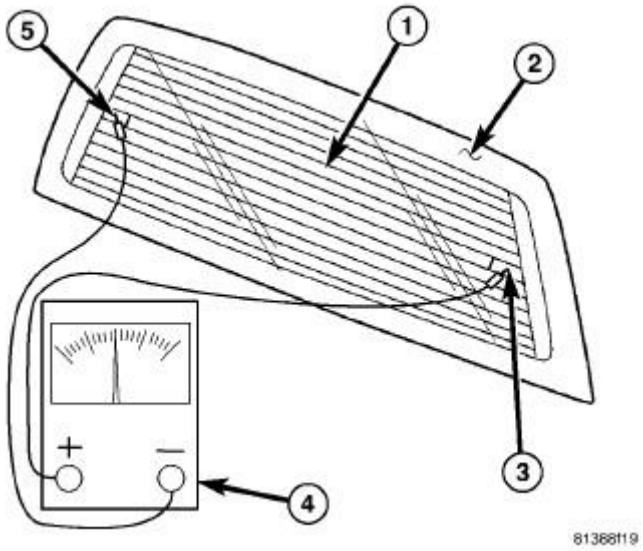

Fig. 1: Testing EBL Grid Lines
Courtesy of CHRYSLER GROUP, LLC

1. Use a scan tool and check for Diagnostic Trouble Codes (DTCs) related to the A/C-heater control and the Totally Integrated Power Module (TIPM). If no DTCs are found, go to 2. If any DTCs are found, repair as required, then proceed to 2.
2. Turn the ignition switch to RUN. Set the rear window defogger switch to ON. Rear window defogger operation can be checked by feeling the rear window glass, or the heated outside rear view mirror glass. A distinct difference in temperature between the grid lines (1) and the adjacent clear glass (2) or the heated mirror glass should be detected within 3 to 4 minutes of operation.
3. If a rear window glass temperature difference is not detected, use a 12-volt DC voltmeter (4) and contact the rear glass heating grid power feed terminal A (3) with the positive lead, and the ground terminal B (5)

with the negative lead. The voltmeter should read battery voltage. If the voltmeter does not read battery voltage, check the following:

- Confirm the ignition switch is in RUN.
- Confirm the rear window defogger switch is ON.
- Confirm the EBL feed wire is connected to the heating grid positive terminal and that there is continuity between the TIPM and the heating grid.
- Confirm the EBL ground wire is connected to the heating grid negative terminal and that there is continuity to ground.
- When diagnosing a heated mirror concern, check the heated mirror circuit fuse located in the TIPM. The fuse must be tight in the receptacle and all electrical connections must be secure.

4. If broken defogger grid lines or bus bars are suspected, use a 12-volt DC voltmeter and contact the rear glass heating grid ground terminal B with the negative lead and each rear glass heating grid line at its mid-point with the positive lead. The voltmeter should read approximately 6 volts at each grid line mid-point. If the voltmeter does not read approximately 6 volts, repair the open grid line(s) or bus bar(s). Refer to **GRID, DEFOGGER, REAR, STANDARD PROCEDURE** .
5. If the operation of the EBL system and/or the heated mirror system has been verified but the defogger LED indicator does not illuminate, replace the A/C-heater control. Refer to **CONTROL, A/C AND HEATER, REMOVAL** .

HEATED SEAT ELEMENT

NOTE: **For complete circuit diagrams, see APPROPRIATE Wiring Information. Wiring Information includes wiring diagrams, connector pin-out and location views, details of wire harness routing and retention, splice and ground locations and proper wire and connector repair procedures.**

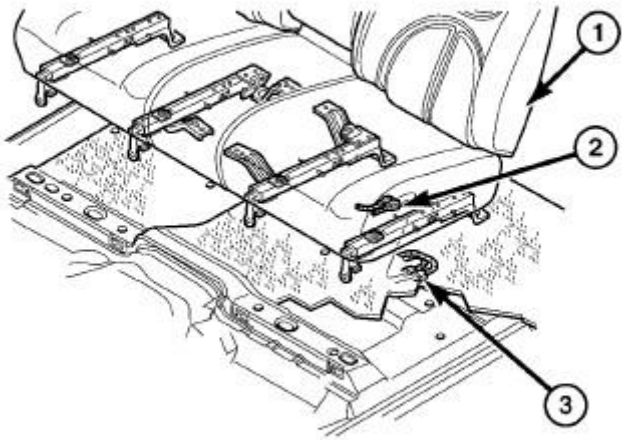

811o4f26

Fig. 2: Heated Seat Elements & Connectors
Courtesy of CHRYSLER GROUP, LLC

The wire harness connectors (2 and 3) for the heating elements are located under the seat (1).

NOTE: **When testing the heated seat elements for resistance, be certain to sit in the seat in question and move around the heating elements within the seat while testing. Moving the heating elements will help eliminate the possibility of an intermittent open in the element, which would only be evident in a certain position.**

1. Locate and disconnect the seat electrical connector.
2. Check the resistance between the circuits leading in and out of the suspect heated seat element. The resistance should be between the specifications listed in the following Heated Seat Element Resistance chart. If OK, refer to **HEATED SEATS - DIAGNOSIS AND TESTING** . If not OK, replace the inoperative heated seat element. Refer to **PAD, HEATER, REMOVAL** .

HEATED SEAT ELEMENT RESISTANCE

Element Location	Acceptable Resistance Value
Seat Bottom Cushion	10.6 - 7.1 ohms
Seat Back Cushion	12.6 - 8.4 ohms

DIAGNOSIS AND TESTING - HEATED SEAT SYSTEM

NOTE: **Vehicles equipped with the heated seat option utilize a low voltage cut-off feature. This feature turns off power to the heated seat system anytime vehicle voltage is below 11.7 volts or above 15.5 volts. Be certain to check the vehicle electrical system for proper voltage anytime the heated seat system appears inoperative.**

NOTE: **If a Diagnostic Trouble Code (DTC) can not be verified, it is a good indication that an INTERMITTENT fault condition may be present. To help find an intermittent problem, sit in the seat in question and move around the heating elements within the seat while testing continuity. also wiggle the heated seat wire harness and electrical connectors while testing continuity.**

NOTE: **For complete circuit diagrams, see APPROPRIATE Wiring Information. Wiring Information includes wiring diagrams, connector pin-out and location views, details of wire harness routing and retention, splice and ground locations and proper wire and connector repair procedures.**

Before testing any individual components in the heated seat system, check the following:

- Check to see if the concern is isolated to only one seat. Operate the other heated seat.
- Check the ignition fuse in the Totally integrated Power Module (TIPM). Repair as necessary.

- Using a scan tool, check for any Diagnostic Trouble Codes (DTCs) related to the Heated Seat Module (HSM), If any DTCs are found, repair as necessary. Refer to **HSM - DIAGNOSIS AND TESTING** .
- Check the vehicles battery open-circuit voltage and charging system performance. If the vehicle's electrical system is defective or weak it may not be suppling sufficient energy to operate the heated seat system.
- If there are no DTCs and the front heated seat system functions properly, but a heated seat switch indicator does not illuminate, the switch pod assembly in the instrument panel must be replaced. Refer to **SWITCH, HEATED SEAT, REMOVAL** .
- If there are no DTCs and the rear heated seat system functions properly, but one or both of the indicator lamps in a rear heated seat switch do not illuminate, check the rear heated switch circuits and repair as necessary. See appropriate Wiring information. If the wiring is OK, replace the inoperative second row heated seat switch. Refer to **SWITCH, HEATED SEAT, REMOVAL** .

HEATED STEERING WHEEL

CAUTION: When equipped with a leather wrapped heated steering wheel and replacement of a Heated Seat Module (HSM) is required, the new HSM must be manually configured with a scan tool. Refer to STANDARD PROCEDURE . Failure to follow these instruction may result in damage to the heated steering wheel.

NOTE: Vehicles equipped with the heated steering wheel option utilize a low voltage cut-off feature. This feature turns off power to the heated steering wheel anytime vehicle voltage is below 11.7 volts or above 15.5 volts. Be certain to check the vehicle electrical system for proper voltage anytime the heated steering wheel appears inoperative.

NOTE: If a Diagnostic Trouble Code (DTC) can not be verified, it is a good indication that an INTERMITTENT fault condition may be present. To help find an intermittent problem, move the steering wheel around while testing continuity. also wiggle the heated steering wheel wire harness and electrical connectors while testing continuity.

NOTE: For complete circuit diagrams, see appropriate Wiring Information. Wiring Information includes wiring diagrams, connector pin-out and location views, details of wire harness routing and retention, splice and ground locations and proper wire and connector repair procedures.

Before testing any individual components in the heated steering wheel system, check the following:

1. Check the fuse located in the Totally Integrated Power Module (TIPM). The fuse must be OK and tight in the receptacle.
2. Using a scan tool, check for any Diagnostic Trouble Codes (DTCs) related to the Heated Seat Module (HSM) and the heated steering wheel switch. Refer to **HSM - DIAGNOSIS AND TESTING** . If any DTCs are found, repair as necessary.

3. When equipped with a leather wrapped heated steering wheel, verify the HSM is configured to the leather steering wheel option, using a scan tool. Refer to **STANDARD PROCEDURE** .
4. Check the vehicles battery open-circuit voltage and charging system performance. If the vehicle's electrical system is defective or weak it may not be suppling sufficient energy to operate the heated steering wheel system.
5. If there are no DTCs and the heated steering wheel system functions properly, but the Light Emitting Diode (LED) indicator in the switch does not illuminate, replace the instrument panel switch pod. Refer to **SWITCH, HEATED STEERING WHEEL, REMOVAL** .

DIAGNOSIS AND TESTING

DIAGNOSIS AND TESTING - HORN SYSTEM

The most reliable, efficient, and accurate means to diagnose the horn system requires the use of a scan tool and the proper Diagnostic Procedures information.

Refer to the appropriate wiring information.

In most cases, any problem involving continually sounding horns can be quickly alleviated by removing the horn fuse from the Totally Integrated Power Module (TIPM).

WARNING: **Disable the airbag system before attempting any steering wheel, steering column, seat belt tensioner, side airbag or instrument panel component diagnosis or service. Refer to WARNING . Disconnect and isolate the negative battery (ground) cable. Wait two minutes for the airbag system capacitor to discharge before performing further diagnosis or service. This is the only sure way to disable the airbag system. Failure to follow these instructions may result in accidental airbag deployment and possible serious or fatal injury.**

Horn System - Service Information - Ram Pickup

DESCRIPTION

DESCRIPTION

This vehicle comes equipped with either a single or a dual-note horn system that features one or two electromagnetic horn units. The horn system includes the following major components:

- **Horn(s) -** The horn(s) are located on the upper radiator cross member at the front of the engine compartment, below the upper splash shield. The splash shield must be removed to gain access to the horns for removal.
- **Horn Fuse(s) -** The horn fuse(s) are located in the Totally Integrated Power Module (TIPM).
- **Horn Switch -** The horn switch consists of four individual buttons that are mounted to the steering wheel armature beneath the driver airbag unit. The four button style switches are only serviced as a unit.

On vehicles with an optional Electronic Vehicle Information Center (EVIC), the horn switch shares the same circuit as the right EVIC switch. This switch is also a LIN bus slave, sharing a LIN input circuit to the CCN (LIN master) with the Steering Control Module (SCM), which is also a LIN bus slave. The right EVIC switch also shares an IOD feed and a ground feed in common with the SCM.

Vehicles with an optional EVIC and steering wheel mounted switches (except LX) have a unique horn switch electrical architecture. For more information on the EVIC, refer to **CENTER, ELECTRONIC VEHICLE INFORMATION, DESCRIPTION** .

OPERATION

OPERATION

The horn system operates on battery current received through a fuse in the Totally Integrated Power Module (TIPM). The horn system circuit is designed so that the system will remain operational, regardless of the ignition switch position.

DIAGNOSIS AND TESTING

DIAGNOSIS AND TESTING - HORN SYSTEM

The most reliable, efficient, and accurate means to diagnose the horn system requires the use of a scan tool and the proper Diagnostic Procedures information.

Refer to the appropriate wiring information.

In most cases, any problem involving continually sounding horns can be quickly alleviated by removing the horn fuse from the Totally Integrated Power Module (TIPM).

WARNING: Disable the airbag system before attempting any steering wheel, steering column, seat belt tensioner, side airbag or instrument panel component diagnosis or service. Refer to WARNING . Disconnect and isolate the negative battery (ground) cable. Wait two minutes for the airbag system capacitor to discharge before performing further diagnosis or service. This is the only sure way to disable the airbag system. Failure to follow these instructions may result in accidental airbag deployment and possible serious or fatal injury.

HORN

REMOVAL

REMOVAL

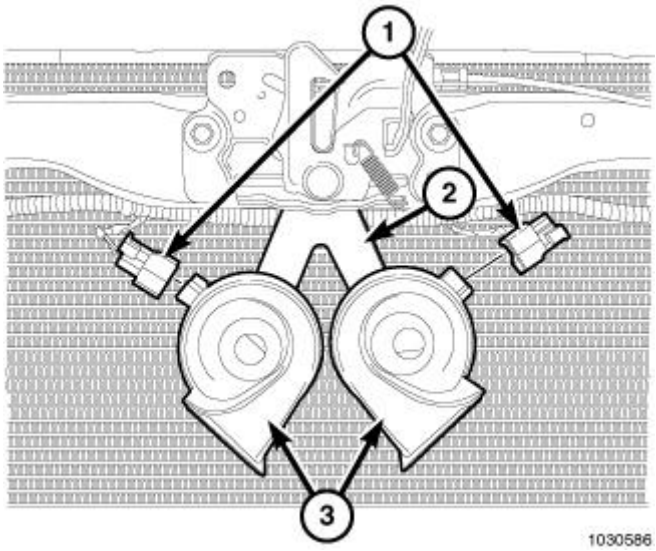

Fig. 1: Horn Harness Connectors
Courtesy of CHRYSLER GROUP, LLC

1. Disconnect and isolate the battery negative cable.
2. Remove the front upper splash shield.
3. Disconnect the wire harness connectors (1) from the horns (3).
4. Remove mounting bolt securing the horn bracket (2) and remove horns.

INSTALLATION

INSTALLATION

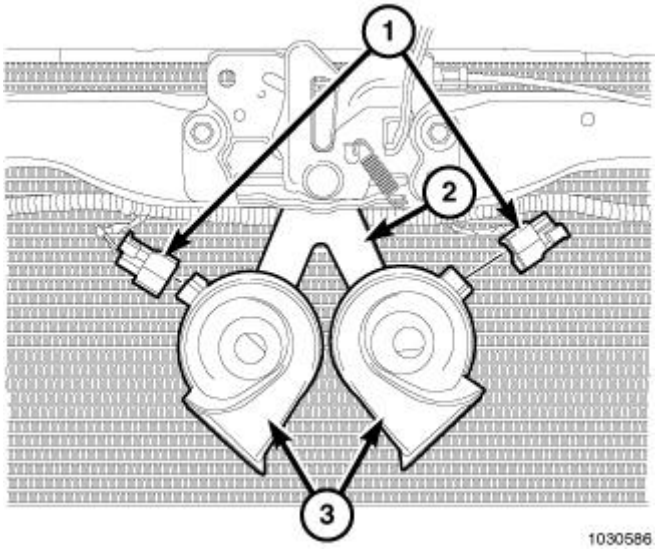

Fig. 2: Horn Harness Connectors
Courtesy of CHRYSLER GROUP, LLC

1. Position horns (3) and mounting bracket (2), install and tighten mounting bolt.
2. Connect wire harness connectors (1).
3. Install the front upper splash shield.
4. Connect battery negative cable.

SWITCH, HORN

REMOVAL

REMOVAL

WARNING: **On vehicles equipped with an airbag, refer to RESTRAINTS - SERVICE INFORMATION for warnings and cautions before servicing the horn switch.**

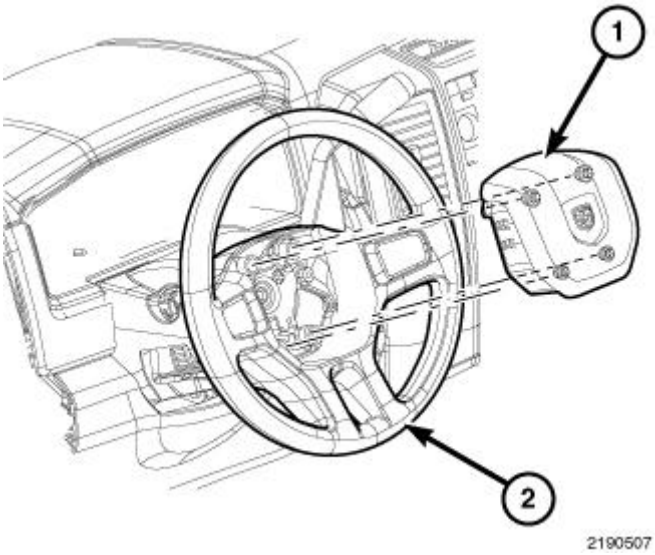

Fig. 3: Air Bag Assembly
Courtesy of CHRYSLER GROUP, LLC

1. Disconnect and isolate the battery negative cable.
2. Remove the steering wheel assembly (2). Refer to **WHEEL, STEERING, REMOVAL** .

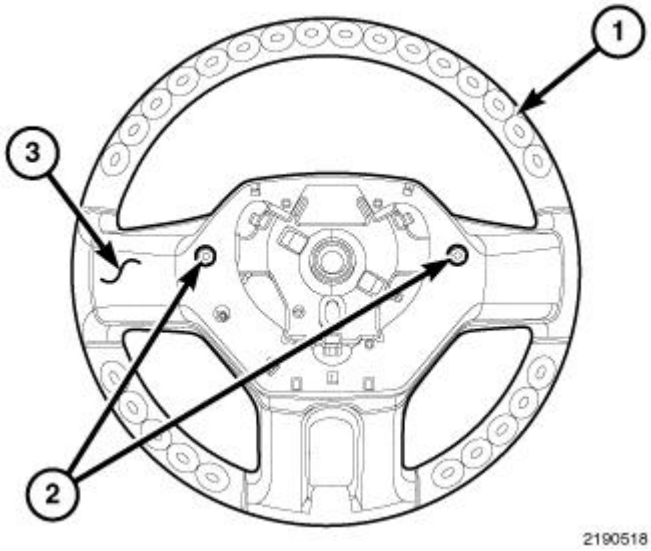

Fig. 4: Steering Wheel Fasteners
Courtesy of CHRYSLER GROUP, LLC

3. Remove the two fasteners (2) and remove the steering wheel back cover (3).
4. Squeeze the tabs on each horn switch and remove the switches from the steering wheel armature.
5. Disconnect the electrical connector and remove the switch assemblies.

INSTALLATION

INSTALLATION

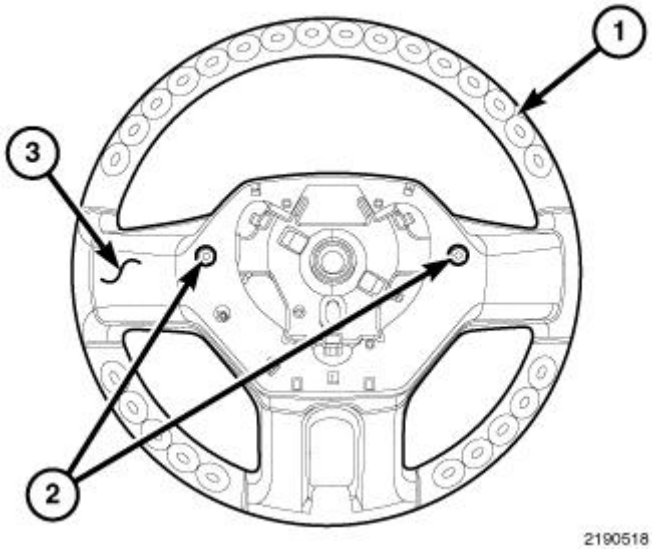

Fig. 5: Steering Wheel Fasteners
Courtesy of CHRYSLER GROUP, LLC

1. Install the four horn button switches and connect the electrical connector.
2. Install the steering wheel back cover (3) and the two fasteners (2).

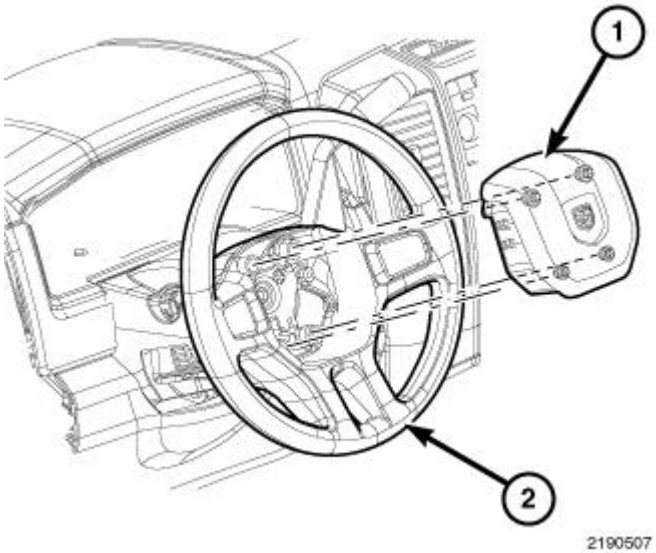

Fig. 6: Air Bag Assembly
Courtesy of CHRYSLER GROUP, LLC

3. Install the steering wheel assembly (2). Refer to **WHEEL, STEERING, INSTALLATION** .
4. Connect the battery negative cable.

DIAGNOSIS AND TESTING

PRNDL NOT DISPLAYING CORRECT POSITION (EATX VEHICLES)

For a complete wiring diagram, **refer to appropriate SYSTEM WIRING DIAGRAMS article** .

POSSIBLE CAUSES

Possible Causes
DTC PRESENT CLUSTER

DIAGNOSTIC TEST

1. **DTC PRESENT**

NOTE: **Make sure that the correct Cluster is installed and is correctly configured for the vehicle.**

NOTE: **Make sure that there is communication between the Cluster and PCM before proceeding with this test.**

NOTE: **Diagnose and repair any DTCs before proceeding with this test.**

NOTE: **Make sure that the PCM passes the Shift Lever Test with the scan tool before proceeding with this test.**

1. Turn the ignition on.
2. With the scan tool, read DTCs.

   Does the scan tool display any Cluster or PCM DTCs?

   Yes

   - Cluster DTCs. Refer to **DIAGNOSIS AND TESTING** .
   - PCM DTCs. Refer to **DTC INDEX** .

   No

   - Go To 2.

2. **CLUSTER**
    1. Perform the Instrument Cluster Self Test.
    2. Turn the ignition off.
    3. Press and hold the Trip/Reset button.
    4. Turn the ignition on.
    5. Observe the PRNDL display during the Self Test.

    Did any part of the VF display fail to illuminate?

    Yes

    - Replace and program the Cluster in accordance with the Service Information.
    - Refer to **STANDARD PROCEDURE** and perform the BODY VERIFICATION TEST.

    No

    - The condition is not present at this time. Monitor scan tool parameters while wiggling the related wiring harness. Refer to any Technical Service Bulletins (TSB) that may apply. Visually inspect the related wiring harness and connector terminals.
    - Refer to **STANDARD PROCEDURE** and perform the BODY VERIFICATION TEST.

ONE GAUGE INOPERATIVE - GAS ENGINES

For a complete wiring diagram, **refer to appropriate SYSTEM WIRING DIAGRAMS article** .

POSSIBLE CAUSES

Possible Causes
POWERTRAIN CONTROL MODULE CLUSTER

DIAGNOSTIC TEST

1. **POWERTRAIN CONTROL MODULE**
    1. Turn the ignition on.
    2. With the scan tool, read DTCs.

    Does the scan tool display any PCM DTCs?

    Yes

    - Refer to **DTC INDEX** and perform the appropriate diagnostic procedure.

    No

- Go To 2.

2. **CLUSTER**
    1. Turn the ignition off.
    2. Perform the Cluster Self Test.

    NOTE: The Self Test can be initiated manually by depressing and holding the Trip Reset button while turning the ignition on, or by using the scan tool.

    3. Observe the gauge in question while the Cluster performs the Self Test.
    4. The gauges should position at the following calibrations points:
    5. Speedometer MPH: 0, 20, 60, 90
    6. Tachometer Gas: 0, 1000, 3000, 6000
    7. Fuel: E, 1/4, 1/2, 3/4, F
    8. Coolant: Cold, 1/4, 1/2, 3/4, HI
    9. Volts: 6, 9, 12, 15, 17

    Did the gauge in question operate properly?

    Yes

    - The condition is not present at this time. Monitor scan tool parameters while wiggling the related wire harness. Refer to any Technical Service Bulletins (TSB) that may apply. Visually inspect the related wiring harness and connector terminals.
    - Refer to **STANDARD PROCEDURE** and perform the BODY VERIFICATION TEST.

    No

    - Replace and configure the Cluster in accordance with the Service Information.
    - Refer to **STANDARD PROCEDURE** and perform the BODY VERIFICATION TEST.

DESCRIPTION

DESCRIPTION

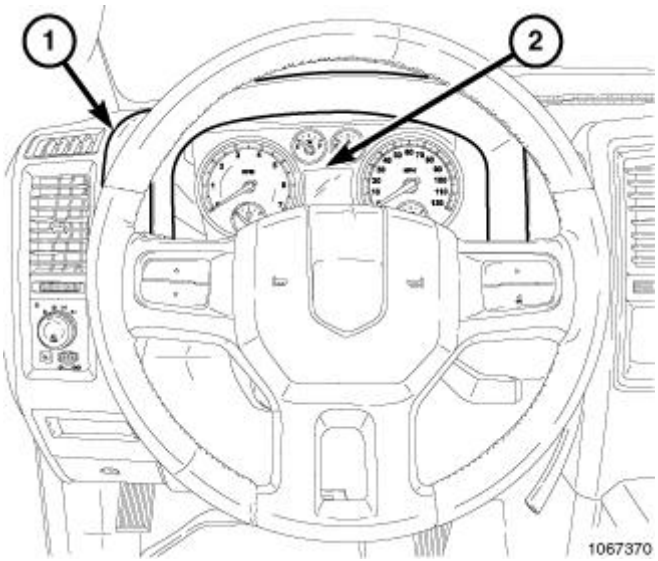

Fig. 1: Instrument Cluster
Courtesy of CHRYSLER GROUP, LLC

The instrument cluster (2) is located in the instrument panel (1) above the steering column opening and includes the hardware and software necessary to serve as the electronic body control module also known as the Cab Compartment Node (CCN). The remainder of the instrument cluster, including the mounts and the electrical connections, are concealed within the instrument panel behind the cluster bezel. Besides analog gauges and indicators, the CCN module incorporates a single unit for displaying odometer/trip odometer information, engine hours, several warning or reminder indications and certain diagnostic information. The instrument cluster for this vehicle also.

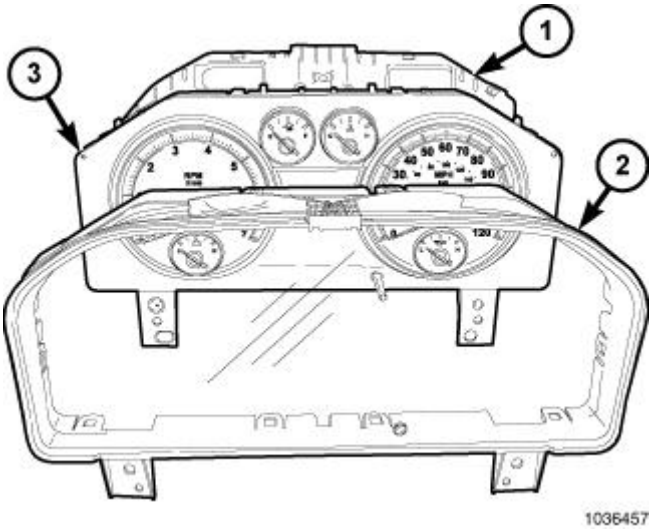

Fig. 2: Instrument Cluster Housing, Rear Cover & Hood Unit
Courtesy of CHRYSLER GROUP, LLC

The instrument cluster gauges and indicators are visible through a dedicated opening in the cluster bezel on the instrument panel and are protected by a clear plastic cluster lens that is integral to a cluster lens and hood unit (2). Just behind the cluster lens is the cluster hood. The cluster hood serves as a visor and shields the face of the cluster from ambient light and reflections to reduce glare. A black plastic odometer/trip odometer switch button protrudes through dedicated holes in the cluster lens, located near the lower edge of the cluster just to the left of the speedometer. The molded plastic lens and hood unit has three integral mounting tabs, one each on the lower outboard corners and one on the upper center of the unit. These mounting tabs are used to secure the CCN to the molded plastic instrument panel cluster carrier with three screws.

The rear of the cluster housing and the CCN electronic circuitry are protected by a molded plastic rear cover (1), which is secured to the cluster housing with molded plastic clips, while eight similar clips around the outside perimeter of the rear cover secure it to the cluster lens and hood unit. The rear cover includes clearance holes for the cluster connector receptacles. The connector receptacles on the back of the cluster electronic circuit board connect the CCN to the vehicle electrical system through three take outs with connectors from the instrument panel wire harness.

Sandwiched between the rear cover and the lens and hood unit is the cluster housing (3). The molded plastic cluster housing serves as the carrier for the cluster circuit board and circuitry, the cluster connector receptacles, the gauges, a Light Emitting Diode (LED) for each cluster indicator, an audible tone transducer, the cluster overlay, the gauge pointers, the odometer/trip odometer switch.

The cluster overlay is a laminated plastic unit. The dark, visible, outer surface of the overlay is marked with all of the gauge dial faces and graduations, but this layer is also translucent. The darkness of this outer layer prevents the cluster from appearing cluttered or busy by concealing the cluster indicators that are not illuminated, while the translucence of this layer allows those indicators and icons that are illuminated to be readily visible. The underlying layer of the overlay is opaque and allows light from the LED for each of the various indicators and the LED general illumination behind it to be visible through the outer layer of the overlay only through predetermined stencil-like cutouts. A rectangular opening in the overlay between the Tachometer and the Speedometer through which the Liquid Crystal Display (LCD) unit can be viewed.

Several versions of the CCN module are offered on this vehicle. These versions accommodate all of the variations of optional equipment and regulatory requirements for the various markets in which the vehicle will be offered. The microprocessor-based CCN utilizes integrated circuitry and information carried on the Controller Area Network (CAN) data bus along with several hard-wired analog and multiplexed inputs to monitor sensors and switches throughout the vehicle. In response to those inputs, the internal circuitry and programming of the CCN allow it to control and integrate many electronic functions and features of the vehicle through both hard-wired outputs and the transmission of electronic message outputs to other electronic modules in the vehicle over the CAN data bus. Refer to **COMMUNICATION, DESCRIPTION** .

VEHICLE SYSTEM SUPPORT

Besides typical instrument cluster gauge and indicator support, the electronic functions and features that the CCN supports or controls include the following:

- **Audible Warnings** - The CCN electronic circuit board is equipped with an audible tone transducer and programming that allows it to provide various audible alerts to the vehicle operator, including chime tones and beep tones and, emulates the sound of a conventional turn signal or hazard warning flasher. Refer to **DESCRIPTION** .
- **Brake Lamp Control** - The CCN provides electronic **brake lamp request** messages to the Totally Integrated Power Module (TIPM) located in the engine compartment near the battery for brake lamp control, excluding control of the Center High Mounted Stop Lamp (CHMSL), which remains controlled by a direct hard-wired output of the brake lamp switch.
- **Cargo Lamp Control** - The CCN provides direct control of cargo lamp operation with a load shedding (battery saver) feature which will automatically turn OFF the cargo lamp if it remains ON after a timed interval.
- **Electronic Transfer Case Interface** - On vehicles equipped with an electronic four-wheel drive transfer case, the CCN monitors a hard-wired multiplex input from the transfer case mode switch and then provides the appropriate electronic data bus messages to the TIPM for transfer case control. After the transfer case shift is completed, the TIPM provides an electronic message back to the CCN and the CCN responds by activating the appropriate 4WD indicators within the cluster or in the transfer case switch.
- **Electronic Vehicle Information Center Support** - The CCN provides support for the optional Electronic Vehicle Information Center (EVIC) by calculating average fuel economy, distance to empty and outside temperature values and storing trip odometer and elapsed ignition-ON time data.
- **Enhanced Accident Response Support** - The CCN monitors an input from the Occupant Restraint Controller (ORC) and, following an airbag deployment. The CCN monitors an input from the Powertrain Control Module (PCM) to automatically turn ON the interior lighting after an airbag deployment event, 10 seconds after the vehicle speed is zero. The interior lighting remains illuminated until the ignition switch is turned to the OFF position, at which time the interior lighting returns to normal operation and control. These Enhanced Accident Response System (EARS) features are each dependent upon a functional vehicle electrical system following the vehicle impact event.
- **Exterior Lighting Control** - The CCN provides electronic **head lamp** and **park lamp request** messages to the TIPM for the appropriate exterior lamp control of standard head and park lamps, as well as optional front fog lamps. This includes support for headlamp beam selection and the optical horn feature, also known as flash-to-pass.
- **Exterior Lighting Fail-Safe** - In the absence of a headlamp switch input, the CCN will turn ON the cluster general illumination lamps and provide electronic **headlamp low beam** and **park lamp request**

messages to the TIPM for default exterior lamp operation. The TIPM will also provide default park lamp and headlamp low beam operation and the CCN will turn ON the cluster general illumination lighting at full intensity if there is a failure of the electronic data bus communication between the CCN and the TIPM.

- **Fuel Level Data Support** - The TIPM provides a current source for and receives a Bus message input from the fuel level sending unit located on the fuel pump module in the fuel tank. The TIPM then sends electronic messages to the CCN over the Can Data bus to calculate the proper fuel gauge needle position and low fuel indicator operation. Based upon this input, the CCN also calculates fuel level, average fuel economy and distance to empty data, then uses electronic messaging to transmit this data over the CAN data bus for use by other electronic modules in the vehicle.
- **Heated Seat Control** - The CCN monitors inputs from the ignition switch and electronic **engine speed** messages from the Powertrain Control Module (PCM) to control a high side driver output to the heated seat switch Light Emitting Diode (LED) indicators. This input allows the heated seat switches to wake up the heated seat module if the switch is actuated. The CCN will de-energize the heated seat switch LED indicators, which deactivates the heated seat system, if the ignition switch is turned to any position except ON or START, or if the **engine speed** message indicates zero. Refer to **DESCRIPTION** .
- **Horn Control** - The CCN monitors an input from the horn switch and provides electronic **horn request** messages to the TIPM for horn control.
- **Instrument Panel Synchronization** - The CCN monitors hard-wired multiplexed inputs from the headlamp switch on the instrument panel, then transmits electronic **panel lamp dimming level** messages which allows all other electronic modules on the CAN data bus to coordinate their illumination intensity with that of the CCN. This includes a PARADE mode (also known as funeral mode) that allows all LCD units in the vehicle to be illuminated at full (daytime) intensity while driving during daylight hours with the exterior lamps turned ON.
- **Interior Lamp Load Shedding** - The CCN provides a battery saver feature which will automatically turn OFF all interior lamps and the cargo lamps if they remain ON after a timed interval of about five minutes.
- **Interior Lighting Control** - The CCN monitors inputs from the interior lighting switch, the door ajar switches, the cargo lamp switch, the reading lamp switches, and the Wireless Ignition Node (WIN) to provide courtesy lamp control. This includes support for timed illuminated entry with theater-style fade-to-OFF and courtesy illumination DEFEAT features.
- **Panel Lamps Dimming Control** - The CCN monitors hard-wired multiplexed inputs from the headlamp switch on the instrument panel, then provides a hard-wired 12-volt Pulse-Width Modulated (PWM) output that synchronizes the dimming level of all panel lamps dimmer controlled lamps with that of the cluster illumination lamps.
- **Remote Keyless Entry** - The CCN supports the optional Remote Keyless Entry (RKE) system features, including support for the RKE LOCK, UNLOCK (with optional driver-door-only unlock, and unlock-all-doors), PANIC, audible chirp, optical chirp, illuminated entry modes, an RKE programming mode, as well as optional Vehicle Theft Security System (VTSS) arming (when the proper VTSS arming conditions are met) and disarming.
- **Remote Radio Switch Interface** - The CCN monitors inputs from the optional remote radio switches and then provides the appropriate electronic data bus messages to the radio to select the radio or optional hands-free cellular system operating mode, volume control, preset station scan and station seek features.
- **Turn Signal and Hazard Warning Lamp Control** - The CCN monitors hard wired multiplexed inputs from the multi-function switch on the steering column, then provides electronic **turn** and **hazard lamp request** messages to the TIPM for turn and hazard lamp control. The CCN also provides an audible click

at one of two rates to emulate normal and bulb out turn or hazard flasher operation based upon electronic **lamp outage** messages from the TIPM, and provides an audible turn signal ON chime warning if a turn is signalled continuously for more than about 1.6 kilometers (one mile) and the vehicle speed remains greater than about 24 kilometers-per-hour (15 miles-per-hour).

- **Vehicle Theft Security System Control** - The CCN monitors inputs from the door ajar switches, the ignition switch, and the WIN, then provides electronic **horn** and **lighting request** messages to the TIPM for the appropriate VTSS alarm output features.
- **Wiper and Washer System Control** - The CCN monitors LIN Bus inputs from the wiper and washer switches in the multi-function switch on the steering column, then provides electronic **wiper** and **washer request** messages to the TIPM for the appropriate wiper and washer system features. Refer to **DESCRIPTION** .

LIQUID CRYSTAL DISPLAY

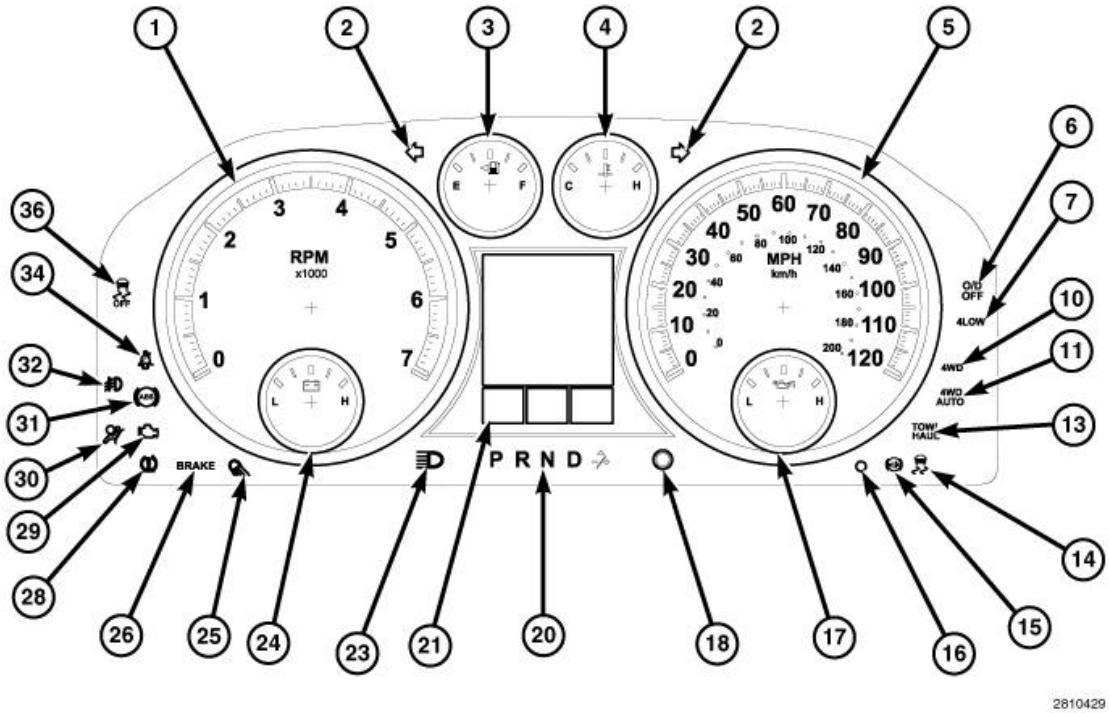

Fig. 3: SLT Cluster (Gasoline and Diesel)
Courtesy of CHRYSLER GROUP, LLC

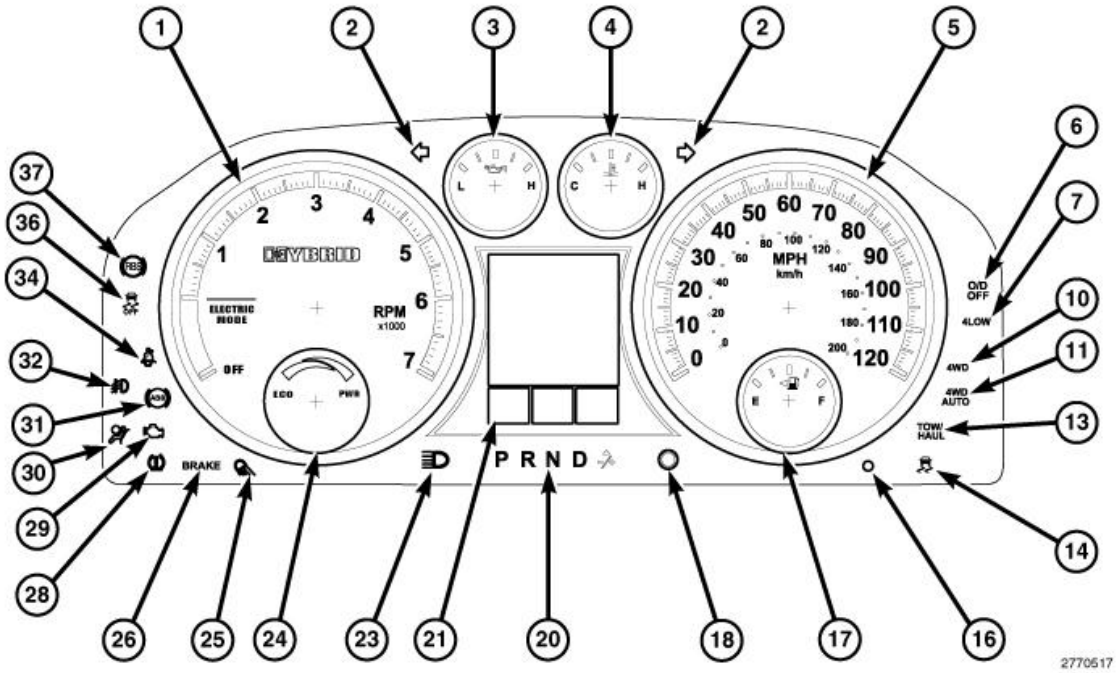

Fig. 4: HEV Cluster
Courtesy of CHRYSLER GROUP, LLC

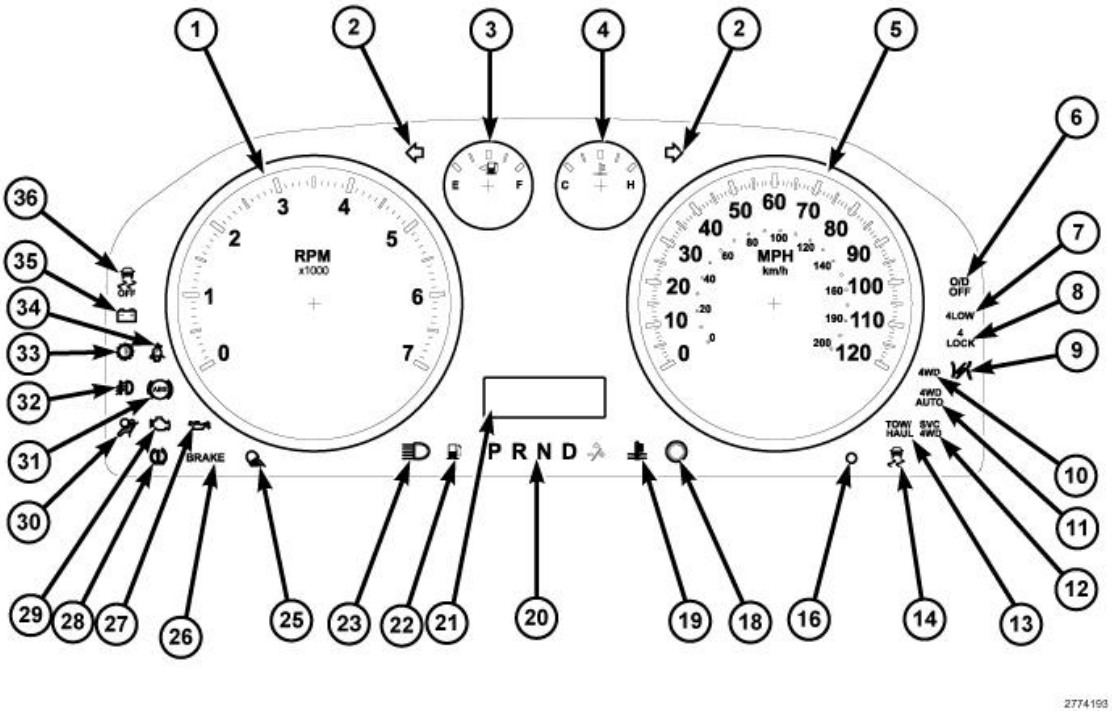

Fig. 5: SL Cluster (Gasoline Only)
Courtesy of CHRYSLER GROUP, LLC

The instrument cluster includes the following Liquid Crystal Display (LCD) units:

- **EVIC Display (20)**
- **Odometer/Trip Odometer Display (20)**

An odometer and trip odometer are standard factory-installed equipment in all instrument clusters. The odometer, trip odometer, and engine hours information are displayed in a common electronic, blue-green LCD unit. This LCD unit is soldered onto the cluster electronic circuit board and is visible through a window with a smoked lens located on the lower edge of the speedometer gauge dial face of the cluster overlay. The dark lens over the LCD prevents the indicator from being clearly visible when it is not illuminated.

The odometer, trip odometer, and engine hours information are not displayed simultaneously. The trip odometer reset switch on the instrument cluster circuit board toggles the display between odometer and trip odometer modes by depressing the odometer/trip odometer switch button that extends through the lower edge of the cluster lens, just left of the tachometer. When the trip odometer information is displayed, the word **TRIP** is also illuminated in the lower right corner of the LCD in a blue-green color and at the same lighting level as the trip odometer information. The engine hours information replaces the selected odometer or trip odometer information whenever the ignition switch is in the ON position and the engine is not running.

The odometer, trip odometer, and engine hours information is stored in the instrument cluster memory. This information can be increased when the proper inputs are provided to the instrument cluster, but the information cannot be decreased. The odometer can display values up to 999, 999 kilometers (621, 000 miles). The odometer latches at these values, and will not roll over to zero. The trip odometer can display values up to 999.9 kilometers (621, 000 miles) before it rolls over to zero. Engine hours are displayed in the format, **hr 9999** . The cluster will accumulate values up to 65, 000 hours before the display rolls over to zero. The engine hours are displayed within the LCD odometer display on low line models and in the EVIC display on high line models.

The odometer display does not have a decimal point and will not show values less than a full unit (kilometer or mile), while the trip odometer display does have a decimal point and will show tenths of a unit (kilometer or mile). The unit of measure (kilometers or miles) for the odometer and trip odometer display is not shown in the LCD. The unit of measure for the instrument cluster odometer/trip odometer is selected at the time that it is manufactured, and cannot be changed. The odometer also has a RENTAL CAR mode, which will illuminate the odometer information in the LCD whenever the driver side front door is opened with the ignition switch in the OFF or ACCESSORY positions.

During daylight hours (exterior lamps are OFF) the odometer LCD is illuminated at full brightness for clear visibility. At night (exterior lamps are ON), the LCD lighting level is adjusted with the other cluster general illumination lamps using the panel lamps dimmer thumbwheel on the headlamp switch. However, a PARADE mode position of the panel lamps dimmer thumbwheel allows the LCD to be illuminated at full brightness if the exterior lamps are turned ON during daylight hours.

The odometer/trip odometer LCD, the trip odometer switch, and the trip odometer switch button are serviced as a unit with the instrument cluster.

The CCN module for this vehicle is serviced only as a complete unit. The CCN module cannot be adjusted or repaired. If a gauge, an LED indicator, the LCD unit, the electronic circuit board, the circuit board hardware, the cluster overlay, or the CCN housing are damaged or ineffective, the entire CCN module must be replaced. The cluster lens, hood and mask unit are available for separate service replacement.

OPERATION

OPERATION

The instrument cluster includes the hardware and software necessary to serve as the electronic body control module and is sometimes referred to as the Cab Compartment Node or (CCN). The following information deals primarily with the instrument cluster functions of this unit. Additional details of the electronic body control functions of this unit may be found within the service information for the system or component that the CCN controls. For example: Additional details of the audible warning functions of the CCN are found within the Chime/Buzzer service information.

The CCN is designed to allow the vehicle operator to monitor the conditions of many of the vehicle components and operating systems. The gauges and indicators in the CCN provide valuable information about the various standard and optional powertrains, fuel and emissions systems, cooling systems, lighting systems, safety systems and many other convenience items. The CCN is installed in the instrument panel so that all of these monitors can be easily viewed by the vehicle operator when driving, while still allowing relative ease of access for service.

The microprocessor-based CCN hardware and software uses various inputs to control the gauges and indicators visible on the face of the cluster. Some of these inputs are hard wired, but most are in the form of electronic messages that are transmitted by other electronic modules over the Controller Area Network (CAN) data bus. Refer to **COMMUNICATION, OPERATION** .

The CCN microprocessor smooths the input data using algorithms to provide gauge readings that are accurate, stable and responsive to operating conditions. These algorithms are designed to provide gauge readings during normal operation that are consistent with customer expectations. However, when abnormal conditions exist such as high coolant temperature, the algorithm can drive the gauge pointer to an extreme position and the microprocessor can sound a chime through the on-board audible tone transducer to provide distinct visual and audible indications of a problem to the vehicle operator. The CCN may also produce audible warnings for other electronic modules in the vehicle based upon electronic **tone request** messages received over the CAN data bus. Each audible warning is intended to provide the vehicle operator with an audible alert to supplement a visual indication.

The CCN circuitry operates on battery current received through a fused B(+) fuse on a non-switched fused B(+) circuit, and on battery current received through a fused ignition switch output (run-start) fuse on a fused ignition switch output (run-start) circuit. This arrangement allows the CCN to provide some features regardless of the ignition switch position, while other features will operate only with the ignition switch in the ON or START positions. The CCN circuitry is grounded through a ground circuit and take out of the instrument panel wire harness with an eyelet terminal connector that is secured by a ground screw to a ground location on the instrument panel structural support.

The CCN also has a self-diagnostic test capability, which will test each of the CAN bus message-controlled functions of the cluster by lighting the appropriate indicators, positioning the gauge needles at several predetermined calibration points across the gauge faces, and illuminating all segments of the odometer/trip odometer/gear selector indicator Liquid Crystal Display (LCD) Display unit. Refer to **DIAGNOSIS AND TESTING**.

LIQUID CRYSTAL DISPLAY

The Liquid Crystal Display (LCD) unit is attached to the CCN electronic circuit board. With the ignition switch in the OFF or ACCESSORY positions, the odometer display is activated when the driver door is opened (Rental Car mode) and is deactivated when the driver door is closed. Otherwise, the display unit is active when the ignition switch is in the ON or START positions, and inactive when the ignition switch is in the OFF or ACCESSORY positions.

The illumination intensity of the LCD unit is controlled by the CCN circuitry based upon an input from the headlamp switch and a dimming level input received from the panel dimmer switch. The CCN synchronizes the illumination intensity of other LCD units with that of the unit in the CCN by sending electronic **dimming level** messages to other electronic modules in the vehicle over the CAN data bus.

The instrument cluster LCD unit has several display capabilities including odometer, trip odometer, engine hours, fuel saver mode notification, gear selector indication (PRNDL) for vehicles with an automatic transmission, warning or reminder indications, as well as various diagnostic messages when certain fault conditions exist. An odometer/trip odometer switch on the CCN circuit board is used to control some of the display modes. This switch is actuated manually by depressing the odometer/trip odometer switch button that extends through the lower edge of the cluster lens, just left of the tachometer. Actuating this switch momentarily with the ignition switch in the ON position will toggle the LCD between the odometer and trip odometer modes. Depressing the switch button for about two seconds while the LCD is in the trip odometer mode will reset the trip odometer value to zero.

While in the odometer mode with the ignition switch in the ON position and the engine not running, depressing the odometer/trip odometer switch for about six seconds will display the engine hours information on vehicle not equipped with an EVIC. Holding this switch depressed while turning the ignition switch from the OFF position to the ON position will initiate the CCN self-diagnostic test for additional details on this cluster function. Refer to **DIAGNOSIS AND TESTING**. The CCN microprocessor remembers which display mode is active when the ignition switch is turned to the OFF position, and returns the LCD display to that mode when the ignition switch is turned ON again.

The LCD unit is diagnosed using the CCN self-diagnostic test. Refer to **DIAGNOSIS AND TESTING**. Proper testing of the CAN data bus and the electronic data bus message inputs to the CCN that control some of the LCD functions requires the use of a diagnostic scan tool. Refer to the appropriate diagnostic information. Specific operation details for the odometer, the trip odometer, the gear selector indicator and the various warning and reminder indicator functions of the LCD unit may be found elsewhere in this service information.

CLUSTER ILLUMINATION

The CCN has several illumination lamps that are illuminated whenever the ignition is turned to the ON position. The illumination intensity of these lamps is adjusted when the interior lighting thumbwheel on the headlamp switch is rotated (down to dim, up to brighten) to one of the available minor detent positions. The CCN monitors a resistor multiplexed input from the headlamp switch on a dimmer input circuit. In response to that input, the CCN electronic circuitry converts a fused 12-volt input it receives on a hardwired panel lamps dimmer switch signal circuit into a 12-volt Pulse Width Modulated (PWM) output.

The CCN uses this PWM output to control the illumination intensity of the cluster illumination lamps and the LCD unit on the CCN circuit board, then provides a synchronized PWM output on various hard wired fused panel lamps dimmer switch signal circuits to control and synchronize the illumination intensity of other incandescent illumination lamps in the vehicle. The CCN also transmits electronic **dimming level** messages

over the CAN data bus to other electronic modules in the vehicle to control and synchronize the illumination intensity of their LCD units to that of the CCN LCD unit.

In addition, the thumbwheel on the headlamp switch has a PARADE mode position to provide a PARADE (or funeral) mode. The CCN monitors the request for this mode from the headlamp switch, then transmits an electronic **dimming level** message to illuminate all LCD units in the vehicle at full (daytime) intensity for easier visibility when driving in daylight with the exterior lighting turned ON.

The hard wired headlamp switch and panel lamps dimmer inputs to and outputs from the CCN may be diagnosed using conventional diagnostic tools and procedures. However, proper testing of the PWM processing of the CCN and the electronic **dimming level** messages sent by the CCN over the CAN data bus requires the use of a diagnostic scan tool. Refer to the appropriate diagnostic information.

DIAGNOSIS AND TESTING

DIAGNOSIS AND TESTING - INSTRUMENT CLUSTER

WARNING: **To avoid serious or fatal injury on vehicles equipped with airbags, disable the Supplemental Restraint System (SRS) before attempting any steering wheel, steering column, airbag, seat belt tensioner, impact sensor or instrument panel component diagnosis or service. Refer to WARNING . Disconnect and isolate the battery negative (ground) cable, then wait two minutes for the system capacitor to discharge before performing further diagnosis or service. This is the only sure way to disable the SRS. Failure to take the proper precautions could result in accidental airbag deployment.**

If all of the instrument cluster gauges and indicators are inoperative, be certain to check the instrument cluster fused B(+) fuse and the instrument cluster fused B(+) and ground circuits for shorts or opens. Refer to the appropriate wiring information. The wiring information includes wiring diagrams, proper wire and connector repair procedures, details of wire harness routing and retention, connector pin-out information and location views for the various wire harness connectors, splices and grounds.

If an individual hardwired gauge or indicator is inoperative, refer to the appropriate diagnostic information for that specific gauge or indicator. If an individual Controller Area Network (CAN) data bus message-controlled gauge or indicator is inoperative, perform the Self Test as follows:

CAUTION: **Instrument clusters used in this vehicle automatically configure themselves for compatibility with the features and optional equipment in the vehicle in which they are initially installed. The instrument cluster is programmed to do this by embedding the Vehicle Identification Number (VIN) and other information critical to proper cluster operation into electronic memory. This embedded information is learned through electronic messages received from other electronic modules in the vehicle over the Controller Area Network (CAN) data bus, and through certain hard wired inputs received when the cluster is connected to the vehicle electrically. Once configured, the instrument cluster memory may be**

irreparably damaged and certain irreversible configuration errors may occur if the cluster is connected electrically to another vehicle; or, if an electronic module from another vehicle is connected that provides data to the instrument cluster (including odometer values) that conflicts with that which was previously learned and stored. Therefore, the practice of exchanging (swapping) instrument clusters and other electronic modules in this vehicle with those removed from another vehicle must always be avoided. Failure to observe this caution may result in instrument cluster damage, which is not reimbursable under the terms of the product warranty. Service replacement instrument clusters are provided with the correct VIN, and the certified odometer and engine hours values embedded into cluster memory, but will otherwise be automatically configured for compatibility with the features and optional equipment in the vehicle in which they are initially installed.

NOTE: **Certain indicators in this instrument cluster are automatically configured. This feature allows those indicators to be activated or deactivated for compatibility with certain optional equipment. If the problem being diagnosed involves improper illumination of the cruise indicator, the electronic throttle control indicator, the fog lamp indicator, any of the four-wheel drive indicators, the overdrive OFF indicator, the tow/haul indicator, the transmission overtemp indicator, the security indicator or the gear selector indicator, disconnect and isolate the battery negative cable. After about five minutes, reconnect the battery negative cable and turn the ignition switch to the ON position. The instrument cluster should automatically relearn the equipment in the vehicle and properly configure the configurable indicators accordingly.**

SELF TEST

The instrument cluster self test will put the instrument cluster into its self-diagnostic mode. In this mode the instrument cluster can perform a self-diagnostic test that will confirm that the instrument cluster circuitry, the gauges, and the indicators are capable of operating as designed. During the self test the instrument cluster circuitry will position each of the gauge needles at various calibration points, illuminate all of the segments or portions in the Liquid Crystal Display (LCD) unit, and turn all of the indicators ON and OFF again.

Successful completion of the self test will confirm that the instrument cluster is operational. However, there may still be a problem with the CAN data bus, the Powertrain Control Module (PCM), the Totally Integrated Power Module (TIPM), the Transmission Control Module (TCM), the Occupant Restraint Controller (ORC), the Controller Anti-lock Brake (CAB), the Wireless Ignition Node (WIN) or the hardwired inputs to one of these electronic control modules. Use a diagnostic scan tool to diagnose these components. Refer to the appropriate diagnostic information.

1. Begin the test with the ignition switch in the OFF position.
2. Depress the odometer/trip odometer switch button.
3. While still holding the odometer/trip odometer switch button depressed, turn the ignition switch to the ON position, but do not start the engine.

4. Release the odometer/trip odometer switch button.
5. The instrument cluster will simultaneously begin to illuminate all of the operational segments in the LCD unit and perform a bulb check of each operational Light Emitting Diode (LED) indicator. The LCD segments and LED indicators remain illuminated as each gauge needle is swept to several calibration points and back. If a VFD segment or an LED indicator fails to illuminate, or if a gauge needle fails to sweep through the calibration points and back during this test, the instrument cluster must be replaced.
6. The self test is now completed. The instrument cluster will automatically exit the self-diagnostic mode and return to normal operation at the completion of the test. The self test will be aborted if the ignition switch is turned to the OFF position, or if a vehicle speed message indicating that the vehicle is moving is received from the PCM over the CAN data bus during the test.
7. Go back to repeat the test, if necessary. Refer to 1.

STANDARD PROCEDURE

STANDARD PROCEDURE - ENHANCED SEATBELT REMINDER PROGRAMMING

The seatbelt indicator also includes a programmable enhanced seatbelt reminder or BELTMINDER feature that is enabled when the vehicle is shipped from the factory. This beltminder feature provides extended and modified visual seatbelt indicator and audible chime warning responses to an unbuckled driver side front seat belt. The BELTMINDER feature may be disabled or enabled by the customer using the programming sequence that follows, or by the dealer using a diagnostic scan tool.

CUSTOMER PROGRAMMING SEQUENCE

NOTE: The following sequence of events must occur within 60 seconds of the ignition switch being placed in the ON position in order for the programming to be completed successfully.

1. With all doors closed and the ignition switch in any position except ON or START, buckle the driver side front seat belt.
2. Turn the ignition switch to the ON position and wait for the seatbelt indicator reminder function to conclude (about six seconds).
3. Unbuckle and buckle the driver side front seat belt slowly three or more times, giving the indicator time to cycle on and off, ending with the belt buckled.
4. Turn the ignition switch to any position except ON or START to toggle the BELTMINDER feature from its current setting (from active to inactive, or from inactive to active). A single chime tone will provide an audible confirmation that the programming sequence has been successfully completed.

REMOVAL

REMOVAL

WARNING: To avoid serious or fatal injury on vehicles equipped with airbags, disable the Supplemental Restraint System (SRS) before attempting any steering wheel, steering column, airbag, seat belt tensioner, impact sensor or

instrument panel component diagnosis or service. Refer to WARNING . Disconnect and isolate the battery negative (ground) cable, then wait two minutes for the system capacitor to discharge before performing further diagnosis or service. This is the only sure way to disable the SRS. Failure to take the proper precautions could result in accidental airbag deployment.

CLUSTER ASSEMBLY

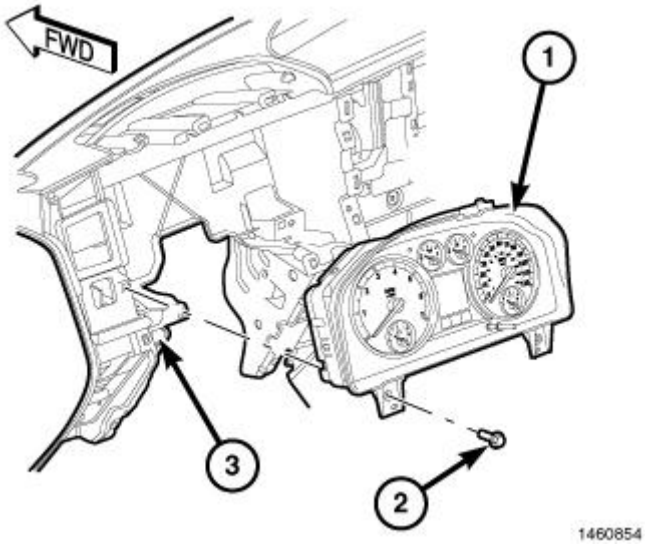

Fig. 6: Instrument Cluster, Panel & Screws
Courtesy of CHRYSLER GROUP, LLC

1. Disconnect and isolate the battery negative cable.
2. Remove the cluster bezel from the instrument panel. Refer to **BEZEL, INSTRUMENT CLUSTER, REMOVAL** .
3. Remove the two screws (2) that secure the instrument cluster (1) to the instrument panel structural support (3).

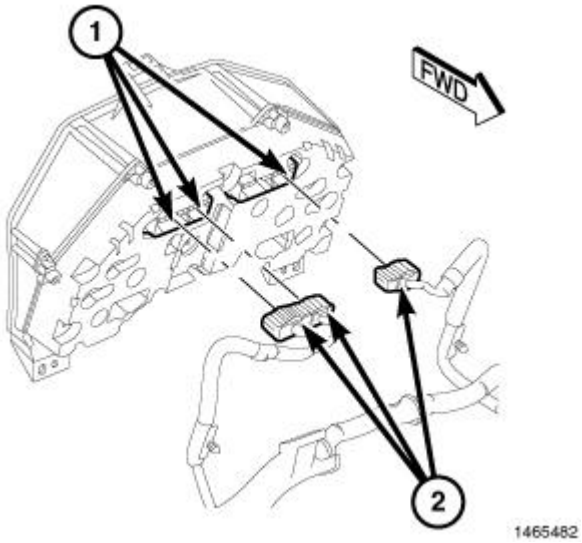

Fig. 7: Instrument Panel Wire Harness Connectors
Courtesy of CHRYSLER GROUP, LLC

4. Pull the instrument cluster rearward far enough to access and disconnect the three instrument panel wire harness connectors (2) from the connector receptacles (1) on the back of the cluster housing.
5. Remove the instrument cluster from the instrument panel.

CLUSTER LENS

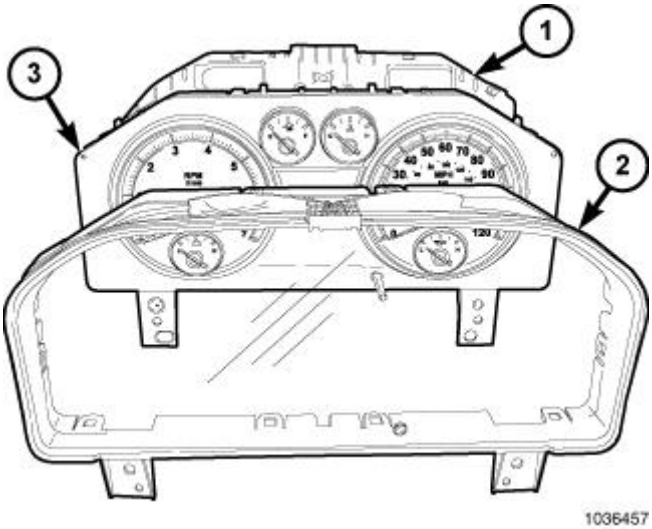

Fig. 8: Instrument Cluster Housing, Rear Cover & Hood Unit
Courtesy of CHRYSLER GROUP, LLC

1. Remove the instrument cluster (1) from the instrument panel. Refer to1.
2. Working around the perimeter of the instrument cluster (3), release the clips that secure the instrument cluster hood and lens unit (2) to the housing and remove the hood and lens.

INSTALLATION

INSTALLATION

WARNING: To avoid serious or fatal injury on vehicles equipped with airbags, disable the Supplemental Restraint System (SRS) before attempting any steering wheel, steering column, airbag, seat belt tensioner, impact sensor or instrument panel component diagnosis or service. Refer to WARNING . Disconnect and isolate the battery negative (ground) cable, then wait two minutes for the system capacitor to discharge before performing further diagnosis or service. This is the only sure way to disable the SRS. Failure to take the proper precautions could result in accidental airbag deployment.

CLUSTER ASSEMBLY

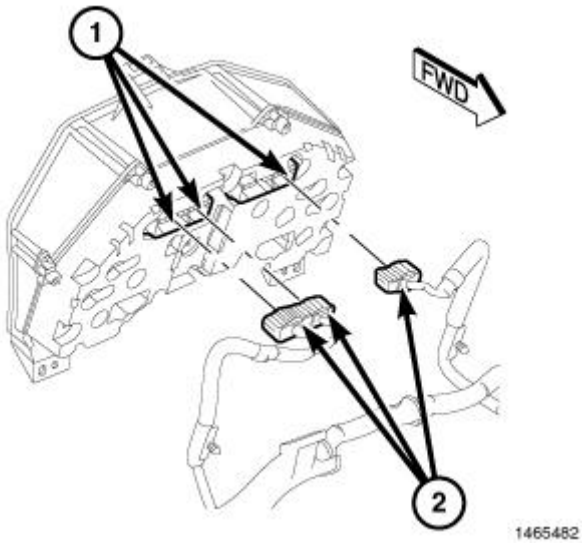

Fig. 9: Instrument Panel Wire Harness Connectors
Courtesy of CHRYSLER GROUP, LLC

1. Position the instrument cluster close enough to the instrument panel to reconnect the three instrument panel wire harness connectors (2) to the connector receptacles (1) on the back of the cluster housing.

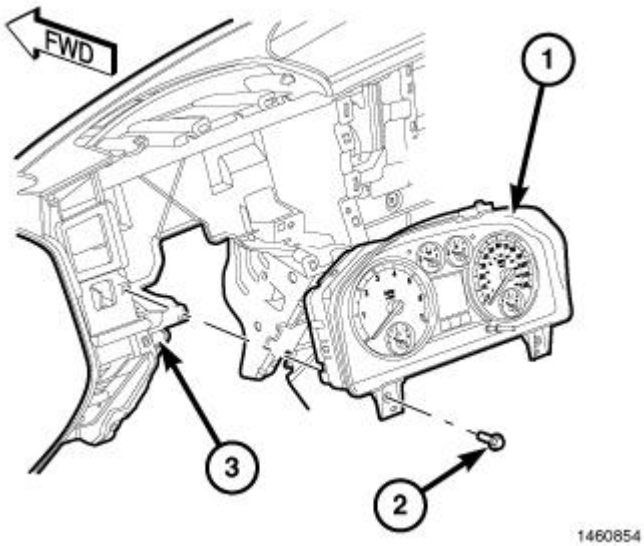

Fig. 10: Instrument Cluster, Panel & Screws
Courtesy of CHRYSLER GROUP, LLC

2. Position the instrument cluster (1) into the instrument panel (3).
3. Install and tighten the two screws (2) that secure the instrument cluster to the instrument panel structural support. Tighten the screws to 4 N.m (31 in. lbs.).
4. Reinstall the cluster bezel onto the instrument panel. Refer to **BEZEL, INSTRUMENT CLUSTER, INSTALLATION** .
5. Reconnect the battery negative cable.

NOTE: **Certain indicators in this instrument cluster are automatically configured. This feature allows those indicators to be activated or deactivated for compatibility with certain optional equipment. If a problem is noted that involves improper illumination of the cruise indicator, the electronic throttle control indicator, the fog lamp indicator, any of the four-wheel drive indicators, the overdrive OFF indicator, the tow/haul indicator, the transmission overtemp indicator, the security indicator or the gear selector indicator, disconnect and isolate the battery negative cable. After about five minutes, reconnect the battery negative cable and turn the ignition switch to the ON position. The instrument cluster should automatically relearn the equipment in the vehicle and properly configure the configurable indicators accordingly.**

CLUSTER LENS

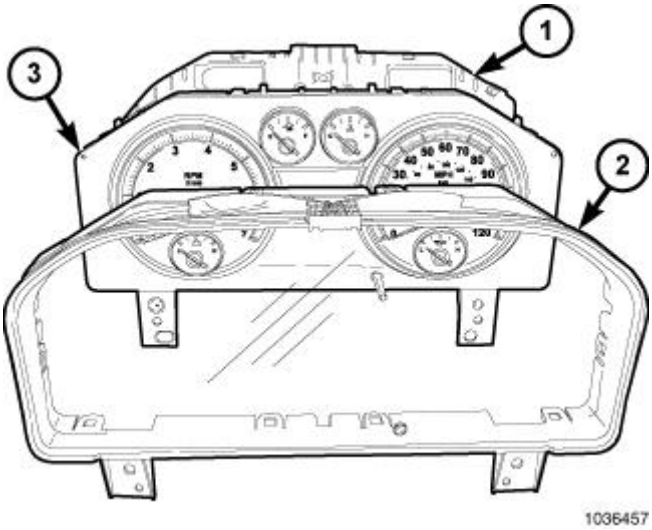

Fig. 11: Instrument Cluster Housing, Rear Cover & Hood Unit
Courtesy of CHRYSLER GROUP, LLC

1. Position the cluster lens and hood unit (2) over the face of the instrument cluster. Be certain that the odometer/trip odometer switch push button is inserted through the clearance hole in the lens and hood unit.
2. Working around the perimeter of the instrument cluster (3), apply even pressure to the lens until each of the retaining clips is fully engaged to the housing.
3. Reinstall the instrument cluster. Refer to 1.

GAUGE PACK, INSTRUMENT CLUSTER

DESCRIPTION

DESCRIPTION

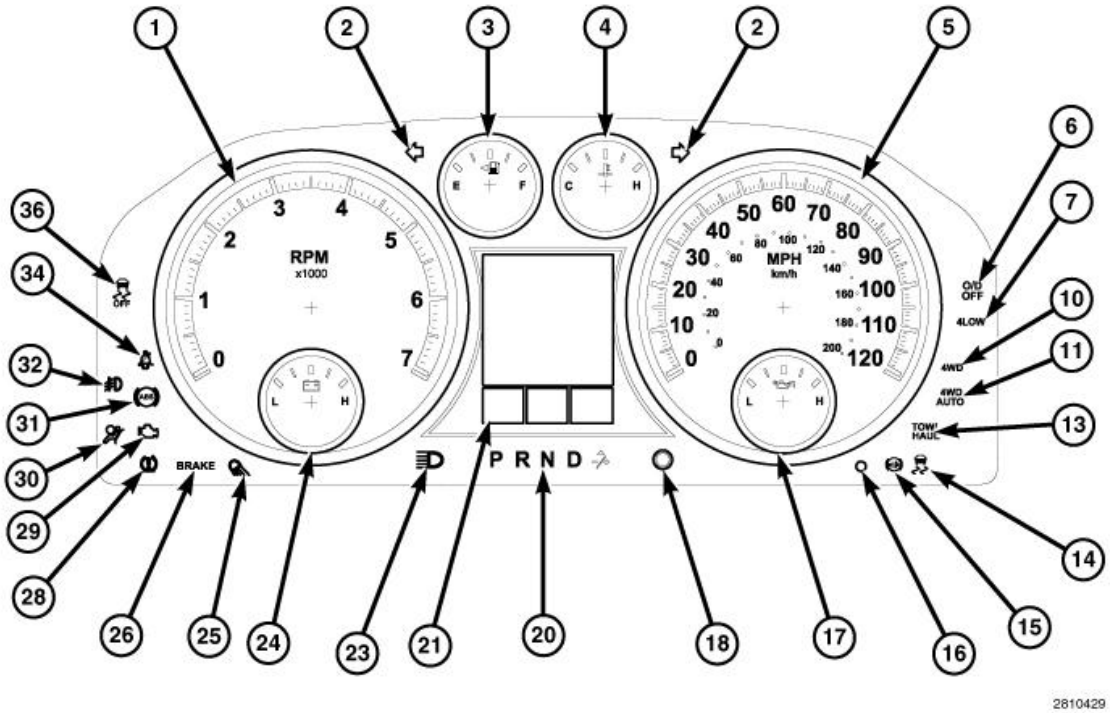

Fig. 12: SLT Cluster (Gasoline and Diesel)
Courtesy of CHRYSLER GROUP, LLC

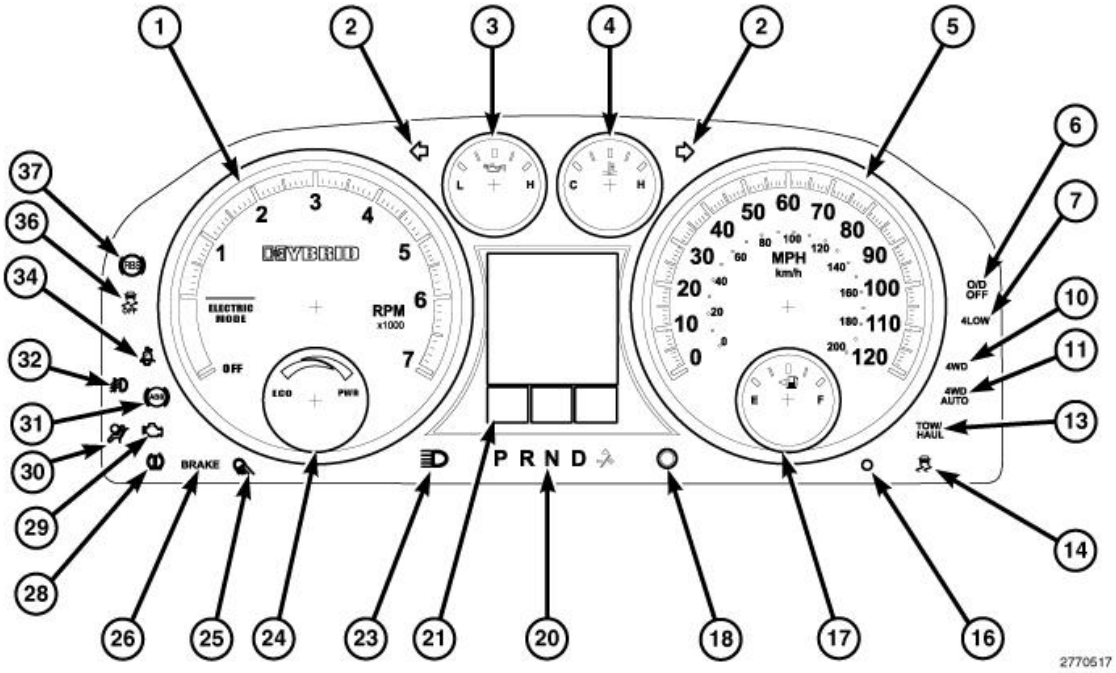

Fig. 13: HEV Cluster
Courtesy of CHRYSLER GROUP, LLC

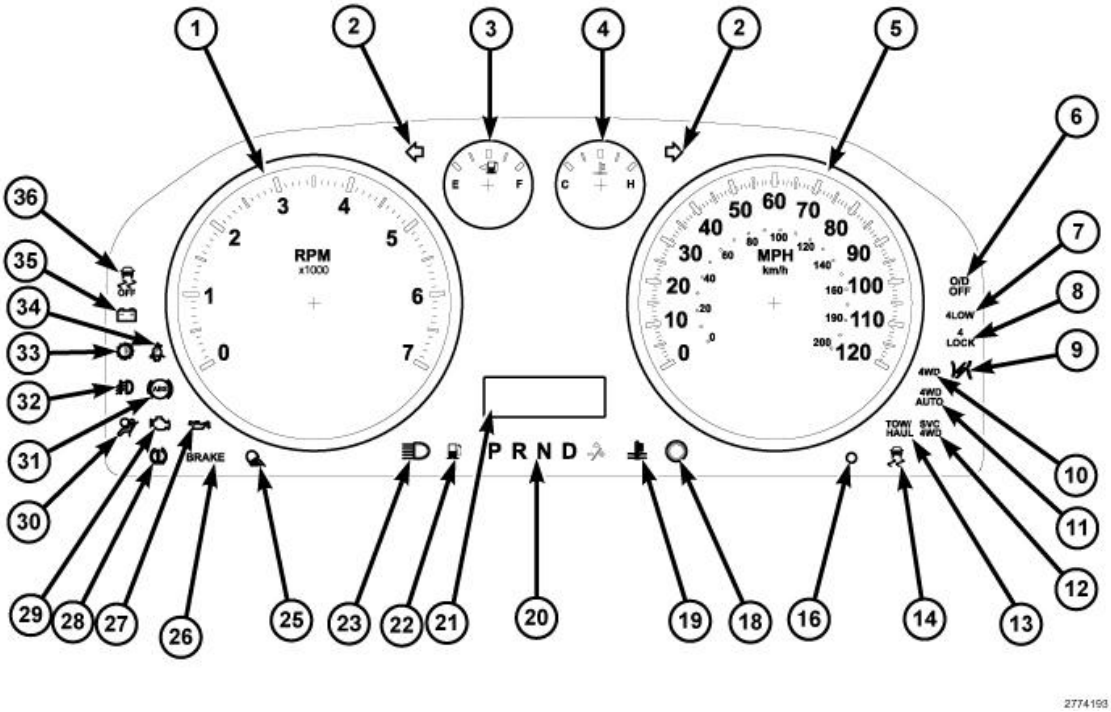

Fig. 14: SL Cluster (Gasoline Only)
Courtesy of CHRYSLER GROUP, LLC

The instrument cluster includes the following analog gauges:

- **Engine Temperature Gauge (4)**
- **Fuel Gauge (3) (17)** - On HEV vehicles the fuel gauge is located within the speedometer.
- **Oil Pressure Gauge (17) (3)** - All except base models. On HEV vehicles the oil pressure gauge is located next to the engine temperature gauge.
- **Speedometer (5)**
- **Tachometer (1)**
- **Voltage Gauge (24)** - All except base models.
- **Power Gauge (24)** - Hybrid Electric Vehicle (HEV) only.

Gauges are illuminated by LEDs that are soldered onto the CCN electronic circuit board. Cluster illumination is accomplished by dimmable LEDs soldered onto the CCN electronic circuit, which illuminate each of the gauges for visibility when the exterior lighting is turned ON. The gauges and LED units are not available for service replacement, and if damaged or inoperative, the entire CCN must be replaced.

ENGINE TEMPERATURE GAUGE

An engine coolant temperature gauge is standard equipment on all instrument clusters. The engine coolant temperature gauge is located in the upper right center quadrant of the instrument cluster, next to the fuel gauge. The gauge consists of a movable gauge needle or pointer controlled by the instrument cluster circuitry and a fixed 90 degree scale on the cluster overlay that reads left-to-right from **C** (or Cold) to **H** (or Hot) for gasoline

engines. An International Control and Display Symbol icon for **Engine Coolant Temperature** is located on the cluster overlay, directly below the left end of the gauge scale.

The engine coolant temperature gauge graphics are white against a black field except for a single red graduation at the high end of the gauge scale making them clearly visible within the instrument cluster in daylight. When illuminated from behind by the panel lamps dimmer controlled cluster illumination lighting with the exterior lamps turned ON, the white gauge graphics appear amber on the low line and white on the high line, while the red graphics still appear red. The gauge needle has internal optical illumination. Gauge illumination is provided by Light Emitting Diode (LED) units located on the instrument cluster electronic circuit board.

FUEL GAUGE

A fuel gauge is standard equipment on all instrument clusters. This gauge is located in the upper center quadrant of the instrument cluster, left of the temperature gauge. This gauge consists of a movable gauge needle or pointer controlled by the instrument cluster circuitry and a fixed 90 degree scale on the cluster overlay that reads left-to-right from **E** (or Empty) to **F** (or Full).

An International Control and Display Symbol icon for **Fuel** is located on the cluster overlay, directly below the gauge scale. An arrowhead pointed to the left side of the vehicle is imprinted on the cluster overlay next to the **Fuel** icon on the gauge to provide the driver with a reminder as to the location of the fuel filler access. On vehicles equipped with a diesel engine, text that specifies **DIESEL ONLY** is located across the fuel gauge below the gauge scale, but above the hub of the gauge needle.

The fuel gauge graphics are white against a black field except for a single red graduation at the low end of the gauge scale making them clearly visible within the instrument cluster in daylight. When illuminated from behind by the panel lamps dimmer controlled cluster general illumination lighting with the exterior lamps turned ON, the gauge graphics appear amber for low line models and white for high line models while the red graphics still appear red. The gauge needle has internal optical illumination. Gauge illumination is provided by an Light Emitting Diode (LED) located on the instrument cluster electronic circuit board.

OIL PRESSURE GAUGE

An oil pressure gauge is standard equipment on all **SLT** instrument clusters with a gasoline or diesel engine. This gauge is located in the lower center quadrant of the speedometer. On Hybrid Electric Vehicle (HEV) models the oil pressure gauge is located above the Electronic Vehicle Information Center (EVIC), just left of center. This gauge consists of a movable gauge needle or pointer controlled by the instrument cluster circuitry and a fixed 90 degree scale on the cluster overlay that reads left-to-right from **L** (or Low) to **H** (or High).

An International Control and Display Symbol icon for **Engine Oil** is located on the cluster overlay, on **ST** instrument clusters and on the gauge face directly below the gauge scale on **SLT** instrument clusters. The oil pressure gauge graphics are white against a black field except for a single red graduation at the low end of the gauge scale making them clearly visible within the instrument cluster in daylight. When illuminated from behind by the panel lamps dimmer controlled cluster general illumination lighting with the exterior lamps turned ON, the white graphics appear white and the red graphics still appear red. The gauge needle has internal optical illumination. Gauge illumination is provided by Light Emitting Diode (LED) units located on the instrument cluster electronic circuit board.

POWER GAUGE

A power gauge is standard equipment on all high line HEV instrument clusters. This gauge is located in the lower portion of the tachometer below the gauge needle. This gauge consists of a movable gauge needle or pointer controlled by the instrument cluster circuitry and a fixed 90 degree scale on the cluster overlay that reads left-to-right from **ECO** to **PWR** .

The power gauge graphics are white against a black field except for a green and white scale used to show the economy and power range of the vehicle, making them clearly visible within the instrument cluster in daylight. When illuminated from behind by the panel lamps dimmer controlled cluster general illumination lighting with the exterior lamps turned ON, the white graphics appear white and the green graphics still appear green. The gauge needle has internal optical illumination. Gauge illumination is provided by a Light Emitting Diode (LED) located on the instrument cluster electronic circuit board.

SPEEDOMETER

A speedometer is standard equipment on all instrument clusters. The speedometer is located next to the tachometer, just to the right of center in the instrument cluster. The speedometer consists of a movable gauge needle or pointer controlled by the instrument cluster circuitry and a fixed 210 degree primary scale on the gauge dial face.

The speedometer reads left-to-right either from **0** to **120** mph, or from **0** to **200** km/h, depending upon the market for which the vehicle is manufactured. Each version also has a secondary inner scale on the gauge dial face that provides the equivalent opposite units from the primary scale. Text appearing on the cluster overlay just below the hub of the speedometer needle abbreviates the unit of measure for the primary scale (either **mph** or **km/h**), followed by the unit of measure for the secondary scale.

The speedometer graphics are white (primary scale) and gray (secondary scale) against a black field making them clearly visible within the instrument cluster in daylight. When illuminated from behind by the panel lamps dimmer controlled cluster general illumination lighting, the primary scale graphics appear white and the secondary scale graphics appear light gray. The gauge needle has internal optical illumination. Gauge illumination is provided by Light Emitting Diode (LED) units located on the instrument cluster electronic circuit board.

TACHOMETER

A tachometer is standard equipment on all instrument clusters. The tachometer is located to the left of the speedometer, just to the left of center in the instrument cluster. The tachometer consists of a movable gauge needle or pointer controlled by the instrument cluster circuitry and a fixed 210 degree scale on the gauge dial face. The tachometer reads left-to-right from **0** to **7** . The text **RPM X 1000** is imprinted on the cluster overlay directly below the hub of the tachometer needle. This text identifies that each number on the tachometer scale is to be multiplied by 1000 rpm.

The tachometer graphics are white against a black field making them clearly visible within the instrument cluster in daylight. When illuminated from behind by the panel lamps dimmer controlled cluster general illumination lighting, the scale graphics appear white and the red graphics still appear red. The gauge needle has internal optical illumination. Gauge illumination is provided by a Light Emitting Diode (LED) unit located on the instrument cluster electronic circuit board.

VOLTAGE GAUGE

A voltage gauge is standard equipment on all high line instrument clusters. This gauge is located in the lower portion of the tachometer below the gauge needle. This gauge consists of a movable gauge needle or pointer controlled by the instrument cluster circuitry and a fixed 90 degree scale on the cluster overlay that reads left-to-right from **L** (or Low) to **H** (or High) and an International Control and Display Symbol icon for **Battery Charging Condition** is located within the gauge itself directly below the gauge scale. On low line models the symbol is near the left edge of the instrument cluster, on the cluster overlay next to the tachometer.

The voltage gauge graphics are white against a black field except for a single red graduation at each end of the gauge scale making them clearly visible within the instrument cluster in daylight. When illuminated from behind by the panel lamps dimmer controlled cluster general illumination lighting with the exterior lamps turned ON, the white graphics appear white and the red graphics still appear red. The gauge needle has internal optical illumination. Gauge illumination is provided by a Light Emitting Diode (LED) located on the instrument cluster electronic circuit board.

OPERATION

OPERATION

GAUGES

All gauges receive battery current through the CCN circuitry only when the ignition switch is in the ON or START positions. With the ignition switch in the OFF position battery current is not supplied to any gauges, and the CCN circuitry is programmed to move all of the gauge needles back to the low end of their respective scales. Therefore, the gauges do not accurately indicate any vehicle condition unless the ignition switch is in the ON or START positions.

All of the CCN gauges are driven by stepper motors. Multiple toothed electromagnets around a central gear-shaped piece of iron are located within each gauge. The electromagnets are energized by the CCN circuitry in response to messages received over the CAN data bus. To make the motor shaft turn, one electromagnet is given power, which makes the gears teeth magnetically attract to the electromagnets. As the second electromagnet is turned on the first is turned off and the gear rotates to align to the energized magnet, and the process is repeated. Each of those slight rotations is called at "step", this allows the motor to be turned to precise angles. The gauge needle moves as the magnets align to the changing magnetic fields created around it by the electromagnets.

The gauges are diagnosed using the CCN self-diagnostic test. Refer to **DIAGNOSIS AND TESTING**. Proper testing of the CAN data bus and the electronic data bus message inputs to the CCN that control each gauge require the use of a diagnostic scan tool. Refer to the appropriate diagnostic information. Specific operation details for each gauge may be found elsewhere in this service information.

ENGINE TEMPERATURE GAUGE

The engine coolant temperature gauge gives an indication to the vehicle operator of the engine coolant temperature. This gauge is controlled by the Cab Compartment Node (CCN) based upon cluster programming and electronic messages received over the Controller Area Network (CAN) data bus. These electronic messages are received from the Powertrain Control Module (PCM) or Engine Control Module (ECM), depending on engine application.

The engine coolant temperature gauge is a stepper motor design unit that receives battery current on the CCN electronic circuit board through the fused ignition switch output (run-start) circuit whenever the ignition switch is in the ON or START positions. The cluster is programmed to move the gauge needle back to the low end of the scale after the ignition switch is turned to the OFF position. The CCN electronic circuitry controls the gauge needle position and provides the following features:

- **Engine Temperature Low Message -** Each time the CCN receives an electronic engine temperature message from the PCM or ECM indicating the temperature is below the low end of normal [about 54 °C (130 °F), the gauge needle is held at the graduation on the far left end of the gauge scale. The gauge needle remains at the low end of the gauge scale until the CCN receives a message from the PCM or ECM indicating the temperature is above about 54 °C (130 °F), or until the ignition switch is turned to the OFF position, whichever occurs first.
- **Engine Temperature Message -** Each time the CCN receives an electronic engine temperature message from the PCM or ECM indicating the temperature is between the low end of normal [about 54 °C (130 ° F) and the high end of normal [about 122 °C (252 °F), the gauge needle is moved to the actual relative temperature position on the gauge scale.
- **Engine Temperature High Message -** Each time the CCN receives three consecutive electronic engine temperature messages from the PCM or ECM indicating the temperature is above about 122 °C (252 °F), the gauge needle is moved to the red increment or zone at the far right end of gauge scale, the check gauges indicator is illuminated, and a single chime tone is sounded. The gauge needle remains at the high end of the gauge scale and the check gauges indicator remains illuminated until the cluster receives a message from the PCM or ECM indicating that the temperature is below about 122 °C (252 °F), or until the ignition switch is turned to the OFF position, whichever occurs first. The chime tone feature will only repeat during the same ignition cycle if the check gauges indicator is cycled OFF and then ON again by the appropriate messages from the PCM or ECM.
- **Communication Error -** If the CCN fails to receive an **engine temperature** message, it will hold the gauge needle at the last indication for about 10 seconds or until the ignition switch is turned to the OFF position, whichever occurs first. After 10 seconds, the CCN will move the gauge needle to the low end of the gauge scale.

The PCM or ECM continually monitors the engine coolant temperature sensor to determine the engine operating temperature. The PCM or ECM then sends the proper messages to the CCN. For further diagnosis of the engine coolant temperature gauge or the electronic circuitry that controls the gauge, refer to **DIAGNOSIS AND TESTING**. If the instrument cluster turns ON the check gauges indicator due to a high engine temperature gauge reading, it may indicate that the engine or the engine cooling system requires service.

FUEL GAUGE

The fuel gauge gives an indication to the vehicle operator of the level of fuel in the fuel tank. This gauge is controlled by the instrument cluster circuit board based upon cluster programming and a bus message received by the cluster. This bus message is based upon a hard-wired input received by the Total Integrated Power Module (TIPM) from the fuel level sending unit on the fuel pump module, located in the fuel tank.

The fuel gauge is a stepper motor design unit that receives battery current on the instrument cluster electronic circuit board through the fused ignition switch output (run-start) circuit whenever the ignition switch is in the ON or START positions. The cluster is programmed to move the gauge needle back to the low end of the scale after the ignition switch is turned to the OFF position. The CCN electronic circuitry controls the gauge needle

position and provides the following features:

- **Fuel Level Sending Unit Input** - The TIPM provides a constant current source to the fuel level sending unit and monitors a return input on a fuel level sense circuit. The resistance through the fuel level sending unit increases as the fuel level falls and decreases as the fuel level rises causing changes in the fuel level sense input voltage. The TIPM sends the fuel level voltage to the cluster over the Controller Area Network (CAN) bus. The cluster programming applies an algorithm to calculate the proper fuel gauge needle position based upon the fuel level bus input, then moves the gauge needle to the proper relative position on the gauge scale. This algorithm is used to dampen gauge needle movement against the negative effect that fuel sloshing within the fuel tank can have on accurate inputs from the fuel tank sending unit to the cluster.
- **Less Than 10 Percent Tank Full Input** - Each time the fuel level sense input to the cluster indicates the fuel tank is about 10 percent full or less for 10 consecutive seconds and the vehicle speed is zero, or for 60 consecutive seconds and the vehicle speed is greater than zero, the gauge needle is moved to about the one-sixteenth graduation on the gauge scale, the low fuel indicator is illuminated, and a single chime tone is sounded. The low fuel indicator remains illuminated until the fuel level sense input is greater than about 15 percent full for 10 consecutive seconds and the vehicle speed is zero, or for 60 consecutive seconds and the vehicle speed is greater than zero, or until the ignition switch is turned to the OFF position, whichever occurs first. The chime tone feature will only repeat during the same ignition cycle if the low fuel indicator is cycled OFF and then ON again by the appropriate inputs from the fuel level sending unit.
- **Less Than Empty Stop Input** - Each time the cluster receives a fuel level sense input that indicates the fuel level in the fuel tank is less than the EMPTY gauge needle stop position, the gauge needle is moved to the low end of the gauge scale and the low fuel indicator is illuminated immediately. This input would indicate that the fuel level sense input to the cluster is a short circuit.
- **More Than Full Stop Input** - Each time the cluster receives a fuel level sense input that indicates the fuel level in the fuel tank is more than the FULL gauge needle stop position, the gauge needle is moved to the low end of the gauge scale and the low fuel indicator is illuminated immediately. This input would indicate that the fuel level sense input to the cluster is an open circuit.

The instrument cluster, also known as the Cab Compartment Node (CCN) continually monitors the fuel tank sending unit to determine the level of fuel in the fuel tank. The CCN then sends the proper electronic fuel level message to other electronic modules in the vehicle over the Controller Area Network (CAN) data bus. For further diagnosis of the fuel gauge or the instrument cluster circuitry that controls the gauge, refer to **DIAGNOSIS AND TESTING**.

OIL PRESSURE GAUGE

The oil pressure gauge gives an indication to the vehicle operator of the engine oil pressure. This gauge is controlled by the Cab Compartment Node (CCN) based upon cluster programming and electronic messages received over the Controller Area Network (CAN) data bus. These electronic messages are received from the Powertrain Control Module (PCM) or Engine Control Module (ECM), depending on engine application.

The oil pressure gauge is a stepper motor design unit that receives battery current on the CCN electronic circuit board through the fused ignition switch output (run-start) circuit whenever the ignition switch is in the ON or START positions. The cluster is programmed to move the gauge needle back to the low end of the scale after the ignition switch is turned to the OFF position. The CCN electronic circuitry controls the gauge needle

position and provides the following features:

- **Engine Oil Pressure Message** - The CCN circuitry restricts the oil pressure gauge needle operation in order to provide readings that are consistent with customer expectations. Each time the cluster receives an electronic engine oil pressure message from the PCM or ECM indicating the pressure is above about 89 kPa (13 psi) the cluster holds the gauge needle at a point near the middle increment within the normal range on the gauge scale.
- **Engine Oil Pressure Low Message** - Each time the CCN receives three consecutive electronic engine oil pressure messages from the PCM or ECM indicating the pressure is below about 89 kPa (13 psi), the gauge needle is moved to the red graduation at the far left end of the gauge scale, the check gauges indicator is illuminated, and a single chime tone is generated. The gauge needle remains at the left end of the gauge scale and the check gauges indicator remains illuminated until the cluster receives a message from the PCM or ECM indicating that the pressure is above about 89 kPa (13 psi), or until the ignition switch is turned to the OFF position, whichever occurs first. The cluster will only turn ON the check gauges indicator in response to a low pressure message if the engine speed is greater than zero.
- **Communication Error** - If the CCN fails to receive an engine oil pressure message, it will hold the gauge needle at the last indication for about 10 seconds, or until the ignition switch is turned to the OFF position, whichever occurs first. After 10 seconds, the CCN will move the gauge needle to the low end of the gauge scale.

The PCM or ECM continually monitors the engine oil pressure sensor to determine the engine oil pressure. The PCM or ECM then sends the proper messages to the CCN. For further diagnosis of the oil pressure gauge or the instrument cluster circuitry that controls the gauge, refer to **DIAGNOSIS AND TESTING**. If the instrument cluster turns ON the check gauges indicator due to a low oil pressure gauge reading, it may indicate that the engine or the engine oiling system requires service.

POWER GAUGE

The power gauge gives an indication to the vehicle operator of how the Hybrid Electric Vehicle (HEV) is being operated in terms of the electric or gasoline modes and the relative gasoline fuel economy. This gauge is controlled by the instrument cluster circuit board based upon cluster programming and electronic messages received by the cluster from the Hybrid Control Processor (HCP) integral to the Traction Power Inverter Module (TPIM) over the Controller Area Network (CAN) data bus.

The power gauge is a stepper motor design unit that receives battery current on the CCN electronic circuit board through the fused ignition switch output (run-start) circuit whenever the ignition switch is in the ON or START positions. The cluster is programmed to move the gauge needle back to the low end of the scale after the ignition switch is turned to the OFF position. The CCN electronic circuitry controls the gauge needle position and provides the following features:

- **Charging Position Message** - Each time the cluster receives electronic messages from the HCP indicating that there is electrical energy being generated by the Regenerative Brake System (RBS) and that the high voltage battery of the HEV system is being recharged it positions the gauge needle within the **Charging** range of the gauge scale. The gauge needle remains within the **Charging** range until the cluster receives a message from the HCP to reposition the gauge needle, or until the ignition switch turns to the OFF position, whichever occurs first.
- **Economy Position Message** - If the cluster receives electronic messages from the HCP indicating that

the vehicle is being operated in the fuel-saving hybrid electrical mode it positions the gauge needle to the appropriate relative position within the **Economy** range of the gauge scale. The closer the needle moves to the center of the **Economy** range indicates that the vehicle is achieving more fuel economy through reliance on the electrical mode of operation; while, the further the needle moves to the right of center indicates that the vehicle is achieving less fuel economy through additional reliance on the gasoline mode of operation. The gauge needle remains within the **Economy** range until the cluster receives a message from the HCP to reposition the gauge needle, or until the ignition switch turns to the OFF position, whichever occurs first.

- **Power Position Message -** Each time the cluster receives electronic messages from the HCP indicating that the vehicle is achieving the least fuel economy through reliance entirely on the gasoline mode of operation it positions the gauge needle to the appropriate relative position within the **Power** range of the gauge scale. The further the needle moves toward the right end of the scale, the greater the power being demanded from the gasoline engine and the lower the fuel economy being achieved. The gauge needle remains within the **Power** range until the cluster receives a message from the HCP to reposition the gauge needle, or until the ignition switch turns to the OFF position, whichever occurs first.
- **Communication Error -** If the cluster fails to receive a power gauge message, it holds the gauge needle at the last indication for about three seconds, or until the ignition switch turns to the OFF position, whichever occurs first. After three seconds, the gauge needle returns to the left end of the gauge scale.

The HCP continually monitors the HEV system circuits, sensors and components as well as inputs from the Powertrain Control Module (PCM) to determine the appropriate HEV operating mode and power gauge positioning strategies. The HCP then sends the proper electronic messages to the instrument cluster, also known as the Cab Compartment Node (CCN) to control the power gauge needle position. For further diagnosis of the power gauge or the instrument cluster circuitry that controls the gauge, refer to **DIAGNOSIS AND TESTING**.

Use a diagnostic scan tool for proper diagnosis of the HEV systems, the HCP, the PCM, the CCN, the CAN data bus or the electronic communication related to power gauge operation. Refer to the appropriate diagnostic information.

SPEEDOMETER

The speedometer gives an indication to the vehicle operator of the vehicle road speed. This gauge is controlled by the instrument cluster circuit board based upon cluster programming and electronic messages received by the cluster from the Powertrain Control Module (PCM) or Engine Control Module (ECM), depending on engine application, over the Controller Area Network (CAN) data bus.

The speedometer is a stepper motor design unit that receives battery current on the instrument cluster electronic circuit board through the fused ignition switch output (run-start) circuit whenever the ignition switch is in the ON or START positions. The cluster is programmed to move the gauge needle back to the low end of the scale after the ignition switch is turned to the OFF position. The instrument cluster circuitry controls the gauge needle position and provides the following features:

- **Vehicle Speed Message -** Each time the cluster receives an electronic vehicle speed message from the PCM it will calculate the correct vehicle speed reading and position the gauge needle at that relative speed position on the gauge scale. The cluster will receive a new message and reposition the gauge pointer accordingly about every 88 milliseconds. The gauge needle will continually be positioned at the relative vehicle speed position on the gauge scale until the vehicle stops moving, or until the ignition switch is turned to the OFF position, whichever occurs first.

- **Communication Error -** If the cluster fails to receive a speed message, it will hold the gauge needle at the last indication for about three seconds, or until the ignition switch is turned to the OFF position, whichever occurs first. After three seconds, the gauge needle will return to the left end of the gauge scale.

The PCM continually monitors the Vehicle Speed Sensor (VSS) or electronic wheel speed messages from the Controller Anti-lock Brake (CAB) to determine the vehicle road speed. The PCM then sends the proper vehicle speed messages to the instrument cluster, also known as the Cab Compartment Node (CCN). For further diagnosis of the speedometer or the instrument cluster circuitry that controls the gauge, refer to **DIAGNOSIS AND TESTING**.

TACHOMETER

The tachometer gives an indication to the vehicle operator of the engine speed. This gauge is controlled by the Cab Compartment Node (CCN) based upon cluster programming and electronic messages received over the Controller Area Network (CAN) data bus. These electronic messages are received from the Powertrain Control Module (PCM) or Engine Control Module (ECM), depending on engine application.

The tachometer is a stepper motor design unit that receives battery current on the instrument cluster electronic circuit board through the fused ignition switch output (run-start) circuit whenever the ignition switch is in the ON or START positions. The cluster is programmed to move the gauge needle back to the low end of the scale after the ignition switch is turned to the OFF position. The CCN electronic circuitry controls the gauge needle position and provides the following features:

- **Engine Speed Message -** Each time the CCN receives an electronic **engine speed** message from the PCM or ECM it will calculate the correct engine speed reading and position the gauge needle at that relative speed position on the gauge scale. The CCN will receive a new message and reposition the gauge pointer accordingly about every 88 milliseconds. The gauge needle will continually be repositioned at the relative engine speed position on the gauge scale until the engine stops running, or until the ignition switch is turned to the OFF position, whichever occurs first.
- **Communication Error -** If the CCN fails to receive a speed message, it will hold the gauge needle at the last indication for about three seconds, or until the ignition switch is turned to the OFF position, whichever occurs first. After three seconds, the gauge needle will return to the left end of the gauge scale.

The PCM continually monitors the crankshaft position sensor to determine the engine speed. The ECM continually monitors the engine speed sensor to determine the engine speed. The PCM or ECM, depending on engine application, then sends the proper **engine speed** messages to the CCN. For further diagnosis of the tachometer or the instrument cluster circuitry that controls the gauge, refer to **DIAGNOSIS AND TESTING**.

VOLTAGE GAUGE

The voltage gauge gives an indication to the vehicle operator of the electrical system voltage. This gauge is controlled by the Cab Compartment Node (CCN) based upon cluster programming and electronic messages received over the Controller Area Network (CAN) data bus. These electronic messages are received from the Powertrain Control Module (PCM) or Engine Control Module (ECM), depending on engine application.

The voltage gauge is a stepper motor design unit that receives battery current on the CCN electronic circuit board through the fused ignition switch output (run-start) circuit whenever the ignition switch is in the ON or START positions. The cluster is programmed to move the gauge needle back to the left end of the scale after

the ignition switch is turned to the OFF position. The CCN electronic circuitry controls the gauge needle position and provides the following features:

- **System Voltage Message** - Each time the CCN receives an electronic system voltage message from the PCM or ECM indicating the voltage is between about 9.5 volts and about 15 volts, the gauge needle is moved to the relative voltage position on the gauge scale.
- **System Voltage Low (Charge Fail) Message** - Each time the CCN receives three consecutive electronic system voltage messages from the PCM or ECM indicating the voltage is less than about 9 volts (charge fail condition) or that the battery temperature sensor input is an open circuit, the gauge needle is moved to the graduation on the far left end of the gauge scale and the check gauges indicator is illuminated. The gauge needle remains at the far left end of the gauge scale and the check gauges indicator remains illuminated until the cluster receives a single message from the PCM or ECM indicating the voltage is greater than about 9.5 volts (but less than about 15.5 volts), or until the ignition switch is turned to the OFF position, whichever occurs first.
- **System Voltage High Message** - Each time the CCN receives 3 consecutive electronic system voltage messages from the PCM or ECM indicating the voltage is greater than about 15.5 volts, the gauge needle is moved to the graduation on the far right end of the gauge scale and the check gauges indicator is illuminated. The gauge needle remains at the right end of the gauge scale and the check gauges indicator remains illuminated until the cluster receives a message from the PCM or ECM indicating the voltage is less than about 15.0 volts (but greater than about 9.5 volts), or until the ignition switch is turned to the OFF position, whichever occurs first.
- **Communication Error** - If the CCN fails to receive a **system voltage** message, it will hold the gauge needle at the last indication for about three seconds, or until the ignition switch is turned to the OFF position, whichever occurs first. After three seconds, the CCN will move the gauge needle to the far left end of the gauge scale.

The PCM or ECM continually monitors the system voltage to control the generator output. The PCM then sends the proper system voltage message to the CCN. For further diagnosis of the voltage gauge or the instrument cluster circuitry that controls the gauge, refer to **DIAGNOSIS AND TESTING**. If the instrument cluster turns ON the check gauges indicator due to a charge fail or voltage high condition, it may indicate that the charging system requires service.

INDICATORS, INSTRUMENT CLUSTER

DESCRIPTION

DESCRIPTION

The CCN houses provisions for up to 28 indicators, as well as 6 analog gauges standard on all models, that are all controlled by the Cab Compartment Node (CCN). For more information on the gauges, refer to **GAUGE PACK, INSTRUMENT CLUSTER, DESCRIPTION**. Some of the CCN indicators are automatically configured when the CCN is connected to the vehicle electrical system for compatibility with certain optional equipment or equipment required for regulatory purposes in certain markets. While each CCN may have provisions for indicators to support every available option, the configurable indicators will not be functional in a vehicle that does not have the equipment that an indicator supports.

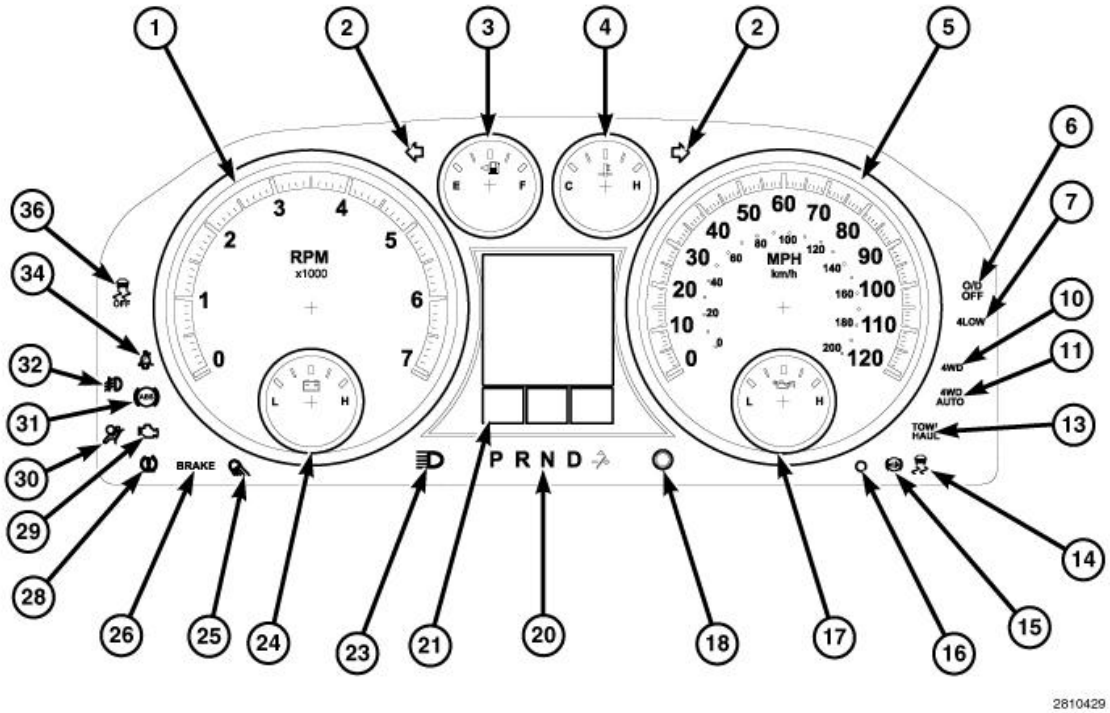

Fig. 15: SLT Cluster (Gasoline and Diesel)
Courtesy of CHRYSLER GROUP, LLC

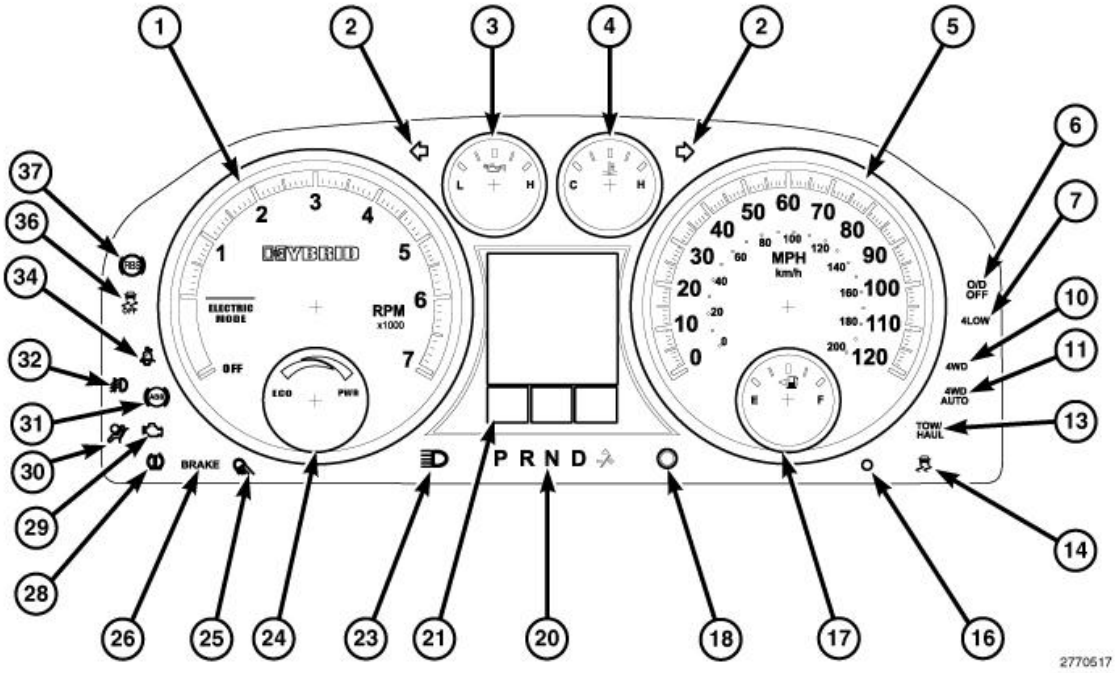

Fig. 16: HEV Cluster
Courtesy of CHRYSLER GROUP, LLC

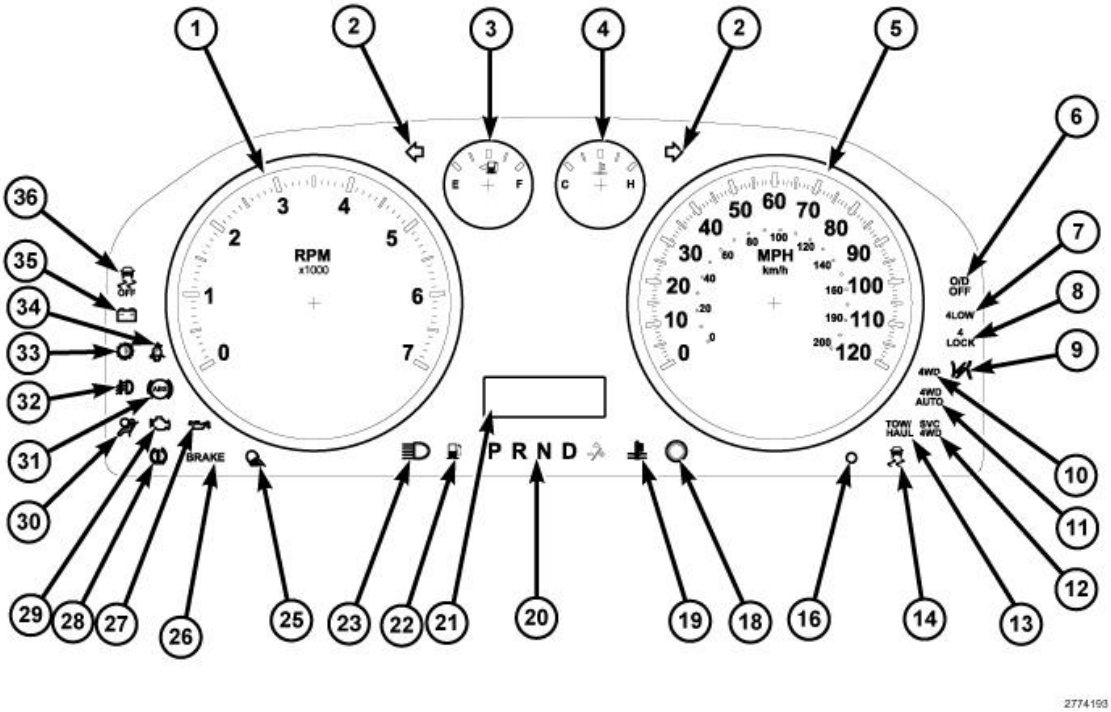

Fig. 17: SL Cluster (Gasoline Only)
Courtesy of CHRYSLER GROUP, LLC

The instrument cluster includes provisions for the following indicators:

- **Airbag Indicator (30)**
- **Antilock Brake System (ABS) Indicator (31)**
- **Brake Indicator (26)**
- **Cargo Lamp Indicator (25)**
- **Change Oil Indicator (21)** - on domestic market vehicles only, a textual message in the Electronic Vehicle Information center (EVIC) if so equipped.
- **Charging Indicator (35)**
- **Cruise Indicator (21)** - Textual message in odometer LCD. Also in the EVIC if so equipped.
- **Diesel Exhaust Fluid (DEF) indicator (21)** - Textual message in the EVIC (diesel engines only).
- **Diesel Exhaust Brake indicator (15)**
- **Door Ajar Indicator (21)** - Textual message in odometer LCD. Also in the EVIC if so equipped.
- **Electronic Stability Control System Activation Indicator (14)**
- **Electronic Stability Control System OFF Indicator (36)** - Also in the EVIC if so equipped.
- **Fog Lamp Indicator (32)**
- **Four-Wheel Drive (4WD) Indicator (10)**
- **Four-Wheel Drive Auto (4WD Auto) Indicator (11)**
- **Four-Wheel Drive Low (4 LOW) Indicator (7)**

- **Four-Wheel Drive Low (4 LOCK) Indicator (8)**
- **Gas Cap Indicator (21) -** International Vehicle Control and Display Symbols (ICON) image in odometer LCD. Vehicle equipped with and EVIC a textual message with an ICON.
- **High Beam Indicator (23)**
- **Low Fuel Indicator (22) -** Also in the EVIC if so equipped.
- **Low Oil Pressure Indicator (27) -** Also in the EVIC if so equipped.
- **Malfunction Indicator Lamp (MIL) (29)**
- **No Bus Indicator (21) -** Textual message in odometer LCD. Also in the EVIC if so equipped.
- **No Fuse Indicator (21) -** Textual message in odometer LCD. Also in the EVIC if so equipped.
- **Regenerative Brake System (RBS) indicator (37)**
- **Seat Belt Indicator (34)**
- **Security Indicator (16)**
- **Service Four-Wheel Drive (Serv 4WD) Indicator (12) -** Also in the EVIC if so equipped.
- **Tire Pressure Monitor (TPM) Indicator (28)**
- **Tow/Haul Indicator (13)**
- **Transmission Overtemp Indicator (33) -** Also in the EVIC if so equipped.
- **Transmission Range Indicator (20)**
- **Electronic Throttle Control (9)** Also in the EVIC if so equipped.
- **Turn Signal (Right and Left) Indicators (2)**
- **Wait-To-Start Indicator (21) -** With diesel engine only
- **Washer Fluid Indicator (21) -** Textual message in odometer LCD. Also in the EVIC if so equipped.
- **Water-In-Fuel Indicator (21) -** With diesel engine only.

Each indicator in the CCN, except those located within the LCD unit, is illuminated by a dedicated LED that is soldered onto the CCN electronic circuit board. Cluster illumination is accomplished by dimmable LED back lighting, which illuminates each of the gauges for visibility when the exterior lighting is turned ON. The LED units are not available for service replacement and, if damaged or ineffective, the entire CCN must be replaced. For more information on the indicator ICON images, refer to **INTERNATIONAL VEHICLE CONTROL AND DISPLAY SYMBOLS, DESCRIPTION** .

OPERATION

OPERATION

Indicators are located in various positions within the CCN and are all connected to the CCN electronic circuit board. The door ajar indicator, high beam indicator, and turn signal indicators operate based upon CAN data bus messages. The cargo lamp indicator operates based upon hardwired inputs to the CCN. The brake indicator is controlled by CAN data bus messages from the Controller Antilock Brake (CAB) as well as by hardwired park brake switch inputs to the CCN. The seatbelt indicator is controlled by the CCN programming, CAN data bus messages from the Occupant Restraint Controller (ORC), and a hardwired seat belt switch input to the CCN. The Malfunction Indicator Lamp (MIL) is normally controlled by CAN data bus messages from the PCM; however, if the CCN loses CAN data bus communication, the CCN circuitry will automatically turn the MIL

ON until CAN data bus communication is restored. The CCN uses CAN data bus messages from the Totally Integrated Power Module (TIPM), the ORC, the CAB, and the Wireless Ignition Node (WIN) to control all of the remaining indicators.

The various CCN indicators are grounded through the CCN circuitry and have a switched battery feed. All indicators are completely controlled by the CCN microprocessor based upon various hard wired and electronic message inputs. The cruise, four-wheel drive, four-wheel drive auto, four-wheel drive low, overdrive OFF and tow/haul indicators and those located within the LCD unit are dimmable. All other indicators are illuminated at a fixed intensity, which is not affected by the selected illumination intensity of the CCN general illumination lamps. The illumination intensity of the dimmable indicators is synchronized with that of the CCN general illumination lamps.

In addition, certain indicators in this instrument cluster are automatically or self-configured. This feature allows the configurable indicators to be enabled by the CCN circuitry for compatibility with certain optional equipment. The CCN defaults for the ABS indicator and airbag indicator are enabled, and these configuration settings must be programmatically disabled in the CCN using a diagnostic scan tool for vehicles that do not have this equipment. The automatically or self-configured indicators remain latent in each CCN at all times and will be active only when the CCN receives the appropriate CAN bus message inputs for that optional system or equipment.

The hard wired indicator inputs may be diagnosed using conventional diagnostic tools and procedures. However, the CCN circuitry and CAN bus message controlled indicators are diagnosed using the CCN self-diagnostic test. Refer to **DIAGNOSIS AND TESTING**. Proper testing of the CAN data bus and the electronic data bus message inputs to the CCN that control an indicator requires the use of a diagnostic scan tool. Refer to the appropriate diagnostic information. Specific details of the operation for each indicator may be found elsewhere in this service information.

ABS INDICATOR

The ABS indicator gives an indication to the vehicle operator when the ABS system, or a circuit or component of the system is ineffective. This indicator is controlled by a transistor on the instrument cluster circuit board based upon cluster programming and electronic messages received by the cluster from the Antilock Brake Module (ABM) over the Controller Area Network (CAN) data bus.

The ABS indicator Light Emitting Diode (LED) is completely controlled by the instrument cluster logic circuit, and that logic will only allow this indicator to operate when the instrument cluster receives a battery current input on the fused ignition switch output (run-start) circuit. Therefore, the LED will always be OFF when the ignition switch is in any position except ON or START. The LED only illuminates when it is provided a path to ground by the instrument cluster transistor. Each time the ignition switch is turned to the ON position the ABS indicator is illuminated for about four seconds as a bulb test. The instrument cluster will turn ON the ABS indicator for the following reasons:

- **ABS Indicator Lamp-On Message** - Each time the cluster receives an electronic ABS indicator lamp-ON message from the ABM, the ABS indicator will be illuminated. The indicator remains illuminated until the cluster receives a lamp-OFF message from the ABM, or until the ignition switch is turned to the OFF position, whichever occurs first.
- **Communication Error** - If the cluster receives no lamp-ON or lamp-OFF messages from the CAB for five consecutive message cycles, the ABS indicator is illuminated. The indicator remains illuminated

until the cluster receives a valid message from the ABM, or until the ignition switch is turned to the OFF position, whichever occurs first.

- **ABS Diagnostic Test -** The ABS indicator is blinked ON and OFF by lamp-ON and lamp-OFF messages from the ABM during the performance of the ABS diagnostic tests.

The Antilock Brake Module (ABM) continually monitors the ABS circuits and sensors to decide whether the system is in good operating condition. The ABM then sends the proper lamp-ON or lamp-OFF message to the instrument cluster, also known as the Cab Compartment Node (CCN). If the ABM sends a lamp-ON message after the bulb test, it indicates that the ABM has detected a system malfunction or that the ABS system has become ineffective. The ABM will store a Diagnostic Trouble Code (DTC) for any malfunction it detects. Each time the ABS indicator fails to light due to an open or short in the cluster ABS indicator circuit, the cluster sends a message notifying the ABM of the condition, then the instrument cluster and the ABM will each store a DTC.

AIRBAG INDICATOR

The airbag indicator gives an indication to the vehicle operator when the airbag system, or a circuit or component of the system is ineffective. The airbag indicator is controlled by a transistor on the instrument cluster circuit board based upon cluster programming and electronic messages received by the cluster from the Occupant Restraint Controller (ORC) over the Controller Area Network (CAN) data bus.

The airbag indicator Light Emitting Diode (LED) is completely controlled by the instrument cluster logic circuit, and that logic will only allow this indicator to operate when the instrument cluster receives a battery current input on the fused ignition switch output (run-start) circuit. Therefore, the LED will always be OFF when the ignition switch is in any position except ON or START. The LED only illuminates when it is provided a path to ground by the instrument cluster transistor. Each time the ignition switch is turned to the ON position the airbag indicator is illuminated for about six to eight seconds. The entire bulb test is a function of the ORC. The instrument cluster will turn ON the airbag indicator for the following reasons:

- **Airbag Indicator Lamp-On Message -** Each time the cluster receives an electronic airbag indicator lamp-ON message from the ORC, the airbag indicator will be illuminated. The indicator remains illuminated for about twelve seconds or until the cluster receives a lamp-OFF message from the ORC, whichever is longer. This indicator will also be extinguished when the ignition switch is turned to the OFF position.
- **Communication Error -** If the cluster receives no lamp-ON or lamp-OFF messages from the ORC for 10 consecutive message cycles, the airbag indicator is illuminated. The indicator remains illuminated until the cluster receives a single lamp-OFF message from the ORC.

The ORC continually monitors the airbag system circuits and sensors to decide whether the system is in good operating condition. The ORC then sends the proper lamp-ON or lamp-OFF message to the instrument cluster, also known as the Cab Compartment Node (CCN). If the ORC sends a lamp-ON message after the bulb test, it indicates that the ORC has detected a system malfunction or that the airbags and seat belt tensioners may not deploy when required, or may deploy when not required. The ORC will store a Diagnostic Trouble Code (DTC) for any malfunction it detects. Each time the airbag indicator fails to illuminate due to an open or short in the cluster airbag indicator circuit, the cluster sends a message notifying the ORC of the condition, the instrument cluster and the ORC will each store a DTC, and the cluster will flash the seatbelt indicator ON and OFF as a backup to notify the vehicle operator.

BRAKE INDICATOR

The brake indicator gives an indication to the vehicle operator when the parking brake is applied, when there are certain brake hydraulic system malfunctions as indicated by a low brake hydraulic fluid level condition, or when the brake fluid level switch is disconnected. The brake indicator can also give an indication when certain faults are detected in the Antilock Brake System (ABS). This indicator is controlled by a transistor on the instrument cluster circuit board based upon cluster programming, electronic messages received by the cluster from the Controller Antilock Brake (CAB) over the Controller Area Network (CAN) data bus, and a hard wired input from the park brake switch.

The brake indicator Light Emitting Diode (LED) is completely controlled by the instrument cluster logic circuit, and that logic will only allow this indicator to operate when the instrument cluster receives a battery current input on the fused ignition switch output (run-start) circuit. Therefore, the LED will always be OFF when the ignition switch is in any position except ON or START. The LED only illuminates when it is provided a path to ground by the instrument cluster transistor. Each time the ignition switch is turned to the ON position the brake indicator is illuminated for about four seconds as a bulb test. The instrument cluster will turn ON the brake indicator for the following reasons:

- **Brake Indicator Lamp-On Message -** Each time the cluster receives an electronic brake indicator lamp-ON message from the CAB, the brake indicator will be illuminated. The CAB may also send lamp-ON messages as feedback during ABS diagnostic procedures. The indicator remains illuminated until the cluster receives a lamp-OFF message from the CAB, or until the ignition switch is turned to the OFF position, whichever occurs first.
- **Park Brake Switch Input -** Each time the cluster detects ground on the park brake switch sense circuit (park brake switch closed = park brake applied or not fully released) while the ignition switch is in the ON position, the brake indicator flashes ON and OFF. The indicator continues to flash until the park brake switch sense input to the cluster is an open circuit (park brake switch open = park brake fully released), or until the ignition switch is turned to the OFF position, whichever occurs first.

The park brake switch on the park brake pedal mechanism provides a hard wired ground input to the instrument cluster circuitry through the park brake switch sense circuit whenever the park brake is applied or not fully released. The CAB continually monitors the ABS system circuits and sensors, including the brake fluid level switch on the brake master cylinder reservoir, to decide whether the system is in good operating condition. The CAB then sends the proper lamp-ON or lamp-OFF message to the instrument cluster, also known as the Cab Compartment Node (CCN). If the CAB sends a lamp-ON message after the bulb test, it indicates that the CAB has detected a brake hydraulic system malfunction or that the ABS system has become ineffective. The CAB will store a Diagnostic Trouble Code (DTC) for any malfunction it detects.

CARGO LAMP INDICATOR

The cargo lamp indicator gives an indication to the vehicle operator when the exterior cargo lamp is illuminated. This indicator is controlled by a transistor on the instrument cluster circuit board based upon cluster programming, a hardwired multiplex input received by the cluster from the cargo lamp switch on the headlamp dimmer switch mux circuit.

The cargo lamp indicator Light Emitting Diode (LED) is completely controlled by the instrument cluster logic circuit and is only on when the cargo lamp is on. The cargo lamp indicator also remains active when the key is out of the ignition. The LED only illuminates when it is provided a path to ground by the instrument cluster

transistor. The instrument cluster will turn ON the cargo lamp indicator for the following reasons:

- **Cargo Lamp-On Input** - Each time the cluster detects a cargo lamp-ON input from the headlamp switch on the headlamp dimmer switch mux circuit, the cargo lamp and the cargo lamp indicator will be illuminated. The cargo lamp and indicator remain illuminated until the cluster receives a cargo lamp-OFF input from the headlamp switch, until the cluster has completed an exterior lamps load shed (about fifteen minutes).

The CCN continually monitors the headlamp dimmer switch circuit to determine the proper interior lamps features and panel lamps illumination levels to provide. The CCN then energizes and de-energizes a low side driver circuit to control the exterior cargo lamp. Each time the CCN energizes the cargo lamp driver and the ignition switch is in the ON or START positions, the CCN also turns ON the cargo lamp indicator. For further diagnosis of the cargo lamp indicator or the instrument cluster circuitry that controls the indicator, refer to **DIAGNOSIS AND TESTING**.

CHARGING INDICATOR

The charging indicator gives an indication to the vehicle operator when the electrical system voltage is too low or too high. This indicator is controlled by the CCN based upon cluster programming and electronic messages received over the Controller Area Network (CAN) data bus. These electronic messages are received from the Powertrain Control Module (PCM) or Engine Control Module (ECM), depending on engine application.

The charging indicator Light Emitting Diode (LED) is completely controlled by the CCN logic circuit, and that logic will only allow this indicator to operate when the instrument cluster receives a battery current input on the fused ignition switch output (run-start) circuit. Therefore, the LED will always be OFF when the ignition switch is in any position except ON or START. The LED only illuminates when it is provided a path to ground by a transistor on the CCN circuit board. Each time the ignition switch is turned to the ON position the charging indicator is illuminated by the CCN for about two seconds as a bulb test. The charging indicator will be turned ON for the following reasons:

- **Voltage Low Message** - Each time the CCN receives an electronic **system voltage** message from the PCM or ECM indicating the voltage is low (less than about 11.5 volts is a charge fail condition), the charging indicator will be illuminated. The indicator remains illuminated until the cluster receives a message from the PCM indicating the voltage is normal (greater than about 12.0 volts, but less than 16.0 volts), or until the ignition switch is turned to the OFF position, whichever occurs first.
- **Voltage High Message** - Each time the CCN receives an electronic **system voltage** message from the PCM or ECM indicating the voltage is high (greater than about 16.0 volts), the charging indicator will be illuminated. The indicator remains illuminated until the CCN receives a message from the PCM or ECM indicating the voltage is normal (less than about 15.5 volts, but greater than 11.5 volts), or until the ignition switch is turned to the OFF position, whichever occurs first.

The PCM or ECM continually monitors the electrical system voltage to control the generator output. The PCM or ECM then sends the proper messages to the CCN. If the charging indicator is turned ON due to a charge fail or voltage high condition, it may indicate that the charging system requires service. For further diagnosis of the charging indicator or the CCN circuitry that controls the indicator, refer to **DIAGNOSIS AND TESTING**.

CRUISE INDICATOR

The cruise indicator gives an indication to the vehicle operator when the electrical system voltage is too low or too high. This indicator is controlled by the CCN based upon cluster programming and electronic messages received over the Controller Area Network (CAN) data bus. These electronic messages are received from the PCM or ECM, depending on engine application.

The cruise indicator Light Emitting Diode (LED) is completely controlled by the CCN logic circuit, and that logic will only allow this indicator to operate when the instrument cluster receives a battery current input on the fused ignition switch output (run-start) circuit. Therefore, the LED will always be OFF when the ignition switch is in any position except ON or START. The LED only illuminates when it is provided a path to ground by a transistor on the CCN circuit board. The cruise indicator will be turned ON for the following reasons:

- **Cruise Indicator Lamp-On Message -** Each time the CCN receives an electronic cruise indicator lamp-ON message from the PCM or ECM indicating the speed control system is ON, the cruise indicator is illuminated. The indicator remains illuminated until the cluster receives a lamp-OFF message from the PCM or ECM or until the ignition switch is turned to the OFF position, whichever occurs first.

The PCM or ECM continually monitors the speed control switches to determine the proper outputs to the speed control servo. The PCM or ECM then sends the proper lamp-ON or lamp-OFF message to the CCN. For further diagnosis of the cruise indicator or the instrument cluster circuitry that controls the LED, refer to **DIAGNOSIS AND TESTING**.

DIESEL EXHAUST BRAKE INDICATOR

The Variable Geometry Turbocharger (VGT) works in conjunction with the engine and the transmission to provide an integrated braking system used to help slow the vehicle. This is commonly called exhaust braking. The diesel exhaust brake indicator gives an indication to the vehicle operator when the exhaust brake feature is active. This indicator is controlled by the CCN based upon cluster programming and electronic messages received from the PCM over the Controller Area Network (CAN) data bus. The exhaust brake feature will only function when the driver turns the exhaust brake switch to the ON position.

Once the switch is in the ON position and the vehicle is moving faster than 8 k/h (5 MPH); the exhaust brake will automatically operate when the driver removes pressure from the throttle pedal allowing the engine to see 0% throttle and 0 fuel delivery. Exhaust braking is most effective when the engine RPM is higher. The automatic transmission has been programmed to downshift more aggressively when the exhaust brake is enabled to increase exhaust brake assistance. Use of automatic transmission Tow/Haul Mode improves interaction between the engine and transmission. Inputs to the exhaust brake feature include:

- Coolant temperature
- Ambient air temperature
- Exhaust manifold pressure sensor
- Throttle pedal position sensor

The PCM continually monitors these sensors, and fault codes with any of these sensors will cause the exhaust brake feature to be disabled.

DIESEL EXHAUST FLUID (DEF) INDICATOR

The diesel exhaust fluid indicator gives an indication to the vehicle operator when the DEF fluid is low or a system malfunction is present. This indicator is controlled by the CCN based upon cluster programming and electronic messages received from the PCM over the Controller Area Network (CAN) data bus.

The diesel exhaust fluid indicator Light Emitting Diode (LED) is completely controlled by the CCN logic circuit, and that logic will only allow this indicator to operate when the instrument cluster receives a battery current input on the fused ignition switch output (run-start) circuit. Therefore, the LED will always be OFF when the ignition switch is in any position except ON or START. The LED only illuminates when it is provided a path to ground by the CCN. Each time the ignition switch is turned to the ON position the water-in-fuel indicator is illuminated for about two seconds as a bulb test. The water-in-fuel indicator will be turned ON for the following reasons:

- **Diesel Exhaust fluid Indicator Lamp-On Message** - Each time the CCN receives an electronic **lamp-ON** message from the PCM indicating that the DEF fluid is low, the DEF indicator will be illuminated. The indicator remains illuminated until the cluster receives a lamp-OFF message from the PCM, or until the ignition switch is turned to the OFF position, whichever occurs first.

The PCM continually monitors the DEF fluid level sensor to determine whether there is sufficient fluid in the tank. The PCM then sends the proper lamp-ON or lamp-OFF message to the CCN. For further diagnosis of the DEF indicator or the instrument cluster circuitry that controls the indicator, refer to **DIAGNOSIS AND TESTING**.

DOOR AJAR INDICATOR

The door ajar indicator gives an indication to the vehicle operator that one or more of the passenger compartment doors may be open or not completely latched. This indicator is controlled by the instrument cluster logic circuit based upon cluster programming and hard wired inputs received by the cluster from the door ajar switches located in each door latch unit.

The door ajar indicator function of the display is completely controlled by the instrument cluster logic circuit, and that logic will only allow this indicator to operate when the instrument cluster receives a battery current input on the fused ignition switch output (run-start) circuit. Therefore, the door ajar indicator will always be OFF when the ignition switch is in any position except ON or START. The instrument cluster will turn ON the door ajar indicator for the following reasons:

- **Door Ajar Switch Input** - Each time the cluster receives a door ajar indication from the Total Integrated Power Module (TPIM) sense circuits (door ajar switch closed = door is open or not completely latched) the door ajar indicator will be illuminated. The indicator remains illuminated until all of the door ajar switch sense inputs to the cluster are an open circuit (door ajar switch open = door fully closed), until the cluster has completed an interior lamps load shed (about five minutes), or until the ignition switch is turned to the OFF position, whichever occurs first.

The instrument cluster, also known as the CCN continually monitors the door ajar switches to determine the status of the doors. For further diagnosis of the door ajar indicator or the instrument cluster circuitry that controls the indicator, refer to **DIAGNOSIS AND TESTING**.

The hardwired door ajar switches and circuits related to door ajar indicator operation may be diagnosed using conventional diagnostic tools and procedures. Refer to the appropriate wiring information.

ELECTRONIC STABILITY CONTROL (ESC) INDICATOR

The ESC indicator gives an indication to the vehicle operator when a problem has been detected in the Electronic Stability Control or when the system has been activated. The indicator is controlled by a transistor on the instrument cluster circuit board based upon cluster programming and electronic messages received by the cluster from the Controller Antilock Brake (CAB), and the Totally Integrated Power Module (TIPM) over the Controller Area Network (CAN) data bus.

The ESC indicator Light Emitting Diode (LED) is completely controlled by the instrument cluster logic circuit, and that logic will only allow this indicator to operate when the instrument cluster receives a battery current input on the fused ignition switch output (run-start) circuit. Therefore, the LED will always be OFF when the ignition switch is in any position except ON or START. The LED only illuminates when it is provided a path to ground by the instrument cluster transistor. Each time the ignition switch is turned to the ON position the ESC indicator is illuminated for about four seconds as a bulb test. The instrument cluster will turn ON the ESC indicator for the following reasons:

- **ESC Indicator Lamp-On Message -** Each time the cluster receives an electronic **ESC indicator lamp-ON** message from the CAB or the TIPM, the ESC indicator will be illuminated. The indicator remains illuminated until the cluster receives a lamp-OFF message from the CAB or TIPM, or until the ignition switch is turned to the OFF position, whichever occurs first.

The CAB and TIPM continually monitor the ESC system circuits and sensors to decide whether the system is in good operating condition and the proper outputs to the components of the system. The CAB or TIPM then sends the proper lamp-ON or lamp-OFF message to the instrument cluster, also known as the Cab Compartment Node (CCN).

ETC INDICATOR

The Electronic Throttle Control (ETC) indicator gives an indication to the vehicle operator when the ETC system, or a circuit or component of the system is ineffective. The ETC indicator is controlled by a transistor on the instrument cluster circuit board based upon cluster programming and electronic messages received by the cluster from the PCM over the Controller Area Network (CAN) data bus.

The ETC indicator Light Emitting Diode (LED) is completely controlled by the instrument cluster logic circuit, and that logic will only allow this indicator to operate when the instrument cluster receives a battery current input on the fused ignition switch output (run-start) circuit. Therefore, the LED will always be OFF when the ignition switch is in any position except ON or START. The LED only illuminates when it is provided a path to ground by the instrument cluster transistor. Each time the ignition switch is turned to the ON position the ETC indicator is illuminated for about six seconds. The entire bulb test is a function of the PCM. The instrument cluster will turn ON the ETC indicator for the following reasons:

- **ETC Indicator Lamp-On Message -** Each time the cluster receives an electronic ETC indicator lamp-ON message from the PCM, the ETC indicator will be illuminated. The indicator can be flashed ON and OFF, or illuminated solid, as dictated by the PCM message. The indicator remains illuminated solid or continues to flash for about 12 seconds or until the cluster receives a lamp-OFF message from the PCM, whichever is longer. If the indicator is illuminated solid with the engine running the vehicle will usually remain drivable. If the indicator is flashing with the engine running the vehicle may require towing. A flashing indicator means the ETC system requires immediate service. The indicator will be extinguished

when the ignition switch is turned to the OFF position.

- **Communication Error -** If the cluster receives no lamp-ON or lamp-OFF messages from the PCM for three consecutive seconds, the ETC indicator is illuminated. The indicator remains illuminated until the cluster receives a single lamp-OFF message from the PCM.

The PCM continually monitors the ETC system circuits and sensors to decide whether the system is in good operating condition. The PCM then sends the proper lamp-ON or lamp-OFF message to the instrument cluster, also known as the Cab Compartment Node (CCN). If the PCM sends a lamp-ON message after the bulb test, it indicates that the PCM has detected an ETC system malfunction or that the ETC system is ineffective. The PCM will store a Diagnostic Trouble Code (DTC) for any malfunction it detects. Each time the ETC indicator fails to illuminate due to an open or short in the cluster ETC indicator circuit, the cluster sends a message notifying the PCM of the condition, then the CCN and the PCM will each store a DTC.

FOG LAMP INDICATOR

The fog lamp indicator gives an indication to the vehicle operator whenever the optional fog lamps are illuminated. This indicator is controlled by the instrument cluster circuit board based upon cluster programming and electronic messages received by the cluster from the Totally Integrated Power Module (TIPM) over the Controller Area Network (CAN) data bus.

The fog lamp indicator is completely controlled by the instrument cluster logic circuit, and that logic will only allow this indicator to operate when the instrument cluster receives a battery current input on the fused ignition switch output (run-start) circuit. Therefore, the indicator will always be OFF when the ignition switch is in any position except ON or START. The indicator only illuminates when it is energized by the instrument cluster logic circuit. The instrument cluster will turn ON the fog lamp indicator for the following reasons:

- **Fog Indicator Lamp-On Message -** Each time the cluster receives an electronic **fog indicator lamp-ON** message from the TIPM indicating the fog lamp circuit is energized, the fog lamp indicator will be illuminated. The indicator remains illuminated until the cluster receives a lamp-OFF message from the TIPM, until the ignition switch is turned to the OFF position or until the exterior lamp load shedding (battery saver) timed interval expires, whichever occurs first.

The TIPM continually monitors electronic **exterior lighting switch status** messages from the instrument cluster, also known as the CCN to determine the appropriate outputs to the fog lamps. The TIPM activates or deactivates the fog lamp circuit then sends the proper lamp-ON or lamp-OFF message back to the CCN. For further diagnosis of the fog lamp indicator or the instrument cluster circuitry that controls the indicator, refer to **DIAGNOSIS AND TESTING**.

GAS CAP INDICATOR

The gas cap indicator gives an indication to the vehicle operator when there is a gross leak detected in the on-board fuel vapor recovery system. This indicator is controlled by the instrument cluster logic circuit based upon cluster programming and electronic messages received over the Controller Area Network (CAN) data bus from the PCM.

The gas cap indicator function is completely controlled by the instrument cluster logic circuit, and that logic will only allow this indicator to operate when the instrument cluster receives a battery current input on the fused ignition switch output (run-start) circuit. Therefore, the Liquid Crystal Display (LCD) gas cap indication will

always be OFF when the ignition switch is in any position except ON or START. The instrument cluster will turn ON the gas cap indicator for the following reasons:

- **Gas Cap Indicator Lamp-On Message -** Each time the cluster receives an electronic **gas cap indicator lamp-ON** message from the PCM indicating there is a gross leak in the vapor recovery system, the gas cap indicator will be illuminated. If the ignition switch is in the ON position and the vehicle is not moving when the message is received, the LCD will repeatedly and sequentially cycle the gas cap indication in two second intervals with the odometer/trip odometer information and any other active textual warnings. If the vehicle is moving, or once the cluster of a non-moving vehicle receives an electronic vehicle speed message from the PCM indicating a speed greater than zero, the warning sequence will consist of three complete display cycles with an audible single chime tone accompanying each cycle, then revert to only the visual gas cap indication and odometer/trip odometer display cycling until the cluster receives a message indicating there is no gross leak in the vapor recovery system, or until the ignition switch is turned to the OFF position, whichever occurs first. The LCD can be reverted to the odometer display and any currently displayed textual messages suspended by momentarily depressing and releasing the odometer/trip odometer reset switch button on the front of the cluster.

The PCM continually monitors the on board vapor recovery system to determine whether there are air leaks in the system. The PCM then sends the proper electronic messages to the instrument cluster, also known as the Cab Compartment Node (CCN). If the CCN turns ON the gas cap indicator due to a monitored gross leak in the vapor recovery system, it may indicate that the gas cap has been removed or is improperly installed.

HIGH BEAM INDICATOR

The high beam indicator gives an indication to the vehicle operator whenever the headlamp high beams are illuminated. This indicator is controlled by a transistor on the instrument cluster circuit board based upon cluster programming and a hard wired multiplex input received by the cluster from the headlamp beam select switch circuitry of the multi-function switch on the washer/beam select switch mux circuit.

The high beam indicator Light Emitting Diode (LED) is completely controlled by the instrument cluster logic circuit, and that logic will allow this indicator to operate whenever the instrument cluster receives a battery current input on the fused B(+) circuit. Therefore, the LED can be illuminated regardless of the ignition switch position. The LED only illuminates when it is provided a path to ground by the instrument cluster transistor. The instrument cluster will turn ON the high beam indicator for the following reasons:

- **High Beam Headlamps-On Input -** Each time the cluster detects a high beam headlamps-ON input from the headlamp beam select switch circuitry of the multi-function switch on the washer/beam select switch mux circuit, the headlamp high beams and the high beam indicator will be illuminated. The indicator remains illuminated until the cluster receives a high beam headlamps-OFF input from the multi-function switch, or until the exterior lamp load shedding (battery saver) timed interval expires, whichever occurs first.

The instrument cluster, also known as the CCN continually monitors the headlamp switch and the multi-function switch to determine the proper headlamp low beam and high beam control. The CCN then sends the proper electronic **low beam** and **high beam lamp-ON** and **lamp-OFF** messages to the Totally Integrated Power Module (TIPM) over the Controller Area Network (CAN) data bus and controls the high beam indicator operation accordingly. For further diagnosis of the high beam indicator or the instrument cluster circuitry that controls the indicator, refer to **DIAGNOSIS AND TESTING**.

LOW FUEL INDICATOR

The low fuel indicator gives an indication to the vehicle operator when the level of fuel in the fuel tank becomes low. This indicator is controlled by a transistor on the instrument cluster circuit board based upon cluster programming and a hardwired input received by the cluster from the fuel level sending unit on the fuel pump module in the fuel tank.

The low fuel indicator Light Emitting Diode (LED) is completely controlled by the instrument cluster logic circuit, and that logic will only allow this indicator to operate when the instrument cluster receives a battery current input on the fused ignition switch output (run-start) circuit. Therefore, the LED will always be OFF when the ignition switch is in any position except ON or START. The LED only illuminates when it is provided a path to ground by the instrument cluster transistor. Each time the ignition switch is turned to the ON position the low fuel indicator is illuminated for about two seconds as a bulb test. The instrument cluster will turn ON the low fuel indicator for the following reasons:

- **Less Than 15 Percent Tank Full Input** - The cluster provides a constant current source to the fuel level sending unit and monitors a return input on a fuel level sense circuit. The resistance through the fuel level sending unit increases as the fuel level falls and decreases as the fuel level rises causing changes in the sense input voltage. Each time the fuel level sense input to the cluster indicates the fuel tank is about 10 percent full or less for 10 consecutive seconds and the vehicle speed is zero, or for 60 consecutive seconds and the vehicle speed is greater than zero, the fuel gauge needle is moved to about the one-sixteenth graduation on the gauge scale, the low fuel indicator is illuminated, and a single chime tone is sounded. The low fuel indicator remains illuminated until the fuel level sense input indicates that the fuel tank is greater than about 15 percent full for 10 consecutive seconds and the vehicle speed is zero, or for 60 consecutive seconds and the vehicle speed is greater than zero, or until the ignition switch is turned to the OFF position, whichever occurs first. The chime tone feature will only repeat during the same ignition cycle if the low fuel indicator is cycled OFF and then ON again by the appropriate inputs from the fuel level sending unit.
- **Less Than Empty Stop Input** - Each time the cluster receives a fuel level sense input that indicates the fuel level in the fuel tank is less than the **E** (or Empty) gauge needle stop position, the gauge needle is moved to the low end of the gauge scale and the low fuel indicator is illuminated immediately. This input would indicate that the fuel level sense input to the cluster is a short circuit.
- **More Than Full Stop Input** - Each time the cluster receives a fuel level sense input that indicates the fuel level in the fuel tank is more than the **F** (or Full) gauge needle stop position, the gauge needle is moved to the low end of the gauge scale and the low fuel indicator is illuminated immediately. This input would indicate that the fuel level sense input to the cluster is an open circuit.

The instrument cluster, also known as the CCN continually monitors the fuel tank sending unit to determine the level of fuel in the fuel tank. The CCN then sends the proper electronic **fuel level** message to other electronic modules in the vehicle over the Controller Area Network (CAN) data bus. For further diagnosis of the low fuel indicator or the instrument cluster circuitry that controls the LED, refer to **DIAGNOSIS AND TESTING**.

LOW OIL PRESSURE INDICATOR

The low oil pressure indicator gives an indication to the vehicle operator when the engine oil pressure reading reflects a condition requiring immediate attention. This indicator is controlled by a transistor on the instrument cluster circuit board based upon cluster programming and electronic messages received by the cluster from the PCM over the Controller Area Network (CAN) data bus.

The low oil pressure indicator Light Emitting Diode (LED) is completely controlled by the instrument cluster logic circuit, and that logic will only allow this indicator to operate when the instrument cluster receives a battery current input on the fused ignition switch output (run-start) circuit. Therefore, the LED will always be OFF when the ignition switch is in any position except ON or START. The LED only illuminates when it is provided a path to ground by the instrument cluster transistor. The instrument cluster will turn ON the low oil pressure indicator for the following reasons:

- **Engine Oil Pressure Low Message -** Each time the cluster receives an electronic **engine oil pressure** message from the PCM indicating the pressure is about 6.9 kPa (1 psi) or lower, the low oil pressure indicator will be illuminated. The indicator remains illuminated until the cluster receives a message from the PCM indicating that the pressure is above about 6.9 kPa (1 psi), or until the ignition switch is turned to the OFF position, whichever occurs first. The cluster will only turn the indicator ON in response to low engine oil pressure if the engine speed is greater than zero.

The PCM continually monitors the engine oil pressure sensor to determine the engine oil pressure. The PCM then sends the proper messages to the instrument cluster, also known as the CCN. For further diagnosis of the low oil pressure indicator or the instrument cluster circuitry that controls the LED, refer to **DIAGNOSIS AND TESTING**.

LOW TIRE PRESSURE

The Tire Pressure Monitor (TPM) indicator gives an indication to the vehicle operator of the status of the TPM system. This indicator is controlled by a transistor on the instrument cluster circuit board based upon cluster programming and electronic messages received by the cluster from the Wireless Ignition Node (WIN) over the Controller Area Network (CAN) data bus.

The TPM indicator Light Emitting Diode (LED) is completely controlled by the instrument cluster logic circuit, and that logic will only allow this indicator to operate when the instrument cluster receives a battery current input on the fused ignition switch output (run-start) circuit. Therefore, the LED will always be OFF when the ignition switch is in any position except ON or START. The LED only illuminates when it is provide a path to ground by the instrument cluster transistor. Each time the ignition switch is turned to the ON position, the WIN sends an electronic TPM indicator lamp-ON message to the cluster to illuminate the TPM indicator for about three seconds as a bulb test. The instrument cluster will turn ON the TPM indicator for the following reasons:

- **TPM Indicator Lamp-On Message -** Each time the cluster receives an electronic TPM indicator lamp-ON message from the WIN, the TPM indicator will be illuminated. The indicator can be flashed ON and OFF, or illuminated solid, as dictated by the WIN message. The indicator remains illuminated until the cluster receives a lamp-OFF message from the WIN or until the ignition switch is turned to the OFF position, whichever occurs first.
- **Communication Error -** If the cluster receives no TPM lamp-ON or lamp-OFF messages from the WIN for six consecutive seconds, the TPM indicator is illuminated by the instrument cluster. The indicator remains controlled and illuminated by the cluster until a valid lamp-ON or lamp-OFF message is received from the WIN.

The WIN performs a self-test each time the ignition switch is turned to the ON position to decide whether the TPM system is in good operating condition and whether the tire inflation pressures are too high or too low. The WIN then sends the proper lamp-ON or lamp-OFF message to the instrument cluster, also known as the CCN. If the instrument cluster turns ON the TPM indicator after the bulb test, it indicates that the inflation pressure of a

tire is too low or that a malfunction has occurred and the TPM system is ineffective.

MALFUNCTION INDICATOR

The MIL gives an indication to the vehicle operator when the PCM or the PCM has recorded a Diagnostic Trouble Code (DTC) for an On-Board Diagnostics II (OBDII) emissions-related circuit or component malfunction. The MIL is controlled by a transistor on the CCN circuit board based upon cluster programming and electronic messages received over the Controller Area Network (CAN) data bus. These electronic messages are received from the PCM or PCM, depending on engine application.

The MIL Light Emitting Diode (LED) is completely controlled by the CCN logic circuit, and that logic will only allow this indicator to operate when the instrument cluster receives a battery current input on the fused ignition switch output (run-start) circuit. Therefore, the LED will always be OFF when the ignition switch is in any position except ON or START. The LED only illuminates when it is provided a path to ground by a transistor on the CCN circuit board. Each time the ignition switch is turned to the ON position the indicator is illuminated for about two seconds as a bulb test. The entire bulb test is a function of the PCM. The MIL will be turned ON for the following reasons:

- **MIL Lamp-On Message** - Each time the CCN receives an electronic **MIL lamp-ON** message from the PCM or ECM, the indicator will be illuminated. The indicator can be flashed ON and OFF, or illuminated solid, as dictated by the PCM. For some DTCs, if a problem does not recur, the PCM or ECM will send a lamp-OFF message automatically. Other DTCs may require that a fault be repaired and the PCM or ECM be reset before a lamp-OFF message will be sent. For more information on the PCM, the ECM, and the DTC set and reset parameters, refer to appropriate diagnostic information.
- **Communication Error** - If the CCN receives no lamp-ON or lamp-OFF messages from the PCM or ECM for about 10 seconds, the MIL is illuminated by the instrument cluster to indicate a loss of bus communication. The indicator remains controlled and illuminated by the cluster until a valid message is received from the PCM.

The PCM or ECM continually monitors the fuel and emissions system circuits and sensors to decide whether the system is in good operating condition. The PCM or ECM then sends the proper lamp-ON or lamp-OFF message to the CCN. For further diagnosis of the MIL or the instrument cluster circuitry that controls the LED, refer to **DIAGNOSIS AND TESTING**. If the CCN turns ON the MIL after the bulb test, it may indicate that a malfunction has occurred and that the fuel and emissions systems may require service.

NO BUS INDICATOR

The no-bus indicator gives an indication to the vehicle operator when the electronic communication data bus is ineffective. This indicator is controlled by the instrument cluster logic circuit based upon cluster programming and electronic messages not being received over the Controller Area Network (CAN) data bus from the Front Control Module (FCM).

The no-bus indicator function of the odometer Liquid Crystal Display (LCD) unit is completely controlled by the instrument cluster logic circuit. This logic only allows the indicator to operate when the instrument cluster receives a battery current input on the fused ignition switch output (run-start) circuit. Therefore, the odometer LCD no-bus indicator is always off when the ignition switch is in any position except ON or START. The instrument cluster turns ON the no bus indicator for the following reasons:

- **No Electronic Communication Messages -** Each time the ignition switch is turned to the ON position and the cluster does not receive electronic communication messages over the CAN data bus, the no-bus indicator illuminates. The indicator remains illuminated until CAN bus communication is restored or until the ignition switch turns to the OFF position, whichever occurs first.

The instrument cluster, also known as the CCN continually monitors the CAN data bus to determine the status of many sensors and systems throughout the vehicle. If bus communication is interrupted, the CCN cannot provide accurate displays and outputs.

NO FUSE INDICATOR

The no fuse indicator gives an indication to the vehicle operator when the Ignition Off Draw (IOD) fuse is ineffective or is not installed. This indicator is controlled by the instrument cluster logic circuit based upon cluster programming and electronic messages received over the Controller Area Network (CAN) data bus from the Totally Integrated Power Module (TIPM).

The no fuse indicator function of the odometer Liquid Crystal Display (LCD) unit is completely controlled by the instrument cluster logic circuit, and that logic will only allow this indicator to operate when the instrument cluster receives a battery current input on the fused ignition switch output (run-start) circuit. Therefore, the odometer LCD no fuse indication will always be OFF when the ignition switch is in any position except ON or START. The instrument cluster will turn ON the no fuse indicator for the following reasons:

- **No Fuse Indicator Lamp-On Message -** Each time the ignition switch is turned to the ON position and the cluster receives an electronic no fuse indicator lamp-ON message from the TIPM indicating that the IOD fuse is missing or ineffective, the no fuse indicator will be illuminated. The indicator remains illuminated for about three seconds, until the IOD fuse is installed, until the trip odometer reset switch button is depressed or until the ignition switch is turned to the OFF position, whichever occurs first.

The TIPM continually monitors the IOD circuit to determine the status of the IOD fuse, then sends the proper lamp-ON or lamp-OFF message to the instrument cluster, also known as the CCN over the CAN data bus.

OIL CHANGE INDICATOR

The change oil indicator gives an indication to the vehicle operator when a duty-cycle algorithm contained within the software of the PCM determines that a recommended oil change interval has been attained. This indicator is controlled by the instrument cluster logic circuit based upon cluster programming and electronic messages received over the Controller Area Network (CAN) data bus from the PCM.

The change oil indicator function of the odometer display unit is completely controlled by the instrument cluster logic circuit, and that logic will only allow this indicator to operate when the instrument cluster receives a battery current input on the fused ignition switch output (run-start) circuit. Therefore, the odometer LCD change oil indication will always be OFF when the ignition switch is in any position except ON or START. The instrument cluster will turn ON the change oil indicator for the following reasons:

- **Change Oil Indicator Lamp-On Message -** Each time the ignition switch is turned to the ON position and the cluster receives an electronic change oil indicator lamp-ON message from the PCM indicating that a duty-cycle based recommended oil change interval has been attained, the change oil indicator will be illuminated for about three seconds, until the trip odometer reset switch button is depressed, or until

the ignition switch is turned to the OFF position, whichever occurs first.

- **Change Oil Indicator Reset Procedure -** Once an engine oil change has been completed, the PCM duty cycle counters can be reset using the following procedure. Turn the ignition switch to the ON position, but DO NOT start the engine. Slowly depress and release the accelerator pedal fully three times within ten seconds. Turn the ignition switch to the OFF position. If the change oil indicator illuminates the next time the engine is started, repeat this procedure.

The PCM continually monitors numerous sensor inputs to determine the duty-cycles to which the engine is being subjected. A pre-programmed algorithm within the PCM then determines when to send the proper lamp-ON or lamp-OFF message to the instrument cluster, also known as the Cab Compartment Node (CCN).

REGENERATIVE BRAKE SYSTEM (RBS)

The Regenerative Brake System indicator gives an indication to the vehicle operator when the RBS system, or a circuit or component of the system is ineffective. This indicator is controlled by a transistor on the instrument cluster circuit board based upon cluster programming and electronic messages received by the cluster from the Regenerative Brake Controller (RBC) over the CAN data bus.

The RBS indicator Light Emitting Diode (LED) is completely controlled by the instrument cluster logic circuit. This logic only allows the indicator to operate when the instrument cluster receives a battery current input on the fused ignition switch output (run-start) circuit. Therefore, the LED is always off when the ignition switch is in any position except ON or START. The LED only illuminates when it is provided a path to ground by the instrument cluster transistor. The instrument cluster turns on the RBS indicator for the following reasons:

- **RBS Indicator Lamp-On Message -** Each time the cluster receives an electronic RBS indicator lamp-on message from the RBC, the RBS indicator illuminates. The indicator remains illuminated until the cluster receives a lamp-off message from the RBC, or until the ignition switch turns to the OFF position, whichever occurs first.
- **Communication Error -** If the cluster receives no lamp-on or lamp-off messages from the RBC for five consecutive message cycles, the RBS indicator is illuminated. The indicator remains illuminated until the cluster receives a valid message from the RBC, or until the ignition switch is turned to the OFF position, whichever occurs first.

The RBC continually monitors the RBS circuits and sensors to decide whether the system is in good operating condition. The RBC then sends the proper lamp-on or lamp-off message to the instrument cluster, also known as the CCN. If the RBC sends a lamp-on message after the bulb test, it indicates that the RBC has detected a system malfunction or that the RBS system has become ineffective. The RBC stores a Diagnostic Trouble Code (DTC) for any malfunction it detects. Each time the RBS indicator fails to light due to an open or short in the cluster RBS indicator circuit, the cluster sends a message notifying the RBC of the condition, then the instrument cluster and the RBC will each store a DTC.

Use a diagnostic scan tool for proper diagnosis of the regenerative brake system, the RBC, the CCN, the CAN data bus or the electronic communication related to RBS indicator operation. Refer to the appropriate diagnostic information.

SEATBELT INDICATOR

The seatbelt indicator gives an indication to the vehicle operator of the status of the driver side front seatbelt.

This indicator is controlled by a transistor on the instrument cluster circuit board based upon cluster programming and a hard wired input from the seatbelt switch in the driver side front seatbelt buckle through the seat belt indicator driver circuit.

The seatbelt indicator also includes a programmable enhanced seatbelt reminder or BELTMINDER feature that is enabled when the vehicle is shipped from the factory. This BELTMINDER feature can be disabled and enabled by the customer using a specific programming event sequence, or by the dealer using a diagnostic scan tool.

The seatbelt indicator Light Emitting Diode (LED) is completely controlled by the instrument cluster logic circuit, and that logic will only allow this indicator to operate when the instrument cluster receives a battery current input on the fused ignition switch output (run-start) circuit. Therefore, the LED will always be OFF when the ignition switch is in any position except ON or START. The LED only illuminates when it is provided a path to ground by the instrument cluster transistor. The instrument cluster will turn ON the seatbelt indicator for the following reasons:

- **Seatbelt Reminder Function -** Each time the cluster receives a battery current input on the fused ignition switch output (run-start) circuit, the indicator will be illuminated as a seatbelt reminder for about six seconds, or until the ignition switch is turned to the OFF position, whichever occurs first. This reminder function will occur regardless of the status of the seatbelt switch input to the cluster.
- **Driver Side Front Seatbelt Not Buckled - Beltminder Active -** Following the seatbelt reminder function, each time the cluster detects an open circuit on the seat belt indicator driver circuit (seatbelt switch open = seatbelt unbuckled) with the ignition switch in the START or ON positions, the indicator will be illuminated. In addition, if the driver side front seat belt remains unbuckled about 60 seconds after the conclusion of the seatbelt reminder function with the vehicle speed greater than about 8 kilometers-per-hour (5 miles-per-hour), the seatbelt indicator will begin to cycle between flashing ON and OFF for 3 seconds, then lighting solid for 2 seconds. The seatbelt indicator will continue to cycle between flashing and solid illumination for 13 complete cycles, until the seat belt indicator driver input to the cluster is closed to ground (seatbelt switch closed = seatbelt buckled), or until the ignition switch is turned to the OFF position, whichever occurs first.
- **Driver Side Front Seatbelt Not Buckled - Beltminder Inactive -** Following the seatbelt reminder function, each time the cluster detects an open circuit on the seat belt indicator driver circuit (seatbelt switch open = seatbelt unbuckled) with the ignition switch in the START or ON positions, the indicator will be illuminated. The seatbelt indicator remains illuminated until the seat belt indicator driver input to the cluster is closed to ground (seatbelt switch closed = seatbelt buckled), or until the ignition switch is turned to the OFF position, whichever occurs first.
- **Airbag Indicator Backup -** If the instrument cluster detects a fault in the airbag indicator circuit it will send an electronic message indicating the fault to the Occupant Restraint Controller (ORC), then flash the seatbelt indicator ON and OFF. The cluster will continue to flash the indicator until the airbag indicator circuit fault is resolved, or until the ignition switch is turned to the OFF position, whichever occurs first.

SECURITY SYSTEM INDICATOR

The security indicator gives an indication to the vehicle operator when the Vehicle Theft Security System (VTSS) is arming or is armed. On vehicles equipped with the Sentry Key Immobilizer System (SKIS), the security indicator also gives an indication to the vehicle operator of the status of the SKIS. This indicator is controlled by a transistor on the instrument cluster circuit board based upon cluster programming, hard wired

inputs to the cluster from the various security system components, and electronic messages received by the cluster from the Wireless Ignition Node (WIN) via the Totally Integrated Power Module (TPIM) over the Controller Area Network (CAN) data bus.

The security indicator Light Emitting Diode (LED) is completely controlled by the instrument cluster logic circuit, and that logic will allow this indicator to operate whenever the instrument cluster receives a battery current input on the fused B(+) circuit. Therefore, the LED can be illuminated regardless of the ignition switch position. The LED only illuminates when it is provided a path to ground by the instrument cluster transistor. Depending upon the programmed condition the indicator can be illuminated solid, flashed at a slow rate (0.5 Hertz, 12.5 percent duty cycle), or flashed at a fast rate (1 Hertz, 50 percent duty cycle). Each time the ignition switch is turned to the ON position the security indicator illuminates for about two seconds as a bulb test. The entire bulb test is a function of the WIN. The instrument cluster will turn ON the security indicator for the following reasons:

- **VTSS Indication** - During the 16 second VTSS arming function, the cluster will flash the security indicator ON and OFF repeatedly at a steady, fast rate to indicate that the VTSS is in the process of arming. Following successful VTSS arming, the cluster flashes the security indicator ON and OFF continuously at a slower rate to indicate that the VTSS is armed. The security indicator continues flashing at the slower rate until the VTSS is disarmed or triggered. If the VTSS has alarmed and rearmed, the cluster will flash the security indicator at a steady, slow rate for about 30 seconds after the VTSS is disarmed.
- **SKIS Indicator Lamp-On Message** - Each time the cluster receives an electronic SKIS indicator lamp-ON message from the WIN, the security indicator will be illuminated. The indicator can be flashed ON and OFF, or illuminated solid, as dictated by the WIN message. The indicator remains illuminated solid or continues to flash until the cluster receives a lamp-OFF message from the WIN, or until the ignition switch is turned to the OFF position, whichever occurs first. For more information on the SKIS and the security indicator control parameters, refer to **OPERATION** .
- **Communication Error** - If the cluster receives no lamp-ON or lamp-OFF messages from the WIN for 10 consecutive message cycles, the security indicator is illuminated by the instrument cluster. The indicator remains controlled and illuminated by the cluster until a valid lamp-ON or lamp-OFF message is received from the WIN.

The instrument cluster circuitry controls the security indicator whenever the ignition switch is in the OFF position and the VTSS is arming, armed, or alarming. Whenever the ignition switch is in the ON or START positions, the WIN performs a self-test to decide whether the SKIS is in good operating condition and whether a valid key is present in the ignition lock cylinder. The WIN then sends the proper lamp-ON or lamp-OFF message to the instrument cluster, also known as the Cab Compartment Node (CCN). If the cluster flashes the security indicator upon ignition ON, or turns ON the security indicator solid after the bulb test, it indicates that a SKIS malfunction has occurred or that the SKIS is ineffective.

SERVICE 4WD INDICATOR

The service 4WD indicator gives an indication to the vehicle operator when the Totally Integrated Power Module (TIPM) has recorded a Diagnostic Trouble Code (DTC) for an electronic transfer case circuit or component malfunction. This indicator is controlled by a transistor on the instrument cluster circuit board based upon cluster programming and electronic messages received by the cluster from the TIPM over the Controller Area Network (CAN) data bus.

The service 4WD indicator Light Emitting Diode (LED) is completely controlled by the instrument cluster logic circuit, and that logic will only allow this indicator to operate when the instrument cluster receives a battery current input on the fused ignition switch output (run-start) circuit. Therefore, the LED will always be OFF when the ignition switch is in any position except ON or START. The LED only illuminates when it is provided a path to ground by the instrument cluster transistor. Each time the ignition switch is turned to the ON position the service 4WD indicator is illuminated for about two seconds as a bulb test. The instrument cluster will turn ON the service 4WD indicator for the following reasons:

- **Service 4WD Indicator Lamp-On Message -** Each time the cluster receives an electronic service 4WD indicator lamp-ON message from the TIPM, the service 4WD indicator will be illuminated. The indicator remains illuminated until the cluster receives a lamp-OFF message from the TIPM, or until the ignition switch is turned to the OFF position, whichever occurs first.
- **Communication Error -** If the cluster receives no lamp-ON or lamp-OFF messages from the TIPM for 10 seconds the service 4WD indicator is illuminated by the cluster to indicate a loss of TIPM communication. The indicator remains controlled and illuminated by the cluster until a valid message is received from the TIPM.

The TIPM continually monitors the electronic transfer case control circuits and transfer case shift motor/mode sensor assembly to determine the condition of the system. The TIPM then sends the proper lamp-ON or lamp-OFF message to the instrument cluster, also known as the CCN. For further diagnosis of the service 4WD indicator or the instrument cluster circuitry that controls the LED, refer to **DIAGNOSIS AND TESTING**.

4WD AUTO INDICATOR

The 4WD auto indicator gives an indication to the vehicle operator when the electronic transfer case has been shifted into the 4WD auto mode. This indicator is controlled by a transistor on the instrument cluster circuit board based upon cluster programming and electronic messages received by the cluster from the Totally Integrated Power Module (TIPM) over the Controller Area Network (CAN) data bus.

The 4WD auto indicator Light Emitting Diode (LED) is completely controlled by the instrument cluster logic circuit, and that logic will only allow this indicator to operate when the instrument cluster receives a battery current input on the fused ignition switch output (run-start) circuit. Therefore, the LED will always be OFF when the ignition switch is in any position except ON or START. The LED only illuminates when it is provided a path to ground by the instrument cluster transistor. The instrument cluster will turn ON the 4WD auto indicator for the following reasons:

- **4WD Auto Indicator Lamp-On Message -** Each time the cluster receives an electronic 4WD auto indicator lamp-ON message from the TIPM, the indicator will be illuminated. The indicator remains illuminated until the cluster receives a lamp-OFF message from the TIPM, or until the ignition switch is turned to the OFF position, whichever occurs first.

The TIPM continually monitors the electronic transfer case through the transfer case shift motor/mode sensor assembly to determine when the 4WD auto mode is engaged. The TIPM then sends the proper lamp-ON or lamp-OFF message to the instrument cluster, also known as the CCN. For further diagnosis of the 4WD auto indicator or the instrument cluster circuitry that controls the LED, refer to **DIAGNOSIS AND TESTING**.

4WD INDICATOR

The 4WD indicator gives an indication to the vehicle operator when the transfer case has been shifted into a 4WD mode. This indicator is controlled by a transistor on the instrument cluster circuit board based upon cluster programming and electronic messages received by the cluster from the Totally Integrated Power Module (TIPM) over the Controller Area Network (CAN) data bus.

The 4WD indicator Light Emitting Diode (LED) is completely controlled by the instrument cluster logic circuit, and that logic will only allow this indicator to operate when the instrument cluster receives a battery current input on the fused ignition switch output (run-start) circuit. Therefore, the LED will always be OFF when the ignition switch is in any position except ON or START. The LED only illuminates when it is provided a path to ground by the instrument cluster transistor. The instrument cluster will turn ON the 4WD indicator for the following reasons:

- **4WD Indicator Lamp-On Message** - Each time the cluster receives an electronic 4WD indicator lamp-ON message from the TIPM, the indicator will be illuminated. The indicator remains illuminated until the cluster receives a lamp-OFF message from the TIPM, or until the ignition switch is turned to the OFF position, whichever occurs first.

The TIPM continually monitors the electronic transfer case through the transfer case shift motor/mode sensor assembly or the manual transfer case through the transfer case switch to determine when the 4WD mode is engaged. The TIPM then sends the proper lamp-ON or lamp-OFF message to the instrument cluster, also known as the Cab Compartment Node (CCN). For further diagnosis of the 4WD indicator or the instrument cluster circuitry that controls the LED, refer to **DIAGNOSIS AND TESTING**.

4 LOW INDICATOR

The 4 low indicator gives an indication to the vehicle operator when the electronic transfer case has been shifted into the 4WD low mode. This indicator is controlled by a transistor on the instrument cluster circuit board based upon cluster programming and electronic messages received by the cluster from the Totally Integrated Power Module (TIPM) over the Controller Area Network (CAN) data bus.

The 4 low indicator Light Emitting Diode (LED) is completely controlled by the instrument cluster logic circuit, and that logic will only allow this indicator to operate when the instrument cluster receives a battery current input on the fused ignition switch output (run-start) circuit. Therefore, the LED will always be OFF when the ignition switch is in any position except ON or START. The LED only illuminates when it is provided a path to ground by the instrument cluster transistor. The instrument cluster will turn ON the 4 low indicator for the following reasons:

- **4 Low Indicator Lamp-On Message** - Each time the cluster receives an electronic 4 low indicator lamp-ON message from the TIPM, the indicator will be illuminated. The indicator remains illuminated until the cluster receives a lamp-OFF message from the TIPM, or until the ignition switch is turned to the OFF position, whichever occurs first.

The TIPM continually monitors the electronic transfer case through the transfer case shift motor/mode sensor assembly to determine when the 4WD low mode is engaged. The TIPM then sends the proper lamp-ON or lamp-OFF message to the instrument cluster, also known as the CCN. For further diagnosis of the 4 low indicator or the instrument cluster circuitry that controls the LED, refer to **DIAGNOSIS AND TESTING**.

TOW/HAUL INDICATOR

The tow/haul indicator gives an indication to the vehicle operator when the tow/haul function of the tow/haul switch has been selected, revising the shift schedule of the electronically controlled automatic transmission. This indicator is controlled by a transistor on the instrument cluster circuit board based upon cluster programming and electronic messages received by the cluster from the PCM over the Controller Area Network (CAN) data bus.

The tow/haul indicator Light Emitting Diode (LED) is completely controlled by the instrument cluster logic circuit, and that logic will only allow this indicator to operate when the instrument cluster receives a battery current input on the fused ignition switch output (run-start) circuit. Therefore, the LED will always be OFF when the ignition switch is in any position except ON or START. The LED only illuminates when it is provided a path to ground by the instrument cluster transistor. The instrument cluster will turn ON the tow/haul indicator for the following reasons:

- **Tow/Haul Indicator Lamp-On Message -** Each time the cluster receives an electronic tow/haul indicator lamp-ON message from the PCM indicating that the tow/haul shift schedule has been selected, the indicator will be illuminated. The indicator remains illuminated until the cluster receives a lamp-OFF message from the PCM, or until the ignition switch is turned to the OFF position, whichever occurs first.

The PCM continually monitors the tow/haul switch to determine the proper outputs to the automatic transmission. The PCM then sends the proper lamp-ON or lamp-OFF message to the instrument cluster, also known as the Cab Compartment Node (CCN). For further diagnosis of the tow/haul indicator or the instrument cluster circuitry that controls the indicator, refer to **DIAGNOSIS AND TESTING**.

TRANSMISSION RANGE INDICATOR

The electronic gear selector indicator gives an indication to the vehicle operator of the transmission gear that has been selected with the automatic transmission gear selector lever. This indicator is controlled by the instrument cluster circuit board based upon cluster programming. The cluster circuitry automatically configures itself for the proper transmission type based upon the hard wired transmission range sensor mux circuit input to the cluster.

The gear selector indicator information is displayed by the odometer/trip odometer Liquid Crystal Display (LCD) unit soldered onto the instrument cluster electronic circuit board, and the LCD will not display the gear selector indicator information after the ignition switch is turned to the OFF position. Each time the cluster is disconnected from battery current for more than about five minutes, it must configure itself for the automatic transmission type that is in the vehicle once it is reconnected to battery current. The instrument cluster circuitry configures the gear selector indicator based upon the following inputs from the transmission range sensor:

- **Open Circuit -** If the cluster is configured for an automatic transmission and the transmission range sensor mux circuit is open, the cluster circuitry controls the gear selector indicator display based upon an electronic selected gear message received from the Transmission Control Module (TCM) over the Controller Area Network (CAN) data bus. If the Transmission Range Sensor (TRS) mux circuit is open and no electronic selected gear messages are received from the TCM within two seconds, the instrument cluster circuitry will not display any gear selector position until the condition is resolved or until the ignition switch is turned to the OFF position, whichever occurs first.
- **Resolved Circuit -** If the transmission range sensor mux circuit is resolved, the cluster circuitry controls the gear selector indicator display based upon the resistance value of the hard wired input from the TRS. If the cluster is configured for an automatic transmission with a TRS input and detects a short to ground

or an open in the TRS mux input, the instrument cluster circuitry will not display any gear selector position in the LCD display. The short-to-ground and open circuit conditions for the LCD display will continue until the condition is resolved or until the ignition switch is turned to the OFF position, whichever occurs first.

On vehicles with a TCM, the TCM continually monitors the TRS, then sends the proper message to the instrument cluster, also known as the CCN. On vehicles without a TCM, the CCN continually monitors the hard wired TRS multiplexed input. For further diagnosis of the gear selector indicator or the instrument cluster circuitry that controls this function, refer to **DIAGNOSIS AND TESTING**. For further diagnosis of the TRS on vehicles without a TCM, refer to appropriate diagnostic information.

TRANSMISSION TEMPERATURE INDICATOR

The transmission over-temperature indicator gives an indication to the vehicle operator when the transmission fluid temperature is excessive, which may lead to accelerated transmission component wear or failure. This indicator is controlled by a transistor on the instrument cluster circuit board based upon cluster programming and electronic messages received over the Controller Area Network (CAN) data bus from the PCM.

The transmission over-temperature indicator Light Emitting Diode (LED) is completely controlled by the instrument cluster logic circuit, and that logic will only allow this indicator to operate when the instrument cluster receives a battery current input on the fused ignition switch output (run-start) circuit. Therefore, the LED will always be OFF when the ignition switch is in any position except ON or START. The LED only illuminates when it is provided a path to ground by the instrument cluster transistor. Each time the ignition switch is turned to the ON position the transmission over-temperature indicator is illuminated for about two seconds as a bulb test. The instrument cluster will turn ON the transmission over-temperature indicator for the following reasons:

- **Trans Over-Temp Indicator Lamp-On Message** - Each time the cluster receives an electronic trans over-temp indicator lamp-ON message from the PCM indicating that the transmission fluid temperature is 135 °C (275 °F) or higher, the indicator will be illuminated and a single chime tone is sounded. The indicator remains illuminated until the cluster receives a lamp-OFF message from the PCM, or until the ignition switch is turned to the OFF position, whichever occurs first. The chime tone feature will only repeat during the same ignition cycle if the indicator is cycled OFF and then ON again by the appropriate lamp-ON and lamp-OFF messages from the PCM.

The PCM continually monitors the transmission temperature sensor to determine the transmission operating condition. The PCM then sends the proper lamp-ON or lamp-OFF message to the instrument cluster, also known as the Cab Compartment Node (CCN). If the instrument cluster illuminates the transmission over-temperature indicator due to a high transmission oil temperature condition, it may indicate that the transmission or the transmission cooling system are being overloaded, or that they require service. For further diagnosis of the transmission over-temperature indicator or the instrument cluster circuitry that controls the LED, refer to **DIAGNOSIS AND TESTING**.

WAIT-TO-START INDICATOR

The wait-to-start indicator gives an indication to the vehicle operator when the air temperature within the diesel engine intake manifold is too cool for efficient and reliable engine starting, and that the intake air heater grids are energized in their pre-heat operating mode. This indicator is controlled by the CCN based upon cluster

programming and electronic messages received by the from the PCM over the Controller Area Network (CAN) data bus.

The wait-to-start indicator, Light Emitting Diode (LED) is completely controlled by the CCN logic circuit, that logic will only allow this indicator to operate when the instrument cluster receives a battery current input on the fused ignition switch output (run-start) circuit. Therefore, the LED will always be OFF when the ignition switch is in any position except ON or START. The LED only illuminates when it is provided a path to ground by the CCN. The wait-to-start indicator will be turned ON for the following reasons:

- **Wait-To-Start Indicator Lamp-On Message** - Each time the CCN receives an electronic wait-to-start indicator lamp-ON message from the ECM indicating that the air temperature within the intake manifold is too cool for efficient and reliable engine starting, the wait-to-start indicator will be illuminated. The indicator remains illuminated until the cluster receives a lamp-OFF message, until the ECM detects that the engine is running or until the ignition switch is turned to the OFF position, whichever occurs first.

The ECM continually monitors the engine intake air temperature sensor to determine when the intake air heater grids should be energized in their pre-heat operating mode. The ECM then sends the proper lamp-ON or lamp-OFF message to the CCN. For further diagnosis of the wait-to-start indicator or the instrument cluster circuitry that controls the indicator, refer to **DIAGNOSIS AND TESTING**.

WASHER FLUID INDICATOR

The washer fluid indicator gives an indication to the vehicle operator that the fluid level in the washer reservoir is low. This indicator is controlled by the instrument cluster logic circuit based upon cluster programming and electronic messages received by the cluster from the Totally Integrated Power Module (TIPM) over the Controller Area Network (CAN) data bus.

The washer fluid indicator function of the Liquid Crystal Display (LCD) is completely controlled by the instrument cluster logic circuit, and that logic will only allow this indicator to operate when the instrument cluster receives a battery current input on the fused ignition switch output (run-start) circuit. Therefore, the LCD washer fluid indication will always be OFF when the ignition switch is in any position except ON or START. The instrument cluster will turn ON the washer fluid indicator for the following reasons:

- **Washer Fluid Indicator Lamp-On Message** - Each time the cluster receives an electronic washer fluid indicator lamp-ON message from the TIPM indicating that a low washer condition has been detected for 60 consecutive seconds, the washer fluid indicator is illuminated and a single chime tone is sounded. The indicator remains illuminated until the cluster receives lamp-OFF messages for 60 consecutive seconds from the TIPM, or until the ignition switch is turned to the OFF position, whichever occurs first. The chime tone feature will only repeat during the same ignition cycle if the washer fluid indicator is cycled OFF and then ON again by the appropriate lamp-ON and lamp-OFF messages from the TIPM.

The TIPM continually monitors the washer fluid level switch in the washer reservoir to determine the level of the washer fluid. The TIPM then sends the proper lamp-ON or lamp-OFF message to the instrument cluster, also known as the Cab Compartment Node (CCN). For further diagnosis of the washer fluid indicator or the instrument cluster circuitry that controls the indicator, refer to **DIAGNOSIS AND TESTING**.

WATER-IN-FUEL INDICATOR

The water-in-fuel indicator gives an indication to the vehicle operator when there is excessive water in the fuel system. This indicator is controlled by the CCN based upon cluster programming and electronic messages received from the PCM over the Controller Area Network (CAN) data bus.

The water-in-fuel indicator Light Emitting Diode (LED) is completely controlled by the CCN logic circuit, and that logic will only allow this indicator to operate when the instrument cluster receives a battery current input on the fused ignition switch output (run-start) circuit. Therefore, the LED will always be OFF when the ignition switch is in any position except ON or START. The LED only illuminates when it is provided a path to ground by the CCN. Each time the ignition switch is turned to the ON position the water-in-fuel indicator is illuminated for about two seconds as a bulb test. The water-in-fuel indicator will be turned ON for the following reasons:

- **Water-In-Fuel Indicator Lamp-On Message** - Each time the CCN receives an electronic **water-in-fuel lamp-ON** message from the ECM indicating that there is excessive water in the diesel fuel system, the water-in-fuel indicator will be illuminated. The indicator remains illuminated until the cluster receives a lamp-OFF message from the ECM, or until the ignition switch is turned to the OFF position, whichever occurs first.

The ECM continually monitors the water-in-fuel sensor to determine whether there is excessive water in the diesel fuel system. The ECM then sends the proper lamp-ON or lamp-OFF message to the CCN. For further diagnosis of the water-in-fuel indicator or the instrument cluster circuitry that controls the indicator, refer to **DIAGNOSIS AND TESTING**.

TURN SIGNAL INDICATOR

The turn signal indicators give an indication to the vehicle operator that the turn signal (left or right indicator flashing) or hazard warning (both left and right indicators flashing) have been selected and are operating. These indicators are controlled by transistors on the instrument cluster electronic circuit board based upon cluster programming, a hard wired multiplex input received by the cluster from the turn signal and hazard warning switch circuitry of the multi-function switch on the turn/hazard switch mux circuit, and electronic messages received from the Totally Integrated Power Module (TIPM) over the Controller Area Network (CAN) data bus.

Each turn signal indicator Light Emitting Diode (LED) is completely controlled by the instrument cluster logic circuit, and that logic will allow this indicator to operate whenever the instrument cluster receives a battery current input on the fused B(+) circuit. Therefore, each LED can be illuminated regardless of the ignition switch position. The LED only illuminates when it is provided a path to ground by the instrument cluster transistor. The instrument cluster will turn ON the turn signal indicators for the following reasons:

- **Turn Signal-On Input** - Each time the cluster detects a turn signal-ON input from the turn signal switch circuitry of the multi-function switch on the turn/hazard switch mux circuit, it sends the appropriate electronic turn signal switch status messages to the TIPM over the CAN data bus. The TIPM responds to these messages by controlling a battery voltage output and the flash rate for either the right or left turn signal lamps. The TIPM also sends the appropriate electronic messages back to the cluster to control the flash rate of the turn signal indicators, as well as to control the click rate of an electromechanical relay soldered onto the cluster electronic circuit board that emulates the sound emitted by a conventional turn signal flasher. The turn signal indicators continue to flash ON and OFF until the cluster receives a turn signal-OFF input from the multi-function switch, or until the ignition switch is turned to the OFF position, whichever occurs first.
- **Hazard Warning-On Input** - Each time the cluster detects a hazard warning-ON input from the hazard

warning switch circuitry of the multi-function switch on the turn/hazard switch mux circuit, it sends the appropriate electronic hazard switch status messages to the TIPM over the CAN data bus. The TIPM responds to these messages by controlling a battery voltage output and the flash rate for each of the right and left turn signal lamps. The TIPM also sends the appropriate electronic messages back to the cluster to control the flash rate of the turn signal indicators, as well as to control the click rate of an electromechanical relay soldered onto the cluster electronic circuit board that emulates the sound emitted by a conventional hazard warning flasher. The turn signal indicators continue to flash ON and OFF until the cluster receives a hazard warning-OFF input from the multi-function switch.

- **Lamp Out Mode -** If the TIPM detects an ineffective turn signal lamp or circuit, it increases the flash rate for the remaining operative turn signals and sends an electronic message to the instrument cluster. The instrument cluster then increases the flash rate of the turn signal indicators and the click rate of the electromechanical relay to provide an indication of the problem to the vehicle operator.

The instrument cluster, also known as the CCN continually monitors the multi-function switch and electronic messages from the TIPM to determine the proper turn signal and hazard warning indicator operation. For further diagnosis of the turn signal indicators or the instrument cluster circuitry that controls the indicators, refer to **DIAGNOSIS AND TESTING**.

POD, SWITCH

DESCRIPTION

DESCRIPTION

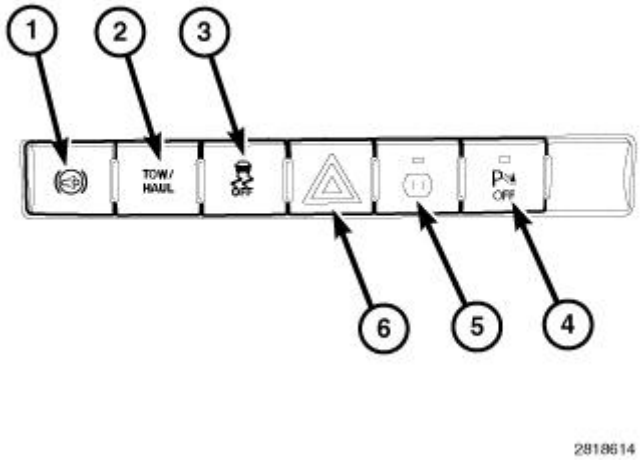

Fig. 18: Instrument Panel Switch Pod
Courtesy of CHRYSLER GROUP, LLC

The Instrument Panel Switch Pod includes push button controls for the Hazard Flashers (6), the Electronic Stability Control (ESC) Off switch (3), the Tow/Haul transmission control switch (2), the Park Assist off switch (4), a 115 volt power outlet off switch (5), and on vehicles equipped with a 6.7L diesel engine, an exhaust brake on switch. The switch pod is a single unit with one wire connector and two mounting tabs and cannot be taken apart or serviced. If one or more of the switches, or illumination is inoperative, the entire pod must be replaced.

The Instrument Panel Switch Pod is located in the instrument panel center bezel just below the radio, and above the A/C control head.

OPERATION

OPERATION

HAZARD WARNING SWITCH

A latching push-button hazard-warning switch is placed in the instrument panel switch pod. This is an ergonomic place for the switch where it can be conveniently reached.

ELECTRONIC STABILITY CONTROL (ESC) OFF SWITCH

A momentary contact, push-button ESC switch is placed in the instrument panel switch pod. For more information on the ESC system and ESC off switch, refer to **DESCRIPTION** and **OPERATION** .

TOW/HAUL SWITCH

A momentary contact Tow/Haul switch is placed in the instrument panel switch pod. For more information on the Tow/Haul switch function and transmission shifting characteristics in the Tow/Haul mode, refer to **SWITCH, OVERDRIVE LOCKOUT, TOW AND HAUL, OPERATION** .

PARK ASSIST OFF SWITCH

A momentary contact park assist off switch is placed in the instrument panel switch pod. For more information on the Park Assist system and other components within the system, refer to **DESCRIPTION** and **OPERATION** .

115 VOLT POWER POINT OFF SWITCH

A momentary contact power point off switch is placed in the instrument panel switch pod. For more information on the power outlet system and power outlet off switch, refer to **DESCRIPTION** and **OPERATION** . .

DIESEL EXHAUST BRAKE ON SWITCH

On vehicles equipped with a 6.7L diesel engine, a momentary contact exhaust brake on switch is placed in the instrument panel switch pod. For more information on the exhaust brake system, refer to **ACTUATOR, TURBOCHARGER, DESCRIPTION, 6.7L** and **INDICATORS, INSTRUMENT CLUSTER, OPERATION**.

REMOVAL

REMOVAL

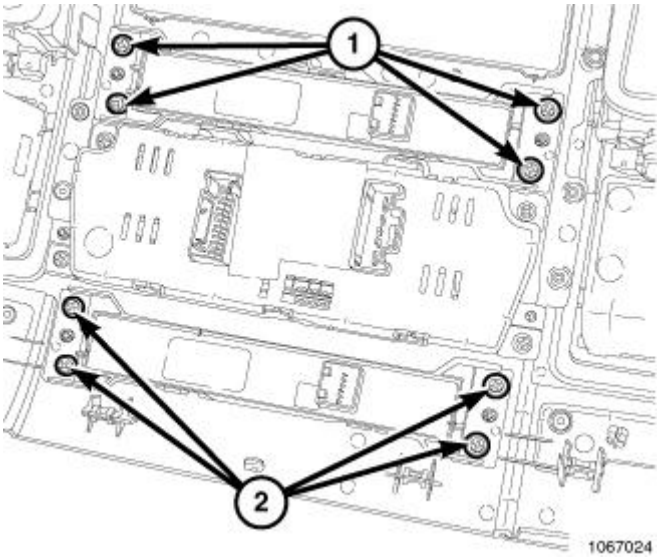

Fig. 19: Switch Pod Fasteners
Courtesy of CHRYSLER GROUP, LLC

1. Disconnect and isolate the negative battery cable.
2. Remove the instrument panel center bezel. Refer to **BEZEL, INSTRUMENT PANEL, CENTER, REMOVAL** .
3. Disconnect the lower switch pod electrical connector.
4. Remove the upper switch pod fasteners (1) from the center bezel.
5. Separate the switch pod from the center bezel.

INSTALLATION

INSTALLATION

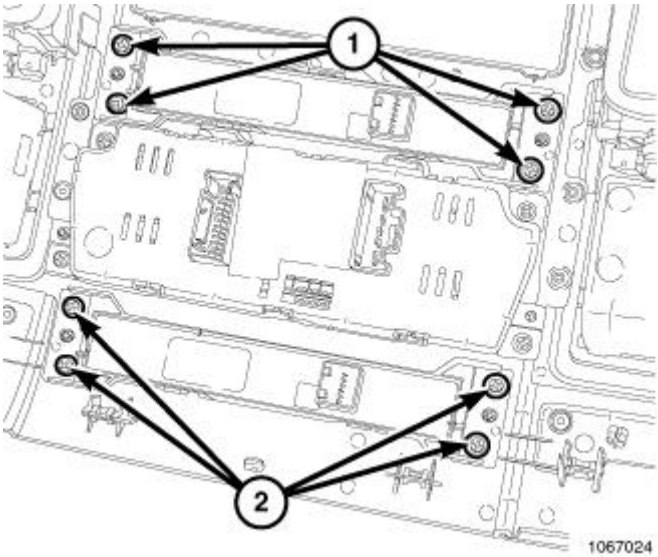

Fig. 20: Switch Pod Fasteners

Courtesy of CHRYSLER GROUP, LLC

1. Align the switch pod to the instrument panel center bezel.
2. Install the upper switch pod fasteners (1) to the center bezel.
3. Connect the switch pod electrical connector.
4. Install the instrument panel center bezel. Refer to **BEZEL, INSTRUMENT PANEL, CENTER, INSTALLATION** .
5. Connect the negative battery cable.

SWITCH, ODOMETER

DESCRIPTION

DESCRIPTION

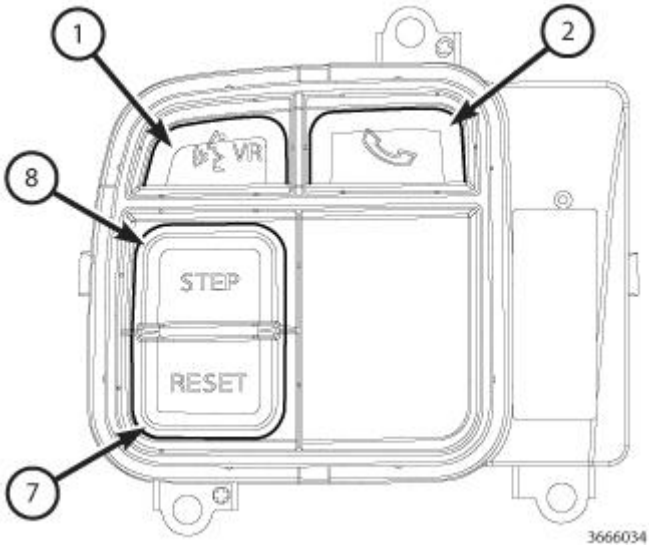

Fig. 21: Control Switch Pod Without EVIC
Courtesy of CHRYSLER GROUP, LLC

The odometer switch pod is located in the left spoke of the steering wheel spoke bezel. This switch has up to four push buttons. Two of the push buttons (7 and 8) are used on all vehicles not equipped with the Electronic Vehicle Information Center (EVIC). Two additional push buttons (1 and 2) are found on vehicles equipped with the optional Uconnect™ Hands-Free Communication System. The only visible components of the switch pod are the switch push buttons and a decorative bezel around the push buttons, which stands slightly proud of the steering wheel spoke bezel. The remainder of the switch pod including its mounting provisions and its electrical connection are concealed beneath the spoke bezel.

The switch pod housing and push buttons are constructed of molded plastic. Each of the push buttons has white International Control and Display Symbol graphics or text applied to it, which clearly identify the function of each push button. The switch pod is secured through three integral mounting tabs to mounting bosses on the back of the spoke bezel by three screws. A connector receptacle integral to the inboard end of the switch pod housing connects the odometer switch pod to the vehicle electrical system through a dedicated take out and

connector of the steering wheel wire harness.

The odometer switch pod cannot be adjusted or repaired. If any function of the switch is ineffective or damaged, the entire switch pod unit must be replaced.

OPERATION

OPERATION

The odometer switch pod is a resistor multiplexed unit that receives source current from and provides hard wired inputs to the Local Interface Network (LIN) slave node integral to the speed control switch pod in the right spoke of the steering wheel spoke bezel. The LIN slave node communicates the switch states of the odometer switch pod, the remote radio switches and the horn switch over the LIN data bus to the ElectroMechanical Instrument Cluster (EMIC) (also known as the Cab Compartment Node/CCN), which is the LIN master node.

The odometer switch pod (also known as the odometer switch) is used only for vehicles not equipped with the Electronic Vehicle Information Center (EVIC) system and contains two switch push buttons whose functions are:

- **Reset -** This switch button allows the operator to reset the trip odometer (A or B) currently displayed in the odometer display unit of the instrument cluster.
- **Step -** This switch button allows the operator to step through the total odometer, trip odometer A and trip odometer B display options of the odometer display of the instrument cluster.

For vehicles equipped with the Uconnect™ Hands-Free Communication System, the odometer switch pod contains two additional switch push buttons whose functions are:

- **VR (Voice Recognition) -** This switch button activates the Uconnect™ Voice Command system.
- **Phone -** This switch push button activates the Uconnect™ Hands-Free Phone system.

The EMIC LIN master node provides a clean ground and fused B(+) current for all of the switches and sensors on the rotating steering wheel through the LIN slave node circuitry of the speed control switch pod as well as for the Light Emitting Diode (LED) back lighting of both the speed control and the odometer switch pods. The EMIC continually monitors the LIN bus data and will store a Signal Not Available (SNA) code for any LIN bus input errors. The EMIC also communicates with other electronic modules over the Controller Area Network (CAN) data bus. Therefore, any EMIC DTC information can be retrieved using a diagnostic scan tool connected to the Data Link Connector (DLC).

The analog resistor multiplexed circuits of the odometer switch pod as well as the hard wired circuits between the switch pod and the LIN slave node within the speed control switch pod may be diagnosed using conventional diagnostic tools and procedures. Refer to the appropriate wiring information. The wiring information includes wiring diagrams, proper wire and connector repair procedures, details of wire harness routing and retention, connector pin-out information and location views for the various wire harness connectors, splices and grounds.

However, conventional diagnostic methods will not prove conclusive in the diagnosis of the LIN slave or

master nodes, the EMIC or the electronic controls and communication between modules and other devices that provide some features of the odometer system. The most reliable, efficient, and accurate means to diagnose the odometer switch pod, the LIN slave or master nodes, the EMIC or the electronic controls and communication related to odometer system operation requires the use of a diagnostic scan tool. Refer to the appropriate diagnostic information.

REMOVAL

REMOVAL

The odometer switch pod is serviced in exactly the same manner as the Electronic Vehicle Information Center (EVIC) control switch. Refer to **SWITCH, EVIC CONTROL, REMOVAL** .

INSTALLATION

INSTALLATION

The odometer switch pod is serviced in exactly the same manner as the Electronic Vehicle Information Center (EVIC) control switch. Refer to **SWITCH, EVIC CONTROL, INSTALLATION** .

DIAGNOSTIC CODE INDEX

DIAGNOSTIC CODE INDEX

DTC	Description
B1D56	ADJUSTABLE PEDAL SENSOR CIRCUIT LOW
B1D57	ADJUSTABLE PEDAL SENSOR CIRCUIT HIGH
B1D5B	ADJUSTABLE PEDAL SWITCH CIRCUIT PERFORMANCE
B1D5C	ADJUSTABLE PEDAL SWITCH CIRCUIT STUCK FORWARD
B1D5D	ADJUSTABLE PEDAL SWITCH CIRCUIT STUCK REARWARD
B1D62	POWER SEAT SWITCH STUCK
B1D63	POWER SEAT SWITCH OPEN
B1D67	ADJUSTABLE PEDAL CONTROL CIRCUIT PERFORMANCE
B1D6D	SEAT HORIZONTAL POSITION SENSOR CIRCUIT LOW
B1D6E	SEAT HORIZONTAL POSITION SENSOR CIRCUIT HIGH
B1D71	SEAT FRONT VERTICAL POSITION SENSOR CIRCUIT LOW
B1D72	SEAT FRONT VERTICAL POSITION SENSOR CIRCUIT HIGH
B1D75	SEAT REAR VERTICAL POSITION SENSOR CIRCUIT LOW
B1D76	SEAT REAR VERTICAL POSITION SENSOR CIRCUIT HIGH
B1D79	SEAT RECLINER POSITION SENSOR CIRCUIT LOW
B1D7A	SEAT RECLINER POSITION SENSOR CIRCUIT HIGH
B1D7B	SEAT HORIZONTAL MOTOR CONTROL CIRCUIT PERFORMANCE
B1D7F	SEAT FRONT VERTICAL MOTOR CONTROL CIRCUIT PERFORMANCE
B1D83	SEAT REAR VERTICAL MOTOR CONTROL CIRCUIT PERFORMANCE
B1D87	SEAT BACKREST MOTOR CONTROL CIRCUIT PERFORMANCE
B1D9B	SEAT HORIZONTAL FRONT STOP NOT LEARNED
B210D	BATTERY VOLTAGE LOW
B210E	BATTERY VOLTAGE HIGH
B221C	MEMORY SEAT MODULE INTERNAL
U0011	CAN INTERIOR BUS OFF PERFORMANCE
U0014	CAN INTERIOR BUS (+) CIRCUIT HIGH
U0016	CAN INTERIOR BUS (-) CIRCUIT LOW
U0141	LOST COMMUNICATION WITH IPM (FCM/TIPM)
U0155	LOST COMMUNICATION WITH CLUSTER/CCN
U0203	LOST COMMUNICATION WITH DOOR MODULE FRONT LEFT
U0204	LOST COMMUNICATION WITH DOOR MODULE FRONT RIGHT

DIAGNOSIS AND TESTING

B1D56-ADJUSTABLE PEDAL SENSOR CIRCUIT LOW

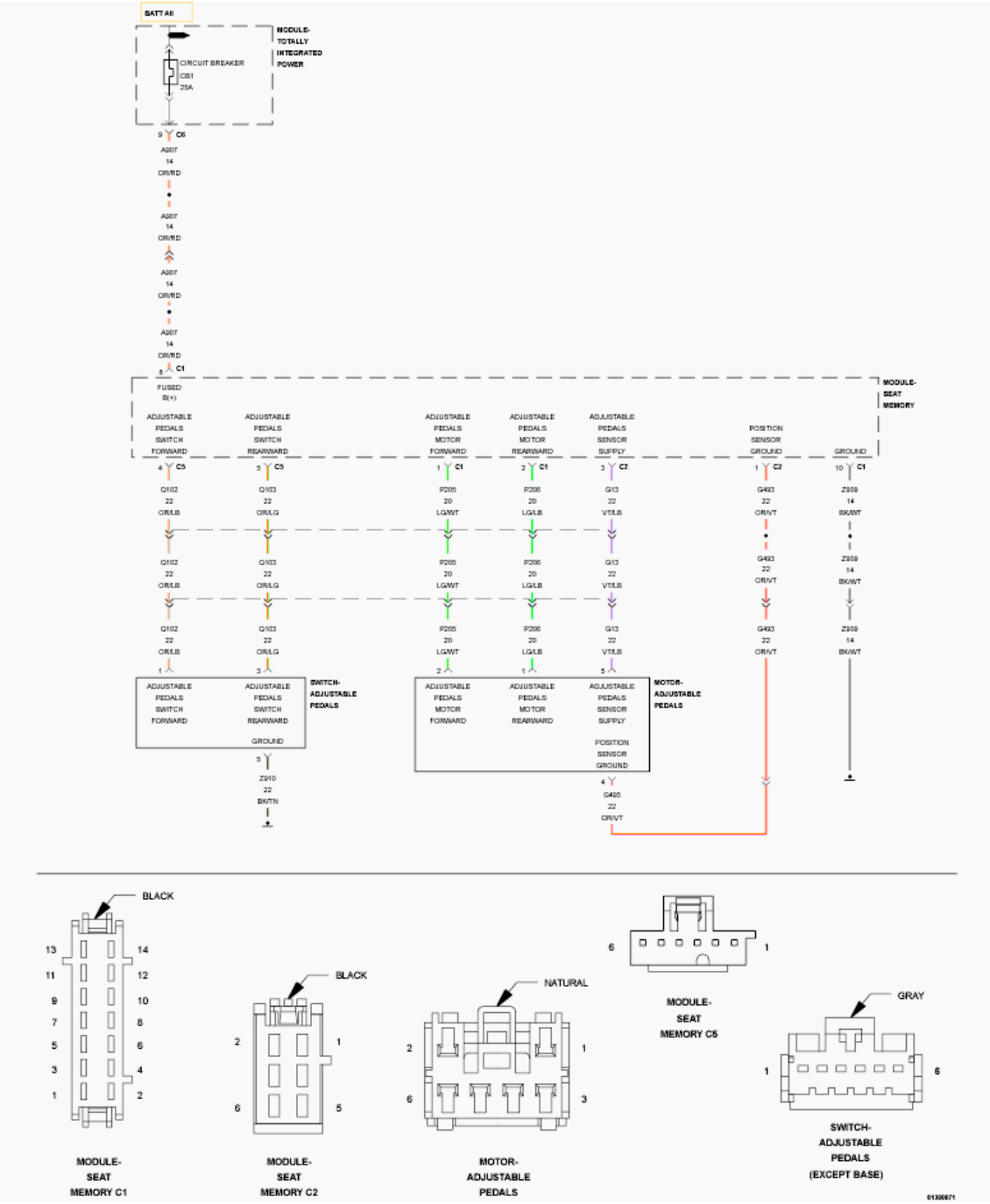

Fig. 1: Adjustable Pedal Sensor Wiring Diagram
Courtesy of CHRYSLER GROUP, LLC

For a complete wiring diagram, **refer to appropriate SYSTEM WIRING DIAGRAMS article** .

WHEN MONITORED:

Continuously.

SET CONDITION:

The Voltage on the (G13) Adjustable Pedals Sensor Supply circuit is not within a specified range. The Memory Seat Module (MSM) will not be able to detect pedal position. When the Adjustable Pedals switch is pressed, the pedals will move for approximately two seconds then the module turns off the output.

POSSIBLE CAUSES

Possible Causes
(G13) ADJUSTABLE PEDALS SENSOR SUPPLY CIRCUIT SHORTED TO GROUND
(G13) ADJUSTABLE PEDALS SENSOR SUPPLY CIRCUIT SHORTED TO THE (G493) POSITION SENSOR GROUND CIRCUIT
(G13) ADJUSTABLE PEDALS SENSOR SUPPLY CIRCUIT SHORTED TO THE (P205) ADJUSTABLE PEDALS MOTOR FORWARD CIRCUIT
(G13) ADJUSTABLE PEDALS SENSOR SUPPLY CIRCUIT SHORTED TO THE (P206) ADJUSTABLE PEDALS MOTOR REARWARD CIRCUIT
ADJUSTABLE PEDALS SENSOR
MEMORY SEAT MODULE (MSM)

DIAGNOSTIC TEST

1. **CHECK FOR ACTIVE FAULT WITH PEDALS STATIONARY**
    1. Turn the ignition on.
    2. Using a scan tool, record and erase DTC's.
    3. Cycle the ignition from on to off.
    4. Turn the ignition on.
    5. Using a scan tool, read DTC's.

    Does the scan tool display DTC B1D56-ADJUSTABLE PEDAL SENSOR CIRCUIT LOW?

    Yes

    - Go To 3.

    No

    - Go To 2.
2. **CHECK FOR ACTIVE FAULT WHILE ADJUSTING THE PEDALS**
    1. Operate the Adjustable Pedals switch in both positions then wait five seconds.
    2. Using a scan tool, read DTC's.

    Does the scan tool display DTC B1D56-ADJUSTABLE PEDAL SENSOR CIRCUIT LOW?

Yes

- Go To 3.

No

- The conditions that caused this code to set are not present at this time. Perform the APS INTERMITTENT CONDITION TEST. Refer to **APS INTERMITTENT CONDITION TEST**.

3. **CHECK THE (G13) ADJUSTABLE PEDALS SENSOR SUPPLY CIRCUIT FOR A SHORT TO GROUND**

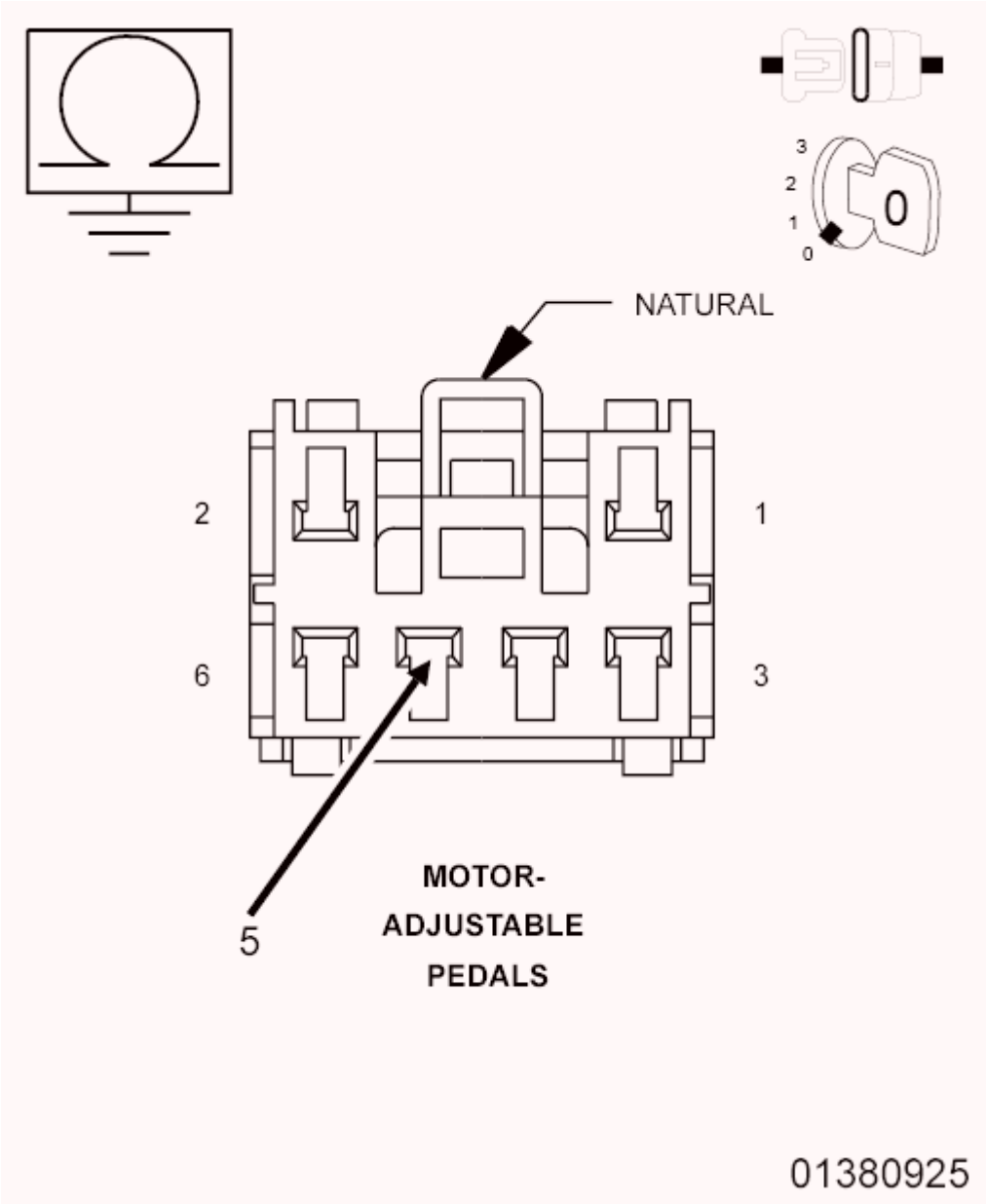

Fig. 2: Checking Adjustable Pedals Sensor Supply Circuit For A Short To Ground

Courtesy of CHRYSLER GROUP, LLC

1. Turn the ignition off.
2. Disconnect the MSM C2 harness connector.
3. Disconnect the Adjustable Pedals Motor harness connector.

NOTE: Check connectors. Clean and repair as necessary.

4. Measure the resistance of the (G13) Adjustable Pedals Sensor Supply circuit between ground and the Adjustable Pedals Motor harness connector.

   Is the resistance below 10K Ohms?

   Yes

   - Repair the (G13) Adjustable Pedals Sensor Supply circuit for a short to ground.
   - Perform APS VERIFICATION TEST. Refer to **APS VERIFICATION TEST**.

   No

   - Go To 4.

4. **CHECK THE (G13) ADJUSTABLE PEDALS SENSOR SUPPLY CIRCUIT FOR A SHORT TO THE (G493) POSITION SENSOR GROUND CIRCUIT, THE (P205) ADJUSTABLE PEDALS MOTOR FORWARD CIRCUIT, OR THE (P206) ADJUSTABLE PEDALS MOTOR REARWARD CIRCUIT**

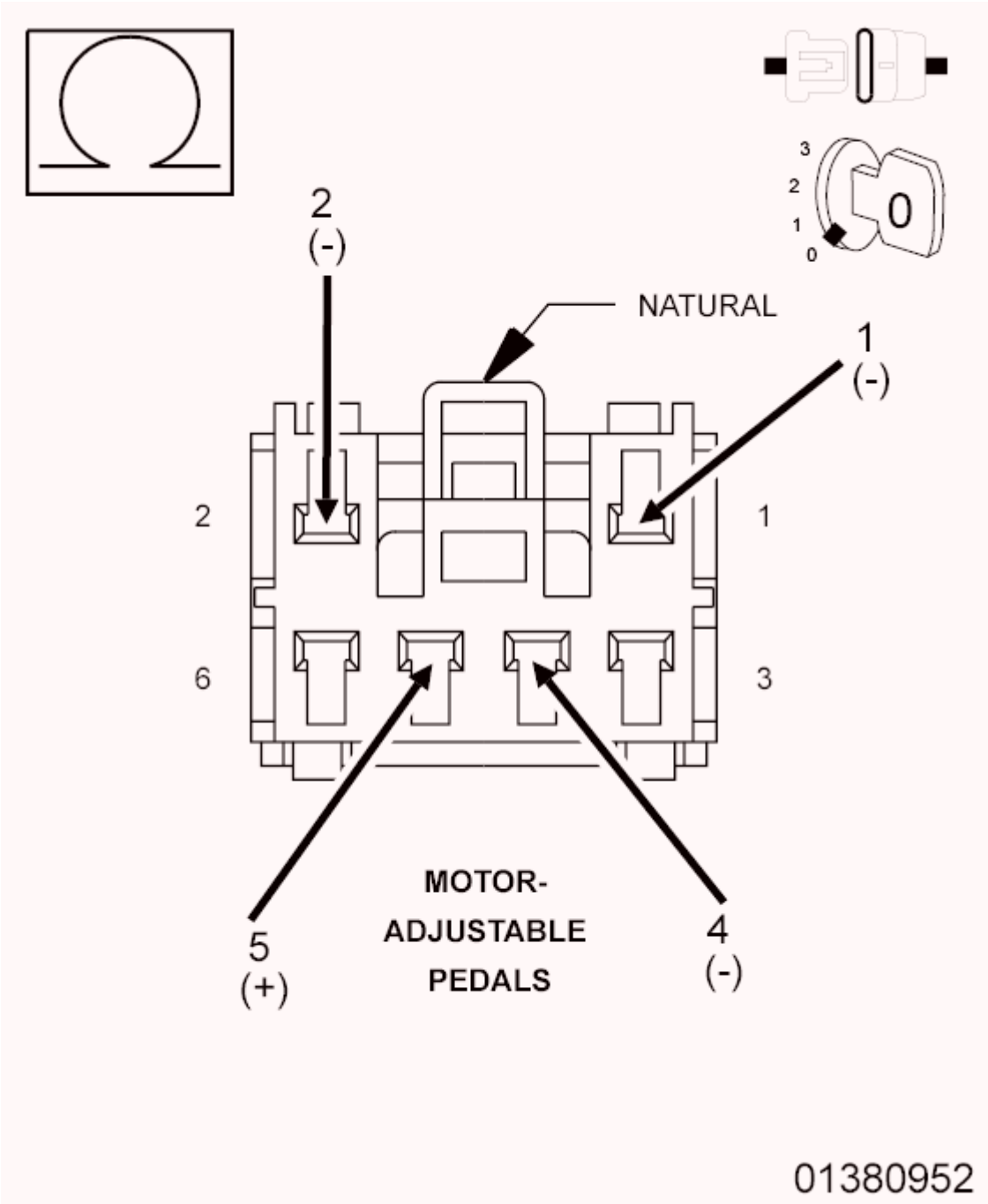

Fig. 3: Measuring Resistance Of Adjustable Pedals Sensor Supply Circuit For A Short
Courtesy of CHRYSLER GROUP, LLC

1. Measure the resistance between the (G13) Adjustable Pedals Sensor Supply circuit and the (G493) Position Sensor Ground circuit at the Adjustable Pedals Motor harness connector.
2. Measure the resistance between the (G13) Adjustable Pedals Sensor Supply circuit and the (P205) Adjustable Pedals Motor Forward circuit at the Adjustable Pedals Motor harness connector.
3. Measure the resistance between the (G13) Adjustable Pedals Sensor Supply circuit and the (P206) Adjustable Pedals Motor Rearward circuit at the Adjustable Pedals Motor harness connector.

Is the resistance below 10K Ohms for any measurement?

Yes

- Repair all circuits with a resistance below 10K Ohms for a short to the (G13) Adjustable Pedals Sensor Supply circuit.
- Perform APS VERIFICATION TEST. Refer to **APS VERIFICATION TEST**.

No

- Go To 5.

5. **CHECK THE (G13) ADJUSTABLE PEDALS SENSOR SUPPLY AND (G493) POSITION SENSOR GROUND CIRCUIT FUNCTION**

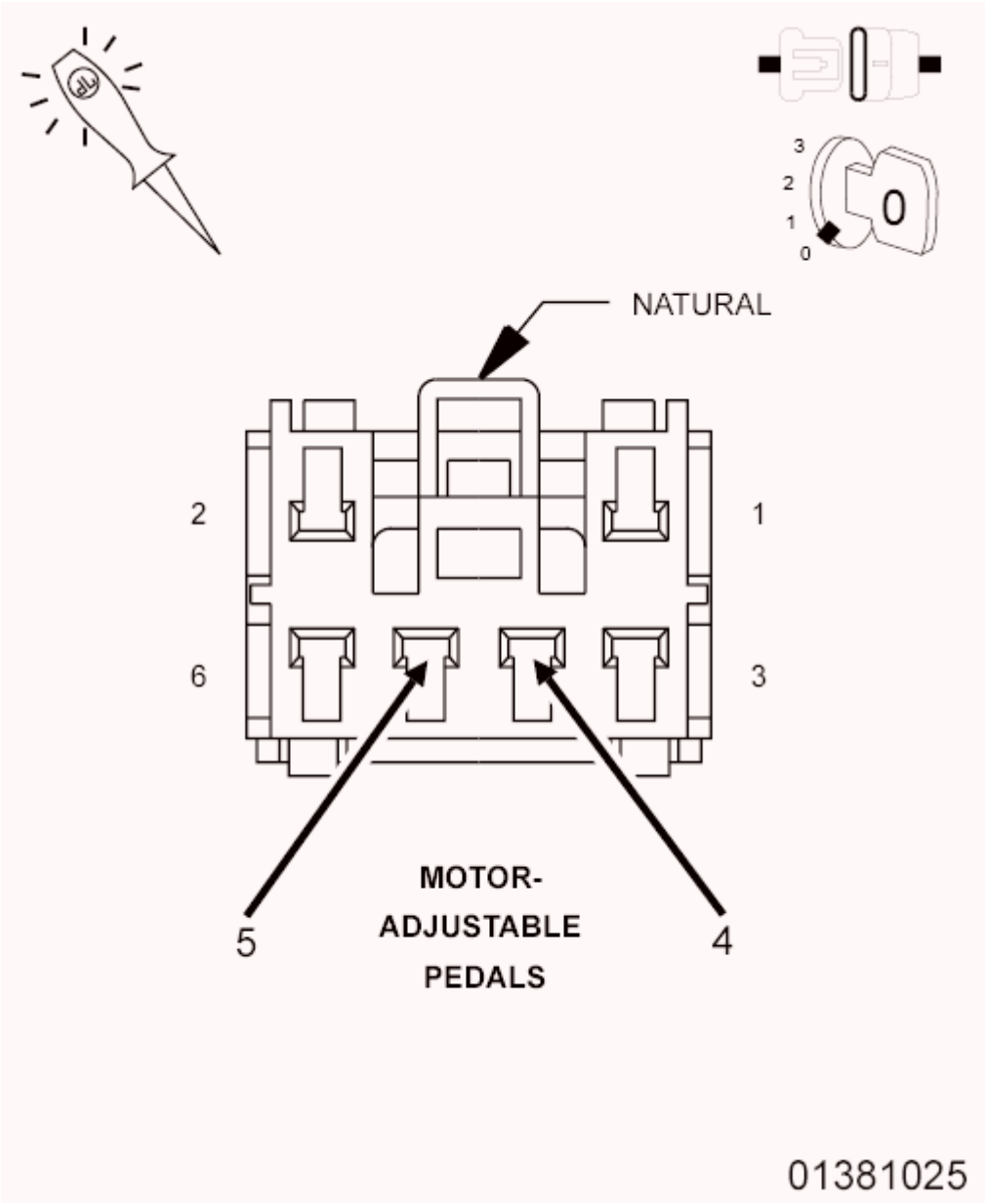

Fig. 4: Checking Adjustable Pedals Sensor Supply & Position Sensor Ground Circuit Function
Courtesy of CHRYSLER GROUP, LLC

1. Reconnect the MSM C2 harness connector.
2. Disconnect the scan tool.
3. Turn off all vehicle interior and exterior lighting.
4. Mark sure all doors are closed then wait 10 seconds.
5. Connect a 12-Volt test light between the (G13) Adjustable Pedals Sensor Supply circuit and the (G493) Position Sensor Ground circuit at the Adjustable Pedals Motor harness connector.
6. While monitoring the test light, press the Adjustable Pedals switch in either direction then release the switch.

Does the test light illuminate for approximately six seconds then turn off?

Yes

- Replace the Adjustable Pedals Sensor in accordance with the Service Information.
- Perform APS VERIFICATION TEST. Refer to **APS VERIFICATION TEST**.

No

- Replace the Memory Seat Module (MSM) in accordance with the Service Information.
- Perform APS VERIFICATION TEST. Refer to **APS VERIFICATION TEST**.

B1D57-ADJUSTABLE PEDAL SENSOR CIRCUIT HIGH

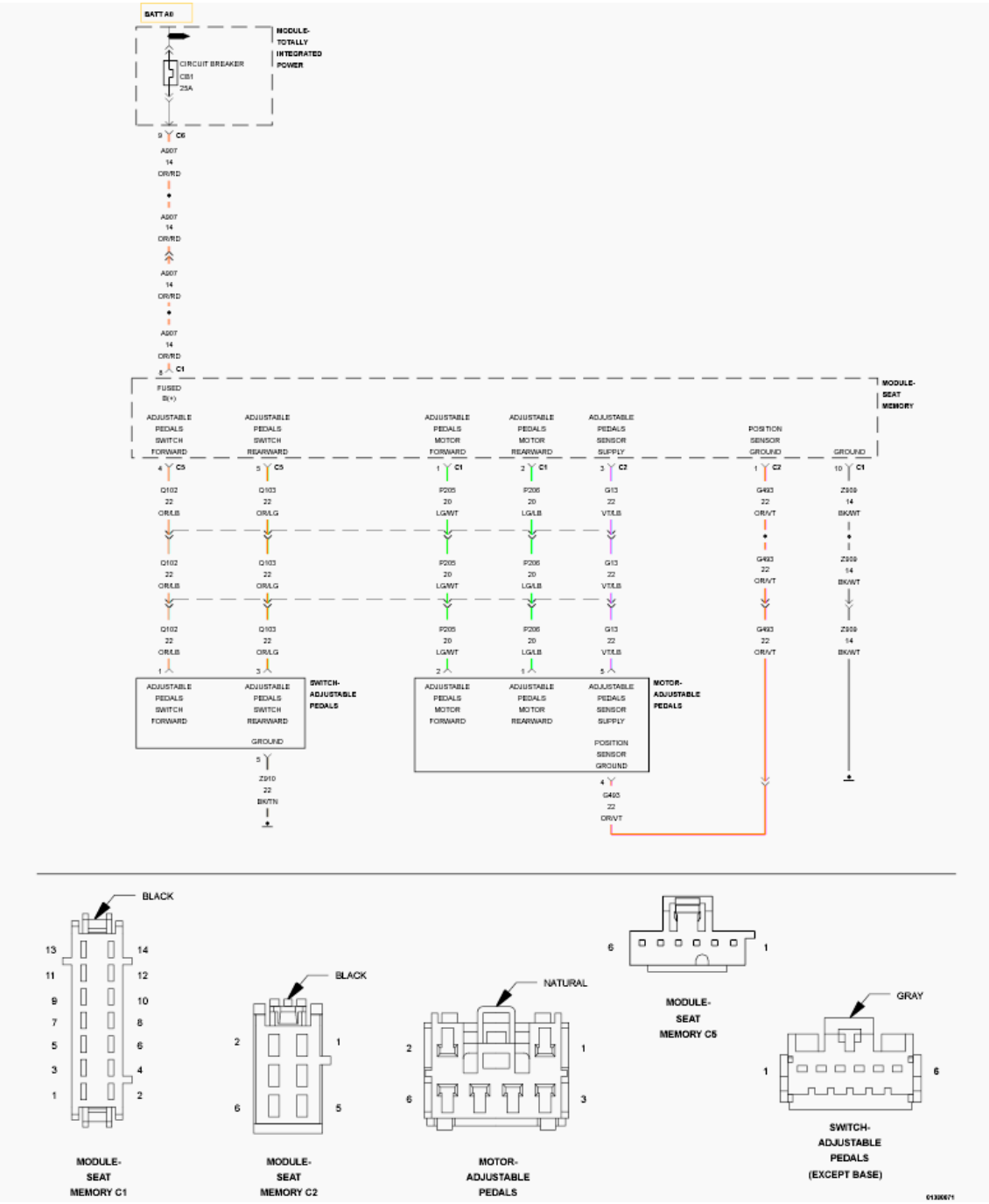

Fig. 5: Adjustable Pedal Sensor Wiring Diagram
Courtesy of CHRYSLER GROUP, LLC

For a complete wiring diagram, **refer to appropriate SYSTEM WIRING DIAGRAMS article** .

WHEN MONITORED:

Continuously.

SET CONDITION:

If Voltage on the (G13) Adjustable Pedals Sensor Supply circuit is not within a specified range. The Memory Seat Module (MSM) will not be able to detect pedal position. When the Adjustable Pedals switch is pressed, the pedals will move for approximately two seconds then the module turns off the output.

POSSIBLE CAUSES

Possible Causes
(G13) ADJUSTABLE PEDALS SENSOR SUPPLY CIRCUIT SHORTED TO VOLTAGE
(G13) ADJUSTABLE PEDALS SENSOR SUPPLY CIRCUIT SHORTED TO THE (P205) ADJUSTABLE PEDALS MOTOR FORWARD CIRCUIT
(G13) ADJUSTABLE PEDALS SENSOR SUPPLY CIRCUIT SHORTED TO THE (P206) ADJUSTABLE PEDALS MOTOR REARWARD CIRCUIT
(G13) ADJUSTABLE PEDALS SENSOR SUPPLY CIRCUIT OPEN
(G493) POSITION SENSOR GROUND CIRCUIT OPEN
ADJUSTABLE PEDALS SENSOR
MEMORY SEAT MODULE (MSM)

DIAGNOSTIC TEST

1. **TEST FOR INTERMITTENT CONDITION**
    1. Turn the ignition on.
    2. Using a scan tool, record and erase DTC's.
    3. Cycle the ignition from on to off.
    4. Turn the ignition on.
    5. Operate the Adjustable Pedals switch in both positions then wait five seconds.
    6. Using a scan tool read DTC's.

    Does the scan tool display DTC B1D57-ADJUSTABLE PEDAL SENSOR CIRCUIT HIGH?

    Yes

    - Go To 2.

    No

    - The conditions that caused this code to set are not present at this time. Perform the APS INTERMITTENT CONDITION TEST. Refer to **APS INTERMITTENT CONDITION TEST**.
2. **CHECK THE (G13) ADJUSTABLE PEDALS SENSOR SUPPLY CIRCUIT FOR A SHORT TO VOLTAGE**

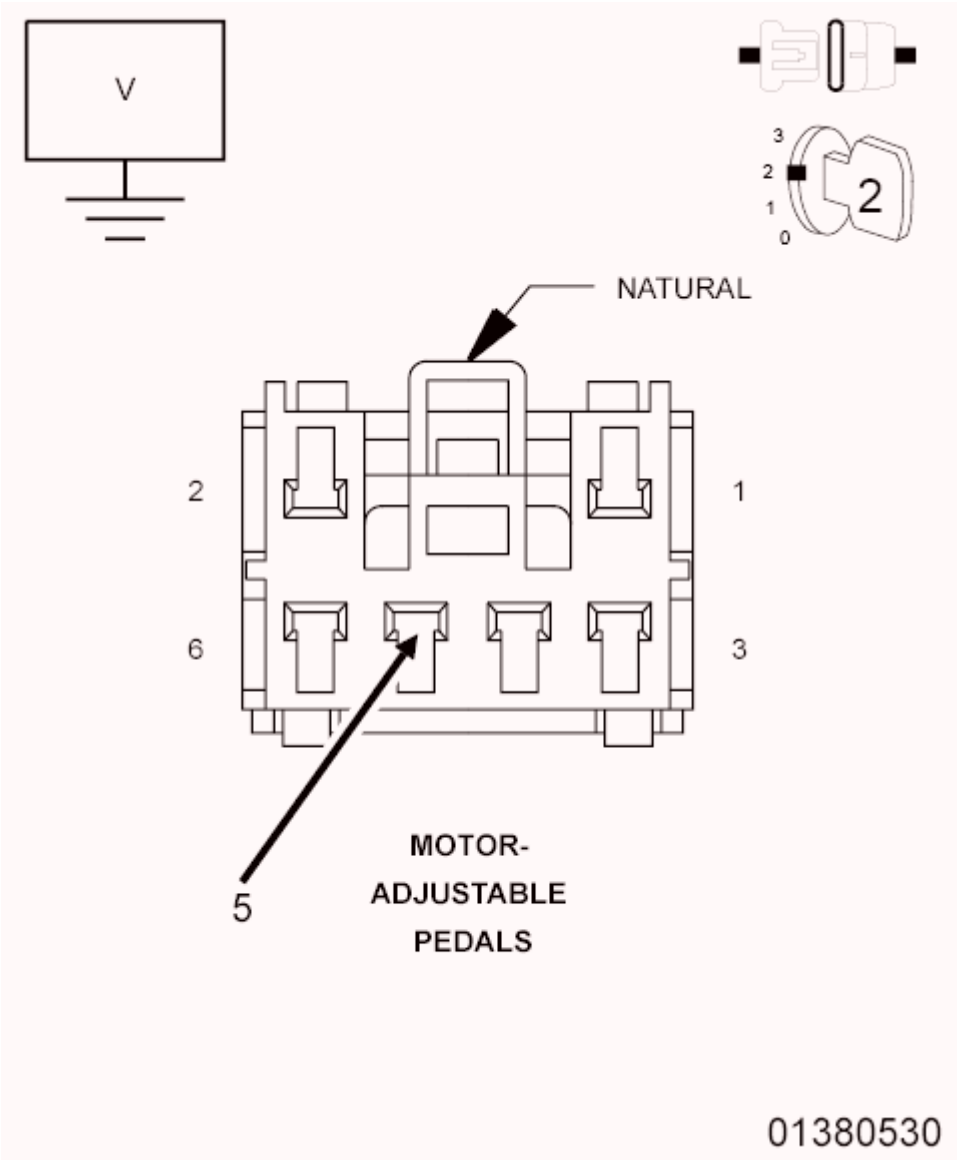

Fig. 6: Checking Adjustable Pedals Sensor Supply Circuit For A Short To Voltage
Courtesy of CHRYSLER GROUP, LLC

1. Turn the ignition off.
2. Disconnect the Adjustable Pedals Motor harness connector.
3. Disconnect the MSM C2 harness connector.

NOTE: Check connectors. Clean and repair as necessary.

4. Turn the ignition on.
5. Measure the Voltage of the (G13) Adjustable Pedals Sensor Supply circuit between the Adjustable Pedals Motor harness connector and ground.

   Is there any Voltage present?

Yes

- Repair the (G13) Adjustable Pedals Sensor Supply circuit for a short to Voltage.
- Perform APS VERIFICATION TEST. Refer to **APS VERIFICATION TEST**.

No

- Go To 3.

3. **CHECK THE (G13) ADJUSTABLE PEDALS SENSOR SUPPLY CIRCUIT FOR A SHORT TO THE (P205) ADJUSTABLE PEDALS MOTOR FORWARD CIRCUIT OR THE (P206) ADJUSTABLE PEDALS MOTOR REARWARD CIRCUIT**

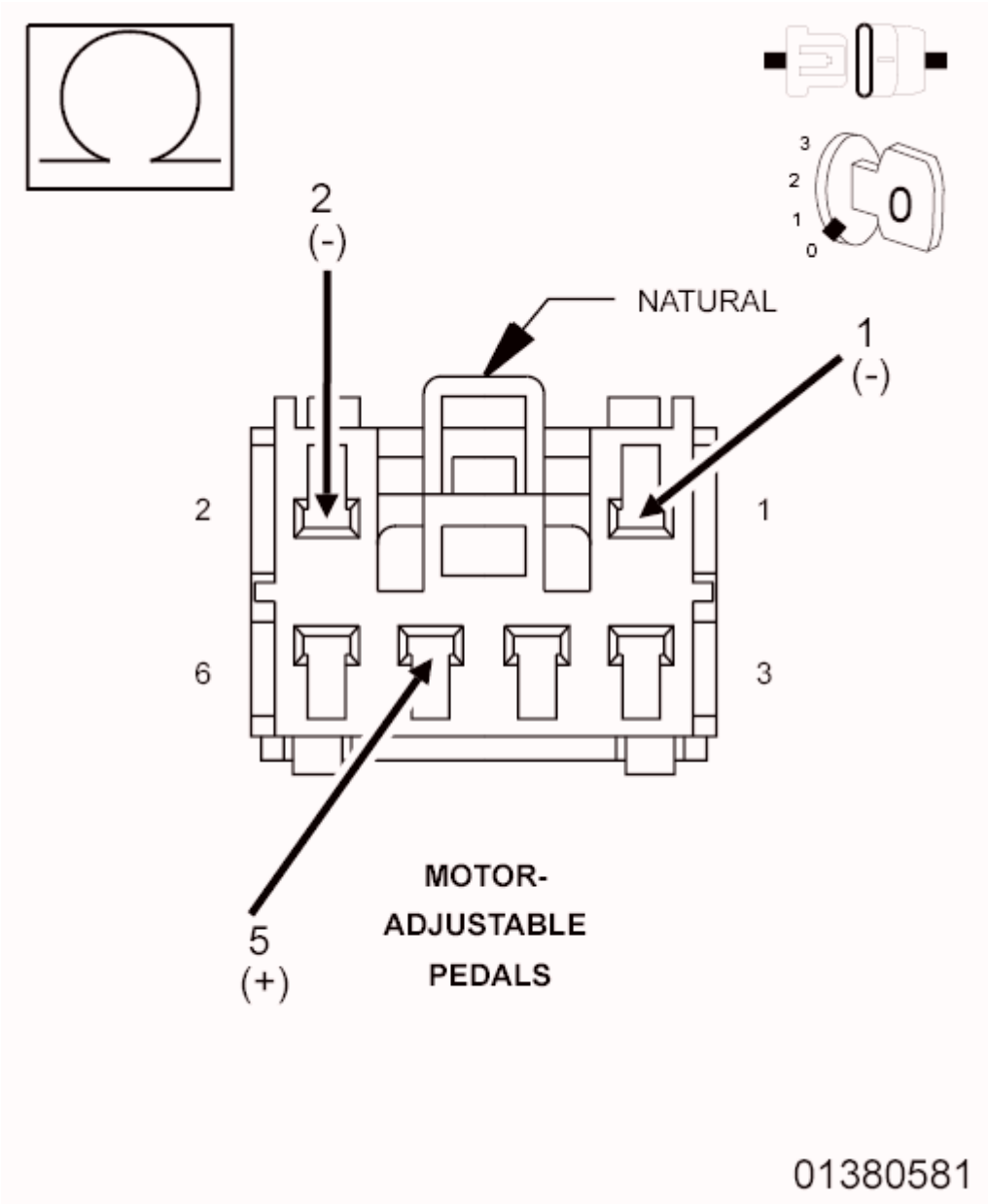

Fig. 7: Checking Adjustable Pedals Sensor Supply Circuit For A Short To Other Circuits
Courtesy of CHRYSLER GROUP, LLC

1. Turn the ignition off.
2. Disconnect the MSM C1 harness connector.

NOTE: Check connectors. Clean and repair as necessary.

3. Measure the resistance between the (G13) Adjustable Pedals Sensor Supply circuit and the (P205) Adjustable Pedals Motor Forward circuit at the Adjustable Pedals Motor harness connector.
4. Measure the resistance between the (G13) Adjustable Pedals Sensor Supply circuit and the (P206) Adjustable Pedals Motor Rearward circuit at the Adjustable Pedals Motor harness connector.

Is the resistance below 10K Ohms for either measurement?

Yes

- Repair all circuits with a resistance below 10K Ohms for a short to the (G13) Adjustable Pedals Sensor Supply circuit.
- Perform APS VERIFICATION TEST. Refer to **APS VERIFICATION TEST**.

No

- Go To 4.

4. **CHECK THE (G13) ADJUSTABLE PEDALS SENSOR SUPPLY CIRCUIT FOR AN OPEN**

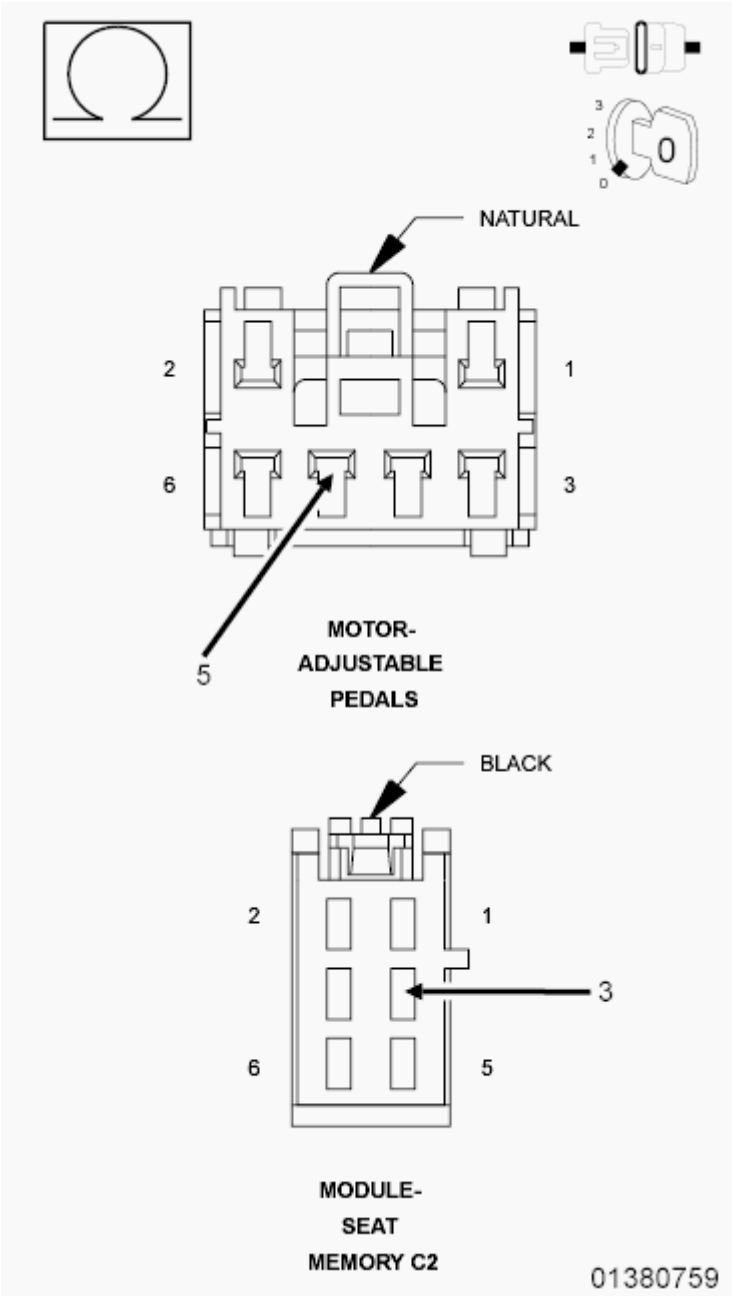

Fig. 8: Checking Adjustable Pedals Sensor Supply Circuit For An Open
Courtesy of CHRYSLER GROUP, LLC

1. Measure the resistance of the (G13) Adjustable Pedals Sensor Supply circuit between the MSM C2 connector and the Adjustable Pedals Motor harness connector.

   Is the resistance below 5.0 Ohms?

   Yes

   - Go To 5.

No

- Repair the (G13) Adjustable Pedals Sensor Supply circuit for an open.
- Perform APS VERIFICATION TEST. Refer to **APS VERIFICATION TEST**.

5. **CHECK THE (G493) POSITION SENSOR GROUND CIRCUIT FOR AN OPEN**

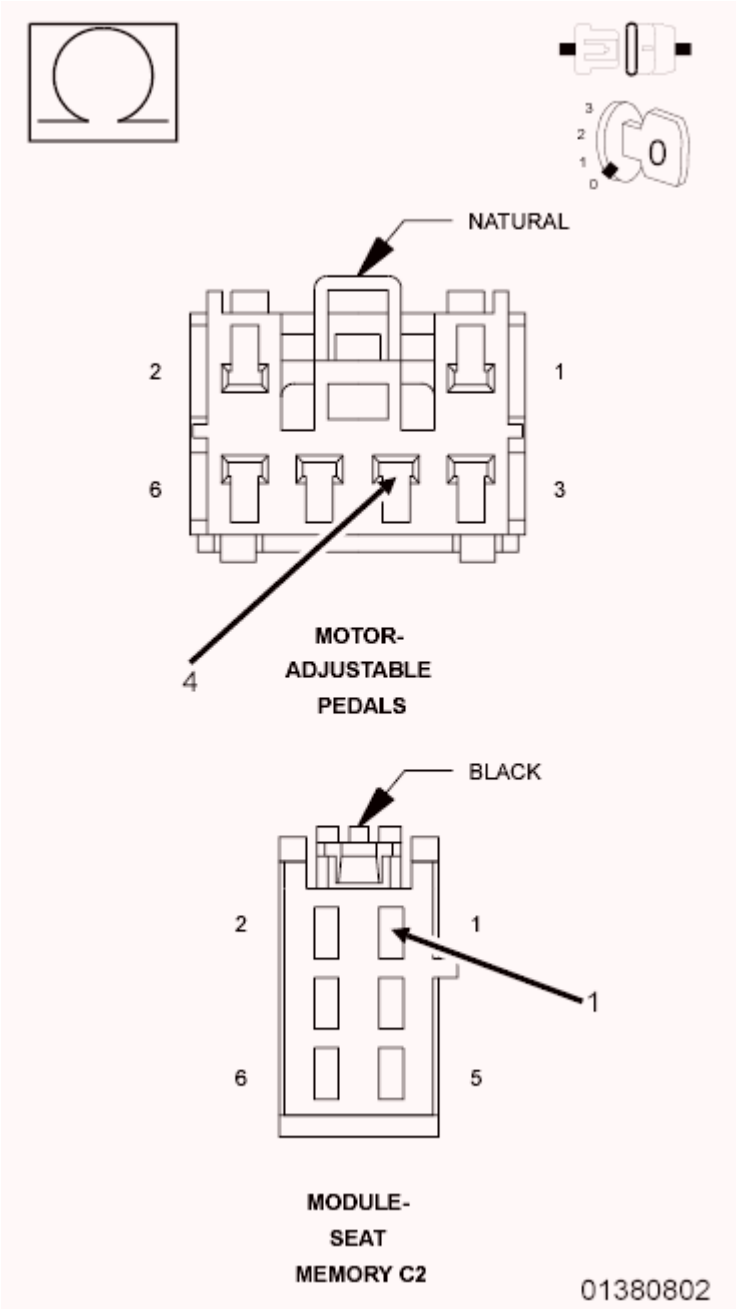

Fig. 9: Checking Adjustable Pedals Sensor Ground Circuit For An Open
Courtesy of CHRYSLER GROUP, LLC

1. Measure the resistance of the (G493) Position Sensor Ground circuit between the MSM C2

connector and the Adjustable Pedals Motor harness connector.

Is the resistance below 5.0 Ohms?

Yes

- Go To 6.

No

- Repair the (G493) Position Sensor Ground circuit for an open.
- Perform APS VERIFICATION TEST. Refer to **APS VERIFICATION TEST**.

6. **CHECK THE (G13) ADJUSTABLE PEDALS SENSOR SUPPLY CIRCUIT FUNCTION**

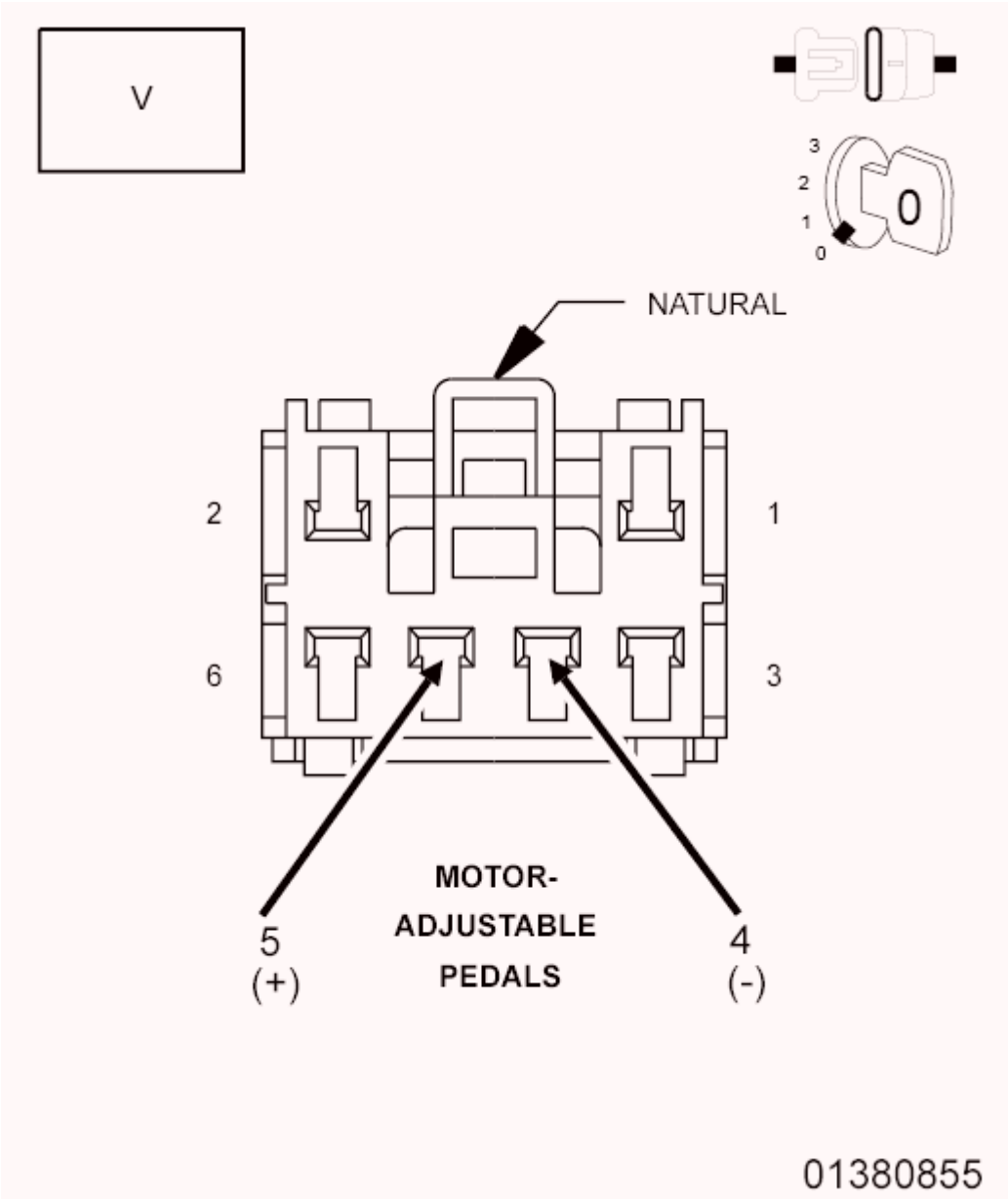

Fig. 10: Checking Adjustable Pedals Sensor Supply Circuit Function
Courtesy of CHRYSLER GROUP, LLC

1. Reconnect the MSM C1 harness connector.
2. Reconnect the MSM C2 harness connector.
3. Disconnect the scan tool.
4. Turn off all vehicle interior and exterior lighting.
5. Mark sure all doors are closed then wait 10 seconds.
6. Connect the positive lead of a voltmeter to the (G13) Adjustable Pedals Sensor Supply circuit and the negative lead to the (G493) Position Sensor Ground circuit at the Adjustable Pedals Motor harness connector.
7. While monitoring the voltmeter, press the Adjustable Pedals switch in either direction then release

the switch.

Does the Voltage drop to 0 Volts after approximately 6 second?

Yes

- Replace the Adjustable Pedals Sensor in accordance with the Service Information.
- Perform APS VERIFICATION TEST. Refer to **APS VERIFICATION TEST**.

No

- Check the (G13) Adjustable Pedals Sensor Supply circuit for a short to Voltage from another circuit and repair as necessary. If circuit is okay, replace the Memory Seat Module (MSM) in accordance with the Service Information.
- Perform APS VERIFICATION TEST. Refer to **APS VERIFICATION TEST**.

B1D5B-ADJUSTABLE PEDAL SWITCH CIRCUIT PERFORMANCE

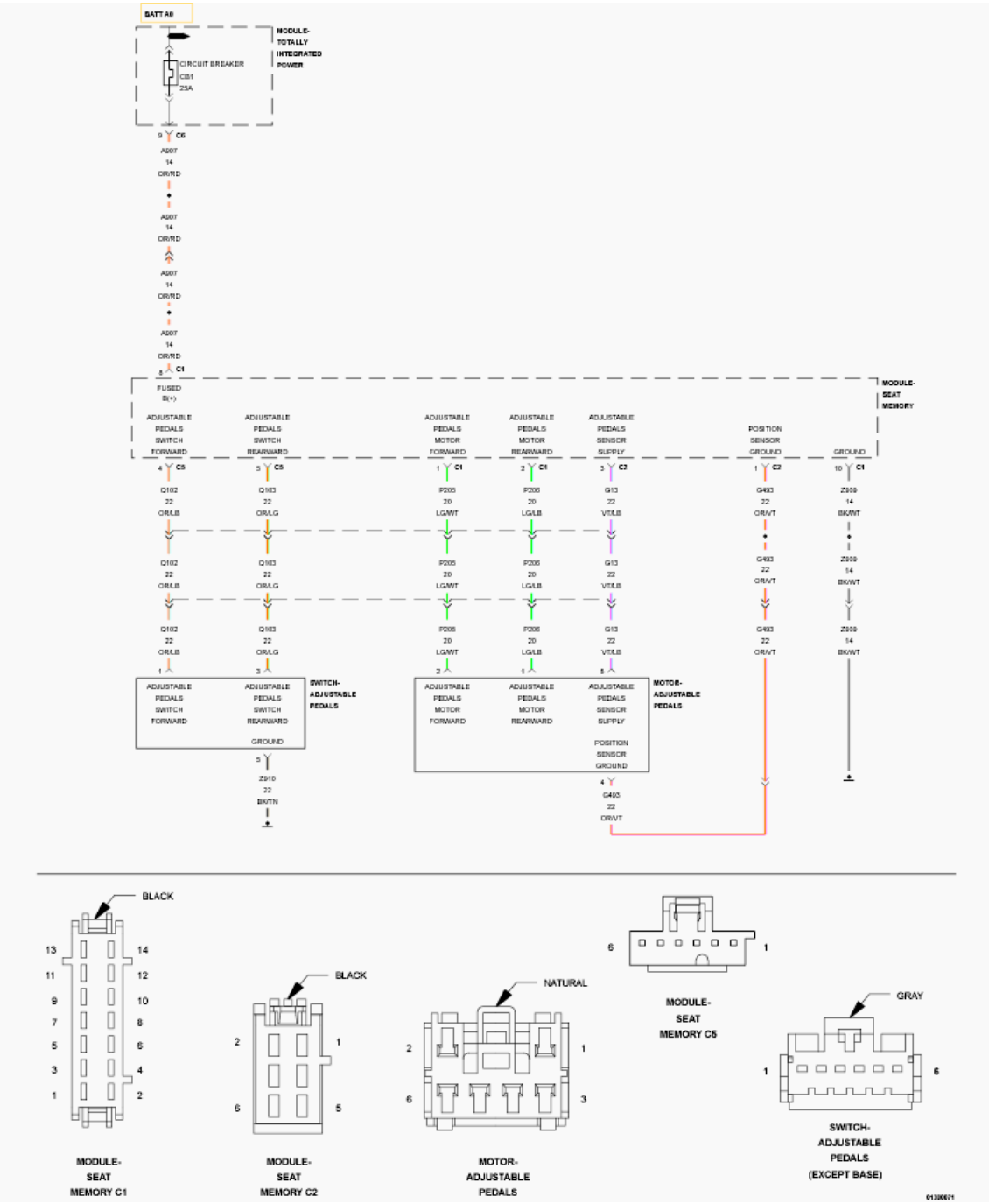

Fig. 11: Adjustable Pedal Sensor Wiring Diagram
Courtesy of CHRYSLER GROUP, LLC

For a complete wiring diagram, **refer to appropriate SYSTEM WIRING DIAGRAMS article** .

WHEN MONITORED:

Continuously.

SET CONDITION:

The Memory Seat Module (MSM) receives a conflicting input from the Adjustable Pedals switch following an Adjustable Pedals switch activation.

POSSIBLE CAUSES

Possible Causes
(Q102) ADJUSTABLE PEDALS SWITCH FORWARD CIRCUIT SHORTED TO THE (Q103) ADJUSTABLE PEDALS SWITCH REARWARD CIRCUIT AND TO GROUND OR TO (Z910) GROUND CIRCUIT
(Q103) ADJUSTABLE PEDALS SWITCH REARWARD CIRCUIT SHORTED TO THE (Q102) ADJUSTABLE PEDALS SWITCH FORWARD CIRCUIT
(Q103) ADJUSTABLE PEDALS SWITCH REARWARD CIRCUIT SHORTED TO GROUND
ADJUSTABLE PEDALS SWITCH
MEMORY SEAT MODULE (MSM)

DIAGNOSTIC TEST

1. **TEST FOR INTERMITTENT CONDITION**
    1. Turn the ignition on.
    2. Using a scan tool, record and erase Diagnostic Trouble Codes (DTC's).
    3. Cycle the ignition from on to off.
    4. Turn the ignition on.
    5. Operate the Adjustable Pedals switch in both directions then wait 5 seconds.
    6. With the scan tool, read DTC's.

    Does the scan tool display DTC B1D5B-ADJUSTABLE PEDAL SWITCH CIRCUIT PERFORMANCE?

    Yes

    - Go To 2.

    No

    - The conditions that caused this code to set are not present at this time. Perform the APS INTERMITTENT CONDITION TEST. Refer to **APS INTERMITTENT CONDITION TEST**.
2. **CHECK THE (Q102)/(Q103) ADJUSTABLE PEDALS SWITCH FORWARD/REARWARD CIRCUITS FOR A SHORT TOGETHER, TO GROUND, OR TO (Z910) GROUND CIRCUIT**
    1. Turn the ignition off.
    2. Disconnect the MSM C5 harness connector.
    3. Disconnect the Adjustable Pedals switch harness connector.

NOTE: Check connectors. Clean and repair as necessary.

4. Measure the resistance between the (Q102) Adjustable Pedals Switch Forward circuit and the (Q103) Adjustable Pedals Switch Rearward circuit at the Adjustable Pedals switch harness connector.
5. Measure the resistance of the (Q102) Adjustable Pedals Switch Forward circuit between ground and the Adjustable Pedals switch harness connector.
6. Measure the resistance of the (Q103) Adjustable Pedals Switch Rearward circuit between ground and the Adjustable Pedals switch harness connector.
7. Measure the resistance between the (Q102) Adjustable Pedals Switch Forward circuit and the (Z910) Ground circuit at the Adjustable Pedals switch harness connector.
8. Measure the resistance between the (Q103) Adjustable Pedals Switch Rearward circuit and the (Z910) Ground circuit at the Adjustable Pedals switch harness connector.

Is the resistance below 10K Ohms for any measurement?

Yes

- Repair all circuits with a resistance below 10K Ohms for a short to one another/to ground or (Z910) Ground circuit.
- Perform APS VERIFICATION TEST. Refer to **APS VERIFICATION TEST**.

No

- Go To 3.

3. **CHECK FOR A SHORTED ADJUSTABLE PEDALS SWITCH**
   1. Remove the Adjustable Pedals Switch in accordance with the Service Information.
   2. Measure the resistance between the (Q102) Adjustable Pedals Switch Forward circuit and the (Q103) Adjustable Pedals Switch Rearward circuit at the Adjustable Pedals Switch (component) connector.
   3. Measure the resistance between the (Q102) Adjustable Pedals Switch Forward circuit and the (Z910) Ground circuit at the Adjustable Pedals Switch (component) connector.
   4. Measure the resistance between the (Q103) Adjustable Pedals Switch Rearward circuit and the (Z910) Ground circuit at the Adjustable Pedals Switch (component) connector.

   Is the resistance below 10K Ohms for any measurement?

   Yes

   - Replace the Adjustable Pedals Switch in accordance with the Service Information.
   - Perform APS VERIFICATION TEST. Refer to **APS VERIFICATION TEST**.

   No

- Replace the Memory Seat Module (MSM) in accordance with the Service Information.
- Perform APS VERIFICATION TEST. Refer to **APS VERIFICATION TEST**.

B1D5C-ADJUSTABLE PEDAL SWITCH CIRCUIT STUCK FORWARD

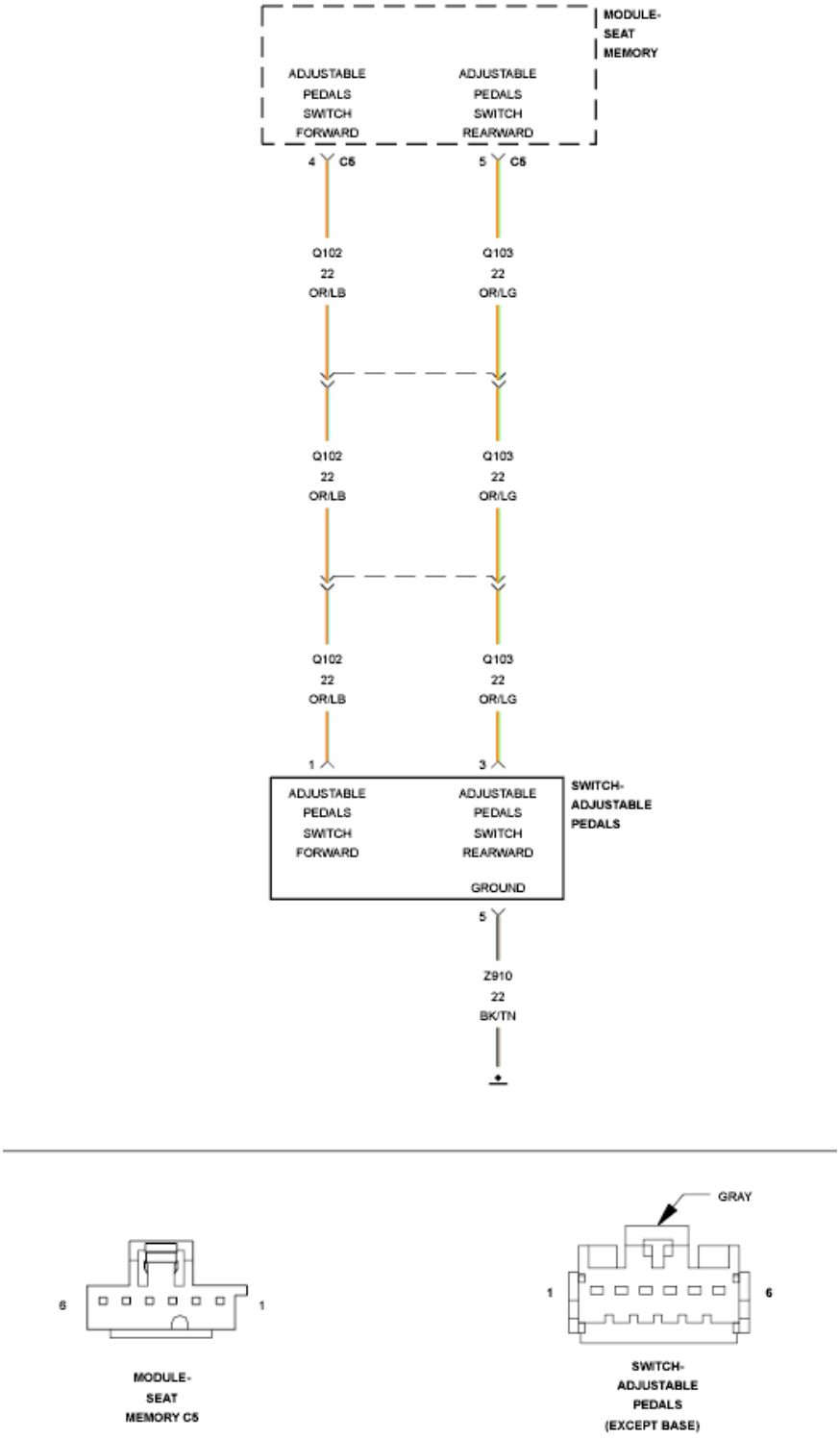

Fig. 12: Adjustable Pedal Switch Wiring Diagram
Courtesy of CHRYSLER GROUP, LLC

For a complete wiring diagram, **refer to appropriate SYSTEM WIRING DIAGRAMS article** .

WHEN MONITORED:

Continuously.

SET CONDITION:

The Memory Seat Module (MSM) detects that the Adjustable Pedals Switch has been activated for more than 50 seconds.

POSSIBLE CAUSES

Possible Causes
OBJECT HOLDING ADJUSTABLE PEDALS SWITCH IN A PUSHED POSITION
SUBSTANCE CAUSING ADJUSTABLE PEDALS SWITCH TO GET STUCK IN A PUSHED POSITION
(Q102) ADJUSTABLE PEDALS SWITCH FORWARD CIRCUIT SHORTED TO GROUND
(Q102) ADJUSTABLE PEDALS SWITCH FORWARD CIRCUIT SHORTED TO THE (Z910) GROUND CIRCUIT
ADJUSTABLE PEDALS SWITCH
MEMORY SEAT MODULE (MSM)

DIAGNOSTIC TEST

1. **INSPECT THE ADJUSTABLE PEDALS SWITCH FOR DAMAGE**
    1. Turn the ignition off.
    2. Inspect the Adjustable Pedals switch for damage.

       Is the switch damaged?

       Yes

       - Replace the Adjustable Pedals switch in accordance with the Service Information.
       - Perform APS VERIFICATION TEST. Refer to **APS VERIFICATION TEST**.

       No

       - Go To 2.
2. **INSPECT FOR OBJECT OR SUBSTANCE CAUSING THE ADJUSTABLE PEDALS SWITCH TO STAY OR STICK IN A PUSHED POSITION**
    1. Inspect the Adjustable Pedals switch for anything that would cause it to stay or stick in a pushed position.

       Is anything present that would cause the Adjustable Pedals switch to stay or stick in a pushed position?

Yes

- Repair as necessary.
- Perform the APS VERIFICATION TEST. Refer to **STANDARD PROCEDURE**.

No

- Go To 3.

3. **TEST FOR INTERMITTENT CONDITION**
   1. Turn the ignition on.
   2. Using a scan tool, record and erase Diagnostic Trouble Codes (DTC's).
   3. Cycle the ignition from on to off.
   4. Turn the ignition on.
   5. Operate the Adjustable Pedals switch in both directions then wait one minute.
   6. With the scan tool, read DTC's.

   Does the scan tool display DTC B1D5-ADJUSTABLE PEDAL SWITCH CIRCUIT STUCK FORWARD?

   Yes

   - Go To 4.

   No

   - The conditions that caused this code to set are not present at this time. Perform the APS INTERMITTENT CONDITION TEST. Refer to **APS INTERMITTENT CONDITION TEST**.

4. **CHECK THE (Q102) ADJUSTABLE PEDALS SWITCH FORWARD CIRCUIT FOR A SHORT TO GROUND**

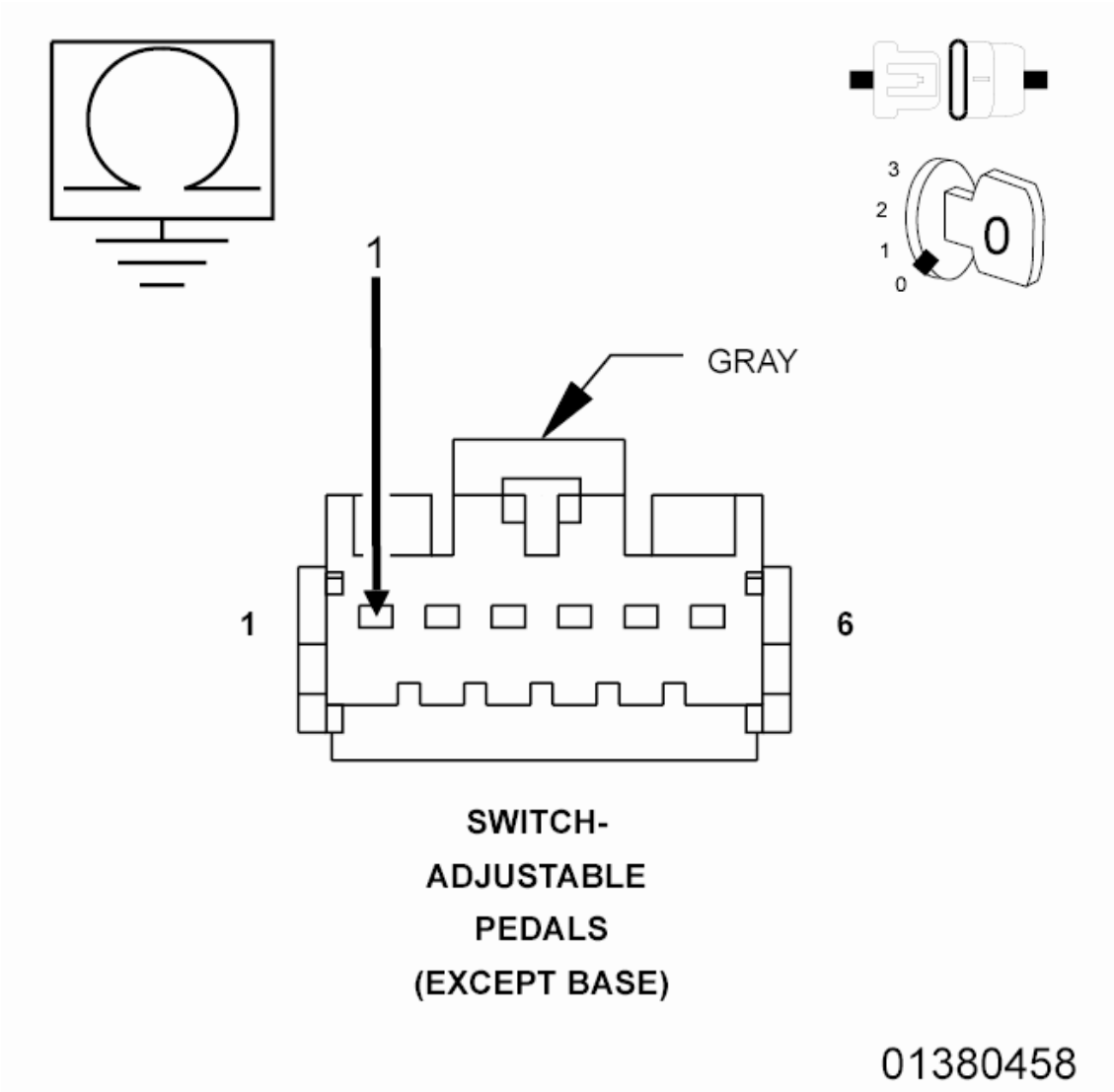

Fig. 13: Checking Adjustable Pedals Switch Forward Circuit For A Short To Ground
Courtesy of CHRYSLER GROUP, LLC

1. Turn the ignition off.
2. Disconnect the MSM C5 harness connector.
3. Disconnect the Adjustable Pedals switch harness connector.

NOTE: Check connectors. Clean and repair as necessary.

4. Measure the resistance of the (Q102) Adjustable Pedals Switch Forward circuit between ground and the Adjustable Pedals switch harness connector.

   Is the resistance below 10K Ohms?

   Yes

- Repair the (Q102) Adjustable Pedals Switch Forward circuit for a short to ground.
- Perform APS VERIFICATION TEST. Refer to **APS VERIFICATION TEST**.

No

- Go To 5.

5. **CHECK THE (Q102) ADJUSTABLE PEDALS SWITCH FORWARD CIRCUIT FOR A SHORT TO THE (Z910) GROUND CIRCUIT**

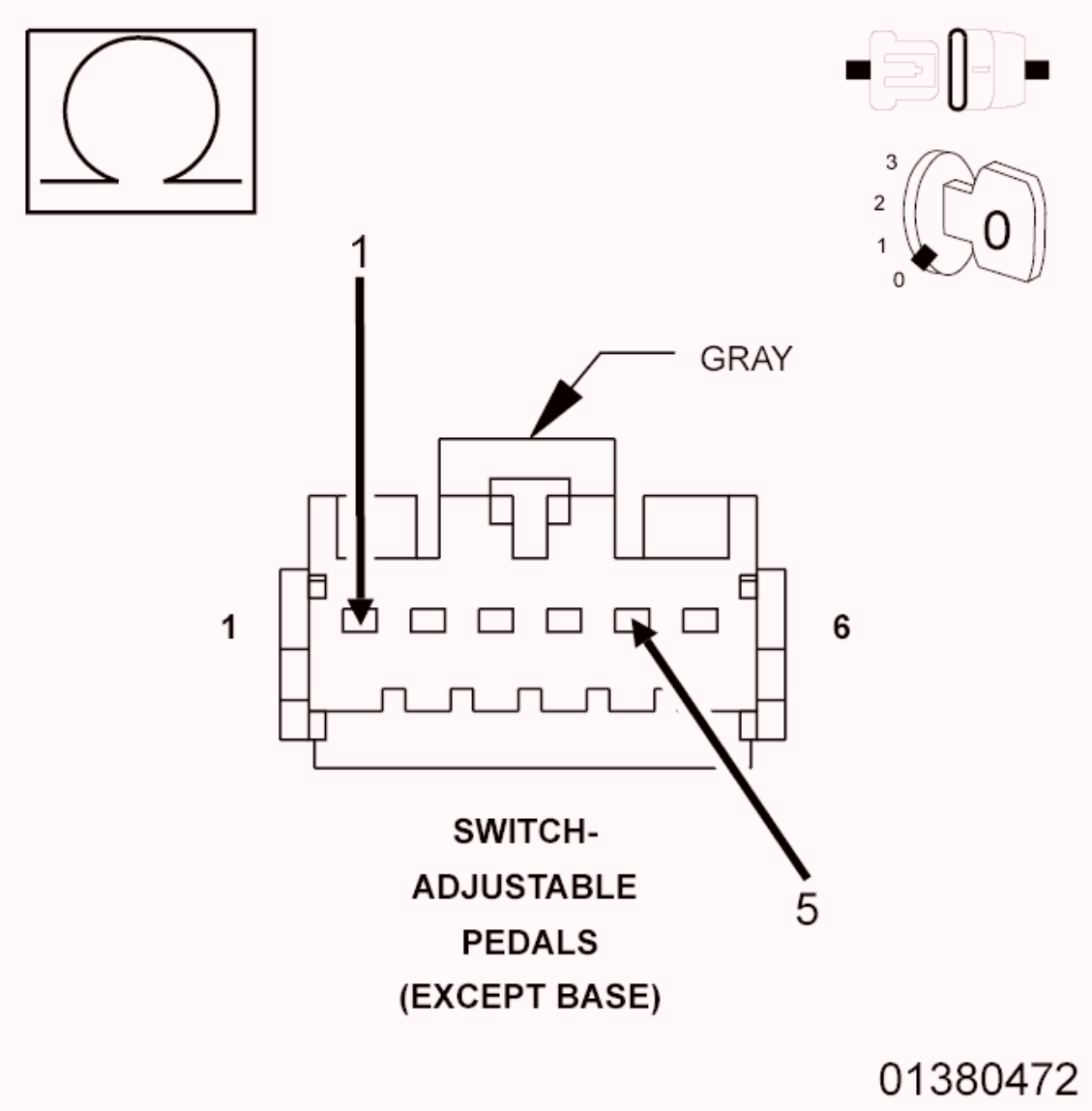

Fig. 14: Checking Adjustable Pedals Switch Forward Circuit For A Short To The Ground Circuit
Courtesy of CHRYSLER GROUP, LLC

1. Measure the resistance between the (Q102) Adjustable Pedals Switch Forward circuit and the (Z910) Ground circuit at the Adjustable Pedals switch harness connector.

Is the resistance below 10K Ohms?

Yes

- Repair the short between the (Q102) Adjustable Pedals Switch Forward circuit and the (Z910) Ground circuit.
- Perform APS VERIFICATION TEST. Refer to **APS VERIFICATION TEST**.

No

- Go To 6.

6. **CHECK FOR A SHORTED ADJUSTABLE PEDALS SWITCH**

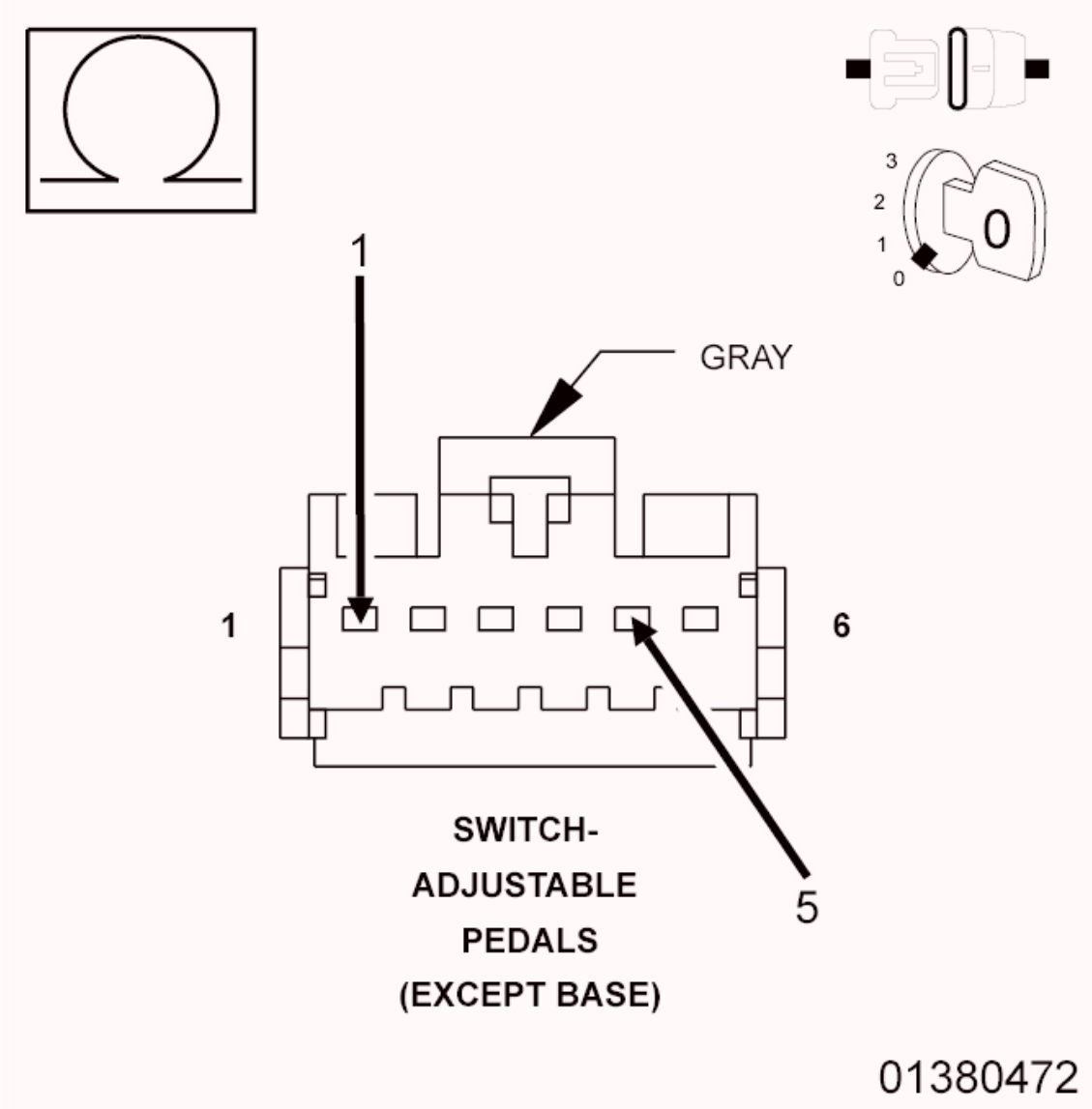

Fig. 15: Checking Adjustable Pedals Switch Forward Circuit For A Short To The Ground Circuit
Courtesy of CHRYSLER GROUP, LLC

1. Remove the Adjustable Pedals Switch in accordance with the Service Information.

   NOTE: Adjustable Pedals Switch (harness) connector shown in illustration. Mirror image for Adjustable Pedals Switch (component) connector.

2. Measure the resistance between the (Q102) Adjustable Pedals Switch Forward circuit and the (Z910) Ground circuit at the Adjustable Pedals Switch (component) connector.

   Is the resistance below 10K Ohms?

   Yes

   - Replace the Adjustable Pedals Switch in accordance with the Service Information.
   - Perform APS VERIFICATION TEST. Refer to **APS VERIFICATION TEST**.

   No

   - Replace the Memory Seat Module (MSM) in accordance with the Service Information.
   - Perform APS VERIFICATION TEST. Refer to **APS VERIFICATION TEST**.

B1D5D-ADJUSTABLE PEDAL SWITCH CIRCUIT STUCK REARWARD

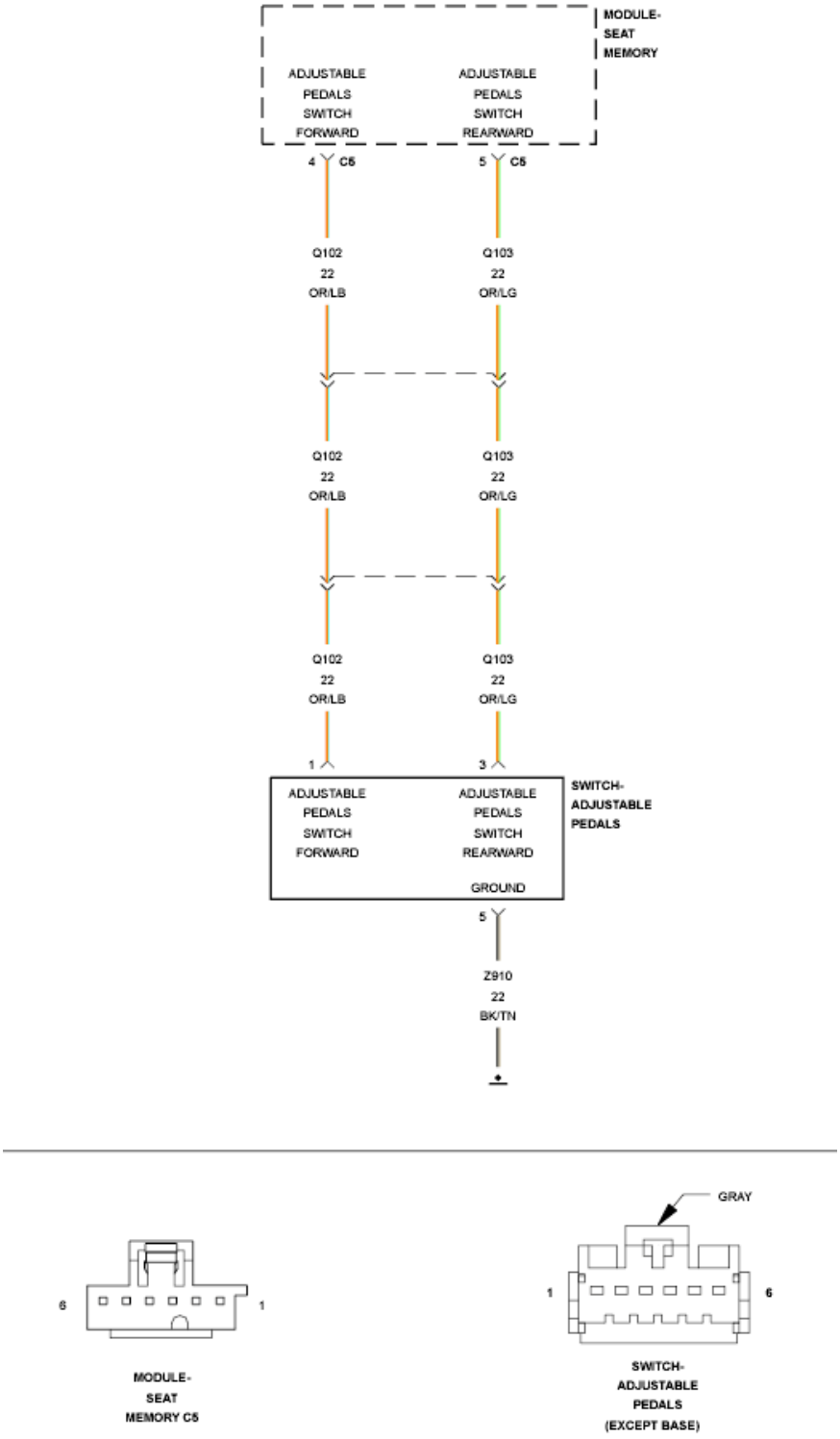

Fig. 16: Adjustable Pedal Switch Wiring Diagram
Courtesy of CHRYSLER GROUP, LLC

For a complete wiring diagram, **refer to appropriate SYSTEM WIRING DIAGRAMS article** .

WHEN MONITORED:

Continuously.

SET CONDITION:

The Memory Seat Module (MSM) detects that the Adjustable Pedals Switch has been activated for more than 50 seconds.

POSSIBLE CAUSES

Possible Causes
OBJECT HOLDING ADJUSTABLE PEDALS SWITCH IN A PUSHED POSITION
SUBSTANCE CAUSING ADJUSTABLE PEDALS SWITCH TO GET STUCK IN A PUSHED POSITION
(Q103) ADJUSTABLE PEDALS SWITCH REARWARD CIRCUIT SHORTED TO GROUND
(Q103) ADJUSTABLE PEDALS SWITCH REARWARD CIRCUIT SHORTED TO (Z910) GROUND CIRCUIT
ADJUSTABLE PEDALS SWITCH
MEMORY SEAT MODULE (MSM)

DIAGNOSTIC TEST

1. **INSPECT THE ADJUSTABLE PEDALS SWITCH FOR DAMAGE**
    1. Turn the ignition off.
    2. Inspect the Adjustable Pedals switch for damage.

       Is the switch damaged?

       Yes

       - Replace the Adjustable Pedals switch in accordance with the Service Information.
       - Perform APS VERIFICATION TEST. Refer to **APS VERIFICATION TEST**.

       No

       - Go To 2.
2. **INSPECT FOR OBJECT OR SUBSTANCE CAUSING THE ADJUSTABLE PEDALS SWITCH TO STAY OR STICK IN A PUSHED POSITION**
    1. Inspect the Adjustable Pedals switch for anything that would cause it to stay or stick in a pushed position.

       Is anything present that would cause the Adjustable Pedals switch to stay or stick in a pushed position?

Yes

- Repair as necessary.
- Perform APS VERIFICATION TEST. Refer to **APS VERIFICATION TEST**.

No

- Go To 3.

3. **TEST FOR INTERMITTENT CONDITION**
   1. Turn the ignition on.
   2. Using a scan tool, record and erase Diagnostic Trouble Codes (DTC's).
   3. Cycle the ignition from on to off.
   4. Turn the ignition on.
   5. Operate the Adjustable Pedals switch in both directions then wait one minute.
   6. With the scan tool, read DTC's.

   Does the scan tool display DTC B1D5D-ADJUSTABLE PEDAL SWITCH CIRCUIT STUCK REARWARD?

   Yes

   - Go To 4.

   No

   - The conditions that caused this code to set are not present at this time. Perform the APS INTERMITTENT CONDITION TEST. Refer to **APS INTERMITTENT CONDITION TEST**.

4. **CHECK THE (Q103) ADJUSTABLE PEDALS SWITCH REARWARD CIRCUIT FOR A SHORT TO GROUND**

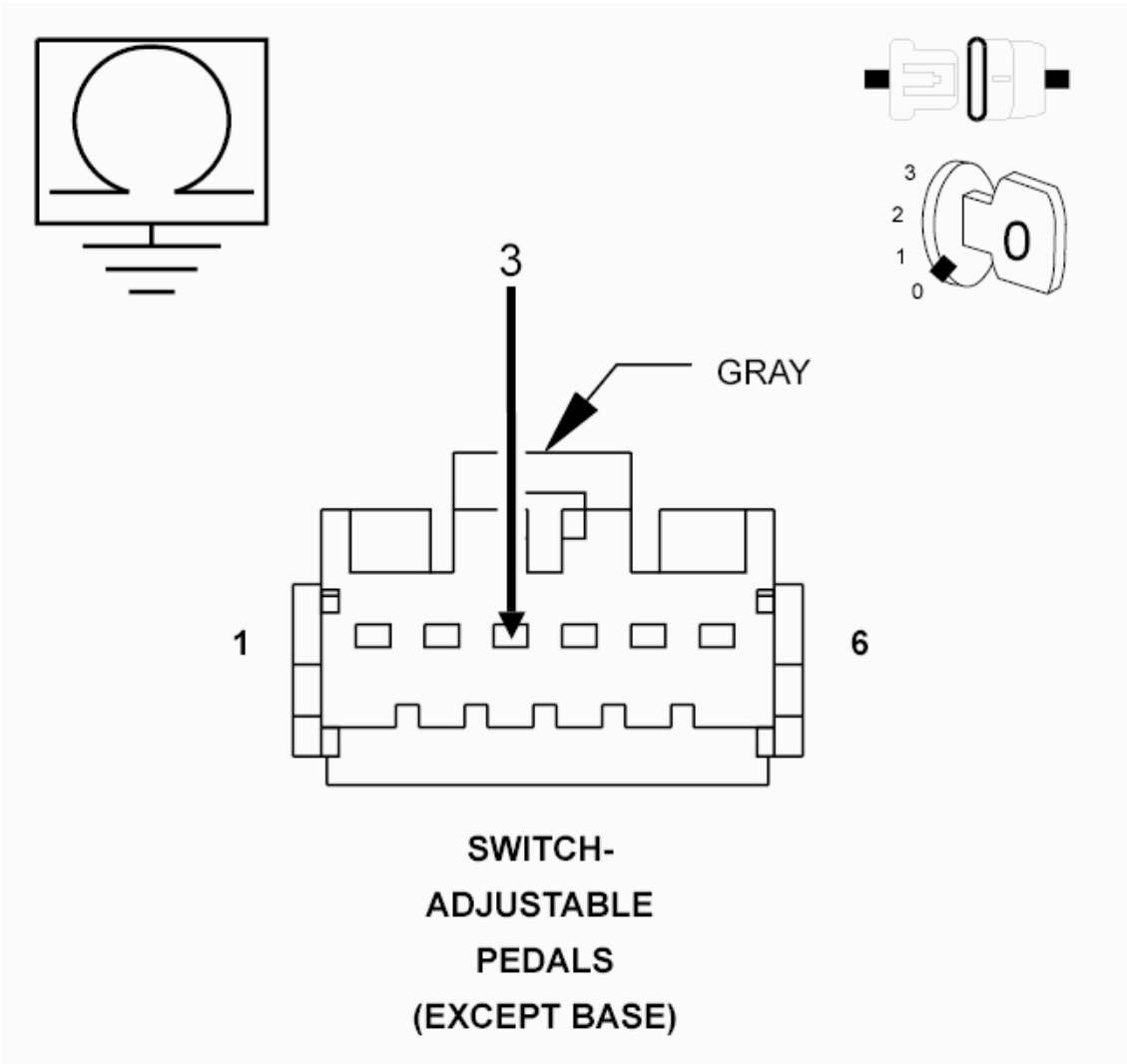

Fig. 17: Checking Adjustable Pedals Switch Rearward Circuit For A Short To Ground
Courtesy of CHRYSLER GROUP, LLC

1. Turn the ignition off.
2. Disconnect the MSM C5 harness connector.
3. Disconnect the Adjustable Pedals switch harness connector.

NOTE: Check connectors. Clean and repair as necessary.

4. Measure the resistance of the (Q103) Adjustable Pedals Switch Rearward circuit between ground and the Adjustable Pedals switch harness connector.

   Is the resistance below 10K Ohms?

   Yes

   - Repair the (Q103) Adjustable Pedals Switch Rearward circuit for a short to ground.

- Perform APS VERIFICATION TEST. Refer to **APS VERIFICATION TEST**.

No

- Go To 5.

5. **CHECK THE (Q103) ADJUSTABLE PEDALS SWITCH REARWARD CIRCUIT FOR A SHORT TO THE (Z910) GROUND CIRCUIT**

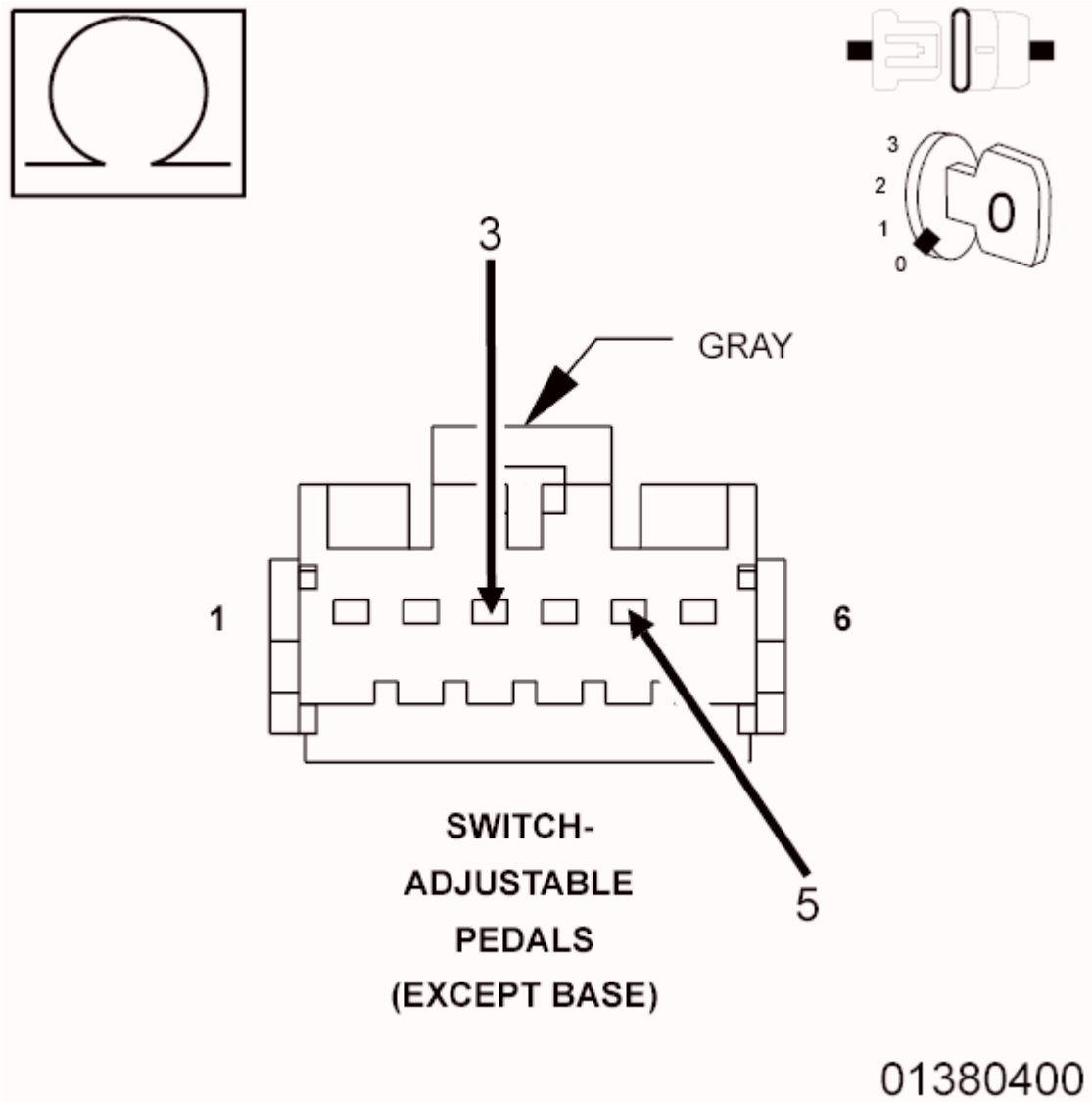

Fig. 18: Checking Adjustable Pedals Switch Rearward Circuit For A Short To The Ground Circuit
Courtesy of CHRYSLER GROUP, LLC

1. Measure the resistance between the (Q103) Adjustable Pedals Switch Rearward circuit and the (Z910) Ground circuit at the Adjustable Pedals switch connector.

   Is the resistance below 10K Ohms?

Yes

- Repair the (Q103) Adjustable Pedals Switch Rearward circuit for a short to the (Z910) Ground circuit.
- Perform APS VERIFICATION TEST. Refer to **APS VERIFICATION TEST**.

No

- Go To 6.

6. **CHECK FOR A SHORTED ADJUSTABLE PEDALS SWITCH**

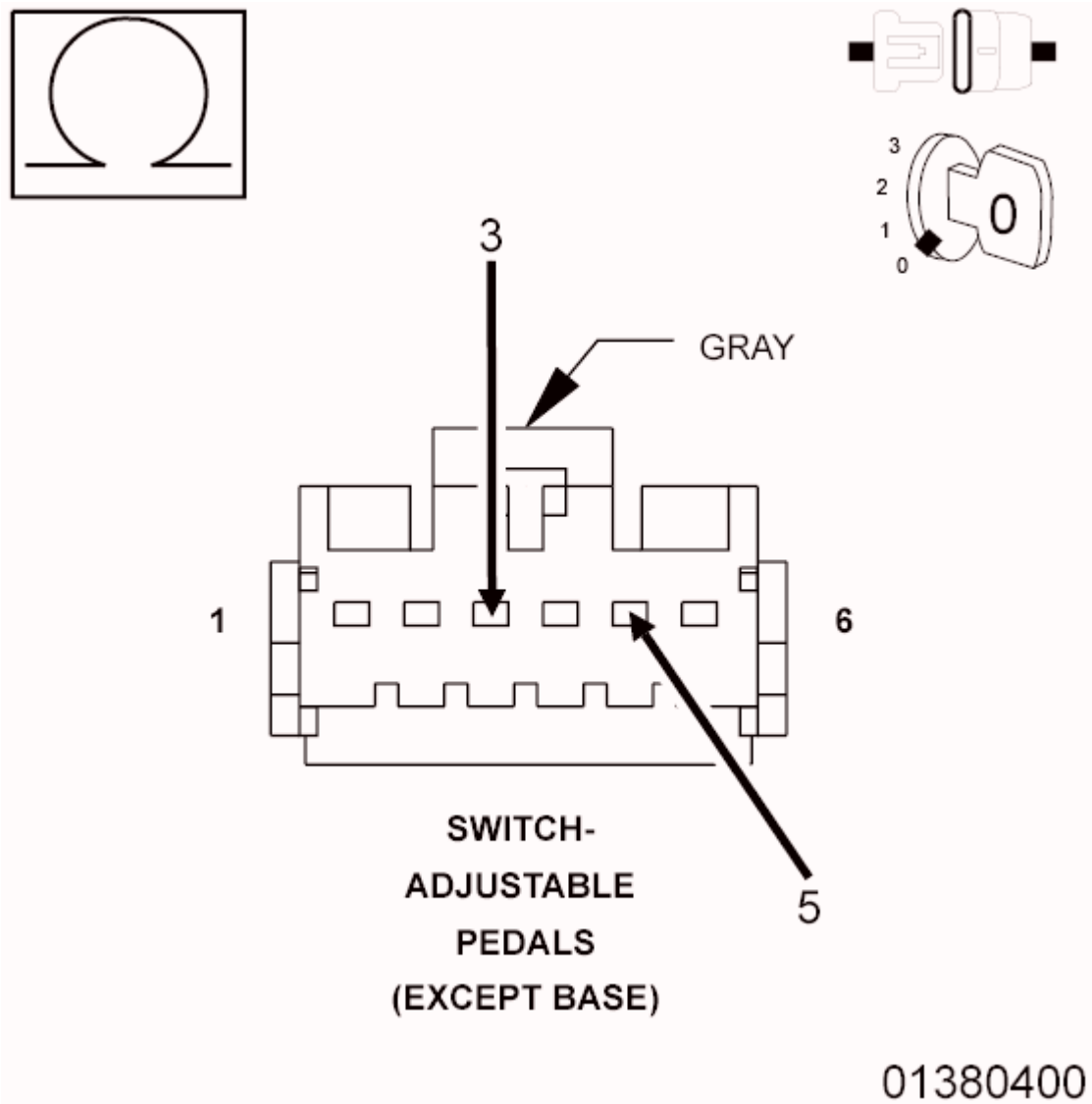

Fig. 19: Checking Adjustable Pedals Switch Rearward Circuit For A Short To The Ground Circuit
Courtesy of CHRYSLER GROUP, LLC

1. Remove the Adjustable Pedals Switch in accordance with the Service Information.

NOTE: **Adjustable Pedals Switch (harness) connector shown in illustration. Mirror image for Adjustable Pedals Switch (component) connector.**

2. Measure the resistance between the (Q103) Adjustable Pedals Switch Rearward circuit and the (Z910) Ground circuit at the Adjustable Pedals Switch (component) connector.

   Is the resistance below 10K Ohms?

   Yes

   - Replace the Adjustable Pedals Switch in accordance with the Service Information.
   - Perform APS VERIFICATION TEST. Refer to **APS VERIFICATION TEST**.

   No

   - Replace the Memory Seat Module (MSM) in accordance with the Service Information.
   - Perform APS VERIFICATION TEST. Refer to **APS VERIFICATION TEST**.

B1D62-POWER SEAT SWITCH STUCK

For a complete wiring diagram, **refer to appropriate SYSTEM WIRING DIAGRAMS article** .

WHEN MONITORED:

Continuously.

SET CONDITION:

When the Memory Seat Module (MSM) detects the Driver Seat Switch engaged in an active position for more than 50 seconds.

POSSIBLE CAUSES

Possible Causes
OBJECT HOLDING DRIVER SEAT SWITCH IN A PUSHED POSITION
SUBSTANCE CAUSING DRIVER SEAT SWITCH TO GET STUCK IN A PUSHED POSITION
DRIVER SEAT SWITCH

DIAGNOSTIC TEST

1. **INSPECT DRIVER SEAT SWITCH FOR DAMAGE**
   1. Turn the ignition off.
   2. Inspect the Driver Seat Switch for damage.

      Is the switch damaged?

Yes

- Replace the Driver Seat Switch in accordance with the Service Information.
- Perform POWER SEAT SYSTEM VERIFICATION TEST. Refer to **POWER SEAT SYSTEM VERIFICATION TEST**.

No

- Go To 2.

2. **INSPECT FOR OBJECT OR SUBSTANCE CAUSING DRIVER SEAT SWITCH TO STAY OR STICK IN A PUSHED POSITION**
   1. Inspect the Driver Seat Switch for anything that would cause it to stay or stick in a pushed position.

      Is anything present that would cause the switch to stay or stick in a pushed position?

      Yes

      - Repair as necessary.
      - Perform POWER SEAT SYSTEM VERIFICATION TEST. Refer to **POWER SEAT SYSTEM VERIFICATION TEST**.

      No

      - Go To 3.

3. **TEST FOR INTERMITTENT CONDITION**
   1. Turn the ignition on.
   2. Using a scan tool, record and erase Diagnostic Trouble Codes (DTC's).
   3. Press the Driver Seat Switch in all directions several times then wait one minute.
   4. Using a scan tool, read DTC's.

      Does the scan tool display DTC B1D62-POWER SEAT SWITCH STUCK?

      Yes

      - Replace the Driver Seat Switch in accordance with the Service Information.
      - Perform POWER SEAT SYSTEM VERIFICATION TEST. Refer to **POWER SEAT SYSTEM VERIFICATION TEST**.

      No

      - The conditions that caused this code to set are not present at this time. Verify seat harness is routed correctly. Using the wiring diagram/schematic as a guide, inspect the wiring and connectors. Look for chafed, pierced, pinched, or partially broken wires and broken, bent, pushed out, spread, corroded, or contaminated terminals.

- Perform POWER SEAT SYSTEM VERIFICATION TEST. Refer to **POWER SEAT SYSTEM VERIFICATION TEST**.

B1D63-POWER SEAT SWITCH OPEN

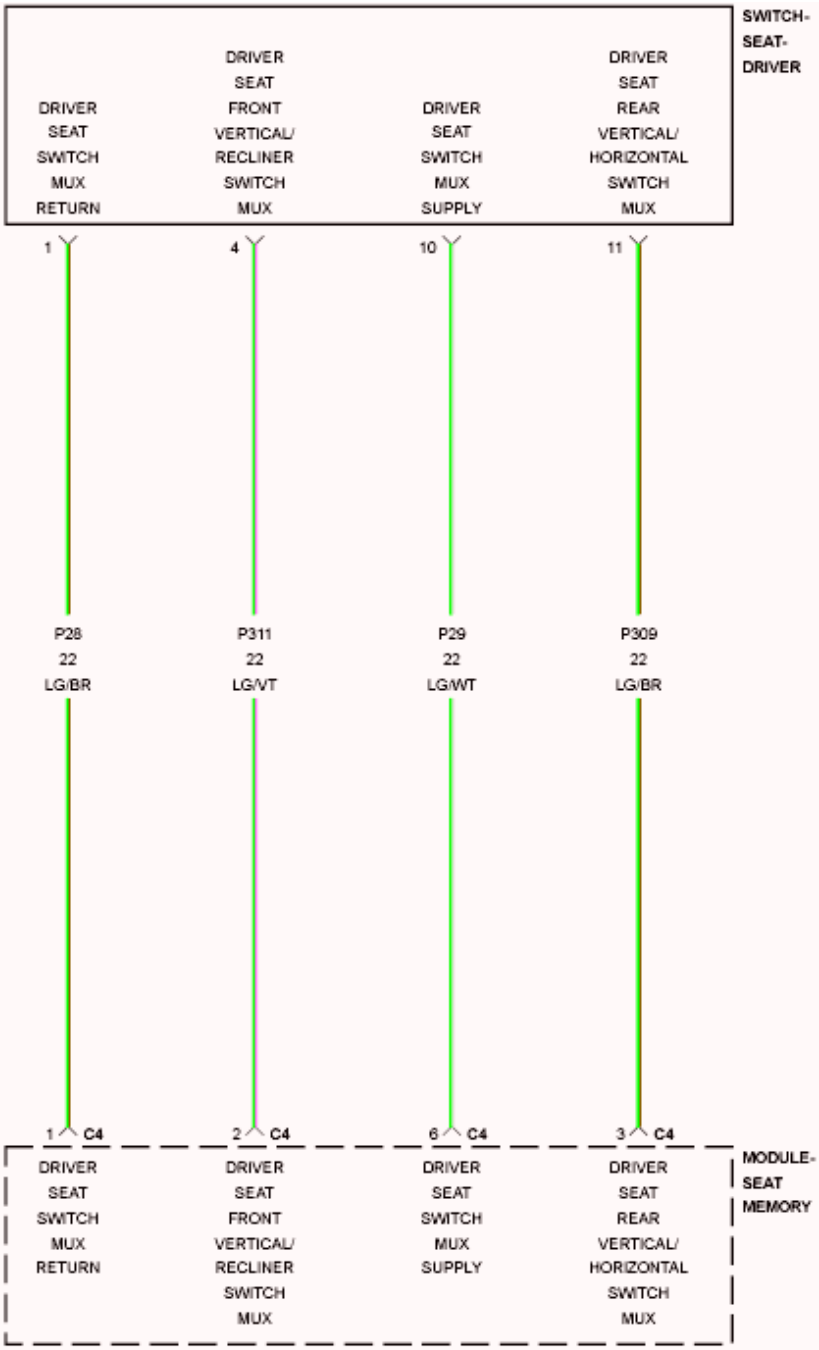
SWITCH-
SEAT-
DRIVER
DRIVER SEAT SWITCH MUX RETURN
DRIVER SEAT FRONT VERTICAL/ RECLINER SWITCH MUX
DRIVER SEAT SWITCH MUX SUPPLY
DRIVER SEAT REAR VERTICAL/ HORIZONTAL SWITCH MUX
1
4
10
11
P28
22
LG/BR
P311
22
LG/VT
P29
22
LG/WT
P309
22
LG/BR
1 C4
2 C4
6 C4
3 C4
MODULE-
SEAT
MEMORY
DRIVER SEAT SWITCH MUX RETURN
DRIVER SEAT FRONT VERTICAL/ RECLINER SWITCH MUX
DRIVER SEAT SWITCH MUX SUPPLY
DRIVER SEAT REAR VERTICAL/ HORIZONTAL SWITCH MUX

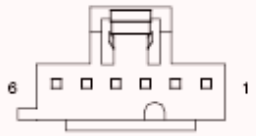
6
1

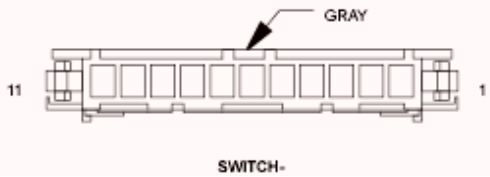
GRAY
11
1
SWITCH-

Fig. 20: Power Seat Switch Wiring Diagram
Courtesy of CHRYSLER GROUP, LLC

For a complete wiring diagram, **refer to appropriate SYSTEM WIRING DIAGRAMS article** .

WHEN MONITORED:

Continuously.

SET CONDITION:

When the Memory Seat Module (MSM) detects an open Driver Seat Switch MUX circuit.

POSSIBLE CAUSES

Possible Causes
(P309) DRIVER SEAT REAR VERTICAL/HORIZONTAL SWITCH MUX CIRCUIT OPEN
(P311) DRIVER SEAT FRONT VERTICAL/RECLINER SWITCH MUX CIRCUIT OPEN
(P28) DRIVER SEAT SWITCH MUX RETURN CIRCUIT OPEN
DRIVER SEAT SWITCH
MEMORY SEAT MODULE (MSM)

DIAGNOSTIC TEST

1. **TEST FOR INTERMITTENT CONDITION**
    1. Turn the ignition on.
    2. Using a scan tool, record and erase Diagnostic Trouble Codes (DTC's).
    3. Press the seat switch in all directions several times then wait one minute.
    4. Using a scan tool, read DTC's.

    Does the scan tool display DTC B1D63-POWER SEAT SWITCH OPEN?

    Yes

    - Go To 2.

    No

    - The conditions that caused this code to set are not present at this time. Verify seat harness is routed correctly. Using the wiring diagram/schematic as a guide, inspect the wiring and connectors. Look for chafed, pierced, pinched, or partially broken wires and broken, bent, pushed out, spread, corroded, or contaminated terminals.
    - Perform POWER SEAT SYSTEM VERIFICATION TEST. Refer to **POWER SEAT SYSTEM VERIFICATION TEST**.
2. **CHECK THE (P309) DRIVER SEAT REAR VERTICAL/HORIZONTAL SWITCH MUX**

CIRCUIT RESISTANCE

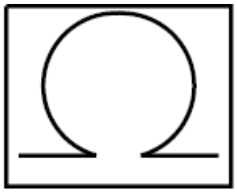

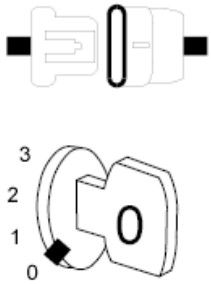

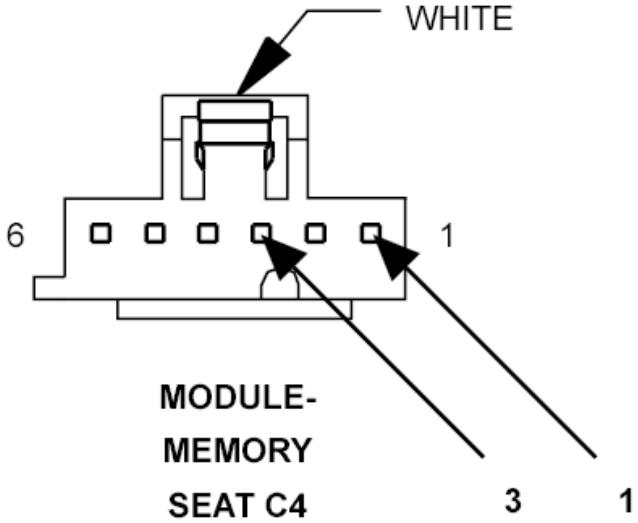

13696

Fig. 21: Checking Driver Seat Rear Vertical/Horizontal Switch Mux Circuit Resistance
Courtesy of CHRYSLER GROUP, LLC

1. Turn the ignition off.
2. Disconnect the Memory Seat Module C4 connector.

NOTE: Check connectors. Clean and repair as necessary.

3. Measure the resistance between the (P309) Driver Seat Rear Vertical/Horizontal Switch MUX circuit and the (P28) Driver Seat Switch MUX Return circuit at the Memory Seat Module C4 connector.

   Is the resistance 47.0 Ohms + or - 1.0?

   Yes

- Go To 3.

No

- Go To 5.

3. **CHECK THE (P311) DRIVER SEAT FRONT VERTICAL/RECLINER SWITCH MUX CIRCUIT RESISTANCE**

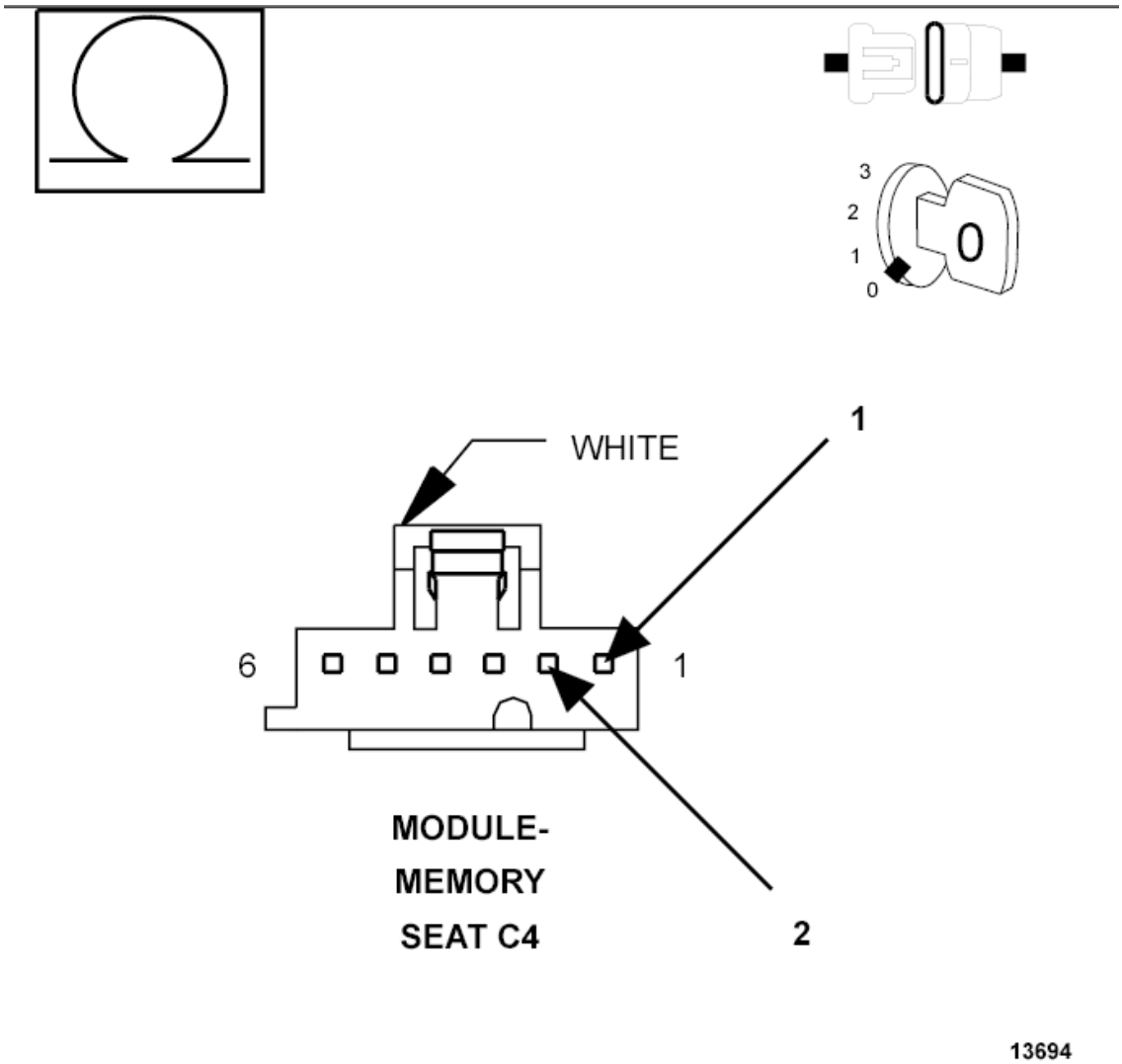

Fig. 22: Checking Driver Seat Front Vertical/Recliner Switch Mux Circuit Resistance
Courtesy of CHRYSLER GROUP, LLC

1. Measure the resistance between the (P311) Driver Seat Front Vertical/Recliner Switch MUX circuit and the (P28) Driver Seat Switch MUX Return circuit at the Memory Seat Module C4 connector.

   Is the resistance 47.0 Ohms + or - 1.0?

   Yes

- Replace the Memory Seat Module (MSM) in accordance with the Service Information.
- Perform POWER SEAT SYSTEM VERIFICATION TEST. Refer to **POWER SEAT SYSTEM VERIFICATION TEST**.

No

- Go To 4.

4. **CHECK THE (P311) DRIVER SEAT FRONT VERTICAL/RECLINER SWITCH MUX CIRCUIT FOR AN OPEN**

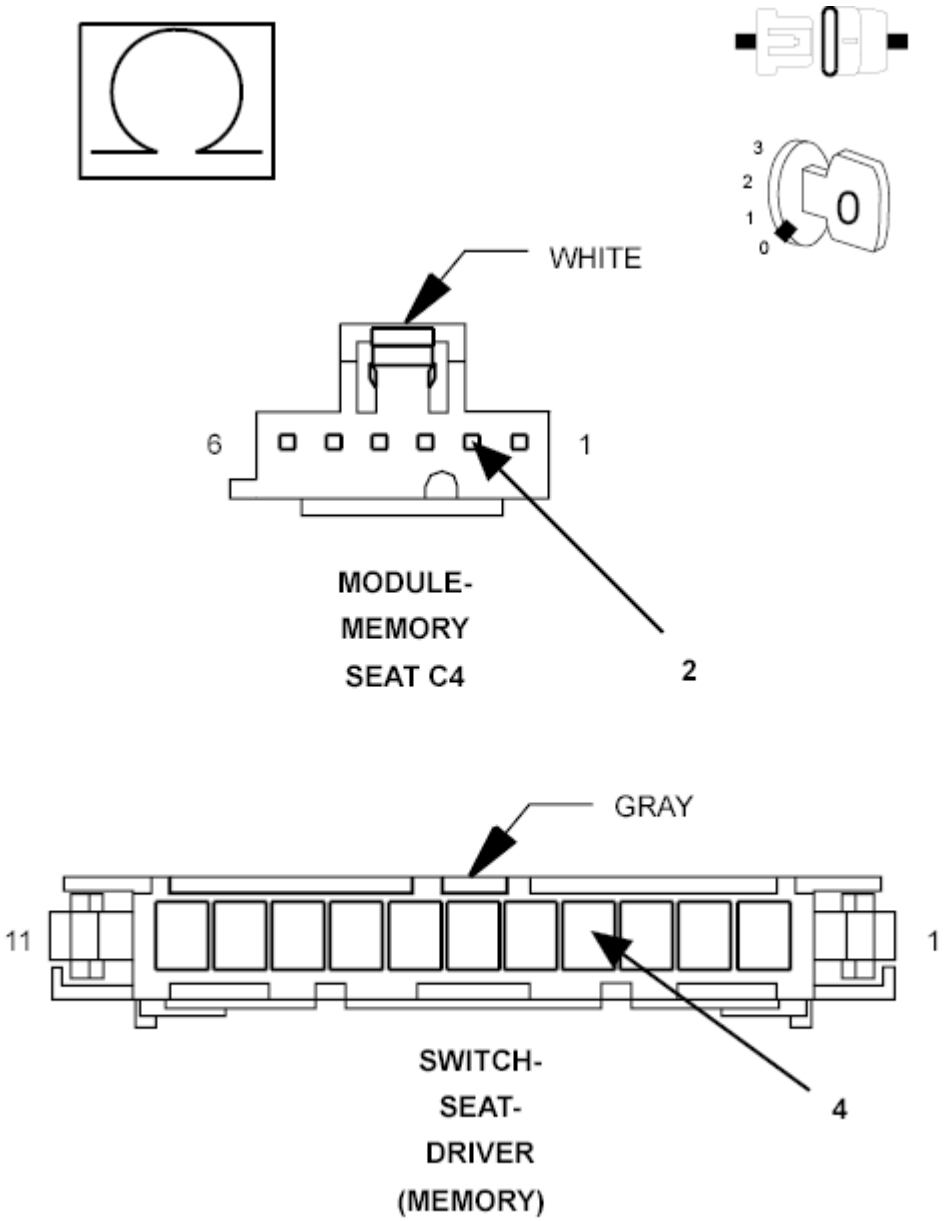

Fig. 23: Checking Driver Seat Front Vertical/Recliner Switch Mux Circuit For An Open
Courtesy of CHRYSLER GROUP, LLC

1. Disconnect the Driver Seat Switch connector.

   NOTE: Check connectors. Clean and repair as necessary.

2. Measure the resistance of the (P311) Driver Seat Front Vertical/Recliner Switch MUX circuit between the Memory Seat Module C4 connector and the Driver Seat Switch connector.

   Is the resistance below 5.0 Ohms?

   Yes

   - Replace the Driver Seat Switch in accordance with the Service Information.
   - Perform POWER SEAT SYSTEM VERIFICATION TEST. Refer to **POWER SEAT SYSTEM VERIFICATION TEST**.

   No

   - Repair the (P311) Driver Seat Front Vertical/Recliner Switch MUX circuit for an open.
   - Perform POWER SEAT SYSTEM VERIFICATION TEST. Refer to **POWER SEAT SYSTEM VERIFICATION TEST**.

5. **CHECK THE (P309) DRIVER SEAT REAR VERTICAL/HORIZONTAL SWITCH MUX CIRCUIT FOR AN OPEN**

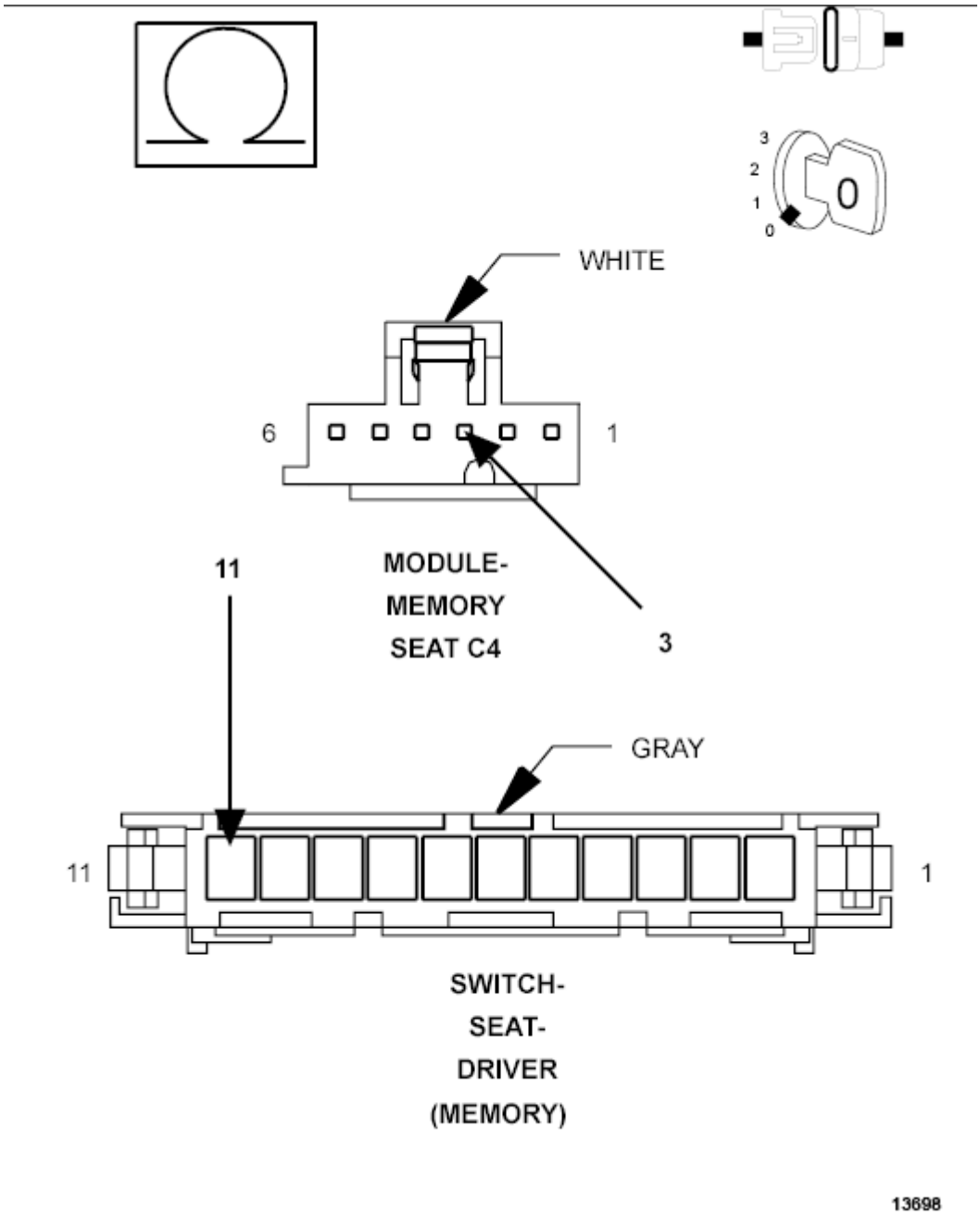

Fig. 24: Checking Driver Seat Rear Vertical/Horizontal Switch Mux Circuit For An Open
Courtesy of CHRYSLER GROUP, LLC

1. Measure the resistance of the (P309) Driver Seat Rear Vertical/Horizontal Switch MUX circuit between the Memory Seat Module C4 connector and the Driver Seat Switch connector.

   Is the resistance below 5.0 Ohms?

   Yes

   - Go To 6.

No

- Repair the (P309) Driver Seat Rear Vertical/Horizontal Switch MUX circuit for an open.
- Perform POWER SEAT SYSTEM VERIFICATION TEST. Refer to **POWER SEAT SYSTEM VERIFICATION TEST**.

6. **CHECK THE (P28) DRIVER SEAT SWITCH MUX RETURN CIRCUIT FOR AN OPEN**

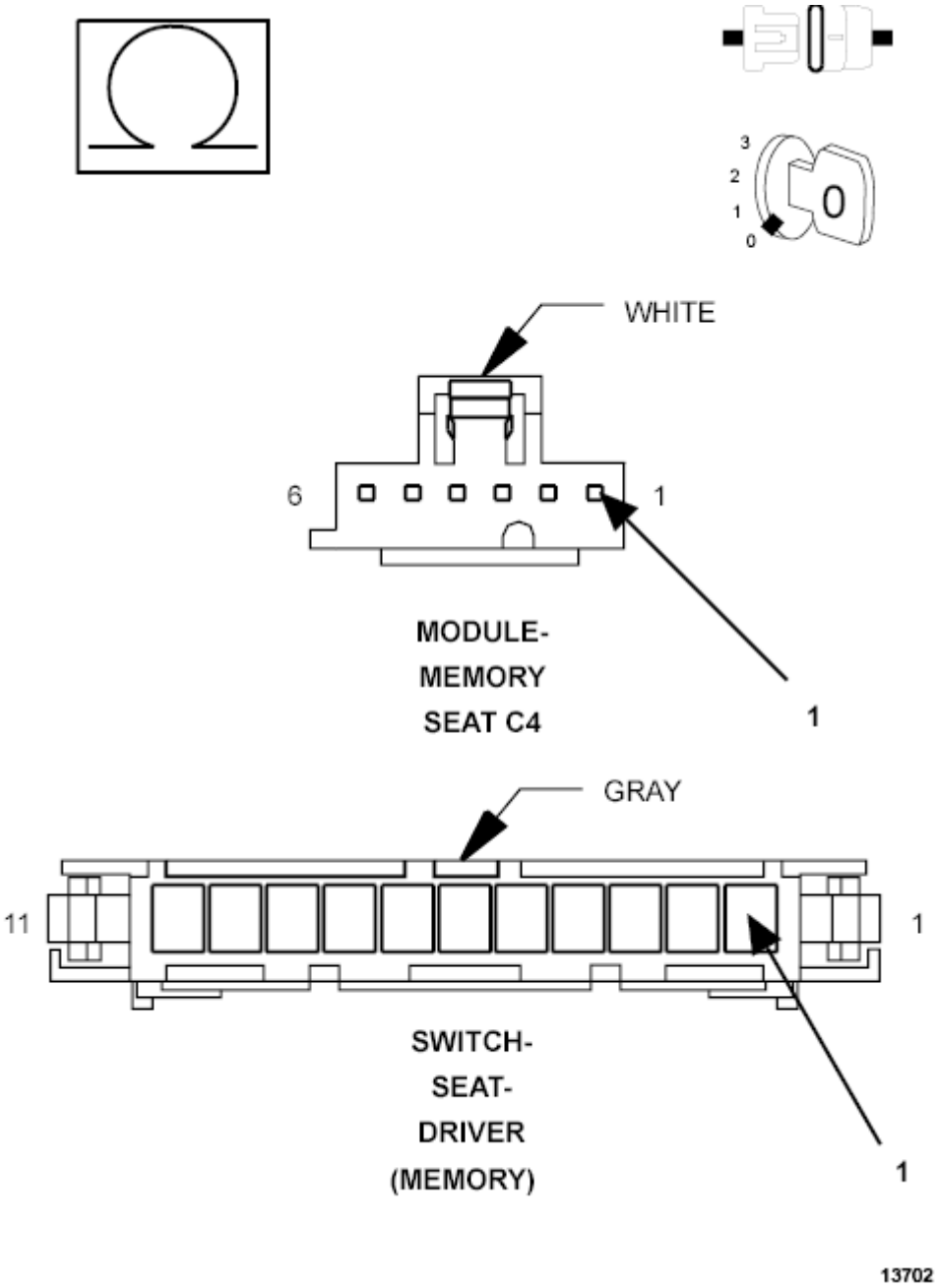

Fig. 25: Checking Driver Seat Switch Mux Return Circuit For An Open
Courtesy of CHRYSLER GROUP, LLC

1. Measure the resistance of the (P28) Driver Seat Switch MUX Return circuit between the Memory

Seat Module C4 connector and the Driver Seat Switch connector.

Is the resistance below 5.0 Ohms?

Yes

- Replace the Driver Seat Switch in accordance with the Service Information.
- Perform POWER SEAT SYSTEM VERIFICATION TEST. Refer to **POWER SEAT SYSTEM VERIFICATION TEST**.

No

- Repair the (P28) Driver Seat Switch MUX Return circuit for an open.
- Perform POWER SEAT SYSTEM VERIFICATION TEST. Refer to **POWER SEAT SYSTEM VERIFICATION TEST**.

B1D67-ADJUSTABLE PEDAL CONTROL CIRCUIT PERFORMANCE

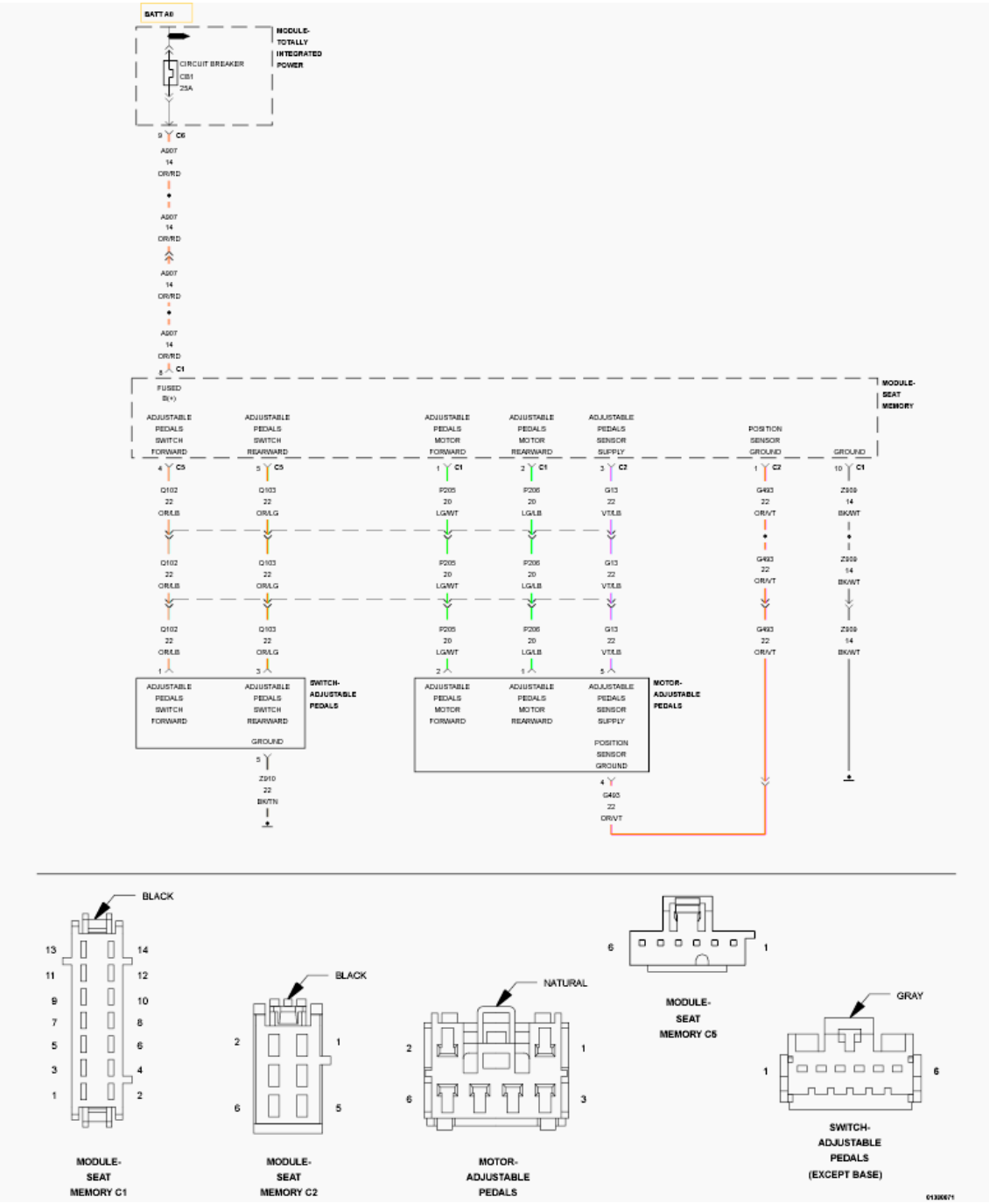

Fig. 26: Adjustable Pedal Sensor Wiring Diagram
Courtesy of CHRYSLER GROUP, LLC

For a complete wiring diagram, **refer to appropriate SYSTEM WIRING DIAGRAMS article** .

WHEN MONITORED:

Continuously.

SET CONDITION:

The Adjustable Pedals switch is pressed three times in opposite directions (e.g. either, forward, rearward, forward, or rearward, forward, rearward) and each switch activation is for at least one second and the Memory Seat Module (MSM) does not detect Adjustable Pedals Motor rotation in either direction.

POSSIBLE CAUSES

Possible Causes
ADJUSTABLE PEDALS ASSEMBLY DAMAGED
OBSTRUCTION IN PATH OF ADJUSTABLE PEDALS
(P205) ADJUSTABLE PEDALS MOTOR FORWARD CIRCUIT OPEN
(P206) ADJUSTABLE PEDALS MOTOR REARWARD CIRCUIT OPEN
ADJUSTABLE PEDALS SENSOR
ADJUSTABLE PEDALS MOTOR
MEMORY SEAT MODULE (MSM)

DIAGNOSTIC TEST

1. **INSPECT THE ADJUSTABLE PEDALS ASSEMBLY FOR DAMAGE**

   NOTE: If present, diagnose and repair Diagnostic Trouble Code (DTC) B1D56-Adjustable Pedal Sensor Circuit Low or B1D57-Adjustable Pedal Sensor Circuit High before proceeding.

   1. Turn the ignition off.
   2. Inspect the Adjustable Pedals assembly for damage.

      Is the assembly damaged?

      Yes

      - Replace the Adjustable Pedals assembly in accordance with the Service Information.
      - Perform APS VERIFICATION TEST. Refer to **APS VERIFICATION TEST**.

      No

      - Go To 2.
2. **INSPECT FOR OBSTRUCTION IN PATH OF ADJUSTABLE PEDALS**
   1. Inspect for anything that would prevent the Adjustable Pedals from moving to each end-stop.

      Is anything present that would prevent the Adjustable Pedals from moving to each end-stop?

      Yes

- Repair as necessary.
- Perform APS VERIFICATION TEST. Refer to **APS VERIFICATION TEST**.

No

- Go To 3.

3. **TEST FOR INTERMITTENT CONDITION**
   1. Turn the ignition on.
   2. Using a scan tool, record and erase DTC's.
   3. Cycle the ignition from on to off.
   4. Turn the ignition on.

      NOTE: Do not adjust the pedals against an end-stop when performing the following.

   5. Press the Adjustable Pedals switch in one direction for at least one second then release the switch. Repeat three times consecutively, but press the switch in the opposite direction each time.
   6. Using a scan tool, read DTC's.

      Does the scan tool display DTC B1D67-ADJUSTABLE PEDAL CONTROL CIRCUIT PERFORMANCE?

      Yes

      - Go To 4.

      No

      - The conditions that caused this code to set are not present at this time. Repeat Step 5, beginning in direction opposite of that previously selected. If DTC now is active, Go To 4. Otherwise, perform the APS INTERMITTENT CONDITION TEST. Refer to **STANDARD PROCEDURE**.

4. **CHECK (P205) ADJUSTABLE PEDALS MOTOR FORWARD AND (P206) ADJUSTABLE PEDALS MOTOR REARWARD CIRCUIT FUNCTION**

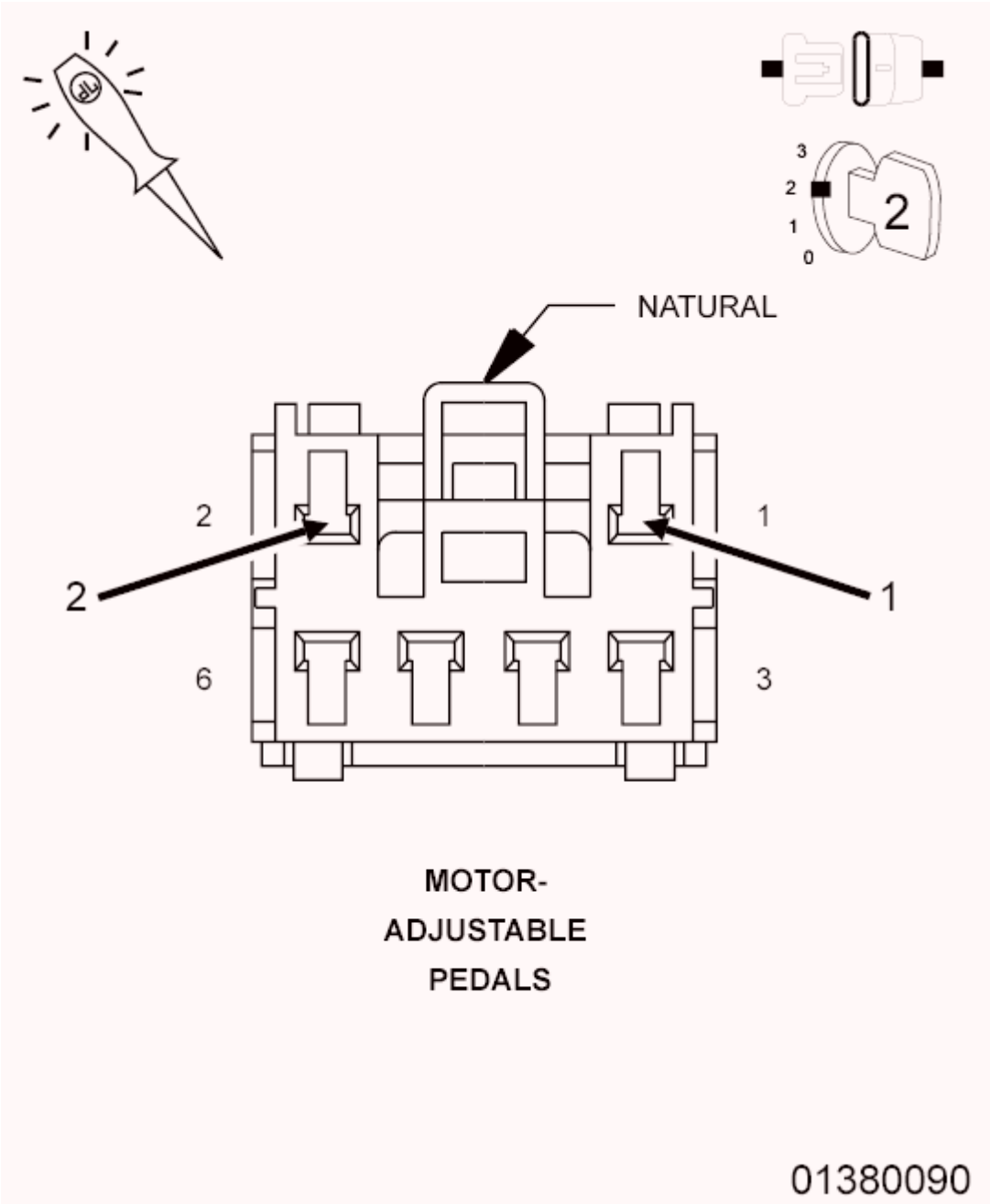

Fig. 27: Checking Adjustable Pedals Motor Forward & Rearward Function
Courtesy of CHRYSLER GROUP, LLC

1. Turn the ignition off.
2. Disconnect the Adjustable Pedals Motor harness connector.

NOTE: Check connectors. Clean and repair as necessary.

3. Connect a 12-volt test light between the (P205) Adjustable Pedals Motor Forward circuit and the (P206) Adjustable Pedals Motor Rearward circuit at the Adjustable Pedals Motor harness

connector.

4. Turn the ignition on.
5. While monitoring the test light, operate the Adjustable Pedals switch in both directions.

   Does the test light illuminate with the Adjustable Pedals switch engaged?

   Yes

   - Go To 5.

   No

   - Go To 8.

5. **CHECK ADJUSTABLE PEDALS MOTOR OPERATION**

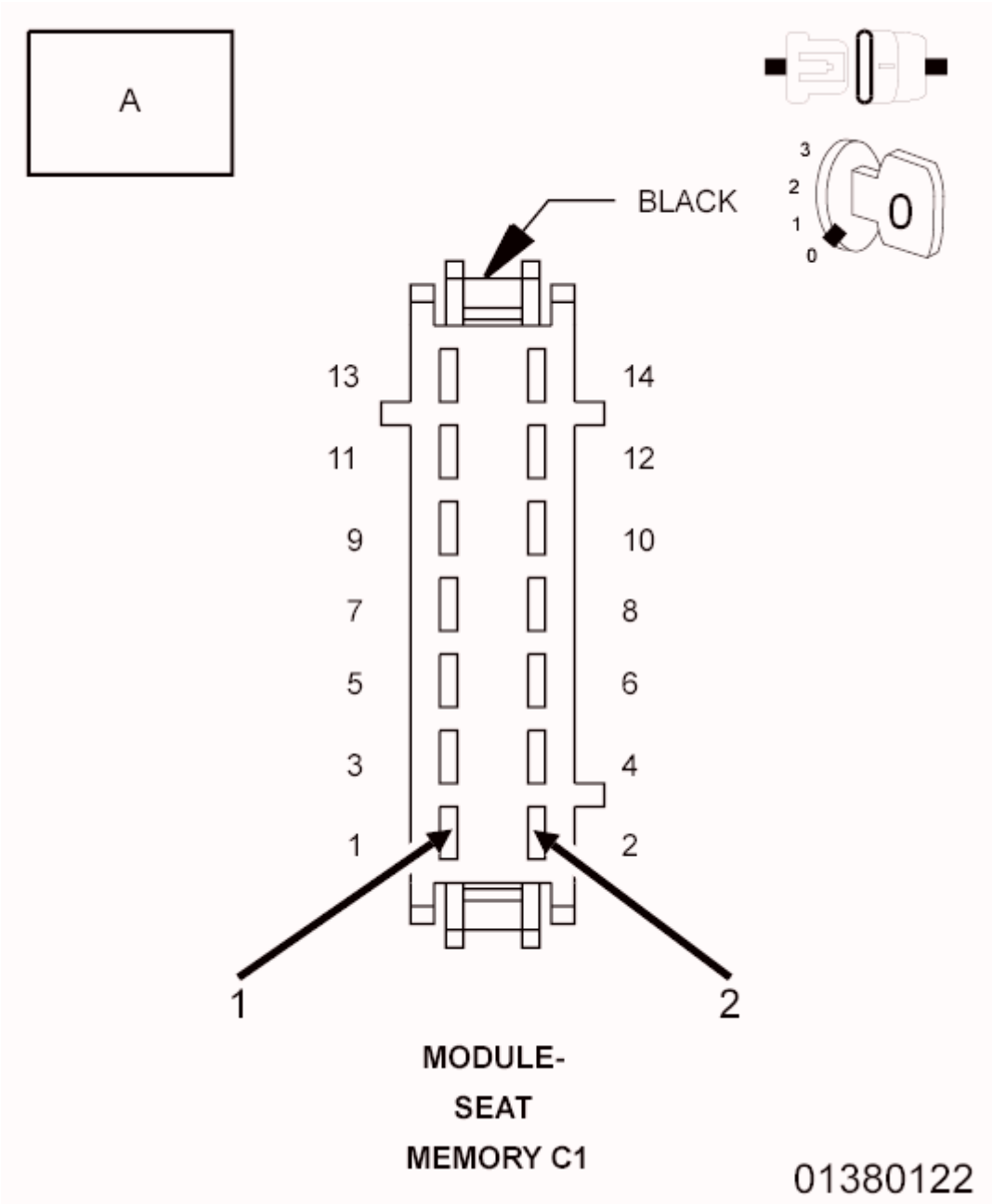

Fig. 28: Checking Adjustable Pedals Motor Operation
Courtesy of CHRYSLER GROUP, LLC

1. Turn the ignition off.
2. Reconnect the Adjustable Pedals Motor harness connector.
3. Disconnect the MSM C1 connector.

NOTE: Check connectors. Clean and repair as necessary.

4. Check motor operation in both directions as follows:

NOTE: **Do not adjust the pedals against an end-stop when performing the following.**

To drive pedals forward:

- Connect one end of a fused jumper wire to battery voltage and the other end to the (P205) Adjustable Pedals Motor Forward circuit at the MSM C1 harness connector.
- Connect an ammeter between ground and the (P206) Adjustable Pedals Motor Rearward circuit at the MSM C1 harness connector.
- Disconnect before reaching the end-stop.

To drive pedals rearward:

- Connect one end of a fused jumper wire to battery voltage and the other end to the (P206) Adjustable Pedals Motor Rearward circuit at the MSM C1 harness connector.
- Connect an ammeter between ground and the (P205) Adjustable Pedals Motor Forward circuit at the MSM C1 harness connector.
- Disconnect before reaching the end-stop.

NOTE: **The Adjustable Pedals Motor should be operational in both directions and the ammeter should read 0.9 to 1.5 amps.**

Does the motor operate as specified?

Yes

- Go To 6.

No

- Check (P205) Adjustable Pedals Motor Forward circuit and (P206) Adjustable Pedals Motor Rearward circuit for high resistance. If circuits are okay, replace the Adjustable Pedals Motor in accordance with the Service Information.
- Perform APS VERIFICATION TEST. Refer to **APS VERIFICATION TEST**.

6. **CHECK ADJUSTABLE PEDALS SENSOR OPERATION**

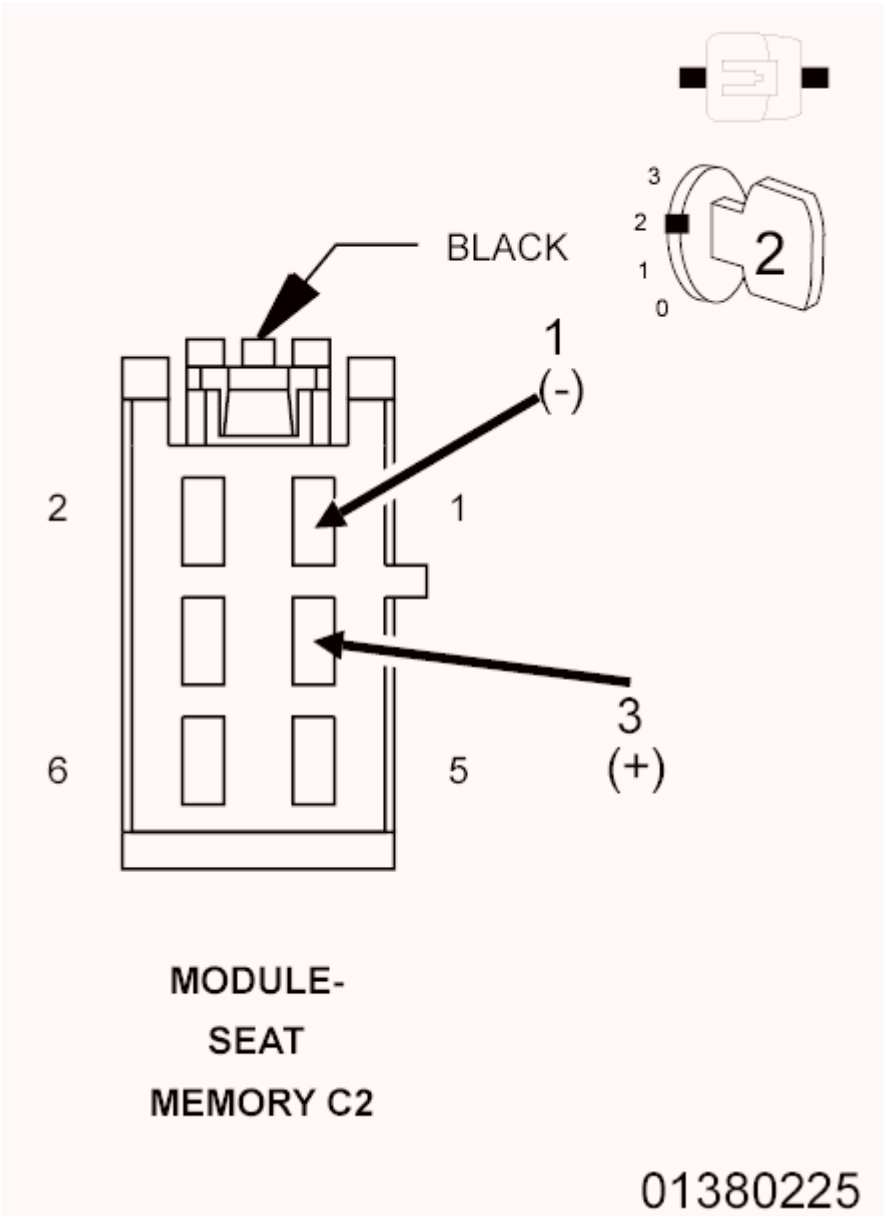

Fig. 29: Checking Adjustable Pedals Sensor Operation
Courtesy of CHRYSLER GROUP, LLC

1. Reconnect the MSM C1 harness connector.
2. Turn the ignition on.
3. Using a scan tool, erase DTC's.
4. Cycle the ignition from on to off.
5. Connect the positive lead of a lab scope to the (G13) Adjustable Pedals Sensor Supply circuit and the negative lead to the (G493) Position Sensor Ground circuit the MSM C2 harness connector. Set the lab scope range to 20 volts and time to 20 ms divisions.
6. Turn the ignition on.

NOTE: **Do not adjust the pedals against an end-stop when performing the following.**

7. Operate the Adjustable Pedals switch in one direction.

NOTE: **If the sensor is functioning normally the scope will display a continuously cycling square wave when operating the pedals. If the module fails to detect sensor operation it will stop pedal operation in approximately two seconds.**

Does the sensor operate as specified?

Yes

- Leave Scope Connected. Go To 7.

No

- Replace the Adjustable Pedals Sensor in accordance with the Service Information.
- Perform APS VERIFICATION TEST. Refer to **APS VERIFICATION TEST**.

7. **CHECK ADJUSTABLE PEDALS SENSOR OPERATION IN OPPOSITE DIRECTION**

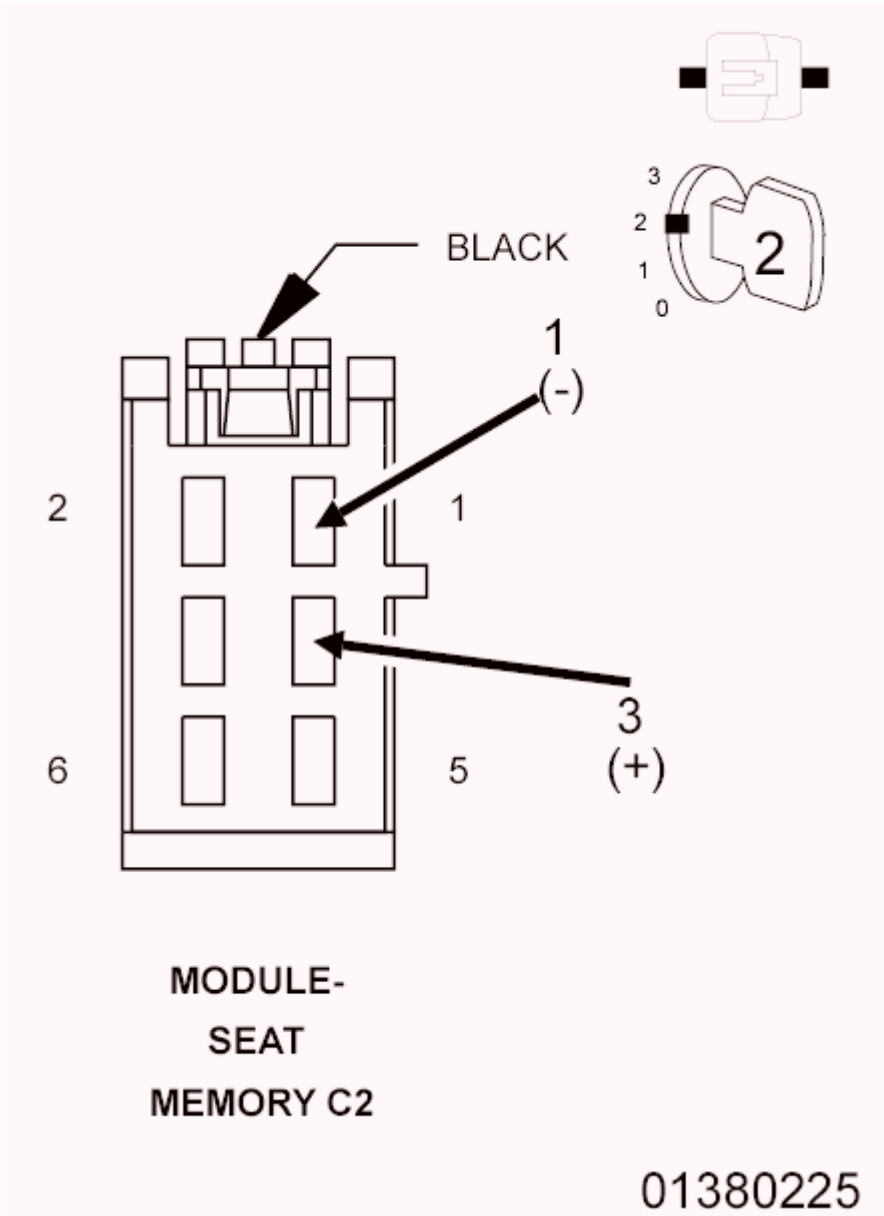

Fig. 30: Checking Adjustable Pedals Sensor Operation
Courtesy of CHRYSLER GROUP, LLC

1. Using a scan tool, erase DTC's if present.
2. Cycle the ignition from on to off.
3. Turn the ignition on.

NOTE: **Do not adjust the pedals against an end-stop when performing the following.**

4. Operate the Adjustable Pedals switch in the direction opposite of that previously selected.

NOTE: **If the sensor is functioning normally the scope will display a continuously cycling square wave when operating the pedals. If the module fails to detect sensor operation it will stop pedal operation in approximately two seconds.**

Does the sensor operate as specified?

Yes

- Replace the Memory Seat Module (MSM) in accordance with the Service Information.
- Perform APS VERIFICATION TEST. Refer to **APS VERIFICATION TEST**.

No

- Replace the Adjustable Pedals Sensor in accordance with the Service Information.
- Perform APS VERIFICATION TEST. Refer to **APS VERIFICATION TEST**.

8. **CHECK THE (P205) ADJUSTABLE PEDALS MOTOR FORWARD CIRCUIT FOR AN OPEN**

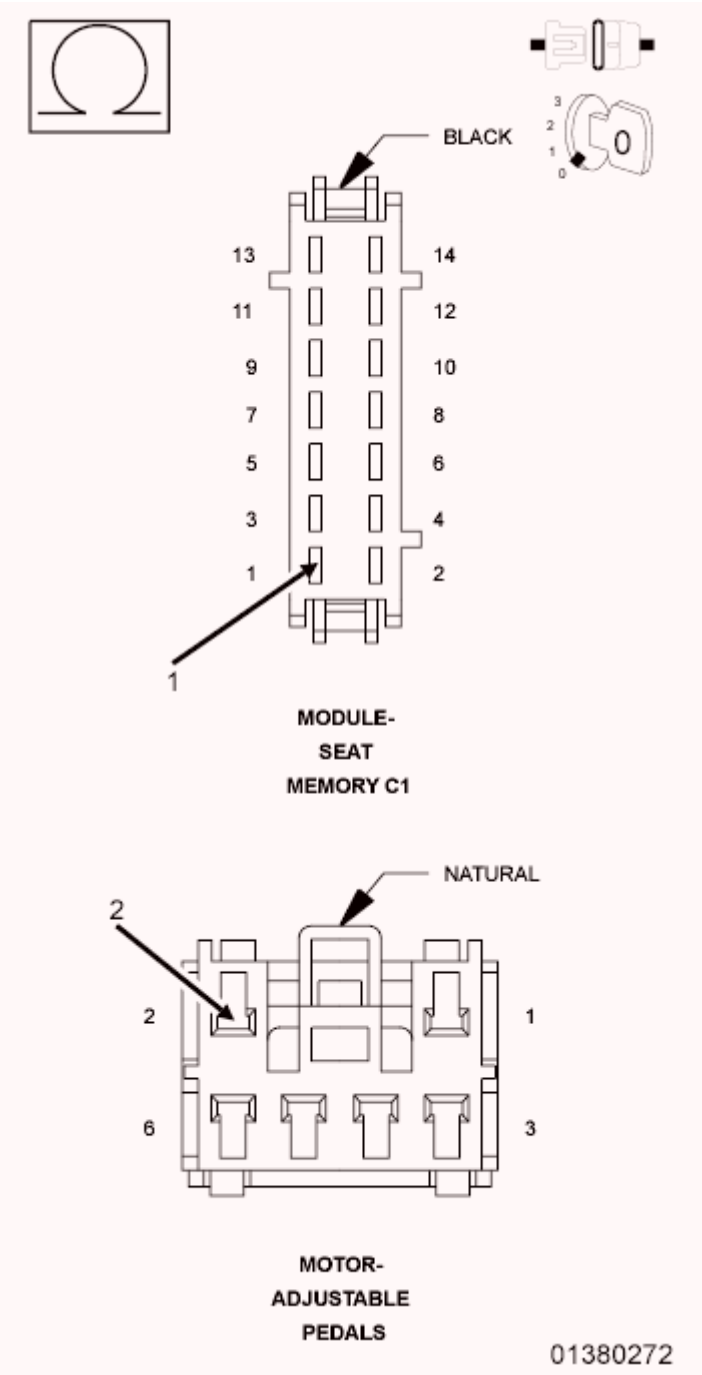

Fig. 31: Checking Adjustable Pedals Motor Forward Circuit For An Open
Courtesy of CHRYSLER GROUP, LLC

1. Turn the ignition off.
2. Disconnect the MSM C1 harness connector.
3. Measure the resistance of the (P205) Adjustable Pedals Motor Forward circuit between the MSM C1 harness connector and the Adjustable Pedals Motor connector.

   Is the resistance below 5.0 Ohms?

Yes

- Go To 9.

No

- Repair the (P205) Adjustable Pedals Motor Forward circuit for an open.
- Perform APS VERIFICATION TEST. Refer to **APS VERIFICATION TEST**.

9. **CHECK THE (P206) ADJUSTABLE PEDALS MOTOR REARWARD CIRCUIT FOR AN OPEN**

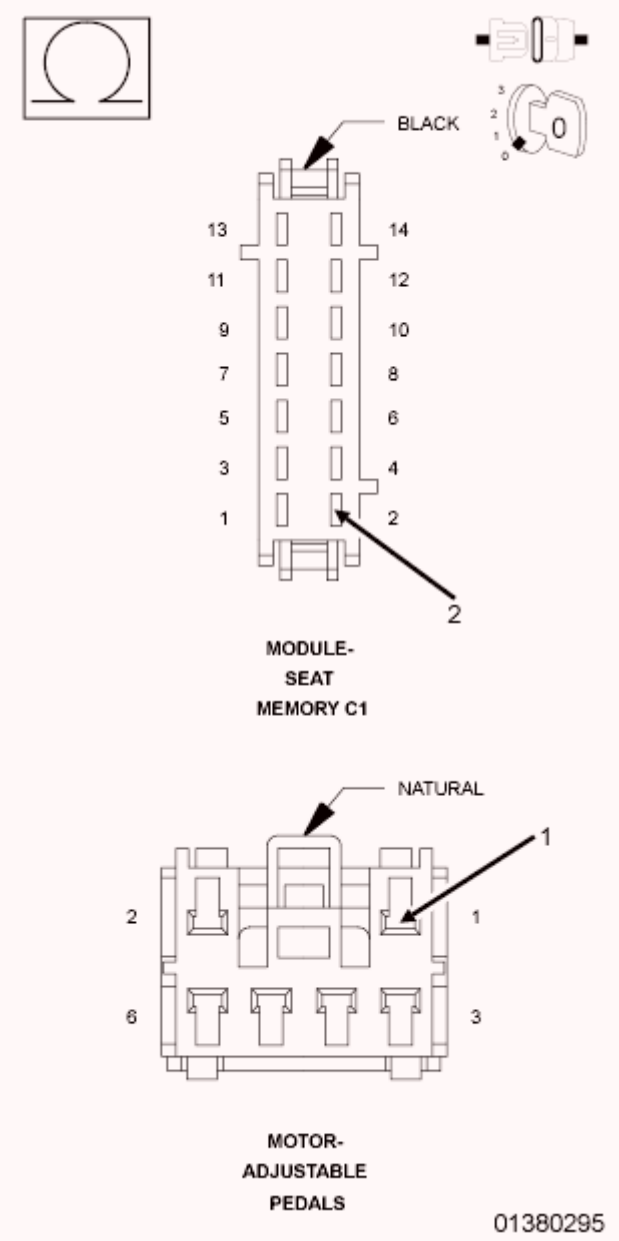

Fig. 32: Checking Adjustable Pedals Motor Rearward Circuit For An Open
Courtesy of CHRYSLER GROUP, LLC

1. Measure the resistance of the (P206) Adjustable Pedals Motor Rearward circuit between the MSM C1 connector and the Adjustable Pedals Motor connector.

   Is the resistance below 5.0 Ohms?

   Yes

   - Replace the Memory Seat Module (MSM) in accordance with the Service Information.
   - Perform APS VERIFICATION TEST. Refer to **APS VERIFICATION TEST**.

   No

   - Repair the (P206) Adjustable Pedals Motor Rearward circuit for an open.
   - Perform APS VERIFICATION TEST. Refer to **APS VERIFICATION TEST**.

B1D6D-SEAT HORIZONTAL POSITION SENSOR CIRCUIT LOW

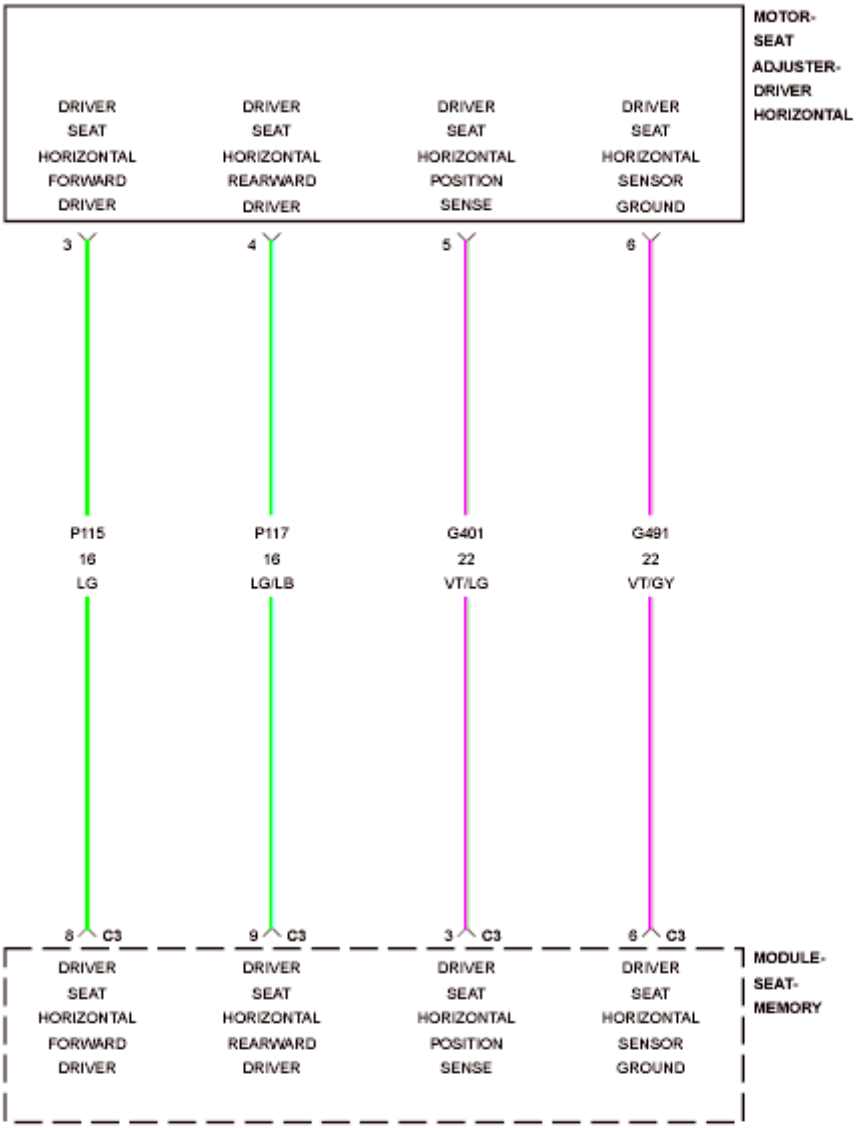

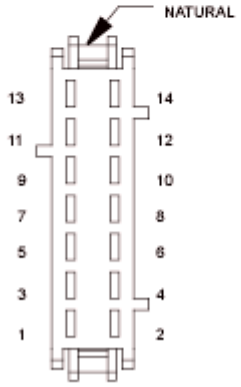

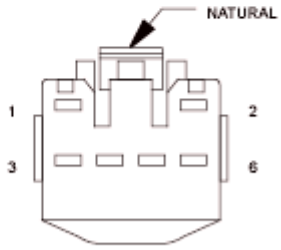

MOTOR-
SEAT
ADJUSTER-
DRIVER

Fig. 33: Seat Horizontal Position Sensor Wiring Diagram
Courtesy of CHRYSLER GROUP, LLC

For a complete wiring diagram, **refer to appropriate SYSTEM WIRING DIAGRAMS article** .

WHEN MONITORED:

Continuously.

SET CONDITION:

If Voltage on the (G401) Driver Seat Horizontal Position Sense circuit is not within a specified range.

POSSIBLE CAUSES

Possible Causes
(G401) DRIVER SEAT HORIZONTAL POSITION SENSE CIRCUIT SHORTED TO GROUND
(G401) DRIVER SEAT HORIZONTAL POSITION SENSE CIRCUIT SHORTED TO THE (G491) DRIVER SEAT HORIZONTAL SENSOR GROUND CIRCUIT
(G401) DRIVER SEAT HORIZONTAL POSITION SENSE CIRCUIT SHORTED TO THE (P115) DRIVER SEAT HORIZONTAL FORWARD DRIVER CIRCUIT
(G401) DRIVER SEAT HORIZONTAL POSITION SENSE CIRCUIT SHORTED TO THE (P117) DRIVER SEAT HORIZONTAL REARWARD DRIVER CIRCUIT
DRIVER HORIZONTAL SEAT ADJUSTER MOTOR
MEMORY SEAT MODULE (MSM)

DIAGNOSTIC TEST

1. **CHECK FOR ACTIVE FAULT WITH SEAT STATIONARY**
    1. Turn the ignition on.
    2. Using a scan tool, record and erase Diagnostic Trouble Codes (DTC's).
    3. Cycle the ignition from on to off three times.
    4. Turn the ignition on and wait 30 seconds.
    5. Using a scan tool, read DTC's.

    Is DTC B1D6D-SEAT HORIZONTAL POSITION SENSOR CIRCUIT LOW active?

    Yes

    - Go To 3.

    No

    - Go To 2.
2. **CHECK FOR ACTIVE FAULT WHILE ADJUSTING THE SEAT**

1. Move the seat switch in the horizontal adjust position three times.
2. Using a scan tool, read DTC's.

   Is DTC B1D6D-SEAT HORIZONTAL POSITION SENSOR CIRCUIT LOW active?

   Yes

   - Go To 3.

   No

   - The conditions that caused this code to set are not present at this time. Verify seat harness is routed correctly. Using the wiring diagram/schematic as a guide, inspect the wiring and connectors. Look for chafed, pierced, pinched, or partially broken wires and broken, bent, pushed out, spread, corroded, or contaminated terminals.
   - Perform POWER SEAT SYSTEM VERIFICATION TEST. Refer to **POWER SEAT SYSTEM VERIFICATION TEST**.

3. **CHECK THE (G401) DRIVER SEAT HORIZONTAL POSITION SENSE CIRCUIT FOR A SHORT TO GROUND**

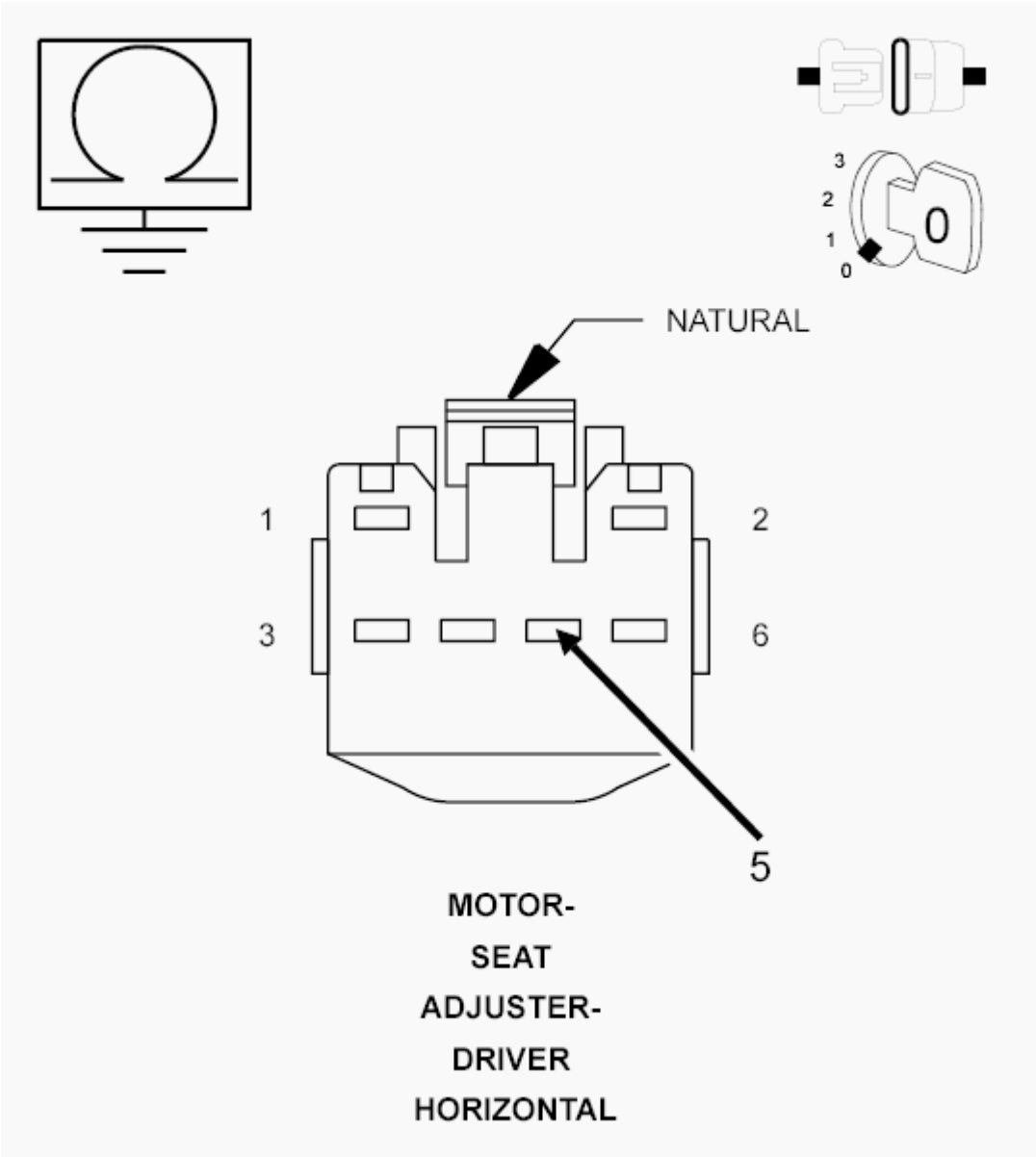

Fig. 34: Checking Driver Seat Horizontal Position Sense Circuit For A Short To Ground
Courtesy of CHRYSLER GROUP, LLC

1. Turn the ignition off.
2. Disconnect the MSM C3 connector.
3. Disconnect the Driver Horizontal Seat Adjuster Motor connector.

NOTE: Check connectors. Clean and repair as necessary.

4. Measure the resistance of the (G401) Driver Seat Horizontal Position Sense circuit between ground and the Driver Horizontal Seat Adjuster Motor connector.

   Is the resistance below 10K Ohms?

Yes

- Repair the (G401) Driver Seat Horizontal Position Sense circuit for a short to ground.
- Perform POWER SEAT SYSTEM VERIFICATION TEST. Refer to **POWER SEAT SYSTEM VERIFICATION TEST**.

No

- Go To 4.

4. **CHECK THE (G401) DRIVER SEAT HORIZONTAL POSITION SENSE CIRCUIT FOR A SHORT TO (G491) DRIVER SEAT HORIZONTAL SENSOR GROUND CIRCUIT, (P115) DRIVER SEAT HORIZONTAL FORWARD DRIVER CIRCUIT, AND (P117) DRIVER SEAT HORIZONTAL REARWARD DRIVER CIRCUIT**

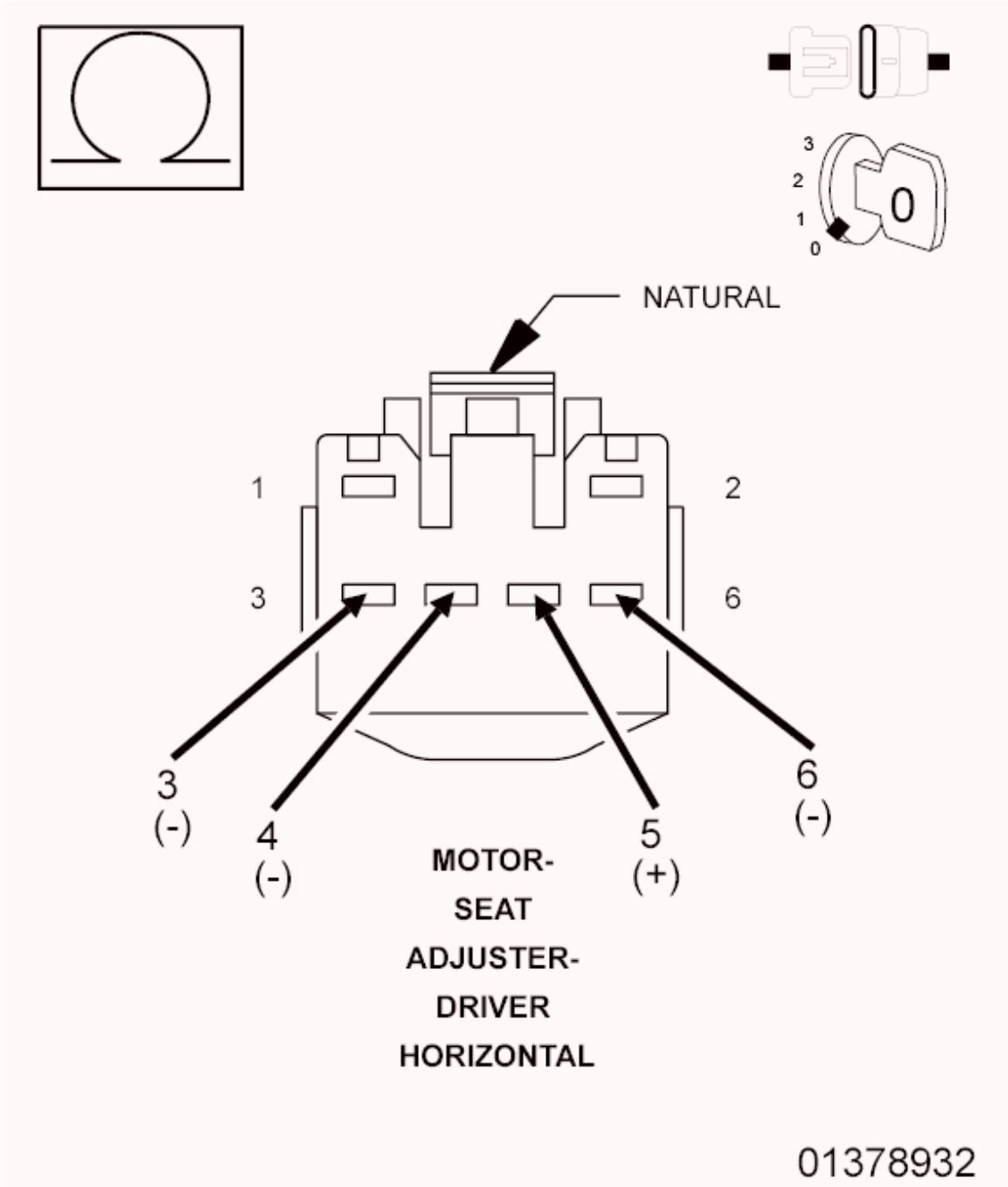

Fig. 35: Checking Driver Seat Horizontal Position Sense Circuit For A Short To Other Circuits
Courtesy of CHRYSLER GROUP, LLC

1. Measure the resistance between the (G401) Driver Seat Horizontal Position Sense circuit and the (G491) Driver Seat Horizontal Sensor Ground circuit at the Driver Horizontal Seat Adjuster Motor connector.
2. Measure the resistance between the (G401) Driver Seat Horizontal Position Sense circuit and the (P115) Driver Seat Horizontal Forward Driver circuit at the Driver Horizontal Seat Adjuster Motor connector.
3. Measure the resistance between the (G401) Driver Seat Horizontal Position Sense circuit and the

(P117) Driver Seat Horizontal Rearward Driver circuit at the Driver Horizontal Seat Adjuster Motor connector.

Is the resistance below 10K Ohms for any measurement?

Yes

- Repair all circuits with a resistance below 10K Ohms for a short to the (G401) Driver Seat Horizontal Position Sense circuit.
- Perform POWER SEAT SYSTEM VERIFICATION TEST. Refer to **POWER SEAT SYSTEM VERIFICATION TEST**.

No

- Go To 5.

5. **CHECK THE (G401) DRIVER SEAT HORIZONTAL POSITION SENSE CIRCUIT AND THE (G491) DRIVER SEAT HORIZONTAL SENSOR GROUND CIRCUIT FUNCTION**

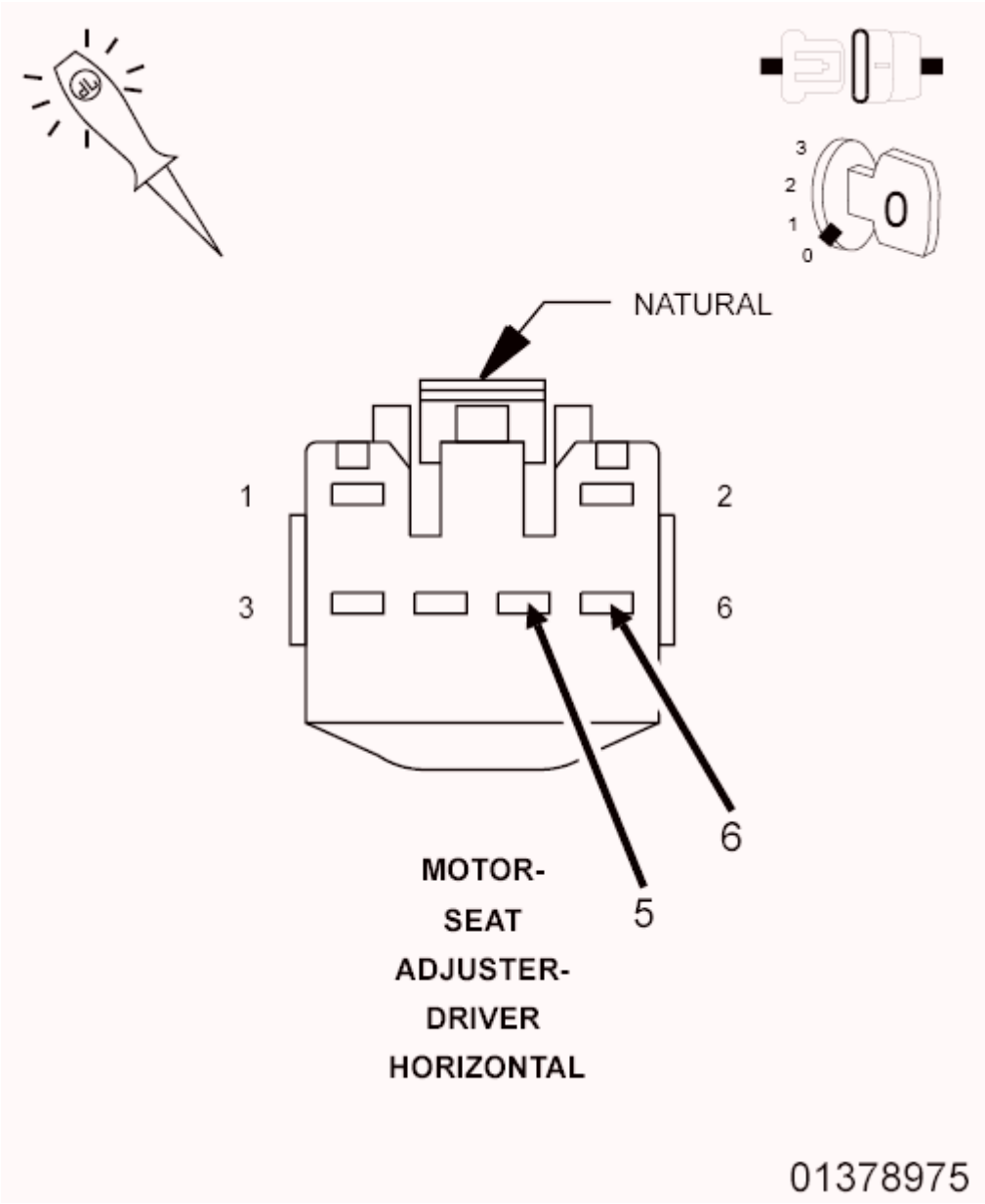

Fig. 36: Checking Driver Seat Horizontal Position Sense Function
Courtesy of CHRYSLER GROUP, LLC

1. Reconnect the MSM C3 connector.
2. Disconnect the scan tool.
3. Turn off all vehicle interior and exterior lighting.
4. Mark sure all doors are closed then wait 10 seconds.
5. Connect a 12-Volt test light between the (G401) Driver Seat Horizontal Position Sense circuit and the (G491) Driver Seat Horizontal Sensor Ground circuit at the Driver Horizontal Seat Adjuster Motor connector.
6. Move the seat switch in the horizontal adjust position then release the switch.

Does the test light illuminate for approximately five seconds then turn off?

Yes

- Replace the Seat Track Horizontal Motor assembly in accordance with the Service Information.
- Perform POWER SEAT SYSTEM VERIFICATION TEST. Refer to **POWER SEAT SYSTEM VERIFICATION TEST**.

No

- Replace the Memory Seat Module (MSM) in accordance with the Service Information.
- Perform POWER SEAT SYSTEM VERIFICATION TEST. Refer to **POWER SEAT SYSTEM VERIFICATION TEST**.

B1D6E-SEAT HORIZONTAL POSITION SENSOR CIRCUIT HIGH

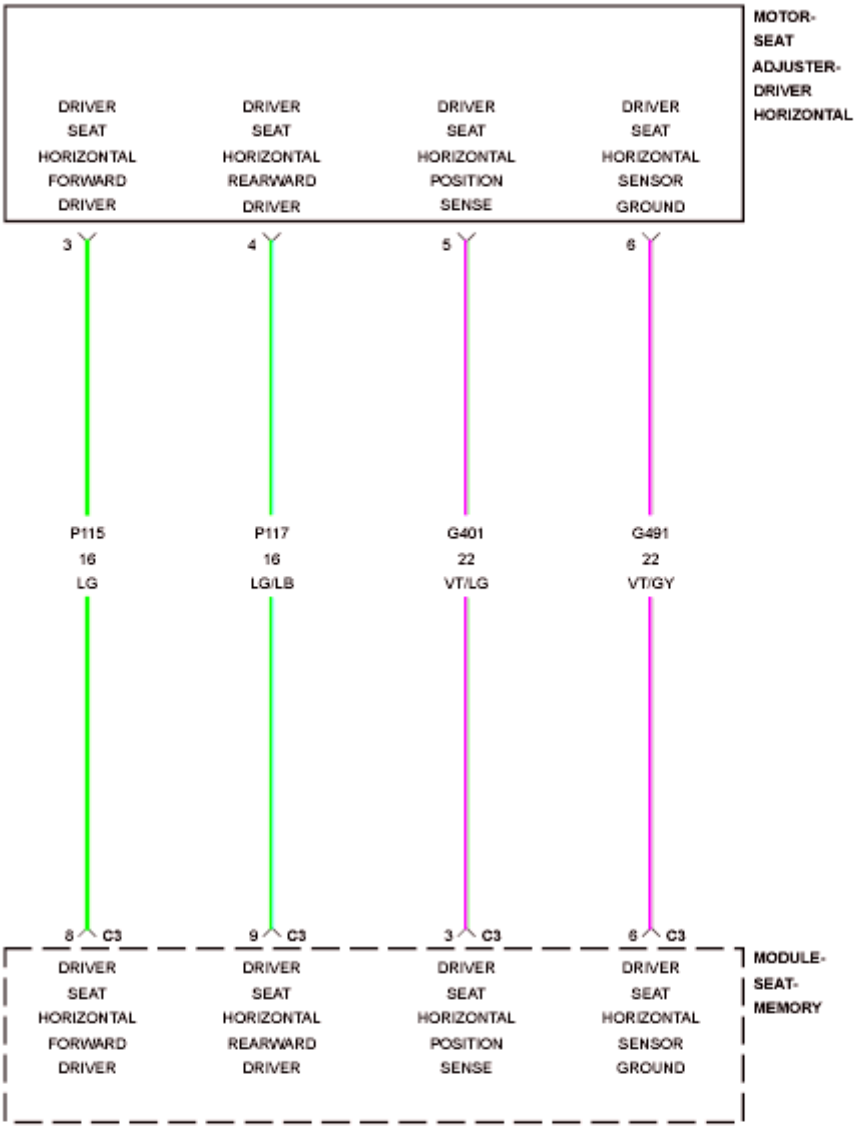

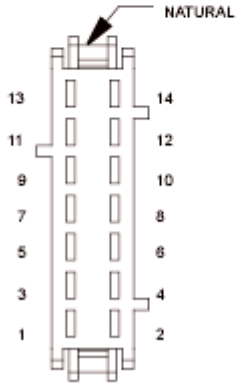

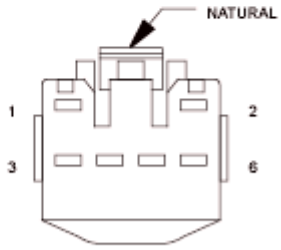

MOTOR-
SEAT
ADJUSTER-
DRIVER

Fig. 37: Seat Horizontal Position Sensor Wiring Diagram
Courtesy of CHRYSLER GROUP, LLC

For a complete wiring diagram, **refer to appropriate SYSTEM WIRING DIAGRAMS article** .

WHEN MONITORED:

When the seat motor is activated (sensor supply Voltage is switched on whenever motor is activated).

SET CONDITION:

If the sensor Voltage is not within a specified range and the seat switch is moved in the same direction three consecutive times.

POSSIBLE CAUSES

Possible Causes
(G401) DRIVER SEAT HORIZONTAL POSITION SENSE CIRCUIT SHORTED TO VOLTAGE
(G401) DRIVER SEAT HORIZONTAL POSITION SENSE CIRCUIT OPEN
(G491) DRIVER SEAT HORIZONTAL SENSOR GROUND CIRCUIT OPEN
DRIVER HORIZONTAL SEAT ADJUSTER MOTOR
MEMORY SEAT MODULE (MSM)

DIAGNOSTIC TEST

1. **TEST FOR INTERMITTENT CONDITION**
    1. Turn the ignition on.
    2. Using a scan tool, record and erase Diagnostic Trouble Codes (DTC's).
    3. Move the seat switch in the horizontal adjust position three times.
    4. Using a scan tool, read DTC's.

    Does the scan tool display DTC B1D6E-SEAT HORIZONTAL POSITION SENSOR CIRCUIT HIGH?

    Yes

    - Go To 2.

    No

    - The conditions that caused this code to set are not present at this time. Verify seat harness is routed correctly. Using the wiring diagram/schematic as a guide, inspect the wiring and connectors. Look for chafed, pierced, pinched, or partially broken wires and broken, bent, pushed out, spread, corroded, or contaminated terminals.
    - Perform POWER SEAT SYSTEM VERIFICATION TEST. Refer to **POWER SEAT**

SYSTEM VERIFICATION TEST.

2. **CHECK THE (G401) DRIVER SEAT HORIZONTAL POSITION SENSE CIRCUIT FOR A SHORT TO VOLTAGE**

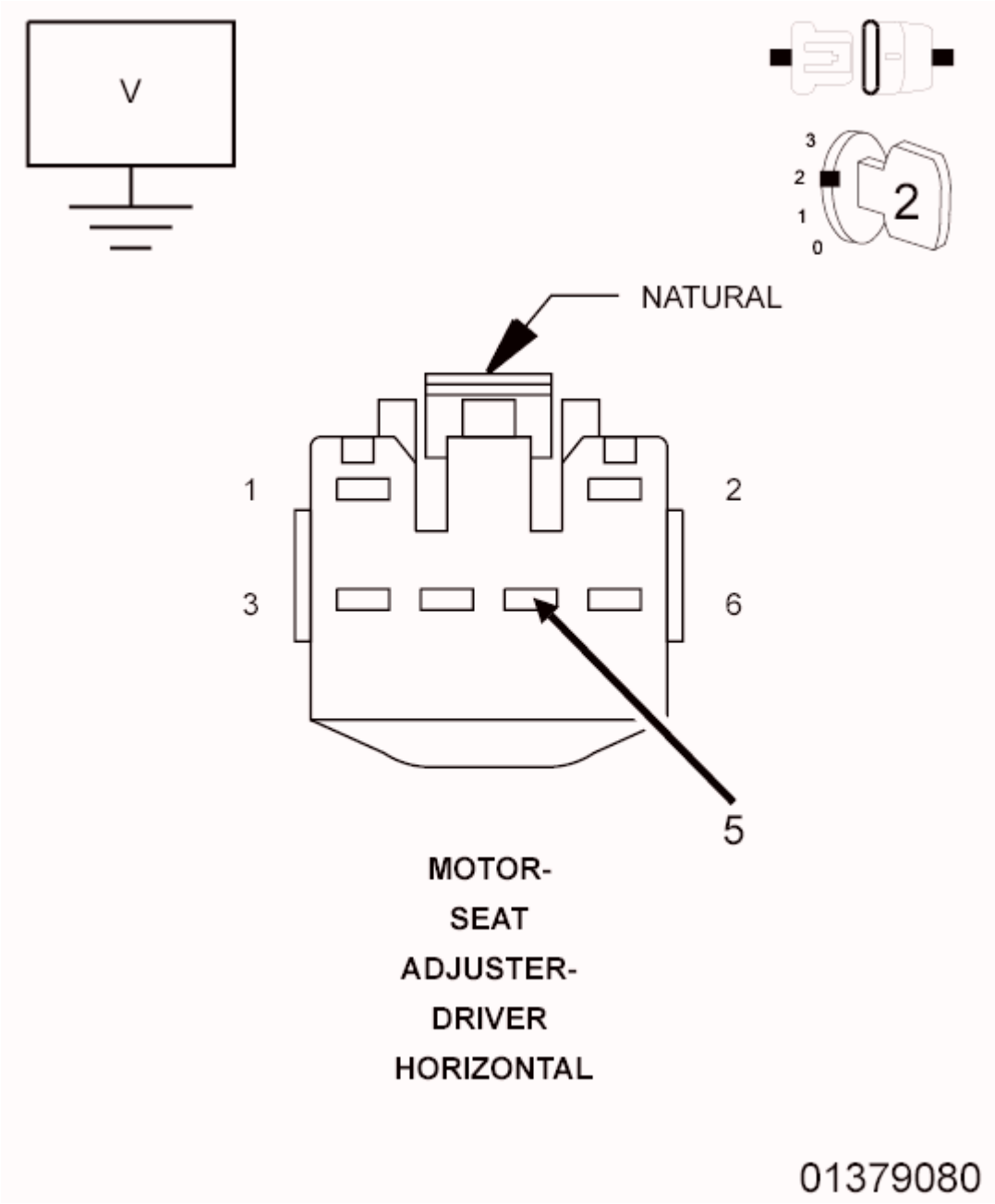

Fig. 38: Checking Driver Seat Horizontal Position Sense Circuit For A Short To Voltage
Courtesy of CHRYSLER GROUP, LLC

1. Turn the ignition off.
2. Disconnect the Driver Horizontal Seat Adjuster Motor connector.
3. Disconnect the MSM C3 connector.

NOTE: Check connectors. Clean and repair as necessary.

4. Turn the ignition on.
5. Measure the Voltage of the (G401) Driver Seat Horizontal Position Sense circuit between the Driver Horizontal Seat Adjuster Motor connector and ground.

   Is there any Voltage present?

   Yes

   - Repair the (G401) Driver Seat Horizontal Position Sense circuit for a short to Voltage.
   - Perform POWER SEAT SYSTEM VERIFICATION TEST. Refer to **POWER SEAT SYSTEM VERIFICATION TEST**.

   No

   - Go To 3.

3. **CHECK THE (G401) DRIVER SEAT HORIZONTAL POSITION SENSE CIRCUIT AND THE (G491) DRIVER SEAT HORIZONTAL SENSOR GROUND CIRCUIT FUNCTION**

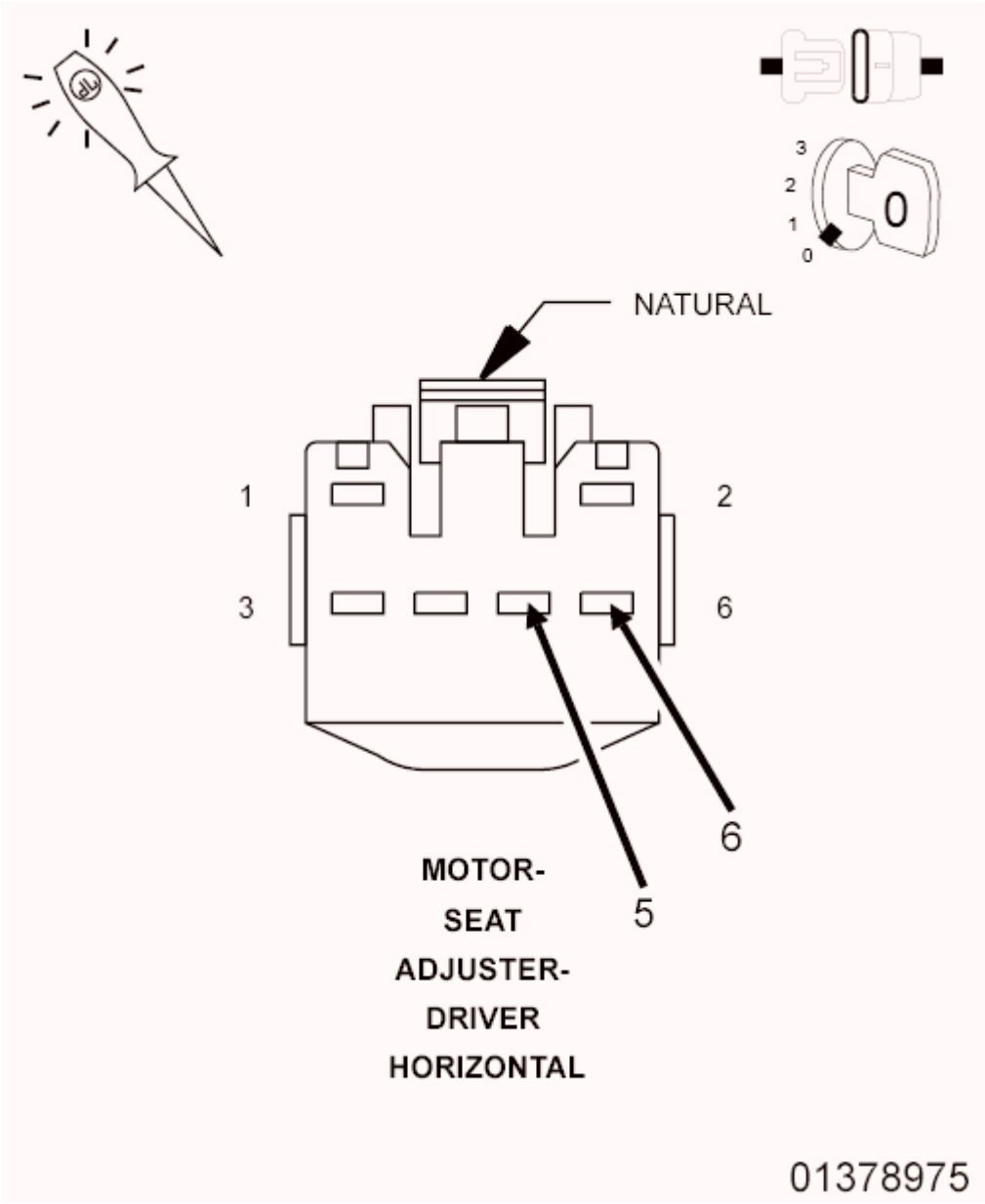

Fig. 39: Checking Driver Seat Horizontal Position Sense Function
Courtesy of CHRYSLER GROUP, LLC

1. Turn the ignition off.
2. Reconnect the MSM C3 connector.
3. Disconnect the scan tool.
4. Turn off all vehicle interior and exterior lighting.
5. Mark sure all doors are closed then wait 10 seconds.
6. Connect a 12-Volt test light connect between the (G401) Driver Seat Horizontal Position Sense circuit and the (G491) Driver Seat Horizontal Sensor Ground circuit at the Driver Horizontal Seat Adjuster Motor connector.
7. Move the seat switch in the horizontal adjust position then release the switch.

Does the test light illuminate for approximately five seconds then turn off?

Yes

- Replace the Seat Track Horizontal Motor Assembly in accordance with the Service Information.
- Perform POWER SEAT SYSTEM VERIFICATION TEST. Refer to **POWER SEAT SYSTEM VERIFICATION TEST**.

No

- Go To 4.

4. **CHECK THE (G401) DRIVER SEAT HORIZONTAL POSITION SENSE CIRCUIT FOR AN OPEN**

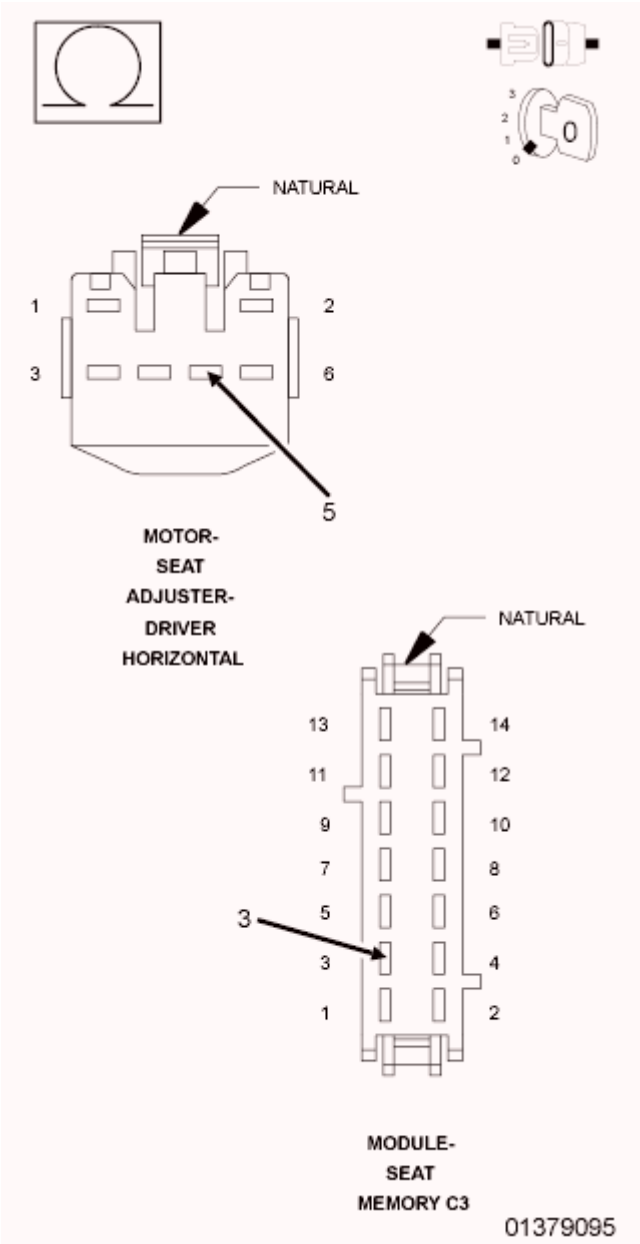

Fig. 40: Checking Driver Seat Horizontal Position Sense Circuit For An Open
Courtesy of CHRYSLER GROUP, LLC

1. Disconnect the MSM C3 connector.

   NOTE: Check connectors. Clean and repair as necessary.

2. Measure the resistance of the (G401) Driver Seat Horizontal Position Sense circuit between the Driver Horizontal Seat Adjuster Motor connector and the MSM C3 connector.

   Is the resistance below 5.0 Ohms?

Yes

- Go To 5.

No

- Repair the (G401) Driver Seat Horizontal Position Sense circuit for an open.
- Perform POWER SEAT SYSTEM VERIFICATION TEST. Refer to **POWER SEAT SYSTEM VERIFICATION TEST**.

5. **CHECK THE (G491) DRIVER SEAT HORIZONTAL SENSOR GROUND CIRCUIT FOR AN OPEN**

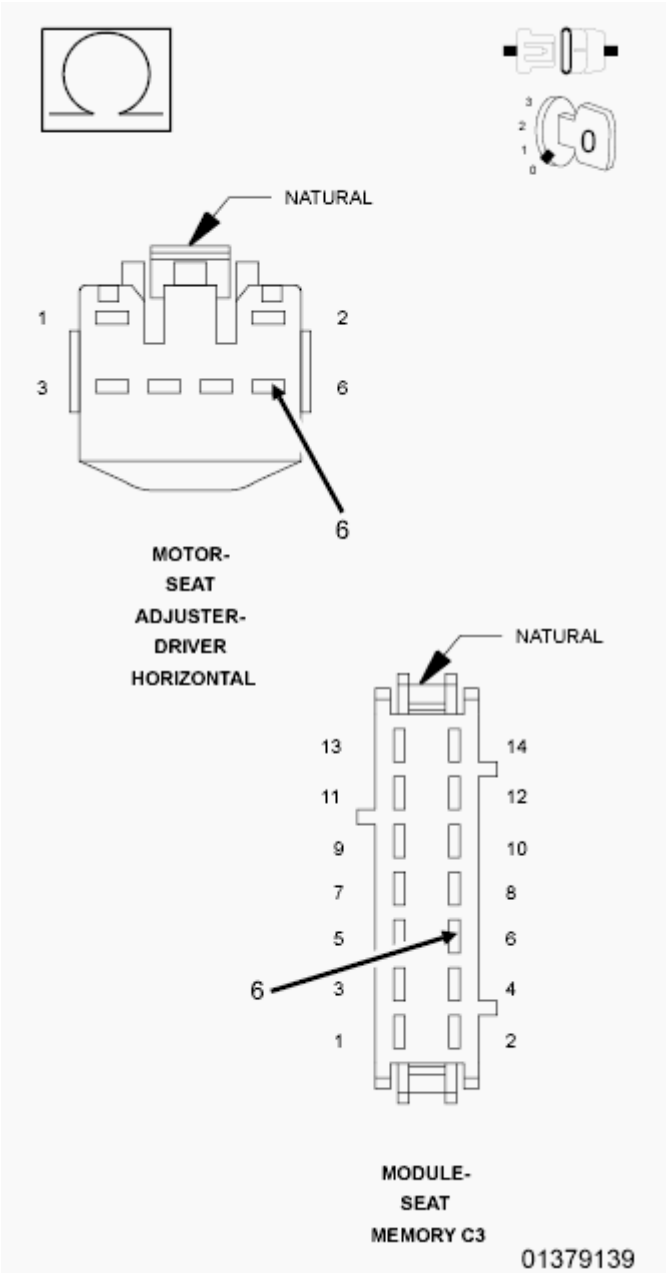

Fig. 41: Checking Driver Seat Horizontal Sensor Ground Circuit For An Open
Courtesy of CHRYSLER GROUP, LLC

1. Measure the resistance of the (G491) Driver Seat Horizontal Sensor Ground circuit between the Driver Horizontal Seat Adjuster Motor connector and the MSM C3 connector.

   Is the resistance below 5.0 Ohms?

   Yes

   - Replace the Memory Seat Module (MSM) in accordance with the Service Information.
   - Perform POWER SEAT SYSTEM VERIFICATION TEST. Refer to **POWER SEAT SYSTEM VERIFICATION TEST**.

   No

   - Repair the (G491) Driver Seat Horizontal Senor Ground circuit for an open.
   - Perform POWER SEAT SYSTEM VERIFICATION TEST. Refer to **POWER SEAT SYSTEM VERIFICATION TEST**.

B1D71-SEAT FRONT VERTICAL POSITION SENSOR CIRCUIT LOW

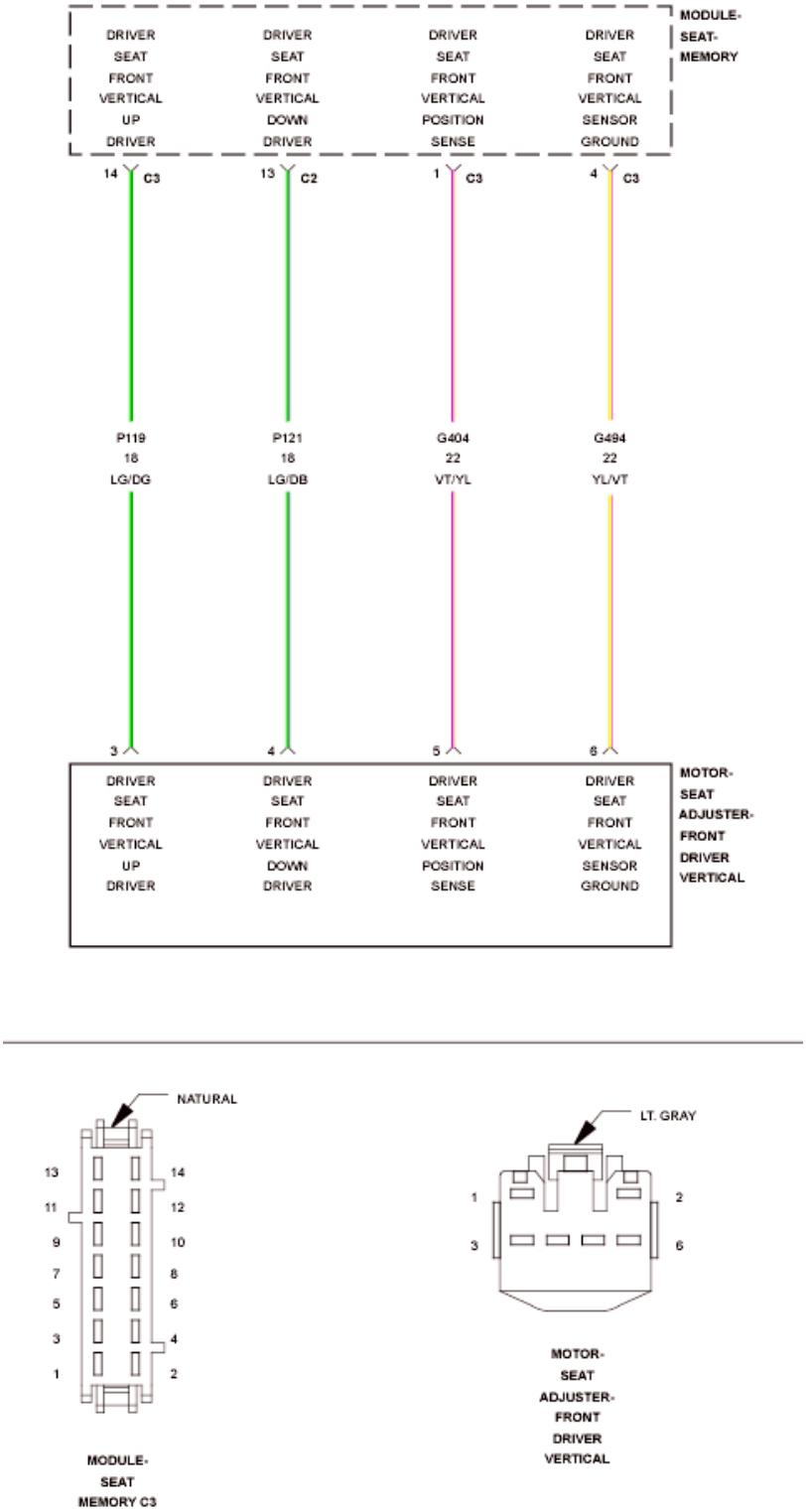

Fig. 42: Driver Seat Front Vertical Motor Wiring Diagram
Courtesy of CHRYSLER GROUP, LLC

For a complete wiring diagram, **refer to appropriate SYSTEM WIRING DIAGRAMS article** .

WHEN MONITORED:

Continuously.

SET CONDITION:

If Voltage on the (G404) Driver Seat Front Vertical Position Sense circuit is not within a specified range.

POSSIBLE CAUSES

Possible Causes
(G404) DRIVER SEAT FRONT VERTICAL POSITION SENSE CIRCUIT SHORTED TO GROUND
(G404) DRIVER SEAT FRONT VERTICAL POSITION SENSE CIRCUIT SHORTED TO THE (G494) DRIVER SEAT FRONT VERTICAL SENSOR GROUND CIRCUIT
(G404) DRIVER SEAT FRONT VERTICAL POSITION SENSE CIRCUIT SHORTED TO THE (P119) DRIVER SEAT FRONT VERTICAL UP DRIVER CIRCUIT
(G404) DRIVER SEAT FRONT VERTICAL POSITION SENSE CIRCUIT SHORTED TO THE (P121) DRIVER SEAT FRONT VERTICAL DOWN DRIVER CIRCUIT
FRONT DRIVER VERTICAL SEAT ADJUSTER MOTOR
MEMORY SEAT MODULE (MSM)

DIAGNOSTIC TEST

1. **CHECK FOR ACTIVE FAULT WITH SEAT STATIONARY**
    1. Turn the ignition on.
    2. Using a scan tool, record and erase Diagnostic Trouble Codes (DTC's).
    3. Cycle the ignition from on to off three times.
    4. Turn the ignition on and wait 30 seconds.
    5. Using a scan tool, read DTC's.

    Is DTC B1D71-SEAT FRONT VERTICAL POSITION SENSOR CIRCUIT LOW active?

    Yes

    - Go To 3.

    No

    - Go To 2.
2. **CHECK FOR ACTIVE FAULT WHILE ADJUSTING THE SEAT**
    1. Move the seat switch in the front vertical adjust position three times.
    2. Using a scan tool, read DTC's.

    Is DTC B1D71-SEAT FRONT VERTICAL POSITION SENSOR CIRCUIT LOW active?

Yes

- Go To 3.

No

- The conditions that caused this code to set are not present at this time. Verify seat harness is routed correctly. Using the wiring diagram/schematic as a guide, inspect the wiring and connectors. Look for chafed, pierced, pinched, or partially broken wires and broken, bent, pushed out, spread, corroded, or contaminated terminals.
- Perform POWER SEAT SYSTEM VERIFICATION TEST. Refer to **POWER SEAT SYSTEM VERIFICATION TEST**.

3. **CHECK THE (G404) DRIVER SEAT FRONT VERTICAL POSITION SENSE CIRCUIT FOR A SHORT TO GROUND**

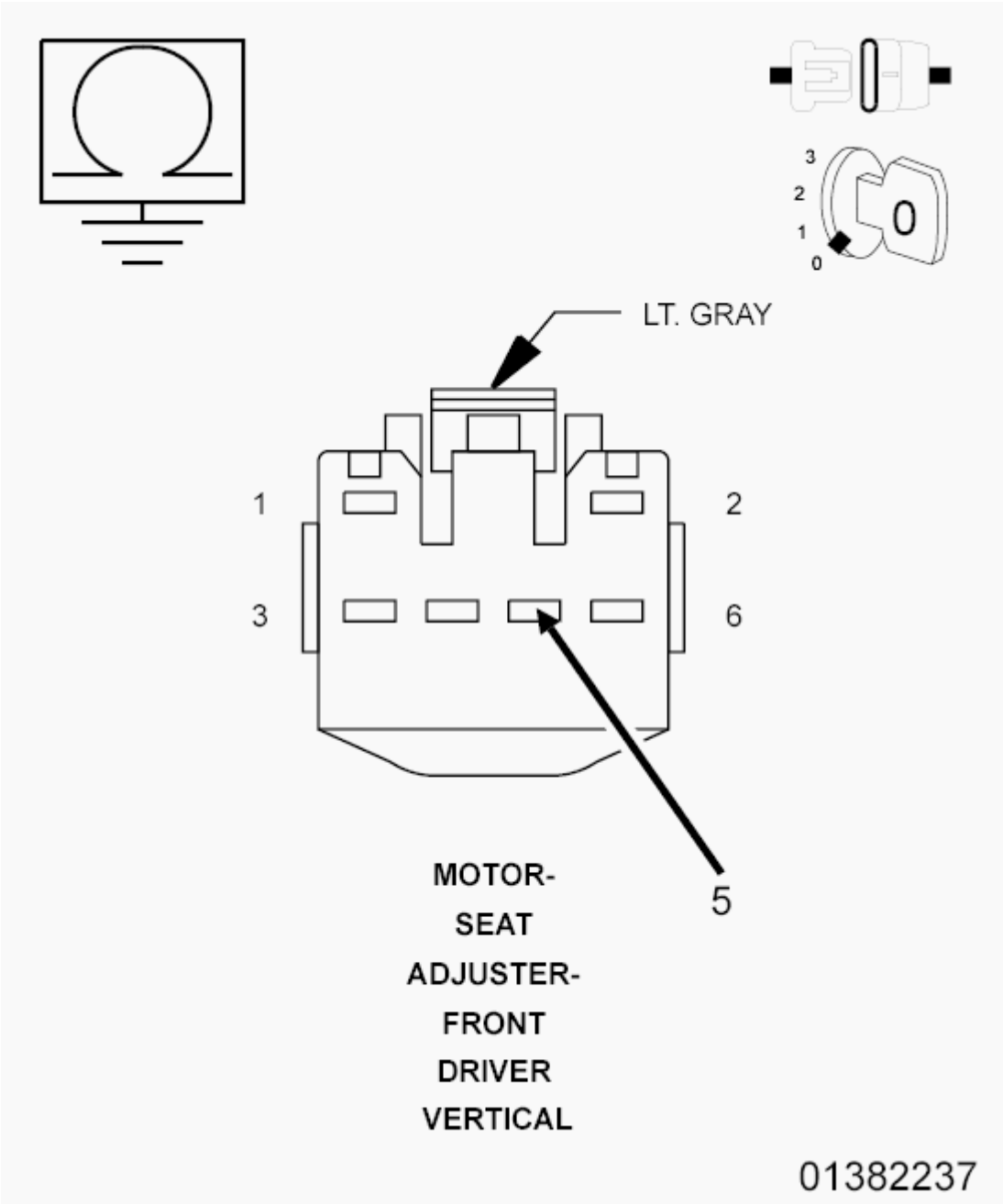

Fig. 43: Checking Driver Seat Front Vertical Position Sense Circuit For A Short To Ground
Courtesy of CHRYSLER GROUP, LLC

1. Turn the ignition off.
2. Disconnect the MSM C3 connector.
3. Disconnect the Front Driver Vertical Seat Adjuster Motor connector.

NOTE: Check connectors. Clean and repair as necessary.

4. Measure the resistance of the (G404) Driver Seat Front Vertical Position Sense circuit between

ground and the Front Driver Vertical Seat Adjuster Motor connector.

Is the resistance below 10K Ohms?

Yes

- Repair the (G404) Driver Seat Front Vertical Position Sense circuit for a short to ground.
- Perform POWER SEAT SYSTEM VERIFICATION TEST. Refer to **POWER SEAT SYSTEM VERIFICATION TEST**.

No

- Go To 4.

4. **CHECK THE (G404) DRIVER SEAT FRONT VERTICAL POSITION SENSE CIRCUIT FOR A SHORT TO (G494) DRIVER SEAT FRONT VERTICAL SENSOR GROUND CIRCUIT, (P119) DRIVER SEAT FRONT VERTICAL UP DRIVER CIRCUIT, AND (P121) DRIVER SEAT FRONT VERTICAL DOWN DRIVER CIRCUIT**

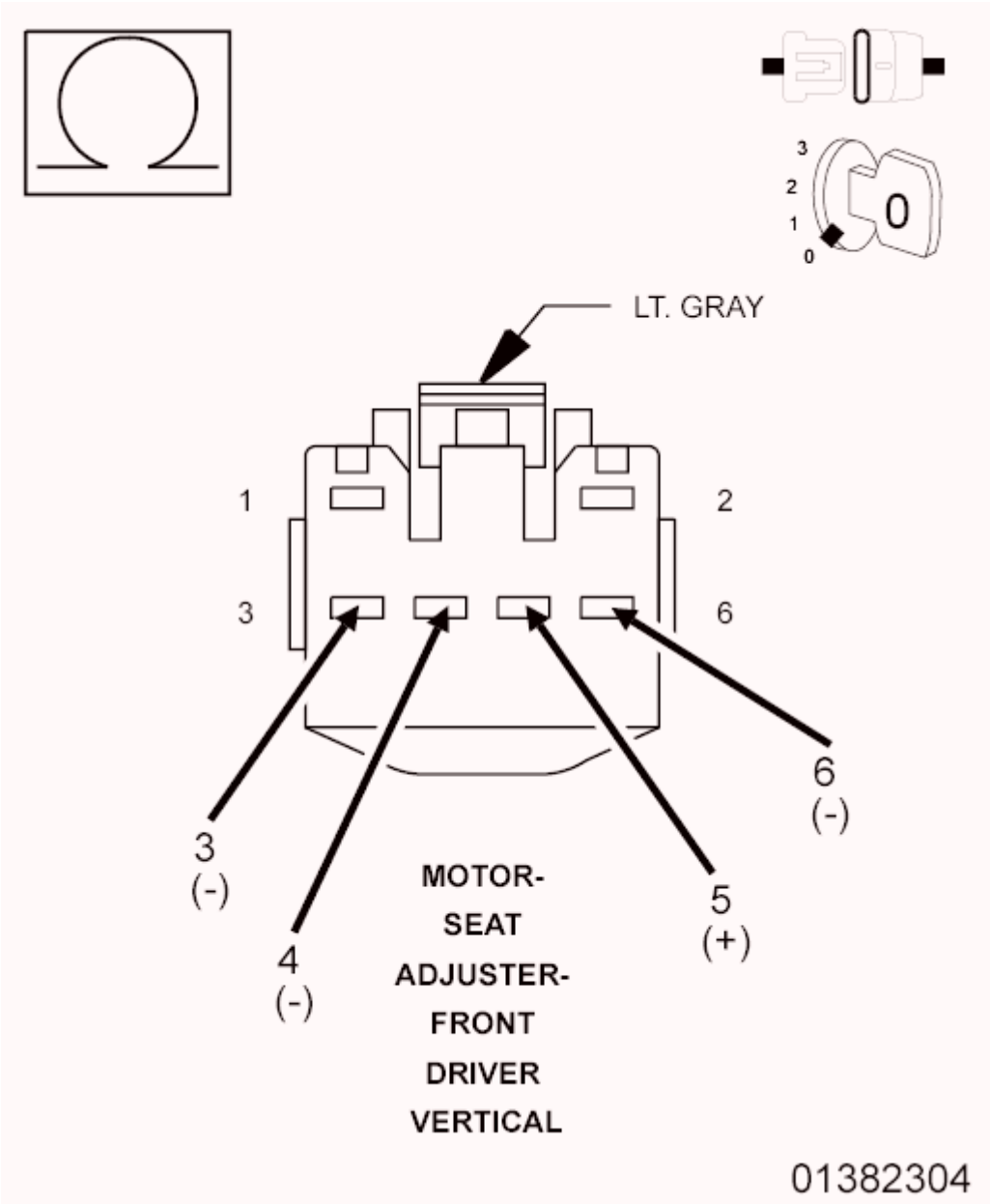

Fig. 44: Checking Driver Seat Front Vertical Position Sense Circuit For A Short To Other Circuits
Courtesy of CHRYSLER GROUP, LLC

1. Measure the resistance between the (G404) Driver Seat Front Vertical Position Sense circuit and the (G494) Driver Seat Front Vertical Sensor Ground circuit at the Front Driver Vertical Seat Adjuster Motor connector.
2. Measure the resistance between the (G404) Driver Seat Front Vertical Position Sense circuit and the (P119) Driver Seat Front Vertical Up Driver circuit at the Front Driver Vertical Seat Adjuster Motor connector.
3. Measure the resistance between the (G404) Driver Seat Front Vertical Position Sense circuit and the (P121) Driver Seat Front Vertical Down Driver circuit at the Front Driver Vertical Seat Adjuster Motor connector.

Is the resistance below 10K Ohms for any measurement?

Yes

- Repair all circuits with a resistance below 10K Ohms for a short to the (G404) Driver Seat Front Vertical Position Sense circuit.
- Perform POWER SEAT SYSTEM VERIFICATION TEST. Refer to **POWER SEAT SYSTEM VERIFICATION TEST**.

No

- Go To 5.

5. **CHECK THE (G404) DRIVER SEAT FRONT VERTICAL POSITION SENSE CIRCUIT AND THE (G494) DRIVER SEAT FRONT VERTICAL SENSOR GROUND CIRCUIT FUNCTION**

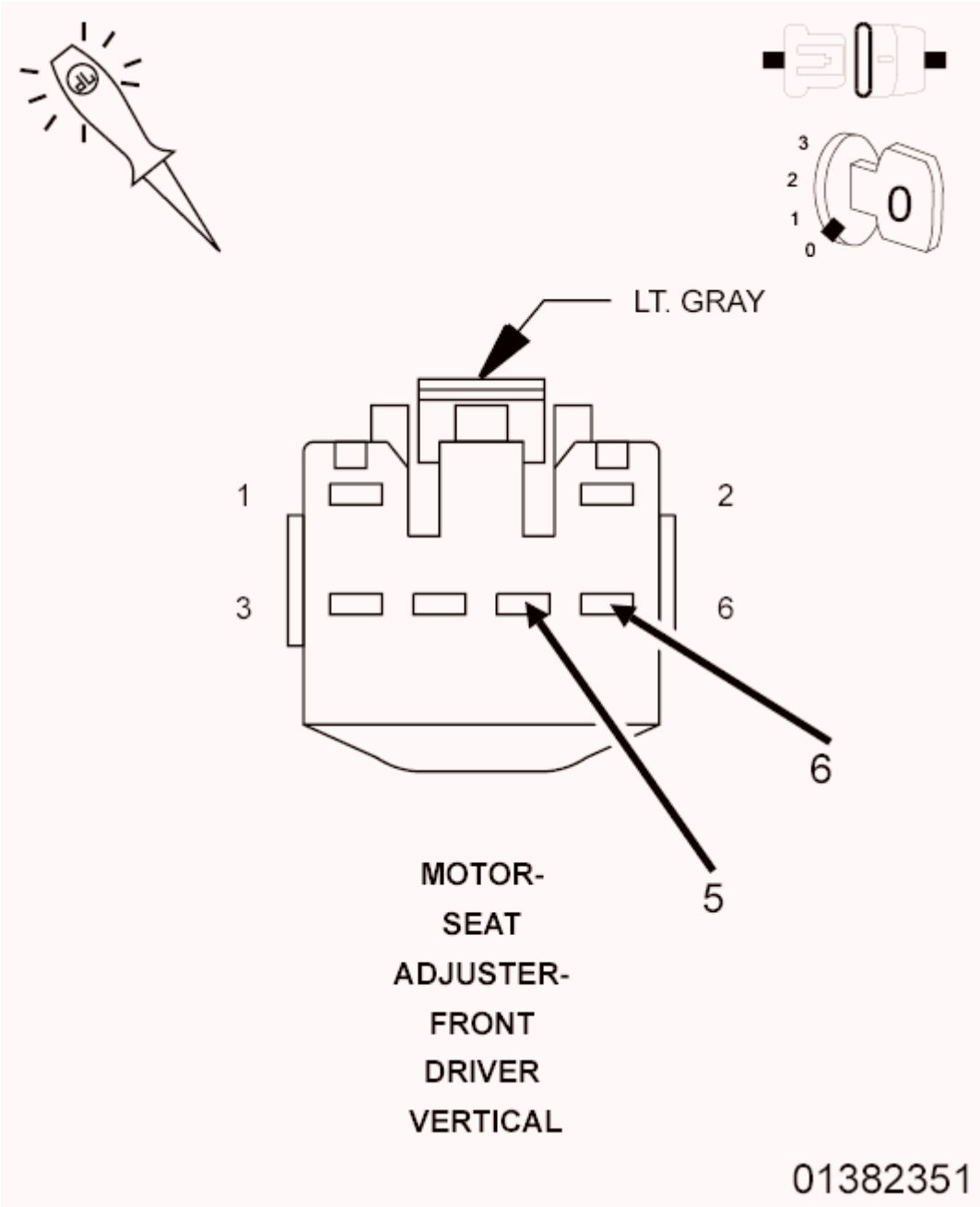

Fig. 45: Checking Driver Seat Front Vertical Position Sense Function
Courtesy of CHRYSLER GROUP, LLC

1. Reconnect the MSM C3 connector.
2. Disconnect the scan tool.
3. Turn off all vehicle interior and exterior lighting.
4. Mark sure all doors are closed then wait 10 seconds.
5. Connect a 12-Volt test light between the (G404) Driver Seat Front Vertical Position Sense circuit and the (G494) Driver Seat Front Vertical Sensor Ground circuit at the Front Driver Vertical Seat Adjuster Motor connector.

6. Move the seat switch in the front vertical adjust position then release the switch.

   Does the test light illuminate for approximately five seconds then turn off?

   Yes

   - Replace the Front Driver Vertical Seat Adjuster Motor assembly in accordance with the Service Information.
   - Perform POWER SEAT SYSTEM VERIFICATION TEST. Refer to **POWER SEAT SYSTEM VERIFICATION TEST**.

   No

   - Replace the Memory Seat Module (MSM) in accordance with the Service Information.
   - Perform POWER SEAT SYSTEM VERIFICATION TEST. Refer to **POWER SEAT SYSTEM VERIFICATION TEST**.

B1D72-SEAT FRONT VERTICAL POSITION SENSOR CIRCUIT HIGH

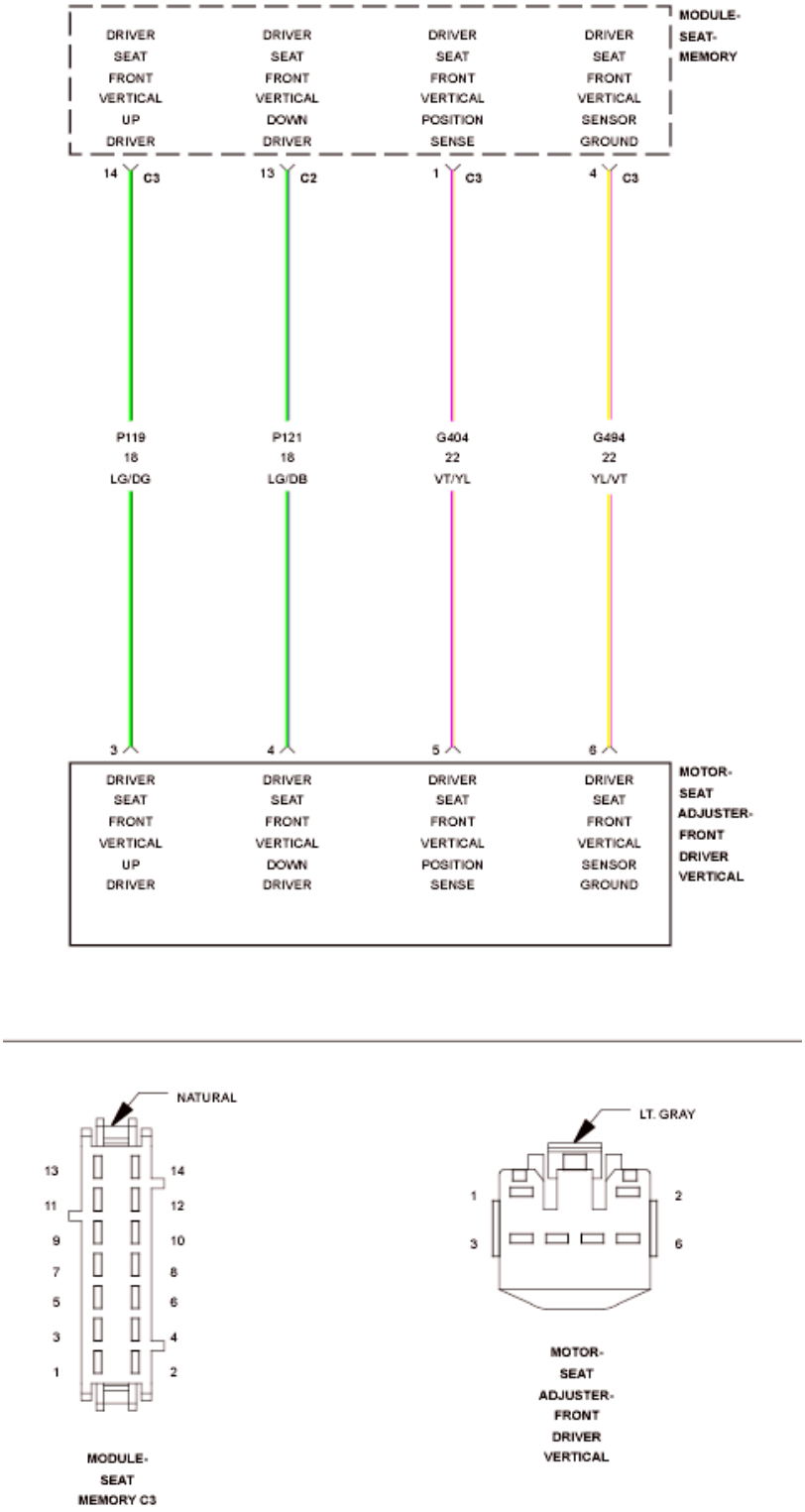

Fig. 46: Driver Seat Front Vertical Motor Wiring Diagram
Courtesy of CHRYSLER GROUP, LLC

For a complete wiring diagram, **refer to appropriate SYSTEM WIRING DIAGRAMS article** .

WHEN MONITORED:

When the seat motor is activated (sensor supply Voltage is switched on whenever motor is activated).

SET CONDITION:

If the sensor Voltage is not within a specified range and the seat switch is moved in the same direction three consecutive times.

POSSIBLE CAUSES

Possible Causes
(G404) DRIVER SEAT FRONT VERTICAL POSITION SENSE CIRCUIT SHORTED TO VOLTAGE
(G404) DRIVER SEAT FRONT VERTICAL POSITION SENSE CIRCUIT OPEN
(G494) DRIVER SEAT FRONT VERTICAL SENSOR GROUND CIRCUIT OPEN
FRONT DRIVER VERTICAL SEAT ADJUSTER MOTOR
MEMORY SEAT MODULE (MSM)

DIAGNOSTIC TEST

1. **TEST FOR INTERMITTENT CONDITION**
    1. Turn the ignition on.
    2. Using a scan tool, record and erase Diagnostic Trouble Codes (DTC's).
    3. Move the seat switch in the front vertical adjust position three times.
    4. Using a scan tool, read DTC's.

    Does the scan tool display DTC B1D72-SEAT FRONT VERTICAL POSITION SENSOR CIRCUIT HIGH?

    Yes

    - Go To 2.

    No

    - The conditions that caused this code to set are not present at this time. Verify seat harness is routed correctly. Using the wiring diagram/schematic as a guide, inspect the wiring and connectors. Look for chafed, pierced, pinched, or partially broken wires and broken, bent, pushed out, spread, corroded, or contaminated terminals.
    - Perform POWER SEAT SYSTEM VERIFICATION TEST. Refer to **POWER SEAT SYSTEM VERIFICATION TEST**.
2. **CHECK THE (G404) DRIVER SEAT FRONT VERTICAL POSITION SENSE CIRCUIT FOR A SHORT TO VOLTAGE**

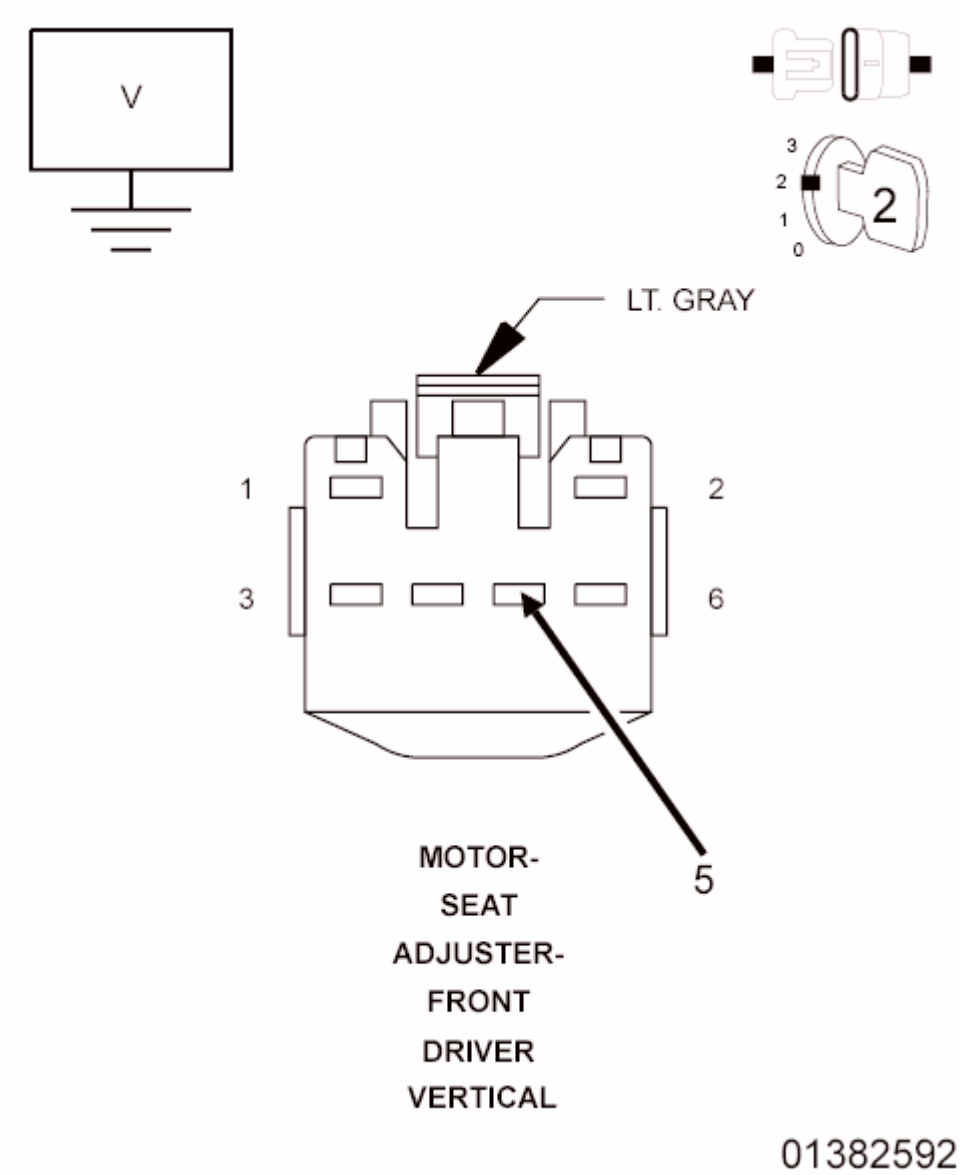

Fig. 47: Checking Driver Seat Front Vertical Position Sense Circuit For A Short To Voltage
Courtesy of CHRYSLER GROUP, LLC

1. Turn the ignition off.
2. Disconnect the Front Driver Vertical Seat Adjuster Motor connector.
3. Disconnect the MSM C3 connector.

NOTE: Check connectors. Clean and repair as necessary.

4. Turn the ignition on.
5. Measure the Voltage of the (G404) Driver Seat Front Vertical Position Sense circuit between the Driver Horizontal Seat Adjuster Motor connector and ground.

Is there any Voltage present?

Yes

- Repair the (G404) Driver Seat Front Vertical Position Sense circuit for a short to Voltage.
- Perform POWER SEAT SYSTEM VERIFICATION TEST. Refer to **POWER SEAT SYSTEM VERIFICATION TEST**.

No

- Go To 3.

3. **CHECK THE (G404) DRIVER SEAT FRONT VERTICAL POSITION SENSE CIRCUIT AND THE (G494) DRIVER SEAT FRONT VERTICAL SENSOR GROUND CIRCUIT FUNCTION**

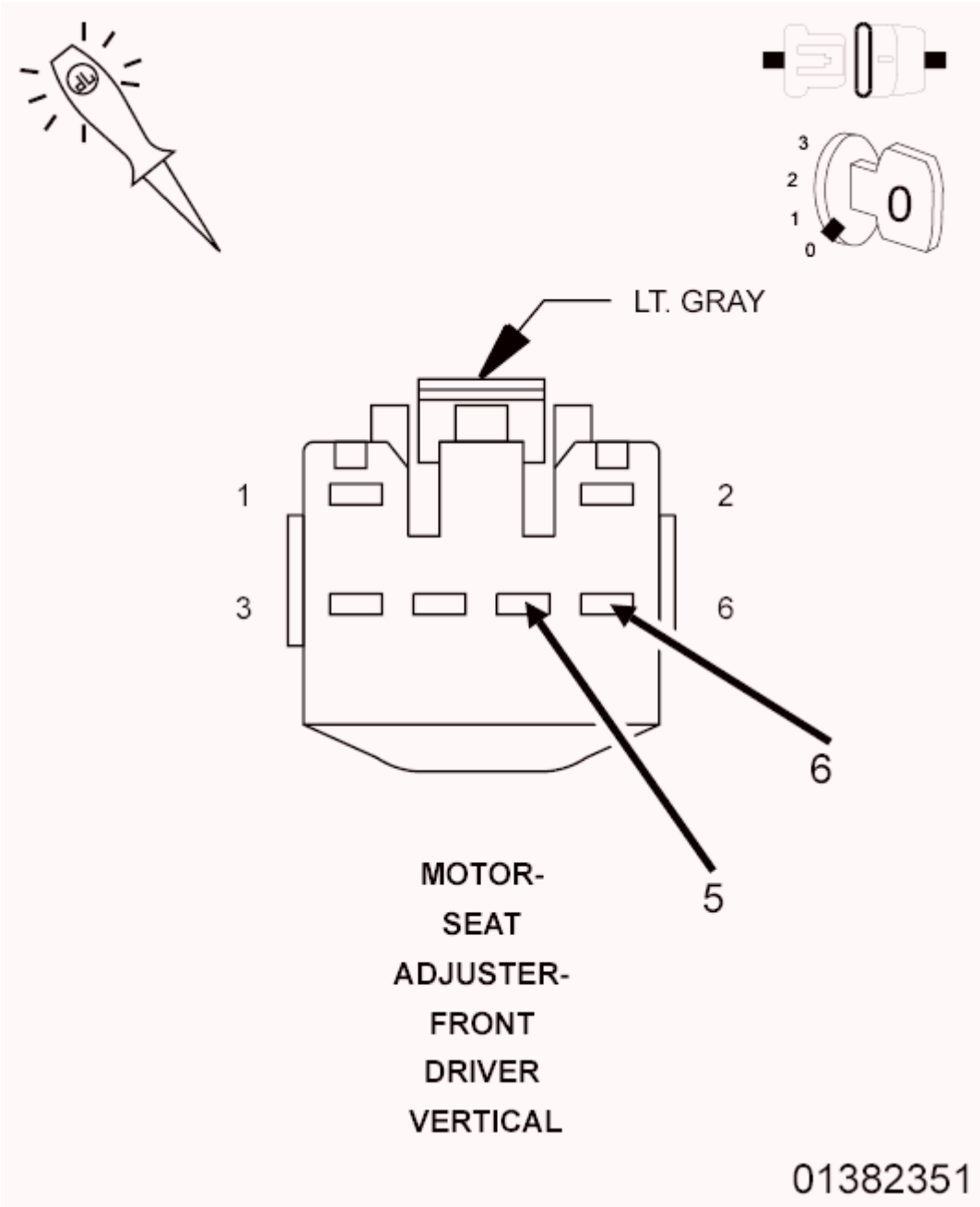

Fig. 48: Checking Driver Seat Front Vertical Position Sense Function
Courtesy of CHRYSLER GROUP, LLC

1. Turn the ignition off.
2. Reconnect the MSM C3 connector.
3. Disconnect the scan tool.
4. Turn off all vehicle interior and exterior lighting.
5. Mark sure all doors are closed then wait 10 seconds.
6. Connect a 12-Volt test light between the (G404) Driver Seat Front Vertical Position Sense circuit and the (G494) Driver Seat Front Vertical Sensor Ground circuit at the Driver Front Vertical Seat

Adjuster Motor connector.

7. Move the seat switch in the front vertical adjust position then release the switch.

   Does the test light illuminate for approximately five seconds then turn off?

   Yes

   - Replace the Front Driver Vertical Seat Adjuster Motor Assembly in accordance with the Service Information.
   - Perform POWER SEAT SYSTEM VERIFICATION TEST. Refer to **POWER SEAT SYSTEM VERIFICATION TEST**.

   No

   - Go To 4.

4. **CHECK THE (G404) DRIVER SEAT FRONT VERTICAL POSITION SENSE CIRCUIT FOR AN OPEN**

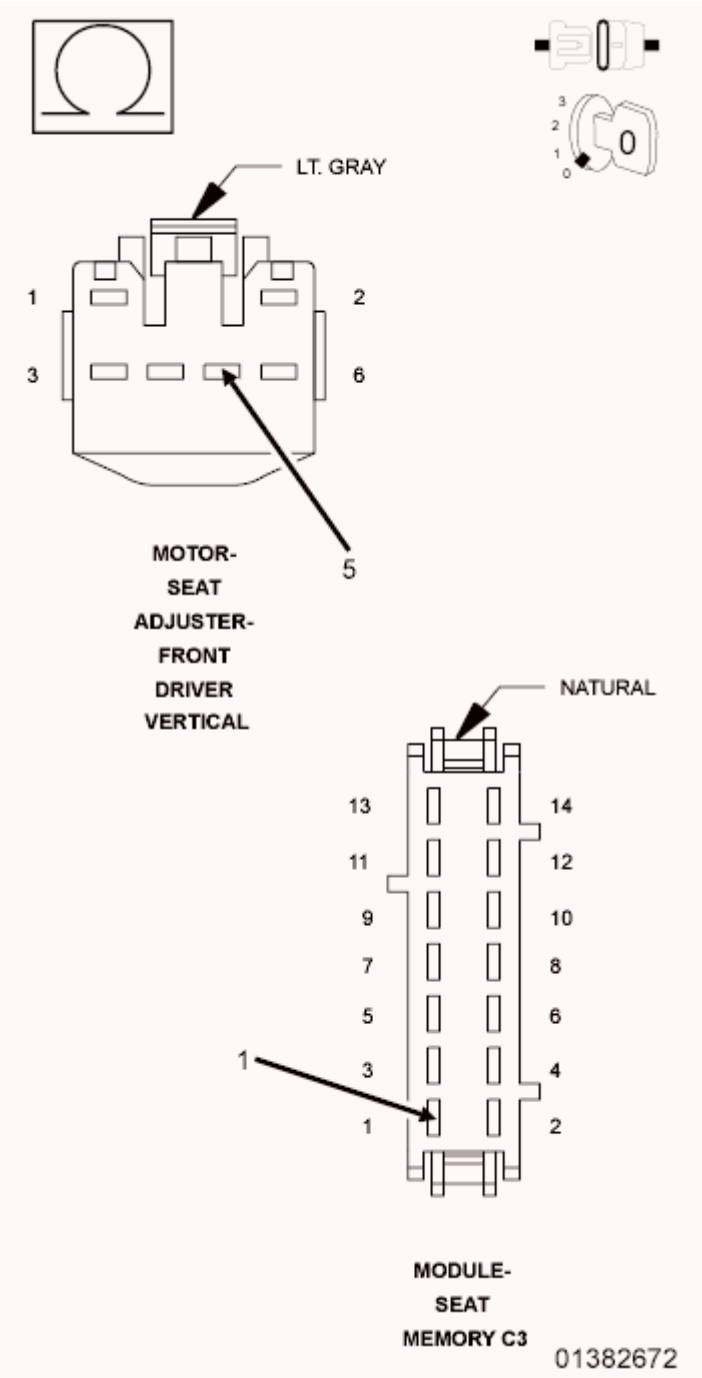

Fig. 49: Checking Driver Seat Front Vertical Position Sense Circuit For An Open
Courtesy of CHRYSLER GROUP, LLC

1. Disconnect the MSM C3 connector.

   NOTE: Check connectors. Clean and repair as necessary.

2. Measure the resistance of the (G404) Driver Seat Front Vertical Position Sense circuit between the Front Driver Vertical Seat Adjuster Motor connector and the MSM C3 connector.

Is the resistance below 5.0 Ohms?

Yes

- Go To 5.

No

- Repair the (G404) Driver Seat Front Vertical Position Sense circuit for an open.
- Perform POWER SEAT SYSTEM VERIFICATION TEST. Refer to **POWER SEAT SYSTEM VERIFICATION TEST**.

5. **CHECK THE (G494) DRIVER SEAT FRONT VERTICAL SENSOR GROUND CIRCUIT FOR AN OPEN**

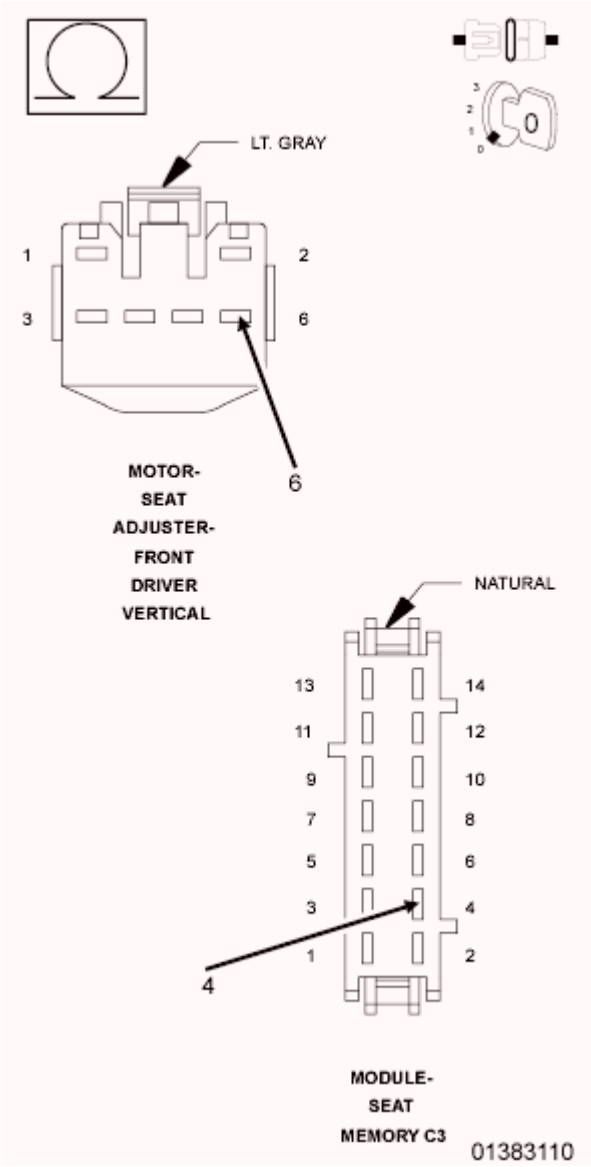

Fig. 50: Checking Driver Seat Front Vertical Sensor Ground Circuit For An Open
Courtesy of CHRYSLER GROUP, LLC

1. Measure the resistance of the (G494) Driver Seat Front Vertical Sensor Ground circuit between the Driver Front Vertical Seat Adjuster Motor connector and the MSM C3 connector.

   Is the resistance below 5.0 Ohms?

   Yes

   - Replace the Memory Seat Module (MSM) in accordance with the Service Information.
   - Perform POWER SEAT SYSTEM VERIFICATION TEST. Refer to **POWER SEAT SYSTEM VERIFICATION TEST**.

   No

   - Repair the (G494) Driver Seat Front Vertical Senor Ground circuit for an open.
   - Perform POWER SEAT SYSTEM VERIFICATION TEST. Refer to **POWER SEAT SYSTEM VERIFICATION TEST**.

B1D75-SEAT REAR VERTICAL POSITION SENSOR CIRCUIT LOW

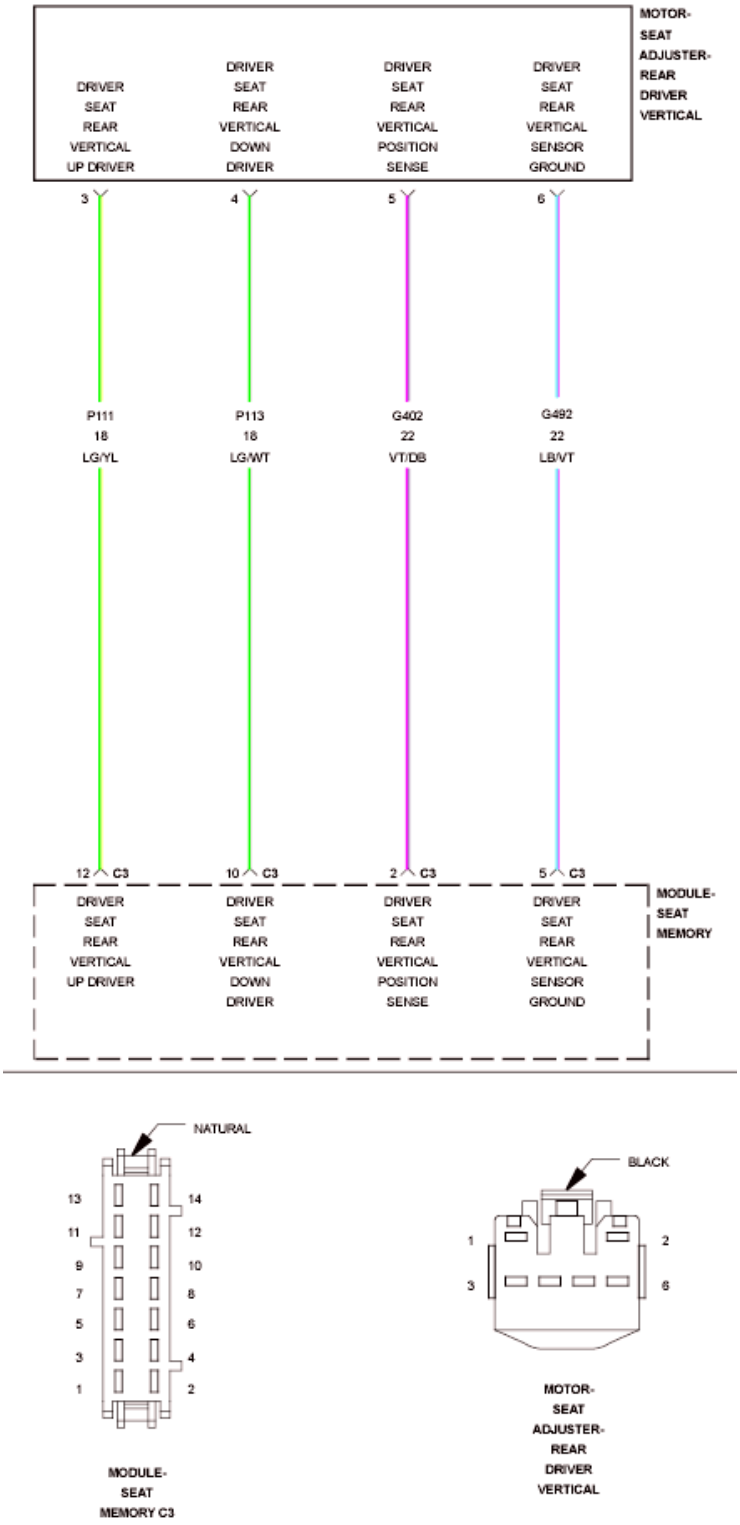

Fig. 51: Driver Seat Rear Vertical Motor Wiring Diagram
Courtesy of CHRYSLER GROUP, LLC

For a complete wiring diagram, **refer to appropriate SYSTEM WIRING DIAGRAMS article** .

WHEN MONITORED:

Continuously.

SET CONDITION:

If Voltage on the (G402) Driver Seat Rear Vertical Position Sense circuit is not within a specified range.

POSSIBLE CAUSES

Possible Causes
(G402) DRIVER SEAT REAR VERTICAL POSITION SENSE CIRCUIT SHORTED TO GROUND
(G402) DRIVER SEAT REAR VERTICAL POSITION SENSE CIRCUIT SHORTED TO THE (G492) DRIVER SEAT REAR VERTICAL SENSOR GROUND CIRCUIT
(G402) DRIVER SEAT REAR VERTICAL POSITION SENSE CIRCUIT SHORTED TO THE (P111) DRIVER SEAT REAR VERTICAL UP DRIVER CIRCUIT
(G402) DRIVER SEAT REAR VERTICAL POSITION SENSE CIRCUIT SHORTED TO THE (P113) DRIVER SEAT REAR VERTICAL DOWN DRIVER CIRCUIT
REAR DRIVER VERTICAL SEAT ADJUSTER MOTOR
MEMORY SEAT MODULE (MSM)

DIAGNOSTIC TEST

1. **CHECK FOR ACTIVE FAULT WITH SEAT STATIONARY**
    1. Turn the ignition on.
    2. Using a scan tool, record and erase Diagnostic Trouble Codes (DTC's).
    3. Cycle the ignition from on to off three times.
    4. Turn the ignition on and wait 30 seconds.
    5. Using a scan tool, read DTC's.

    Is DTC B1D75-SEAT REAR VERTICAL POSITION SENSOR CIRCUIT LOW active?

    Yes

    - Go To 3.

    No

    - Go To 2.
2. **CHECK FOR ACTIVE FAULT WHILE ADJUSTING THE SEAT**
    1. Move the seat switch in the rear vertical adjust position three times.
    2. Using a scan tool, read DTC's.

    Is DTC B1D75-SEAT REAR VERTICAL POSITION SENSOR CIRCUIT LOW active?

Yes

- Go To 3.

No

- The conditions that caused this code to set are not present at this time. Verify seat harness is routed correctly. Using the wiring diagram/schematic as a guide, inspect the wiring and connectors. Look for chafed, pierced, pinched, or partially broken wires and broken, bent, pushed out, spread, corroded, or contaminated terminals.
- Perform POWER SEAT SYSTEM VERIFICATION TEST. Refer to **POWER SEAT SYSTEM VERIFICATION TEST**.

3. **CHECK THE (G402) DRIVER SEAT REAR VERTICAL POSITION SENSE CIRCUIT FOR A SHORT TO GROUND**

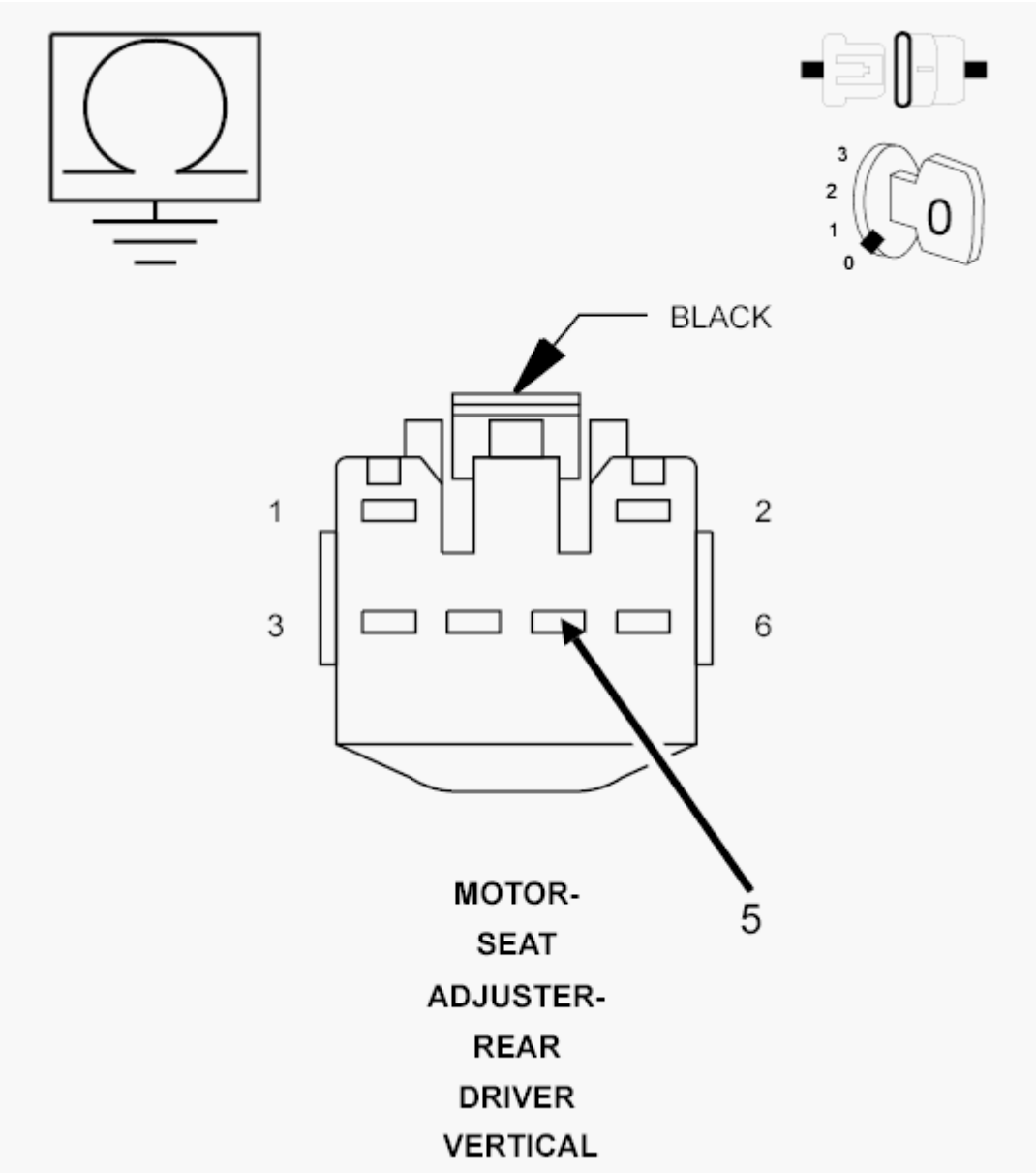

Fig. 52: Checking Driver Seat Rear Vertical Position Sense Circuit For A Short To Ground
Courtesy of CHRYSLER GROUP, LLC

1. Turn the ignition off.
2. Disconnect the MSM C3 connector.
3. Disconnect the Rear Driver Vertical Seat Adjuster Motor connector.

NOTE: Check connectors. Clean and repair as necessary.

4. Measure the resistance of the (G402) Driver Seat Rear Vertical Position Sense circuit between ground and the Rear Driver Vertical Seat Adjuster Motor connector.

   Is the resistance below 10K Ohms?

Yes

- Repair the (G402) Driver Seat Rear Vertical Position Sense circuit for a short to ground.
- Perform POWER SEAT SYSTEM VERIFICATION TEST. Refer to **POWER SEAT SYSTEM VERIFICATION TEST**.

No

- Go To 4.

4. **CHECK THE (G402) DRIVER SEAT REAR VERTICAL POSITION SENSE CIRCUIT FOR A SHORT TO (G492) DRIVER SEAT REAR VERTICAL SENSOR GROUND CIRCUIT, (P111) DRIVER SEAT REAR VERTICAL UP DRIVER CIRCUIT, AND (P113) DRIVER SEAT REAR VERTICAL DOWN DRIVER CIRCUIT**

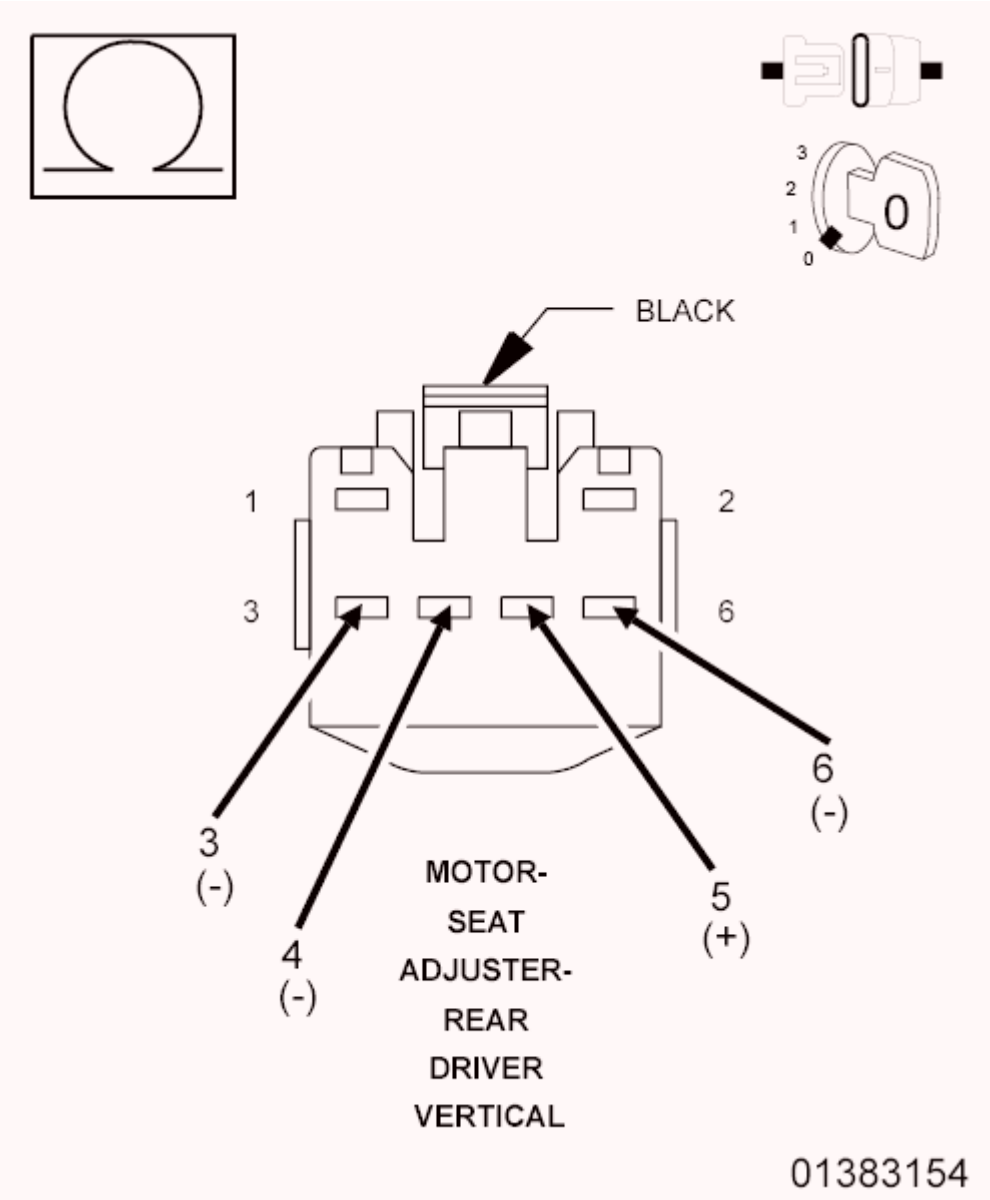

Fig. 53: Checking Driver Seat Rear Vertical Position Sense Circuit For A Short To Other Circuits
Courtesy of CHRYSLER GROUP, LLC

1. Measure the resistance between the (G402) Driver Seat Rear Vertical Position Sense circuit and the (G492) Driver Seat Rear Vertical Sensor Ground circuit at the Rear Driver Vertical Seat Adjuster Motor connector.
2. Measure the resistance between the (G402) Driver Seat Rear Vertical Position Sense circuit and the (P111) Driver Seat Rear Vertical Up Driver circuit at the Rear Driver Vertical Seat Adjuster Motor connector.
3. Measure the resistance between the (G402) Driver Seat Rear Vertical Position Sense circuit and the (P113) Driver Seat Rear Vertical Down Driver circuit at the Rear Driver Vertical Seat Adjuster Motor connector.

   Is the resistance below 10K Ohms for any measurement?

   Yes

   - Repair all circuits with a resistance below 10K Ohms for a short to the (G402) Driver Seat Rear Vertical Position Sense circuit.
   - Perform POWER SEAT SYSTEM VERIFICATION TEST. Refer to **POWER SEAT SYSTEM VERIFICATION TEST**.

   No

   - Go To 5.

5. **CHECK THE (G402) DRIVER SEAT REAR VERTICAL POSITION SENSE CIRCUIT AND THE (G492) DRIVER SEAT REAR VERTICAL SENSOR GROUND CIRCUIT FUNCTION**

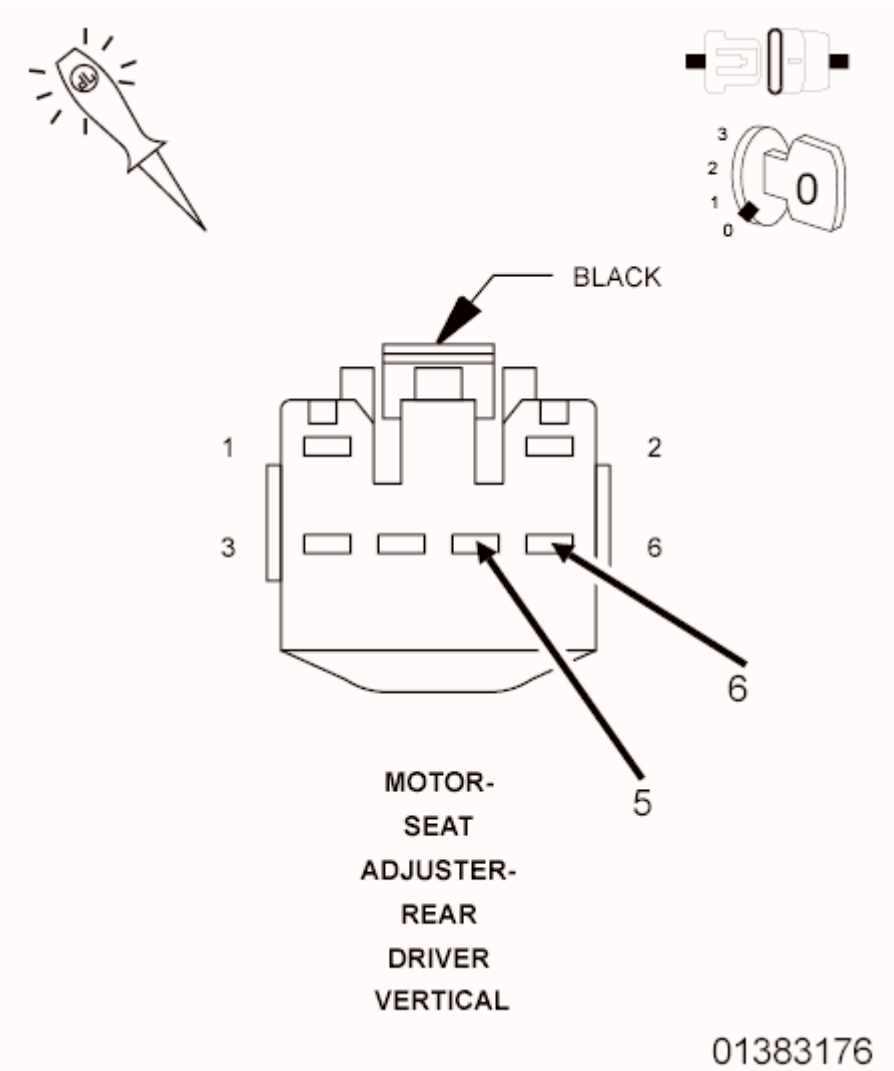

Fig. 54: Checking Driver Seat Rear Vertical Position Sense Function
Courtesy of CHRYSLER GROUP, LLC

1. Reconnect the MSM C3 connector.
2. Disconnect the scan tool.
3. Turn off all vehicle interior and exterior lighting.
4. Mark sure all doors are closed then wait 10 seconds.
5. Connect a 12-Volt test light between the (G402) Driver Seat Rear Vertical Position Sense circuit and the (G492) Driver Seat Rear Vertical Sensor Ground circuit at the Rear Driver Vertical Seat Adjuster Motor connector.
6. Move the seat switch in the rear vertical adjust position then release the switch.

   Does the test light illuminate for approximately five seconds then turn off?

   Yes

- Replace the Rear Driver Vertical Seat Adjuster Motor assembly in accordance with the Service Information.
- Perform POWER SEAT SYSTEM VERIFICATION TEST. Refer to **POWER SEAT SYSTEM VERIFICATION TEST**.

No

- Replace the Memory Seat Module (MSM) in accordance with the Service Information.
- Perform POWER SEAT SYSTEM VERIFICATION TEST. Refer to **POWER SEAT SYSTEM VERIFICATION TEST**.

B1D76-SEAT REAR VERTICAL POSITION SENSOR CIRCUIT HIGH

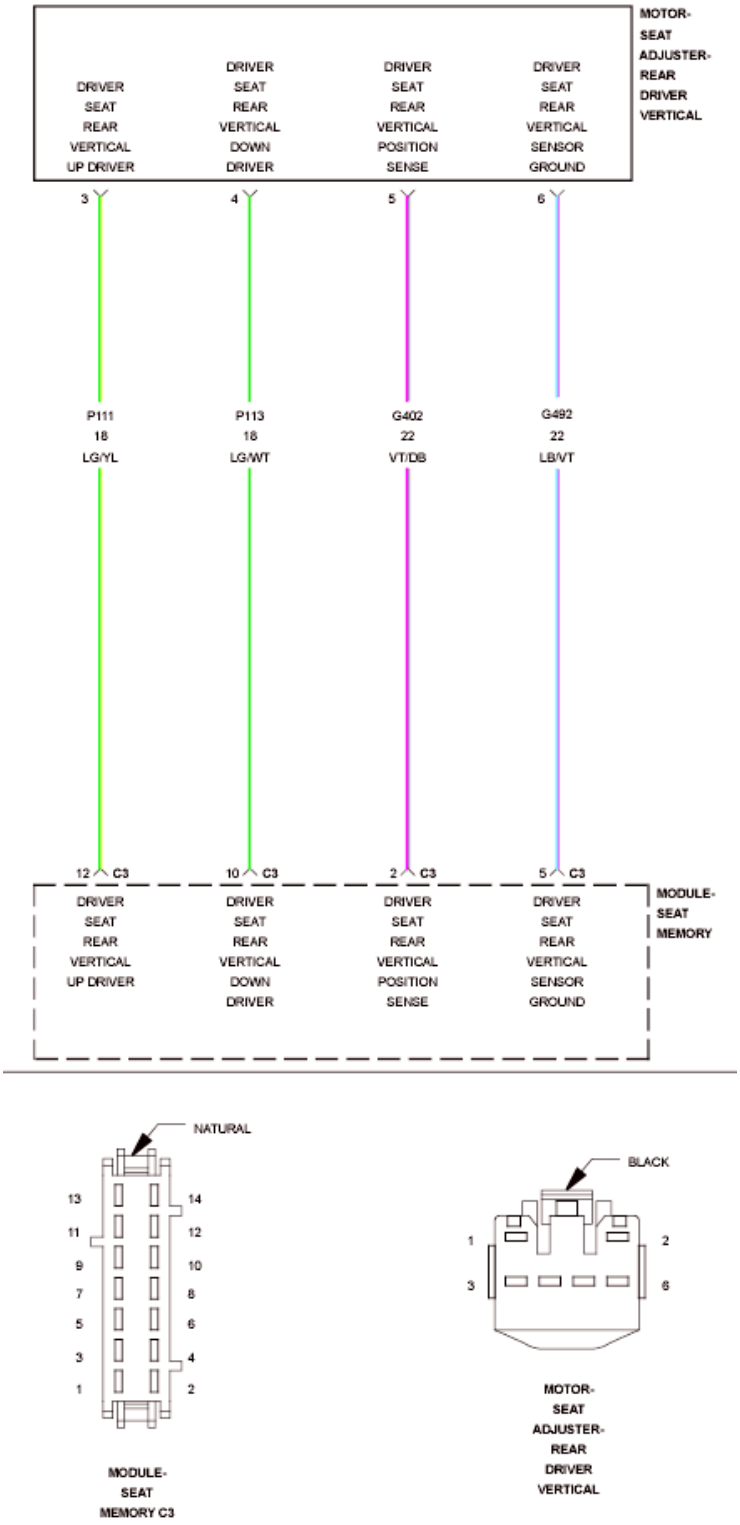

Fig. 55: Driver Seat Rear Vertical Motor Wiring Diagram
Courtesy of CHRYSLER GROUP, LLC

For a complete wiring diagram, **refer to appropriate SYSTEM WIRING DIAGRAMS article**

WHEN MONITORED:

When the seat motor is activated (sensor supply voltage is switched on whenever motor is activated).

SET CONDITION:

If the sensor Voltage is not within a specified range and the seat switch is moved in the same direction three consecutive times.

POSSIBLE CAUSES

Possible Causes
(G402) DRIVER SEAT REAR VERTICAL POSITION SENSE CIRCUIT SHORTED TO VOLTAGE
(G402) DRIVER SEAT REAR VERTICAL POSITION SENSE CIRCUIT OPEN
(G492) DRIVER SEAT REAR VERTICAL SENSOR GROUND CIRCUIT OPEN
REAR DRIVER VERTICAL SEAT ADJUSTER MOTOR
MEMORY SEAT MODULE (MSM)

DIAGNOSTIC TEST

1. **TEST FOR INTERMITTENT CONDITION**
    1. Turn the ignition on.
    2. Using a scan tool, record and erase Diagnostic Trouble Codes (DTC's).
    3. Move the seat switch in the rear vertical adjust position three times.
    4. Using a scan tool, read DTC's.

    Does the scan tool display DTC B1D76-SEAT REAR VERTICAL POSITION SENSOR CIRCUIT HIGH?

    Yes

    - Go To 2.

    No

    - The conditions that caused this code to set are not present at this time. Verify seat harness is routed correctly. Using the wiring diagram/schematic as a guide, inspect the wiring and connectors. Look for chafed, pierced, pinched, or partially broken wires and broken, bent, pushed out, spread, corroded, or contaminated terminals.
    - Perform POWER SEAT SYSTEM VERIFICATION TEST. Refer to **POWER SEAT SYSTEM VERIFICATION TEST**.
2. **CHECK THE (G402) DRIVER SEAT REAR VERTICAL POSITION SENSE CIRCUIT FOR A SHORT TO VOLTAGE**

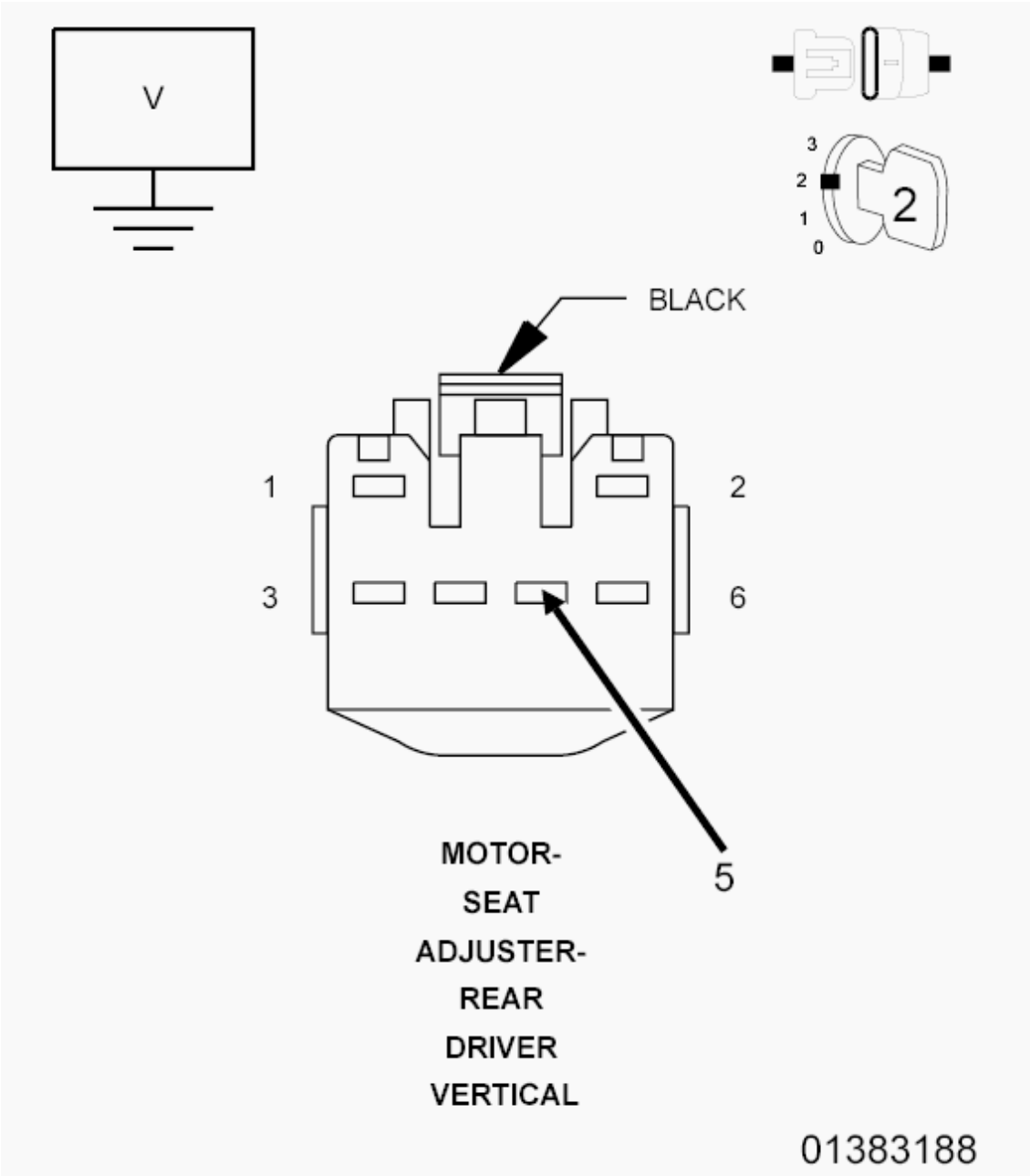

Fig. 56: Checking Driver Seat Rear Vertical Position Sense Circuit For A Short To Voltage
Courtesy of CHRYSLER GROUP, LLC

1. Turn the ignition off.
2. Disconnect the Rear Driver Vertical Seat Adjuster Motor connector.
3. Disconnect the MSM C3 connector.

NOTE: Check connectors. Clean and repair as necessary.

4. Turn the ignition on.

5. Measure the Voltage of the (G402) Driver Seat Rear Vertical Position Sense circuit between the Rear Driver Vertical Seat Adjuster Motor connector and ground.

   Is there any Voltage present?

   Yes

   - Repair the (G402) Driver Seat Rear Vertical Position Sense circuit for a short to Voltage.
   - Perform POWER SEAT SYSTEM VERIFICATION TEST. Refer to **POWER SEAT SYSTEM VERIFICATION TEST**.

   No

   - Go To 3.

3. **CHECK THE (G402) DRIVER SEAT REAR VERTICAL POSITION SENSE CIRCUIT AND THE (G492) DRIVER SEAT REAR VERTICAL SENSOR GROUND CIRCUIT FUNCTION**

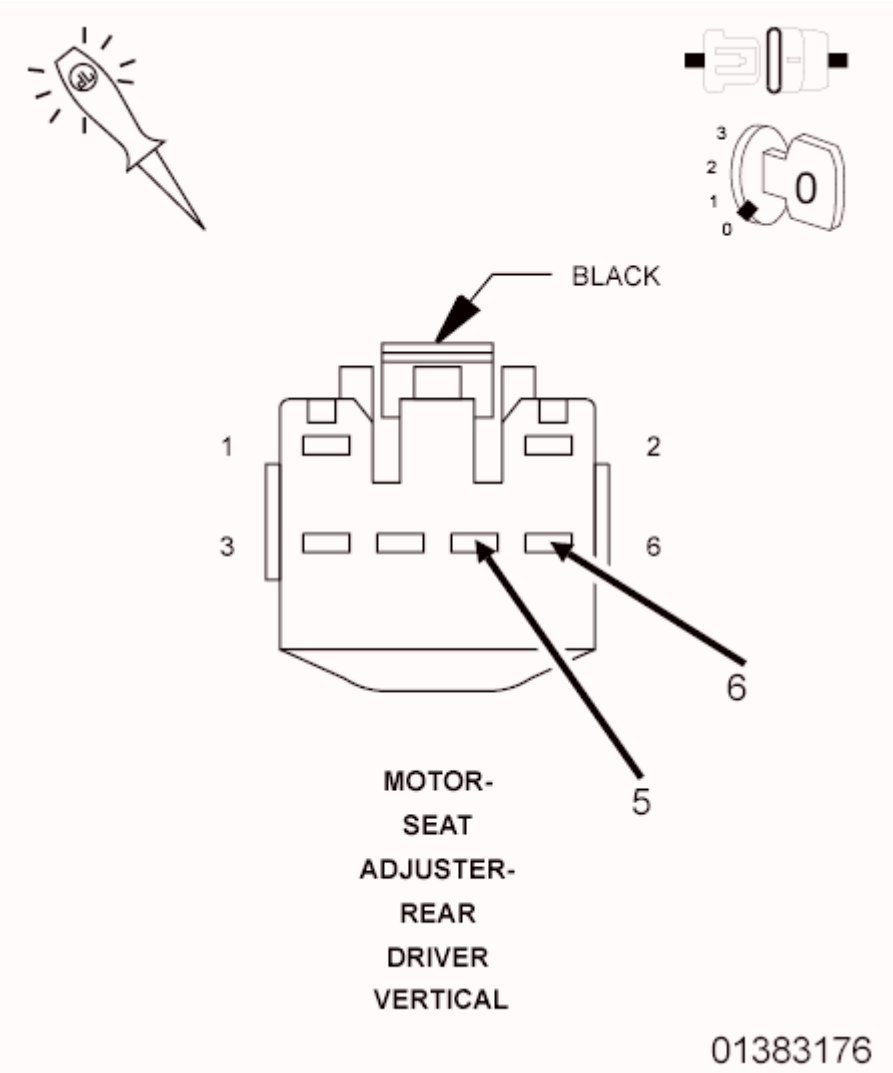

Fig. 57: Checking Driver Seat Rear Vertical Position Sense Function
Courtesy of CHRYSLER GROUP, LLC

1. Turn the ignition off.
2. Reconnect the MSM C3 connector.
3. Disconnect the scan tool.
4. Turn off all vehicle interior and exterior lighting.
5. Mark sure all doors are closed then wait 10 seconds.
6. Connect a 12-Volt test light between the (G402) Driver Seat Rear Vertical Position Sense circuit and the (G492) Driver Seat Rear Vertical Sensor Ground circuit at the Driver Rear Vertical Seat Adjuster Motor connector.
7. Move the seat switch in the rear vertical adjust position then release the switch.

   Does the test light illuminate for approximately five seconds then turn off?

   Yes

   - Replace the Rear Driver Vertical Seat Adjuster motor assembly in accordance with the Service Information.
   - Perform POWER SEAT SYSTEM VERIFICATION TEST. Refer to **POWER SEAT SYSTEM VERIFICATION TEST**.

   No

   - Go To 4.

4. **CHECK THE (G402) DRIVER SEAT REAR VERTICAL POSITION SENSE CIRCUIT FOR AN OPEN**

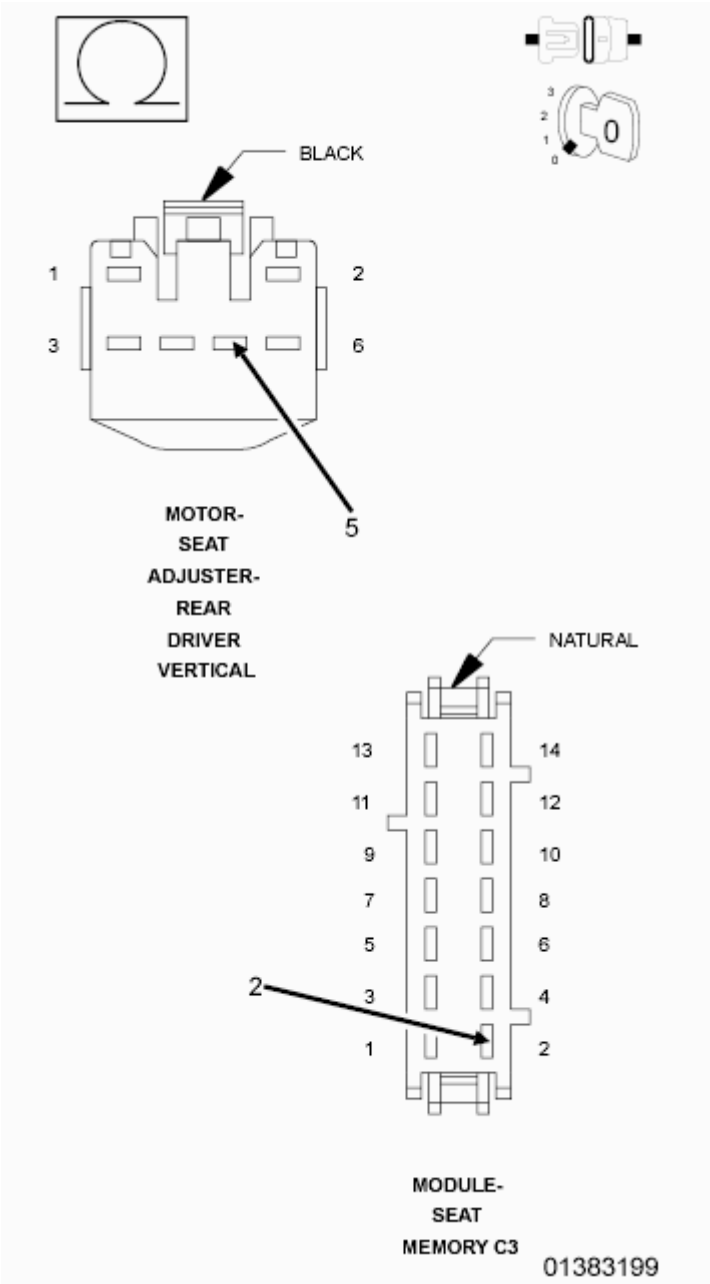

Fig. 58: Checking Driver Seat Rear Vertical Position Sense Circuit For An Open
Courtesy of CHRYSLER GROUP, LLC

1. Disconnect the MSM C3 connector.

   NOTE: Check connectors. Clean and repair as necessary.

2. Measure the resistance of the (G402) Driver Seat Rear Vertical Position Sense circuit between the Rear Driver Vertical Seat Adjuster Motor connector and the MSM C3 connector.

   Is the resistance below 5.0 ohms?

Yes

- Go To 5.

No

- Repair the (G402) Driver Seat Rear Vertical Position Sense circuit for an open.
- Perform POWER SEAT SYSTEM VERIFICATION TEST. Refer to **POWER SEAT SYSTEM VERIFICATION TEST**.

5. **CHECK THE (G492) DRIVER SEAT REAR VERTICAL SENSOR GROUND CIRCUIT FOR AN OPEN**

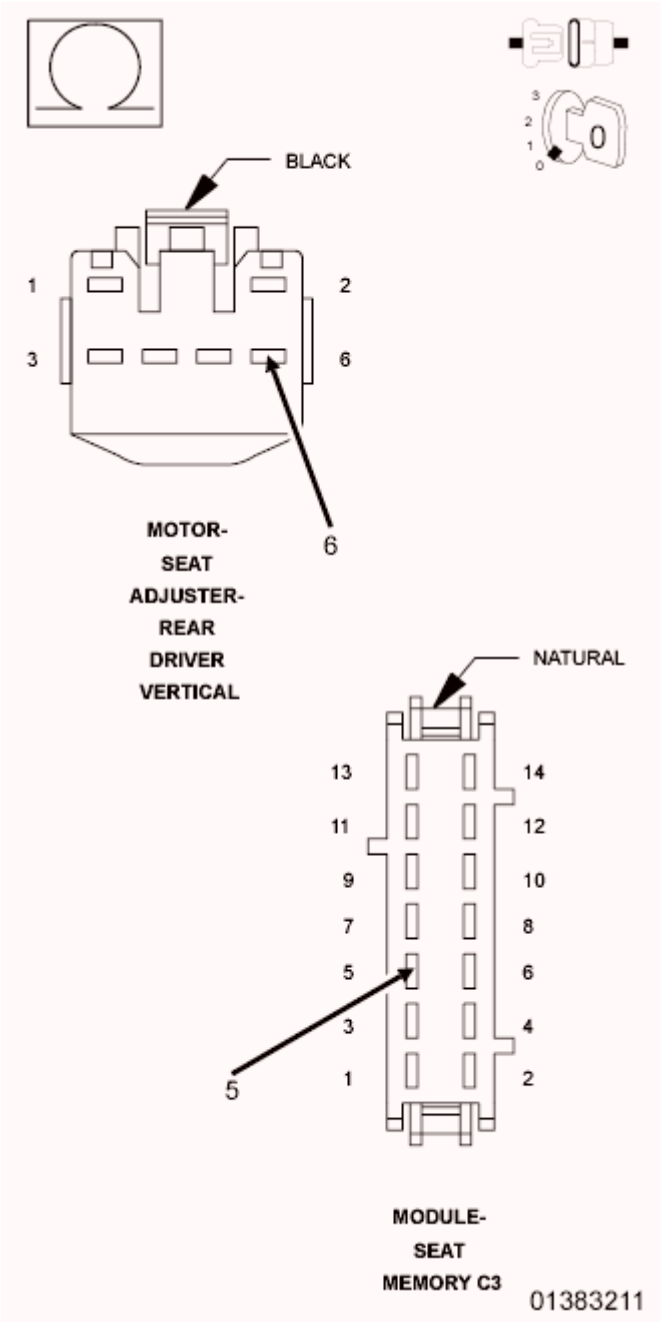

Fig. 59: Checking Driver Seat Rear Vertical Sensor Ground Circuit For An Open
Courtesy of CHRYSLER GROUP, LLC

1. Measure the resistance of the (G492) Driver Seat Rear Vertical Sensor Ground circuit between the Driver Rear Vertical Seat Adjuster Motor connector and the MSM C3 connector.

   Is the resistance below 5.0 ohms?

   Yes

   - Replace the Memory Seat Module (MSM) in accordance with the Service Information.

- Perform POWER SEAT SYSTEM VERIFICATION TEST. Refer to **POWER SEAT SYSTEM VERIFICATION TEST**.

No

- Repair the (G492) Driver Seat Rear Vertical Sensor Ground circuit for an open.
- Perform POWER SEAT SYSTEM VERIFICATION TEST. Refer to **POWER SEAT SYSTEM VERIFICATION TEST**.

B1D79-SEAT RECLINER POSITION SENSOR CIRCUIT LOW

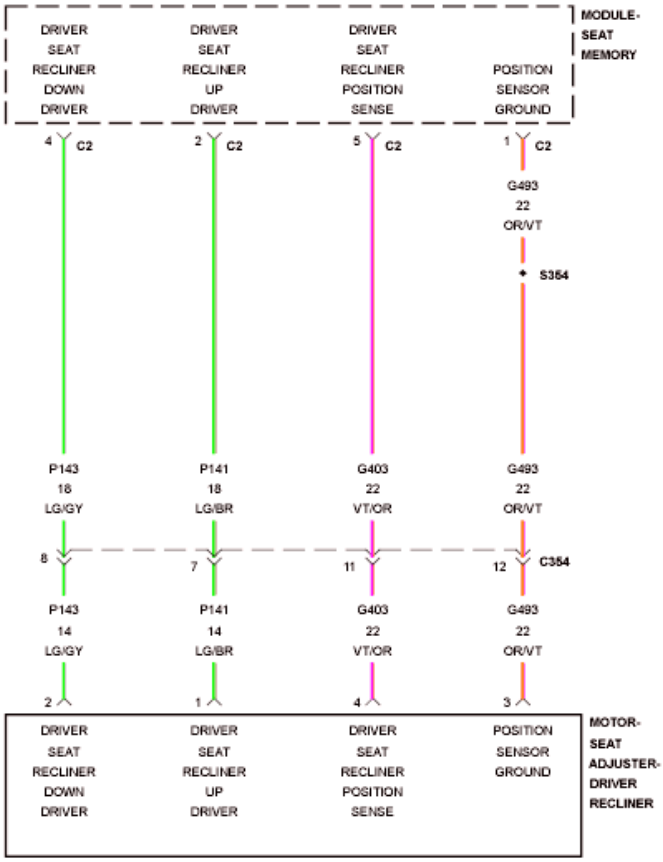

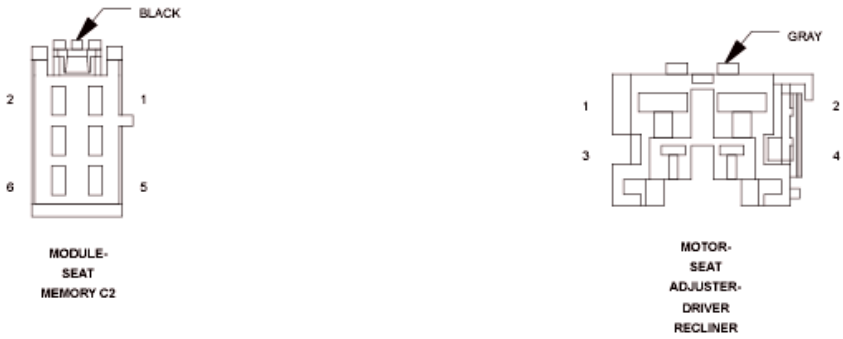

Fig. 60: Seat Recliner Position Sensor Wiring Diagram
Courtesy of CHRYSLER GROUP, LLC

For a complete wiring diagram, **refer to appropriate SYSTEM WIRING DIAGRAMS article** .

WHEN MONITORED:

Continuously.

SET CONDITION:

If Voltage on the (G403) Driver Seat Recliner Position Sense circuit is not within a specified range.

POSSIBLE CAUSES

Possible Causes
(G403) DRIVER SEAT RECLINER POSITION SENSE CIRCUIT SHORTED TO GROUND
(G403) DRIVER SEAT RECLINER POSITION SENSE CIRCUIT SHORTED TO THE (G493) DRIVER SEAT RECLINER POSITION SENSOR GROUND CIRCUIT
(G403) DRIVER SEAT RECLINER POSITION SENSE CIRCUIT SHORTED TO THE (P141) DRIVER SEAT RECLINER UP DRIVER CIRCUIT
(G403) DRIVER SEAT RECLINER POSITION SENSE CIRCUIT SHORTED TO THE (P143) DRIVER SEAT RECLINER DOWN DRIVER CIRCUIT
DRIVER RECLINER SEAT ADJUSTER MOTOR
MEMORY SEAT MODULE (MSM)

DIAGNOSTIC TEST

1. **CHECK FOR ACTIVE FAULT WITH SEAT STATIONARY**
    1. Turn the ignition on.
    2. Using a scan tool, record and erase Diagnostic Trouble Codes (DTC's).
    3. Cycle the ignition from on to off three times.
    4. Turn the ignition on and wait 30 seconds.
    5. Using a scan tool, read DTC's.

    Is DTC B1D79-SEAT RECLINER POSITION SENSOR CIRCUIT LOW active?

    Yes

    - Go To 3.

    No

    - Go To 2.
2. **CHECK FOR ACTIVE FAULT WHILE ADJUSTING THE SEAT**
    1. Move the seat switch in the recliner adjust position three times.
    2. Using a scan tool, read DTC's.

    Is DTC B1D79-SEAT RECLINER POSITION SENSOR CIRCUIT LOW active?

Yes

- Go To 3.

No

- The conditions that caused this code to set are not present at this time. Verify seat harness is routed correctly. Using the wiring diagram/schematic as a guide, inspect the wiring and connectors. Look for chafed, pierced, pinched, or partially broken wires and broken, bent, pushed out, spread, corroded, or contaminated terminals.
- Perform POWER SEAT SYSTEM VERIFICATION TEST. Refer to **POWER SEAT SYSTEM VERIFICATION TEST**.

3. **CHECK THE (G403) DRIVER SEAT RECLINER POSITION SENSE CIRCUIT FOR A SHORT TO GROUND**

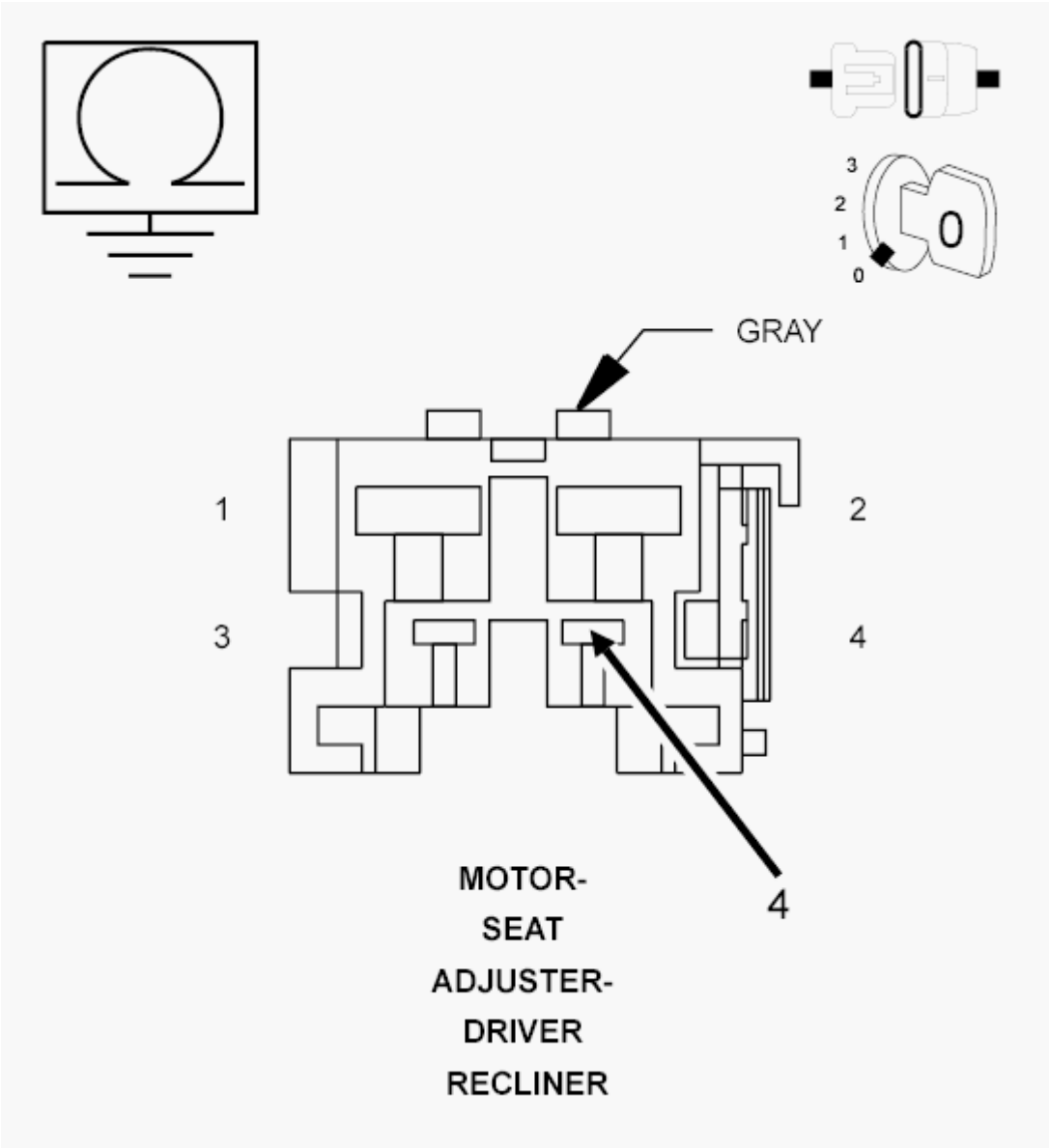

Fig. 61: Checking Driver Seat Recliner Position Sense Circuit For A Short To Ground
Courtesy of CHRYSLER GROUP, LLC

1. Turn the ignition off.
2. Disconnect the MSM C2 connector.
3. Disconnect the Driver Recliner Seat Adjuster Motor connector.

NOTE: Check connectors. Clean and repair as necessary.

4. Measure the resistance of the (G403) Driver Seat Recliner Position Sense circuit between ground and the Driver Recliner Seat Adjuster Motor connector.

   Is the resistance below 10K Ohms?

Yes

- Repair the (G403) Driver Seat Recliner Position Sense circuit for a short to ground.
- Perform POWER SEAT SYSTEM VERIFICATION TEST. Refer to **POWER SEAT SYSTEM VERIFICATION TEST**.

No

- Go To 4.

4. **CHECK THE (G403) DRIVER SEAT RECLINER POSITION SENSE CIRCUIT FOR A SHORT TO THE (G493) DRIVER SEAT RECLINER POSITION SENSOR GROUND CIRCUIT, THE (P141) DRIVER SEAT RECLINER UP DRIVER CIRCUIT, AND THE (P143) DRIVER SEAT RECLINER DOWN DRIVER CIRCUIT**

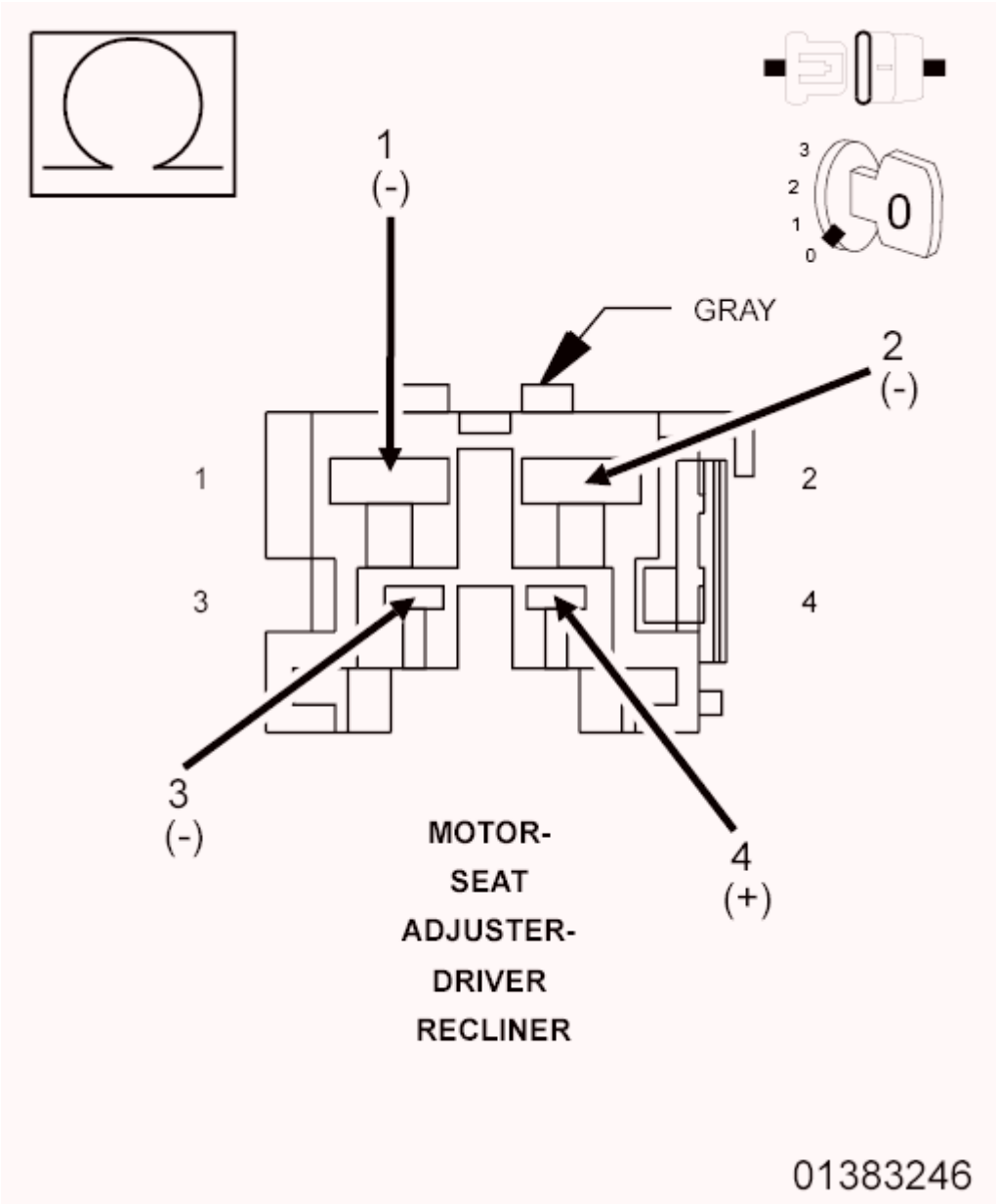

Fig. 62: Checking Driver Seat Recliner Position Sense Circuit For A Short To Other Circuits
Courtesy of CHRYSLER GROUP, LLC

1. Measure the resistance between the (G403) Driver Seat Recliner Position Sense circuit and the (G493) Driver Seat Recliner Position Sensor Ground circuit at the Driver Recliner Seat Adjuster Motor connector.
2. Measure the resistance between the (G403) Driver Seat Recliner Position Sense circuit and the (P141) Driver Seat Recliner Up Driver circuit at the Driver Recliner Seat Adjuster Motor connector.
3. Measure the resistance between the (G403) Driver Seat Recliner Position Sense circuit and the (P143) Driver Seat Recliner Down Driver circuit at the Driver Recliner Seat Adjuster Motor connector.

Is the resistance below 10K Ohms for any measurement?

Yes

- Repair all circuits with a resistance below 10K Ohms for a short to the (G403) Driver Seat Recliner Position Sense circuit.
- Perform POWER SEAT SYSTEM VERIFICATION TEST. Refer to **POWER SEAT SYSTEM VERIFICATION TEST**.

No

- Go To 5.

5. **CHECK THE (G403) DRIVER SEAT RECLINER POSITION SENSE CIRCUIT AND THE (G493) DRIVER SEAT RECLINER POSITION SENSOR GROUND CIRCUIT FUNCTION**

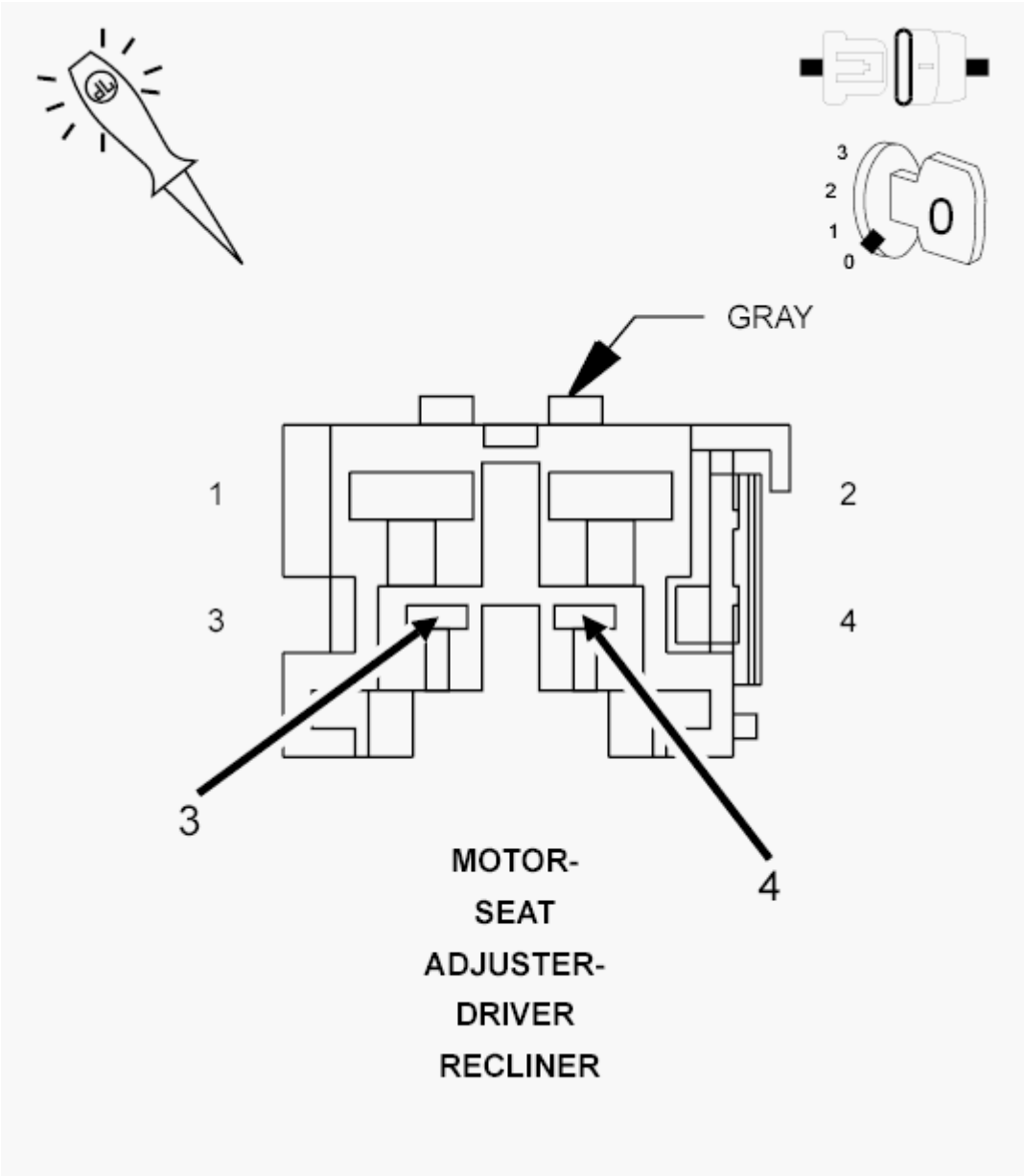

Fig. 63: Checking Driver Seat Recliner Position Sense Circuit Function
Courtesy of CHRYSLER GROUP, LLC

1. Reconnect the MSM C2 connector.
2. Disconnect the scan tool.
3. Turn off all vehicle interior and exterior lighting.
4. Mark sure all doors are closed then wait 10 seconds.
5. Connect a 12-Volt test light between the (G403) Driver Seat Recliner Position Sense circuit and the (G493) Driver Seat Recliner Position Sensor Ground circuit at the Driver Recliner Seat Adjuster Motor connector.
6. Move the seat switch in the recliner adjust position then release the switch.

Does the test light illuminate for approximately five seconds then turn off?

Yes

- Replace the Driver Recliner Seat Adjuster Motor assembly in accordance with the Service Information.
- Perform POWER SEAT SYSTEM VERIFICATION TEST. Refer to **POWER SEAT SYSTEM VERIFICATION TEST**.

No

- Replace the Memory Seat Module (MSM) in accordance with the Service Information.
- Perform POWER SEAT SYSTEM VERIFICATION TEST. Refer to **POWER SEAT SYSTEM VERIFICATION TEST**.

B1D7A-SEAT RECLINER POSITION SENSOR CIRCUIT HIGH

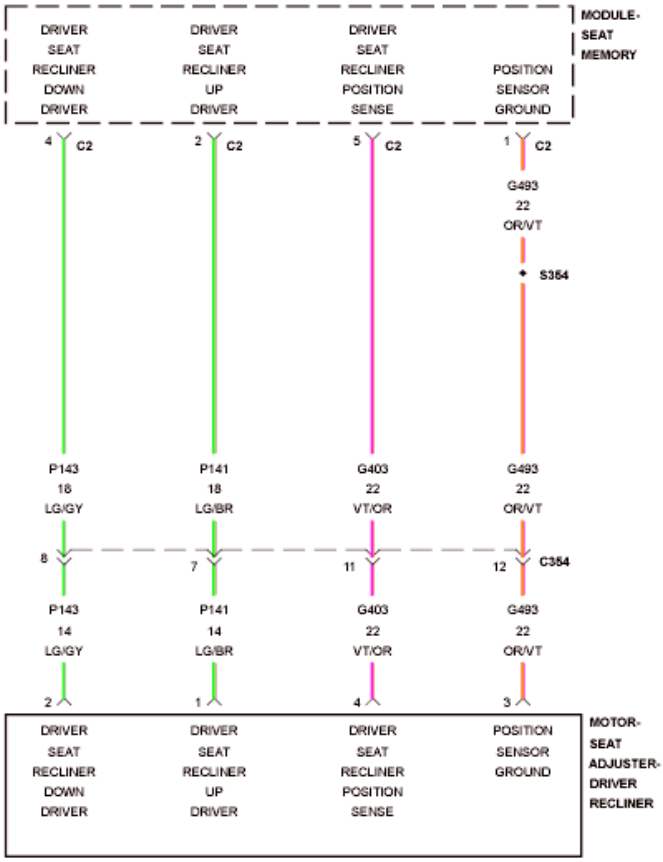

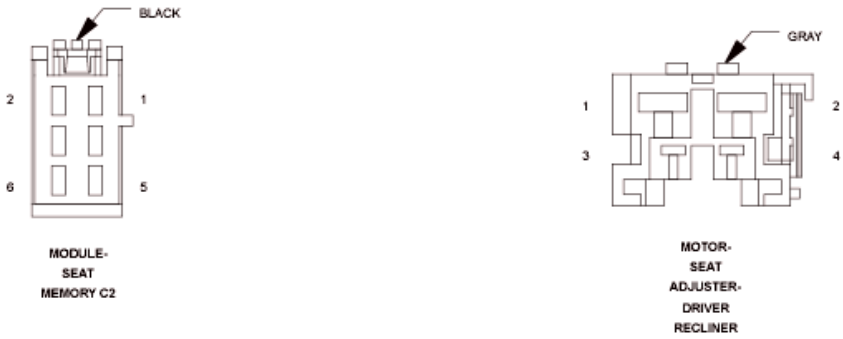

Fig. 64: Seat Recliner Position Sensor Wiring Diagram
Courtesy of CHRYSLER GROUP, LLC

For a complete wiring diagram, **refer to appropriate SYSTEM WIRING DIAGRAMS article** .

WHEN MONITORED:

When the seat motor is activated (sensor supply Voltage is switched on whenever motor is activated).

SET CONDITION:

If the sensor Voltage is not within a specified range and the seat switch is moved in the same direction three consecutive times.

POSSIBLE CAUSES

Possible Causes
(G403) DRIVER SEAT RECLINER POSITION SENSE CIRCUIT SHORTED TO VOLTAGE
(G403) DRIVER SEAT RECLINER POSITION SENSE CIRCUIT OPEN
(G493) DRIVER SEAT RECLINER POSITION SENSOR GROUND CIRCUIT OPEN
DRIVER RECLINER SEAT ADJUSTER MOTOR
MEMORY SEAT MODULE (MSM)

DIAGNOSTIC TEST

1. **TEST FOR INTERMITTENT CONDITION**
    1. Turn the ignition on.
    2. Using a scan tool, record and erase Diagnostic Trouble Codes (DTC's).
    3. Move the seat switch in the recliner adjust position three times.
    4. Using a scan tool, read DTC's.

    Does the scan tool display DTC B1D7A-SEAT RECLINER POSITION SENSOR CIRCUIT HIGH?

    Yes

    - Go To 2.

    No

    - The conditions that caused this code to set are not present at this time. Verify seat harness is routed correctly. Using the wiring diagram/schematic as a guide, inspect the wiring and connectors. Look for chafed, pierced, pinched, or partially broken wires and broken, bent, pushed out, spread, corroded, or contaminated terminals.
    - Perform POWER SEAT SYSTEM VERIFICATION TEST. Refer to **POWER SEAT SYSTEM VERIFICATION TEST**.
2. **CHECK THE (G403) DRIVER SEAT RECLINER POSITION SENSE CIRCUIT FOR A SHORT TO VOLTAGE**

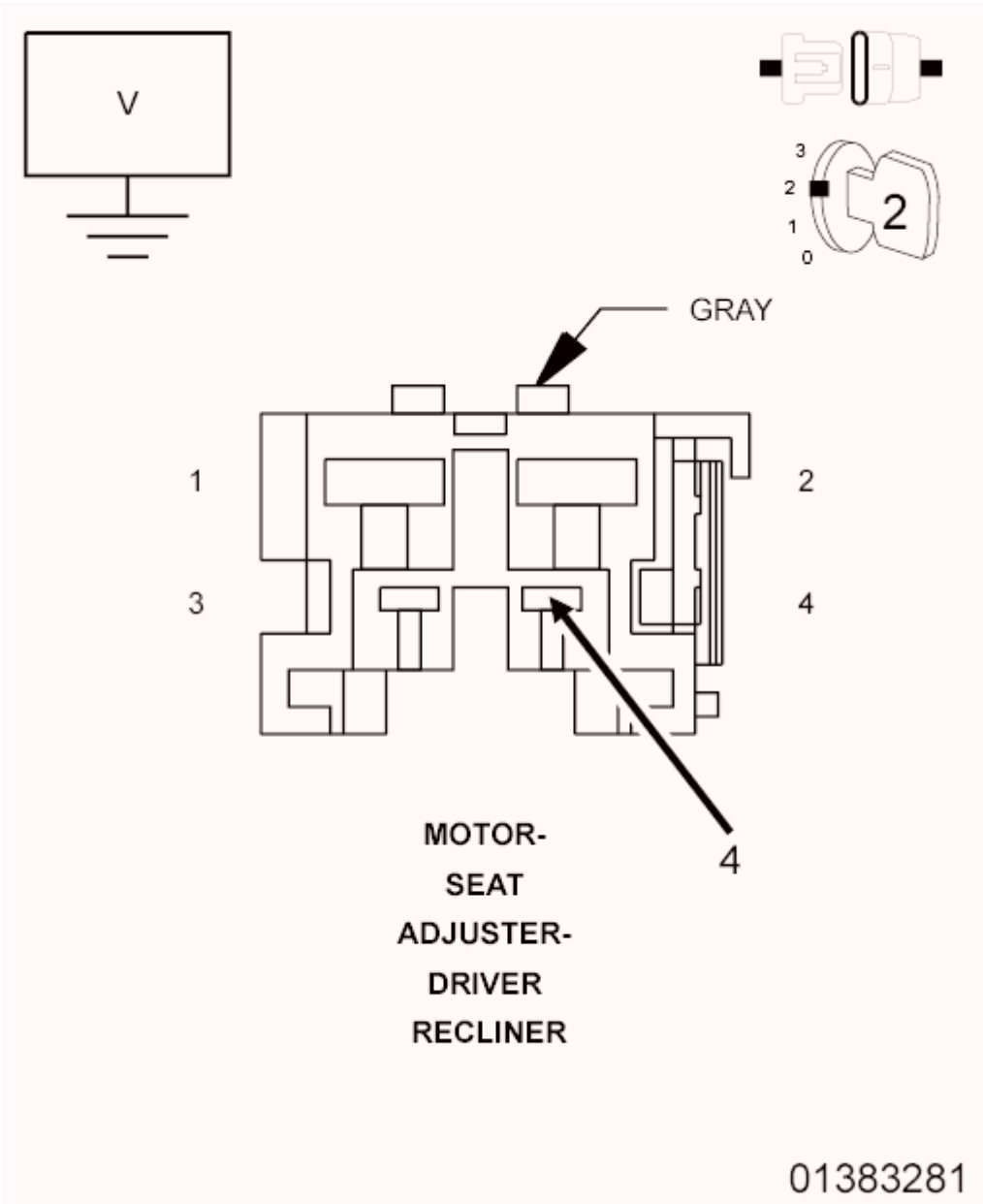

Fig. 65: Checking Driver Seat Recliner Position Sense Circuit For A Short To Voltage
Courtesy of CHRYSLER GROUP, LLC

1. Turn the ignition off.
2. Disconnect the Driver Recliner Seat Adjuster Motor connector.
3. Disconnect the MSM C2 connector.

NOTE: Check connectors. Clean and repair as necessary.

4. Turn the ignition on.
5. Measure the Voltage of the (G403) Driver Seat Recliner Position Sense circuit between the Driver Recliner Seat Adjuster Motor connector and ground.

Is there any Voltage present?

Yes

- Repair the (G403) Driver Seat Recliner Position Sense circuit for a short to Voltage.
- Perform POWER SEAT SYSTEM VERIFICATION TEST. Refer to **POWER SEAT SYSTEM VERIFICATION TEST**.

No

- Go To 3.

3. **CHECK THE (G403) DRIVER SEAT RECLINER POSITION SENSE CIRCUIT AND THE (G493) DRIVER SEAT RECLINER POSITION SENSOR GROUND CIRCUIT FUNCTION**

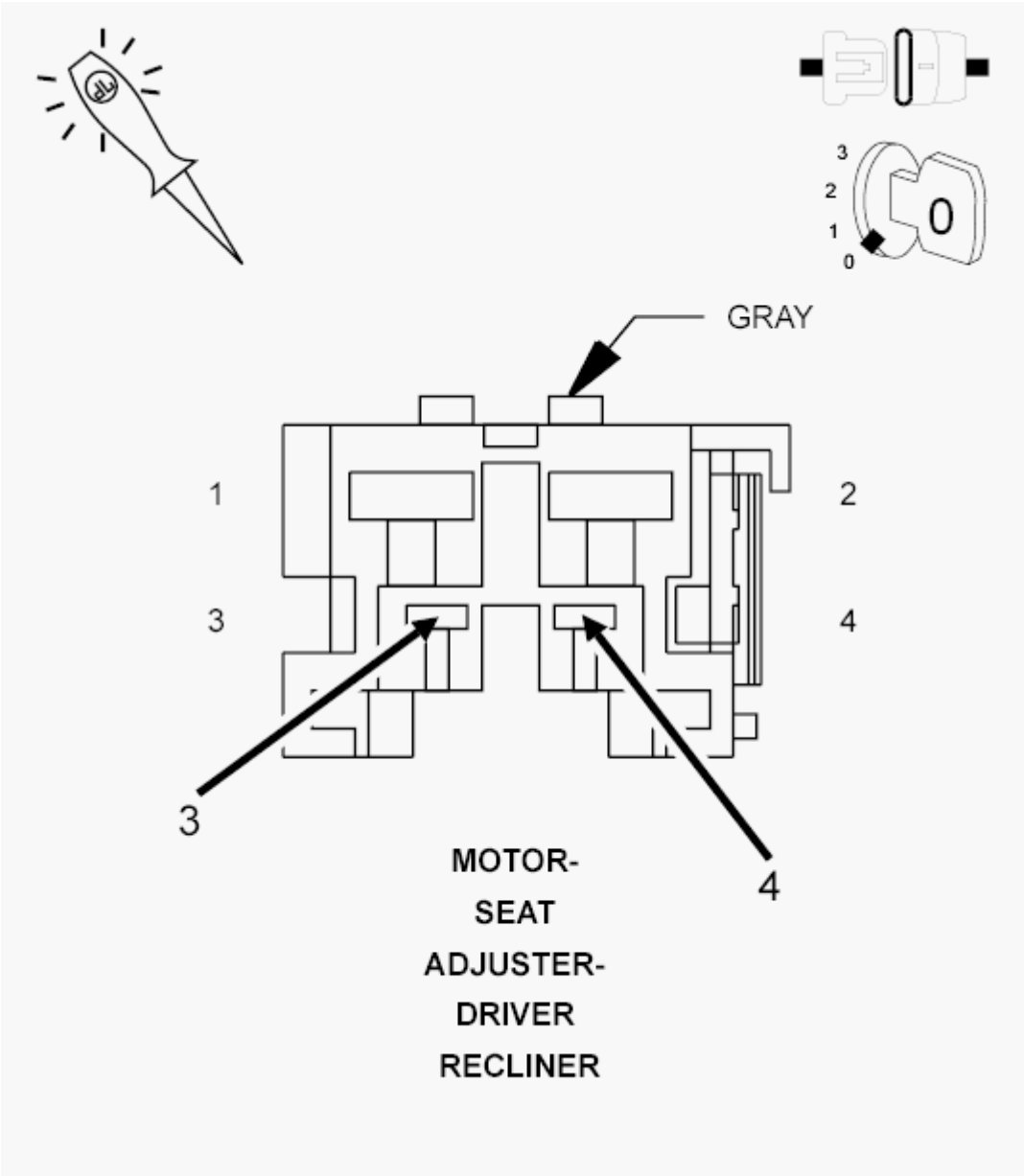

Fig. 66: Checking Driver Seat Recliner Position Sense Circuit Function
Courtesy of CHRYSLER GROUP, LLC

1. Turn the ignition off.
2. Reconnect the MSM C3 connector.
3. Disconnect the scan tool.
4. Turn off all vehicle interior and exterior lighting.
5. Mark sure all doors are closed then wait 10 seconds.
6. Connect a 12-Volt test light between the (G403) Driver Seat Recliner Position Sense circuit and the (G493) Driver Seat Recliner Position Sensor Ground circuit at the Driver Recliner Seat Adjuster Motor connector.
7. Move the seat switch in the recliner adjust position then release the switch.

Does the test light illuminate for approximately five seconds then turn off?

Yes

- Replace the Driver Recliner Seat Adjuster Motor Assembly in accordance with the Service Information.
- Perform POWER SEAT SYSTEM VERIFICATION TEST. Refer to **POWER SEAT SYSTEM VERIFICATION TEST**.

No

- Go To 4.

4. **CHECK THE (G403) DRIVER SEAT RECLINER POSITION SENSE CIRCUIT FOR AN OPEN**

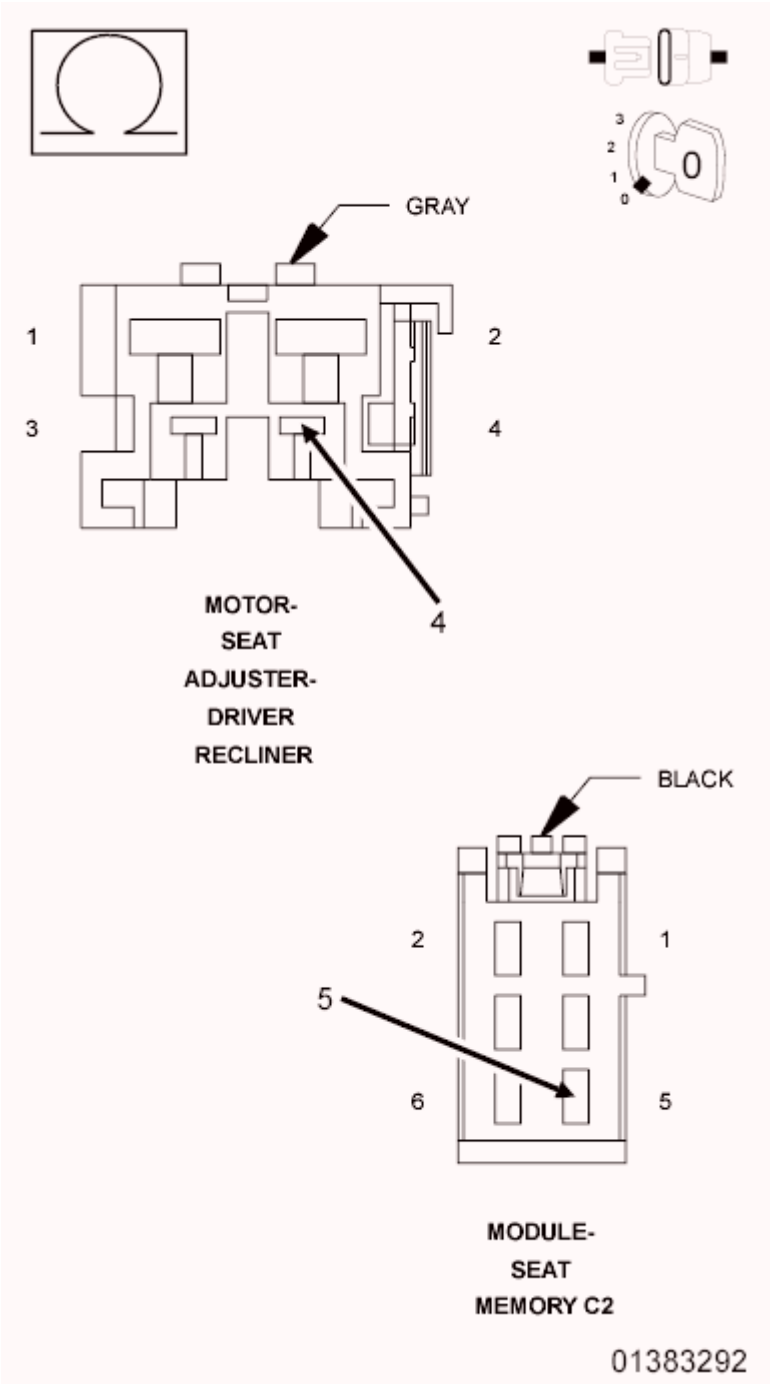

Fig. 67: Checking Driver Seat Recliner Position Sense Circuit For An Open
Courtesy of CHRYSLER GROUP, LLC

1. Disconnect the MSM C2 connector.

NOTE: Check connectors. Clean and repair as necessary.

2. Measure the resistance of the (G403) Driver Seat Recliner Position Sense circuit between the

Driver Recliner Seat Adjuster Motor connector and the MSM C2 connector.

Is the resistance below 5.0 Ohms?

Yes

- Go To 5.

No

- Repair the (G403) Driver Seat Recliner Position Sense circuit for an open.
- Perform POWER SEAT SYSTEM VERIFICATION TEST. Refer to **POWER SEAT SYSTEM VERIFICATION TEST**.

5. **CHECK THE (G493) DRIVER SEAT RECLINER POSITION SENSOR GROUND CIRCUIT FOR AN OPEN**

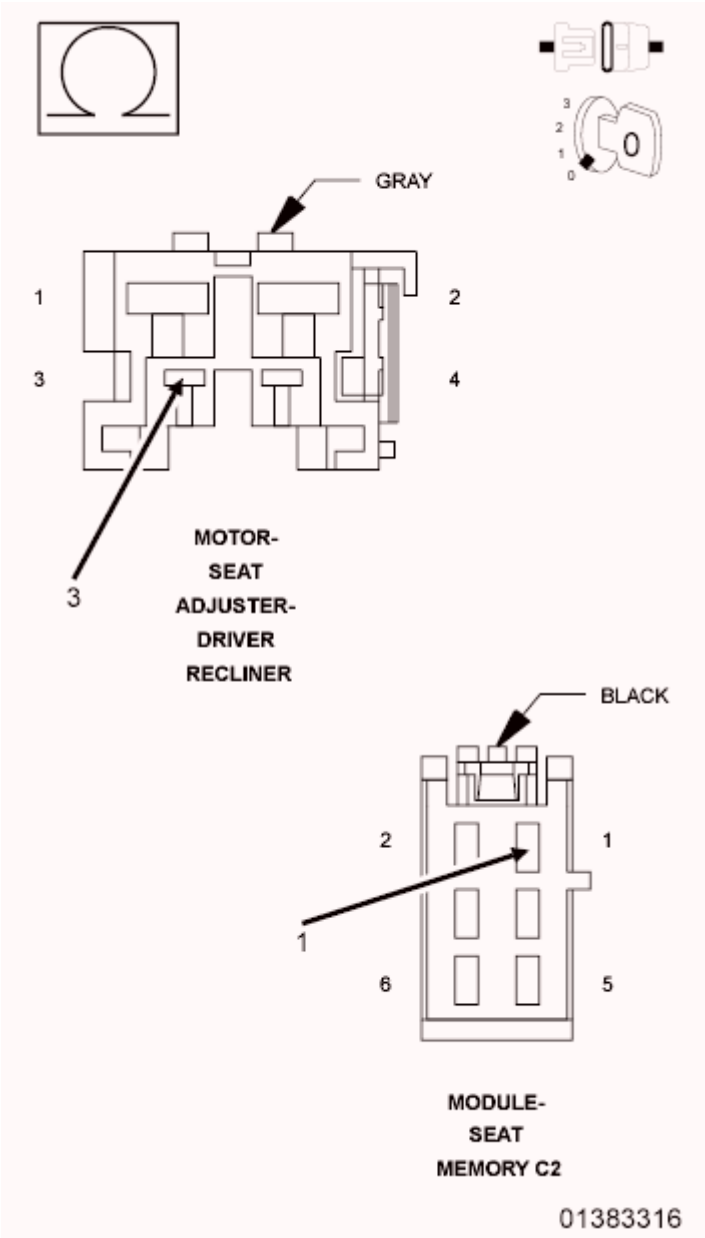

Fig. 68: Checking Driver Seat Recliner Position Sensor Ground Circuit For An Open
Courtesy of CHRYSLER GROUP, LLC

1. Measure the resistance of the (G493) Driver Seat Recliner Position Sensor Ground circuit between the Driver Recliner Seat Adjuster Motor connector and the MSM C2 connector.

   Is the resistance below 5.0 Ohms?

   Yes

   - Replace the Memory Seat Module (MSM) in accordance with the Service Information.
   - Perform POWER SEAT SYSTEM VERIFICATION TEST. Refer to **POWER SEAT SYSTEM VERIFICATION TEST**.

No

- Repair the (G493) Driver Seat Recliner Position Senor Ground circuit for an open.
- Perform POWER SEAT SYSTEM VERIFICATION TEST. Refer to **POWER SEAT SYSTEM VERIFICATION TEST**.

B1D7B-SEAT HORIZONTAL MOTOR CONTROL CIRCUIT PERFORMANCE

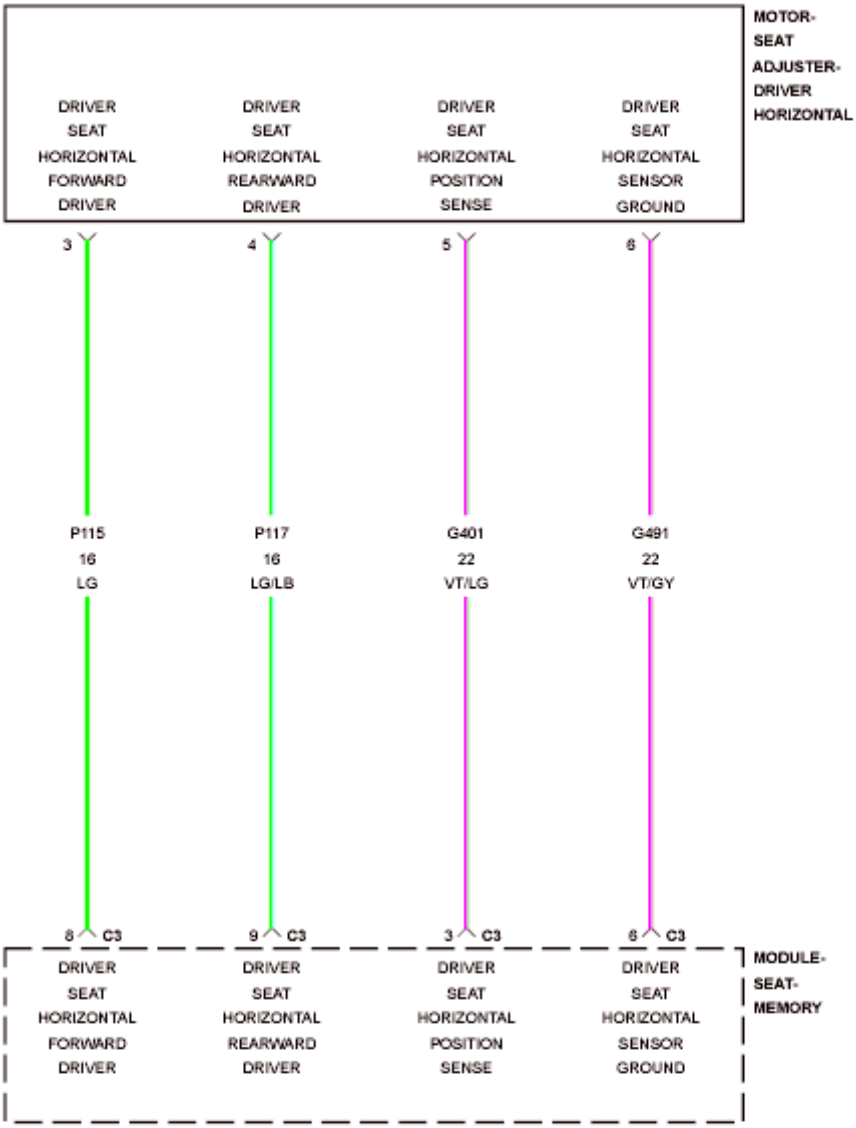

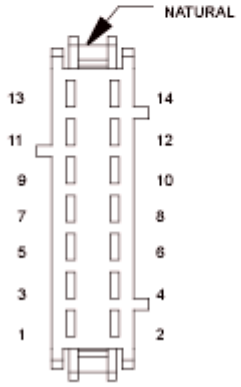

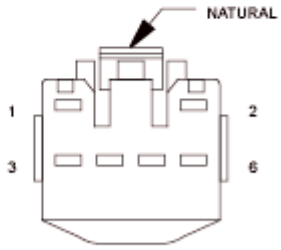

MOTOR-
SEAT
ADJUSTER-
DRIVER

Fig. 69: Seat Horizontal Position Sensor Wiring Diagram
Courtesy of CHRYSLER GROUP, LLC

For a complete wiring diagram, **refer to appropriate SYSTEM WIRING DIAGRAMS article** .

WHEN MONITORED:

Whenever the seat motor is activated.

SET CONDITION:

The seat switch is pressed three times in opposite directions (e.g. either, horizontal forward, horizontal rearward, and horizontal forward, or horizontal rearward, horizontal forward, and horizontal rearward) and each switch activation is for at least one second and the Memory Seat Module (MSM) does not detect seat motor rotation in either direction.

POSSIBLE CAUSES

Possible Causes
SEAT POSITION SENSOR DIAGNOSTIC TROUBLE CODES (DTC's) PRESENT
(G401) DRIVER SEAT HORIZONTAL POSITION SENSE CIRCUIT OPEN
(G491) DRIVER SEAT HORIZONTAL SENSOR GROUND CIRCUIT OPEN
(P115) DRIVER SEAT HORIZONTAL FORWARD DRIVER CIRCUIT OPEN
(P117) DRIVER SEAT HORIZONTAL REARWARD DRIVER CIRCUIT OPEN
DRIVER HORIZONTAL SEAT ADJUSTER MOTOR SENSOR
DRIVER HORIZONTAL SEAT ADJUSTER MOTOR
MEMORY SEAT MODULE (MSM)

DIAGNOSTIC TEST

1. **INSPECT SEAT TRACK, MOTOR, AND HARNESS**
    1. Verify seat harness is routed correctly.
    2. Inspect seat track and motor for damage.
    3. Inspect for anything that would prevent the seat from moving to each end-stop.

    Is anything present that would prevent the seat from moving to each end-stop?

    Yes

    - Repair as necessary.
    - Perform POWER SEAT SYSTEM VERIFICATION TEST. Refer to **POWER SEAT SYSTEM VERIFICATION TEST**.

    No

- Go To 2.

2. **CHECK FOR SEAT POSITION SENSOR DIAGNOSTIC TROUBLE CODES (DTC's)**
    1. Turn the ignition on.
    2. Using a scan tool, read DTC's.

    Does the scan tool display any seat position sensor DTC's?

    Yes

    - Diagnose and repair all seat position sensor DTC's. Refer to **DIAGNOSIS AND TESTING**.

    No

    - Go To 3.

3. **TEST FOR INTERMITTENT CONDITION**
    1. Using a scan tool, record and erase DTC's.
    2. Move the seat switch in one horizontal adjustment direction for at least one second then release the switch. Repeat three times consecutively, but move the switch in the opposite direction each time.
    3. Using a scan tool, read DTC's.

    Does the scan tool display DTC B1D7B-SEAT HORIZONTAL MOTOR CONTROL CIRCUIT PERFORMANCE?

    Yes

    - Go To 4.

    No

    - The conditions that caused this code to set are not present at this time. Using the wiring diagram/schematic as a guide, inspect the wiring and connectors. Look for chafed, pierced, pinched, or partially broken wires and broken, bent, pushed out, spread, corroded, or contaminated terminals.
    - Perform POWER SEAT SYSTEM VERIFICATION TEST. Refer to **POWER SEAT SYSTEM VERIFICATION TEST**.

4. **CHECK THE (G401) DRIVER SEAT HORIZONTAL POSITION SENSE CIRCUIT AND THE (G491) DRIVER SEAT HORIZONTAL SENSOR GROUND CIRCUIT FUNCTION**

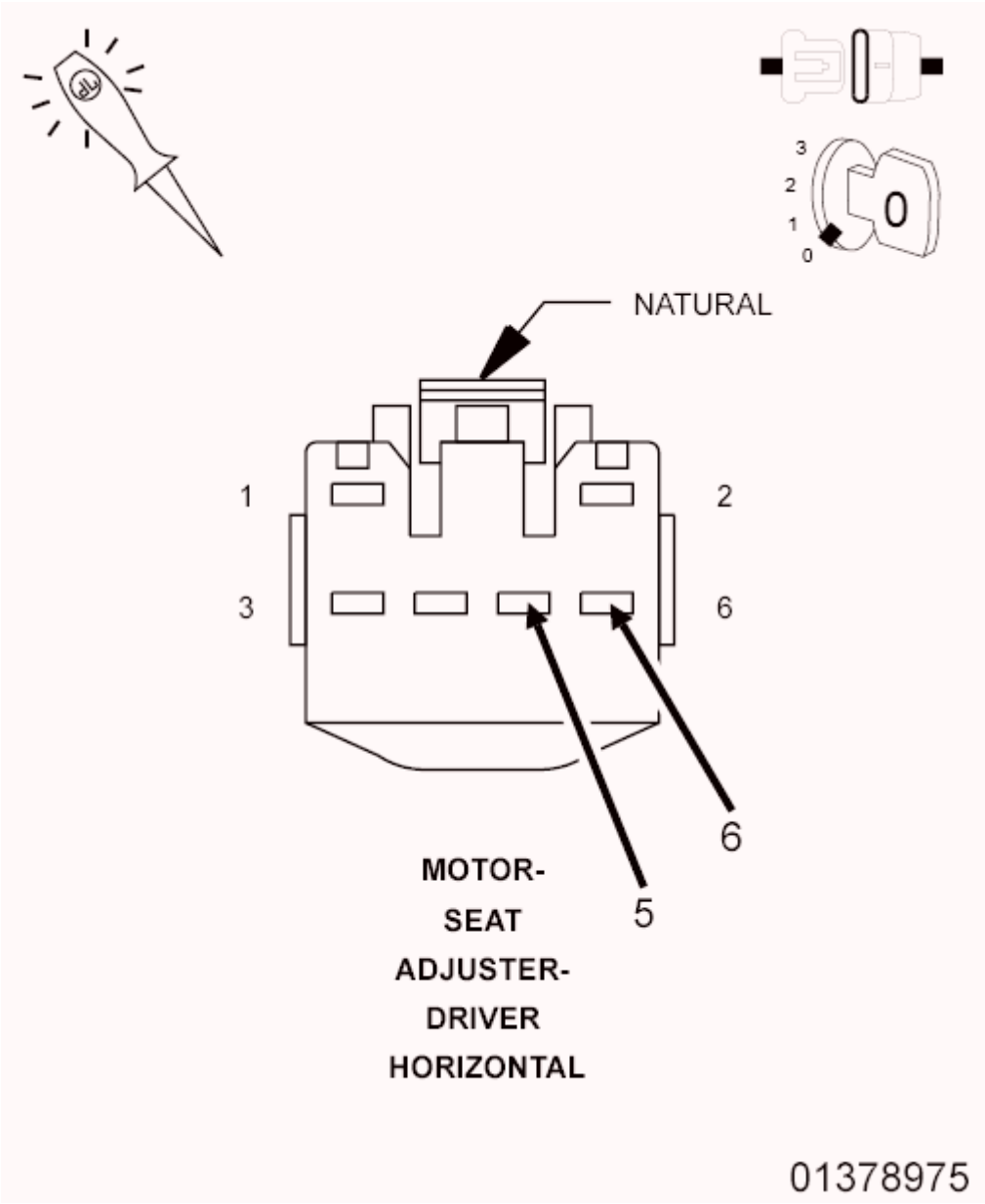

Fig. 70: Checking Driver Seat Horizontal Position Sense Function
Courtesy of CHRYSLER GROUP, LLC

1. Turn the ignition off.
2. Disconnect the Driver Horizontal Seat Adjuster Motor connector.

NOTE: Check connectors - Clean and repair as necessary.

3. Disconnect the scan tool.
4. Turn off all vehicle interior and exterior lighting.
5. Mark sure all doors are closed then wait 10 seconds.
6. Connect a 12-Volt test light connect between the (G401) Driver Seat Horizontal Position Sense

circuit and the (G491) Driver Seat Horizontal Sensor Ground circuit at the Driver Horizontal Seat Adjuster Motor connector.

7. Move the seat switch in the horizontal adjust position then release the switch.

   Does the test light illuminate for approximately five seconds then turn off?

   Yes

   - Go To 5.

   No

   - Go To 9.

5. **CHECK THE (P115) DRIVER SEAT HORIZONTAL FORWARD DRIVER CIRCUIT AND THE (P117) DRIVER SEAT HORIZONTAL REARWARD DRIVER CIRCUIT FUNCTION**

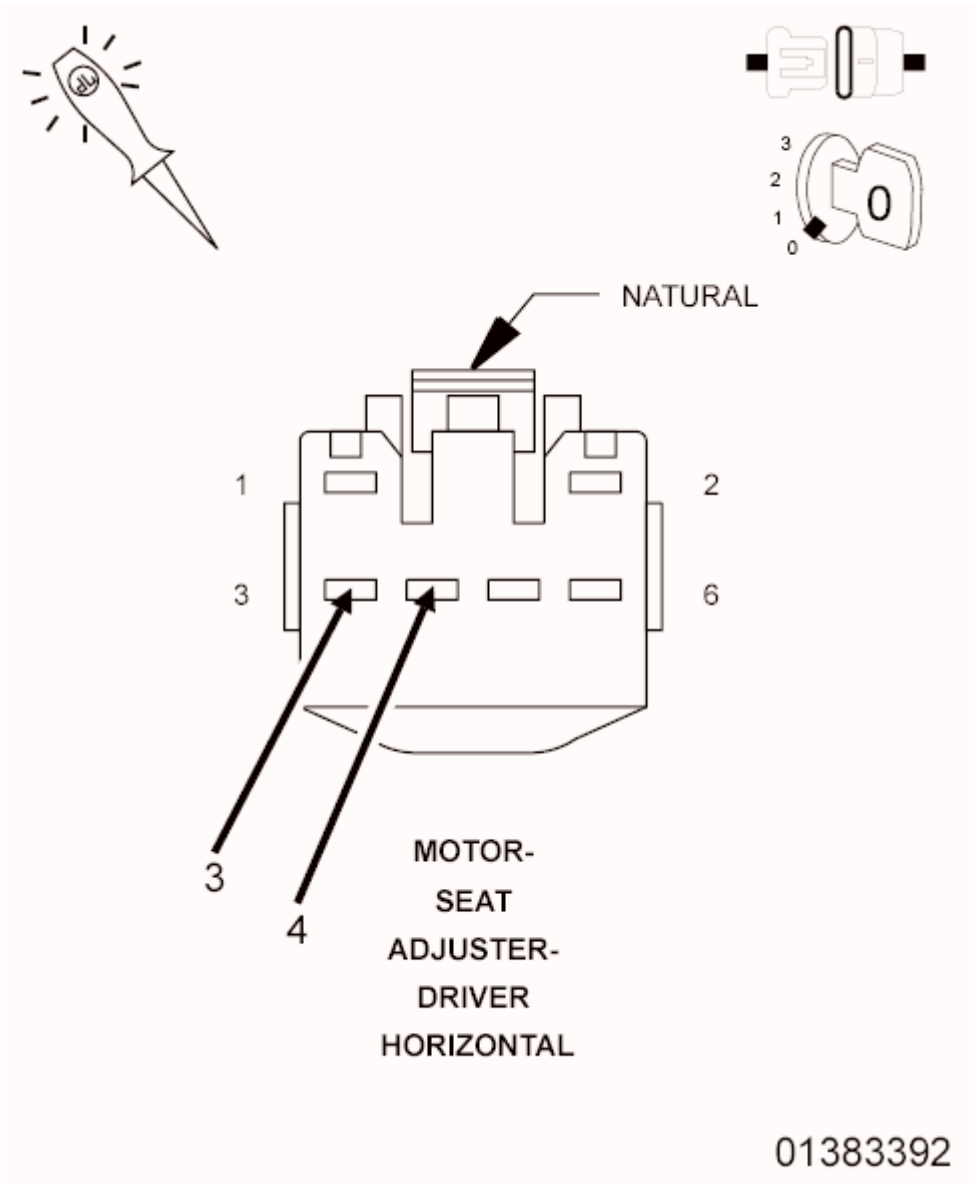

Fig. 71: Checking Driver Seat Horizontal Position Sense Circuit Function
Courtesy of CHRYSLER GROUP, LLC

1. Connect a 12-Volt test light between the (P115) Driver Seat Horizontal Forward Driver circuit and the (P117) Driver Seat Horizontal Rearward Driver circuit at the Driver Horizontal Seat Adjuster Motor connector.
2. Move the seat switch in the horizontal adjust position.

   Does the test light illuminate with the seat switch engaged?

   Yes

   - Go To 6.

No

- Go To 11.

6. **CHECK THE DRIVER HORIZONTAL SEAT ADJUSTER MOTOR OPERATION**

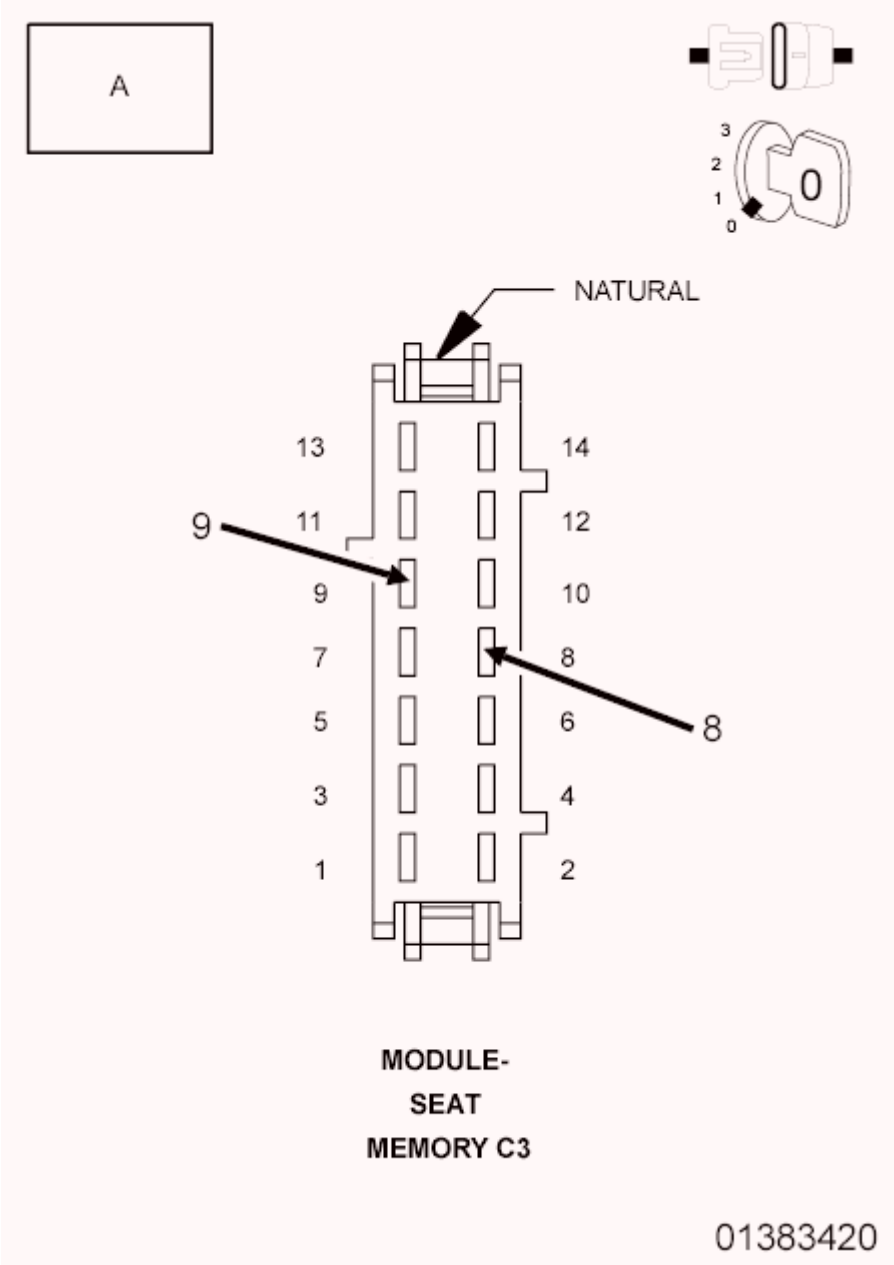

Fig. 72: Checking Driver Horizontal Seat Adjuster Motor Operation
Courtesy of CHRYSLER GROUP, LLC

1. Reconnect the Driver Horizontal Seat Adjuster Motor connector.
2. Disconnect the MSM C3 connector.

NOTE: **Check connectors. Clean and repair as necessary.**

3. Check motor operation in both directions as follows:

NOTE: **Do not adjust the seat against an end-stop when performing the following.**

To drive seat forward:

- Connect one end of a fused jumper wire to battery Voltage and the other end to the (P115) Driver Seat Horizontal Forward Driver circuit at the MSM C3 connector.
- Connect an ammeter between ground and the (P117) Driver Seat Horizontal Rearward Driver circuit at the MSM C3 connector.
- Disconnect before reaching the end-stop.

To drive seat rearward:

- Connect one end of a fused jumper wire to battery Voltage and the other end to the (P117) Driver Seat Horizontal Rearward Driver circuit at the MSM C3 connector.
- Connect an ammeter between ground and the (P115) Driver Seat Horizontal Forward Driver circuit at the MSM C3 connector.
- Disconnect before reaching the end-stop.

NOTE: **The seat motor should be operational in both directions and the ammeter should read approximately 4.3 amps in the forward direction and 3.5 amps in the rearward direction.**

Does the motor operate as specified?

Yes

- Go To 7.

No

- Check (P115) Driver Seat Horizontal Forward Driver circuit and (P117) Driver Seat Horizontal Rearward Driver circuit for high resistance. If circuits are okay, replace the Seat Track Horizontal Motor assembly in accordance with the Service Information.
- Perform POWER SEAT SYSTEM VERIFICATION TEST. Refer to **POWER SEAT SYSTEM VERIFICATION TEST**.

7. **CHECK THE DRIVER HORIZONTAL SEAT ADJUSTER MOTOR SENSOR OPERATION**

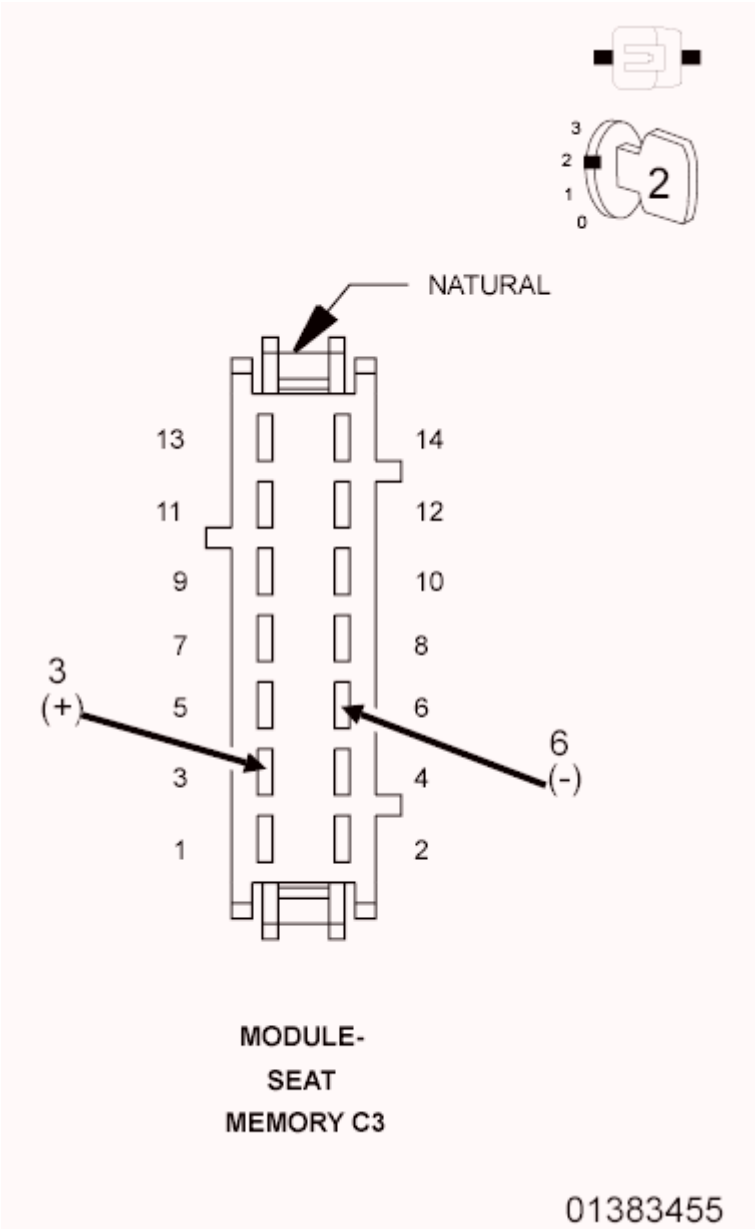

Fig. 73: Checking Driver Horizontal Seat Adjuster Motor Sensor Operation
Courtesy of CHRYSLER GROUP, LLC

1. Reconnect the MSM C3 connector.
2. Turn the ignition on.
3. Using a scan tool, erase DTC's.
4. Connect the positive lead of a lab scope to the (G401) Driver Seat Horizontal Position Sense circuit and the negative lead to the (G491) Driver Seat Horizontal Sensor Ground circuit at the MSM C3 connector. Set the lab scope range to 20 Volts and time to 20 ms divisions.

NOTE: **Do not adjust the seat against an end-stop when performing the following.**

5. Move the seat switch in one horizontal adjust position.

NOTE: **If the sensor is functioning normally the scope will display a continuously cycling square wave when operating the seat. If the module fails to detect sensor operation it will stop seat operation in approximately two seconds.**

Does the sensor operate as specified?

Yes

- Leave Scope Connected. Go To 8.

No

- Replace the Seat Track Horizontal Motor assembly in accordance with the Service Information.
- Perform POWER SEAT SYSTEM VERIFICATION TEST. Refer to **POWER SEAT SYSTEM VERIFICATION TEST**.

8. **CHECK THE DRIVER HORIZONTAL SEAT ADJUSTER MOTOR SENSOR OPERATION IN OPPOSITE DIRECTION**

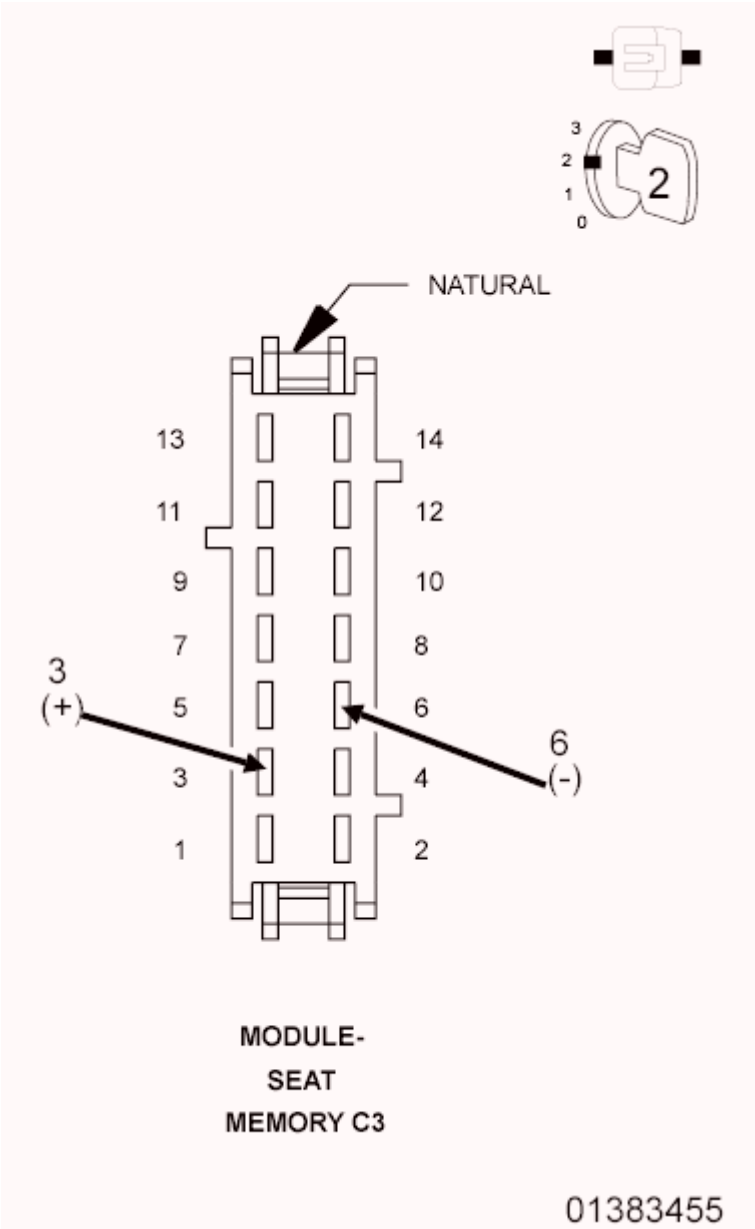

Fig. 74: Checking Driver Horizontal Seat Adjuster Motor Sensor Operation
Courtesy of CHRYSLER GROUP, LLC

1. Using a scan tool, erase DTC's if present.

NOTE: **Do not adjust the seat against an end-stop when performing the following.**

2. Move the seat switch in the direction opposite of that previously selected.

NOTE: **If the sensor is functioning normally the scope will display a continuously cycling square wave when operating the seat. If the**

module fails to detect sensor operation it will stop seat operation in approximately two seconds.

Does the sensor operate as specified?

Yes

- Replace the Memory Seat Module (MSM) in accordance with the Service Information.
- Perform APS VERIFICATION TEST. Refer to **APS VERIFICATION TEST**.

No

- Replace the Seat Track Horizontal Motor assembly in accordance with the Service Information.
- Perform POWER SEAT SYSTEM VERIFICATION TEST. Refer to **POWER SEAT SYSTEM VERIFICATION TEST**.

9. **CHECK THE (G401) DRIVER SEAT HORIZONTAL POSITION SENSE CIRCUIT FOR AN OPEN**

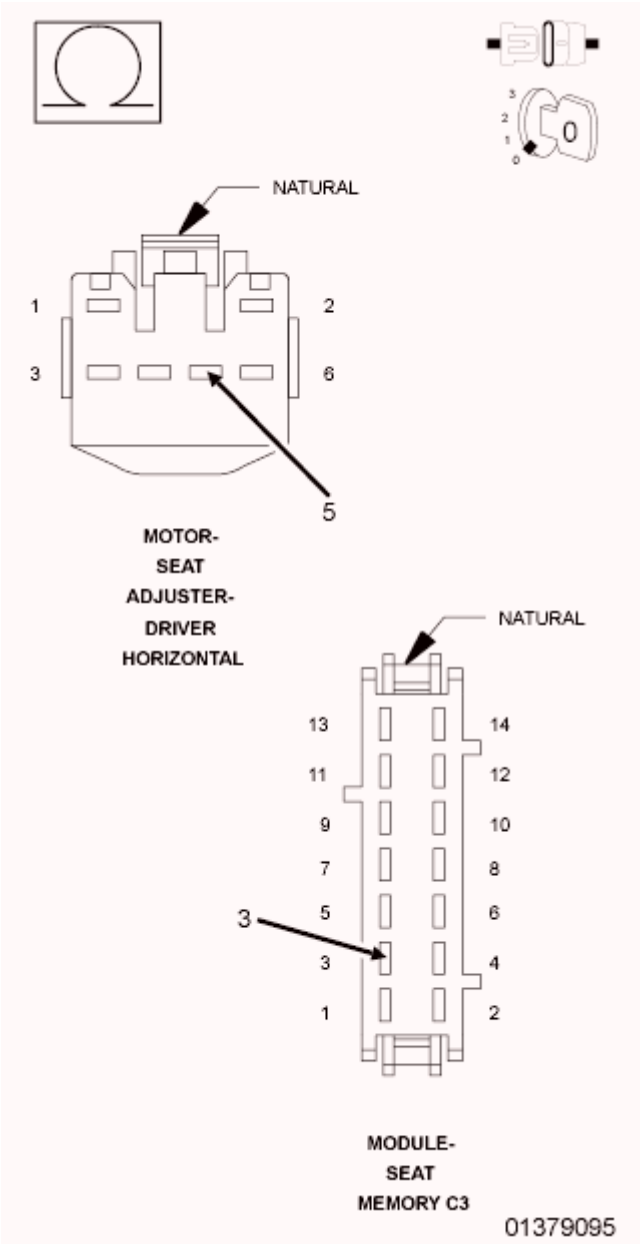

Fig. 75: Checking Driver Seat Horizontal Position Sense Circuit For An Open
Courtesy of CHRYSLER GROUP, LLC

1. Disconnect the MSM C3 connector.

   NOTE: Check connectors. Clean and repair as necessary.

2. Measure the resistance of the (G401) Driver Seat Horizontal Position Sense circuit between the Driver Horizontal Seat Adjuster Motor connector and the MSM C3 connector.

   Is the resistance below 5.0 Ohms?

Yes

- Go To 10.

No

- Repair the (G401) Driver Seat Horizontal Position Sense circuit for an open.
- Perform POWER SEAT SYSTEM VERIFICATION TEST. Refer to **POWER SEAT SYSTEM VERIFICATION TEST**.

10. **CHECK THE (G491) DRIVER SEAT HORIZONTAL SENSOR GROUND CIRCUIT FOR AN OPEN**

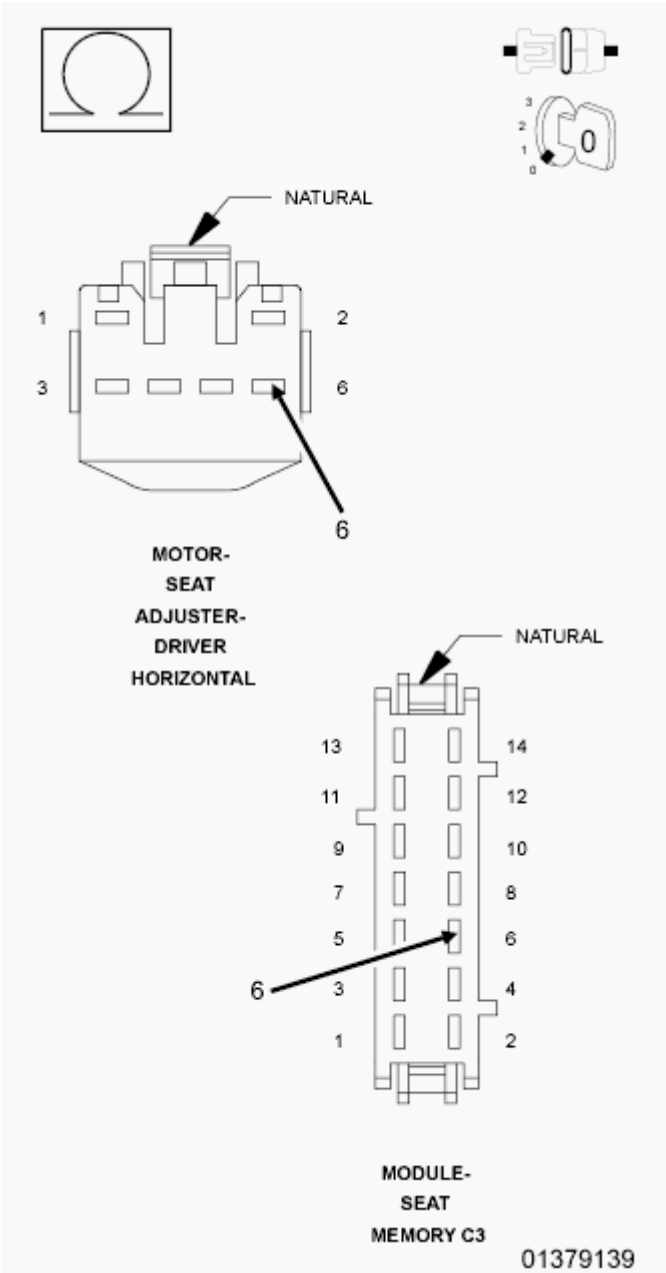

Fig. 76: Checking Driver Seat Horizontal Sensor Ground Circuit For An Open
Courtesy of CHRYSLER GROUP, LLC

1. Measure the resistance of the (G491) Driver Seat Horizontal Sensor Ground circuit between the Driver Horizontal Seat Adjuster Motor connector and the MSM C3 connector.

   Is the resistance below 5.0 Ohms?

   Yes

   - Replace the Memory Seat Module (MSM) in accordance with the Service Information.
   - Perform POWER SEAT SYSTEM VERIFICATION TEST. Refer to **POWER SEAT SYSTEM VERIFICATION TEST**.

   No

   - Repair the (G491) Driver Seat Horizontal Senor Ground circuit for an open.
   - Perform POWER SEAT SYSTEM VERIFICATION TEST. Refer to **POWER SEAT SYSTEM VERIFICATION TEST**.

11. **CHECK THE (P115) DRIVER SEAT HORIZONTAL FORWARD DRIVER CIRCUIT FOR AN OPEN**

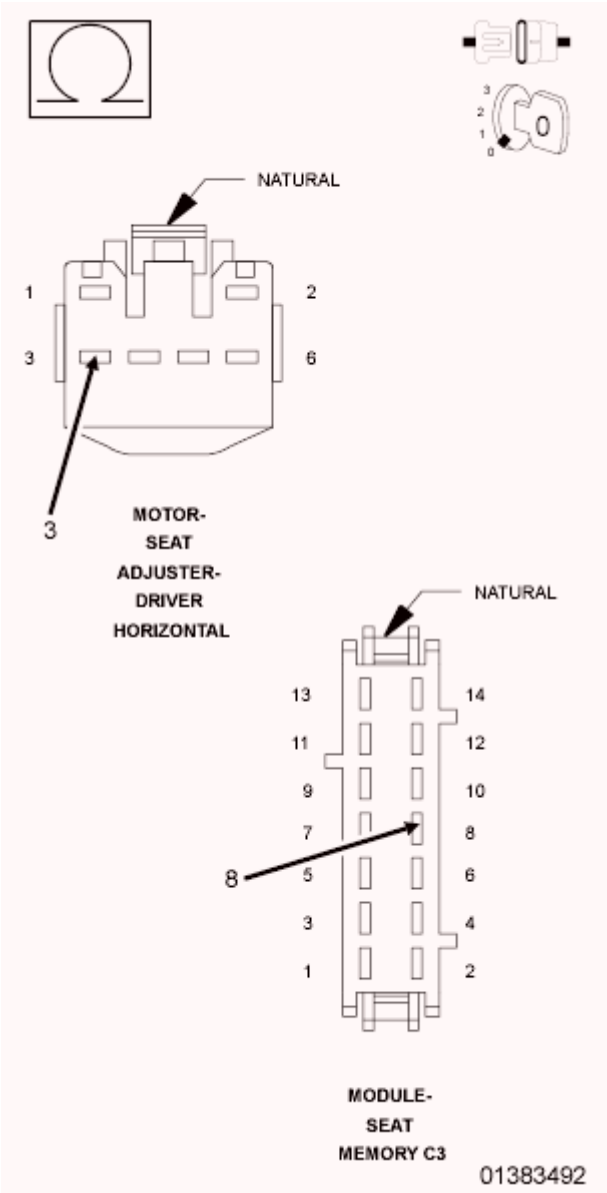

Fig. 77: Checking Driver Seat Horizontal Forward Driver Circuit For An Open
Courtesy of CHRYSLER GROUP, LLC

1. Disconnect the MSM C3 connector.

   NOTE: Check connectors. Clean and repair as necessary.

2. Measure the resistance of the (P115) Driver Seat Horizontal Forward Driver circuit between the Driver Horizontal Seat Adjuster Motor connector and the MSM C3 connector.

   Is the resistance below 5.0 Ohms?

   Yes

- Go To 12.

No

- Repair the (P115) Driver Seat Horizontal Forward Driver circuit for an open.
- Perform POWER SEAT SYSTEM VERIFICATION TEST. Refer to **POWER SEAT SYSTEM VERIFICATION TEST**.

12. **CHECK THE (P117) DRIVER SEAT HORIZONTAL REARWARD DRIVER CIRCUIT FOR AN OPEN**

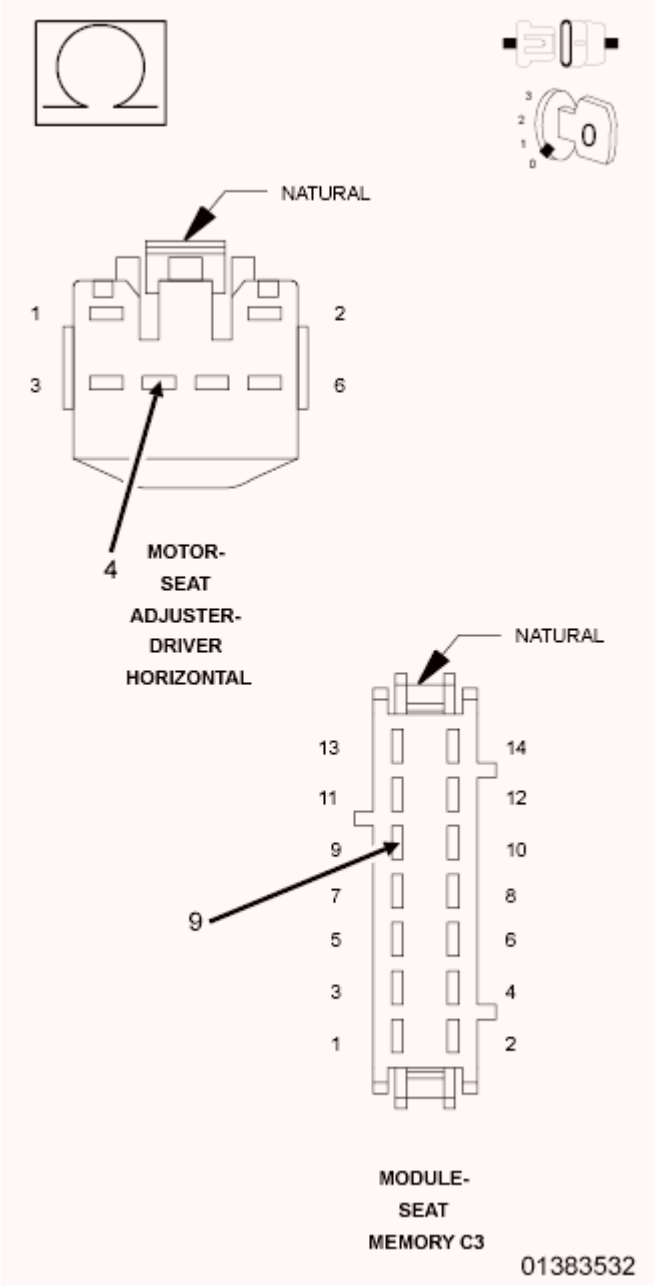

Fig. 78: Checking Driver Seat Horizontal Rearward Driver Circuit For An Open

Courtesy of CHRYSLER GROUP, LLC

1. Measure the resistance of the (P117) Driver Seat Horizontal Rearward Driver circuit between the Driver Horizontal Seat Adjuster Motor connector and the MSM C3 connector.

   Is the resistance below 5.0 Ohms?

   Yes

   - Replace the Memory Seat Module (MSM) in accordance with the Service Information.
   - Perform POWER SEAT SYSTEM VERIFICATION TEST. Refer to **POWER SEAT SYSTEM VERIFICATION TEST**.

   No

   - Repair the (P117) Driver Seat Horizontal Rearward Driver circuit for an open.
   - Perform POWER SEAT SYSTEM VERIFICATION TEST. Refer to **POWER SEAT SYSTEM VERIFICATION TEST**.

B1D7F-SEAT FRONT VERTICAL MOTOR CONTROL CIRCUIT PERFORMANCE

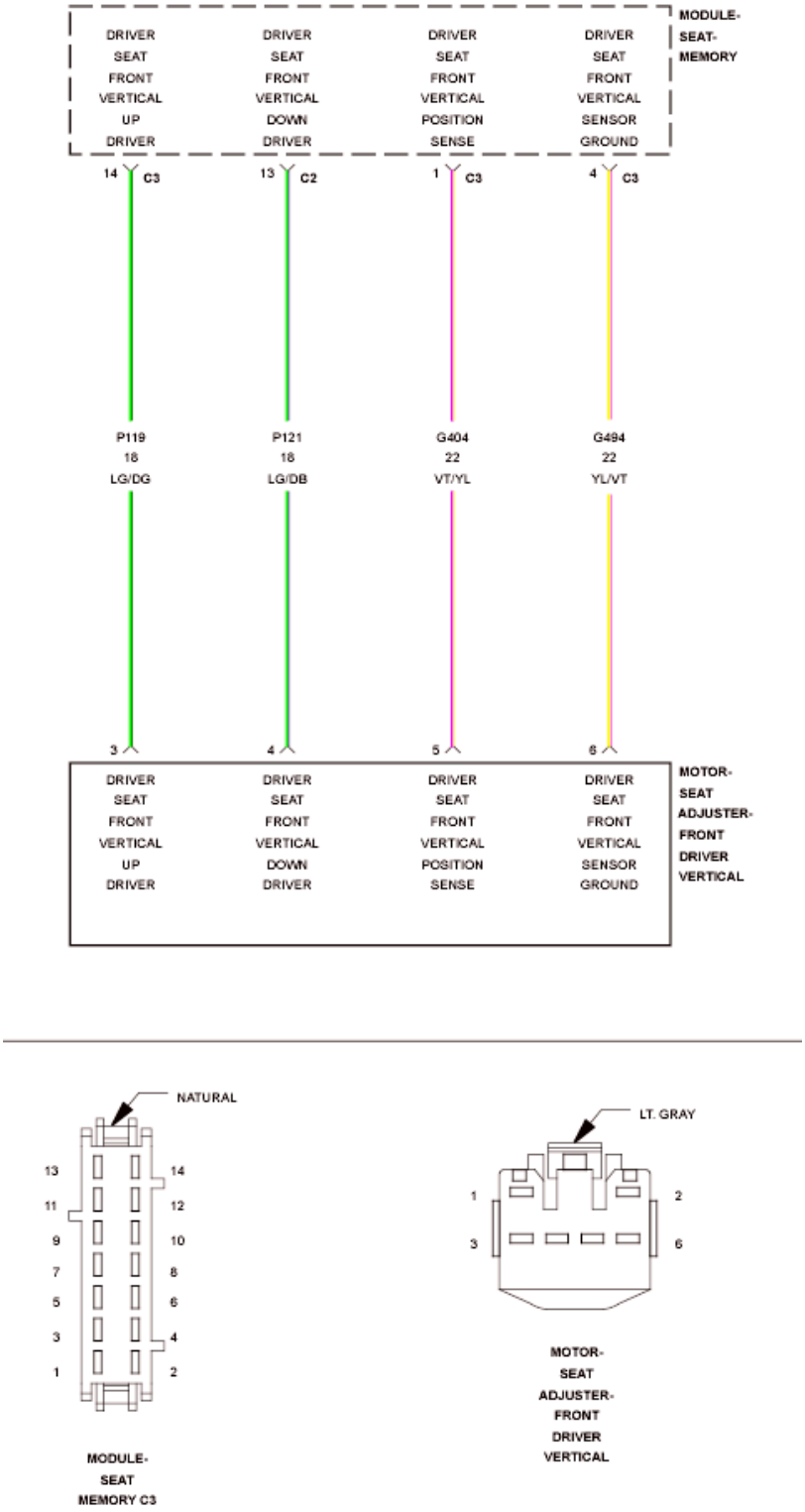

Fig. 79: Driver Seat Front Vertical Motor Wiring Diagram
Courtesy of CHRYSLER GROUP, LLC

For a complete wiring diagram, **refer to appropriate SYSTEM WIRING DIAGRAMS article** .

WHEN MONITORED:

Whenever the seat motor is activated.

SET CONDITION:

The seat switch is pressed three times in opposite directions (e.g. either, front vertical up, front vertical down, and front vertical up, or front vertical down, front vertical up, and front vertical down) and each switch activation is for at least one second and the Memory Seat Module (MSM) does not detect seat motor rotation in either direction.

POSSIBLE CAUSES

Possible Causes
SEAT POSITION SENSOR DIAGNOSTIC TROUBLE CODES (DTC's) PRESENT
(G404) DRIVER SEAT FRONT VERTICAL POSITION SENSE CIRCUIT OPEN
(G494) DRIVER SEAT FRONT VERTICAL SENSOR GROUND CIRCUIT OPEN
(P119) DRIVER SEAT FRONT VERTICAL UP DRIVER CIRCUIT OPEN
(P121) DRIVER SEAT FRONT VERTICAL DOWN DRIVER CIRCUIT OPEN
FRONT DRIVER VERTICAL SEAT ADJUSTER MOTOR SENSOR
FRONT DRIVER VERTICAL SEAT ADJUSTER MOTOR
MEMORY SEAT MODULE (MSM)

DIAGNOSTIC TEST

1. **INSPECT SEAT TRACK, MOTOR, AND HARNESS**
    1. Verify seat harness is routed correctly.
    2. Inspect seat track and motor for damage.
    3. Inspect for anything that would prevent the seat from moving to each end-stop.

    Is anything present that would prevent the seat from moving to each end-stop?

    Yes

    - Repair as necessary.
    - Perform POWER SEAT SYSTEM VERIFICATION TEST. Refer to **POWER SEAT SYSTEM VERIFICATION TEST**.

    No

    - Go To 2.
2. **CHECK FOR SEAT POSITION SENSOR DIAGNOSTIC TROUBLE CODES (DTC's)**
    1. Turn the ignition on.
    2. Using a scan tool, read DTC's.

Does the scan tool display any seat position sensor DTC's?

Yes

- Diagnose and repair all seat position sensor DTC's. Refer to **DIAGNOSIS AND TESTING**.

No

- Go To 3.

3. **TEST FOR INTERMITTENT CONDITION**
   1. Using a scan tool, record and erase DTC's.
   2. Move the seat switch in one front vertical adjustment direction for at least one second then release the switch. Repeat three times consecutively, but move the switch in the opposite direction each time.
   3. Using a scan tool, read DTC's.

   Does the scan tool display DTC B1D7F-SEAT FRONT VERTICAL MOTOR CONTROL CIRCUIT PERFORMANCE?

   Yes

   - Go To 4.

   No

   - The conditions that caused this code to set are not present at this time. Using the wiring diagram/schematic as a guide, inspect the wiring and connectors. Look for chafed, pierced, pinched, or partially broken wires and broken, bent, pushed out, spread, corroded, or contaminated terminals.
   - Perform POWER SEAT SYSTEM VERIFICATION TEST. Refer to **POWER SEAT SYSTEM VERIFICATION TEST**.

4. **CHECK THE (G404) DRIVER SEAT FRONT VERTICAL POSITION SENSE CIRCUIT AND THE (G494) DRIVER SEAT FRONT VERTICAL SENSOR GROUND CIRCUIT FUNCTION**

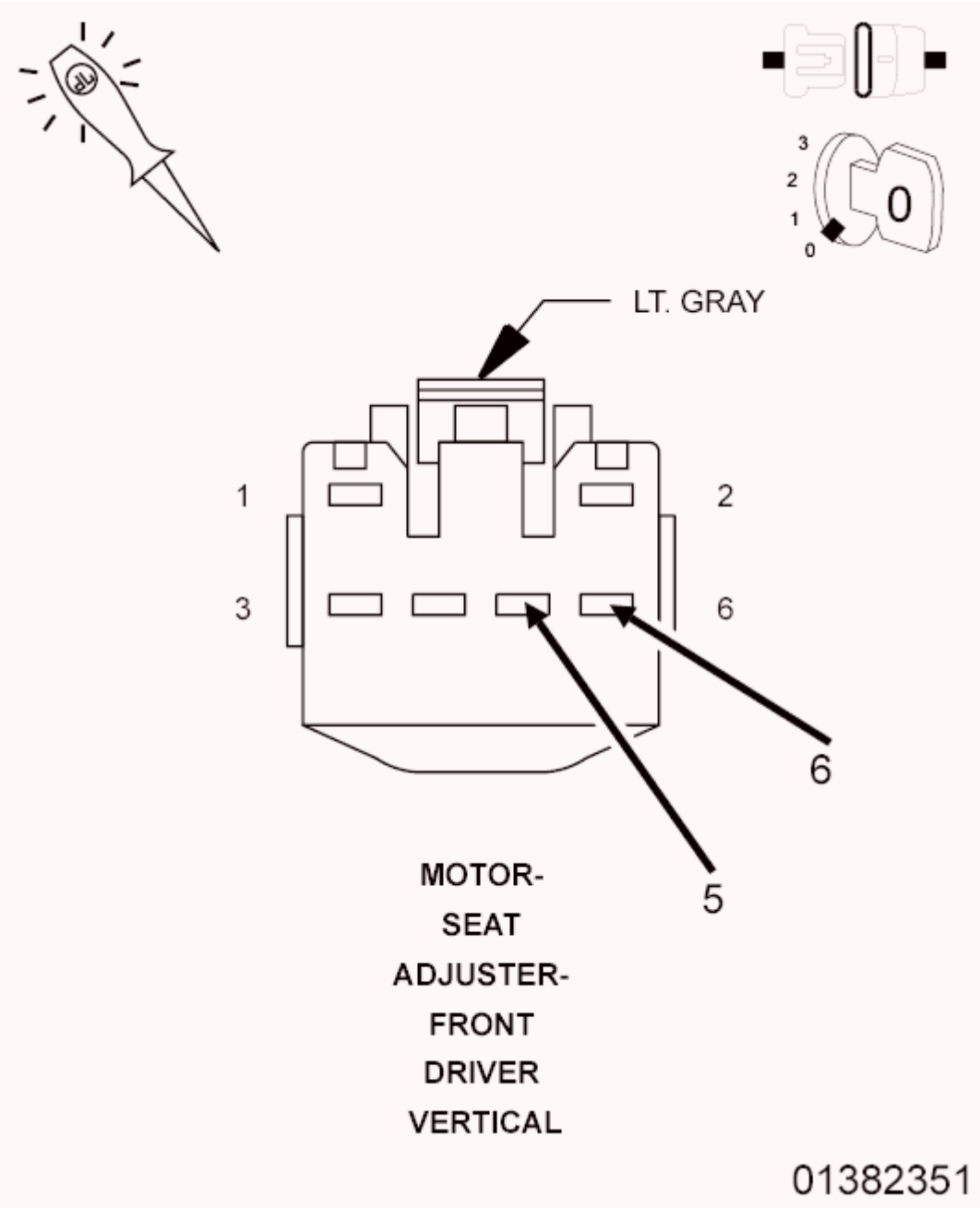

Fig. 80: Checking Driver Seat Front Vertical Position Sense Function
Courtesy of CHRYSLER GROUP, LLC

1. Turn the ignition off.
2. Disconnect the Front Driver Vertical Seat Adjuster Motor connector.

NOTE: Check connectors. Clean and repair as necessary.

3. Disconnect the scan tool.
4. Turn off all vehicle interior and exterior lighting.

5. Mark sure all doors are closed then wait 10 seconds.
6. Connect a 12-Volt test light between the (G404) Driver Seat Front Vertical Position Sense circuit and the (G494) Driver Seat Front Vertical Sensor Ground circuit at the Driver Front Vertical Seat Adjuster Motor connector.
7. Move the seat switch in the front vertical adjust position then release the switch.

   Does the test light illuminate for approximately five seconds then turn off?

   Yes

   - Go To 5.

   No

   - Go To 9.

5. **CHECK THE (P119) DRIVER SEAT FRONT VERTICAL UP DRIVER CIRCUIT THE (P121) DRIVER SEAT FRONT VERTICAL DOWN DRIVER CIRCUIT FUNCTION**

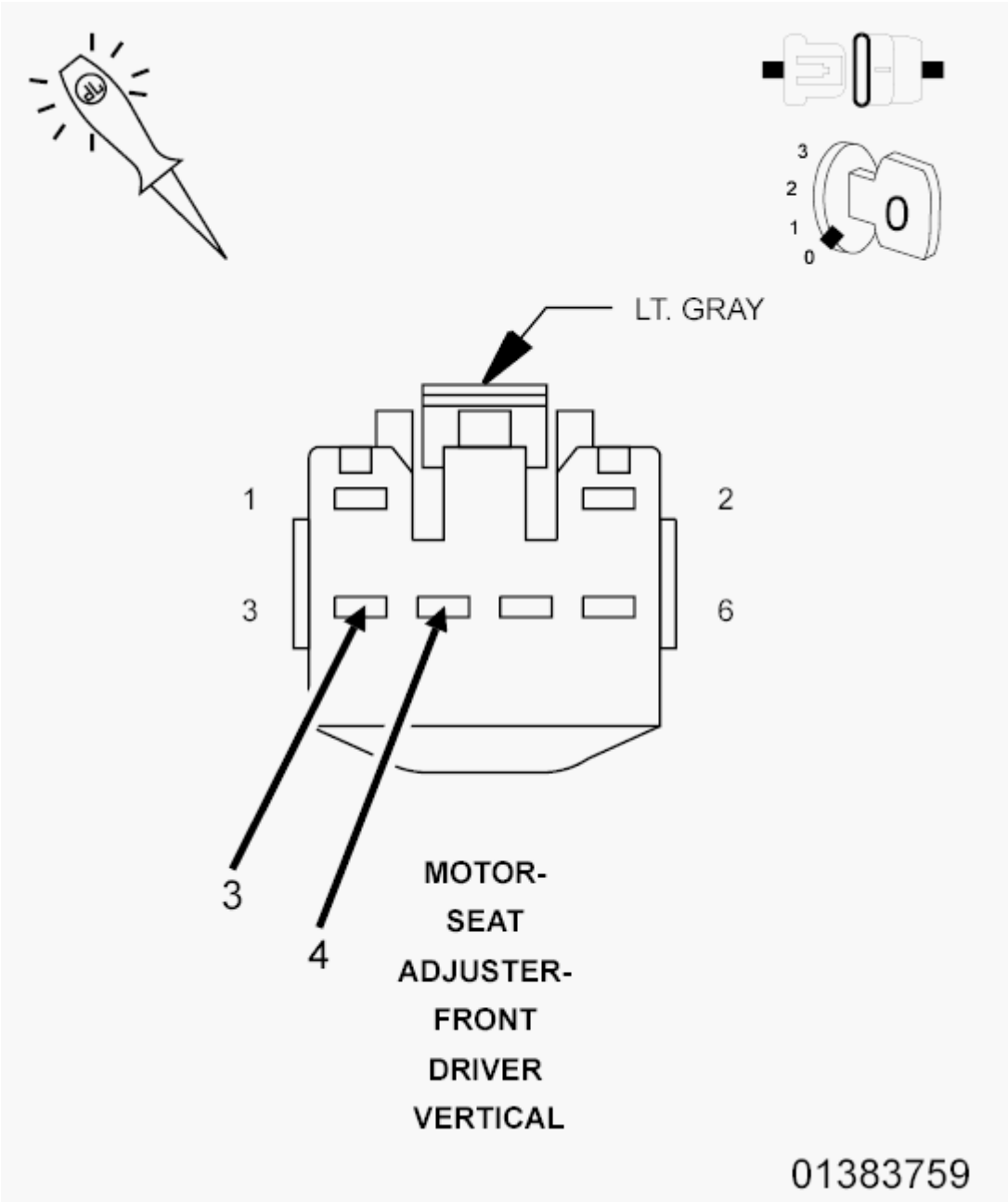

Fig. 81: Checking Driver Seat Front Vertical Up Driver Circuit Function
Courtesy of CHRYSLER GROUP, LLC

1. Connect a 12-Volt test light between the (P119) Driver Seat Front Vertical Up Driver circuit and the (P121) Driver Seat Front Vertical Down Driver circuit at the Front Driver Vertical Seat Adjuster Motor connector.
2. Move the seat switch in the front vertical adjust position.

   Does the test light illuminate with the seat switch engaged?

   Yes

- Go To 6.

No

- Go To 11.

6. **CHECK THE FRONT DRIVER VERTICAL SEAT ADJUSTER MOTOR OPERATION**

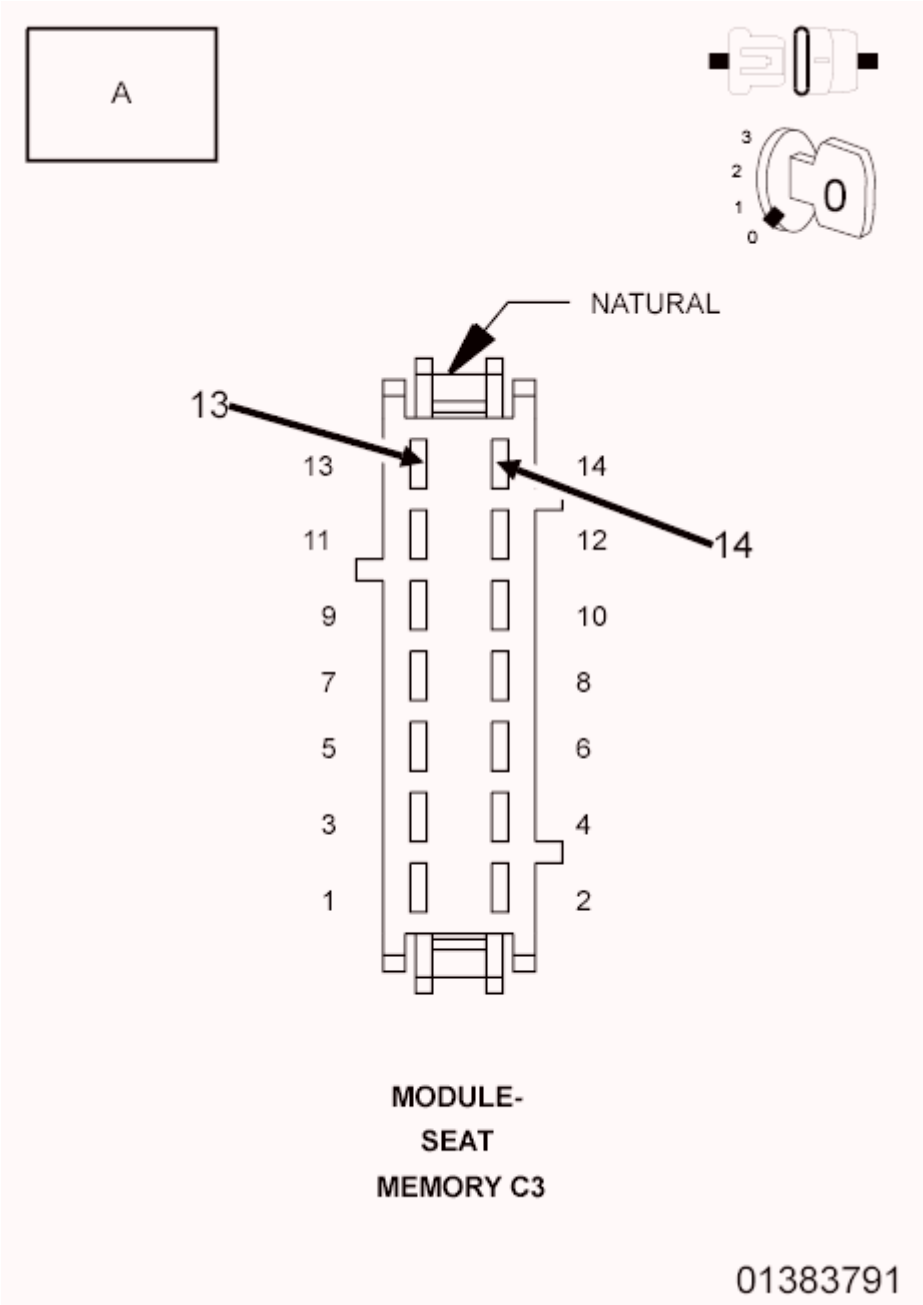

Fig. 82: Checking Front Driver Vertical Seat Adjuster Motor Operation
Courtesy of CHRYSLER GROUP, LLC

1. Reconnect the Front Driver Vertical Seat Adjuster Motor connector.

2. Disconnect the MSM C3 connector.

NOTE: Check connectors. Clean and repair as necessary.

3. Check motor operation in both directions as follows:

NOTE: Do not adjust the seat against an end-stop when performing the following.

To drive seat upward:

- Connect one end of a fused jumper wire to battery Voltage and the other end to the (P119) Driver Seat Front Vertical Up Driver circuit at the MSM C3 connector.
- Connect an ammeter between ground and the (P121) Driver Seat Front Vertical Down Driver circuit at the MSM C3 connector.
- Disconnect before reaching the end-stop.

To drive seat downward:

- Connect one end of a fused jumper wire to battery Voltage and the other end to the (P121) Driver Seat Front Vertical Down Driver circuit at the MSM C3 connector.
- Connect an ammeter between ground and the (P119) Driver Seat Front Vertical Up Driver circuit at the MSM C3 connector.
- Disconnect before reaching the end-stop.

NOTE: The seat motor should be operational in both directions and the ammeter should read approximately 2.5 amps in the upward direction and 3.5 amps in the downward direction.

Does the motor operate as specified?

Yes

- Go To 7.

No

- Check (P119) Driver Seat Front Vertical Up Driver circuit and (P121) Driver Seat Front Vertical Down Driver circuit for high resistance. If circuits are okay, replace the Front Driver Vertical Seat Adjuster motor assembly in accordance with the Service Information.
- Perform POWER SEAT SYSTEM VERIFICATION TEST. Refer to **POWER SEAT SYSTEM VERIFICATION TEST**.

7. **CHECK THE FRONT DRIVER VERTICAL SEAT ADJUSTER MOTOR SENSOR OPERATION**

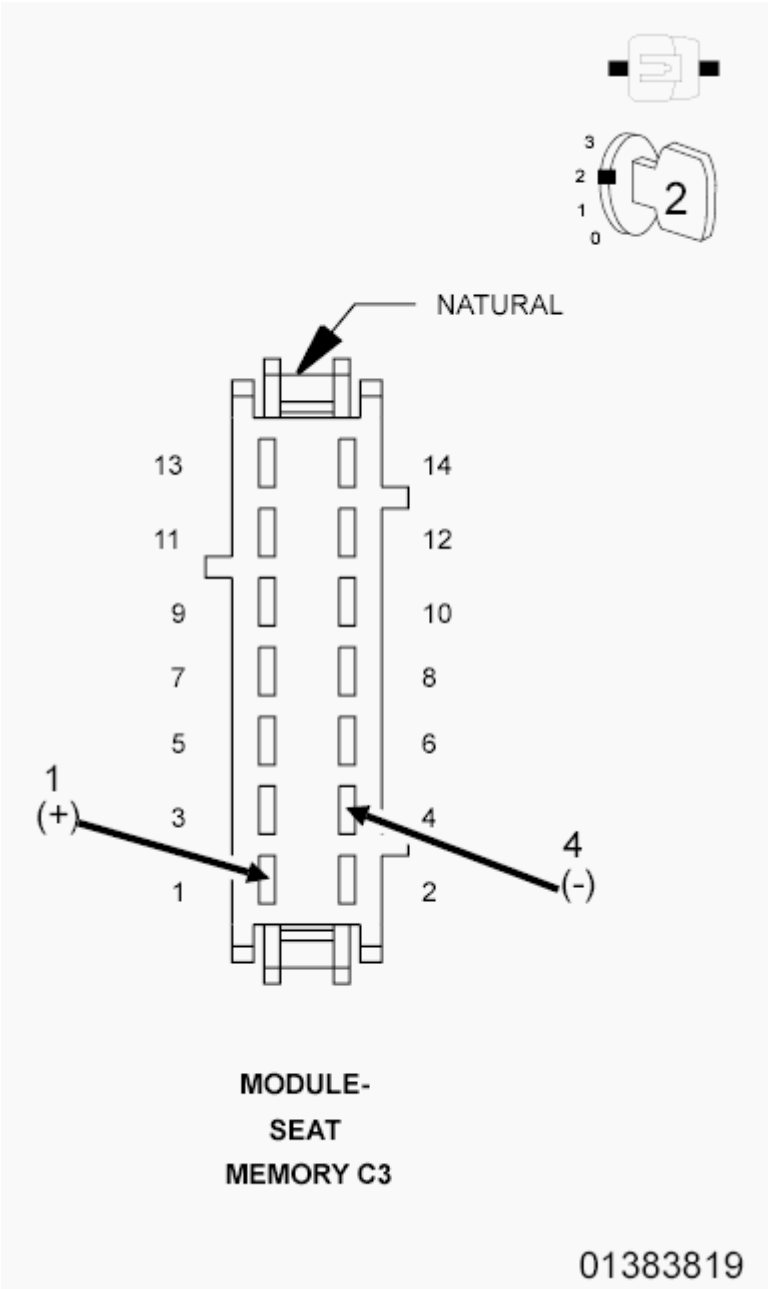

Fig. 83: Checking Front Driver Vertical Seat Adjuster Motor Sensor Operation
Courtesy of CHRYSLER GROUP, LLC

1. Reconnect the MSM C3 connector.
2. Turn the ignition on.
3. Using a scan tool, erase DTC's.
4. Connect the positive lead of a lab scope to the (G404) Driver Seat Front Vertical Position Sense circuit and the negative lead to the (G494) Driver Seat Front Vertical Sensor Ground circuit at the MSM C3 connector. Set the lab scope range to 20 Volts and time to 20 ms divisions.

NOTE: **Do not adjust the seat against an end-stop when performing the following.**

5. Move the seat switch in one front vertical adjust position.

NOTE: **If the sensor is functioning normally the scope will display a continuously cycling square wave when operating the seat. If the module fails to detect sensor operation it will stop seat operation in approximately two seconds.**

Does the sensor operate as specified?

Yes

- Leave Scope Connected. Go To 8.

No

- Replace the Front Driver Vertical Seat Adjuster motor assembly in accordance with the Service Information.
- Perform POWER SEAT SYSTEM VERIFICATION TEST. Refer to **POWER SEAT SYSTEM VERIFICATION TEST**.

8. **CHECK THE FRONT DRIVER VERTICAL SEAT ADJUSTER MOTOR SENSOR OPERATION IN OPPOSITE DIRECTION**

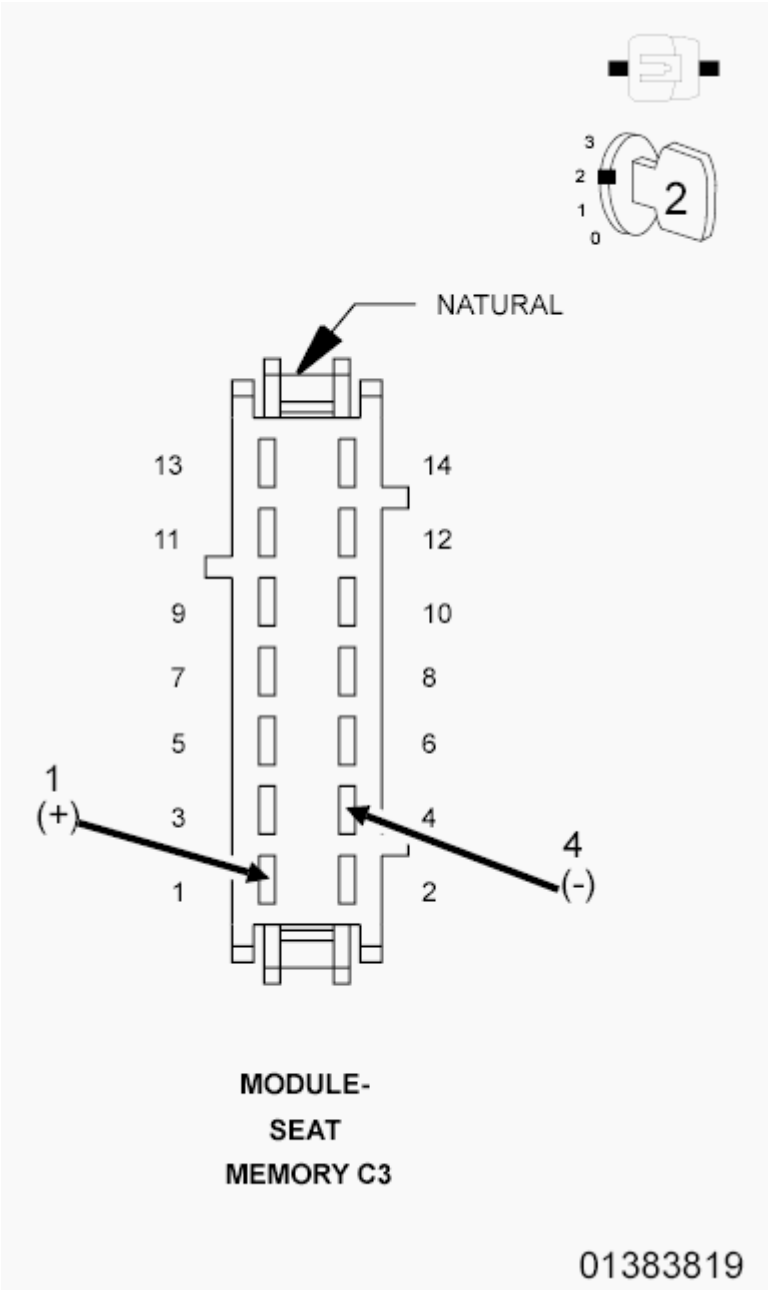

Fig. 84: Checking Front Driver Vertical Seat Adjuster Motor Sensor Operation
Courtesy of CHRYSLER GROUP, LLC

1. Using a scan tool, erase DTC's if present.

NOTE: **Do not adjust the seat against an end-stop when performing the following.**

2. Move the seat switch in the direction opposite of that previously selected.

NOTE: **If the sensor is functioning normally the scope will display a**

continuously cycling square wave when operating the seat. If the module fails to detect sensor operation it will stop seat operation in approximately two seconds.

Does the sensor operate as specified?

Yes

- Replace the Memory Seat Module (MSM) in accordance with the Service Information.
- Perform APS VERIFICATION TEST. Refer to **APS VERIFICATION TEST**.

No

- Replace the Front Driver Vertical Seat Adjuster motor assembly in accordance with the Service Information.
- Perform POWER SEAT SYSTEM VERIFICATION TEST. Refer to **POWER SEAT SYSTEM VERIFICATION TEST**.

9. **CHECK THE (G404) DRIVER SEAT FRONT VERTICAL POSITION SENSE CIRCUIT FOR AN OPEN**

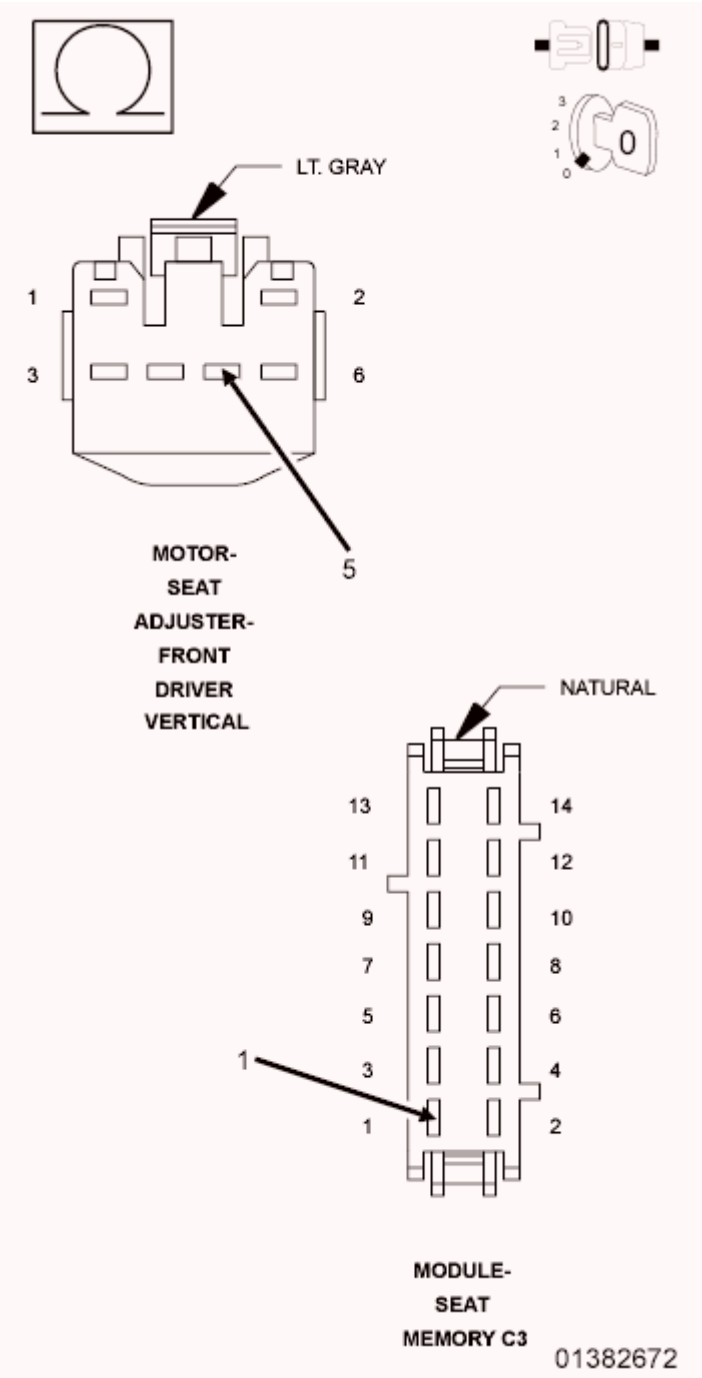

Fig. 85: Checking Driver Seat Front Vertical Position Sense Circuit For An Open
Courtesy of CHRYSLER GROUP, LLC

1. Disconnect the MSM C3 connector.

   NOTE: Check connectors. Clean and repair as necessary.

2. Measure the resistance of the (G404) Driver Seat Front Vertical Position Sense circuit between the Front Driver Vertical Seat Adjuster Motor connector and the MSM C3 connector.

Is the resistance below 5.0 Ohms?

Yes

- Go To 10.

No

- Repair the (G404) Driver Seat Front Vertical Position Sense circuit for an open.
- Perform POWER SEAT SYSTEM VERIFICATION TEST. Refer to **POWER SEAT SYSTEM VERIFICATION TEST**.

10. **CHECK THE (G494) DRIVER SEAT FRONT VERTICAL SENSOR GROUND CIRCUIT FOR AN OPEN**

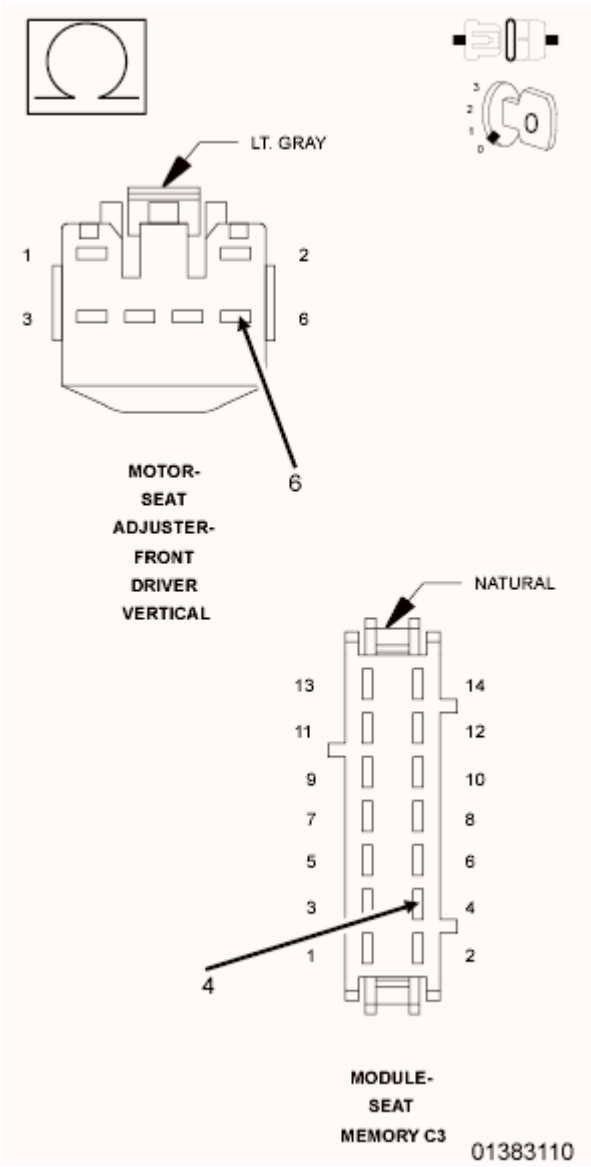

Fig. 86: Checking Driver Seat Front Vertical Sensor Ground Circuit For An Open
Courtesy of CHRYSLER GROUP, LLC

1. Measure the resistance of the (G494) Driver Seat Front Vertical Sensor Ground circuit between the Driver Front Vertical Seat Adjuster Motor connector and the MSM C3 connector.

   Is the resistance below 5.0 Ohms?

   Yes

   - Replace the Memory Seat Module (MSM) in accordance with the Service Information.
   - Perform POWER SEAT SYSTEM VERIFICATION TEST. Refer to **POWER SEAT SYSTEM VERIFICATION TEST**.

   No

   - Repair the (G494) Driver Seat Front Vertical Senor Ground circuit for an open.
   - Perform POWER SEAT SYSTEM VERIFICATION TEST. Refer to **POWER SEAT SYSTEM VERIFICATION TEST**.

11. **CHECK THE (P119) DRIVER SEAT FRONT VERTICAL UP DRIVER CIRCUIT FOR AN OPEN**

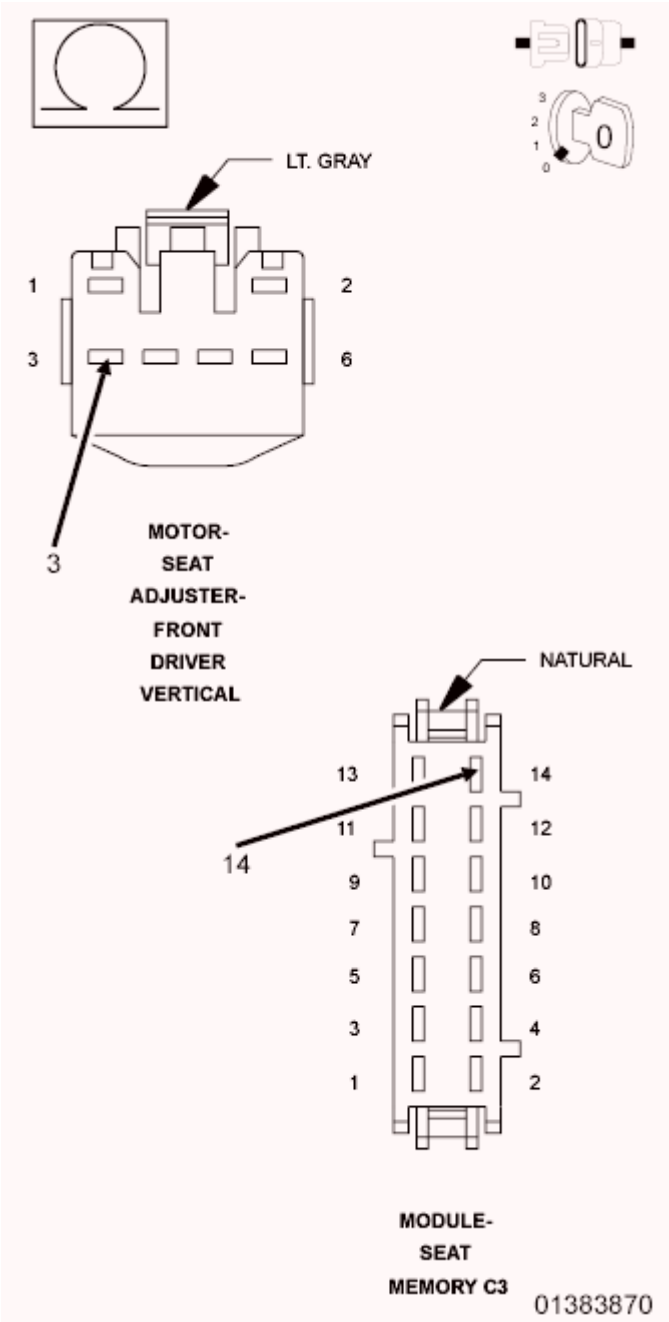

Fig. 87: Checking Driver Seat Front Vertical Up Driver Circuit For An Open
Courtesy of CHRYSLER GROUP, LLC

1. Disconnect the MSM C3 connector.

   NOTE: Check connectors. Clean and repair as necessary.

2. Measure the resistance of the (P119) Driver Seat Front Vertical Up Driver circuit between the Driver Front Vertical Seat Adjuster Motor connector and the MSM C3 connector.

Is the resistance below 5.0 Ohms?

Yes

- Go To 12.

No

- Repair the (P119) Driver Seat Front Vertical Up Driver circuit for an open.
- Perform POWER SEAT SYSTEM VERIFICATION TEST. Refer to **POWER SEAT SYSTEM VERIFICATION TEST**.

12. **CHECK THE (P121) DRIVER SEAT FRONT VERTICAL DOWN DRIVER CIRCUIT FOR AN OPEN**

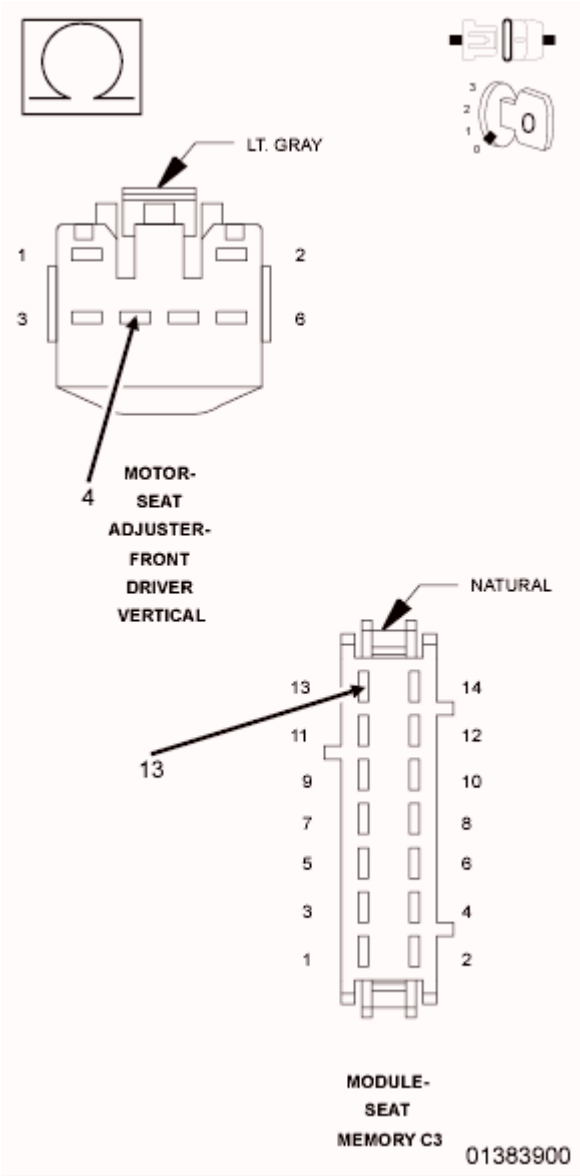

Fig. 88: Checking Driver Seat Front Vertical Down Driver Circuit For An Open
Courtesy of CHRYSLER GROUP, LLC

1. Measure the resistance of the (P121) Driver Seat Front Vertical Down Driver circuit between the Driver Front Vertical Seat Adjuster Motor connector and the MSM C3 connector.

   Is the resistance below 5.0 Ohms?

   Yes

   - Replace the Memory Seat Module (MSM) in accordance with the Service Information.
   - Perform POWER SEAT SYSTEM VERIFICATION TEST. Refer to **POWER SEAT SYSTEM VERIFICATION TEST**.

   No

   - Repair the (P121) Driver Seat Front Vertical Down Driver circuit for an open.
   - Perform POWER SEAT SYSTEM VERIFICATION TEST. Refer to **POWER SEAT SYSTEM VERIFICATION TEST**.

B1D83-SEAT REAR VERTICAL MOTOR CONTROL CIRCUIT PERFORMANCE

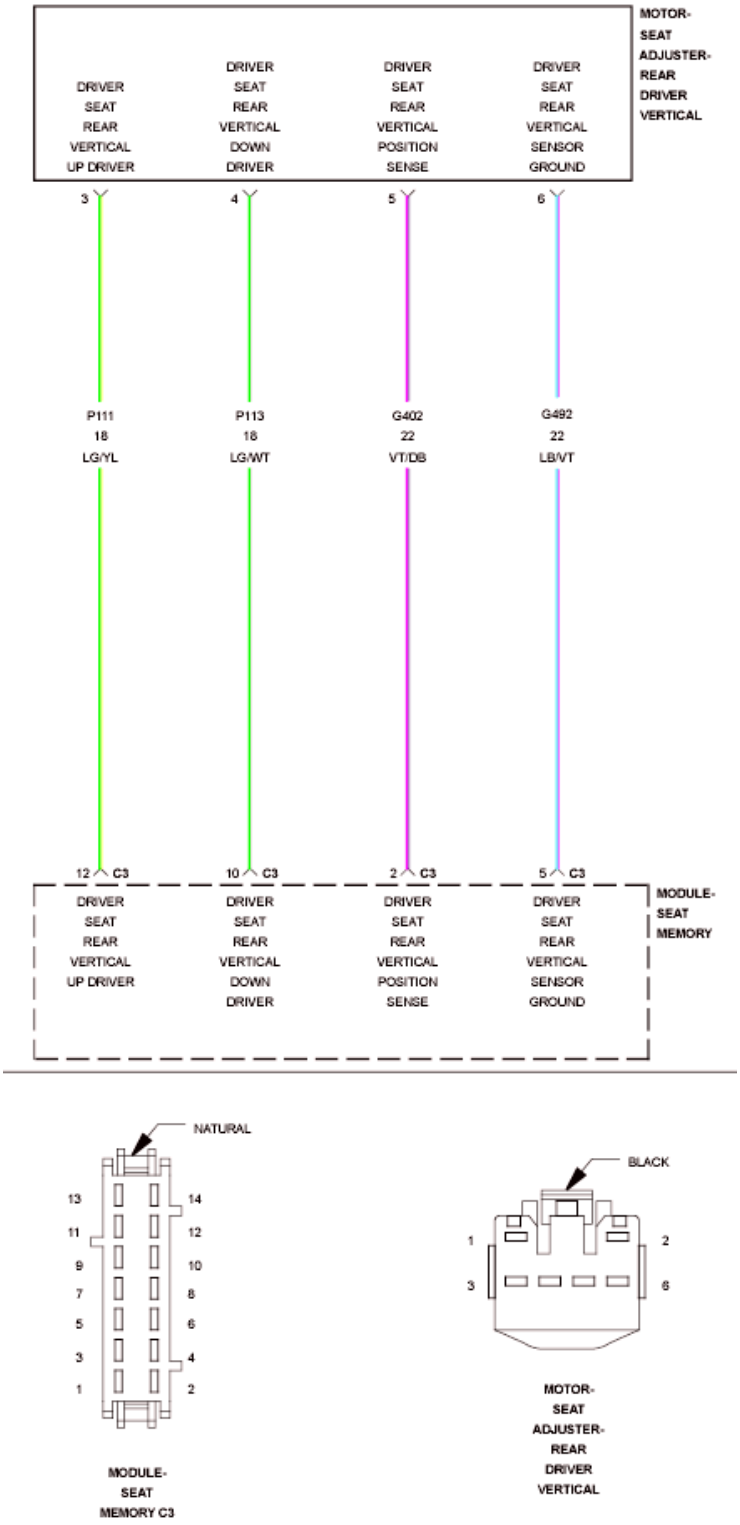

Fig. 89: Driver Seat Rear Vertical Motor Wiring Diagram
Courtesy of CHRYSLER GROUP, LLC

For a complete wiring diagram, **refer to appropriate SYSTEM WIRING DIAGRAMS article** .

WHEN MONITORED:

Whenever the seat motor is activated.

SET CONDITION:

The seat switch is pressed three times in opposite directions (e.g. either, rear vertical up, rear vertical down, and rear vertical up, or rear vertical down, rear vertical up, and rear vertical down) and each switch activation is for at least one second and the Memory Seat Module (MSM) does not detect seat motor rotation in either direction.

POSSIBLE CAUSES

Possible Causes
SEAT POSITION SENSOR DIAGNOSTIC TROUBLE CODES (DTC's) PRESENT
(G402) DRIVER SEAT REAR VERTICAL POSITION SENSE CIRCUIT OPEN
(G492) DRIVER SEAT REAR VERTICAL SENSOR GROUND CIRCUIT OPEN
(P111) DRIVER SEAT REAR VERTICAL UP DRIVER CIRCUIT OPEN
(P113) DRIVER SEAT REAR VERTICAL DOWN DRIVER CIRCUIT OPEN
REAR DRIVER VERTICAL SEAT ADJUSTER MOTOR SENSOR
REAR DRIVER VERTICAL SEAT ADJUSTER MOTOR
MEMORY SEAT MODULE (MSM)

DIAGNOSTIC TEST

1. **INSPECT SEAT TRACK, MOTOR, AND HARNESS**
    1. Verify seat harness is routed correctly.
    2. Inspect seat track and motor for damage.
    3. Inspect for anything that would prevent the seat from moving to each end-stop.

    Is anything present that would prevent the seat from moving to each end-stop?

    Yes

    - Repair as necessary.
    - Perform POWER SEAT SYSTEM VERIFICATION TEST. Refer to **POWER SEAT SYSTEM VERIFICATION TEST**.

    No

    - Go To 2.
2. **CHECK FOR SEAT POSITION SENSOR DIAGNOSTIC TROUBLE CODES (DTC's)**
    1. Turn the ignition on.
    2. Using a scan tool, read DTC's.

Does the scan tool display any seat position sensor DTC's?

Yes

- Diagnose and repair all seat position sensor DTC's. Refer to **DIAGNOSIS AND TESTING**.

No

- Go To 3.

3. **TEST FOR INTERMITTENT CONDITION**
   1. Using a scan tool, record and erase DTC's.
   2. Move the seat switch in one rear vertical adjustment direction for at least one second then release the switch. Repeat three times consecutively, but move the switch in the opposite direction each time.
   3. Using a scan tool, read DTC's.

   Does the scan tool display DTC B1D83-SEAT REAR VERTICAL MOTOR CONTROL CIRCUIT PERFORMANCE?

   Yes

   - Go To 4.

   No

   - The conditions that caused this code to set are not present at this time. Using the wiring diagram/schematic as a guide, inspect the wiring and connectors. Look for chafed, pierced, pinched, or partially broken wires and broken, bent, pushed out, spread, corroded, or contaminated terminals.
   - Perform POWER SEAT SYSTEM VERIFICATION TEST. Refer to **POWER SEAT SYSTEM VERIFICATION TEST**.

4. **CHECK THE (G402) DRIVER SEAT REAR VERTICAL POSITION SENSE CIRCUIT AND THE (G492) DRIVER SEAT REAR VERTICAL SENSOR GROUND CIRCUIT FUNCTION**

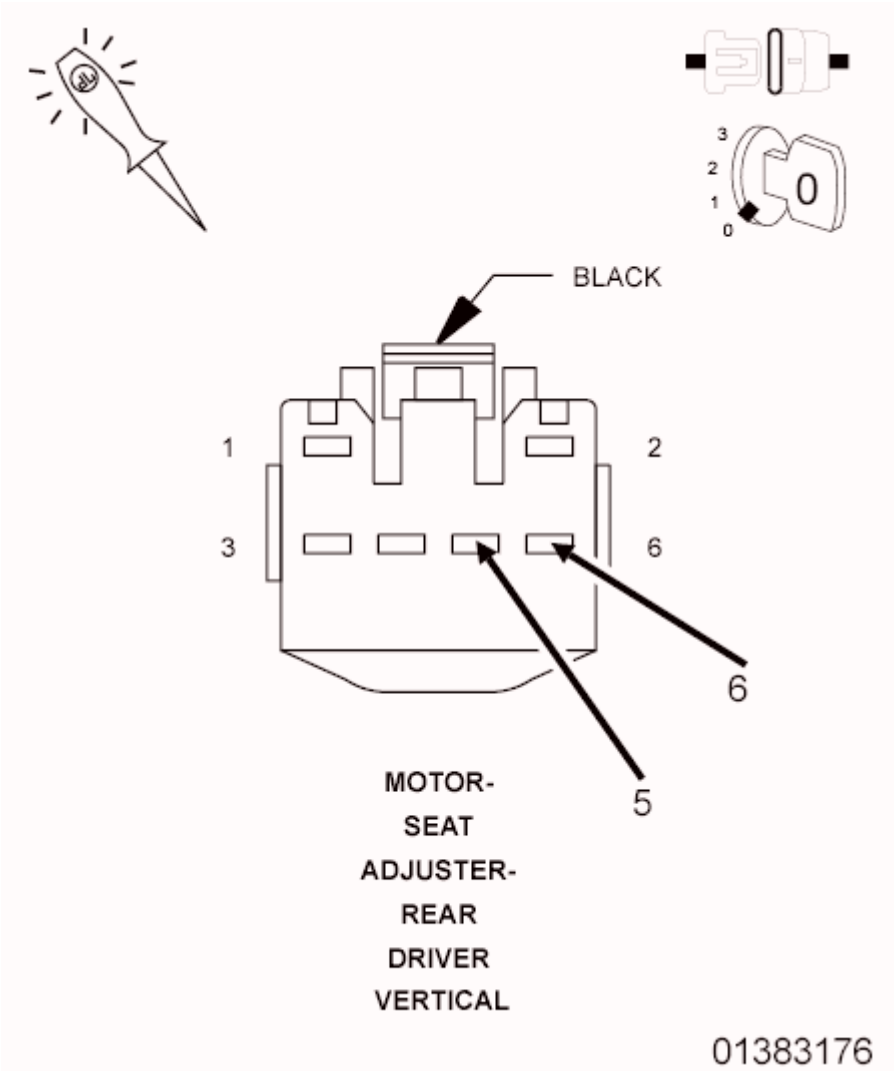

Fig. 90: Checking Driver Seat Rear Vertical Position Sense Function
Courtesy of CHRYSLER GROUP, LLC

1. Turn the ignition off.
2. Disconnect the Rear Driver Vertical Seat Adjuster Motor connector.

NOTE: Check connectors. Clean and repair as necessary.

3. Disconnect the scan tool.
4. Turn off all vehicle interior and exterior lighting.
5. Mark sure all doors are closed then wait 10 seconds.
6. Connect a 12-Volt test light between the (G402) Driver Seat Rear Vertical Position Sense circuit and the (G492) Driver Seat Rear Vertical Sensor Ground circuit at the Driver Rear Vertical Seat Adjuster Motor connector.
7. Move the seat switch in the rear vertical adjust position then release the switch.

Does the test light illuminate for approximately five seconds then turn off?

Yes

- Go To 5.

No

- Go To 9.

5. **CHECK THE (P111) DRIVER SEAT REAR VERTICAL UP DRIVER CIRCUIT AND THE (P113) DRIVER SEAT REAR VERTICAL DOWN DRIVER CIRCUIT FUNCTION**

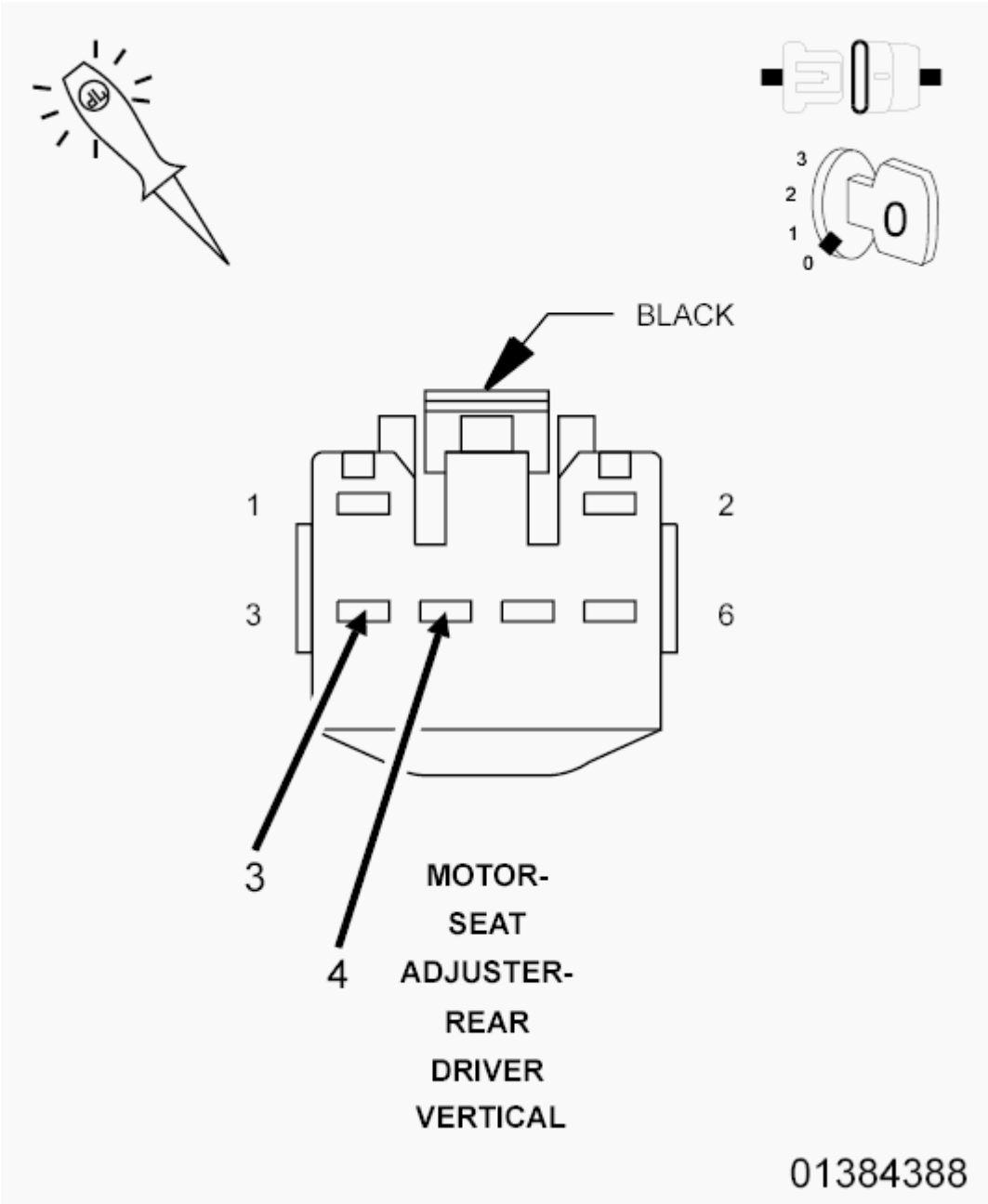

Fig. 91: Checking Driver Seat Rear Vertical Up Driver Circuit Function
Courtesy of CHRYSLER GROUP, LLC

1. Connect a 12-Volt test light between the (P111) Driver Seat Rear Vertical Up Driver circuit and the (P113) Driver Seat Rear Vertical Down Driver circuit at the Rear Driver Vertical Seat Adjuster Motor connector.
2. Move the seat switch in the rear vertical adjust position.

   Does the test light illuminate with the seat switch engaged?

   Yes

- Go To 6.

No

- Go To 11.

6. **CHECK THE REAR DRIVER VERTICAL SEAT ADJUSTER MOTOR OPERATION**

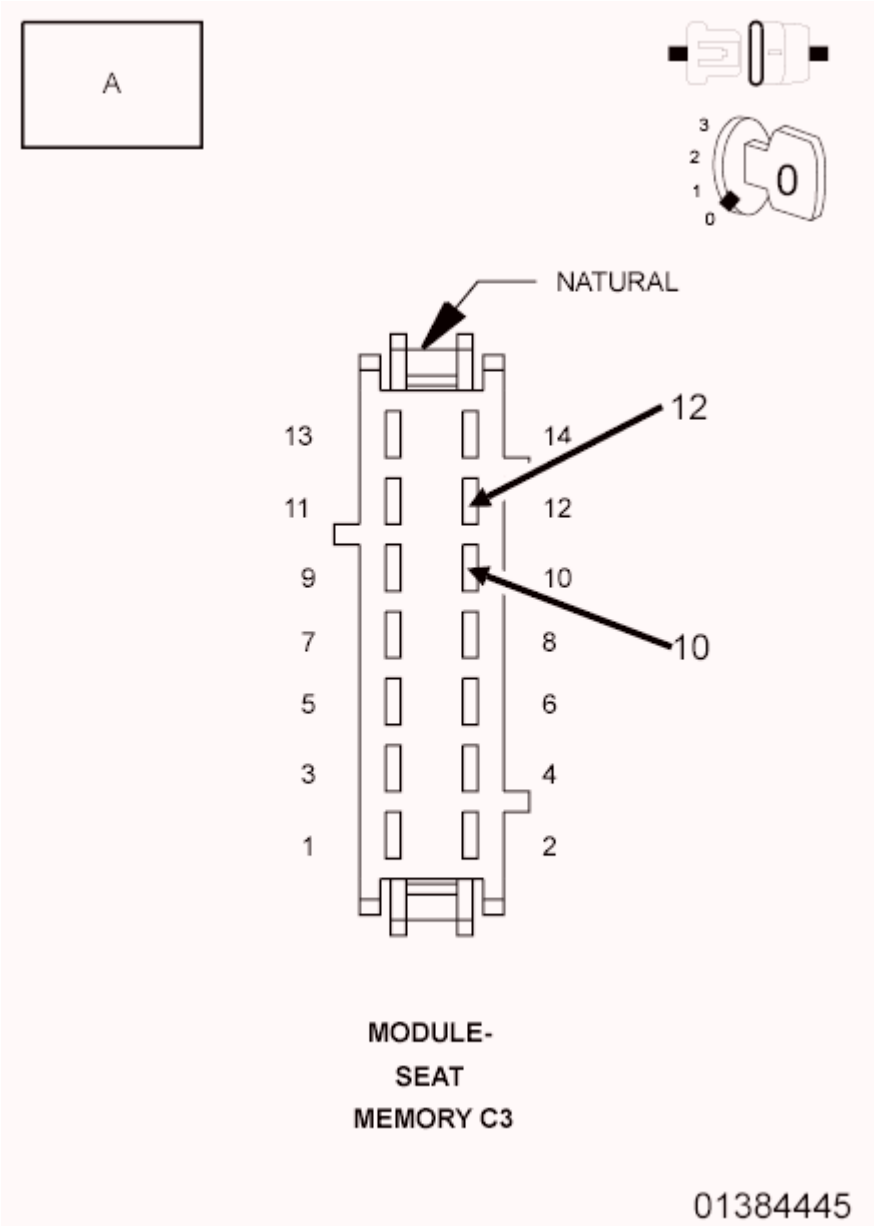

Fig. 92: Checking Rear Driver Vertical Seat Adjuster Motor Operation
Courtesy of CHRYSLER GROUP, LLC

1. Reconnect the Rear Driver Vertical Seat Adjuster Motor connector.
2. Disconnect the MSM C3 connector.

NOTE: **Check connectors. Clean and repair as necessary.**

3. Check motor operation in both directions as follows:

NOTE: **Do not adjust the seat against an end-stop when performing the following.**

To drive seat upward:

- Connect one end of a fused jumper wire to battery Voltage and the other end to the (P111) Driver Seat Rear Vertical Up Driver circuit at the MSM C3 connector.
- Connect an ammeter between ground and the (P113) Driver Seat Rear Vertical Down Driver circuit at the MSM C3 connector.
- Disconnect before reaching the end-stop.

To drive seat downward:

- Connect one end of a fused jumper wire to battery Voltage and the other end to the (P113) Driver Seat Rear Vertical Down Driver circuit at the MSM C3 connector.
- Connect an ammeter between ground and the (P111) Driver Seat Rear Vertical Up Driver circuit at the MSM C3 connector.
- Disconnect before reaching the end-stop.

NOTE: **The seat motor should be operational in both directions and the ammeter should read approximately 2.6 amps in the upward direction and 1.4 amps in the downward direction.**

Does the motor operate as specified?

Yes

- Go To 7.

No

- Check (P111) Driver Seat Rear Vertical Up Driver circuit and (P113) Driver Seat Rear Vertical Down Driver circuit for high resistance. If circuits are okay, replace the Rear Driver Vertical Seat Adjuster motor assembly in accordance with the Service Information.
- Perform POWER SEAT SYSTEM VERIFICATION TEST. Refer to **POWER SEAT SYSTEM VERIFICATION TEST**.

7. **CHECK THE REAR DRIVER VERTICAL SEAT ADJUSTER MOTOR SENSOR OPERATION**

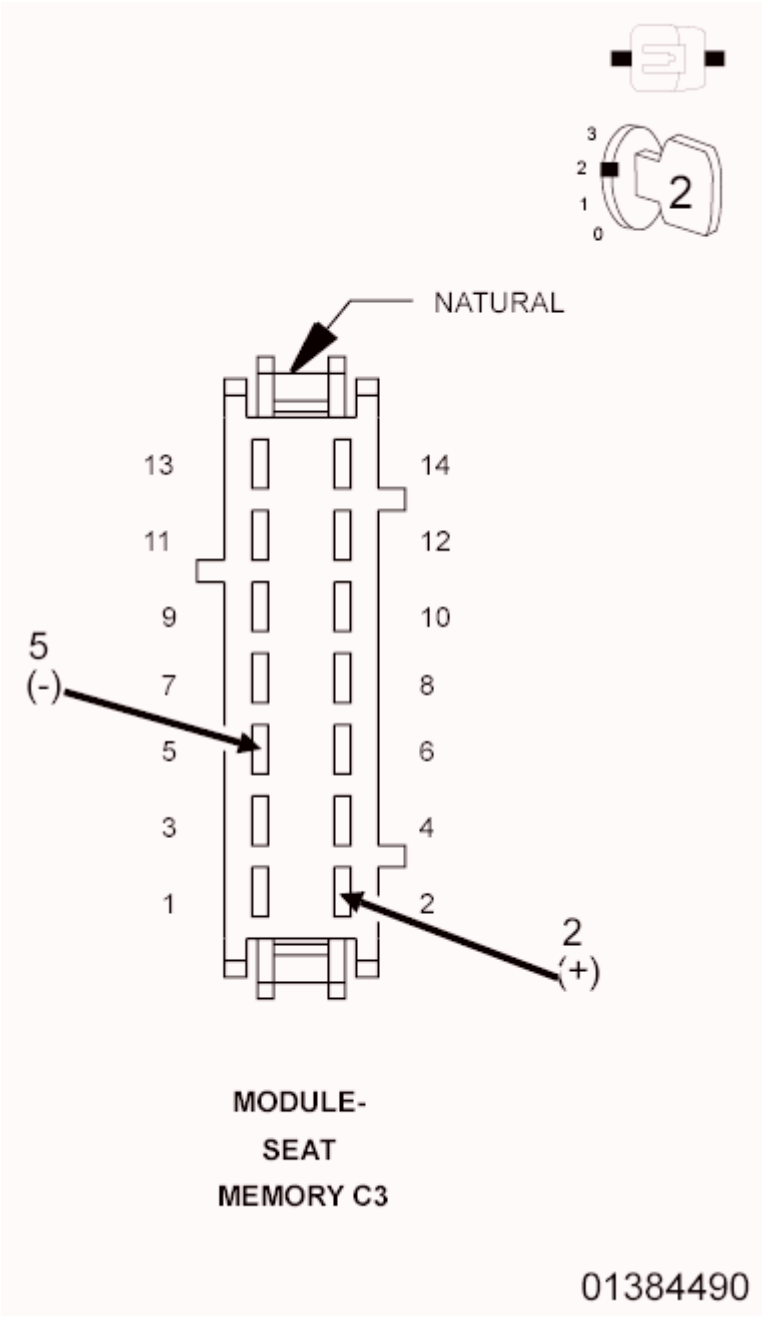

Fig. 93: Checking Driver Rear Vertical Seat Adjuster Motor Sensor Operation
Courtesy of CHRYSLER GROUP, LLC

1. Reconnect the MSM C3 connector.
2. Turn the ignition on.
3. Using a scan tool, erase DTC's.
4. Connect the positive lead of a lab scope to the (G402) Driver Seat Rear Vertical Position Sense circuit and the negative lead to the (G492) Driver Seat Rear Vertical Sensor Ground circuit at the MSM C3 connector. Set the lab scope range to 20 Volts and time to 20 ms divisions.

NOTE: **Do not adjust the seat against an end-stop when performing the following.**

5. Move the seat switch in one rear vertical adjust position.

NOTE: **If the sensor is functioning normally the scope will display a continuously cycling square wave when operating the seat. If the module fails to detect sensor operation it will stop seat operation in approximately two seconds.**

Does the sensor operate as specified?

Yes

- Leave Scope Connected. Go To 8.

No

- Replace the Rear Driver Vertical Seat Adjuster motor assembly in accordance with the Service Information.
- Perform POWER SEAT SYSTEM VERIFICATION TEST. Refer to **POWER SEAT SYSTEM VERIFICATION TEST**.

8. **CHECK THE REAR DRIVER VERTICAL SEAT ADJUSTER MOTOR SENSOR OPERATION IN OPPOSITE DIRECTION**

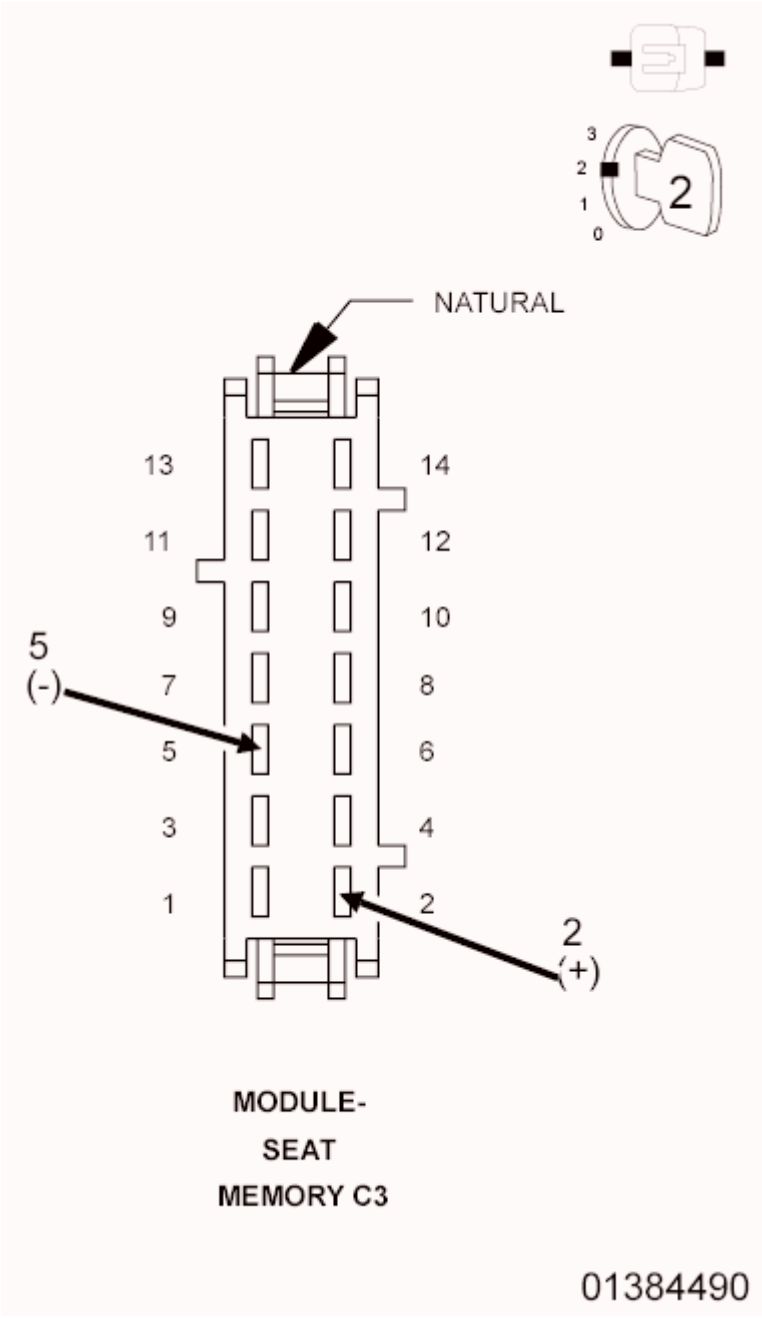

Fig. 94: Checking Driver Rear Vertical Seat Adjuster Motor Sensor Operation
Courtesy of CHRYSLER GROUP, LLC

1. Using a scan tool, erase DTC's if present.

   NOTE: Do not adjust the seat against an end-stop when performing the following.

2. Move the seat switch in the direction opposite of that previously selected.

NOTE: **If the sensor is functioning normally the scope will display a continuously cycling square wave when operating the seat. If the module fails to detect sensor operation it will stop seat operation in approximately two seconds.**

Does the sensor operate as specified?

Yes

- Replace the Memory Seat Module (MSM) in accordance with the Service Information.
- Perform APS VERIFICATION TEST. Refer to **APS VERIFICATION TEST**.

No

- Replace the Rear Driver Vertical Seat Adjuster motor assembly in accordance with the Service Information.
- Perform POWER SEAT SYSTEM VERIFICATION TEST. Refer to **POWER SEAT SYSTEM VERIFICATION TEST**.

9. **CHECK THE (G402) DRIVER SEAT REAR VERTICAL POSITION SENSE CIRCUIT FOR AN OPEN**

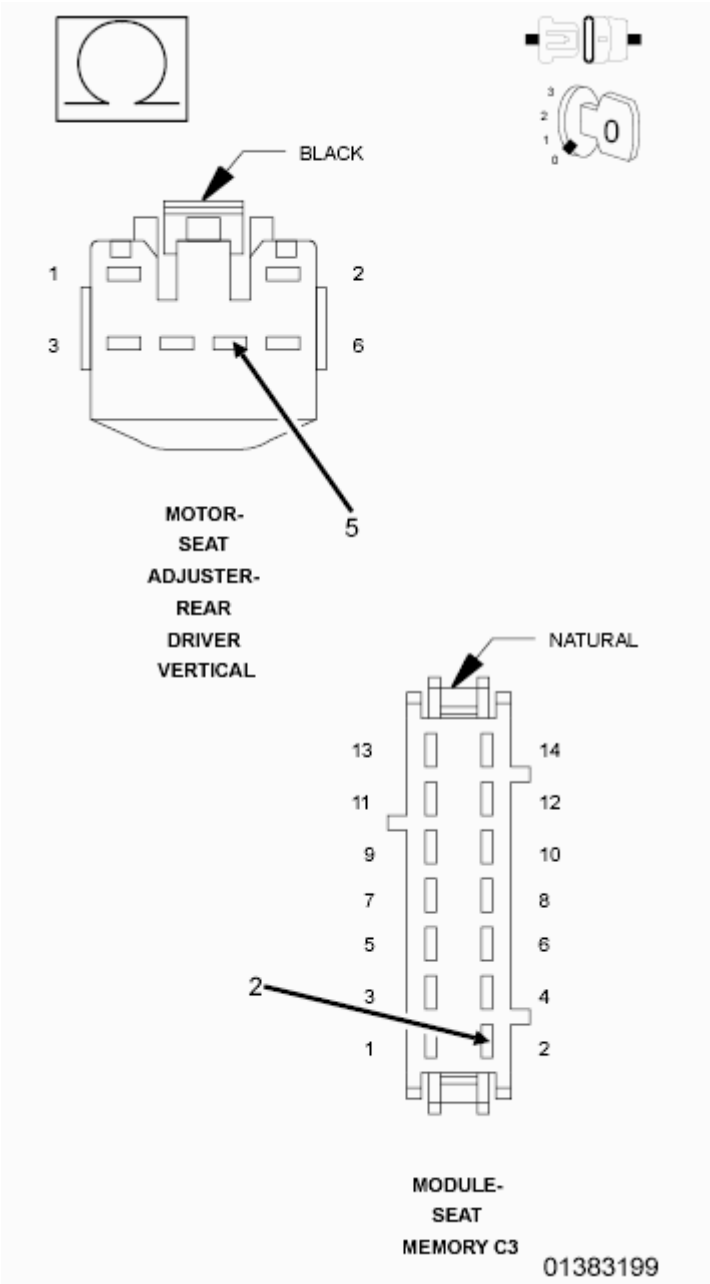

Fig. 95: Checking Driver Seat Rear Vertical Position Sense Circuit For An Open
Courtesy of CHRYSLER GROUP, LLC

1. Disconnect the MSM C3 connector.

   NOTE: Check connectors. Clean and repair as necessary.

2. Measure the resistance of the (G402) Driver Seat Rear Vertical Position Sense circuit between the Rear Driver Vertical Seat Adjuster Motor connector and the MSM C3 connector.

   Is the resistance below 5.0 Ohms?

Yes

- Go To 10.

No

- Repair the (G402) Driver Seat Rear Vertical Position Sense circuit for an open.
- Perform POWER SEAT SYSTEM VERIFICATION TEST. Refer to **POWER SEAT SYSTEM VERIFICATION TEST**.

10. **CHECK THE (G492) DRIVER SEAT REAR VERTICAL SENSOR GROUND CIRCUIT FOR AN OPEN**

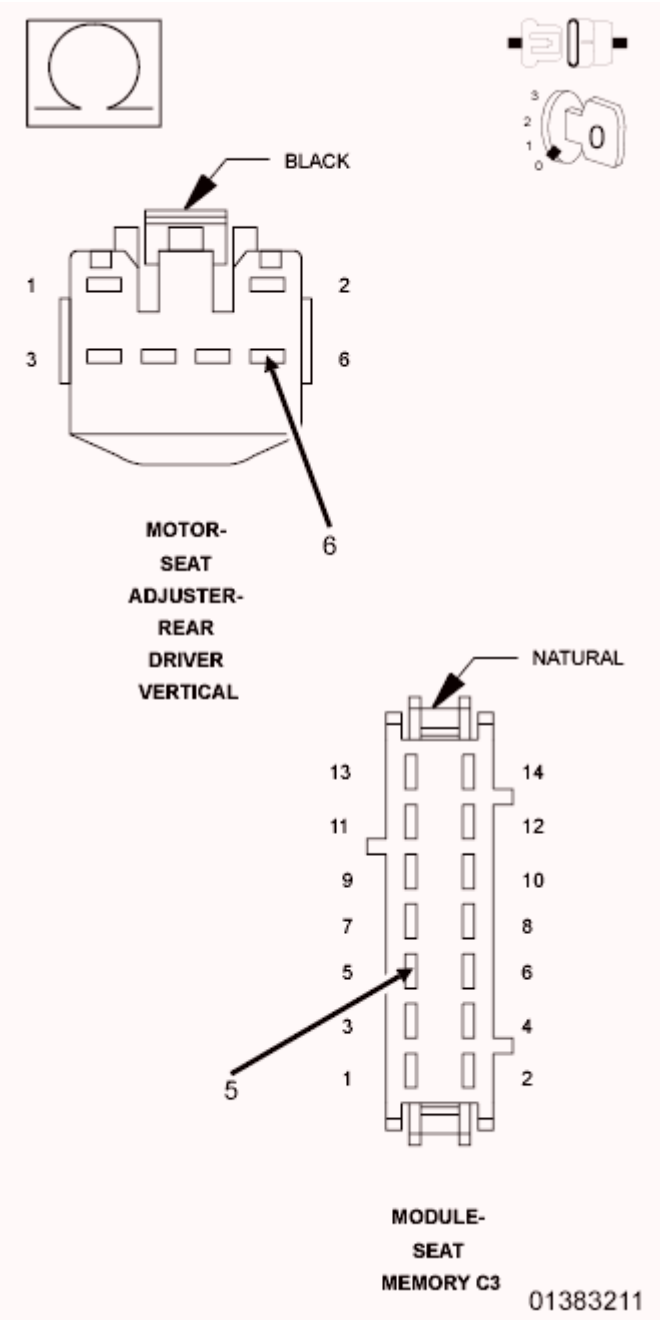

Fig. 96: Checking Driver Seat Rear Vertical Sensor Ground Circuit For An Open
Courtesy of CHRYSLER GROUP, LLC

1. Measure the resistance of the (G492) Driver Seat Rear Vertical Sensor Ground circuit between the Driver Rear Vertical Seat Adjuster Motor connector and the MSM C3 connector.

   Is the resistance below 5.0 Ohms?

   Yes

   - Replace the Memory Seat Module (MSM) in accordance with the Service Information.

- Perform POWER SEAT SYSTEM VERIFICATION TEST. Refer to **POWER SEAT SYSTEM VERIFICATION TEST**.

No

- Repair the (G492) Driver Seat Rear Vertical Sensor Ground circuit for an open.
- Perform POWER SEAT SYSTEM VERIFICATION TEST. Refer to **POWER SEAT SYSTEM VERIFICATION TEST**.

11. **CHECK THE (P111) DRIVER SEAT REAR VERTICAL UP DRIVER CIRCUIT FOR AN OPEN**

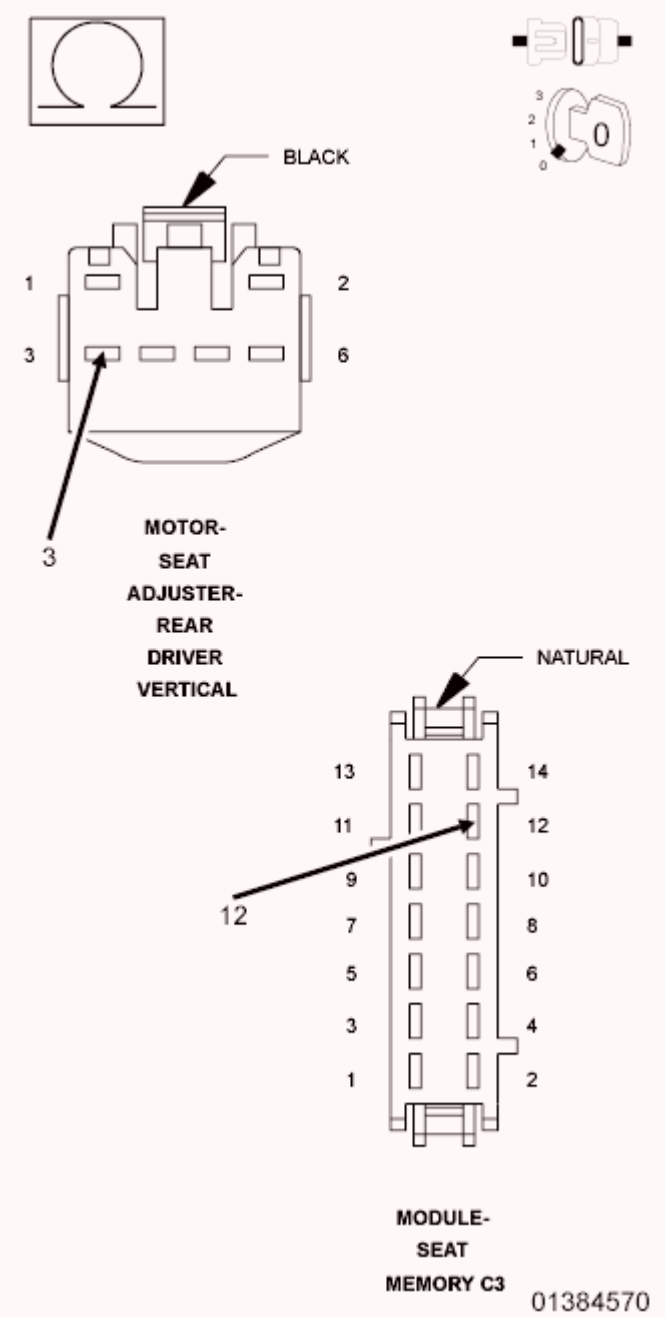

Fig. 97: Checking Driver Seat Rear Vertical Up Driver Circuit For An Open
Courtesy of CHRYSLER GROUP, LLC

1. Disconnect the MSM C3 connector.

   NOTE: Check connectors. Clean and repair as necessary.

2. Measure the resistance of the (P111) Driver Seat Rear Vertical Up Driver circuit between the Driver Rear Vertical Seat Adjuster Motor connector and the MSM C3 connector.

   Is the resistance below 5.0 Ohms?

   Yes

   - Go To 12.

   No

   - Repair the (P111) Driver Seat Rear Vertical Up Driver circuit for an open.
   - Perform POWER SEAT SYSTEM VERIFICATION TEST. Refer to **POWER SEAT SYSTEM VERIFICATION TEST**.

12. **CHECK THE (P113) DRIVER SEAT REAR VERTICAL DOWN DRIVER CIRCUIT FOR AN OPEN**

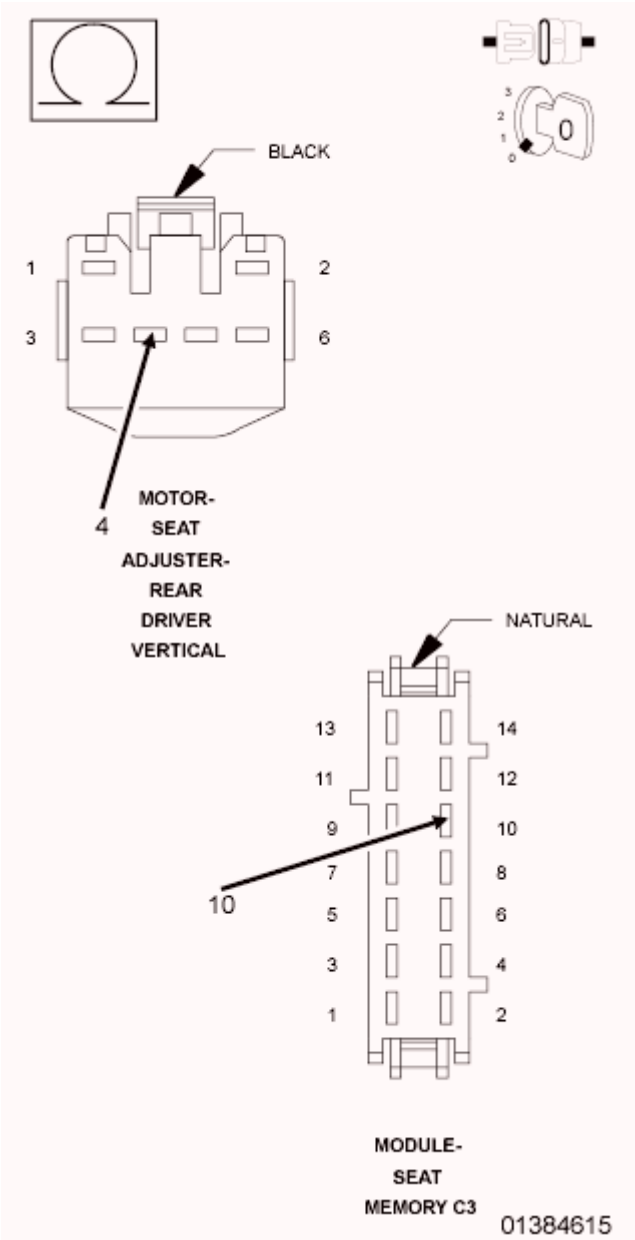

Fig. 98: Checking Driver Seat Rear Vertical Down Driver Circuit For An Open
Courtesy of CHRYSLER GROUP, LLC

1. Measure the resistance of the (P113) Driver Seat Rear Vertical Down Driver circuit between the Driver Rear Vertical Seat Adjuster Motor connector and the MSM C3 connector.

   Is the resistance below 5.0 Ohms?

   Yes

   - Replace the Memory Seat Module (MSM) in accordance with the Service Information.
   - Perform POWER SEAT SYSTEM VERIFICATION TEST. Refer to **POWER SEAT SYSTEM VERIFICATION TEST**.

No

- Repair the (P113) Driver Seat Rear Vertical Down Driver circuit for an open.
- Perform POWER SEAT SYSTEM VERIFICATION TEST. Refer to **POWER SEAT SYSTEM VERIFICATION TEST**.

B1D87-SEAT BACKREST MOTOR CONTROL CIRCUIT PERFORMANCE

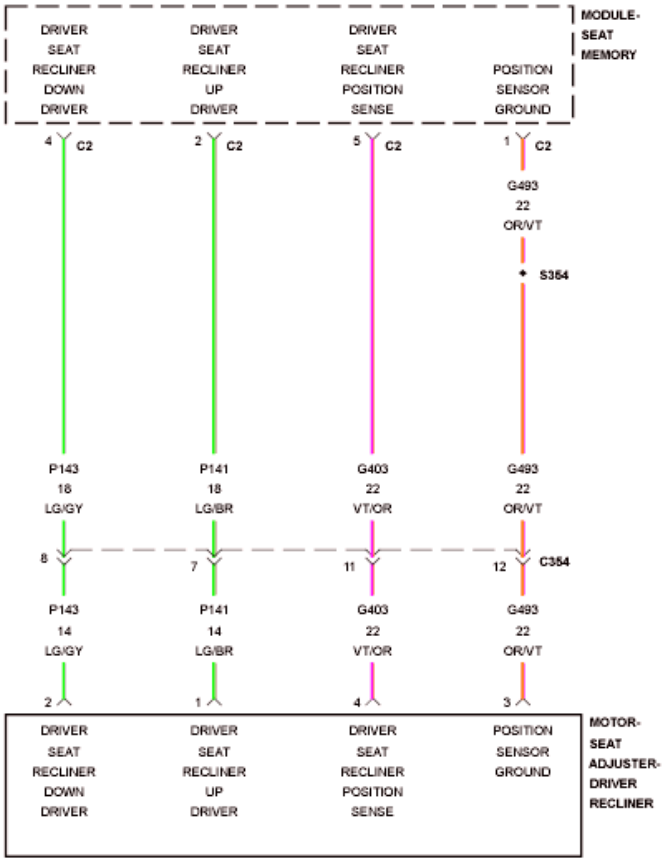

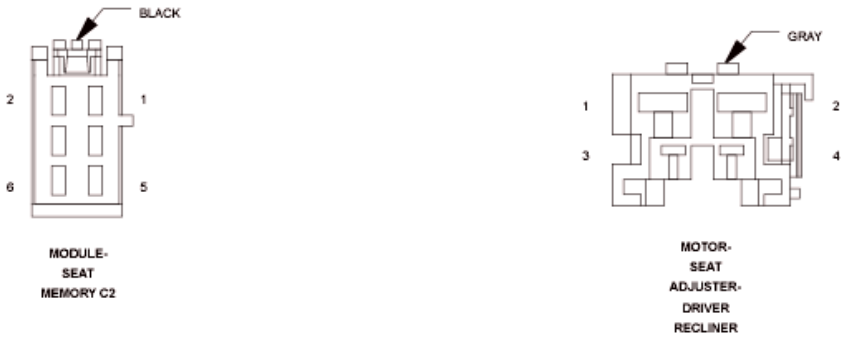

Fig. 99: Seat Recliner Position Sensor Wiring Diagram
Courtesy of CHRYSLER GROUP, LLC

For a complete wiring diagram, **refer to appropriate SYSTEM WIRING DIAGRAMS article** .

WHEN MONITORED:

Whenever the seat motor is activated.

SET CONDITION:

The seat switch is pressed three times in opposite directions (e.g. either, recliner forward, recliner rearward, and recliner forward, or recliner rearward, recliner forward, and recliner rearward) and each switch activation is for at least one second and the Memory Seat Module (MSM) does not detect seat motor rotation in either direction.

POSSIBLE CAUSES

Possible Causes
SEAT POSITION SENSOR DIAGNOSTIC TROUBLE CODES (DTC's) PRESENT
(G403) DRIVER SEAT RECLINER POSITION SENSE CIRCUIT OPEN
(G493) DRIVER SEAT RECLINER POSITION SENSOR GROUND CIRCUIT OPEN
(P141) DRIVER SEAT RECLINER UP DRIVER CIRCUIT OPEN
(P143) DRIVER SEAT RECLINER DOWN DRIVER CIRCUIT OPEN
DRIVER RECLINER SEAT ADJUSTER MOTOR SENSOR
DRIVER RECLINER SEAT ADJUSTER MOTOR
MEMORY SEAT MODULE (MSM)

DIAGNOSTIC TEST

1. **INSPECT FOR OBSTRUCTION IN SEAT PATH**
    1. Verify seat harness is routed correctly.
    2. Inspect seat for damage.
    3. Inspect for anything that would prevent the seat from moving to each end-stop.

    Is anything present that would prevent the seat from moving to each end-stop?

    Yes

    - Repair as necessary.
    - Perform POWER SEAT SYSTEM VERIFICATION TEST. Refer to **POWER SEAT SYSTEM VERIFICATION TEST**.

    No

    - Go To 2.
2. **CHECK FOR SEAT POSITION SENSOR DIAGNOSTIC TROUBLE CODES (DTC's)**
    1. Turn the ignition on.
    2. Using a scan tool, read DTC's.

Does the scan tool display any seat position sensor DTC's?

Yes

- Diagnose and repair all seat position sensor DTC's. Refer to **DIAGNOSIS AND TESTING**.

No

- Go To 3.

3. **TEST FOR INTERMITTENT CONDITION**
   1. Using a scan tool, record and erase DTC's.
   2. Move the seat switch in one recliner adjustment direction for at least one second then release the switch. Repeat three times consecutively, but move the switch in the opposite direction each time.
   3. Using a scan tool, read DTC's.

   Does the scan tool display DTC B1D87-SEAT BACKREST MOTOR CONTROL CIRCUIT PERFORMANCE?

   Yes

   - Go To 4.

   No

   - The conditions that caused this code to set are not present at this time. Using the wiring diagram/schematic as a guide, inspect the wiring and connectors. Look for chafed, pierced, pinched, or partially broken wires and broken, bent, pushed out, spread, corroded, or contaminated terminals.
   - Perform POWER SEAT SYSTEM VERIFICATION TEST. Refer to **POWER SEAT SYSTEM VERIFICATION TEST**.

4. **CHECK THE (G403) DRIVER SEAT RECLINER POSITION SENSE CIRCUIT AND THE (G493) DRIVER SEAT RECLINER POSITION SENSOR GROUND CIRCUIT FUNCTION**

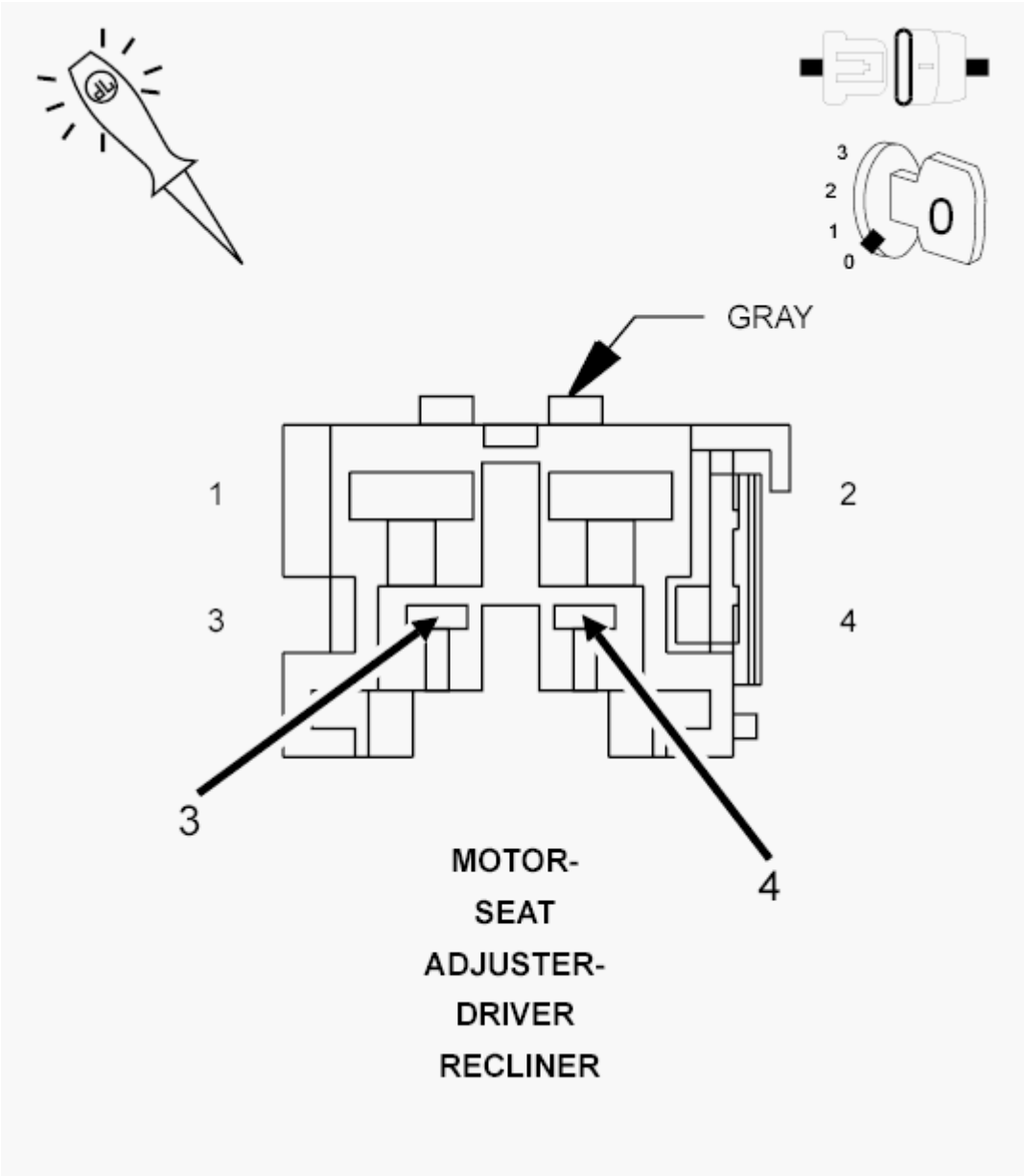

Fig. 100: Checking Driver Seat Recliner Position Sense Circuit Function
Courtesy of CHRYSLER GROUP, LLC

1. Turn the ignition off.
2. Disconnect the Driver Recliner Seat Adjuster Motor connector.

NOTE: Check connectors. Clean and repair as necessary.

3. Disconnect the scan tool.
4. Turn off all vehicle interior and exterior lighting.
5. Mark sure all doors are closed then wait 10 seconds.
6. Connect a 12-Volt test light between the (G403) Driver Seat Recliner Position Sense circuit and the

(G493) Driver Seat Recliner Position Sensor Ground circuit at the Driver Recliner Seat Adjuster Motor connector.

7. Move the seat switch in the recliner adjust position then release the switch.

   Does the test light illuminate for approximately five seconds then turn off?

   Yes

   - Go To 5.

   No

   - Go To 9.

5. **CHECK THE (P141) DRIVER SEAT RECLINER UP DRIVER CIRCUIT AND THE (P143) DRIVER SEAT RECLINER DOWN DRIVER CIRCUIT FUNCTION**

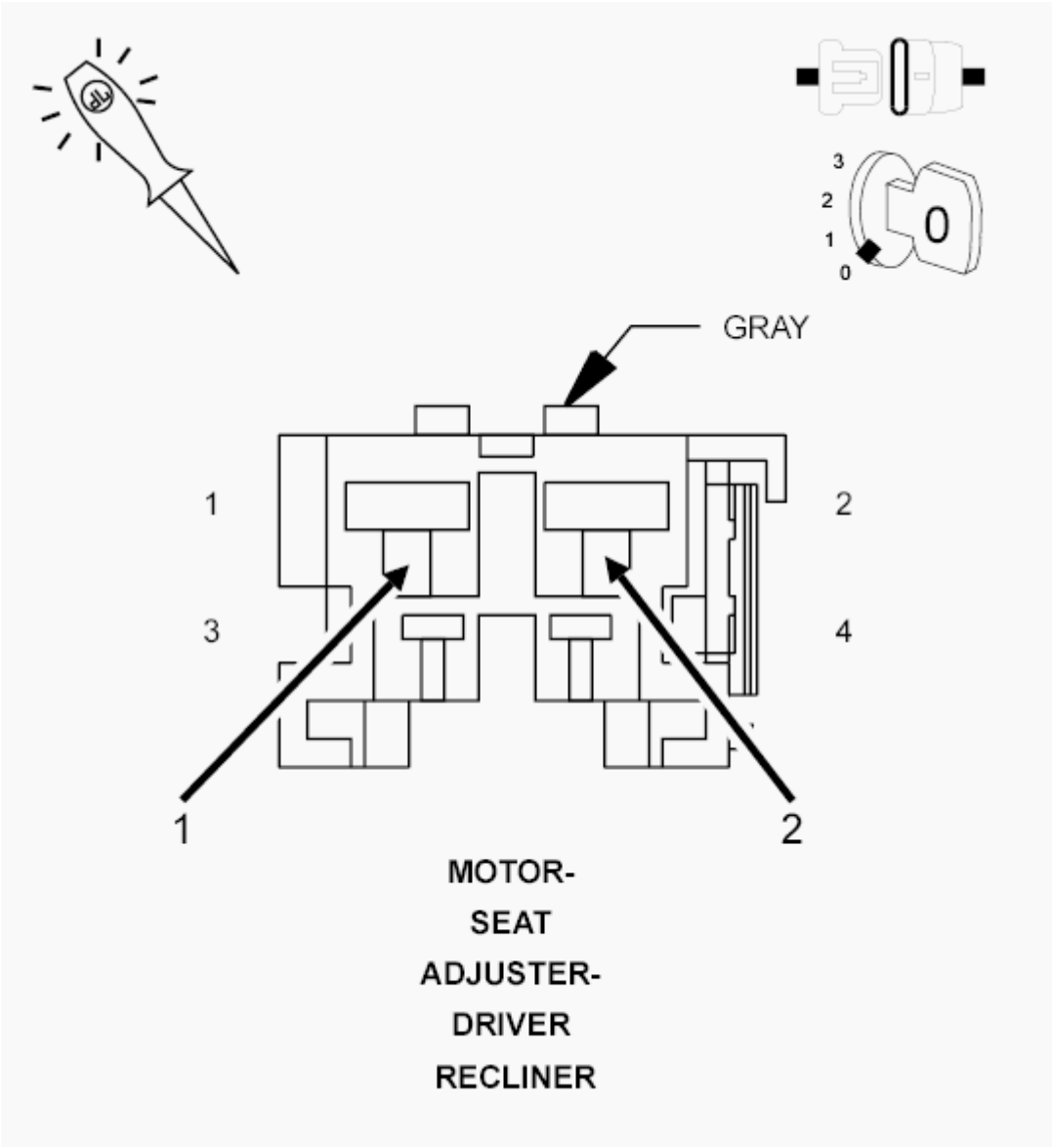

Fig. 101: Checking Driver Seat Recliner Up Driver Circuit Function
Courtesy of CHRYSLER GROUP, LLC

1. Connect a 12-Volt test light between the (P141) Driver Seat Recliner Up Driver circuit and the (P143) Driver Seat Recliner Down Driver circuit at the Driver Recliner Seat Adjuster Motor connector.
2. Move the seat switch in the recliner adjust position.

   Does the test light illuminate with the seat switch engaged?

   Yes

   - Go To 6.

No

- Go To 11.

6. **CHECK THE DRIVER SEAT RECLINER ADJUSTER MOTOR OPERATION**

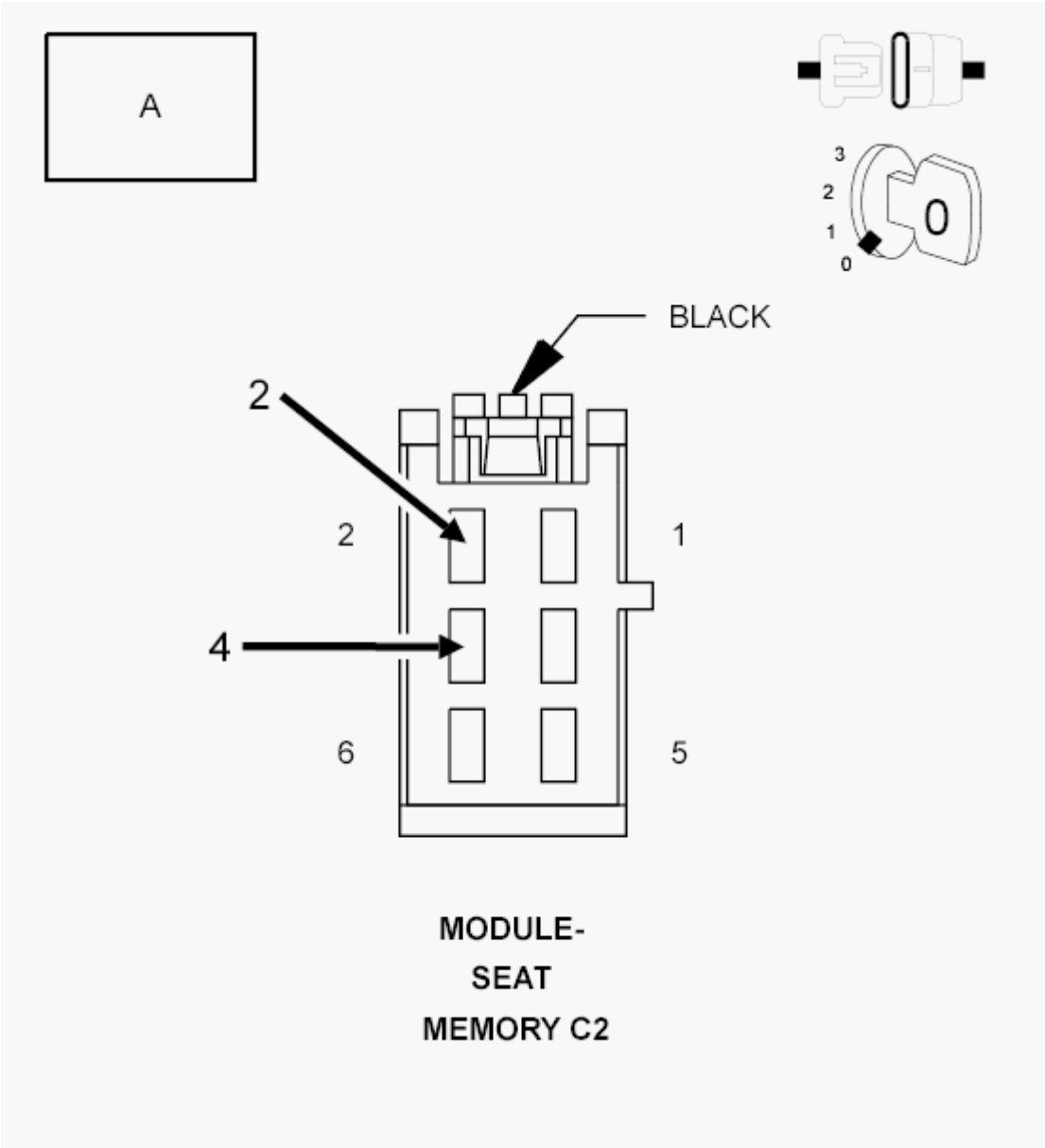

Fig. 102: Checking Driver Seat Recliner Adjuster Motor Operation
Courtesy of CHRYSLER GROUP, LLC

1. Turn the ignition off.
2. Reconnect the Driver Recliner Seat Adjuster Motor connector.
3. Disconnect the MSM C2 connector.

NOTE: **Check connectors. Clean and repair as necessary.**

4. Check motor operation in both directions as follows:

NOTE: **Do not adjust the seat against an end-stop when performing the following.**

To drive seat back forward:

- Connect one end of a fused jumper wire to battery Voltage and the other end to the (P141) Driver Seat Recliner Up Driver circuit at the MSM C2 connector.
- Connect an ammeter between ground and the (P143) Driver Seat Recliner Down Driver circuit at the MSM C2 connector.
- Disconnect before reaching the end-stop.

To drive seat back rearward:

- Connect one end of a fused jumper wire to battery Voltage and the other end to the (P143) Driver Seat Recliner Down Driver circuit at the MSM C2 connector.
- Connect an ammeter between ground and the (P141) Driver Seat Recliner Up Driver circuit at the MSM C2 connector.
- Disconnect before reaching the end-stop.

NOTE: **The seat motor should be operational in both directions and the ammeter should read approximately 2.0 amps reclining backward and 2.5 amps reclining forward.**

Does the motor operate as specified?

Yes

- Go To 7.

No

- Check (P141) Driver Seat Recliner Up Driver circuit and (P143) Driver Seat Recliner Down Driver circuit for high resistance. If circuits are okay, replace the Recliner motor assembly in accordance with the Service Information.
- Perform POWER SEAT SYSTEM VERIFICATION TEST. Refer to **POWER SEAT SYSTEM VERIFICATION TEST**.

7. **CHECK THE DRIVER SEAT RECLINER ADJUSTER MOTOR SENSOR OPERATION**

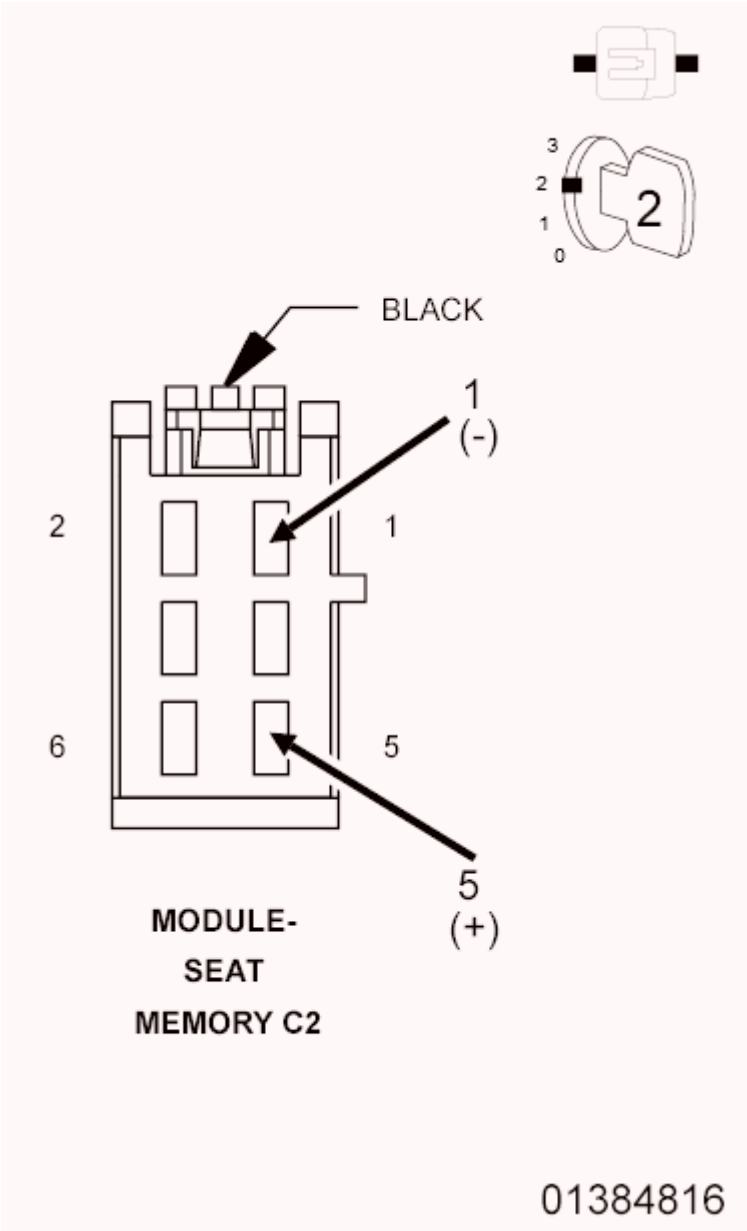

Fig. 103: Checking Driver Seat Recliner Adjuster Motor Sensor Operation
Courtesy of CHRYSLER GROUP, LLC

1. Reconnect the MSM C2 connector.
2. Turn the ignition on.
3. Using a scan tool, erase DTC's.
4. Connect the positive lead of a lab scope to the (G403) Driver Seat Recliner Position Sense circuit and the negative lead to the (G493) Driver Seat Recliner Position Sensor Ground circuit at the MSM C2 connector. Set the lab scope range to 20 Volts and time to 20 ms divisions.

NOTE: **Do not adjust the seat against an end-stop when performing the following.**

5. Move the seat switch in one recliner adjust position.

NOTE: **If the sensor is functioning normally the scope will display a continuously cycling square wave when operating the seat. If the module fails to detect sensor operation it will stop seat operation in approximately two seconds.**

Does the sensor operate as specified?

Yes

- Leave Scope Connected. Go To 8.

No

- Replace the Recliner motor assembly in accordance with the Service Information.
- Perform POWER SEAT SYSTEM VERIFICATION TEST. Refer to **POWER SEAT SYSTEM VERIFICATION TEST**.

8. **CHECK THE DRIVER SEAT RECLINER ADJUSTER MOTOR SENSOR OPERATION IN OPPOSITE DIRECTION**

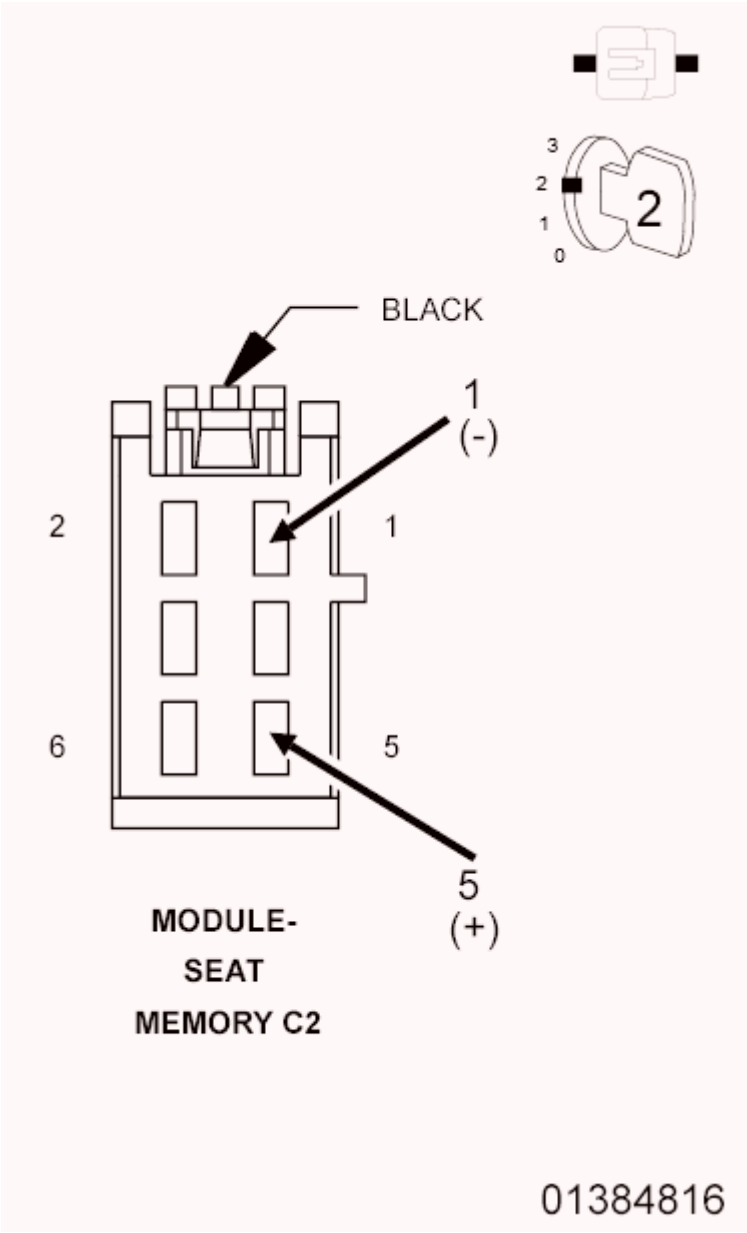

Fig. 104: Checking Driver Seat Recliner Adjuster Motor Sensor Operation
Courtesy of CHRYSLER GROUP, LLC

1. Using a scan tool, erase DTC's if present.

NOTE: **Do not adjust the seat against an end-stop when performing the following.**

2. Move the seat switch in the direction opposite of that previously selected.

NOTE: **If the sensor is functioning normally the scope will display a continuously cycling square wave when operating the seat. If the**

module fails to detect sensor operation it will stop seat operation in approximately two seconds.

Does the sensor operate as specified?

Yes

- Replace the Memory Seat Module (MSM) in accordance with the Service Information.
- Perform APS VERIFICATION TEST. Refer to **APS VERIFICATION TEST**.

No

- Replace the Recliner motor assembly in accordance with the Service Information.
- Perform POWER SEAT SYSTEM VERIFICATION TEST. Refer to **POWER SEAT SYSTEM VERIFICATION TEST**.

9. **CHECK THE (G403) DRIVER SEAT RECLINER POSITION SENSE CIRCUIT FOR AN OPEN**

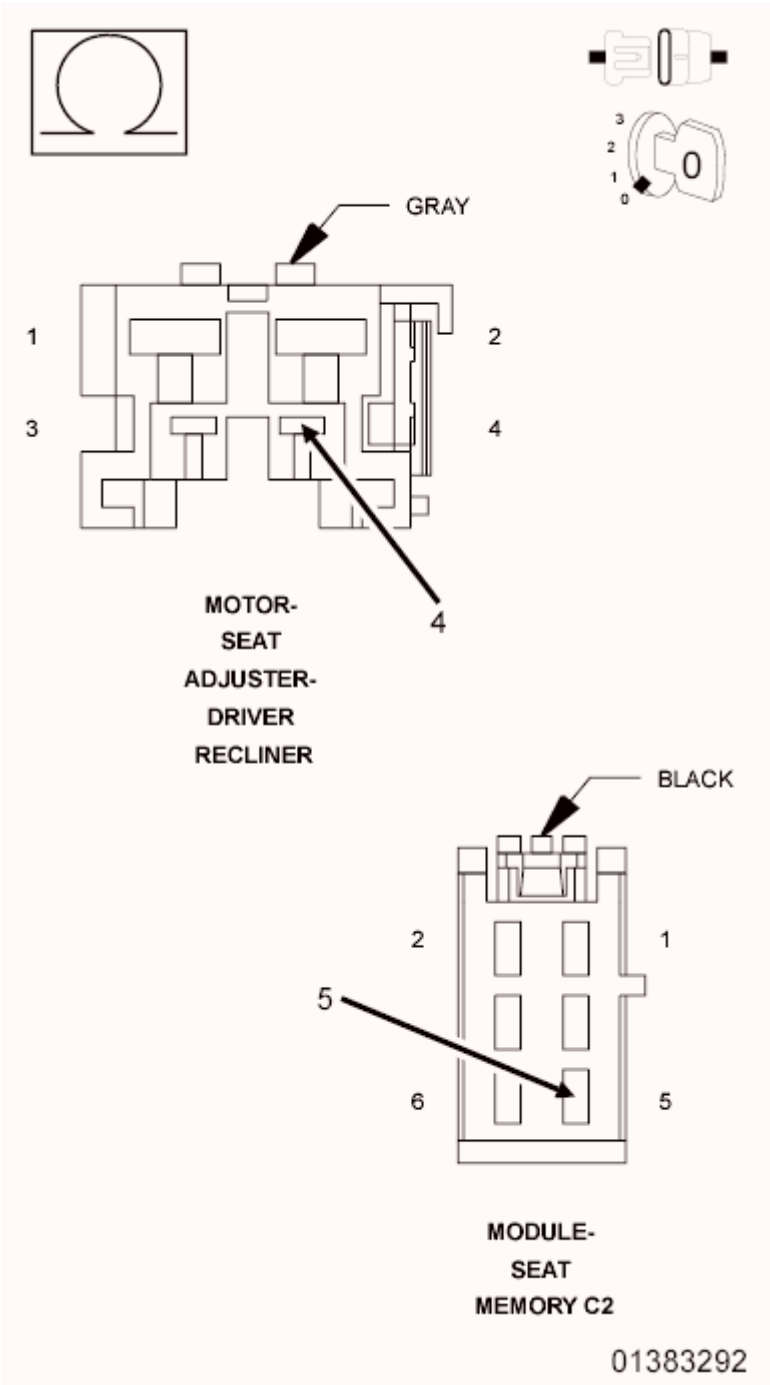

Fig. 105: Checking Driver Seat Recliner Position Sense Circuit For An Open
Courtesy of CHRYSLER GROUP, LLC

1. Disconnect the MSM C2 connector.

NOTE: Check connectors. Clean and repair as necessary.

2. Measure the resistance of the (G403) Driver Seat Recliner Position Sense circuit between the

Driver Recliner Seat Adjuster Motor connector and the MSM C2 connector.

Is the resistance below 5.0 Ohms?

Yes

- Go To 10.

No

- Repair the (G403) Driver Seat Recliner Position Sense circuit for an open.
- Perform POWER SEAT SYSTEM VERIFICATION TEST. Refer to **POWER SEAT SYSTEM VERIFICATION TEST**.

10. **CHECK THE (G493) DRIVER SEAT RECLINER POSITION SENSOR GROUND CIRCUIT FOR AN OPEN**

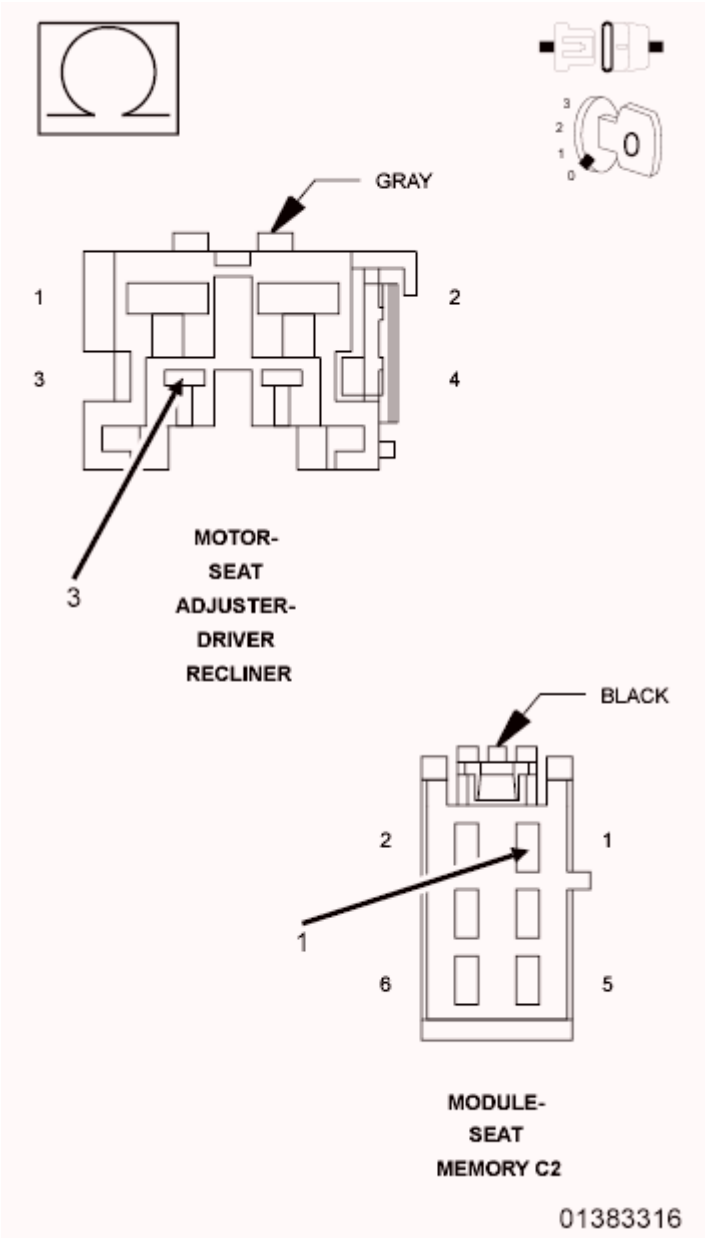

Fig. 106: Checking Driver Seat Recliner Position Sensor Ground Circuit For An Open
Courtesy of CHRYSLER GROUP, LLC

1. Measure the resistance of the (G493) Driver Seat Recliner Position Sensor Ground circuit between the Driver Recliner Seat Adjuster Motor connector and the MSM C2 connector.

   Is the resistance below 5.0 Ohms?

   Yes

   - Replace the Memory Seat Module (MSM) in accordance with the Service Information.
   - Perform POWER SEAT SYSTEM VERIFICATION TEST. Refer to **POWER SEAT SYSTEM VERIFICATION TEST**.

No

- Repair the (G493) Driver Seat Recliner Position Senor Ground circuit for an open.
- Perform POWER SEAT SYSTEM VERIFICATION TEST. Refer to **POWER SEAT SYSTEM VERIFICATION TEST**.

11. **CHECK THE (P141) DRIVER SEAT RECLINER UP DRIVER CIRCUIT FOR AN OPEN**

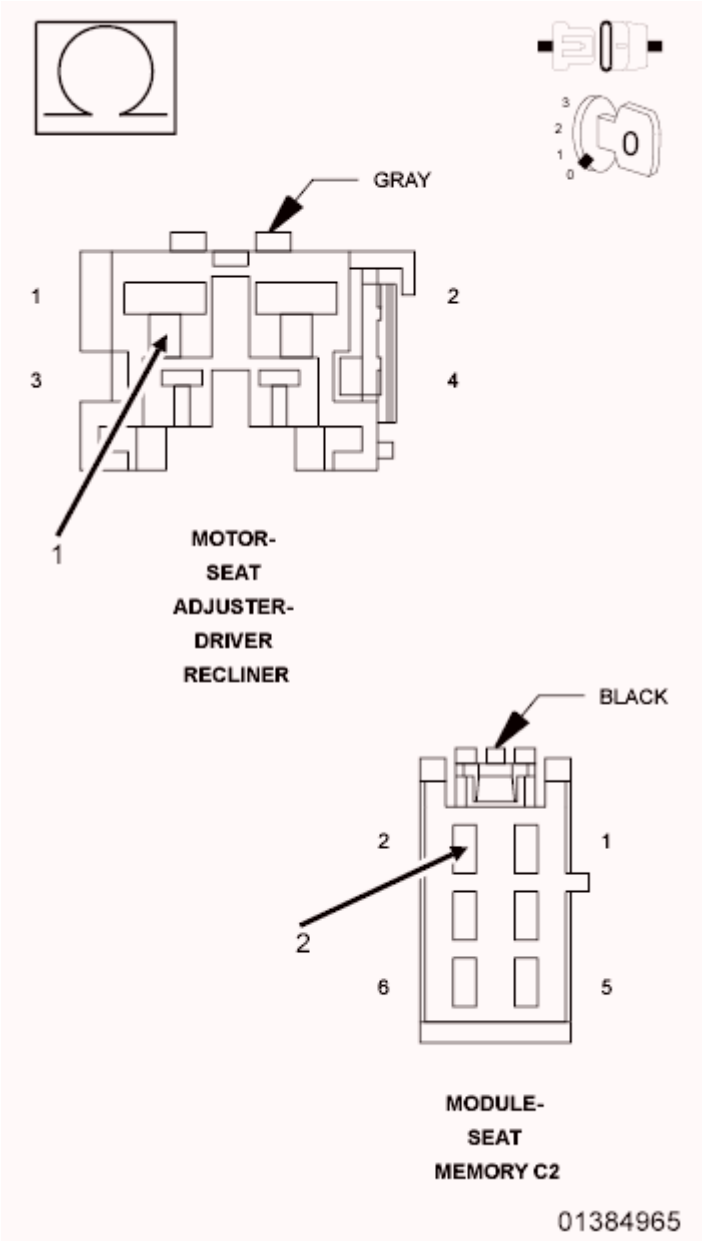

Fig. 107: Checking Driver Seat Recliner Up Driver Circuit For An Open
Courtesy of CHRYSLER GROUP, LLC

1. Disconnect the MSM C2 connector.

NOTE: Check connectors. Clean and repair as necessary.

2. Measure the resistance of the (P141) Driver Seat Recliner Up Driver circuit between the Driver Recliner Seat Adjuster Motor connector and the MSM C2 connector.

   Is the resistance below 5.0 Ohms?

   Yes

   - Go To 12.

   No

   - Repair the (P141) Driver Seat Recliner Up Driver circuit for an open.
   - Perform POWER SEAT SYSTEM VERIFICATION TEST. Refer to **POWER SEAT SYSTEM VERIFICATION TEST**.

12. **CHECK THE (P143) DRIVER SEAT RECLINER DOWN DRIVER CIRCUIT FOR AN OPEN**

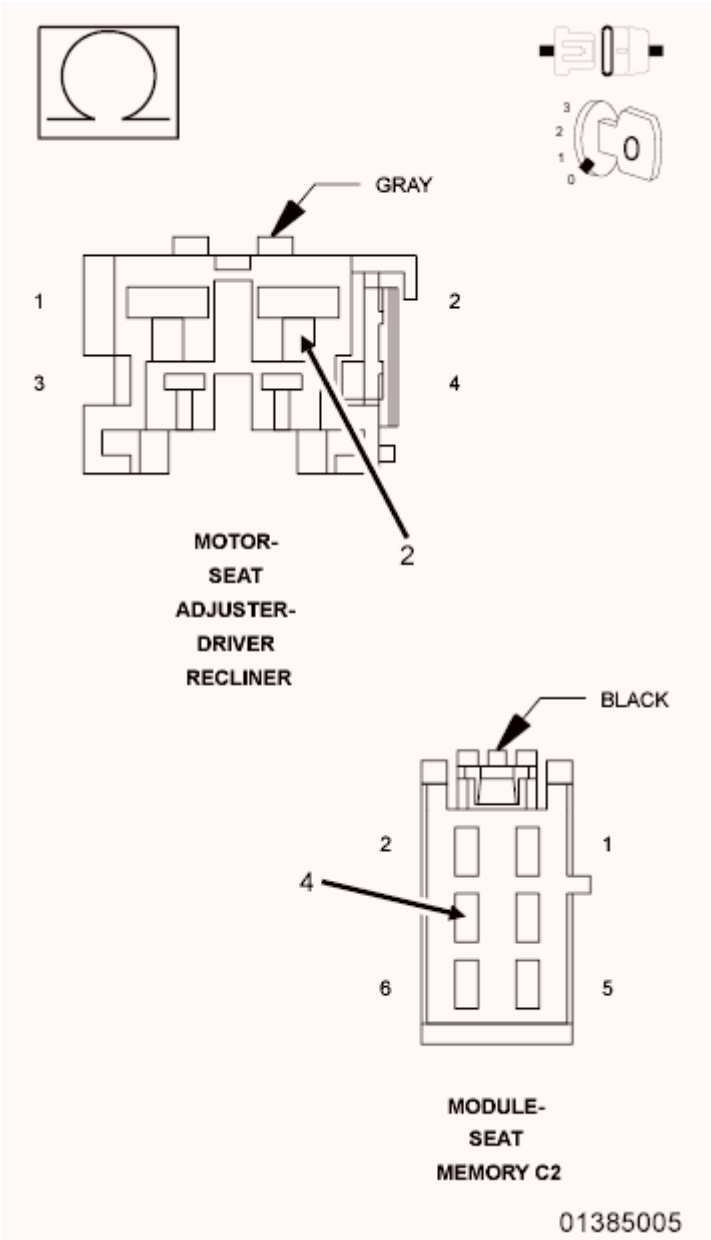

Fig. 108: Checking Driver Seat Recliner Down Driver Circuit For An Open
Courtesy of CHRYSLER GROUP, LLC

1. Measure the resistance of the (P143) Driver Seat Recliner Down Driver circuit between the Driver Recliner Seat Adjuster Motor connector and the MSM C2 connector.

   Is the resistance below 5.0 Ohms?

   Yes

   - Replace the Memory Seat Module (MSM) in accordance with the Service Information.
   - Perform POWER SEAT SYSTEM VERIFICATION TEST. Refer to **POWER SEAT SYSTEM VERIFICATION TEST**.

No

- Repair the (P143) Driver Seat Recliner Down Driver circuit for an open.
- Perform POWER SEAT SYSTEM VERIFICATION TEST. Refer to **POWER SEAT SYSTEM VERIFICATION TEST**.

B1D9B-SEAT HORIZONTAL FRONT STOP NOT LEARNED

For a complete wiring diagram, **refer to appropriate SYSTEM WIRING DIAGRAMS article** .

WHEN MONITORED:

Whenever the seat motor is activated.

SET CONDITION:

If the seat is standardized and then it becomes de-standardized. The seat is standardized when the module learns the seat cushion horizontal front hard stop position. The seat is de-standardized if the seat cushion motor is 5% past the expected hard stop position or if a seat cushion hall sensor failure occurs. The seat must be standardized to perform an Easy Exit/Entry function.

POSSIBLE CAUSES

Possible Causes
SEAT POSITION SENSOR DIAGNOSTIC TROUBLE CODES (DTC's) PRESENT SEAT STANDARDIZATION ROUTINE NOT PERFORMED

DIAGNOSTIC TEST

1. **CHECK FOR SEAT POSITION SENSOR AND CIRCUIT PERFORMANCE DIAGNOSTIC TROUBLE CODES (DTC's)**
   1. Turn the ignition on.
   2. Using a scan tool, read DTC's.

      Does the scan tool display any seat position sensor or circuit performance DTC's?

      Yes

      - Diagnose and repair all seat position sensor and circuit performance DTC's. Refer to **DIAGNOSIS AND TESTING**.

      No

      - Go To 2.
2. **TEST FOR INTERMITTENT CONDITION**
   1. Using a scan tool, record and erase DTC's.

2. Move the seat switch in the full forward horizontal adjust position.
3. Using a scan tool, read DTC's.

   Does the scan tool display DTC B1D9B-SEAT HORIZONTAL FRONT STOP NOT LEARNED?

   Yes

   - Using a scan tool, perform the MSM Standard Routine.
   - Perform POWER SEAT SYSTEM VERIFICATION TEST. Refer to **POWER SEAT SYSTEM VERIFICATION TEST**.

   No

   - The conditions that caused this code to set are not present at this time. Using the wiring diagram/schematic as a guide, inspect the wiring and connectors.
   - Perform POWER SEAT SYSTEM VERIFICATION TEST. Refer to **POWER SEAT SYSTEM VERIFICATION TEST**.

B210D-BATTERY VOLTAGE LOW

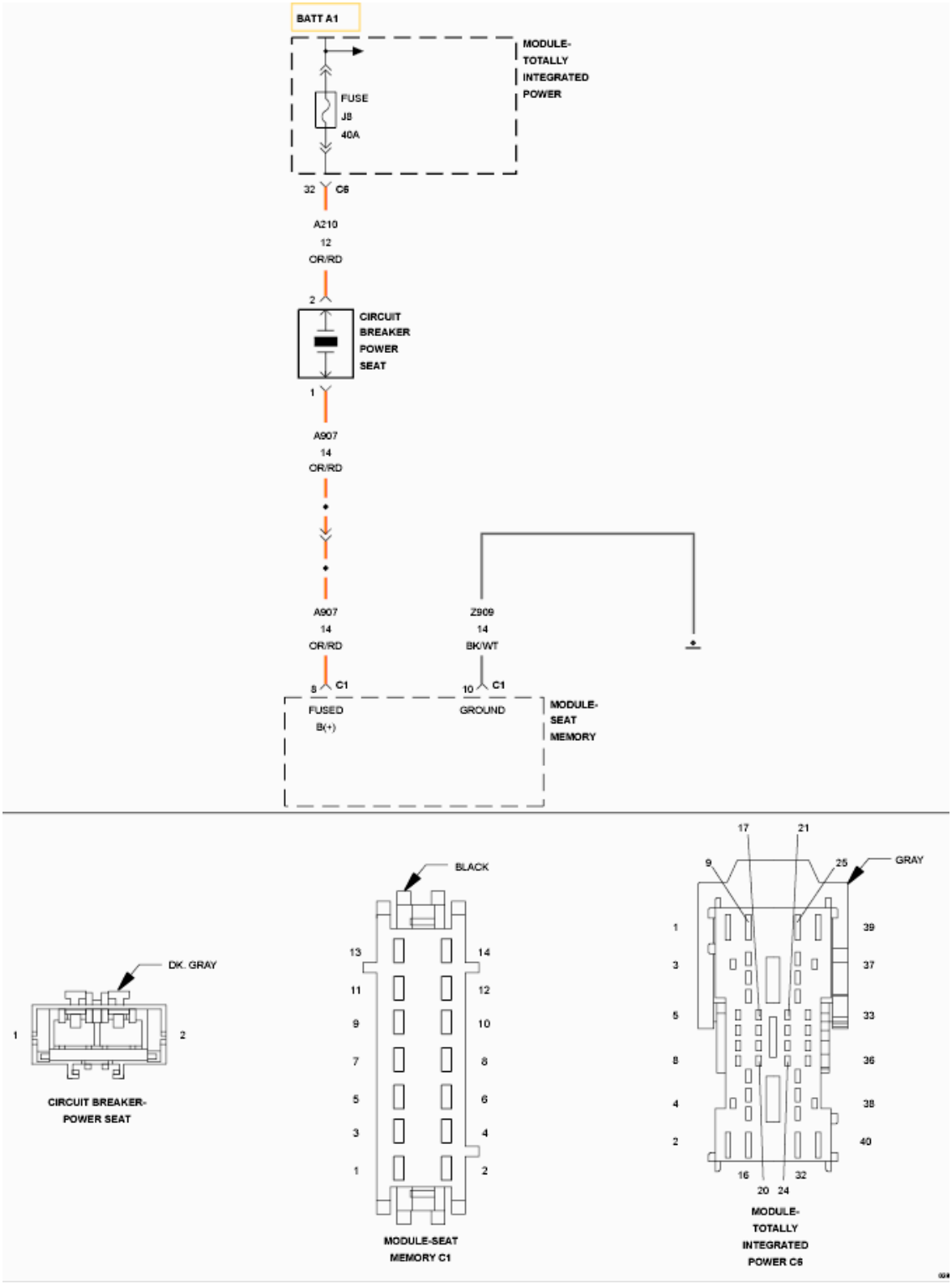

Fig. 109: Memory Seat Module Power Supply Wiring Diagram
Courtesy of CHRYSLER GROUP, LLC

For a complete wiring diagram, **refer to appropriate SYSTEM WIRING DIAGRAMS article** .

WHEN MONITORED:

Whenever the Bus is awake or during seat motor operation.

SET CONDITION:

This code sets if the Memory Seat Module (MSM) detects Voltage under 9.5-volts on the (A907) Fused B(+) circuit.

POSSIBLE CAUSES

Possible Causes
CHARGING SYSTEM VOLTAGE LOW
(A907) FUSED B(+) CIRCUIT
MEMORY SEAT MODULE (MSM)

DIAGNOSTIC TEST

1. **CHECK FOR CHARGING SYSTEM DIAGNOSTIC TROUBLE CODES (DTC's)**
    1. Turn the ignition on.
    2. Using a scan tool, read Powertrain Control Module (PCM) DTC's.

    Are there any Charging System DTC's set in the PCM?

    Yes

    - Refer to **3.7L/4.7L/5.7L - DIAGNOSTIC CODE INDEX - NGC - 1500 & 2500** or **6.7L - DIAGNOSTIC CODE INDEX - 2500 & 3500** or **5.7L - DIAGNOSTIC CODE INDEX - 3500 CAB & CHASSIS** or **6.7L - DIAGNOSTIC CODE INDEX - 3500 CAB & CHASSIS, 4500 & 5500** and perform the appropriate diagnostic procedures.

    No

    - Go To 2.
2. **TEST FOR INTERMITTENT CONDITION**
    1. Using a scan tool, record and erase DTC's.
    2. Turn the ignition off.
    3. Start the engine and let run for one minute.
    4. Operate the driver power seat.
    5. Using a scan tool, read DTC's.

    Does DTC B210D-BATTERY VOLTAGE LOW reset?

    Yes

- Go To 3.

No

- The conditions that caused this code to set are not present at this time. Using the wiring diagram/schematic as a guide, inspect the wiring and connectors. Look for chafed, pierced, pinched, or partially broken wires and broken, bent, pushed out, spread, corroded, or contaminated terminals.
- Perform POWER SEAT SYSTEM VERIFICATION TEST. Refer to **POWER SEAT SYSTEM VERIFICATION TEST**.

3. **CHECK (A907) FUSED B(+) CIRCUIT VOLTAGE**

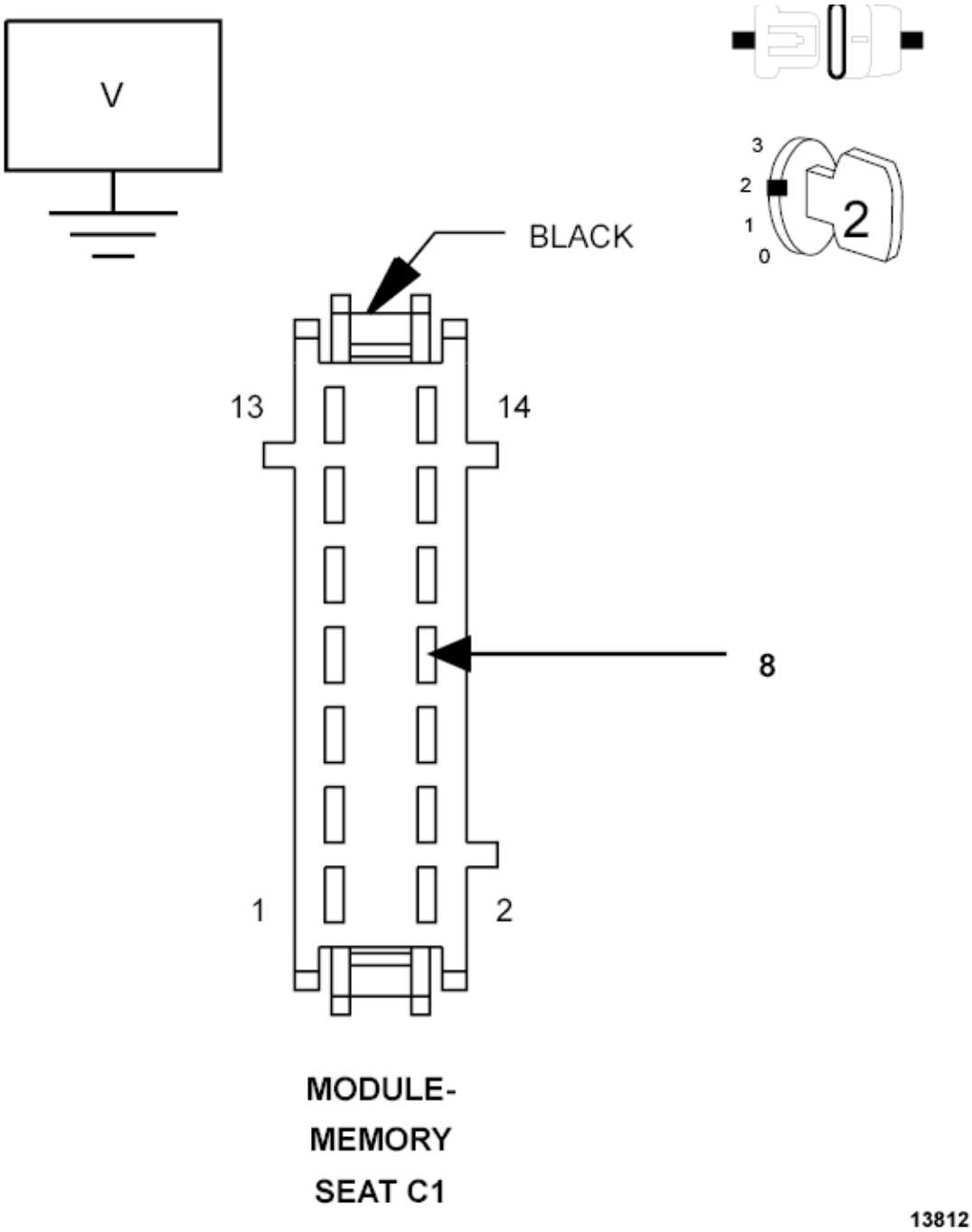

Fig. 110: Checking Fused B(+) Circuit Voltage
Courtesy of CHRYSLER GROUP, LLC

1. Turn the ignition off.
2. Disconnect the Memory Seat Module C1 harness connector.

NOTE: Check connectors - Clean and repair as necessary.

3. Start the engine and let idle.

4. Measure the Voltage of the (A907) Fused B(+) circuit between the Memory Seat Module C1 harness connector and ground and compare it to the Voltage at the vehicle battery.

   Is the Voltage measured at the Memory Seat Module C1 harness connector the same as the Voltage measured at the battery?

   Yes

   - Replace the Memory Seat Module (MSM) in accordance with the service information.
   - Perform POWER SEAT SYSTEM VERIFICATION TEST. Refer to **POWER SEAT SYSTEM VERIFICATION TEST**.

   No

   - Repair the (A907) Fused B(+) circuit for the cause of the low Voltage condition at the Memory Seat Module (MSM).
   - Perform POWER SEAT SYSTEM VERIFICATION TEST. Refer to **POWER SEAT SYSTEM VERIFICATION TEST**.

B210E-BATTERY VOLTAGE HIGH

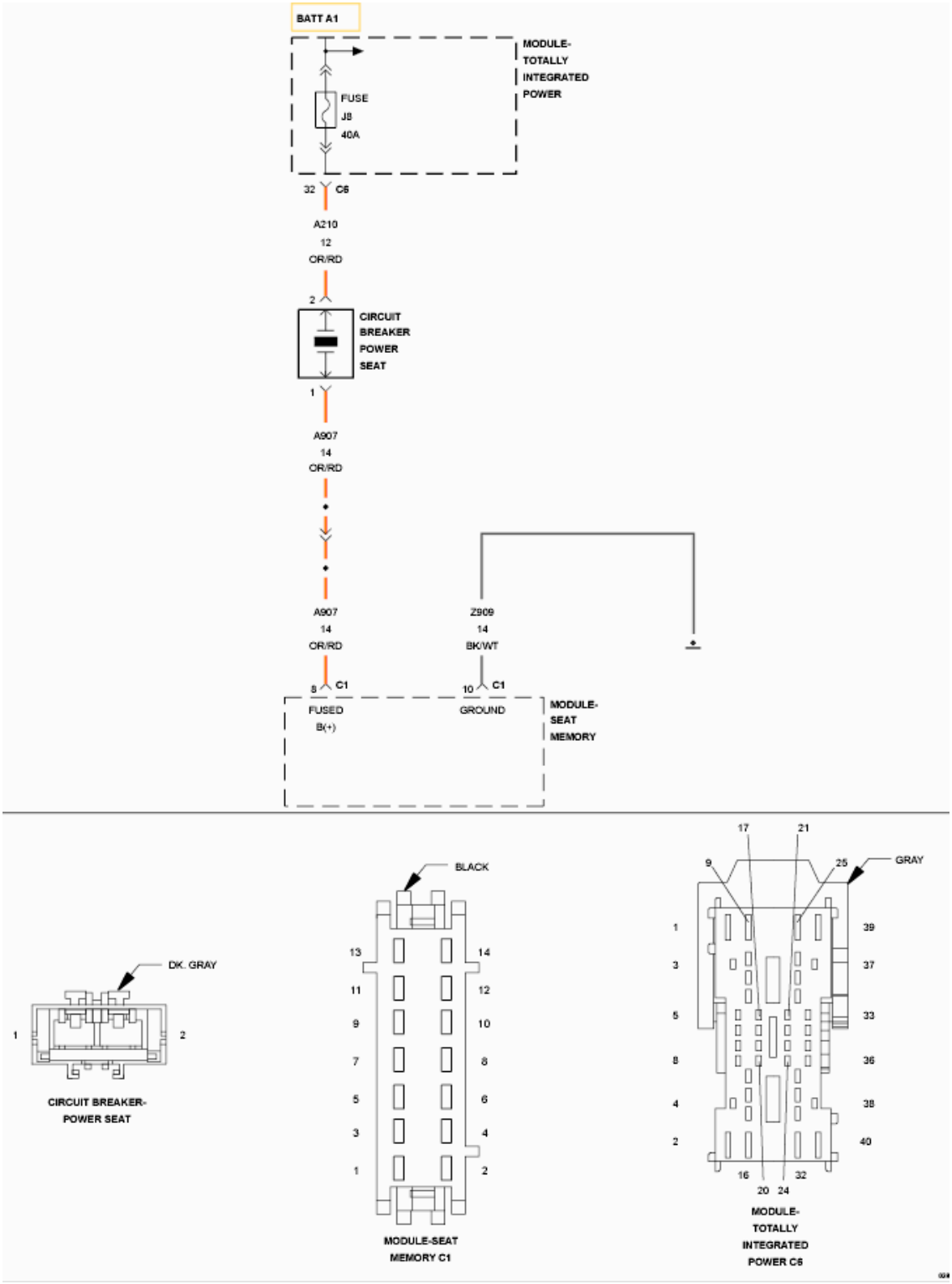

Fig. 111: Memory Seat Module Power Supply Wiring Diagram
Courtesy of CHRYSLER GROUP, LLC

For a complete wiring diagram, **refer to appropriate SYSTEM WIRING DIAGRAMS article** .

WHEN MONITORED:

Whenever the Bus is awake or during seat operation.

SET CONDITION:

This code will set if the Memory Seat Module (MSM) detects Voltage over 16.5-volts on the (A907) Fused B (+) circuit.

POSSIBLE CAUSES

Possible Causes
CHARGING SYSTEM VOLTAGE HIGH
(A907) FUSED B(+) CIRCUIT
MEMORY SEAT MODULE (MSM)

DIAGNOSTIC TEST

1. **CHECK FOR CHARGING SYSTEM DIAGNOSTIC TROUBLE CODES (DTC's)**
    1. Turn the ignition on.
    2. Using a scan tool, read Powertrain Control Module (PCM) DTC's.

    Are there any Charging System DTC's set in the PCM?

    Yes

    - Refer to **3.7L/4.7L/5.7L - DIAGNOSTIC CODE INDEX - NGC - 1500 & 2500** or **6.7L - DIAGNOSTIC CODE INDEX - 2500 & 3500** or **5.7L - DIAGNOSTIC CODE INDEX - 3500 CAB & CHASSIS** or **6.7L - DIAGNOSTIC CODE INDEX - 3500 CAB & CHASSIS, 4500 & 5500** and perform the appropriate diagnostic procedure.

    No

    - Go To 2.
2. **TEST FOR INTERMITTENT CONDITION**
    1. Using a scan tool, record and erase DTC's.
    2. Turn the ignition off.
    3. Start the engine and let run for one minute.
    4. Operate the driver power seat.
    5. Using a scan tool, read DTC's.

    Does DTC B210E-BATTERY VOLTAGE HIGH reset?

    Yes

- Go To 3.

No

- The conditions that caused this code to set are not present at this time. Using the wiring diagram/schematic as a guide, inspect the wiring and connectors.
- Perform POWER SEAT SYSTEM VERIFICATION TEST. Refer to **POWER SEAT SYSTEM VERIFICATION TEST**.

3. **CHECK (A907) FUSED B(+) CIRCUIT VOLTAGE**

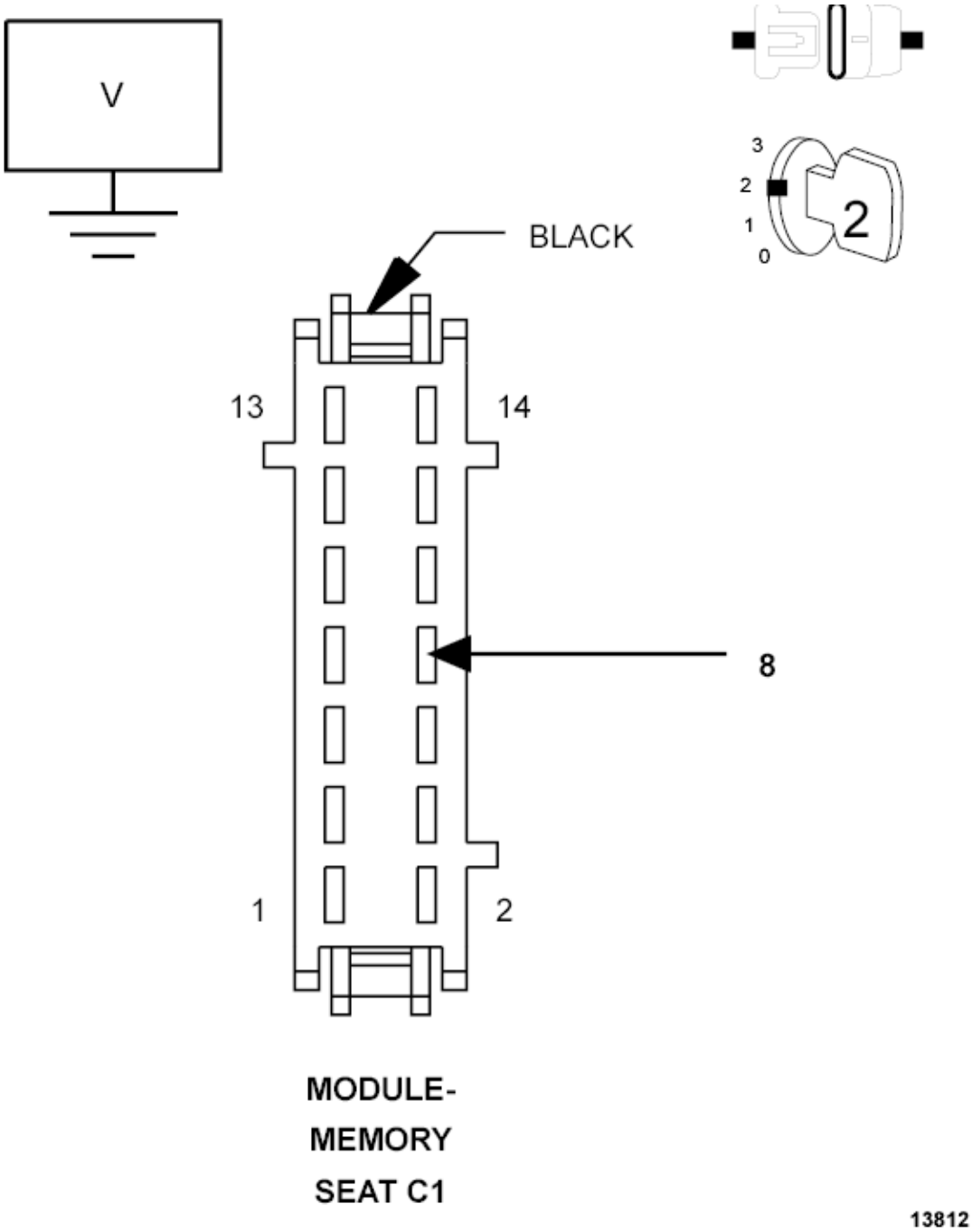

Fig. 112: Checking Fused B(+) Circuit Voltage
Courtesy of CHRYSLER GROUP, LLC

1. Turn the ignition off.
2. Disconnect the Memory Seat Module C1 harness connector.

NOTE: Check connectors. Clean and repair as necessary.

3. Start the engine and let idle.

4. Measure the Voltage of the (A907) Fused B(+) circuit between the Memory Seat Module C1 harness connector and ground and compare it to the Voltage at the vehicle battery.

   Is the Voltage measured at the Memory Seat Module C1 connector the same as the Voltage measured at the battery?

   Yes

   - Replace the Memory Seat Module (MSM) in accordance with the service information.
   - Perform POWER SEAT SYSTEM VERIFICATION TEST. Refer to **POWER SEAT SYSTEM VERIFICATION TEST**.

   No

   - Repair the (A907) Fused B(+) circuit for the cause of the high Voltage condition at the Memory Seat Module (MSM).
   - Perform POWER SEAT SYSTEM VERIFICATION TEST. Refer to **POWER SEAT SYSTEM VERIFICATION TEST**.

B221C-MEMORY SEAT MODULE INTERNAL

For a complete wiring diagram, **refer to appropriate SYSTEM WIRING DIAGRAMS article** .

WHEN MONITORED:

Ignition on.

SET CONDITION:

If the Memory Seat Module (MSM) internal self-test fails.

POSSIBLE CAUSES

Possible Causes
MEMORY SEAT MODULE (MSM)

DIAGNOSTIC TEST

1. **TEST FOR INTERMITTENT CONDITION**
   1. Turn the ignition on.
   2. Using a scan tool, record and erase Diagnostic Trouble Codes (DTC's).
   3. Cycle the ignition switch off and then on again.
   4. Using a scan tool, read DTC's.

      Does the scan tool display DTC B221C-MEMORY SEAT MODULE INTERNAL?

Yes

- Replace the Memory Seat Module (MSM) in accordance with the Service Information.
- Perform POWER SEAT SYSTEM VERIFICATION TEST. Refer to **POWER SEAT SYSTEM VERIFICATION TEST**.

No

- The conditions that caused this code to set are not present at this time. Using the wiring diagram/schematic as a guide, inspect the wiring and connectors.
- Perform POWER SEAT SYSTEM VERIFICATION TEST. Refer to **POWER SEAT SYSTEM VERIFICATION TEST**.

U0011-CAN INTERIOR BUS OFF PERFORMANCE

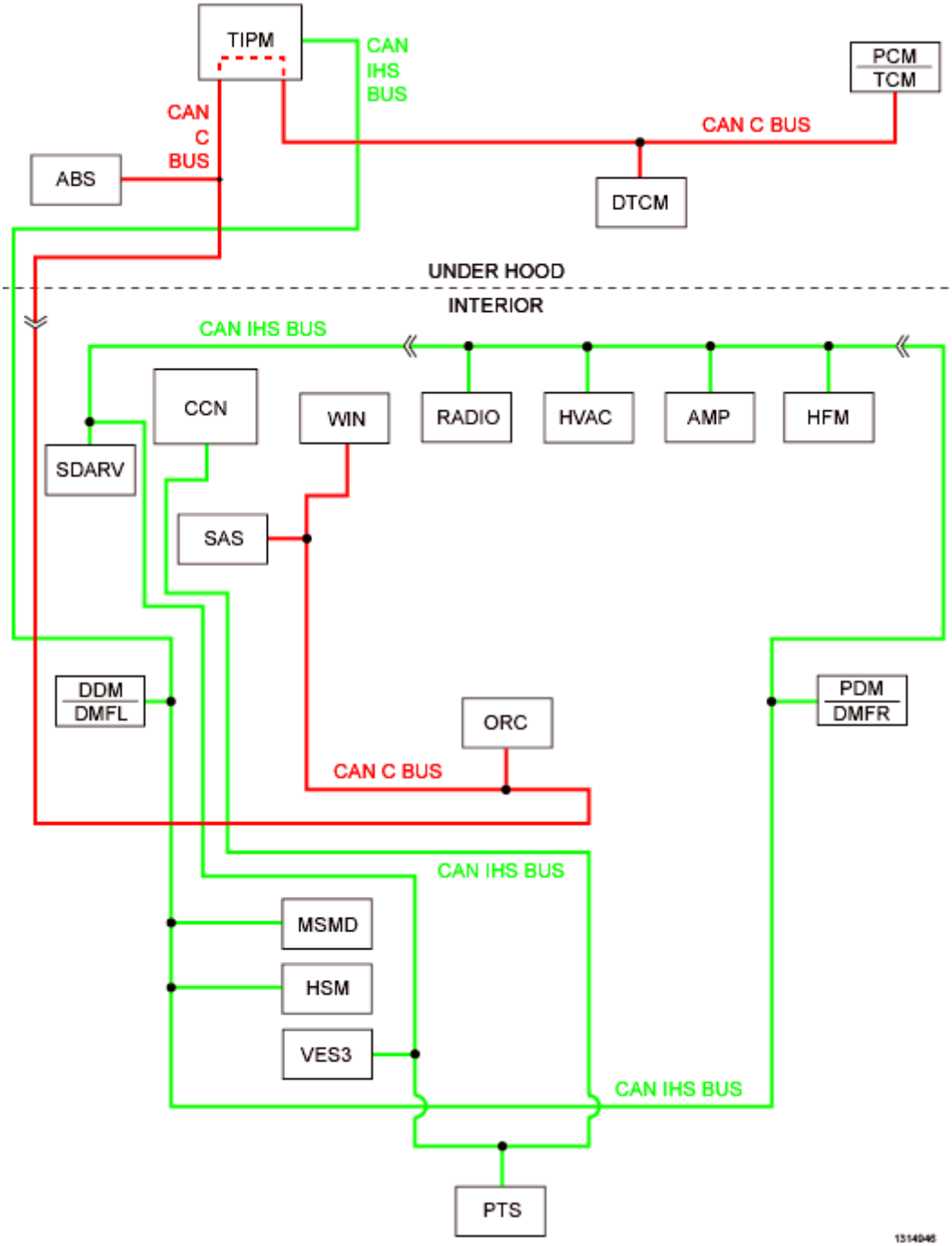

Fig. 113: CAN Ihs Bus & TIPM CAN C Bus Circuit Wiring Diagram
Courtesy of CHRYSLER GROUP, LLC

For a complete wiring diagram, **refer to appropriate SYSTEM WIRING DIAGRAMS article** .

WHEN MONITORED:

With the ignition on.

SET CONDITION:

The Memory Seat Module (MSM) detects that the (D265) CAN Interior Bus (125K) (+) circuit or (D264) CAN Interior Bus (125K) (-) circuit is shorted.

POSSIBLE CAUSES

Possible Causes
(D265) CAN INTERIOR BUS (125K) (+) CIRCUIT SHORTED TO GROUND
(D264) CAN INTERIOR BUS (125K) (-) CIRCUIT SHORTED TO VOLTAGE
(D265) CAN INTERIOR BUS (125K) (+) CIRCUIT SHORTED TO (D264) CAN INTERIOR BUS (125K) (-) CIRCUIT
ANY CAN INTERIOR BUS MODULE
TOTALLY INTEGRATED POWER MODULE (TIPM)

DIAGNOSTIC TEST

This module will not be able to communicate when this fault is active and therefore will only display this DTC as stored. To diagnose this fault, use a scan tool and check for DTC's in the TIPM. If DTC's are active, Refer to **DIAGNOSIS AND TESTING** and diagnose and repair the faults. If no DTC's are active, but there are stored Lost Communication DTC's set, Refer to **DIAGNOSIS AND TESTING** and diagnose and repair these faults. If no DTC's are set, perform BODY VERIFICATION TEST. Refer to **STANDARD PROCEDURE** .

U0014-CAN INTERIOR BUS (+) CIRCUIT HIGH

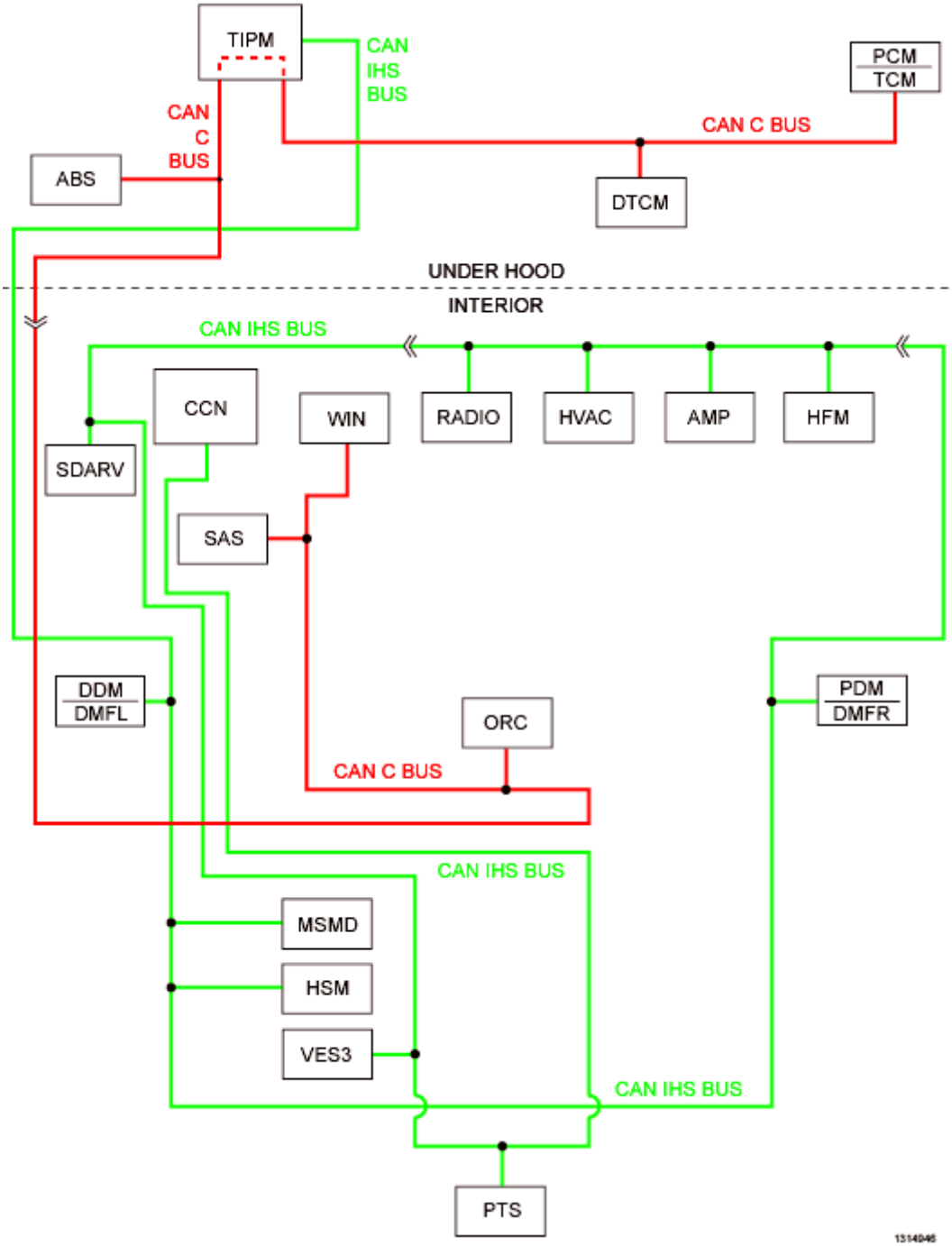

Fig. 114: CAN Ihs Bus & TIPM CAN C Bus Circuit Wiring Diagram
Courtesy of CHRYSLER GROUP, LLC

For a complete wiring diagram, **refer to appropriate SYSTEM WIRING DIAGRAMS article** .

WHEN MONITORED:

With the ignition on.

SET CONDITION:

The Memory Seat Module (MSM) detects that the (D265) CAN Interior Bus (125K) (+) circuit is shorted.

POSSIBLE CAUSES

Possible Causes
(D265) CAN INTERIOR BUS (125K) (+) CIRCUIT SHORTED TO VOLTAGE
ANY CAN INTERIOR BUS MODULE
TOTALLY INTEGRATED POWER MODULE (TIPM)

DIAGNOSTIC TEST

This module will not be able to communicate when this fault is active and therefore will only display this DTC as stored. To diagnose this fault, use a scan tool and check for DTC's in the TIPM. If DTC's are active, Refer to **DIAGNOSIS AND TESTING** and diagnose and repair the faults. If no DTC's are active, but there are stored Lost Communication DTC's set, Refer to **DIAGNOSIS AND TESTING** and diagnose and repair these faults. If no DTC's are set, perform BODY VERIFICATION TEST. Refer to **STANDARD PROCEDURE** .

U0016-CAN INTERIOR BUS (-) CIRCUIT LOW

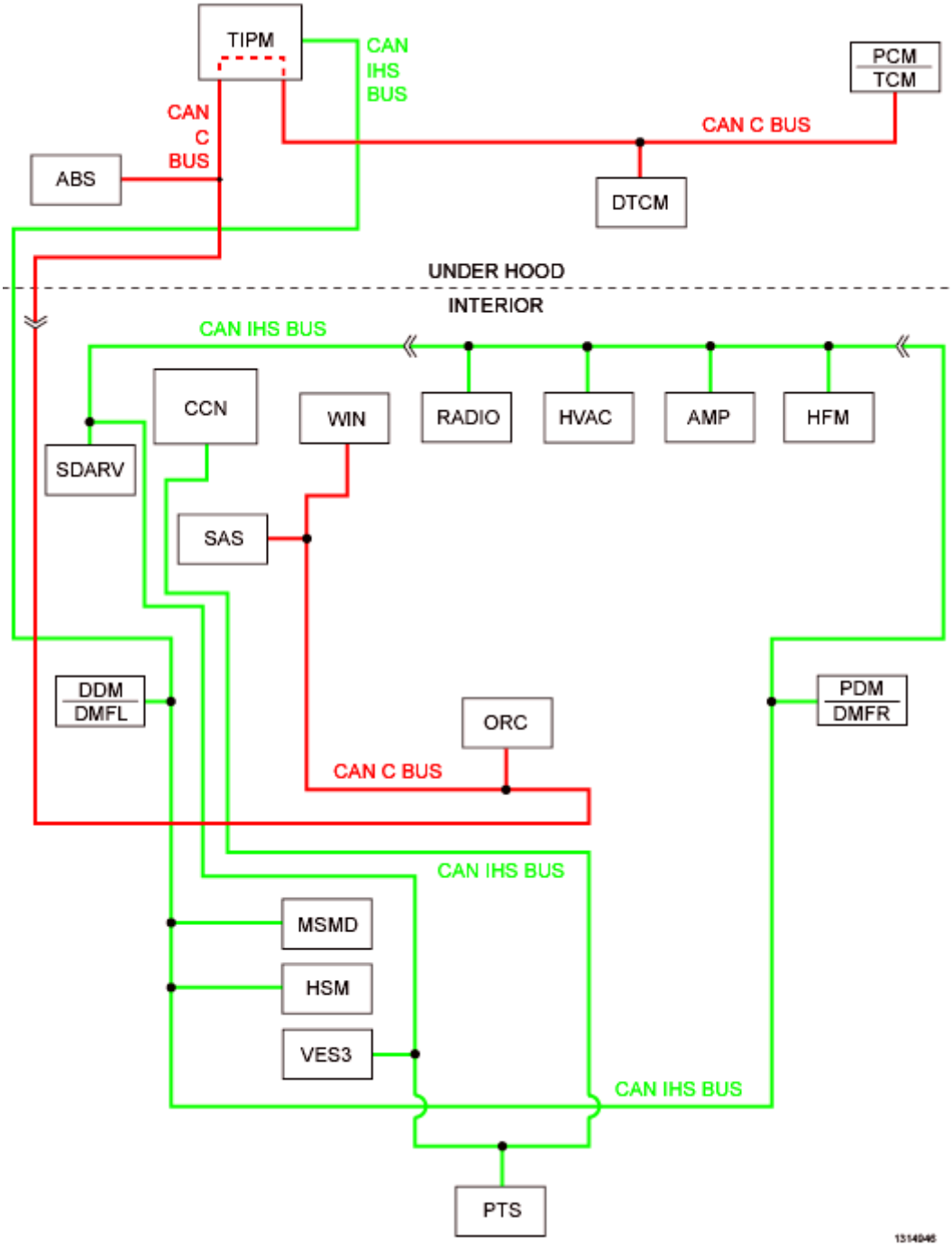

Fig. 115: CAN Ihs Bus & TIPM CAN C Bus Circuit Wiring Diagram
Courtesy of CHRYSLER GROUP, LLC

For a complete wiring diagram, **refer to appropriate SYSTEM WIRING DIAGRAMS article** .

WHEN MONITORED:

With the ignition on.

SET CONDITION:

The Memory Seat Module (MSM) detects that the (D264) CAN Interior Bus (125K) (-) circuit is shorted.

POSSIBLE CAUSES

Possible Causes
(D264) CAN INTERIOR BUS (125K) (-) CIRCUIT SHORTED TO GROUND
ANY CAN INTERIOR BUS MODULE
TOTALLY INTEGRATED POWER MODULE (TIPM)

DIAGNOSTIC TEST

This module will not be able to communicate when this fault is active and therefore will only display this DTC as stored. To diagnose this fault, use a scan tool and check for DTC's in the TIPM. If DTC's are active, Refer to **DIAGNOSIS AND TESTING** and diagnose and repair the faults. If no DTC's are active, but there are stored Lost Communication DTC's set, Refer to **DIAGNOSIS AND TESTING** and diagnose and repair these faults. If no DTC's are set, perform BODY VERIFICATION TEST. Refer to **STANDARD PROCEDURE** .

U0141-LOST COMMUNICATION WITH IPM (FCM/TIPM)

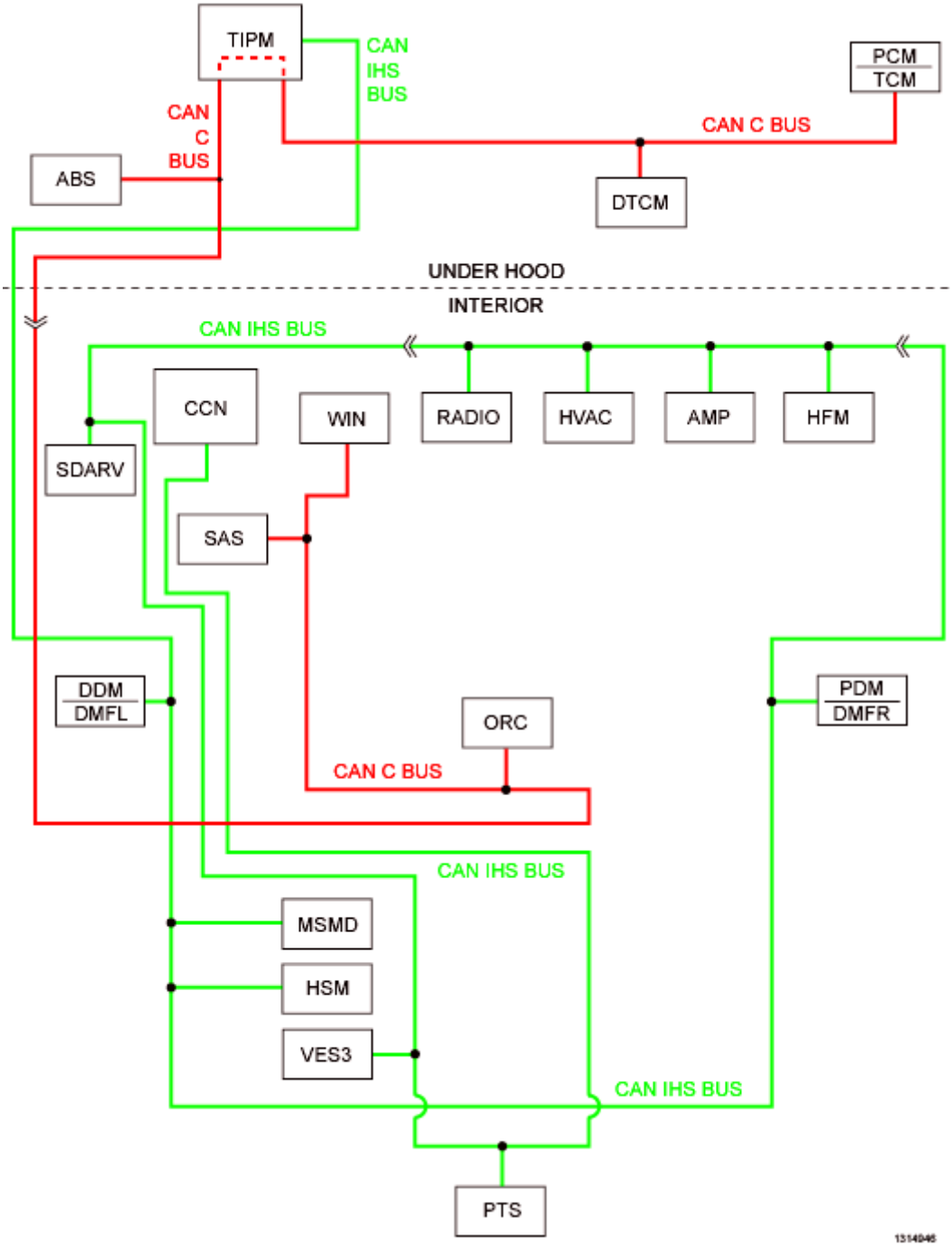

Fig. 116: CAN Ihs Bus & TIPM CAN C Bus Circuit Wiring Diagram
Courtesy of CHRYSLER GROUP, LLC

For a complete wiring diagram, **refer to appropriate SYSTEM WIRING DIAGRAMS article** .

WHEN MONITORED:

With the ignition on.

Battery Voltage between 10 and 16 Volts.

Ignition Off Draw (IOD) fuse installed.

Totally Integrated Power Module (TIPM) is configured correctly.

SET CONDITION:

Bus messages not received from the Totally Integrated Power Module (TIPM) for approximately two to five seconds.

POSSIBLE CAUSES

Possible Causes
DIAGNOSTIC CAN C BUS CIRCUITS OPEN OR SHORTED
CAN INTERIOR BUS (125K) CIRCUITS OPEN OR SHORTED
DIAGNOSTIC TROUBLE CODES (DTC's) RELATED TO BATTERY VOLTAGE, IGNITION, OR VIN MESSAGES PRESENT
TIPM NOT CONFIGURED CORRECTLY
TIPM POWER AND GROUND
TOTALLY INTEGRATED POWER MODULE (TIPM)
MEMORY SEAT MODULE (MSM)

DIAGNOSTIC TEST

1. **VERIFY DIAGNOSTIC TROUBLE CODE (DTC) IS ACTIVE**

   NOTE: Make sure the IOD fuse is installed and battery Voltage is between 10 and 16 Volts before proceeding.

   1. Turn the ignition on.
   2. Using a scan tool, read DTC's.

      Is this DTC active?

      Yes

      - Go To 2.

      No

      - **Refer to <u>DIAGNOSIS AND TESTING</u>** and perform the Stored Lost Communication DTC's diagnostic procedure.
2. **VERIFY TIPM IS COMMUNICATING WITH OTHER MODULES**
   1. Using a scan tool, read DTC's in all modules.

Is any other module reporting a loss of communication with the TIPM?

Yes

- **Refer to COMMUNICATION - DIAGNOSIS AND TESTING** and perform the No Response from TIPM diagnostic procedure.

No

- Replace the Memory Seat Module (MSM) in accordance with the Service Information.
- Perform the BODY VERIFICATION TEST. Refer to **STANDARD PROCEDURE** .

U0155-LOST COMMUNICATION WITH CLUSTER/CCN

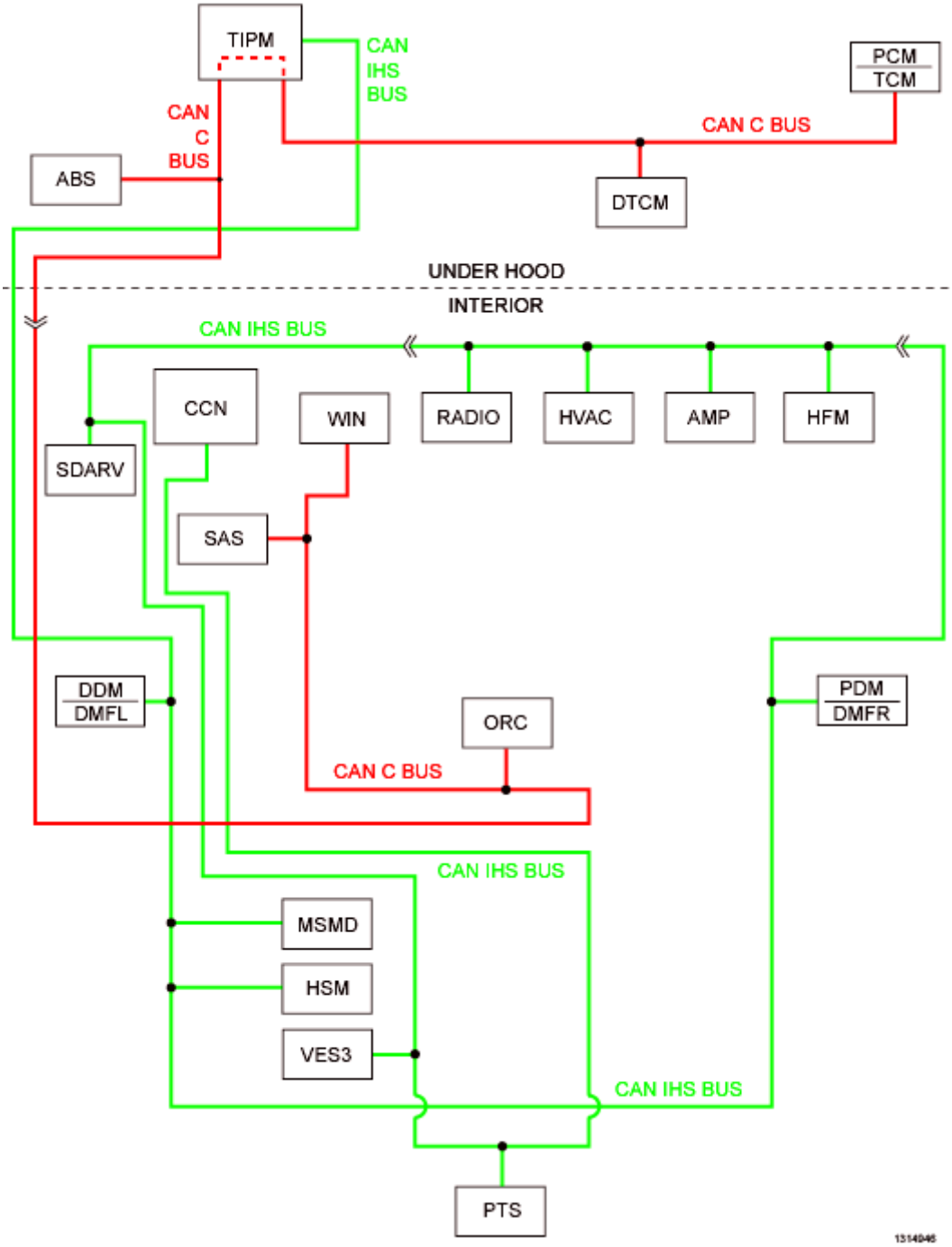

Fig. 117: CAN Ihs Bus & TIPM CAN C Bus Circuit Wiring Diagram
Courtesy of CHRYSLER GROUP, LLC

For a complete wiring diagram, **refer to appropriate SYSTEM WIRING DIAGRAMS article** .

WHEN MONITORED:

With the ignition on.

Battery Voltage between 10 and 16 Volts.

Ignition Off Draw (IOD) fuse installed.

Totally Integrated Power Module (TIPM) is configured correctly.

SET CONDITION:

Bus messages not received from the Cluster (CCN) for approximately two to five seconds.

POSSIBLE CAUSES

Possible Causes
CAN INTERIOR BUS (125K) CIRCUITS OPEN OR SHORTED
DIAGNOSTIC TROUBLE CODES (DTC's) RELATED TO BATTERY VOLTAGE, IGNITION, OR VIN MESSAGES PRESENT
TIPM NOT CONFIGURED CORRECTLY
CCN POWER AND GROUND
CCN
MODULE THAT SET THIS DTC

DIAGNOSTIC TEST

1. **VERIFY DIAGNOSTIC TROUBLE CODE (DTC) IS ACTIVE**

   NOTE: Make sure the IOD fuse is installed and battery Voltage is between 10 and 16 Volts before proceeding.

   1. Turn the ignition on.
   2. Using a scan tool, read DTC's.

      Is this DTC active?

      Yes

      - Go To 2.

      No

      - **Refer to <u>DIAGNOSIS AND TESTING</u>** and perform the Stored Lost Communication DTC's diagnostic procedure.
2. **VERIFY CCN IS COMMUNICATING WITH OTHER MODULES**
   1. Using a scan tool, read DTC's in all modules.

      Are any other modules reporting a loss of communication with the CCN?

Yes

- **Refer to COMMUNICATION - DIAGNOSIS AND TESTING** and perform the No Response from CCN diagnostic procedure.

No

- Replace the Memory Seat Module (MSM) in accordance with the Service Information.
- Perform the BODY VERIFICATION TEST. Refer to **STANDARD PROCEDURE** .

U0203-LOST COMMUNICATION WITH DOOR MODULE FRONT LEFT

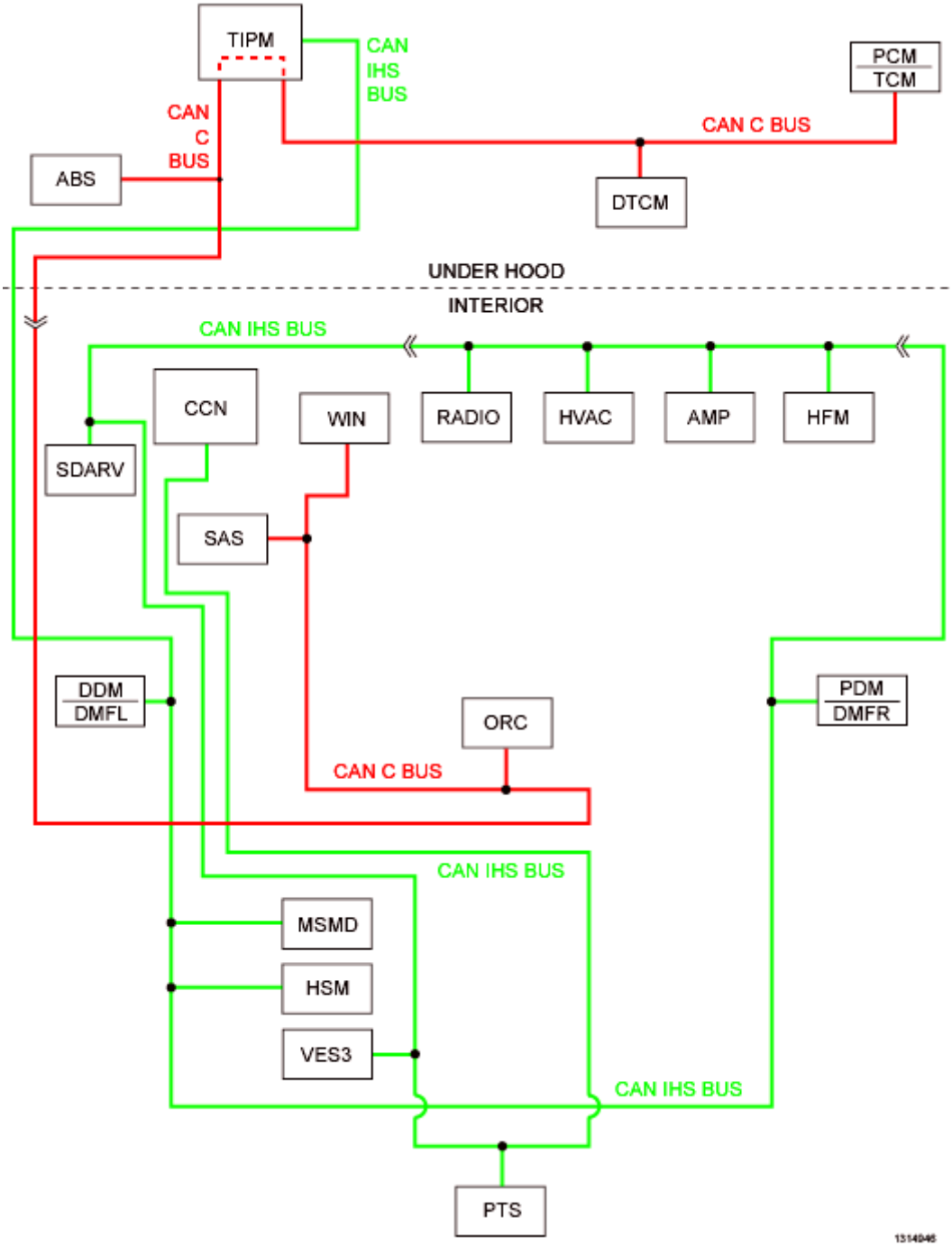

Fig. 118: CAN Ihs Bus & TIPM CAN C Bus Circuit Wiring Diagram
Courtesy of CHRYSLER GROUP, LLC

For a complete wiring diagram, **refer to appropriate SYSTEM WIRING DIAGRAMS article**

WHEN MONITORED:

With the ignition on.

Battery Voltage between 10 and 16 Volts.

Ignition Off Draw (IOD) fuse installed.

Totally Integrated Power Module (TIPM) is configured correctly.

SET CONDITION:

Bus messages not received from the Door Module Front Left (DMFL) for approximately two to five seconds.

POSSIBLE CAUSES

Possible Causes
CAN INTERIOR BUS (125K) CIRCUITS OPEN OR SHORTED
DIAGNOSTIC TROUBLE CODES (DTC's) RELATED TO BATTERY VOLTAGE, IGNITION, OR VIN MESSAGES PRESENT
TIPM NOT CONFIGURED CORRECTLY
DMFL POWER AND GROUND
DMFL
MEMORY SEAT MODULE (MSM)

DIAGNOSTIC TEST

1. **VERIFY DIAGNOSTIC TROUBLE CODE (DTC) IS ACTIVE**

   NOTE: Make sure the IOD fuse is installed and battery Voltage is between 10 and 16 Volts before proceeding.

   1. Turn the ignition on.
   2. Using a scan tool, read DTC's.

      Is this DTC active?

      Yes

      - Go To 2.

      No

      - **Refer to <u>DIAGNOSIS AND TESTING</u>** and perform the Stored Lost Communication DTC's diagnostic procedure.
2. **VERIFY DMFL IS COMMUNICATING WITH OTHER MODULES**
   1. Using a scan tool, read DTC's in all modules.

      Is any other module reporting a loss of communication with the DMFL?

Yes

- **Refer to COMMUNICATION - DIAGNOSIS AND TESTING** and perform the No Response from DMFL diagnostic procedure.

No

- Replace the Memory Seat Module (MSM) in accordance with the Service Information.
- Perform the BODY VERIFICATION TEST. Refer to **STANDARD PROCEDURE** .

U0204-LOST COMMUNICATION WITH DOOR MODULE FRONT RIGHT

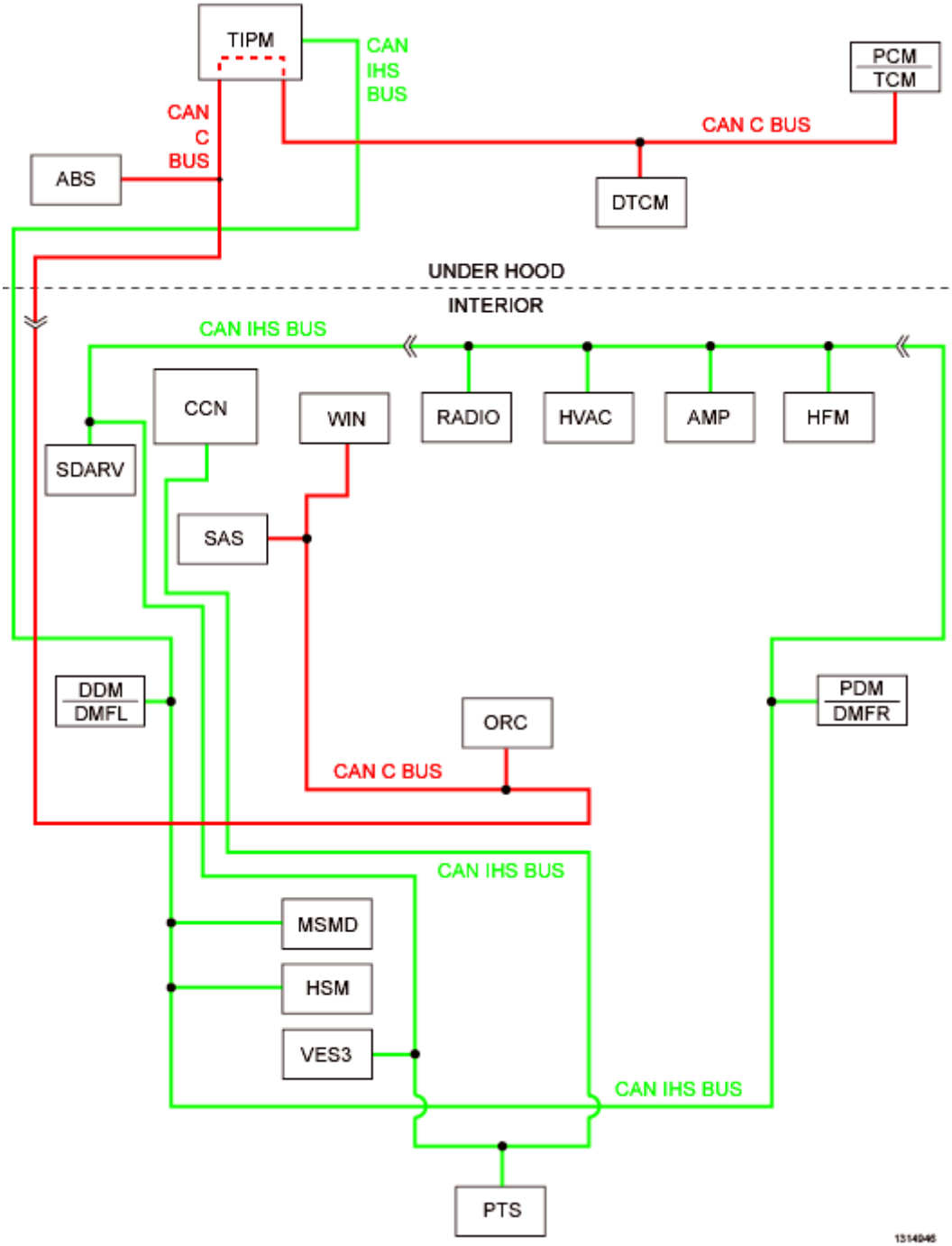

Fig. 119: CAN Ihs Bus & TIPM CAN C Bus Circuit Wiring Diagram
Courtesy of CHRYSLER GROUP, LLC

For a complete wiring diagram, **refer to appropriate SYSTEM WIRING DIAGRAMS article** .

WHEN MONITORED:

With the ignition on.

Battery Voltage between 10 and 16 Volts.

Ignition Off Draw (IOD) fuse installed.

Totally Integrated Power Module (TIPM) is configured correctly.

SET CONDITION:

Bus messages not received from the Door Module Front Right (DMFR) for approximately two to five seconds.

POSSIBLE CAUSES

Possible Causes
CAN INTERIOR BUS (125K) CIRCUITS OPEN OR SHORTED
DIAGNOSTIC TROUBLE CODES (DTC's) RELATED TO BATTERY VOLTAGE, IGNITION, OR VIN MESSAGES PRESENT
TIPM NOT CONFIGURED CORRECTLY
DMFR POWER AND GROUND
DMFR
MEMORY SEAT MODULE (MSM)

DIAGNOSTIC TEST

1. **VERIFY DIAGNOSTIC TROUBLE CODE (DTC) IS ACTIVE**

   NOTE: Make sure the IOD fuse is installed and battery Voltage is between 10 and 16 Volts before proceeding.

   1. Turn the ignition on.
   2. Using a scan tool, read DTC's.

      Is this DTC active?

      Yes

      - Go To 2.

      No

      - **Refer to <u>DIAGNOSIS AND TESTING</u>** and perform the Stored Lost Communication DTC's diagnostic procedure.
2. **VERIFY DMFR IS COMMUNICATING WITH OTHER MODULES**
   1. Using a scan tool, read DTC's in all modules.

      Is any other module reporting a loss of communication with the DMFR?

Yes

- **Refer to COMMUNICATION - DIAGNOSIS AND TESTING** and perform the No Response from DMFR diagnostic procedure.

No

- Replace the Memory Seat Module (MSM) in accordance with the Service Information.
- Perform the BODY VERIFICATION TEST. Refer to **STANDARD PROCEDURE** .

STANDARD PROCEDURE

APS INTERMITTENT CONDITION TEST

For a complete wiring diagram, **refer to appropriate SYSTEM WIRING DIAGRAMS article** .

DIAGNOSTIC TEST

1. **PERFORM APS INTERMITTENT CONDITION TEST**

WARNING: **When the engine is operating, do not stand in direct line with the fan. Do not put your hands near the pulleys, belts or fan. Do not wear loose clothing. Failure to follow these instructions may result in possible serious or fatal injury.**

1. Refer to any Technical Service Bulletins (TSBs) that may apply.
2. Review the scan tool information. If possible, try to duplicate the conditions under which the DTC set.
3. Turn the ignition off.
4. Visually inspect the related wire harness. Disconnect all the related harness connectors. Look for any chafed, pierced, pinched, partially broken wires and broken, bent, pushed out, or corroded terminals.
5. Wiggle the wires while checking for shorts and open circuits.
6. Perform a voltage drop test on the related circuits between the suspected faulty component and the Memory Seat Module.
7. Inspect and clean all grounds that are related to the most current DTC.
8. If numerous trouble codes were set, use a wiring schematic and look for any common ground or supply circuits
9. Monitor with the scan tool and wiggle the related wire harness to try to interrupt the actuation.
10. Use the scan tool to perform a System Test if one applies to failing component.
11. A co-pilot, data recorder, and/or lab scope should be used to help diagnose intermittent conditions.

Were any problems found during the above inspections?

Yes

- Repair as necessary.
- Perform APS VERIFICATION TEST. Refer to **APS VERIFICATION TEST**.

No

- Test Complete.

APS VERIFICATION TEST

DIAGNOSTIC TEST

1. **PERFORM ADJUSTABLE PEDALS SYSTEM VERIFICATION TEST**
    1. Make sure all accessories are turned off and the battery is fully charged.
    2. Connect all previously disconnected components and connectors.
    3. If not done previously, turn the ignition on.
    4. Using a scan tool, erase all Diagnostic Trouble Codes (DTC's) from all modules.
    5. Cycle the ignition from on to off.
    6. Turn the ignition on.
    7. Operate the Adjustable Pedals in both directions.
    8. Press the Adjustable Pedals switch in one direction for at least one second then release the switch. Repeat three times consecutively, but press the switch in the opposite direction each time.
    9. Using a scan tool, read DTC's from all modules.

    Are any DTC's present or is the original concern still present?

    Yes

    - Repair is not complete. Refer to appropriate system for the diagnostic procedure.

    No

    - Repair is complete.

POWER SEAT SYSTEM VERIFICATION TEST

DIAGNOSTIC TEST

1. **PERFORM POWER SEAT SYSTEM VERIFICATION TEST**
    1. Disconnect all jumper wires and reconnect all previously disconnected components and connectors.
    2. Make sure that all accessories are turned off.
    3. Make sure that the battery is fully charged.
    4. Turn the ignition on.

5. If either the Memory Seat Module (MSM) or the Driver Horizontal Seat Adjuster Motor/Seat Track was replaced, then the MSM Standard Routine must be performed using a scan tool.
6. Using a scan tool, record and erase Diagnostic Trouble Codes (DTC's) from all modules.
7. Operate the driver seat in all positions.
8. Using the Memory Switch on the driver's door, program the driver's seat number 1 Button to a desired position and driver's seat number 2 Button to a different position.
9. Verify both Memory positions can be recalled with the Remote Keyless Entry (RKE) transmitter and the Memory Switch on the driver's door.
10. Turn the ignition off, wait 10 seconds, then turn the ignition on.
11. Using a scan tool, select ECU View.
12. Check for DTC's in the modules.

    Are DTC's present in any of the modules or is the original condition still present?

    Yes

    - The Repair Is Not Complete. Refer To The Appropriate Diagnostic Information For The DTC Or Symptom That Is Still Present.

    No

    - The repair is complete.

CENTER, ELECTRONIC VEHICLE INFORMATION

DESCRIPTION

DESCRIPTION

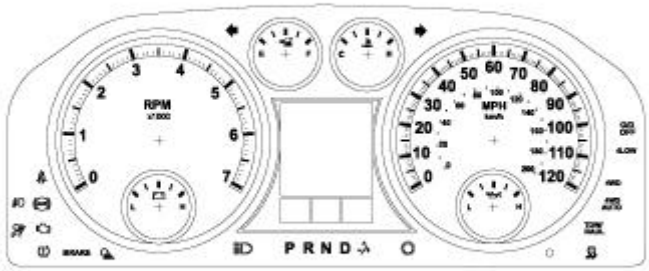

1154127

Fig. 1: Electronic Vehicle Information Center (EVIC)
Courtesy of CHRYSLER GROUP, LLC

The Electronic Vehicle Information Center (EVIC) features a driver-interactive display. The display is located in the middle of the instrument cluster between the speedometer and tachometer. This system conveniently allows the driver to select a variety of useful information by pressing the push buttons of an EVIC switch mounted on the left spoke of the steering wheel. The EVIC displays information related to the following:

- **Audio Mode Display**
- **Compass Display**
- **Diesel Exhaust Fluid (DEF)** - on 6.7 liter diesel engine models only.
- **Navigation System Displays** - if the vehicle is so equipped.
- **Outside Temperature Display**
- **Park Assist System** - if the vehicle is so equipped.
- **Personal Settings** - also known as customer programmable features.
- **System Status**
- **Tire Pressure Monitor System** - if the vehicle is so equipped.
- **Trip Computer Functions**
- **U-Connect™ Hands-Free Communication System Displays** - if the vehicle is so equipped.

- **Warning Message Displays**

The EVIC system includes the following components:

- **Ambient Temperature Sensor**
- **Electronic Overhead Module**
- **EVIC Switch**
- **Instrument Cluster**
- **Remote Compass Module**

The EVIC display is part of the ElectroMechanical Instrument Cluster (EMIC) (also known as the Cab Compartment Node/CCN) and is not serviced as a separate component. If the EVIC display is damaged or ineffective, the entire EMIC unit must be replaced.

OPERATION

OPERATION

The Electronic Vehicle Information Center (EVIC) uses both non-switched and ignition switched sources of battery current so that some of its features remain operational at any time, while others may only operate with the ignition switch in the ON position. When the ignition switch is turned to the ON position, the EVIC display will return to the last function being displayed before the ignition was turned to the OFF position.

The EVIC system consists of several different components that communicate over the Controller Area Network (CAN) and Local Interface Network (LIN) data buses. **If the system is inoperative, a scan tool and the appropriate diagnostic information must be used to diagnose the system.**

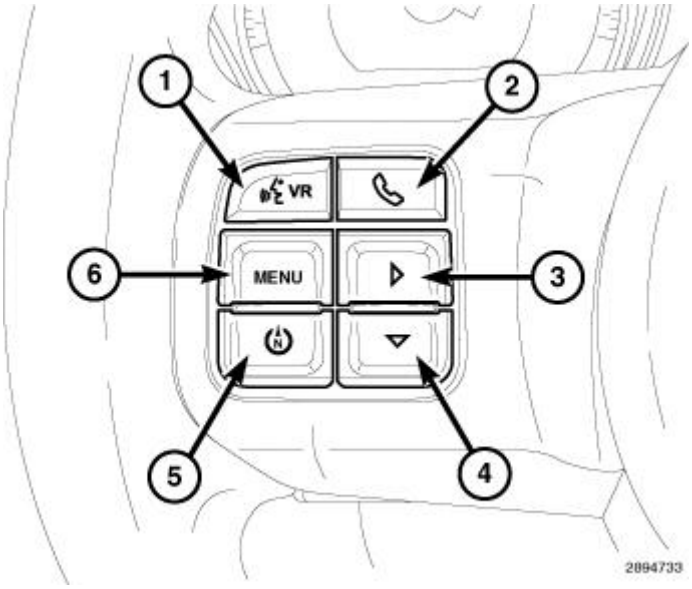

Fig. 2: EVIC Switch Pod
Courtesy of CHRYSLER GROUP, LLC

The EVIC switch pod push buttons on the left spoke of the steering wheel are used to operate the available functions of the EVIC system. Pressing and releasing the **MENU** push button (6) allows the operator to select the Compass/Temperature, Trip Computer, Navigation (if equipped), Personal Settings (also known as customer programmable features) or System Status functions. The **DOWN / SCROLL** push button (4) is used to scroll through options or features of the Trip Computer, Personal Settings or System Status functions. Pressing and releasing the **SELECT / RESET** push button (3) enables the selection or resetting of the feature or function presently displayed in the EVIC. Pressing and releasing the **COMPASS** push button (5) will provide instant access to the compass/temperature display mode from any other mode.

In addition, if the vehicle is so equipped, the EVIC switch pod will include a **VR** (Voice Response) push button (1) to activate the optional Uconnect™ Voice Command system and a **PHONE** push button (2) to activate the Uconnect™ Phone system.

EVIC DISPLAY MODES

SYSTEM STATUS MODE

The System Status mode displays warnings and user interaction messages. Initial warnings will be displayed full-screen in the EVIC for three seconds, then override the odometer and show text warnings on the bottom line of the display. Critical warnings will be displayed until the condition is corrected. Non-critical warnings will be displayed for 60 seconds. The operator can scroll to view multiple messages by using the **DOWN / SCROLL** push button.

When the appropriate conditions exist, the EVIC displays the following messages:

- **Adjustable Pedals Disabled - Cruise Engaged** - If the vehicle is equipped with the optional adjustable pedals system.
- **Adjustable Pedals Disabled - Vehicle In Reverse** - If the vehicle is equipped with the optional adjustable pedals system.
- **Channels Cleared** - If the vehicle is equipped with the optional Universal Garage Door Opener (HomeLink®) system.
- **Channels Defaulted** - If the vehicle is equipped with the optional Universal Garage Door Opener (HomeLink®) system.
- **Channel _ (1, 2, or 3) Transmit** - If the vehicle is equipped with the optional Universal Garage Door Opener (HomeLink®) system.
- **Channel _ (1, 2, or 3) Training** - If the vehicle is equipped with the optional Universal Garage Door Opener (HomeLink®) system.
- **Channel _ (1, 2, or 3) Trained** - If the vehicle is equipped with the optional Universal Garage Door Opener (HomeLink®) system.
- **Check Tire Pressure Monitoring System** - If the vehicle is equipped with the optional Tire Pressure Monitoring system.
- **Clearing Channels** - If the vehicle is equipped with the optional Universal Garage Door Opener (HomeLink®) system.
- **Did Not Train** - If the vehicle is equipped with the optional Universal Garage Door Opener (HomeLink®) system.

- **Door(s) Ajar** - Accompanied by a single audible chime if the vehicle is in motion.
- **Left Front Tire Low Pressure** - If the vehicle is equipped with the optional Tire Pressure Monitoring system.
- **Left Front Turn Signal Lamp Out**
- **Left Rear Tire Low Pressure** - If the vehicle is equipped with the optional Tire Pressure Monitoring system.
- **Left Rear Turn Signal Lamp Out**
- **Left/Right Front Door Ajar** - Either or both, accompanied by a single audible chime if vehicle speed is above 1 kilometer-per-hour (1 mile-per-hour).
- **Left/Right Rear Door Ajar** - If the vehicle is equipped with rear doors, either or both, accompanied by a single audible chime if vehicle speed is above 1 kilometer-per-hour (1 mile-per-hour).
- **Low Washer Fluid** - Accompanied by a single audible chime.
- **Memory System Disabled - Vehicle Not In Park** - If the vehicle is equipped with the optional Memory system. Accompanied by a single audible chime.
- **Memory System Disabled - Seat Belt Buckled** - If the vehicle is equipped with the optional Memory system. Accompanied by a single audible chime.
- **Memory _ (1 or 2) Profile Recall** - If the vehicle is equipped with the optional Memory system.
- **Memory _ (1 or 2) Profile Set** - If the vehicle is equipped with the optional Memory system.
- **Personal Settings Not Available - Vehicle Not in Park**
- **Right Front Tire Low Pressure** - If the vehicle is equipped with the optional Tire Pressure Monitoring system.
- **Right Front Turn Signal Lamp Out**
- **Right Rear Tire Low Pressure** - If the vehicle is equipped with the optional Tire Pressure Monitoring system.
- **Right Rear Turn Signal Lamp Out**
- **RKE Battery Low** - Accompanied by a single audible chime.
- **Service Park Assist System** - If the vehicle is equipped with the optional Park Assist system.
- **Turn Signal On** - Accompanied by a continuous audible warning chime.

TRIP MODE

The trip computer provides a customer programmable choice of displaying units in English or metric measure. The following information can be selected for display at the top of the EVIC screen:

- **Average (Kilometers/Miles) Per Gallon** - Average fuel economy achieved since last reset.
- **Distance To Empty** - Estimated distance (kilometers or miles) until the fuel tank is empty.
- **Trip A** - Distance (kilometers/miles) since last Trip A odometer reset.
- **Trip B** - Distance (kilometers/miles) since last Trip B odometer reset.
- **Elapsed Time** - Total time the ignition switch has been in the ON and ACCESSORY positions since the last elapsed time reset.

The EVIC trip computer features several functions that can be reset. Pressing and releasing the **SELECT / RESET** push button once will reset the function currently being displayed in the EVIC. To reset all functions (global reset), press and release the **SELECT / RESET** push button a second time within 3 seconds of resetting the currently displayed function. **>Reset ALL** will be displayed during this 3 second window.

The odometer is displayed at the bottom of the EVIC display. If warnings exist, they will replace the odometer in the display. The operator can scroll to view information in the EVIC by using the **DOWN / SCROLL** push button.

COMPASS, TEMPERATURE

Compass heading and outside temperature are displayed at the top of the screen. Eight-point compass headings are displayed: **N, S, E, W, NE, NW, SE, SW** . Up to 15 compass variance settings can be set and recalled. Outside temperature is displayed in **°C** (degrees Celsius) or **°F** (degrees Fahrenheit).

NAVIGATION MODE

When the optional Navigation System is active, the EVIC switch **SELECT / RESET** push button can be used to select the Map or Menu display on the Navigation unit. When the Navigation Menu display is active, the **DOWN / SCROLL** push button can be used to scroll through the list, the **SELECT / RESET** push button can be used to select an item. The **DOWN / SCROLL** push button can also be used to return to the previous menu. When the Map display is active, pressing the **SELECT / RESET** push button will change the Navigation unit display to the Menu.

If Turn-By-Turn Navigation is enabled through Personal Settings, the Navigation system will provide turn-by-turn directions to the programmed destination in the EVIC display. The name of the approaching road is displayed at the top of the screen, followed by an arrow to show the direction of the turn, with the remaining distance to the turn counted down.

PERSONAL SETTINGS MODE

The personal settings mode (also known as customer programmable features) allows the operator to set and recall features when the automatic transmission is in the PARK position or the manual transmission vehicle is completely stopped by pressing and releasing the **SELECT / RESET** push button and then the **DOWN / SCROLL** push button until **Personal Settings** is displayed in the EVIC. The following personal settings are available:

- **Automatically Move Seat Back On Exit: On or Off** - If the vehicle is equipped with the optional Memory system.
- **Confirmation Of Voice Commands: On or Off** - If the vehicle is equipped with the optional Uconnect™ Voice Command system.
- **Delay Power Off To Accessories Until Exit: Off, 45 Seconds, 5, 10 or 60 Minutes**
- **Delay Turning Headlamps Off: 0, 30, 60 or 90 seconds**
- **Display Units: English or Metric**
- **Fuel Saver indicator, Economizer (ECO): On or Off**
- **Headlamps On With Wipers: On or Off**

- **Language: English, Spanish or French**
- **Lock Doors Automatically At 24 Kmh (15 Mph): On or Off**
- **Park Assist System: On or Off -** If the vehicle is equipped with the optional Park Assist system.
- **Rain Sensing Intermittent Wipers: On or Off -** If the vehicle is equipped with the optional Automatic Wipers system.
- **Recall Memory With Remote Keyless Entry Unlock: On or Off -** If the vehicle is equipped with the optional Memory system.
- **Remote Keyless Entry: Unlock Driver Door On First Press or Unlock All Doors On First Press**
- **Sound Horn With Remote Keyless Entry Lock: On or Off**
- **Tilt Mirrors Down And In When Transmission Is Shifted To Reverse: On or Off -** If the vehicle is equipped with the optional Memory system.
- **Turn Headlamps On With Remote Keyless Entry Lock: On or Off**
- **Turn Headlamps On With Remote Keyless Entry Unlock: Off or 30 Seconds**
- **Turn-By-Turn Navigation: On or Off -** If the vehicle is equipped with the optional Navigation system.
- **Unlock Doors Automatically On Exit: On or Off**

SYSTEM SETUP MODE

In vehicles equipped with the Integrated Trailer Brake Module (ITBM), the EVIC allows the operator to set, reset and recall the optional settings for this feature. The following settings are available:

- **Trailer Brake Type: EOH (Electric Over Hydraulic) or Electric Brakes**
- **Trailer Weight: Light (10, 000 pounds and below) or Heavy (10, 001 pounds and above)**

DIAGNOSIS AND TESTING

DIAGNOSIS AND TESTING - EVIC

The Electronic Vehicle Information Center (EVIC) relies upon electronic message inputs received over the Controller Area Network (CAN) data bus from other electronic modules in the vehicle. The EVIC will not function properly if the bus messages from any of these modules are not received. If no EVIC data is displayed, check the CAN data bus communications as well as other instrument cluster (also known as the Cab Compartment Node/CCN) functions.

The use of a diagnostic scan tool and the proper diagnostic procedures is required for further testing of the EVIC and the CAN data bus. Refer to the appropriate wiring information for complete circuit schematics and connector pin-out information.

STANDARD PROCEDURE

RESET OIL CHANGE INDICATOR

After performing the needed maintenance, reset the **Oil Change Required** indicator using the following procedure:

1. Turn the ignition switch to the ON position, but do not start the engine.
2. Fully depress and release the accelerator pedal slowly three times within 10 seconds.
3. Turn the ignition switch to the OFF/LOCK position.

NOTE: **If the Oil Change Required indicator message illuminates when you start the engine, the indicator did not reset. If necessary, repeat this procedure.**

RESET PERFORM SERVICE INDICATOR

The **Perform Service** message will display on the Electronic Vehicle Information Center (EVIC) each time you turn the ignition switch to the ON/RUN position to indicate that emission system scheduled maintenance is required. After performing the scheduled maintenance, reset the **Perform Service** indicator using the following procedure:

1. Turn the ignition switch to the ON position, but do not start the engine.
2. Depress and release the brake pedal two times.
3. Fully depress and release the accelerator pedal slowly two times within 10 seconds.
4. Turn the ignition switch to the OFF/LOCK position.

NOTE: **If the indicator message illuminates when you start the engine, the Perform Service indicator did not reset. If necessary, repeat this procedure.**

MODULE, COMPASS

DESCRIPTION

DESCRIPTION

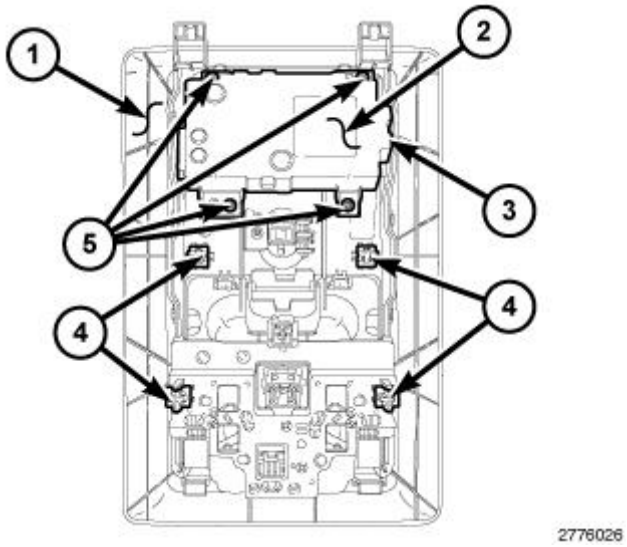

Fig. 3: Remote Compass Module
Courtesy of CHRYSLER GROUP, LLC

The Remote Compass Module (RCM) (2) is a separate stand alone module mounted in the overhead console (1). The RCM can be accessed by removing the overhead console from the vehicle. Some vehicles are equipped with a Universal Garage Door Opener (UGDO) also known as a HomeLink® transceiver. Both the RCM and the HomeLink® transceiver are one in the same and sometimes referred to as the Electronic Overhead Module (EOM).

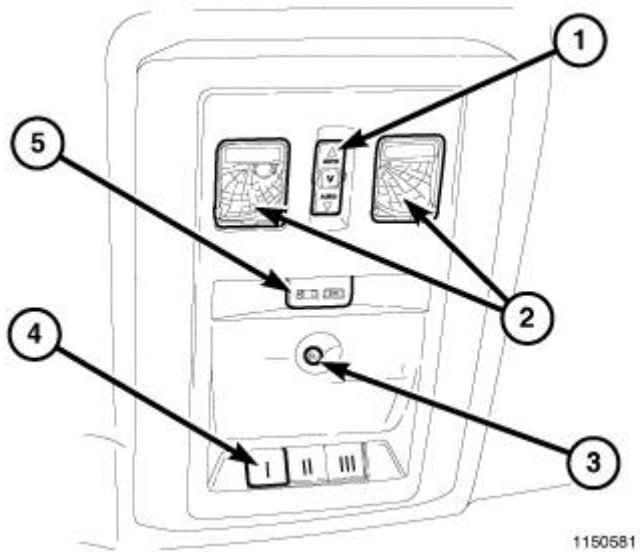

Fig. 4: Overhead Console Assembly
Courtesy of CHRYSLER GROUP, LLC

The only visible component of the HomeLink® transceiver are the three push buttons (4). The buttons are marked with one, two or three dash marks, respectively, for identification of each channel. For more information on the HomeLink® transceiver, refer to **DESCRIPTION** .

The RCM or the HomeLink® transceiver cannot be repaired. If ether the compass position sensor or the transceiver is inoperative and requires replacement, the EOM must be replaced as a complete assembly, For the appropriate procedure, refer to **MODULE, COMPASS, REMOVAL**.

DIAGNOSIS AND TESTING

DIAGNOSIS AND TESTING - REMOTE COMPASS MODULE

The Remote Compass Module (RCM) data is transferred on the Controller Area Network (CAN) Data Bus circuit. The RCM and Electronic Vehicle Information Center (EVIC) will not function properly if the bus messages are not properly received. If no EVIC data is displayed, check the CAN Data Bus circuit communications, the RCM, the Instrument Cluster functions and the Totally Integrated Power Module (TIPM). **Any diagnosis of the RCM and EVIC display should begin with the use of a scan tool and the appropriate diagnostic service information.**

For complete circuit diagrams, refer to the appropriate wiring information. The wiring information includes wiring diagrams, proper wire and connector repair procedures, details of wire harness routing and retention, connector pin-out information and location views for the various wire harness connectors, splices and grounds.

STANDARD PROCEDURE

COMPASS DEMAGNETIZING

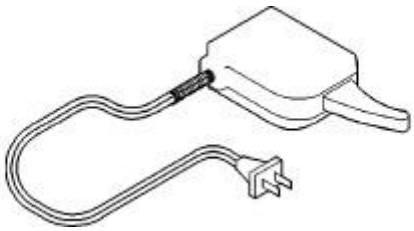

Fig. 5: Degaussing Tool (Special Tool 6029)
Courtesy of CHRYSLER GROUP, LLC

A degaussing tool (Special Tool (special tool #6029, De Gauser)) is used to demagnetize, or degauss, the overhead console forward mounting screw and the roof panel above the overhead console. Equivalent units must be rated as continuous duty for 110/115 volts and 60 Hz. They must also have a field strength of over 350 gauss at 7 millimeters (0.25 inch) beyond the tip of the probe.

To demagnetize the roof panel and the overhead console forward mounting screw, proceed as follows:

1. Be certain that the ignition switch is in the Off position, before you begin the demagnetizing procedure.
2. Connect the degaussing tool to an electrical outlet, while keeping the tool at least 61 centimeters (2 feet) away from the compass unit.
3. Slowly approach the head of the overhead console forward mounting screw with the degaussing tool connected.
4. Contact the head of the screw with the plastic coated tip of the degaussing tool for about two seconds.
5. With the degaussing tool still energized, slowly back it away from the screw. When the tip of the tool is at least 61 centimeters (2 feet) from the screw head, disconnect the tool.

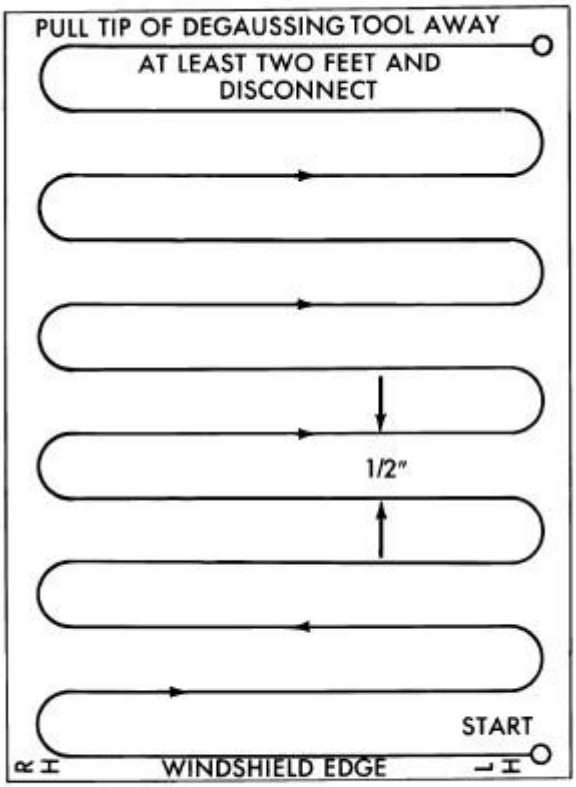

J908E-27

<u>Fig. 6: Demagnetizing Roof Panel Procedure</u>
Courtesy of CHRYSLER GROUP, LLC

To demagnetize the roof panel proceed as follows:

6. Place a piece of paper approximately 22 by 28 centimeters (8.5 by 11 inches), oriented on the vehicle lengthwise from front to rear, on the center line of the roof at the windshield header. The purpose of the paper is to protect the roof panel from scratches, and to define the area to be demagnetized.
7. Connect the degaussing tool to an electrical outlet, while keeping the tool at least 61 centimeters (2 feet) away from the compass unit.
8. Slowly approach the center line of the roof panel at the windshield header, with the degaussing tool connected.
9. Contact the roof panel with the plastic coated tip of the degaussing tool. Be sure that the template is in place to avoid scratching the roof panel. Using a slow, back-and-forth sweeping motion, and allowing 13 millimeters (0.50 inch) between passes, move the tool at least 11 centimeters (4 inches) to each side of the roof center line, and 28 centimeters (11 inches) back from the windshield header.
10. With the degaussing tool still energized, slowly back it away from the roof panel. When the tip of the tool is at least 61 centimeters (2 feet) from the roof panel, disconnect the tool.
11. Calibrate the compass and adjust the compass variance. Refer to **<u>COMPASS VARIANCE ADJUSTMENT</u>**.

COMPASS VARIANCE ADJUSTMENT

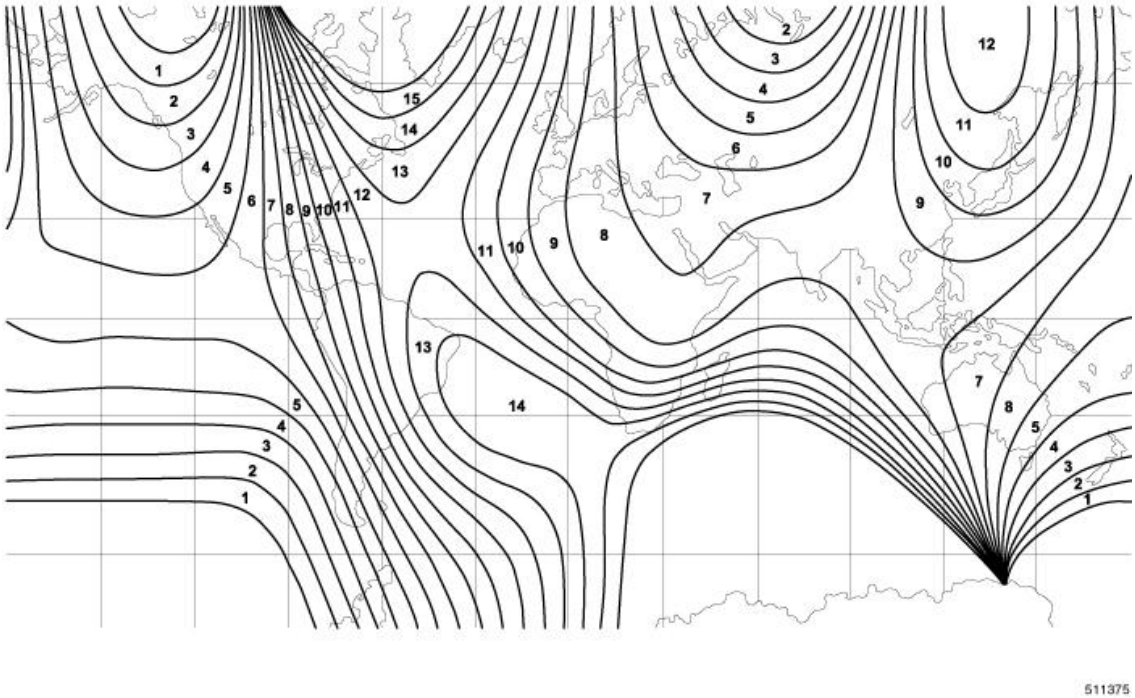

<u>Fig. 7: Magnetic & Geographic North Map</u>
Courtesy of CHRYSLER GROUP, LLC

Compass variance, also known as magnetic declination, is the difference in angle between magnetic north and true geographic north. In some geographic locations, the difference between magnetic and geographic north is great enough to cause the compass to give false readings. If this problem occurs, the compass variance must be set.

NOTE: **If the vehicle is taken on long trips into a new variance zone the compass function may be effected. Compass variance may need to be adjusted to the new zone number to function properly.**

NOTE: **The default for the compass variance from the factory is 8.**

To set the compass variance:

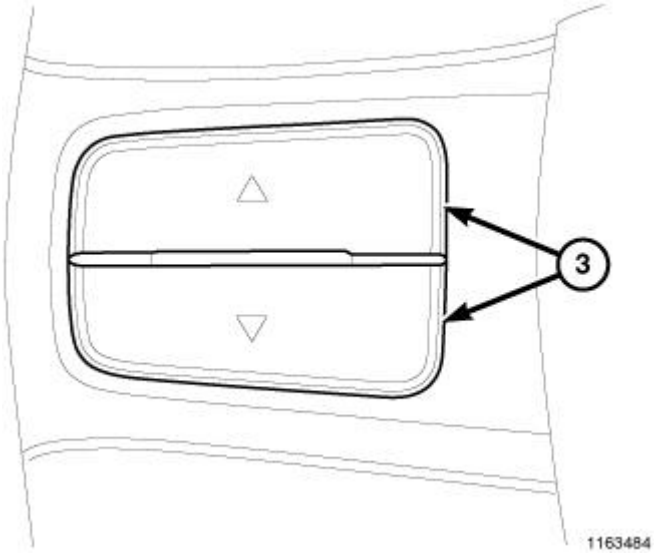

Fig. 8: Steering Wheel Switches (Scroll Buttons)
Courtesy of CHRYSLER GROUP, LLC

1. Using the Variance Settings Map, find your geographic location and note the zone number.
2. Turn the ignition switch to the On/Run position.
3. Press and release the **SCROLL** push buttons (3) until "System setup" displayed in the Electronic Vehicle Information Center (EVIC) display is selected.

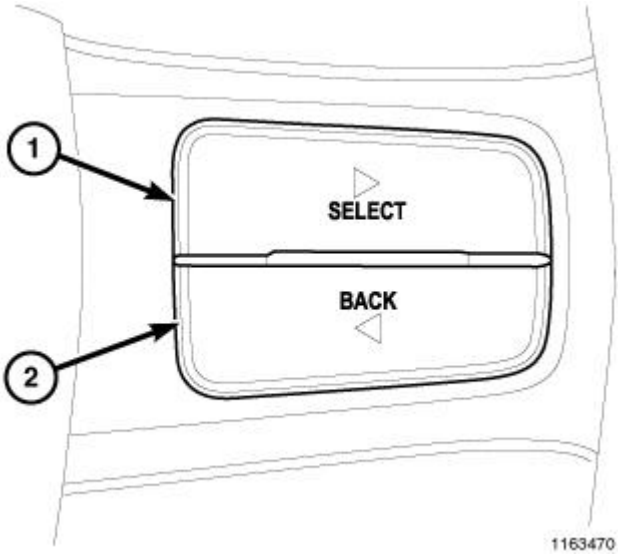

Fig. 9: Steering Wheel Switches
Courtesy of CHRYSLER GROUP, LLC

4. Press and release the **SELECT** push button (1) to enter "System setup".
5. Press and release the **SCROLL** push buttons until "Compass Variance" displayed in the EVIC is selected.
6. Press and release the **SELECT** push button to enter the "Compass Variance" adjustment mode.
7. Press and release the **SELECT** push button repeatedly to toggle through the zone numbers (1-15), until

the zone number for your geographic location appears in the EVIC display.

8. Press and release the **BACK** push button (2) to enter the displayed zone number into the compass unit memory.
9. Confirm that the correct directions are now indicated by the compass.

MANUAL COMPASS CALIBRATION

CAUTION: Do not place any external magnets, such as magnetic roof mount antennas, in the vicinity of the overhead console. Do not use magnetic tools when servicing the overhead console.

NOTE: Whenever the compass is calibrated manually, the variance number must also be checked. For the appropriate procedure, refer to COMPASS VARIANCE ADJUSTMENT.

The electronic compass unit features a self-calibrating design, which simplifies the calibration procedure. This feature automatically updates the compass calibration while the vehicle is being driven. This allows the compass unit to compensate for small changes in the residual magnetism that the vehicle may acquire during normal use. If the compass readings appear to be erratic or the Electronic Vehicle Information Center (EVIC) displays "CAL", perform the following manual calibration procedure. Also, any time EVIC service replacement components are installed, they must be calibrated using this procedure. Do not attempt to calibrate the compass near large metal objects such as other vehicles, large buildings, or bridges; or, near overhead or underground power lines.

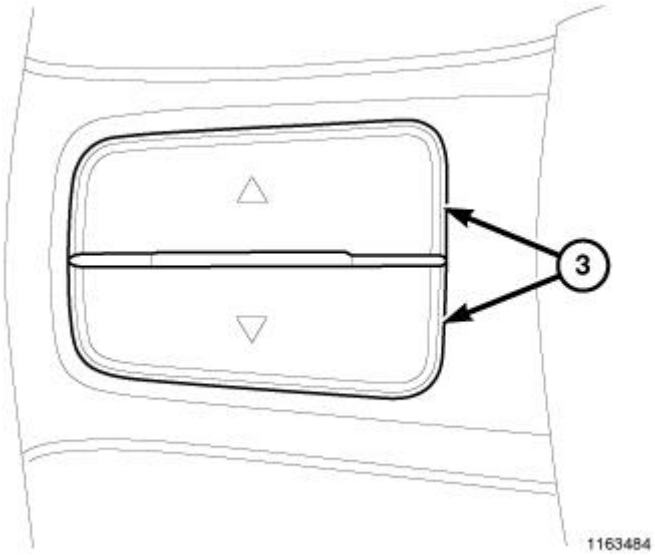

Fig. 10: Steering Wheel Switches (Scroll Buttons)
Courtesy of CHRYSLER GROUP, LLC

Calibrate the compass manually as follows:

1. With the vehicle in park, start the engine and press the **SCROLL** push buttons (3) until "Calibrate Compass" is displayed in the EVIC.

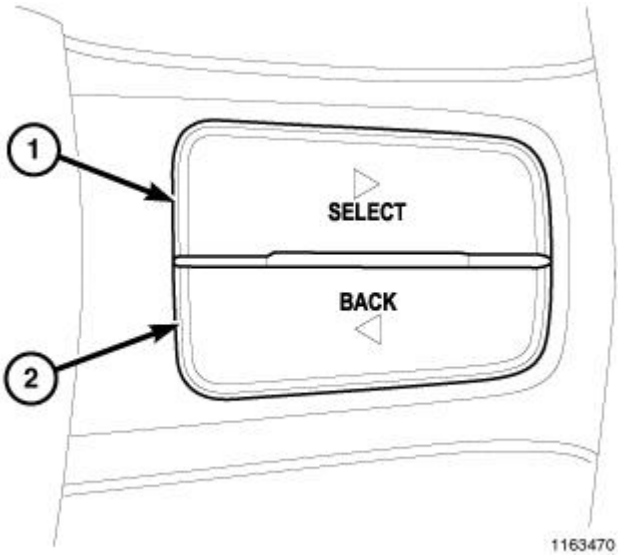

Fig. 11: Steering Wheel Switches
Courtesy of CHRYSLER GROUP, LLC

2. Press the **SELECT** push button (1) to enter the calibration mode.
3. Slowly drive the vehicle on a level surface, away from large metal objects and power lines, through three **complete** circles not exceeding 8 km/h (5 mph). The "CAL" message will disappear from the display to indicate that the compass is now calibrated.

NOTE: **A blank compass display indicates that vehicle degaussing (demagnetizing) may be necessary.**

NOTE: **If the "CAL" message remains in the display, either there is excessive magnetism near the compass, or the EVIC is inoperative. Attempt the calibration procedure at least one more time before performing EVIC diagnosis.**

NOTE: **If the wrong direction is still indicated in the compass display, the area selected for calibration may be too close to a strong magnetic field. Repeat the manual calibration procedure in another location.**

REMOVAL

REMOVAL

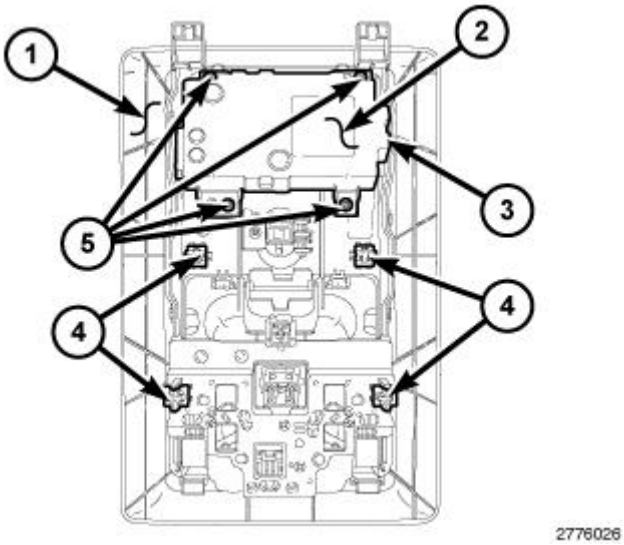

Fig. 12: Remote Compass Module
Courtesy of CHRYSLER GROUP, LLC

1. Disconnect and isolate the negative battery cable.
2. Remove the overhead console assembly (1). Refer to **CONSOLE, OVERHEAD, FRONT, REMOVAL** .
3. Remove the four fasteners (5) that secure the Remote Compass Module (RCM) (2) to the overhead console.
4. Remove the module from the console.

INSTALLATION

INSTALLATION

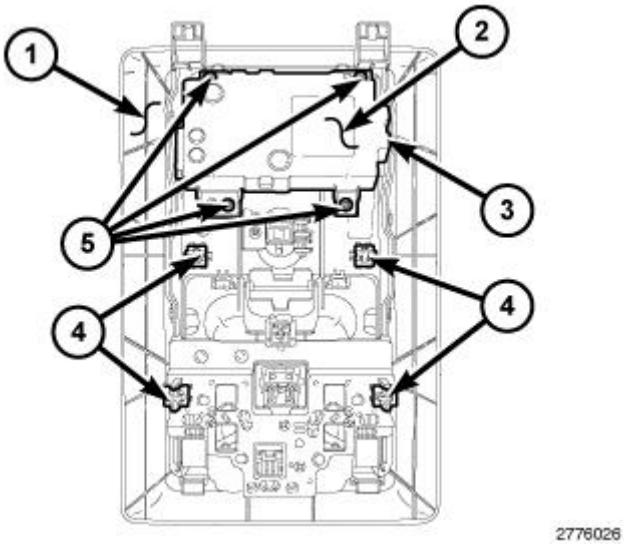

Fig. 13: Remote Compass Module
Courtesy of CHRYSLER GROUP, LLC

1. Position the Remote Compass Module (RCM) (2) in the console.
2. Install the four fasteners (5) that secure the RCM to the overhead console (1).
3. Install the overhead console assembly. Refer to **CONSOLE, OVERHEAD, FRONT, INSTALLATION** .
4. Connect the negative battery cable.
5. Perform the Compass Variance Adjustment. Refer to **COMPASS VARIANCE ADJUSTMENT**.
6. Perform the Manual Compass Calibration. Refer to **MANUAL COMPASS CALIBRATION**.
7. Verify proper compass operation.

SENSOR, AMBIENT TEMPERATURE

DESCRIPTION

DESCRIPTION

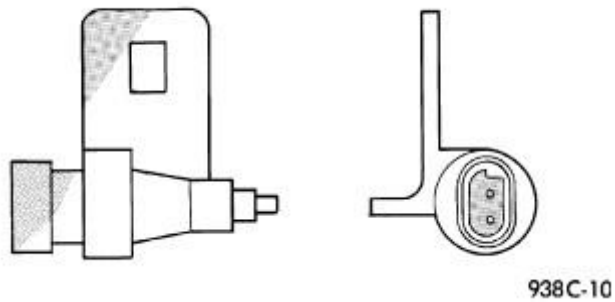

Fig. 14: Ambient Temperature Sensor
Courtesy of CHRYSLER GROUP, LLC

The ambient temperature sensor is a variable resistor mounted to the lower left side of the Front End Module (FEM), behind the radiator grille and in front of the engine compartment.

The ambient temperature sensor cannot be adjusted or repaired and, if inoperative or damaged, it must be replaced.

OPERATION

OPERATION

The ambient temperature sensor is a variable resistor that operates on a five-volt reference signal sent by the Totally Integrated Power Module (TIPM). The resistance in the sensor changes as temperature changes, changing the temperature sensor signal circuit voltage to the TIPM. Based upon the resistance in the sensor, the TIPM senses a specific voltage on the temperature sensor signal circuit. The TIPM then translates the voltage into a temperature reading that it sent over the Controller Area Network (CAN) data bus circuit to other modules utilizing temperature information.

DIAGNOSIS AND TESTING

DIAGNOSIS AND TESTING - AMBIENT TEMPERATURE SENSOR

The temperature function is supported by the ambient temperature sensor, a wiring circuit, and the Totally Integrated Power Module (TIPM). When the sensor is exposed to temperatures above 60° C (140° F), or if the sensor circuit is shorted, 60° C (130/140° F) will appear in the display in place of the temperature. When the sensor is exposed to temperatures below - 40° C (- 40° F) or if the sensor circuit is open, - - ° C (- - ° F) will be displayed on Electronic Vehicle Information Center (EVIC) equipped vehicles.

NOTE: **The system displays the last known temperature when starting the vehicle and may take some time/mileage to update to an accurate current reading, up to 5 minutes at a maintained speed above 40 mph (64.3 kph). Customers with very short commutes may not get an updated reading before the vehicle is turned off, or if the ignition does not remain in the OFF position for more than 255 minutes (4hrs. 15min.). This strategy was intended to eliminate wildly fluctuating readings and may cause some customer confusion leading to unnecessary diagnostics/parts replacements.**

SENSOR TEST

The most reliable, efficient and accurate means to diagnose the ambient temperature circuit requires the use of a scan tool.

1. Turn the ignition switch to the Off position. Disconnect the ambient temperature sensor harness connector.
2. Measure the resistance of the ambient temperature sensor. At - 40° C (- 40° F), the sensor resistance is 336 kilohms. At 55° C (130° F), the sensor resistance is 2.488 kilohms. The sensor resistance should read between these two values. If not OK, replace the inoperative ambient temperature sensor. If OK, perform further diagnosis of the Ambient Temperature System as applicable. Refer to **DIAGNOSIS AND TESTING** .

The ambient temperature sensor circuit can be diagnosed using the following Temperature Sensor Test. If the temperature sensor and circuit are confirmed to be OK, but the temperature display is inoperative or incorrect as applicable. Refer to **DIAGNOSIS AND TESTING** .

SENSOR CIRCUIT TEST

NOTE: **Refer to appropriate Wiring Information for complete circuit schematic and connector pin-out information.**

1. Turn the ignition switch to the Off position. Disconnect and isolate the negative battery cable. Disconnect the wire harness connectors from the ambient temperature sensor and the TIPM.
2. Connect a jumper wire between the two terminals in the body half of the ambient temperature sensor harness connector.
3. Check for continuity between the sensor return circuit and the ambient temperature sensor signal circuit cavities of the TIPM harness connector. There should be continuity. If OK, refer to 4. If not OK, repair the open sensor return circuit or ambient temperature sensor signal circuit to the ambient temperature sensor as required.

4. Check for continuity between the ambient temperature sensor signal circuit cavity of the TIPM harness connector and a good ground. There should be no continuity. If OK, test the EVIC operation. Refer to **CENTER, ELECTRONIC VEHICLE INFORMATION, DIAGNOSIS AND TESTING**. If not OK, repair the shorted ambient temperature sensor signal circuit as required.

REMOVAL

REMOVAL

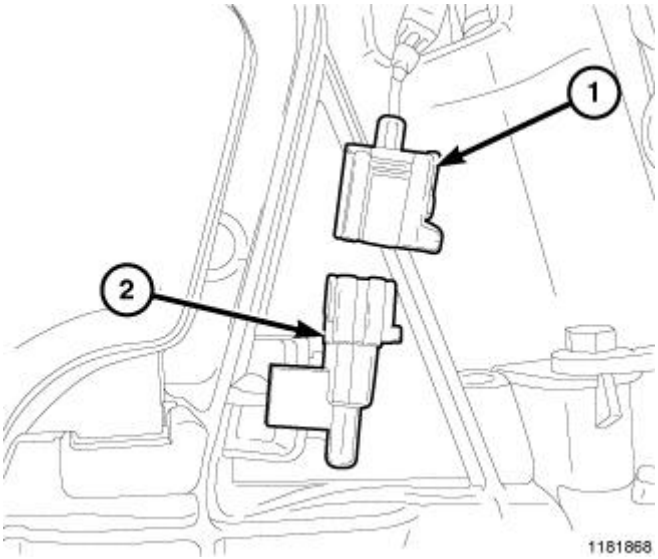

Fig. 15: Ambient Temperature Sensor & Electrical Connector
Courtesy of CHRYSLER GROUP, LLC

1. Open the hood.
2. Disconnect and isolate the negative battery cable.
3. Remove the grille. Refer to **GRILLE, REMOVAL** .
4. Disconnect the sensor electrical connector (1) and remove sensor (2) from vehicle.

INSTALLATION

INSTALLATION

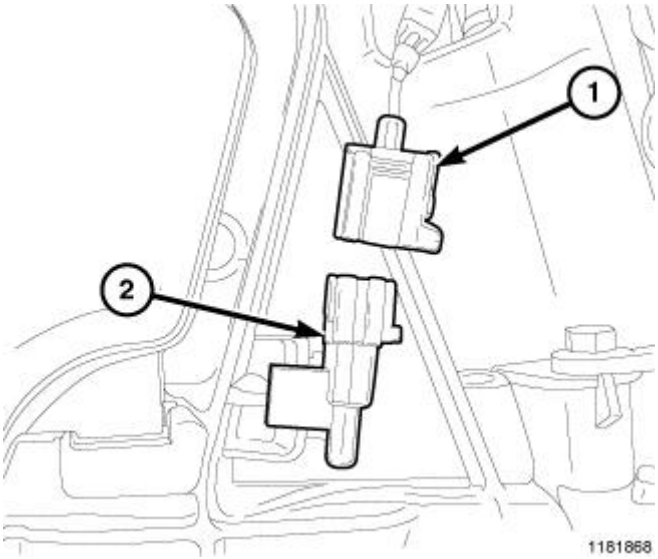

Fig. 16: Ambient Temperature Sensor & Electrical Connector
Courtesy of CHRYSLER GROUP, LLC

1. Install the ambient temperature sensor (2) and connect the sensor electrical connector (1).
2. Install the grille. Refer to **GRILLE, INSTALLATION** .
3. Connect the negative battery cable.
4. Close the hood.

SWITCH, EVIC CONTROL

DESCRIPTION

DESCRIPTION

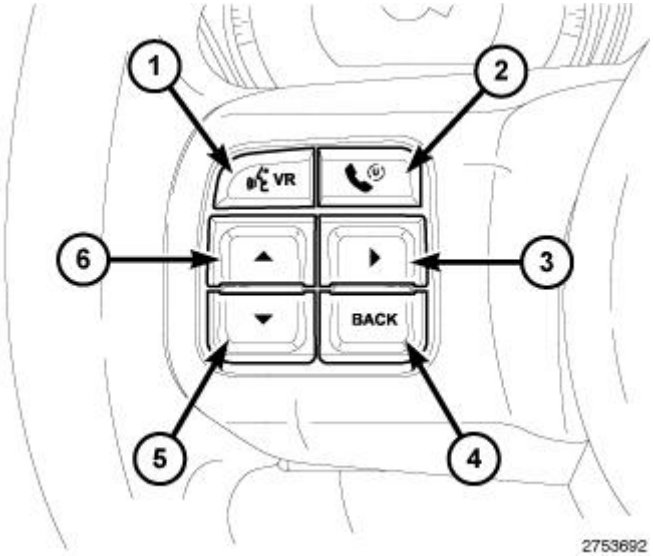

Fig. 17: EVIC Switches

Courtesy of CHRYSLER GROUP, LLC

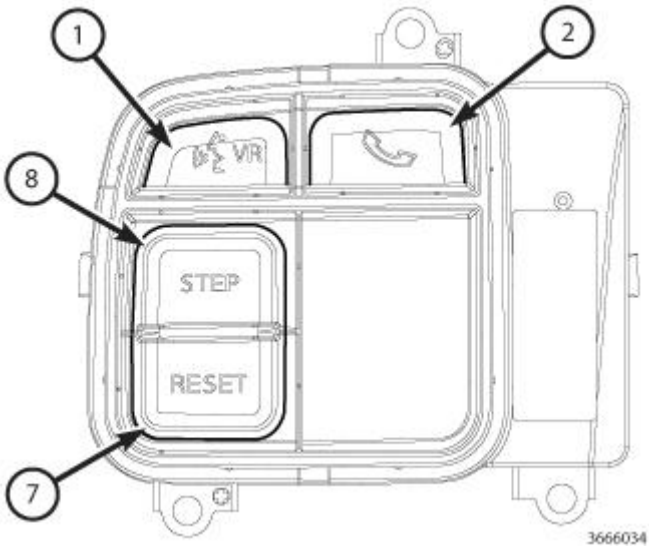

Fig. 18: Control Switch Pod Without EVIC
Courtesy of CHRYSLER GROUP, LLC

The Electronic Vehicle Information Center (EVIC) control switch pod is located in the left spoke of the steering wheel spoke bezel. This switch has up to six push buttons. Four of the push buttons (3 through 6) are used on all vehicles equipped with the EVIC and two of the push buttons (7 and 8) are used on vehicles not equipped with the EVIC. Two additional push buttons (1 and 2) are found on vehicles equipped with the optional Uconnect™ Hands-Free Communication System. The only visible components of the switch pod are the switch push buttons and a decorative bezel around the push buttons, which stands slightly proud of the steering wheel spoke bezel. The remainder of the switch pod including its mounting provisions and its electrical connection are concealed beneath the spoke bezel.

The switch pod housing and push buttons are constructed of molded plastic. Each of the push buttons has white International Control and Display Symbol graphics or text applied to it, which clearly identify the function of each push button. The switch pod is secured through three integral mounting tabs to mounting bosses on the back of the spoke bezel by three screws. A connector receptacle integral to the inboard end of the switch pod housing connects the EVIC control switch pod to the vehicle electrical system through a dedicated take out and connector of the steering wheel wire harness.

The EVIC control switch pod cannot be adjusted or repaired. If any function of the switch is ineffective or damaged, the entire switch pod unit must be replaced.

OPERATION

OPERATION

The Electronic Vehicle Information Center (EVIC) control switch pod is a resistor multiplexed unit that receives source current from and provides hard wired inputs to the Local Interface Network (LIN) slave node integral to the speed control switch pod in the right spoke of the steering wheel spoke bezel. The LIN slave node communicates the switch states of the EVIC control switch pod, the remote radio switches and the horn

switch over the LIN data bus to the ElectroMechanical Instrument Cluster (EMIC) (also known as the Cab Compartment Node/CCN), which is the LIN master node.

The EVIC control switch pod (also known as the odometer switch) for vehicles not equipped with the EVIC system contains two switch push buttons whose functions are:

- **Reset** - This switch button allows the operator to reset the trip odometer (A or B) currently displayed in the odometer display unit of the instrument cluster.
- **Step** - This switch button allows the operator to step through the total odometer, trip odometer A and trip odometer B display options of the odometer display of the instrument cluster.

The EVIC control switch pod for vehicles equipped with the EVIC system contains four switch push buttons whose functions are:

- **Back** - Pressing and releasing the Back push button returns you to the previous sub menu or main menu.
- **Down Arrow** - Pressing and releasing the Down Arrow push button allows the operator to scroll downward through the various EVIC main menus and sub menus.
- **Right Arrow** - Pressing and releasing the Right Arrow (Select) push button allows the operator to navigate, select and reset items or settings in the currently displayed EVIC main menu or sub menu. Pressing and holding the Right Arrow (Select) push button for two seconds provides a global reset of all of those EVIC features that can be reset, whether currently displayed or not.
- **Up Arrow** - Pressing and releasing the Up Arrow push button allows the operator to scroll upward through the various EVIC main menus and sub menus.

For vehicles equipped with the Uconnect™ Hands-Free Communication System, the EVIC control switch pod contains two additional switch push buttons whose functions are:

- **VR (Voice Recognition)** - This switch button activates the Uconnect™ Voice Command system.
- **Phone** - This switch push button activates the Uconnect™ Hands-Free Phone system.

The EMIC LIN master node provides a clean ground and fused B(+) current for all of the switches and sensors on the rotating steering wheel through the LIN slave node circuitry of the speed control switch pod as well as for the Light Emitting Diode (LED) back lighting of both the speed control and the EVIC switch pods. The EMIC continually monitors the LIN bus data and will store a Signal Not Available (SNA) code for any LIN bus input errors. The EMIC also communicates with other electronic modules over the Controller Area Network (CAN) data bus. Therefore, any EMIC DTC information can be retrieved using a diagnostic scan tool connected to the Data Link Connector (DLC).

The analog resistor multiplexed circuits of the EVIC control switch pod as well as the hard wired circuits between the switch pod and the LIN slave node within the speed control switch pod may be diagnosed using conventional diagnostic tools and procedures. Refer to the appropriate wiring information. The wiring information includes wiring diagrams, proper wire and connector repair procedures, details of wire harness routing and retention, connector pin-out information and location views for the various wire harness connectors, splices and grounds.

However, conventional diagnostic methods will not prove conclusive in the diagnosis of the LIN slave or

master nodes, the EMIC or the electronic controls and communication between modules and other devices that provide some features of the EVIC system. The most reliable, efficient, and accurate means to diagnose the EVIC control switch pod, the LIN slave or master nodes, the EMIC or the electronic controls and communication related to EVIC system operation requires the use of a diagnostic scan tool. Refer to the appropriate diagnostic information.

REMOVAL

REMOVAL

WARNING: To avoid serious or fatal injury on vehicles equipped with airbags, disable the Supplemental Restraint System (SRS) before attempting any steering wheel, steering column, airbag, seat belt tensioner, impact sensor or instrument panel component diagnosis or service. Refer to WARNING . Disconnect and isolate the battery negative (ground) cable, then wait two minutes for the system capacitor to discharge before performing further diagnosis or service. This is the only sure way to disable the SRS. Failure to take the proper precautions could result in accidental airbag deployment.

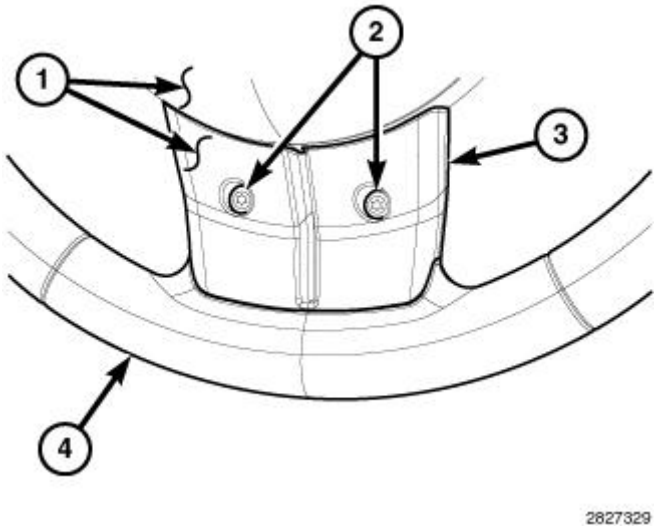

Fig. 19: Rear Cover, Two Screws, Steering Wheel Spoke Front Bezel & Steering Wheel
Courtesy of CHRYSLER GROUP, LLC

1. Disconnect and isolate the battery negative cable.
2. Remove the driver airbag from the steering wheel. Refer to **AIR BAG, DRIVER, REMOVAL** .
3. From the back of the steering wheel (4), remove the two screws (2) that secure the center spoke of the rear cover (1) to the center spoke of the steering wheel spoke front bezel (3).

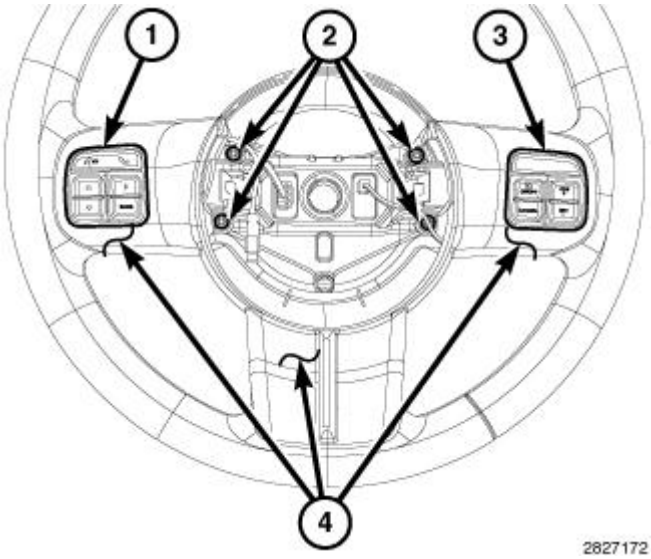

Fig. 20: EVIC Switch Pod, Speed Control Switch Pod, Four Screws & Front Spoke Bezel
Courtesy of CHRYSLER GROUP, LLC

4. From the face of the steering wheel, remove the four screws (2) that secure the front spoke bezel (4) to the steering wheel armature within the steering wheel hub cavity.
5. Using a trim stick or another suitable wide flat-bladed tool, carefully pry at the parting line between the front spoke bezel and the steering wheel rear cover enough to unsnap the two horizontal members of the bezel from those of the rear cover.
6. Pull the front spoke bezel away from the steering wheel far enough to access and disconnect the steering wheel wire harness connections from the Electronic Vehicle Information Center (EVIC) control switch pod (1) and the speed control switch pod (3).

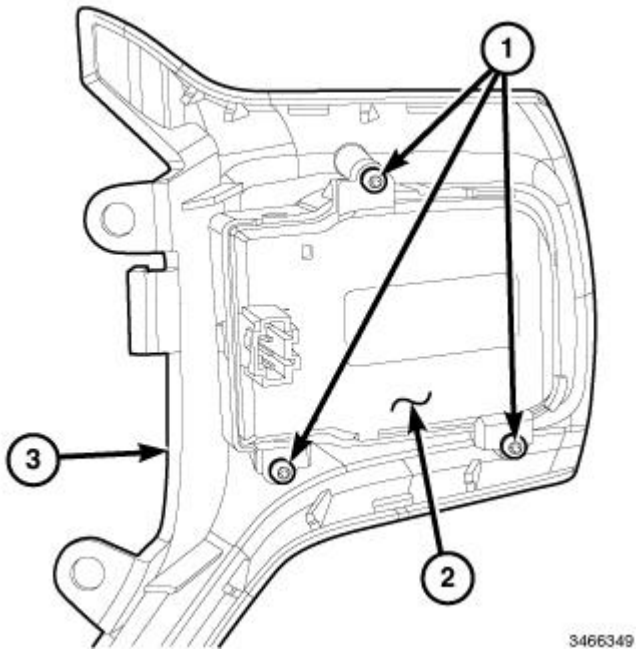

Fig. 21: EVIC Control Switch Pod, Steering Wheel Spoke Front Bezel & Screws

Courtesy of CHRYSLER GROUP, LLC

7. From the back of the steering wheel spoke front bezel (3), remove the three screws (1) that secure the EVIC control switch pod (2) mounting tabs to the bezel.
8. Remove the switch from the bezel.

INSTALLATION

INSTALLATION

WARNING: To avoid serious or fatal injury on vehicles equipped with airbags, disable the Supplemental Restraint System (SRS) before attempting any steering wheel, steering column, airbag, seat belt tensioner, impact sensor or instrument panel component diagnosis or service. Refer to WARNING . Disconnect and isolate the battery negative (ground) cable, then wait two minutes for the system capacitor to discharge before performing further diagnosis or service. This is the only sure way to disable the SRS. Failure to take the proper precautions could result in accidental airbag deployment.

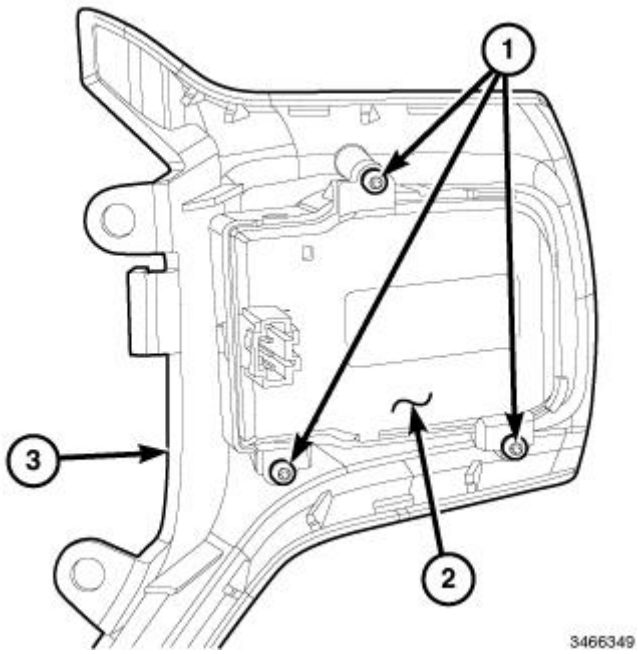

Fig. 22: EVIC Control Switch Pod, Steering Wheel Spoke Front Bezel & Screws
Courtesy of CHRYSLER GROUP, LLC

1. Position the Electronic Vehicle Information Center (EVIC) control switch pod (2) to the back of the steering wheel spoke front bezel (3).
2. Install and tighten the three screws (1) that secure the switch mounting tabs to the bezel. Tighten the screws securely.
3. Position the front spoke bezel close enough to the steering wheel to reconnect the steering wheel wire

harness connections to the EVIC control switch pod and the speed control switch pod connector receptacles.

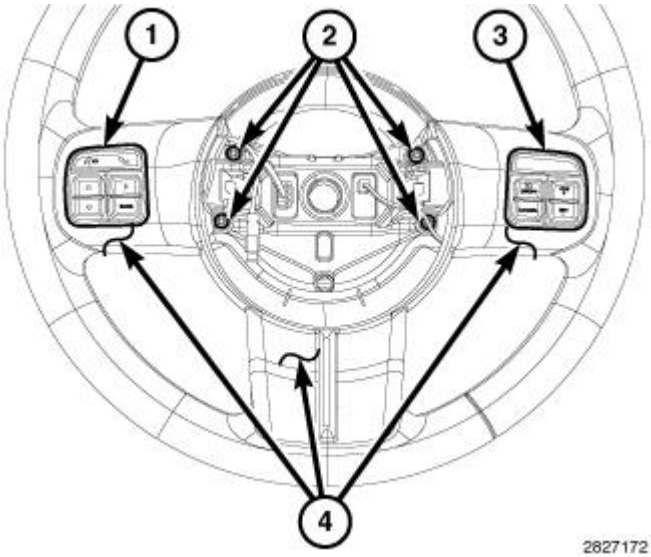

Fig. 23: EVIC Switch Pod, Speed Control Switch Pod, Four Screws & Front Spoke Bezel
Courtesy of CHRYSLER GROUP, LLC

4. Position the front spoke bezel (4), EVIC control switch pod (1) and speed control switch pod (3) as a unit to the steering wheel. Be certain that the steering wheel wire harness is routed between the lower or upper bezel stanchions and the inside circumference of the steering wheel hub cavity so that the wiring will not be pinched when the driver airbag is reinstalled.
5. Use hand pressure to squeeze the horizontal spokes of both the front spoke bezel and the steering wheel rear cover together until all of the snap features are fully engaged.
6. Install and tighten the four screws that secure the stanchions of the front spoke bezel to the steering wheel armature within the steering wheel hub cavity. Tighten the screws securely.

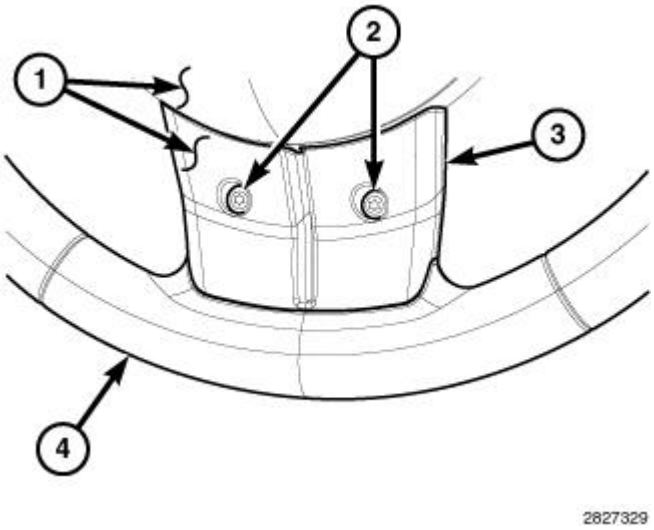

Fig. 24: Rear Cover, Two Screws, Steering Wheel Spoke Front Bezel & Steering Wheel

Courtesy of CHRYSLER GROUP, LLC

7. From the back of the steering wheel (4), install and tighten the two screws (2) that secure the center spoke of the rear cover (1) to the center spoke of the steering wheel spoke front bezel (3). Tighten the screws securely.
8. Reinstall the driver airbag onto the steering wheel. Refer to **AIR BAG, DRIVER, INSTALLATION** .
9. Reconnect the negative battery cable.

DIAGNOSIS AND TESTING

DIAGNOSIS AND TESTING - AUTOMATIC DAY / NIGHT MIRROR

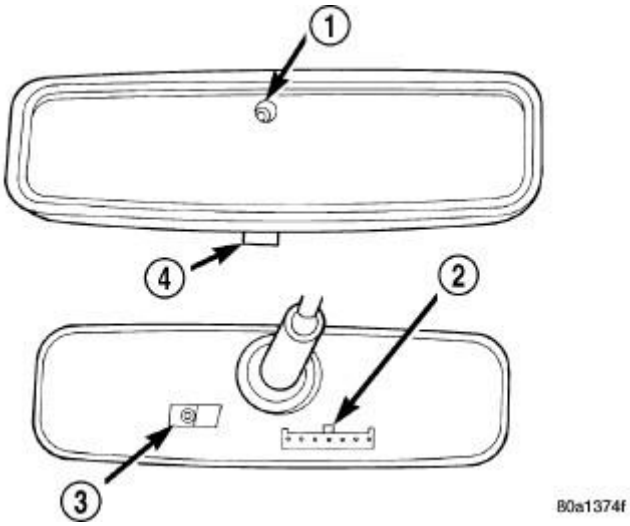

Fig. 1: Identifying Rearview Connector Terminals
Courtesy of CHRYSLER GROUP, LLC

For complete circuit diagrams, refer to the appropriate wiring information.

1. Check the fuse in the Totally Integrated Power Module (TIPM). If OK, go to 2. If not OK, repair the shorted circuit or component as required and replace the faulty fuse.
2. Turn the ignition switch to the On position. Check for battery voltage at the fuse in the TIPM. If OK, go to 3. If not OK, repair the open circuit to the ignition switch as required.
3. Turn the ignition switch to the Off position. Disconnect and isolate the battery negative cable. Unplug the wire harness connector from the automatic day/night mirror. Connect the battery negative cable. Turn the ignition switch to the On position. Check for battery voltage at the fused ignition switch output (run/start) circuit cavity of the automatic day/night mirror wire harness connector. If OK, go to 4. If not OK, repair the open circuit to the TIPM as required.
4. Turn the ignition switch to the Off position. Disconnect and isolate the battery negative cable. Check for continuity between the ground circuit cavity of the automatic day/night mirror wire harness connector and a good ground. There should be continuity. If OK, go to 5. If not OK, repair the circuit to ground as required.
5. Connect the battery negative cable. Turn the ignition switch to the On position. Set the parking brake. Place the transmission gear selector lever in the Reverse position. Check for battery voltage at the backup lamp switch output circuit cavity of the automatic day/night mirror wire harness connector. If OK, go to 6. If not OK, repair the open circuit as required.
6. Turn the ignition switch to the Off position. Disconnect the battery negative cable. Plug in the automatic

day/night mirror wire harness connector. Connect the battery negative cable. Turn the ignition switch to the On position. Place the transmission gear selector lever in the Neutral position. Place the mirror switch in the On (the LED in the mirror switch is lighted) position. Cover the forward facing ambient photocell sensor to keep out any ambient light.

NOTE: **The ambient photocell sensor must be covered completely, so that no light reaches the sensor. Use a finger pressed tightly against the sensor, or cover the sensor completely with electrical tape.**

7. Shine a light into the rearward facing headlamp photocell sensor. The mirror glass should darken. If OK, go to 8. If not OK, replace the faulty automatic day/night mirror unit.
8. With the mirror glass darkened, place the transmission gear selector lever in the Reverse position. The mirror should return to its normal reflectance. If not OK, replace the faulty automatic day/night mirror unit.

DESCRIPTION

DESCRIPTION

NAVIGATION

A optional navigation radio (RB4) is available on this vehicle. The navigation system allows the user to input addresses, points of interest or way points to plan a route to the desired location. The system will provide audible and visual prompts that will direct the user along the desired route. Any variances in the route will cause the navigation system to automatically recalculate the route. The Electronic Vehicle Information Center (EVIC) displays turn-by-turn directions to a programmed destination when Turn by Turn Navigation is enabled through Personal Settings. When enabled, the EVIC displays the name of the approaching road at the top of the screen, followed by an arrow to indicate the direction to turn the vehicle, and a count down to indicate the distance to the turn.

TELECOMMUNICATIONS

The hands-free cellular system on this vehicle uses Bluetooth™ technology to provide wireless communication between the operator's compatible cellular telephone and the vehicle's on-board receiver.

The system uses voice recognition technology to control operation. The incoming voice is broadcast through the vehicle's radio speakers, automatically overriding any other audio signals on the front speakers when the hands-free system is in use. A microphone in the rearview mirror picks up vehicle occupant's voices. If a call is in progress when the ignition is switched off, the hands-free system will continue to operate for up to 45 seconds as part of the Accessory Relay Delay function. Thereafter, the call can continue on the hand-held telephone.

The system will communicate with a telephone that is anywhere within the vehicle. However, covering the hand held phone or the hands-free phone module with a metal object may block the signal. The system will recognize up to seven telephones, each of which is given a spoken identification by the user during the setup process. The system includes Spanish and French voice recognition in addition to English.

Two buttons on the rearview mirror, identified with ISO icons, control the system: A "phone" button turns the system on and off; a "voice recognition" (or voice command) button prompts the hands-free system to listen for a voice command.

OPERATION

OPERATION

NAVIGATION

The optional navigation radio system receives GPS signals from up to eight satellites to display the position and direction of the vehicle. Map information is supplied through a DVD-ROM. An electronic gyro-sensor and the

vehicle's speed sensor enable the system to display the present vehicle position even in locations where GPS signals may be blocked.

When a destination is selected, the navigation system uses information from the map to quickly calculate a route. As the vehicle is driven along the chosen route, the operator is guided with pictorial displays and voice prompts.

TELECOMMUNICATION

Two buttons on the rearview mirror, identified with ISO icons, control the system: A "phone" button turns the system on and off; a "voice recognition" (or voice command) button prompts the hands-free system to listen for a voice command. The system includes the following features:

- Phone book - Stores telephone numbers for later recall by name or other verbal identification, called a voice tag, and memory location.
- Four memory locations - Home, Work, Cellular and Pager. A maximum of 32 unique names or voice tags may be stored at the same time, with a different number in each of the four memory locations.
- Voice tag dialing - Dials the number associated with a voice tag and memory location.
- Digit dialing - Dials the telephone number by recognizing the names of the digits as they are spoken.
- Receiving calls - A voice prompt notifies the user of an incoming call. A voice response accepts or rejects the call without manual intervention.
- Privacy Mode - Switches the call to the handheld telephone and the hands-free system and back again using the "voice recognition" (or "voice command") button and a voice command, if desired.

DIAGNOSIS AND TESTING

DIAGNOSIS AND TESTING - TELECOMMUNICATION

Any diagnosis of the Telecommunication system should begin with the use of scan tool. For information on the use of the scan tool, refer to the appropriate Diagnostic Service information.

For complete circuit diagrams, refer to the appropriate wiring information.

WARNING: **On vehicles equipped with airbags, refer to RESTRAINTS - SERVICE INFORMATION before attempting any steering wheel, steering column, or instrument panel component diagnosis or service. Failure to take the proper precautions could result in accidental airbag deployment and possible personal injury.**

TELECOMMUNICATION SYSTEM DIAGNOSIS

CONDITION	POSSIBLE CAUSE	CORRECTION
PHONE NOT AVAILABLE	1. Bluetooth phone not paired to the system.	1. Ensure that phone(s) are paired to the system.

	2. Bluetooth phone not present or turned OFF.	2. Make sure paired phone is present, turned ON and that the Bluetooth option is enabled on the phone.
	3. Bluetooth phone has low battery.	3. At low battery levels, some phones will turn off Bluetooth functionality. Ensure cellular phone is charged to an adequate level.
PHONE PAIRING FAILED	1. Phone does not support Hands Free Profile	1. The Telecommunication system requires the cellular phone to be Bluetooth™ enabled, as well as supporting the Hands Free Profile. The customer will have to upgrade their phone to one supporting Hands Free Profile. A list of suggested phones is available at: http://www.chrysler.com/uconnect.
	2. Phone not Bluetooth enabled.	2. The Telecommunication system requires the cellular phone to be Bluetooth™ enabled. A list of suggested phones is available at: http://www.chrysler.com/uconnect.
	3. PIN entered on the phone is not the same as PIN spoken to the system.	3. The PIN spoken to the system must be the same PIN entered into the phone.
	4. Phone has reached maximum number of allowed devices paired.	4. Remove one of the previously paired devices from it's list.
POOR VOICE RECOGNITION	1. Microphone failure	1. Using a scan tool, check for microphone fault codes.
	2. Customer not waiting for the beep before speaking.	2. Ensure customer is waiting for the system "beep" prior to beginning the speech to be recognized.
	3. Customer not speaking in a smooth normal manner.	3. Verify that the customer is attempting to use the system with a smooth consistent voice. The system is designed to accept normal speech spoken at a normal tone, some people tend to speak to a computer loud and slow, which results in reduced performance.
	4. Rear view mirror not properly attached to mounting.	4. Mirror must be firmly mounted to the mounting location. Ensure that mirror is tightened to the specified torque.
	5. High levels of noise in vehicle compartment	5. System performance is increased when noise conditions in the vehicle are lowered. Ideal conditions include windows closed.
	6. Object interfering with microphone input	6. Verify that there is no object, hanging from the mirror, that could be obstructing the microphone.
	7. User not saying "send" after a pager	7. User must say "send" at the end of a Pager Dialing request.

	dialing request	
	8. Other passengers talking while customer is attempting to use the system	8. Although designed for primary use by the driver, the microphone will pick up passengers in any seat of the vehicle. System performance is increased in low noise environments.
PHONEBOOK NAMES NOT RECOGNIZED CONSISTENTLY	1. Phonebook names recorded in high noise conditions	1. For increased system performance, it is recommended that the phone book entries are recorded in a low noise environment. That is, vehicle in park, with windows up.
	2. Phonebook name (s) short	2. For increased performance it is recommended that the user use both first and last name as a phonebook entry. Example: "Daniel Johnson" as opposed to "Dan".
	3. Phonebook names recorded by another user	3. It is recommended that each user of the system record their own phonebook entries. This will increase the recognition performance.
	4. Similar names in phonebook	4. For increased system performance it is recommended that the user do not enter similar sounding names in the phonebook.
	5. Object interfering with microphone input	5. Object interfering with microphone input.
POOR PHONE AUDIO QUALITY.	1. Microphone failure	1. Use a scan tool, and check for Microphone faults.
	2. Rear view mirror not properly fixed to mounting button	2. Mirror must be firmly mounted to the mounting location. Tighten mirror to the specified torque.
	3. System being used in high noise conditions	3. System performance is increased when noise conditions in the vehicle are lowered. Ideal conditions include windows closed.
NO PHONE AUDIO	1. Phone setting cause phone audio to be routed to handset.	1. Route audio to "Hands free" device.

ANTENNA, NAVIGATION

REMOVAL

REMOVAL

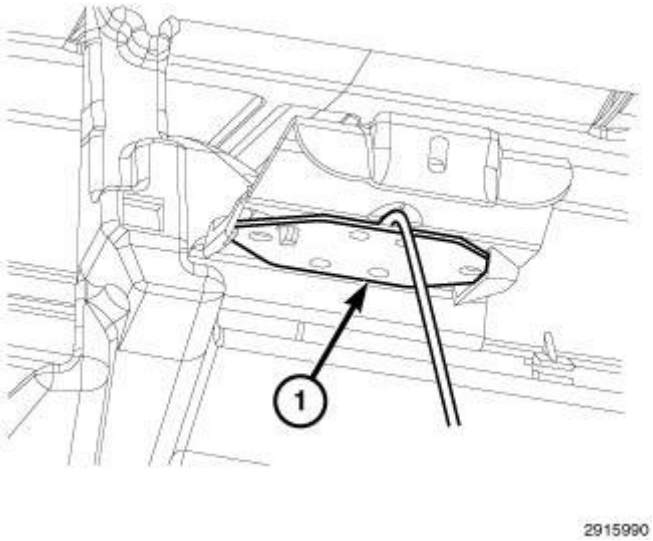

Fig. 1: Identifying Navigation Antenna
Courtesy of CHRYSLER GROUP, LLC

1. Disconnect and isolate the battery negative cable.
2. Remove the instrument panel center bezel. Refer to **BEZEL, INSTRUMENT PANEL, CENTER, REMOVAL** .
3. Remove the radio. Refer to **RADIO, REMOVAL** .
4. Unclip the antenna from the antenna mounting bracket.

INSTALLATION

INSTALLATION

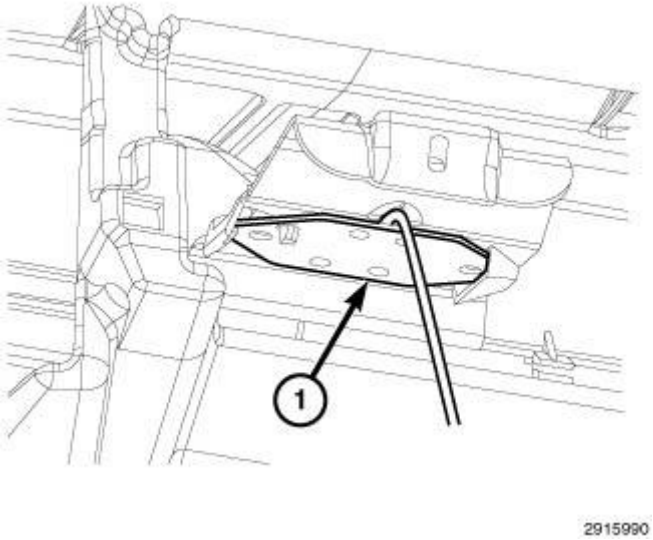

Fig. 2: Identifying Navigation Antenna
Courtesy of CHRYSLER GROUP, LLC

1. Clip the antenna (1) into the mounting bracket.
2. Install the radio. Refer to **RADIO, INSTALLATION** .
3. Install the instrument panel center bezel. Refer to **BEZEL, INSTRUMENT PANEL, CENTER, INSTALLATION** .
4. Connect battery negative cable.

MODULE, HANDS FREE (HFM)

REMOVAL

REMOVAL

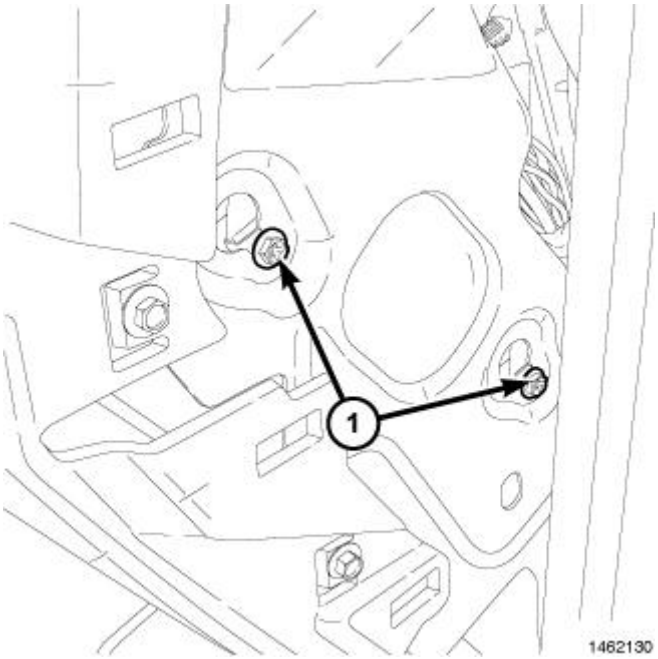

Fig. 3: Hands Free (HFM) Mounting Fasteners
Courtesy of CHRYSLER GROUP, LLC

1. Disconnect and isolate the battery negative cable.
2. Remove the glove box. Refer to **GLOVE BOX, INSTRUMENT PANEL, REMOVAL** .
3. Remove the instrument panel right side end cap.
4. Remove the two mounting fasteners (1).

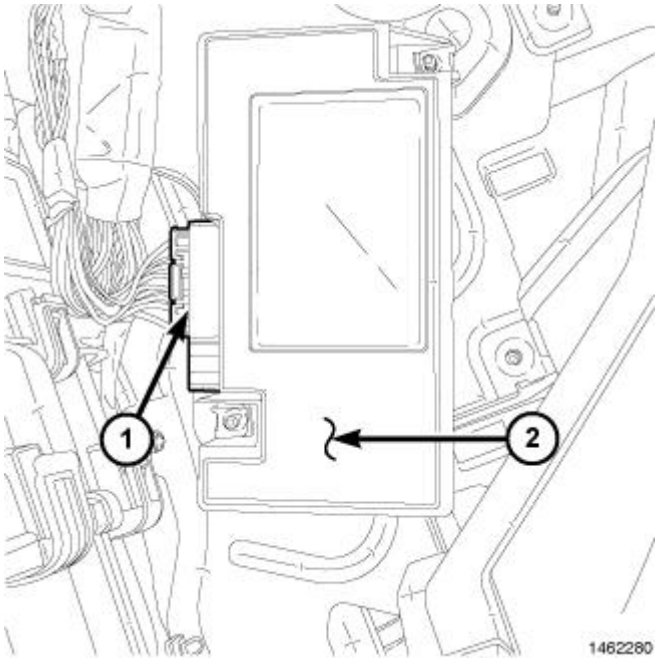

Fig. 4: Hands Free (HFM) Module & Electrical Harness Connector
Courtesy of CHRYSLER GROUP, LLC

5. Disconnect the electrical harness connector and remove module.

INSTALLATION

INSTALLATION

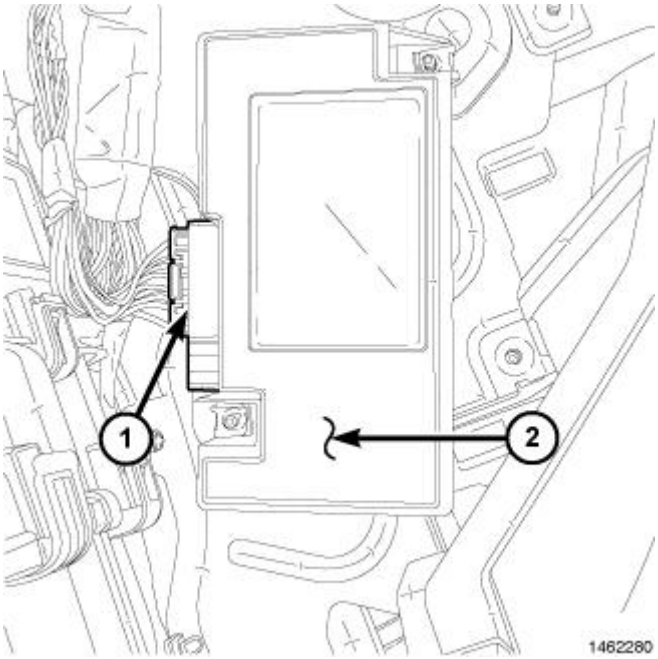

Fig. 5: Hands Free (HFM) Module & Electrical Harness Connector
Courtesy of CHRYSLER GROUP, LLC

1. Connect the Hands Free Module (HFM) electrical connector and position the module into place.

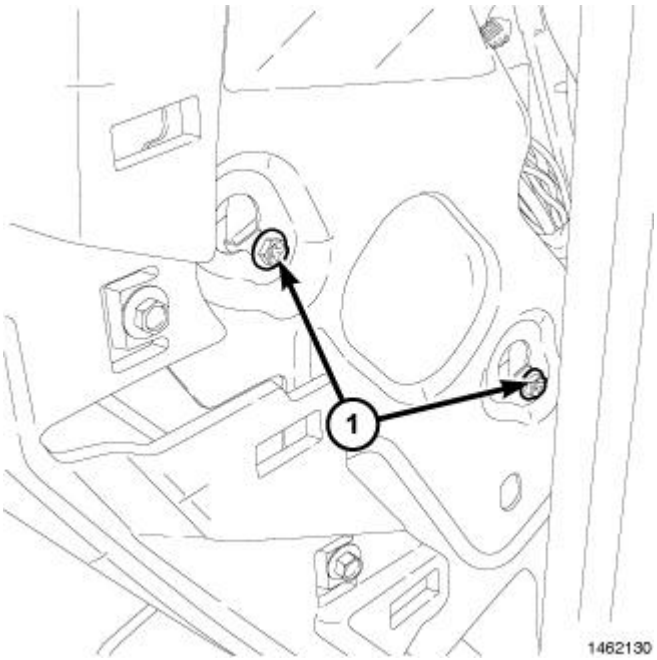

Fig. 6: Hands Free (HFM) Mounting Fasteners
Courtesy of CHRYSLER GROUP, LLC

2. Install and tighten the mounting fasteners.
3. Install the instrument panel right side end cap.
4. Install the glove box. Refer to **GLOVE BOX, INSTRUMENT PANEL, INSTALLATION** .
5. Connect the battery negative cable.

DIAGNOSTIC CODE INDEX

DIAGNOSTIC CODE INDEX

DTC	Description
B1295-11	PTS SENSOR 8 - CIRCUIT SHORT TO GROUND
B1295-12	PTS SENSOR 8 - CIRCUIT SHORT TO BATTERY
B1295-25	PTS SENSOR 8 - SIGNAL SHAPE / WAVEFORM FAILURE
B1295-92	PTS SENSOR 8 - PERFORMANCE OR INCORRECT OPERATION
B1296-11	PTS SENSOR 9 - CIRCUIT SHORT TO GROUND
B1296-12	PTS SENSOR 9 - CIRCUIT SHORT TO BATTERY
B1296-25	PTS SENSOR 9 - SIGNAL SHAPE / WAVEFORM FAILURE
B1296-92	PTS SENSOR 9 - PERFORMANCE OR INCORRECT OPERATION
B1297-11	PTS SENSOR 10 - CIRCUIT SHORT TO GROUND
B1297-12	PTS SENSOR 10 - CIRCUIT SHORT TO BATTERY
B1297-25	PTS SENSOR 10 - SIGNAL SHAPE / WAVEFORM FAILURE
B1297-92	PTS SENSOR 10 - PERFORMANCE OR INCORRECT OPERATION
B1298-11	PTS SENSOR 11 - CIRCUIT SHORT TO GROUND
B1298-12	PTS SENSOR 11 - CIRCUIT SHORT TO BATTERY
B1298-25	PTS SENSOR 11 - SIGNAL SHAPE / WAVEFORM FAILURE
B1298-92	PTS SENSOR 11 - PERFORMANCE OR INCORRECT OPERATION
B210C-16	BATTERY VOLTAGE INPUT-CIRCUIT VOLTAGE BELOW THRESHOLD
B210C-17	BATTERY VOLTAGE INPUT-CIRCUIT VOLTAGE ABOVE THRESHOLD
B2128-16	SENSOR SUPPLY VOLTAGE-CIRCUIT VOLTAGE BELOW THRESHOLD
B2128-17	SENSOR SUPPLY VOLTAGE-CIRCUIT VOLTAGE ABOVE THRESHOLD
B222A-00	VEHICLE LINE MISMATCH
B2232-00	(PTS) PARKTRONICS INTERNAL
U0010-00	CAN INTERIOR BUS
U0423-00	IMPLAUSIBLE DATA RECEIVED FROM CLUSTER/CCN
U0141-00	LOST COMMUNICATION WITH IPM (FCM/TIPM)
U0155-00	LOST COMMUNICATION WITH CLUSTER/CCN

DIAGNOSIS AND TESTING

B1295-11-PTS SENSOR 8 - CIRCUIT SHORT TO GROUND

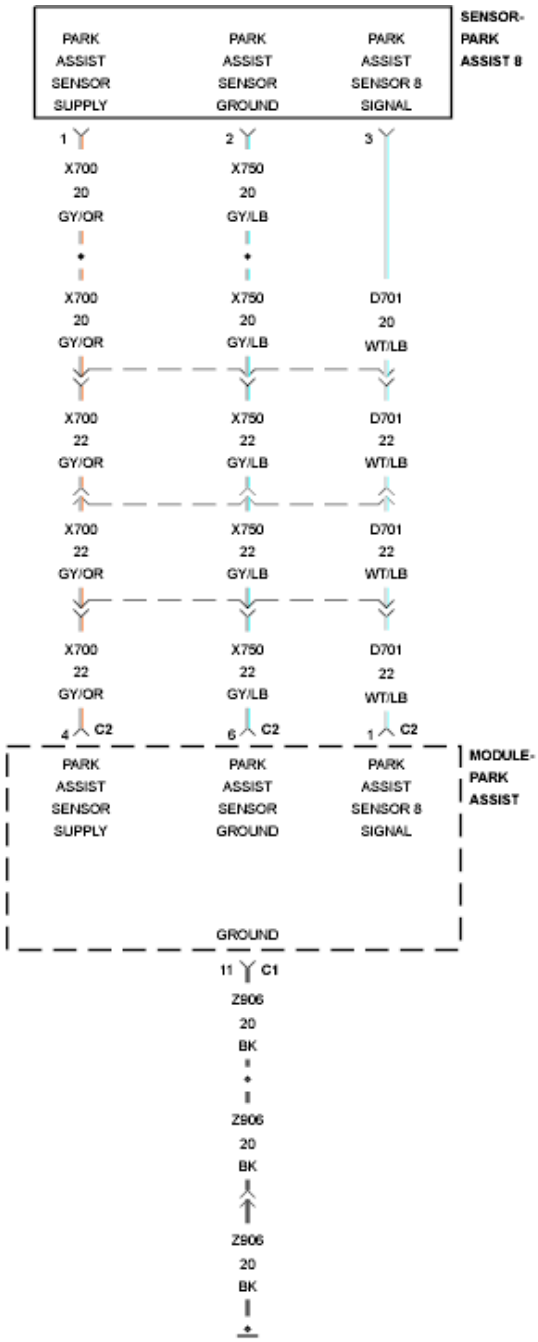
SENSOR-
PARK
ASSIST 8
PARK ASSIST SENSOR SUPPLY
PARK ASSIST SENSOR GROUND
PARK ASSIST SENSOR 8 SIGNAL
1
2
3
X700 20 GY/OR
X750 20 GY/LB
X700 20 GY/OR
X750 20 GY/LB
D701 20 WT/LB
X700 22 GY/OR
X750 22 GY/LB
D701 22 WT/LB
X700 22 GY/OR
X750 22 GY/LB
D701 22 WT/LB
X700 22 GY/OR
X750 22 GY/LB
D701 22 WT/LB
4 C2
6 C2
1 C2
MODULE-
PARK
ASSIST
PARK ASSIST SENSOR SUPPLY
PARK ASSIST SENSOR GROUND
PARK ASSIST SENSOR 8 SIGNAL
GROUND
11 C1
Z906 20 BK
Z906 20 BK
Z906 20 BK

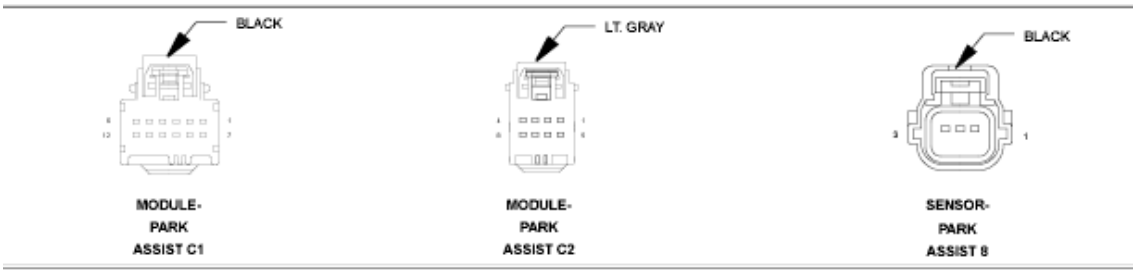
BLACK
LT. GRAY
BLACK
MODULE-
PARK
ASSIST C1
MODULE-
PARK
ASSIST C2
SENSOR-
PARK
ASSIST 8

Fig. 1: Park Assist Sensor Wiring Diagram
Courtesy of CHRYSLER GROUP, LLC

For a complete wiring diagram, **refer to appropriate SYSTEM WIRING DIAGRAMS article** .

THEORY OF OPERATION

The Park Assist Sensors are ultrasonic transceivers that are completely controlled by the Park Assist Module. The sensors transmit and receive ultrasonic signals. Each sensor has a voltage, signal, and return circuit to the module. The sensors communicate with the Park Assist Module using a dedicated serial bus communication circuit.

NOTE: **The numbering system for the park assist sensors allows for up to twelve sensors on the vehicle, six front and six rear. The sensors are numbered in a clockwise manner starting at the left front bumper. The left front sensor (if equipped with front park assist) is the number 1 sensor. The numbering continues in a clockwise direction around the vehicle. Since Chrysler Group vehicles use only four rear sensors, sensor numbers 7 and 12 are omitted, so the left rear sensor is the number 11 sensor.**

WHEN MONITORED:

Vehicle in reverse and during the self-test while vehicle is in drive between 18 km/h (11 mph) and 40 km/h (25 mph).

SET CONDITION:

The Park Assist Module detects a short to ground on the Park Assist Sensor Signal circuit.

POSSIBLE CAUSES

Possible Causes
PARK ASSIST SENSOR DISCONNECTED
(D701) PARK ASSIST SENSOR 8 SIGNAL CIRCUIT SHORTED TO GROUND
(D701) PARK ASSIST SENSOR 8 SIGNAL CIRCUIT SHORTED TO THE (X750) PARK ASSIST SENSOR GROUND CIRCUIT
(D701) PARK ASSIST SENSOR 8 SIGNAL CIRCUIT OPEN
(X700) PARK ASSIST SENSOR SUPPLY CIRCUIT OPEN
PARK ASSIST SENSOR
PARK ASSIST MODULE

DIAGNOSTIC TEST

1. **CHECK FOR AN ACTIVE DIAGNOSTIC TROUBLE CODE (DTC)**

NOTE: **A disconnected sensor will set this DTC. Verify the Park Assist Sensor is**

connected before proceeding with this diagnostic procedure.

1. Turn the ignition on.
2. With the scan tool, read DTC's.

   Does the scan tool display this DTC as active?

   Yes

   - Go To 2.

   No

   - Test complete, the condition or conditions that originally set this DTC are not present at this time. Using the wiring diagrams as a guide, check all related splices and connectors for signs of water intrusion, corrosion, pushed out or bent terminals, and correct pin tension.
   - Perform the BODY VERIFICATION TEST. Refer to **STANDARD PROCEDURE** .

2. **CHECK THE VOLTAGE OF THE (X700) PARK ASSIST SENSOR SUPPLY CIRCUIT**

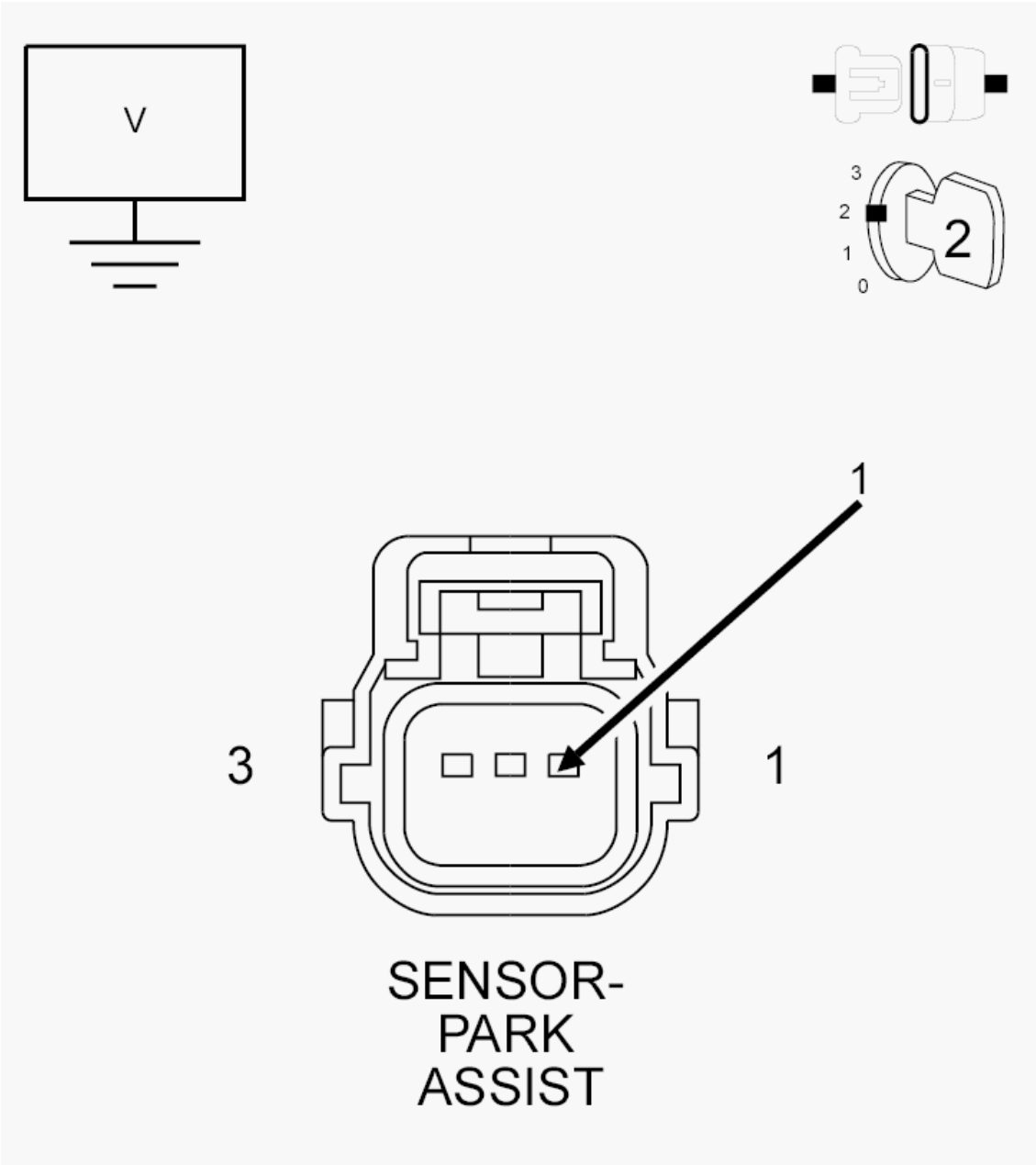

Fig. 2: Measuring Voltage Of Park Assist Sensor Supply Circuit
Courtesy of CHRYSLER GROUP, LLC

1. Turn the ignition off.
2. Disconnect the Park Assist Sensor harness connector.
3. Turn the ignition on.
4. Measure the voltage of the (X700) Park Assist Sensor Supply circuit.

   Is the voltage above 8.0 volts?

   Yes

- Go To 4.

No

- Go To 3.

3. **CHECK THE (X700) PARK ASSIST SENSOR SUPPLY CIRCUIT FOR AN OPEN OR HIGH RESISTANCE**

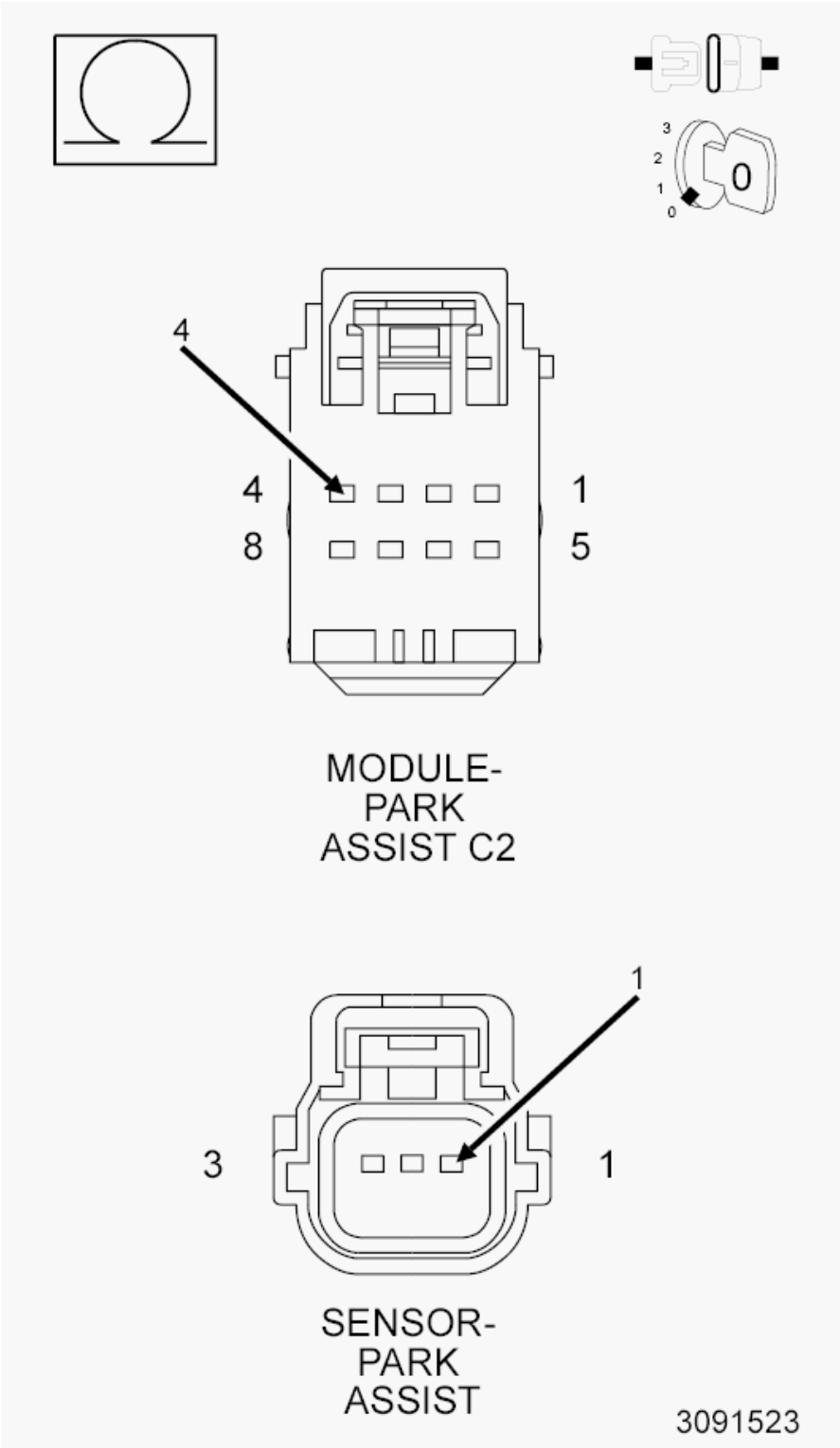

Fig. 3: Measuring Resistance Of Park Assist Sensor Supply Circuit
Courtesy of CHRYSLER GROUP, LLC

1. Turn the ignition off.
2. Disconnect the Park Assist Module C2 harness connector.

3. Measure the resistance of the (X700) Park Assist Sensor Supply circuit.

   Is the resistance below 5.0 Ohms?

   Yes

   - Replace the Park Assist Module in accordance with the Service Information. Refer to **MODULE, PARK ASSIST, REMOVAL** .
   - Perform the BODY VERIFICATION TEST. Refer to **STANDARD PROCEDURE** .

   No

   - Repair the open or high resistance in the (X700) Park Assist Sensor Supply circuit.
   - Perform the BODY VERIFICATION TEST. Refer to **STANDARD PROCEDURE** .

4. **CHECK THE (D701) PARK ASSIST SENSOR 8 SIGNAL CIRCUIT FOR A SHORT TO GROUND WITH THE PARK ASSIST MODULE CONNECTED**

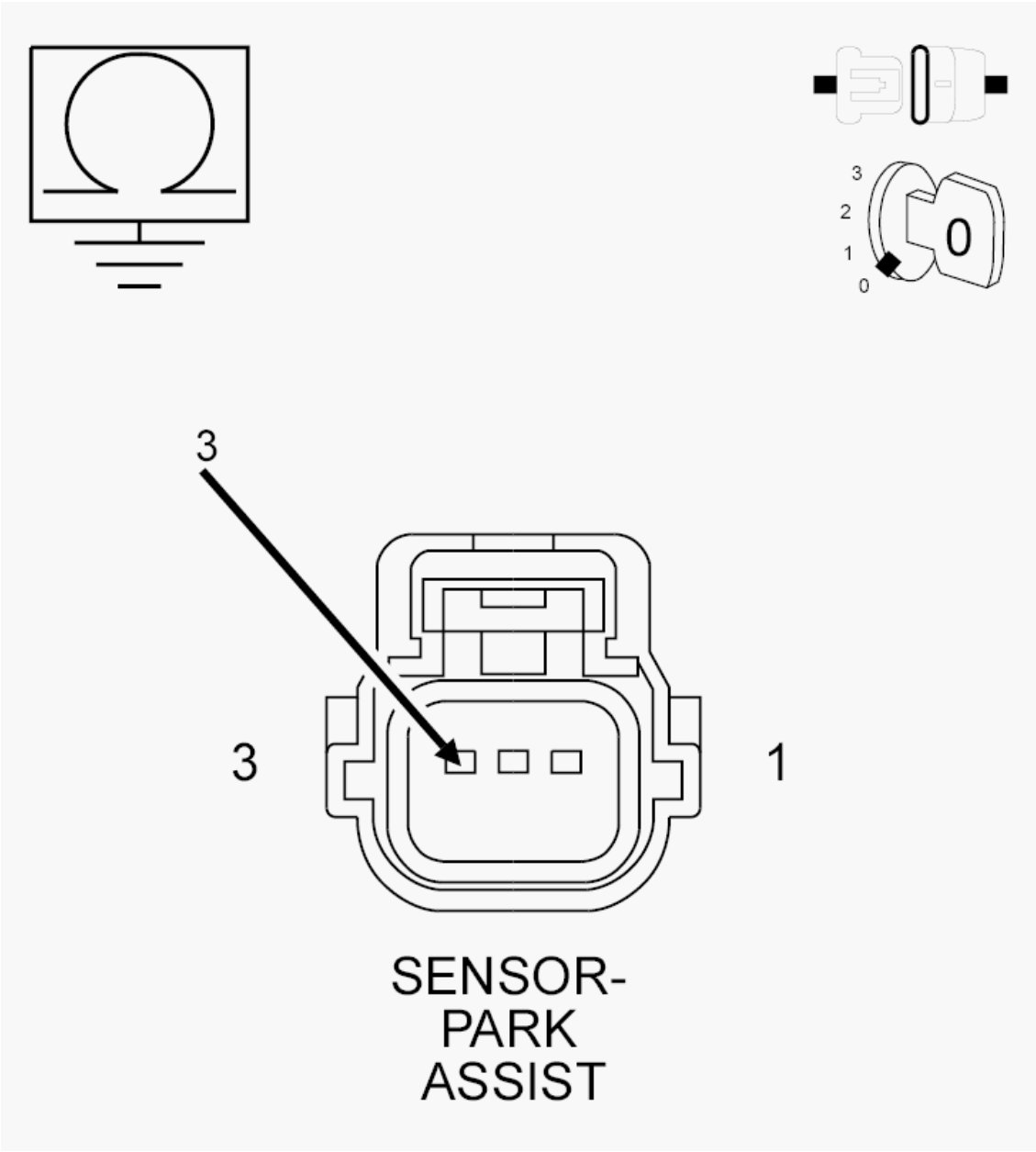

Fig. 4: Measuring Resistance Between Ground & Park Assist Sensor Signal Circuit
Courtesy of CHRYSLER GROUP, LLC

NOTE: Perform this step with the Park Assist Module connected.

1. Measure the resistance between ground and the (D701) Park Assist Sensor 8 Signal circuit.

   Is the resistance below 10K Ohms?

   Yes

   - Go To 5.

No

- Go To 7.

5. **CHECK THE (D701) PARK ASSIST SENSOR 8 SIGNAL CIRCUIT FOR A SHORT TO GROUND WITH THE PARK ASSIST MODULE DISCONNECTED**

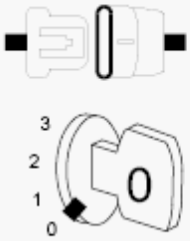

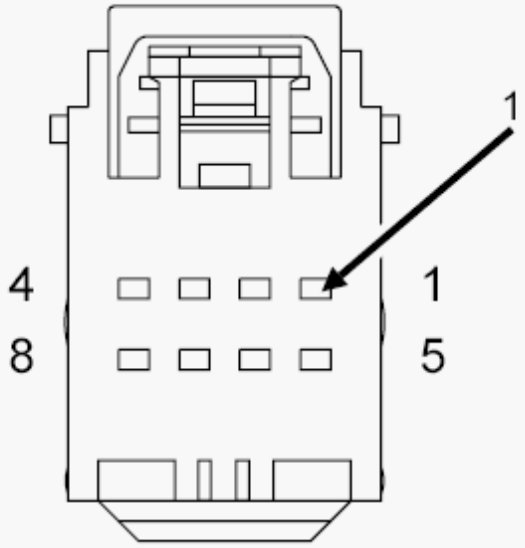

MODULE-
PARK
ASSIST C2

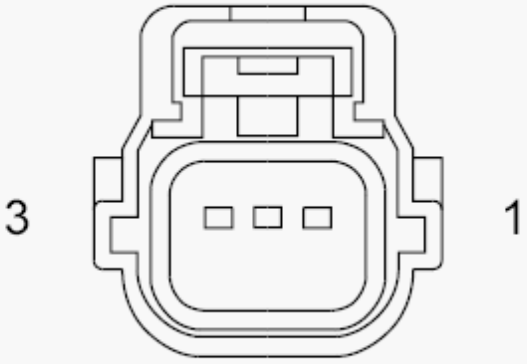

SENSOR-
PARK

Fig. 5: Measuring Resistance Between Ground & Park Assist Sensor Signal Circuit
Courtesy of CHRYSLER GROUP, LLC

1. Disconnect the Park Assist Module C2 harness connector.
2. Measure the resistance between ground and the (D701) Park Assist Sensor 8 Signal circuit.

   Is the resistance below 10K Ohms?

   Yes

   - Repair the short to ground in the (D701) Park Assist Sensor 8 Signal circuit.
   - Perform the BODY VERIFICATION TEST. Refer to **STANDARD PROCEDURE** .

   No

   - Go To 6.

6. **CHECK THE (D701) PARK ASSIST SENSOR 8 SIGNAL CIRCUIT FOR A SHORT TO THE (X750) PARK ASSIST SENSOR GROUND CIRCUIT**

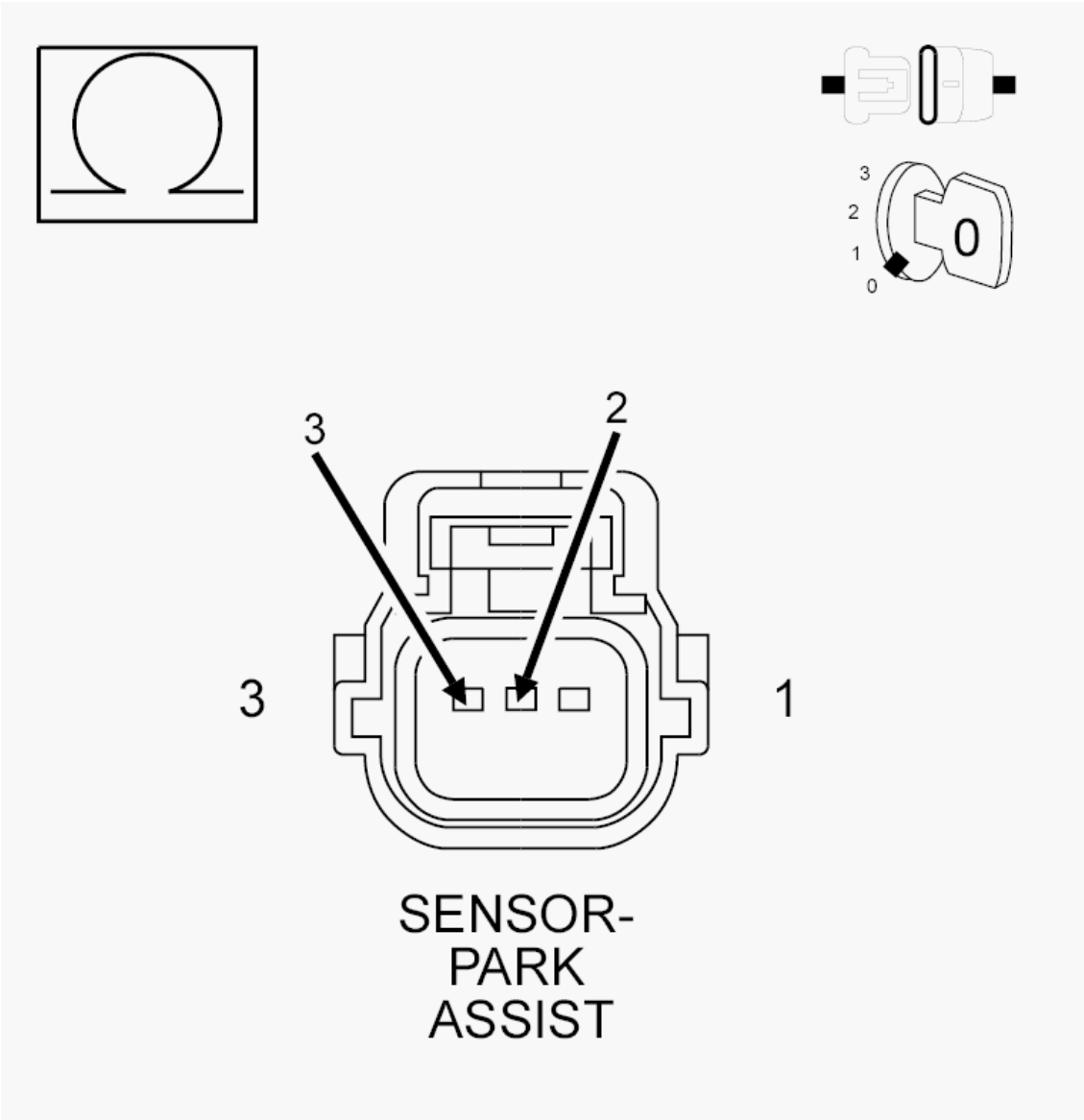

Fig. 6: Measuring Resistance Between Park Assist Sensor Signal Circuit & Park Assist Sensor Ground Circuit
Courtesy of CHRYSLER GROUP, LLC

1. Measure the resistance between the (D701) Park Assist Sensor 8 Signal circuit and the (X750) Park Assist Sensor Ground circuit.

   Is the resistance below 10K Ohms?

   Yes

   - Repair the short between the (D701) Park Assist Sensor 8 Signal circuit and the (X750) Park Assist Sensor Ground circuit.
   - Perform the BODY VERIFICATION TEST. Refer to **STANDARD PROCEDURE** .

No

- Replace the Park Assist Module in accordance with the Service Information. Refer to **MODULE, PARK ASSIST, REMOVAL** .
- Perform the BODY VERIFICATION TEST. Refer to **STANDARD PROCEDURE** .

7. **CHECK THE (D701) PARK ASSIST SENSOR 8 SIGNAL CIRCUIT FOR AN OPEN**

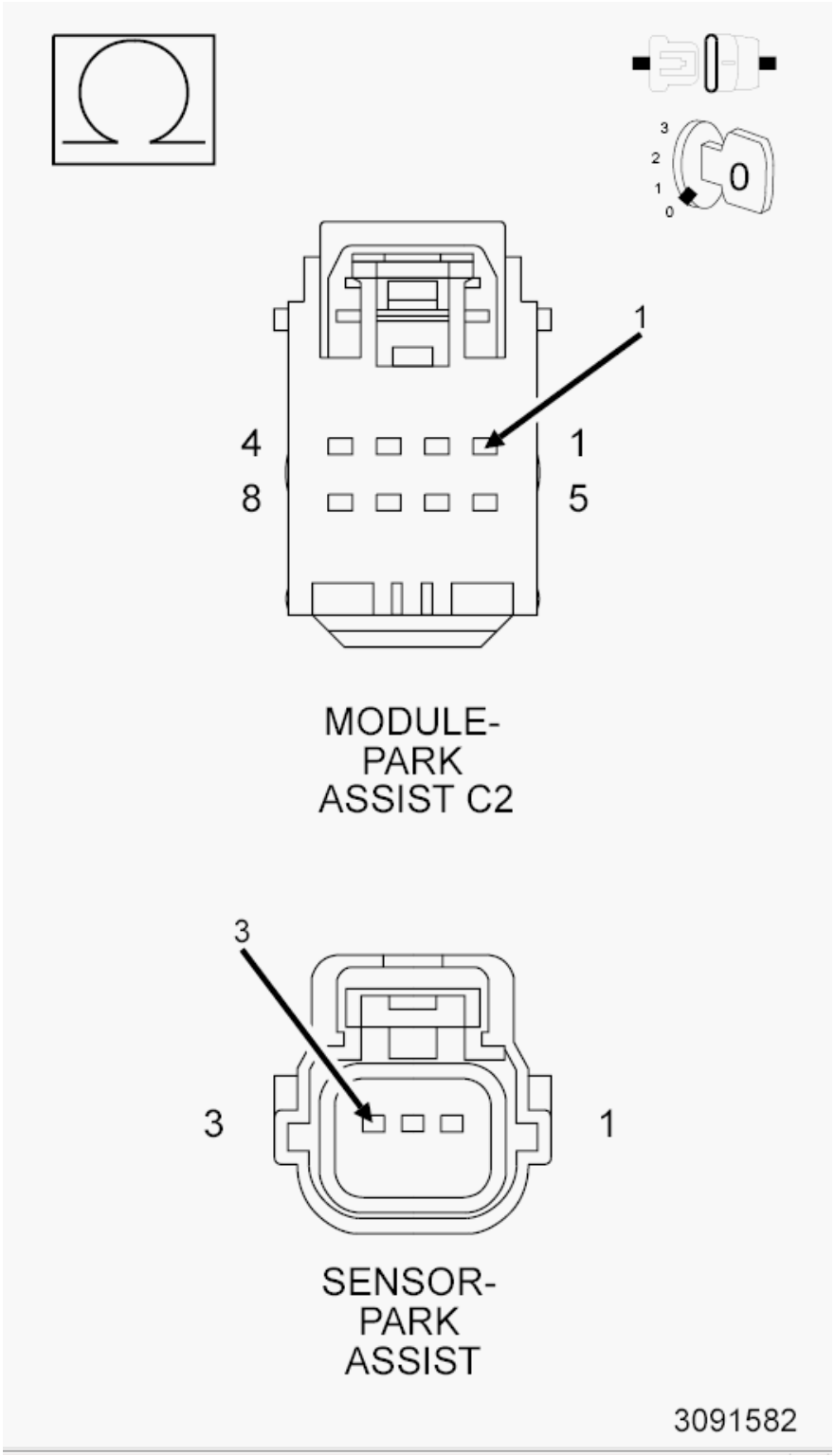

Fig. 7: Measuring Resistance Of Park Assist Sensor 8 Signal Circuit
Courtesy of CHRYSLER GROUP, LLC

1. Disconnect the Park Assist Module C2 harness connector.

2. Measure the resistance of the (D701) Park Assist Sensor 8 Signal circuit.

   Is the resistance above 5.0 Ohms?

   Yes

   - Repair the open in the (D701) Park Assist Sensor 8 Signal circuit.
   - Perform the BODY VERIFICATION TEST. Refer to **STANDARD PROCEDURE** .

   No

   - Go To 8.

8. **PARK ASSIST SENSOR**

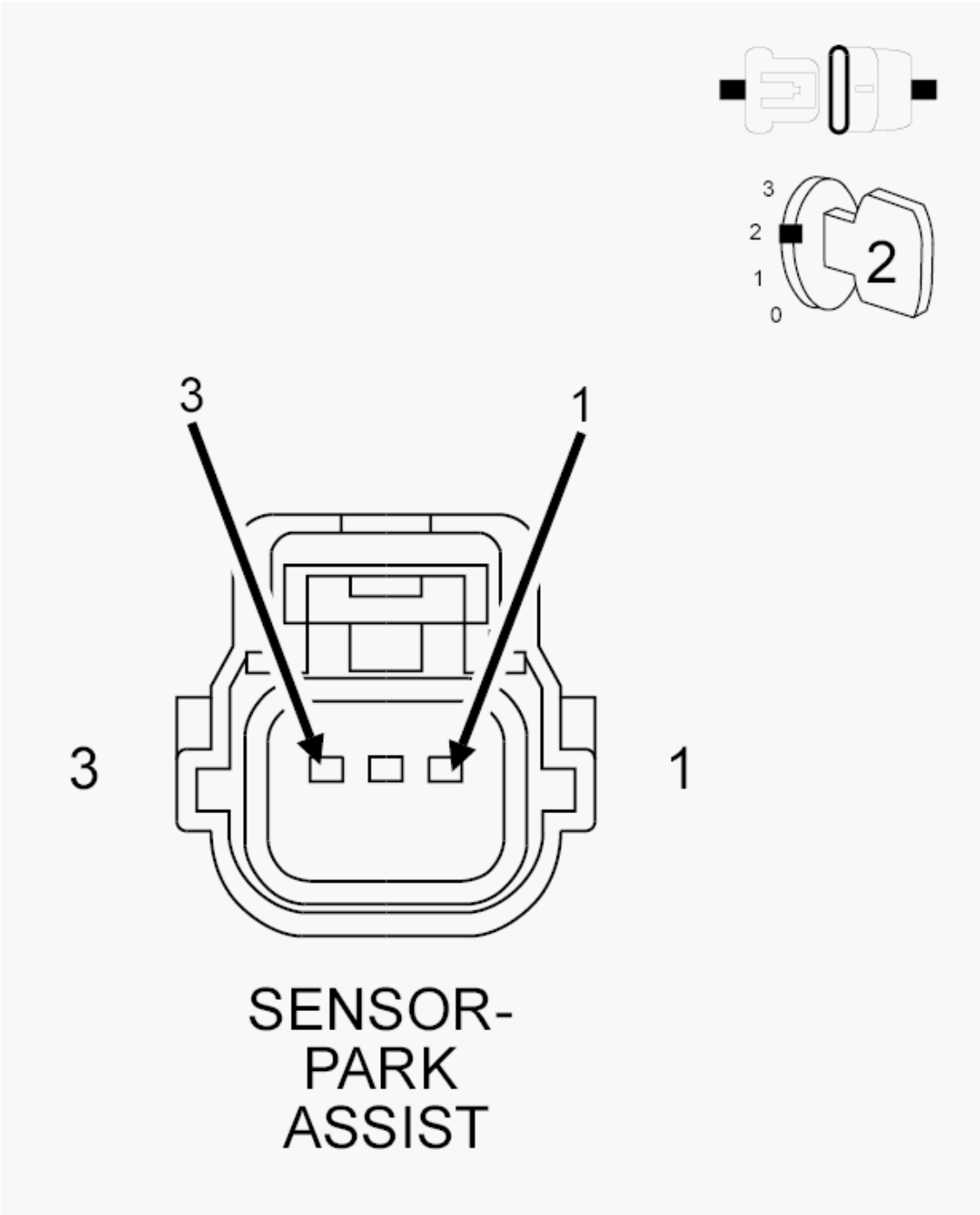

Fig. 8: Park Assist Sensor Connector End View
Courtesy of CHRYSLER GROUP, LLC

1. Turn the ignition on.
2. Reconnect the Park Assist Module C2 harness connector.
3. Connect a jumper wire across the (X700) Park Assist Sensor Supply and (D701) Park Assist Sensor 8 Signal circuits.
4. Turn the ignition on.

5. With the scan tool, read DTC's.

   Does the scan tool display DTC: B1295-12-PTS SENSOR 8 - CIRCUIT SHORT TO BATTERY as active?

   Yes

   - Replace the Park Assist Sensor in accordance with the Service Information. Refer to **SENSOR, PARK ASSIST, REMOVAL** .
   - Perform the BODY VERIFICATION TEST. Refer to **STANDARD PROCEDURE** .

   No

   - Replace the Park Assist Module in accordance with the Service Information. Refer to **MODULE, PARK ASSIST, REMOVAL** .
   - Perform the BODY VERIFICATION TEST. Refer to **STANDARD PROCEDURE** .

B1295-12-PTS SENSOR 8 - CIRCUIT SHORT TO BATTERY

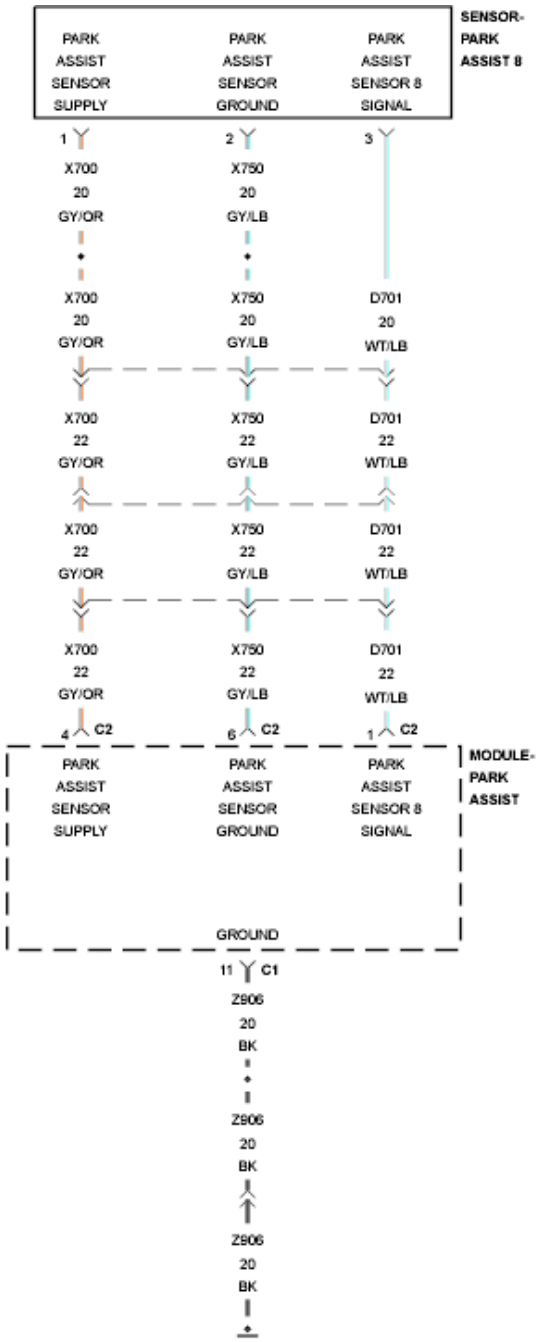
SENSOR-
PARK
ASSIST 8
PARK ASSIST SENSOR SUPPLY
PARK ASSIST SENSOR GROUND
PARK ASSIST SENSOR 8 SIGNAL
1
2
3
X700 20 GY/OR
X750 20 GY/LB
X700 20 GY/OR
X750 20 GY/LB
D701 20 WT/LB
X700 22 GY/OR
X750 22 GY/LB
D701 22 WT/LB
X700 22 GY/OR
X750 22 GY/LB
D701 22 WT/LB
X700 22 GY/OR
X750 22 GY/LB
D701 22 WT/LB
4 C2
6 C2
1 C2
MODULE-
PARK
ASSIST
PARK ASSIST SENSOR SUPPLY
PARK ASSIST SENSOR GROUND
PARK ASSIST SENSOR 8 SIGNAL
GROUND
11 C1
Z906 20 BK
Z906 20 BK
Z906 20 BK

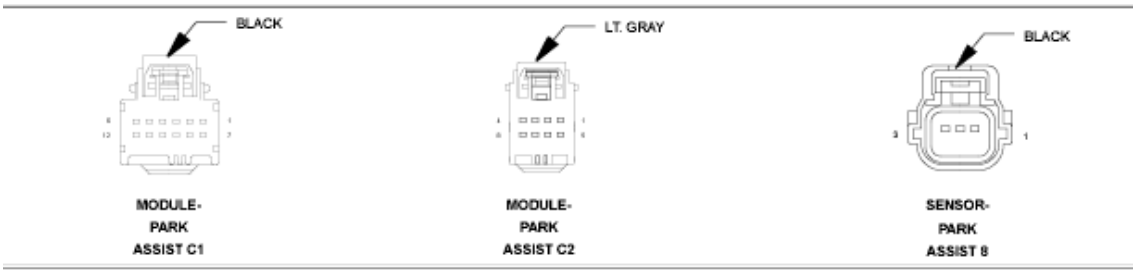
BLACK
LT. GRAY
BLACK
MODULE-
PARK
ASSIST C1
MODULE-
PARK
ASSIST C2
SENSOR-
PARK
ASSIST 8

Fig. 9: Park Assist Sensor Wiring Diagram
Courtesy of CHRYSLER GROUP, LLC

For a complete wiring diagram, **refer to appropriate SYSTEM WIRING DIAGRAMS article** .

THEORY OF OPERATION

The Park Assist Sensors are ultrasonic transceivers that are completely controlled by the Park Assist Module. The sensors transmit and receive ultrasonic signals. Each sensor has a voltage, signal, and return circuit to the module. The sensors communicate with the Park Assist Module using a dedicated serial bus communication circuit.

NOTE: **The numbering system for the park assist sensors allows for up to twelve sensors on the vehicle, six front and six rear. The sensors are numbered in a clockwise manner starting at the left front bumper. The left front sensor (if equipped with front park assist) is the number 1 sensor. The numbering continues in a clockwise direction around the vehicle. Since Chrysler Group vehicles use only four rear sensors, sensor numbers 7 and 12 are omitted, so the left rear sensor is the number 11 sensor.**

WHEN MONITORED:

Vehicle in reverse and during the self-test while vehicle is in drive between 18 km/h (11 mph) and 40 km/h (25 mph).

SET CONDITION:

The Park Assist Module detects an open or short to voltage on the Park Assist Sensor Signal circuit.

POSSIBLE CAUSES

Possible Causes
(D701) PARK ASSIST SENSOR 8 SIGNAL CIRCUIT SHORTED TO VOLTAGE
(D701) PARK ASSIST SENSOR 8 SIGNAL CIRCUIT SHORTED TO THE (X700) PARK ASSIST SENSOR SUPPLY CIRCUIT
(X750) PARK ASSIST SENSOR GROUND CIRCUIT OPEN
PARK ASSIST SENSOR
PARK ASSIST MODULE

DIAGNOSTIC TEST

1. **CHECK FOR AN ACTIVE DIAGNOSTIC TROUBLE CODE (DTC)**
    1. Turn the ignition on.
    2. With the scan tool, read DTC's.

    Does the scan tool display this DTC as active?

Yes

- Go To 2.

No

- Test complete, the condition or conditions that originally set this DTC are not present at this time. Using the wiring diagrams as a guide, check all related splices and connectors for signs of water intrusion, corrosion, pushed out or bent terminals, and correct pin tension.
- Perform the BODY VERIFICATION TEST. Refer to **STANDARD PROCEDURE** .

2. **(D701) PARK ASSIST SENSOR 8 SIGNAL CIRCUIT SHORTED TO BATTERY**

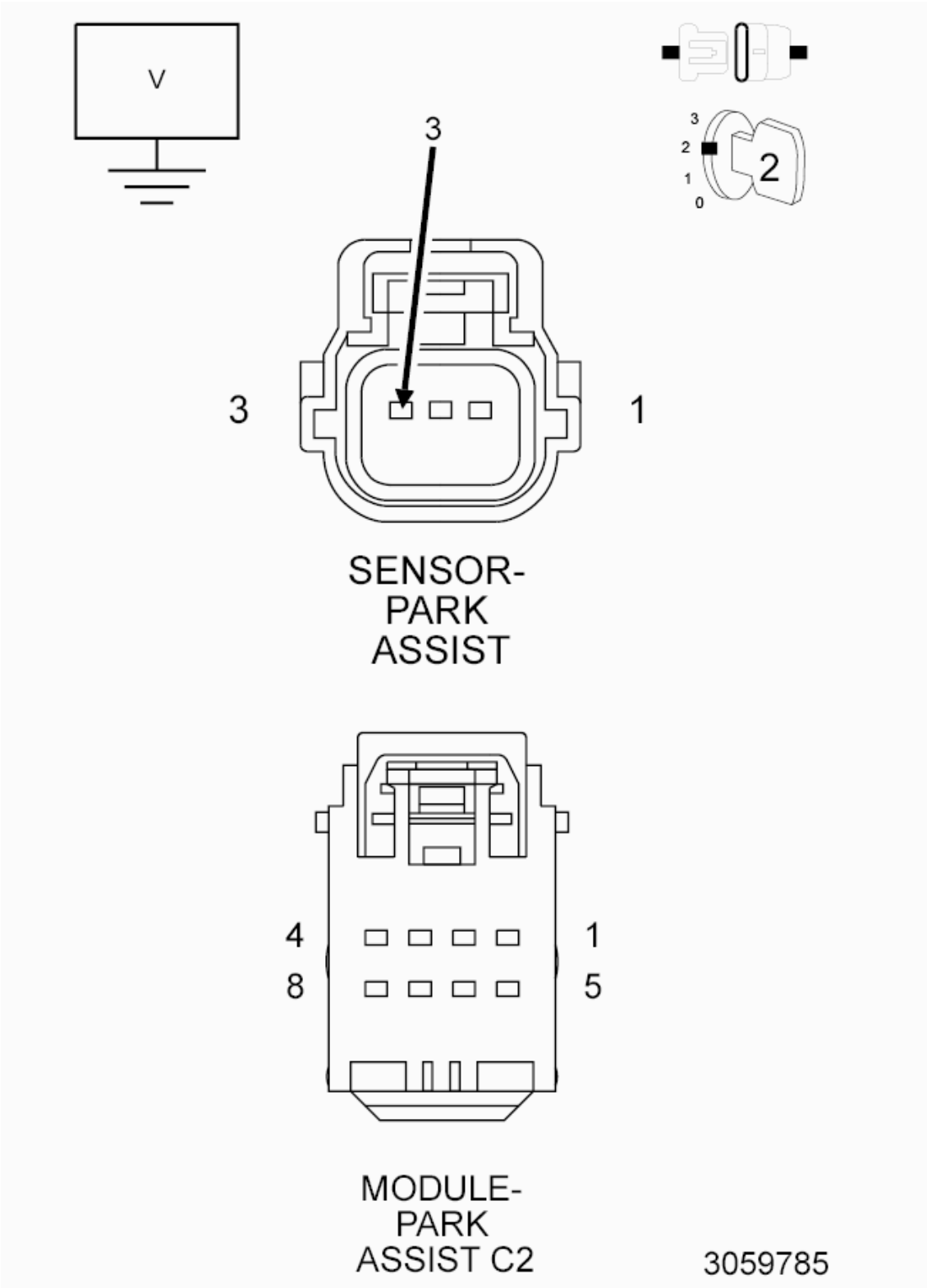

Fig. 10: Measuring Voltage Of Park Assist Sensor 8 Signal Circuit
Courtesy of CHRYSLER GROUP, LLC

1. Turn the ignition off.

2. Disconnect the Park Assist Module C2 harness connector.
3. Disconnect the Park Assist Sensor harness connector.
4. Turn the ignition on.
5. Measure the voltage of the (D701) Park Assist Sensor 8 Signal circuit.

   Is the voltage above 10.0 volts?

   Yes

   - Repair the (D701) Park Assist Sensor 8 Signal circuit for a short to battery.
   - Perform the BODY VERIFICATION TEST. Refer to **STANDARD PROCEDURE** .

   No

   - Go To 3.

3. **(D701) PARK ASSIST SENSOR 8 SIGNAL CIRCUIT SHORTED TO THE (X700) PARK ASSIST SENSOR SUPPLY CIRCUIT**

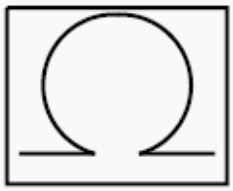

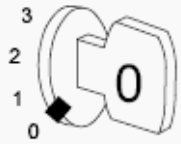

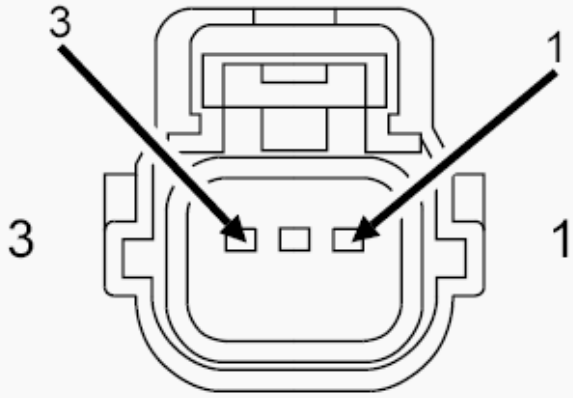

SENSOR-
PARK
ASSIST

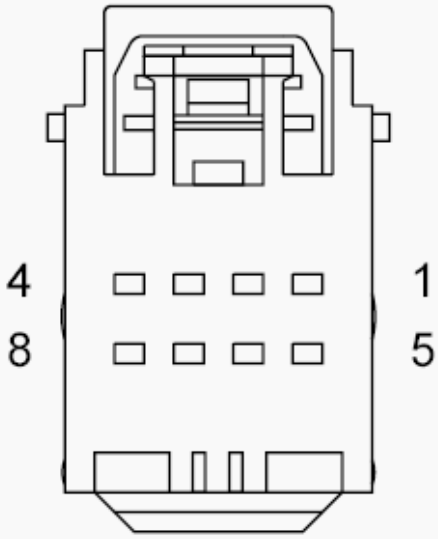

MODULE-
PARK
ASSIST C2

3060400

Fig. 11: Measuring Resistance Between Park Assist Sensor Signal Circuit & Park Assist Sensor Supply Circuit
Courtesy of CHRYSLER GROUP, LLC

1. Turn the ignition off.
2. Measure the resistance between the (D701) Park Assist Sensor 8 Signal circuit and the (X700) Park Assist Sensor Supply circuit.

   Is the resistance below 10K Ohms?

   Yes

   - Repair the (D701) Park Assist Sensor 8 Signal circuit for a short to the (X700) Park Assist Sensor Supply circuit.
   - Perform the BODY VERIFICATION TEST. Refer to **STANDARD PROCEDURE** .

   No

   - Go To 4.

4. **(X750) PARK ASSIST SENSOR GROUND CIRCUIT OPEN**

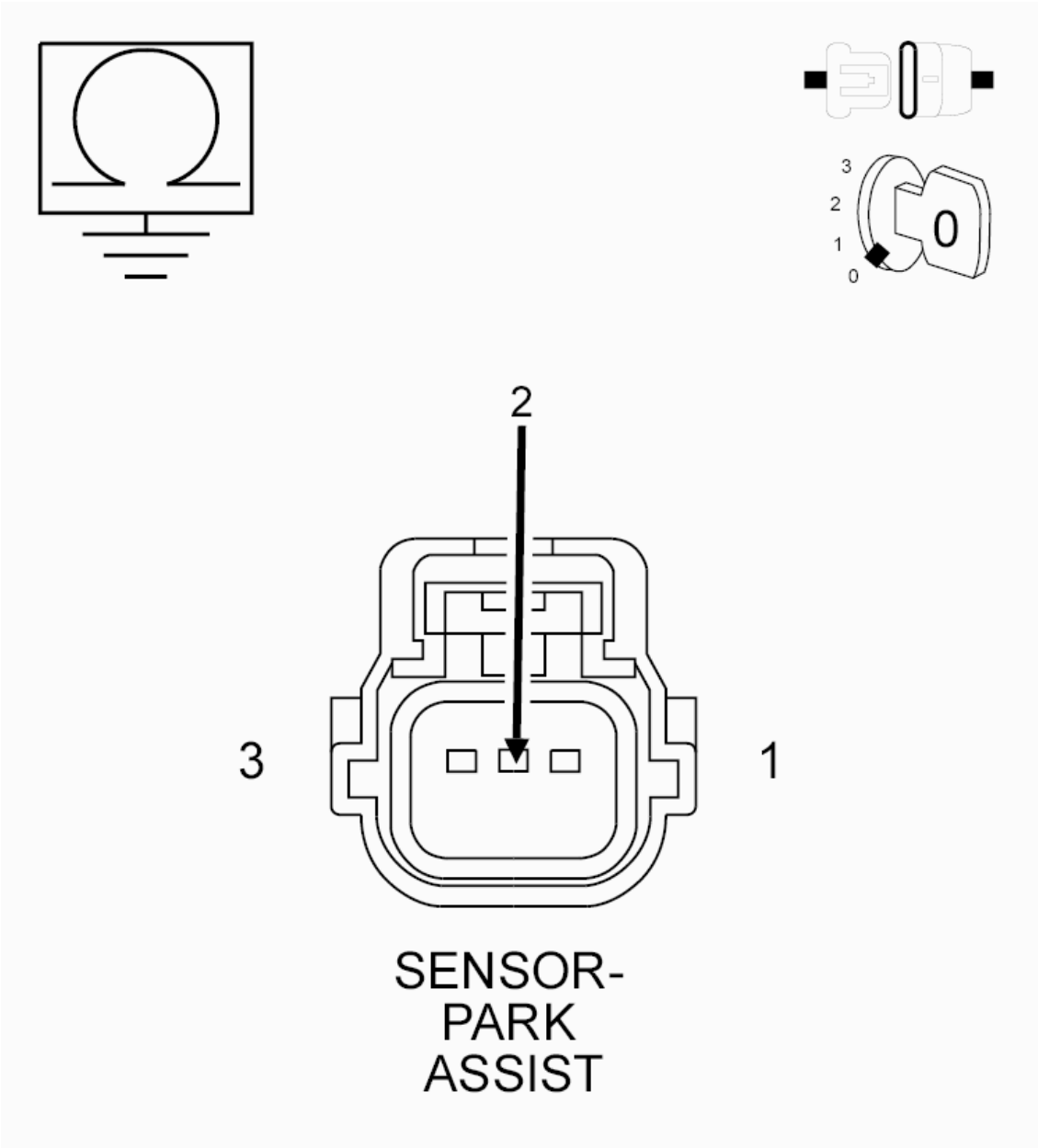

Fig. 12: Checking Park Assist Sensor Ground Circuit For An Open
Courtesy of CHRYSLER GROUP, LLC

1. Reconnect the Park Assist Module C2 harness connector.
2. Measure the resistance between ground and the (X750) Park Assist Sensor Ground circuit.

   Is the resistance above 20.0 Ohms?

   Yes

   - Go To 5.

No

- Replace the Park Assist Sensor in accordance with the Service Information. Refer to **SENSOR, PARK ASSIST, REMOVAL** .
- Perform the BODY VERIFICATION TEST. Refer to **STANDARD PROCEDURE** .

5. **(X750) PARK ASSIST SENSOR GROUND CIRCUIT OPEN BETWEEN PARK ASSIST MODULE AND SENSOR**

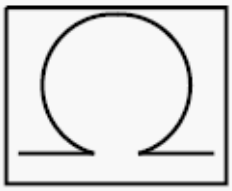

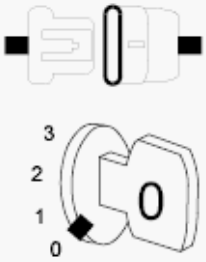

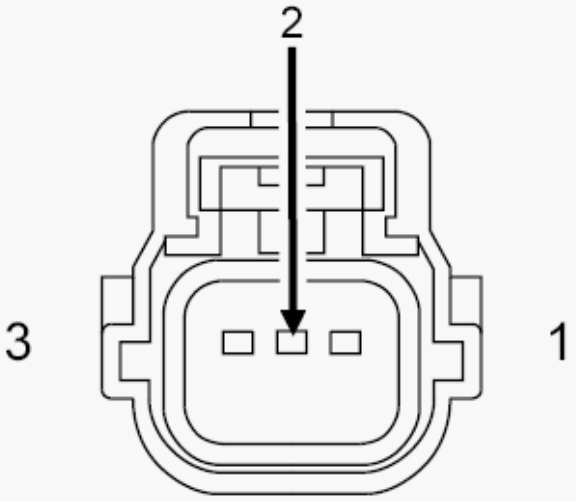

SENSOR-
PARK
ASSIST

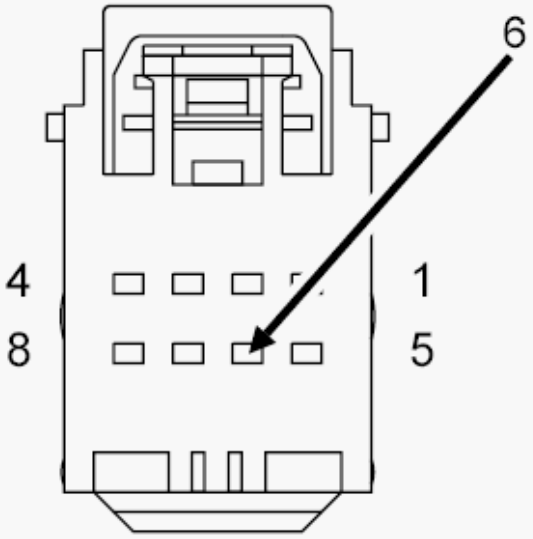

MODULE-
PARK
ASSIST C2

3060659

Fig. 13: Checking Park Assist Sensor Ground Circuit For An Open Between Park Assist Module And Sensor
Courtesy of CHRYSLER GROUP, LLC

1. Disconnect the Park Assist Module C2 harness connector.
2. Measure the resistance of the (X750) Park Assist Sensor Ground circuit.

   Is the resistance above 5.0 Ohms?

   Yes

   - Repair the open in the (X750) Park Assist Sensor Ground circuit.
   - Perform the BODY VERIFICATION TEST. Refer to **STANDARD PROCEDURE** .

   No

   - Replace the Park Assist Module in accordance with the Service Information. Refer to **SENSOR, PARK ASSIST, REMOVAL** .
   - Perform the BODY VERIFICATION TEST. Refer to **STANDARD PROCEDURE** .

B1295-25-PTS SENSOR 8 - SIGNAL SHAPE / WAVEFORM FAILURE

For a complete wiring diagram, **refer to appropriate SYSTEM WIRING DIAGRAMS article** .

NOTE: **The numbering system for the park assist sensors allows for up to twelve sensors on the vehicle, six front and six rear. The sensors are numbered in a clockwise manner starting at the left front bumper. The left front sensor (if equipped with front park assist) is the number 1 sensor. The numbering continues in a clockwise direction around the vehicle. Since Chrysler LLC vehicles use only four rear sensors, sensor numbers 7 and 12 are omitted, so the left rear sensor is the number 11 sensor.**

WHEN MONITORED:

Vehicle in reverse.

During the self-test while vehicle is in drive between 11 mph (18 km/h) and 25 mph (40 km/h).

SET CONDITION:

The Park Assist Module detects an internal Sensor error.

POSSIBLE CAUSES

Possible Causes
PARK ASSIST SENSOR MEMBRANE OBSTRUCTION (ICE, SNOW, MUD, DIRT COVERING

FASCIA)
PARK ASSIST SENSOR CONNECTOR OBSTRUCTION (ICE, SNOW, MUD, DIRT)
DECOUPLING RING MISSING/MOUNTED WRONG
OBJECTS - SUCH AS LICENSE PLATES - IN CLOSE RANGE TO THE SENSOR
PARK ASSIST SENSOR

DIAGNOSTIC TEST

1. **CHECK FOR AN ACTIVE DTC**

   NOTE: Before proceeding with this diagnostic procedure, remove any ice, snow, mud, dirt, or other obstructions from the front/rear fascia/bumper. Also remove any ice, snow, dirt, mud, or other obstructions from the underside of the Fascia/Bumper surrounding the sensors.

   1. Turn the ignition on.
   2. With the scan tool, read DTC's.

      Is this DTC active?

      Yes

      - Go To 2.

      No

      - Test complete, the condition or conditions that originally set this DTC are not present at this time. Using the wiring diagrams as a guide, check all related splices and connectors for signs of water intrusion, corrosion, pushed out or bent terminals, and correct pin tension.
2. **PARK ASSIST SENSOR**
   1. Verify that none of the possible causes mentioned above are present. Repair as necessary.

      If none of the possible causes mentioned above are present, view repair.

      Repair

      - Replace the Park Assist Sensor in accordance with the Service Information.
      - Perform the BODY VERIFICATION TEST. Refer to **STANDARD PROCEDURE** .

B1295-92-PTS SENSOR 8 - PERFORMANCE OR INCORRECT OPERATION

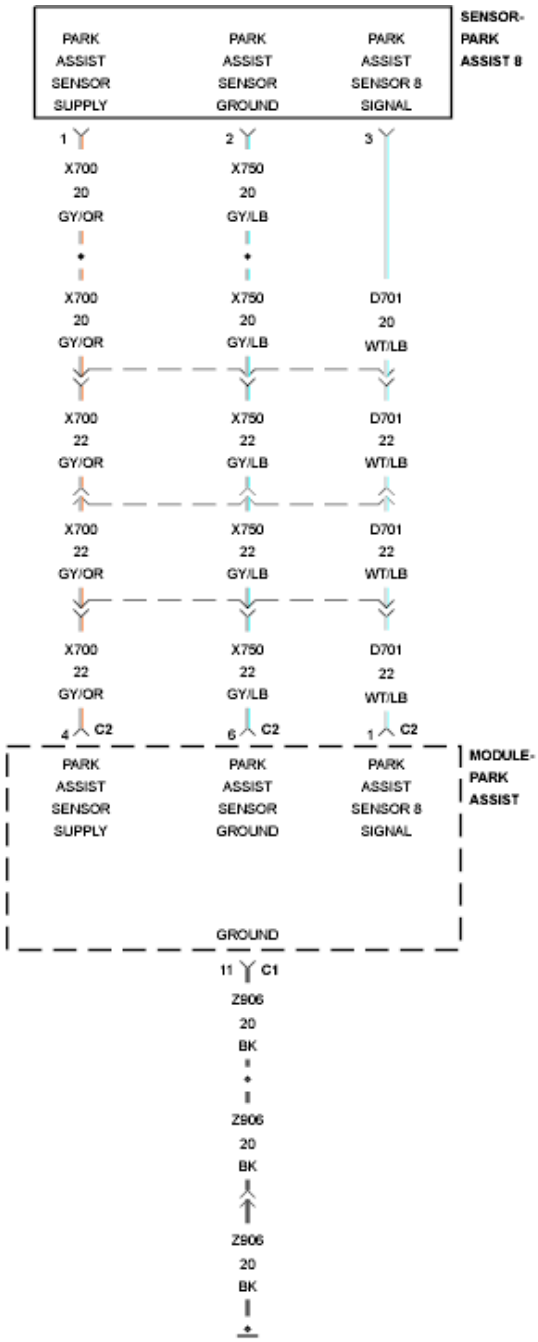
SENSOR-
PARK
ASSIST 8
PARK ASSIST SENSOR SUPPLY
PARK ASSIST SENSOR GROUND
PARK ASSIST SENSOR 8 SIGNAL
1
2
3
X700 20 GY/OR
X750 20 GY/LB
X700 20 GY/OR
X750 20 GY/LB
D701 20 WT/LB
X700 22 GY/OR
X750 22 GY/LB
D701 22 WT/LB
X700 22 GY/OR
X750 22 GY/LB
D701 22 WT/LB
X700 22 GY/OR
X750 22 GY/LB
D701 22 WT/LB
4 C2
6 C2
1 C2
MODULE-
PARK
ASSIST
PARK ASSIST SENSOR SUPPLY
PARK ASSIST SENSOR GROUND
PARK ASSIST SENSOR 8 SIGNAL
GROUND
11 C1
Z906 20 BK
Z906 20 BK
Z906 20 BK

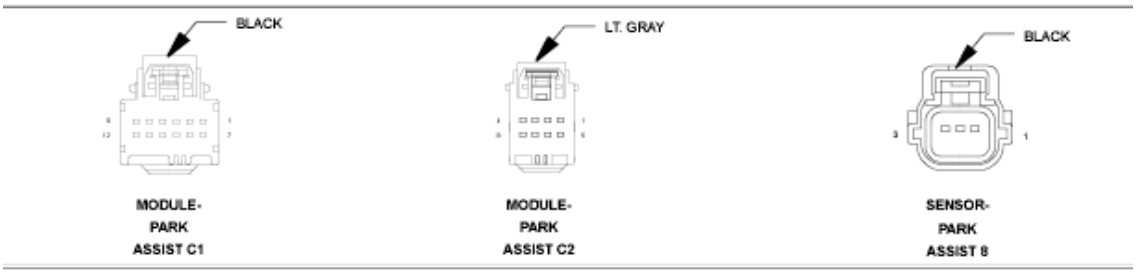
BLACK
LT. GRAY
BLACK
MODULE-
PARK
ASSIST C1
MODULE-
PARK
ASSIST C2
SENSOR-
PARK
ASSIST 8

Fig. 14: Park Assist Sensor Wiring Diagram
Courtesy of CHRYSLER GROUP, LLC

For a complete wiring diagram, **refer to appropriate SYSTEM WIRING DIAGRAMS article** .

THEORY OF OPERATION

The Park Assist Sensors are ultrasonic transceivers that are completely controlled by the Park Assist Module. The sensors transmit and receive ultrasonic signals. Each sensor has a voltage, signal, and return circuit to the module. The sensors communicate with the Park Assist Module using a dedicated serial bus communication circuit.

NOTE: **The numbering system for the park assist sensors allows for up to twelve sensors on the vehicle, six front and six rear. The sensors are numbered in a clockwise manner starting at the left front bumper. The left front sensor (if equipped with front park assist) is the number 1 sensor. The numbering continues in a clockwise direction around the vehicle. Since Chrysler Group vehicles use only four rear sensors, sensor numbers 7 and 12 are omitted, so the left rear sensor is the number 11 sensor.**

WHEN MONITORED:

During Reverse and during self test in Forward between 11 mph (18 km/h) and 25 mph (40 km/h).

SET CONDITION:

If the system detects data corruption in the transmission in the internal communication line between the module and sensors.

POSSIBLE CAUSES

Possible Causes
(D701) PTS SENSOR 8 SIGNAL CIRCUIT SHORTED TO GROUND
(D701) PTS SENSOR 8 SIGNAL CIRCUIT SHORTED TO BATTERY
(D701) PTS SENSOR 8 SIGNAL CIRCUIT OPEN
PARK ASSIST SENSOR 8
PARK ASSIST MODULE

DIAGNOSTIC TEST

1. **TEST FOR INTERMITTENT CONDITION**
    1. Turn the ignition on.
    2. With the scan tool, read the active DTC's.

       Does the scan tool display this DTC as active?

Yes

- Go To 2.

No

- Test complete, the condition or conditions that originally set this DTC are not present at this time. Using the wiring diagrams as a guide, check all related splices and connectors for signs of water intrusion, corrosion, pushed out or bent terminals, and correct pin tension.
- Perform the BODY VERIFICATION TEST. Refer to **STANDARD PROCEDURE** .

2. **CHECK PARK ASSIST SENSOR 8 FOR INTERNAL SHORT**
   1. Disconnect the Park Assist Sensor 8 harness connector.
   2. With the scan tool, read the active DTC's.

   Does the scan tool display this DTC as active?

   Yes

   - Go To 3.

   No

   - Replace the Park Assist Sensor in accordance with the Service Information. Refer to **SENSOR, PARK ASSIST, REMOVAL** .
   - Perform the BODY VERIFICATION TEST. Refer to **STANDARD PROCEDURE** .

3. **CHECK THE (D701) PARK ASSIST SENSOR 8 SIGNAL CIRCUIT FOR A SHORT TO GROUND**

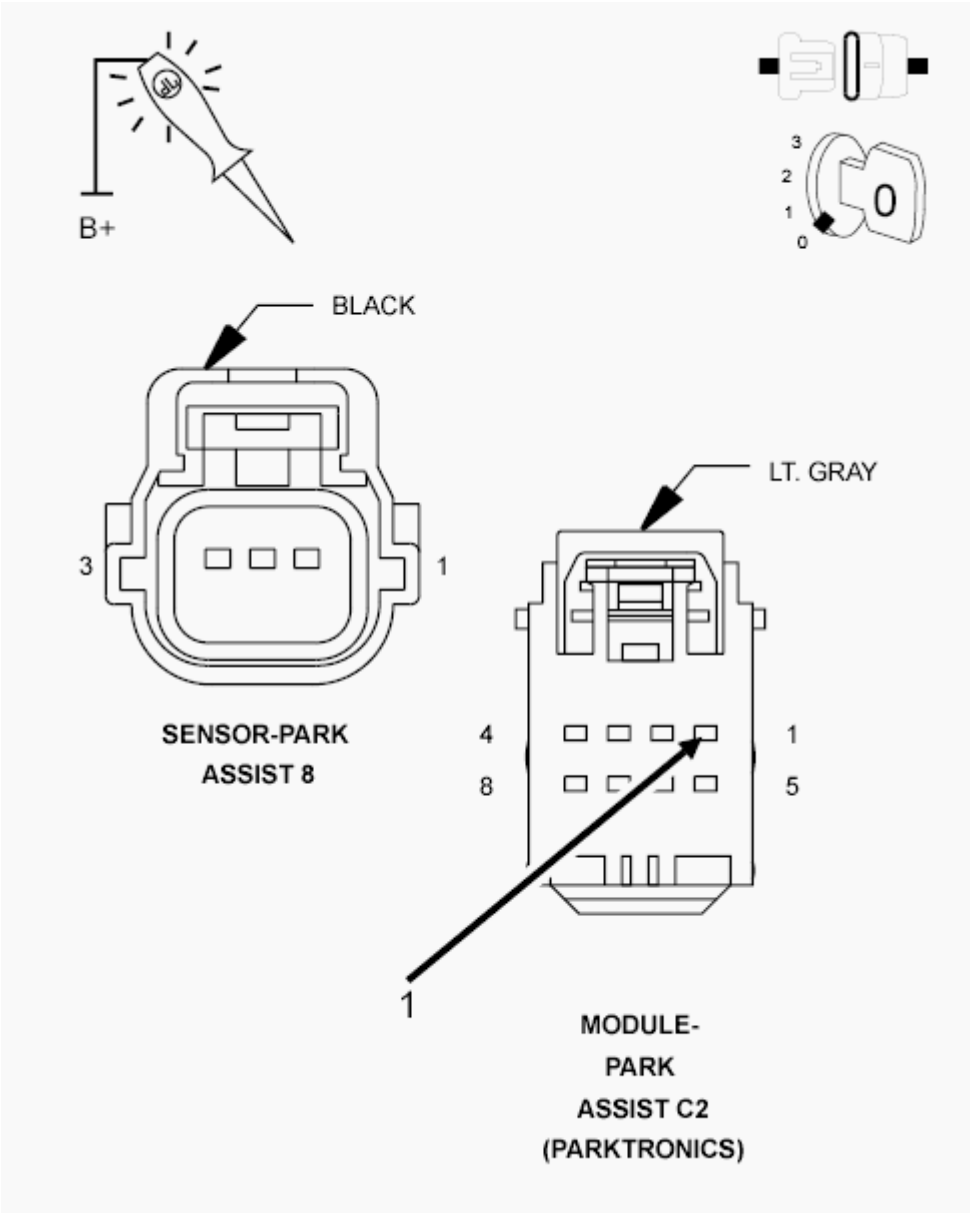

Fig. 15: Checking Park Assist Sensor Signal Circuit For A Short To Ground
Courtesy of CHRYSLER GROUP, LLC

1. Turn the ignition off.
2. Disconnect the Park Assist Module C2 harness connector.
3. Using a 12-volt test light connected to 12-volts, check the (D701) Park Assist Sensor 8 Signal circuit at the Park Assist Module C2 harness connector.

   Does the test light illuminate brightly?

   Yes

   - Repair the short to ground in the (D701) Park Assist Sensor 8 Signal circuit.

- Perform the BODY VERIFICATION TEST. Refer to **STANDARD PROCEDURE** .

No

- Go To 4.

4. **CHECK THE (D701) PARK ASSIST SENSOR 8 SIGNAL CIRCUIT FOR A SHORT TO BATTERY**

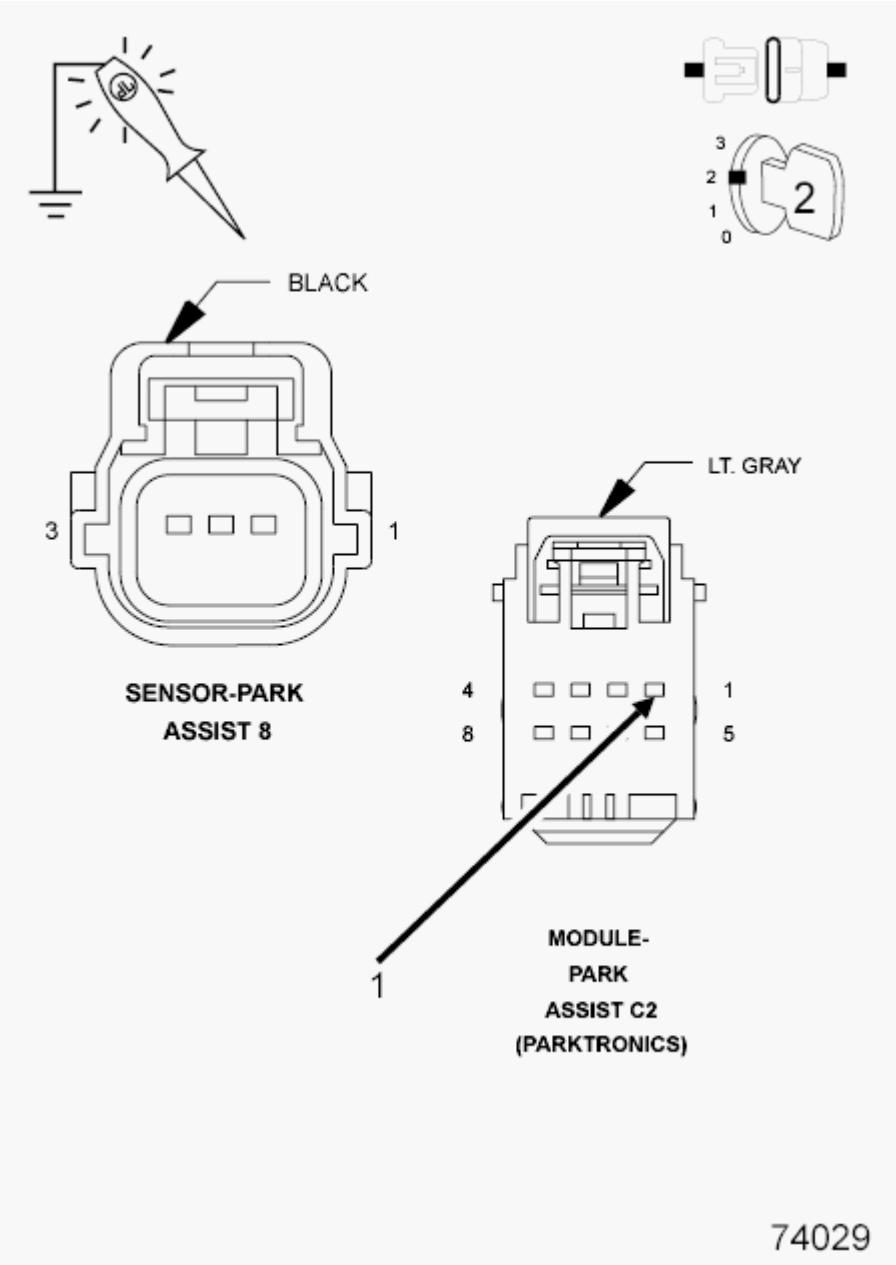

Fig. 16: Checking Park Assist Sensor Signal Circuit For A Short To Battery
Courtesy of CHRYSLER GROUP, LLC

1. Turn the ignition on.

2. Using a 12-volt test light connected to ground, check the (D701) Park Assist Sensor 8 Signal circuit at the Park Assist Module C2 harness connector.

   Does the test light illuminate brightly?

   Yes

   - Repair the short to voltage (D701) Park Assist Sensor 8 Signal circuit.
   - Perform the BODY VERIFICATION TEST. Refer to **STANDARD PROCEDURE** .

   No

   - Go To 5.

5. **CHECK THE (D701) PARK ASSIST SENSOR 8 SIGNAL CIRCUIT FOR AN OPEN**

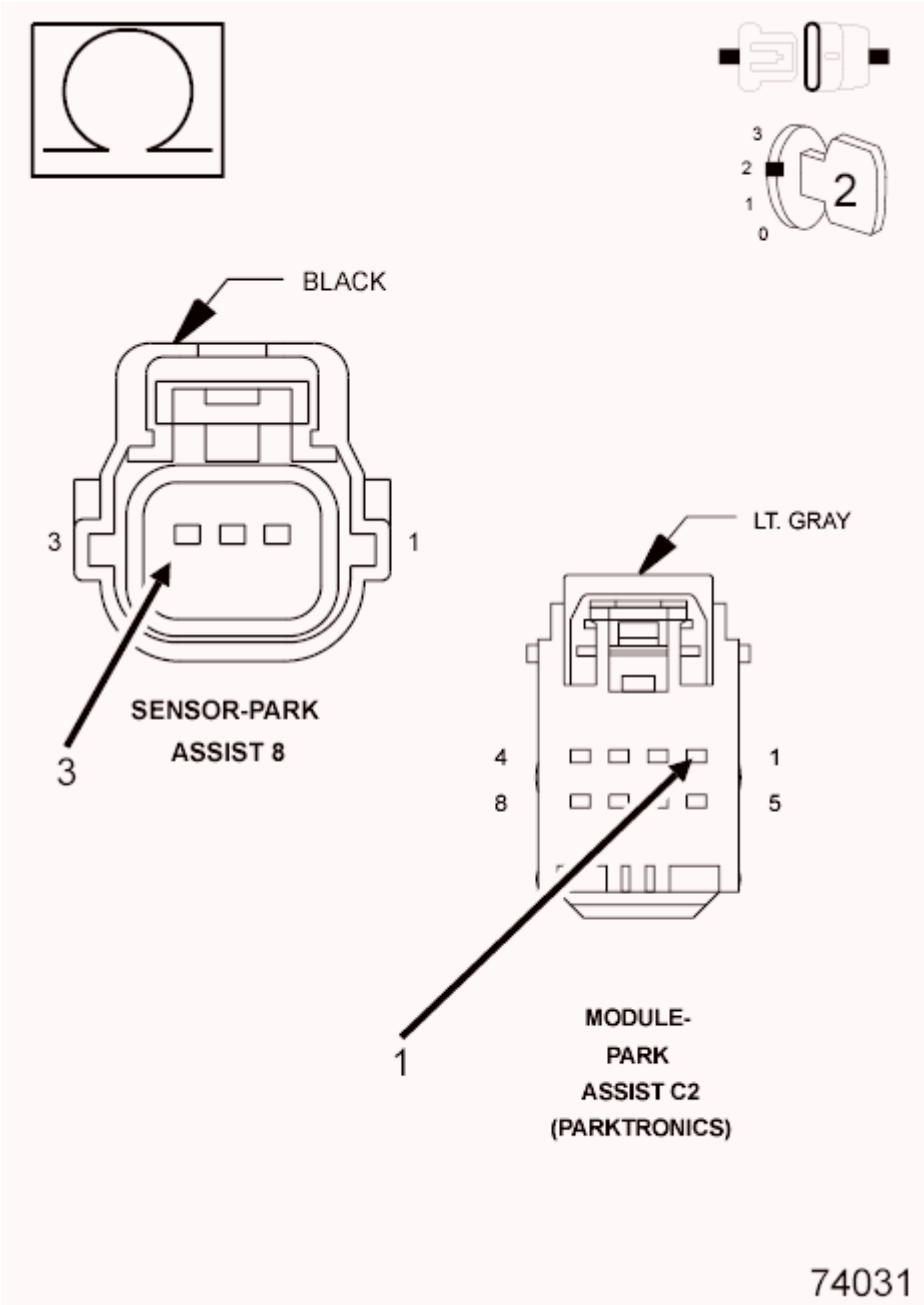

Fig. 17: Checking Park Assist Sensor Signal Circuit For An Open
Courtesy of CHRYSLER GROUP, LLC

1. Measure the resistance of the (D701) Park Assist Sensor 8 Signal circuit between the Park Assist Module C2 harness connector and the Park Assist Sensor 8 harness connector.

   Is the resistance above 5.0 Ohms?

   Yes

   - Repair the open in the (D701) Park Assist Sensor 8 Signal circuit.

- Perform the BODY VERIFICATION TEST. Refer to **STANDARD PROCEDURE** .

No

- Replace the Park Assist Module in accordance with Service Information. Refer to **MODULE, PARK ASSIST, REMOVAL** .
- Perform the BODY VERIFICATION TEST. Refer to **STANDARD PROCEDURE** .

B1296-11-PTS SENSOR 9 - CIRCUIT SHORT TO GROUND

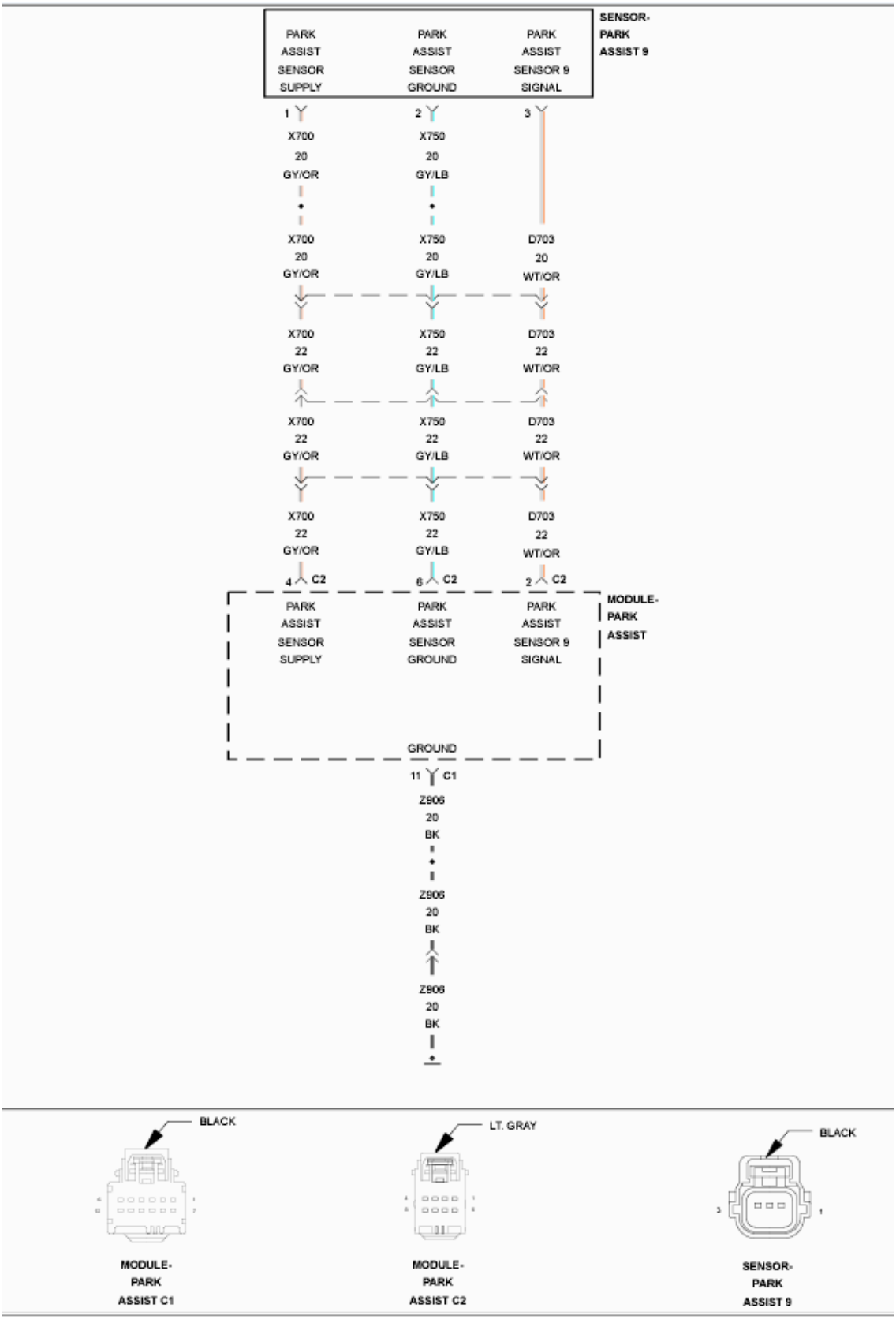

Fig. 18: Park Assist Sensor 9 Wiring Diagram

Courtesy of CHRYSLER GROUP, LLC

For a complete wiring diagram, **refer to appropriate SYSTEM WIRING DIAGRAMS article** .

THEORY OF OPERATION

The Park Assist Sensors are ultrasonic transceivers that are completely controlled by the Park Assist Module. The sensors transmit and receive ultrasonic signals. Each sensor has a voltage, signal, and return circuit to the module. The sensors communicate with the Park Assist Module using a dedicated serial bus communication circuit.

NOTE: **The numbering system for the park assist sensors allows for up to twelve sensors on the vehicle, six front and six rear. The sensors are numbered in a clockwise manner starting at the left front bumper. The left front sensor (if equipped with front park assist) is the number 1 sensor. The numbering continues in a clockwise direction around the vehicle. Since Chrysler Group vehicles use only four rear sensors, sensor numbers 7 and 12 are omitted, so the left rear sensor is the number 11 sensor.**

WHEN MONITORED:

Vehicle in reverse and during the self-test while vehicle is in drive between 18 km/h (11 mph) and 40 km/h (25 mph).

SET CONDITION:

The Park Assist Module detects a short to ground on the Park Assist Sensor Signal circuit.

POSSIBLE CAUSES

Possible Causes
PARK ASSIST SENSOR DISCONNECTED
(D703) PARK ASSIST SENSOR 9 SIGNAL CIRCUIT SHORTED TO GROUND
(D703) PARK ASSIST SENSOR 9 SIGNAL CIRCUIT SHORTED TO THE (X750) PARK ASSIST SENSOR GROUND CIRCUIT
(D703) PARK ASSIST SENSOR 9 SIGNAL CIRCUIT OPEN
(X700) PARK ASSIST SENSOR SUPPLY CIRCUIT OPEN
PARK ASSIST SENSOR
PARK ASSIST MODULE

DIAGNOSTIC TEST

1. **CHECK FOR AN ACTIVE DIAGNOSTIC TROUBLE CODE (DTC)**

   NOTE: **A disconnected sensor will set this DTC. Verify the Park Assist Sensor is connected before proceeding with this diagnostic procedure.**

1. Turn the ignition on.
2. With the scan tool, read DTC's.

   Does the scan tool display this DTC as active?

   Yes

   - Go To 2.

   No

   - Test complete, the condition or conditions that originally set this DTC are not present at this time. Using the wiring diagrams as a guide, check all related splices and connectors for signs of water intrusion, corrosion, pushed out or bent terminals, and correct pin tension.
   - Perform the BODY VERIFICATION TEST. Refer to **STANDARD PROCEDURE** .

2. **CHECK THE VOLTAGE OF THE (X700) PARK ASSIST SENSOR SUPPLY CIRCUIT**

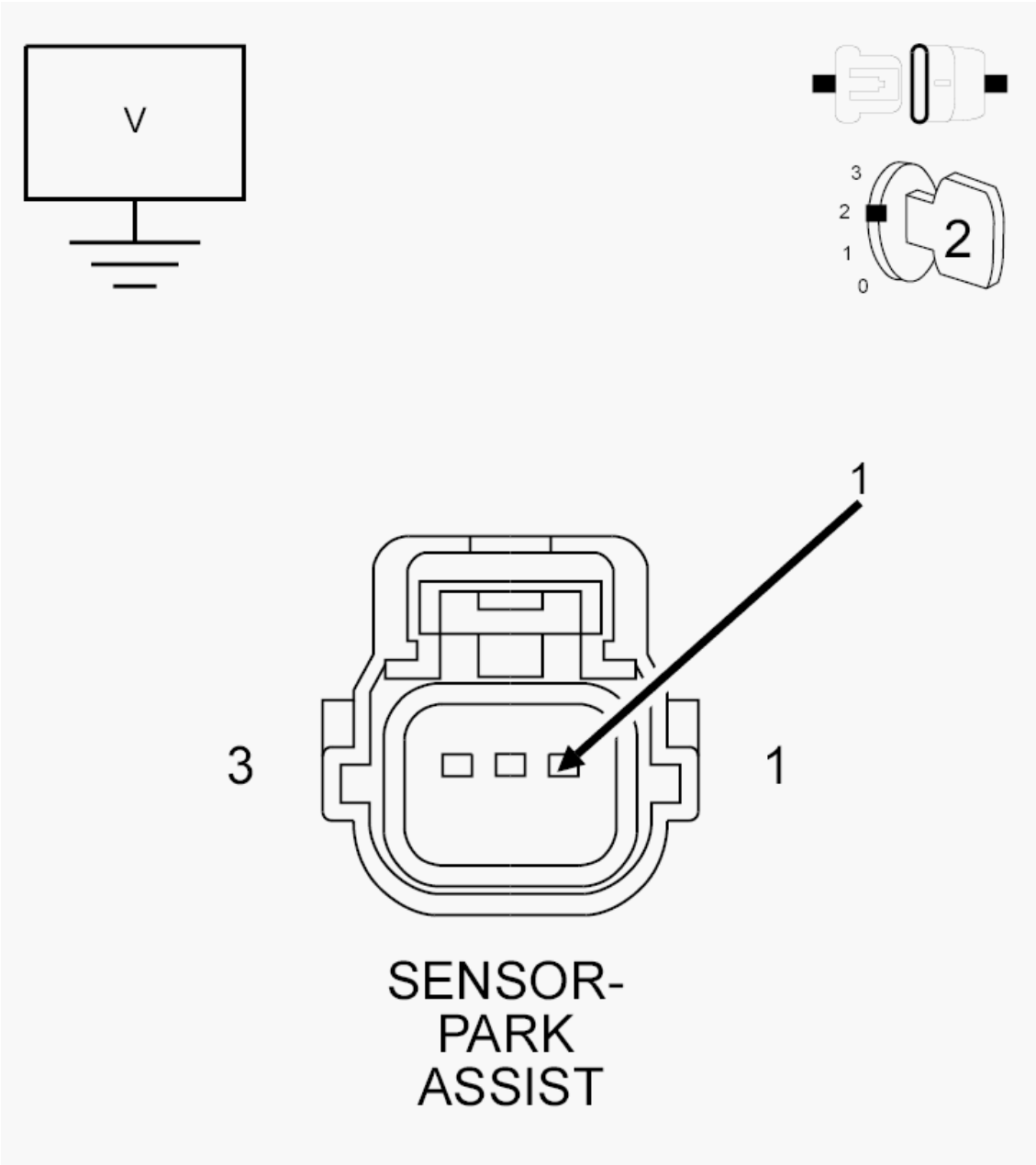

Fig. 19: Measuring Voltage Of Park Assist Sensor Supply Circuit
Courtesy of CHRYSLER GROUP, LLC

1. Turn the ignition off.
2. Disconnect the Park Assist Sensor.
3. Turn the ignition on.
4. Measure the voltage of the (X700) Park Assist Sensor Supply circuit.

   Is the voltage above 8.0 volts?

   Yes

- Go To 4.

No

- Go To 3.

3. **CHECK THE (X700) PARK ASSIST SENSOR SUPPLY CIRCUIT FOR AN OPEN OR HIGH RESISTANCE**

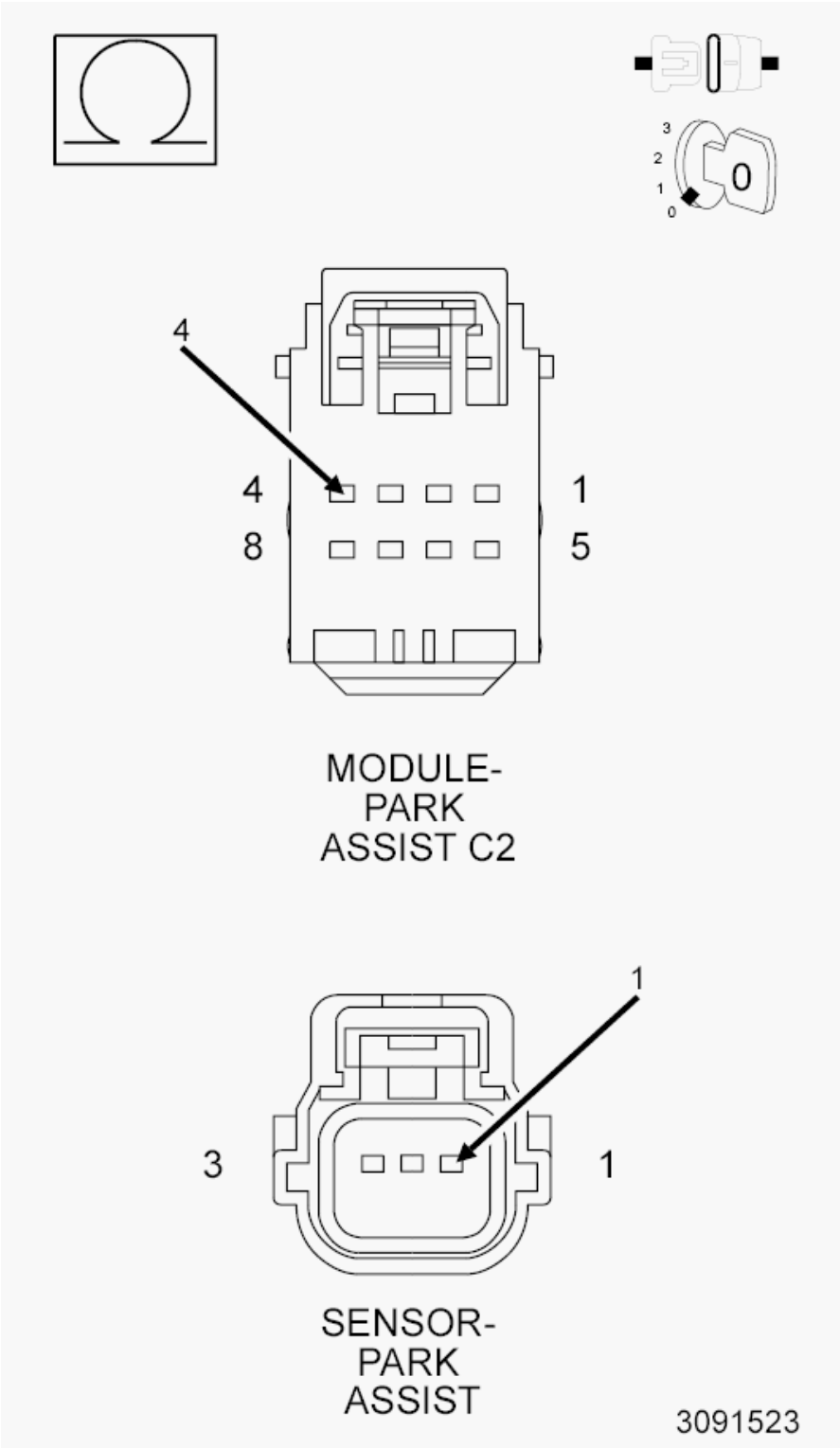

Fig. 20: Measuring Resistance Of Park Assist Sensor Supply Circuit
Courtesy of CHRYSLER GROUP, LLC

1. Turn the ignition off.
2. Disconnect the Park Assist Module C2 harness connector.

3. Measure the resistance of the (X700) Park Assist Sensor Supply circuit.

   Is the resistance below 5.0 Ohms?

   Yes

   - Replace the Park Assist Module in accordance with the Service Information. Refer to **MODULE, PARK ASSIST, REMOVAL** .
   - Perform the BODY VERIFICATION TEST. Refer to **STANDARD PROCEDURE** .

   No

   - Repair the open or high resistance in the (X700) Park Assist Sensor Supply circuit.
   - Perform the BODY VERIFICATION TEST. Refer to **STANDARD PROCEDURE** .

4. **CHECK THE (D703) PARK ASSIST SENSOR 9 SIGNAL CIRCUIT FOR A SHORT TO GROUND WITH THE PARK ASSIST MODULE CONNECTED**

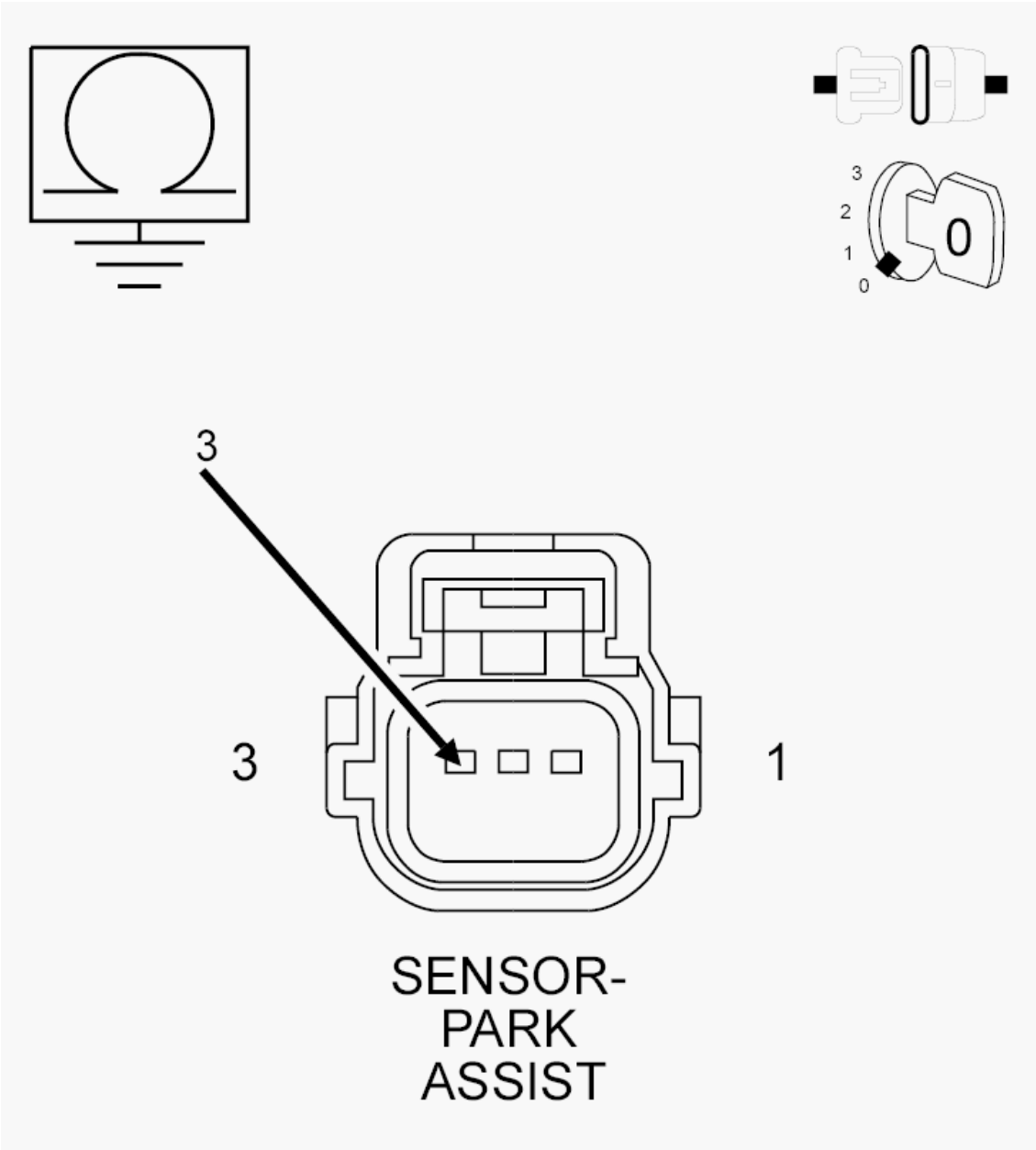

Fig. 21: Measuring Resistance Between Ground & Park Assist Sensor Signal Circuit
Courtesy of CHRYSLER GROUP, LLC

NOTE: Perform this step with the Park Assist Module connected.

1. Measure the resistance between ground and the (D703) Park Assist Sensor 9 Signal circuit.

   Is the resistance below 10K Ohms?

   Yes

   - Go To 5.

No

- Go To 7.

5. **CHECK THE (D703) PARK ASSIST SENSOR 9 SIGNAL CIRCUIT FOR A SHORT TO GROUND WITH THE PARK ASSIST MODULE DISCONNECTED**

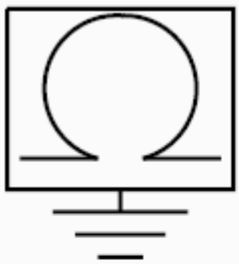

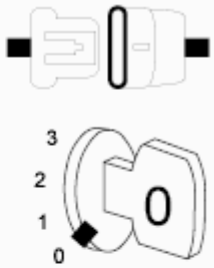

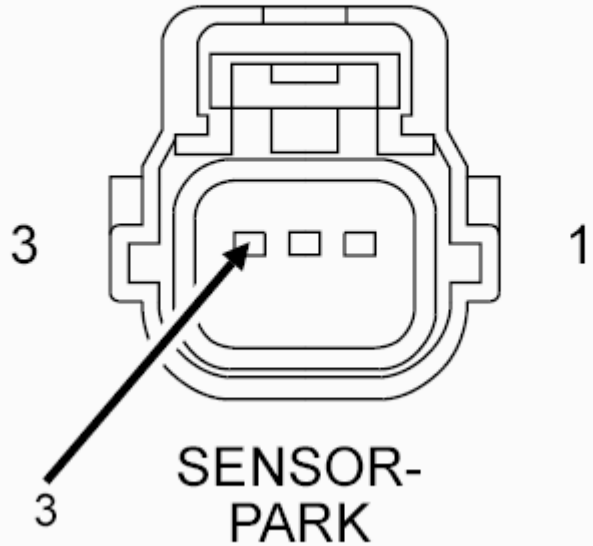

SENSOR-
PARK
ASSIST

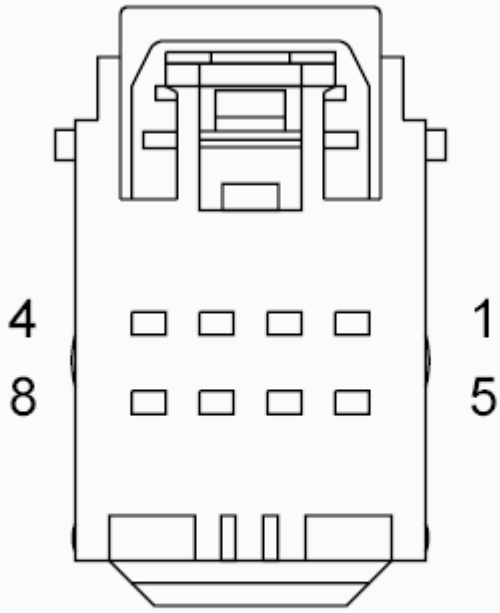

MODULE-
PARK
ASSIST C2

Fig. 22: Measuring Resistance Between Ground & Park Assist Sensor 9 Signal Circuit
Courtesy of CHRYSLER GROUP, LLC

1. Disconnect the Park Assist Module C2 harness connector.
2. Measure the resistance between ground and the (D703) Park Assist Sensor 9 Signal circuit.

   Is the resistance below 10K Ohms?

   Yes

   - Repair the short to ground in the (D703) Park Assist Sensor 9 Signal circuit.
   - Perform the BODY VERIFICATION TEST. Refer to **STANDARD PROCEDURE** .

   No

   - Go To 6.

6. **CHECK THE (D703) PARK ASSIST SENSOR 9 SIGNAL CIRCUIT FOR A SHORT TO THE (X750) PARK ASSIST SENSOR GROUND CIRCUIT**

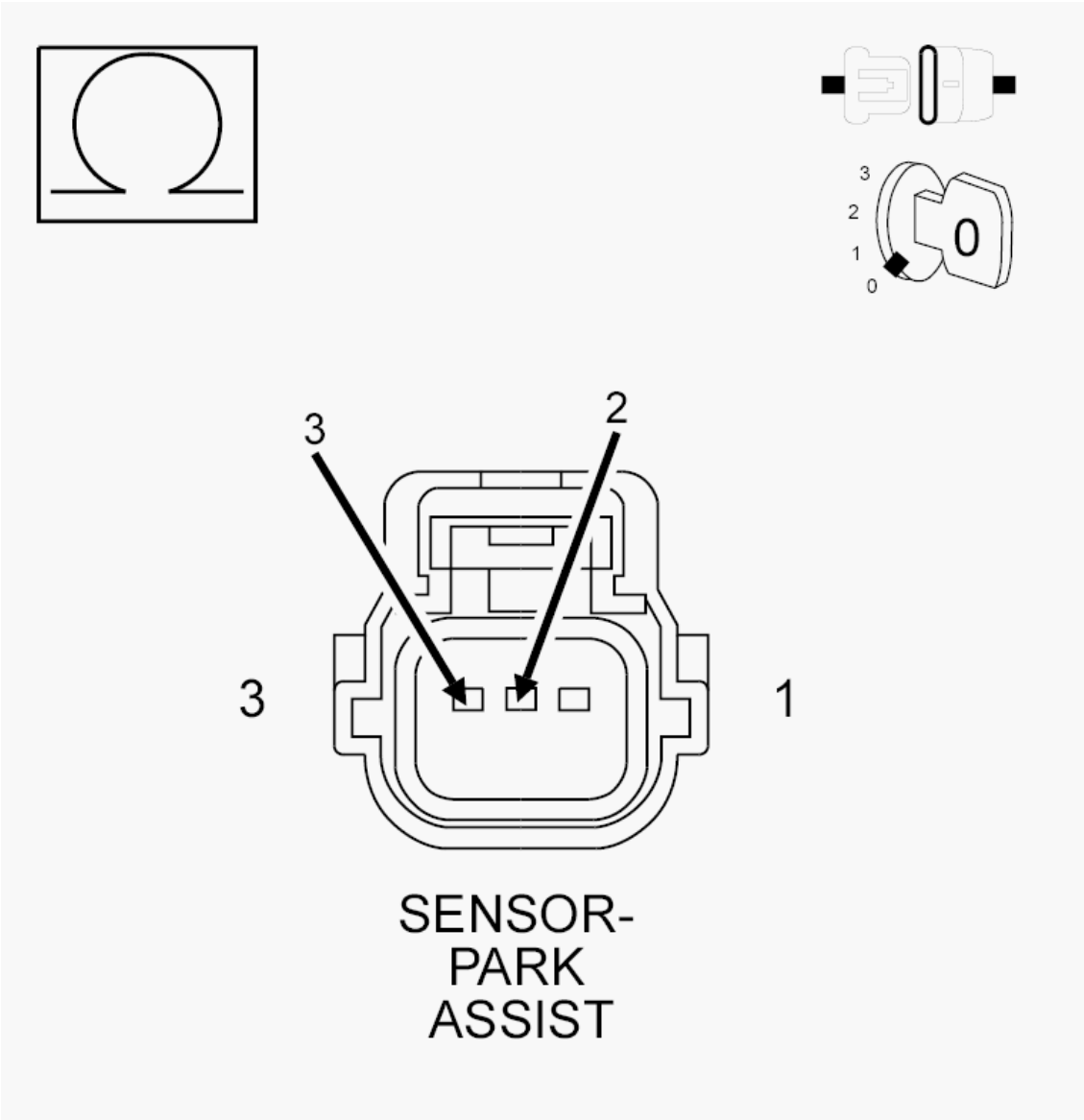

Fig. 23: Measuring Resistance Between Park Assist Sensor Signal Circuit & Park Assist Sensor Ground Circuit
Courtesy of CHRYSLER GROUP, LLC

1. Measure the resistance between the (D703) Park Assist Sensor 9 Signal circuit and the (X750) Park Assist Sensor Ground circuit.

   Is the resistance below 10K Ohms?

   Yes

   - Repair the short between the (D703) Park Assist Sensor 9 Signal circuit and the (X750) Park Assist Sensor Ground circuit.
   - Perform the BODY VERIFICATION TEST. Refer to **STANDARD PROCEDURE** .

No

- Replace the Park Assist Module in accordance with the Service Information. Refer to **MODULE, PARK ASSIST, REMOVAL** .
- Perform the BODY VERIFICATION TEST. Refer to **STANDARD PROCEDURE** .

7. **CHECK THE (D703) PARK ASSIST SENSOR 9 SIGNAL CIRCUIT FOR AN OPEN**

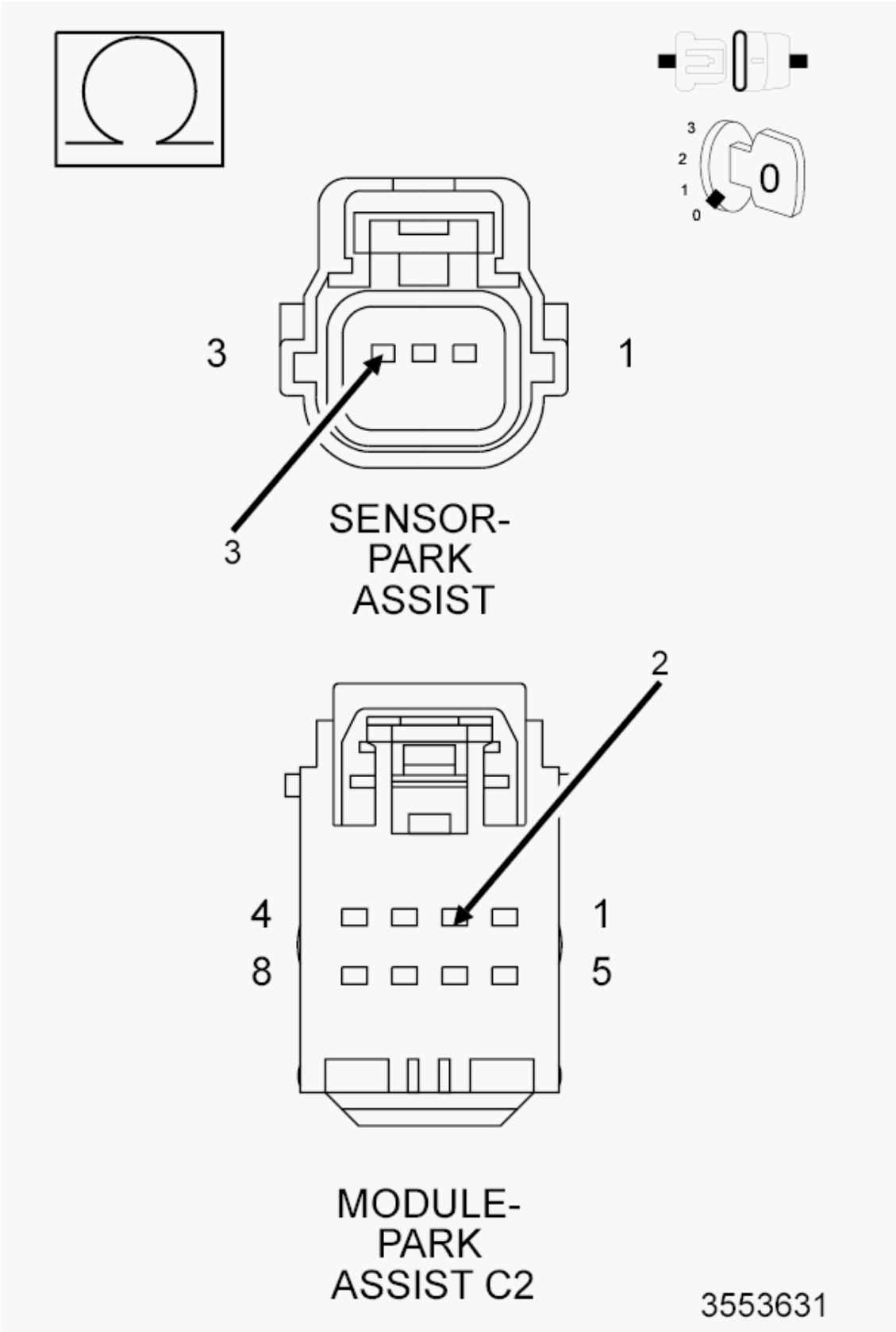

Fig. 24: Checking Park Assist Sensor 9 Signal Circuit For An Open

Courtesy of CHRYSLER GROUP, LLC

1. Disconnect the Park Assist Module C2 harness connector.
2. Measure the resistance of the (D703) Park Assist Sensor 9 Signal circuit.

   Is the resistance above 5.0 Ohms?

   Yes

   - Repair the open in the (D703) Park Assist Sensor 9 Signal circuit.
   - Perform the BODY VERIFICATION TEST. Refer to **STANDARD PROCEDURE** .

   No

   - Go To 8.

8. **PARK ASSIST SENSOR**

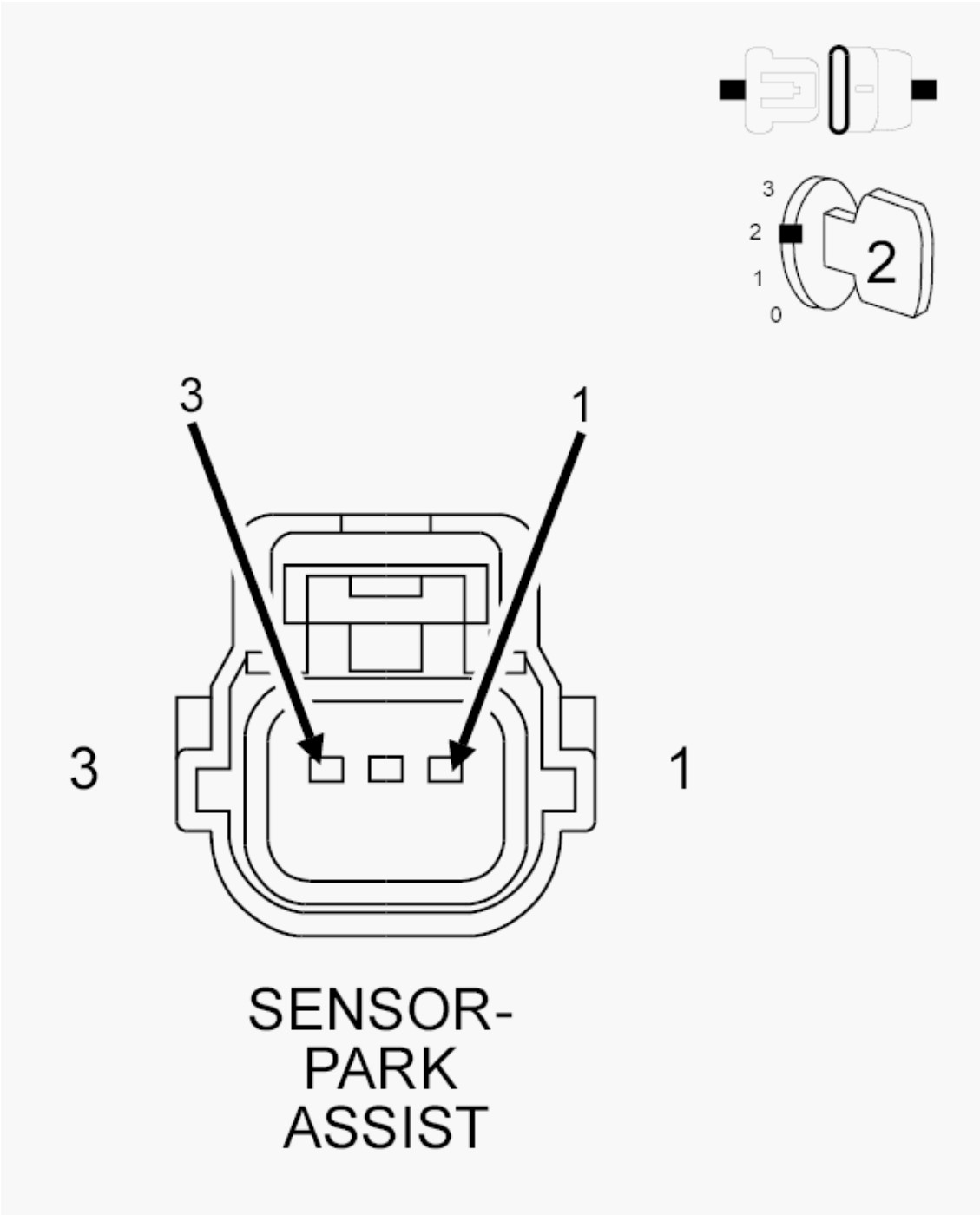

Fig. 25: Park Assist Sensor Connector End View
Courtesy of CHRYSLER GROUP, LLC

1. Turn the ignition on.
2. Reconnect the Park Assist Module C2 harness connector.
3. Connect a jumper wire across the (X700) Park Assist Sensor Supply and (D703) Park Assist Sensor 9 Signal circuits.
4. Turn the ignition on.

5. With the scan tool, read DTC's.

   Does the scan tool display DTC: B1296-12-PTS SENSOR 9 - CIRCUIT SHORT TO BATTERY as active?

   Yes

   - Replace the Park Assist Sensor in accordance with the Service Information. Refer to **SENSOR, PARK ASSIST, REMOVAL** .
   - Perform the BODY VERIFICATION TEST. Refer to **STANDARD PROCEDURE** .

   No

   - Replace the Park Assist Module in accordance with the Service Information. Refer to **MODULE, PARK ASSIST, REMOVAL** .
   - Perform the BODY VERIFICATION TEST. Refer to **STANDARD PROCEDURE** .

B1296-12-PTS SENSOR 9 - CIRCUIT SHORT TO BATTERY

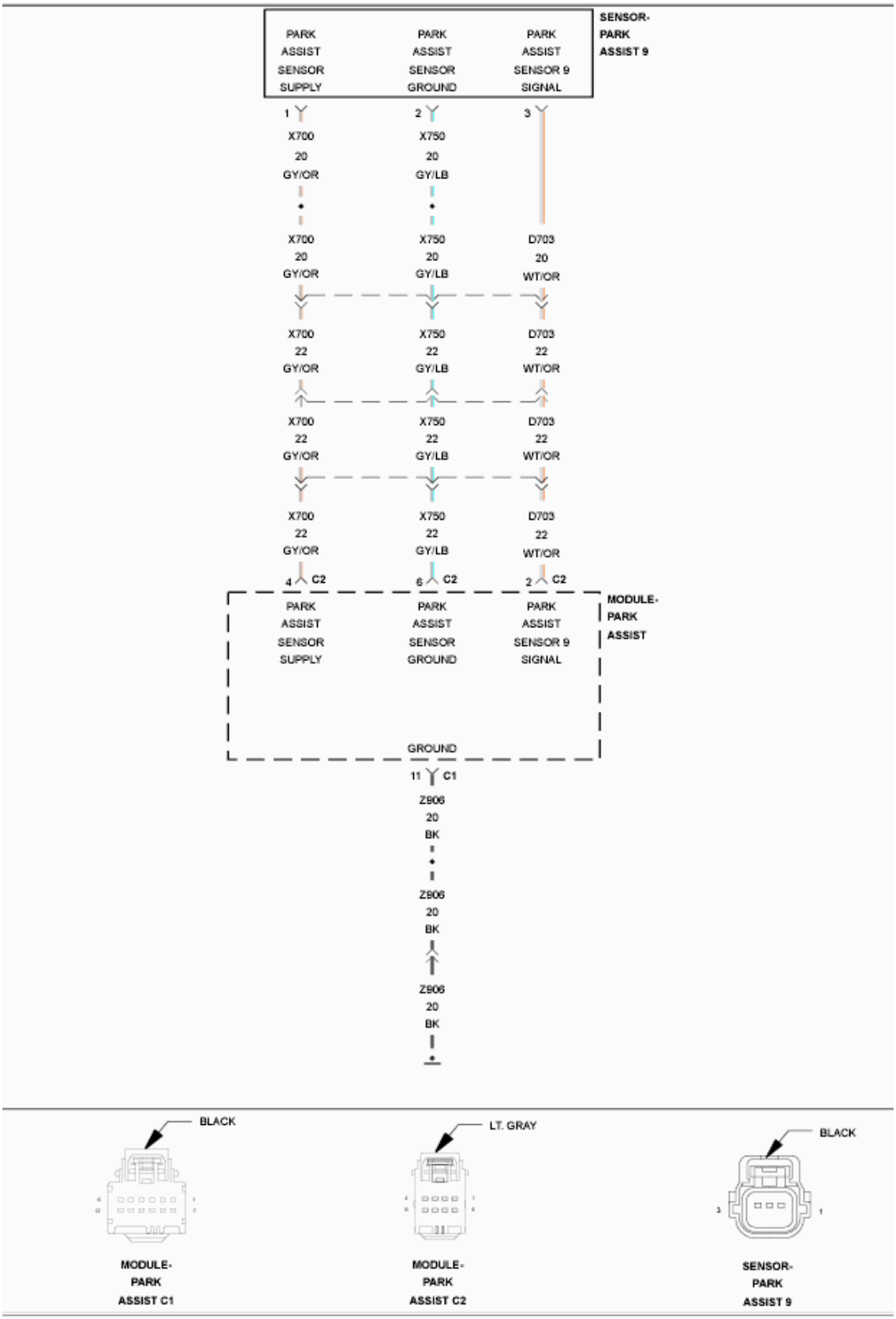

Fig. 26: Park Assist Sensor 9 Wiring Diagram

Courtesy of CHRYSLER GROUP, LLC

For a complete wiring diagram, **refer to appropriate SYSTEM WIRING DIAGRAMS article** .

THEORY OF OPERATION

The Park Assist Sensors are ultrasonic transceivers that are completely controlled by the Park Assist Module. The sensors transmit and receive ultrasonic signals. Each sensor has a voltage, signal, and return circuit to the module. The sensors communicate with the Park Assist Module using a dedicated serial bus communication circuit.

NOTE: **The numbering system for the park assist sensors allows for up to twelve sensors on the vehicle, six front and six rear. The sensors are numbered in a clockwise manner starting at the left front bumper. The left front sensor (if equipped with front park assist) is the number 1 sensor. The numbering continues in a clockwise direction around the vehicle. Since Chrysler Group vehicles use only four rear sensors, sensor numbers 7 and 12 are omitted, so the left rear sensor is the number 11 sensor.**

WHEN MONITORED:

Vehicle in reverse and during the self-test while vehicle is in drive between 18 km/h (11 mph) and 40 km/h (25 mph).

SET CONDITION:

The Park Assist Module detects an open or short to voltage on the Park Assist Sensor Signal circuit.

POSSIBLE CAUSES

Possible Causes
(D703) PARK ASSIST SENSOR 9 SIGNAL CIRCUIT SHORTED TO VOLTAGE
(D703) PARK ASSIST SENSOR 9 SIGNAL CIRCUIT SHORTED TO THE (X700) PARK ASSIST SENSOR SUPPLY CIRCUIT
(X750) PARK ASSIST SENSOR GROUND CIRCUIT OPEN
PARK ASSIST SENSOR
PARK ASSIST MODULE

DIAGNOSTIC TEST

1. **CHECK FOR AN ACTIVE DIAGNOSTIC TROUBLE CODE (DTC)**
    1. Turn the ignition on.
    2. With the scan tool, read DTC's.

    Does the scan tool display this DTC as active?

Yes

- Go To 2.

No

- Test complete, the condition or conditions that originally set this DTC are not present at this time. Using the wiring diagrams as a guide, check all related splices and connectors for signs of water intrusion, corrosion, pushed out or bent terminals, and correct pin tension.
- Perform the BODY VERIFICATION TEST. Refer to **STANDARD PROCEDURE** .

2. **(D703) PARK ASSIST SENSOR 9 SIGNAL CIRCUIT SHORTED TO BATTERY**

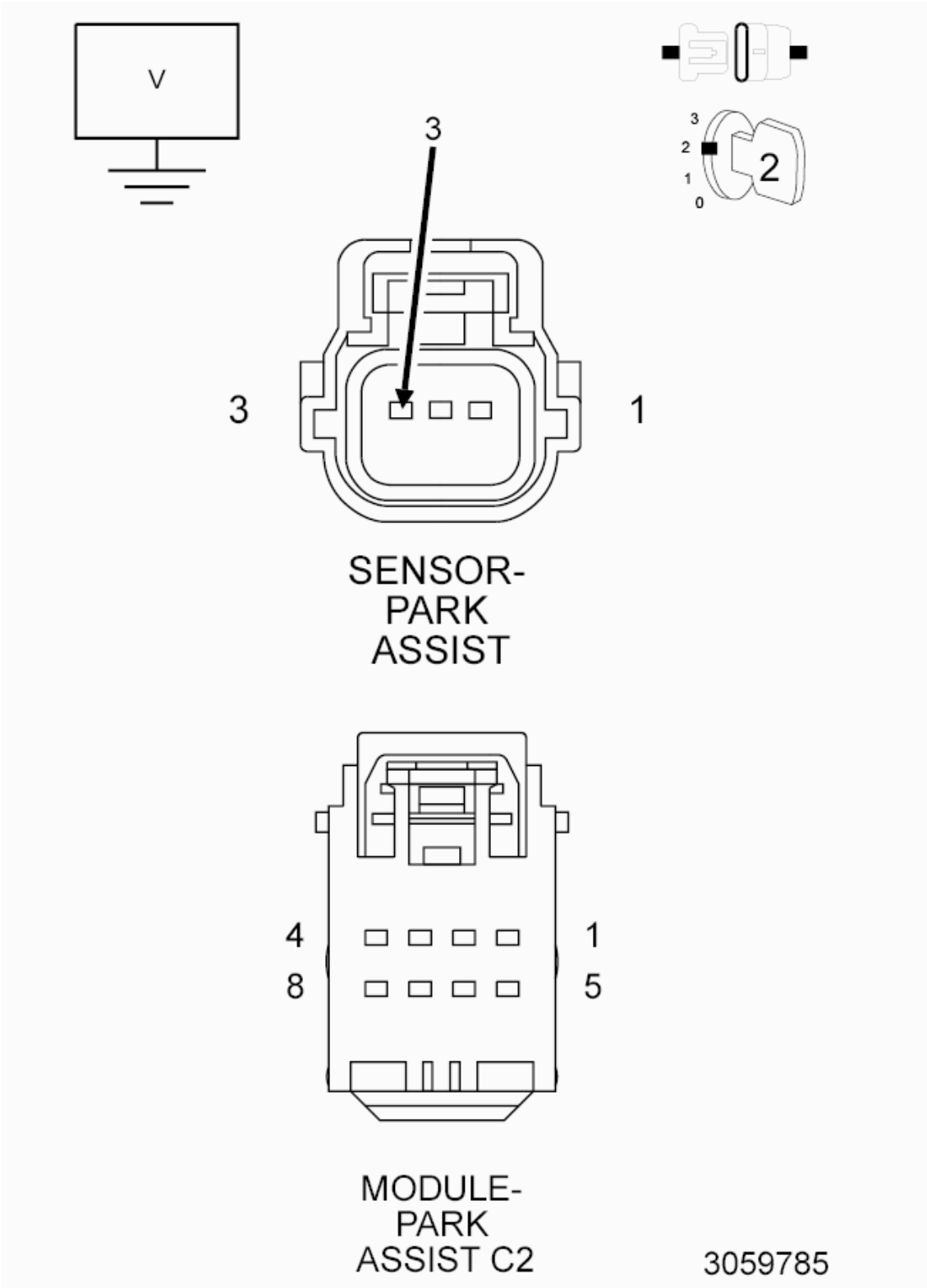

Fig. 27: Measuring Voltage Of Park Assist Sensor 8 Signal Circuit
Courtesy of CHRYSLER GROUP, LLC

1. Turn the ignition off.

2. Disconnect the Park Assist Module C2 harness connector.
3. Disconnect the Park Assist Sensor harness connector.
4. Turn the ignition on.
5. Measure the voltage of the (D703) Park Assist Sensor 9 Signal circuit.

   Is the voltage above 10.0 volts?

   Yes

   - Repair the (D703) Park Assist Sensor 9 Signal circuit for a short to battery.
   - Perform the BODY VERIFICATION TEST. Refer to **STANDARD PROCEDURE** .

   No

   - Go To 3.

3. **(D703) PARK ASSIST SENSOR 9 SIGNAL CIRCUIT SHORTED TO THE (X700) PARK ASSIST SENSOR SUPPLY CIRCUIT**

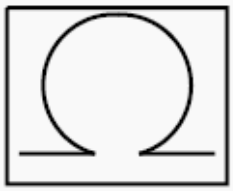

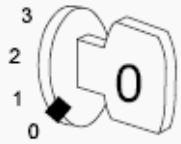

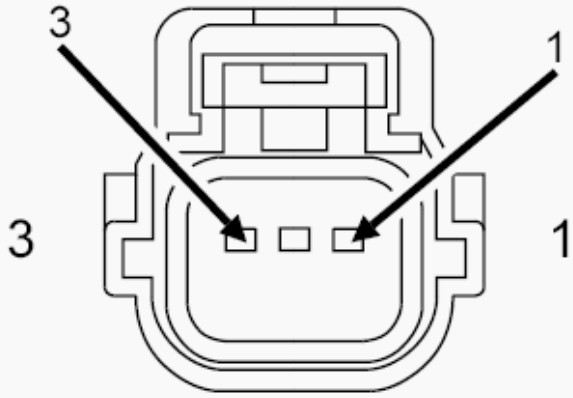

SENSOR-
PARK
ASSIST

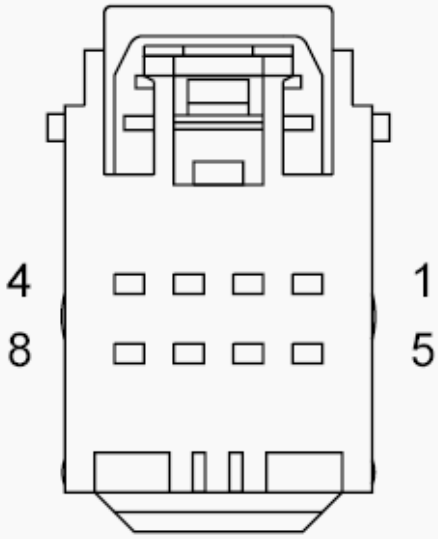

MODULE-
PARK
ASSIST C2

3060400

Fig. 28: Measuring Resistance Between Park Assist Sensor Signal Circuit & Park Assist Sensor Supply Circuit
Courtesy of CHRYSLER GROUP, LLC

1. Turn the ignition off.
2. Measure the resistance between the (D703) Park Assist Sensor 9 Signal circuit and the (X700) Park Assist Sensor Supply circuit.

   Is the resistance below 10K Ohms?

   Yes

   - Repair the (D703) Park Assist Sensor 9 Signal circuit for a short to the (X700) Park Assist Sensor Supply circuit.
   - Perform the BODY VERIFICATION TEST. Refer to **STANDARD PROCEDURE** .

   No

   - Go To 4.

4. **(X750) PARK ASSIST SENSOR GROUND CIRCUIT OPEN**

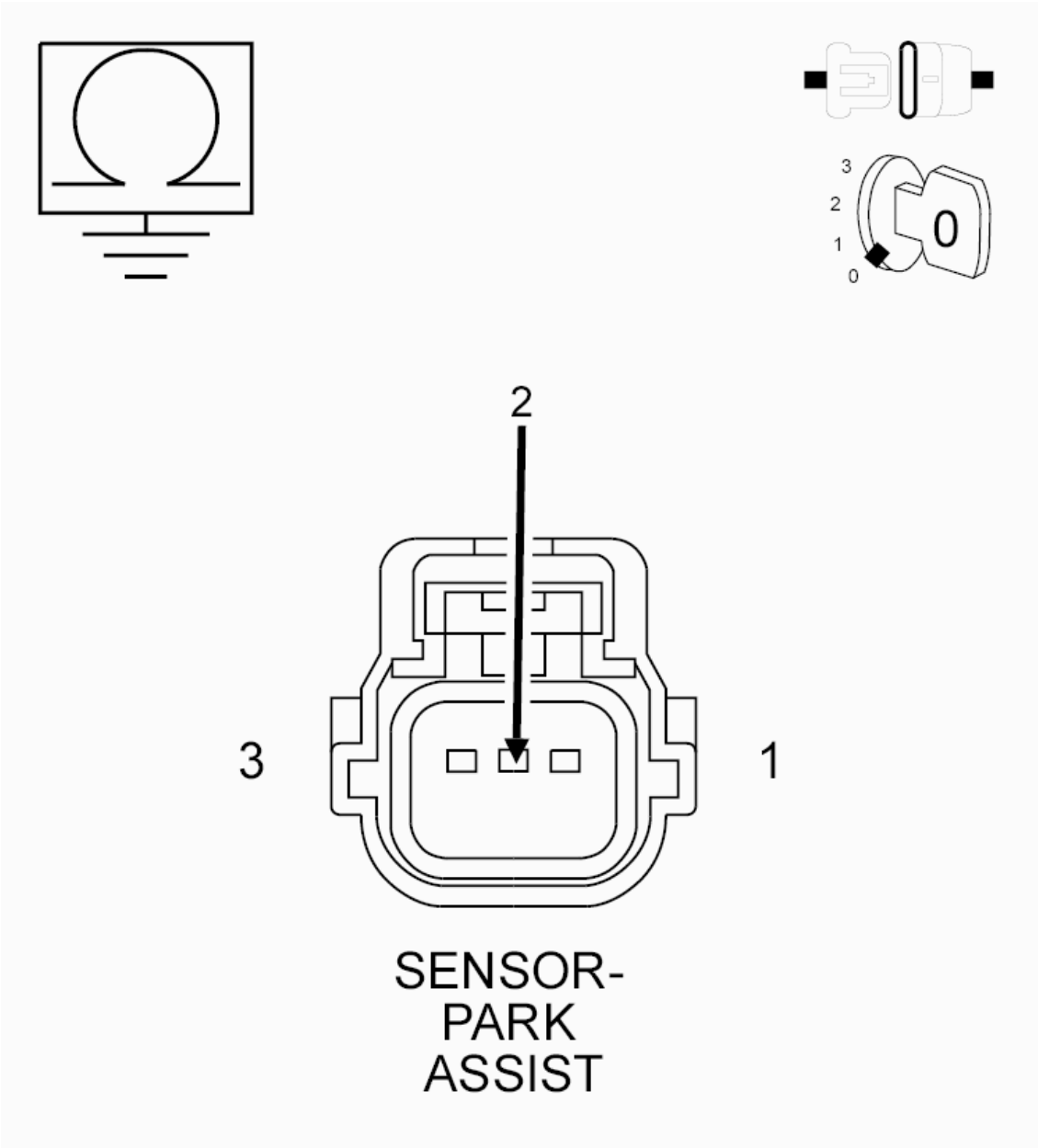

Fig. 29: Checking Park Assist Sensor Ground Circuit For An Open
Courtesy of CHRYSLER GROUP, LLC

1. Reconnect the Park Assist Module C2 harness connector.
2. Measure the resistance between ground and the (X750) Park Assist Sensor Ground circuit.

   Is the resistance above 20.0 Ohms?

   Yes

   - Go To 5.

No

- Replace the Park Assist Sensor that caused this DTC to change from active to stored after disconnecting it in accordance with the Service Information. Refer to **SENSOR, PARK ASSIST, REMOVAL** .
- Perform the BODY VERIFICATION TEST. Refer to **STANDARD PROCEDURE** .

5. **(X750) PARK ASSIST SENSOR GROUND CIRCUIT OPEN BETWEEN PARK ASSIST MODULE AND SENSOR**

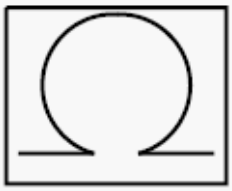

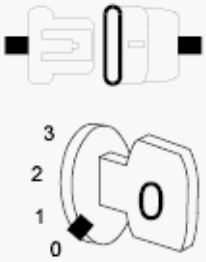

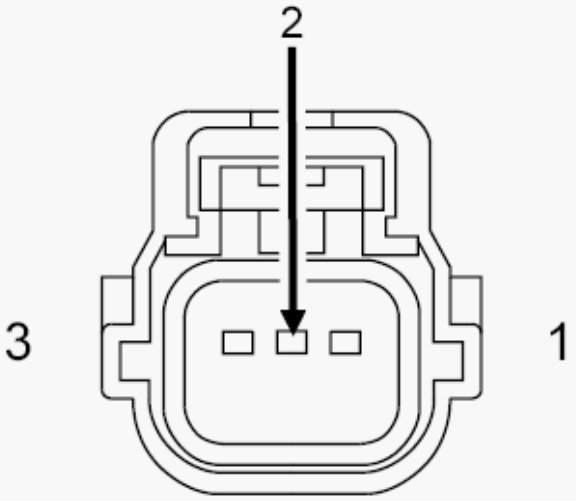

SENSOR-
PARK
ASSIST

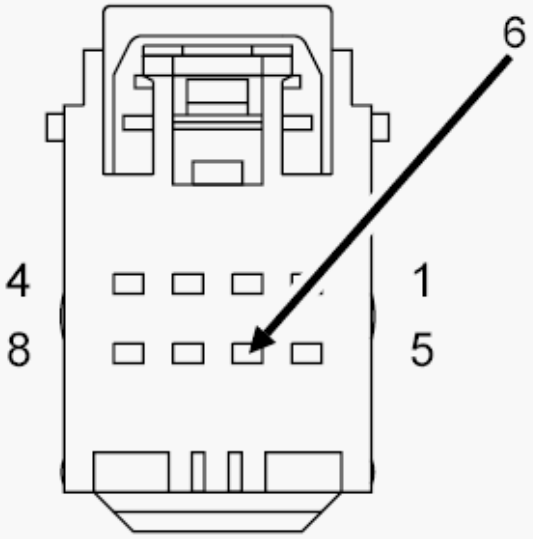

MODULE-
PARK
ASSIST C2

3060659

Fig. 30: Checking Park Assist Sensor Ground Circuit For An Open Between Park Assist Module And Sensor
Courtesy of CHRYSLER GROUP, LLC

1. Disconnect the Park Assist Module C2 harness connector.
2. Measure the resistance of the (X750) Park Assist Sensor Ground circuit.

   Is the resistance above 5.0 Ohms?

   Yes

   - Repair the open in the (X750) Park Assist Sensor Ground circuit.
   - Perform the BODY VERIFICATION TEST. Refer to **STANDARD PROCEDURE** .

   No

   - Replace the Park Assist Module in accordance with the Service Information. Refer to **MODULE, PARK ASSIST, REMOVAL** .
   - Perform the BODY VERIFICATION TEST. Refer to **STANDARD PROCEDURE** .

B1296-25-PTS SENSOR 9 - SIGNAL SHAPE / WAVEFORM FAILURE

For a complete wiring diagram, **refer to appropriate SYSTEM WIRING DIAGRAMS article** .

NOTE: **The numbering system for the park assist sensors allows for up to twelve sensors on the vehicle, six front and six rear. The sensors are numbered in a clockwise manner starting at the left front bumper. The left front sensor (if equipped with front park assist) is the number 1 sensor. The numbering continues in a clockwise direction around the vehicle. Since Chrysler LLC vehicles use only four rear sensors, sensor numbers 7 and 12 are omitted, so the left rear sensor is the number 11 sensor.**

WHEN MONITORED:

Vehicle in reverse.

During the self-test while vehicle is in drive between 11 mph (18 km/h) and 25 mph (40 km/h).

SET CONDITION:

The Park Assist Module detects an internal Sensor error.

POSSIBLE CAUSES

Possible Causes
PARK ASSIST SENSOR MEMBRANE OBSTRUCTION (ICE, SNOW, MUD, DIRT COVERING

FASCIA)
PARK ASSIST SENSOR CONNECTOR OBSTRUCTION (ICE, SNOW, MUD, DIRT)
DECOUPLING RING MISSING/MOUNTED WRONG
OBJECTS - SUCH AS LICENSE PLATES - IN CLOSE RANGE TO THE SENSOR
PARK ASSIST SENSOR

DIAGNOSTIC TEST

1. **CHECK FOR AN ACTIVE DTC**

   NOTE: Before proceeding with this diagnostic procedure, remove any ice, snow, mud, dirt, or other obstructions from the front/rear fascia/bumper. Also remove any ice, snow, dirt, mud, or other obstructions from the underside of the Fascia/Bumper surrounding the sensors.

   1. Turn the ignition on.
   2. With the scan tool, read DTC's.

      Is this DTC active?

      Yes

      - Go To 2.

      No

      - Test complete, the condition or conditions that originally set this DTC are not present at this time. Using the wiring diagrams as a guide, check all related splices and connectors for signs of water intrusion, corrosion, pushed out or bent terminals, and correct pin tension.
2. **PARK ASSIST SENSOR**
   1. Verify that none of the possible causes mentioned above are present. Repair as necessary.

      If none of the possible causes mentioned above are present, view repair.

      Repair

      - Replace the Park Assist Sensor in accordance with the Service Information.
      - Perform the BODY VERIFICATION TEST. Refer to **STANDARD PROCEDURE** .

B1296-92-PTS SENSOR 9 - PERFORMANCE OR INCORRECT OPERATION

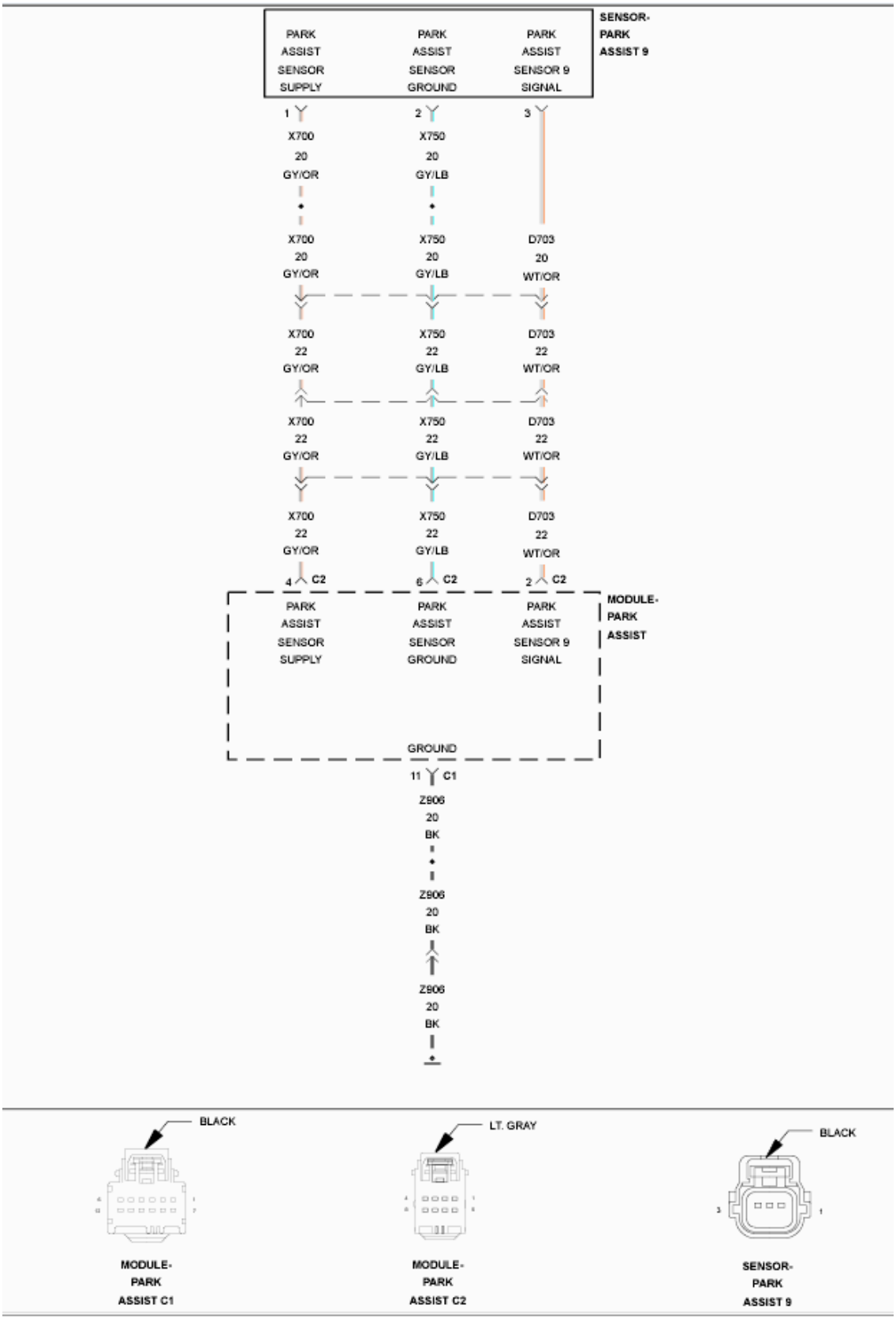

Fig. 31: Park Assist Sensor 9 Wiring Diagram

Courtesy of CHRYSLER GROUP, LLC

For a complete wiring diagram, **refer to appropriate SYSTEM WIRING DIAGRAMS article** .

THEORY OF OPERATION

The Park Assist Sensors are ultrasonic transceivers that are completely controlled by the Park Assist Module. The sensors transmit and receive ultrasonic signals. Each sensor has a voltage, signal, and return circuit to the module. The sensors communicate with the Park Assist Module using a dedicated serial bus communication circuit.

NOTE: **The numbering system for the park assist sensors allows for up to twelve sensors on the vehicle, six front and six rear. The sensors are numbered in a clockwise manner starting at the left front bumper. The left front sensor (if equipped with front park assist) is the number 1 sensor. The numbering continues in a clockwise direction around the vehicle. Since Chrysler Group vehicles use only four rear sensors, sensor numbers 7 and 12 are omitted, so the left rear sensor is the number 11 sensor.**

WHEN MONITORED:

During Reverse and during self test in Forward between 11 mph (18 km/h) and 25 mph (40 km/h).

SET CONDITION:

If the system detects data corruption in the transmission in the internal communication line between the module and sensors.

POSSIBLE CAUSES

Possible Causes
(D703) PTS SENSOR 9 SIGNAL CIRCUIT SHORTED TO GROUND
(D703) PTS SENSOR 9 SIGNAL CIRCUIT SHORTED TO BATTERY
(D703) PTS SENSOR 9 SIGNAL CIRCUIT OPEN
PARK ASSIST SENSOR 9
PARK ASSIST MODULE

DIAGNOSTIC TEST

1. **TEST FOR INTERMITTENT CONDITION**
    1. Turn the ignition on.
    2. With the scan tool, read the active DTC's.

    Does the scan tool display this DTC as active?

    Yes

- Go To 2.

No

- Test complete, the condition or conditions that originally set this DTC are not present at this time. Using the wiring diagrams as a guide, check all related splices and connectors for signs of water intrusion, corrosion, pushed out or bent terminals, and correct pin tension.
- Perform the BODY VERIFICATION TEST. Refer to **STANDARD PROCEDURE** .

2. **CHECK PARK ASSIST SENSOR 9 FOR INTERNAL SHORT**
   1. Disconnect the Park Assist Sensor 9 harness connector.
   2. With the scan tool, read the active DTC's.

   Does the scan tool display this DTC as active?

   Yes

   - Go To 3.

   No

   - Replace the Park Assist Sensor 9 in accordance with the Service Information. Refer to **SENSOR, PARK ASSIST, REMOVAL** .
   - Perform the BODY VERIFICATION TEST. Refer to **STANDARD PROCEDURE** .
3. **CHECK THE (D703) PARK ASSIST SENSOR 9 SIGNAL CIRCUIT FOR A SHORT TO GROUND**

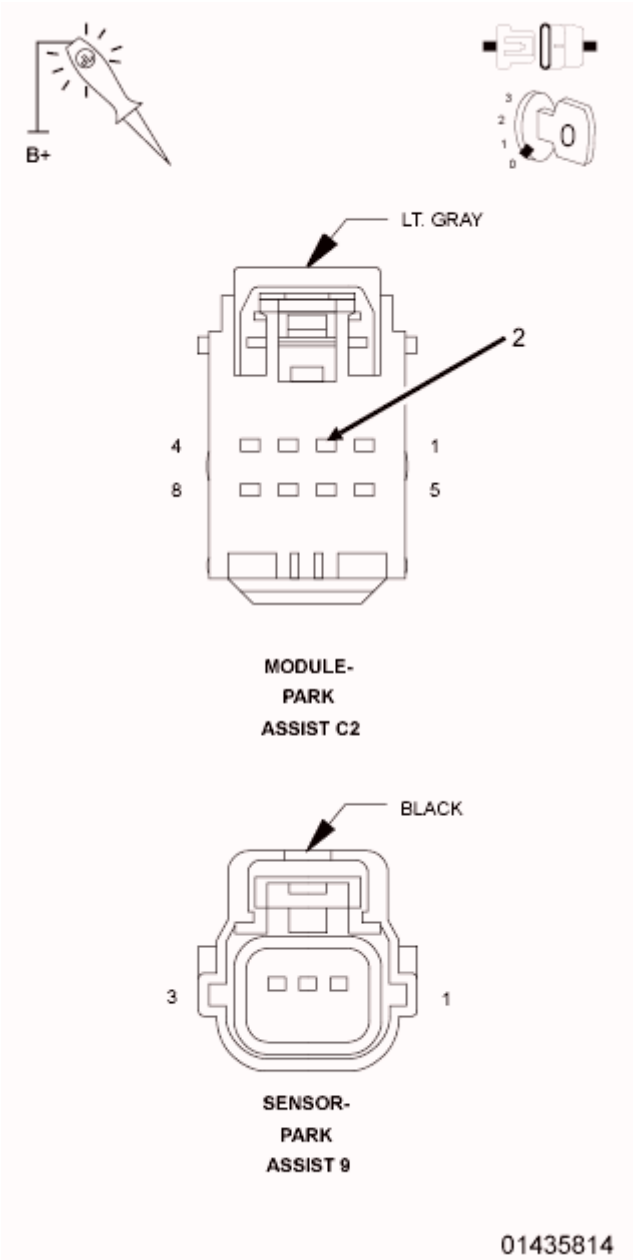

Fig. 32: Checking Park Assist Sensor Signal Circuit For A Short To Ground
Courtesy of CHRYSLER GROUP, LLC

1. Turn the ignition off.
2. Disconnect the Park Assist Module C2 harness connector.
3. Using a 12-volt test light connected to 12-volts, check the (D703) Park Assist Sensor 9 Signal circuit at the Park Assist Module C2 harness connector.

   Does the test light illuminate brightly?

   Yes

- Repair the short to ground in the (D703) Park Assist Sensor 9 Signal circuit.
- Perform the BODY VERIFICATION TEST. Refer to **STANDARD PROCEDURE** .

No

- Go To 4.

4. **CHECK THE (D703) PARK ASSIST SENSOR 9 SIGNAL CIRCUIT FOR A SHORT TO BATTERY**

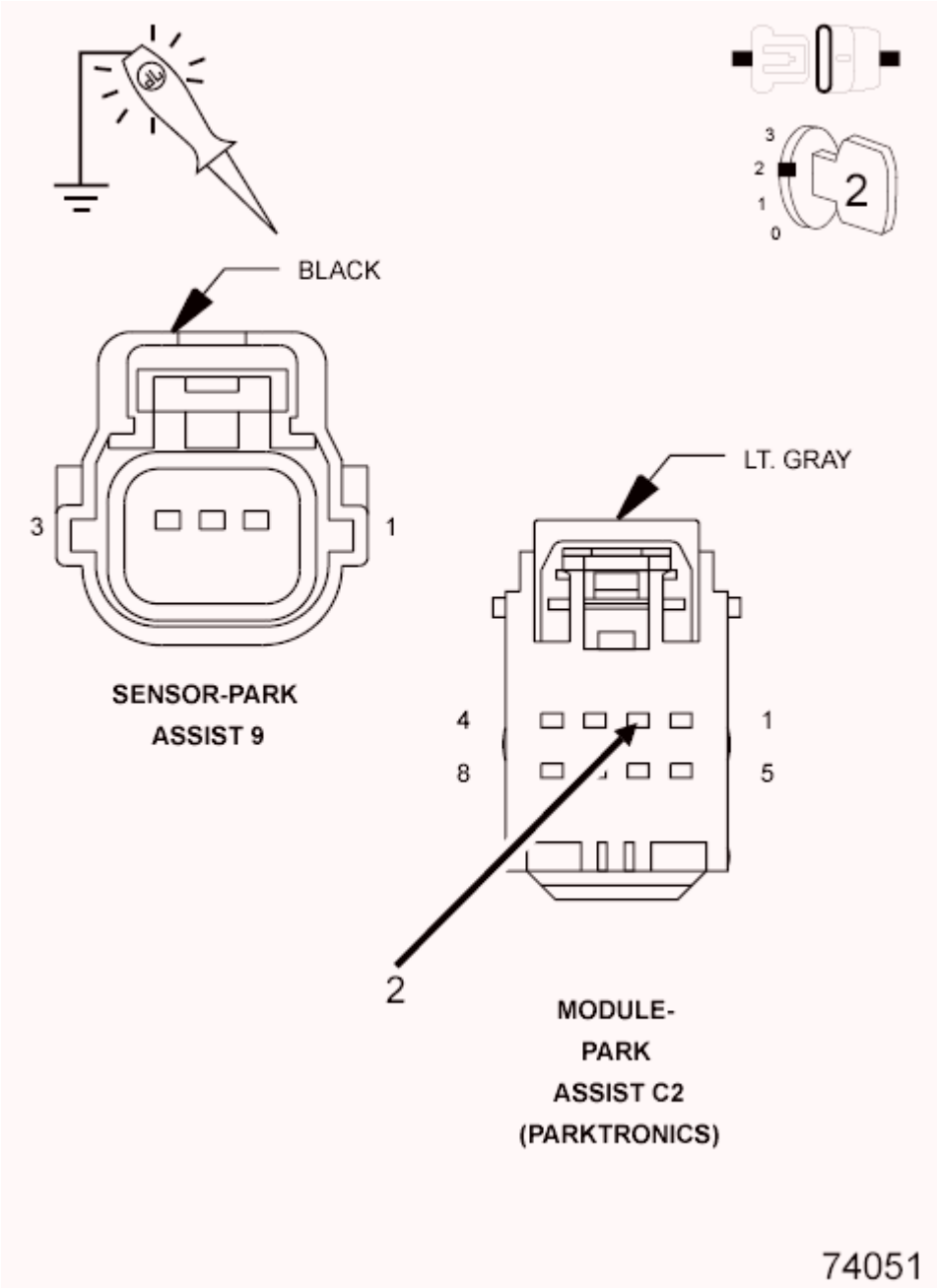

Fig. 33: Checking Park Assist Sensor Signal Circuit For A Short To Battery

Courtesy of CHRYSLER GROUP, LLC

1. Turn the ignition on.
2. Using a 12-volt test light connected to ground, check the (D703) Park Assist Sensor 9 Signal circuit at the Park Assist Module C2 harness connector.

   Does the test light illuminate brightly?

   Yes

   - Repair the short to voltage in the (D703) Park Assist Sensor 9 Signal circuit.
   - Perform the BODY VERIFICATION TEST. Refer to **STANDARD PROCEDURE** .

   No

   - Go To 5.

5. **CHECK THE (D703) PARK ASSIST SENSOR 9 SIGNAL CIRCUIT FOR AN OPEN**

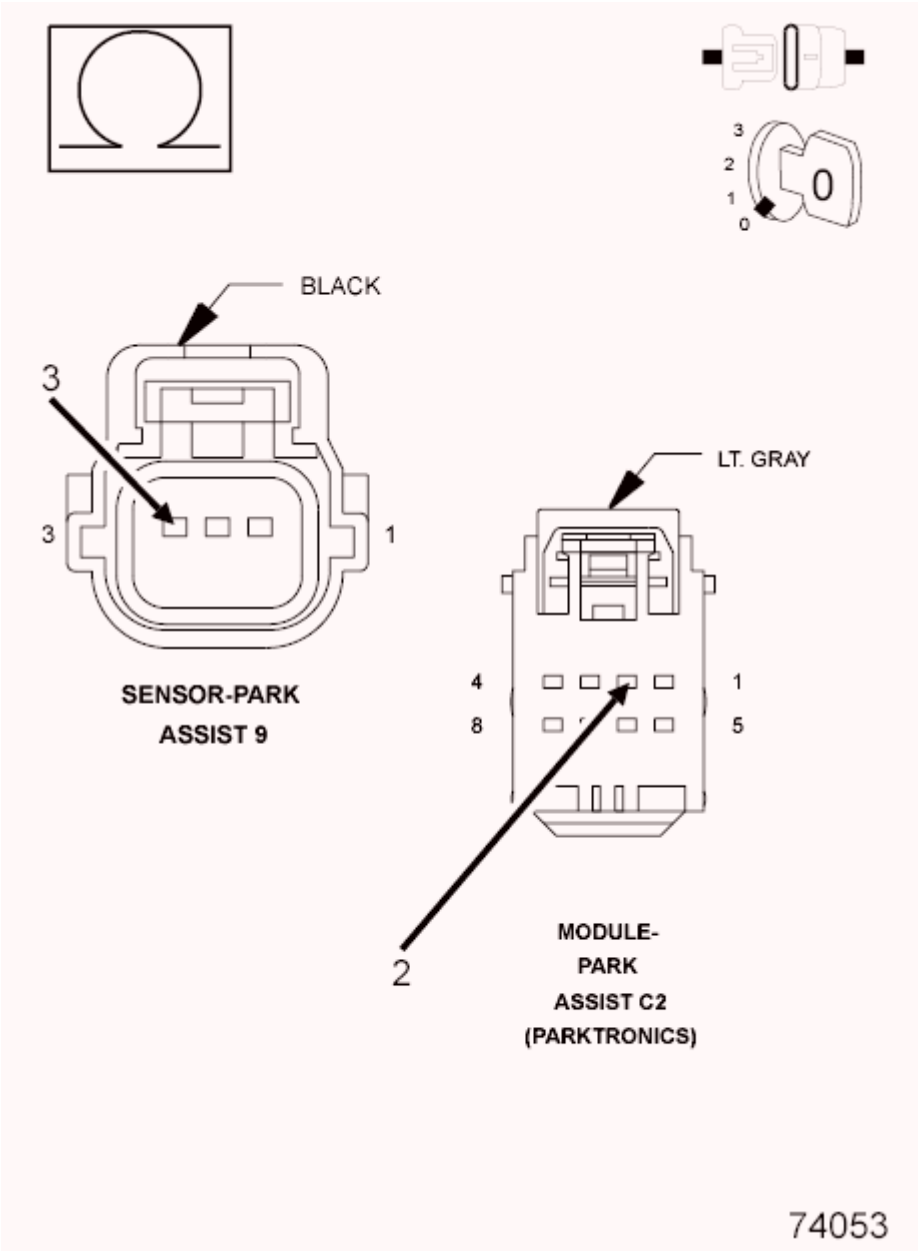

Fig. 34: Checking Park Assist Sensor Signal Circuit For An Open
Courtesy of CHRYSLER GROUP, LLC

1. Measure the resistance of the (D703) Park Assist Sensor 9 Signal circuit between the Park Assist Module C2 harness connector and the Park Assist Sensor 9 harness connector.

   Is the resistance above 5.0 Ohms?

   Yes

   - Repair the open in the (D703) Park Assist Sensor 9 Signal circuit.
   - Perform the BODY VERIFICATION TEST. Refer to **STANDARD PROCEDURE** .

No

- Replace the Park Assist Module in accordance with Service Information. Refer to **MODULE, PARK ASSIST, REMOVAL** .
- Perform the BODY VERIFICATION TEST. Refer to **STANDARD PROCEDURE** .

B1297-11-PTS SENSOR 10 - CIRCUIT SHORT TO GROUND

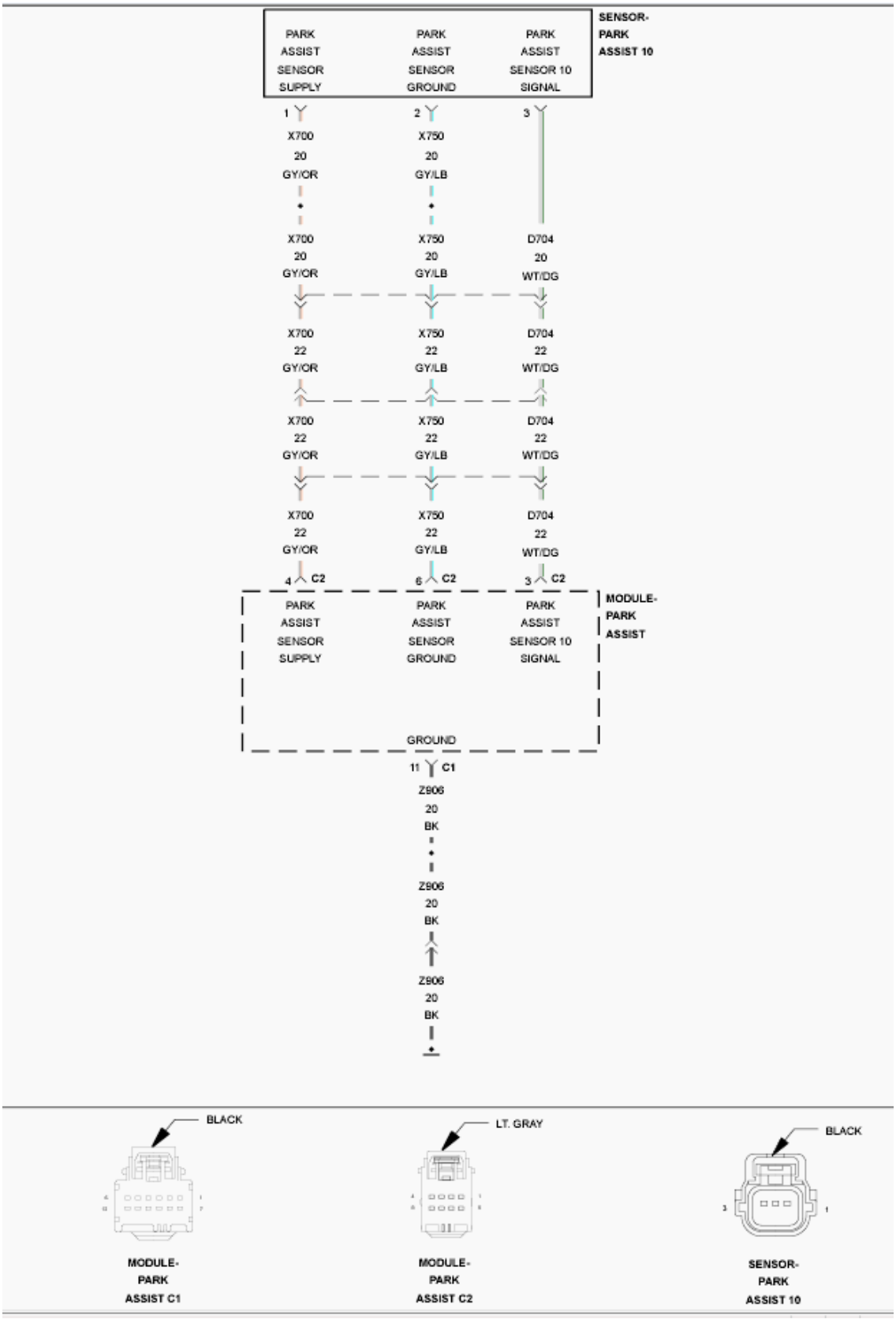

Fig. 35: Park Assist Sensor 10 Wiring Diagram

Courtesy of CHRYSLER GROUP, LLC

For a complete wiring diagram, **refer to appropriate SYSTEM WIRING DIAGRAMS article** .

THEORY OF OPERATION

The Park Assist Sensors are ultrasonic transceivers that are completely controlled by the Park Assist Module. The sensors transmit and receive ultrasonic signals. Each sensor has a voltage, signal, and return circuit to the module. The sensors communicate with the Park Assist Module using a dedicated serial bus communication circuit.

NOTE: **The numbering system for the park assist sensors allows for up to twelve sensors on the vehicle, six front and six rear. The sensors are numbered in a clockwise manner starting at the left front bumper. The left front sensor (if equipped with front park assist) is the number 1 sensor. The numbering continues in a clockwise direction around the vehicle. Since Chrysler Group vehicles use only four rear sensors, sensor numbers 7 and 12 are omitted, so the left rear sensor is the number 11 sensor.**

WHEN MONITORED:

Vehicle in reverse and during the self-test while vehicle is in drive between 18 km/h (11 mph) and 40 km/h (25 mph).

SET CONDITION:

The Park Assist Module detects a short to ground on the Park Assist Sensor Signal circuit.

POSSIBLE CAUSES

Possible Causes
PARK ASSIST SENSOR DISCONNECTED
(D704) PARK ASSIST SENSOR 10 SIGNAL CIRCUIT SHORTED TO GROUND
(D704) PARK ASSIST SENSOR 10 SIGNAL CIRCUIT SHORTED TO THE (X750) PARK ASSIST SENSOR GROUND CIRCUIT
(D704) PARK ASSIST SENSOR 10 SIGNAL CIRCUIT OPEN
(X700) PARK ASSIST SENSOR SUPPLY CIRCUIT OPEN
PARK ASSIST SENSOR
PARK ASSIST MODULE

DIAGNOSTIC TEST

1. **CHECK FOR AN ACTIVE DIAGNOSTIC TROUBLE CODE (DTC)**

   NOTE: **A disconnected sensor will set this DTC. Verify the Park Assist Sensor is connected before proceeding with this diagnostic procedure.**

1. Turn the ignition on.
2. With the scan tool, read DTC's.

   Does the scan tool display this DTC as active?

   Yes

   - Go To 2.

   No

   - Test complete, the condition or conditions that originally set this DTC are not present at this time. Using the wiring diagrams as a guide, check all related splices and connectors for signs of water intrusion, corrosion, pushed out or bent terminals, and correct pin tension.
   - Perform the BODY VERIFICATION TEST. Refer to **STANDARD PROCEDURE** .

2. **CHECK THE VOLTAGE OF THE (X700) PARK ASSIST SENSOR SUPPLY CIRCUIT**

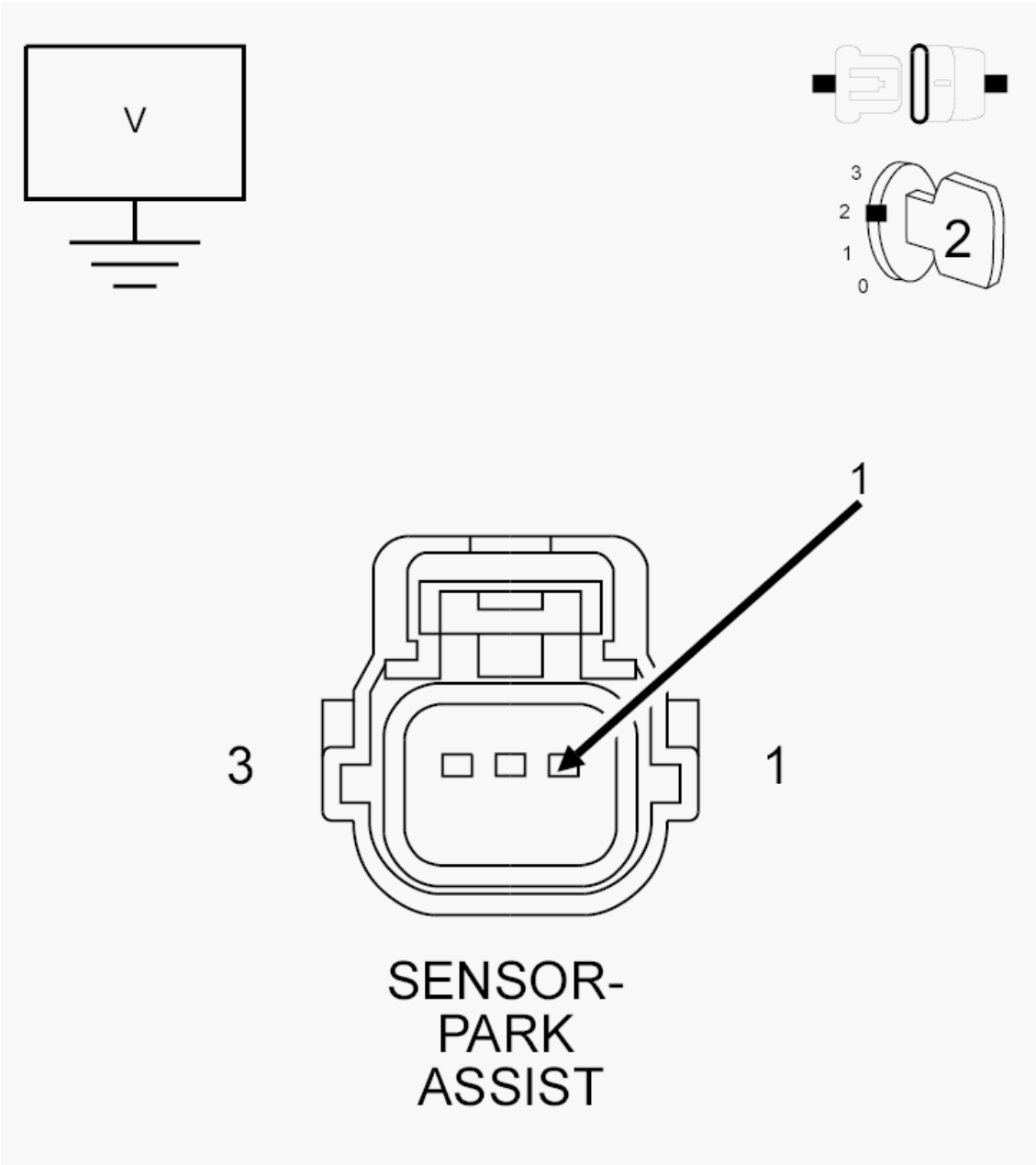

Fig. 36: Measuring Voltage Of Park Assist Sensor Supply Circuit
Courtesy of CHRYSLER GROUP, LLC

1. Turn the ignition off.
2. Disconnect the Park Assist Sensor harness connector.
3. Turn the ignition on.
4. Measure the voltage of the (X700) Park Assist Sensor Supply circuit.

   Is the voltage above 8.0 volts?

   Yes

- Go To 4.

No

- Go To 3.

3. **CHECK THE (X700) PARK ASSIST SENSOR SUPPLY CIRCUIT FOR AN OPEN OR HIGH RESISTANCE**

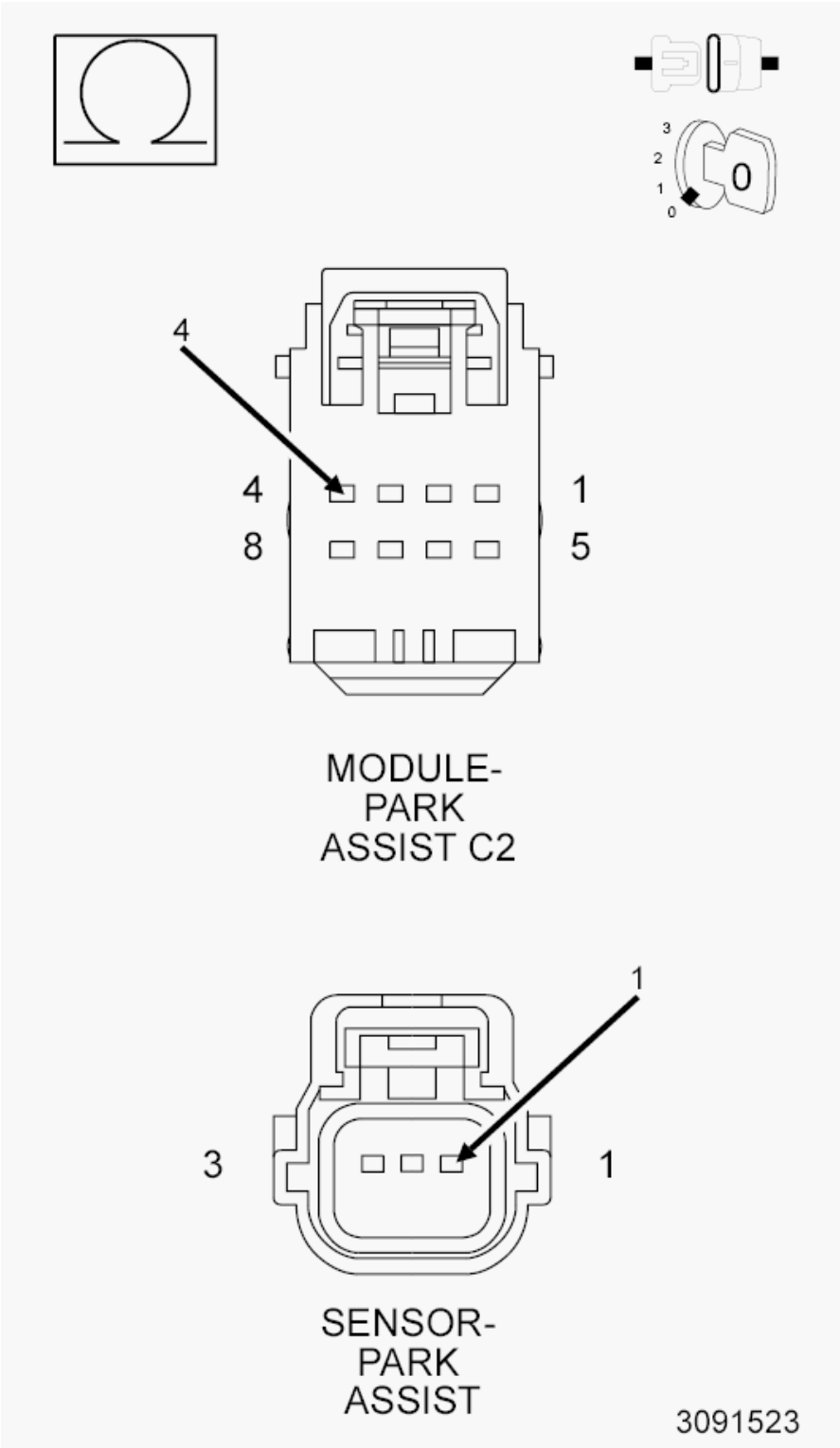

Fig. 37: Measuring Resistance Of Park Assist Sensor Supply Circuit
Courtesy of CHRYSLER GROUP, LLC

1. Turn the ignition off.
2. Disconnect the Park Assist Module C2 harness connector.

3. Measure the resistance of the (X700) Park Assist Sensor Supply circuit.

   Is the resistance below 5.0 Ohms?

   Yes

   - Replace the Park Assist Module in accordance with the Service Information. Refer to **MODULE, PARK ASSIST, REMOVAL** .
   - Perform the BODY VERIFICATION TEST. Refer to **STANDARD PROCEDURE** .

   No

   - Repair the open or high resistance in the (X700) Park Assist Sensor Supply circuit.
   - Perform the BODY VERIFICATION TEST. Refer to **STANDARD PROCEDURE** .

4. **CHECK THE (D704) PARK ASSIST SENSOR 10 SIGNAL CIRCUIT FOR A SHORT TO GROUND WITH THE PARK ASSIST MODULE CONNECTED**

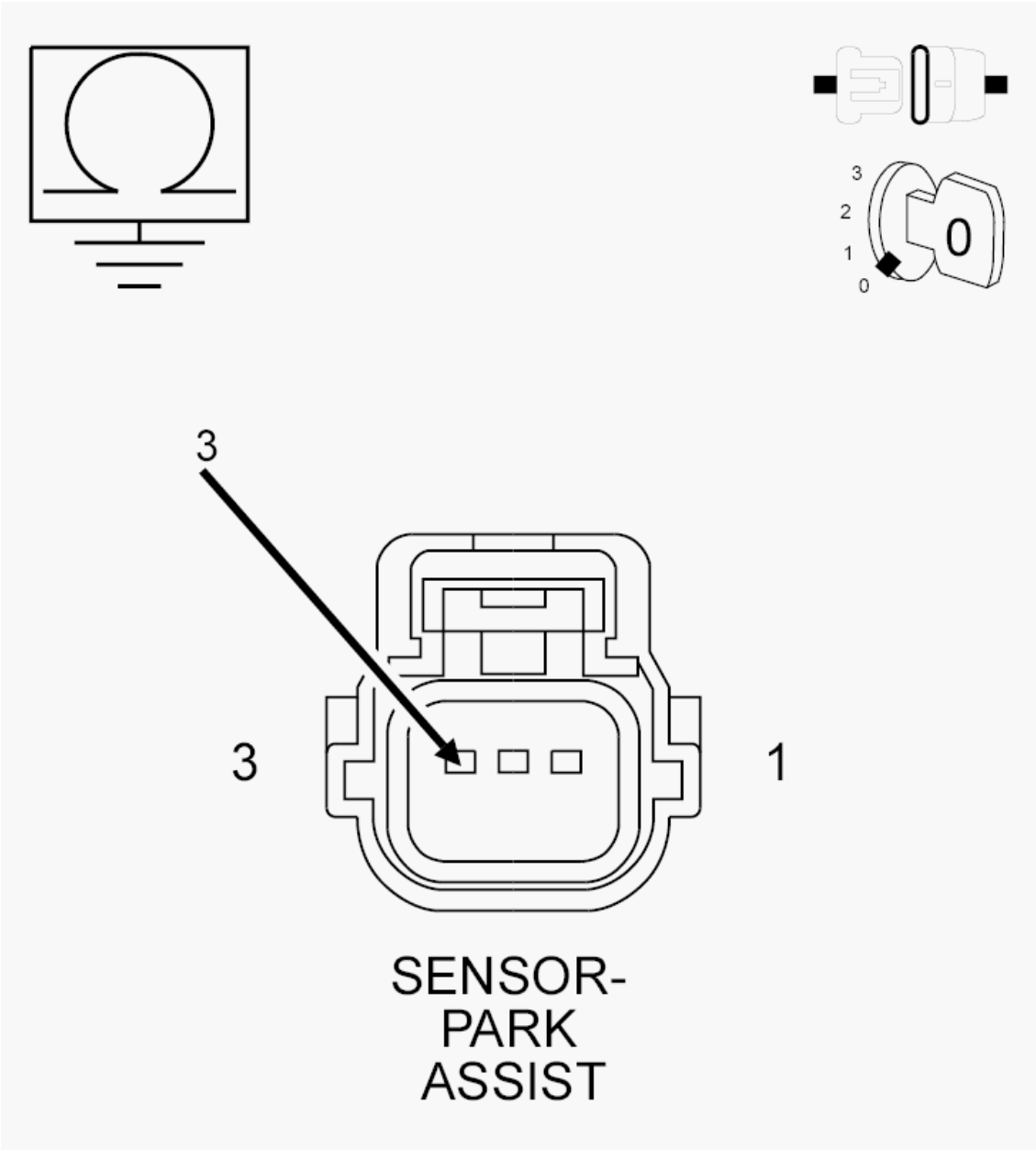

Fig. 38: Measuring Resistance Between Ground & Park Assist Sensor Signal Circuit
Courtesy of CHRYSLER GROUP, LLC

NOTE: Perform this step with the Park Assist Module connected.

1. Measure the resistance between ground and the (D704) Park Assist Sensor 10 Signal circuit.

   Is the resistance below 10K Ohms?

   Yes

   - Go To 5.

No

- Go To 7.

5. **CHECK THE (D704) PARK ASSIST SENSOR 10 SIGNAL CIRCUIT FOR A SHORT TO GROUND WITH THE PARK ASSIST MODULE DISCONNECTED**

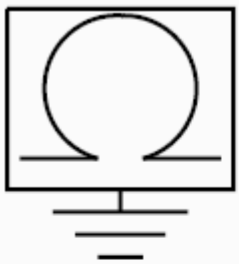

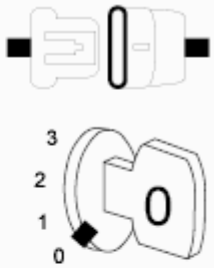

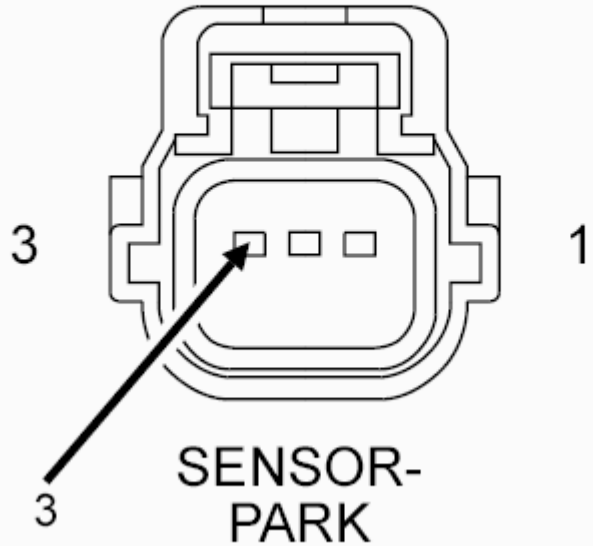

SENSOR-
PARK
ASSIST

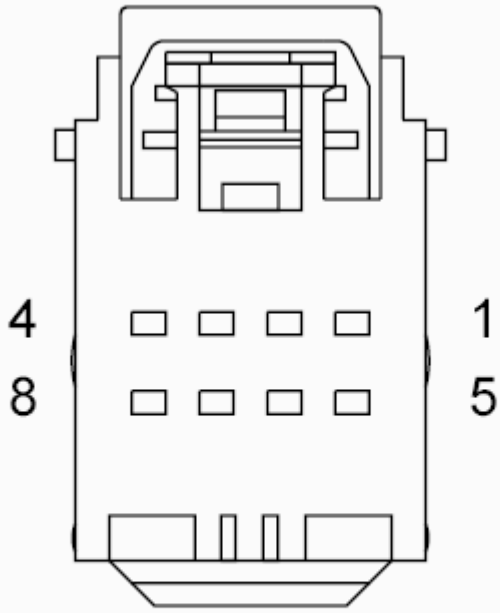

MODULE-
PARK
ASSIST C2

Fig. 39: Measuring Resistance Between Ground & Park Assist Sensor 9 Signal Circuit
Courtesy of CHRYSLER GROUP, LLC

1. Disconnect the Park Assist Module C2 harness connector.
2. Measure the resistance between ground and the (D704) Park Assist Sensor 10 Signal circuit.

   Is the resistance below 10K Ohms?

   Yes

   - Repair the short to ground in the (D704) Park Assist Sensor 10 Signal circuit.
   - Perform the BODY VERIFICATION TEST. Refer to **STANDARD PROCEDURE** .

   No

   - Go To 6.

6. **CHECK THE (D704) PARK ASSIST SENSOR 10 SIGNAL CIRCUIT FOR A SHORT TO THE (X750) PARK ASSIST SENSOR GROUND CIRCUIT**

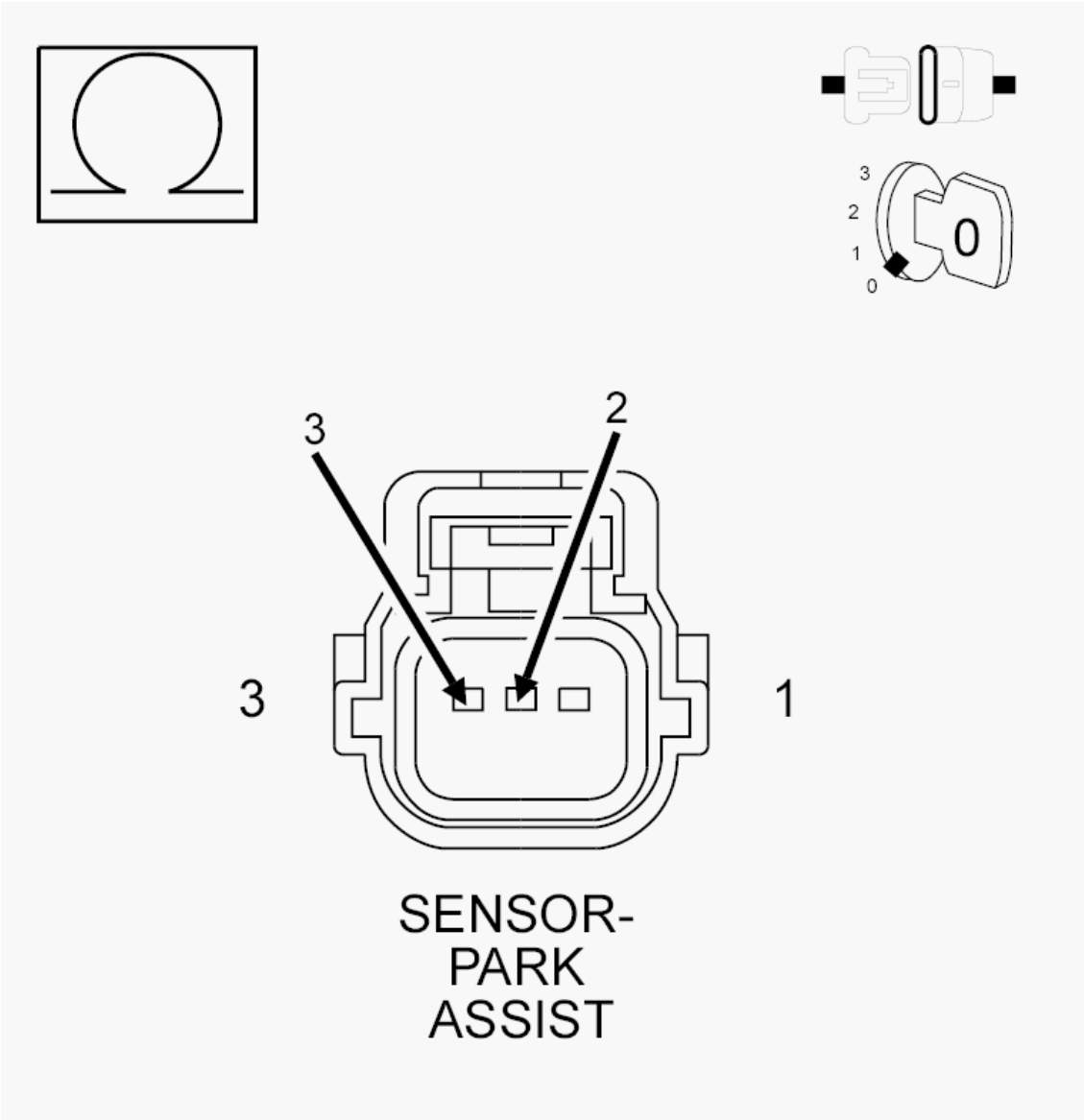

Fig. 40: Measuring Resistance Between Park Assist Sensor Signal Circuit & Park Assist Sensor Ground Circuit
Courtesy of CHRYSLER GROUP, LLC

1. Measure the resistance between the (D704) Park Assist Sensor 10 Signal circuit and the (X750) Park Assist Sensor Ground circuit.

   Is the resistance below 10K Ohms?

   Yes

   - Repair the short between the (D704) Park Assist Sensor 10 Signal circuit and the (X750) Park Assist Sensor Ground circuit.
   - Perform the BODY VERIFICATION TEST. Refer to **STANDARD PROCEDURE** .

No

- Replace the Park Assist Module in accordance with the Service Information. Refer to **MODULE, PARK ASSIST, REMOVAL** .
- Perform the BODY VERIFICATION TEST. Refer to **STANDARD PROCEDURE** .

7. **CHECK THE (D704) PARK ASSIST SENSOR 10 SIGNAL CIRCUIT FOR AN OPEN**

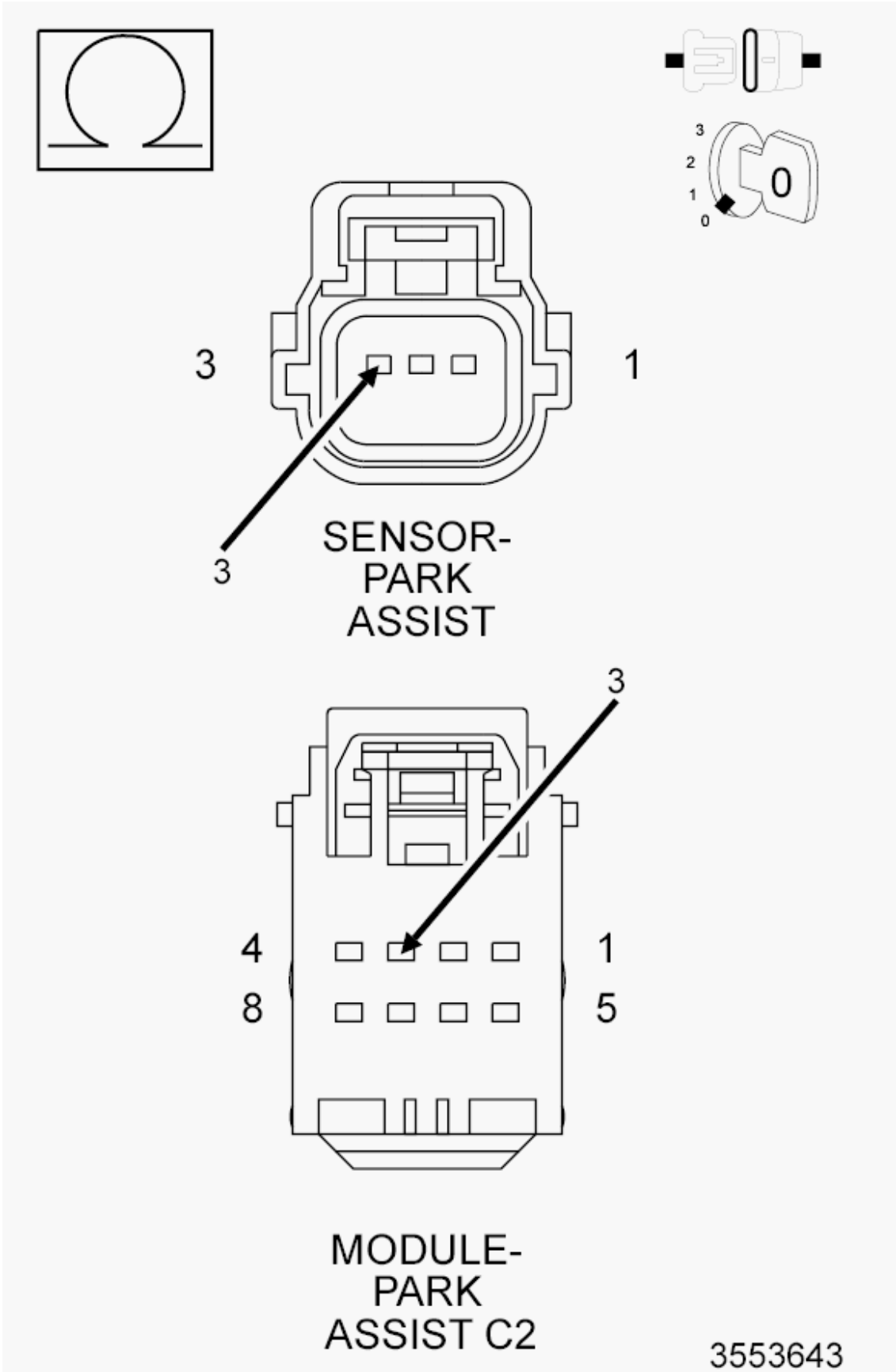
3
2
1
0
0
3
1
3
SENSOR-
PARK
ASSIST
3
4
1
8
5
MODULE-
PARK
ASSIST C2
3553643

Fig. 41: Measuring Resistance Of Park Assist Sensor 10 Signal Circuit
Courtesy of CHRYSLER GROUP, LLC

1. Disconnect the Park Assist Module C2 harness connector.
2. Measure the resistance of the (D704) Park Assist Sensor 10 Signal circuit.

   Is the resistance above 5.0 Ohms?

   Yes

   - Repair the open in the (D704) Park Assist Sensor 10 Signal circuit.
   - Perform the BODY VERIFICATION TEST. Refer to **STANDARD PROCEDURE** .

   No

   - Go To 8.

8. **PARK ASSIST SENSOR**

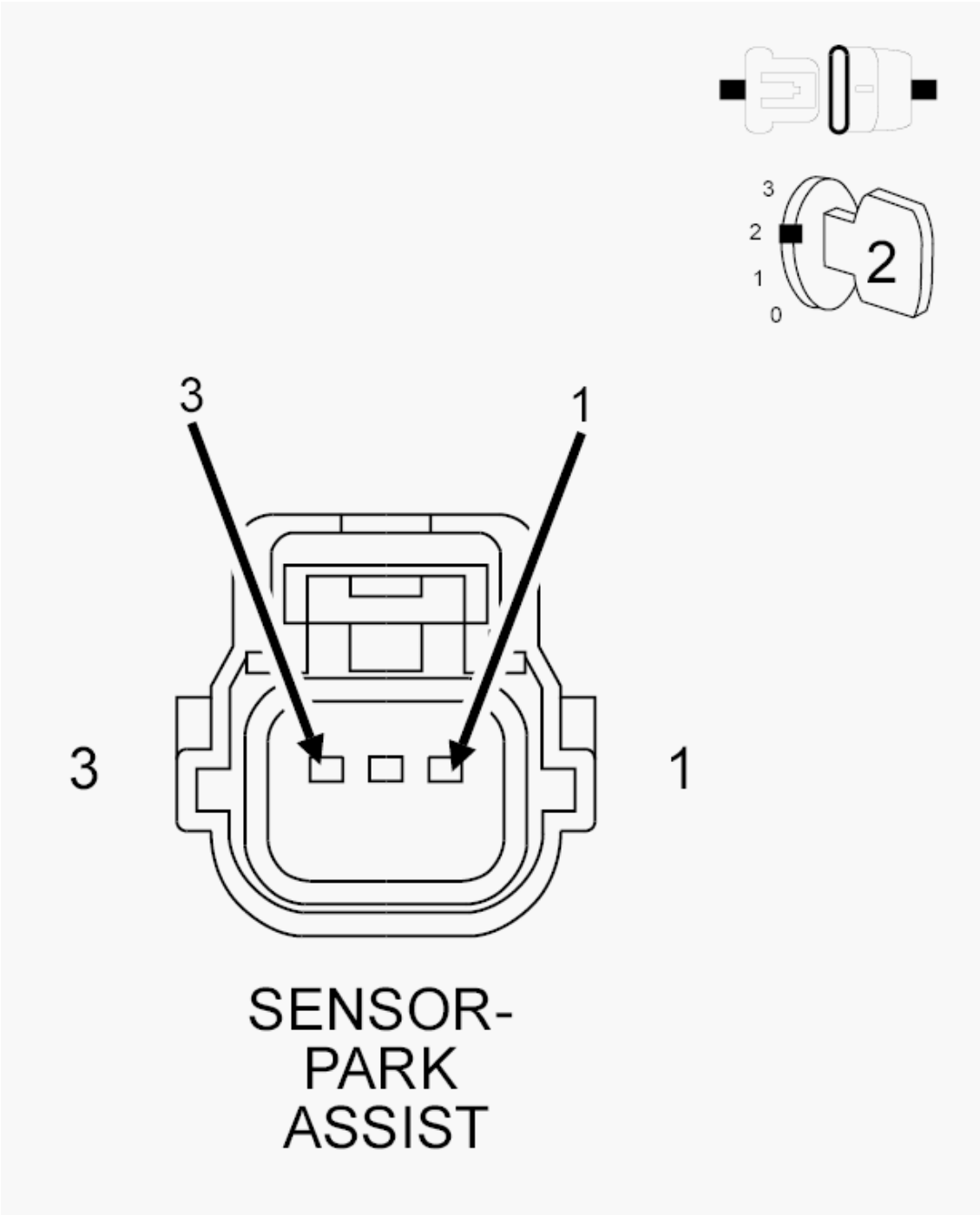

Fig. 42: Park Assist Sensor Connector End View
Courtesy of CHRYSLER GROUP, LLC

1. Turn the ignition on.
2. Reconnect the Park Assist Module C2 harness connector.
3. Connect a jumper wire across the (X700) Park Assist Sensor Supply and (D704) Park Assist Sensor 10 Signal circuits.
4. Turn the ignition on.

5. With the scan tool, read DTC's.

   Does the scan tool display DTC: B1297-12-PTS SENSOR 10 - CIRCUIT SHORT TO BATTERY as active?

   Yes

   - Replace the Park Assist Sensor in accordance with the Service Information. Refer to **SENSOR, PARK ASSIST, REMOVAL** .
   - Perform the BODY VERIFICATION TEST. Refer to **STANDARD PROCEDURE** .

   No

   - Replace the Park Assist Module in accordance with the Service Information. Refer to **MODULE, PARK ASSIST, REMOVAL** .
   - Perform the BODY VERIFICATION TEST. Refer to **STANDARD PROCEDURE** .

B1297-12-PTS SENSOR 10 - CIRCUIT SHORT TO BATTERY

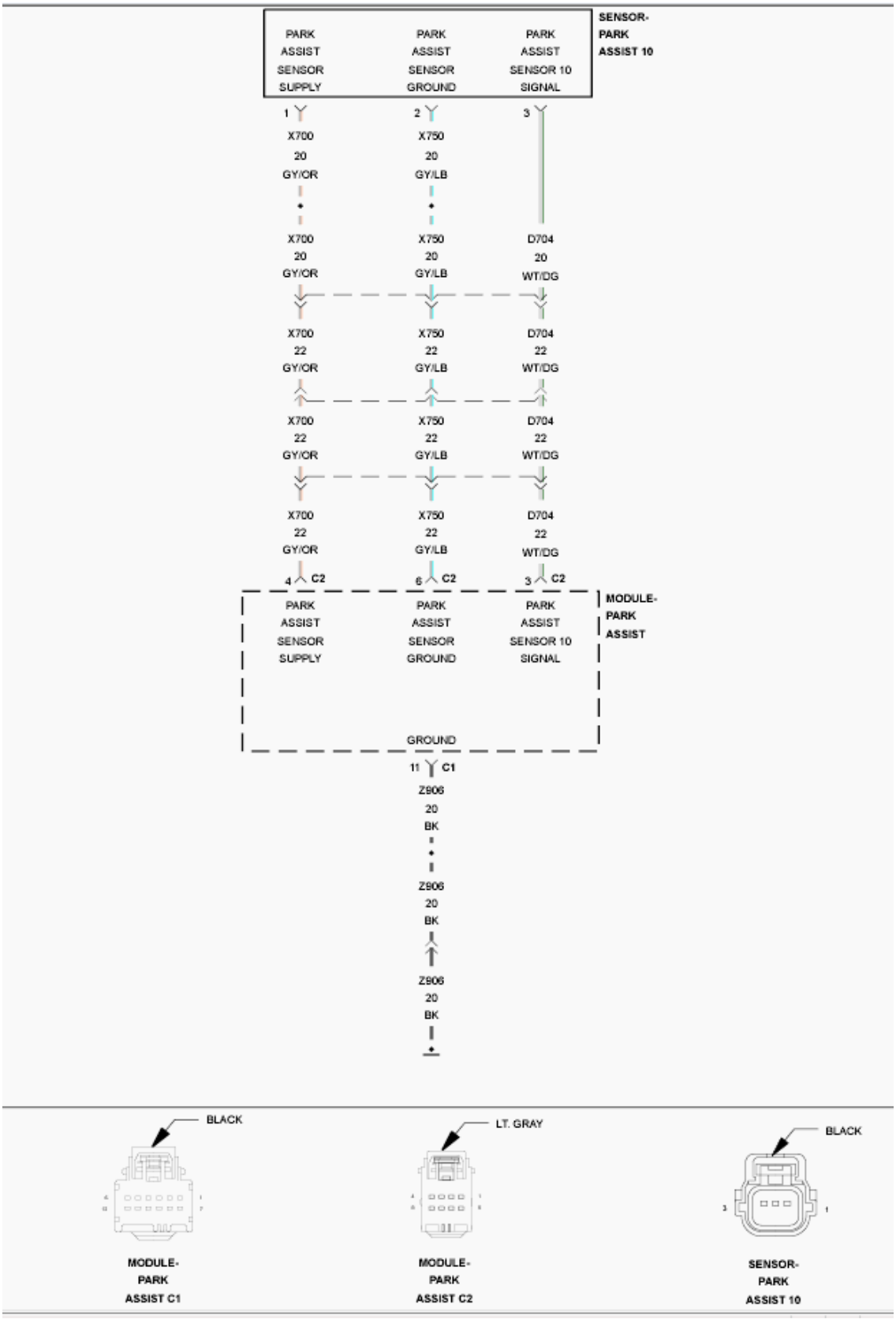

Fig. 43: Park Assist Sensor 10 Wiring Diagram

Courtesy of CHRYSLER GROUP, LLC

For a complete wiring diagram, **refer to appropriate SYSTEM WIRING DIAGRAMS article** .

THEORY OF OPERATION

The Park Assist Sensors are ultrasonic transceivers that are completely controlled by the Park Assist Module. The sensors transmit and receive ultrasonic signals. Each sensor has a voltage, signal, and return circuit to the module. The sensors communicate with the Park Assist Module using a dedicated serial bus communication circuit.

NOTE: **The numbering system for the park assist sensors allows for up to twelve sensors on the vehicle, six front and six rear. The sensors are numbered in a clockwise manner starting at the left front bumper. The left front sensor (if equipped with front park assist) is the number 1 sensor. The numbering continues in a clockwise direction around the vehicle. Since Chrysler Group vehicles use only four rear sensors, sensor numbers 7 and 12 are omitted, so the left rear sensor is the number 11 sensor.**

WHEN MONITORED:

Vehicle in reverse and during the self-test while vehicle is in drive between 18 km/h (11 mph) and 40 km/h (25 mph).

SET CONDITION:

The Park Assist Module detects an open or short to voltage on the Park Assist Sensor Signal circuit.

POSSIBLE CAUSES

Possible Causes
(D704) PARK ASSIST SENSOR 10 SIGNAL CIRCUIT SHORTED TO VOLTAGE
(D704) PARK ASSIST SENSOR 10 SIGNAL CIRCUIT SHORTED TO THE (X700) PARK ASSIST SENSOR SUPPLY CIRCUIT
(X750) PARK ASSIST SENSOR GROUND CIRCUIT OPEN
PARK ASSIST SENSOR
PARK ASSIST MODULE

DIAGNOSTIC TEST

1. **CHECK FOR AN ACTIVE DIAGNOSTIC TROUBLE CODE (DTC)**
    1. Turn the ignition on.
    2. With the scan tool, read DTC's.

    Does the scan tool display this DTC as active?

Yes

- Go To 2.

No

- Test complete, the condition or conditions that originally set this DTC are not present at this time. Using the wiring diagrams as a guide, check all related splices and connectors for signs of water intrusion, corrosion, pushed out or bent terminals, and correct pin tension.
- Perform the BODY VERIFICATION TEST. Refer to **STANDARD PROCEDURE** .

2. **(D704) PARK ASSIST SENSOR 10 SIGNAL CIRCUIT SHORTED TO BATTERY**

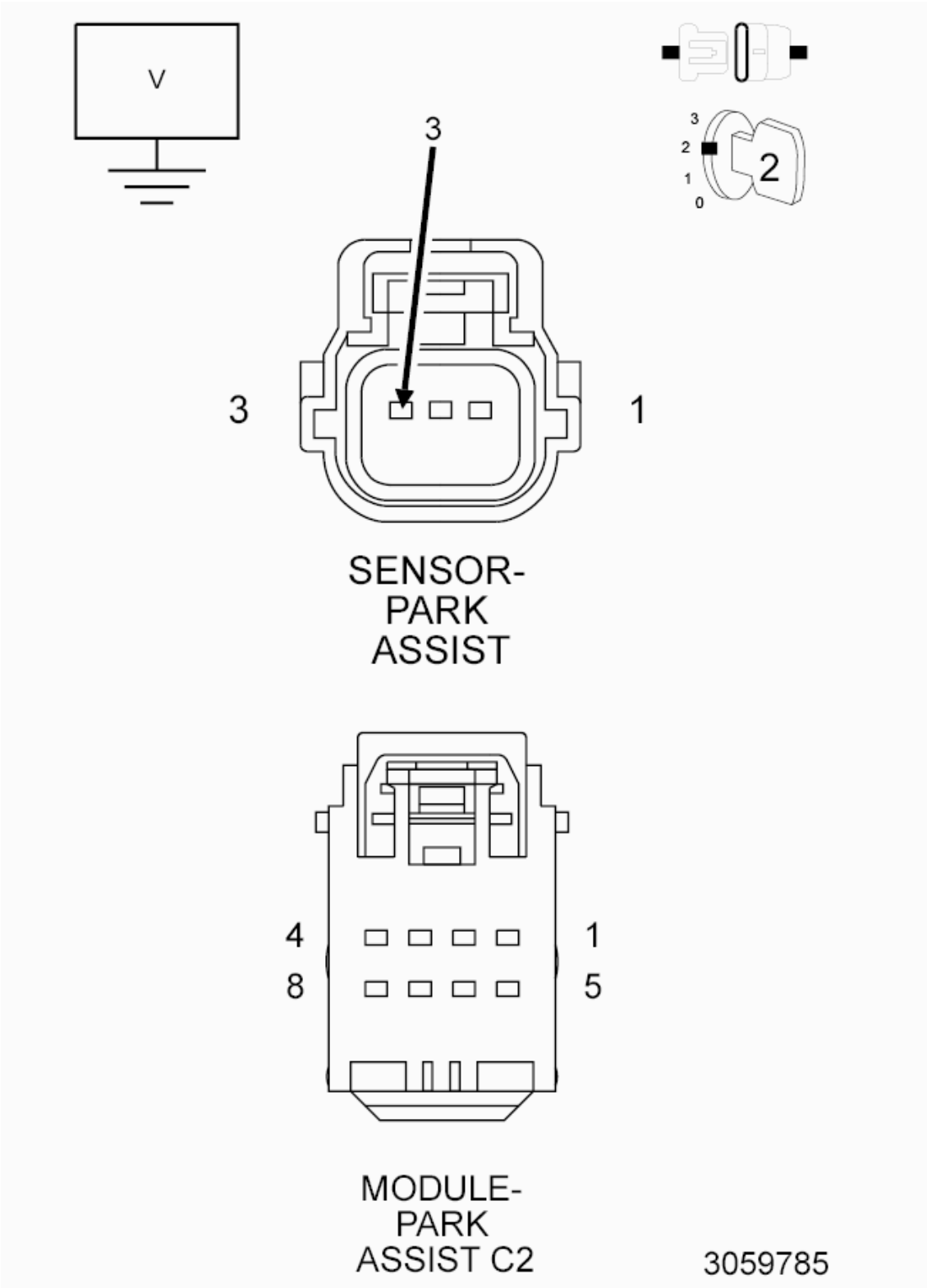

Fig. 44: Measuring Voltage Of Park Assist Sensor 8 Signal Circuit
Courtesy of CHRYSLER GROUP, LLC

1. Turn the ignition off.

2. Disconnect the Park Assist Module C2 harness connector.
3. Disconnect the Park Assist Sensor harness connector.
4. Turn the ignition on.
5. Measure the voltage of the (D704) Park Assist Sensor 10 Signal circuit.

   Is the voltage above 10.0 volts?

   Yes

   - Repair the (D704) Park Assist Sensor 10 Signal circuit for a short to battery.
   - Perform the BODY VERIFICATION TEST. Refer to **STANDARD PROCEDURE** .

   No

   - Go To 3.

3. **(D704) PARK ASSIST SENSOR 10 SIGNAL CIRCUIT SHORTED TO THE (X700) PARK ASSIST SENSOR SUPPLY CIRCUIT**

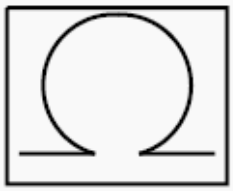

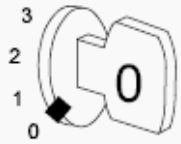

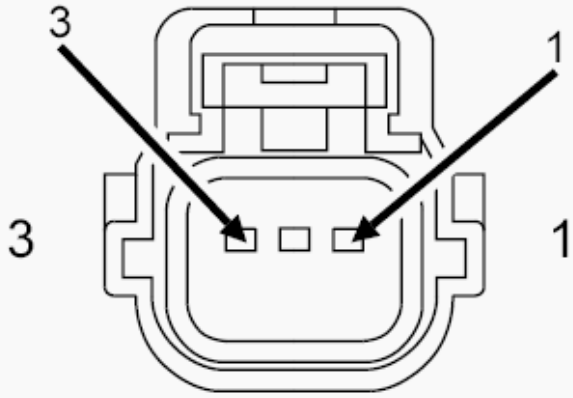

SENSOR-
PARK
ASSIST

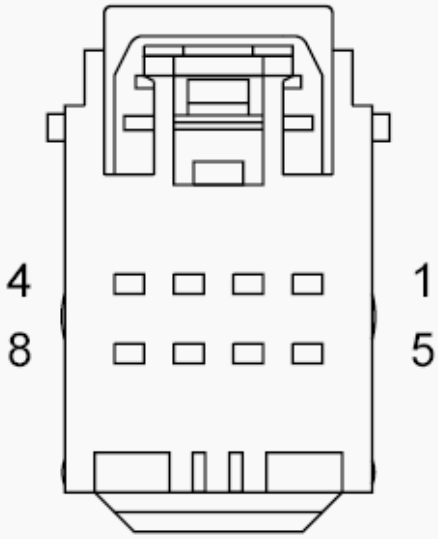

MODULE-
PARK
ASSIST C2

3060400

Fig. 45: Measuring Resistance Between Park Assist Sensor Signal Circuit & Park Assist Sensor Supply Circuit
Courtesy of CHRYSLER GROUP, LLC

1. Turn the ignition off.
2. Measure the resistance between the (D704) Park Assist Sensor 10 Signal circuit and the (X700) Park Assist Sensor Supply circuit.

   Is the resistance below 10K Ohms?

   Yes

   - Repair the (D704) Park Assist Sensor 10 Signal circuit for a short to the (X700) Park Assist Sensor Supply circuit.
   - Perform the BODY VERIFICATION TEST. Refer to **STANDARD PROCEDURE** .

   No

   - Go To 4.

4. **(X750) PARK ASSIST SENSOR GROUND CIRCUIT OPEN**

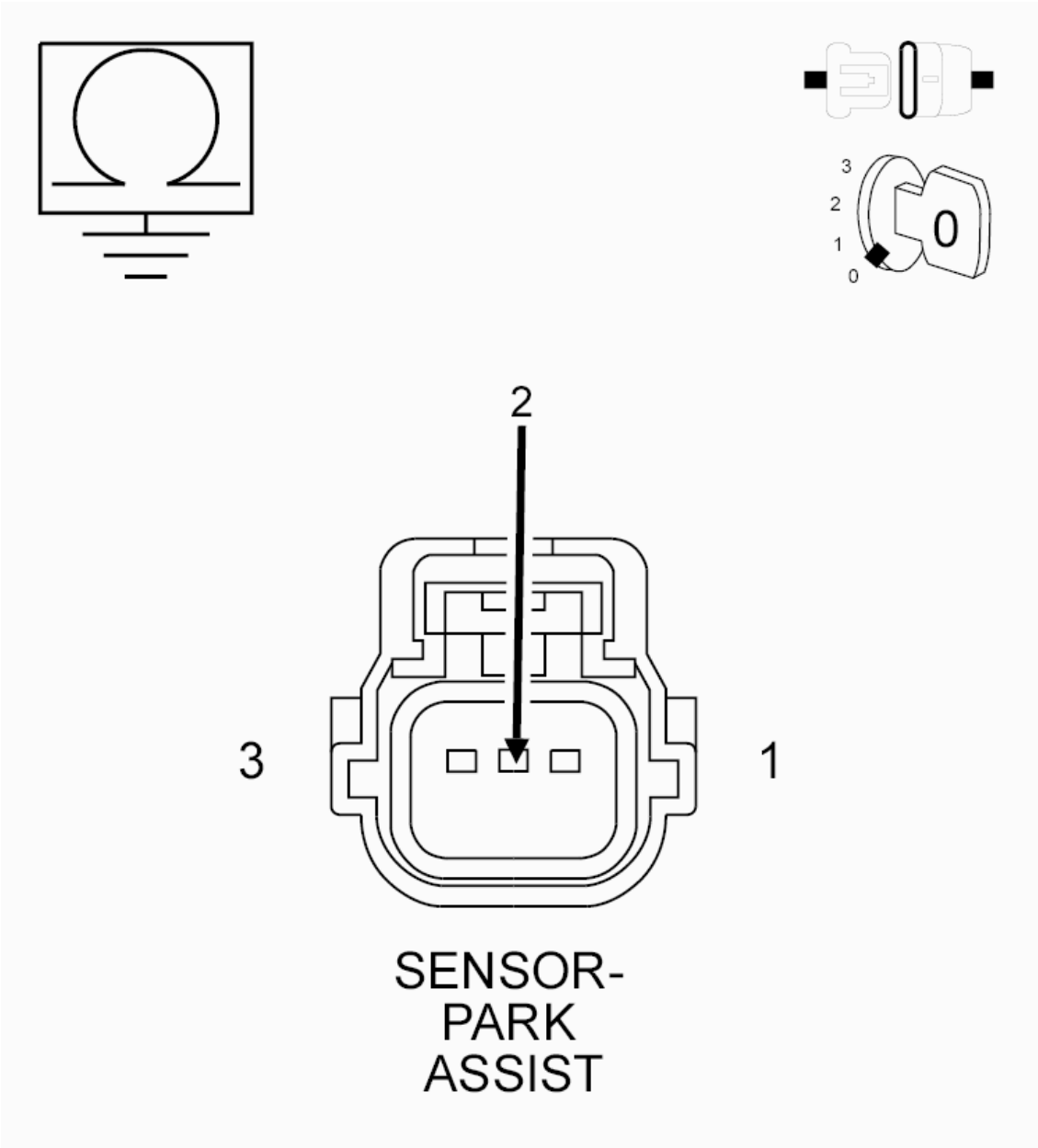

Fig. 46: Checking Park Assist Sensor Ground Circuit For An Open
Courtesy of CHRYSLER GROUP, LLC

1. Reconnect the Park Assist Module C2 harness connector.
2. Measure the resistance between ground and the (X750) Park Assist Sensor Ground circuit.

   Is the resistance above 20.0 Ohms?

   Yes

   - Go To 5.

No

- Replace the Park Assist Sensor in accordance with the Service Information. Refer to **SENSOR, PARK ASSIST, REMOVAL** .
- Perform the BODY VERIFICATION TEST. Refer to **STANDARD PROCEDURE** .

5. **(X750) PARK ASSIST SENSOR GROUND CIRCUIT OPEN BETWEEN PARK ASSIST MODULE AND SENSOR**

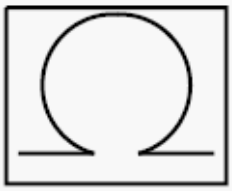

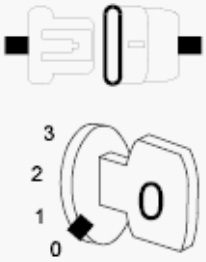

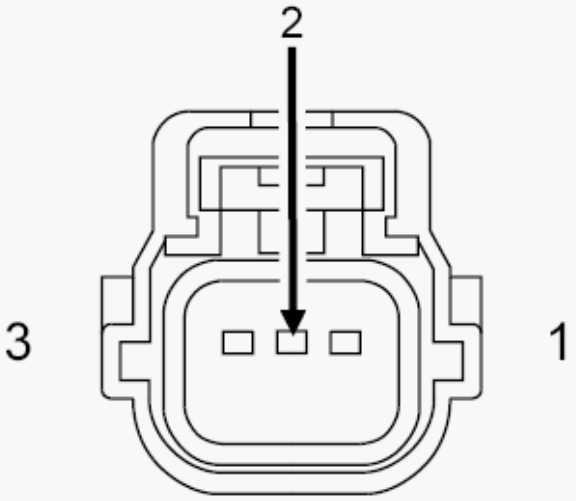

SENSOR-
PARK
ASSIST

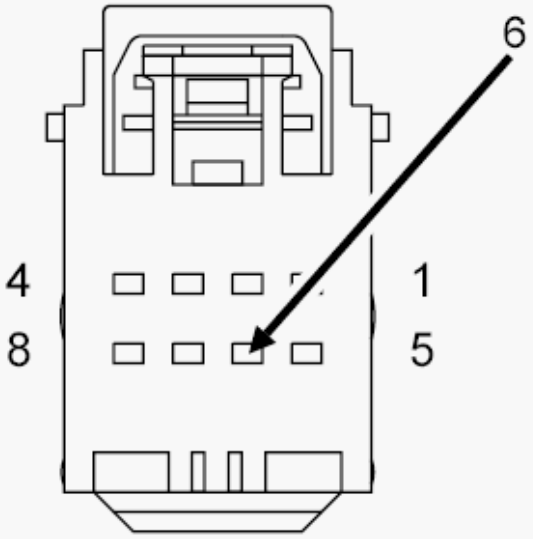

MODULE-
PARK
ASSIST C2

3060659

Fig. 47: Checking Park Assist Sensor Ground Circuit For An Open Between Park Assist Module And Sensor
Courtesy of CHRYSLER GROUP, LLC

1. Disconnect the Park Assist Module C2 harness connector.
2. Measure the resistance of the (X750) Park Assist Sensor Ground circuit.

   Is the resistance above 5.0 Ohms?

   Yes

   - Repair the open in the (X750) Park Assist Sensor Ground circuit.
   - Perform the BODY VERIFICATION TEST. Refer to **STANDARD PROCEDURE** .

   No

   - Replace the Park Assist Module in accordance with the Service Information. Refer to **SENSOR, PARK ASSIST, REMOVAL** .
   - Perform the BODY VERIFICATION TEST. Refer to **STANDARD PROCEDURE** .

B1297-25-PTS SENSOR 10 - SIGNAL SHAPE / WAVEFORM FAILURE

For a complete wiring diagram, **refer to appropriate SYSTEM WIRING DIAGRAMS article** .

NOTE: **The numbering system for the park assist sensors allows for up to twelve sensors on the vehicle, six front and six rear. The sensors are numbered in a clockwise manner starting at the left front bumper. The left front sensor (if equipped with front park assist) is the number 1 sensor. The numbering continues in a clockwise direction around the vehicle. Since Chrysler LLC vehicles use only four rear sensors, sensor numbers 7 and 12 are omitted, so the left rear sensor is the number 11 sensor.**

WHEN MONITORED:

Vehicle in reverse.

During the self-test while vehicle is in drive between 11 mph (18 km/h) and 25 mph (40 km/h).

SET CONDITION:

The Park Assist Module detects an internal Sensor error.

POSSIBLE CAUSES

Possible Causes
PARK ASSIST SENSOR MEMBRANE OBSTRUCTION (ICE, SNOW, MUD, DIRT COVERING

FASCIA)
PARK ASSIST SENSOR CONNECTOR OBSTRUCTION (ICE, SNOW, MUD, DIRT)
DECOUPLING RING MISSING/MOUNTED WRONG
OBJECTS - SUCH AS LICENSE PLATES - IN CLOSE RANGE TO THE SENSOR
PARK ASSIST SENSOR

DIAGNOSTIC TEST

1. **CHECK FOR AN ACTIVE DTC**

   NOTE: Before proceeding with this diagnostic procedure, remove any ice, snow, mud, dirt, or other obstructions from the front/rear fascia/bumper. Also remove any ice, snow, dirt, mud, or other obstructions from the underside of the Fascia/Bumper surrounding the sensors.

   1. Turn the ignition on.
   2. With the scan tool, read DTC's.

      Is this DTC active?

      Yes

      - Go To 2.

      No

      - Test complete, the condition or conditions that originally set this DTC are not present at this time. Using the wiring diagrams as a guide, check all related splices and connectors for signs of water intrusion, corrosion, pushed out or bent terminals, and correct pin tension.
2. **PARK ASSIST SENSOR**
   1. Verify that none of the possible causes mentioned above are present. Repair as necessary.

      If none of the possible causes mentioned above are present, view repair.

      Repair

      - Replace the Park Assist Sensor in accordance with the Service Information.
      - Perform the BODY VERIFICATION TEST. Refer to **STANDARD PROCEDURE** .

B1297-92-PTS SENSOR 10 - PERFORMANCE OR INCORRECT OPERATION

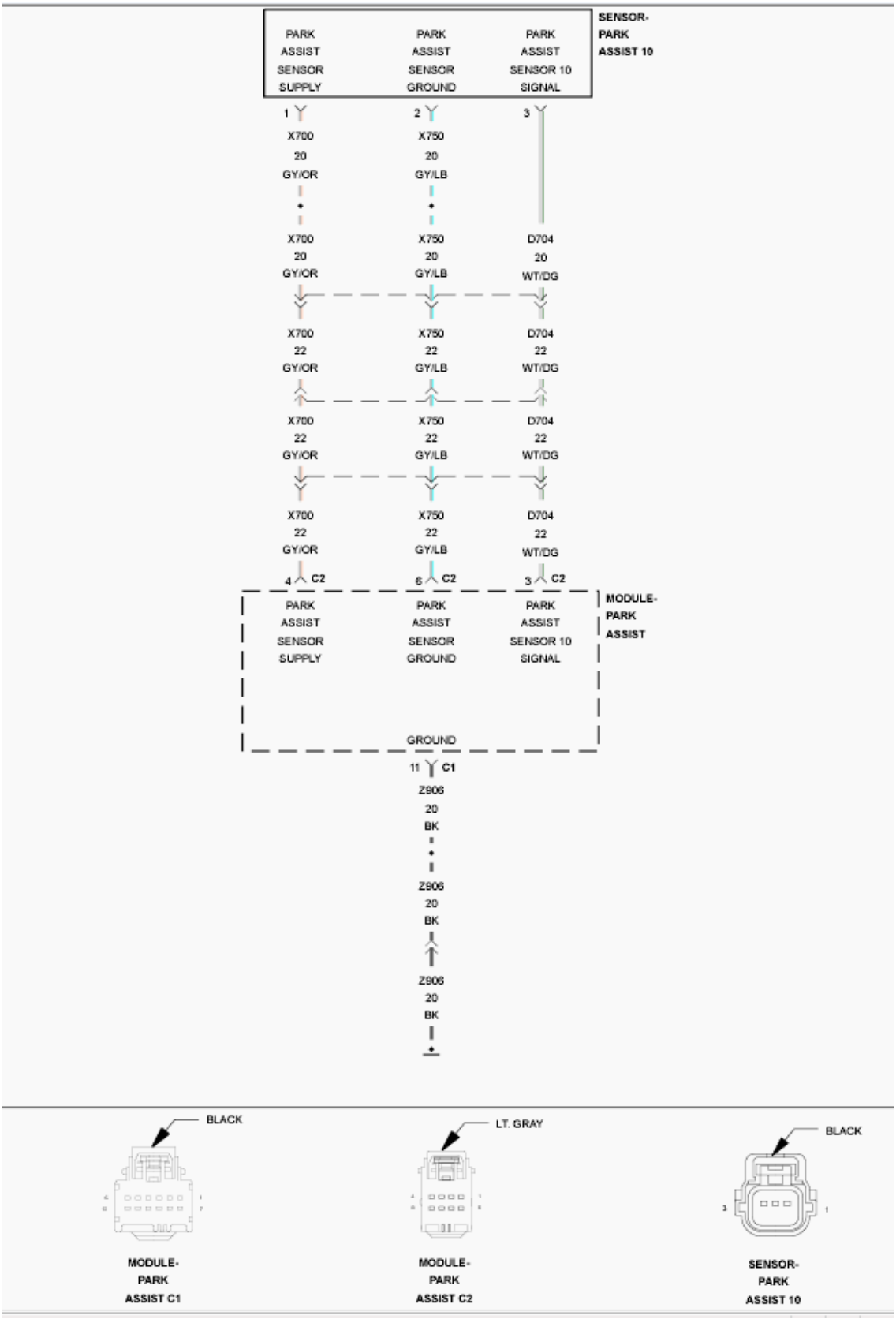

Fig. 48: Park Assist Sensor 10 Wiring Diagram

Courtesy of CHRYSLER GROUP, LLC

For a complete wiring diagram, **refer to appropriate SYSTEM WIRING DIAGRAMS article** .

THEORY OF OPERATION

The Park Assist Sensors are ultrasonic transceivers that are completely controlled by the Park Assist Module. The sensors transmit and receive ultrasonic signals. Each sensor has a voltage, signal, and return circuit to the module. The sensors communicate with the Park Assist Module using a dedicated serial bus communication circuit.

NOTE: **The numbering system for the park assist sensors allows for up to twelve sensors on the vehicle, six front and six rear. The sensors are numbered in a clockwise manner starting at the left front bumper. The left front sensor (if equipped with front park assist) is the number 1 sensor. The numbering continues in a clockwise direction around the vehicle. Since Chrysler Group vehicles use only four rear sensors, sensor numbers 7 and 12 are omitted, so the left rear sensor is the number 11 sensor.**

WHEN MONITORED:

During Reverse and during self test in Forward between 11 mph (18 km/h) and 25 mph (40 km/h).

SET CONDITION:

If the system detects data corruption in the transmission in the internal communication line between the module and sensors.

POSSIBLE CAUSES

Possible Causes
(D704) PTS SENSOR 10 SIGNAL CIRCUIT SHORTED TO GROUND
(D704) PTS SENSOR 10 SIGNAL CIRCUIT SHORTED TO BATTERY
(D704) PTS SENSOR 10 SIGNAL CIRCUIT OPEN
PARK ASSIST SENSOR 10
PARK ASSIST MODULE

DIAGNOSTIC TEST

1. **TEST FOR INTERMITTENT CONDITION**
    1. Turn the ignition on.
    2. Using the scan tool, read the active DTC's.

       Does the scan tool display this DTC as active?

       Yes

- Go To 2.

No

- Test complete, the condition or conditions that originally set this DTC are not present at this time. Using the wiring diagrams as a guide, check all related splices and connectors for signs of water intrusion, corrosion, pushed out or bent terminals, and correct pin tension.
- Perform the BODY VERIFICATION TEST. Refer to **STANDARD PROCEDURE** .

2. **CHECK PARK ASSIST SENSOR 10 FOR INTERNAL SHORT**
   1. Disconnect the Park Assist Sensor 10 harness connector.
   2. Using the scan tool, read the active DTC's.

   Does the scan tool display this DTC as active?

   Yes

   - Go To 3.

   No

   - Replace the Park Assist Sensor 10 in accordance with the Service Information. Refer to **SENSOR, PARK ASSIST, REMOVAL** .
   - Perform the BODY VERIFICATION TEST. Refer to **STANDARD PROCEDURE** .
3. **CHECK THE (D704) PARK ASSIST SENSOR 10 SIGNAL CIRCUIT FOR A SHORT TO GROUND**

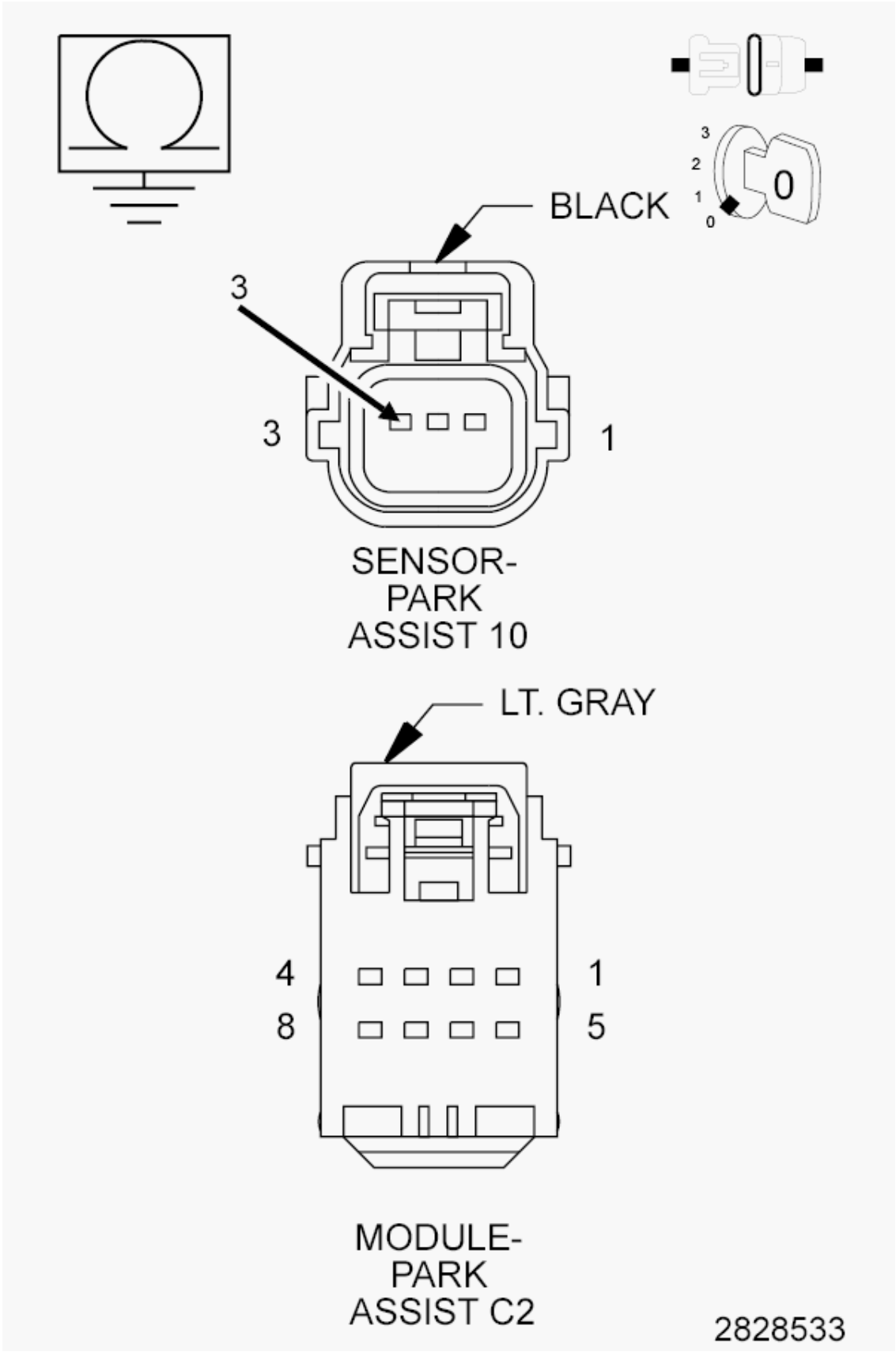
BLACK
3
2
1
0
0
3
3
1
SENSOR-
PARK
ASSIST 10
LT. GRAY
4
1
8
5
MODULE-
PARK
ASSIST C2
2828533

Fig. 49: Checking Park Assist Sensor 10 Signal Circuit For A Short To Ground
Courtesy of CHRYSLER GROUP, LLC

1. Turn the ignition off.
2. Disconnect the Park Assist Module C2 harness connector.
3. Measure the resistance between ground and the (D704) Park Assist Sensor 10 Signal circuit.

   Is the resistance below 5 Ohms?

   Yes

   - Repair the short to ground (D704) Park Assist Sensor 10 Signal circuit.
   - Perform the BODY VERIFICATION TEST. Refer to **STANDARD PROCEDURE** .

   No

   - Go To 4.

4. **CHECK THE (D704) PARK ASSIST SENSOR 10 SIGNAL CIRCUIT FOR A SHORT TO BATTERY**

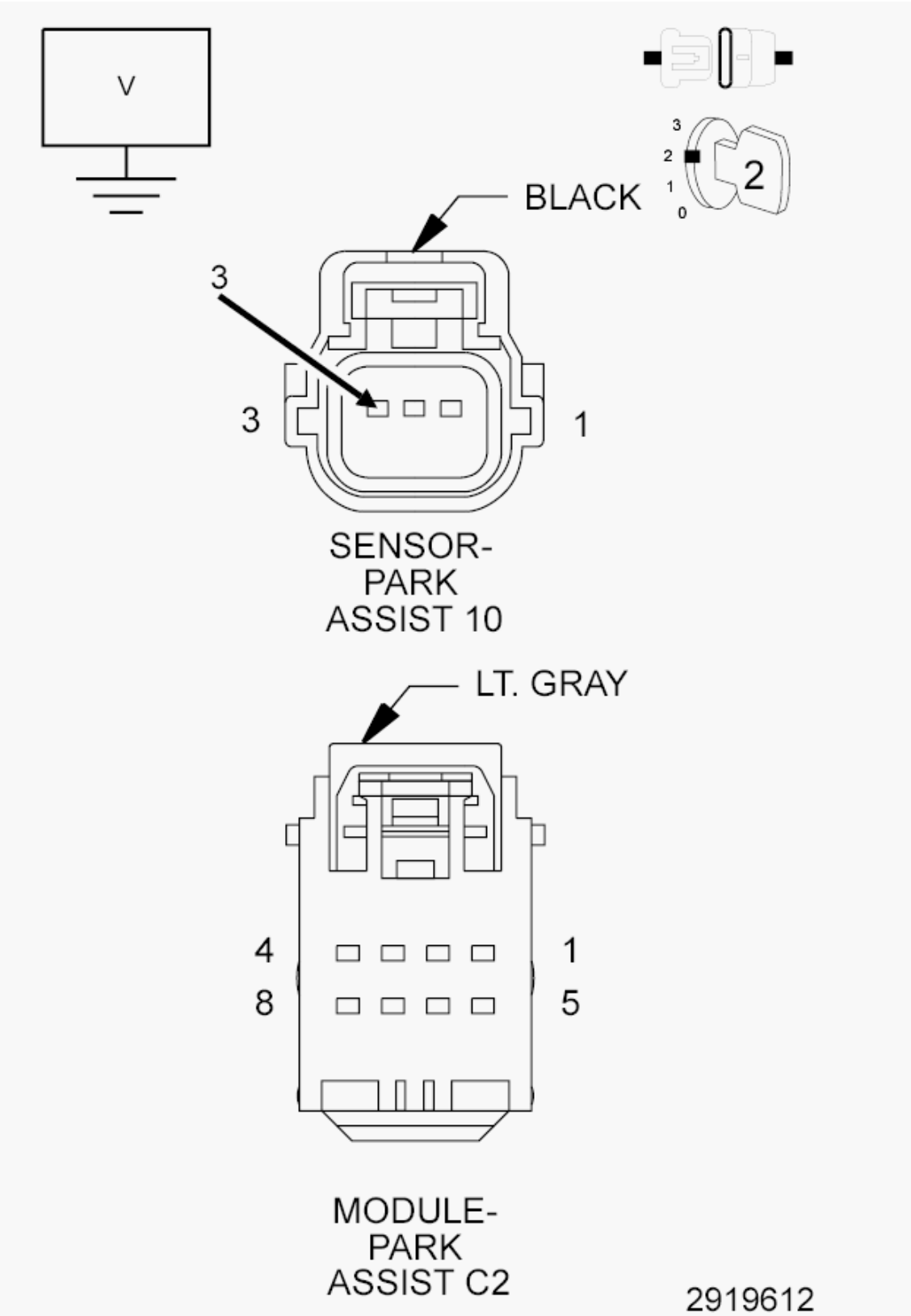

Fig. 50: Checking Park Assist Sensor 10 Signal Circuit For A Short To Battery
Courtesy of CHRYSLER GROUP, LLC

1. Turn the ignition on.
2. Measure the voltage of the (D704) Park Assist Sensor 10 Signal circuit.

   Is the voltage above 10 volts?

   Yes

   - Repair the short to voltage (D704) Park Assist Sensor 10 Signal circuit.
   - Perform the BODY VERIFICATION TEST. Refer to **STANDARD PROCEDURE** .

   No

   - Go To 5.

5. **CHECK THE (D704) PARK ASSIST SENSOR 10 SIGNAL CIRCUIT FOR AN OPEN**

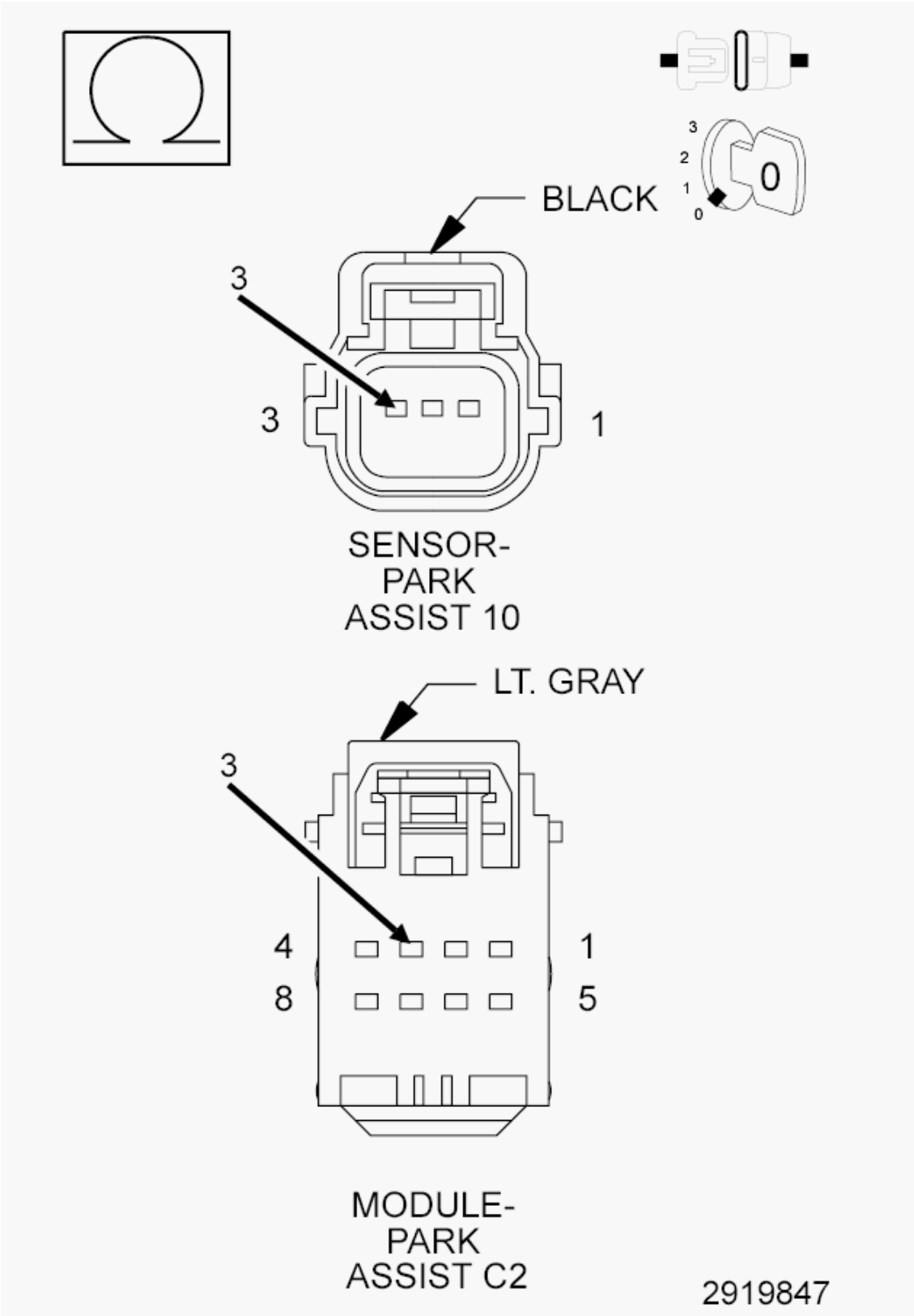

Fig. 51: Checking Park Assist Sensor 10 Signal Circuit For An Open
Courtesy of CHRYSLER GROUP, LLC

1. Measure the resistance of the (D704) Park Assist Sensor 10 Signal circuit between the Park Assist Module C2 harness connector and the Park Assist Sensor 10 harness connector.

   Is the resistance above 5.0 Ohms?

   Yes

   - Repair the open in the (D704) Park Assist Sensor 10 Signal circuit.
   - Perform the BODY VERIFICATION TEST. Refer to **STANDARD PROCEDURE** .

   No

   - Replace the Park Assist Module in accordance with Service Information. Refer to **MODULE, PARK ASSIST, REMOVAL** .
   - Perform the BODY VERIFICATION TEST. Refer to **STANDARD PROCEDURE** .

B1298-11-PTS SENSOR 11 - CIRCUIT SHORT TO GROUND

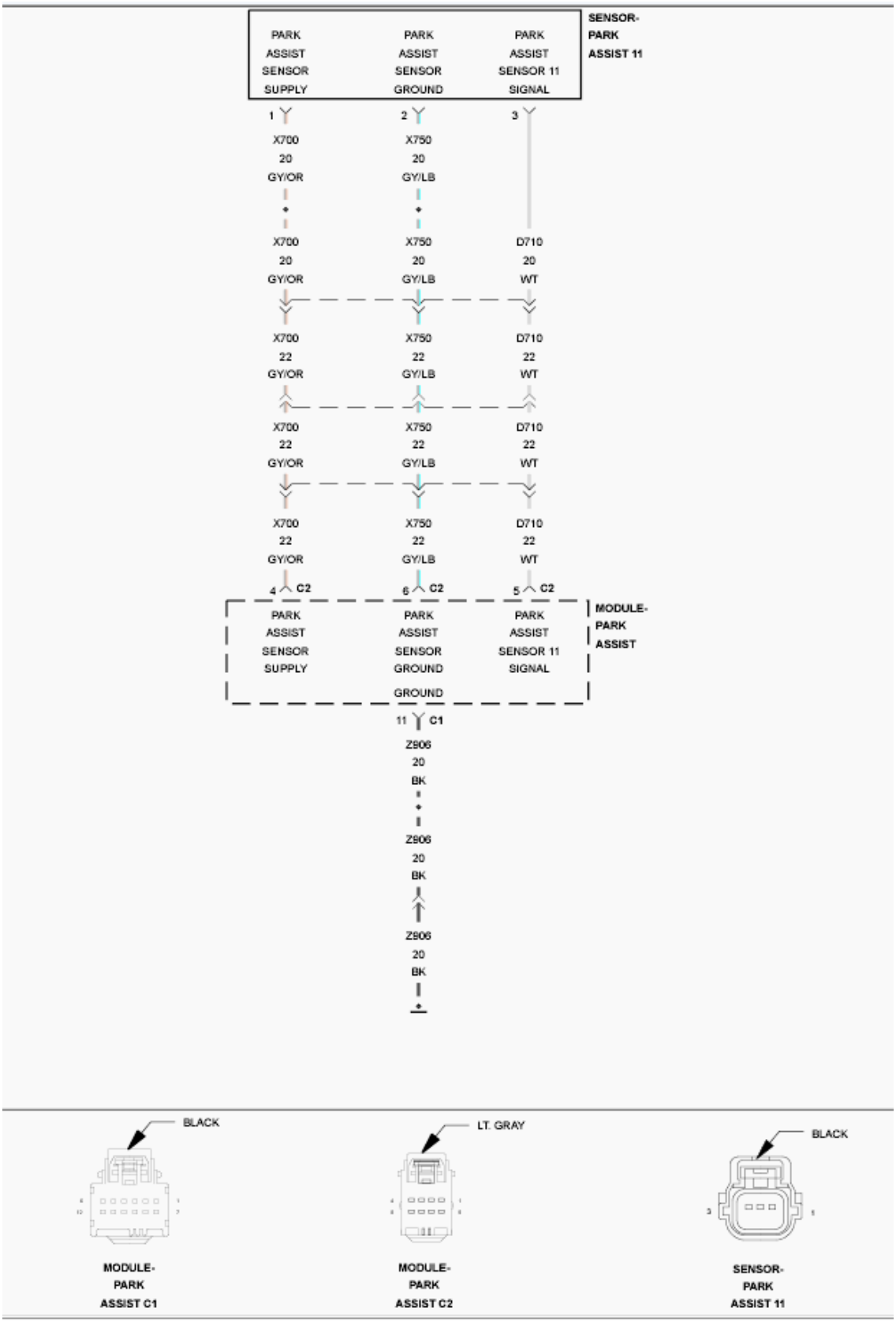

Fig. 52: Park Assist Sensor 11 Wiring Diagram

Courtesy of CHRYSLER GROUP, LLC

For a complete wiring diagram, **refer to appropriate SYSTEM WIRING DIAGRAMS article** .

THEORY OF OPERATION

The Park Assist Sensors are ultrasonic transceivers that are completely controlled by the Park Assist Module. The sensors transmit and receive ultrasonic signals. Each sensor has a voltage, signal, and return circuit to the module. The sensors communicate with the Park Assist Module using a dedicated serial bus communication circuit.

NOTE: **The numbering system for the park assist sensors allows for up to twelve sensors on the vehicle, six front and six rear. The sensors are numbered in a clockwise manner starting at the left front bumper. The left front sensor (if equipped with front park assist) is the number 1 sensor. The numbering continues in a clockwise direction around the vehicle. Since Chrysler Group vehicles use only four rear sensors, sensor numbers 7 and 12 are omitted, so the left rear sensor is the number 11 sensor.**

WHEN MONITORED:

Vehicle in reverse and during the self-test while vehicle is in drive between 18 km/h (11 mph) and 40 km/h (25 mph).

SET CONDITION:

The Park Assist Module detects a short to ground on the Park Assist Sensor Signal circuit.

POSSIBLE CAUSES

Possible Causes
PARK ASSIST SENSOR DISCONNECTED
(D710) PARK ASSIST SENSOR 11 SIGNAL CIRCUIT SHORTED TO GROUND
(D710) PARK ASSIST SENSOR 11 SIGNAL CIRCUIT SHORTED TO THE (X750) PARK ASSIST SENSOR GROUND CIRCUIT
(D710) PARK ASSIST SENSOR 11 SIGNAL CIRCUIT OPEN
(X700) PARK ASSIST SENSOR SUPPLY CIRCUIT OPEN
PARK ASSIST SENSOR
PARK ASSIST MODULE

DIAGNOSTIC TEST

1. **CHECK FOR AN ACTIVE DIAGNOSTIC TROUBLE CODE (DTC)**

   NOTE: **A disconnected sensor will set this DTC. Verify the Park Assist Sensor is connected before proceeding with this diagnostic procedure.**

1. Turn the ignition on.
2. With the scan tool, read DTC's.

   Does the scan tool display this DTC as active?

   Yes

   - Go To 2.

   No

   - Test complete, the condition or conditions that originally set this DTC are not present at this time. Using the wiring diagrams as a guide, check all related splices and connectors for signs of water intrusion, corrosion, pushed out or bent terminals, and correct pin tension.
   - Perform the BODY VERIFICATION TEST. Refer to **STANDARD PROCEDURE** .

2. **CHECK THE VOLTAGE OF THE (X700) PARK ASSIST SENSOR SUPPLY CIRCUIT**

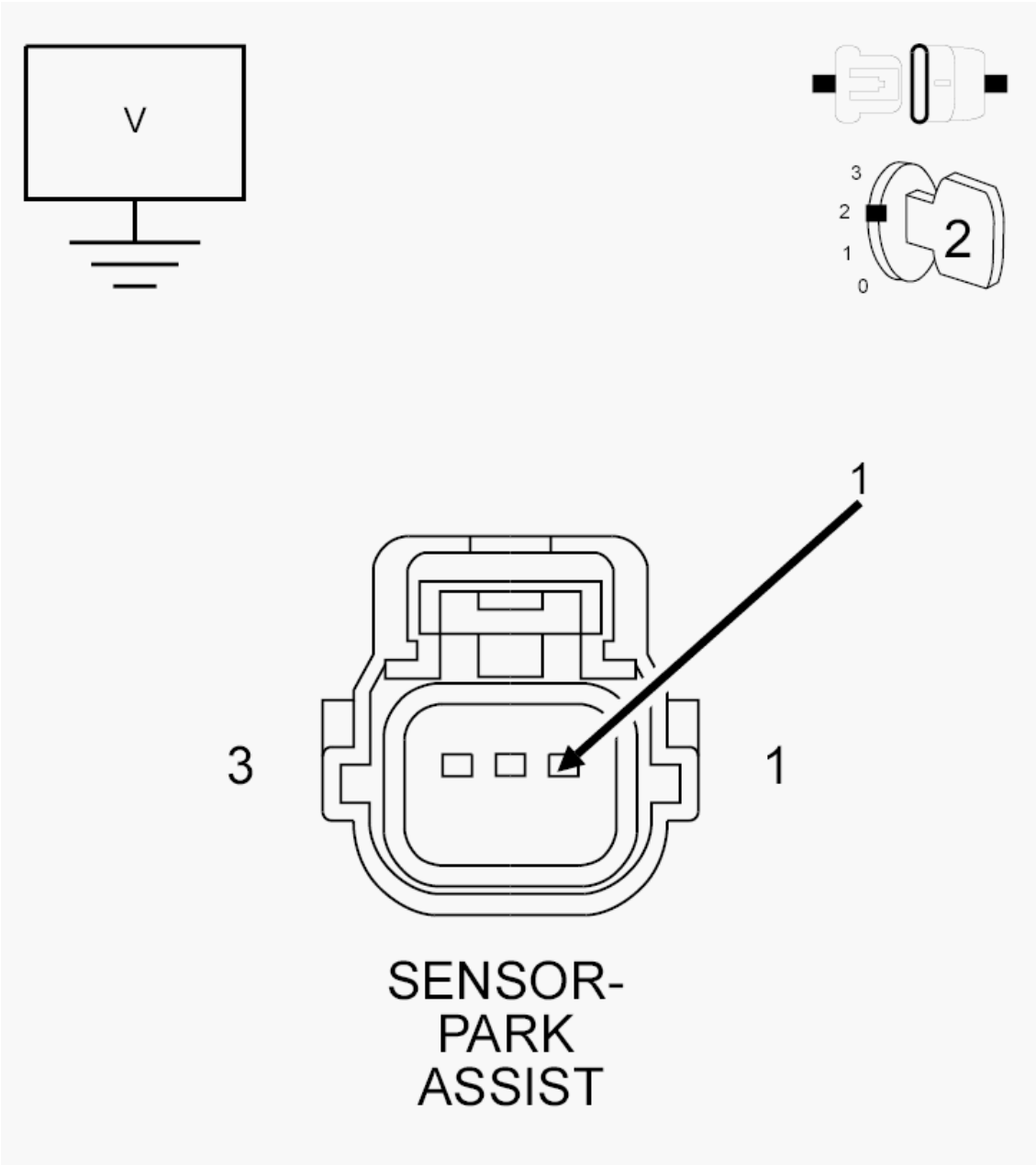

Fig. 53: Measuring Voltage Of Park Assist Sensor Supply Circuit
Courtesy of CHRYSLER GROUP, LLC

1. Turn the ignition off.
2. Disconnect the Park Assist Sensor 11 harness connector.
3. Turn the ignition on.
4. Measure the voltage of the (X700) Park Assist Sensor Supply circuit.

   Is the voltage above 8.0 volts?

   Yes

- Go To 4.

No

- Go To 3.

3. **CHECK THE (X700) PARK ASSIST SENSOR SUPPLY CIRCUIT FOR AN OPEN OR HIGH RESISTANCE**

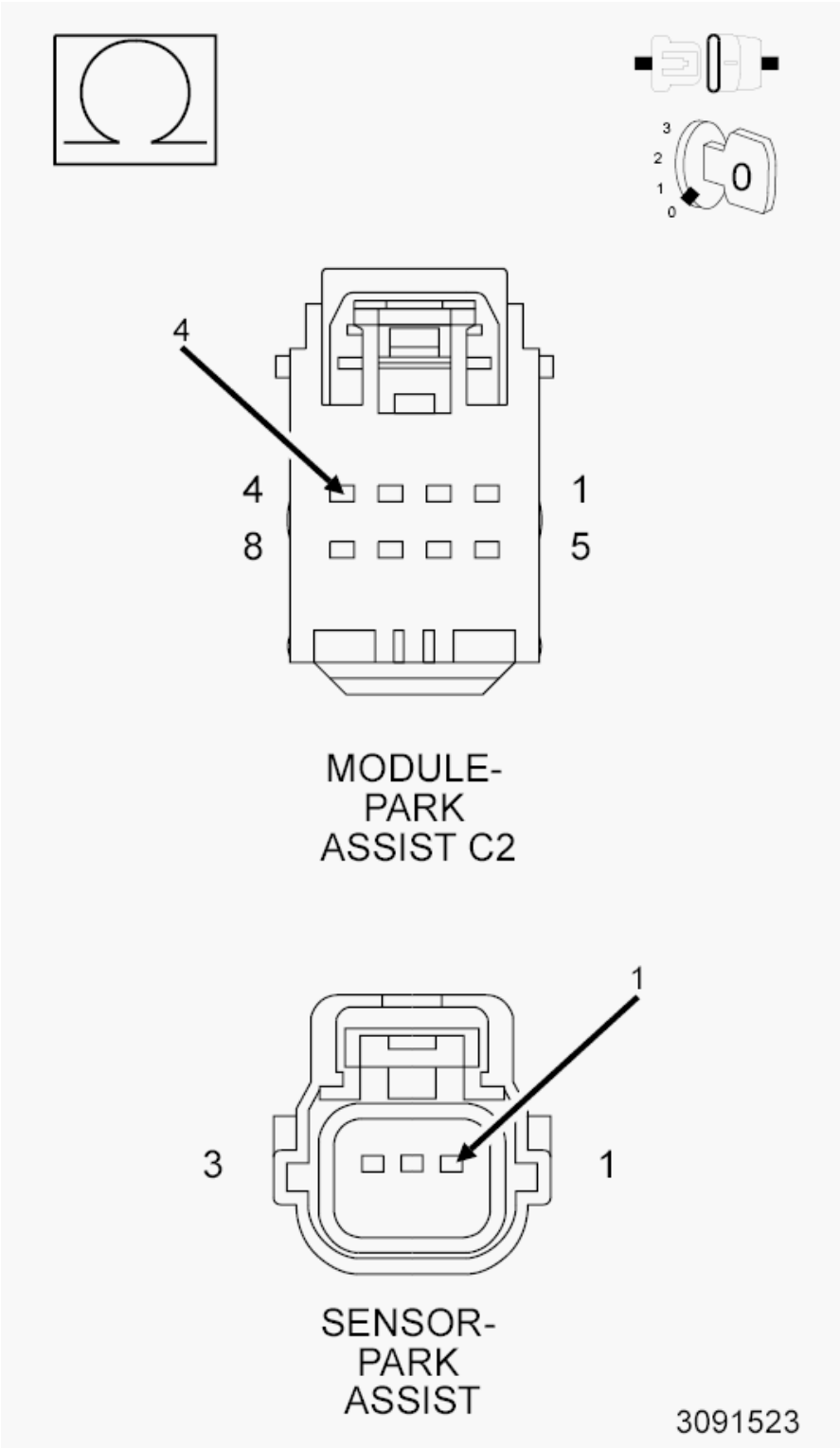

Fig. 54: Measuring Resistance Of Park Assist Sensor Supply Circuit
Courtesy of CHRYSLER GROUP, LLC

1. Turn the ignition off.
2. Disconnect the Park Assist Module C2 harness connector.

3. Measure the resistance of the (X700) Park Assist Sensor Supply circuit.

   Is the resistance below 5.0 Ohms?

   Yes

   - Replace the Park Assist Module in accordance with the Service Information. Refer to **MODULE, PARK ASSIST, REMOVAL** .
   - Perform the BODY VERIFICATION TEST. Refer to **STANDARD PROCEDURE** .

   No

   - Repair the open or high resistance in the (X700) Park Assist Sensor Supply circuit.
   - Perform the BODY VERIFICATION TEST. Refer to **STANDARD PROCEDURE** .

4. **CHECK THE (D710) PARK ASSIST SENSOR 11 SIGNAL CIRCUIT FOR A SHORT TO GROUND WITH THE PARK ASSIST MODULE CONNECTED**

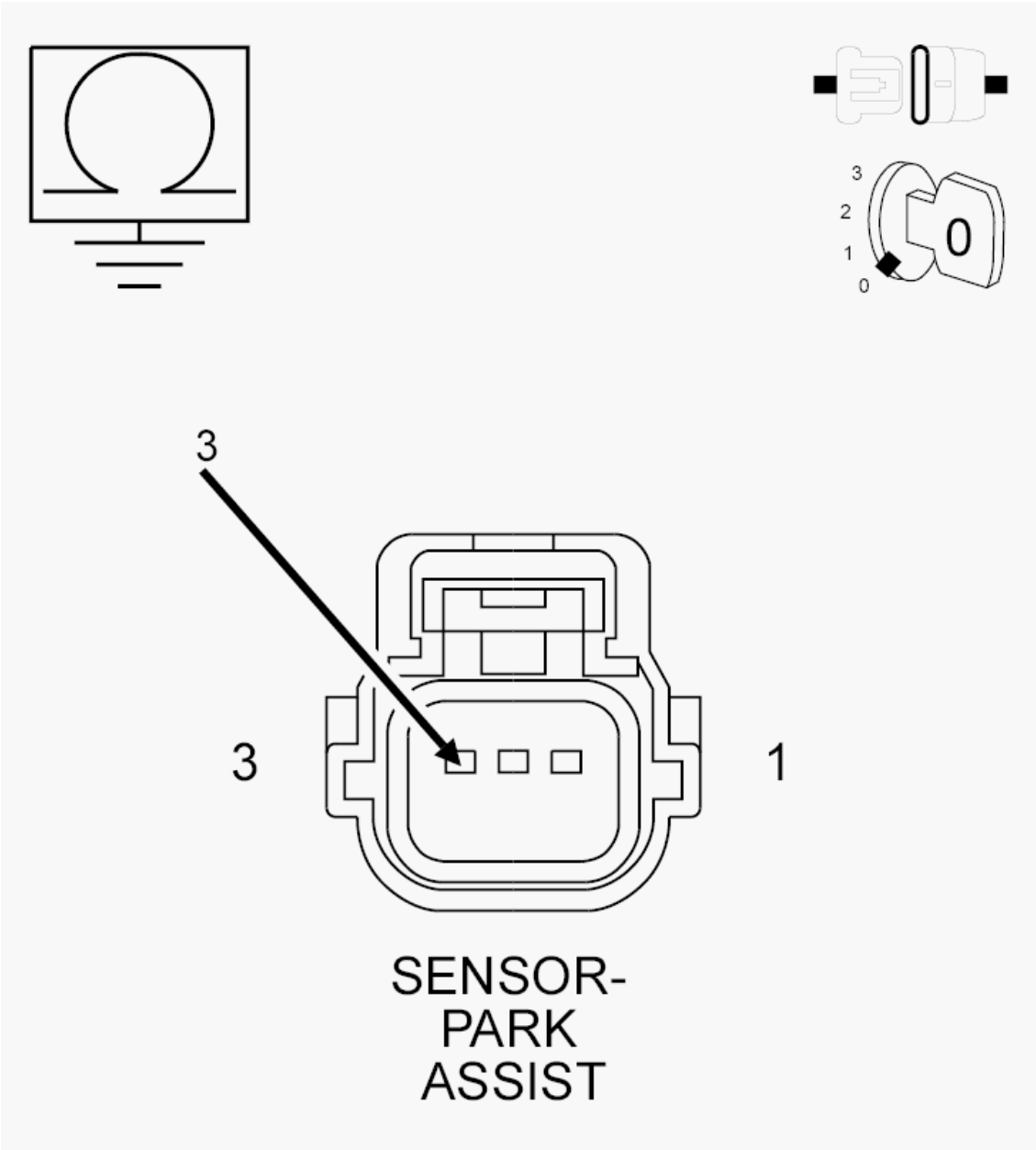

Fig. 55: Measuring Resistance Between Ground & Park Assist Sensor Signal Circuit
Courtesy of CHRYSLER GROUP, LLC

NOTE: Perform this step with the Park Assist Module connected.

1. Measure the resistance between ground and the (D710) Park Assist Sensor 11 Signal circuit.

   Is the resistance below 10K Ohms?

   Yes

   - Go To 5.

No

- Go To 7.

5. **CHECK THE (D710) PARK ASSIST SENSOR 11 SIGNAL CIRCUIT FOR A SHORT TO GROUND WITH THE PARK ASSIST MODULE DISCONNECTED**

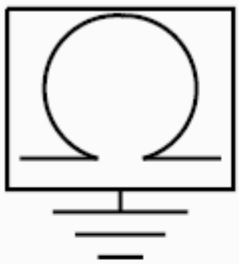

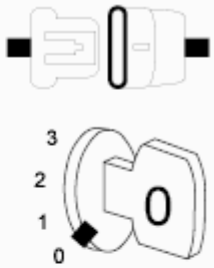

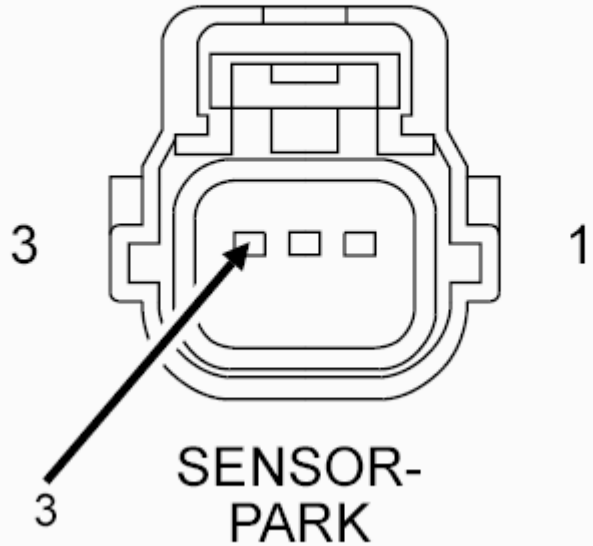

SENSOR-
PARK
ASSIST

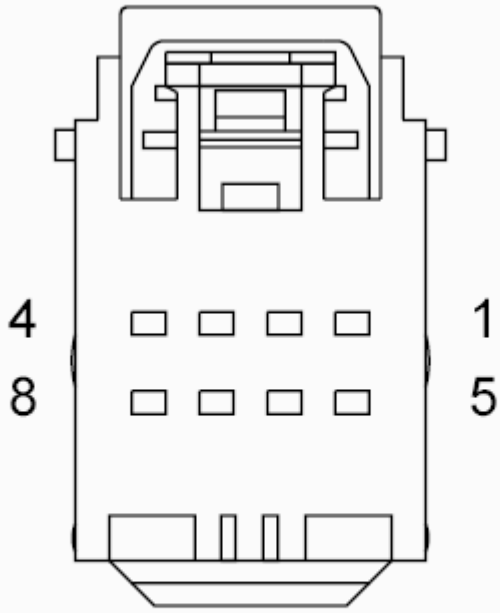

MODULE-
PARK
ASSIST C2

Fig. 56: Measuring Resistance Between Ground & Park Assist Sensor 9 Signal Circuit
Courtesy of CHRYSLER GROUP, LLC

1. Disconnect the Park Assist Module C2 harness connector.
2. Measure the resistance between ground and the (D710) Park Assist Sensor 11 Signal circuit.

   Is the resistance below 10K Ohms?

   Yes

   - Repair the short to ground in the (D710) Park Assist Sensor 11 Signal circuit.
   - Perform the BODY VERIFICATION TEST. Refer to **STANDARD PROCEDURE** .

   No

   - Go To 6.

6. **CHECK THE (D710) PARK ASSIST SENSOR 11 SIGNAL CIRCUIT FOR A SHORT TO THE (X750) PARK ASSIST SENSOR GROUND CIRCUIT**

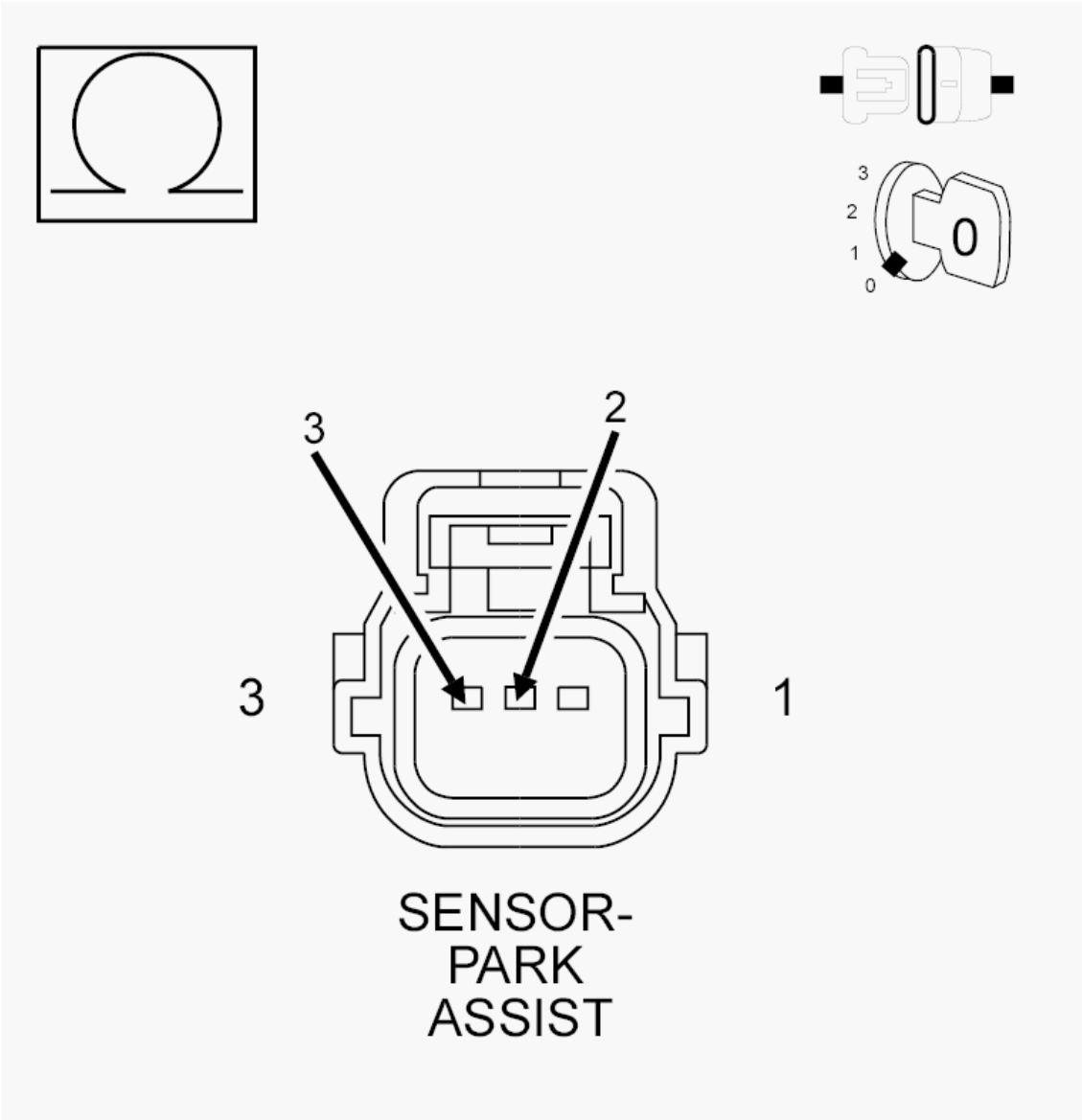

Fig. 57: Measuring Resistance Between Park Assist Sensor Signal Circuit & Park Assist Sensor Ground Circuit
Courtesy of CHRYSLER GROUP, LLC

1. Measure the resistance between the (D710) Park Assist Sensor 11 Signal circuit and the (X750) Park Assist Sensor Ground circuit.

   Is the resistance below 10K Ohms?

   Yes

   - Repair the short between the (D710) Park Assist Sensor 11 Signal circuit and the (X750) Park Assist Sensor Ground circuit.
   - Perform the BODY VERIFICATION TEST. Refer to **STANDARD PROCEDURE** .

No

- Replace the Park Assist Module in accordance with the Service Information. Refer to **MODULE, PARK ASSIST, REMOVAL** .
- Perform the BODY VERIFICATION TEST. Refer to **STANDARD PROCEDURE** .

7. **CHECK THE (D710) PARK ASSIST SENSOR 11 SIGNAL CIRCUIT FOR AN OPEN**

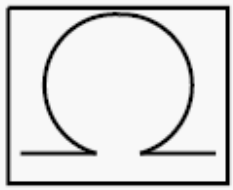

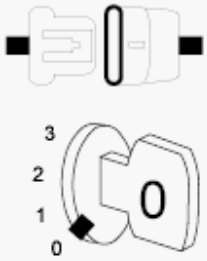

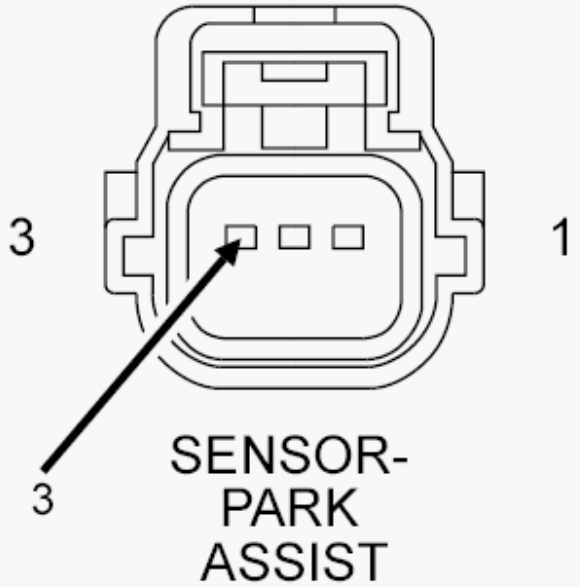

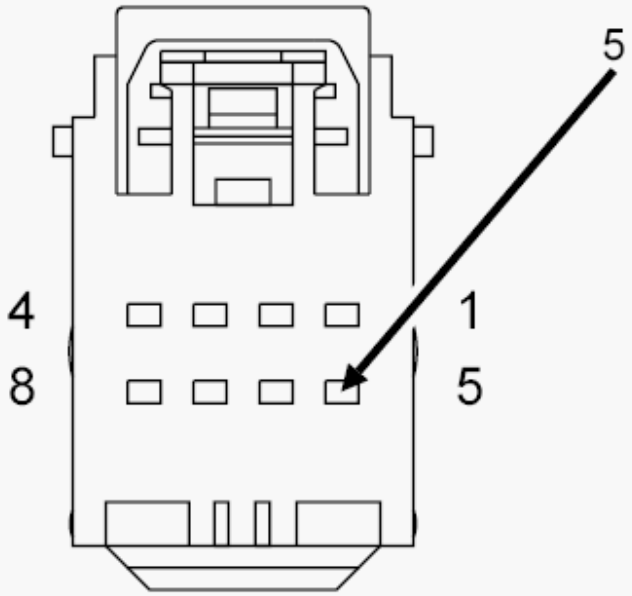

3553662

Fig. 58: Checking Park Assist Sensor 11 Signal Circuit For An Open
Courtesy of CHRYSLER GROUP, LLC

1. Disconnect the Park Assist Module C2 harness connector.
2. Measure the resistance of the (D710) Park Assist Sensor 11 Signal circuit.

   Is the resistance above 5.0 Ohms?

   Yes

   - Repair the open in the (D710) Park Assist Sensor 11 Signal circuit.
   - Perform the BODY VERIFICATION TEST. Refer to **STANDARD PROCEDURE** .

   No

   - Go To 8.

8. **PARK ASSIST SENSOR**

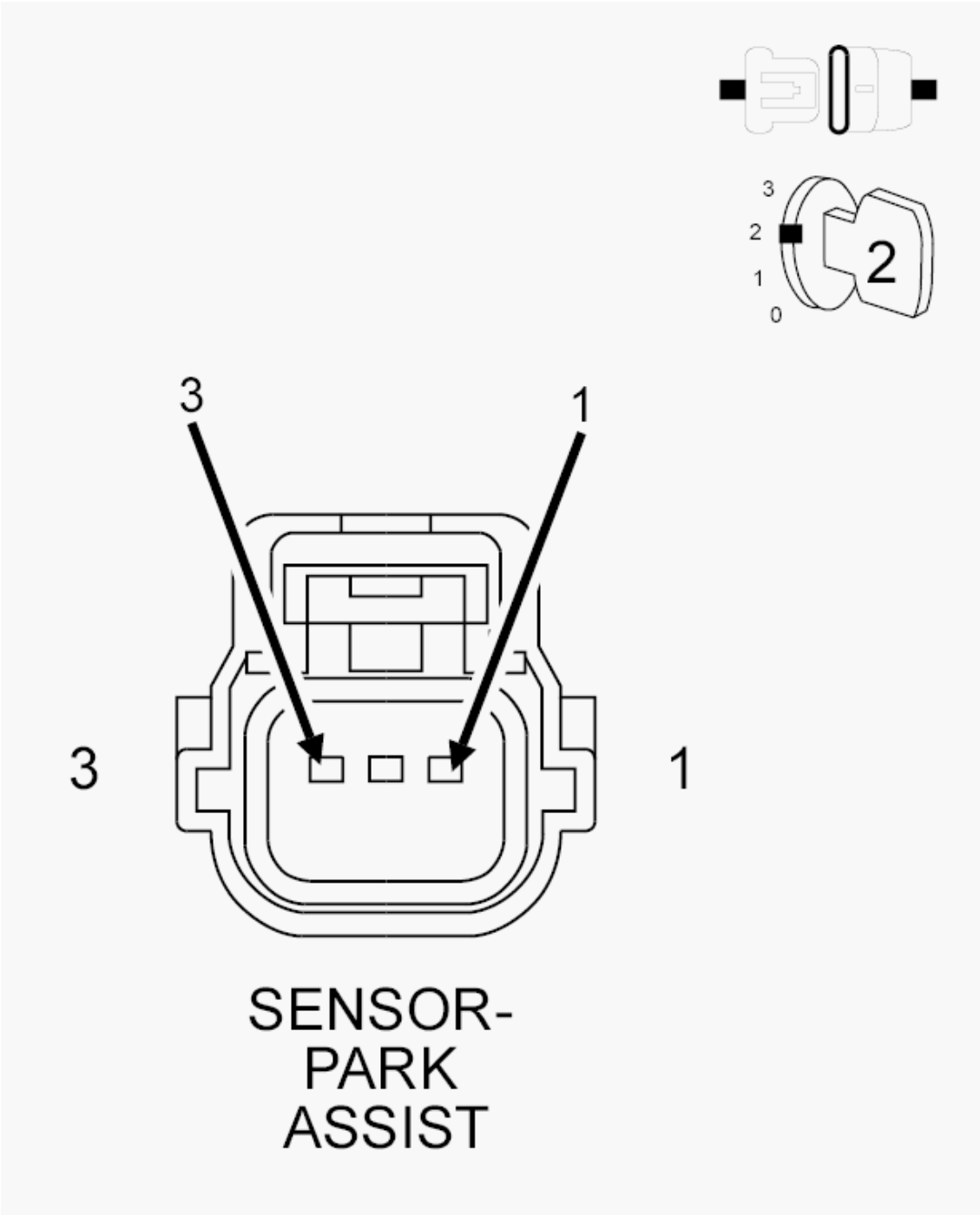

Fig. 59: Park Assist Sensor Connector End View
Courtesy of CHRYSLER GROUP, LLC

1. Turn the ignition on.
2. Reconnect the Park Assist Module C2 harness connector.
3. Connect a jumper wire across the (X700) Park Assist Sensor Supply and (D710) Park Assist Sensor 11 Signal circuits.
4. Turn the ignition on.

5. With the scan tool, read DTC's.

   Does the scan tool display DTC: B1298-12-PTS SENSOR 11 - CIRCUIT SHORT TO BATTERY as active?

   Yes

   - Replace the Park Assist Sensor in accordance with the Service Information. Refer to **SENSOR, PARK ASSIST, REMOVAL** .
   - Perform the BODY VERIFICATION TEST. Refer to **STANDARD PROCEDURE** .

   No

   - Replace the Park Assist Module in accordance with the Service Information. Refer to **MODULE, PARK ASSIST, REMOVAL** .
   - Perform the BODY VERIFICATION TEST. Refer to **STANDARD PROCEDURE** .

B1298-12-PTS SENSOR 11 - CIRCUIT SHORT TO BATTERY

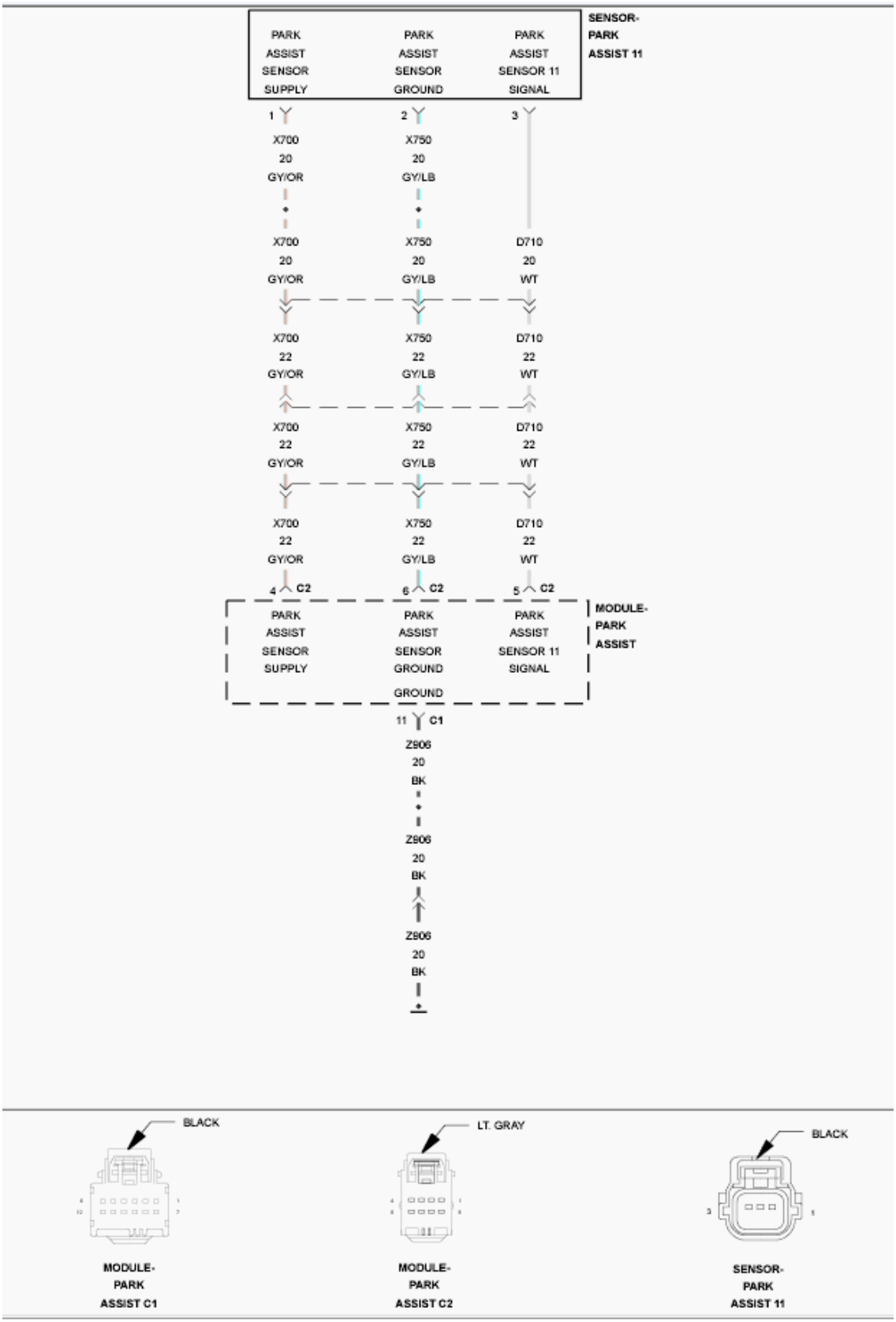

Fig. 60: Park Assist Sensor 11 Wiring Diagram

Courtesy of CHRYSLER GROUP, LLC

For a complete wiring diagram, **refer to appropriate SYSTEM WIRING DIAGRAMS article** .

THEORY OF OPERATION

The Park Assist Sensors are ultrasonic transceivers that are completely controlled by the Park Assist Module. The sensors transmit and receive ultrasonic signals. Each sensor has a voltage, signal, and return circuit to the module. The sensors communicate with the Park Assist Module using a dedicated serial bus communication circuit.

NOTE: **The numbering system for the park assist sensors allows for up to twelve sensors on the vehicle, six front and six rear. The sensors are numbered in a clockwise manner starting at the left front bumper. The left front sensor (if equipped with front park assist) is the number 1 sensor. The numbering continues in a clockwise direction around the vehicle. Since Chrysler Group vehicles use only four rear sensors, sensor numbers 7 and 12 are omitted, so the left rear sensor is the number 11 sensor.**

WHEN MONITORED:

Vehicle in reverse and during the self-test while vehicle is in drive between 18 km/h (11 mph) and 40 km/h (25 mph).

SET CONDITION:

The Park Assist Module detects an open or short to voltage on the Park Assist Sensor Signal circuit.

POSSIBLE CAUSES

Possible Causes
(D710) PARK ASSIST SENSOR 11 SIGNAL CIRCUIT SHORTED TO VOLTAGE
(D710) PARK ASSIST SENSOR 11 SIGNAL CIRCUIT SHORTED TO THE (X700) PARK ASSIST SENSOR SUPPLY CIRCUIT
(X750) PARK ASSIST SENSOR GROUND CIRCUIT OPEN
PARK ASSIST SENSOR
PARK ASSIST MODULE

DIAGNOSTIC TEST

1. **CHECK FOR AN ACTIVE DIAGNOSTIC TROUBLE CODE (DTC)**
    1. Turn the ignition on.
    2. With the scan tool, read DTC's.

    Does the scan tool display this DTC as active?

Yes

- Go To 2.

No

- Test complete, the condition or conditions that originally set this DTC are not present at this time. Using the wiring diagrams as a guide, check all related splices and connectors for signs of water intrusion, corrosion, pushed out or bent terminals, and correct pin tension.
- Perform the BODY VERIFICATION TEST. Refer to **STANDARD PROCEDURE** .

2. **(D710) PARK ASSIST SENSOR 11 SIGNAL CIRCUIT SHORTED TO BATTERY**

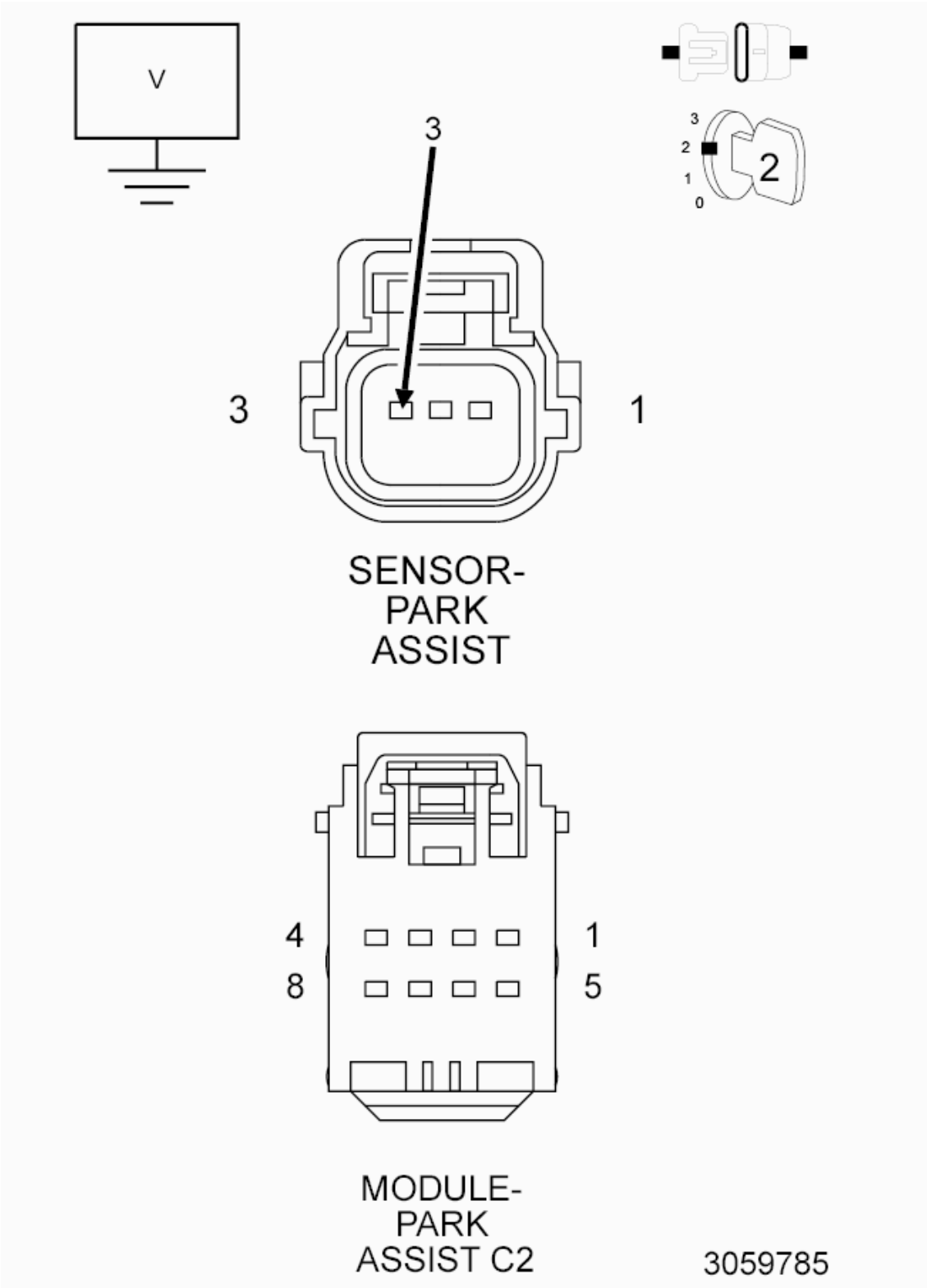

Fig. 61: Measuring Voltage Of Park Assist Sensor 8 Signal Circuit
Courtesy of CHRYSLER GROUP, LLC

1. Turn the ignition off.

2. Disconnect the Park Assist Module C2 harness connector.
3. Disconnect the Park Assist Sensor 11 harness connector.
4. Turn the ignition on.
5. Measure the voltage of the (D710) Park Assist Sensor 11 Signal circuit.

   Is the voltage above 10.0 volts?

   Yes

   - Repair the (D710) Park Assist Sensor 11 Signal circuit for a short to battery.
   - Perform the BODY VERIFICATION TEST. Refer to **STANDARD PROCEDURE** .

   No

   - Go To 3.

3. **(D710) PARK ASSIST SENSOR 11 SIGNAL CIRCUIT SHORTED TO THE (X700) PARK ASSIST SENSOR SUPPLY CIRCUIT**

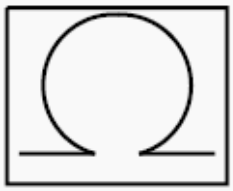

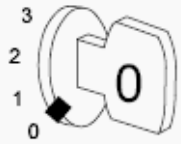

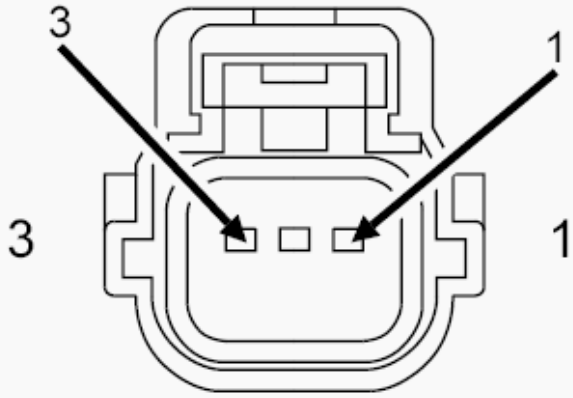

SENSOR-
PARK
ASSIST

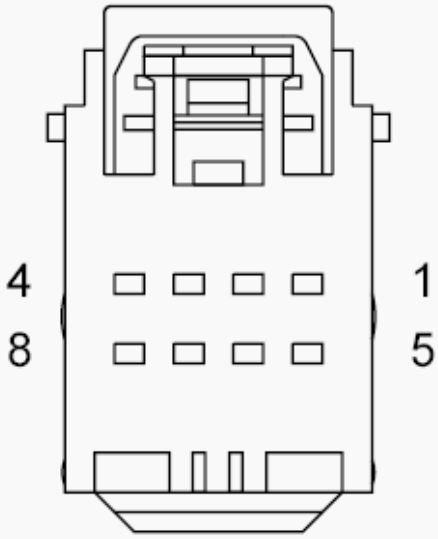

MODULE-
PARK
ASSIST C2

3060400

Fig. 62: Measuring Resistance Between Park Assist Sensor Signal Circuit & Park Assist Sensor Supply Circuit
Courtesy of CHRYSLER GROUP, LLC

1. Turn the ignition off.
2. Measure the resistance between the (D710) Park Assist Sensor 11 Signal circuit and the (X700) Park Assist Sensor Supply circuit.

   Is the resistance below 10K Ohms?

   Yes

   - Repair the (D710) Park Assist Sensor 11 Signal circuit for a short to the (X700) Park Assist Sensor Supply circuit.
   - Perform the BODY VERIFICATION TEST. Refer to **STANDARD PROCEDURE** .

   No

   - Go To 4.

4. **(X750) PARK ASSIST SENSOR GROUND CIRCUIT OPEN**

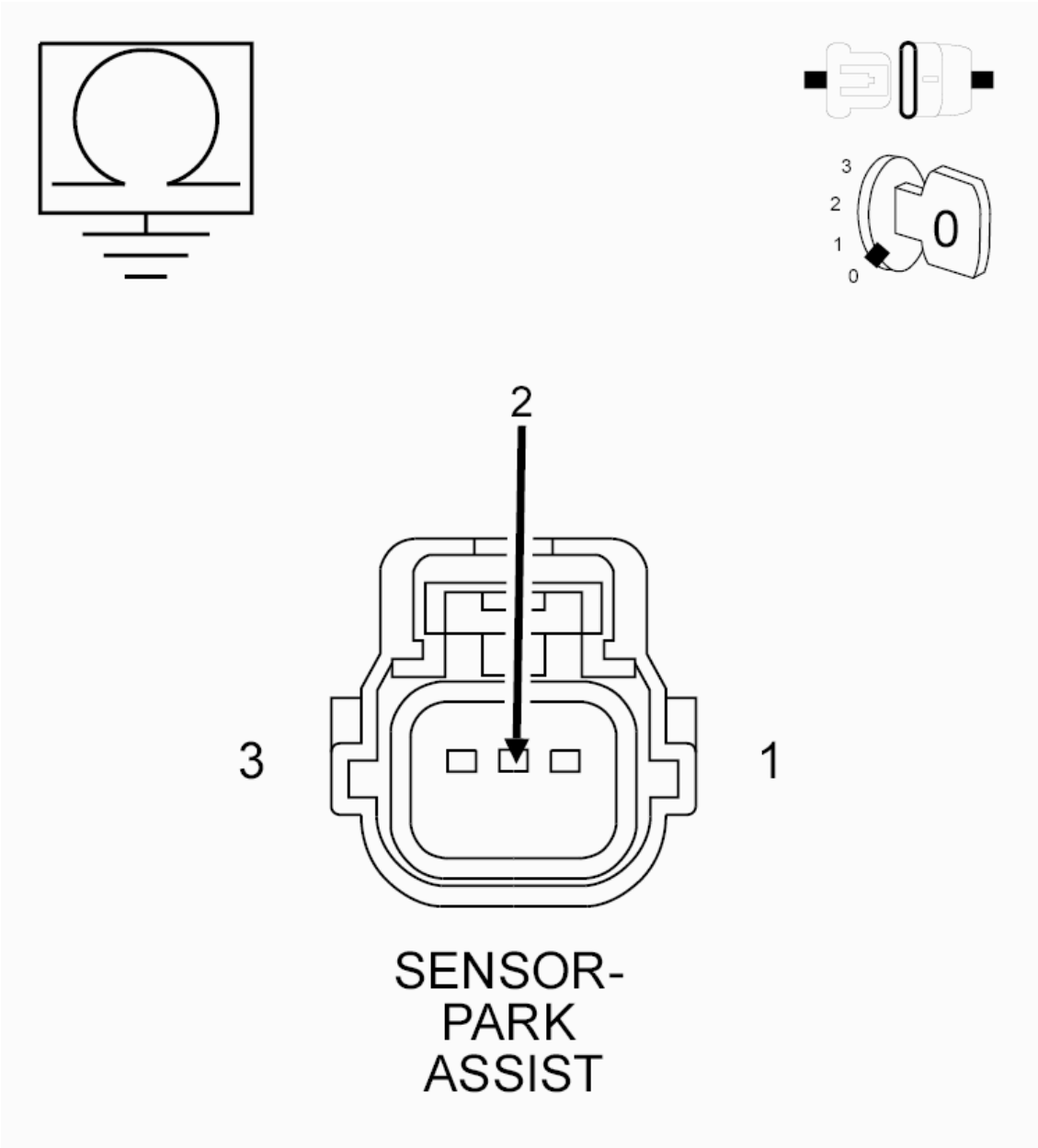

Fig. 63: Checking Park Assist Sensor Ground Circuit For An Open
Courtesy of CHRYSLER GROUP, LLC

1. Reconnect the Park Assist Module C2 harness connector.
2. Measure the resistance between ground and the (X750) Park Assist Sensor Ground circuit.

   Is the resistance above 20.0 Ohms?

   Yes

   - Go To 5.

No

- Replace the Park Assist Sensor in accordance with the Service Information. Refer to **SENSOR, PARK ASSIST, REMOVAL** .
- Perform the BODY VERIFICATION TEST. Refer to **STANDARD PROCEDURE** .

5. **(X750) PARK ASSIST SENSOR GROUND CIRCUIT OPEN BETWEEN PARK ASSIST MODULE AND SENSOR**

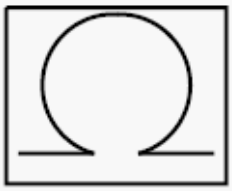

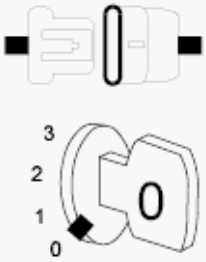

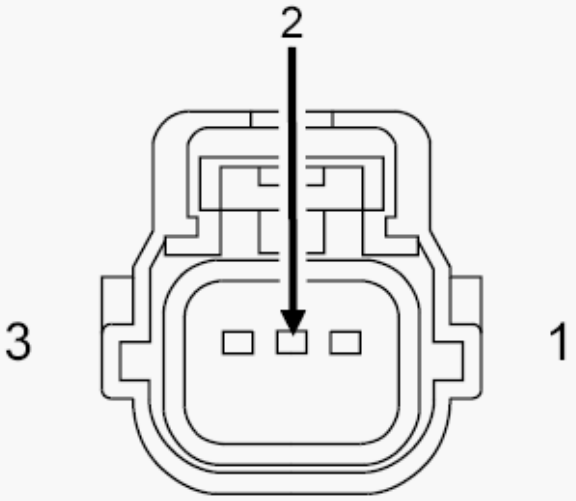

SENSOR-
PARK
ASSIST

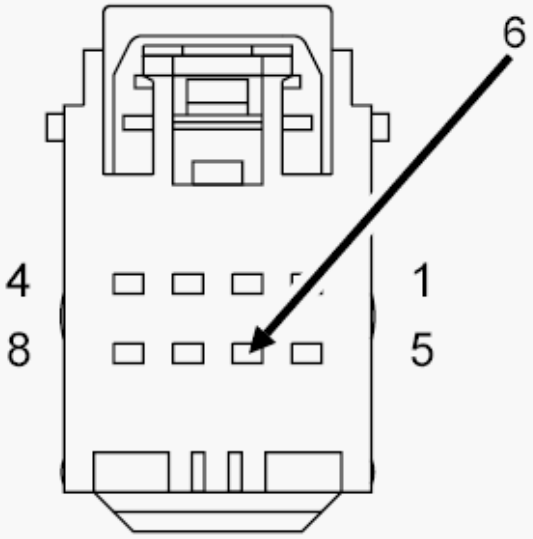

MODULE-
PARK
ASSIST C2

3060659

Fig. 64: Checking Park Assist Sensor Ground Circuit For An Open Between Park Assist Module And Sensor
Courtesy of CHRYSLER GROUP, LLC

1. Disconnect the Park Assist Module C2 harness connector.
2. Measure the resistance of the (X750) Park Assist Sensor Ground circuit.

   Is the resistance above 5.0 Ohms?

   Yes

   - Repair the open in the (X750) Park Assist Sensor Ground circuit.
   - Perform the BODY VERIFICATION TEST. Refer to **STANDARD PROCEDURE** .

   No

   - Replace the Park Assist Module in accordance with the Service Information. Refer to **SENSOR, PARK ASSIST, REMOVAL** .
   - Perform the BODY VERIFICATION TEST. Refer to **STANDARD PROCEDURE** .

B1298-25-PTS SENSOR 11 - SIGNAL SHAPE / WAVEFORM FAILURE

For a complete wiring diagram, **refer to appropriate SYSTEM WIRING DIAGRAMS article** .

NOTE: **The numbering system for the park assist sensors allows for up to twelve sensors on the vehicle, six front and six rear. The sensors are numbered in a clockwise manner starting at the left front bumper. The left front sensor (if equipped with front park assist) is the number 1 sensor. The numbering continues in a clockwise direction around the vehicle. Since Chrysler LLC vehicles use only four rear sensors, sensor numbers 7 and 12 are omitted, so the left rear sensor is the number 11 sensor.**

WHEN MONITORED:

Vehicle in reverse.

During the self-test while vehicle is in drive between 11 mph (18 km/h) and 25 mph (40 km/h).

SET CONDITION:

The Park Assist Module detects an internal Sensor error.

POSSIBLE CAUSES

Possible Causes
PARK ASSIST SENSOR MEMBRANE OBSTRUCTION (ICE, SNOW, MUD, DIRT COVERING

FASCIA)
PARK ASSIST SENSOR CONNECTOR OBSTRUCTION (ICE, SNOW, MUD, DIRT)
DECOUPLING RING MISSING/MOUNTED WRONG
OBJECTS - SUCH AS LICENSE PLATES - IN CLOSE RANGE TO THE SENSOR
PARK ASSIST SENSOR

DIAGNOSTIC TEST

1. **CHECK FOR AN ACTIVE DTC**

   NOTE: Before proceeding with this diagnostic procedure, remove any ice, snow, mud, dirt, or other obstructions from the front/rear fascia/bumper. Also remove any ice, snow, dirt, mud, or other obstructions from the underside of the Fascia/Bumper surrounding the sensors.

   1. Turn the ignition on.
   2. With the scan tool, read DTC's.

      Is this DTC active?

      Yes

      - Go To 2.

      No

      - Test complete, the condition or conditions that originally set this DTC are not present at this time. Using the wiring diagrams as a guide, check all related splices and connectors for signs of water intrusion, corrosion, pushed out or bent terminals, and correct pin tension.
2. **PARK ASSIST SENSOR**
   1. Verify that none of the possible causes mentioned above are present. Repair as necessary.

      If none of the possible causes mentioned above are present, view repair.

      Repair

      - Replace the Park Assist Sensor in accordance with the Service Information.
      - Perform the BODY VERIFICATION TEST. Refer to **STANDARD PROCEDURE** .

B1298-92-PTS SENSOR 11 - PERFORMANCE OR INCORRECT OPERATION

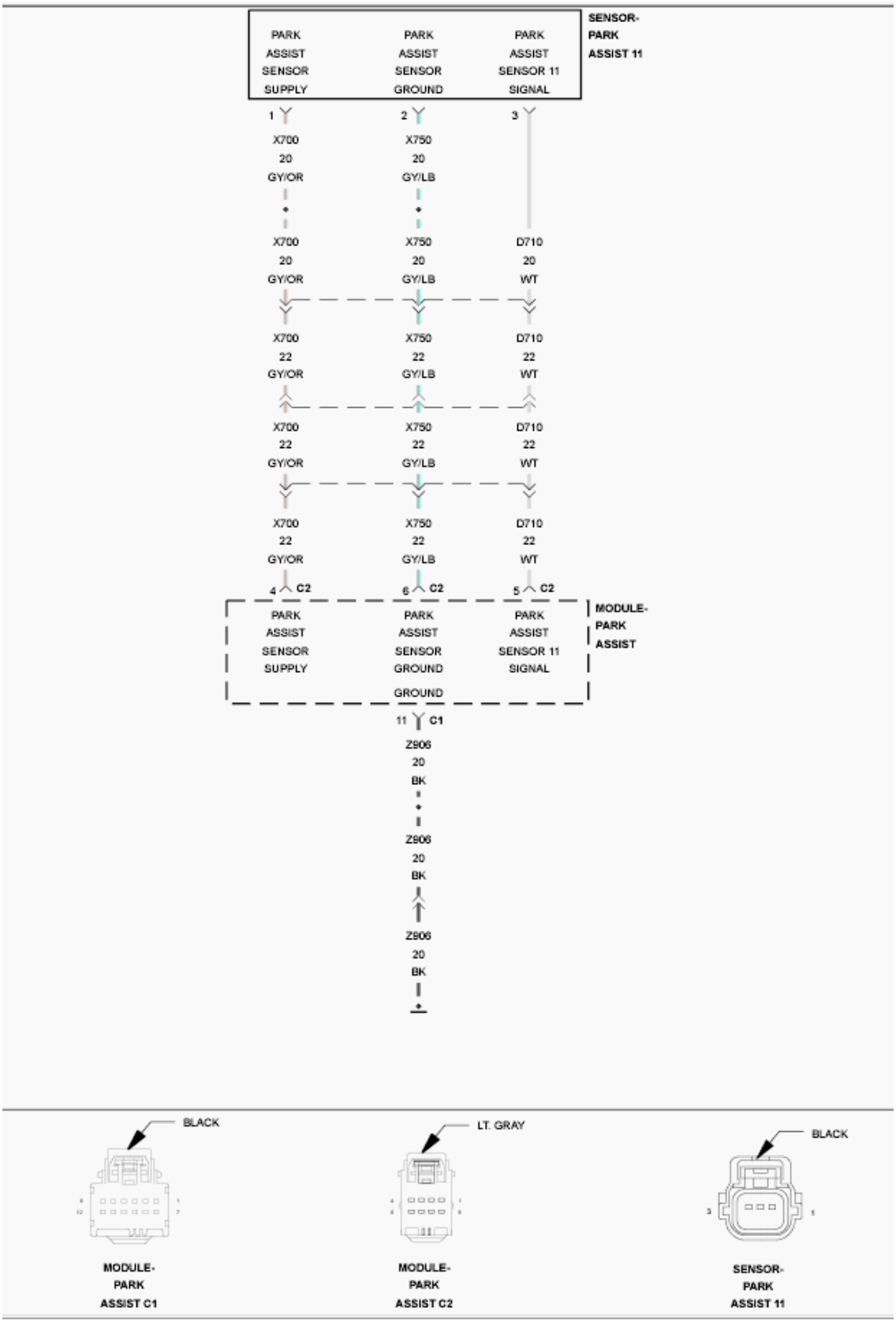

Fig. 65: Park Assist Sensor 11 Wiring Diagram

Courtesy of CHRYSLER GROUP, LLC

For a complete wiring diagram, **refer to appropriate SYSTEM WIRING DIAGRAMS article** .

THEORY OF OPERATION

The Park Assist Sensors are ultrasonic transceivers that are completely controlled by the Park Assist Module. The sensors transmit and receive ultrasonic signals. Each sensor has a voltage, signal, and return circuit to the module. The sensors communicate with the Park Assist Module using a dedicated serial bus communication circuit.

NOTE: **The numbering system for the park assist sensors allows for up to twelve sensors on the vehicle, six front and six rear. The sensors are numbered in a clockwise manner starting at the left front bumper. The left front sensor (if equipped with front park assist) is the number 1 sensor. The numbering continues in a clockwise direction around the vehicle. Since Chrysler Group vehicles use only four rear sensors, sensor numbers 7 and 12 are omitted, so the left rear sensor is the number 11 sensor.**

WHEN MONITORED:

During Reverse and during self test in Forward between 11 mph (18 km/h) and 25 mph (40 km/h).

SET CONDITION:

If the system detects data corruption in the transmission in the internal communication line between the module and sensors.

POSSIBLE CAUSES

Possible Causes
(D710) PTS SENSOR 11 SIGNAL CIRCUIT SHORTED TO GROUND
(D710) PTS SENSOR 11 SIGNAL CIRCUIT SHORTED TO BATTERY
(D710) PTS SENSOR 11 SIGNAL CIRCUIT OPEN
PARK ASSIST SENSOR 11
PARK ASSIST MODULE

DIAGNOSTIC TEST

1. **TEST FOR INTERMITTENT CONDITION**
    1. Turn the ignition on.
    2. With the scan tool, read the active DTC's.

    Does the scan tool display this DTC as active?

    Yes

- Go To 2.

No

- Test complete, the condition or conditions that originally set this DTC are not present at this time. Using the wiring diagrams as a guide, check all related splices and connectors for signs of water intrusion, corrosion, pushed out or bent terminals, and correct pin tension.
- Perform the BODY VERIFICATION TEST. Refer to **STANDARD PROCEDURE** .

2. **CHECK PARK ASSIST SENSOR 11 FOR INTERNAL SHORT**
   1. Disconnect the Park Assist Sensor 11 harness connector.
   2. With the scan tool, read the active DTC's.

   Does the scan tool display this DTC as active?

   Yes

   - Go To 3.

   No

   - Replace the Park Assist Sensor 11 in accordance with the Service Information. Refer to **SENSOR, PARK ASSIST, REMOVAL** .
   - Perform the BODY VERIFICATION TEST. Refer to **STANDARD PROCEDURE** .

3. **CHECK THE (D710) PARK ASSIST SENSOR 11 SIGNAL CIRCUIT FOR A SHORT TO GROUND**

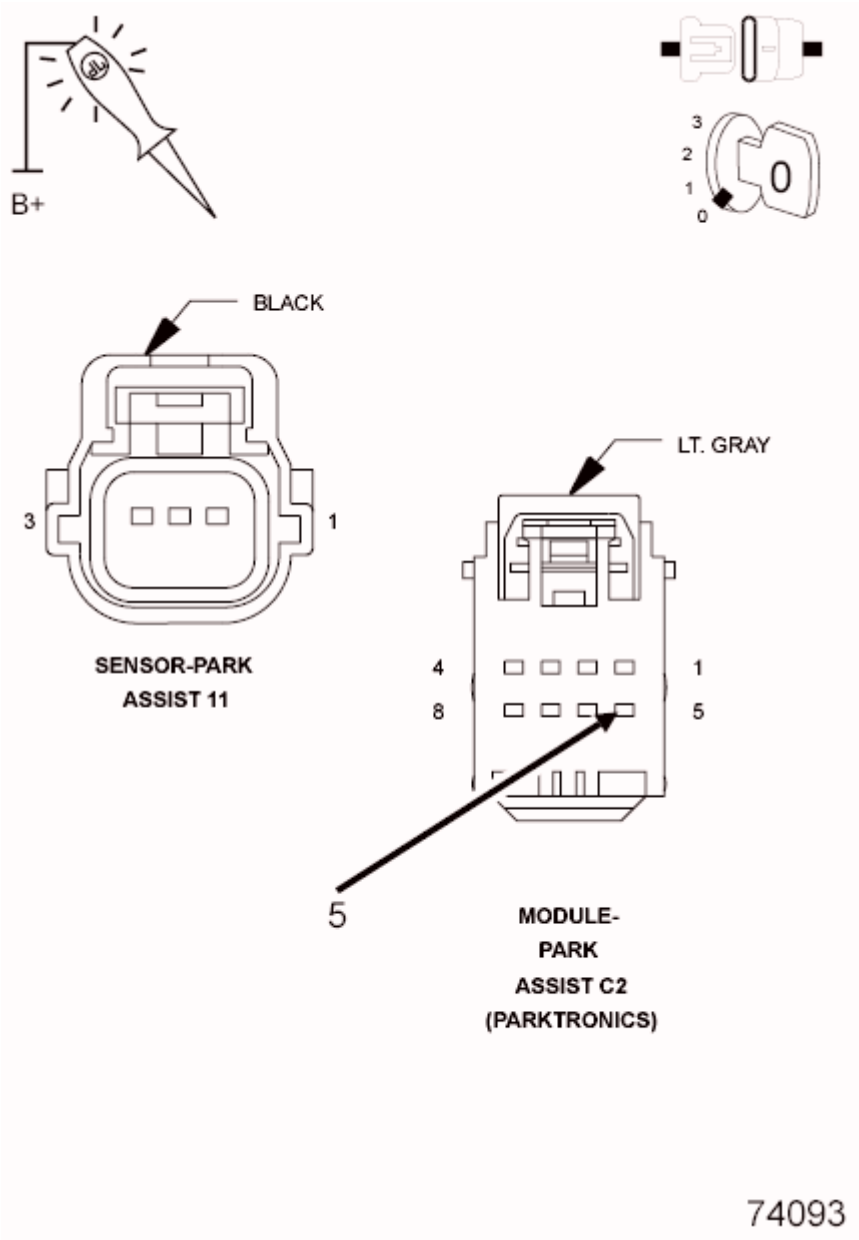

Fig. 66: Checking Park Assist Sensor Signal Circuit For A Short To Ground
Courtesy of CHRYSLER GROUP, LLC

1. Turn the ignition off.
2. Disconnect the Park Assist Module harness connectors C1 and C2.
3. Using a 12-volt test light connected to 12-volts, check the (D710) Park Assist Sensor 11 Signal circuit at the Park Assist Module C2 harness connector.

   Does the test light illuminate brightly?

   Yes

- Repair the short to ground in the (D710) Park Assist Sensor 11 Signal circuit.
- Perform the BODY VERIFICATION TEST. Refer to **STANDARD PROCEDURE** .

No

- Go To 4.

4. **CHECK THE (D710) PARK ASSIST SENSOR 11 SIGNAL CIRCUIT FOR A SHORT TO BATTERY**

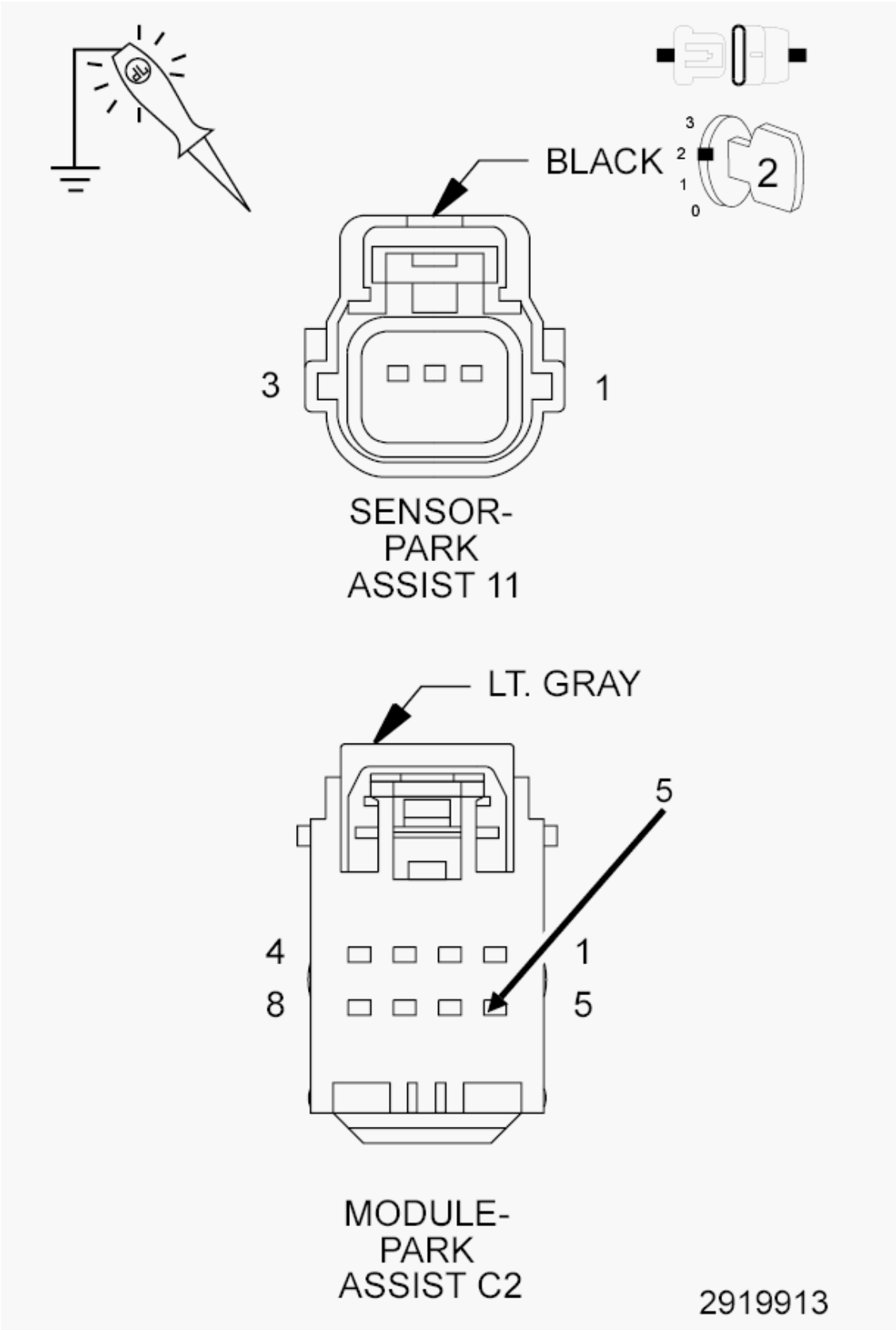

Fig. 67: Checking Park Assist Sensor 11 Signal Circuit For A Short To Battery

Courtesy of CHRYSLER GROUP, LLC

1. Turn the ignition on.
2. Using a 12-volt test light connected to ground, check the (D710) Park Assist Sensor 11 Signal circuit at the Park Assist module C2 harness connector.

   Does the test light illuminate brightly?

   Yes

   - Repair the short to voltage in the (D710) Park Assist Sensor 11 Signal circuit.
   - Perform the BODY VERIFICATION TEST. Refer to **STANDARD PROCEDURE** .

   No

   - Go To 5.

5. **CHECK THE (D710) PARK ASSIST SENSOR 11 SIGNAL CIRCUIT FOR AN OPEN**

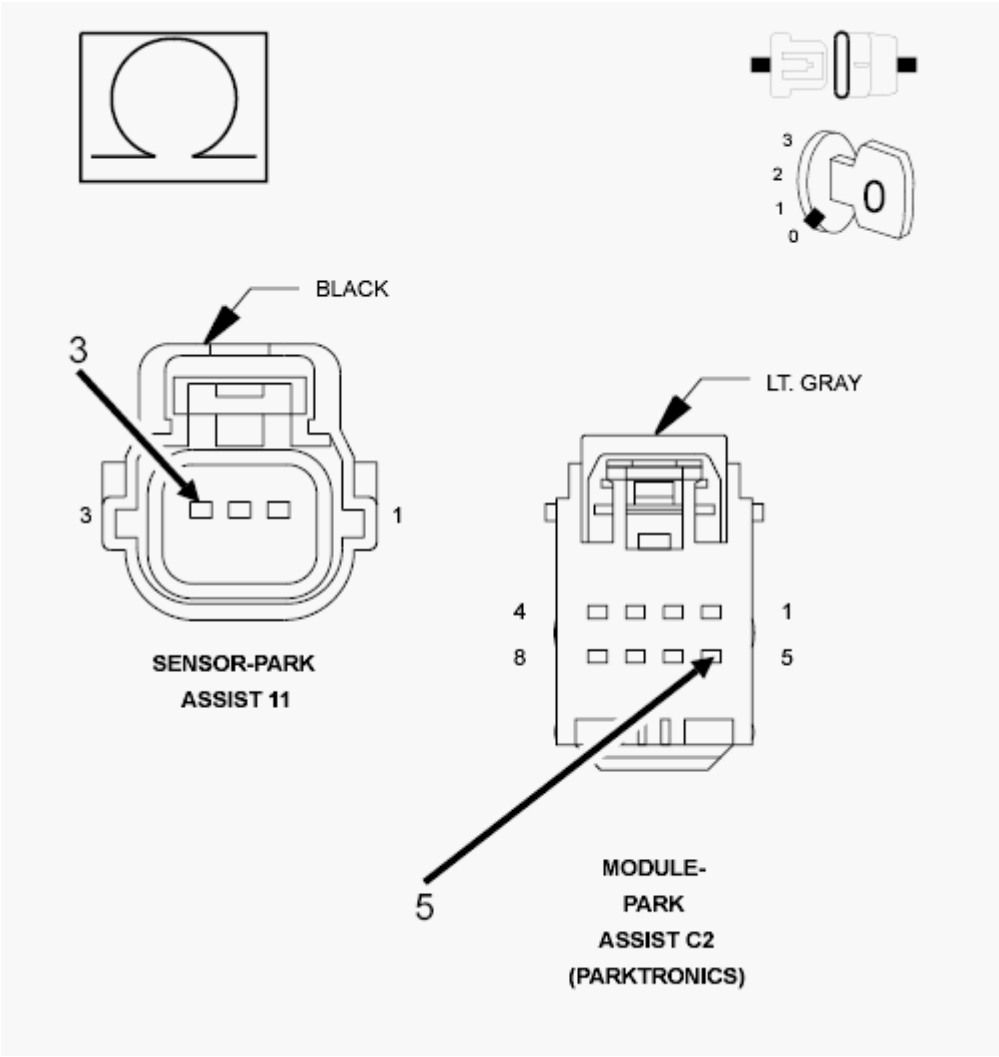

Fig. 68: Checking Park Assist Sensor Signal Circuit For An Open
Courtesy of CHRYSLER GROUP, LLC

1. Measure the resistance of the (D710) Park Assist Sensor 11 Signal circuit between the Park Assist Module C2 harness connector and the Park Assist Sensor 11 harness connector.

   Is the resistance above 5.0 Ohms?

   Yes

   - Repair the open in the (D710) Park Assist Sensor 11 Signal circuit.
   - Perform the BODY VERIFICATION TEST. Refer to **STANDARD PROCEDURE** .

   No

   - Replace the Park Assist Module in accordance with Service Information. Refer to **MODULE, PARK ASSIST, REMOVAL** .

- Perform the BODY VERIFICATION TEST. Refer to **STANDARD PROCEDURE** .

B210C-16-BATTERY VOLTAGE INPUT-CIRCUIT VOLTAGE BELOW THRESHOLD

For a complete wiring diagram, **refer to appropriate SYSTEM WIRING DIAGRAMS article** .

WHEN MONITORED:

While the vehicle is in reverse for speeds less than 10 mph (16km/h).

SET CONDITION:

Park Assist Module supply voltage less than 6.5 volts.

POSSIBLE CAUSES

Possible Causes
VEHICLE CHARGING SYSTEM PARK ASSIST MODULE

DIAGNOSTIC TEST

1. **CHECK FOR ACTIVE DTC**
    1. Turn the ignition on.
    2. Apply the vehicle park brake.
    3. Shift the transmission into reverse.
    4. With the scan tool, record and erase Park Assist Module DTC's.
    5. Wait 30 seconds.
    6. With the scan tool, read Park Assist Module DTC's.

    Is this DTC active?

    Yes

    - Go To 2.

    No

    - The condition that caused this code to set is not present at this time. Check for an intermittent condition by inspecting the related wiring harness for chafed, pierced, pinched, and partially broken wires. Also inspect the related connectors for broken, bent, pushed out, spread, corroded, or contaminated terminals.
    - Perform the BODY VERIFICATION TEST. Refer to **STANDARD PROCEDURE** .
2. **VERIFY OPERATION OF THE VEHICLE CHARGING SYSTEM**

NOTE: **Troubleshoot any Powertrain Control Module (PCM) charging/cranking DTC's before proceeding.**

NOTE: **Make sure the battery is fully charged.**

Are any charging system DTC's present?

Yes

- Refer to **CHARGING SYSTEM - DIAGNOSIS AND TESTING** and perform the active charging system or battery diagnostic procedure.

No

- Replace the Park Assist Module in accordance with the Service Information.
- Perform the BODY VERIFICATION TEST. Refer to **STANDARD PROCEDURE** .

B210C-17-BATTERY VOLTAGE INPUT-CIRCUIT VOLTAGE ABOVE THRESHOLD

For a complete wiring diagram, **refer to appropriate SYSTEM WIRING DIAGRAMS article** .

WHEN MONITORED:

While the vehicle is in reverse for speeds less than 16km/h (10 mph).

SET CONDITION:

Park Assist Module supply voltage greater than 16.0 volts.

POSSIBLE CAUSES

Possible Causes
VEHICLE CHARGING SYSTEM PARK ASSIST MODULE

DIAGNOSTIC TEST

1. **CHECK FOR ACTIVE DTC**
    1. Turn the ignition on.
    2. Apply the vehicle park brake.
    3. Shift the transmission into reverse.
    4. With the scan tool, record and erase Park Assist Module DTC's.
    5. Wait 30 seconds.
    6. With the scan tool, read Park Assist Module DTC's.

Is this DTC active?

Yes

- Go To 2.

No

- The condition that caused this code to set is not present at this time. Check for an intermittent condition by inspecting the related wiring harness for chafed, pierced, pinched, and partially broken wires. Also inspect the related connectors for broken, bent, pushed out, spread, corroded, or contaminated terminals.
- Perform the BODY VERIFICATION TEST. Refer to **STANDARD PROCEDURE** .

2. **VERIFY OPERATION OF THE VEHICLE CHARGING SYSTEM**

NOTE: Troubleshoot any Powertrain Control Module (PCM) charging/cranking DTC's before proceeding.

NOTE: Make sure the battery is fully charged.

Are any charging system DTC's present?

Yes

- Refer to **CHARGING SYSTEM - DIAGNOSIS AND TESTING** and perform the active charging system or battery diagnostic procedures.

No

- Replace the Park Assist Module in accordance with the Service Information.
- Perform the BODY VERIFICATION TEST. Refer to **STANDARD PROCEDURE** .

B2128-16-SENSOR SUPPLY VOLTAGE-CIRCUIT VOLTAGE BELOW THRESHOLD

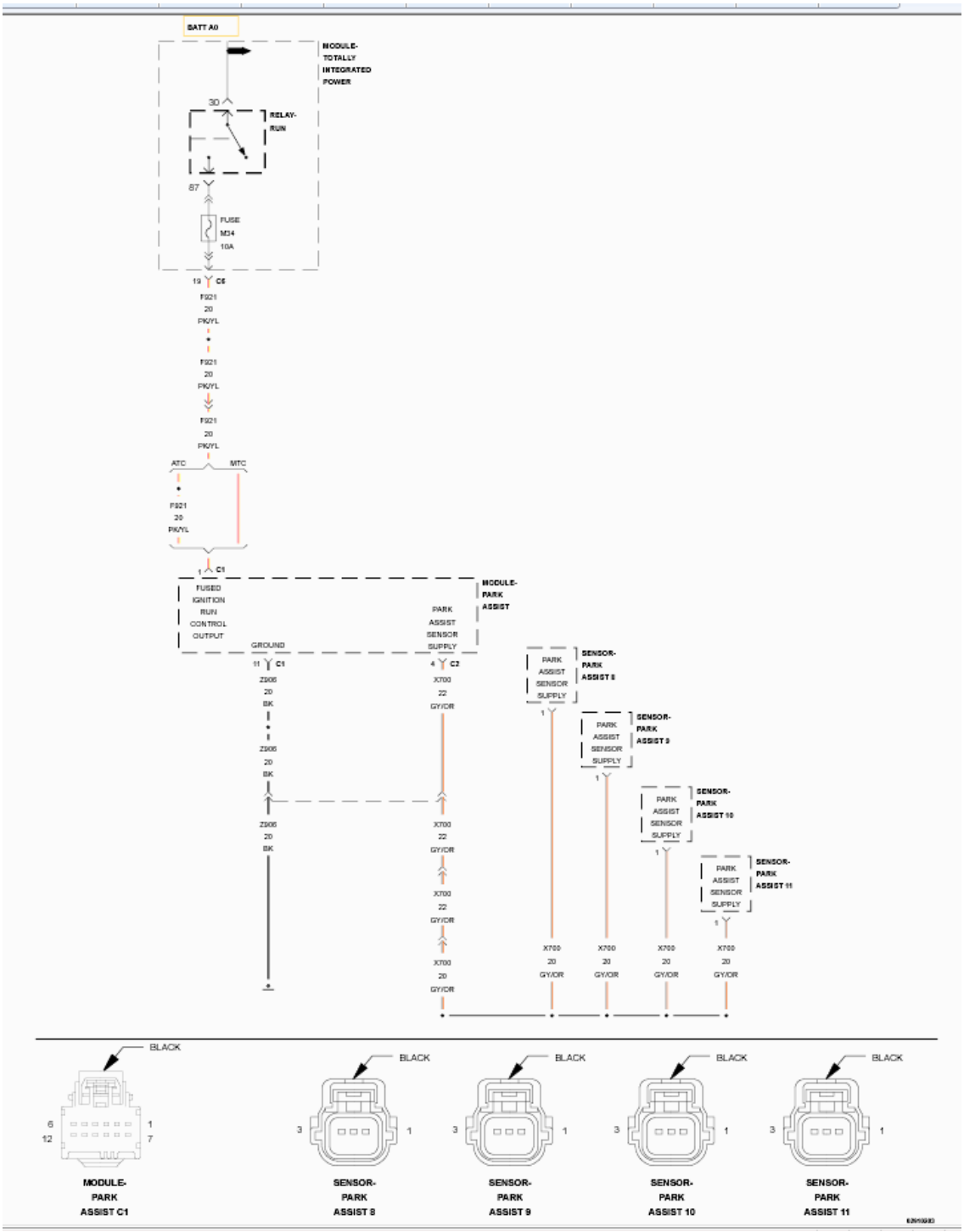

Fig. 69: Parking Assist Sensor Power Supply Wiring Diagram
Courtesy of CHRYSLER GROUP, LLC

For a complete wiring diagram, **refer to appropriate SYSTEM WIRING DIAGRAMS article** .

NOTE: **The numbering system for the park assist sensors allows for up to twelve sensors on the vehicle, six front and six rear. The sensors are numbered in a**

clockwise manner starting at the left front bumper. The left front sensor (if equipped with front park assist) is the number 1 sensor. The numbering continues in a clockwise direction around the vehicle. Since Chrysler LLC vehicles use only four rear sensors, sensor numbers 7 and 12 are omitted, so the left rear sensor is the number 11 sensor.

WHEN MONITORED:

While the vehicle is in reverse for speeds less than 10 mph (16km/h).

SET CONDITION:

Park Assist Sensor supply voltage less than 7.2 volts.

POSSIBLE CAUSES

Possible Causes
(X700) PARK ASSIST SENSOR SUPPLY CIRCUIT SHORTED TO (X750) PARK ASSIST SENSOR GROUND CIRCUIT
(X700) PARK ASSIST SENSOR SUPPLY CIRCUIT SHORTED TO (X772) PARK ASSIST DISPLAY GROUND CIRCUIT
(X700) PARK ASSIST SENSOR SUPPLY CIRCUIT SHORTED TO (Z906) PARK ASSIST MODULE GROUND CIRCUIT
(X700) PARK ASSIST SENSOR SUPPLY CIRCUIT SHORTED TO GROUND
PARK ASSIST SENSOR
PARK ASSIST MODULE

DIAGNOSTIC TEST

1. **CHECK FOR AN ACTIVE DTC**
    1. Turn the ignition on.
    2. Apply the park brake.
    3. Shift the transmission into Reverse.
    4. With the scan tool, record and erase DTC's.
    5. Wait 30 seconds.
    6. With the scan tool, read DTC's.

    Is this DTC active?

    Yes

    - Go To 2.

    No

- The condition that caused this code to set is not present at this time. Check for an intermittent condition by inspecting the related wiring harness for chafed, pierced, pinched, and partially broken wires. Also inspect the related connectors for broken, bent, pushed out, spread, corroded, or contaminated terminals.
- Perform the BODY VERIFICATION TEST. Refer to **STANDARD PROCEDURE** .

2. **CHECK EACH PARK ASSIST SENSOR FOR A SHORT TO GROUND**
   1. Turn the ignition off.
   2. Disconnect one Park Assist Sensor.
   3. Turn the ignition on.
   4. With the scan tool, read Park Assist Module DTC's. If this DTC is still active, repeat this procedure by disconnecting another park assist sensor. However, if this DTC changes from active to stored, or if all four sensors have been disconnected, proceed as follows:

      Is this DTC still active?

      Yes

      - Go To 3.

      No

      - Replace the Park Assist Sensor that caused this DTC to change from active to stored after disconnecting it in accordance with the Service Information.
      - Perform the BODY VERIFICATION TEST. Refer to **STANDARD PROCEDURE** .
3. **CHECK THE (X700) PARK ASSIST SENSOR SUPPLY CIRCUIT FOR A SHORT TO (X750) PARK ASSIST SENSOR GROUND CIRCUIT**

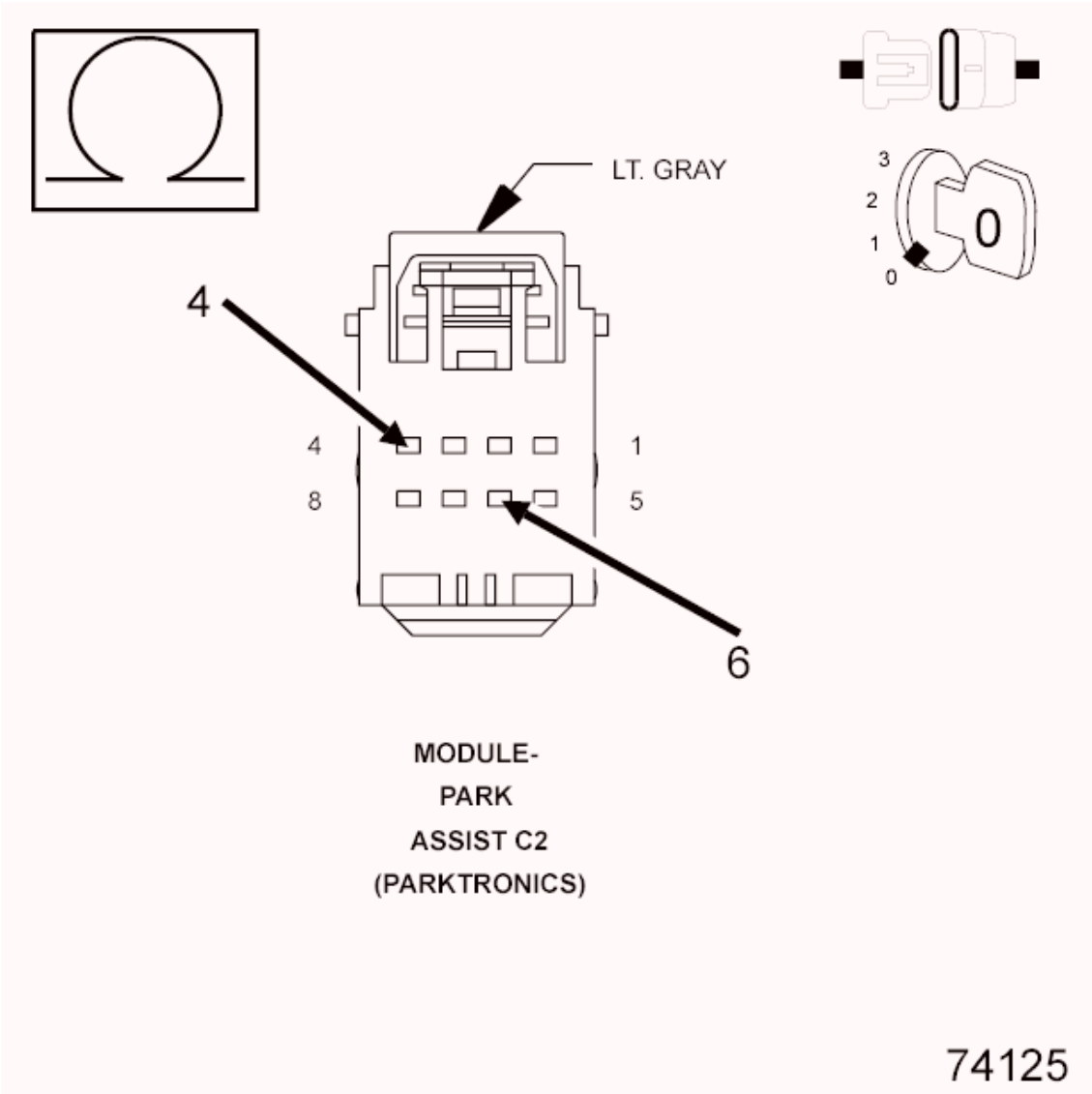

Fig. 70: Checking Park Assist Sensor Supply Circuit For A Short To Park Assist Sensor Ground Circuit
Courtesy of CHRYSLER GROUP, LLC

NOTE: Perform this test with all Park Assist Sensors disconnected.

1. Turn the ignition off.
2. Disconnect the Park Assist Module harness connector.
3. Measure the resistance between the (X700) Park Assist Sensor Supply circuit and the (X750) Park Assist Sensor Ground circuit.

   Is the resistance below 10K Ohms?

   Yes

- Repair the (X700) Park Assist Sensor Supply circuit for a short to the (X750) Park Assist Sensor Ground circuit.
- Perform the BODY VERIFICATION TEST. Refer to **STANDARD PROCEDURE** .

No

- Go To 4.

4. **CHECK THE (X700) PARK ASSIST SENSOR SUPPLY CIRCUIT FOR A SHORT TO THE (X772) PARK ASSIST DISPLAY GROUND CIRCUIT**

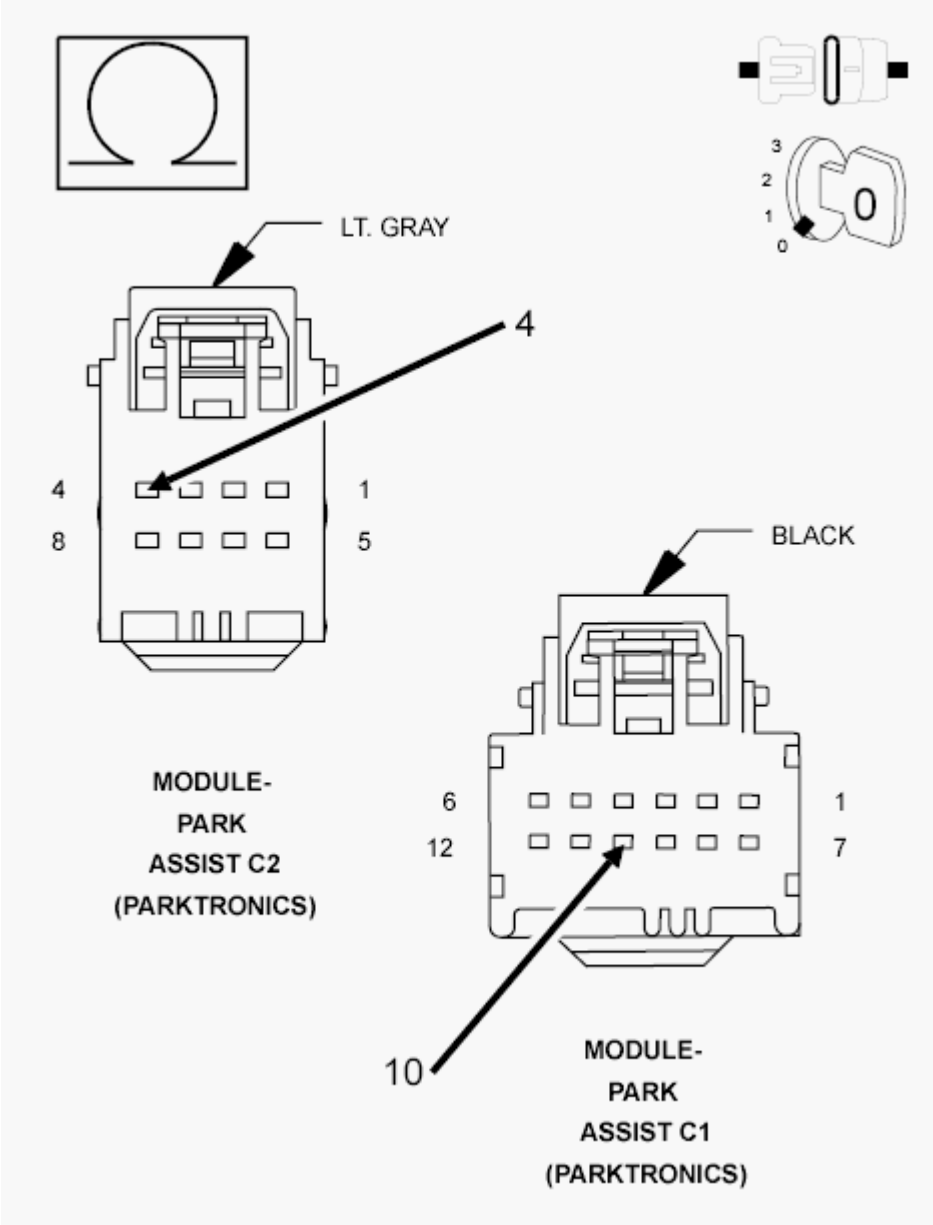

Fig. 71: Checking Park Assist Sensor Supply Circuit For A Short To The Park Assist Display Ground Circuit

Courtesy of CHRYSLER GROUP, LLC

NOTE: Perform this test with all Park Assist Sensors disconnected.

1. Measure the resistance between the (X700) Park Assist Sensor Supply circuit and the (X772) Park Assist Display Ground circuit.

   Is the resistance below 10K Ohms?

   Yes

   - Repair the (X700) Park Assist Sensor Supply circuit for a short to the (X772) Park Assist Display Ground circuit.
   - Perform the BODY VERIFICATION TEST. Refer to **STANDARD PROCEDURE** .

   No

   - Go To 5.

5. **CHECK THE (X700) PARK ASSIST SENSOR SUPPLY CIRCUIT FOR A SHORT TO THE (Z906) PARK ASSIST MODULE GROUND CIRCUIT**

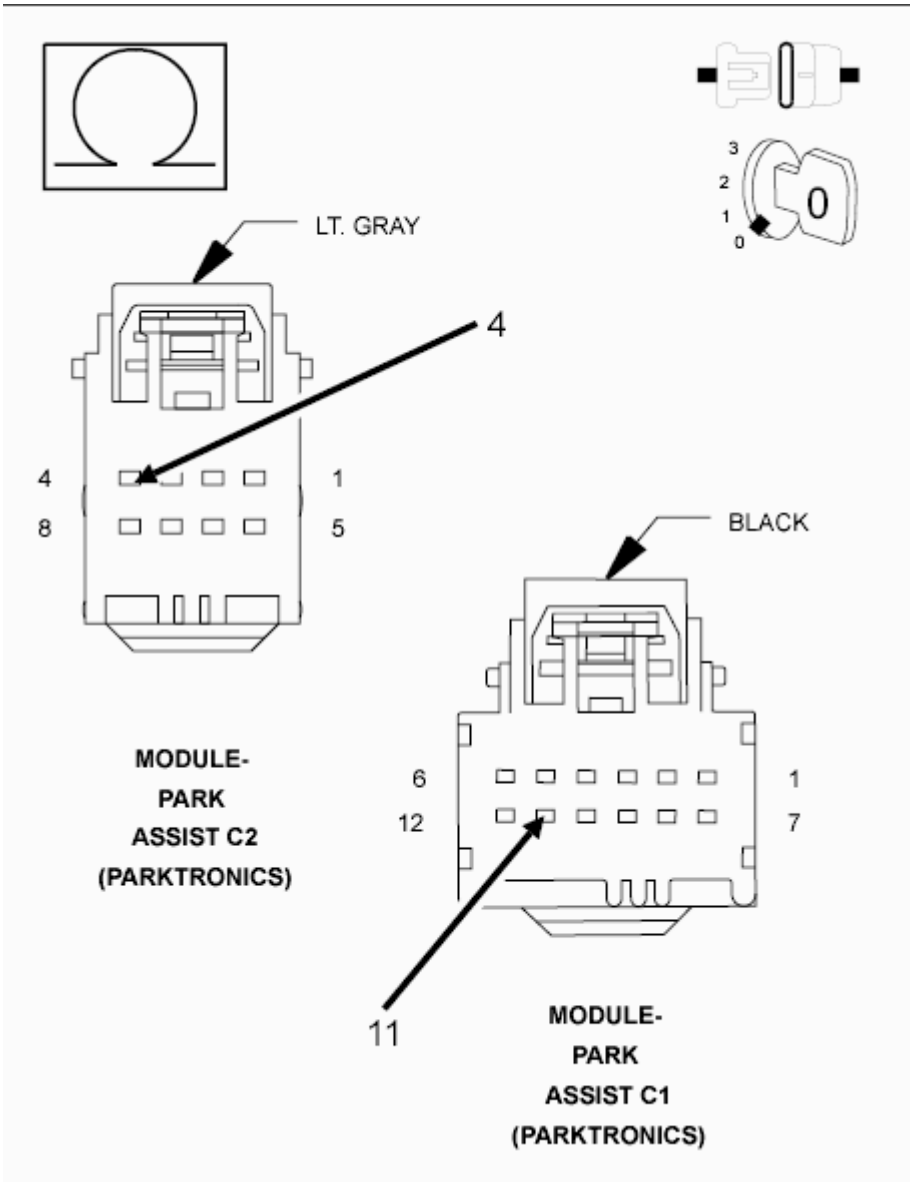

Fig. 72: Checking Park Assist Sensor Supply Circuit For A Short To The Park Assist Module Ground Circuit
Courtesy of CHRYSLER GROUP, LLC

NOTE: Perform this test with all Park Assist Sensors disconnected.

1. Measure the resistance between the (X700) Park Assist Sensor Supply circuit and the (Z906) Park Assist Module Ground circuit.

   Is the resistance below 10K Ohms?

   Yes

   - Repair the (X700) Park Assist Sensor Supply circuit for a short to the (Z906) Park Assist

Module Ground circuit.

- Perform the BODY VERIFICATION TEST. Refer to **STANDARD PROCEDURE** .

No

- Go To 6.

6. **CHECK THE (X700) PARK ASSIST SENSOR SUPPLY CIRCUIT FOR A SHORT TO GROUND**

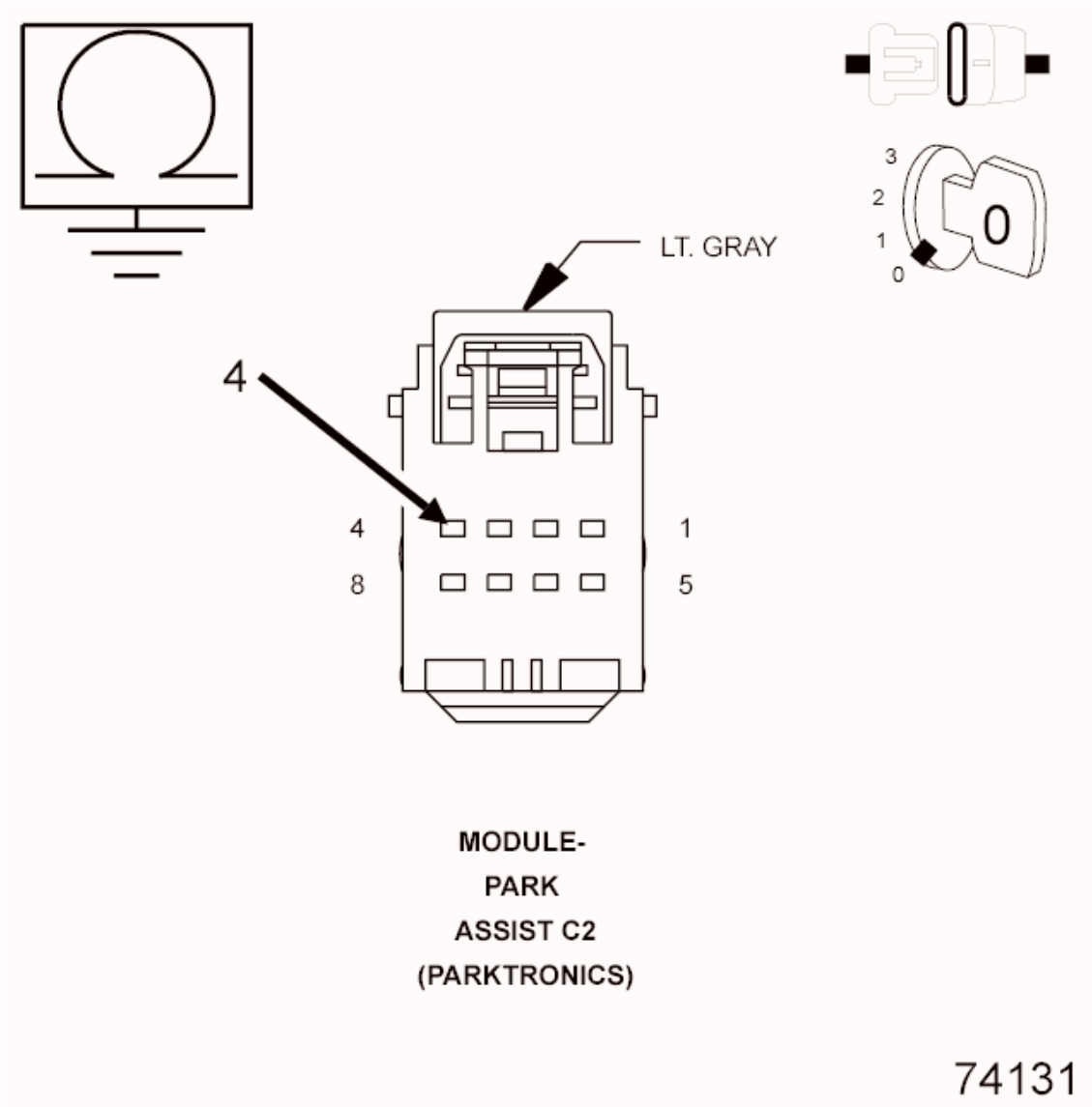

Fig. 73: Checking Park Assist Sensor Supply Circuit For A Short To Ground
Courtesy of CHRYSLER GROUP, LLC

NOTE: Perform this test with all Park Assist Sensors disconnected.

1. Measure the resistance between ground and the (X700) Park Assist Sensor Supply circuit.

Is the resistance below 10K Ohms?

Yes

- Repair the (X700) Park Assist Sensor Supply circuit for a short to ground.
- Perform the BODY VERIFICATION TEST. Refer to **STANDARD PROCEDURE** .

No

- Replace the Park Assist Module in accordance with the Service Information.
- Perform the BODY VERIFICATION TEST. Refer to **STANDARD PROCEDURE** .

B2128-17-SENSOR SUPPLY VOLTAGE-CIRCUIT VOLTAGE ABOVE THRESHOLD

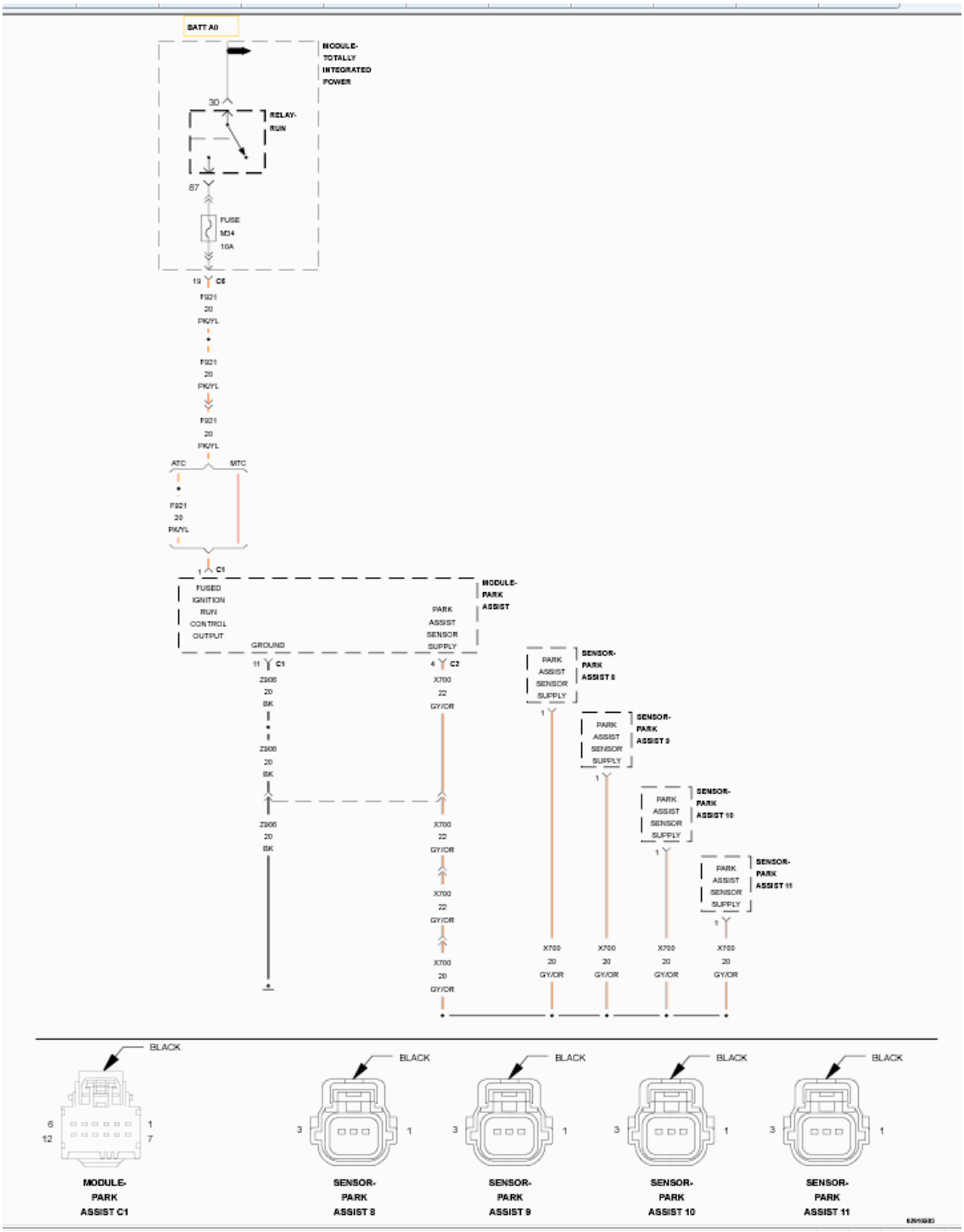

Fig. 74: Parking Assist Sensor Power Supply Wiring Diagram
Courtesy of CHRYSLER GROUP, LLC

For a complete wiring diagram, **refer to appropriate SYSTEM WIRING DIAGRAMS article** .

NOTE: **The numbering system for the park assist sensors allows for up to twelve sensors on the vehicle, six front and six rear. The sensors are numbered in a**

clockwise manner starting at the left front bumper. The left front sensor (if equipped with front park assist) is the number 1 sensor. The numbering continues in a clockwise direction around the vehicle. Since Chrysler LLC vehicles use only four rear sensors, sensor numbers 7 and 12 are omitted, so the left rear sensor is the number 11 sensor.

WHEN MONITORED:

While the vehicle is in reverse for speeds less than 10 mph (16km/h).

SET CONDITION:

Park Assist Sensor supply voltage greater than 9.2 volts.

POSSIBLE CAUSES

Possible Causes
(X700) PARK ASSIST SENSOR SUPPLY CIRCUIT SHORTED TO VOLTAGE PARK ASSIST MODULE

DIAGNOSTIC TEST

1. **CHECK FOR ACTIVE DTC**
    1. Turn the ignition on.
    2. Apply the vehicle park brake.
    3. Shift the transmission into Reverse.
    4. With the scan tool, record and erase Park Assist Module DTC's.
    5. Wait 30 seconds.
    6. With the scan tool, read Park Assist Module DTC's.

    Is this DTC active?

    Yes

    - Go To 2.

    No

    - The condition that caused this code to set is not present at this time. Check for an intermittent condition by inspecting the related wiring harness for chafed, pierced, pinched, and partially broken wires. Also inspect the related connectors for broken, bent, pushed out, spread, corroded, or contaminated terminals.
    - Perform the BODY VERIFICATION TEST. Refer to **STANDARD PROCEDURE** .
2. **CHECK THE (X700) PARK ASSIST SENSOR SUPPLY CIRCUIT FOR A SHORT TO VOLTAGE**

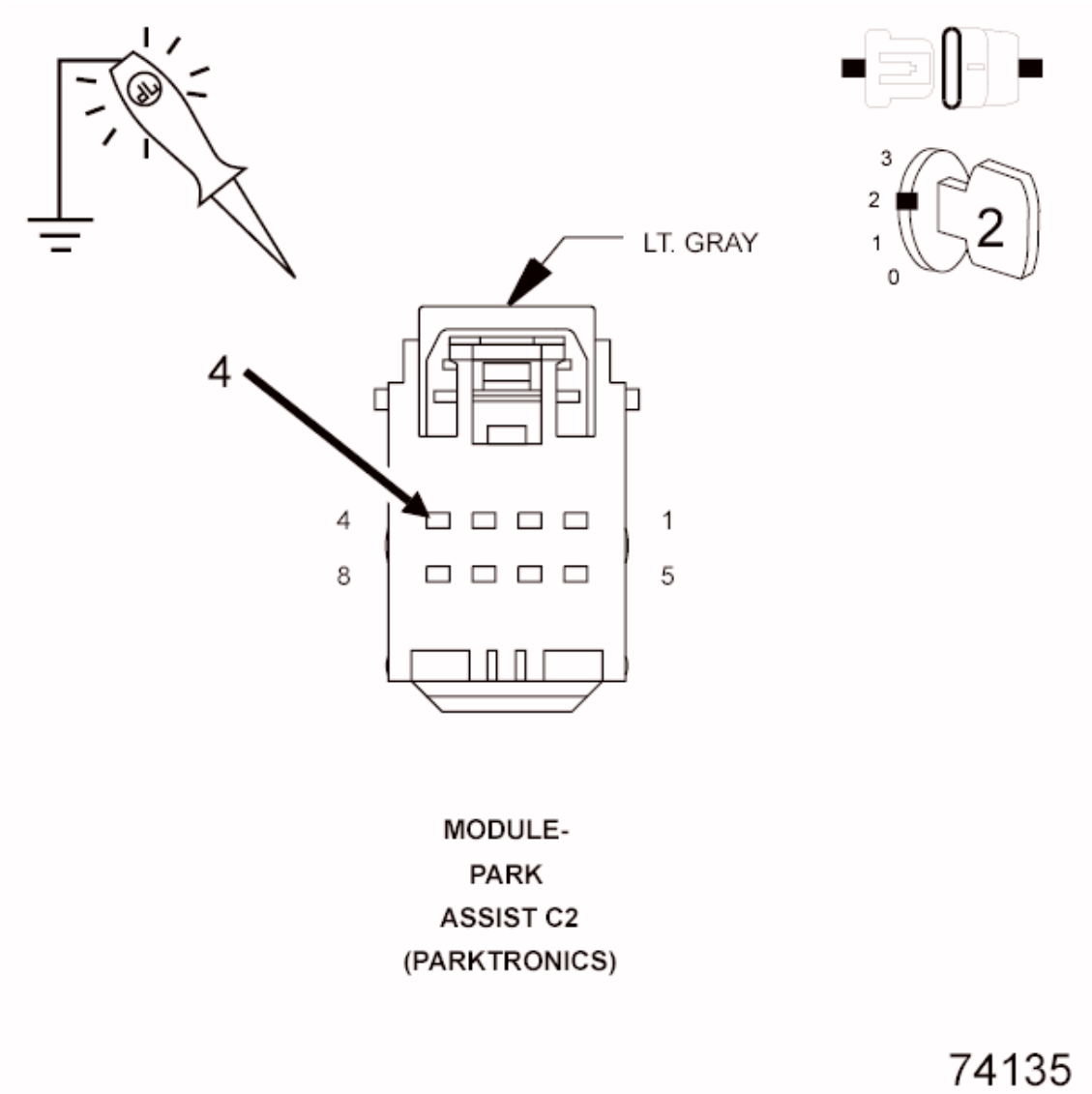

Fig. 75: Checking Park Assist Sensor Supply Circuit For A Short To Voltage
Courtesy of CHRYSLER GROUP, LLC

1. Turn the ignition off.
2. Disconnect the Park Assist Module harness connector.
3. Turn the ignition on.
4. Measure the voltage on the (X700) Park Assist Sensor Supply circuit.

   Is the voltage above 9.2 volts?

   Yes

   - Repair the (X700) Park Assist Sensor Supply circuit for a short to voltage.
   - Perform the BODY VERIFICATION TEST. Refer to **STANDARD PROCEDURE** .

No

- Replace the Park Assist Module in accordance with the Service Information.
- Perform the BODY VERIFICATION TEST. Refer to **STANDARD PROCEDURE** .

B222A-00-VEHICLE LINE MISMATCH

For a complete wiring diagram, **refer to appropriate SYSTEM WIRING DIAGRAMS article** .

WHEN MONITORED:

With the ignition on.

SET CONDITION:

If the Vehicle Line data transmitted on the bus doesn't correspond with the data stored in the Park Assist Module.

POSSIBLE CAUSES

Possible Causes
PARK ASSIST MODULE

DIAGNOSTIC TEST

1. **CHECK VEHICLE LINE IN THE PCM**
    1. With the scan tool, compare the vehicle line that is programmed in to the Powertrain Control Module (PCM) to the vehicle line of the vehicle.

       Does the vehicle line programmed into the PCM match the vehicle?

       Yes

       - Replace the Park Assist Module in accordance with the Service Information.
       - Perform the BODY VERIFICATION TEST. Refer to **STANDARD PROCEDURE** .

       No

       - The condition that caused this code to set is not present at this time. Check for an intermittent condition by inspecting the related wiring harness for chafed, pierced, pinched, and partially broken wires. Also inspect the related connectors for broken, bent, pushed out, spread, corroded, or contaminated terminals.
       - Perform the BODY VERIFICATION TEST. Refer to **STANDARD PROCEDURE** .

B2232-00-(PTS) PARKTRONICS INTERNAL

For a complete wiring diagram, **refer to appropriate SYSTEM WIRING DIAGRAMS article** .

WHEN MONITORED:

With the ignition on.

SET CONDITION:

The Park Assist Module detects an internal failure.

POSSIBLE CAUSES

Possible Causes
PARK ASSIST MODULE

DIAGNOSTIC TEST

1. **REPLACE THE PARK ASSIST MODULE**

   View Repair

   Repair

   - Replace the Park Assist Module in accordance with the Service Information.
   - Perform the BODY VERIFICATION TEST. Refer to **STANDARD PROCEDURE** .

U0010-00-CAN INTERIOR BUS

For a complete wiring diagram, **refer to appropriate SYSTEM WIRING DIAGRAMS article** .

WHEN MONITORED:

Continuously when the ignition is on.

Battery voltage between 10 and 16 volts.

Ignition Off Draw (IOD) fuse installed.

SET CONDITION:

The controller detects a short to ground on the CAN Interior Bus (125K) (+) circuit or a short to voltage on the CAN Interior Bus (125K) (-) circuit.

POSSIBLE CAUSES

Possible Causes
(D265) CAN INTERIOR BUS(+) (125k) CIRCUIT SHORTED TO VOLTAGE

(D264) CAN INTERIOR BUS(-) (125k) CIRCUIT SHORTED TO GROUND
(D264) CAN INTERIOR BUS(-) (125k) CIRCUIT SHORTED TO THE (D265) CAN INTERIOR BUS (+) (125k) CIRCUIT
TOTALLY INTEGRATED POWER MODULE (TIPM)
ANY CAN INTERIOR BUS MODULE

DIAGNOSTIC TEST

1. **VERIFY DIAGNOSTIC TROUBLE CODE (DTC) IS ACTIVE**

   NOTE: Make sure the IOD fuse is installed and battery voltage is between 10 and 16 volts before proceeding.

   1. Using the scan tool, read active DTC's.

      Is this DTC active?

      Yes

      - **Refer to TIPM - DIAGNOSIS AND TESTING** and perform the U0010-CAN Interior Bus diagnostic procedure.

      No

      - **Refer to COMMUNICATION - DIAGNOSIS AND TESTING** and perform the Stored Lost Communication DTC's diagnostic procedure.

U0423-00-IMPLAUSIBLE DATA RECEIVED FROM CLUSTER/CCN

For a complete wiring diagram, **refer to appropriate SYSTEM WIRING DIAGRAMS article** .

WHEN MONITORED:

Park Assist Module supply voltage between 9-16 volts. Ignition in Run/Start.

SET CONDITION:

Ignition status = 7h

POSSIBLE CAUSES

Possible Causes
NO COMMUNICATION WITH INSTRUMENT CLUSTER
DTC's STORED OR ACTIVE IN THE INSTRUMENT CLUSTER
ACTIVE DTC's IN THE TIPM
PARK ASSIST MODULE

DIAGNOSTIC TEST

1. **CHECK FOR ACTIVE DTC**
    1. Turn the ignition on.
    2. With the scan tool, record and erase Park Assist Module DTC's.
    3. Wait 30 seconds.
    4. With the scan tool, read Park Assist Module DTC's.

    Is this DTC active?

    Yes

    - Go To 2.

    No

    - The condition that caused this code to set is not present at this time. Check for an intermittent condition by inspecting the related wiring harness for chafed, pierced, pinched, and partially broken wires. Also inspect the related connectors for broken, bent, pushed out, spread, corroded, or contaminated terminals.
    - Perform the BODY VERIFICATION TEST. Refer to **STANDARD PROCEDURE** .
2. **INSTRUMENT CLUSTER IS ACTIVE ON THE CAN C INTERIOR BUS**
    1. With the scan tool, select ECU View.
    2. Verify that the Instrument Cluster is active on the bus.

    Is the Instrument Cluster active on the bus?

    Yes

    - Go To 3.

    No

    - Refer to **COMMUNICATION - DIAGNOSIS AND TESTING** and perform the No Response from Cluster/CCN diagnostic procedure.
3. **DTC's STORED OR ACTIVE IN THE INSTRUMENT CLUSTER**
    1. Check for Ignition Switch DTC's in the Instrument Cluster.

    Are any DTC's active or stored in the Instrument Cluster?

    Yes

    - Refer to **CCN - DIAGNOSIS AND TESTING** and perform the appropriate diagnostic procedure.

No

- Go To 4.

4. **ACTIVE DTC's IN THE TIPM**
   1. With the scan tool, select ECU View and select TIPM.
   2. With the scan tool, read active DTC's.

   Are any Communication DTC's active in the TIPM Park Assist System?

   Yes

   - Refer to **TIPM - DIAGNOSIS AND TESTING** and perform the appropriate diagnostic procedure.

   No

   - Replace and program the Park Assist Module in accordance with the Service Information.
   - Perform the BODY VERIFICATION TEST. Refer to **STANDARD PROCEDURE** .

U0141-00-LOST COMMUNICATION WITH IPM (FCM/TIPM)

For a complete wiring diagram, **refer to appropriate SYSTEM WIRING DIAGRAMS article** .

WHEN MONITORED:

Continuously when the ignition is on.

Battery voltage between 10 and 16 volts.

Ignition Off Draw (IOD) fuse installed.

Totally Integrated Power Module (TIPM) is configured correctly.

SET CONDITION:

Bus messages not received from the Integrated Power Module (TIPM) for approximately two to five seconds.

POSSIBLE CAUSES

Possible Causes
(D65) CAN C BUS(+) CIRCUIT SHORTED TO VOLTAGE
(D64) CAN C BUS(-) CIRCUIT SHORTED TO GROUND
TOTALLY INTEGRATED POWER MODULE (TIPM) POWER AND GROUND
TIPM NOT CONFIGURED CORRECTLY
TOTALLY INTEGRATED POWER MODULE (TIPM)

MODULE THAT SET THIS DTC

DIAGNOSTIC TEST

1. **VERIFY THE DTC IS ACTIVE**

   NOTE: Make sure the IOD fuse is installed and the battery is fully charged before proceeding.

   1. Turn the ignition on.
   2. With the scan tool, read active DTC's.

      Is the DTC active at this time?

      Yes

      - Perform the U0141-Lost Communication with IPM (FCM/TIPM) diagnostic procedure. **Refer to TIPM - DIAGNOSIS AND TESTING** .

      No

      - Perform the Stored Lost Communication DTC's diagnostic procedure. **Refer to COMMUNICATION - DIAGNOSIS AND TESTING** .

U0155-00-LOST COMMUNICATION WITH CLUSTER/CCN

For a complete wiring diagram, **refer to appropriate SYSTEM WIRING DIAGRAMS article** .

WHEN MONITORED:

Continuously when the ignition is on.

Battery voltage between 10 and 16 volts.

Ignition Off Draw (IOD) fuse installed.

Totally Integrated Power Module (TIPM) is configured correctly.

SET CONDITION:

Bus messages not received from the Instrument Cluster (CCN) for approximately two to five seconds.

POSSIBLE CAUSES

Possible Causes
(D265) CAN INTERIOR BUS(+) (125k) CIRCUIT SHORTED TO VOLTAGE

(D264) CAN INTERIOR BUS(-) (125k) CIRCUIT SHORTED TO GROUND
INSTRUMENT CLUSTER POWER AND GROUND
TIPM NOT CONFIGURED CORRECTLY
INSTRUMENT CLUSTER (CCN)
MODULE THAT SET THIS DTC

DIAGNOSTIC TEST

1. **VERIFY DTC IS ACTIVE**

   NOTE: Make sure the IOD fuse is installed and the battery is fully charged before proceeding.

   1. Turn the ignition on.
   2. With the scan tool, read active DTC's.

      Is this DTC active?

      Yes

      - **Refer to TIPM - DIAGNOSIS AND TESTING** and perform the U0155-Lost Communication with Cluster/CCN diagnostic procedure.

      No

      - **Refer to COMMUNICATION - DIAGNOSIS AND TESTING** and perform the Stored Lost Communication DTC's diagnostic procedure.

DIAGNOSTIC CODE INDEX

DIAGNOSTIC CODE INDEX

DTC	Description
B164E-11	PASSENGER MIRROR SIGNAL LAMP CONTROL - CIRCUIT FOR A SHORT TO GROUND
B164E-15	PASSENGER MIRROR SIGNAL LAMP CONTROL - CIRCUIT FOR A SHORT TO BATTERY OR OPEN
B16A3-11	PASSENGER WINDOW SWITCH BACKLIGHTING - CIRCUIT FOR A SHORT TO GROUND
B16A3-15	PASSENGER WINDOW SWITCH BACKLIGHTING - CIRCUIT FOR A SHORT TO BATTERY OR OPEN
B1805-2A	PASSENGER DOOR LOCK/UNLOCK SWITCH - SIGNAL STUCK IN RANGE
B185E-11	PASSENGER WINDOW CONTROL - CIRCUIT FOR A SHORT TO GROUND
B185E-13	PASSENGER WINDOW CONTROL - CIRCUIT FOR AN OPEN
B1862-11	PASSENGER WINDOW POSITION SENSOR POWER SUPPLY - CIRCUIT FOR A SHORT TO GROUND
B1862-15	PASSENGER WINDOW POSITION SENSOR POWER SUPPLY - CIRCUIT FOR A SHORT TO BATTERY OR OPEN - EXPRESS MOTOR ONLY
B1865-31	PASSENGER WINDOW POSITION SENSOR - NO SIGNAL
B1910-2A	PASSENGER WINDOW SWITCH - SIGNAL STUCK IN RANGE
B1D11-11	PASSENGER MIRROR POSITION SENSOR POWER SUPPLY - CIRCUIT FOR A SHORT TO GROUND
B1D14-11	PASSENGER MIRROR VERTICAL POSITION SENSOR INPUT - CIRCUIT FOR A SHORT TO GROUND
B1D14-12	PASSENGER MIRROR VERTICAL POSITION SENSOR INPUT - CIRCUIT FOR A SHORT TO BATTERY
B1D17-11	PASSENGER MIRROR HORIZONTAL POSITION SENSOR INPUT - CIRCUIT FOR A SHORT TO GROUND
B1D17-12	PASSENGER MIRROR HORIZONTAL POSITION SENSOR INPUT - CIRCUIT FOR A SHORT TO BATTERY
B1D2A-11	PASSENGER MIRROR VERTICAL MOTOR CONTROL - CIRCUIT FOR A SHORT TO GROUND
B1D2E-11	PASSENGER MIRROR HORIZONTAL MOTOR CONTROL - CIRCUIT FOR A SHORT TO GROUND
B1D36-11	PASSENGER MIRROR HEATER CONTROL - CIRCUIT FOR A SHORT TO GROUND
B1D36-15	PASSENGER MIRROR HEATER CONTROL - CIRCUIT FOR A SHORT TO BATTERY OR OPEN
B1E6A-11	PASSENGER MIRROR FOLD CONTROL CIRCUIT FOR A SHORT TO

	GROUND
B1E6A-15	PASSENGER MIRROR FOLD CONTROL CIRCUIT FOR A SHORT TO BATTERY OR OPEN
B210C-16	BATTERY VOLTAGE INPUT - CIRCUIT VOLTAGE BELOW THRESHOLD - DD/DP
B210C-16	BATTERY VOLTAGE INPUT - CIRCUIT VOLTAGE BELOW THRESHOLD - DS/DJ/D2
B210C-17	BATTERY VOLTAGE INPUT - CIRCUIT VOLTAGE ABOVE THRESHOLD - DD/DP
B210C-17	BATTERY VOLTAGE INPUT - CIRCUIT VOLTAGE ABOVE THRESHOLD - DS/DJ/D2
B21A1-00	ECU RESET/RECOVERY OCCURRED
B21DD-84	SYSTEM VOLTAGE - SIGNAL BELOW ALLOWABLE RANGE
B21DD-85	SYSTEM VOLTAGE - SIGNAL ABOVE ALLOWABLE RANGE
B2599-54	DOOR MODULE FRONT RIGHT - MISSING CALIBRATION - QUAD/CREW CAB ONLY
B2599-96	DOOR MODULE FRONT RIGHT - COMPONENT INTERNAL FAILURE
B282F-11	PASSENGER PUDDLE LAMP CONTROL - CIRCUIT FOR A SHORT TO GROUND
B282F-15	PASSENGER PUDDLE LAMP CONTROL - CIRCUIT FOR A SHORT TO BATTERY OR OPEN
U0010-00	CAN INTERIOR BUS
U0141-00	LOST COMMUNICATION WITH IPM (FCM/TIPM)
U0155-00	LOST COMMUNICATION WITH CLUSTER/CCN
U0164-00	LOST COMMUNICATION WITH HVAC CONTROL MODULE
U0203-00	LOST COMMUNICATION WITH DOOR MODULE FRONT LEFT
U0204-00	LOST COMMUNICATION WITH DOOR MODULE FRONT RIGHT
U0209-00	LOST COMMUNICATION WITH MEMORY SEAT CONTROL MODULE

DIAGNOSIS AND TESTING

B164E-11-PASSENGER MIRROR SIGNAL LAMP CONTROL - CIRCUIT FOR A SHORT TO GROUND

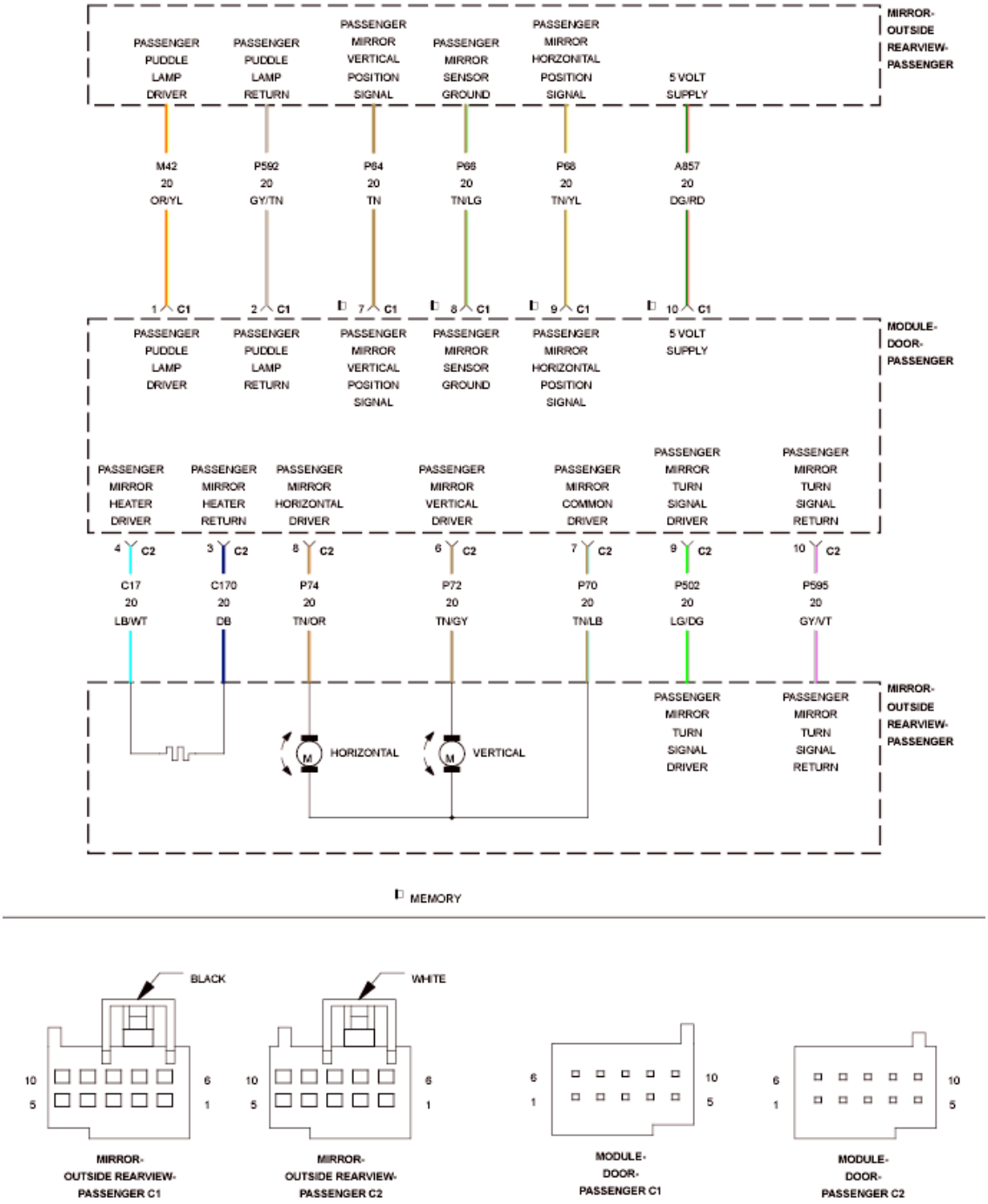

Fig. 1: Passenger Mirror Signal Lamp Control Wiring Diagram
Courtesy of CHRYSLER GROUP, LLC

For a complete wiring diagram, **refer to appropriate SYSTEM WIRING DIAGRAMS article** .

WHEN MONITORED:

Continuously.

SET CONDITION:

The Door Module senses a short low on the (P502) Passenger Mirror Turn Signal Driver circuit for more than two seconds with the turn signal switched on.

POSSIBLE CAUSES

Possible Causes
(P502) PASSENGER MIRROR TURN SIGNAL DRIVER CIRCUIT FOR A SHORT TO GROUND
(P502) PASSENGER MIRROR TURN SIGNAL DRIVER CIRCUIT FOR A SHORT TO THE (P72) PASSENGER MIRROR VERTICAL DRIVER CIRCUIT
(P502) PASSENGER MIRROR TURN SIGNAL DRIVER CIRCUIT FOR A SHORT TO THE (P70) PASSENGER MIRROR COMMON DRIVER CIRCUIT
(P502) PASSENGER MIRROR TURN SIGNAL DRIVER CIRCUIT FOR A SHORT TO THE (P74) PASSENGER MIRROR HORIZONTAL DRIVER CIRCUIT
(P502) PASSENGER MIRROR TURN SIGNAL DRIVER CIRCUIT FOR A SHORT TO THE (C170) PASSENGER MIRROR HEATER RETURN CIRCUIT
(P502) PASSENGER MIRROR TURN SIGNAL DRIVER CIRCUIT FOR A SHORT TO THE (P595) PASSENGER MIRROR TURN SIGNAL RETURN CIRCUIT
(P502) PASSENGER MIRROR TURN SIGNAL DRIVER CIRCUIT FOR A SHORT TO THE (P66) PASSENGER MIRROR SENSOR GROUND CIRCUIT
(P502) PASSENGER MIRROR TURN SIGNAL DRIVER CIRCUIT FOR A SHORT TO THE (P592) PASSENGER PUDDLE LAMP RETURN CIRCUIT
PASSENGER OUTSIDE REARVIEW MIRROR SHORTED
DOOR MODULE

DIAGNOSTIC TEST

1. **TEST FOR INTERMITTENT CONDITION**
    1. Turn the ignition on.
    2. Using a scan tool, record and erase Diagnostic Trouble Codes (DTC's).
    3. Turn the turn signal on.
    4. Turn the puddle lamps on, if equipped with puddle lamp mirror.
    5. Turn the rear defogger on, if equipped with heated mirror.
    6. Press and release the Mirror Select switch to select the Passenger Outside Rearview Mirror.
    7. Operate the Mirror Adjust switch in all directions several times while monitoring the scan tool for DTC's.

NOTE: **After adjusting the mirror in one direction wait at least two seconds before adjusting the mirror in the opposite direction as this will allow time for an active fault to set if present.**

Is the DTC active?

Yes

- Go To 2.

No

- The conditions that caused this code to set are not present at this time. For vehicle's equipped with folding outside rearview mirrors, repeat test with mirror folded. If DTC is now active, Go To 2. Otherwise, use the wiring diagram/schematic as a guide and inspect the wiring and connectors.
- Perform the BODY VERIFICATION TEST. Refer to **STANDARD PROCEDURE** .

2. **CHECK (P502) PASSENGER MIRROR TURN SIGNAL DRIVER CIRCUIT FOR A SHORT TO GROUND**

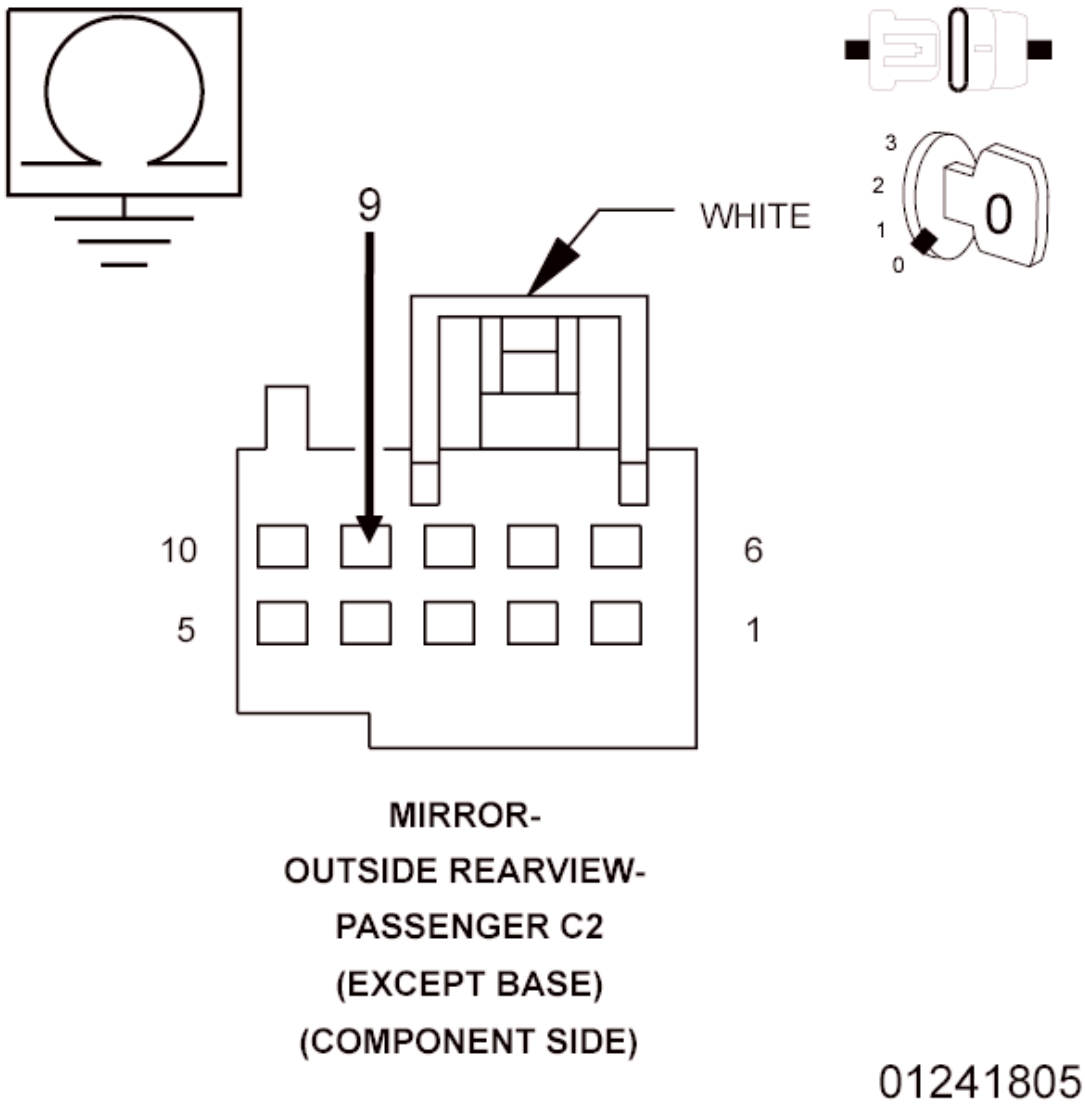

Fig. 2: Checking Passenger Mirror Turn Signal Driver Circuit For A Short To Ground
Courtesy of CHRYSLER GROUP, LLC

1. Turn the ignition off.
2. Disconnect the Passenger Outside Rearview Mirror C2 (Component Side) connector from the Door Module C2 connector.
3. Measure the resistance of the (P502) Passenger Mirror Turn Signal Driver circuit between ground and the Passenger Outside Rearview Mirror C2 (Component Side) connector.

   Is the resistance below 10K Ohms?

   Yes

   - Repair the (P502) Passenger Mirror Turn Signal Driver circuit for a short to ground. If the wiring harness and connector are okay, replace the Passenger Outside Rearview Mirror in

accordance with the Service Information.

- Perform the BODY VERIFICATION TEST. Refer to **STANDARD PROCEDURE** .

No

- Go To 3.

3. **CHECK (P502) PASSENGER MIRROR TURN SIGNAL DRIVER CIRCUIT FOR A SHORT TO THE (P72) PASSENGER MIRROR VERTICAL DRIVER CIRCUIT, (P70) PASSENGER MIRROR COMMON DRIVER CIRCUIT, OR TO THE (P74) PASSENGER MIRROR HORIZONTAL DRIVER CIRCUIT**

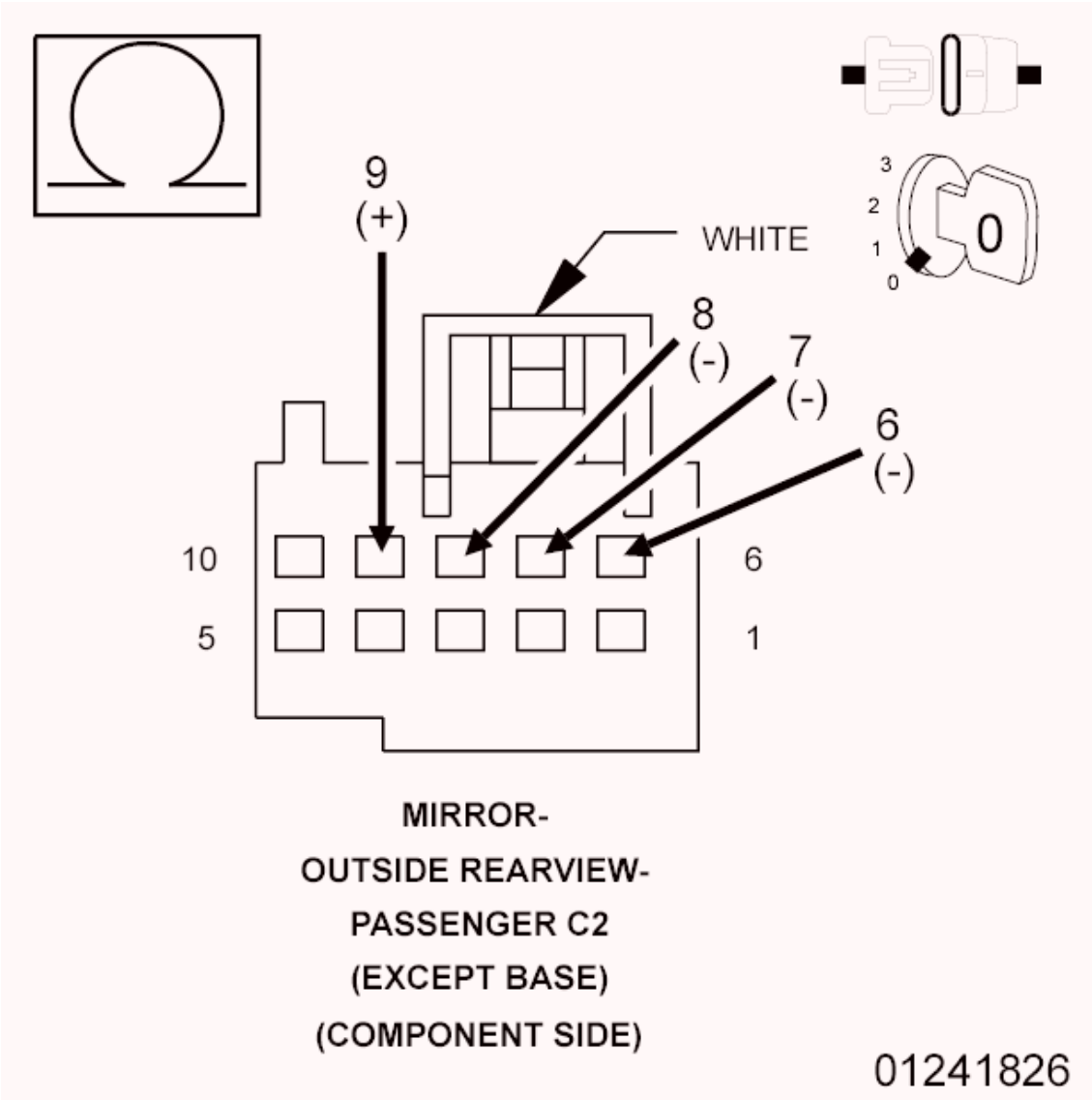

Fig. 3: Checking Passenger Mirror Turn Signal Driver Circuit For A Short To Other Circuits
Courtesy of CHRYSLER GROUP, LLC

1. Measure the resistance between the (P502) Passenger Mirror Turn Signal Driver circuit and the

(P72) Passenger Mirror Vertical Driver circuit at the Passenger Outside Rearview Mirror C2 (Component Side) connector.

2. Measure the resistance between the (P502) Passenger Mirror Turn Signal Driver circuit and the (P70) Passenger Mirror Common Driver circuit at the Passenger Outside Rearview Mirror C2 (Component Side) connector.
3. Measure the resistance between the (P502) Passenger Mirror Turn Signal Driver circuit and the (P74) Passenger Mirror Horizontal Driver circuit at the Passenger Outside Rearview Mirror C2 (Component Side) connector.

Is the resistance below 10K Ohms for any measurement?

Yes

- Repair all circuits with a resistance below 10K Ohms for a short to the (P502) Passenger Mirror Turn Signal Driver circuit. If the wiring harness and connector are okay, replace the Passenger Outside Rearview Mirror in accordance with the Service Information.
- Perform the BODY VERIFICATION TEST. Refer to **STANDARD PROCEDURE** .

No, with Heated Mirror

- Go To 4.

No, without Heated Mirror

- Go To 5.

4. **CHECK (P502) PASSENGER MIRROR TURN SIGNAL DRIVER CIRCUIT FOR A SHORT TO THE (C170) PASSENGER MIRROR HEATER RETURN CIRCUIT**

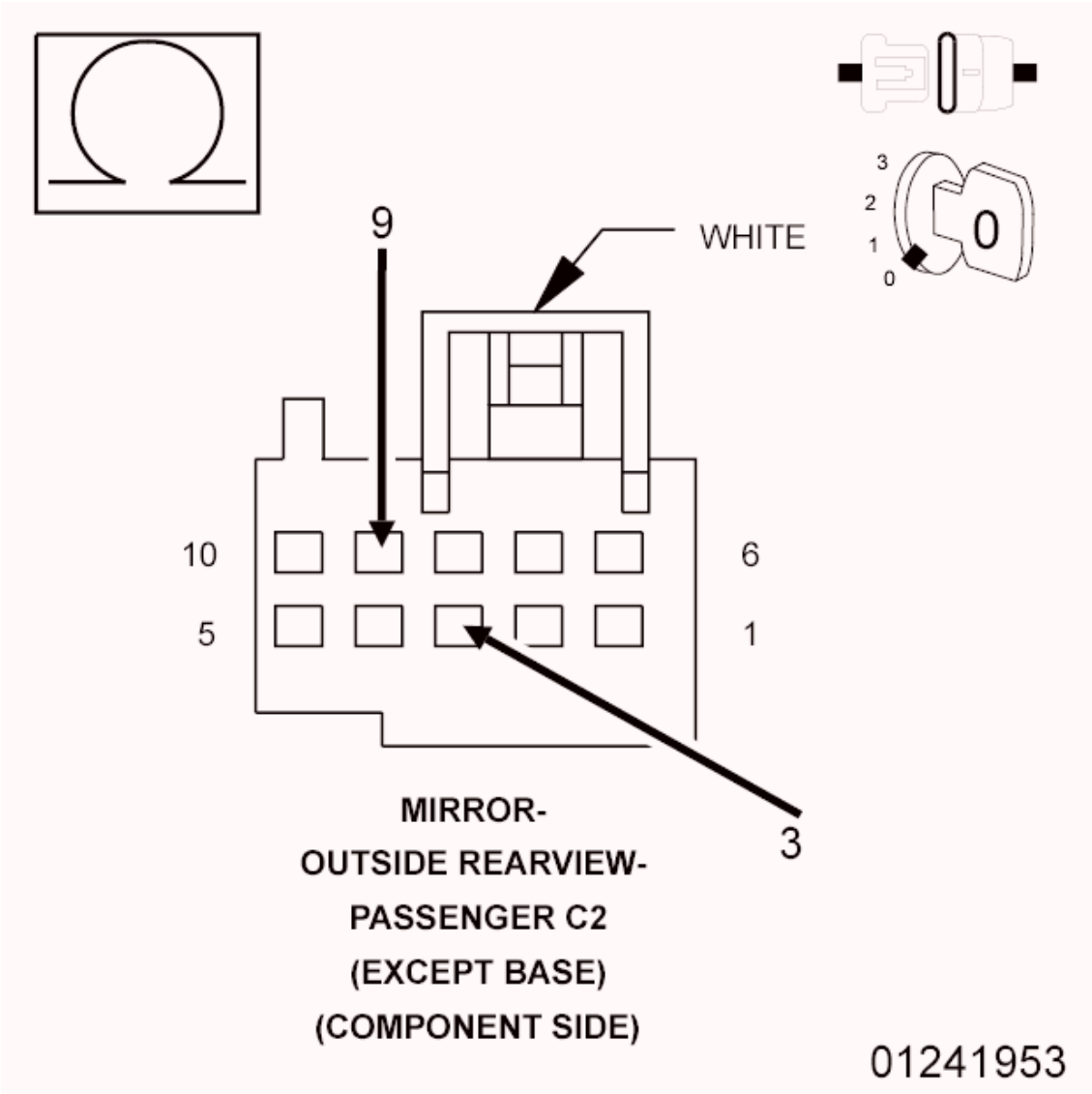

Fig. 4: Checking Passenger Mirror Turn Signal Driver Circuit For A Short To The Passenger Mirror Heater Return Circuit
Courtesy of CHRYSLER GROUP, LLC

1. Measure the resistance between the (P502) Passenger Mirror Turn Signal Driver circuit and the (C170) Passenger Mirror Heater Return circuit at the Passenger Outside Rearview Mirror C2 (Component Side) connector.

   Is the resistance below 10K Ohms?

   Yes

   - Repair the (P502) Passenger Mirror Turn Signal Driver circuit for a short to the (C170) Passenger Mirror Heater Return circuit. If the wiring harness and connector are okay, replace the Passenger Outside Rearview Mirror in accordance with the Service Information.
   - Perform the BODY VERIFICATION TEST. Refer to **STANDARD PROCEDURE** .

No

- Go To 5.

5. **CHECK (P502) PASSENGER MIRROR TURN SIGNAL DRIVER CIRCUIT FOR A SHORT TO THE (P595) PASSENGER MIRROR TURN SIGNAL RETURN CIRCUIT**

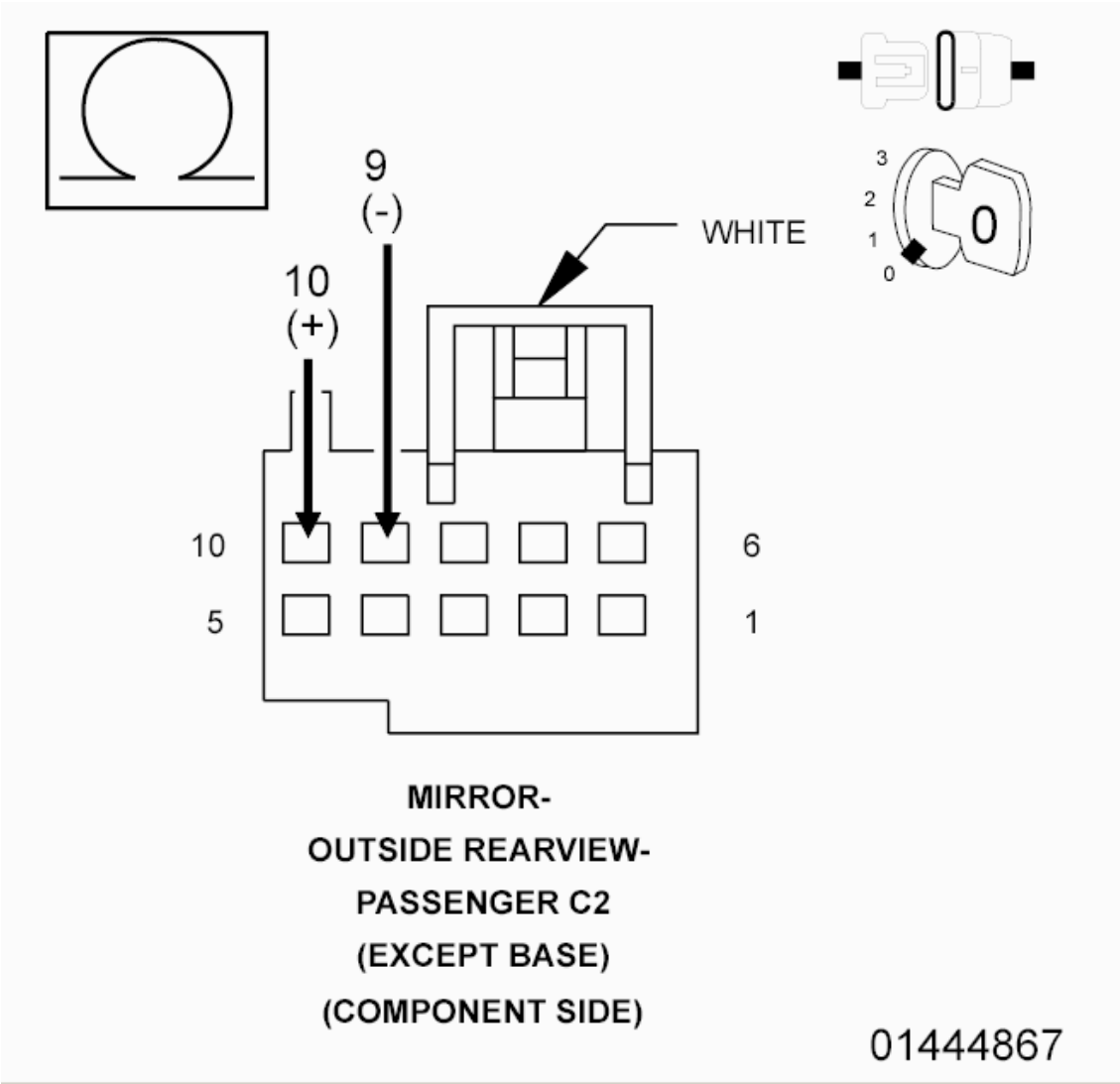

Fig. 5: Checking Passenger Mirror Turn Signal Driver Circuit For A Short To The Passenger Mirror Turn Signal Return Circuit
Courtesy of CHRYSLER GROUP, LLC

NOTE: **The Ohmmeter positive lead must be connected to the (P595) Passenger Mirror Turn Signal Return circuit and the negative lead to the (P502) Passenger Mirror Turn Signal Driver circuit for the test results to be valid.**

1. Measure the resistance between the (P502) Passenger Mirror Turn Signal Driver circuit and the (P595) Passenger Mirror Turn Signal Return circuit at the Passenger Outside Rearview Mirror C2

(Component Side) connector.

Is there any resistance present?

Yes

- Repair the (P502) Passenger Mirror Turn Signal Driver circuit for a short to the (P595) Passenger Mirror Turn Signal Return circuit. If the wiring harness and connector are okay, replace the Passenger Outside Rearview Mirror in accordance with the Service Information.
- Perform the BODY VERIFICATION TEST. Refer to **STANDARD PROCEDURE** .

No

- Go To 6.

6. **CHECK (P502) PASSENGER MIRROR TURN SIGNAL DRIVER CIRCUIT FOR A SHORT TO THE (P66) PASSENGER MIRROR SENSOR GROUND CIRCUIT**

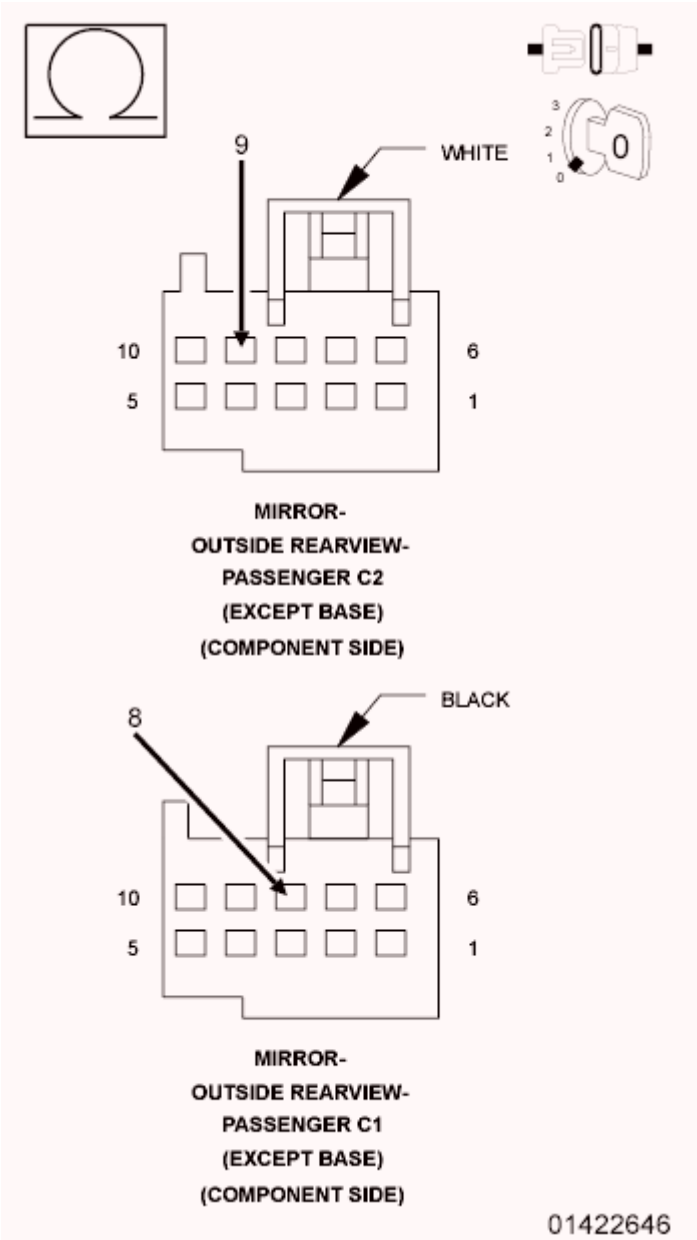

Fig. 6: Checking Passenger Mirror Turn Signal Driver Circuit For A Short To The Passenger Mirror Sensor Ground Circuit
Courtesy of CHRYSLER GROUP, LLC

1. Disconnect the Passenger Outside Rearview Mirror C1 (Component Side) connector from the Door Module C1 connector.
2. Measure the resistance between the (P502) Passenger Mirror Turn Signal Driver circuit and the (P66) Passenger Mirror Sensor Ground circuit at the Passenger Outside Rearview Mirror C2 and C1 (Component Side) connectors.

   Is the resistance below 10K Ohms?

   Yes

- Repair the (P502) Passenger Mirror Turn Signal Driver circuit for a short to the (P66) Passenger Mirror Sensor Ground circuit. If the wiring harness and connector are okay, replace the Passenger Outside Rearview Mirror in accordance with the Service Information.
- Perform the BODY VERIFICATION TEST. Refer to **STANDARD PROCEDURE** .

No, with Puddle Lamp Mirror

- Go To 7.

No, without Puddle Lamp Mirror

- Inspect the wiring and connectors for damage and repair as necessary. If the wiring and connectors are okay, replace the Door Module in accordance with the Service Information.
- Perform the BODY VERIFICATION TEST. Refer to **STANDARD PROCEDURE** .

7. **CHECK (P502) PASSENGER MIRROR TURN SIGNAL DRIVER CIRCUIT FOR A SHORT TO THE (P592) PASSENGER PUDDLE LAMP RETURN CIRCUIT**

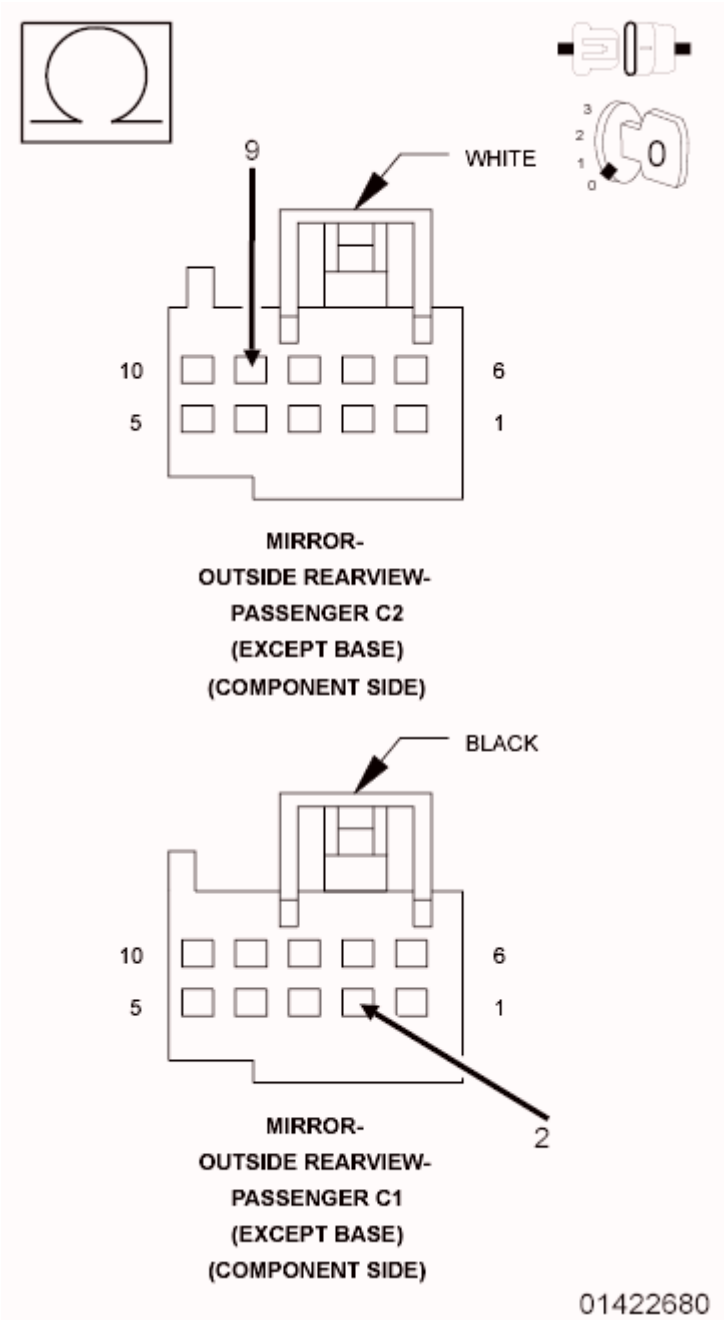

Fig. 7: Checking Passenger Mirror Turn Signal Driver Circuit For A Short To The Passenger Puddle Lamp Return Circuit
Courtesy of CHRYSLER GROUP, LLC

1. Measure the resistance between the (P502) Passenger Mirror Turn Signal Driver circuit and the (P592) Passenger Puddle Lamp Return circuit at the Passenger Outside Rearview Mirror C2 and C1 (Component Side) connectors.

   Is the resistance below 10K Ohms?

   Yes

- Repair the (P502) Passenger Mirror Turn Signal Driver circuit for a short to the (P592) Passenger Puddle Lamp Return circuit. If the wiring harness and connector are okay, replace the Passenger Outside Rearview Mirror in accordance with the Service Information.
- Perform the BODY VERIFICATION TEST. Refer to **STANDARD PROCEDURE** .

No

- Inspect the wiring and connectors for damage and repair as necessary. If the wiring and connectors are okay, replace the Door Module in accordance with the Service Information.
- Perform the BODY VERIFICATION TEST. Refer to **STANDARD PROCEDURE** .

B164E-15-PASSENGER MIRROR SIGNAL LAMP CONTROL - CIRCUIT FOR A SHORT TO BATTERY OR OPEN

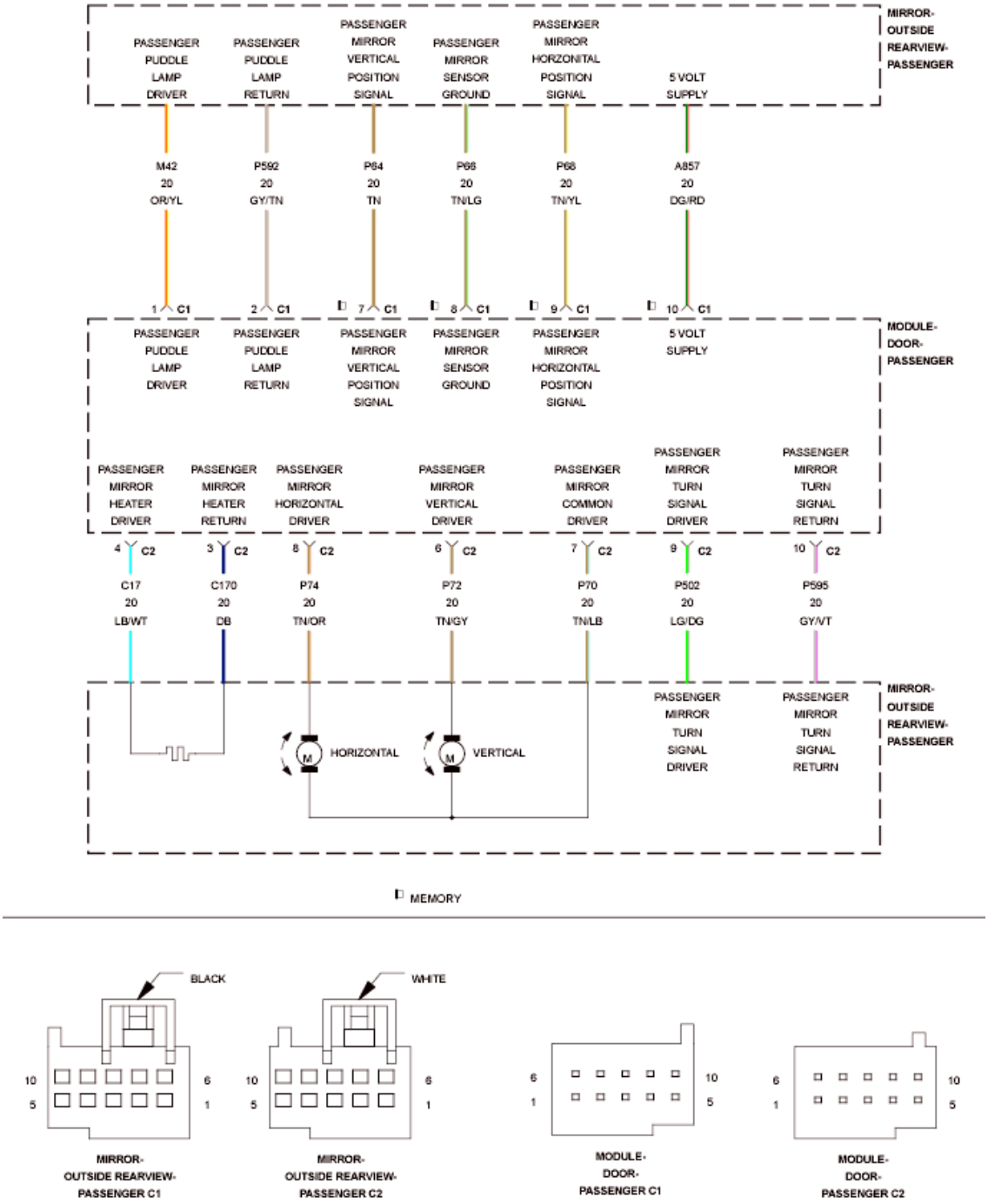

Fig. 8: Passenger Mirror Signal Lamp Control Wiring Diagram
Courtesy of CHRYSLER GROUP, LLC

For a complete wiring diagram, **refer to appropriate SYSTEM WIRING DIAGRAMS article** .

WHEN MONITORED:

Continuously.

SET CONDITION:

The Door Module senses current greater than 100 mA or an open on the (P502) Passenger Mirror Turn Signal Driver circuit for more than two seconds with the turn signal switched on.

POSSIBLE CAUSES

Possible Causes
(P502) PASSENGER MIRROR TURN SIGNAL DRIVER CIRCUIT FOR A SHORT TO VOLTAGE
(P502) PASSENGER MIRROR TURN SIGNAL DRIVER CIRCUIT FOR A SHORT TO THE (P72) PASSENGER MIRROR VERTICAL DRIVER CIRCUIT
(P502) PASSENGER MIRROR TURN SIGNAL DRIVER CIRCUIT FOR A SHORT TO THE (P70) PASSENGER MIRROR COMMON DRIVER CIRCUIT
(P502) PASSENGER MIRROR TURN SIGNAL DRIVER CIRCUIT FOR A SHORT TO THE (P74) PASSENGER MIRROR HORIZONTAL DRIVER CIRCUIT
(P502) PASSENGER MIRROR TURN SIGNAL DRIVER CIRCUIT FOR A SHORT TO THE (C17) PASSENGER MIRROR HEATER DRIVER CIRCUIT
(P502) PASSENGER MIRROR TURN SIGNAL DRIVER CIRCUIT FOR AN OPEN
(P595) PASSENGER MIRROR TURN SIGNAL RETURN CIRCUIT FOR AN OPEN
(P502) PASSENGER MIRROR TURN SIGNAL DRIVER CIRCUIT FOR A SHORT TO THE (M42) PASSENGER PUDDLE LAMP DRIVER CIRCUIT
PASSENGER OUTSIDE REARVIEW MIRROR
DOOR MODULE

DIAGNOSTIC TEST

1. **TEST FOR INTERMITTENT CONDITION**
    1. Turn the ignition on.
    2. Using a scan tool, record and erase Diagnostic Trouble Codes (DTC's).
    3. Turn the turn signal on.
    4. Turn the puddle lamps on, if equipped with puddle lamp mirror.
    5. Turn the rear defogger on, if equipped with heated mirror.
    6. Press and release the Mirror Select switch to select the Passenger Outside Rearview Mirror.
    7. Operate the Mirror Adjust switch in all directions several times while monitoring the scan tool for DTC's.

    NOTE: **After adjusting the mirror in one direction wait at least two seconds before adjusting the mirror in the opposite direction, as this will allow time for an active fault to set if present.**

    Is the DTC active?

Yes

- Go To 2.

No

- The conditions that caused this code to set are not present at this time. For vehicle's equipped with folding outside rearview mirrors, repeat test with mirror folded. If DTC is now active, Go To 2. Otherwise, use the wiring diagram/schematic as a guide and inspect the wiring and connectors.
- Perform the BODY VERIFICATION TEST. Refer to **STANDARD PROCEDURE** .

2. **CHECK (P502) PASSENGER MIRROR TURN SIGNAL DRIVER CIRCUIT FOR A SHORT TO VOLTAGE**

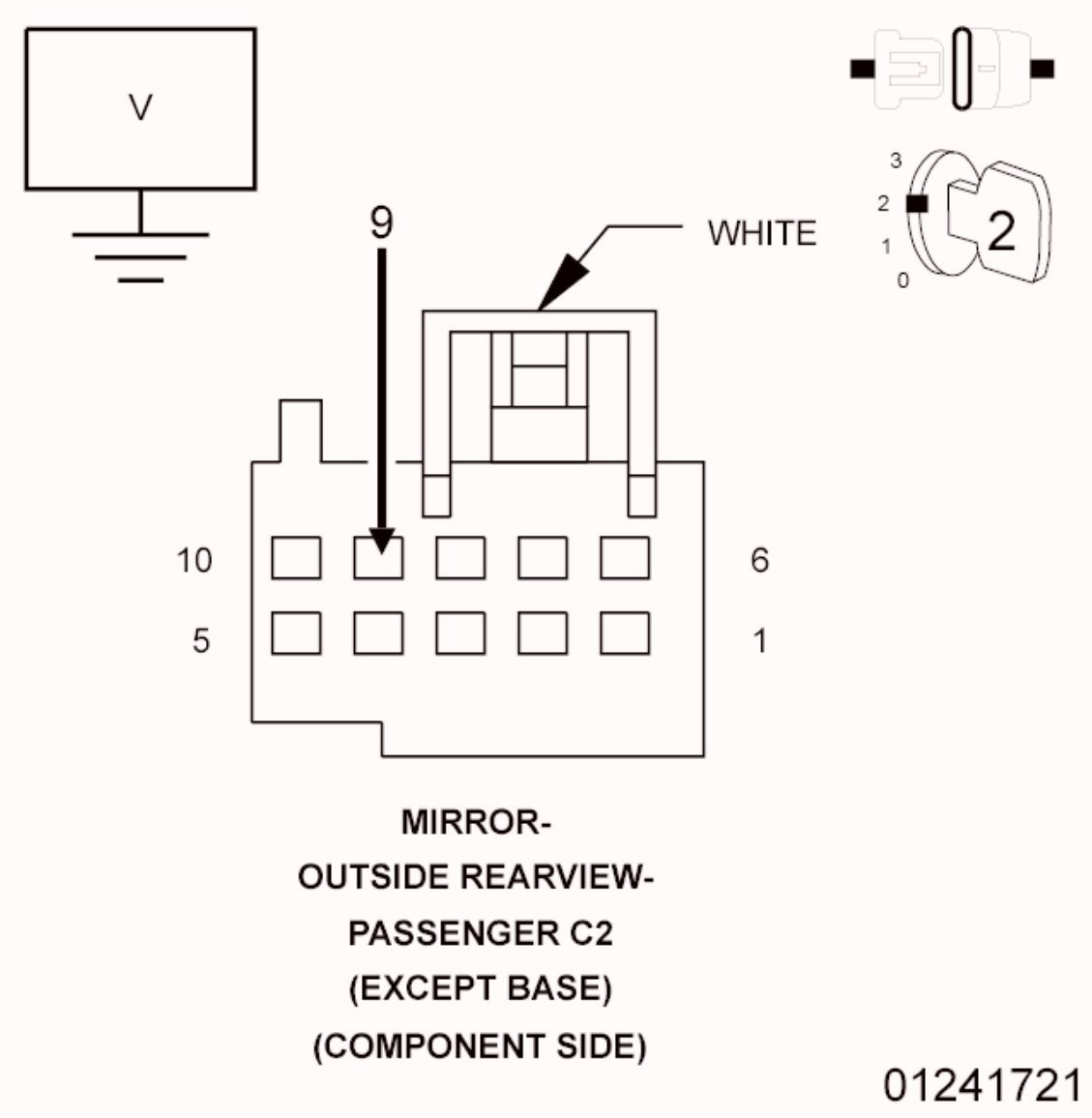

Fig. 9: Checking Passenger Mirror Turn Signal Driver Circuit For A Short To Voltage

Courtesy of CHRYSLER GROUP, LLC

1. Turn the ignition off.
2. Disconnect the Passenger Outside Rearview Mirror C2 (Component Side) connector from the Door Module C2 connector.
3. Turn the ignition on.
4. Measure the voltage of the (P502) Passenger Mirror Turn Signal Driver circuit between the Passenger Outside Rearview Mirror C2 (Component Side) connector and ground.

   Is there any voltage present?

   Yes

   - Repair the (P502) Passenger Mirror Turn Signal Driver circuit for a short to voltage. If the wiring harness and connector are okay, replace the Passenger Outside Rearview Mirror in accordance with the Service Information.
   - Perform the BODY VERIFICATION TEST. Refer to **STANDARD PROCEDURE** .

   No

   - Go To 3.

3. **CHECK (P502) PASSENGER MIRROR TURN SIGNAL DRIVER CIRCUIT FOR A SHORT TO THE (P72) PASSENGER MIRROR VERTICAL DRIVER CIRCUIT, (P70) PASSENGER MIRROR COMMON DRIVER CIRCUIT, OR TO THE (P74) PASSENGER MIRROR HORIZONTAL DRIVER CIRCUIT**

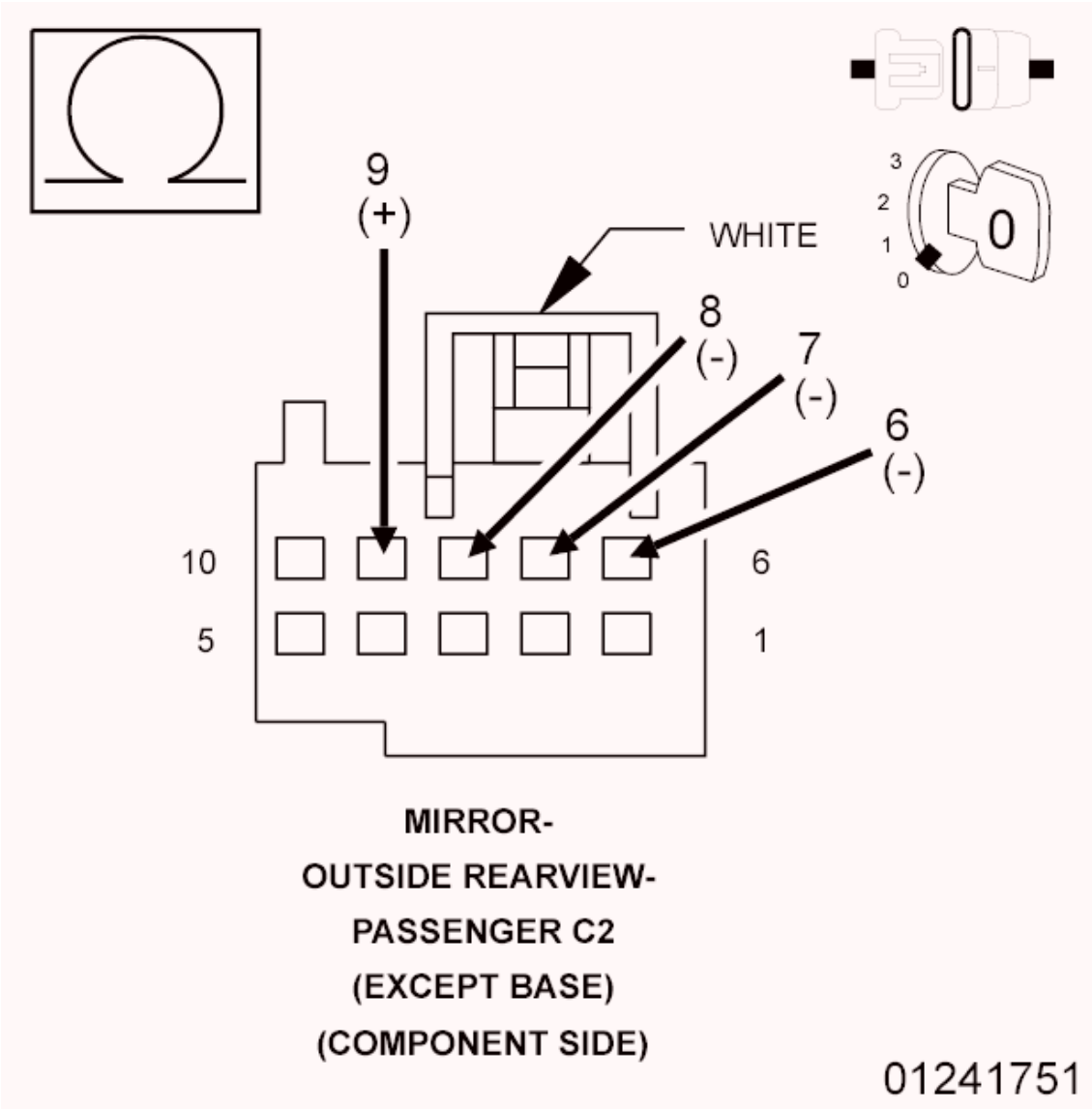

Fig. 10: Checking Passenger Mirror Turn Signal Driver Circuit For A Short To Other Circuits
Courtesy of CHRYSLER GROUP, LLC

1. Turn the ignition off.
2. Measure the resistance between the (P502) Passenger Mirror Turn Signal Driver circuit and the (P72) Passenger Mirror Vertical Driver circuit at the Passenger Outside Rearview Mirror C2 (Component Side) connector.
3. Measure the resistance between the (P502) Passenger Mirror Turn Signal Driver circuit and the (P70) Passenger Mirror Common Driver circuit at the Passenger Outside Rearview Mirror C2 (Component Side) connector.
4. Measure the resistance between the (P502) Passenger Mirror Turn Signal Driver circuit and the (P74) Passenger Mirror Horizontal Driver circuit at the Passenger Outside Rearview Mirror C2 (Component Side) connector.

   Is the resistance below 10K Ohms for any measurement?

Yes

- Repair all circuits with a resistance below 10K Ohms for a short to the (P502) Passenger Mirror Turn Signal Driver circuit. If the wiring harness and connector are okay, replace the Passenger Outside Rearview Mirror in accordance with the Service Information.
- Perform the BODY VERIFICATION TEST. Refer to **STANDARD PROCEDURE** .

No, with Heated Mirror

- Go To 4.

No, without Heated Mirror

- Go To 5.

4. **CHECK (P502) PASSENGER MIRROR TURN SIGNAL DRIVER CIRCUIT FOR A SHORT TO THE (C17) PASSENGER MIRROR HEATER DRIVER CIRCUIT**

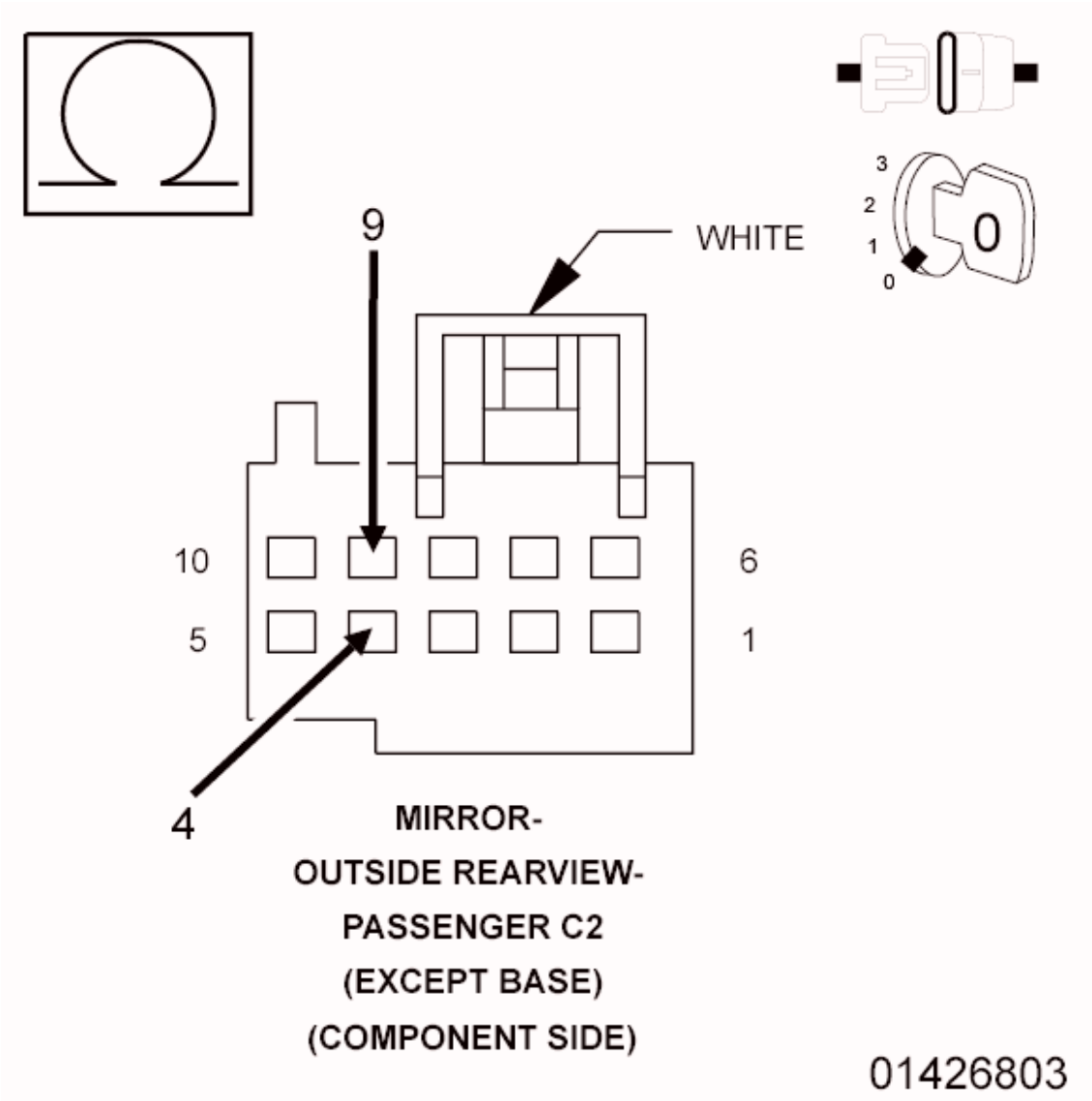

Fig. 11: Checking Passenger Mirror Turn Signal Driver Circuit For A Short To The Passenger Mirror Heater Driver Circuit
Courtesy of CHRYSLER GROUP, LLC

1. Measure the resistance between the (P502) Passenger Mirror Turn Signal Driver circuit and the (C17) Passenger Mirror Heater Driver circuit at the Passenger Outside Rearview Mirror C2 (Component Side) connector.

   Is the resistance below 10K Ohms?

   Yes

   - Repair the (P502) Passenger Mirror Turn Signal Driver circuit for a short to the (C17) Passenger Mirror Heater Driver circuit. If the wiring harness and connector are okay, replace the Passenger Outside Rearview Mirror in accordance with the Service Information.

- Perform the BODY VERIFICATION TEST. Refer to **STANDARD PROCEDURE** .

No

- Go To 5.

5. **CHECK (P502) PASSENGER MIRROR TURN SIGNAL DRIVER CIRCUIT AND (P595) PASSENGER MIRROR TURN SIGNAL RETURN CIRCUIT FOR AN OPEN**

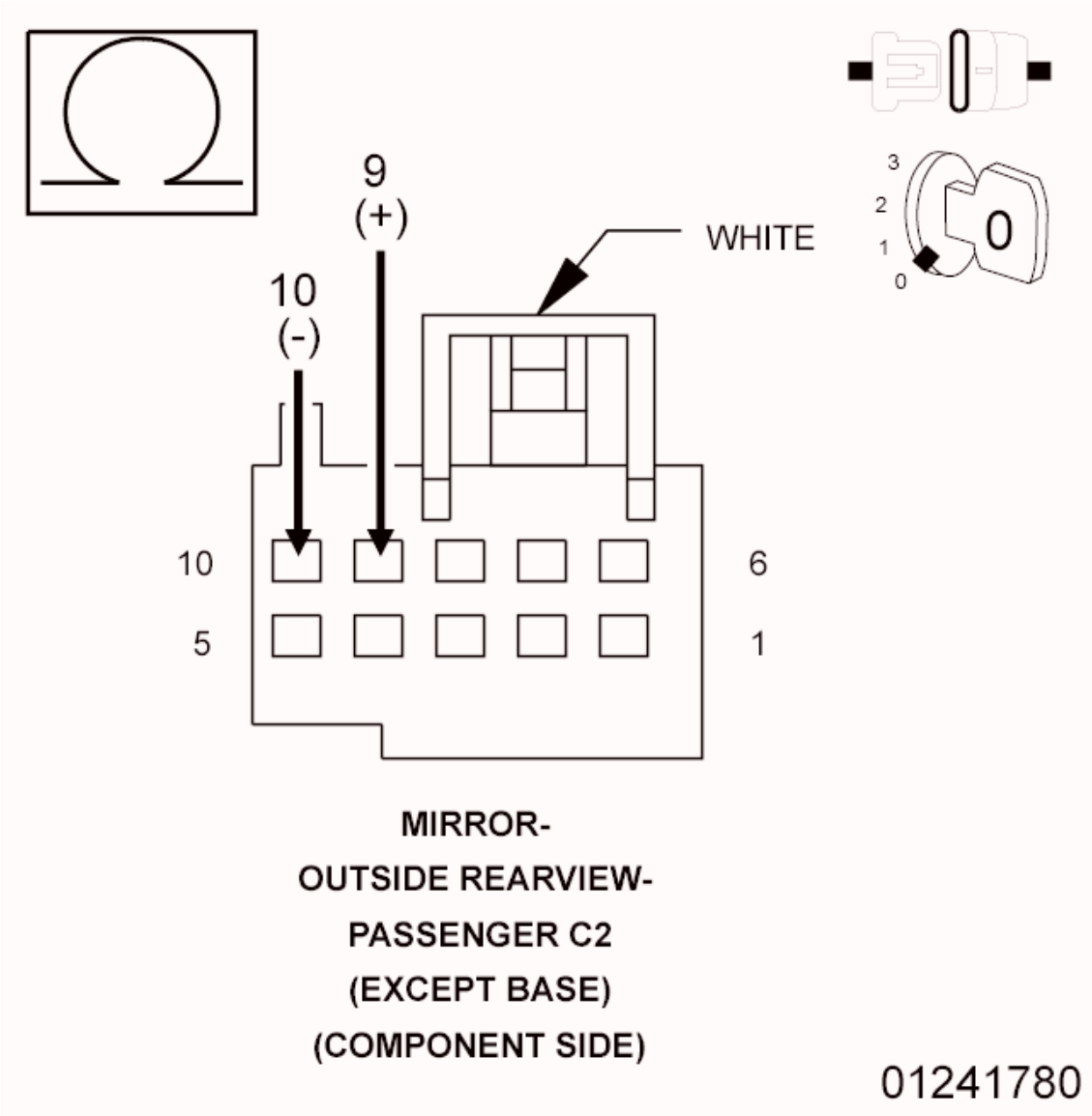

Fig. 12: Checking Passenger Mirror Turn Signal Driver Circuit And Passenger Mirror Turn Signal Return Circuit For An Open
Courtesy of CHRYSLER GROUP, LLC

NOTE: **The Ohmmeter positive lead must be connected to the (P502) Passenger Mirror Turn Signal Driver circuit and the negative lead to the (P595)**

Passenger Mirror Turn Signal Return circuit for the test results to be valid.

1. Measure the resistance between the (P502) Passenger Mirror Turn Signal Driver circuit and the (P595) Passenger Mirror Turn Signal Return circuit at the Passenger Outside Rearview Mirror C2 (Component Side) connector.

   Is the resistance above 1K Ohm?

   Yes

   - Repair the (P502) Passenger Mirror Turn Signal Driver circuit or the (P595) Passenger Mirror Turn Signal Return circuit for an open. If the wiring harness and connector are okay, replace the Passenger Outside Rearview Mirror in accordance with the Service Information.
   - Perform the BODY VERIFICATION TEST. Refer to **STANDARD PROCEDURE** .

   No, with Puddle Lamp Mirror

   - Go To 6.

   No, without Puddle Lamp Mirror

   - Inspect the wiring and connectors for damage and repair as necessary. If the wiring and connectors are okay, replace the Door Module in accordance with the Service Information.
   - Perform the BODY VERIFICATION TEST. Refer to **STANDARD PROCEDURE** .

6. **CHECK (P502) PASSENGER MIRROR TURN SIGNAL DRIVER CIRCUIT FOR A SHORT TO THE (M42) PASSENGER PUDDLE LAMP DRIVER CIRCUIT**

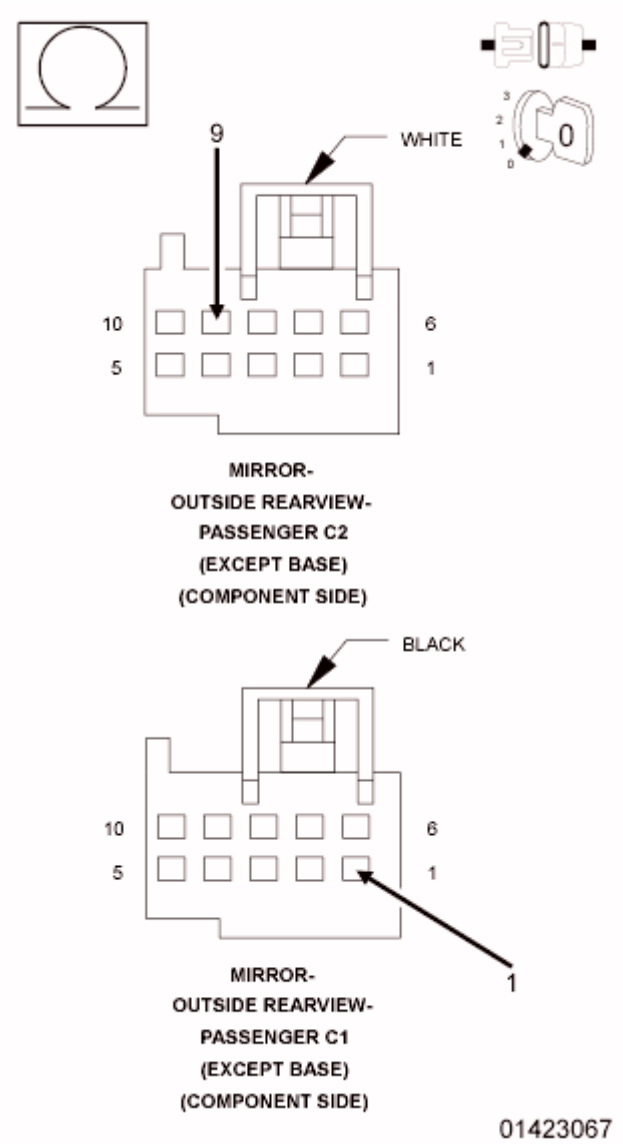

Fig. 13: Checking Passenger Mirror Turn Signal Driver Circuit For A Short To The Passenger Puddle Lamp Driver Circuit
Courtesy of CHRYSLER GROUP, LLC

1. Disconnect the Passenger Outside Rearview Mirror C1 (Component Side) connector from the Door Module C1 connector.
2. Measure the resistance between the (P502) Passenger Mirror Turn Signal Driver circuit and the (M42) Passenger Puddle Lamp Driver circuit at the Passenger Outside Rearview Mirror C2 and C1 (Component Side) connectors.

   Is the resistance below 10K Ohms?

   Yes

   - Repair the (P502) Passenger Mirror Turn Signal Driver circuit for a short to the (M42)

Passenger Puddle Lamp Driver circuit. If the wiring harness and connector are okay, replace the Passenger Outside Rearview Mirror in accordance with the Service Information.

- Perform the BODY VERIFICATION TEST. Refer to **STANDARD PROCEDURE** .

No

- Inspect the wiring and connectors for damage and repair as necessary. If the wiring and connectors are okay, replace the Door Module in accordance with the Service Information.
- Perform the BODY VERIFICATION TEST. Refer to **STANDARD PROCEDURE** .

B16A3-11-PASSENGER WINDOW SWITCH BACKLIGHTING - CIRCUIT FOR A SHORT TO GROUND

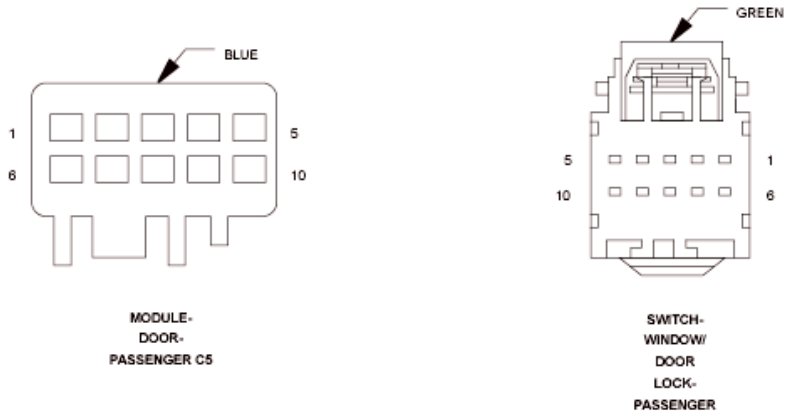

Fig. 14: Passenger Window Switch Backlighting Wiring Diagram
Courtesy of CHRYSLER GROUP, LLC

For a complete wiring diagram, **refer to appropriate SYSTEM WIRING DIAGRAMS article** .

WHEN MONITORED:

Whenever the module is awake, the park lamps are on and the window lock out switch is on.

SET CONDITION:

When the Passenger Window Switch Illumination Driver circuit falls below 3.0 Volts for over 25 ms. and the above conditions are met.

POSSIBLE CAUSES

Possible Causes
(E34) PASSENGER WINDOW SWITCH ILLUMINATION DRIVER CIRCUIT FOR A SHORT TO GROUND
(E34) PASSENGER WINDOW SWITCH ILLUMINATION DRIVER CIRCUIT FOR A SHORT TO THE (Q936) PASSENGER WINDOW SWITCH RETURN
WINDOW/DOOR LOCK SWITCH SHORTED
PASSENGER DOOR MODULE (PDM)

DIAGNOSTIC TEST

1. **TEST FOR INTERMITTENT CONDITION**
    1. Turn the ignition on.
    2. With the scan tool, record and erase DTC's.
    3. Make sure the passenger window lock out switch is on.
    4. Turn the park lights on.
    5. Wait 30 seconds.
    6. With the scan tool, read the active DTC's.

    Does the scan tool display B16A3-11-PASSENGER WINDOW SWITCH BACKLIGHTING - CIRCUIT FOR A SHORT TO GROUND?

    Yes

    - Go To 2.

    No

    - Test complete, the condition or conditions that originally set this DTC are not present at this time. Using the wiring diagrams as a guide, check all related splices and connectors for signs of water intrusion, corrosion, pushed out or bent terminals, and correct pin tension.
    - Perform the BODY VERIFICATION TEST. Refer to **STANDARD PROCEDURE** .
2. **WINDOW/DOOR LOCK SWITCH SHORTED**

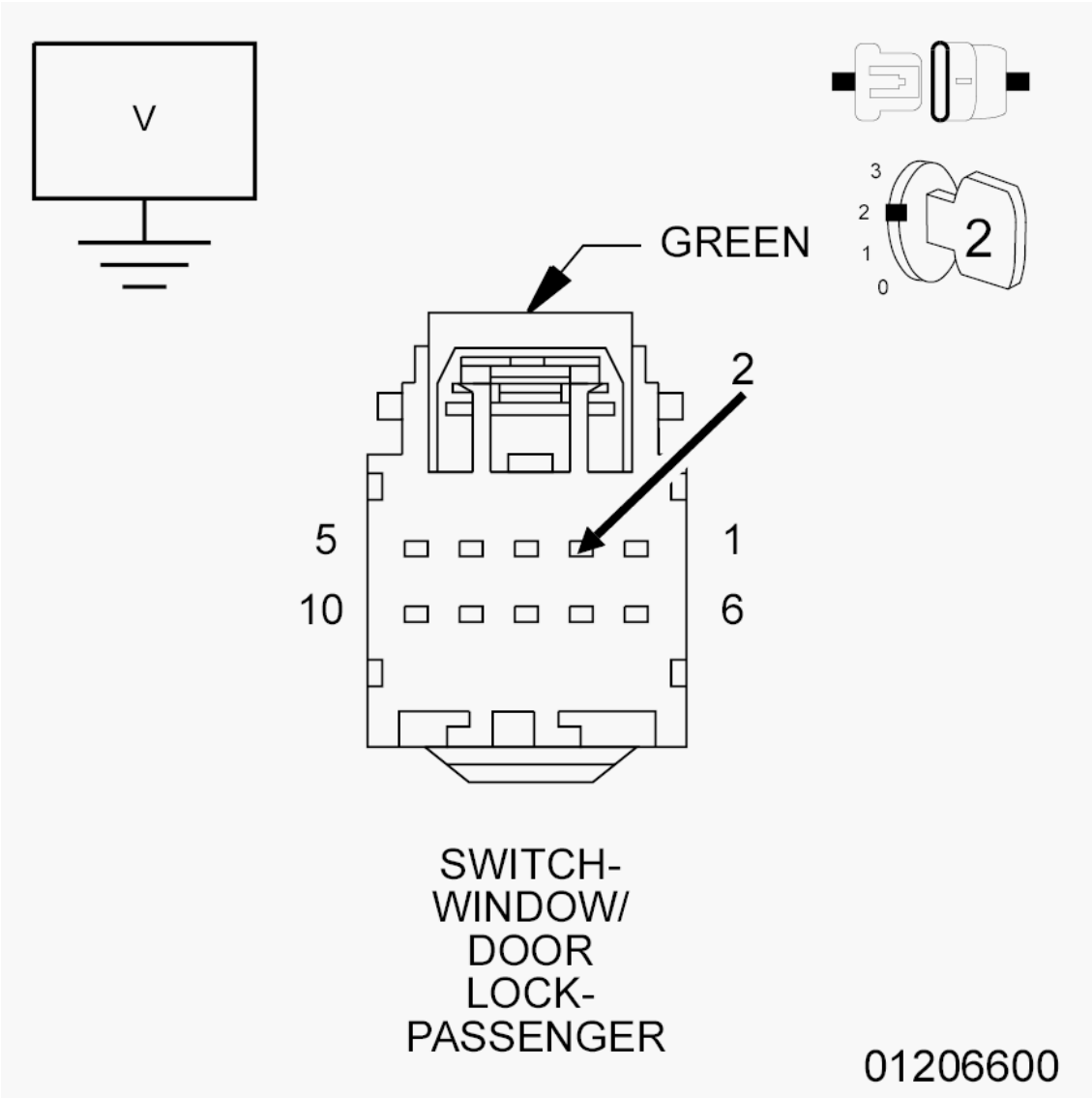

Fig. 15: Checking Window/Door Lock Switch For A Short
Courtesy of CHRYSLER GROUP, LLC

1. With the scan tool, erase DTC's.
2. Turn the ignition off.
3. Disconnect the Passenger Window/Door Lock Switch harness connector.
4. Make sure the passenger window lock out switch is on and the park lamps are still on.
5. Turn the ignition on.
6. With the scan tool, read the active DTC's.

   Does the scan tool display B16A3-11-PASSENGER WINDOW SWITCH BACKLIGHTING - CIRCUIT FOR A SHORT TO GROUND?

   Yes

- Go To 3.

No

- Replace the Window/Door Lock Switch in accordance with the Service Information.
- Perform the BODY VERIFICATION TEST. Refer to **STANDARD PROCEDURE** .

3. **(E34) PASSENGER WINDOW SWITCH ILLUMINATION DRIVER CIRCUIT FOR A SHORT TO GROUND**

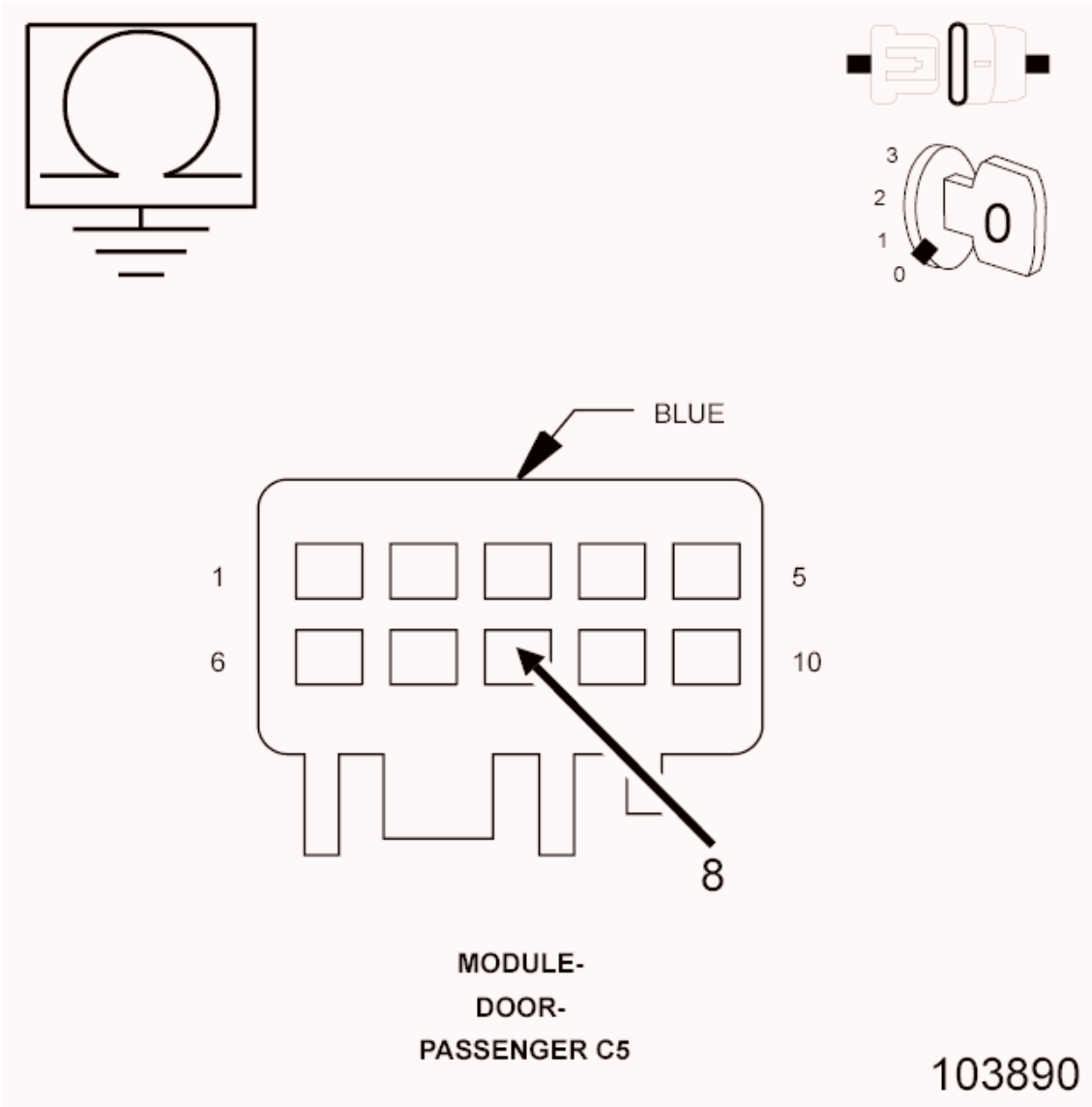

Fig. 16: Checking Passenger Window Switch Illumination Driver Circuit For A Short To Ground
Courtesy of CHRYSLER GROUP, LLC

1. Turn the ignition off.
2. Turn the park lamps off.

3. Disconnect the Passenger Door Module C5 harness connector.
4. Measure the resistance between ground and the (E34) Passenger Window Switch Illumination Driver circuit.

   Is the resistance below 10, 000 Ohms?

   Yes

   - Repair the short to ground in the (E34) Passenger Window Switch Illumination Driver circuit.
   - Perform the BODY VERIFICATION TEST. Refer to **STANDARD PROCEDURE** .

   No

   - Go To 4.

4. **(E34) PASSENGER WINDOW SWITCH ILLUMINATION DRIVER CIRCUIT FOR A SHORT TO (Q936) PASSENGER WINDOW SWITCH RETURN CIRCUIT**

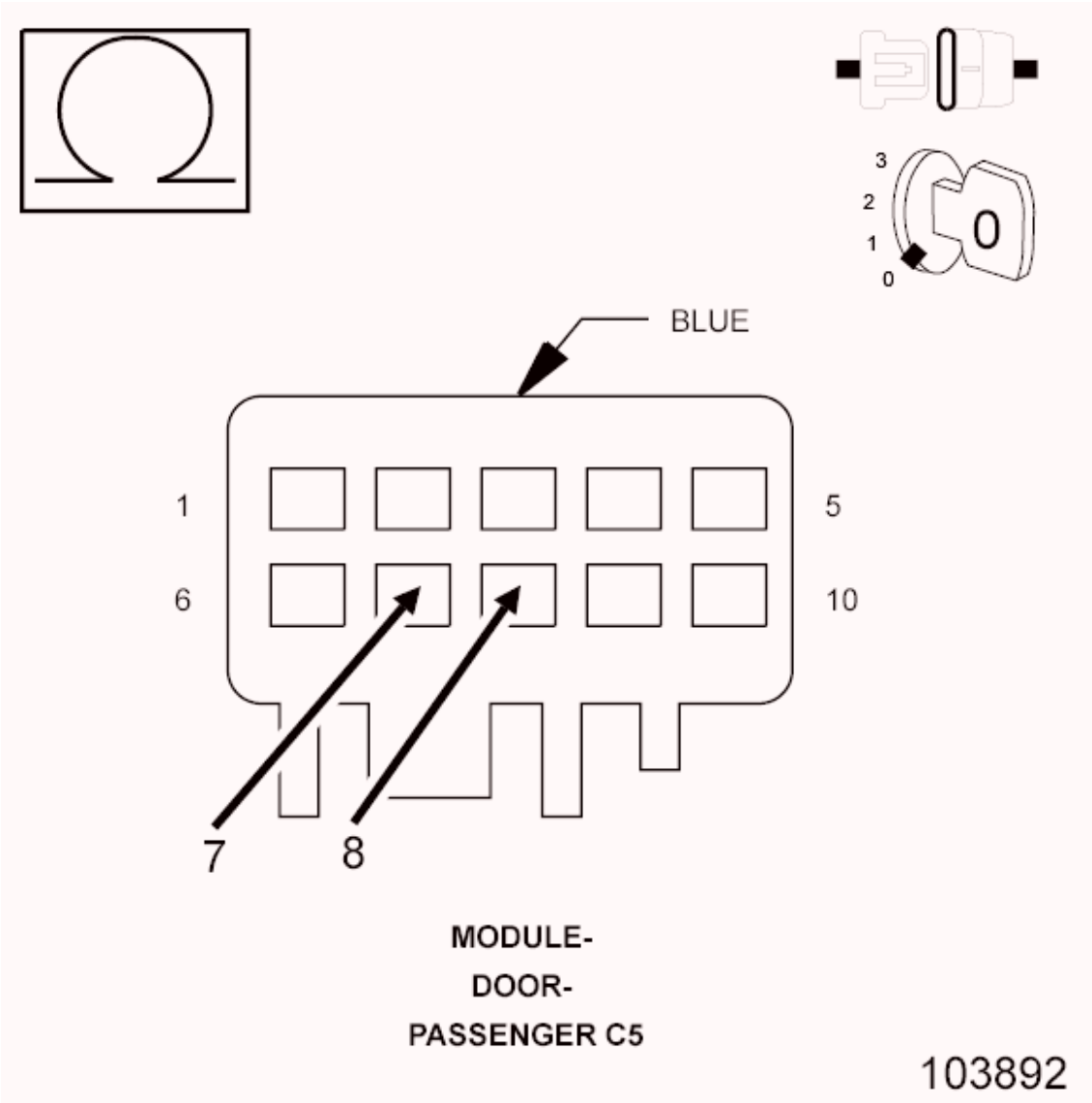

Fig. 17: Checking Passenger Window Switch Illumination Driver Circuit For A Short To Passenger Window Switch Return Circuit
Courtesy of CHRYSLER GROUP, LLC

1. Measure the resistance between the (E34) Passenger Window Switch Illumination Driver circuit and the (Q936) Passenger Window Switch Return circuit.

   Is the resistance below 10, 000 Ohms?

   Yes

   - Repair the (E34) Passenger Window Switch Illumination Driver circuit for a short to the (Q936) Passenger Window Switch Return circuit.
   - Perform the BODY VERIFICATION TEST. Refer to **STANDARD PROCEDURE** .

No

- Replace the Passenger Door Module in accordance with the Service Information.
- Perform the BODY VERIFICATION TEST. Refer to **STANDARD PROCEDURE** .

B16A3-15-PASSENGER WINDOW SWITCH BACKLIGHTING - CIRCUIT FOR A SHORT TO BATTERY OR OPEN

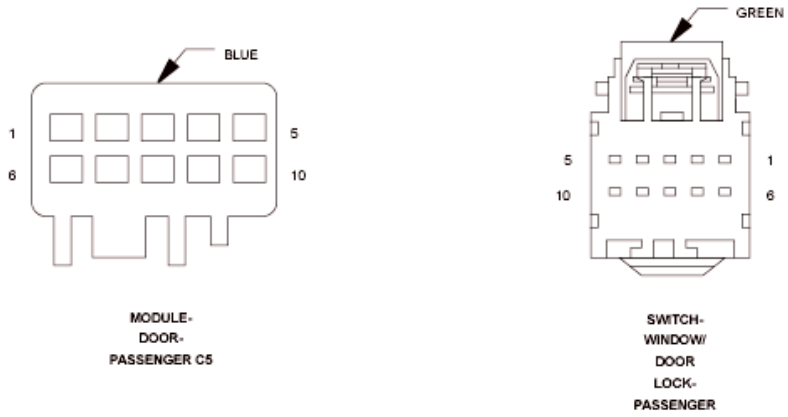

Fig. 18: Passenger Window Switch Backlighting Wiring Diagram
Courtesy of CHRYSLER GROUP, LLC

For a complete wiring diagram, **refer to appropriate SYSTEM WIRING DIAGRAMS article** .

WHEN MONITORED:

Whenever the module is awake.

SET CONDITION:

When the Passenger Window Switch Illumination Driver circuit current draw is greater than 120mA for over 2000 ms. and the switch illumination output is turned off or there is no current draw when the switch illumination is turn on.

POSSIBLE CAUSES

Possible Causes
(E34) PASSENGER WINDOW SWITCH ILLUMINATION DRIVER CIRCUIT FOR A SHORT TO VOLTAGE
(E34) PASSENGER WINDOW SWITCH ILLUMINATION DRIVER CIRCUIT FOR AN OPEN
(Q936) PASSENGER WINDOW SWITCH RETURN CIRCUIT FOR AN OPEN
WINDOW/DOOR LOCK SWITCH
PASSENGER DOOR MODULE (PDM)

DIAGNOSTIC TEST

1. **CHECK FOR OPEN CIRCUIT**
    1. With the scan tool, record and erase DTC's.
    2. Make sure the passenger window lock out switch is on.
    3. Make sure the ignition is on.
    4. Turn the park lamps are on.
    5. Wait 30 seconds.
    6. With the scan tool, read the active DTC's.

    Does the scan tool display B16A3-15-PASSENGER WINDOW SWITCH BACKLIGHTING - CIRCUIT FOR A SHORT TO BATTERY OR OPEN?

    Yes

    - Go To 2.

    No

    - Test complete, the condition or conditions that originally set this DTC are not present at this time. Using the wiring diagrams as a guide, check all related splices and harness connectors for signs of water intrusion, corrosion, pushed out or bent terminals, and correct pin tension.
    - Perform the BODY VERIFICATION TEST. Refer to **STANDARD PROCEDURE** .
2. **(E34) PASSENGER WINDOW SWITCH ILLUMINATION DRIVER CIRCUIT FOR AN OPEN**

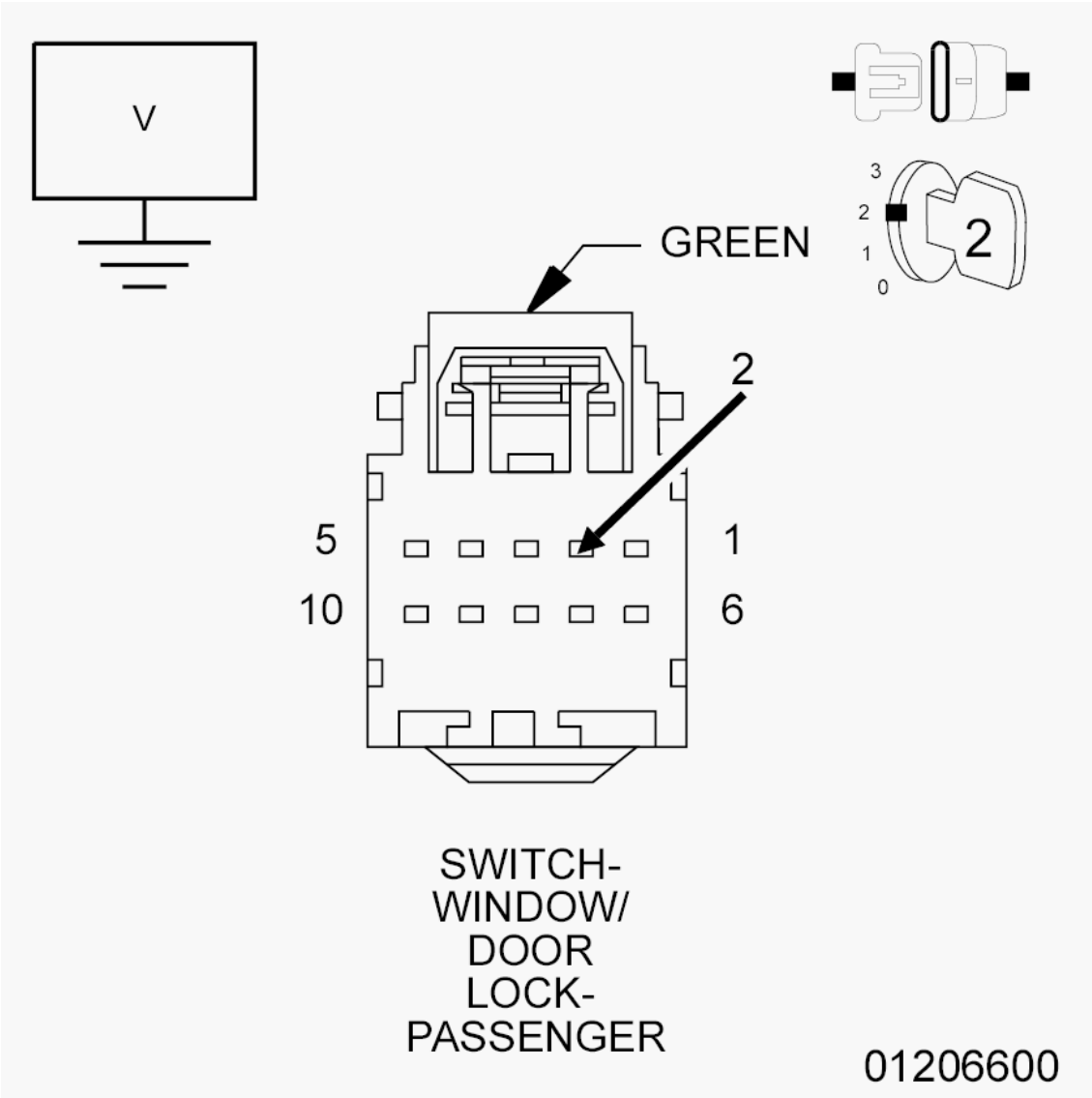

Fig. 19: Checking Window/Door Lock Switch For A Short
Courtesy of CHRYSLER GROUP, LLC

1. Turn the ignition off.
2. Disconnect the Passenger Window/Door Lock Switch harness connector.
3. Turn the ignition on.
4. Make sure the park lamps and the lock out switch are still on.
5. Turn the panel lamps fully on.
6. Measure the voltage between the (E34) Passenger Window Switch Illumination Driver circuit and ground.

   Is the voltage above 10.0 Volts?

   Yes

- Go To 4.

No

- Go To 3.

3. **(E34) PASSENGER WINDOW SWITCH ILLUMINATION DRIVER WIRE OPEN**

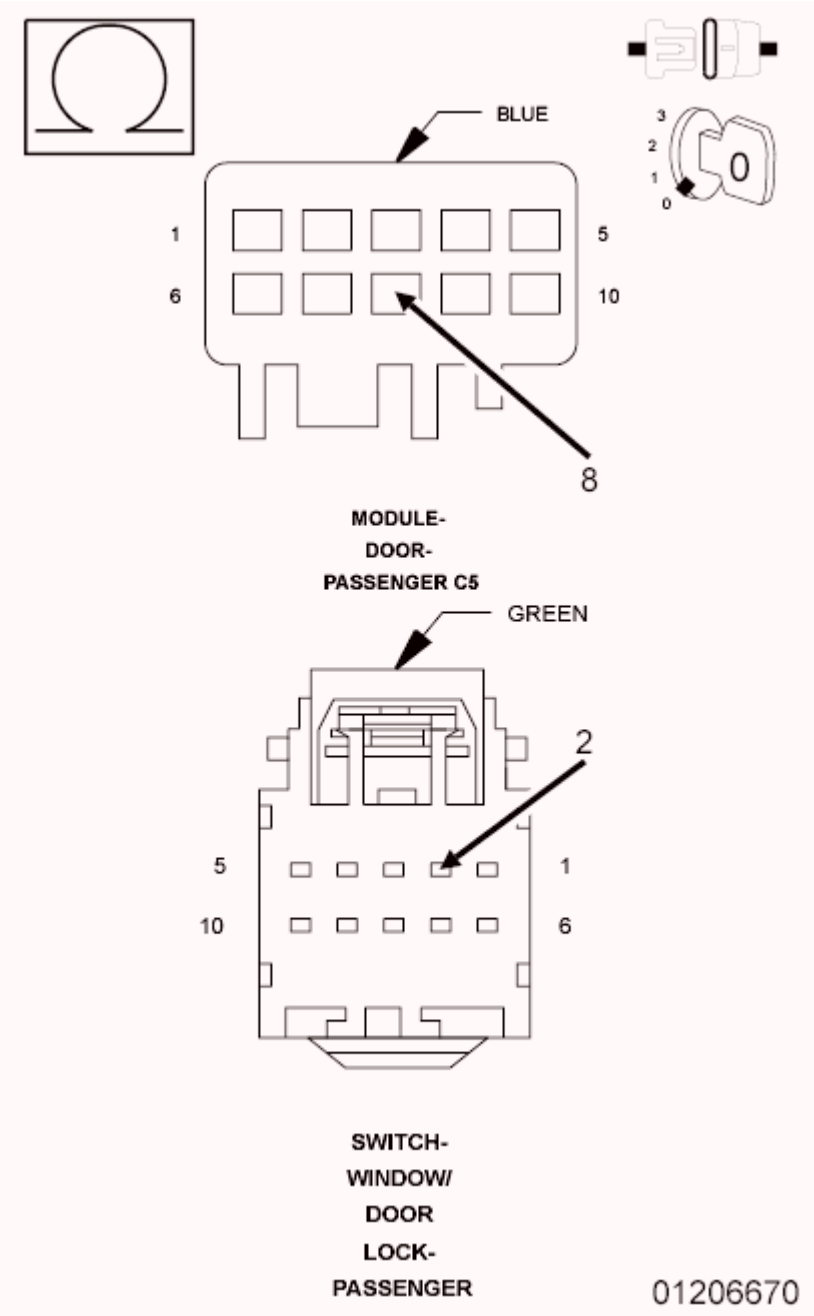

Fig. 20: Checking Passenger Window Switch Illumination Driver Wire For An Open
Courtesy of CHRYSLER GROUP, LLC

1. Turn the ignition off.
2. Disconnect the Passenger Door Module C5 harness connector.
3. Measure the resistance of the (E34) Passenger Window Switch Illumination Driver circuit between the Passenger Door Module C5 harness connector and the Passenger Window/Door Lock Switch harness connector.

   Is the resistance above 2.0 Ohms?

   Yes

   - Repair the open in the (E34) Passenger Window Switch Illumination Driver circuit.
   - Perform the BODY VERIFICATION TEST. Refer to **STANDARD PROCEDURE** .

   No

   - Replace the Passenger Door Module in accordance with the Service Information.
   - Perform the BODY VERIFICATION TEST. Refer to **STANDARD PROCEDURE** .

4. **(Q936) PASSENGER WINDOW SWITCH RETURN CIRCUIT FOR AN OPEN**

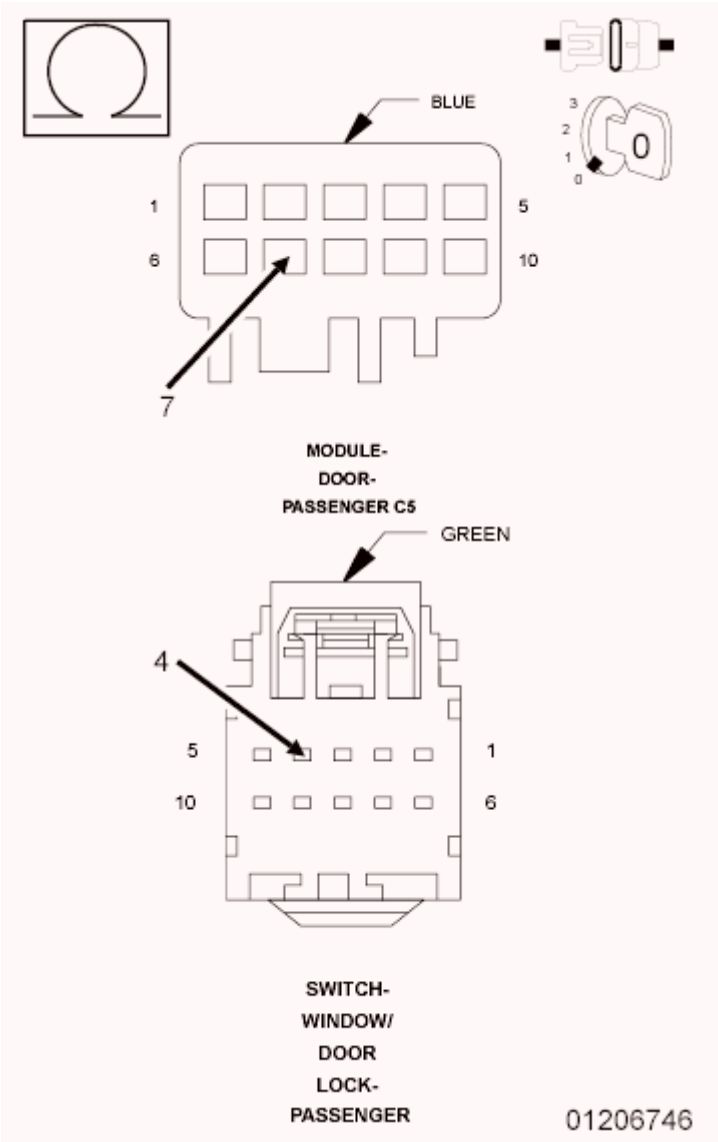

Fig. 21: Checking Passenger Window Switch Return Circuit For An Open
Courtesy of CHRYSLER GROUP, LLC

1. Measure the resistance of the (Q936) Passenger Window Switch Return circuit between the Passenger Door Module C5 harness connector and the Passenger Window/Door Lock Switch harness connector.

   Is the resistance above 2.0 Ohms?

   Yes

   - Repair the open in the (Q936) Passenger Window Switch Return circuit.
   - Perform the BODY VERIFICATION TEST. Refer to **STANDARD PROCEDURE** .

   No

- Go To 5.

5. **(E34) PASSENGER WINDOW SWITCH ILLUMINATION DRIVER CIRCUIT FOR A SHORT TO VOLTAGE**

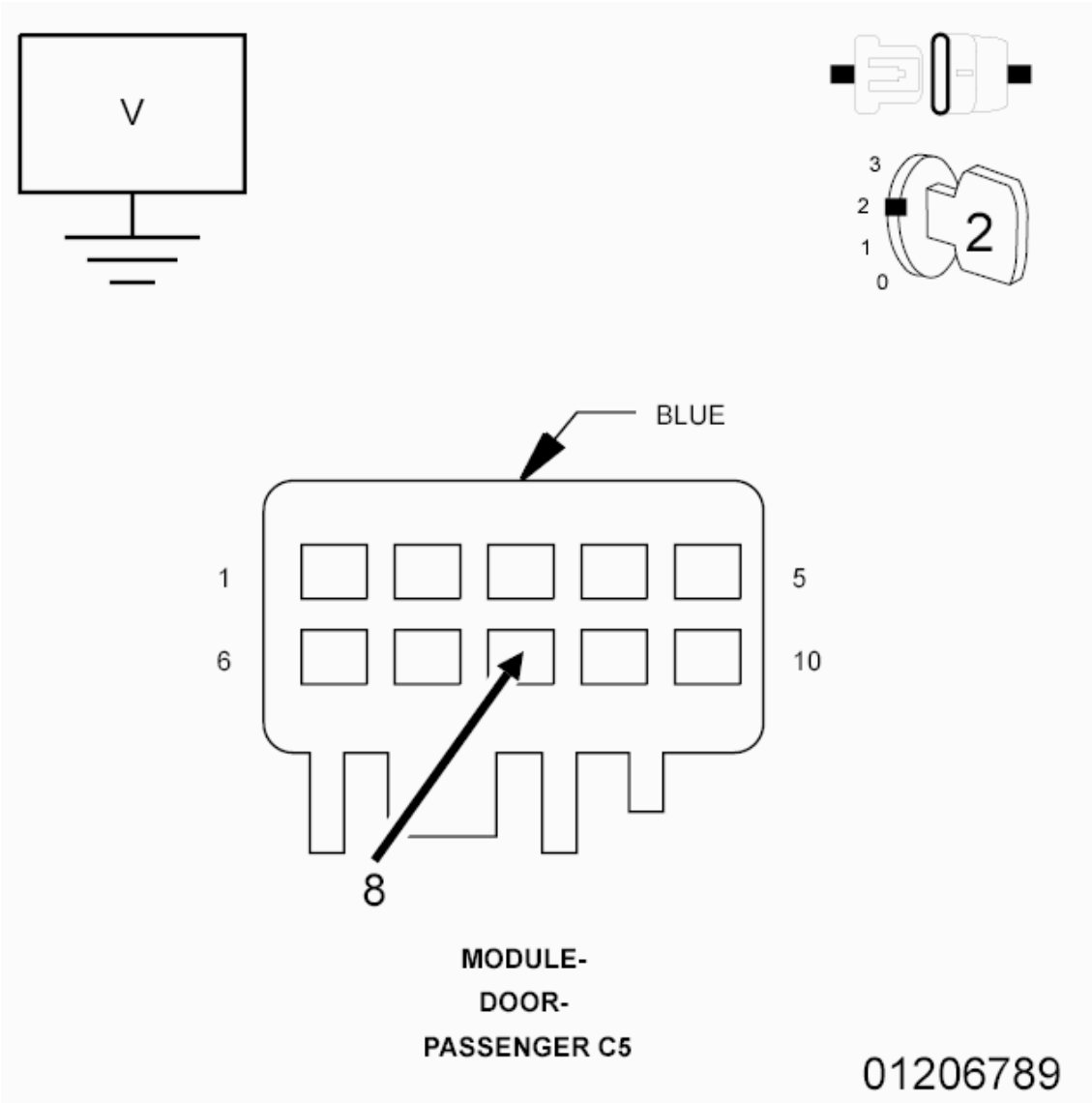

Fig. 22: Checking Passenger Window Switch Illumination Driver Circuit For A Short To Voltage
Courtesy of CHRYSLER GROUP, LLC

1. Turn the ignition on.
2. Measure the voltage between the (E34) Passenger Window Switch Illumination Driver circuit and ground.

   Is there any voltage present?

   Yes

- Repair the short to voltage in the (E34) Passenger Window Switch Illumination Driver circuit.
- Perform the BODY VERIFICATION TEST. Refer to **STANDARD PROCEDURE** .

No

- Replace the Passenger Door Module in accordance with the Service Information.
- Perform the BODY VERIFICATION TEST. Refer to **STANDARD PROCEDURE** .

B1805-2A-PASSENGER DOOR LOCK/UNLOCK SWITCH - SIGNAL STUCK IN RANGE

For a complete wiring diagram, **refer to appropriate SYSTEM WIRING DIAGRAMS article** .

WHEN MONITORED:

Continuously

SET CONDITION:

When the Door Lock/Unlock Switch is stuck for over 30 seconds, this code will set.

POSSIBLE CAUSES

Possible Causes
OBSTRUCTION IN SWITCH
DOOR LOCK SWITCH

DIAGNOSTIC TEST

1. **TEST FOR INTERMITTENT CONDITION**
    1. With the scan tool, record and erase the DTC's.
    2. Operate the Passenger Door Lock Switch in all positions several times.
    3. Cycle the ignition from on to off.
    4. Turn the ignition on.
    5. With the scan tool, read the DTC's.

    Does the scan tool display B1805-2A-PASSENGER DOOR LOCK/UNLOCK SWITCH - SIGNAL STUCK IN RANGE?

    Yes

    - Go To 2.

    No

- The conditions that caused this code to set are not present at this time. Using the wiring diagram/schematic as a guide, inspect the wiring and connectors.
- Perform the BODY VERIFICATION TEST. Refer to **STANDARD PROCEDURE** .

2. **DOOR LOCK SWITCH**
    1. Check the switch for any objects that could cause a sticking condition.

       Was anything found that could cause a sticking condition?

       Yes

       - Clean or remove the object as necessary.
       - Perform the BODY VERIFICATION TEST. Refer to **STANDARD PROCEDURE** .

       No

       - Replace the Door Lock Switch.
       - Perform the BODY VERIFICATION TEST. Refer to **STANDARD PROCEDURE** .

B185E-11-PASSENGER WINDOW CONTROL - CIRCUIT FOR A SHORT TO GROUND

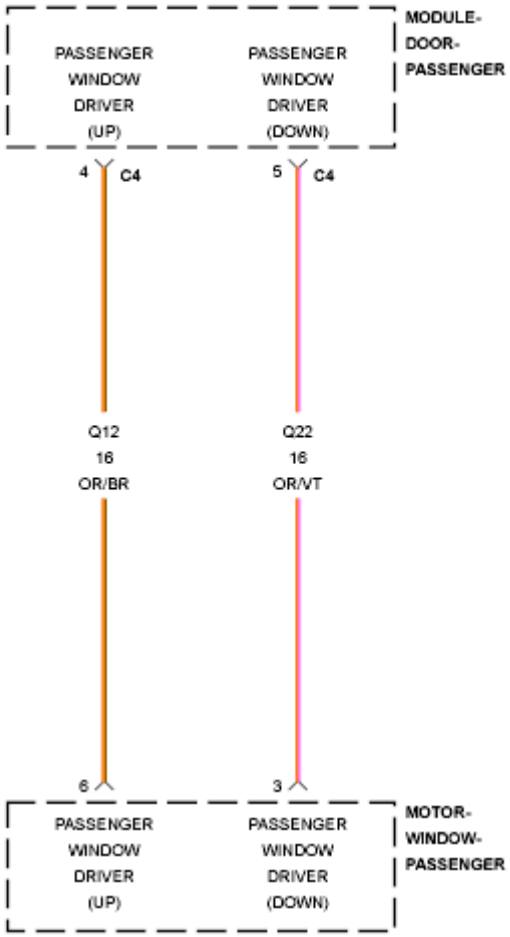

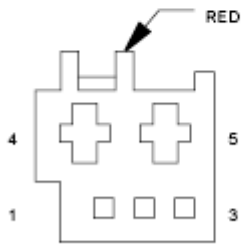

MODULE-
DOOR-
PASSENGER C4

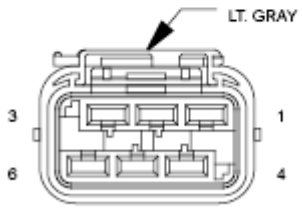

MOTOR-
WINDOW-
PASSENGER

Fig. 23: Passenger Window Control Wiring Diagram
Courtesy of CHRYSLER GROUP, LLC

For a complete wiring diagram, **refer to appropriate SYSTEM WIRING DIAGRAMS article** .

WHEN MONITORED:

Whenever the module is awake.

SET CONDITION:

When both Passenger Window Driver circuits (Up and Down) are grounded during a window movement command.

POSSIBLE CAUSES

Possible Causes
(Q22) PASSENGER WINDOW DRIVER (DOWN) CIRCUIT FOR A SHORT TO GROUND
(Q12) PASSENGER WINDOW DRIVER (UP) CIRCUIT FOR A SHORT TO GROUND
(Q22) PASSENGER WINDOW DRIVER (DOWN) CIRCUIT FOR A SHORT TO THE (Q12) PASSENGER WINDOW DRIVER (UP) CIRCUIT
WINDOW MOTOR SHORTED
PASSENGER DOOR MODULE (PDM)

DIAGNOSTIC TEST

1. **TEST FOR INTERMITTENT CONDITION**
    1. Turn the ignition on.
    2. With the scan tool, record and erase DTC's.
    3. Operate the Passenger Window switch up and down several times.
    4. Wait 30 seconds.
    5. With the scan tool, read the active DTC's.

    Does the scan tool display B185E-11-PASSENGER WINDOW CONTROL - CIRCUIT FOR A SHORT TO GROUND?

    Yes

    - Go To 2.

    No

    - Test complete, the condition or conditions that originally set this DTC are not present at this time. Using the wiring diagrams as a guide, check all related splices and connectors for signs of water intrusion, corrosion, pushed out or bent terminals, and correct pin tension.

- Perform the BODY VERIFICATION TEST. Refer to **STANDARD PROCEDURE** .

2. **WINDOW MOTOR SHORTED**

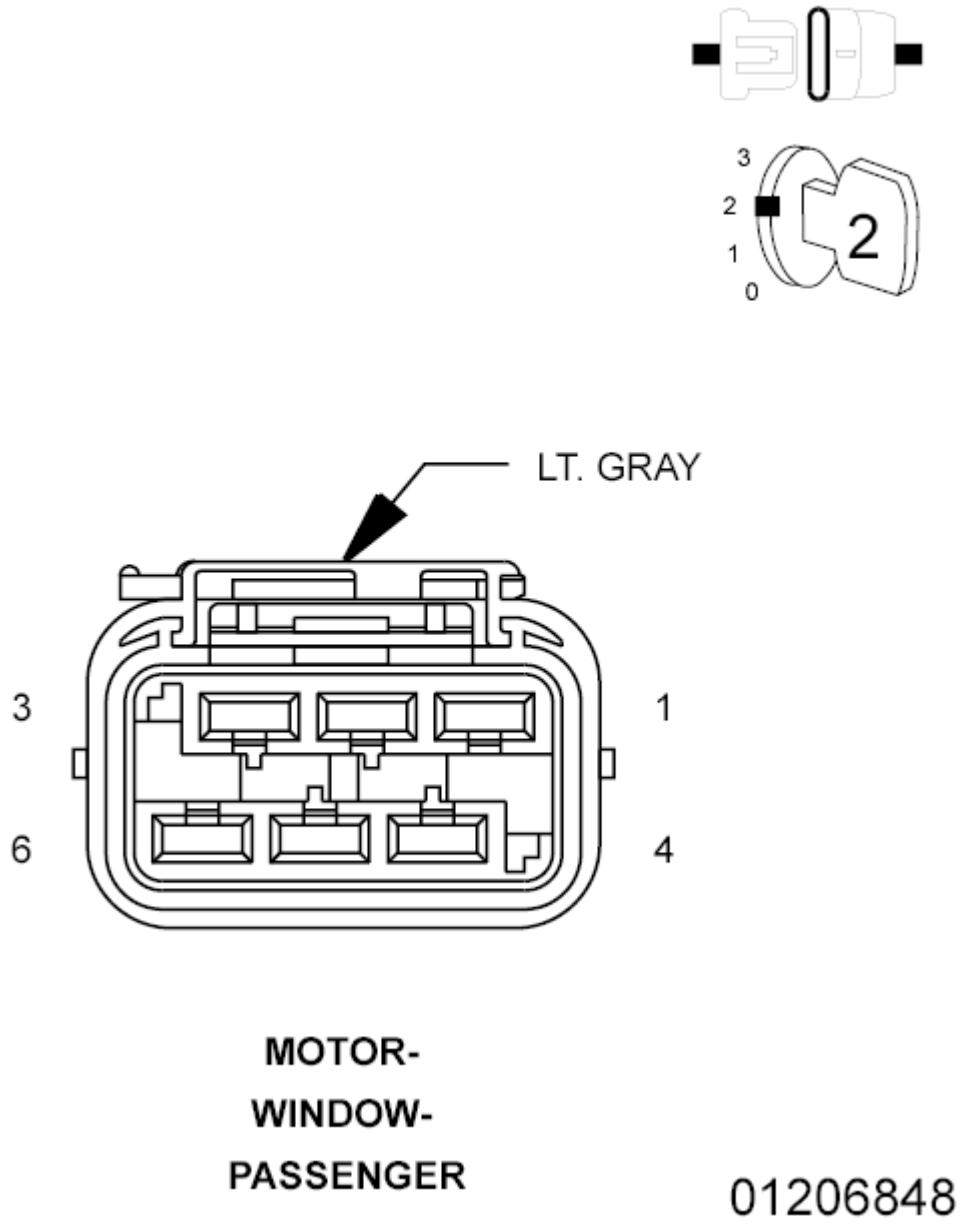

Fig. 24: Checking Window Motor For A Short
Courtesy of CHRYSLER GROUP, LLC

1. With the scan tool, erase DTC's.
2. Turn the ignition off.
3. Disconnect the Passenger Window Motor harness connector.
4. Turn the ignition on.

5. Operate the Passenger Window switch up and down several times.
6. With the scan tool, read the active DTC's.

   Does the scan tool display B185E-11-PASSENGER WINDOW CONTROL - CIRCUIT FOR A SHORT TO GROUND?

   Yes

   - Go To 3.

   No

   - Replace the Passenger Window Motor in accordance with the Service Information.
   - Perform the BODY VERIFICATION TEST. Refer to **STANDARD PROCEDURE** .

3. **(Q22) PASSENGER WINDOW DRIVER (DOWN) CIRCUIT FOR A SHORT TO GROUND**

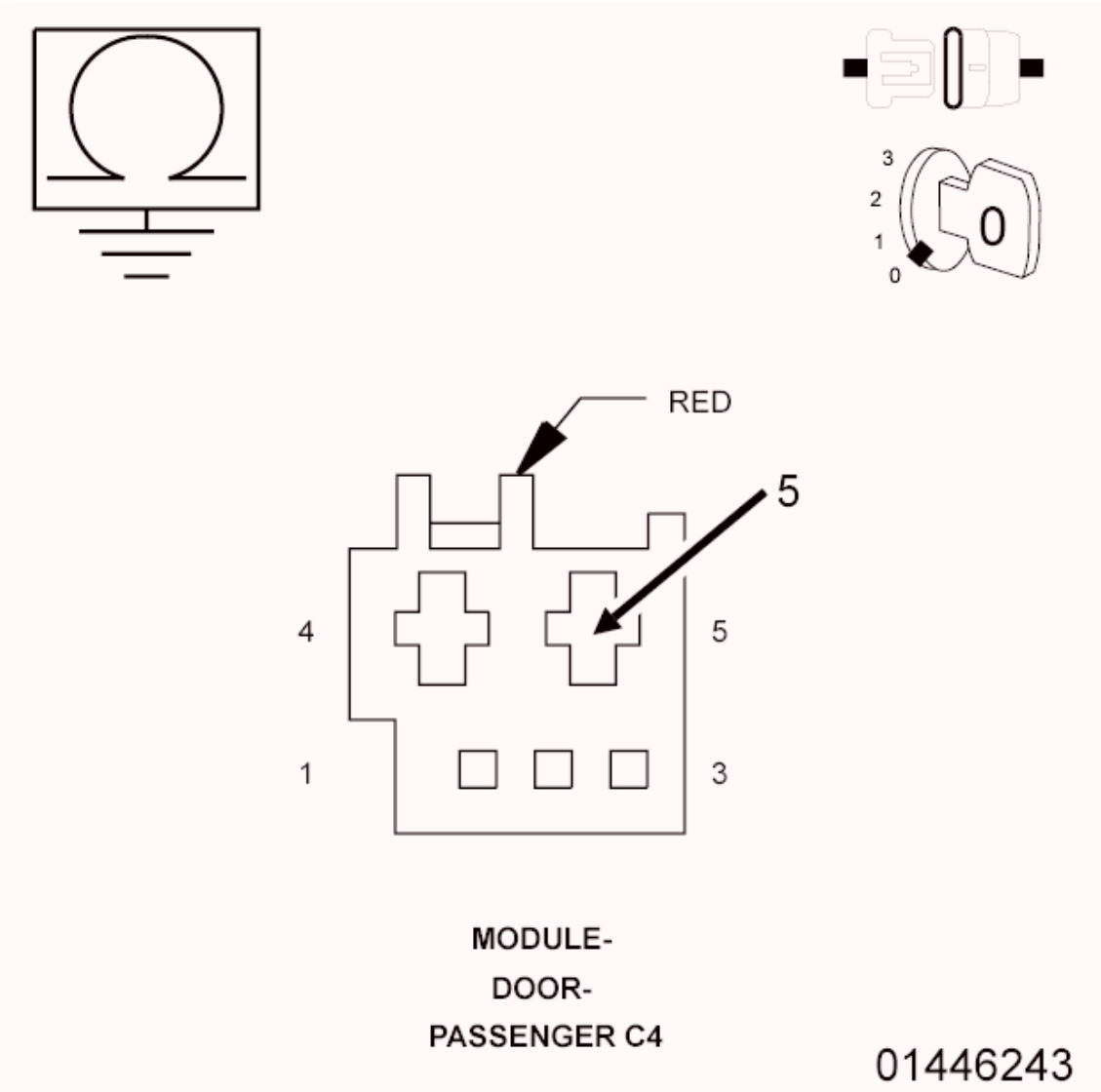

Fig. 25: Checking Passenger Window Driver (Down) Circuit For A Short To Ground
Courtesy of CHRYSLER GROUP, LLC

1. Turn the ignition off.
2. Disconnect the Passenger Door Module C4 harness connector.
3. Measure the resistance between ground and the (Q22) Passenger Window Driver (Down) circuit.

   Is the resistance below 10, 000 Ohms?

   Yes

   - Repair the short to ground in the (Q22) Passenger Window Driver (Down) circuit.
   - Perform the BODY VERIFICATION TEST. Refer to **STANDARD PROCEDURE** .

   No

- Go To 4.

4. **(Q12) PASSENGER WINDOW DRIVER (UP) CIRCUIT FOR A SHORT TO GROUND**

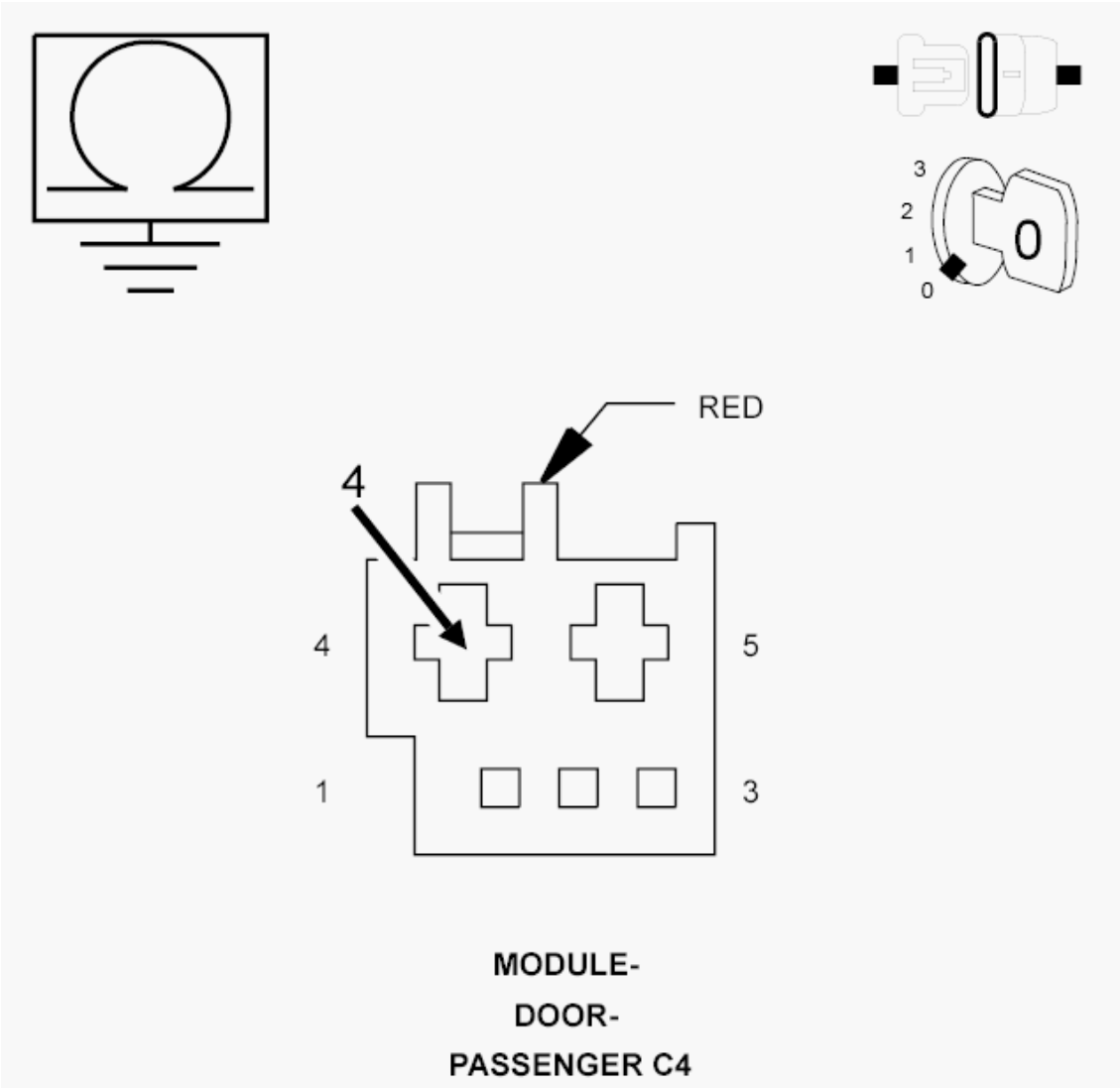

Fig. 26: Checking Passenger Window Driver (Up) Circuit For A Short To Ground
Courtesy of CHRYSLER GROUP, LLC

1. Measure the resistance between ground and the (Q12) Passenger Window Driver (Up) circuit.

   Is the resistance below 10, 000 Ohms?

   Yes

   - Repair the short to ground in the (Q12) Passenger Window Driver (Up) circuit.
   - Perform the BODY VERIFICATION TEST. Refer to **STANDARD PROCEDURE** .

   No

- Go To 5.

5. **(Q22) DRIVER WINDOW DRIVER (DOWN) CIRCUIT FOR A SHORT TO THE (Q12) PASSENGER WINDOW DRIVER (UP) CIRCUIT**

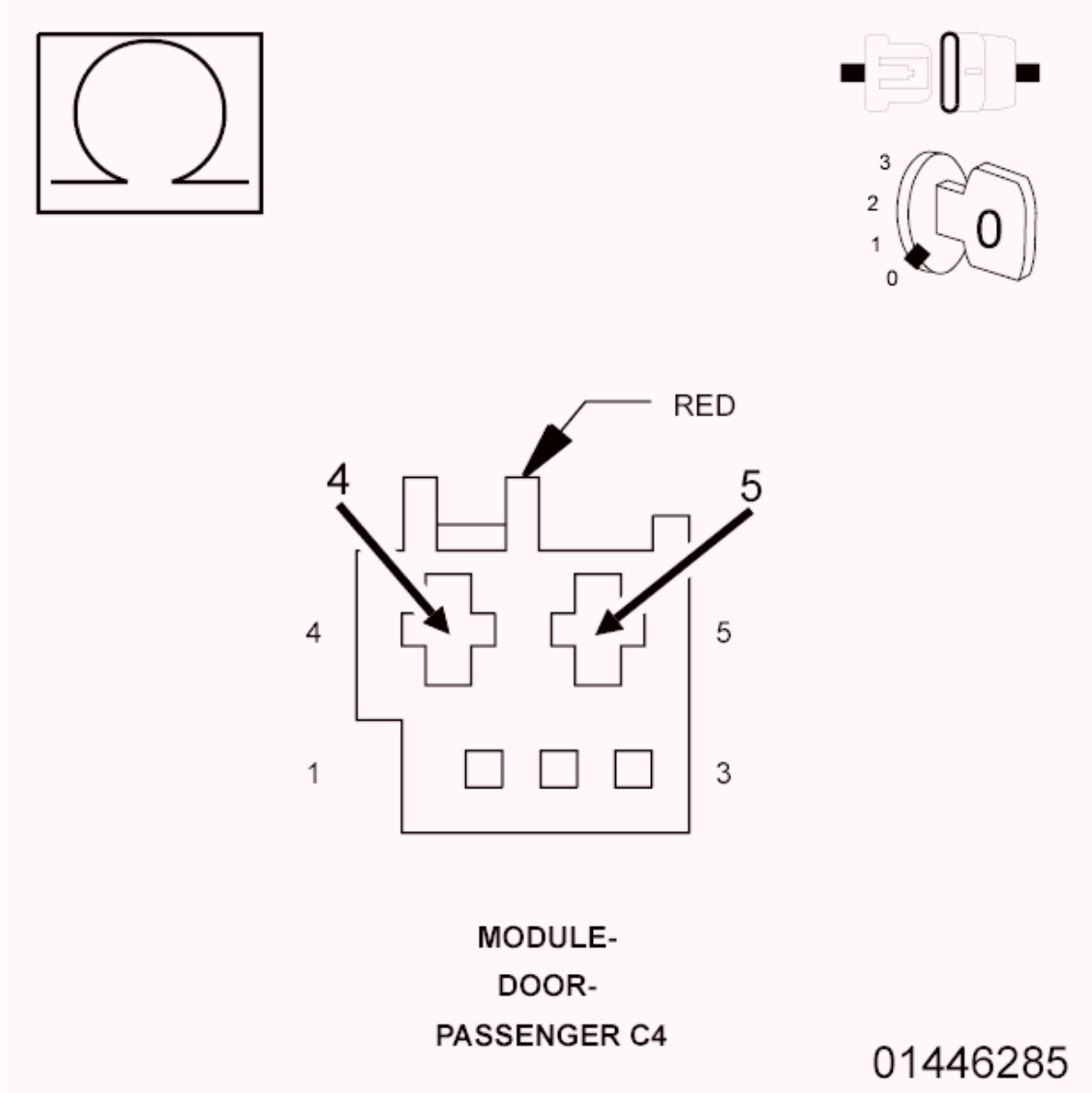

Fig. 27: Checking Driver Window Driver (Down) Circuit For A Short To The Passenger Window Driver (Up) Circuit
Courtesy of CHRYSLER GROUP, LLC

1. Measure the resistance between the (Q22) Passenger Window Driver (Down) circuit and the (Q12) Passenger Window Driver (Up) circuit.

   Is the resistance below 10, 000 Ohms?

   Yes

- Repair the (Q22) Passenger Window Driver (Down) circuit for a short to the (Q12) Passenger Window Driver (Up) circuit.
- Perform the BODY VERIFICATION TEST. Refer to **STANDARD PROCEDURE** .

No

- Replace the Passenger Door Module in accordance with the Service Information.
- Perform the BODY VERIFICATION TEST. Refer to **STANDARD PROCEDURE** .

B185E-13-PASSENGER WINDOW CONTROL - CIRCUIT FOR AN OPEN

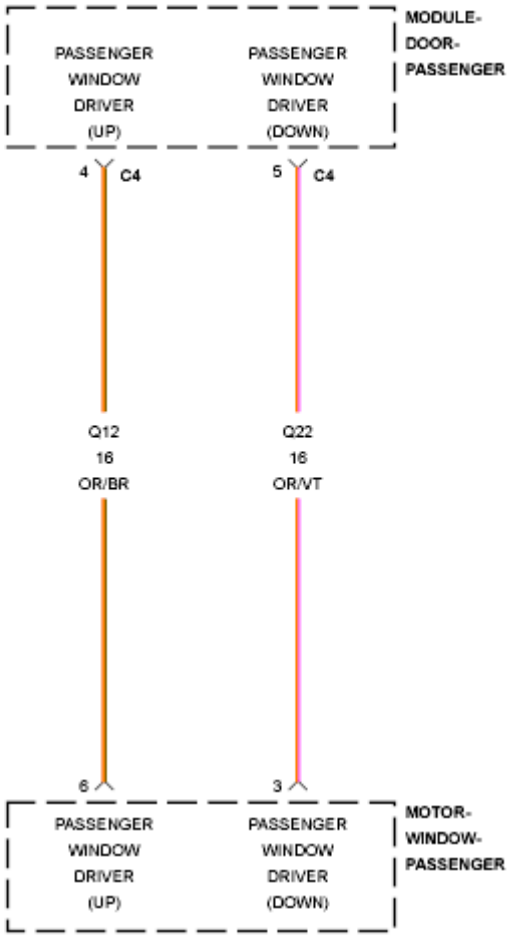

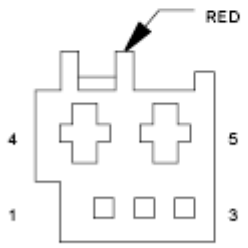

MODULE-
DOOR-
PASSENGER C4

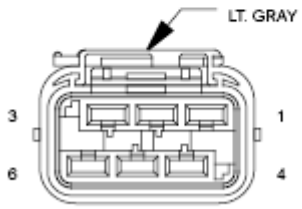

MOTOR-
WINDOW-
PASSENGER

Fig. 28: Passenger Window Control Wiring Diagram
Courtesy of CHRYSLER GROUP, LLC

For a complete wiring diagram, **refer to appropriate SYSTEM WIRING DIAGRAMS article** .

WHEN MONITORED:

Whenever the module is awake.

SET CONDITION:

When one or both Driver Window Driver circuits (Up and Down) are not supplied with voltage, when they should be, during a window movement command for more than 2000 ms.

POSSIBLE CAUSES

Possible Causes
(Q22) PASSENGER WINDOW DRIVER (DOWN) CIRCUIT FOR AN OPEN
(Q12) PASSENGER WINDOW DRIVER (UP) CIRCUIT FOR AN OPEN
WINDOW MOTOR (REGULATOR)
PASSENGER DOOR MODULE (PDM)

DIAGNOSTIC TEST

1. **TEST FOR INTERMITTENT CONDITION**
    1. Turn the ignition on.
    2. With the scan tool, record and erase DTC's.
    3. Operate the Passenger Window switch up and down several times.
    4. Wait 30 seconds.
    5. With the scan tool, read the active DTC's.

    Does the scan tool display B185E-13-PASSENGER WINDOW CONTROL - CIRCUIT FOR AN OPEN?

    Yes

    - Go To 2.

    No

    - Test complete, the condition or conditions that originally set this DTC are not present at this time. Using the wiring diagrams as a guide, check all related splices and connectors for signs of water intrusion, corrosion, pushed out or bent terminals, and correct pin tension.
    - Perform the BODY VERIFICATION TEST. Refer to **STANDARD PROCEDURE** .
2. **WINDOW MOTOR OR CIRCUIT FOR AN OPEN**

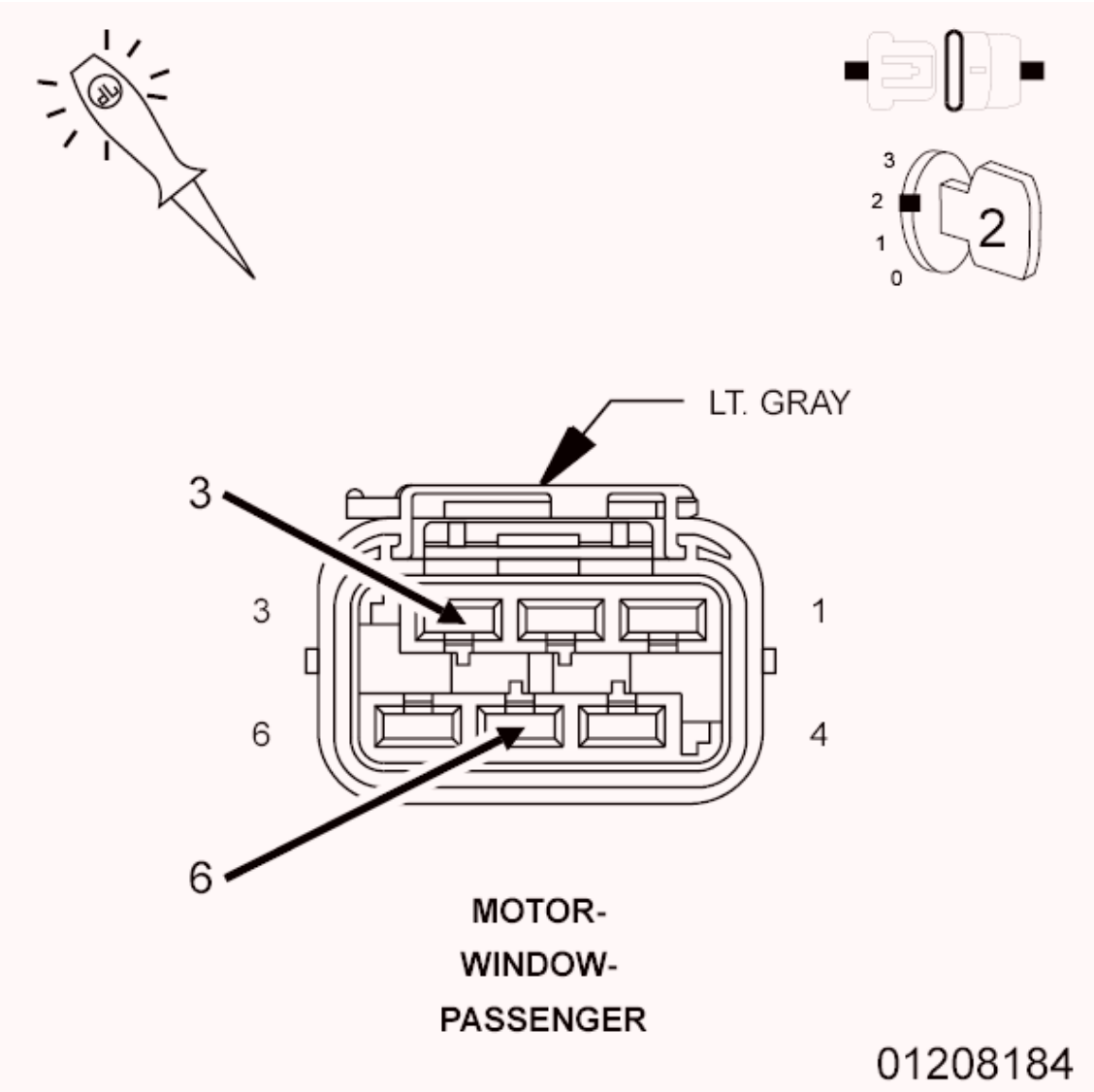

Fig. 29: Checking Window Motor Or Circuit For An Open
Courtesy of CHRYSLER GROUP, LLC

1. Turn the ignition off.
2. Disconnect the Passenger Window Motor harness connector.
3. Connect a test light between the (Q12) Passenger Window Driver (Up) circuit and the (Q22) Passenger Window Driver (Down) circuit.
4. Turn the ignition on.
5. Trip the driver door latch to the closed position.
6. Operate the Passenger Window switch up and down several times while observing the test light.

   Does the test light illuminate brightly when the switch is pressed in both directions? With the express up window, the test light will only flash momentarily each time the switch is activated.

   Yes

- Replace the Passenger Window Motor (regulator) in accordances with the Service Information.
- Perform the BODY VERIFICATION TEST. Refer to **STANDARD PROCEDURE** .

No

- Go To 3.

3. **(Q22) PASSENGER WINDOW DRIVER (DOWN) CIRCUIT FOR AN OPEN**

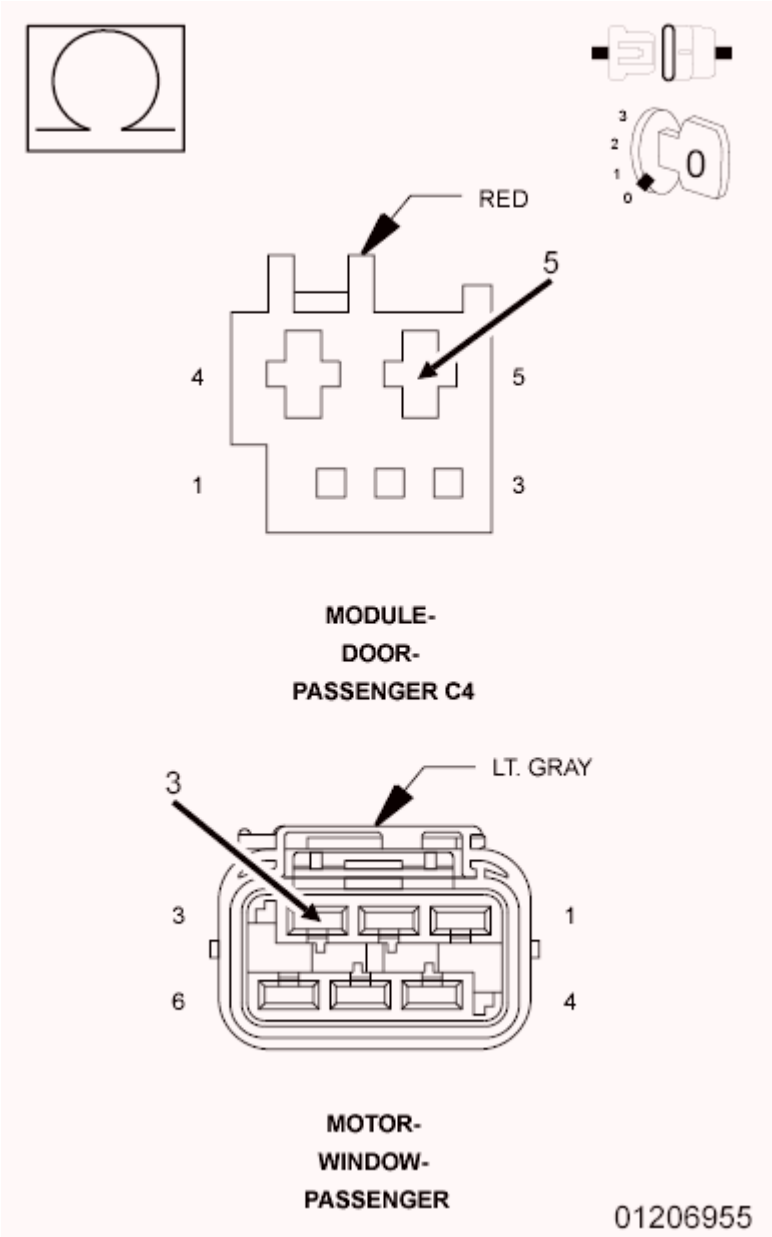

Fig. 30: Checking Passenger Window Driver (Down) Circuit For An Open
Courtesy of CHRYSLER GROUP, LLC

1. Turn the ignition off.
2. Disconnect the Passenger Door Module C4 harness connector.
3. Measure the resistance of the (Q22) Passenger Window Driver (Down) circuit between the Passenger Door Module C4 module harness connector and the Passenger Window Motor harness connector.

   Is the resistance above 2.0 Ohms?

   Yes

   - Repair the open in the (Q22) Passenger Window Driver (Down) circuit.
   - Perform the BODY VERIFICATION TEST. Refer to **STANDARD PROCEDURE** .

   No

   - Go To 4.

4. **(Q12) PASSENGER WINDOW DRIVER (UP) CIRCUIT FOR AN OPEN**

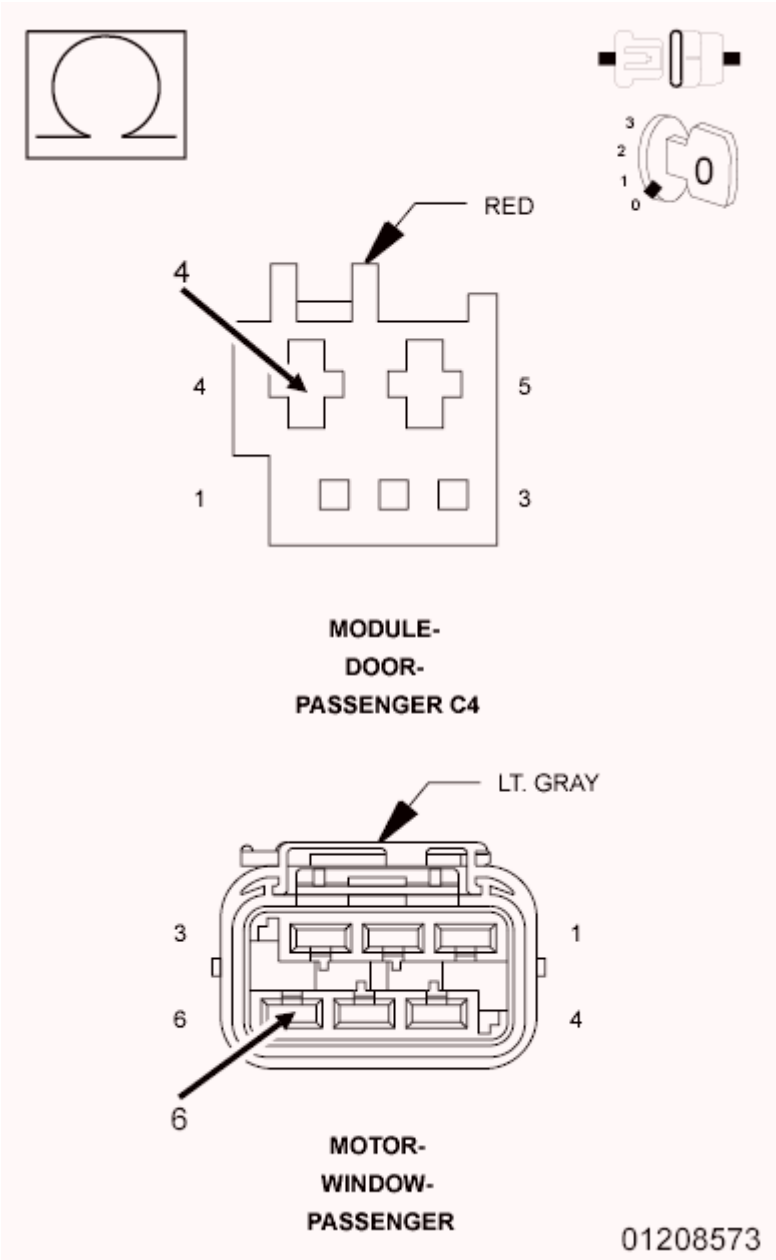

Fig. 31: Checking Passenger Window Driver (Up) Circuit For An Open
Courtesy of CHRYSLER GROUP, LLC

1. Measure the resistance of the (Q12) Passenger Window Driver (Up) circuit between the Passenger Door Module C4 module harness connector and the Passenger Window Motor harness connector.

   Is the resistance above 2.0 Ohms?

   Yes

   - Repair the open in the (Q12) Passenger Window Driver (Up) circuit.
   - Perform the BODY VERIFICATION TEST. Refer to **STANDARD PROCEDURE** .

Yes

- Replace the Passenger Door Module in accordance with the Service Information.
- Perform the BODY VERIFICATION TEST. Refer to **STANDARD PROCEDURE** .

B1862-11-PASSENGER WINDOW POSITION SENSOR POWER SUPPLY - CIRCUIT FOR A SHORT TO GROUND

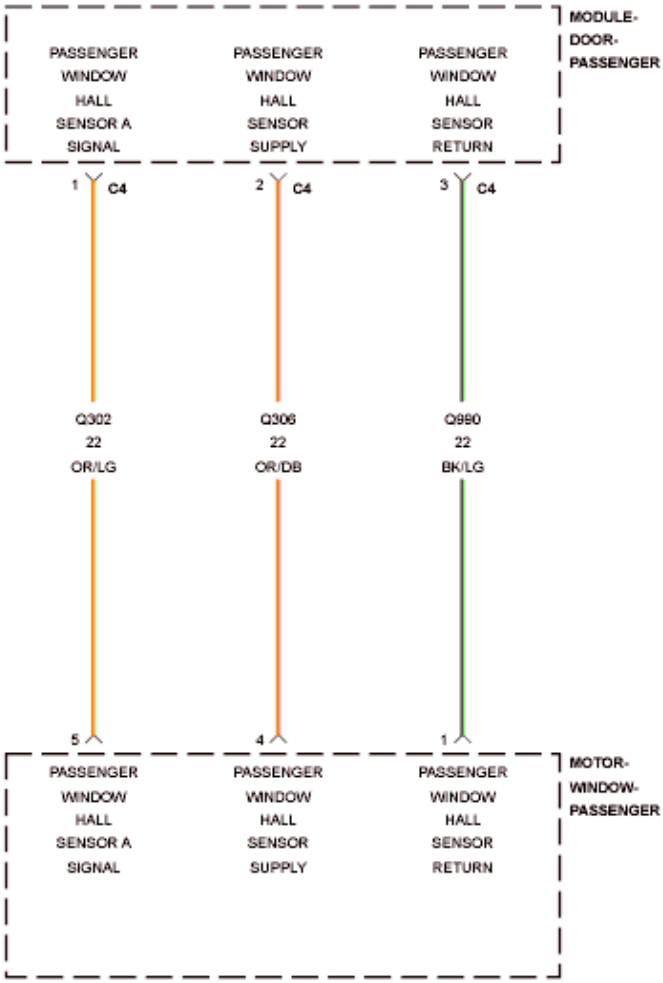

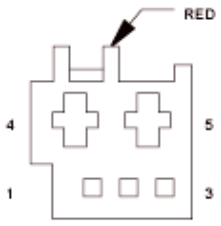

MODULE-
DOOR-
PASSENGER C4

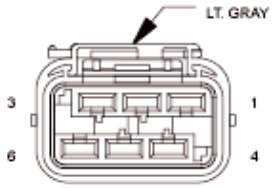

MOTOR-
WINDOW-
PASSENGER

Fig. 32: Passenger Window Hall Sensor Power Supply Wiring Diagram
Courtesy of CHRYSLER GROUP, LLC

For a complete wiring diagram, **refer to appropriate SYSTEM WIRING DIAGRAMS article** .

WHEN MONITORED:

Whenever the module is awake.

SET CONDITION:

When the Passenger Window Hall Sensor Supply circuit falls below 0.8 of a Volt for over two seconds.

POSSIBLE CAUSES

Possible Causes
(Q306) PASSENGER WINDOW HALL SENSOR SUPPLY CIRCUIT FOR A SHORT TO GROUND
WINDOW MOTOR SHORTED
PASSENGER DOOR MODULE (PDM)

DIAGNOSTIC TEST

1. **TEST FOR INTERMITTENT CONDITION**
    1. Turn the ignition on.
    2. With the scan tool, record and erase DTC's.
    3. Operate the Passenger Window switch up and down several times.
    4. Wait 30 seconds.
    5. With the scan tool, read the active DTC's.

    Does the scan tool display B1862-11-PASSENGER WINDOW POSITION SENSOR POWER SUPPLY - CIRCUIT FOR A SHORT TO GROUND?

    Yes

    - Go To 2.

    No

    - Test complete, the condition or conditions that originally set this DTC are not present at this time. Using the wiring diagrams as a guide, check all related splices and connectors for signs of water intrusion, corrosion, pushed out or bent terminals, and correct pin tension.
    - Perform the BODY VERIFICATION TEST. Refer to **STANDARD PROCEDURE** .
2. **WINDOW MOTOR SHORTED**

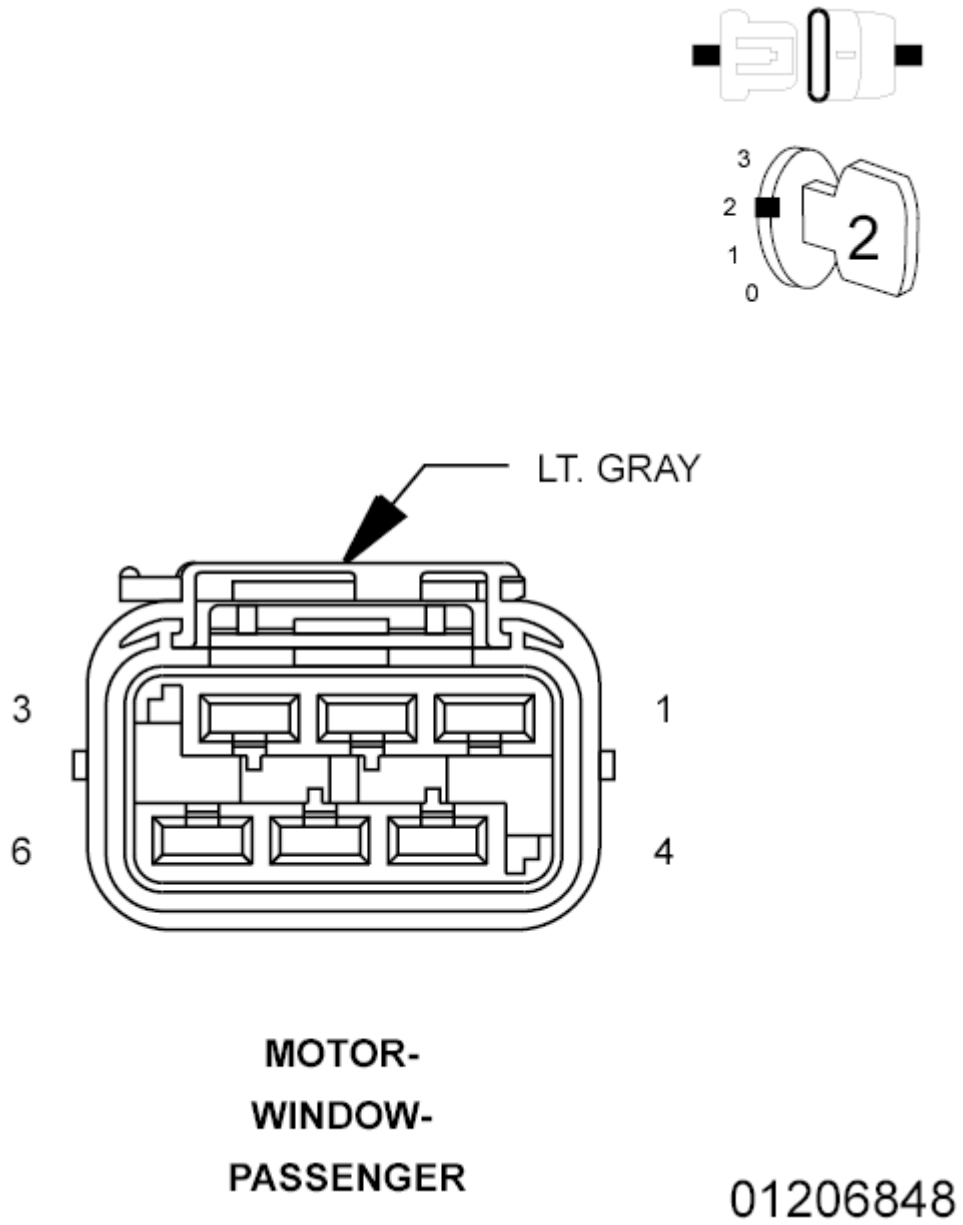

Fig. 33: Checking Window Motor For A Short
Courtesy of CHRYSLER GROUP, LLC

1. With the scan tool, erase DTC's.
2. Turn the ignition off.
3. Disconnect the Passenger Window Motor harness connector.
4. Turn the ignition on.
5. Operate the Passenger Window switch up and down several times.
6. With the scan tool, read the active DTC's.

Does the scan tool display B1862-11-PASSENGER WINDOW POSITION SENSOR POWER

SUPPLY - CIRCUIT FOR A SHORT TO GROUND?

Yes

- Go To 3.

No

- Replace the Window Motor (regulator) in accordance with the Service Information.
- Perform the BODY VERIFICATION TEST. Refer to **STANDARD PROCEDURE** .

3. **(Q306) PASSENGER WINDOW HALL SENSOR SUPPLY CIRCUIT FOR A SHORT TO GROUND**

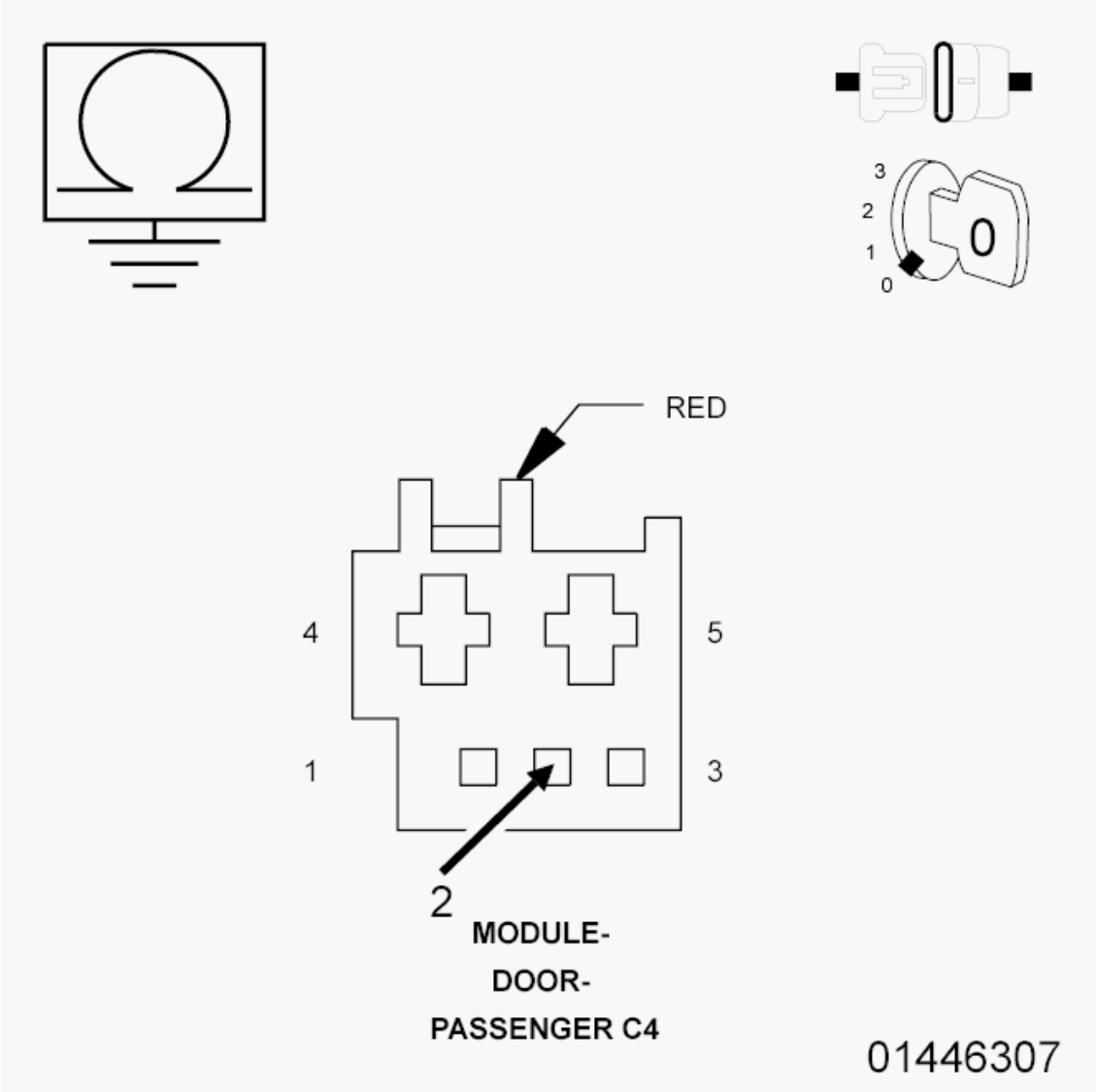

Fig. 34: Checking Passenger Window Hall Sensor Supply Circuit For A Short To Ground
Courtesy of CHRYSLER GROUP, LLC

1. Turn the ignition off.
2. Disconnect the Passenger Door Module C4 harness connector.
3. Measure the resistance between ground and the (Q306) Passenger Window Hall Sensor Supply circuit.

   Is the resistance below 10, 000 Ohms?

   Yes

   - Repair the short to ground in the (Q306) Passenger Window Hall Sensor Supply circuit.
   - Perform the BODY VERIFICATION TEST. Refer to **STANDARD PROCEDURE** .

   No

   - Replace the Passenger Door Module in accordance with the Service Information.
   - Perform the BODY VERIFICATION TEST. Refer to **STANDARD PROCEDURE** .

B1862-15-PASSENGER WINDOW POSITION SENSOR POWER SUPPLY - CIRCUIT FOR A SHORT TO BATTERY OR OPEN - EXPRESS MOTOR ONLY

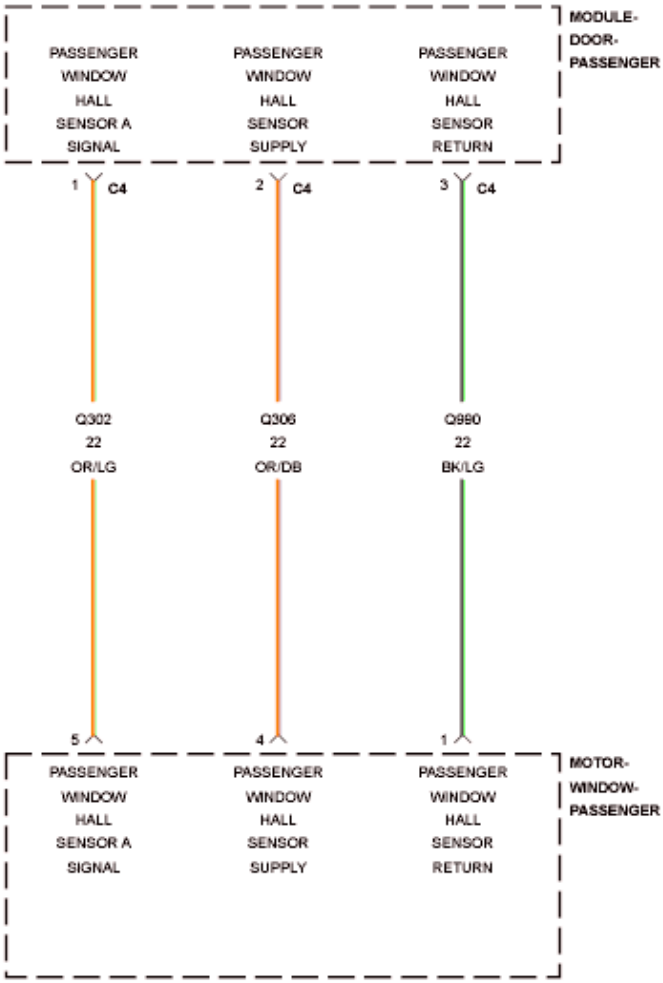

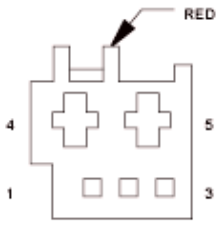

MODULE-
DOOR-
PASSENGER C4

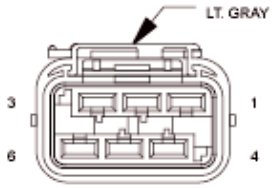

MOTOR-
WINDOW-
PASSENGER

Fig. 35: Passenger Window Hall Sensor Power Supply Wiring Diagram
Courtesy of CHRYSLER GROUP, LLC

For a complete wiring diagram, **refer to appropriate SYSTEM WIRING DIAGRAMS article** .

WHEN MONITORED:

Whenever the module is awake.

SET CONDITION:

When the Passenger Window Hall Sensor Supply circuit is above 1.5 Volts for over 2000 ms. and the power to the module has been turned off.

POSSIBLE CAUSES

Possible Causes
(Q306) PASSENGER WINDOW HALL SENSOR SUPPLY CIRCUIT FOR A SHORT TO VOLTAGE
(Q306) PASSENGER WINDOW HALL SENSOR SUPPLY CIRCUIT FOR AN OPEN
(Q990) PASSENGER WINDOW HALL SENSOR RETURN CIRCUIT FOR AN OPEN
PASSENGER WINDOW MOTOR
PASSENGER DOOR MODULE (PDM)

DIAGNOSTIC TEST

1. **TEST FOR INTERMITTENT CONDITION**
    1. Turn the ignition on.
    2. With the scan tool, record and erase DTC's.
    3. Wait 30 seconds.
    4. Operate the Passenger Window switch in both directions several times.
    5. With the scan tool, read the active DTC's.

    Does the scan tool display B1862-15-PASSENGER WINDOW POSITION SENSOR POWER SUPPLY - CIRCUIT FOR A SHORT TO BATTERY OR OPEN?

    Yes

    - Go To 2.

    No

    - Test complete, the condition or conditions that originally set this DTC are not present at this time. Using the wiring diagrams as a guide, check all related splices and connectors for signs of water intrusion, corrosion, pushed out or bent terminals, and correct pin tension.
    - Perform the BODY VERIFICATION TEST. Refer to **STANDARD PROCEDURE** .

2. **(Q306) PASSENGER WINDOW HALL SENSOR SUPPLY CIRCUIT FOR A SHORT TO VOLTAGE**

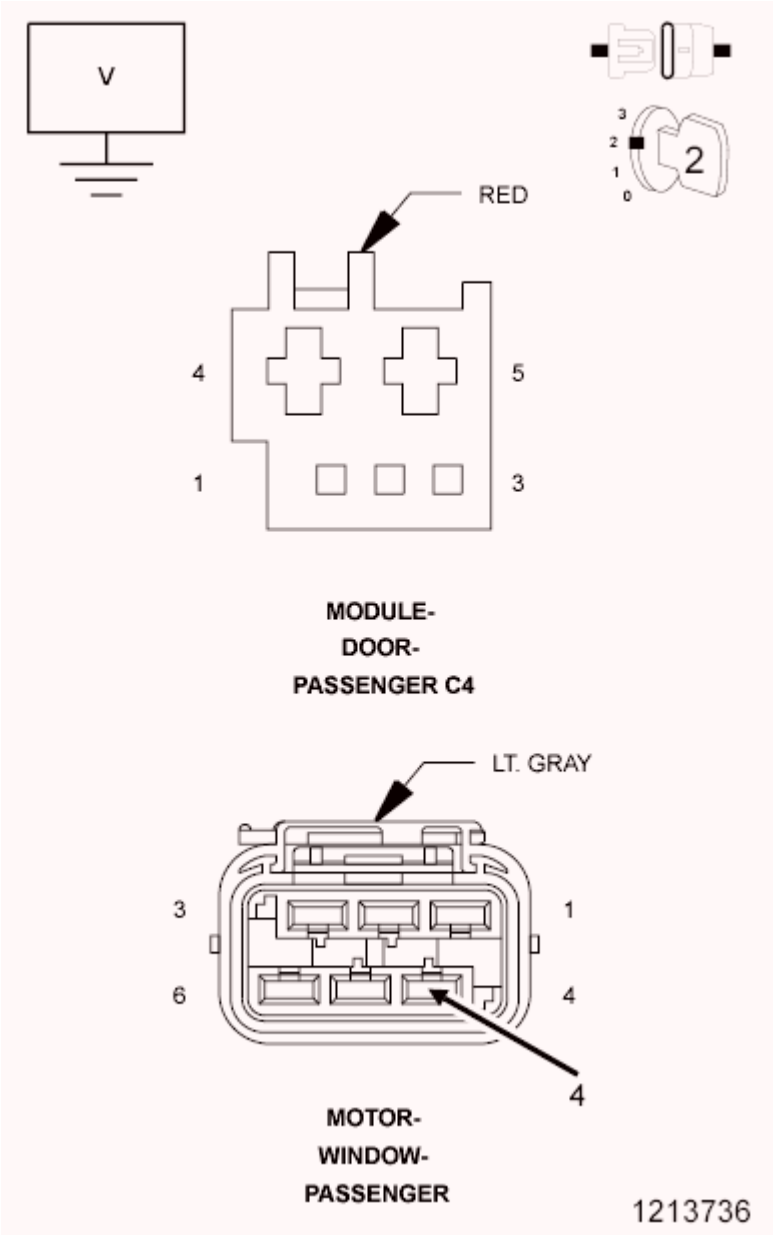

Fig. 36: Checking Passenger Window Hall Sensor Supply Circuit For A Short To Voltage
Courtesy of CHRYSLER GROUP, LLC

1. Turn the ignition off.
2. Disconnect the Passenger Door Module C4 harness connector.
3. Disconnect the Passenger Window Motor harness connector.
4. Turn the ignition on.
5. Measure the voltage between the (Q306) Passenger Window Hall Sensor Supply circuit and ground.

Is there any voltage present?

Yes

- Repair the short to the voltage in the (Q306) Passenger Window Hall Sensor Supply circuit.
- Perform the BODY VERIFICATION TEST. Refer to **STANDARD PROCEDURE** .

No

- Go To 3.

3. **(Q306) PASSENGER WINDOW HALL SENSOR SUPPLY CIRCUIT FOR AN OPEN**

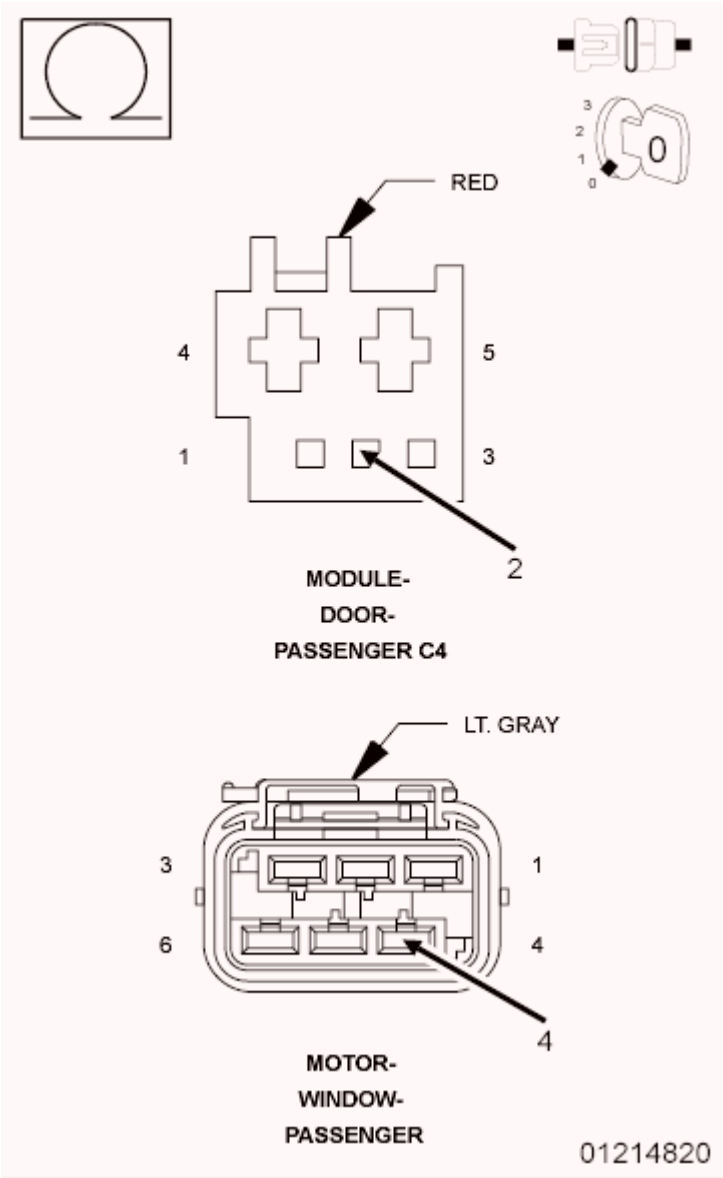

Fig. 37: Checking Passenger Window Hall Sensor Supply Circuit For An Open
Courtesy of CHRYSLER GROUP, LLC

1. Turn the ignition off.
2. Measure the resistance of the (Q306) Passenger Window Hall Sensor Supply circuit between the Passenger Door Module C4 harness connector and the Passenger Window Motor harness connector.

   Is the resistance above 2.0 Ohms?

   Yes

   - Repair the open in the (Q306) Passenger Window Hall Sensor Supply circuit.
   - Perform the BODY VERIFICATION TEST. Refer to **STANDARD PROCEDURE** .

   No

   - Go To 4.

4. **(Q990) PASSENGER WINDOW HALL SENSOR RETURN CIRCUIT FOR AN OPEN**

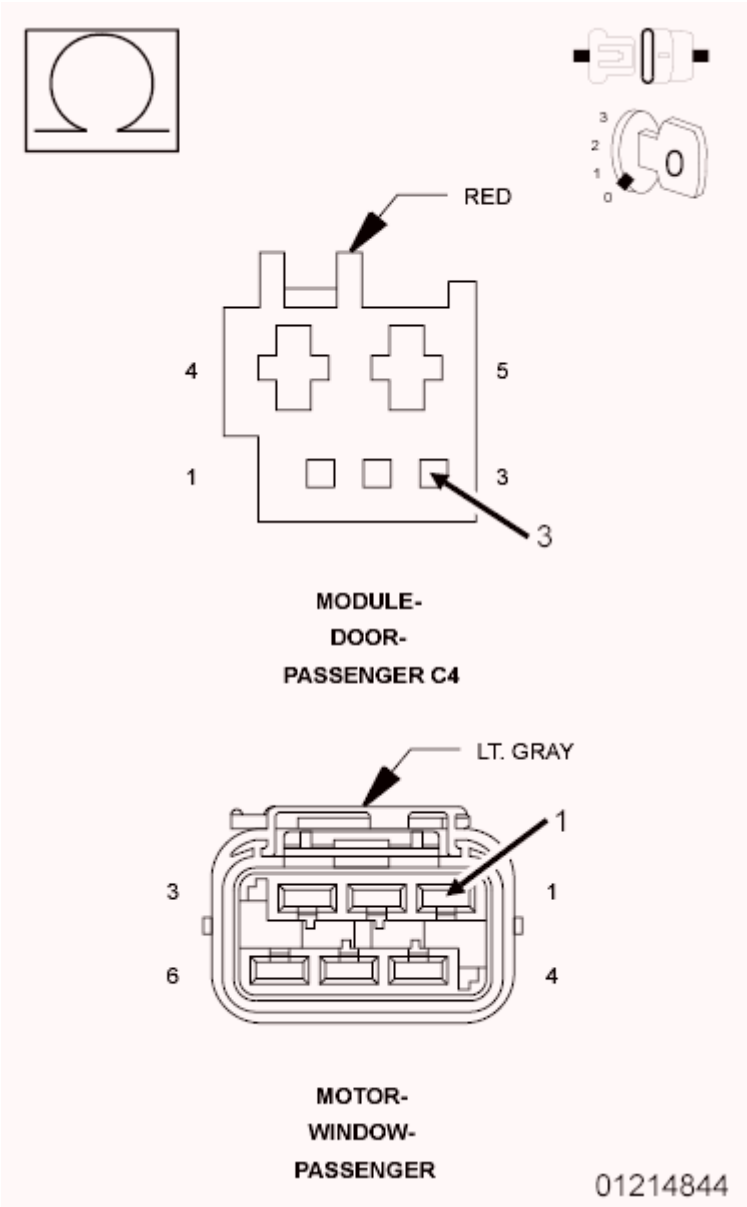

Fig. 38: Checking Passenger Window Hall Sensor Return Circuit For An Open
Courtesy of CHRYSLER GROUP, LLC

1. Measure the resistance of the (Q990) Passenger Window Hall Sensor Return circuit between the Passenger Door Module C4 harness connector and the Passenger Window Motor harness connector.

   Is the resistance above 2.0 Ohms?

   Yes

   - Repair the open in the (Q990) Passenger Window Hall Sensor Return circuit.
   - Perform the BODY VERIFICATION TEST. Refer to **STANDARD PROCEDURE** .

No

- Go To 5.

5. **PASSENGER WINDOW MOTOR HALL SENSOR OPEN**

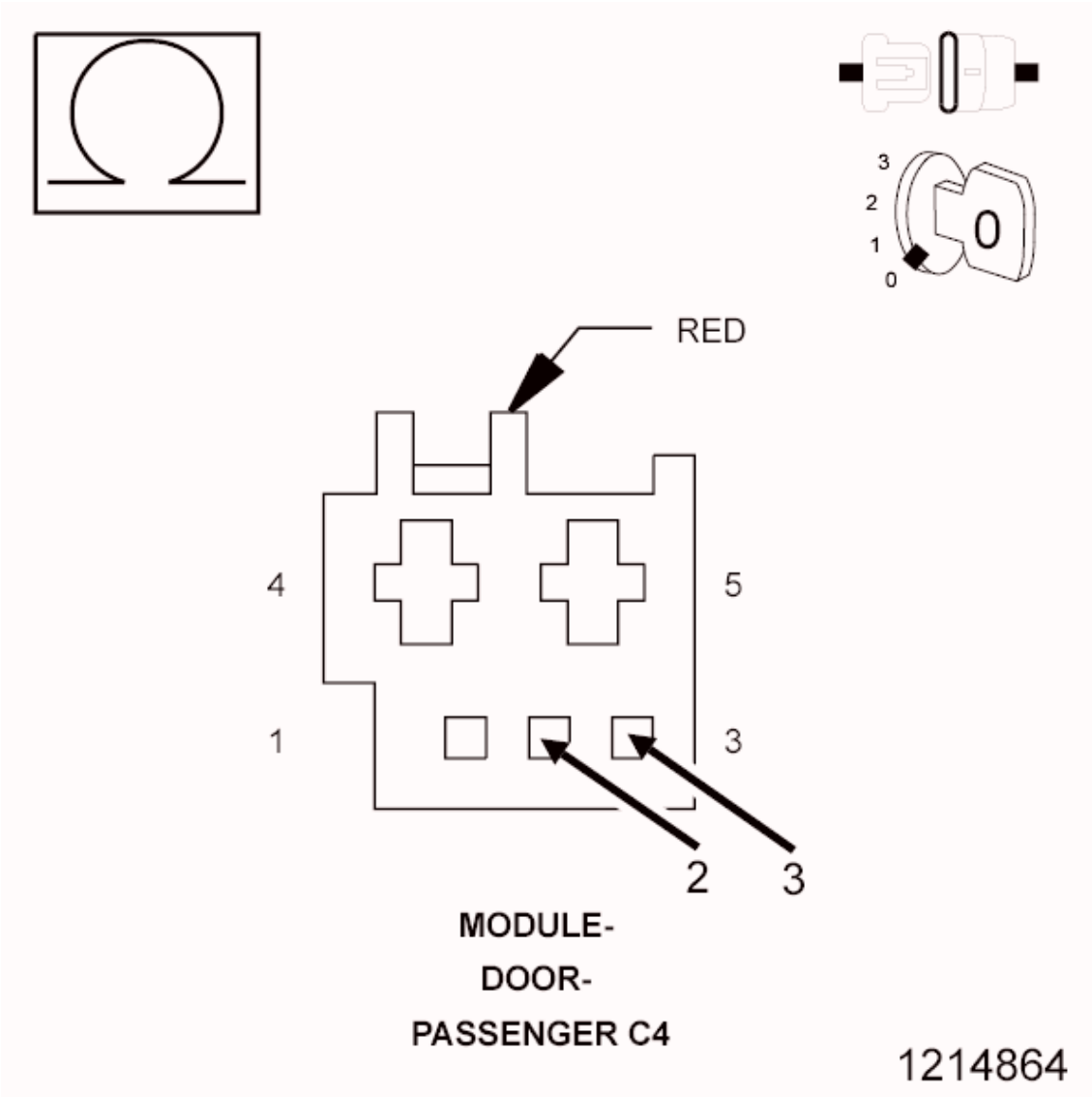

Fig. 39: Checking Passenger Window Motor Hall Sensor For An Open
Courtesy of CHRYSLER GROUP, LLC

1. Reconnect the Passenger Window Motor harness connector.
2. Measure the resistance between the (Q990) Passenger Window Hall Sensor Return circuit and the (Q306) Passenger Window Hall Sensor Supply circuit in the Passenger Door Module C4 harness connector.

NOTE: **If the Ohmmeter shows "OL", reconnect the Passenger Door Module C4 harness connector and move the motor to a different position.**

Disconnect the Passenger Door Module C4 harness connector and check the resistance again. If the Ohmmeter still shows "OL", re-try moving the motor again and re-check.

Is the resistance between 500, 000 and 650, 000 (500k and 650k) Ohms?

Yes

- Replace the Passenger Door Module in accordance with the Service Information
- Perform the BODY VERIFICATION TEST. Refer to **STANDARD PROCEDURE** .

No

- Replace the Window Motor in accordance with the Service Information.
- Perform the BODY VERIFICATION TEST. Refer to **STANDARD PROCEDURE** .

B1865-31-PASSENGER WINDOW POSITION SENSOR - NO SIGNAL

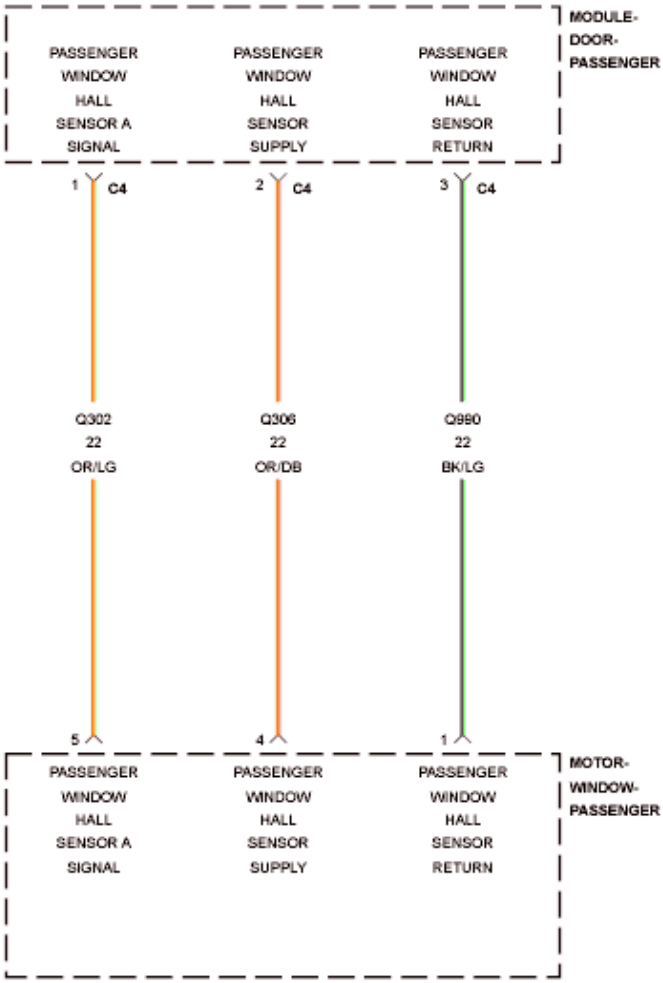

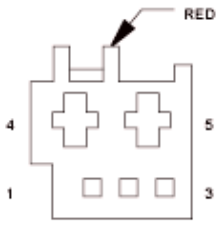

MODULE-
DOOR-
PASSENGER C4

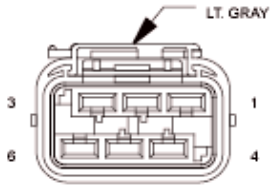

MOTOR-
WINDOW-
PASSENGER

Fig. 40: Passenger Window Hall Sensor Power Supply Wiring Diagram
Courtesy of CHRYSLER GROUP, LLC

For a complete wiring diagram, **refer to appropriate SYSTEM WIRING DIAGRAMS article** .

WHEN MONITORED:

Whenever the module is awake.

SET CONDITION:

When the Passenger Window Motor Hall Sensor does not generate a signal during a window movement.

POSSIBLE CAUSES

Possible Causes
(Q302) PASSENGER WINDOW HALL SENSOR A SIGNAL CIRCUIT FOR A SHORT TO GROUND
(Q990) PASSENGER WINDOW HALL SENSOR RETURN CIRCUIT FOR AN OPEN
(Q302) PASSENGER WINDOW HALL SENSOR A SIGNAL CIRCUIT FOR A SHORT TO THE (Q990) PASSENGER WINDOW HALL SENSOR RETURN CIRCUIT
(Q302) PASSENGER WINDOW HALL SENSOR A SIGNAL CIRCUIT FOR AN OPEN
WINDOW MOTOR

DIAGNOSTIC TEST

1. **TEST FOR INTERMITTENT CONDITION**
    1. Turn the ignition on.
    2. With the scan tool, record and erase DTC's.
    3. Operate the Passenger Window switch up and down several times.
    4. Wait 30 seconds.
    5. With the scan tool, read the active DTC's.

    Does the scan tool display B1865-31-PASSENGER WINDOW POSITION SENSOR - NO SIGNAL?

    Yes

    - Go To 2.

    No

    - Test complete, the condition or conditions that originally set this DTC are not present at this time. Using the wiring diagrams as a guide, check all related splices and connectors for signs of water intrusion, corrosion, pushed out or bent terminals, and correct pin tension.

- Perform the BODY VERIFICATION TEST. Refer to **STANDARD PROCEDURE** .

2. **(Q302) PASSENGER WINDOW HALL SENSOR A SIGNAL SHORTED TO GROUND**

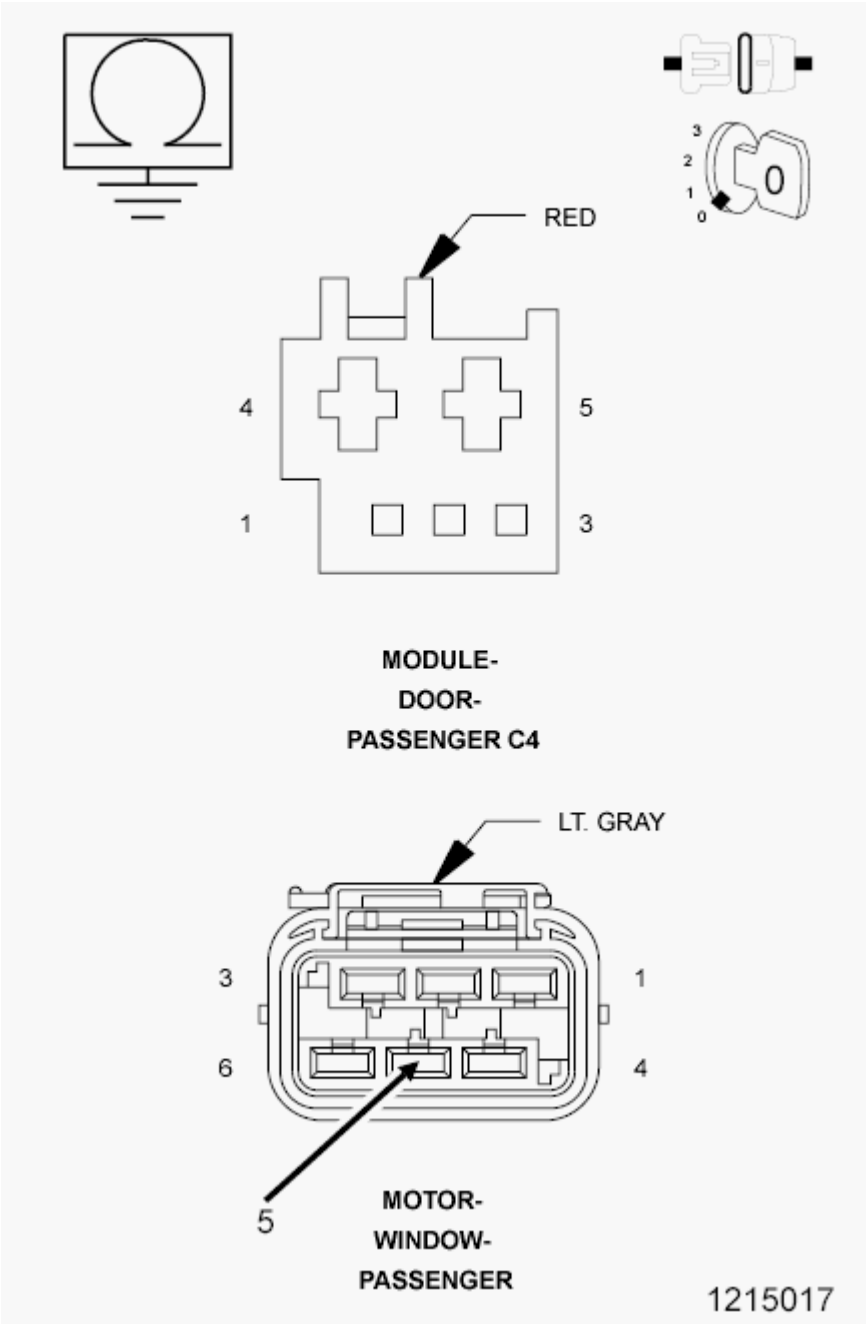

Fig. 41: Checking Passenger Window Hall Sensor A Signal Shorted To Ground
Courtesy of CHRYSLER GROUP, LLC

1. Turn the ignition off.
2. Disconnect the Passenger Window Motor harness connector.
3. Disconnect the Passenger Door Module C4 harness connector.

4. Measure the resistance between ground and the (Q302) Passenger Window Hall Sensor A Signal circuit.

   Is the resistance below 10, 000 Ohms?

   Yes

   - Repair the short to ground in the Passenger Window Hall Sensor A signal circuit.
   - Perform the BODY VERIFICATION TEST. Refer to **STANDARD PROCEDURE** .

   No

   - Go To 3.

3. **(Q990) PASSENGER WINDOW HALL SENSOR RETURN CIRCUIT FOR AN OPEN**

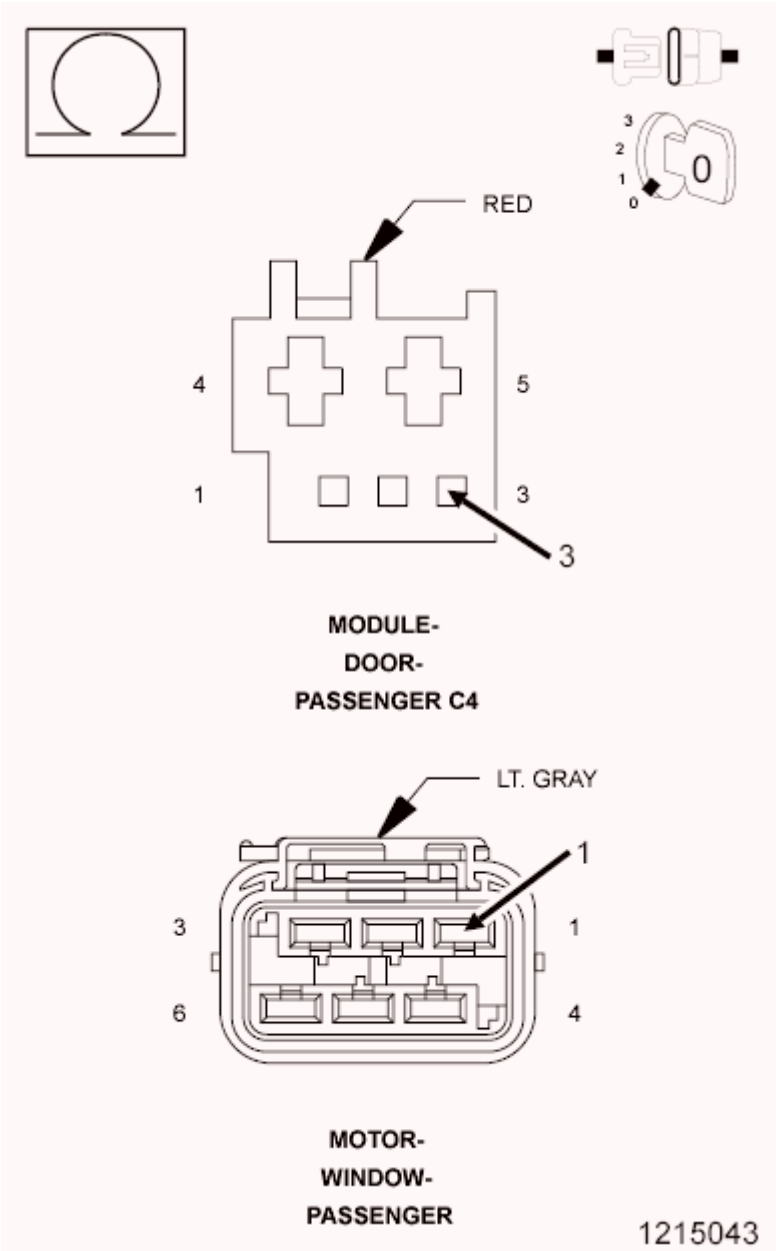

Fig. 42: Checking Passenger Window Hall Sensor Return Circuit For An Open
Courtesy of CHRYSLER GROUP, LLC

1. Measure the resistance of the (Q990) Passenger Window Hall Sensor Return circuit between the Passenger Door Module C4 harness connector and the Passenger Window Motor harness connector.

   Is the resistance above 2.0 Ohms?

   Yes

   - Repair the open in the (Q990) Passenger Window Hall Sensor Return circuit.

- Perform the BODY VERIFICATION TEST. Refer to **STANDARD PROCEDURE** .

No

- Go To 4.

4. **(Q302) PASSENGER WINDOW HALL SENSOR A SIGNAL CIRCUIT FOR AN OPEN**

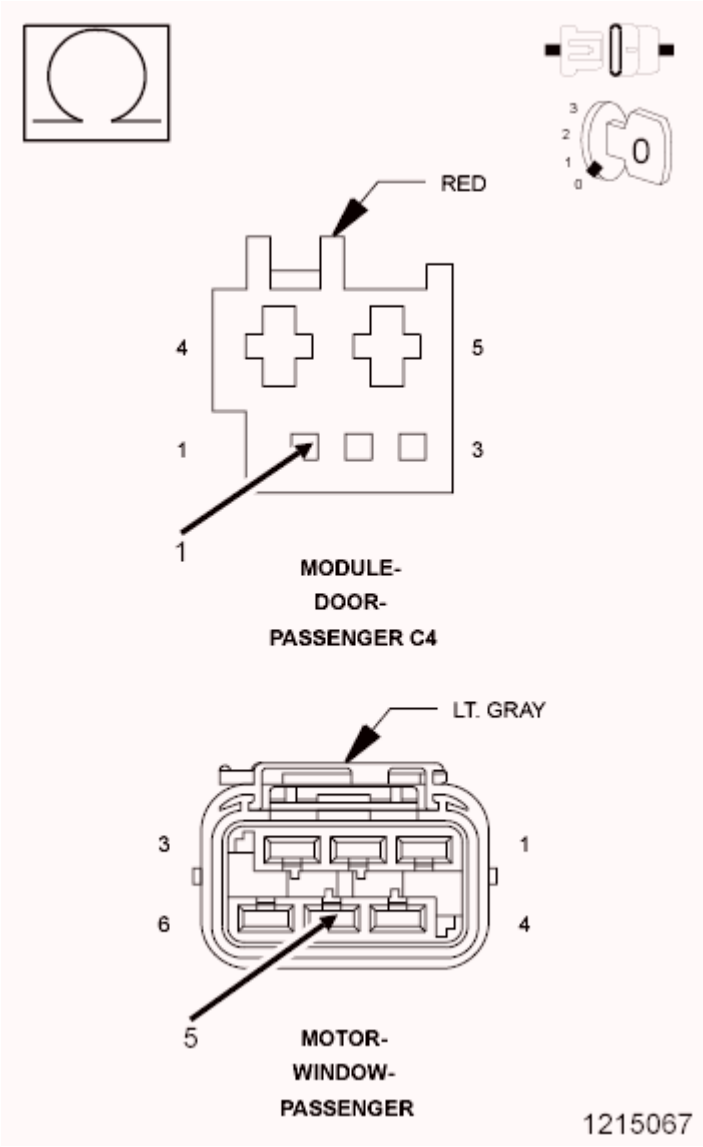

Fig. 43: Checking Passenger Window Hall Sensor A Signal Circuit For An Open
Courtesy of CHRYSLER GROUP, LLC

1. Measure the resistance of the (Q302) Passenger Window Hall Sensor A Signal circuit between the Passenger Door Module C4 harness connector and the Passenger Window Motor harness connector.

   Is the resistance above 2.0 Ohms?

Yes

- Repair the open in the (Q302) Passenger Window Hall Sensor A Signal circuit.
- Perform the BODY VERIFICATION TEST. Refer to **STANDARD PROCEDURE** .

No

- Go To 5.

5. **(Q302) PASSENGER WINDOW HALL SENSOR A SIGNAL CIRCUIT FOR A SHORT TO THE (Q990) PASSENGER WINDOW HALL SENSOR RETURN CIRCUIT**

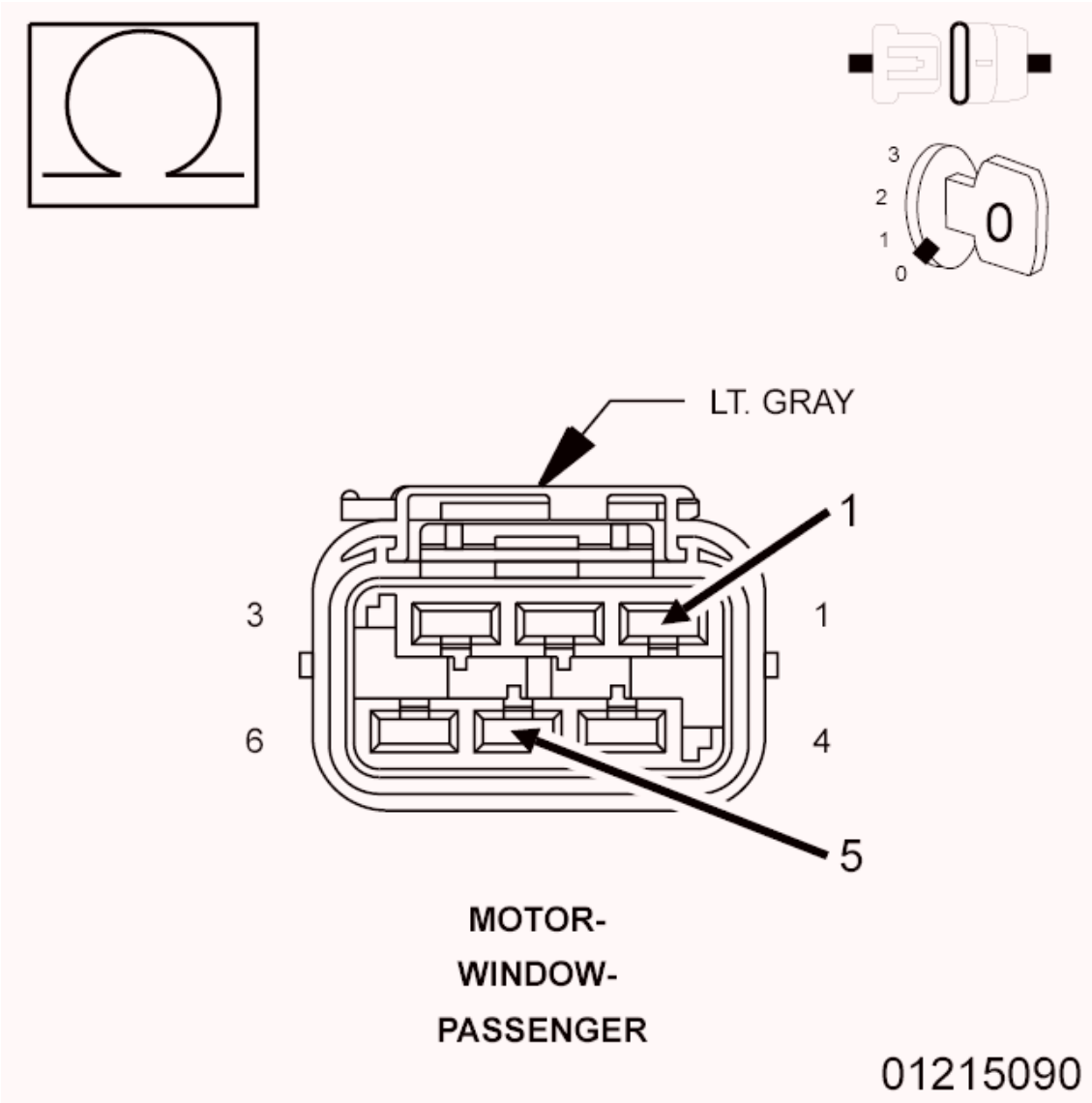

Fig. 44: Checking Passenger Window Hall Sensor A Signal Circuit For A Short To The Passenger Window Hall Sensor Return Circuit
Courtesy of CHRYSLER GROUP, LLC

1. Measure the resistance between the (Q302) Passenger Window Hall Sensor A Signal circuit and the (Q990) Passenger Window Hall Sensor Return circuit.

   Is the resistance below 10, 000 Ohms?

   Yes

   - Repair the (Q302) Passenger Window Hall Sensor A Signal circuit for a short to the (Q990) Passenger Window Hall Sensor Return circuit.
   - Perform the BODY VERIFICATION TEST. Refer to **STANDARD PROCEDURE** .

   No

   - Replace the Window Motor in accordance with the Service Information.
   - Perform the BODY VERIFICATION TEST. Refer to **STANDARD PROCEDURE** .

B1910-2A-PASSENGER WINDOW SWITCH - SIGNAL STUCK IN RANGE

For a complete wiring diagram, **refer to appropriate SYSTEM WIRING DIAGRAMS article** .

WHEN MONITORED:

Continuously

SET CONDITION:

When the Passenger Window Switch is stuck for over 30 seconds, this code will set.

POSSIBLE CAUSES

Possible Causes
OBSTRUCTION IN SWITCH
PASSENGER WINDOW SWITCH

DIAGNOSTIC TEST

1. **TEST FOR INTERMITTENT CONDITION**
   1. With the scan tool, record and erase the DTC's.
   2. Operate the Passenger Window Switch in all positions several times.
   3. Cycle the ignition from on to off.
   4. Turn the ignition on.
   5. With the scan tool, read the DTC's.

      Does the scan tool display B1910-2A-PASSENGER WINDOW SWITCH - SIGNAL STUCK IN RANGE?

Yes

- Go To 2.

No

- The conditions that caused this code to set are not present at this time. Using the wiring diagram/schematic as a guide, inspect the wiring and connectors.
- Perform the BODY VERIFICATION TEST. Refer to **STANDARD PROCEDURE** .

2. **WINDOW SWITCH**
   1. Check the switch for any objects that could cause a sticking condition.

      Was anything found that could cause a sticking condition?

      Yes

      - Clean or remove the object as necessary.
      - Perform the BODY VERIFICATION TEST. Refer to **STANDARD PROCEDURE** .

      No

      - Replace the Passenger Window Switch.
      - Perform the BODY VERIFICATION TEST. Refer to **STANDARD PROCEDURE** .

B1D11-11-PASSENGER MIRROR POSITION SENSOR POWER SUPPLY - CIRCUIT FOR A SHORT TO GROUND

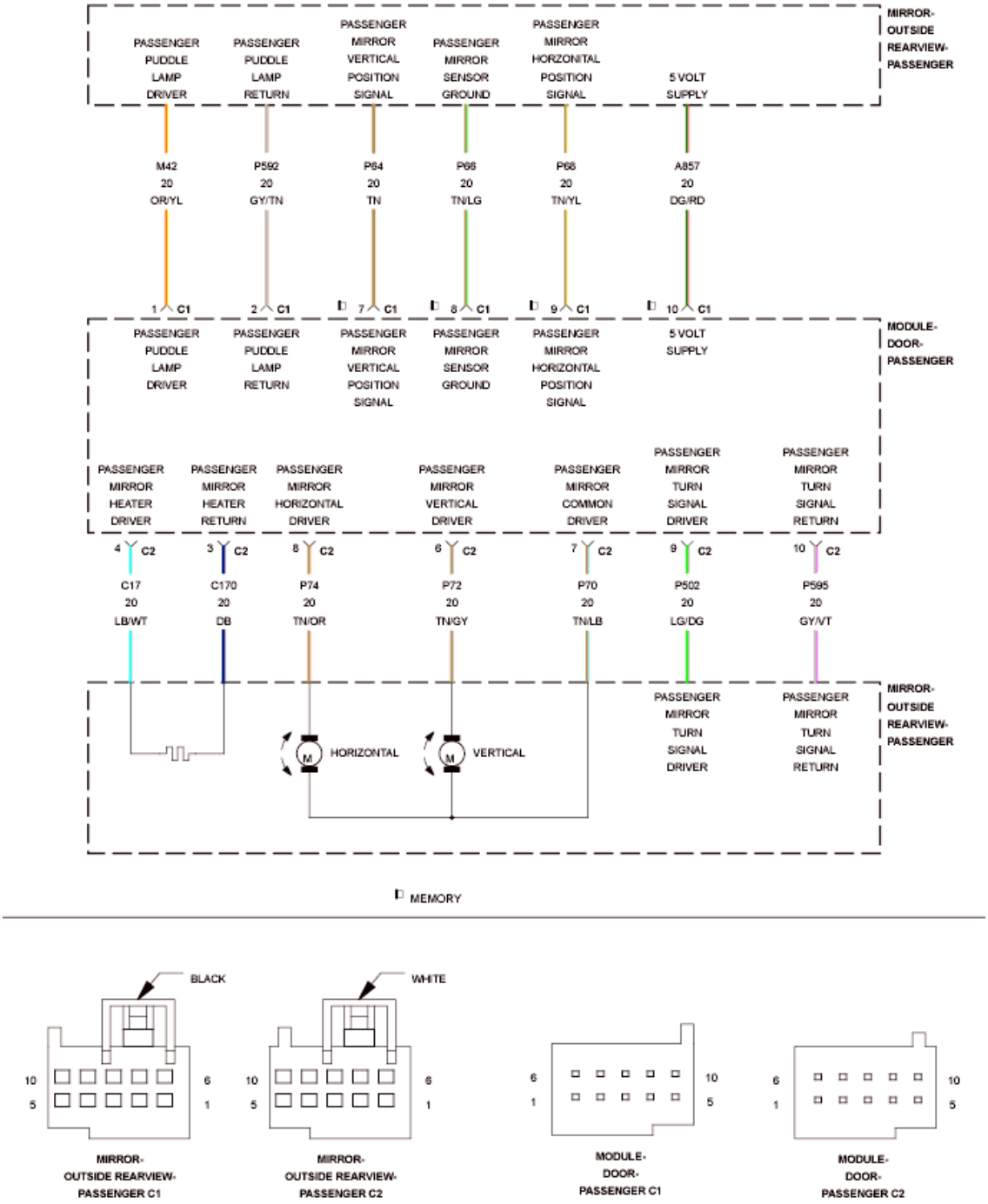

Fig. 45: Passenger Mirror Signal Lamp Control Wiring Diagram
Courtesy of CHRYSLER GROUP, LLC

For a complete wiring diagram, **refer to appropriate SYSTEM WIRING DIAGRAMS article** .

WHEN MONITORED:

Continuously.

SET CONDITION:

The Door Module senses a short low on the (A857) 5-volt Supply circuit for more than two seconds with the output turned on.

POSSIBLE CAUSES

Possible Causes
(A857) 5-VOLT SUPPLY CIRCUIT FOR A SHORT TO GROUND
(A857) 5-VOLT SUPPLY CIRCUIT FOR A SHORT TO THE (P66) PASSENGER MIRROR SENSOR GROUND CIRCUIT
(A857) 5-VOLT SUPPLY CIRCUIT FOR A SHORT TO THE (P592) PASSENGER PUDDLE LAMP RETURN CIRCUIT
(A857) 5-VOLT SUPPLY CIRCUIT FOR A SHORT TO THE (P72) PASSENGER MIRROR VERTICAL DRIVER CIRCUIT
(A857) 5-VOLT SUPPLY CIRCUIT FOR A SHORT TO THE (P70) PASSENGER MIRROR COMMON DRIVER CIRCUIT
(A857) 5-VOLT SUPPLY CIRCUIT FOR A SHORT TO THE (P74) PASSENGER MIRROR HORIZONTAL DRIVER CIRCUIT
(A857) 5-VOLT SUPPLY CIRCUIT FOR A SHORT TO THE (C170) PASSENGER MIRROR HEATER RETURN CIRCUIT
(A857) 5-VOLT SUPPLY CIRCUIT FOR A SHORT TO THE (P595) PASSENGER MIRROR TURN SIGNAL RETURN CIRCUIT
PASSENGER OUTSIDE REARVIEW MIRROR SHORTED
DOOR MODULE

DIAGNOSTIC TEST

1. **TEST FOR INTERMITTENT CONDITION**
    1. Turn the ignition on.
    2. Using a scan tool, record and erase Diagnostic Trouble Codes (DTC's).
    3. Turn the turn signal on, if equipped with turn signal mirror.
    4. Turn the puddle lamps on, if equipped puddle lamp mirror.
    5. Turn the rear defogger on, if equipped with heated mirror.
    6. Press and release the Mirror Select switch to select the Passenger Outside Rearview Mirror.
    7. Operate the Mirror Adjust switch in all directions several times while monitoring the scan tool for DTC's.

NOTE: **After adjusting the mirror in one direction wait at least two seconds before adjusting the mirror in the opposite direction as this will allow time for an active fault to set if present.**

Is the DTC active?

Yes

- Go To 2.

No

- The conditions that caused this code to set are not present at this time. For vehicle's equipped with folding outside rearview mirrors, repeat test with mirror folded. If DTC is now active, Go To 2. Otherwise, use the wiring diagram/schematic as a guide and inspect the wiring and connectors.
- Perform the BODY VERIFICATION TEST. Refer to **STANDARD PROCEDURE** .

2. **CHECK (A857) 5-VOLT SUPPLY CIRCUIT FOR A SHORT TO GROUND**

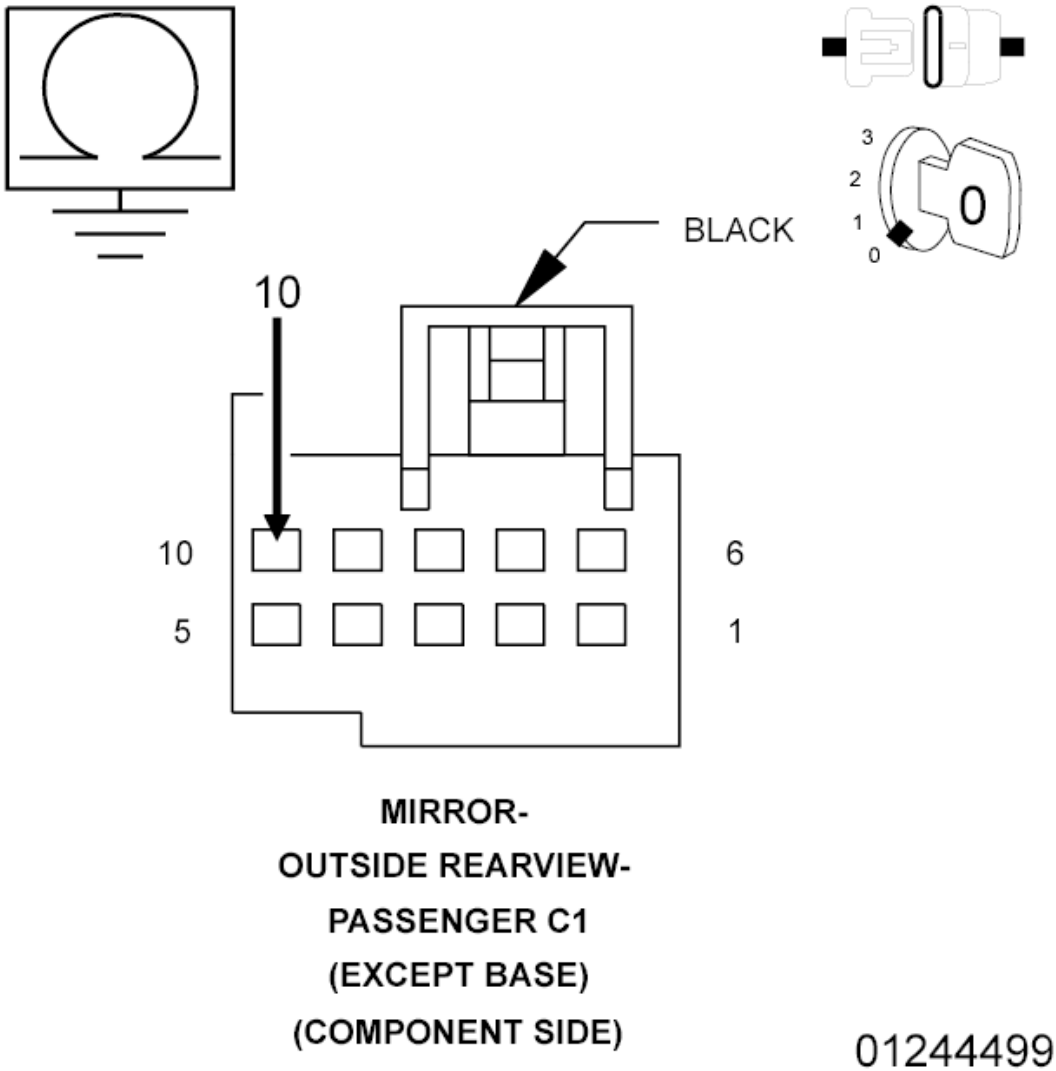

Fig. 46: Checking 5-Volt Supply Circuit For A Short To Ground
Courtesy of CHRYSLER GROUP, LLC

1. Turn the ignition off.
2. Disconnect the Passenger Outside Rearview Mirror C1 (Component Side) connector from the Door Module C1 connector.
3. Measure the resistance of the (A857) 5-volt Supply circuit between ground and the Passenger Outside Rearview Mirror C1 (Component Side) connector.

   Is the resistance below 10K Ohms?

   Yes

   - Repair the (A857) 5-volt Supply circuit for a short to ground. If the wiring harness and connector are okay, replace the Passenger Outside Rearview Mirror in accordance with the Service Information
   - Perform the BODY VERIFICATION TEST. Refer to **STANDARD PROCEDURE** .

   No

   - Go To 3.

3. **CHECK (A857) 5-VOLT SUPPLY CIRCUIT FOR A SHORT TO (P66) PASSENGER MIRROR SENSOR GROUND CIRCUIT**

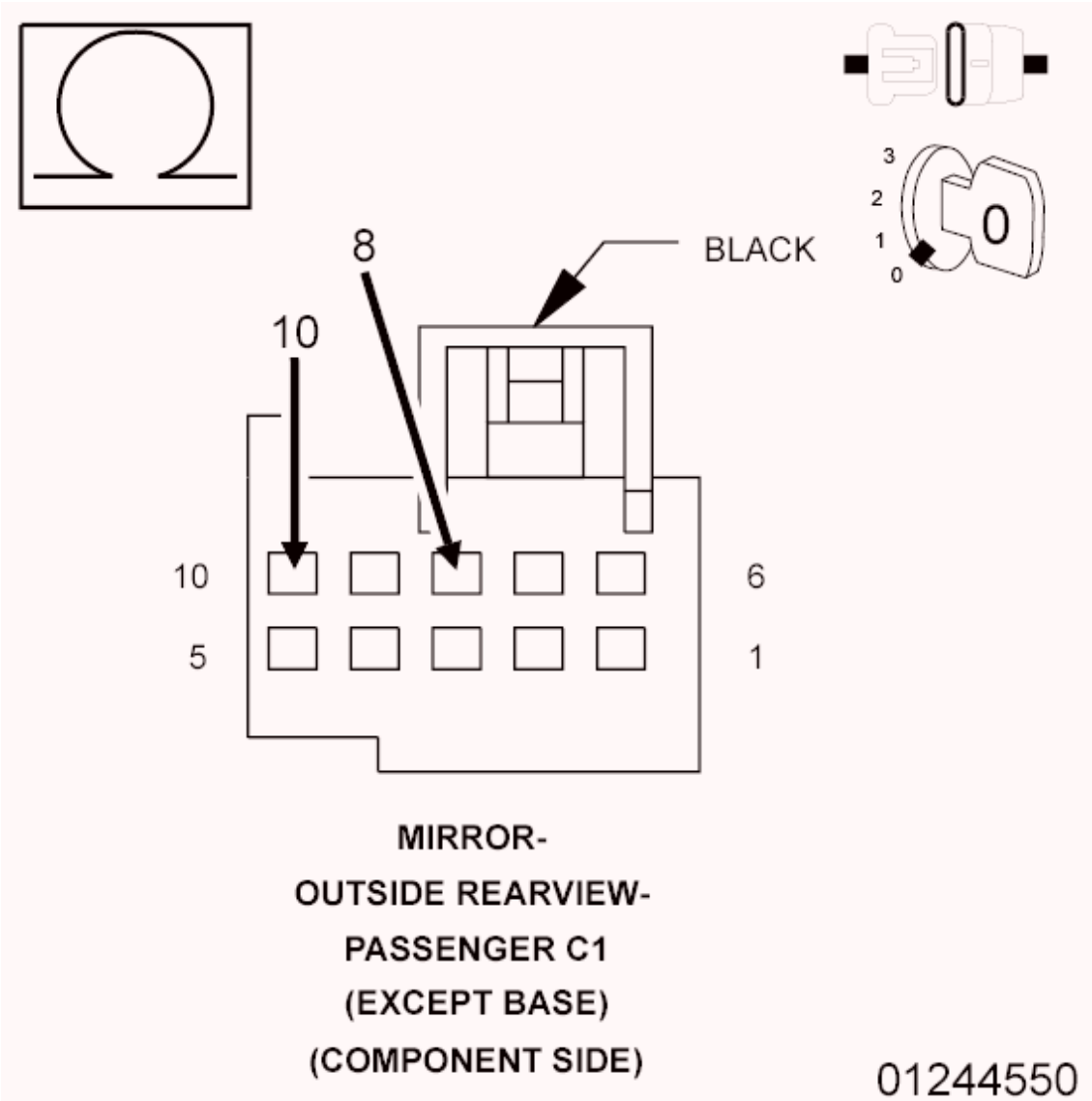

Fig. 47: Checking 5-Volt Supply Circuit For A Short To Passenger Mirror Sensor Ground Circuit
Courtesy of CHRYSLER GROUP, LLC

1. Measure the residence between the (A857) 5-volt Supply circuit and the (P66) Passenger Mirror Sensor Ground circuit at the Passenger Outside Rearview Mirror C1 (Component Side) connector.

   Is the resistance below 1.0 Ohm?

   Yes

   - Repair the (A857) 5-volt Supply circuit for a short to the (P66) Passenger Mirror Sensor Ground circuit. If the wiring harness and connector are okay, replace the Passenger Outside Rearview Mirror in accordance with the Service Information.
   - Perform the BODY VERIFICATION TEST. Refer to **STANDARD PROCEDURE** .

No, with Puddle Lamp Mirror

- Go To 4.

No, without Puddle Lamp Mirror

- Go To 5.

4. **CHECK (A857) 5-VOLT SUPPLY CIRCUIT FOR A SHORT TO (P592) PASSENGER PUDDLE LAMP RETURN CIRCUIT**

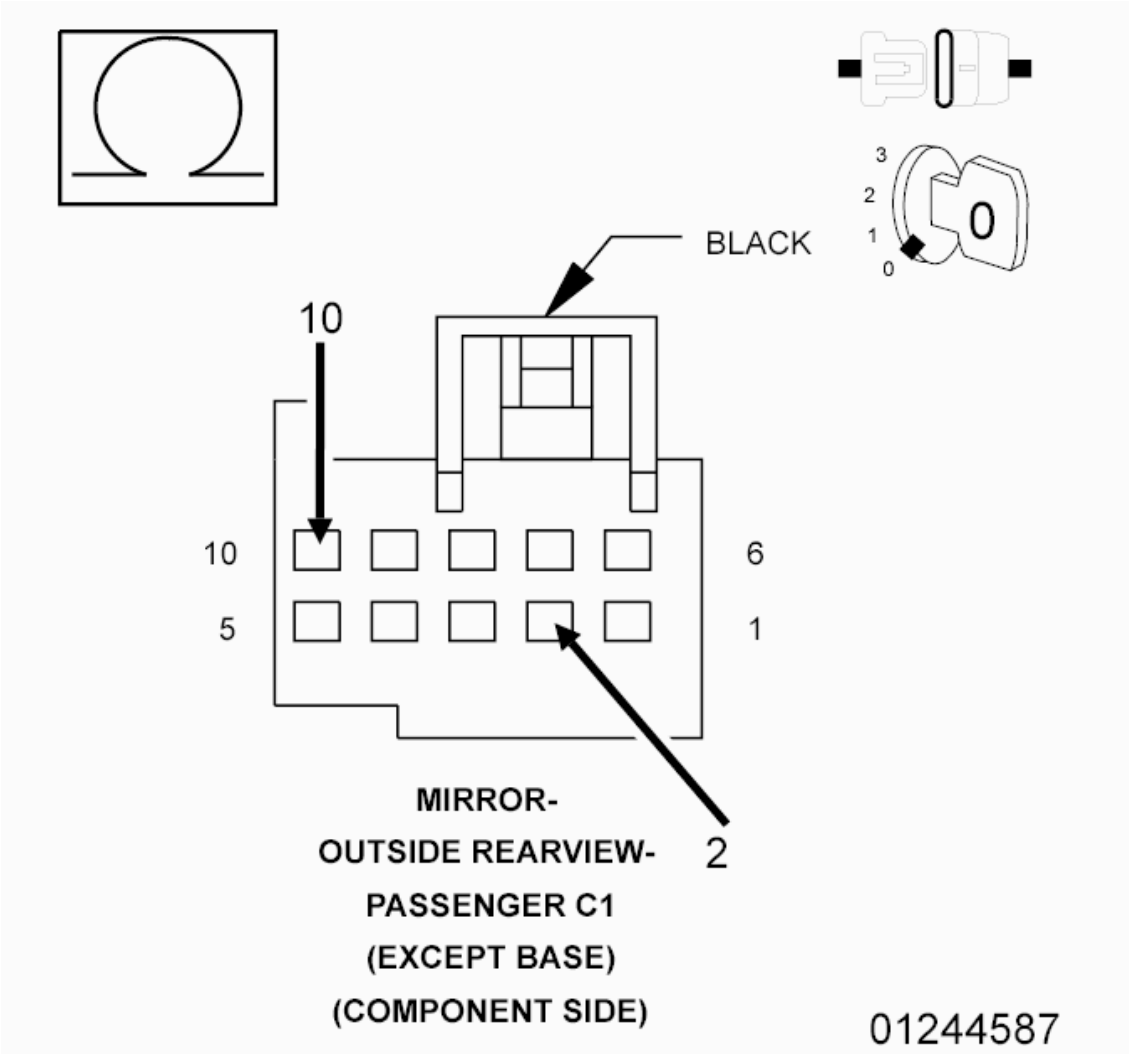

Fig. 48: Checking 5-Volt Supply Circuit For A Short To Passenger Puddle Lamp Return Circuit
Courtesy of CHRYSLER GROUP, LLC

1. Measure the residence between the (A857) 5-volt Supply circuit and the (P592) Passenger Puddle Lamp Return circuit at the Passenger Outside Rearview Mirror C1 (Component Side) connector.

   Is the resistance below 10K Ohms?

Yes

- Repair the (A857) 5-volt Supply circuit for a short to the (P592) Passenger Puddle Lamp Return circuit. If the wiring harness and connector are okay, replace the Passenger Outside Rearview Mirror in accordance with the Service Information.
- Perform the BODY VERIFICATION TEST. Refer to **STANDARD PROCEDURE** .

No

- Go To 5.

5. **CHECK (A857) 5-VOLT SUPPLY CIRCUIT FOR A SHORT TO (P72) PASSENGER MIRROR VERTICAL DRIVER CIRCUIT, (P70) PASSENGER MIRROR COMMON DRIVER CIRCUIT, OR TO (P74) PASSENGER MIRROR HORIZONTAL DRIVER CIRCUIT**

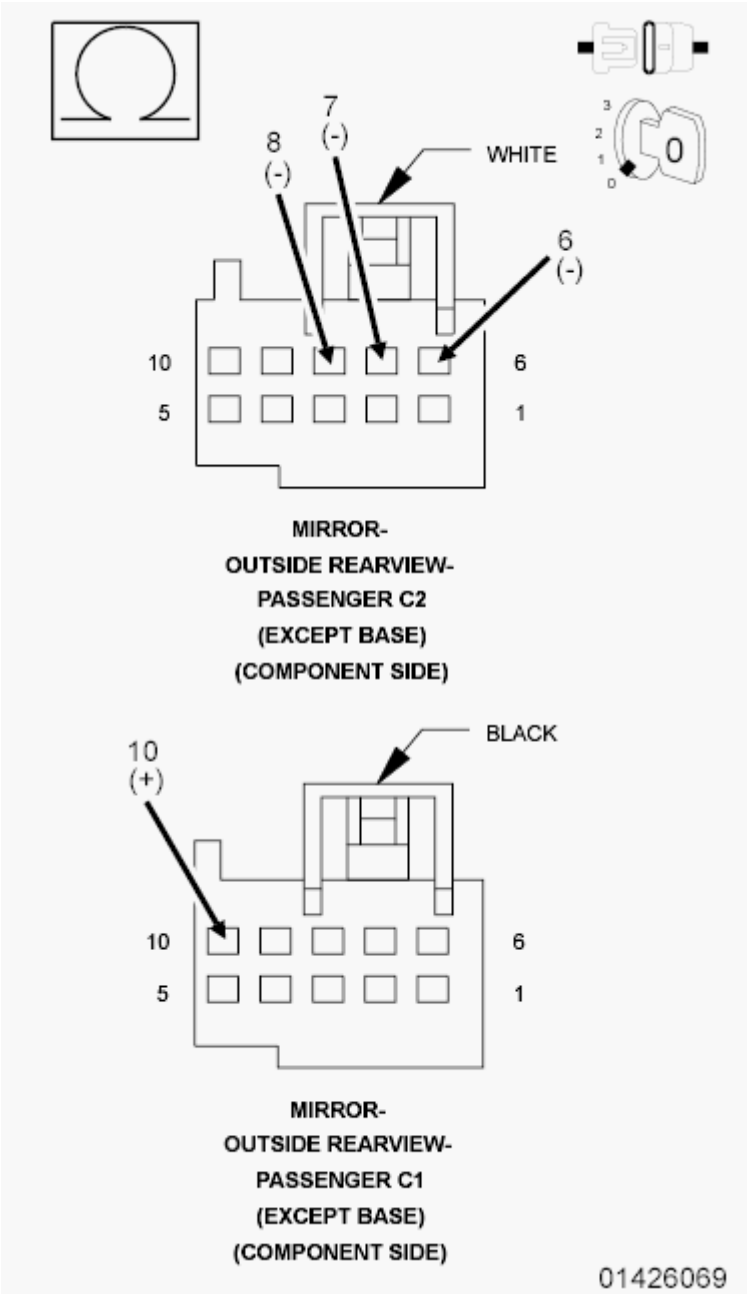

Fig. 49: Checking 5-Volt Supply Circuit For A Short To Other Circuits
Courtesy of CHRYSLER GROUP, LLC

1. Disconnect the Passenger Outside Rearview Mirror C2 (Component Side) connector from the Door Module C2 connector.
2. Measure the resistance between the (A857) 5-volt Supply circuit and the (P72) Passenger Mirror Vertical Driver circuit at the Passenger Outside Rearview Mirror C1 and C2 (Component Side) connectors.
3. Measure the resistance between the (A857) 5-volt Supply circuit and the (P70) Passenger Mirror Common Driver circuit at the Passenger Outside Rearview Mirror C1 and C2 (Component Side) connectors.

4. Measure the resistance between the (A857) 5-volt Supply circuit and the (P74) Passenger Mirror Horizontal Driver circuit at the Passenger Outside Rearview Mirror C1 and C2 (Component Side) connectors.

   Is the resistance below 10K Ohms for any measurement?

   Yes

   - Repair all circuits with a resistance below 10K Ohms for a short to the (A857) 5-volt Supply circuit. If the wiring harness and connector are okay, replace the Passenger Outside Rearview Mirror in accordance with the Service Information.
   - Perform the BODY VERIFICATION TEST. Refer to **STANDARD PROCEDURE** .

   No, with Heated/Turn Signal Mirror

   - Go To 6.

   No, without Heated/Turn Signal Mirror

   - Inspect the wiring and connectors for damage and repair as necessary. If the wiring and connectors are okay, replace the Door Module in accordance with the Service Information.
   - Perform the BODY VERIFICATION TEST. Refer to **STANDARD PROCEDURE** .

6. **CHECK (A857) 5-VOLT SUPPLY CIRCUIT FOR A SHORT TO (C170) PASSENGER MIRROR HEATER RETURN CIRCUIT OR TO (P595) PASSENGER MIRROR TURN SIGNAL RETURN CIRCUIT**

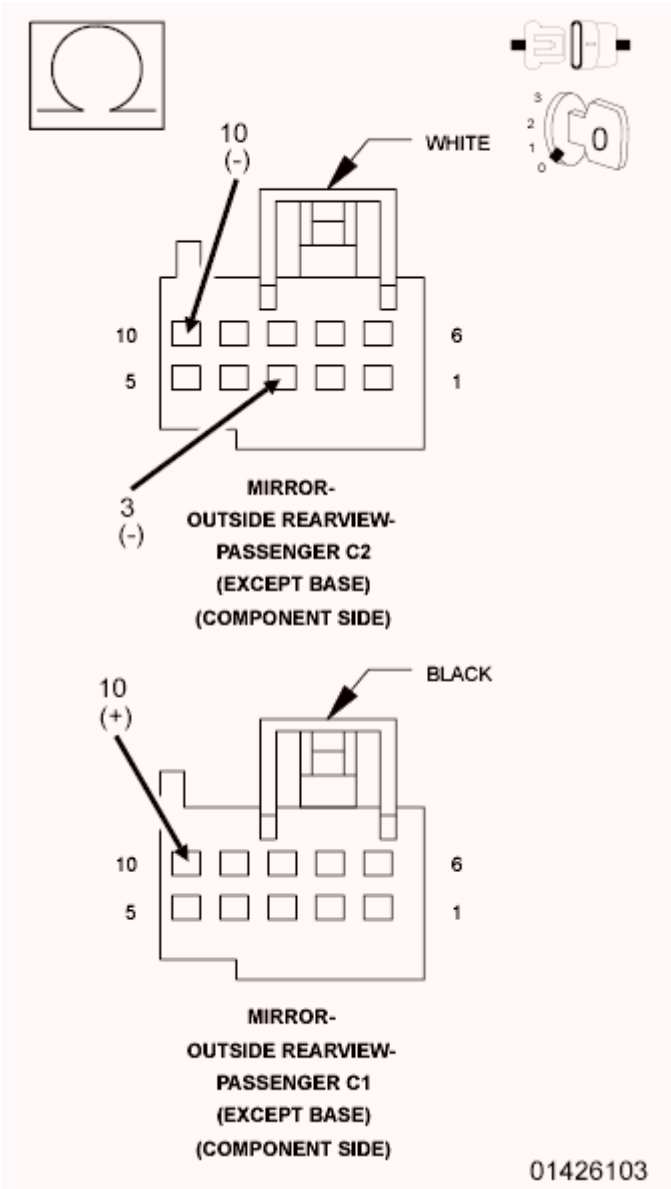

Fig. 50: Checking 5-Volt Supply Circuit For A Short To Other Circuits
Courtesy of CHRYSLER GROUP, LLC

1. For Heated Mirror, measure the resistance between the (A857) 5-volt Supply circuit and the (C170) Passenger Mirror Heater Return circuit at the Passenger Outside Rearview Mirror C1 and C2 (Component Side) connectors.
2. For Turn Signal Mirror, measure the resistance between the (A857) 5-volt Supply circuit and the (P595) Passenger Mirror Turn Signal Return circuit at the Passenger Outside Rearview Mirror C1 and C2 (Component Side) connectors.

   Is the resistance below 10K Ohms for either measurement?

   Yes

- Repair all circuits with a resistance below 10K Ohms for a short to the (A857) 5-volt Supply circuit. If the wiring harness and connector are okay, replace the Passenger Outside Rearview Mirror in accordance with the Service Information.
- Perform the BODY VERIFICATION TEST. Refer to **STANDARD PROCEDURE** .

No

- Inspect the wiring and connectors for damage and repair as necessary. If the wiring and connectors are okay, replace the Door Module in accordance with the Service Information.
- Perform the BODY VERIFICATION TEST. Refer to **STANDARD PROCEDURE** .

B1D14-11-PASSENGER MIRROR VERTICAL POSITION SENSOR INPUT - CIRCUIT FOR A SHORT TO GROUND

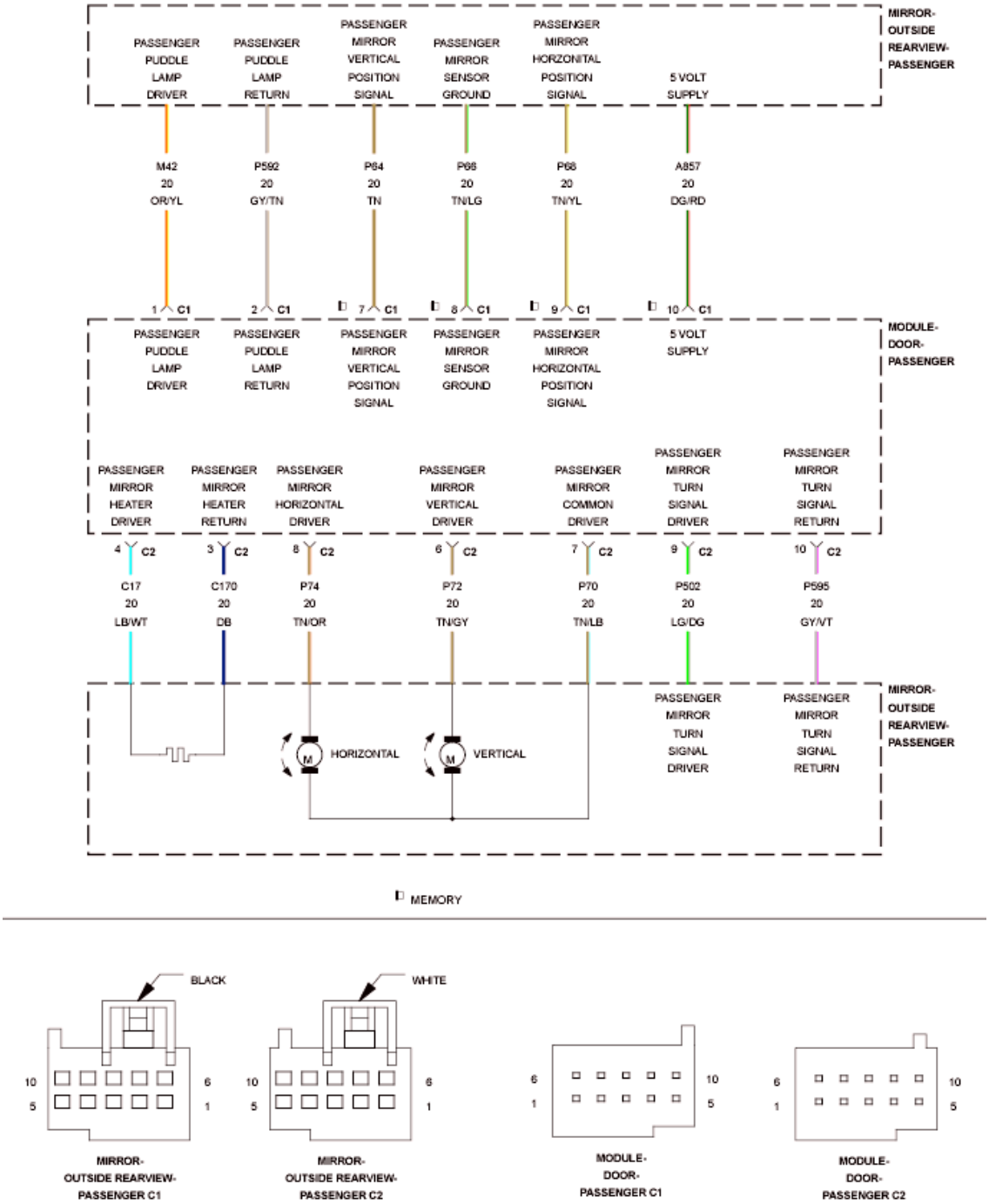

Fig. 51: Passenger Mirror Signal Lamp Control Wiring Diagram
Courtesy of CHRYSLER GROUP, LLC

For a complete wiring diagram, **refer to appropriate SYSTEM WIRING DIAGRAMS article** .

WHEN MONITORED:

Continuously.

SET CONDITION:

The Door Module senses a short low on the (P64) Passenger Mirror Vertical Position Signal circuit for more than two seconds.

POSSIBLE CAUSES

Possible Causes
(P64) PASSENGER MIRROR VERTICAL POSITION SIGNAL CIRCUIT FOR A SHORT TO GROUND
(P64) PASSENGER MIRROR VERTICAL POSITION SIGNAL CIRCUIT FOR A SHORT TO THE (P66) PASSENGER MIRROR SENSOR GROUND CIRCUIT
(P64) PASSENGER MIRROR VERTICAL POSITION SIGNAL CIRCUIT FOR A SHORT TO THE (P592) PASSENGER PUDDLE LAMP RETURN CIRCUIT
(P64) PASSENGER MIRROR VERTICAL POSITION SIGNAL CIRCUIT FOR A SHORT TO THE (P72) PASSENGER MIRROR VERTICAL DRIVER CIRCUIT
(P64) PASSENGER MIRROR VERTICAL POSITION SIGNAL CIRCUIT FOR A SHORT TO THE (P70) PASSENGER MIRROR COMMON DRIVER CIRCUIT
(P64) PASSENGER MIRROR VERTICAL POSITION SIGNAL CIRCUIT FOR A SHORT TO THE (P74) PASSENGER MIRROR HORIZONTAL DRIVER CIRCUIT
(P64) PASSENGER MIRROR VERTICAL POSITION SIGNAL CIRCUIT FOR A SHORT TO THE (C170) PASSENGER MIRROR HEATER RETURN CIRCUIT
(P64) PASSENGER MIRROR VERTICAL POSITION SIGNAL CIRCUIT FOR A SHORT TO THE (P595) PASSENGER MIRROR TURN SIGNAL RETURN CIRCUIT
PASSENGER OUTSIDE REARVIEW MIRROR SHORTED
DOOR MODULE

DIAGNOSTIC TEST

1. **TEST FOR INTERMITTENT CONDITION**
    1. Turn the ignition on.
    2. Using a scan tool, record and erase Diagnostic Trouble Codes (DTC's).
    3. Turn the turn signal on, if equipped with turn signal mirror.
    4. Turn the puddle lamps on, if equipped with puddle lamp mirror.
    5. Turn the rear defogger on, if equipped with heated mirror.
    6. Press and release the Mirror Select switch to select the Passenger Outside Rearview Mirror.
    7. Operate the Mirror Adjust switch in all directions several times while monitoring the scan tool for DTC's.

    NOTE: **After adjusting the mirror in one direction wait at least two seconds before adjusting the mirror in the opposite direction, as this will allow time for an active fault to set if present.**

Is the DTC active?

Yes

- Go To 2.

No

- The conditions that caused this code to set are not present at this time. For vehicle's equipped with folding outside rearview mirrors, repeat test with mirror folded. If DTC is now active, Go To 2. Otherwise, use the wiring diagram/schematic as a guide and inspect the wiring and connectors.
- Perform the BODY VERIFICATION TEST. Refer to **STANDARD PROCEDURE** .

2. **CHECK (P64) PASSENGER MIRROR VERTICAL POSITION SIGNAL CIRCUIT FOR A SHORT TO GROUND**

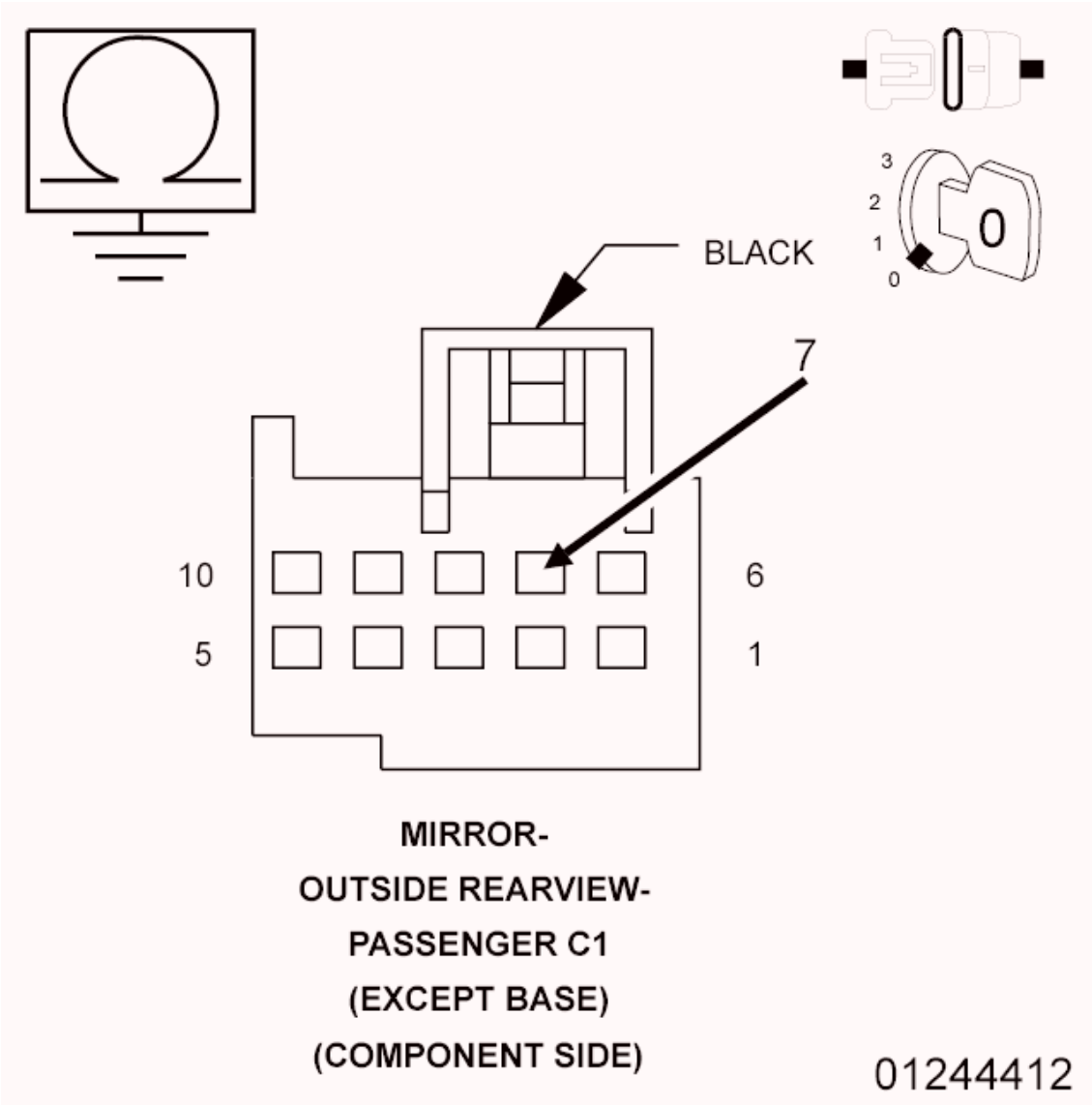

Fig. 52: Checking Passenger Mirror Vertical Position Signal Circuit For A Short To Ground
Courtesy of CHRYSLER GROUP, LLC

1. Turn the ignition off.
2. Disconnect the Passenger Outside Rearview Mirror C1 (Component Side) connector from the Door Module C1 connector.
3. Measure the resistance of the (P64) Passenger Mirror Vertical Position Signal circuit between ground and the Passenger Outside Rearview Mirror C1 (Component Side) connector.

   Is the resistance below 10K Ohms?

   Yes

   - Repair the (P64) Passenger Mirror Vertical Position Signal circuit for a short to ground. If the wiring harness and connector are okay, replace the Passenger Outside Rearview Mirror in

accordance with the Service Information.

- Perform the BODY VERIFICATION TEST. Refer to **STANDARD PROCEDURE** .

No

- Go To 3.

3. **CHECK (P64) PASSENGER MIRROR VERTICAL POSITION SIGNAL CIRCUIT FOR A SHORT TO (P66) PASSENGER MIRROR SENSOR GROUND CIRCUIT**

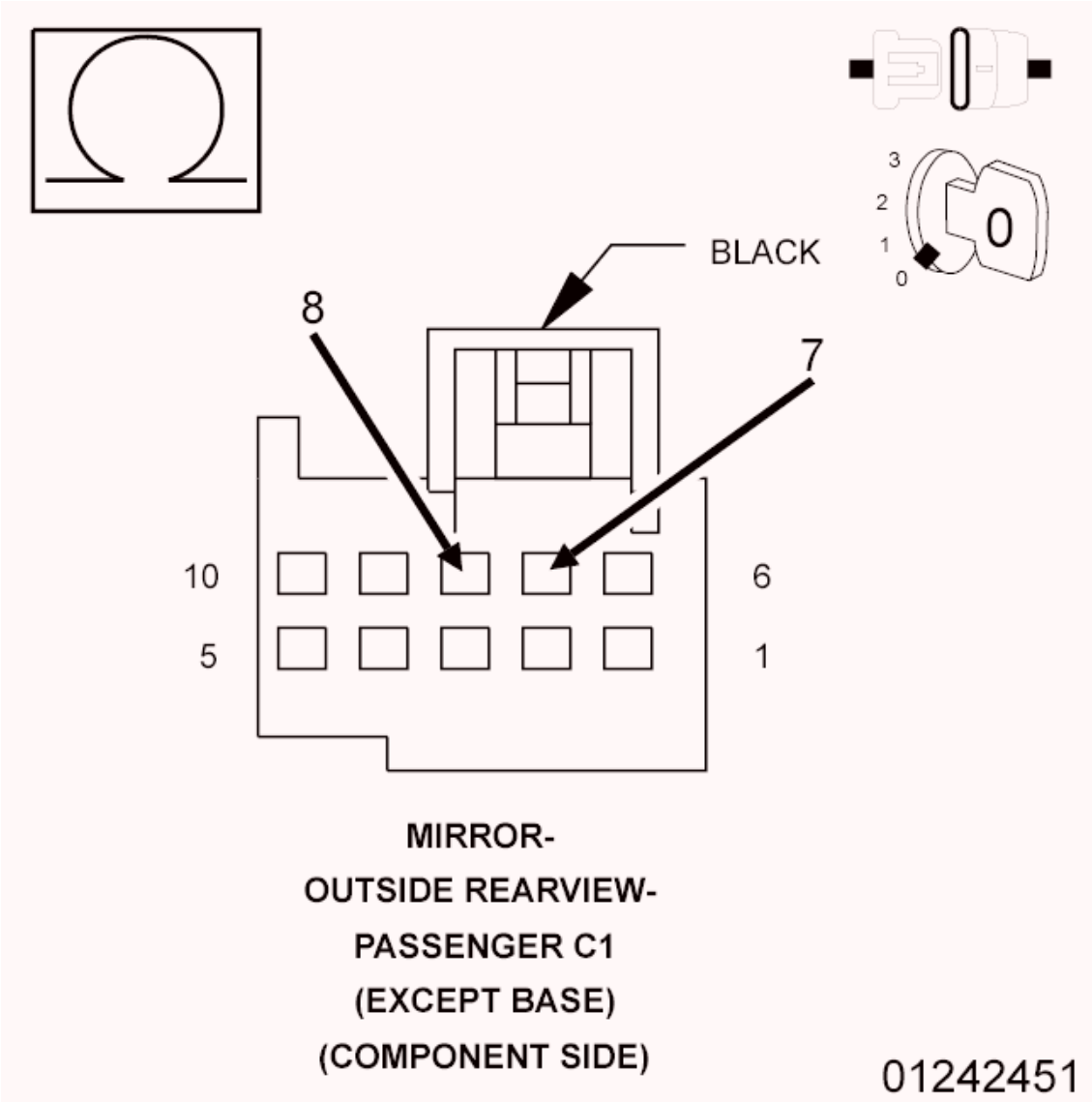

Fig. 53: Checking Passenger Mirror Vertical Position Signal Circuit For A Short To Passenger Mirror Sensor Ground Circuit
Courtesy of CHRYSLER GROUP, LLC

1. Measure the residence between the (P64) Passenger Mirror Vertical Position Signal circuit and the (P66) Passenger Mirror Sensor Ground circuit at the Passenger Outside Rearview Mirror C1

(Component Side) connector.

Is the resistance below 1.0 Ohm?

Yes

- Repair the (P64) Passenger Mirror Vertical Position Signal circuit for a short to the (P66) Passenger Mirror Sensor Ground circuit. If the wiring harness and connector are okay, replace the Passenger Outside Rearview Mirror in accordance with the Service Information.
- Perform the BODY VERIFICATION TEST. Refer to **STANDARD PROCEDURE** .

No, with Puddle Lamp Mirror

- Go To 4.

No, without Puddle Lamp Mirror

- Go To 5.

4. **CHECK (P64) PASSENGER MIRROR VERTICAL POSITION SIGNAL CIRCUIT FOR A SHORT TO (P592) PASSENGER PUDDLE LAMP RETURN CIRCUIT**

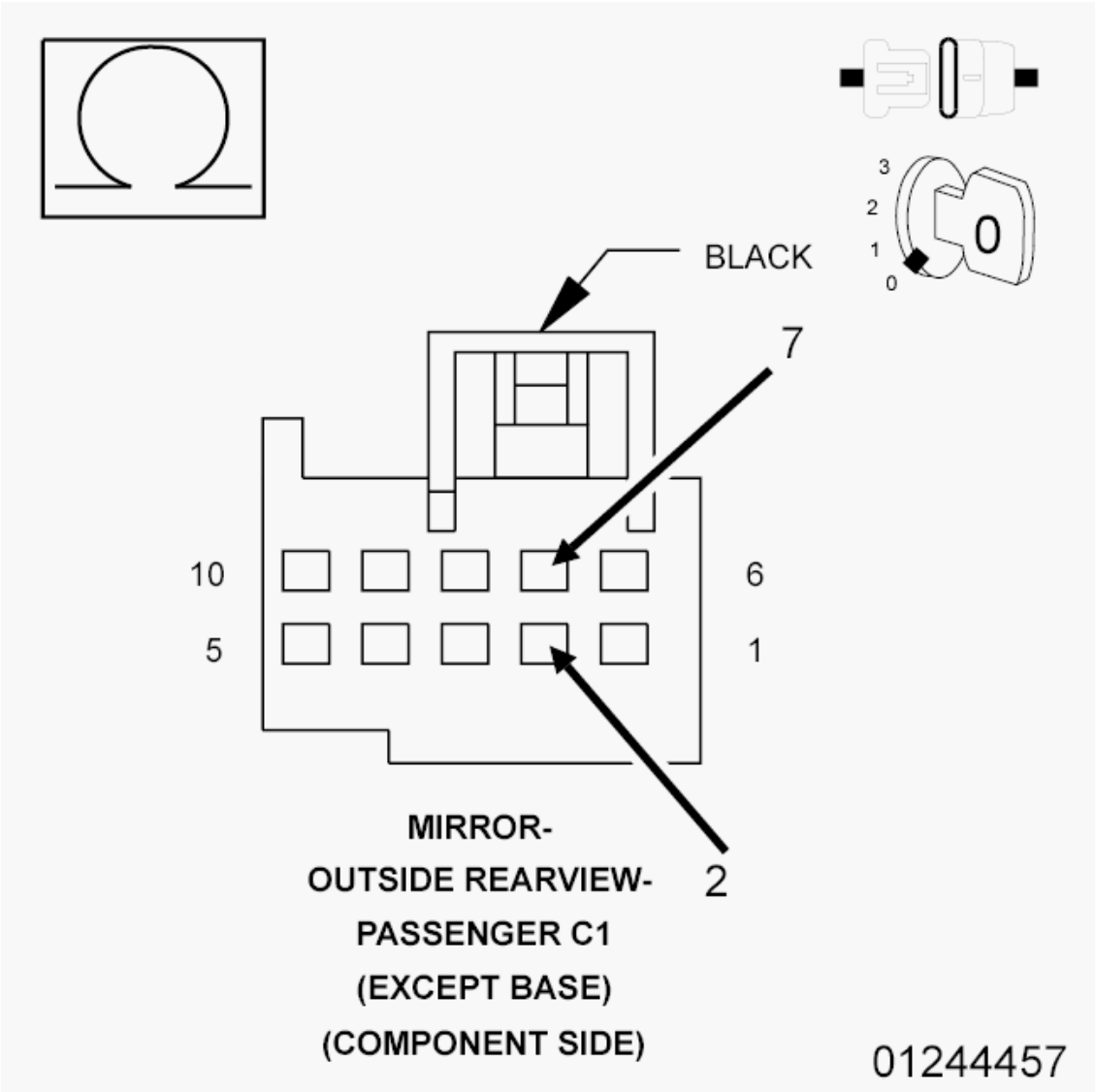

Fig. 54: Checking Passenger Mirror Vertical Position Signal Circuit For A Short To Passenger Puddle Lamp Return Circuit
Courtesy of CHRYSLER GROUP, LLC

1. Measure the residence between the (P64) Passenger Mirror Vertical Position Signal circuit and the (P592) Passenger Puddle Lamp Return circuit at the Passenger Outside Rearview Mirror C1 (Component Side) connector.

   Is the resistance below 10K Ohms?

   Yes

   - Repair the (P64) Passenger Mirror Vertical Position Signal circuit for a short to the (P592) Passenger Puddle Lamp Return circuit. If the wiring harness and connector are okay, replace the Passenger Outside Rearview Mirror in accordance with the Service Information.
   - Perform the BODY VERIFICATION TEST. Refer to **STANDARD PROCEDURE** .

No

- Go To 5.

5. **CHECK (P64) PASSENGER MIRROR VERTICAL POSITION SIGNAL CIRCUIT FOR A SHORT TO (P72) PASSENGER MIRROR VERTICAL DRIVER CIRCUIT, (P70) PASSENGER MIRROR COMMON DRIVER CIRCUIT, OR TO (P74) PASSENGER MIRROR HORIZONTAL DRIVER CIRCUIT**

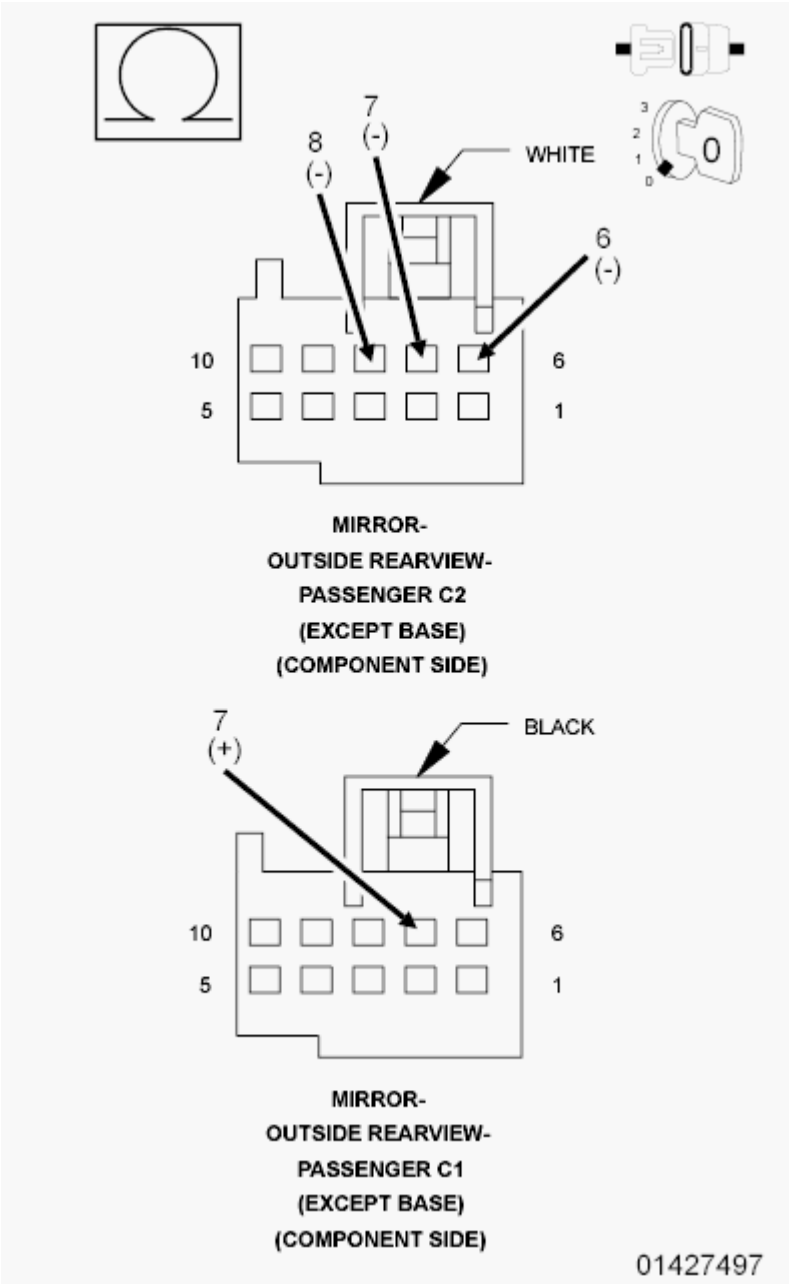

Fig. 55: Checking Passenger Mirror Vertical Position Signal Circuit For A Short To Other Circuits
Courtesy of CHRYSLER GROUP, LLC

1. Disconnect the Passenger Outside Rearview Mirror C2 (Component Side) connector from the Door Module C2 connector.
2. Measure the resistance between the (P64) Passenger Mirror Vertical Position Signal circuit and the (P72) Passenger Mirror Vertical Driver circuit at the Passenger Outside Rearview Mirror C1 and C2 (Component Side) connectors.
3. Measure the resistance between the (P64) Passenger Mirror Vertical Position Signal circuit and the (P70) Passenger Mirror Common Driver circuit at the Passenger Outside Rearview Mirror C1 and C2 (Component Side) connectors.
4. Measure the resistance between the (P64) Passenger Mirror Vertical Position Signal circuit and the (P74) Passenger Mirror Horizontal Driver circuit at the Passenger Outside Rearview Mirror C1 and C2 (Component Side) connectors.

   Is the resistance below 10K Ohms for any measurement?

   Yes

   - Repair all circuits with a resistance below 10K Ohms for a short to the (P64) Passenger Mirror Vertical Position Signal circuit. If the wiring harness and connector are okay, replace the Passenger Outside Rearview Mirror in accordance with the Service Information.
   - Perform the BODY VERIFICATION TEST. Refer to **STANDARD PROCEDURE** .

   No, with Heated/Turn Signal Mirror

   - Go To 6.

   No, without Heated/Turn Signal Mirror

   - Inspect the wiring and connectors for damage and repair as necessary. If the wiring and connectors are okay, replace the Door Module in accordance with the Service Information.
   - Perform the BODY VERIFICATION TEST. Refer to **STANDARD PROCEDURE** .

6. **CHECK (P64) PASSENGER MIRROR VERTICAL POSITION SIGNAL CIRCUIT FOR A SHORT TO (C170) PASSENGER MIRROR HEATER RETURN CIRCUIT OR TO (P595) PASSENGER MIRROR TURN SIGNAL RETURN CIRCUIT**

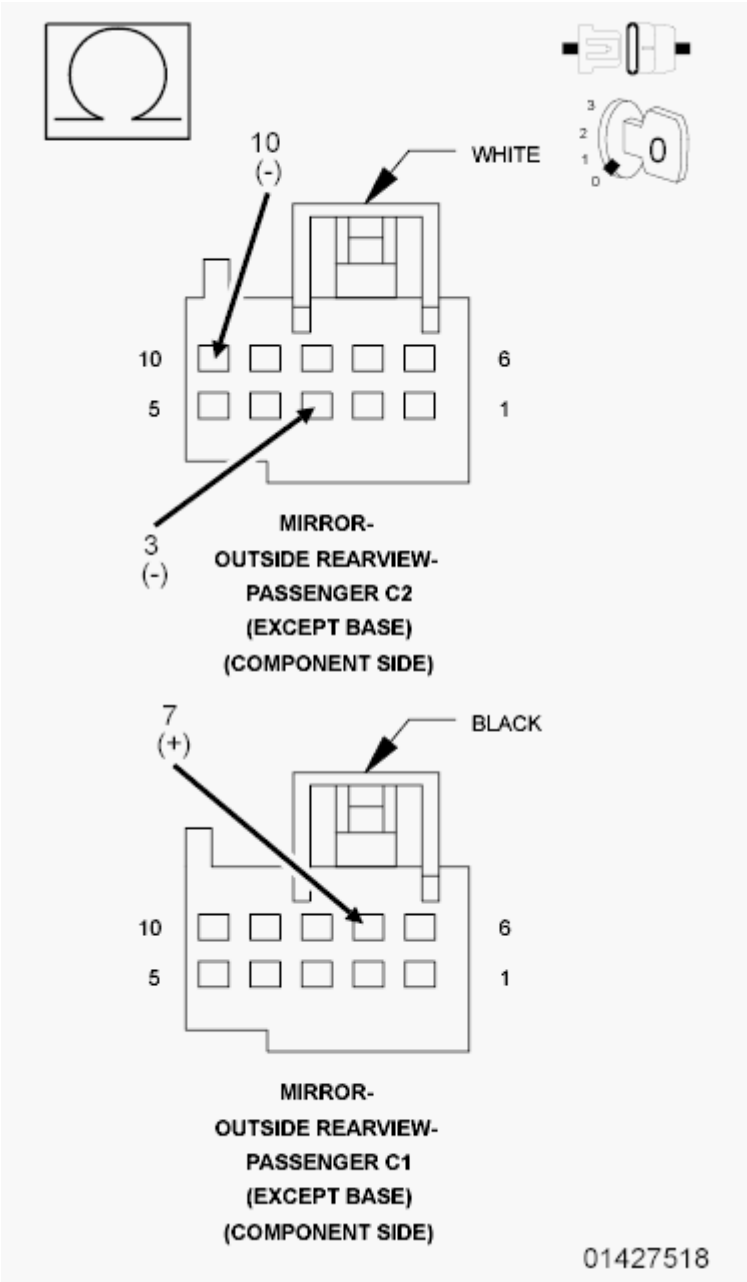

Fig. 56: Checking Passenger Mirror Vertical Position Signal Circuit For A Short To Other Circuits
Courtesy of CHRYSLER GROUP, LLC

1. For Heated Mirror, measure the resistance between the (P64) Passenger Mirror Vertical Position Signal circuit and the (C170) Passenger Mirror Heater Return circuit at the Passenger Outside Rearview Mirror C1 and C2 (Component Side) connectors.
2. For Turn Signal Mirror, measure the resistance between the (P64) Passenger Mirror Vertical Position Signal circuit and the (P595) Passenger Mirror Turn Signal Return circuit at the Passenger Outside Rearview Mirror C1 and C2 (Component Side) connectors.

   Is the resistance below 10K Ohms for either measurement?

Yes

- Repair all circuits with a resistance below 10K Ohms for a short to the (P64) Passenger Mirror Vertical Position Signal circuit. If the wiring harness and connector are okay, replace the Passenger Outside Rearview Mirror in accordance with the Service Information.
- Perform the BODY VERIFICATION TEST. Refer to **STANDARD PROCEDURE** .

No

- Inspect the wiring and connectors for damage and repair as necessary. If the wiring and connectors are okay, replace the Door Module in accordance with the Service Information.
- Perform the BODY VERIFICATION TEST. Refer to **STANDARD PROCEDURE** .

B1D14-12-PASSENGER MIRROR VERTICAL POSITION SENSOR INPUT - CIRCUIT FOR A SHORT TO BATTERY

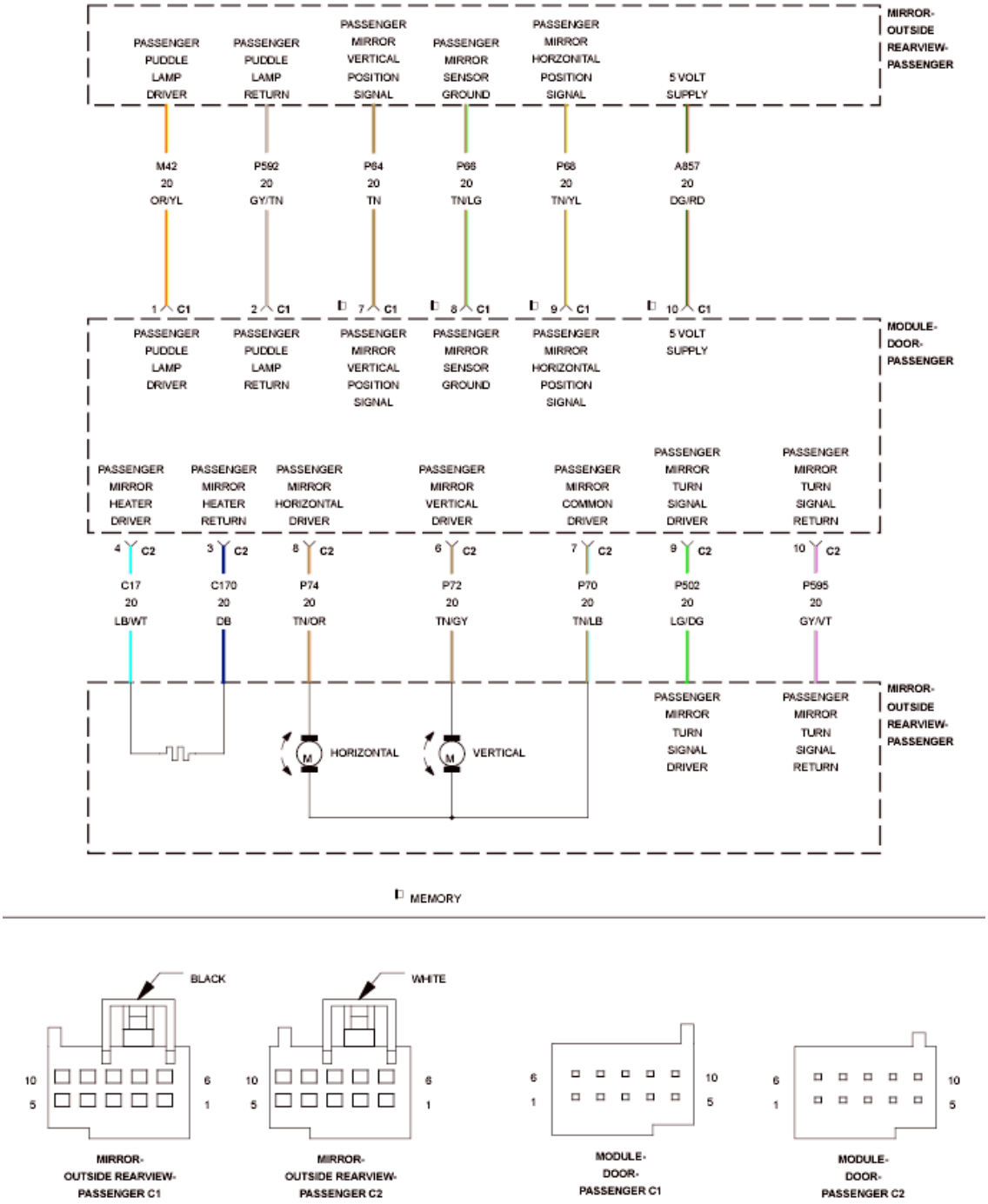

Fig. 57: Passenger Mirror Signal Lamp Control Wiring Diagram
Courtesy of CHRYSLER GROUP, LLC

For a complete wiring diagram, **refer to appropriate SYSTEM WIRING DIAGRAMS article** .

WHEN MONITORED:

Continuously.

SET CONDITION:

The Door Module senses more than 400 mA current on the (A857) 5-volt Supply circuit or an open or a short high on the (P64) Passenger Mirror Vertical Position Signal circuit for more than two seconds.

POSSIBLE CAUSES

Possible Causes
(P64) PASSENGER MIRROR VERTICAL POSITION SIGNAL CIRCUIT FOR A SHORT TO VOLTAGE
(P64) PASSENGER MIRROR VERTICAL POSITION SIGNAL CIRCUIT FOR A SHORT TO THE (M42) PASSENGER PUDDLE LAMP DRIVER CIRCUIT
(P64) PASSENGER MIRROR VERTICAL POSITION SIGNAL CIRCUIT FOR AN OPEN
(P66) PASSENGER MIRROR SENSOR GROUND CIRCUIT FOR AN OPEN
(P64) PASSENGER MIRROR VERTICAL POSITION SIGNAL CIRCUIT FOR A SHORT TO THE (P72) PASSENGER MIRROR VERTICAL DRIVER CIRCUIT
(P64) PASSENGER MIRROR VERTICAL POSITION SIGNAL CIRCUIT FOR A SHORT TO THE (P70) PASSENGER MIRROR COMMON DRIVER CIRCUIT
(P64) PASSENGER MIRROR VERTICAL POSITION SIGNAL CIRCUIT FOR A SHORT TO THE (P74) PASSENGER MIRROR HORIZONTAL DRIVER CIRCUIT
(P64) PASSENGER MIRROR VERTICAL POSITION SIGNAL CIRCUIT FOR A SHORT TO THE (C17) PASSENGER MIRROR HEATER DRIVER CIRCUIT
(P64) PASSENGER MIRROR VERTICAL POSITION SIGNAL CIRCUIT FOR A SHORT TO THE (P502) PASSENGER MIRROR TURN SIGNAL DRIVER CIRCUIT
(A857) 5-VOLT SUPPLY CIRCUIT FOR A SHORT TO VOLTAGE
(A857) 5-VOLT SUPPLY CIRCUIT FOR A SHORT TO THE (M42) PASSENGER PUDDLE LAMP DRIVER CIRCUIT
(A857) 5-VOLT SUPPLY CIRCUIT FOR A SHORT TO THE (P72) PASSENGER MIRROR VERTICAL DRIVER CIRCUIT
(A857) 5-VOLT SUPPLY CIRCUIT FOR A SHORT TO THE (P70) PASSENGER MIRROR COMMON DRIVER CIRCUIT
(A857) 5-VOLT SUPPLY CIRCUIT FOR A SHORT TO THE (P74) PASSENGER MIRROR HORIZONTAL DRIVER CIRCUIT
(A857) 5-VOLT SUPPLY CIRCUIT FOR A SHORT TO THE (C17) PASSENGER MIRROR HEATER DRIVER CIRCUIT
(A857) 5-VOLT SUPPLY CIRCUIT FOR A SHORT TO THE (P502) PASSENGER MIRROR TURN SIGNAL DRIVER CIRCUIT
PASSENGER OUTSIDE REARVIEW MIRROR SHORTED
DOOR MODULE

DIAGNOSTIC TEST

1. **TEST FOR INTERMITTENT CONDITION**

1. Turn the ignition on.
2. Using a scan tool, record and erase Diagnostic Trouble Codes (DTC's).
3. Turn the turn signal on, if equipped with turn signal mirror.
4. Turn the puddle lamps on, if equipped with puddle lamp mirror.
5. Turn the rear defogger on, if equipped with heated mirror.
6. Press and release the Mirror Select switch to select the Passenger Outside Rearview Mirror.
7. Operate the Mirror Adjust switch in all directions several times while monitoring the scan tool for DTC's.

NOTE: **After adjusting the mirror in one direction wait at least two seconds before adjusting the mirror in the opposite direction, as this will allow time for an active fault to set if present.**

Is the DTC active?

Yes

- Go To 2.

No

- The conditions that caused this code to set are not present at this time. For vehicle's equipped with folding outside rearview mirrors, repeat test with mirror folded. If DTC is now active, Go To 2. Otherwise, use the wiring diagram/schematic as a guide and inspect the wiring and connectors.
- Perform the BODY VERIFICATION TEST. Refer to **STANDARD PROCEDURE** .

2. **CHECK (P64) PASSENGER MIRROR VERTICAL POSITION SIGNAL CIRCUIT AND (A857) 5-VOLT SUPPLY CIRCUIT FOR A SHORT TO VOLTAGE**

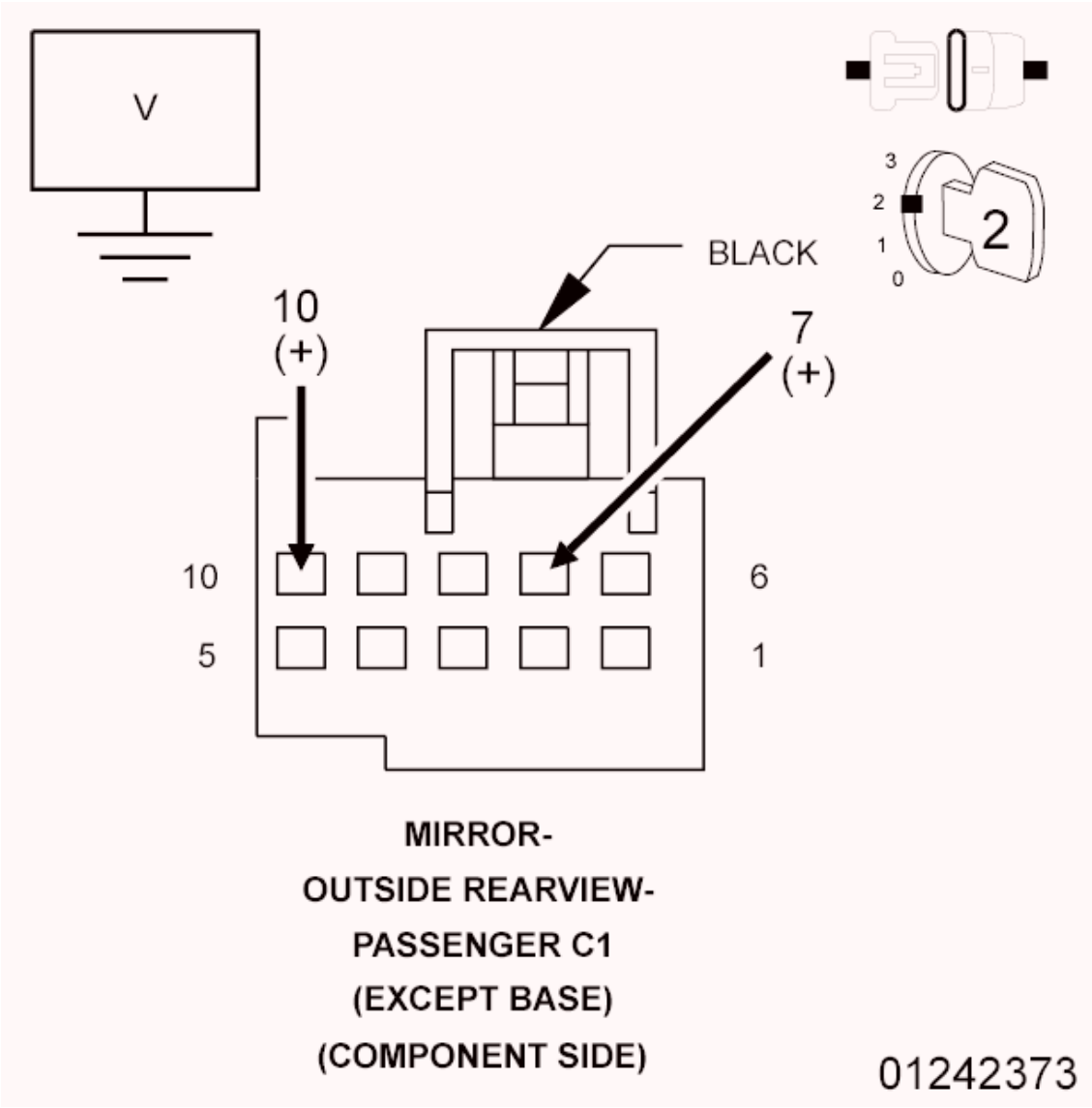

Fig. 58: Checking Passenger Mirror Vertical Position Signal Circuit And 5-Volt Supply Circuit For A Short To Voltage
Courtesy of CHRYSLER GROUP, LLC

1. Turn the ignition off.
2. Disconnect the Passenger Outside Rearview Mirror C1 (Component Side) connector from the Door Module C1 connector.
3. Turn the ignition on.
4. Measure the voltage of the (P64) Passenger Mirror Vertical Position Signal circuit between the Passenger Outside Rearview Mirror C1 (Component Side) connector and ground.
5. Measure the voltage of the (A857) 5-volt Supply circuit between the Passenger Outside Rearview Mirror C1 (Component Side) connector and ground.

   Is there any Voltage present on either circuit?

Yes

- Repair all circuits with Voltage present for a short to Voltage. If the wiring harness and connector are okay, replace the Passenger Outside Rearview Mirror in accordance with the Service Information.
- Perform the BODY VERIFICATION TEST. Refer to **STANDARD PROCEDURE** .

No, with Puddle Lamp Mirror

- Go To 3.

No, without Puddle Lamp Mirror

- Go To 4.

3. **CHECK (P64) PASSENGER MIRROR VERTICAL POSITION SIGNAL CIRCUIT AND (A857) 5-VOLT SUPPLY CIRCUIT FOR A SHORT TO (M42) PASSENGER PUDDLE LAMP DRIVER CIRCUIT**

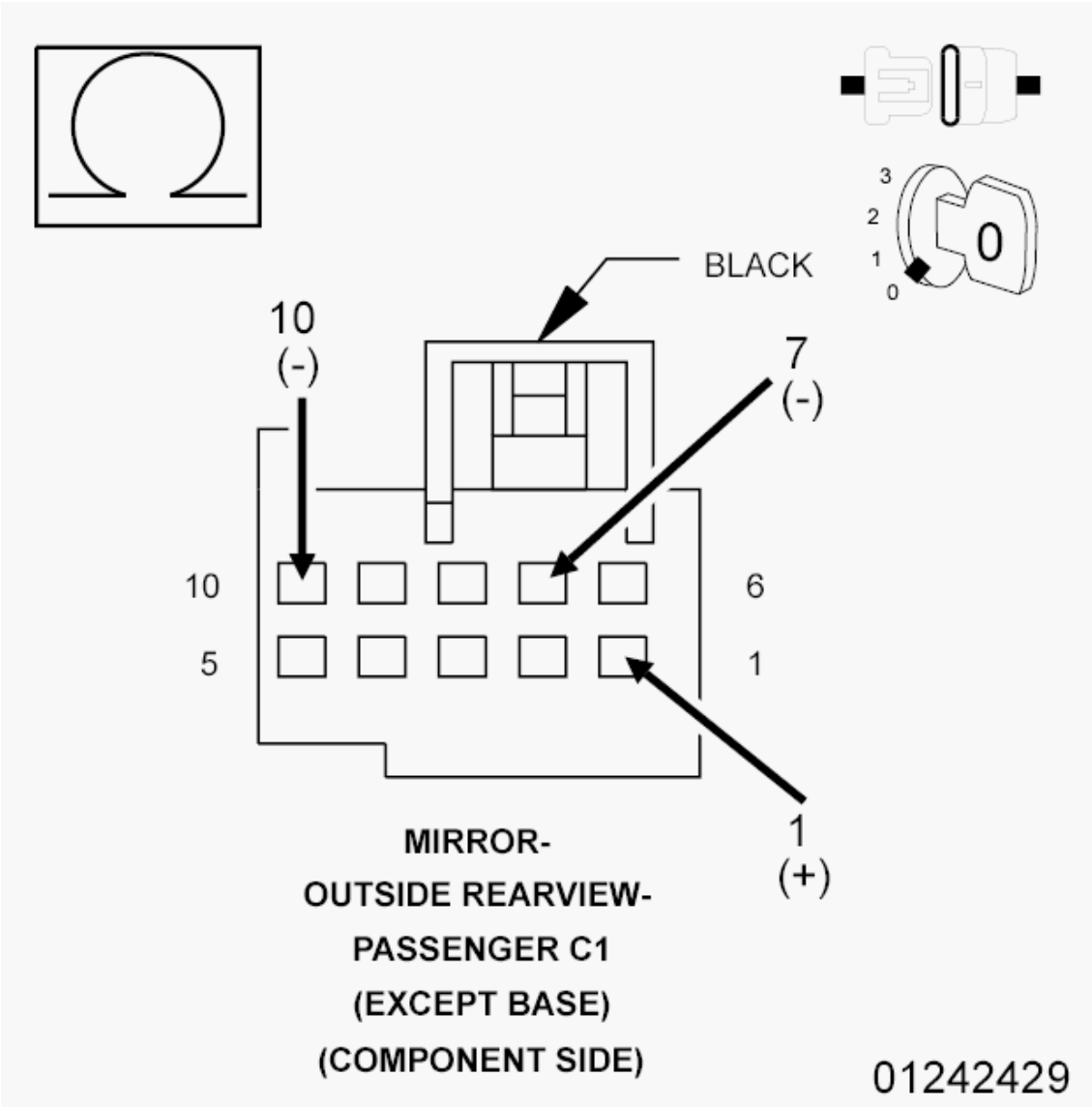

Fig. 59: Checking Passenger Mirror Vertical Position Signal Circuit And 5-Volt Supply Circuit For A Short To Passenger Puddle Lamp Driver Circuit
Courtesy of CHRYSLER GROUP, LLC

1. Turn the ignition off.
2. Measure the resistance between the (M42) Passenger Puddle Lamp Driver circuit and the (P64) Passenger Mirror Vertical Position Signal circuit at the Passenger Outside Rearview Mirror C1 (Component Side) connector.
3. Measure the resistance between the (M42) Passenger Puddle Lamp Driver circuit and the (A857) 5-volt Supply circuit at the Passenger Outside Rearview Mirror C1 (Component Side) connector.

   Is the resistance below 10K Ohms for either measurement?

   Yes

- Repair all circuits with a resistance below 10K Ohms for a short to the (M42) Passenger Puddle Lamp Driver circuit. If the wiring harness and connector are okay, replace the Passenger Outside Rearview Mirror in accordance with the Service Information.
- Perform the BODY VERIFICATION TEST. Refer to **STANDARD PROCEDURE** .

No

- Go To 4.

4. **CHECK (P64) PASSENGER MIRROR VERTICAL POSITION SIGNAL CIRCUIT AND (P66) PASSENGER MIRROR SENSOR GROUND CIRCUIT FOR AN OPEN**

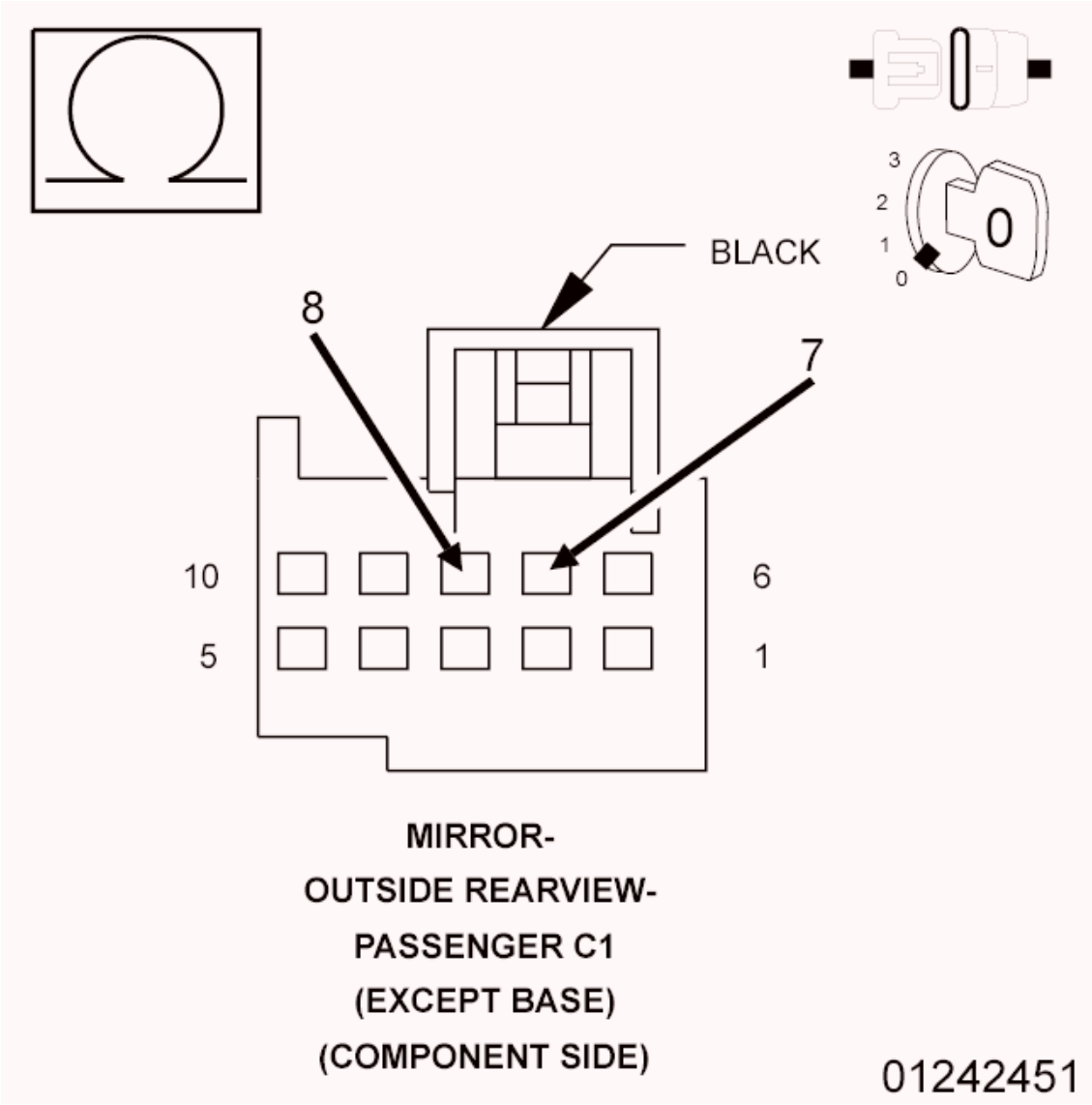

Fig. 60: Checking Passenger Mirror Vertical Position Signal Circuit For A Short To Passenger Mirror Sensor Ground Circuit
Courtesy of CHRYSLER GROUP, LLC

1. If not done previously, turn the ignition off.
2. Measure the resistance between the (P64) Passenger Mirror Vertical Position Signal circuit and the (P66) Passenger Mirror Sensor Ground circuit at the Passenger Outside Rearview Mirror C1 (Component Side) connector.

   Is the resistance below 3.0 Ohms?

   Yes

   - Go To 5.

   No

   - Repair (P64) Passenger Mirror Vertical Position Signal circuit or the (P66) Passenger Mirror Sensor Ground circuit for an open. If the wiring harness and connector are okay, replace the Passenger Outside Rearview Mirror in accordance with the Service Information.
   - Perform the BODY VERIFICATION TEST. Refer to **STANDARD PROCEDURE** .

5. **CHECK (P64) PASSENGER MIRROR VERTICAL POSITION SIGNAL CIRCUIT FOR A SHORT TO (P72) PASSENGER MIRROR VERTICAL DRIVER CIRCUIT, (P70) PASSENGER MIRROR COMMON DRIVER CIRCUIT, OR TO (P74) PASSENGER MIRROR HORIZONTAL DRIVER CIRCUIT**

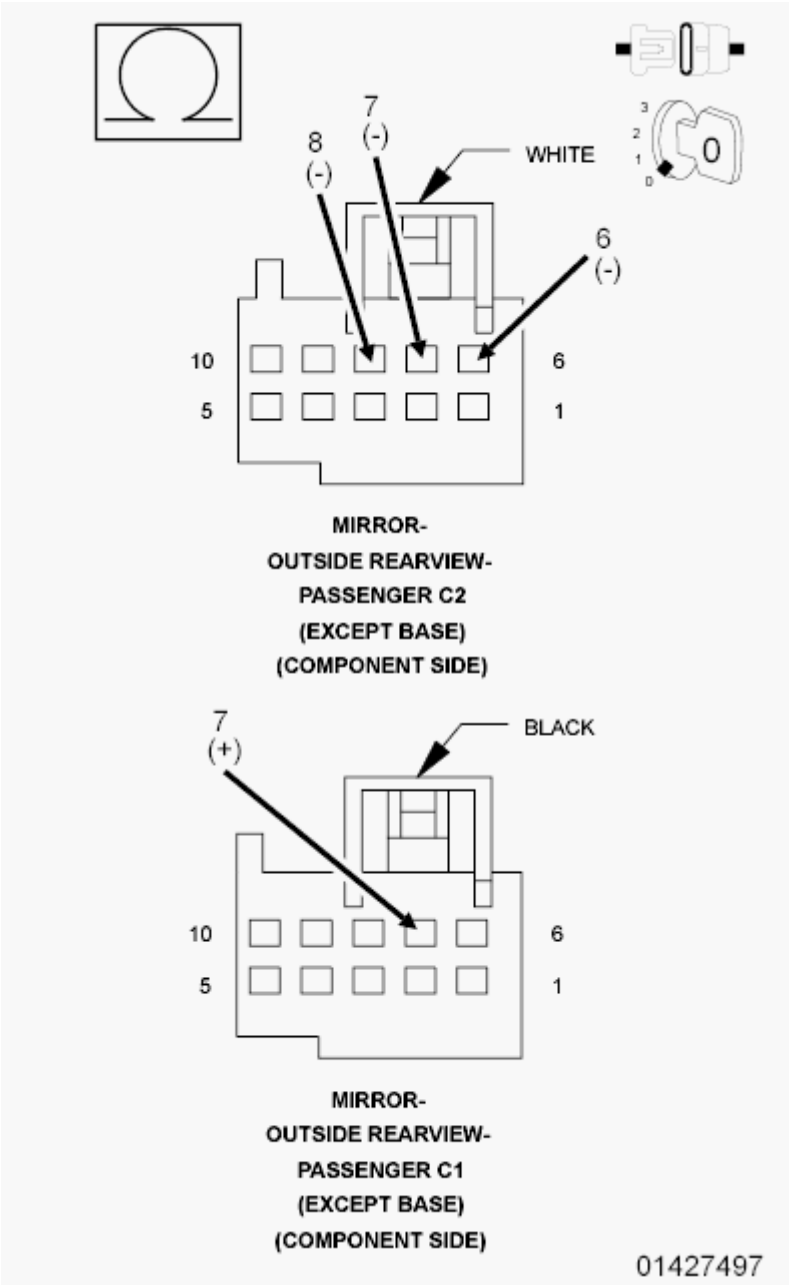

Fig. 61: Checking Passenger Mirror Vertical Position Signal Circuit For A Short To Other Circuits
Courtesy of CHRYSLER GROUP, LLC

1. Disconnect the Passenger Outside Rearview Mirror C2 (Component Side) connector from the Door Module C2 connector.
2. Measure the resistance between the (P64) Passenger Mirror Vertical Position Signal circuit and the (P72) Passenger Mirror Vertical Driver circuit at the Passenger Outside Rearview Mirror C1 and C2 (Component Side) connectors.
3. Measure the resistance between the (P64) Passenger Mirror Vertical Position Signal circuit and the (P70) Passenger Mirror Common Driver circuit at the Passenger Outside Rearview Mirror C1 and C2 (Component Side) connectors.

4. Measure the resistance between the (P64) Passenger Mirror Vertical Position Signal circuit and the (P74) Passenger Mirror Horizontal Driver circuit at the Passenger Outside Rearview Mirror C1 and C2 (Component Side) connectors.

   Is the resistance below 10K Ohms for any measurement?

   Yes

   - Repair all circuits with a resistance below 10K Ohms for a short to the (P64) Passenger Mirror Vertical Position Signal circuit. If the wiring harness and connector are okay, replace the Passenger Outside Rearview Mirror in accordance with the Service Information.
   - Perform the BODY VERIFICATION TEST. Refer to **STANDARD PROCEDURE** .

   No, with Heated/Turn Signal Mirror

   - Go To 6.

   No, without Heated/Turn Signal Mirror

   - Go To 7.

6. **CHECK (P64) PASSENGER MIRROR VERTICAL POSITION SIGNAL CIRCUIT FOR A SHORT TO (C17) PASSENGER MIRROR HEATER DRIVER CIRCUIT OR TO (P502) PASSENGER MIRROR TURN SIGNAL DRIVER CIRCUIT**

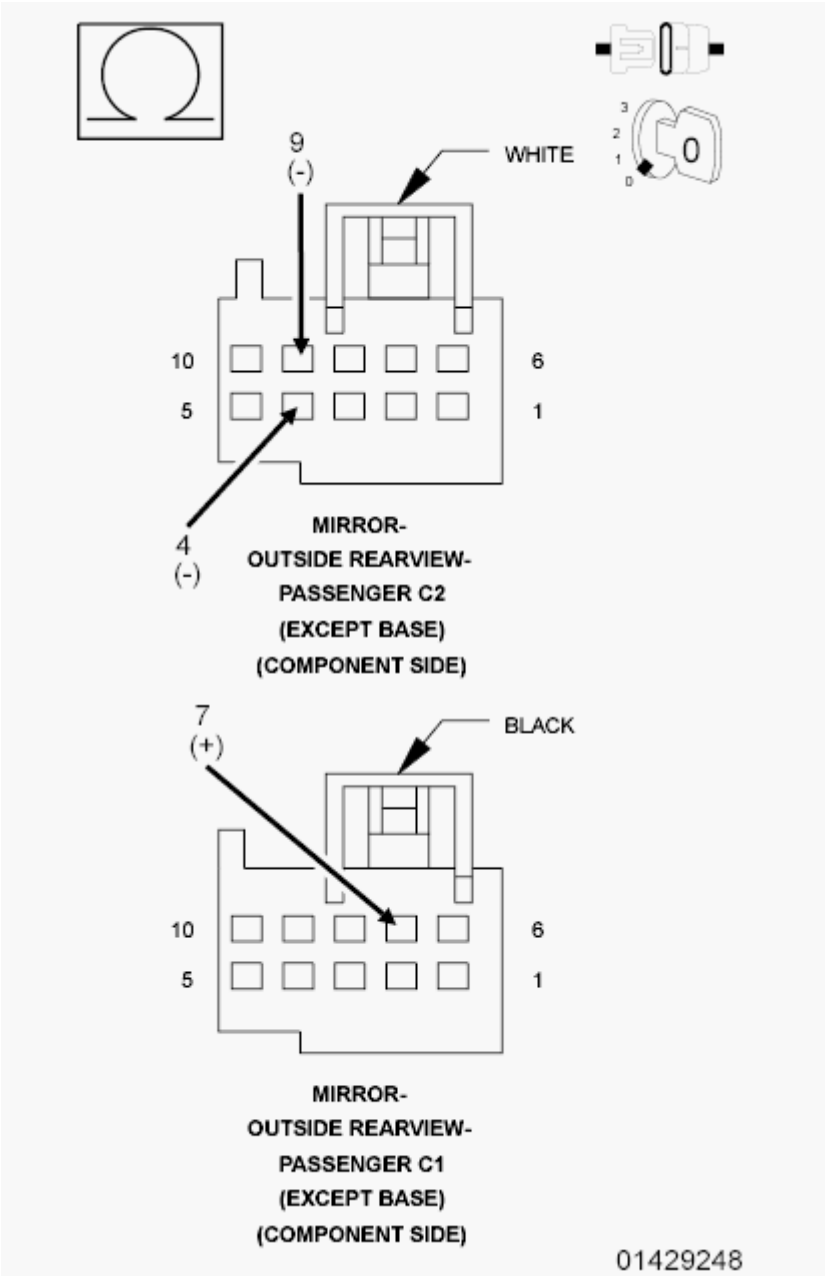

Fig. 62: Checking Passenger Mirror Vertical Position Signal Circuit For A Short To Passenger Mirror Heater Driver Circuit Or To Passenger Mirror Turn Signal Driver Circuit
Courtesy of CHRYSLER GROUP, LLC

1. For Heated Mirror, measure the resistance between the (P64) Passenger Mirror Vertical Position Signal circuit and the (C17) Passenger Mirror Heater Driver circuit at the Passenger Outside Rearview Mirror C1 and C2 (Component Side) connectors.
2. For Turn Signal Mirror, measure the resistance between the (P64) Passenger Mirror Vertical Position Signal circuit and the (P502) Passenger Mirror Turn Signal Driver circuit at the Passenger Outside Rearview Mirror C1 and C2 (Component Side) connectors.

   Is the resistance below 10K Ohms for either measurement?

Yes

- Repair all circuits with a resistance below 10K Ohms for a short to the (P64) Passenger Mirror Vertical Position Signal circuit. If the wiring harness and connector are okay, replace the Passenger Outside Rearview Mirror in accordance with the Service Information.
- Perform the BODY VERIFICATION TEST. Refer to **STANDARD PROCEDURE** .

No

- Go To 7.

7. **CHECK (A857) 5-VOLT SUPPLY CIRCUIT FOR A SHORT TO (P72) PASSENGER MIRROR VERTICAL DRIVER CIRCUIT, (P70) PASSENGER MIRROR COMMON DRIVER CIRCUIT, OR TO (P74) PASSENGER MIRROR HORIZONTAL DRIVER CIRCUIT**

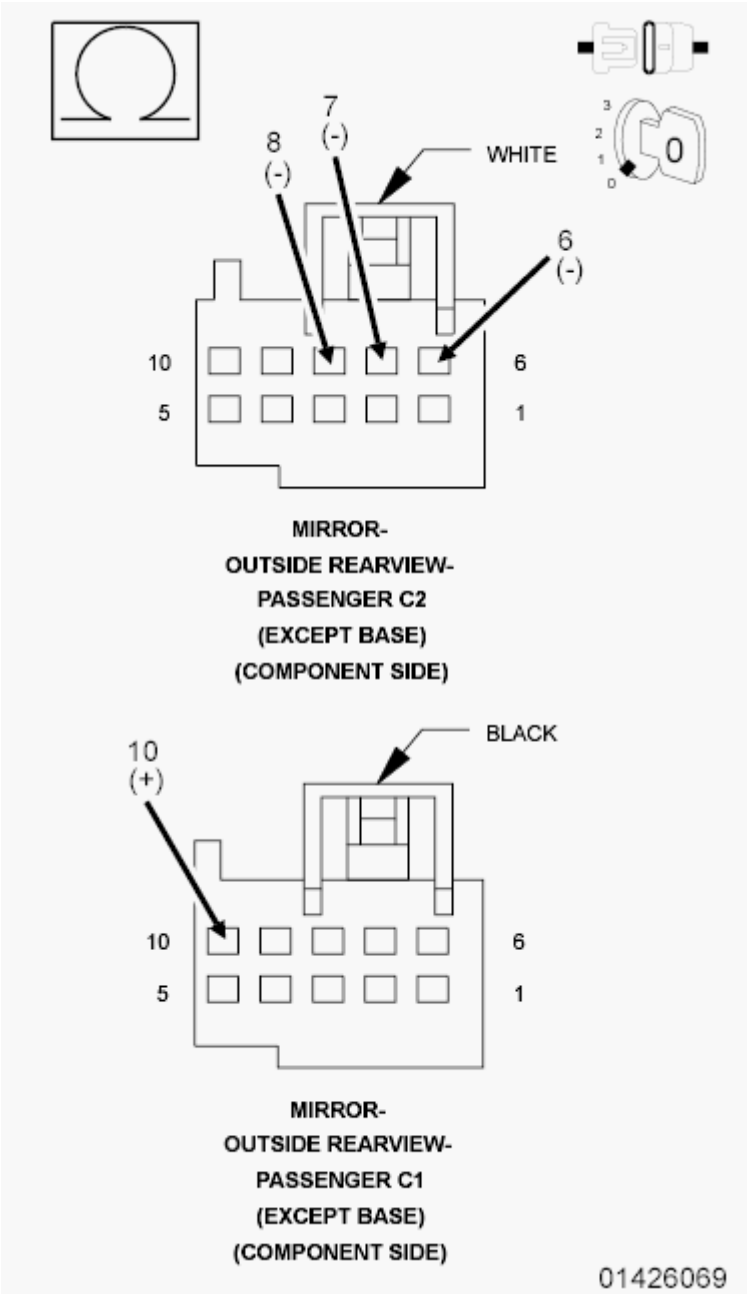

Fig. 63: Checking 5-Volt Supply Circuit For A Short To Other Circuits
Courtesy of CHRYSLER GROUP, LLC

1. Measure the resistance between the (A857) 5-volt Supply circuit and the (P72) Passenger Mirror Vertical Driver circuit at the Passenger Outside Rearview Mirror C1 and C2 (Component Side) connectors.
2. Measure the resistance between the (A857) 5-volt Supply circuit and the (P70) Passenger Mirror Common Driver circuit at the Passenger Outside Rearview Mirror C1 and C2 (Component Side) connectors.
3. Measure the resistance between the (A857) 5-volt Supply circuit and the (P74) Passenger Mirror Horizontal Driver circuit at the Passenger Outside Rearview Mirror C1 and C2 (Component Side)

connectors.

Is the resistance below 10K Ohms for any measurement?

Yes

- Repair all circuits with a resistance below 10K Ohms for a short to the (A857) 5-volt Supply circuit. If the wiring harness and connector are okay, replace the Passenger Outside Rearview Mirror in accordance with the Service Information.
- Perform the BODY VERIFICATION TEST. Refer to **STANDARD PROCEDURE** .

No, with Heated/Turn Signal Mirror

- Go To 8.

No, without Heated/Turn Signal Mirror

- Inspect the wiring and connectors for damage and repair as necessary. If the wiring and connectors are okay, replace the Door Module in accordance with the Service Information.
- Perform the BODY VERIFICATION TEST. Refer to **STANDARD PROCEDURE** .

8. **CHECK (A857) 5-VOLT SUPPLY CIRCUIT FOR A SHORT TO (C17) PASSENGER MIRROR HEATER DRIVER CIRCUIT OR TO (P502) PASSENGER MIRROR TURN SIGNAL DRIVER CIRCUIT**

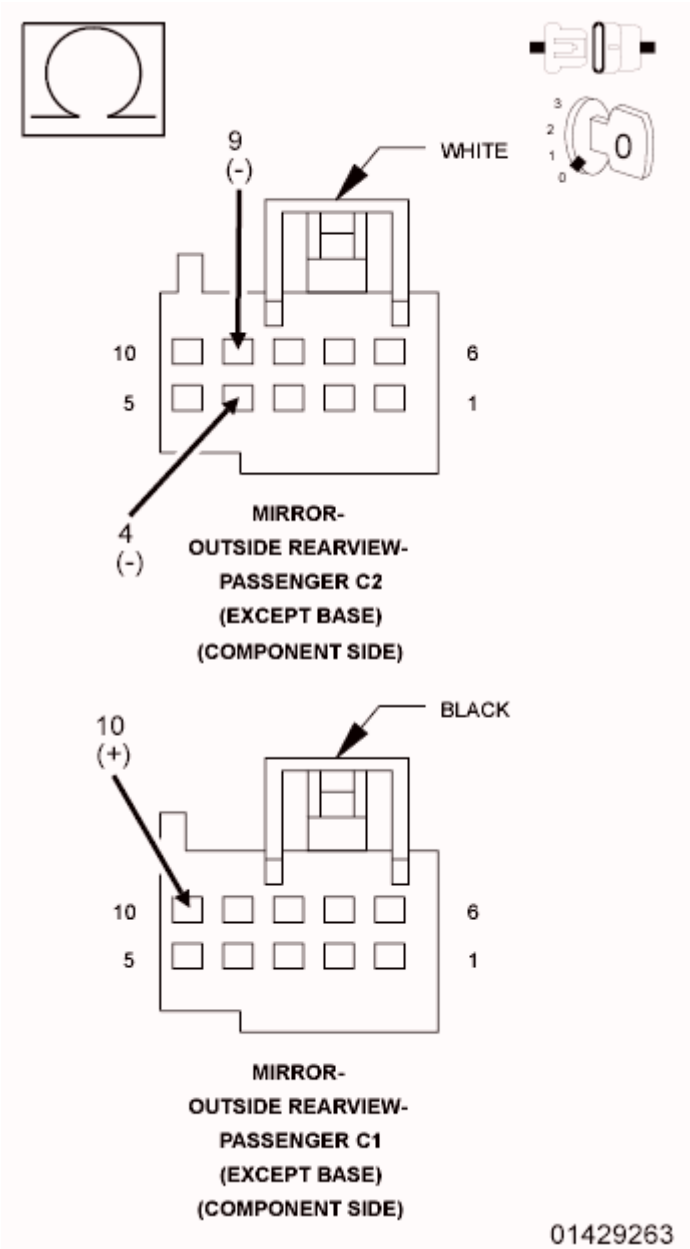

Fig. 64: Checking 5-Volt Supply Circuit For A Short To Passenger Mirror Heater Driver Circuit Or To Passenger Mirror Turn Signal Driver Circuit
Courtesy of CHRYSLER GROUP, LLC

1. For Heated Mirror, measure the resistance between the (A857) 5-volt Supply circuit and the (C17) Passenger Mirror Heater Driver circuit at the Passenger Outside Rearview Mirror C1 and C2 (Component Side) connectors.
2. For Turn Signal Mirror, measure the resistance between the (A857) 5-volt Supply circuit and the (P502) Passenger Mirror Turn Signal Driver circuit at the Passenger Outside Rearview Mirror C1 and C2 (Component Side) connectors.

   Is the resistance below 10K Ohms for either measurement?

Yes

- Repair all circuits with a resistance below 10K Ohms for a short to the (A857) 5-volt Supply circuit. If the wiring harness and connector are okay, replace the Passenger Outside Rearview Mirror in accordance with the Service Information.
- Perform the BODY VERIFICATION TEST. Refer to **STANDARD PROCEDURE** .

No

- Inspect the wiring and connectors for damage and repair as necessary. If the wiring and connectors are okay, replace the Door Module in accordance with the Service Information.
- Perform the BODY VERIFICATION TEST. Refer to **STANDARD PROCEDURE** .

B1D17-11-PASSENGER MIRROR HORIZONTAL POSITION SENSOR INPUT - CIRCUIT FOR A SHORT TO GROUND

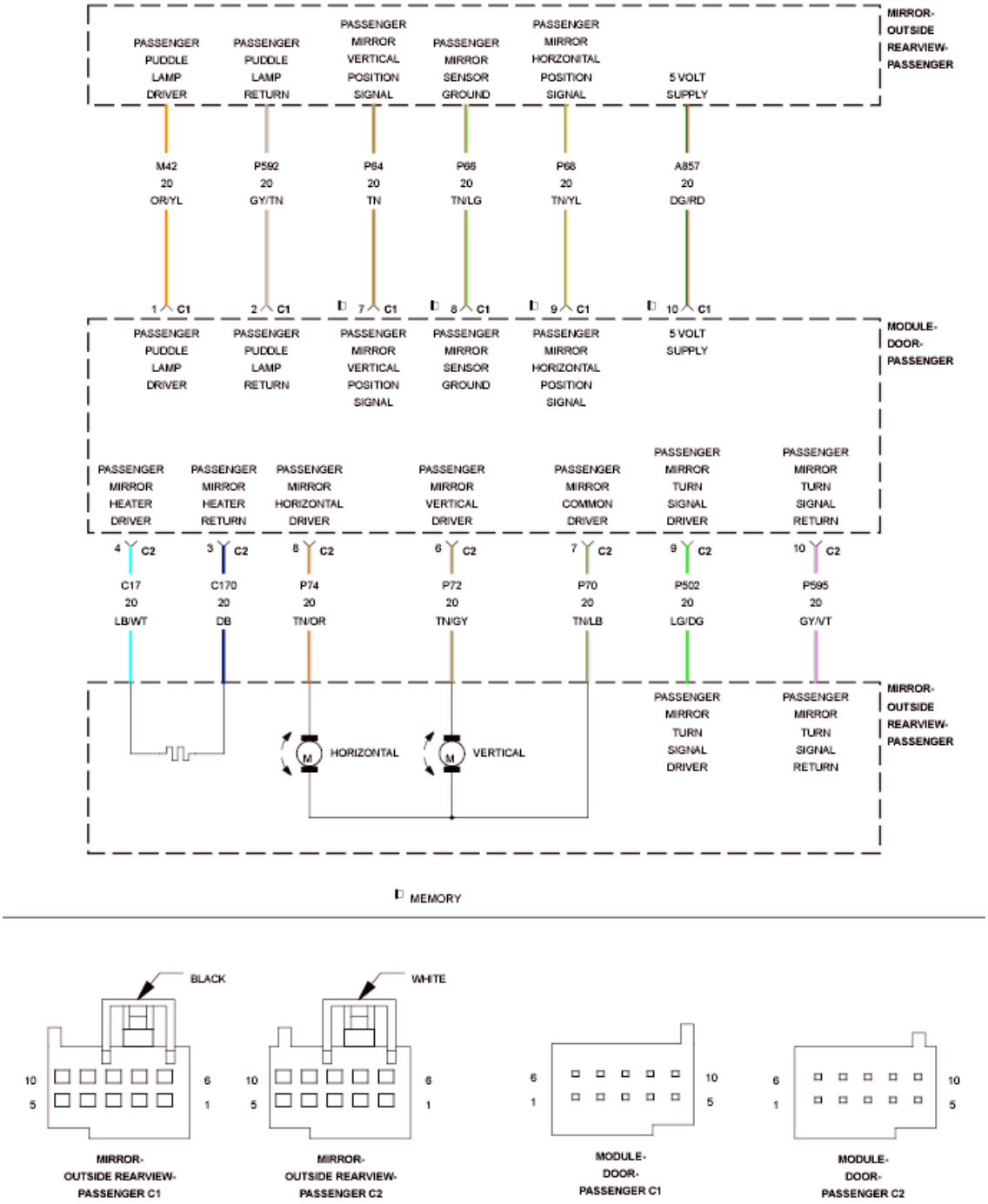

Fig. 65: Passenger Mirror Signal Lamp Control Wiring Diagram
Courtesy of CHRYSLER GROUP, LLC

For a complete wiring diagram, **refer to appropriate SYSTEM WIRING DIAGRAMS article** .

WHEN MONITORED:

Continuously.

SET CONDITION:

The Door Module senses a short low on the (P68) Passenger Mirror Horizontal Position Signal circuit for more than two seconds.

POSSIBLE CAUSES

Possible Causes
(P68) PASSENGER MIRROR HORIZONTAL POSITION SIGNAL CIRCUIT FOR A SHORT TO GROUND
(P68) PASSENGER MIRROR HORIZONTAL POSITION SIGNAL CIRCUIT FOR A SHORT TO THE (P66) PASSENGER MIRROR SENSOR GROUND CIRCUIT
(P68) PASSENGER MIRROR HORIZONTAL POSITION SIGNAL CIRCUIT FOR A SHORT TO THE (P592) PASSENGER PUDDLE LAMP RETURN CIRCUIT
(P68) PASSENGER MIRROR HORIZONTAL POSITION SIGNAL CIRCUIT FOR A SHORT TO THE (P72) PASSENGER MIRROR VERTICAL DRIVER CIRCUIT
(P68) PASSENGER MIRROR HORIZONTAL POSITION SIGNAL CIRCUIT FOR A SHORT TO THE (P70) PASSENGER MIRROR COMMON DRIVER CIRCUIT
(P68) PASSENGER MIRROR HORIZONTAL POSITION SIGNAL CIRCUIT FOR A SHORT TO THE (P74) PASSENGER MIRROR HORIZONTAL DRIVER CIRCUIT
(P68) PASSENGER MIRROR HORIZONTAL POSITION SIGNAL CIRCUIT FOR A SHORT TO THE (C170) PASSENGER MIRROR HEATER RETURN CIRCUIT
(P68) PASSENGER MIRROR HORIZONTAL POSITION SIGNAL CIRCUIT FOR A SHORT TO THE (P595) PASSENGER MIRROR TURN SIGNAL RETURN CIRCUIT
PASSENGER OUTSIDE REARVIEW MIRROR SHORTED
DOOR MODULE

DIAGNOSTIC TEST

1. **TEST FOR INTERMITTENT CONDITION**
    1. Turn the ignition on.
    2. With the can tool, record and erase DTC's.
    3. Turn the turn signal on, if equipped with turn signal mirror.
    4. Turn the puddle lamps on, if equipped with puddle lamp mirror.
    5. Turn the rear defogger on, if equipped with heated mirror.
    6. Press and release the Mirror Select switch to select the Passenger Outside Rearview Mirror.
    7. Operate the Mirror Adjust switch in all directions several times while monitoring the scan tool for DTC's.

    NOTE: **After adjusting the mirror in one direction wait at least two seconds before adjusting the mirror in the opposite direction, as this will allow time for an active fault to set if present.**

Does the scan tool display B1D17-11-PASSENGER MIRROR HORIZONTAL POSITION SENSOR INPUT - CIRCUIT FOR A SHORT TO GROUND?

Yes

- Go To 2.

No

- Test complete, the condition or conditions that originally set this DTC are not present at this time. Using the wiring diagrams as a guide, check all related splices and connectors for signs of water intrusion, corrosion, pushed out or bent terminals, and correct pin tension. For vehicle's equipped with folding outside rearview mirrors, repeat test with mirror folded. If DTC is now active, Go To 2.
- Perform the BODY VERIFICATION TEST. Refer to **STANDARD PROCEDURE** .

2. **CHECK (P68) PASSENGER MIRROR HORIZONTAL POSITION SIGNAL CIRCUIT FOR A SHORT TO GROUND**

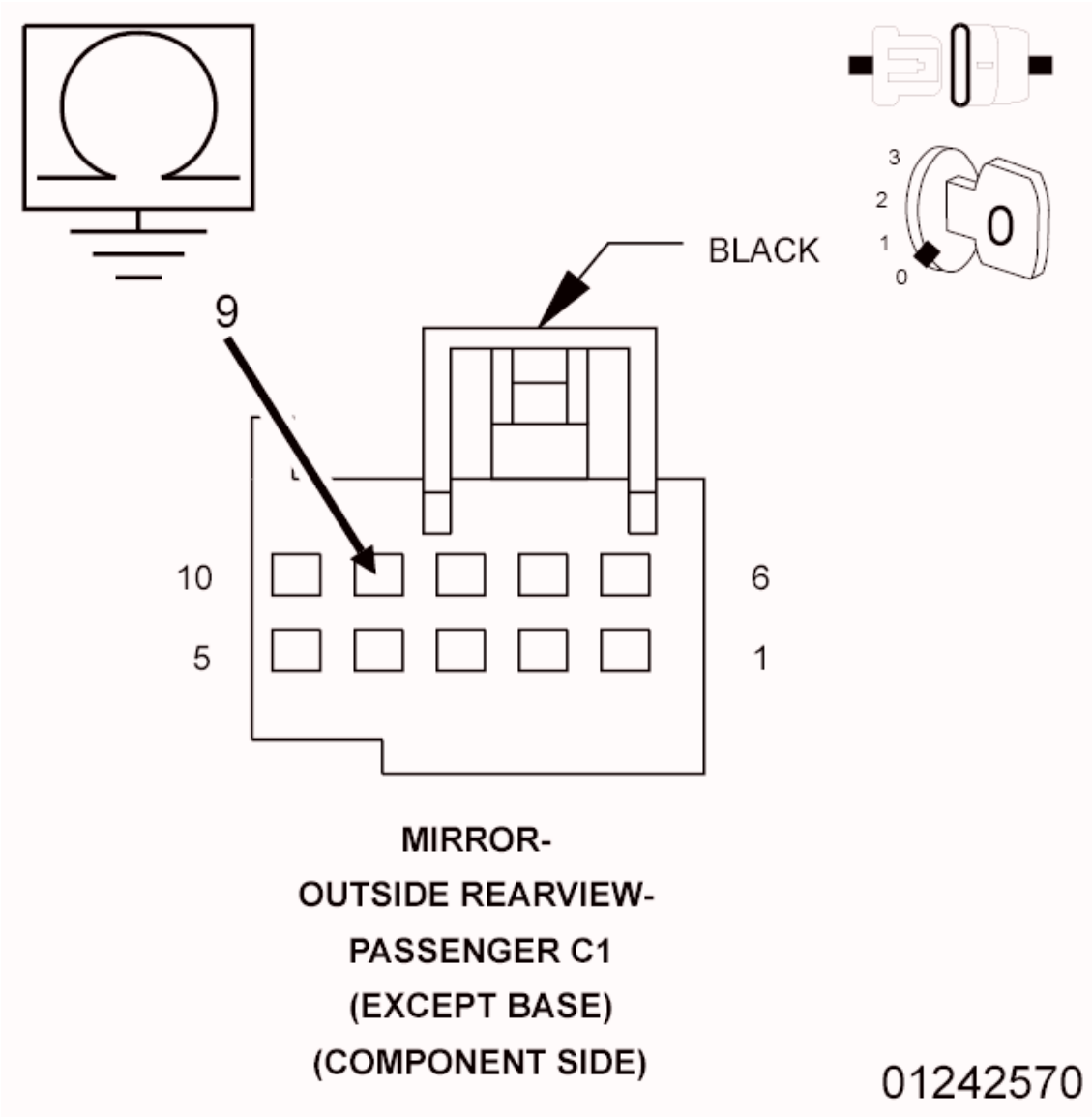

Fig. 66: Checking Passenger Mirror Horizontal Position Signal Circuit For A Short To Ground
Courtesy of CHRYSLER GROUP, LLC

1. Turn the ignition off.
2. Disconnect the Passenger Outside Rearview Mirror C1 (Component Side) harness connector from the Door Module.
3. Measure the resistance between ground and the (P68) Passenger Mirror Horizontal Position Signal circuit.

   Is the resistance below 10K Ohms?

   Yes

   - Repair the short to ground in the (P68) Passenger Mirror Horizontal Position Signal circuit. If the wiring harness and harness connector are okay, replace the Passenger Outside Rearview

Mirror in accordance with the Service Information.

- Perform the BODY VERIFICATION TEST. Refer to **STANDARD PROCEDURE** .

No

- Go To 3.

3. **CHECK (P68) PASSENGER MIRROR HORIZONTAL POSITION SIGNAL CIRCUIT FOR A SHORT TO (P66) PASSENGER MIRROR SENSOR GROUND CIRCUIT**

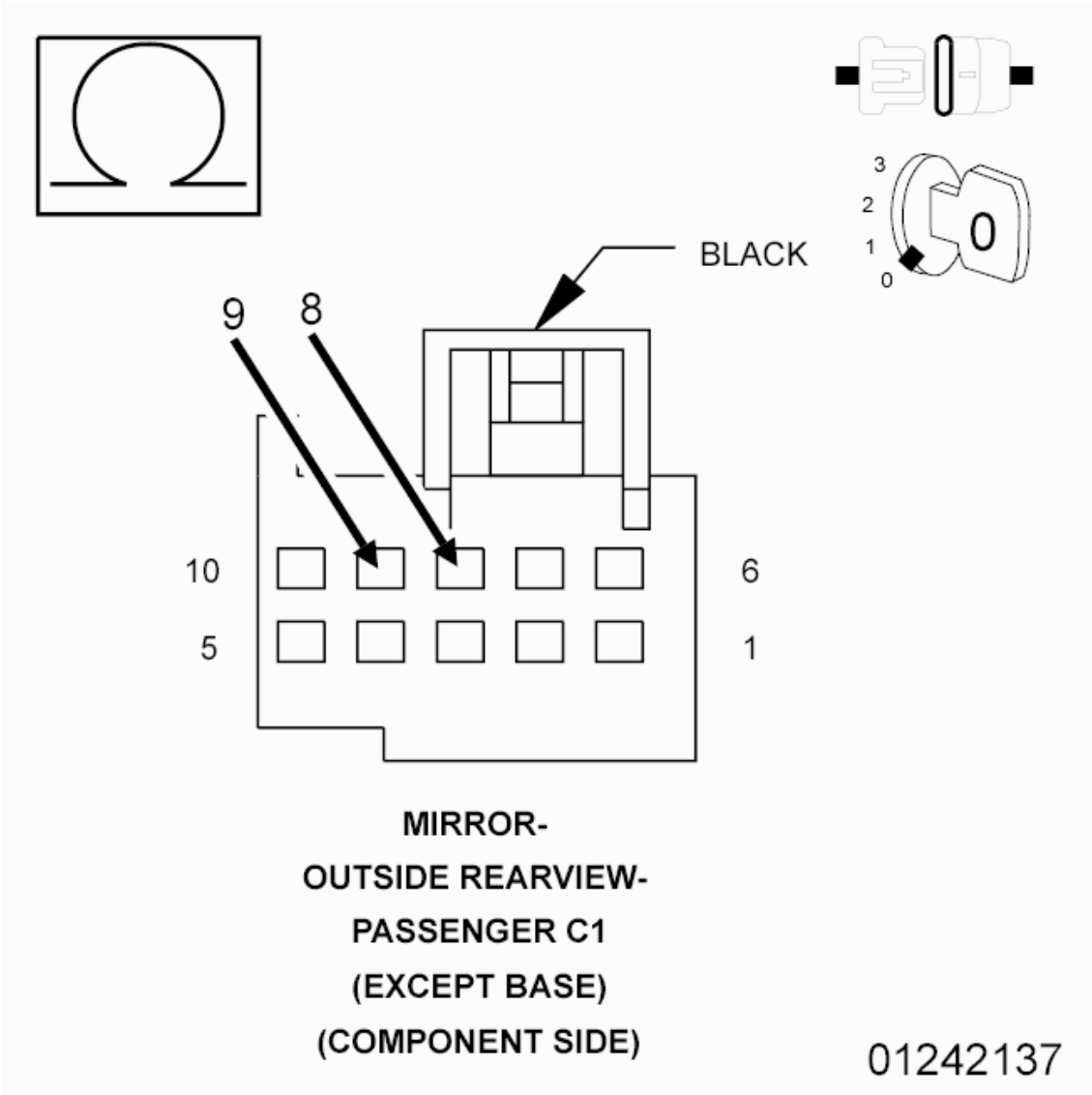

Fig. 67: Checking Passenger Mirror Horizontal Position Signal Circuit For A Short To Passenger Mirror Sensor Ground Circuit
Courtesy of CHRYSLER GROUP, LLC

1. Measure the residence between the (P68) Passenger Mirror Horizontal Position Signal circuit and the (P66) Passenger Mirror Sensor Ground circuit.

Is the resistance below 1.0 Ohm?

Yes

- Repair the (P68) Passenger Mirror Horizontal Position Signal circuit for a short to the (P66) Passenger Mirror Sensor Ground circuit. If the wiring harness and harness connector are okay, replace the Passenger Outside Rearview Mirror in accordance with the Service Information.
- Perform the BODY VERIFICATION TEST. Refer to **STANDARD PROCEDURE** .

No, with Puddle Lamp Mirror

- Go To 4.

No, without Puddle Lamp Mirror

- Go To 5.

4. **CHECK (P68) PASSENGER MIRROR HORIZONTAL POSITION SIGNAL CIRCUIT FOR A SHORT TO (P592) PASSENGER PUDDLE LAMP RETURN CIRCUIT**

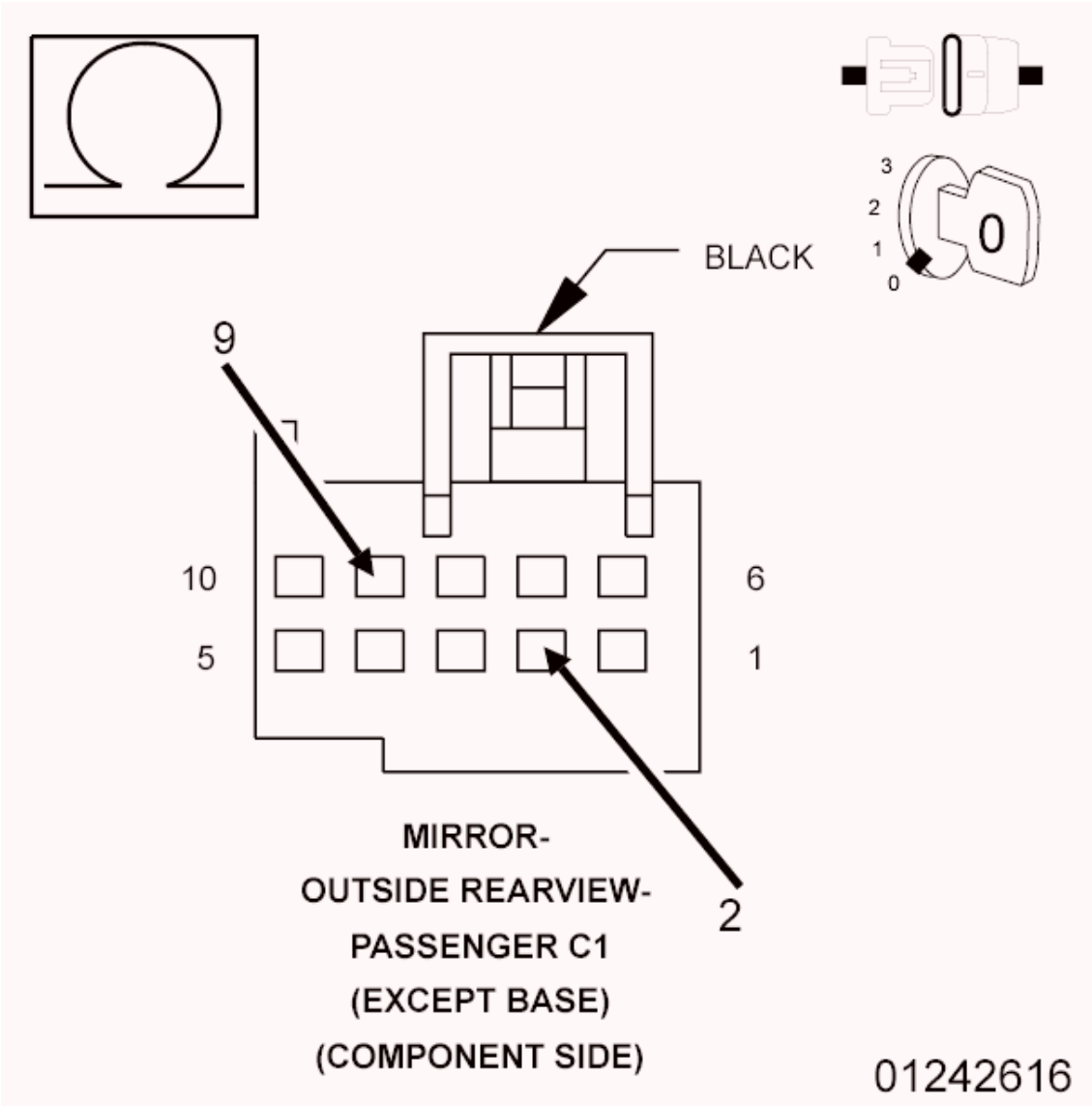

Fig. 68: Checking Passenger Mirror Horizontal Position Signal Circuit For A Short To Passenger Puddle Lamp Return Circuit
Courtesy of CHRYSLER GROUP, LLC

1. Measure the residence between the (P68) Passenger Mirror Horizontal Position Signal circuit and the (P592) Passenger Puddle Lamp Return circuit.

   Is the resistance below 10K Ohms?

   Yes

   - Repair the (P68) Passenger Mirror Horizontal Position Signal circuit for a short to the (P592) Passenger Puddle Lamp Return circuit. If the wiring harness and harness connector are okay, replace the Passenger Outside Rearview Mirror in accordance with the Service Information.
   - Perform the BODY VERIFICATION TEST. Refer to **STANDARD PROCEDURE** .

No

- Go To 5.

5. **CHECK (P68) PASSENGER MIRROR HORIZONTAL POSITION SIGNAL CIRCUIT FOR A SHORT TO (P72) PASSENGER MIRROR VERTICAL DRIVER CIRCUIT, (P70) PASSENGER MIRROR COMMON DRIVER CIRCUIT, OR TO (P74) PASSENGER MIRROR HORIZONTAL DRIVER CIRCUIT**

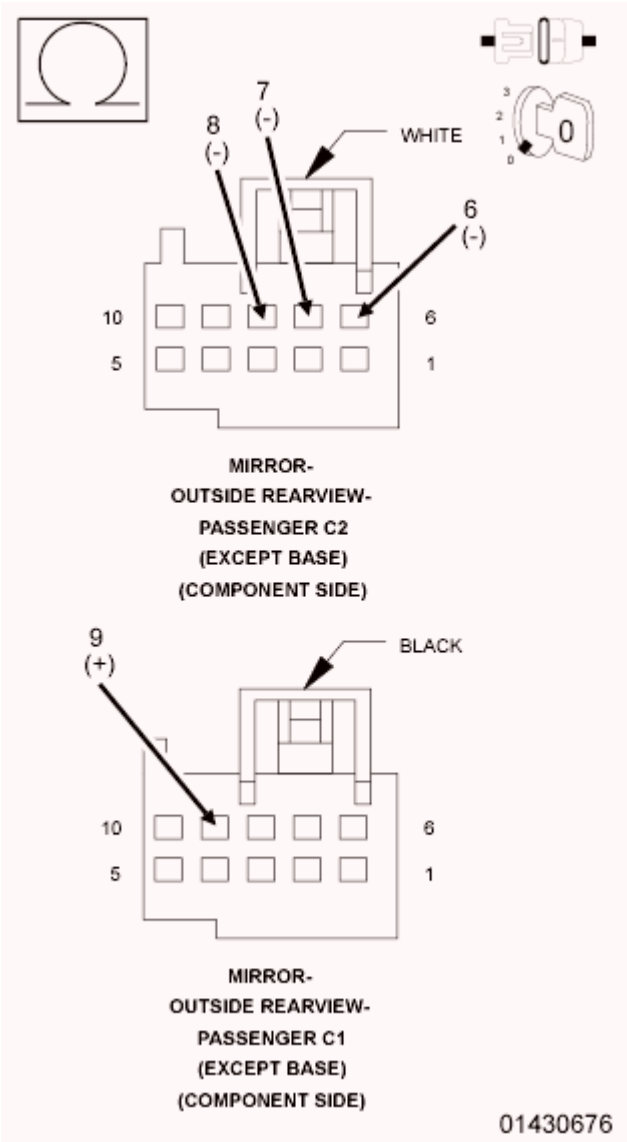

Fig. 69: Checking Passenger Mirror Horizontal Position Signal Circuit For A Short To Other Circuits
Courtesy of CHRYSLER GROUP, LLC

1. Disconnect the Passenger Outside Rearview Mirror C2 (Component Side) harness connector from the Door Module.
2. Measure the resistance between the (P68) Passenger Mirror Horizontal Position Signal circuit and

the (P72) Passenger Mirror Vertical Driver circuit at the Passenger Outside Rearview Mirror C1 and C2 (Component Side) harness connectors.

3. Measure the resistance between the (P68) Passenger Mirror Horizontal Position Signal circuit and the (P70) Passenger Mirror Common Driver circuit at the Passenger Outside Rearview Mirror C1 and C2 (Component Side) harness connectors.
4. Measure the resistance between the (P68) Passenger Mirror Horizontal Position Signal circuit and the (P74) Passenger Mirror Horizontal Driver circuit at the Passenger Outside Rearview Mirror C1 and C2 (Component Side) harness connectors.

Is the resistance below 10K Ohms for any measurement?

Yes

- Repair all circuits with a resistance below 10K Ohms for a short to the (P68) Passenger Mirror Horizontal Position Signal circuit. If the wiring harness and harness connector are okay, replace the Passenger Outside Rearview Mirror in accordance with the Service Information.
- Perform the BODY VERIFICATION TEST. Refer to **STANDARD PROCEDURE** .

No, with Heated/Turn Signal Mirror

- Go To 6.

No, without Heated/Turn Signal Mirror

- Inspect the wiring and harness connectors for damage and repair as necessary. If the wiring and harness connectors are okay, replace the Door Module in accordance with the Service Information.
- Perform the BODY VERIFICATION TEST. Refer to **STANDARD PROCEDURE** .

6. **CHECK (P68) PASSENGER MIRROR HORIZONTAL POSITION SIGNAL CIRCUIT FOR A SHORT TO (C170) PASSENGER MIRROR HEATER RETURN CIRCUIT OR TO (P595) PASSENGER MIRROR TURN SIGNAL RETURN CIRCUIT**

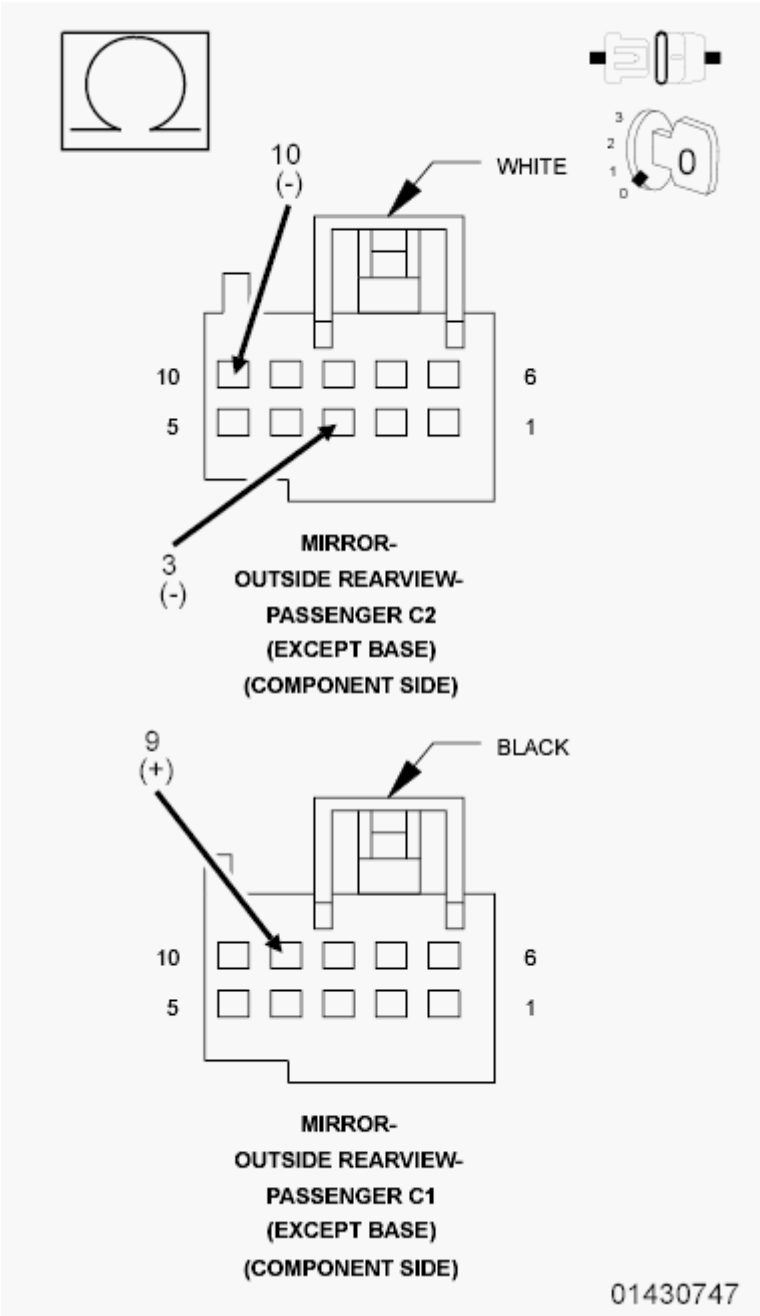

Fig. 70: Checking Passenger Mirror Horizontal Position Signal Circuit For A Short To Other Circuits
Courtesy of CHRYSLER GROUP, LLC

1. For Heated Mirror, measure the resistance between the (P68) Passenger Mirror Horizontal Position Signal circuit and the (C170) Passenger Mirror Heater Return circuit at the Passenger Outside Rearview Mirror C1 and C2 (Component Side) harness connectors.
2. For Turn Signal Mirror, measure the resistance between the (P68) Passenger Mirror Horizontal Position Signal circuit and the (P595) Passenger Mirror Turn Signal Return circuit at the Passenger Outside Rearview Mirror C1 and C2 (Component Side) harness connectors.

Is the resistance below 10K Ohms for either measurement?

Yes

- Repair all circuits with a resistance below 10K Ohms for a short to the (P68) Passenger Mirror Horizontal Position Signal circuit. If the wiring harness and harness connector are okay, replace the Passenger Outside Rearview Mirror in accordance with the Service Information.
- Perform the BODY VERIFICATION TEST. Refer to **STANDARD PROCEDURE** .

No

- Inspect the wiring and harness connectors for damage and repair as necessary. If the wiring and harness connectors are okay, replace the Door Module in accordance with the Service Information.
- Perform the BODY VERIFICATION TEST. Refer to **STANDARD PROCEDURE** .

B1D17-12-PASSENGER MIRROR HORIZONTAL POSITION SENSOR INPUT - CIRCUIT FOR A SHORT TO BATTERY

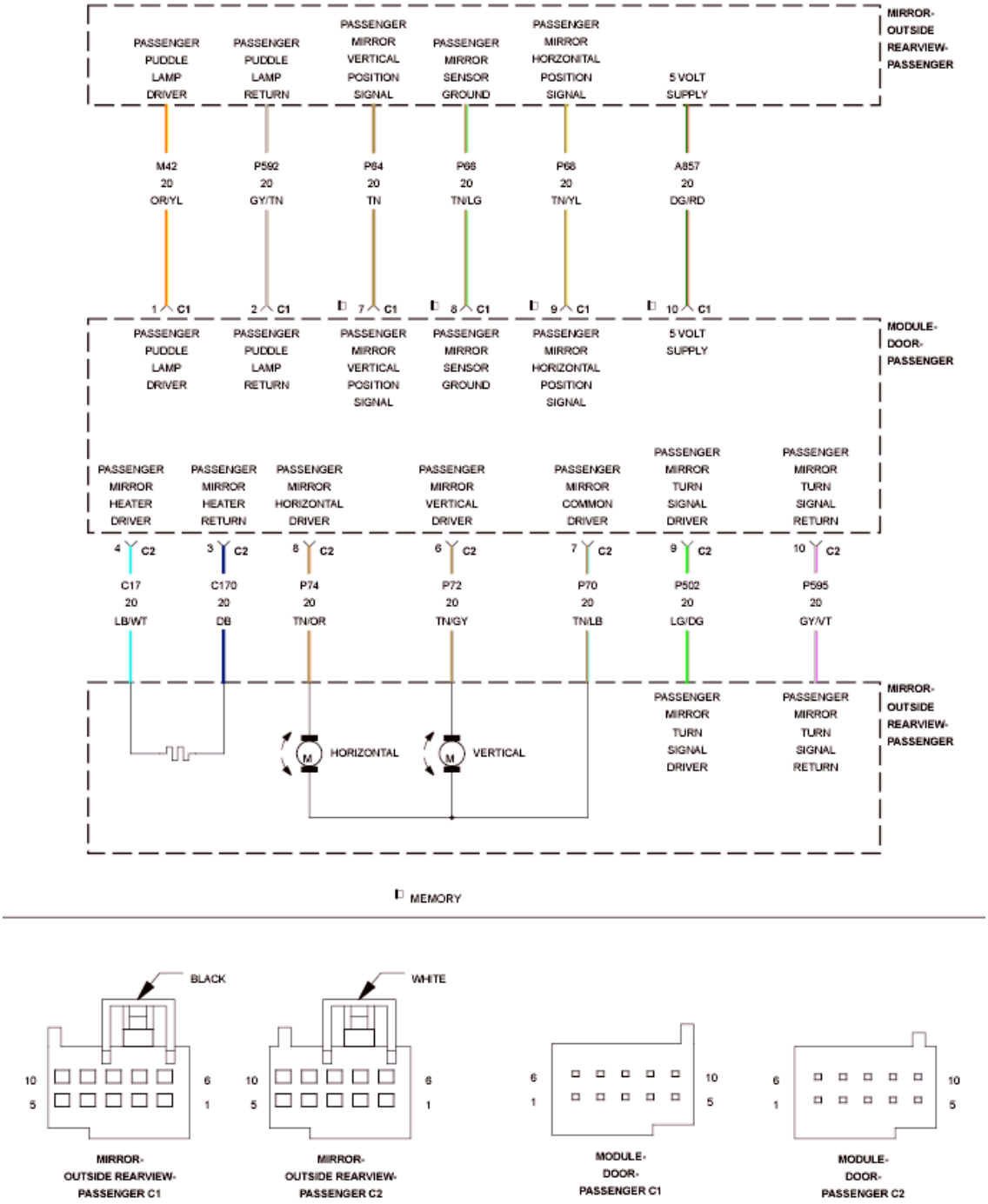

Fig. 71: Passenger Mirror Signal Lamp Control Wiring Diagram
Courtesy of CHRYSLER GROUP, LLC

For a complete wiring diagram, **refer to appropriate SYSTEM WIRING DIAGRAMS article** .

WHEN MONITORED:

Continuously.

SET CONDITION:

The Door Module senses more than 400 mA current on the (A857) 5-volt Supply circuit or an open or a short high on the (P68) Passenger Mirror Horizontal Position Signal circuit for more than two seconds.

POSSIBLE CAUSES

Possible Causes
(P68) PASSENGER MIRROR HORIZONTAL POSITION SIGNAL CIRCUIT FOR A SHORT TO VOLTAGE
(P68) PASSENGER MIRROR HORIZONTAL POSITION SIGNAL CIRCUIT FOR A SHORT TO THE (M42) PASSENGER PUDDLE LAMP DRIVER CIRCUIT
(P68) PASSENGER MIRROR HORIZONTAL POSITION SIGNAL CIRCUIT FOR AN OPEN
(P66) PASSENGER MIRROR SENSOR GROUND CIRCUIT FOR AN OPEN
(P68) PASSENGER MIRROR HORIZONTAL POSITION SIGNAL CIRCUIT FOR A SHORT TO THE (P72) PASSENGER MIRROR VERTICAL DRIVER CIRCUIT
(P68) PASSENGER MIRROR HORIZONTAL POSITION SIGNAL CIRCUIT FOR A SHORT TO THE (P70) PASSENGER MIRROR COMMON DRIVER CIRCUIT
(P68) PASSENGER MIRROR HORIZONTAL POSITION SIGNAL CIRCUIT FOR A SHORT TO THE (P74) PASSENGER MIRROR HORIZONTAL DRIVER CIRCUIT
(P68) PASSENGER MIRROR HORIZONTAL POSITION SIGNAL CIRCUIT FOR A SHORT TO THE (C17) PASSENGER MIRROR HEATER DRIVER CIRCUIT
(P68) PASSENGER MIRROR HORIZONTAL POSITION SIGNAL CIRCUIT FOR A SHORT TO THE (P502) PASSENGER MIRROR TURN SIGNAL DRIVER CIRCUIT
(A857) 5-VOLT SUPPLY CIRCUIT FOR A SHORT TO VOLTAGE
(A857) 5-VOLT SUPPLY CIRCUIT FOR A SHORT TO THE (M42) PASSENGER PUDDLE LAMP DRIVER CIRCUIT
(A857) 5-VOLT SUPPLY CIRCUIT FOR A SHORT TO THE (P72) PASSENGER MIRROR VERTICAL DRIVER CIRCUIT
(A857) 5-VOLT SUPPLY CIRCUIT FOR A SHORT TO THE (P70) PASSENGER MIRROR COMMON DRIVER CIRCUIT
(A857) 5-VOLT SUPPLY CIRCUIT FOR A SHORT TO THE (P74) PASSENGER MIRROR HORIZONTAL DRIVER CIRCUIT
(A857) 5-VOLT SUPPLY CIRCUIT FOR A SHORT TO THE (C17) PASSENGER MIRROR HEATER DRIVER CIRCUIT
(A857) 5-VOLT SUPPLY CIRCUIT FOR A SHORT TO THE (P502) PASSENGER MIRROR TURN SIGNAL DRIVER CIRCUIT
PASSENGER OUTSIDE REARVIEW MIRROR SHORTED
DOOR MODULE

DIAGNOSTIC TEST

1. **TEST FOR INTERMITTENT CONDITION**

1. Turn the ignition on.
2. Using a scan tool, record and erase Diagnostic Trouble Codes (DTC's).
3. Turn the turn signal on, if equipped with turn signal mirror.
4. Turn the puddle lamps on, if equipped with puddle lamp mirror.
5. Turn the rear defogger on, if equipped with heated mirror.
6. Press and release the Mirror Select switch to select the Passenger Outside Rearview Mirror.
7. Operate the Mirror Adjust switch in all directions several times while monitoring the scan tool for DTC's.

NOTE: **After adjusting the mirror in one direction wait at least two seconds before adjusting the mirror in the opposite direction, as this will allow time for an active fault to set if present.**

Is the DTC active?

Yes

- Go To 2.

No

- The conditions that caused this code to set are not present at this time. For vehicle's equipped with folding outside rearview mirrors, repeat test with mirror folded. If DTC is now active, Go To 2. Otherwise, use the wiring diagram/schematic as a guide and inspect the wiring and connectors.
- Perform the BODY VERIFICATION TEST. Refer to **STANDARD PROCEDURE** .

2. **CHECK (P68) PASSENGER MIRROR HORIZONTAL POSITION SIGNAL CIRCUIT AND (A857) 5-VOLT SUPPLY CIRCUIT FOR A SHORT TO VOLTAGE**

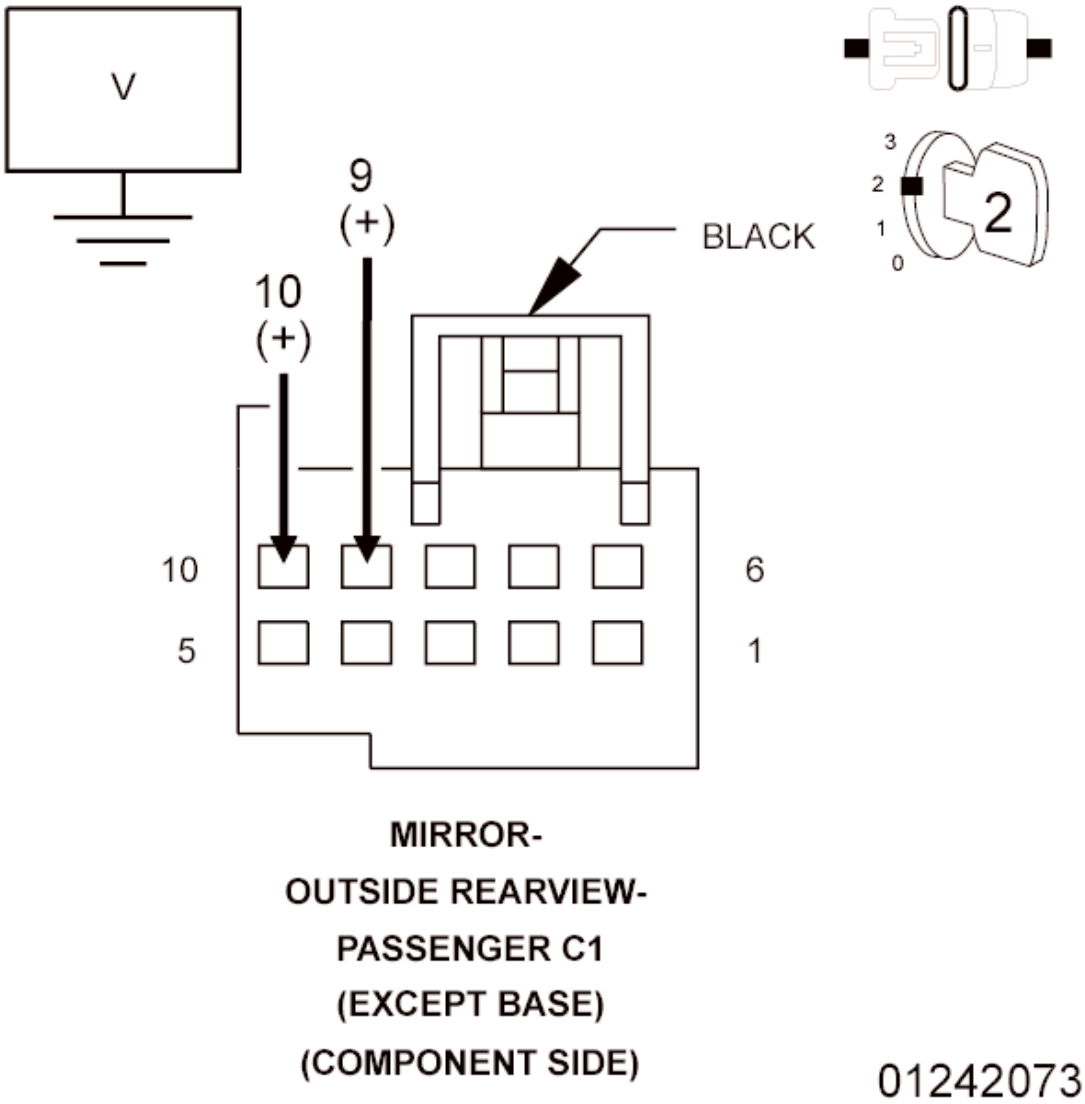

Fig. 72: Checking Passenger Mirror Horizontal Position Signal Circuit And 5-Volt Supply Circuit For A Short To Voltage
Courtesy of CHRYSLER GROUP, LLC

1. Turn the ignition off.
2. Disconnect the Passenger Outside Rearview Mirror C1 (Component Side) connector from the Door Module C1 connector.
3. Turn the ignition on.
4. Measure the Voltage of the (P68) Passenger Mirror Horizontal Position Signal circuit between the Passenger Outside Rearview Mirror C1 (Component Side) connector and ground.
5. Measure the voltage of the (A857) 5-volt Supply circuit between the Passenger Outside Rearview Mirror C1 (Component Side) connector and ground.

   Is there any Voltage present on either circuit?

Yes

- Repair all circuits with Voltage present for a short to Voltage. If the wiring harness and connector are okay, replace the Passenger Outside Rearview Mirror in accordance with the Service Information.
- Perform the BODY VERIFICATION TEST. Refer to **STANDARD PROCEDURE** .

No, with Puddle Lamp Mirror

- Go To 3.

No, without Puddle Lamp Mirror

- Go To 4.

3. **CHECK (P68) PASSENGER MIRROR HORIZONTAL POSITION SIGNAL CIRCUIT AND (A857) 5-VOLT SUPPLY CIRCUIT FOR A SHORT TO (M42) PASSENGER PUDDLE LAMP DRIVER CIRCUIT**

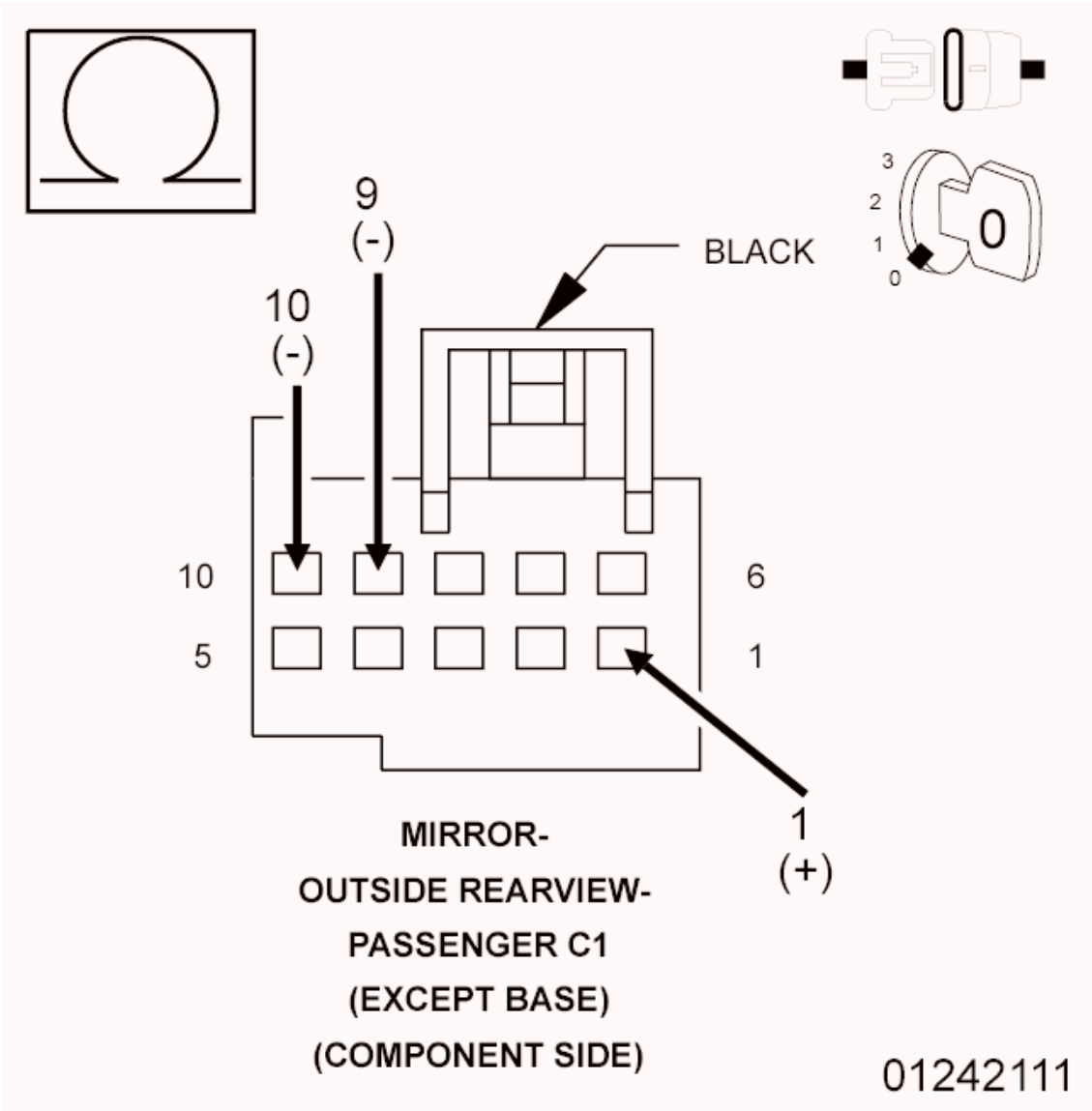

Fig. 73: Checking Passenger Mirror Horizontal Position Signal Circuit And 5-Volt Supply Circuit For A Short To Passenger Puddle Lamp Driver Circuit
Courtesy of CHRYSLER GROUP, LLC

1. Turn the ignition off.
2. Measure the resistance between the (M42) Passenger Puddle Lamp Driver circuit and the (P68) Passenger Mirror Horizontal Position Signal circuit at the Passenger Outside Rearview Mirror C1 (Component Side) connector.
3. Measure the resistance between the (M42) Passenger Puddle Lamp Driver circuit and the (A857) 5-volt Supply circuit at the Passenger Outside Rearview Mirror C1 (Component Side) connector.

   Is the resistance below 10K Ohms for either measurement?

   Yes

- Repair all circuits with a resistance below 10K Ohms for a short to the (M42) Passenger Puddle Lamp Driver circuit. If the wiring harness and connector are okay, replace the Passenger Outside Rearview Mirror in accordance with the Service Information.
- Perform the BODY VERIFICATION TEST. Refer to **STANDARD PROCEDURE** .

No

- Go To 4.

4. **CHECK (P68) PASSENGER MIRROR HORIZONTAL POSITION SIGNAL CIRCUIT AND (P66) PASSENGER MIRROR SENSOR GROUND CIRCUIT FOR AN OPEN**

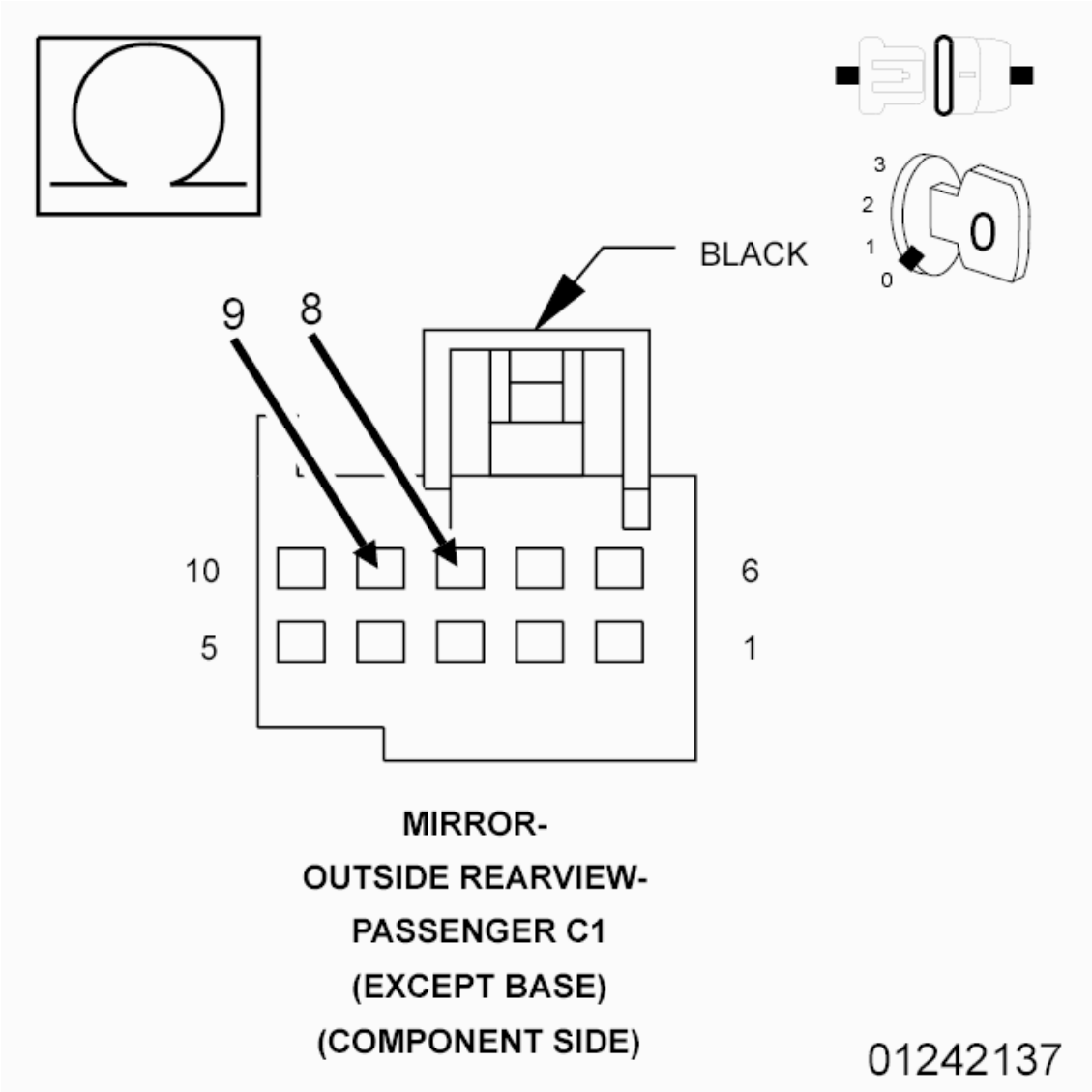

Fig. 74: Checking Passenger Mirror Horizontal Position Signal Circuit For A Short To Passenger Mirror Sensor Ground Circuit
Courtesy of CHRYSLER GROUP, LLC

1. If not done previously, turn the ignition off.
2. Measure the resistance between the (P68) Passenger Mirror Horizontal Position Signal circuit and the (P66) Passenger Mirror Sensor Ground circuit at the Passenger Outside Rearview Mirror C1 (Component Side) connector.

   Is the resistance below 3.0 Ohms?

   Yes

   - Go To 5.

   No

   - Repair the (P68) Passenger Mirror Horizontal Position Signal circuit or the (P66) Passenger Mirror Sensor Ground circuit for an open. If the wiring harness and connector are okay, replace the Passenger Outside Rearview Mirror in accordance with the Service Information.
   - Perform the BODY VERIFICATION TEST. Refer to **STANDARD PROCEDURE** .

5. **CHECK (P68) PASSENGER MIRROR HORIZONTAL POSITION SIGNAL CIRCUIT FOR A SHORT TO (P72) PASSENGER MIRROR VERTICAL DRIVER CIRCUIT, (P70) PASSENGER MIRROR COMMON DRIVER CIRCUIT, OR TO (P74) PASSENGER MIRROR HORIZONTAL DRIVER CIRCUIT**

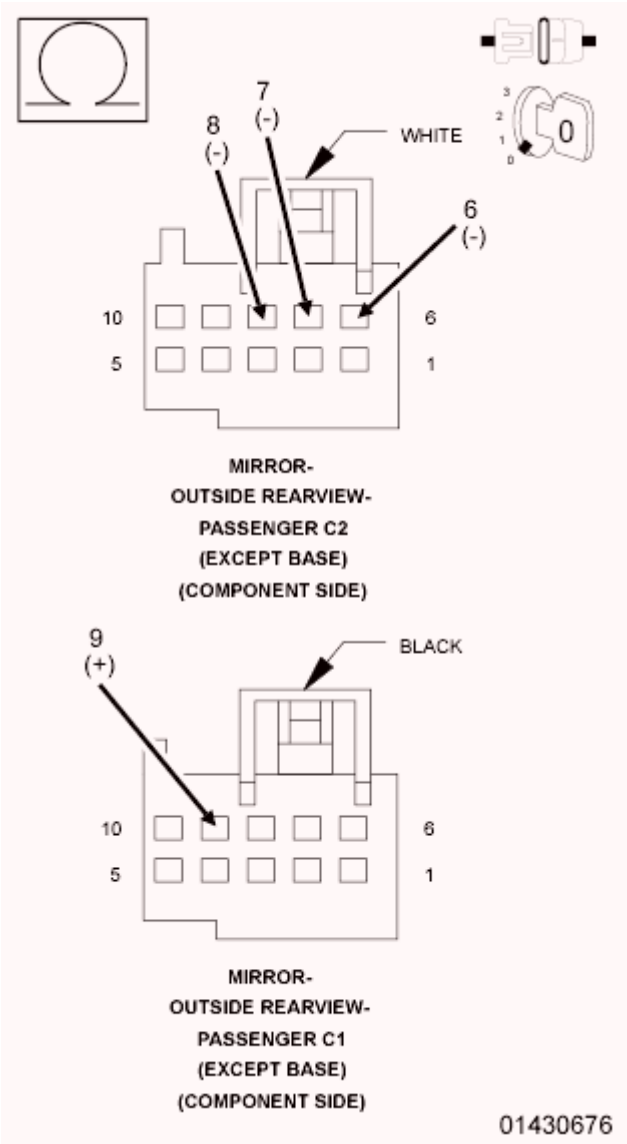

Fig. 75: Checking Passenger Mirror Horizontal Position Signal Circuit For A Short To Other Circuits
Courtesy of CHRYSLER GROUP, LLC

1. Disconnect the Passenger Outside Rearview Mirror C2 (Component Side) connector from the Door Module C2 connector.
2. Measure the resistance between the (P68) Passenger Mirror Horizontal Position Signal circuit and the (P72) Passenger Mirror Vertical Driver circuit at the Passenger Outside Rearview Mirror C1 and C2 (Component Side) connectors.
3. Measure the resistance between the (P68) Passenger Mirror Horizontal Position Signal circuit and the (P70) Passenger Mirror Common Driver circuit at the Passenger Outside Rearview Mirror C1 and C2 (Component Side) connectors.
4. Measure the resistance between the (P68) Passenger Mirror Horizontal Position Signal circuit and the (P74) Passenger Mirror Horizontal Driver circuit at the Passenger Outside Rearview Mirror C1 and C2 (Component Side) connectors.

Is the resistance below 10K Ohms for any measurement?

Yes

- Repair all circuits with a resistance below 10K Ohms for a short to the (P68) Passenger Mirror Horizontal Position Signal circuit. If the wiring harness and connector are okay, replace the Passenger Outside Rearview Mirror in accordance with the Service Information.
- Perform the BODY VERIFICATION TEST. Refer to **STANDARD PROCEDURE** .

No, with Heated/Turn Signal Mirror

- Go To 6.

No, without Heated/Turn Signal Mirror

- Go To 7.

6. **CHECK (P68) PASSENGER MIRROR HORIZONTAL POSITION SIGNAL CIRCUIT FOR A SHORT TO (C17) PASSENGER MIRROR HEATER DRIVER CIRCUIT OR TO (P502) PASSENGER MIRROR TURN SIGNAL DRIVER CIRCUIT**

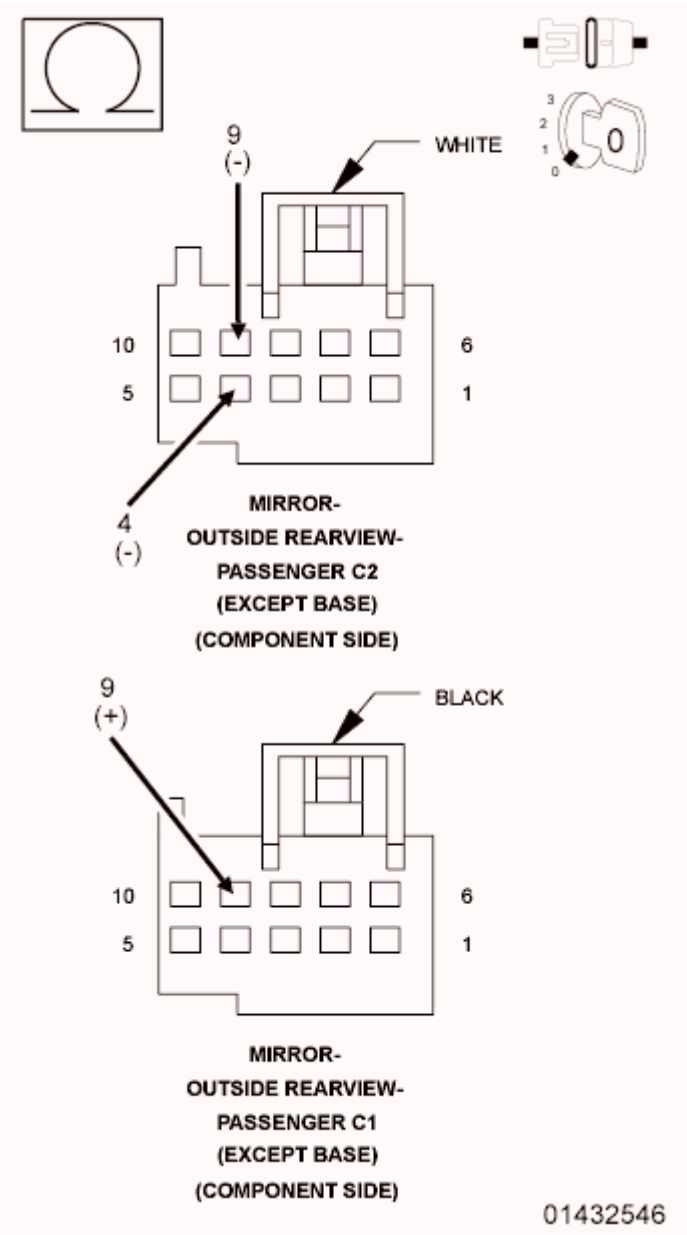

Fig. 76: Checking Passenger Mirror Horizontal Position Signal Circuit For A Short To Other Circuits
Courtesy of CHRYSLER GROUP, LLC

1. For Heated Mirror, measure the resistance between the (P68) Passenger Mirror Horizontal Position Signal circuit and the (C17) Passenger Mirror Heater Driver circuit at the Passenger Outside Rearview Mirror C1 and C2 (Component Side) connectors.
2. For Turn Signal Mirror, measure the resistance between the (P68) Passenger Mirror Horizontal Position Signal circuit and the (P502) Passenger Mirror Turn Signal Driver circuit at the Passenger Outside Rearview Mirror C1 and C2 (Component Side) connectors.

   Is the resistance below 10K Ohms for either measurement?

Yes

- Repair all circuits with a resistance below 10K Ohms for a short to the (P68) Passenger Mirror Horizontal Position Signal circuit. If the wiring harness and connector are okay, replace the Passenger Outside Rearview Mirror in accordance with the Service Information.
- Perform the BODY VERIFICATION TEST. Refer to **STANDARD PROCEDURE** .

No

- Go To 7.

7. **CHECK (A857) 5-VOLT SUPPLY CIRCUIT FOR A SHORT TO (P72) PASSENGER MIRROR VERTICAL DRIVER CIRCUIT, (P70) PASSENGER MIRROR COMMON DRIVER CIRCUIT, OR TO (P74) PASSENGER MIRROR HORIZONTAL DRIVER CIRCUIT**

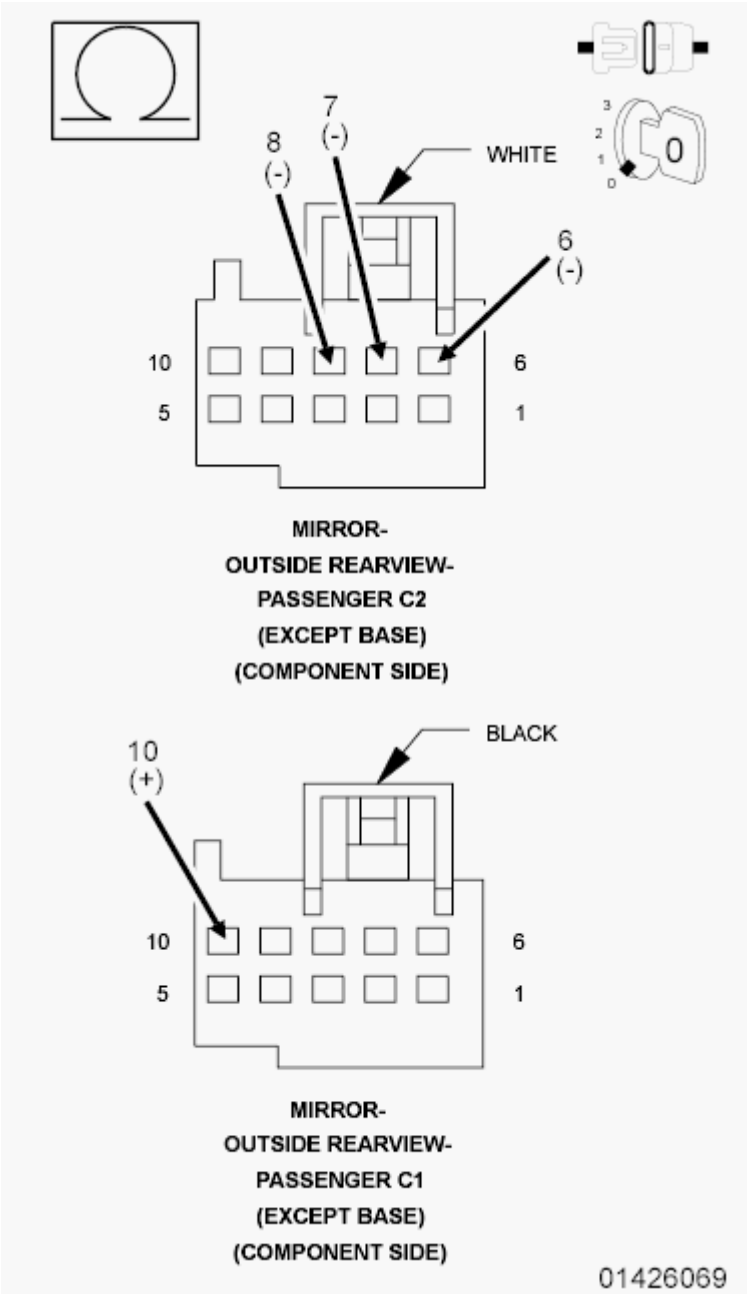

Fig. 77: Checking 5-Volt Supply Circuit For A Short To Other Circuits
Courtesy of CHRYSLER GROUP, LLC

1. Measure the resistance between the (A857) 5-volt Supply circuit and the (P72) Passenger Mirror Vertical Driver circuit at the Passenger Outside Rearview Mirror C1 and C2 (Component Side) connectors.
2. Measure the resistance between the (A857) 5-volt Supply circuit and the (P70) Passenger Mirror Common Driver circuit at the Passenger Outside Rearview Mirror C1 and C2 (Component Side) connectors.
3. Measure the resistance between the (A857) 5-volt Supply circuit and the (P74) Passenger Mirror Horizontal Driver circuit at the Passenger Outside Rearview Mirror C1 and C2 (Component Side)

connectors.

Is the resistance below 10K Ohms for any measurement?

Yes

- Repair all circuits with a resistance below 10K Ohms for a short to the (A857) 5-volt Supply circuit. If the wiring harness and connector are okay, replace the Passenger Outside Rearview Mirror in accordance with the Service Information.
- Perform the BODY VERIFICATION TEST. Refer to **STANDARD PROCEDURE** .

No, with Heated/Turn Signal Mirror

- Go To 8.

No, without Heated/Turn Signal Mirror

- Inspect the wiring and connectors for damage and repair as necessary. If the wiring and connectors are okay, replace the Door Module in accordance with the Service Information.
- Perform the BODY VERIFICATION TEST. Refer to **STANDARD PROCEDURE** .

8. **CHECK (A857) 5-VOLT SUPPLY CIRCUIT FOR A SHORT TO (C17) PASSENGER MIRROR HEATER DRIVER CIRCUIT OR TO (P502) PASSENGER MIRROR TURN SIGNAL DRIVER CIRCUIT**

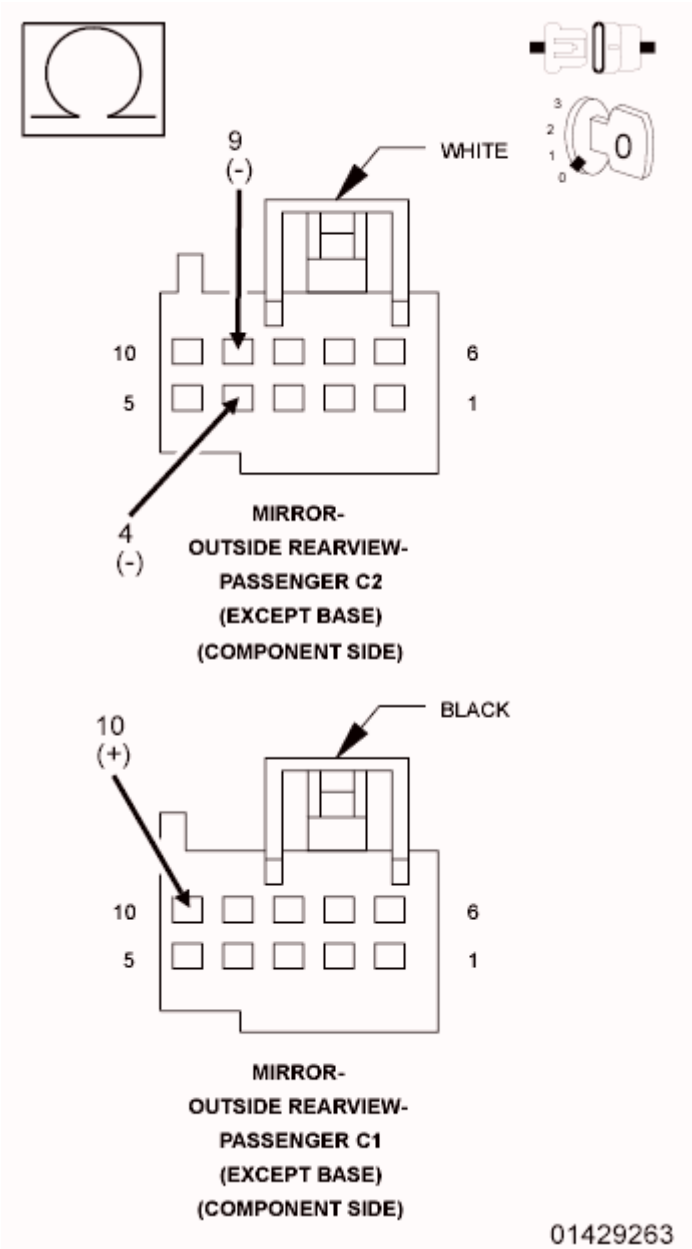

Fig. 78: Checking 5-Volt Supply Circuit For A Short To Passenger Mirror Heater Driver Circuit Or To Passenger Mirror Turn Signal Driver Circuit
Courtesy of CHRYSLER GROUP, LLC

1. For Heated Mirror, measure the resistance between the (A857) 5-volt Supply circuit and the (C17) Passenger Mirror Heater Driver circuit at the Passenger Outside Rearview Mirror C1 and C2 (Component Side) connectors.
2. For Turn Signal Mirror, measure the resistance between the (A857) 5-volt Supply circuit and the (P502) Passenger Mirror Turn Signal Driver circuit at the Passenger Outside Rearview Mirror C1 and C2 (Component Side) connectors.

   Is the resistance below 10K Ohms for either measurement?

Yes

- Repair all circuits with a resistance below 10K Ohms for a short to the (A857) 5-volt Supply circuit. If the wiring harness and connector are okay, replace the Passenger Outside Rearview Mirror in accordance with the Service Information.
- Perform the BODY VERIFICATION TEST. Refer to **STANDARD PROCEDURE** .

No

- Inspect the wiring and connectors for damage and repair as necessary. If the wiring and connectors are okay, replace the Door Module in accordance with the Service Information.
- Perform the BODY VERIFICATION TEST. Refer to **STANDARD PROCEDURE** .

B1D2A-11-PASSENGER MIRROR VERTICAL MOTOR CONTROL - CIRCUIT FOR A SHORT TO GROUND

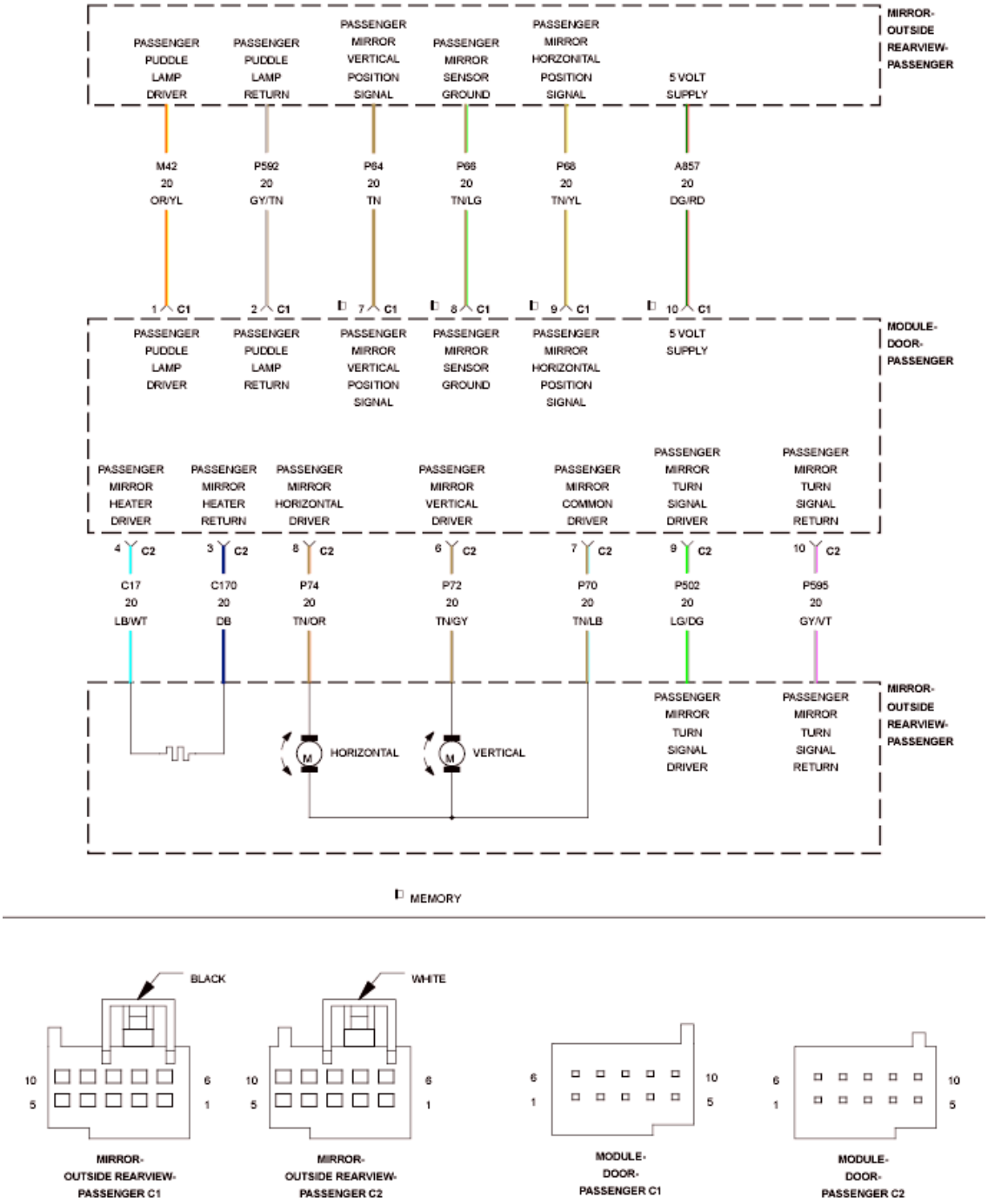

Fig. 79: Passenger Mirror Signal Lamp Control Wiring Diagram
Courtesy of CHRYSLER GROUP, LLC

For a complete wiring diagram, **refer to appropriate SYSTEM WIRING DIAGRAMS article** .

WHEN MONITORED:

Continuously.

SET CONDITION:

The Door Module senses a short low on the (P72) Passenger Mirror Vertical Driver circuit for more than two seconds.

POSSIBLE CAUSES

Possible Causes
(P72) PASSENGER MIRROR VERTICAL DRIVER CIRCUIT FOR A SHORT TO GROUND
(P72) PASSENGER MIRROR VERTICAL DRIVER CIRCUIT FOR A SHORT TO THE (C170) PASSENGER MIRROR HEATER RETURN CIRCUIT
(P72) PASSENGER MIRROR VERTICAL DRIVER CIRCUIT FOR A SHORT TO THE (P595) PASSENGER MIRROR TURN SIGNAL RETURN CIRCUIT
(P72) PASSENGER MIRROR VERTICAL DRIVER CIRCUIT FOR A SHORT TO THE (P66) PASSENGER MIRROR SENSOR GROUND CIRCUIT
(P72) PASSENGER MIRROR VERTICAL DRIVER CIRCUIT FOR A SHORT TO THE (P592) PASSENGER PUDDLE LAMP RETURN CIRCUIT
PASSENGER OUTSIDE REARVIEW MIRROR SHORTED
DOOR MODULE

DIAGNOSTIC TEST

1. **TEST FOR INTERMITTENT CONDITION**
    1. Turn the ignition on.
    2. Using a scan tool, record and erase Diagnostic Trouble Codes (DTC's).
    3. Turn the turn signal on, if equipped with turn signal mirror.
    4. Turn the puddle lamps on, if equipped with puddle lamp mirror.
    5. Turn the rear defogger on, if equipped with heated mirror.
    6. Press and release the Mirror Select switch to select the Passenger Outside Rearview Mirror.
    7. Operate the Mirror Adjust switch in all directions several times while monitoring the scan tool for DTC's.

    NOTE: **After adjusting the mirror in one direction wait at least two seconds before adjusting the mirror in the opposite direction as this will allow time for an active fault to set if present.**

    Is the DTC active?

    Yes

    - Go To 2.

No

- The conditions that caused this code to set are not present at this time. For vehicle's equipped with folding outside rearview mirrors, repeat test with mirror folded. If DTC is now active, Go To 2. Otherwise, use the wiring diagram/schematic as a guide and inspect the wiring and connectors.
- Perform the BODY VERIFICATION TEST. Refer to **STANDARD PROCEDURE** .

2. **CHECK (P72) PASSENGER MIRROR VERTICAL DRIVER CIRCUIT FOR A SHORT TO GROUND**

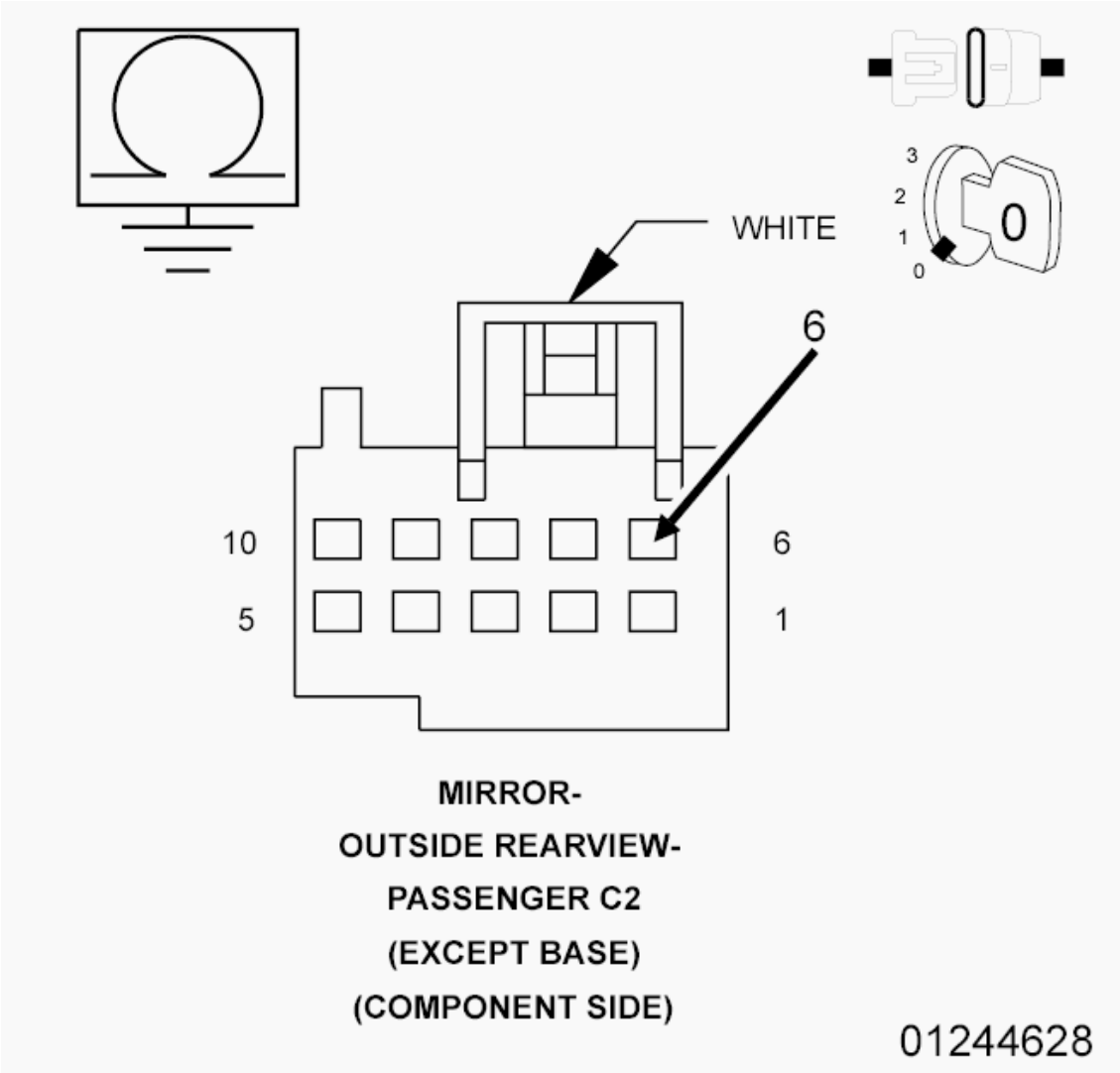

Fig. 80: Checking Passenger Mirror Vertical Driver Circuit For A Short To Ground
Courtesy of CHRYSLER GROUP, LLC

1. Turn the ignition off.
2. Disconnect the Passenger Outside Rearview Mirror C2 (Component Side) connector from the Door Module C2 connector.

3. Measure the resistance of the (P72) Passenger Mirror Vertical Driver circuit between ground and the Passenger Outside Rearview Mirror C2 (Component Side) connector.

   Is the resistance below 10K Ohms?

   Yes

   - Repair the (P72) Passenger Mirror Vertical Driver circuit for a short to ground. If the wiring harness and connector are okay, replace the Passenger Outside Rearview Mirror in accordance with the Service Information.
   - Perform the BODY VERIFICATION TEST. Refer to **STANDARD PROCEDURE** .

   No, with Heated/Turn Signal Mirror

   - Go To 3.

   No, without Heated/Turn Signal Mirror

   - Go To 4.

3. **CHECK (P72) PASSENGER MIRROR VERTICAL DRIVER CIRCUIT FOR A SHORT TO (C170) PASSENGER MIRROR HEATER RETURN CIRCUIT OR TO (P595) PASSENGER MIRROR TURN SIGNAL RETURN CIRCUIT**

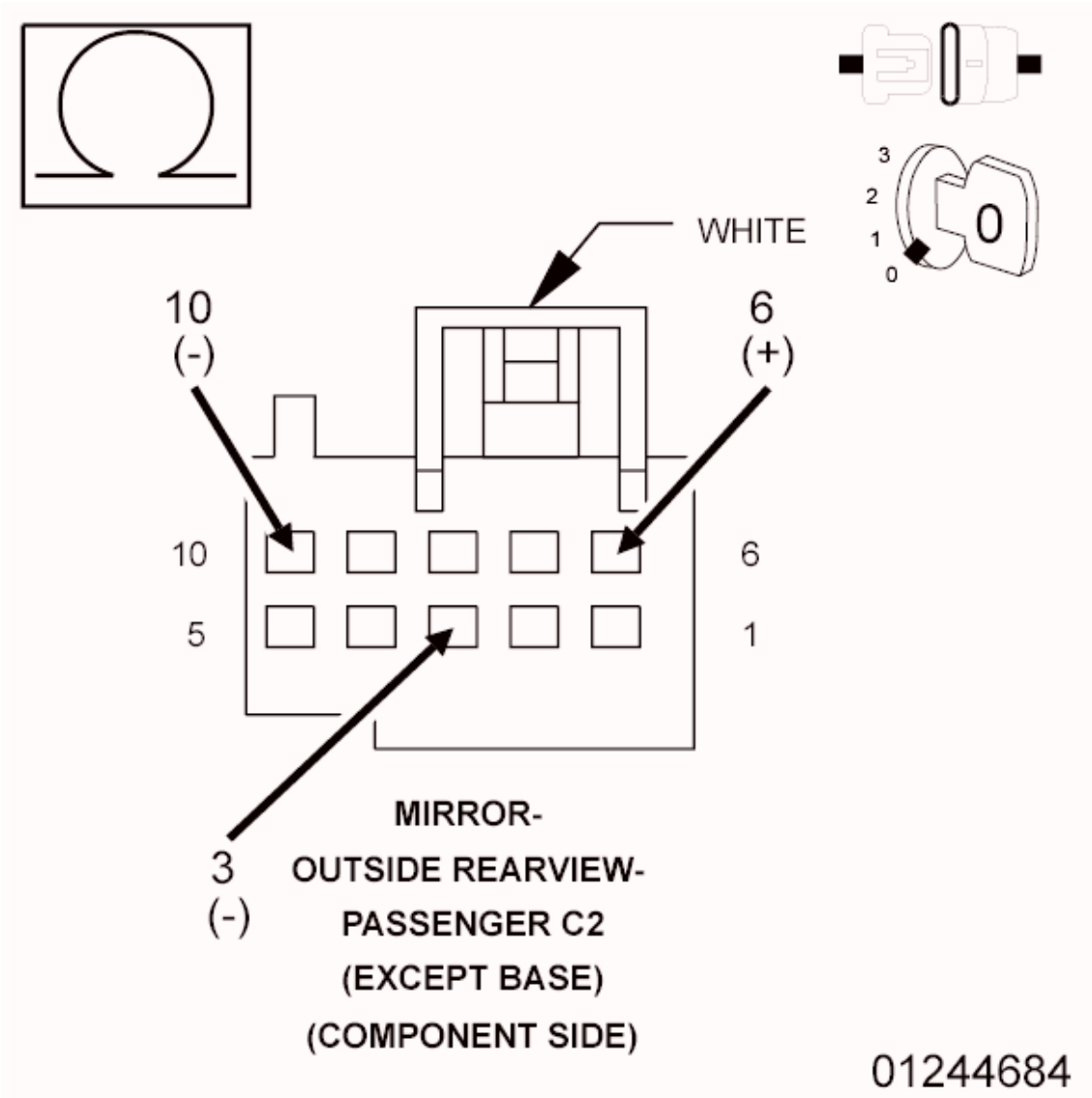

Fig. 81: Checking Passenger Mirror Vertical Driver Circuit For A Short To Passenger Mirror Heater Return Circuit Or To Passenger Mirror Turn Signal Return Circuit
Courtesy of CHRYSLER GROUP, LLC

1. For heated mirror, measure the resistance between the (P72) Passenger Mirror Vertical Driver circuit and the (C170) Passenger Mirror Heater Return circuit at the Passenger Outside Rearview Mirror C2 (Component Side) connector.
2. For turn signal mirror, measure the resistance between the (P72) Passenger Mirror Vertical Driver circuit and the (P595) Passenger Mirror Turn Signal Return circuit at the Passenger Outside Rearview Mirror C2 (Component Side) connector.

   Is the resistance below 10K Ohms for either measurement?

   Yes

- Repair all circuits with a resistance below 10K Ohms for a short to the (P72) Passenger Mirror Vertical Driver circuit. If the wiring harness and connector are okay, replace the Passenger Outside Rearview Mirror in accordance with the Service Information.
- Perform the BODY VERIFICATION TEST. Refer to **STANDARD PROCEDURE** .

No

- Go To 4.

4. **CHECK (P72) PASSENGER MIRROR VERTICAL DRIVER CIRCUIT FOR A SHORT TO (P66) PASSENGER MIRROR SENSOR GROUND CIRCUIT**

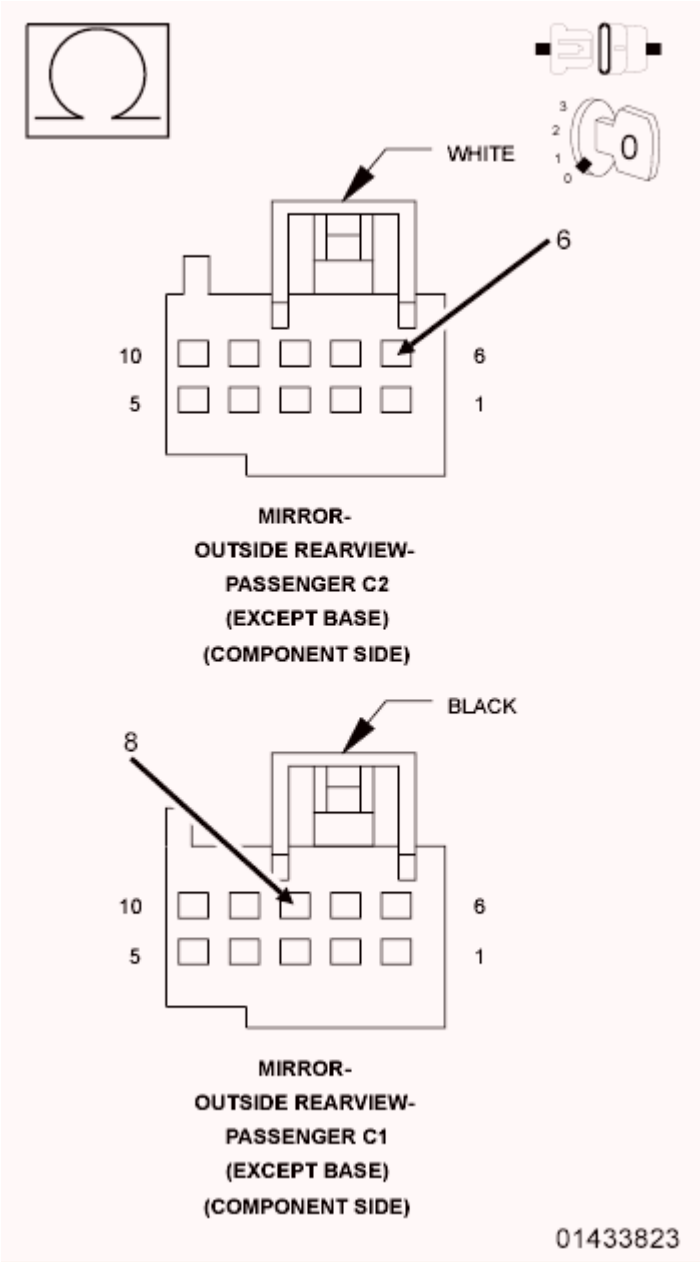

Fig. 82: Checking Passenger Mirror Vertical Driver Circuit For A Short To Passenger Mirror Sensor Ground Circuit
Courtesy of CHRYSLER GROUP, LLC

1. Disconnect the Passenger Outside Rearview Mirror C1 (Component Side) connector from the Door Module C1 connector.
2. Measure the resistance between the (P72) Passenger Mirror Vertical Driver circuit and the (P66) Passenger Mirror Sensor Ground circuit at the Passenger Outside Rearview Mirror C2 and C1 (Component Side) connectors.

   Is the resistance below 10K Ohms?

   Yes

   - Repair the (P72) Passenger Mirror Vertical Driver circuit for a short to the (P66) Passenger Mirror Sensor Ground circuit. If the wiring harness and connector are okay, replace the Passenger Outside Rearview Mirror in accordance with the Service Information.
   - Perform the BODY VERIFICATION TEST. Refer to **STANDARD PROCEDURE** .

   No, with Puddle Lamp Mirror

   - Go To 5.

   No, without Puddle Lamp Mirror

   - Inspect the wiring and connectors for damage and repair as necessary. If the wiring and connectors are okay, replace the Door Module in accordance with the Service Information.
   - Perform the BODY VERIFICATION TEST. Refer to **STANDARD PROCEDURE** .

5. **CHECK (P72) PASSENGER MIRROR VERTICAL DRIVER CIRCUIT FOR A SHORT TO (P592) PASSENGER PUDDLE LAMP RETURN CIRCUIT**

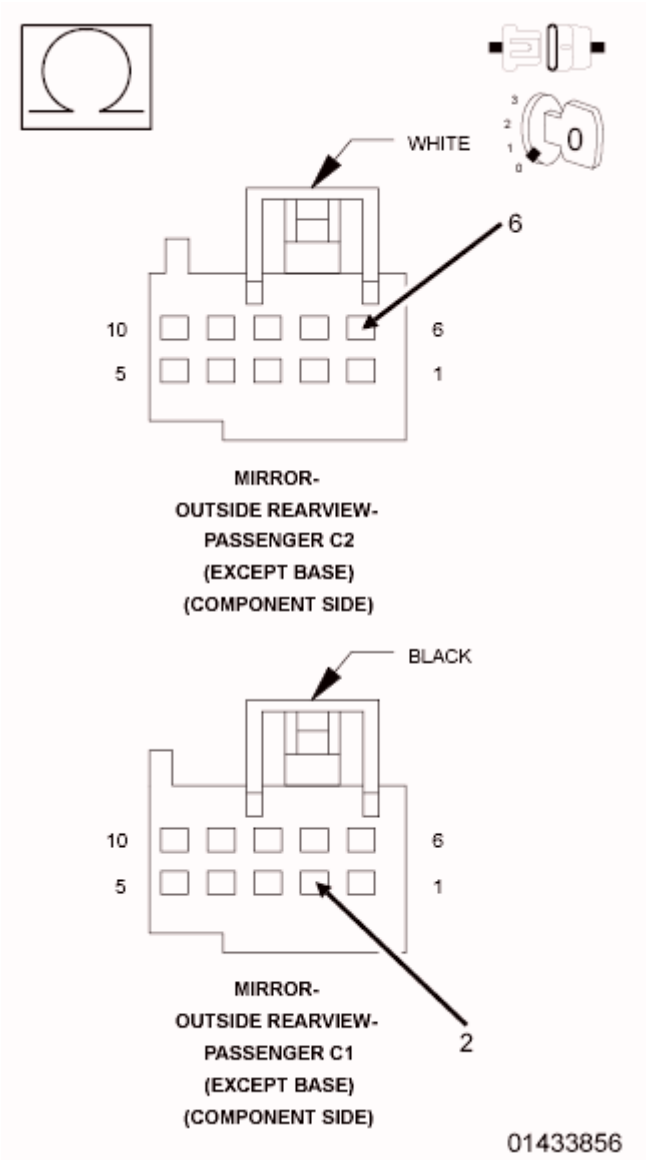

Fig. 83: Checking Passenger Mirror Vertical Driver Circuit For A Short To Passenger Puddle Lamp Return Circuit
Courtesy of CHRYSLER GROUP, LLC

1. Measure the resistance between the (P72) Passenger Mirror Vertical Driver circuit and the (P592) Passenger Puddle Lamp Return circuit at the Passenger Outside Rearview Mirror C2 and C1 (Component Side) connectors.

   Is the resistance below 10K Ohms?

   Yes

   - Repair the (P72) Passenger Mirror Vertical Driver circuit for a short to the (P592) Passenger Puddle Lamp Return circuit. If the wiring harness and connector are okay, replace the Passenger Outside Rearview Mirror in accordance with the Service Information.

- Perform the BODY VERIFICATION TEST. Refer to **STANDARD PROCEDURE** .

No

- Inspect the wiring and connectors for damage and repair as necessary. If the wiring and connectors are okay, replace the Door Module in accordance with the Service Information.
- Perform the BODY VERIFICATION TEST. Refer to **STANDARD PROCEDURE** .

B1D2E-11-PASSENGER MIRROR HORIZONTAL MOTOR CONTROL - CIRCUIT FOR A SHORT TO GROUND

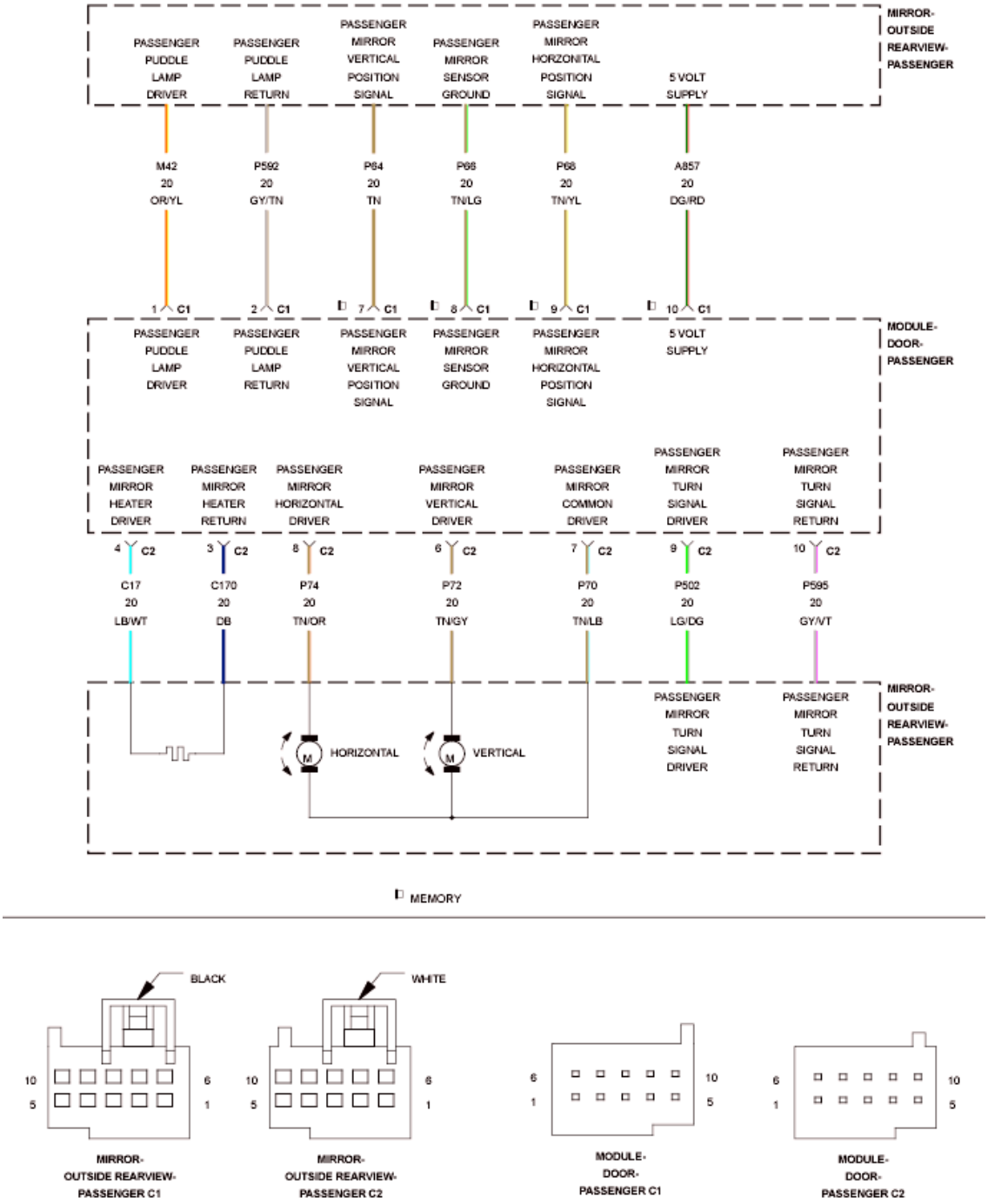

Fig. 84: Passenger Mirror Signal Lamp Control Wiring Diagram
Courtesy of CHRYSLER GROUP, LLC

For a complete wiring diagram, **refer to appropriate SYSTEM WIRING DIAGRAMS article** .

WHEN MONITORED:

Continuously.

SET CONDITION:

The Door Module senses a short low on the (P74) Passenger Mirror Horizontal Driver circuit for more than two seconds.

POSSIBLE CAUSES

Possible Causes
(P74) PASSENGER MIRROR HORIZONTAL DRIVER CIRCUIT FOR A SHORT TO GROUND
(P74) PASSENGER MIRROR HORIZONTAL DRIVER CIRCUIT FOR A SHORT TO THE (C170) PASSENGER MIRROR HEATER RETURN CIRCUIT
(P74) PASSENGER MIRROR HORIZONTAL DRIVER CIRCUIT FOR A SHORT TO THE (P595) PASSENGER MIRROR TURN SIGNAL RETURN CIRCUIT
(P74) PASSENGER MIRROR HORIZONTAL DRIVER CIRCUIT FOR A SHORT TO THE (P66) PASSENGER MIRROR SENSOR GROUND CIRCUIT
(P74) PASSENGER MIRROR HORIZONTAL DRIVER CIRCUIT FOR A SHORT TO THE (P592) PASSENGER PUDDLE LAMP RETURN CIRCUIT
PASSENGER OUTSIDE REARVIEW MIRROR SHORTED
DOOR MODULE

DIAGNOSTIC TEST

1. **TEST FOR INTERMITTENT CONDITION**
    1. Turn the ignition on.
    2. Using a scan tool, record and erase Diagnostic Trouble Codes (DTC's).
    3. Turn the turn signal on, if equipped with turn signal mirror.
    4. Turn the puddle lamps on, if equipped with puddle lamp mirror.
    5. Turn the rear defogger on, if equipped with heated mirror.
    6. Press and release the Mirror Select switch to select the Passenger Outside Rearview Mirror.
    7. Operate the Mirror Adjust switch in all directions several times while monitoring the scan tool for DTC's.

    NOTE: **After adjusting the mirror in one direction wait at least two seconds before adjusting the mirror in the opposite direction, as this will allow time for an active fault to set if present.**

    Is the DTC active?

    Yes

    - Go To 2.

No

- The conditions that caused this code to set are not present at this time. For vehicle's equipped with folding outside rearview mirrors, repeat test with mirror folded. If DTC is now active, Go To 2. Otherwise, use the wiring diagram/schematic as a guide and inspect the wiring and connectors.
- Perform the BODY VERIFICATION TEST. Refer to **STANDARD PROCEDURE** .

2. **CHECK (P74) PASSENGER MIRROR HORIZONTAL DRIVER CIRCUIT FOR A SHORT TO GROUND**

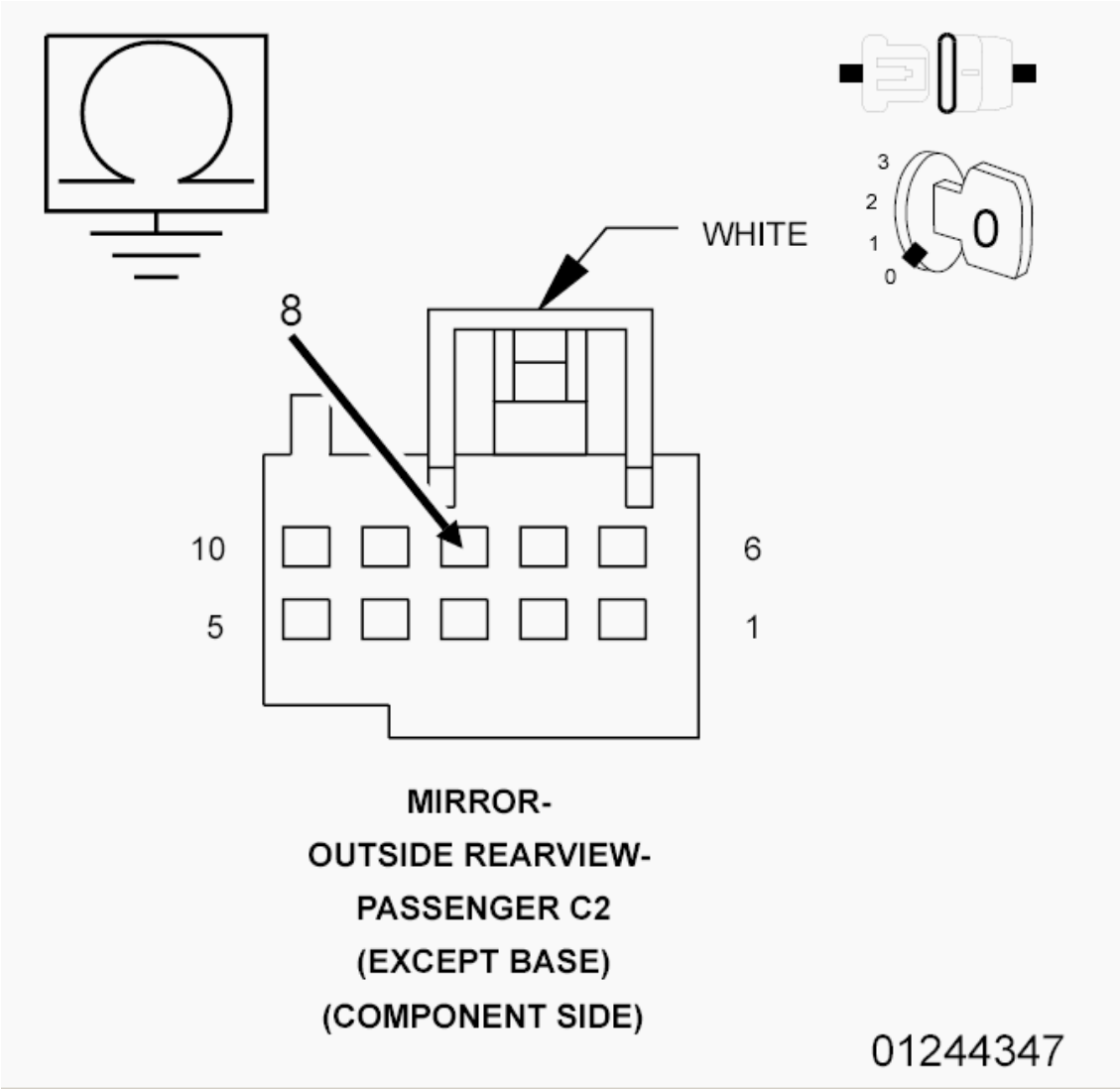

Fig. 85: Checking Passenger Mirror Horizontal Driver Circuit For A Short To Ground
Courtesy of CHRYSLER GROUP, LLC

1. Turn the ignition off.
2. Disconnect the Passenger Outside Rearview Mirror C2 (Component Side) connector from the Door Module C2 connector.

3. Measure the resistance of the (P74) Passenger Mirror Horizontal Driver circuit between ground and the Passenger Outside Rearview Mirror C2 (Component Side) connector.

   Is the resistance below 10K Ohms?

   Yes

   - Repair the (P74) Passenger Mirror Horizontal Driver circuit for a short to ground. If the wiring harness and connector are okay, replace the Passenger Outside Rearview Mirror in accordance with the Service Information.
   - Perform the BODY VERIFICATION TEST. Refer to **STANDARD PROCEDURE** .

   No, with Heated/Turn Signal Mirror

   - Go To 3.

   No, without Heated/Turn Signal Mirror

   - Go To 4.

3. **CHECK (P74) PASSENGER MIRROR HORIZONTAL DRIVER CIRCUIT FOR A SHORT TO (C170) PASSENGER MIRROR HEATER RETURN CIRCUIT OR TO (P595) PASSENGER MIRROR TURN SIGNAL RETURN CIRCUIT**

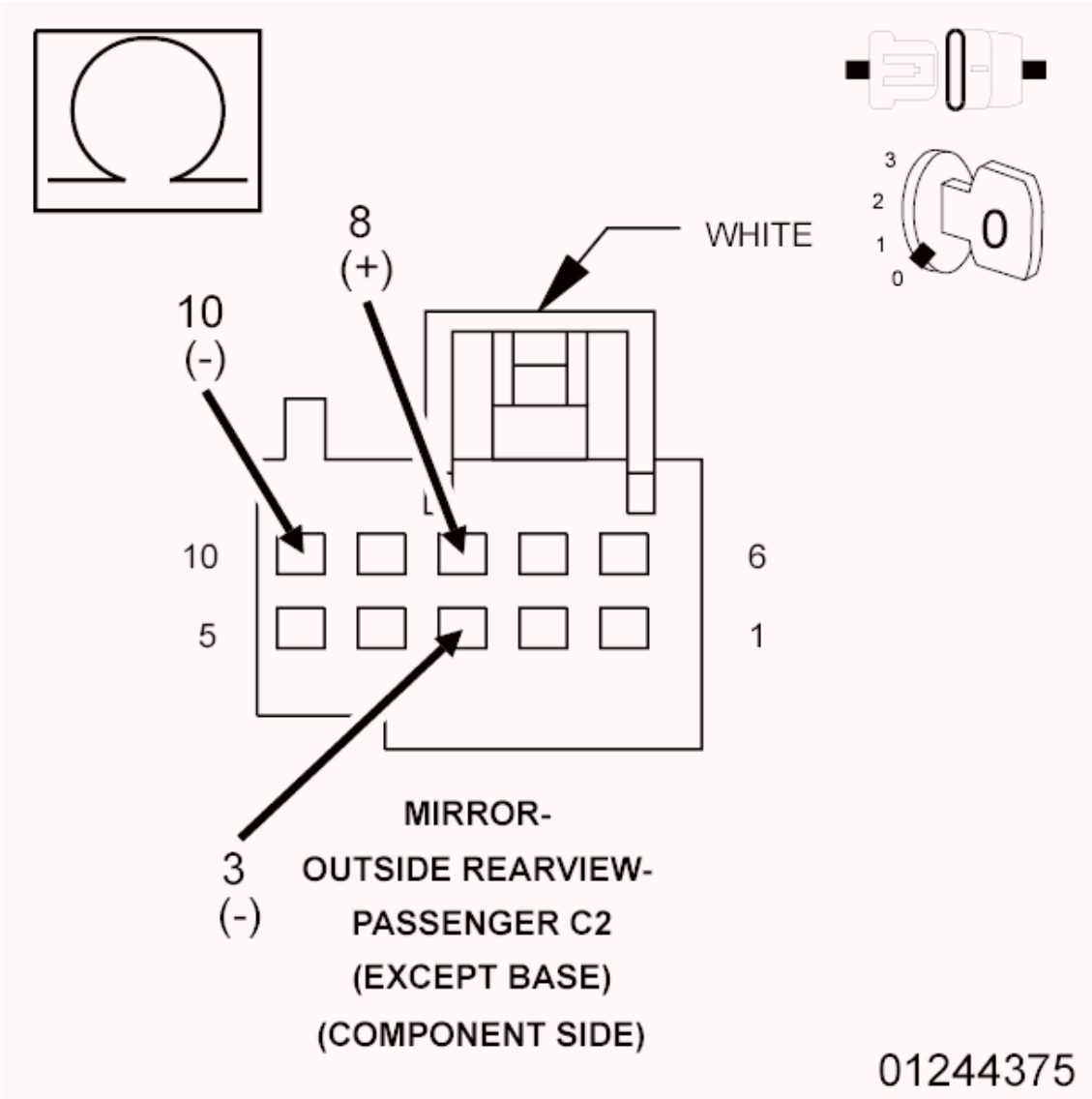

Fig. 86: Checking Passenger Mirror Horizontal Driver Circuit For A Short To Passenger Mirror Heater Return Circuit Or To Passenger Mirror Turn Signal Return Circuit
Courtesy of CHRYSLER GROUP, LLC

1. For heated mirror, measure the resistance between the (P74) Passenger Mirror Horizontal Driver circuit and the (C170) Passenger Mirror Heater Return circuit at the Passenger Outside Rearview Mirror C2 (Component Side) connector.
2. For turn signal mirror, measure the resistance between the (P74) Passenger Mirror Horizontal Driver circuit and the (P595) Passenger Mirror Turn Signal Return circuit at the Passenger Outside Rearview Mirror C2 (Component Side) connector.

   Is the resistance below 10K Ohms for either measurement?

   Yes

   - Repair all circuits with a resistance below 10K Ohms for a short to the (P74) Passenger

Mirror Horizontal Driver circuit. If the wiring harness and connector are okay, replace the Passenger Outside Rearview Mirror in accordance with the Service Information.

- Perform the BODY VERIFICATION TEST. Refer to **STANDARD PROCEDURE** .

No

- Go To 4.

4. **CHECK (P74) PASSENGER MIRROR HORIZONTAL DRIVER CIRCUIT FOR A SHORT TO (P66) PASSENGER MIRROR SENSOR GROUND CIRCUIT**

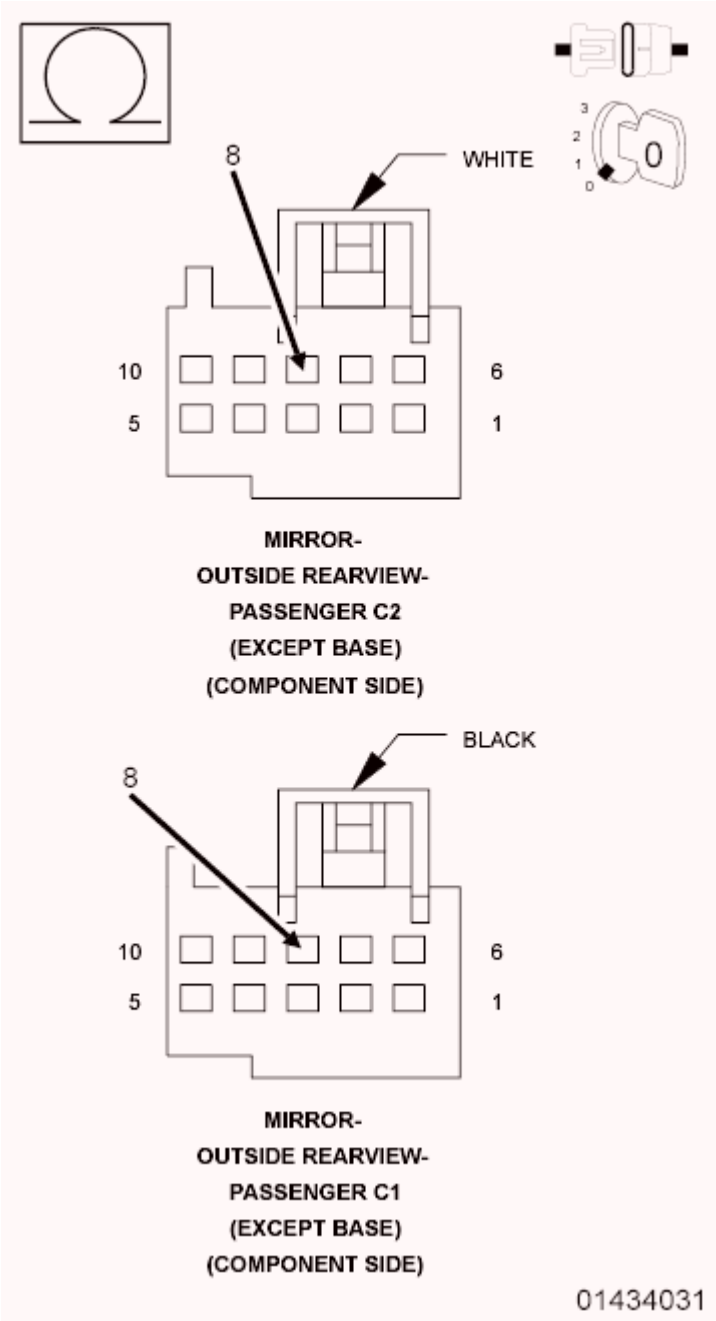

Fig. 87: Checking Passenger Mirror Horizontal Driver Circuit For A Short To Passenger Mirror Sensor Ground Circuit
Courtesy of CHRYSLER GROUP, LLC

1. Disconnect the Passenger Outside Rearview Mirror C1 (Component Side) connector from the Door Module C1 connector.
2. Measure the resistance between the (P74) Passenger Mirror Horizontal Driver circuit and the (P66) Passenger Mirror Sensor Ground circuit at the Passenger Outside Rearview Mirror C2 and C1 (Component Side) connectors.

   Is the resistance below 10K Ohms?

   Yes

   - Repair the (P74) Passenger Mirror Horizontal Driver circuit for a short to the (P66) Passenger Mirror Sensor Ground circuit. If the wiring harness and connector are okay, replace the Passenger Outside Rearview Mirror in accordance with the Service Information.
   - Perform the BODY VERIFICATION TEST. Refer to **STANDARD PROCEDURE** .

   No, with Puddle Lamp Mirror

   - Go To 5.

   No, without Puddle Lamp Mirror

   - Inspect the wiring and connectors for damage and repair as necessary. If the wiring and connectors are okay, replace the Door Module in accordance with the Service Information.
   - Perform the BODY VERIFICATION TEST. Refer to **STANDARD PROCEDURE** .

5. **CHECK (P74) PASSENGER MIRROR HORIZONTAL DRIVER CIRCUIT FOR A SHORT TO (P592) PASSENGER PUDDLE LAMP RETURN CIRCUIT**

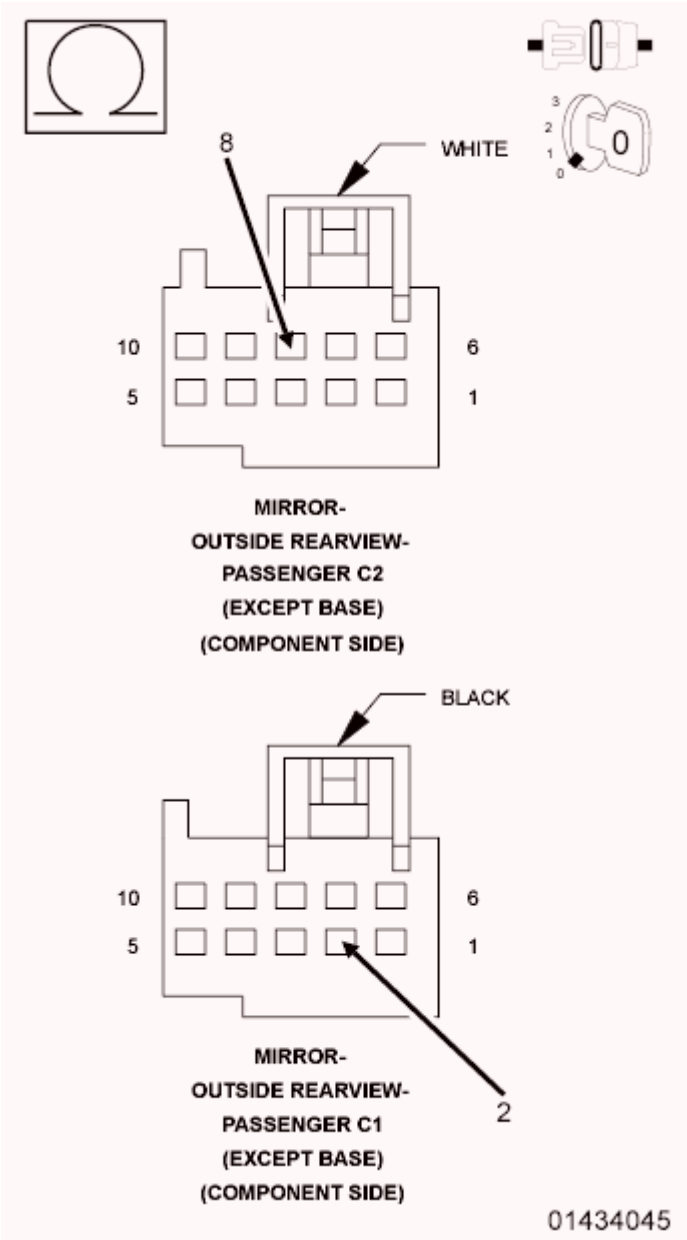

Fig. 88: Checking Passenger Mirror Horizontal Driver Circuit For A Short To Passenger Puddle Lamp Return Circuit
Courtesy of CHRYSLER GROUP, LLC

1. Measure the resistance between the (P74) Passenger Mirror Horizontal Driver circuit and the (P592) Passenger Puddle Lamp Return circuit at the Passenger Outside Rearview Mirror C2 and C1 (Component Side) connectors.

   Is the resistance below 10K Ohms?

   Yes

   - Repair the (P74) Passenger Mirror Horizontal Driver circuit for a short to the (P592)

Passenger Puddle Lamp Return circuit. If the wiring harness and connector are okay, replace the Passenger Outside Rearview Mirror in accordance with the Service Information.

- Perform the BODY VERIFICATION TEST. Refer to **STANDARD PROCEDURE** .

No

- Inspect the wiring and connectors for damage and repair as necessary. If the wiring and connectors are okay, replace the Door Module in accordance with the Service Information.
- Perform the BODY VERIFICATION TEST. Refer to **STANDARD PROCEDURE** .

B1D36-11-PASSENGER MIRROR HEATER CONTROL - CIRCUIT FOR A SHORT TO GROUND

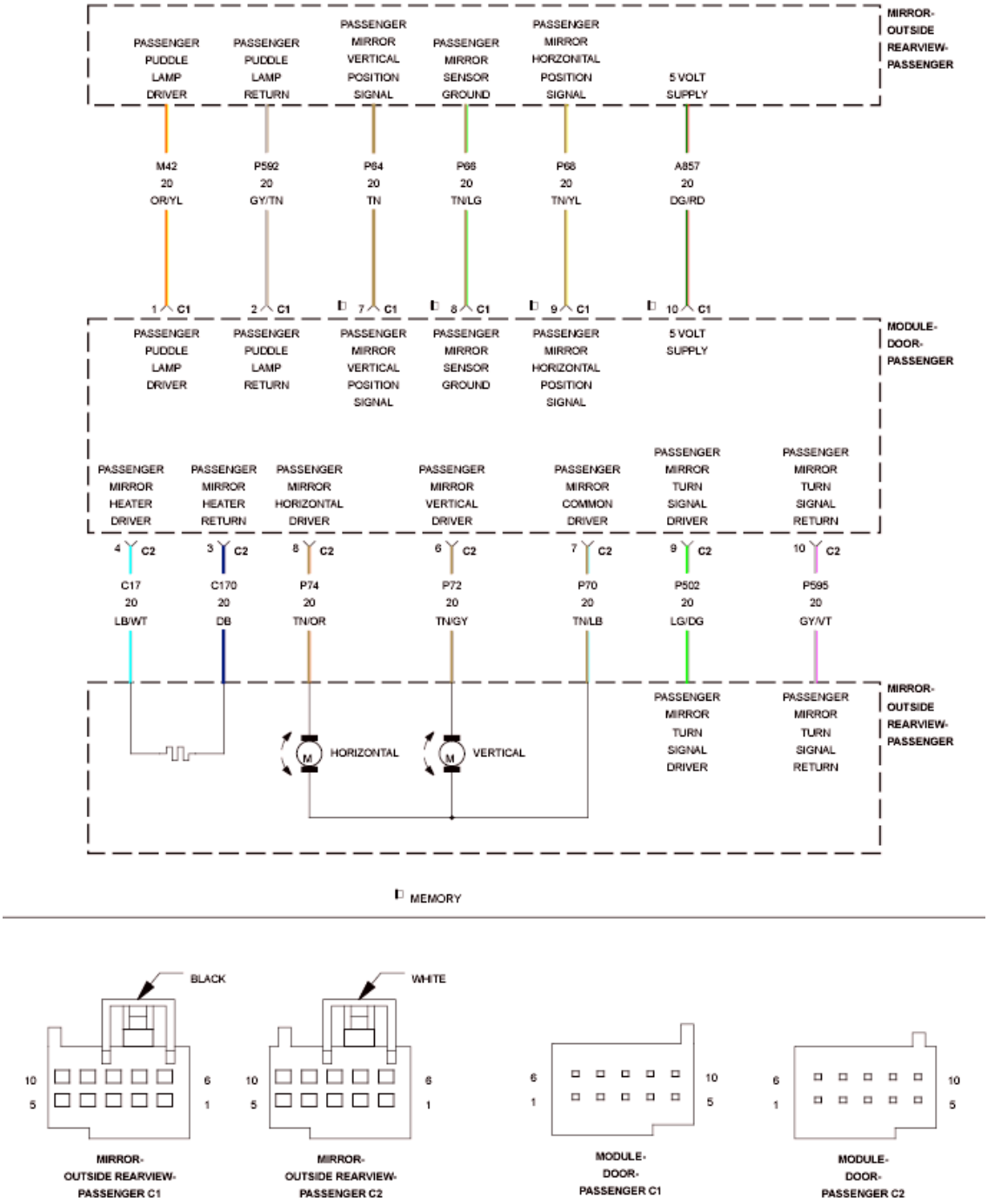

Fig. 89: Passenger Mirror Signal Lamp Control Wiring Diagram
Courtesy of CHRYSLER GROUP, LLC

For a complete wiring diagram, **refer to appropriate SYSTEM WIRING DIAGRAMS article** .

WHEN MONITORED:

Continuously.

SET CONDITION:

The Door Module senses a short low on the (C17) Passenger Mirror Heater Driver circuit for more than two seconds with the heater switched on.

POSSIBLE CAUSES

Possible Causes
(C17) PASSENGER MIRROR HEATER DRIVER CIRCUIT FOR A SHORT TO GROUND
(C17) PASSENGER MIRROR HEATER DRIVER CIRCUIT FOR A SHORT TO THE (P74) PASSENGER MIRROR HORIZONTAL DRIVER CIRCUIT
(C17) PASSENGER MIRROR HEATER DRIVER CIRCUIT FOR A SHORT TO THE (P72) PASSENGER MIRROR VERTICAL DRIVER CIRCUIT
(C17) PASSENGER MIRROR HEATER DRIVER CIRCUIT FOR A SHORT TO THE (P70) PASSENGER MIRROR COMMON DRIVER CIRCUIT
(C17) PASSENGER MIRROR HEATER DRIVER CIRCUIT FOR A SHORT TO THE (P595) PASSENGER MIRROR TURN SIGNAL RETURN CIRCUIT
(C17) PASSENGER MIRROR HEATER DRIVER CIRCUIT FOR A SHORT TO THE (C170) PASSENGER MIRROR HEATER RETURN CIRCUIT
(C17) PASSENGER MIRROR HEATER DRIVER CIRCUIT FOR A SHORT TO THE (P66) PASSENGER MIRROR SENSOR GROUND CIRCUIT
(C17) PASSENGER MIRROR HEATER DRIVER CIRCUIT FOR A SHORT TO THE (P592) PASSENGER PUDDLE LAMP DRIVER CIRCUIT
PASSENGER OUTSIDE REARVIEW MIRROR SHORTED
DOOR MODULE

DIAGNOSTIC TEST

1. **TEST FOR INTERMITTENT CONDITION**
    1. Turn the ignition on.
    2. Using a scan tool, record and erase Diagnostic Trouble Codes (DTC's).
    3. Turn the turn signal on, if equipped with turn signal mirror.
    4. Turn the puddle lamps on, if equipped with puddle lamp mirror.
    5. Turn the rear defogger on.
    6. Press and release the Mirror Select switch to select the Passenger Outside Rearview Mirror.
    7. Operate the Mirror Adjust switch in all directions several times while monitoring the scan tool for DTC's.

NOTE: **After adjusting the mirror in one direction wait at least two seconds before adjusting the mirror in the opposite direction, as this will allow time for an active fault to set if present.**

Is the DTC active?

Yes

- Go To 2.

No

- The conditions that caused this code to set are not present at this time. For vehicle's equipped with folding outside rearview mirrors, repeat test with mirror folded. If DTC is now active, Go To 2. Otherwise, use the wiring diagram/schematic as a guide and inspect the wiring and connectors.
- Perform the BODY VERIFICATION TEST. Refer to **STANDARD PROCEDURE** .

2. **CHECK (C17) PASSENGER MIRROR HEATER DRIVER CIRCUIT FOR A SHORT TO GROUND**

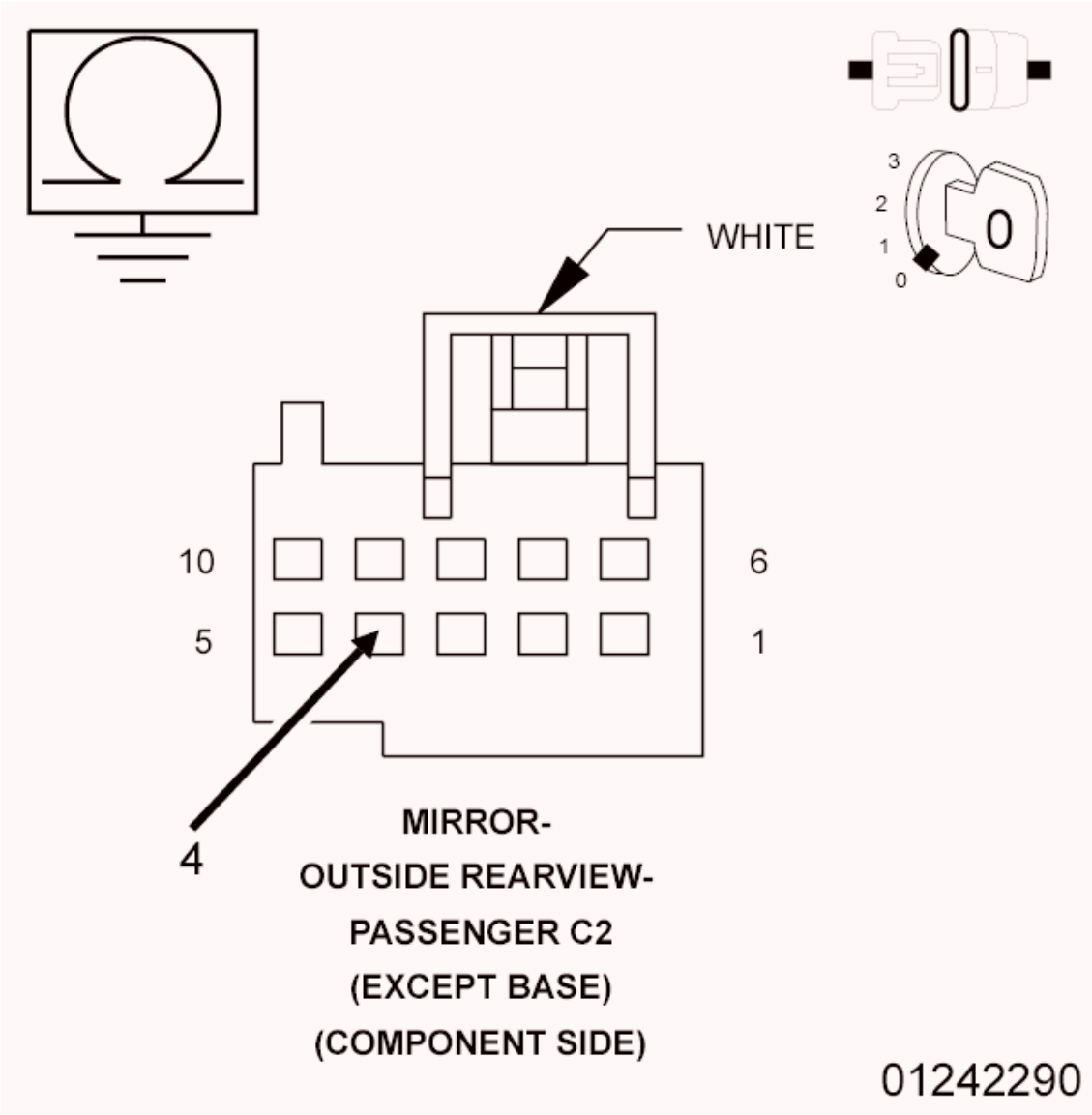

Fig. 90: Checking Passenger Mirror Heater Driver Circuit For A Short To Ground
Courtesy of CHRYSLER GROUP, LLC

1. Turn the ignition off.
2. Disconnect the Passenger Outside Rearview Mirror C2 (Component Side) connector from the Door Module C2 connector.
3. Measure the resistance of the (C17) Passenger Mirror Heater Driver circuit between ground and the Passenger Outside Rearview Mirror C2 (Component Side) connector.

   Is the resistance below 10K Ohms?

   Yes

   - Repair the (C17) Passenger Mirror Heater Driver circuit for a short to ground. If the wiring harness and connector are okay, replace the Passenger Outside Rearview Mirror in

accordance with the Service Information.

- Perform the BODY VERIFICATION TEST. Refer to **STANDARD PROCEDURE** .

No

- Go To 3.

3. **CHECK (C17) PASSENGER MIRROR HEATER DRIVER CIRCUIT FOR A SHORT TO (P74) PASSENGER MIRROR HORIZONTAL DRIVER CIRCUIT, (P72) PASSENGER MIRROR VERTICAL DRIVER CIRCUIT, OR TO (P70) PASSENGER MIRROR COMMON DRIVER CIRCUIT**

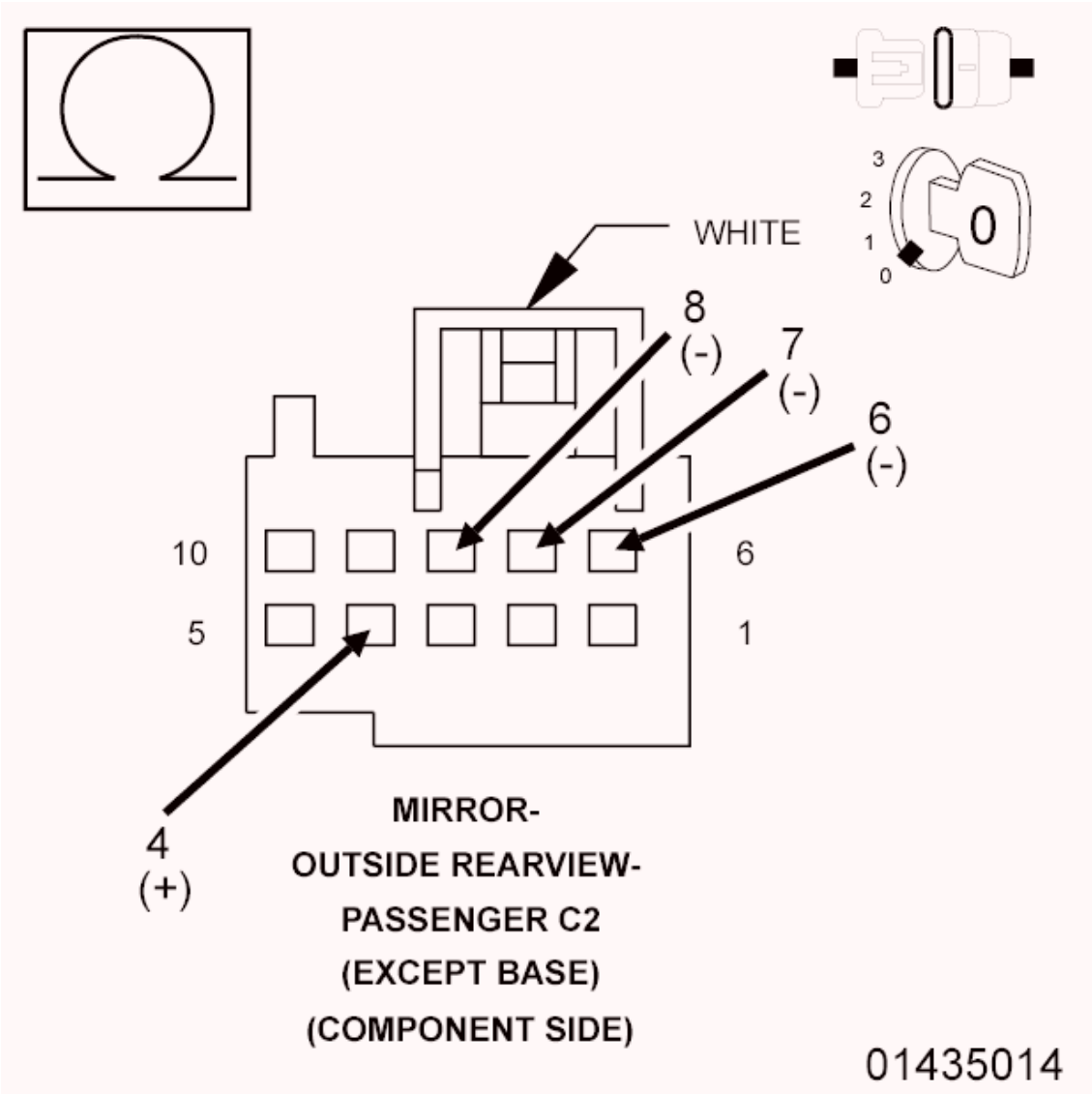

Fig. 91: Checking Passenger Mirror Heater Driver Circuit For A Short To Other Circuits
Courtesy of CHRYSLER GROUP, LLC

1. Measure the resistance between the (C17) Passenger Mirror Heater Driver circuit and the (P74)

Passenger Mirror Horizontal Driver circuit at the Passenger Outside Rearview Mirror C2 (Component Side) connector.

2. Measure the resistance between the (C17) Passenger Mirror Heater Driver circuit and the (P72) Passenger Mirror Vertical Driver circuit at the Passenger Outside Rearview Mirror C2 (Component Side) connector.
3. Measure the resistance between the (C17) Passenger Mirror Heater Driver circuit and the (P70) Passenger Mirror Common Driver circuit at the Passenger Outside Rearview Mirror C2 (Component Side) connector.

Is the resistance below 10K Ohms for any measurement?

Yes

- Repair all circuits with a resistance below 10K Ohms for a short to the (C17) Passenger Mirror Heater Driver circuit. If the wiring harness and connector are okay, replace the Passenger Outside Rearview Mirror in accordance with the Service Information.
- Perform the BODY VERIFICATION TEST. Refer to **STANDARD PROCEDURE** .

No, with Turn Signal Mirror

- Go To 4.

No, without Turn Signal Mirror

- Go To 5.

4. **CHECK (C17) PASSENGER MIRROR HEATER DRIVER CIRCUIT FOR A SHORT TO (P595) PASSENGER MIRROR TURN SIGNAL RETURN CIRCUIT**

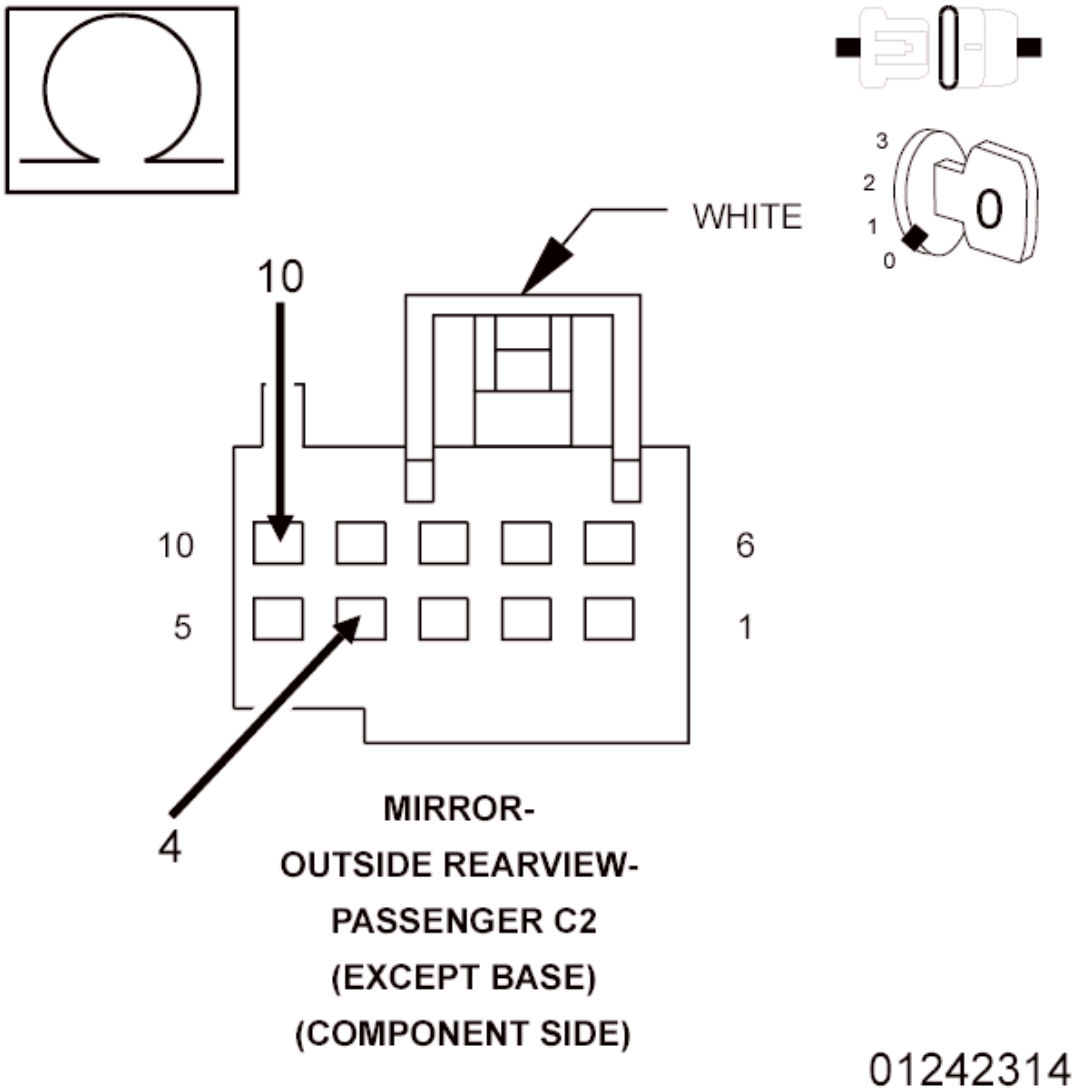

Fig. 92: Checking Passenger Mirror Heater Driver Circuit For A Short To Passenger Mirror Turn Signal Return Circuit
Courtesy of CHRYSLER GROUP, LLC

1. Measure the resistance between the (C17) Passenger Mirror Heater Driver circuit and the (P595) Passenger Mirror Turn Signal Return circuit at the Passenger Outside Rearview Mirror C2 (Component Side) connector.

   Is the resistance below 10K Ohms?

   Yes

   - Repair the (C17) Passenger Mirror Heater Driver circuit for a short to the (P595) Passenger Mirror Turn Signal Return circuit. If the wiring harness and connector are okay, replace the Passenger Outside Rearview Mirror in accordance with the Service Information.
   - Perform the BODY VERIFICATION TEST. Refer to **STANDARD PROCEDURE** .

No

- Go To 5.

5. **CHECK (C17) PASSENGER MIRROR HEATER DRIVER CIRCUIT FOR A SHORT TO (C170) PASSENGER MIRROR HEATER RETURN CIRCUIT**

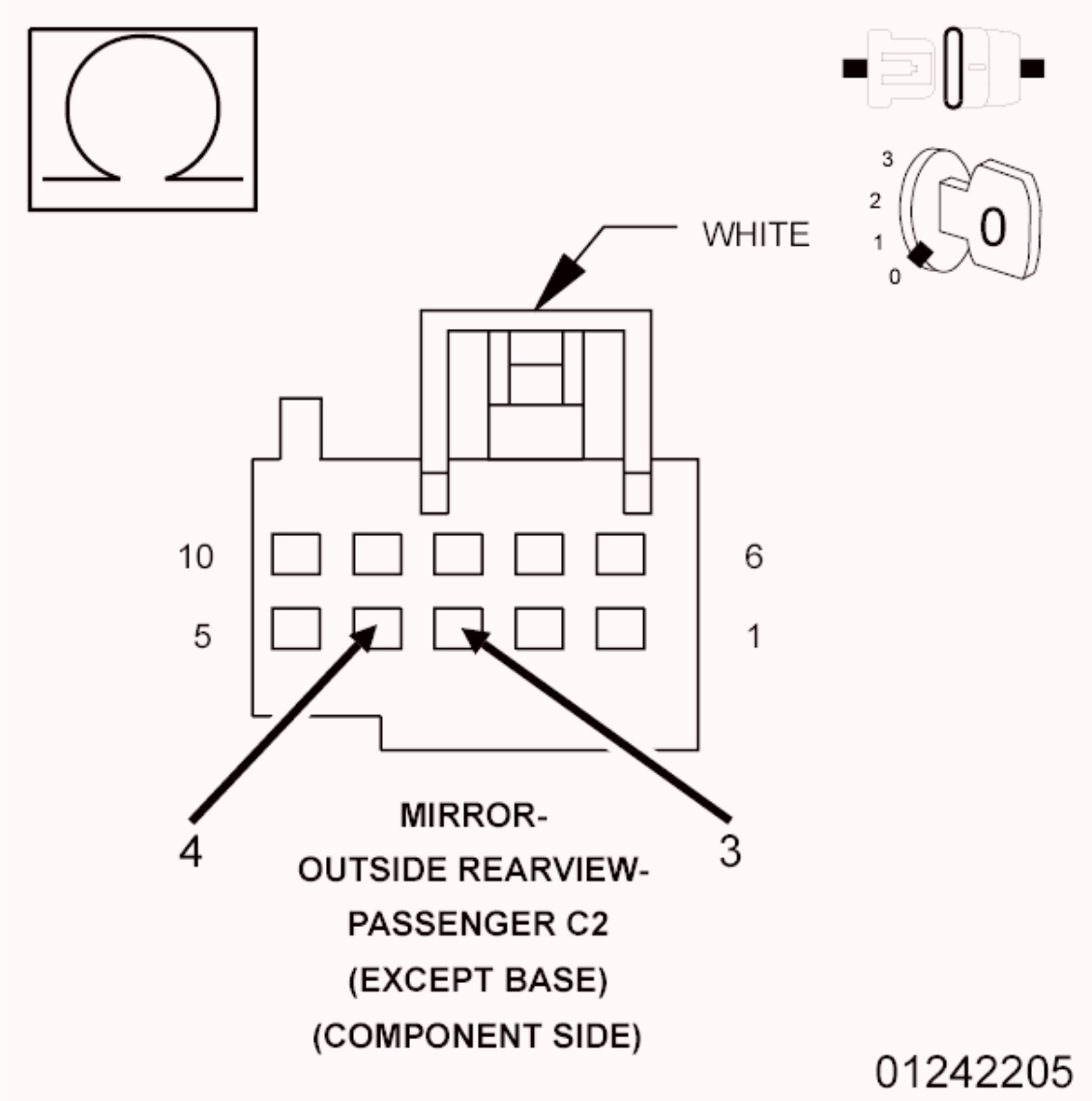

Fig. 93: Checking Passenger Mirror Heater Driver Circuit For A Short To Passenger Mirror Heater Return Circuit
Courtesy of CHRYSLER GROUP, LLC

1. Measure the resistance between the (C17) Passenger Mirror Heater Driver circuit and the (C170) Passenger Mirror Heater Return circuit at the Passenger Outside Rearview Mirror C2 (Component Side) connector.

   Is the resistance below 1.0 Ohm?

Yes

- Repair the (C17) Passenger Mirror Heater Driver circuit for a short to the (C170) Passenger Mirror Heater Return circuit. If the wiring harness and connector are okay, replace the Passenger Outside Rearview Mirror in accordance with the Service Information.
- Perform the BODY VERIFICATION TEST. Refer to **STANDARD PROCEDURE** .

No

- Go To 6.

6. **CHECK (C17) PASSENGER MIRROR HEATER DRIVER CIRCUIT FOR A SHORT TO (66) PASSENGER MIRROR SENSOR GROUND CIRCUIT**

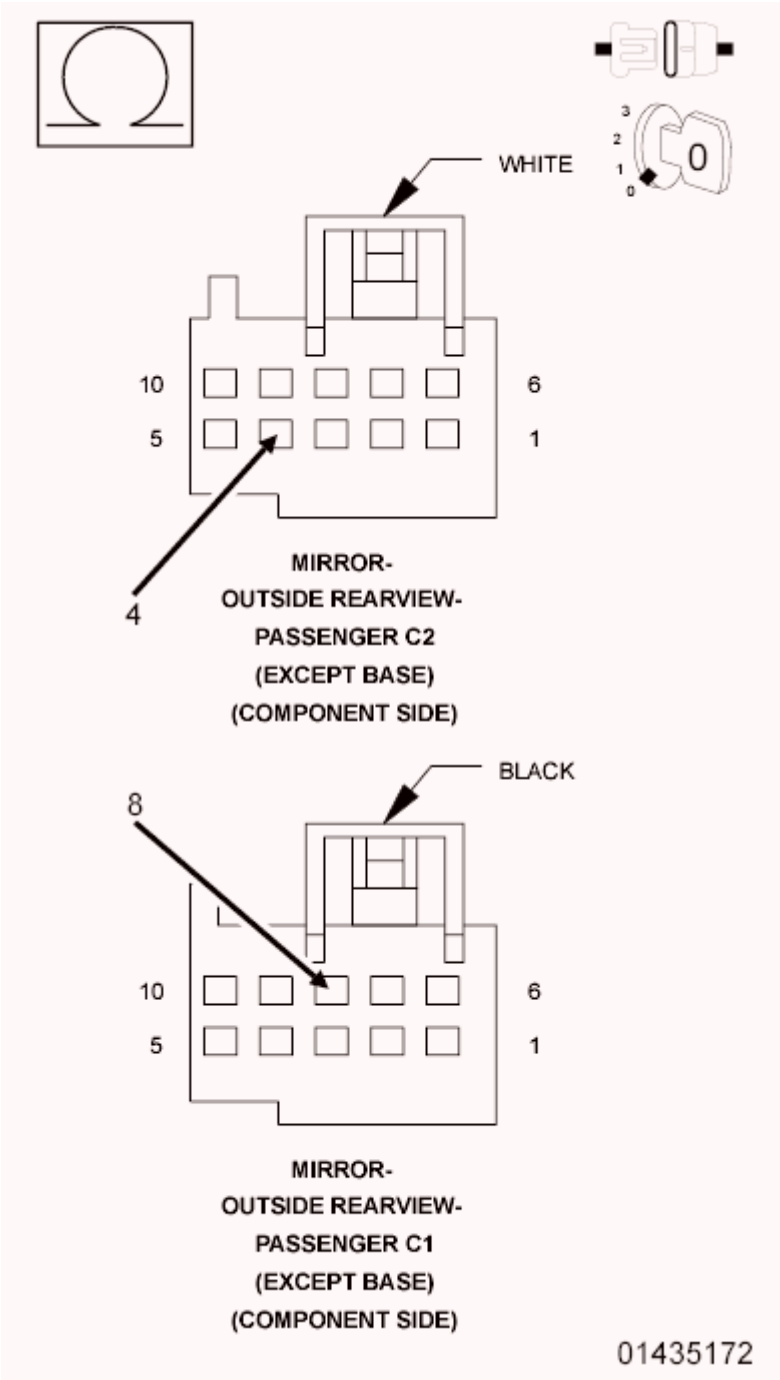

Fig. 94: Checking Passenger Mirror Heater Driver Circuit For A Short To Passenger Mirror Sensor Ground Circuit
Courtesy of CHRYSLER GROUP, LLC

1. Disconnect the Passenger Outside Rearview Mirror C1 (Component Side) connector from the Door Module C1 connector.
2. Measure the resistance between the (C17) Passenger Mirror Heater Driver circuit and the (P66) Passenger Mirror Sensor Ground circuit at the Passenger Outside Rearview Mirror C2 and C1 (Component Side) connectors.

Is the resistance below 10K Ohms?

Yes

- Repair the (C17) Passenger Mirror Heater Driver circuit for a short to the (P66) Passenger Mirror Sensor Ground circuit. If the wiring harness and connector are okay, replace the Passenger Outside Rearview Mirror in accordance with the Service Information.
- Perform the BODY VERIFICATION TEST. Refer to **STANDARD PROCEDURE** .

No, with Puddle Lamp Mirror

- Go To 7.

No, without Puddle Lamp Mirror

- Inspect the wiring and connectors for damage and repair as necessary. If the wiring and connectors are okay, replace the Door Module in accordance with the Service Information.
- Perform the BODY VERIFICATION TEST. Refer to **STANDARD PROCEDURE** .

7. **CHECK (C17) PASSENGER MIRROR HEATER DRIVER CIRCUIT FOR A SHORT TO (P592) PASSENGER PUDDLE LAMP RETURN CIRCUIT**

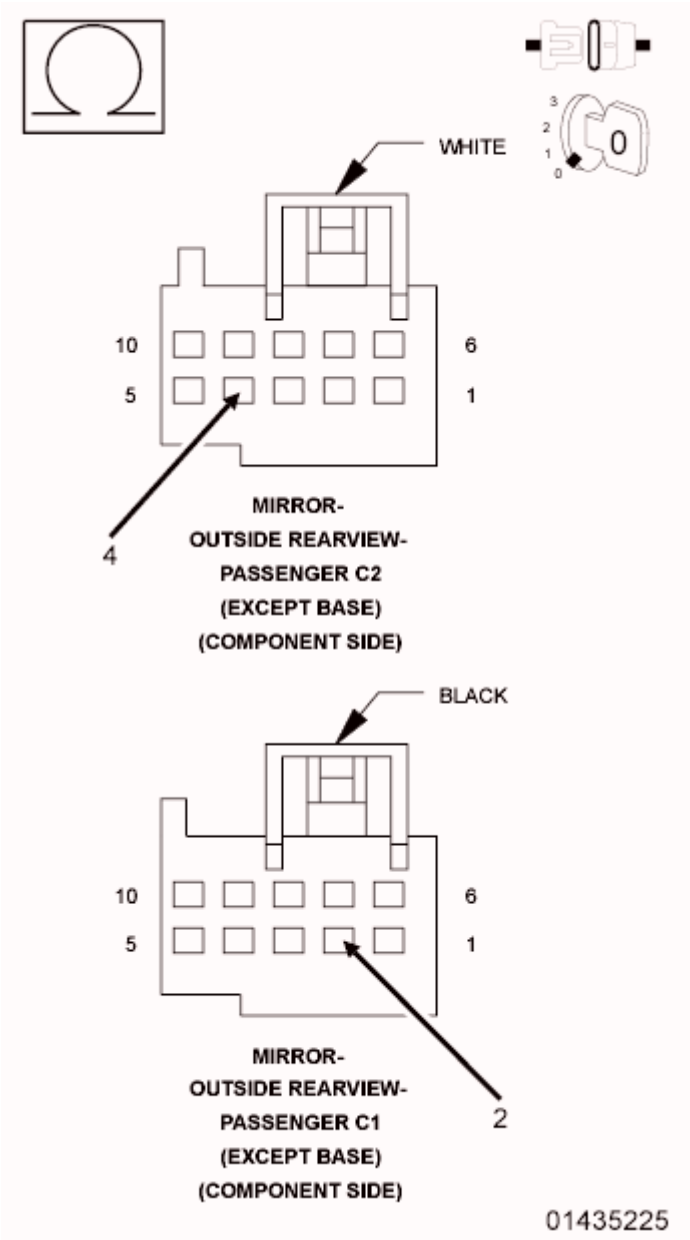

Fig. 95: Checking Passenger Mirror Heater Driver Circuit For A Short To Passenger Puddle Lamp Return Circuit
Courtesy of CHRYSLER GROUP, LLC

1. Measure the resistance between the (C17) Passenger Mirror Heater Driver circuit and the (P592) Passenger Puddle Lamp Return circuit at the Passenger Outside Rearview Mirror C2 and C1 (Component Side) connectors.

   Is the resistance below 10K Ohms?

   Yes

   - Repair the (C17) Passenger Mirror Heater Driver circuit for a short to the (P592) Passenger

Puddle Lamp Return circuit. If the wiring harness and connector are okay, replace the Passenger Outside Rearview Mirror in accordance with the Service Information.

- Perform the BODY VERIFICATION TEST. Refer to **STANDARD PROCEDURE** .

No

- Inspect the wiring and connectors for damage and repair as necessary. If the wiring and connectors are okay, replace the Door Module in accordance with the Service Information.
- Perform the BODY VERIFICATION TEST. Refer to **STANDARD PROCEDURE** .

B1D36-15-PASSENGER MIRROR HEATER CONTROL - CIRCUIT FOR A SHORT TO BATTERY OR OPEN

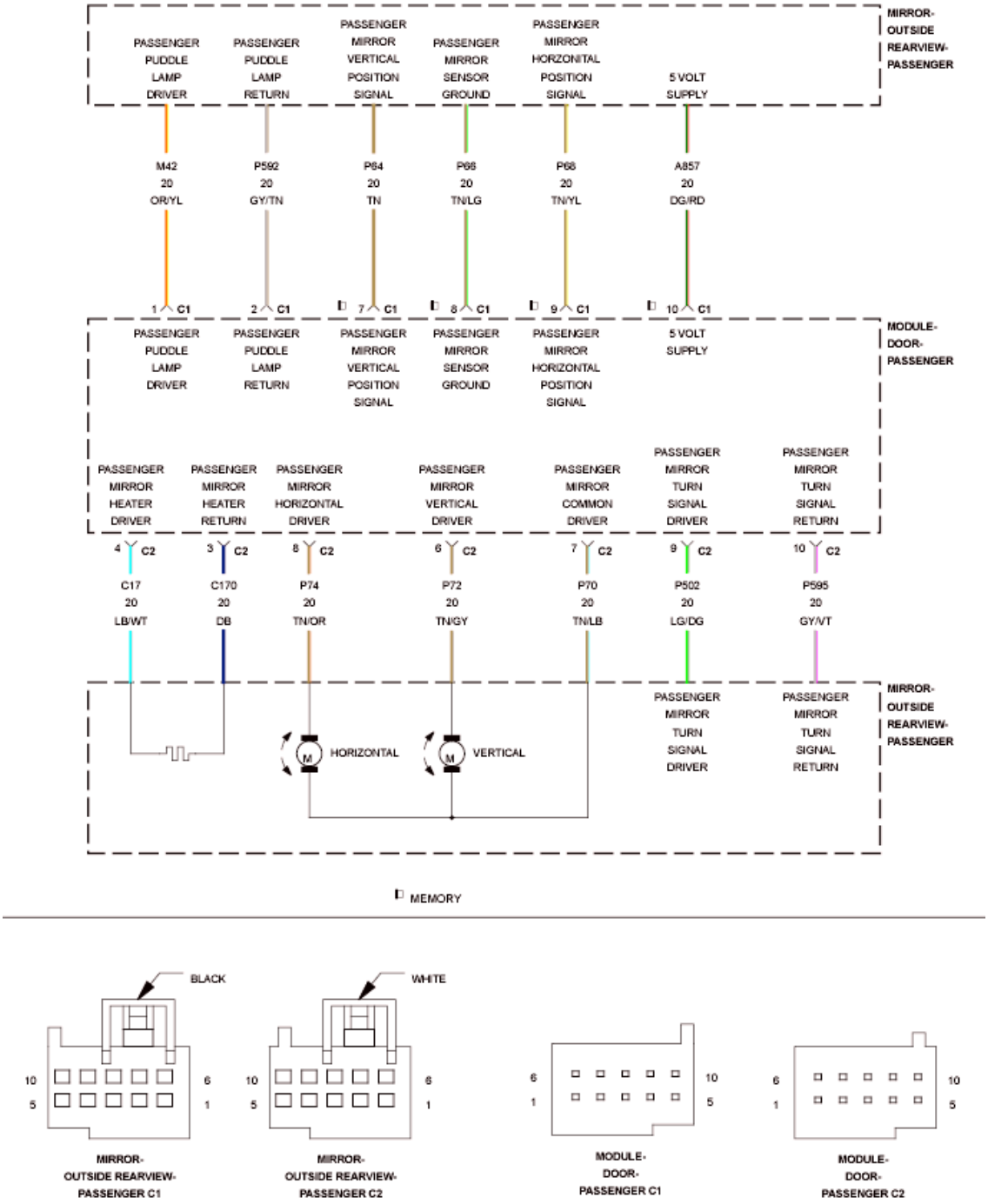

Fig. 96: Passenger Mirror Signal Lamp Control Wiring Diagram
Courtesy of CHRYSLER GROUP, LLC

For a complete wiring diagram, **refer to appropriate SYSTEM WIRING DIAGRAMS article** .

WHEN MONITORED:

Continuously.

SET CONDITION:

The Door Module senses an open or a short high on the (C17) Passenger Mirror Heater Driver circuit for more than two seconds.

POSSIBLE CAUSES

Possible Causes
(C17) PASSENGER MIRROR HEATER DRIVER CIRCUIT FOR A SHORT TO VOLTAGE
(C17) PASSENGER MIRROR HEATER DRIVER CIRCUIT FOR AN OPEN
(C170) PASSENGER MIRROR HEATER RETURN CIRCUIT FOR AN OPEN
(C17) PASSENGER MIRROR HEATER DRIVER CIRCUIT FOR A SHORT TO THE (P74) PASSENGER MIRROR HORIZONTAL DRIVER CIRCUIT
(C17) PASSENGER MIRROR HEATER DRIVER CIRCUIT FOR A SHORT TO THE (P72) PASSENGER MIRROR VERTICAL DRIVER CIRCUIT
(C17) PASSENGER MIRROR HEATER DRIVER CIRCUIT FOR A SHORT TO THE (P70) PASSENGER MIRROR COMMON DRIVER CIRCUIT
(C17) PASSENGER MIRROR HEATER DRIVER CIRCUIT FOR A SHORT TO THE (P502) PASSENGER MIRROR TURN SIGNAL DRIVER CIRCUIT
(C17) PASSENGER MIRROR HEATER DRIVER CIRCUIT FOR A SHORT TO THE (M42) PASSENGER PUDDLE LAMP DRIVER CIRCUIT
PASSENGER OUTSIDE REARVIEW MIRROR
DOOR MODULE

DIAGNOSTIC TEST

1. **TEST FOR INTERMITTENT CONDITION - HEATER OFF**
    1. Turn the ignition on.
    2. Using a scan tool, record and erase Diagnostic Trouble Codes (DTC's).
    3. Turn the turn signal on, if equipped with turn signal mirror.
    4. Turn the puddle lamps on, if equipped with puddle lamp mirror.
    5. Press and release the Mirror Select switch to select the Passenger Outside Rearview Mirror.
    6. Operate the Mirror Adjust switch in all directions several times while monitoring the scan tool for DTC's.

    NOTE: **After adjusting the mirror in one direction wait at least two seconds before adjusting the mirror in the opposite direction, as this will allow time for an active fault to set if present.**

    Is the DTC active?

    Yes

- Go To 3.

No

- Go To 2.

2. **TEST FOR INTERMITTENT CONDITION - HEATER ON**
   1. Turn the rear defogger on.
   2. Operate the Mirror Adjust switch in all directions several times while monitoring the scan tool for DTC's.

NOTE: **After adjusting the mirror in one direction wait at least two seconds before adjusting the mirror in the opposite direction, as this will allow time for an active fault to set if present.**

Is the DTC active?

Yes

- Go To 3.

No

- The conditions that caused this code to set are not present at this time. For vehicle's equipped with folding outside rearview mirrors, repeat test with mirror folded. If DTC is now active, Go To 3. Otherwise, use the wiring diagram/schematic as a guide and inspect the wiring and connectors.
- Perform the BODY VERIFICATION TEST. Refer to **STANDARD PROCEDURE** .

3. **CHECK (C17) PASSENGER MIRROR HEATER DRIVER CIRCUIT FOR A SHORT TO VOLTAGE**

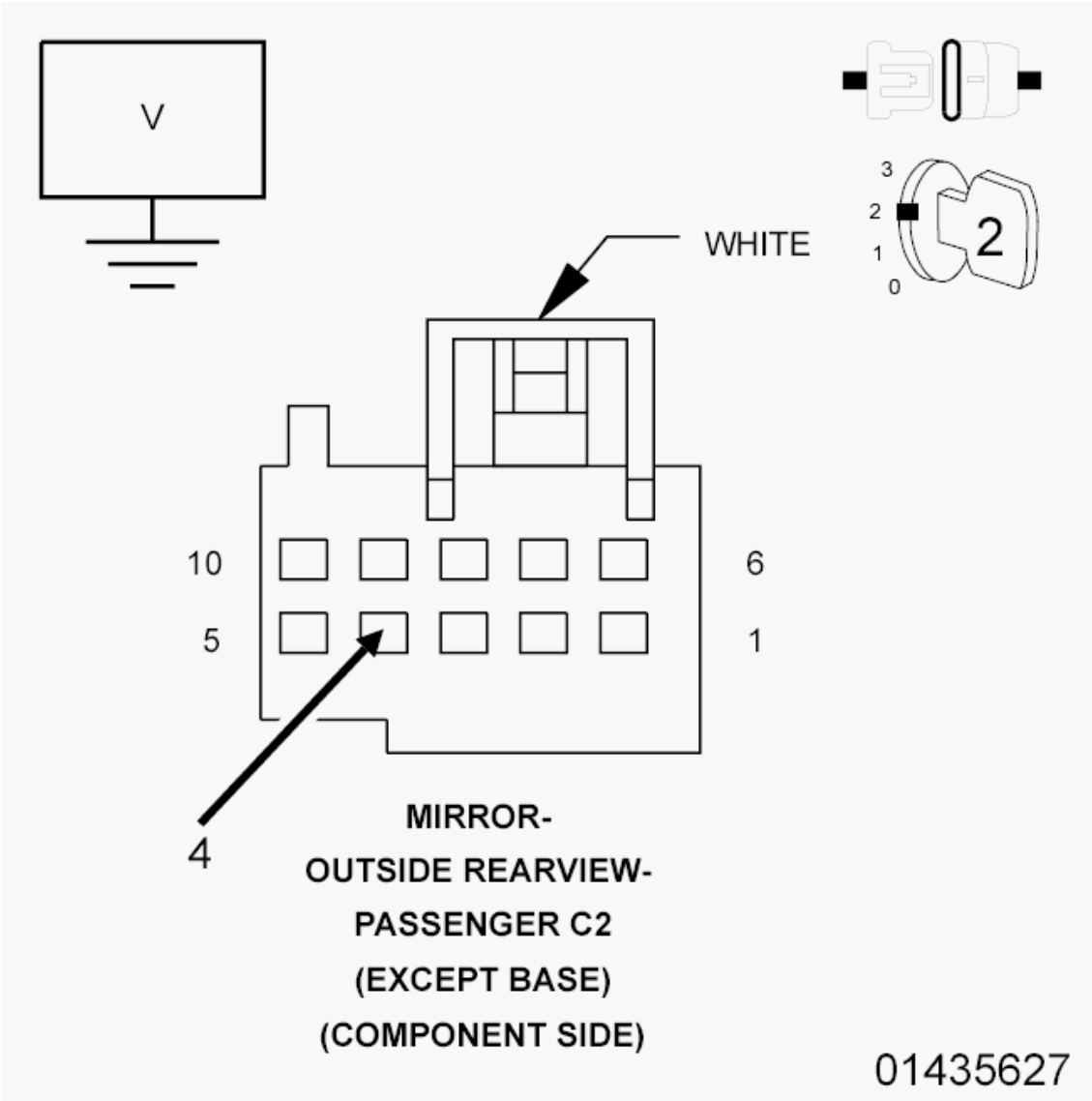

Fig. 97: Checking Passenger Mirror Heater Driver Circuit For A Short To Voltage
Courtesy of CHRYSLER GROUP, LLC

1. Turn the ignition off.
2. Disconnect the Passenger Outside Rearview Mirror C2 (Component Side) connector from the Door Module C2 connector.
3. Turn the ignition on.
4. Measure the voltage of the (C17) Passenger Mirror Heater Driver circuit between the Passenger Outside Rearview Mirror C2 (Component Side) connector and ground.

   Is there any voltage present?

   Yes

   - Repair the (C17) Passenger Mirror Heater Driver circuit for a short to voltage. If the wiring

harness and connector are okay, replace the Passenger Outside Rearview Mirror in accordance with the Service Information.

- Perform the BODY VERIFICATION TEST. Refer to **STANDARD PROCEDURE** .

No

- Go To 4.

4. **CHECK (C17) PASSENGER MIRROR HEATER DRIVER CIRCUIT AND (C170) PASSENGER MIRROR HEATER RETURN CIRCUIT FOR AN OPEN**

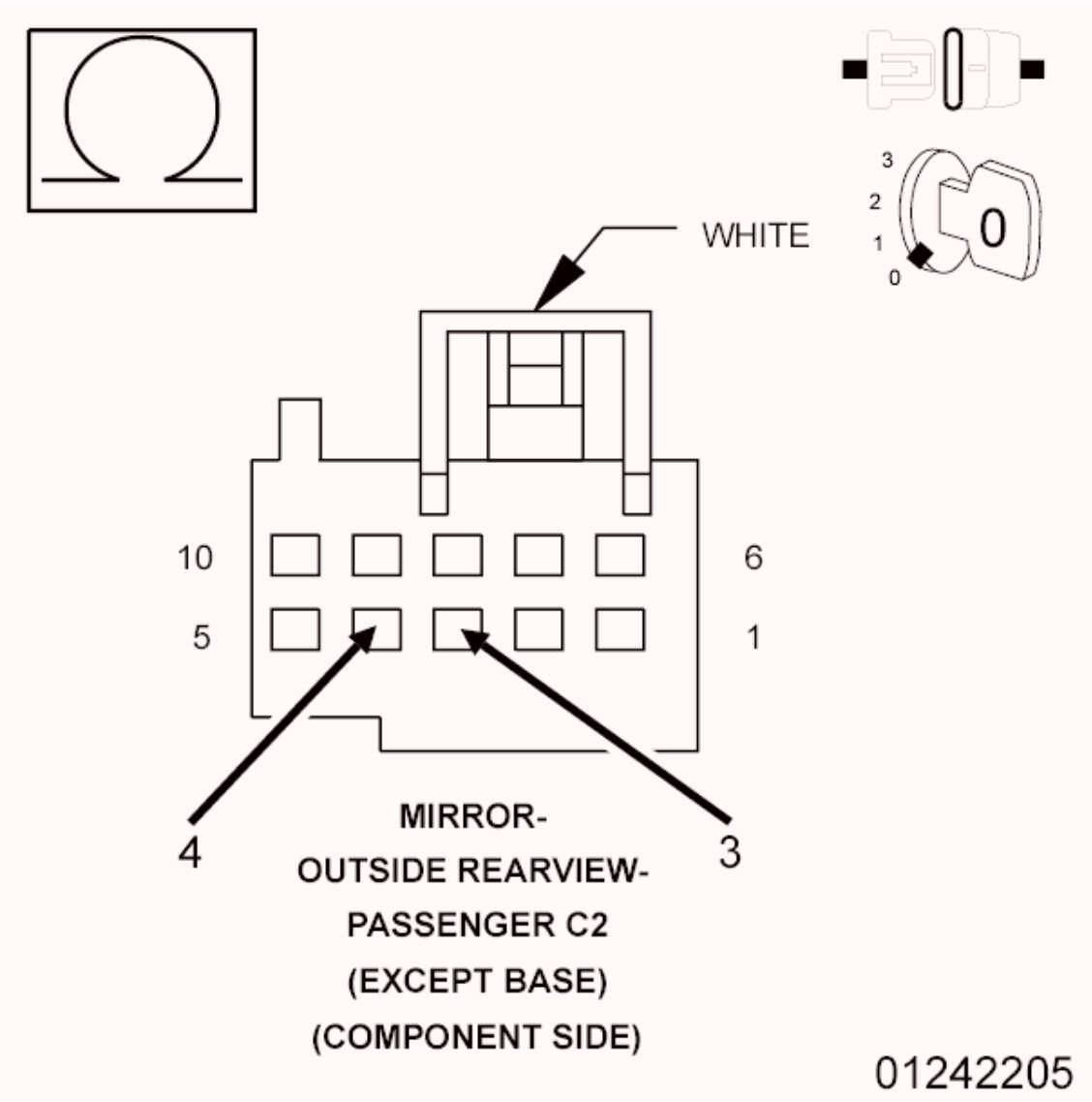

Fig. 98: Checking Passenger Mirror Heater Driver Circuit For A Short To Passenger Mirror Heater Return Circuit
Courtesy of CHRYSLER GROUP, LLC

1. Turn the ignition off.

2. Measure the resistance between the (C17) Passenger Mirror Heater Driver circuit and the (C170) Passenger Mirror Heater Return circuit at the Passenger Outside Rearview Mirror C2 (Component Side) connector.

   Is the resistance below 9.0 Ohms?

   Yes

   - Go To 5.

   No

   - Repair the (C17) Passenger Mirror Heater Driver circuit or the (C170) Passenger Mirror Heater Return circuit for an open. If the wiring harness and connector are okay, replace the Passenger Outside Rearview Mirror in accordance with the Service Information.
   - Perform the BODY VERIFICATION TEST. Refer to **STANDARD PROCEDURE** .

5. **CHECK (C17) PASSENGER MIRROR HEATER DRIVER CIRCUIT FOR A SHORT TO (P74) PASSENGER MIRROR HORIZONTAL DRIVER CIRCUIT, (P72) PASSENGER MIRROR VERTICAL DRIVER CIRCUIT, OR TO (P70) PASSENGER MIRROR COMMON DRIVER CIRCUIT**

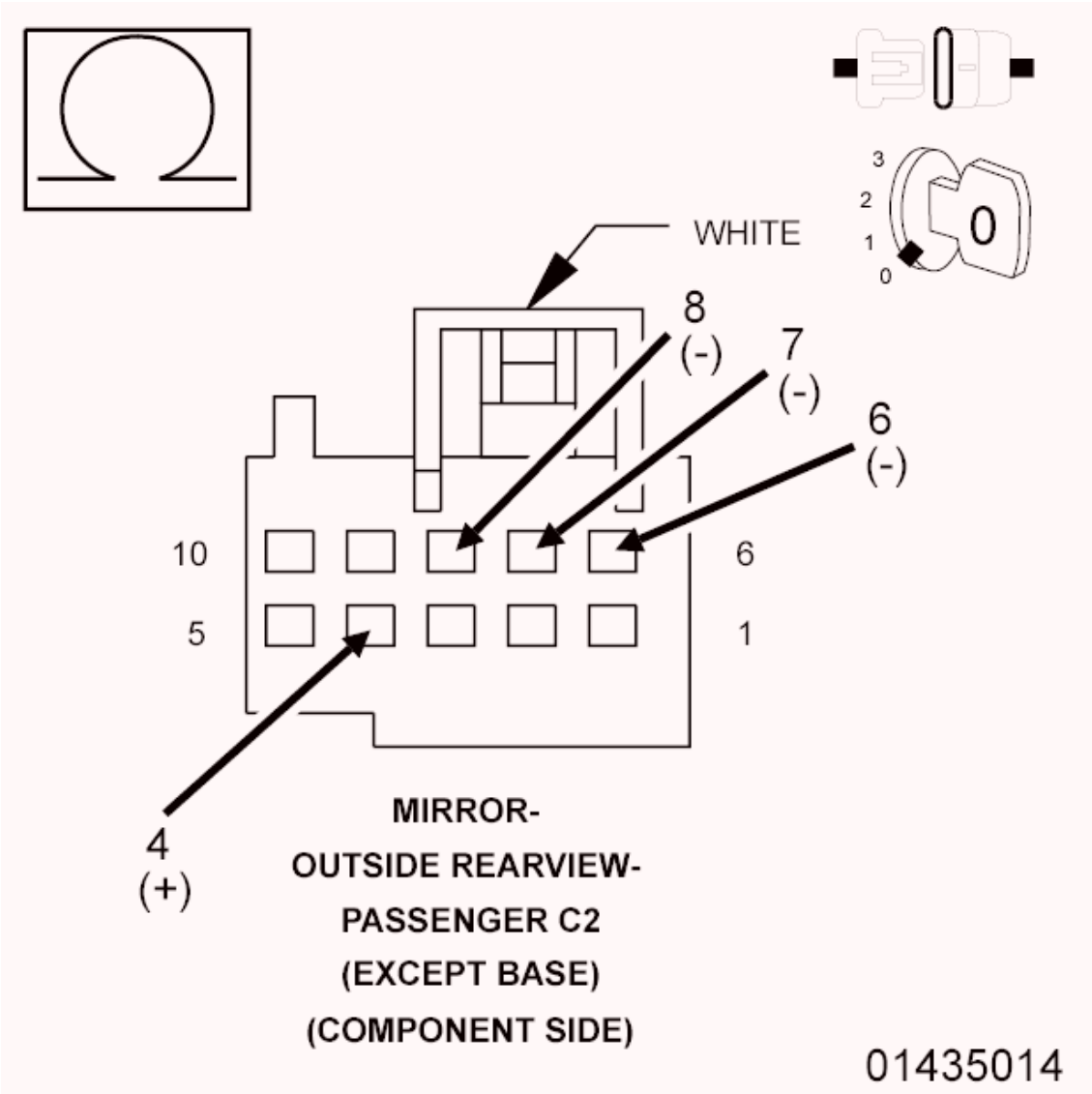

Fig. 99: Checking Passenger Mirror Heater Driver Circuit For A Short To Other Circuits
Courtesy of CHRYSLER GROUP, LLC

1. Measure the resistance between the (C17) Passenger Mirror Heater Driver circuit and the (P74) Passenger Mirror Horizontal Driver circuit at the Passenger Outside Rearview Mirror C2 (Component Side) connector.
2. Measure the resistance between the (C17) Passenger Mirror Heater Driver circuit and the (P72) Passenger Mirror Vertical Driver circuit at the Passenger Outside Rearview Mirror C2 (Component Side) connector.
3. Measure the resistance between the (C17) Passenger Mirror Heater Driver circuit and the (P70) Passenger Mirror Common Driver circuit at the Passenger Outside Rearview Mirror C2 (Component Side) connector.

   Is the resistance below 10K Ohms for any measurement?

Yes

- Repair all circuits with a resistance below 10K Ohms for a short to the (C17) Passenger Mirror Heater Driver circuit. If the wiring harness and connector are okay, replace the Passenger Outside Rearview Mirror in accordance with the Service Information.
- Perform the BODY VERIFICATION TEST. Refer to **STANDARD PROCEDURE** .

No, with Turn Signal Mirror

- Go To 6.

No, without Turn Signal Mirror

- Go To 7.

6. **CHECK (C17) PASSENGER MIRROR HEATER DRIVER CIRCUIT FOR A SHORT TO (P502) PASSENGER MIRROR TURN SIGNAL DRIVER CIRCUIT**

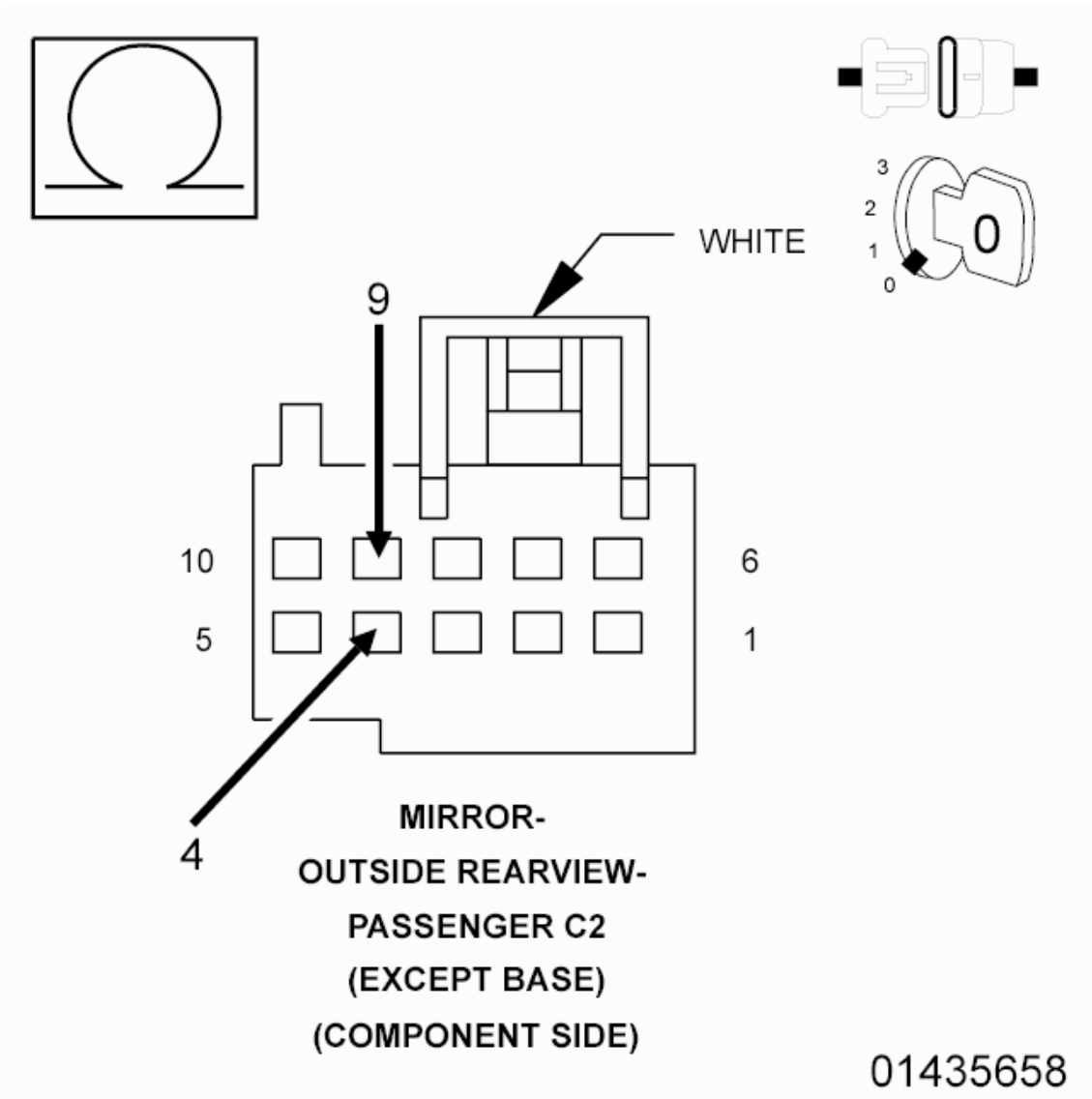

Fig. 100: Checking Passenger Mirror Heater Driver Circuit For A Short To Passenger Mirror Turn Signal Driver Circuit
Courtesy of CHRYSLER GROUP, LLC

1. Measure the resistance between the (C17) Passenger Mirror Heater Driver circuit and the (P502) Passenger Mirror Turn Signal Driver circuit at the Passenger Outside Rearview Mirror C2 (Component Side) connector.

   Is the resistance below 10K Ohms?

   Yes

   - Repair the (C17) Passenger Mirror Heater Driver circuit for a short to the (P502) Passenger Mirror Turn Signal Driver circuit. If the wiring harness and connector are okay, replace the Passenger Outside Rearview Mirror in accordance with the Service Information.
   - Perform the BODY VERIFICATION TEST. Refer to **STANDARD PROCEDURE** .

No, with Puddle Lamp Mirror

- Go To 7.

No, without Puddle Lamp Mirror

- Inspect the wiring and connectors for damage and repair as necessary. If the wiring and connectors are okay, replace the Door Module in accordance with the Service Information.
- Perform the BODY VERIFICATION TEST. Refer to **STANDARD PROCEDURE** .

7. **CHECK (C17) PASSENGER MIRROR HEATER DRIVER CIRCUIT FOR A SHORT TO (M42) PASSENGER PUDDLE LAMP DRIVER CIRCUIT**

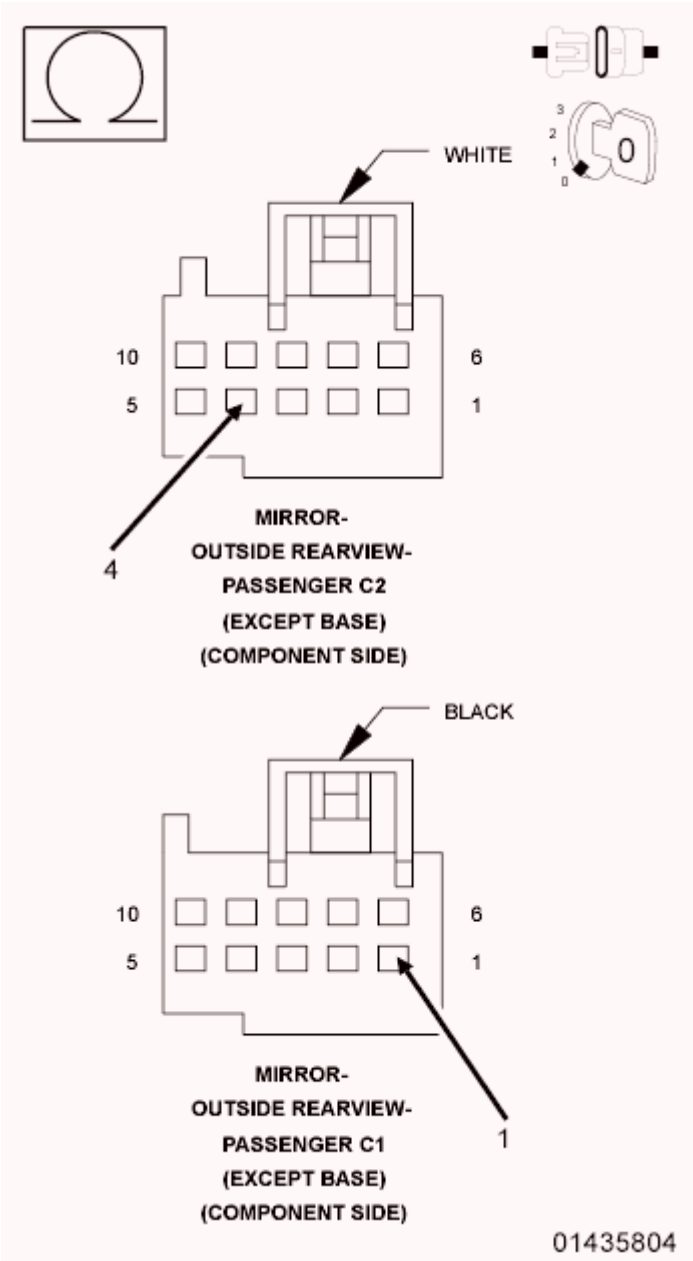

Fig. 101: Checking Passenger Mirror Heater Driver Circuit For A Short To Passenger Puddle Lamp Driver Circuit
Courtesy of CHRYSLER GROUP, LLC

1. Disconnect the Passenger Outside Rearview Mirror C1 (Component Side) connector from the Door Module C1 connector.
2. Measure the resistance between the (C17) Passenger Mirror Heater Driver circuit and the (M42) Passenger Puddle Lamp Driver circuit at the Passenger Outside Rearview Mirror C2 and C1 (Component Side) connectors.

   Is the resistance below 10K Ohms?

   Yes

   - Repair the (C17) Passenger Mirror Heater Driver circuit for a short to the (M42) Passenger Puddle Lamp Driver circuit. If the wiring harness and connector are okay, replace the Passenger Outside Rearview Mirror in accordance with the Service Information.
   - Perform the BODY VERIFICATION TEST. Refer to **STANDARD PROCEDURE** .

   No

   - Inspect the wiring and connectors for damage and repair as necessary. If the wiring and connectors are okay, replace the Door Module in accordance with the Service Information.
   - Perform the BODY VERIFICATION TEST. Refer to **STANDARD PROCEDURE** .

B1E6A-11-PASSENGER MIRROR FOLD CONTROL CIRCUIT FOR A SHORT TO GROUND

For a complete wiring diagram, **refer to appropriate SYSTEM WIRING DIAGRAMS article** .

WHEN MONITORED:

Continuously.

SET CONDITION:

When one of the Mirror Fold or Unfold driver circuits are shorted to ground for approximately 30 seconds.

POSSIBLE CAUSES

Possible Causes
PASSENGER MIRROR ASSEMBLY
PASSENGER DOOR MODULE (PDM)

DIAGNOSTIC TEST

1. **TEST FOR INTERMITTENT CONDITION**

1. Turn the ignition on.
2. With the scan tool, erase the DTC's.
3. Cycle the ignition from on to off three times.
4. Turn the ignition on.
5. Operate the Mirror Fold switch in both directions three times.
6. Wait 30 seconds.
7. With the scan tool, read active DTC's.

   Does the scan tool display: B1E6A-11-PASSENGER MIRROR FOLD CONTROL CIRCUIT FOR A SHORT TO GROUND as active?

   Yes

   - Go To 2.

   No

   - Test complete, the condition or conditions that originally set this DTC are not present at this time. Using the wiring diagrams as a guide, check all related splices and connectors for signs of water intrusion, corrosion, pushed out or bent terminals and poor pin fit. Repair as necessary.
   - Perform the BODY VERIFICATION TEST. Refer to **STANDARD PROCEDURE** .

2. **INSPECT MIRROR CONNECTIONS**

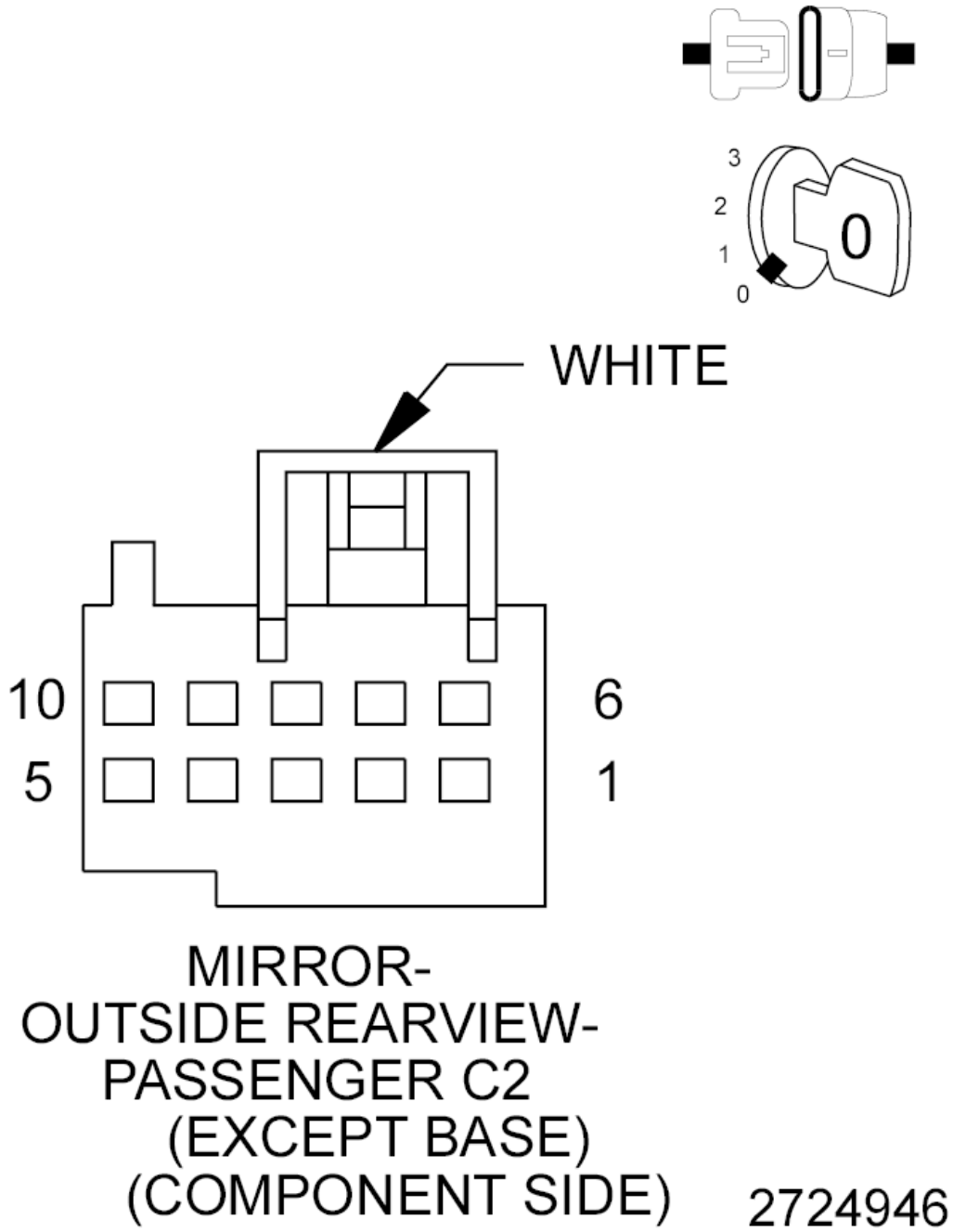

Fig. 102: Passenger Outside Rearview Mirror Connector End View
Courtesy of CHRYSLER GROUP, LLC

1. Turn the ignition off.
2. Disconnect the Passenger Outside Rearview Mirror connector at the Passenger Door Module C2 harness connector.
3. Inspect the wiring and connectors between the mirror and the Passenger Door Module.

Were there any problems found?

Yes

- Repair as necessary.
- Perform the BODY VERIFICATION TEST. Refer to **STANDARD PROCEDURE** .

No

- Go To 3.

3. **MIRROR ASSEMBLY**
    1. Turn the ignition on
    2. With the scan tool, erase the DTC's.
    3. Cycle the ignition from on to off three times.
    4. Turn the ignition on.
    5. Operate the Mirror Fold switch in both directions three times.
    6. Wait 30 seconds.
    7. With the scan tool, read the active DTC's.

    Does the scan tool display: B1E6A-11-PASSENGER MIRROR FOLD CONTROL CIRCUIT FOR A SHORT TO GROUND as active?

    Yes

    - Replace the Drivers Door Module in accordance with the Service Information.
    - Perform the BODY VERIFICATION TEST. Refer to **STANDARD PROCEDURE** .

    No

    - Replace the Passenger Folding Mirror assembly in accordance with the Service Information.
    - Perform the BODY VERIFICATION TEST. Refer to **STANDARD PROCEDURE** .

B1E6A-15-PASSENGER MIRROR FOLD CONTROL CIRCUIT FOR A SHORT TO BATTERY OR OPEN

For a complete wiring diagram, **refer to appropriate SYSTEM WIRING DIAGRAMS article** .

WHEN MONITORED:

Continuously.

SET CONDITION:

When one of the Mirror Fold or Unfold Driver circuits are shorted to battery voltage or the circuit is open for approximately 30 seconds.

POSSIBLE CAUSES

Possible Causes
PASSENGER MIRROR ASSEMBLY
PASSENGER DOOR MODULE (PDM)

DIAGNOSTIC TEST

1. **TEST FOR INTERMITTENT CONDITION**
    1. Turn the ignition on.
    2. With the scan tool, erase the DTC's.
    3. Cycle the ignition from on to off 3 times.
    4. Turn the ignition on.
    5. Operate the Mirror Fold switch in both directions three times.
    6. Wait 30 seconds.
    7. With the scan tool, read the active DTC's.

    Does the scan tool display: B1E6A-15-PASSENGER MIRROR FOLD CONTROL CIRCUIT FOR A SHORT TO BATTERY OR OPEN as active?

    Yes

    - Go To 2.

    No

    - The condition that caused this symptom is currently not present. Check for an intermittent condition by inspecting the related wiring harness for chafed, pierced, pinched and partially broken wires. Also, inspect the related connectors for broken, bent, pushed out, spread, corroded or contaminated terminals. Repair as necessary.
    - Perform the BODY VERIFICATION TEST. Refer to **STANDARD PROCEDURE** .
2. **INSPECT MIRROR CONNECTIONS**

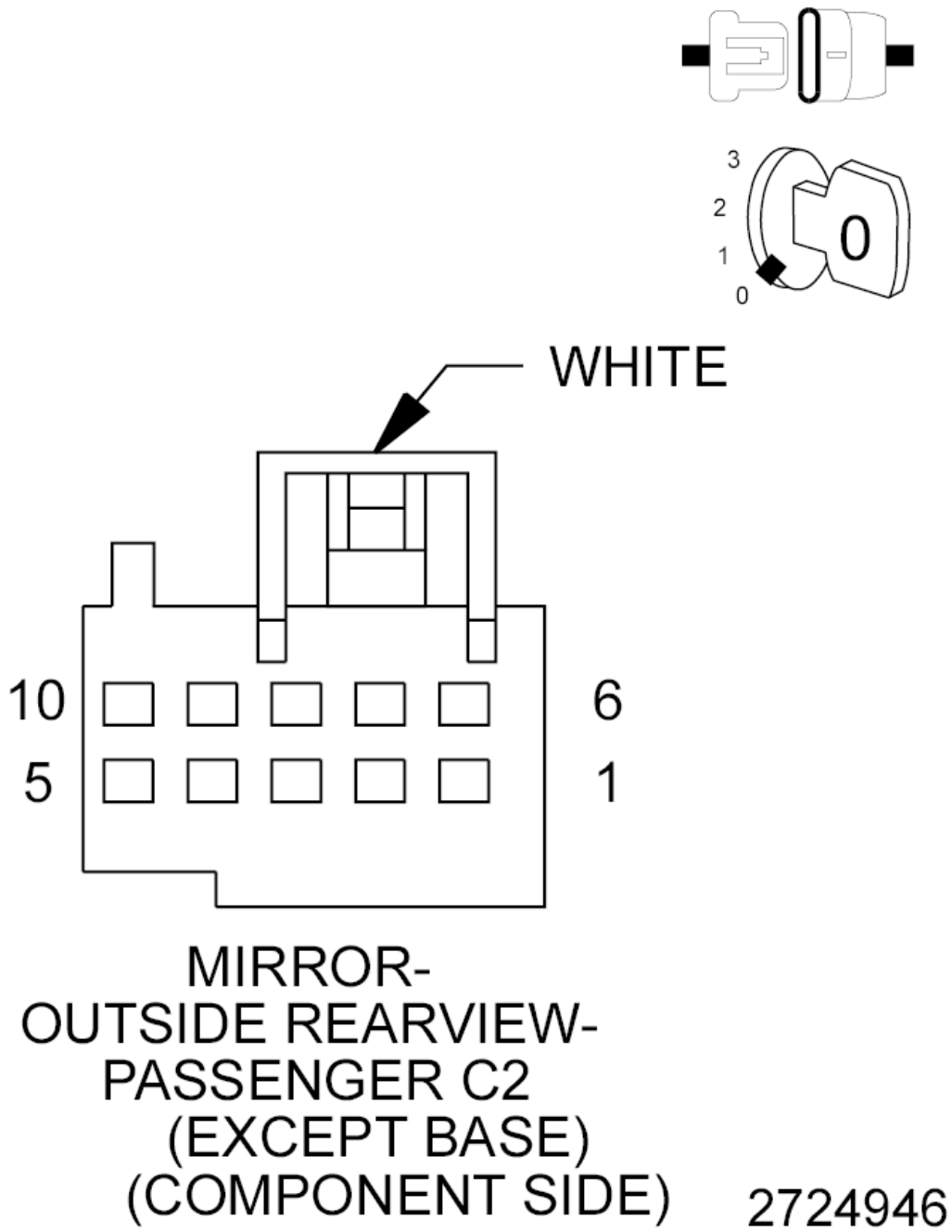

Fig. 103: Passenger Outside Rearview Mirror Connector End View
Courtesy of CHRYSLER GROUP, LLC

1. Turn the ignition off.
2. Disconnect the Passenger Outside Rearview Mirror connector at the Passenger Door Module C2 harness connector.
3. Inspect the wiring and connectors between the mirror and the Passenger Door Module.

Were there any problems found?

Yes

- Repair as necessary.
- Perform the BODY VERIFICATION TEST. Refer to **STANDARD PROCEDURE** .

No

- Go To 3.

3. **MIRROR ASSEMBLY**
    1. Turn the ignition off.
    2. Replace the Passenger Power Folding Mirror Assembly.
    3. Turn the ignition on
    4. With the scan tool, erase the DTC's.
    5. Cycle the ignition from on to off three times.
    6. Turn the ignition on.
    7. Operate the Mirror Fold switch in both directions three times.
    8. Wait 30 seconds.
    9. With the scan tool, read the active DTC's.

    Does the scan tool display: B1E6A-15-PASSENGER MIRROR FOLD CONTROL CIRCUIT FOR A SHORT TO BATTERY OR OPEN as active?

    Yes

    - Replace the Passenger Door Module in accordance with the Service Information.
    - Perform the BODY VERIFICATION TEST. Refer to **STANDARD PROCEDURE** .

    No

    - Test Complete.
    - Perform the BODY VERIFICATION TEST. Refer to **STANDARD PROCEDURE** .

B210C-16-BATTERY VOLTAGE INPUT - CIRCUIT VOLTAGE BELOW THRESHOLD - DD/DP

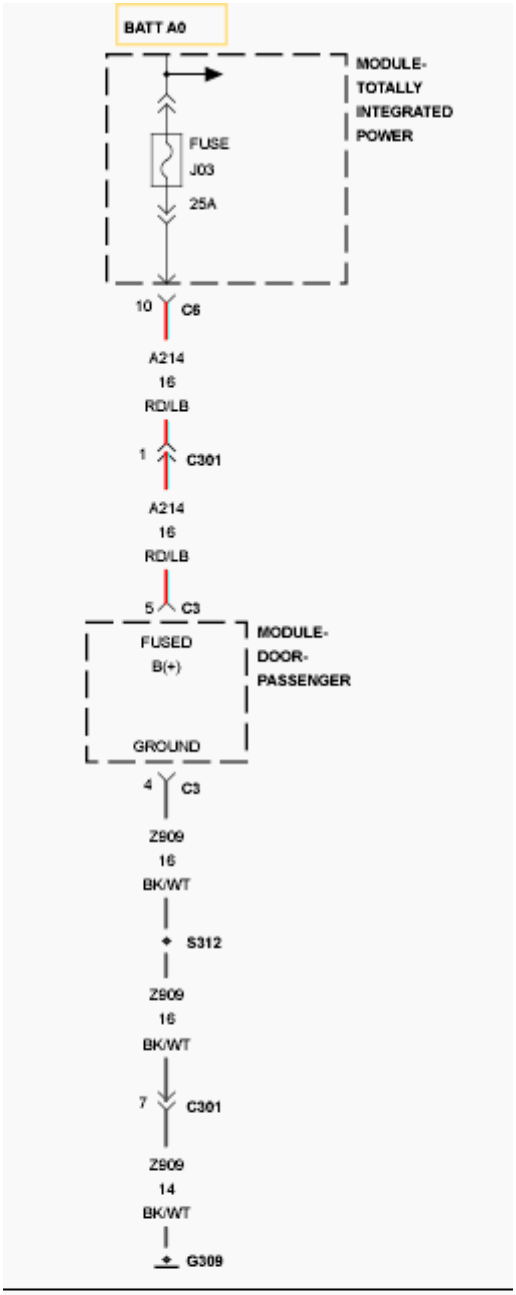
BATT A0
MODULE-
TOTALLY
INTEGRATED
POWER
FUSE
J03
25A
10
C6
A214
16
RD/LB
1
C301
A214
16
RD/LB
5
C3
FUSED
B(+)
MODULE-
DOOR-
PASSENGER
GROUND
4
C3
Z909
16
BK/WT
S312
Z909
16
BK/WT
7
C301
Z909
14
BK/WT
G309

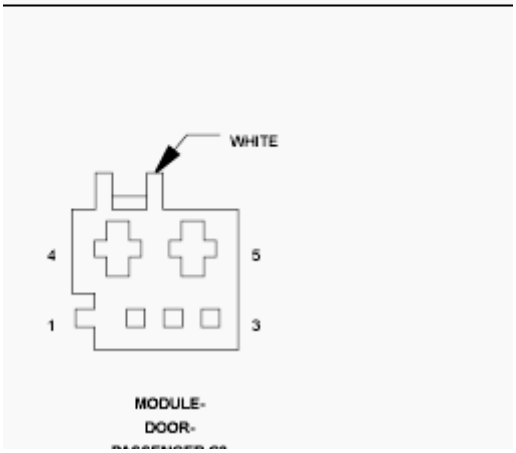
WHITE
4
5
1
3
MODULE-
DOOR-

Fig. 104: Passenger Door Module Power Supply Wiring Diagram
Courtesy of CHRYSLER GROUP, LLC

For a complete wiring diagram, **refer to appropriate SYSTEM WIRING DIAGRAMS article** .

WHEN MONITORED:

At all times.

SET CONDITION:

Anytime the module senses voltage input below 8.0 Volts for more than four seconds, this code will set.

POSSIBLE CAUSES

POSSIBLE CAUSES
LOW VOLTAGE ENGINE DTC
(A214) FUSED B(+) CIRCUIT HAS HIGH RESISTANCE
(Z909) GROUND CIRCUIT HAS HIGH RESISTANCE
PASSENGER DOOR MODULE

DIAGNOSTIC TEST

1. **CHECK ENGINE DTC's**
    1. Using the scan tool, read the active ENGINE DTC's.

       Are there any ENGINE Charging or Battery DTC's present?

       No

       - Go To 2.

       Yes

       - Refer to **3.7L/4.7L/5.7L - DIAGNOSTIC CODE INDEX - NGC - 1500 & 2500** or **6.7L - DIAGNOSTIC CODE INDEX - 2500 & 3500** or **5.7L - DIAGNOSTIC CODE INDEX - 3500 CAB & CHASSIS** or **6.7L - DIAGNOSTIC CODE INDEX - 3500 CAB & CHASSIS, 4500 & 5500** and perform the appropriate diagnostic test procedure.
2. **TEST FOR INTERMITTENT CONDITION**
    1. Using the scan tool, record and erase the DTC's.
    2. Start the engine and run for two minutes.
    3. Using the scan tool, read the active DTC's in the Door Module.

       Does the scan tool display B210C-16-BATTERY VOLTAGE INPUT - CIRCUIT VOLTAGE BELOW THRESHOLD?

Yes

- Go To 3.

No

- Test complete, the condition or conditions that originally set this DTC are not present at this time. Using the wiring diagrams as a guide, check all related splices and connectors for signs of water intrusion, corrosion, pushed out or bent terminals and correct pin tension.
- Perform the BODY VERIFICATION TEST. Refer to **STANDARD PROCEDURE** .

3. **(A214) FUSED B(+) OR (Z909) GROUND CIRCUITS RESISTED**

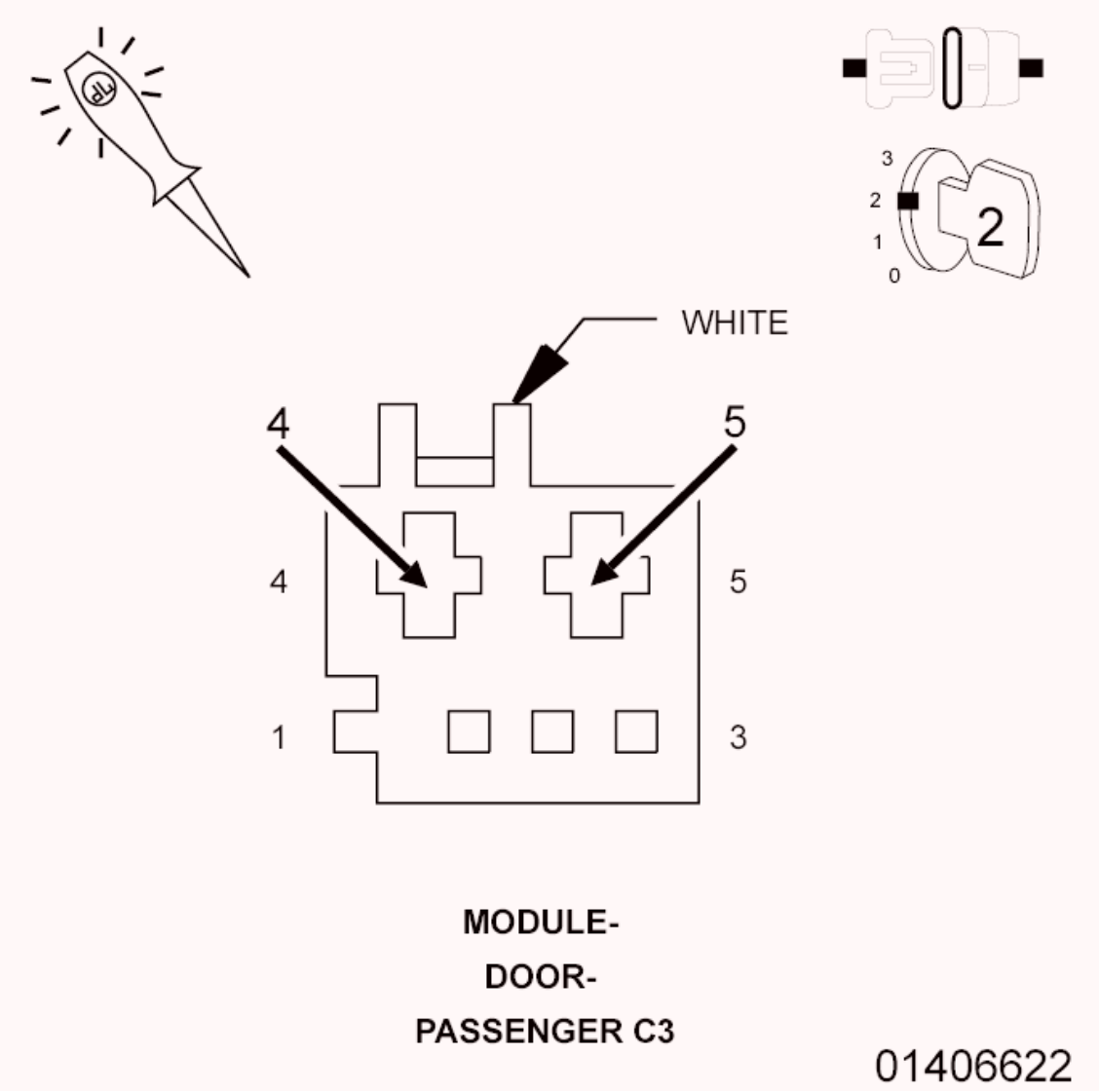

Fig. 105: Checking Fused B(+) Or Ground Circuits For Resistance
Courtesy of CHRYSLER GROUP, LLC

1. Turn the ignition off.

2. Disconnect the Passenger Door Module C3 connector.
3. Turn the ignition on.
4. Test the (A214) Fused B(+) circuits by connecting a 12-volt test light between the Fused B(+) circuit and the (Z909) Ground circuits in the door module C3 connector. The test light must illuminate brightly. Compare the brightness to that of a direct connection to the battery.

   Does the test light illuminate brightly?

   Yes

   - Replace the Passenger Door Module in accordance with the Service Information.
   - Perform the BODY VERIFICATION TEST. Refer to **STANDARD PROCEDURE** .

   No

   - Test the (A214) Fused B(+) and the (Z909) Ground circuits to determine which one has the high resistance. Repair the necessary circuit for high resistance.
   - Perform the BODY VERIFICATION TEST. Refer to **STANDARD PROCEDURE** .

B210C-16-BATTERY VOLTAGE INPUT - CIRCUIT VOLTAGE BELOW THRESHOLD - DS/DJ/D2

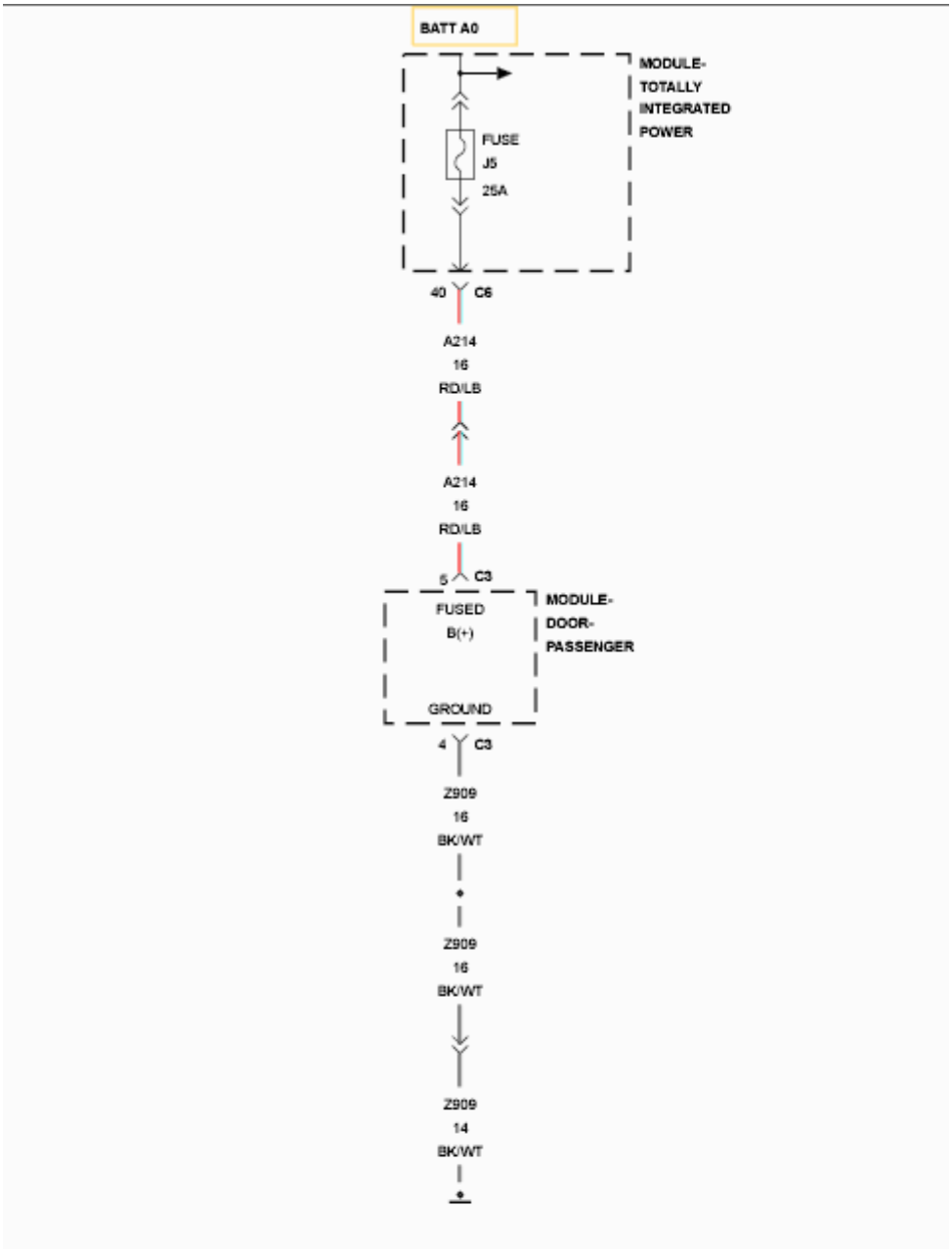
BATT A0
MODULE-
TOTALLY
INTEGRATED
POWER
FUSE
J5
25A
40
C6
A214
16
RD/LB
A214
16
RD/LB
5
C3
FUSED
B(+)
GROUND
MODULE-
DOOR-
PASSENGER
4
C3
Z909
16
BK/WT
Z909
16
BK/WT
Z909
14
BK/WT

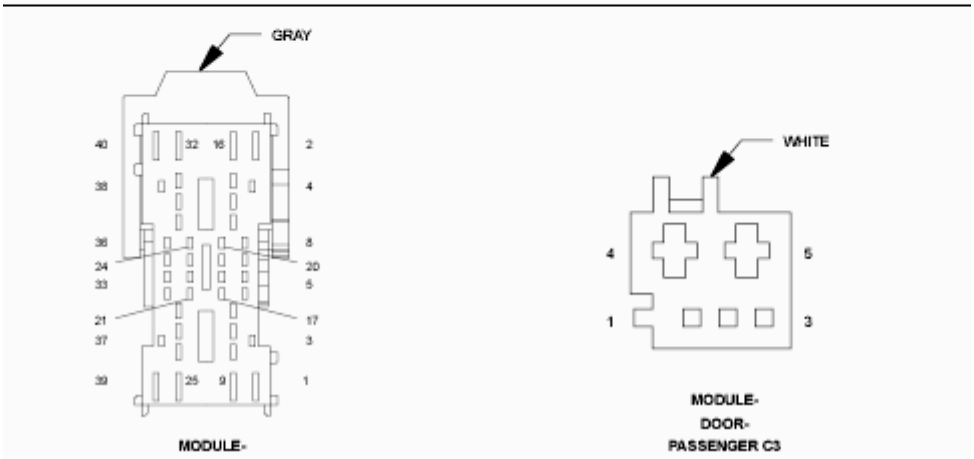
GRAY
40
32
16
2
38
4
36
8
24
20
33
5
21
17
37
3
39
25
9
1
MODULE-
WHITE
4
5
1
3
MODULE-
DOOR-
PASSENGER C3

Fig. 106: PDM Power Supply Wiring Diagram
Courtesy of CHRYSLER GROUP, LLC

For a complete wiring diagram, **refer to appropriate SYSTEM WIRING DIAGRAMS article** .

WHEN MONITORED:

At all times.

SET CONDITION:

Anytime the module senses voltage input below 8.0 Volts for more than four seconds, this code will set.

POSSIBLE CAUSES

POSSIBLE CAUSES
LOW VOLTAGE ENGINE DTC (A214) FUSED B(+) CIRCUIT HAS HIGH RESISTANCE (Z909) GROUND CIRCUIT HAS HIGH RESISTANCE PASSENGER DOOR MODULE (PDM)

DIAGNOSTIC TEST

1. **CHECK POWERTRAIN CONTROL MODULE DTC's**
    1. Using the scan tool, read the active PCM DTC's.

       Are there any PCM Charging or Battery DTC's present?

       No

       - Go To 2.

       Yes

       - Refer to **3.7L/4.7L/5.7L - DIAGNOSTIC CODE INDEX - NGC - 1500 & 2500** or **6.7L - DIAGNOSTIC CODE INDEX - 2500 & 3500** or **5.7L - DIAGNOSTIC CODE INDEX - 3500 CAB & CHASSIS** or **6.7L - DIAGNOSTIC CODE INDEX - 3500 CAB & CHASSIS, 4500 & 5500** and perform the appropriate diagnostic test procedure.
2. **TEST FOR INTERMITTENT CONDITION**
    1. Using the scan tool, record and erase the DTC's.
    2. Start the engine and run for two minutes.
    3. Using the scan tool, read the active DTC's in the Door Module.

       Does the scan tool display B210C-16-BATTERY VOLTAGE INPUT - CIRCUIT VOLTAGE BELOW THRESHOLD?

Yes

- Go To 3.

No

- Test complete, the condition or conditions that originally set this DTC are not present at this time. Using the wiring diagrams as a guide, check all related splices and connectors for signs of water intrusion, corrosion, pushed out or bent terminals and correct pin tension.
- Perform the BODY VERIFICATION TEST. Refer to **STANDARD PROCEDURE** .

3. **(A214) FUSED B(+) OR (Z909) GROUND CIRCUITS RESISTED**

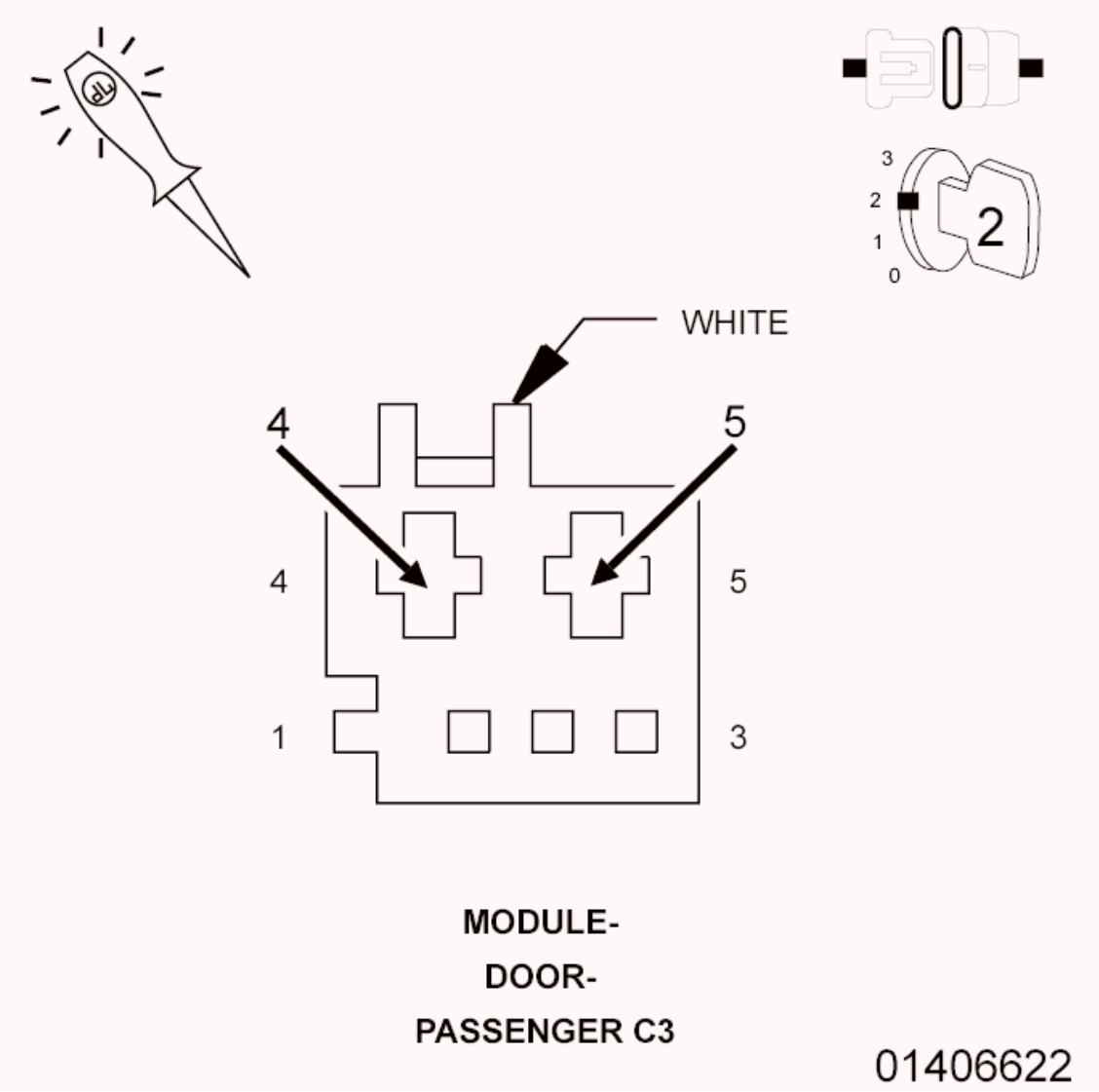

Fig. 107: Checking Fused B(+) Or Ground Circuits For Resistance
Courtesy of CHRYSLER GROUP, LLC

1. Turn the ignition off.

2. Disconnect the Passenger Door Module C3 connector.
3. Turn the ignition on.
4. Test the (A214) Fused B(+) circuits by connecting a 12-volt test light between the Fused B(+) circuit and the (Z909) Ground circuits in the door module C3 connector. The test light must illuminate brightly. Compare the brightness to that of a direct connection to the battery.

   Does the test light illuminate brightly?

   Yes

   - Replace the Passenger Door Module in accordance with the Service Information.
   - Perform the BODY VERIFICATION TEST. Refer to **STANDARD PROCEDURE** .

   No

   - Test the (A214) Fused B(+) and the (Z909) Ground circuits to determine which one has the high resistance. Repair the necessary circuit for high resistance.
   - Perform the BODY VERIFICATION TEST. Refer to **STANDARD PROCEDURE** .

B210C-17-BATTERY VOLTAGE INPUT - CIRCUIT VOLTAGE ABOVE THRESHOLD - DD/DP

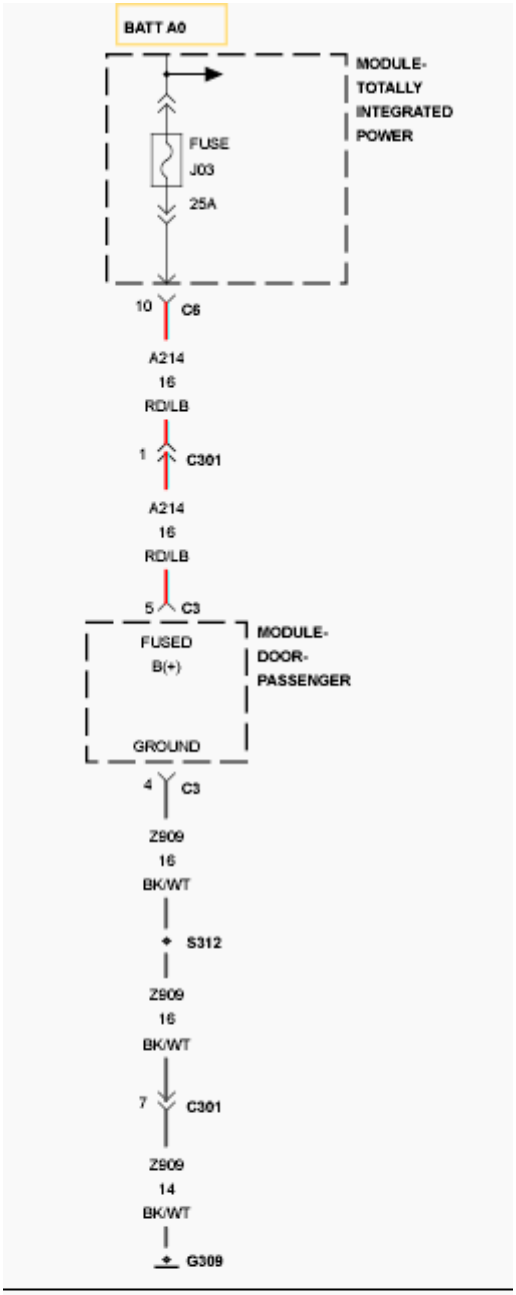
BATT A0
MODULE-
TOTALLY
INTEGRATED
POWER
FUSE
J03
25A
10
C6
A214
16
RD/LB
1
C301
A214
16
RD/LB
5
C3
FUSED
B(+)
MODULE-
DOOR-
PASSENGER
GROUND
4
C3
Z909
16
BK/WT
S312
Z909
16
BK/WT
7
C301
Z909
14
BK/WT
G309

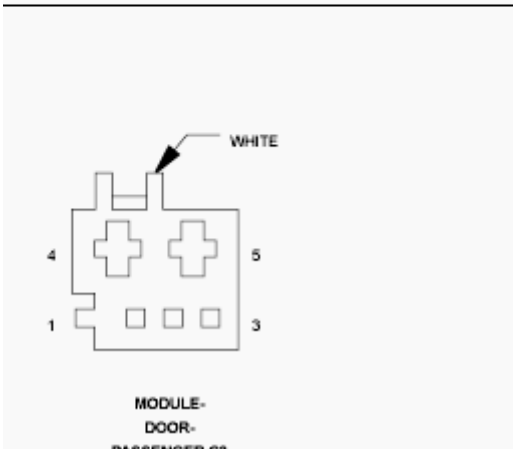
WHITE
4
5
1
3
MODULE-
DOOR-

Fig. 108: Passenger Door Module Power Supply Wiring Diagram
Courtesy of CHRYSLER GROUP, LLC

For a complete wiring diagram, **refer to appropriate SYSTEM WIRING DIAGRAMS article** .

WHEN MONITORED:

At all times.

SET CONDITION:

Anytime the module senses voltage input above 16.0 volts for more than four seconds, this code will set.

POSSIBLE CAUSES

POSSIBLE CAUSES
HIGH VOLTAGE ENGINE DTC PASSENGER DOOR MODULE (PDM)

DIAGNOSTIC TEST

1. **CHECK ENGINE DTC's**
    1. With the scan tool, read the active Powertrain Control Module DTC's.

       Are there any active Charging or Battery DTC's present?

       No

       - Go To 2.

       Yes

       - Refer to **3.7L/4.7L/5.7L - DIAGNOSTIC CODE INDEX - NGC - 1500 & 2500** or **6.7L - DIAGNOSTIC CODE INDEX - 2500 & 3500** or **5.7L - DIAGNOSTIC CODE INDEX - 3500 CAB & CHASSIS** or **6.7L - DIAGNOSTIC CODE INDEX - 3500 CAB & CHASSIS, 4500 & 5500** and perform the appropriate diagnostic test procedure.
2. **TEST FOR INTERMITTENT CONDITION**
    1. With the scan tool, record and erase the DTC's.
    2. Start the engine and run for two minutes.
    3. With the scan tool, read the active door module DTC's.

       Does the scan tool display B210C-17-BATTERY VOLTAGE INPUT - CIRCUIT VOLTAGE ABOVE THRESHOLD?

       Yes

- Replace the Passenger Door Module in accordance with the Service Information.
- Perform the BODY VERIFICATION TEST. Refer to **STANDARD PROCEDURE** .

No

- Test complete, the condition or conditions that originally set this DTC are not present at this time. Using the wiring diagrams as a guide, check all related splices and connectors for signs of water intrusion, corrosion, pushed out or bent terminals and correct pin tension.
- Perform the BODY VERIFICATION TEST. Refer to **STANDARD PROCEDURE** .

B210C-17-BATTERY VOLTAGE INPUT - CIRCUIT VOLTAGE ABOVE THRESHOLD - DS/DJ/D2

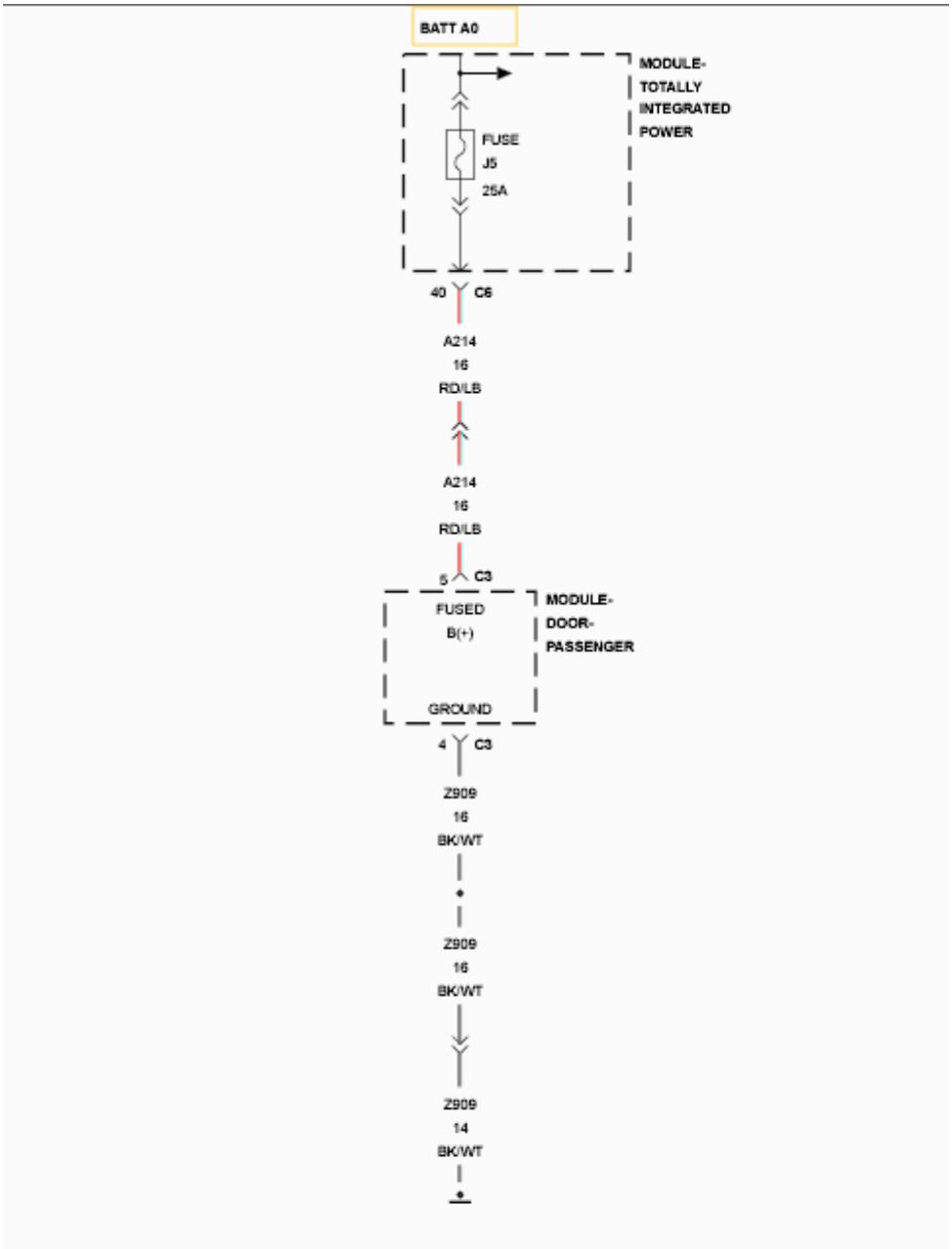
BATT A0
MODULE-
TOTALLY
INTEGRATED
POWER
FUSE
J5
25A
40
C6
A214
16
RD/LB
A214
16
RD/LB
5
C3
FUSED
B(+)
GROUND
MODULE-
DOOR-
PASSENGER
4
C3
Z909
16
BK/WT
Z909
16
BK/WT
Z909
14
BK/WT

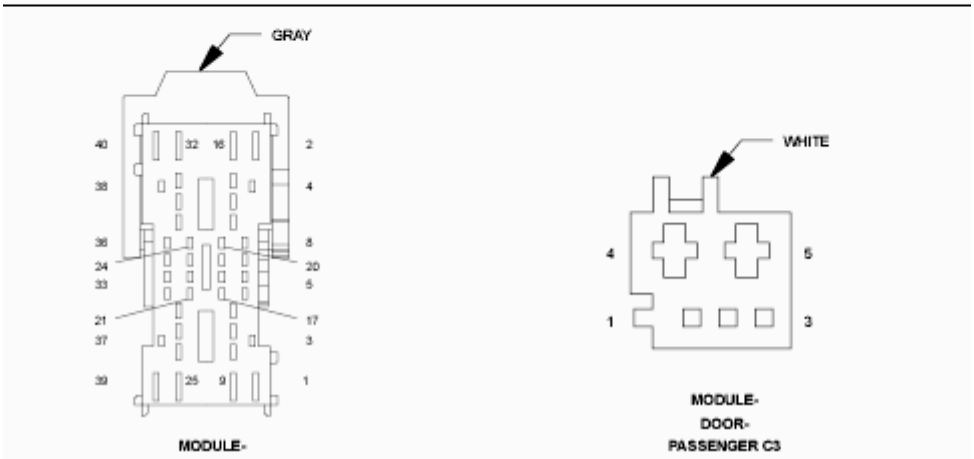
GRAY
40
32
16
2
38
4
36
8
24
20
33
5
21
17
37
3
39
25
9
1
MODULE-
WHITE
4
5
1
3
MODULE-
DOOR-
PASSENGER C3

Fig. 109: PDM Power Supply Wiring Diagram
Courtesy of CHRYSLER GROUP, LLC

For a complete wiring diagram,**refer to appropriate SYSTEM WIRING DIAGRAMS article** .

WHEN MONITORED:

At all times.

SET CONDITION:

Anytime the module senses voltage input above 16.0 volts for more than four seconds, this code will set.

POSSIBLE CAUSES

POSSIBLE CAUSES
HIGH VOLTAGE ENGINE DTC PASSENGER DOOR MODULE (PDM)

DIAGNOSTIC TEST

1. **CHECK POWERTRAIN CONTROL MODULE DTC's**
    1. With the scan tool, read the active PCM DTC's.

       Are there any active PCM Charging or Battery DTC's present?

       No

       - Go To 2.

       Yes

       - Refer to **3.7L/4.7L/5.7L - DIAGNOSTIC CODE INDEX - NGC - 1500 & 2500** or **6.7L - DIAGNOSTIC CODE INDEX - 2500 & 3500** or **5.7L - DIAGNOSTIC CODE INDEX - 3500 CAB & CHASSIS** or **6.7L - DIAGNOSTIC CODE INDEX - 3500 CAB & CHASSIS, 4500 & 5500** and perform the appropriate diagnostic test procedure.
2. **TEST FOR INTERMITTENT CONDITION**
    1. With the scan tool, record and erase the DTC's.
    2. Start the engine and run for two minutes.
    3. With the scan tool, read the active door module DTC's.

       Does the scan tool display; B210C-17-BATTERY VOLTAGE INPUT - CIRCUIT VOLTAGE ABOVE THRESHOLD?

       Yes

- Replace the Passenger Door Module (PDM) in accordance with the Service Information.
- Perform the BODY VERIFICATION TEST. Refer to **STANDARD PROCEDURE** .

No

- Test complete, the condition or conditions that originally set this DTC are not present at this time. Using the wiring diagrams as a guide, check all related splices and connectors for signs of water intrusion, corrosion, pushed out or bent terminals and correct pin tension.
- Perform the BODY VERIFICATION TEST. Refer to **STANDARD PROCEDURE** .

B21A1-00-ECU RESET/RECOVERY OCCURRED

For a complete wiring diagram, **refer to appropriate SYSTEM WIRING DIAGRAMS article** .

WHEN MONITORED:

At all times.

SET CONDITION:

Whenever the module detects a power on reset or a reflash, this code will set. This code is for information only. No repair is necessary.

POSSIBLE CAUSES

POSSIBLE CAUSES
MODULE WAS RE-FLASHED MODULE WAS RESET

DIAGNOSTIC TEST

This DTC is for information only. At some time the module was re-flashed or was reset during a power on operation. No repair is necessary.

B21DD-84-SYSTEM VOLTAGE - SIGNAL BELOW ALLOWABLE RANGE

For a complete wiring diagram, **refer to appropriate SYSTEM WIRING DIAGRAMS article** .

WHEN MONITORED:

At all times.

SET CONDITION:

This is a CAN message that the battery voltage was below 10.0 volts for over four seconds.

POSSIBLE CAUSES

POSSIBLE CAUSES
LOW SYSTEM VOLTAGE BATTERY OR CHARGING SYSTEM

DIAGNOSTIC TEST

1. **CHECK ENGINE DTC's**
    1. With the scan tool, read Powertrain Control Module DTC's

       Are there any Charging or Battery DTC's present?

       Yes

       - Refer to **3.7L/4.7L/5.7L - DIAGNOSTIC CODE INDEX - NGC - 1500 & 2500** or **6.7L - DIAGNOSTIC CODE INDEX - 2500 & 3500** or **5.7L - DIAGNOSTIC CODE INDEX - 3500 CAB & CHASSIS** or **6.7L - DIAGNOSTIC CODE INDEX - 3500 CAB & CHASSIS, 4500 & 5500** and perform the appropriate diagnostic test procedure.

       No

       - This code is for information only. At some time there was a low battery system voltage. Check the battery and charging system in accordance with the Service Information.

B21DD-85-SYSTEM VOLTAGE - SIGNAL ABOVE ALLOWABLE RANGE

For a complete wiring diagram, **refer to appropriate SYSTEM WIRING DIAGRAMS article** .

WHEN MONITORED:

At all times.

SET CONDITION:

This is a CAN message that the system voltage was above 16.0 volts for over four seconds.

POSSIBLE CAUSES

POSSIBLE CAUSES
HIGH BATTERY SYSTEM VOLTAGE CHARGING SYSTEM

DIAGNOSTIC TEST

1. **CHECK ENGINE DTC's**
    1. With the scan tool, read Powertrain Control Module DTC's

Are there any Charging or Battery DTC's present?

Yes

- Refer to **CHARGING SYSTEM - DIAGNOSIS AND TESTING** and perform the active charging system or battery DTC diagnostic procedure.

No

- This code is a CAN system message for information only. Check the charging system in accordance with the Service Information.

B2599-54-DOOR MODULE FRONT RIGHT - MISSING CALIBRATION - QUAD/CREW CAB ONLY

For a complete wiring diagram, **refer to appropriate SYSTEM WIRING DIAGRAMS article** .

THEORY OF OPERATION

This code can set anytime the battery or the door module connector is disconnected.

WHEN MONITORED:

Whenever the window motor is operating.

SET CONDITION:

When the Door Module has lost the parameters for window travel.

POSSIBLE CAUSES

Possible Causes
MODULE NOT CALIBRATED
EXPRESS WINDOW SWITCH
PASSENGER DOOR MODULE (PDM)

DIAGNOSTIC TEST

1. **TEST FOR INTERMITTENT CONDITION**

   NOTE: If there are any other Power Window DTC's, repair them before continuing.

   1. Turn the ignition on.
   2. With the scan tool, record and erase DTC's.
   3. Operate the Passenger Window switch up and down several times.
   4. Wait 30 seconds.
   5. With the scan tool, read the active DTC's.

Does the scan tool display B2599-54-DOOR MODULE FRONT RIGHT - MISSING CALIBRATION?

Yes

- Go To 2.

No

- Test complete, the condition or conditions that originally set this DTC are not present at this time. Using the wiring diagrams as a guide, check all related splices and connectors for signs of water intrusion, corrosion, pushed out or bent terminals, and correct pin tension.
- Perform the BODY VERIFICATION TEST. Refer to **STANDARD PROCEDURE** .

2. **WINDOW MODULE NOT CALIBRATED**
    1. Operate the window to the full up position and continue to hold the switch for an additional two seconds.
    2. Operate the window to the full down position and continue to hold the switch for an additional two seconds.
    3. Again operate the window to the full up position and continue to hold the switch for an additional two seconds.
    4. Lower the window all the way down then press and release the switch to the express up position.

    Did the window move to the full up position?

    Yes

    - Test complete.
    - Perform the BODY VERIFICATION TEST. Refer to **STANDARD PROCEDURE** .

    No

    - Go To 3.
3. **EXPRESS WINDOW SWITCH**
    1. Turn the ignition off.
    2. Move the Passenger Express Window Switch from the idle position to the up position and then to the express up position.

    Is there two definite detent positions felt?

    Yes

    - Replace the Passenger Door Module in accordance with the Service Information.
    - Perform the BODY VERIFICATION TEST. Refer to **STANDARD PROCEDURE** .

No

- Replace the Passenger Express Window Switch in accordance with the Service Information.
- Perform the BODY VERIFICATION TEST. Refer to **STANDARD PROCEDURE** .

B2599-96-DOOR MODULE FRONT RIGHT - COMPONENT INTERNAL FAILURE

For a complete wiring diagram, **refer to appropriate SYSTEM WIRING DIAGRAMS article** .

WHEN MONITORED:

At all times.

SET CONDITION:

When the door module senses an internal fault, this code will set.

POSSIBLE CAUSES

Possible Causes
PASSENGER DOOR MODULE (PDM)

DIAGNOSTIC TEST

1. **TEST FOR INTERMITTENT CONDITION**
    1. Turn the ignition on.
    2. With the scan tool, record and erase the DTC's.
    3. Operate the Passenger Window up and down several times.
    4. Wait 30 seconds.
    5. With the scan tool, read the active DTC's.

    Does the scan tool display B2599-96-DOOR MODULE FRONT RIGHT - COMPONENT INTERNAL FAILURE ?

    Yes

    - Replace the Door Module in accordance with the Service Information.
    - Perform the BODY VERIFICATION TEST. Refer to **STANDARD PROCEDURE** .

    No

    - The conditions that caused this code to set are not present at this time. If this code ever repeats, replace the door module in accordance with the Service Information.
    - Perform the BODY VERIFICATION TEST. Refer to **STANDARD PROCEDURE** .

B282F-11-PASSENGER PUDDLE LAMP CONTROL - CIRCUIT FOR A SHORT TO GROUND

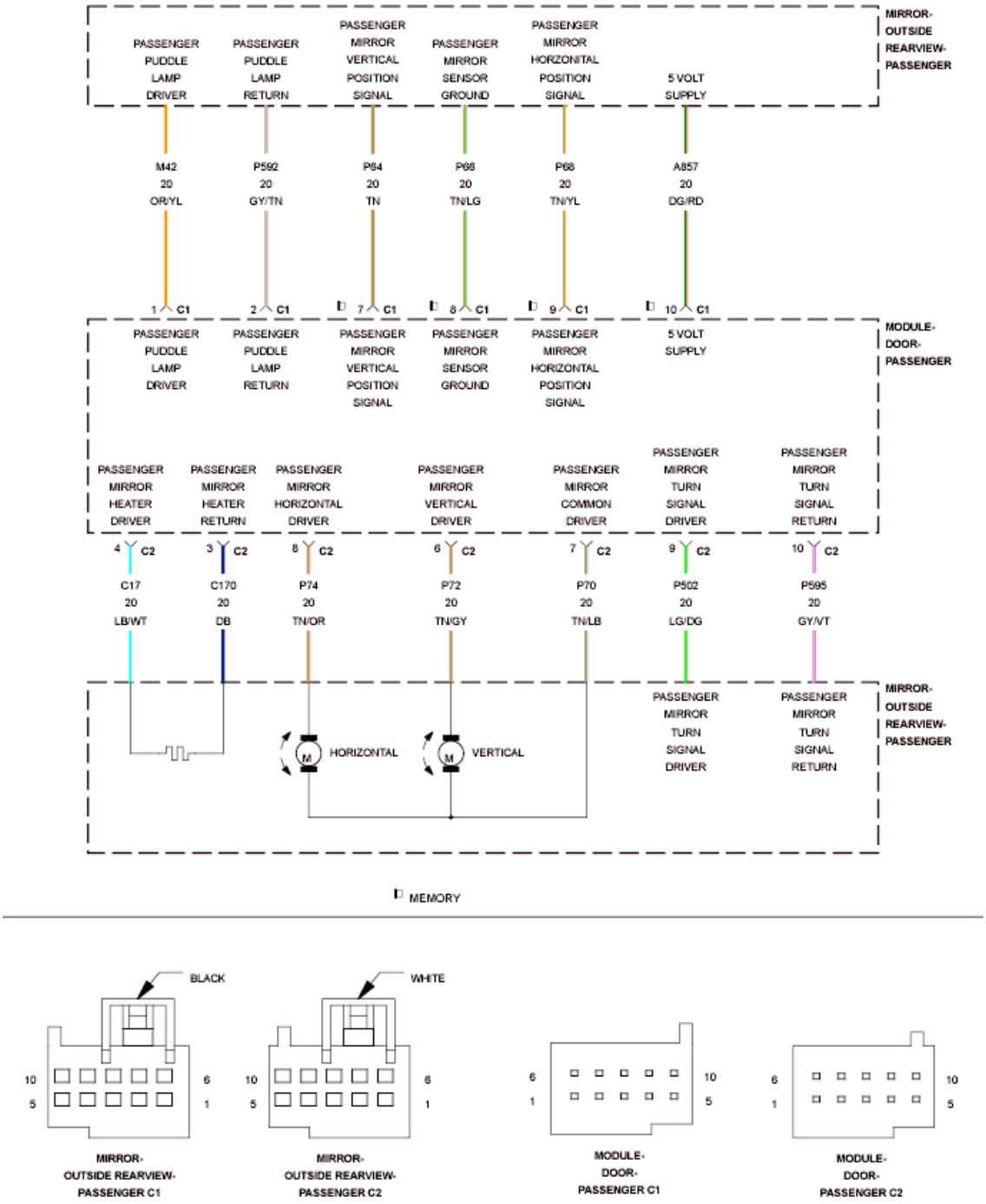

Fig. 110: Passenger Mirror Signal Lamp Control Wiring Diagram
Courtesy of CHRYSLER GROUP, LLC

For a complete wiring diagram, **refer to appropriate SYSTEM WIRING DIAGRAMS article** .

WHEN MONITORED:

Continuously.

SET CONDITION:

The Door Module senses a short low on the (M42) Passenger Puddle Lamp Driver circuit for more than two seconds with the lamp switched on.

POSSIBLE CAUSES

Possible Causes
(M42) PASSENGER PUDDLE LAMP DRIVER CIRCUIT FOR A SHORT TO GROUND
(M42) PASSENGER PUDDLE LAMP DRIVER CIRCUIT FOR A SHORT TO THE (P66) PASSENGER MIRROR SENSOR GROUND CIRCUIT
(M42) PASSENGER PUDDLE LAMP DRIVER CIRCUIT FOR A SHORT TO THE (P592) PASSENGER PUDDLE LAMP RETURN CIRCUIT
(M42) PASSENGER PUDDLE LAMP DRIVER CIRCUIT FOR A SHORT TO THE (P72) PASSENGER MIRROR VERTICAL DRIVER CIRCUIT
(M42) PASSENGER PUDDLE LAMP DRIVER CIRCUIT FOR A SHORT TO THE (P70) PASSENGER MIRROR COMMON DRIVER CIRCUIT
(M42) PASSENGER PUDDLE LAMP DRIVER CIRCUIT FOR A SHORT TO THE (P74) PASSENGER MIRROR HORIZONTAL DRIVER CIRCUIT
(M42) PASSENGER PUDDLE LAMP DRIVER CIRCUIT FOR A SHORT TO THE (C170) PASSENGER MIRROR HEATER RETURN CIRCUIT
(M42) PASSENGER PUDDLE LAMP DRIVER CIRCUIT FOR A SHORT TO THE (P595) PASSENGER MIRROR TURN SIGNAL RETURN CIRCUIT
PASSENGER OUTSIDE REARVIEW MIRROR SHORTED
DOOR MODULE

DIAGNOSTIC TEST

1. **TEST FOR INTERMITTENT CONDITION**
    1. Turn the ignition on.
    2. Using a scan tool, record and erase Diagnostic Trouble Codes (DTC's).
    3. Turn the turn signal on, if equipped with turn signal mirror.
    4. Turn the puddle lamps on.

    NOTE: Verify the panel lamps dimmer switch is not in the defeat (off) position.

    5. Turn the rear defogger on, if equipped with heated mirror.
    6. Press and release the Mirror Select switch to select the Passenger Outside Rearview Mirror.
    7. Operate the Mirror Adjust switch in all directions several times while monitoring the scan tool for

DTC's.

NOTE: **After adjusting the mirror in one direction wait at least two seconds before adjusting the mirror in the opposite direction, as this will allow time for an active fault to set if present.**

Is the DTC active?

Yes

- Go To 2.

No

- The conditions that caused this code to set are not present at this time. For vehicle's equipped with folding outside rearview mirrors, repeat test with mirror folded. If DTC is now active, Go To 2. Otherwise, use the wiring diagram/schematic as a guide and inspect the wiring and connectors.
- Perform the BODY VERIFICATION TEST. Refer to **STANDARD PROCEDURE** .

2. **CHECK (M42) PASSENGER PUDDLE LAMP DRIVER CIRCUIT FOR A SHORT TO GROUND**

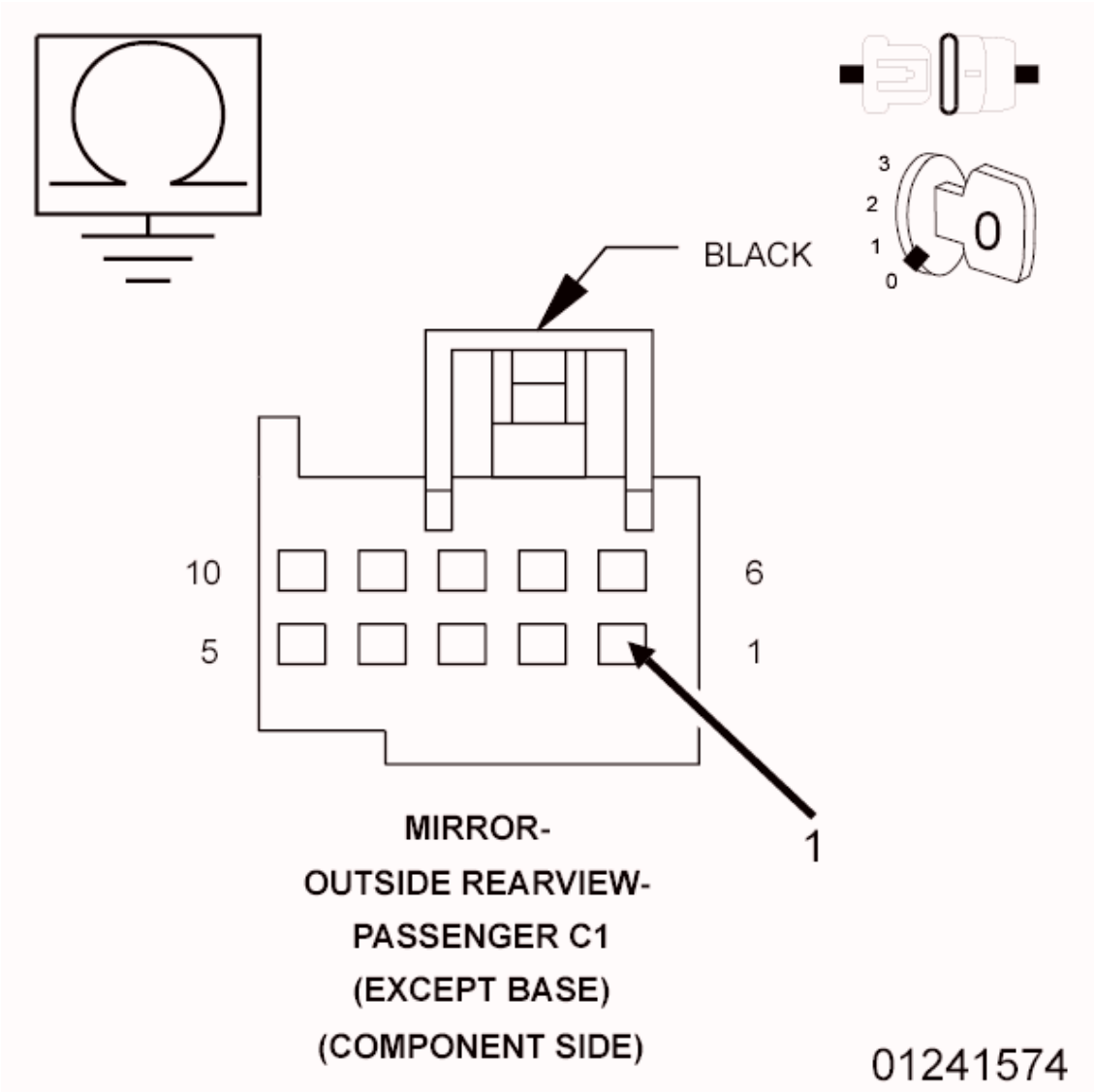

Fig. 111: Checking Passenger Puddle Lamp Driver Circuit For A Short To Ground
Courtesy of CHRYSLER GROUP, LLC

1. Turn the ignition off.
2. Disconnect the Passenger Outside Rearview Mirror C1 (Component Side) connector from the Door Module C1 connector.
3. Measure the resistance of the (M42) Passenger Puddle Lamp Driver circuit between ground and the Passenger Outside Rearview Mirror C1 (Component Side) connector.

   Is the resistance below 10K Ohms?

   Yes

   - Repair the (M42) Passenger Puddle Lamp Driver circuit for a short to ground. If the wiring harness and connector are okay, replace the Passenger Outside Rearview Mirror in

accordance with the Service Information.

- Perform the BODY VERIFICATION TEST. Refer to **STANDARD PROCEDURE** .

No

- Go To 3.

3. **CHECK (M42) PASSENGER PUDDLE LAMP DRIVER CIRCUIT FOR A SHORT TO (P66) PASSENGER MIRROR SENSOR GROUND CIRCUIT**

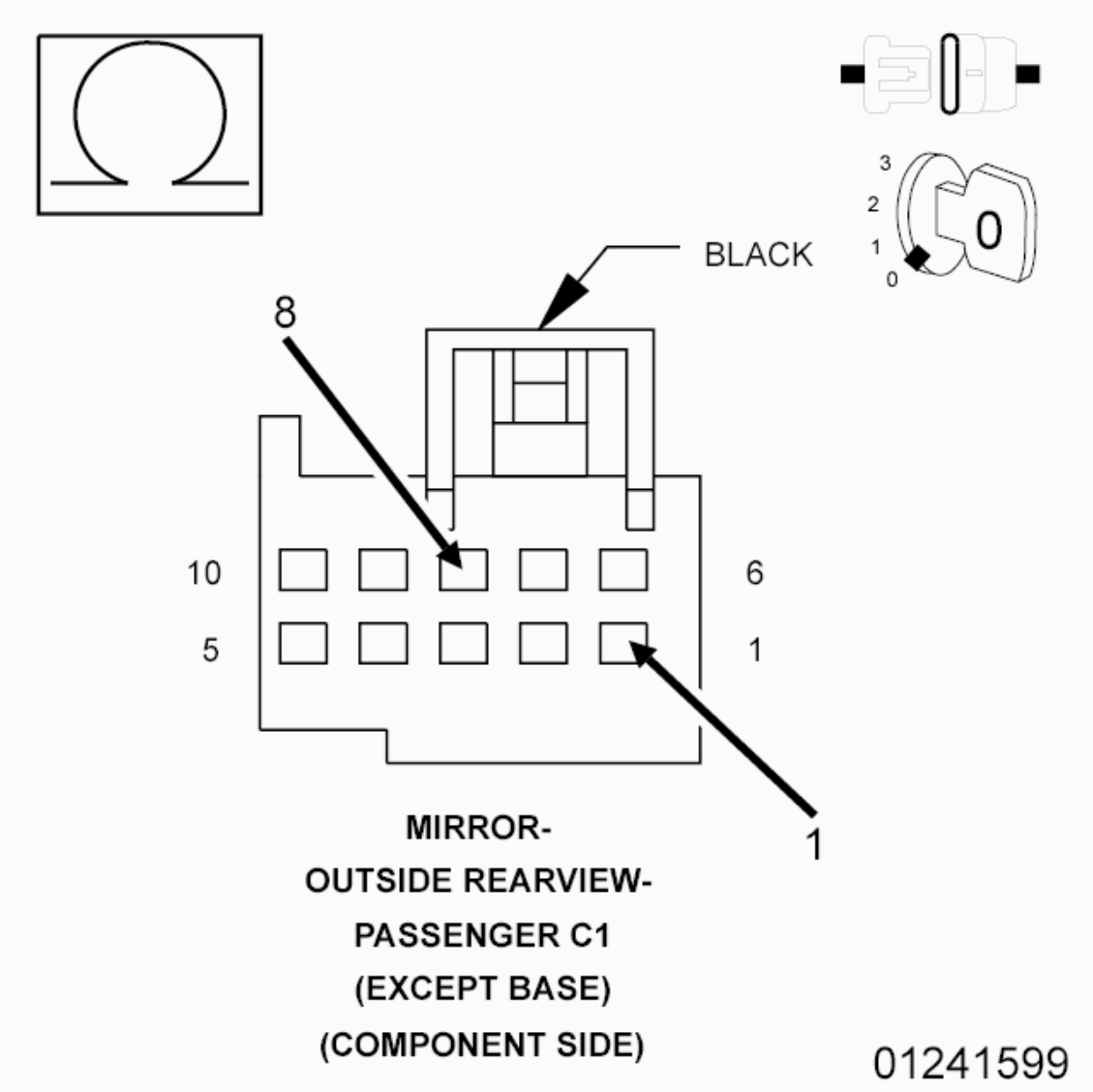

Fig. 112: Checking Passenger Puddle Lamp Driver Circuit For A Short To Passenger Mirror Sensor Ground Circuit
Courtesy of CHRYSLER GROUP, LLC

1. Measure the resistance between the (M42) Passenger Puddle Lamp Driver circuit and the (P66) Passenger Mirror Sensor Ground circuit at the Passenger Outside Rearview Mirror C1 (Component

Side) connector.

Is the resistance below 10K Ohms?

Yes

- Repair the (M42) Passenger Puddle Lamp Driver circuit for a short to the (P66) Passenger Mirror Sensor Ground circuit. If the wiring harness and connector are okay, replace the Passenger Outside Rearview Mirror in accordance with the Service Information.
- Perform the BODY VERIFICATION TEST. Refer to **STANDARD PROCEDURE** .

No

- Go To 4.

4. **CHECK (M42) PASSENGER PUDDLE LAMP DRIVER CIRCUIT FOR A SHORT TO (P592) PASSENGER PUDDLE LAMP RETURN CIRCUIT**

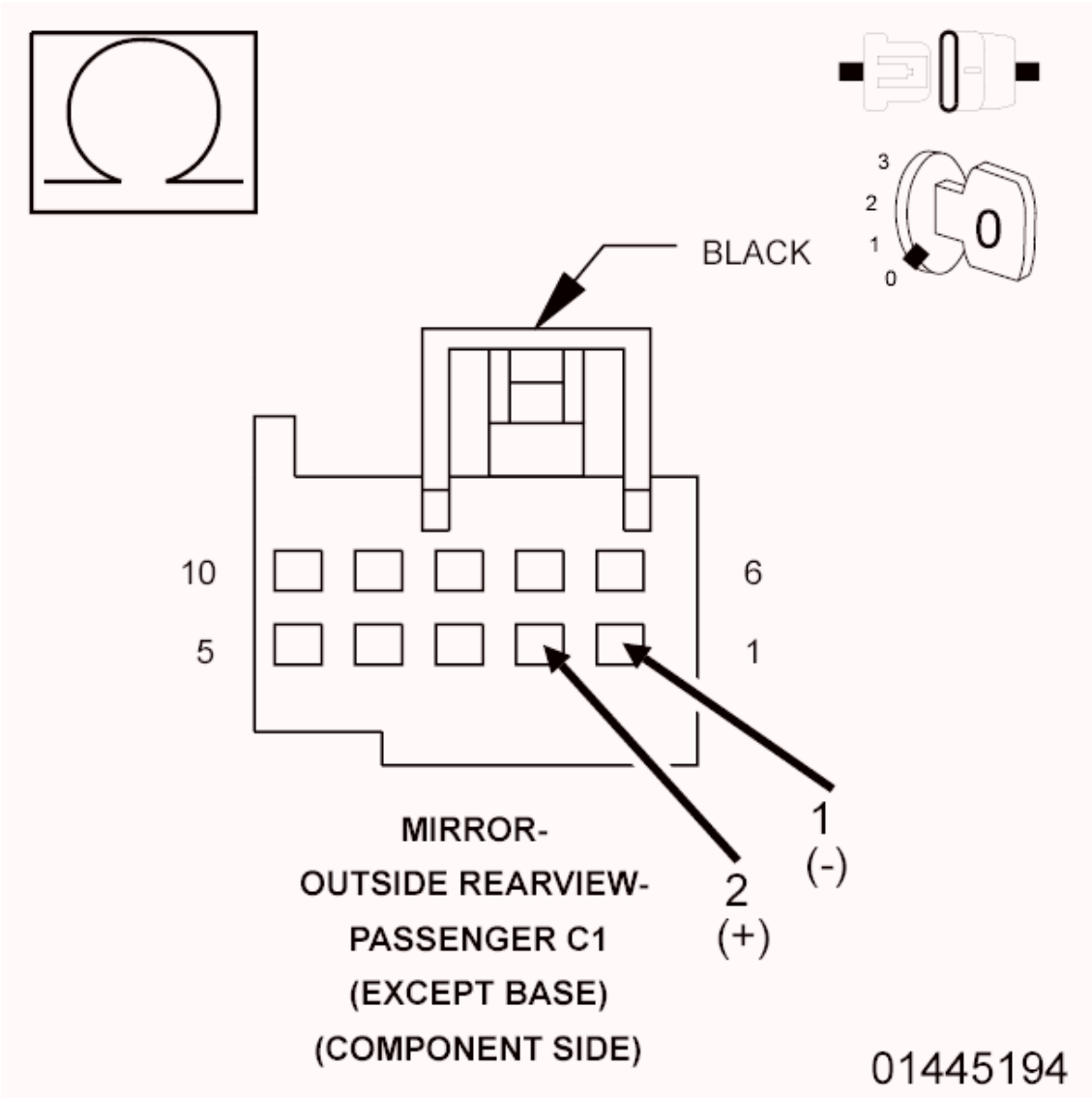

Fig. 113: Checking Passenger Puddle Lamp Driver Circuit For A Short To Passenger Puddle Lamp Return Circuit
Courtesy of CHRYSLER GROUP, LLC

NOTE: **The Ohmmeter positive lead must be connected to the (P592) Passenger Puddle Lamp Return circuit and the negative lead to the (M42) Passenger Puddle Lamp Driver circuit for the test results to be valid.**

1. Measure the resistance between the (M42) Passenger Puddle Lamp Driver circuit and the (P592) Passenger Puddle Lamp Return circuit at the Passenger Outside Rearview Mirror C1 (Component Side) connector.

   Is there any resistance present?

   Yes

- Repair the (M42) Passenger Puddle Lamp Driver circuit for a short to the (P592) Passenger Puddle Lamp Return circuit. If the wiring harness and connector are okay, replace the Passenger Outside Rearview Mirror in accordance with the Service Information.
- Perform the BODY VERIFICATION TEST. Refer to **STANDARD PROCEDURE** .

No

- Go To 5.

5. **CHECK (M42) PASSENGER PUDDLE LAMP DRIVER CIRCUIT FOR A SHORT TO (P72) PASSENGER MIRROR VERTICAL DRIVER CIRCUIT, (P70) PASSENGER MIRROR COMMON DRIVER CIRCUIT, OR TO (P74) PASSENGER MIRROR HORIZONTAL DRIVER CIRCUIT**

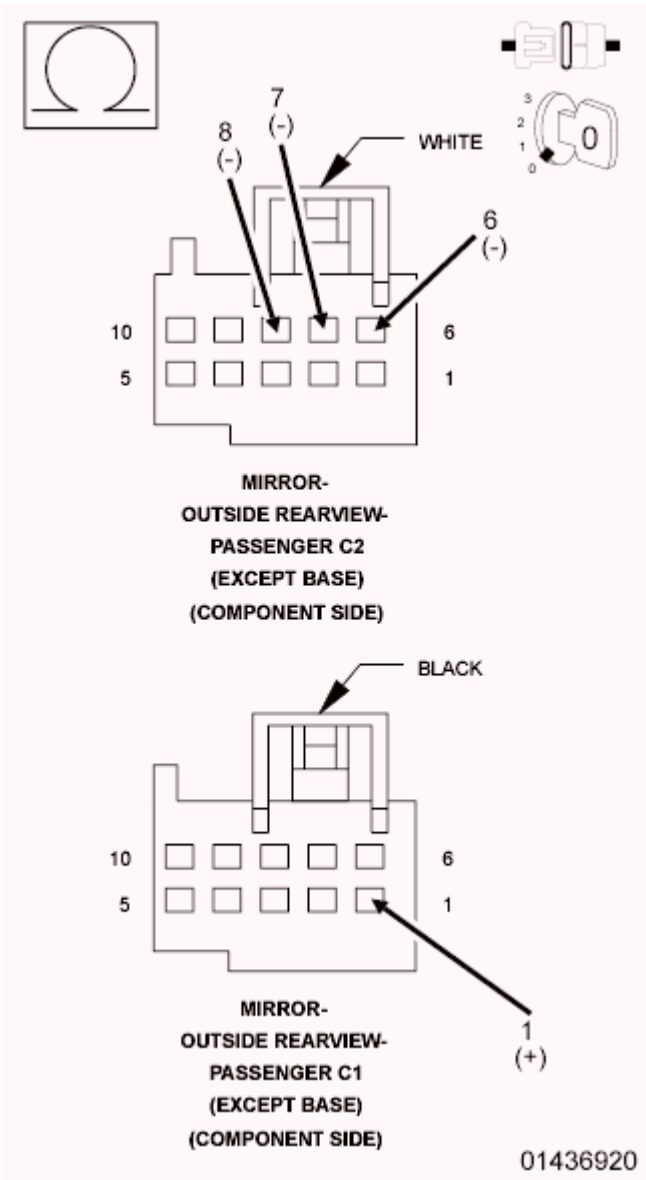

Fig. 114: Checking Passenger Puddle Lamp Driver Circuit For A Short To Other Circuits

Courtesy of CHRYSLER GROUP, LLC

1. Disconnect the Passenger Outside Rearview Mirror C2 (Component Side) connector from the Door Module C2 connector.
2. Measure the resistance between the (M42) Passenger Puddle Lamp Driver circuit and the (P72) Passenger Mirror Vertical Driver circuit at the Passenger Outside Rearview Mirror C1 and C2 (Component Side) connectors.
3. Measure the resistance between the (M42) Passenger Puddle Lamp Driver circuit and the (P70) Passenger Mirror Common Driver circuit at the Passenger Outside Rearview Mirror C1 and C2 (Component Side) connectors.
4. Measure the resistance between the (M42) Passenger Puddle Lamp Driver circuit and the (P74) Passenger Mirror Horizontal Driver circuit at the Passenger Outside Rearview Mirror C1 and C2 (Component Side) connectors.

   Is the resistance below 10K Ohms for any measurement?

   Yes

   - Repair all circuits with a resistance below 10K Ohms for a short to the (M42) Passenger Puddle Lamp Driver circuit. If the wiring harness and connector are okay, replace the Passenger Outside Rearview Mirror in accordance with the Service Information.
   - Perform the BODY VERIFICATION TEST. Refer to **STANDARD PROCEDURE** .

   No, with Heated/Turn Signal Mirror

   - Go To 6.

   No, without Heated/Turn Signal Mirror

   - Inspect the wiring and connectors for damage and repair as necessary. If the wiring and connectors are okay, replace the Door Module in accordance with the Service Information.
   - Perform the BODY VERIFICATION TEST. Refer to **STANDARD PROCEDURE** .

6. **CHECK (M42) PASSENGER PUDDLE LAMP DRIVER CIRCUIT FOR A SHORT TO (C170) PASSENGER MIRROR HEATER RETURN CIRCUIT OR TO (P595) PASSENGER MIRROR TURN SIGNAL RETURN CIRCUIT**

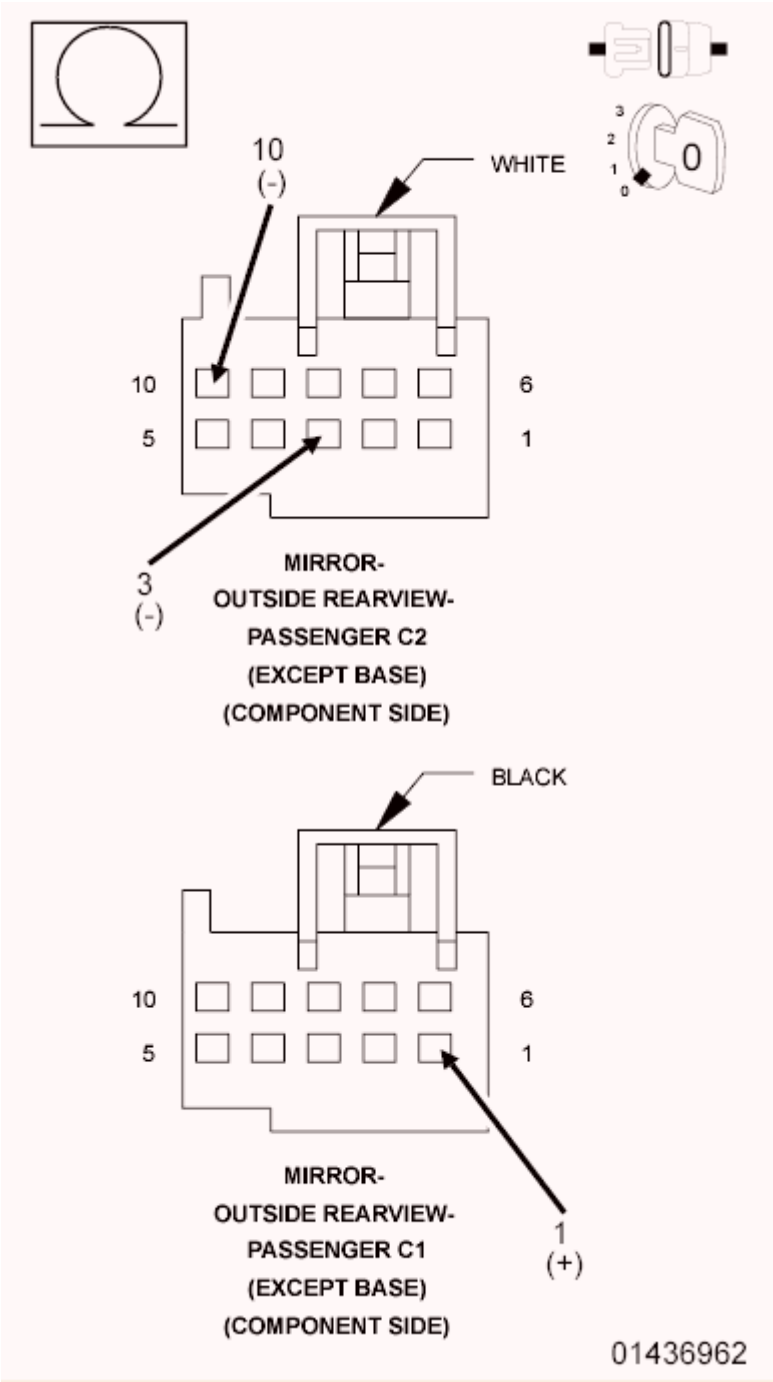

Fig. 115: Checking Passenger Puddle Lamp Driver Circuit For A Short To Passenger Mirror Heater Return Circuit Or To Passenger Mirror Turn Signal Return Circuit
Courtesy of CHRYSLER GROUP, LLC

1. For Heated Mirror, measure the resistance between the (M42) Passenger Puddle Lamp Driver circuit and the (C170) Passenger Mirror Heater Return circuit at the Passenger Outside Rearview Mirror C1 and C2 (Component Side) connectors.
2. For Turn Signal Mirror, measure the resistance between the (M42) Passenger Puddle Lamp Driver circuit and the (P595) Passenger Mirror Turn Signal Return circuit at the Passenger Outside

Rearview Mirror C1 and C2 (Component Side) connectors.

Is the resistance below 10K Ohms for either measurement?

Yes

- Repair all circuits with a resistance below 10K Ohms for a short to the (M42) Passenger Puddle Lamp Driver circuit. If the wiring harness and connector are okay, replace the Passenger Outside Rearview Mirror in accordance with the Service Information.
- Perform the BODY VERIFICATION TEST. Refer to **STANDARD PROCEDURE** .

No

- Inspect the wiring and connectors for damage and repair as necessary. If the wiring and connectors are okay, replace the Door Module in accordance with the Service Information.
- Perform the BODY VERIFICATION TEST. Refer to **STANDARD PROCEDURE** .

B282F-15-PASSENGER PUDDLE LAMP CONTROL - CIRCUIT FOR A SHORT TO BATTERY OR OPEN

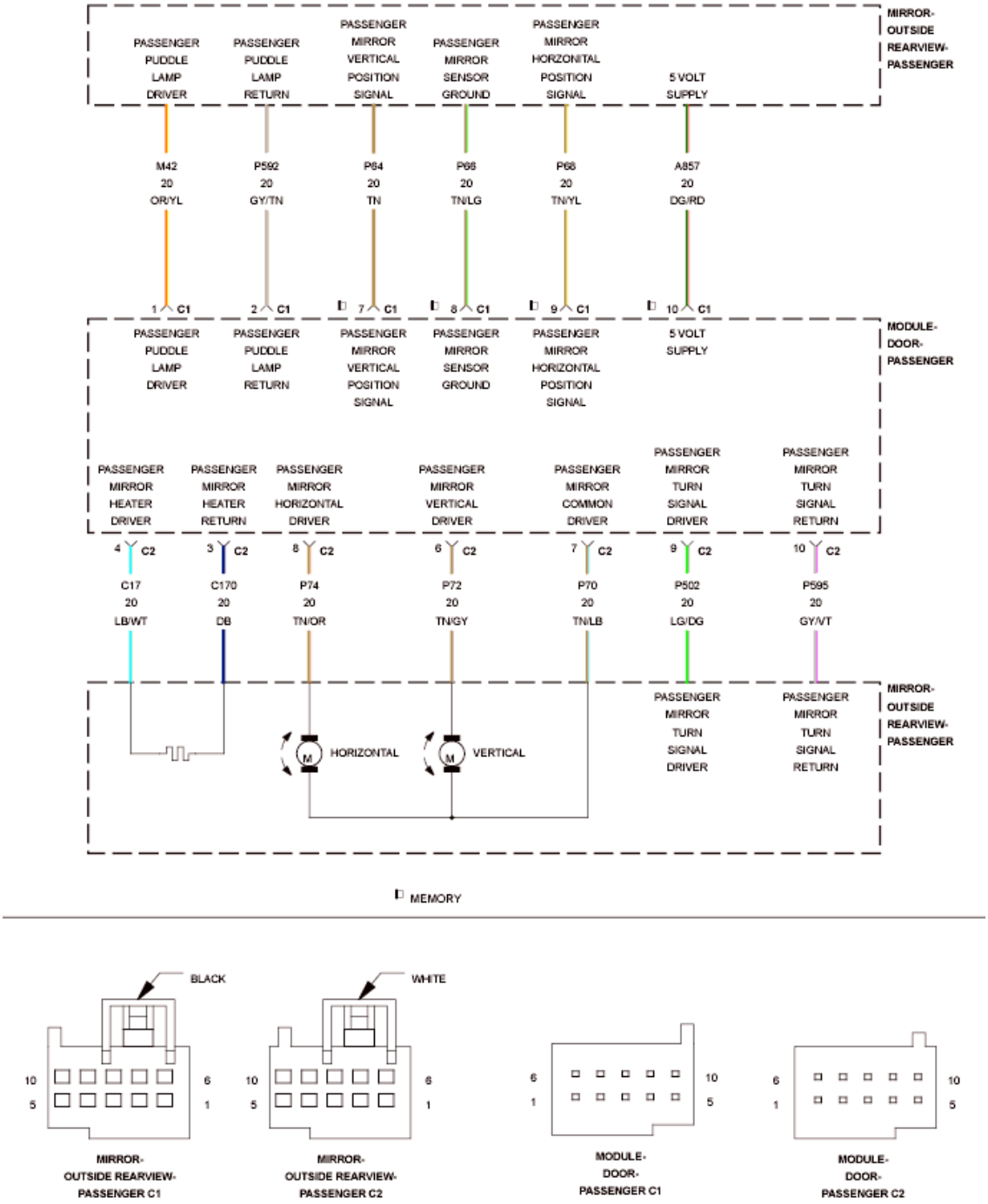

Fig. 116: Passenger Mirror Signal Lamp Control Wiring Diagram
Courtesy of CHRYSLER GROUP, LLC

For a complete wiring diagram, **refer to appropriate SYSTEM WIRING DIAGRAMS article** .

WHEN MONITORED:

Continuously.

SET CONDITION:

The Door Module senses a short high or an open on the (M42) Passenger Puddle Lamp Driver circuit for more than two seconds with the lamp switched on.

POSSIBLE CAUSES

Possible Causes
(M42) PASSENGER PUDDLE LAMP DRIVER CIRCUIT FOR A SHORT TO VOLTAGE
(M42) PASSENGER PUDDLE LAMP DRIVER CIRCUIT FOR AN OPEN
(P592) PASSENGER PUDDLE LAMP RETURN CIRCUIT FOR AN OPEN
(M42) PASSENGER PUDDLE LAMP DRIVER CIRCUIT FOR A SHORT TO THE (P72) PASSENGER MIRROR VERTICAL DRIVER CIRCUIT
(M42) PASSENGER PUDDLE LAMP DRIVER CIRCUIT FOR A SHORT TO THE (P70) PASSENGER MIRROR COMMON DRIVER CIRCUIT
(M42) PASSENGER PUDDLE LAMP DRIVER CIRCUIT FOR A SHORT TO THE (P74) PASSENGER MIRROR HORIZONTAL DRIVER CIRCUIT
(M42) PASSENGER PUDDLE LAMP DRIVER CIRCUIT FOR A SHORT TO THE (C17) PASSENGER MIRROR HEATER DRIVER CIRCUIT
(M42) PASSENGER PUDDLE LAMP DRIVER CIRCUIT FOR A SHORT TO THE (P502) PASSENGER MIRROR TURN SIGNAL DRIVER CIRCUIT
PASSENGER OUTSIDE REARVIEW MIRROR
DOOR MODULE

DIAGNOSTIC TEST

1. **TEST FOR INTERMITTENT CONDITION**
    1. Turn the ignition on.
    2. With a scan tool, record and erase DTC's.
    3. Turn the turn signal on, if equipped with turn signal mirror.
    4. Turn the puddle lamps on.

    NOTE: Verify the panel lamps dimmer switch is not in the defeat (off) position.

    5. Turn the rear defogger on, if equipped with heated mirror.
    6. Press and release the Mirror Select switch to select the Passenger Outside Rearview Mirror.
    7. Operate the Mirror Adjust switch in all directions several times while monitoring the scan tool for DTC's.

    NOTE: After adjusting the mirror in one direction wait at least two seconds before adjusting the mirror in the opposite direction, as this will allow

time for an active fault to set if present.

Does the scan tool display B282F-15-PASSENGER PUDDLE LAMP CONTROL - CIRCUIT FOR A SHORT TO BATTERY OR OPEN?

Yes

- Go To 2.

No

- Test complete, the condition or conditions that originally set this DTC are not present at this time. Using the wiring diagrams as a guide, check all related splices and connectors for signs of water intrusion, corrosion, pushed out or bent terminals, and correct pin tension. For vehicle's equipped with folding outside rearview mirrors, repeat test with mirror folded. If DTC is now active, Go To 2.
- Perform the BODY VERIFICATION TEST. Refer to **STANDARD PROCEDURE** .

2. **CHECK (M42) PASSENGER PUDDLE LAMP DRIVER CIRCUIT FOR A SHORT TO VOLTAGE**

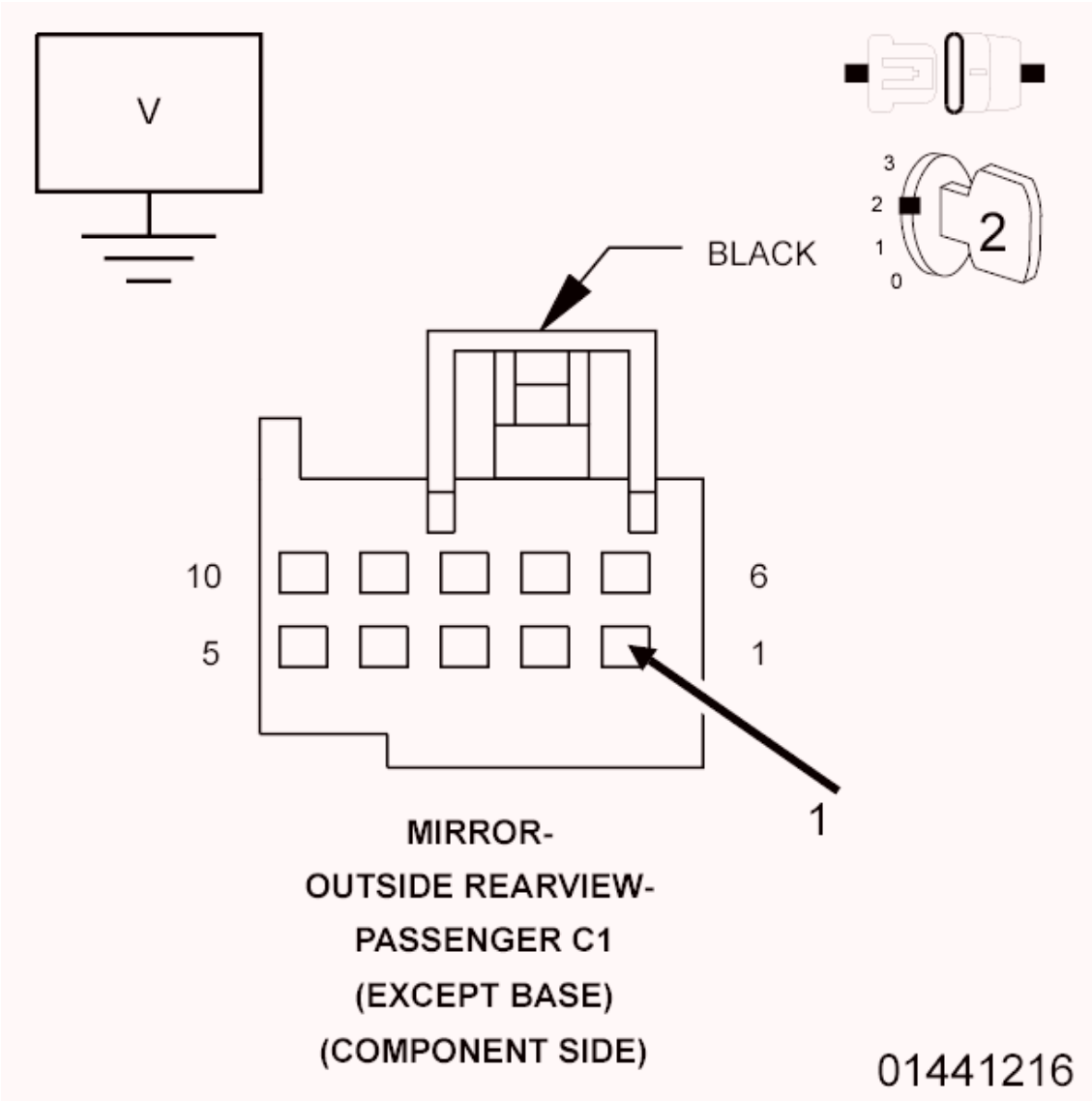

Fig. 117: Checking Passenger Puddle Lamp Driver Circuit For A Short To Voltage
Courtesy of CHRYSLER GROUP, LLC

1. Turn the ignition off.
2. Disconnect Passenger Outside Rearview Mirror C1 (Component Side) harness connector from the Door Module.
3. Turn the ignition on.
4. Measure the voltage between the (M42) Passenger Puddle Lamp Driver circuit and ground.

   Is there any voltage present?

   Yes

   - Repair the short to voltage in the (M42) Passenger Puddle Lamp Driver circuit. If the wiring harness and harness connector are okay, replace the Passenger Outside Rearview Mirror in

accordance with the Service Information.

- Perform the BODY VERIFICATION TEST. Refer to **STANDARD PROCEDURE** .

No

- Go To 3.

3. **CHECK (M42) PASSENGER PUDDLE LAMP DRIVER CIRCUIT AND (P592) PASSENGER PUDDLE LAMP RETURN CIRCUIT FOR AN OPEN**

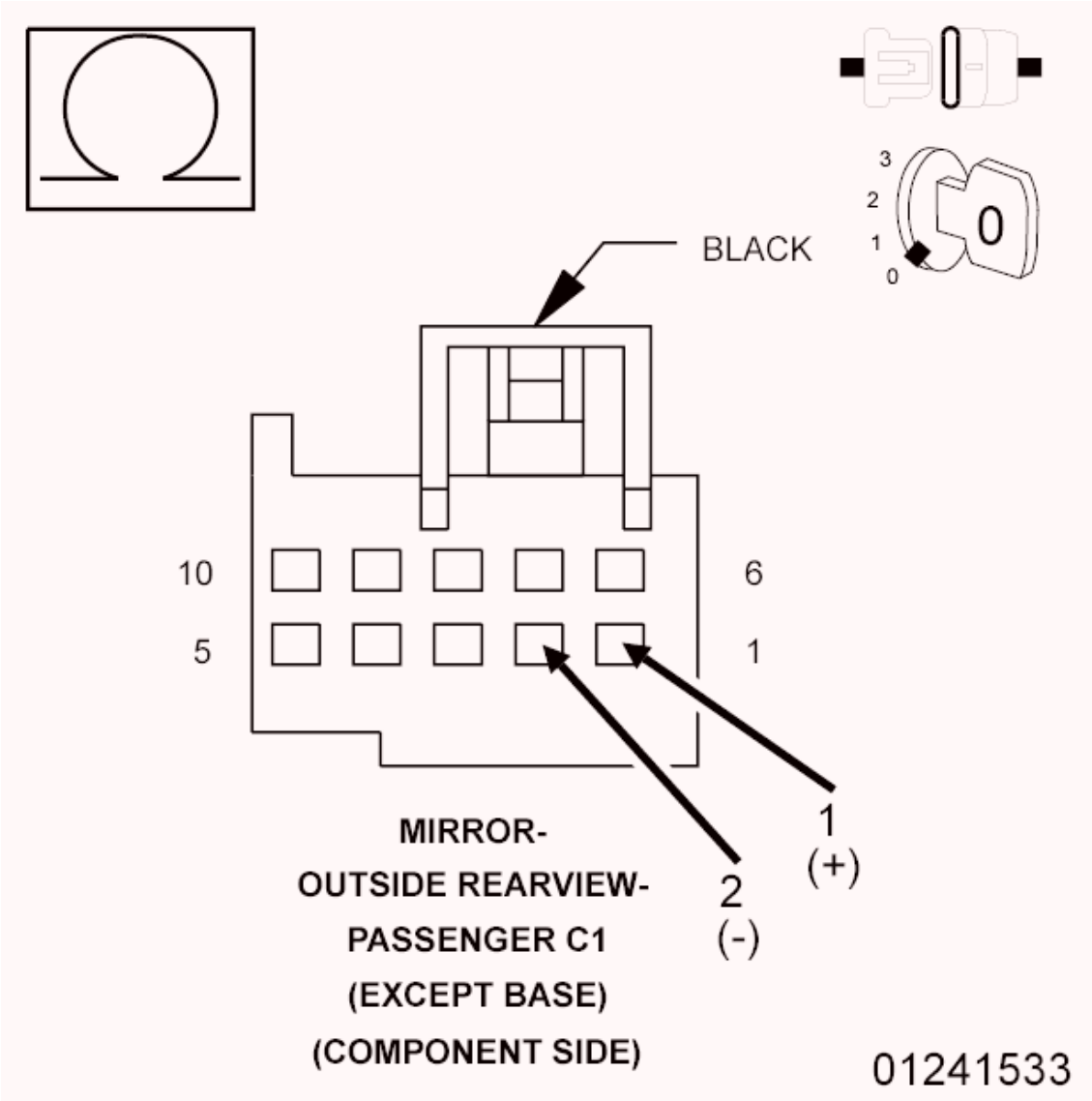

Fig. 118: Checking Passenger Puddle Lamp Driver Circuit And Passenger Puddle Lamp Return Circuit For An Open
Courtesy of CHRYSLER GROUP, LLC

1. Turn the ignition off.

NOTE: **The Ohmmeter positive lead must be connected to the (M42) Passenger Puddle Lamp Driver circuit and the negative lead to the (P592) Passenger Puddle Lamp Return circuit for the test results to be valid.**

2. Measure the resistance between the (M42) Passenger Puddle Lamp Driver circuit and the (P592) Passenger Puddle Lamp Return circuit.

   Is the resistance above 1000 Ohms?

   Yes

   - Repair the open in the (M42) Passenger Puddle Lamp Driver circuit or the (P592) Passenger Puddle Lamp Return circuit. If the wiring harness and harness connector are okay, replace the Passenger Outside Rearview Mirror in accordance with the Service Information.
   - Perform the BODY VERIFICATION TEST. Refer to **STANDARD PROCEDURE** .

   No

   - Go To 4.

4. **CHECK (M42) PASSENGER PUDDLE LAMP DRIVER CIRCUIT FOR A SHORT TO (P72) PASSENGER MIRROR VERTICAL DRIVER CIRCUIT, (P70) PASSENGER MIRROR COMMON DRIVER CIRCUIT, OR TO (P74) PASSENGER MIRROR HORIZONTAL DRIVER CIRCUIT**

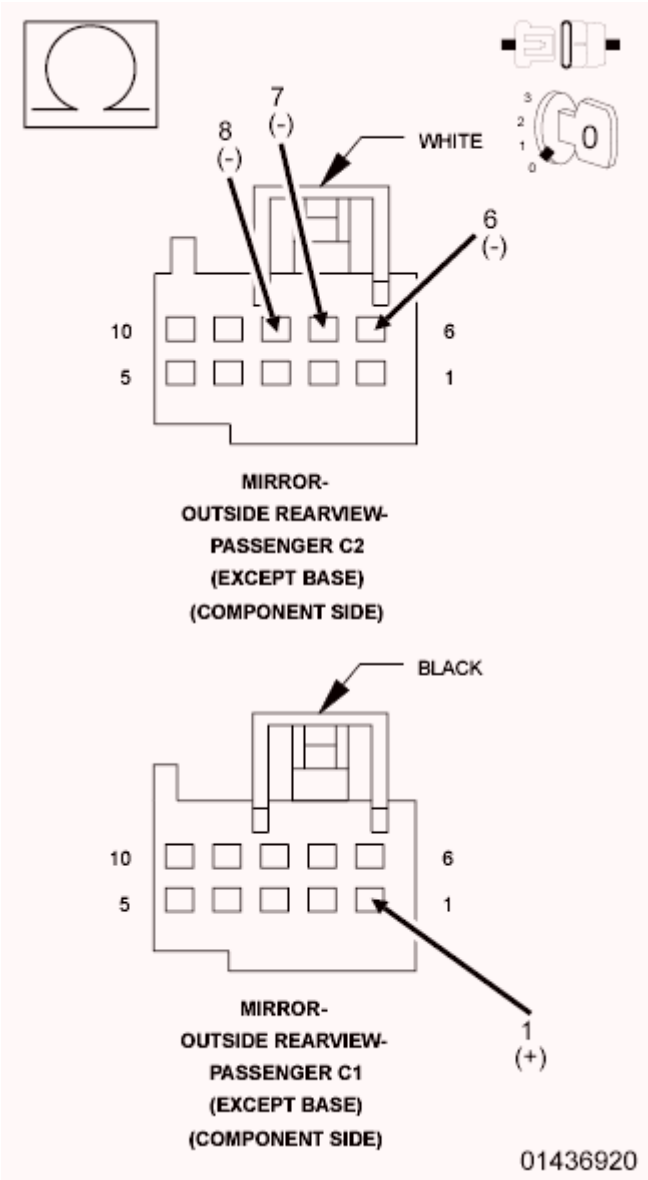

Fig. 119: Checking Passenger Puddle Lamp Driver Circuit For A Short To Other Circuits
Courtesy of CHRYSLER GROUP, LLC

1. Disconnect the Passenger Outside Rearview Mirror C2 (Component Side) harness connector from the Door Module.
2. Measure the resistance between the (M42) Passenger Puddle Lamp Driver circuit and the (P72) Passenger Mirror Vertical Driver circuit at the Passenger Outside Rearview Mirror C1 and C2 (Component Side) harness connectors.
3. Measure the resistance between the (M42) Passenger Puddle Lamp Driver circuit and the (P70) Passenger Mirror Common Driver circuit at the Passenger Outside Rearview Mirror C1 and C2 (Component Side) harness connectors.
4. Measure the resistance between the (M42) Passenger Puddle Lamp Driver circuit and the (P74) Passenger Mirror Horizontal Driver circuit at the Passenger Outside Rearview Mirror C1 and C2 (Component Side) harness connectors.

Is the resistance below 10K Ohms for any measurement?

Yes

- Repair all circuits with a resistance below 10K Ohms for a short to the (M42) Passenger Puddle Lamp Driver circuit. If the wiring harness and harness connector are okay, replace the Passenger Outside Rearview Mirror in accordance with the Service Information.
- Perform the BODY VERIFICATION TEST. Refer to **STANDARD PROCEDURE** .

No, with Heated/Turn Signal Mirror

- Go To 5.

No, without Heated/Turn Signal Mirror

- Inspect the wiring and harness connectors for damage and repair as necessary. If the wiring and harness connectors are okay, replace the Door Module in accordance with the Service Information.
- Perform the BODY VERIFICATION TEST. Refer to **STANDARD PROCEDURE** .

5. **CHECK (M42) PASSENGER PUDDLE LAMP DRIVER CIRCUIT FOR A SHORT TO (C17) PASSENGER MIRROR HEATER DRIVER CIRCUIT OR TO (P502) PASSENGER MIRROR TURN SIGNAL DRIVER CIRCUIT**

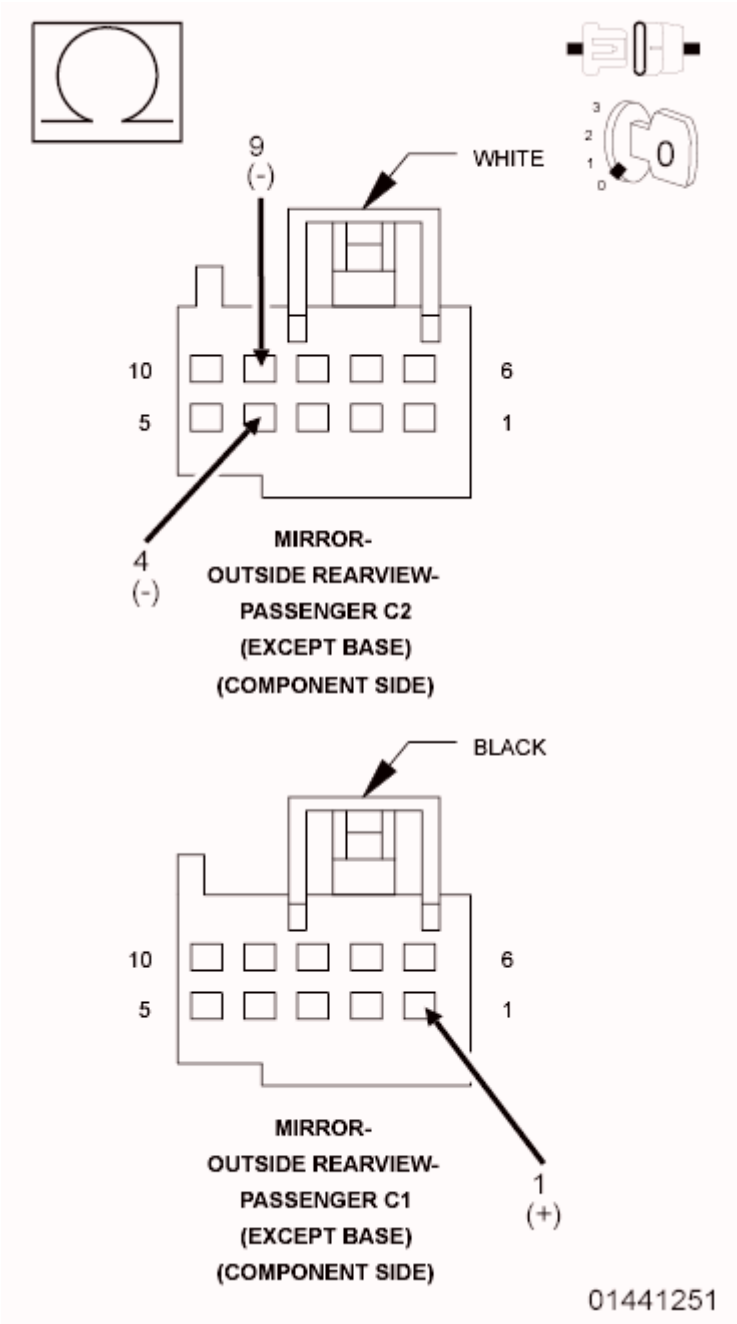

Fig. 120: Checking Passenger Puddle Lamp Driver Circuit For A Short To Passenger Mirror Heater Driver Circuit Or To Passenger Mirror Turn Signal Driver Circuit
Courtesy of CHRYSLER GROUP, LLC

1. For Heated Mirror, measure the resistance between the (M42) Passenger Puddle Lamp Driver circuit and the (C17) Passenger Mirror Heater Driver circuit at the Passenger Outside Rearview Mirror C1 and C2 (Component Side) harness connectors.
2. For Turn Signal Mirror, measure the resistance between the (M42) Passenger Puddle Lamp Driver circuit and the (P502) Passenger Mirror Turn Signal Driver circuit at the Passenger Outside Rearview Mirror C1 and C2 (Component Side) harness connectors.

Is the resistance below 10K Ohms for either measurement?

Yes

- Repair all circuits with a resistance below 10K Ohms for a short to the (M42) Passenger Puddle Lamp Driver circuit. If the wiring harness and harness connector are okay, replace the Passenger Outside Rearview Mirror in accordance with the Service Information.
- Perform the BODY VERIFICATION TEST. Refer to **STANDARD PROCEDURE** .

No

- Inspect the wiring and harness connectors for damage and repair as necessary. If the wiring and harness connectors are okay, replace the Door Module in accordance with the Service Information.
- Perform the BODY VERIFICATION TEST. Refer to **STANDARD PROCEDURE** .

U0010-00-CAN INTERIOR BUS

For a complete wiring diagram, **refer to appropriate SYSTEM WIRING DIAGRAMS article** .

WHEN MONITORED:

Continuously when the ignition is on.

Battery voltage between 10 and 16 volts.

Ignition Off Draw (IOD) fuse installed.

SET CONDITION:

The Totally Integrated Power Module (TIPM) detects a short to ground on the CAN Interior Bus (125K) (+) circuit or a short to voltage on the CAN Interior Bus (125K) (-) circuit.

POSSIBLE CAUSES

Possible Causes
(D265) CAN INTERIOR BUS(+) (125k) CIRCUIT FOR A SHORT TO VOLTAGE
(D264) CAN INTERIOR BUS(-) (125k) CIRCUIT FOR A SHORT TO GROUND
(D264) CAN INTERIOR BUS(-) (125k) CIRCUIT FOR A SHORT TO THE (D265) CAN INTERIOR BUS(+) (125k) CIRCUIT
TOTALLY INTEGRATED POWER MODULE (TIPM)
ANY CAN INTERIOR BUS MODULE

DIAGNOSTIC TEST

1. **VERIFY DTC IS ACTIVE**

NOTE: **Make sure the IOD fuse is installed and the battery is fully charged before proceeding.**

1. Turn the ignition on.
2. With the scan tool, read active Door Module DTC's.

   Is this DTC active?

   Yes

   - **Refer to DIAGNOSIS AND TESTING** and perform the U0010-CAN Interior Bus diagnostic procedure.

   No

   - **Refer to COMMUNICATION - DIAGNOSIS AND TESTING** and perform the Stored Lost Communication DTC's diagnostic procedure.

U0141-00-LOST COMMUNICATION WITH IPM (FCM/TIPM)

For a complete wiring diagram, **refer to appropriate SYSTEM WIRING DIAGRAMS article** .

WHEN MONITORED:

Continuously when the ignition is on.

Battery voltage between 10 and 16 volts.

Ignition Off Draw (IOD) fuse installed.

Totally Integrated Power Module (TIPM) is configured correctly.

SET CONDITION:

Bus messages not received from the Integrated Power Module (TIPM) for approximately two to five seconds.

POSSIBLE CAUSES

Possible Causes
(D65) CAN C BUS(+) CIRCUIT FOR A SHORT TO VOLTAGE
(D64) CAN C BUS(-) CIRCUIT FOR A SHORT TO GROUND
TOTALLY INTEGRATED POWER MODULE (TIPM) POWER AND GROUND
TIPM NOT CONFIGURED CORRECTLY
TOTALLY INTEGRATED POWER MODULE (TIPM)
MODULE THAT SET THIS DTC

DIAGNOSTIC TEST

1. **VERIFY THE DTC IS ACTIVE**

   NOTE: Make sure the IOD fuse is installed and the battery is fully charged before proceeding.

   1. Turn the ignition on.
   2. With the scan tool, read active DTC's.

      Is the DTC active at this time?

      Yes

      - Perform the U0141-Lost Communication with IPM (FCM/TIPM) diagnostic procedure. **Refer to DIAGNOSIS AND TESTING** .

      No

      - Perform the Stored Lost Communication DTC's diagnostic procedure. **Refer to COMMUNICATION - DIAGNOSIS AND TESTING** .

U0155-00-LOST COMMUNICATION WITH CLUSTER/CCN

For a complete wiring diagram, **refer to appropriate SYSTEM WIRING DIAGRAMS article** .

WHEN MONITORED:

Continuously when the ignition is on.

Battery voltage between 10 and 16 volts.

Ignition Off Draw (IOD) fuse installed.

Totally Integrated Power Module (TIPM) is configured correctly.

SET CONDITION:

Bus messages not received from the Instrument Cluster (CCN) for approximately two to five seconds.

POSSIBLE CAUSES

Possible Causes
(D265) CAN INTERIOR BUS(+) (125k) CIRCUIT FOR A SHORT TO VOLTAGE
(D264) CAN INTERIOR BUS(-) (125k) CIRCUIT FOR A SHORT TO GROUND
INSTRUMENT CLUSTER POWER AND GROUND

TIPM NOT CONFIGURED CORRECTLY
INSTRUMENT CLUSTER (CCN)
MODULE THAT SET THIS DTC

DIAGNOSTIC TEST

1. **VERIFY DTC IS ACTIVE**

   NOTE: Make sure the IOD fuse is installed and the battery is fully charged before proceeding.

   1. Turn the ignition on.
   2. With the scan tool, read active DTC's.

      Is this DTC active?

      Yes

      - **Refer to DIAGNOSIS AND TESTING** and perform the U0155-Lost Communication with Cluster/CCN diagnostic procedure.

      No

      - **Refer to COMMUNICATION - DIAGNOSIS AND TESTING** and perform the Stored Lost Communication DTC's diagnostic procedure.

U0164-00-LOST COMMUNICATION WITH HVAC CONTROL MODULE

For a complete wiring diagram, **refer to appropriate SYSTEM WIRING DIAGRAMS article** .

WHEN MONITORED:

Continuously when the ignition is on.

Battery voltage between 10 and 16 volts.

Ignition Off Draw (IOD) fuse installed.

SET CONDITION:

Bus messages not received from the HVAC Control Module for approximately two to five seconds.

POSSIBLE CAUSES

Possible Causes
(D265) CAN INTERIOR BUS(+) (125k) CIRCUIT FOR A SHORT TO VOLTAGE

(D264) CAN INTERIOR BUS(-) (125k) CIRCUIT FOR A SHORT TO GROUND
DTC's RELATED TO BATTERY VOLTAGE, IGNITION, OR VIN MESSAGES
TIPM NOT CONFIGURED CORRECTLY
HVAC POWER AND GROUND
HVAC CONTROL MODULE
MODULE THAT SET THE DTC

DIAGNOSTIC TEST

1. **VERIFY DTC IS ACTIVE**

   NOTE: Make sure the IOD fuse is installed and the battery is fully charged before proceeding.

   1. Turn the ignition on.
   2. With the scan tool, read active DTC's.

      Is this DTC active?

      Yes

      - **Refer to DIAGNOSIS AND TESTING** and perform the U0164-Lost Communication with HVAC Control Module.

      No

      - **Refer to COMMUNICATION - DIAGNOSIS AND TESTING** and perform the Stored Lost Communication DTC's diagnostic procedure.

U0203-00-LOST COMMUNICATION WITH DOOR MODULE FRONT LEFT

For a complete wiring diagram, **refer to appropriate SYSTEM WIRING DIAGRAMS article** .

WHEN MONITORED:

Continuously when the ignition is on.

Battery voltage between 10 and 16 volts.

Ignition Off Draw (IOD) fuse installed.

SET CONDITION:

Bus messages not received from the Left Front Door Module (DMFL) for approximately two to five seconds.

POSSIBLE CAUSES

Possible Causes
(D265) CAN INTERIOR BUS(+) (125k) CIRCUIT FOR A SHORT TO VOLTAGE
(D264) CAN INTERIOR BUS(-) (125k) CIRCUIT FOR A SHORT TO GROUND
DTC's RELATED TO BATTERY VOLTAGE, IGNITION, OR VIN MESSAGES
TIPM NOT CONFIGURED CORRECTLY
DOOR MODULE POWER AND GROUND
LEFT FRONT DOOR MODULE
CONTROL MODULE MODULE THAT SET THE DTC

DIAGNOSTIC TEST

1. **VERIFY DTC IS ACTIVE**

   NOTE: Make sure the IOD fuse is installed and the battery is fully charged before proceeding.

   1. Turn the ignition on.
   2. With the scan tool, read active DTC's.

      Is this DTC active?

      Yes

      - **Refer to DIAGNOSIS AND TESTING** and perform the U0203-Lost Communication with Door Module Front Left diagnostic procedure.

      No

      - **Refer to COMMUNICATION - DIAGNOSIS AND TESTING** and perform the Stored Lost Communication DTC's diagnostic procedure.

U0204-00-LOST COMMUNICATION WITH DOOR MODULE FRONT RIGHT

For a complete wiring diagram, **refer to appropriate SYSTEM WIRING DIAGRAMS article** .

WHEN MONITORED:

Continuously when the ignition is on.

Battery voltage between 10 and 16 volts.

Ignition Off Draw (IOD) fuse installed.

SET CONDITION:

Bus messages not received from the Right Front Door Module (DMFR) for approximately two to five seconds.

POSSIBLE CAUSES

Possible Causes
(D265) CAN INTERIOR BUS(+) (125k) CIRCUIT FOR A SHORT TO VOLTAGE
(D264) CAN INTERIOR BUS(-) (125k) CIRCUIT FOR A SHORT TO GROUND
DTC's RELATED TO BATTERY VOLTAGE, IGNITION, OR VIN MESSAGES
TIPM NOT CONFIGURED CORRECTLY
DOOR MODULE POWER AND GROUND
RIGHT FRONT DOOR MODULE
CONTROL MODULE MODULE THAT SET THE DTC

DIAGNOSTIC TEST

1. **VERIFY DTC IS ACTIVE**

   NOTE: Make sure the IOD fuse is installed and the battery is fully charged before proceeding.

   1. Turn the ignition on.
   2. With the scan tool, read active DTC's.

      Is this DTC active?

      Yes

      - **Refer to <u>DIAGNOSIS AND TESTING</u>** and perform the U0204-Lost Communication with Door Module Front Right diagnostic procedure.

      No

      - **Refer to <u>COMMUNICATION - DIAGNOSIS AND TESTING</u>** and perform the Stored Lost Communication DTC's diagnostic procedure.

U0209-00-LOST COMMUNICATION WITH MEMORY SEAT CONTROL MODULE

For a complete wiring diagram, **refer to appropriate SYSTEM WIRING DIAGRAMS article** .

WHEN MONITORED:

Continuously when the ignition is on.

Battery voltage between 10 and 16 volts.

Ignition Off Draw (IOD) fuse installed.

Totally Integrated Power Module (TIPM) is configured correctly.

SET CONDITION:

Bus messages not received from the Memory Seat Module for approximately two to five seconds.

POSSIBLE CAUSES

Possible Causes
(D265) CAN INTERIOR BUS(+) (125k) CIRCUIT FOR A SHORT TO VOLTAGE
(D264) CAN INTERIOR BUS(-) (125k) CIRCUIT FOR A SHORT TO GROUND
MEMORY SEAT MODULE POWER AND GROUND
TIPM NOT CONFIGURED CORRECTLY
MEMORY SEAT MODULE
MODULE THAT SET THIS DTC

DIAGNOSTIC TEST

1. **VERIFY DTC IS ACTIVE**

   NOTE: Make sure the IOD fuse is installed and the battery is fully charged before proceeding.

   1. Turn the ignition on.
   2. With the scan tool, read active DTC's.

      Is this DTC active?

      Yes

      - **Refer to DIAGNOSIS AND TESTING** and perform the U0209-Lost Communication with Memory Seat Control Module diagnostic procedure.

      No

      - **Refer to COMMUNICATION - DIAGNOSIS AND TESTING** and perform the Stored Lost Communication DTC's diagnostic procedure.

DIAGNOSIS AND TESTING

DRIVER DOOR LOCK INOPERATIVE - DS/DJ/D2

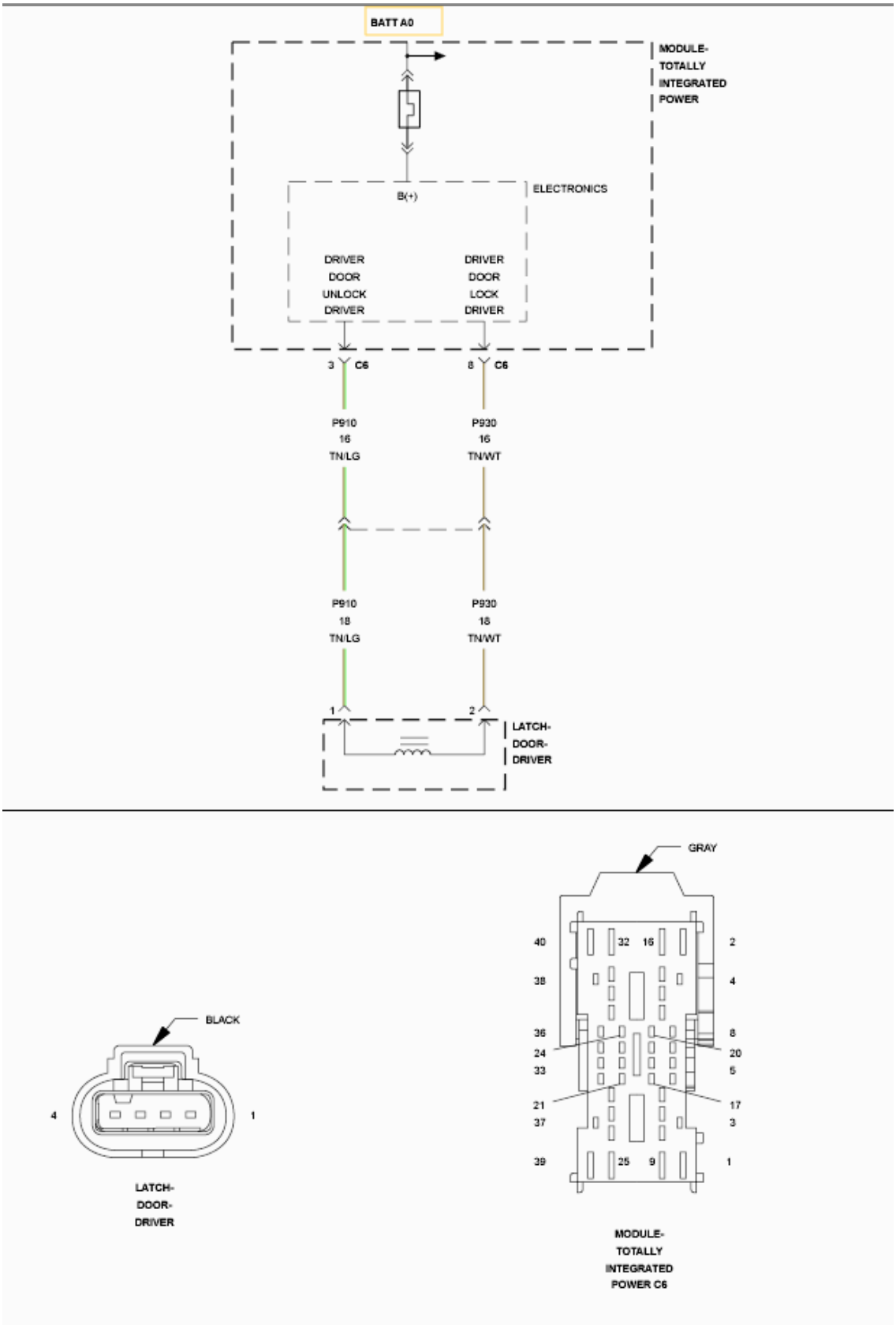

Fig. 1: Driver Door Latch Wiring Diagram

Courtesy of CHRYSLER GROUP, LLC

For a complete wiring diagram, **refer to appropriate SYSTEM WIRING DIAGRAMS article** .

POSSIBLE CAUSES

Possible Causes
(P930) DRIVER DOOR LOCK DRIVER CIRCUIT OPEN
(P930) DRIVER DOOR LOCK DRIVER CIRCUIT SHORTED TO GROUND
(P910) DRIVER DOOR UNLOCK DRIVER CIRCUIT OPEN
(P910) DRIVER DOOR UNLOCK DRIVER CIRCUIT SHORTED TO GROUND
DRIVER DOOR LATCH
TOTALLY INTEGRATED POWER MODULE (TIPM)

DIAGNOSTIC TEST

1. **DRIVER DOOR LATCH INOPERATIVE**

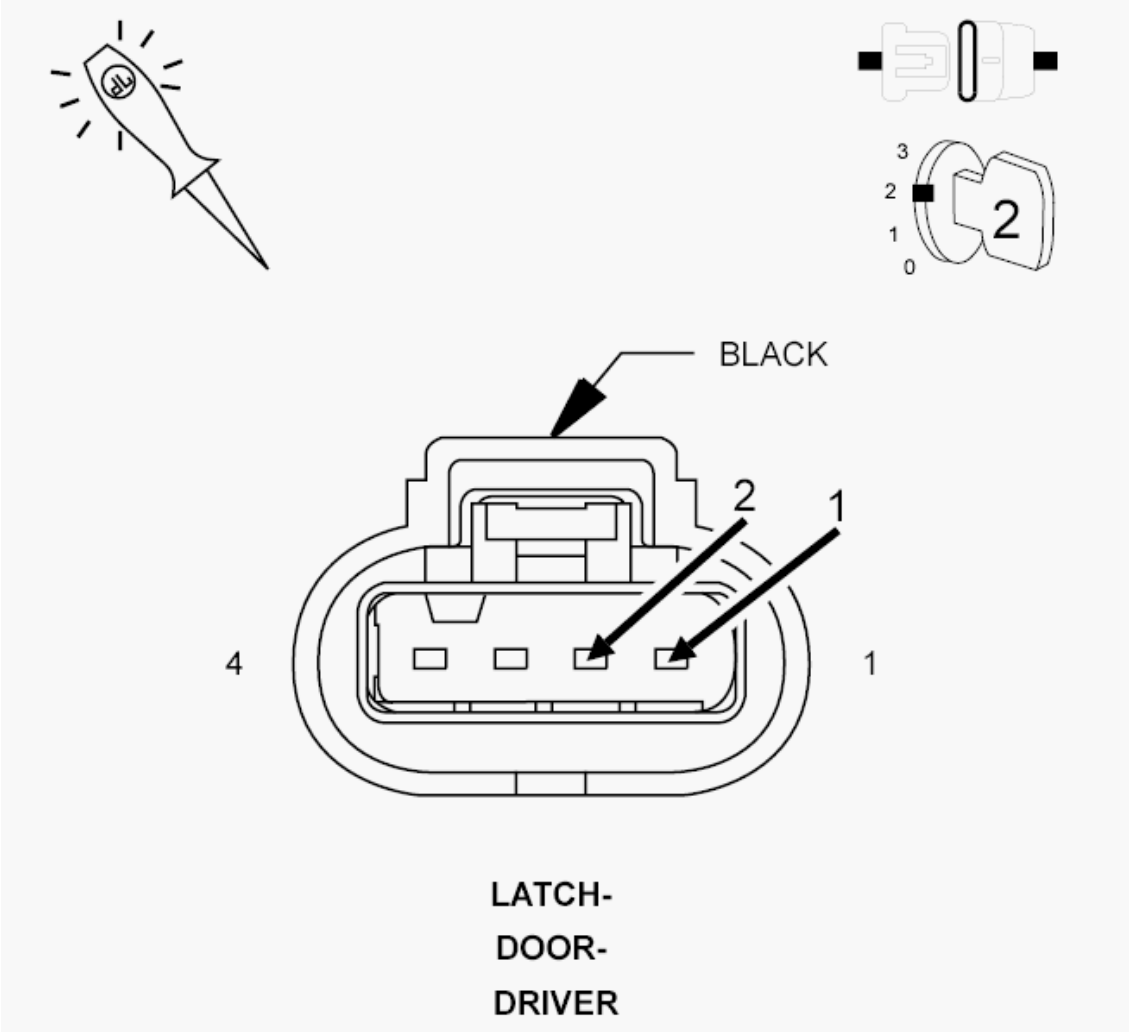

Fig. 2: Checking Driver Door Latch Operation
Courtesy of CHRYSLER GROUP, LLC

1. Disconnect the Driver Door Latch connector.
2. Connect a test light between the (P930) Driver Door Lock Driver circuit and the (P910) Driver Door Unlock Driver circuit.
3. Close the front doors or trip the door latches to the closed position.
4. Operate the door locks in both positions and observe the test light.

   Does the test light illuminate brightly for approximately 300 ms. when the door locks are actuated?

   Yes

   - Replace the Driver Door Latch.
   - Perform the BODY VERIFICATION TEST. Refer to **STANDARD PROCEDURE** .

   No

   - Go To 2.

2. **(P910) DRIVER DOOR UNLOCK DRIVER CIRCUIT OPEN**

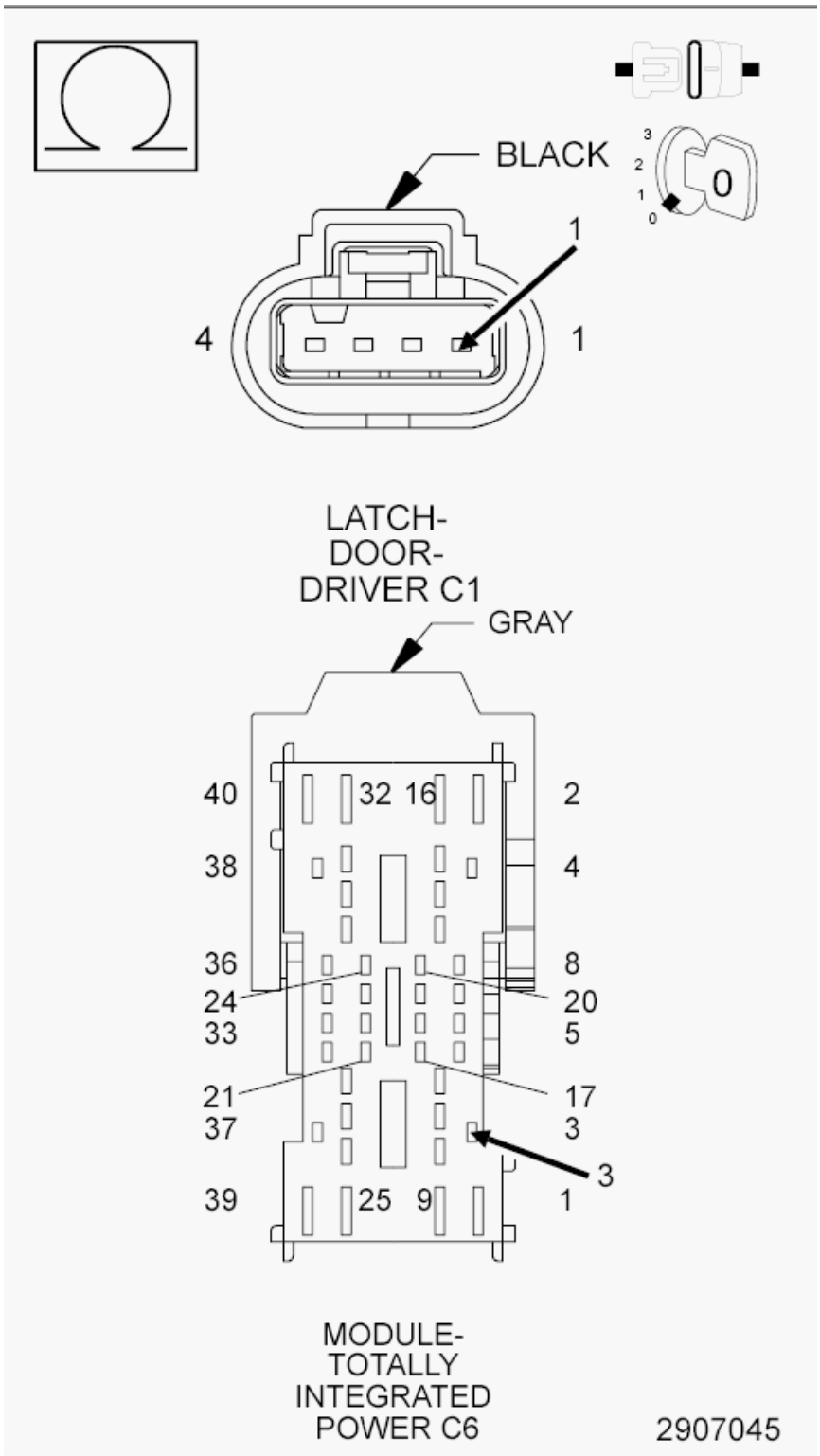

Fig. 3: Checking Driver Door Unlock Driver Circuit For An Open
Courtesy of CHRYSLER GROUP, LLC

NOTE: **The Driver Unlock circuit is shown in the TIPM graphic above.**

1. Turn the ignition off.
2. Disconnect the TIPM C6 harness connector.
3. Measure the resistance of the (P910) Driver Door Unlock Driver circuit between the Latch connector and the TIPM C6 connector.

   Is the resistance below 2.0 Ohms?

   Yes

   - Go To 3.

   No

   - Repair the (P910) Driver Door Unlock Driver circuit for an open.
   - Perform the BODY VERIFICATION TEST. Refer to **STANDARD PROCEDURE** .

3. **(P910) DRIVER DOOR UNLOCK DRIVER CIRCUIT SHORTED TO GROUND**

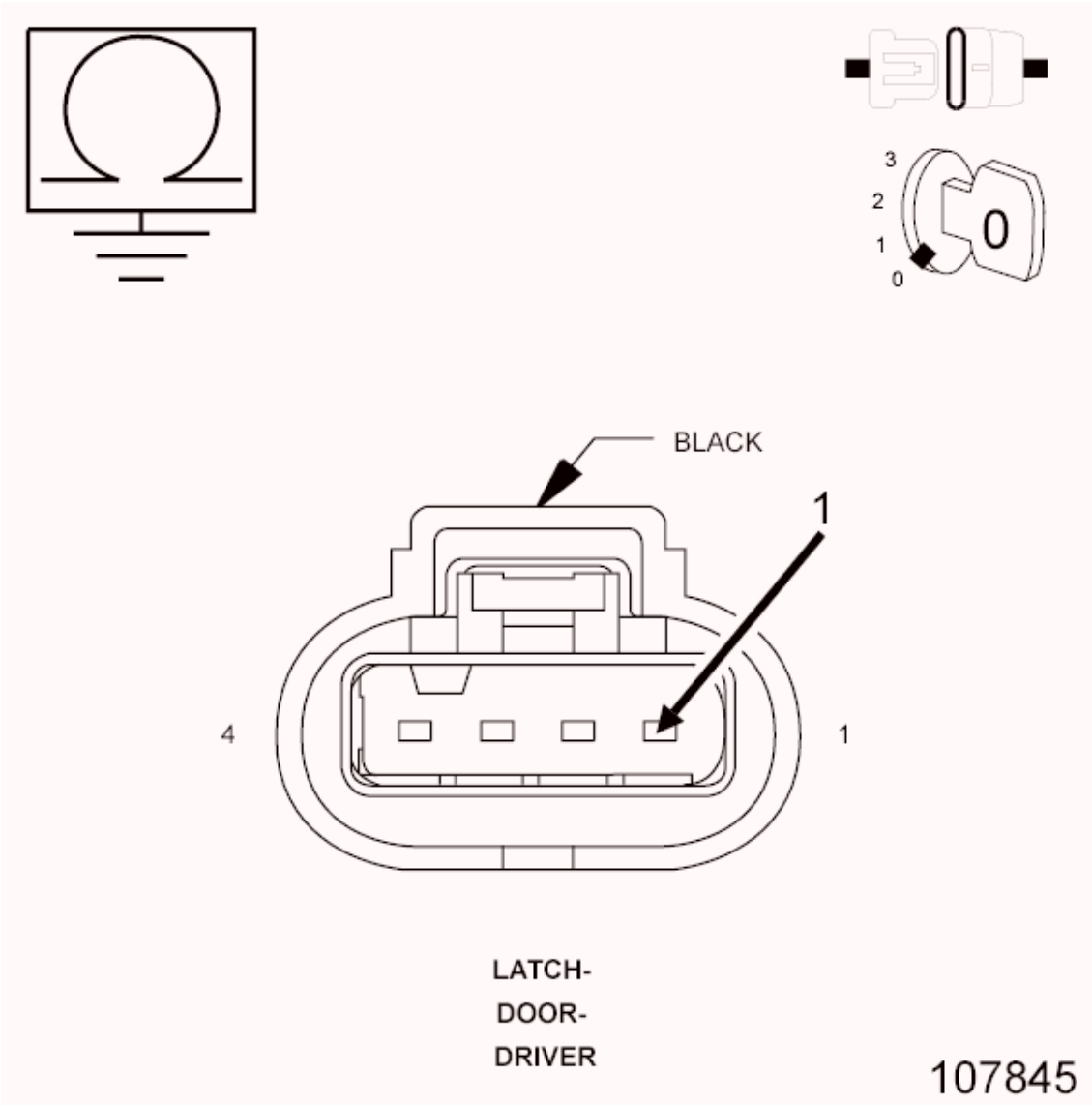

Fig. 4: Checking Driver Door Unlock Driver Circuit For A Short To Ground
Courtesy of CHRYSLER GROUP, LLC

1. Measure the resistance between Ground and the (P910) Driver Door Unlock Driver circuit.

   Is the resistance below 1, 000 Ohms?

   Yes

   - Repair the (P910) Driver Door Unlock Driver circuit for a short to ground.
   - Perform the BODY VERIFICATION TEST. Refer to **STANDARD PROCEDURE** .

   No

   - Go To 4.

4. **(P930) DRIVER DOOR LOCK DRIVER CIRCUIT OPEN**

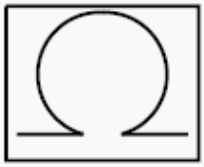

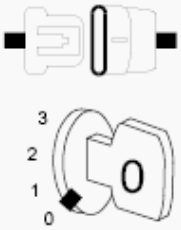

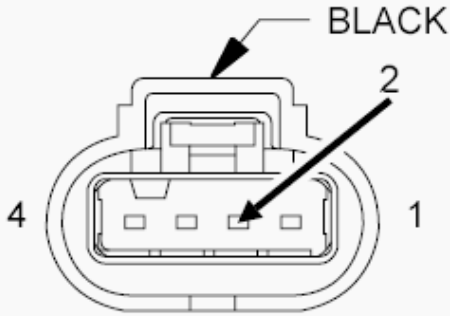

LATCH-
DOOR-
DRIVER C1

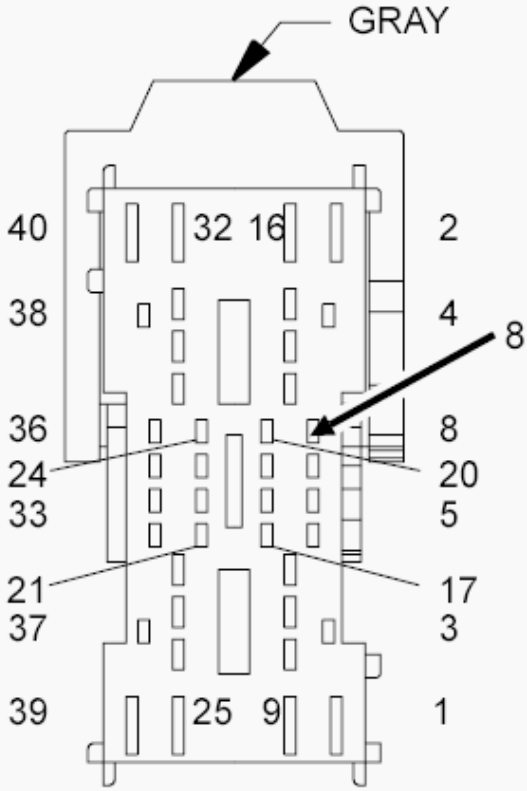

MODULE-
TOTALLY
INTEGRATED
POWER C6

2907105

Fig. 5: Checking Driver Door Lock Driver Circuit For An Open
Courtesy of CHRYSLER GROUP, LLC

NOTE: The Driver Lock circuit is shown in the TIPM graphic above.

1. Measure the resistance of the (P930) Driver Door Lock Driver circuit between the TIPM C6 connector and the Driver Door Latch connector.

   Is the resistance below 2.0 Ohms?

   Yes

   - Go To 5.

   No

   - Repair the (P930) Driver Door Lock Driver circuit for an open.
   - Perform the BODY VERIFICATION TEST. Refer to **STANDARD PROCEDURE** .

5. **(P930) DRIVER DOOR LOCK DRIVER CIRCUIT SHORTED TO GROUND**

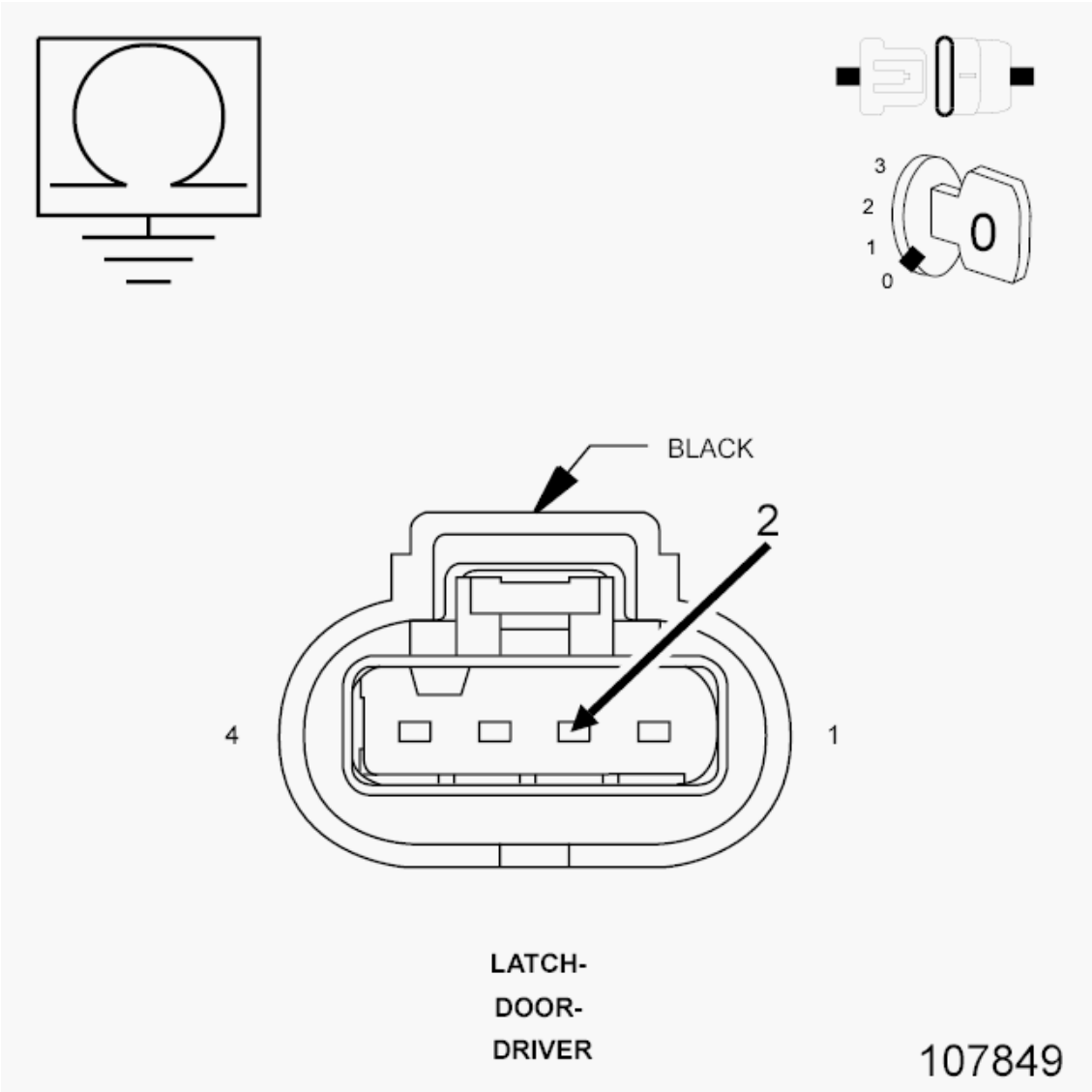

Fig. 6: Checking Driver Door Lock Driver Circuit For A Short To Ground
Courtesy of CHRYSLER GROUP, LLC

1. Measure the resistance between Ground and the (P930) Driver Door Lock Driver circuit.

   Is the resistance below 1, 000 Ohms?

   Yes

   - Repair the (P930) Driver Door Lock Driver circuit for a short to ground.
   - Perform the BODY VERIFICATION TEST. Refer to **STANDARD PROCEDURE** .

   No

   - Replace the Totally Integrated Power Module (TIPM) in accordance with the Service Information.

- Perform the BODY VERIFICATION TEST. Refer to **STANDARD PROCEDURE** .

DRIVER DOOR LOCK INOPERATIVE - DD/DP

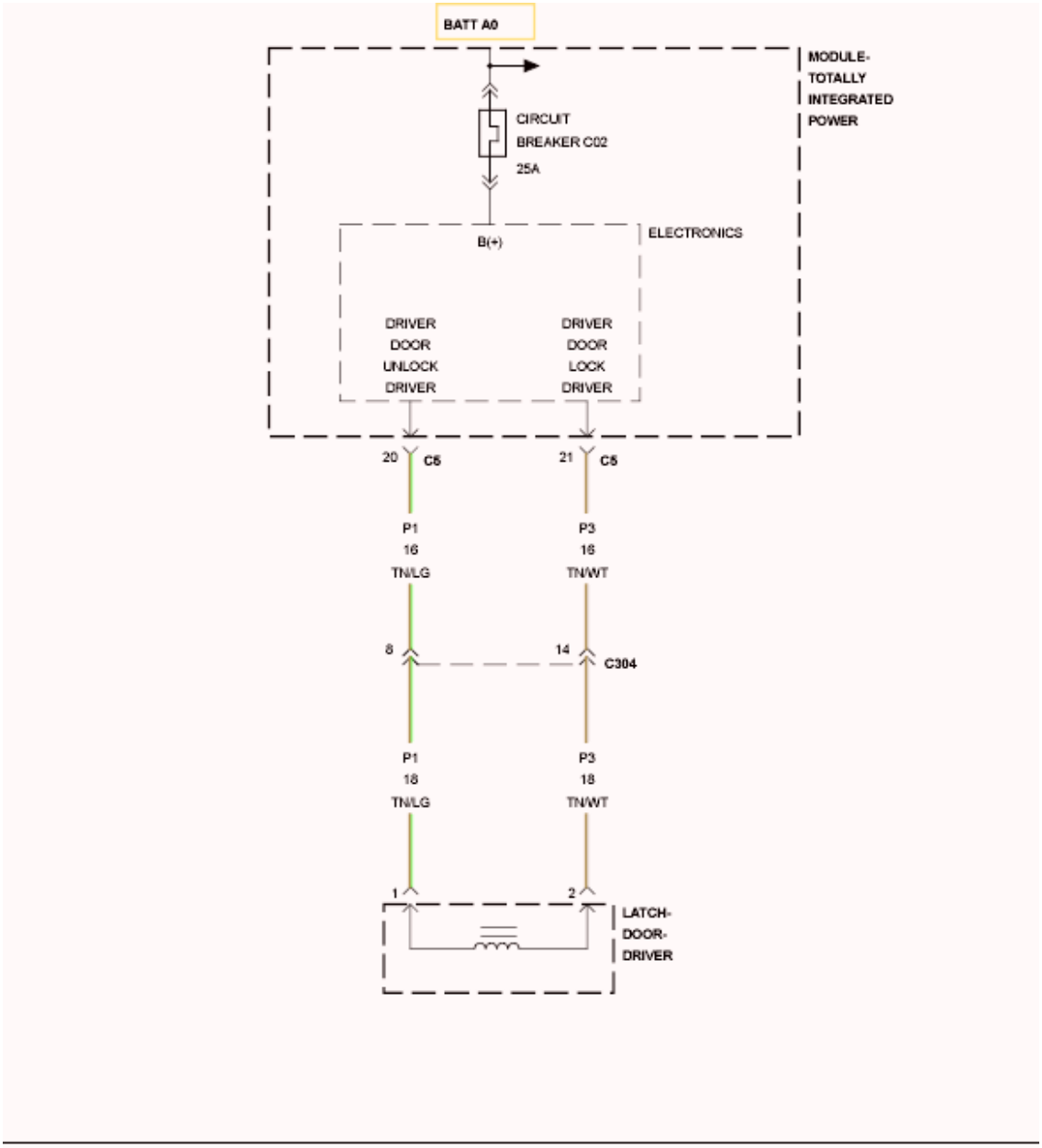

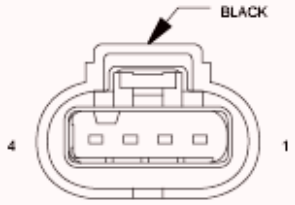

LATCH-
DOOR-
DRIVER

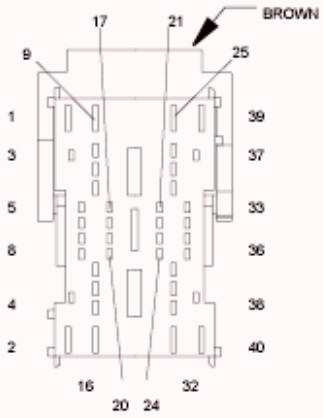

MODULE-

Fig. 7: Driver Door Lock Wiring Diagram
Courtesy of CHRYSLER GROUP, LLC

For a complete wiring diagram, **refer to appropriate SYSTEM WIRING DIAGRAMS article** .

POSSIBLE CAUSES

Possible Causes
(P3) DRIVER DOOR LOCK DRIVER CIRCUIT OPEN
(P3) DRIVER DOOR LOCK DRIVER CIRCUIT SHORTED TO GROUND
(P1) DRIVER DOOR UNLOCK DRIVER CIRCUIT OPEN
(P1) DRIVER DOOR UNLOCK DRIVER CIRCUIT SHORTED TO GROUND
DRIVER DOOR LATCH
TOTALLY INTEGRATED POWER MODULE (TIPM)

DIAGNOSTIC TEST

1. **DRIVER DOOR LATCH INOPERATIVE**

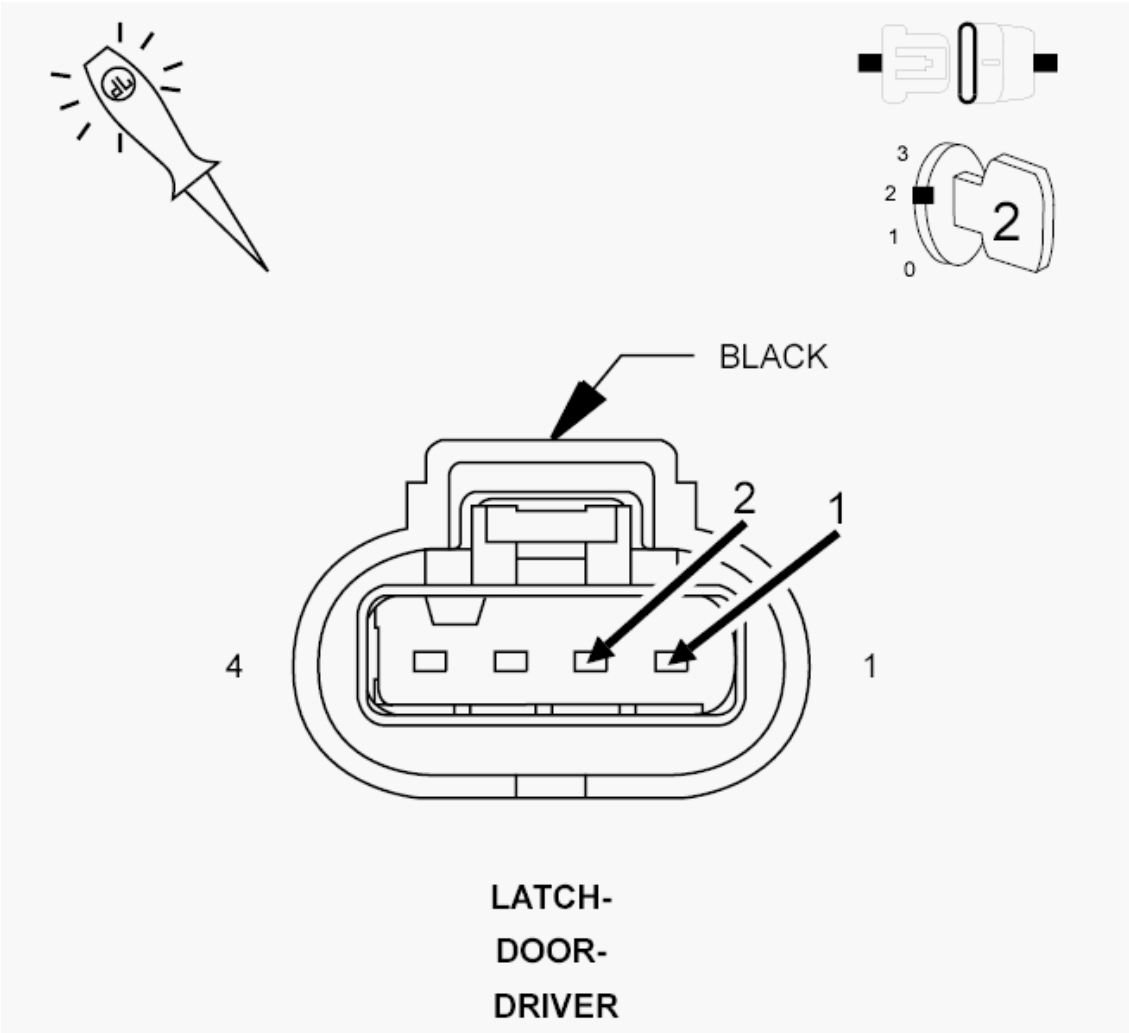

Fig. 8: Checking Driver Door Latch Operation
Courtesy of CHRYSLER GROUP, LLC

1. Disconnect the Driver Door Latch connector.
2. Connect a test light between the (P3) Driver Door Lock Driver circuit and the (P1) Driver Door Unlock Driver circuit.
3. Close the front doors or trip the door latches to the closed position.
4. Operate the door locks in both positions and observe the test light.

   Does the test light illuminate brightly for approximately 300 ms. when the door locks are actuated?

   Yes

   - Replace the Driver Door Latch.
   - Perform the BODY VERIFICATION TEST. Refer to **STANDARD PROCEDURE** .

   No

- Go To 2.

2. **CHECK (P1) DRIVER DOOR UNLOCK DRIVER CIRCUIT OPEN**

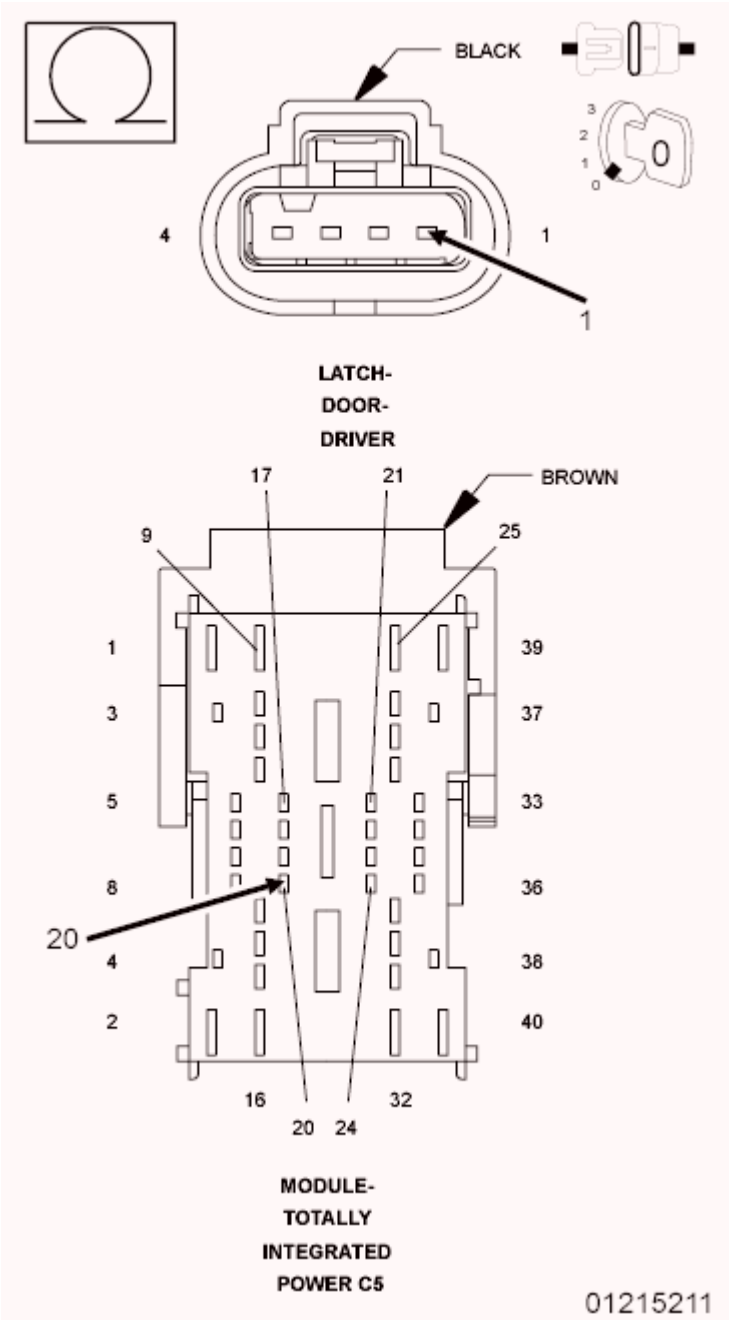

Fig. 9: Checking Driver Door Unlock Driver Circuit For An Open
Courtesy of CHRYSLER GROUP, LLC

1. Turn the ignition off.
2. Disconnect the TIPM C5 harness connector.
3. Measure the resistance of the (P1) Driver Door Unlock Driver circuit between the Latch connector and the TIPM C5 connector.

Is the resistance below 2.0 Ohms?

Yes

- Go To 3.

No

- Repair the (P1) Driver Door Unlock Driver circuit for an open.
- Perform the BODY VERIFICATION TEST. Refer to **STANDARD PROCEDURE** .

3. **CHECK (P1) DRIVER DOOR UNLOCK DRIVER CIRCUIT SHORT TO GROUND**

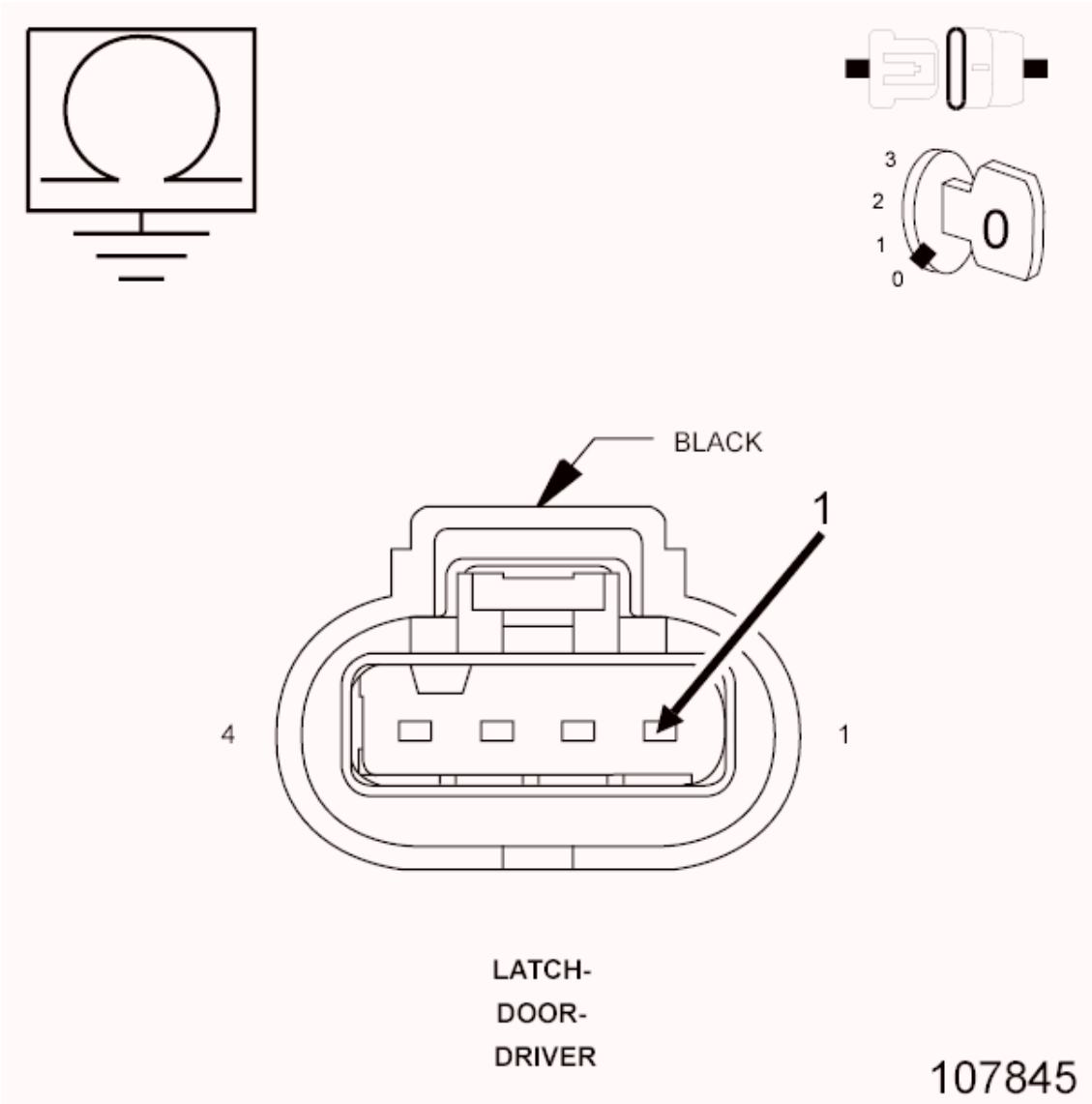

Fig. 10: Checking Driver Door Unlock Driver Circuit For A Short To Ground
Courtesy of CHRYSLER GROUP, LLC

1. Measure the resistance between Ground and the (P910) Driver Door Unlock Driver circuit.

   Is the resistance below 1, 000 Ohms?

   Yes

   - Repair the (P1) Driver Door Unlock Driver circuit for a short to ground.
   - Perform the BODY VERIFICATION TEST. Refer to **STANDARD PROCEDURE** .

   No

   - Go To 4.

4. **CHECK (P3) DRIVER DOOR LOCK DRIVER CIRCUIT OPEN**

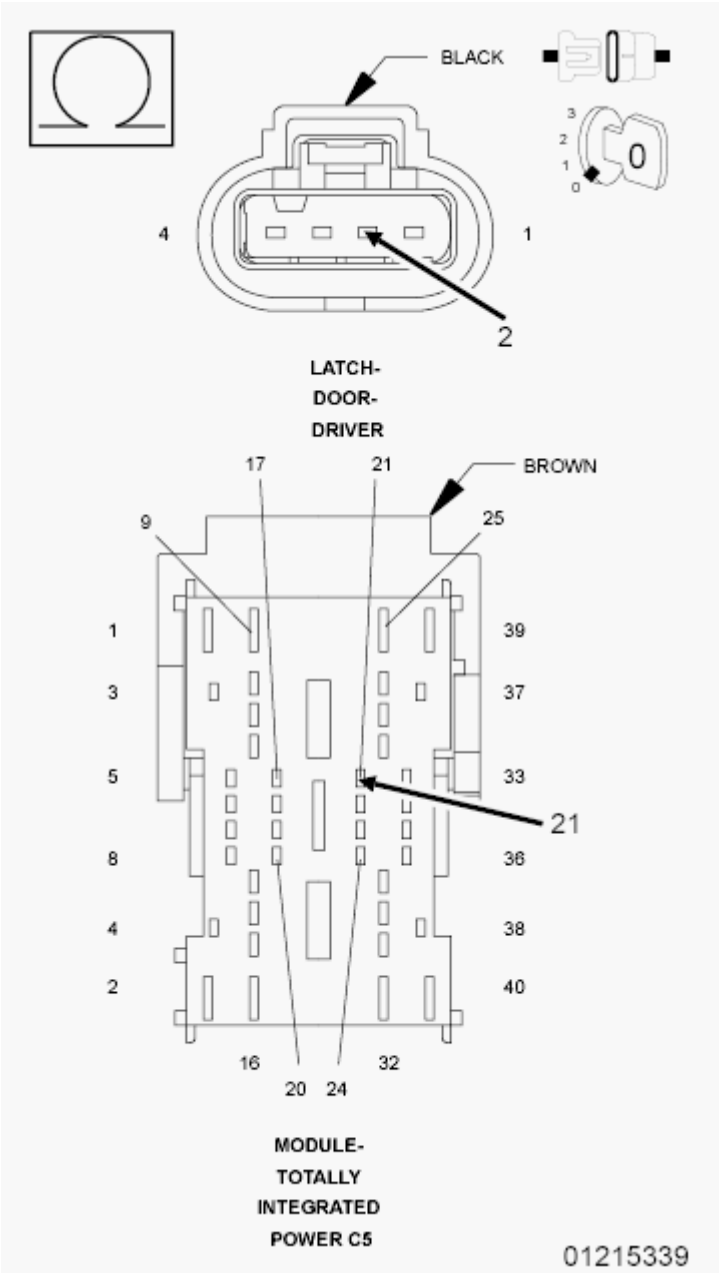

Fig. 11: Checking Driver Door Lock Driver Circuit For An Open
Courtesy of CHRYSLER GROUP, LLC

1. Measure the resistance of the (P3) Driver Door Lock Driver circuit between the TIPM C5 connector and the Driver Door Latch connector.

   Is the resistance below 2.0 Ohms?

   Yes

   - Go To 5.

No

- Repair the (P3) Driver Door Lock Driver circuit for an open.
- Perform the BODY VERIFICATION TEST. Refer to **STANDARD PROCEDURE** .

5. **CHECK (P3) DRIVER DOOR LOCK DRIVER CIRCUIT SHORT TO GROUND**

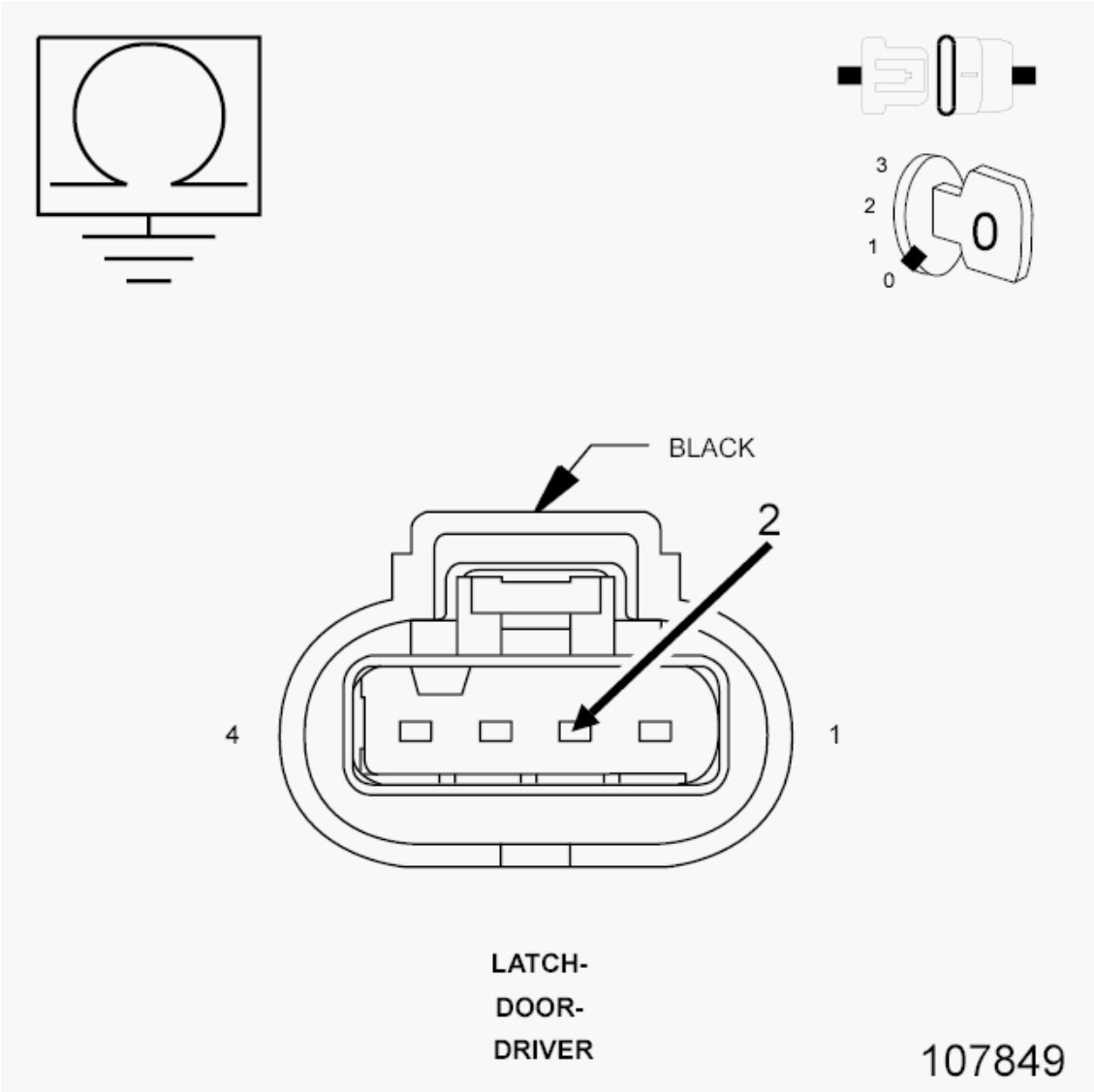

Fig. 12: Checking Driver Door Lock Driver Circuit For A Short To Ground
Courtesy of CHRYSLER GROUP, LLC

1. Measure the resistance between Ground and the (P3) Driver Door Lock Driver circuit.

   Is the resistance below 1, 000 Ohms?

   Yes

- Repair the (P3) Driver Door Lock Driver circuit for a short to ground.
- Perform the BODY VERIFICATION TEST. Refer to **STANDARD PROCEDURE** .

No

- Replace the Totally Integrated Power Module in accordance with the Service Information.
- Perform the BODY VERIFICATION TEST. Refer to **STANDARD PROCEDURE** .

ONE PASSENGER DOOR LOCK INOPERATIVE - DS/DJ/D2

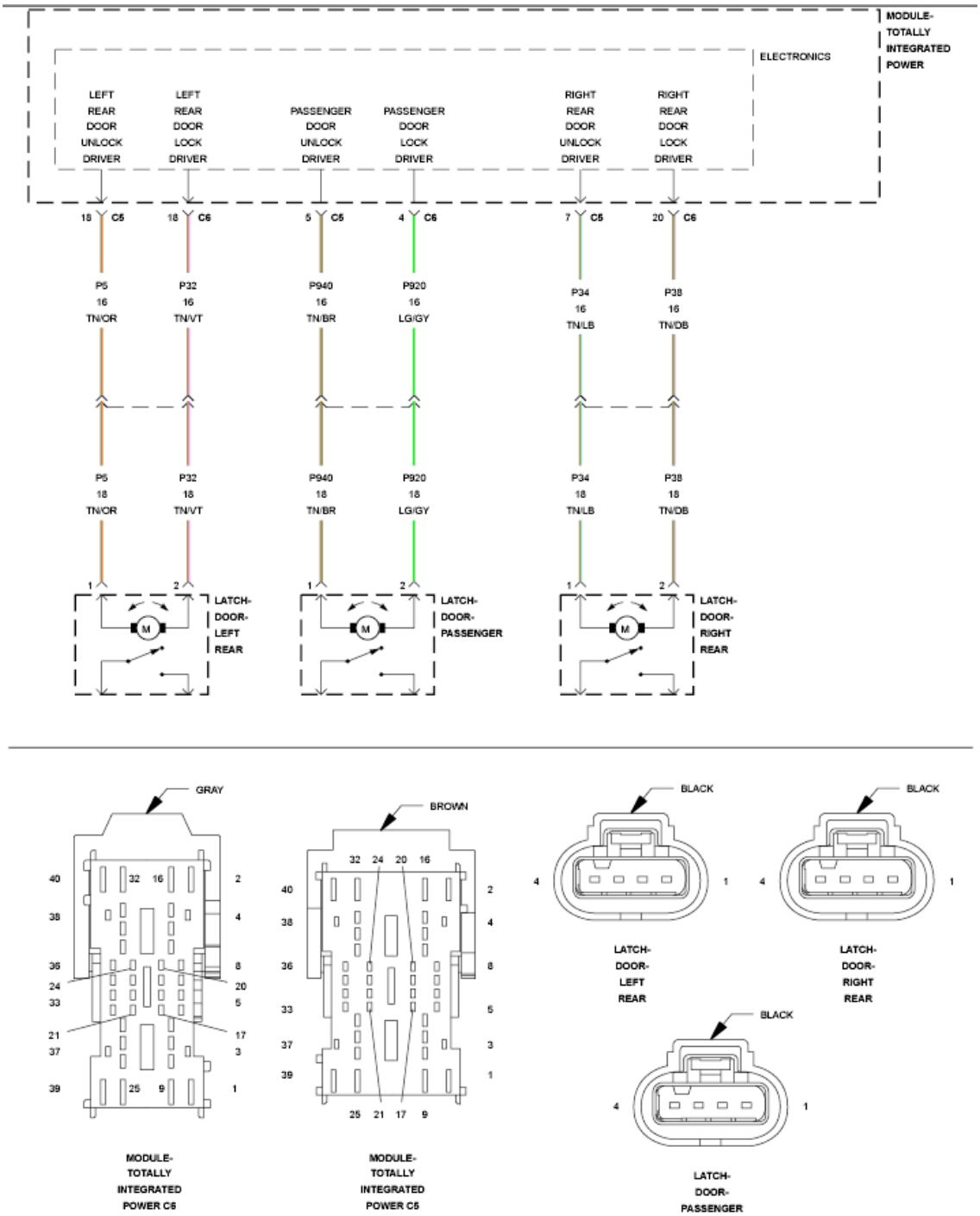

Fig. 13: Passenger Door Latch Wiring Diagram
Courtesy of CHRYSLER GROUP, LLC

For a complete wiring diagram, **refer to appropriate SYSTEM WIRING DIAGRAMS article** .

POSSIBLE CAUSES

Possible Causes
(P32), (P38) OR (P920) DOOR LOCK DRIVER CIRCUIT OPEN
(P32, (P38) OR (P920) DOOR LOCK DRIVER CIRCUIT SHORTED TO GROUND
(P5), (P34) OR (P940) DOOR UNLOCK DRIVER CIRCUIT OPEN
(P5), (P34) OR (P940) DOOR UNLOCK DRIVER CIRCUIT SHORTED TO GROUND
TOTALLY INTEGRATED POWER MODULE (TIPM)
DOOR LATCH

DIAGNOSTIC TEST

1. **PASSENGER DOOR LATCH INOPERATIVE**

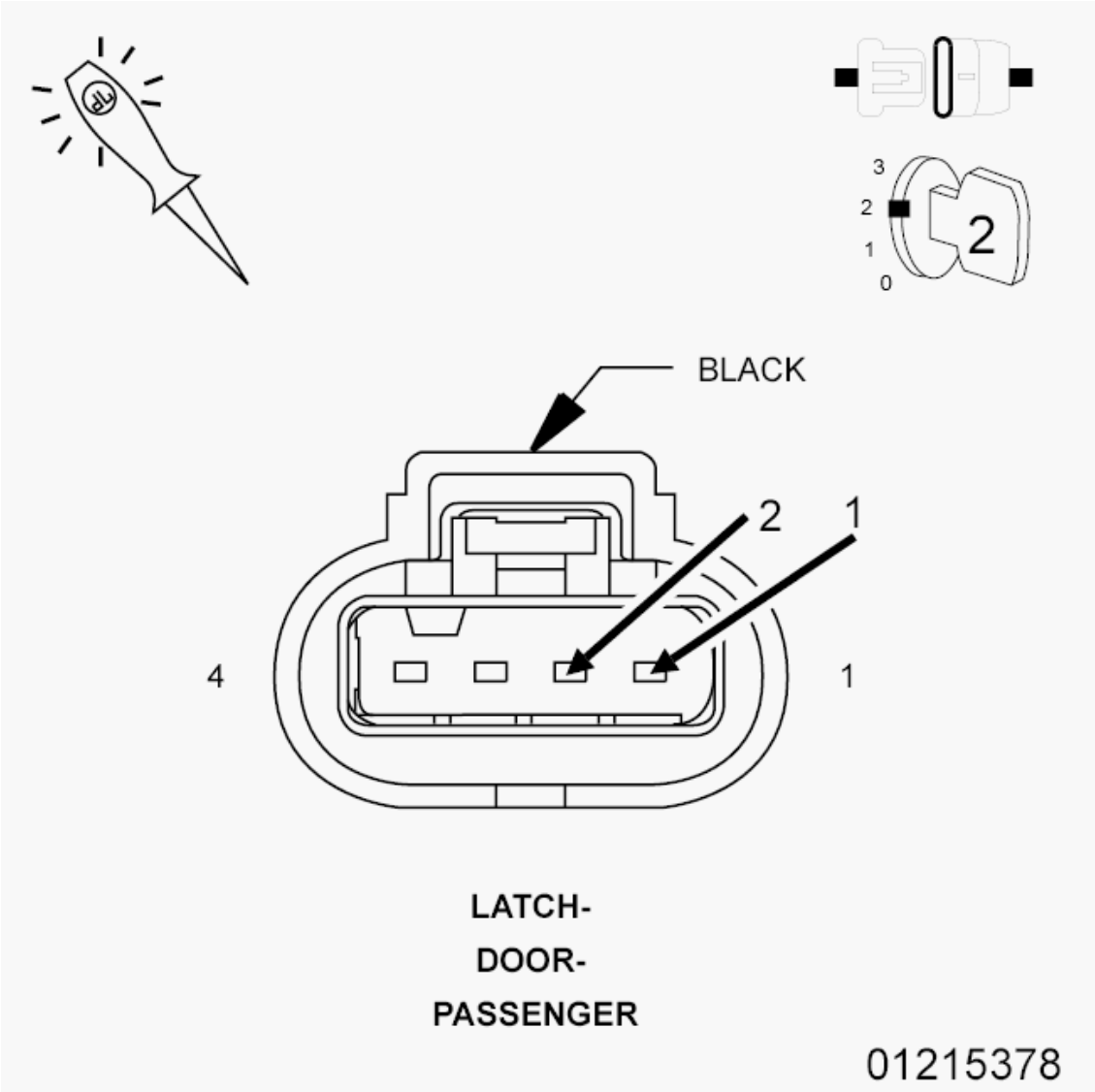

Fig. 14: Checking Passenger Door Latch Operation
Courtesy of CHRYSLER GROUP, LLC

NOTE: **Graphics in this test show the Front Passenger Latch. The 2 rear passenger latches (if applicable) are similar. See the schematic for the connector cavity numbers.**

1. Turn the ignition off.
2. Disconnect the inoperative Passenger Door latch connector.
3. Connect a test light between the Door Lock Driver circuit and the Door Unlock Driver circuit.
4. Turn the ignition on.
5. Operate the door locks in both positions and observe the test light.

   Does the test light illuminate brightly for approximately 300 ms. when the door locks are actuated?

   Yes

   - Replace the Passenger Door Latch Assembly in accordance with the Service Information.
   - Perform the BODY VERIFICATION TEST. Refer to **STANDARD PROCEDURE** .

   No

   - Go To 2.

2. **PASSENGER DOOR UNLOCK DRIVER CIRCUIT OPEN**

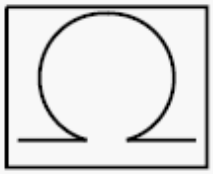

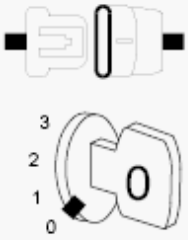

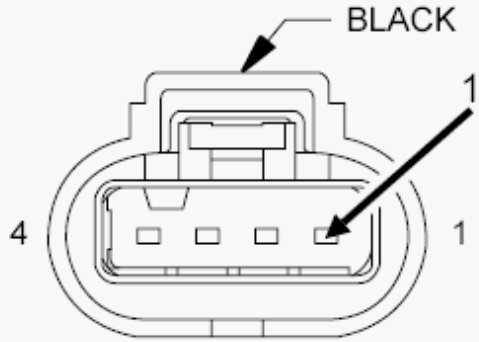

LATCH-
DOOR-
PASSENGER C1
(LHD/RHD BASE)

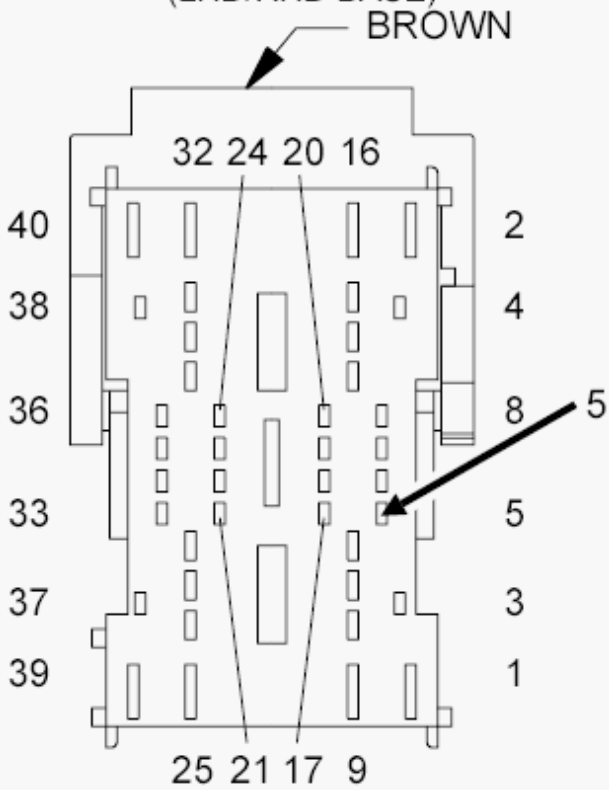

MODULE-
TOTALLY
INTEGRATED

Fig. 15: Checking Passenger Door Unlock Driver Circuit For An Open
Courtesy of CHRYSLER GROUP, LLC

NOTE: The passenger unlock circuit is shown in the TIPM graphic above.

1. Turn the ignition off.
2. Disconnect the TIPM C5 connector.
3. Measure the resistance of the appropriate Door Unlock Driver circuit between the Latch connector and the TIPM C5 connector.

   Is the resistance below 2.0 Ohms?

   Yes

   - Go To 3.

   No

   - Using the wiring diagram/schematic as a guide, measure the circuit from the in-line door harness connector to the latch connector to determine if the wire is open in the door harness or the instrument panel harness. Repair the appropriate Door Unlock Driver circuit for an open.
   - Perform the BODY VERIFICATION TEST. Refer to **STANDARD PROCEDURE** .

3. **PASSENGER DOOR UNLOCK DRIVER CIRCUIT SHORTED TO GROUND**

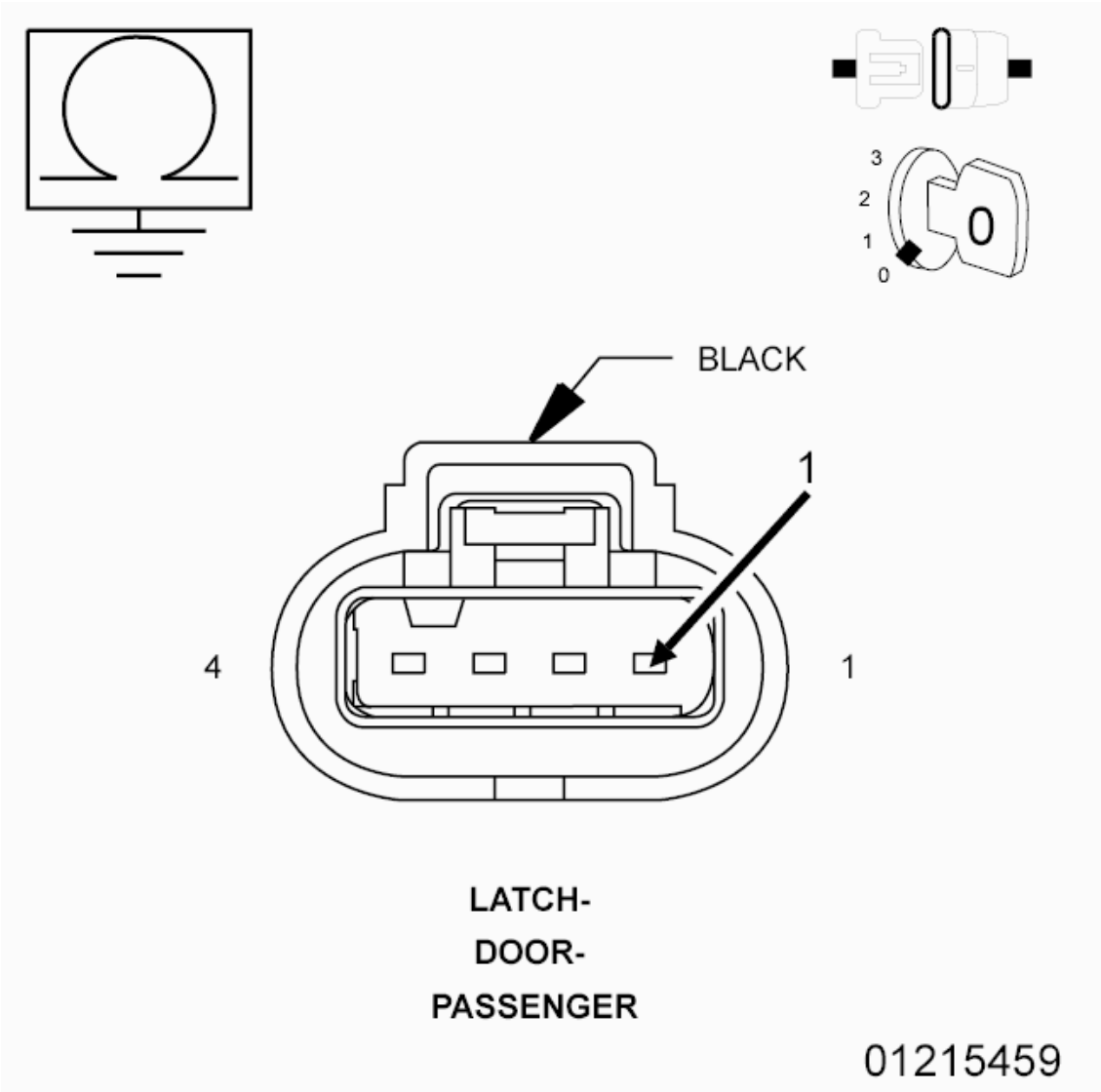

Fig. 16: Checking Passenger Door Unlock Driver Circuit For A Short To Ground
Courtesy of CHRYSLER GROUP, LLC

1. Measure the resistance between Ground and the appropriate Door Unlock Driver circuit.

   Is the resistance below 1, 000 Ohms?

   Yes

   - Using the wiring diagram/schematic as a guide, measure the circuit from the in-line door harness connector to ground to determine if the wire is shorted in the door harness or the instrument panel harness. Repair the appropriate Door Unlock Driver circuit for a short to ground.
   - Perform the BODY VERIFICATION TEST. Refer to **STANDARD PROCEDURE** .

   No

- Go To 4.

4. **PASSENGER DOOR LOCK DRIVER CIRCUIT OPEN**

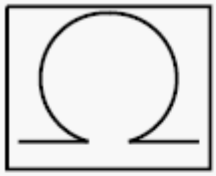

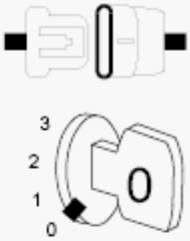

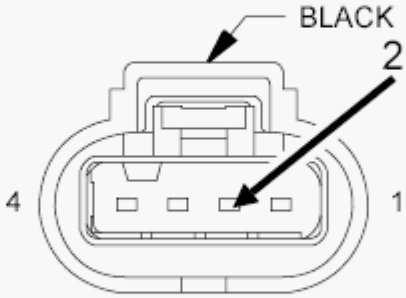

LATCH-
DOOR-
PASSENGER C1
(LHD/RHD BASE)

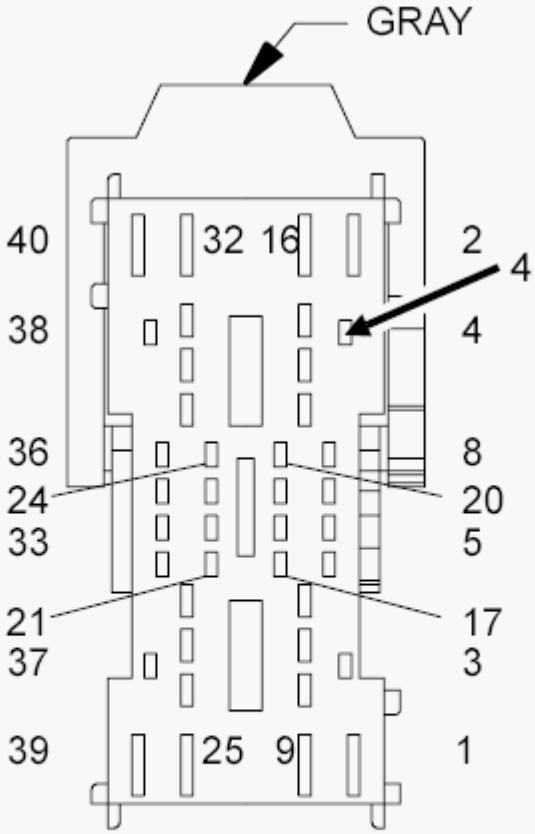

MODULE-
TOTALLY

Fig. 17: Checking Passenger Door Lock Driver Circuit For An Open
Courtesy of CHRYSLER GROUP, LLC

NOTE: The passenger lock circuit is shown in the TIPM graphic above.

1. Disconnect the TIPM C6 harness connector.
2. Measure the resistance of the appropriate Door Lock Driver circuit between the TIPM C6 connector and the appropriate Door Latch connector.

   Is the resistance below 2.0 Ohms?

   Yes

   - Go To 5.

   No

   - Using the wiring diagram/schematic as a guide, measure the circuit from the in-line door harness connector to the latch connector to determine if the wire is open in the door harness or the instrument panel harness. Repair the appropriate Door Lock Driver circuit for an open.
   - Perform the BODY VERIFICATION TEST. Refer to **STANDARD PROCEDURE** .

5. **PASSENGER DOOR LOCK DRIVER CIRCUIT SHORTED TO GROUND**

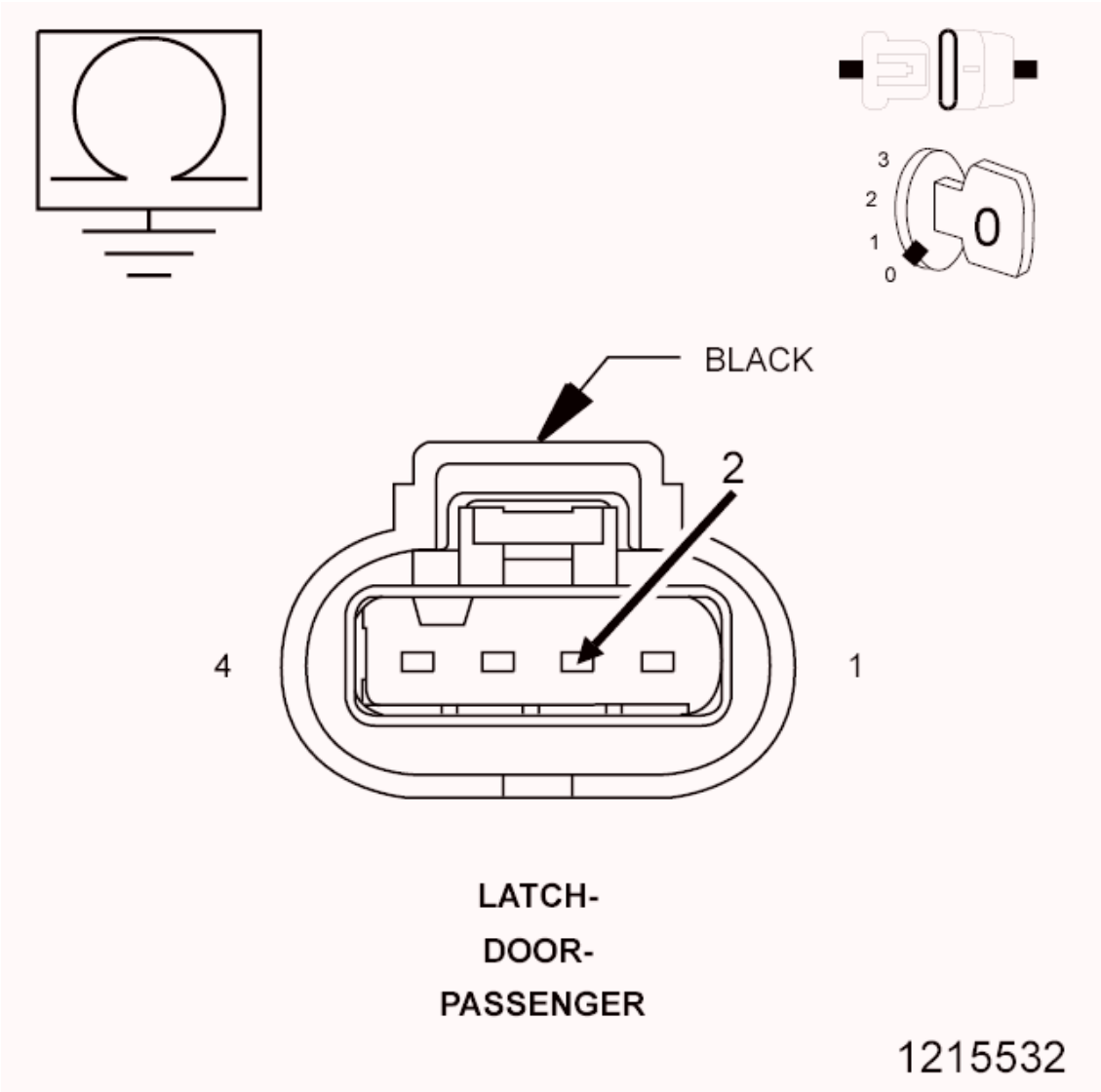

Fig. 18: Checking Passenger Door Lock Driver Circuit For A Short To Ground
Courtesy of CHRYSLER GROUP, LLC

1. Measure the resistance between Ground and the appropriate Door Lock Driver circuit.

   Is the resistance below 1, 000 Ohms?

   Yes

   - Using the wiring diagram/schematic as a guide, measure the circuit from the in-line door harness connector to ground to determine if the wire is shorted in the door harness or the instrument panel harness. Repair the appropriate Door Lock Driver circuit for a short to ground.
   - Perform the BODY VERIFICATION TEST. Refer to **STANDARD PROCEDURE** .

   No

- Replace the Totally Integrated Power Module (TIPM) in accordance with the Service Information.
- Perform the BODY VERIFICATION TEST. Refer to **STANDARD PROCEDURE** .

ONE PASSENGER DOOR LOCK INOPERATIVE - DD/DP

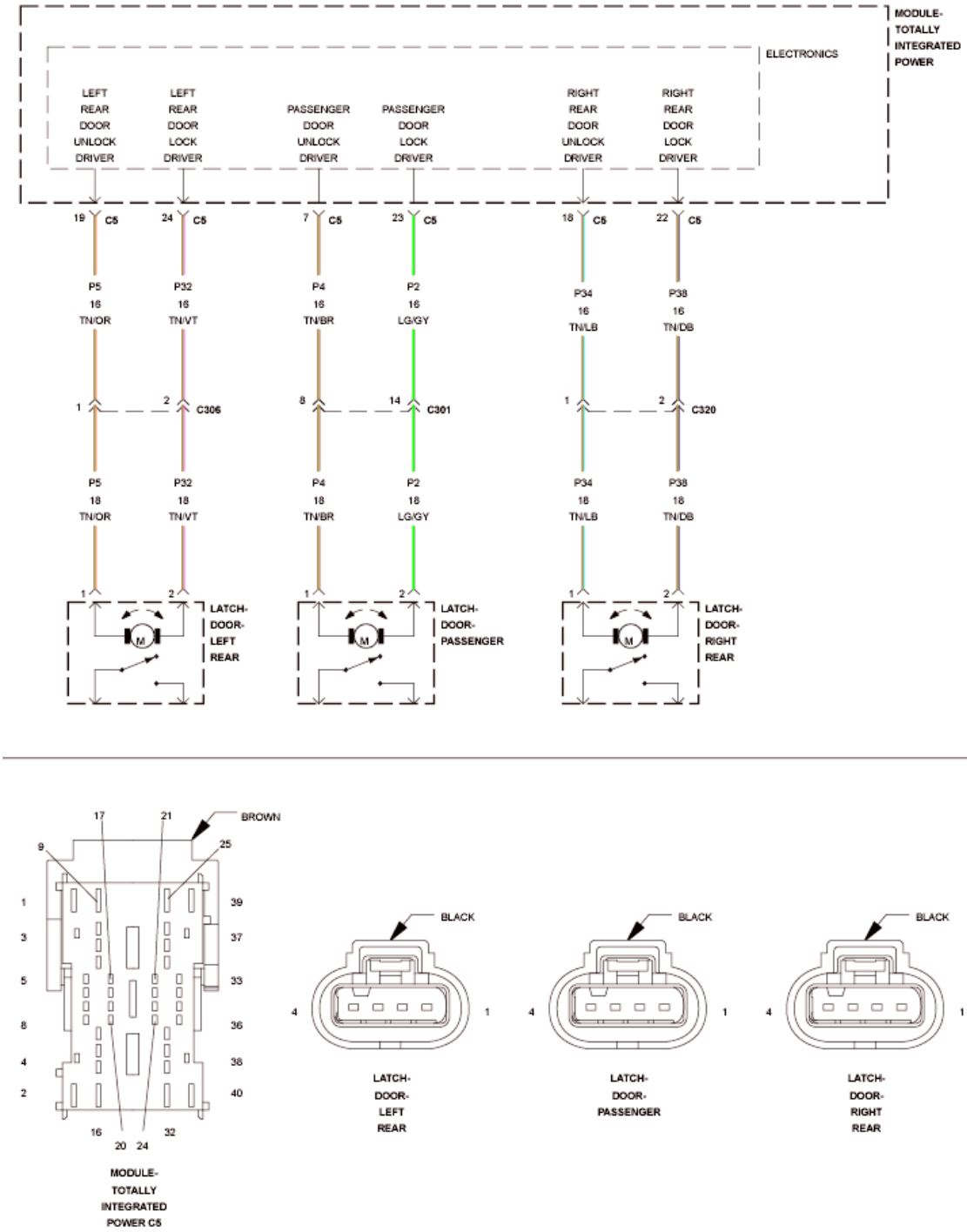

Fig. 19: One Passenger Door Lock Wiring Diagram

Courtesy of CHRYSLER GROUP, LLC

For a complete wiring diagram, **refer to appropriate SYSTEM WIRING DIAGRAMS article** .

POSSIBLE CAUSES

Possible Causes
(P32), (P38) OR (P2) DOOR LOCK DRIVER CIRCUIT OPEN
(P32, (P38) OR (P2) DOOR LOCK DRIVER CIRCUIT SHORTED TO GROUND
(P5), (P34) OR (P4) DOOR UNLOCK DRIVER CIRCUIT OPEN
(P5), (P34) OR (P4) DOOR UNLOCK DRIVER CIRCUIT SHORTED TO GROUND
TOTALLY INTEGRATED POWER MODULE (TIPM)
DOOR LATCH

DIAGNOSTIC TEST

1. **PASSENGER DOOR LATCH INOPERATIVE**

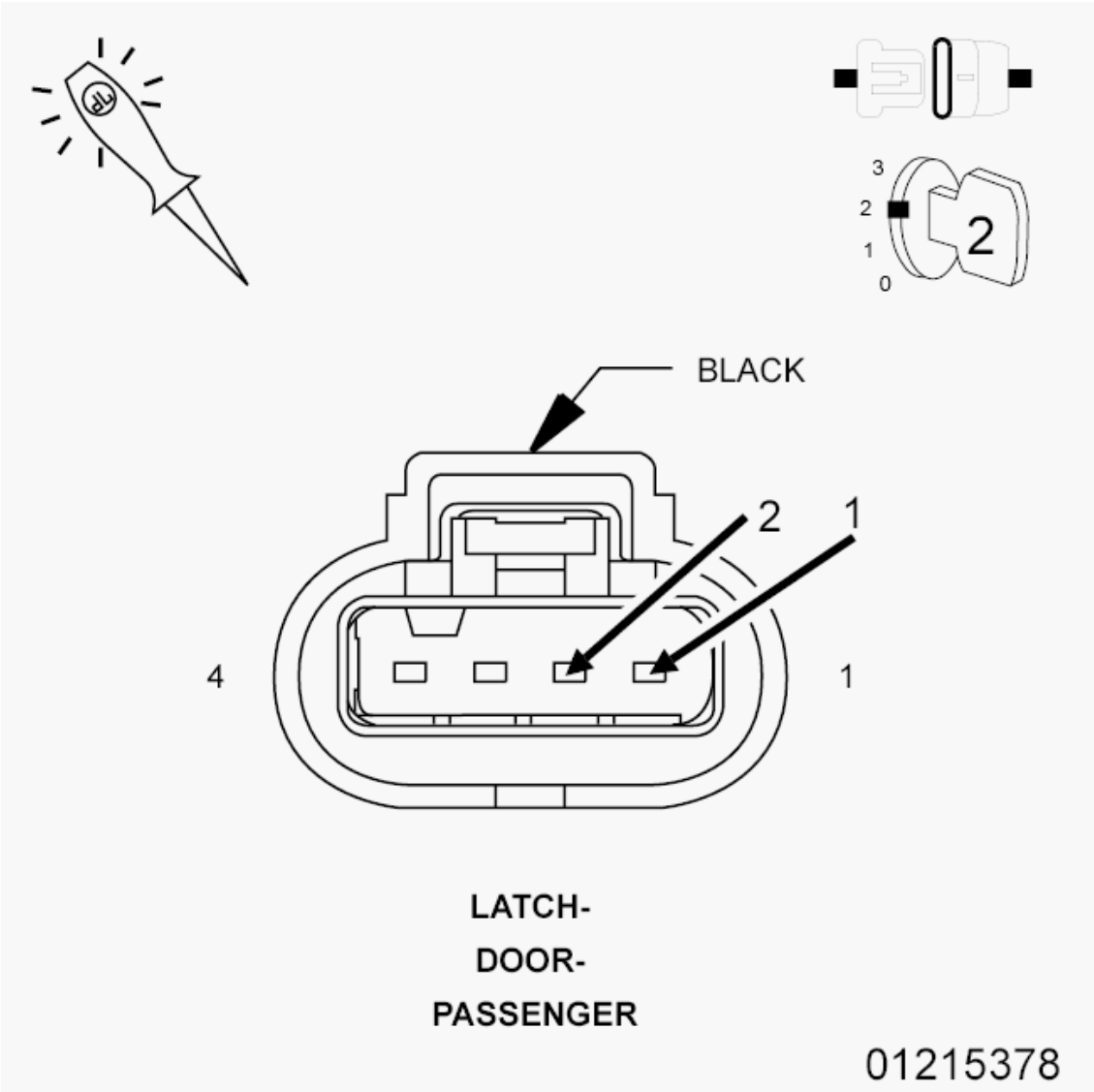

Fig. 20: Checking Passenger Door Latch Operation
Courtesy of CHRYSLER GROUP, LLC

NOTE: **Graphics in this test show the Front Passenger Latch. The 2 rear passenger latches (if applicable) are similar. See the schematic for the connector cavity numbers.**

1. Turn the ignition off.
2. Disconnect the inoperative Passenger Door latch connector.
3. Connect a test light between the Door Lock Driver circuit and the Door Unlock Driver circuit.
4. Turn the ignition on.
5. Operate the door locks in both positions and observe the test light.

   Does the test light illuminate brightly for approximately 300 ms. when the door locks are actuated?

Yes

- Replace the Passenger Door Latch Assembly.
- Perform the BODY VERIFICATION TEST. Refer to **STANDARD PROCEDURE** .

No

- Go To 2.

2. **PASSENGER DOOR UNLOCK DRIVER CIRCUIT OPEN**

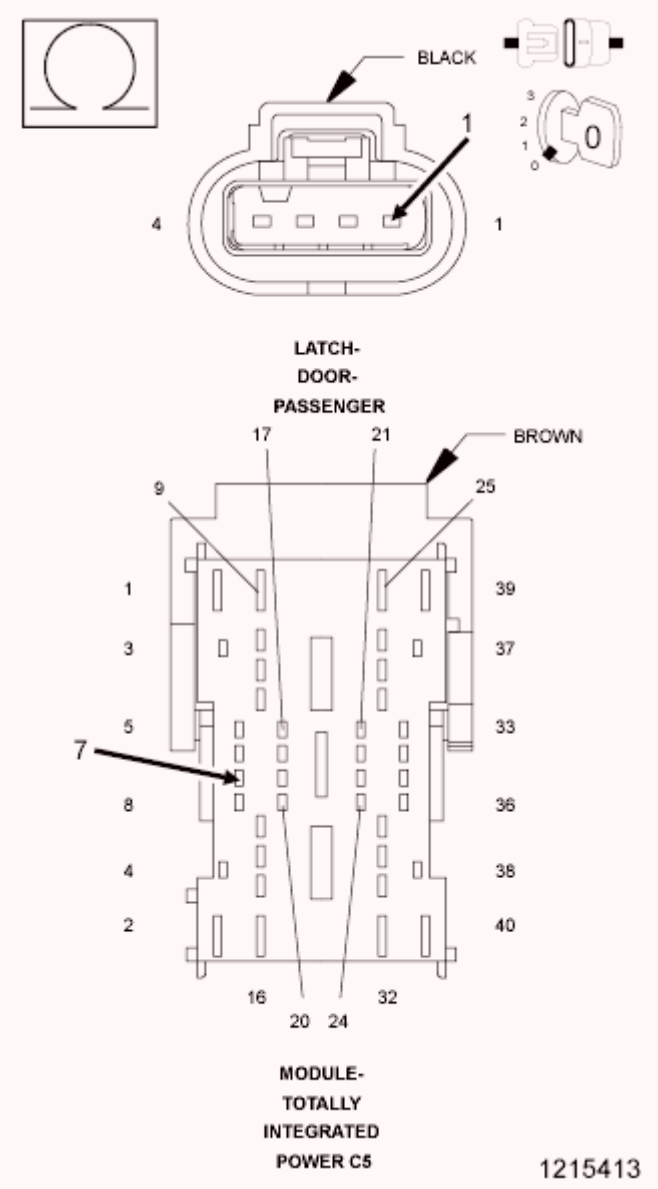

Fig. 21: Checking Passenger Door Unlock Driver Circuit For An Open
Courtesy of CHRYSLER GROUP, LLC

1. Turn the ignition off.

2. Disconnect the TIPM C5 connector.
3. Measure the resistance of the appropriate Door Unlock Driver circuit between the Latch connector and the TIPM C5 connector.

   Is the resistance below 2.0 Ohms?

   Yes

   - Go To 3.

   No

   - Using the wiring diagram/schematic as a guide, measure the circuit from the in-line door harness connector to the latch connector to determine if the wire is open in the door harness or the instrument panel harness. Repair the appropriate Door Unlock Driver circuit for an open.
   - Perform the BODY VERIFICATION TEST. Refer to **STANDARD PROCEDURE** .

3. **PASSENGER DOOR UNLOCK DRIVER CIRCUIT SHORT TO GROUND**

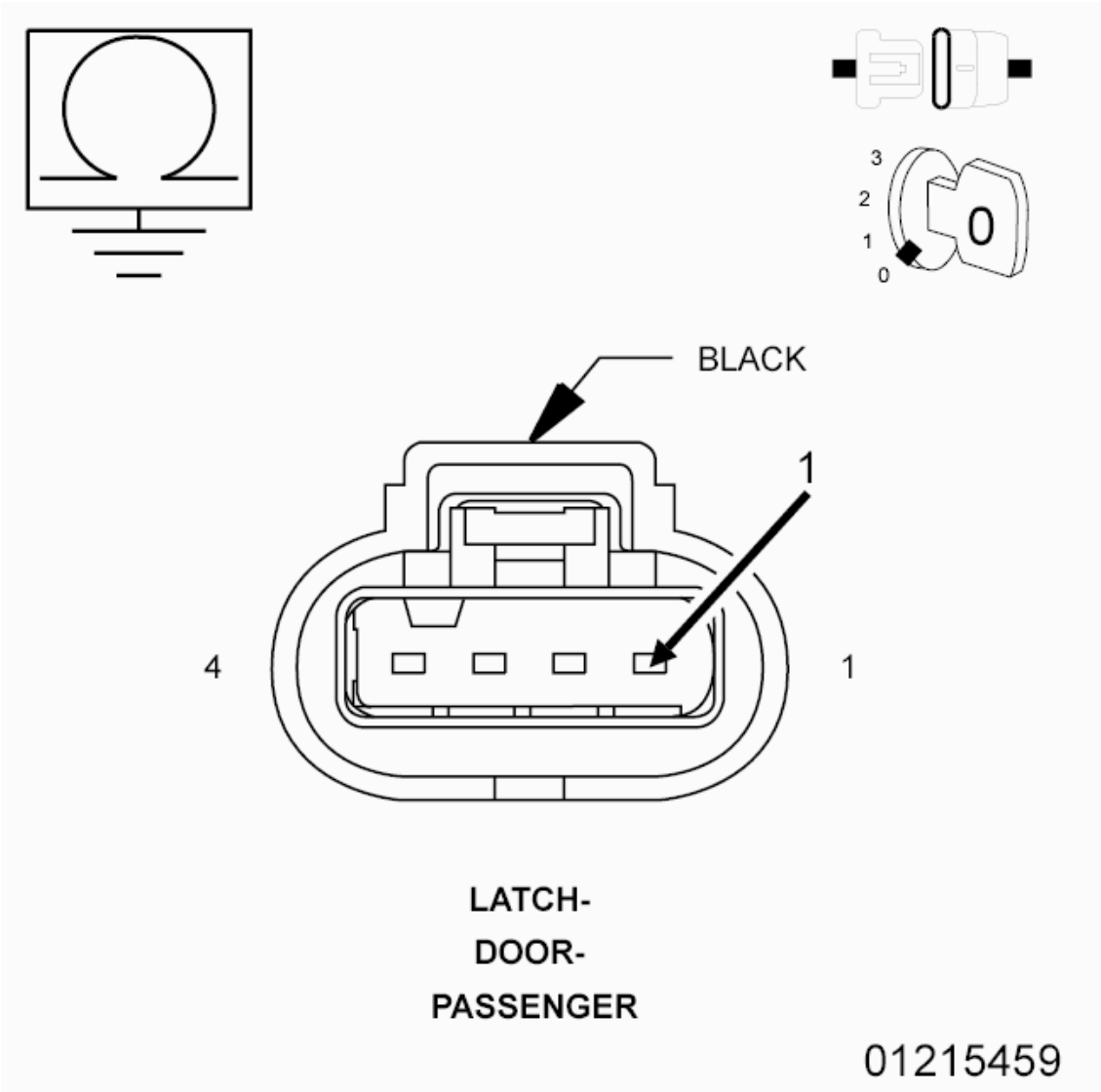

Fig. 22: Checking Passenger Door Unlock Driver Circuit For A Short To Ground
Courtesy of CHRYSLER GROUP, LLC

1. Measure the resistance between Ground and the appropriate Door Unlock Driver circuit.

   Is the resistance below 1, 000 Ohms?

   Yes

   - Using the wiring diagram/schematic as a guide, measure the circuit from the in-line door harness connector to ground to determine if the wire is shorted in the door harness or the instrument panel harness. Repair the appropriate Door Unlock Driver circuit for a short to ground.
   - Perform the BODY VERIFICATION TEST. Refer to **STANDARD PROCEDURE** .

   No

- Go To 4.

4. **PASSENGER DOOR LOCK DRIVER CIRCUIT OPEN**

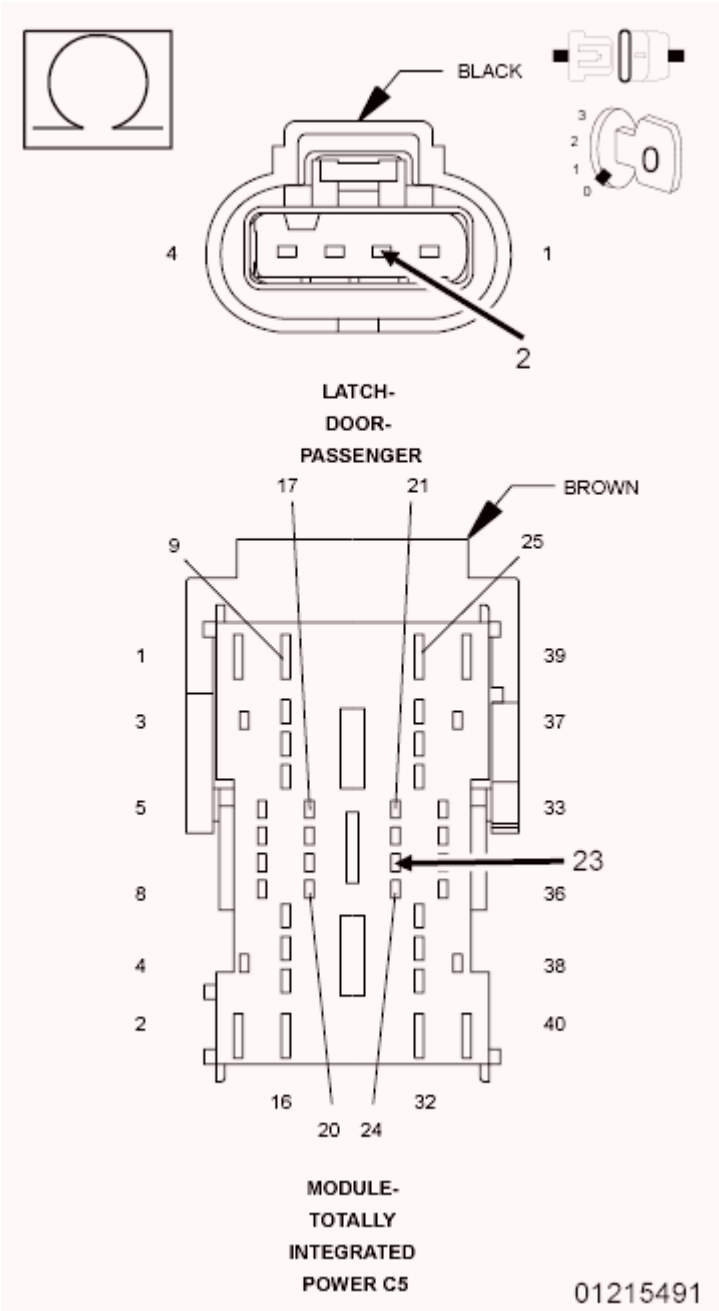

Fig. 23: Checking Passenger Door Lock Driver Circuit For An Open
Courtesy of CHRYSLER GROUP, LLC

1. Measure the resistance of the appropriate Door Lock Driver circuit between the TIPM C5 connector and the appropriate Door Latch connector.

   Is the resistance below 2.0 Ohms?

Yes

- Go To 5.

No

- Using the wiring diagram/schematic as a guide, measure the circuit from the in-line door harness connector to the latch connector to determine if the wire is open in the door harness or the instrument panel harness. Repair the appropriate Door Lock Driver circuit for an open.
- Perform the BODY VERIFICATION TEST. Refer to **STANDARD PROCEDURE** .

5. **PASSENGER DOOR LOCK DRIVER CIRCUIT SHORTED TO GROUND**

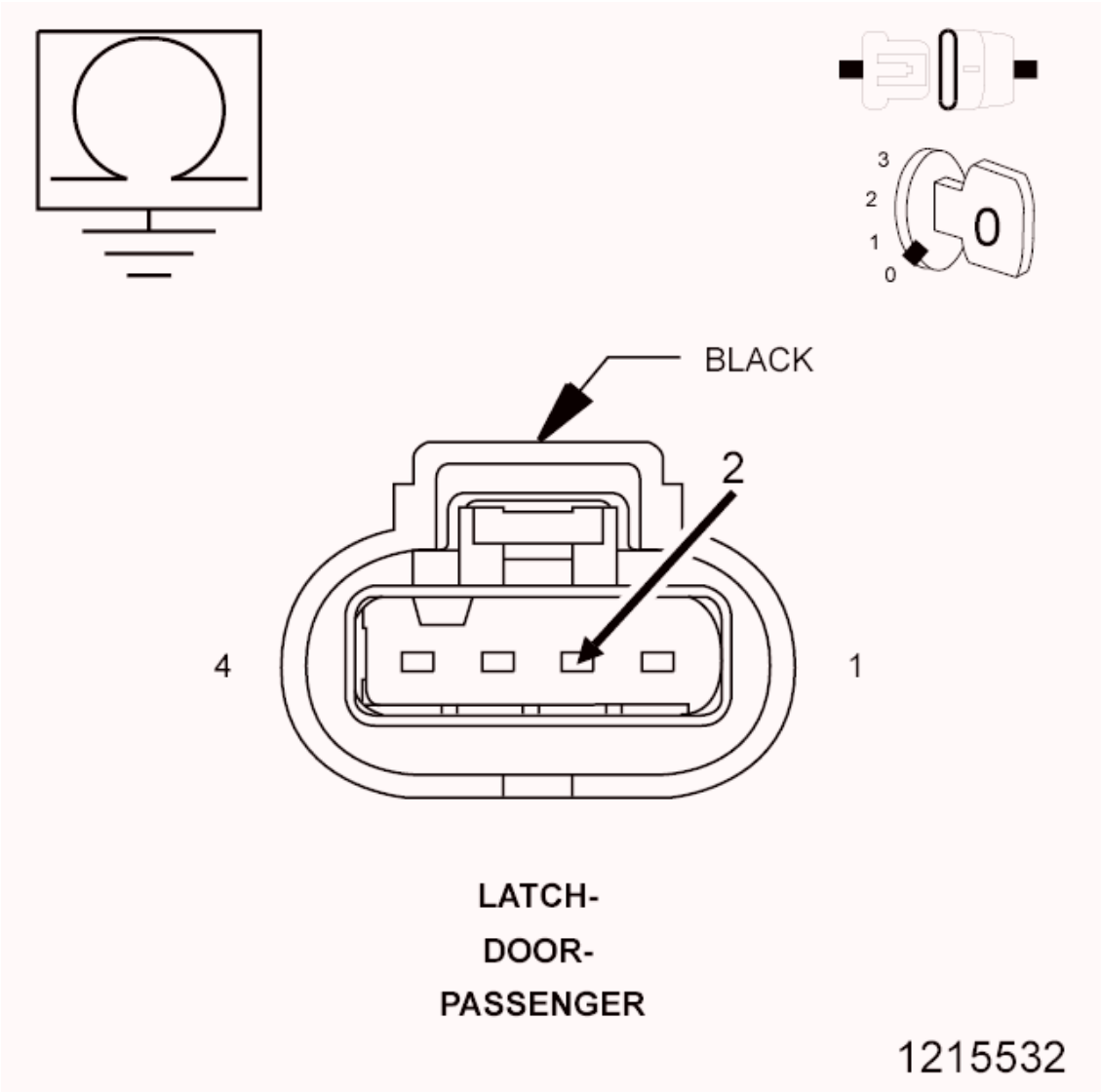

Fig. 24: Checking Passenger Door Lock Driver Circuit For A Short To Ground
Courtesy of CHRYSLER GROUP, LLC

1. Measure the resistance between Ground and the appropriate Door Lock Driver circuit.

Is the resistance below 1, 000 Ohms?

Yes

- Using the wiring diagram/schematic as a guide, measure the circuit from the in-line door harness connector to ground to determine if the wire is shorted in the door harness or the instrument panel harness. Repair the appropriate Door Lock Driver circuit for a short to ground.
- Perform the BODY VERIFICATION TEST. Refer to **STANDARD PROCEDURE** .

No

- Replace the Totally Integrated Power Module in accordance with the Service Information.
- Perform the BODY VERIFICATION TEST. Refer to **STANDARD PROCEDURE** .

DESCRIPTION

DESCRIPTION

POWER LOCKS

The power lock system allows all of the doors to be locked or unlocked electrically by operating a switch on either front door trim panel. When an actuation input signal from the door lock switch, WIN or FOBIK signal is received, the door modules turns on the output drivers a provides a voltage level to the door lock motor for a specified time to lock/unlock the door. Their are two door modules, the Driver Door Module (DDM) and Passenger Door Module (PDM). The door modules have an unswitched battery feed from the TIPM, so the locks can be actuated in any ignition switch position.

The door modules locks the doors automatically when the vehicle is driven beyond the speed of 25.7 km/h (15 mph), all doors are closed and the accelerator pedal is depressed. The rolling door lock feature can be disabled if desired.

This vehicle also offers several customer programmable features, which allows the selection of several optional electronic features to suit individual preferences.

The power lock system for this vehicle can also be operated remotely using the FOBIK.

Certain functions and features of the power lock system rely upon resources shared with other electronic modules in the vehicle over the CAN data bus network. For proper diagnosis of these electronic modules or of the CAN data bus network, the use of a scan tool and the appropriate diagnostic information are required.

AUTOMATIC DOOR LOCKS

When enabled, this feature will lock all of the door locks if all of the doors are closed and the vehicle speed goes above 25.7 km/h (15 mph). If a door unlock has occurred, then the door modules will perform another auto lock, if the doors did not electrically unlock, another auto lock will not occur.

DOOR LOCK INHIBIT

When the FOBIK is in the ignition (in any switch position) and either front door is opened, the door lock switches LOCK functions are disabled. The UN-LOCK functions are still functional. This protects against locking the vehicle with the FOBIK still in the ignition. The FOBIK will still lock the doors. After the FOBIK is removed from the ignition or the doors are closed, the power door locks will operate normally.

REMOTE KEYLESS ENTRY

A Radio Frequency (RF) type Remote Keyless Entry (RKE) system is an available factory-installed option on this model. The RKE system allows the use of a remote battery-powered radio transmitter to signal the Wireless Ignition Node (WIN) to actuate the power lock system. The WIN operates on non-switched battery current

through a fuse in the Totally Integrated Power Module (TIPM), so that the system remains operational, regardless of the ignition switch position.

The FOBIK transmitters are also equipped with a Panic button. If the Panic button on the FOBIK transmitter is depressed, the horn will sound and the exterior lights will flash on the vehicle for about three minutes, or until the Panic button is depressed a second time. A vehicle speed of about 25.7 km/h (15 mph) will also cancel the panic event.

The RKE system can also perform other functions on this vehicle. If the vehicle is equipped with the optional Vehicle Theft Security System (VTSS), the FOBIK transmitter will arm the VTSS when the Lock button is depressed, and disarm the VTSS when the Unlock button is depressed.

The RKE system includes two transmitters when the vehicle is shipped from the factory, but the system can retain the vehicle access codes of up to a total of eight transmitters. The transmitter codes are retained in the WIN memory, even if the battery is disconnected. If an FOBIK transmitter is faulty or lost, new transmitter vehicle access codes can be programmed into the system using a scan tool. Refer to **STANDARD PROCEDURE** .

This vehicle also offers several customer programmable features, which allows the selection of several optional electronic features to suit individual preferences. Customer programmable feature options affecting the RKE system include:

- **Automatic Door Lock** - Customer programmable feature that allows the TIPM to perform an automatic door lock if the vehicle speed is above 25.7 km/h (15 miles-per-hour).
- **Automatic Door Unlock On Exit** - Customer programmable feature that allows the TIPM to perform an automatic door unlock if the vehicle speed is 0, vehicle in park and driver door is opened.
- **Flash Lights with Lock and Unlock** - Allows the option of having the park lamps flash as an optical verification that the RKE system received a valid Lock request or Unlock request from the FOBIK transmitter, or having no optical verification.
- **Programming Additional Transmitters** - Allows up to a total of eight transmitter vehicle access codes to be stored.
- **Remote Unlock Sequence** - Allows the option of having only the driver side front door unlock when the FOBIK transmitter Unlock button is depressed the first time. The remaining doors unlock when the button is depressed a second time within 5 seconds of the first unlock press. Another option is having all doors unlock upon the first depression of the FOBIK transmitter Unlock button.
- **Sound Horn on Lock** - Allows the option of having the horn sound a short chirp as an audible verification that the RKE system received a valid Lock request from the FOBIK transmitter, or having no audible verification.

Certain functions and features of the RKE system rely upon resources shared with other electronic modules in the vehicle over CAN data bus network. For diagnosis of these electronic modules or of the CAN data bus network, the use of a scan tool and the appropriate diagnostic information are required.

OPERATION

OPERATION

POWER LOCKS

The power lock system allows all of the doors to be locked or unlocked electrically by operating a switch on either front door trim panel. When an actuation input signal from the door lock switch, WIN or FOBIK signal is received, the door modules turns on the output drivers a provides a voltage level to the door lock motor for a specified time to lock/unlock the door. Their are two door modules, the Driver Door Module (DDM) and Passenger Door Module (PDM). The door modules have an unswitched battery feed from the TIPM, so the locks can be actuated in any ignition switch position.

REMOTE KEYLESS ENTRY

The FOBIK transmitter uses radio frequency signals to communicate with the WIN. The WIN is on the CAN bus. When the operator presses a button on the transmitter, it sends a specific request to the WIN. In turn, the WIN sends the appropriate request over the CAN bus to the following:

- **Totally Integrated Power Module (TIPM) -** to activate the park lamps, the headlamps and the horn for the horn chirp.
- **Door Control Modules -** to activate the door locks and windows.

After pressing the lock button on the FOBIK transmitter, all of the door locks will lock, the illuminated entry will turn off (if all doors are closed) and the vehicle theft security system (if equipped) will arm.

Pressing the unlock button one time will unlock the driver door, or all doors based on the customer programmable feature enabled, the illuminated entry will turn on the courtesy lamps and the vehicle theft security system (if equipped) will disarm. Pressing the unlock button a second time, the remaining door locks will unlock.

If the vehicle is equipped with the memory system, the memory message will identify which transmitter sent the signal.

ROLLING CODE

The rolling code feature changes part of the transmitter message each time that it is used. The transmitter message and the receiver message increment together. Under certain conditions with a rolling code system, such as pressing a button on the FOBIK transmitter over 255 times outside of receiver range or replacing the battery, the receiver and transmitter can fall out of synchronization. To re-synchronize, press and release the UNLOCK button on the FOBIK transmitter repeatedly (it may take up to eight cycles) while listening carefully for the power door locks in the vehicle to cycle, indicating that resynchronization has occurred.

The lock function works from the FOBIK transmitter even in an out of synchronization condition, therefore it could be verified by pressing the LOCK button on the FOBIK.

DIAGNOSIS AND TESTING

DIAGNOSIS AND TESTING - POWER LOCKS

The most reliable, efficient, and accurate means to diagnose the power lock system requires the use of a

scan tool and the proper Diagnostic Procedures information.

Refer to the appropriate wiring information.

Following are tests that will help to diagnose the hard wired components and circuits of the power lock system. However, these tests may not prove conclusive in the diagnosis of this system. In order to obtain conclusive testing of the power lock system, the CAN data bus network and all of the electronic modules that provide inputs to, or receive outputs from the power lock system components must be checked.

PRELIMINARY DIAGNOSIS

As a preliminary diagnosis for the power lock system, note the system operation while you actuate both the Lock and Unlock functions with the power lock switches and with the Remote Keyless Entry FOBIK transmitter. Then, proceed as follows:

- If the entire power lock system fails to function with either the power lock switches or the FOBIK, check the fused B(+) fuse in the Totally Integrated Power Module (TIPM).
- If the power lock system functions with both power lock switches, but not with the FOBIK, refer to **TRANSMITTER, INTEGRATED KEY FOB, DIAGNOSIS AND TESTING** or **DIAGNOSIS AND TESTING** .
- If the power lock system functions with the FOBIK, but not with one or both power lock switches, refer to **DIAGNOSIS AND TESTING** .
- If the driver side power lock switch operates only the driver side front door power lock motor, but all other power lock motors operate with the passenger side power lock switch or the FOBIK, use a scan tool and the appropriate diagnostic information to diagnose the CAN data bus.

MOTOR, DOOR LOCK

DESCRIPTION

DESCRIPTION

The lock mechanisms are actuated by a reversible electric motor mounted within each door. The power lock motors are integral to the door latch units. The power lock motors cannot be adjusted or repaired and, if faulty or damaged, the door latch unit must be replaced.

For replacement of the front door latch, refer to **LATCH, DOOR, REMOVAL** .

For replacement of the rear door latch, refer to **LATCH, DOOR, REMOVAL** .

OPERATION

OPERATION

The door lock motors are controlled by the Totally Integrated Power Module (TIPM). A positive and negative battery connection to the two motor terminals will cause the motor to move in one direction. Reversing the current will cause the motor to move in the opposite direction.

SWITCH, LOCK, WITH WINDOW SWITCHES

DESCRIPTION

DESCRIPTION

A window/lock switch is used on all models equipped with power locks, power windows, and power mirrors. The window/lock switch houses the following switches:

- **Power Lock Switch -** A two-way, momentary, resistor multiplexed switch to control the power lock system.
- **Power Mirror Selector Switch -** Two separate push button switches selects the right or left power mirror for adjustment, or turns the power mirror system Off.
- **Power Mirror Adjustment Switches -** Four momentary, arrowhead shaped, directional switches allow the driver to adjust the selected power mirror in the Up, Down, Right, or Left directions.
- **Power Window Lockout Switch -** A two-way, latching, push-button switch allows the vehicle operator to lock out the power window switches on each passenger door so that the passenger door power windows may be operated only from the master switches.
- **Power Window Switches -** A two-way, momentary power window switch for the driver side front door. This switch also has a second detent in the Down and up (when equipped) direction and internal circuitry to provide an Auto-Up/Down feature for the driver side front door power window. The four door gets auto-up/down, while the two door just gets the auto-down feature. In addition to the power window switch for its own door, there are individual master switches for each passenger door power window.

The window/lock switch also incorporates several green Light-Emitting Diodes (LEDs) that illuminate the power lock and power window switch paddles, and the power mirror switch directional buttons to improve switch visibility.

OPERATION

OPERATION

The window/lock switch combines a power lock switch, a driver power window switch with an Auto-down/up feature, master switches for each passenger door power window, a power window lockout switch, a power mirror selector switch, and four power mirror adjustment switches in a single unit.

POWER LOCK SWITCH

The power lock switch circuitry is connected in series between ground and the driver door switch mux input of the instrument cluster. Each power lock switch position (Lock, Unlock, and Neutral) provides a different resistance value to the instrument cluster input, which allows the instrument cluster to sense the switch position. Based upon the power lock switch input, the instrument cluster controls the battery and ground feed outputs to the individual power lock motors to lock or unlock the door latches. The Light-Emitting Diode (LED) in the power lock switch is connected to battery current through the power window circuit breaker in the Totally Integrated Power Module (TIPM) on a fused ignition switch output (run-acc) circuit. The switch will be illuminated whenever the ignition switch is in the On or Accessory positions.

POWER WINDOW SWITCHES

The power window switch circuitry is connected to battery current through a circuit breaker in the Totally Integrated Power Module (TIPM) on a fused ignition switch output (run-acc) circuit so that the power windows will operate whenever the ignition switch is in the On or Accessory positions. Each two-way, momentary master passenger power window switch provides battery current and ground to the individual power window switches on each passenger door so that the power window switch controls the battery current and ground feeds to its respective power window motor. The switch for the driver side front door power window is labeled "Auto" and includes an auto-up/down feature. The four door gets both auto-up/down, the two door gets auto-down only feature. When this switch is pressed/depressed to a second momentary detent position and released, the driver door power window is automatically operated through an internal circuit and relay to its fully lowered or closed positions. The Auto-up/down event is cancelled if the switch paddle is depressed a second time in either the Up or Down direction. When the two position window lockout switch is depressed and latched in the lockout position, the battery current feed to each of the individual passenger power window switches is interrupted so that the passenger door power windows can only be operated from the master switches. The window lockout switch also controls the battery current feed for the LED in each passenger power window switch so that the switch will not be illuminated when it is locked out.

POWER MIRROR SWITCHES

The power mirror switch circuitry is connected to battery current through a fuse in the TIPM on a fused B(+) circuit so that the power mirrors remain operational regardless of the ignition switch position. A monetary two push button selector switch one to select the right mirror, and one to select the left mirror. After the right or left mirror is selected, one of four directional buttons is depressed to move the selected mirror Up, Down, Right or Left. The power mirror switch circuitry controls the battery current and ground feeds to each of the four (two in each mirror head) power mirror motors. The Light-Emitting Diode (LED) in the power mirror switch is connected to battery current through the power window circuit breaker in the TIPM on a fused ignition switch output (run-acc) circuit so that the switch directional buttons will be illuminated whenever the ignition switch is in the On or Accessory positions.

REMOVAL

REMOVAL

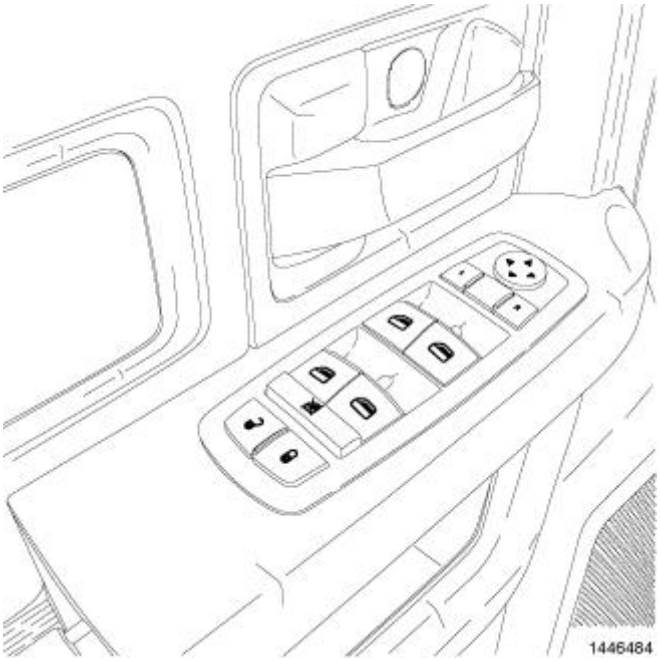

Fig. 1: Location Of Window/Lock Switch (Driver Side)
Courtesy of CHRYSLER GROUP, LLC

1. Disconnect and isolate the battery negative cable.
2. Using a trim stick, gently pry the switch from the door trim panel.
3. Disconnect electrical connectors.
4. Remove switch from trim panel.

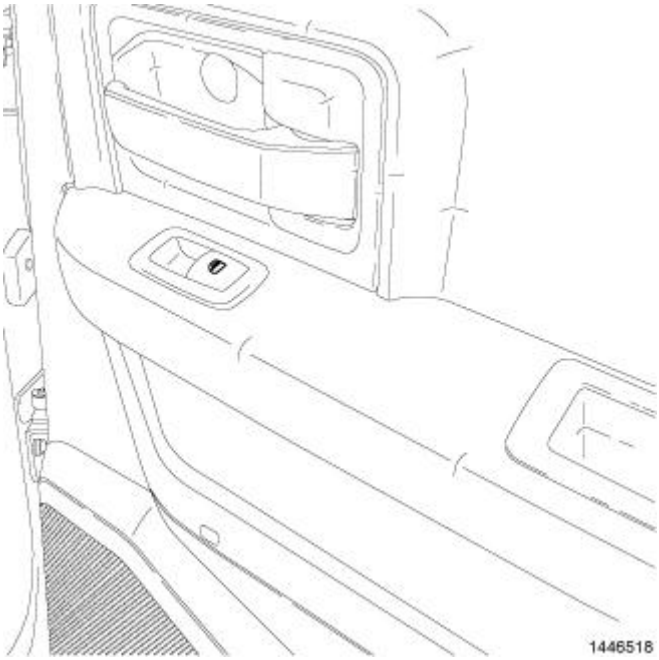

Fig. 2: Location Of Window Switch (Rear)
Courtesy of CHRYSLER GROUP, LLC

INSTALLATION

INSTALLATION

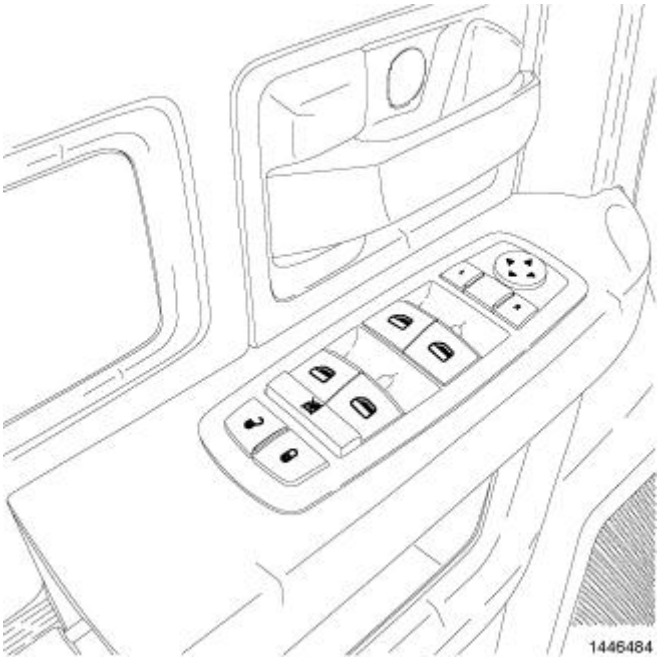

Fig. 3: Location Of Window/Lock Switch (Driver Side)
Courtesy of CHRYSLER GROUP, LLC

1. Connect electrical connectors.
2. Push the switch into place.
3. Connect battery negative cable.

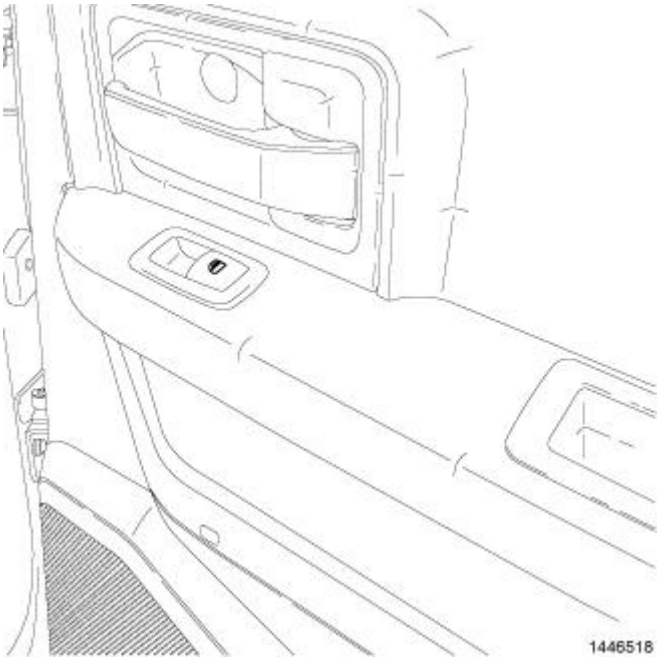

Fig. 4: Location Of Window Switch (Rear)
Courtesy of CHRYSLER GROUP, LLC

TRANSMITTER, INTEGRATED KEY FOB

DIAGNOSIS AND TESTING

FOBIK TRAPPED IN WIN

The Fob with Integrated Key (FOBIK) cannot be rotated to the LOCK position, allowing it to be removed from the ignition switch also referred to as the Wireless Ignition Node/WIN. The automatic transmission or transaxle is shifted mechanically through a cable from the gearshift lever mechanism to the transmission or transaxle valve body. A gated park switch is physically located on and integral to the gearshift lever mechanism and is hard wired directly to the WIN. The gated park switch is a simple plunger-like actuated open or closed contact switch that could be considered redundant to the Transmission Range Sensor (TRS) except that it monitors the position selected with the gearshift lever, while the TRS monitors the position or gear of the transmission or transaxle that is actually engaged. A damaged or improperly adjusted gearshift cable could result in a different gear being engaged than that which is selected. The WIN uses the gated park switch input to control an internal key lock solenoid, which controls whether the FOBIK can be rotated to the LOCK position. When the gearshift lever is not in the PARK position, the gated park switch is a closed circuit, the key lock solenoid is energized and the FOBIK cannot be rotated to the LOCK position for removal.

CONDITION	POSSIBLE CAUSES	CORRECTION
CANNOT TURN FOBIK TO LOCK POSITION	1. Damaged, binding or improperly adjusted gearshift cable.	1. Inspect and replace or adjust gearshift cable, if required.
	2. Damaged or binding gearshift lever mechanism.	2. Inspect and replace or adjust gearshift lever mechanism.
	3. No gated park switch input to WIN.	3. Use a diagnostic scan tool with software release version 8.05 or greater to read and confirm no gated park switch input to the WIN. Refer to the appropriate CONDITION that follows.
	4. Key lock solenoid (WIN) unresponsive to gated park switch input.	4. Use a diagnostic scan tool with software release version 8.05 or greater to read and confirm gated park switch input to the WIN. Refer to the appropriate CONDITION that follows.
NO GATED PARK SWITCH INPUT	1. Open TRS park signal circuit.	1. Repair the open TRS park signal circuit between the gated park switch (gearshift lever mechanism) and the WIN, if required
	2. Damaged or ineffective gated park switch.	2. Replace the damaged or ineffective gated park switch (gearshift lever mechanism), if required.
KEY LOCK SOLENOID	1. Damaged or	

UNRESPONSIVE TO GATED PARK SWITCH INPUT	ineffective key lock solenoid.	1. Replace the damaged or ineffective key lock solenoid (WIN), if required.

REMOTE KEYLESS ENTRY TRANSMITTER

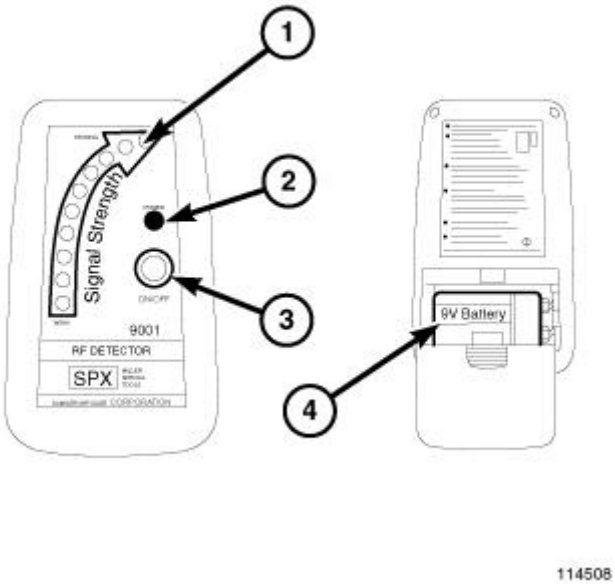

Fig. 5: Radio Frequency Detector #9001
Courtesy of CHRYSLER GROUP, LLC

Using special tool (special tool #9001, Rf Detector), first test to ensure that the transmitter is functioning. Typical testing distance is 2.5 centimeters (1 inch) for Asian transmitters and 30.5 centimeters (12 inches) for all others. To test, position the transmitter as shown in illustration. Press any transmitter button, then test each button individually. The tool will beep if a radio signal strength that lights five or more LED's is detected. Repeat this test three times. If transmitter fails any of the tests, refer to **DIAGNOSIS AND TESTING**.

STANDARD PROCEDURE

FOBIK TRANSMITTER BATTERY REPLACEMENT

FOBIK WITH BATTERY COVER

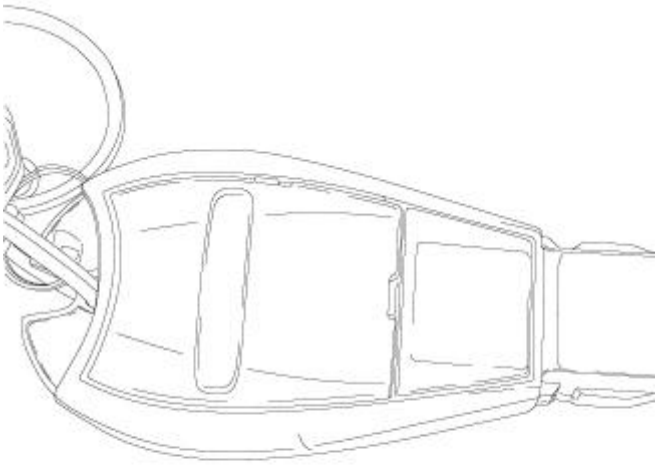

1953754

Fig. 6: Fobik With Battery Cover
Courtesy of CHRYSLER GROUP, LLC

NOTE: **Do not disturb the metal terminal near the battery. Avoid touching the new battery. Skin oils may cause battery deterioration. If battery is touched, clean with rubbing alcohol.**

To replace the FOBIK transmitter battery:

1. Using a small flat bladed tool, carefully remove the battery cover on the back of the FOBIK.

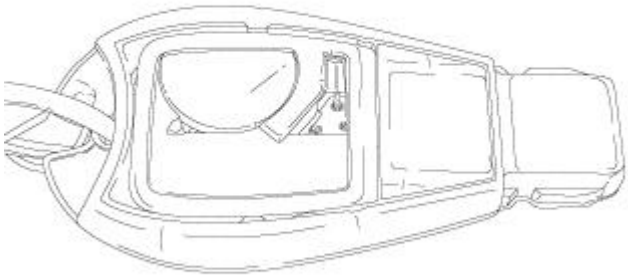

1953797

Fig. 7: Fobik With Battery Cover Removed
Courtesy of CHRYSLER GROUP, LLC

2. Remove the battery by slightly lifting up and sliding out from the FOBIK.
3. Replace the battery with the same type of battery cell.
4. Install the battery with the positive terminal up.
5. Install battery cover and snap into place.
6. Test FOBIK operation.

FOBIK WITHOUT BATTERY COVER

Fig. 8: Fobik Without Battery Cover
Courtesy of CHRYSLER GROUP, LLC

NOTE: **Do not disturb the metal terminal near the battery. Avoid touching the new battery. Skin oils may cause battery deterioration. If battery is touched, clean with rubbing alcohol.**

This design is a clam shell design whereby both halves are split apart.

1. Remove the valet/spare key from the FOBIK if present.
2. Using a trim stick (special tool #C-4755, Trim Stick) or equivalent, carefully separate the top half from the bottom half.

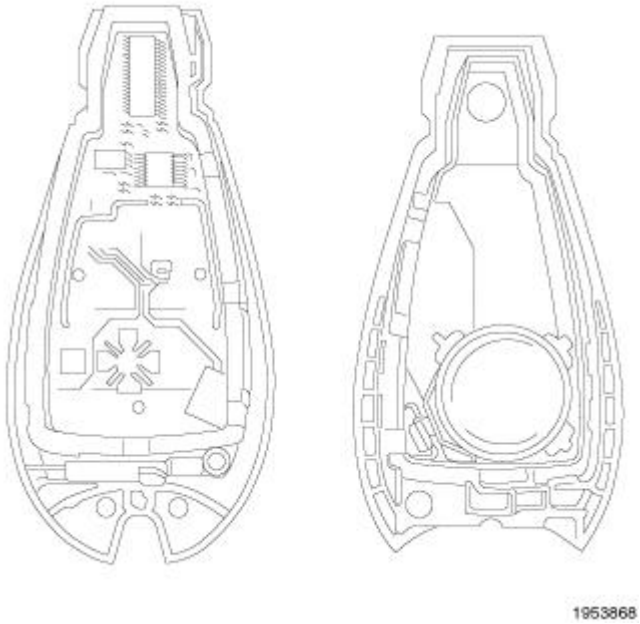

Fig. 9: Fobik Without Battery Cover Separated
Courtesy of CHRYSLER GROUP, LLC

3. Lift up on the battery to remove.
4. Replace battery with the same type of cell.
5. Install new battery negative side up.
6. Snap the top and bottom halves together.
7. Test FOBIK operation.

FOBIK PROGRAMING

Make sure instructions are followed in order. Refer to **STANDARD PROCEDURE** .

SPECIFICATIONS

SPECIFICATIONS

BATTERY

The transmitter has two 3 volt batteries, which can be removed and replaced without special tools. Insert a dime in the side slot of the transmitter case and twist. The halves should separate and the batteries are stacked on top of each other. The batteries are available at local retail stores. Recommended batteries are Duracell DL 2016 or equivalent. Typical battery life is about two years.

CAUTION: Do not handle the batteries any more than necessary. Hands must be clean and dry.

RANGE

Normal Remote Keyless Entry (RKE) transmitter operation range for vehicles manufactured for domestic markets is up to 20 meters (66 feet) away from the vehicle. On vehicles manufactured for export markets, normal RKE transmitter range is up to 10 meters (33 feet) away from the vehicle. If a domestic market vehicle is equipped with the optional factory-installed Remote Start System, the normal transmitter range is increased to up to 91 meters (300 feet). Please note that the actual RKE transmitter range values may be better or worse than specified above, depending upon many possible variables in the environment at the specific time and location that any RKE transmission is attempted.

Power Mirrors - Service Information - Ram Pickup

DESCRIPTION

DESCRIPTION

AUTOMATIC DAY/NIGHT MIRROR

The automatic day/night mirror system is able to automatically change the reflectance of the inside rear view mirror in order to reduce the glare of headlamps approaching the vehicle from the rear. The automatic day/night rear view mirror receives battery current through a fuse in the Totally Integrated Power Module (TIPM) only when the ignition switch is in the On position.

OUTSIDE REAR VIEW MIRROR

The power operated outside rear view mirrors allow the driver to adjust both outside mirrors electrically from the driver side front seat position by operating a switch on the driver side front door trim panel. The power mirrors receive a non-switched battery feed through a fuse in the Totally Integrated Power Module (TIPM) so that the system will remain operational, regardless of the ignition switch position.

OPERATION

OPERATION

AUTOMATIC DAY/NIGHT MIRROR

A switch located on the bottom of the automatic day/night mirror housing allows the vehicle operator to select whether the automatic dimming feature is operational. When the automatic day/night mirror is turned on, the mirror switch is lighted by an integral Light-Emitting Diode (LED). The mirror will automatically disable its self-dimming feature whenever the vehicle is being driven in reverse.

OUTSIDE REAR VIEW MIRROR

The mirror switch has a push button selector switch for the driver and passenger side mirror operation, with a four directional arrow push button switch. When the mirror switch is press, it sends a signal to the driver door module (DMM), which controls the motors for the mirror.

The heated mirrors include an electric heating grid behind the mirror glass in each outside mirror, which can clear the mirror glass of ice, snow, or fog. For more information, Refer to **DESCRIPTION** .

DIAGNOSIS AND TESTING

DIAGNOSIS AND TESTING - POWER MIRRORS

Any diagnosis of the Power Mirror system should begin with the use of scan tool. Refer to DIAGNOSIS

AND TESTING .

For complete circuit diagrams, refer to the appropriate wiring information.

MIRROR, AUTOMATIC DAY AND NIGHT

DESCRIPTION

DESCRIPTION

The automatic day/night mirror uses a thin layer of electrochromic material between two pieces of conductive glass to make up the face of the mirror. When the mirror switch is in the On position, two photocell sensors are used by the mirror circuitry to monitor external light levels and adjust the reflectance of the mirror.

OPERATION

OPERATION

The ambient photocell sensor is located on the forward-facing (windshield side) of the rear view mirror housing, and detects the ambient light levels outside of the vehicle. The headlamp photocell sensor is located inside the rear view mirror housing behind the mirror glass and faces rearward, to detect the level of the light being received at the rear window side of the mirror. When the circuitry of the automatic day/night mirror detects that the difference between the two light levels is too great (the light level received at the rear of the mirror is much higher than that at the front of the mirror), it begins to darken the mirror.

The automatic day/night mirror circuitry also monitors the transmission using an input from the backup lamp circuit. The mirror circuitry is programmed to automatically disable its self-dimming feature whenever it senses that the transmission backup lamp circuit is energized.

The automatic day/night mirror is a completely self-contained unit and cannot be repaired. If faulty or damaged, the entire mirror assembly must be replaced.

DIAGNOSIS AND TESTING

DIAGNOSIS AND TESTING - AUTOMATIC DAY / NIGHT MIRROR

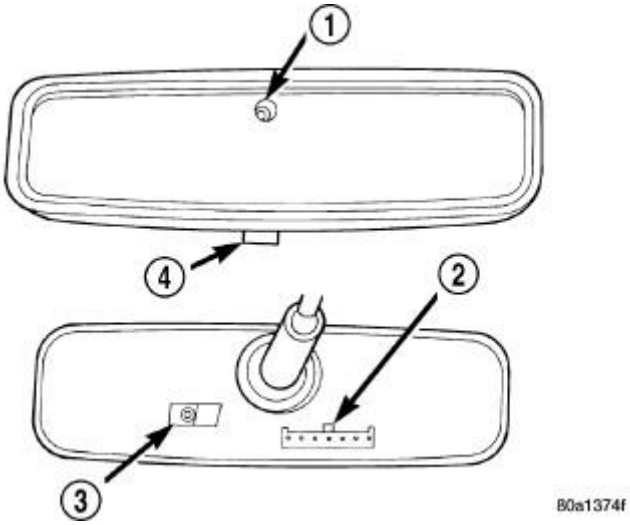

Fig. 1: Identifying Rearview Connector Terminals
Courtesy of CHRYSLER GROUP, LLC

For complete circuit diagrams, refer to the appropriate wiring information.

1. Check the fuse in the Totally Integrated Power Module (TIPM). If OK, refer to 2. If not OK, repair the shorted circuit or component as required and replace the faulty fuse.
2. Turn the ignition switch to the On position. Check for battery voltage at the fuse in the TIPM. If OK, refer to 3. If not OK, repair the open circuit to the ignition switch as required.
3. Turn the ignition switch to the Off position. Disconnect and isolate the battery negative cable. Unplug the wire harness connector from the automatic day/night mirror. Connect the battery negative cable. Turn the ignition switch to the On position. Check for battery voltage at the fused ignition switch output (run/start) circuit cavity of the automatic day/night mirror wire harness connector. If OK, refer to 4. If not OK, repair the open circuit to the TIPM as required.
4. Turn the ignition switch to the Off position. Disconnect and isolate the battery negative cable. Check for continuity between the ground circuit cavity of the automatic day/night mirror wire harness connector and a good ground. There should be continuity. If OK, refer to 5. If not OK, repair the circuit to ground as required.
5. Connect the battery negative cable. Turn the ignition switch to the On position. Set the parking brake. Place the transmission gear selector lever in the Reverse position. Check for battery voltage at the backup lamp switch output circuit cavity of the automatic day/night mirror wire harness connector. If OK, refer to 6. If not OK, repair the open circuit as required.
6. Turn the ignition switch to the Off position. Disconnect the battery negative cable. Plug in the automatic day/night mirror wire harness connector. Connect the battery negative cable. Turn the ignition switch to the On position. Place the transmission gear selector lever in the Neutral position. Place the mirror switch in the On (the LED in the mirror switch is lighted) position. Cover the forward facing ambient photocell sensor to keep out any ambient light.

NOTE: **The ambient photocell sensor must be covered completely, so that no light reaches the sensor. Use a finger pressed tightly against the sensor, or cover the sensor completely with electrical tape.**

7. Shine a light into the rearward facing headlamp photocell sensor. The mirror glass should darken. If OK, refer to 8. If not OK, replace the faulty automatic day/night mirror unit.
8. With the mirror glass darkened, place the transmission gear selector lever in the Reverse position. The mirror should return to its normal reflectance. If not OK, replace the faulty automatic day/night mirror unit.

SWITCH, MIRROR

DIAGNOSIS AND TESTING

DIAGNOSIS AND TESTING - POWER MIRROR SWITCH

The power mirror switch is included with the window/lock switch. Refer to **DIAGNOSIS AND TESTING**.

REMOVAL

REMOVAL

The power mirror switch is included with the window/lock switch. Refer to **SWITCH, LOCK, WITH WINDOW SWITCHES, REMOVAL** .

INSTALLATION

INSTALLATION

The power mirror switch is included with the window/lock switch. Refer to **SWITCH, LOCK, WITH WINDOW SWITCHES, INSTALLATION** .

DESCRIPTION

DESCRIPTION

POWER SEAT SYSTEM

The power seat system allows the driver and front seat passenger to electrically adjust their seating positions using the power seat switches located on the outboard seat cushion side shield of each front seat.

A driver side ten-way power seat includes a six-way adjustable seat cushion track, a two-way power seat back and two-way power lumbar. The driver power seat can be adjusted up, down, front up, front down, forward, rearward, recliner forward, and recliner rearward. A passenger side four-way power seat includes a two-way adjustable seat cushion track and a two-way power seat back. The passenger power front seat can be adjusted forward, rearward, recliner forward and recliner rearward. The power seat system is also available with the heated seat option and memory seat option that automatically positions the power seat for two different drivers and Memory Seat System. Refer to **DESCRIPTION** .

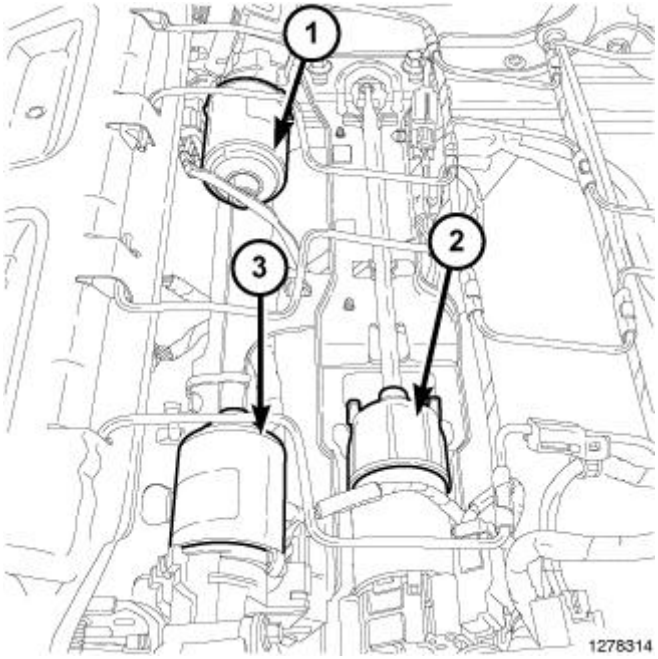

Fig. 1: Front Tilt Motor, Power Seat Adjuster Motor & Rear Tilt Motor
Courtesy of CHRYSLER GROUP, LLC

The driver power seat adjuster fore/aft contains a reversible motor (2) that are connected to worm-drive gearbox that move the seat adjuster through a combination of screw-type drive units. On vehicles equipped with non-memory power seats, each motor contains a self-resetting circuit breaker to protect it from overload. On vehicles equipped with memory power seats the motor overload protection is a function of the Memory Seat Module (MSM). Consecutive or frequent resetting of the circuit breakers may damaged the motors. There are

no motors on the passenger upper power seat adjuster.

The power seat system for this vehicle includes the following major components:

The **Front Tilt Motor** (1). Located on the left front of the seat bottom.

The **Rear Tilt Motor** (3). Located on the right front of the seat bottom.

The **Power Seat Adjuster Motor** (2) (driver and passenger seat). Located on the left rear of the seat bottom. The reversible motor is connected to a worm-drive gearbox that moves the seat adjuster through a screw-type drive unit. On vehicles equipped with non-memory power seats, the motor will contain a self-resetting circuit breaker to protect it from overload. On vehicles equipped with memory power seats, the motor overload protection is a function of the Memory Seat Module (MSM). Consecutive or frequent resetting of the circuit breakers may damaged the motors. The motor is part of the lower power seat track unit and must be replaced as an assembly.

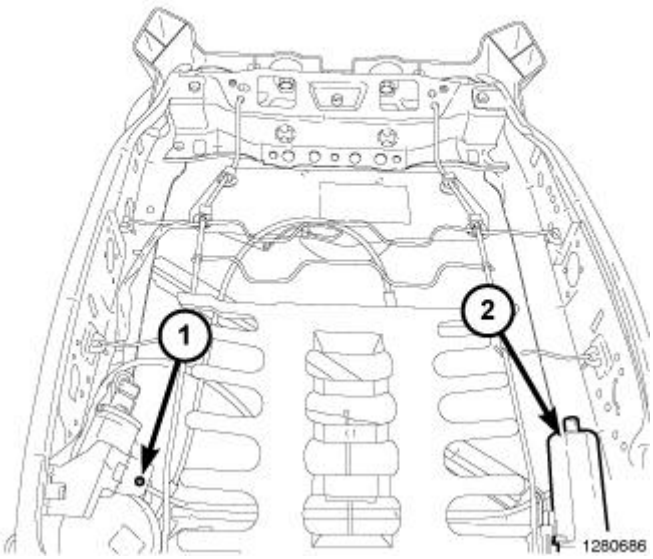

Fig. 2: Power Lumbar Motor & Power Seat Recliner Motor
Courtesy of CHRYSLER GROUP, LLC

NOTE: The power seat recliner motor cannot be repaired. If the unit is inoperative or damaged, the seat back frame must be replaced. Refer to RECLINER, REMOVAL.

Power Lumbar Motor (1). Located on the inboard side of the seat back with a black wire cable.

Power Seat Recliner Motor (2). Located on the inboard side of the seat back. The power seat recliner replaces the manual seat recliner. The power seat option includes an electrically operated power seat back recliner mechanism. The power seat recliner switch is integral to the power seat switch assembly, but is actuated with a separate switch knob.

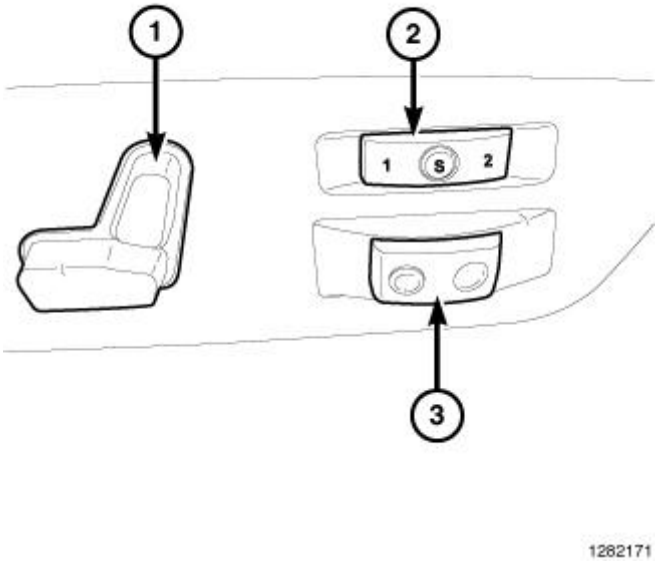

Fig. 3: Power Seat Switch, Memory Seat Switch & Power Lumbar Switch
Courtesy of CHRYSLER GROUP, LLC

NOTE: Left front power seat switch shown in illustration. Right front power seat switch doesn't include lumbar and memory.

Power Seat Switch (1). Located on the outboard side of the seat cushion. Vehicles may be equipped with driver only, or driver and passenger power seat switches. One seat switch is used for each front seat. The power seat switches are paddle-type levers. Movement of the seat cushions and backs mimics the action of the switch paddles. The driver power seat switch type (memory or non-memory) can be identified by the color of the switch electrical connector receptacle. Memory switches have a light gray connector receptacle and non-memory have a black receptacle. for additional information.

Power Lumbar Switch (3). When equipped, this switch is located at the bottom rear of the seat switch panel.

Memory Seat Switch (2) (driver seat only). When equipped, this switch is located at the upper rear of the seat switch panel. For more information, refer to **MEMORY SEAT SYSTEM**.

MEMORY SEAT SYSTEM

An electronic memory seat system is available on certain models. The memory system is able to store and recall all driver side power seat positions, and the drivers side view mirror positions. The system can be set for two different drivers. On vehicles with a factory installed radio connected to the Controller Area Network (CAN) data bus network, the memory system is also able to store and recall up to twenty radio station presets (ten AM and ten FM), also for two drivers. The memory system also will store and recall the last station listened to for each driver, even if it is not one of the twenty preset stations.

The memory system will automatically recall all of these settings when a button of the memory switch is depressed, or when the doors are unlocked using the FOBIK transmitter (if enabled). If the vehicle has more

than two drivers the FOBIK transmitter recall of memory features can be disabled. This is a customer programmable feature of the EVIC.

The memory system also has a easy exit feature that will move the driver seat rearward 55 millimeters or to the end of its travel, whichever occurs first, when the key is removed from the ignition switch lock cylinder. This is a customer programmable feature of the overhead console.

The memory system includes the following components:

- **Memory Selector Switch** - located in the driver seat trim panel.
- **Driver Door Module (DMM)** - located in the driver door, behind the trim panel.
- **Passenger Door Module (PDM)** - located in the passenger door, behind the trim panel.
- **Hall Effect Sensors - Drivers Mirror** - The hall effect sensor is permanently installed on the drivers side view mirror motor. This hall effect sensor is used to provide a reference signal to the memory heated seat mirror module, letting the module know the exact position of the mirror.
- **Wireless Integration Node (WIN)** - located at ignition key cylinder.
- **FOBIK Transmitter** - located with ignition key.
- **Memory Seat Module (MSM)** - located underneath the driver seat, also controls the Adjustable Pedals and Mirrors.
- **Hall Effect Sensors - Seat Track** - These hall effect sensors are permanently installed in each of the power seat track motors. They are used to provide a reference signal to the memory heated seat mirror module, letting the module know the exact position of the seat cushion and recliner.
- **Radio** - located in the instrument panel center stack.
- **Automatic Temperature Control (ATC)** - located in the instrument panel center stack.

Certain functions and features of the memory system rely upon resources shared with other electronic modules in the vehicle over the Controller Area Network (CAN) bus. The CAN bus allows the sharing of sensor information. This helps to reduce wire harness complexity, internal controller hardware, and component sensor current loads. At the same time, this system provides increased reliability, enhanced diagnostics, and allows the addition of many new feature capabilities. For diagnosis of these electronic modules or of the CAN bus, the use of a scan tool and the proper diagnostic information are needed.

OPERATION

OPERATION

POWER SEAT SYSTEM

The power seat system receives battery current through a 50 amp fuse in the Totally Integrated Power Module (TIPM) so that the power seats remain operational, regardless of the ignition switch position.

When a power seat switch is actuated, a battery feed and a ground path are applied through the power seat switch contacts to the appropriate motor or motors. The motor and drive unit operate to move the seat in the selected direction until the switch is released, or until the travel limit of the power seat track is reached. When the switch is moved in the opposite direction, the battery feed and ground path to the motor is reversed through

the switch contacts. This causes the motor to run in the opposite direction.

MEMORY SEAT SYSTEM

The Memory Seat Module (MSM) receives battery current through a 50 amp fuse in the Totally Integrated Power Module (TIPM) so that the power seats remain operational, regardless of the ignition switch position. When the driver memory seat switch control knob is actuated, a resistance signal is sent to the MSM via the Controller Area Network (CAN) bus circuit. The MSM is responsible for the 12v battery feed and ground path to the power seat adjuster motor. The adjuster motor operates to move the power seat adjuster mechanism through its drive unit in the selected direction until the switch is released, or until the travel limit of the adjuster is reached.

The MSM receives memory set/position switch input through the CAN bus circuit. The MSM also receives hard wired input from the hall effect sensors, mounted on each of the driver power seat adjuster motors and the driver side view mirror motor. The programmed software in the module allows it to know where the seat/mirror is located in its designed travel by a pulse count generated from the hall effect sensors. This way, when the memory switch is depressed the module will power the seat adjuster/mirror motors until the correct preset location is achieved. The module will prevent the seat memory recall function from being initiated, if the transmission gear selector lever is not in the Park position, or if the vehicle is moving. These inputs are monitored over the Controller Area Network (CAN) bus circuit by the MSM.

A memory setting is saved by pressing the "set" button, then pressing either the memory "1" or "2" button within 5 seconds of pressing the "set" button.

A memory setting is recalled by pressing either the memory "1" or "2" button, or by pressing the unlock button on a "linked" FOBIK.

For driver safety, memorized settings can not be recalled if the transmission is in a position other than Park or the seat belt is latched.

DIAGNOSIS AND TESTING

MEMORY SEAT SYSTEM

In order to obtain conclusive testing of the power seats with and without the memory system option, the Controller Area Network (CAN) bus, and all of the electronic modules that provide inputs to, or receive outputs from the memory system components must be checked. Use a scan tool and the proper diagnostic information to accurately diagnose the power seat/memory seat systems.

NOTE: Vehicles equipped with the memory/heated seat option utilize a low voltage cut-off feature. This feature turns off the 12v power to the power seat system anytime vehicle voltage is below 11.0v. Be certain to check the vehicle electrical system for proper voltage anytime the power seat system appears inoperative.

Before any testing of the power seat system is attempted, the battery should be fully-charged.

POWER SEAT ADJUSTER

Operate the power seat switch and move the seat in all directions. The seat should move in each of the selected directions.

If the power seat adjuster fails to operate in more than one direction, proceed as follows:

1. Inspect the power seat adjuster motors to ensure the electrical connectors are fully seated to the motors. If OK, refer to 2. If not OK, connect the electrical connector to the fully seated position.
2. Check the power seat fuse in the power distribution center. If OK, refer to 3. If not OK, replace the inoperative fuse.
3. Remove the power seat switch from the seat cushion side panel. Check for battery voltage at the fused B (+) circuit cavity of the power seat switch wire harness connector. If OK, refer to 4. If not OK, repair the open circuit to the power distribution center as required.
4. Check for continuity between the ground circuit cavity of the power seat switch wire harness connector and a good ground. There should be continuity. If OK, refer to 5. If not OK, repair the open circuit to ground as required.
5. Refer to **SWITCH, SEAT, POWER, DIAGNOSIS AND TESTING**. If the switch tests OK, check the wire harness between the power seat switch and the motor. If the circuits check OK, replace the faulty power seat adjuster assembly. If the circuits are not OK, repair the wire harness as required.

STANDARD PROCEDURE

STANDARD PROCEDURE - MEMORY SYSTEM PROGRAMMING

NOTE: The module will abort a recall if the transmission is moved out of park or if any seat movement is activated whether manually or by memory recall. The module will also abort a recall if any movement of the adjustable pedals is detected.

MEMORY SYSTEM PROGRAMMING

The Memory Seat Module (MSM) interfaces with the Remote Keyless Entry (RKE) system/ WIN via the Controller Area Network (CAN) bus. The proper procedure of setting and recalling a memory position using the RKE is as follows:

1. Press and release memory switch 1 or 2 to recall memory position 1 or 2.
2. Adjust the seat, recliner, adjustable pedal position, set radio station presets, set HVAC temperature preset, and the side view mirrors to the desired position.
3. Press momentarily and release memory switch S.
4. Within five seconds, press momentarily and release memory switch 1 or 2.
5. To link the FOBIK transmitter, the FOBIK must be removed from the ignition switch: within ten seconds, press and release the "LOCK" button on one of the RKE transmitters

To program the second driver's position, repeat the above procedure using memory switch 2. The second RKE transmitter can be programmed in the same fashion as indicated in step 5. Refer to 5.

To recall either of the programmed positions momentarily press and release either memory selector switch 1 or

2. If using FOBIK, just press and release the "UNLOCK" button on the proper transmitter for either position 1 or 2.

A recall is possible any time the vehicle transmission is in PARK and the seatbelt is unbuckled. This condition is monitored by the MSM.

TO DISABLE A RKE TRANSMITTER LINKED TO MEMORY

1. Turn the ignition switch to the OFF position and remove the key.
2. Press and release the memory SET button located on the driver's seat.
3. Within 10 seconds, press and release the UNLOCK button on the RKE transmitter.

To disable another RKE transmitter linked to either memory position, repeat Steps 1-3 for each RKE transmitter.

NOTE: The capability to link RKE transmitters to memory is enabled when delivered from the factory. The capability to link RKE transmitters to memory can be disabled (or later re-enabled) by an authorized dealer. For vehicles equipped with the electronics vehicle information center (EVIC) under setup features.

MOTOR, LUMBAR

REMOVAL

REMOVAL

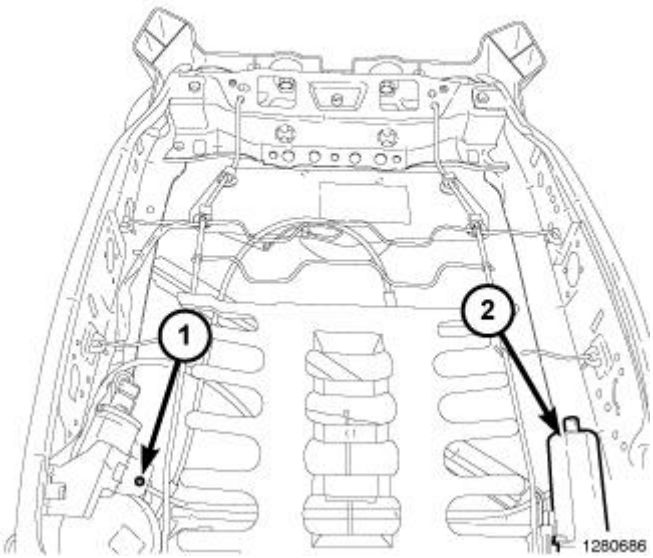

Fig. 4: Power Lumbar Motor & Power Seat Recliner Motor
Courtesy of CHRYSLER GROUP, LLC

NOTE: **The lumbar motor (1) is serviced as part of the seat back frame. Do not attempt to transfer the motor as the service part will come equipped with a new motor installed.**

1. Remove the seat back frame assembly. Refer to **SEAT BACK, FRONT, REMOVAL** .
2. Remove any parts that will need to be installed on new seat back frame assembly. (1)

INSTALLATION

INSTALLATION

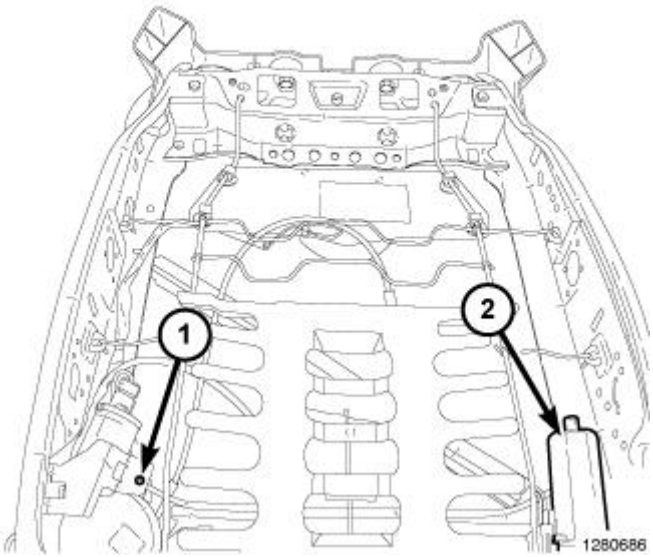

Fig. 5: Power Lumbar Motor & Power Seat Recliner Motor
Courtesy of CHRYSLER GROUP, LLC

1. Install parts from old seat back assembly as necessary. (1)
2. Install the seat back. Refer to **SEAT BACK, FRONT, INSTALLATION** .

MOTOR, SEAT ADJUSTER

REMOVAL

REMOVAL

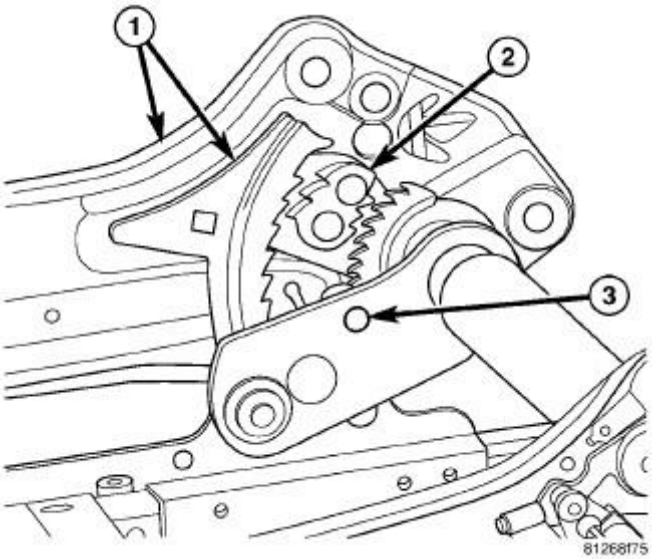

Fig. 6: View Of Locking Pawl
Courtesy of CHRYSLER GROUP, LLC

WARNING: A seat structure that has seen significant load may have the locking mechanism activated and may exhibit the following symptoms:

- **Locking pawl (2) loose**
- **Locking pawl (2) engaged into the seat frame sidemember (1)**
- **Height adjuster only works on outboard side**
- **Broken or missing shear pin (3)**

If any of above symptoms exist, replace the height adjuster assembly. Do not attempt any repairs. Failure to follow these instructions may result in possible serious or fatal injury.

FRONT TILT MOTOR

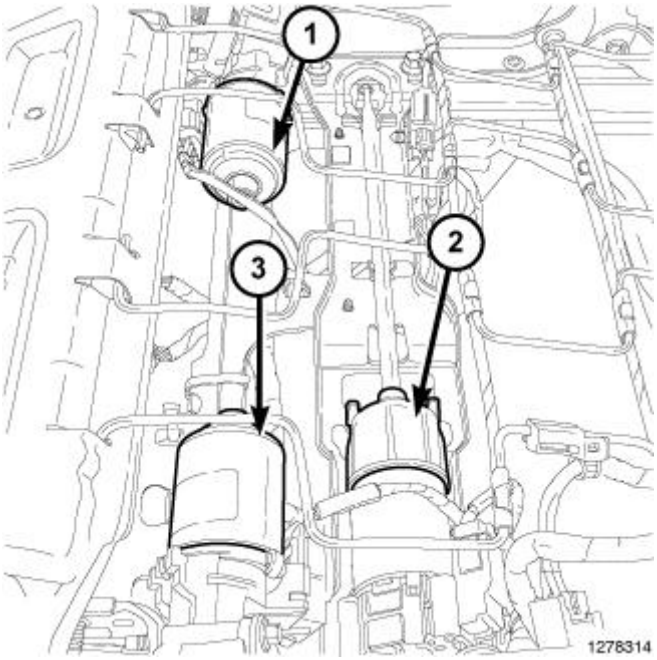

Fig. 7: Front Tilt Motor, Power Seat Adjuster Motor & Rear Tilt Motor
Courtesy of CHRYSLER GROUP, LLC

1. Disconnect and isolate the negative battery cable.
2. Remove the affected seat. Refer to **SEAT, FRONT, REMOVAL** or **SEAT, FRONT CENTER, REMOVAL** .
3. Remove the affected seat cushion cover, cushion and pan.
4. Disconnect the electrical connector from the front tilt motor (1).
5. Remove the screws retaining the front tilt motor to the seat adjuster.
6. Remove the front tilt motor from the seat adjuster.

REAR TILT MOTOR

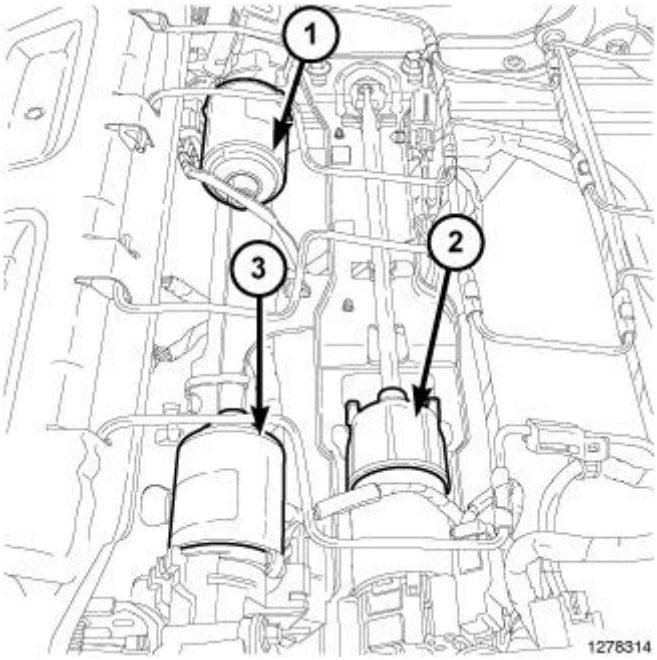

Fig. 8: Front Tilt Motor, Power Seat Adjuster Motor & Rear Tilt Motor
Courtesy of CHRYSLER GROUP, LLC

1. Disconnect and isolate the negative battery cable.
2. Remove the affected seat. Refer to **SEAT, FRONT, REMOVAL** or **SEAT, FRONT CENTER, REMOVAL** .
3. Remove the affected seat cushion cover, cushion and pan.
4. Disconnect the electrical connector from the rear tilt motor (3).
5. Remove the screws retaining the rear tilt motor to the seat adjuster.
6. Remove the screw and washer from the motor shaft.
7. Remove the rear tilt motor from the seat adjuster.

INSTALLATION

INSTALLATION

FRONT TILT MOTOR

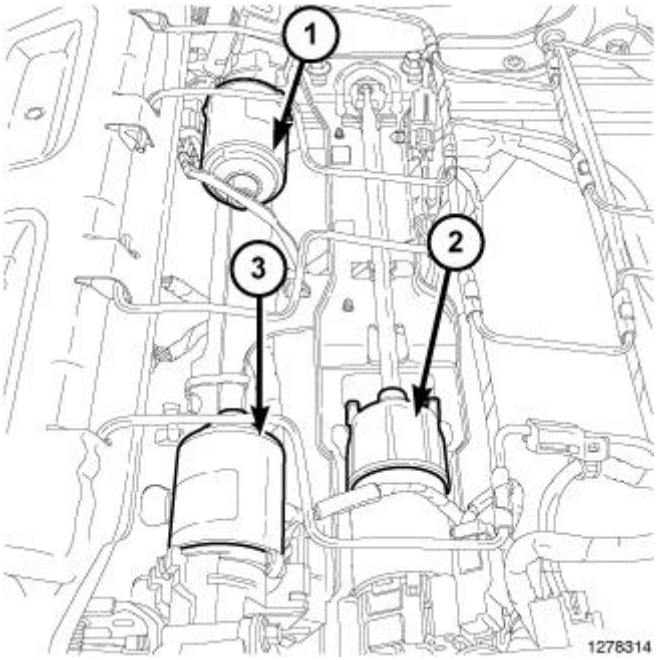

Fig. 9: Front Tilt Motor, Power Seat Adjuster Motor & Rear Tilt Motor
Courtesy of CHRYSLER GROUP, LLC

1. Position the front tilt motor (1) to the seat adjuster and install the screws. Tighten the screws to 5 N.m (44 in. lbs.).
2. Connect the electrical connector.
3. Install the seat cushion cover, cushion and pan.
4. Clip the wire harness to the pan.
5. Install the seat assembly. Refer to **SEAT, FRONT, INSTALLATION** or **SEAT, FRONT CENTER, INSTALLATION** .
6. Reconnect the negative battery cable.

REAR TILT MOTOR

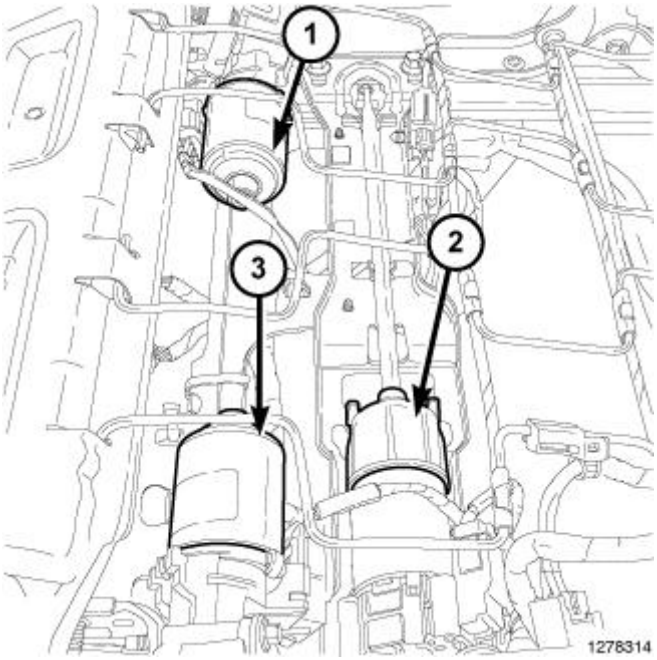

Fig. 10: Front Tilt Motor, Power Seat Adjuster Motor & Rear Tilt Motor
Courtesy of CHRYSLER GROUP, LLC

1. Position the rear tilt motor (3) to the seat adjuster and install the screws. Tighten the screws to 5 N.m (44 in. lbs.).
2. Connect the electrical connector.
3. Install the seat cushion cover, cushion and pan.
4. Clip the wire harness to the pan.
5. Install the seat assembly. Refer to **SEAT, FRONT, INSTALLATION** or **SEAT, FRONT CENTER, INSTALLATION** .
6. Reconnect the negative battery cable.

RECLINER

REMOVAL

REMOVAL

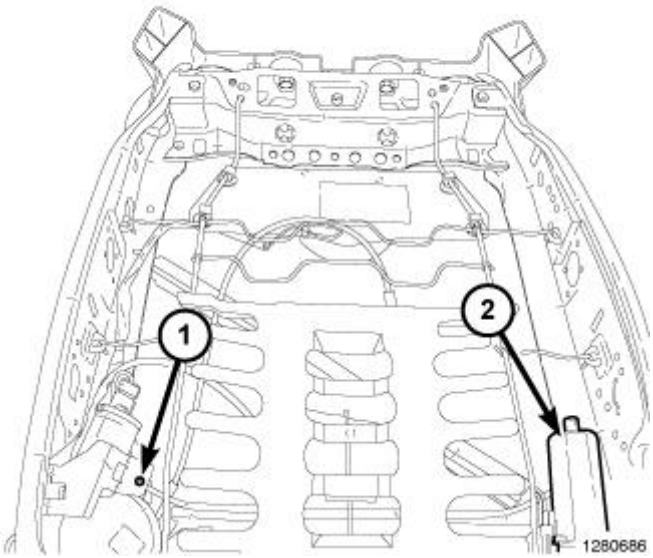

Fig. 11: Power Lumbar Motor & Power Seat Recliner Motor
Courtesy of CHRYSLER GROUP, LLC

NOTE: **The recliner motor is serviced as part of the seat back frame. Do not attempt to transfer the motor as the service part will come equipped with a new motor installed.**

1. Remove the seat back frame assembly. Refer to **SEAT BACK, FRONT, REMOVAL** .
2. Remove any parts that will need to be installed on new seat back frame assembly. (2)

INSTALLATION

INSTALLATION

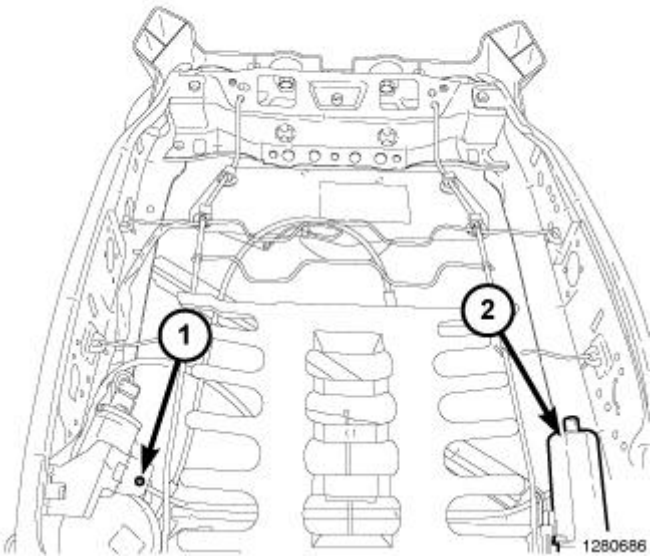

Fig. 12: Power Lumbar Motor & Power Seat Recliner Motor
Courtesy of CHRYSLER GROUP, LLC

1. Install parts from old seat back assembly as necessary. (2)
2. Install the seat back. Refer to **SEAT BACK, FRONT, INSTALLATION** .

SWITCH, LUMBAR CONTROL

DESCRIPTION

DESCRIPTION

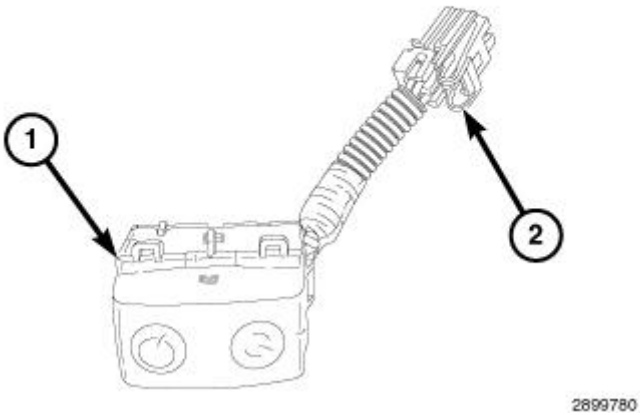

Fig. 13: Lumbar Control Switch & Electrical Connector

Courtesy of CHRYSLER GROUP, LLC

The power lumbar support can be adjusted inward and outward for added driver comfort using the lumbar control switch (1), located on the outboard seat cushion side trim panel.

CAUTION: The electrical connector for the lumbar control switch must be disconnected prior to removing the power seat switch bezel from the seat cushion side trim panel. Failure to follow these instructions can result in damage to the lumbar control switch.

The lumbar control switch has a wire lead and electrical connector (2) attached to it. The electrical connector must be disconnected, prior to removing the seat switch bezel from the seat cushion side trim panel.

OPERATION

OPERATION

When the lumbar control switch is actuated, a battery feed and a ground path are applied through the switch contacts to the power lumbar support adjuster motor. The lumbar support adjuster motor operates the lumbar support adjuster mechanism through its drive unit in the selected direction until the switch is released, or until the travel limit of the adjuster is reached. When the switch is moved in the opposite direction, the battery feed and ground path to the motor are reversed through the switch contacts. This causes the power lumbar support adjuster motor to run in the opposite direction.

On vehicles equipped with the memory seat system, the driver memory seat switch provides a resistive signal/input to the Memory Seat Module (MSM). The MSM is responsible for the 12 volt battery feed and ground path to the power lumbar support adjuster motor.

The lumbar control switch should NOT be held applied in any direction after the adjuster has reached its travel limit. The power lumbar support adjuster motor contains a self-resetting circuit breaker to protect it from overload. However, consecutive or frequent resetting of the circuit breaker may result in motor damage.

The lumbar control switch cannot be adjusted or repaired and must be replaced if damaged or inoperative.

DIAGNOSIS AND TESTING

DIAGNOSIS AND TESTING - LUMBAR CONTROL SWITCH

NOTE: For complete circuit diagrams, refer to appropriate Wiring Information. Wiring Information includes wiring diagrams, connector pin-out and location views, details of wire harness routing and retention, splice and ground locations and proper wire and connector repair procedures.

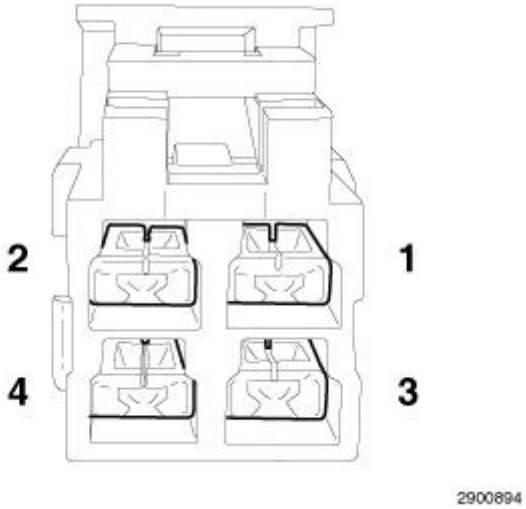

Fig. 14: Lumbar Control Switch
Courtesy of CHRYSLER GROUP, LLC

1. Disconnect and isolate the battery negative cable.
2. Remove the lumbar control switch from the seat. Refer to **SWITCH, LUMBAR CONTROL, REMOVAL**.
3. Use an ohmmeter to test the continuity of the lumbar control switch using the following table. If not OK, replace the inoperative lumbar control switch. If switch tests OK, check for an open or short in the power lumbar support circuit wiring. If no open or short is found, replace the seat back. Refer to **SEAT BACK, FRONT, REMOVAL** .

LUMBAR CONTROL SWITCH CONTINUITY

SWITCH POSITION	CONTINUITY BETWEEN
OFF	2-3, 2-4, 3-4
IN	1-2, 3-4
OUT	1-4, 2-3

REMOVAL

REMOVAL

WARNING: **To avoid serious or fatal injury on vehicles equipped with airbags, disable the Supplemental Restraint System (SRS) before attempting any steering wheel, steering column, airbag, seat belt tensioner, impact sensor or instrument panel component diagnosis or service. Refer to WARNING . Disconnect and isolate the battery negative (ground) cable, then wait two minutes for the system capacitor to discharge before performing further diagnosis or service. This is the only sure way to disable the SRS. Failure to take the proper precautions could result in accidental airbag deployment.**

NOTE: **Take the proper precautions to protect the face of the seat switch bezel from cosmetic damage while performing this procedure.**

NOTE: **Driver side shown in illustration. Passenger side similar.**

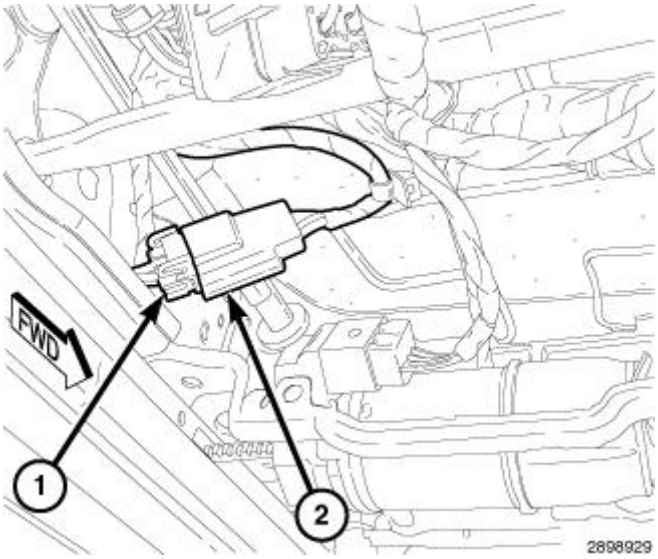

Fig. 15: Lumbar Control Switch Electrical Connector & Seat Wire Harness
Courtesy of CHRYSLER GROUP, LLC

1. Disconnect and isolate the negative battery cable.

CAUTION: **Disconnect the lumbar control switch electrical connector beneath the seat, prior to removing the power seat switch bezel from the seat. Failure to follow these instructions can result in damage to the lumbar control switch.**

2. From the back of the seat, reach under the seat being serviced and disconnect the lumbar control switch electrical connector (1) from the seat wire harness (2).

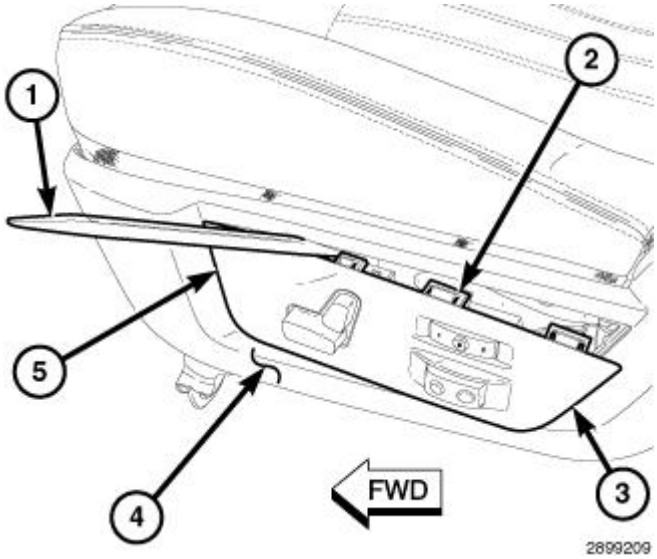

Fig. 16: Seat Switch Bezel & Seat Cushion Side Trim Panel
Courtesy of CHRYSLER GROUP, LLC

CAUTION: The seat switch bezel is attached to the seat cushion side trim panel by a total of eight retaining tabs. Always disengage the retaining tabs starting at the rear of the bezel. Always disengage the front retaining tab last. Failure to follow these instructions can result in damage to the seat switch bezel or the seat cushion side trim panel.

3. Using Trim Stick (special tool #C-4755, Trim Stick) or equivalent (1), carefully disengage seven of the eight retaining tabs (2) that secure the seat switch bezel (3) to the seat cushion side trim panel (4). Start at the rear of the switch bezel and work forward. There is one tab at the rear of the bezel, four on top and two on the bottom.
4. Slide the power seat switch bezel rearward to disengage the eighth retaining tab (5), located at the front of the switch bezel.

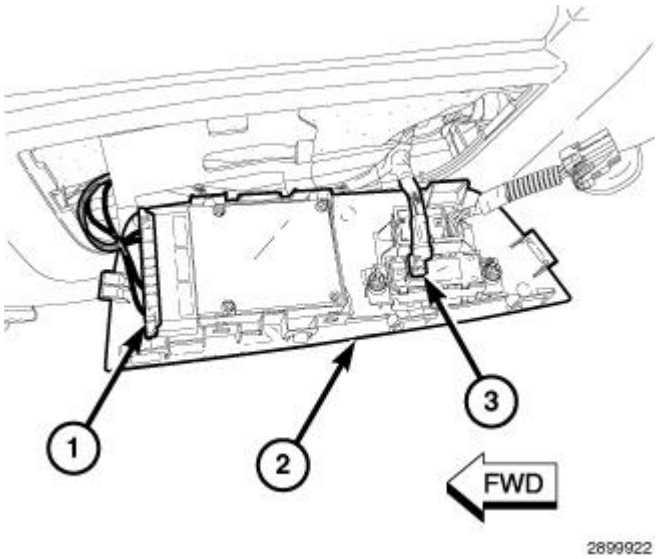

Fig. 17: Seat Switch Bezel & Electrical Connectors
Courtesy of CHRYSLER GROUP, LLC

5. Disconnect the electrical connectors (1 and 3).
6. Place the seat switch bezel (2) on a suitable workbench.

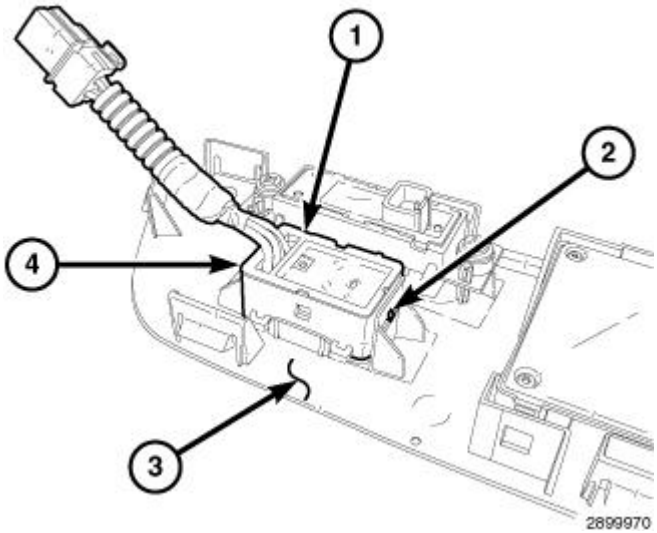

Fig. 18: Lumbar Control Switch & Seat Switch Bezel
Courtesy of CHRYSLER GROUP, LLC

7. Using a small flat bladed tool, carefully disengage the two retaining tabs (2 and 4) that secure the lumbar control switch (1) to the seat switch bezel (3) and remove the switch.

INSTALLATION

INSTALLATION

NOTE: **Take the proper precautions to protect the face of the seat switch bezel from cosmetic damage while performing this procedure.**

NOTE: **Driver side shown in illustration. Passenger side similar.**

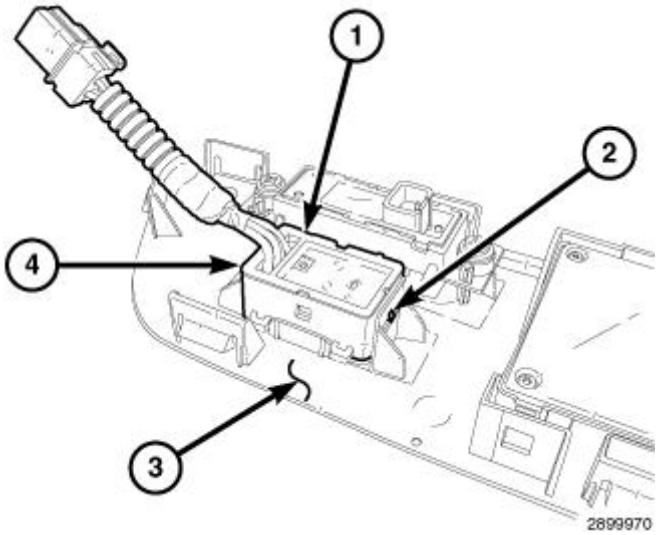

Fig. 19: Lumbar Control Switch & Seat Switch Bezel
Courtesy of CHRYSLER GROUP, LLC

1. Position the lumbar control switch (1) to the seat switch bezel (3).
2. Align the tab on the lumbar control switch with the slot in the seat switch bezel and engage the two retaining tabs (2 and 4) that secure the switch to the bezel. Make sure the tabs are fully engaged.

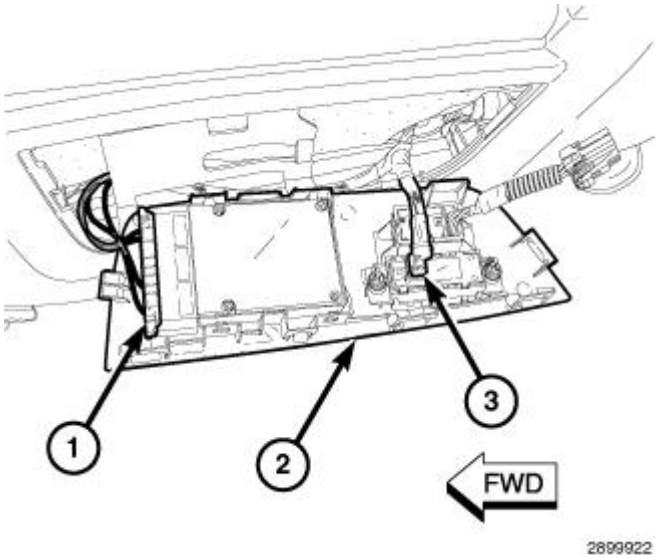

Fig. 20: Seat Switch Bezel & Electrical Connectors
Courtesy of CHRYSLER GROUP, LLC

3. Position the seat switch bezel (2) to the seat and connect the electrical connectors (1 and 3).

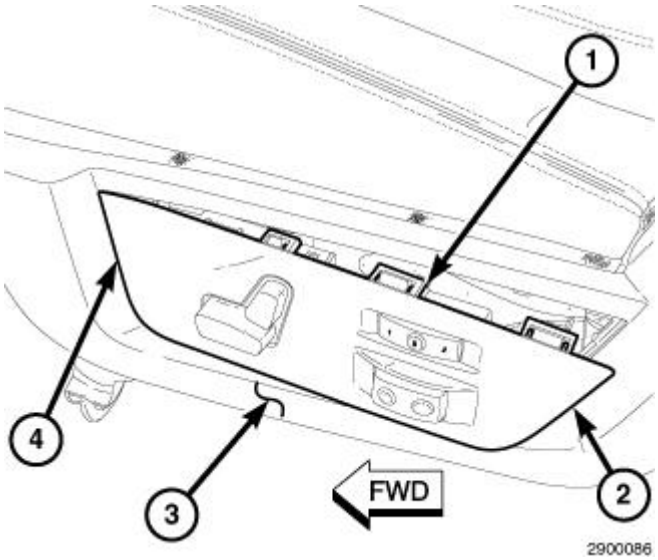

Fig. 21: Seat Switch Bezel & Seat Cushion Side Trim Panel
Courtesy of CHRYSLER GROUP, LLC

4. Engage the retaining tab (4) at the front of the seat switch bezel (2) to the seat cushion side trim panel (3).
5. Carefully engage the remaining seven retaining tabs (1) that secure the seat switch bezel to the seat cushion side trim panel. Start at the front of the switch bezel and work rearward. Make sure all eight retaining tabs are fully engaged.

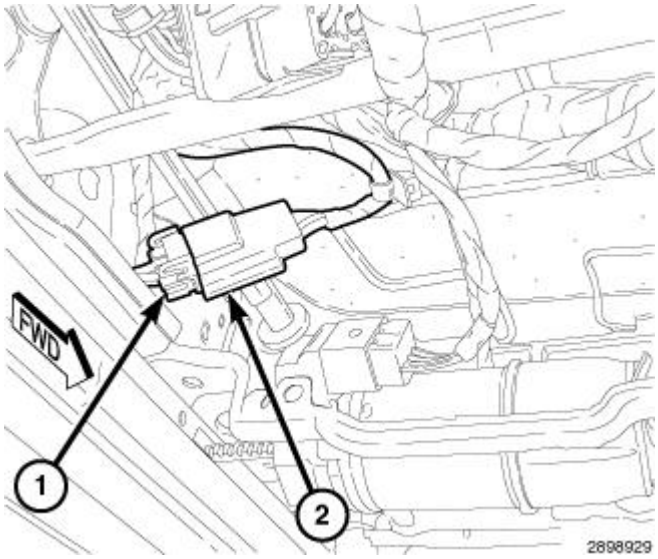

Fig. 22: Lumbar Control Switch Electrical Connector & Seat Wire Harness
Courtesy of CHRYSLER GROUP, LLC

6. Connect the lumbar control switch electrical connector (1) to the seat wire harness (2).
7. Reconnect the negative battery cable.
8. Verify proper power seat operation.

SWITCH, MEMORY

DESCRIPTION

DESCRIPTION

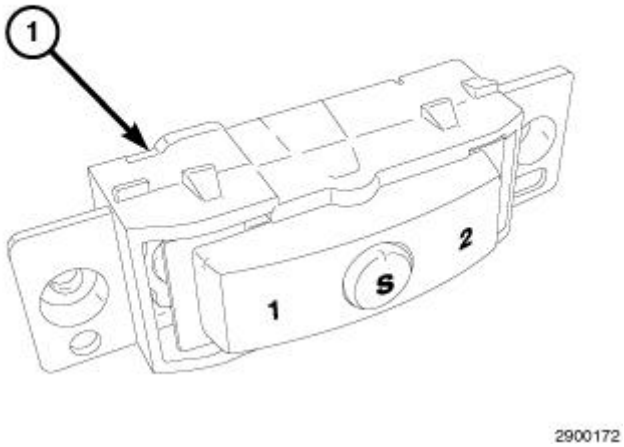

Fig. 23: Memory Seat Switch
Courtesy of CHRYSLER GROUP, LLC

The driver seating position can be automatically adjusted for two different driver preference settings using the memory seat switch (1), located on the outboard seat cushion side trim panel, when equipped with memory seat system. The memory seat system is able to store and recall all driver power seat positions (fore/aft, up/down, tilt and recline), driver side power rear view mirror position and up to twelve radio station presets (six AM and six FM), along with the last radio station listened to for each driver, even if it is not one of the twelve preset stations, on vehicles with a factory installed radio connected to the Controller Area Network (CAN) data bus network.

OPERATION

OPERATION

When one of the two buttons of the memory seat switch is pressed, the Memory Seat Module (MSM) receives the memory set/position switch input over the Controller Area Network (CAN) bus. The MSM also receives hard wired input from the hall effect sensors, mounted on each of the driver power seat adjuster motors and driver side power rear view mirror motors. The programmed software in the MSM allows it to know where the seat and mirror are located in there designed travel by a pulse count generated from the hall effect sensors. This way, when a memory seat switch button is pressed, the MSM will power the seat adjuster motors and mirror adjuster motors until the correct preset locations are achieved. The MSM will prevent the seat memory recall function from being initiated whenever the transmission gear selector lever is not in the Park position, or if the vehicle is moving. These inputs are monitored over the CAN bus by the MSM.

The memory seat switch is diagnosed using a scan tool. Refer to appropriate Electrical Diagnostic article.

The memory seat switch cannot be adjusted or repaired and must be replaced if damaged or inoperative.

REMOVAL

REMOVAL

WARNING: To avoid serious or fatal injury on vehicles equipped with airbags, disable the Supplemental Restraint System (SRS) before attempting any steering wheel, steering column, airbag, seat belt tensioner, impact sensor or instrument panel component diagnosis or service. Refer to WARNING . Disconnect and isolate the battery negative (ground) cable, then wait two minutes for the system capacitor to discharge before performing further diagnosis or service. This is the only sure way to disable the SRS. Failure to take the proper precautions could result in accidental airbag deployment.

NOTE: Take the proper precautions to protect the face of the seat switch bezel from cosmetic damage while performing this procedure.

NOTE: Driver side shown in illustration. Passenger side similar.

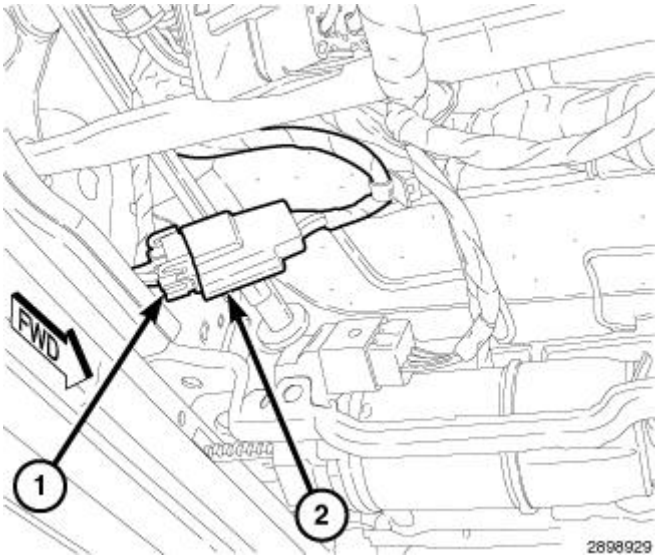

Fig. 24: Lumbar Control Switch Electrical Connector & Seat Wire Harness
Courtesy of CHRYSLER GROUP, LLC

1. Disconnect and isolate the negative battery cable.

CAUTION: Disconnect the lumbar control switch electrical connector beneath the seat, prior to removing the power seat switch bezel from the seat. Failure to follow these instructions can result in damage to the lumbar control switch.

2. From the back of the seat, reach under the seat being serviced and disconnect the lumbar control switch electrical connector (1) from the seat wire harness (2).

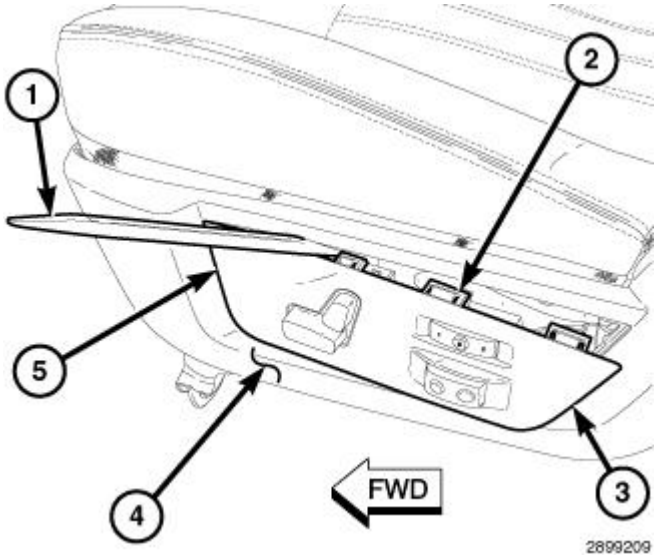

Fig. 25: Seat Switch Bezel & Seat Cushion Side Trim Panel
Courtesy of CHRYSLER GROUP, LLC

CAUTION: The seat switch bezel is attached to the seat cushion side trim panel by a total of eight retaining tabs. Always disengage the retaining tabs starting at the rear of the bezel. Always disengage the front retaining tab last. Failure to follow these instructions can result in damage to the seat switch bezel or the seat cushion side trim panel.

3. Using Trim Stick (special tool #C-4755, Trim Stick) or equivalent (1), carefully disengage seven of the eight retaining tabs (2) that secure the seat switch bezel (3) to the seat cushion side trim panel (4). Start at the rear of the switch bezel and work forward. There is one tab at the rear of the bezel, four on top and two on the bottom.
4. Slide the power seat switch bezel rearward to disengage the eighth retaining tab (5), located at the front of the switch bezel.

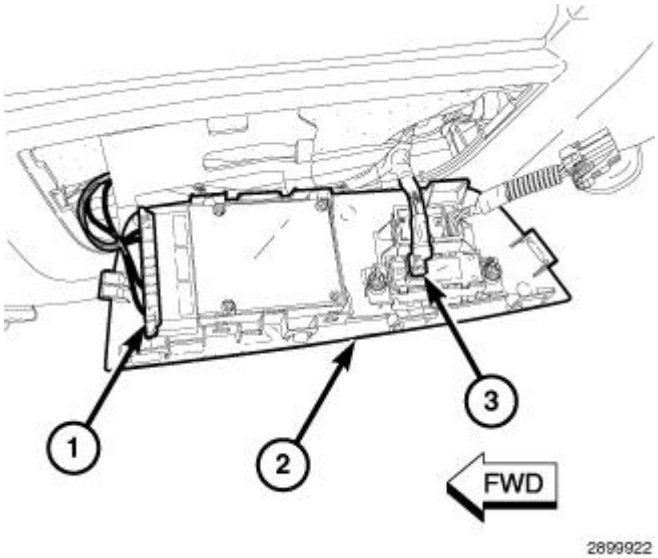

Fig. 26: Seat Switch Bezel & Electrical Connectors
Courtesy of CHRYSLER GROUP, LLC

5. Disconnect the electrical connectors (1 and 3).
6. Place the seat switch bezel (2) on a suitable workbench.

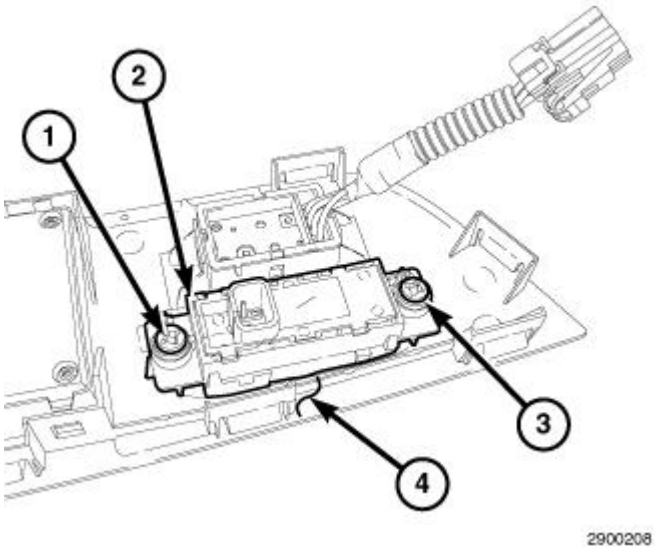

Fig. 27: Memory Seat Switch & Seat Switch Bezel
Courtesy of CHRYSLER GROUP, LLC

7. Remove the two screws (1 and 3) that secure the memory seat switch (2) to the seat switch bezel (3) and remove the switch.

INSTALLATION

INSTALLATION

NOTE: **Take the proper precautions to protect the face of the seat switch bezel from cosmetic damage while performing this procedure.**

NOTE: **Driver side shown in illustration. Passenger side similar.**

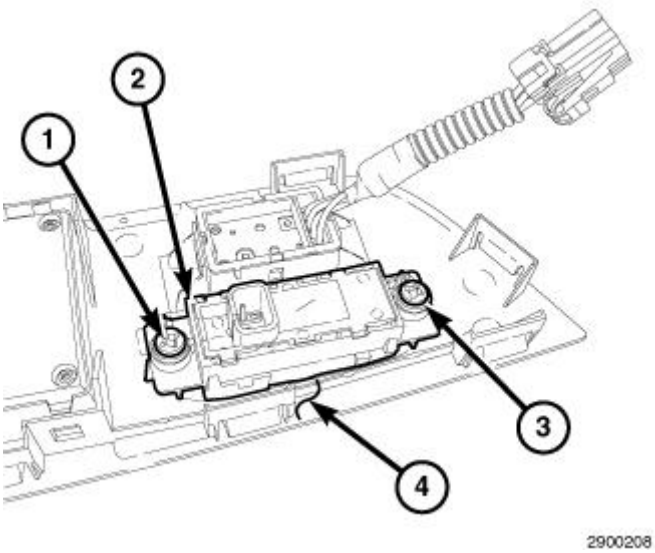

Fig. 28: Memory Seat Switch & Seat Switch Bezel
Courtesy of CHRYSLER GROUP, LLC

1. Position the memory seat switch (2) to the seat switch bezel (4).
2. Install the two screws (1 and 3) that secure the memory seat switch to the seat switch bezel. Tighten the screws securely.

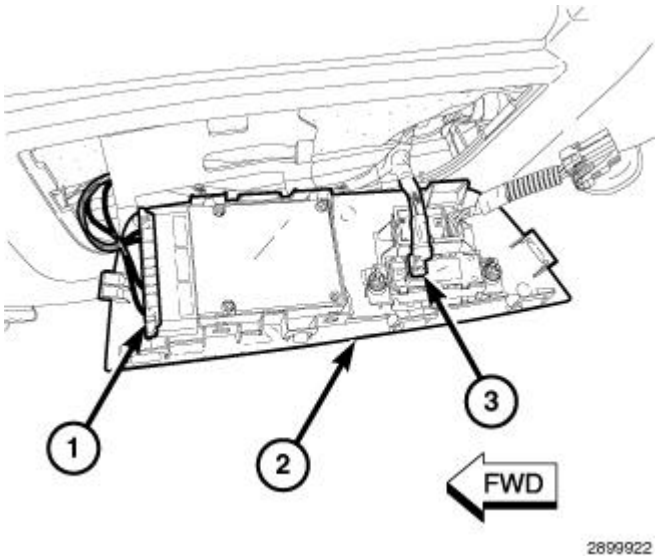

Fig. 29: Seat Switch Bezel & Electrical Connectors
Courtesy of CHRYSLER GROUP, LLC

3. Position the seat switch bezel (2) to the seat and connect the electrical connectors (1 and 3).

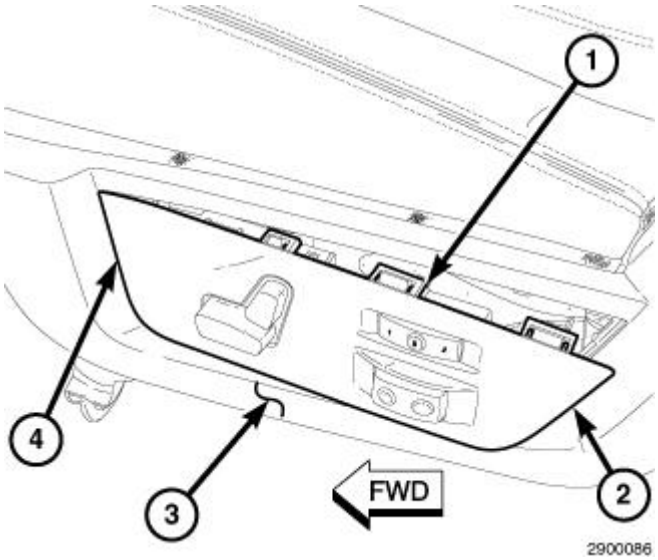

Fig. 30: Seat Switch Bezel & Seat Cushion Side Trim Panel
Courtesy of CHRYSLER GROUP, LLC

4. Engage the retaining tab (4) at the front of the seat switch bezel (2) to the seat cushion side trim panel (3).
5. Carefully engage the remaining seven retaining tabs (1) that secure the seat switch bezel to the seat cushion side trim panel. Start at the front of the switch bezel and work rearward. Make sure all eight retaining tabs are fully engaged.

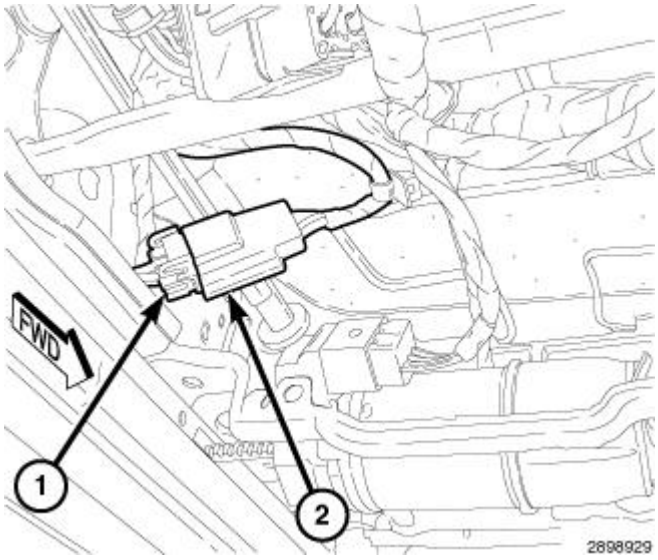

Fig. 31: Lumbar Control Switch Electrical Connector & Seat Wire Harness
Courtesy of CHRYSLER GROUP, LLC

6. Connect the lumbar control switch electrical connector (1) to the seat wire harness (2).
7. Reconnect the negative battery cable.
8. Verify proper power seat operation.

SWITCH, SEAT, POWER

DESCRIPTION

DESCRIPTION

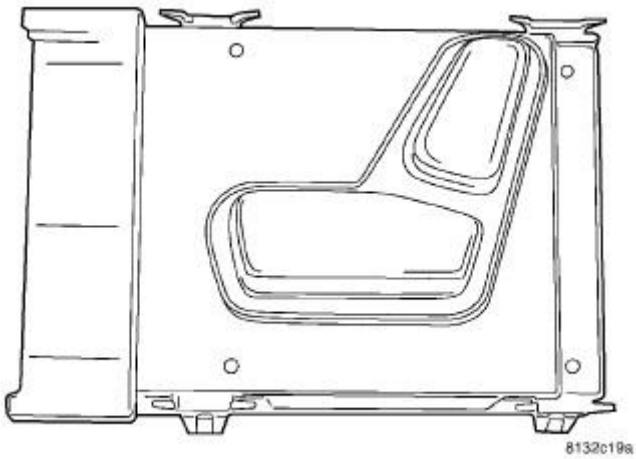

Fig. 32: Power Seat Switch
Courtesy of CHRYSLER GROUP, LLC

NOTE: Driver power seat switch shown in illustration.

The standard power driver seat and available power front passenger seat can be adjusted using the power seat switches located on the outboard seat cushion side shield. The driver power seat can be adjusted in ten different ways and the passenger power seat can be adjusted in four different ways.

OPERATION

OPERATION

When a power seat switch is actuated, a battery feed and a ground path are applied through the switch contacts to the selected power seat adjuster or recliner adjuster motor. The selected seat adjuster motor operates to move the seat or recliner through its drive unit in the selected direction until the switch is released, or until the travel limit of the adjuster is reached. When the switch is moved in the opposite direction, the battery feed and ground path to the motor are reversed through the switch contacts. This causes the seat adjuster motor to run in the opposite direction.

On vehicles equipped with the memory seat system, the driver memory seat switch provides a resistive signal/input to the Memory Seat Module (MSM). The MSM is responsible for the 12 volt battery feed and ground path to the power seat adjuster motors.

No power seat switch should be held applied in any direction after the adjuster has reached its travel limit. The power seat adjuster motors each contain a self-resetting circuit breaker to protect them from overload. However, consecutive or frequent resetting of the circuit breaker may result in motor damage.

The individual switches in the power seat switch cannot be adjusted or repaired. If a switch is damaged or inoperative, the entire power seat switch must be replaced.

DIAGNOSIS AND TESTING

DIAGNOSIS AND TESTING - POWER SEAT SWITCH

DRIVER SEAT WITHOUT MEMORY SEAT SYSTEM

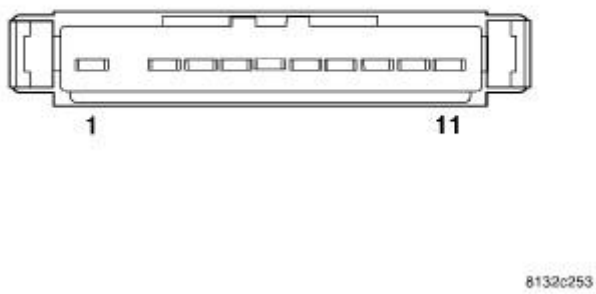

Fig. 33: Power Seat Switch Connector End View (Without Memory)
Courtesy of CHRYSLER GROUP, LLC

1. Disconnect and isolate the battery negative cable.
2. Remove the power seat switch from the seat. Refer to **SWITCH, SEAT, POWER, REMOVAL**.
3. Use an ohmmeter to test the continuity of the power seat switch using the following table. If not OK, replace the inoperative power seat switch. If switch tests OK, check for an open or short in the power seat circuit wiring. If no open or short is found, replace the power adjuster motor(s) as required.

DRIVER SEAT SWITCH CONTINUITY - WITHOUT MEMORY

SWITCH POSITION	CONTINUITY BETWEEN
OFF	7-1, 7-3, 7-4, 7-5, 7-8, 7-9, 7-10, 7-11
RECLINER UP	6-3, 7-1, 7-4, 7-5, 7-8, 7-9, 7-10, 7-11
RECLINER DOWN	6-1, 7-3, 7-4, 7-5, 7-8, 7-9, 7-10, 7-11
HORIZONTAL FORWARD	6-8, 7-1, 7-3, 7-4, 7-5, 7-9, 7-10, 7-11
HORIZONTAL REARWARD	6-4, 7-1, 7-3, 7-5, 7-8, 7-9, 7-10, 7-11
FRONT TILT DOWN	6-5, 7-1, 7-3, 7-4, 7-8, 7-9, 7-10, 7-11
FRONT TILT UP	6-9, 7-1, 7-3, 7-4, 7-5, 7-8, 7-10, 7-11
REAR TILT DOWN	6-10, 7-1, 7-3, 7-4, 7-5, 7-8, 7-9, 7-11
REAR TILT UP	6-11, 7-1, 7-3, 7-4, 7-5, 7-8, 7-9, 7-10

DRIVER SEAT WITH MEMORY SEAT SYSTEM

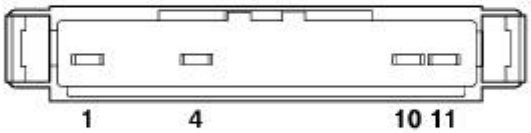

8132c26a

Fig. 34: Power Seat Switch Connector End View (With Memory)
Courtesy of CHRYSLER GROUP, LLC

1. Disconnect and isolate the battery negative cable.
2. Remove the power seat switch from the seat. Refer to **SWITCH, SEAT, POWER, REMOVAL**.
3. Use an ohmmeter to test the continuity of the power seat switch using the following table. If not OK, replace the inoperative power seat switch. If switch tests OK, check for an open or short in the power seat circuit wiring. If no open or short is found, replace the power adjuster motor(s) as required.

DRIVER SEAT SWITCH CONTINUITY - WITH MEMORY

SWITCH POSITION	CONTINUITY BETWEEN	RESISTANCE VALUE
OFF	10-4	OPEN
OFF	10-11	OPEN
OFF	1-4	47 OHMS
OFF	1-11	47 OHMS
REAR TILT UP	10-11	169 OHMS
REAR TILT DOWN	10-11	76 OHMS
HORIZONTAL FORWARD	10-11	43 OHMS
HORIZONTAL REARWARD	10-11	10 OHMS
RECLINER UP	10-4	43 OHMS
RECLINER DOWN	10-4	10 OHMS
FRONT TILT UP	10-4	169 OHMS
FRONT TILT DOWN	10-4	76 OHMS
ALL RESISTANCE VALUES ARE ± FIVE PERCENT		

PASSENGER SEAT

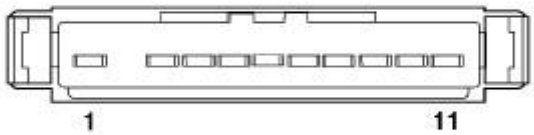

8132c253

Fig. 35: Power Seat Switch Connector End View (Without Memory)
Courtesy of CHRYSLER GROUP, LLC

1. Disconnect and isolate the negative battery cable.
2. Remove the power seat switch from the seat. Refer to **SWITCH, SEAT, POWER, REMOVAL**.
3. Use an ohmmeter to test the continuity of the power seat switch using the following tables. If not OK, replace the inoperative power seat switch. If switch tests OK, check for an open or short in the power seat circuit wiring. If no open or short is found, replace the power adjuster motor(s) as required.

PASSENGER SEAT SWITCH CONTINUITY

SWITCH POSITION	CONTINUITY BETWEEN
OFF	7-1, 7-3, 7-4, 7-8
RECLINER UP	6-3, 7-1, 7-4, 7-8
RECLINER DOWN	6-1, 7-3, 7-4, 7-8
HORIZONTAL FORWARD	6-8, 7-1, 7-3, 7-4
HORIZONTAL REARWARD	6-4, 7-1, 7-3, 7-8

REMOVAL

REMOVAL

WARNING: **To avoid serious or fatal injury on vehicles equipped with airbags, disable the Supplemental Restraint System (SRS) before attempting any steering wheel, steering column, airbag, seat belt tensioner, impact sensor or instrument panel component diagnosis or service. Refer to WARNING . Disconnect and isolate the battery negative (ground) cable, then wait two minutes for the system capacitor to discharge before performing further diagnosis or service. This is the only sure way to disable the SRS. Failure to take the proper precautions could result in accidental airbag deployment.**

NOTE: **Driver side shown in illustration. Passenger side similar.**

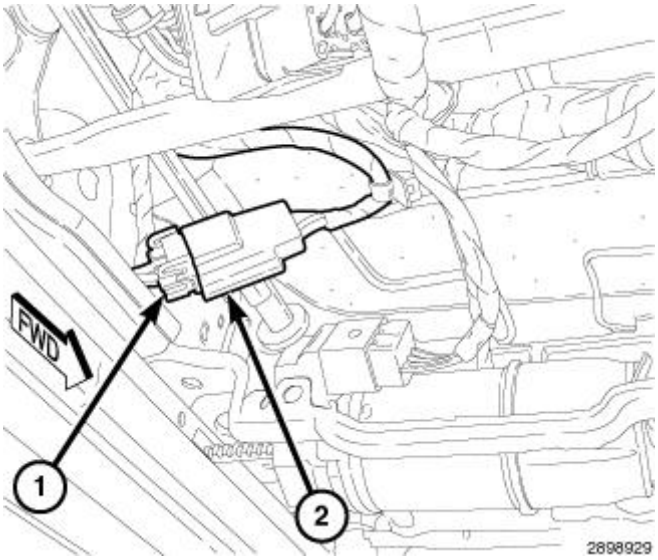

Fig. 36: Lumbar Control Switch Electrical Connector & Seat Wire Harness
Courtesy of CHRYSLER GROUP, LLC

1. Disconnect and isolate the negative battery cable.

CAUTION: Disconnect the lumbar control switch electrical connector beneath the seat, prior to removing the power seat switch bezel from the seat. Failure to follow these instructions can result in damage to the lumbar control switch.

2. From the back of the seat, reach under the seat being serviced and disconnect the lumbar control switch electrical connector (1) from the seat wire harness (2).

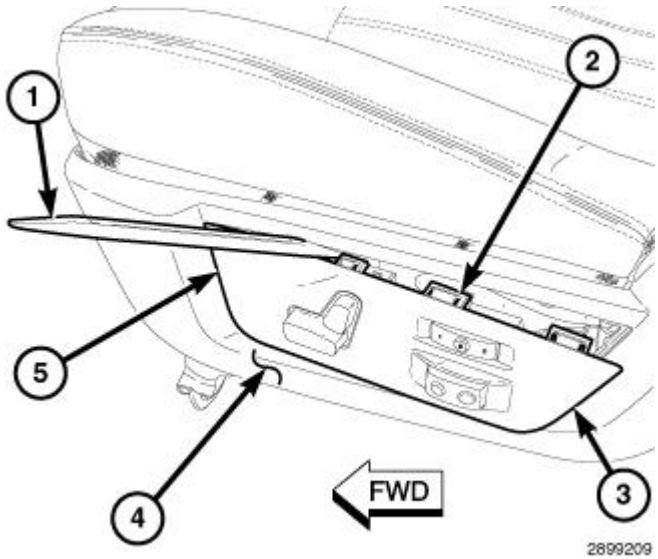

Fig. 37: Seat Switch Bezel & Seat Cushion Side Trim Panel

Courtesy of CHRYSLER GROUP, LLC

CAUTION: The seat switch bezel is attached to the seat cushion side trim panel by a total of eight retaining tabs. Always disengage the retaining tabs starting at the rear of the bezel. Always disengage the front retaining tab last. Failure to follow these instructions can result in damage to the seat switch bezel or the seat cushion side trim panel.

3. Using Trim Stick (special tool #C-4755, Trim Stick) or equivalent (1), carefully disengage seven of the eight retaining tabs (2) that secure the seat switch bezel (3) to the seat cushion side trim panel (4). Start at the rear of the switch bezel and work forward. There is one tab at the rear of the bezel, four on top and two on the bottom.
4. Slide the power seat switch bezel rearward to disengage the eighth retaining tab (5), located at the front of the switch bezel.

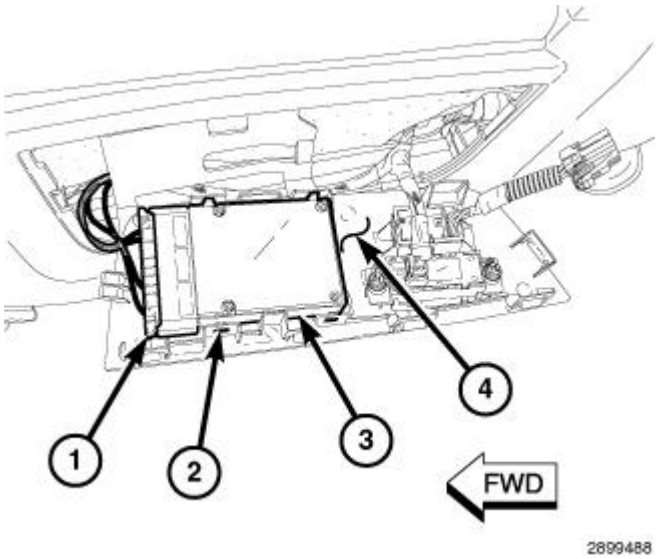

Fig. 38: Power Seat Switch Bezel & Power Seat Switch
Courtesy of CHRYSLER GROUP, LLC

5. Position the power seat switch bezel (4) to gain access to the back of the power seat switch (3).
6. Using a small flat bladed tool, carefully disengage the four retaining tabs (2) that secure the power seat switch to the power seat switch bezel.
7. Disconnect the electrical connector (1) from the power seat switch and remove the switch.

INSTALLATION

INSTALLATION

NOTE: Driver side shown in illustration. Passenger side similar.

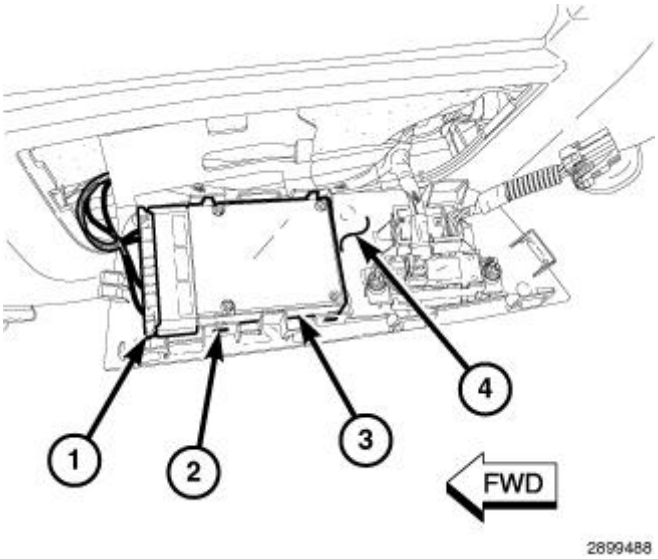

Fig. 39: Power Seat Switch Bezel & Power Seat Switch
Courtesy of CHRYSLER GROUP, LLC

1. Connect the electrical connector (1) to the power seat switch (3). Make sure the connector is fully engaged to the switch.
2. Position the power seat switch to the seat switch bezel (4).
3. Engage the four retaining tabs (2) that secure the power seat switch to the bezel. Make sure the tabs are fully engaged.

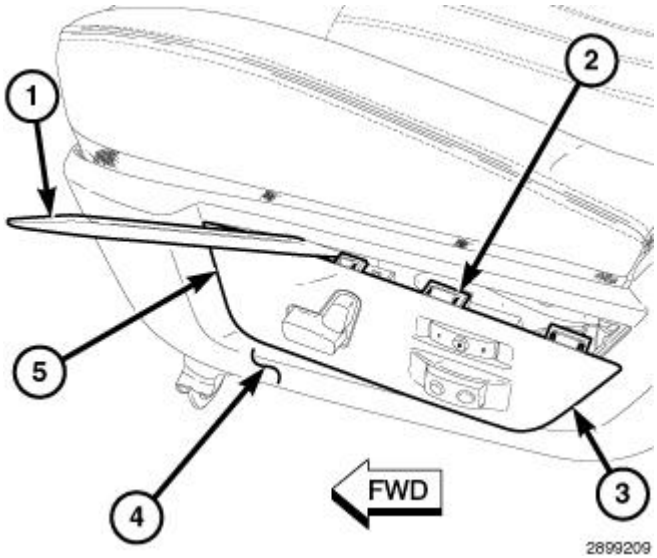

Fig. 40: Seat Switch Bezel & Seat Cushion Side Trim Panel
Courtesy of CHRYSLER GROUP, LLC

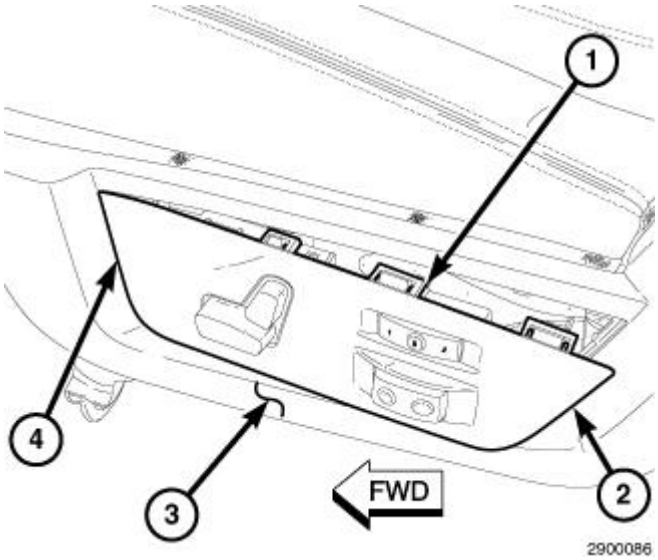

Fig. 41: Seat Switch Bezel & Seat Cushion Side Trim Panel
Courtesy of CHRYSLER GROUP, LLC

4. Engage the retaining tab (4) at the front of the seat switch bezel (2) to the seat cushion side trim panel (3).
5. Carefully engage the remaining seven retaining tabs (1) that secure the seat switch bezel to the seat cushion side trim panel. Start at the front of the switch bezel and work rearward. Make sure all eight retaining tabs are fully engaged.

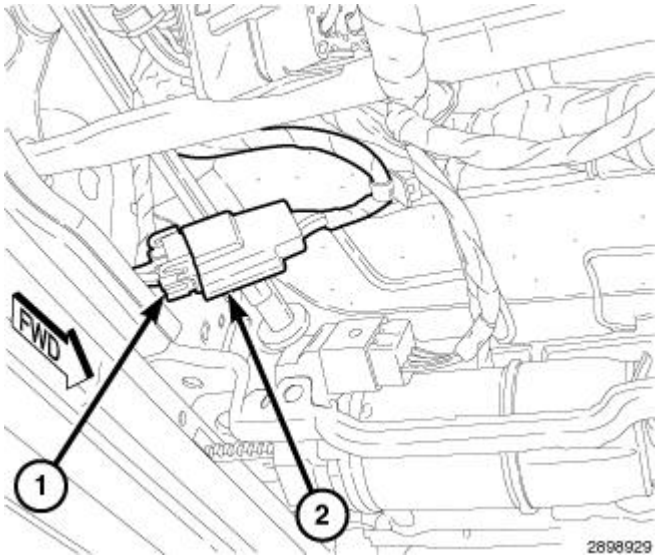

Fig. 42: Lumbar Control Switch Electrical Connector & Seat Wire Harness
Courtesy of CHRYSLER GROUP, LLC

6. Connect the lumbar control switch electrical connector (1) to the seat wire harness (2).
7. Reconnect the negative battery cable.
8. Verify proper power seat operation.

DIAGNOSIS AND TESTING

DIAGNOSIS AND TESTING - MOTOR/MODULE - SUNROOF

Any diagnosis of the power sunroof system should begin with the use of a scan tool and the proper Diagnostic Procedures Information. The scan tool can provide confirmation that the Controller Area Network (CAN) Data Bus is functional, that all of the electronic modules are sending and receiving the proper messages on the CAN Data Bus, and that the power sunroof motor is being sent the proper hard wired output by the sunroof switch.

Refer to the appropriate diagnostic information.

NOTE: If there is no sunroof movement when the "OPEN" or "CLOSED" button are pushed but the sunroof operates when the "VENT" button is pushed and held the sunroof motor/module is out of calibration. Complete the sunroof position calibration procedure prior to performing any sunroof diagnostics. Refer to MOTOR, SUNROOF, STANDARD PROCEDURE .

The wire harness connectors for the sunroof motor/module are located above the vehicle headliner. Removal of the headliner may be necessary for access to the connector and proper diagnosis of the motor/module. Refer to **HEADLINER, REMOVAL** . **For complete circuit diagrams, refer to the appropriate wiring information.** The wiring information includes wiring diagrams, proper wire and connector repair procedures, details of wire harness routing and retention, connector pin-out information and location views for the various wire harness connectors, splices and grounds.

1. Verify that all other power accessories are in proper operating condition. If not, a common electrical problem may exist.
2. Disconnect the sunroof motor/module connector directly at the motor/module (not at the headliner in-line connector). Connect a test light between the harness connector pin 6 and a known good B+ circuit. The test light should illuminate brightly. If OK, go to 3. If not OK repair the ground circuit as necessary.
3. Connect a test light between the harness connector pin 8 and a known good ground. The test light should illuminate brightly. If OK, go to 4. If not OK repair the B+ circuit as necessary.
4. Using an ohmmeter check the sunroof switch feed circuit for continuity between the sunroof motor/module and sunroof switch. Continuity should be present. If OK replace the inoperative motor/module. Refer to **MOTOR, SUNROOF, REMOVAL** . If not OK repair the sunroof switch feed circuit as necessary.

DIAGNOSIS AND TESTING - POWER WINDOWS

POWER WINDOW MOTOR TEST

If the power window motor is receiving proper current and ground and does not operate, proceed with motor test.

1. Remove front door trim panel as necessary to gain access to power window motor wire connector. Refer to **PANEL, DOOR TRIM, REMOVAL** .
2. Disconnect power window motor wire connector from door harness.
3. Using two jumper wires, connect one to a battery (+) source and the other to a good ground (-).
4. Connect the Negative (-) jumper probe to one of the motor connector terminals.
5. Momentarily touch the Positive (+) jumper probe to the other motor connector terminal.

   When positive probe is connected the motor should rotate in one direction to either move window up or down. If window is all the way up or down the motor will grunt and the inner door panel will flex when actuated in that one direction.

6. Reverse jumper probes at the motor connector terminals and window should now move in opposite direction. If window does not move or grunt, replace the motor.

If window moved completely up or down, reverse the jumper probes and cycle window to the opposite position to verify full operation.

If motor grunts and does not move, verify that regulator is not binding.

DIAGNOSIS AND TESTING - SUNROOF

Any diagnosis of the power sunroof system should begin with the use of a scan tool and the proper Diagnostic Procedures Information. The scan tool can provide confirmation that the Controller Area Network (CAN) Data Bus is functional, that all of the electronic modules are sending and receiving the proper messages on the CAN Data Bus, and that the power sunroof motor is being sent the proper hard wired output by the sunroof switch.

Check the condition of the circuit protection and inspect all wiring connector pins for proper engagement and continuity. For complete circuit diagrams, refer to the appropriate wiring information. The wiring information includes wiring diagrams, proper wire and connector repair procedures, details of wire harness routing and retention, connector pin-out information and location views for the various wire harness connectors, splices and grounds.

Refer to the appropriate diagnostic information.

NOTE: If there is no sunroof movement when the "OPEN" or "CLOSED" button are pushed but the sunroof operates when the "VENT" button is pushed and held the sunroof motor/module is out of calibration. Complete the sunroof position calibration procedure prior to performing any sunroof diagnostics. Refer to MOTOR, SUNROOF, STANDARD PROCEDURE .

for possible causes. Refer to **SUNROOF DIAGNOSIS CHART**. Before beginning sunroof diagnostics verify that all other power accessories are in proper operating condition. If not, a common electrical problem may exist.

SUNROOF DIAGNOSIS CHART

SYMPTOM	POSSIBLE CAUSE	CORRECTION

Sunroof completely inoperative.	Inoperative control switch.	Perform sunroof switch diagnostics. Refer to **SWITCH, SUNROOF, DIAGNOSIS AND TESTING** .
	Inoperative circuit ground between sunroof motor/module and body harness.	Inspect ground connections and wiring. Repair as necessary.
	Inoperative power circuit between sunroof motor/module, control switch, and body harness.	Check the condition of the circuit protection and inspect all wiring. Repair as necessary.
	Inoperative sunroof motor/module.	Replace the sunroof motor/module. Refer to **MOTOR, SUNROOF, REMOVAL** .
Audible whine when switch is depressed, sunroof does not operate.	Inoperative sunroof motor/module.	Replace the sunroof motor/module. Refer to **MOTOR, SUNROOF, REMOVAL** .
	Binding cable.	Repair or replace binding cable as necessary.
Audible clicking or ratcheting when switch is pressed, sunroof does not operate.	Broken or worn drive cable.	Repair or replace binding cable as necessary.
	Worn drive motor gear.	Replace the sunroof motor/module. Refer to **MOTOR, SUNROOF, REMOVAL** .
	Sunroof glass panel out of adjustment.	Perform sunroof glass panel adjustment procedure. Refer to **GLASS, SUNROOF, ADJUSTMENTS** .
Sunroof vents and opens, but does not close.	Broken or disengaged trough guide.	Repair trough guide as necessary.
	Binding cable.	Repair or replace binding cable as necessary.
	Inoperative sunroof "CLOSE" circuit.	Check the condition of the circuit, connections and wiring. Repair as necessary.
	Inoperative control switch.	Perform sunroof switch diagnostics. Refer to **SWITCH, SUNROOF, DIAGNOSIS AND TESTING** .
	Inoperative sunroof motor/module.	Replace the sunroof motor/module. Refer to **MOTOR, SUNROOF, REMOVAL** .
Sunroof vents and closes, but does not open.	Binding cable or mechanism.	Repair or replace binding cable as necessary.
	Inoperative sunroof "OPEN" circuit.	Check the condition of the circuit, connections and wiring. Repair as necessary.
	Inoperative control switch.	Perform sunroof switch diagnostics. Refer to **SWITCH, SUNROOF, DIAGNOSIS AND TESTING** .
	Inoperative sunroof motor/module.	Replace the sunroof motor/module. Refer to **MOTOR, SUNROOF, REMOVAL** .

Sunroof does not vent	Binding cable or mechanism.	Repair or replace binding cable as necessary.
	Inoperative sunroof "VENT" circuit.	Check the condition of the circuit, connections and wiring. Repair as necessary.
	Inoperative control switch.	Perform sunroof switch diagnostics. Refer to **MOTOR, SUNROOF, REMOVAL** .
	Inoperative sunroof motor/module.	Replace the sunroof motor/module. Refer to **SWITCH, SUNROOF, DIAGNOSIS AND TESTING** .
Glass movement not consistent or glass does not operate smoothly	Sunroof glass panel out of adjustment.	Perform sunroof glass panel adjustment procedure. Refer to **GLASS, SUNROOF, ADJUSTMENTS** .

DIAGNOSIS AND TESTING - SWITCH - POWER SUNROOF

For complete circuit diagrams, refer to the appropriate wiring information. The wiring information includes wiring diagrams, proper wire and connector repair procedures, details of wire harness routing and retention, connector pin-out information and location views for the various wire harness connectors, splices and grounds. If completing the appropriate diagnostic information results in the sunroof switch being inoperative, perform the following test prior to switch replacement.

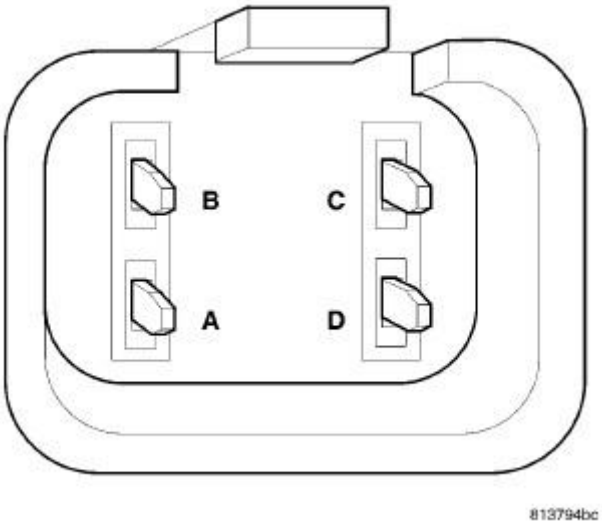

Fig. 1: Power Sunroof Switch Wire Harness Connector
Courtesy of CHRYSLER GROUP, LLC

1. Disconnect and isolate the battery negative cable.
2. Remove the overhead console. Refer to **CONSOLE, OVERHEAD, FRONT, REMOVAL** .
3. Disconnect the power sunroof switch wire harness connector.
4. Using an ohmmeter, test the continuity of the power sunroof switch in each switch position. Refer to the

POWER SUNROOF SWITCH CONTINUITY TABLE. If OK, inspect the wiring harness and connectors for damage. Use a scan tool and the proper Diagnostic Procedures Information to complete diagnosis of the power sunroof system. If not OK, replace the overhead console.

POWER SUNROOF SWITCH CONTINUITY TABLE

SWITCH POSITION	CONTINUITY BETWEEN PINS
OFF	NO CONTINUITY
SUNROOF OPEN	B AND D
SUNROOF CLOSED	B AND C
SUNROOF VENT	B AND A

DIAGNOSIS AND TESTING - WINDOW SWITCH

The Light-Emitting Diode (LED) illumination lamps for all of the power window and lock switch and bezel unit switch paddles receive battery current through the power window circuit breaker in the junction block. If all of the LEDs are inoperative in both the power window and lock switch units and the power windows are inoperative. Refer to **DIAGNOSIS AND TESTING** . If the power windows operate, but any or all of the LEDs are inoperative, the power window and lock switch units with the inoperative LED(s) is faulty and must be replaced. For complete circuit diagrams, refer to the appropriate wiring information.

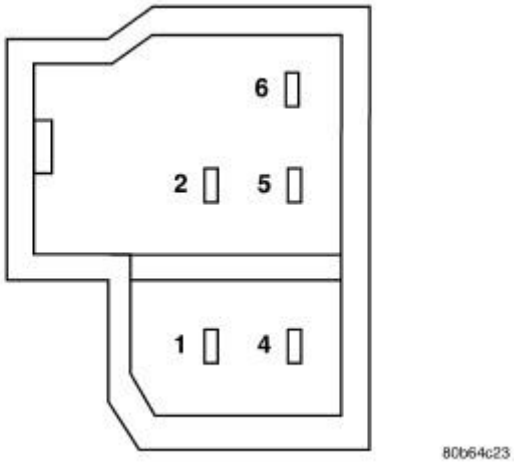

Fig. 2: Passenger Door Switch
Courtesy of CHRYSLER GROUP, LLC

1. Check the fuse in the Totally Integrated Power Module (TIPM) and the circuit breaker located near the park brake pedal. If OK, go to 2. If not OK, replace the faulty fuse or circuit breaker.
2. Turn the ignition switch to the On position. Check for battery voltage at the fuse in the Totally Integrated Power Module (TIPM). If OK, turn the ignition switch to the Off position and go to 3. If not OK, check circuit breaker and repair the circuit to the ignition switch as required.
3. Disconnect and isolate the battery negative cable. Remove the power window switch unit from the door trim panel (passenger doors). The drivers door switch is included with the window/lock switch for service procedures. Refer to **SWITCH, POWER WINDOW, REMOVAL** . Unplug the wire harness connector from the switch unit.

4. Test the power window switch continuity. See the Power Window Switch Continuity charts to determine if the continuity is correct in the Off, Up and Down switch positions. Refer to **Fig. 2**. If OK. Refer to **DIAGNOSIS AND TESTING** . If not OK, replace the faulty switch.

POWER WINDOW SWITCH CONTINUITY CHART

SWITCH POSITION	CONTINUITY BETWEEN
NEUTRAL	PIN 2 AND 5, PIN 4 AND 1
UP (FRONT PASSENGER)	PIN 6 AND 5
UP (REAR PASSENGER)	PIN 6 AND 1
DOWN (FRONT PASSENGER)	PIN 6 AND 1
DOWN (REAR PASSENGER)	PIN 6 AND 5

DESCRIPTION

DESCRIPTION

The power window system allows each of the door windows to be raised and lowered electrically by actuating a switch on each door panel. A master switch on the drivers door allows the driver to raise or lower each of the passenger door windows and to lock out the individual switches on the passenger doors from operation. The power window system receives battery feed through a fuse in the Totally Integrated Power Module (TIPM) to the door modules. Their are two door modules, the Driver Door Module (DDM) and the Passenger Door Module (PDM). This is only powered when the ignition switch is in the RUN or ACCESSORY position.

If equipped, the windows have the option of auto up/down. If equipped, the four door gets auto-up/down feature, while the two door just gets the auto-down feature.

The window motors are replaced with the window regulator assembly. If the window motors require replacement, the window regulator must be replaced. For the front door, refer to **MOTOR, WINDOW REGULATOR, REMOVAL**. For the rear window, refer to **MOTOR, WINDOW REGULATOR, REAR SLIDING WINDOW, REMOVAL**.

OPERATION

OPERATION

POWER WINDOWS

The door control modules, (Driver Door Module (DDM) and Passenger Door Module (PDM)) opens or closes the windows when a actuation input signal from the window switch is received from the door trim panel. When the power window lockout switch is in the Lock position, the passenger doors windows switches are disabled. This is only powered when the ignition switch is in the RUN or ACCESSORY position.

If equipped, the windows have the option of auto up/down. If equipped, the four door gets auto-up/down feature, while the two door just gets the auto-down feature.

WINDOW MOTOR

Window motors use permanent type magnets. The B+ and ground applied at the motor terminal pins will cause the motor to rotate in one direction. Reversing current through the motor terminals will cause the motor to rotate in the opposite direction.

EXPRESS DOWN WINDOW FEATURE

This feature allows you to remotely lower both front door windows at the same time. To use this feature, press and release the UNLOCK button on the RKE transmitter and then immediately press and hold the UNLOCK

button until the windows lower to the desired level or until they lower completely.

DIAGNOSIS AND TESTING

DIAGNOSIS AND TESTING - POWER WINDOWS

POWER WINDOW MOTOR TEST

If the power window motor is receiving proper current and ground and does not operate, proceed with motor test.

1. Remove front door trim panel as necessary to gain access to power window motor wire connector. Refer to **PANEL, DOOR TRIM, REMOVAL** .
2. Disconnect power window motor wire connector from door harness.
3. Using two jumper wires, connect one to a battery (+) source and the other to a good ground (-).
4. Connect the Negative (-) jumper probe to one of the motor connector terminals.
5. Momentarily touch the Positive (+) jumper probe to the other motor connector terminal.

   When positive probe is connected the motor should rotate in one direction to either move window up or down. If window is all the way up or down the motor will grunt and the inner door panel will flex when actuated in that one direction.

6. Reverse jumper probes at the motor connector terminals and window should now move in opposite direction. If window does not move or grunt, replace the motor.

If window moved completely up or down, reverse the jumper probes and cycle window to the opposite position to verify full operation.

If motor grunts and does not move, verify that regulator is not binding.

STANDARD PROCEDURE

STANDARD PROCEDURE

CLEAR/RELEARN

NOTE: The battery must be fully charged or the vehicle running for proper calibration of the front door module.

NOTE: The following procedure must be performed anytime the power window system has been serviced in either front door or, there is a possible concern with a door module calibration.

Express-up / Express-down possible concerns.

- Glass will not lower all the way down flush to the belt-line.
- Glass will not raise fully; wind noise / water leak.
- Glass will not raise automatically (Expess-up) after lifting the switch to the second detent and releasing.

To clear/denormalize the door module memory, perform the following procedure:

CLEAR/DENORMALIZE

1. Check and repair any door module Diagnostic Trouble Code (DTC) (s) before proceeding.
2. Using a scan tool, under the miscellaneous functions menu select (Denormalize Window/Reset ECU), and follow the directions to clear/denormalize the door module memory.

To relearn/normalize the door module memory, perform the following procedure:

RELEARN/NORMALIZE

NOTE: The battery must be fully charged or the vehicle running before proceeding.

1. If needed, place the vehicle battery on charge or have the engine running.
2. To relearn/normalize the door module, start by raising the door glass to the full-up position by pulling up on the window switch to its second detent and hold the switch until the door glass is fully closed. Continue to hold the window switch up for two seconds after the door glass is full closed.
3. Lower the door glass to the full-down position by pushing down (depress) the window switch to its second detent and hold the switch until the door glass is fully open. Continue to hold the window switch down for two seconds after the door glass is fully open.
4. Check the operation of the express-up and express-down features.
5. If the express up does not work, repeat the procedure starting at step #2, waiting for three seconds after the window stops.
6. Check that the door glass reverses when in the express-up mode by holding a pen in the path of the glass.
7. Recheck and repair any door module DTC's as needed

MOTOR, WINDOW REGULATOR

REMOVAL

REMOVAL

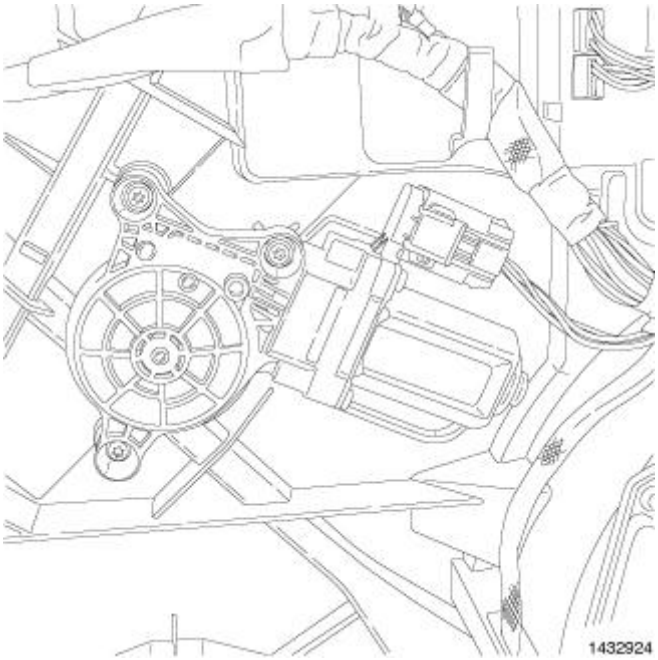

Fig. 1: Window Regulator Motor
Courtesy of CHRYSLER GROUP, LLC

1. Disconnect and isolate the negative battery cable.
2. Remove door trim panel. Refer to **PANEL, DOOR TRIM, REMOVAL** .
3. Remove fasteners from motor/regulator.
4. Disconnect electrical connector.
5. Remove motor/regulator from carrier plate.

INSTALLATION

INSTALLATION

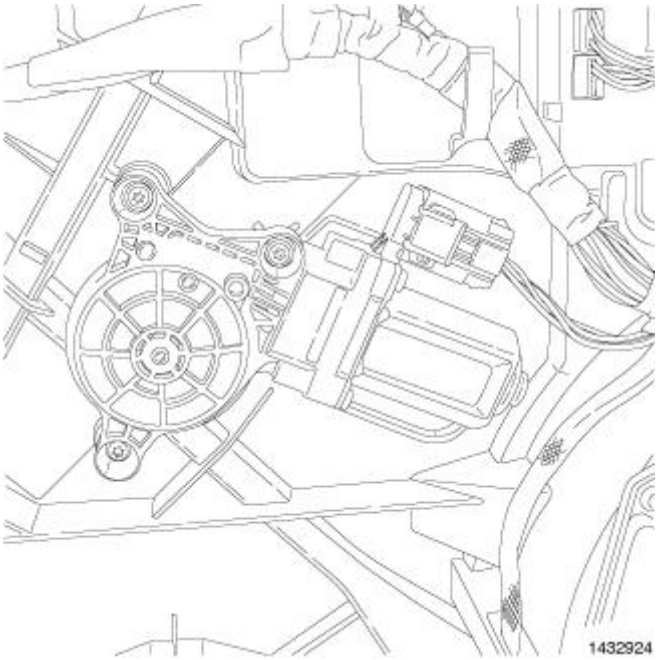

Fig. 2: Window Regulator Motor
Courtesy of CHRYSLER GROUP, LLC

1. Connect electrical connector.
2. Place motor/regulator into place and install fasteners.
3. Install door trim panel. Refer to **PANEL, DOOR TRIM, INSTALLATION** .
4. Connect the negative battery cable.

MOTOR, WINDOW REGULATOR, REAR SLIDING WINDOW

REMOVAL

REMOVAL

1. Disconnect and isolate the battery negative cable.
2. Remove the rear seats. Refer to **SEAT, REAR, REMOVAL** or **SEAT, MEGA CAB REAR, REMOVAL** .
3. Remove the rear cab back panel. Refer to **PANEL, CAB BACK TRIM, REMOVAL** .

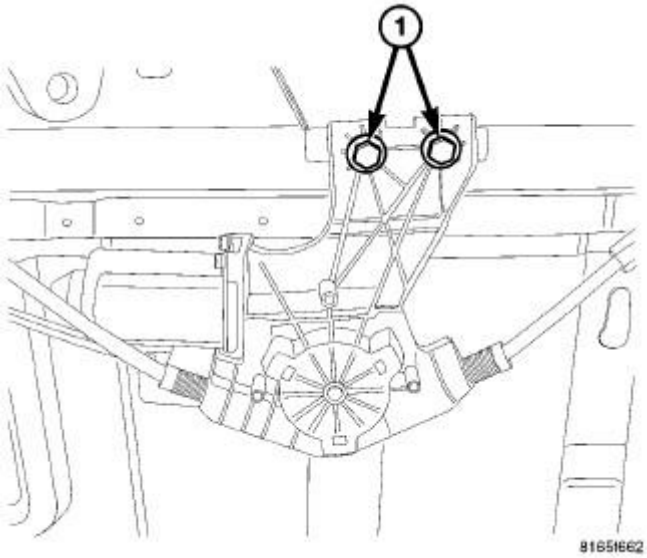

Fig. 3: Backlite Glass Regulator Mounting Bolts
Courtesy of CHRYSLER GROUP, LLC

4. Remove the 2 mounting bolts (1).
5. Disconnect the electrical connector to the power motor.

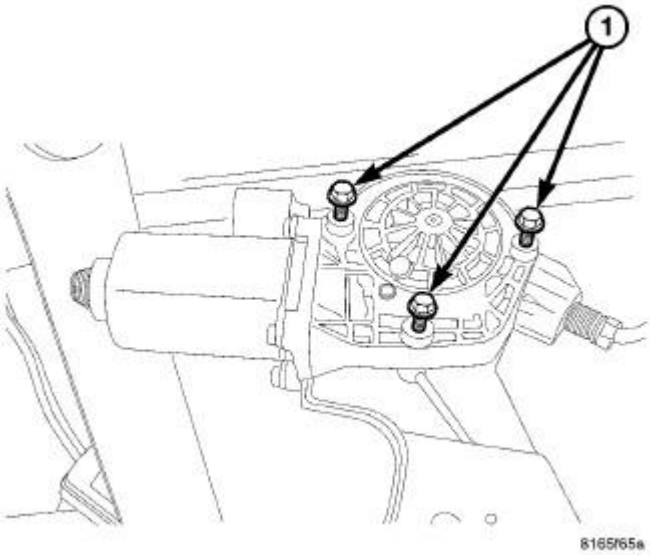

Fig. 4: Motor Screws
Courtesy of CHRYSLER GROUP, LLC

6. Rotate the assembly and remove the 3 screws (1) that attach the motor to the regulator.

INSTALLATION

INSTALLATION

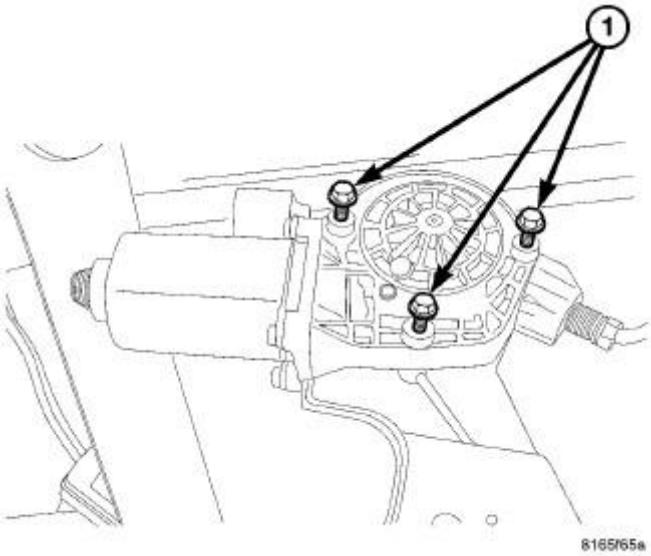

Fig. 5: Motor Screws
Courtesy of CHRYSLER GROUP, LLC

1. Install the power motor to the regulator with the 3 screws (1).
2. Connect the electrical connector to the power motor.

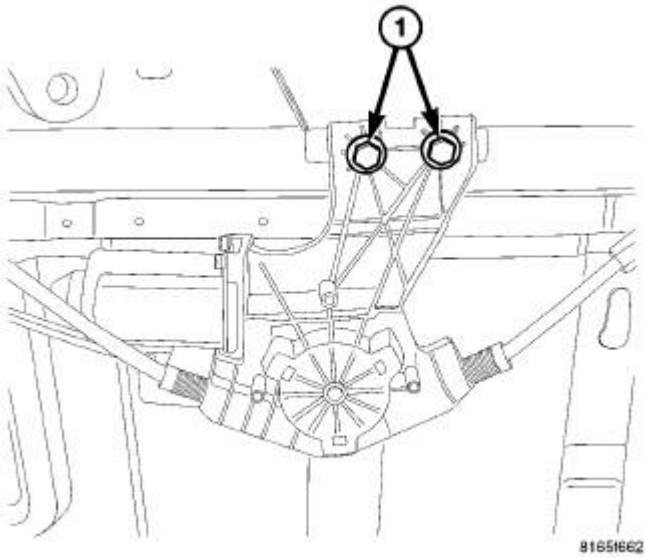

Fig. 6: Backlite Glass Regulator Mounting Bolts
Courtesy of CHRYSLER GROUP, LLC

3. Install the 2 mounting bolts (1).
4. Install the rear cab back panel. Refer to **PANEL, CAB BACK TRIM, INSTALLATION** .
5. Install the rear seats. Refer to **SEAT, REAR, INSTALLATION** or **SEAT, MEGA CAB REAR, INSTALLATION** .

6. Connect the battery negative cable.

SWITCH, POWER WINDOW

DIAGNOSIS AND TESTING

DIAGNOSIS AND TESTING - WINDOW SWITCH

The Light-Emitting Diode (LED) illumination lamps for all of the power window and lock switch and bezel unit switch paddles receive battery current through the power window circuit breaker in the junction block. If all of the LEDs are inoperative in both the power window and lock switch units and the power windows are inoperative. Refer to **DIAGNOSIS AND TESTING**. If the power windows operate, but any or all of the LEDs are inoperative, the power window and lock switch units with the inoperative LED(s) is faulty and must be replaced. For complete circuit diagrams, refer to the appropriate wiring information.

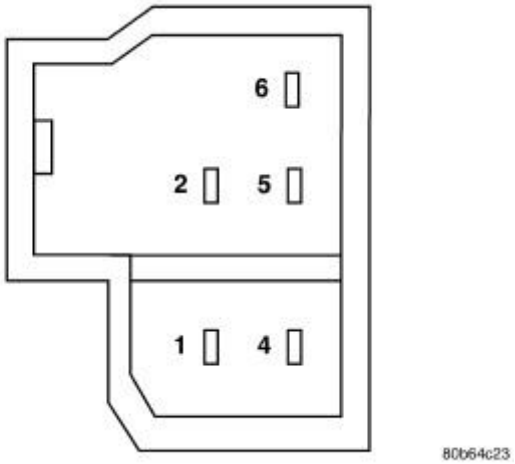

Fig. 7: Power Window Switch Connector End View
Courtesy of CHRYSLER GROUP, LLC

1. Check the fuse in the Totally Integrated Power Module (TIPM) and the circuit breaker located near the park brake pedal. If OK, refer to 2. If not OK, replace the faulty fuse or circuit breaker.
2. Turn the ignition switch to the On position. Check for battery voltage at the fuse in the Totally Integrated Power Module (TIPM). If OK, turn the ignition switch to the Off position. Refer to 3. If not OK, check circuit breaker and repair the circuit to the ignition switch as required.
3. Disconnect and isolate the battery negative cable. Remove the power window switch unit from the door trim panel (passenger doors). The drivers door switch is included with the window/lock switch. For service procedures, refer to **SWITCH, POWER WINDOW, REMOVAL**. Unplug the wire harness connector from the switch unit.
4. Test the power window switch continuity. Refer to **POWER WINDOW SWITCH CONTINUITY CHART**. To determine if the continuity is correct in the Off, Up and Down switch positions, refer to **Fig. 7**. If OK, refer to **DIAGNOSIS AND TESTING**. If not OK, replace the faulty switch.

POWER WINDOW SWITCH CONTINUITY CHART

SWITCH POSITION	CONTINUITY BETWEEN
NEUTRAL	PIN 2 AND 5, PIN 4 AND 1
UP (FRONT PASSENGER)	PIN 6 AND 5
UP (REAR PASSENGER)	PIN 6 AND 1
DOWN (FRONT PASSENGER)	PIN 6 AND 1
DOWN (REAR PASSENGER)	PIN 6 AND 5

REMOVAL

REMOVAL

The power window switch is included with the power mirror/lock switch. Refer to **SWITCH, LOCK, WITH WINDOW SWITCHES, REMOVAL** .

INSTALLATION

INSTALLATION

The power window switch is included with the power mirror/lock switch. Refer to **SWITCH, LOCK, WITH WINDOW SWITCHES, INSTALLATION** .

DIAGNOSIS AND TESTING

DIAGNOSIS AND TESTING - LUMBAR CONTROL SWITCH

NOTE: **For complete circuit diagrams, see appropriate Wiring Information. Wiring Information includes wiring diagrams, connector pin-out and location views, details of wire harness routing and retention, splice and ground locations and proper wire and connector repair procedures.**

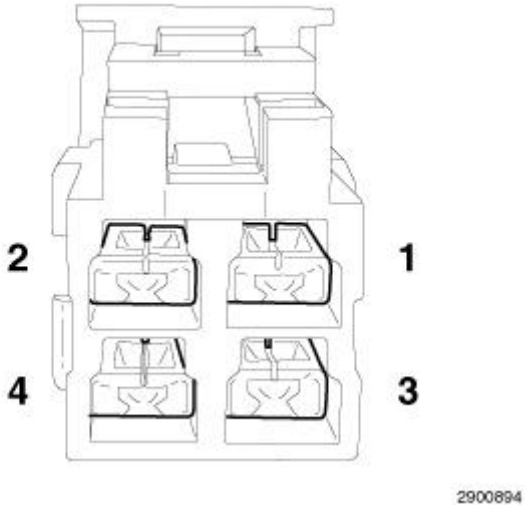

Fig. 1: Lumbar Control Switch Connector End View
Courtesy of CHRYSLER GROUP, LLC

1. Disconnect and isolate the battery negative cable.
2. Remove the lumbar control switch from the seat. Refer to **SWITCH, LUMBAR CONTROL, REMOVAL** .
3. Use an ohmmeter to test the continuity of the lumbar control switch using the following table. If not OK, replace the inoperative lumbar control switch. If switch tests OK, check for an open or short in the power lumbar support circuit wiring. If no open or short is found, replace the seat back. Refer to **SEAT BACK, FRONT, REMOVAL** and/or **SEAT BACK, REAR, REMOVAL** .

LUMBAR CONTROL SWITCH CONTINUITY

SWITCH POSITION	CONTINUITY BETWEEN
OFF	2-3, 2-4, 3-4
IN	1-2, 3-4
OUT	1-4, 2-3

MEMORY SEAT SYSTEM

In order to obtain conclusive testing of the power seats with and without the memory system option, the Controller Area Network (CAN) bus, and all of the electronic modules that provide inputs to, or receive outputs from the memory system components must be checked. Use a scan tool and the proper diagnostic information to accurately diagnose the power seat/memory seat systems.

NOTE: **Vehicles equipped with the memory/heated seat option utilize a low voltage cut-off feature. This feature turns off the 12v power to the power seat system anytime vehicle voltage is below 11.0v. Be certain to check the vehicle electrical system for proper voltage anytime the power seat system appears inoperative.**

Before any testing of the power seat system is attempted, the battery should be fully-charged.

POWER SEAT ADJUSTER

Operate the power seat switch and move the seat in all directions. The seat should move in each of the selected directions.

If the power seat adjuster fails to operate in more than one direction, proceed as follows:

1. Inspect the power seat adjuster motors to ensure the electrical connectors are fully seated to the motors. If OK, go to 2. If not OK, connect the electrical connector to the fully seated position.
2. Check the power seat fuse in the power distribution center. If OK, go to 3. If not OK, replace the inoperative fuse.
3. Remove the power seat switch from the seat cushion side panel. Check for battery voltage at the fused B (+) circuit cavity of the power seat switch wire harness connector. If OK, go to 4. If not OK, repair the open circuit to the power distribution center as required.
4. Check for continuity between the ground circuit cavity of the power seat switch wire harness connector and a good ground. There should be continuity. If OK, go to 5. If not OK, repair the open circuit to ground as required.
5. Refer to **SWITCH, SEAT, POWER, DIAGNOSIS AND TESTING** . If the switch tests OK, check the wire harness between the power seat switch and the motor. If the circuits check OK, replace the faulty power seat adjuster assembly. If the circuits are not OK, repair the wire harness as required.

DIAGNOSIS AND TESTING - POWER SEAT SWITCH

DRIVER SEAT WITHOUT MEMORY SEAT SYSTEM

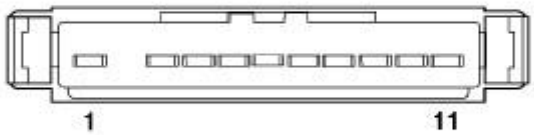

8132c253

Fig. 2: Power Seat Switch Connector End View (Without Memory)
Courtesy of CHRYSLER GROUP, LLC

1. Disconnect and isolate the battery negative cable.
2. Remove the power seat switch from the seat. Refer to **SWITCH, SEAT, POWER, REMOVAL** .
3. Use an ohmmeter to test the continuity of the power seat switch using the following table. If not OK, replace the inoperative power seat switch. If switch tests OK, check for an open or short in the power seat circuit wiring. If no open or short is found, replace the power adjuster motor(s) as required.

DRIVER SEAT SWITCH CONTINUITY - WITHOUT MEMORY

SWITCH POSITION	CONTINUITY BETWEEN
OFF	7-1, 7-3, 7-4, 7-5, 7-8, 7-9, 7-10, 7-11
RECLINER UP	6-3, 7-1, 7-4, 7-5, 7-8, 7-9, 7-10, 7-11
RECLINER DOWN	6-1, 7-3, 7-4, 7-5, 7-8, 7-9, 7-10, 7-11
HORIZONTAL FORWARD	6-8, 7-1, 7-3, 7-4, 7-5, 7-9, 7-10, 7-11
HORIZONTAL REARWARD	6-4, 7-1, 7-3, 7-5, 7-8, 7-9, 7-10, 7-11
FRONT TILT DOWN	6-5, 7-1, 7-3, 7-4, 7-8, 7-9, 7-10, 7-11
FRONT TILT UP	6-9, 7-1, 7-3, 7-4, 7-5, 7-8, 7-10, 7-11
REAR TILT DOWN	6-10, 7-1, 7-3, 7-4, 7-5, 7-8, 7-9, 7-11
REAR TILT UP	6-11, 7-1, 7-3, 7-4, 7-5, 7-8, 7-9, 7-10

DRIVER SEAT WITH MEMORY SEAT SYSTEM

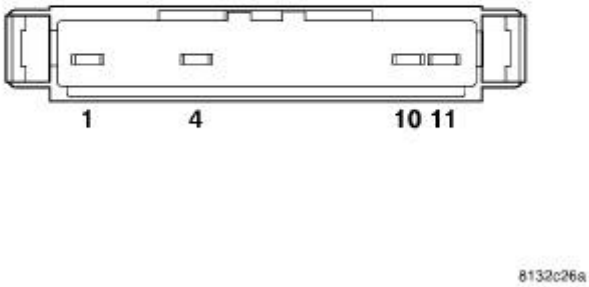

Fig. 3: Power Seat Switch Connector End View (With Memory)
Courtesy of CHRYSLER GROUP, LLC

1. Disconnect and isolate the battery negative cable.
2. Remove the power seat switch from the seat. Refer to **SWITCH, SEAT, POWER, REMOVAL** .
3. Use an ohmmeter to test the continuity of the power seat switch using the following table. If not OK, replace the inoperative power seat switch. If switch tests OK, check for an open or short in the power seat circuit wiring. If no open or short is found, replace the power adjuster motor(s) as required.

DRIVER SEAT SWITCH CONTINUITY - WITH MEMORY

SWITCH POSITION	CONTINUITY BETWEEN	RESISTANCE VALUE
OFF	10-4	OPEN
OFF	10-11	OPEN
OFF	1-4	47 OHMS
OFF	1-11	47 OHMS
REAR TILT UP	10-11	169 OHMS
REAR TILT DOWN	10-11	76 OHMS
HORIZONTAL FORWARD	10-11	43 OHMS
HORIZONTAL REARWARD	10-11	10 OHMS
RECLINER UP	10-4	43 OHMS
RECLINER DOWN	10-4	10 OHMS
FRONT TILT UP	10-4	169 OHMS
FRONT TILT DOWN	10-4	76 OHMS
ALL RESISTANCE VALUES ARE ± FIVE PERCENT		

PASSENGER SEAT

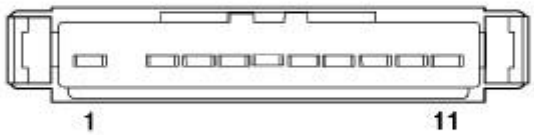

8132c253

Fig. 4: Power Seat Switch Connector End View (Without Memory)
Courtesy of CHRYSLER GROUP, LLC

1. Disconnect and isolate the negative battery cable.
2. Remove the power seat switch from the seat. Refer to **SWITCH, SEAT, POWER, REMOVAL** .
3. Use an ohmmeter to test the continuity of the power seat switch using the following tables. If not OK, replace the inoperative power seat switch. If switch tests OK, check for an open or short in the power seat circuit wiring. If no open or short is found, replace the power adjuster motor(s) as required.

PASSENGER SEAT SWITCH CONTINUITY

SWITCH POSITION	CONTINUITY BETWEEN
OFF	7-1, 7-3, 7-4, 7-8
RECLINER UP	6-3, 7-1, 7-4, 7-8
RECLINER DOWN	6-1, 7-3, 7-4, 7-8
HORIZONTAL FORWARD	6-8, 7-1, 7-3, 7-4
HORIZONTAL REARWARD	6-4, 7-1, 7-3, 7-8

VENTED SEATS

Diagnosis of the vented seat system requires the use of a scan tool. If a fault is present in the vented seat system a DTC will be set and the vented seat switch will illuminate for 2 seconds and then go out. For further diagnosis see the appropriate diagnostic information.

DESCRIPTION

DESCRIPTION

An electronic speed control (also known as cruise control) system is available factory-installed equipment on this vehicle. The electronic speed control system includes the following major components, which are described in further detail elsewhere in this service information:

- **Antilock Brake Module** - An Antilock Brake Module (ABM) (also known as Controller Antilock Brake/CAB or the Electronic Stability Control/ESC module) is located on the antilock brake Hydraulic Control Unit (HCU) in the engine compartment. Refer to **MODULE, ANTI-LOCK BRAKE SYSTEM, DESCRIPTION** .
- **Brake Lamp Switch** - The brake (also known as stop) lamp switch is located on the brake pedal support bracket under the driver side of the instrument panel. Refer to **SWITCH, STOP LAMP, DESCRIPTION** .
- **ElectroMechanical Instrument Cluster** - A CRUISE indicator is located in the fixed segment display of the ElectroMechanical Instrument Cluster (EMIC) (also known as the Cab Compartment Node/CCN) that provides an indication to the vehicle operator when the speed control system is turned ON. Refer to **DESCRIPTION** .
- **Powertrain Control Module** - The Powertrain Control Module (PCM) located in the left front corner of the engine compartment contains the software and hardware that monitors all of the speed control system inputs and controls all of the speed control system outputs. Refer to appropriate Electrical Diagnostic article. .
- **Speed Control Switches** - A speed control switch pod containing four momentary switch push buttons is located in the right horizontal spoke of the steering wheel.
- **Wheel Speed Sensors** - A wheel speed sensor is located on the knuckle of each front and rear wheel. Refer to **SENSOR, WHEEL SPEED, FRONT, DESCRIPTION** .

The ABM, the EMIC and the PCM each contain a microprocessor and programming that allow them to communicate with each other using the Controller Area Network (CAN) data bus. This method of communication is used by the PCM for control of the CRUISE indicator in the EMIC. Refer to **COMMUNICATION, DESCRIPTION** .

Hard wired circuitry connects the conventional electronic speed control system components to the electrical system of the vehicle. These hard wired circuits are integral to several wire harnesses, which are routed throughout the vehicle and retained by many different methods. These circuits may be connected to each other, to the vehicle electrical system and to the speed control system components through the use of a combination of soldered splices, splice block connectors, and many different types of wire harness terminal connectors and insulators. Refer to the appropriate wiring information. The wiring information includes wiring diagrams, proper wire and connector repair procedures, further details on wire harness routing and retention, as well as pin-out and location views for the various wire harness connectors, splices and grounds.

OPERATION

OPERATION

The vehicle operator controls all speed control system features through the speed control switch pod on the face of the right horizontal spoke of the steering wheel. When a push button of the switch pod is depressed, it provides a hard wired resistor multiplexed analog input to the Powertrain Control Module (PCM).

The PCM reads the speed control switch input, along with other hard wired and electronic message inputs received from other electronic modules in the vehicle over the Controller Area Network (CAN) data bus. The PCM software continually monitors these inputs as well as electronic **vehicle distance** message inputs from the Antilock Brake Module (ABM) (also known as the Controller Antilock Brake/CAB or the Electronic Stability Control/ESC module) and numerous hard wired inputs including the brake (or stop) lamp switch, then provides the appropriate electronic message and hard wired outputs to invoke the requested and programmed electronic speed control features.

The PCM microprocessor continuously monitors all of the speed control system electrical circuits to determine the system readiness. If the PCM detects a monitored system fault, it sets and stores a Diagnostic Trouble Code (DTC). The PCM uses On-Board Diagnostics (OBD) and can communicate with other electronic modules in the vehicle as well as with the diagnostic scan tool using the CAN data bus. This method of communication is used for control of the Cruise indicator and the Malfunction Indicator Lamp (MIL) (also known as the Check Engine lamp) in the ElectroMechanical Instrument Cluster (EMIC) (also known as the Cab Compartment Node/CCN) and for system diagnosis and testing through the 16-way Data Link Connector (DLC) located on the driver side lower edge of the instrument panel.

The hard wired inputs and outputs for the PCM may be diagnosed using conventional diagnostic tools and procedures. Refer to the appropriate wiring information. However, conventional diagnostic methods will not prove conclusive in the diagnosis of the PCM or the electronic controls or communication between other modules and devices that provide features of the speed control system. The most reliable, efficient, and accurate means to diagnose the PCM or the electronic controls and communication related to speed control system operation requires the use of a diagnostic scan tool. Refer to the appropriate diagnostic information.

SWITCH, SPEED CONTROL

DESCRIPTION

DESCRIPTION

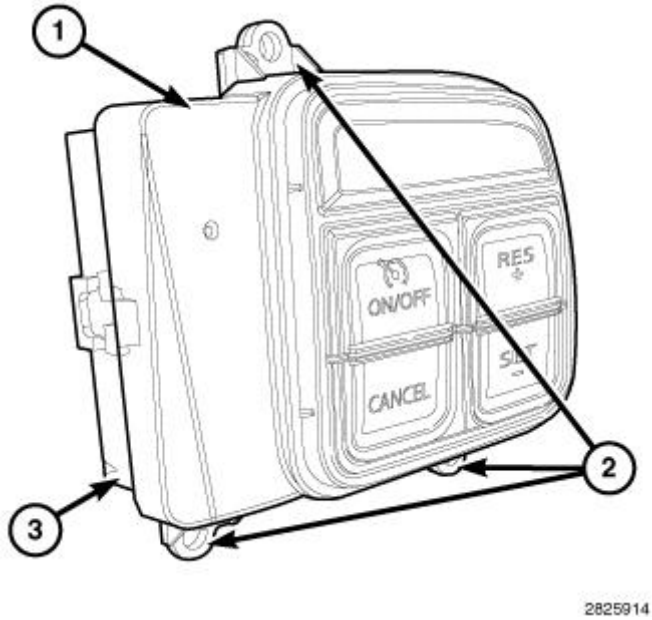

Fig. 1: Speed Control Switch Pod, Mounting Tabs & Connector Receptacle
Courtesy of CHRYSLER GROUP, LLC

The speed control switch pod (1) is located in the right spoke of the steering wheel spoke bezel. This switch has four push buttons and is used on all vehicles equipped with the optional speed control (also known as cruise control) system. The only visible components of the switch pod are the switch push buttons and a decorative bezel around the push buttons, which stands slightly proud of the steering wheel spoke bezel. The remainder of the switch pod including its mounting provisions and its electrical connection are concealed beneath the spoke bezel.

The switch pod housing and push buttons are constructed of molded plastic. Each of the push buttons has white International Control and Display Symbol graphics or text applied to it, which clearly identify the function of each push button. The switch pod is secured through three integral mounting tabs (2) to mounting bosses on the back of the spoke bezel by three screws. A connector receptacle (3) integral to the inboard end of the switch pod housing connects the speed control switch and the Local Interface Network (LIN) slave node circuitry integral to the switch pod to the vehicle electrical system through a dedicated take out and connector of the steering wheel wire harness.

The speed control switch pod cannot be adjusted or repaired. If any function of the switch or the LIN slave node is ineffective or damaged, the entire switch pod unit must be replaced.

OPERATION

OPERATION

The speed control switch pod is a resistor multiplexed unit that provides hard wired inputs to the Powertrain Control Module (PCM) microprocessor. The speed control switch pod also contains the circuitry of a Local Interface Network (LIN) slave node, which provides source current for and communicates the switch or sensor states of the Electronic Vehicle Information Center (EVIC) switches, the remote radio switches and the horn switch over the LIN data bus to the ElectroMechanical Instrument Cluster (EMIC) (also known as the Cab

Compartment Node/CCN), which is the LIN master node.

The speed control switch pod for vehicles equipped with the electronic speed control system contains four switch push buttons whose functions are:

- **On/Off -** This switch button enables or disables the speed control system and clears any previous speed control set speed from system memory.
- **Resume / + -** This switch button restores the vehicle to a previously stored set speed or accelerates the vehicle from an already attained set speed.
- **Cancel -** This switch button cancels the current speed control event, but does not turn the system OFF or clear the currently stored set speed.
- **Set / - -** This switch button sets the current vehicle speed as the stored set speed or decelerates (coasts) the vehicle to a speed that is slower than the already attained set speed.

The EMIC LIN master node provides a clean ground and fused B(+) current for all of the switches and sensors on the rotating steering wheel through the LIN slave node circuitry of the speed control switch pod as well as for the Light Emitting Diode (LED) back lighting of both the speed control and the EVIC switch pods. The PCM continually monitors all of the hard wired speed control switch circuits, while the EMIC continually monitors the LIN bus data. The PCM will set a Diagnostic Trouble Code (DTC) for any problem it detects in the speed control switch circuits, and the EMIC will store a Signal Not Available (SNA) code for any LIN bus input errors. The PCM and EMIC also communicate with other electronic modules over the Controller Area Network (CAN) data bus. Therefore, any PCM or EMIC DTC information can be retrieved using a diagnostic scan tool connected to the Data Link Connector (DLC).

The analog resistor multiplexed circuits of the speed control switch pod as well as the hard wired circuits between the switch pod and the PCM or EMIC may be diagnosed using conventional diagnostic tools and procedures. Refer to the appropriate wiring information. The wiring information includes wiring diagrams, proper wire and connector repair procedures, details of wire harness routing and retention, connector pin-out information and location views for the various wire harness connectors, splices and grounds.

However, conventional diagnostic methods will not prove conclusive in the diagnosis of the LIN slave or master nodes, the PCM, the EMIC or the electronic controls and communication between modules and other devices that provide some features of the speed control system. The most reliable, efficient, and accurate means to diagnose the speed control switch pod, the LIN slave or master nodes, the PCM, the EMIC or the electronic controls and communication related to speed control system operation requires the use of a diagnostic scan tool. Refer to the appropriate diagnostic information.

DIAGNOSIS AND TESTING

DIAGNOSIS AND TESTING - SPEED CONTROL SWITCH

WARNING: **To avoid serious or fatal injury on vehicles equipped with airbags, disable the Supplemental Restraint System (SRS) before attempting any steering wheel, steering column, airbag, seat belt tensioner, impact sensor or instrument panel component diagnosis or service. Refer to WARNING . Disconnect and isolate the battery negative (ground) cable, then wait two minutes for the system capacitor to discharge before performing further**

diagnosis or service. This is the only sure way to disable the SRS. Failure to take the proper precautions could result in accidental airbag deployment.

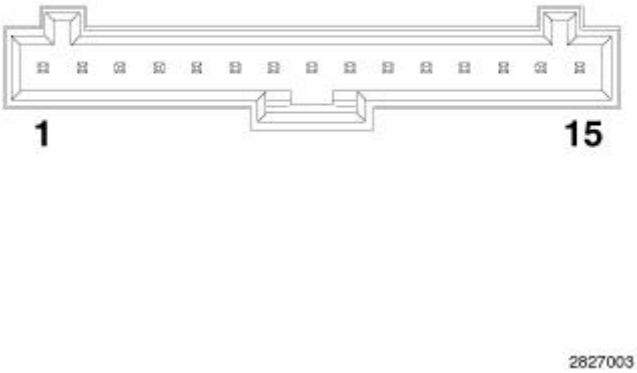

Fig. 2: Speed Control Switch Connector End View
Courtesy of CHRYSLER GROUP, LLC

NOTE: **The following test confirms only correct speed control switch functions. It does not test or confirm any of the Local Interface Network (LIN) slave node inputs, outputs or functions. LIN slave node testing requires the use of a diagnostic scan tool. Refer to the appropriate diagnostic information.**

1. Remove the speed control switch pod from the steering wheel. Refer to **SWITCH, SPEED CONTROL, REMOVAL**.
2. Disconnect the steering wheel wire harness connector from the back of the speed control switch pod.
3. Using an ohmmeter, test the resistance between the terminals of the switch as shown in the Speed Control Switch Tests table.

SPEED CONTROL SWITCH TESTS	
SWITCH POSITION (PINS)	**PINS (*RESISTANCE - OHMS)**
NO PUSH BUTTONS DEPRESSED	13 and 14 (20708) 14 and 15 (20591)
ON / OFF	13 and 14 (464) 14 and 15 (133)
CANCEL	13 and 14 (896) 14 and 15 (457)
SET / - (DECEL)	13 and 14 (4088) 14 and 15 (2471)
	13 and 14 (7408)

RESUME / + (ACCEL)	14 and 15 (4091)
*All resistance values are plus or minus 5%.	

4. If the switch fails any of the tests, replace the ineffective speed control switch pod as required.

REMOVAL

REMOVAL

WARNING: To avoid serious or fatal injury on vehicles equipped with airbags, disable the Supplemental Restraint System (SRS) before attempting any steering wheel, steering column, airbag, seat belt tensioner, impact sensor or instrument panel component diagnosis or service. Refer to WARNING . Disconnect and isolate the battery negative (ground) cable, then wait two minutes for the system capacitor to discharge before performing further diagnosis or service. This is the only sure way to disable the SRS. Failure to take the proper precautions could result in accidental airbag deployment.

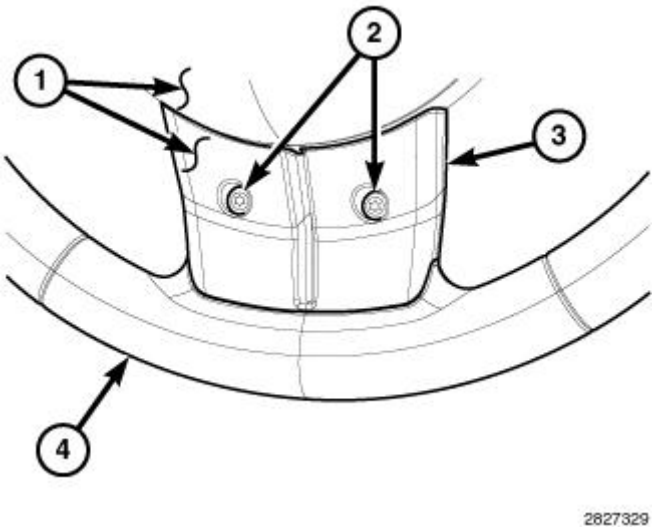

Fig. 3: Rear Cover, Two Screws, Steering Wheel Spoke Front Bezel & Steering Wheel
Courtesy of CHRYSLER GROUP, LLC

1. Disconnect and isolate the battery negative cable.
2. Remove the driver airbag from the steering wheel. Refer to **AIR BAG, DRIVER, REMOVAL** .
3. From the back of the steering wheel (4), remove the two screws (2) that secure the center spoke of the rear cover (1) to the center spoke of the steering wheel spoke front bezel (3).

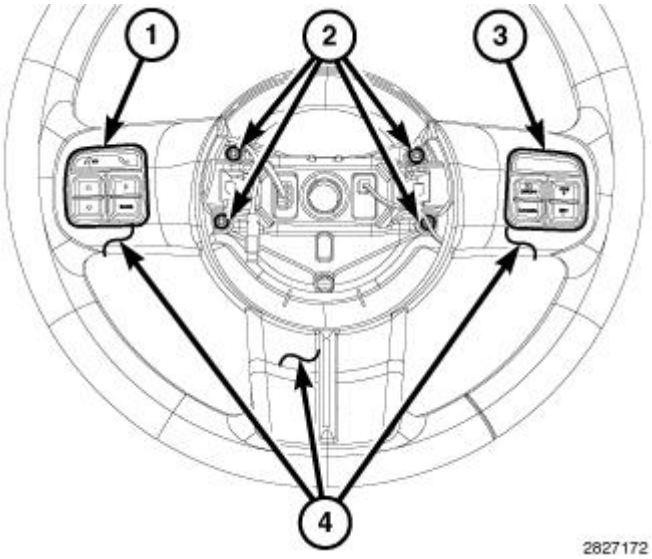

Fig. 4: EVIC Switch Pod, Speed Control Switch Pod, Four Screws & Front Spoke Bezel
Courtesy of CHRYSLER GROUP, LLC

4. From the face of the steering wheel, remove the four screws (2) that secure the front spoke bezel (4) to the steering wheel armature within the steering wheel hub cavity.
5. Using a trim stick or another suitable wide flat-bladed tool, carefully pry at the parting line between the front spoke bezel and the steering wheel rear cover enough to unsnap the two horizontal members of the bezel from those of the rear cover.
6. Pull the front spoke bezel away from the steering wheel far enough to access and disconnect the steering wheel wire harness connections from the Electronic Vehicle Information Center (EVIC) switch pod (1) and the speed control switch pod (3).

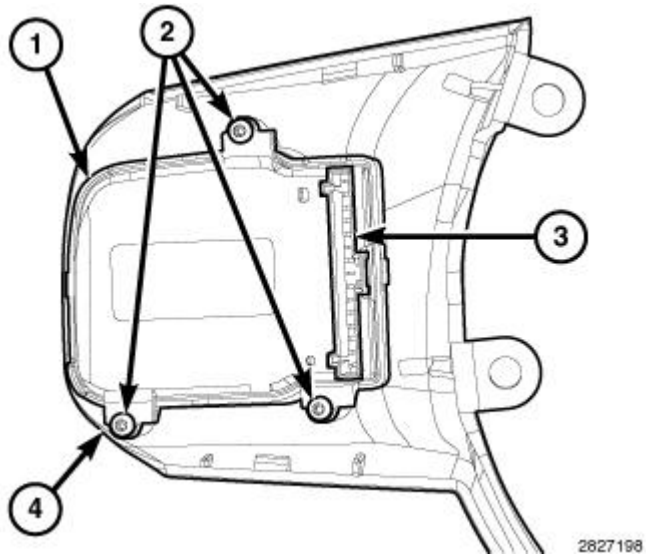

Fig. 5: Steering Wheel Spoke Front Bezel, Screws, Speed Control Switch Pod & Harness Connector
Courtesy of CHRYSLER GROUP, LLC

7. From the back of the steering wheel spoke front bezel (4), remove the three screws (2) that secure the

speed control switch pod (1) mounting tabs to the bezel.

8. Remove the switch from the bezel.

INSTALLATION

INSTALLATION

WARNING: To avoid serious or fatal injury on vehicles equipped with airbags, disable the Supplemental Restraint System (SRS) before attempting any steering wheel, steering column, airbag, seat belt tensioner, impact sensor or instrument panel component diagnosis or service. Refer to WARNING . Disconnect and isolate the battery negative (ground) cable, then wait two minutes for the system capacitor to discharge before performing further diagnosis or service. This is the only sure way to disable the SRS. Failure to take the proper precautions could result in accidental airbag deployment.

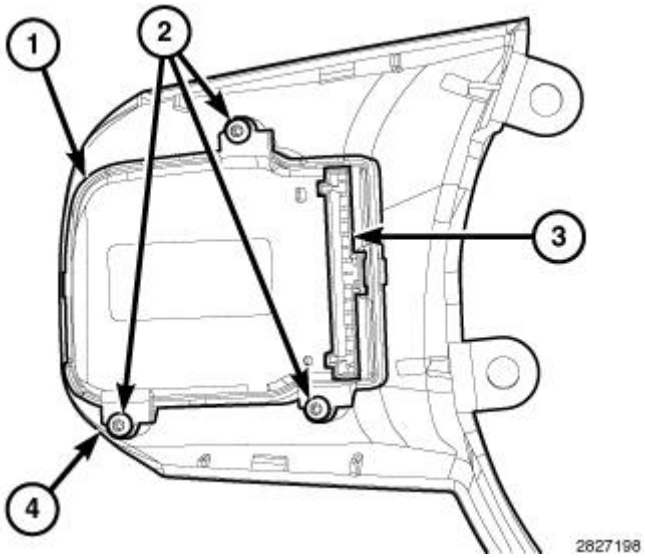

Fig. 6: Steering Wheel Spoke Front Bezel, Screws, Speed Control Switch Pod & Harness Connector
Courtesy of CHRYSLER GROUP, LLC

1. Position the speed control switch pod (1) to the back of the steering wheel spoke front bezel (4).
2. Install and tighten the three screws (2) that secure the switch mounting tabs to the bezel. Tighten the screws securely.
3. Position the front spoke bezel close enough to the steering wheel to reconnect the steering wheel wire harness connections to the Electronic Vehicle Information Center (EVIC) switch pod and the speed control switch pod connector receptacles (3).

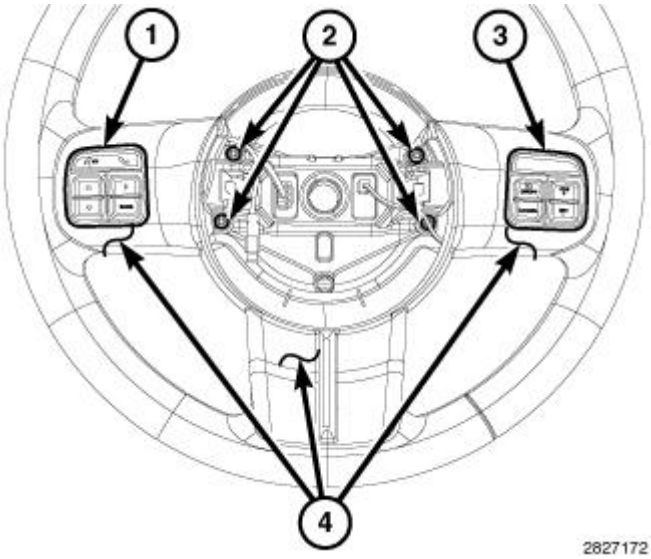

Fig. 7: EVIC Switch Pod, Speed Control Switch Pod, Four Screws & Front Spoke Bezel
Courtesy of CHRYSLER GROUP, LLC

4. Position the front spoke bezel (4), EVIC switch pod (1) and speed control switch pod (3) as a unit to the steering wheel. Be certain that the steering wheel wire harness is routed between the lower or upper bezel stanchions and the inside circumference of the steering wheel hub cavity so that the wiring will not be pinched when the driver airbag is reinstalled.
5. Use hand pressure to squeeze the horizontal spokes of both the front spoke bezel and the steering wheel rear cover together until all of the snap features are fully engaged.
6. Install and tighten the four screws that secure the stanchions of the front spoke bezel to the steering wheel armature within the steering wheel hub cavity. Tighten the screws securely.

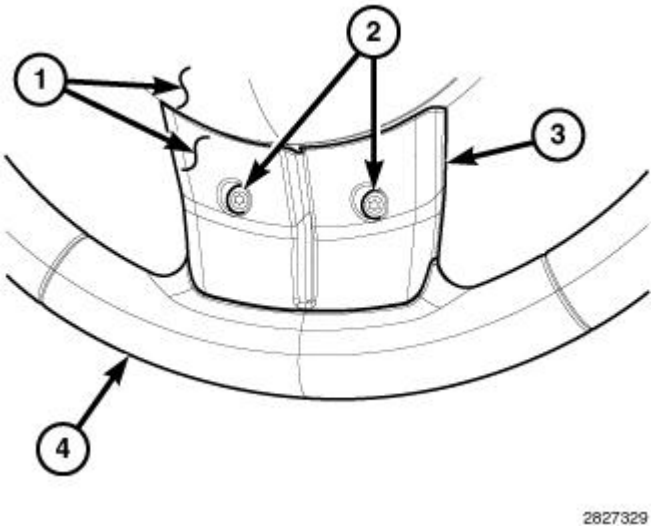

Fig. 8: Rear Cover, Two Screws, Steering Wheel Spoke Front Bezel & Steering Wheel
Courtesy of CHRYSLER GROUP, LLC

7. From the back of the steering wheel (4), install and tighten the two screws (2) that secure the center spoke

of the rear cover (1) to the center spoke of the steering wheel spoke front bezel (3). Tighten the screws securely.

8. Reinstall the driver airbag onto the steering wheel. Refer to **AIR BAG, DRIVER, INSTALLATION** .
9. Reconnect the battery negative cable.

DIAGNOSIS AND TESTING

DIAGNOSIS AND TESTING - UCI SERVICE DIAGNOSTICS

CONDITION	POSSIBLE CAUSES	CORRECTION
RADIO DOES NOT ENTER UCI / iPOD MODE	1. iPOD not connected	1. Check and connect device.
	2. iPOD faulty	2. Check device, use known good device to check connection.
	3. iPOD battery completely discharged.	3. When unplugged, Check if the iPOD works, if not iPOD may be in deep battery discharge. Charge it on UCI or separately. If the iPOD does not work at all (or does not charge at all), see iPOD dealer/service.
	4. Vehicle not equipped with UConnect	4. Notify customer vehicle not equipped. Check if Mopar kit available for this vehicle.
	5. iPOD works, but when connected to UCI, it does not.	5. Ask customer to update the iPOD firmware to the latest from the iPOD manufactures website (www.apple.com).
	6. iPOD harness wiring faulty	6a. Use scan tool to determine "UCI Connection State", if shows no harness connected with iPOD plugged in, then wiring is suspect / faulty. 6b. Check wiring and repair if needed.
	7. Radio Faulty	7. Refer to Radio Diagnostic Service Information.
	8. UConnect module Faulty	8. Replace the Hands Free Module in accordance with the Service Information.
iPOD DOES NOT SHOW "OK TO DISCONNECT" SCREEN	1. iPOD faulty	1. Check device, use known good device to check connection
	2. iPOD harness wiring faulty	2. Check wiring and repair if needed.
	3. UConnect module Faulty	4. Replace the Hands Free Module in accordance with the Service Information.
iPOD DOES NOT CHARGE	1. iPOD not connected	1. Check and connect device

	2. iPOD faulty / iPOD battery faulty	2. Check device, use known good device to check connection
	3. iPOD harness wiring faulty	3. Check wiring and repair if needed.
	4. UConnect module Faulty	4. Replace the Hands Free Module in accordance with the Service Information.
iPOD DOES NOT PLAY AUDIO	1. iPOD not connected	1. Check and connect device
	2. iPOD faulty	2. Check device, use known good device to check connection
	3. iPOD harness wiring faulty	3. Check wiring and repair if needed.
	4. Radio Faulty	4. Check that radio audio is audible in other modes
	5. UConnect module Faulty	5. Replace the Hands Free Module in accordance with the Service Information.
CANNOT GET RADIO TO ENTER UCI MODE	1. iPOD not plugged into UCI port	1. Make sure cable is available to customer (usually in glovebox of new vehicles) and show customer how to plug in device.
	2. iPOD plugged into audio jack on radio	2. iPOD must be plugged into UCI port using provided cable in glovebox. Connecting via audio jack or USB port to radio will not provide UCI mode access.
	3. iPOD plugged into USB jack on radio	3. iPOD must be plugged into UCI port using provided cable in glovebox. Connecting via audio jack or USB port to radio will not provide UCI mode access.
	4. No cable provided to customer	4. Cable not provided from factory. Mopar cable P/N is 82210787
ALPHA SORT BUTTON ON REN / REZ RADIO DOES NOT STAY ON DURING BROWSE MODE	1. Customer iPOD is using version of iTunes software with known software bug (Version 7.0)	1. Ask customer to update the iPOD firmware to the latest from the iPOD manufactures website (www.apple.com)
	2. Customer has entries stored on their device which begin with non-standard English lanaguage characters	2. The system may not recognize entries which begin with characters from certain non-English languages such as Russian, Japanese, Chinese, Hebrew, etc. This could cause the alpha-sort function to fail and the button to turn off.
ALPHA SORT BUTTON ON REN / REZ RADIO IS	1. This is Normal Behavior, the	

GRAYED OUT FOR A WHILE BEFORE IT CAN BE SELECTED	button is grayed out while the song / artist / album / etc. data is being alphabetized by the UCI system.	1. Not an issue, The time the button is grayed out is directly proportional to the number of entries to be alphabetized.
ERROR MESSAGE DISPLAYED ON RADIO WHEN ATTEMPTING TO ENTER UCI MODE.	1. Error message: Comm Error	1a. Use the scan tool to determine UCI Connection state, if shows no harness connected wiring is suspect / faulty. 1b. Check wiring and repair if needed. 1c. Unplug and reconnect iPOD.
	2. Error Message:Not Supported	2. Ask customer to update the iPOD firmware to the latest from the iPOD manufactures website (www.apple.com)
	3. Error Message: No Files Found on iPOD	3. iPOD has no audio files on it, have the customer put some audio files on the iPOD and try to reconnect the device.
	4. Error Message: Unknown Error. iPOD unavailable	4a. Unplug and reconnect iPOD. 4b. Check wiring and repair if needed.
CUSTOMER IS UNABLE TO COPY FILES FROM iPOD TO RADIO HARD DRIVE	1. This feature is only available by connecting the iPOD to the USB port on the radio AND using the iPOD as a storage device. It is not possible to download audio tracks you play on the iPOD to the radio Hard Drive	1a. Ensure customer is connecting iPOD to USB port on radio. 1b. Feature not available by plugging iPOD into the UCI port.
iPOD DOES NOT TURN OFF WHEN THE VEHICLE IS TURNED OFF AND THE iPOD IS LEFT PLUGGED IN	1. This is normal iPOD behavior. The iPOD has a default setting where it will stay on for X minutes after the vehicle is turned off.	1. Not an issue.

DIAGNOSIS AND TESTING - TELECOMMUNICATION

Any diagnosis of the Telecommunication system should begin with the use of scan tool. For information on the use of the scan tool, refer to the appropriate Diagnostic Service information.

For complete circuit diagrams, refer to the appropriate wiring information.

WARNING: **On vehicles equipped with airbags, refer to electrical, restraints before attempting any steering wheel, steering column, or instrument panel component diagnosis or service. Failure to take the proper precautions could result in accidental airbag deployment and possible personal injury.**

TELECOMMUNICATION SYSTEM DIAGNOSIS

CONDITION	POSSIBLE CAUSE	CORRECTION
PHONE NOT AVAILABLE	1. Bluetooth™™ phone not paired to the system.	1. Ensure that phone(s) are paired to the system.

	2. Bluetooth™™ phone not present or turned OFF.	2. Make sure paired phone is present, turned ON and that the Bluetooth™™ option is enabled on the phone.
	3. Bluetooth™™ phone has low battery.	3. At low battery levels, some phones will turn off Bluetooth™™ functionality. Ensure cellular phone is charged to an adequate level.
PHONE PAIRING FAILED	1. Phone does not support Hands Free Profile	1. The Telecommunication system requires the cellular phone to be Bluetooth™™ enabled, as well as supporting the Hands Free Profile. The customer will have to upgrade their phone to one supporting Hands Free Profile. A list of suggested phones is available at: http://www.chrysler.com/uconnect.
	2. Phone not Bluetooth™™ enabled.	2. The Telecommunication system requires the cellular phone to be Bluetooth™™™ enabled. A list of suggested phones is available at: http://www.chrysler.com/uconnect.
	3. PIN entered on the phone is not the same as PIN spoken to the system.	3. The PIN spoken to the system must be the same PIN entered into the phone.
	4. Phone has reached maximum number of allowed devices paired.	4. Remove one of the previously paired devices from it's list.
POOR VOICE RECOGNITION	1. Microphone failure	1. Using a scan tool, check for microphone fault codes.
	2. Customer not waiting for the beep before speaking.	2. Ensure customer is waiting for the system "beep" prior to beginning the speech to be recognized.
	3. Customer not speaking in a smooth normal manner.	3. Verify that the customer is attempting to use the system with a smooth consistent voice. The system is designed to accept normal speech spoken at a normal tone, some people tend to speak to a computer loud and slow, which results in reduced performance.
	4. Rear view mirror not properly attached to mounting.	4. Mirror must be firmly mounted to the mounting location. Ensure that mirror is tightened to the specified torque.
	5. High levels of noise in vehicle compartment	5. System performance is increased when noise conditions in the vehicle are lowered. Ideal conditions include windows closed.
	6. Object interfering with microphone input	6. Verify that there is no object, hanging from the mirror, that could be obstructing the microphone.
	7. User not saying "send" after a pager dialing request	7. User must say "send" at the end of a Pager Dialing request.

	8. Other passengers talking while customer is attempting to use the system	8. Although designed for primary use by the driver, the microphone will pick up passengers in any seat of the vehicle. System performance is increased in low noise environments.
PHONEBOOK NAMES NOT RECOGNIZED CONSISTENTLY	1. Phonebook names recorded in high noise conditions	1. For increased system performance, it is recommended that the phone book entries are recorded in a low noise environment. That is, vehicle in park, with windows up.
	2. Phonebook name(s) short	2. For increased performance it is recommended that the user use both first and last name as a phonebook entry. Example: "Daniel Johnson" as opposed to "Dan".
	3. Phonebook names recorded by another user	3. It is recommended that each user of the system record their own phonebook entries. This will increase the recognition performance.
	4. Similar names in phonebook	4. For increased system performance it is recommended that the user do not enter similar sounding names in the phonebook.
	5. Object interfering with microphone input	5. Object interfering with microphone input.
POOR PHONE AUDIO QUALITY.	1. Microphone failure	1. Use a scan tool, and check for Microphone faults.
	2. Rear view mirror not properly fixed to mounting button	2. Mirror must be firmly mounted to the mounting location. Tighten mirror to the specified torque.
	3. System being used in high noise conditions	3. System performance is increased when noise conditions in the vehicle are lowered. Ideal conditions include windows closed.
NO PHONE AUDIO	1. Phone setting cause phone audio to be routed to handset.	1. Route audio to "Hands free" device.

DIAGNOSTIC CODE INDEX

DIAGNOSTIC CODE INDEX

DTC	Description
B162B	LEFT LOW BEAM CONTROL CIRCUIT LOW
B162C	LEFT LOW BEAM CONTROL CIRCUIT HIGH
B162F	RIGHT LOW BEAM CONTROL CIRCUIT LOW
B1630	RIGHT LOW BEAM CONTROL CIRCUIT HIGH
B1633	LEFT HI BEAM CONTROL CIRCUIT LOW
B1634	LEFT HI BEAM CONTROL CIRCUIT HIGH
B1637	RIGHT HI BEAM CONTROL CIRCUIT LOW
B1638	RIGHT HI BEAM CONTROL CIRCUIT HIGH
B163B	FRONT LEFT TURN LAMP CONTROL CIRCUIT LOW
B163C	FRONT LEFT TURN LAMP CONTROL CIRCUIT HIGH
B163F	FRONT RIGHT TURN LAMP CONTROL CIRCUIT LOW
B1640	FRONT RIGHT TURN LAMP CONTROL CIRCUIT HIGH
B1643	REAR LEFT TURN LAMP CONTROL CIRCUIT LOW
B1644	REAR LEFT TURN LAMP CONTROL CIRCUIT HIGH
B1647	REAR RIGHT TURN LAMP CONTROL CIRCUIT LOW
B1648	REAR RIGHT TURN LAMP CONTROL CIRCUIT HIGH
B165C	PARK LAMP CONTROL CIRCUIT LOW
B16F8	FRONT LEFT FOG LAMP CONTROL CIRCUIT LOW
B16F9	FRONT LEFT FOG LAMP CONTROL CIRCUIT HIGH
B16FC	FRONT RIGHT FOG LAMP CONTROL CIRCUIT LOW
B16FD	FRONT RIGHT FOG LAMP CONTROL CIRCUIT HIGH
B17AE	REAR LEFT TRAILER TURN LAMP CONTROL CIRCUIT LOW
B17B2	REAR RIGHT TRAILER TURN LAMP CONTROL CIRCUIT LOW
B1801	DRIVER DOOR LOCK/UNLOCK SWITCH CIRCUIT LOW
B1806	PASSENGER DOOR LOCK/UNLOCK SWITCH CIRCUIT LOW
B1820	HOOD AJAR INPUT CIRCUIT HIGH
B1934	DRIVER DOOR LOCK/UNLOCK SWITCH CIRCUIT STUCK
B1935	PASSENGER DOOR LOCK/UNLOCK SWITCH CIRCUIT STUCK
B1D4F	ADJUSTABLE PEDAL INHIBIT CIRCUIT LOW
B2101	IGNITION RUN/START INPUT LOW
B2102	IGNITION RUN/START INPUT HIGH
B210D	BATTERY VOLTAGE LOW
B210E	BATTERY VOLTAGE HIGH
B212F	IGNITION RUN/ACC CONTROL CIRCUIT LOW

B2142	IGNITION OFF DRAW (IOD) FUSE NOT PRESENT
B219A	IGNITION UNLOCK RUN/START CONTROL CIRCUIT OVERCURRENT
B219F	IGNITION OFF DRAW (IOD) FUSE BLOWN
B2206	CURRENT VIN MISSING / MISMATCH
B2215	FRONT CONTROL MODULE INTERNAL (TOTALLY INTEGRATED POWER MODULE)
B222C	VEHICLE CONFIGURATION NOT PROGRAMMED
B2304	WIPER PARK SWITCH INPUT CIRCUIT LOW (STUCK LOW)
B2305	WIPER PARK SWITCH INPUT CIRCUIT HIGH (STUCK HIGH)
C1008	BRAKE FLUID LEVEL CIRCUIT HIGH
C1404	TRANSFER CASE RANGE POSITION SENSOR CIRCUIT LOW
C1405	TRANSFER CASE RANGE POSITION SENSOR CIRCUIT HIGH
P0072	AMBIENT AIR TEMPERATURE SENSOR CIRCUIT LOW
P0073	AMBIENT AIR TEMPERATURE SENSOR CIRCUIT HIGH
P0462	FUEL LEVEL SENSOR 1 CIRCUIT LOW
P0463	FUEL LEVEL SENSOR 1 CIRCUIT HIGH
P0691	COOLING FAN 1 CONTROL CIRCUIT LOW
P0692	COOLING FAN 1 CONTROL CIRCUIT HIGH
P0693	COOLING FAN 2 CONTROL CIRCUIT LOW
P0694	COOLING FAN 2 CONTROL CIRCUIT HIGH
P1273	A/C CONTROL CIRCUIT 2 HIGH
P1275	A/C CONTROL CIRCUIT 2 OVERCURRENT
P129E	INVERTER CONTROL CIRCUIT OVERCURRENT
U0001	CAN C BUS
U0010	CAN INTERIOR BUS
U0100	LOST COMMUNICATION WITH ECM/PCM
U0101	LOST COMMUNICATION WITH TCM
U0102	LOST COMMUNICATION WITH TRANSFER CASE CONTROL MODULE / AWD
U0114	LOST COMMUNICATION WITH FINAL DRIVE CONTROL MODULE
U0121	LOST COMMUNICATION WITH ABS
U0127	LOST COMMUNICATION WITH TIRE PRESSURE MONITOR MODULE
U0137	LOST COMMUNICATION WITH TRAILER BRAKE CONTROL MODULE
U0141	LOST COMMUNICATION WITH IPM (FCM/TIPM)
U0151	LOST COMMUNICATION WITH OCCUPANT RESTRAINT CONTROLLER (ORC)
U0155	LOST COMMUNICATION WITH CLUSTER/CCN
U0159	LOST COMMUNICATION WITH PARK ASSIST MODULE (PTS)
U0164	LOST COMMUNICATION WITH HVAC CONTROL MODULE
U0168	LOST COMMUNICATION WITH VEHICLE SECURITY CONTROL MODULE (WIRELESS IGNITION NODE OR WIN)
U0184	LOST COMMUNICATION WITH RADIO

U0186	LOST COMMUNICATION WITH AUDIO AMPLIFIER (AMP)
U0197	LOST COMMUNICATION WITH HANDS FREE PHONE MODULE (HFM)
U0203	LOST COMMUNICATION WITH DOOR MODULE FRONT LEFT (DMFL) (DRIVER DOOR MODULE)
U0204	LOST COMMUNICATION WITH DOOR MODULE FRONT RIGHT (DMFR) (PASSENGER DOOR MODULE)
U0208	LOST COMMUNICATION WITH HEATED SEAT CONTROL MODULE
U0209	LOST COMMUNICATION WITH MEMORY SEAT CONTROL MODULE (MSMD)
U0212	LOST COMMUNICATION WITH SCM
U0249	LOST COMMUNICATION WITH VEHICLE ENTERTAINMENT CONTROL MODULE - LAST ROW (VES3)
U1147	ADDITIONAL CAN INTERIOR BUS ECU DETECTED
U1148	ADDITIONAL CAN C BUS ECU DETECTED

DIAGNOSIS AND TESTING

B162B-LEFT LOW BEAM CONTROL CIRCUIT LOW

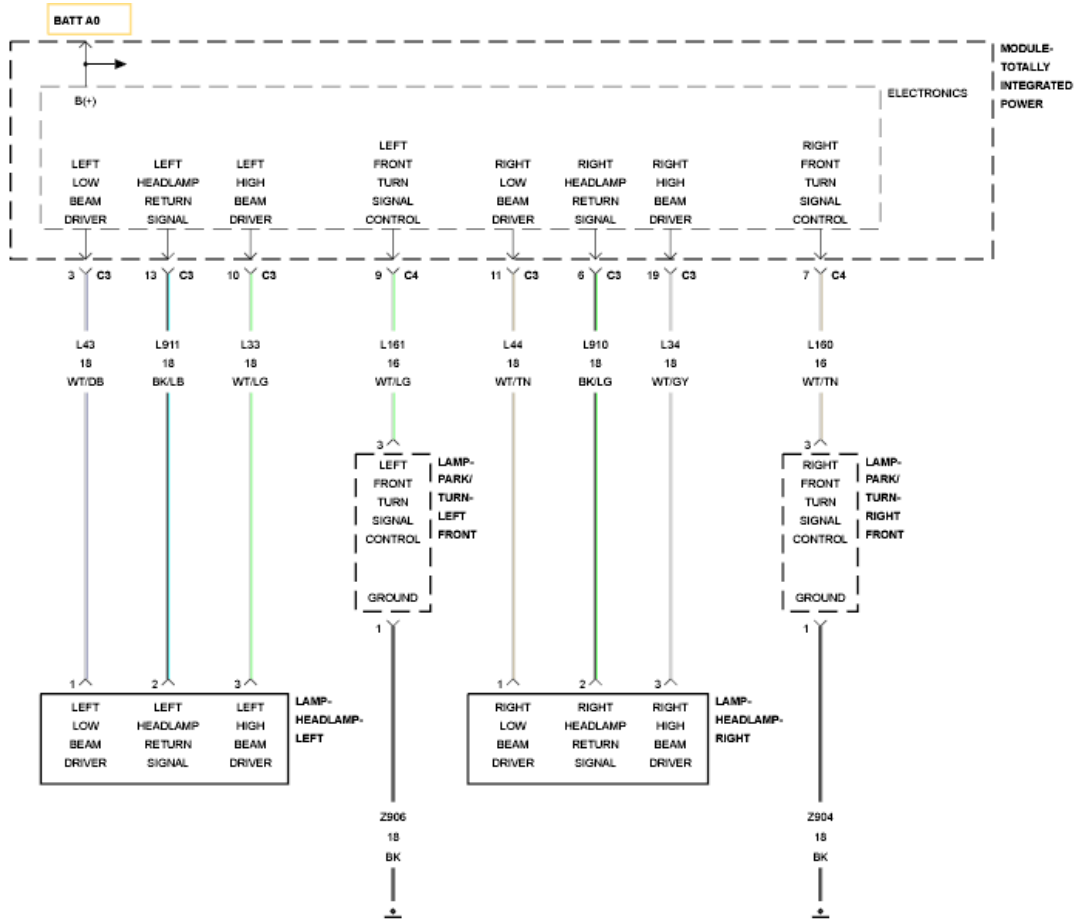

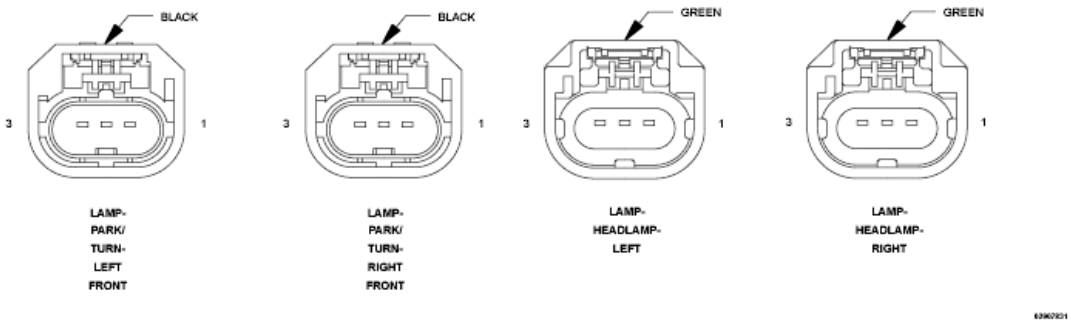

Fig. 1: Headlamp & Front Parking Lamp Wiring Diagram
Courtesy of CHRYSLER GROUP, LLC

For a complete wiring diagram, **refer to appropriate SYSTEM WIRING DIAGRAMS article** .

THEORY OF OPERATION

The Totally Integrated Power Module (TIPM) receives a bus message requesting low beam lamp illumination.

When this bus message is received, the TIPM provides a voltage output through the low beam driver circuit. The low beam driver circuit connects to the Low Beam Lamp. A headlamp return signal circuit is used instead of a ground circuit. For additional information on the Headlamp operation. Refer to **EXTERIOR LIGHTING - OPERATION** .

WHEN MONITORED:

With the low beam headlamps active.

SET CONDITION:

When the Totally Integrated Power Module (TIPM) detects a low condition on the (L43) Left Low Beam Driver circuit.

POSSIBLE CAUSES

Possible Causes
(L43) LEFT LOW BEAM DRIVER CIRCUIT SHORTED TO GROUND
(L43) LEFT LOW BEAM DRIVER CIRCUIT SHORTED TO THE (L911) LEFT HEADLAMP RETURN SIGNAL CIRCUIT
LEFT LOW BEAM BULB
TOTALLY INTEGRATED POWER MODULE (TIPM)

DIAGNOSTIC TEST

1. **INTERMITTENT CONDITION**
    1. Turn the ignition on.
    2. With the scan tool, clear all DTC's.
    3. Turn the Headlamps on.
    4. With the scan tool, read DTC's.

    Does the scan tool display DTC: B162B-LEFT LOW BEAM CONTROL CIRCUIT LOW?

    Yes

    - Go To 2.

    No

    - Test complete, the condition or conditions that originally set this DTC are not present at this time. Using the wiring diagrams as a guide, check all related splices and connectors for signs of water intrusion, corrosion, pushed out or bent terminals, and correct pin tension.
    - Perform the BODY VERIFICATION TEST. Refer to **BODY VERIFICATION TEST**.
2. **ATTEMPT TO SET THE OPPOSITE DTC**
    1. Turn the ignition off.

2. Disconnect the Left Headlamp Lamp harness connector.
3. Turn the ignition on.
4. With the scan tool, read DTC's.

   Does the scan tool display DTC: B162C-LEFT LOW BEAM CONTROL CIRCUIT HIGH?

   Yes

   - Replace the Left Low Beam Bulb in accordance with the Service Information. Refer to **UNIT, FRONT LAMP, REMOVAL** .
   - Perform the BODY VERIFICATION TEST. Refer to **BODY VERIFICATION TEST**.

   No

   - Go To 3.

3. **CHECK THE (L43) LEFT LOW BEAM DRIVER CIRCUIT FOR A SHORT TO GROUND**

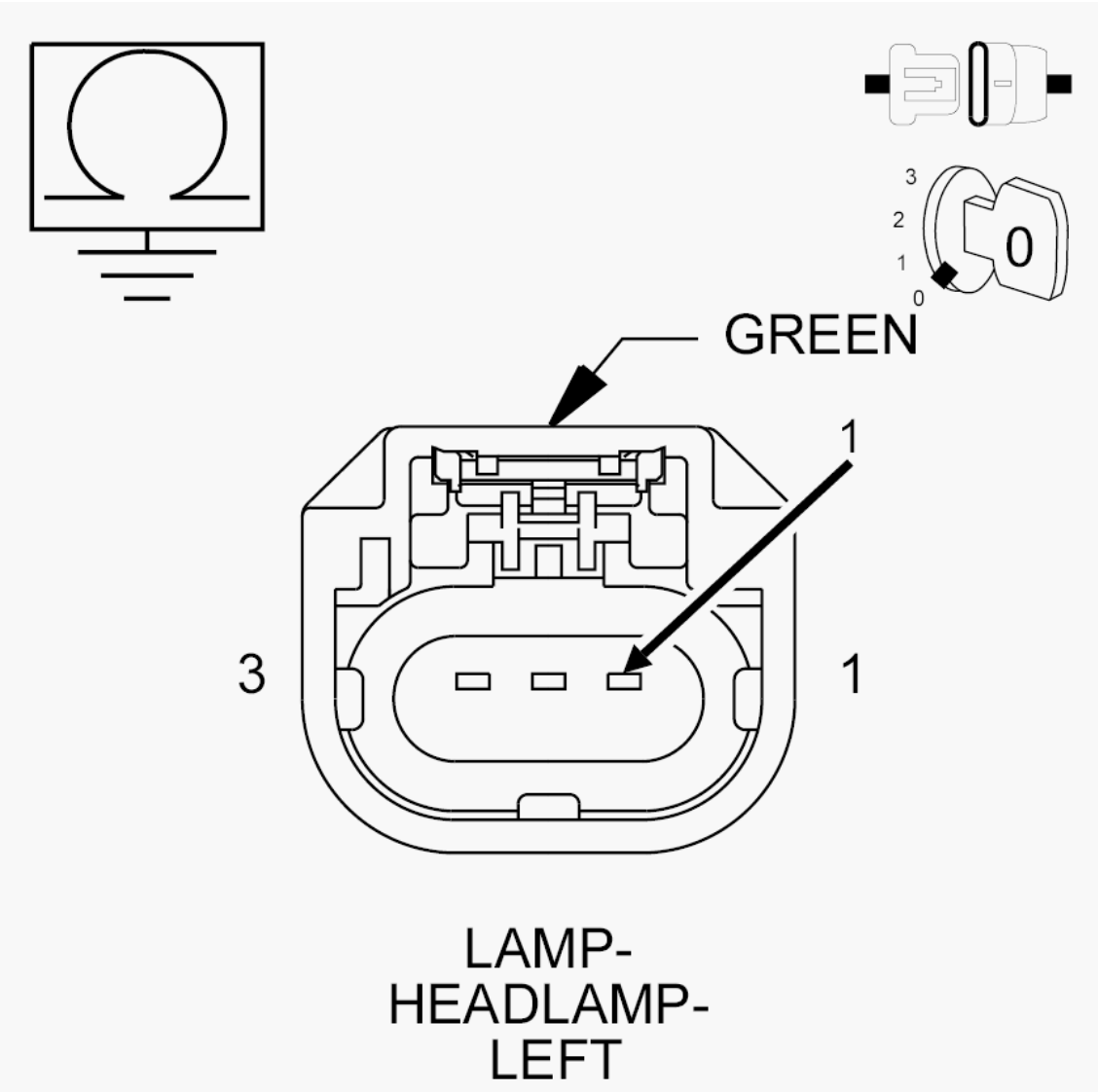

Fig. 2: Checking Left Low Beam Driver Circuit For A Short To Ground
Courtesy of CHRYSLER GROUP, LLC

1. Turn the ignition off.
2. Disconnect the TIPM C3 harness connector.
3. Measure the resistance between ground and the (L43) Left Low Beam Driver circuit.

   Is the resistance above 10k Ohms?

   Yes

   - Go To 4.

   No

   - Repair the short to ground in the (L43) Left Low Beam Driver circuit.

- Perform the BODY VERIFICATION TEST. Refer to **BODY VERIFICATION TEST**.

4. **CHECK THE (L43) LEFT LOW BEAM DRIVER CIRCUIT FOR A SHORT TO THE (L911) LEFT HEADLAMP RETURN SIGNAL CIRCUIT**

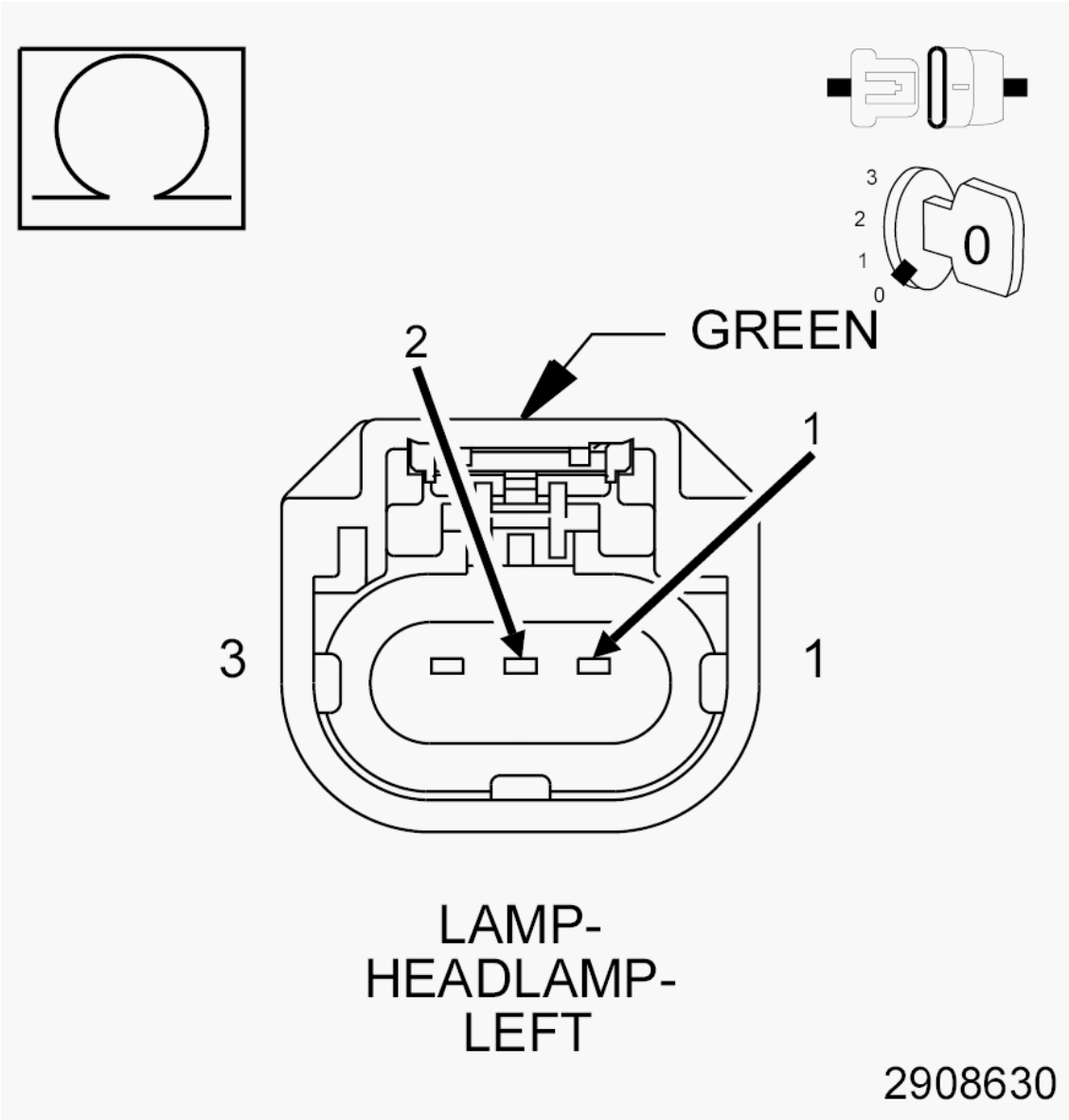

Fig. 3: Checking Left Low Beam Driver Circuit For A Short To Left Headlamp Return Signal Circuit
Courtesy of CHRYSLER GROUP, LLC

1. Measure the resistance between the (L43) Left Low Beam Driver circuit and the (L911) Left Headlamp Return Signal circuit.

   Is the resistance above 10k Ohms?

   Yes

- Replace the Totally Integrated Power Module (TIPM) in accordance with the Service Information. Refer to **MODULE, TOTALLY INTEGRATED POWER (TIPM), REMOVAL** .
- Perform the BODY VERIFICATION TEST. Refer to **BODY VERIFICATION TEST**.

No

- Repair the short between the (L43) Left Low Beam Driver circuit and the (L911) Left Headlamp Return Signal circuit.
- Perform the BODY VERIFICATION TEST. Refer to **BODY VERIFICATION TEST**.

B162C-LEFT LOW BEAM CONTROL CIRCUIT HIGH

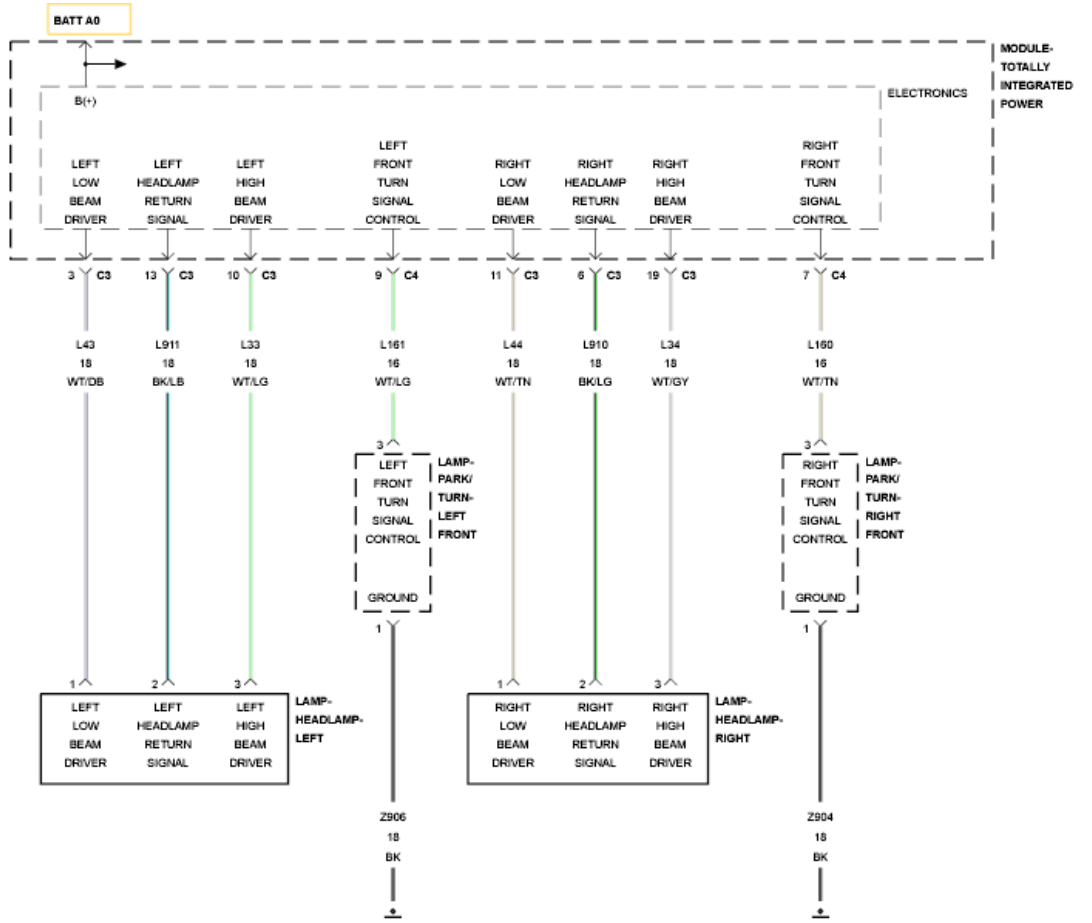

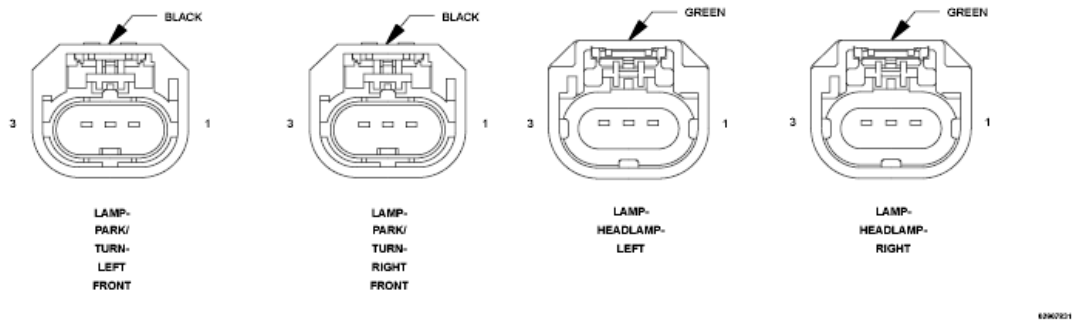

Fig. 4: Headlamp & Front Parking Lamp Wiring Diagram
Courtesy of CHRYSLER GROUP, LLC

For a complete wiring diagram, **refer to appropriate SYSTEM WIRING DIAGRAMS article** .

THEORY OF OPERATION

The Totally Integrated Power Module (TIPM) receives a bus message requesting low beam lamp illumination.

When this bus message is received, the TIPM provides a voltage output through the low beam driver circuit. The low beam driver circuit connects to the Low Beam Lamp. A headlamp return signal circuit is used instead of a ground circuit. For additional information on the Headlamp operation. Refer to **EXTERIOR LIGHTING - OPERATION** .

WHEN MONITORED:

With the low beam headlamps active.

SET CONDITION:

When the Totally Integrated Power Module (TIPM) detects a high condition on the (L43) Left Low Beam Driver circuit.

POSSIBLE CAUSES

Possible Causes
(L43) LEFT LOW BEAM DRIVER CIRCUIT OPEN
(L43) LEFT LOW BEAM DRIVER CIRCUIT SHORTED TO VOLTAGE
(L911) LEFT HEADLAMP RETURN SIGNAL CIRCUIT OPEN
LEFT LOW BEAM BULB
TOTALLY INTEGRATED POWER MODULE (TIPM)

DIAGNOSTIC TEST

1. **INTERMITTENT CONDITION**
    1. Turn the ignition on.
    2. With the scan tool, clear all DTC's.
    3. Turn the Headlamps on.
    4. With the scan tool, read DTC's.

    Does the scan tool display DTC: B162C-LEFT LOW BEAM CONTROL CIRCUIT HIGH?

    Yes

    - Go To 2.

    No

    - Test complete, the condition or conditions that originally set this DTC are not present at this time. Using the wiring diagrams as a guide, check all related splices and connectors for signs of water intrusion, corrosion, pushed out or bent terminals, and correct pin tension.
    - Perform the BODY VERIFICATION TEST. Refer to **BODY VERIFICATION TEST**.
2. **CHECK THE (L43) LEFT LOW BEAM DRIVER CIRCUIT FOR A SHORT TO VOLTAGE IN THE HARNESS**

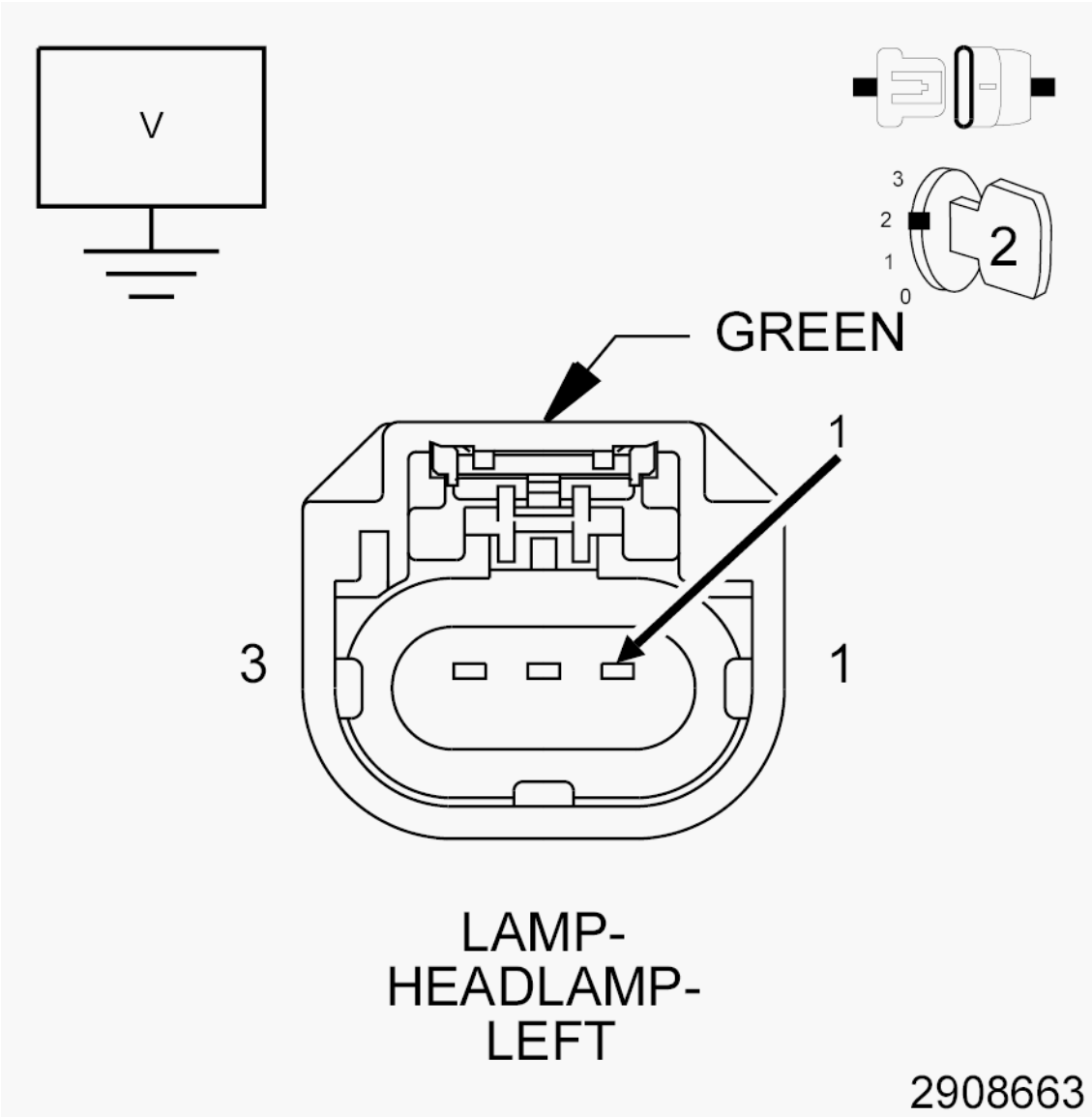

Fig. 5: Checking Left Low Beam Driver Circuit For A Short To Voltage In The Harness
Courtesy of CHRYSLER GROUP, LLC

1. Turn the Headlamps off.
2. Turn the ignition off.
3. Disconnect the Left Headlamp Lamp harness connector.
4. Disconnect the TIPM C3 harness connector.
5. Turn the ignition on.
6. Measure the voltage between ground and the (L43) Left Low Beam Driver circuit.

   Is there any voltage present?

   Yes

- Repair the short to voltage in the (L43) Left Low Beam Driver circuit.
- Perform the BODY VERIFICATION TEST. Refer to **BODY VERIFICATION TEST**.

No

- Go To 3.

3. **CHECK THE TIPM FOR CORRECT OPERATION**

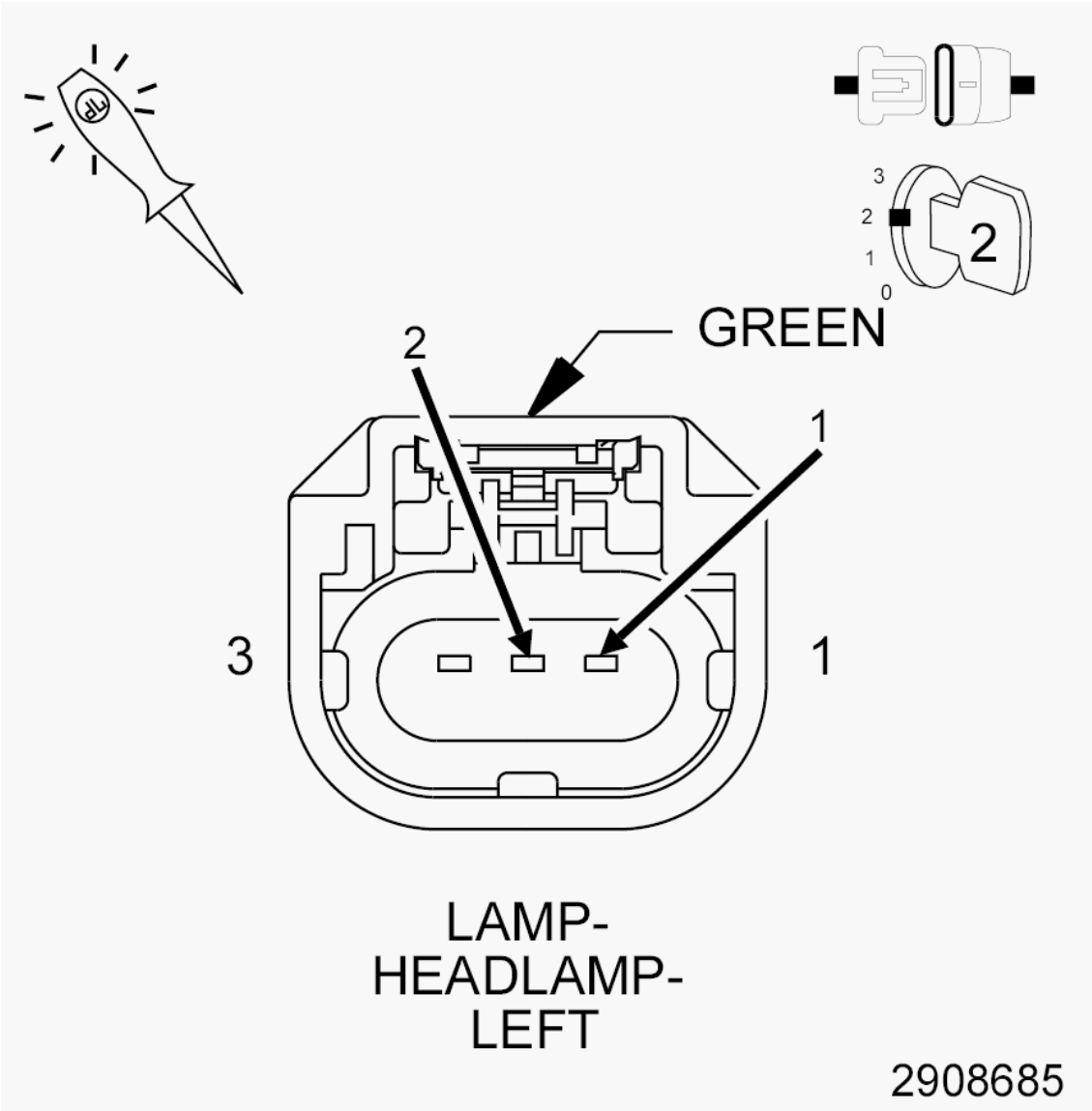

Fig. 6: Checking TIPM For Correct Operation
Courtesy of CHRYSLER GROUP, LLC

1. Turn the ignition off.
2. Reconnect the TIPM C3 harness connector.
3. Connect a 12-volt test light between the (L43) Left Low Beam Driver circuit and (L911) Left

Headlamp Return Signal circuit in the Left Headlamp Lamp harness connector.

4. Turn the ignition on.
5. Turn the Headlamps on.

Does the test light illuminate brightly?

Yes

- Replace the Left Low Beam Bulb in accordance with the Service Information. Refer to **UNIT, FRONT LAMP, REMOVAL** .
- Perform the BODY VERIFICATION TEST. Refer to **BODY VERIFICATION TEST**.

No

- Go To 4.

4. **CHECK THE (L43) LEFT LOW BEAM DRIVER CIRCUIT FOR AN OPEN IN THE HARNESS**

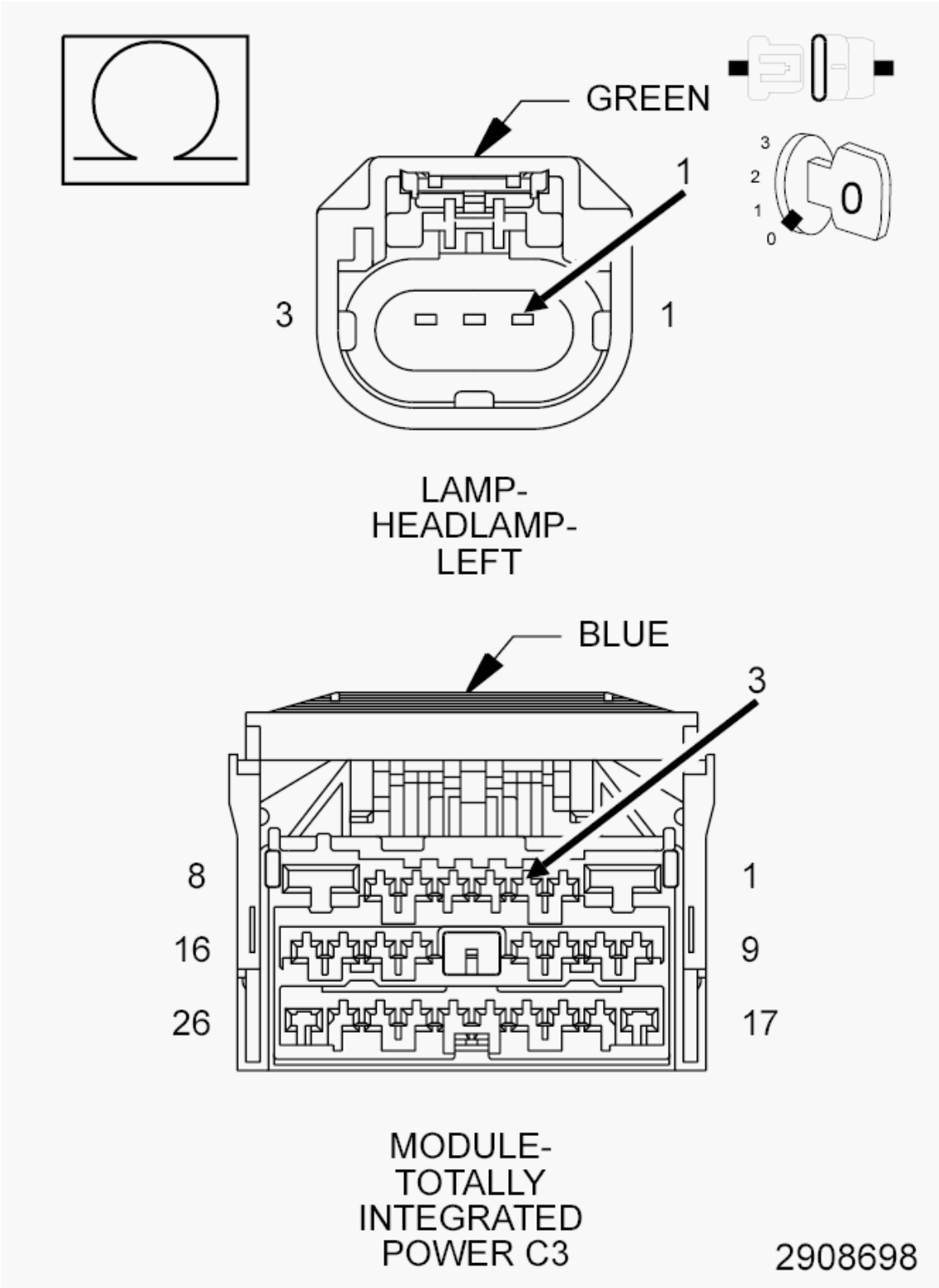

Fig. 7: Checking Left Low Beam Driver Circuit For An Open In The Harness
Courtesy of CHRYSLER GROUP, LLC

1. Turn the ignition off.

2. Disconnect the TIPM C3 harness connector.
3. Measure the resistance of the (L43) Left Low Beam Driver circuit between the Left Headlamp Lamp harness connector and the TIPM C3 harness connector.

   Is the resistance below 5.0 Ohms?

   Yes

   - Go To 5.

   No

   - Repair the open in the (L43) Left Low Beam Driver circuit.
   - Perform the BODY VERIFICATION TEST. Refer to **BODY VERIFICATION TEST**.

5. **CHECK THE (L911) LEFT HEADLAMP RETURN SIGNAL CIRCUIT FOR AN OPEN IN THE HARNESS**

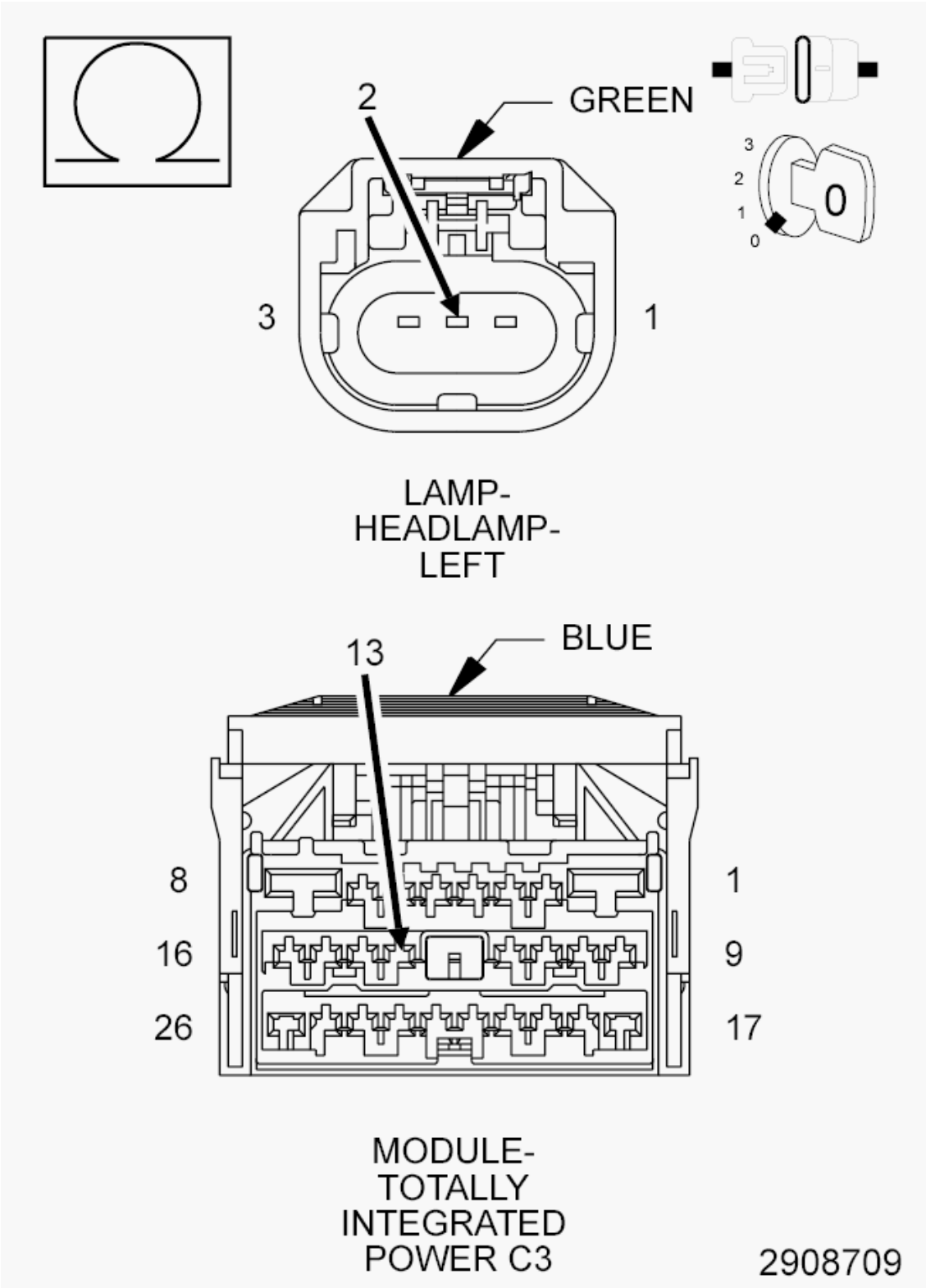

Fig. 8: Checking Left Headlamp Return Signal Circuit For An Open In The Harness
Courtesy of CHRYSLER GROUP, LLC

1. Measure the resistance of the (L911) Left Headlamp Return Signal circuit between the Left

Headlamp Lamp harness connector and the TIPM C3 harness connector.

Is the resistance below 5.0 Ohms?

Yes

- Replace the Totally Integrated Power Module (TIPM) in accordance with the Service Information. Refer to **MODULE, TOTALLY INTEGRATED POWER (TIPM), REMOVAL** .
- Perform the BODY VERIFICATION TEST. Refer to **BODY VERIFICATION TEST**.

No

- Repair the open in the (L911) Left Headlamp Return Signal circuit.
- Perform the BODY VERIFICATION TEST. Refer to **BODY VERIFICATION TEST**.

B162F-RIGHT LOW BEAM CONTROL CIRCUIT LOW

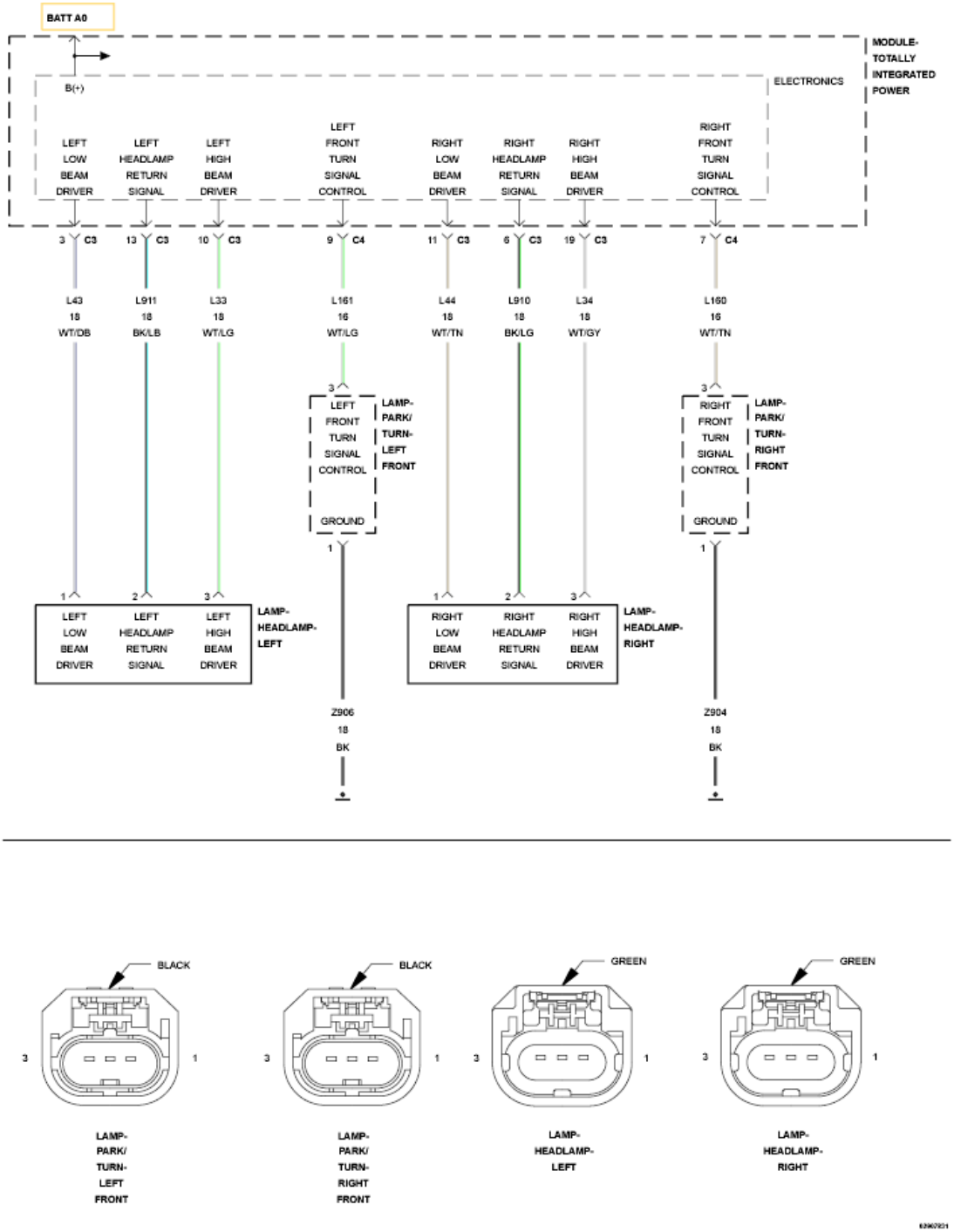

Fig. 9: Headlamp & Front Parking Lamp Wiring Diagram
Courtesy of CHRYSLER GROUP, LLC

For a complete wiring diagram, **refer to appropriate SYSTEM WIRING DIAGRAMS article** .

THEORY OF OPERATION

The Totally Integrated Power Module (TIPM) receives a bus message requesting low beam lamp illumination.

When this bus message is received, the TIPM provides a voltage output through the low beam driver circuit. The low beam driver circuit connects to the Low Beam Lamp. A headlamp return signal circuit is used instead of a ground circuit. For additional information on the Headlamp operation. Refer to **EXTERIOR LIGHTING - OPERATION** .

WHEN MONITORED:

With the low beam headlamps active.

SET CONDITION:

When the Totally Integrated Power Module (TIPM) detects a low condition on the (L44) Right Low Beam Driver circuit.

POSSIBLE CAUSES

Possible Causes
(L44) RIGHT LOW BEAM DRIVER CIRCUIT SHORTED TO GROUND
(L44) RIGHT LOW BEAM DRIVER CIRCUIT SHORTED TO THE (L910) RIGHT HEADLAMP RETURN SIGNAL CIRCUIT
RIGHT LOW BEAM BULB
TOTALLY INTEGRATED POWER MODULE (TIPM)

DIAGNOSTIC TEST

1. **INTERMITTENT CONDITION**
    1. Turn the ignition on.
    2. With the scan tool, clear all DTC's.
    3. Turn the Headlamps on.
    4. With the scan tool, read DTC's.

    Does the scan tool display DTC: B162F-RIGHT LOW BEAM CONTROL CIRCUIT LOW?

    Yes

    - Go To 2.

    No

    - Test complete, the condition or conditions that originally set this DTC are not present at this time. Using the wiring diagrams as a guide, check all related splices and connectors for signs of water intrusion, corrosion, pushed out or bent terminals, and correct pin tension.
    - Perform the BODY VERIFICATION TEST. Refer to **BODY VERIFICATION TEST**.
2. **ATTEMPT TO SET THE OPPOSITE DTC**
    1. Turn the ignition off.

2. Disconnect the Right Headlamp Lamp harness connector.
3. Turn the ignition on.
4. With the scan tool, read DTC's.

   Does the scan tool display DTC: B1630-RIGHT LOW BEAM CONTROL CIRCUIT HIGH?

   Yes

   - Replace the Right Low Beam Bulb in accordance with the Service Information. Refer to **UNIT, FRONT LAMP, REMOVAL** .
   - Perform the BODY VERIFICATION TEST. Refer to **BODY VERIFICATION TEST**.

   No

   - Go To 3.

3. **CHECK THE (L44) RIGHT LOW BEAM DRIVER CIRCUIT FOR A SHORT TO GROUND**

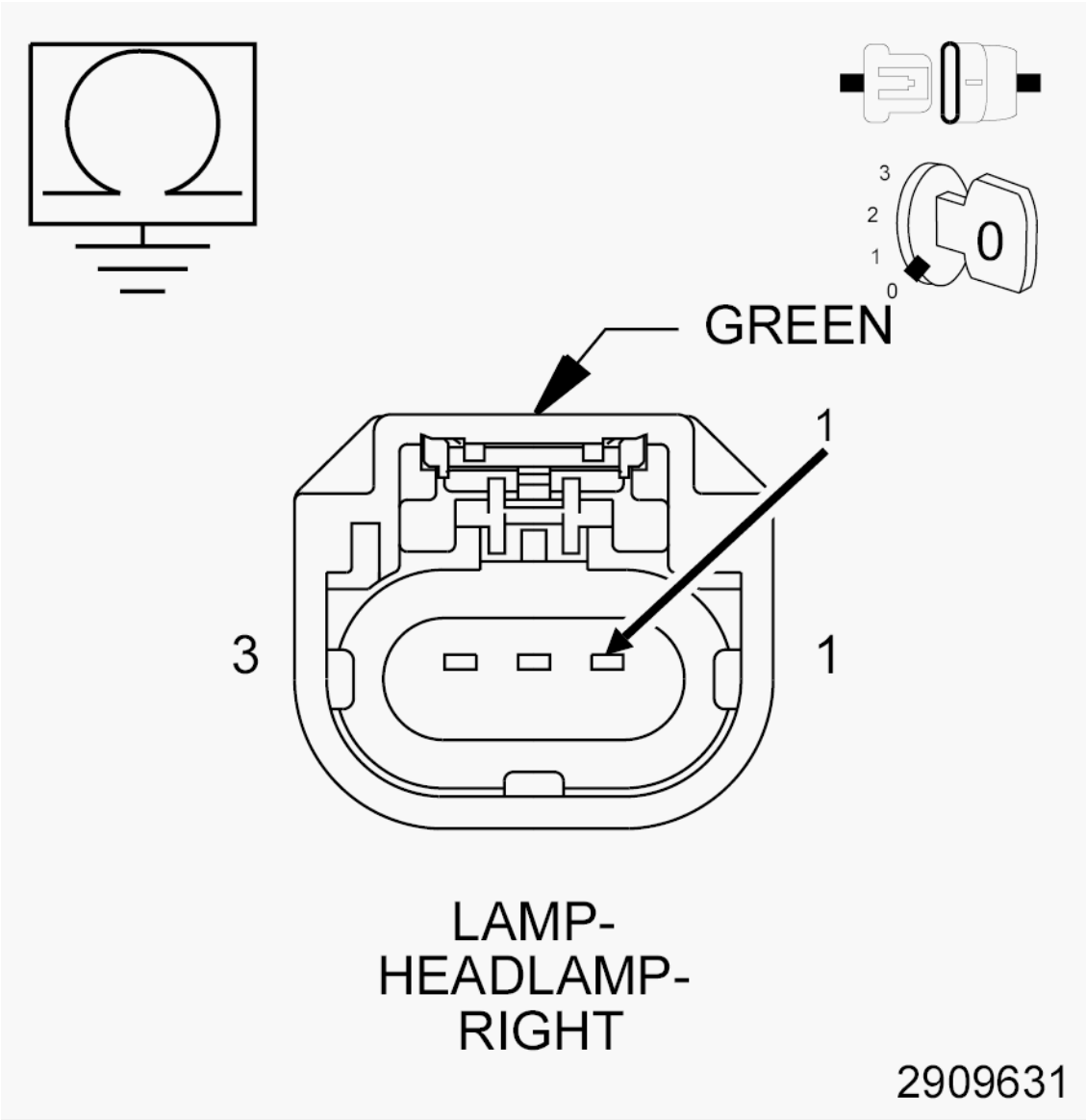

Fig. 10: Checking Right Low Beam Driver Circuit For A Short To Ground
Courtesy of CHRYSLER GROUP, LLC

1. Turn the ignition off.
2. Disconnect the TIPM C3 harness connector.
3. Measure the resistance between ground and the (L44) Right Low Beam Driver circuit.

   Is the resistance above 10k Ohms?

   Yes

   - Go To 4.

   No

- Repair the short to ground in the (L44) Right Low Beam Driver circuit.
- Perform the BODY VERIFICATION TEST. Refer to **BODY VERIFICATION TEST**.

4. **CHECK THE (L44) RIGHT LOW BEAM DRIVER CIRCUIT FOR A SHORT TO THE (L910) RIGHT HEADLAMP RETURN SIGNAL CIRCUIT**

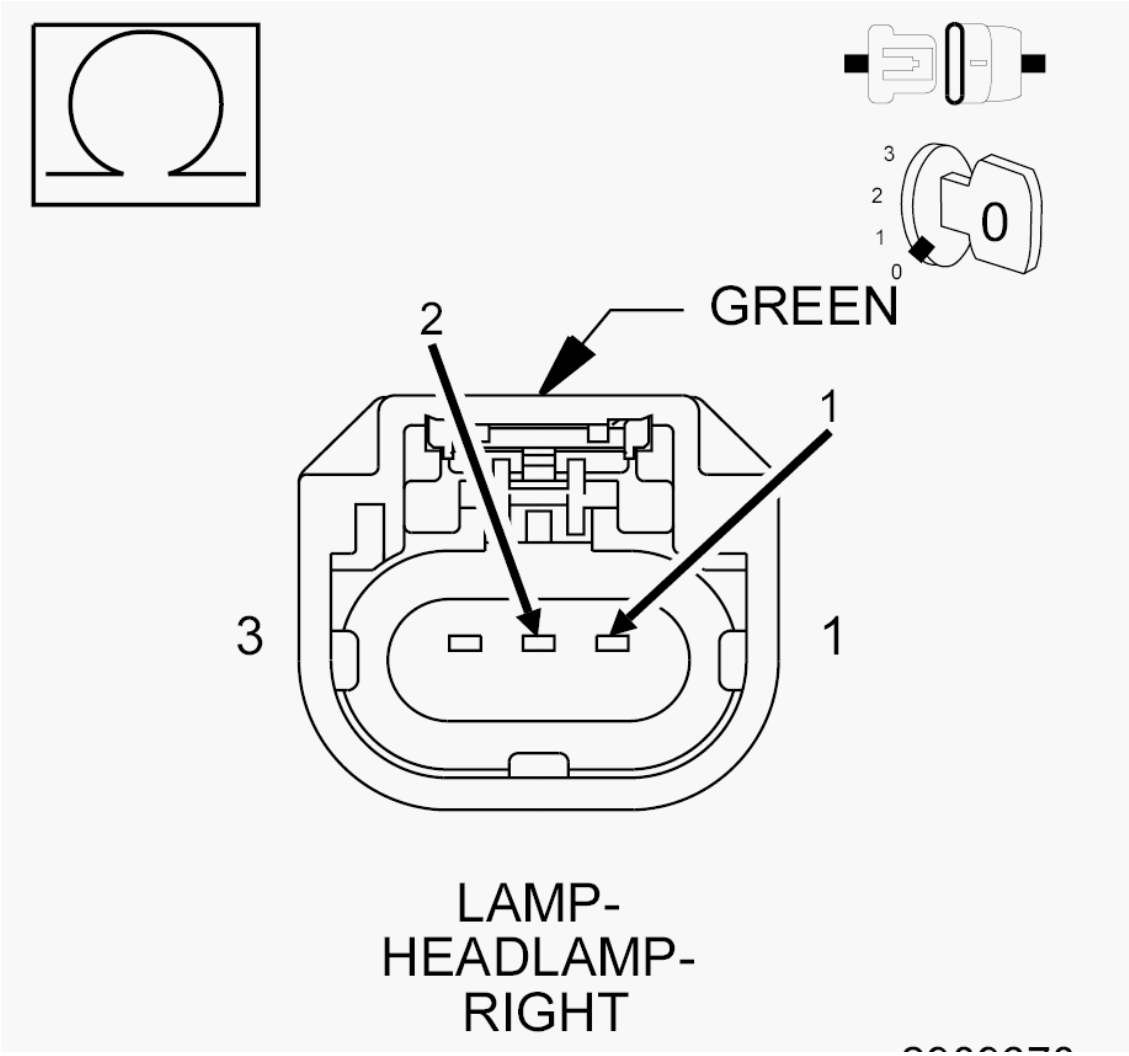

Fig. 11: Checking Right Low Beam Driver Circuit For A Short To Right Headlamp Return Signal Circuit
Courtesy of CHRYSLER GROUP, LLC

1. Measure the resistance between the (L44) Right Low Beam Driver circuit and the (L910) Right Headlamp Return Signal circuit.

   Is the resistance above 10k Ohms?

   Yes

   - Replace the Totally Integrated Power Module (TIPM) in accordance with the Service

Information. Refer to **MODULE, TOTALLY INTEGRATED POWER (TIPM), REMOVAL** .

- Perform the BODY VERIFICATION TEST. Refer to **BODY VERIFICATION TEST**.

No

- Repair the short between the (L44) Right Low Beam Driver circuit and the (L910) Right Headlamp Return Signal circuit.
- Perform the BODY VERIFICATION TEST. Refer to **BODY VERIFICATION TEST**.

B1630-RIGHT LOW BEAM CONTROL CIRCUIT HIGH

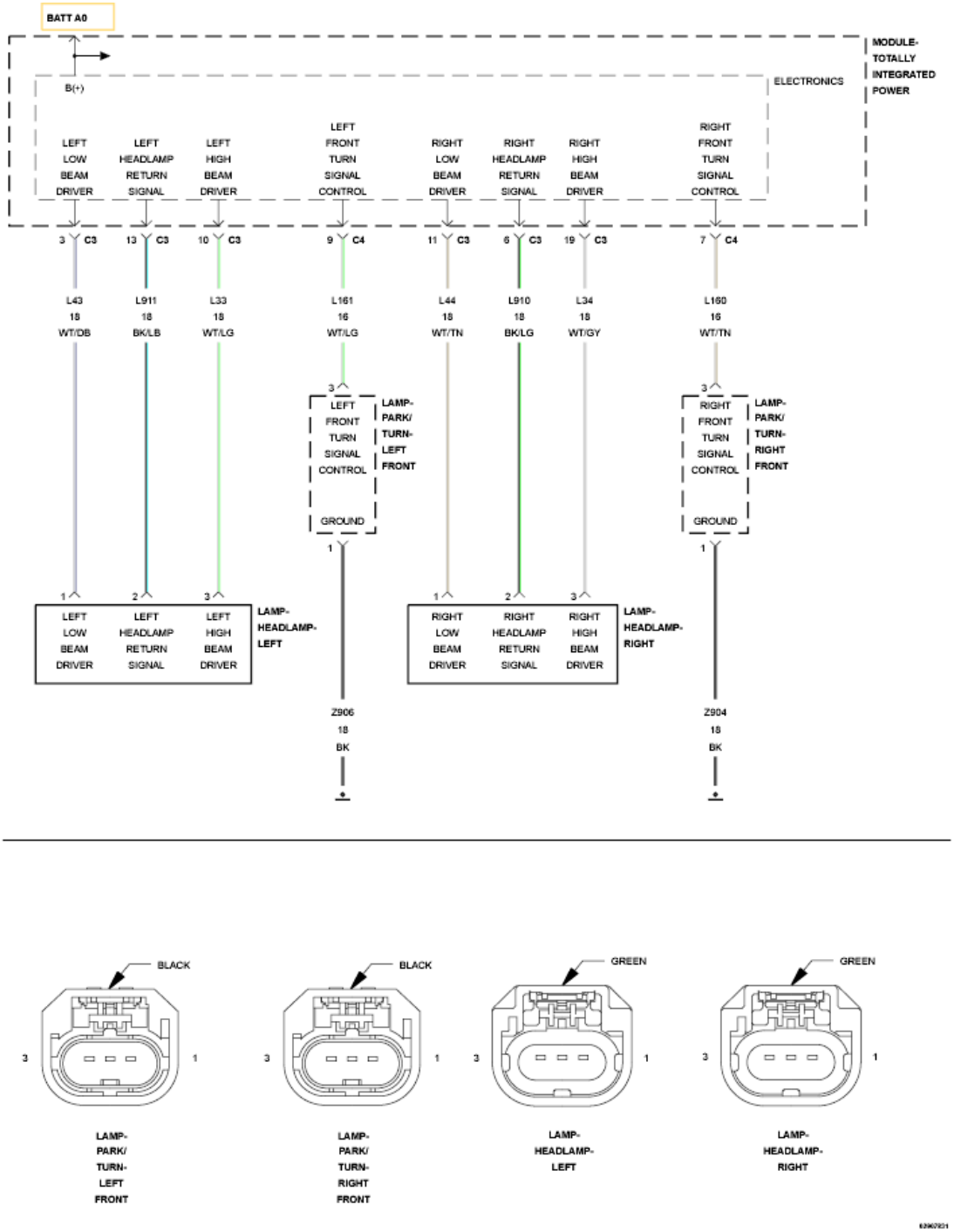

Fig. 12: Headlamp & Front Parking Lamp Wiring Diagram
Courtesy of CHRYSLER GROUP, LLC

For a complete wiring diagram, **refer to appropriate SYSTEM WIRING DIAGRAMS article** .

THEORY OF OPERATION

The Totally Integrated Power Module (TIPM) receives a bus message requesting low beam lamp illumination.

When this bus message is received, the TIPM provides a voltage output through the low beam driver circuit. The low beam driver circuit connects to the Low Beam Lamp. A headlamp return signal circuit is used instead of a ground circuit. For additional information on the Headlamp operation. Refer to **EXTERIOR LIGHTING - OPERATION** .

WHEN MONITORED:

With the low beam headlamps active.

SET CONDITION:

When the Totally Integrated Power Module (TIPM) detects a high condition on the (L44) Right Low Beam Driver circuit.

POSSIBLE CAUSES

Possible Causes
(L44) RIGHT LOW BEAM DRIVER CIRCUIT OPEN
(L44) RIGHT LOW BEAM DRIVER CIRCUIT SHORTED TO VOLTAGE
(L910) RIGHT HEADLAMP RETURN SIGNAL CIRCUIT OPEN
RIGHT LOW BEAM BULB
TOTALLY INTEGRATED POWER MODULE (TIPM)

DIAGNOSTIC TEST

1. **INTERMITTENT CONDITION**
    1. Turn the ignition on.
    2. With the scan tool, clear all DTC's.
    3. Turn the Headlamps on.
    4. With the scan tool, read DTC's.

    Does the scan tool display DTC: B1630-RIGHT LOW BEAM CONTROL CIRCUIT HIGH?

    Yes

    - Go To 2.

    No

    - Test complete, the condition or conditions that originally set this DTC are not present at this time. Using the wiring diagrams as a guide, check all related splices and connectors for signs of water intrusion, corrosion, pushed out or bent terminals, and correct pin tension.
    - Perform the BODY VERIFICATION TEST. Refer to **BODY VERIFICATION TEST**.
2. **CHECK THE (L44) RIGHT LOW BEAM DRIVER CIRCUIT FOR A SHORT TO VOLTAGE IN THE HARNESS**

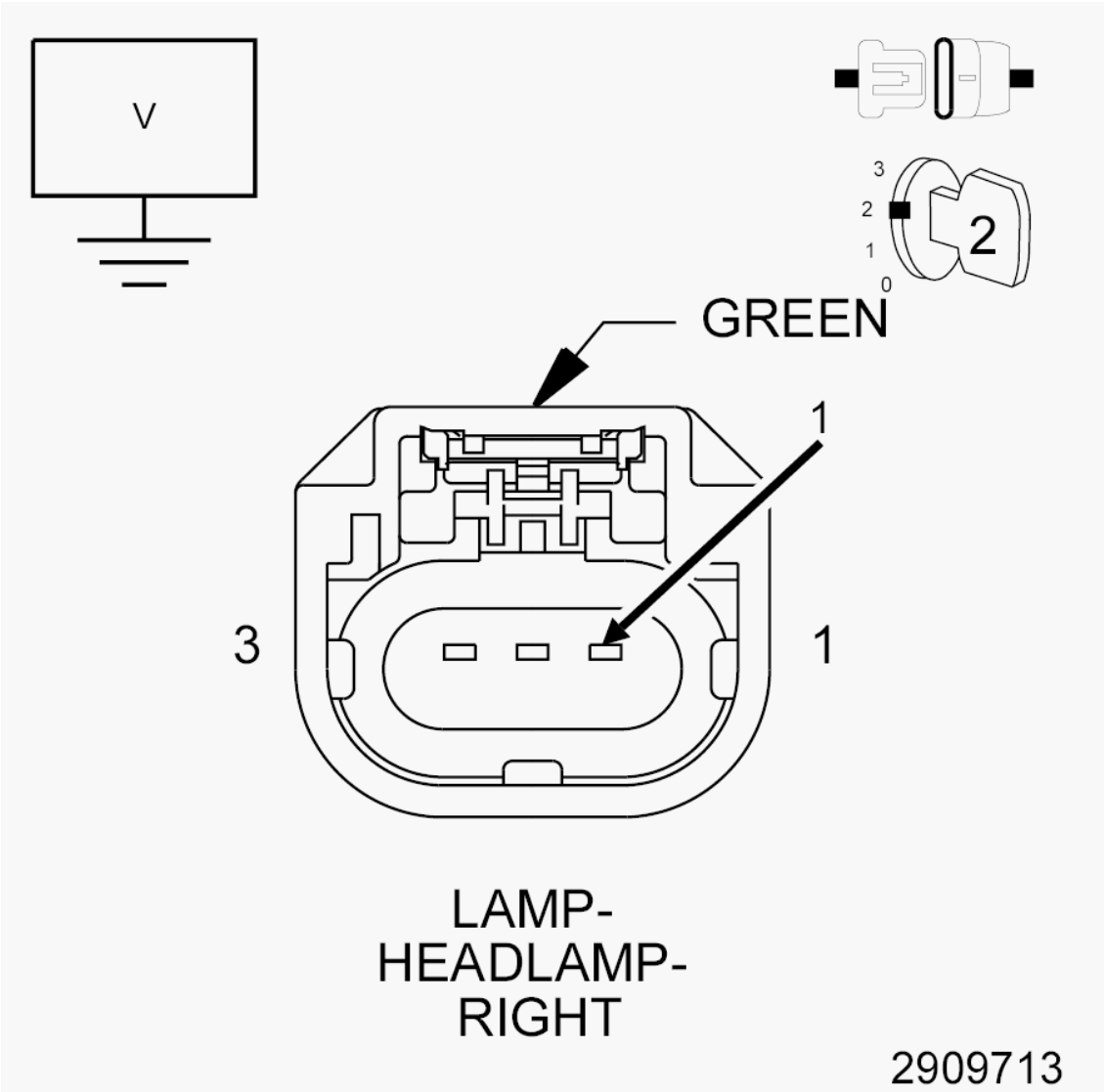

Fig. 13: Checking Right Low Beam Driver Circuit For A Short To Voltage In The Harness
Courtesy of CHRYSLER GROUP, LLC

1. Turn the Headlamps off.
2. Turn the ignition off.
3. Disconnect the Right Headlamp Lamp harness connector.
4. Disconnect the TIPM C3 harness connector.
5. Turn the ignition on.
6. Measure the voltage between ground and the (L44) Right Low Beam Driver circuit.

   Is there any voltage present?

   Yes

   - Repair the short to voltage in the (L44) Right Low Beam Driver circuit.

- Perform the BODY VERIFICATION TEST. Refer to **BODY VERIFICATION TEST**.

No

- Go To 3.

3. **CHECK THE TIPM FOR CORRECT OPERATION**

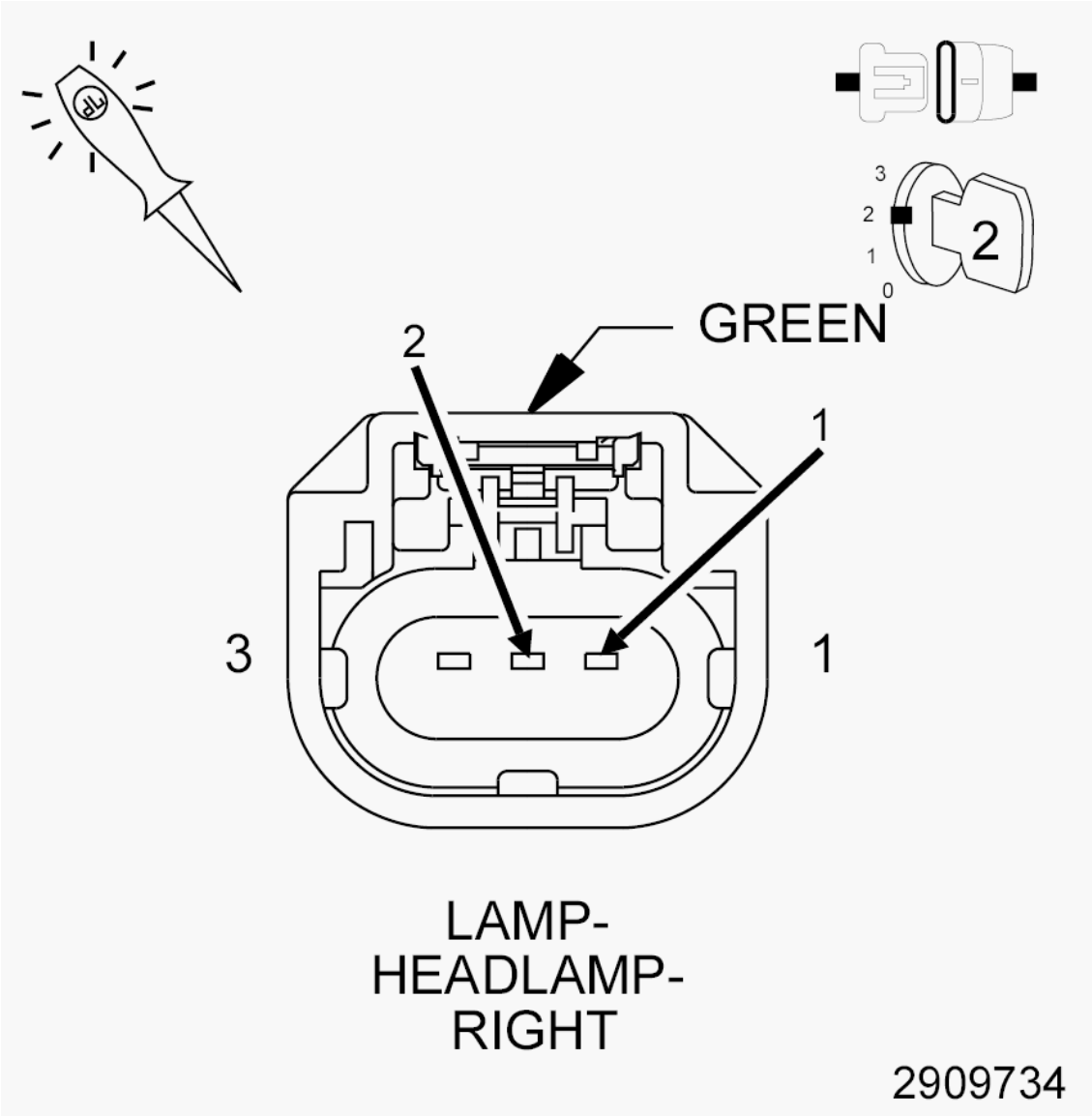

Fig. 14: Checking TIPM For Correct Operation
Courtesy of CHRYSLER GROUP, LLC

1. Turn the ignition off.
2. Reconnect the TIPM C3 harness connector.
3. Connect a 12-volt test light between the (L44) Right Low Beam Driver circuit and (L910) Right Headlamp Return Signal circuit in the Right Headlamp Lamp harness connector.

4. Turn the ignition on.
5. Turn the Headlamps on.

   Does the test light illuminate brightly?

   Yes

   - Replace the Right Low Beam Bulb in accordance with the Service Information. Refer to **UNIT, FRONT LAMP, REMOVAL** .
   - Perform the BODY VERIFICATION TEST. Refer to **BODY VERIFICATION TEST**.

   No

   - Go To 4.

4. **CHECK THE (L44) RIGHT LOW BEAM DRIVER CIRCUIT FOR AN OPEN IN THE HARNESS**

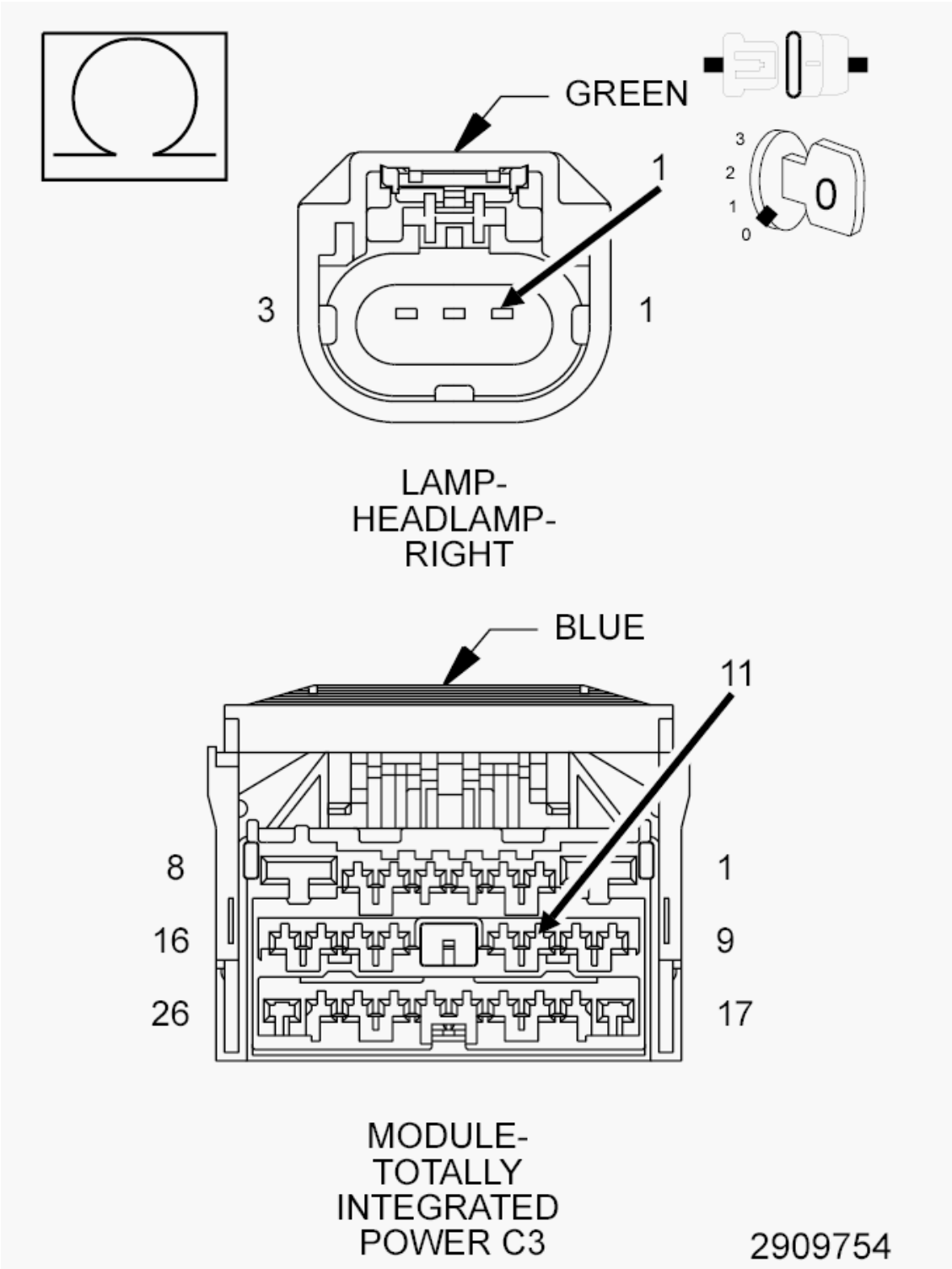

Fig. 15: Checking Right Low Beam Driver Circuit For An Open In The Harness
Courtesy of CHRYSLER GROUP, LLC

1. Turn the ignition off.
2. Disconnect the TIPM C3 harness connector.

3. Measure the resistance of the (L44) Right Low Beam Driver circuit between the Right Headlamp Lamp harness connector and the TIPM C3 harness connector.

   Is the resistance below 5.0 Ohms?

   Yes

   - Go To 5.

   No

   - Repair the open in the (L44) Right Low Beam Driver circuit.
   - Perform the BODY VERIFICATION TEST. Refer to **BODY VERIFICATION TEST**.

5. **CHECK THE (L910) RIGHT HEADLAMP RETURN SIGNAL CIRCUIT FOR AN OPEN IN THE HARNESS**

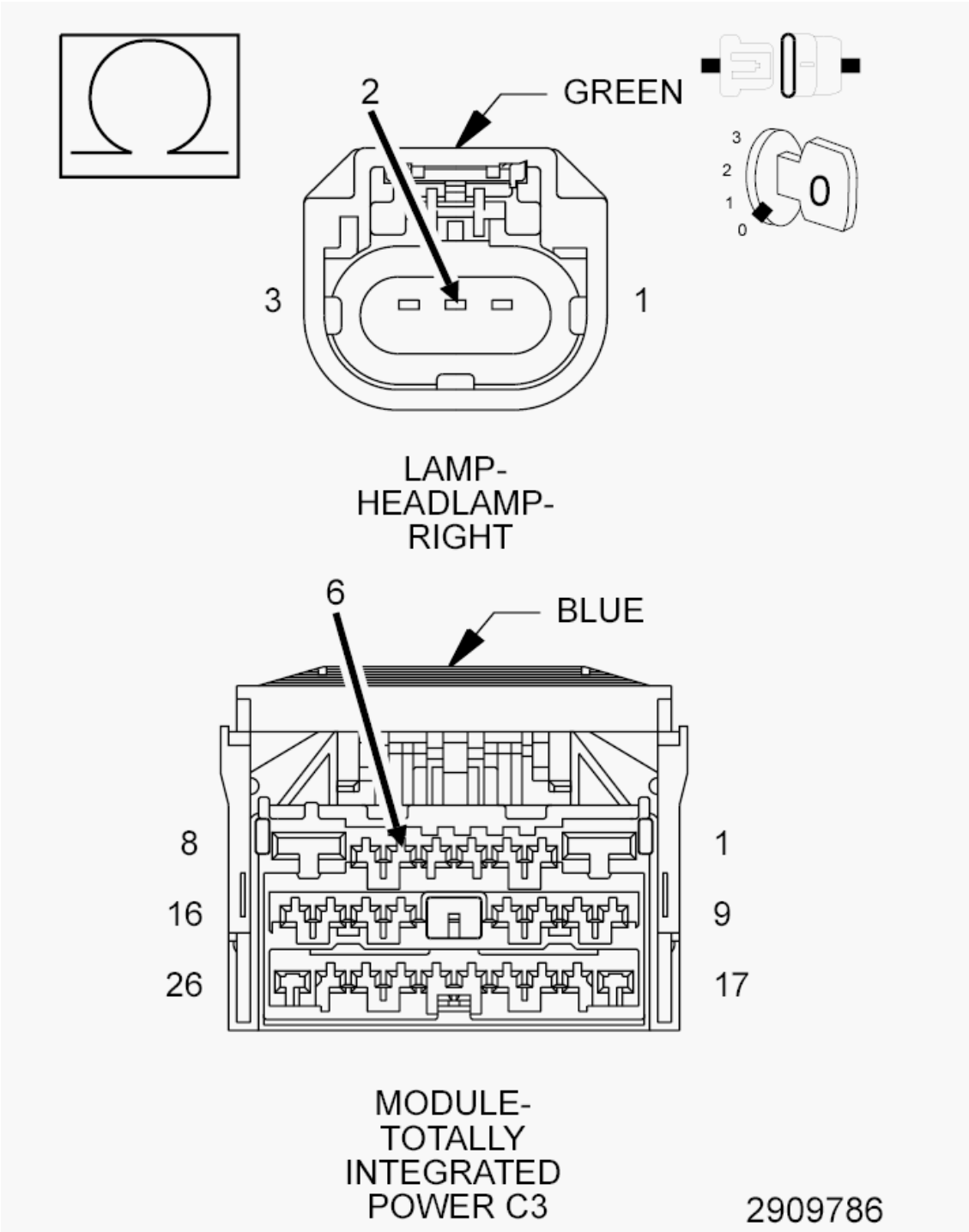

Fig. 16: Checking Right Headlamp Return Signal Circuit For An Open In The Harness
Courtesy of CHRYSLER GROUP, LLC

1. Measure the resistance of the (L910) Right Headlamp Return Signal circuit between the Right Headlamp Lamp harness connector and the TIPM C3 harness connector.

   Is the resistance below 5.0 Ohms?

Yes

- Replace the Totally Integrated Power Module (TIPM) in accordance with the Service Information. Refer to **MODULE, TOTALLY INTEGRATED POWER (TIPM), REMOVAL** .
- Perform the BODY VERIFICATION TEST. Refer to **BODY VERIFICATION TEST**.

No

- Repair the open in the (L910) Right Headlamp Return Signal circuit.
- Perform the BODY VERIFICATION TEST. Refer to **BODY VERIFICATION TEST**.

B1633-LEFT HI BEAM CONTROL CIRCUIT LOW

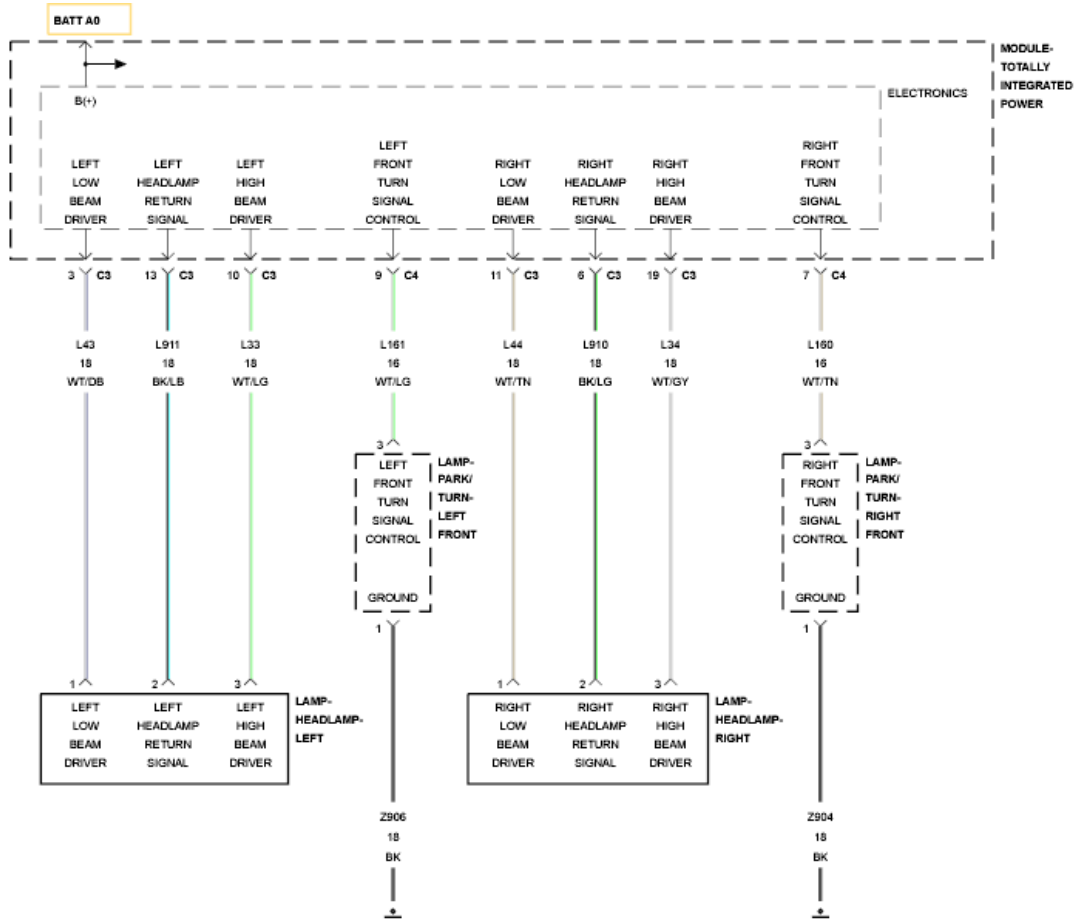

Fig. 17: Headlamp & Front Parking Lamp Wiring Diagram
Courtesy of CHRYSLER GROUP, LLC

For a complete wiring diagram, **refer to appropriate SYSTEM WIRING DIAGRAMS article** .

THEORY OF OPERATION

The Totally Integrated Power Module (TIPM) receives a bus message requesting high beam lamp illumination.

When this bus message is received, the TIPM provides a voltage output through the high beam driver circuit. The high beam driver circuit connects to the High Beam Lamp. A headlamp return signal circuit is used instead of a ground circuit. For additional information on the Headlamp operation. Refer to **EXTERIOR LIGHTING - OPERATION** .

WHEN MONITORED:

With the high beam headlamps active.

SET CONDITION:

When the Totally Integrated Power Module (TIPM) detects a low condition on the (L33) Left High Beam Driver circuit.

POSSIBLE CAUSES

Possible Causes
(L33) LEFT HIGH BEAM DRIVER CIRCUIT SHORTED TO GROUND
(L33) LEFT HIGH BEAM DRIVER CIRCUIT SHORTED TO THE (L911) LEFT HEADLAMP RETURN SIGNAL CIRCUIT
LEFT HIGH BEAM BULB
TOTALLY INTEGRATED POWER MODULE (TIPM)

DIAGNOSTIC TEST

1. **INTERMITTENT CONDITION**
    1. Turn the ignition on.
    2. With the scan tool, clear all DTC's.
    3. Turn the High Beam Headlamps on.
    4. With the scan tool, read DTC's.

    Does the scan tool display DTC: B1633-LEFT HI BEAM CONTROL CIRCUIT LOW?

    Yes

    - Go To 2.

    No

    - Test complete, the condition or conditions that originally set this DTC are not present at this time. Using the wiring diagrams as a guide, check all related splices and connectors for signs of water intrusion, corrosion, pushed out or bent terminals, and correct pin tension.
    - Perform the BODY VERIFICATION TEST. Refer to **BODY VERIFICATION TEST**.
2. **ATTEMPT TO SET THE OPPOSITE DTC**
    1. Turn the ignition off.

2. Disconnect the Left Headlamp Lamp harness connector.
3. Turn the ignition on.
4. With the scan tool, read DTC's.

   Does the scan tool display DTC: B1634-LEFT HI BEAM CONTROL CIRCUIT HIGH?

   Yes

   - Replace the Left High Beam Bulb in accordance with the Service Information. Refer to **UNIT, FRONT LAMP, REMOVAL** .
   - Perform the BODY VERIFICATION TEST. Refer to **BODY VERIFICATION TEST**.

   No

   - Go To 3.

3. **CHECK THE (L33) LEFT HIGH BEAM DRIVER CIRCUIT FOR A SHORT TO GROUND**

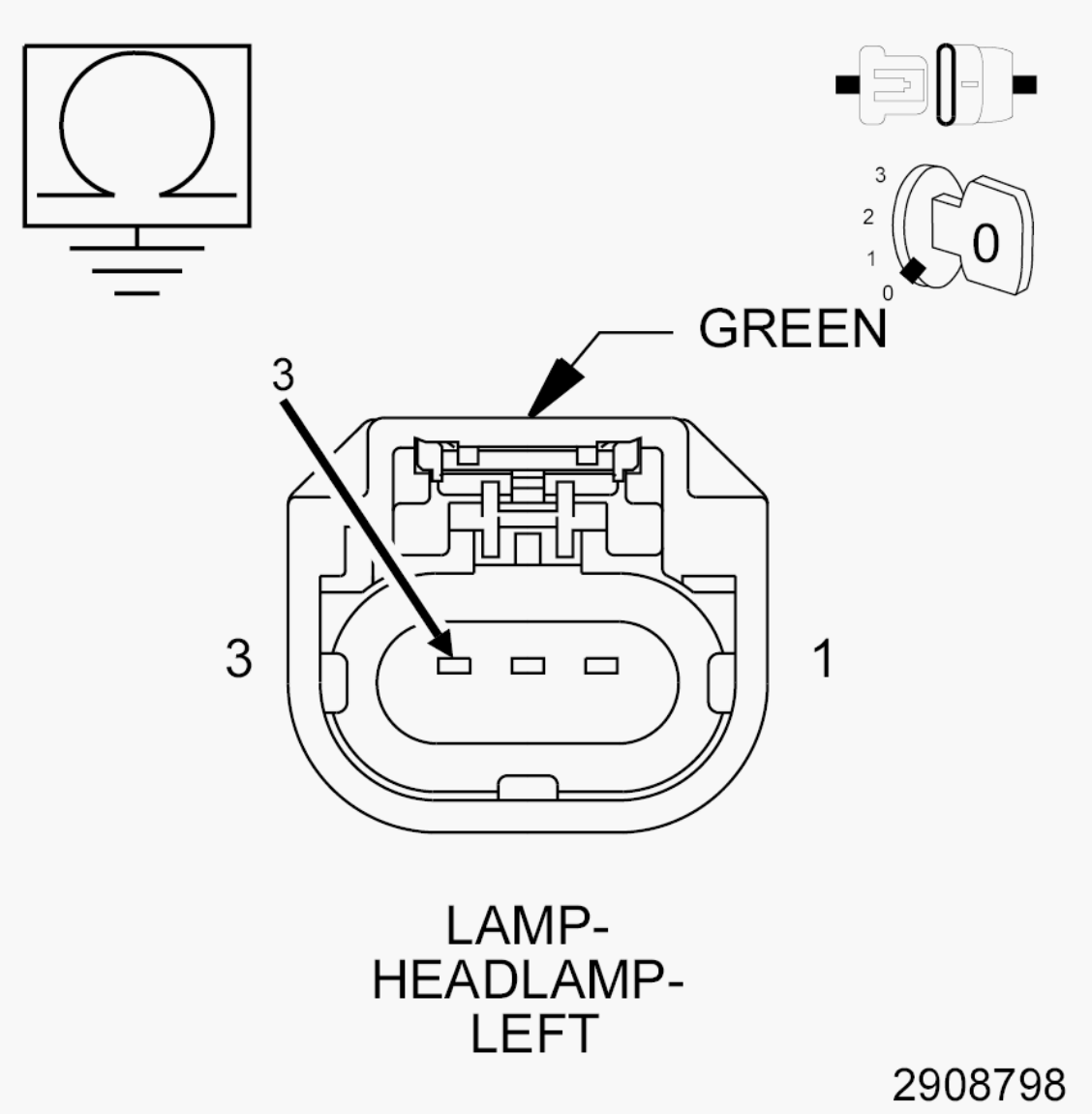

Fig. 18: Checking Left High Beam Driver Circuit For A Short To Ground
Courtesy of CHRYSLER GROUP, LLC

1. Turn the ignition off.
2. Disconnect the TIPM C3 harness connector.
3. Measure the resistance between ground and the (L33) Left High Beam Driver circuit.

   Is the resistance above 10k Ohms?

   Yes

   - Go To 4.

   No

- Repair the short to ground in the (L33) Left High Beam Driver circuit.
- Perform the BODY VERIFICATION TEST. Refer to **BODY VERIFICATION TEST**.

4. **CHECK THE (L33) LEFT HIGH BEAM DRIVER CIRCUIT FOR A SHORT TO THE (L911) LEFT HEADLAMP RETURN SIGNAL CIRCUIT**

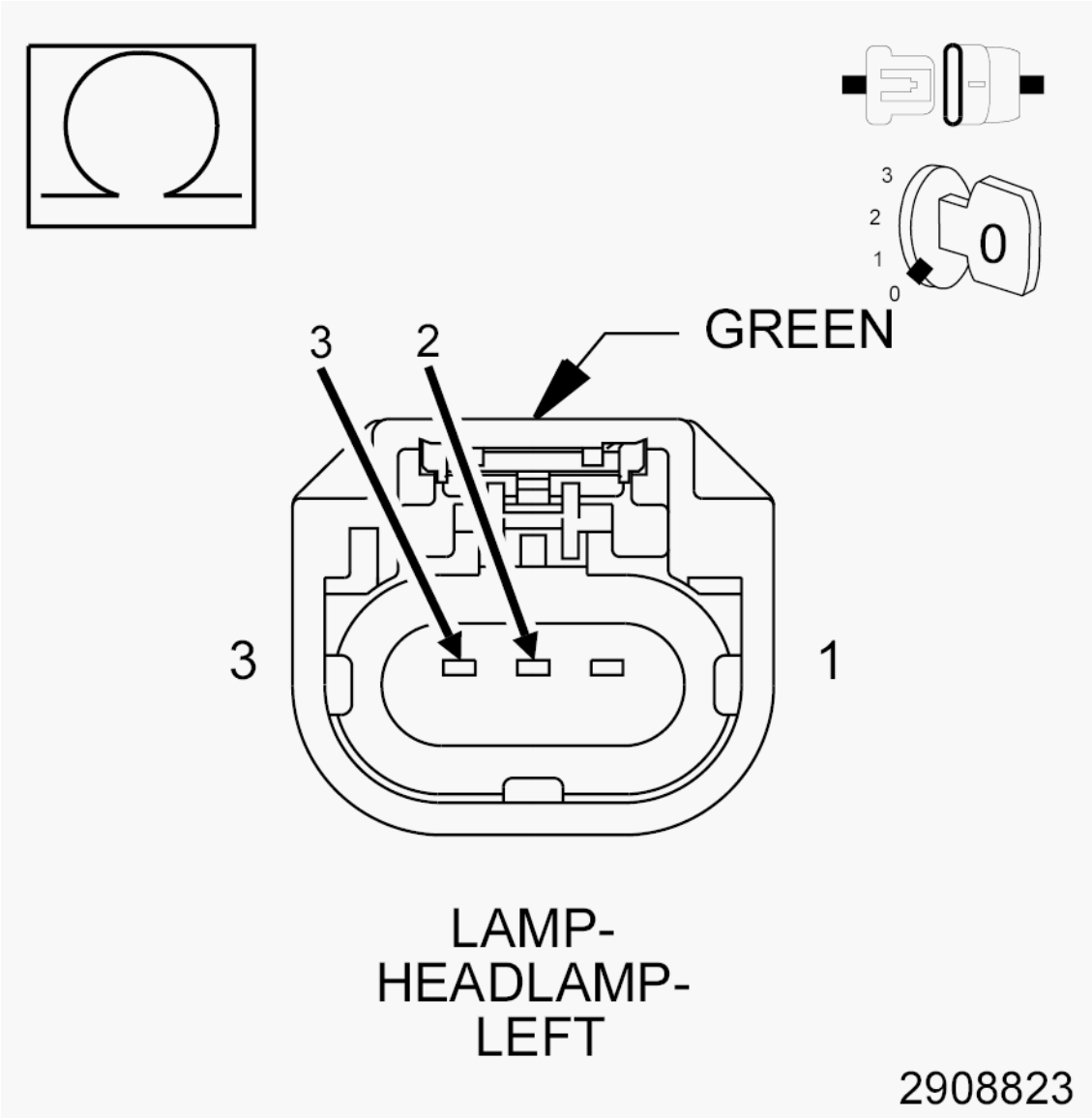

Fig. 19: Checking Left High Beam Driver Circuit For A Short To Left Headlamp Return Signal Circuit
Courtesy of CHRYSLER GROUP, LLC

1. Measure the resistance between the (L33) Left High Beam Driver circuit and the (L911) Left Headlamp Return Signal circuit.

   Is the resistance above 10k Ohms?

Yes

- Replace the Totally Integrated Power Module (TIPM) in accordance with the Service Information. Refer to **MODULE, TOTALLY INTEGRATED POWER (TIPM), REMOVAL** .
- Perform the BODY VERIFICATION TEST. Refer to **BODY VERIFICATION TEST**.

No

- Repair the short between the (L33) Left High Beam Driver circuit and the (L911) Left Headlamp Return Signal circuit.
- Perform the BODY VERIFICATION TEST. Refer to **BODY VERIFICATION TEST**.

B1634-LEFT HI BEAM CONTROL CIRCUIT HIGH

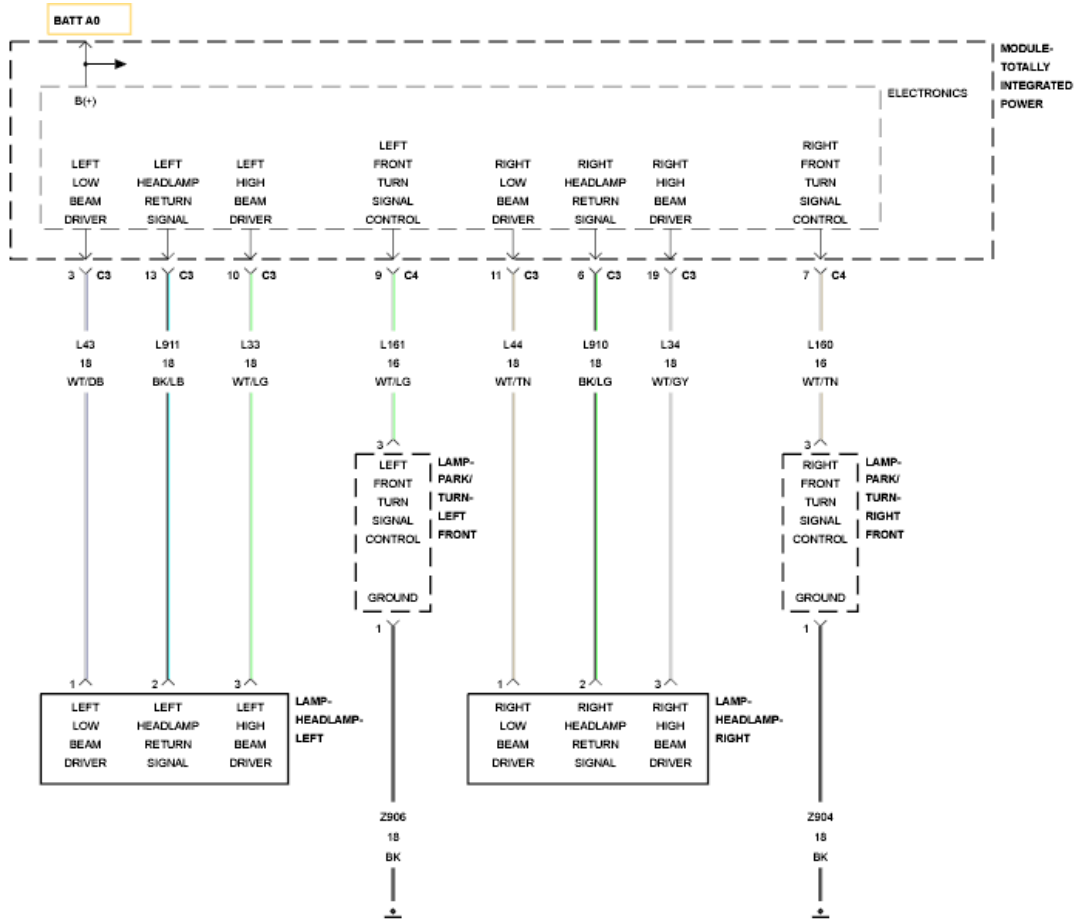

Fig. 20: Headlamp & Front Parking Lamp Wiring Diagram
Courtesy of CHRYSLER GROUP, LLC

For a complete wiring diagram, **refer to appropriate SYSTEM WIRING DIAGRAMS article** .

THEORY OF OPERATION

The Totally Integrated Power Module (TIPM) receives a bus message requesting high beam lamp illumination.

When this bus message is received, the TIPM provides a voltage output through the high beam driver circuit. The high beam driver circuit connects to the High Beam Lamp. A headlamp return signal circuit is used instead of a ground circuit. For additional information on the Headlamp operation. Refer to **EXTERIOR LIGHTING - OPERATION** .

WHEN MONITORED:

With the high beam headlamps active.

SET CONDITION:

When the Totally Integrated Power Module (TIPM) detects a high condition on the (L33) Left High Beam Driver circuit.

POSSIBLE CAUSES

Possible Causes
(L33) LEFT HIGH BEAM DRIVER CIRCUIT OPEN
(L33) LEFT HIGH BEAM DRIVER CIRCUIT SHORTED TO VOLTAGE
(L911) LEFT HEADLAMP RETURN SIGNAL CIRCUIT OPEN
LEFT HIGH BEAM BULB
TOTALLY INTEGRATED POWER MODULE (TIPM)

DIAGNOSTIC TEST

1. **INTERMITTENT CONDITION**
    1. Turn the ignition on.
    2. With the scan tool, clear all DTC's.
    3. Turn the High Beam Headlamps on.
    4. With the scan tool, read DTC's.

    Does the scan tool display DTC: B1634-LEFT HI BEAM CONTROL CIRCUIT HIGH?

    Yes

    - Go To 2.

    No

    - Test complete, the condition or conditions that originally set this DTC are not present at this time. Using the wiring diagrams as a guide, check all related splices and connectors for signs of water intrusion, corrosion, pushed out or bent terminals, and correct pin tension.
    - Perform the BODY VERIFICATION TEST. Refer to **BODY VERIFICATION TEST**.
2. **CHECK THE (L33) LEFT HIGH BEAM DRIVER CIRCUIT FOR A SHORT TO VOLTAGE IN THE HARNESS**

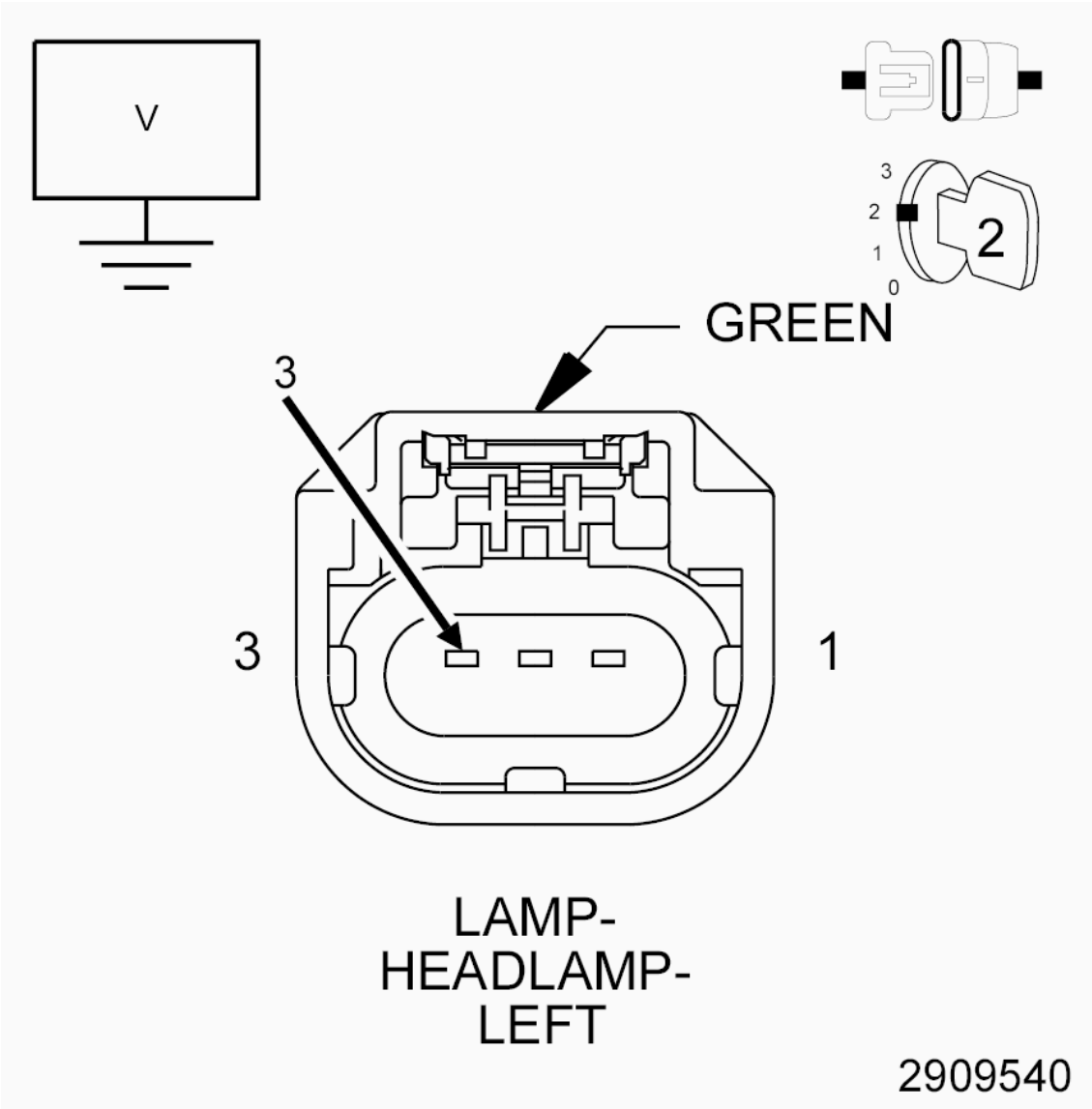

Fig. 21: Checking Left High Beam Driver Circuit For A Short To Voltage In The Harness
Courtesy of CHRYSLER GROUP, LLC

1. Turn the Headlamps off.
2. Turn the ignition off.
3. Disconnect the Left Headlamp Lamp harness connector.
4. Disconnect the TIPM C3 harness connector.
5. Turn the ignition on.
6. Measure the voltage between ground and the (L33) Left High Beam Driver circuit.

   Is there any voltage present?

   Yes

- Repair the short to voltage in the (L33) Left High Beam Driver circuit.
- Perform the BODY VERIFICATION TEST. Refer to **BODY VERIFICATION TEST**.

No

- Go To 3.

3. **CHECK THE TIPM FOR CORRECT OPERATION**

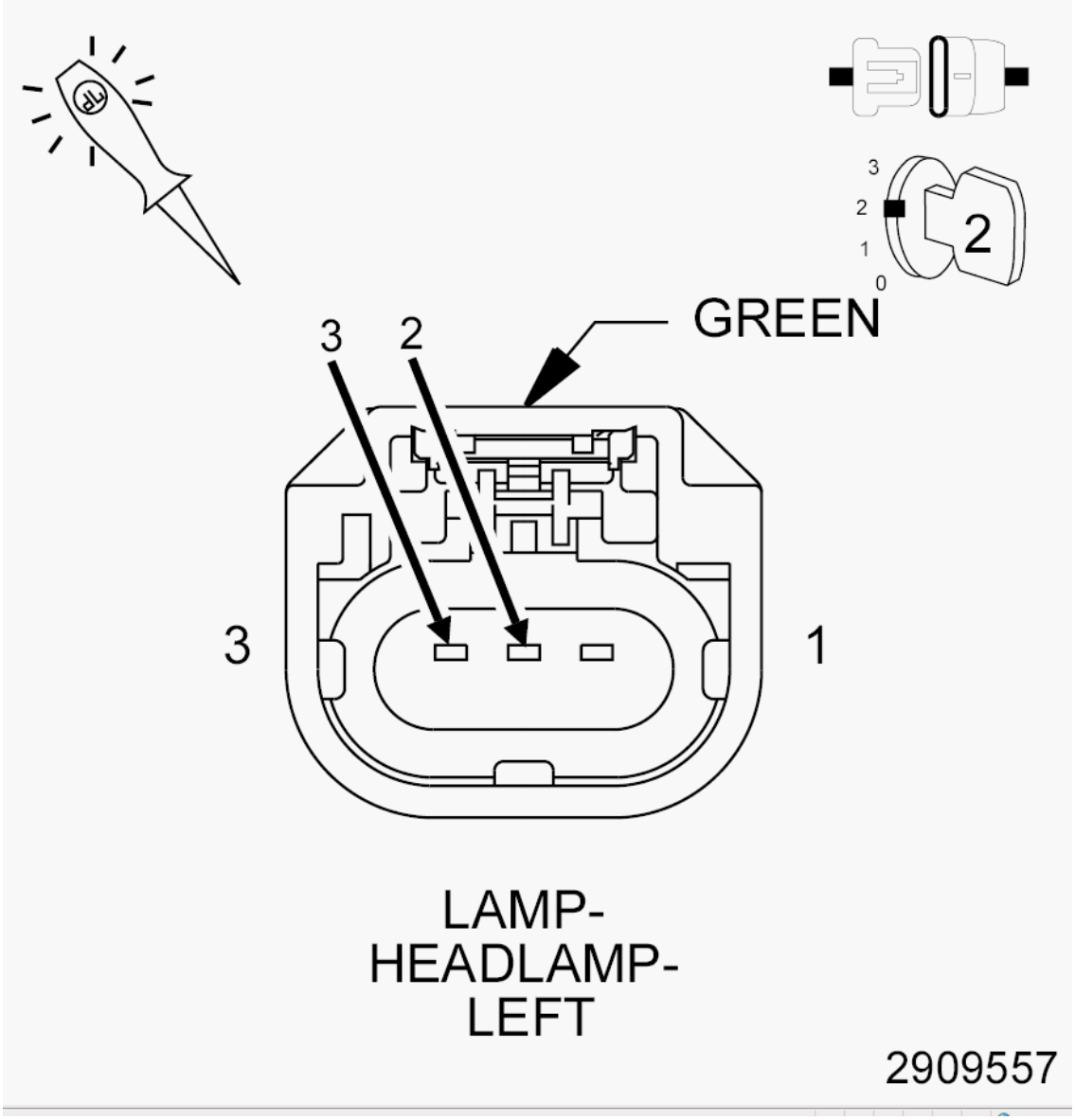

Fig. 22: Checking TIPM For Correct Operation
Courtesy of CHRYSLER GROUP, LLC

1. Turn the ignition off.
2. Reconnect the TIPM C3 harness connector.

3. Connect a 12-volt test light between the (L33) Left High Beam Driver circuit and (L911) Left Headlamp Return Signal circuit in the Left Headlamp Lamp harness connector.
4. Turn the ignition on.
5. Turn the High Beam Headlamps on.

   Does the test light illuminate brightly?

   Yes

   - Replace the Left High Beam Bulb in accordance with the Service Information. Refer to **UNIT, FRONT LAMP, REMOVAL** .
   - Perform the BODY VERIFICATION TEST. Refer to **BODY VERIFICATION TEST**.

   No

   - Go To 4.

4. **CHECK THE (L33) LEFT HIGH BEAM DRIVER CIRCUIT FOR AN OPEN IN THE HARNESS**

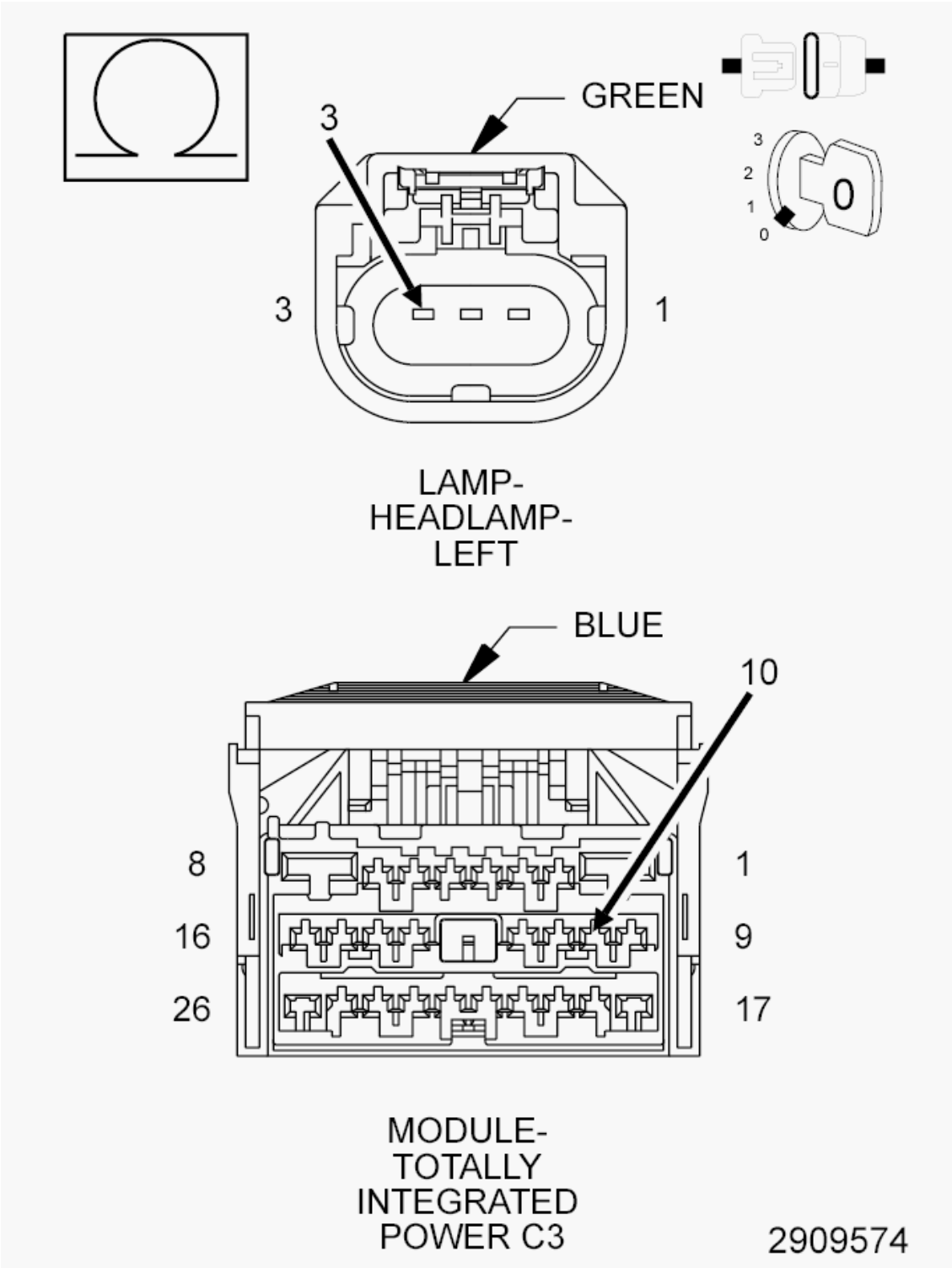

Fig. 23: Checking Left High Beam Driver Circuit For An Open In The Harness
Courtesy of CHRYSLER GROUP, LLC

1. Turn the ignition off.
2. Disconnect the TIPM C3 harness connector.

3. Measure the resistance of the (L33) Left High Beam Driver circuit between the Left Headlamp Lamp harness connector and the TIPM C3 harness connector.

   Is the resistance below 5.0 Ohms?

   Yes

   - Go To 5.

   No

   - Repair the open in the (L33) Left High Beam Driver circuit.
   - Perform the BODY VERIFICATION TEST. Refer to **BODY VERIFICATION TEST**.

5. **CHECK THE (L911) LEFT HEADLAMP RETURN SIGNAL CIRCUIT FOR AN OPEN IN THE HARNESS**

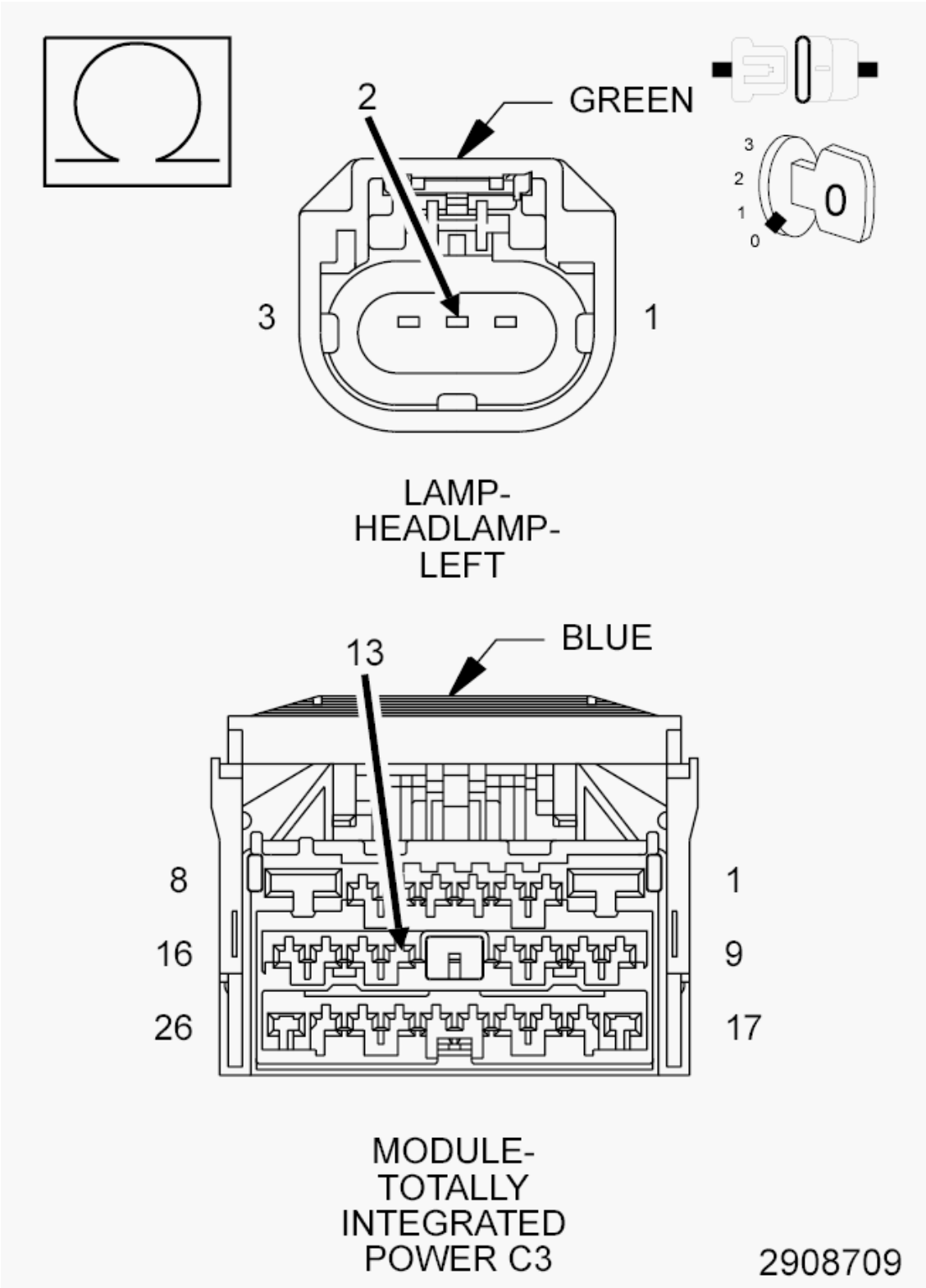

Fig. 24: Checking Left Headlamp Return Signal Circuit For An Open In The Harness
Courtesy of CHRYSLER GROUP, LLC

1. Measure the resistance of the (L911) Left Headlamp Return Signal circuit between the Left

Headlamp Lamp harness connector and the TIPM C3 harness connector.

Is the resistance below 5.0 Ohms?

Yes

- Replace the Totally Integrated Power Module (TIPM) in accordance with the Service Information. Refer to **MODULE, TOTALLY INTEGRATED POWER (TIPM), REMOVAL** .
- Perform the BODY VERIFICATION TEST. Refer to **BODY VERIFICATION TEST**.

No

- Repair the open in the (L911) Left Headlamp Return Signal circuit.
- Perform the BODY VERIFICATION TEST. Refer to **BODY VERIFICATION TEST**.

B1637-RIGHT HI BEAM CONTROL CIRCUIT LOW

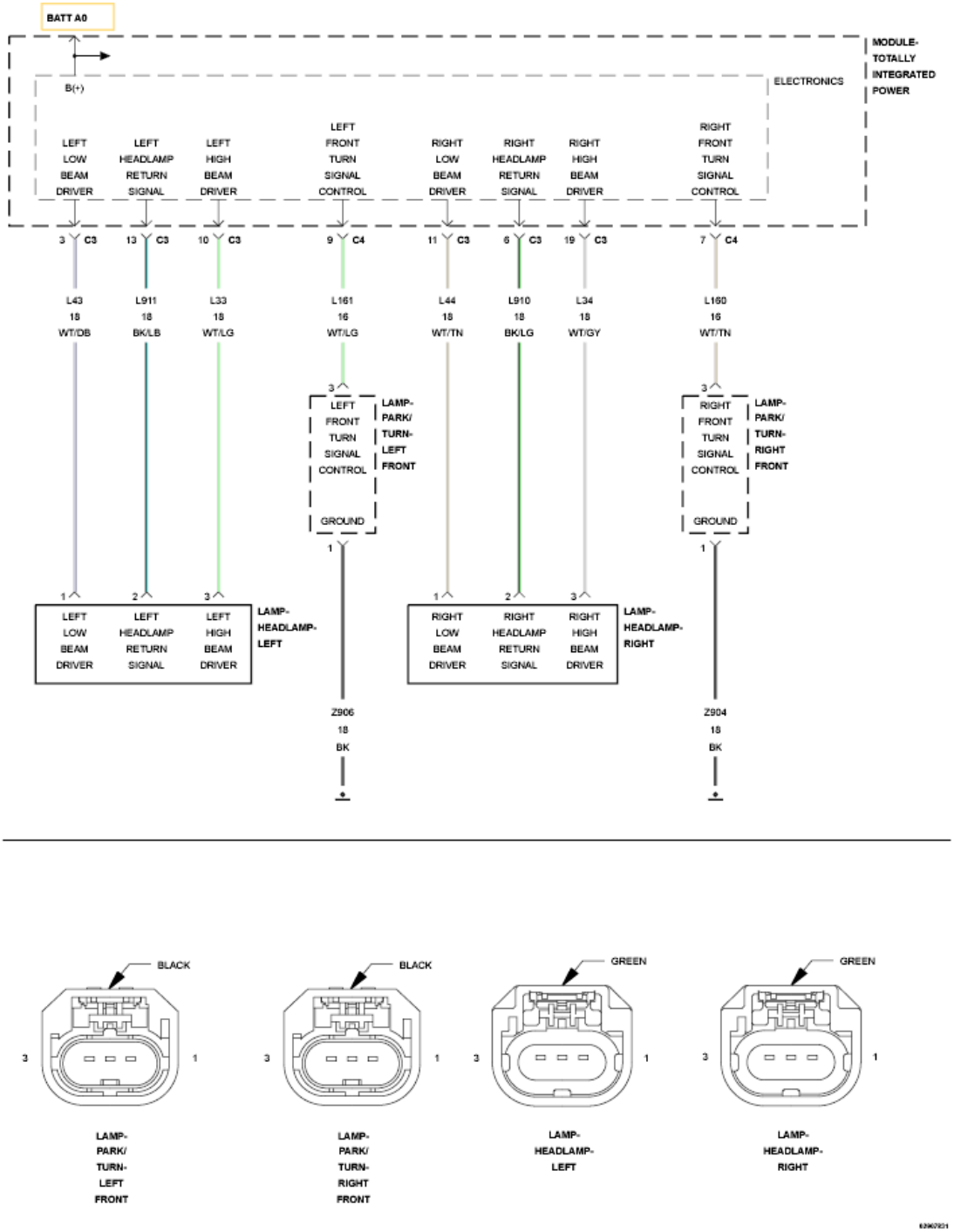

Fig. 25: Headlamp & Front Parking Lamp Wiring Diagram
Courtesy of CHRYSLER GROUP, LLC

For a complete wiring diagram, **refer to appropriate SYSTEM WIRING DIAGRAMS article** .

THEORY OF OPERATION

The Totally Integrated Power Module (TIPM) receives a bus message requesting high beam lamp illumination.

When this bus message is received, the TIPM provides a voltage output through the high beam driver circuit. The high beam driver circuit connects to the High Beam Lamp. A headlamp return signal circuit is used instead of a ground circuit. For additional information on the Headlamp operation. Refer to **EXTERIOR LIGHTING - OPERATION** .

WHEN MONITORED:

With the high beam headlamps active.

SET CONDITION:

When the Totally Integrated Power Module (TIPM) detects a low condition on the (L34) Right High Beam Driver circuit.

POSSIBLE CAUSES

Possible Causes
(L34) RIGHT HIGH BEAM DRIVER CIRCUIT SHORTED TO GROUND
(L34) RIGHT HIGH BEAM DRIVER CIRCUIT SHORTED TO THE (L910) RIGHT HEADLAMP RETURN SIGNAL CIRCUIT
RIGHT HIGH BEAM BULB
TOTALLY INTEGRATED POWER MODULE (TIPM)

DIAGNOSTIC TEST

1. **INTERMITTENT CONDITION**
    1. Turn the ignition on.
    2. With the scan tool, clear all DTC's.
    3. Turn the High Beam Headlamps on.
    4. With the scan tool, read DTC's.

    Does the scan tool display DTC: B1637-RIGHT HI BEAM CONTROL CIRCUIT LOW?

    Yes

    - Go To 2.

    No

    - Test complete, the condition or conditions that originally set this DTC are not present at this time. Using the wiring diagrams as a guide, check all related splices and connectors for signs of water intrusion, corrosion, pushed out or bent terminals, and correct pin tension.
    - Perform the BODY VERIFICATION TEST. Refer to **BODY VERIFICATION TEST**.
2. **ATTEMPT TO SET THE OPPOSITE DTC**
    1. Turn the ignition off.

2. Disconnect the Right Headlamp Lamp harness connector.
3. Turn the ignition on.
4. With the scan tool, read DTC's.

   Does the scan tool display DTC: B1638-RIGHT HI BEAM CONTROL CIRCUIT HIGH?

   Yes

   - Replace the Right High Beam Bulb in accordance with the Service Information. Refer to **UNIT, FRONT LAMP, REMOVAL** .
   - Perform the BODY VERIFICATION TEST. Refer to **BODY VERIFICATION TEST**.

   No

   - Go To 3.

3. **CHECK THE (L34) RIGHT HIGH BEAM DRIVER CIRCUIT FOR A SHORT TO GROUND**

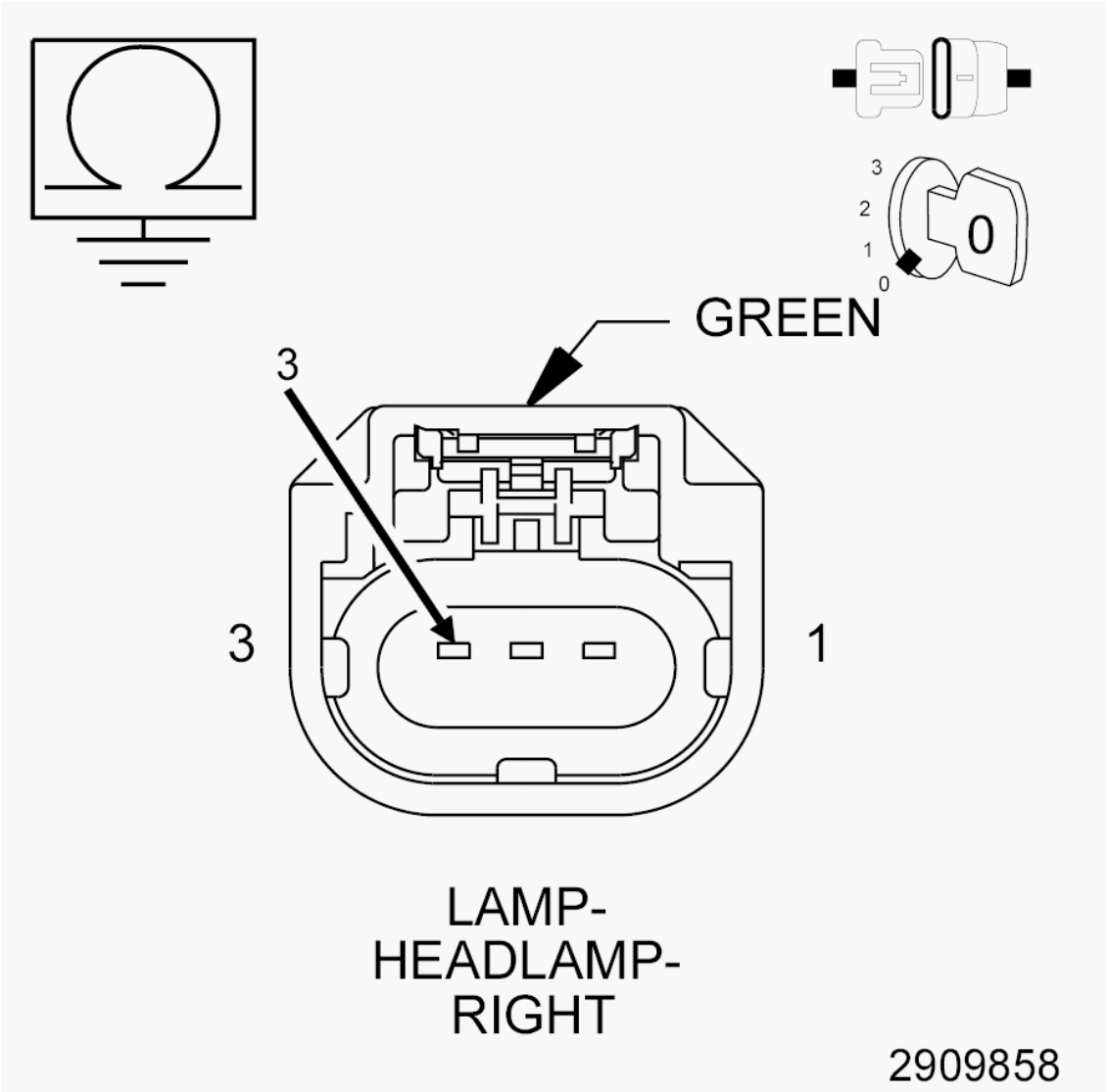

Fig. 26: Checking Right High Beam Driver Circuit For A Short To Ground
Courtesy of CHRYSLER GROUP, LLC

1. Turn the ignition off.
2. Disconnect the TIPM C3 harness connector.
3. Measure the resistance between ground and the (L34) Right High Beam Driver circuit.

   Is the resistance above 10k Ohms?

   Yes

   - Go To 4.

   No

   - Repair the short to ground in the (L34) Right High Beam Driver circuit.

- Perform the BODY VERIFICATION TEST. Refer to **BODY VERIFICATION TEST**.

4. **CHECK THE (L34) RIGHT HIGH BEAM DRIVER CIRCUIT FOR A SHORT TO THE (L910) RIGHT HEADLAMP RETURN SIGNAL CIRCUIT**

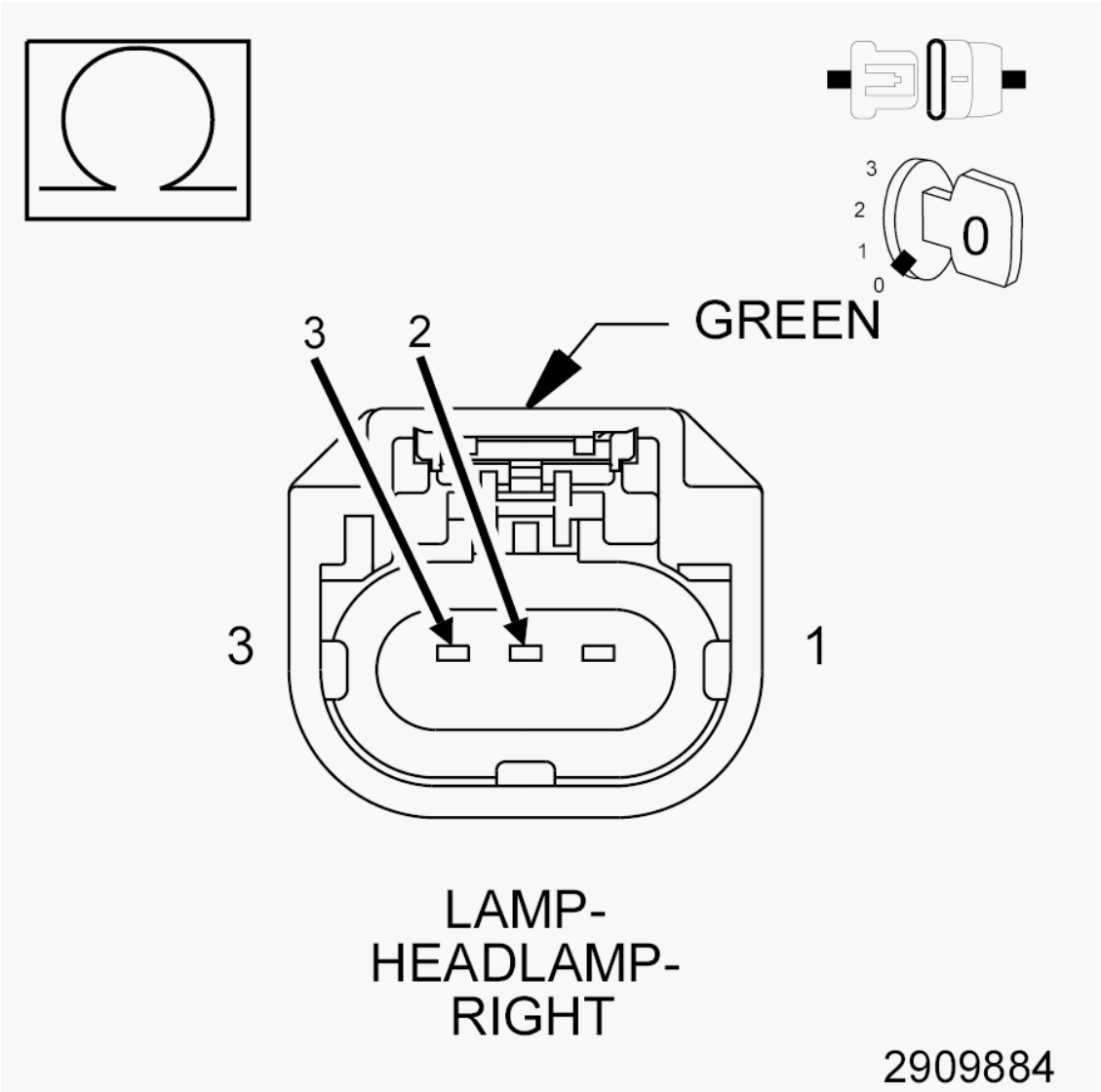

Fig. 27: Checking Right High Beam Driver Circuit For A Short To Right Headlamp Return Signal Circuit
Courtesy of CHRYSLER GROUP, LLC

1. Measure the resistance between the (L34) Right High Beam Driver circuit and the (L910) Right Headlamp Return Signal circuit.

   Is the resistance above 10k Ohms?

   Yes

   - Replace the Totally Integrated Power Module (TIPM) in accordance with the Service

Information. Refer to **MODULE, TOTALLY INTEGRATED POWER (TIPM), REMOVAL** .

- Perform the BODY VERIFICATION TEST. Refer to **BODY VERIFICATION TEST**.

No

- Repair the short between the (L34) Right High Beam Driver circuit and the (L910) Right Headlamp Return Signal circuit.
- Perform the BODY VERIFICATION TEST. Refer to **BODY VERIFICATION TEST**.

B1638-RIGHT HI BEAM CONTROL CIRCUIT HIGH

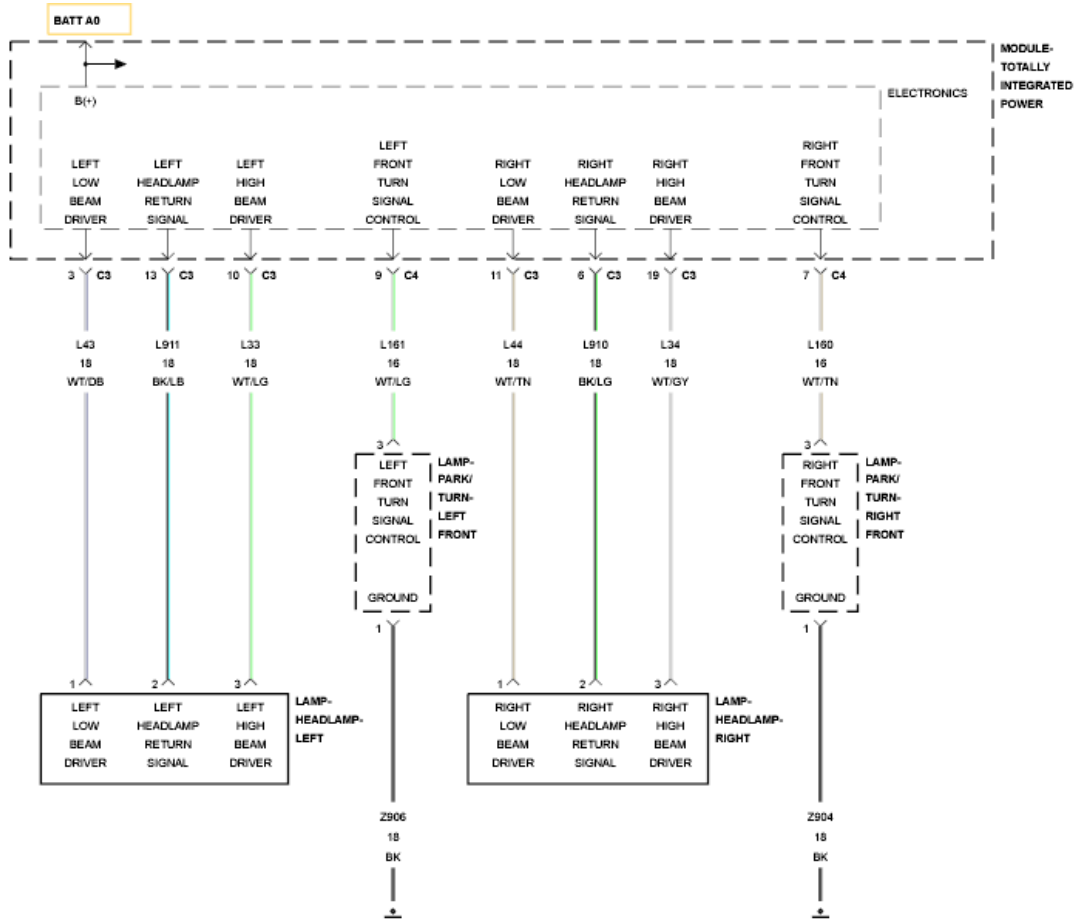

Fig. 28: Headlamp & Front Parking Lamp Wiring Diagram
Courtesy of CHRYSLER GROUP, LLC

For a complete wiring diagram, **refer to appropriate SYSTEM WIRING DIAGRAMS article** .

THEORY OF OPERATION

The Totally Integrated Power Module (TIPM) receives a bus message requesting high beam lamp illumination.

When this bus message is received, the TIPM provides a voltage output through the high beam driver circuit. The high beam driver circuit connects to the High Beam Lamp. A headlamp return signal circuit is used instead of a ground circuit. For additional information on the Headlamp operation. Refer to **EXTERIOR LIGHTING - OPERATION** .

WHEN MONITORED:

With the high beam headlamps active.

SET CONDITION:

When the Totally Integrated Power Module (TIPM) detects a high condition on the (L34) Right High Beam Driver circuit.

POSSIBLE CAUSES

Possible Causes
(L34) RIGHT HIGH BEAM DRIVER CIRCUIT OPEN
(L34) RIGHT HIGH BEAM DRIVER CIRCUIT SHORTED TO VOLTAGE
(L910) RIGHT HEADLAMP RETURN SIGNAL CIRCUIT OPEN
RIGHT HIGH BEAM BULB
TOTALLY INTEGRATED POWER MODULE (TIPM)

DIAGNOSTIC TEST

1. **INTERMITTENT CONDITION**
    1. Turn the ignition on.
    2. With the scan tool, clear all DTC's.
    3. Turn the High Beam Headlamps on.
    4. With the scan tool, read DTC's.

    Does the scan tool display DTC: B1638-RIGHT HI BEAM CONTROL CIRCUIT HIGH?

    Yes

    - Go To 2.

    No

    - Test complete, the condition or conditions that originally set this DTC are not present at this time. Using the wiring diagrams as a guide, check all related splices and connectors for signs of water intrusion, corrosion, pushed out or bent terminals, and correct pin tension.
    - Perform the BODY VERIFICATION TEST. Refer to **BODY VERIFICATION TEST**.
2. **CHECK THE (L34) RIGHT HIGH BEAM DRIVER CIRCUIT FOR A SHORT TO VOLTAGE IN THE HARNESS**

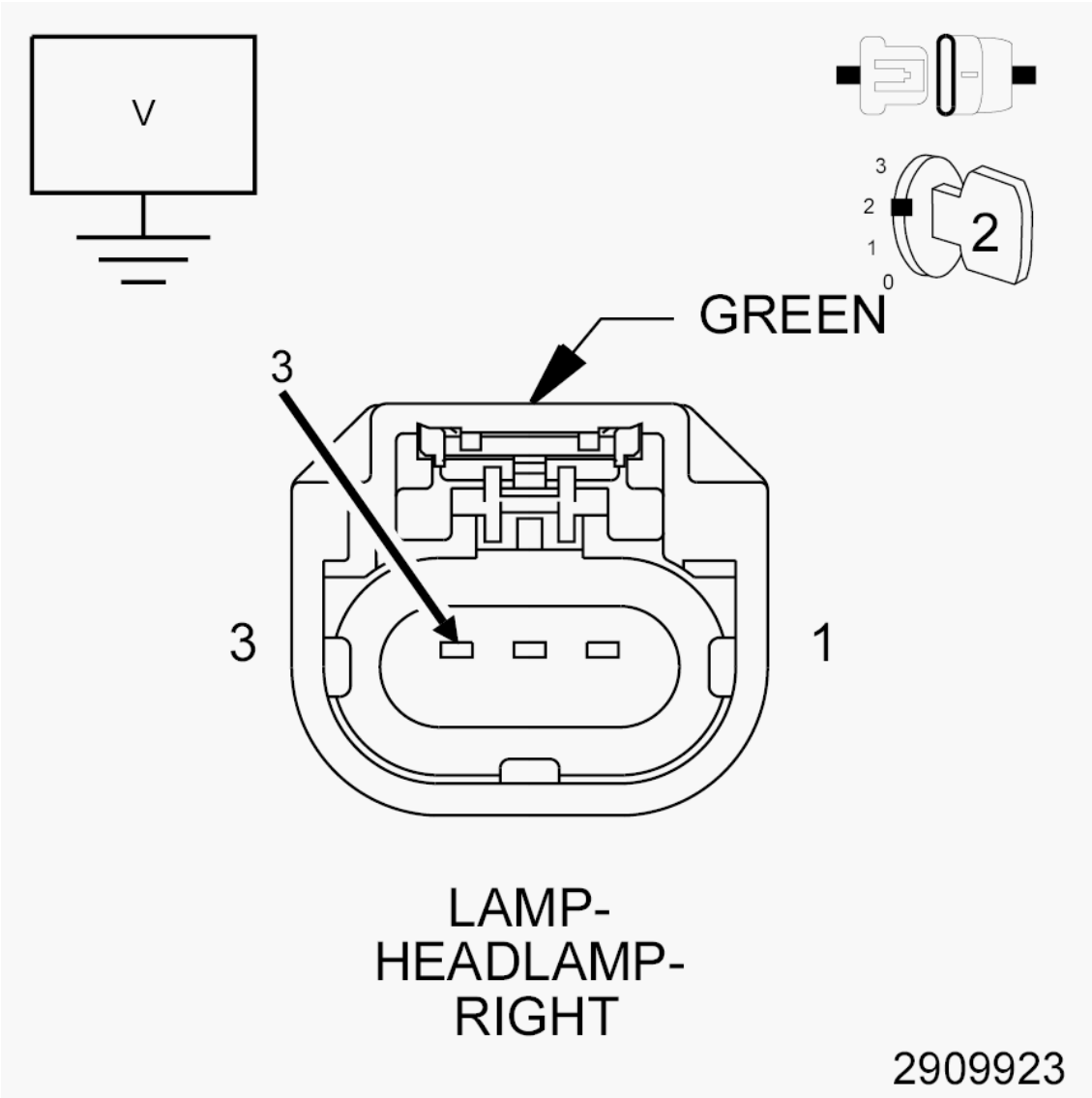

Fig. 29: Checking Right High Beam Driver Circuit For A Short To Voltage In The Harness
Courtesy of CHRYSLER GROUP, LLC

1. Turn the Headlamps off.
2. Turn the ignition off.
3. Disconnect the Right Headlamp Lamp harness connector.
4. Disconnect the TIPM C3 harness connector.
5. Turn the ignition on.
6. Measure the voltage between ground and the (L34) Right High Beam Driver circuit.

   Is there any voltage present?

   Yes

- Repair the short to voltage in the (L34) Right High Beam Driver circuit.
- Perform the BODY VERIFICATION TEST. Refer to **BODY VERIFICATION TEST**.

No

- Go To 3.

3. **CHECK THE TIPM FOR CORRECT OPERATION**

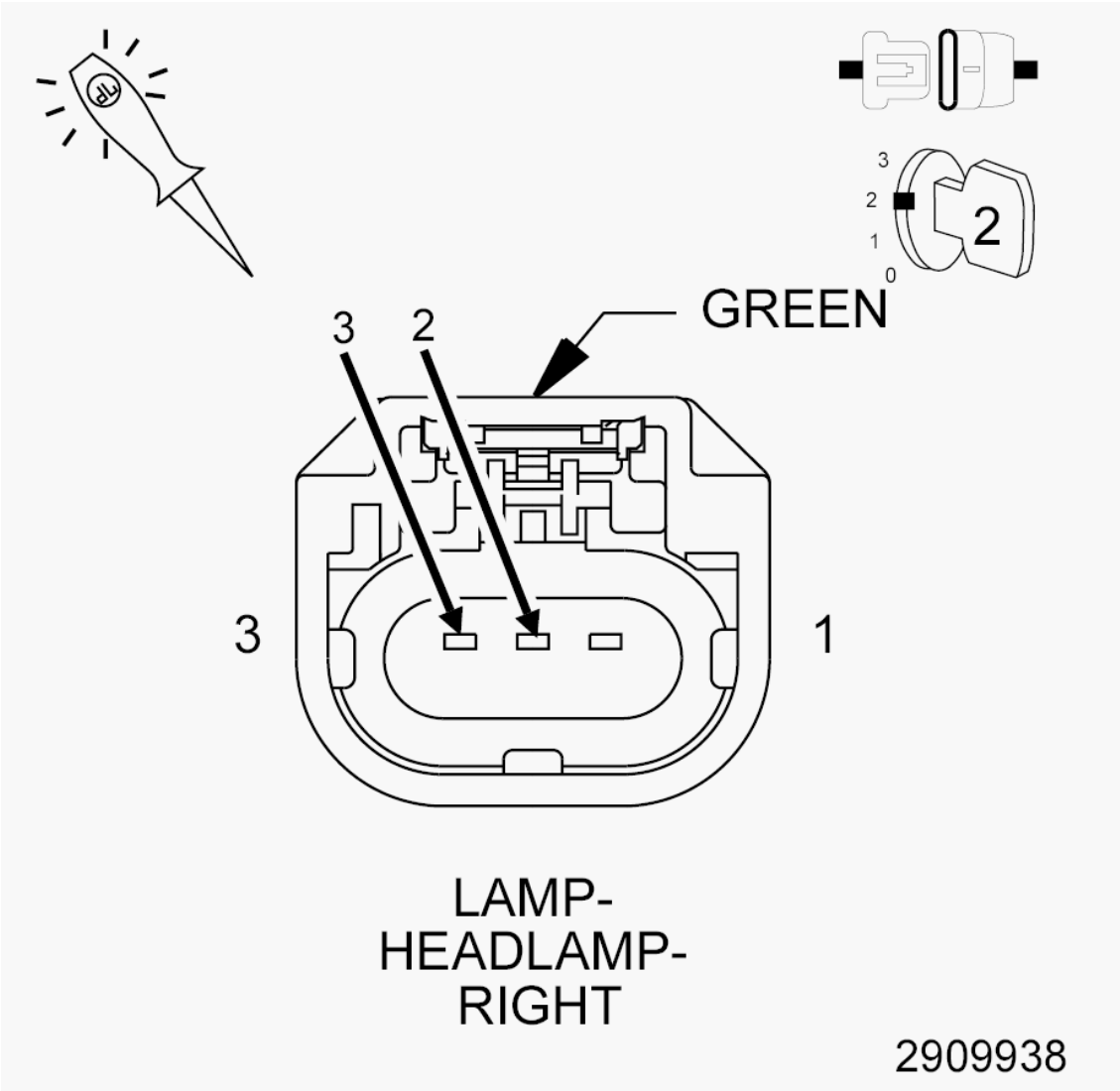

Fig. 30: Checking TIPM For Correct Operation
Courtesy of CHRYSLER GROUP, LLC

1. Turn the ignition off.
2. Reconnect the TIPM C3 harness connector.
3. Connect a 12-volt test light between the (L34) Right High Beam Driver circuit and (L910) Right Headlamp Return Signal circuit in the Right Headlamp Lamp harness connector.

4. Turn the ignition on.
5. Turn the High Beam Headlamps on.

   Does the test light illuminate brightly?

   Yes

   - Replace the Right High Beam Bulb in accordance with the Service Information. Refer to **UNIT, FRONT LAMP, REMOVAL** .
   - Perform the BODY VERIFICATION TEST. Refer to **BODY VERIFICATION TEST**.

   No

   - Go To 4.

4. **CHECK THE (L34) RIGHT HIGH BEAM DRIVER CIRCUIT FOR AN OPEN IN THE HARNESS**

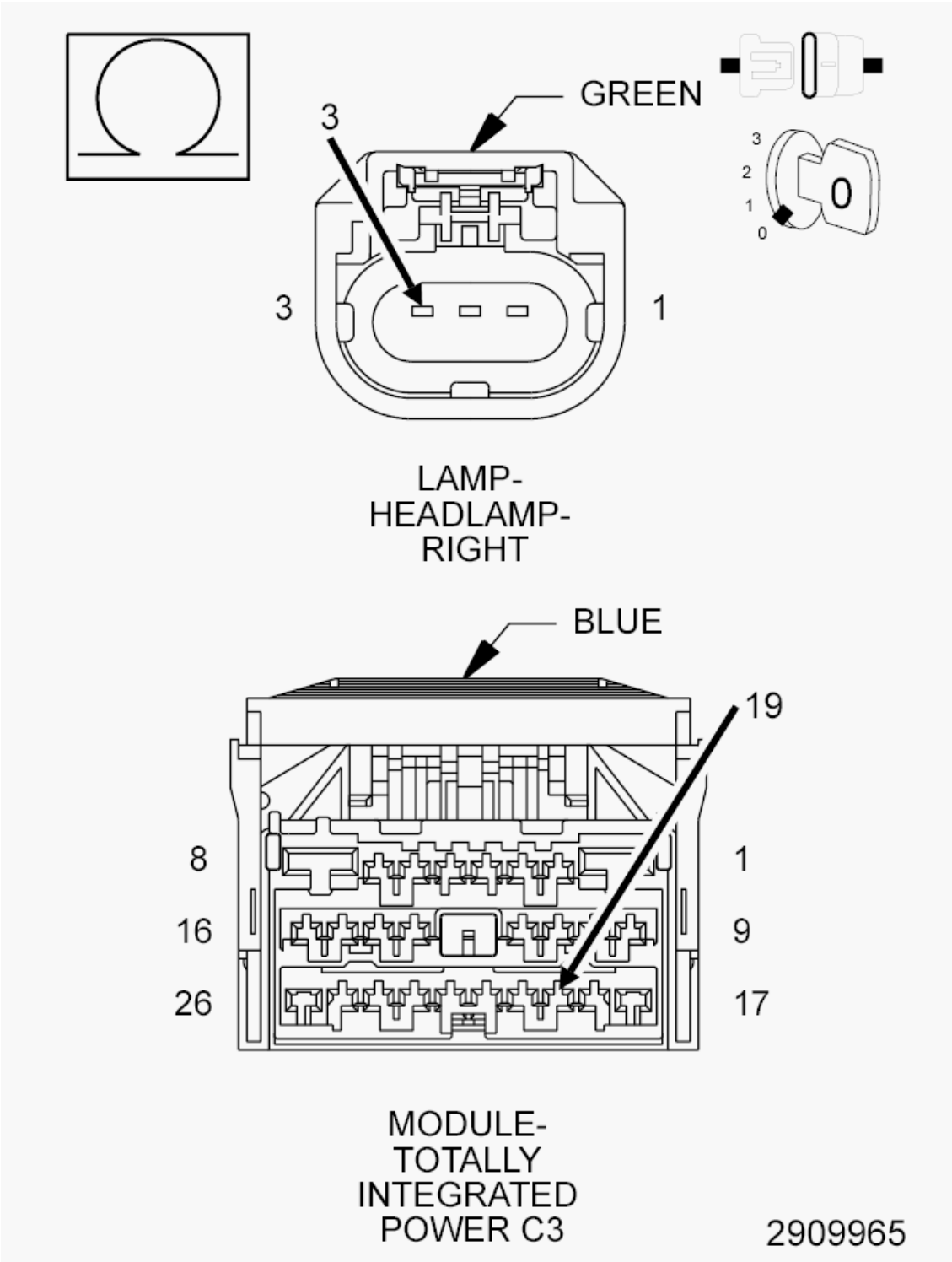

Fig. 31: Checking Right High Beam Driver Circuit For An Open In The Harness
Courtesy of CHRYSLER GROUP, LLC

1. Turn the ignition off.
2. Disconnect the TIPM C3 harness connector.

3. Measure the resistance of the (L34) Right High Beam Driver circuit between the Right Headlamp Lamp harness connector and the TIPM C3 harness connector.

   Is the resistance below 5.0 Ohms?

   Yes

   - Go To 5.

   No

   - Repair the open in the (L34) Right High Beam Driver circuit.
   - Perform the BODY VERIFICATION TEST. Refer to **BODY VERIFICATION TEST**.

5. **CHECK THE (L910) RIGHT HEADLAMP RETURN SIGNAL CIRCUIT FOR AN OPEN IN THE HARNESS**

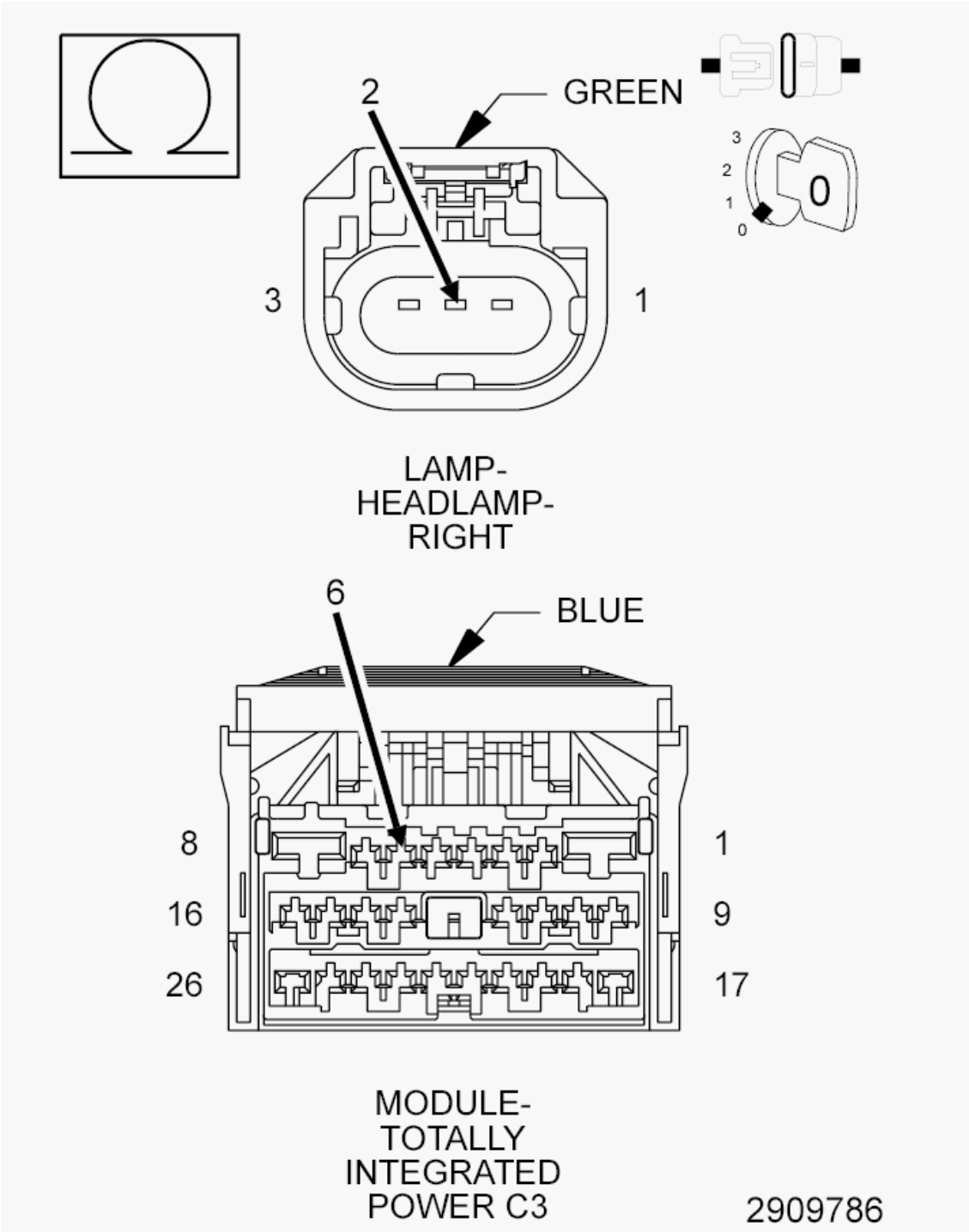

Fig. 32: Checking Right Headlamp Return Signal Circuit For An Open In The Harness
Courtesy of CHRYSLER GROUP, LLC

1. Measure the resistance of the (L910) Right Headlamp Return Signal circuit between the Right Headlamp Lamp harness connector and the TIPM C3 harness connector.

   Is the resistance below 5.0 Ohms?

Yes

- Replace the Totally Integrated Power Module (TIPM) in accordance with the Service Information. Refer to **MODULE, TOTALLY INTEGRATED POWER (TIPM), REMOVAL** .
- Perform the BODY VERIFICATION TEST. Refer to **BODY VERIFICATION TEST**.

No

- Repair the open in the (L910) Right Headlamp Return Signal circuit.
- Perform the BODY VERIFICATION TEST. Refer to **BODY VERIFICATION TEST**.

B163B-FRONT LEFT TURN LAMP CONTROL CIRCUIT LOW

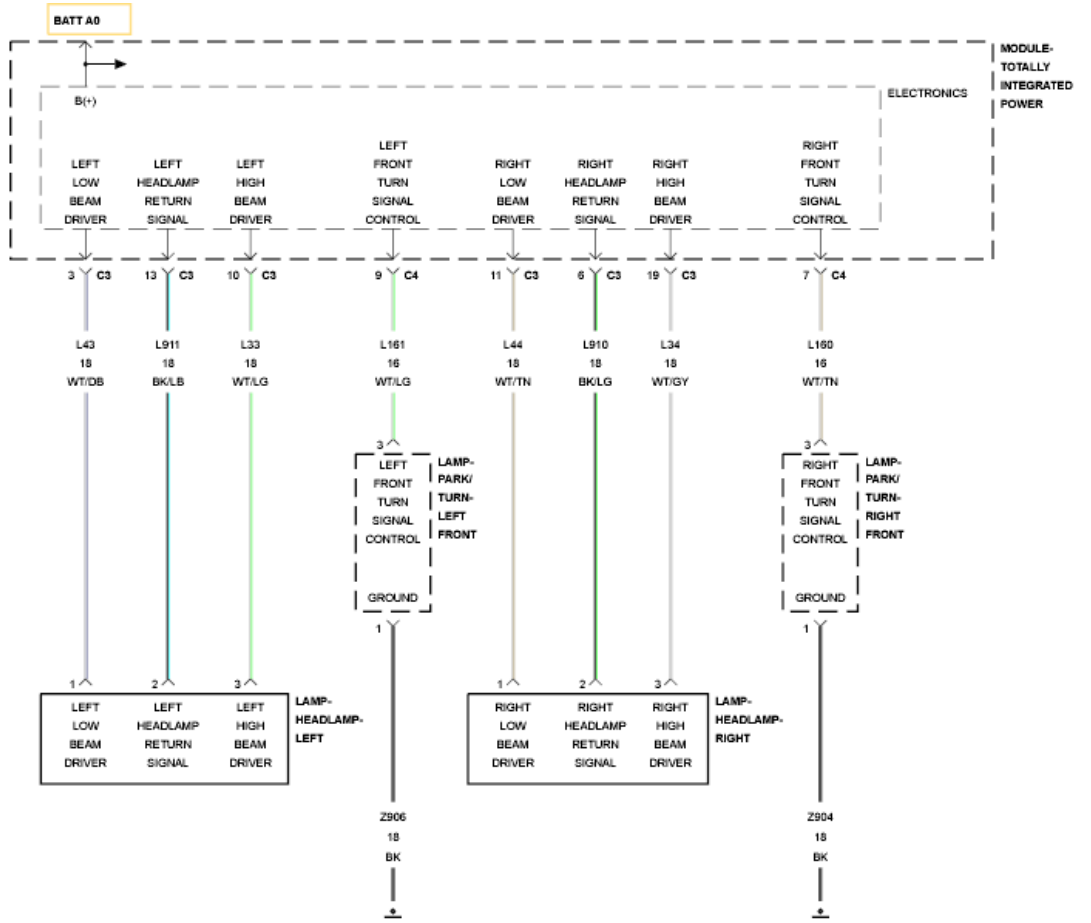

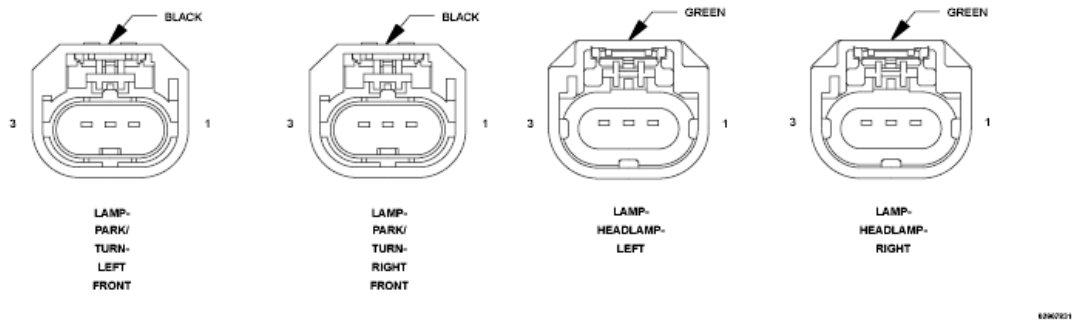

Fig. 33: Headlamp & Front Parking Lamp Wiring Diagram
Courtesy of CHRYSLER GROUP, LLC

For a complete wiring diagram, **refer to appropriate SYSTEM WIRING DIAGRAMS article** .

THEORY OF OPERATION

The Totally Integrated Power Module (TIPM) receives a bus message requesting turn signal lamp illumination.

When this bus message is received, the TIPM provides a pulsed voltage output through the front turn signal control circuit. The front turn signal control circuit connects to the dual filament Park and Turn Signal Lamp. The same ground circuit is used for both the Park and Turn Signal filaments in a dual filament lamp. For additional information on the Turn Signal Lamps operation. Refer to **EXTERIOR LIGHTING - OPERATION** .

WHEN MONITORED:

With the turn signal active.

SET CONDITION:

When the Totally Integrated Power Module (TIPM) detects a low condition on the (L161) Left Front Turn Signal Control circuit.

POSSIBLE CAUSES

Possible Causes
(L161) LEFT FRONT TURN SIGNAL CONTROL CIRCUIT SHORTED TO GROUND PARK AND TURN SIGNAL BULB TOTALLY INTEGRATED POWER MODULE (TIPM)

DIAGNOSTIC TEST

1. **INTERMITTENT CONDITION**
    1. Turn the ignition on.
    2. With the scan tool, clear all DTC's.
    3. Turn the Left Turn Signal on.
    4. With the scan tool, read DTC's.

    Does the scan tool display DTC: B163B-FRONT LEFT TURN LAMP CONTROL CIRCUIT LOW?

    Yes

    - Go To 2.

    No

    - Test complete, the condition or conditions that originally set this DTC are not present at this time. Using the wiring diagrams as a guide, check all related splices and connectors for signs of water intrusion, corrosion, pushed out or bent terminals, and correct pin tension.
    - Perform the BODY VERIFICATION TEST. Refer to **BODY VERIFICATION TEST**.
2. **ATTEMPT TO SET THE OPPOSITE DTC**
    1. Turn the Left Turn Signal off.

2. Turn the ignition off.
3. Disconnect the Left Front Park/Turn Lamp harness connector.
4. Turn the ignition on.
5. Turn the Left Turn Signal on.
6. With the scan tool, read DTC's.

   Does the scan tool display DTC: B163C-FRONT LEFT TURN LAMP CONTROL CIRCUIT HIGH?

   Yes

   - Replace the Left Park and Turn Signal Bulb in accordance with the Service Information. Refer to **UNIT, FRONT LAMP, REMOVAL** .
   - Perform the BODY VERIFICATION TEST. Refer to **BODY VERIFICATION TEST**.

   No

   - Go To 3.

3. **CHECK THE (L161) LEFT FRONT TURN SIGNAL CONTROL CIRCUIT FOR A SHORT TO GROUND**

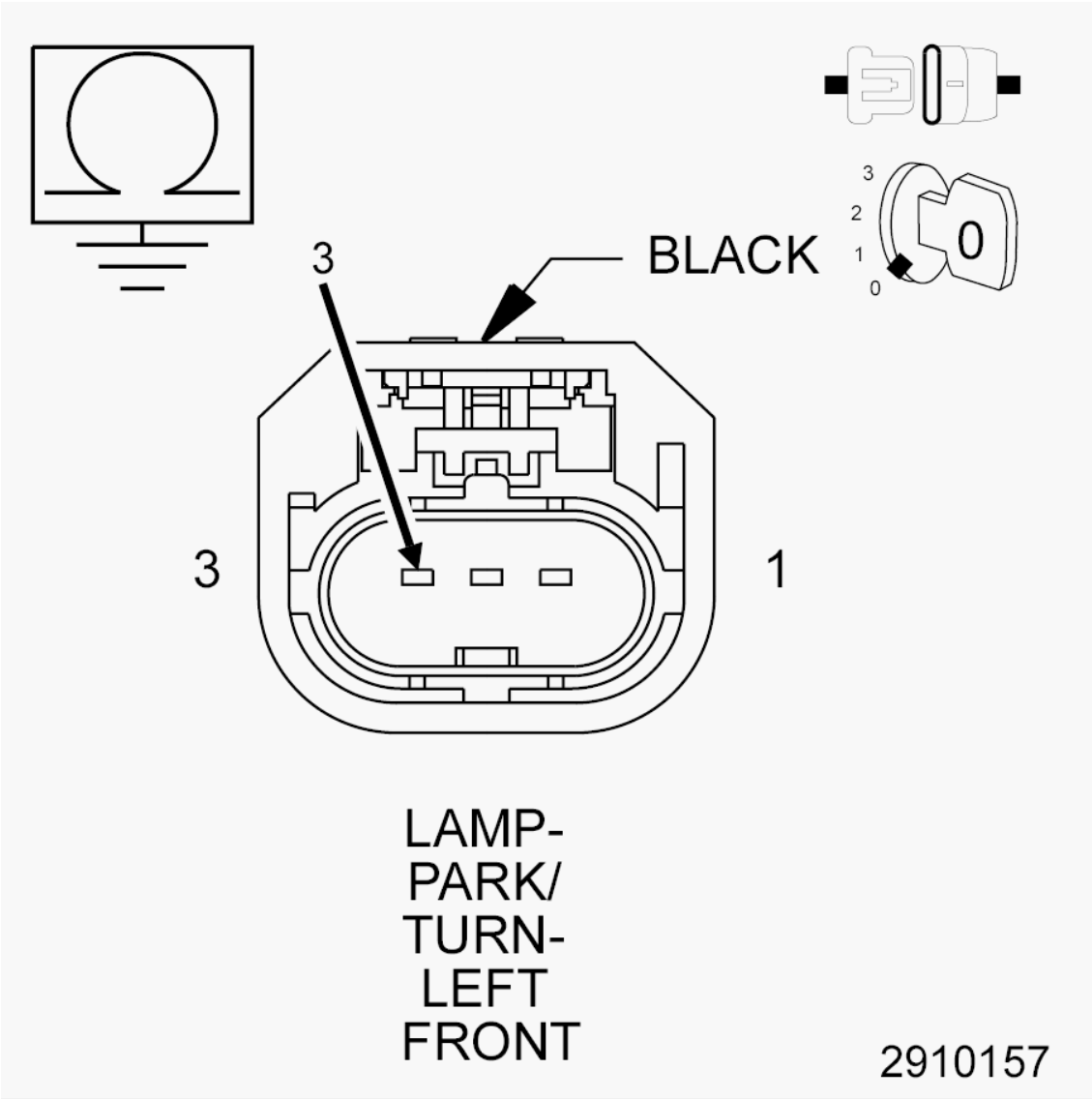

Fig. 34: Checking Left Front Turn Signal Control Circuit For A Short To Ground
Courtesy of CHRYSLER GROUP, LLC

1. Turn the ignition off.
2. Disconnect the TIPM C4 harness connector.
3. Measure the resistance between ground and the (L161) Left Front Turn Signal Control circuit.

   Is the resistance above 10k Ohms?

   Yes

   - Replace the Totally Integrated Power Module (TIPM) in accordance with the Service Information. Refer to **MODULE, TOTALLY INTEGRATED POWER (TIPM), REMOVAL** .
   - Perform the BODY VERIFICATION TEST. Refer to **BODY VERIFICATION TEST**.

No

- Repair the short to ground in the (L161) Left Front Turn Signal Control circuit.
- Perform the BODY VERIFICATION TEST. Refer to **BODY VERIFICATION TEST**.

B163C-FRONT LEFT TURN LAMP CONTROL CIRCUIT HIGH

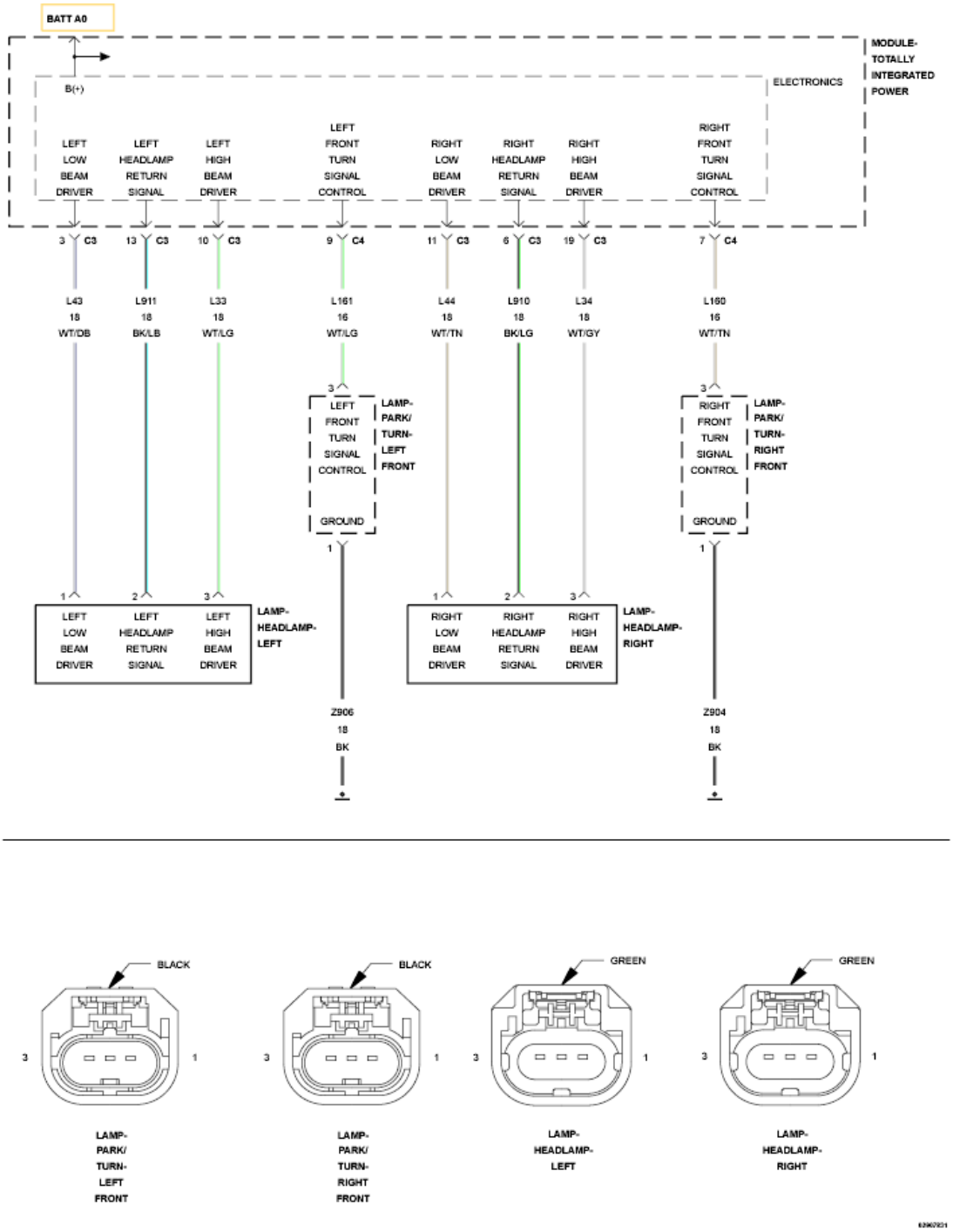

Fig. 35: Headlamp & Front Parking Lamp Wiring Diagram

Courtesy of CHRYSLER GROUP, LLC

For a complete wiring diagram, **refer to appropriate SYSTEM WIRING DIAGRAMS article** .

THEORY OF OPERATION

The Totally Integrated Power Module (TIPM) receives a bus message requesting turn signal lamp illumination. When this bus message is received, the TIPM provides a pulsed voltage output through the front turn signal control circuit. The front turn signal control circuit connects to the dual filament Park and Turn Signal Lamp. The same ground circuit is used for both the Park and Turn Signal filaments in a dual filament lamp. For additional information on the Turn Signal Lamps operation. Refer to **EXTERIOR LIGHTING - OPERATION** .

WHEN MONITORED:

With the turn signal active.

SET CONDITION:

When the Totally Integrated Power Module (TIPM) detects a high condition on the (L161) Left Front Turn Signal Control circuit.

POSSIBLE CAUSES

Possible Causes
(L161) LEFT FRONT TURN SIGNAL CONTROL CIRCUIT OPEN
(L161) LEFT FRONT TURN SIGNAL CONTROL CIRCUIT SHORTED TO VOLTAGE
(Z906) GROUND CIRCUIT OPEN
PARK AND TURN SIGNAL BULB
TOTALLY INTEGRATED POWER MODULE (TIPM)

DIAGNOSTIC TEST

1. **INTERMITTENT CONDITION**
    1. Turn the ignition on.
    2. With the scan tool, clear all DTC's.
    3. Turn the Left Turn Signal on.
    4. With the scan tool, read DTC's.

    Does the scan tool display DTC: B163C-FRONT LEFT TURN LAMP CONTROL CIRCUIT HIGH?

    Yes

    - Go To 2.

No

- Test complete, the condition or conditions that originally set this DTC are not present at this time. Using the wiring diagrams as a guide, check all related splices and connectors for signs of water intrusion, corrosion, pushed out or bent terminals, and correct pin tension.
- Perform the BODY VERIFICATION TEST. Refer to **BODY VERIFICATION TEST**.

2. **CHECK THE (L161) LEFT FRONT TURN SIGNAL CONTROL CIRCUIT FOR A SHORT TO VOLTAGE IN THE HARNESS**

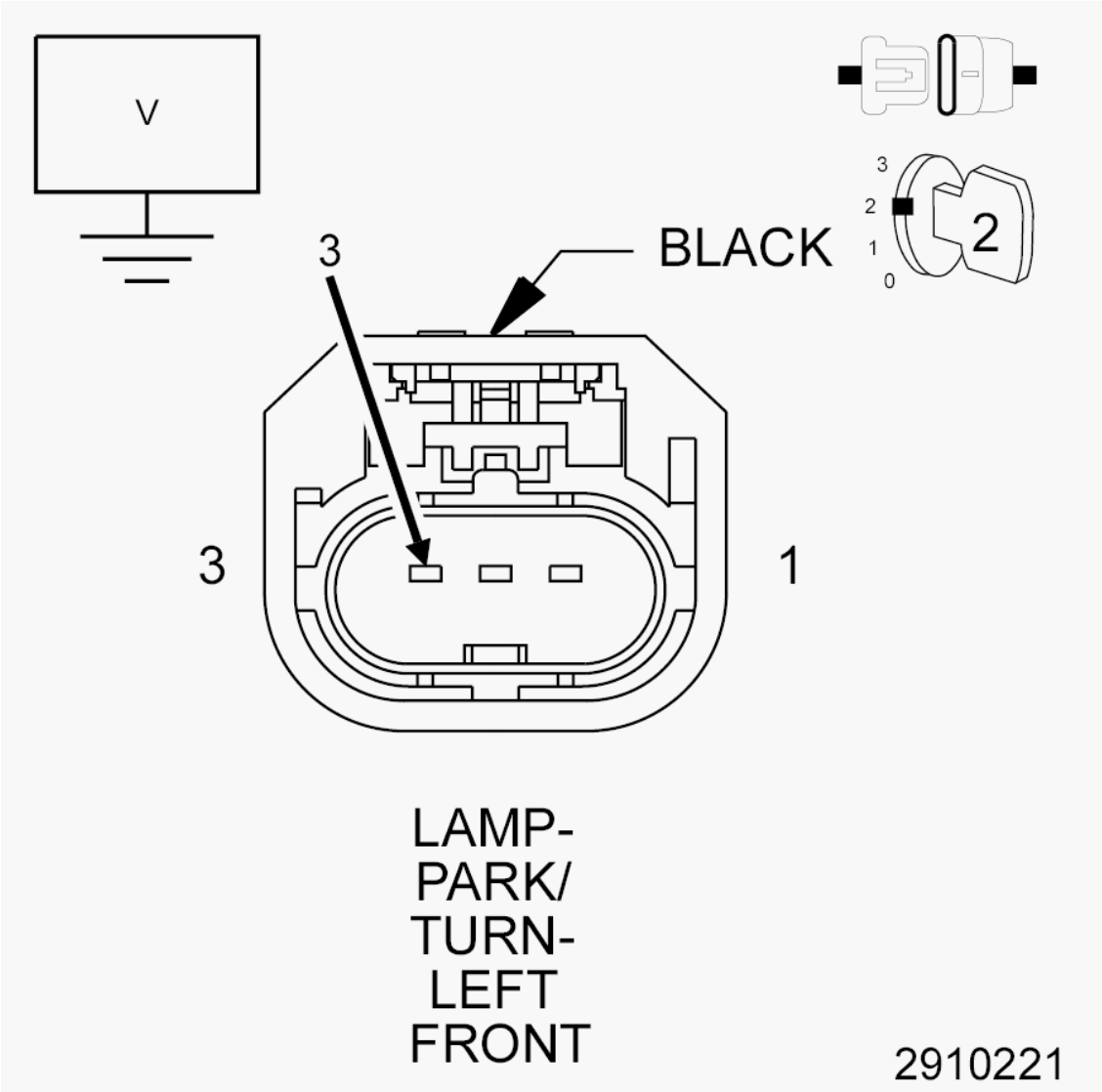

Fig. 36: Checking Left Front Turn Signal Control Circuit For A Short To Voltage In The Harness
Courtesy of CHRYSLER GROUP, LLC

1. Turn the Left Turn Signal off.
2. Turn the ignition off.
3. Disconnect the Left Front Park/Turn Lamp harness connector.

4. Disconnect the TIPM C4 harness connector.
5. Turn the ignition on.
6. Measure the voltage between ground and the (L161) Left Front Turn Signal Control circuit.

   Is there any voltage present?

   Yes

   - Repair the short to voltage in the (L161) Left Front Turn Signal Control circuit.
   - Perform the BODY VERIFICATION TEST. Refer to **BODY VERIFICATION TEST**.

   No

   - Go To 3.

3. **CHECK THE TIPM FOR CORRECT OPERATION**

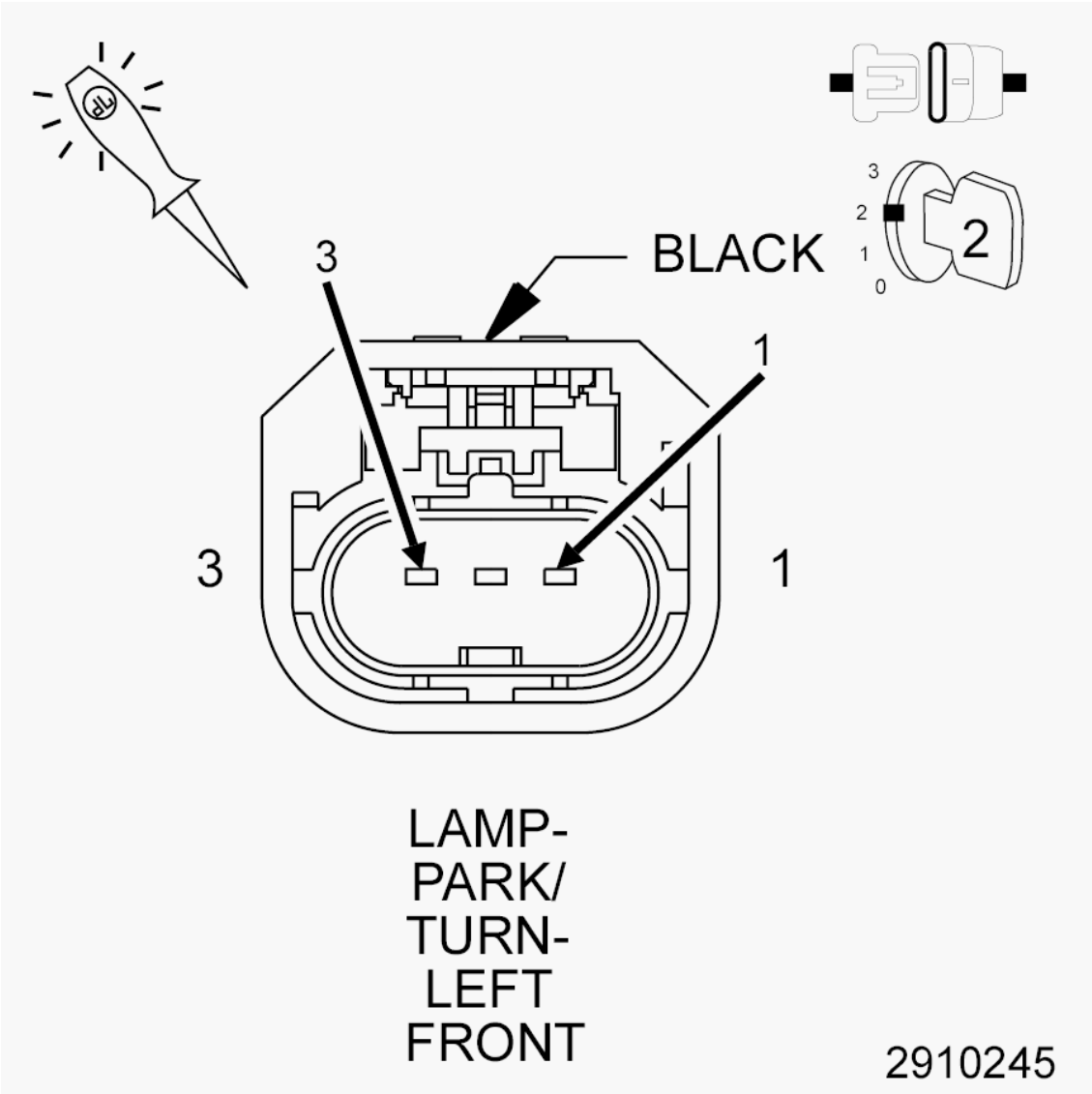

Fig. 37: Checking TIPM For Correct Operation
Courtesy of CHRYSLER GROUP, LLC

1. Turn the ignition off.
2. Reconnect the TIPM C4 harness connector.
3. Connect a 12-volt test light between the (L161) Left Front Turn Signal Control circuit and the (Z906) Ground circuit at the Left Front Park/Turn Lamp harness connector.
4. Turn the ignition on.
5. Turn the Left Turn Signal on.

   Does the test light blink on and off?

   Yes

   - Replace the Park and Turn Signal Bulb in accordance with the Service Information. Refer to

UNIT, FRONT LAMP, REMOVAL .

- Perform the BODY VERIFICATION TEST. Refer to **BODY VERIFICATION TEST**.

No

- Go To 4.

4. **CHECK THE (L161) LEFT FRONT TURN SIGNAL CONTROL CIRCUIT FOR AN OPEN IN THE HARNESS**

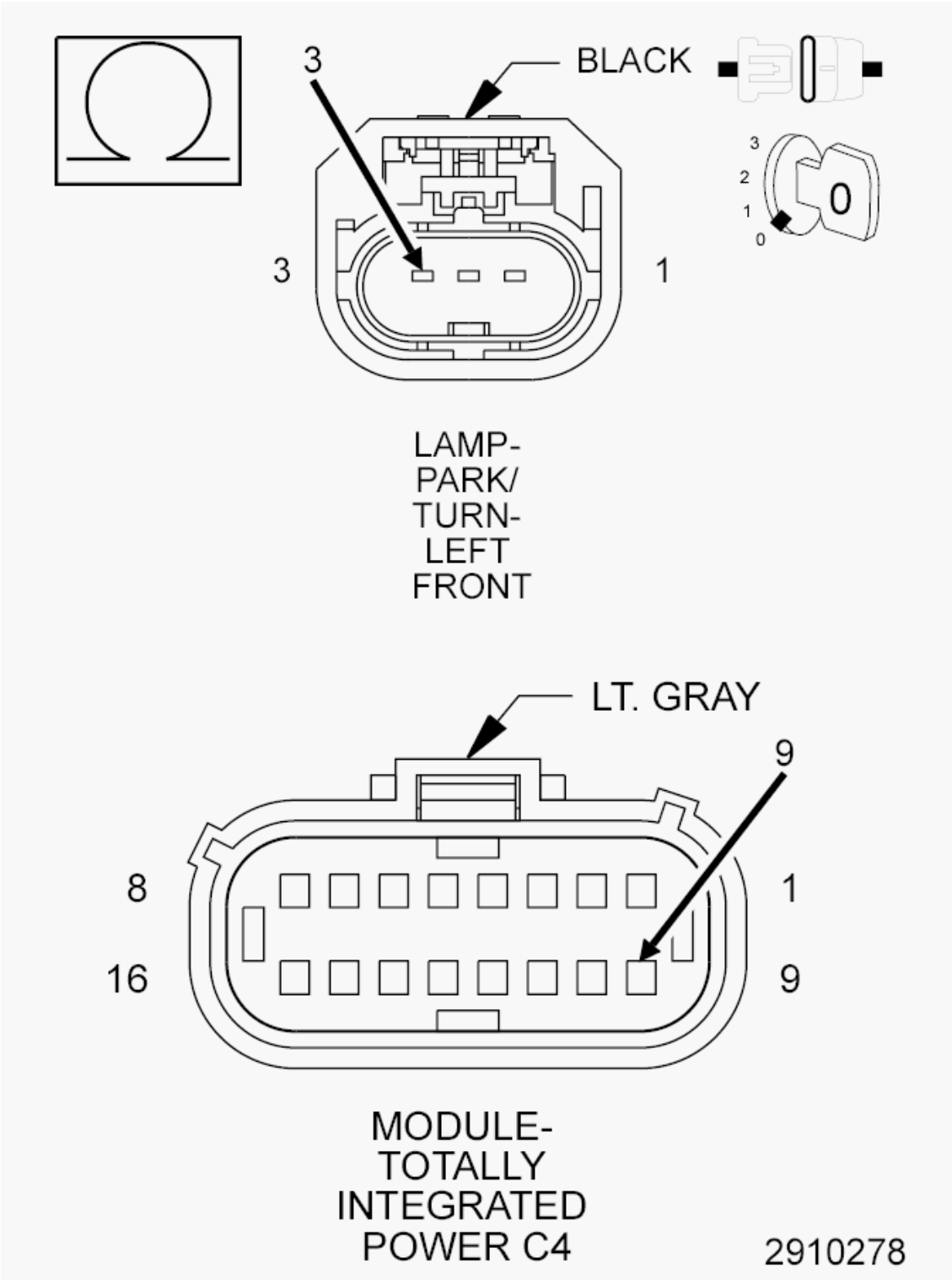

Fig. 38: Checking Left Front Turn Signal Control Circuit For An Open In The Harness
Courtesy of CHRYSLER GROUP, LLC

1. Turn the ignition off.
2. Disconnect the TIPM C4 harness connector.

3. Measure the resistance of the (L161) Left Front Turn Signal Control circuit between the Left Front Park/Turn Lamp harness connector and the TIPM C4 harness connector.

   Is the resistance below 5.0 Ohms?

   Yes

   - Go To 5.

   No

   - Repair the open in the (L161) Left Front Turn Signal Control circuit.
   - Perform the BODY VERIFICATION TEST. Refer to **BODY VERIFICATION TEST**.

5. **CHECK THE (Z906) GROUND CIRCUIT FOR AN OPEN IN THE HARNESS**

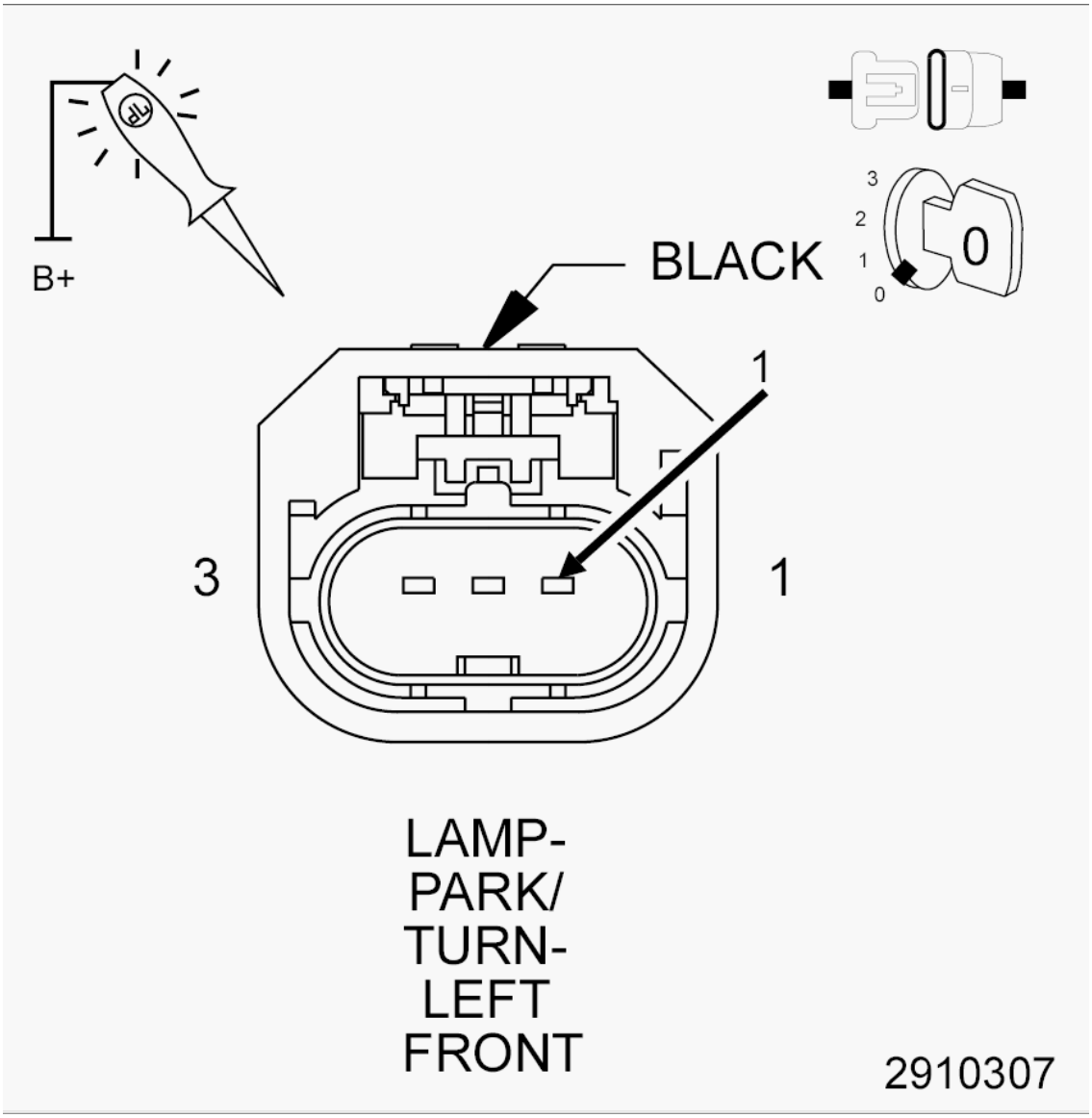

Fig. 39: Checking Ground Circuit For An Open In The Harness
Courtesy of CHRYSLER GROUP, LLC

1. Using a 12-volt test light connected to 12-volts, check the (Z906) Ground circuit.

   Does the test light illuminate brightly?

   Yes

   - Replace the Totally Integrated Power Module (TIPM) in accordance with the Service Information. Refer to **MODULE, TOTALLY INTEGRATED POWER (TIPM), REMOVAL** .
   - Perform the BODY VERIFICATION TEST. Refer to **BODY VERIFICATION TEST**.

   No

   - Repair the open in the (Z906) Ground circuit.
   - Perform the BODY VERIFICATION TEST. Refer to **BODY VERIFICATION TEST**.

B163F-FRONT RIGHT TURN LAMP CONTROL CIRCUIT LOW

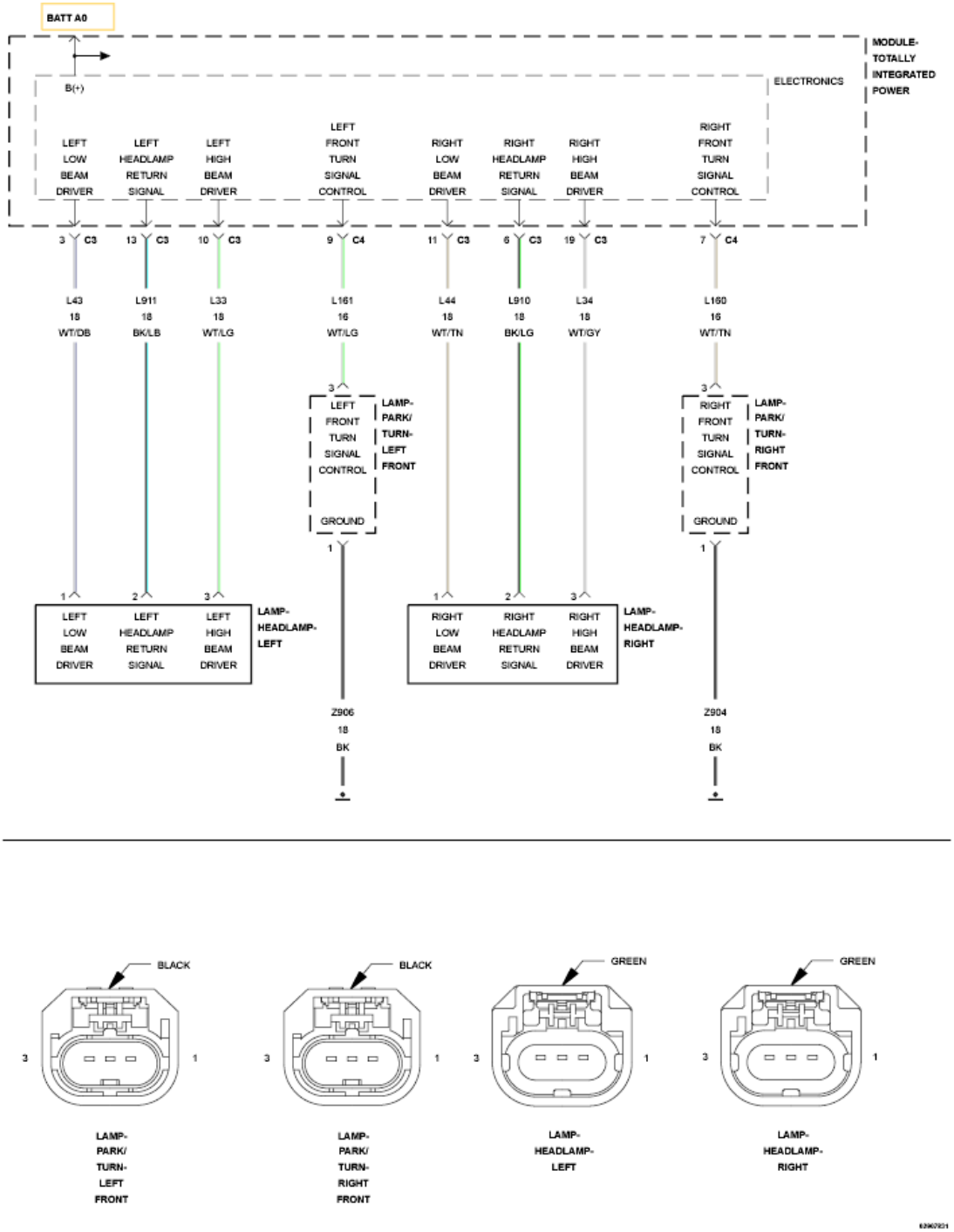

Fig. 40: Headlamp & Front Parking Lamp Wiring Diagram
Courtesy of CHRYSLER GROUP, LLC

For a complete wiring diagram, **refer to appropriate SYSTEM WIRING DIAGRAMS article** .

THEORY OF OPERATION

The Totally Integrated Power Module (TIPM) receives a bus message requesting turn signal lamp illumination.

When this bus message is received, the TIPM provides a pulsed voltage output through the front turn signal control circuit. The front turn signal control circuit connects to the dual filament Park and Turn Signal Lamp. The same ground circuit is used for both the Park and Turn Signal filaments in a dual filament lamp. For additional information on the Turn Signal Lamps operation. Refer to **EXTERIOR LIGHTING - OPERATION** .

WHEN MONITORED:

With the turn signal active.

SET CONDITION:

When the Totally Integrated Power Module (TIPM) detects a low condition on the (L160) Right Front Turn Signal Control circuit.

POSSIBLE CAUSES

Possible Causes
(L160) RIGHT FRONT TURN SIGNAL CONTROL CIRCUIT SHORTED TO GROUND PARK AND TURN SIGNAL BULB TOTALLY INTEGRATED POWER MODULE (TIPM)

DIAGNOSTIC TEST

1. **INTERMITTENT CONDITION**
    1. Turn the ignition on.
    2. With the scan tool, clear all DTC's.
    3. Turn the Right Turn Signal on.
    4. With the scan tool, read DTC's.

    Does the scan tool display DTC: B163F-FRONT RIGHT TURN LAMP CONTROL CIRCUIT LOW?

    Yes

    - Go To 2.

    No

    - Test complete, the condition or conditions that originally set this DTC are not present at this time. Using the wiring diagrams as a guide, check all related splices and connectors for signs of water intrusion, corrosion, pushed out or bent terminals, and correct pin tension.
    - Perform the BODY VERIFICATION TEST. Refer to **BODY VERIFICATION TEST**.
2. **ATTEMPT TO SET THE OPPOSITE DTC**
    1. Turn the ignition off.

2. Disconnect the Right Front Park/Turn Lamp harness connector.
3. Turn the ignition on.
4. Turn the Right Turn Signal on.
5. With the scan tool, read DTC's.

   Does the scan tool display DTC: B1640-FRONT RIGHT TURN LAMP CONTROL CIRCUIT HIGH?

   Yes

   - Replace the Right Park and Turn Signal Bulb in accordance with the Service Information. Refer to **UNIT, FRONT LAMP, REMOVAL** .
   - Perform the BODY VERIFICATION TEST. Refer to **BODY VERIFICATION TEST**.

   No

   - Go To 3.

3. **CHECK THE (L160) RIGHT FRONT TURN SIGNAL CONTROL CIRCUIT FOR A SHORT TO GROUND**

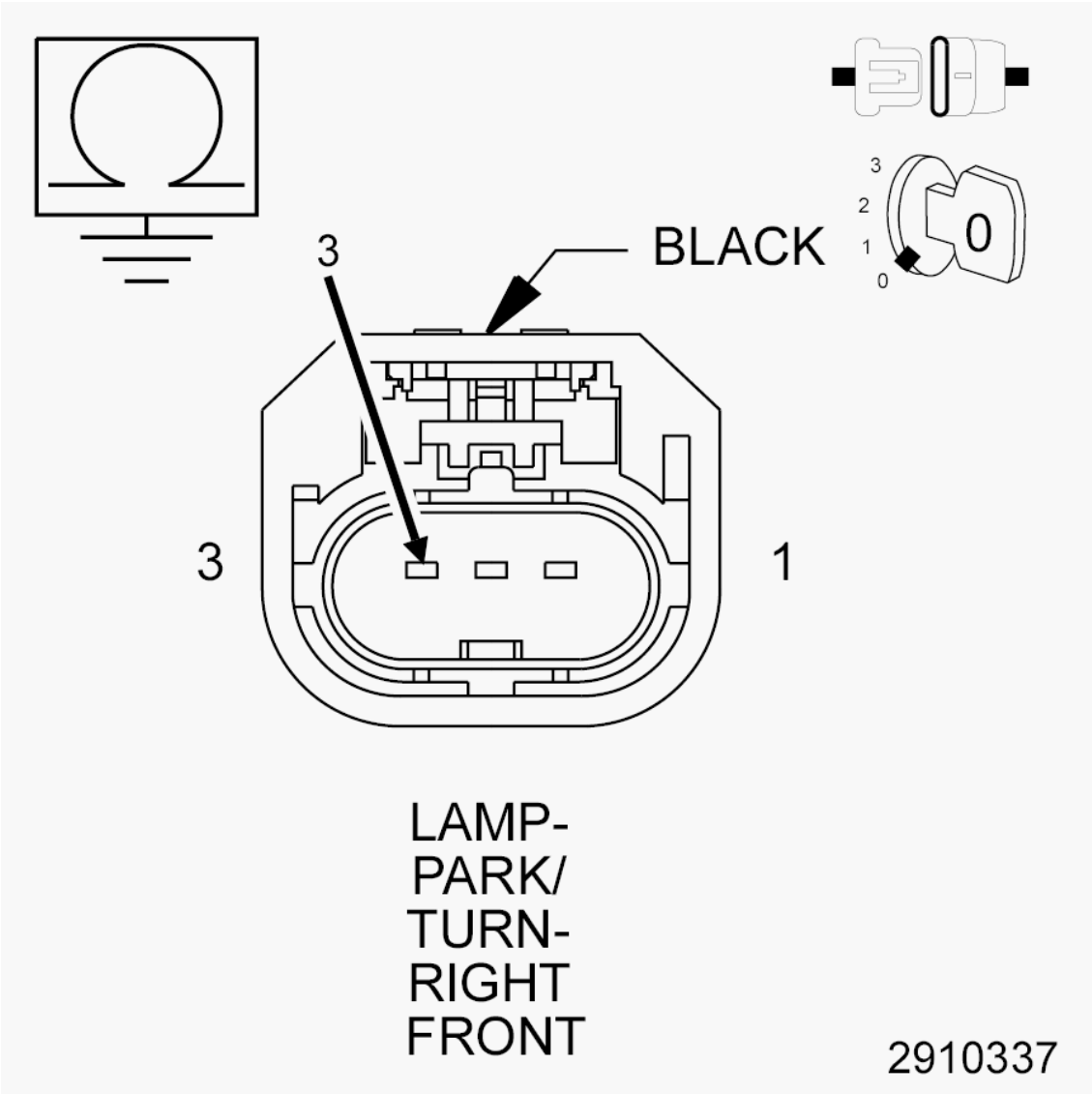

Fig. 41: Checking Right Front Turn Signal Control Circuit For A Short To Ground
Courtesy of CHRYSLER GROUP, LLC

1. Turn the ignition off.
2. Measure the resistance between ground and the (L160) Right Front Turn Signal Control circuit.

   Is the resistance above 10k Ohms?

   Yes

   - Replace the Totally Integrated Power Module (TIPM) in accordance with the Service Information. Refer to **MODULE, TOTALLY INTEGRATED POWER (TIPM), REMOVAL** .
   - Perform the BODY VERIFICATION TEST. Refer to **BODY VERIFICATION TEST**.

No

- Repair the short to ground in the (L160) Right Front Turn Signal Control circuit.
- Perform the BODY VERIFICATION TEST. Refer to **BODY VERIFICATION TEST**.

B1640-FRONT RIGHT TURN LAMP CONTROL CIRCUIT HIGH

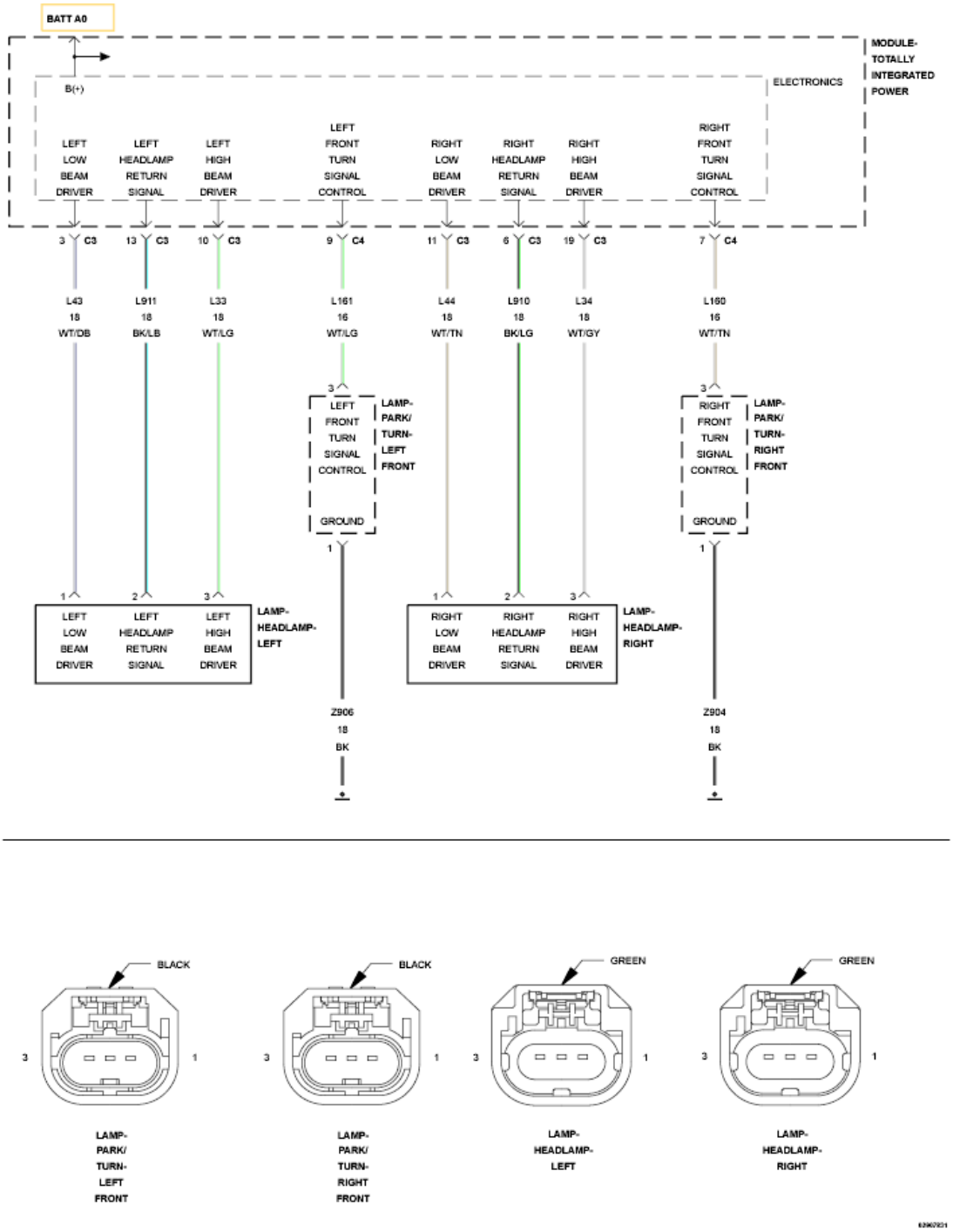

Fig. 42: Headlamp & Front Parking Lamp Wiring Diagram

Courtesy of CHRYSLER GROUP, LLC

For a complete wiring diagram, **refer to appropriate SYSTEM WIRING DIAGRAMS article** .

THEORY OF OPERATION

The Totally Integrated Power Module (TIPM) receives a bus message requesting turn signal lamp illumination. When this bus message is received, the TIPM provides a pulsed voltage output through the front turn signal control circuit. The front turn signal control circuit connects to the dual filament Park and Turn Signal Lamp. The same ground circuit is used for both the Park and Turn Signal filaments in a dual filament lamp. For additional information on the Turn Signal Lamps operation. Refer to **EXTERIOR LIGHTING - OPERATION** .

WHEN MONITORED:

With the turn signal active.

SET CONDITION:

When the Totally Integrated Power Module (TIPM) detects a high condition on the (L160) Right Front Turn Signal Driver circuit.

POSSIBLE CAUSES

Possible Causes
(L160) RIGHT FRONT TURN SIGNAL DRIVER CIRCUIT OPEN
(L160) RIGHT FRONT TURN SIGNAL DRIVER CIRCUIT SHORTED TO VOLTAGE
(Z904) GROUND CIRCUIT OPEN
PARK AND TURN SIGNAL BULB
TOTALLY INTEGRATED POWER MODULE (TIPM)

DIAGNOSTIC TEST

1. **INTERMITTENT CONDITION**
    1. Turn the ignition on.
    2. With the scan tool, clear all DTC's.
    3. Turn the Right Turn Signal on.
    4. With the scan tool, read DTC's.

    Does the scan tool display DTC: B1640-FRONT RIGHT TURN LAMP CONTROL CIRCUIT HIGH?

    Yes

    - Go To 2.

No

- Test complete, the condition or conditions that originally set this DTC are not present at this time. Using the wiring diagrams as a guide, check all related splices and connectors for signs of water intrusion, corrosion, pushed out or bent terminals, and correct pin tension.
- Perform the BODY VERIFICATION TEST. Refer to **BODY VERIFICATION TEST**.

2. **CHECK THE (L160) RIGHT FRONT TURN SIGNAL DRIVER CIRCUIT FOR A SHORT TO VOLTAGE IN THE HARNESS**

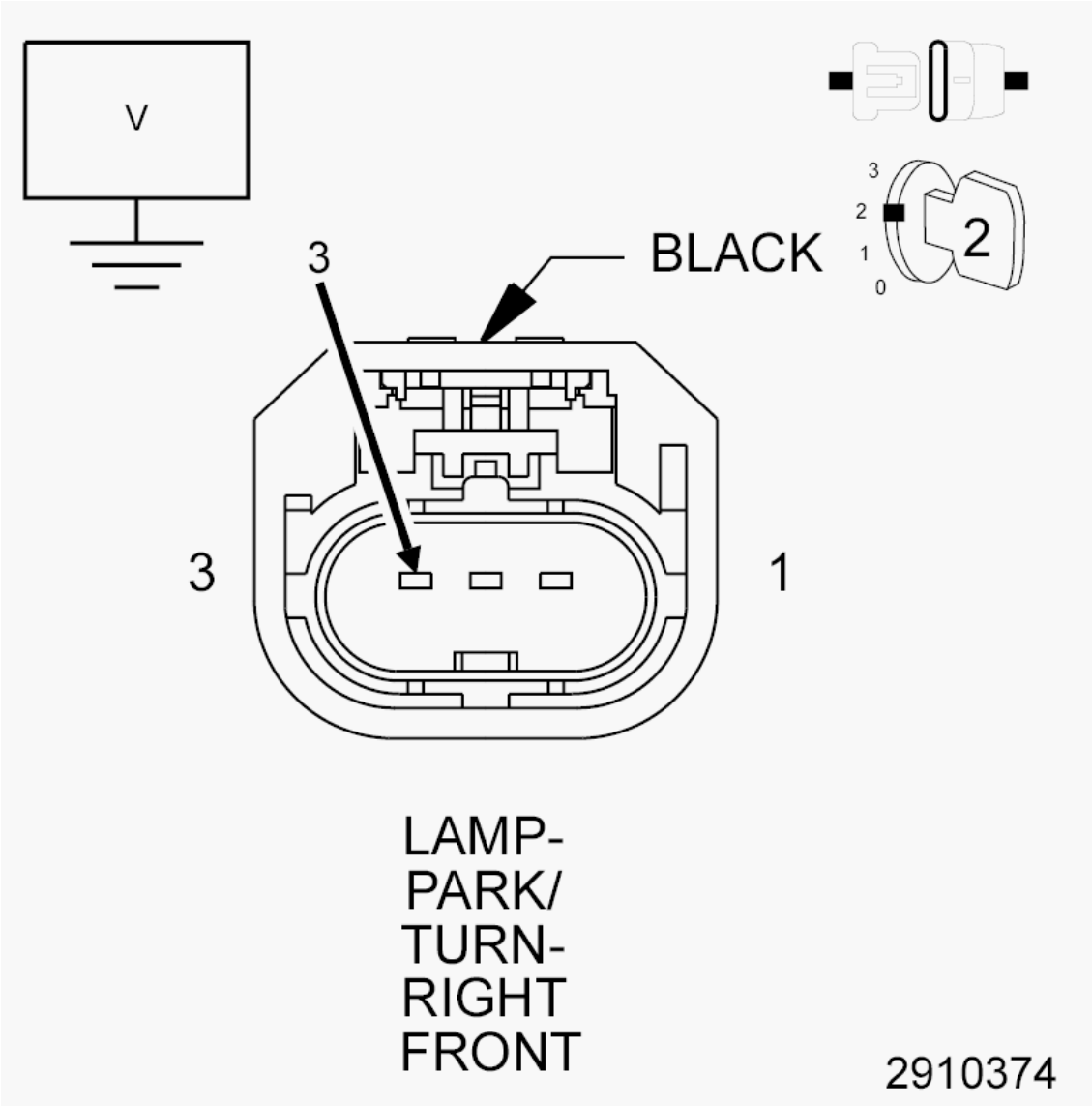

Fig. 43: Checking Right Front Turn Signal Driver Circuit For A Short To Voltage In The Harness
Courtesy of CHRYSLER GROUP, LLC

1. Turn the Right Turn Signal off.
2. Turn the ignition off.
3. Disconnect the Right Front Park/Turn Lamp harness connector.

4. Disconnect the TIPM C4 harness connector.
5. Turn the ignition on.
6. Measure the voltage between ground and the (L160) Right Front Turn Signal Driver circuit.

   Is there any voltage present?

   Yes

   - Repair the short to voltage in the (L160) Right Front Turn Signal Driver circuit.
   - Perform the BODY VERIFICATION TEST. Refer to **BODY VERIFICATION TEST**.

   No

   - Go To 3.

3. **CHECK THE TIPM FOR CORRECT OPERATION**

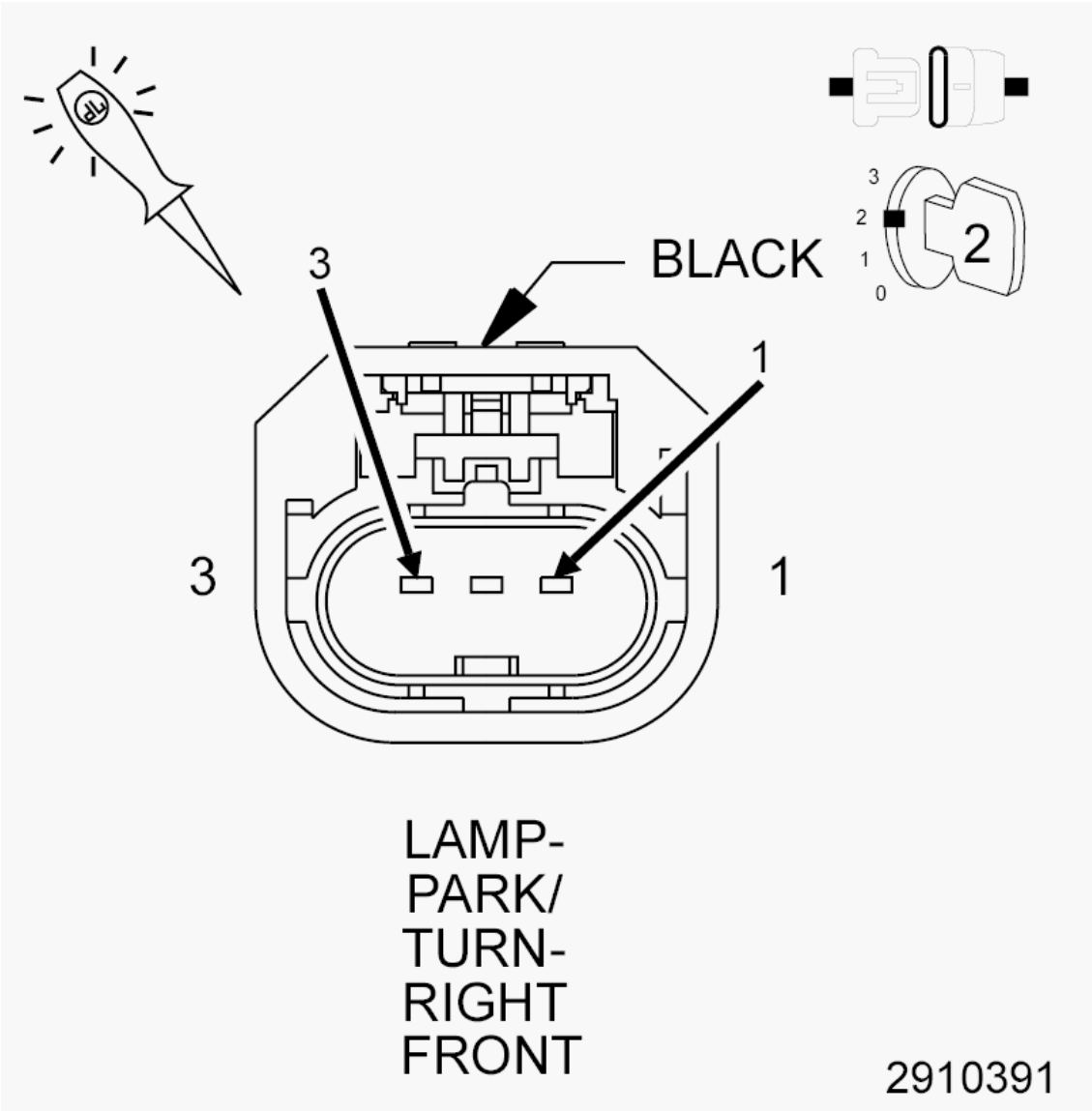

Fig. 44: Checking TIPM For Correct Operation
Courtesy of CHRYSLER GROUP, LLC

1. Turn the ignition off.
2. Reconnect the TIPM C4 harness connector.
3. Connect a 12-volt test light between the (L160) Right Front Turn Signal Driver circuit and the (Z904) Ground circuit at the Right Front Park/Turn Lamp harness connector.
4. Turn the ignition on.
5. Turn the Right Turn Signal on.

   Does the test light blink on and off?

   Yes

- Replace the Park and Turn Signal Bulb in accordance with the Service Information. Refer to **UNIT, FRONT LAMP, REMOVAL** .
- Perform the BODY VERIFICATION TEST. Refer to **BODY VERIFICATION TEST**.

No

- Go To 4.

4. **CHECK THE (L160) RIGHT FRONT TURN SIGNAL DRIVER CIRCUIT FOR AN OPEN IN THE HARNESS**

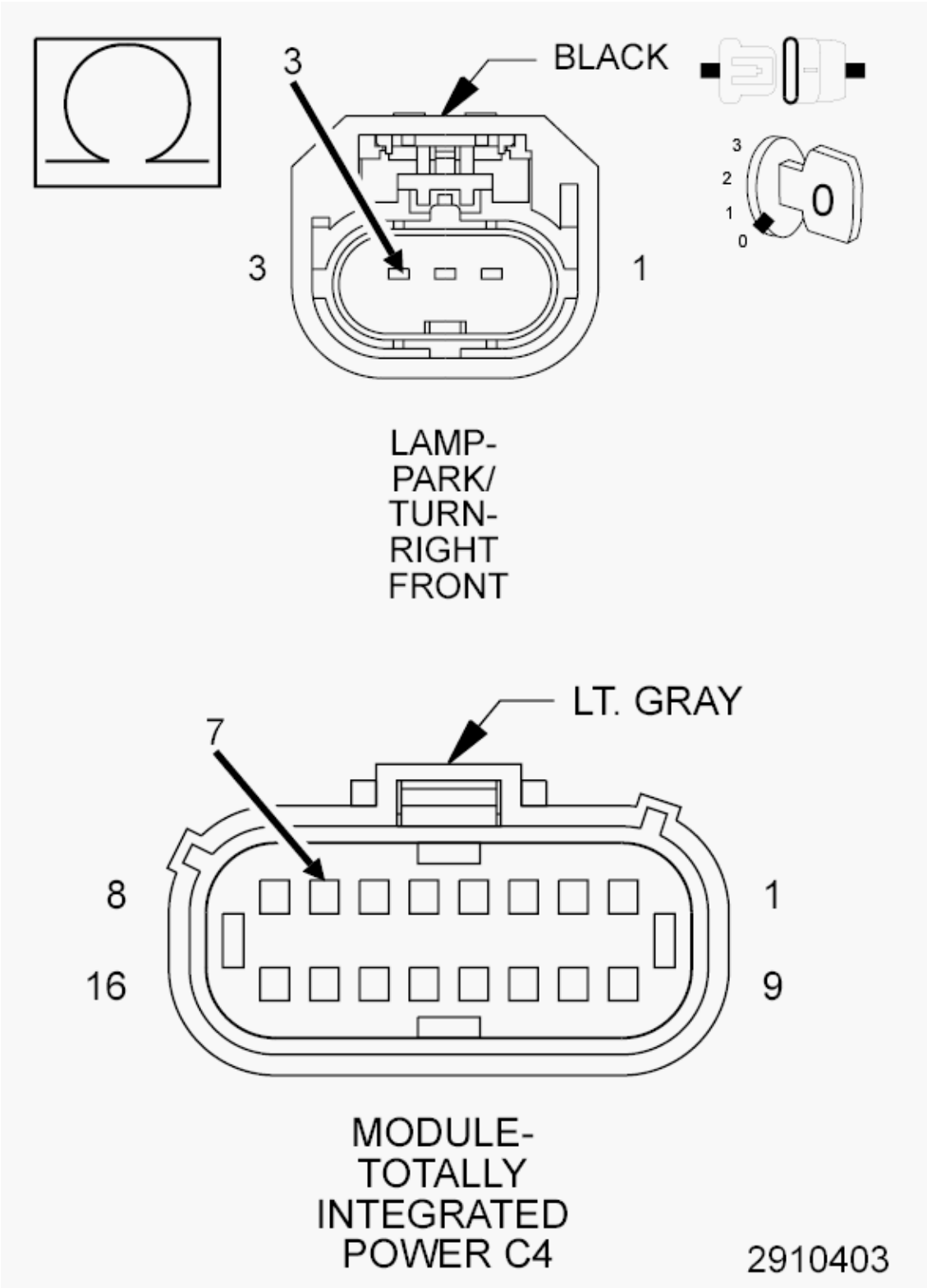

Fig. 45: Checking Right Front Turn Signal Driver Circuit For An Open
Courtesy of CHRYSLER GROUP, LLC

1. Turn the ignition off.

2. Disconnect the TIPM C4 harness connector.
3. Measure the resistance of the (L160) Right Front Turn Signal Driver circuit between the Right Front Park/Turn Lamp harness connector and the TIPM C4 harness connector.

   Is the resistance below 5.0 Ohms?

   Yes

   - Go To 5.

   No

   - Repair the open in the (L160) Right Front Turn Signal Driver circuit.
   - Perform the BODY VERIFICATION TEST. Refer to **BODY VERIFICATION TEST**.

5. **CHECK THE (Z904) GROUND CIRCUIT FOR AN OPEN IN THE HARNESS**

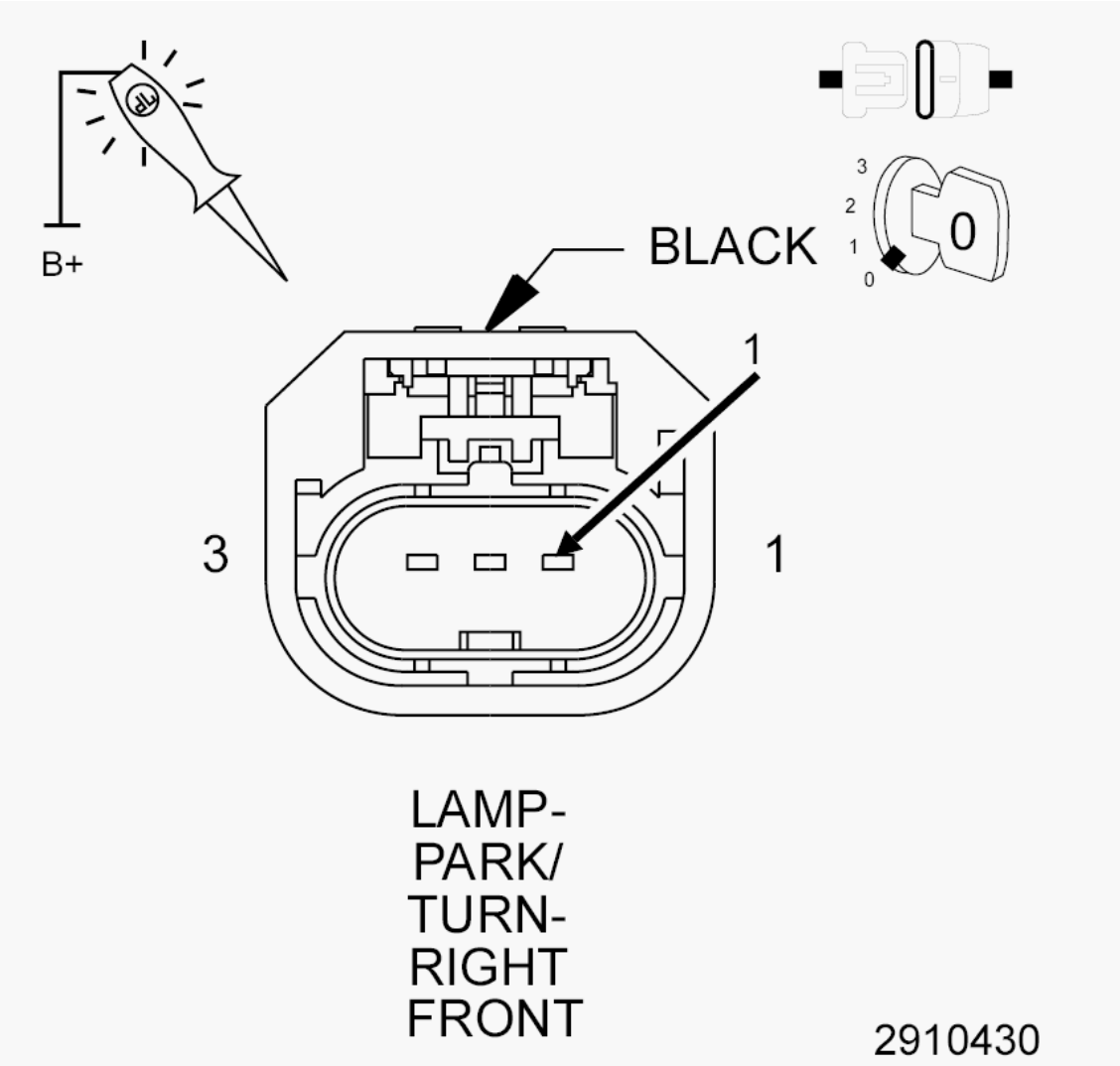

Fig. 46: Checking Ground Circuit For An Open
Courtesy of CHRYSLER GROUP, LLC

1. Using a 12-volt test light connected to 12-volts, check the (Z904) Ground circuit.

   Does the test light illuminate brightly?

   Yes

   - Replace the Totally Integrated Power Module (TIPM) in accordance with the Service Information. Refer to **MODULE, TOTALLY INTEGRATED POWER (TIPM), REMOVAL** .
   - Perform the BODY VERIFICATION TEST. Refer to **BODY VERIFICATION TEST**.

   No

   - Repair the open in the (Z904) Ground circuit.
   - Perform the BODY VERIFICATION TEST. Refer to **BODY VERIFICATION TEST**.

B1643-REAR LEFT TURN LAMP CONTROL CIRCUIT LOW

For a complete wiring diagram, **refer to appropriate SYSTEM WIRING DIAGRAMS article** .

THEORY OF OPERATION

The Totally Integrated Power Module (TIPM) receives a bus message requesting turn signal lamp illumination. When this bus message is received, the TIPM provides a pulsed voltage output through the rear turn signal control circuit. The rear turn signal control circuit connects to the dual filament Park and Turn Signal Bulb in the Lamp, Tail Stop Turn. The same ground circuit is used for both the Park and Turn Signal filaments in a dual filament lamp. For additional information on the Turn Signal Lamps operation. Refer to **EXTERIOR LIGHTING - OPERATION** .

WHEN MONITORED:

With the turn signal active.

SET CONDITION:

When the Totally Integrated Power Module (TIPM) detects a low condition on the (L63) Left Rear Turn Lamp Driver circuit.

POSSIBLE CAUSES

Possible Causes
(L63) LEFT REAR TURN LAMP DRIVER CIRCUIT SHORTED TO GROUND
LEFT REAR TURN SIGNAL BULB
TOTALLY INTEGRATED POWER MODULE (TIPM)

DIAGNOSTIC TEST

1. **INTERMITTENT CONDITION**
    1. Turn the ignition on.
    2. With the scan tool, clear all DTC's.
    3. Turn the Left Turn Signal on.
    4. With the scan tool, read DTC's.

    Does the scan tool display DTC: B1643-REAR LEFT TURN LAMP CONTROL CIRCUIT LOW?

    Yes

    - Go To 2.

    No

    - Test complete, the condition or conditions that originally set this DTC are not present at this time. Using the wiring diagrams as a guide, check all related splices and connectors for signs of water intrusion, corrosion, pushed out or bent terminals, and correct pin tension.
    - Perform the BODY VERIFICATION TEST. Refer to **BODY VERIFICATION TEST**.
2. **ATTEMPT TO SET THE OPPOSITE DTC**
    1. Turn the Left Turn Signal off.
    2. Turn the ignition off.
    3. Disconnect the Left Tail Lamp Assembly C1 harness connector.
    4. Turn the ignition on.
    5. Turn the Left Turn Signal on.
    6. With the scan tool, read DTC's.

    Does the scan tool display DTC: B1644-REAR LEFT TURN LAMP CONTROL CIRCUIT HIGH?

    Yes

    - Replace the Left Rear Turn Signal Bulb in accordance with the Service Information. Refer to **LAMP, TAIL STOP TURN, REMOVAL** .
    - Perform the BODY VERIFICATION TEST. Refer to **BODY VERIFICATION TEST**.

    No

    - Go To 3.
3. **CHECK THE (L63) LEFT REAR TURN LAMP DRIVER CIRCUIT FOR A SHORT TO GROUND**
    1. Turn the ignition off.
    2. Disconnect the TIPM C7 harness connector.

3. Measure the resistance between ground and the (L63) Left Rear Turn Lamp Driver circuit.

   Is the resistance above 10k Ohms?

   Yes

   - Replace the Totally Integrated Power Module (TIPM) in accordance with the Service Information. Refer to **MODULE, TOTALLY INTEGRATED POWER (TIPM), REMOVAL** .
   - Perform the BODY VERIFICATION TEST. Refer to **BODY VERIFICATION TEST**.

   No

   - Repair the short to ground in the (L63) Left Rear Turn Lamp Driver circuit.
   - Perform the BODY VERIFICATION TEST. Refer to **BODY VERIFICATION TEST**.

B1644-REAR LEFT TURN LAMP CONTROL CIRCUIT HIGH

For a complete wiring diagram, **refer to appropriate SYSTEM WIRING DIAGRAMS article** .

THEORY OF OPERATION

The Totally Integrated Power Module (TIPM) receives a bus message requesting turn signal lamp illumination. When this bus message is received, the TIPM provides a pulsed voltage output through the rear turn signal control circuit. The rear turn signal control circuit connects to the dual filament Park and Turn Signal Bulb in the Lamp, Tail Stop Turn. The same ground circuit is used for both the Park and Turn Signal filaments in a dual filament lamp. For additional information on the Turn Signal Lamps operation. Refer to **EXTERIOR LIGHTING - OPERATION** .

WHEN MONITORED:

With the turn signal active.

SET CONDITION:

When the Totally Integrated Power Module (TIPM) detects a high condition on the (L63) Left Rear Turn Lamp Driver circuit.

POSSIBLE CAUSES

Possible Causes
(L63) LEFT REAR TURN LAMP DRIVER CIRCUIT OPEN
(L63) LEFT REAR TURN LAMP DRIVER CIRCUIT SHORTED TO VOLTAGE
(Z906) GROUND CIRCUIT OPEN
LEFT REAR TURN SIGNAL BULB
TOTALLY INTEGRATED POWER MODULE (TIPM)

DIAGNOSTIC TEST

1. **INTERMITTENT CONDITION**
    1. Turn the ignition on.
    2. With the scan tool, clear all DTC's.
    3. Turn the Left Turn Signal on.
    4. With the scan tool, read DTC's.

    Does the scan tool display DTC: B1644-REAR LEFT TURN LAMP CONTROL CIRCUIT HIGH?

    Yes

    - Go To 2.

    No

    - Test complete, the condition or conditions that originally set this DTC are not present at this time. Using the wiring diagrams as a guide, check all related splices and connectors for signs of water intrusion, corrosion, pushed out or bent terminals, and correct pin tension.
    - Perform the BODY VERIFICATION TEST. Refer to **BODY VERIFICATION TEST**.
2. **CHECK THE (L63) LEFT REAR TURN LAMP DRIVER CIRCUIT FOR A SHORT TO VOLTAGE IN THE HARNESS**
    1. Turn the Left Turn Signal off.
    2. Turn the ignition off.
    3. Disconnect the Left Tail Lamp Assembly C1 harness connector.
    4. Disconnect the TIPM C7 harness connector.
    5. Turn the ignition on.
    6. Measure the voltage between ground and the (L63) Left Rear Turn Lamp Driver circuit.

    Is there any voltage present?

    Yes

    - Repair the short to voltage in the (L63) Left Rear Turn Lamp Driver circuit.
    - Perform the BODY VERIFICATION TEST. Refer to **BODY VERIFICATION TEST**.

    No

    - Go To 3.
3. **CHECK THE TIPM FOR CORRECT OPERATION**
    1. Turn the ignition off.
    2. Reconnect the TIPM C7 harness connector.
    3. Connect a 12-volt test light between the (L63) Left Rear Turn Lamp Driver circuit and the (Z906)

Ground circuit at the Left Tail Lamp Assembly C1 harness connector.

4. Turn the ignition on.
5. Turn the Left Turn Signal on.

Does the test light blink on and off?

Yes

- Replace the Left Rear Turn Signal Bulb in accordance with the Service Information. Refer to **LAMP, TAIL STOP TURN, REMOVAL** .
- Perform the BODY VERIFICATION TEST. Refer to **BODY VERIFICATION TEST**.

No

- Go To 4.

4. **CHECK THE (L63) LEFT REAR TURN LAMP DRIVER CIRCUIT FOR AN OPEN IN THE HARNESS**
   1. Turn the ignition off.
   2. Disconnect the TIPM C7 harness connector.
   3. Measure the resistance of the (L63) Left Rear Turn Lamp Driver circuit between the Left Tail Lamp Assembly C1 harness connector and the TIPM C7 harness connector.

   Is the resistance below 5.0 Ohms?

   Yes

   - Go To 5.

   No

   - Repair the open in the (L63) Left Rear Turn Lamp Driver circuit.
   - Perform the BODY VERIFICATION TEST. Refer to **BODY VERIFICATION TEST**.
5. **CHECK THE (Z906) GROUND CIRCUIT FOR AN OPEN IN THE HARNESS**
   1. Using a 12-volt test light connected to 12-volts, check the (Z906) Ground circuit.

   Does the test light illuminate brightly?

   Yes

   - Replace the Totally Integrated Power Module (TIPM) in accordance with the Service Information. Refer to **MODULE, TOTALLY INTEGRATED POWER (TIPM), REMOVAL** .
   - Perform the BODY VERIFICATION TEST. Refer to **BODY VERIFICATION TEST**.

No

- Repair the open in the (Z906) Ground circuit.
- Perform the BODY VERIFICATION TEST. Refer to **BODY VERIFICATION TEST**.

B1647-REAR RIGHT TURN LAMP CONTROL CIRCUIT LOW

For a complete wiring diagram, **refer to appropriate SYSTEM WIRING DIAGRAMS article** .

THEORY OF OPERATION

The Totally Integrated Power Module (TIPM) receives a bus message requesting turn signal lamp illumination. When this bus message is received, the TIPM provides a pulsed voltage output through the rear turn signal control circuit. The rear turn signal control circuit connects to the dual filament Park and Turn Signal Bulb in the Lamp, Tail Stop Turn. The same ground circuit is used for both the Park and Turn Signal filaments in a dual filament lamp. For additional information on the Turn Signal Lamps operation. Refer to **EXTERIOR LIGHTING - OPERATION** .

WHEN MONITORED:

With the turn signal active.

SET CONDITION:

When the Totally Integrated Power Module (TIPM) detects a low condition on the (L62) Right Rear Turn Lamp Driver circuit.

POSSIBLE CAUSES

Possible Causes
(L62) RIGHT REAR TURN LAMP DRIVER CIRCUIT SHORTED TO GROUND
RIGHT REAR TURN SIGNAL BULB
TOTALLY INTEGRATED POWER MODULE (TIPM)

DIAGNOSTIC TEST

1. **INTERMITTENT CONDITION**
    1. Turn the ignition on.
    2. With the scan tool, clear all DTC's.
    3. Turn the Right Turn Signal on.
    4. With the scan tool, read DTC's.

    Does the scan tool display DTC: B1647-REAR RIGHT TURN LAMP CONTROL CIRCUIT LOW?

    Yes

- Go To 2.

No

- Test complete, the condition or conditions that originally set this DTC are not present at this time. Using the wiring diagrams as a guide, check all related splices and connectors for signs of water intrusion, corrosion, pushed out or bent terminals, and correct pin tension.
- Perform the BODY VERIFICATION TEST. Refer to **BODY VERIFICATION TEST**.

2. **ATTEMPT TO SET THE OPPOSITE DTC**
   1. Turn the Right Turn Signal off.
   2. Turn the ignition off.
   3. Disconnect the Right Tail Lamp Assembly C1 harness connector.
   4. Turn the ignition on.
   5. Turn the Right Turn Signal on.
   6. With the scan tool, read DTC's.

   Does the scan tool display DTC: B1648-REAR RIGHT TURN LAMP CONTROL CIRCUIT HIGH?

   Yes

   - Replace the Right Rear Turn Signal Bulb in accordance with the Service Information. Refer to **LAMP, TAIL STOP TURN, REMOVAL** .
   - Perform the BODY VERIFICATION TEST. Refer to **BODY VERIFICATION TEST**.

   No

   - Go To 3.

3. **CHECK THE (L62) RIGHT REAR TURN LAMP DRIVER CIRCUIT FOR A SHORT TO GROUND**
   1. Turn the ignition off.
   2. Disconnect the TIPM C7 harness connector.
   3. Measure the resistance between ground and the (L62) Right Rear Turn Lamp Driver circuit.

   Is the resistance above 10k Ohms?

   Yes

   - Replace the Totally Integrated Power Module (TIPM) in accordance with the Service Information. Refer to **MODULE, TOTALLY INTEGRATED POWER (TIPM), REMOVAL** .
   - Perform the BODY VERIFICATION TEST. Refer to **BODY VERIFICATION TEST**.

No

- Repair the short to ground in the (L62) Right Rear Turn Lamp Driver circuit.
- Perform the BODY VERIFICATION TEST. Refer to **BODY VERIFICATION TEST**.

B1648-REAR RIGHT TURN LAMP CONTROL CIRCUIT HIGH

For a complete wiring diagram, **refer to appropriate SYSTEM WIRING DIAGRAMS article** .

THEORY OF OPERATION

The Totally Integrated Power Module (TIPM) receives a bus message requesting turn signal lamp illumination. When this bus message is received, the TIPM provides a pulsed voltage output through the rear turn signal control circuit. The rear turn signal control circuit connects to the dual filament Park and Turn Signal Bulb in the Lamp, Tail Stop Turn. The same ground circuit is used for both the Park and Turn Signal filaments in a dual filament lamp. For additional information on the Turn Signal Lamps operation. Refer to **EXTERIOR LIGHTING - OPERATION** .

WHEN MONITORED:

With the turn signal active.

SET CONDITION:

When the Totally Integrated Power Module (TIPM) detects a high condition on the (L62) Right Rear Turn Lamp Driver circuit.

POSSIBLE CAUSES

Possible Causes
(L62) RIGHT REAR TURN LAMP DRIVER CIRCUIT OPEN
(L62) RIGHT REAR TURN LAMP DRIVER CIRCUIT SHORTED TO VOLTAGE
(Z914) GROUND CIRCUIT OPEN
RIGHT REAR TURN SIGNAL BULB
TOTALLY INTEGRATED POWER MODULE (TIPM)

DIAGNOSTIC TEST

1. **INTERMITTENT CONDITION**
    1. Turn the ignition on.
    2. With the scan tool, clear all DTC's.
    3. Turn the Right Turn Signal on.
    4. With the scan tool, read DTC's.

    Does the scan tool display DTC: B1648-REAR RIGHT TURN LAMP CONTROL CIRCUIT HIGH?

Yes

- Go To 2.

No

- Test complete, the condition or conditions that originally set this DTC are not present at this time. Using the wiring diagrams as a guide, check all related splices and connectors for signs of water intrusion, corrosion, pushed out or bent terminals, and correct pin tension.
- Perform the BODY VERIFICATION TEST. Refer to **BODY VERIFICATION TEST**.

2. **CHECK THE (L62) RIGHT REAR TURN LAMP DRIVER CIRCUIT FOR A SHORT TO VOLTAGE IN THE HARNESS**
   1. Turn the Right Turn Signal off.
   2. Turn the ignition off.
   3. Disconnect the Right Tail Lamp Assembly C1 harness connector.
   4. Disconnect the TIPM C7 harness connector.
   5. Turn the ignition on.
   6. Measure the voltage between ground and the (L62) Right Rear Turn Lamp Driver circuit.

   Is there any voltage present?

   Yes

   - Repair the short to voltage in the (L62) Right Rear Turn Lamp Driver circuit.
   - Perform the BODY VERIFICATION TEST. Refer to **BODY VERIFICATION TEST**.

   No

   - Go To 3.

3. **CHECK THE TIPM FOR CORRECT OPERATION**
   1. Turn the ignition off.
   2. Reconnect the TIPM C7 harness connector.
   3. Connect a 12-volt test light between the (L62) Right Rear Turn Lamp Driver circuit and the (Z914) Ground circuit at the Right Tail Lamp Assembly C1 harness connector.
   4. Turn the ignition on.
   5. Turn the Right Turn Signal on.

   Does the test light blink on and off?

   Yes

   - Replace the Right Rear Turn Signal Bulb in accordance with the Service Information. Refer to **LAMP, TAIL STOP TURN, REMOVAL** .

- Perform the BODY VERIFICATION TEST. Refer to **BODY VERIFICATION TEST**.

No

- Go To 4.

4. **CHECK THE (L62) RIGHT REAR TURN LAMP DRIVER CIRCUIT FOR AN OPEN IN THE HARNESS**
   1. Turn the ignition off.
   2. Disconnect the TIPM C7 harness connector.
   3. Measure the resistance of the (L62) Right Rear Turn Lamp Driver circuit between the Right Tail Lamp Assembly C1 harness connector and the TIPM C7 harness connector.

      Is the resistance below 5.0 Ohms?

      Yes

      - Go To 5.

      No

      - Repair the open in the (L62) Right Rear Turn Lamp Driver circuit.
      - Perform the BODY VERIFICATION TEST. Refer to **BODY VERIFICATION TEST**.
5. **CHECK THE (Z914) GROUND CIRCUIT FOR AN OPEN IN THE HARNESS**
   1. Using a 12-volt test light connected to 12-volts, check the (Z914) Ground circuit.

      Does the test light illuminate brightly?

      Yes

      - Replace the Totally Integrated Power Module (TIPM) in accordance with the Service Information. Refer to **MODULE, TOTALLY INTEGRATED POWER (TIPM), REMOVAL** .
      - Perform the BODY VERIFICATION TEST. Refer to **BODY VERIFICATION TEST**.

      No

      - Repair the open in the (Z914) Ground circuit.
      - Perform the BODY VERIFICATION TEST. Refer to **BODY VERIFICATION TEST**.

B165C-PARK LAMP CONTROL CIRCUIT LOW

For a complete wiring diagram, **refer to appropriate SYSTEM WIRING DIAGRAMS article** .

THEORY OF OPERATION

The Totally Integrated Power Module (TIPM) receives a bus message requesting park lamp illumination. When this bus message is received, the TIPM provides a voltage output through the park lamp circuits. Two of the park lamp circuits are controlled by the TIPM through a relay. The other circuit is controlled directly by the TIPM. For additional information on the operation of the Park Lamps. Refer to **EXTERIOR LIGHTING - OPERATION** .

WHEN MONITORED:

With the Park Lamps active.

SET CONDITION:

When the Totally Integrated Power Module (TIPM) detects a low voltage condition on one of the park lamp voltage supply circuits.

POSSIBLE CAUSES

Possible Causes
(L17) FUSED PARK LAMP RELAY OUTPUT CIRCUIT SHORTED TO GROUND
(L60) RIGHT PARK LAMP DRIVER CIRCUIT SHORTED TO GROUND
(L678) FUSED PARK LAMP RELAY OUTPUT CIRCUIT SHORTED TO GROUND
DAMAGED OR INOPERATIVE LAMP/BULB
AFTERMARKET OR ACCESSORIES
TOTALLY INTEGRATED POWER MODULE (TIPM)

DIAGNOSTIC TEST

1. **INTERMITTENT CONDITION**
    1. Turn the ignition on.
    2. With the scan tool, clear all TIPM DTC's.
    3. Turn the Park Lamps off and on.
    4. With the scan tool, read the DTC's.

    Does the scan tool display B165C-PARK LAMP CONTROL CIRCUIT LOW?

    Yes

    - Go To 2.

    No

    - Test complete, the condition or conditions that originally set this DTC are not present at this time. Using the wiring diagrams as a guide, check all related splices and connectors for signs of water intrusion, corrosion, pushed out or bent terminals, and correct pin tension.
    - Perform the BODY VERIFICATION TEST. Refer to **BODY VERIFICATION TEST**.

2. **ISOLATE THE (L17) FUSED PARK LAMP RELAY OUTPUT CIRCUIT**
    1. Remove Fuse M35 to isolate the (L17) Fused Park Lamp Relay Output circuit.
    2. Turn the Park Lamps off and on.
    3. With the scan tool, read the DTC's.

    Does the scan tool display DTC B165C-PARK LAMP CONTROL CIRCUIT LOW as stored?

    Yes

    - Go To 3.

    No

    - Go To 5.
3. **CHECK THE LAMPS ON THE (L17) FUSED PARK LAMP RELAY OUTPUT CIRCUIT FOR AN INTERNAL SHORT TO GROUND**
    1. Install Fuse M35.
    2. Turn the Park Lamps off and on.
    3. Using the wiring diagrams as a guide, disconnect the harness connector for each lamp on the (L17) Fused Park Lamp Relay Output circuit one at a time while checking for the DTC to become stored.

    Does the DTC change to stored?

    Yes

    - Repair or replace the lamp/bulb that caused the DTC to change to stored in accordance with the Service Information.
    - Perform the BODY VERIFICATION TEST. Refer to **BODY VERIFICATION TEST**.

    No

    - Go To 4.
4. **CHECK THE (L17) FUSED PARK LAMP RELAY OUTPUT CIRCUIT FOR A SHORT TO GROUND**

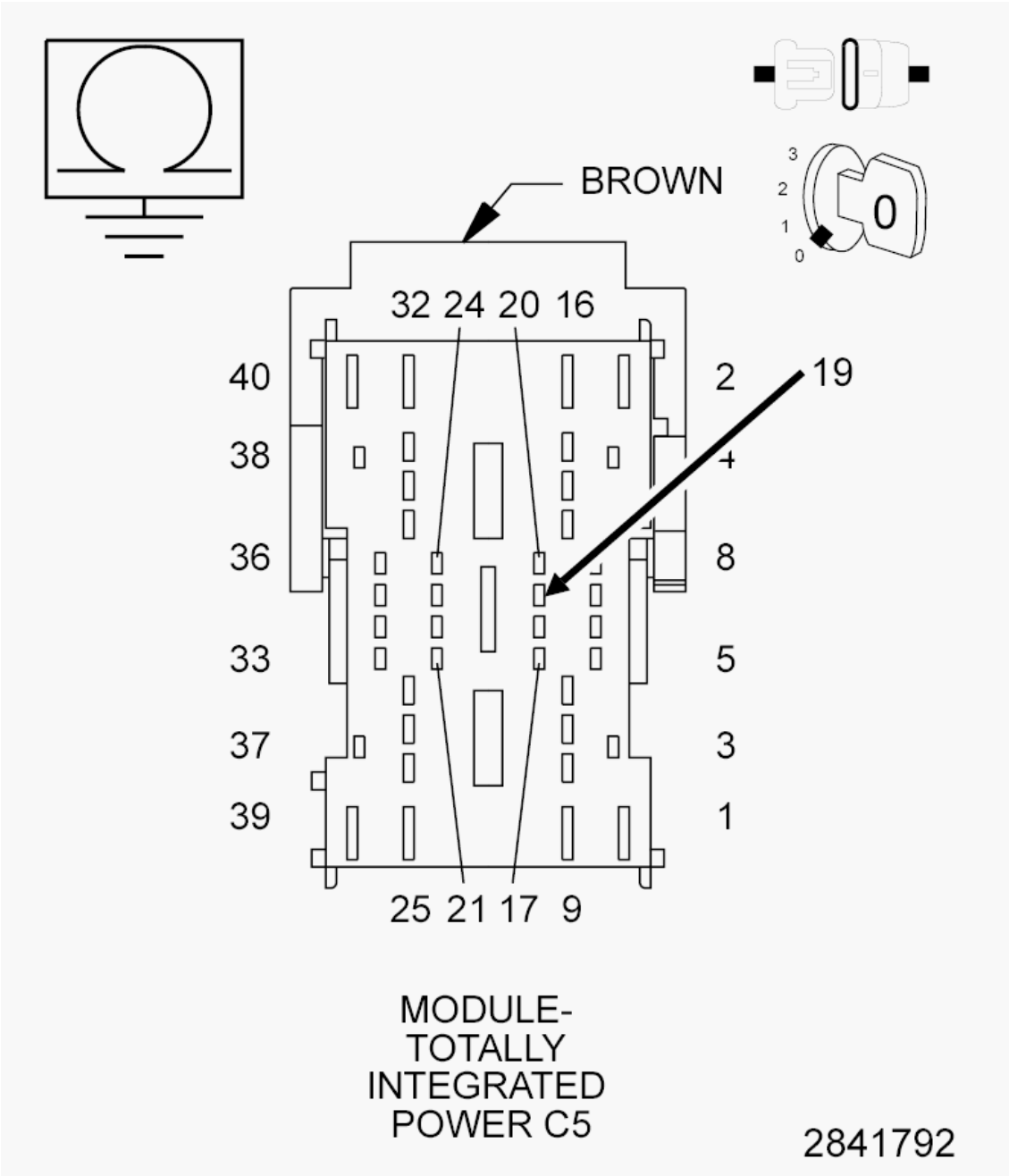

Fig. 47: Checking Fused Park Lamp Relay Output Circuit For A Short To Ground
Courtesy of CHRYSLER GROUP, LLC

1. Turn the ignition off.
2. Disconnect the TIPM C5 harness connector.
3. Measure the resistance between ground and the (L17) Fused Park Lamp Relay Output circuit in the TIPM C5 harness connector.

   Is the resistance above 10k Ohms?

Yes

- Replace the Totally Integrated Power Module (TIPM) in accordance with the Service Information. Refer to **MODULE, TOTALLY INTEGRATED POWER (TIPM), REMOVAL** .
- Perform the BODY VERIFICATION TEST. Refer to **BODY VERIFICATION TEST**.

No

- Repair the short to ground in the (L17) Fused Park Lamp Relay Output circuit.
- Perform the BODY VERIFICATION TEST. Refer to **BODY VERIFICATION TEST**.

5. **ISOLATE THE (L678) FUSED PARK LAMP RELAY OUTPUT CIRCUIT**
   1. Install Fuse M35.
   2. Remove Fuse J14 to isolate the (L678) Fused Park Lamp Relay Output circuit.
   3. Turn the Park Lamps off and on.
   4. With the scan tool, read the DTC's.

   Does the scan tool display DTC B165C-PARK LAMP CONTROL CIRCUIT LOW as stored?

   Yes

   - Go To 6.

   No

   - Go To 8.

6. **CHECK THE AFTERMARKET, TRAILER TOW, OR ACCESSORIES FOR A SHORT TO GROUND**

   NOTE: **Inspect the connections at any aftermarket, trailer tow, or accessories using the (L678) Fused Park Lamp Relay Output circuit for signs of water intrusion, corrosion, pushed out or bent terminals, and correct pin tension. Repair as necessary.**

   1. Install Fuse J14.
   2. Disconnect any aftermarket, trailer tow, or accessories using the (L678) Fused Park Lamp Relay Output circuit.
   3. Turn the Park Lamps off and on.
   4. With the scan tool, read the DTC's.

   Does the scan tool display DTC B165C-PARK LAMP CONTROL CIRCUIT LOW as stored?

   Yes

- The concern is with the aftermarket, trailer tow, or accessories using the (L678) Fused Park Lamp Relay Output circuit. Repair as necessary. Refer to the aftermarket accessories or accessories information.
- Perform the BODY VERIFICATION TEST. Refer to **BODY VERIFICATION TEST**.

No

- Go To 7.

7. **CHECK THE (L678) FUSED PARK LAMP RELAY OUTPUT CIRCUIT FOR A SHORT TO GROUND**

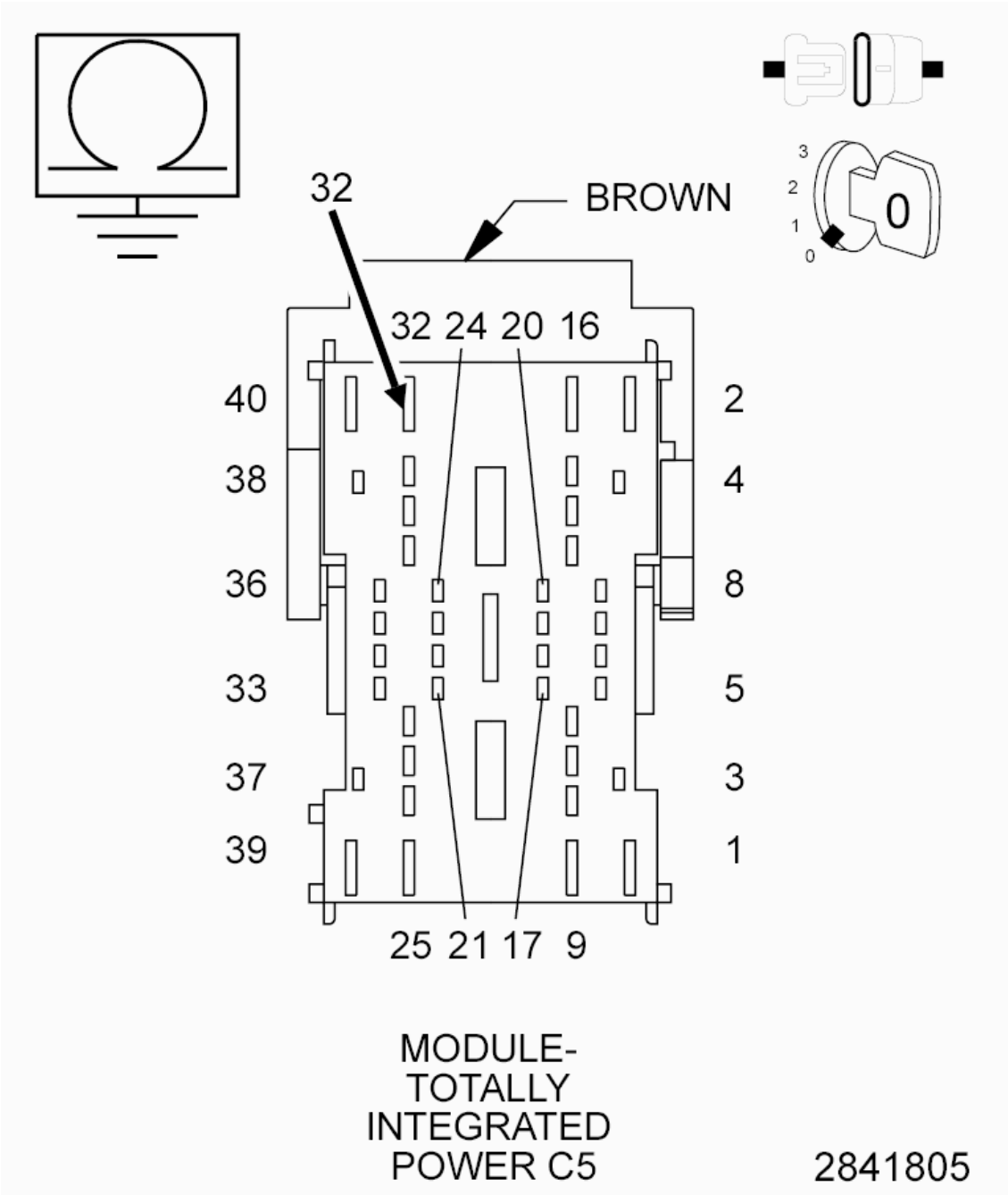

Fig. 48: Checking Fused Park Lamp Relay Output Circuit For A Short To Ground
Courtesy of CHRYSLER GROUP, LLC

1. Turn the ignition off.
2. Disconnect the TIPM C5 harness connector.
3. Measure the resistance between ground and the (L678) Fused Park Lamp Relay Output circuit in the TIPM C5 harness connector.

   Is the resistance above 10k Ohms?

Yes

- Replace the Totally Integrated Power Module (TIPM) in accordance with the Service Information. Refer to **MODULE, TOTALLY INTEGRATED POWER (TIPM), REMOVAL** .
- Perform the BODY VERIFICATION TEST. Refer to **BODY VERIFICATION TEST**.

No

- Repair the short to ground in the (L678) Fused Park Lamp Relay Output circuit.
- Perform the BODY VERIFICATION TEST. Refer to **BODY VERIFICATION TEST**.

8. **CHECK THE LAMPS ON THE (L60) RIGHT PARK LAMP DRIVER CIRCUIT FOR AN INTERNAL SHORT TO GROUND**
   1. Install Fuse J14.
   2. Using the wiring diagrams as a guide, disconnect the harness connector for each lamp or component on the (L60) Right Park Lamp Driver circuit one at a time while checking for the DTC to become stored.

      Does the DTC change to stored?

      Yes

      - Repair or replace the lamp/bulb that caused the DTC to change to stored in accordance with the Service Information.
      - Perform the BODY VERIFICATION TEST. Refer to **BODY VERIFICATION TEST**.

      No

      - Go To 9.

9. **CHECK THE (L60) RIGHT PARK LAMP DRIVER CIRCUIT FOR A SHORT TO GROUND**

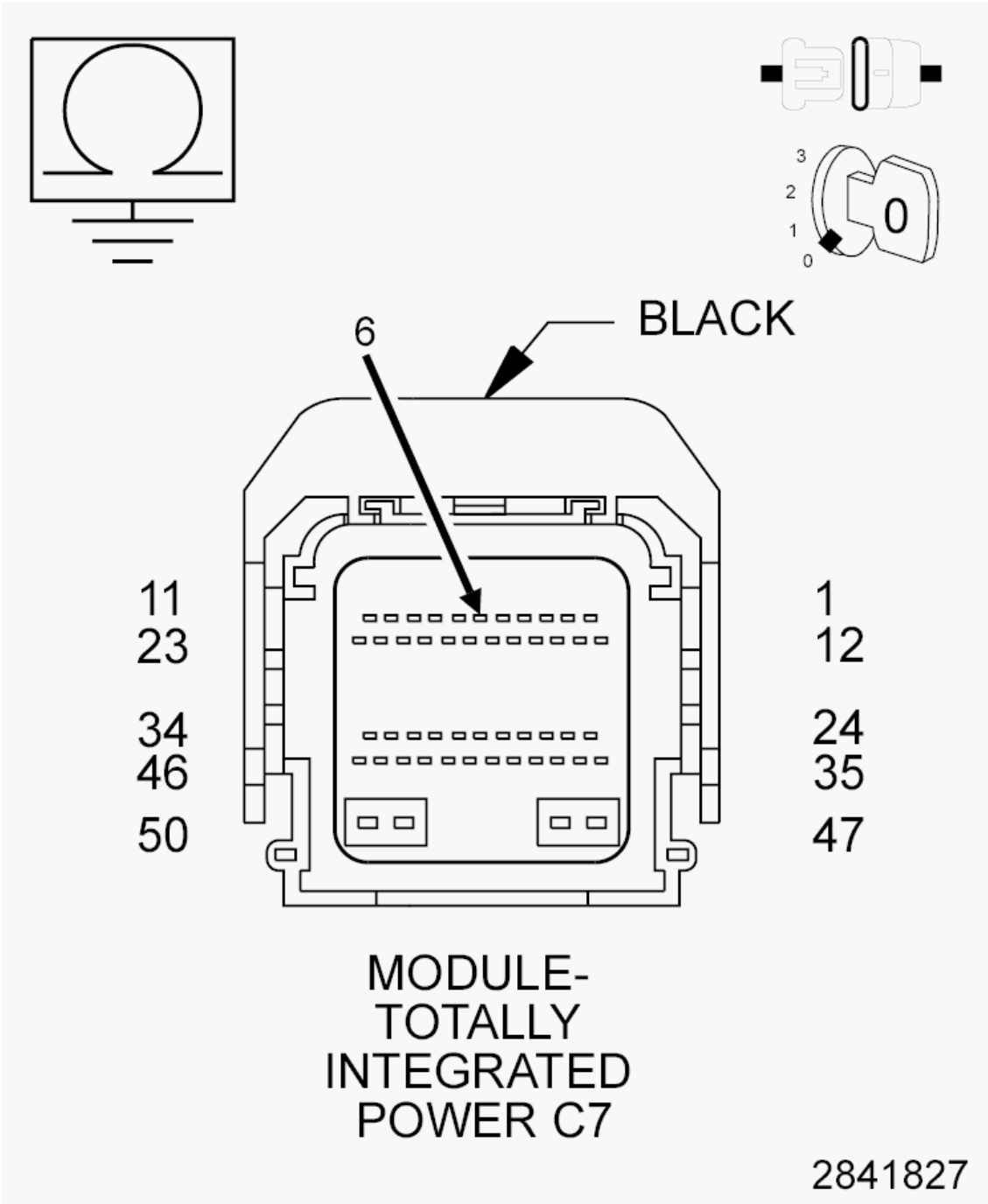

Fig. 49: Checking Right Park Lamp Driver Circuit For A Short To Ground
Courtesy of CHRYSLER GROUP, LLC

1. Turn the ignition off.
2. Disconnect the TIPM C7 harness connector.
3. Measure the resistance between ground and the (L60) Right Park Lamp Driver circuit in the TIPM C7 harness connector.

   Is the resistance above 10k Ohms?

Yes

- Replace the Totally Integrated Power Module (TIPM) in accordance with the Service Information. Refer to **MODULE, TOTALLY INTEGRATED POWER (TIPM), REMOVAL** .
- Perform the BODY VERIFICATION TEST. Refer to **BODY VERIFICATION TEST**.

No

- Repair the short to ground in the (L60) Right Park Lamp Driver circuit.
- Perform the BODY VERIFICATION TEST. Refer to **BODY VERIFICATION TEST**.

B16F8-FRONT LEFT FOG LAMP CONTROL CIRCUIT LOW

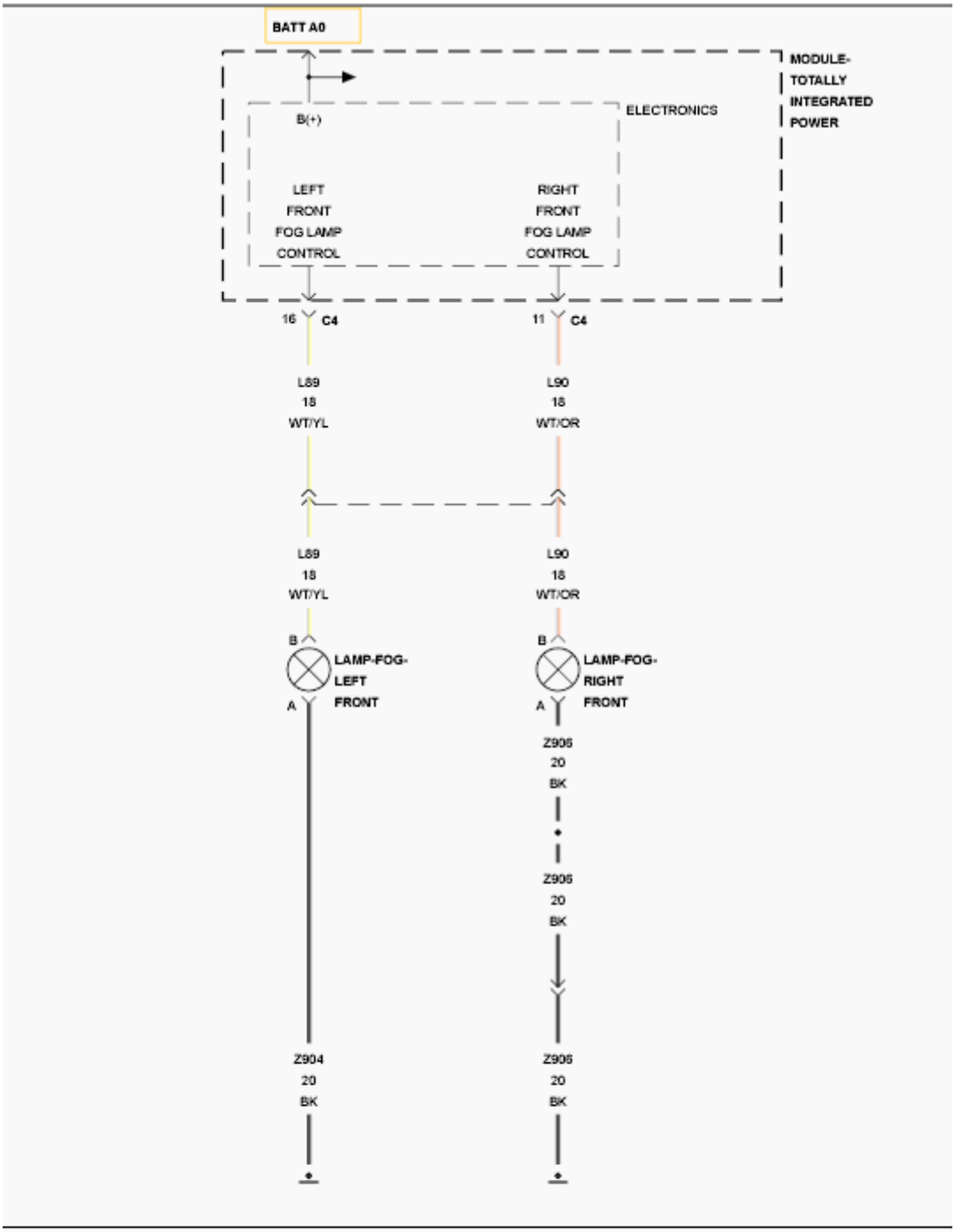
BATT A0
MODULE-
TOTALLY
INTEGRATED
POWER
ELECTRONICS
B(+)
LEFT
FRONT
FOG LAMP
CONTROL
RIGHT
FRONT
FOG LAMP
CONTROL
16
C4
11
C4
L89
18
WT/YL
L90
18
WT/OR
L89
18
WT/YL
L90
18
WT/OR
B
A
LAMP-FOG-
LEFT
FRONT
B
A
LAMP-FOG-
RIGHT
FRONT
Z906
20
BK
Z906
20
BK
Z904
20
BK
Z906
20
BK

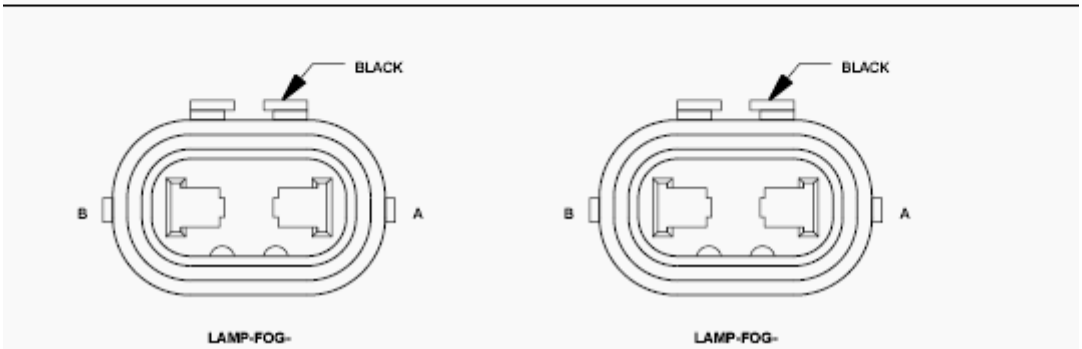
BLACK
B
A
LAMP-FOG-
BLACK
B
A
LAMP-FOG-

Fig. 50: Fog Lamp Control Wiring Diagram
Courtesy of CHRYSLER GROUP, LLC

For a complete wiring diagram, **refer to appropriate SYSTEM WIRING DIAGRAMS article** .

THEORY OF OPERATION

The Totally Integrated Power Module (TIPM) receives a bus message requesting fog lamp illumination. When this bus message is received, the TIPM provides a voltage output through the left and right fog lamp control output circuits. Separate ground circuits are used for the Left and Right Front Fog Lamps. For additional information on the Front Fog Lamps operation. Refer to **EXTERIOR LIGHTING - OPERATION** .

WHEN MONITORED:

With the fog lamps active.

SET CONDITION:

When the Totally Integrated Power Module (TIPM) detects a low condition on the (L89) Left Front Fog Lamp Control circuit.

POSSIBLE CAUSES

Possible Causes
(L89) LEFT FRONT FOG LAMP CONTROL CIRCUIT SHORTED TO GROUND
LEFT FRONT FOG LAMP BULB
TOTALLY INTEGRATED POWER MODULE (TIPM)

DIAGNOSTIC TEST

1. **INTERMITTENT CONDITION**
    1. Turn the ignition on.
    2. With the scan tool, clear all DTC's.
    3. Turn the Fog Lamps on.
    4. With the scan tool, read DTC's.

    Does the scan tool display DTC: B16F8-FRONT LEFT FOG LAMP CONTROL CIRCUIT LOW?

    Yes

    - Go To 2.

    No

    - Test complete, the condition or conditions that originally set this DTC are not present at this time. Using the wiring diagrams as a guide, check all related splices and connectors for signs

of water intrusion, corrosion, pushed out or bent terminals, and correct pin tension.

- Perform the BODY VERIFICATION TEST. Refer to **BODY VERIFICATION TEST**.

2. **ATTEMPT TO SET THE OPPOSITE DTC**
    1. Turn the Fog Lamps off.
    2. Turn the ignition off.
    3. Disconnect the Left Front Fog Lamp harness connector.
    4. Turn the ignition on.
    5. Turn the Fog Lamps on.
    6. With the scan tool, read DTC's.

    Does the scan tool display DTC: B16F9-FRONT LEFT FOG LAMP CONTROL CIRCUIT HIGH?

    Yes

    - Replace the Left Front Fog Lamp Bulb in accordance with the Service Information. Refer to **LAMP, FOG, REMOVAL** .
    - Perform the BODY VERIFICATION TEST. Refer to **BODY VERIFICATION TEST**.

    No

    - Go To 3.

3. **CHECK THE (L89) LEFT FRONT FOG LAMP CONTROL CIRCUIT FOR A SHORT TO GROUND**

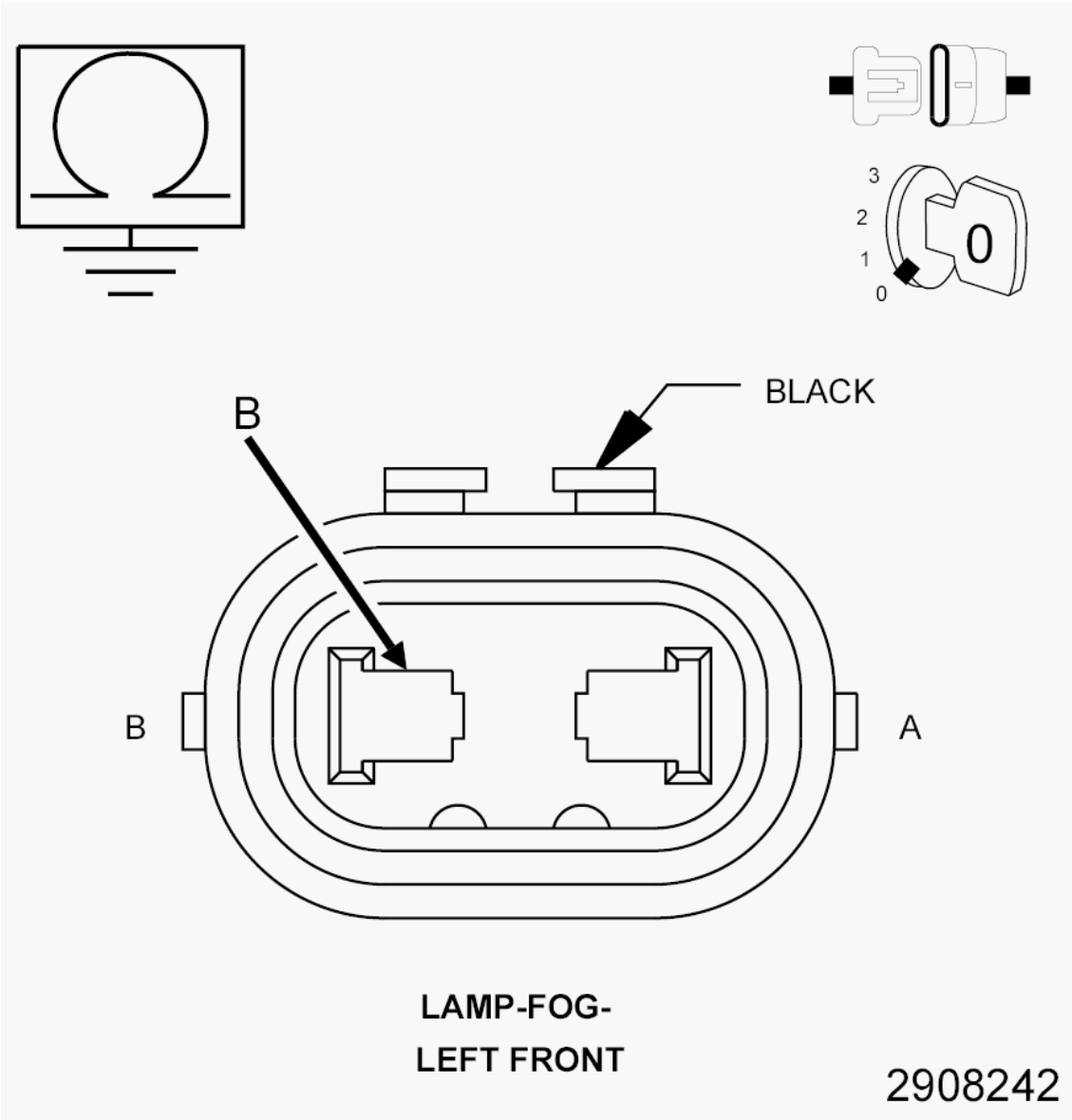

Fig. 51: Checking Left Front Fog Lamp Control Circuit For A Short To Ground
Courtesy of CHRYSLER GROUP, LLC

1. Turn the ignition off.
2. Disconnect the TIPM C4 harness connector.
3. Measure the resistance between ground and the (L89) Left Front Fog Lamp Control circuit.

   Is the resistance above 10k Ohms?

   Yes

   - Replace the Totally Integrated Power Module (TIPM) in accordance with the Service Information. Refer to **MODULE, TOTALLY INTEGRATED POWER (TIPM), REMOVAL** .

- Perform the BODY VERIFICATION TEST. Refer to **BODY VERIFICATION TEST**.

No

- Repair the short to ground in the (L89) Left Front Fog Lamp Control circuit.
- Perform the BODY VERIFICATION TEST. Refer to **BODY VERIFICATION TEST**.

B16F9-FRONT LEFT FOG LAMP CONTROL CIRCUIT HIGH

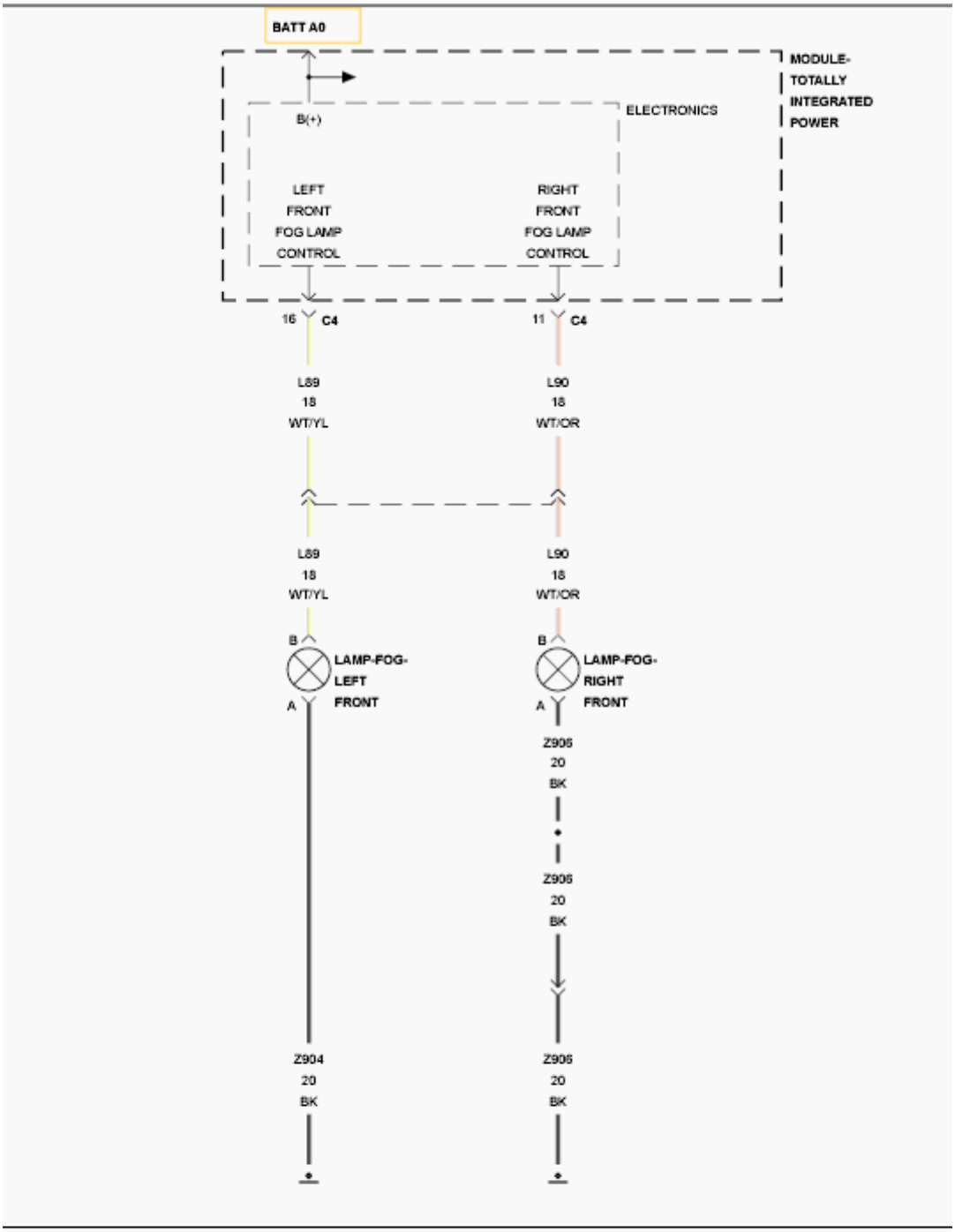
BATT A0
MODULE-
TOTALLY
INTEGRATED
POWER
ELECTRONICS
B(+)
LEFT
FRONT
FOG LAMP
CONTROL
RIGHT
FRONT
FOG LAMP
CONTROL
16
C4
11
C4
L89
18
WT/YL
L90
18
WT/OR
L89
18
WT/YL
L90
18
WT/OR
B
A
LAMP-FOG-
LEFT
FRONT
B
A
LAMP-FOG-
RIGHT
FRONT
Z906
20
BK
Z906
20
BK
Z904
20
BK
Z906
20
BK

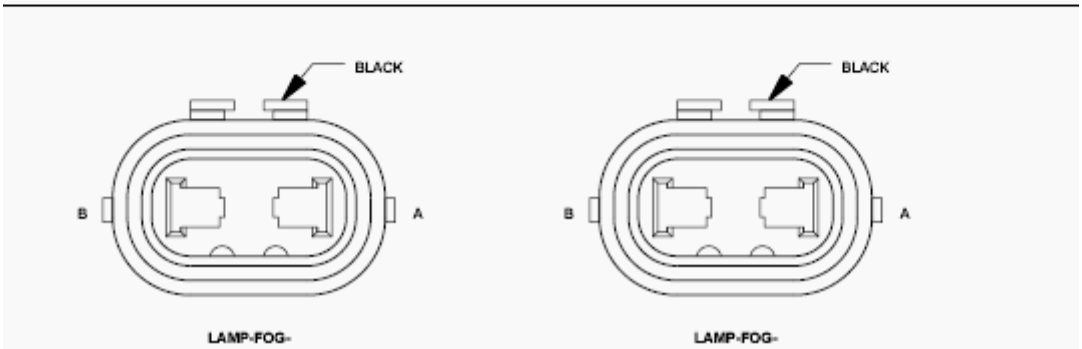
BLACK
B
A
LAMP-FOG-
BLACK
B
A
LAMP-FOG-

Fig. 52: Fog Lamp Control Wiring Diagram
Courtesy of CHRYSLER GROUP, LLC

For a complete wiring diagram, **refer to appropriate SYSTEM WIRING DIAGRAMS article** .

THEORY OF OPERATION

The Totally Integrated Power Module (TIPM) receives a bus message requesting fog lamp illumination. When this bus message is received, the TIPM provides a voltage output through the left and right fog lamp control output circuits. Separate ground circuits are used for the Left and Right Front Fog Lamps. For additional information on the Front Fog Lamps operation. Refer to **EXTERIOR LIGHTING - OPERATION** .

WHEN MONITORED:

With the fog lamps active.

SET CONDITION:

When the Totally Integrated Power Module (TIPM) detects a high condition on the (L89) Left Front Fog Lamp Driver circuit.

POSSIBLE CAUSES

Possible Causes
(L89) LEFT FRONT FOG LAMP CONTROL CIRCUIT OPEN
(L89) LEFT FRONT FOG LAMP CONTROL CIRCUIT SHORTED TO VOLTAGE
(Z904) GROUND CIRCUIT OPEN
LEFT FRONT FOG LAMP BULBS
TOTALLY INTEGRATED POWER MODULE (TIPM)

DIAGNOSTIC TEST

1. **INTERMITTENT CONDITION**
    1. Turn the ignition on.
    2. With the scan tool, clear all TIPM DTC's.
    3. Turn the Front Fog Lamps on.
    4. With the scan tool, read DTC's.

    Does the scan tool display DTC: B16F9-FRONT LEFT FOG LAMP CONTROL CIRCUIT HIGH?

    Yes

    - Go To 2.

    No

- Test complete, the condition or conditions that originally set this DTC are not present at this time. Using the wiring diagrams as a guide, check all related splices and connectors for signs of water intrusion, corrosion, pushed out or bent terminals, and correct pin tension.
- Perform the BODY VERIFICATION TEST. Refer to **BODY VERIFICATION TEST**.

2. **CHECK THE (L89) LEFT FRONT FOG LAMP CONTROL CIRCUIT FOR A SHORT TO VOLTAGE IN THE HARNESS**

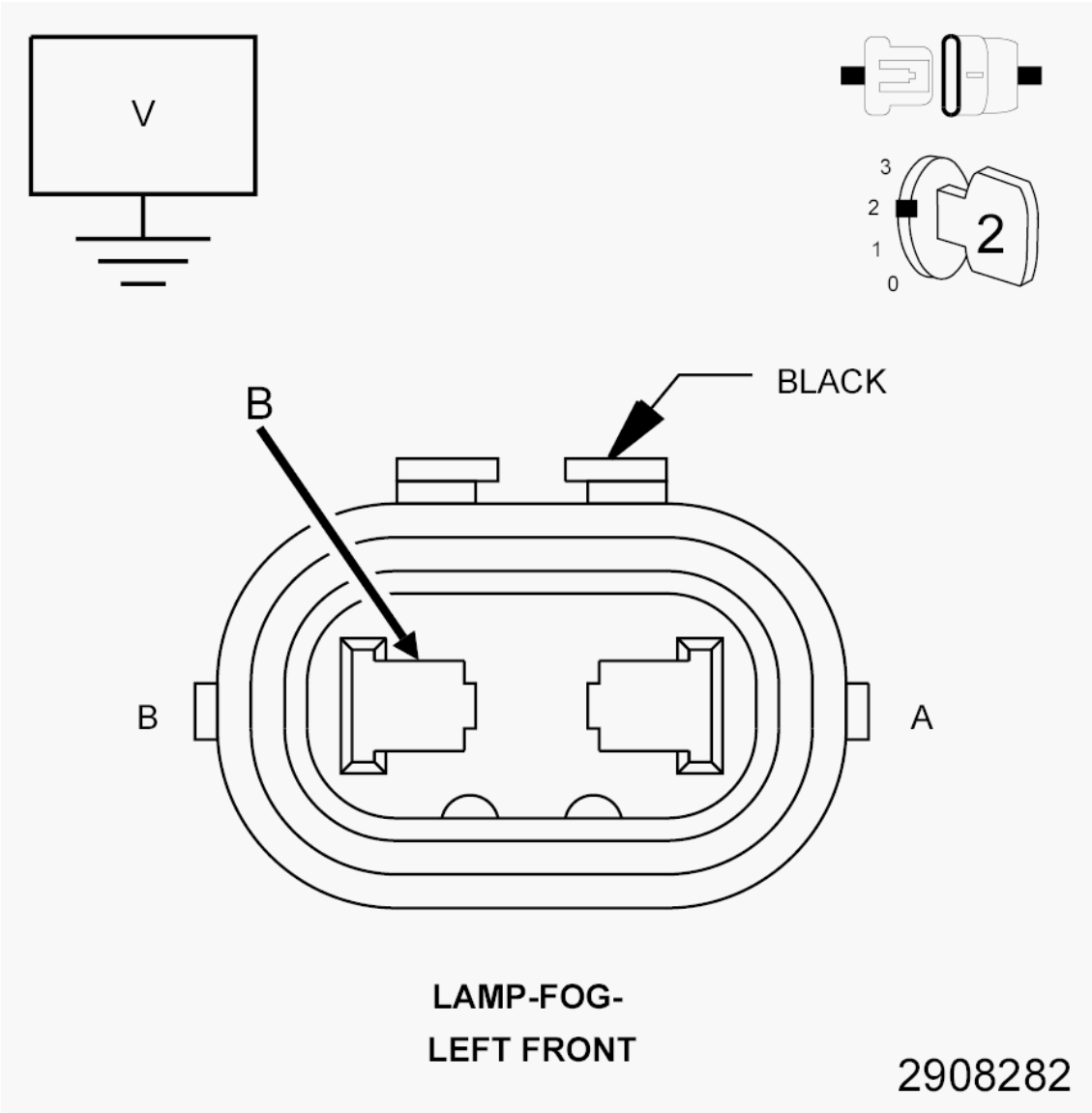

Fig. 53: Checking Left Front Fog Lamp Control Circuit For A Short To Voltage
Courtesy of CHRYSLER GROUP, LLC

1. Turn the Fog Lamps off.
2. Turn the ignition off.
3. Disconnect the Left Front Fog Lamp harness connector.
4. Disconnect the TIPM C4 harness connector.

5. Turn the ignition on.
6. Measure the voltage between ground and the (L89) Left Front Fog Lamp Control circuit.

   Is there any voltage present?

   Yes

   - Repair the short to voltage on the (L89) Left Front Fog Lamp Control circuit.
   - Perform the BODY VERIFICATION TEST. Refer to **BODY VERIFICATION TEST**.

   No

   - Go To 3.

3. **CHECK THE TIPM FOR CORRECT OPERATION**

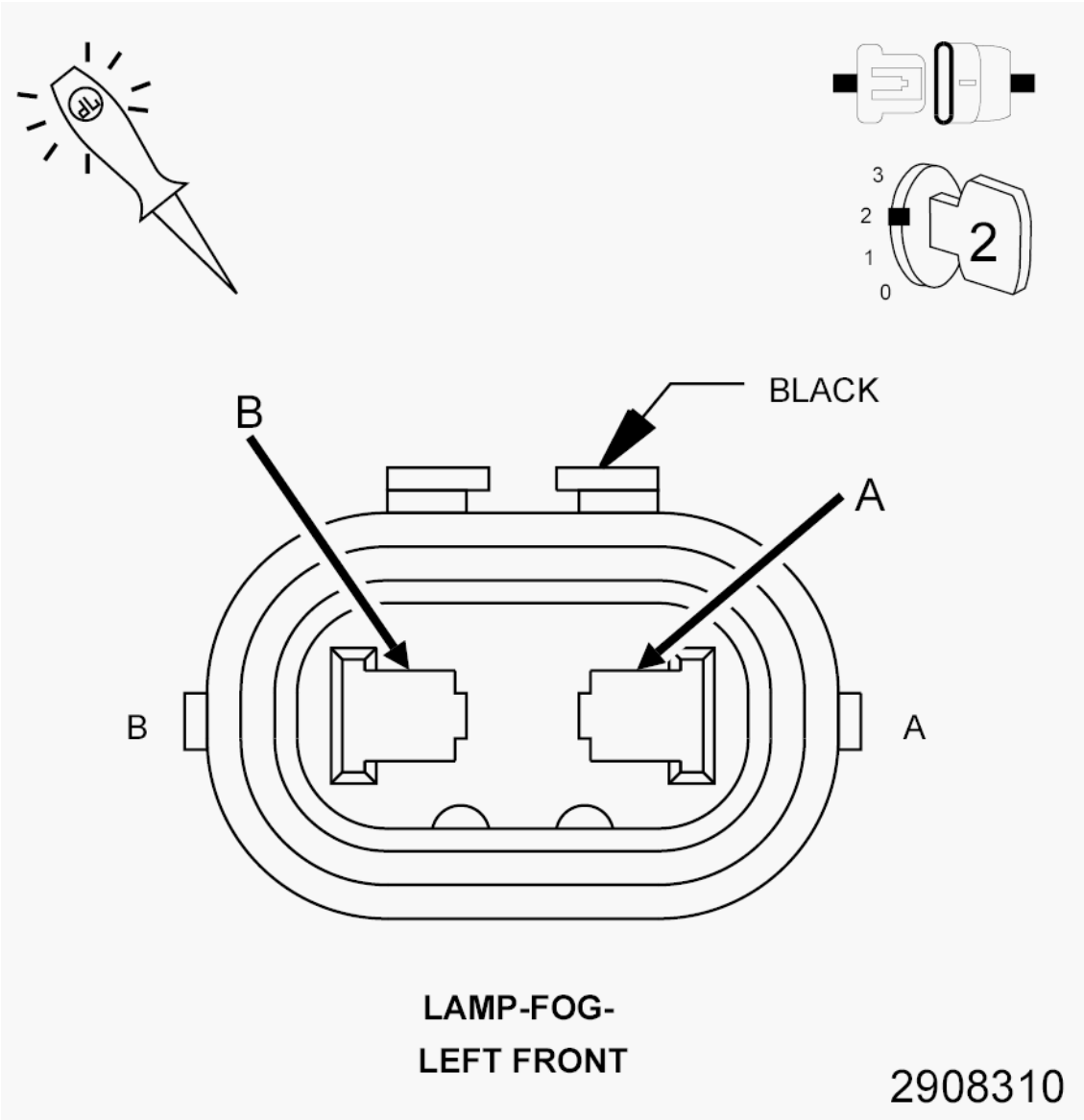

Fig. 54: Checking TIPM For Correct Operation
Courtesy of CHRYSLER GROUP, LLC

1. Turn the ignition off.
2. Reconnect the TIPM C4 harness connector.
3. Connect a 12-volt test light between the (L89) Left Front Fog Lamp Control circuit and the (Z904) Ground circuit at the Left Front Fog Lamp harness connector.
4. Turn the ignition on.
5. Turn the Fog Lamps on.

   Does the test light illuminate brightly?

   Yes

- Replace the Left Front Fog Lamp Bulb in accordance with the Service Information. Refer to **LAMP, FOG, REMOVAL** .
- Perform the BODY VERIFICATION TEST. Refer to **BODY VERIFICATION TEST**.

No

- Go To 4.

4. **CHECK THE (L89) LEFT FRONT FOG LAMP CONTROL CIRCUIT FOR AN OPEN IN THE HARNESS**

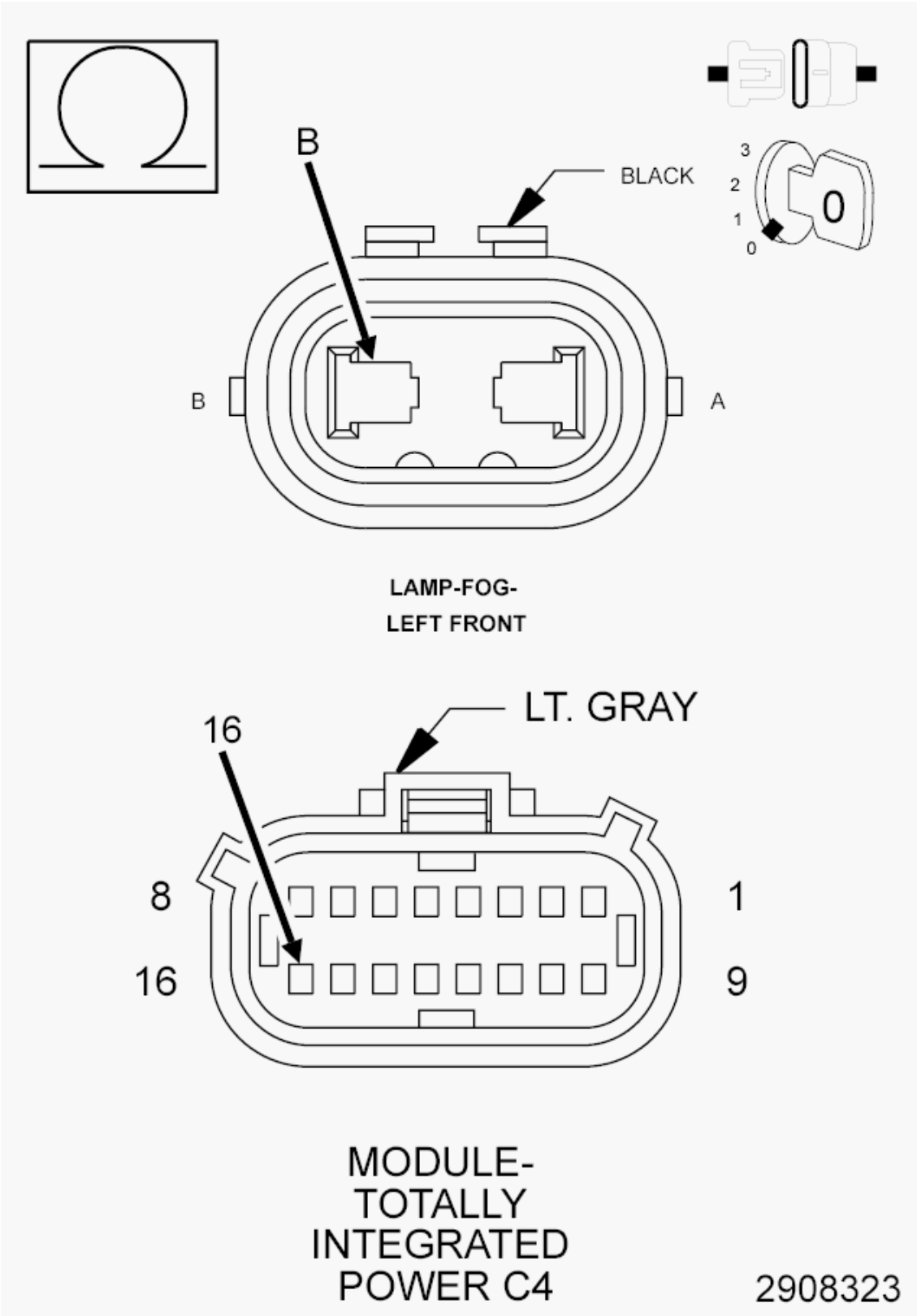

Fig. 55: Checking Left Front Fog Lamp Control Circuit For An Open
Courtesy of CHRYSLER GROUP, LLC

1. Turn the ignition off.
2. Disconnect the TIPM C4 harness connector.
3. Measure the resistance of the (L89) Left Front Fog Lamp Control circuit between the Left Front Fog Lamp harness connector and the TIPM C4 harness connector.

   Is the resistance below 5.0 Ohms?

   Yes

   - Go To 5.

   No

   - Repair the open in the (L89) Left Front Fog Lamp Control circuit.
   - Perform the BODY VERIFICATION TEST. Refer to **BODY VERIFICATION TEST**.

5. **CHECK THE (Z904) GROUND CIRCUIT FOR AN OPEN IN THE HARNESS**

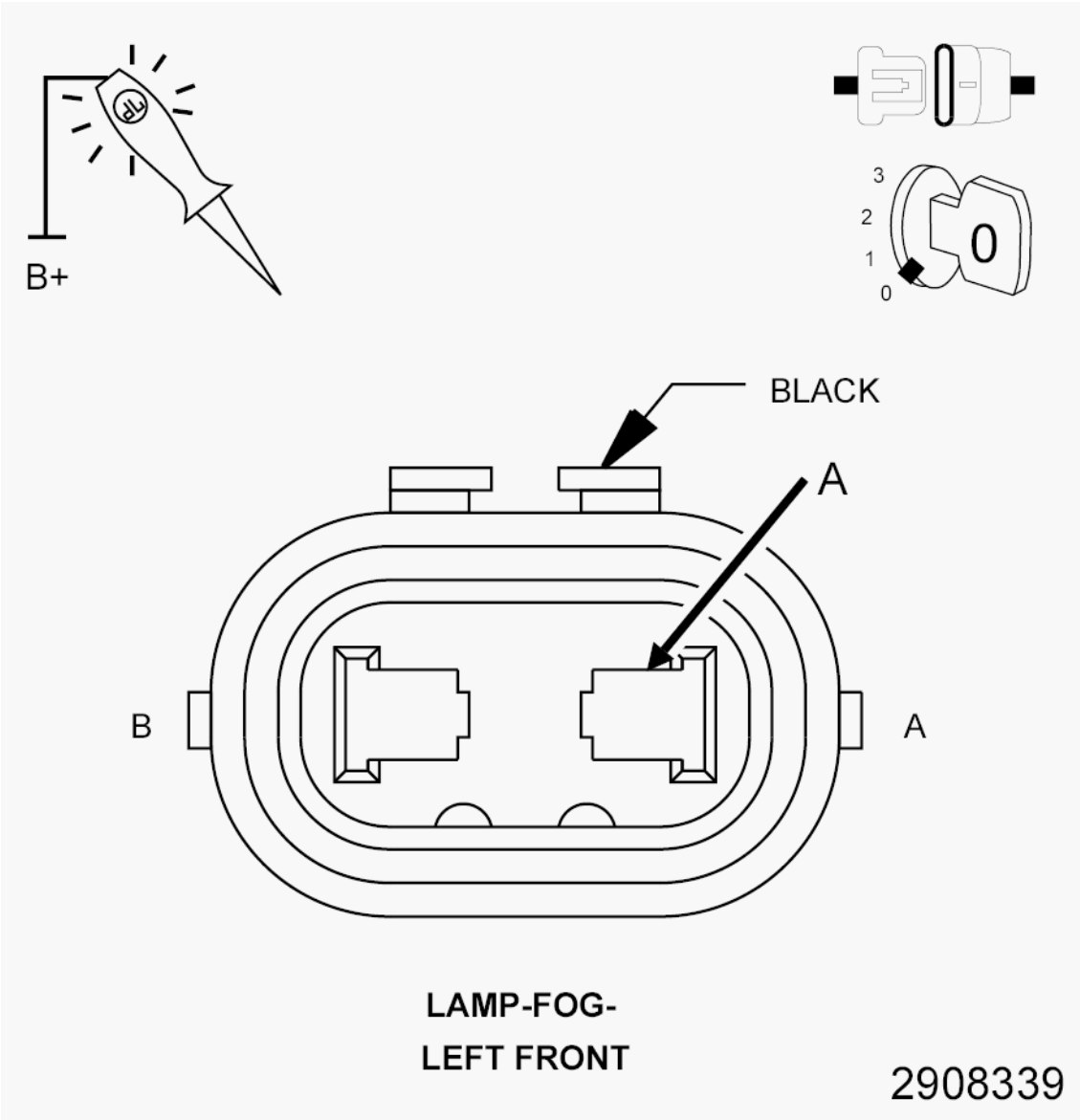

Fig. 56: Checking Ground Circuit For An Open In The Harness
Courtesy of CHRYSLER GROUP, LLC

1. Using a 12-volt test light connected to 12-volts, check the (Z904) Ground circuit.

   Does the test light illuminate brightly?

   Yes

   - Replace the Totally Integrated Power Module (TIPM) in accordance with the Service Information. Refer to **MODULE, TOTALLY INTEGRATED POWER (TIPM), REMOVAL** .
   - Perform the BODY VERIFICATION TEST. Refer to **BODY VERIFICATION TEST**.

   No

- Repair the open in the (Z904) Ground circuit.
- Perform the BODY VERIFICATION TEST. Refer to **BODY VERIFICATION TEST**.

B16FC-FRONT RIGHT FOG LAMP CONTROL CIRCUIT LOW

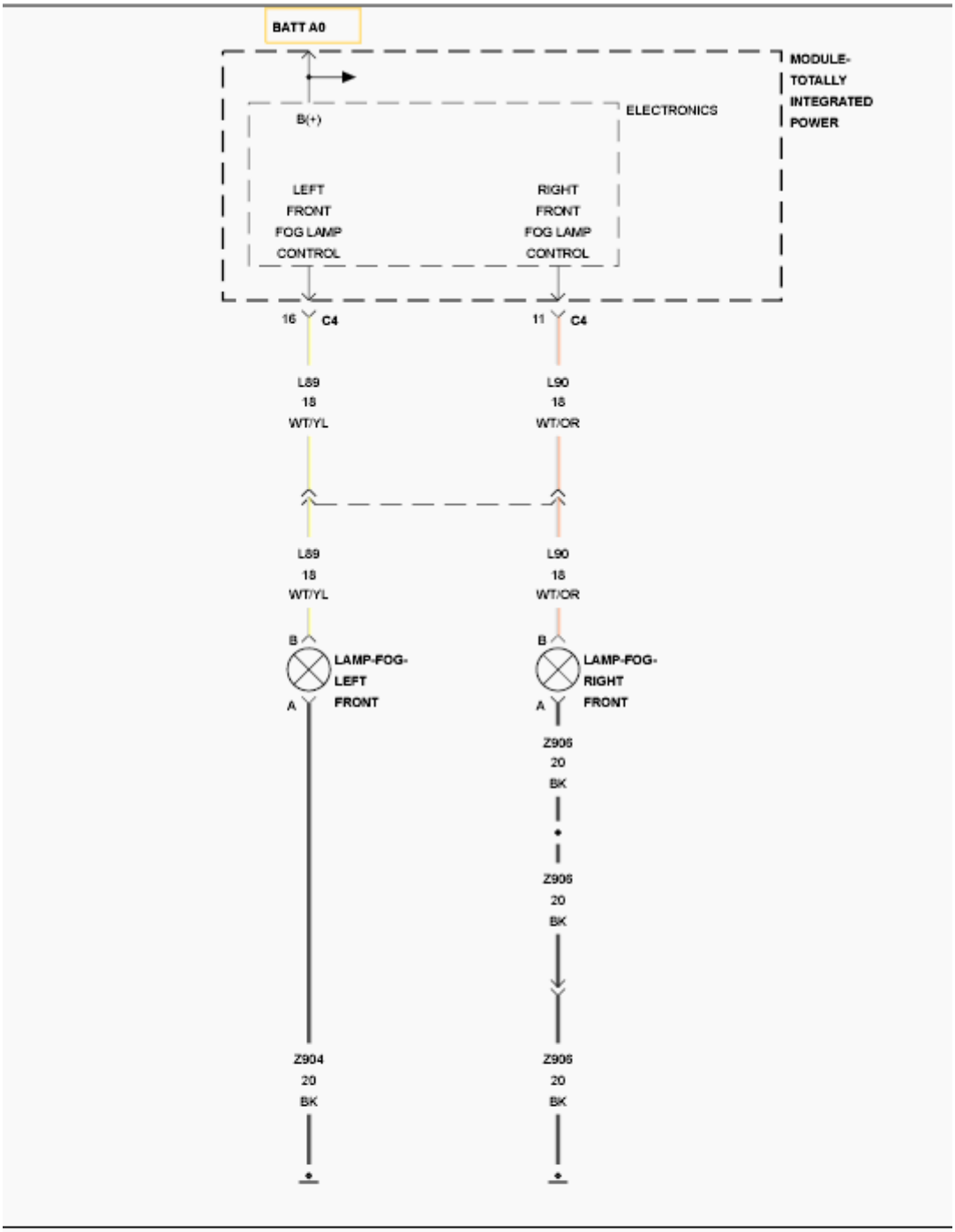
BATT A0
MODULE-
TOTALLY
INTEGRATED
POWER
ELECTRONICS
B(+)
LEFT
FRONT
FOG LAMP
CONTROL
RIGHT
FRONT
FOG LAMP
CONTROL
16
C4
11
C4
L89
18
WT/YL
L90
18
WT/OR
L89
18
WT/YL
L90
18
WT/OR
B
A
LAMP-FOG-
LEFT
FRONT
B
A
LAMP-FOG-
RIGHT
FRONT
Z906
20
BK
Z906
20
BK
Z904
20
BK
Z906
20
BK

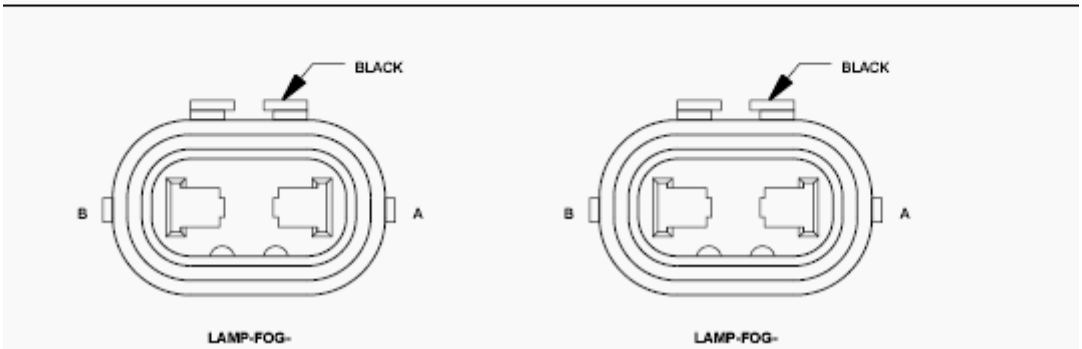
BLACK
B
A
LAMP-FOG-
BLACK
B
A
LAMP-FOG-

Fig. 57: Fog Lamp Control Wiring Diagram
Courtesy of CHRYSLER GROUP, LLC

For a complete wiring diagram, **refer to appropriate SYSTEM WIRING DIAGRAMS article** .

THEORY OF OPERATION

The Totally Integrated Power Module (TIPM) receives a bus message requesting fog lamp illumination. When this bus message is received, the TIPM provides a voltage output through the left and right fog lamp control output circuits. Separate ground circuits are used for the Left and Right Front Fog Lamps. For additional information on the Front Fog Lamps operation. Refer to **EXTERIOR LIGHTING - OPERATION** .

WHEN MONITORED:

With the fog lamps active.

SET CONDITION:

When the Totally Integrated Power Module (TIPM) detects a low condition on the (L90) Right Front Fog Lamp Control circuit.

POSSIBLE CAUSES

Possible Causes
(L90) RIGHT FRONT FOG LAMP CONTROL CIRCUIT SHORTED TO GROUND
RIGHT FRONT FOG LAMP BULB
TOTALLY INTEGRATED POWER MODULE (TIPM)

DIAGNOSTIC TEST

1. **INTERMITTENT CONDITION**
    1. Turn the ignition on.
    2. With the scan tool, clear all DTC's.
    3. Turn the Fog Lamps on.
    4. With the scan tool, read DTC's.

    Does the scan tool display DTC: B16FC-FRONT RIGHT FOG LAMP CONTROL CIRCUIT LOW?

    Yes

    - Go To 2.

    No

    - Test complete, the condition or conditions that originally set this DTC are not present at this

time. Using the wiring diagrams as a guide, check all related splices and connectors for signs of water intrusion, corrosion, pushed out or bent terminals, and correct pin tension.

- Perform the BODY VERIFICATION TEST. Refer to **BODY VERIFICATION TEST**.

2. **ATTEMPT TO SET THE OPPOSITE DTC**
   1. Turn the Fog Lamps off.
   2. Turn the ignition off.
   3. Disconnect the Right Front Fog Lamp harness connector.
   4. Turn the ignition on.
   5. Turn the Fog Lamps on.
   6. With the scan tool, read DTC's.

   Does the scan tool display DTC: B16FD-FRONT RIGHT FOG LAMP CONTROL CIRCUIT HIGH?

   Yes

   - Replace the Right Front Fog Lamp Bulb in accordance with the Service Information. Refer to **LAMP, FOG, REMOVAL** .
   - Perform the BODY VERIFICATION TEST. Refer to **BODY VERIFICATION TEST**.

   No

   - Go To 3.

3. **CHECK THE (L90) RIGHT FRONT FOG LAMP CONTROL CIRCUIT FOR A SHORT TO GROUND**

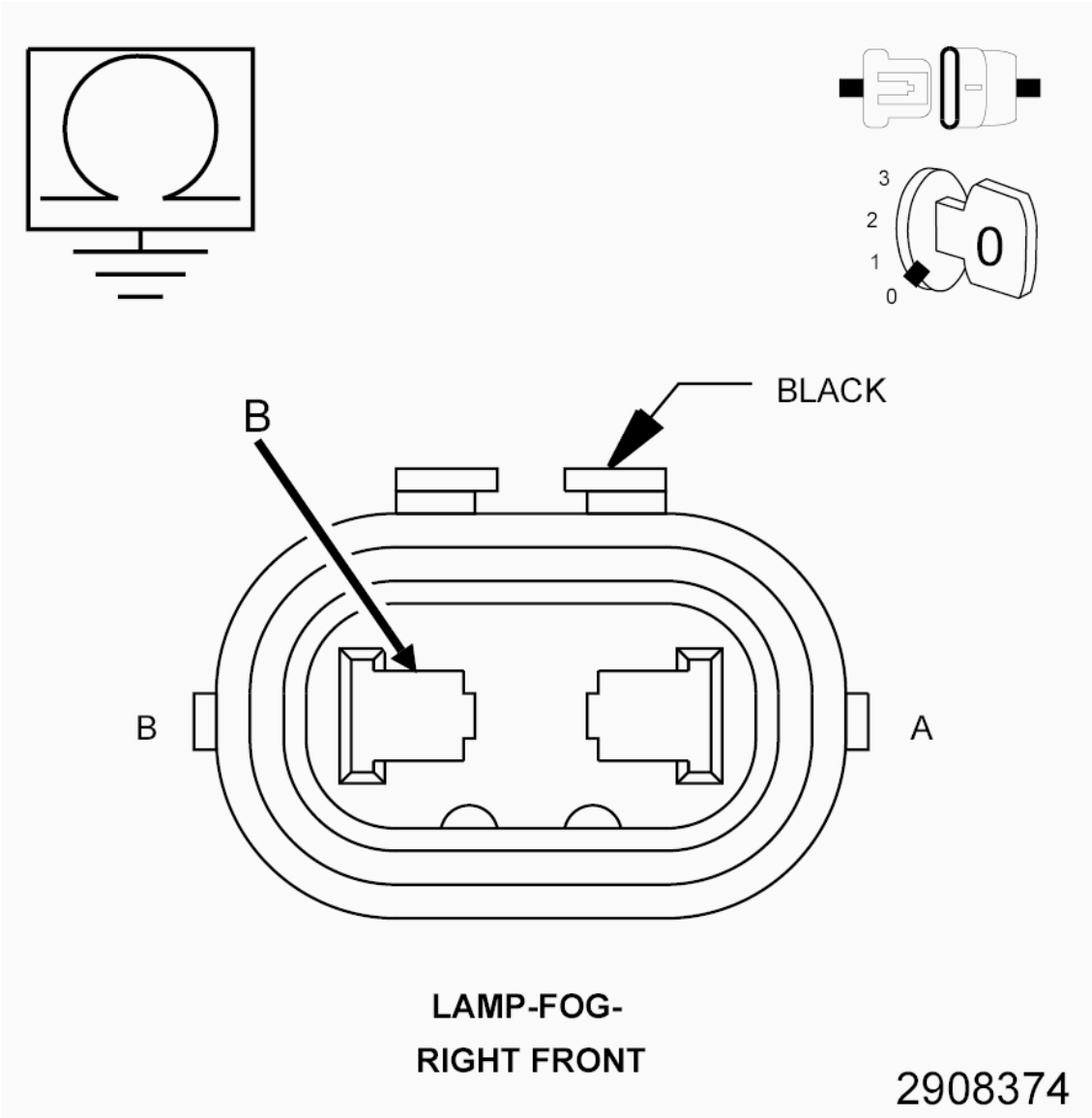

Fig. 58: Checking Right Front Fog Lamp Control Circuit For A Short To Ground
Courtesy of CHRYSLER GROUP, LLC

1. Turn the ignition off.
2. Disconnect the TIPM C4 harness connector.
3. Measure the resistance between ground and the (L90) Right Front Fog Lamp Control circuit.

   Is the resistance above 10k Ohms?

   Yes

   - Replace the Totally Integrated Power Module (TIPM) in accordance with the Service Information. Refer to **MODULE, TOTALLY INTEGRATED POWER (TIPM), REMOVAL** .

- Perform the BODY VERIFICATION TEST. Refer to **BODY VERIFICATION TEST**.

No

- Repair the short to ground in the (L90) Right Front Fog Lamp Control circuit.
- Perform the BODY VERIFICATION TEST. Refer to **BODY VERIFICATION TEST**.

B16FD-FRONT RIGHT FOG LAMP CONTROL CIRCUIT HIGH

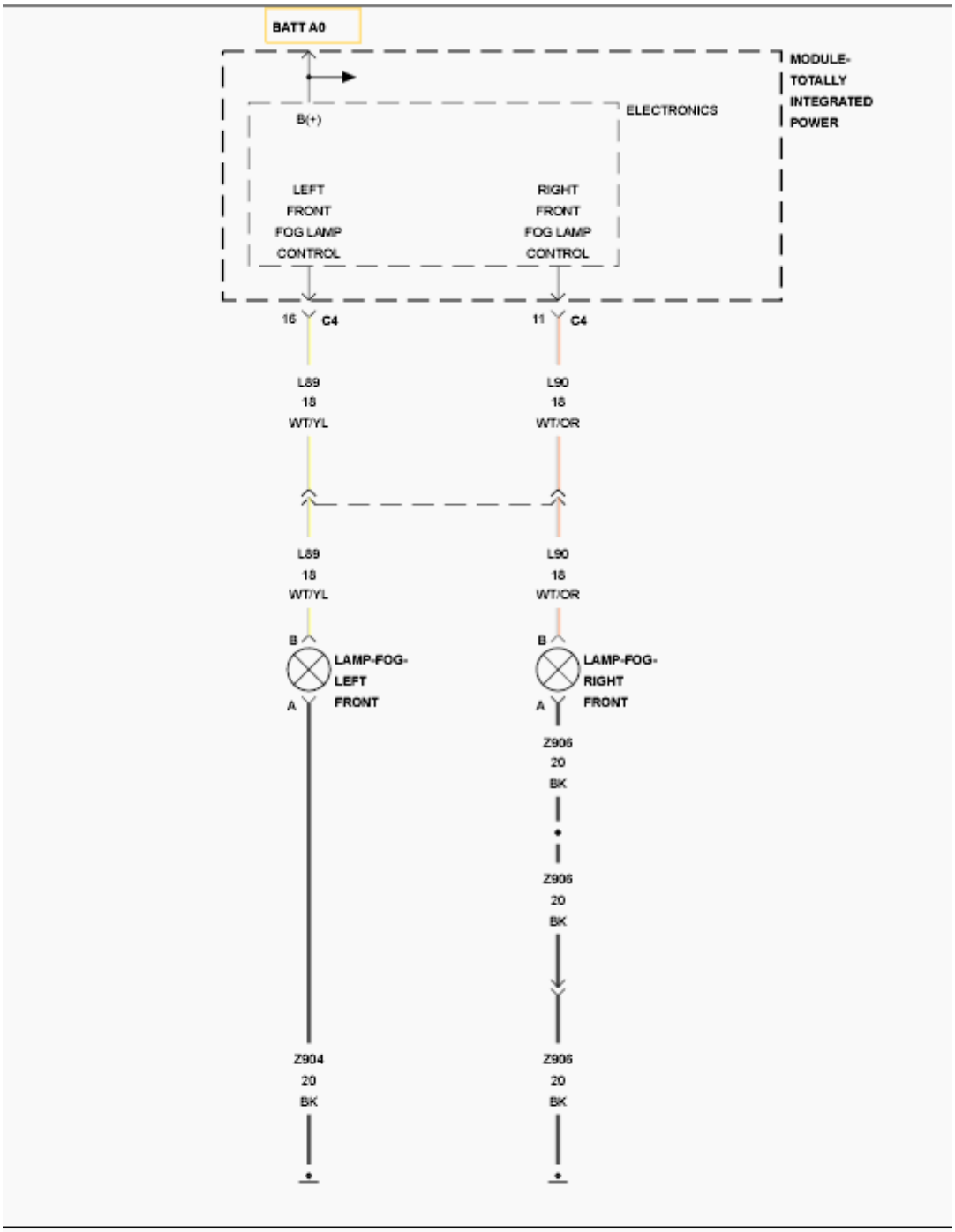
BATT A0
MODULE-
TOTALLY
INTEGRATED
POWER
ELECTRONICS
B(+)
LEFT
FRONT
FOG LAMP
CONTROL
RIGHT
FRONT
FOG LAMP
CONTROL
16
C4
11
C4
L89
18
WT/YL
L90
18
WT/OR
L89
18
WT/YL
L90
18
WT/OR
B
A
LAMP-FOG-
LEFT
FRONT
B
A
LAMP-FOG-
RIGHT
FRONT
Z906
20
BK
Z906
20
BK
Z904
20
BK
Z906
20
BK

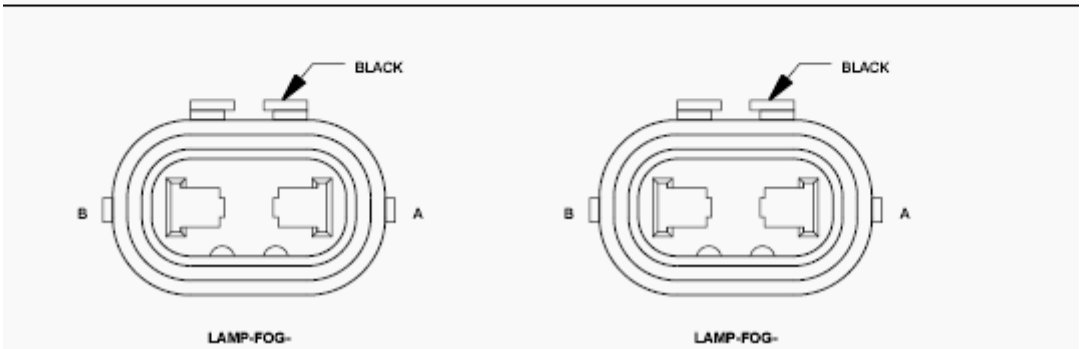
BLACK
B
A
LAMP-FOG-
BLACK
B
A
LAMP-FOG-

Fig. 59: Fog Lamp Control Wiring Diagram
Courtesy of CHRYSLER GROUP, LLC

For a complete wiring diagram, **refer to appropriate SYSTEM WIRING DIAGRAMS article** .

THEORY OF OPERATION

The Totally Integrated Power Module (TIPM) receives a bus message requesting fog lamp illumination. When this bus message is received, the TIPM provides a voltage output through the left and right fog lamp control output circuits. Separate ground circuits are used for the Left and Right Front Fog Lamps. For additional information on the Front Fog Lamps operation. Refer to **EXTERIOR LIGHTING - OPERATION** .

WHEN MONITORED:

With the fog lamps active.

SET CONDITION:

When the Totally Integrated Power Module (TIPM) detects a high condition on the (L90) Right Front Fog Lamp Control circuit.

POSSIBLE CAUSES

Possible Causes
(L90) RIGHT FRONT FOG LAMP CONTROL CIRCUIT OPEN
(L90) RIGHT FRONT FOG LAMP CONTROL CIRCUIT SHORTED TO VOLTAGE
(Z906) GROUND CIRCUIT OPEN
RIGHT FRONT FOG LAMP BULB
TOTALLY INTEGRATED POWER MODULE (TIPM)

DIAGNOSTIC TEST

1. **INTERMITTENT CONDITION**
    1. Turn the ignition on.
    2. With the scan tool, clear all TIPM DTC's.
    3. Turn the Front Fog Lamps on.
    4. With the scan tool, read DTC's.

    Does the scan tool display DTC: B16FD-FRONT RIGHT FOG LAMP CONTROL CIRCUIT HIGH?

    Yes

    - Go To 2.

    No

- Test complete, the condition or conditions that originally set this DTC are not present at this time. Using the wiring diagrams as a guide, check all related splices and connectors for signs of water intrusion, corrosion, pushed out or bent terminals, and correct pin tension.
- Perform the BODY VERIFICATION TEST. Refer to **BODY VERIFICATION TEST**.

2. **CHECK THE (L90) RIGHT FRONT FOG LAMP CONTROL CIRCUIT FOR A SHORT TO VOLTAGE IN THE HARNESS**

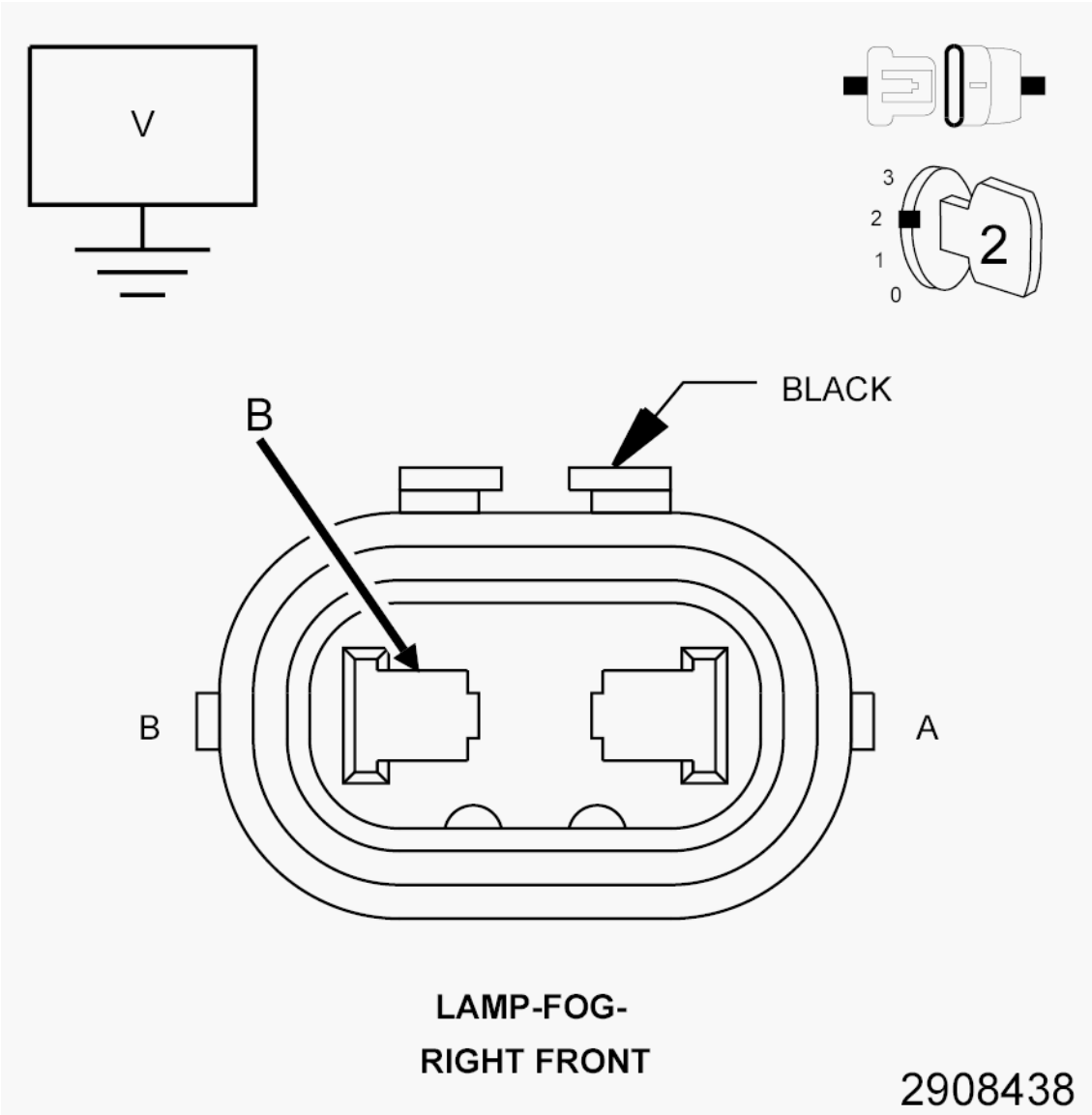

Fig. 60: Checking Right Front Fog Lamp Control Circuit For A Short To Voltage
Courtesy of CHRYSLER GROUP, LLC

1. Turn the Fog Lamps off.
2. Turn the ignition off.
3. Disconnect the Right Front Fog Lamp harness connectors.
4. Disconnect the TIPM C4 harness connector.

5. Turn the ignition on.
6. Measure the voltage between ground and the (L90) Right Front Fog Lamp Control circuit.

   Is there any voltage present?

   Yes

   - Repair the short to voltage on the (L90) Right Front Fog Lamp Control circuit.
   - Perform the BODY VERIFICATION TEST. Refer to **BODY VERIFICATION TEST**.

   No

   - Go To 3.

3. **CHECK THE TIPM FOR CORRECT OPERATION**

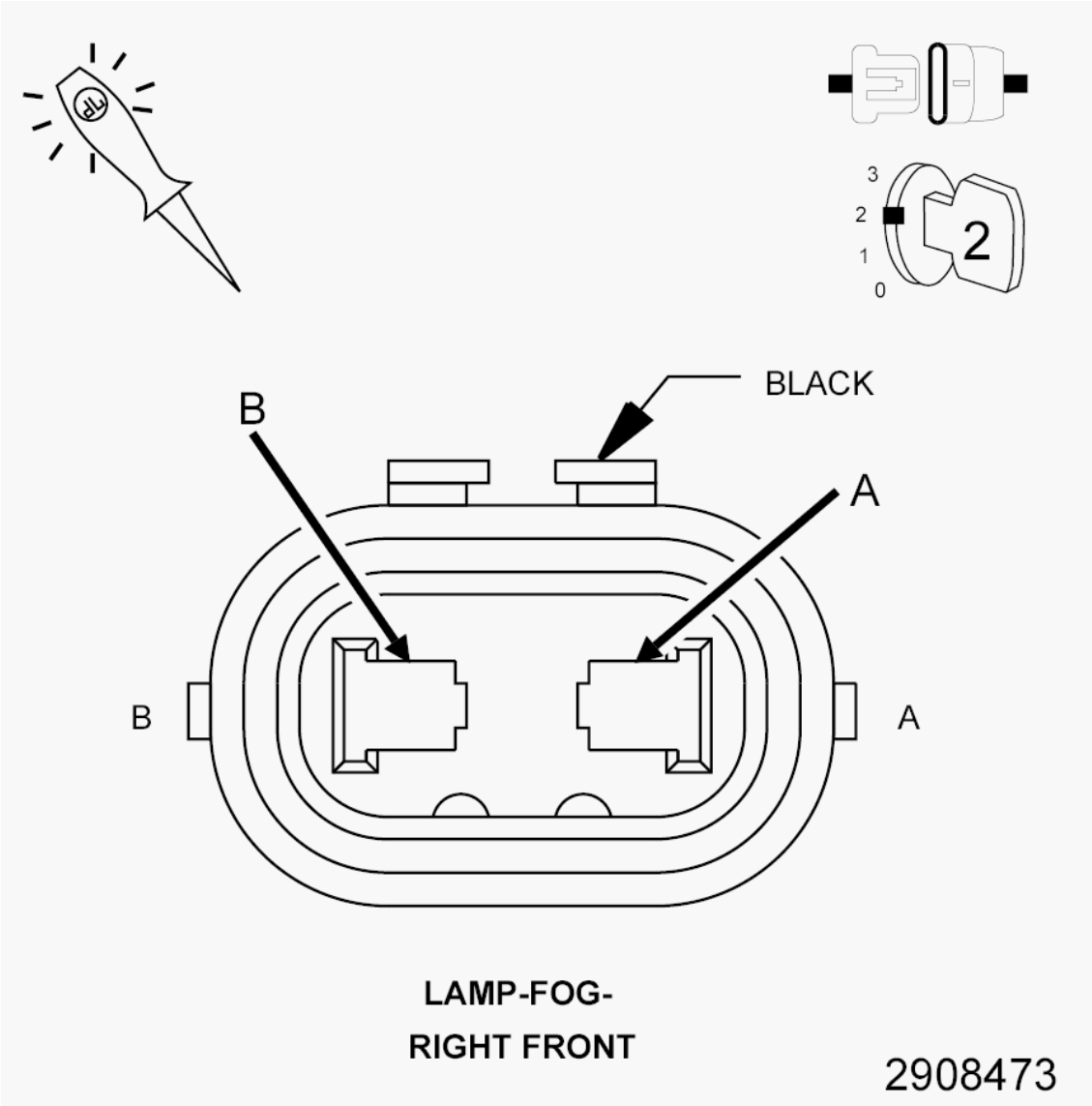

Fig. 61: Checking TIPM For Correct Operation
Courtesy of CHRYSLER GROUP, LLC

1. Turn the ignition off.
2. Reconnect the TIPM C4 harness connector.
3. Connect a 12-volt test light between the (L90) Right Front Fog Lamp Control circuit and the (Z906) Ground circuit at the Right Front Fog Lamp harness connector.
4. Turn the ignition on.
5. Turn the Fog Lamps on.

   Does the test light illuminate brightly?

   Yes

   - Replace the Right Front Fog Lamp Bulb in accordance with the Service Information. Refer to **LAMP, FOG, REMOVAL** .
   - Perform the BODY VERIFICATION TEST. Refer to **BODY VERIFICATION TEST**.

   No

   - Go To 4.

4. **CHECK THE (L90) RIGHT FRONT FOG LAMP CONTROL CIRCUIT FOR AN OPEN IN THE HARNESS**

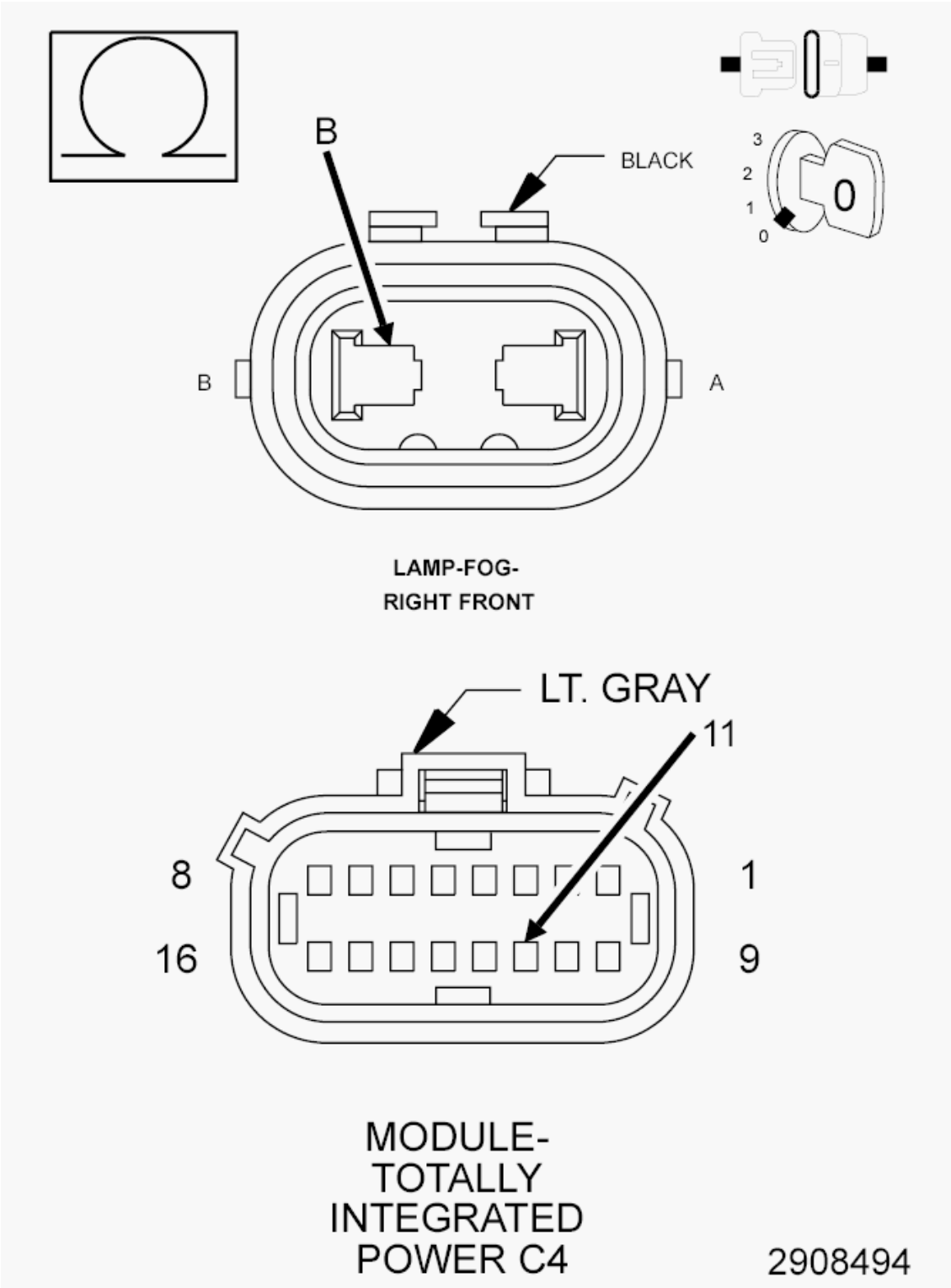

Fig. 62: Checking Right Front Fog Lamp Control Circuit For An Open
Courtesy of CHRYSLER GROUP, LLC

1. Turn the ignition off.
2. Disconnect the TIPM C4 harness connector.

3. Measure the resistance of the (L90) Right Front Fog Lamp Control circuit between the Right Front Fog Lamp harness connector and the TIPM C4 harness connector.

   Is the resistance below 5.0 Ohms?

   Yes

   - Go To 5.

   No

   - Repair the open in the (L90) Right Front Fog Lamp Control circuit.
   - Perform the BODY VERIFICATION TEST. Refer to **BODY VERIFICATION TEST**.

5. **CHECK THE (Z906) GROUND CIRCUIT FOR AN OPEN IN THE HARNESS**

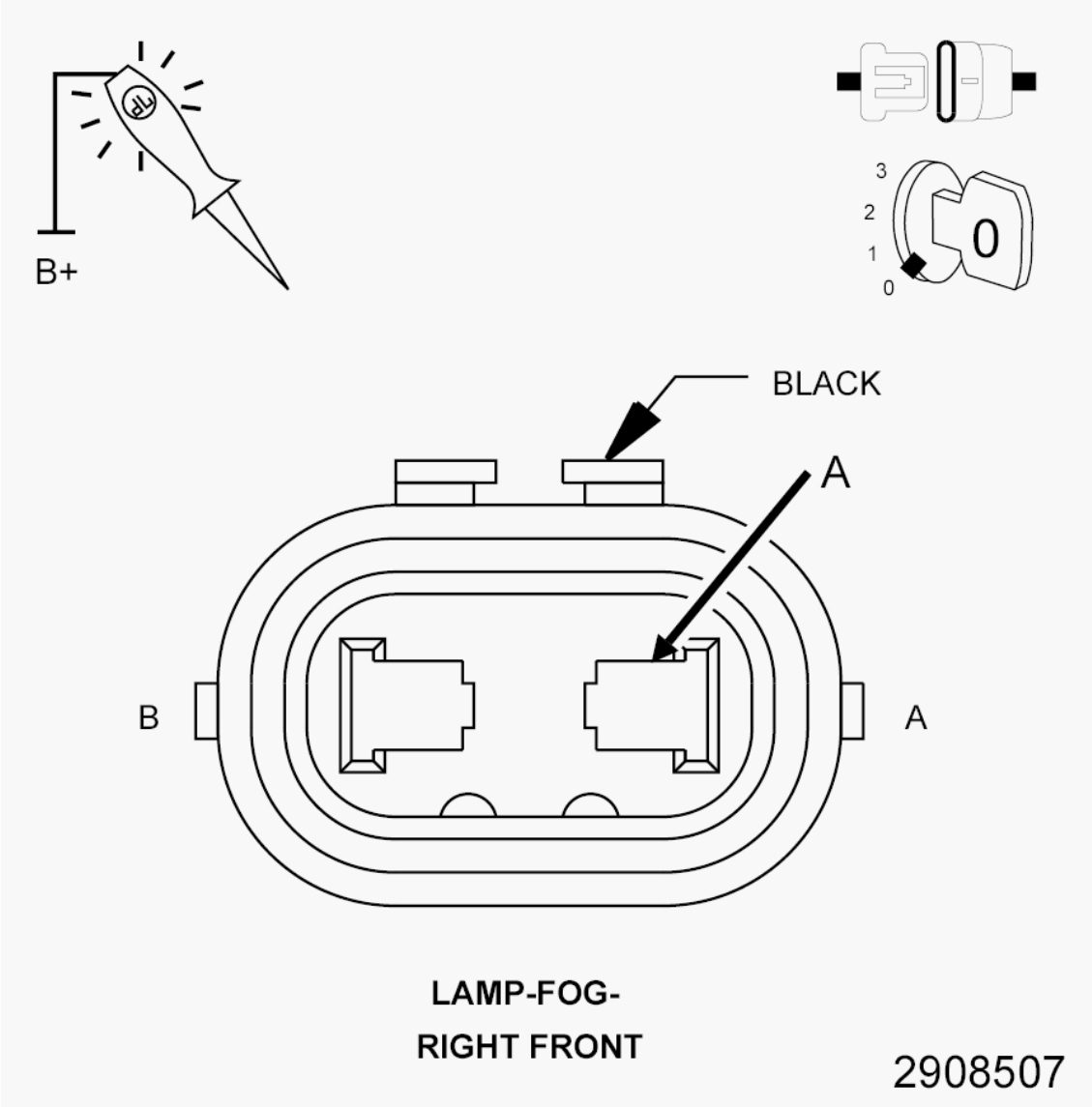

Fig. 63: Checking Ground Circuit For An Open
Courtesy of CHRYSLER GROUP, LLC

1. Using a 12-volt test light connected to 12-volts, check the (Z906) Ground circuit.

   Does the test light illuminate brightly?

   Yes

   - Replace the Totally Integrated Power Module (TIPM) in accordance with the Service Information. Refer to **MODULE, TOTALLY INTEGRATED POWER (TIPM), REMOVAL** .
   - Perform the BODY VERIFICATION TEST. Refer to **BODY VERIFICATION TEST**.

   No

   - Repair the open in the (Z906) Ground circuit.
   - Perform the BODY VERIFICATION TEST. Refer to **BODY VERIFICATION TEST**.

B17AE-REAR LEFT TRAILER TURN LAMP CONTROL CIRCUIT LOW

For a complete wiring diagram, **refer to appropriate SYSTEM WIRING DIAGRAMS article** .

THEORY OF OPERATION

The Totally Integrated Power Module (TIPM) receives a bus message requesting turn signal lamp illumination. When this bus message is received, the TIPM provides a pulsed voltage output through the trailer tow turn signal control circuit. For additional information on the Trailer Tow Wiring operation. Refer to **EXTERIOR LIGHTING - OPERATION** .

WHEN MONITORED:

With the turn signal active.

SET CONDITION:

When the Totally Integrated Power Module (TIPM) detects a low condition on the (L655) Left Rear Turn Signal Control circuit.

POSSIBLE CAUSES

Possible Causes
(L655) LEFT REAR TURN SIGNAL CONTROL CIRCUIT SHORTED TO GROUND TRAILER TOW CONNECTOR TOTALLY INTEGRATED POWER MODULE (TIPM)

DIAGNOSTIC TEST

1. **TEST FOR INTERMITTENT CONDITION**

NOTE: Make sure any aftermarket or trailer tow accessories are disconnected from the trailer tow connector.

1. Turn the ignition on.
2. With the scan tool, clear all DTC's.
3. Turn on the Left Turn Signal.
4. With the scan tool, read DTC's.

   Does the scan tool display DTC: B17AE-REAR LEFT TRAILER TURN LAMP CONTROL CIRCUIT LOW?

   Yes

   - Go To 2.

   No

   - Test complete, the condition or conditions that originally set this DTC are not present at this time. Using the wiring diagrams as a guide, check all related splices and connectors for signs of water intrusion, corrosion, pushed out or bent terminals, and correct pin tension.
   - Perform the BODY VERIFICATION TEST. Refer to **BODY VERIFICATION TEST**.

2. **CHECK THE (L655) LEFT REAR TURN SIGNAL CONTROL CIRCUIT FOR A SHORT TO GROUND IN THE HARNESS**

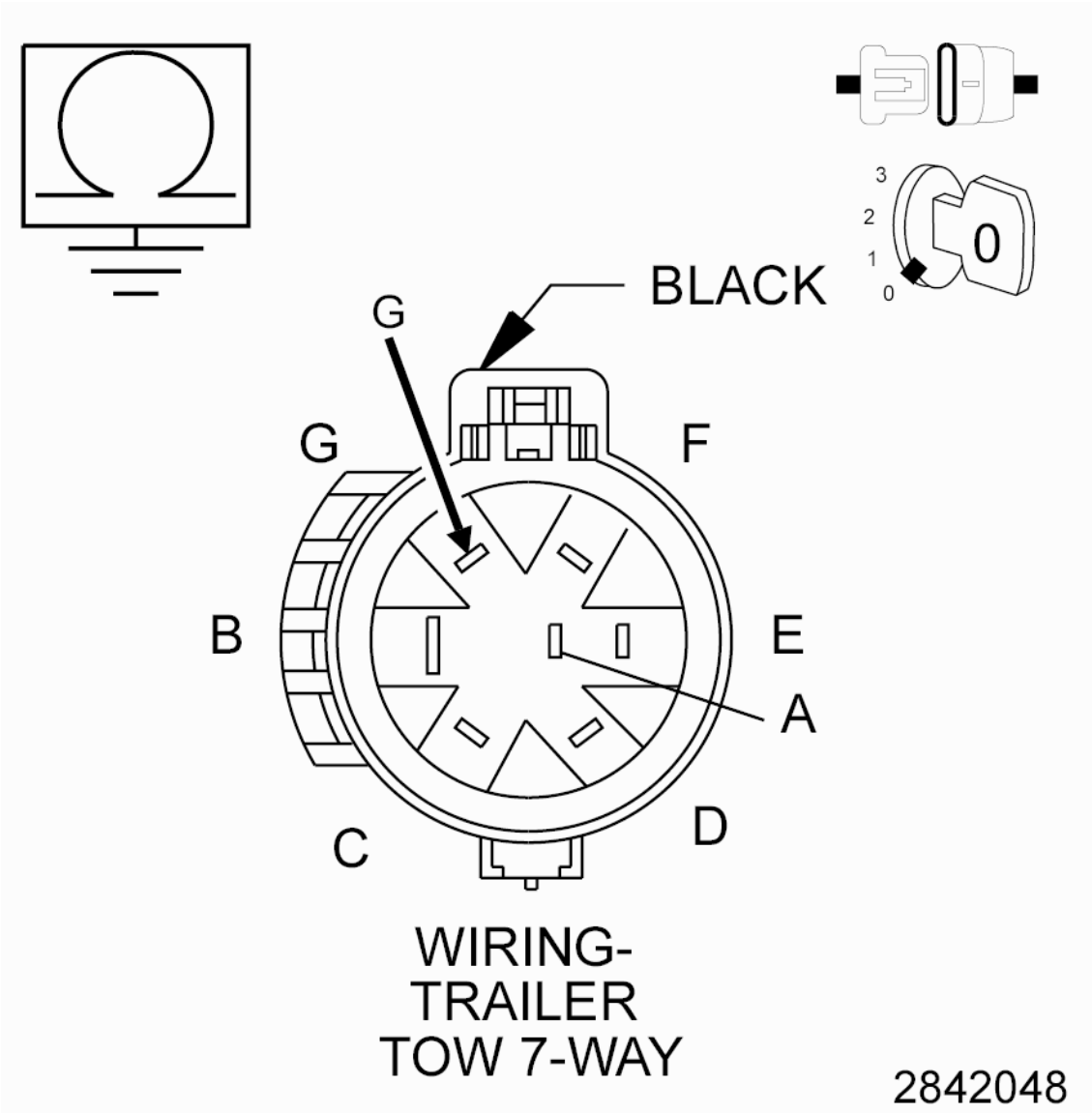

Fig. 64: Checking Left Rear Turn Signal Control Circuit For A Short
Courtesy of CHRYSLER GROUP, LLC

1. Turn the ignition off.
2. Disconnect the TIPM C7 harness connector.
3. Disconnect the Trailer Tow 7-Way Wiring harness connector.
4. Measure the resistance between ground and the (L655) Left Rear Turn Signal Control circuit.

   Is the resistance above 10k Ohms?

   Yes

   - Go To 3.

   No

- Repair the short to ground in the (L655) Left Rear Turn Signal Control circuit.
- Perform the BODY VERIFICATION TEST. Refer to **BODY VERIFICATION TEST**.

3. **CHECK THE TRAILER TOW CONNECTOR FOR AN INTERNAL SHORT TO GROUND**

NOTE: This measurement is taken at the Trailer Tow Connector used by the customer. Use the diagram on the Trailer Tow Connector cover to determine the correct terminal.

1. Reconnect the Trailer Tow 7-Way Wiring harness connector.
2. Measure the resistance between ground and the (L655) Left Rear Turn Signal Control circuit at the appropriate terminal in the Trailer Tow Connector.

   Is the resistance above 10k Ohms?

   Yes

   - Replace the Totally Integrated Power Module (TIPM) in accordance with the Service Information. Refer to **MODULE, TOTALLY INTEGRATED POWER (TIPM), REMOVAL** .
   - Perform the BODY VERIFICATION TEST. Refer to **BODY VERIFICATION TEST**.

   No

   - Replace the Trailer Tow Connector in accordance with the Service Information. Refer to **CONNECTOR, TRAILER TOW, REMOVAL** .
   - Perform the BODY VERIFICATION TEST. Refer to **BODY VERIFICATION TEST**.

B17B2-REAR RIGHT TRAILER TURN LAMP CONTROL CIRCUIT LOW

For a complete wiring diagram, **refer to appropriate SYSTEM WIRING DIAGRAMS article** .

THEORY OF OPERATION

The Totally Integrated Power Module (TIPM) receives a bus message requesting turn signal lamp illumination. When this bus message is received, the TIPM provides a pulsed voltage output through the trailer tow turn signal control circuit. For additional information on the Trailer Tow Wiring operation. Refer to **EXTERIOR LIGHTING - OPERATION** .

WHEN MONITORED:

With the turn signal active.

SET CONDITION:

When the Totally Integrated Power Module (TIPM) detects a low condition on the (L656) Right Rear Turn Signal Control circuit.

POSSIBLE CAUSES

Possible Causes
(L656) RIGHT REAR TURN SIGNAL CONTROL CIRCUIT SHORTED TO GROUND TRAILER TOW CONNECTOR TOTALLY INTEGRATED POWER MODULE (TIPM)

DIAGNOSTIC TEST

1. **TEST FOR INTERMITTENT CONDITION**

   NOTE: Make sure any aftermarket or trailer tow accessories are disconnected from the Trailer Tow Connector.

   1. Turn the ignition on.
   2. With the scan tool, clear all DTC's.
   3. Turn on the Right Turn Signal.
   4. With the scan tool, read DTC's.

   Does the scan tool display DTC: B17B2-REAR RIGHT TRAILER TURN LAMP CONTROL CIRCUIT LOW?

   Yes

   - Go To 2.

   No

   - Test complete, the condition or conditions that originally set this DTC are not present at this time. Using the wiring diagrams as a guide, check all related splices and connectors for signs of water intrusion, corrosion, pushed out or bent terminals, and correct pin tension.
   - Perform the BODY VERIFICATION TEST. Refer to **BODY VERIFICATION TEST**.

2. **CHECK THE (L656) RIGHT REAR TURN SIGNAL CONTROL CIRCUIT FOR A SHORT TO GROUND IN THE HARNESS**

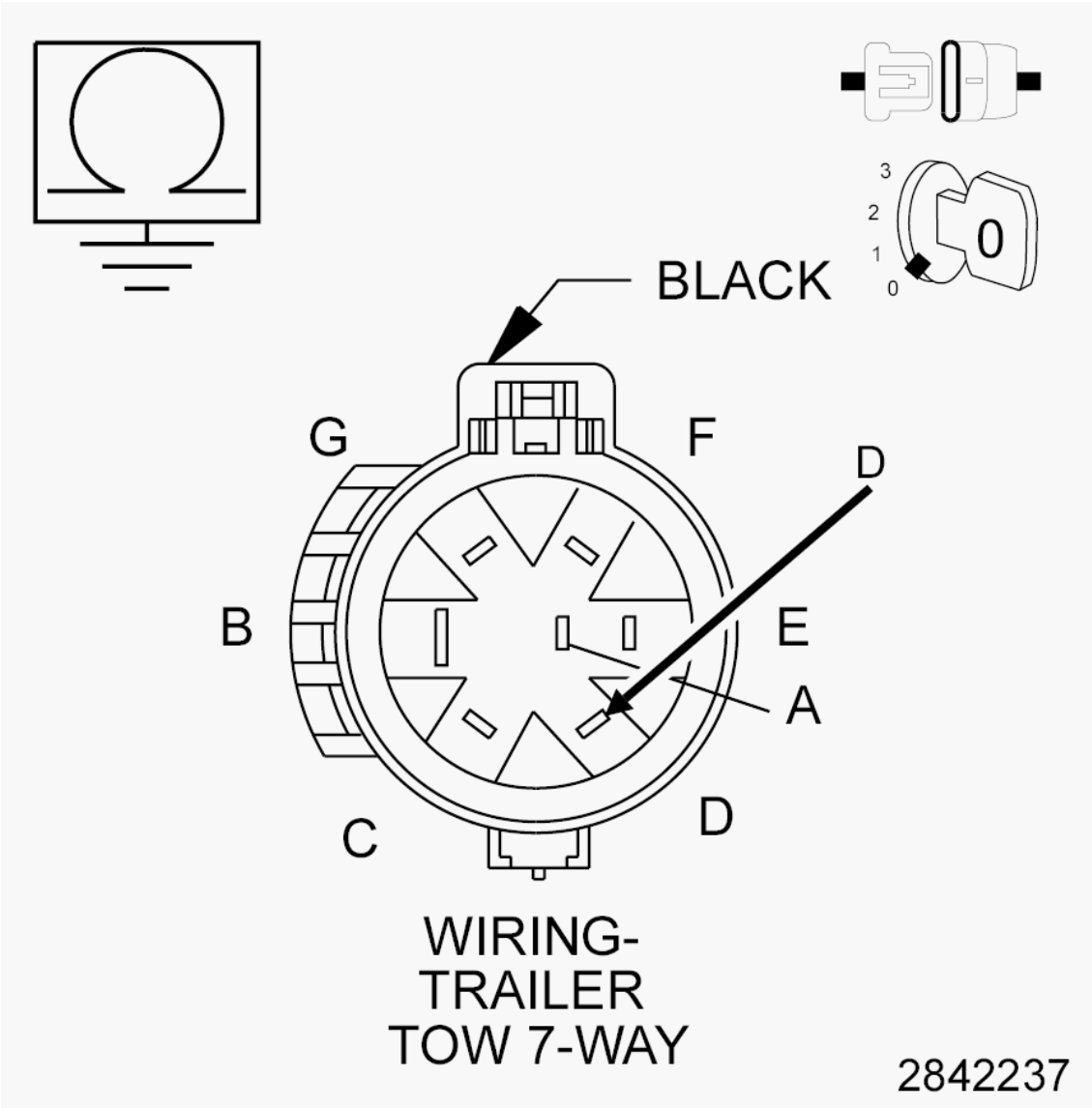

Fig. 65: Checking Right Rear Turn Signal Control Circuit For A Short
Courtesy of CHRYSLER GROUP, LLC

1. Turn the ignition off.
2. Disconnect the TIPM C7 harness connector.
3. Disconnect the Trailer Tow 7-Way Wiring harness connector.
4. Measure the resistance between ground and the (L656) Right Rear Turn Signal Control circuit.

   Is the resistance above 10k Ohms?

   Yes

   - Go To 3.

   No

- Repair the short to ground in the (L656) Right Rear Turn Signal Control circuit.
- Perform the BODY VERIFICATION TEST. Refer to **BODY VERIFICATION TEST**.

3. **CHECK THE TRAILER TOW CONNECTOR FOR AN INTERNAL SHORT TO GROUND**

NOTE: This measurement is taken at the Trailer Tow Connector used by the customer. Use the diagram on the Trailer Tow Connector cover to determine the correct terminal.

1. Reconnect the Trailer Tow 7-Way Wiring harness connector.
2. Measure the resistance between ground and the (L656) Right Rear Turn Signal Control circuit at the appropriate terminal in the Trailer Tow Connector.

   Is the resistance above 10k Ohms?

   Yes

   - Replace the Totally Integrated Power Module (TIPM) in accordance with the Service Information. Refer to **MODULE, TOTALLY INTEGRATED POWER (TIPM), REMOVAL** .
   - Perform the BODY VERIFICATION TEST. Refer to **BODY VERIFICATION TEST**.

   No

   - Replace the Trailer Tow Connector in accordance with the Service Information. Refer to **CONNECTOR, TRAILER TOW, REMOVAL** .
   - Perform the BODY VERIFICATION TEST. Refer to **BODY VERIFICATION TEST**.

B1801-DRIVER DOOR LOCK/UNLOCK SWITCH CIRCUIT LOW

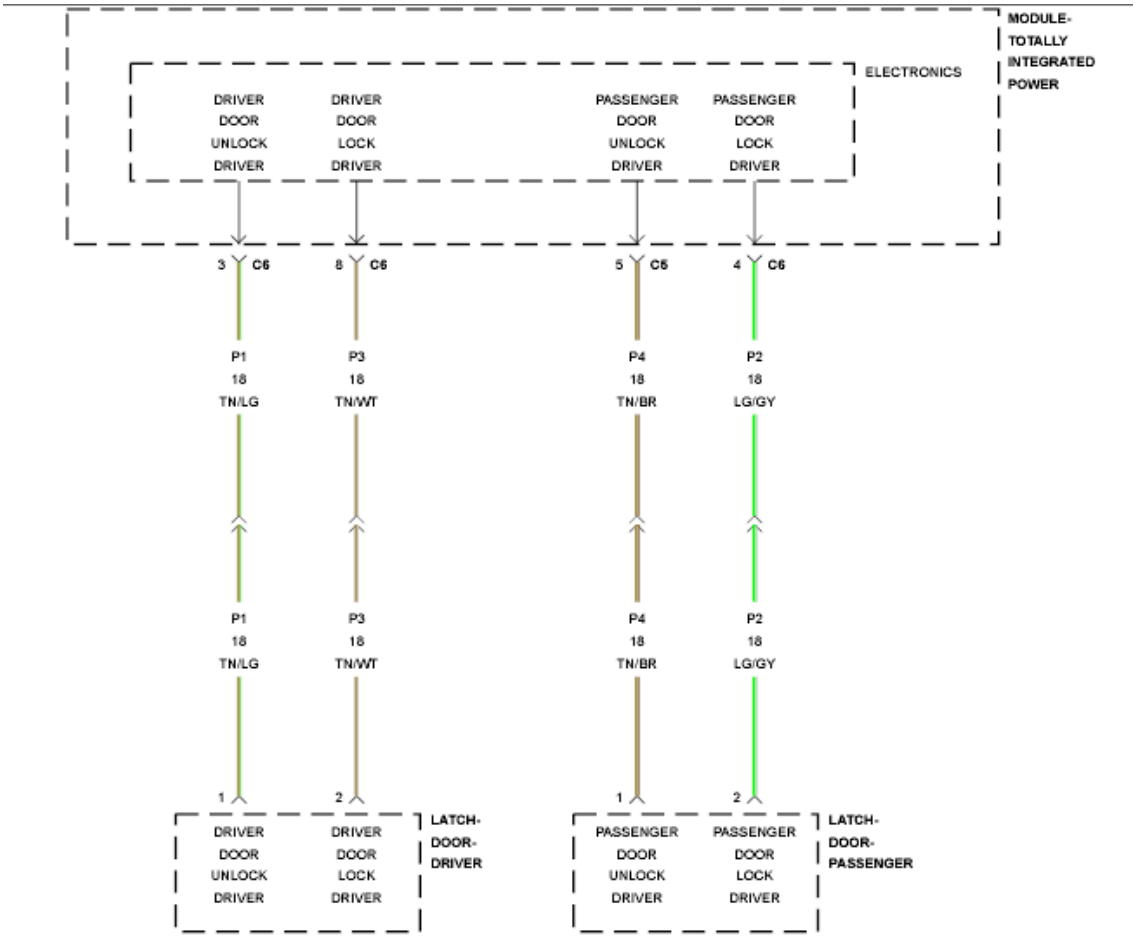

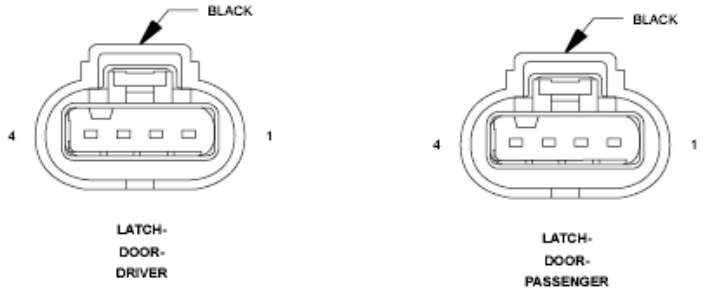

Fig. 66: Door Lock/Unlock Switch Wiring Diagram
Courtesy of CHRYSLER GROUP, LLC

For a complete wiring diagram, **refer to appropriate SYSTEM WIRING DIAGRAMS article** .

WHEN MONITORED:

Continuously

SET CONDITION:

The Totally Integrated Power Module (TIPM) detects that the Driver Door Unlock Driver circuit voltage is lower than the threshold value for more than five seconds.

POSSIBLE CAUSES

Possible Causes
(P1) DRIVER DOOR UNLOCK DRIVER CIRCUIT SHORTED TO GROUND
DRIVER DOOR LATCH
TOTALLY INTEGRATED POWER MODULE (TIPM)

DIAGNOSTIC TEST

1. **TEST FOR INTERMITTENT CONDITION**
    1. With the scan tool, record and erase DTC's.
    2. Operate the Driver Door Lock Switch in all positions several times.
    3. Cycle the ignition from on to off.
    4. Turn the ignition on.
    5. With the scan tool, read DTC's.

    Does the scan tool display B1801-DRIVER DOOR LOCK/UNLOCK SWITCH CIRCUIT LOW?

    Yes

    - Go To 2.

    No

    - Test complete, the condition or conditions that originally set this DTC are not present at this time. Using the wiring diagrams as a guide, check all related splices and connectors for signs of water intrusion, corrosion, pushed out or bent terminals, and correct pin tension.
    - Perform the BODY VERIFICATION TEST. Refer to **BODY VERIFICATION TEST**.
2. **CHECK THE DRIVER DOOR LATCH FOR AN INTERNAL SHORT**
    1. With the scan tool, erase DTC's.
    2. Turn the ignition off.
    3. Disconnect the Driver Door Latch harness connector.
    4. Turn the ignition on.
    5. With the scan tool, read DTC's.

Does the scan tool display B1801-DRIVER DOOR LOCK/UNLOCK SWITCH CIRCUIT LOW as active?

Yes

- Go To 3.

No

- Replace the Driver Door Latch in accordance with the Service Information. Refer to **LATCH, DOOR, REMOVAL** .
- Perform the BODY VERIFICATION TEST. Refer to **BODY VERIFICATION TEST**.

3. **CHECK THE (P1) DRIVER DOOR UNLOCK DRIVER CIRCUIT FOR A SHORT TO GROUND**

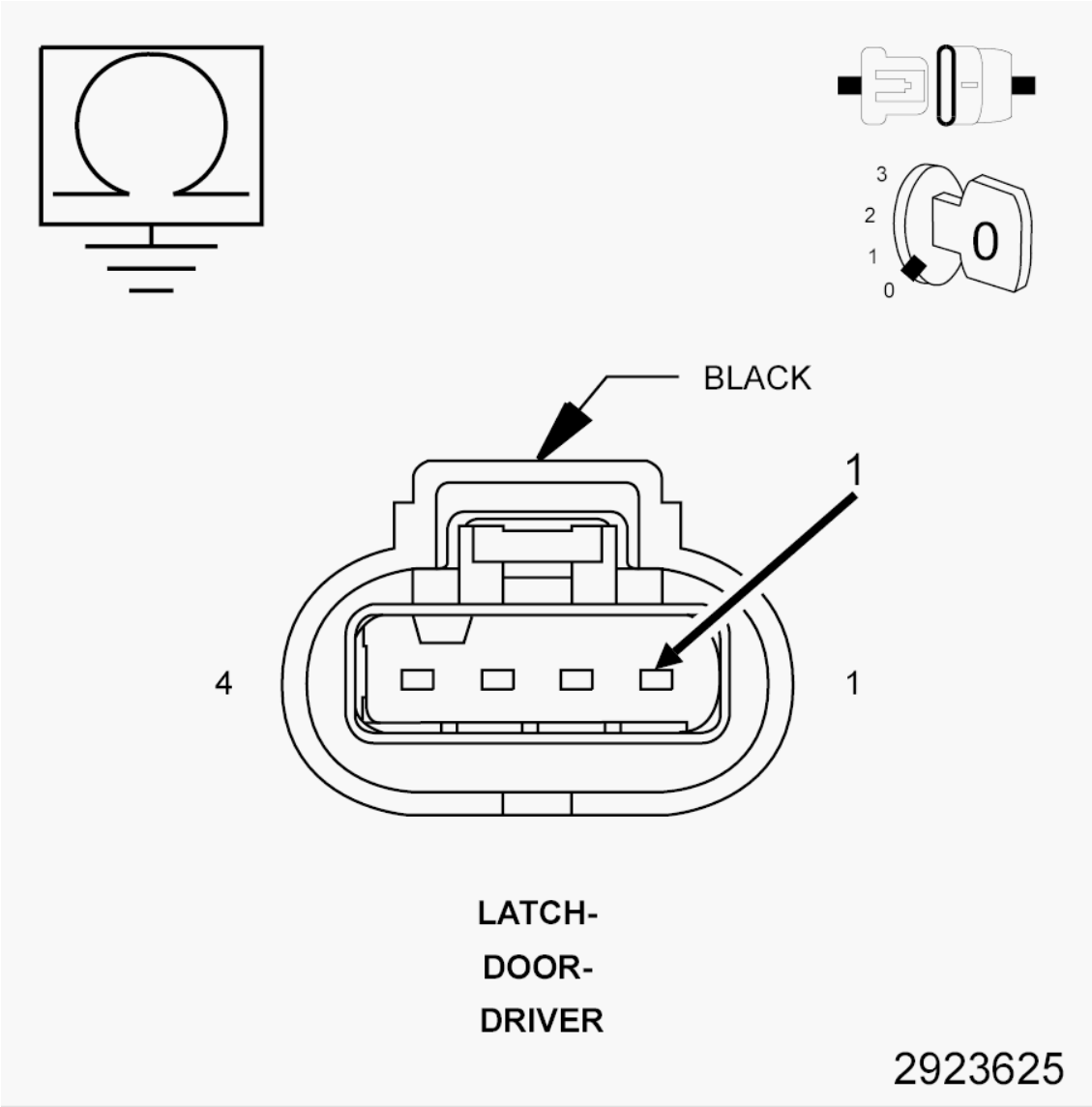

Fig. 67: Checking Driver Door Unlock Driver Circuit For A Short To Ground

Courtesy of CHRYSLER GROUP, LLC

1. Turn the ignition off.
2. Disconnect the TIPM C6 harness connector.
3. Measure the resistance between ground and the (P1) Driver Door Unlock Driver circuit.

   Is the resistance above 10k Ohms?

   Yes

   - Replace the Totally Integrated Power Module (TIPM) in accordance with the Service Information. Refer to **MODULE, TOTALLY INTEGRATED POWER (TIPM), REMOVAL** .
   - Perform the BODY VERIFICATION TEST. Refer to **BODY VERIFICATION TEST**.

   No

   - Repair the short to ground in the (P1) Driver Door Unlock Driver circuit.
   - Perform the BODY VERIFICATION TEST. Refer to **BODY VERIFICATION TEST**.

B1806-PASSENGER DOOR LOCK/UNLOCK SWITCH CIRCUIT LOW

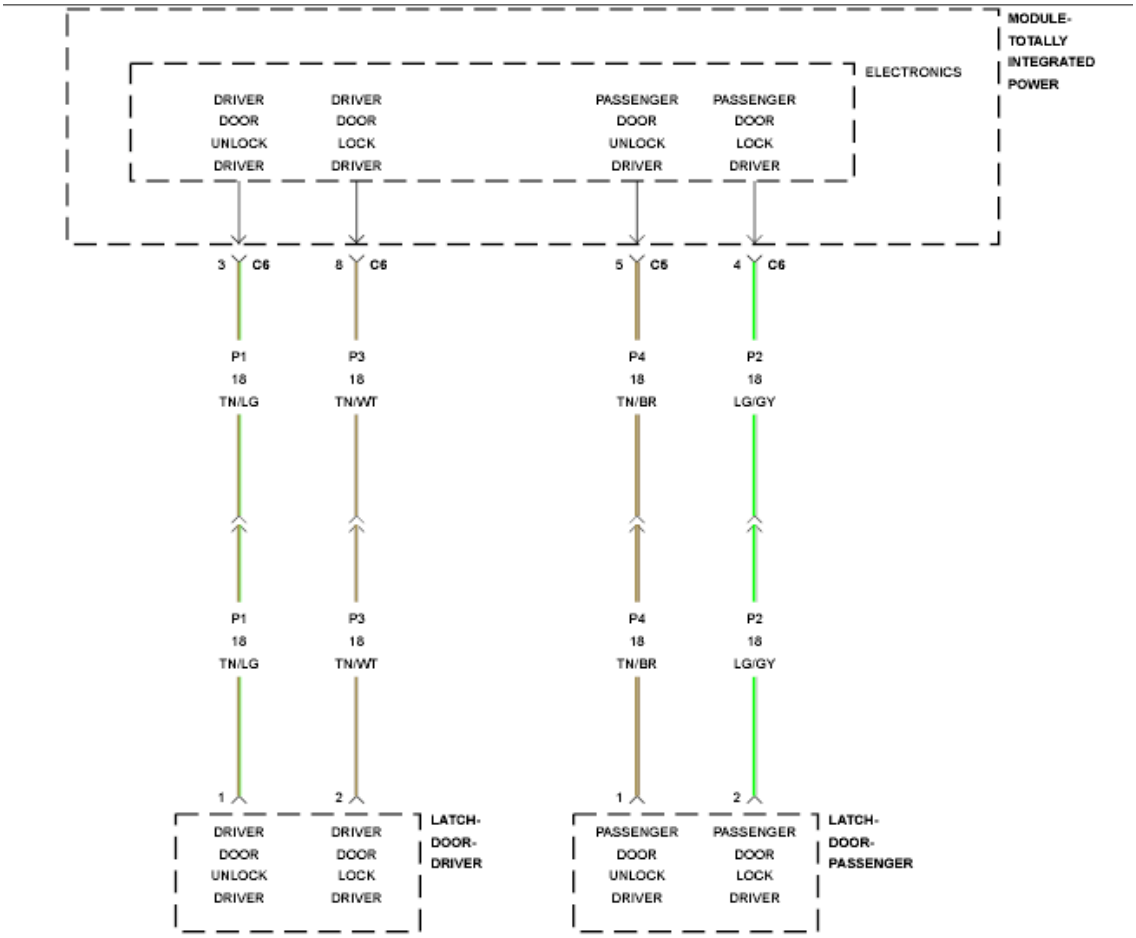

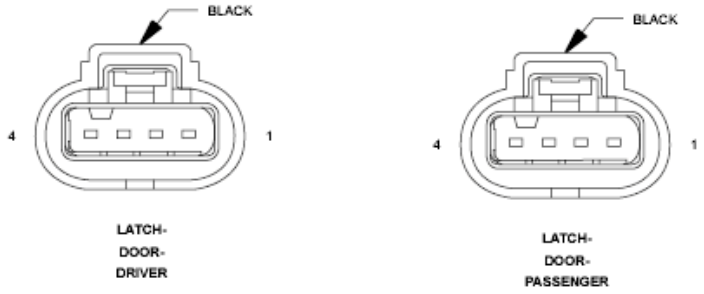

Fig. 68: Door Lock/Unlock Switch Wiring Diagram
Courtesy of CHRYSLER GROUP, LLC

For a complete wiring diagram, **refer to appropriate SYSTEM WIRING DIAGRAMS article** .

WHEN MONITORED:

Continuously

SET CONDITION:

The Totally Integrated Power Module (TIPM) detects that the Passenger Door Unlock Driver circuit voltage is lower than the threshold value for more than five seconds.

POSSIBLE CAUSES

Possible Causes
(P4) PASSENGER DOOR UNLOCK DRIVER CIRCUIT SHORTED TO GROUND
PASSENGER DOOR LATCH
TOTALLY INTEGRATED POWER MODULE (TIPM)

DIAGNOSTIC TEST

1. **TEST FOR INTERMITTENT CONDITION**
    1. With the scan tool, record and erase DTC's.
    2. Operate the Passenger Door Lock Switch in all positions several times.
    3. Cycle the ignition from on to off.
    4. Turn the ignition on.
    5. With the scan tool, read DTC's.

    Does the scan tool display B1806-PASSENGER DOOR LOCK/UNLOCK SWITCH CIRCUIT LOW?

    Yes

    - Go To 2.

    No

    - Test complete, the condition or conditions that originally set this DTC are not present at this time. Using the wiring diagrams as a guide, check all related splices and connectors for signs of water intrusion, corrosion, pushed out or bent terminals, and correct pin tension.
    - Perform the BODY VERIFICATION TEST. Refer to **BODY VERIFICATION TEST**.
2. **CHECK THE PASSENGER DOOR LATCH FOR A SHORT**
    1. With the scan tool, erase DTC's.
    2. Turn the ignition off.
    3. Disconnect the Passenger Door Latch harness connector.
    4. Turn the ignition on.
    5. With the scan tool, read DTC's.

Does the scan tool display B1806-PASSENGER DOOR LOCK/UNLOCK SWITCH CIRCUIT LOW as active?

Yes

- Go To 3.

No

- Replace the Passenger Door Latch in accordance with the Service Information. Refer to **LATCH, DOOR, REMOVAL** .
- Perform the BODY VERIFICATION TEST. Refer to **BODY VERIFICATION TEST**.

3. **CHECK THE (P4) PASSENGER DOOR UNLOCK DRIVER CIRCUIT FOR A SHORT TO GROUND**

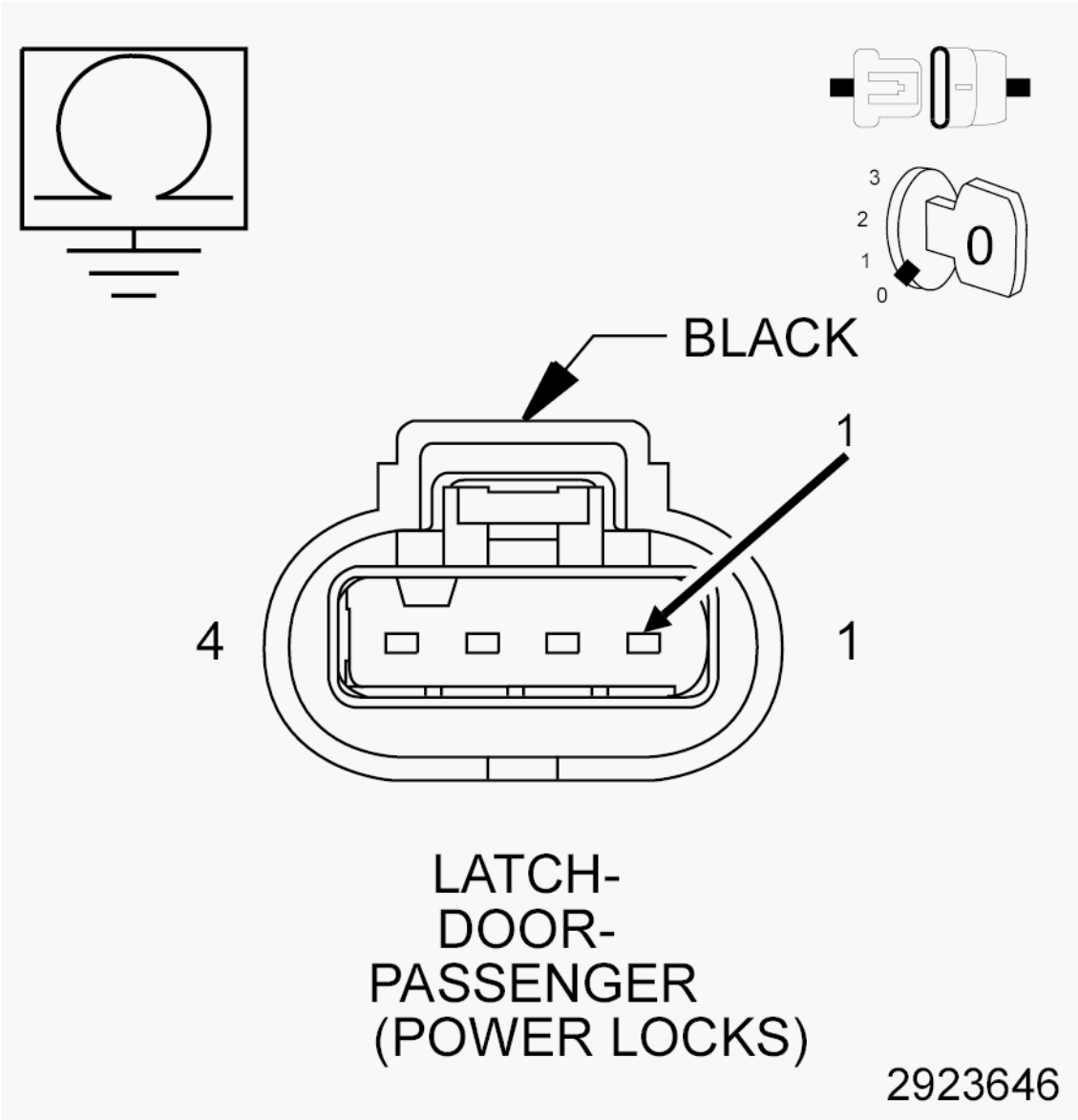

Fig. 69: Checking Passenger Door Unlock Driver Circuit For A Short To Ground
Courtesy of CHRYSLER GROUP, LLC

1. Turn the ignition off.
2. Disconnect the TIPM C5 harness connector.
3. Measure the resistance between ground and the (P4) Passenger Door Unlock Driver circuit.

   Is the resistance above 10k Ohms?

   Yes

   - Replace the Totally Integrated Power Module (TIPM) in accordance with the Service Information. Refer to **MODULE, TOTALLY INTEGRATED POWER (TIPM), REMOVAL** .

- Perform the BODY VERIFICATION TEST. Refer to **BODY VERIFICATION TEST**.

No

- Repair the short to ground in the (P4) Passenger Door Unlock Driver circuit.
- Perform the BODY VERIFICATION TEST. Refer to **BODY VERIFICATION TEST**.

B1820-HOOD AJAR INPUT CIRCUIT HIGH

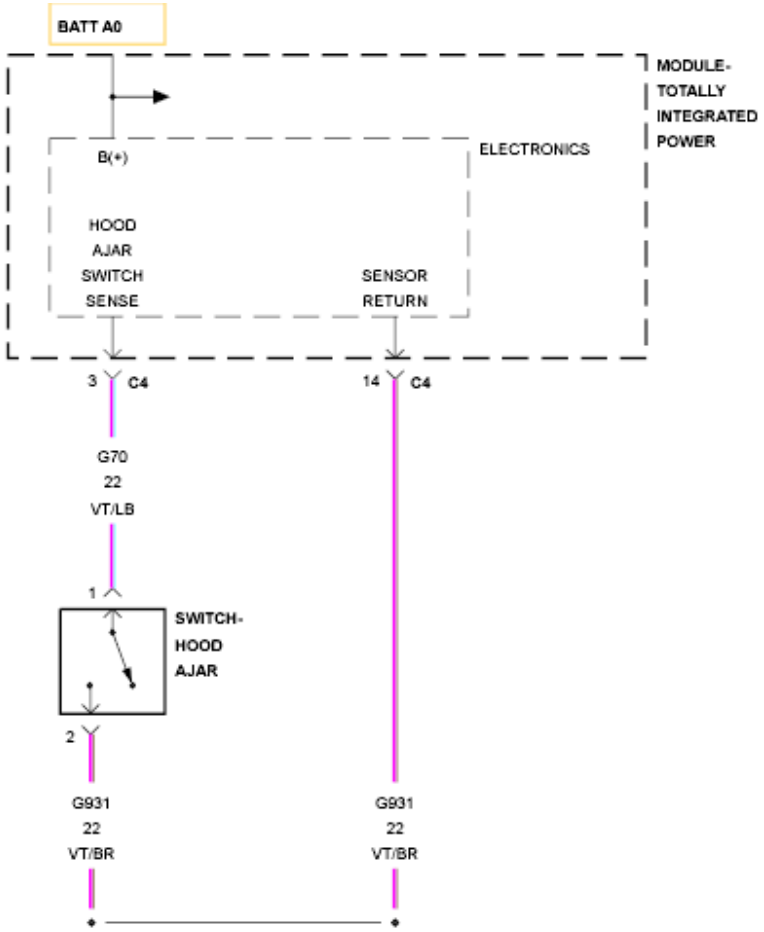

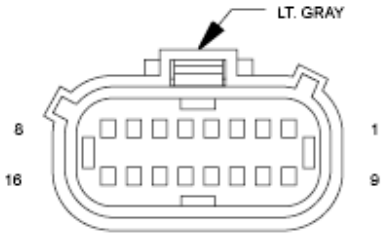

MODULE-
TOTALLY
INTEGRATED
POWER C4

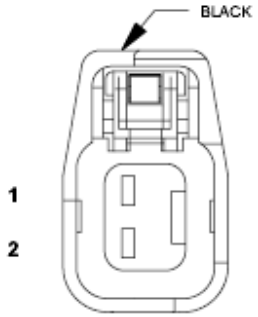

SWITCH-
HOOD
AJAR

Fig. 70: Hood Ajar Switch Wiring Diagram
Courtesy of CHRYSLER GROUP, LLC

For a complete wiring diagram, **refer to appropriate SYSTEM WIRING DIAGRAMS article** .

WHEN MONITORED:

Continuously

SET CONDITION:

When the Totally Integrated Power Module (TIPM) detects and open or short to voltage on the Hood Ajar Switch Sense circuit for over 10 seconds, this code will set.

POSSIBLE CAUSES

Possible Causes
(G70) HOOD AJAR SWITCH SENSE CIRCUIT OPEN
(G931) SENSOR RETURN CIRCUIT OPEN
(G70) HOOD AJAR SWITCH SENSE CIRCUIT SHORTED TO VOLTAGE
HOOD AJAR SWITCH OPEN
TOTALLY INTEGRATED POWER MODULE (TIPM)

DIAGNOSTIC TEST

1. **TEST FOR INTERMITTENT CONDITION**

   NOTE: Open the hood and make sure the Hood Ajar Switch is connected before proceeding.

   1. With the scan tool, record and erase DTC's.
   2. Close the hood.
   3. Cycle the ignition from on to off.
   4. Turn the ignition on.
   5. Open then close the hood.
   6. With the scan tool, read DTC's.

   Does the scan tool display B1820-HOOD AJAR INPUT CIRCUIT HIGH?

   Yes

   - Go To 2.

   No

- Test complete, the condition or conditions that originally set this DTC are not present at this time. Using the wiring diagrams as a guide, check all related splices and connectors for signs of water intrusion, corrosion, pushed out or bent terminals, and correct pin tension.
- Perform the BODY VERIFICATION TEST. Refer to **BODY VERIFICATION TEST**.

2. **CHECK THE HOOD AJAR SWITCH**
   1. Turn the ignition off.
   2. Open the hood.
   3. Disconnect the Hood Ajar Switch harness connector.
   4. For vehicles with a plunger type Hood Ajar Switch, depress the switch plunger. For vehicles with the Hood Ajar Switch integral to the Hood Latch, manually rotate the Hood Latch into the closed position.
   5. Measure the resistance between the (G70) Hood Ajar Switch Sense circuit and the (G931) Sensor Return circuit at the component.

      Is the resistance approximately 1k Ohms?

      Yes

      - Go To 3.

      No

      - For vehicles with a plunger-type Hood Ajar Switch, replace the Hood Ajar Switch in accordance with the Service Information. Refer to **SWITCH, HOOD AJAR, REMOVAL** . For vehicles with the Hood Ajar Switch integral to the Hood Latch, replace the Hood Latch in accordance with the Service Information. Refer to **LATCH, HOOD, REMOVAL** .
      - Perform the BODY VERIFICATION TEST. Refer to **BODY VERIFICATION TEST**.

3. **CHECK THE (G70) HOOD AJAR SWITCH SENSE CIRCUIT FOR A SHORT TO VOLTAGE IN THE HARNESS**

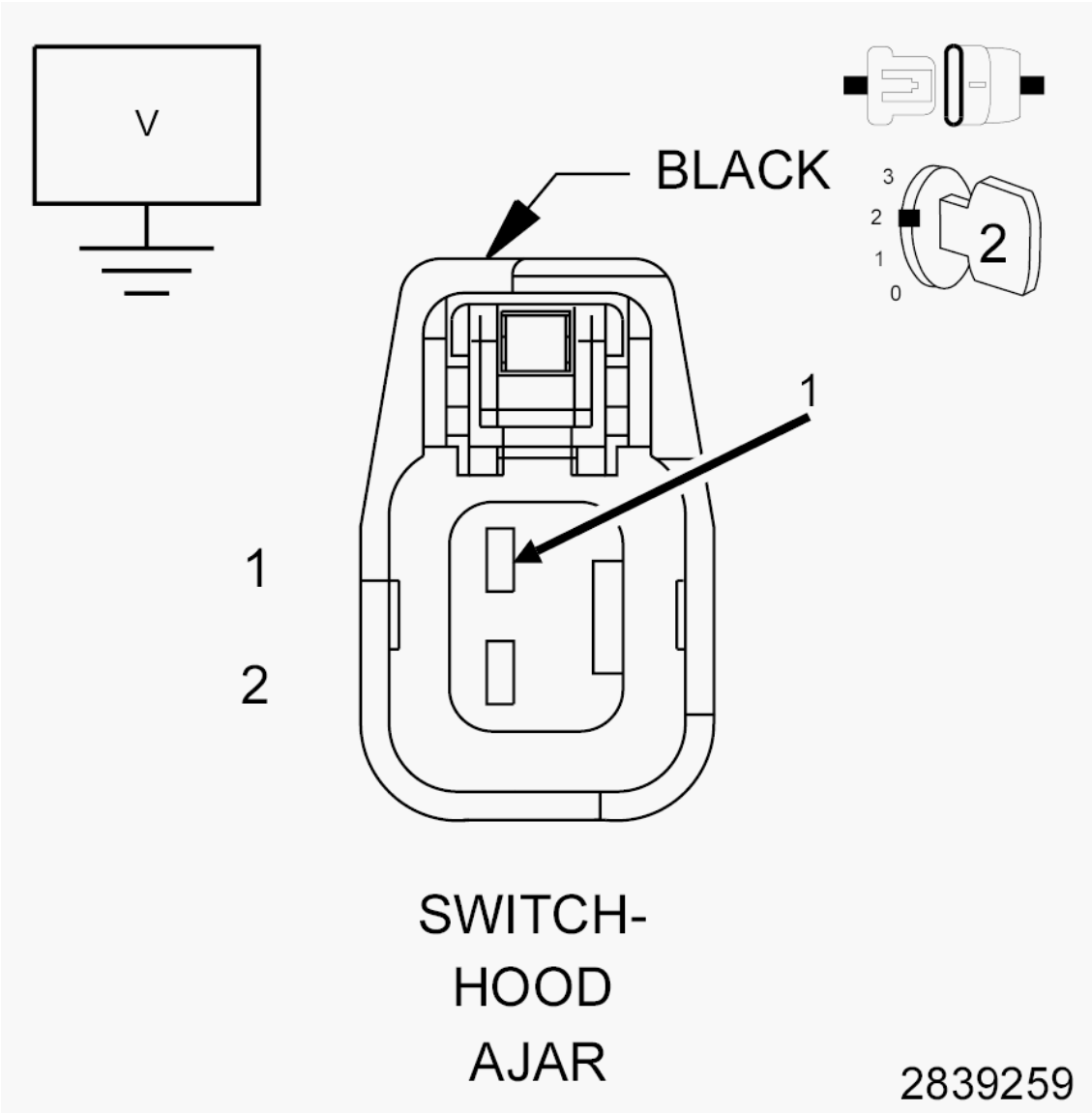

Fig. 71: Checking Hood Ajar Switch Sense Circuit For A Short To Voltage
Courtesy of CHRYSLER GROUP, LLC

1. Disconnect the TIPM C4 harness connector.
2. Turn the ignition on.
3. Measure the voltage between ground and the (G70) Hood Ajar Switch Sense circuit.

   Is there any voltage present?

   Yes

   - Repair the short to voltage in the (G70) Hood Ajar Switch Sense circuit.
   - Perform the BODY VERIFICATION TEST. Refer to **BODY VERIFICATION TEST**.

   No

- Go To 4.

4. **CHECK THE (G70) HOOD AJAR SWITCH SENSE CIRCUIT FOR AN OPEN IN THE HARNESS**

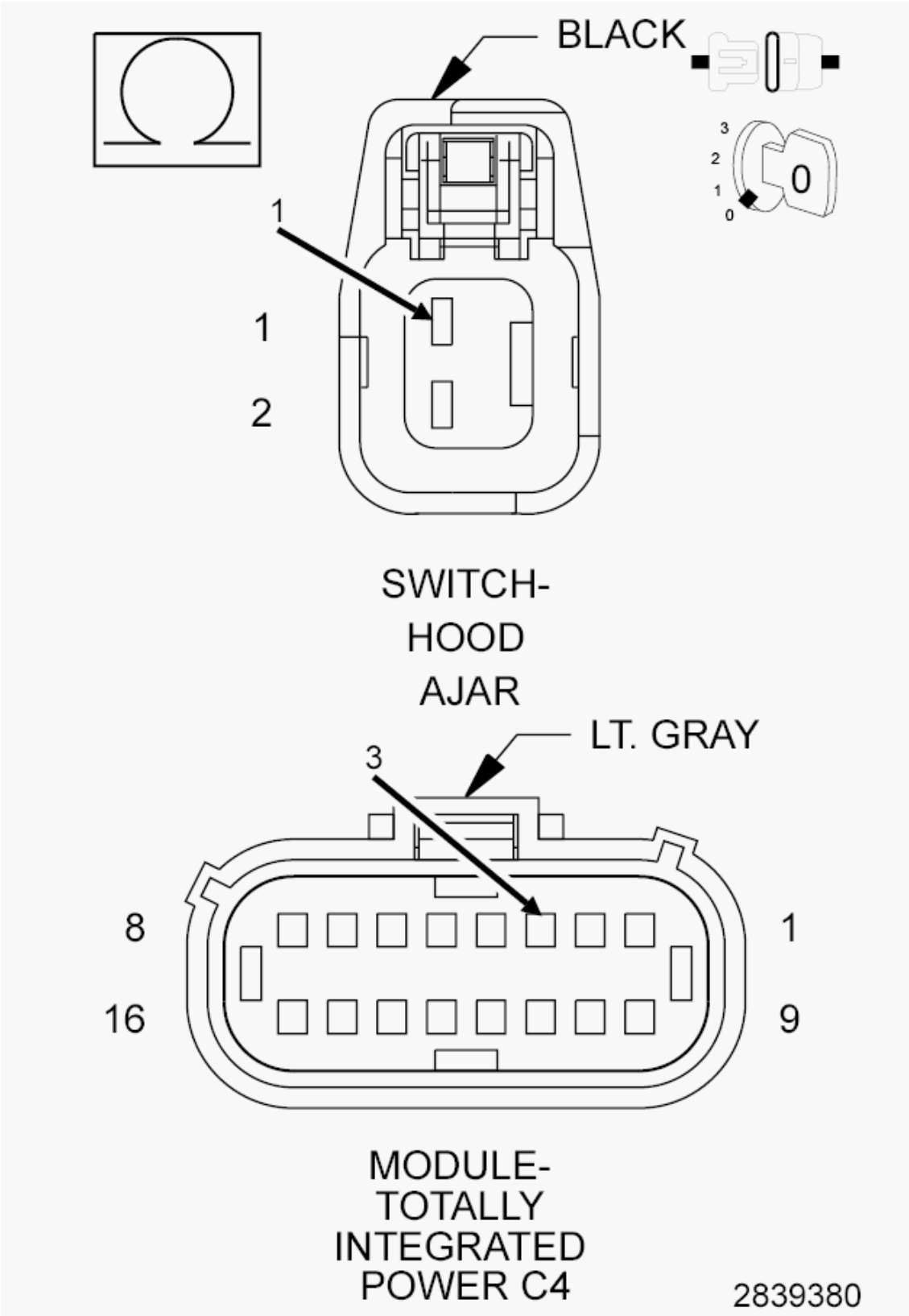

Fig. 72: Checking Hood Ajar Switch Sense Circuit For An Open
Courtesy of CHRYSLER GROUP, LLC

1. Turn the ignition off.
2. Measure the resistance of the (G70) Hood Ajar Switch Sense circuit between the TIPM C4 harness connector and the Hood Ajar Switch harness connector.

   Is the resistance below 5.0 Ohms?

   Yes

   - Go To 5.

   No

   - Repair the open in the (G70) Hood Ajar Switch Sense circuit.
   - Perform the BODY VERIFICATION TEST. Refer to **BODY VERIFICATION TEST**.

5. **CHECK THE (G931) SENSOR RETURN CIRCUIT FOR AN OPEN**

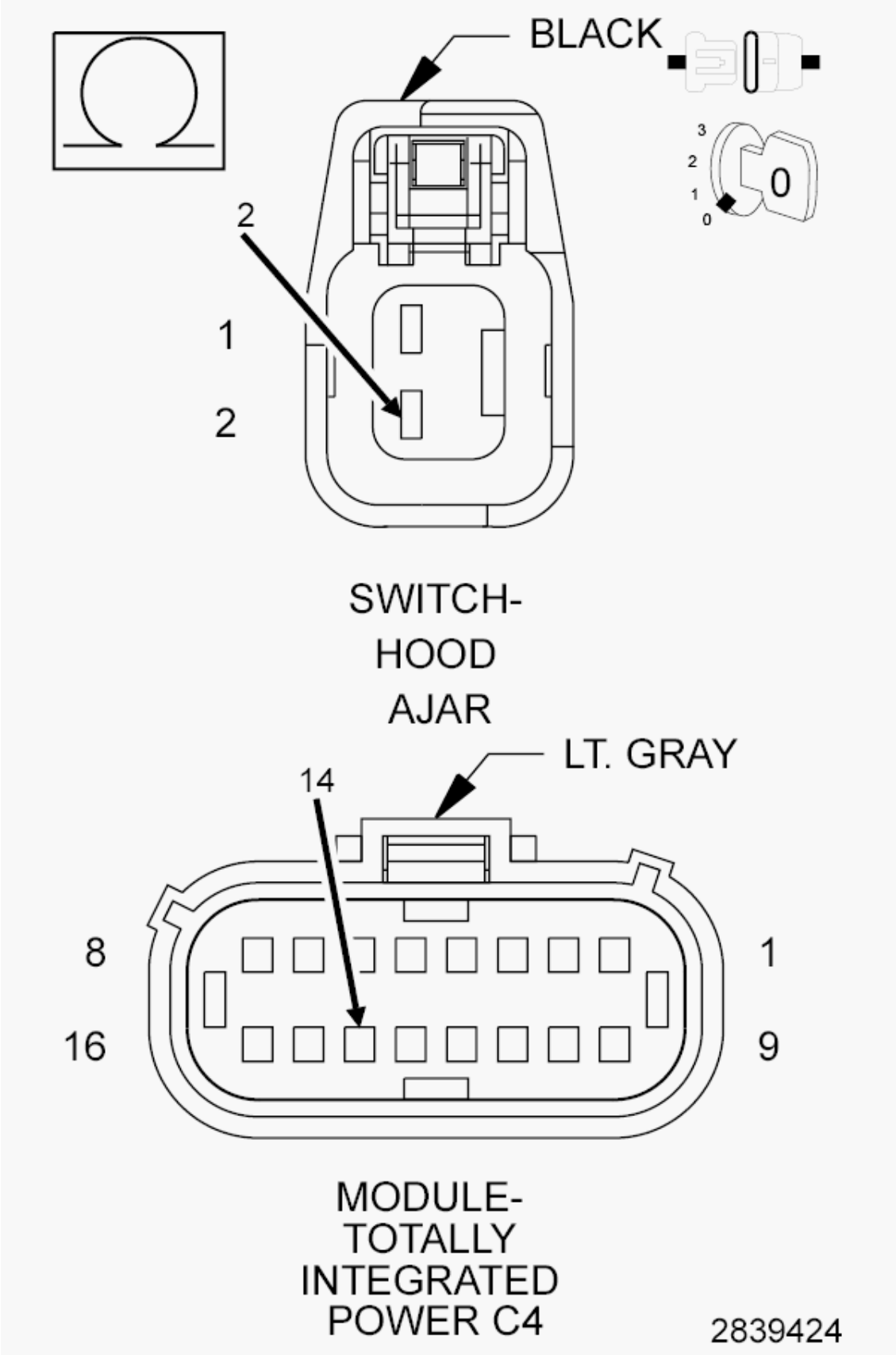
BLACK
3
2
1
0
0
2
1
2
SWITCH-
HOOD
AJAR
LT. GRAY
14
8
1
16
9
MODULE-
TOTALLY
INTEGRATED
POWER C4
2839424

Fig. 73: Checking Sensor Return Circuit For An Open
Courtesy of CHRYSLER GROUP, LLC

1. Measure the resistance of the (G931) Sensor Return circuit between the TIPM C4 harness connector and the Hood Ajar Switch harness connector.

   Is the resistance below 5.0 Ohms?

   Yes

   - Replace the Totally Integrated Power Module (TIPM) in accordance with the Service Information. Refer to **MODULE, TOTALLY INTEGRATED POWER (TIPM), REMOVAL** .
   - Perform the BODY VERIFICATION TEST. Refer to **BODY VERIFICATION TEST**.

   No

   - Repair the open in the (G931) Sensor Return circuit.
   - Perform the BODY VERIFICATION TEST. Refer to **BODY VERIFICATION TEST**.

B1934-DRIVER DOOR LOCK/UNLOCK SWITCH CIRCUIT STUCK

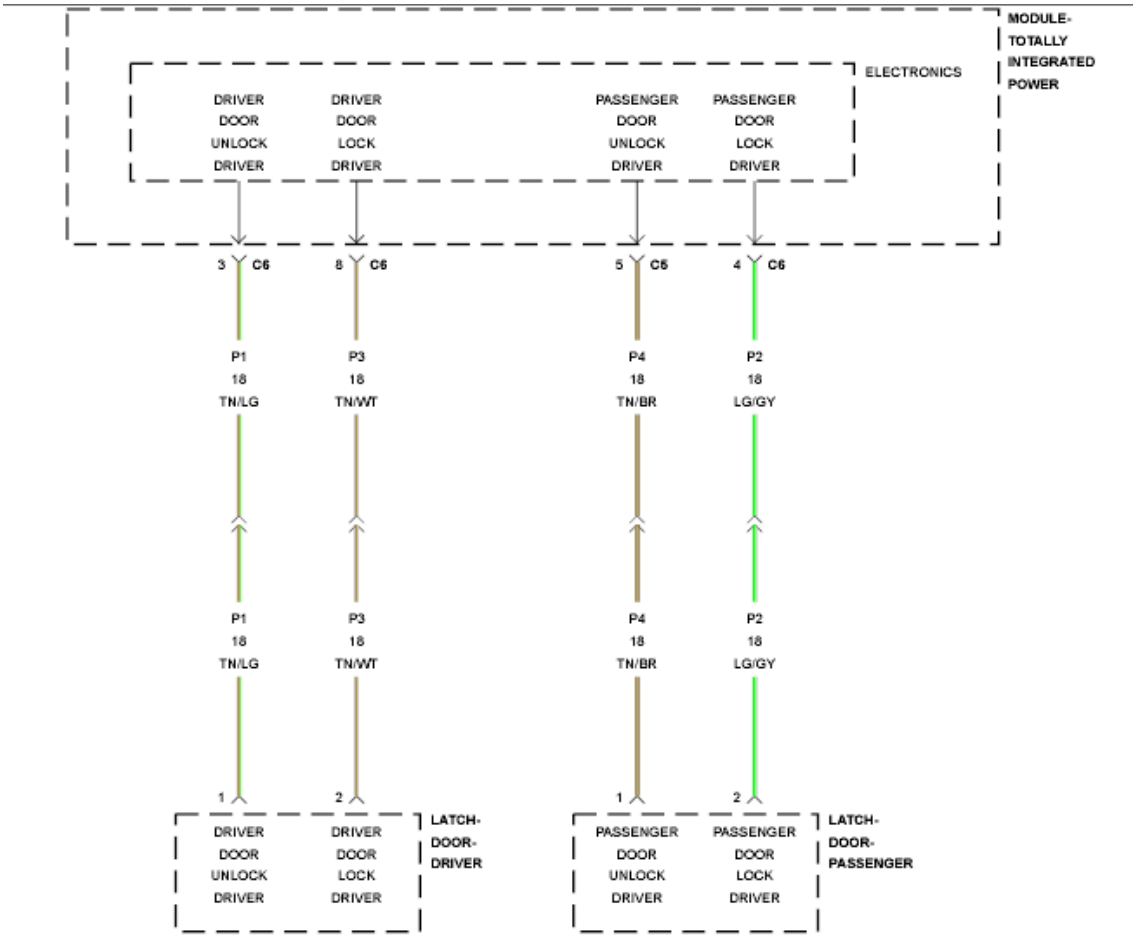

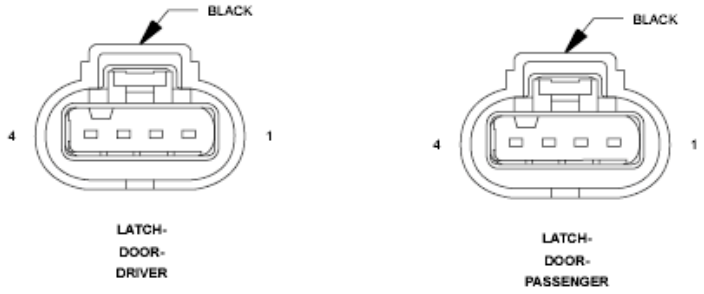

Fig. 74: Door Lock/Unlock Switch Wiring Diagram
Courtesy of CHRYSLER GROUP, LLC

For a complete wiring diagram, **refer to appropriate SYSTEM WIRING DIAGRAMS article** .

WHEN MONITORED:

Continuously

SET CONDITION:

The Totally Integrated Power Module (TIPM) detects that the Driver Door Unlock Driver circuit voltage does not change for more than 10 seconds.

POSSIBLE CAUSES

Possible Causes
(P1) DRIVER DOOR UNLOCK DRIVER CIRCUIT OPEN
(P1) DRIVER DOOR UNLOCK DRIVER CIRCUIT SHORTED VOLTAGE
DRIVER DOOR LATCH
TOTALLY INTEGRATED POWER MODULE (TIPM)

DIAGNOSTIC TEST

1. **TEST FOR INTERMITTENT CONDITION**

   NOTE: Make sure the Driver Door Lock Switch is not stuck in one position. Clean or repair as necessary.

   1. With the scan tool, record and erase DTC's.
   2. Operate the Driver Door Lock Switch in all positions several times.
   3. Cycle the ignition from on to off.
   4. Turn the ignition on.
   5. With the scan tool, read DTC's.

      Does the scan tool display B1934-DRIVER DOOR LOCK/UNLOCK SWITCH CIRCUIT STUCK?

      Yes

      - Go To 2.

      No

      - Test complete, the condition or conditions that originally set this DTC are not present at this time. Using the wiring diagrams as a guide, check all related splices and connectors for signs of water intrusion, corrosion, pushed out or bent terminals, and correct pin tension.
      - Perform the BODY VERIFICATION TEST. Refer to **BODY VERIFICATION TEST**.

2. **CHECK THE DRIVER DOOR LATCH FOR AN INTERNAL SHORT**
   1. With the scan tool, erase DTC's.

2. Turn the ignition off.
3. Disconnect the Driver Door Latch harness connector.
4. Turn the ignition on.
5. Operate the Driver Door Lock Switch in all positions several times.
6. With the scan tool, read DTC's.

   Does the scan tool display B1934-DRIVER DOOR LOCK/UNLOCK SWITCH CIRCUIT STUCK?

   Yes

   - Go To 3.

   No

   - Replace the Driver Door Latch in accordance with the Service Information. Refer to **LATCH, DOOR, REMOVAL** .
   - Perform the BODY VERIFICATION TEST. Refer to **BODY VERIFICATION TEST**.

3. **CHECK THE (P1) DRIVER DOOR UNLOCK DRIVER CIRCUIT FOR A SHORT TO VOLTAGE**

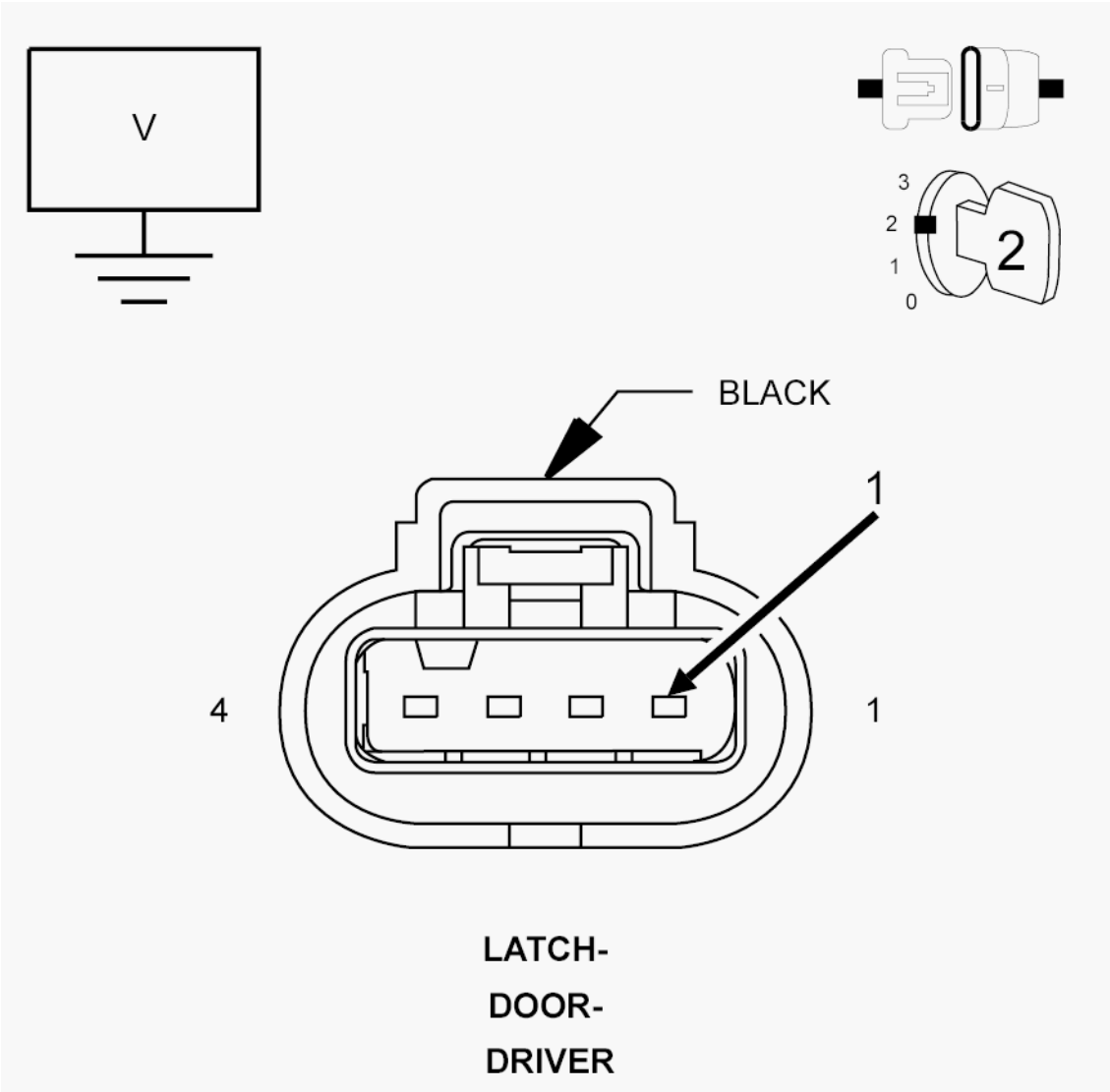

Fig. 75: Checking Driver Door Unlock Driver Circuit For A Short To Voltage
Courtesy of CHRYSLER GROUP, LLC

1. Turn the ignition off.
2. Disconnect the TIPM C6 harness connector.
3. Turn the ignition on.
4. Measure the voltage between ground and the (P1) Driver Door Unlock Driver circuit in the Driver Door Latch harness connector.

   Is there any voltage present?

   Yes

   - Repair the short to voltage in the (P1) Driver Door Unlock Driver circuit.
   - Perform the BODY VERIFICATION TEST. Refer to **BODY VERIFICATION TEST**.

No

- Go To 4.

4. **CHECK THE (P1) DRIVER DOOR UNLOCK DRIVER CIRCUIT FOR AN OPEN**

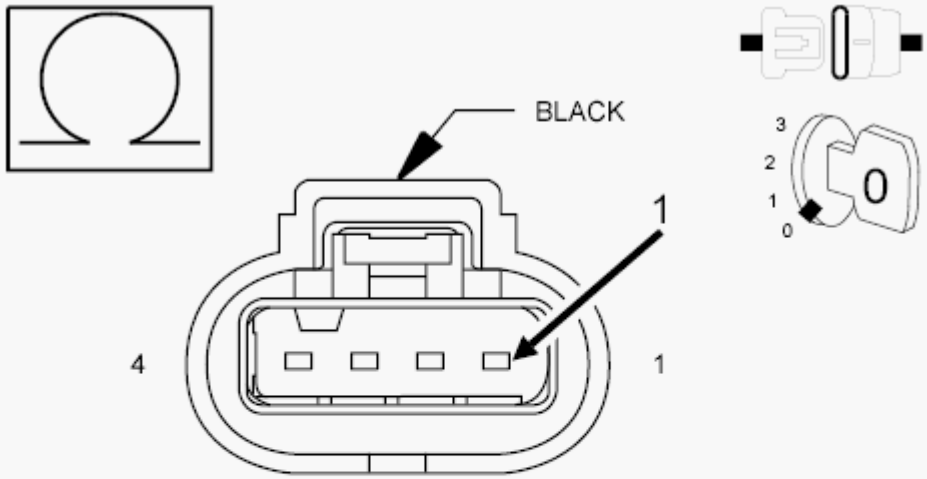

LATCH-
DOOR-
DRIVER

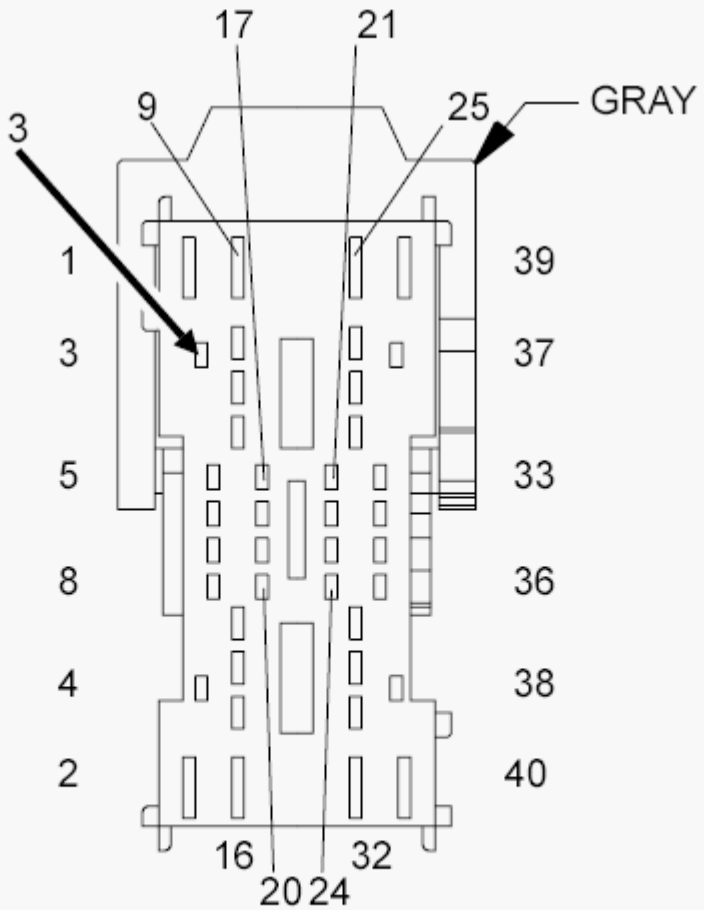

MODULE-
TOTALLY

Fig. 76: Checking Driver Door Unlock Driver Circuit For An Open
Courtesy of CHRYSLER GROUP, LLC

1. Turn the ignition off.
2. Measure the resistance of the (P1) Driver Door Unlock Driver circuit between the Driver Door Latch harness connector and the TIPM C6 harness connector.

   Is the resistance below 5.0 Ohms?

   Yes

   - Replace the Totally Integrated Power Module (TIPM) in accordance with the Service Information. Refer to **MODULE, TOTALLY INTEGRATED POWER (TIPM), REMOVAL** .
   - Perform the BODY VERIFICATION TEST. Refer to **BODY VERIFICATION TEST**.

   No

   - Repair the open in the (P1) Driver Door Unlock Driver circuit.
   - Perform the BODY VERIFICATION TEST. Refer to **BODY VERIFICATION TEST**.

B1935-PASSENGER DOOR LOCK/UNLOCK SWITCH CIRCUIT STUCK

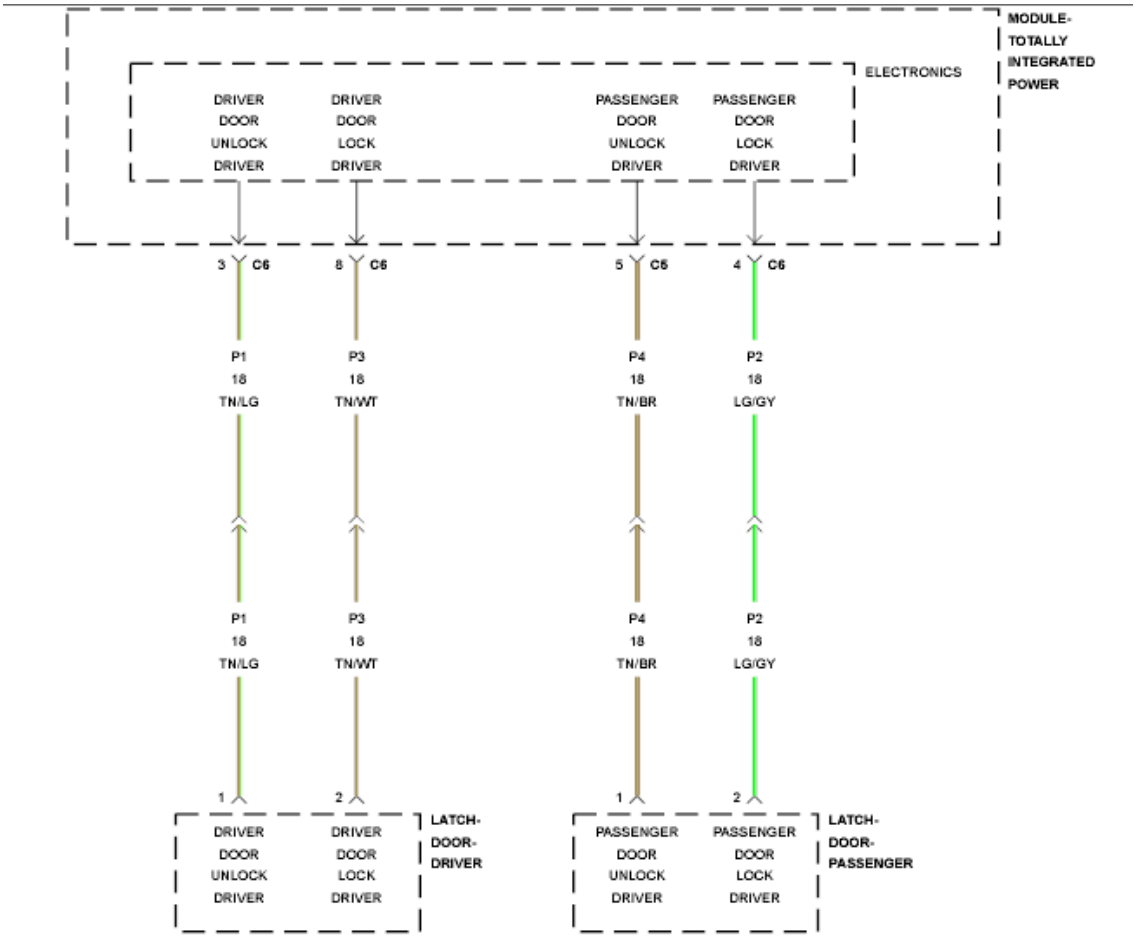

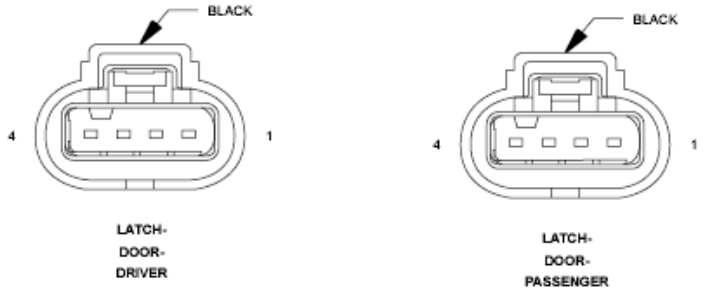

Fig. 77: Door Lock/Unlock Switch Wiring Diagram
Courtesy of CHRYSLER GROUP, LLC

For a complete wiring diagram, **refer to appropriate SYSTEM WIRING DIAGRAMS article** .

WHEN MONITORED:

Continuously

SET CONDITION:

The Totally Integrated Power Module (TIPM) detects that the Passenger Door Unlock Driver circuit voltage does not change for more than 10 seconds.

POSSIBLE CAUSES

Possible Causes
(P4) PASSENGER DOOR UNLOCK DRIVER CIRCUIT OPEN
(P4) PASSENGER DOOR UNLOCK DRIVER CIRCUIT SHORTED VOLTAGE
PASSENGER DOOR LATCH
TOTALLY INTEGRATED POWER MODULE (TIPM)

DIAGNOSTIC TEST

1. **TEST FOR INTERMITTENT CONDITION**

   NOTE: Make sure the Passenger Door Lock Switch is not stuck in one position. Clean or repair as necessary.

   1. With the scan tool, record and erase DTC's.
   2. Operate the Passenger Door Lock Switch in all positions several times.
   3. Cycle the ignition from on to off.
   4. Turn the ignition on.
   5. With the scan tool, read DTC's.

      Does the scan tool display B1935-PASSENGER DOOR LOCK/UNLOCK SWITCH CIRCUIT STUCK?

      Yes

      - Go To 2.

      No

      - Test complete, the condition or conditions that originally set this DTC are not present at this time. Using the wiring diagrams as a guide, check all related splices and connectors for signs of water intrusion, corrosion, pushed out or bent terminals, and correct pin tension.
      - Perform the BODY VERIFICATION TEST. Refer to **BODY VERIFICATION TEST**.

2. **CHECK THE PASSENGER DOOR LATCH FOR AN INTERNAL SHORT**
   1. With the scan tool, erase DTC's.

2. Turn the ignition off.
3. Disconnect the Passenger Door Latch harness connector.
4. Turn the ignition on.
5. Operate the Passenger Door Lock Switch in all positions several times.
6. With the scan tool, read DTC's.

   Does the scan tool display B1935-PASSENGER DOOR LOCK/UNLOCK SWITCH CIRCUIT STUCK?

   Yes

   - Go To 3.

   No

   - Replace the Passenger Door Latch in accordance with the Service Information. Refer to **LATCH, DOOR, REMOVAL** .
   - Perform the BODY VERIFICATION TEST. Refer to **BODY VERIFICATION TEST**.

3. **CHECK THE (P4) PASSENGER DOOR UNLOCK DRIVER CIRCUIT FOR A SHORT TO VOLTAGE**

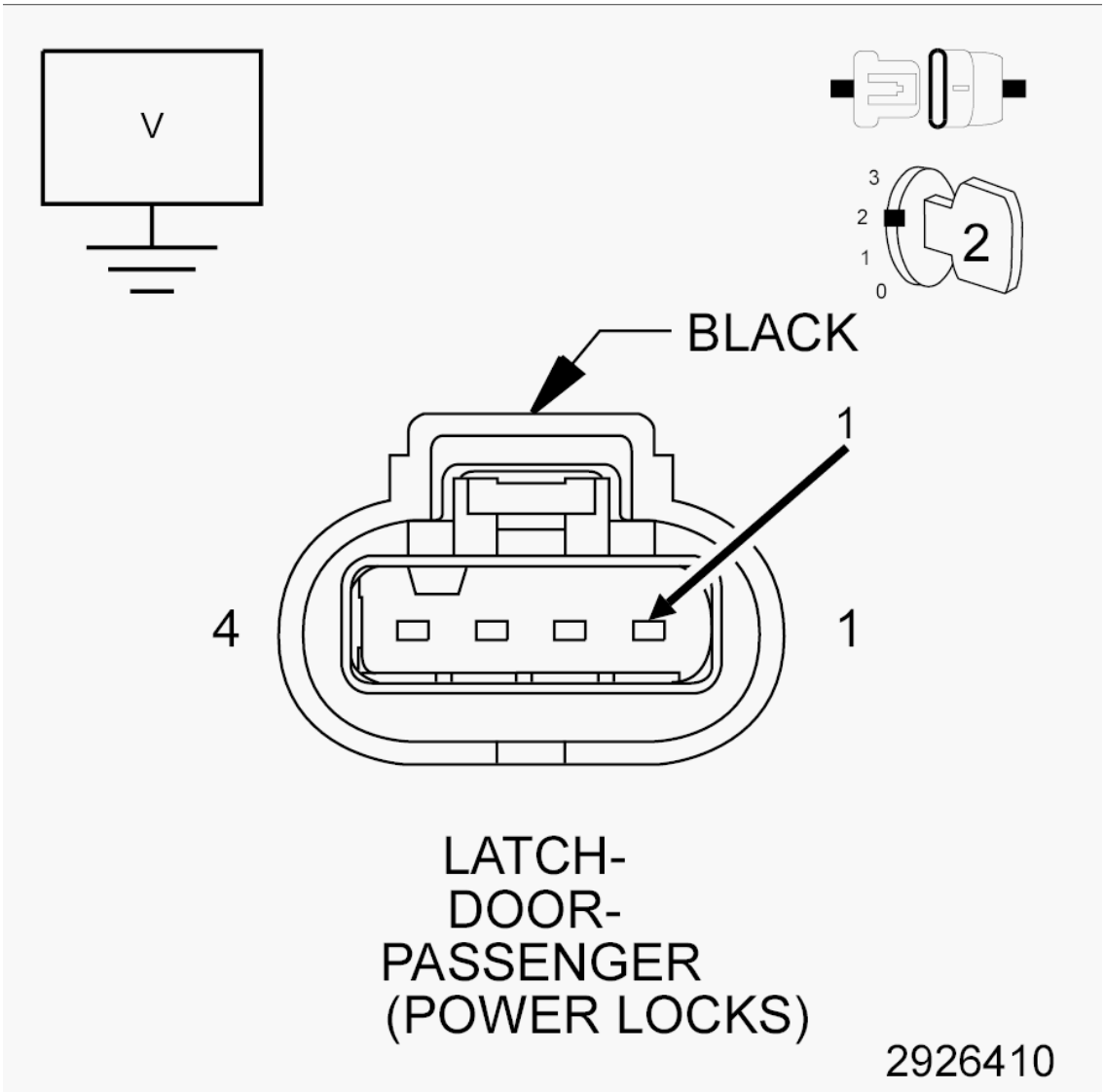

Fig. 78: Checking Passenger Door Unlock Driver Circuit For A Short To Voltage
Courtesy of CHRYSLER GROUP, LLC

1. Turn the ignition off.
2. Disconnect the TIPM C5 harness connector.
3. Turn the ignition on.
4. Measure the voltage between ground and the (P4) Passenger Door Unlock Driver circuit in the Passenger Door Latch harness connector.

   Is there any voltage present?

   Yes

   - Repair the short to voltage in the (P4) Passenger Door Unlock Driver circuit.
   - Perform the BODY VERIFICATION TEST. Refer to **BODY VERIFICATION TEST**.

No

- Go To 4.

4. **CHECK THE (P4) PASSENGER DOOR UNLOCK DRIVER CIRCUIT FOR AN OPEN**

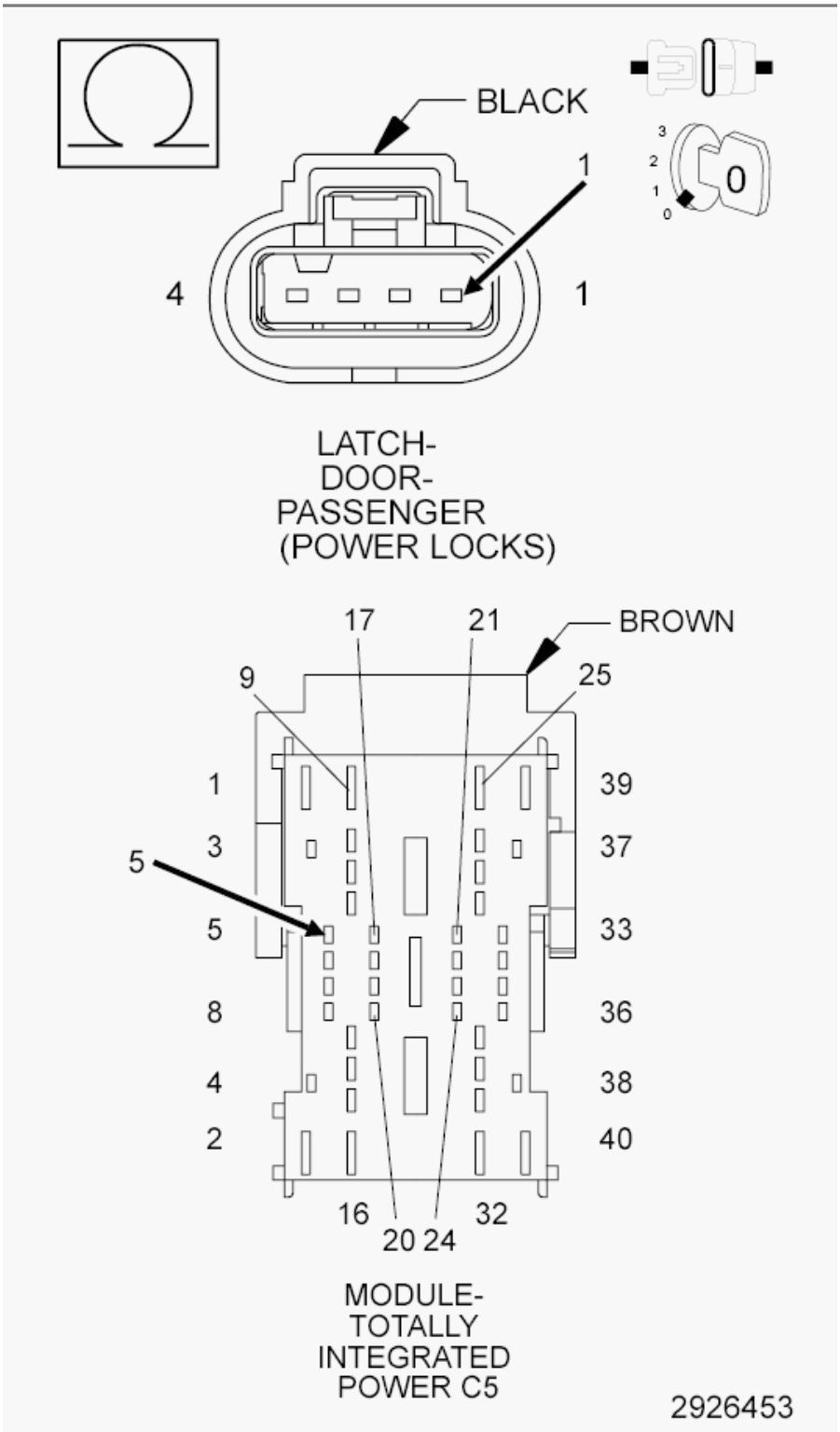

Fig. 79: Checking Passenger Door Unlock Driver Circuit For An Open
Courtesy of CHRYSLER GROUP, LLC

1. Turn the ignition off.
2. Measure the resistance of the (P4) Passenger Door Unlock Driver circuit between the Passenger Door Latch harness connector and the TIPM C5 harness connector.

   Is the resistance below 5.0 Ohms?

   Yes

   - Replace the Totally Integrated Power Module (TIPM) in accordance with the Service Information. Refer to **MODULE, TOTALLY INTEGRATED POWER (TIPM), REMOVAL** .
   - Perform the BODY VERIFICATION TEST. Refer to **BODY VERIFICATION TEST**.

   No

   - Repair the open in the (P4) Passenger Door Unlock Driver circuit.
   - Perform the BODY VERIFICATION TEST. Refer to **BODY VERIFICATION TEST**.

B1D4F-ADJUSTABLE PEDAL INHIBIT CIRCUIT LOW

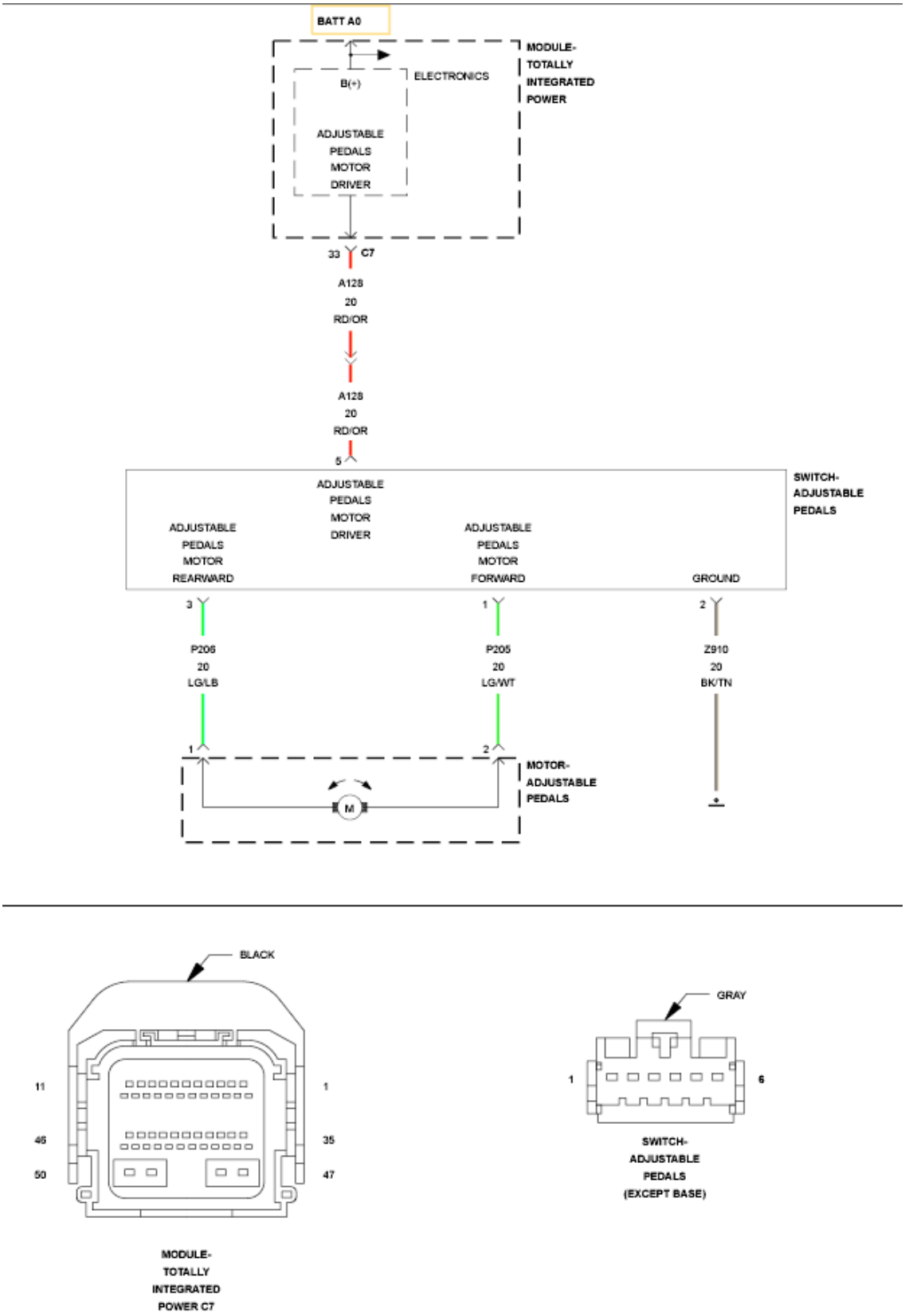

Fig. 80: Adjustable Pedal Wiring Diagram

Courtesy of CHRYSLER GROUP, LLC

For a complete wiring diagram, **refer to appropriate SYSTEM WIRING DIAGRAMS article** .

WHEN MONITORED:

With the ignition on.

Vehicle is not in reverse.

Cruise control is not active.

SET CONDITION:

If the Totally Integrated Power Module (TIPM) detects a low voltage condition on the (A128) Adjustable Pedals Motor Driver circuit.

POSSIBLE CAUSES

Possible Causes
(A128) ADJUSTABLE PEDALS MOTOR DRIVER CIRCUIT SHORTED TO GROUND
(A128) ADJUSTABLE PEDALS MOTOR DRIVER CIRCUIT SHORTED TO THE (P205) ADJUSTABLE PEDALS MOTOR FORWARD CIRCUIT
(A128) ADJUSTABLE PEDALS MOTOR DRIVER CIRCUIT SHORTED TO THE (Z910) GROUND CIRCUIT
(A128) ADJUSTABLE PEDALS MOTOR DRIVER CIRCUIT SHORTED TO THE (P206) ADJUSTABLE PEDALS MOTOR REARWARD CIRCUIT
ADJUSTABLE PEDALS SWITCH
ADJUSTABLE PEDALS MOTOR
TOTALLY INTEGRATED POWER MODULE (TIPM)

DIAGNOSTIC TEST

1. **TEST FOR INTERMITTENT CONDITION**

   NOTE: Look closely at the temperatures at which this Diagnostic Trouble Code (DTC) set. Low battery Voltage can also cause excessive current draw in very hot and very cold ambient temperatures. Make sure the battery can pass a load test before continuing.

   1. Turn the ignition on.
   2. Using a scan tool, record and erase Diagnostic Trouble Codes (DTC's).
   3. Cycle the ignition from on to off.
   4. Turn the ignition on.
   5. Operate the Adjustable Pedals switch in both positions.

6. With the scan tool, read the TIPM DTC's.

   Is the DTC Active at this time?

   Yes

   - Go To 2.

   No

   - The conditions that caused this code to set are not present at this time. Using the wiring diagram/schematic as a guide, inspect the wiring and connectors. While monitoring the scan tool data relative to this circuit, wiggle test the wiring and connectors. Look for the data to change or for the code to reset during the wiggle test.
   - Perform the BODY VERIFICATION TEST. Refer to **BODY VERIFICATION TEST**.

2. **CHECK FOR AN ACTIVE DTC WITH THE ADJUSTABLE PEDALS MOTOR DISCONNECTED**
   1. Turn the ignition off.
   2. Disconnect the Adjustable Pedals Motor harness connector.
   3. Turn the ignition on.
   4. Operate the Adjustable Pedals switch in both positions.
   5. With the scan tool, read the TIPM DTC's.

      Is the DTC Active at this time?

      Yes

      - Go To 3.

      No

      - Replace the Adjustable Pedals Motor in accordance with the Service Information. Refer to **MOTOR, ADJUSTABLE PEDALS, REMOVAL** .
      - Perform the BODY VERIFICATION TEST. Refer to **BODY VERIFICATION TEST**.

3. **CHECK FOR A SHORTED ADJUSTABLE PEDALS SWITCH**

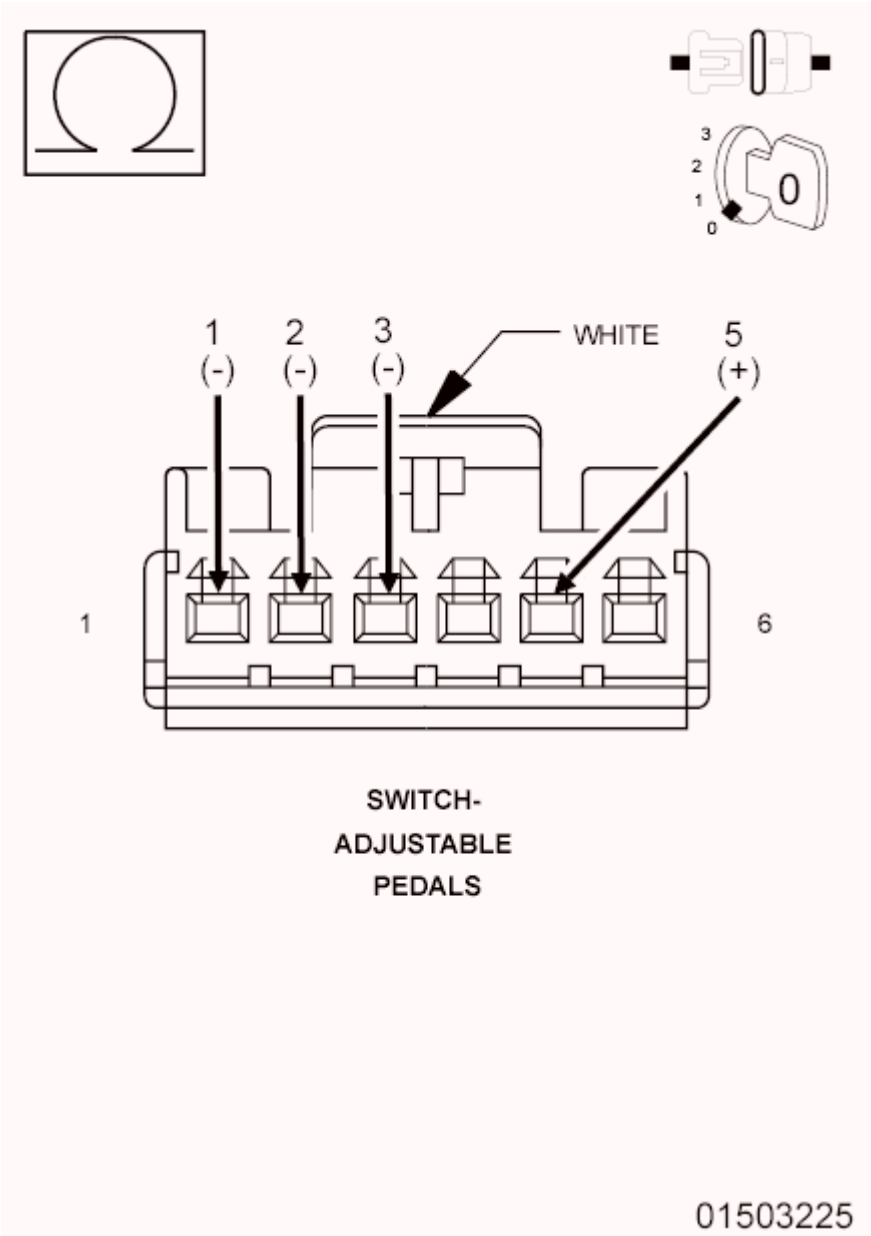

Fig. 81: Checking For A Shorted Adjustable Pedals Switch
Courtesy of CHRYSLER GROUP, LLC

1. Turn the ignition off.
2. Disconnect the Adjustable Pedals Switch harness connector.

NOTE: Check connectors. Clean and repair as necessary.

3. Remove the Adjustable Pedals Switch in accordance with the Service Information. Refer to **SWITCH, ADJUSTABLE PEDALS, REMOVAL** .

NOTE: Adjustable Pedals Switch harness connector shown in illustration.

Mirror image for Adjustable Pedals Switch component connector.

4. Measure the resistance between the (A128) Adjustable Pedals Motor Driver circuit and the (P205) Adjustable Pedals Motor Forward circuit at the Adjustable Pedals Switch component connector.
5. Measure the resistance between the (A128) Adjustable Pedals Motor Driver circuit and the (Z910) Ground circuit at the Adjustable Pedals Switch component connector.
6. Measure the resistance between the (A128) Adjustable Pedals Motor Driver circuit and the (P206) Adjustable Pedals Motor Rearward circuit at the Adjustable Pedals Switch component connector.

   Is the resistance below 10k Ohms for any measurement?

   Yes

   - Replace the Adjustable Pedals Switch in accordance with the Service Information. Refer to **SWITCH, ADJUSTABLE PEDALS, REMOVAL** .
   - Perform the BODY VERIFICATION TEST. Refer to **BODY VERIFICATION TEST**.

   No

   - Go To 4.

4. **CHECK (A128) ADJUSTABLE PEDALS MOTOR DRIVER CIRCUIT FOR A SHORT TO GROUND**

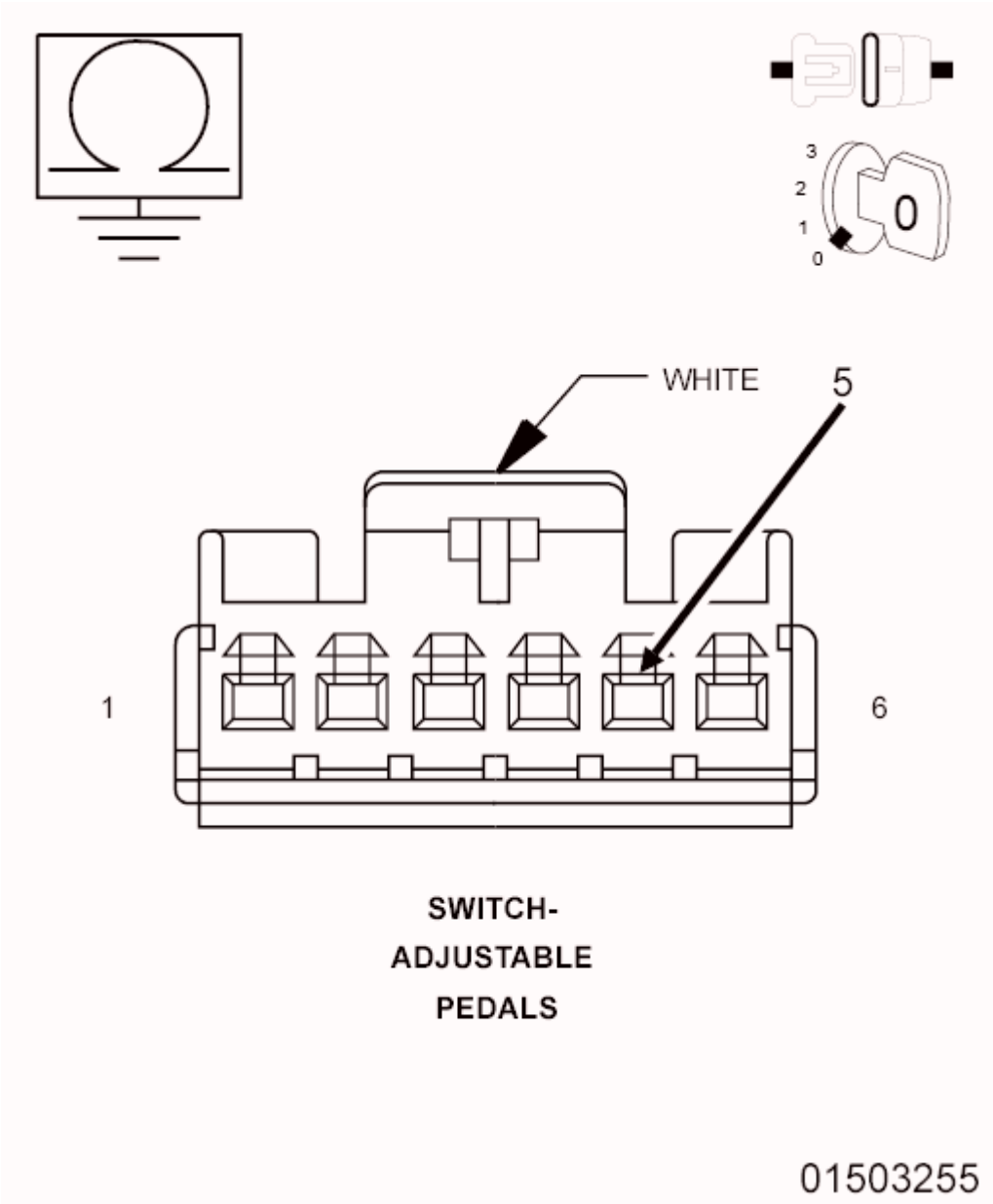

Fig. 82: Checking Adjustable Pedals Motor Driver Circuit For A Short To Ground
Courtesy of CHRYSLER GROUP, LLC

1. Disconnect the TIPM C7 connector.

   NOTE: Check connectors. Clean and repair as necessary.

2. Measure the resistance of the (A128) Adjustable Pedals Motor Driver circuit between ground and the Adjustable Pedal Switch harness connector.

   Is the resistance below 10k Ohms?

   Yes

- Repair the short to ground in the (A128) Adjustable Pedals Motor Driver circuit.
- Perform the BODY VERIFICATION TEST. Refer to **BODY VERIFICATION TEST**.

No

- Go To 5.

5. **CHECK (A128) ADJUSTABLE PEDALS MOTOR DRIVER CIRCUIT FOR A SHORT TO (P205) ADJUSTABLE PEDALS MOTOR FORWARD CIRCUIT, (Z910) GROUND CIRCUIT, OR TO (P206) ADJUSTABLE PEDALS MOTOR REARWARD CIRCUIT**

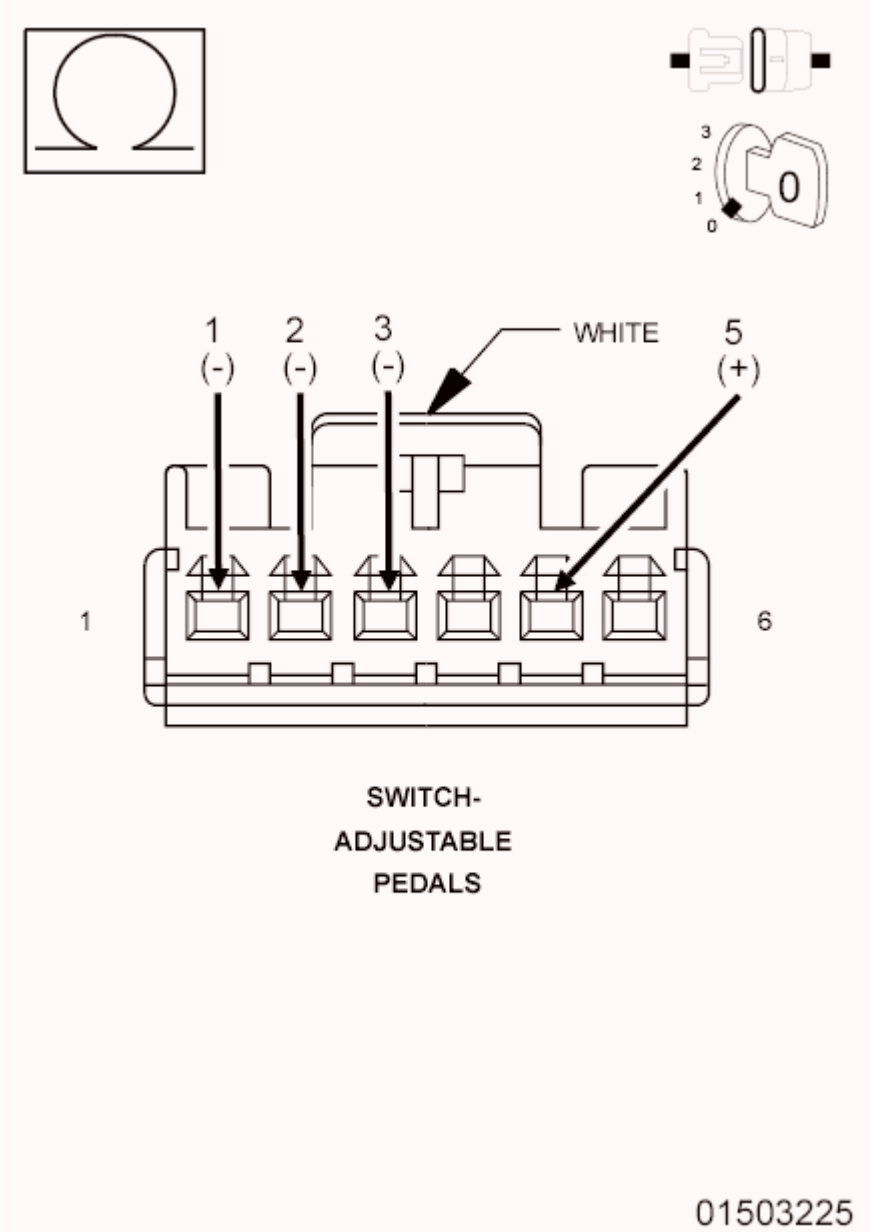

Fig. 83: Checking For A Shorted Adjustable Pedals Switch
Courtesy of CHRYSLER GROUP, LLC

1. Measure the resistance between the (A128) Adjustable Pedals Motor Driver circuit and the (P205) Adjustable Pedals Motor Forward circuit at the Adjustable Pedals Switch harness connector.
2. Measure the resistance between the (A128) Adjustable Pedals Motor Driver circuit and the (Z910) Ground circuit at the Adjustable Pedals Switch harness connector.
3. Measure the resistance between the (A128) Adjustable Pedals Motor Driver circuit and the (P206) Adjustable Pedals Motor Rearward circuit at the Adjustable Pedals Switch harness connector.

   Is the resistance below 10k Ohms for any measurement?

   Yes

   - Repair all circuits with a resistance below 10k Ohms for a short to the (A128) Adjustable Pedals Motor Driver circuit.
   - Perform the BODY VERIFICATION TEST. Refer to **BODY VERIFICATION TEST**.

   No

   - Replace the Totally Integrated Power Module (TIPM) in accordance with the Service Information. Refer to **MODULE, TOTALLY INTEGRATED POWER (TIPM), REMOVAL** .
   - Perform the BODY VERIFICATION TEST. Refer to **BODY VERIFICATION TEST**.

B2101-IGNITION RUN/START INPUT LOW

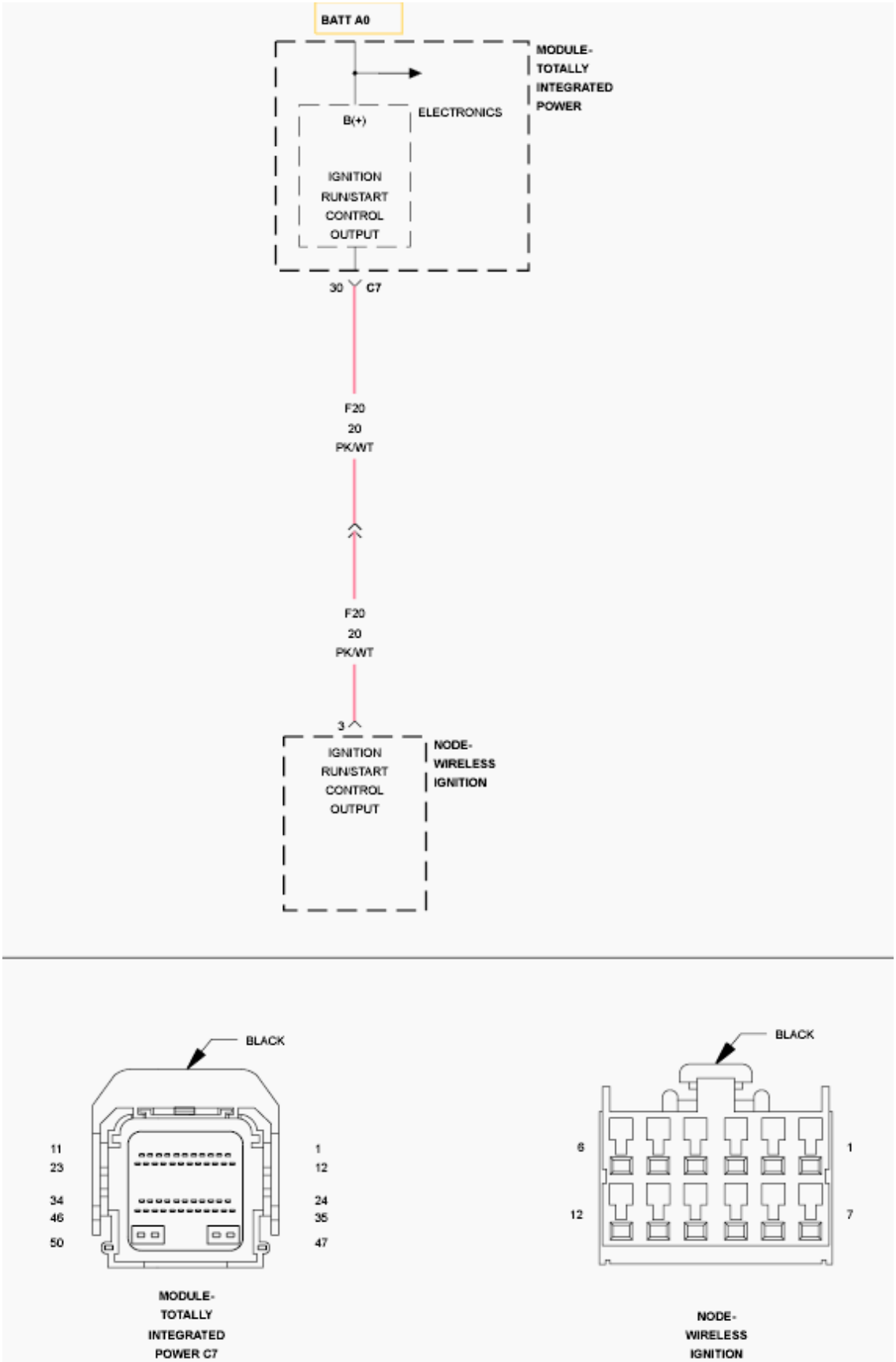
BATT A0
MODULE-
TOTALLY
INTEGRATED
POWER
ELECTRONICS
B(+)
IGNITION
RUN/START
CONTROL
OUTPUT
30
C7
F20
20
PK/WT
F20
20
PK/WT
3
IGNITION
RUN/START
CONTROL
OUTPUT
NODE-
WIRELESS
IGNITION
BLACK
11
23
34
46
50
1
12
24
35
47
MODULE-
TOTALLY
INTEGRATED
POWER C7
BLACK
6
12
1
7
NODE-
WIRELESS
IGNITION

Fig. 84: Ignition Run/Start Wiring Diagram
Courtesy of CHRYSLER GROUP, LLC

For a complete wiring diagram, **refer to appropriate SYSTEM WIRING DIAGRAMS article** .

THEORY OF OPERATION

The Totally Integrated Power Module (TIPM) monitors the hardwired ignition switch output circuit from the ignition switch or Wireless Ignition Node (WIN) and compares it to the ignition switch status message received over the Controller Area Network (CAN) bus.

WHEN MONITORED:

With the ignition switch on.

SET CONDITION:

The TIPM has detected that the hardwired ignition switch input voltage from the Wireless Ignition Node (WIN) indicates that the ignition switch is in the off position, but the CAN bus message indicates that the ignition switch is the run position.

POSSIBLE CAUSES

Possible Causes
(F20) IGNITION RUN/START CONTROL OUTPUT CIRCUIT SHORTED TO GROUND WIRELESS IGNITION NODE (WIN) TOTALLY INTEGRATED POWER MODULE (TIPM)

DIAGNOSTIC TEST

1. **CHECK FOR ACTIVE DTC**

NOTE: **Check to make sure the battery and charging system are operating properly. Battery and/or charging system problems may cause these DTC's to set.**

NOTE: **Diagnose any related Powertrain DTC(s) before continuing.**

1. Turn the ignition on.
2. With the scan tool, read TIPM DTC(s).

   Does the scan tool display this DTC as active?

   Yes

   - Go To 2.

No

- Test complete, the condition or conditions that originally set this DTC are not present at this time. Using the wiring diagrams as a guide, check all related splices and connectors for signs of water intrusion, corrosion, pushed out or bent terminals, and correct pin tension.
- Perform the BODY VERIFICATION TEST. Refer to **BODY VERIFICATION TEST**.

2. **CHECK THE (F20) IGNITION RUN/START CONTROL OUTPUT CIRCUIT AT THE TIPM**

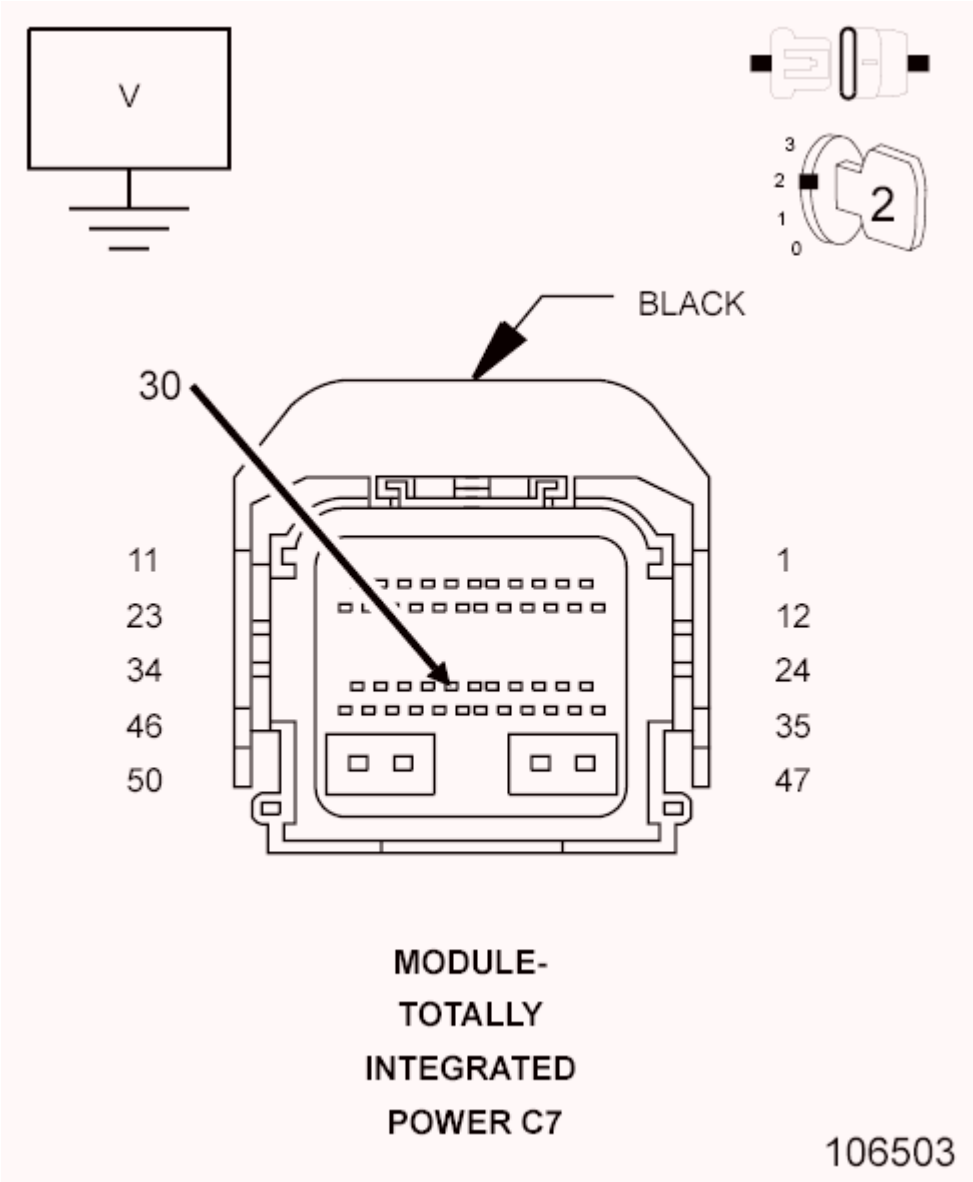

Fig. 85: Measure Voltage AT TIPM
Courtesy of CHRYSLER GROUP, LLC

1. Turn the ignition off.
2. Disconnect the TIPM C7 harness connector.

3. Turn the ignition on.
4. Measure the voltage between ground and the (F20) Ignition Run/Start Control Output circuit.

   Is the voltage above 10.0 volts?

   Yes

   - Replace the Totally Integrated Power Module (TIPM) in accordance with the Service Information. Refer to **MODULE, TOTALLY INTEGRATED POWER (TIPM), REMOVAL** .
   - Perform the BODY VERIFICATION TEST. Refer to **BODY VERIFICATION TEST**.

   No

   - Go To 3.

3. **CHECK THE (F20) IGNITION RUN/START CONTROL OUTPUT CIRCUIT FOR A SHORT TO GROUND**

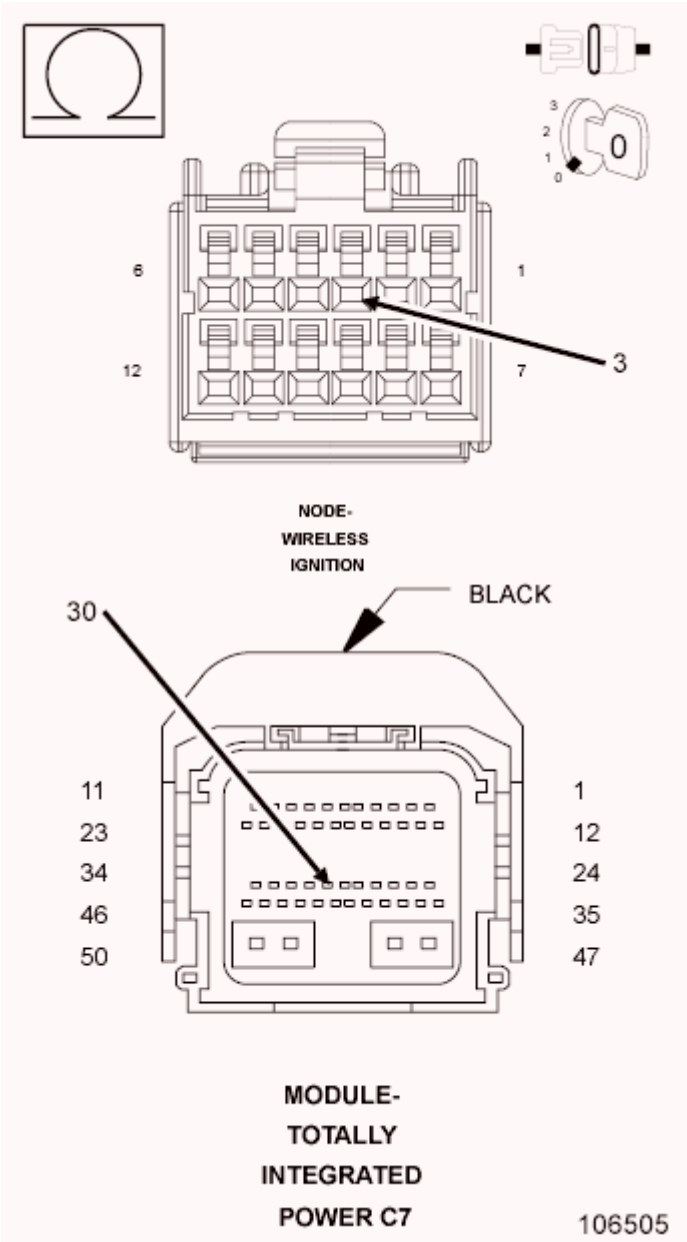

Fig. 86: Checking Ignition Run/Start Control Output Circuit For A Short To Ground
Courtesy of CHRYSLER GROUP, LLC

1. Turn the ignition off.
2. Disconnect the WIN harness connector.
3. Measure the resistance between ground and the (F20) Ignition Run/Start Control Output circuit.

   Is the resistance above 10k Ohms?

   Yes

   - Replace the WIN in accordance with the Service Information. Refer to **RECEIVER,**

WIRELESS IGNITION NODE, REMOVAL .

- Perform the BODY VERIFICATION TEST. Refer to **BODY VERIFICATION TEST**.

No

- Repair the short to ground in the (F20) Ignition Run/Start Control Output circuit.
- Perform the BODY VERIFICATION TEST. Refer to **BODY VERIFICATION TEST**.

B2102-IGNITION RUN/START INPUT HIGH

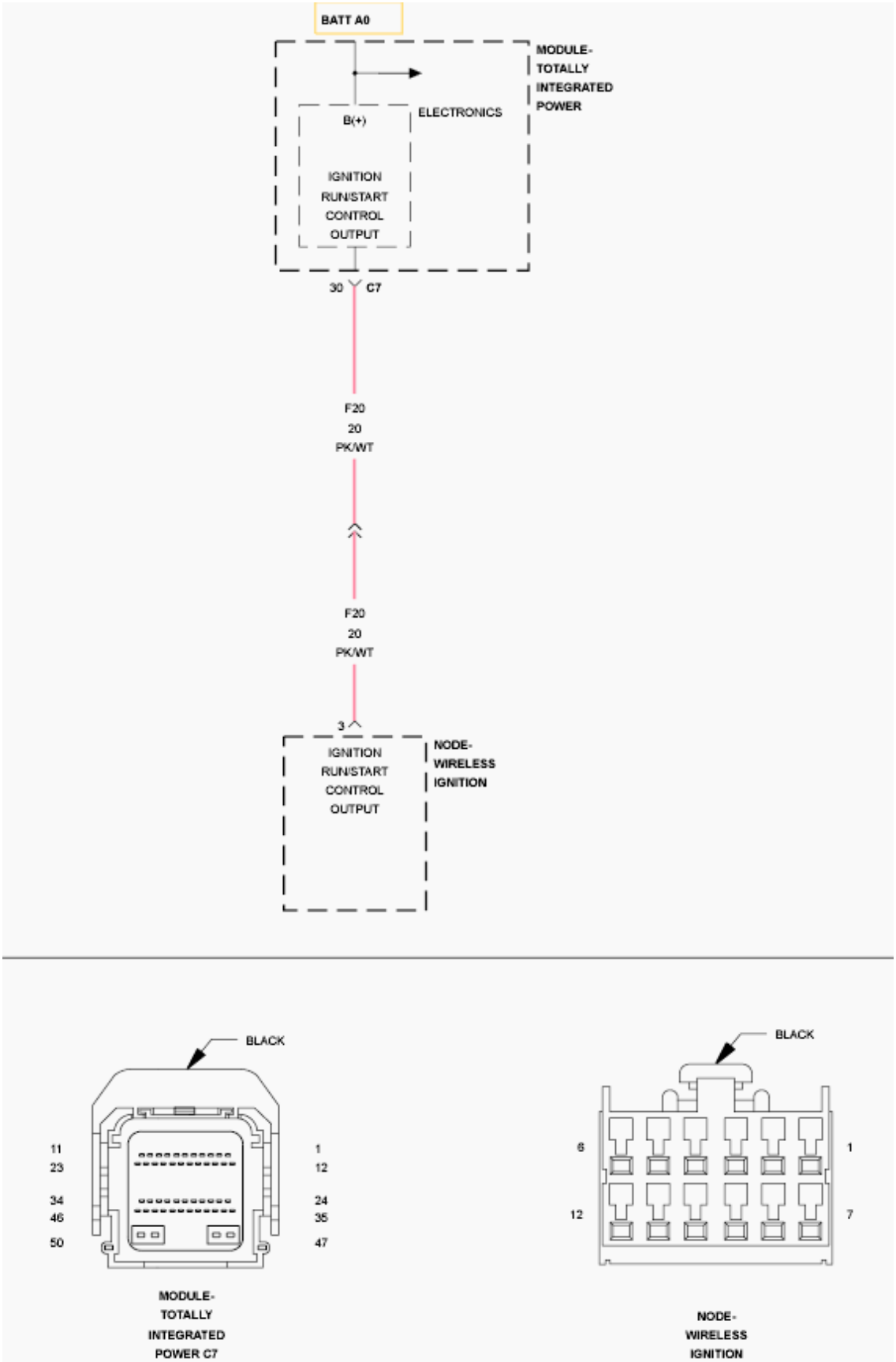
BATT A0
MODULE-
TOTALLY
INTEGRATED
POWER
ELECTRONICS
B(+)
IGNITION
RUN/START
CONTROL
OUTPUT
30
C7
F20
20
PK/WT
F20
20
PK/WT
3
IGNITION
RUN/START
CONTROL
OUTPUT
NODE-
WIRELESS
IGNITION
BLACK
11
23
34
46
50
1
12
24
35
47
MODULE-
TOTALLY
INTEGRATED
POWER C7
BLACK
6
12
1
7
NODE-
WIRELESS
IGNITION

Fig. 87: Ignition Run/Start Wiring Diagram
Courtesy of CHRYSLER GROUP, LLC

For a complete wiring diagram, **refer to appropriate SYSTEM WIRING DIAGRAMS article** .

THEORY OF OPERATION

The Totally Integrated Power Module (TIPM) monitors the hardwired ignition switch output circuit from the ignition switch or Wireless Ignition Node (WIN) and compares it to the ignition switch status message received over the Controller Area Network (CAN) bus.

WHEN MONITORED:

With the ignition switch on.

SET CONDITION:

The TIPM has detected that the hardwired ignition switch input voltage from the Wireless Ignition Node (WIN) indicates that the ignition switch is in the run position, but the CAN bus message indicates that the ignition switch is the off position.

POSSIBLE CAUSES

Possible Causes
(F20) IGNITION RUN/START CONTROL OUTPUT CIRCUIT SHORTED TO VOLTAGE
WIRELESS IGNITION NODE (WIN)
TOTALLY INTEGRATED POWER MODULE (TIPM)

DIAGNOSTIC TEST

1. **CHECK FOR ACTIVE DTC**

NOTE: **Check to make sure the battery and charging system are operating properly. Battery and/or charging system problems may cause these DTC's to set.**

NOTE: **Diagnose any related Powertrain DTC(s) before continuing.**

1. Turn the ignition on.
2. Using the scan tool, read TIPM DTC(s).

   Does the scan tool display this DTC as active?

   Yes

   - Go To 2.

No

- Test complete, the condition or conditions that originally set this DTC are not present at this time. Using the wiring diagrams as a guide, check all related splices and connectors for signs of water intrusion, corrosion, pushed out or bent terminals, and correct pin tension.
- Perform the BODY VERIFICATION TEST. Refer to **BODY VERIFICATION TEST**.

2. **CHECK THE (F20) IGNITION RUN/START CONTROL OUTPUT CIRCUIT FOR A SHORT TO BATTERY VOLTAGE**

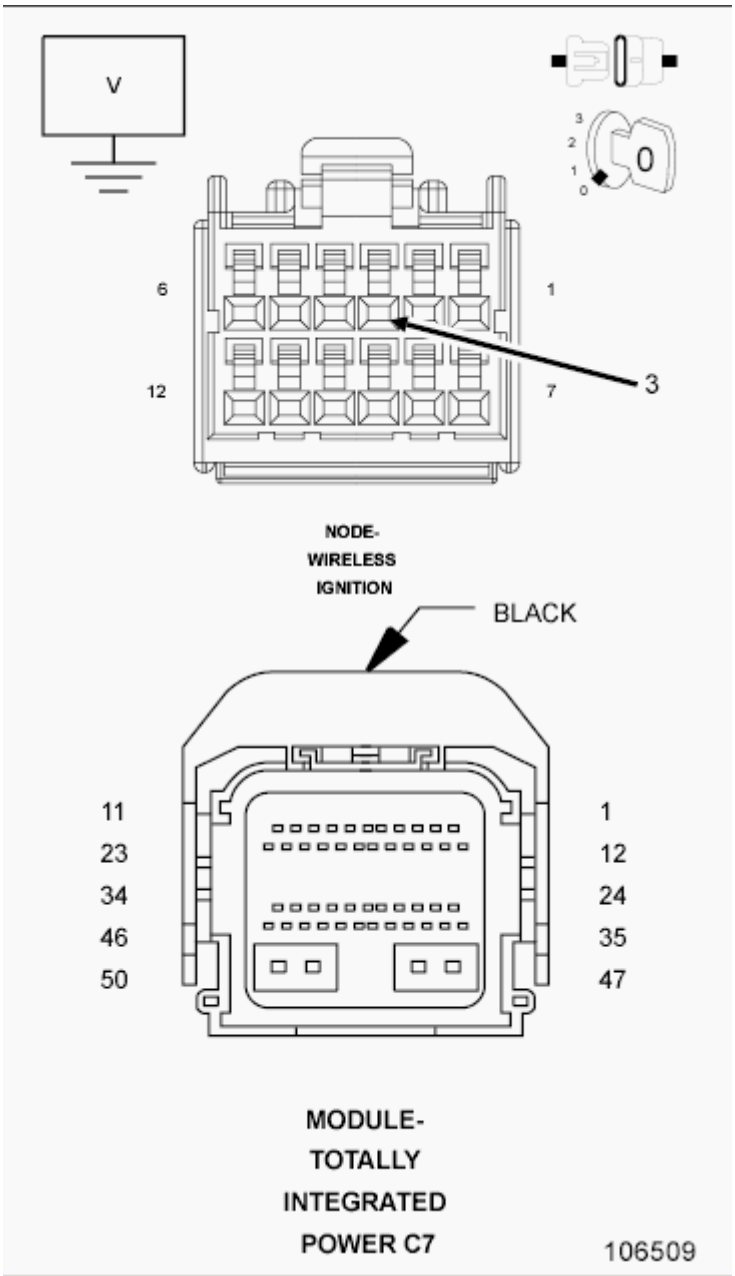

Fig. 88: Checking Ignition Run/Start Control Output Circuit For A Short To Battery Voltage
Courtesy of CHRYSLER GROUP, LLC

1. Turn the ignition off.
2. Disconnect the TIPM C7 harness connector.
3. Disconnect the WIN harness connector.
4. Measure the voltage between ground and the (F20) Ignition Run/Start Control Output circuit in the WIN harness connector.

   Is there any voltage present?

   Yes

   - Repair the short to voltage in the (F20) Ignition Run/Start Control Output circuit.
   - Perform the BODY VERIFICATION TEST. Refer to **BODY VERIFICATION TEST**.

   No

   - Go To 3.

3. **CHECK THE WIN FOR AN INTERNAL SHORT TO VOLTAGE**

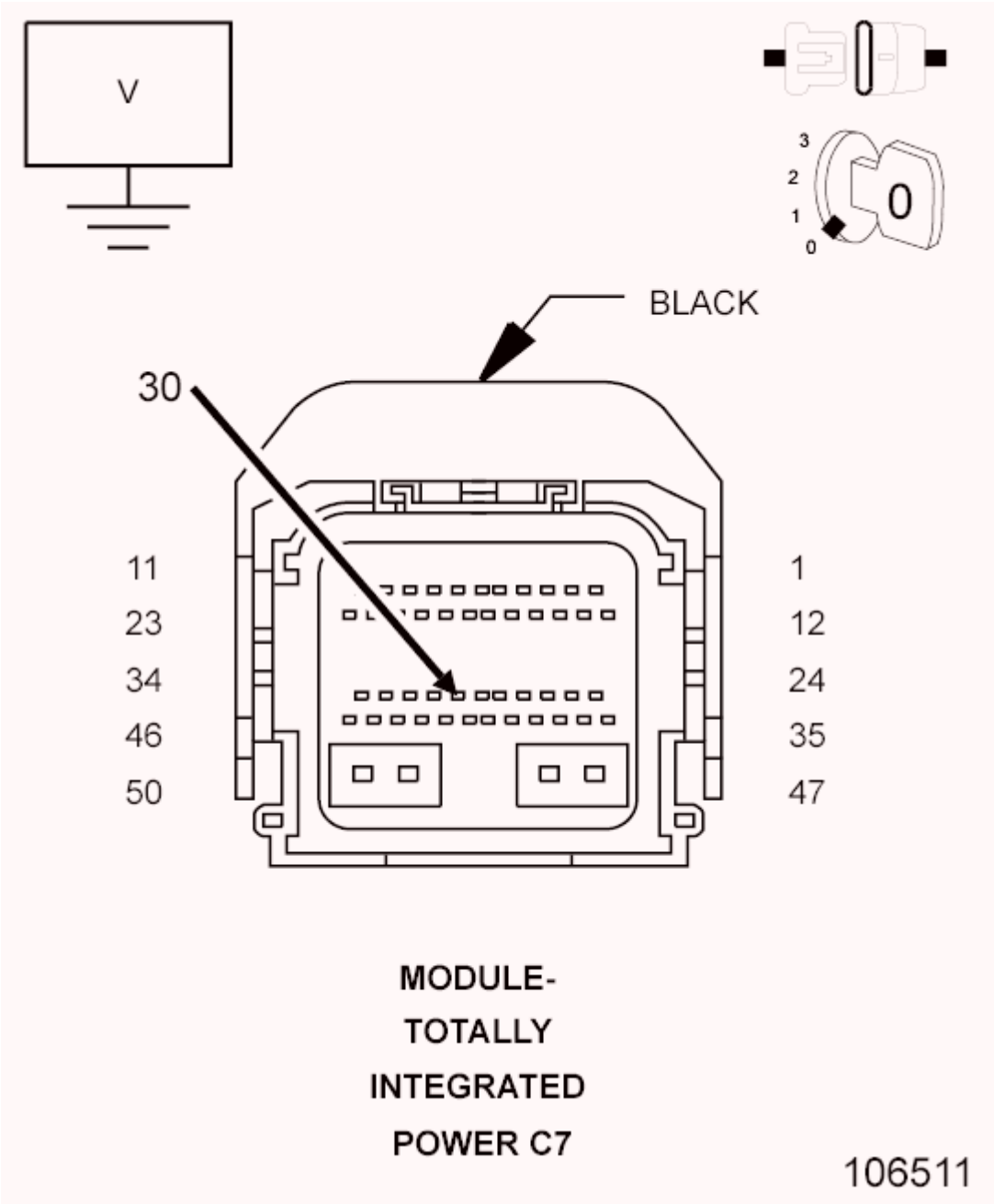

Fig. 89: Checking WIN For An Internal Short To Voltage
Courtesy of CHRYSLER GROUP, LLC

1. Reconnect the WIN harness connector.
2. Measure the voltage between ground and the (F20) Ignition Run/Start Control Output circuit in the TIPM C7 harness connector.

   Is there any voltage present?

   Yes

- Replace the WIN in accordance with the Service Information. Refer to **RECEIVER, WIRELESS IGNITION NODE, REMOVAL** .
- Perform the BODY VERIFICATION TEST. Refer to **BODY VERIFICATION TEST**.

No

- Replace the Totally Integrated Power Module (TIPM) in accordance with the Service Information. Refer to **MODULE, TOTALLY INTEGRATED POWER (TIPM), REMOVAL** .
- Perform the BODY VERIFICATION TEST. Refer to **BODY VERIFICATION TEST**.

B210D-BATTERY VOLTAGE LOW

For a complete wiring diagram, **refer to appropriate SYSTEM WIRING DIAGRAMS article** .

WHEN MONITORED:

With the ignition on.

SET CONDITION:

Battery voltage less than 9 volts for approximately five to six seconds.

POSSIBLE CAUSES

Possible Causes
RESISTANCE IN THE BATTERY POSITIVE CIRCUIT
RESISTANCE IN THE GENERATOR CASE GROUND
GENERATOR OPERATION
GROUND CIRCUIT OPEN
POWERTRAIN CONTROL MODULE (PCM)

DIAGNOSTIC TEST

1. **CHECK FOR ANY POWERTRAIN CONTROL MODULES DTC's**

NOTE: **Make sure the Battery is in good condition. Refer to BATTERY SYSTEM - DIAGNOSIS AND TESTING and perform the Battery System diagnostic procedure.**

NOTE: **Inspect the vehicle for after market accessories that may exceed the Generator System output.**

NOTE: **Make sure the generator drive belt is in good operating condition.**

NOTE: **Inspect the fuses in the TIPM. If an open fuse is found, use the wire diagram/schematic as a guide, inspect the wiring and connectors for damage.**

1. Turn the ignition on.
2. With the scan tool, read active PCM DTC's.

   Does the scan tool display any active PCM DTC's?

   Yes

   - Refer to **3.7L/4.7L/5.7L - DIAGNOSTIC CODE INDEX - NGC - 1500 & 2500** or **6.7L - DIAGNOSTIC CODE INDEX - 2500 & 3500** or **5.7L - DIAGNOSTIC CODE INDEX - 3500 CAB & CHASSIS** or **6.7L - DIAGNOSTIC CODE INDEX - 3500 CAB & CHASSIS, 4500 & 5500** and perform the appropriate diagnostic test procedure.

   No

   - Check the above conditions that can cause a low voltage condition. Repair as necessary.
   - Perform the BODY VERIFICATION TEST. Refer to **BODY VERIFICATION TEST**.

B210E-BATTERY VOLTAGE HIGH

For a complete wiring diagram, **refer to appropriate SYSTEM WIRING DIAGRAMS article** .

WHEN MONITORED:

With the ignition on.

SET CONDITION:

Battery voltage greater than 16 volts for approximately five to six seconds.

POSSIBLE CAUSES

Possible Causes
GENERATOR OPERATION
POWERTRAIN CONTROL MODULE (PCM)

DIAGNOSTIC TEST

1. **CHECK FOR ANY POWERTRAIN CONTROL MODULES DTC's**

   NOTE: **Make sure the Battery is in good condition. Refer to BATTERY SYSTEM - DIAGNOSIS AND TESTING and perform the Battery System diagnostic procedure.**

NOTE: **Inspect the vehicle for after market accessories that may exceed the Generator System output.**

NOTE: **Make sure the generator drive belt is in good operating condition.**

NOTE: **Inspect the fuses in the TIPM. If an open fuse is found, use the wire diagram/schematic as a guide, inspect the wiring and connectors for damage.**

1. Turn the ignition on.
2. With the scan tool, read active PCM DTC's.

   Does the scan tool display any active PCM DTC's?

   Yes

   - Refer to **3.7L/4.7L/5.7L - DIAGNOSTIC CODE INDEX - NGC - 1500 & 2500** or **6.7L - DIAGNOSTIC CODE INDEX - 2500 & 3500** or **5.7L - DIAGNOSTIC CODE INDEX - 3500 CAB & CHASSIS** or **6.7L - DIAGNOSTIC CODE INDEX - 3500 CAB & CHASSIS, 4500 & 5500** and perform the appropriate diagnostic test procedure.

   No

   - Check the above conditions that can cause a high voltage condition. Repair as necessary.
   - Perform the BODY VERIFICATION TEST. Refer to **BODY VERIFICATION TEST**.

B212F-IGNITION RUN/ACC CONTROL CIRCUIT LOW

For a complete wiring diagram, **refer to appropriate SYSTEM WIRING DIAGRAMS article** .

THEORY OF OPERATION

When the ignition is in the accessory or on position, the Totally Integrated Power Module (TIPM) energizes the Run/Accessory Relay. The TIPM internally grounds the coil for the Run/Accessory Relay.

WHEN MONITORED:

With the ignition on.

Battery voltage greater than 10 volts.

With the Run/Accessory Relay commanded on.

SET CONDITION:

The Totally Integrated Power Module (TIPM) detects a short to ground in the internal Run/Accessory Relay

Control circuit.

POSSIBLE CAUSES

Possible Causes
RUN/ACCESSORY RELAY
TOTALLY INTEGRATED POWER MODULE (TIPM)

DIAGNOSTIC TEST

1. **CHECK FOR AN INTERMITTENT CONDITION**
    1. Turn the ignition on.
    2. With the scan tool, clear all DTC's.
    3. Cycle the ignition from off to on.
    4. With the scan tool, read DTC's.

    Does the scan tool display DTC: B212F-IGNITION RUN/ACC CONTROL CIRCUIT LOW?

    Yes

    - Go To 2.

    No

    - Test complete, the condition or conditions that originally set this DTC are not present at this time. Using the wiring diagrams as a guide, check all related splices and connectors for signs of water intrusion, corrosion, pushed out or bent terminals, and correct pin tension.
    - Perform the BODY VERIFICATION TEST. Refer to **BODY VERIFICATION TEST**.
2. **RUN/ACCESSORY RELAY**
    1. Turn the ignition off.
    2. Remove the Run/Accessory Relay and substitute it with a known good relay.
    3. Turn the ignition on.
    4. With the scan tool, clear all DTC's.
    5. Turn the ignition off.
    6. Turn the ignition on.
    7. With the scan tool, read DTC's.

    Does the scan tool display DTC: B212F-IGNITION RUN/ACC CONTROL CIRCUIT LOW?

    Yes

    - Go To 3.

No

- Replace the Run/Accessory Relay.
- Perform the BODY VERIFICATION TEST. Refer to **BODY VERIFICATION TEST**.

3. **TOTALLY INTEGRATED POWER MODULE**

NOTE: Before continuing, check the TIPM harness connector terminals for corrosion, damage, or terminal push out. Repair as necessary.

1. Using the schematics as a guide, inspect the wire harness and connectors.
2. Pay particular attention to all Power and Ground circuits.

Were any problems found?

Yes

- Repair as necessary.
- Perform the BODY VERIFICATION TEST. Refer to **BODY VERIFICATION TEST**.

No

- Replace the TIPM in accordance with the Service Information. Refer to **MODULE, TOTALLY INTEGRATED POWER (TIPM), REMOVAL** .
- Perform the BODY VERIFICATION TEST. Refer to **BODY VERIFICATION TEST**.

B2142-IGNITION OFF DRAW (IOD) FUSE NOT PRESENT

For a complete wiring diagram, **refer to appropriate SYSTEM WIRING DIAGRAMS article** .

THEORY OF OPERATION

All vehicles are equipped with an Ignition-Off Draw (IOD) fuse that is disconnected within the Totally Integrated Power Module (TIPM) when the vehicle is shipped from the factory. The IOD fuse feeds the memory and sleep mode functions for some of the electronic modules in the vehicle as well as various other accessories that require battery current when the ignition switch is in the off position.

WHEN MONITORED:

With the Ignition on.

Odometer reading is less than 80.5 km (50 mi).

SET CONDITION:

Ignition Off Draw (IOD) Fuse not installed or blown in the Totally Integrated Power Module (TIPM).

POSSIBLE CAUSES

Possible Causes
IOD FUSE NOT PRESENT
IOD FUSE OPEN

DIAGNOSTIC TEST

1. **CHECK FOR ACTIVE DTC**

   NOTE: If the odometer reading is greater than 80.5 km (50 mi), DTC B219F sets instead of B2142 when the IOD fuse cannot be detected.

   1. With the scan tool, record and erase DTC's.
   2. Cycle the ignition switch from off to on, leaving the ignition off for a minimum of 30 seconds.
   3. With the scan tool, read the active DTC's.

   Does the scan tool display DTC: B2142-IGNITION OFF DRAW (IOD) FUSE NOT PRESENT?

   Yes

   - Go To 2.

   No

   - Test complete, the condition or conditions that originally set this DTC are not present at this time. Using the wiring diagrams as a guide, check all related splices and connectors for signs of water intrusion, corrosion, pushed out or bent terminals, and correct pin tension.
2. **VERIFY THE IOD FUSE IS INSTALLED**
   1. Verify the IOD Fuse is installed in the TIPM.

   Is the IOD Fuse present?

   Yes

   - Go To 3.

   No

   - Install the IOD Fuse.
   - Perform the BODY VERIFICATION TEST. Refer to **BODY VERIFICATION TEST**.
3. **CHECK FOR A OPEN IOD FUSE**
   1. Check if the IOD Fuse is open.

   Is the IOD Fuse blown?

Yes

- Using the wiring diagrams, diagnose the cause of the short to ground condition. Repair as necessary.
- Perform the BODY VERIFICATION TEST. Refer to **BODY VERIFICATION TEST**.

No

- Test complete.
- Perform the BODY VERIFICATION TEST. Refer to **BODY VERIFICATION TEST**.

B219A-IGNITION UNLOCK RUN/START CONTROL CIRCUIT OVERCURRENT

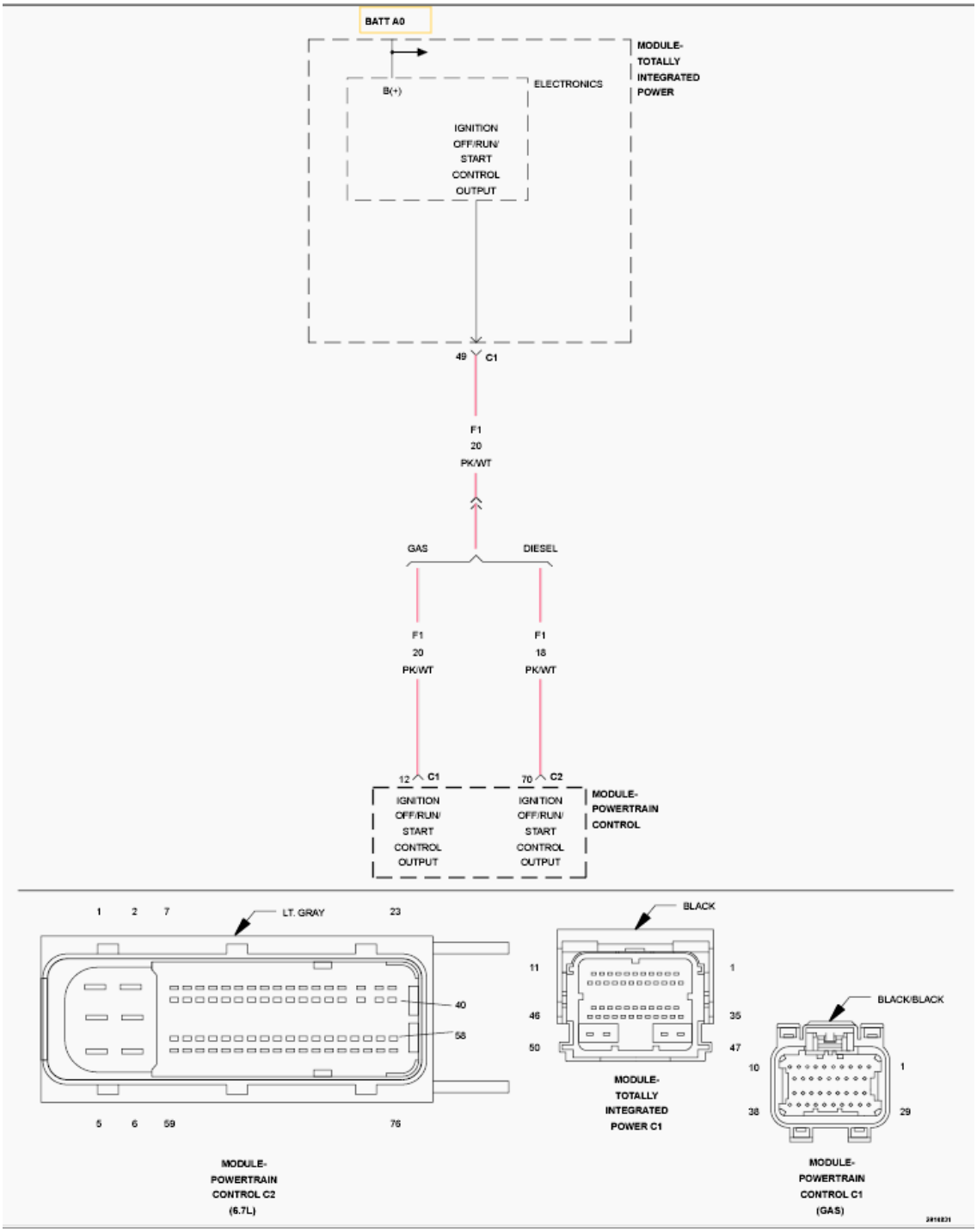

Fig. 90: Ignition Unlock Run/Start Control Wiring Diagram
Courtesy of CHRYSLER GROUP, LLC

For a complete wiring diagram, **refer to appropriate SYSTEM WIRING DIAGRAMS article** .

WHEN MONITORED:

With the ignition on.

SET CONDITION:

The Totally Integrated Power Module (TIPM) sets this code when a short to ground condition exists in the (F1) Ignition Off/Run/Start Control Output circuit.

POSSIBLE CAUSES

Possible Causes
(F1) IGNITION OFF/RUN/START CONTROL OUTPUT CIRCUIT SHORTED TO GROUND
POWERTRAIN CONTROL MODULE (PCM)
TOTALLY INTEGRATED POWER MODULE (TIPM)

DIAGNOSTIC TEST

1. **CHECK FOR ACTIVE DTC**
    1. With the scan tool, read the active DTC.
    2. Cycle the ignition switch from off to on, leaving the ignition off for a minimum of 30 seconds.
    3. With the scan tool, read the active DTC.

    Does the scan tool display this DTC as active?

    Yes

    - Go To 2.

    No

    - Test complete, the condition or conditions that originally set this DTC are not present at this time. Using the wiring diagrams as a guide, check all related splices and connectors for signs of water intrusion, corrosion, pushed out or bent terminals, and correct pin tension.
    - Perform the BODY VERIFICATION TEST. Refer to **BODY VERIFICATION TEST**.
2. **POWERTRAIN CONTROL MODULE (PCM)**
    1. Turn the ignition off.
    2. Disconnect the PCM C1 or C2 (6.7L) harness connector.
    3. Turn the ignition on.
    4. With the scan tool, read DTC's.

    Does the scan tool display this DTC as active?

    Yes

    - Go To 3.

    No

- Replace the PCM in accordance with the Service Information. Refer to **3.7L, 4.7L & 5.7L - MODULE, POWERTRAIN CONTROL, REMOVAL** or **MODULE, POWERTRAIN CONTROL, 6.7L DIESEL [ETJ], REMOVAL** .
- Perform the appropriate POWERTRAIN VERIFICATION TEST. Refer to **1500 & 2500 - 3.7L, 4.7L & 5.7L - POWERTRAIN VERIFICATION TEST** or **2500 & 3500 - POWERTRAIN VERIFICATION TEST - 6.7L** or **3500 CAB & CHASSIS - POWERTRAIN VERIFICATION TEST** or **3500 CAB & CHASSIS, 4500 & 5500 - POWERTRAIN VERIFICATION TEST - 6.7L** .

3. **(F1) IGNITION OFF/RUN/START CONTROL OUTPUT CIRCUIT SHORTED TO GROUND**

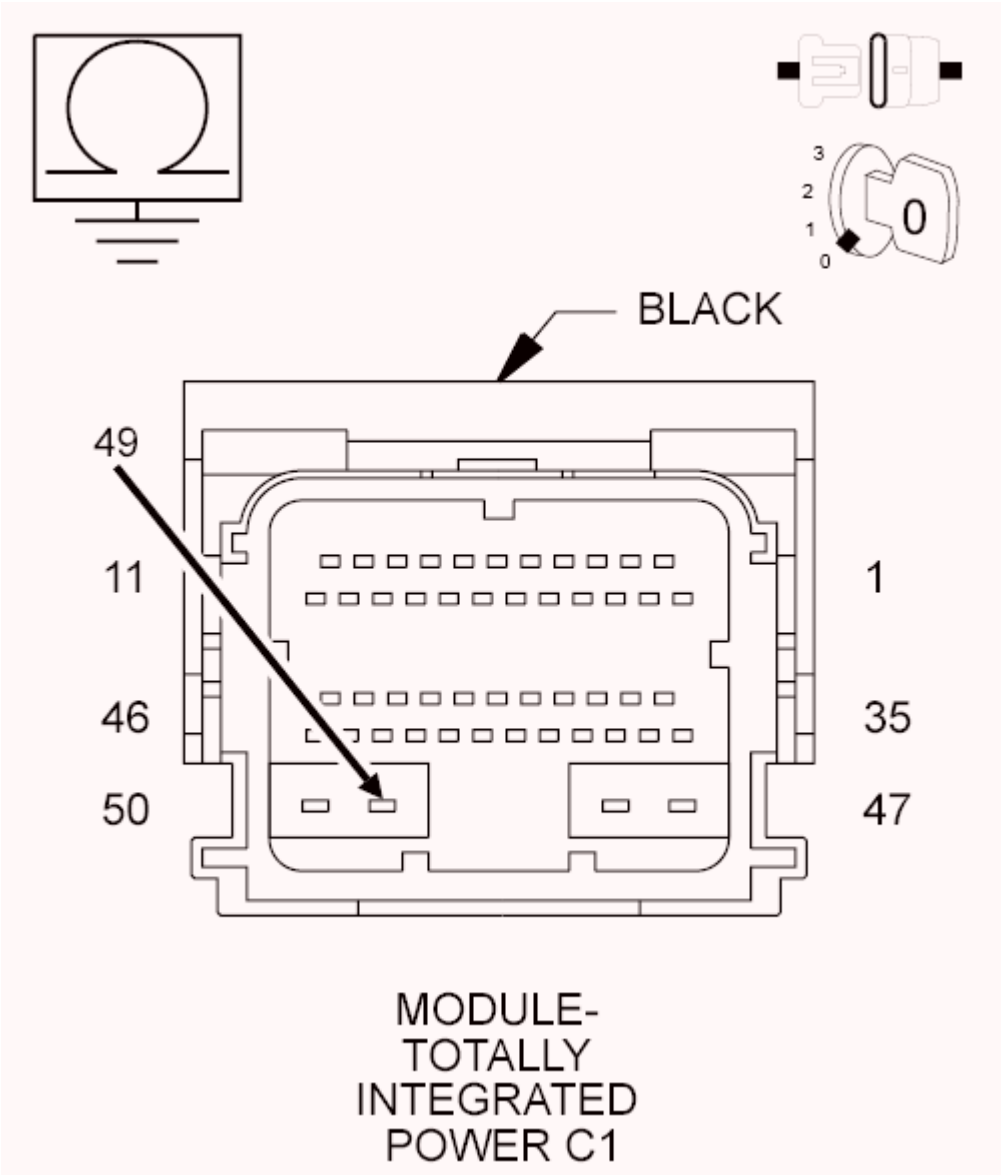

Fig. 91: Checking Ignition Off/Run/Start Control Output Circuit For A Short To Ground
Courtesy of CHRYSLER GROUP, LLC

1. Turn the ignition off.

2. Disconnect the TIPM C1 harness connector.
3. Measure the resistance between ground and the (F1) Ignition Off/Run/Start Control Output circuit.

   Is the resistance below 10K Ohms?

   Yes

   - Repair the short to ground in the (F1) Ignition Off/Run/Start Control Output circuit.
   - Perform the BODY VERIFICATION TEST. Refer to **BODY VERIFICATION TEST**.

   No

   - Replace the Totally Integrated Power Module (TIPM) in accordance with the Service Information. Refer to **MODULE, TOTALLY INTEGRATED POWER (TIPM), REMOVAL** .
   - Perform the BODY VERIFICATION TEST. Refer to **BODY VERIFICATION TEST**.

B219F-IGNITION OFF DRAW (IOD) FUSE BLOWN

For a complete wiring diagram, **refer to appropriate SYSTEM WIRING DIAGRAMS article** .

THEORY OF OPERATION

All vehicles are equipped with an Ignition-Off Draw (IOD) fuse that is disconnected within the Totally Integrated Power Module (TIPM) when the vehicle is shipped from the factory. The IOD fuse feeds the memory and sleep mode functions for some of the electronic modules in the vehicle as well as various other accessories that require battery current when the ignition switch is in the off position.

WHEN MONITORED:

With the Ignition on.

Odometer reading is greater than 80.5 km (50 mi).

SET CONDITION:

Ignition Off Draw (IOD) Fuse not installed or open in the Totally Integrated Power Module (TIPM).

POSSIBLE CAUSES

Possible Causes
IOD FUSE NOT PRESENT
IOD FUSE OPEN

DIAGNOSTIC TEST

1. **CHECK FOR ACTIVE DTC**
    1. With the scan tool, record and erase DTC's.
    2. Cycle the ignition switch from off to on, leaving the ignition off for a minimum of 30 seconds.
    3. With the scan tool, read the active DTC's.

    Does the scan tool display DTC: B219F-IGNITION OFF DRAW (IOD) FUSE BLOWN?

    Yes

    - Go To 2.

    No

    - Test complete, the condition or conditions that originally set this DTC are not present at this time. Using the wiring diagrams as a guide, check all related splices and connectors for signs of water intrusion, corrosion, pushed out or bent terminals, and correct pin tension.
2. **VERIFY THE IOD FUSE IS INSTALLED**
    1. Verify the IOD Fuse is installed in the TIPM.

    Is the IOD Fuse present?

    Yes

    - Go To 3.

    No

    - Install the IOD Fuse.
    - Perform the BODY VERIFICATION TEST. Refer to **BODY VERIFICATION TEST**.
3. **CHECK FOR A OPEN IOD FUSE**
    1. Check if the IOD Fuse is open.

    Is the IOD Fuse blown?

    Yes

    - Using the wiring diagrams, diagnose the cause of the short to ground condition. Repair as necessary.
    - Perform the BODY VERIFICATION TEST. Refer to **BODY VERIFICATION TEST**.

    No

    - Test complete.
    - Perform the BODY VERIFICATION TEST. Refer to **BODY VERIFICATION TEST**.

B2206-CURRENT VIN MISSING / MISMATCH

For a complete wiring diagram, **refer to appropriate SYSTEM WIRING DIAGRAMS article** .

THEORY OF OPERATION

The Powertrain Control Module (PCM) transmits the Vehicle Identification Number (VIN) as a network message on the CAN C bus. The Totally Integrated Power Module (TIPM) receives and stores the VIN.

WHEN MONITORED:

With the ignition on.

SET CONDITION:

The current VIN message from the PCM is different than the VIN stored in the TIPM.

POSSIBLE CAUSES

Possible Causes
PCM FROM ANOTHER VEHICLE INSTALLED

DIAGNOSTIC TEST

1. **PCM FROM ANOTHER VEHICLE INSTALLED**

   NOTE: This DTC is set when a PCM from another vehicle is installed into the current vehicle.

   Has another PCM been installed?

   Yes

   - Replace the PCM in accordance with the Service Information. Refer to **3.7L, 4.7L & 5.7L - MODULE, POWERTRAIN CONTROL, REMOVAL** or **MODULE, POWERTRAIN CONTROL, 6.7L DIESEL [ETJ], REMOVAL** .
   - Perform the BODY VERIFICATION TEST. Refer to **BODY VERIFICATION TEST**.

   No

   - Go To 2.
2. **OTHER CAN-C MODULES SET VIN MISMATCH**

   Is the VIN Mismatch DTC set in other CAN-C modules?

   Yes

- Replace the PCM in accordance with the Service Information. Refer to **3.7L, 4.7L & 5.7L - MODULE, POWERTRAIN CONTROL, REMOVAL** or **MODULE, POWERTRAIN CONTROL, 6.7L DIESEL [ETJ], REMOVAL** .
- Perform the BODY VERIFICATION TEST. Refer to **BODY VERIFICATION TEST**.

No

- Replace the TIPM in accordance with the Service Information. Refer to **MODULE, TOTALLY INTEGRATED POWER (TIPM), REMOVAL** .
- Perform the BODY VERIFICATION TEST. Refer to **BODY VERIFICATION TEST**.

B2215-FRONT CONTROL MODULE INTERNAL (TOTALLY INTEGRATED POWER MODULE)

For a complete wiring diagram, **refer to appropriate SYSTEM WIRING DIAGRAMS article** .

THEORY OF OPERATION

The Totally Integrated Power Module (TIPM) performs an internal self test. The repair of this fault condition does not involve any external circuitry and centers on verifying the integrity of the internal circuitry and software validity.

WHEN MONITORED:

Continuously.

SET CONDITION:

The Totally Integrated Power Module (TIPM) detects an internal fault.

POSSIBLE CAUSES

Possible Causes
TOTALLY INTEGRATED POWER MODULE (TIPM)

DIAGNOSTIC TEST

1. **REPLACE THE TIPM IF THE DTC IS ACTIVE**
    1. With the scan tool, read the active DTC's.

       Does the scan tool display this DTC as active?

       Yes

       - Replace the TIPM in accordance with the Service Information. Refer to **MODULE, TOTALLY INTEGRATED POWER (TIPM), REMOVAL** .
       - Perform the BODY VERIFICATION TEST. Refer to **BODY VERIFICATION TEST**.

No

- Test complete, the condition or conditions that originally set this DTC are not present at this time. Using the wiring diagrams as a guide, check all related splices and connectors for signs of water intrusion, corrosion, pushed out or bent terminals, and correct pin tension.
- Perform the BODY VERIFICATION TEST. Refer to **BODY VERIFICATION TEST**.

B222C-VEHICLE CONFIGURATION NOT PROGRAMMED

For a complete wiring diagram, **refer to appropriate SYSTEM WIRING DIAGRAMS article** .

THEORY OF OPERATION

The same Totally Integrated Power Module (TIPM) for a vehicle can be used with different market and vehicle content applications. In order for the TIPM to function properly, the vehicle configuration information must be correctly programmed into the module when the module is replaced.

WHEN MONITORED:

With the ignition on.

SET CONDITION:

The Totally Integrated Power Module (TIPM) is not configured correctly to the vehicle.

POSSIBLE CAUSES

Possible Causes
TIPM NOT CONFIGURED CORRECTLY TOTALLY INTEGRATED POWER MODULE (TIPM)

DIAGNOSTIC TEST

1. **CHECK FOR ACTIVE DTC**
    1. With the scan tool, read the active DTC's.
    2. Cycle the ignition switch from off to on at least five times, leaving the ignition on for a minimum of 90 seconds per cycle.
    3. With the scan tool, read the active DTC's.

    Does the scan tool display this DTC as active?

    Yes

    - Go To 2.

    No

- Test complete, the condition or conditions that originally set this DTC are not present at this time.
- Perform the BODY VERIFICATION TEST. Refer to **BODY VERIFICATION TEST**.

2. **CONFIGURE THE TIPM TO THE VEHICLE**
    1. With the scan tool, enter program network configuration and program the TIPM to the vehicle configuration.
    2. With the scan tool, erase TIPM DTC's.
    3. Cycle the ignition switch from off to on at least five times, leaving the ignition on for a minimum of 90 seconds per cycle.
    4. With the scan tool, read the active DTC's.

    Does the scan tool display this DTC as active?

    Yes

    - Inspect the wiring and connectors for damage or shorted circuits. If OK, replace and program the TIPM in accordance with the Service Information. Refer to **MODULE, TOTALLY INTEGRATED POWER (TIPM), REMOVAL** .
    - Perform the BODY VERIFICATION TEST. Refer to **BODY VERIFICATION TEST**.

    No

    - Repair is complete.

B2304-WIPER PARK SWITCH INPUT CIRCUIT LOW (STUCK LOW)

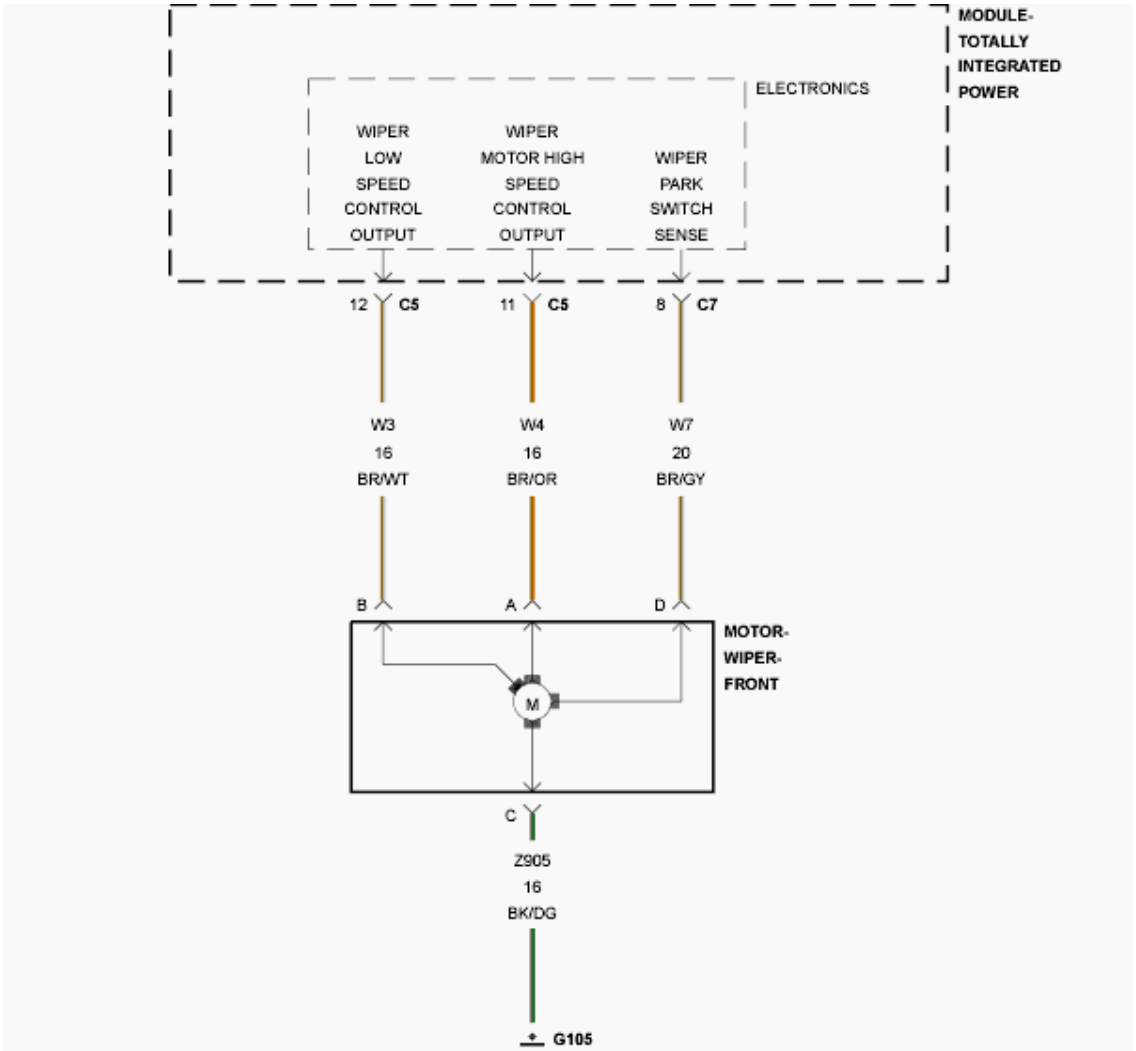
MODULE-
TOTALLY
INTEGRATED
POWER
ELECTRONICS
WIPER
LOW
SPEED
CONTROL
OUTPUT
WIPER
MOTOR HIGH
SPEED
CONTROL
OUTPUT
WIPER
PARK
SWITCH
SENSE
12 C5
11 C5
8 C7
W3
16
BR/WT
W4
16
BR/OR
W7
20
BR/GY
B
A
D
MOTOR-
WIPER-
FRONT
M
C
Z905
16
BK/DG
G105

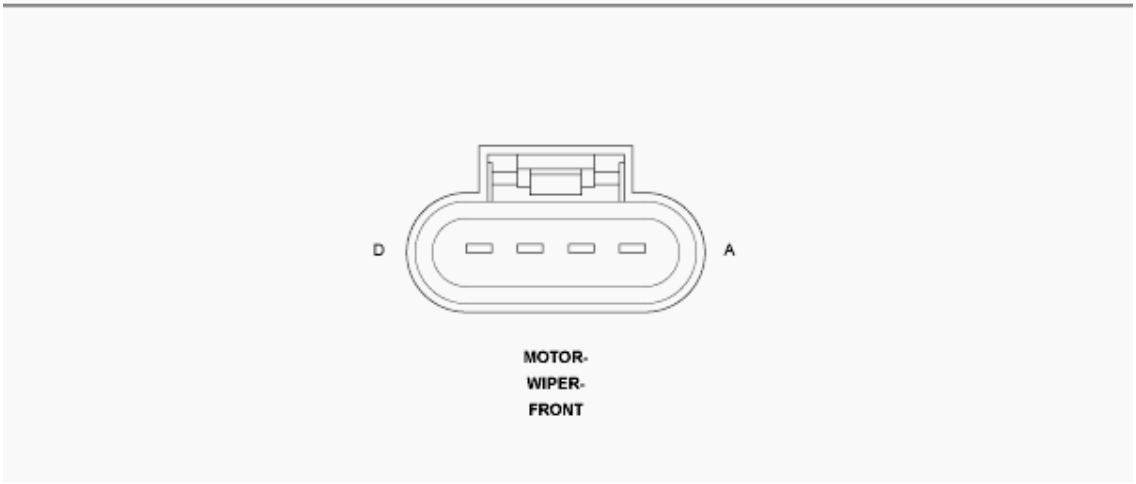
D
A
MOTOR-
WIPER-
FRONT

Fig. 92: Wiper Motor Wiring Diagram
Courtesy of CHRYSLER GROUP, LLC

For a complete wiring diagram, **refer to appropriate SYSTEM WIRING DIAGRAMS article** .

WHEN MONITORED:

With the ignition on.

Front Wiper operating in Low Speed or Intermittent mode.

SET CONDITION:

The Totally Integrated Power Module (TIPM) detects a short to ground on the Wiper Park Switch Sense circuit.

POSSIBLE CAUSES

Possible Causes
(W7) WIPER PARK SWITCH SENSE CIRCUIT SHORTED TO GROUND
WIPER MOTOR
TOTALLY INTEGRATED POWER MODULE (TIPM)

DIAGNOSTIC TEST

1. **INTERMITTENT CONDITION**
    1. Turn the ignition on.
    2. With the scan tool, clear all DTC's.
    3. Cycle the Wiper Switch on and off three times.
    4. With the scan tool, read DTC's.

    Does the scan tool display this DTC as active?

    Yes

    - Go To 2.

    No

    - Test complete, the condition or conditions that originally set this DTC are not present at this time. Using the wiring diagrams as a guide, check all related splices and connectors for signs of water intrusion, corrosion, pushed out or bent terminals, and correct pin tension.
    - Perform the BODY VERIFICATION TEST. Refer to **BODY VERIFICATION TEST**.
2. **FRONT WIPER MOTOR**
    1. Turn the ignition off.
    2. Disconnect the Front Wiper Motor harness connector.

3. Turn the ignition on.
4. Wait 30 seconds.
5. With the scan tool, read the Front Wiper Park Switch Sense.

   Does the Front Wiper Park Switch Sense display: Not Parked?

   Yes

   - Replace the Wiper Motor in accordance with the Service Information. Refer to **MOTOR, WIPER, REMOVAL** .
   - Perform the BODY VERIFICATION TEST. Refer to **BODY VERIFICATION TEST**.

   No

   - Go To 3.

3. **CHECK (W7) WIPER PARK SWITCH SENSE CIRCUIT FOR A SHORT TO GROUND**

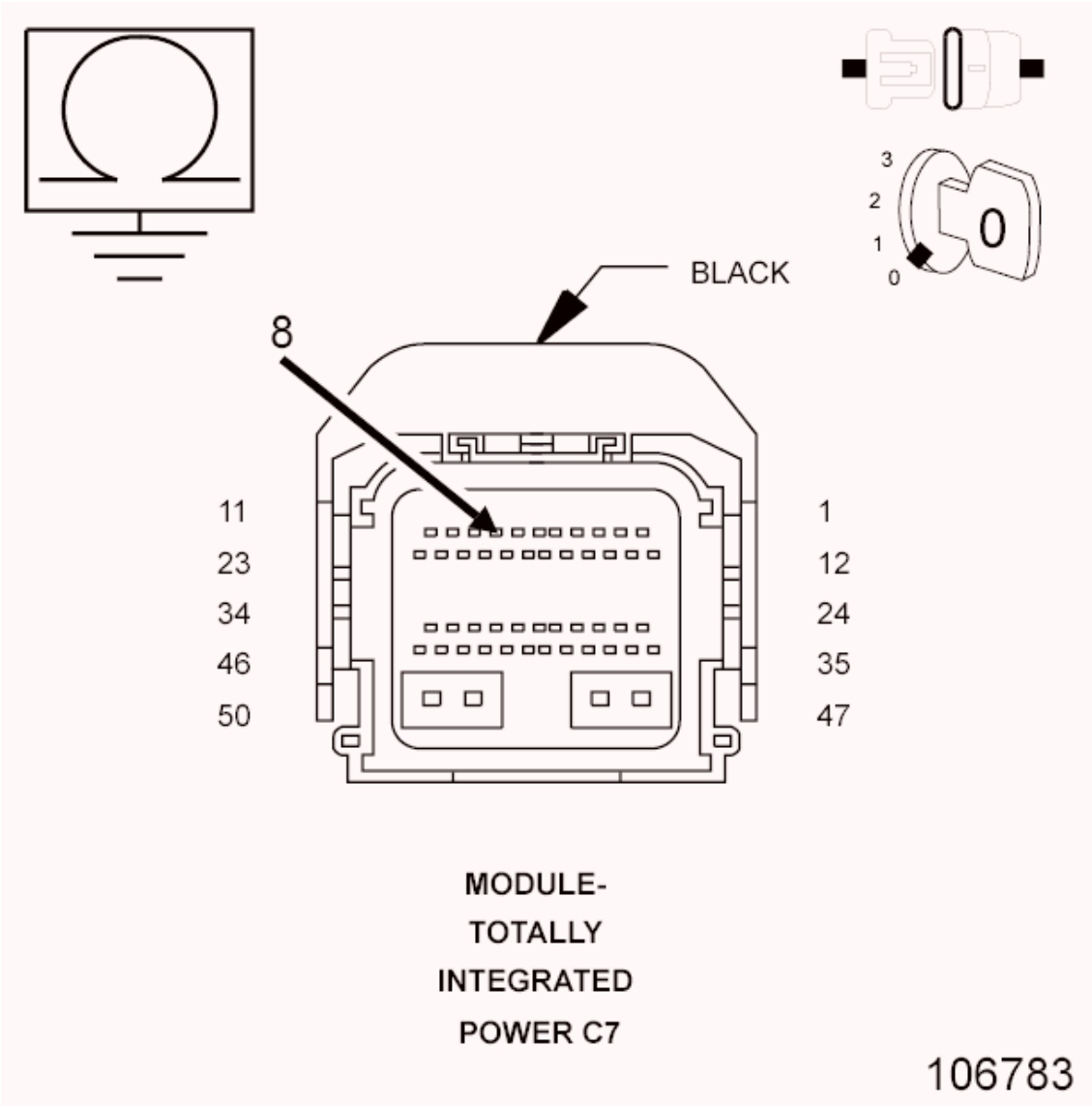

Fig. 93: Checking Wiper Park Switch Sense Circuit For A Short To Ground
Courtesy of CHRYSLER GROUP, LLC

1. Turn the ignition off.
2. Disconnect the TIPM C7 harness connector.
3. Measure the resistance between ground and the (W7) Front Wiper Park Sense Circuit.

   Is the resistance above 10k Ohms?

   Yes

   - Replace the Totally Integrated Power Module (TIPM) in accordance with the Service Information. Refer to **MODULE, TOTALLY INTEGRATED POWER (TIPM), REMOVAL** .
   - Perform the BODY VERIFICATION TEST. Refer to **BODY VERIFICATION TEST**.

No

- Repair the short to ground in the (W7) Wiper Park Switch Sense circuit.
- Perform the BODY VERIFICATION TEST. Refer to **BODY VERIFICATION TEST**.

B2305-WIPER PARK SWITCH INPUT CIRCUIT HIGH (STUCK HIGH)

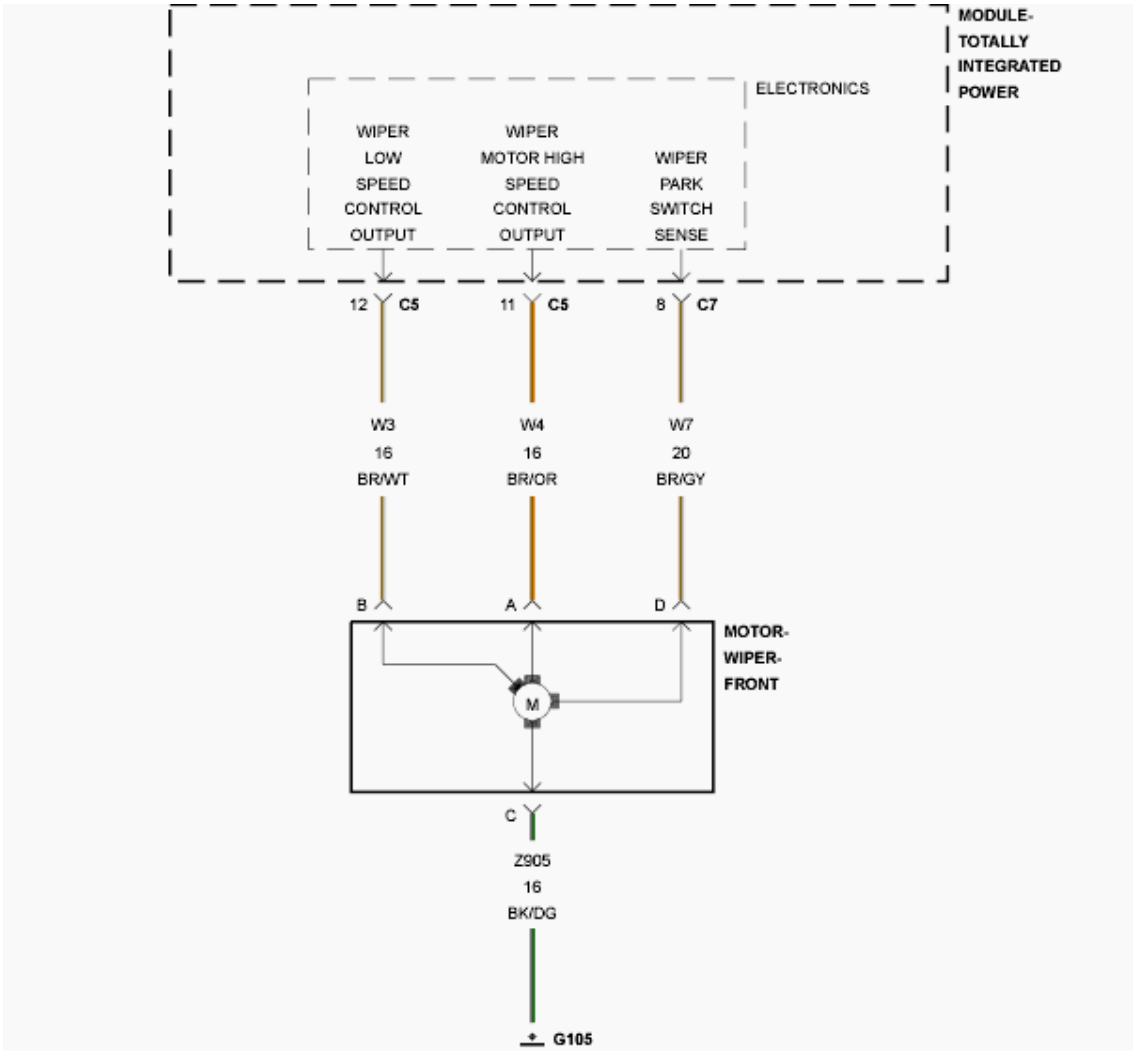
MODULE-
TOTALLY
INTEGRATED
POWER
ELECTRONICS
WIPER
LOW
SPEED
CONTROL
OUTPUT
WIPER
MOTOR HIGH
SPEED
CONTROL
OUTPUT
WIPER
PARK
SWITCH
SENSE
12 C5
11 C5
8 C7
W3
16
BR/WT
W4
16
BR/OR
W7
20
BR/GY
B
A
D
MOTOR-
WIPER-
FRONT
M
C
Z905
16
BK/DG
G105

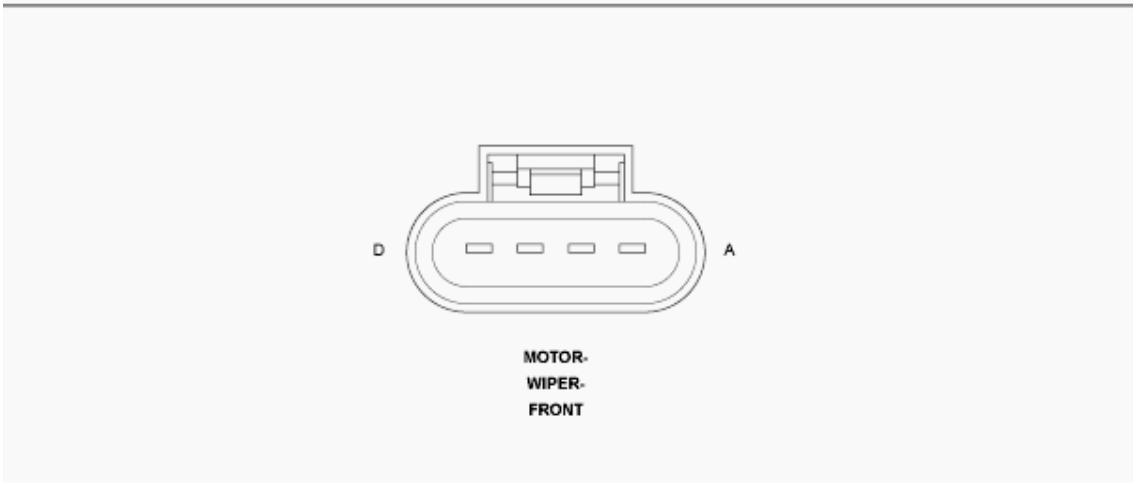
D
A
MOTOR-
WIPER-
FRONT

Fig. 94: Wiper Motor Wiring Diagram
Courtesy of CHRYSLER GROUP, LLC

For a complete wiring diagram, **refer to appropriate SYSTEM WIRING DIAGRAMS article** .

WHEN MONITORED:

With the ignition on.

Front Wiper operating in Low Speed or Intermittent mode.

SET CONDITION:

The Totally Integrated Power Module (TIPM) does not detect a change from High to Low voltage on the Wiper Park Switch Sense Circuit.

POSSIBLE CAUSES

Possible Causes
(W7) WIPER PARK SWITCH SENSE CIRCUIT OPEN
(W7) WIPER PARK SWITCH SENSE CIRCUIT SHORTED TO VOLTAGE
FRONT WIPER MOTOR
TOTALLY INTEGRATED POWER MODULE (TIPM)

DIAGNOSTIC TEST

1. **INTERMITTENT CONDITION**
    1. Turn the ignition on.
    2. With the scan tool, clear all DTC's.
    3. Cycle the Wiper Switch on and off three times.
    4. With the scan tool, read DTC's.

    Does the scan tool display this DTC as active?

    Yes

    - Go To 2.

    No

    - Test complete, the condition or conditions that originally set this DTC are not present at this time. Using the wiring diagrams as a guide, check all related splices and connectors for signs of water intrusion, corrosion, pushed out or bent terminals, and correct pin tension.
    - Perform the BODY VERIFICATION TEST. Refer to **BODY VERIFICATION TEST**.
2. **CHECK THE (W7) WIPER PARK SWITCH SENSE CIRCUIT FOR A SHORT TO VOLTAGE**

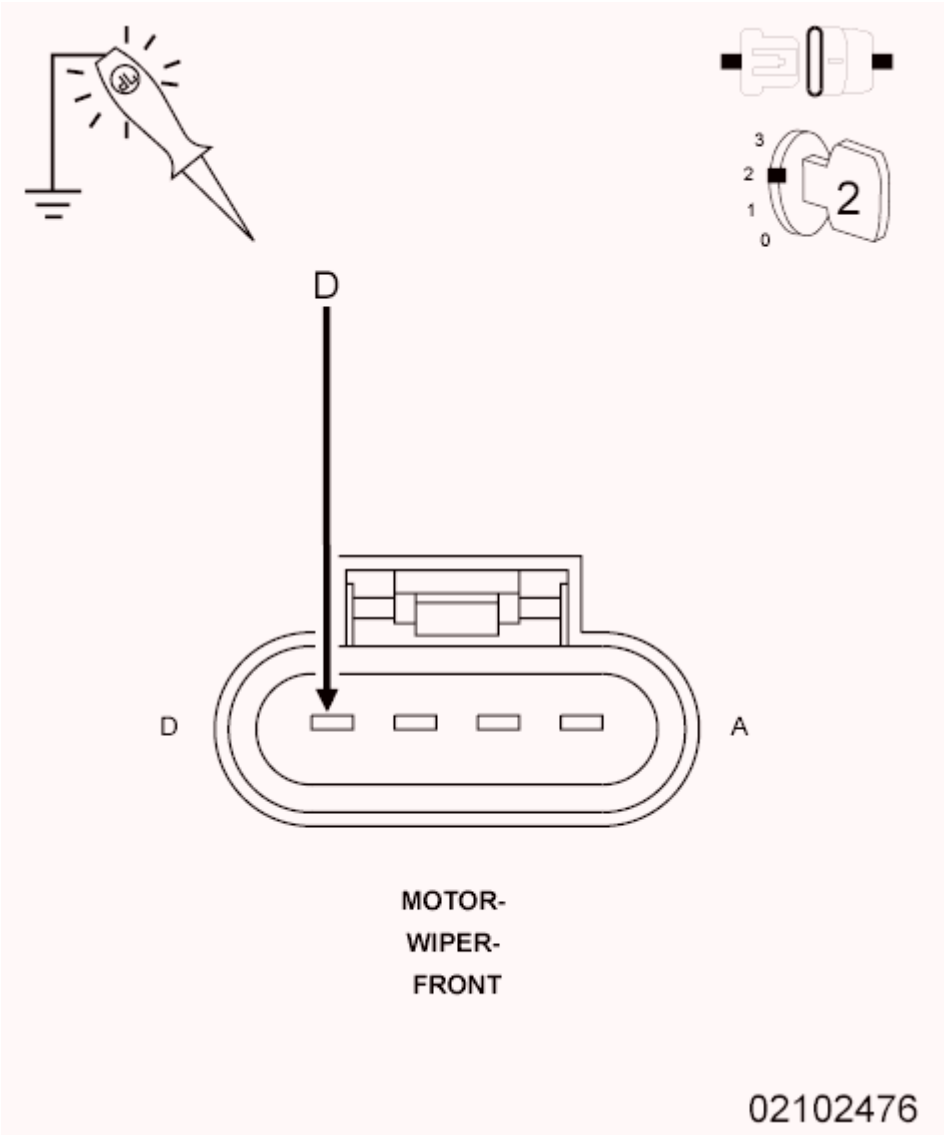

Fig. 95: Checking Wiper Park Switch Sense Circuit For A Short To Voltage
Courtesy of CHRYSLER GROUP, LLC

1. Turn the ignition off.
2. Disconnect the Front Wiper Motor harness connector.
3. Disconnect the TIPM C7 harness connector.
4. Turn the ignition on.
5. Measure the voltage between ground and the (W7) Wiper Park Switch Sense circuit.

   Is there any voltage present?

   Yes

   - Repair the short to voltage in the (W7) Wiper Park Switch Sense circuit.

- Perform the BODY VERIFICATION TEST. Refer to **BODY VERIFICATION TEST**.

No

- Go To 3.

3. **CHECK THE FRONT WIPER MOTOR**

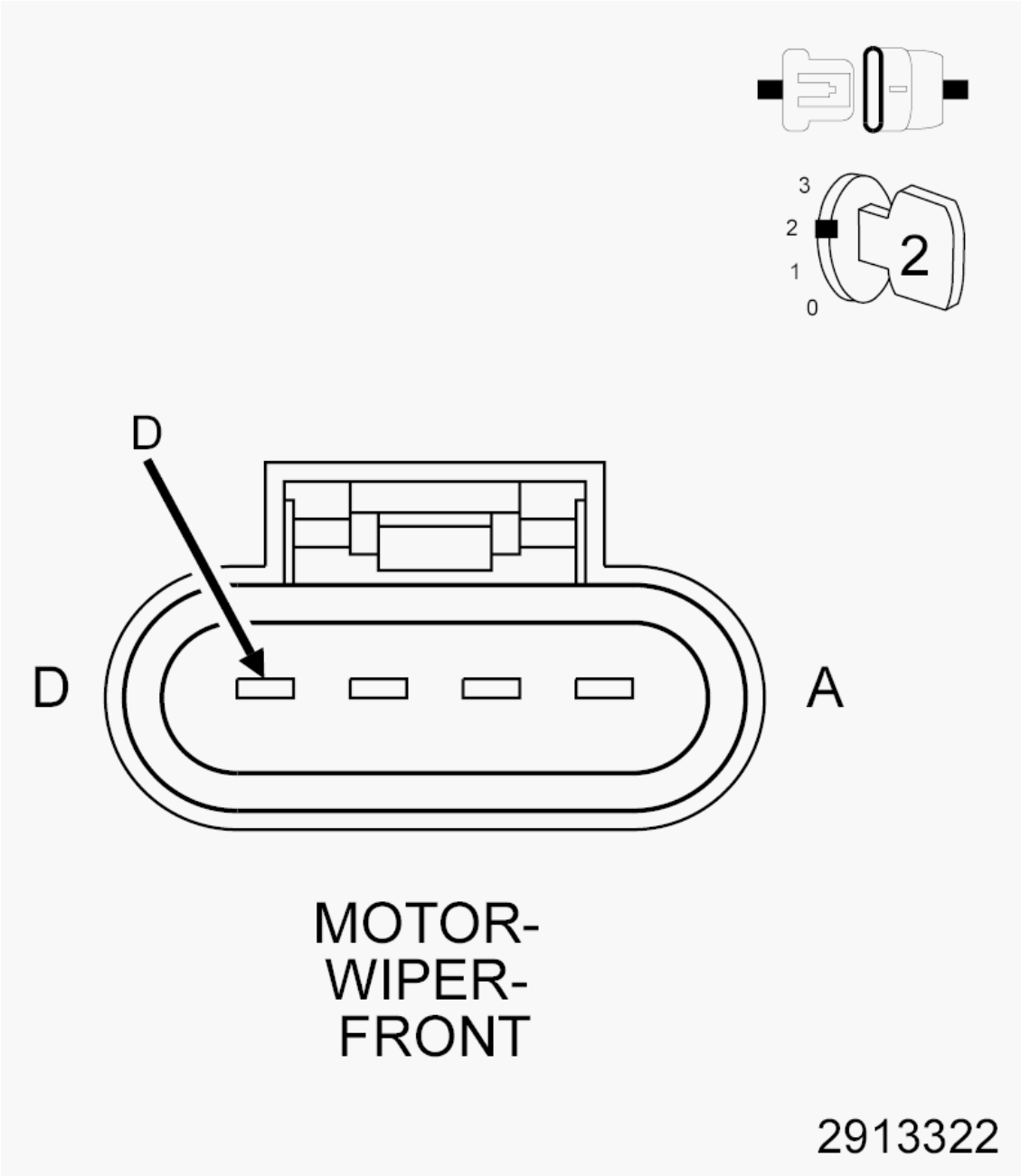

Fig. 96: Checking Front Wiper Motor
Courtesy of CHRYSLER GROUP, LLC

1. Turn the ignition off.

2. Reconnect the TIPM C7 harness connector.
3. Turn the ignition on.
4. Connect a jumper wire between the (W7) Wiper Park Switch Sense circuit and ground.
5. With the scan tool, read the Front Wiper Park Switch Sense.

   Does the Front Wiper Park Switch Sense display: Parked?

   Yes

   - Replace the Wiper Motor in accordance with the Service Information. Refer to **MOTOR, WIPER, REMOVAL** .
   - Perform the BODY VERIFICATION TEST. Refer to **BODY VERIFICATION TEST**.

   No

   - Go To 4.

4. **CHECK (W7) WIPER PARK SWITCH SENSE CIRCUIT FOR AN OPEN**

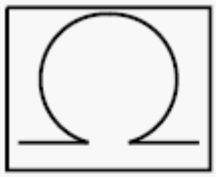

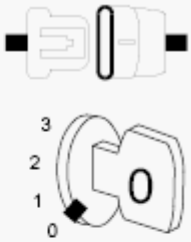

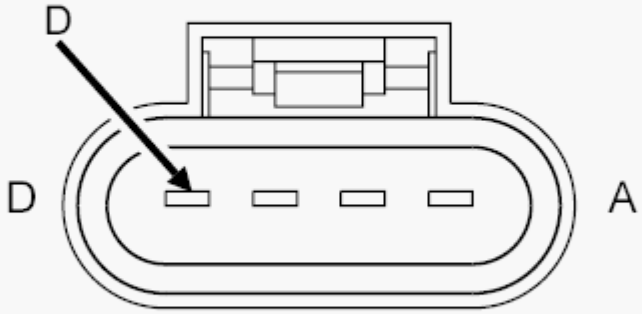

MOTOR-
WIPER-
FRONT

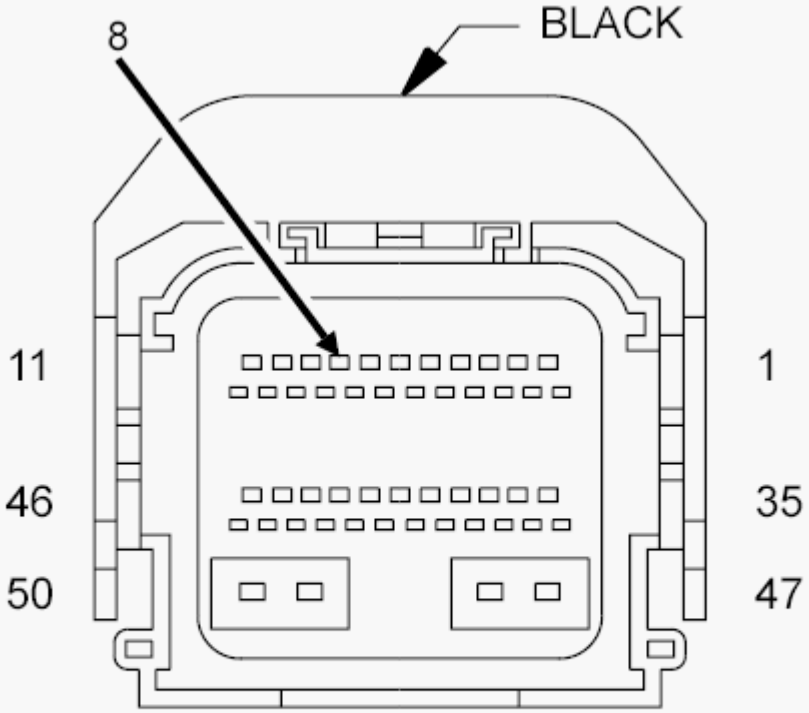

MODULE-
TOTALLY

Fig. 97: Checking Wiper Park Switch Sense Circuit For An Open
Courtesy of CHRYSLER GROUP, LLC

1. Turn the ignition off.
2. Disconnect the TIPM C7 harness connector.
3. Measure the resistance of the (W7) Wiper Park Switch Sense circuit between the Front Wiper Motor harness connector and the TIPM C7 harness connector.

   Is the resistance below 5.0 Ohms?

   Yes

   - Replace the Totally Integrated Power Module (TIPM) in accordance with the Service Information. Refer to **MODULE, TOTALLY INTEGRATED POWER (TIPM), REMOVAL** .
   - Perform the BODY VERIFICATION TEST. Refer to **BODY VERIFICATION TEST**.

   No

   - Repair the open in the (W7) Wiper Park Switch Sense circuit.
   - Perform the BODY VERIFICATION TEST. Refer to **BODY VERIFICATION TEST**.

C1008-BRAKE FLUID LEVEL CIRCUIT HIGH

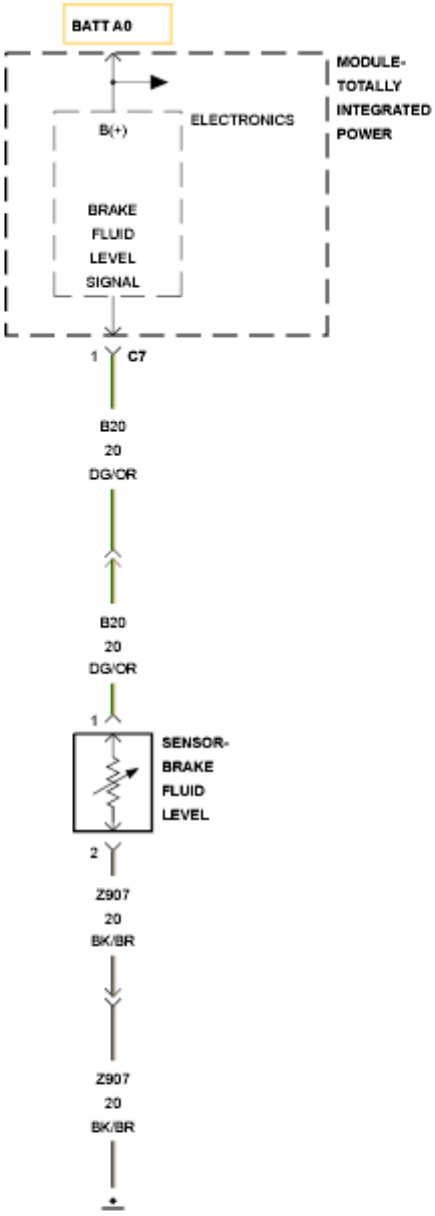

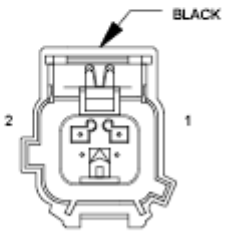

SENSOR-
BRAKE
FLUID
LEVEL

Fig. 98: Brake Fluid Level Wiring Diagram
Courtesy of CHRYSLER GROUP, LLC

For a complete wiring diagram, **refer to appropriate SYSTEM WIRING DIAGRAMS article** .

WHEN MONITORED:

With the ignition on.

SET CONDITION:

When the Totally Integrated Power Module (TIPM) detects the Brake Fluid Level Circuit voltage is greater than expected for more than five seconds.

POSSIBLE CAUSES

Possible Causes
(B20) BRAKE FLUID LEVEL SIGNAL CIRCUIT OPEN
(B20) BRAKE FLUID LEVEL SIGNAL SHORTED TO BATTERY VOLTAGE
(Z907) GROUND CIRCUIT OPEN
BRAKE FLUID LEVEL SENSOR
TOTALLY INTEGRATED POWER MODULE (TIPM)

DIAGNOSTIC TEST

1. **CHECK FOR ACTIVE DIAGNOSTIC TROUBLE CODE (DTC)**
    1. Turn the ignition on.
    2. With the scan tool, read the TIPM DTC's.

       Does the scan tool display this DTC as active?

       Yes

       - Go To 2.

       No

       - Test complete, the condition or conditions that originally set this DTC are not present at this time. Using the wiring diagrams as a guide, check all related splices and connectors for signs of water intrusion, corrosion, pushed out or bent terminals, and correct pin tension.
       - Perform the BODY VERIFICATION TEST. Refer to **BODY VERIFICATION TEST**.
2. **CHECK THE (B20) BRAKE FLUID LEVEL SIGNAL CIRCUIT FOR A SHORT TO VOLTAGE IN THE HARNESS**

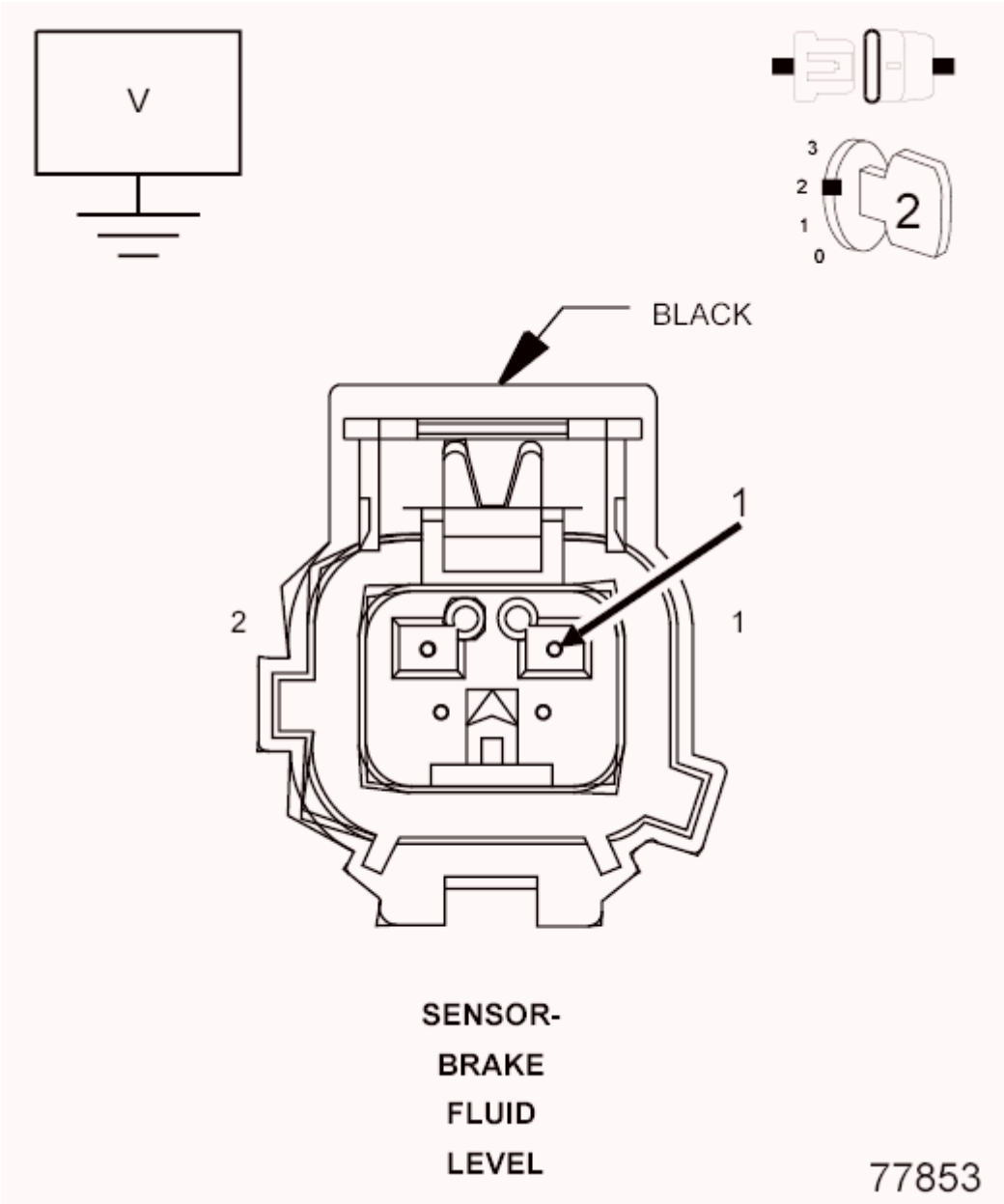

Fig. 99: Checking Brake Fluid Level Sensor For A Short To Voltage In The Harness
Courtesy of CHRYSLER GROUP, LLC

1. Turn the ignition off.
2. Disconnect the Brake Fluid Level Sensor harness connector.
3. Disconnect the TIPM C7 harness connector.
4. Turn the ignition on.
5. Measure the voltage between ground and the (B20) Brake Fluid Level Signal circuit.

   Is there any voltage present?

   Yes

- Repair the short to voltage in the (B20) Brake Fluid Level Signal circuit.
- Perform the BODY VERIFICATION TEST. Refer to **BODY VERIFICATION TEST**.

No

- Go To 3.

3. **CHECK THE (B20) BRAKE FLUID LEVEL SIGNAL CIRCUIT FOR AN OPEN IN THE HARNESS**

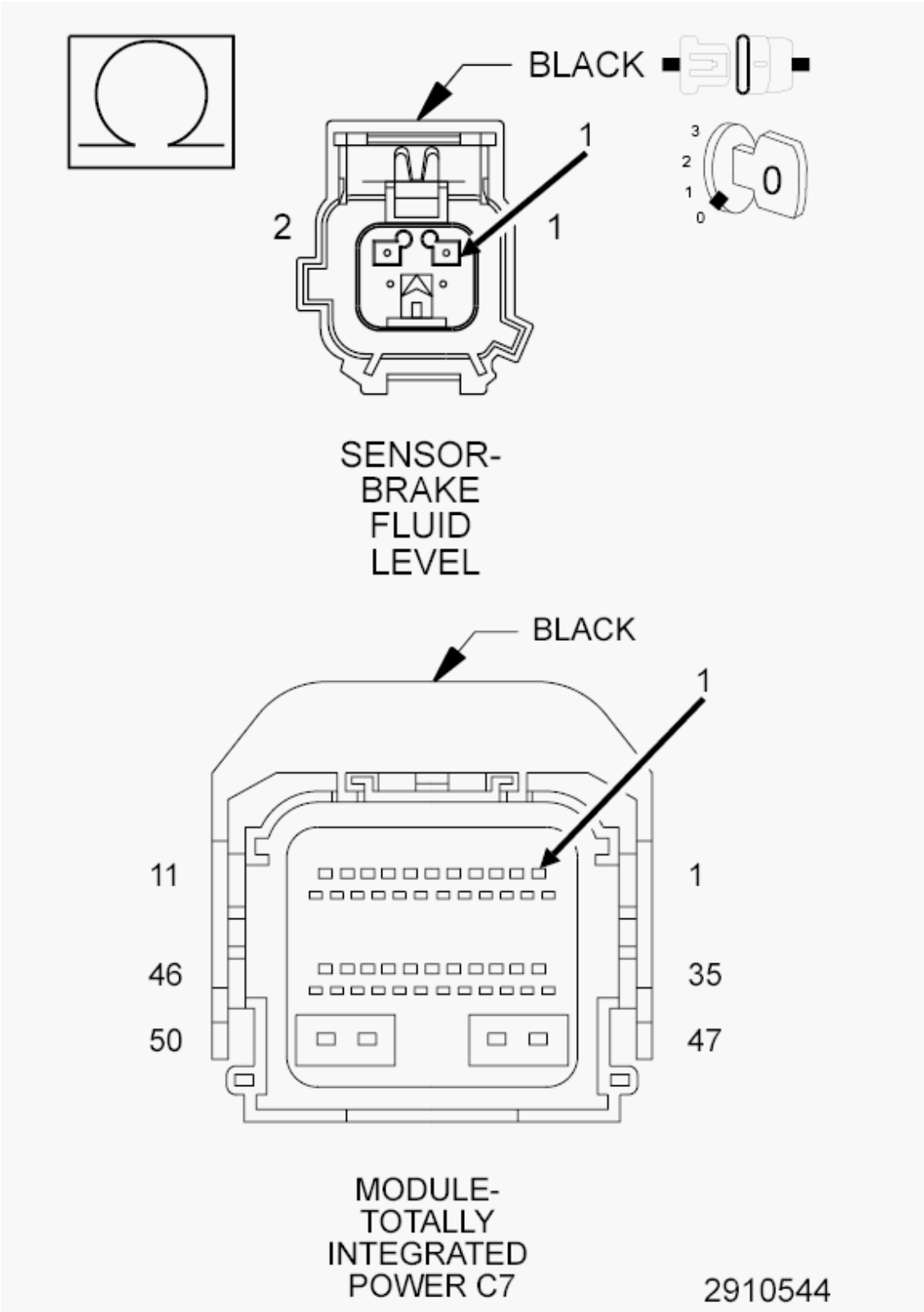

Fig. 100: Checking Brake Fluid Level Signal Circuit For An Open In The Harness
Courtesy of CHRYSLER GROUP, LLC

1. Turn the ignition off.
2. Measure the resistance of the (B20) Brake Fluid Level Signal circuit between the Brake Fluid Level Sensor harness connector and the TIPM C7 harness connector.

   Is the resistance below 5.0 Ohms?

   Yes

   - Go To 4.

   No

   - Repair the open in the (B20) Brake Fluid Level Signal circuit.
   - Perform the BODY VERIFICATION TEST. Refer to **BODY VERIFICATION TEST**.

4. **CHECK THE (Z907) GROUND CIRCUIT FOR AN OPEN IN THE HARNESS**

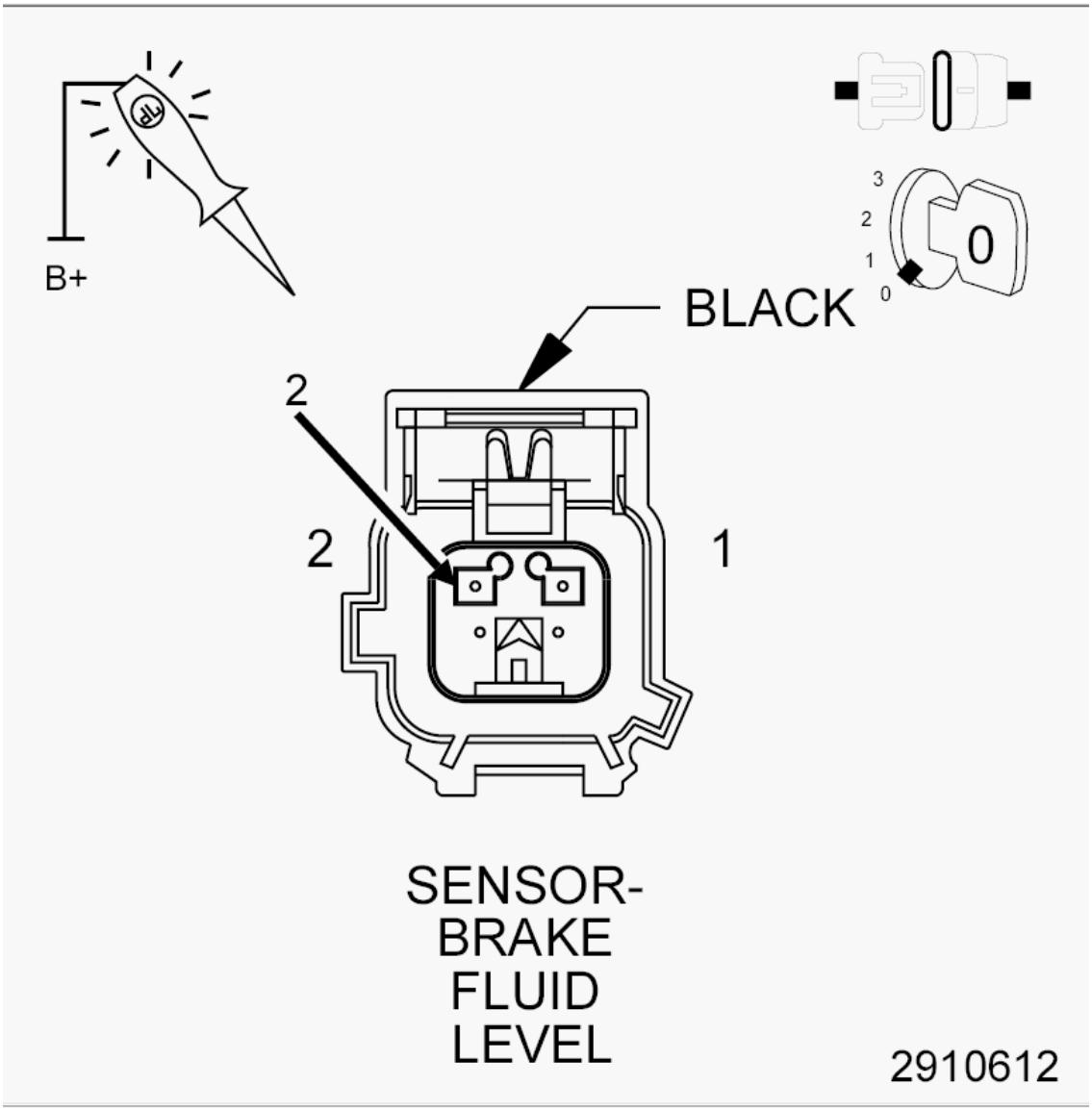

Fig. 101: Checking Ground Circuit For An Open In The Harness
Courtesy of CHRYSLER GROUP, LLC

1. Using a 12-volt test light connected to 12-volts, check the (Z907) Ground circuit.

   Does the test light illuminate brightly?

   Yes

   - Go To 5.

   No

   - Repair the open in the (Z907) Ground circuit.
   - Perform the BODY VERIFICATION TEST. Refer to **BODY VERIFICATION TEST**.

5. **CHECK THE TIPM FOR CORRECT OPERATION**

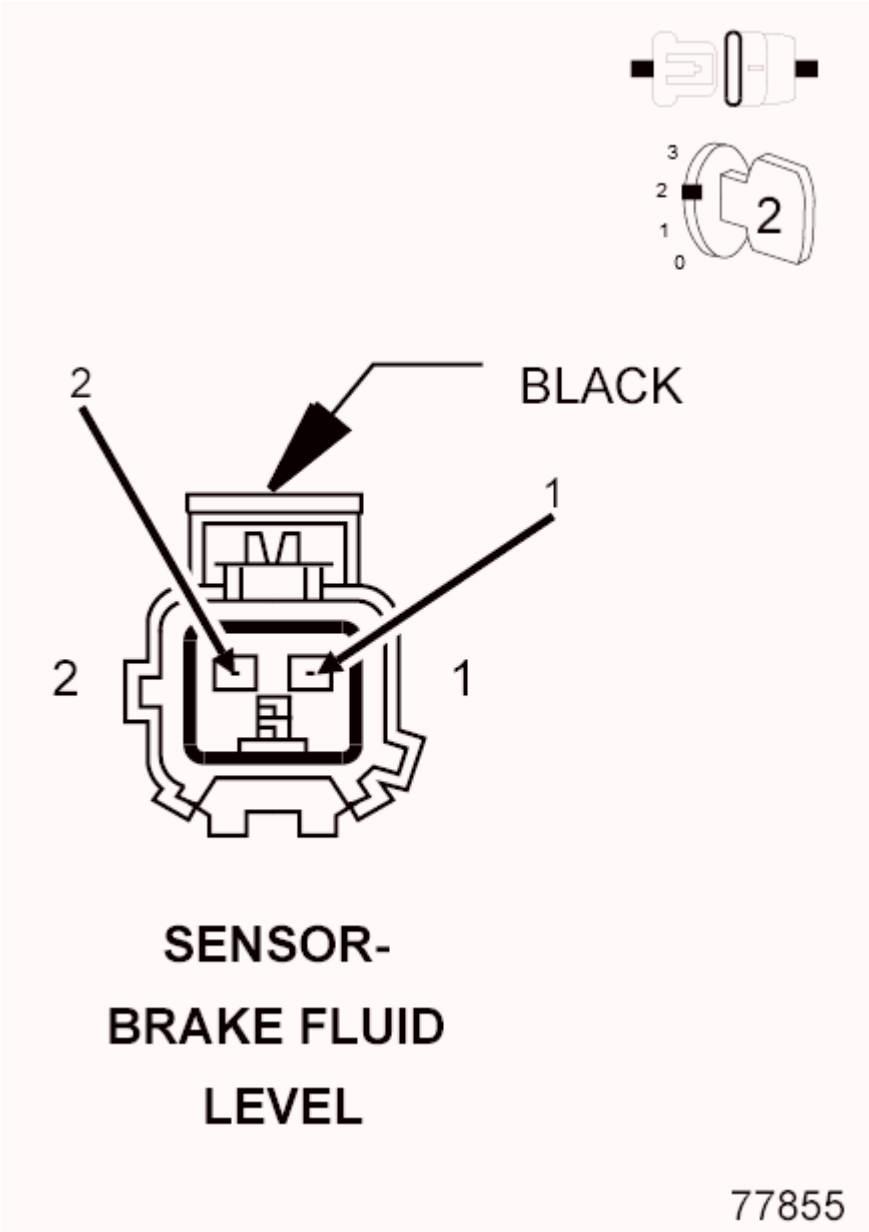

Fig. 102: Checking Brake Fluid Level Sensor Operation
Courtesy of CHRYSLER GROUP, LLC

1. Connect a jumper wire between the (B20) Brake Fluid Level Signal circuit and the (Z907) Ground circuit in the Brake Fluid Level Switch harness connector.
2. Turn the ignition on.
3. With the scan tool, read the Brake Fluid Level Voltage.

   Is the voltage below 1.0 volt?

Yes

- Replace the Brake Fluid Level Switch.
- Perform the BODY VERIFICATION TEST. Refer to **BODY VERIFICATION TEST**.

No

- Replace the Totally Integrated Power Module (TIPM) in accordance with the Service Information.
- Perform the BODY VERIFICATION TEST. Refer to **BODY VERIFICATION TEST**.

C1404-TRANSFER CASE RANGE POSITION SENSOR CIRCUIT LOW

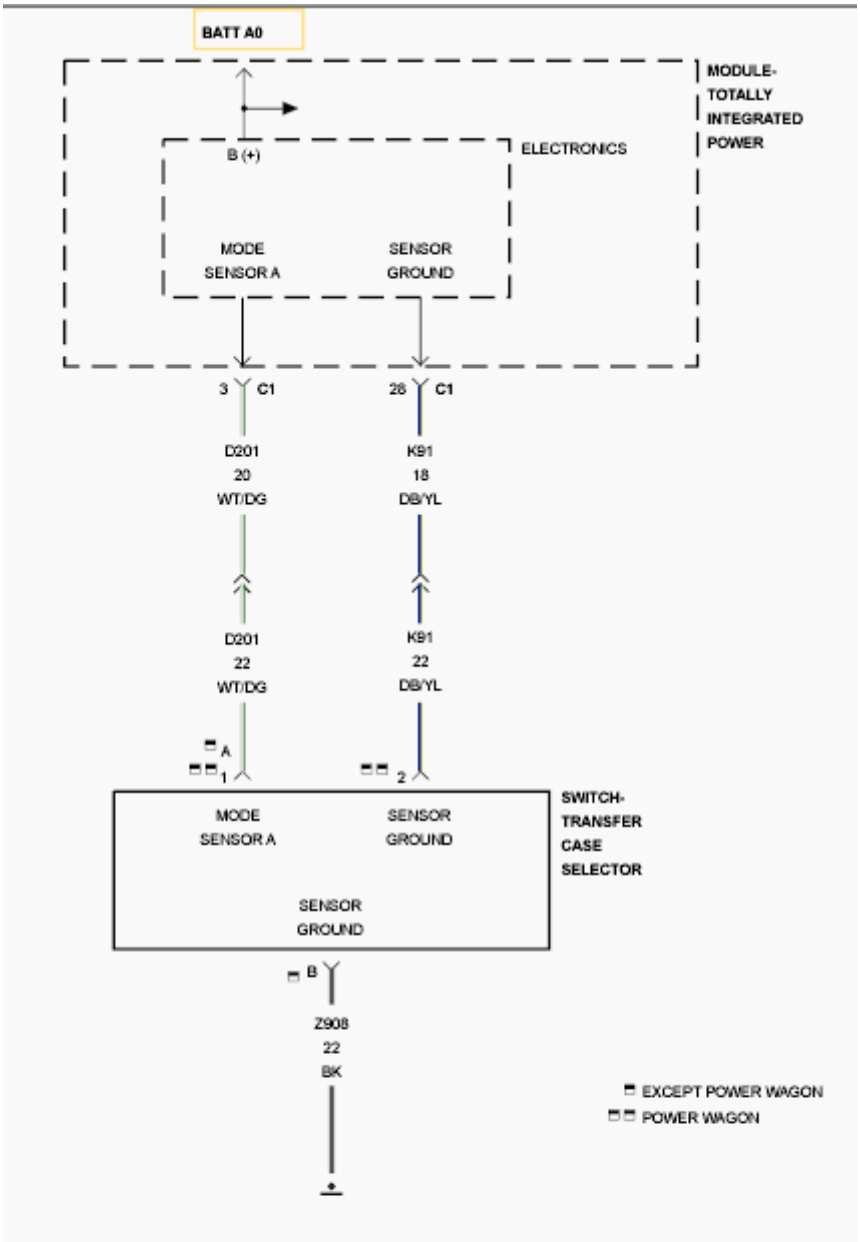

SWITCH-
TRANSFER
CASE SELECTOR
(EXCEPT POWER WAGON)

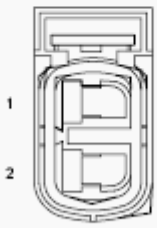

SWITCH-
TRANSFER
CASE
SELECTOR
(POWER WAGON)

Fig. 103: Transfer Case Range Position Sensor Wiring Diagram
Courtesy of CHRYSLER GROUP, LLC

For a complete wiring diagram, **refer to appropriate SYSTEM WIRING DIAGRAMS article** .

WHEN MONITORED:

Ignition on.

Battery voltage between 9.0 and 16.0 volts.

SET CONDITION:

The Totally Integrated Power Module (TIPM) detects a short to ground on the Mode Sensor A circuit for more than five seconds.

POSSIBLE CAUSES

Possible Causes
(D201) MODE SENSOR A CIRCUIT SHORTED TO GROUND
(D201) MODE SENSOR A CIRCUIT SHORTED TO THE (K91) SENSOR GROUND CIRCUIT (POWER WAGON)
TRANSFER CASE SELECTOR SWITCH
TOTALLY INTEGRATED POWER MODULE (TIPM)

DIAGNOSTIC TEST

1. **DTC IS ACTIVE**
    1. Start the engine and allow it to idle.
    2. Move the Transfer Case Lever to each position several times.
    3. With the scan tool, read the DTC's.

       Is the status Active for this DTC?

       Yes

       - Go To 3.

       No

       - Test complete, the condition or conditions that originally set this DTC are not present at this time. Using the wiring diagrams as a guide, check all related splices and connectors for signs of water intrusion, corrosion, pushed out or bent terminals, and correct pin tension.
       - Perform the BODY VERIFICATION TEST. Refer to **BODY VERIFICATION TEST**.
2. **ATTEMPT TO SET THE OPPOSITE DTC**

1. Turn the ignition off.
2. Disconnect the Transfer Case Selector Switch harness connector.
3. Turn the ignition on.
4. With the scan tool, read the TIPM DTC's.

   Does the scan tool display DTC C1405-TRANSFER CASE RANGE POSITION SENSOR CIRCUIT HIGH?

   Yes

   - Replace the Transfer Case Selector Switch in accordance with the Service Information. Refer to **SENSOR, POSITION, REMOVAL** .
   - Perform the BODY VERIFICATION TEST. Refer to **BODY VERIFICATION TEST**.

   No

   - Go To 3.

3. **CHECK THE (D201) MODE SENSOR A CIRCUIT FOR A SHORT TO GROUND**

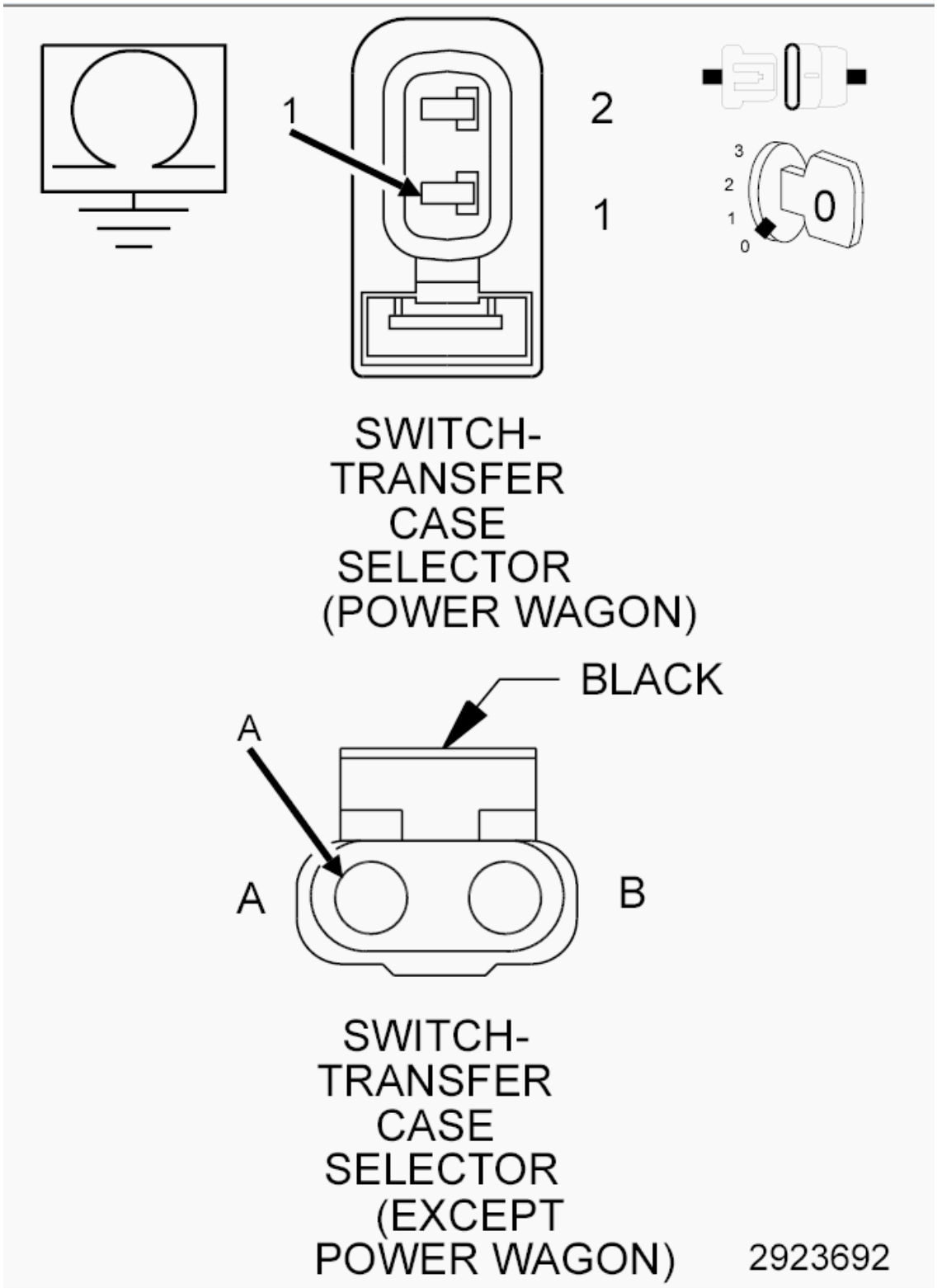

Fig. 104: Checking Mode Sensor A Circuit For A Short To Ground
Courtesy of CHRYSLER GROUP, LLC

1. Turn the ignition off.

2. Disconnect the TIPM C1 harness connector.
3. Measure the resistance between ground and the (D201) Mode Sensor A circuit.

   Is the resistance above 10k Ohms?

   Yes

   - For Power Wagon vehicles, Go To 4.
   - For all others, replace the Totally Integrated Power Module (TIPM) in accordance with the Service Information. Refer to **MODULE, TOTALLY INTEGRATED POWER (TIPM), REMOVAL** .
   - Perform the BODY VERIFICATION TEST. Refer to **BODY VERIFICATION TEST**.

   No

   - Repair the short to ground in the (D201) Mode Sensor A circuit.
   - Perform the BODY VERIFICATION TEST. Refer to **BODY VERIFICATION TEST**.

4. **CHECK THE (D201) MODE SENSOR A CIRCUIT FOR A SHORT TO THE (K91) SENSOR GROUND CIRCUIT**

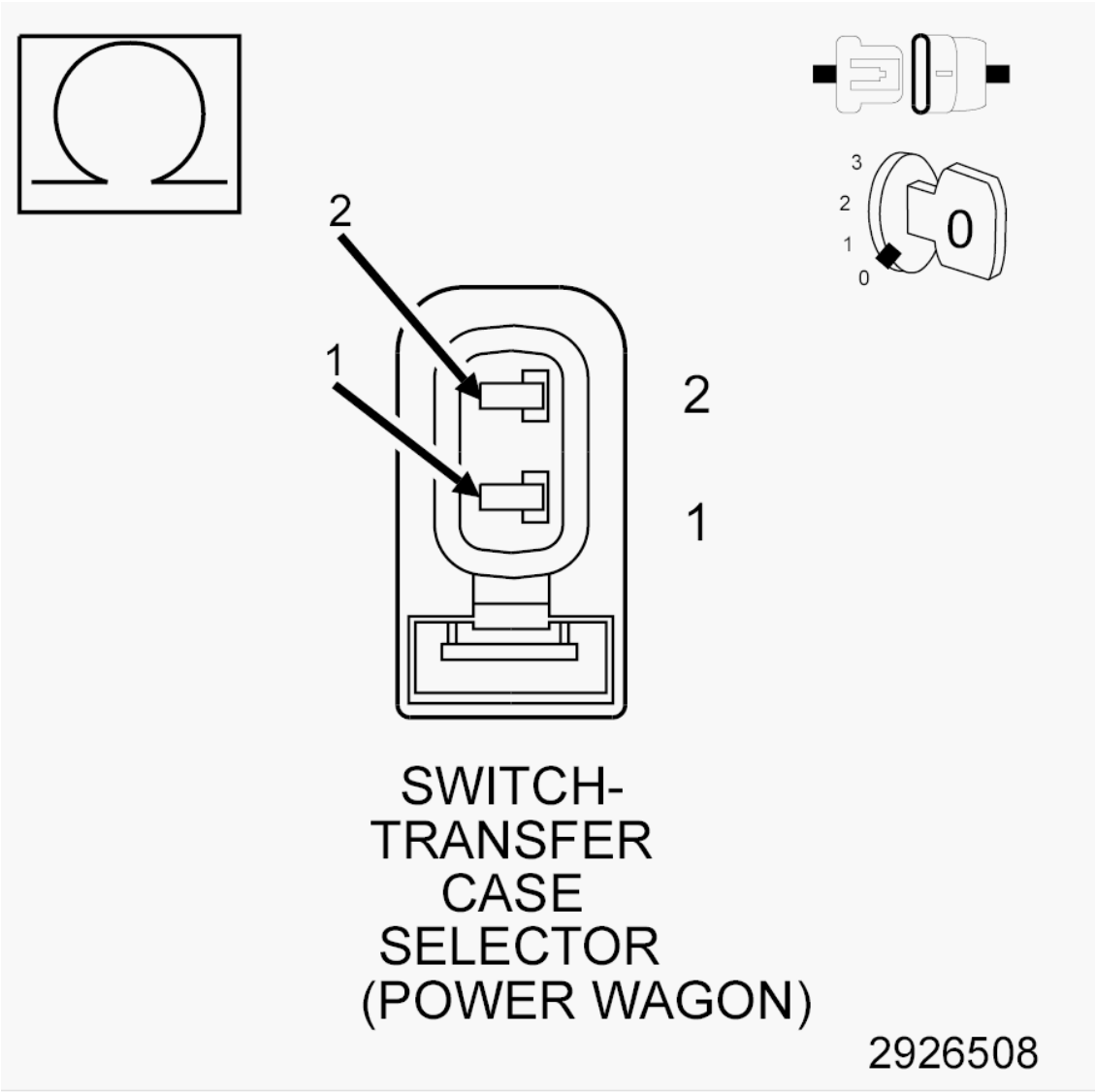

Fig. 105: Checking Mode Sensor A Circuit For A Short To Sensor Ground Circuit
Courtesy of CHRYSLER GROUP, LLC

1. Measure the resistance between the (D201) Mode Sensor A circuit and the (K91) Sensor Ground circuit at the Transfer Case Selector Switch harness connector.

   Is the resistance above 10k Ohms?

   Yes

   - Replace the Totally Integrated Power Module (TIPM) in accordance with the Service Information. Refer to **MODULE, TOTALLY INTEGRATED POWER (TIPM), REMOVAL** .
   - Perform the BODY VERIFICATION TEST. Refer to **BODY VERIFICATION TEST**.

   No

- Repair the short between the (D201) Mode Sensor A circuit and the (K91) Sensor Ground circuit.
- Perform the BODY VERIFICATION TEST. Refer to **BODY VERIFICATION TEST**.

C1405-TRANSFER CASE RANGE POSITION SENSOR CIRCUIT HIGH

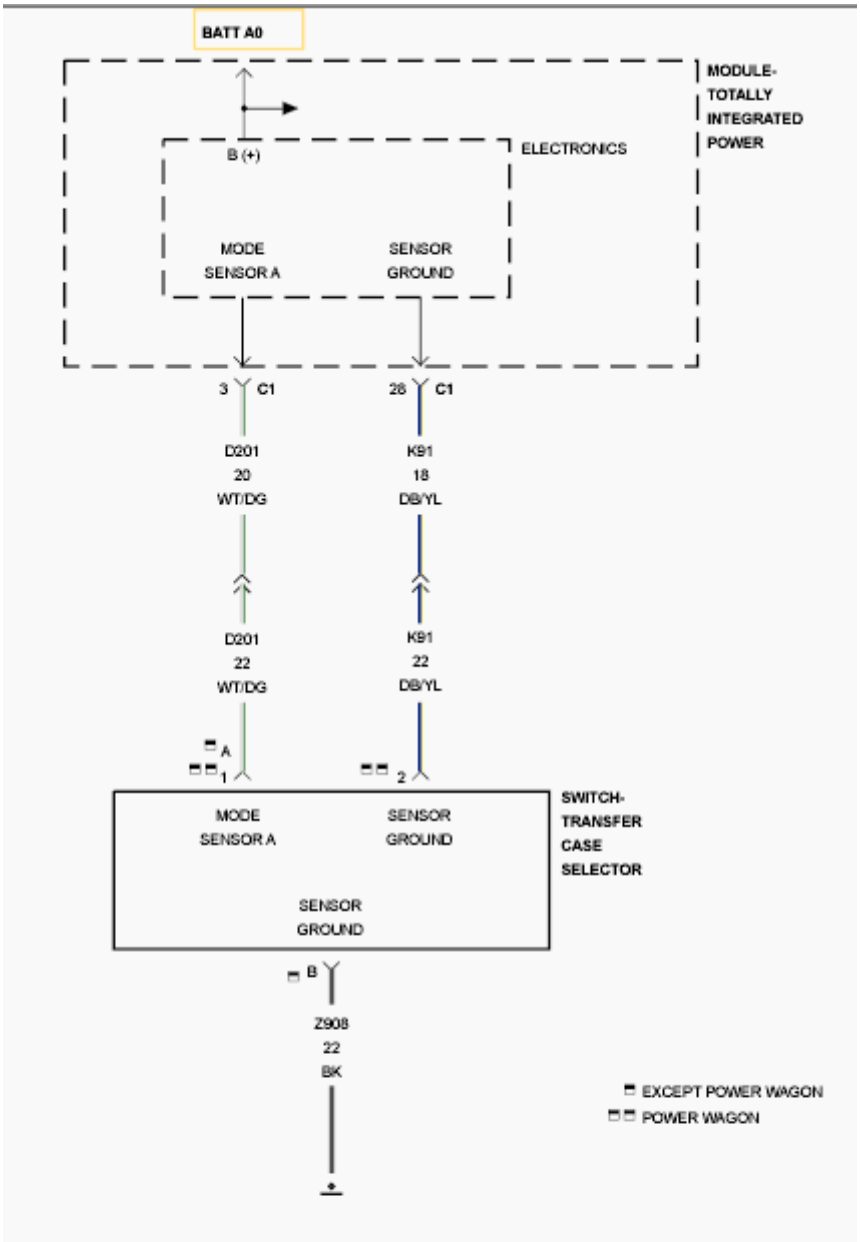

SWITCH-
TRANSFER
CASE SELECTOR
(EXCEPT POWER WAGON)

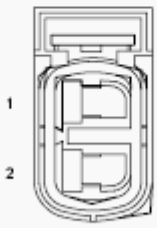

SWITCH-
TRANSFER
CASE
SELECTOR
(POWER WAGON)

Fig. 106: Transfer Case Range Position Sensor Wiring Diagram
Courtesy of CHRYSLER GROUP, LLC

For a complete wiring diagram, **refer to appropriate SYSTEM WIRING DIAGRAMS article** .

WHEN MONITORED:

With the ignition on.

Battery voltage between 9.0 and 16.0 volts.

SET CONDITION:

The Totally Integrated Power Module (TIPM) detects an open or a short to voltage on the Mode Sensor A circuit for more than five seconds.

POSSIBLE CAUSES

Possible Causes
(D201) MODE SENSOR A CIRCUIT SHORTED TO VOLTAGE
(D201) MODE SENSOR A CIRCUIT OPEN
(K91) SENSOR GROUND CIRCUIT OPEN (POWER WAGON)
(Z908) GROUND CIRCUIT OPEN
TRANSFER CASE SELECTOR SWITCH
TOTALLY INTEGRATED POWER MODULE (TIPM)

DIAGNOSTIC TEST

1. **DTC IS ACTIVE**
    1. Start the engine and allow it to idle.
    2. Move the Transfer Case Lever to each position several times.
    3. With the scan tool, read DTC's.

    Is the status Active for this DTC?

    Yes

    - Go To 2.

    No

    - Test complete, the condition or conditions that originally set this DTC are not present at this time. Using the wiring diagrams as a guide, check all related splices and connectors for signs of water intrusion, corrosion, pushed out or bent terminals, and correct pin tension.
    - Perform the BODY VERIFICATION TEST. Refer to **BODY VERIFICATION TEST**.

2. **CHECK THE (D201) MODE SENSOR A CIRCUIT FOR A SHORT TO VOLTAGE**

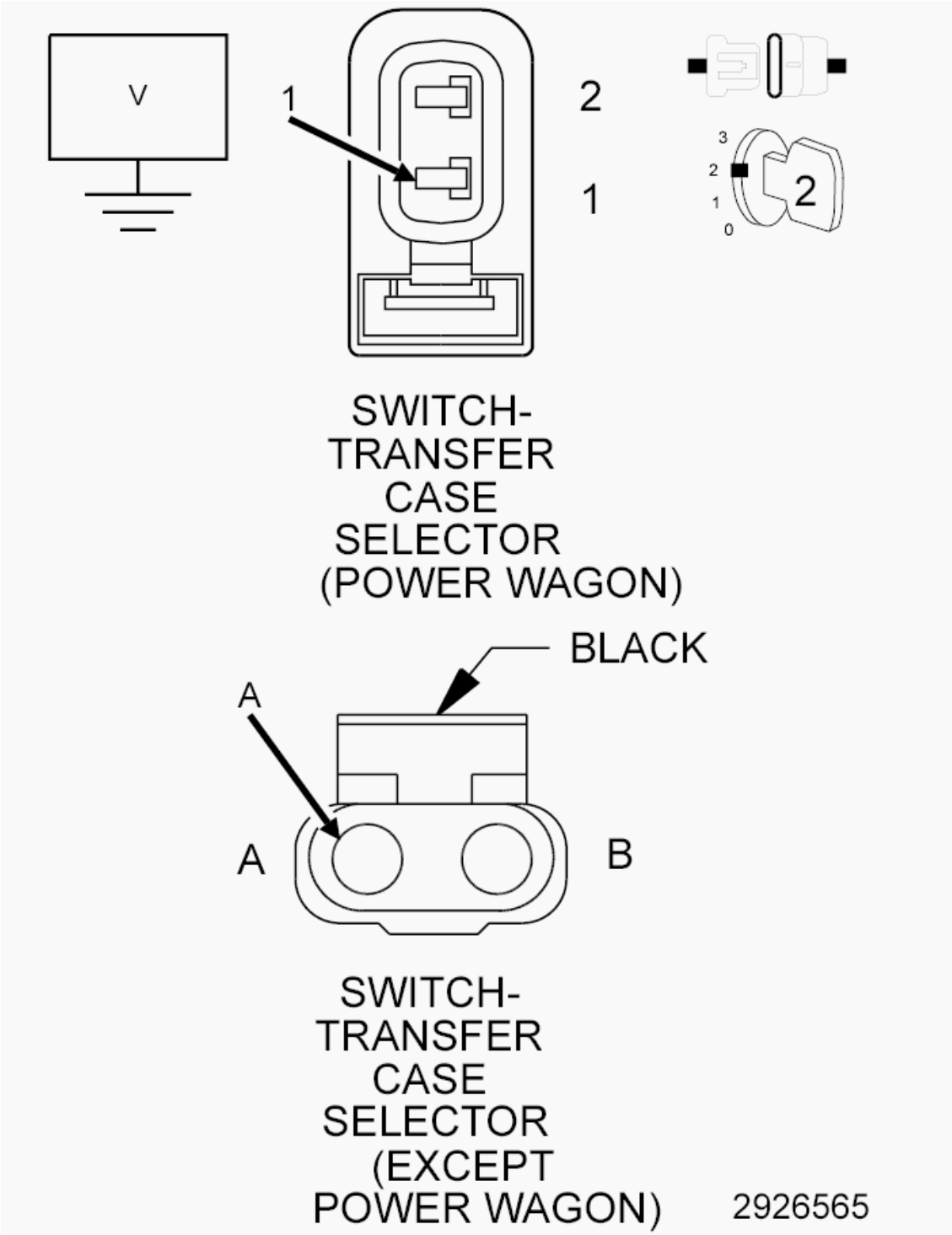

Fig. 107: Checking Mode Sensor A Circuit For A Short To Voltage
Courtesy of CHRYSLER GROUP, LLC

1. Turn the ignition off.

2. Disconnect the Transfer Case Selector Switch harness connector.
3. Disconnect the TIPM C1 harness connector.
4. Turn the ignition on.
5. Measure the voltage between ground and the (D201) Mode Sensor A circuit.

   Is there any voltage present?

   Yes

   - Repair the short to voltage in the (D201) Mode Sensor A circuit.
   - Perform the BODY VERIFICATION TEST. Refer to **BODY VERIFICATION TEST**.

   No

   - Go To 3.

3. **ATTEMPT TO SET THE OPPOSITE DTC**

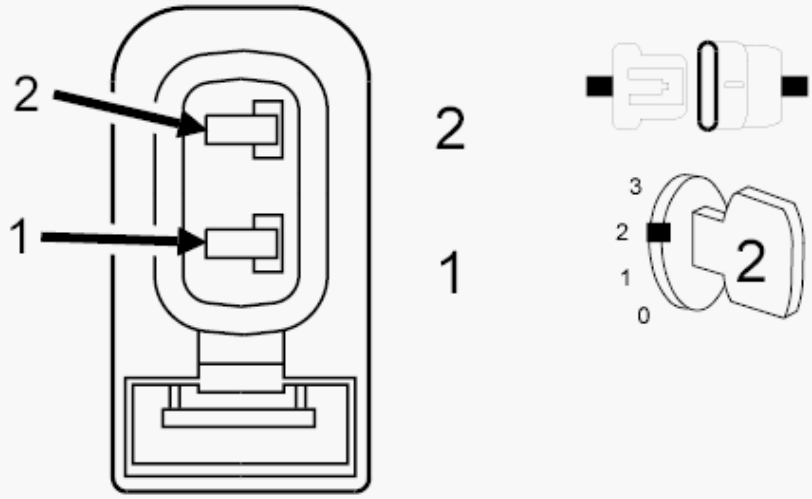

SWITCH-
TRANSFER
CASE
SELECTOR
(POWER WAGON)

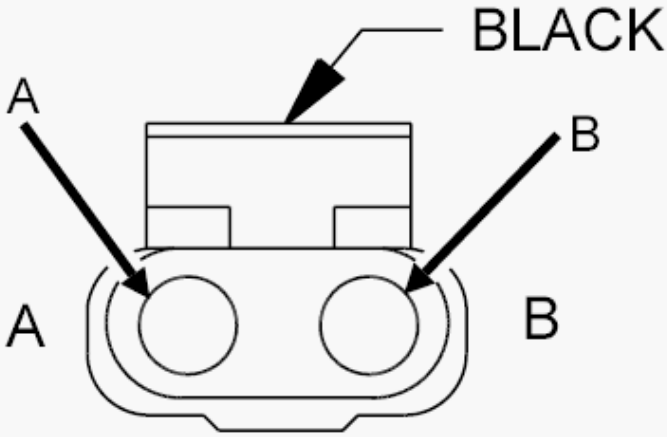

SWITCH-
TRANSFER
CASE
SELECTOR
(EXCEPT
POWER WAGON)

2926585

Fig. 108: Attempting To Set A DTC
Courtesy of CHRYSLER GROUP, LLC

1. Turn the ignition off.
2. Reconnect the TIPM C1 harness connector.
3. Connect a jumper wire between the (Z908) Ground or (K91) Sensor Ground circuit and the (D201) Mode Sensor A circuit at the Transfer Case Selector Switch harness connector.
4. Turn the ignition on.
5. With the scan tool, read DTC's.

   Does the scan tool display DTC C1404-TRANSFER CASE RANGE POSITION SENSOR CIRCUIT LOW?

   Yes

   - Replace the Transfer Case Selector Switch in accordance with the Service Information. Refer to **SENSOR, POSITION, REMOVAL** .
   - Perform the BODY VERIFICATION TEST. Refer to **BODY VERIFICATION TEST**.

   No

   - Go To 4.

4. **CHECK THE (D201) MODE SENSOR A CIRCUIT FOR AN OPEN**

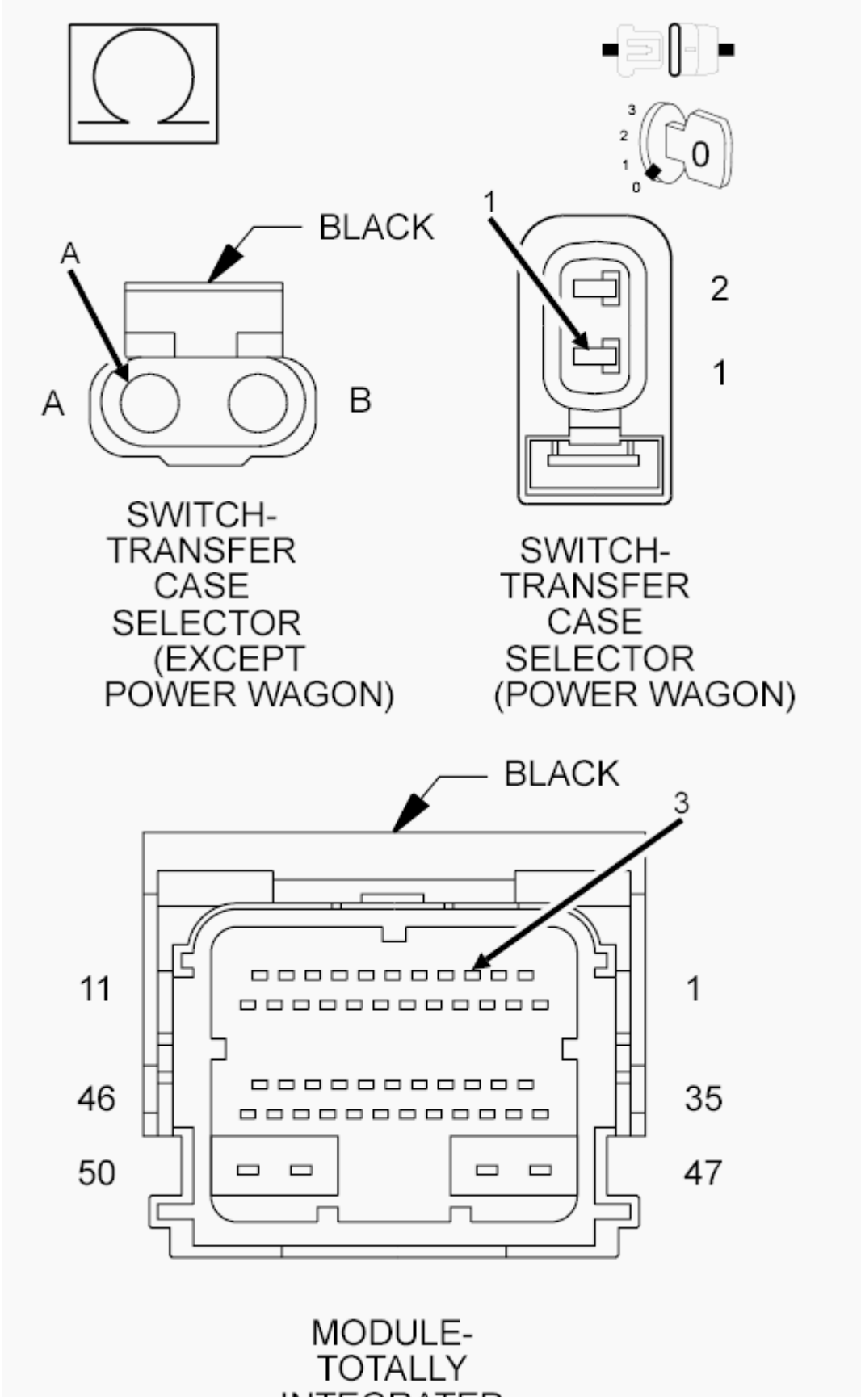
3
2
1
0
0
BLACK
A
A
B
SWITCH-
TRANSFER
CASE
SELECTOR
(EXCEPT
POWER WAGON)
1
2
1
SWITCH-
TRANSFER
CASE
SELECTOR
(POWER WAGON)
BLACK
3
11
1
46
35
50
47
MODULE-
TOTALLY

Fig. 109: Checking Mode Sensor A Circuit For An Open
Courtesy of CHRYSLER GROUP, LLC

1. Turn the ignition off.
2. Disconnect the TIPM C1 harness connector.
3. Measure the resistance of the (D201) Mode Sensor A circuit between the Transfer Case Selector Switch harness connector and the TIPM C1 harness connector.

   Is the resistance below 5.0 Ohms?

   Yes

   - For Power Wagon vehicles, Go To 5.
   - For all others, Go To 6.

   No

   - Repair the open in the (D201) Mode Sensor A circuit.
   - Perform the BODY VERIFICATION TEST. Refer to **BODY VERIFICATION TEST**.

5. **CHECK THE (K91) SENSOR GROUND CIRCUIT FOR AN OPEN**

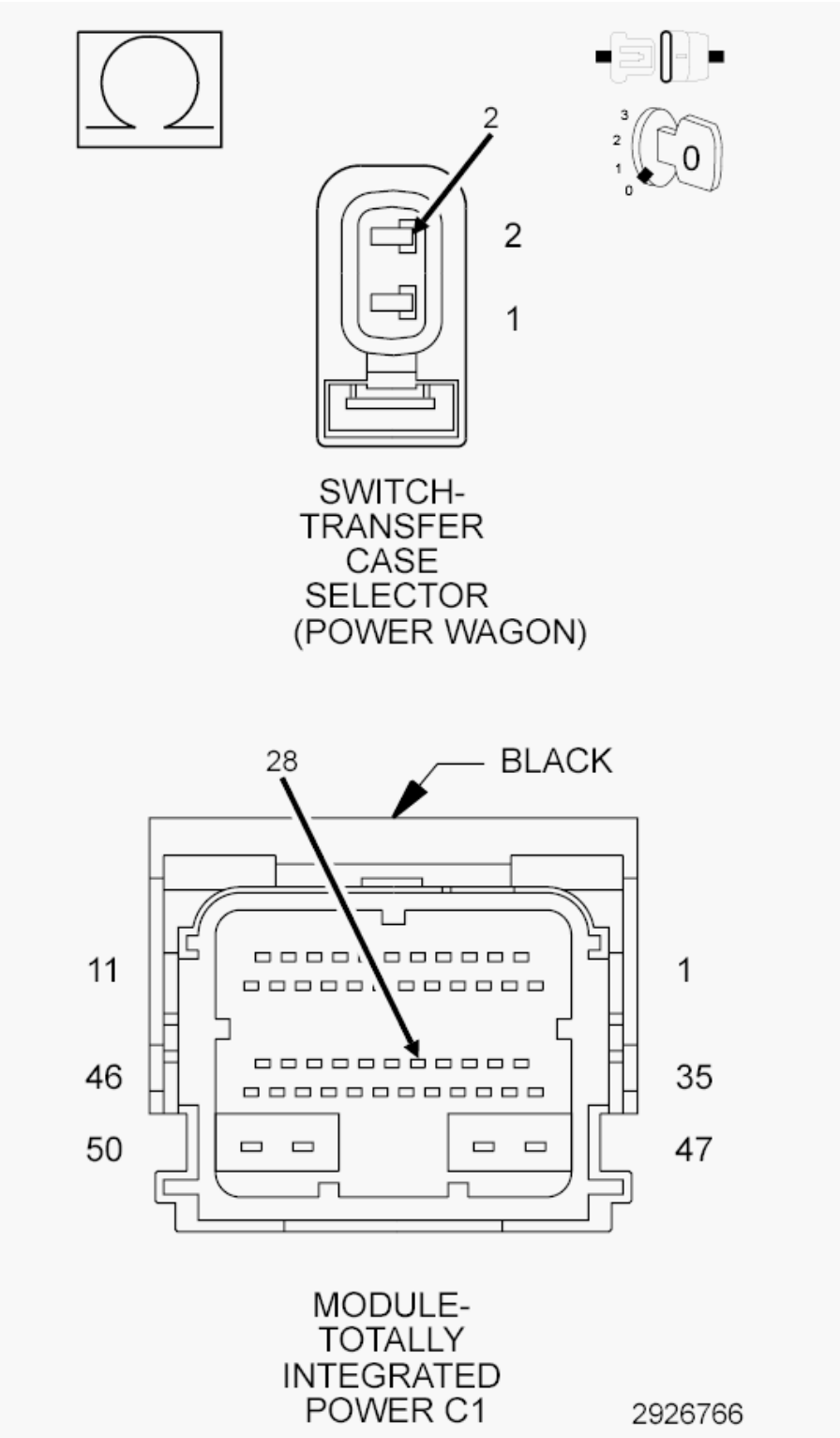

Fig. 110: Checking Sensor Ground Circuit For An Open
Courtesy of CHRYSLER GROUP, LLC

1. Measure the resistance of the (K91) Sensor Ground circuit between the Transfer Case Selector Switch harness connector and the TIPM C1 harness connector.

Is the resistance below 5.0 Ohms?

Yes

- Replace the Totally Integrated Power Module (TIPM) in accordance with the Service information. Refer to **MODULE, TOTALLY INTEGRATED POWER (TIPM), REMOVAL** .
- Perform the BODY VERIFICATION TEST. Refer to **BODY VERIFICATION TEST**.

No

- Repair the open in the (K91) Sensor Ground circuit.
- Perform the BODY VERIFICATION TEST. Refer to **BODY VERIFICATION TEST**.

6. **CHECK THE (Z908) GROUND CIRCUIT FOR AN OPEN**

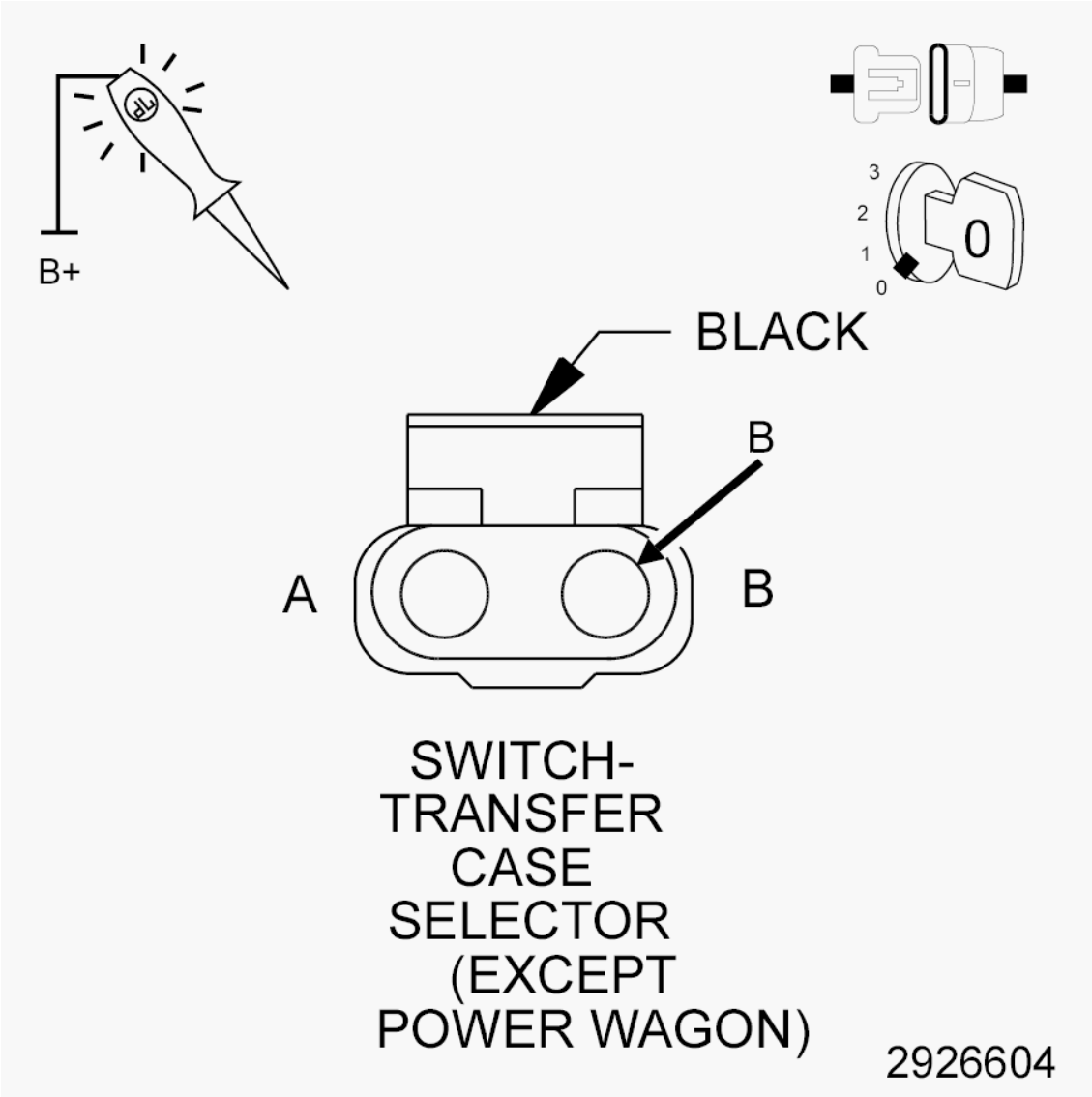

Fig. 111: Checking Ground Circuit For An Open
Courtesy of CHRYSLER GROUP, LLC

1. Using a 12-volt test light connected to 12-volts, check the (Z908) Ground circuit.

   Does the test light illuminate brightly?

   Yes

   - Replace the Totally Integrated Power Module (TIPM) in accordance with the Service information. Refer to **MODULE, TOTALLY INTEGRATED POWER (TIPM), REMOVAL** .
   - Perform the BODY VERIFICATION TEST. Refer to **BODY VERIFICATION TEST**.

   No

   - Repair the open in the (Z908) Ground circuit.
   - Perform the BODY VERIFICATION TEST. Refer to **BODY VERIFICATION TEST**.

P0072-AMBIENT AIR TEMPERATURE SENSOR CIRCUIT LOW

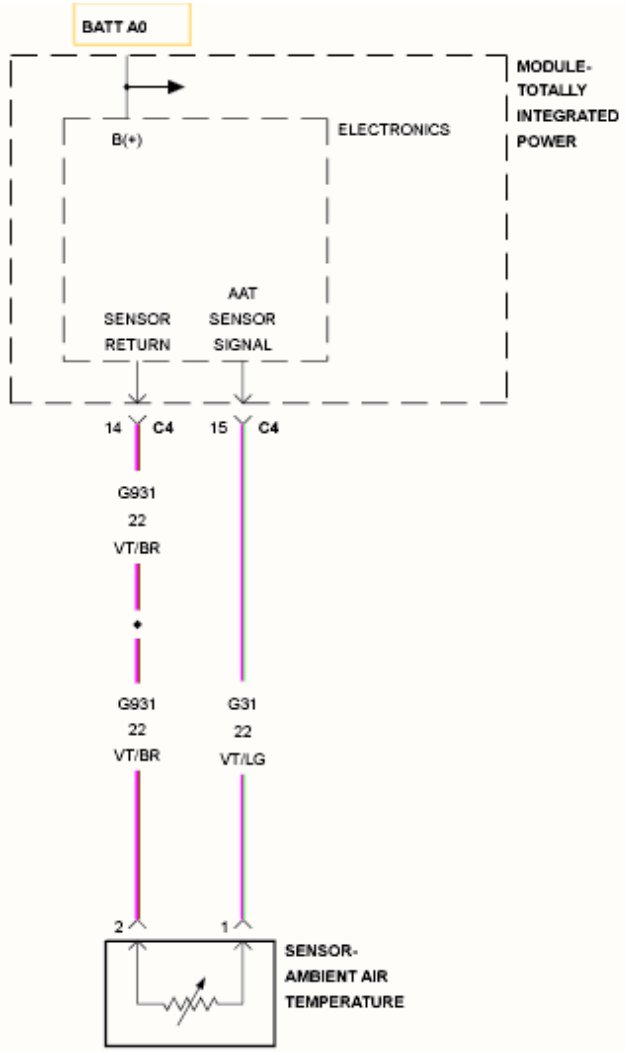

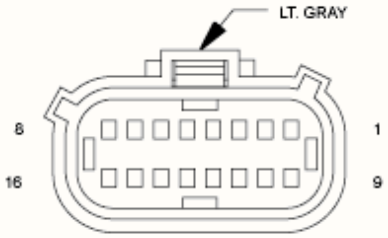

MODULE-
TOTALLY
INTEGRATED
POWER C4

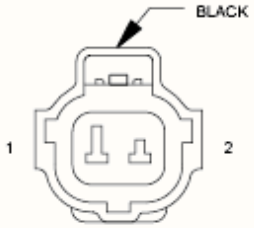

SENSOR-
AMBIENT AIR
TEMPERATURE

Fig. 112: Ambient Air Temperature (AAT) Sensor Wiring Diagram
Courtesy of CHRYSLER GROUP, LLC

For a complete wiring diagram, **refer to appropriate SYSTEM WIRING DIAGRAMS article** .

WHEN MONITORED:

With the ignition on.

Battery voltage greater than 10.4 volts.

SET CONDITION:

The Totally Integrated Power Module (TIPM) detects the Ambient Air Temperature Sensor input voltage is below the minimum acceptable value.

POSSIBLE CAUSES

Possible Causes
(G31) AAT SENSOR SIGNAL CIRCUIT SHORTED TO GROUND
(G31) AAT SENSOR SIGNAL CIRCUIT SHORTED TO THE (G931) SENSOR RETURN CIRCUIT
AMBIENT AIR TEMPERATURE (AAT) SENSOR
TOTALLY INTEGRATED POWER MODULE (TIPM)

DIAGNOSTIC TEST

1. **VERIFY THE DTC IS ACTIVE**

   NOTE: Diagnose and repair any system voltage DTC's before continuing with this test.

   1. Start the engine and allow it to reach normal operating temperature.

      WARNING: When the engine is operating, do not stand in direct line with the fan. Do not put your hands near the pulleys, belts or fan. Do not wear loose clothing. Failure to follow these instructions may result in possible serious or fatal injury.

   2. With the scan tool, select View DTC's.

      Is the DTC Active at this time?

      Yes

      - Go To 2.

No

- Test complete, the condition or conditions that originally set this DTC are not present at this time. Using the wiring diagrams as a guide, check all related splices and connectors for signs of water intrusion, corrosion, pushed out or bent terminals, and correct pin tension.
- Perform the BODY VERIFICATION TEST. Refer to **BODY VERIFICATION TEST**.

2. **CHECK THE AMBIENT AIR TEMPERATURE SENSOR**
   1. Turn the ignition off.
   2. Disconnect the Ambient Air Temperature Sensor harness connector.
   3. Turn the ignition on.
   4. With the scan tool, read the Ambient Air Temperature Sensor signal voltage.

   Is the voltage above 4.5 volts with the Ambient Air Temperature Sensor harness disconnected?

   Yes

   - Verify there is good pin to terminal contact in the AAT Sensor and TIPM harness connectors. Replace the Ambient Temperature Sensor if no problems were found with the connectors in accordance with the Service Information. Refer to **SENSOR, AMBIENT TEMPERATURE, REMOVAL** .
   - Perform the BODY VERIFICATION TEST. Refer to **BODY VERIFICATION TEST**.

   No

   - Go To 3.

3. **CHECK THE (G31) AAT SENSOR SIGNAL CIRCUIT FOR A SHORT TO GROUND**

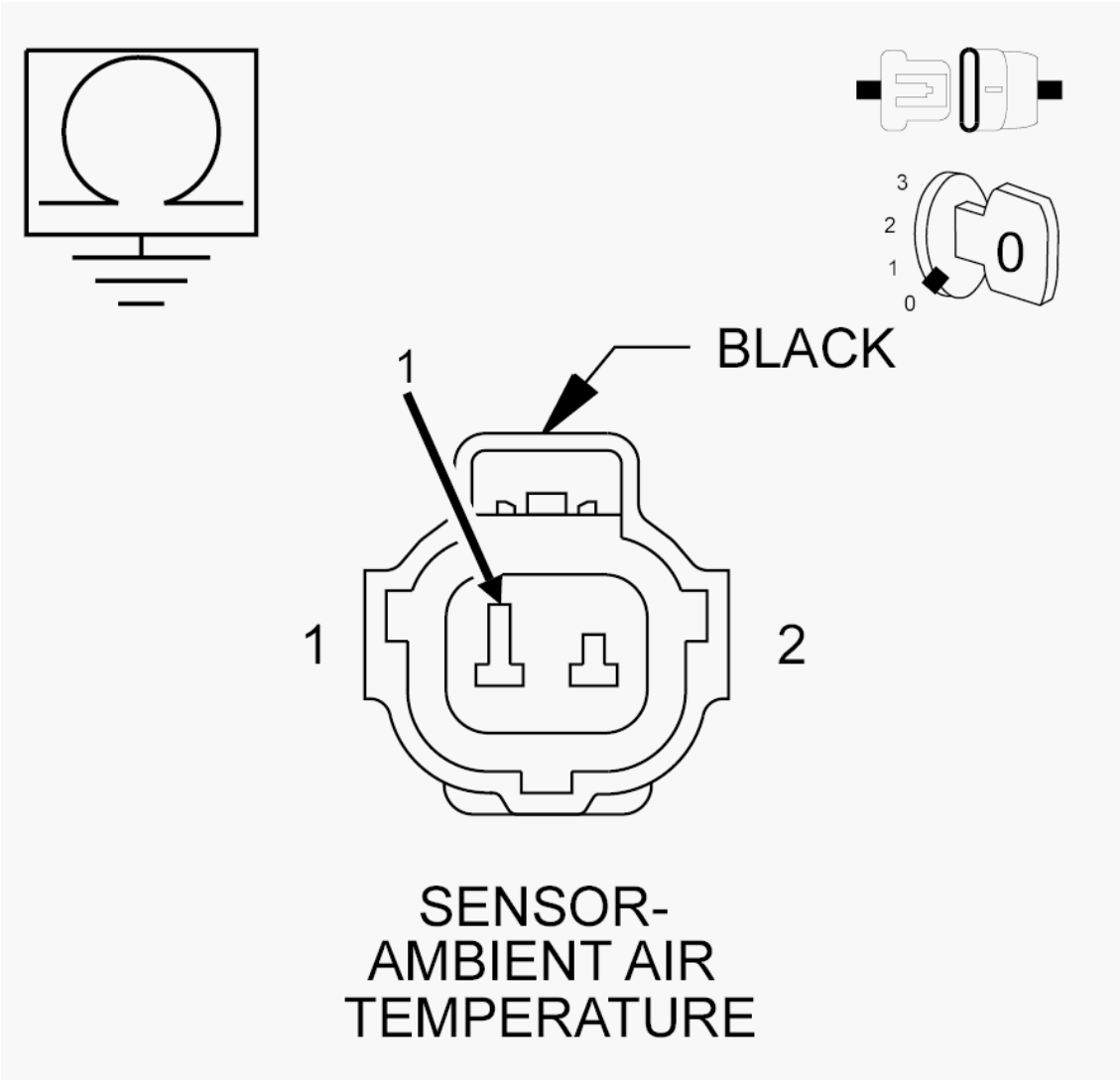

Fig. 113: Checking AAT Sensor Signal Circuit For A Short To Ground
Courtesy of CHRYSLER GROUP, LLC

1. Turn the ignition off.
2. Disconnect the TIPM C4 harness connector.
3. Measure the resistance between ground and the (G31) AAT Sensor Signal circuit in the Ambient Air Temperature Sensor harness connector.

   Is the resistance above 10k Ohms?

   Yes

   - Go To 4.

   No

   - Repair the short to ground in the (G31) AAT Sensor Signal circuit.

- Perform the BODY VERIFICATION TEST. Refer to **BODY VERIFICATION TEST**.

4. **CHECK THE (G31) AAT SENSOR SIGNAL CIRCUIT FOR A SHORT TO THE (G931) SENSOR RETURN CIRCUIT**

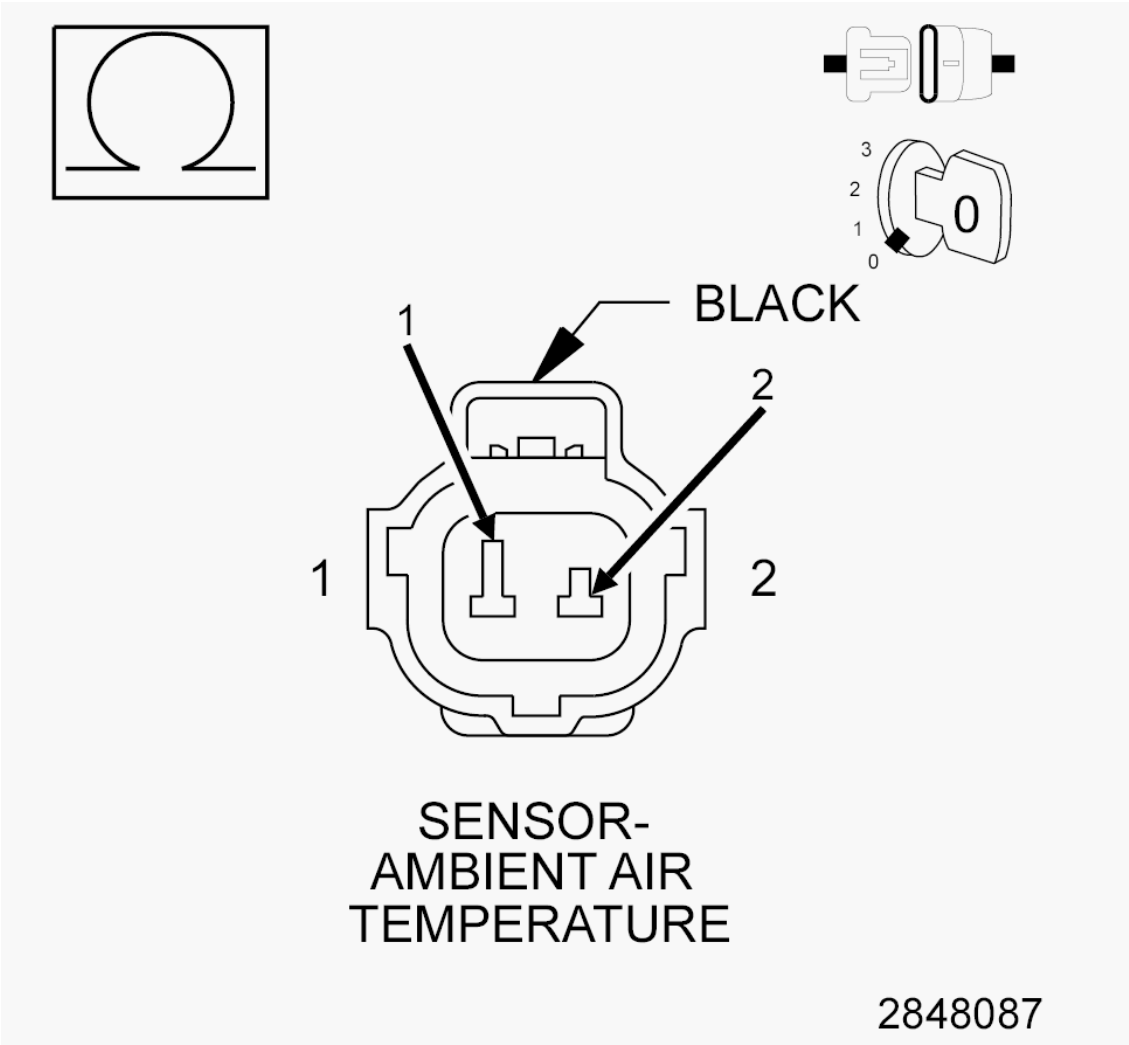

Fig. 114: Checking AAT Sensor Signal Circuit For A Short To Sensor Return Circuit
Courtesy of CHRYSLER GROUP, LLC

1. Measure the resistance between the (G31) AAT Sensor Signal circuit and the (G931) Sensor Return circuit in the Ambient Air Temperature Sensor harness connector.

   Is the resistance above 10k Ohms?

   Yes

   - Go To 5.

   No

- Repair the short between the (G31) AAT Sensor Signal circuit and the (G931) Sensor Return circuit.
- Perform the BODY VERIFICATION TEST. Refer to **BODY VERIFICATION TEST**.

5. **TOTALLY INTEGRATED POWER MODULE (TIPM)**
    1. Using the wiring diagram/schematic as a guide, inspect the wiring and connectors between the Ambient Air Temperature Sensor and the Totally Integrated Power Module (TIPM).
    2. Look for any chafed, pierced, pinched, or partially broken wires.
    3. Look for broken, bent, pushed out or corroded terminals.
    4. Verify that there is good pin to terminal contact in the AAT Sensor and TIPM connectors.
    5. Monitor the scan tool data relative to this circuit and wiggle test the wiring and connectors.
    6. Look for the data to change or for the DTC to reset during the wiggle test.
    7. Perform any Technical Service Bulletins (TSB)s that may apply.

    Were any problems found?

    Yes

    - Repair as necessary.
    - Perform the BODY VERIFICATION TEST. Refer to **BODY VERIFICATION TEST**.

    No

    - Replace the TIPM in accordance with the Service Information. Refer to **MODULE, TOTALLY INTEGRATED POWER (TIPM), REMOVAL** .
    - Perform the BODY VERIFICATION TEST. Refer to **BODY VERIFICATION TEST**.

P0073-AMBIENT AIR TEMPERATURE SENSOR CIRCUIT HIGH

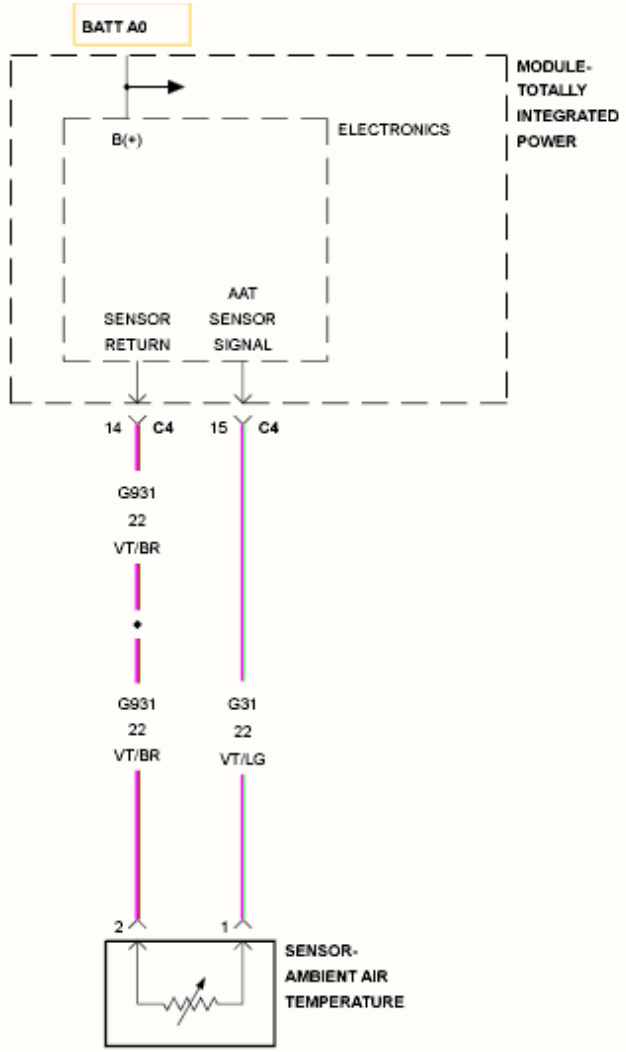

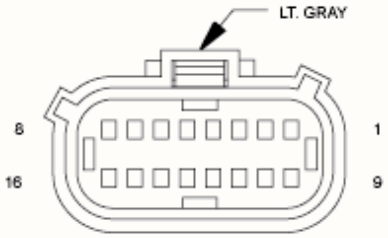

MODULE-
TOTALLY
INTEGRATED
POWER C4

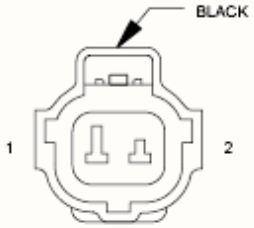

SENSOR-
AMBIENT AIR
TEMPERATURE

Fig. 115: Ambient Air Temperature (AAT) Sensor Wiring Diagram
Courtesy of CHRYSLER GROUP, LLC

For a complete wiring diagram, **refer to appropriate SYSTEM WIRING DIAGRAMS article** .

WHEN MONITORED:

With the ignition on.

Battery voltage greater than 10.4 volts.

SET CONDITION:

The Totally Integrated Power Module (TIPM) detects that the Ambient Air Temperature Sensor input voltage is above the maximum acceptable value.

POSSIBLE CAUSES

Possible Causes
(G31) AAT SENSOR SIGNAL CIRCUIT SHORTED TO VOLTAGE
(G31) AAT SENSOR SIGNAL CIRCUIT OPEN
(G931) SENSOR RETURN CIRCUIT OPEN
AMBIENT AIR TEMPERATURE (AAT) SENSOR
TOTALLY INTEGRATED POWER MODULE (TIPM)

DIAGNOSTIC TEST

1. **VERIFY THE DTC IS ACTIVE**

   NOTE: Diagnose and repair any system voltage DTC's before continuing with this test.

   1. Start the engine and allow it to reach normal operating temperature.

      WARNING: When the engine is operating, do not stand in direct line with the fan. Do not put your hands near the pulleys, belts or fan. Do not wear loose clothing. Failure to follow these instructions may result in possible serious or fatal injury.

   2. With the scan tool, select View DTC's.

      Is the DTC Active at this time?

      Yes

      - Go To 2.

No

- Test complete, the condition or conditions that originally set this DTC are not present at this time. Using the wiring diagrams as a guide, check all related splices and connectors for signs of water intrusion, corrosion, pushed out or bent terminals, and correct pin tension.
- Perform the BODY VERIFICATION TEST. Refer to **BODY VERIFICATION TEST**.

2. **CHECK THE (G31) AAT SENSOR SIGNAL CIRCUIT FOR A SHORT TO VOLTAGE**

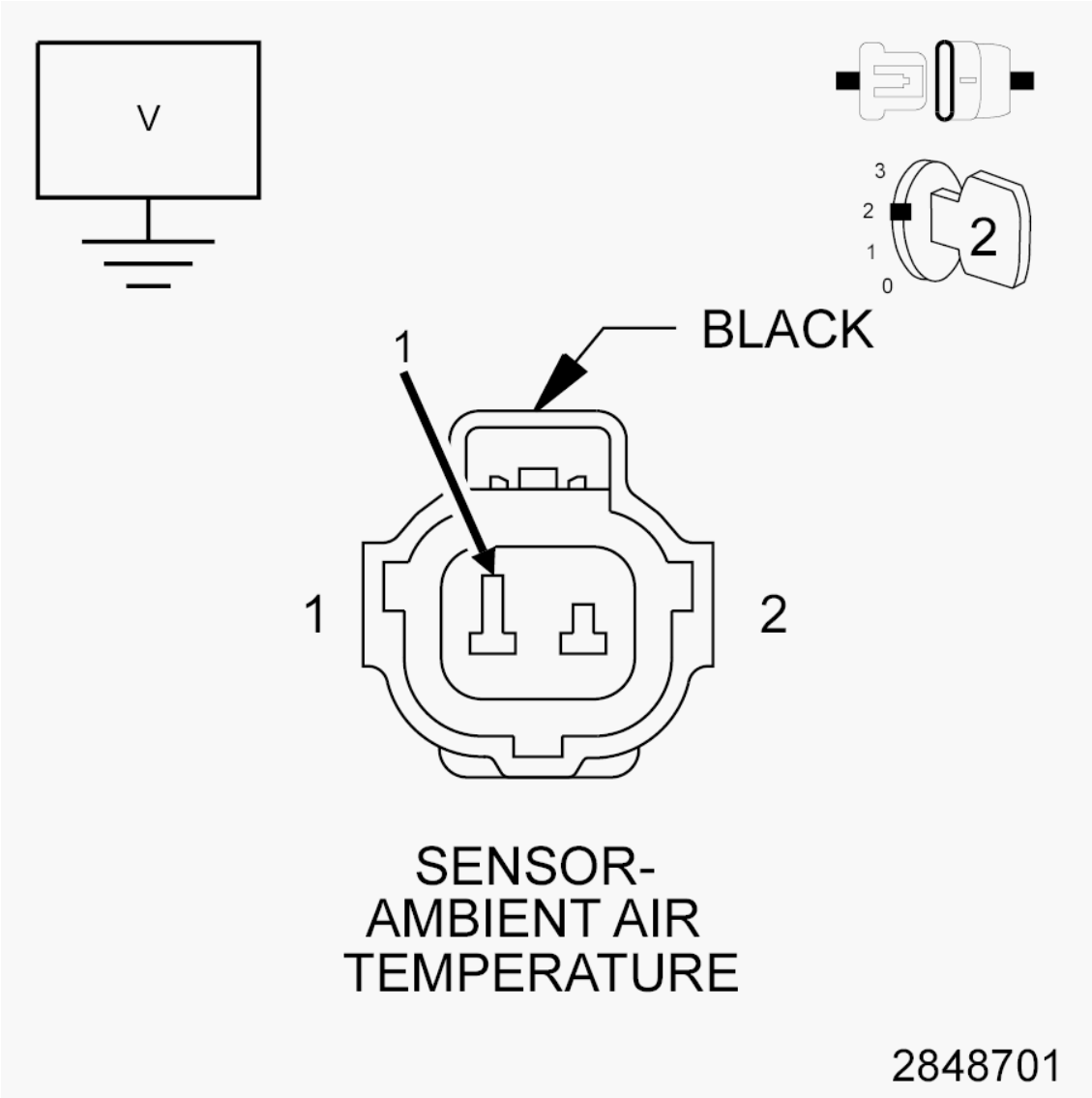

Fig. 116: Checking AAT Sensor Signal Circuit For A Short To Voltage
Courtesy of CHRYSLER GROUP, LLC

1. Turn the ignition off.
2. Disconnect the Ambient Air Temperature Sensor harness connector.
3. Disconnect the TIPM C4 harness connector.

4. Turn the ignition on.
5. Measure the voltage of the (G31) AAT Sensor Signal circuit in the Ambient Air Temperature Sensor harness connector.

   Is there any voltage present?

   Yes

   - Repair the short to voltage in the (G31) AAT Sensor Signal circuit.
   - Perform the BODY VERIFICATION TEST. Refer to **BODY VERIFICATION TEST**.

   No

   - Go To 3.

3. **CHECK THE AMBIENT AIR TEMPERATURE SENSOR**

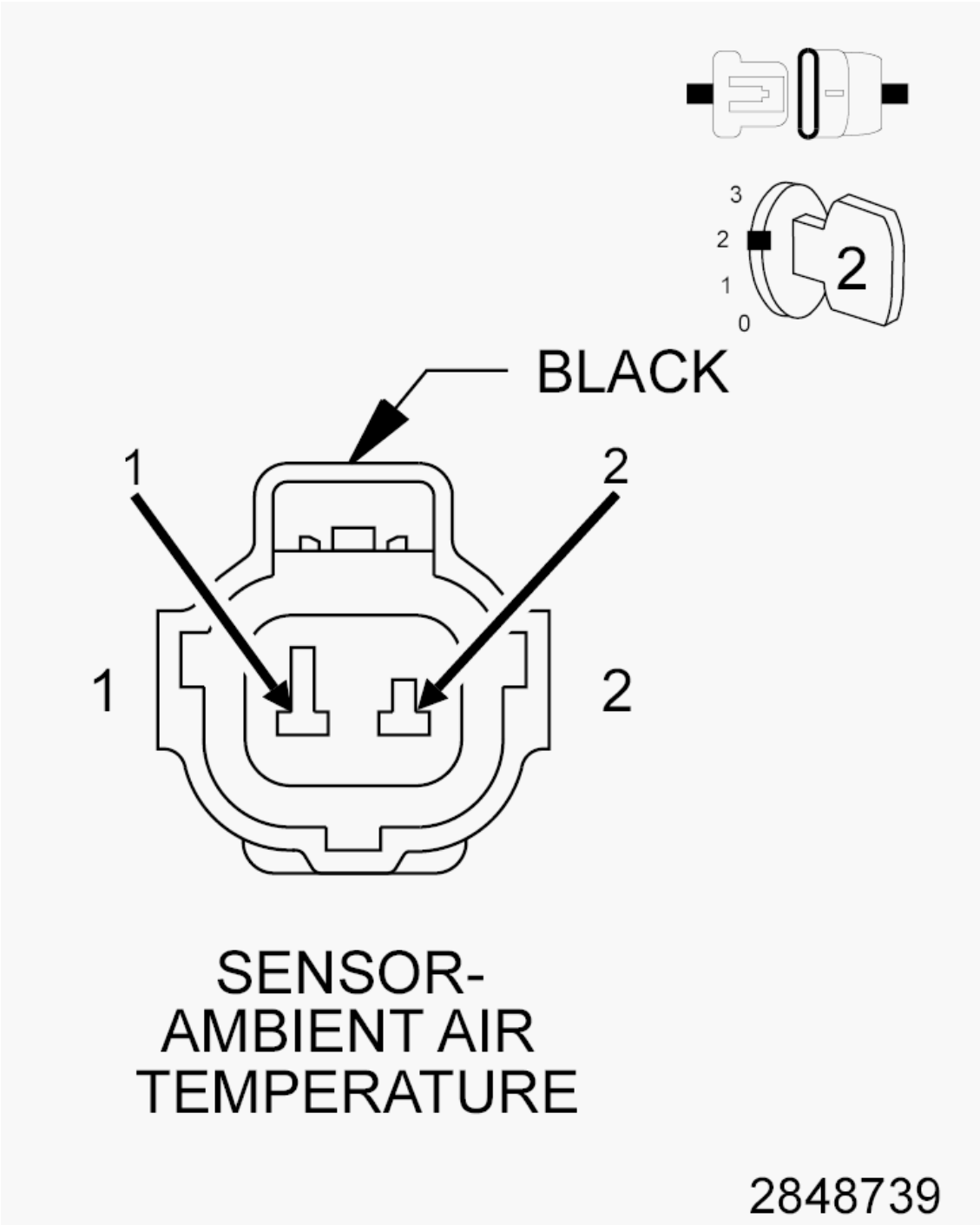

Fig. 117: Checking Ambient Air Temperature (AAT) Sensor
Courtesy of CHRYSLER GROUP, LLC

1. Turn the ignition off.
2. Reconnect the TIPM C4 harness connector.
3. Connect a jumper wire between the (G31) AAT Sensor Signal circuit and the (G931) Sensor Return in the Ambient Air Temperature Sensor harness connector.

4. Turn the ignition on.
5. With the scan tool, read the Ambient Air Temperature Sensor signal voltage.

   Is the voltage below 1.0 volt with the jumper wire in place?

   Yes

   - Verify there is good pin to terminal contact in the AAT Sensor and TIPM harness connectors. Replace the Ambient Temperature Sensor if no problems were found with the connectors in accordance with the Service Information. Refer to **SENSOR, AMBIENT TEMPERATURE, REMOVAL** .
   - Perform the BODY VERIFICATION TEST. Refer to **BODY VERIFICATION TEST**.

   No

   - Go To 4.

4. **CHECK THE (G31) AAT SENSOR SIGNAL CIRCUIT FOR AN OPEN**

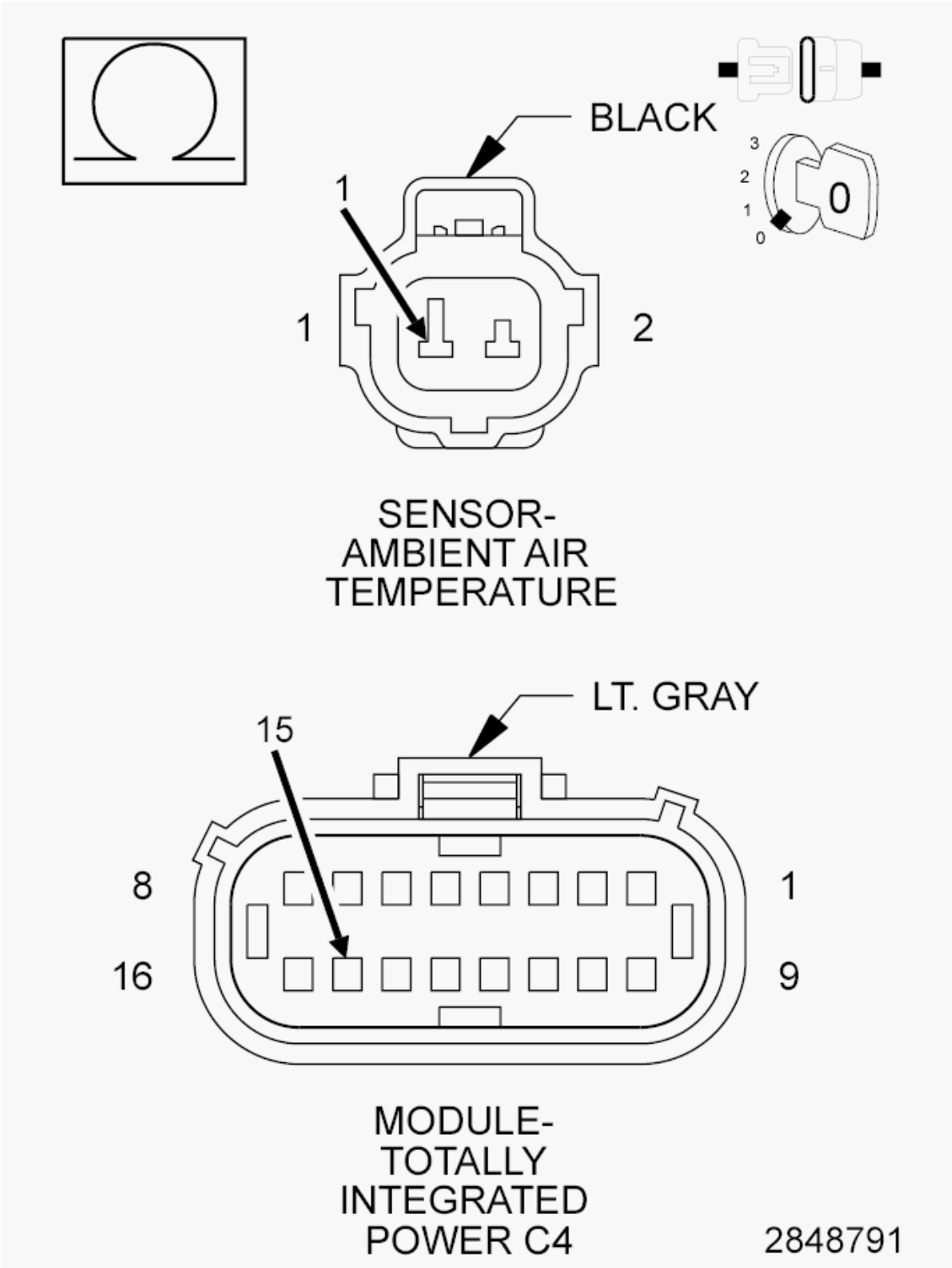

Fig. 118: Checking AAT Sensor Signal Circuit For An Open
Courtesy of CHRYSLER GROUP, LLC

1. Turn the ignition off.
2. Disconnect the TIPM C4 harness connector.

3. Measure the resistance of the (G31) AAT Sensor Signal circuit between the Ambient Air Temperature Sensor harness connector and the TIPM C4 harness connector.

   Is the resistance below 5.0 Ohms?

   Yes

   - Go To 5.

   No

   - Repair the open in the (G31) AAT Sensor Signal circuit.
   - Perform the BODY VERIFICATION TEST. Refer to **BODY VERIFICATION TEST**.

5. **CHECK THE (G931) SENSOR RETURN CIRCUIT FOR AN OPEN**

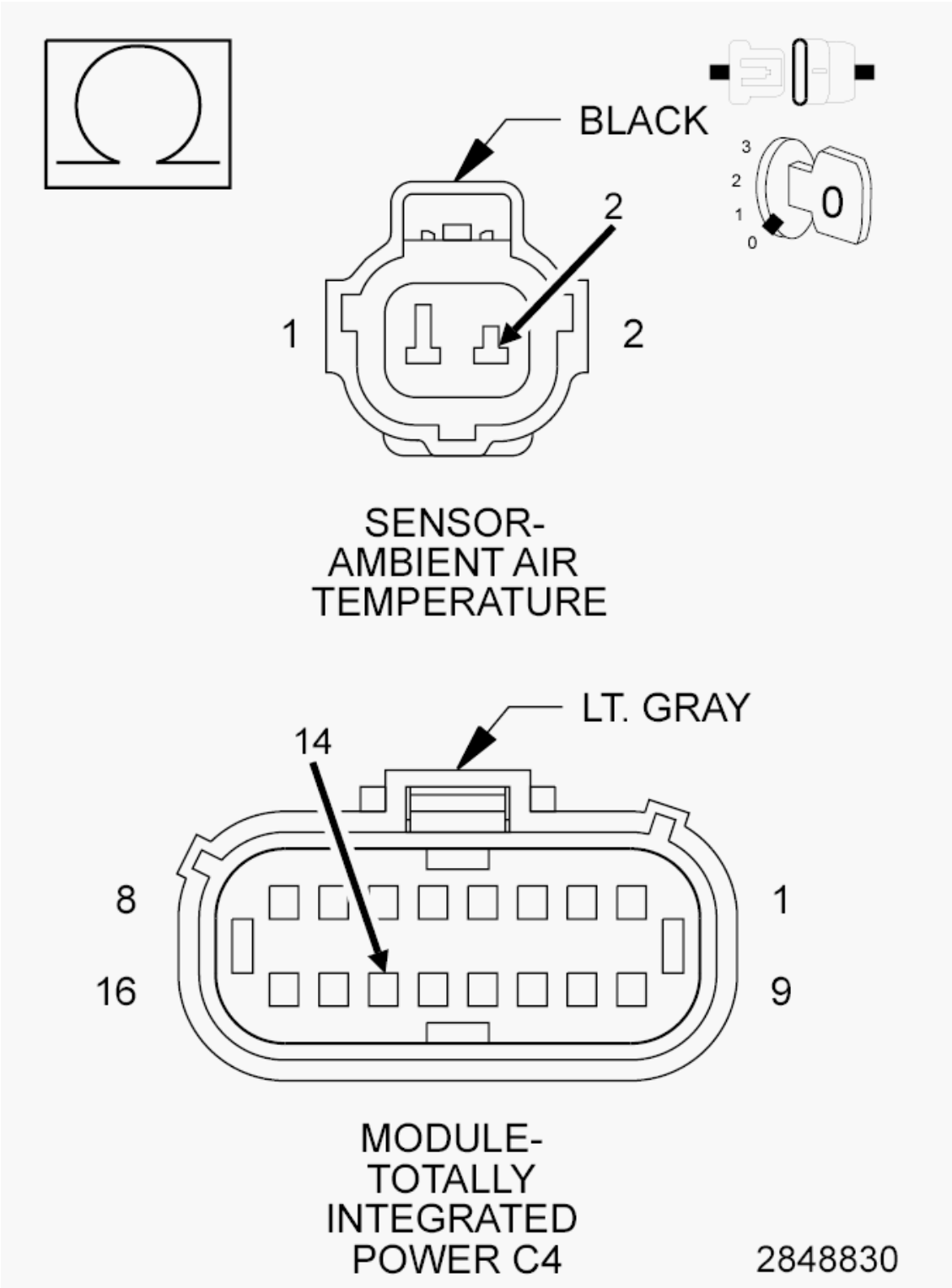

Fig. 119: Checking Sensor Return Circuit For An Open
Courtesy of CHRYSLER GROUP, LLC

1. Measure the resistance of the (G931) Sensor Return circuit between the Ambient Air Temperature Sensor harness connector and the TIPM C4 harness connector.

Is the resistance below 5.0 Ohms?

Yes

- Go To 6.

No

- Repair the open in the (G931) Sensor Return circuit.
- Perform the BODY VERIFICATION TEST. Refer to **BODY VERIFICATION TEST**.

6. **TOTALLY INTEGRATED POWER MODULE (TIPM)**
    1. Using the wiring diagram/schematic as a guide, inspect the wiring and connectors between the Ambient Air Temperature Sensor and the Totally Integrated Power Module (TIPM).
    2. Look for any chafed, pierced, pinched, or partially broken wires.
    3. Look for broken, bent, pushed out or corroded terminals.
    4. Verify that there is good pin to terminal contact in the AAT Sensor and Totally Integrated Power Module connectors.
    5. Monitor the scan tool data relative to this circuit and wiggle test the wiring and connectors.
    6. Look for the data to change or for the DTC to reset during the wiggle test.
    7. Perform any Technical Service Bulletins (TSB)s that may apply.

    Were any problems found?

    Yes

    - Repair as necessary.
    - Perform the BODY VERIFICATION TEST. Refer to **BODY VERIFICATION TEST**.

    No

    - Replace the TIPM in accordance with the Service Information. Refer to **MODULE, TOTALLY INTEGRATED POWER (TIPM), REMOVAL** .
    - Perform the BODY VERIFICATION TEST. Refer to **BODY VERIFICATION TEST**.

P0462-FUEL LEVEL SENSOR 1 CIRCUIT LOW

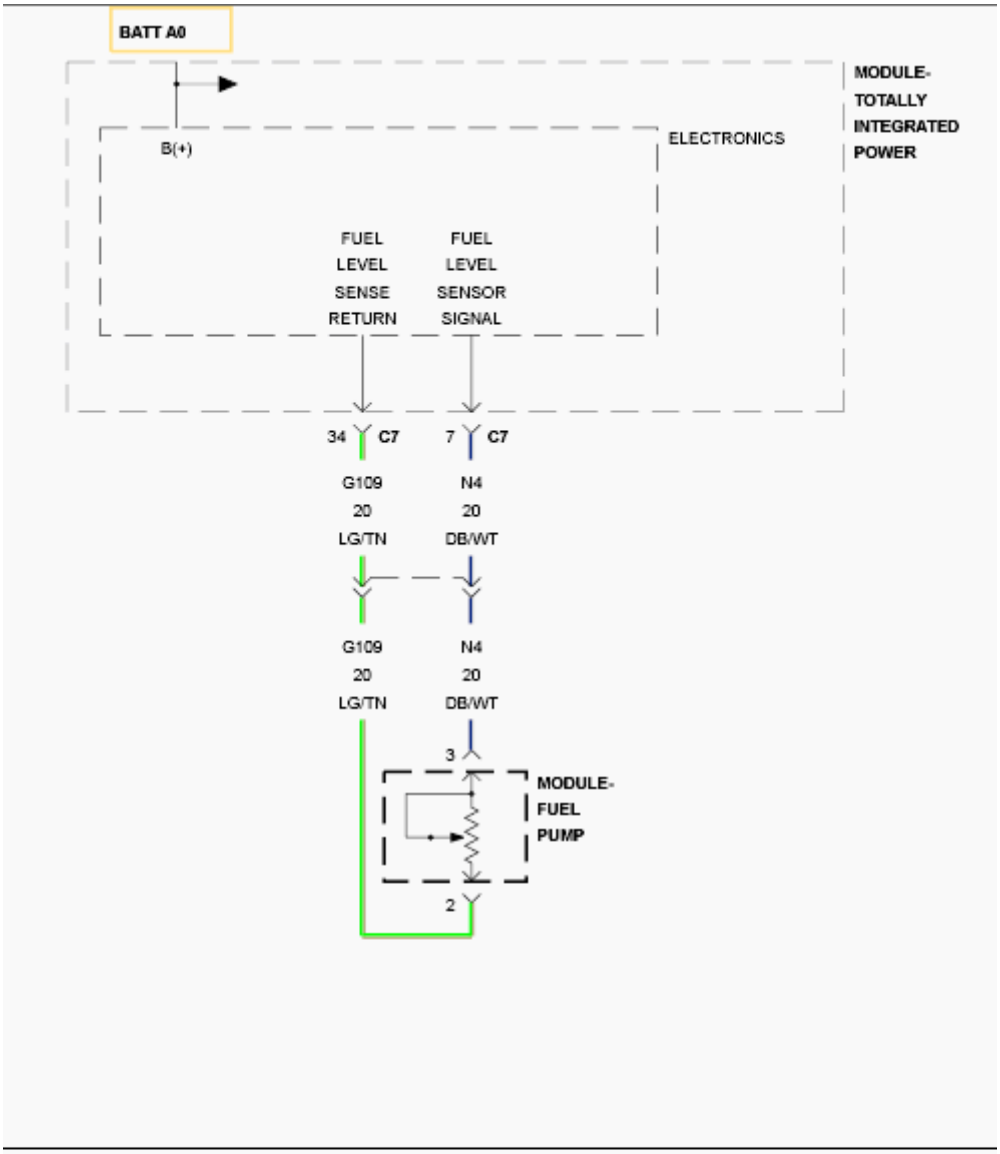

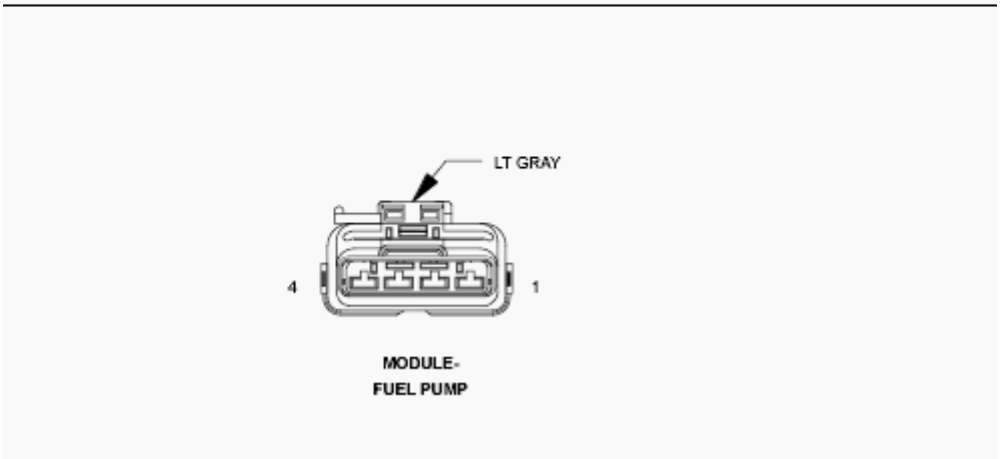

Fig. 120: Fuel Level Sensor Wiring Diagram
Courtesy of CHRYSLER GROUP, LLC

For a complete wiring diagram, **refer to appropriate SYSTEM WIRING DIAGRAMS article** .

WHEN MONITORED:

With the ignition on.

Battery voltage greater than 10.4 volts.

SET CONDITION:

The Totally Integrated Power Module (TIPM) detects that the Fuel Level Sensor input voltage is below the minimum acceptable value.

POSSIBLE CAUSES

Possible Causes
(N4) FUEL LEVEL SENSOR SIGNAL CIRCUIT SHORTED TO GROUND
(N4) FUEL LEVEL SENSOR SIGNAL CIRCUIT SHORTED TO THE (G109) FUEL LEVEL SENSE RETURN CIRCUIT
FUEL LEVEL SENSOR
TOTALLY INTEGRATED POWER MODULE (TIPM)

DIAGNOSTIC TEST

1. **CHECK FOR AN INTERMITTENT CONDITION**
    1. Turn the ignition on.
    2. With the scan tool, clear all DTC's.
    3. With the scan tool, read DTC's.

    Does the scan tool display DTC: P0462-FUEL LEVEL SENSOR 1 CIRCUIT LOW?

    Yes

    - Go To 2.

    No

    - Test complete, the condition or conditions that originally set this DTC are not present at this time. Using the wiring diagrams as a guide, check all related splices and connectors for signs of water intrusion, corrosion, pushed out or bent terminals, and correct pin tension.
    - Perform the BODY VERIFICATION TEST. Refer to **BODY VERIFICATION TEST**.
2. **ATTEMPT TO SET THE OPPOSITE DTC**
    1. Turn the ignition off.
    2. Disconnect the Fuel Pump Module harness connector.
    3. Turn the ignition on.

4. With the scan tool, read DTC's.

   Does the scan tool display DTC: P0463-FUEL LEVEL SENSOR 1 CIRCUIT HIGH?

   Yes

   - Replace the Fuel Pump Module in accordance with the Service Information. Refer to **DIESEL - MODULE, FUEL PUMP, REMOVAL** **GAS - MODULE, FUEL PUMP, REMOVAL** .
   - Perform the BODY VERIFICATION TEST. Refer to **BODY VERIFICATION TEST**.

   No

   - Go To 3.

3. **CHECK THE (N4) FUEL LEVEL SENSOR SIGNAL CIRCUIT FOR A SHORT TO GROUND**

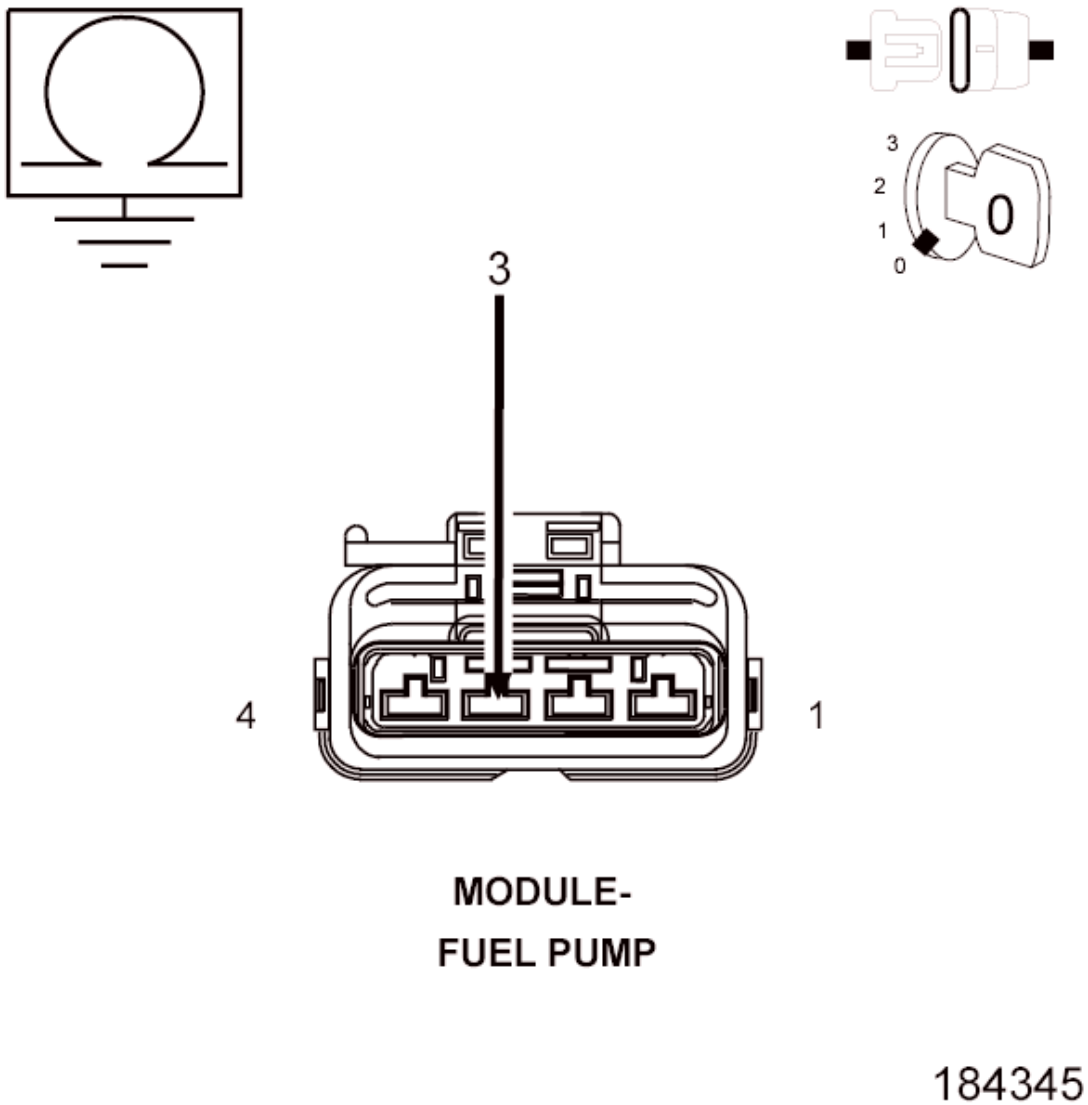

Fig. 121: Checking Fuel Level Sensor Signal Circuit For A Short To Ground
Courtesy of CHRYSLER GROUP, LLC

1. Turn the ignition off.
2. Disconnect the Fuel Pump Module harness connector.
3. Disconnect the TIPM C7 harness connector.
4. Measure the resistance between ground and the (N4) Fuel Level Sensor Signal circuit at the Fuel Pump Module harness connector.

   Is the resistance above 10k Ohms?

   Yes

   - Go To 4.

No

- Repair the short to ground in the (N4) Fuel Level Sensor Signal circuit.
- Perform the BODY VERIFICATION TEST. Refer to **BODY VERIFICATION TEST**.

4. **CHECK THE (N4) FUEL LEVEL SENSOR SIGNAL CIRCUIT FOR A SHORT TO THE (G109) FUEL LEVEL SENSE RETURN CIRCUIT**

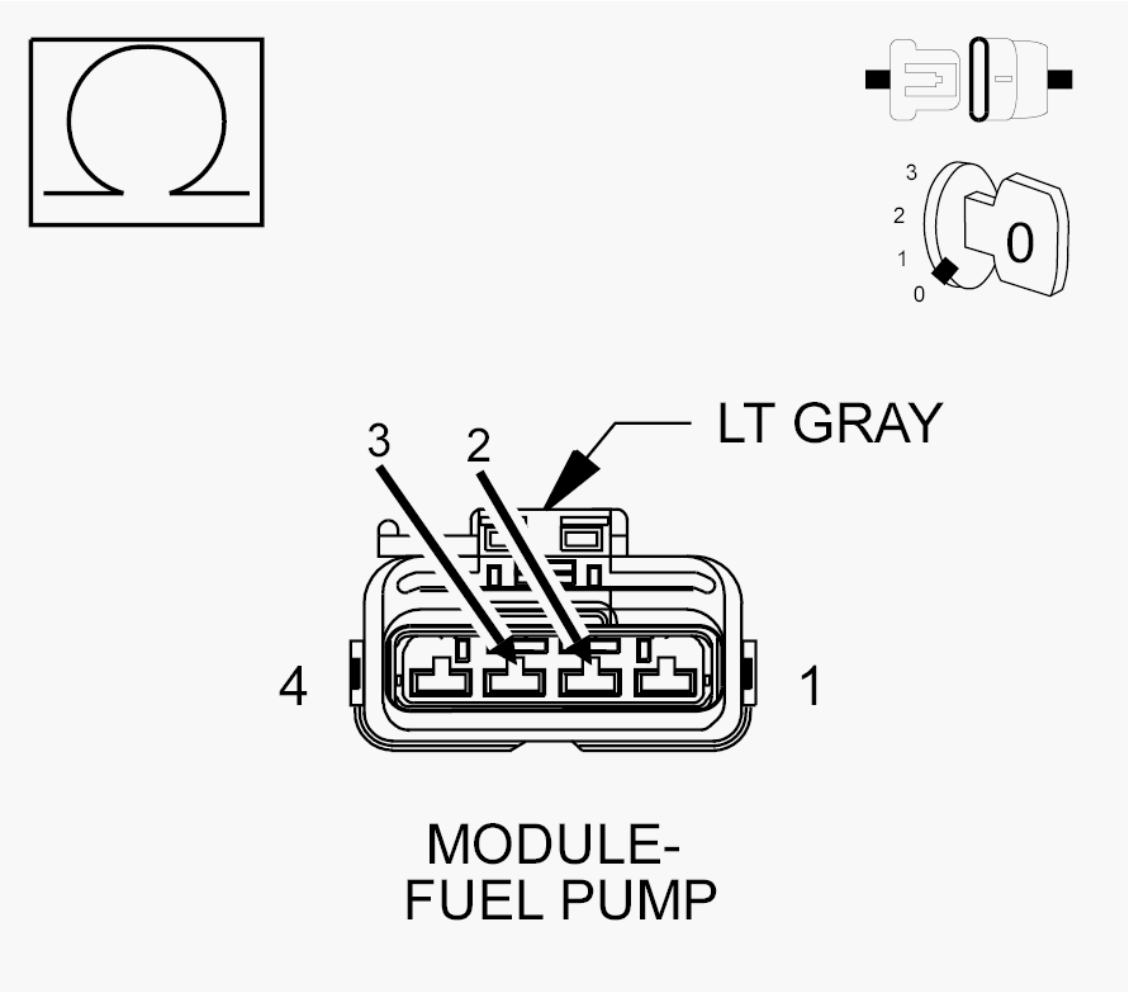

Fig. 122: Checking Fuel Level Sensor Signal Circuit For A Short To Fuel Level Sense Return Circuit
Courtesy of CHRYSLER GROUP, LLC

1. Measure the resistance between the (G109) Fuel Level Sense Return circuit and the (N4) Fuel Level Sensor Signal circuit at the Fuel Pump Module harness connector.

   Is the resistance above 10k Ohms?

   Yes

   - Go To 5.

No

- Repair the short between the (G109) Fuel Level Sense Return circuit and the (N4) Fuel Level Sensor Signal circuit.
- Perform the BODY VERIFICATION TEST. Refer to **BODY VERIFICATION TEST**.

5. **TOTALLY INTEGRATED POWER MODULE (TIPM)**
   1. Using the wiring diagram/schematic as a guide, inspect the wiring and connectors between the Fuel Pump Module and the TIPM.
   2. Look for any chafed, pierced, pinched, or partially broken wires.
   3. Look for broken, bent, pushed out or corroded terminals. Verify that there is good pin to terminal contact in the Fuel Pump Module and the TIPM C7 harness connectors.
   4. Perform any Technical Service Bulletins (TSB)s that may apply.

   Were any problems found?

   Yes

   - Repair as necessary.
   - Perform the BODY VERIFICATION TEST. Refer to **BODY VERIFICATION TEST**.

   No

   - Replace the TIPM in accordance with the Service Information. Refer to **MODULE, TOTALLY INTEGRATED POWER (TIPM), REMOVAL** .
   - Perform the BODY VERIFICATION TEST. Refer to **BODY VERIFICATION TEST**.

P0463-FUEL LEVEL SENSOR 1 CIRCUIT HIGH

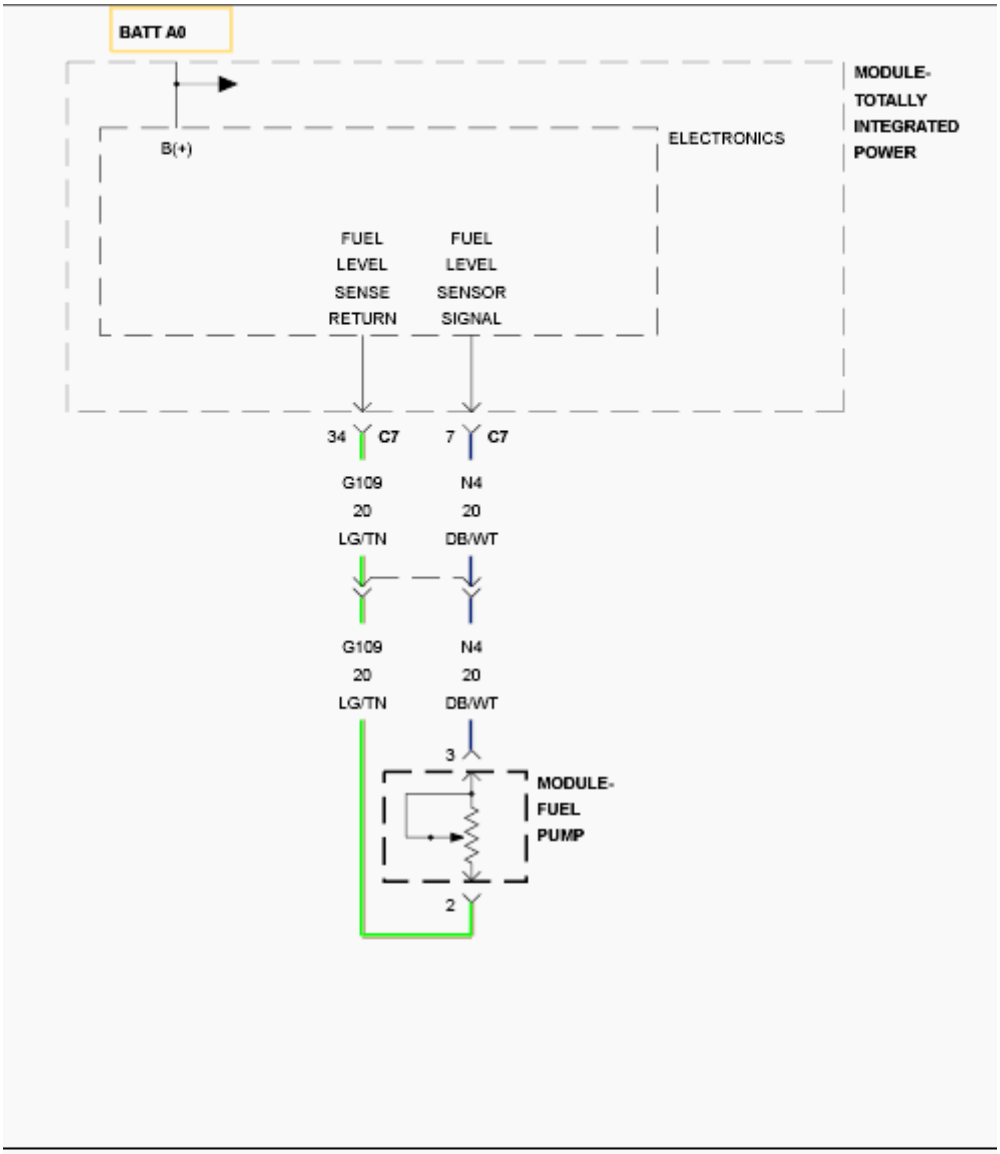

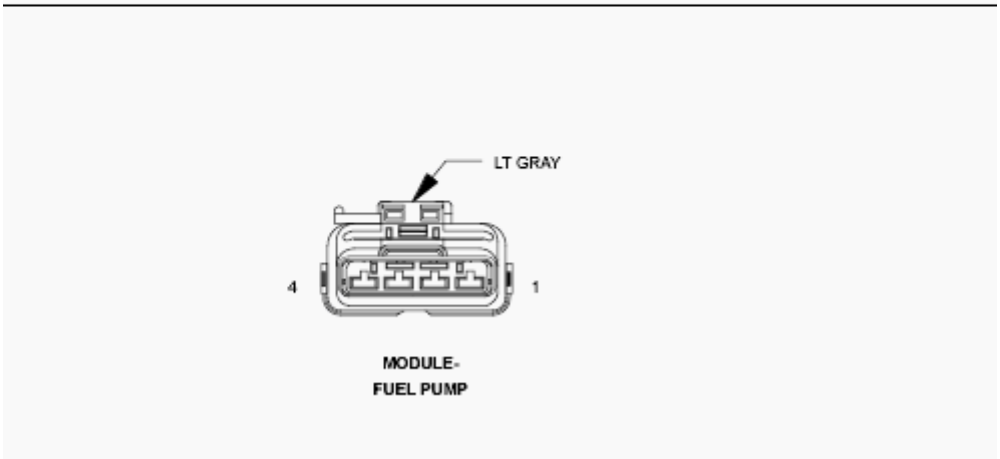

Fig. 123: Fuel Level Sensor Wiring Diagram
Courtesy of CHRYSLER GROUP, LLC

For a complete wiring diagram, **refer to appropriate SYSTEM WIRING DIAGRAMS article** .

WHEN MONITORED:

With the ignition on.

Battery voltage greater than 10.4 volts.

SET CONDITION:

The Totally Integrated Power Module (TIPM) detects that the Fuel Level Sensor input voltage is above the maximum acceptable value.

POSSIBLE CAUSES

Possible Causes
(N4) FUEL LEVEL SENSOR SIGNAL CIRCUIT OPEN
(N4) FUEL LEVEL SENSOR SIGNAL CIRCUIT SHORTED TO VOLTAGE
(G109) FUEL LEVEL SENSE RETURN CIRCUIT OPEN
FUEL LEVEL SENSOR
TOTALLY INTEGRATED POWER MODULE (TIPM)

DIAGNOSTIC TEST

1. **CHECK FOR AN INTERMITTENT CONDITION**
    1. Turn the ignition on.
    2. With the scan tool, clear all DTC's.
    3. With the scan tool, read DTC's.

    Does the scan tool display DTC: P0463-FUEL LEVEL SENSOR 1 CIRCUIT HIGH?

    Yes

    - Go To 2.

    No

    - Test complete, the condition or conditions that originally set this DTC are not present at this time. Using the wiring diagrams as a guide, check all related splices and connectors for signs of water intrusion, corrosion, pushed out or bent terminals, and correct pin tension.
    - Perform the BODY VERIFICATION TEST. Refer to **BODY VERIFICATION TEST**.
2. **CHECK THE (N4) FUEL LEVEL SENSOR SIGNAL CIRCUIT FOR A SHORT TO VOLTAGE**

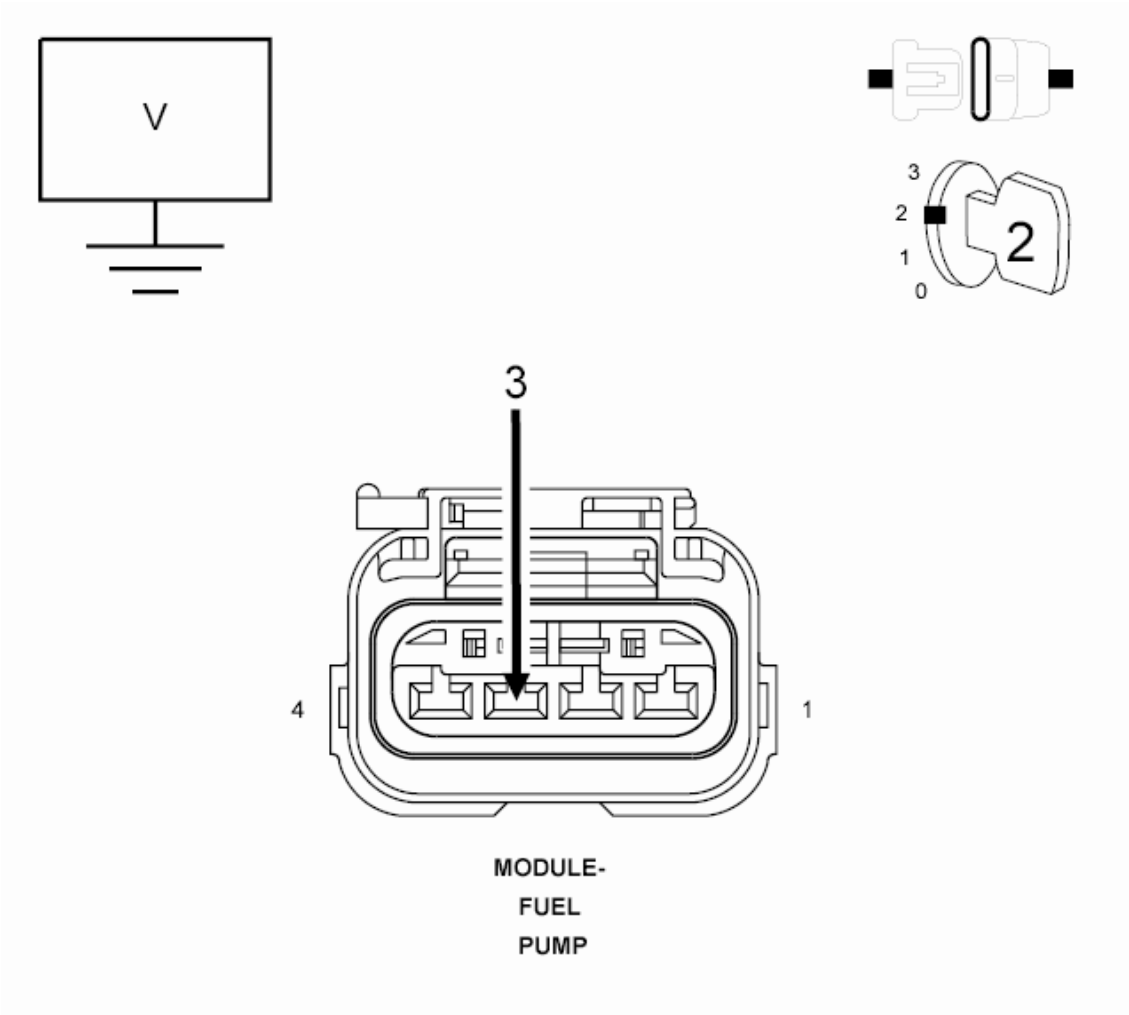

Fig. 124: Checking Fuel Level Sensor Signal Circuit For A Short To Voltage
Courtesy of CHRYSLER GROUP, LLC

1. Turn the ignition off.
2. Disconnect the Fuel Pump Module harness connector.
3. Disconnect the TIPM C7 harness connector.
4. Turn the ignition on.
5. Measure the voltage between ground and the (N4) Fuel Level Sensor Signal circuit at the Fuel Pump Module harness connector.

   Is there any voltage present?

   Yes

   - Repair the short to voltage in the (N4) Fuel Level Sensor Signal circuit.
   - Perform the BODY VERIFICATION TEST. Refer to **BODY VERIFICATION TEST**.

   No

- Go To 3.

3. **CHECK THE FUEL LEVEL SENSOR FOR CORRECT OPERATION**

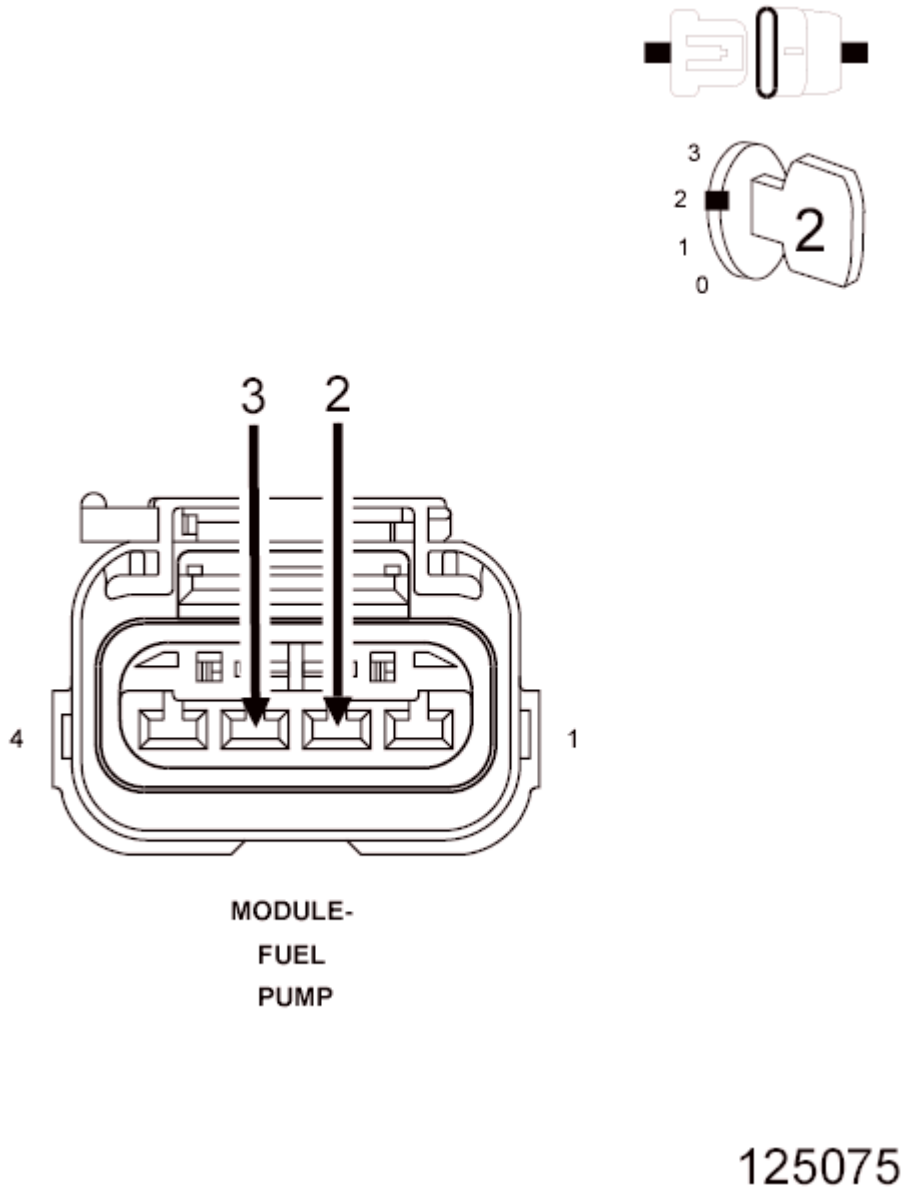

Fig. 125: Checking Fuel Level Sensor For Correct Operation
Courtesy of CHRYSLER GROUP, LLC

1. Turn the ignition off.
2. Connect the TIPM C7 harness connector.
3. Connect a jumper wire between the (N4) Fuel Level Sensor Signal circuit and the (G109) Fuel Level Sense Return circuit at the Fuel Pump Module harness connector.
4. Turn the ignition on.
5. With the scan tool, read DTC's.

Does the scan tool display DTC: P0463-FUEL LEVEL SENSOR 1 CIRCUIT LOW?

Yes

- Replace the Fuel Pump Module in accordance with the Service Information. Refer to **DIESEL - MODULE, FUEL PUMP, REMOVAL** **GAS - MODULE, FUEL PUMP, REMOVAL** .
- Perform the BODY VERIFICATION TEST. Refer to **BODY VERIFICATION TEST**.

No

- Go To 4.

4. **CHECK THE (N4) FUEL LEVEL SENSOR SIGNAL CIRCUIT FOR AN OPEN**

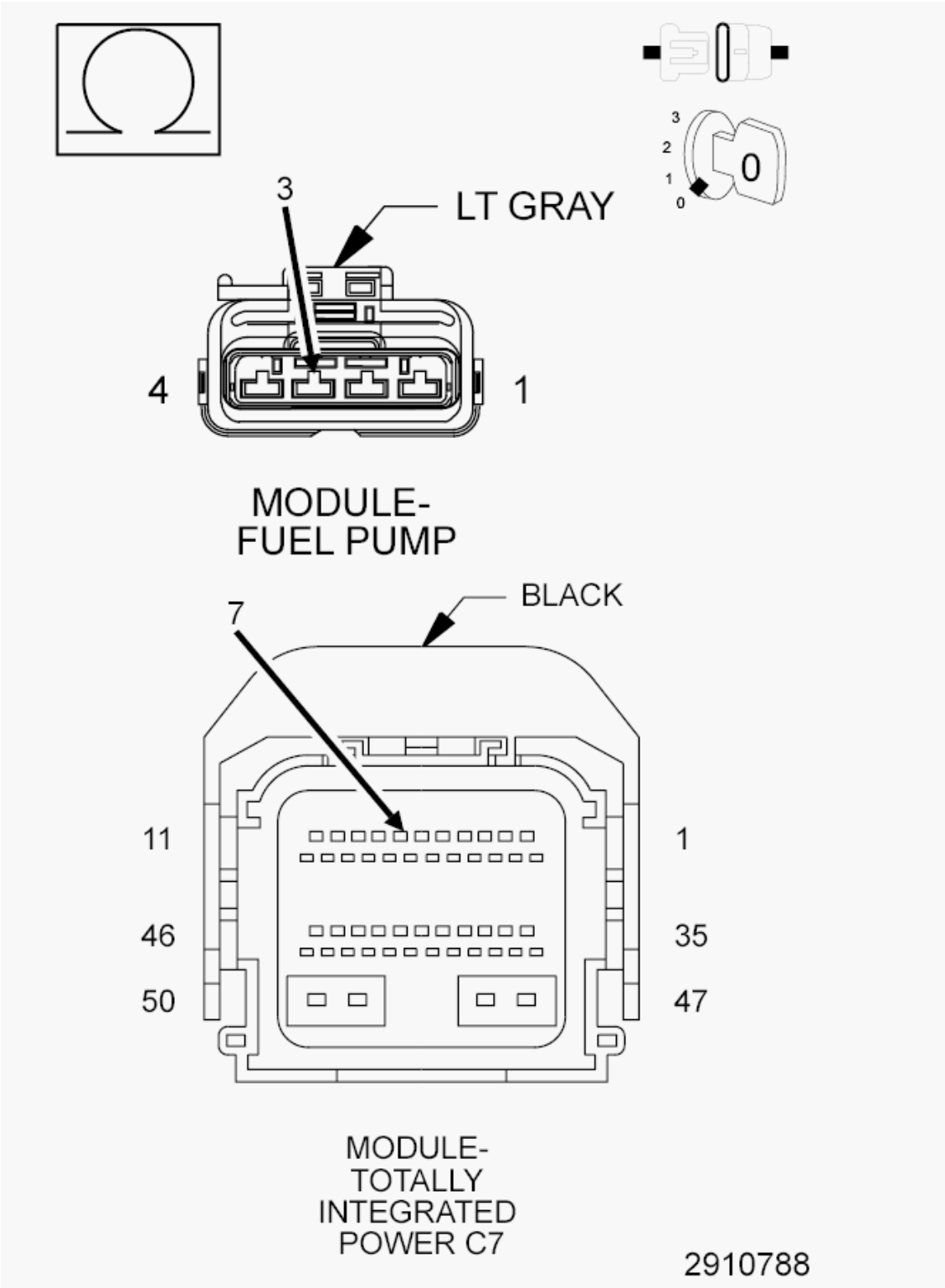

Fig. 126: Checking Fuel Level Sensor Signal Circuit For An Open
Courtesy of CHRYSLER GROUP, LLC

1. Turn the ignition off.

2. Disconnect the TIPM C7 harness connector.
3. Measure the resistance of the (N4) Fuel Level Sensor Signal circuit between the Fuel Pump Module harness connector and the TIPM C7 harness connector.

   Is the resistance below 5.0 Ohms?

   Yes

   - Go To 5.

   No

   - Repair the open in the (N4) Fuel Level Sensor Signal circuit.
   - Perform the BODY VERIFICATION TEST. Refer to **BODY VERIFICATION TEST**.

5. **CHECK THE (G109) FUEL LEVEL SENSE RETURN CIRCUIT FOR AN OPEN**

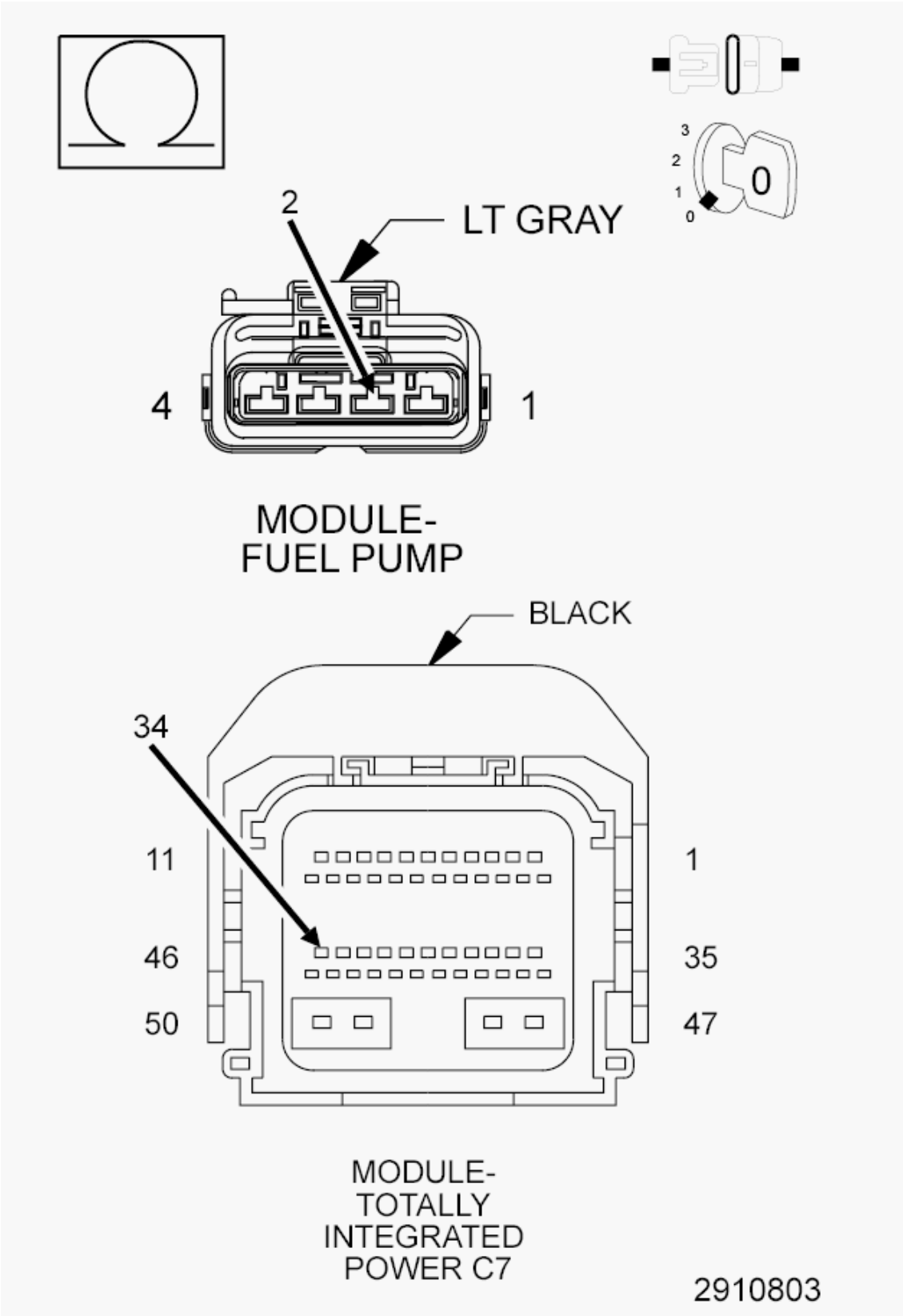

Fig. 127: Checking Fuel Level Sense Return Circuit For An Open
Courtesy of CHRYSLER GROUP, LLC

1. Measure the resistance of the (G109) Fuel Level Sense Return circuit between the Fuel Pump Module harness connector and the TIPM C7 harness connector.

   Is the resistance below 5.0 Ohms?

   Yes

   - Go To 6.

   No

   - Repair the open in the (G109) Fuel Level Sense Return circuit.
   - Perform the BODY VERIFICATION TEST. Refer to **BODY VERIFICATION TEST**.

6. **TOTALLY INTEGRATED POWER MODULE (TIPM)**
   1. Using the wiring diagram/schematic as a guide, inspect the wiring and connectors between the Fuel Pump Module and the TIPM.
   2. Look for any chafed, pierced, pinched, or partially broken wires.
   3. Look for broken, bent, pushed out or corroded terminals. Verify that there is good pin to terminal contact in the Fuel Pump Module and the TIPM C7 harness connectors.
   4. Perform any Technical Service Bulletins (TSB)s that may apply.

      Were any problems found?

      Yes

      - Repair as necessary.
      - Perform the BODY VERIFICATION TEST. Refer to **BODY VERIFICATION TEST**.

      No

      - Replace the TIPM in accordance with the Service Information. Refer to **MODULE, TOTALLY INTEGRATED POWER (TIPM), REMOVAL** .
      - Perform the BODY VERIFICATION TEST. Refer to **BODY VERIFICATION TEST**.

P0691-COOLING FAN 1 CONTROL CIRCUIT LOW

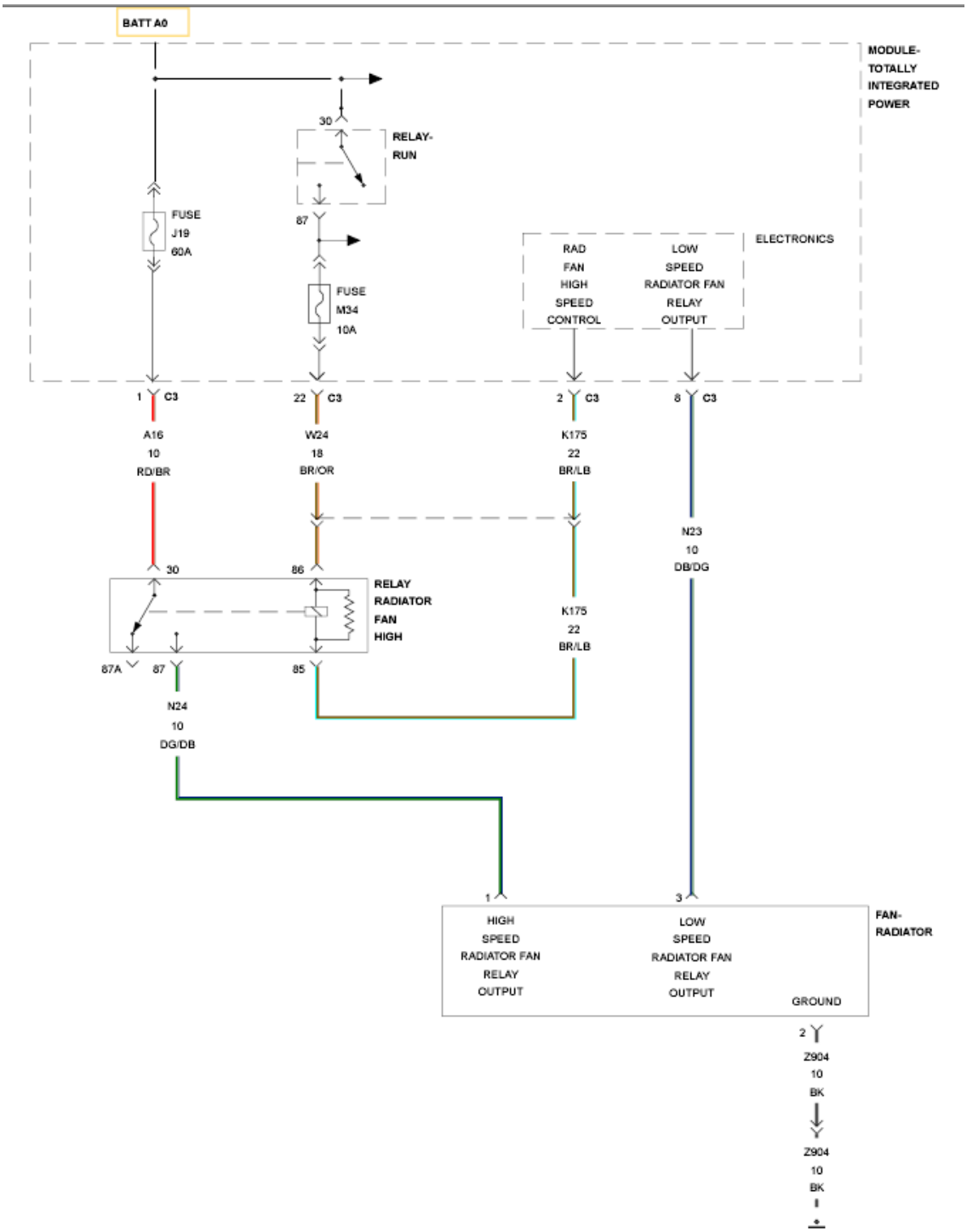

Fig. 128: Cooling Fan Control Wiring Diagram
Courtesy of CHRYSLER GROUP, LLC

For a complete wiring diagram, **refer to appropriate SYSTEM WIRING DIAGRAMS article** .

THEORY OF OPERATION

The Powertrain Control Module (PCM) sends a CAN bus message to the Totally Integrated Power Module (TIPM) requesting low speed cooling fan operation. The TIPM internally grounds the coil for the Low Speed Cooling Fan Relay. The Low Speed Cooling Fan Relay then provides battery voltage to the low speed coil in the Cooling Fan Motor.

WHEN MONITORED:

With the ignition on.

Battery voltage greater than 10 volts.

With the Low Speed Cooling Fan off.

SET CONDITION:

The TIPM detects an open in the internal Low Speed Cooling Fan Control circuit.

POSSIBLE CAUSES

Possible Causes
LOW SPEED COOLING FAN RELAY
TOTALLY INTEGRATED POWER MODULE (TIPM)

DIAGNOSTIC TEST

1. **CHECK FOR AN INTERMITTENT CONDITION**
    1. Turn the ignition on.
    2. With the scan tool, clear all DTC's.
    3. With the scan tool, read DTC's.

    Does the scan tool display DTC: P0691-COOLING FAN 1 CONTROL CIRCUIT LOW?

    Yes

    - Go To 2.

    No

    - Test complete, the condition or conditions that originally set this DTC are not present at this time. Using the wiring diagrams as a guide, check all related splices and connectors for signs of water intrusion, corrosion, pushed out or bent terminals, and correct pin tension.
    - Perform the BODY VERIFICATION TEST. Refer to **BODY VERIFICATION TEST**.
2. **LOW SPEED COOLING FAN RELAY**
    1. Turn the ignition off.
    2. Remove the Low Speed Cooling Fan Relay and substitute it with a known good relay.

3. Turn the ignition on.
4. With the scan tool, clear all DTC's.
5. Turn the ignition off.
6. Turn the ignition on.
7. With the scan tool, read DTC's.

Does the scan tool display DTC: P0691-COOLING FAN 1 CONTROL CIRCUIT LOW?

Yes

- Go To 3.

No

- Replace the Low Speed Cooling Fan Relay.
- Perform the BODY VERIFICATION TEST. Refer to **BODY VERIFICATION TEST**.

3. **TOTALLY INTEGRATED POWER MODULE**

NOTE: Before continuing, check the TIPM harness connector terminals for corrosion, damage, or terminal push out. Repair as necessary.

1. Using the schematics as a guide, inspect the wire harness and connectors.
2. Pay particular attention to all Power and Ground circuits.

Were any problems found?

Yes

- Repair as necessary.
- Perform the BODY VERIFICATION TEST. Refer to **BODY VERIFICATION TEST**.

No

- Replace the TIPM in accordance with the Service Information. Refer to **MODULE, TOTALLY INTEGRATED POWER (TIPM), REMOVAL** .
- Perform the BODY VERIFICATION TEST. Refer to **BODY VERIFICATION TEST**.

P0692-COOLING FAN 1 CONTROL CIRCUIT HIGH

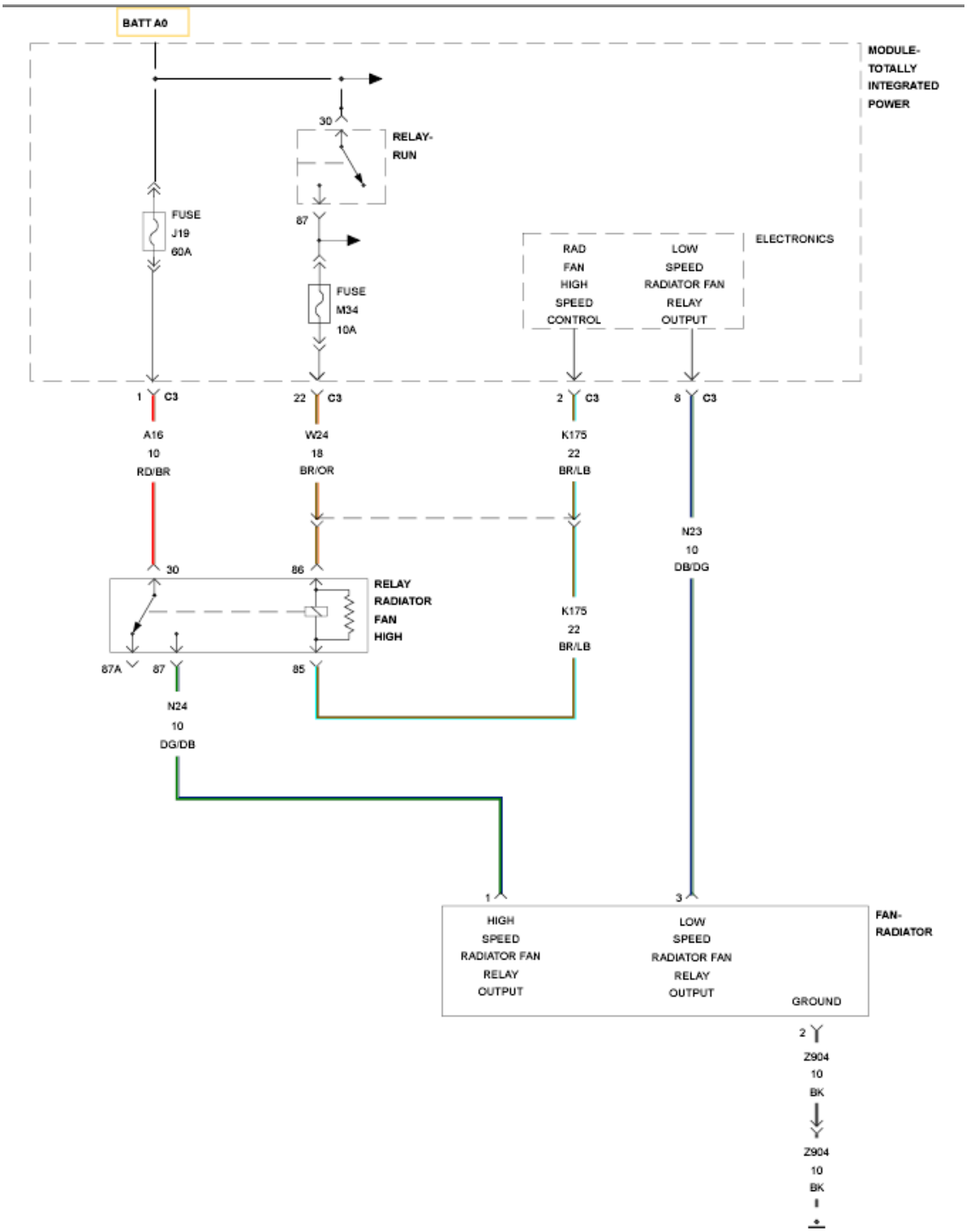

Fig. 129: Cooling Fan Control Wiring Diagram
Courtesy of CHRYSLER GROUP, LLC

For a complete wiring diagram, **refer to appropriate SYSTEM WIRING DIAGRAMS article** .

THEORY OF OPERATION

The Powertrain Control Module (PCM) sends a CAN bus message to the Totally Integrated Power Module (TIPM) requesting low speed cooling fan operation. The TIPM internally grounds the coil for the Low Speed Cooling Fan Relay. The Low Speed Cooling Fan Relay then provides battery voltage to the low speed coil in the Cooling Fan Motor.

WHEN MONITORED:

With the ignition on.

Battery voltage greater than 10 volts.

With the Low Speed Cooling Fan on.

SET CONDITION:

The TIPM detects a shorted condition in the internal Low Speed Cooling Fan Control circuit.

POSSIBLE CAUSES

Possible Causes
LOW SPEED COOLING FAN RELAY
TOTALLY INTEGRATED POWER MODULE (TIPM)

DIAGNOSTIC TEST

1. **CHECK FOR AN INTERMITTENT CONDITION**
    1. Turn the ignition on.
    2. With the scan tool, clear all DTC's.
    3. With the scan tool, actuate Radiator Fan 1.
    4. With the scan tool, read DTC's.

    Does the scan tool display DTC: P0692-COOLING FAN 1 CONTROL CIRCUIT HIGH?

    Yes

    - Go To 2.

    No

    - Test complete, the condition or conditions that originally set this DTC are not present at this time. Using the wiring diagrams as a guide, check all related splices and connectors for signs of water intrusion, corrosion, pushed out or bent terminals, and correct pin tension.
    - Perform the BODY VERIFICATION TEST. Refer to **BODY VERIFICATION TEST**.
2. **LOW SPEED COOLING FAN RELAY**
    1. Turn the ignition off.

2. Remove the Low Speed Cooling Fan Relay and substitute it with a known good relay.
3. Turn the ignition on.
4. With the scan tool, clear all DTC's.
5. Turn the ignition off.
6. Turn the ignition on.
7. With the scan tool, actuate Radiator Fan 1.
8. With the scan tool, read DTC's.

   Does the scan tool display DTC: P0692-COOLING FAN 1 CONTROL CIRCUIT HIGH?

   Yes

   - Go To 3.

   No

   - Replace the Low Speed Cooling Fan Relay.
   - Perform the BODY VERIFICATION TEST. Refer to **BODY VERIFICATION TEST**.

3. **TOTALLY INTEGRATED POWER MODULE**

   NOTE: Before continuing, check the TIPM harness connector terminals for corrosion, damage, or terminal push out. Repair as necessary.

   1. Using the schematics as a guide, inspect the wire harness and connectors.
   2. Pay particular attention to all Power and Ground circuits.

   Were any problems found?

   Yes

   - Repair as necessary.
   - Perform the BODY VERIFICATION TEST. Refer to **BODY VERIFICATION TEST**.

   No

   - Replace the TIPM in accordance with the Service Information. Refer to **MODULE, TOTALLY INTEGRATED POWER (TIPM), REMOVAL** .
   - Perform the BODY VERIFICATION TEST. Refer to **BODY VERIFICATION TEST**.

P0693-COOLING FAN 2 CONTROL CIRCUIT LOW

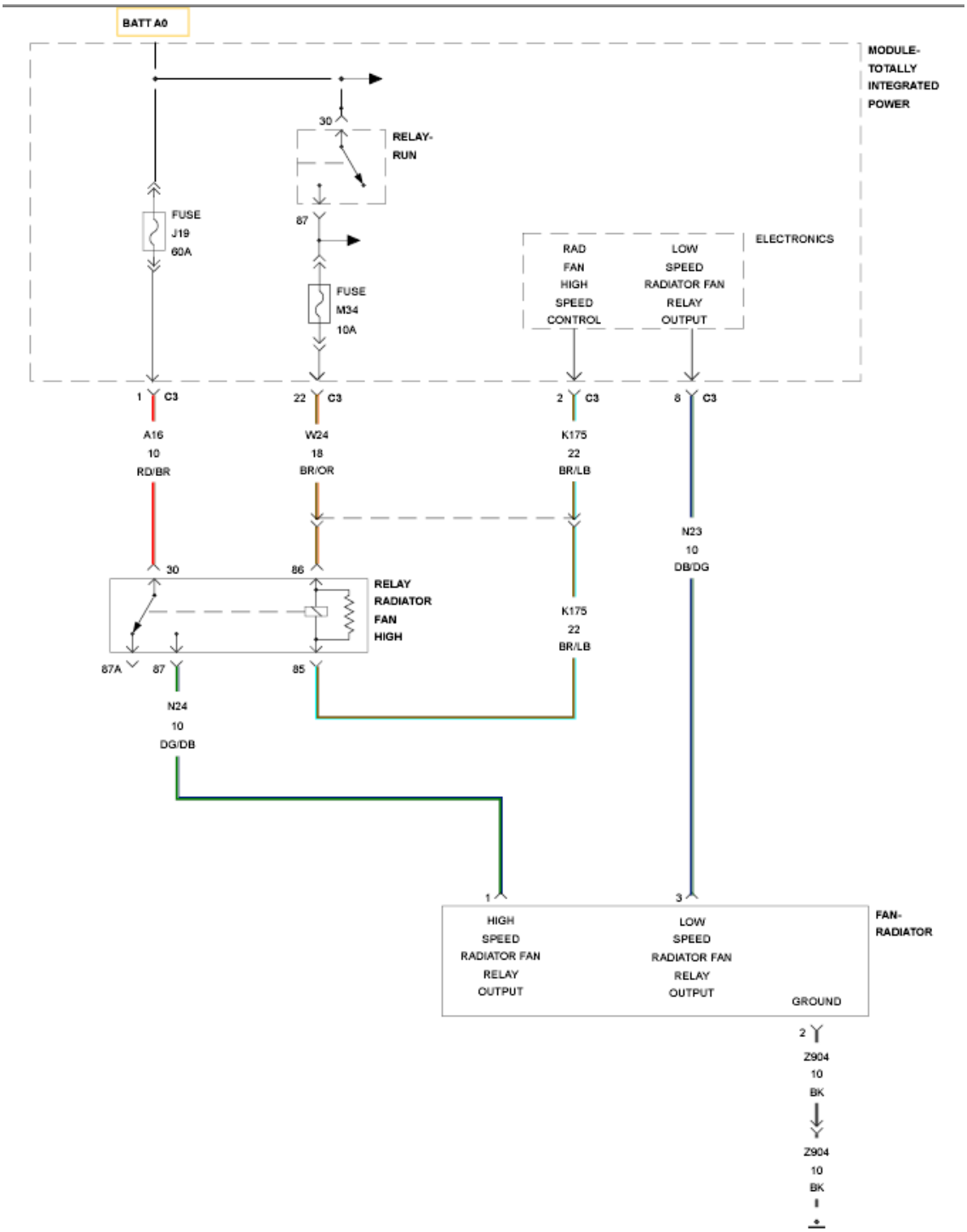

Fig. 130: Cooling Fan Control Wiring Diagram
Courtesy of CHRYSLER GROUP, LLC

For a complete wiring diagram, **refer to appropriate SYSTEM WIRING DIAGRAMS article** .

THEORY OF OPERATION

The Powertrain Control Module (PCM) sends a CAN bus message to the Totally Integrated Power Module (TIPM) requesting high speed cooling fan operation. The TIPM grounds the coil for the High Speed Cooling Fan Relay through the high speed radiator fan control circuit. The High Speed Cooling Fan Relay then provides battery voltage to the high speed coil in the Cooling Fan Motor.

WHEN MONITORED:

With the ignition on.

Battery voltage greater than 10 volts.

With the High Speed Cooling Fan off.

SET CONDITION:

The TIPM detects a low condition in the Rad Fan High Speed Control circuit.

POSSIBLE CAUSES

Possible Causes
(K175) RAD FAN HIGH SPEED CONTROL CIRCUIT OPEN OR HIGH RESISTANCE
(K175) RAD FAN HIGH SPEED CONTROL CIRCUIT SHORTED TO GROUND
(W24) FUSED RUN RELAY OUTPUT CIRCUIT OPEN
RADIATOR FAN HIGH RELAY
TOTALLY INTEGRATED POWER MODULE (TIPM)

DIAGNOSTIC TEST

1. **CHECK FOR AN INTERMITTENT CONDITION**
    1. Turn the ignition on.
    2. With the scan tool, clear all DTC's.
    3. With the scan tool, read DTC's.

    Does the scan tool display DTC: P0693-COOLING FAN 2 CONTROL CIRCUIT LOW?

    Yes

    - Go To 2.

    No

    - Test complete, the condition or conditions that originally set this DTC are not present at this time. Using the wiring diagrams as a guide, check all related splices and connectors for signs of water intrusion, corrosion, pushed out or bent terminals, and correct pin tension.
    - Perform the BODY VERIFICATION TEST. Refer to **BODY VERIFICATION TEST**.

2. **RADIATOR FAN HIGH RELAY**
    1. Turn the ignition off.
    2. Remove the Radiator Fan High Relay and substitute it with a known good relay.
    3. Turn the ignition on.
    4. With the scan tool, clear all DTC's.
    5. Turn the ignition off.
    6. Turn the ignition on.
    7. With the scan tool, read DTC's.

    Does the scan tool display DTC: P0693-COOLING FAN 2 CONTROL CIRCUIT LOW?

    Yes

    - Go To 3.

    No

    - Replace the Radiator Fan High Relay.
    - Perform the BODY VERIFICATION TEST. Refer to **BODY VERIFICATION TEST**.
3. **CHECK THE (W24) FUSED RUN RELAY OUTPUT CIRCUIT FOR AN OPEN**

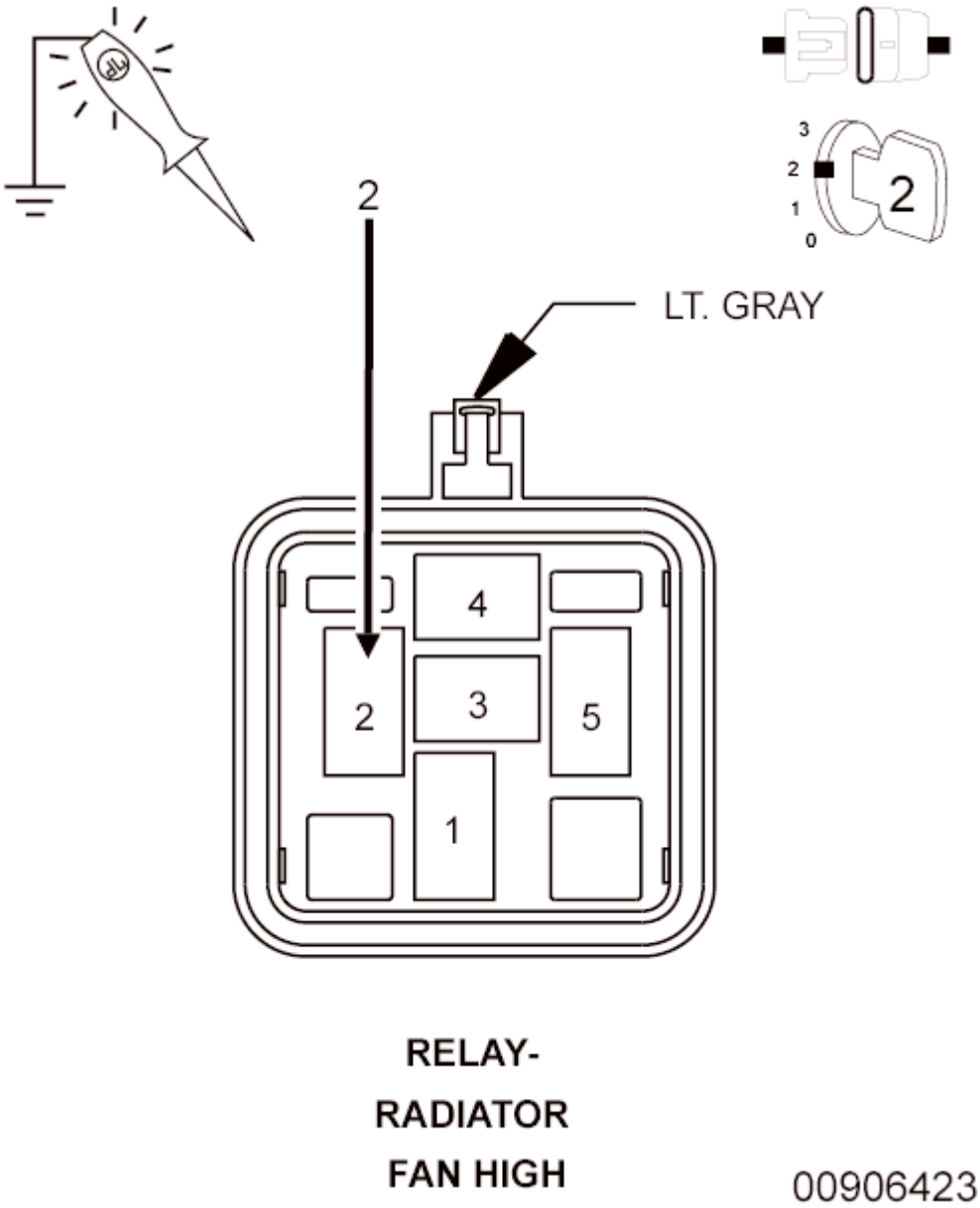

Fig. 131: Checking Fused Run Relay Output Circuit For An Open
Courtesy of CHRYSLER GROUP, LLC

1. Turn the ignition off.
2. Remove the Radiator Fan High Relay.
3. Turn the ignition on.
4. Using a 12-volt test light connected to ground, check the (W24) Fused Run Relay Output circuit.

NOTE: **The test light should be illuminated and bright. Compare the brightness to that of a direct connection to the battery.**

Is the test light illuminated and bright?

Yes

- Go To 4.

No

- Repair the open or high resistance in the (W24) Fused Run Relay Output circuit.
- Perform the BODY VERIFICATION TEST. Refer to **BODY VERIFICATION TEST**.

4. **CHECK THE (K175) RAD FAN HIGH SPEED CONTROL CIRCUIT FOR A SHORT TO GROUND**

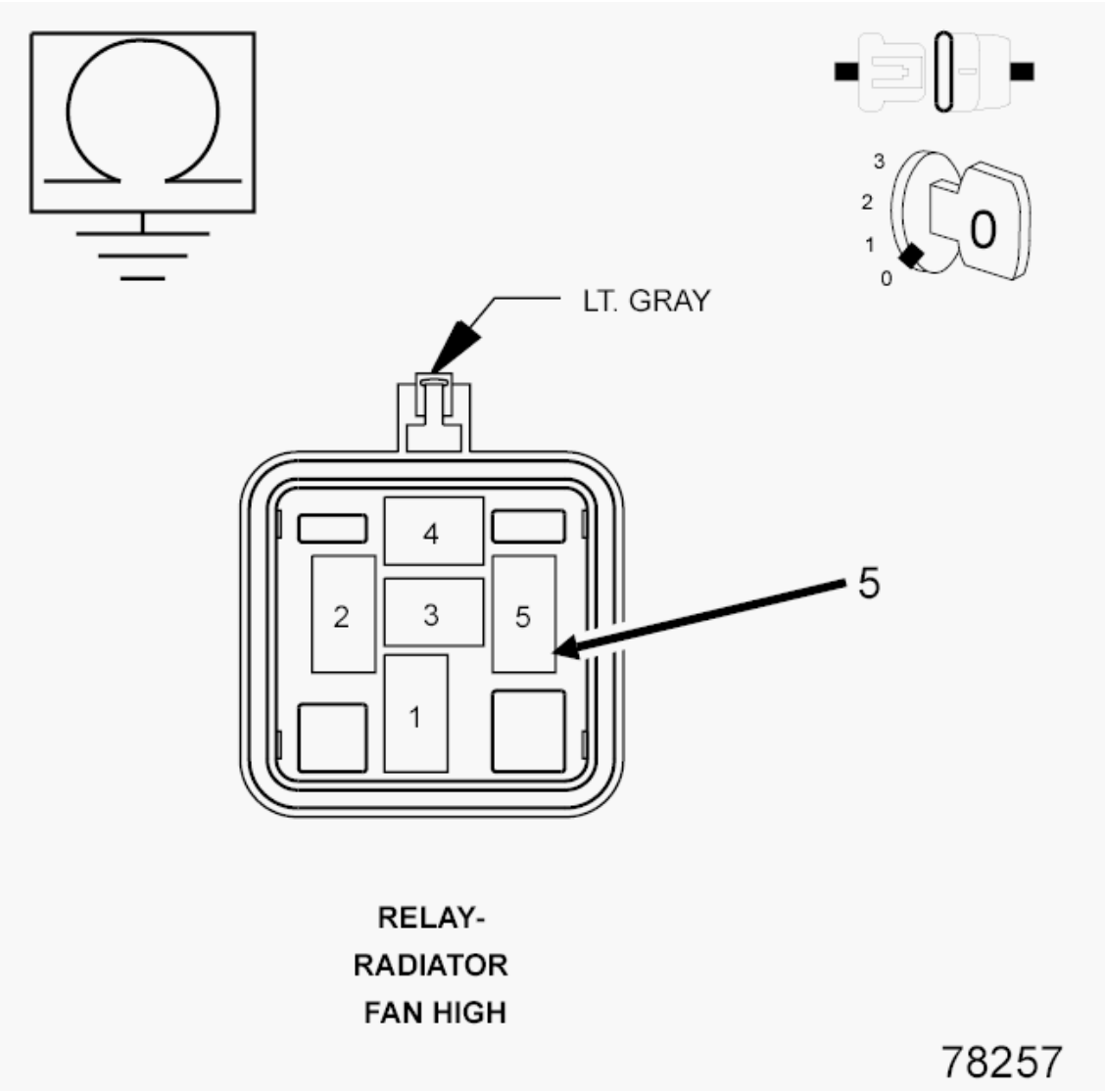

Fig. 132: Checking Rad Fan High Speed Control Circuit For A Short To Ground
Courtesy of CHRYSLER GROUP, LLC

1. Turn the ignition off.
2. Disconnect the TIPM C3 harness connector.

3. Measure the resistance between ground and the (K175) Rad Fan High Speed Control circuit.

   Is the resistance above 10k Ohms?

   Yes

   - Go To 5.

   No

   - Repair the short to ground in the (K175) Rad Fan High Speed Control circuit.
   - Perform the BODY VERIFICATION TEST. Refer to **BODY VERIFICATION TEST**.

5. **CHECK THE (K175) RAD FAN HIGH SPEED CONTROL CIRCUIT FOR AN OPEN OR HIGH RESISTANCE**

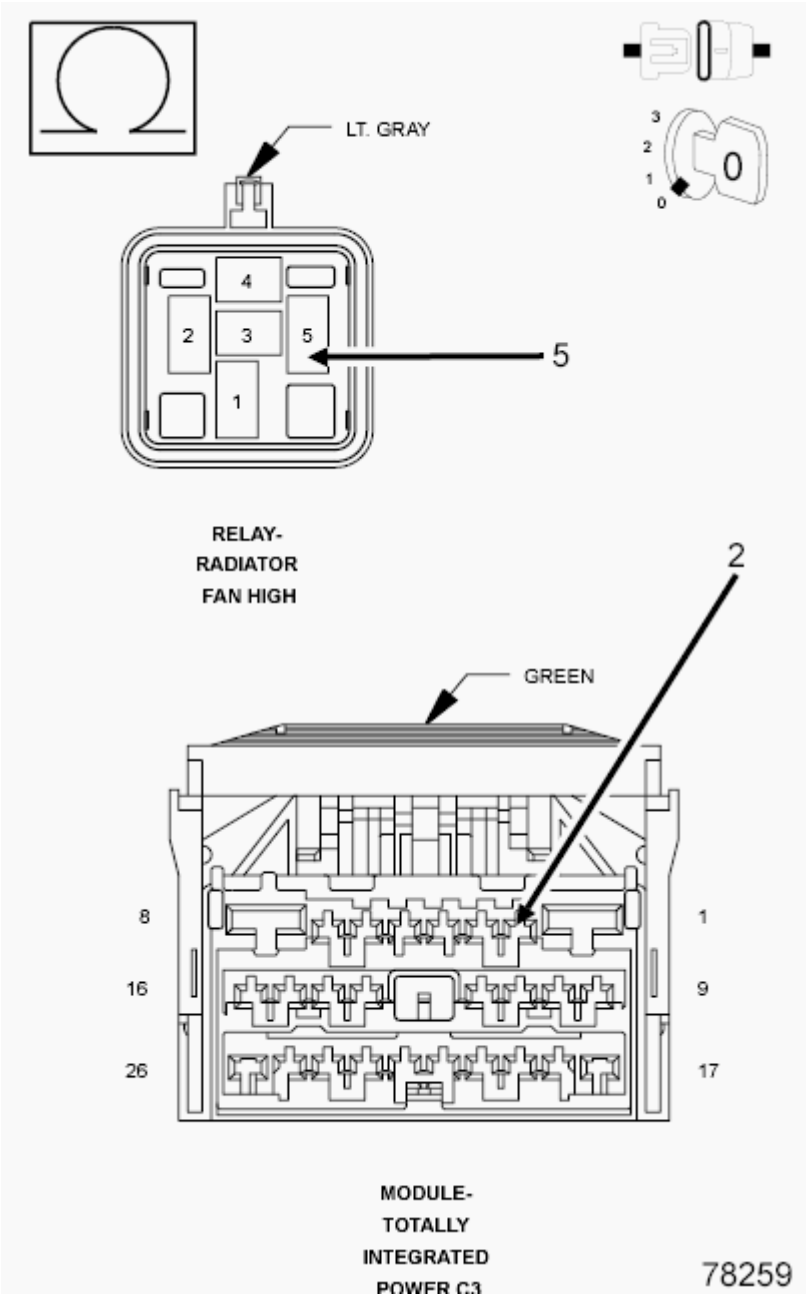

Fig. 133: Checking Rad Fan High Speed Control Circuit For An Open Or High Resistance
Courtesy of CHRYSLER GROUP, LLC

1. Measure the resistance of the (K175) Rad Fan High Speed Control circuit from the TIPM C3 harness connector to the Radiator Fan High Relay.

   Is the resistance below 5.0 Ohms?

   Yes

   - Go To 6.

No

- Repair the open or high resistance in the (K175) Rad Fan High Speed Control circuit.
- Perform the BODY VERIFICATION TEST. Refer to **BODY VERIFICATION TEST**.

6. **TOTALLY INTEGRATED POWER MODULE (TIPM)**

NOTE: **Before continuing, check the TIPM harness connector terminals for corrosion, damage, or terminal push out. Repair as necessary.**

1. Using the schematics as a guide, inspect the wire harness and connectors.

   Pay particular attention to all Power and Ground circuits.

   Were there any problems found?

   Yes

   - Repair as necessary.
   - Perform the BODY VERIFICATION TEST. Refer to **BODY VERIFICATION TEST**.

   No

   - Replace the TIPM in accordance with the Service Information. Refer to **MODULE, TOTALLY INTEGRATED POWER (TIPM), REMOVAL** .
   - Perform the BODY VERIFICATION TEST. Refer to **BODY VERIFICATION TEST**.

P0694-COOLING FAN 2 CONTROL CIRCUIT HIGH

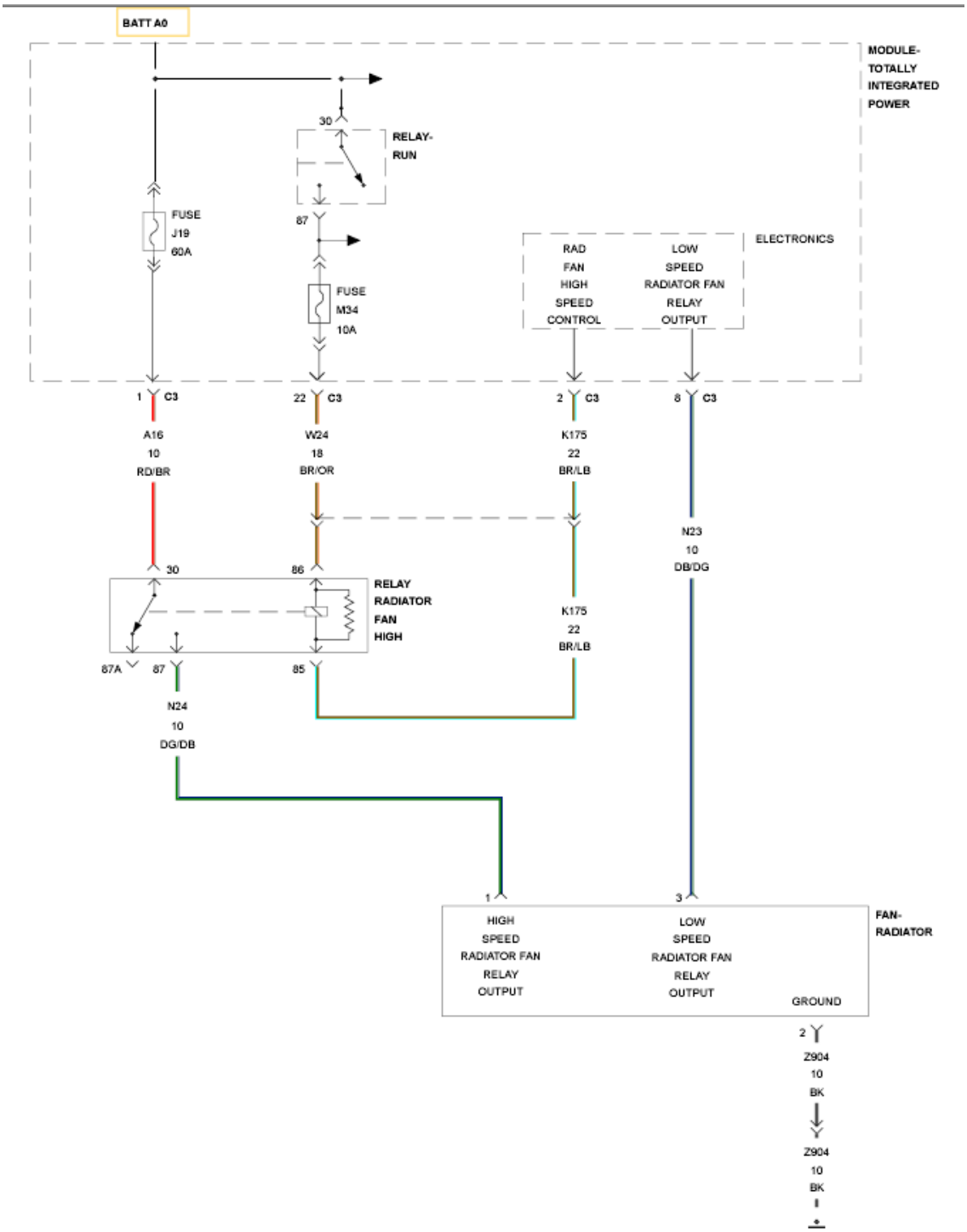

Fig. 134: Cooling Fan Control Wiring Diagram
Courtesy of CHRYSLER GROUP, LLC

For a complete wiring diagram, **refer to appropriate SYSTEM WIRING DIAGRAMS article** .

THEORY OF OPERATION

The Powertrain Control Module (PCM) sends a CAN bus message to the Totally Integrated Power Module (TIPM) requesting high speed cooling fan operation. The TIPM grounds the coil for the High Speed Cooling Fan Relay through the high speed radiator fan control circuit. The High Speed Cooling Fan Relay then provides battery voltage to the high speed coil in the Cooling Fan Motor.

WHEN MONITORED:

With the ignition on.

Battery voltage greater than 10 volts.

With the High Speed Cooling Fan on.

SET CONDITION:

The TIPM detects a short to voltage in the Rad Fan High Speed Control circuit.

POSSIBLE CAUSES

Possible Causes
(K175) RAD FAN HIGH SPEED CONTROL CIRCUIT SHORTED TO VOLTAGE
RADIATOR FAN HIGH RELAY
TOTALLY INTEGRATED POWER MODULE (TIPM)

DIAGNOSTIC TEST

1. **ACTIVE DTC**
    1. Turn the ignition on.
    2. With the scan tool, clear all DTC's.
    3. With the scan tool, actuate Radiator Fan 2.
    4. With the scan tool, read DTC's.

    Does the scan tool display DTC: P0694-COOLING FAN 2 CONTROL CIRCUIT HIGH?

    Yes

    - Go To 2.

    No

    - Test complete, the condition or conditions that originally set this DTC are not present at this time. Using the wiring diagrams as a guide, check all related splices and connectors for signs of water intrusion, corrosion, pushed out or bent terminals, and correct pin tension.
    - Perform the BODY VERIFICATION TEST. Refer to **BODY VERIFICATION TEST**.
2. **RADIATOR FAN HIGH RELAY**

1. Turn the ignition off.
2. Remove the Radiator Fan High Relay and substitute it with a known good relay.
3. Turn the ignition on.
4. With the scan tool, clear all DTC's.
5. Turn the ignition off.
6. Turn the ignition on.
7. With the scan tool, actuate Radiator Fan 2.
8. With the scan tool, read DTC's.

Does the scan tool display DTC: P0694-COOLING FAN 2 CONTROL CIRCUIT HIGH?

Yes

- Go To 3.

No

- Replace the Radiator Fan High Relay.
- Perform the BODY VERIFICATION TEST. Refer to **BODY VERIFICATION TEST**.

3. **CHECK THE (K175) RAD FAN HIGH SPEED CONTROL CIRCUIT FOR A SHORT TO VOLTAGE**

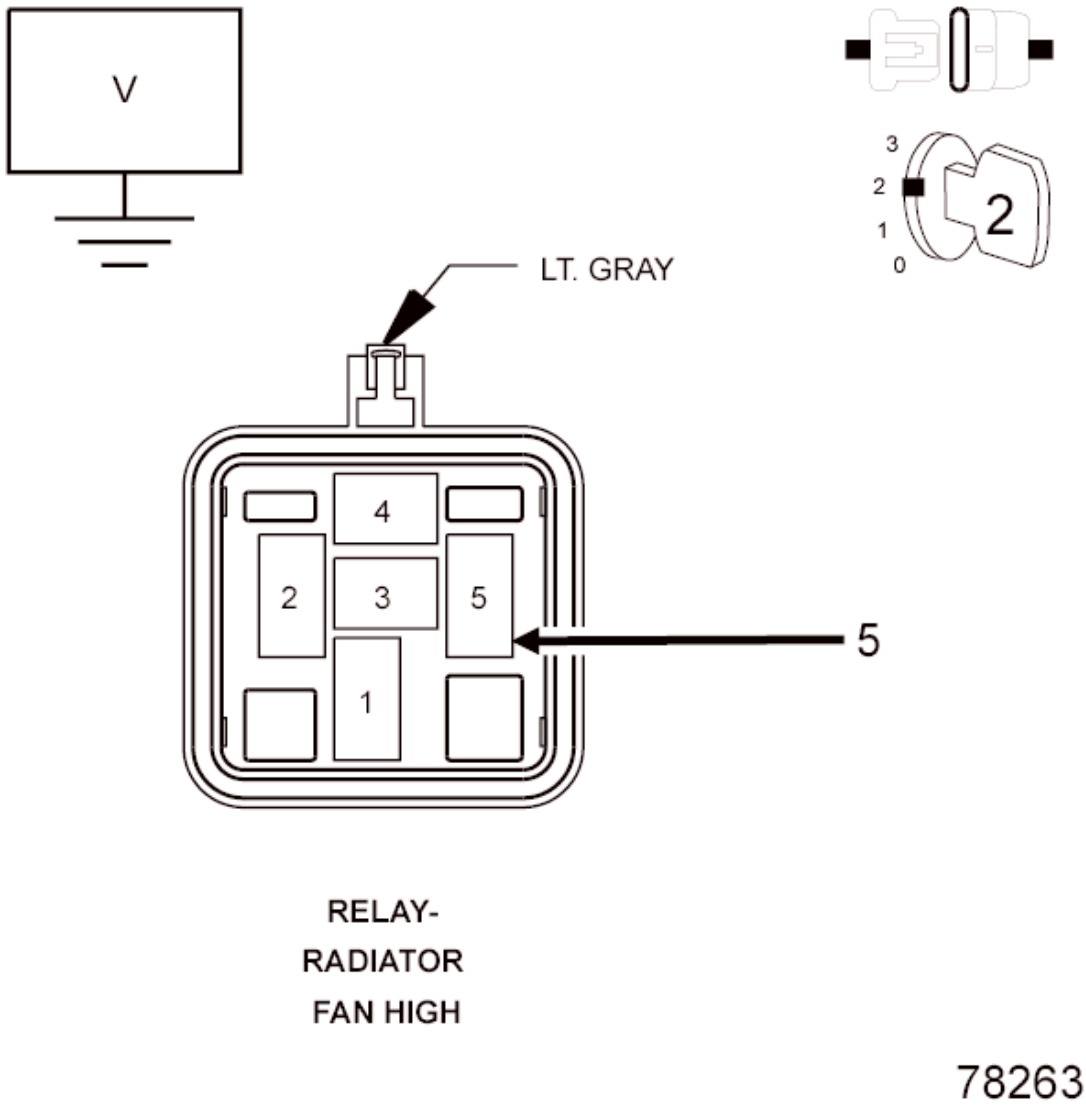

Fig. 135: Checking Rad Fan High Speed Control Circuit For A Short To Voltage
Courtesy of CHRYSLER GROUP, LLC

1. Turn the ignition off.
2. Disconnect the TIPM C3 harness connector.
3. Remove the Radiator Fan High Relay.
4. Turn the ignition on.
5. Measure the voltage between ground and the (K175) Rad Fan High Speed Control circuit.

   Is there any voltage present?

   Yes

   - Repair the short to voltage in the (K175) Rad Fan High Speed Control circuit.
   - Perform the BODY VERIFICATION TEST. Refer to **BODY VERIFICATION TEST**.

No

- Go To 4.

4. **TOTALLY INTEGRATED POWER MODULE (TIPM)**

NOTE: Before continuing, check the TIPM harness connector terminals for corrosion, damage, or terminal push out. Repair as necessary.

1. Using the schematics as a guide, inspect the wire harness and connectors.

   Pay particular attention to all Power and Ground circuits.

   Were there any problems found?

   Yes

   - Repair as necessary.
   - Perform the BODY VERIFICATION TEST. Refer to **BODY VERIFICATION TEST**.

   No

   - Replace the TIPM in accordance with the Service Information. Refer to **MODULE, TOTALLY INTEGRATED POWER (TIPM), REMOVAL** .
   - Perform the BODY VERIFICATION TEST. Refer to **BODY VERIFICATION TEST**.

P1273-A/C CONTROL CIRCUIT 2 HIGH

For a complete wiring diagram, **refer to appropriate SYSTEM WIRING DIAGRAMS article** .

THEORY OF OPERATION

The Totally Integrated Power Module (TIPM) is commanded by the Powertrain Control Module (PCM) through a hardwired signal to actuate the A/C Clutch. The TIPM actuates the A/C Clutch by providing voltage through a high-side driver circuit. The TIPM monitors this circuit for correct voltage and current flow.

WHEN MONITORED:

With the ignition on.

Battery voltage greater than 10.4 volts.

Air Conditioning (A/C) Switch on.

A/C Compressor Clutch command on.

SET CONDITION:

The Totally Integrated Power Module (TIPM) detects the voltage on the A/C Clutch Control Output circuit is higher than the calibrated level.

POSSIBLE CAUSES

Possible Causes
(C3) A/C CLUTCH CONTROL OUTPUT CIRCUIT OPEN
(C3) A/C CLUTCH CONTROL OUTPUT CIRCUIT SHORTED TO VOLTAGE
(Z908)/(Z916) GROUND CIRCUIT OPEN OR EXCESSIVE RESISTANCE
A/C COMPRESSOR CLUTCH
TOTALLY INTEGRATED POWER MODULE (TIPM)

DIAGNOSTIC TEST

1. **A/C COMPRESSOR CLUTCH OPERATION**

   NOTE: If Powertrain Control Module (PCM) DTC P0645-A/C CLUTCH CONTROL CIRCUIT is present, diagnose it first.

   1. Ignition on, engine not running.
   2. With the scan tool, actuate the A/C Clutch.

      Does the A/C Clutch actuate?

      Yes

      - Test complete, the condition or conditions that originally set this DTC are not present at this time. Using the wiring diagrams as a guide, check all related splices and connectors for signs of water intrusion, corrosion, pushed out or bent terminals, and correct pin tension.
      - Perform the BODY VERIFICATION TEST. Refer to **BODY VERIFICATION TEST**.

      No

      - Go To 2.

2. **CHECK THE (C3) A/C CLUTCH CONTROL OUTPUT CIRCUIT FOR A SHORT TO VOLTAGE**

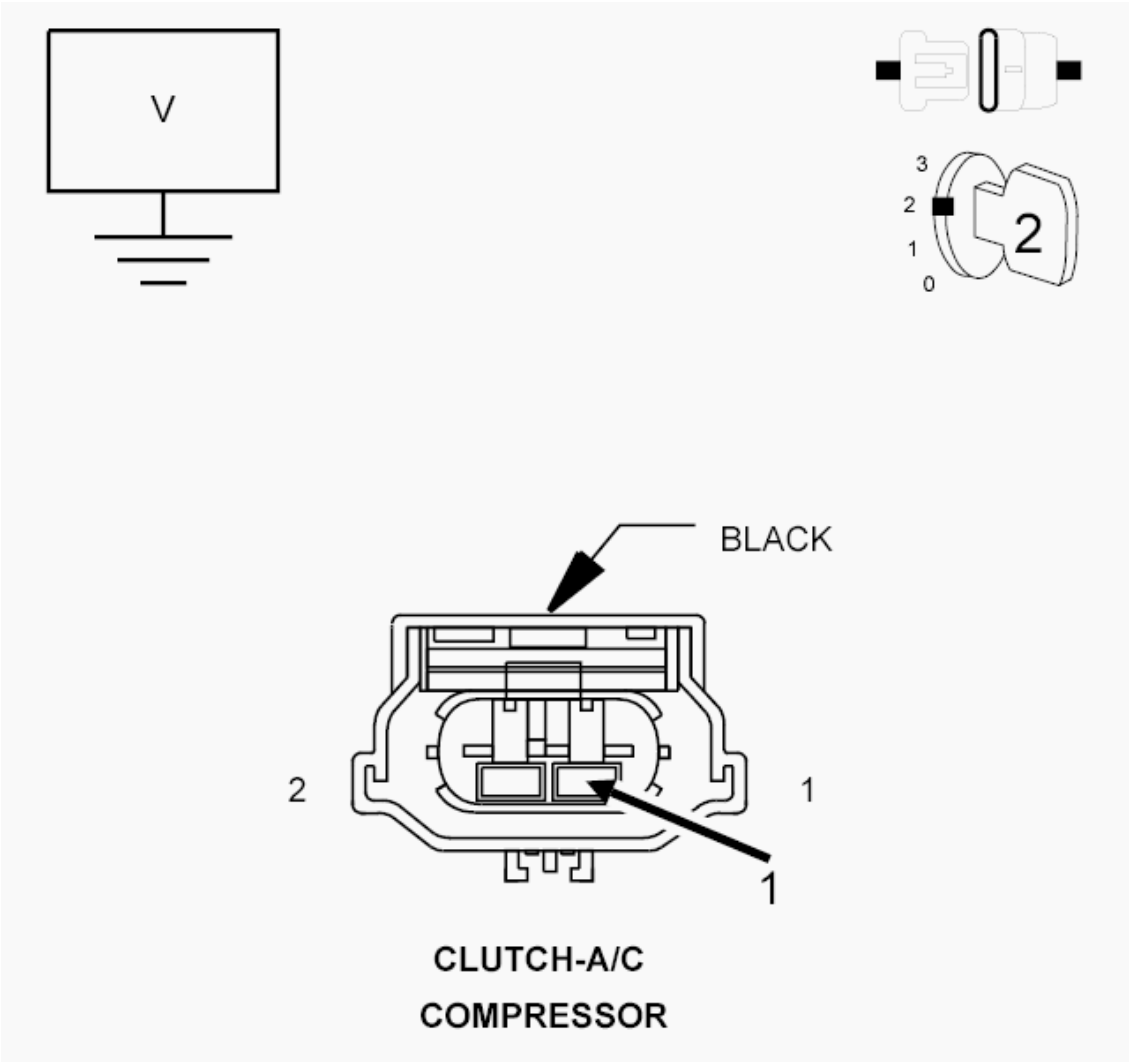

Fig. 136: Checking A/C Clutch Control Output Circuit For A Short To Voltage
Courtesy of CHRYSLER GROUP, LLC

1. Turn the ignition off.
2. Disconnect the A/C Compressor Clutch harness connector.
3. Disconnect the TIPM C1 harness connector.
4. Ignition on, engine not running.
5. Measure the voltage between ground and the (C3) A/C Clutch Control Output circuit at the A/C Compressor Clutch harness connector.

   Is there any voltage present?

   Yes

   - Repair the short to voltage in the (C3) A/C Clutch Control Output circuit.
   - Perform the BODY VERIFICATION TEST. Refer to **BODY VERIFICATION TEST**.

No

- Go To 3.

3. **CHECK THE TIPM FOR CORRECT OPERATION**

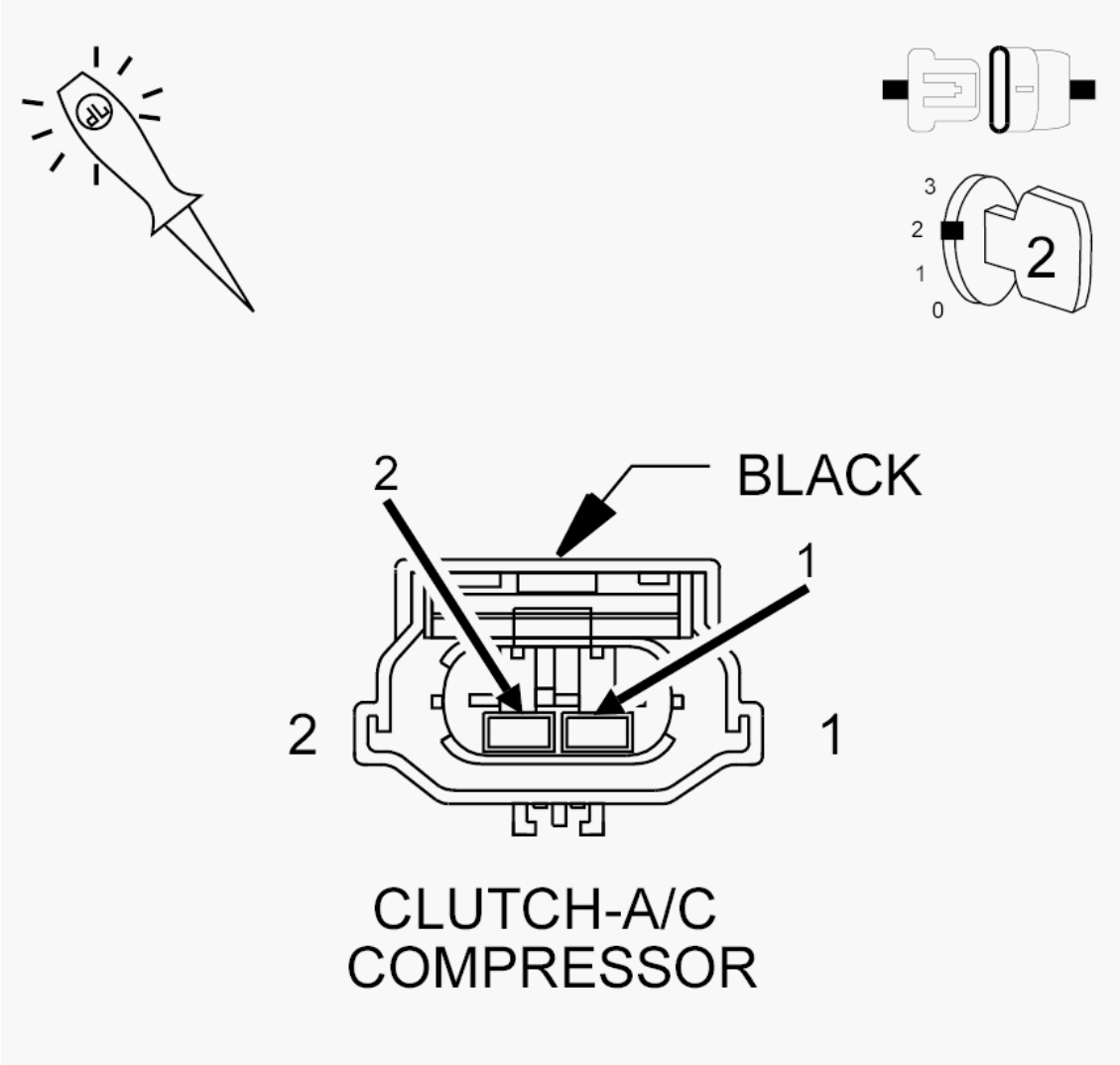

Fig. 137: Checking A/C Clutch Control Output For Correct Operation
Courtesy of CHRYSLER GROUP, LLC

1. Turn the ignition off.
2. Reconnect the TIPM C1 harness connector.
3. Ignition on, engine not running.
4. Connect a 12-volt test light between the (C3) A/C Clutch Control Output circuit and (Z908)/(Z916) Ground circuit at the A/C Compressor Clutch harness connector.
5. With the scan tool, actuate the A/C Clutch.

   Does the test light illuminate when the A/C Clutch is commanded on?

Yes

- Verify that there is good pin to terminal contact in the A/C Compressor Clutch and TIPM connectors. If OK, replace the A/C Compressor Clutch in accordance with the Service Information. Refer to **COMPRESSOR, A/C, REMOVAL** .
- Perform the BODY VERIFICATION TEST. Refer to **BODY VERIFICATION TEST**.

No

- Go To 4.

4. **CHECK THE (C3) A/C CLUTCH CONTROL OUTPUT CIRCUIT FOR AN OPEN**

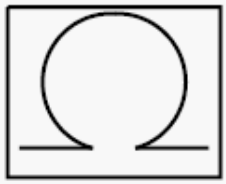

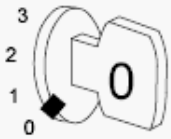

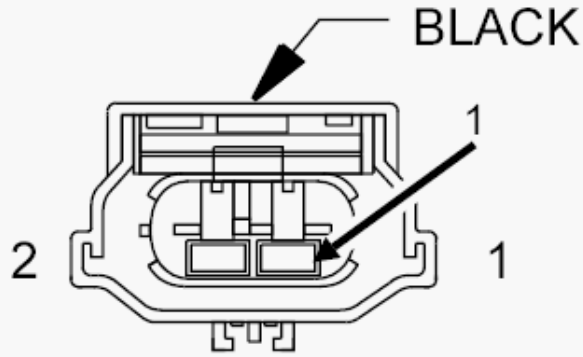

CLUTCH-A/C
COMPRESSOR

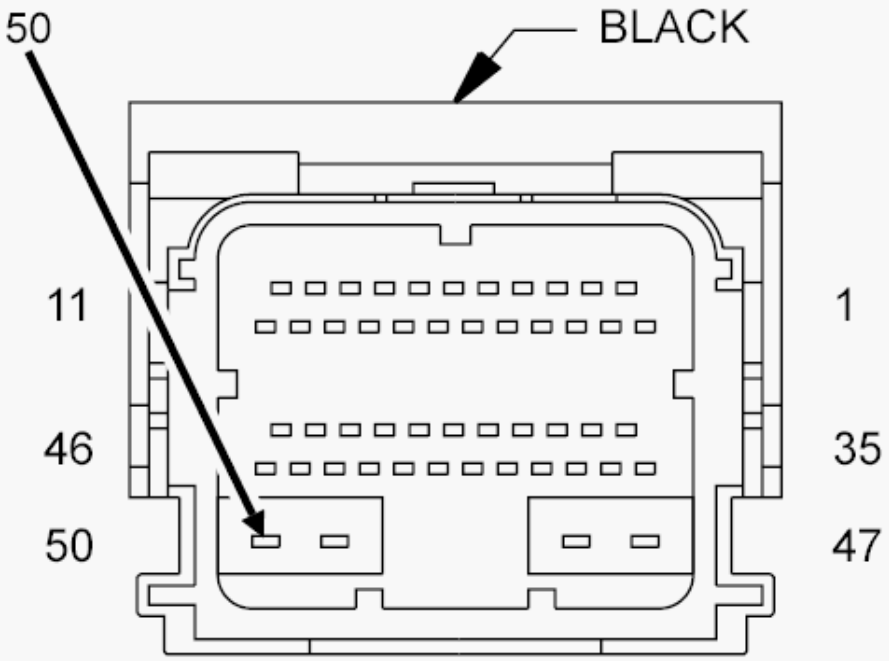

MODULE-
TOTALLY
INTEGRATED
POWER C1

2911328

Fig. 138: Checking A/C Clutch Control Output Circuit For An Open
Courtesy of CHRYSLER GROUP, LLC

1. Turn the ignition off.
2. Disconnect the TIPM C1 harness connector.
3. Measure the resistance of the (C3) A/C Clutch Control Output circuit between the A/C Compressor Clutch harness connector and the TIPM C1 harness connector.

   Is the resistance below 5.0 Ohms?

   Yes

   - Go To 5.

   No

   - Repair the open in the (C3) A/C Clutch Control Output circuit.
   - Perform the BODY VERIFICATION TEST. Refer to **BODY VERIFICATION TEST**.

5. **CHECK THE (Z908)/(Z916) GROUND CIRCUIT FOR AN OPEN**

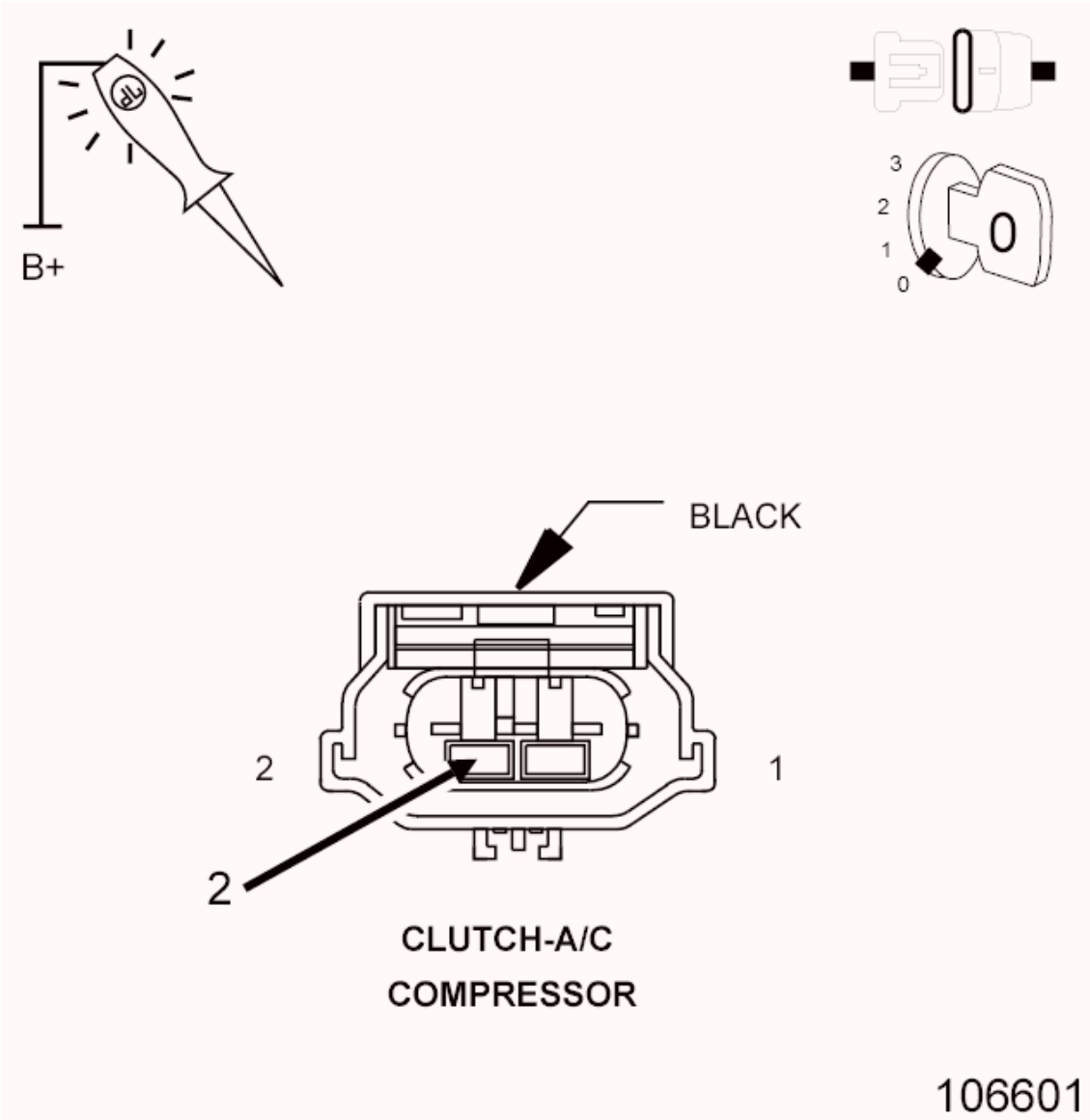

Fig. 139: Checking A/C Clutch Ground Circuit For An Open
Courtesy of CHRYSLER GROUP, LLC

1. Using a 12-volt test light connected to 12-volts, check the (Z908)/(Z916) Ground circuit at the A/C Compressor Clutch harness connector.

   Does the test light illuminate brightly?

   Yes

   - Go To 6.

   No

   - Repair the open or excessive resistance in the (Z908)/(Z916) Ground circuit.

- Perform the BODY VERIFICATION TEST. Refer to **BODY VERIFICATION TEST**.

6. **TOTALLY INTEGRATED POWER MODULE (TIPM)**
    1. Using the wiring diagram/schematic as a guide, inspect the wiring and connectors between the A/C Clutch and TIPM.
    2. Look for any chafed, pierced, pinched, or partially broken wires.
    3. Look for broken, bent, pushed out or corroded terminals. Verify that there is good pin to terminal contact in the A/C Compressor Clutch and TIPM connectors.
    4. Perform any Technical Service Bulletins (TSB)s that may apply.

    Were any problems found?

    Yes

    - Repair as necessary.
    - Perform the BODY VERIFICATION TEST. Refer to **BODY VERIFICATION TEST**.

    No

    - Replace the TIPM in accordance with the Service Information. Refer to **MODULE, TOTALLY INTEGRATED POWER (TIPM), REMOVAL** .
    - Perform the BODY VERIFICATION TEST. Refer to **BODY VERIFICATION TEST**.

P1275-A/C CONTROL CIRCUIT 2 OVERCURRENT

For a complete wiring diagram, **refer to appropriate SYSTEM WIRING DIAGRAMS article** .

THEORY OF OPERATION

The Totally Integrated Power Module (TIPM) is commanded by the Powertrain Control Module (PCM) through a hardwired signal to actuate the A/C Clutch. The TIPM actuates the A/C Clutch by providing voltage through a high-side driver circuit. The TIPM monitors this circuit for correct voltage and current flow.

WHEN MONITORED:

With the ignition on.

Battery voltage greater than 10.4 volts.

Air Conditioning (A/C) Switch on.

A/C Compressor Clutch command on.

SET CONDITION:

The TIPM detects the current draw on the A/C Clutch Control Output circuit is higher than the calibrated level.

POSSIBLE CAUSES

Possible Causes
(C3) A/C CLUTCH CONTROL OUTPUT CIRCUIT SHORTED TO GROUND
A/C COMPRESSOR CLUTCH
TOTALLY INTEGRATED POWER MODULE (TIPM)

DIAGNOSTIC TEST

1. **A/C CLUTCH OPERATION**
    1. Ignition on, engine not running.
    2. With a scan tool, actuate the A/C Clutch.

    Does the A/C Clutch actuate?

    Yes

    - Test complete, the condition or conditions that originally set this DTC are not present at this time. Using the wiring diagrams as a guide, check all related splices and connectors for signs of water intrusion, corrosion, pushed out or bent terminals, and correct pin tension.
    - Perform the BODY VERIFICATION TEST. Refer to **BODY VERIFICATION TEST**.

    No

    - Go To 2.
2. **CHECK THE (C3) A/C CLUTCH CONTROL OUTPUT CIRCUIT FOR A SHORT TO GROUND**

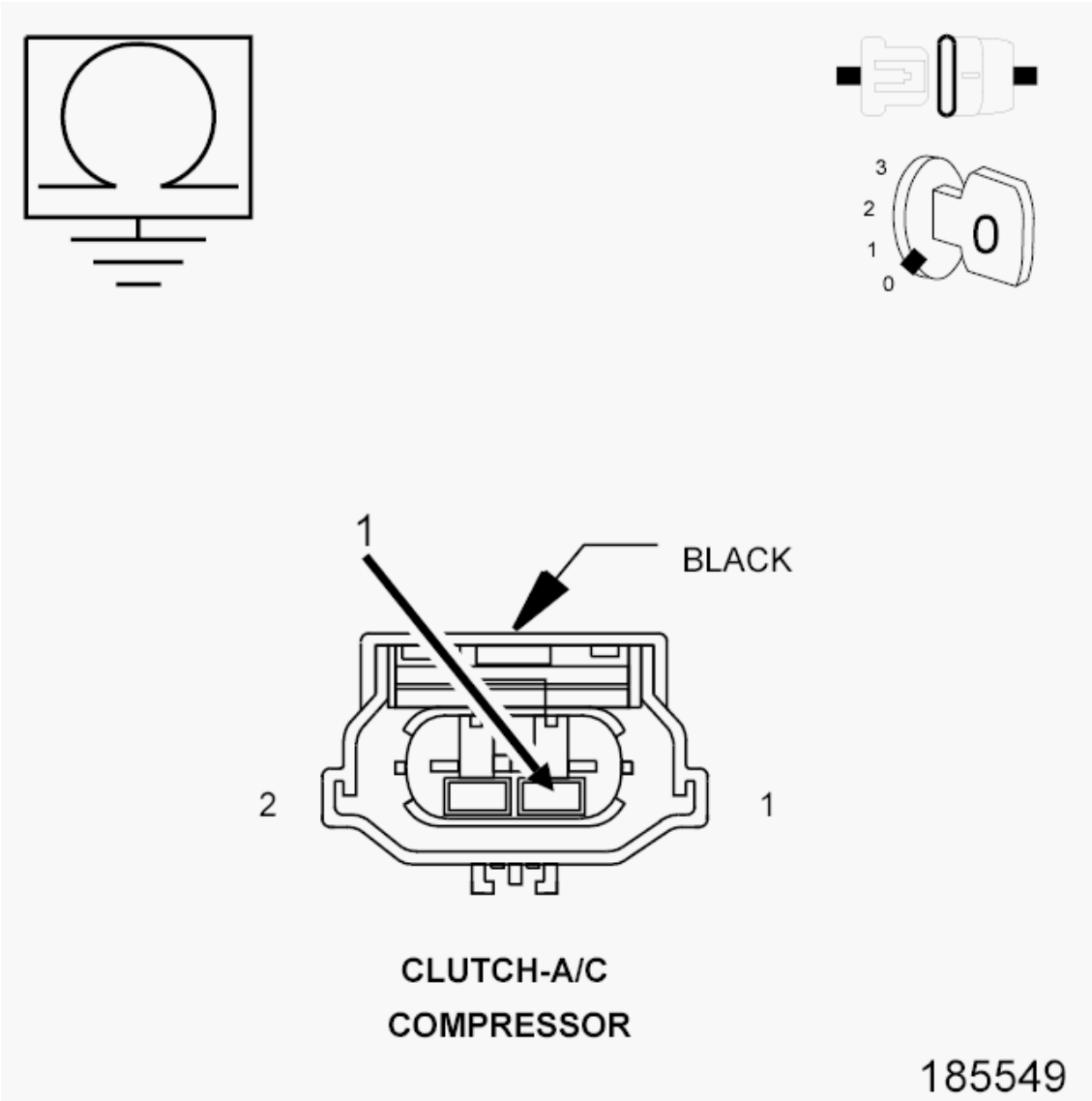

Fig. 140: Checking A/C Clutch Control Output Circuit For A Short To Ground
Courtesy of CHRYSLER GROUP, LLC

1. Turn the ignition off.
2. Disconnect the A/C Compressor Clutch harness connector.
3. Disconnect the TIPM C1 harness connector.
4. Measure the resistance between ground and the (C3) A/C Clutch Control Output circuit at the A/C Compressor Clutch harness connector.

   Is the resistance above 10k Ohms?

   Yes

   - Go To 3.

No

- Repair the short to ground in the (C3) A/C Clutch Control Output circuit.
- Perform the BODY VERIFICATION TEST. Refer to **BODY VERIFICATION TEST**.

3. **CHECK THE (C3) A/C CLUTCH CONTROL OUTPUT FROM TIPM**

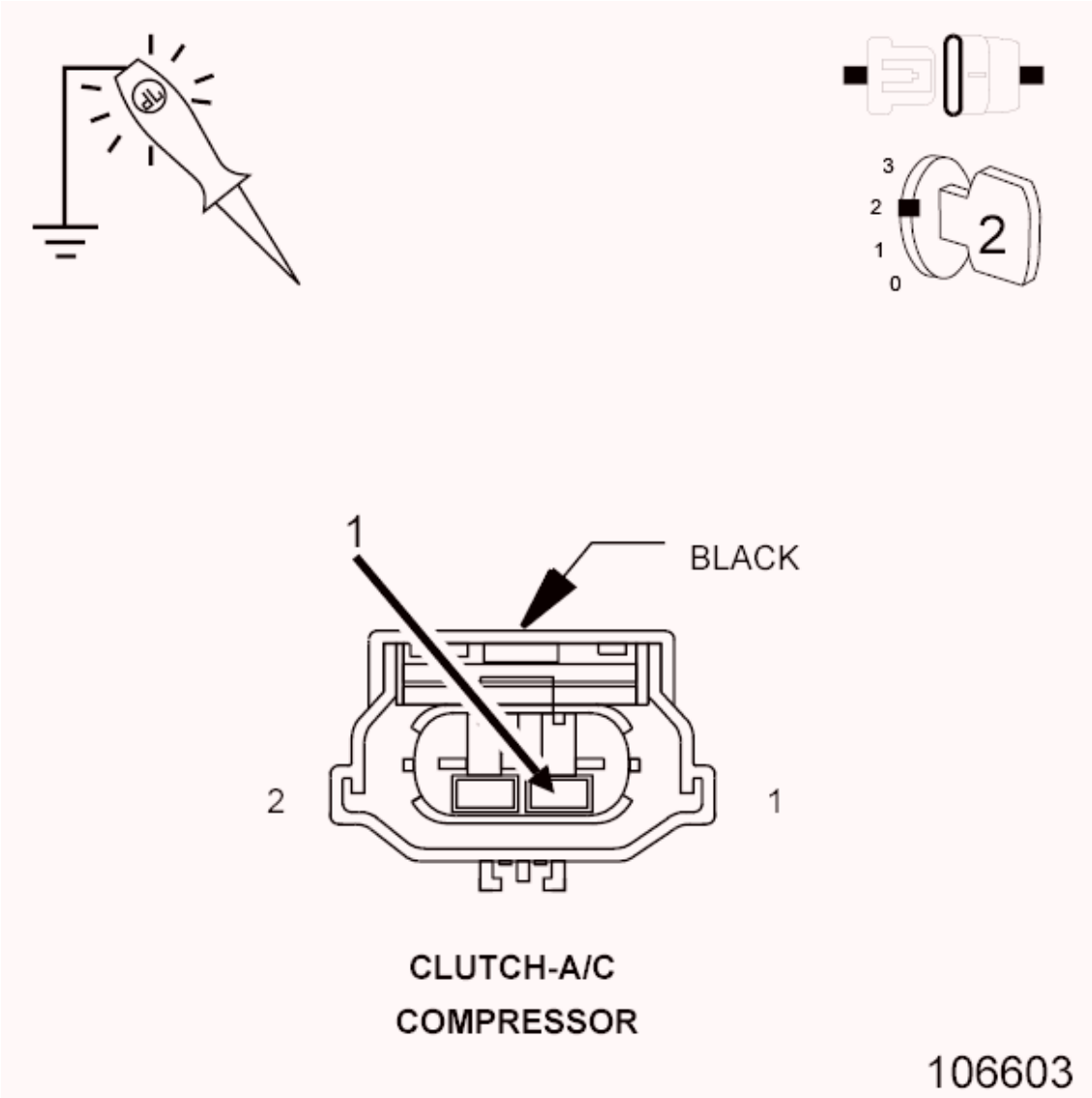

Fig. 141: Measuring A/C Clutch Control Output From TIPM
Courtesy of CHRYSLER GROUP, LLC

1. Reconnect the TIPM C1 harness connector.
2. Ignition on, engine not running.
3. Using the 12-volt test light connected to ground, check the (C3) A/C Clutch Control Output circuit in the A/C Compressor Clutch harness connector.
4. With a scan tool, actuate the A/C Clutch.

Does the test light illuminate when the A/C Clutch is commanded on?

Yes

- Verify that there is good pin to terminal contact in the A/C Compressor Clutch and TIPM connectors. If OK, replace the A/C Clutch in accordance with the Service Information. Refer to **COMPRESSOR, A/C, REMOVAL** .
- Perform the BODY VERIFICATION TEST. Refer to **BODY VERIFICATION TEST**.

No

- Replace the TIPM in accordance with the Service Information. Refer to **MODULE, TOTALLY INTEGRATED POWER (TIPM), REMOVAL** .
- Perform the BODY VERIFICATION TEST. Refer to **BODY VERIFICATION TEST**.

P129E-INVERTER CONTROL CIRCUIT OVERCURRENT

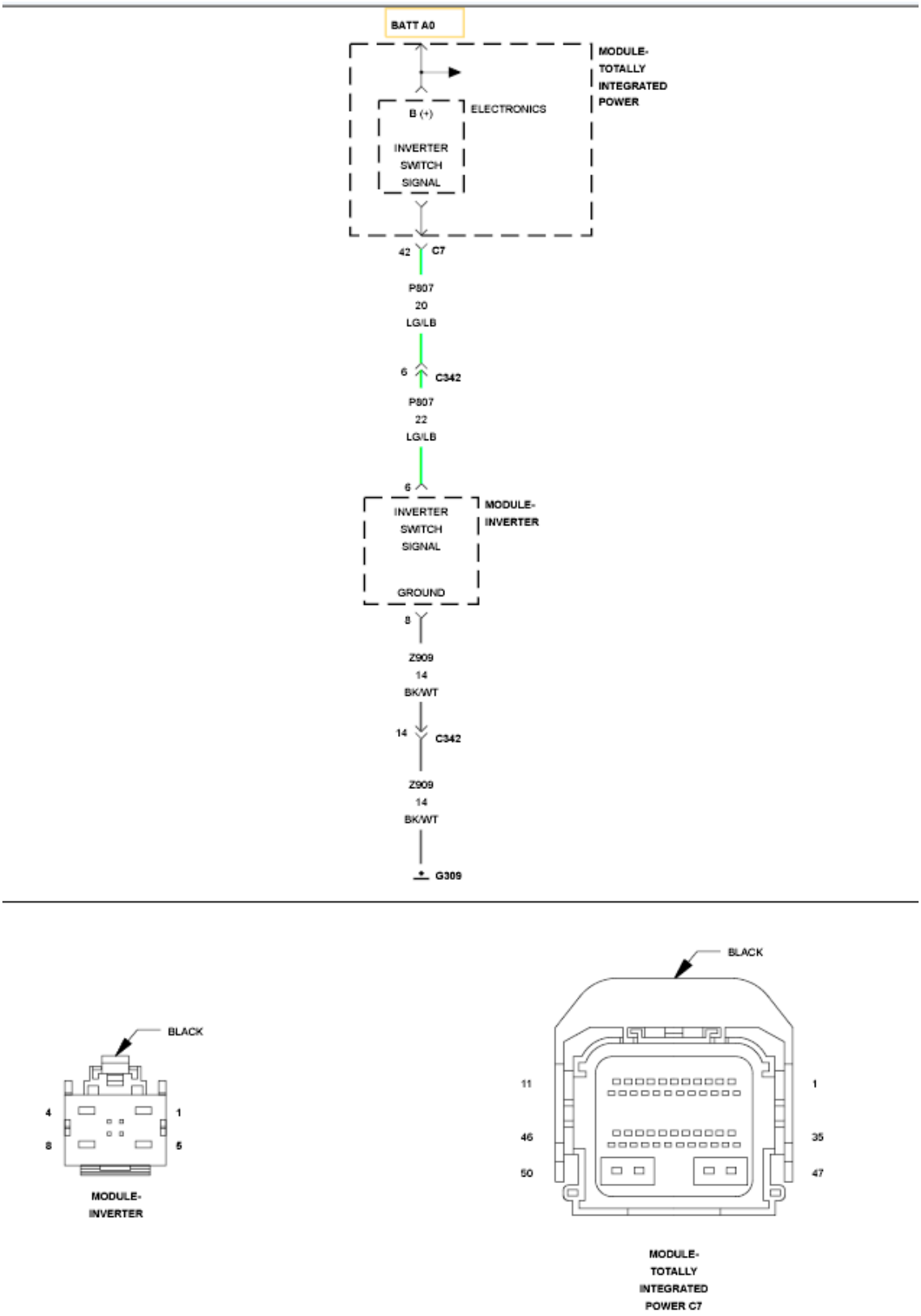

Fig. 142: Inverter Control Wiring Diagram
Courtesy of CHRYSLER GROUP, LLC

For a complete wiring diagram, **refer to appropriate SYSTEM WIRING DIAGRAMS article** .

THEORY OF OPERATION

Once the 115 Volt AC Outlet switch is pressed, the Switch Bank Module sends a message over the Local Interface Network (LIN) to the Cluster (CCN) indicating the switch has been pressed. The Cluster (CCN) then sends a message over the Controller Area Network (CAN) bus to the Totally Integrated Power Module (TIPM) to enable the Power Inverter Module. The TIPM provides a voltage output to enable the Power Inverter Module. Once the Power Inverter Module is functional, it sends a signal to the Cluster (CCN) indicating that it is ready to function. The Cluster (CCN) then requests the Switch Bank Module to illuminate the status indicator on the 115 Volt AC Outlet switch.

WHEN MONITORED:

With the ignition on.

Battery voltage greater than 10 volts.

Inverter commanded on.

SET CONDITION:

If the Totally Integrated Power Module (TIPM) detects an overcurrent condition on the (P807) Inverter Switch Signal circuit.

POSSIBLE CAUSES

Possible Causes
(P807) INVERTER SWITCH SIGNAL CIRCUIT SHORTED TO GROUND
POWER INVERTER MODULE
TOTALLY INTEGRATED POWER MODULE (TIPM)

DIAGNOSTIC TEST

1. **TEST FOR INTERMITTENT CONDITION**
    1. Turn the ignition on.
    2. With the scan tool, record and erase DTC's.
    3. Operate the 115 Volt AC Outlet switch several times.
    4. With the scan tool, read DTC's.

    Is the DTC active at this time?

    Yes

    - Go To 2.

No

- Test complete, the condition or conditions that originally set this DTC are not present at this time. Using the wiring diagrams as a guide, check all related splices and connectors for signs of water intrusion, corrosion, pushed out or bent terminals, and correct pin tension.
- Perform the BODY VERIFICATION TEST. Refer to **BODY VERIFICATION TEST**.

2. **CHECK (P807) INVERTER SWITCH SIGNAL CIRCUIT FOR A SHORT TO GROUND**

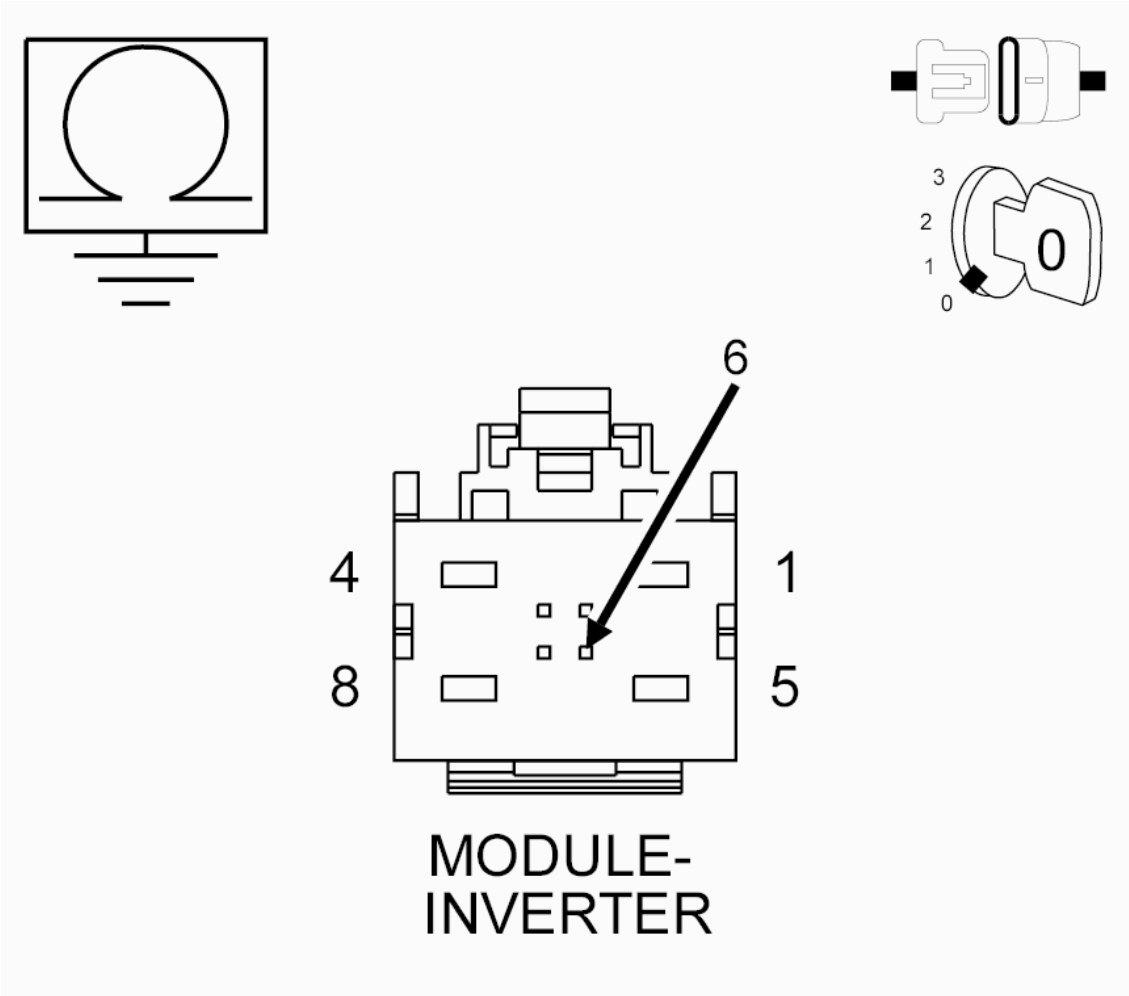

Fig. 143: Checking Inverter Switch Signal Circuit For A Short To Ground
Courtesy of CHRYSLER GROUP, LLC

1. Turn the ignition off.
2. Disconnect the TIPM C7 harness connector.
3. Disconnect the Inverter Module harness connector.
4. Measure the resistance between ground and the (P807) Inverter Switch Signal circuit at the Inverter Module harness connector.

   Is the resistance above 10k Ohms?

Yes

- Go To 3.

No

- Repair the short to ground in the (P807) Inverter Switch Signal circuit.
- Perform the BODY VERIFICATION TEST. Refer to **BODY VERIFICATION TEST**.

3. **CHECK (P807) INVERTER SWITCH SIGNAL CIRCUIT FUNCTION**

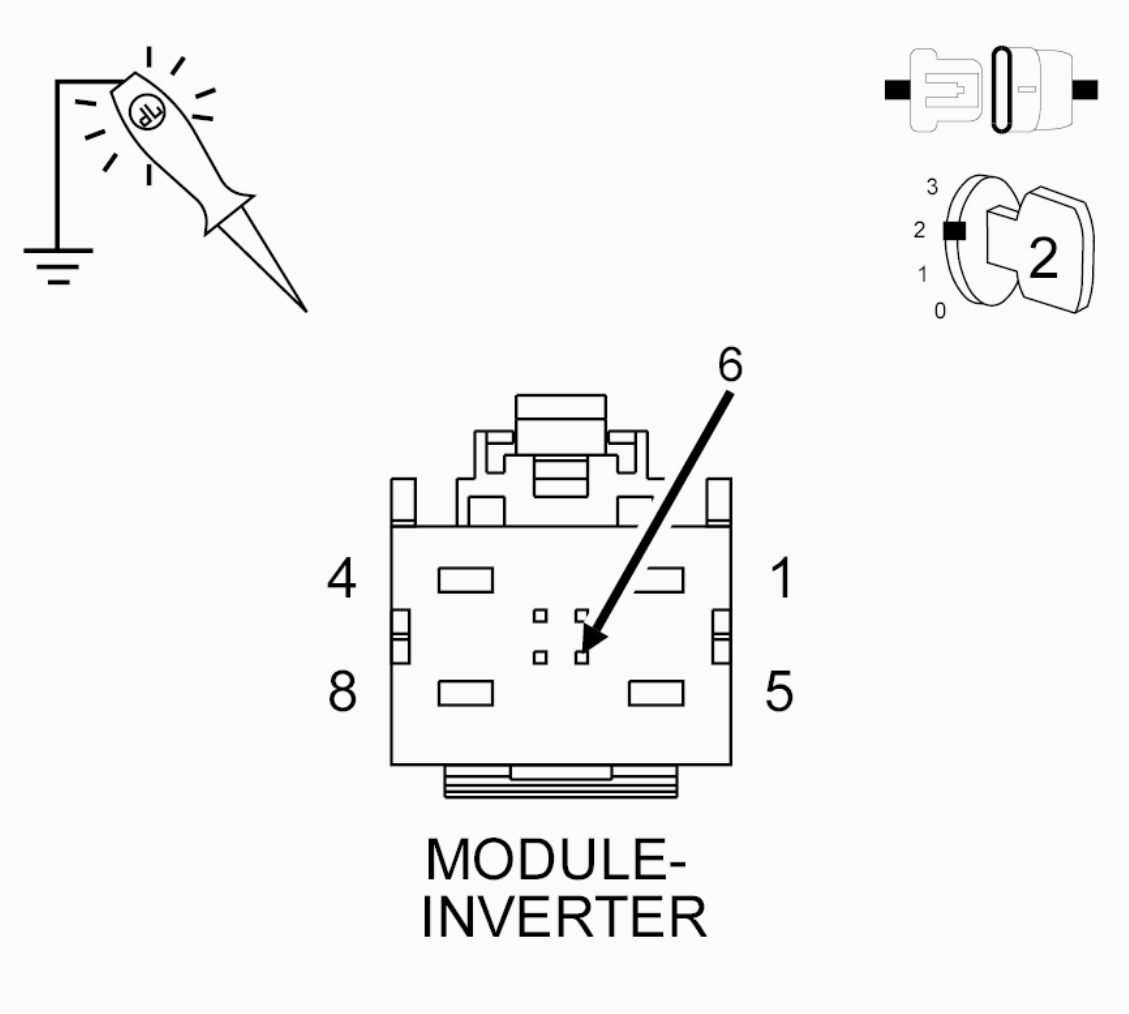

Fig. 144: Checking Inverter Switch Signal Circuit Function
Courtesy of CHRYSLER GROUP, LLC

1. Turn the ignition off.
2. Reconnect the TIPM C7 harness connector.
3. Turn the ignition on.
4. Using a 12-volt test light connected to ground, check the (P807) Inverter Switch Signal circuit at the Inverter Module harness connector.

5. With the scan tool, actuate the Inverter Switch.

NOTE: The test light should be illuminated and bright. Compare the brightness to that of a direct connection to the battery.

Does the test light illuminate brightly?

Yes

- Replace the Power Inverter Module in accordance with the Service Information. Refer to **MODULE, POWER INVERTER, REMOVAL** .
- Perform the BODY VERIFICATION TEST. Refer to **BODY VERIFICATION TEST**.

No

- Replace the TIPM in accordance with the Service Information. Refer to **MODULE, TOTALLY INTEGRATED POWER (TIPM), REMOVAL** .
- Perform the BODY VERIFICATION TEST. Refer to **BODY VERIFICATION TEST**.

U0001-CAN C BUS

For a complete wiring diagram, **refer to appropriate SYSTEM WIRING DIAGRAMS article** .

THEORY OF OPERATION

The primary communication network between electronic control modules on this vehicle is the Controller Area Network (CAN) data bus system. The Controller Area Network (CAN) data bus allows all electronic modules connected to the bus to share information with each other. Regardless of whether a message originates from a module on the higher speed CAN C (500K) Bus or on the lower speed CAN Interior High Speed (IHS) (125K) Bus the message structure and layout is similar, which allows the Totally Integrated Power Module/Central GateWay (TIPM or TIPMCGW) to process and transfer messages between the CAN buses. The TIPM also stores Diagnostic Trouble Codes (DTC's) for certain bus network faults.

All modules transmit and receive messages over one of these buses. Data exchange between the modules is achieved by serial transmission of encoded data messages (a form of transmission in which data bits are sent sequentially, one at a time, over a single line). Each module can both send and receive serial data simultaneously. Each data bit of a CAN Bus message is carried over the bus as a voltage differential between the two bus circuits which, when strung together, form a message. Each module uses arbitration to sort the message priority if two competing messages are attempting to be broadcast at the same time. Corruption of a single bit within a message will corrupt the entire message. Each message contains a Cyclic Redundancy Check (CRC) which specifies the message size exactly. If the message detected conflicts with the CRC the ECU receiving it will determine the message to be an error and consider that communication has not been possible. Diagnosis of this condition using a lab scope may reveal activity that appears to be Bus data messages even if no actual communication is possible. Communication problems that affect the whole bus, as a result of opens and terminal push outs are more likely to occur on data busses that operate at a high speed than a data bus that operates at a lower speed.

When an open circuit or terminal push out occurs one or more modules can become isolated from the remainder of the bus. The isolated module will attempt to communicate, but will not be able to receive messages or determine arbitration from other modules. Each time the isolated module attempts to communicate it alters the bus voltage on the intact bus circuit. Without functioning arbitration the isolated module alters the bus voltage while other bus messages are being sent thereby corrupting the messages on the remainder of the bus.

The CAN bus modules are connected in parallel to the two-wire bus using a twisted pair, where the wires are wrapped around each other to provide shielding from unwanted electromagnetic induction, thus preventing interference with the relatively low voltage signals being carried through them. While the CAN bus is operating (active), one of the bus wires will carry a higher voltage and is referred to as the CAN High or CAN bus (+) wire, while the other bus wire will carry a lower voltage and is referred to as the CAN Low or CAN bus (-) wire.

WHEN MONITORED:

With the ignition on.

SET CONDITION:

The Totally Integrated Power Module (TIPM) detects a corrupt CAN C Bus message.

POSSIBLE CAUSES

Possible Causes
(D52) OR (D65) CAN C BUS (+) CIRCUIT SHORTED TO GROUND
(D51) OR (D64) CAN C BUS (-) CIRCUIT SHORTED TO VOLTAGE
(D52) CAN C BUS (+) CIRCUIT SHORTED TO THE (D51) CAN C BUS (-) CIRCUIT
(D65) CAN C BUS (+) CIRCUIT SHORTED TO THE (D64) CAN C BUS (-) CIRCUIT
ANTILOCK BRAKE MODULE (ABS)
OCCUPANT RESTRAINT CONTROLLER MODULE (ORC)
POWERTRAIN CONTROL MODULE (PCM)
STEERING ANGLE SENSOR (SAS)
WIRELESS IGNITION NODE (WIN)
DRIVE TRAIN CONTROL MODULE (DTCM)
FINAL DRIVE CONTROL MODULE (FDCM)
INTEGRATED TRAILER BRAKE MODULE (ITBM)
TIRE PRESSURE MONITORING (TPM) MODULE
TRANSMISSION CONTROL MODULE (TCM)
TOTALLY INTEGRATED POWER MODULE (TIPM)

DIAGNOSTIC TEST

1. **TEST FOR INTERMITTENT CONDITION**
    1. Turn the ignition on.
    2. With the scan tool, record and erase TIPM DTC's.

3. Cycle the ignition from on to off three times.
4. Turn the ignition on.
5. With the scan tool, read active TIPM DTC's.

   Does the scan tool display U0001-CAN C BUS as active?

   Yes

   - Go To 2.

   No

   - Test complete, the condition or conditions that originally set this DTC are not present at this time. Using the wiring diagrams as a guide, check all related splices and connectors for signs of water intrusion, corrosion, pushed out or bent terminals, and correct pin tension.

2. **ANTILOCK BRAKE MODULE - INTERNAL SHORT**
   1. Turn the ignition off.
   2. Disconnect the Antilock Brake Module harness connector.
   3. Turn the ignition on.
   4. With the scan tool, record and erase TIPM DTC's.
   5. Cycle the ignition from on to off three times.
   6. Turn the ignition on.
   7. With the scan tool, read active TIPM DTC's.

   Does the scan tool display U0001-CAN C BUS as active?

   Yes

   - Go To 3.

   No

   - Inspect the wiring and connectors for damage or shorted circuits. If OK, replace and program the Antilock Brake Module in accordance with the Service Information. Refer to **MODULE, ANTI-LOCK BRAKE SYSTEM, REMOVAL** .
   - Perform the ABS VERIFICATION TEST. Refer to **1500, 2500 & 3500 - ABS VERIFICATION TEST** or **3500 CAB & CHASSIS, 4500 & 5500 - ABS VERIFICATION TEST** .

3. **OCCUPANT RESTRAINT CONTROLLER MODULE - INTERNAL SHORT**

   WARNING: **Turn the ignition off disconnect the 12-volt battery and wait two minutes before proceeding. Failure to follow these instructions may result in possible serious or fatal injury.**

1. Disconnect the Occupant Restraint Controller Module harness connectors.
2. Reconnect the 12-volt battery.
3. Turn the ignition on.
4. With the scan tool, record and erase TIPM DTC's.
5. Cycle the ignition from on to off three times.
6. Turn the ignition on.
7. With the scan tool, read active TIPM DTC's.

   Does the scan tool display U0001-CAN C BUS as active?

   Yes

   - Go To 4.

   No

   - Inspect the wiring and connectors for damage or shorted circuits. If OK, replace the Occupant Restraint Controller Module in accordance with the Service Information. Refer to **CONTROLLER, OCCUPANT RESTRAINT, REMOVAL** .
   - Perform the RESTRAINTS SYSTEM VERIFICATION TEST. Refer to **RESTRAINTS SYSTEM VERIFICATION TEST** .

4. **POWERTRAIN CONTROL MODULE - INTERNAL SHORT**
   1. Turn the ignition off.
   2. Disconnect the PCM C1 or PCM C2 (6.7L) harness connector.
   3. Turn the ignition on.
   4. With the scan tool, record and erase TIPM DTC's.
   5. Cycle the ignition from on to off three times.
   6. Turn the ignition on.
   7. With the scan tool, read active TIPM DTC's.

      Does the scan tool display U0001-CAN C BUS as active?

      Yes

      - Go To 5.

      No

      - Inspect the wiring and connectors for damage or shorted circuits. If OK, replace and program the Powertrain Control Module in accordance with the Service Information. Refer to **3.7L, 4.7L & 5.7L - MODULE, POWERTRAIN CONTROL, REMOVAL** or **MODULE, POWERTRAIN CONTROL, 6.7L DIESEL [ETJ], REMOVAL** .
      - Perform the POWERTRAIN VERIFICATION TEST. Refer to **1500 & 2500 - 3.7L, 4.7L &**

5.7L - POWERTRAIN VERIFICATION TEST or **2500 & 3500 - POWERTRAIN VERIFICATION TEST - 6.7L** or **3500 CAB & CHASSIS - POWERTRAIN VERIFICATION TEST** or **3500 CAB & CHASSIS, 4500 & 5500 - POWERTRAIN VERIFICATION TEST - 6.7L** .

5. **STEERING ANGLE SENSOR - INTERNAL SHORT**
    1. Turn the ignition off.
    2. Disconnect the Clockspring C3 (SAS) harness connector.
    3. Turn the ignition on.
    4. With the scan tool, record and erase TIPM DTC's.
    5. Cycle the ignition from on to off three times.
    6. Turn the ignition on.
    7. With the scan tool, read active TIPM DTC's.

    Does the scan tool display U0001-CAN C BUS as active?

    Yes

    - Go To 6.

    No

    - Inspect the wiring and connectors for damage or shorted circuits. If OK, replace the Clockspring and program the SAS in accordance with the Service Information. Refer to **CLOCKSPRING, REMOVAL** .
    - Perform the BODY VERIFICATION TEST. Refer to **BODY VERIFICATION TEST**.
6. **WIRELESS IGNITION NODE - INTERNAL SHORT**
    1. Turn the ignition off.
    2. Disconnect the Wireless Ignition Node harness connector.
    3. Turn the ignition on.
    4. With the scan tool, record and erase TIPM DTC's.
    5. Cycle the ignition from on to off three times.
    6. Turn the ignition on.
    7. With the scan tool, read active TIPM DTC's.

    Does the scan tool display U0001-CAN C BUS as active?

    Yes

    - Go To 7.

    No

    - Inspect the wiring and connectors for damage or shorted circuits. If OK, replace the Wireless

Ignition Node in accordance with the Service Information. Refer to **RECEIVER, WIRELESS IGNITION NODE, REMOVAL** .

- Perform the WIRELESS IGNITION NODE (WIN) VERIFICATION TEST. Refer to **WIRELESS IGNITION NODE (WIN) VERIFICATION** .

7. **DRIVETRAIN CONTROL MODULE - INTERNAL SHORT**
   1. Turn the ignition off.

      NOTE: If vehicle is not equipped with this module, answer yes to the question.

   2. Disconnect the Drive Train Control Module C1 harness connector.
   3. Turn the ignition on.
   4. With the scan tool, record and erase TIPM DTC's.
   5. Cycle the ignition from on to off three times.
   6. Turn the ignition on.
   7. With the scan tool, read active TIPM DTC's.

      Does the scan tool display U0001-CAN C BUS as active?

      Yes

      - Go To 8.

      No

      - Inspect the wiring and connectors for damage or shorted circuits. If OK, replace the Drivetrain Control Module in accordance with the Service Information. Refer to **MODULE, DRIVETRAIN CONTROL, REMOVAL** .
      - Perform the DTCM VERIFICATION TEST. Refer to **1500, 2500& 3500 - DTCM VERIFICATION TEST** or **3500 CAB & CHASSIS, 4500 & 5500 - DTCM VERIFICATION TEST** .

8. **FINAL DRIVE CONTROL MODULE (FDCM) - INTERNAL SHORT**
   1. Turn the ignition off.

      NOTE: If vehicle is not equipped with this module, answer yes to the question.

   2. Disconnect the FDCM harness connector.
   3. Turn the ignition on.
   4. With the scan tool, record and erase TIPM DTC's.
   5. Cycle the ignition from on to off three times.
   6. Turn the ignition on.
   7. With the scan tool, read active TIPM DTC's.

Does the scan tool display U0001-CAN C BUS as active?

Yes

- Go To 9.

No

- Inspect the wiring and connectors for damage or shorted circuits. If OK, replace and program the FDCM in accordance with the Service Information. Refer to **ACTUATOR, STABILIZER BAR, REMOVAL** .
- Perform the FDCM VERIFICATION TEST. Refer to **FDCM VERIFICATION TEST** .

9. **INTEGRATED TRAILER BRAKE MODULE (ITBM) - INTERNAL SHORT**
   1. Turn the ignition off.

      NOTE: If vehicle is not equipped with this module, answer yes to the question.

   2. Disconnect the ITBM harness connector.
   3. Turn the ignition on.
   4. With the scan tool, record and erase TIPM DTC's.
   5. Cycle the ignition from on to off three times.
   6. Turn the ignition on.
   7. With the scan tool, read active TIPM DTC's.

      Does the scan tool display this DTC as active?

      Yes

      - Go To 10.

      No

      - Inspect the wiring and connectors for damage or shorted circuits. If OK, replace and program the ITBM in accordance with the Service Information. Refer to **MODULE, INTEGRATED TRAILER BRAKE (ITBM), REMOVAL** .
      - Perform the BODY VERIFICATION TEST. Refer to **BODY VERIFICATION TEST**.

10. **TIRE PRESSURE MONITORING MODULE - INTERNAL SHORT**
    1. Turn the ignition off.

       NOTE: If vehicle is not equipped with this module, answer yes to the question.

    2. Disconnect the Tire Pressure Module harness connector.

3. Turn the ignition on.
4. With the scan tool, record and erase TIPM DTC's.
5. Cycle the ignition from on to off three times.
6. Turn the ignition on.
7. With the scan tool, read active TIPM DTC's.

   Does the scan tool display U0001-CAN C BUS as active?

   Yes

   - Go To 11.

   No

   - Inspect the wiring and connectors for damage or shorted circuits. If OK, replace the Tire Pressure Monitoring Module in accordance with the Service Information. Refer to **MODULE, TIRE PRESSURE MONITORING (TPM), REMOVAL** .
   - Perform the TPM VERIFICATION. Refer to **TPM VERIFICATION TEST** .

11. **TRANSMISSION CONTROL MODULE (TCM) - INTERNAL SHORT**
    1. Turn the ignition off.

       NOTE: If vehicle is not equipped with this module, answer yes to the question.

    2. Disconnect the TCM C2 harness connector.
    3. Turn the ignition on.
    4. With the scan tool, record and erase TIPM DTC's.
    5. Cycle the ignition from on to off three times.
    6. Turn the ignition on.
    7. With the scan tool, read active TIPM DTC's.

       Does the scan tool display U0001-CAN C BUS as active?

       Yes

       - Go To 12.

       No

       - Inspect the wiring and connectors for damage or shorted circuits. If OK, replace the Transmission Control Module in accordance with the Service Information. Refer to **MODULE, TRANSMISSION CONTROL, DESCRIPTION** .
       - Perform the TCM VERIFICATION TEST. Refer to **AS68RC TRANSMISSION**

VERIFICATION TEST .

12. **(D51) OR (D64) CAN C BUS (-) CIRCUIT SHORTED TO VOLTAGE**

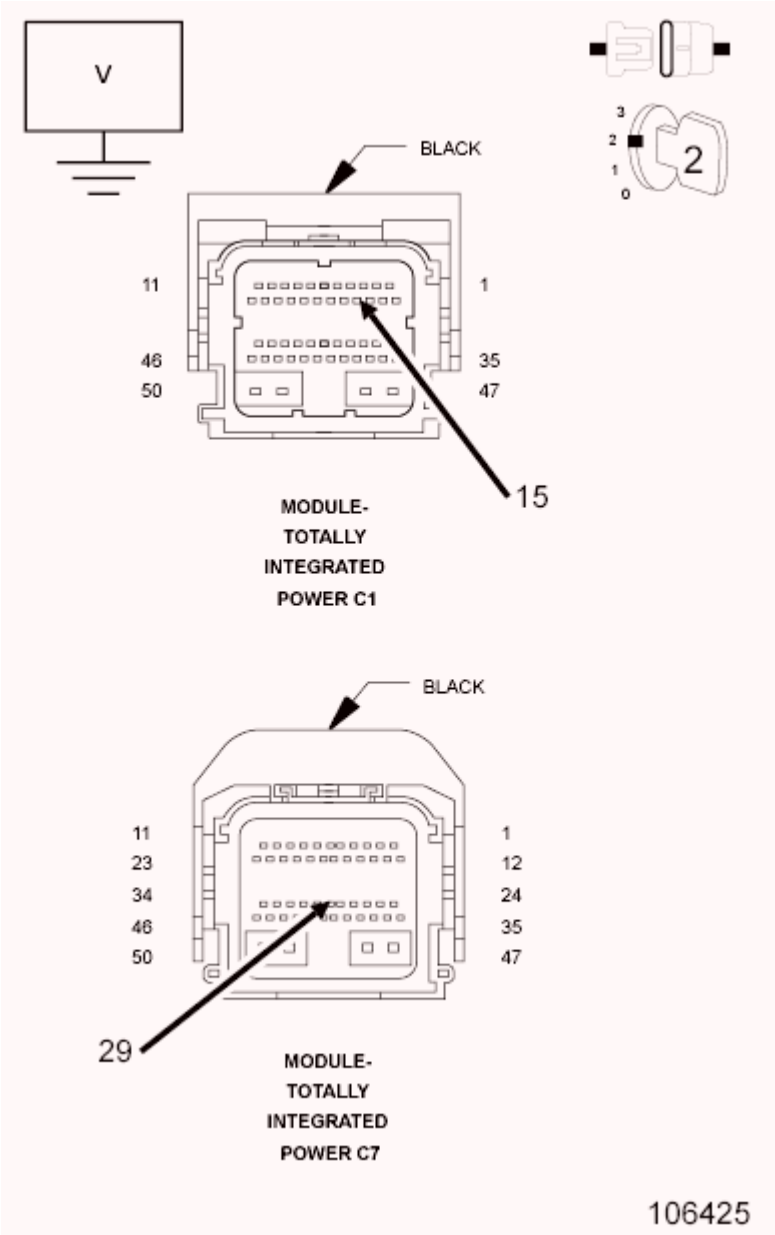

Fig. 145: Checking Can C Bus (-) Circuit For A Short To Voltage
Courtesy of CHRYSLER GROUP, LLC

1. Turn the ignition off.
2. Disconnect the TIPM C7 and C1 harness connectors.
3. Turn the ignition on.
4. Measure the voltage between the (D51) CAN C Bus (-) circuit and ground at the TIPM C7 harness connector.
5. Measure the voltage between the (D64) CAN C Bus (-) circuit and ground at the TIPM C1 harness

connector.

Is there any voltage present?

Yes

- Repair the short to voltage in the (D51) or the (D64) CAN C Bus (-) circuit.
- Perform the BODY VERIFICATION TEST. Refer to **BODY VERIFICATION TEST**.

No

- Go To 13.

13. **(D52) OR (D65) CAN C BUS (+) CIRCUIT SHORTED TO GROUND**

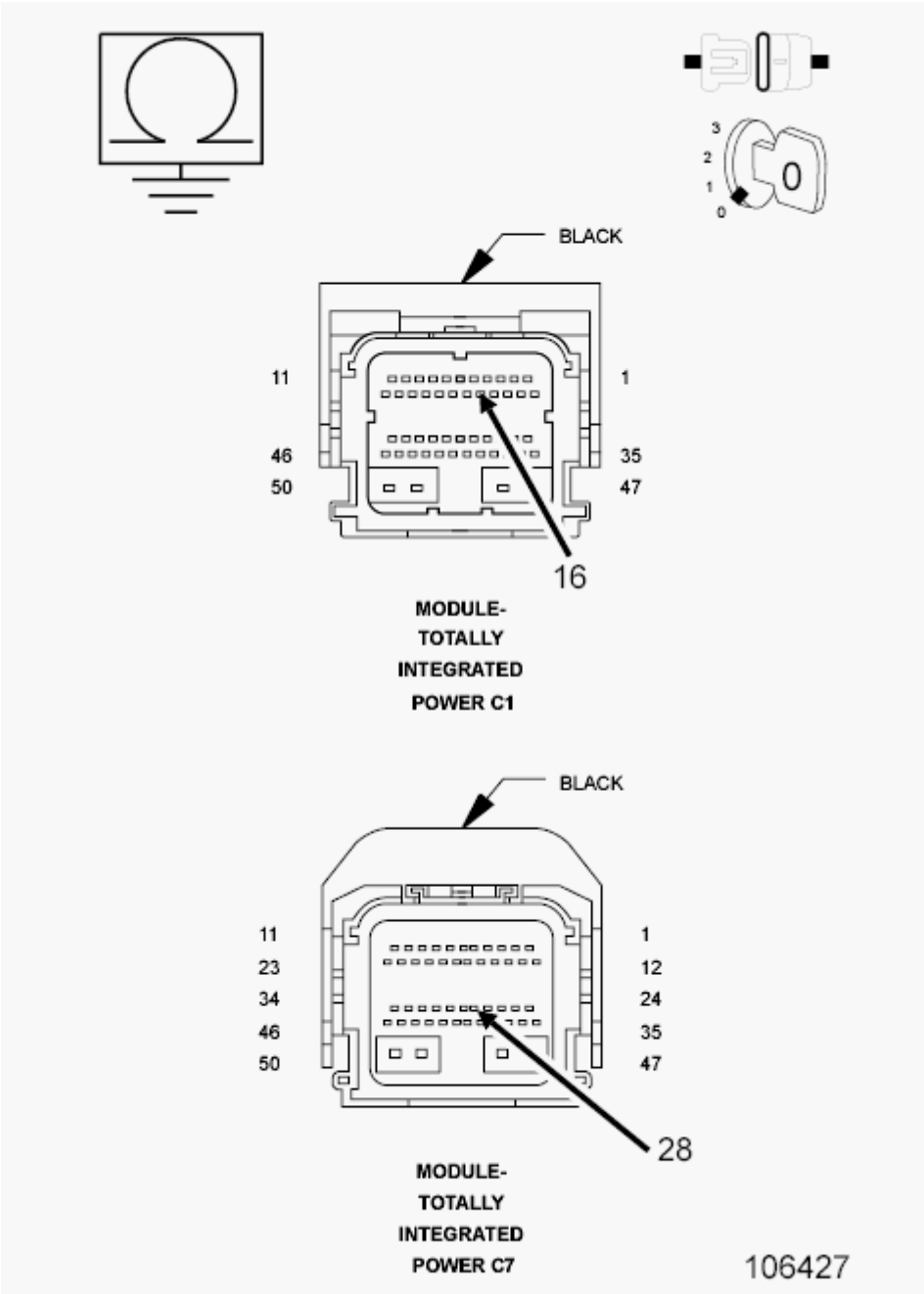

Fig. 146: Checking Can C Bus (+) Circuit For A Short To Ground
Courtesy of CHRYSLER GROUP, LLC

1. Turn the ignition off.
2. Measure the resistance between ground and the (D52) CAN C Bus (+) circuit.
3. Measure the resistance between ground and the (D65) CAN C Bus (+) circuit.

   Is any resistance present?

   Yes

- Repair the short to ground in the (D52) or (D65) CAN C Bus (+) circuit.
- Perform the BODY VERIFICATION TEST. Refer to **BODY VERIFICATION TEST**.

No

- Go To 14.

14. **CAN C BUS (+) CIRCUIT SHORTED TO CAN C BUS (-) CIRCUIT**

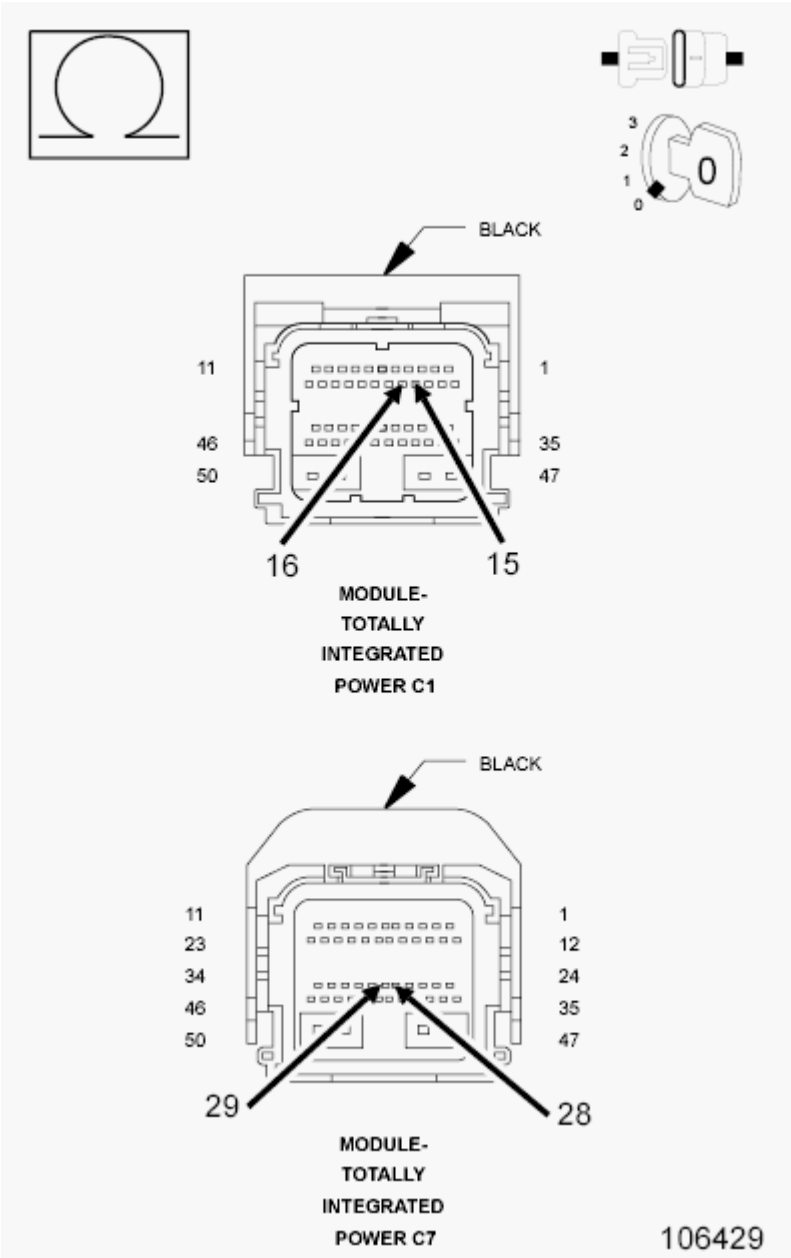

Fig. 147: Checking Can C Bus (+) Circuit For A Short To Can C Bus (-) Circuit
Courtesy of CHRYSLER GROUP, LLC

1. Measure the resistance between the (D52) CAN C Bus (+) circuit and the (D51) CAN C Bus (-) circuit.
2. Measure the resistance between the (D65) CAN C Bus (+) circuit and the (D64) CAN C Bus (-) circuit.

   Is any resistance present?

   Yes

   - Repair the short between the CAN C Bus (+) circuit and the CAN C Bus (-) circuit.
   - Perform the BODY VERIFICATION TEST. Refer to **BODY VERIFICATION TEST**.

   No

   - Inspect the wiring and connectors for damage or shorted circuits. If OK, replace the Totally Integrated Power Module in accordance with the Service Information. Refer to **MODULE, TOTALLY INTEGRATED POWER (TIPM), REMOVAL** .
   - Perform the BODY VERIFICATION TEST. Refer to **BODY VERIFICATION TEST**.

U0010-CAN INTERIOR BUS

For a complete wiring diagram, **refer to appropriate SYSTEM WIRING DIAGRAMS article** .

THEORY OF OPERATION

The primary communication network between electronic control modules on this vehicle is the Controller Area Network (CAN) data bus system. The Controller Area Network (CAN) data bus allows all electronic modules connected to the bus to share information with each other. Regardless of whether a message originates from a module on the higher speed CAN C (500K) Bus or on the lower speed CAN Interior High Speed (IHS) (125K) Bus the message structure and layout is similar, which allows the Totally Integrated Power Module/Central GateWay (TIPM or TIPMCGW) to process and transfer messages between the CAN buses. The TIPM also stores Diagnostic Trouble Codes (DTC's) for certain bus network faults.

All modules transmit and receive messages over one of these buses. Data exchange between the modules is achieved by serial transmission of encoded data messages (a form of transmission in which data bits are sent sequentially, one at a time, over a single line). Each module can both send and receive serial data simultaneously. Each data bit of a CAN Bus message is carried over the bus as a voltage differential between the two bus circuits which, when strung together, form a message. Each module uses arbitration to sort the message priority if two competing messages are attempting to be broadcast at the same time. Corruption of a single bit within a message will corrupt the entire message. Each message contains a Cyclic Redundancy Check (CRC) which specifies the message size exactly. If the message detected conflicts with the CRC the ECU receiving it will determine the message to be an error and consider that communication has not been possible. Diagnosis of this condition using a lab scope may reveal activity that appears to be Bus data messages even if no actual communication is possible. Communication problems that affect the whole bus, as a result of opens and terminal push outs are more likely to occur on data busses that operate at a high speed than a data bus that operates at a lower speed.

When an open circuit or terminal push out occurs one or more modules can become isolated from the remainder of the bus. The isolated module will attempt to communicate, but will not be able to receive messages or determine arbitration from other modules. Each time the isolated module attempts to communicate it alters the bus voltage on the intact bus circuit. Without functioning arbitration the isolated module alters the bus voltage while other bus messages are being sent thereby corrupting the messages on the remainder of the bus.

The CAN bus modules are connected in parallel to the two-wire bus using a twisted pair, where the wires are wrapped around each other to provide shielding from unwanted electromagnetic induction, thus preventing interference with the relatively low voltage signals being carried through them. While the CAN bus is operating (active), one of the bus wires will carry a higher voltage and is referred to as the CAN High or CAN bus (+) wire, while the other bus wire will carry a lower voltage and is referred to as the CAN Low or CAN bus (-) wire.

WHEN MONITORED:

With the ignition on.

SET CONDITION:

The Totally Integrated Power Module (TIPM) detects a short to ground on the CAN Interior Bus (125K) (+) circuit or a short to voltage on the CAN Interior Bus (125K) (-) circuit.

POSSIBLE CAUSES

Possible Causes
(D265) CAN INTERIOR BUS (125K) (+) CIRCUIT SHORTED TO GROUND
(D264) CAN INTERIOR BUS (125K) (-) CIRCUIT SHORTED TO VOLTAGE
ANY CAN INTERIOR BUS MODULE
TOTALLY INTEGRATED POWER MODULE (TIPM)

DIAGNOSTIC TEST

1. **TEST FOR INTERMITTENT CONDITION**
    1. Turn the ignition on.
    2. With the scan tool, record and erase TIPM DTC's.
    3. Cycle the ignition from on to off three times.
    4. Turn the ignition on.
    5. With the scan tool, read active TIPM DTC's.

    Does the scan tool display this DTC as active?

    Yes

    - Go To 2.

    No

- Test complete, the condition or conditions that originally set this DTC are not present at this time. Using the wiring diagrams as a guide, check all related splices and connectors for signs of water intrusion, corrosion, pushed out or bent terminals, and correct pin tension.

2. **ANY CAN INTERIOR BUS (125K) MODULE - INTERNAL SHORT**

NOTE: When performing this step, turn the ignition off (wait one minute) before disconnecting any module. When the module is disconnected turn the ignition on.

NOTE: This step is to determine if the fault is internal within a module.

1. While monitoring the scan tool, disconnect each CAN Interior Bus (125K) module (except for the TIPM), one at a time.
2. Check for this DTC to become active after disconnecting each CAN Interior Bus (125K) module the vehicle is equipped with.

NOTE: If the DTC becomes stored when a particular module is disconnected, that module is causing the DTC to set.

With all the CAN Interior Bus modules disconnected, does the scan tool display this DTC as active?

Yes

- Go To 3.

No

- Replace the module that when disconnected caused this DTC to become stored in accordance with the Service Information.
- Perform the BODY VERIFICATION TEST. Refer to **BODY VERIFICATION TEST**.

3. **(D265) CAN INTERIOR BUS (125K) (+) CIRCUIT SHORTED TO GROUND**

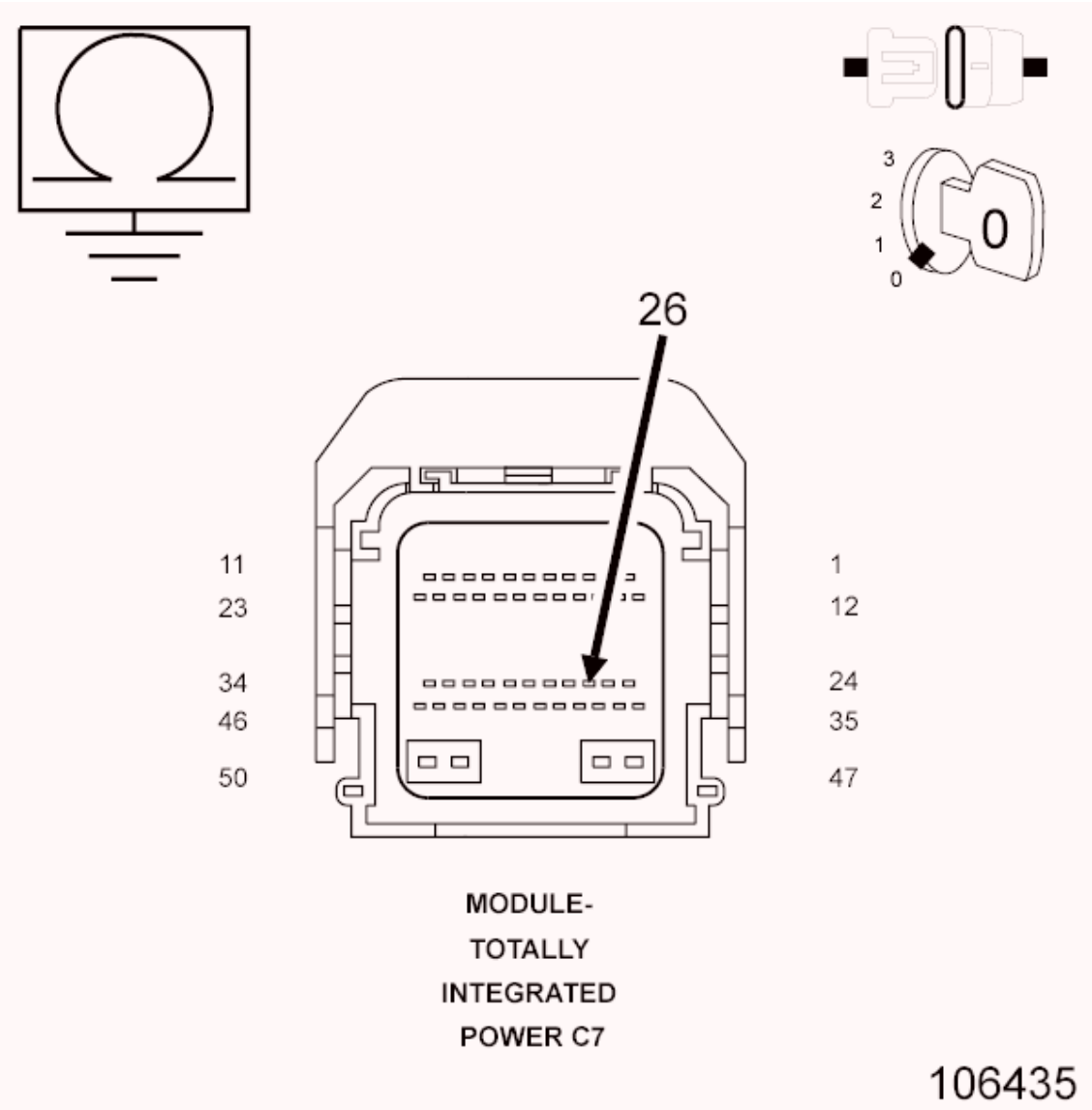

Fig. 148: Checking Can Interior Bus (125K) (+) Circuit For A Short To Ground
Courtesy of CHRYSLER GROUP, LLC

1. Turn the ignition off.
2. Measure the resistance between ground and the (D265) CAN Interior Bus (125K) (+) circuit at the TIPM C7 harness connector.

   Is any resistance present?

   Yes

   - Repair the short to ground in the (D265) CAN Interior Bus (125K) (+) circuit.
   - Perform the BODY VERIFICATION TEST. Refer to **BODY VERIFICATION TEST**.

   No

- Go To 4.

4. **(D264) CAN INTERIOR BUS (125K) (-) CIRCUIT SHORTED TO VOLTAGE**

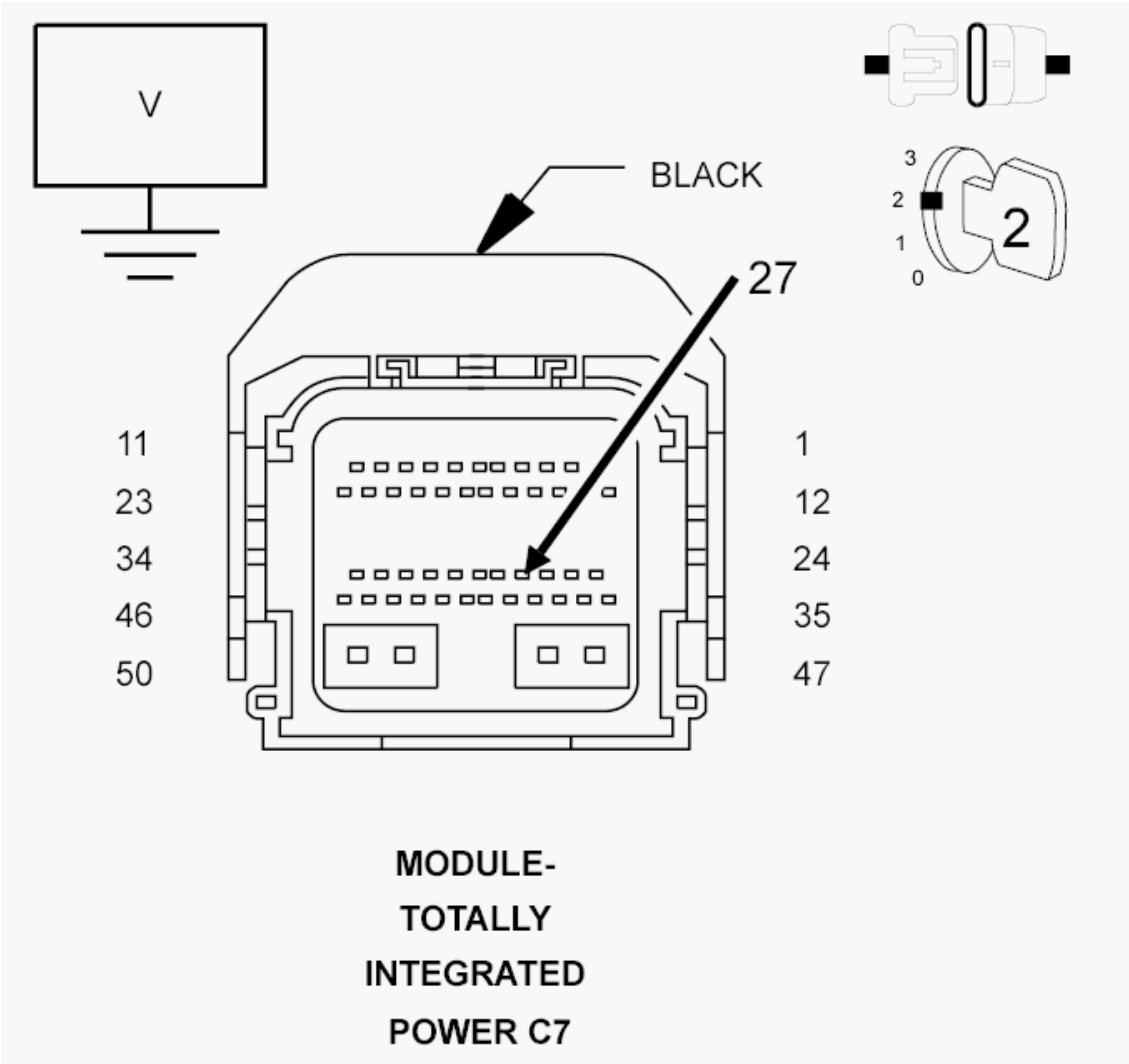

Fig. 149: Checking Can Interior Bus (125K) (-) Circuit For A Short To Voltage
Courtesy of CHRYSLER GROUP, LLC

1. Turn the ignition on.
2. Measure the voltage at the (D264) CAN Interior Bus (125K) (-) circuit at the TIPM C7 harness connector.

   Is the voltage above 6 volts?

   Yes

   - Repair the short to voltage in the (D264) CAN Interior Bus (125K) (-) circuit.
   - Perform the BODY VERIFICATION TEST. Refer to **BODY VERIFICATION TEST**.

No

- Inspect the wiring and connectors for damage or short circuits. If OK, replace the TIPM in accordance with the Service Information. Refer to **MODULE, TOTALLY INTEGRATED POWER (TIPM), REMOVAL** .
- Perform the BODY VERIFICATION TEST. Refer to **BODY VERIFICATION TEST**.

U0100-LOST COMMUNICATION WITH ECM/PCM

For a complete wiring diagram, **refer to appropriate SYSTEM WIRING DIAGRAMS article** .

THEORY OF OPERATION

The primary communication network between electronic control modules on this vehicle is the Controller Area Network (CAN) data bus system. The Controller Area Network (CAN) data bus allows all electronic modules connected to the bus to share information with each other. Regardless of whether a message originates from a module on the higher speed CAN C (500K) Bus or on the lower speed CAN Interior High Speed (IHS) (125K) Bus the message structure and layout is similar, which allows the Totally Integrated Power Module/Central GateWay (TIPM or TIPMCGW) to process and transfer messages between the CAN buses. The TIPM also stores Diagnostic Trouble Codes (DTC's) for certain bus network faults.

All modules transmit and receive messages over one of these buses. Data exchange between the modules is achieved by serial transmission of encoded data messages (a form of transmission in which data bits are sent sequentially, one at a time, over a single line). Each module can both send and receive serial data simultaneously. Each data bit of a CAN Bus message is carried over the bus as a voltage differential between the two bus circuits which, when strung together, form a message. Each module uses arbitration to sort the message priority if two competing messages are attempting to be broadcast at the same time. Corruption of a single bit within a message will corrupt the entire message. Each message contains a Cyclic Redundancy Check (CRC) which specifies the message size exactly. If the message detected conflicts with the CRC the ECU receiving it will determine the message to be an error and consider that communication has not been possible. Diagnosis of this condition using a lab scope may reveal activity that appears to be Bus data messages even if no actual communication is possible. Communication problems that affect the whole bus, as a result of opens and terminal push outs are more likely to occur on data busses that operate at a high speed than a data bus that operates at a lower speed.

When an open circuit or terminal push out occurs one or more modules can become isolated from the remainder of the bus. The isolated module will attempt to communicate, but will not be able to receive messages or determine arbitration from other modules. Each time the isolated module attempts to communicate it alters the bus voltage on the intact bus circuit. Without functioning arbitration the isolated module alters the bus voltage while other bus messages are being sent thereby corrupting the messages on the remainder of the bus.

The CAN bus modules are connected in parallel to the two-wire bus using a twisted pair, where the wires are wrapped around each other to provide shielding from unwanted electromagnetic induction, thus preventing interference with the relatively low voltage signals being carried through them. While the CAN bus is operating (active), one of the bus wires will carry a higher voltage and is referred to as the CAN High or CAN bus (+) wire, while the other bus wire will carry a lower voltage and is referred to as the CAN Low or CAN bus (-) wire.

WHEN MONITORED:

With the ignition on.

Battery voltage between 10 and 16 volts.

Ignition Off Draw (IOD) fuse installed.

Totally Integrated Power Module (TIPM) is configured correctly.

SET CONDITION:

Bus messages not received from the Powertrain Control Module (PCM) for approximately two to five seconds.

POSSIBLE CAUSES

Possible Causes
(D51) OR (D65) CAN C BUS (+) CIRCUIT SHORTED TO VOLTAGE
(D52) OR (D64) CAN C BUS (-) CIRCUIT SHORTED TO GROUND
DTC's RELATED TO BATTERY VOLTAGE, IGNITION, OR VIN MESSAGES
TIPM NOT CONFIGURED CORRECTLY
PCM POWER AND GROUND
POWERTRAIN CONTROL MODULE (PCM)
MODULE THAT SET THIS DTC

DIAGNOSTIC TEST

1. **VERIFY DTC IS ACTIVE**

   NOTE: Make sure the IOD fuse is installed and battery voltage is between 10 and 16 volts before proceeding.

   1. With the scan tool, read active DTC's.

      Is this DTC active?

      Yes

      - Go To 2.

      No

      - Refer to **STORED LOST COMMUNICATION DTC's** and perform the diagnostic procedure.

2. **CHECK FOR ANY OF THE FOLLOWING ACTIVE DTC's**

1. With the scan tool, read all active DTC's from all modules.

   NOTE: Check for TIPM configuration, CAN C hardware electrical, VIN Missing/Mismatch, battery or ignition related DTC's.

   Does the scan tool display any active DTC's to the conditions listed above?

   Yes

   - Go to **DIAGNOSTIC CODE INDEX** and perform the appropriate diagnostic procedure.

   No

   - Go To 3.

3. **VERIFY THE PCM IS ACTIVE ON THE BUS**
   1. Turn the ignition on.
   2. With the scan tool, select Network Diagnostics.
   3. Verify the PCM is active on the bus.

   Is the PCM active on the bus?

   Yes

   - Go To 4.

   No

   - Refer to **NO RESPONSE FROM PCM (POWERTRAIN CONTROL MODULE) - GAS** or **NO RESPONSE FROM PCM (POWERTRAIN CONTROL MODULE) - 6.7L** and perform the appropriate diagnostic procedure.

4. **CHECK FOR ADDITIONAL COMMUNICATION RELATED DTC's**
   1. With the scan tool, select Network Diagnostics.

   Is there more than one module with active DTC's "Logged Against" the PCM?

   Yes

   - Replace/update the PCM in accordance with the Service Information. Refer to **3.7L, 4.7L & 5.7L - MODULE, POWERTRAIN CONTROL, REMOVAL** **MODULE, POWERTRAIN CONTROL, 6.7L DIESEL [ETJ], REMOVAL** .
   - Perform the POWERTRAIN VERIFICATION TEST. Refer to **1500 & 2500 - 3.7L, 4.7L & 5.7L - POWERTRAIN VERIFICATION TEST** or **2500 & 3500 - POWERTRAIN VERIFICATION TEST - 6.7L** or **3500 CAB & CHASSIS - POWERTRAIN VERIFICATION TEST** or **3500 CAB & CHASSIS, 4500 & 5500 - POWERTRAIN VERIFICATION TEST - 6.7L** .

No

- Go To 5.

5. **CLEAR DTC IN MODULE SETTING FAULT**
   1. With the scan tool, select the module setting the DTC against the PCM.
   2. Clear active DTC's.

   Is this DTC still active?

   Yes

   - Replace/update the module that set this DTC in accordance with the Service Information.
   - Perform the appropriate verification test for the module being replaced. If there is no verification test for the associated module, Perform the BODY VERIFICATION TEST. Refer to **BODY VERIFICATION TEST**.

   No

   - Go To 6.

6. **CYCLE IGNITION**
   1. Cycle the ignition from RUN to OFF three times ending with the key in the RUN position.

   Does this DTC become active?

   Yes

   - Go To 7.

   No

   - The condition is not present at this time. Using the wiring diagram/schematic as a guide, inspect the wiring for chafed, pierced, pinched and partially broken wires and the wiring harness connectors for broken, bent, pushed out and corroded terminals.
   - Perform the appropriate verification test for the module being replaced. If there is no verification test for the associated module, Perform the BODY VERIFICATION TEST. Refer to **BODY VERIFICATION TEST**.

7. **CHECK FOR ADDITIONAL LOST COMMUNICATION FAULTS**
   1. With the scan tool, select Network Diagnostics.

   Does the TIPM and other CAN C BUS modules show Lost Communication with the remaining CAN C BUS modules?

   Yes

   - Go To 8.

No

- Replace/update the module that set this DTC in accordance with the Service Information.
- Perform the appropriate verification test for the module being replaced. If there is no verification test for the associated module, Perform the BODY VERIFICATION TEST. Refer to **BODY VERIFICATION TEST**.

8. **(D52) OR (D65) CAN C BUS (+) CIRCUIT SHORTED TO VOLTAGE**

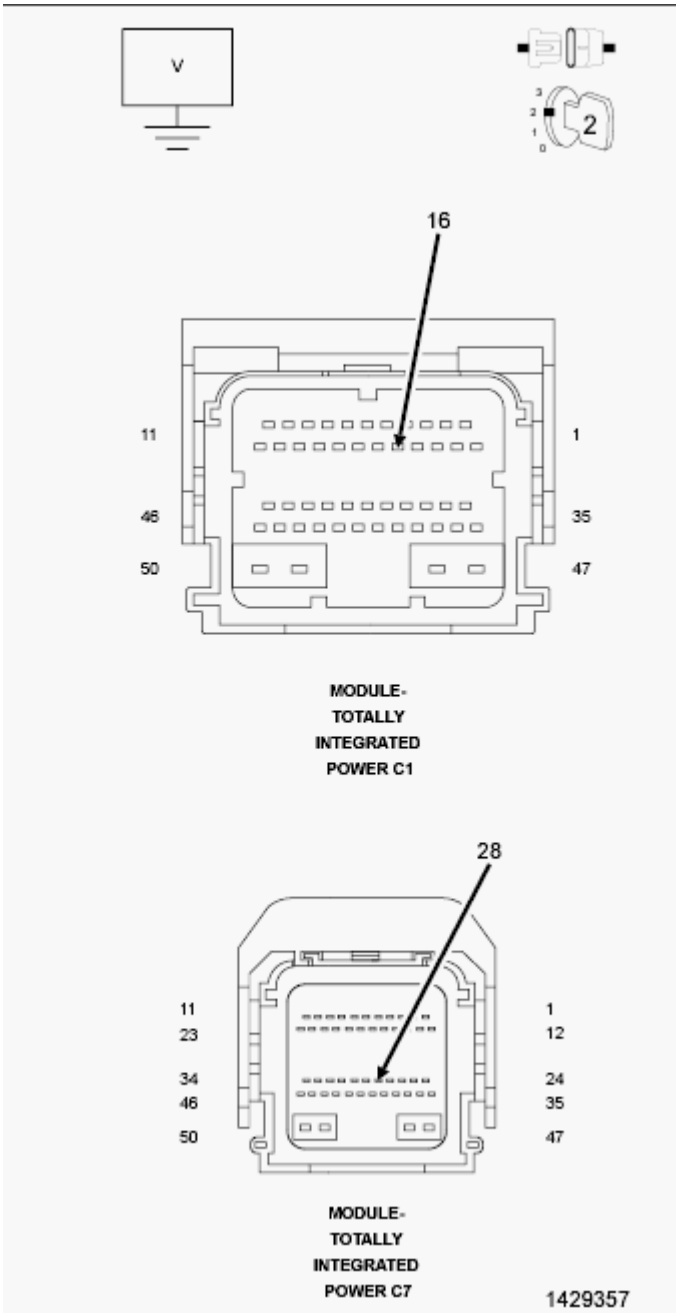

Fig. 150: Checking Can C Bus (+) Circuit For A Short To Voltage
Courtesy of CHRYSLER GROUP, LLC

1. Measure the voltage between the (D52) CAN C Bus (+) circuit and ground.
2. Measure the voltage between the (D65) CAN C Bus (+) circuit and ground.

   Is the voltage above 5.0 volts?

   Yes

   - Repair the short to voltage in the (D52) or (D65) CAN C Bus (+) circuit.
   - Perform the BODY VERIFICATION TEST. Refer to **BODY VERIFICATION TEST**.

   No

   - Go To 9.

9. **(D51) OR (D64) CAN C BUS (-) CIRCUIT SHORTED TO GROUND**

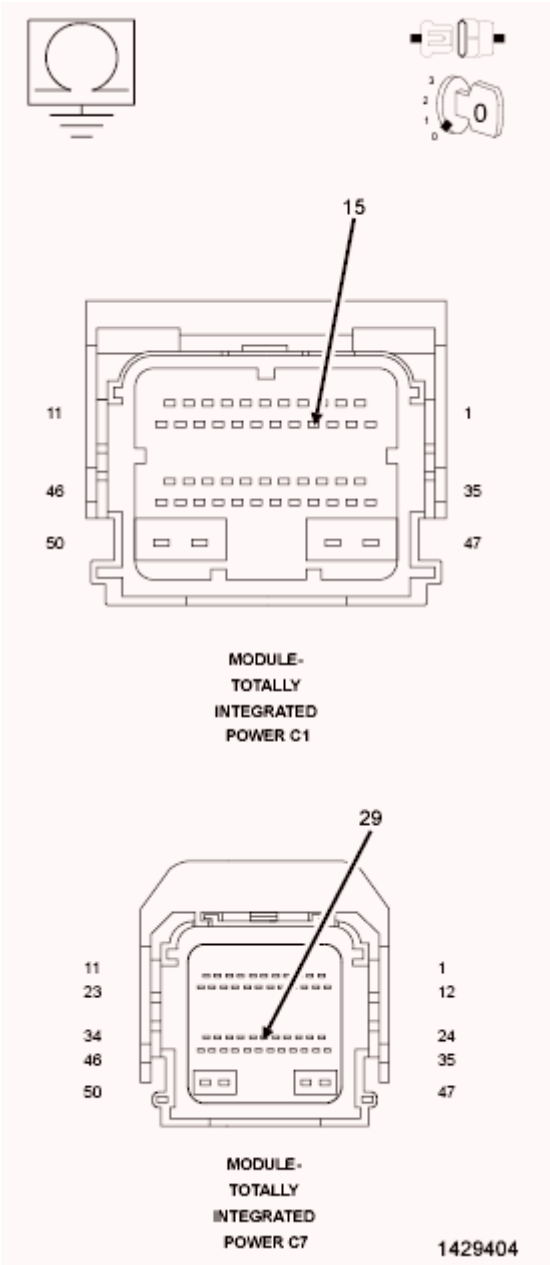

Fig. 151: Checking Can C Bus (-) Circuit For A Short To Ground
Courtesy of CHRYSLER GROUP, LLC

1. Turn the ignition off.
2. Measure the resistance between ground and the (D51) CAN C Bus (-) circuit.
3. Measure the resistance between ground and the (D64) CAN C Bus (-) circuit.

   Is the resistance below 10k Ohms?

   Yes

   - Repair the short to ground in the (D51) or (D64) CAN C Bus (-) circuit.

- Perform the BODY VERIFICATION TEST. Refer to **BODY VERIFICATION TEST**.

No

- Replace/update the module that set this DTC in accordance with the Service Information.
- Perform the appropriate verification test for the module being replaced. If there is no verification test for the associated module, Perform the BODY VERIFICATION TEST. Refer to **BODY VERIFICATION TEST**.

U0101-LOST COMMUNICATION WITH TCM

For a complete wiring diagram, **refer to appropriate SYSTEM WIRING DIAGRAMS article** .

THEORY OF OPERATION

The primary communication network between electronic control modules on this vehicle is the Controller Area Network (CAN) data bus system. The Controller Area Network (CAN) data bus allows all electronic modules connected to the bus to share information with each other. Regardless of whether a message originates from a module on the higher speed CAN C (500K) Bus or on the lower speed CAN Interior High Speed (IHS) (125K) Bus the message structure and layout is similar, which allows the Totally Integrated Power Module/Central GateWay (TIPM or TIPMCGW) to process and transfer messages between the CAN buses. The TIPM also stores Diagnostic Trouble Codes (DTC's) for certain bus network faults.

All modules transmit and receive messages over one of these buses. Data exchange between the modules is achieved by serial transmission of encoded data messages (a form of transmission in which data bits are sent sequentially, one at a time, over a single line). Each module can both send and receive serial data simultaneously. Each data bit of a CAN Bus message is carried over the bus as a voltage differential between the two bus circuits which, when strung together, form a message. Each module uses arbitration to sort the message priority if two competing messages are attempting to be broadcast at the same time. Corruption of a single bit within a message will corrupt the entire message. Each message contains a Cyclic Redundancy Check (CRC) which specifies the message size exactly. If the message detected conflicts with the CRC the ECU receiving it will determine the message to be an error and consider that communication has not been possible. Diagnosis of this condition using a lab scope may reveal activity that appears to be Bus data messages even if no actual communication is possible. Communication problems that affect the whole bus, as a result of opens and terminal push outs are more likely to occur on data busses that operate at a high speed than a data bus that operates at a lower speed.

When an open circuit or terminal push out occurs one or more modules can become isolated from the remainder of the bus. The isolated module will attempt to communicate, but will not be able to receive messages or determine arbitration from other modules. Each time the isolated module attempts to communicate it alters the bus voltage on the intact bus circuit. Without functioning arbitration the isolated module alters the bus voltage while other bus messages are being sent thereby corrupting the messages on the remainder of the bus.

The CAN bus modules are connected in parallel to the two-wire bus using a twisted pair, where the wires are wrapped around each other to provide shielding from unwanted electromagnetic induction, thus preventing interference with the relatively low voltage signals being carried through them. While the CAN bus is operating (active), one of the bus wires will carry a higher voltage and is referred to as the CAN High or CAN bus (+)

wire, while the other bus wire will carry a lower voltage and is referred to as the CAN Low or CAN bus (-) wire.

WHEN MONITORED:

With the ignition on.

Battery voltage between 10 and 16 volts.

Ignition Off Draw (IOD) fuse installed.

Totally Integrated Power Module (TIPM) is configured correctly.

SET CONDITION:

Bus messages not received from the Transmission Control Module (TCM) for approximately two to five seconds.

POSSIBLE CAUSES

Possible Causes
(D51) OR (D65) CAN C BUS (+) CIRCUIT SHORTED TO VOLTAGE
(D52) OR (D64) CAN C BUS (-) CIRCUIT SHORTED TO GROUND
DTC's RELATED TO BATTERY VOLTAGE, IGNITION, OR VIN MESSAGES
TIPM NOT CONFIGURED CORRECTLY
TCM POWER AND GROUND
TRANSMISSION CONTROL MODULE (TCM)
MODULE THAT SET THIS DTC

DIAGNOSTIC TEST

1. **VERIFY DTC IS ACTIVE**

   NOTE: Make sure the IOD fuse is installed and battery voltage is between 10 and 16 volts before proceeding.

   1. With the scan tool, read active DTC's.

      Is this DTC active?

      Yes

      - Go To 2.

      No

- Refer to **STORED LOST COMMUNICATION DTC's** and perform the diagnostic procedure.

2. **CHECK FOR ANY OF THE FOLLOWING ACTIVE DTC's**
   1. With the scan tool, read all active DTC's from all modules.

      NOTE: Check for TIPM configuration, CAN C hardware electrical, VIN Missing/Mismatch, battery or ignition related DTC's.

      Does the scan tool display any active DTC's to the conditions listed above?

      Yes

      - Go to **DIAGNOSTIC CODE INDEX** and perform the appropriate diagnostic procedure.

      No

      - Go To 3.

3. **VERIFY THE TCM IS ACTIVE ON THE BUS**
   1. Turn the ignition on.
   2. With the scan tool, select Network Diagnostics.
   3. Verify the TCM is active on the bus.

      Is the TCM active on the bus?

      Yes

      - Go To 4.

      No

      - Refer to **NO RESPONSE FROM TCM (POWERTRAIN CONTROL MODULE) - GAS** or **NO RESPONSE FROM TCM (TRANSMISSION CONTROL MODULE) - 6.7L** or **NO RESPONSE FROM TCM (TRANSMISSION CONTROL MODULE) - AS68RC** and perform the diagnostic procedure.

4. **CHECK FOR ADDITIONAL COMMUNICATION RELATED DTC's**
   1. With the scan tool, select Network Diagnostics.

      Is there more than one module with active DTC's "Logged Against" the TCM?

      Yes

      - Replace/update the TCM in accordance with the Service Information. Refer to **MODULE, POWERTRAIN CONTROL, REMOVAL** for RLE and RFE transmissions, or **MODULE, POWERTRAIN CONTROL, 6.7L DIESEL [ETJ], REMOVAL** . Refer to **MODULE, TRANSMISSION CONTROL, DESCRIPTION** for AS68RC transmissions.

- Perform the appropriate TRANSMISSION VERIFICATION TEST. Refer to **AS68RC TRANSMISSION VERIFICATION TEST** .

No

- Go To 5.

5. **CLEAR DTC IN MODULE SETTING FAULT**
   1. With the scan tool, select the module setting the DTC against the TCM.
   2. Clear active DTC's.

   Is this DTC still active?

   Yes

   - Replace/update the module that set this DTC in accordance with the Service Information.
   - Perform the appropriate verification test for the module being replaced. If there is no verification test for the associated module, Perform the BODY VERIFICATION TEST. Refer to **BODY VERIFICATION TEST**.

   No

   - Go To 6.

6. **CYCLE IGNITION**
   1. Cycle the ignition from RUN to OFF three times ending with the key in the RUN position.

   Does this DTC become active?

   Yes

   - Go To 7.

   No

   - The condition is not present at this time. Using the wiring diagram/schematic as a guide, inspect the wiring for chafed, pierced, pinched, and partially broken wires and the wiring harness connectors for broken, bent, pushed out, and corroded terminals.
   - Perform the appropriate VERIFICATION TEST.

7. **CHECK FOR ADDITIONAL LOST COMMUNICATION FAULTS**
   1. With the scan tool, select Network Diagnostics.

   Does the TIPM and other CAN C BUS modules show Lost Communication with the remaining CAN C BUS modules?

   Yes

- Go To 8.

No

- Replace/update the module that set this DTC in accordance with the Service Information.
- Perform the appropriate verification test for the module being replaced. If there is no verification test for the associated module, Perform the BODY VERIFICATION TEST. Refer to **BODY VERIFICATION TEST**.

8. **(D52) OR (D65) CAN C BUS (+) CIRCUIT SHORTED TO VOLTAGE**

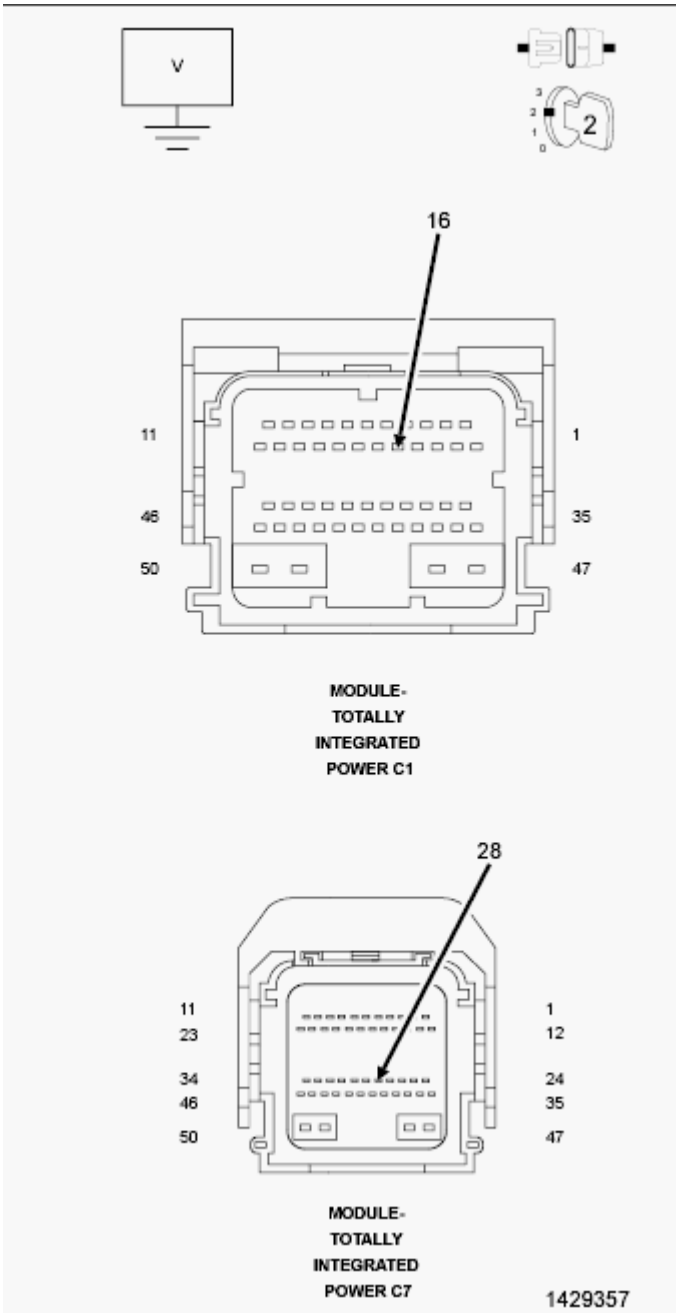

Fig. 152: Checking Can C Bus (+) Circuit For A Short To Voltage
Courtesy of CHRYSLER GROUP, LLC

1. Measure the voltage between the (D52) CAN C Bus (+) circuit and ground.
2. Measure the voltage between the (D65) CAN C Bus (+) circuit and ground.

   Is the voltage above 5.0 volts?

   Yes

   - Repair the short to voltage in the (D52) or (D65) CAN C Bus (+) circuit.
   - Perform the BODY VERIFICATION TEST. Refer to **BODY VERIFICATION TEST**.

   No

   - Go To 9.

9. **(D51) OR (D64) CAN C BUS (-) CIRCUIT SHORTED TO GROUND**

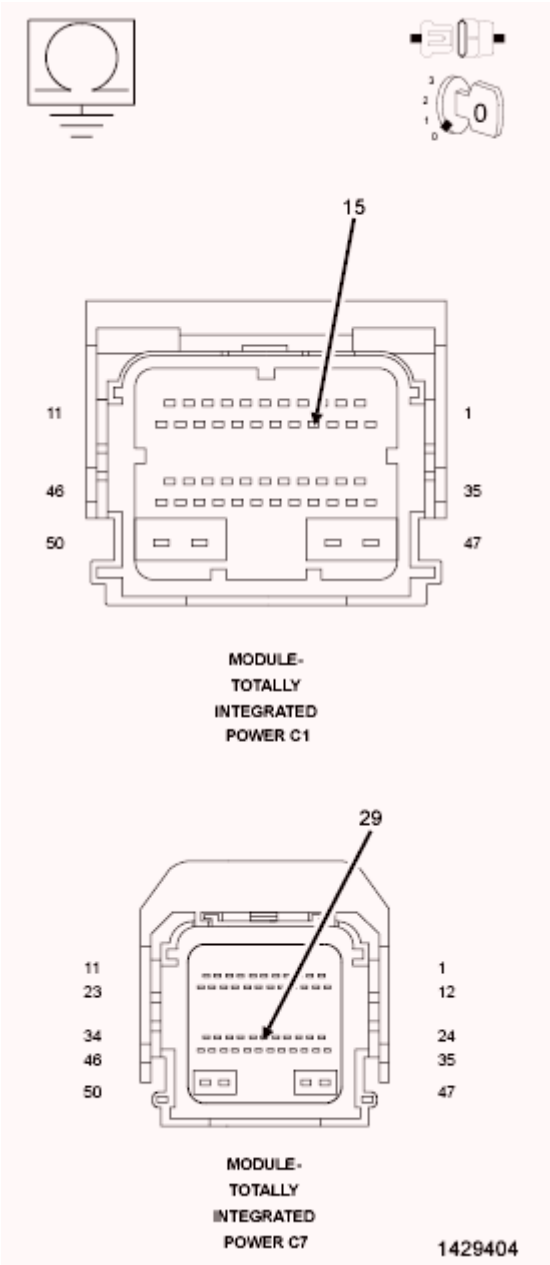

Fig. 153: Checking Can C Bus (-) Circuit For A Short To Ground
Courtesy of CHRYSLER GROUP, LLC

1. Turn the ignition off.
2. Measure the resistance between ground and the (D51) CAN C Bus (-) circuit.
3. Measure the resistance between ground and the (D64) CAN C Bus (-) circuit.

   Is the resistance below 10k Ohms?

   Yes

   - Repair the short to ground in the (D51) or (D64) CAN C Bus (-) circuit.

- Perform the BODY VERIFICATION TEST. Refer to **BODY VERIFICATION TEST**.

No

- Replace/update the module that set this DTC in accordance with the Service Information.
- Perform the appropriate verification test for the module being replaced. If there is no verification test for the associated module, Perform the BODY VERIFICATION TEST. Refer to **BODY VERIFICATION TEST**.

U0102-LOST COMMUNICATION WITH TRANSFER CASE CONTROL MODULE / AWD

For a complete wiring diagram, **refer to appropriate SYSTEM WIRING DIAGRAMS article** .

THEORY OF OPERATION

The primary communication network between electronic control modules on this vehicle is the Controller Area Network (CAN) data bus system. The Controller Area Network (CAN) data bus allows all electronic modules connected to the bus to share information with each other. Regardless of whether a message originates from a module on the higher speed CAN C (500K) Bus or on the lower speed CAN Interior High Speed (IHS) (125K) Bus the message structure and layout is similar, which allows the Totally Integrated Power Module/Central GateWay (TIPM or TIPMCGW) to process and transfer messages between the CAN buses. The TIPM also stores Diagnostic Trouble Codes (DTC's) for certain bus network faults.

All modules transmit and receive messages over one of these buses. Data exchange between the modules is achieved by serial transmission of encoded data messages (a form of transmission in which data bits are sent sequentially, one at a time, over a single line). Each module can both send and receive serial data simultaneously. Each data bit of a CAN Bus message is carried over the bus as a voltage differential between the two bus circuits which, when strung together, form a message. Each module uses arbitration to sort the message priority if two competing messages are attempting to be broadcast at the same time. Corruption of a single bit within a message will corrupt the entire message. Each message contains a Cyclic Redundancy Check (CRC) which specifies the message size exactly. If the message detected conflicts with the CRC the ECU receiving it will determine the message to be an error and consider that communication has not been possible. Diagnosis of this condition using a lab scope may reveal activity that appears to be Bus data messages even if no actual communication is possible. Communication problems that affect the whole bus, as a result of opens and terminal push outs are more likely to occur on data busses that operate at a high speed than a data bus that operates at a lower speed.

When an open circuit or terminal push out occurs one or more modules can become isolated from the remainder of the bus. The isolated module will attempt to communicate, but will not be able to receive messages or determine arbitration from other modules. Each time the isolated module attempts to communicate it alters the bus voltage on the intact bus circuit. Without functioning arbitration the isolated module alters the bus voltage while other bus messages are being sent thereby corrupting the messages on the remainder of the bus.

The CAN bus modules are connected in parallel to the two-wire bus using a twisted pair, where the wires are wrapped around each other to provide shielding from unwanted electromagnetic induction, thus preventing interference with the relatively low voltage signals being carried through them. While the CAN bus is operating (active), one of the bus wires will carry a higher voltage and is referred to as the CAN High or CAN bus (+)

wire, while the other bus wire will carry a lower voltage and is referred to as the CAN Low or CAN bus (-) wire.

WHEN MONITORED:

With the ignition on.

Battery voltage between 10 and 16 volts.

Ignition Off Draw (IOD) fuse installed.

Totally Integrated Power Module (TIPM) is configured correctly.

SET CONDITION:

Bus messages not received from the Drive Train Control Module (DTCM) for approximately two to five seconds.

POSSIBLE CAUSES

Possible Causes
(D51) OR (D65) CAN C BUS (+) CIRCUIT SHORTED TO VOLTAGE
(D52) OR (D64) CAN C BUS (-) CIRCUIT SHORTED TO GROUND
DTC's RELATED TO BATTERY VOLTAGE, IGNITION, OR VIN MESSAGES
TIPM NOT CONFIGURED CORRECTLY
DTCM POWER AND GROUND
DRIVE TRAIN CONTROL MODULE (DTCM)
MODULE THAT SET THIS DTC

DIAGNOSTIC TEST

1. **VERIFY DTC IS ACTIVE**

   NOTE: Make sure the IOD fuse is installed and battery voltage is between 10 and 16 volts before proceeding.

   1. With the scan tool, read active DTC's.

      Is this DTC active?

      Yes

      - Go To 2.

      No

- Refer to **STORED LOST COMMUNICATION DTC's** and perform the diagnostic procedure.

2. **CHECK FOR ANY OF THE FOLLOWING ACTIVE DTC's**
   1. With the scan tool, read all active DTC's from all modules.

      NOTE: Check for TIPM configuration, CAN C hardware electrical, VIN Missing/Mismatch, battery or ignition related DTC's.

      Does the scan tool display any active DTC's to the conditions listed above?

      Yes

      - Go to **DIAGNOSTIC CODE INDEX** and perform the appropriate diagnostic procedure.

      No

      - Go To 3.

3. **VERIFY THE DTCM IS ACTIVE ON THE BUS**
   1. Turn the ignition on.
   2. With the scan tool, select Network Diagnostics.
   3. Verify the DTCM is active on the bus.

      Is the DTCM active on the bus?

      Yes

      - Go To 4.

      No

      - Refer to **NO RESPONSE FROM DTCM (DRIVETRAIN CONTROL MODULE)** and perform the diagnostic procedure.

4. **CHECK FOR ADDITIONAL COMMUNICATION RELATED DTC's**
   1. With the scan tool, select Network Diagnostics.

      Is there more than one module with active DTC's "Logged Against" the DTCM?

      Yes

      - Replace/update the DTCM in accordance with the Service Information. Refer to **MODULE, DRIVETRAIN CONTROL, REMOVAL** .
      - Perform the DTCM VERIFICATION TEST. Refer to **1500, 2500& 3500 - DTCM VERIFICATION TEST** or **3500 CAB & CHASSIS, 4500 & 5500 - DTCM VERIFICATION TEST** .

No

- Go To 5.

5. **CLEAR DTC IN MODULE SETTING FAULT**
   1. With the scan tool, select the module setting the DTC against the DTCM.
   2. Clear active DTC's.

      Is this DTC still active?

      Yes

      - Replace/update the module that set this DTC in accordance with the Service Information.
      - Perform the appropriate verification test for the module being replaced. If there is no verification test for the associated module, Perform the BODY VERIFICATION TEST. Refer to **BODY VERIFICATION TEST**.

      No

      - Go To 6.

6. **CYCLE IGNITION**
   1. Cycle the ignition from RUN to OFF three times ending with the key in the RUN position.

      Does this DTC become active?

      Yes

      - Go To 7.

      No

      - The condition is not present at this time. Using the wiring diagram/schematic as a guide, inspect the wiring for chafed, pierced, pinched, and partially broken wires and the wiring harness connectors for broken, bent, pushed out, and corroded terminals.
      - Perform the appropriate VERIFICATION TEST.

7. **CHECK FOR ADDITIONAL LOST COMMUNICATION FAULTS**
   1. With the scan tool, select Network Diagnostics.

      Does the TIPM and other CAN C BUS modules show Lost Communication with the remaining CAN C BUS modules?

      Yes

      - Go To 8.

      No

- Replace/update the module that set this DTC in accordance with the Service Information.
- Perform the appropriate verification test for the module being replaced. If there is no verification test for the associated module, Perform the BODY VERIFICATION TEST. Refer to **BODY VERIFICATION TEST**.

8. **(D52) OR (D65) CAN C BUS (+) CIRCUIT SHORTED TO VOLTAGE**

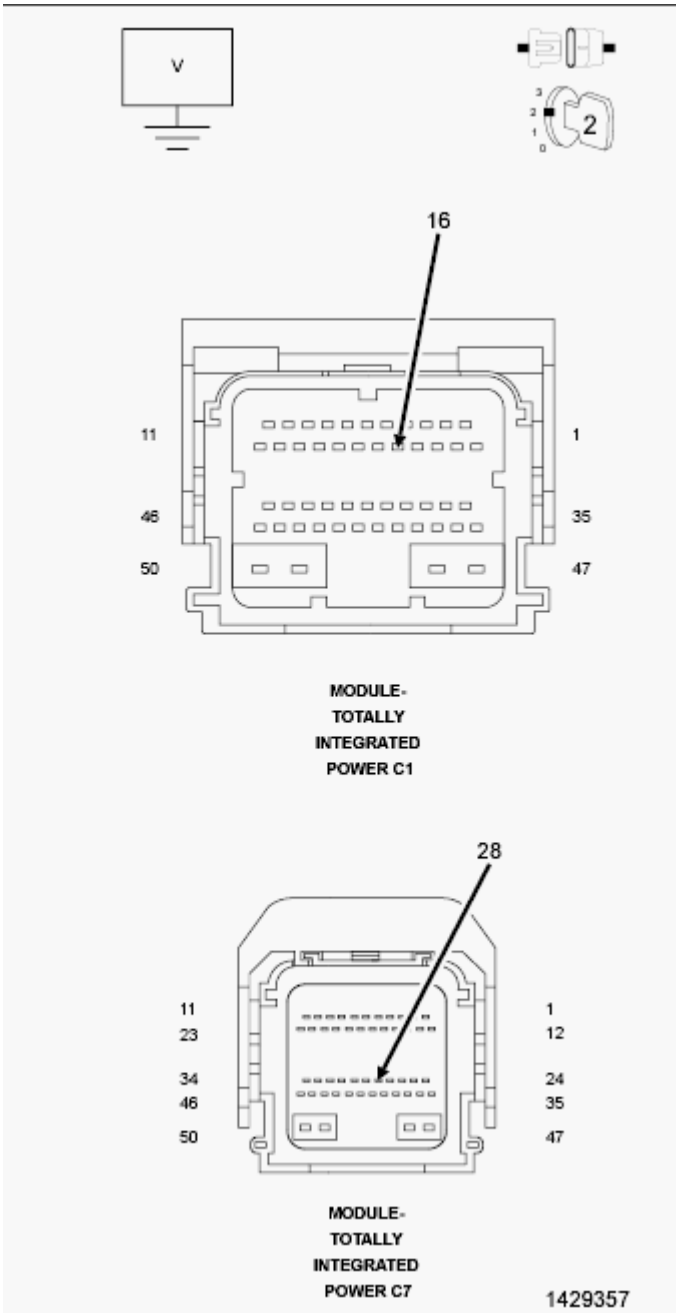

Fig. 154: Checking Can C Bus (+) Circuit For A Short To Voltage
Courtesy of CHRYSLER GROUP, LLC

1. Measure the voltage between the (D52) CAN C Bus (+) circuit and ground.

2. Measure the voltage between the (D65) CAN C Bus (+) circuit and ground.

   Is the voltage above 5.0 volts?

   Yes

   - Repair the short to voltage in the (D52) or (D65) CAN C Bus (+) circuit.
   - Perform the BODY VERIFICATION TEST. Refer to **BODY VERIFICATION TEST**.

   No

   - Go To 9.

9. **(D51) OR (D64) CAN C BUS (-) CIRCUIT SHORTED TO GROUND**

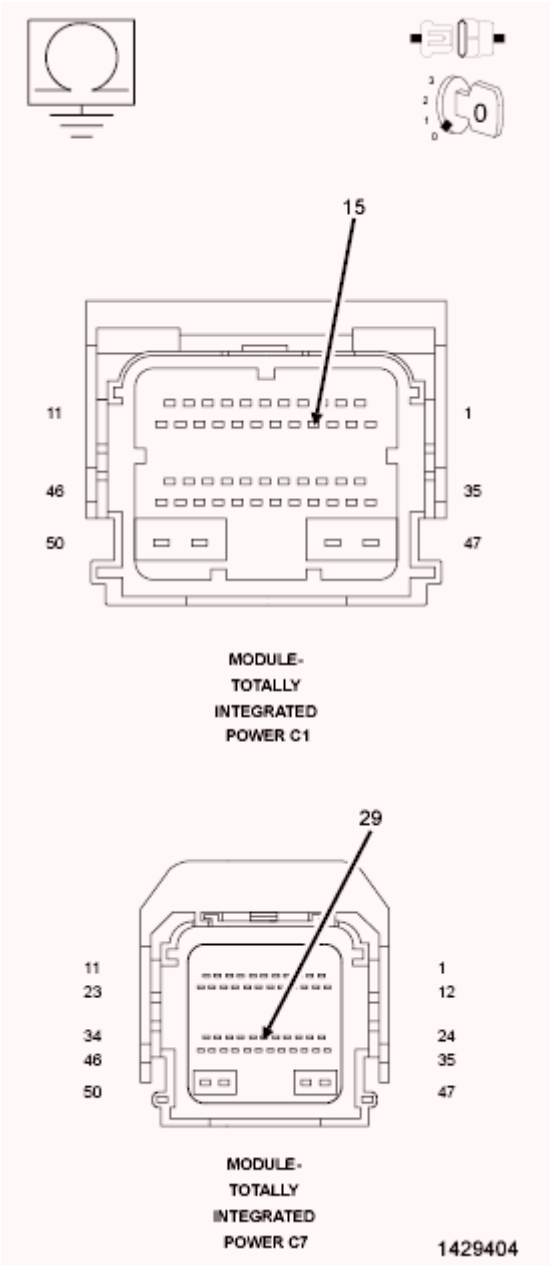

Fig. 155: Checking Can C Bus (-) Circuit For A Short To Ground
Courtesy of CHRYSLER GROUP, LLC

1. Turn the ignition off.
2. Measure the resistance between ground and the (D51) CAN C Bus (-) circuit.
3. Measure the resistance between ground and the (D64) CAN C Bus (-) circuit.

   Is the resistance below 10k Ohms?

   Yes

   - Repair the short to ground in the (D51) or (D64) CAN C Bus (-) circuit.

- Perform the BODY VERIFICATION TEST. Refer to **BODY VERIFICATION TEST**.

No

- Replace/update the module that set this DTC in accordance with the Service Information.
- Perform the appropriate verification test for the module being replaced. If there is no verification test for the associated module, Perform the BODY VERIFICATION TEST. Refer to **BODY VERIFICATION TEST**.

U0114-LOST COMMUNICATION WITH FINAL DRIVE CONTROL MODULE

For a complete wiring diagram, **refer to appropriate SYSTEM WIRING DIAGRAMS article** .

THEORY OF OPERATION

The primary communication network between electronic control modules on this vehicle is the Controller Area Network (CAN) data bus system. The Controller Area Network (CAN) data bus allows all electronic modules connected to the bus to share information with each other. Regardless of whether a message originates from a module on the higher speed CAN C (500K) Bus or on the lower speed CAN Interior High Speed (IHS) (125K) Bus the message structure and layout is similar, which allows the Totally Integrated Power Module/Central GateWay (TIPM or TIPMCGW) to process and transfer messages between the CAN buses. The TIPM also stores Diagnostic Trouble Codes (DTC's) for certain bus network faults.

All modules transmit and receive messages over one of these buses. Data exchange between the modules is achieved by serial transmission of encoded data messages (a form of transmission in which data bits are sent sequentially, one at a time, over a single line). Each module can both send and receive serial data simultaneously. Each data bit of a CAN Bus message is carried over the bus as a voltage differential between the two bus circuits which, when strung together, form a message. Each module uses arbitration to sort the message priority if two competing messages are attempting to be broadcast at the same time. Corruption of a single bit within a message will corrupt the entire message. Each message contains a Cyclic Redundancy Check (CRC) which specifies the message size exactly. If the message detected conflicts with the CRC the ECU receiving it will determine the message to be an error and consider that communication has not been possible. Diagnosis of this condition using a lab scope may reveal activity that appears to be Bus data messages even if no actual communication is possible. Communication problems that affect the whole bus, as a result of opens and terminal push outs are more likely to occur on data busses that operate at a high speed than a data bus that operates at a lower speed.

When an open circuit or terminal push out occurs one or more modules can become isolated from the remainder of the bus. The isolated module will attempt to communicate, but will not be able to receive messages or determine arbitration from other modules. Each time the isolated module attempts to communicate it alters the bus voltage on the intact bus circuit. Without functioning arbitration the isolated module alters the bus voltage while other bus messages are being sent thereby corrupting the messages on the remainder of the bus.

The CAN bus modules are connected in parallel to the two-wire bus using a twisted pair, where the wires are wrapped around each other to provide shielding from unwanted electromagnetic induction, thus preventing interference with the relatively low voltage signals being carried through them. While the CAN bus is operating (active), one of the bus wires will carry a higher voltage and is referred to as the CAN High or CAN bus (+)

wire, while the other bus wire will carry a lower voltage and is referred to as the CAN Low or CAN bus (-) wire.

WHEN MONITORED:

With the ignition on.

Battery voltage between 10 and 16 volts.

Ignition Off Draw (IOD) fuse installed.

Totally Integrated Power Module (TIPM) is configured correctly.

SET CONDITION:

Bus messages not received from the Final Drive Control Module (FDCM) for approximately two to five seconds.

POSSIBLE CAUSES

Possible Causes
CAN C BUS (+) CIRCUIT SHORTED TO VOLTAGE
CAN C BUS (-) CIRCUIT SHORTED TO GROUND
DTC's RELATED TO BATTERY VOLTAGE, IGNITION, OR VIN MESSAGES
TIPM NOT CONFIGURED CORRECTLY
FDCM POWER AND GROUND
FINAL DRIVE CONTROL MODULE (FDCM)
MODULE THAT SET THIS DTC

DIAGNOSTIC TEST

1. **VERIFY THE DIAGNOSTIC TROUBLE CODE (DTC) IS ACTIVE**

   NOTE: Make sure the IOD fuse is installed and battery voltage is between 10 and 16 volts before proceeding.

   1. With the scan tool, read active DTC's.

      Is this DTC active?

      Yes

      - Go To 2.

      No

- Refer to **STORED LOST COMMUNICATION DTC's** and perform the diagnostic procedure.

2. **CHECK FOR ANY OF THE FOLLOWING ACTIVE DTC's**
   1. With the scan tool, read all active DTC's from all modules.

      NOTE: Check for TIPM configuration, CAN C hardware electrical, VIN Missing/Mismatch, battery or ignition related DTC's.

      Does the scan tool display any active DTC's to the conditions listed above?

      Yes

      - Perform the appropriate diagnostic procedure.

      No

      - Go To 3.

3. **VERIFY THE FDCM IS ACTIVE ON THE BUS**
   1. Turn the ignition on.
   2. With the scan tool, select Network Diagnostics.
   3. Verify the FDCM is active on the bus.

      Is the FDCM active on the bus?

      Yes

      - Go To 4.

      No

      - Refer to **NO RESPONSE FROM FDCM (FINAL DRIVE CONTROL MODULE)** and perform the diagnostic procedure.

4. **CHECK FOR ADDITIONAL COMMUNICATION RELATED DTC's**
   1. With the scan tool, select Network Diagnostics.

      Is there more than one module with active DTC's "Logged Against" the FDCM?

      Yes

      - Replace/update the FDCM in accordance with the Service Information. Refer to **ACTUATOR, STABILIZER BAR, REMOVAL** .
      - Perform the FDCM VERIFICATION TEST. Refer to **FDCM VERIFICATION TEST** .

      No

- Go To 5.

5. **CLEAR DTC IN MODULE SETTING FAULT**
    1. With the scan tool, select the module setting the DTC against the FDCM.
    2. Clear active DTC's.

    Is this DTC still active?

    Yes

    - Replace/update the module that set this DTC in accordance with the Service Information.
    - Perform the appropriate verification test for the module being replaced. If there is no verification test for the associated module, Perform the BODY VERIFICATION TEST. Refer to **BODY VERIFICATION TEST**.

    No

    - Go To 6.

6. **CYCLE IGNITION**
    1. Cycle the ignition from RUN to OFF three times ending with the key in the RUN position.

    Does this DTC become active?

    Yes

    - Go To 7.

    No

    - The condition is not present at this time. Using the wiring diagrams as a guide, check all related splices and connectors for signs of water intrusion, corrosion, pushed out or bent terminals, and correct pin tension.
    - Perform the BODY VERIFICATION TEST. Refer to **BODY VERIFICATION TEST**.

7. **CHECK FOR ADDITIONAL LOST COMMUNICATION FAULTS**
    1. With the scan tool, select Network Diagnostics.

    Does the TIPM and other CAN C BUS modules show Lost Communication with the remaining CAN C BUS modules?

    Yes

    - Go To 8.

    No

    - Replace/update the module that set this DTC in accordance with the Service Information.

- Perform the appropriate verification test for the module being replaced. If there is no verification test for the associated module, Perform the BODY VERIFICATION TEST. Refer to **BODY VERIFICATION TEST**.

8. **(D52) OR (D65) CAN C BUS (+) CIRCUIT SHORTED TO VOLTAGE**

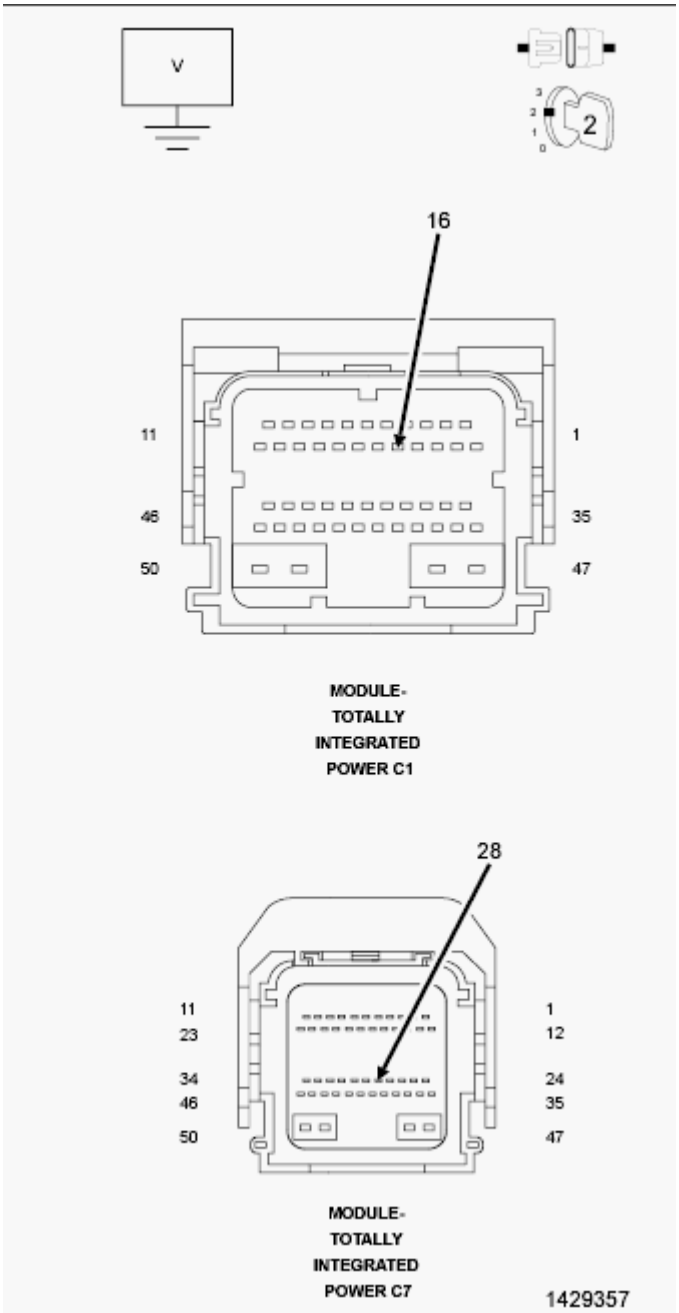

Fig. 156: Checking Can C Bus (+) Circuit For A Short To Voltage
Courtesy of CHRYSLER GROUP, LLC

1. Measure the voltage between the (D52) CAN C Bus (+) circuit and ground.
2. Measure the voltage between the (D65) CAN C Bus (+) circuit and ground.

Is the voltage above 5 volts?

Yes

- Repair the short to voltage in the (D52) or (D65) CAN C Bus (+) circuit.
- Perform the BODY VERIFICATION TEST. Refer to **BODY VERIFICATION TEST**.

No

- Go To 9.

9. **(D51) OR (D64) CAN C BUS (-) CIRCUIT SHORTED TO GROUND**

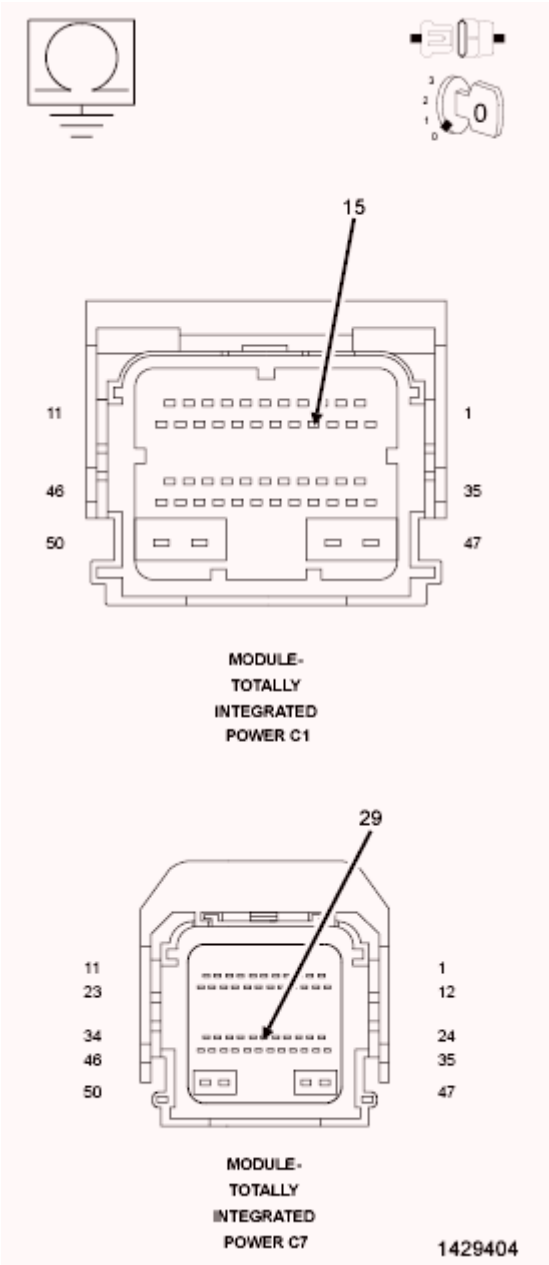

Fig. 157: Checking Can C Bus (-) Circuit For A Short To Ground
Courtesy of CHRYSLER GROUP, LLC

1. Turn the ignition off.
2. Measure the resistance between ground and the (D51) CAN C Bus (-) circuit.
3. Measure the resistance between ground and the (D64) CAN C Bus (-) circuit.

   Is the resistance below 10K Ohms?

   Yes

   - Repair the short to ground in the (D51) or (D64) CAN C Bus (-) circuit.
   - Perform the BODY VERIFICATION TEST. Refer to **BODY VERIFICATION TEST**.

   No

   - Replace/update the module that set this DTC in accordance with the Service Information.
   - Perform the appropriate verification test for the module being replaced. If there is no verification test for the associated module, Perform the BODY VERIFICATION TEST. Refer to **BODY VERIFICATION TEST**.

U0121-LOST COMMUNICATION WITH ABS

For a complete wiring diagram, **refer to appropriate SYSTEM WIRING DIAGRAMS article** .

THEORY OF OPERATION

The primary communication network between electronic control modules on this vehicle is the Controller Area Network (CAN) data bus system. The Controller Area Network (CAN) data bus allows all electronic modules connected to the bus to share information with each other. Regardless of whether a message originates from a module on the higher speed CAN C (500K) Bus or on the lower speed CAN Interior High Speed (IHS) (125K) Bus the message structure and layout is similar, which allows the Totally Integrated Power Module/Central GateWay (TIPM or TIPMCGW) to process and transfer messages between the CAN buses. The TIPM also stores Diagnostic Trouble Codes (DTC's) for certain bus network faults.

All modules transmit and receive messages over one of these buses. Data exchange between the modules is achieved by serial transmission of encoded data messages (a form of transmission in which data bits are sent sequentially, one at a time, over a single line). Each module can both send and receive serial data simultaneously. Each data bit of a CAN Bus message is carried over the bus as a voltage differential between the two bus circuits which, when strung together, form a message. Each module uses arbitration to sort the message priority if two competing messages are attempting to be broadcast at the same time. Corruption of a single bit within a message will corrupt the entire message. Each message contains a Cyclic Redundancy Check (CRC) which specifies the message size exactly. If the message detected conflicts with the CRC the ECU receiving it will determine the message to be an error and consider that communication has not been possible. Diagnosis of this condition using a lab scope may reveal activity that appears to be Bus data messages even if no actual communication is possible. Communication problems that affect the whole bus, as a result of opens and terminal push outs are more likely to occur on data busses that operate at a high speed than a data bus that

operates at a lower speed.

When an open circuit or terminal push out occurs one or more modules can become isolated from the remainder of the bus. The isolated module will attempt to communicate, but will not be able to receive messages or determine arbitration from other modules. Each time the isolated module attempts to communicate it alters the bus voltage on the intact bus circuit. Without functioning arbitration the isolated module alters the bus voltage while other bus messages are being sent thereby corrupting the messages on the remainder of the bus.

The CAN bus modules are connected in parallel to the two-wire bus using a twisted pair, where the wires are wrapped around each other to provide shielding from unwanted electromagnetic induction, thus preventing interference with the relatively low voltage signals being carried through them. While the CAN bus is operating (active), one of the bus wires will carry a higher voltage and is referred to as the CAN High or CAN bus (+) wire, while the other bus wire will carry a lower voltage and is referred to as the CAN Low or CAN bus (-) wire.

WHEN MONITORED:

With the ignition on.

Battery voltage between 10 and 16 volts.

Ignition Off Draw (IOD) fuse installed.

Totally Integrated Power Module (TIPM) is configured correctly.

SET CONDITION:

Bus messages not received from the Anti-Lock Brake Module (ABS) for approximately two to five seconds.

POSSIBLE CAUSES

Possible Causes
(D51) OR (D65) CAN C BUS (+) CIRCUIT SHORTED TO VOLTAGE
(D52) OR (D64) CAN C BUS (-) CIRCUIT SHORTED TO GROUND
DTC's RELATED TO BATTERY VOLTAGE, IGNITION, OR VIN MESSAGES
TIPM NOT CONFIGURED CORRECTLY
ABS POWER AND GROUND
ANTI-LOCK BRAKE MODULE (ABS)
MODULE THAT SET THIS DTC

DIAGNOSTIC TEST

1. **VERIFY DTC IS ACTIVE**

NOTE: **Make sure the IOD fuse is installed and battery voltage is between 10 and 16 volts before proceeding.**

1. With the scan tool, read active DTC's.

   Is this DTC active?

   Yes

   - Go To 2.

   No

   - Refer to **STORED LOST COMMUNICATION DTC's** and perform the diagnostic procedure.

2. **CHECK FOR ANY OF THE FOLLOWING ACTIVE DTC's**
   1. With the scan tool, read all active DTC's from all modules.

      NOTE: Check for TIPM configuration, CAN C hardware electrical, VIN Missing/Mismatch, battery or ignition related DTC's.

      Does the scan tool display any active DTC's to the conditions listed above?

      Yes

      - Go to **DIAGNOSTIC CODE INDEX** and perform the appropriate diagnostic procedure.

      No

      - Go To 3.

3. **VERIFY THE ABS IS ACTIVE ON THE BUS**
   1. Turn the ignition on.
   2. With the scan tool, select Network Diagnostics.
   3. Verify the ABS is active on the bus.

      Is the ABS active on the bus?

      Yes

      - Go To 4.

      No

      - Refer to **NO RESPONSE FROM ABS (ANTILOCK BRAKE MODULE)** and perform the diagnostic procedure.

4. **CHECK FOR ADDITIONAL COMMUNICATION RELATED DTC's**
   1. With the scan tool, select Network Diagnostics.

Is there more than one module with active DTC's "Logged Against" the ABS?

Yes

- Replace/update the ABS module in accordance with the Service Information. Refer to **MODULE, ANTI-LOCK BRAKE SYSTEM, REMOVAL** .
- Perform the ABS VERIFICATION TEST. Refer to **1500, 2500 & 3500 - ABS VERIFICATION TEST** or **3500 CAB & CHASSIS, 4500 & 5500 - ABS VERIFICATION TEST** .

No

- Go To 5.

5. **CLEAR DTC IN MODULE SETTING FAULT**
   1. With the scan tool, select the module setting the DTC against the ABS.
   2. Clear active DTC's.

   Is this DTC still active?

   Yes

   - Replace/update the module that set this DTC in accordance with the Service Information.
   - Perform the appropriate verification test for the module being replaced. If there is no verification test for the associated module, Perform the BODY VERIFICATION TEST. Refer to **BODY VERIFICATION TEST**.

   No

   - Go To 6.

6. **CYCLE IGNITION**
   1. Cycle the ignition from RUN to OFF three times ending with the key in the RUN position.

   Does this DTC become active?

   Yes

   - Go To 7.

   No

   - The condition is not present at this time. Using the wiring diagram/schematic as a guide, inspect the wiring for chafed, pierced, pinched, and partially broken wires and the wiring harness connectors for broken, bent, pushed out, and corroded terminals.
   - Perform the appropriate VERIFICATION TEST.

7. **CHECK FOR ADDITIONAL LOST COMMUNICATION FAULTS**

1. With the scan tool, select Network Diagnostics.

   Does the TIPM and other CAN C BUS modules show Lost Communication with the remaining CAN C BUS modules?

   Yes

   - Go To 8.

   No

   - Replace/update the module that set this DTC in accordance with the Service Information.
   - Perform the appropriate verification test for the module being replaced. If there is no verification test for the associated module, Perform the BODY VERIFICATION TEST. Refer to **BODY VERIFICATION TEST**.

8. **(D52) OR (D65) CAN C BUS (+) CIRCUIT SHORTED TO VOLTAGE**

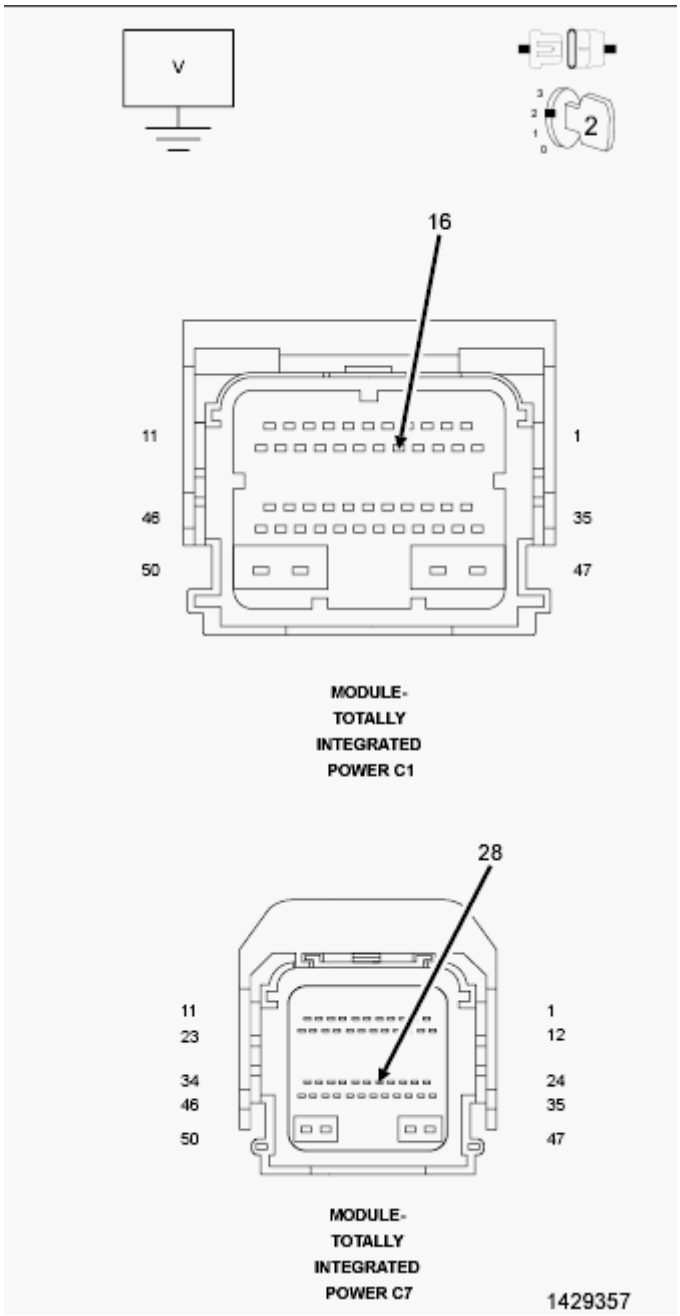

Fig. 158: Checking Can C Bus (+) Circuit For A Short To Voltage
Courtesy of CHRYSLER GROUP, LLC

1. Measure the voltage between the (D52) CAN C Bus (+) circuit and ground.
2. Measure the voltage between the (D65) CAN C Bus (+) circuit and ground.

   Is the voltage above 5.0 volts?

   Yes

   - Repair the short to voltage in the (D52) or (D65) CAN C Bus (+) circuit.

- Perform the BODY VERIFICATION TEST. Refer to **BODY VERIFICATION TEST**.

No

- Go To 9.

9. **(D51) OR (D64) CAN C BUS (-) CIRCUIT SHORTED TO GROUND**

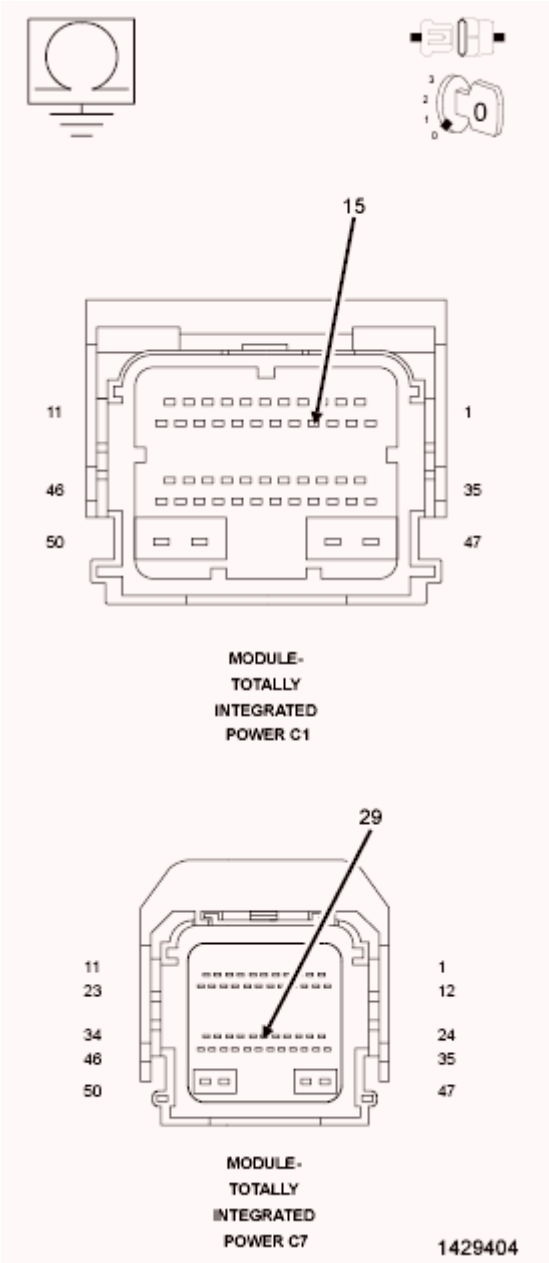

Fig. 159: Checking Can C Bus (-) Circuit For A Short To Ground
Courtesy of CHRYSLER GROUP, LLC

1. Turn the ignition off.

2. Measure the resistance between ground and the (D51) CAN C Bus (-) circuit.
3. Measure the resistance between ground and the (D64) CAN C Bus (-) circuit.

   Is the resistance below 10k Ohms?

   Yes

   - Repair the short to ground in the (D51) or (D64) CAN C Bus (-) circuit.
   - Perform the BODY VERIFICATION TEST. Refer to **BODY VERIFICATION TEST**.

   No

   - Replace/update the module that set this DTC in accordance with the Service Information.
   - Perform the appropriate verification test for the module being replaced. If there is no verification test for the associated module, Perform the BODY VERIFICATION TEST. Refer to **BODY VERIFICATION TEST**.

U0127-LOST COMMUNICATION WITH TIRE PRESSURE MONITOR MODULE

For a complete wiring diagram, **refer to appropriate SYSTEM WIRING DIAGRAMS article** .

THEORY OF OPERATION

The primary communication network between electronic control modules on this vehicle is the Controller Area Network (CAN) data bus system. The Controller Area Network (CAN) data bus allows all electronic modules connected to the bus to share information with each other. Regardless of whether a message originates from a module on the higher speed CAN C (500K) Bus or on the lower speed CAN Interior High Speed (IHS) (125K) Bus the message structure and layout is similar, which allows the Totally Integrated Power Module/Central GateWay (TIPM or TIPMCGW) to process and transfer messages between the CAN buses. The TIPM also stores Diagnostic Trouble Codes (DTC's) for certain bus network faults.

All modules transmit and receive messages over one of these buses. Data exchange between the modules is achieved by serial transmission of encoded data messages (a form of transmission in which data bits are sent sequentially, one at a time, over a single line). Each module can both send and receive serial data simultaneously. Each data bit of a CAN Bus message is carried over the bus as a voltage differential between the two bus circuits which, when strung together, form a message. Each module uses arbitration to sort the message priority if two competing messages are attempting to be broadcast at the same time. Corruption of a single bit within a message will corrupt the entire message. Each message contains a Cyclic Redundancy Check (CRC) which specifies the message size exactly. If the message detected conflicts with the CRC the ECU receiving it will determine the message to be an error and consider that communication has not been possible. Diagnosis of this condition using a lab scope may reveal activity that appears to be Bus data messages even if no actual communication is possible. Communication problems that affect the whole bus, as a result of opens and terminal push outs are more likely to occur on data busses that operate at a high speed than a data bus that operates at a lower speed.

When an open circuit or terminal push out occurs one or more modules can become isolated from the remainder of the bus. The isolated module will attempt to communicate, but will not be able to receive messages or

determine arbitration from other modules. Each time the isolated module attempts to communicate it alters the bus voltage on the intact bus circuit. Without functioning arbitration the isolated module alters the bus voltage while other bus messages are being sent thereby corrupting the messages on the remainder of the bus.

The CAN bus modules are connected in parallel to the two-wire bus using a twisted pair, where the wires are wrapped around each other to provide shielding from unwanted electromagnetic induction, thus preventing interference with the relatively low voltage signals being carried through them. While the CAN bus is operating (active), one of the bus wires will carry a higher voltage and is referred to as the CAN High or CAN bus (+) wire, while the other bus wire will carry a lower voltage and is referred to as the CAN Low or CAN bus (-) wire.

WHEN MONITORED:

With the ignition on.

Battery voltage between 10 and 16 volts.

Ignition Off Draw (IOD) fuse installed.

Totally Integrated Power Module (TIPM) is configured correctly.

SET CONDITION:

Bus messages not received from the Tire Pressure Monitoring (TPM) module for approximately two to five seconds.

POSSIBLE CAUSES

Possible Causes
(D51) OR (D65) CAN C BUS (+) CIRCUIT SHORTED TO VOLTAGE
(D52) OR (D64) CAN C BUS (-) CIRCUIT SHORTED TO GROUND
DTC's RELATED TO BATTERY VOLTAGE, IGNITION, OR VIN MESSAGES
TIPM NOT CONFIGURED CORRECTLY
TPM POWER AND GROUND
TIRE PRESSURE MONITORING (TPM) MODULE
MODULE THAT SET THIS DTC

DIAGNOSTIC TEST

1. **VERIFY DTC IS ACTIVE**

NOTE: **Make sure the IOD fuse is installed and battery voltage is between 10 and 16 volts before proceeding.**

1. With the scan tool, read active DTC's.

Is this DTC active?

Yes

- Go To 2.

No

- Refer to **STORED LOST COMMUNICATION DTC's** and perform the diagnostic procedure.

2. **CHECK FOR ANY OF THE FOLLOWING ACTIVE DTC's**
   1. With the scan tool, read all active DTC's from all modules.

      NOTE: Check for TIPM configuration, CAN C hardware electrical, VIN Missing/Mismatch, battery or ignition related DTC's.

      Does the scan tool display any active DTC's to the conditions listed above?

      Yes

      - Go to **DIAGNOSTIC CODE INDEX** and perform the appropriate diagnostic procedure.

      No

      - Go To 3.

3. **VERIFY THE TPM IS ACTIVE ON THE BUS**
   1. Turn the ignition on.
   2. With the scan tool, select Network Diagnostics.
   3. Verify the TPM is active on the bus.

      Is the TPM active on the bus?

      Yes

      - Go To 4.

      No

      - Refer to **NO RESPONSE FROM TPM (TIRE PRESSURE MONITORING) MODULE** and perform the diagnostic procedure.

4. **CHECK FOR ADDITIONAL COMMUNICATION RELATED DTC's**
   1. With the scan tool, select Network Diagnostics.

      Is there more than one module with active DTC's "Logged Against" the TPM?

Yes

- Replace/update the TPM module in accordance with the Service Information. Refer to **MODULE, TIRE PRESSURE MONITORING (TPM), REMOVAL** .
- Perform the TPM VERIFICATION TEST. Refer to **TPM VERIFICATION TEST** .

No

- Go To 5.

5. **CLEAR DTC IN MODULE SETTING FAULT**
   1. With the scan tool, select the module setting the DTC against the TPM.
   2. Clear active DTC's.

   Is this DTC still active?

   Yes

   - Replace/update the module that set this DTC in accordance with the Service Information.
   - Perform the appropriate verification test for the module being replaced. If there is no verification test for the associated module, Perform the BODY VERIFICATION TEST. Refer to **BODY VERIFICATION TEST**.

   No

   - Go To 6.

6. **CYCLE IGNITION**
   1. Cycle the ignition from RUN to OFF three times ending with the key in the RUN position.

   Does this DTC become active?

   Yes

   - Go To 7.

   No

   - The condition is not present at this time. Using the wiring diagrams as a guide, check all related splices and connectors for signs of water intrusion, corrosion, pushed out or bent terminals, and correct pin tension.
   - Perform the appropriate VERIFICATION TEST.

7. **CHECK FOR ADDITIONAL LOST COMMUNICATION FAULTS**
   1. With the scan tool, select Network Diagnostics.

   Does the TIPM and other CAN C BUS modules show Lost Communication with the remaining CAN C BUS modules?

Yes

- Go To 8.

No

- Replace/update the module that set this DTC in accordance with the Service Information.
- Perform the appropriate verification test for the module being replaced. If there is no verification test for the associated module, Perform the BODY VERIFICATION TEST. Refer to **BODY VERIFICATION TEST**.

8. **(D52) OR (D65) CAN C BUS (+) CIRCUIT SHORTED TO VOLTAGE**

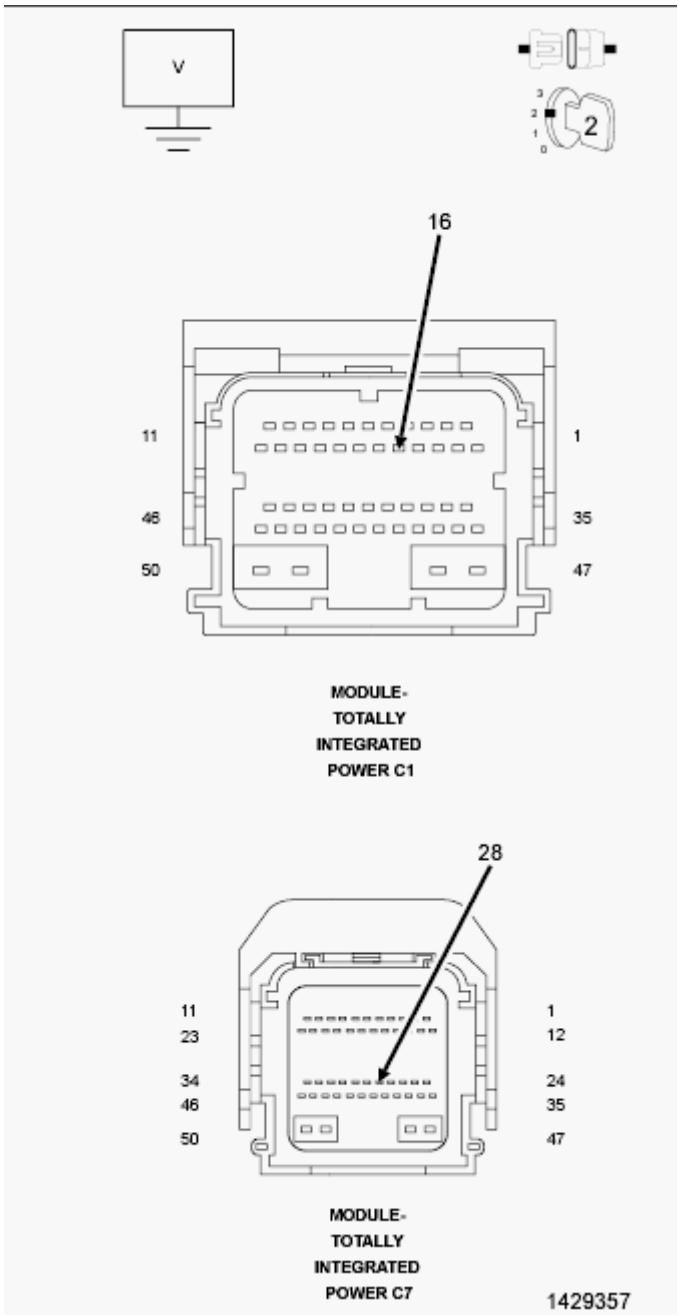

Fig. 160: Checking Can C Bus (+) Circuit For A Short To Voltage
Courtesy of CHRYSLER GROUP, LLC

1. Measure the voltage between the (D52) CAN C Bus (+) circuit and ground.
2. Measure the voltage between the (D65) CAN C Bus (+) circuit and ground.

   Is the voltage above 5.0 volts?

   Yes

   - Repair the short to voltage in the (D52) or (D65) CAN C Bus (+) circuit.

- Perform the BODY VERIFICATION TEST. Refer to **BODY VERIFICATION TEST**.

No

- Go To 9.

9. **(D51) OR (D64) CAN C BUS (-) CIRCUIT SHORTED TO GROUND**

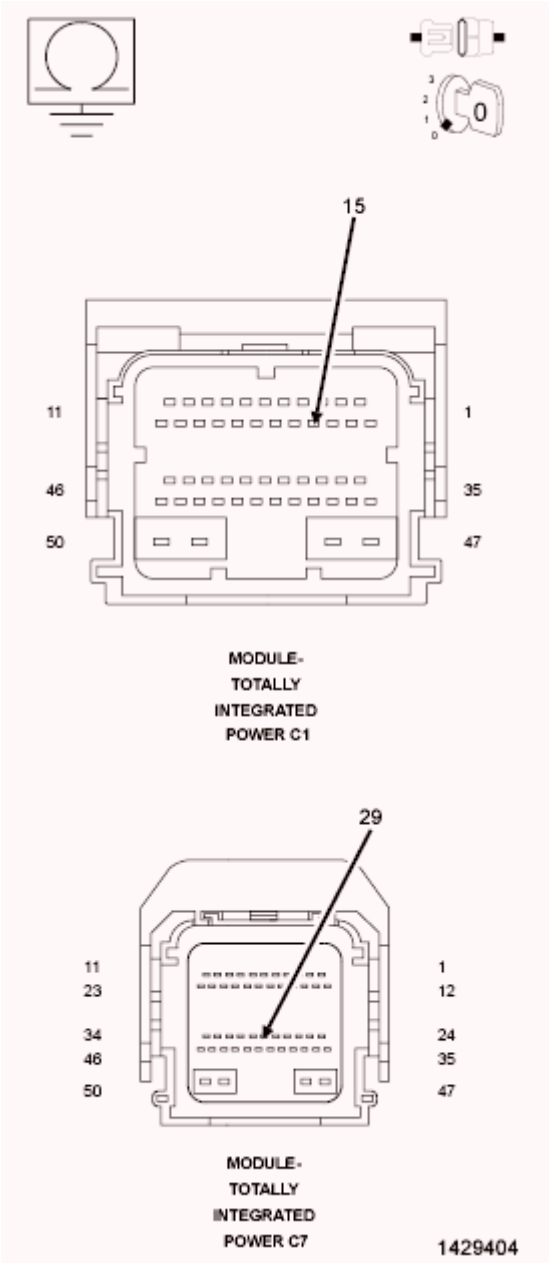

Fig. 161: Checking Can C Bus (-) Circuit For A Short To Ground
Courtesy of CHRYSLER GROUP, LLC

1. Turn the ignition off.

2. Measure the resistance between ground and the (D51) CAN C Bus (-) circuit.
3. Measure the resistance between ground and the (D64) CAN C Bus (-) circuit.

   Is the resistance below 10K Ohms?

   Yes

   - Repair the short to ground in the (D51) or (D64) CAN C Bus (-) circuit.
   - Perform the BODY VERIFICATION TEST. Refer to **BODY VERIFICATION TEST**.

   No

   - Replace/update the module that set this DTC in accordance with the Service Information.
   - Perform the appropriate verification test for the module being replaced. If there is no verification test for the associated module, Perform the BODY VERIFICATION TEST. Refer to **BODY VERIFICATION TEST**.

U0137-LOST COMMUNICATION WITH TRAILER BRAKE CONTROL MODULE

For a complete wiring diagram, **refer to appropriate SYSTEM WIRING DIAGRAMS article** .

THEORY OF OPERATION

The primary communication network between electronic control modules on this vehicle is the Controller Area Network (CAN) data bus system. The Controller Area Network (CAN) data bus allows all electronic modules connected to the bus to share information with each other. Regardless of whether a message originates from a module on the higher speed CAN C (500K) Bus or on the lower speed CAN Interior High Speed (IHS) (125K) Bus the message structure and layout is similar, which allows the Totally Integrated Power Module/Central GateWay (TIPM or TIPMCGW) to process and transfer messages between the CAN buses. The TIPM also stores Diagnostic Trouble Codes (DTC's) for certain bus network faults.

All modules transmit and receive messages over one of these buses. Data exchange between the modules is achieved by serial transmission of encoded data messages (a form of transmission in which data bits are sent sequentially, one at a time, over a single line). Each module can both send and receive serial data simultaneously. Each data bit of a CAN Bus message is carried over the bus as a voltage differential between the two bus circuits which, when strung together, form a message. Each module uses arbitration to sort the message priority if two competing messages are attempting to be broadcast at the same time. Corruption of a single bit within a message will corrupt the entire message. Each message contains a Cyclic Redundancy Check (CRC) which specifies the message size exactly. If the message detected conflicts with the CRC the ECU receiving it will determine the message to be an error and consider that communication has not been possible. Diagnosis of this condition using a lab scope may reveal activity that appears to be Bus data messages even if no actual communication is possible. Communication problems that affect the whole bus, as a result of opens and terminal push outs are more likely to occur on data busses that operate at a high speed than a data bus that operates at a lower speed.

When an open circuit or terminal push out occurs one or more modules can become isolated from the remainder of the bus. The isolated module will attempt to communicate, but will not be able to receive messages or

determine arbitration from other modules. Each time the isolated module attempts to communicate it alters the bus voltage on the intact bus circuit. Without functioning arbitration the isolated module alters the bus voltage while other bus messages are being sent thereby corrupting the messages on the remainder of the bus.

The CAN bus modules are connected in parallel to the two-wire bus using a twisted pair, where the wires are wrapped around each other to provide shielding from unwanted electromagnetic induction, thus preventing interference with the relatively low voltage signals being carried through them. While the CAN bus is operating (active), one of the bus wires will carry a higher voltage and is referred to as the CAN High or CAN bus (+) wire, while the other bus wire will carry a lower voltage and is referred to as the CAN Low or CAN bus (-) wire.

WHEN MONITORED:

With the ignition on.

Battery voltage between 10 and 16 volts.

Ignition Off Draw (IOD) fuse installed.

Totally Integrated Power Module (TIPM) is configured correctly.

SET CONDITION:

Bus messages not received from the Integrated Trailer Brake Module (ITBM) for approximately two to five seconds.

POSSIBLE CAUSES

Possible Causes
CAN C BUS (+) CIRCUIT SHORTED TO VOLTAGE
CAN C BUS (-) CIRCUIT SHORTED TO GROUND
DTC's RELATED TO BATTERY VOLTAGE, IGNITION, OR VIN MESSAGES
TIPM NOT CONFIGURED CORRECTLY
ITBM POWER AND GROUND
INTEGRATED TRAILER BRAKE MODULE (ITBM)
MODULE THAT SET THIS DTC

DIAGNOSTIC TEST

1. **VERIFY THE DIAGNOSTIC TROUBLE CODE (DTC) IS ACTIVE**

   NOTE: Make sure the IOD fuse is installed and battery voltage is between 10 and 16 volts before proceeding.

   1. With the scan tool, read active DTC's.

Is this DTC active?

Yes

- Go To 2.

No

- Refer to **STORED LOST COMMUNICATION DTC's** and perform the diagnostic procedure.

2. **CHECK FOR ANY OF THE FOLLOWING ACTIVE DTC's**
   1. With the scan tool, read all active DTC's from all modules.

      NOTE: Check for TIPM configuration, CAN C hardware electrical, VIN Missing/Mismatch, battery or ignition related DTC's.

      Does the scan tool display any active DTC's to the conditions listed above?

      Yes

      - Perform the appropriate diagnostic procedure.

      No

      - Go To 3.

3. **VERIFY THE ITBM IS ACTIVE ON THE BUS**
   1. Turn the ignition on.
   2. With the scan tool, select Network Diagnostics.
   3. Verify the ITBM is active on the bus.

      Is the ITBM active on the bus?

      Yes

      - Go To 4.

      No

      - Refer to **NO RESPONSE FROM ITBM (INTEGRATED TRAILER BRAKE MODULE)** and perform the diagnostic procedure.

4. **CHECK FOR ADDITIONAL COMMUNICATION RELATED DTC's**
   1. With the scan tool, select Network Diagnostics.

      Is there more than one module with active DTC's "Logged Against" the ITBM?

Yes

- Replace the ITBM in accordance with the Service Information. Refer to **MODULE, INTEGRATED TRAILER BRAKE (ITBM), REMOVAL** .
- Perform the BODY VERIFICATION TEST. Refer to **BODY VERIFICATION TEST**.

No

- Go To 5.

5. **CLEAR DTC IN MODULE SETTING FAULT**
   1. With the scan tool, select the module setting the DTC against the ITBM.
   2. Clear active DTC's.

   Is this DTC still active?

   Yes

   - Replace/update the module that set this DTC in accordance with the Service Information.
   - Perform the appropriate verification test for the module being replaced. If there is no verification test for the associated module, Perform the BODY VERIFICATION TEST. Refer to **BODY VERIFICATION TEST**.

   No

   - Go To 6.

6. **CYCLE IGNITION**
   1. Cycle the ignition from RUN to OFF three times ending with the key in the RUN position.

   Does this DTC become active?

   Yes

   - Go To 7.

   No

   - The condition is not present at this time. Using the wiring diagrams as a guide, check all related splices and connectors for signs of water intrusion, corrosion, pushed out or bent terminals, and correct pin tension.
   - Perform the BODY VERIFICATION TEST. Refer to **BODY VERIFICATION TEST**.

7. **CHECK FOR ADDITIONAL LOST COMMUNICATION FAULTS**
   1. With the scan tool, select Network Diagnostics.

   Does the TIPM and other CAN C BUS modules show Lost Communication with the remaining CAN C BUS modules?

Yes

- Go To 8.

No

- Replace/update the module that set this DTC in accordance with the Service Information.
- Perform the appropriate verification test for the module being replaced. If there is no verification test for the associated module, Perform the BODY VERIFICATION TEST. Refer to **BODY VERIFICATION TEST**.

8. **(D52) OR (D65) CAN C BUS (+) CIRCUIT SHORTED TO VOLTAGE**

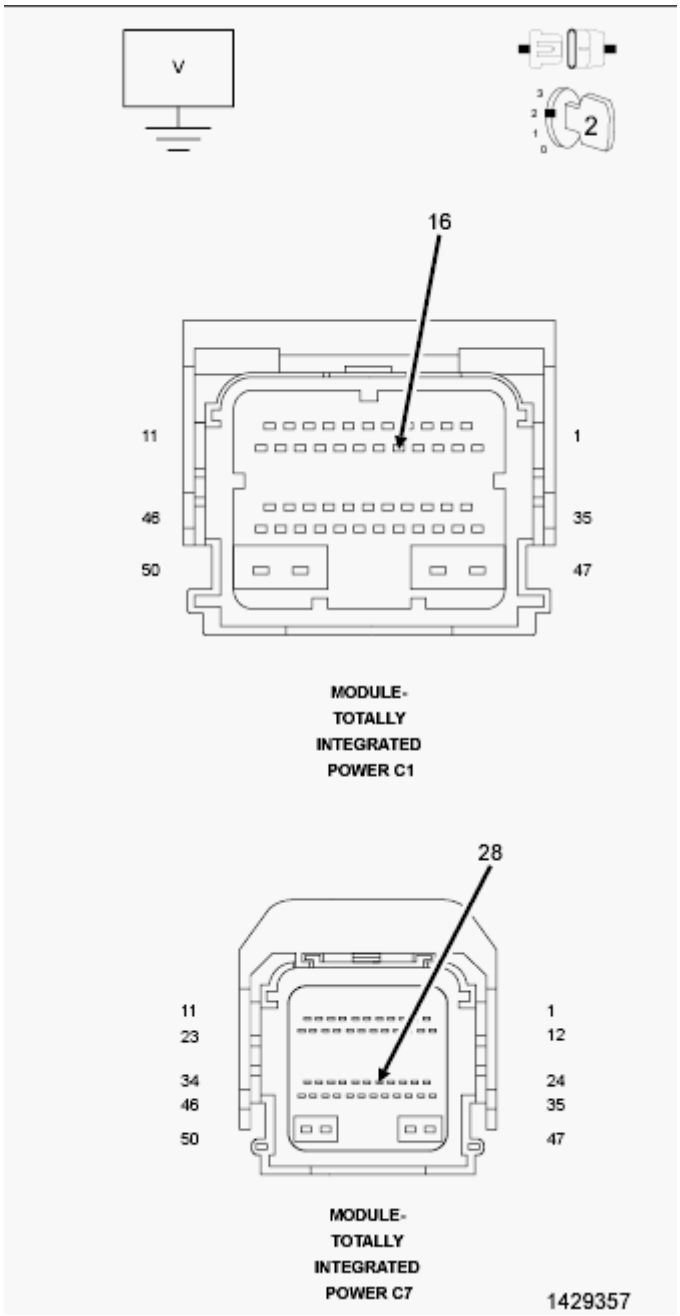

Fig. 162: Checking Can C Bus (+) Circuit For A Short To Voltage
Courtesy of CHRYSLER GROUP, LLC

1. Measure the voltage between the (D52) CAN C Bus (+) circuit and ground.
2. Measure the voltage between the (D65) CAN C Bus (+) circuit and ground.

   Is the voltage above 5.0 volts?

   Yes

   - Repair the short to voltage in the (D52) or (D65) CAN C Bus (+) circuit.

- Perform the BODY VERIFICATION TEST. Refer to **BODY VERIFICATION TEST**.

No

- Go To 9.

9. **(D51) OR (D64) CAN C BUS (-) CIRCUIT SHORTED TO GROUND**

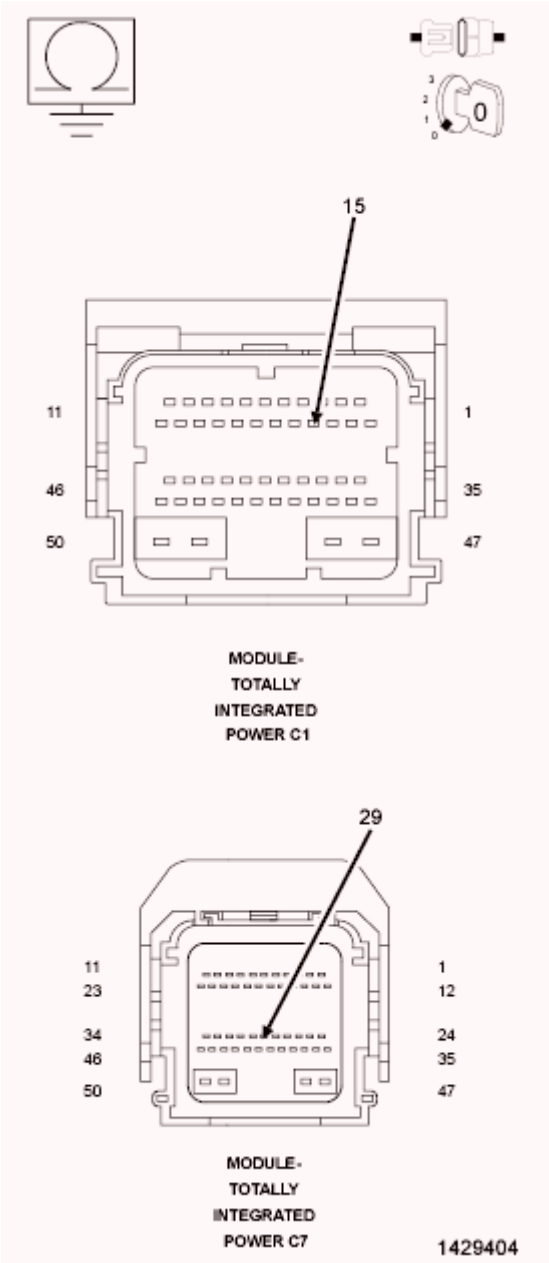

Fig. 163: Checking Can C Bus (-) Circuit For A Short To Ground
Courtesy of CHRYSLER GROUP, LLC

1. Turn the ignition off.

2. Measure the resistance between ground and the (D51) CAN C Bus (-) circuit.
3. Measure the resistance between ground and the (D64) CAN C Bus (-) circuit.

   Is the resistance below 10K Ohms?

   Yes

   - Repair the short to ground in the (D51) or (D64) CAN C Bus (-) circuit.
   - Perform the BODY VERIFICATION TEST. Refer to **BODY VERIFICATION TEST**.

   No

   - Replace/update the module that set this DTC in accordance with the Service Information.
   - Perform the appropriate verification test for the module being replaced. If there is no verification test for the associated module, Perform the BODY VERIFICATION TEST. Refer to **BODY VERIFICATION TEST**.

U0141-LOST COMMUNICATION WITH IPM (FCM/TIPM)

For a complete wiring diagram, **refer to appropriate SYSTEM WIRING DIAGRAMS article** .

THEORY OF OPERATION

The primary communication network between electronic control modules on this vehicle is the Controller Area Network (CAN) data bus system. The Controller Area Network (CAN) data bus allows all electronic modules connected to the bus to share information with each other. Regardless of whether a message originates from a module on the higher speed CAN C (500K) Bus or on the lower speed CAN Interior High Speed (IHS) (125K) Bus the message structure and layout is similar, which allows the Totally Integrated Power Module/Central GateWay (TIPM or TIPMCGW) to process and transfer messages between the CAN buses. The TIPM also stores Diagnostic Trouble Codes (DTC's) for certain bus network faults.

All modules transmit and receive messages over one of these buses. Data exchange between the modules is achieved by serial transmission of encoded data messages (a form of transmission in which data bits are sent sequentially, one at a time, over a single line). Each module can both send and receive serial data simultaneously. Each data bit of a CAN Bus message is carried over the bus as a voltage differential between the two bus circuits which, when strung together, form a message. Each module uses arbitration to sort the message priority if two competing messages are attempting to be broadcast at the same time. Corruption of a single bit within a message will corrupt the entire message. Each message contains a Cyclic Redundancy Check (CRC) which specifies the message size exactly. If the message detected conflicts with the CRC the ECU receiving it will determine the message to be an error and consider that communication has not been possible. Diagnosis of this condition using a lab scope may reveal activity that appears to be Bus data messages even if no actual communication is possible. Communication problems that affect the whole bus, as a result of opens and terminal push outs are more likely to occur on data busses that operate at a high speed than a data bus that operates at a lower speed.

When an open circuit or terminal push out occurs one or more modules can become isolated from the remainder of the bus. The isolated module will attempt to communicate, but will not be able to receive messages or

determine arbitration from other modules. Each time the isolated module attempts to communicate it alters the bus voltage on the intact bus circuit. Without functioning arbitration the isolated module alters the bus voltage while other bus messages are being sent thereby corrupting the messages on the remainder of the bus.

The CAN bus modules are connected in parallel to the two-wire bus using a twisted pair, where the wires are wrapped around each other to provide shielding from unwanted electromagnetic induction, thus preventing interference with the relatively low voltage signals being carried through them. While the CAN bus is operating (active), one of the bus wires will carry a higher voltage and is referred to as the CAN High or CAN bus (+) wire, while the other bus wire will carry a lower voltage and is referred to as the CAN Low or CAN bus (-) wire.

WHEN MONITORED:

With the ignition on.

Battery voltage between 10 and 16 volts.

Ignition Off Draw (IOD) fuse installed.

Totally Integrated Power Module (TIPM) is configured correctly.

SET CONDITION:

Bus messages not received from the Totally Integrated Power Module (TIPM) for approximately two to five seconds.

POSSIBLE CAUSES

Possible Causes
DIAGNOSTIC CAN C BUS CIRCUITS OPEN OR SHORTED
DTC's RELATED TO BATTERY VOLTAGE, IGNITION, OR VIN MESSAGES
TIPM NOT CONFIGURED CORRECTLY
TIPM POWER AND GROUND
TOTALLY INTEGRATED POWER MODULE (TIPM)
MODULE THAT SET THIS DTC

DIAGNOSTIC TEST

1. **VERIFY DTC IS ACTIVE**

   NOTE: Make sure the IOD fuse is installed and battery voltage is between 10 and 16 volts before proceeding.

   1. With the scan tool, read active DTC's.

      Is this DTC active?

Yes

- Go To 2.

No

- Refer to **STORED LOST COMMUNICATION DTC's** and perform the diagnostic procedure.

2. **CHECK FOR ANY OF THE FOLLOWING ACTIVE DTC's**
   1. With the scan tool, read all active DTC's from all modules.

      NOTE: Check for TIPM configuration, CAN C hardware electrical, VIN Missing/Mismatch, battery or ignition related DTC's.

      Does the scan tool display any active DTC's to the conditions listed above?

      Yes

      - Go to **DIAGNOSTIC CODE INDEX** and perform the appropriate diagnostic procedure.

      No

      - Go To 3.

3. **VERIFY THE TIPM IS ACTIVE ON THE BUS**
   1. Turn the ignition on.
   2. With the scan tool, select Network Diagnostics.
   3. Verify the TIPM is active on the bus.

      Is the TIPM active on the bus?

      Yes

      - Go To 4.

      No

      - Refer to **NO RESPONSE FROM TIPM (TOTALLY INTEGRATED POWER MODULE)** and perform the diagnostic procedure.

4. **CHECK FOR ADDITIONAL COMMUNICATION RELATED DTC's**
   1. With the scan tool, select Network Diagnostics.

      Is there more than one module with active DTC's "Logged Against" the TIPM?

      Yes

- Replace/update the TIPM in accordance with the Service Information. Refer to **MODULE, TOTALLY INTEGRATED POWER (TIPM), REMOVAL** .
- Perform the BODY VERIFICATION TEST. Refer to **BODY VERIFICATION TEST**.

No

- Replace/update the module that set this DTC in accordance with the Service Information.
- Perform the appropriate verification test for the module being replaced. If there is no verification test for the associated module, Perform the BODY VERIFICATION TEST. Refer to **BODY VERIFICATION TEST**.

U0151-LOST COMMUNICATION WITH OCCUPANT RESTRAINT CONTROLLER (ORC)

For a complete wiring diagram, **refer to appropriate SYSTEM WIRING DIAGRAMS article** .

THEORY OF OPERATION

The primary communication network between electronic control modules on this vehicle is the Controller Area Network (CAN) data bus system. The Controller Area Network (CAN) data bus allows all electronic modules connected to the bus to share information with each other. Regardless of whether a message originates from a module on the higher speed CAN C (500K) Bus or on the lower speed CAN Interior High Speed (IHS) (125K) Bus the message structure and layout is similar, which allows the Totally Integrated Power Module/Central GateWay (TIPM or TIPMCGW) to process and transfer messages between the CAN buses. The TIPM also stores Diagnostic Trouble Codes (DTC's) for certain bus network faults.

All modules transmit and receive messages over one of these buses. Data exchange between the modules is achieved by serial transmission of encoded data messages (a form of transmission in which data bits are sent sequentially, one at a time, over a single line). Each module can both send and receive serial data simultaneously. Each data bit of a CAN Bus message is carried over the bus as a voltage differential between the two bus circuits which, when strung together, form a message. Each module uses arbitration to sort the message priority if two competing messages are attempting to be broadcast at the same time. Corruption of a single bit within a message will corrupt the entire message. Each message contains a Cyclic Redundancy Check (CRC) which specifies the message size exactly. If the message detected conflicts with the CRC the ECU receiving it will determine the message to be an error and consider that communication has not been possible. Diagnosis of this condition using a lab scope may reveal activity that appears to be Bus data messages even if no actual communication is possible. Communication problems that affect the whole bus, as a result of opens and terminal push outs are more likely to occur on data busses that operate at a high speed than a data bus that operates at a lower speed.

When an open circuit or terminal push out occurs one or more modules can become isolated from the remainder of the bus. The isolated module will attempt to communicate, but will not be able to receive messages or determine arbitration from other modules. Each time the isolated module attempts to communicate it alters the bus voltage on the intact bus circuit. Without functioning arbitration the isolated module alters the bus voltage while other bus messages are being sent thereby corrupting the messages on the remainder of the bus.

The CAN bus modules are connected in parallel to the two-wire bus using a twisted pair, where the wires are wrapped around each other to provide shielding from unwanted electromagnetic induction, thus preventing

interference with the relatively low voltage signals being carried through them. While the CAN bus is operating (active), one of the bus wires will carry a higher voltage and is referred to as the CAN High or CAN bus (+) wire, while the other bus wire will carry a lower voltage and is referred to as the CAN Low or CAN bus (-) wire.

WHEN MONITORED:

With the ignition on.

Battery voltage between 10 and 16 volts.

Ignition Off Draw (IOD) fuse installed.

Totally Integrated Power Module (TIPM) is configured correctly.

SET CONDITION:

Bus messages not received from the Occupant Restraint Controller (ORC) for approximately two to five seconds.

POSSIBLE CAUSES

Possible Causes
(D51) OR (D65) CAN C BUS (+) CIRCUIT SHORTED TO VOLTAGE
(D52) OR (D64) CAN C BUS (-) CIRCUIT SHORTED TO GROUND
DTC's RELATED TO BATTERY VOLTAGE, IGNITION, OR VIN MESSAGES
TIPM NOT CONFIGURED CORRECTLY
ORC POWER AND GROUND
OCCUPANT RESTRAINT CONTROLLER (ORC)
MODULE THAT SET THIS DTC

DIAGNOSTIC TEST

1. **VERIFY DTC IS ACTIVE**

   NOTE: Make sure the IOD fuse is installed and battery voltage is between 10 and 16 volts before proceeding.

   1. With the scan tool, read active DTC's.

      Is this DTC active?

      Yes

      - Go To 2.

No

- Refer to **STORED LOST COMMUNICATION DTC's** and perform the diagnostic procedure.

2. **CHECK FOR ANY OF THE FOLLOWING ACTIVE DTC's**
   1. With the scan tool, read all active DTC's from all modules.

      NOTE: Check for TIPM configuration, CAN C hardware electrical, VIN Missing/Mismatch, battery or ignition related DTC's.

      Does the scan tool display any active DTC's to the conditions listed above?

      Yes

      - Go to **DIAGNOSTIC CODE INDEX** and perform the appropriate diagnostic procedure.

      No

      - Go To 3.

3. **VERIFY THE ORC IS ACTIVE ON THE BUS**
   1. Turn the ignition on.
   2. With the scan tool, select Network Diagnostics.
   3. Verify the ORC is active on the bus.

      Is the ORC active on the bus?

      Yes

      - Go To 4.

      No

      - Refer to **NO RESPONSE FROM ORC (OCCUPANT RESTRAINT CONTROLLER)** and perform the diagnostic procedure.

4. **CHECK FOR ADDITIONAL COMMUNICATION RELATED DTC's**
   1. With the scan tool, select Network Diagnostics.

      Is there more than one module with active DTC's "Logged Against" the ORC?

      Yes

      - Replace/update the ORC in accordance with the Service Information. Refer to **CONTROLLER, OCCUPANT RESTRAINT, REMOVAL** .
      - Perform the RESTRAINTS SYSTEM VERIFICATION TEST. Refer to **STANDARD PROCEDURE** .

No

- Go To 5.

5. **CLEAR DTC IN MODULE SETTING FAULT**
   1. With the scan tool, select the module setting the DTC against the ORC.
   2. Clear active DTC's.

      Is this DTC still active?

      Yes

      - Replace/update the module that set this DTC in accordance with the Service Information.
      - Perform the appropriate verification test for the module being replaced. If there is no verification test for the associated module, Perform the BODY VERIFICATION TEST. Refer to **BODY VERIFICATION TEST**.

      No

      - Go To 6.

6. **CYCLE IGNITION**
   1. Cycle the ignition from RUN to OFF three times ending with the key in the RUN position.

      Does this DTC become active?

      Yes

      - Go To 7.

      No

      - The condition is not present at this time. Using the wiring diagram/schematic as a guide, inspect the wiring for chafed, pierced, pinched, and partially broken wires and the wiring harness connectors for broken, bent, pushed out, and corroded terminals.
      - Perform the appropriate VERIFICATION TEST.

7. **CHECK FOR ADDITIONAL LOST COMMUNICATION FAULTS**
   1. With the scan tool, select Network Diagnostics.

      Does the TIPM and other CAN C BUS modules show Lost Communication with the remaining CAN C BUS modules?

      Yes

      - Go To 8.

      No

- Replace/update the module that set this DTC in accordance with the Service Information.
- Perform the appropriate verification test for the module being replaced. If there is no verification test for the associated module, Perform the BODY VERIFICATION TEST. Refer to **BODY VERIFICATION TEST**.

8. **(D52) OR (D65) CAN C BUS (+) CIRCUIT SHORTED TO VOLTAGE**

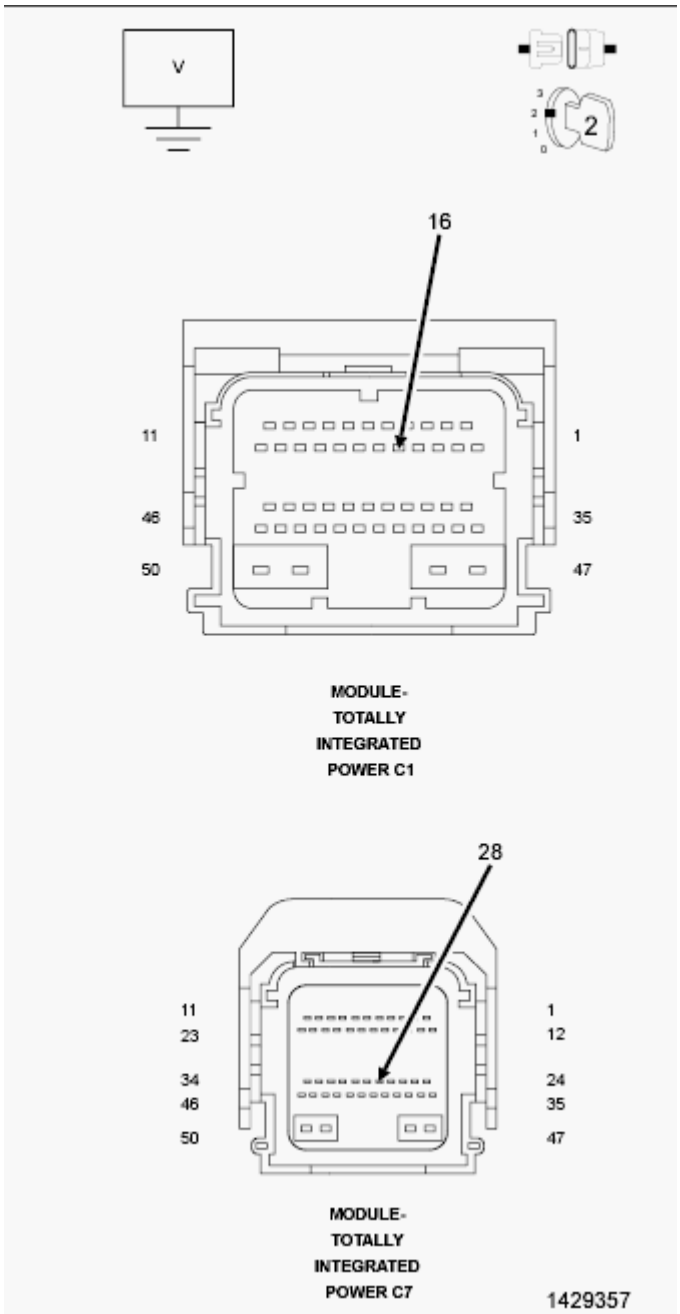

Fig. 164: Checking Can C Bus (+) Circuit For A Short To Voltage
Courtesy of CHRYSLER GROUP, LLC

1. Measure the voltage between the (D52) CAN C Bus (+) circuit and ground.

2. Measure the voltage between the (D65) CAN C Bus (+) circuit and ground.

   Is the voltage above 5.0 volts?

   Yes

   - Repair the short to voltage in the (D52) or (D65) CAN C Bus (+) circuit.
   - Perform the BODY VERIFICATION TEST. Refer to **BODY VERIFICATION TEST**.

   No

   - Go To 9.

9. **(D51) OR (D64) CAN C BUS (-) CIRCUIT SHORTED TO GROUND**

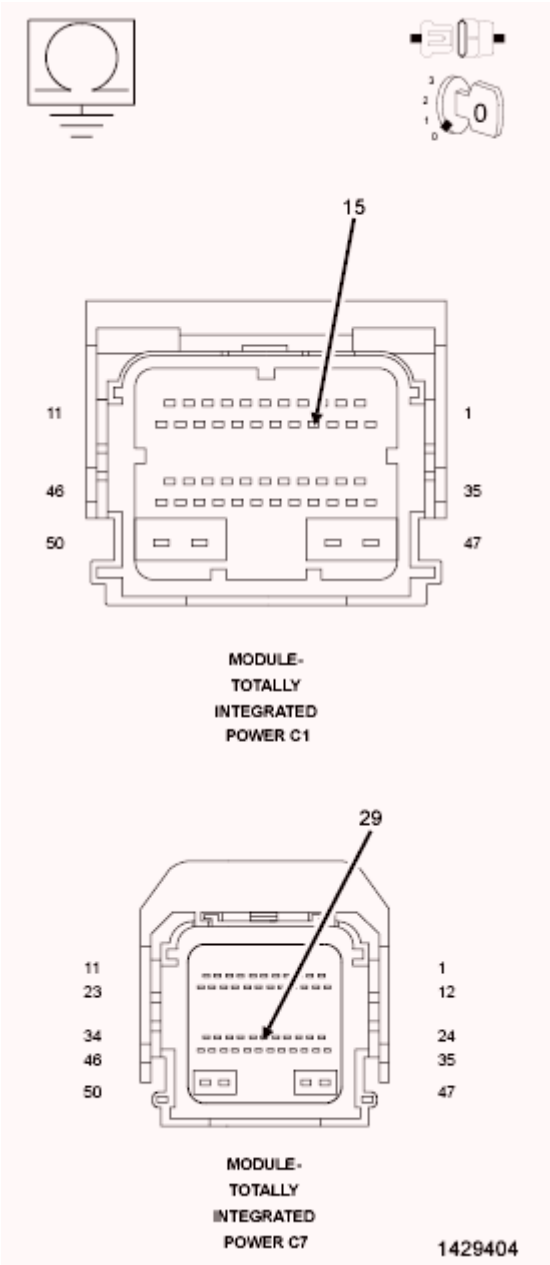

Fig. 165: Checking Can C Bus (-) Circuit For A Short To Ground
Courtesy of CHRYSLER GROUP, LLC

1. Turn the ignition off.
2. Measure the resistance between ground and the (D51) CAN C Bus (-) circuit.
3. Measure the resistance between ground and the (D64) CAN C Bus (-) circuit.

   Is the resistance below 10k Ohms?

   Yes

   - Repair the short to ground in the (D51) or (D64) CAN C Bus (-) circuit.

- Perform the BODY VERIFICATION TEST. Refer to **BODY VERIFICATION TEST**.

No

- Replace/update the module that set this DTC in accordance with the Service Information.
- Perform the appropriate verification test for the module being replaced. If there is no verification test for the associated module, Perform the BODY VERIFICATION TEST. Refer to **BODY VERIFICATION TEST**.

U0155-LOST COMMUNICATION WITH CLUSTER/CCN

For a complete wiring diagram, **refer to appropriate SYSTEM WIRING DIAGRAMS article** .

THEORY OF OPERATION

The primary communication network between electronic control modules on this vehicle is the Controller Area Network (CAN) data bus system. The Controller Area Network (CAN) data bus allows all electronic modules connected to the bus to share information with each other. Regardless of whether a message originates from a module on the higher speed CAN C (500K) Bus or on the lower speed CAN Interior High Speed (IHS) (125K) Bus the message structure and layout is similar, which allows the Totally Integrated Power Module/Central GateWay (TIPM or TIPMCGW) to process and transfer messages between the CAN buses. The TIPM also stores Diagnostic Trouble Codes (DTC's) for certain bus network faults.

All modules transmit and receive messages over one of these buses. Data exchange between the modules is achieved by serial transmission of encoded data messages (a form of transmission in which data bits are sent sequentially, one at a time, over a single line). Each module can both send and receive serial data simultaneously. Each data bit of a CAN Bus message is carried over the bus as a voltage differential between the two bus circuits which, when strung together, form a message. Each module uses arbitration to sort the message priority if two competing messages are attempting to be broadcast at the same time. Corruption of a single bit within a message will corrupt the entire message. Each message contains a Cyclic Redundancy Check (CRC) which specifies the message size exactly. If the message detected conflicts with the CRC the ECU receiving it will determine the message to be an error and consider that communication has not been possible. Diagnosis of this condition using a lab scope may reveal activity that appears to be Bus data messages even if no actual communication is possible. Communication problems that affect the whole bus, as a result of opens and terminal push outs are more likely to occur on data busses that operate at a high speed than a data bus that operates at a lower speed.

When an open circuit or terminal push out occurs one or more modules can become isolated from the remainder of the bus. The isolated module will attempt to communicate, but will not be able to receive messages or determine arbitration from other modules. Each time the isolated module attempts to communicate it alters the bus voltage on the intact bus circuit. Without functioning arbitration the isolated module alters the bus voltage while other bus messages are being sent thereby corrupting the messages on the remainder of the bus.

The CAN bus modules are connected in parallel to the two-wire bus using a twisted pair, where the wires are wrapped around each other to provide shielding from unwanted electromagnetic induction, thus preventing interference with the relatively low voltage signals being carried through them. While the CAN bus is operating (active), one of the bus wires will carry a higher voltage and is referred to as the CAN High or CAN bus (+)

wire, while the other bus wire will carry a lower voltage and is referred to as the CAN Low or CAN bus (-) wire.

WHEN MONITORED:

With the ignition on.

Battery voltage between 10 and 16 volts.

Ignition Off Draw (IOD) fuse installed.

Totally Integrated Power Module (TIPM) is configured correctly.

SET CONDITION:

Bus messages not received from the Cluster/Cabin Compartment Node (CCN) for approximately two to five seconds.

POSSIBLE CAUSES

Possible Causes
(D265) CAN INTERIOR BUS (+) (125K) CIRCUIT SHORTED TO VOLTAGE
(D264) CAN INTERIOR BUS (-) (125K) CIRCUIT SHORTED TO GROUND
DTC's RELATED TO BATTERY VOLTAGE, IGNITION, OR VIN MESSAGES
TIPM NOT CONFIGURED CORRECTLY
CLUSTER/CCN POWER AND GROUND
CLUSTER/CABIN COMPARTMENT NODE (CCN)
MODULE THAT SET THE DTC

DIAGNOSTIC TEST

1. **VERIFY DTC IS ACTIVE**

   NOTE: Make sure the IOD fuse is installed and battery voltage is between 10 and 16 volts before proceeding.

   1. With the scan tool, read active DTC's.

      Is this DTC active?

      Yes

      - Go To 2.

      No

- Refer to **STORED LOST COMMUNICATION DTC's** and perform the diagnostic procedure.

2. **CHECK FOR ANY OF THE FOLLOWING ACTIVE DTC's**
   1. With the scan tool, read all active DTC's from all modules.

      NOTE: Check for TIPM configuration, CAN Interior Bus hardware electrical, VIN Missing/Mismatch, battery or ignition related DTC's.

      Does the scan tool display any active DTC's to the conditions listed above?

      Yes

      - Go to **DIAGNOSTIC CODE INDEX** and perform the appropriate diagnostic procedure.

      No

      - Go To 3.

3. **VERIFY THE CCN IS ACTIVE ON THE BUS**
   1. Turn the ignition on.
   2. With the scan tool, select Network Diagnostics.
   3. Verify the CCN is active on the bus.

      Is the CCN active on the bus?

      Yes

      - Go To 4.

      No

      - Refer to **NO RESPONSE FROM CCN (CLUSTER)** and perform the diagnostic procedure.

4. **CHECK FOR ADDITIONAL COMMUNICATION RELATED DTC's**
   1. With the scan tool, select Network Diagnostics.

      Is there more than one module with active DTC's "Logged Against" the CCN?

      Yes

      - Replace/update the Cluster/CCN in accordance with the Service Information. Refer to **REMOVAL** .
      - Perform the BODY VERIFICATION TEST. Refer to **BODY VERIFICATION TEST**.

      No

- Go To 5.

5. **CLEAR DTC IN MODULE SETTING FAULT**
    1. With the scan tool, select the module setting the DTC against the Cluster/CCN.
    2. Clear active DTC's.

    Is this DTC still active?

    Yes

    - Replace/update the module that set this DTC in accordance with the Service Information.
    - Perform the appropriate verification test for the module being replaced. If there is no verification test for the associated module, Perform the BODY VERIFICATION TEST. Refer to **BODY VERIFICATION TEST**.

    No

    - Go To 6.

6. **CYCLE IGNITION**
    1. Cycle the ignition from RUN to OFF three times ending with the key in the RUN position.

    Does this DTC become active?

    Yes

    - Go To 7.

    No

    - The condition is not present at this time. Using the wiring diagrams as a guide, check all related splices and connectors for signs of water intrusion, corrosion, pushed out or bent terminals, and correct pin tension.
    - Perform the appropriate VERIFICATION TEST.

7. **CHECK FOR ADDITIONAL LOST COMMUNICATION FAULTS**
    1. With the scan tool, select Network Diagnostics.

    Does the TIPM and other CAN Interior BUS (125K) modules show Lost Communication with the remaining CAN Interior BUS (125K) modules?

    Yes

    - Go To 8.

    No

    - Replace/update the module that set this DTC in accordance with the Service Information.

- Perform the appropriate verification test for the module being replaced. If there is no verification test for the associated module, Perform the BODY VERIFICATION TEST. Refer to **BODY VERIFICATION TEST**.

8. **(D265) CAN INTERIOR BUS (+) (125K) CIRCUIT SHORTED TO VOLTAGE**

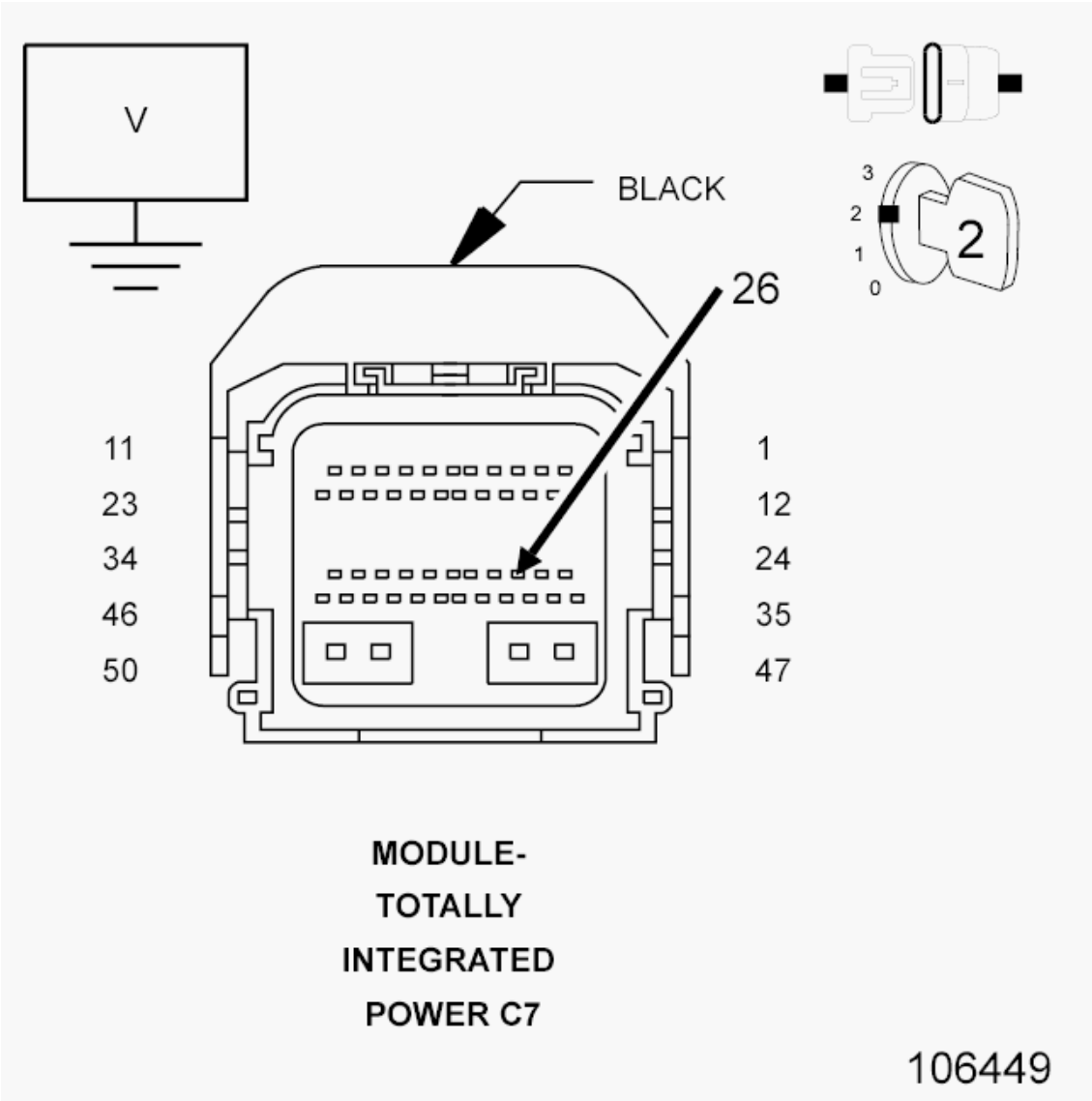

Fig. 166: Checking Can Interior Bus (+) (125K) Circuit For A Short To Voltage
Courtesy of CHRYSLER GROUP, LLC

1. Measure the voltage between the (D265) CAN Interior Bus (+) (125K) circuit and ground.

   Is the voltage above 5.0 volts?

   Yes

   - Repair the short to voltage in the (D265) CAN Interior Bus (+) (125K) circuit.

- Perform the BODY VERIFICATION TEST. Refer to **BODY VERIFICATION TEST**.

No

- Go To 9.

9. **(D264) CAN INTERIOR BUS (-) (125K) CIRCUIT SHORTED TO GROUND**

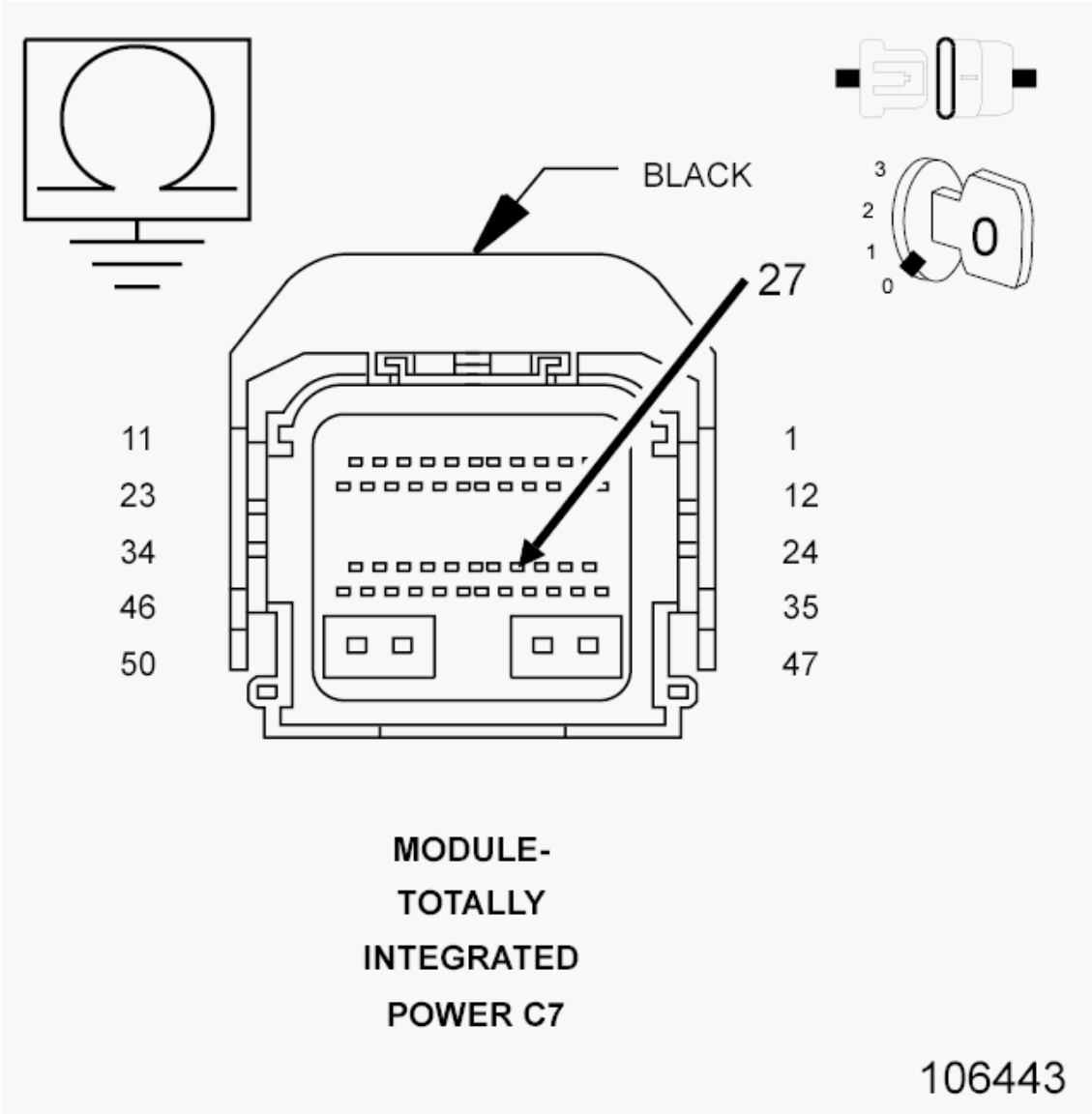

Fig. 167: Checking Can Interior Bus (-) (125K) Circuit For A Short To Ground
Courtesy of CHRYSLER GROUP, LLC

1. Turn the ignition off.
2. Measure the resistance between ground and the (D264) CAN Interior Bus (-) (125K) circuit.

   Is the resistance below 10k Ohms?

Yes

- Repair the short to ground in the (D264) CAN Interior Bus (-) (125K) circuit.
- Perform the BODY VERIFICATION TEST. Refer to **BODY VERIFICATION TEST**.

No

- Replace/update the module that set this DTC in accordance with the Service Information.
- Perform the appropriate verification test for the module being replaced. If there is no verification test for the associated module, Perform the BODY VERIFICATION TEST. Refer to **BODY VERIFICATION TEST**.

U0159-LOST COMMUNICATION WITH PARK ASSIST MODULE (PTS)

For a complete wiring diagram, **refer to appropriate SYSTEM WIRING DIAGRAMS article** .

THEORY OF OPERATION

The primary communication network between electronic control modules on this vehicle is the Controller Area Network (CAN) data bus system. The Controller Area Network (CAN) data bus allows all electronic modules connected to the bus to share information with each other. Regardless of whether a message originates from a module on the higher speed CAN C (500K) Bus or on the lower speed CAN Interior High Speed (IHS) (125K) Bus the message structure and layout is similar, which allows the Totally Integrated Power Module/Central GateWay (TIPM or TIPMCGW) to process and transfer messages between the CAN buses. The TIPM also stores Diagnostic Trouble Codes (DTC's) for certain bus network faults.

All modules transmit and receive messages over one of these buses. Data exchange between the modules is achieved by serial transmission of encoded data messages (a form of transmission in which data bits are sent sequentially, one at a time, over a single line). Each module can both send and receive serial data simultaneously. Each data bit of a CAN Bus message is carried over the bus as a voltage differential between the two bus circuits which, when strung together, form a message. Each module uses arbitration to sort the message priority if two competing messages are attempting to be broadcast at the same time. Corruption of a single bit within a message will corrupt the entire message. Each message contains a Cyclic Redundancy Check (CRC) which specifies the message size exactly. If the message detected conflicts with the CRC the ECU receiving it will determine the message to be an error and consider that communication has not been possible. Diagnosis of this condition using a lab scope may reveal activity that appears to be Bus data messages even if no actual communication is possible. Communication problems that affect the whole bus, as a result of opens and terminal push outs are more likely to occur on data busses that operate at a high speed than a data bus that operates at a lower speed.

When an open circuit or terminal push out occurs one or more modules can become isolated from the remainder of the bus. The isolated module will attempt to communicate, but will not be able to receive messages or determine arbitration from other modules. Each time the isolated module attempts to communicate it alters the bus voltage on the intact bus circuit. Without functioning arbitration the isolated module alters the bus voltage while other bus messages are being sent thereby corrupting the messages on the remainder of the bus.

The CAN bus modules are connected in parallel to the two-wire bus using a twisted pair, where the wires are

wrapped around each other to provide shielding from unwanted electromagnetic induction, thus preventing interference with the relatively low voltage signals being carried through them. While the CAN bus is operating (active), one of the bus wires will carry a higher voltage and is referred to as the CAN High or CAN bus (+) wire, while the other bus wire will carry a lower voltage and is referred to as the CAN Low or CAN bus (-) wire.

WHEN MONITORED:

With the ignition on.

Battery voltage between 10 and 16 volts.

Ignition Off Draw (IOD) fused installed.

Totally Integrated Power Module (TIPM) is configured correctly.

SET CONDITION:

Bus messages not received from the Park Assist (PTS) Module for approximately two to five seconds.

POSSIBLE CAUSES

Possible Causes
(D265) CAN INTERIOR BUS (+) (125K) CIRCUIT SHORTED TO VOLTAGE
(D264) CAN INTERIOR BUS (-) (125K) CIRCUIT SHORTED TO GROUND
DTC's RELATED TO BATTERY VOLTAGE, IGNITION, OR VIN MESSAGES
TIPM NOT CONFIGURED CORRECTLY
PARK ASSIST MODULE POWER AND GROUND
PARK ASSIST MODULE (PTS)
MODULE THAT SET THE DTC

DIAGNOSTIC TEST

1. **VERIFY DTC IS ACTIVE**

   NOTE: Make sure the IOD fuse is installed and battery voltage is between 10 and 16 volts before proceeding.

   1. With the scan tool, read active DTC's.

      Is this DTC active?

      Yes

      - Go To 2.

No

- Refer to **STORED LOST COMMUNICATION DTC's** and perform the diagnostic procedure.

2. **CHECK FOR ANY OF THE FOLLOWING ACTIVE DTC's**
   1. With the scan tool, read active DTC's from all modules.

      NOTE: Check for TIPM configuration, CAN Interior Bus hardware electrical, VIN Missing/Mismatch, battery or ignition related DTC's.

      Does the scan tool display any active DTC's to the conditions listed above?

      Yes

      - Go to **DIAGNOSTIC CODE INDEX** and perform the appropriate diagnostic procedure.

      No

      - Go To 3.

3. **VERIFY THE PTS IS ACTIVE ON THE BUS**
   1. Turn the ignition on.
   2. With the scan tool, select Network Diagnostics.
   3. Verify the PTS is active on the bus.

      Is the PTS active on the bus?

      Yes

      - Go To 4.

      No

      - Refer to **NO RESPONSE FROM PTS (PARK ASSIST MODULE)** and perform the diagnostic procedure.

4. **CHECK FOR ADDITIONAL COMMUNICATION RELATED DTC's**
   1. With the scan tool, select Network Diagnostics.

      Is there more than one module with active DTC's "Logged Against" the PTS?

      Yes

      - Replace/update the Park Assist (PTS) Module in accordance with the Service Information. Refer to **MODULE, PARK ASSIST, REMOVAL** .
      - Perform the BODY VERIFICATION TEST. Refer to **BODY VERIFICATION TEST**.

No

- Go To 5.

5. **CLEAR DTC IN MODULE SETTING FAULT**
   1. With the scan tool, select the module setting the DTC against the Park Assist (PTS) Module.
   2. Clear active DTC's.

   Is this DTC still active?

   Yes

   - Replace/update the module that set this DTC in accordance with the Service Information.
   - Perform the appropriate verification test for the module being replaced. If there is no verification test for the associated module, Perform the BODY VERIFICATION TEST. Refer to **BODY VERIFICATION TEST**.

   No

   - Go To 6.

6. **CYCLE IGNITION**
   1. Cycle the ignition from RUN to OFF three times ending with the key in the RUN position.

   Does this DTC become active?

   Yes

   - Go To 7.

   No

   - The condition is not present at this time. Using the wiring diagrams as a guide, check all related splices and connectors for signs of water intrusion, corrosion, pushed out or bent terminals, and correct pin tension.
   - Perform the appropriate VERIFICATION TEST.

7. **CHECK FOR ADDITIONAL LOST COMMUNICATION FAULTS**
   1. With the scan tool, select Network Diagnostics.

   Does the TIPM and other CAN Interior BUS (125K) modules show Lost Communication with the remaining CAN Interior BUS (125K) modules?

   Yes

   - Go To 8.

   No

- Replace/update the module that set this DTC in accordance with the Service Information.
- Perform the appropriate verification test for the module being replaced. If there is no verification test for the associated module, Perform the BODY VERIFICATION TEST. Refer to **BODY VERIFICATION TEST**.

8. **(D265) CAN INTERIOR BUS (+) (125K) CIRCUIT SHORTED TO VOLTAGE**

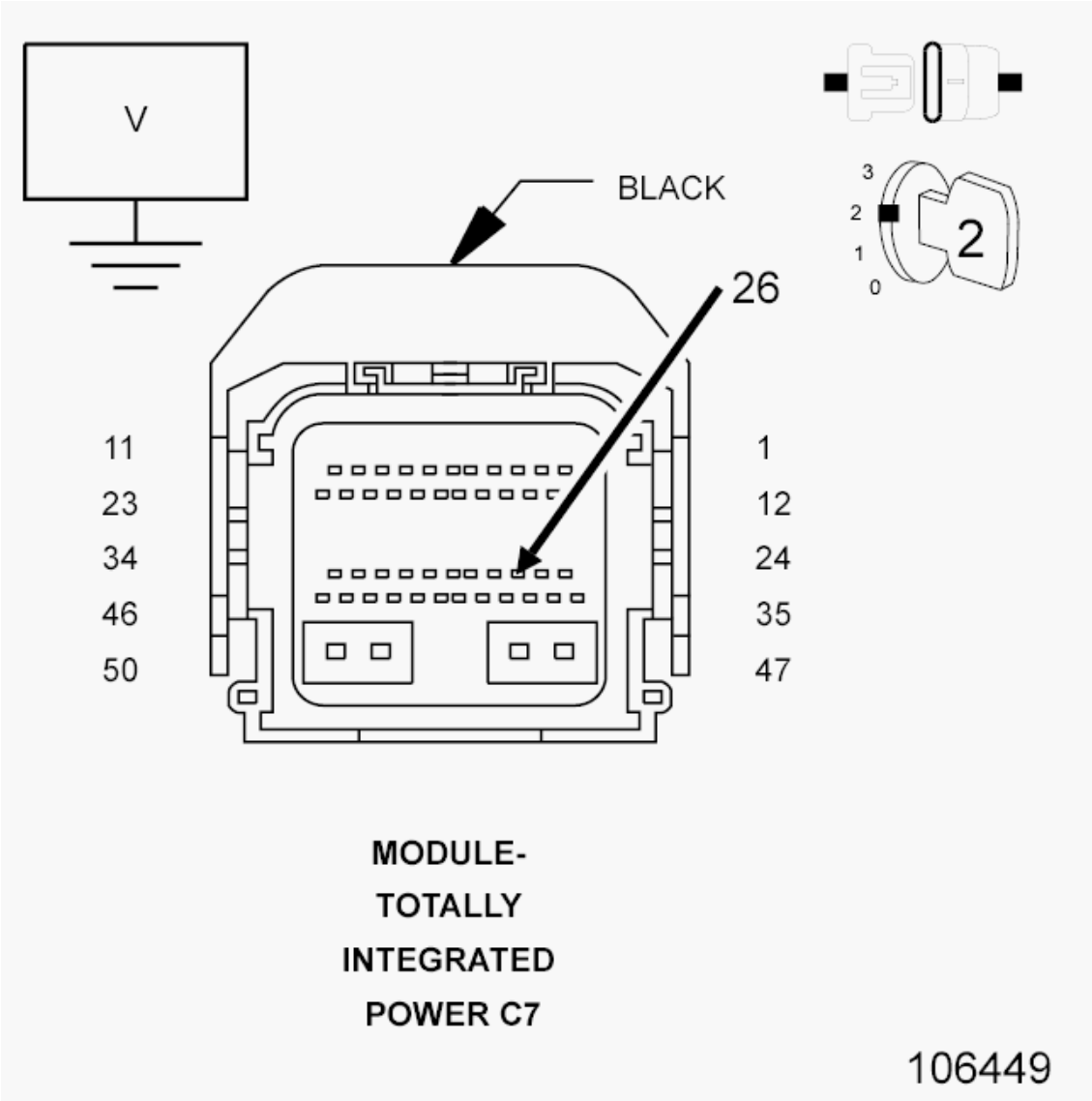

Fig. 168: Checking Can Interior Bus (+) (125K) Circuit For A Short To Voltage
Courtesy of CHRYSLER GROUP, LLC

1. Measure the voltage between the (D265) CAN Interior Bus (+) (125K) circuit and ground.

   Is the voltage above 5.0 volts?

   Yes

- Repair the short to voltage in the (D265) CAN Interior Bus (+) (125K) circuit.
- Perform the BODY VERIFICATION TEST. Refer to **BODY VERIFICATION TEST**.

No

- Go To 9.

9. **(D264) CAN INTERIOR BUS (-) (125K) CIRCUIT SHORTED TO GROUND**

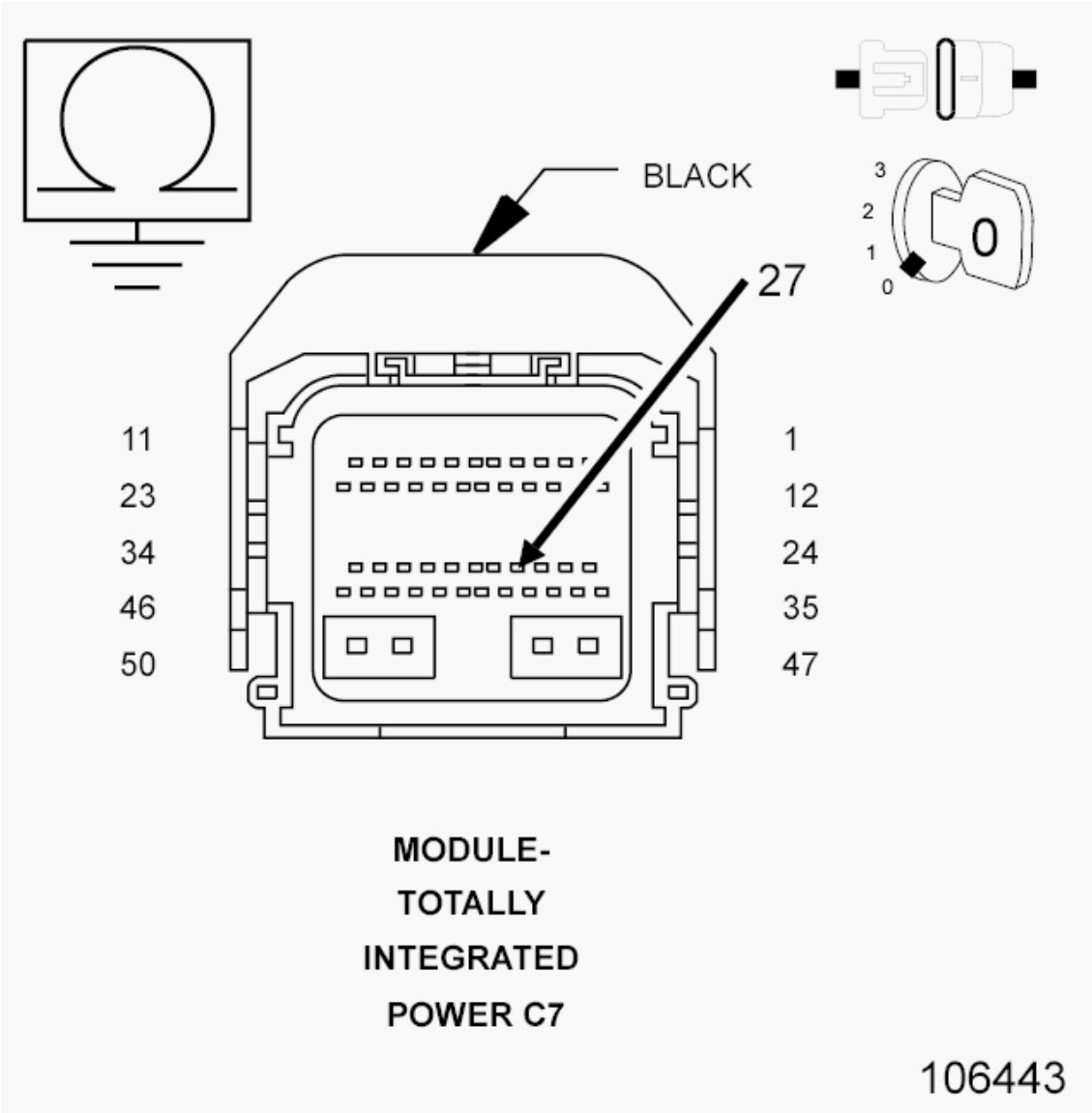

Fig. 169: Checking Can Interior Bus (-) (125K) Circuit For A Short To Ground
Courtesy of CHRYSLER GROUP, LLC

1. Turn the ignition off.
2. Measure the resistance between ground and the (D264) CAN Interior Bus (-) (125K) circuit.

Is the resistance below 10k Ohms?

Yes

- Repair the short to ground in the (D264) CAN Interior Bus (-) (125K) circuit.
- Perform the BODY VERIFICATION TEST. Refer to **BODY VERIFICATION TEST**.

No

- Replace/update the module that set this DTC in accordance with the Service Information.
- Perform the appropriate verification test for the module being replaced. If there is no verification test for the associated module, Perform the BODY VERIFICATION TEST. Refer to **BODY VERIFICATION TEST**.

U0164-LOST COMMUNICATION WITH HVAC CONTROL MODULE

For a complete wiring diagram, **refer to appropriate SYSTEM WIRING DIAGRAMS article** .

THEORY OF OPERATION

The primary communication network between electronic control modules on this vehicle is the Controller Area Network (CAN) data bus system. The Controller Area Network (CAN) data bus allows all electronic modules connected to the bus to share information with each other. Regardless of whether a message originates from a module on the higher speed CAN C (500K) Bus or on the lower speed CAN Interior High Speed (IHS) (125K) Bus the message structure and layout is similar, which allows the Totally Integrated Power Module/Central GateWay (TIPM or TIPMCGW) to process and transfer messages between the CAN buses. The TIPM also stores Diagnostic Trouble Codes (DTC's) for certain bus network faults.

All modules transmit and receive messages over one of these buses. Data exchange between the modules is achieved by serial transmission of encoded data messages (a form of transmission in which data bits are sent sequentially, one at a time, over a single line). Each module can both send and receive serial data simultaneously. Each data bit of a CAN Bus message is carried over the bus as a voltage differential between the two bus circuits which, when strung together, form a message. Each module uses arbitration to sort the message priority if two competing messages are attempting to be broadcast at the same time. Corruption of a single bit within a message will corrupt the entire message. Each message contains a Cyclic Redundancy Check (CRC) which specifies the message size exactly. If the message detected conflicts with the CRC the ECU receiving it will determine the message to be an error and consider that communication has not been possible. Diagnosis of this condition using a lab scope may reveal activity that appears to be Bus data messages even if no actual communication is possible. Communication problems that affect the whole bus, as a result of opens and terminal push outs are more likely to occur on data busses that operate at a high speed than a data bus that operates at a lower speed.

When an open circuit or terminal push out occurs one or more modules can become isolated from the remainder of the bus. The isolated module will attempt to communicate, but will not be able to receive messages or determine arbitration from other modules. Each time the isolated module attempts to communicate it alters the bus voltage on the intact bus circuit. Without functioning arbitration the isolated module alters the bus voltage while other bus messages are being sent thereby corrupting the messages on the remainder of the bus.

The CAN bus modules are connected in parallel to the two-wire bus using a twisted pair, where the wires are wrapped around each other to provide shielding from unwanted electromagnetic induction, thus preventing interference with the relatively low voltage signals being carried through them. While the CAN bus is operating (active), one of the bus wires will carry a higher voltage and is referred to as the CAN High or CAN bus (+) wire, while the other bus wire will carry a lower voltage and is referred to as the CAN Low or CAN bus (-) wire.

WHEN MONITORED:

With the ignition on.

Battery voltage between 10 and 16 volts.

Ignition Off Draw (IOD) fuse installed.

Totally Integrated Power Module (TIPM) is configured correctly.

SET CONDITION:

Bus messages not received from the HVAC Control Module for approximately two to five seconds.

POSSIBLE CAUSES

Possible Causes
(D265) CAN INTERIOR BUS (+) (125K) CIRCUIT SHORTED TO VOLTAGE
(D264) CAN INTERIOR BUS (-) (125K) CIRCUIT SHORTED TO GROUND
DTC's RELATED TO BATTERY VOLTAGE, IGNITION, OR VIN MESSAGES
TIPM NOT CONFIGURED CORRECTLY
HVAC POWER AND GROUND
HVAC CONTROL MODULE
MODULE THAT SET THE DTC

DIAGNOSTIC TEST

1. **VERIFY DTC IS ACTIVE**

   NOTE: Make sure the IOD fuse is installed and battery voltage is between 10 and 16 volts before proceeding.

   1. With the scan tool, read active DTC's.

      Is this DTC active?

      Yes

      - Go To 2.

No

- Refer to **STORED LOST COMMUNICATION DTC's** and perform the diagnostic procedure.

2. **CHECK FOR ANY OF THE FOLLOWING ACTIVE DTC's**
   1. With the scan tool, read active DTC's from all modules.

      NOTE: Check for TIPM configuration, CAN Interior Bus hardware electrical, VIN Missing/Mismatch, battery or ignition related DTC's.

      Does the scan tool display any active DTC's to the conditions listed above?

      Yes

      - Go to **DIAGNOSTIC CODE INDEX** and perform the appropriate diagnostic procedure.

      No

      - Go To 3.

3. **VERIFY THE HVAC IS ACTIVE ON THE BUS**
   1. Turn the ignition on.
   2. With the scan tool, select Network Diagnostics.
   3. Verify the HVAC is active on the bus.

      Is the HVAC active on the bus?

      Yes

      - Go To 4.

      No

      - Refer to **NO RESPONSE FROM HVAC (A/C HEATER CONTROL MODULE)** and perform the diagnostic procedure.

4. **CHECK FOR ADDITIONAL COMMUNICATION RELATED DTC's**
   1. With the scan tool, select Network Diagnostics.

      Is there more than one module with active DTC's "Logged Against" the HVAC?

      Yes

      - Replace/update the HVAC Control Module in accordance with the Service Information. Refer to **CONTROL, A/C AND HEATER, REMOVAL** .
      - Perform the HVAC VERIFICATION TEST. Refer to **ATC- 1500, 2500 & 3500 - HVAC VERIFICATION TEST** or **ATC - 3500 CAB & CHASSIS, 4500 & 5500 - HVAC**

VERIFICATION TEST or **MTC - 1500, 2500 & 3500 - HVAC VERIFICATION TEST** or **MTC - 3500 CAB & CHASSIS, 4500 & 5500 - HVAC VERIFICATION TEST** .

No

- Go To 5.

5. **CLEAR DTC IN MODULE SETTING FAULT**
   1. With the scan tool, select the module setting the DTC against the HVAC.
   2. Clear active DTC's.

   Is this DTC still active?

   Yes

   - Replace/update the module that set this DTC in accordance with the Service Information.
   - Perform the appropriate verification test for the module being replaced. If there is no verification test for the associated module, Perform the BODY VERIFICATION TEST. Refer to **BODY VERIFICATION TEST**.

   No

   - Go To 6.

6. **CYCLE IGNITION**
   1. Cycle the ignition from RUN to OFF three times ending with the key in the RUN position.

   Does this DTC become active?

   Yes

   - Go To 7.

   No

   - The condition is not present at this time. Using the wiring diagrams as a guide, check all related splices and connectors for signs of water intrusion, corrosion, pushed out or bent terminals, and correct pin tension.
   - Perform the appropriate VERIFICATION TEST.

7. **CHECK FOR ADDITIONAL LOST COMMUNICATION FAULTS**
   1. With the scan tool, select Network Diagnostics.

   Does the TIPM and other CAN Interior BUS (125K) modules show Lost Communication with the remaining CAN Interior BUS (125K) modules?

   Yes

- Go To 8.

No

- Replace/update the module that set this DTC in accordance with the Service Information.
- Perform the appropriate verification test for the module being replaced. If there is no verification test for the associated module, Perform the BODY VERIFICATION TEST. Refer to **BODY VERIFICATION TEST**.

8. **(D265) CAN INTERIOR BUS (+) (125K) CIRCUIT SHORTED TO VOLTAGE**

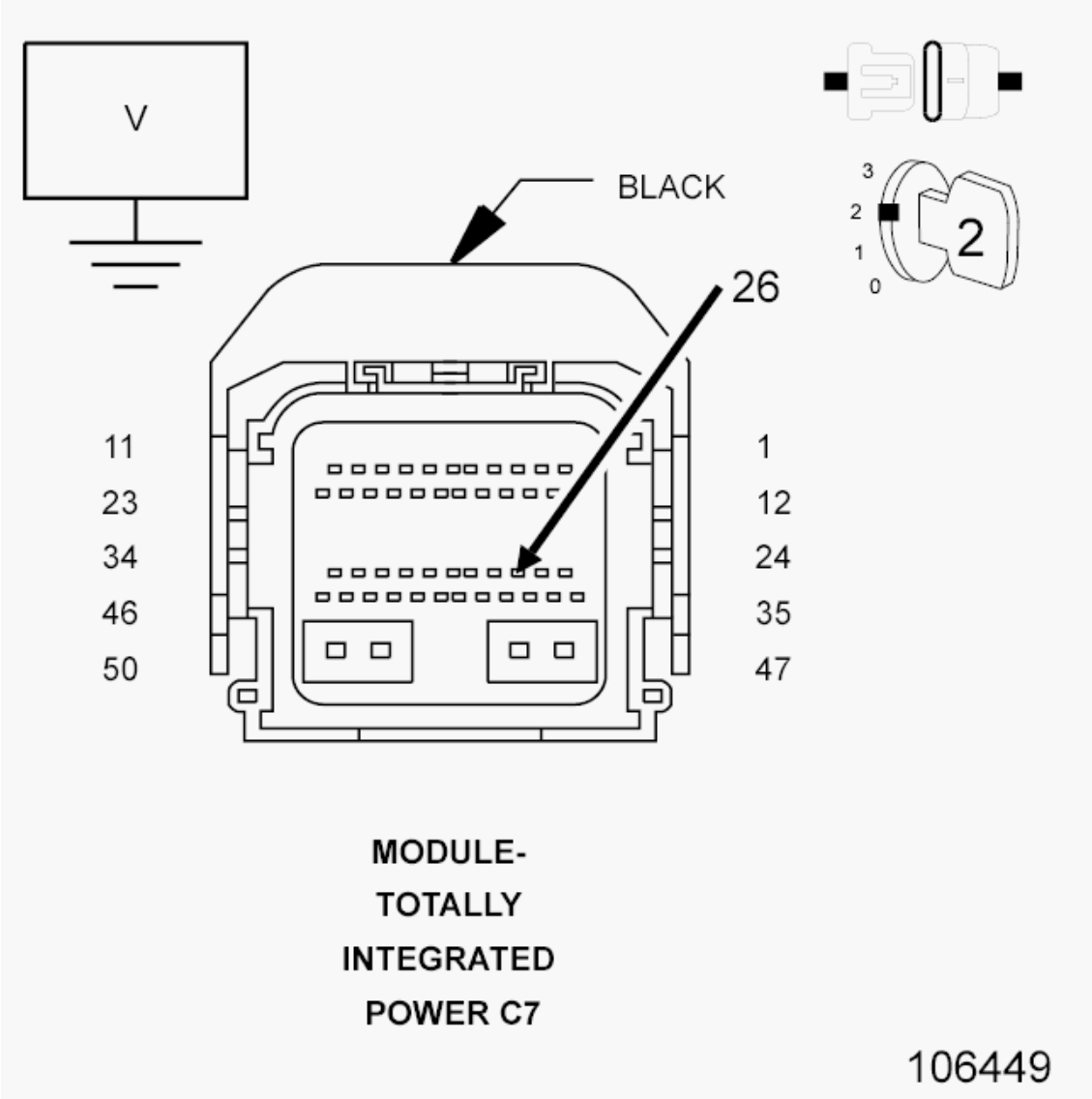

Fig. 170: Checking Can Interior Bus (+) (125K) Circuit For A Short To Voltage
Courtesy of CHRYSLER GROUP, LLC

1. Measure the voltage between the (D265) CAN Interior Bus (+) (125K) circuit and ground.

Is the voltage above 5.0 volts?

Yes

- Repair the short to voltage in the (D265) CAN Interior Bus (+) (125K) circuit.
- Perform the BODY VERIFICATION TEST. Refer to **BODY VERIFICATION TEST**.

No

- Go To 9.

9. **(D264) CAN INTERIOR BUS (-) (125K) CIRCUIT SHORTED TO GROUND**

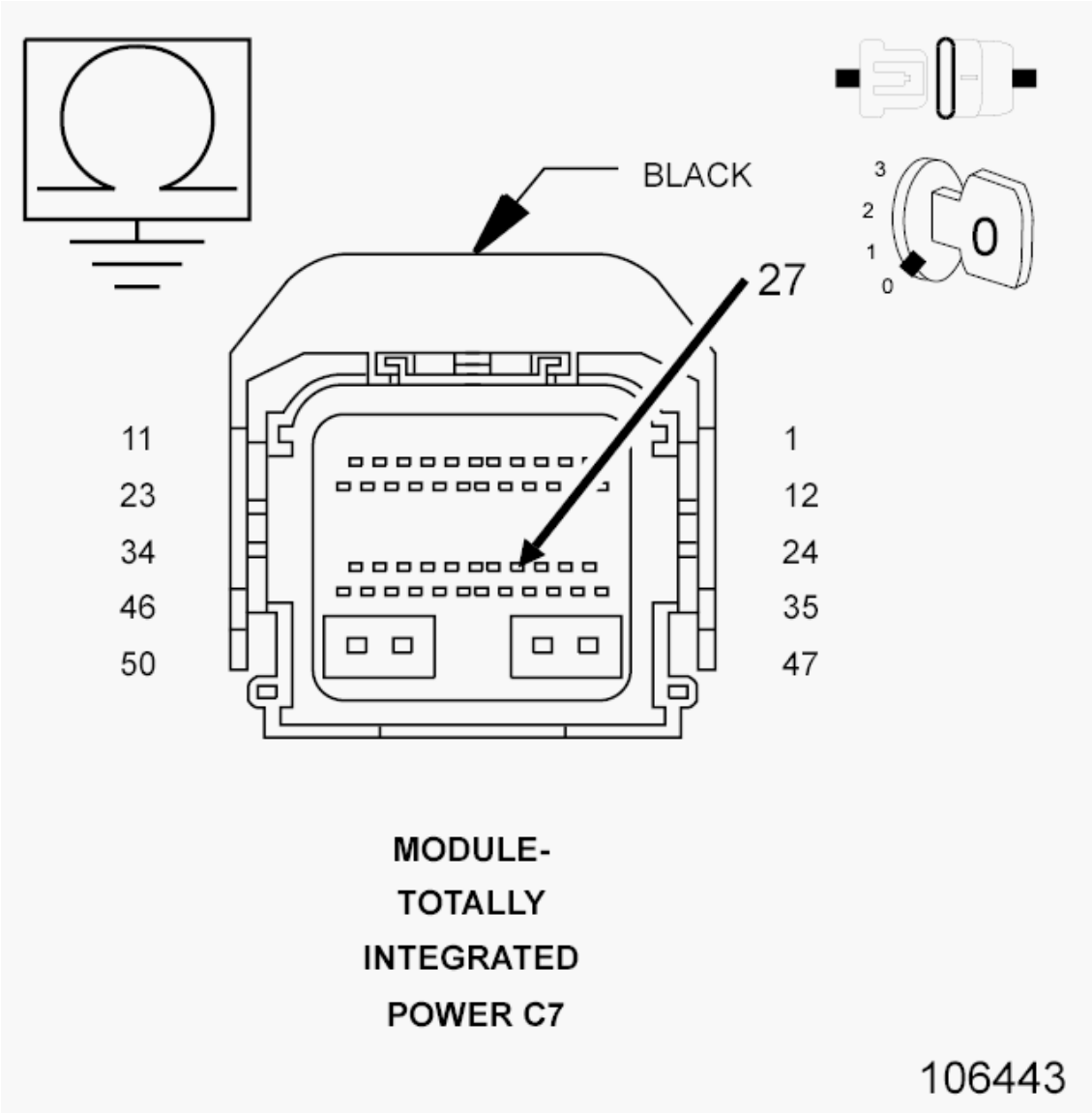

Fig. 171: Checking Can Interior Bus (-) (125K) Circuit For A Short To Ground
Courtesy of CHRYSLER GROUP, LLC

1. Turn the ignition off.
2. Measure the resistance between ground and the (D264) CAN Interior Bus (-) (125K) circuit.

   Is the resistance below 10k Ohms?

   Yes

   - Repair the short to ground in the (D264) CAN Interior Bus (-) (125K) circuit.
   - Perform the BODY VERIFICATION TEST. Refer to **BODY VERIFICATION TEST**.

   No

   - Replace/update the module that set this DTC in accordance with the Service Information.
   - Perform the appropriate verification test for the module being replaced. If there is no verification test for the associated module, Perform the BODY VERIFICATION TEST. Refer to **BODY VERIFICATION TEST**.

U0168-LOST COMMUNICATION WITH VEHICLE SECURITY CONTROL MODULE (WIRELESS IGNITION NODE OR WIN)

For a complete wiring diagram, **refer to appropriate SYSTEM WIRING DIAGRAMS article** .

THEORY OF OPERATION

The primary communication network between electronic control modules on this vehicle is the Controller Area Network (CAN) data bus system. The Controller Area Network (CAN) data bus allows all electronic modules connected to the bus to share information with each other. Regardless of whether a message originates from a module on the higher speed CAN C (500K) Bus or on the lower speed CAN Interior High Speed (IHS) (125K) Bus the message structure and layout is similar, which allows the Totally Integrated Power Module/Central GateWay (TIPM or TIPMCGW) to process and transfer messages between the CAN buses. The TIPM also stores Diagnostic Trouble Codes (DTC's) for certain bus network faults.

All modules transmit and receive messages over one of these buses. Data exchange between the modules is achieved by serial transmission of encoded data messages (a form of transmission in which data bits are sent sequentially, one at a time, over a single line). Each module can both send and receive serial data simultaneously. Each data bit of a CAN Bus message is carried over the bus as a voltage differential between the two bus circuits which, when strung together, form a message. Each module uses arbitration to sort the message priority if two competing messages are attempting to be broadcast at the same time. Corruption of a single bit within a message will corrupt the entire message. Each message contains a Cyclic Redundancy Check (CRC) which specifies the message size exactly. If the message detected conflicts with the CRC the ECU receiving it will determine the message to be an error and consider that communication has not been possible. Diagnosis of this condition using a lab scope may reveal activity that appears to be Bus data messages even if no actual communication is possible. Communication problems that affect the whole bus, as a result of opens and terminal push outs are more likely to occur on data busses that operate at a high speed than a data bus that operates at a lower speed.

When an open circuit or terminal push out occurs one or more modules can become isolated from the remainder

of the bus. The isolated module will attempt to communicate, but will not be able to receive messages or determine arbitration from other modules. Each time the isolated module attempts to communicate it alters the bus voltage on the intact bus circuit. Without functioning arbitration the isolated module alters the bus voltage while other bus messages are being sent thereby corrupting the messages on the remainder of the bus.

The CAN bus modules are connected in parallel to the two-wire bus using a twisted pair, where the wires are wrapped around each other to provide shielding from unwanted electromagnetic induction, thus preventing interference with the relatively low voltage signals being carried through them. While the CAN bus is operating (active), one of the bus wires will carry a higher voltage and is referred to as the CAN High or CAN bus (+) wire, while the other bus wire will carry a lower voltage and is referred to as the CAN Low or CAN bus (-) wire.

WHEN MONITORED:

With the ignition on.

Battery voltage between 10 and 16 volts.

Ignition Off Draw (IOD) fuse installed.

Totally Integrated Power Module (TIPM) is configured correctly.

SET CONDITION:

Bus messages not received from the Wireless Ignition Node (WIN) for approximately two to five seconds.

POSSIBLE CAUSES

Possible Causes
(D51) OR (D65) CAN C BUS (+) CIRCUIT SHORTED TO VOLTAGE
(D52) OR (D64) CAN C BUS (-) CIRCUIT SHORTED TO GROUND
DTC's RELATED TO BATTERY VOLTAGE, IGNITION, OR VIN MESSAGES
TIPM NOT CONFIGURED CORRECTLY
WIN POWER AND GROUND
WIRELESS IGNITION NODE (WIN)
MODULE THAT SET THIS DTC

DIAGNOSTIC TEST

1. **VERIFY DTC IS ACTIVE**

NOTE: **Make sure the IOD fuse is installed and battery voltage is between 10 and 16 volts before proceeding.**

1. With the scan tool, read active DTC's.

Is this DTC active?

Yes

- Go To 2.

No

- Refer to **STORED LOST COMMUNICATION DTC's** and perform the diagnostic procedure.

2. **CHECK FOR ANY OF THE FOLLOWING ACTIVE DTC's**
   1. With the scan tool, read all active DTC's from all modules.

      NOTE: Check for TIPM configuration, CAN C hardware electrical, VIN Missing/Mismatch, battery or ignition related DTC's.

      Does the scan tool display any active DTC's to the conditions listed above?

      Yes

      - Go to **DIAGNOSTIC CODE INDEX** and perform the appropriate diagnostic procedure.

      No

      - Go To 3.

3. **VERIFY THE WIN IS ACTIVE ON THE BUS**
   1. Turn the ignition on.
   2. With the scan tool, select Network Diagnostics.
   3. Verify the WIN is active on the bus.

      Is the WIN active on the bus?

      Yes

      - Go To 4.

      No

      - Refer to **NO RESPONSE FROM WIN (WIRELESS IGNITION NODE)** and perform the diagnostic procedure.

4. **CHECK FOR ADDITIONAL COMMUNICATION RELATED DTC's**
   1. With the scan tool, select Network Diagnostics.

      Is there more than one module with active DTC's "Logged Against" the WIN?

Yes

- Replace/update the WIN in accordance with the Service Information. Refer to **RECEIVER, WIRELESS IGNITION NODE, REMOVAL** .
- Perform the WIRELESS IGNITION NODE (WIN) VERIFICATION TEST. Refer to **WIRELESS IGNITION NODE (WIN) VERIFICATION** .

No

- Go To 5.

5. **CLEAR DTC IN MODULE SETTING FAULT**
   1. With the scan tool, select the module setting the DTC against the WIN.
   2. Clear active DTC's.

   Is this DTC still active?

   Yes

   - Replace/update the module that set this DTC in accordance with the Service Information.
   - Perform the appropriate verification test for the module being replaced. If there is no verification test for the associated module, Perform the BODY VERIFICATION TEST. Refer to **BODY VERIFICATION TEST**.

   No

   - Go To 6.

6. **CYCLE IGNITION**
   1. Cycle the ignition from RUN to OFF three times ending with the key in the RUN position.

   Does this DTC become active?

   Yes

   - Go To 7.

   No

   - The condition is not present at this time. Using the wiring diagrams as a guide, check all related splices and connectors for signs of water intrusion, corrosion, pushed out or bent terminals, and correct pin tension.
   - Perform the appropriate VERIFICATION TEST.

7. **CHECK FOR ADDITIONAL LOST COMMUNICATION FAULTS**
   1. With the scan tool, select Network Diagnostics.

   Does the TIPM and other CAN C BUS modules show Lost Communication with the remaining

CAN C BUS modules?

Yes

- Go To 8.

No

- Replace/update the module that set this DTC in accordance with the Service Information.
- Perform the appropriate verification test for the module being replaced. If there is no verification test for the associated module, Perform the BODY VERIFICATION TEST. Refer to **BODY VERIFICATION TEST**.

8. **(D52) OR (D65) CAN C BUS (+) CIRCUIT SHORTED TO VOLTAGE**

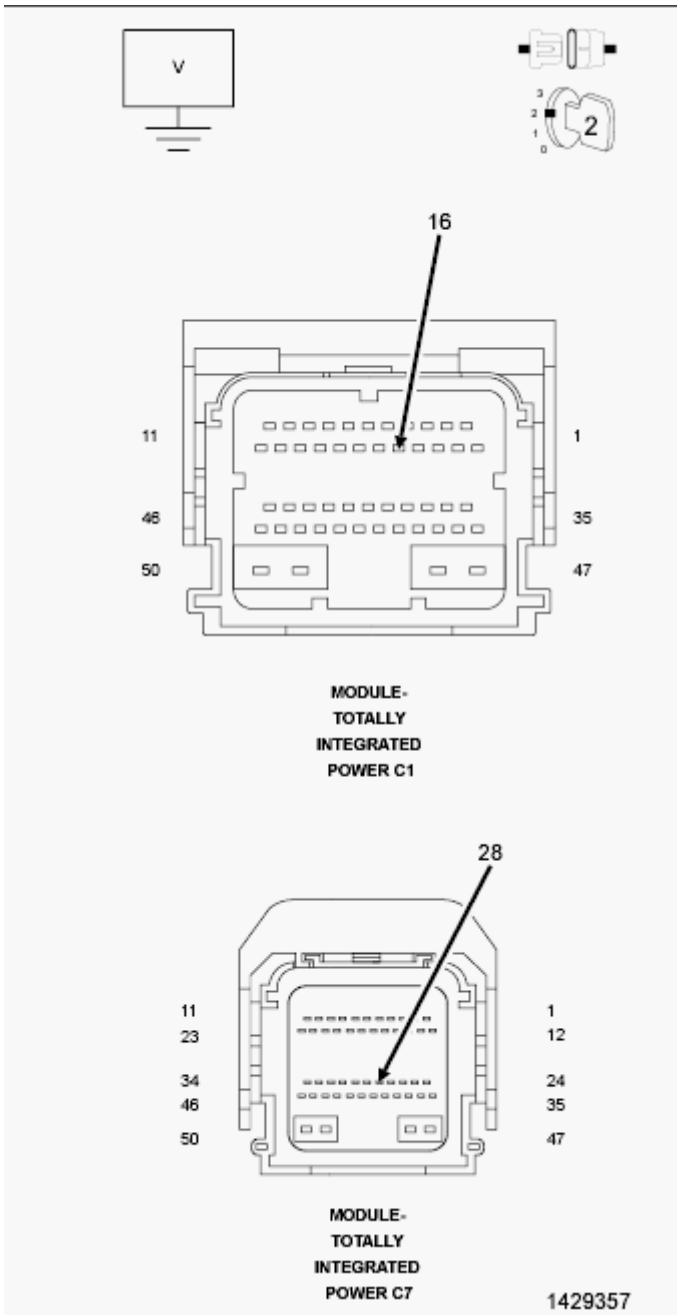

Fig. 172: Checking Can C Bus (+) Circuit For A Short To Voltage
Courtesy of CHRYSLER GROUP, LLC

1. Measure the voltage between the (D52) CAN C Bus (+) circuit and ground.
2. Measure the voltage between the (D65) CAN C Bus (+) circuit and ground.

   Is the voltage above 5.0 volts?

   Yes

   - Repair the short to voltage in the (D52) or (D65) CAN C Bus (+) circuit.

- Perform the BODY VERIFICATION TEST. Refer to **BODY VERIFICATION TEST**.

No

- Go To 9.

9. **(D51) OR (D64) CAN C BUS (-) CIRCUIT SHORTED TO GROUND**

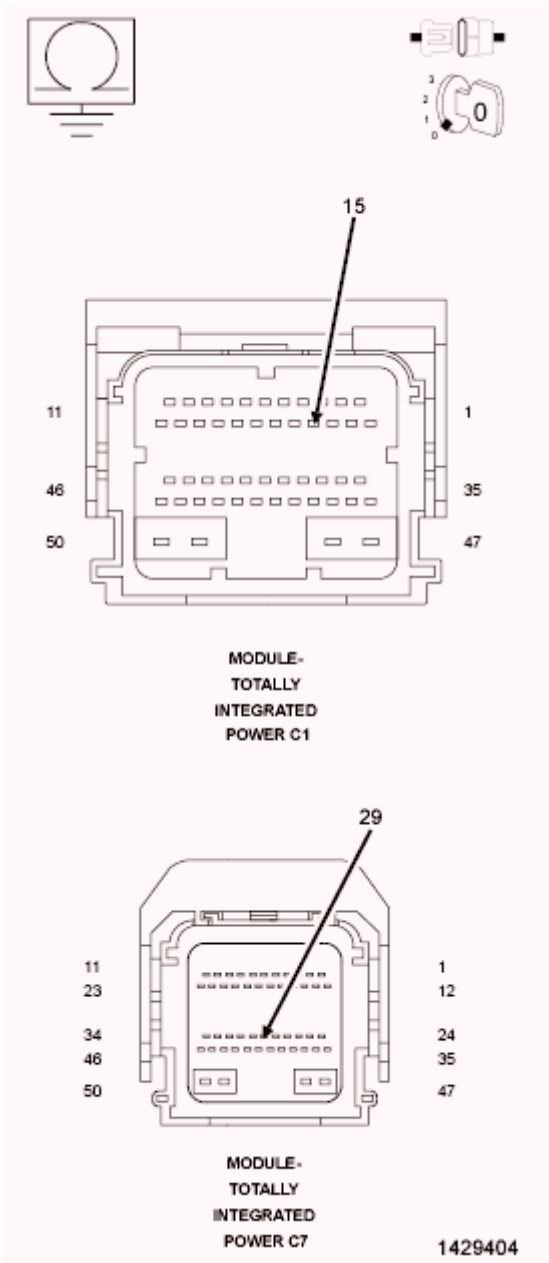

Fig. 173: Checking Can C Bus (-) Circuit For A Short To Ground
Courtesy of CHRYSLER GROUP, LLC

1. Turn the ignition off.

2. Measure the resistance between ground and the (D51) CAN C Bus (-) circuit.
3. Measure the resistance between ground and the (D64) CAN C Bus (-) circuit.

   Is the resistance below 10k Ohms?

   Yes

   - Repair the short to ground in the (D51) or (D64) CAN C Bus (-) circuit.
   - Perform the BODY VERIFICATION TEST. Refer to **BODY VERIFICATION TEST**.

   No

   - Replace/update the module that set this DTC in accordance with the Service Information.
   - Perform the appropriate verification test for the module being replaced. If there is no verification test for the associated module, Perform the BODY VERIFICATION TEST. Refer to **BODY VERIFICATION TEST**.

U0184-LOST COMMUNICATION WITH RADIO

For a complete wiring diagram, **refer to appropriate SYSTEM WIRING DIAGRAMS article** .

THEORY OF OPERATION

The primary communication network between electronic control modules on this vehicle is the Controller Area Network (CAN) data bus system. The Controller Area Network (CAN) data bus allows all electronic modules connected to the bus to share information with each other. Regardless of whether a message originates from a module on the higher speed CAN C (500K) Bus or on the lower speed CAN Interior High Speed (IHS) (125K) Bus the message structure and layout is similar, which allows the Totally Integrated Power Module/Central GateWay (TIPM or TIPMCGW) to process and transfer messages between the CAN buses. The TIPM also stores Diagnostic Trouble Codes (DTC's) for certain bus network faults.

All modules transmit and receive messages over one of these buses. Data exchange between the modules is achieved by serial transmission of encoded data messages (a form of transmission in which data bits are sent sequentially, one at a time, over a single line). Each module can both send and receive serial data simultaneously. Each data bit of a CAN Bus message is carried over the bus as a voltage differential between the two bus circuits which, when strung together, form a message. Each module uses arbitration to sort the message priority if two competing messages are attempting to be broadcast at the same time. Corruption of a single bit within a message will corrupt the entire message. Each message contains a Cyclic Redundancy Check (CRC) which specifies the message size exactly. If the message detected conflicts with the CRC the ECU receiving it will determine the message to be an error and consider that communication has not been possible. Diagnosis of this condition using a lab scope may reveal activity that appears to be Bus data messages even if no actual communication is possible. Communication problems that affect the whole bus, as a result of opens and terminal push outs are more likely to occur on data busses that operate at a high speed than a data bus that operates at a lower speed.

When an open circuit or terminal push out occurs one or more modules can become isolated from the remainder of the bus. The isolated module will attempt to communicate, but will not be able to receive messages or

determine arbitration from other modules. Each time the isolated module attempts to communicate it alters the bus voltage on the intact bus circuit. Without functioning arbitration the isolated module alters the bus voltage while other bus messages are being sent thereby corrupting the messages on the remainder of the bus.

The CAN bus modules are connected in parallel to the two-wire bus using a twisted pair, where the wires are wrapped around each other to provide shielding from unwanted electromagnetic induction, thus preventing interference with the relatively low voltage signals being carried through them. While the CAN bus is operating (active), one of the bus wires will carry a higher voltage and is referred to as the CAN High or CAN bus (+) wire, while the other bus wire will carry a lower voltage and is referred to as the CAN Low or CAN bus (-) wire.

WHEN MONITORED:

With the ignition on.

Battery voltage between 10 and 16 volts.

Ignition Off Draw (IOD) fuse installed.

Totally Integrated Power Module (TIPM) is configured correctly.

SET CONDITION:

Bus messages not received from the Radio for approximately two to five seconds.

POSSIBLE CAUSES

Possible Causes
(D265) CAN INTERIOR BUS (+) (125K) CIRCUIT SHORTED TO VOLTAGE
(D264) CAN INTERIOR BUS (-) (125K) CIRCUIT SHORTED TO GROUND
DTC's RELATED TO BATTERY VOLTAGE, IGNITION, OR VIN MESSAGES
TIPM NOT CONFIGURED CORRECTLY
RADIO POWER AND GROUND
RADIO
MODULE THAT SET THE DTC

DIAGNOSTIC TEST

1. **VERIFY DTC IS ACTIVE**

   NOTE: Make sure the IOD fuse is installed and battery voltage is between 10 and 16 volts before proceeding.

   1. With the scan tool, read active DTC's.

      Is this DTC active?

Yes

- Go To 2.

No

- Refer to **STORED LOST COMMUNICATION DTC's** and perform the diagnostic procedure.

2. **CHECK FOR ANY OF THE FOLLOWING ACTIVE DTC's**
   1. With the scan tool, read active DTC's from all modules.

      NOTE: Check for TIPM configuration, CAN Interior Bus hardware electrical, VIN Missing/Mismatch, battery or ignition related DTC's.

      Does the scan tool display any active DTC's to the conditions listed above?

      Yes

      - Go to **DIAGNOSTIC CODE INDEX** and perform the appropriate diagnostic procedure.

      No

      - Go To 3.

3. **VERIFY THE RADIO IS ACTIVE ON THE BUS**
   1. Turn the ignition on.
   2. With the scan tool, select Network Diagnostics.
   3. Verify the Radio is active on the bus.

      Is the Radio active on the bus?

      Yes

      - Go To 4.

      No

      - Refer to **NO RESPONSE FROM RADIO** and perform the diagnostic procedure.

4. **CHECK FOR ADDITIONAL COMMUNICATION RELATED DTC's**
   1. With the scan tool, select Network Diagnostics.

      Is there more than one module with active DTC's "Logged Against" the Radio?

      Yes

      - Replace/update the Radio in accordance with the Service Information. Refer to **RADIO,**

REMOVAL .
- Perform the BODY VERIFICATION TEST. Refer to **BODY VERIFICATION TEST**.

No

- Go To 5.

5. **CLEAR DTC IN MODULE SETTING FAULT**
   1. With the scan tool, select the module setting the DTC against the Radio.
   2. Clear active DTC's.

   Is this DTC still active?

   Yes

   - Replace/update the module that set this DTC in accordance with the Service Information.
   - Perform the appropriate verification test for the module being replaced. If there is no verification test for the associated module, Perform the BODY VERIFICATION TEST. Refer to **BODY VERIFICATION TEST**.

   No

   - Go To 6.

6. **CYCLE IGNITION**
   1. Cycle the ignition from RUN to OFF three times ending with the key in the RUN position.

   Does this DTC become active?

   Yes

   - Go To 7.

   No

   - The condition is not present at this time. Using the wiring diagrams as a guide, check all related splices and connectors for signs of water intrusion, corrosion, pushed out or bent terminals, and correct pin tension.
   - Perform the appropriate VERIFICATION TEST.

7. **CHECK FOR ADDITIONAL LOST COMMUNICATION FAULTS**
   1. With the scan tool, select Network Diagnostics.

   Does the TIPM and other CAN Interior BUS (125K) modules show Lost Communication with the remaining CAN Interior BUS (125K) modules?

   Yes

- Go To 8.

No

- Replace/update the module that set this DTC in accordance with the Service Information.
- Perform the appropriate verification test for the module being replaced. If there is no verification test for the associated module, Perform the BODY VERIFICATION TEST. Refer to **BODY VERIFICATION TEST**.

8. **(D265) CAN INTERIOR BUS (+) (125K) CIRCUIT SHORTED TO VOLTAGE**

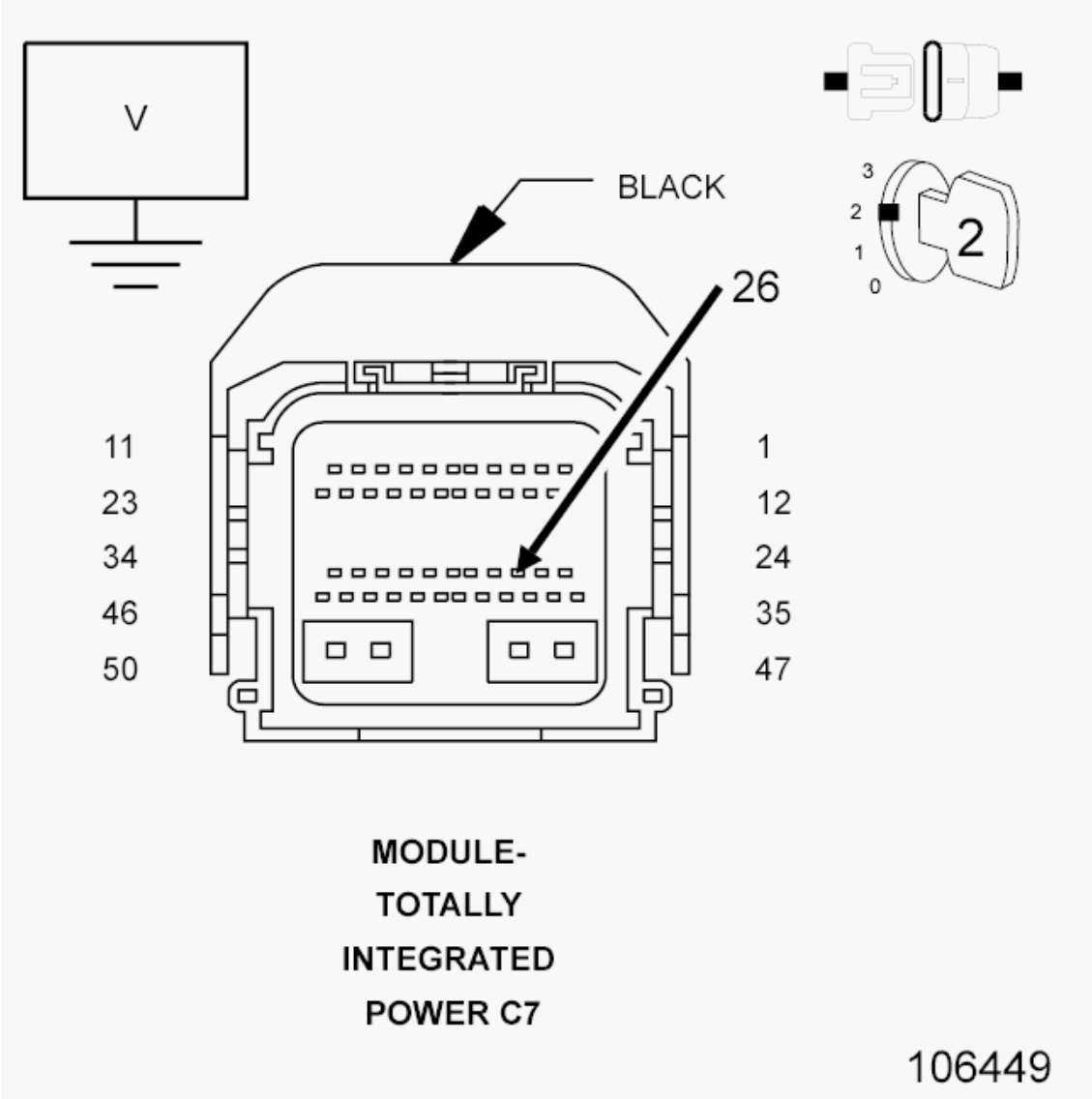

Fig. 174: Checking Can Interior Bus (+) (125K) Circuit For A Short To Voltage
Courtesy of CHRYSLER GROUP, LLC

1. Measure the voltage between the (D265) CAN Interior Bus (+) (125K) circuit and ground.

Is the voltage above 5.0 volts?

Yes

- Repair the short to voltage in the (D265) CAN Interior Bus (+) (125K) circuit.
- Perform the BODY VERIFICATION TEST. Refer to **BODY VERIFICATION TEST**.

No

- Go To 9.

9. **(D264) CAN INTERIOR BUS (-) (125K) CIRCUIT SHORTED TO GROUND**

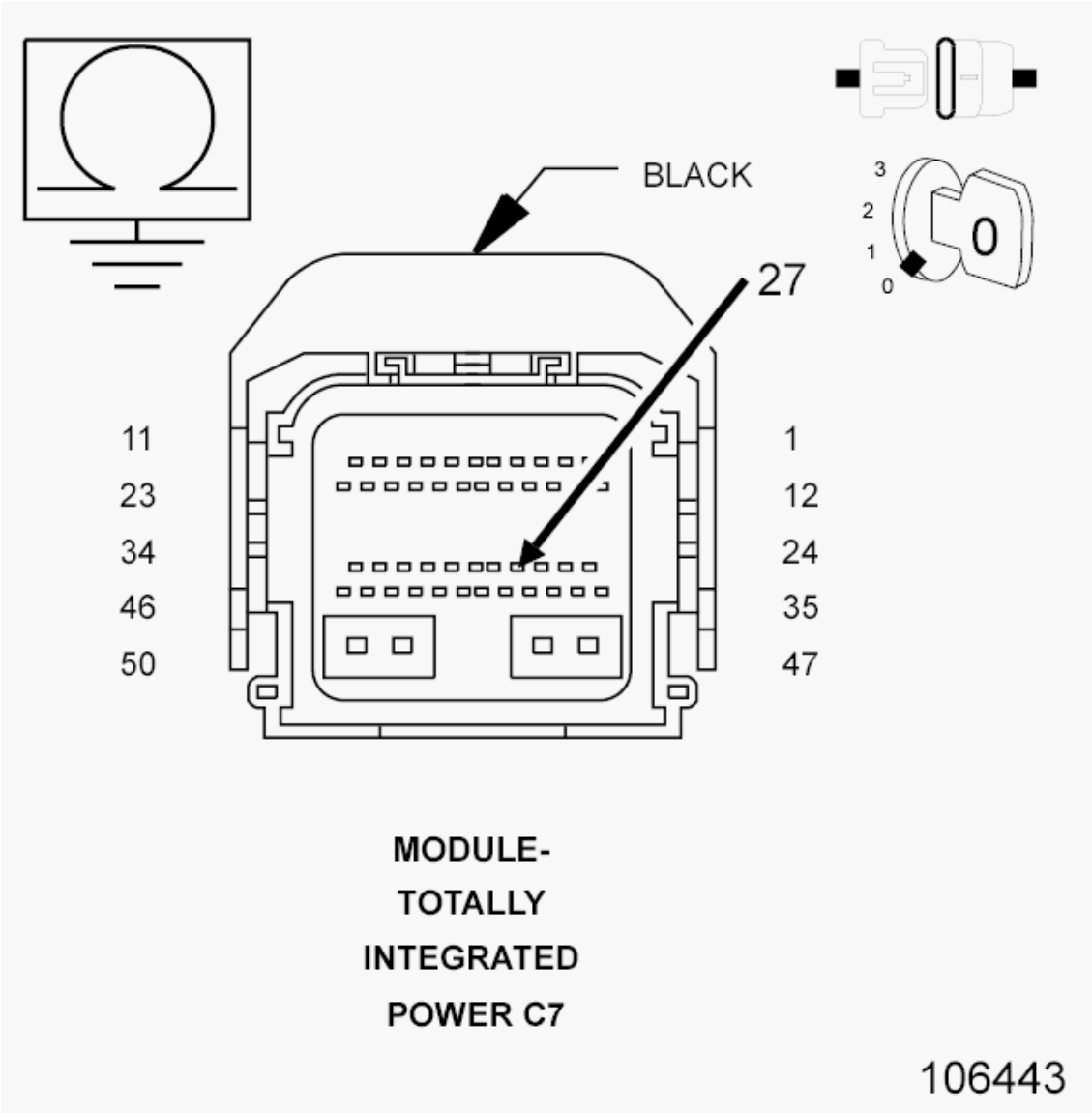

Fig. 175: Checking Can Interior Bus (-) (125K) Circuit For A Short To Ground
Courtesy of CHRYSLER GROUP, LLC

1. Turn the ignition off.
2. Measure the resistance between ground and the (D264) CAN Interior Bus (-) (125K) circuit.

   Is the resistance below 10k Ohms?

   Yes

   - Repair the short to ground in the (D264) CAN Interior Bus (-) (125K) circuit.
   - Perform the BODY VERIFICATION TEST. Refer to **BODY VERIFICATION TEST**.

   No

   - Replace/update the module that set this DTC in accordance with the Service Information.
   - Perform the appropriate verification test for the module being replaced. If there is no verification test for the associated module, Perform the BODY VERIFICATION TEST. Refer to **BODY VERIFICATION TEST**.

U0186-LOST COMMUNICATION WITH AUDIO AMPLIFIER (AMP)

For a complete wiring diagram, **refer to appropriate SYSTEM WIRING DIAGRAMS article** .

THEORY OF OPERATION

The primary communication network between electronic control modules on this vehicle is the Controller Area Network (CAN) data bus system. The Controller Area Network (CAN) data bus allows all electronic modules connected to the bus to share information with each other. Regardless of whether a message originates from a module on the higher speed CAN C (500K) Bus or on the lower speed CAN Interior High Speed (IHS) (125K) Bus the message structure and layout is similar, which allows the Totally Integrated Power Module/Central GateWay (TIPM or TIPMCGW) to process and transfer messages between the CAN buses. The TIPM also stores Diagnostic Trouble Codes (DTC's) for certain bus network faults.

All modules transmit and receive messages over one of these buses. Data exchange between the modules is achieved by serial transmission of encoded data messages (a form of transmission in which data bits are sent sequentially, one at a time, over a single line). Each module can both send and receive serial data simultaneously. Each data bit of a CAN Bus message is carried over the bus as a voltage differential between the two bus circuits which, when strung together, form a message. Each module uses arbitration to sort the message priority if two competing messages are attempting to be broadcast at the same time. Corruption of a single bit within a message will corrupt the entire message. Each message contains a Cyclic Redundancy Check (CRC) which specifies the message size exactly. If the message detected conflicts with the CRC the ECU receiving it will determine the message to be an error and consider that communication has not been possible. Diagnosis of this condition using a lab scope may reveal activity that appears to be Bus data messages even if no actual communication is possible. Communication problems that affect the whole bus, as a result of opens and terminal push outs are more likely to occur on data busses that operate at a high speed than a data bus that operates at a lower speed.

When an open circuit or terminal push out occurs one or more modules can become isolated from the remainder of the bus. The isolated module will attempt to communicate, but will not be able to receive messages or

determine arbitration from other modules. Each time the isolated module attempts to communicate it alters the bus voltage on the intact bus circuit. Without functioning arbitration the isolated module alters the bus voltage while other bus messages are being sent thereby corrupting the messages on the remainder of the bus.

The CAN bus modules are connected in parallel to the two-wire bus using a twisted pair, where the wires are wrapped around each other to provide shielding from unwanted electromagnetic induction, thus preventing interference with the relatively low voltage signals being carried through them. While the CAN bus is operating (active), one of the bus wires will carry a higher voltage and is referred to as the CAN High or CAN bus (+) wire, while the other bus wire will carry a lower voltage and is referred to as the CAN Low or CAN bus (-) wire.

WHEN MONITORED:

With the ignition on.

Battery voltage between 10 and 16 volts.

Ignition Off Draw (IOD) fuse installed.

Totally Integrated Power Module (TIPM) is configured correctly.

SET CONDITION:

Bus messages not received from the Amplifier (AMP) for approximately two to five seconds.

POSSIBLE CAUSES

Possible Causes
(D265) CAN INTERIOR BUS (+) (125K) CIRCUIT SHORTED TO VOLTAGE
(D264) CAN INTERIOR BUS (-) (125K) CIRCUIT SHORTED TO GROUND
DTC's RELATED TO BATTERY VOLTAGE, IGNITION, OR VIN MESSAGES
TIPM NOT CONFIGURED CORRECTLY
AMP POWER AND GROUND
AMPLIFIER (AMP)
MODULE THAT SET THE DTC

DIAGNOSTIC TEST

1. **VERIFY DTC IS ACTIVE**

NOTE: **Make sure the IOD fuse is installed and battery voltage is between 10 and 16 volts before proceeding.**

1. With the scan tool, read active DTC's.

   Is this DTC active?

Yes

- Go To 2.

No

- Refer to **STORED LOST COMMUNICATION DTC's** and perform the diagnostic procedure.

2. **CHECK FOR ANY OF THE FOLLOWING ACTIVE DTC's**
   1. With the scan tool, read active DTC's from all modules.

      NOTE: Check for TIPM configuration, CAN Interior Bus hardware electrical, VIN Missing/Mismatch, battery or ignition related DTC's.

      Does the scan tool display any active DTC's to the conditions listed above?

      Yes

      - Go to **DIAGNOSTIC CODE INDEX** and perform the appropriate diagnostic procedure.

      No

      - Go To 3.

3. **VERIFY THE AMP IS ACTIVE ON THE BUS**
   1. Turn the ignition on.
   2. With the scan tool, select Network Diagnostics.
   3. Verify the AMP is active on the bus.

      Is the AMP active on the bus?

      Yes

      - Go To 4.

      No

      - Refer to **NO RESPONSE FROM AMP (AMPLIFIER)** and perform the diagnostic procedure.

4. **CHECK FOR ADDITIONAL COMMUNICATION RELATED DTC's**
   1. With the scan tool, select Network Diagnostics.

      Is there more than one module with active DTC's "Logged Against" the AMP?

      Yes

- Replace/update the AMP in accordance with the Service Information. Refer to **AMPLIFIER, REMOVAL** .
- Perform the BODY VERIFICATION TEST. Refer to **BODY VERIFICATION TEST**.

No

- Go To 5.

5. **CLEAR DTC IN MODULE SETTING FAULT**
   1. With the scan tool, select the module setting the DTC against the AMP.
   2. Clear active DTC's.

      Is this DTC still active?

      Yes

      - Replace/update the module that set this DTC in accordance with the Service Information.
      - Perform the appropriate verification test for the module being replaced. If there is no verification test for the associated module, Perform the BODY VERIFICATION TEST. Refer to **BODY VERIFICATION TEST**.

      No

      - Go To 6.

6. **CYCLE IGNITION**
   1. Cycle the ignition from RUN to OFF three times ending with the key in the RUN position.

      Does this DTC become active?

      Yes

      - Go To 7.

      No

      - The condition is not present at this time. Using the wiring diagrams as a guide, check all related splices and connectors for signs of water intrusion, corrosion, pushed out or bent terminals, and correct pin tension.
      - Perform the appropriate VERIFICATION TEST.

7. **CHECK FOR ADDITIONAL LOST COMMUNICATION FAULTS**
   1. With the scan tool, select Network Diagnostics.

      Does the TIPM and other CAN Interior BUS (125K) modules show Lost Communication with the remaining CAN Interior BUS (125K) modules?

Yes

- Go To 8.

No

- Replace/update the module that set this DTC in accordance with the Service Information.
- Perform the appropriate verification test for the module being replaced. If there is no verification test for the associated module, Perform the BODY VERIFICATION TEST. Refer to **BODY VERIFICATION TEST**.

8. **(D265) CAN INTERIOR BUS (+) (125K) CIRCUIT SHORTED TO VOLTAGE**

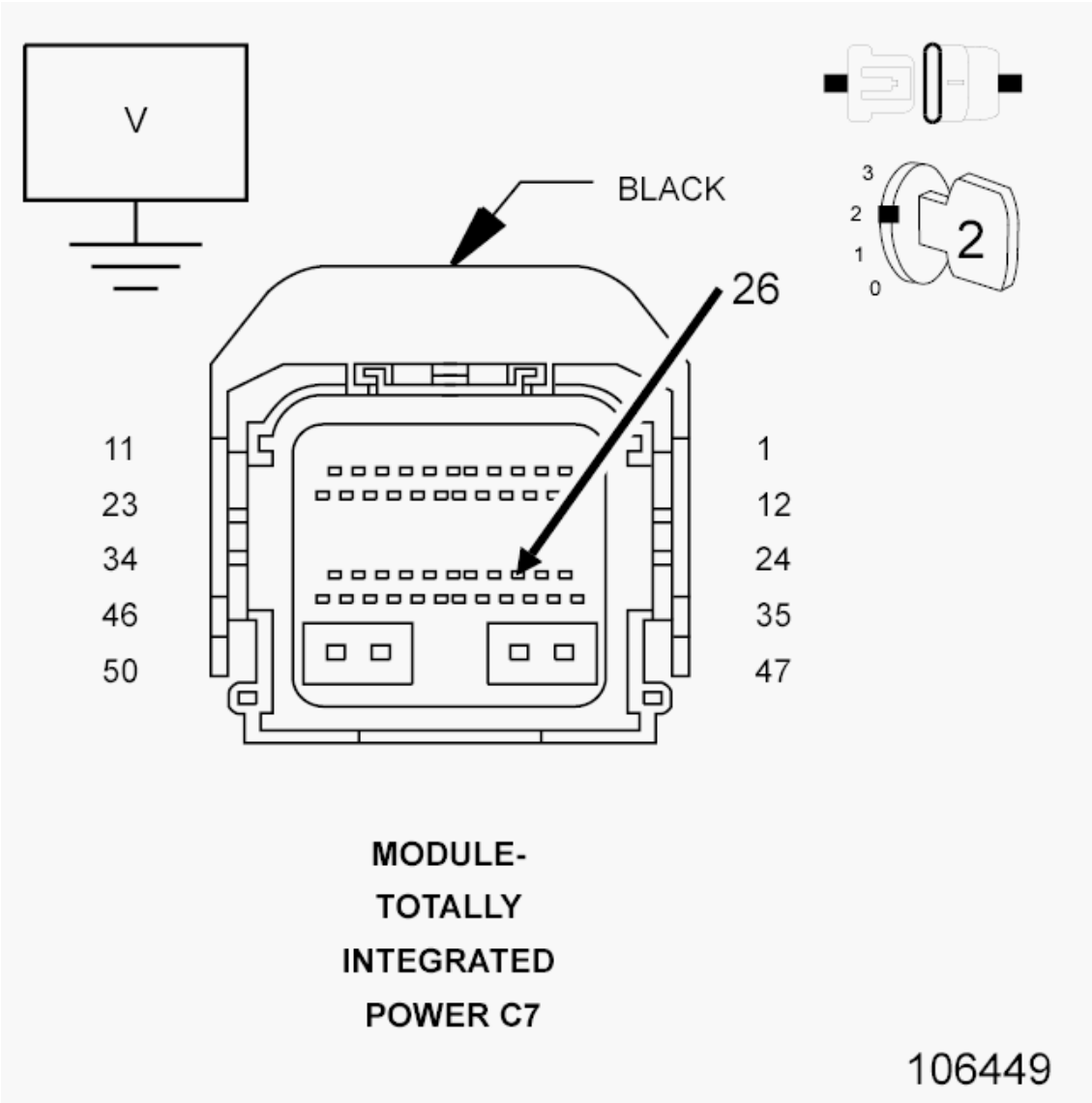

Fig. 176: Checking Can Interior Bus (+) (125K) Circuit For A Short To Voltage
Courtesy of CHRYSLER GROUP, LLC

1. Measure the voltage between the (D265) CAN Interior Bus (+) (125K) circuit and ground.

   Is the voltage above 5.0 volts?

   Yes

   - Repair the short to voltage in the (D265) CAN Interior Bus (+) (125K) circuit.
   - Perform the BODY VERIFICATION TEST. Refer to **BODY VERIFICATION TEST**.

   No

   - Go To 9.

9. **(D264) CAN INTERIOR BUS (-) (125K) CIRCUIT SHORTED TO GROUND**

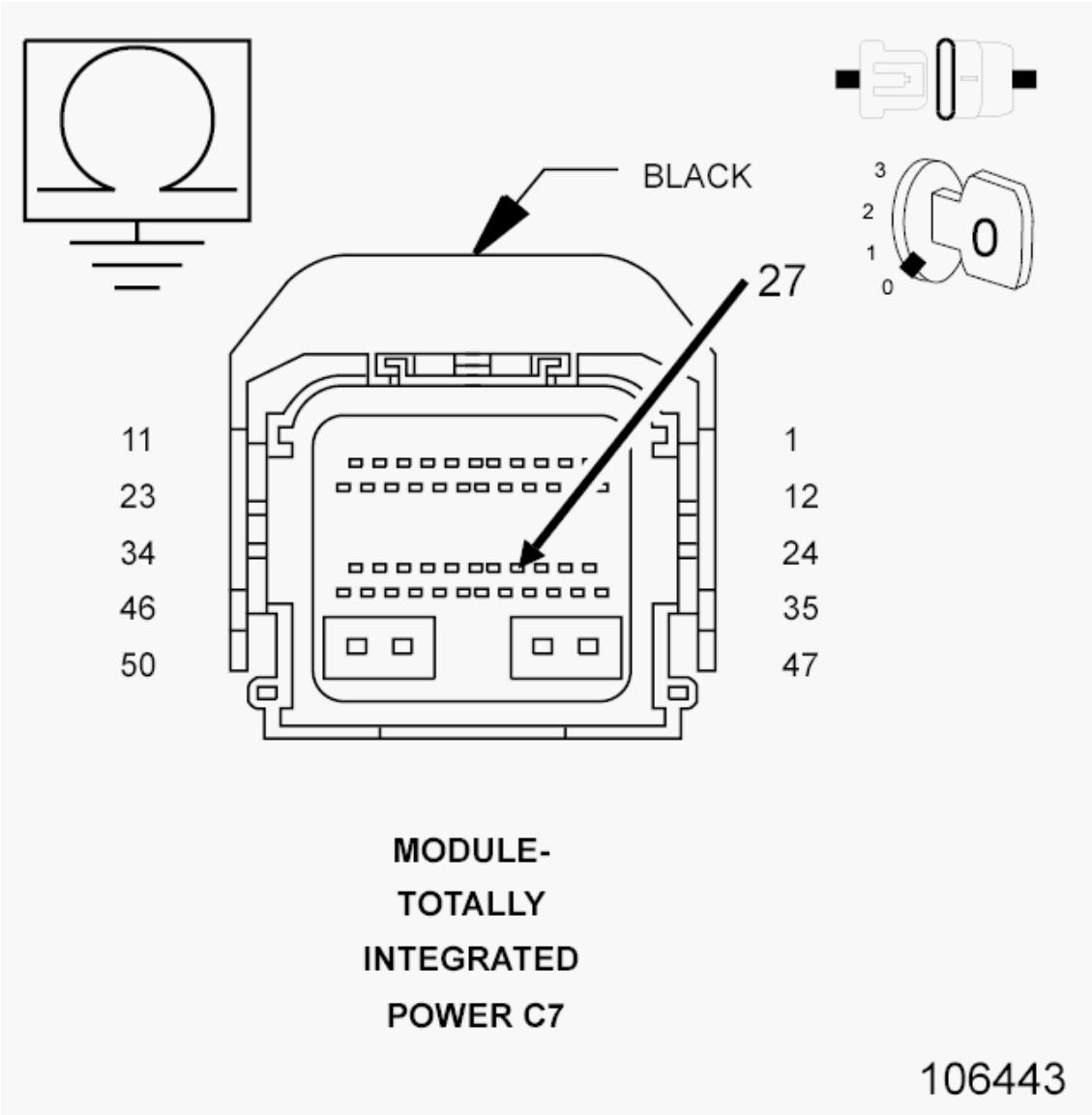

Fig. 177: Checking Can Interior Bus (-) (125K) Circuit For A Short To Ground
Courtesy of CHRYSLER GROUP, LLC

1. Turn the ignition off.
2. Measure the resistance between ground and the (D264) CAN Interior Bus (-) (125K) circuit.

   Is the resistance below 10k Ohms?

   Yes

   - Repair the short to ground in the (D264) CAN Interior Bus (-) (125K) circuit.
   - Perform the BODY VERIFICATION TEST. Refer to **BODY VERIFICATION TEST**.

   No

   - Replace/update the module that set this DTC in accordance with the Service Information.
   - Perform the appropriate verification test for the module being replaced. If there is no verification test for the associated module, Perform the BODY VERIFICATION TEST. Refer to **BODY VERIFICATION TEST**.

U0197-LOST COMMUNICATION WITH HANDS FREE PHONE MODULE (HFM)

For a complete wiring diagram, **refer to appropriate SYSTEM WIRING DIAGRAMS article** .

THEORY OF OPERATION

The primary communication network between electronic control modules on this vehicle is the Controller Area Network (CAN) data bus system. The Controller Area Network (CAN) data bus allows all electronic modules connected to the bus to share information with each other. Regardless of whether a message originates from a module on the higher speed CAN C (500K) Bus or on the lower speed CAN Interior High Speed (IHS) (125K) Bus the message structure and layout is similar, which allows the Totally Integrated Power Module/Central GateWay (TIPM or TIPMCGW) to process and transfer messages between the CAN buses. The TIPM also stores Diagnostic Trouble Codes (DTC's) for certain bus network faults.

All modules transmit and receive messages over one of these buses. Data exchange between the modules is achieved by serial transmission of encoded data messages (a form of transmission in which data bits are sent sequentially, one at a time, over a single line). Each module can both send and receive serial data simultaneously. Each data bit of a CAN Bus message is carried over the bus as a voltage differential between the two bus circuits which, when strung together, form a message. Each module uses arbitration to sort the message priority if two competing messages are attempting to be broadcast at the same time. Corruption of a single bit within a message will corrupt the entire message. Each message contains a Cyclic Redundancy Check (CRC) which specifies the message size exactly. If the message detected conflicts with the CRC the ECU receiving it will determine the message to be an error and consider that communication has not been possible. Diagnosis of this condition using a lab scope may reveal activity that appears to be Bus data messages even if no actual communication is possible. Communication problems that affect the whole bus, as a result of opens and terminal push outs are more likely to occur on data busses that operate at a high speed than a data bus that operates at a lower speed.

When an open circuit or terminal push out occurs one or more modules can become isolated from the remainder of the bus. The isolated module will attempt to communicate, but will not be able to receive messages or determine arbitration from other modules. Each time the isolated module attempts to communicate it alters the bus voltage on the intact bus circuit. Without functioning arbitration the isolated module alters the bus voltage while other bus messages are being sent thereby corrupting the messages on the remainder of the bus.

The CAN bus modules are connected in parallel to the two-wire bus using a twisted pair, where the wires are wrapped around each other to provide shielding from unwanted electromagnetic induction, thus preventing interference with the relatively low voltage signals being carried through them. While the CAN bus is operating (active), one of the bus wires will carry a higher voltage and is referred to as the CAN High or CAN bus (+) wire, while the other bus wire will carry a lower voltage and is referred to as the CAN Low or CAN bus (-) wire.

WHEN MONITORED:

With the ignition on.

Battery voltage between 10 and 16 volts.

Ignition Off Draw (IOD) fuse installed.

Totally Integrated Power Module (TIPM) is configured correctly.

SET CONDITION:

Bus messages not received from the HFM for approximately two to five seconds.

POSSIBLE CAUSES

Possible Causes
(D265) CAN INTERIOR BUS (+) (125K) CIRCUIT SHORTED TO VOLTAGE
(D264) CAN INTERIOR BUS (-) (125K) CIRCUIT SHORTED TO GROUND
DTC's RELATED TO BATTERY VOLTAGE, IGNITION, OR VIN MESSAGES
TIPM NOT CONFIGURED CORRECTLY
HFM POWER AND GROUND
HANDS FREE PHONE MODULE (HFM)
MODULE THAT SET THE DTC

DIAGNOSTIC TEST

1. **VERIFY DTC IS ACTIVE**

   NOTE: Make sure the IOD fuse is installed and battery voltage is between 10 and 16 volts before proceeding.

   1. With the scan tool, read active DTC's.

Is this DTC active?

Yes

- Go To 2.

No

- Refer to **STORED LOST COMMUNICATION DTC's** and perform the diagnostic procedure.

2. **CHECK FOR ANY OF THE FOLLOWING ACTIVE DTC's**
   1. With the scan tool, read active DTC's from all modules.

      NOTE: Check for TIPM configuration, CAN Interior Bus hardware electrical, VIN Missing/Mismatch, battery or ignition related DTC's.

      Does the scan tool display any active DTC's to the conditions listed above?

      Yes

      - Go to **DIAGNOSTIC CODE INDEX** and perform the appropriate diagnostic procedure.

      No

      - Go To 3.

3. **VERIFY THE HFM IS ACTIVE ON THE BUS**
   1. Turn the ignition on.
   2. With the scan tool, select Network Diagnostics.
   3. Verify the HFM is active on the bus.

      Is the HFM active on the bus?

      Yes

      - Go To 4.

      No

      - Refer to **NO RESPONSE FROM HFM (HANDS FREE MODULE)** and perform the diagnostic procedure.

4. **CHECK FOR ADDITIONAL COMMUNICATION RELATED DTC's**
   1. With the scan tool, select Network Diagnostics.

      Is there more than one module with active DTC's "Logged Against" the HFM?

Yes

- Replace/update the HFM in accordance with the Service Information. Refer to **MODULE, HANDS FREE (HFM), REMOVAL** .
- Perform the BODY VERIFICATION TEST. Refer to **BODY VERIFICATION TEST**.

No

- Go To 5.

5. **CLEAR DTC IN MODULE SETTING FAULT**
   1. With the scan tool, select the module setting the DTC against the HFM.
   2. Clear active DTC's.

   Is this DTC still active?

   Yes

   - Replace/update the module that set this DTC in accordance with the Service Information.
   - Perform the appropriate verification test for the module being replaced. If there is no verification test for the associated module, Perform the BODY VERIFICATION TEST. Refer to **BODY VERIFICATION TEST**.

   No

   - Go To 6.

6. **CYCLE IGNITION**
   1. Cycle the ignition from RUN to OFF three times ending with the key in the RUN position.

   Does this DTC become active?

   Yes

   - Go To 7.

   No

   - The condition is not present at this time. Using the wiring diagrams as a guide, check all related splices and connectors for signs of water intrusion, corrosion, pushed out or bent terminals, and correct pin tension.
   - Perform the appropriate VERIFICATION TEST.

7. **CHECK FOR ADDITIONAL LOST COMMUNICATION FAULTS**
   1. With the scan tool, select Network Diagnostics.

   Does the TIPM and other CAN Interior BUS (125K) modules show Lost Communication with the remaining CAN Interior BUS (125K) modules?

Yes

- Go To 8.

No

- Replace/update the module that set this DTC in accordance with the Service Information.
- Perform the appropriate verification test for the module being replaced. If there is no verification test for the associated module, Perform the BODY VERIFICATION TEST. Refer to **BODY VERIFICATION TEST**.

8. **(D265) CAN INTERIOR BUS (+) (125K) CIRCUIT SHORTED TO VOLTAGE**

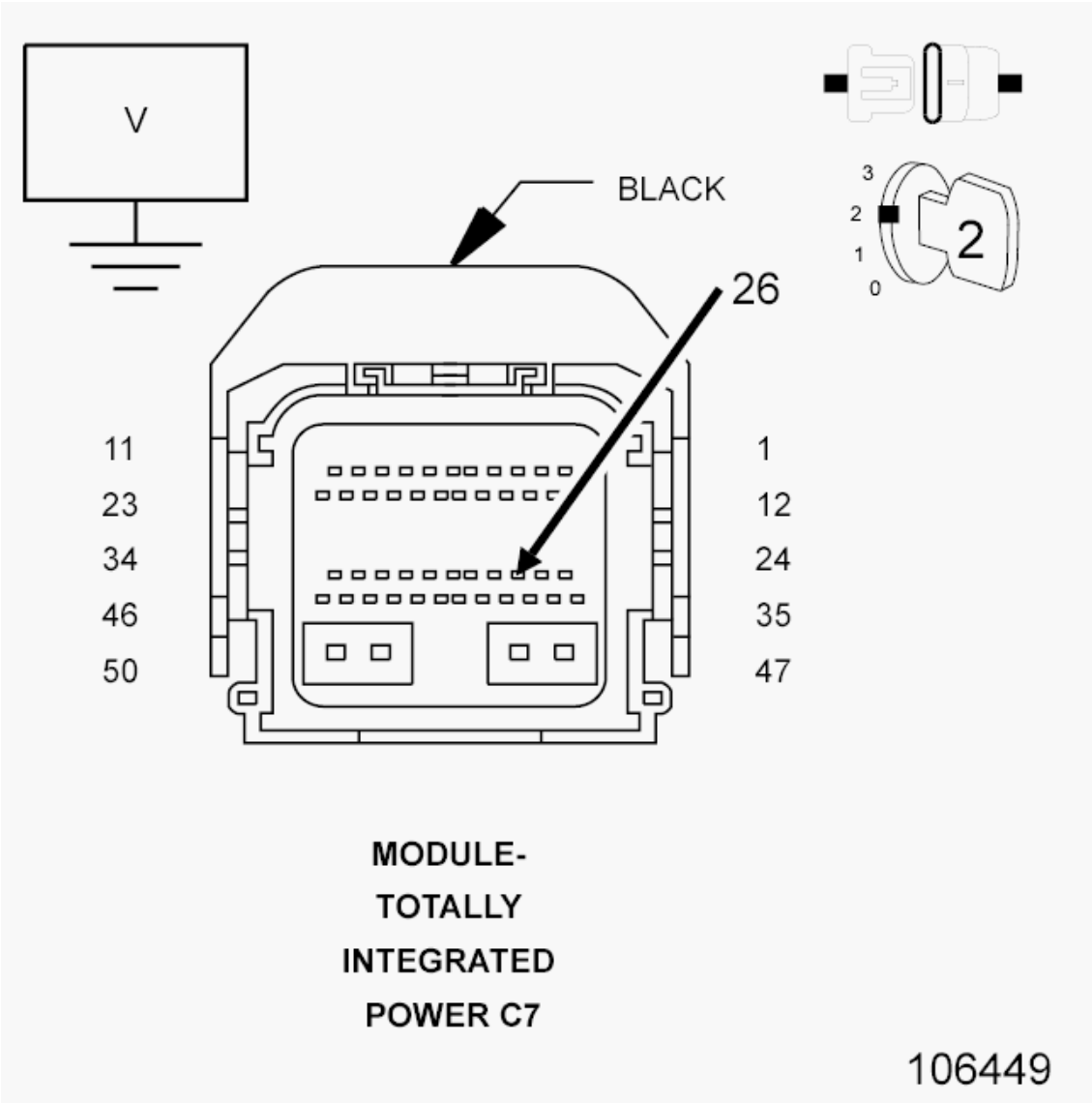

Fig. 178: Checking Can Interior Bus (+) (125K) Circuit For A Short To Voltage
Courtesy of CHRYSLER GROUP, LLC

1. Measure the voltage between the (D265) CAN Interior Bus (+) (125K) circuit and ground.

   Is the voltage above 5.0 volts?

   Yes

   - Repair the short to voltage in the (D265) CAN Interior Bus (+) (125K) circuit.
   - Perform the BODY VERIFICATION TEST. Refer to **BODY VERIFICATION TEST**.

   No

   - Go To 9.

9. **(D264) CAN INTERIOR BUS (-) (125K) CIRCUIT SHORTED TO GROUND**

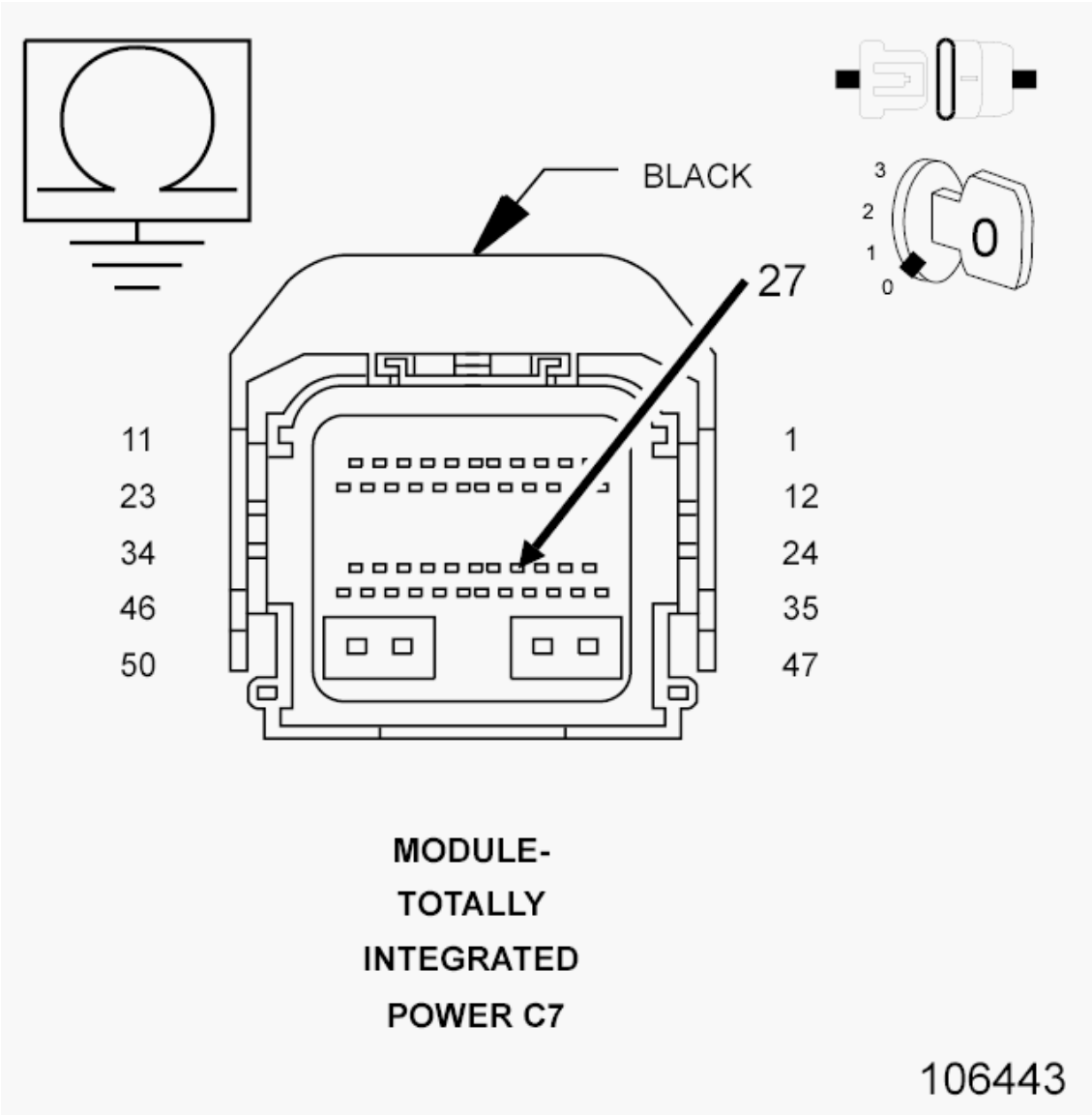

Fig. 179: Checking Can Interior Bus (-) (125K) Circuit For A Short To Ground
Courtesy of CHRYSLER GROUP, LLC

1. Turn the ignition off.
2. Measure the resistance between ground and the (D264) CAN Interior Bus (-) (125K) circuit.

   Is the resistance below 10k Ohms?

   Yes

   - Repair the short to ground in the (D264) CAN Interior Bus (-) (125K) circuit.
   - Perform the BODY VERIFICATION TEST. Refer to **BODY VERIFICATION TEST**.

   No

   - Replace/update the module that set this DTC in accordance with the Service Information.
   - Perform the appropriate verification test for the module being replaced. If there is no verification test for the associated module, Perform the BODY VERIFICATION TEST. Refer to **BODY VERIFICATION TEST**.

U0203-LOST COMMUNICATION WITH DOOR MODULE FRONT LEFT (DMFL) (DRIVER DOOR MODULE)

For a complete wiring diagram, **refer to appropriate SYSTEM WIRING DIAGRAMS article** .

THEORY OF OPERATION

The primary communication network between electronic control modules on this vehicle is the Controller Area Network (CAN) data bus system. The Controller Area Network (CAN) data bus allows all electronic modules connected to the bus to share information with each other. Regardless of whether a message originates from a module on the higher speed CAN C (500K) Bus or on the lower speed CAN Interior High Speed (IHS) (125K) Bus the message structure and layout is similar, which allows the Totally Integrated Power Module/Central GateWay (TIPM or TIPMCGW) to process and transfer messages between the CAN buses. The TIPM also stores Diagnostic Trouble Codes (DTC's) for certain bus network faults.

All modules transmit and receive messages over one of these buses. Data exchange between the modules is achieved by serial transmission of encoded data messages (a form of transmission in which data bits are sent sequentially, one at a time, over a single line). Each module can both send and receive serial data simultaneously. Each data bit of a CAN Bus message is carried over the bus as a voltage differential between the two bus circuits which, when strung together, form a message. Each module uses arbitration to sort the message priority if two competing messages are attempting to be broadcast at the same time. Corruption of a single bit within a message will corrupt the entire message. Each message contains a Cyclic Redundancy Check (CRC) which specifies the message size exactly. If the message detected conflicts with the CRC the ECU receiving it will determine the message to be an error and consider that communication has not been possible. Diagnosis of this condition using a lab scope may reveal activity that appears to be Bus data messages even if no actual communication is possible. Communication problems that affect the whole bus, as a result of opens and terminal push outs are more likely to occur on data busses that operate at a high speed than a data bus that

operates at a lower speed.

When an open circuit or terminal push out occurs one or more modules can become isolated from the remainder of the bus. The isolated module will attempt to communicate, but will not be able to receive messages or determine arbitration from other modules. Each time the isolated module attempts to communicate it alters the bus voltage on the intact bus circuit. Without functioning arbitration the isolated module alters the bus voltage while other bus messages are being sent thereby corrupting the messages on the remainder of the bus.

The CAN bus modules are connected in parallel to the two-wire bus using a twisted pair, where the wires are wrapped around each other to provide shielding from unwanted electromagnetic induction, thus preventing interference with the relatively low voltage signals being carried through them. While the CAN bus is operating (active), one of the bus wires will carry a higher voltage and is referred to as the CAN High or CAN bus (+) wire, while the other bus wire will carry a lower voltage and is referred to as the CAN Low or CAN bus (-) wire.

WHEN MONITORED:

With the ignition on.

Battery voltage between 10 and 16 volts.

Ignition Off Draw (IOD) fuse installed.

Totally Integrated Power Module (TIPM) is configured correctly.

SET CONDITION:

Bus messages not received from the Door Module Front Left (DMFL) or Driver Door Module for approximately two to five seconds.

POSSIBLE CAUSES

Possible Causes
(D265) CAN INTERIOR BUS (+) (125K) CIRCUIT SHORTED TO VOLTAGE
(D264) CAN INTERIOR BUS (-) (125K) CIRCUIT SHORTED TO GROUND
DTC's RELATED TO BATTERY VOLTAGE, IGNITION, OR VIN MESSAGES
TIPM NOT CONFIGURED CORRECTLY
DMFL POWER AND GROUND
DOOR MODULE FRONT LEFT (DMFL)
MODULE THAT SET THE DTC

DIAGNOSTIC TEST

1. **VERIFY DTC IS ACTIVE**

NOTE: Make sure the IOD fuse is installed and battery voltage is between 10 and

16 volts before proceeding.

1. With the scan tool, read active DTC's.

   Is this DTC active?

   Yes

   - Go To 2.

   No

   - Refer to **STORED LOST COMMUNICATION DTC's** and perform the diagnostic procedure.

2. **CHECK FOR ANY OF THE FOLLOWING ACTIVE DTC's**
   1. With the scan tool, read active DTC's from all modules.

      NOTE: Check for TIPM configuration, CAN Interior Bus hardware electrical, VIN Missing/Mismatch, battery or ignition related DTC's.

      Does the scan tool display any active DTC's to the conditions listed above?

      Yes

      - Go to **DIAGNOSTIC CODE INDEX** and perform the appropriate diagnostic procedure.

      No

      - Go To 3.

3. **VERIFY THE DMFL IS ACTIVE ON THE BUS**
   1. Turn the ignition on.
   2. With the scan tool, select Network Diagnostics.
   3. Verify the DMFL is active on the bus.

      Is the DMFL active on the bus?

      Yes

      - Go To 4.

      No

      - Refer to **NO RESPONSE FROM DDM (DMLF) (DRIVER DOOR MODULE)** and perform the diagnostic procedure.

4. **CHECK FOR ADDITIONAL COMMUNICATION RELATED DTC's**

1. With the scan tool, select Network Diagnostics.

   Is there more than one module with active DTC's "Logged Against" the DMFL?

   Yes

   - Replace/update the DMFL or Driver Door Module in accordance with the Service Information. Refer to **MODULE, DOOR, REMOVAL** .
   - Perform the BODY VERIFICATION TEST. Refer to **BODY VERIFICATION TEST**.

   No

   - Go To 5.

5. **CLEAR DTC IN MODULE SETTING FAULT**
   1. With the scan tool, select the module setting the DTC against the DMFL.
   2. Clear active DTC's.

      Is this DTC still active?

      Yes

      - Replace/update the module that set this DTC in accordance with the Service Information.
      - Perform the appropriate verification test for the module being replaced. If there is no verification test for the associated module, Perform the BODY VERIFICATION TEST. Refer to **BODY VERIFICATION TEST**.

      No

      - Go To 6.

6. **CYCLE IGNITION**
   1. Cycle the ignition from RUN to OFF three times ending with the key in the RUN position.

      Does this DTC become active?

      Yes

      - Go To 7.

      No

      - The condition is not present at this time. Using the wiring diagrams as a guide, check all related splices and connectors for signs of water intrusion, corrosion, pushed out or bent terminals, and correct pin tension.
      - Perform the appropriate VERIFICATION TEST.

7. **CHECK FOR ADDITIONAL LOST COMMUNICATION FAULTS**

1. With the scan tool, select Network Diagnostics.

   Does the TIPM and other CAN Interior BUS (125K) modules show Lost Communication with the remaining CAN Interior BUS (125K) modules?

   Yes

   - Go To 8.

   No

   - Replace/update the module that set this DTC in accordance with the Service Information.
   - Perform the appropriate verification test for the module being replaced. If there is no verification test for the associated module, Perform the BODY VERIFICATION TEST. Refer to **BODY VERIFICATION TEST**.

8. **(D265) CAN INTERIOR BUS (+) (125K) CIRCUIT SHORTED TO VOLTAGE**

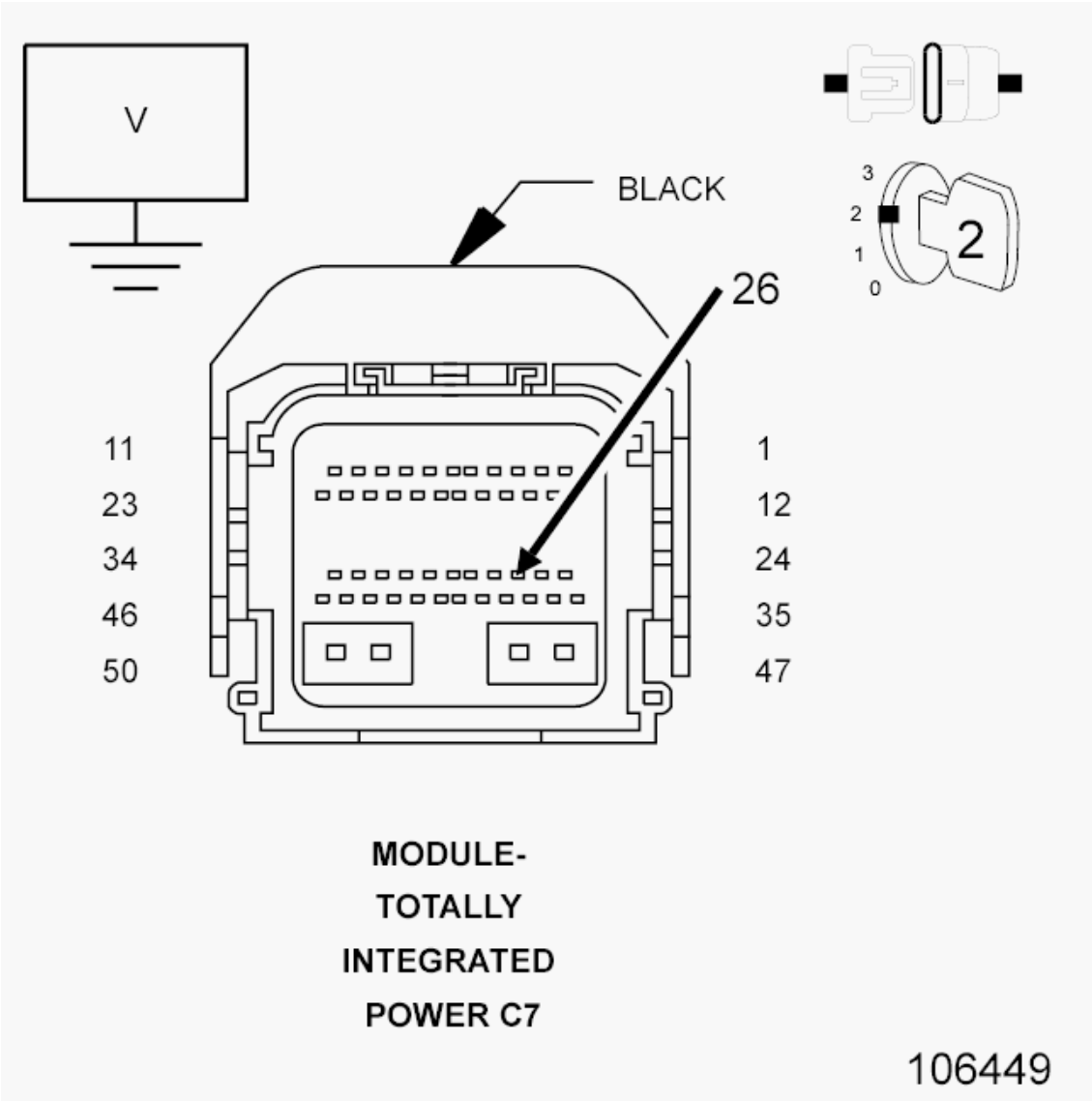

Fig. 180: Checking Can Interior Bus (+) (125K) Circuit For A Short To Voltage
Courtesy of CHRYSLER GROUP, LLC

1. Measure the voltage between the (D265) CAN Interior Bus (+) (125K) circuit and ground.

   Is the voltage above 5.0 volts?

   Yes

   - Repair the short to voltage in the (D265) CAN Interior Bus (+) (125K) circuit.
   - Perform the BODY VERIFICATION TEST. Refer to **BODY VERIFICATION TEST**.

   No

   - Go To 9.

9. **(D264) CAN INTERIOR BUS (-) (125K) CIRCUIT SHORTED TO GROUND**

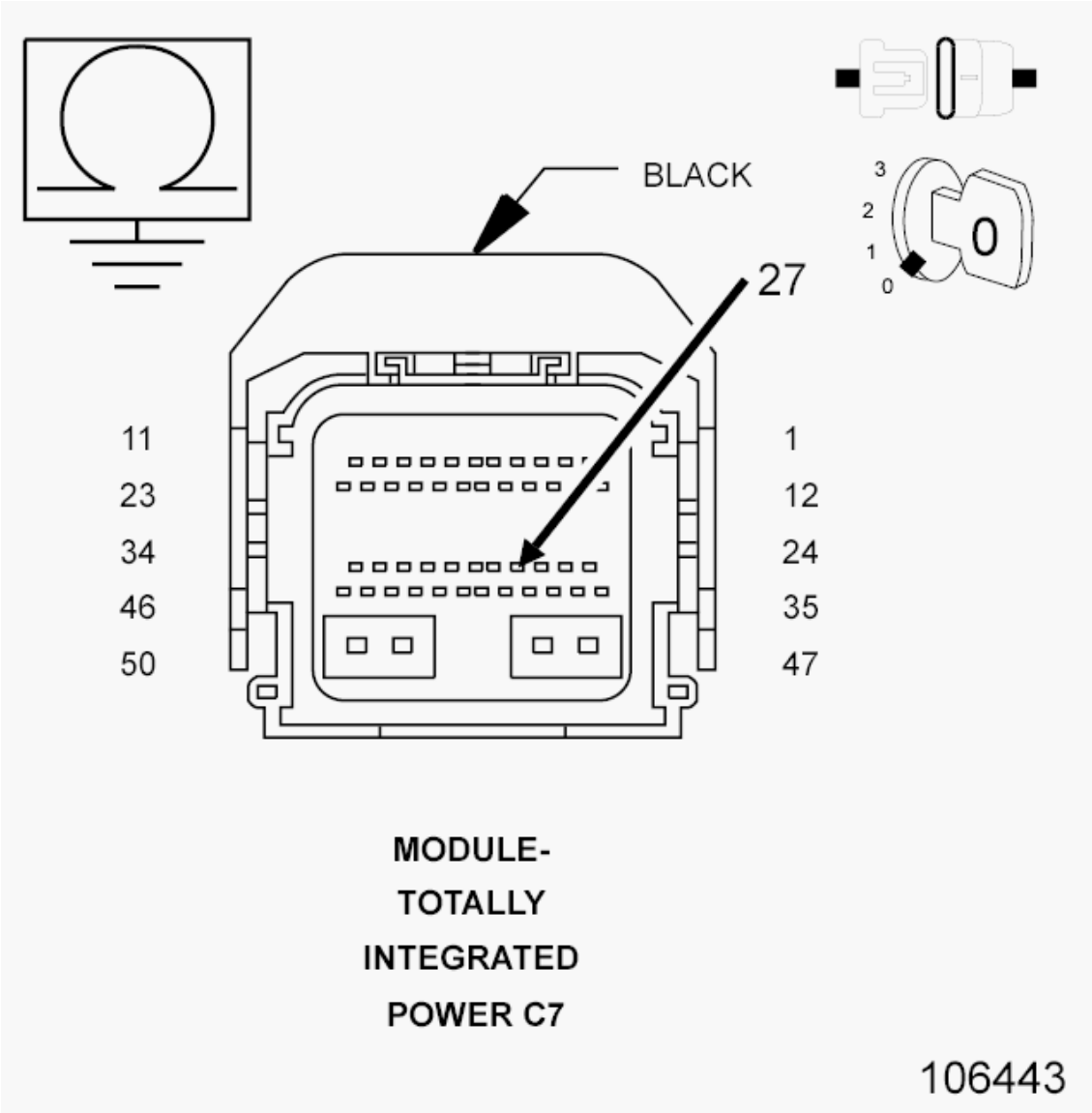

Fig. 181: Checking Can Interior Bus (-) (125K) Circuit For A Short To Ground
Courtesy of CHRYSLER GROUP, LLC

1. Turn the ignition off.
2. Measure the resistance between ground and the (D264) CAN Interior Bus (-) (125K) circuit.

   Is the resistance below 10k Ohms?

   Yes

   - Repair the short to ground in the (D264) CAN Interior Bus (-) (125K) circuit.
   - Perform the BODY VERIFICATION TEST. Refer to **BODY VERIFICATION TEST**.

No

- Replace/update the module that set this DTC in accordance with the Service Information.
- Perform the appropriate verification test for the module being replaced. If there is no verification test for the associated module, Perform the BODY VERIFICATION TEST. Refer to **BODY VERIFICATION TEST**.

U0204-LOST COMMUNICATION WITH DOOR MODULE FRONT RIGHT (DMFR) (PASSENGER DOOR MODULE)

For a complete wiring diagram, **refer to appropriate SYSTEM WIRING DIAGRAMS article** .

THEORY OF OPERATION

The primary communication network between electronic control modules on this vehicle is the Controller Area Network (CAN) data bus system. The Controller Area Network (CAN) data bus allows all electronic modules connected to the bus to share information with each other. Regardless of whether a message originates from a module on the higher speed CAN C (500K) Bus or on the lower speed CAN Interior High Speed (IHS) (125K) Bus the message structure and layout is similar, which allows the Totally Integrated Power Module/Central GateWay (TIPM or TIPMCGW) to process and transfer messages between the CAN buses. The TIPM also stores Diagnostic Trouble Codes (DTC's) for certain bus network faults.

All modules transmit and receive messages over one of these buses. Data exchange between the modules is achieved by serial transmission of encoded data messages (a form of transmission in which data bits are sent sequentially, one at a time, over a single line). Each module can both send and receive serial data simultaneously. Each data bit of a CAN Bus message is carried over the bus as a voltage differential between the two bus circuits which, when strung together, form a message. Each module uses arbitration to sort the message priority if two competing messages are attempting to be broadcast at the same time. Corruption of a single bit within a message will corrupt the entire message. Each message contains a Cyclic Redundancy Check (CRC) which specifies the message size exactly. If the message detected conflicts with the CRC the ECU receiving it will determine the message to be an error and consider that communication has not been possible. Diagnosis of this condition using a lab scope may reveal activity that appears to be Bus data messages even if no actual communication is possible. Communication problems that affect the whole bus, as a result of opens and terminal push outs are more likely to occur on data busses that operate at a high speed than a data bus that operates at a lower speed.

When an open circuit or terminal push out occurs one or more modules can become isolated from the remainder of the bus. The isolated module will attempt to communicate, but will not be able to receive messages or determine arbitration from other modules. Each time the isolated module attempts to communicate it alters the bus voltage on the intact bus circuit. Without functioning arbitration the isolated module alters the bus voltage while other bus messages are being sent thereby corrupting the messages on the remainder of the bus.

The CAN bus modules are connected in parallel to the two-wire bus using a twisted pair, where the wires are wrapped around each other to provide shielding from unwanted electromagnetic induction, thus preventing interference with the relatively low voltage signals being carried through them. While the CAN bus is operating (active), one of the bus wires will carry a higher voltage and is referred to as the CAN High or CAN bus (+) wire, while the other bus wire will carry a lower voltage and is referred to as the CAN Low or CAN bus (-) wire.

WHEN MONITORED:

With the ignition on.

Battery voltage between 10 and 16 volts.

Ignition Off Draw (IOD) fuse installed.

Totally Integrated Power Module (TIPM) is configured correctly.

SET CONDITION:

Bus messages not received from the Door Module Front Right (DMFR) or Passenger Door Module for approximately two to five seconds.

POSSIBLE CAUSES

Possible Causes
(D265) CAN INTERIOR BUS (+) (125K) CIRCUIT SHORTED TO VOLTAGE
(D264) CAN INTERIOR BUS (-) (125K) CIRCUIT SHORTED TO GROUND
DTC's RELATED TO BATTERY VOLTAGE, IGNITION, OR VIN MESSAGES
TIPM NOT CONFIGURED CORRECTLY
DMFR POWER AND GROUND
DOOR MODULE FRONT RIGHT (DMFR)
MODULE THAT SET THE DTC

DIAGNOSTIC TEST

1. **VERIFY DTC IS ACTIVE**

   NOTE: Make sure the IOD fuse is installed and battery voltage is between 10 and 16 volts before proceeding.

   1. With the scan tool, read active DTC's.

      Is this DTC active?

      Yes

      - Go To 2.

      No

      - Refer to **STORED LOST COMMUNICATION DTC's** and perform the diagnostic procedure.

2. **CHECK FOR ANY OF THE FOLLOWING ACTIVE DTC's**

1. With the scan tool, read active DTC's from all modules.

   NOTE: Check for TIPM configuration, CAN Interior Bus hardware electrical, VIN Missing/Mismatch, battery or ignition related DTC's.

   Does the scan tool display any active DTC's to the conditions listed above?

   Yes

   - Go to **DIAGNOSTIC CODE INDEX** and perform the appropriate diagnostic procedure.

   No

   - Go To 3.

3. **VERIFY THE DMFR IS ACTIVE ON THE BUS**
   1. Turn the ignition on.
   2. With the scan tool, select Network Diagnostics.
   3. Verify the DMFR is active on the bus.

   Is the DMFR active on the bus?

   Yes

   - Go To 4.

   No

   - Refer to **NO RESPONSE FROM PDM (DMRF) (PASSENGER DOOR MODULE)** and perform the diagnostic procedure.

4. **CHECK FOR ADDITIONAL COMMUNICATION RELATED DTC's**
   1. With the scan tool, select Network Diagnostics.

   Is there more than one module with active DTC's "Logged Against" the DMFR?

   Yes

   - Replace/update the DMFR or Passenger Door Module in accordance with the Service Information. Refer to **MODULE, DOOR, REMOVAL** .
   - Perform the BODY VERIFICATION TEST. Refer to **BODY VERIFICATION TEST**.

   No

   - Go To 5.

5. **CLEAR DTC IN MODULE SETTING FAULT**

1. With the scan tool, select the module setting the DTC against the DMFR.
2. Clear active DTC's.

   Is this DTC still active?

   Yes

   - Replace/update the module that set this DTC in accordance with the Service Information.
   - Perform the appropriate verification test for the module being replaced. If there is no verification test for the associated module, Perform the BODY VERIFICATION TEST. Refer to **BODY VERIFICATION TEST**.

   No

   - Go To 6.

6. **CYCLE IGNITION**
   1. Cycle the ignition from RUN to OFF three times ending with the key in the RUN position.

      Does this DTC become active?

      Yes

      - Go To 7.

      No

      - The condition is not present at this time. Using the wiring diagrams as a guide, check all related splices and connectors for signs of water intrusion, corrosion, pushed out or bent terminals, and correct pin tension.
      - Perform the appropriate VERIFICATION TEST.

7. **CHECK FOR ADDITIONAL LOST COMMUNICATION FAULTS**
   1. With the scan tool, select Network Diagnostics.

      Does the TIPM and other CAN Interior BUS (125K) modules show Lost Communication with the remaining CAN Interior BUS (125K) modules?

      Yes

      - Go To 8.

      No

      - Replace/update the module that set this DTC in accordance with the Service Information.
      - Perform the appropriate verification test for the module being replaced. If there is no verification test for the associated module, Perform the BODY VERIFICATION TEST.

Refer to **BODY VERIFICATION TEST**.

8. **(D265) CAN INTERIOR BUS (+) (125K) CIRCUIT SHORTED TO VOLTAGE**

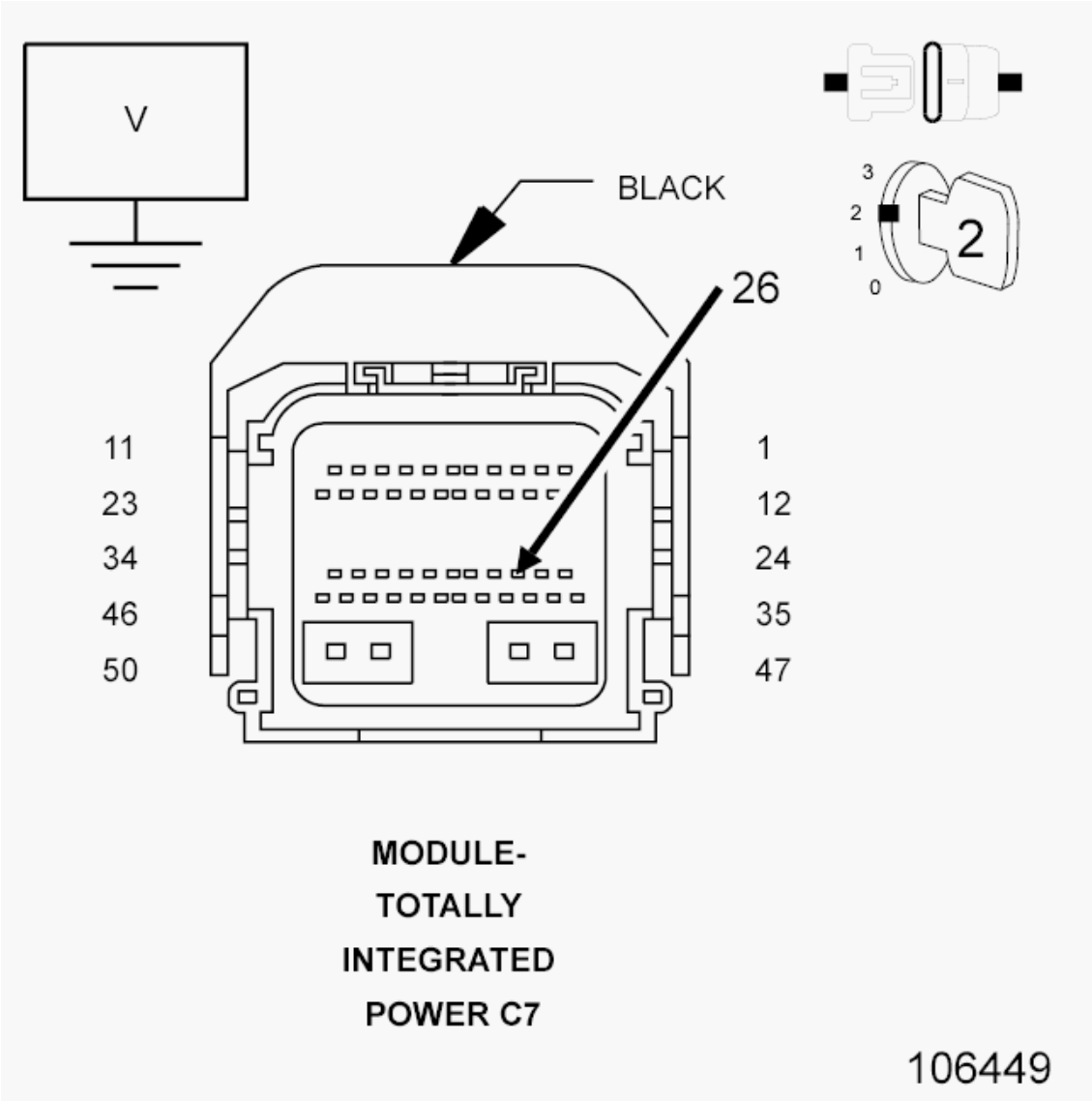

Fig. 182: Checking Can Interior Bus (+) (125K) Circuit For A Short To Voltage
Courtesy of CHRYSLER GROUP, LLC

1. Measure the voltage between the (D265) CAN Interior Bus (+) (125K) circuit and ground.

   Is the voltage above 5.0 volts?

   Yes

   - Repair the short to voltage in the (D265) CAN Interior Bus (+) (125K) circuit.
   - Perform the BODY VERIFICATION TEST. Refer to **BODY VERIFICATION TEST**.

No

- Go To 9.

9. **(D264) CAN INTERIOR BUS (-) (125K) CIRCUIT SHORTED TO GROUND**

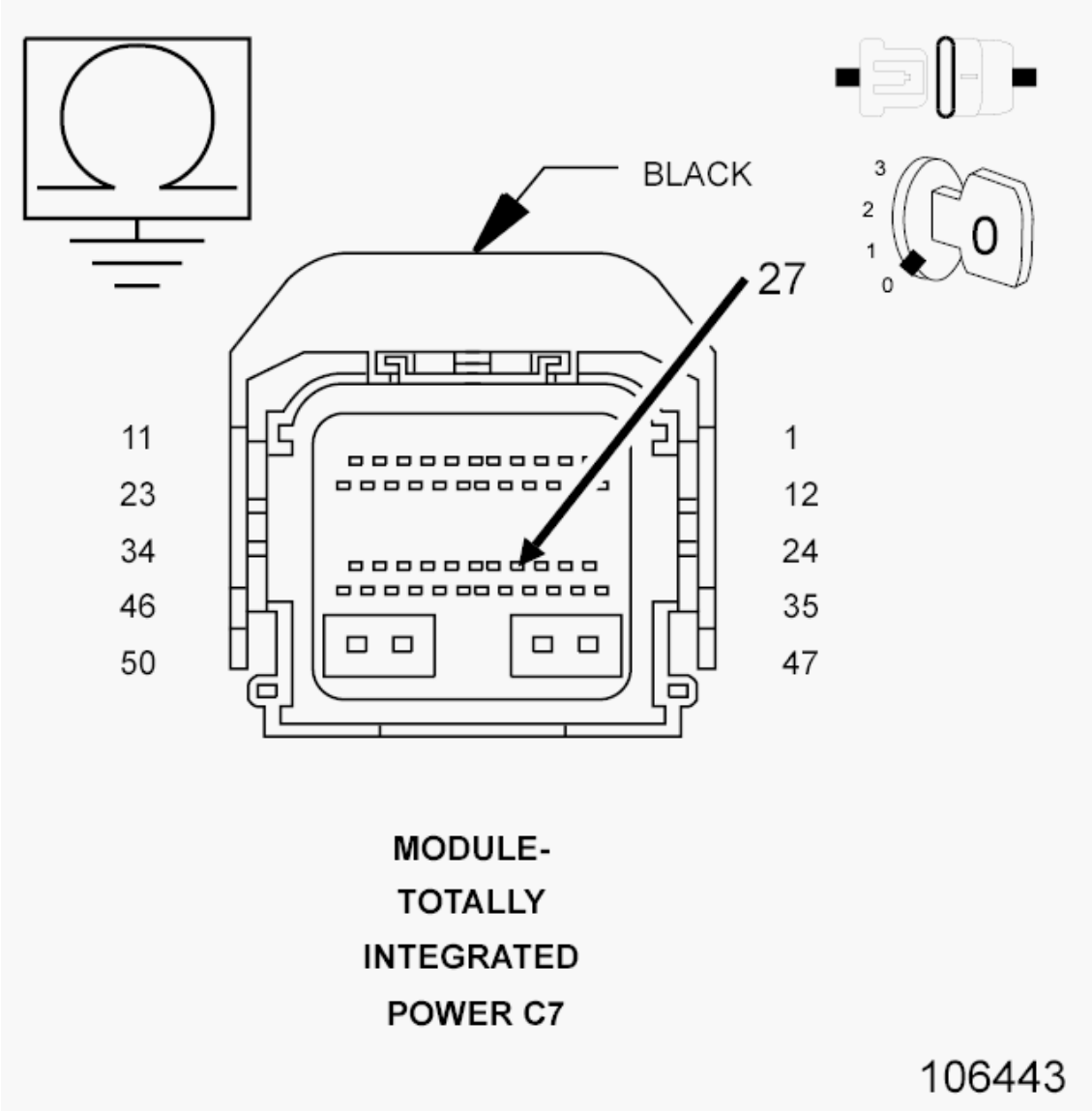

Fig. 183: Checking Can Interior Bus (-) (125K) Circuit For A Short To Ground
Courtesy of CHRYSLER GROUP, LLC

1. Turn the ignition off.
2. Measure the resistance between ground and the (D264) CAN Interior Bus (-) (125K) circuit.

   Is the resistance below 10k Ohms?

   Yes

- Repair the short to ground in the (D264) CAN Interior Bus (-) (125K) circuit.
- Perform the BODY VERIFICATION TEST. Refer to **BODY VERIFICATION TEST**.

No

- Replace/update the module that set this DTC in accordance with the Service Information.
- Perform the appropriate verification test for the module being replaced. If there is no verification test for the associated module, Perform the BODY VERIFICATION TEST. Refer to **BODY VERIFICATION TEST**.

U0208-LOST COMMUNICATION WITH HEATED SEAT CONTROL MODULE

For a complete wiring diagram, **refer to appropriate SYSTEM WIRING DIAGRAMS article** .

THEORY OF OPERATION

The primary communication network between electronic control modules on this vehicle is the Controller Area Network (CAN) data bus system. The Controller Area Network (CAN) data bus allows all electronic modules connected to the bus to share information with each other. Regardless of whether a message originates from a module on the higher speed CAN C (500K) Bus or on the lower speed CAN Interior High Speed (IHS) (125K) Bus the message structure and layout is similar, which allows the Totally Integrated Power Module/Central GateWay (TIPM or TIPMCGW) to process and transfer messages between the CAN buses. The TIPM also stores Diagnostic Trouble Codes (DTC's) for certain bus network faults.

All modules transmit and receive messages over one of these buses. Data exchange between the modules is achieved by serial transmission of encoded data messages (a form of transmission in which data bits are sent sequentially, one at a time, over a single line). Each module can both send and receive serial data simultaneously. Each data bit of a CAN Bus message is carried over the bus as a voltage differential between the two bus circuits which, when strung together, form a message. Each module uses arbitration to sort the message priority if two competing messages are attempting to be broadcast at the same time. Corruption of a single bit within a message will corrupt the entire message. Each message contains a Cyclic Redundancy Check (CRC) which specifies the message size exactly. If the message detected conflicts with the CRC the ECU receiving it will determine the message to be an error and consider that communication has not been possible. Diagnosis of this condition using a lab scope may reveal activity that appears to be Bus data messages even if no actual communication is possible. Communication problems that affect the whole bus, as a result of opens and terminal push outs are more likely to occur on data busses that operate at a high speed than a data bus that operates at a lower speed.

When an open circuit or terminal push out occurs one or more modules can become isolated from the remainder of the bus. The isolated module will attempt to communicate, but will not be able to receive messages or determine arbitration from other modules. Each time the isolated module attempts to communicate it alters the bus voltage on the intact bus circuit. Without functioning arbitration the isolated module alters the bus voltage while other bus messages are being sent thereby corrupting the messages on the remainder of the bus.

The CAN bus modules are connected in parallel to the two-wire bus using a twisted pair, where the wires are wrapped around each other to provide shielding from unwanted electromagnetic induction, thus preventing interference with the relatively low voltage signals being carried through them. While the CAN bus is operating

(active), one of the bus wires will carry a higher voltage and is referred to as the CAN High or CAN bus (+) wire, while the other bus wire will carry a lower voltage and is referred to as the CAN Low or CAN bus (-) wire.

WHEN MONITORED:

With the ignition on.

Battery voltage between 10 and 16 volts.

Ignition Off Draw (IOD) fuse installed.

Totally Integrated Power Module (TIPM) is configured correctly.

SET CONDITION:

Bus messages not received from the Heated Seat Module (HSM) for approximately two to five seconds.

POSSIBLE CAUSES

Possible Causes
(D265) CAN INTERIOR BUS (+) (125K) CIRCUIT SHORTED TO VOLTAGE
(D264) CAN INTERIOR BUS (-) (125K) CIRCUIT SHORTED TO GROUND
DTC's RELATED TO BATTERY VOLTAGE, IGNITION, OR VIN MESSAGES
TIPM NOT CONFIGURED CORRECTLY
HSM POWER AND GROUND
HEATED SEAT MODULE (HSM)
MODULE THAT SET THE DTC

DIAGNOSTIC TEST

1. **VERIFY DTC IS ACTIVE**

   NOTE: Make sure the IOD fuse is installed and battery voltage is between 10 and 16 volts before proceeding.

   1. With the scan tool, read active DTC's.

      Is this DTC active?

      Yes

      - Go To 2.

      No

- Refer to **STORED LOST COMMUNICATION DTC's** and perform the diagnostic procedure.

2. **CHECK FOR ANY OF THE FOLLOWING ACTIVE DTC's**
   1. With the scan tool, read active DTC's from all modules.

      NOTE: Check for TIPM configuration, CAN Interior Bus hardware electrical, VIN Missing/Mismatch, battery or ignition related DTC's.

      Does the scan tool display any active DTC's to the conditions listed above?

      Yes

      - Go to **DIAGNOSTIC CODE INDEX** and perform the appropriate diagnostic procedure.

      No

      - Go To 3.

3. **VERIFY THE HSM IS ACTIVE ON THE BUS**
   1. Turn the ignition on.
   2. With the scan tool, select Network Diagnostics.
   3. Verify the HSM is active on the bus.

      Is the HSM active on the bus?

      Yes

      - Go To 4.

      No

      - Refer to **NO RESPONSE FROM HSM (HEATED SEAT MODULE)** and perform the diagnostic procedure.

4. **CHECK FOR ADDITIONAL COMMUNICATION RELATED DTC's**
   1. With the scan tool, select Network Diagnostics.

      Is there more than one module with active DTC's "Logged Against" the HSM?

      Yes

      - Replace/update the HSM in accordance with the Service Information. Refer to **MODULE, HEATED SEAT, REMOVAL** .
      - Perform the BODY VERIFICATION TEST. Refer to **BODY VERIFICATION TEST**.

      No

- Go To 5.

5. **CLEAR DTC IN MODULE SETTING FAULT**
    1. With the scan tool, select the module setting the DTC against the HSM.
    2. Clear active DTC's.

    Is this DTC still active?

    Yes

    - Replace/update the module that set this DTC in accordance with the Service Information.
    - Perform the appropriate verification test for the module being replaced. If there is no verification test for the associated module, Perform the BODY VERIFICATION TEST. Refer to **BODY VERIFICATION TEST**.

    No

    - Go To 6.

6. **CYCLE IGNITION**
    1. Cycle the ignition from RUN to OFF three times ending with the key in the RUN position.

    Does this DTC become active?

    Yes

    - Go To 7.

    No

    - The condition is not present at this time. Using the wiring diagrams as a guide, check all related splices and connectors for signs of water intrusion, corrosion, pushed out or bent terminals, and correct pin tension.
    - Perform the appropriate VERIFICATION TEST.

7. **CHECK FOR ADDITIONAL LOST COMMUNICATION FAULTS**
    1. With the scan tool, select Network Diagnostics.

    Does the TIPM and other CAN Interior BUS (125K) modules show Lost Communication with the remaining CAN Interior BUS (125K) modules?

    Yes

    - Go To 8.

    No

    - Replace/update the module that set this DTC in accordance with the Service Information.

- Perform the appropriate verification test for the module being replaced. If there is no verification test for the associated module, Perform the BODY VERIFICATION TEST. Refer to **BODY VERIFICATION TEST**.

8. **(D265) CAN INTERIOR BUS (+) (125K) CIRCUIT SHORTED TO VOLTAGE**

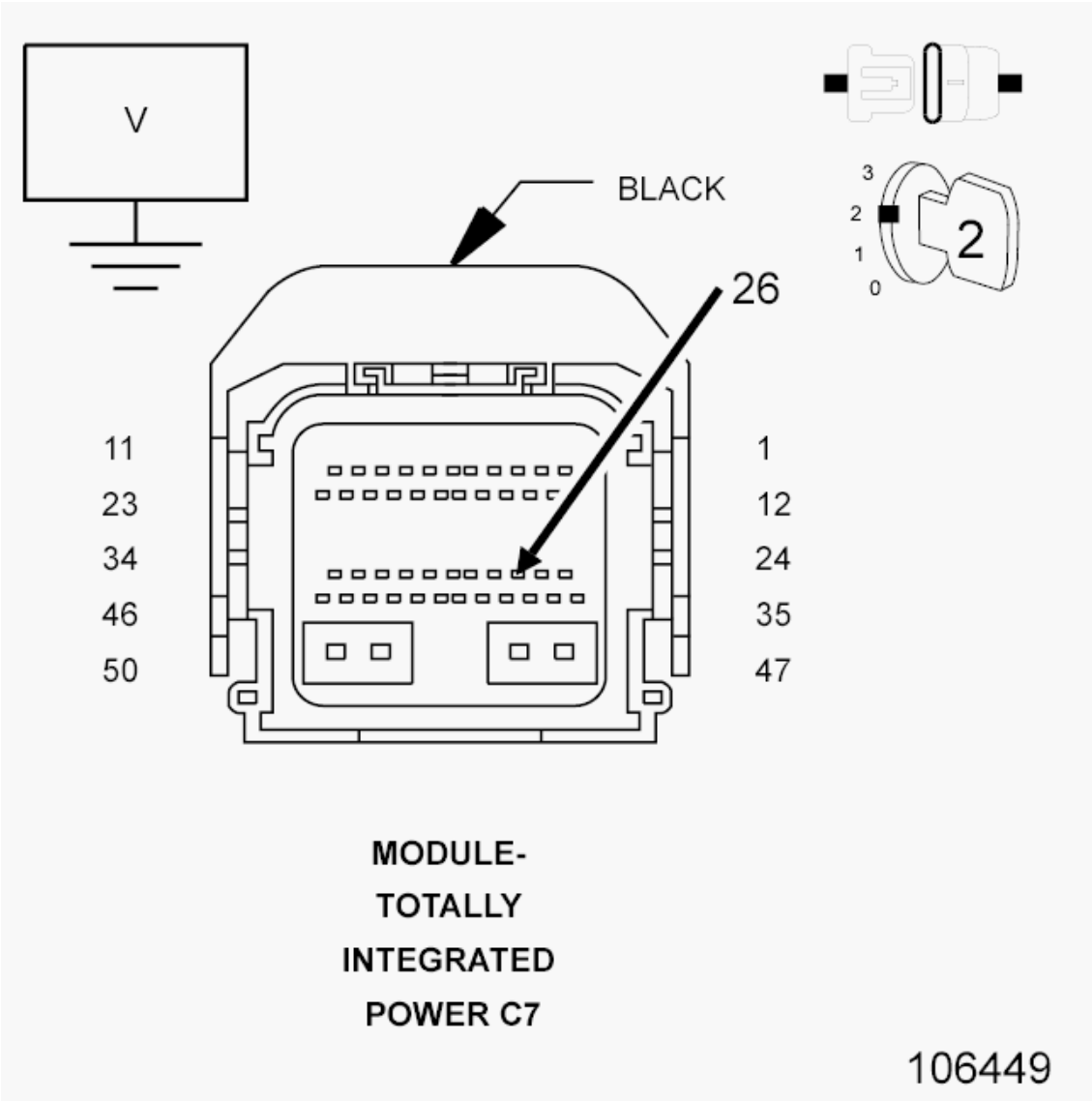

Fig. 184: Checking Can Interior Bus (+) (125K) Circuit For A Short To Voltage
Courtesy of CHRYSLER GROUP, LLC

1. Measure the voltage between the (D265) CAN Interior Bus (+) (125K) circuit and ground.

   Is the voltage above 5.0 volts?

   Yes

   - Repair the short to voltage in the (D265) CAN Interior Bus (+) (125K) circuit.

- Perform the BODY VERIFICATION TEST. Refer to **BODY VERIFICATION TEST**.

No

- Go To 9.

9. **(D264) CAN INTERIOR BUS (-) (125K) CIRCUIT SHORTED TO GROUND**

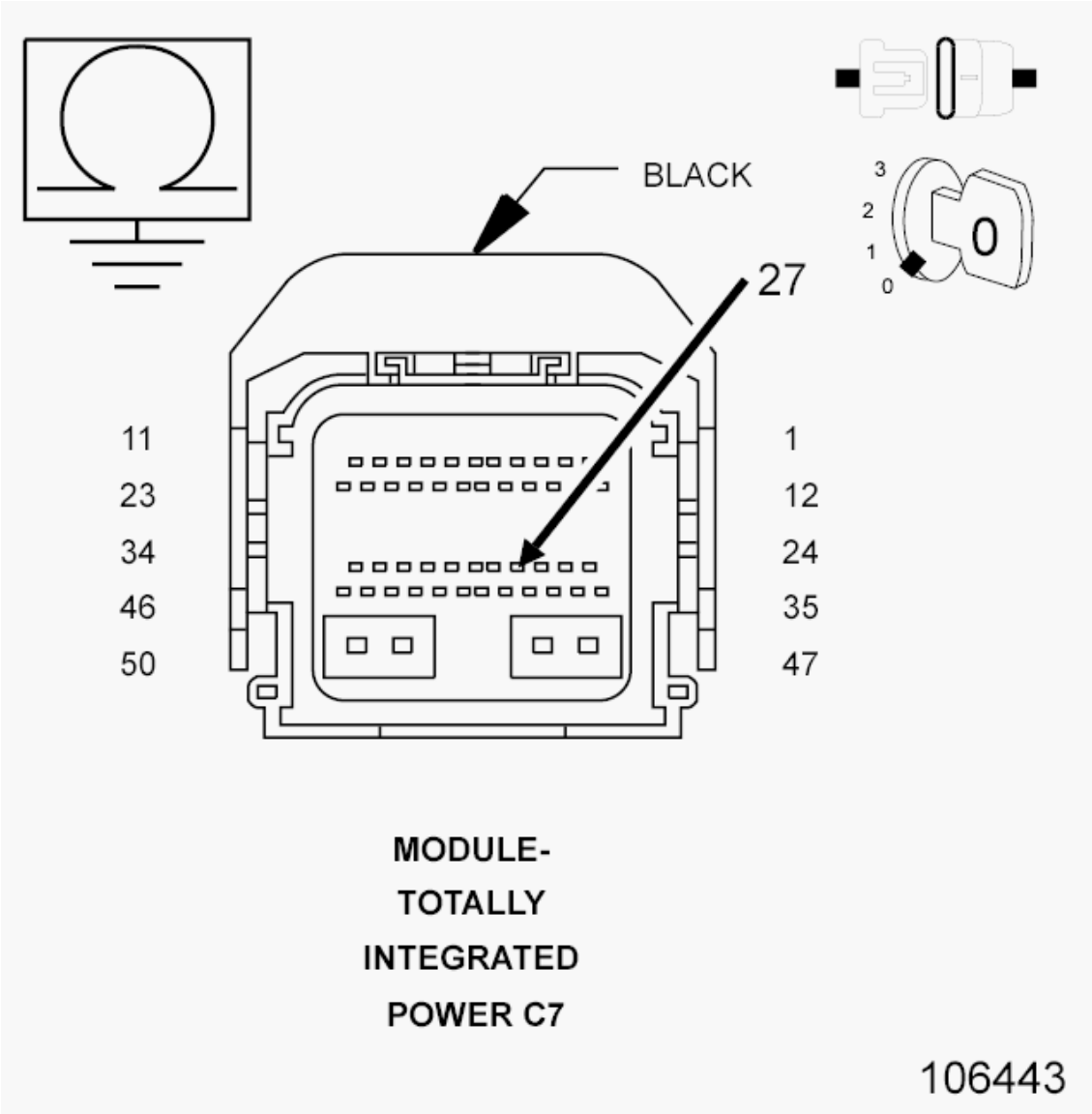

Fig. 185: Checking Can Interior Bus (-) (125K) Circuit For A Short To Ground
Courtesy of CHRYSLER GROUP, LLC

1. Turn the ignition off.
2. Measure the resistance between ground and the (D264) CAN Interior Bus (-) (125K) circuit.

   Is the resistance below 10k Ohms?

Yes

- Repair the short to ground in the (D264) CAN Interior Bus (-) (125K) circuit.
- Perform the BODY VERIFICATION TEST. Refer to **BODY VERIFICATION TEST**.

No

- Replace/update the module that set this DTC in accordance with the Service Information.
- Perform the appropriate verification test for the module being replaced. If there is no verification test for the associated module, Perform the BODY VERIFICATION TEST. Refer to **BODY VERIFICATION TEST**.

U0209-LOST COMMUNICATION WITH MEMORY SEAT CONTROL MODULE (MSMD)

For a complete wiring diagram, **refer to appropriate SYSTEM WIRING DIAGRAMS article** .

THEORY OF OPERATION

The primary communication network between electronic control modules on this vehicle is the Controller Area Network (CAN) data bus system. The Controller Area Network (CAN) data bus allows all electronic modules connected to the bus to share information with each other. Regardless of whether a message originates from a module on the higher speed CAN C (500K) Bus or on the lower speed CAN Interior High Speed (IHS) (125K) Bus the message structure and layout is similar, which allows the Totally Integrated Power Module/Central GateWay (TIPM or TIPMCGW) to process and transfer messages between the CAN buses. The TIPM also stores Diagnostic Trouble Codes (DTC's) for certain bus network faults.

All modules transmit and receive messages over one of these buses. Data exchange between the modules is achieved by serial transmission of encoded data messages (a form of transmission in which data bits are sent sequentially, one at a time, over a single line). Each module can both send and receive serial data simultaneously. Each data bit of a CAN Bus message is carried over the bus as a voltage differential between the two bus circuits which, when strung together, form a message. Each module uses arbitration to sort the message priority if two competing messages are attempting to be broadcast at the same time. Corruption of a single bit within a message will corrupt the entire message. Each message contains a Cyclic Redundancy Check (CRC) which specifies the message size exactly. If the message detected conflicts with the CRC the ECU receiving it will determine the message to be an error and consider that communication has not been possible. Diagnosis of this condition using a lab scope may reveal activity that appears to be Bus data messages even if no actual communication is possible. Communication problems that affect the whole bus, as a result of opens and terminal push outs are more likely to occur on data busses that operate at a high speed than a data bus that operates at a lower speed.

When an open circuit or terminal push out occurs one or more modules can become isolated from the remainder of the bus. The isolated module will attempt to communicate, but will not be able to receive messages or determine arbitration from other modules. Each time the isolated module attempts to communicate it alters the bus voltage on the intact bus circuit. Without functioning arbitration the isolated module alters the bus voltage while other bus messages are being sent thereby corrupting the messages on the remainder of the bus.

The CAN bus modules are connected in parallel to the two-wire bus using a twisted pair, where the wires are

wrapped around each other to provide shielding from unwanted electromagnetic induction, thus preventing interference with the relatively low voltage signals being carried through them. While the CAN bus is operating (active), one of the bus wires will carry a higher voltage and is referred to as the CAN High or CAN bus (+) wire, while the other bus wire will carry a lower voltage and is referred to as the CAN Low or CAN bus (-) wire.

WHEN MONITORED:

With the ignition on.

Battery voltage between 10 and 16 volts.

Ignition Off Draw (IOD) fuse installed.

Totally Integrated Power Module (TIPM) is configured correctly.

SET CONDITION:

Bus messages not received from the MSMD for approximately two to five seconds.

POSSIBLE CAUSES

Possible Causes
(D265) CAN INTERIOR BUS (+) (125K) CIRCUIT SHORTED TO VOLTAGE
(D264) CAN INTERIOR BUS (-) (125K) CIRCUIT SHORTED TO GROUND
DTC's RELATED TO BATTERY VOLTAGE, IGNITION, OR VIN MESSAGES
TIPM NOT CONFIGURED CORRECTLY
MSMD POWER AND GROUND
MEMORY SEAT CONTROL MODULE (MSMD)
MODULE THAT SET THE DTC

DIAGNOSTIC TEST

1. **VERIFY DTC IS ACTIVE**

   NOTE: Make sure the IOD fuse is installed and battery voltage is between 10 and 16 volts before proceeding.

   1. With the scan tool, read active DTC's.

      Is this DTC active?

      Yes

      - Go To 2.

No

- Refer to **STORED LOST COMMUNICATION DTC's** and perform the diagnostic procedure.

2. **CHECK FOR ANY OF THE FOLLOWING ACTIVE DTC's**
   1. With the scan tool, read active DTC's from all modules.

      NOTE: Check for TIPM configuration, CAN Interior Bus hardware electrical, VIN Missing/Mismatch, battery or ignition related DTC's.

      Does the scan tool display any active DTC's to the conditions listed above?

      Yes

      - Go to **DIAGNOSTIC CODE INDEX** and perform the appropriate diagnostic procedure.

      No

      - Go To 3.

3. **VERIFY THE MSMD IS ACTIVE ON THE BUS**
   1. Turn the ignition on.
   2. With the scan tool, select Network Diagnostics.
   3. Verify the MSMD is active on the bus.

      Is the MSMD active on the bus?

      Yes

      - Go To 4.

      No

      - Refer to **NO RESPONSE FROM MSMD (MEMORY SEAT MODULE)** and perform the diagnostic procedure.

4. **CHECK FOR ADDITIONAL COMMUNICATION RELATED DTC's**
   1. With the scan tool, select Network Diagnostics.

      Is there more than one module with active DTC's "Logged Against" the MSMD?

      Yes

      - Replace/update the MSMD in accordance with the Service Information. Refer to **MODULE, MEMORY, REMOVAL** .
      - Perform the POWER SEAT SYSTEM VERIFICATION TEST. Refer to **STANDARD PROCEDURE** .

No

- Go To 5.

5. **CLEAR DTC IN MODULE SETTING FAULT**
   1. With the scan tool, select the module setting the DTC against the MSMD.
   2. Clear active DTC's.

      Is this DTC still active?

      Yes

      - Replace/update the module that set this DTC in accordance with the Service Information.
      - Perform the appropriate verification test for the module being replaced. If there is no verification test for the associated module, Perform the BODY VERIFICATION TEST. Refer to **BODY VERIFICATION TEST**.

      No

      - Go To 6.

6. **CYCLE IGNITION**
   1. Cycle the ignition from RUN to OFF three times ending with the key in the RUN position.

      Does this DTC become active?

      Yes

      - Go To 7.

      No

      - The condition is not present at this time. Using the wiring diagrams as a guide, check all related splices and connectors for signs of water intrusion, corrosion, pushed out or bent terminals, and correct pin tension.
      - Perform the BODY VERIFICATION TEST. Refer to **BODY VERIFICATION TEST**.

7. **CHECK FOR ADDITIONAL LOST COMMUNICATION FAULTS**
   1. With the scan tool, select Network Diagnostics.

      Does the TIPM and other CAN Interior BUS (125K) modules show Lost Communication with the remaining CAN Interior BUS (125K) modules?

      Yes

      - Go To 8.

      No

- Replace/update the module that set this DTC in accordance with the Service Information.
- Perform the appropriate verification test for the module being replaced. If there is no verification test for the associated module, Perform the BODY VERIFICATION TEST. Refer to **BODY VERIFICATION TEST**.

8. **(D265) CAN INTERIOR BUS (+) (125K) CIRCUIT SHORTED TO VOLTAGE**

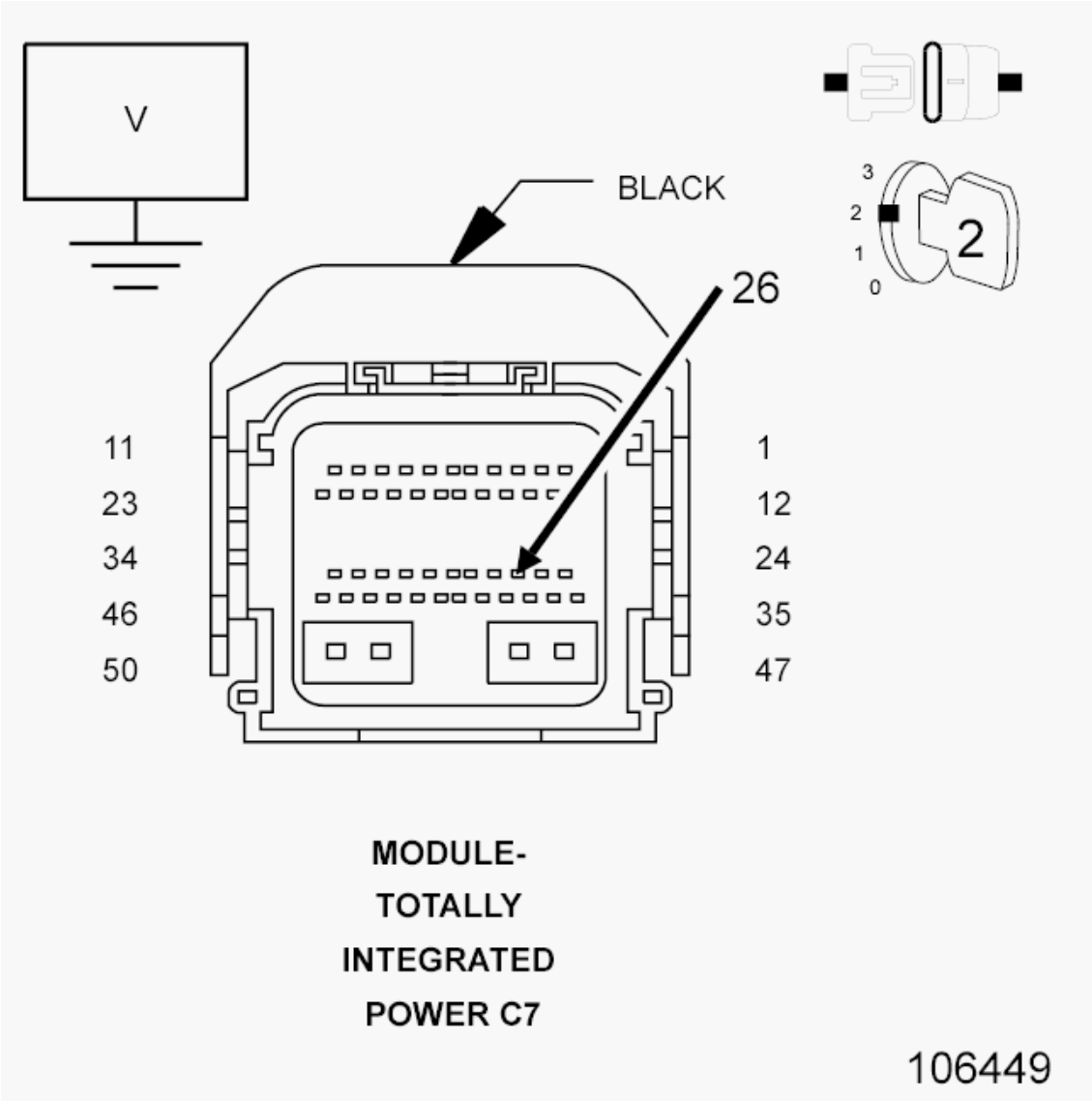

Fig. 186: Checking Can Interior Bus (+) (125K) Circuit For A Short To Voltage
Courtesy of CHRYSLER GROUP, LLC

1. Measure the voltage between the (D265) CAN Interior Bus (+) (125K) circuit and ground.

   Is the voltage above 5.0 volts?

   Yes

- Repair the short to voltage in the (D265) CAN Interior Bus (+) (125K) circuit.
- Perform the BODY VERIFICATION TEST. Refer to **BODY VERIFICATION TEST**.

No

- Go To 9.

9. **(D264) CAN INTERIOR BUS (-) (125K) CIRCUIT SHORTED TO GROUND**

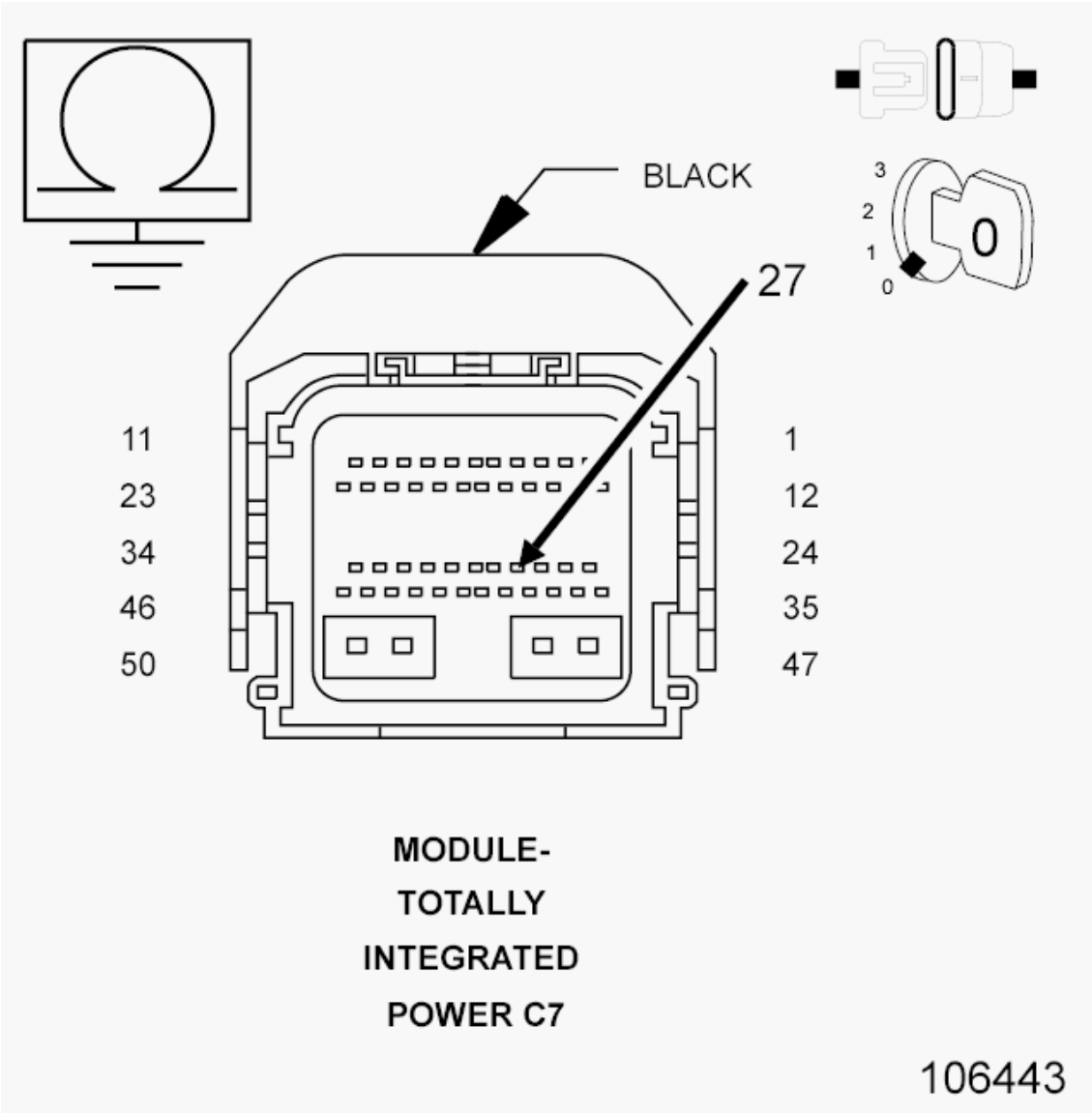

Fig. 187: Checking Can Interior Bus (-) (125K) Circuit For A Short To Ground
Courtesy of CHRYSLER GROUP, LLC

1. Turn the ignition off.
2. Measure the resistance between ground and the (D264) CAN Interior Bus (-) (125K) circuit.

Is the resistance below 10k Ohms?

Yes

- Repair the short to ground in the (D264) CAN Interior Bus (-) (125K) circuit.
- Perform the BODY VERIFICATION TEST. Refer to **BODY VERIFICATION TEST**.

No

- Replace/update the module that set this DTC in accordance with the Service Information.
- Perform the appropriate verification test for the module being replaced. If there is no verification test for the associated module, Perform the BODY VERIFICATION TEST. Refer to **BODY VERIFICATION TEST**.

U0212-LOST COMMUNICATION WITH SCM

For a complete wiring diagram, **refer to appropriate SYSTEM WIRING DIAGRAMS article** .

THEORY OF OPERATION

The primary communication network between electronic control modules on this vehicle is the Controller Area Network (CAN) data bus system. The Controller Area Network (CAN) data bus allows all electronic modules connected to the bus to share information with each other. Regardless of whether a message originates from a module on the higher speed CAN C (500K) Bus or on the lower speed CAN Interior High Speed (IHS) (125K) Bus the message structure and layout is similar, which allows the Totally Integrated Power Module/Central GateWay (TIPM or TIPMCGW) to process and transfer messages between the CAN buses. The TIPM also stores Diagnostic Trouble Codes (DTC's) for certain bus network faults.

All modules transmit and receive messages over one of these buses. Data exchange between the modules is achieved by serial transmission of encoded data messages (a form of transmission in which data bits are sent sequentially, one at a time, over a single line). Each module can both send and receive serial data simultaneously. Each data bit of a CAN Bus message is carried over the bus as a voltage differential between the two bus circuits which, when strung together, form a message. Each module uses arbitration to sort the message priority if two competing messages are attempting to be broadcast at the same time. Corruption of a single bit within a message will corrupt the entire message. Each message contains a Cyclic Redundancy Check (CRC) which specifies the message size exactly. If the message detected conflicts with the CRC the ECU receiving it will determine the message to be an error and consider that communication has not been possible. Diagnosis of this condition using a lab scope may reveal activity that appears to be Bus data messages even if no actual communication is possible. Communication problems that affect the whole bus, as a result of opens and terminal push outs are more likely to occur on data busses that operate at a high speed than a data bus that operates at a lower speed.

When an open circuit or terminal push out occurs one or more modules can become isolated from the remainder of the bus. The isolated module will attempt to communicate, but will not be able to receive messages or determine arbitration from other modules. Each time the isolated module attempts to communicate it alters the bus voltage on the intact bus circuit. Without functioning arbitration the isolated module alters the bus voltage while other bus messages are being sent thereby corrupting the messages on the remainder of the bus.

The CAN bus modules are connected in parallel to the two-wire bus using a twisted pair, where the wires are wrapped around each other to provide shielding from unwanted electromagnetic induction, thus preventing interference with the relatively low voltage signals being carried through them. While the CAN bus is operating (active), one of the bus wires will carry a higher voltage and is referred to as the CAN High or CAN bus (+) wire, while the other bus wire will carry a lower voltage and is referred to as the CAN Low or CAN bus (-) wire.

WHEN MONITORED:

With the ignition on.

Battery voltage between 10 and 16 volts.

Ignition Off Draw (IOD) fuse installed.

Totally Integrated Power Module (TIPM) is configured correctly.

SET CONDITION:

Bus messages not received from the Steering Control Module (SCM)/Steering Angle Sensor (SAS) for approximately two to five seconds.

POSSIBLE CAUSES

Possible Causes
(D51) OR (D65) CAN C BUS (+) CIRCUIT SHORTED TO VOLTAGE
(D52) OR (D64) CAN C BUS (-) CIRCUIT SHORTED TO GROUND
DTC's RELATED TO BATTERY VOLTAGE, IGNITION, OR VIN MESSAGES
TIPM NOT CONFIGURED CORRECTLY
SAS POWER AND GROUND
STEERING CONTROL MODULE (SCM)/STEERING ANGLE SENSOR (SAS)
MODULE THAT SET THIS DTC

DIAGNOSTIC TEST

1. **VERIFY DTC IS ACTIVE**

   NOTE: Make sure the IOD fuse is installed and battery voltage is between 10 and 16 volts before proceeding.

   1. With the scan tool, read active DTC's.

      Is this DTC active?

      Yes

- Go To 2.

No

- Refer to **STORED LOST COMMUNICATION DTC's** and perform the diagnostic procedure.

2. **CHECK FOR ANY OF THE FOLLOWING ACTIVE DTC's**
   1. With the scan tool, read all active DTC's from all modules.

      NOTE: Check for TIPM configuration, CAN C hardware electrical, VIN Missing/Mismatch, battery or ignition related DTC's.

      Does the scan tool display any active DTC's to the conditions listed above?

      Yes

      - Go to **DIAGNOSTIC CODE INDEX** and perform the appropriate diagnostic procedure.

      No

      - Go To 3.

3. **VERIFY THE SAS IS ACTIVE ON THE BUS**
   1. Turn the ignition on.
   2. With the scan tool, select Network Diagnostics.
   3. Verify the SAS is active on the bus.

      Is the SAS active on the bus?

      Yes

      - Go To 4.

      No

      - Refer to **NO RESPONSE FROM THE STEERING ANGLE SENSOR (SAS)** and perform the diagnostic procedure.

4. **CHECK FOR ADDITIONAL COMMUNICATION RELATED DTC's**
   1. With the scan tool, select Network Diagnostics.

      Is there more than one module with active DTC's "Logged Against" the SAS?

      Yes

      - Replace/update the SAS in accordance with the Service Information. Refer to **CLOCKSPRING, REMOVAL** .

- Perform the BODY VERIFICATION TEST. Refer to **BODY VERIFICATION TEST**.

No

- Go To 5.

5. **CLEAR DTC IN MODULE SETTING FAULT**
   1. With the scan tool, select the module setting the DTC against the SAS.
   2. Clear active DTC's.

      Is this DTC still active?

      Yes

      - Replace/update the module that set this DTC in accordance with the Service Information.
      - Perform the appropriate verification test for the module being replaced. If there is no verification test for the associated module, Perform the BODY VERIFICATION TEST. Refer to **BODY VERIFICATION TEST**.

      No

      - Go To 6.

6. **CYCLE IGNITION**
   1. Cycle the ignition from RUN to OFF three times ending with the key in the RUN position.

      Does this DTC become active?

      Yes

      - Go To 7.

      No

      - The condition is not present at this time. Using the wiring diagrams as a guide, check all related splices and connectors for signs of water intrusion, corrosion, pushed out or bent terminals, and correct pin tension.
      - Perform the appropriate VERIFICATION TEST.

7. **CHECK FOR ADDITIONAL LOST COMMUNICATION FAULTS**
   1. With the scan tool, select Network Diagnostics.

      Does the TIPM and other CAN C BUS modules show Lost Communication with the remaining CAN C BUS modules?

      Yes

      - Go To 8.

No

- Replace/update the module that set this DTC in accordance with the Service Information.
- Perform the appropriate verification test for the module being replaced. If there is no verification test for the associated module, Perform the BODY VERIFICATION TEST. Refer to **BODY VERIFICATION TEST**.

8. **(D52) OR (D65) CAN C BUS (+) CIRCUIT SHORTED TO VOLTAGE**

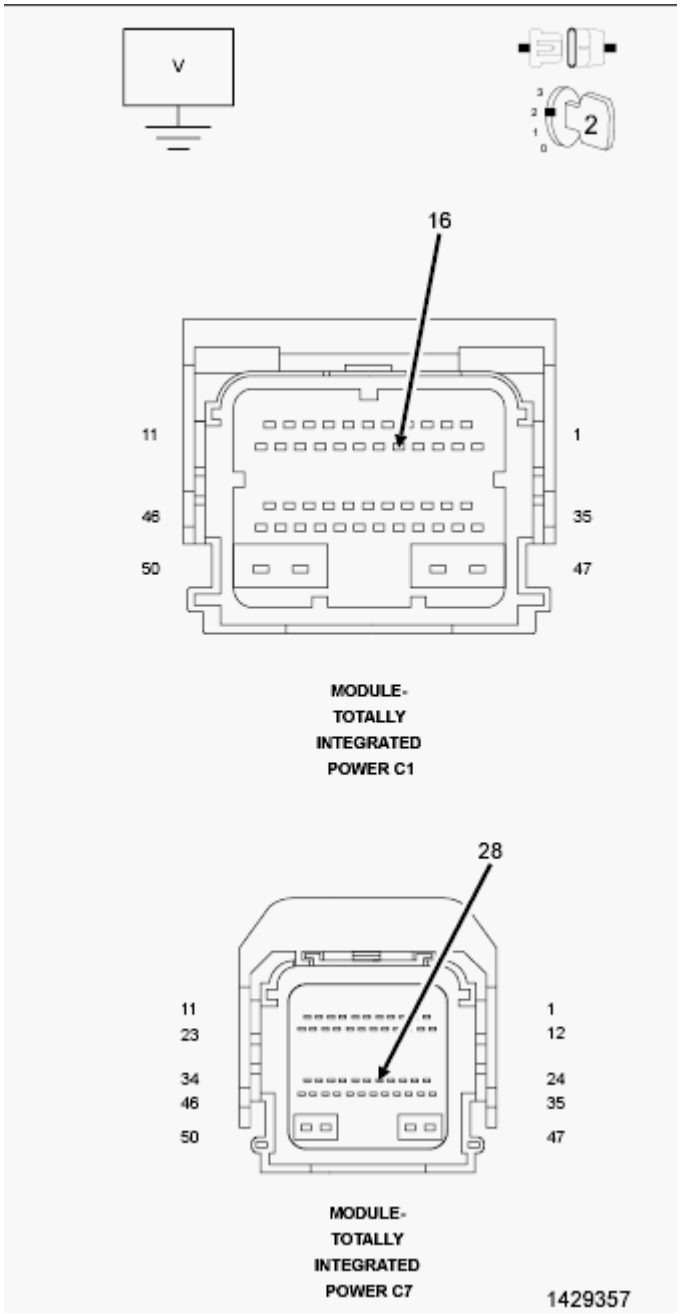

Fig. 188: Checking Can C Bus (+) Circuit For A Short To Voltage
Courtesy of CHRYSLER GROUP, LLC

1. Measure the voltage between the (D52) CAN C Bus (+) circuit and ground.
2. Measure the voltage between the (D65) CAN C Bus (+) circuit and ground.

   Is the voltage above 5.0 volts?

   Yes

   - Repair the short to voltage in the (D52) or (D65) CAN C Bus (+) circuit.
   - Perform the BODY VERIFICATION TEST. Refer to **BODY VERIFICATION TEST**.

   No

   - Go To 9.

9. **(D51) OR (D64) CAN C BUS (-) CIRCUIT SHORTED TO GROUND**

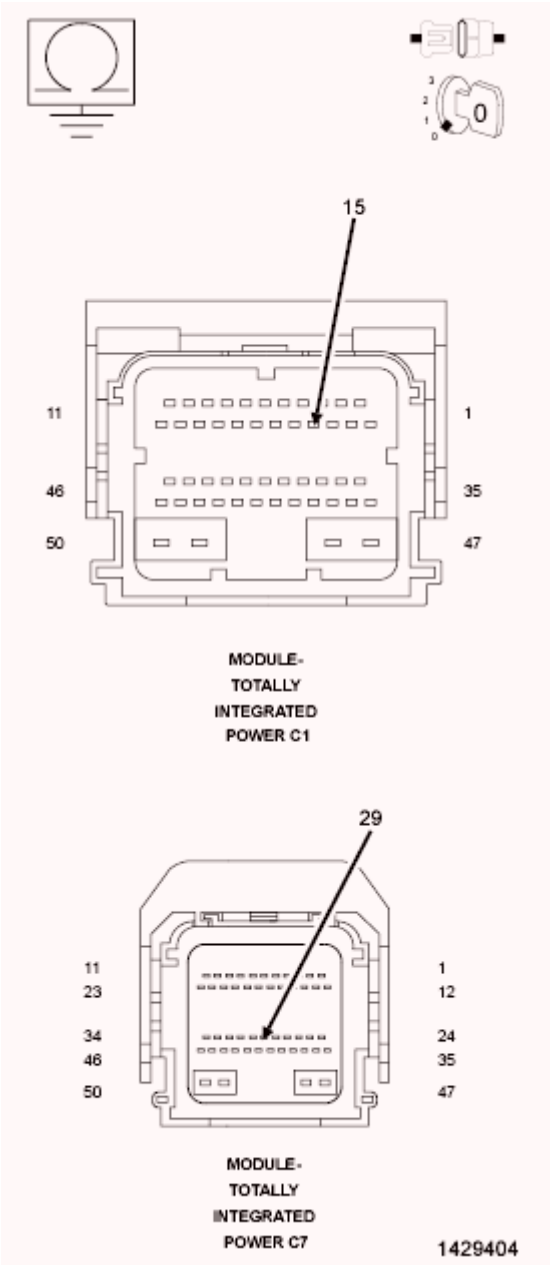

Fig. 189: Checking Can C Bus (-) Circuit For A Short To Ground
Courtesy of CHRYSLER GROUP, LLC

1. Turn the ignition off.
2. Measure the resistance between ground and the (D51) CAN C Bus (-) circuit.
3. Measure the resistance between ground and the (D64) CAN C Bus (-) circuit.

   Is the resistance below 10k Ohms?

   Yes

   - Repair the short to ground in the (D51) or (D64) CAN C Bus (-) circuit.

- Perform the BODY VERIFICATION TEST. Refer to **BODY VERIFICATION TEST**.

No

- Replace/update the module that set this DTC in accordance with the Service Information.
- Perform the appropriate verification test for the module being replaced. If there is no verification test for the associated module, Perform the BODY VERIFICATION TEST. Refer to **BODY VERIFICATION TEST**.

U0249-LOST COMMUNICATION WITH VEHICLE ENTERTAINMENT CONTROL MODULE - LAST ROW (VES3)

For a complete wiring diagram, **refer to appropriate SYSTEM WIRING DIAGRAMS article** .

THEORY OF OPERATION

The primary communication network between electronic control modules on this vehicle is the Controller Area Network (CAN) data bus system. The Controller Area Network (CAN) data bus allows all electronic modules connected to the bus to share information with each other. Regardless of whether a message originates from a module on the higher speed CAN C (500K) Bus or on the lower speed CAN Interior High Speed (IHS) (125K) Bus the message structure and layout is similar, which allows the Totally Integrated Power Module/Central GateWay (TIPM or TIPMCGW) to process and transfer messages between the CAN buses. The TIPM also stores Diagnostic Trouble Codes (DTC's) for certain bus network faults.

All modules transmit and receive messages over one of these buses. Data exchange between the modules is achieved by serial transmission of encoded data messages (a form of transmission in which data bits are sent sequentially, one at a time, over a single line). Each module can both send and receive serial data simultaneously. Each data bit of a CAN Bus message is carried over the bus as a voltage differential between the two bus circuits which, when strung together, form a message. Each module uses arbitration to sort the message priority if two competing messages are attempting to be broadcast at the same time. Corruption of a single bit within a message will corrupt the entire message. Each message contains a Cyclic Redundancy Check (CRC) which specifies the message size exactly. If the message detected conflicts with the CRC the ECU receiving it will determine the message to be an error and consider that communication has not been possible. Diagnosis of this condition using a lab scope may reveal activity that appears to be Bus data messages even if no actual communication is possible. Communication problems that affect the whole bus, as a result of opens and terminal push outs are more likely to occur on data busses that operate at a high speed than a data bus that operates at a lower speed.

When an open circuit or terminal push out occurs one or more modules can become isolated from the remainder of the bus. The isolated module will attempt to communicate, but will not be able to receive messages or determine arbitration from other modules. Each time the isolated module attempts to communicate it alters the bus voltage on the intact bus circuit. Without functioning arbitration the isolated module alters the bus voltage while other bus messages are being sent thereby corrupting the messages on the remainder of the bus.

The CAN bus modules are connected in parallel to the two-wire bus using a twisted pair, where the wires are wrapped around each other to provide shielding from unwanted electromagnetic induction, thus preventing interference with the relatively low voltage signals being carried through them. While the CAN bus is operating

(active), one of the bus wires will carry a higher voltage and is referred to as the CAN High or CAN bus (+) wire, while the other bus wire will carry a lower voltage and is referred to as the CAN Low or CAN bus (-) wire.

WHEN MONITORED:

With the ignition on.

Battery voltage between 10 and 16 volts.

Ignition Off Draw (IOD) fuse installed.

Totally Integrated Power Module (TIPM) is configured correctly.

SET CONDITION:

Bus messages not received from the Vehicle Entertainment Control Module (VES3) for approximately two to five seconds.

POSSIBLE CAUSES

Possible Causes
(D265) CAN INTERIOR BUS (+) (125K) CIRCUIT SHORTED TO VOLTAGE
(D264) CAN INTERIOR BUS (-) (125K) CIRCUIT SHORTED TO GROUND
DTC's RELATED TO BATTERY VOLTAGE, IGNITION, OR VIN MESSAGES
TIPM NOT CONFIGURED CORRECTLY
VES3 POWER AND GROUND
VEHICLE ENTERTAINMENT CONTROL MODULE (VES3)
MODULE THAT SET THE DTC

DIAGNOSTIC TEST

1. **VERIFY DTC IS ACTIVE**

   NOTE: Make sure the IOD fuse is installed and battery voltage is between 10 and 16 volts before proceeding.

   1. With the scan tool, read active DTC's.

      Is this DTC active?

      Yes

      - Go To 2.

      No

- Refer to **STORED LOST COMMUNICATION DTC's** and perform the diagnostic procedure.

2. **CHECK FOR ANY OF THE FOLLOWING ACTIVE DTC's**
   1. With the scan tool, read active DTC's from all modules.

      NOTE: Check for TIPM configuration, CAN Interior Bus hardware electrical, VIN Missing/Mismatch, battery or ignition related DTC's.

      Does the scan tool display any active DTC's to the conditions listed above?

      Yes

      - Go to **DIAGNOSTIC CODE INDEX** and perform the appropriate diagnostic procedure.

      No

      - Go To 3.

3. **VERIFY THE VES3 IS ACTIVE ON THE BUS**
   1. Turn the ignition on.
   2. With the scan tool, select Network Diagnostics.
   3. Verify the VES3 is active on the bus.

      Is the VES3 active on the bus?

      Yes

      - Go To 4.

      No

      - Refer to **NO RESPONSE FROM VES3 (VIDEO SCREEN MODULE)** and perform the diagnostic procedure.

4. **CHECK FOR ADDITIONAL COMMUNICATION RELATED DTC's**
   1. With the scan tool, select Network Diagnostics.

      Is there more than one module with active DTC's "Logged Against" the VES3?

      Yes

      - Replace/update the VES3 in accordance with the Service Information. Refer to **MONITOR, MEDIA SYSTEM, REMOVAL** .
      - Perform the BODY VERIFICATION TEST. Refer to **BODY VERIFICATION TEST**.

      No

- Go To 5.

5. **CLEAR DTC IN MODULE SETTING FAULT**
    1. With the scan tool, select the module setting the DTC against the VES3.
    2. Clear active DTC's.

    Is this DTC still active?

    Yes

    - Replace/update the module that set this DTC in accordance with the Service Information.
    - Perform the appropriate verification test for the module being replaced. If there is no verification test for the associated module, Perform the BODY VERIFICATION TEST. Refer to **BODY VERIFICATION TEST**.

    No

    - Go To 6.

6. **CYCLE IGNITION**
    1. Cycle the ignition from RUN to OFF three times ending with the key in the RUN position.

    Does this DTC become active?

    Yes

    - Go To 7.

    No

    - The condition is not present at this time. Using the wiring diagram/schematic as a guide, inspect the wiring for chafed, pierced, pinched, and partially broken wires and the wiring harness connectors for broken, bent, pushed out, and corroded terminals.
    - Perform the appropriate VERIFICATION TEST.

7. **CHECK FOR ADDITIONAL LOST COMMUNICATION FAULTS**
    1. With the scan tool, select Network Diagnostics.

    Does the TIPM and other CAN Interior BUS (125K) modules show Lost Communication with the remaining CAN Interior BUS (125K) modules?

    Yes

    - Go To 8.

    No

    - Replace/update the module that set this DTC in accordance with the Service Information.

- Perform the appropriate verification test for the module being replaced. If there is no verification test for the associated module, Perform the BODY VERIFICATION TEST. Refer to **BODY VERIFICATION TEST**.

8. **(D265) CAN INTERIOR BUS (+) (125K) CIRCUIT SHORTED TO VOLTAGE**

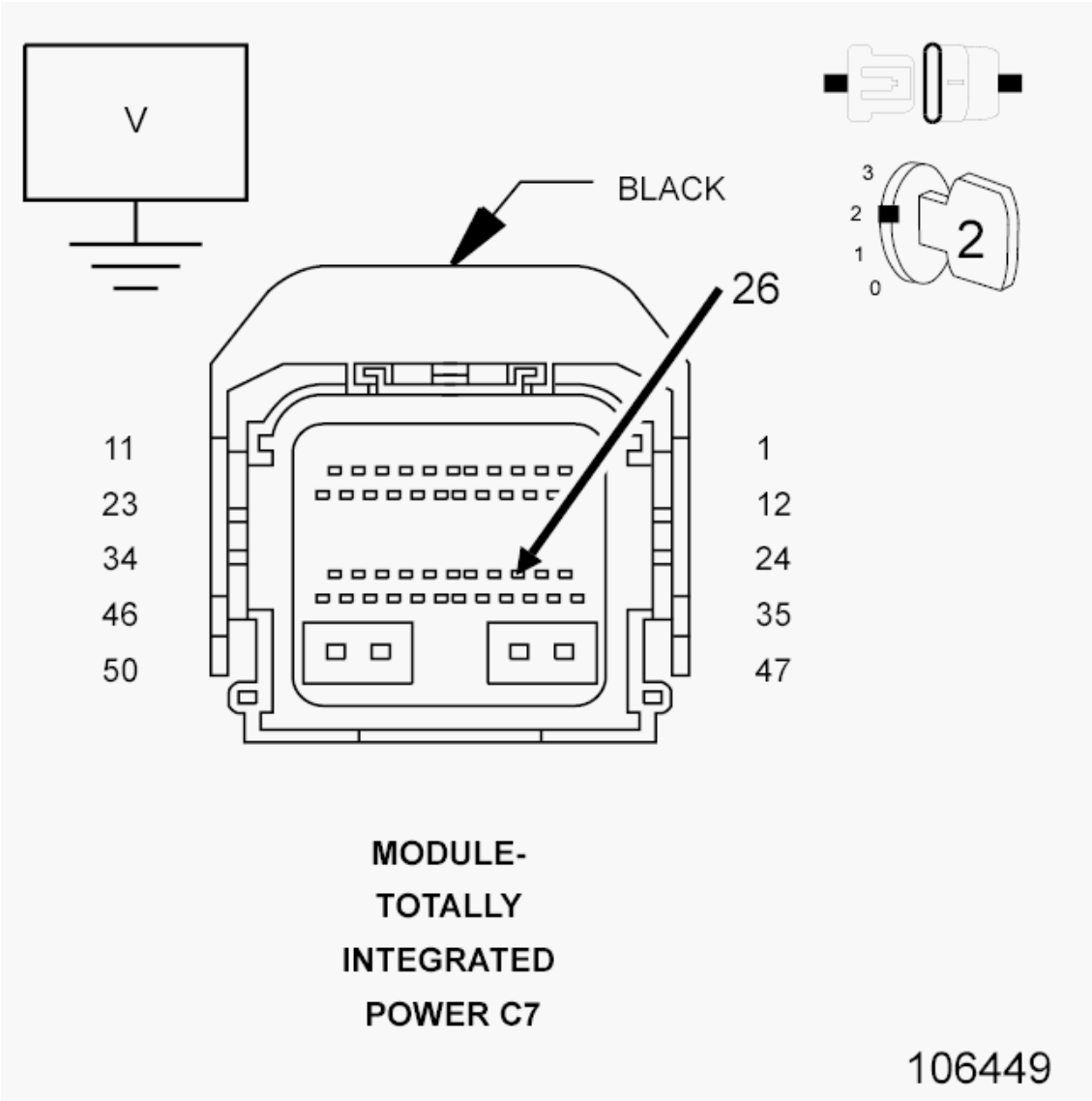

Fig. 190: Checking Can Interior Bus (+) (125K) Circuit For A Short To Voltage
Courtesy of CHRYSLER GROUP, LLC

1. Measure the voltage between the (D265) CAN Interior Bus (+) (125K) circuit and ground.

   Is the voltage above 5.0 volts?

   Yes

   - Repair the short to voltage in the (D265) CAN Interior Bus (+) (125K) circuit.

- Perform the BODY VERIFICATION TEST. Refer to **BODY VERIFICATION TEST**.

No

- Go To 9.

9. **(D264) CAN INTERIOR BUS (-) (125K) CIRCUIT SHORTED TO GROUND**

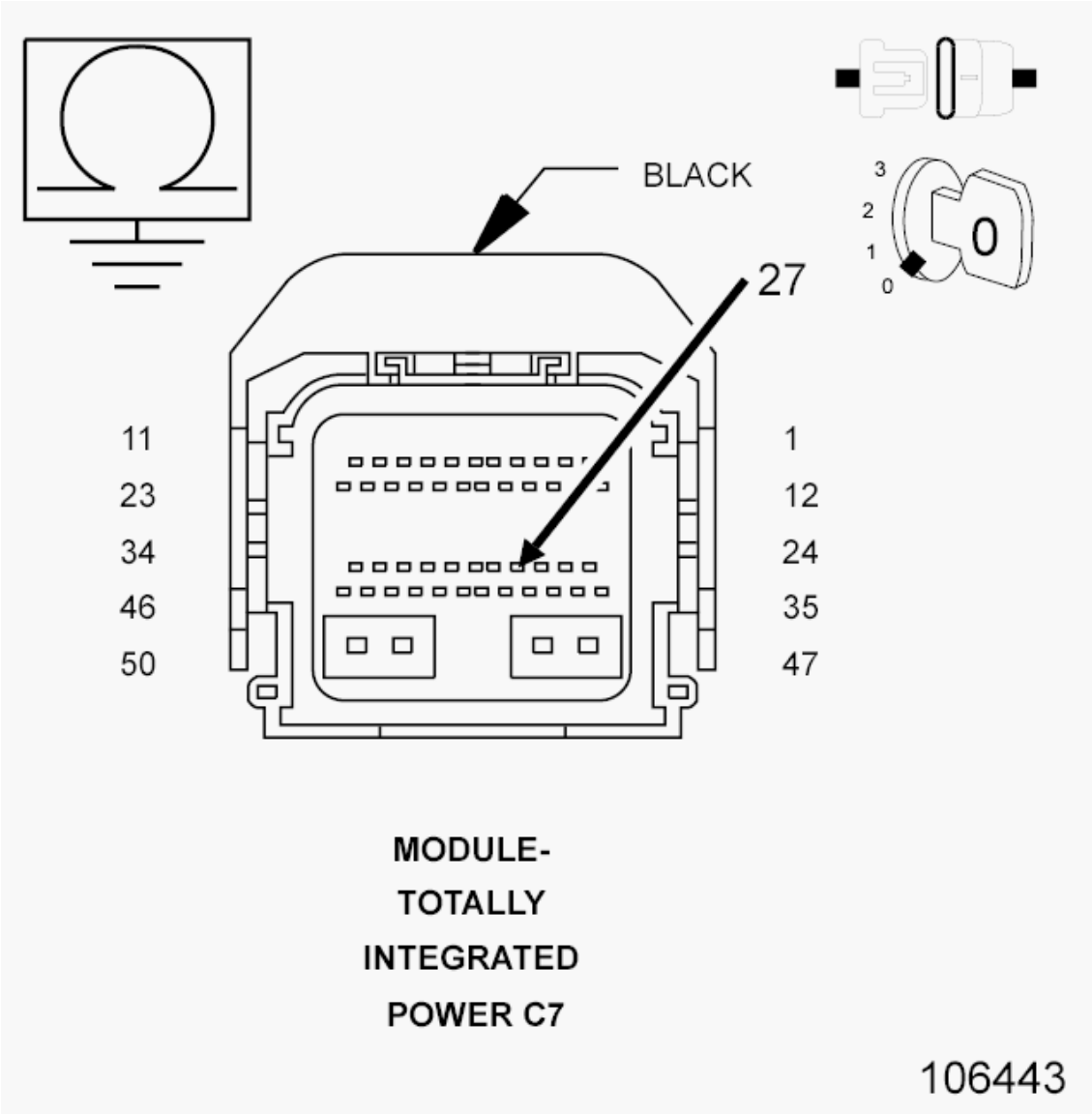

Fig. 191: Checking Can Interior Bus (-) (125K) Circuit For A Short To Ground
Courtesy of CHRYSLER GROUP, LLC

1. Turn the ignition off.
2. Measure the resistance between ground and the (D264) CAN Interior Bus (-) (125K) circuit.

   Is the resistance below 10k Ohms?

Yes

- Repair the short to ground in the (D264) CAN Interior Bus (-) (125K) circuit.
- Perform the BODY VERIFICATION TEST. Refer to **BODY VERIFICATION TEST**.

No

- Replace/update the module that set this DTC in accordance with the Service Information.
- Perform the appropriate verification test for the module being replaced. If there is no verification test for the associated module, Perform the BODY VERIFICATION TEST. Refer to **BODY VERIFICATION TEST**.

U1147-ADDITIONAL CAN INTERIOR BUS ECU DETECTED

For a complete wiring diagram, **refer to appropriate SYSTEM WIRING DIAGRAMS article** .

WHEN MONITORED:

Continuously.

SET CONDITION:

The Totally Integrated Power Module (TIPM) detects an additional CAN Interior Bus module and requires reprogramming.

POSSIBLE CAUSES

Possible Causes
ADDITIONAL MODULE ADDED/REMOVED FROM THE CAN INTERIOR BUS NETWORK

DIAGNOSTIC TEST

1. **CHECK THE VEHICLE REPAIR HISTORY**
    1. Check the vehicle repair history for any recent module replacements or additions.

       Have any modules been recently replaced or added?

       Yes

       - Verify the appropriate installation and module initialization procedures were completed. Make sure any changes related to the sales codes associated with the vehicle or the vehicle configuration were correctly updated. Repair as necessary.
       - Perform the BODY VERIFICATION TEST. Refer to **BODY VERIFICATION TEST**.

       No

- Go To 2.

2. **RESTORE THE VEHICLE CONFIGURATION**
    1. Turn the ignition on.
    2. With the scan tool, view the modules on the communication network. Read and record the listed modules or run a Vehicle Scan Report.
    3. With the scan tool, select TIPM, miscellaneous functions then Restore Vehicle Configuration.
    4. With the scan tool, erase DTC's.
    5. Cycle the ignition from on to off three times and read the active TIPM DTC's.

    Does the scan tool display this DTC as active?

    Yes

    - Retest system and attempt to reprogram the TIPM.
    - Perform the BODY VERIFICATION TEST. Refer to **BODY VERIFICATION TEST**.

    No

    - Repair is complete.
    - Perform the BODY VERIFICATION TEST. Refer to **BODY VERIFICATION TEST**.

U1148-ADDITIONAL CAN C BUS ECU DETECTED

For a complete wiring diagram, **refer to appropriate SYSTEM WIRING DIAGRAMS article** .

WHEN MONITORED:

Continuously.

SET CONDITION:

The Totally Integrated Power Module (TIPM) detects an additional CAN C Bus module and requires reprogramming.

POSSIBLE CAUSES

Possible Causes
ADDITIONAL MODULE ADDED/REMOVED FROM THE CAN C BUS NETWORK

DIAGNOSTIC TEST

1. **CHECK THE VEHICLE REPAIR HISTORY**
    1. Check the vehicle repair history for any recent module replacements or additions.

    Have any modules been recently replaced or added?

Yes

- Verify the appropriate installation and module initialization procedures were completed. Make sure any changes related to the sales codes associated with the vehicle or the vehicle configuration were correctly updated. Repair as necessary.
- Perform the BODY VERIFICATION TEST. Refer to **BODY VERIFICATION TEST**.

No

- Go To 2.

2. **RESTORE THE VEHICLE CONFIGURATION**
    1. Turn the ignition on.
    2. With the scan tool, view the modules on the communication network. Read and record the listed modules or run a Vehicle Scan Report.
    3. With the scan tool, select TIPM, miscellaneous functions then Restore Vehicle Configuration.
    4. With the scan tool, erase DTC's.
    5. Cycle the ignition from on to off three times and read the active TIPM DTC's.

    Does the scan tool display this DTC as active?

    Yes

    - Retest system and attempt to reprogram the TIPM.
    - Perform the BODY VERIFICATION TEST. Refer to **BODY VERIFICATION TEST**.

    No

    - Repair is complete.
    - Perform the BODY VERIFICATION TEST. Refer to **BODY VERIFICATION TEST**.

STANDARD PROCEDURE

BODY VERIFICATION TEST

DIAGNOSTIC TEST

1. **Perform Body Verification Test**
    1. Disconnect all jumper wires and reconnect all previously disconnected components and connectors.
    2. Make sure all accessories are turned off.
    3. Make sure the battery is fully charged.
    4. Turn the ignition on.
    5. With the scan tool, record and erase Diagnostic Trouble Codes (DTC)s from all modules.
    6. If an electronic control module was replaced, select the applicable module from the scan tool. If the

module has programmable features, program as necessary.

7. (Export only) If the Intrusion Transceiver Module (ITM) and/or Siren was replaced, select the ITM from the scan tool and perform the applicable replacement procedure.
8. Turn the ignition off, wait 10 seconds, and then turn the ignition on.
9. Operate all functions of the system that caused the original concern. If a repair or module replacement was done to the power windows, operate the motor fully down and then to the full up position and stall it for two seconds.
10. With the scan tool, view all the modules and check for DTC's.

Are DTC's present in any of the modules or is the original condition still present?

Yes

- The repair is not complete. Refer to the appropriate Electrical Diagnostic Information for the DTC or symptom that is still present.

No

- The repair is complete.

DESCRIPTION

DESCRIPTION

The HomeLink® transceiver for this vehicle is integral to the Remote Compass Module (RCM) and is sometimes referred to as an Electronic Overhead Module (EOM) located in the front overhead console. The only visible component of the HomeLink® transceiver are the three push buttons (4). The buttons are marked with one, two or three dots, respectively, for identification of each channel.

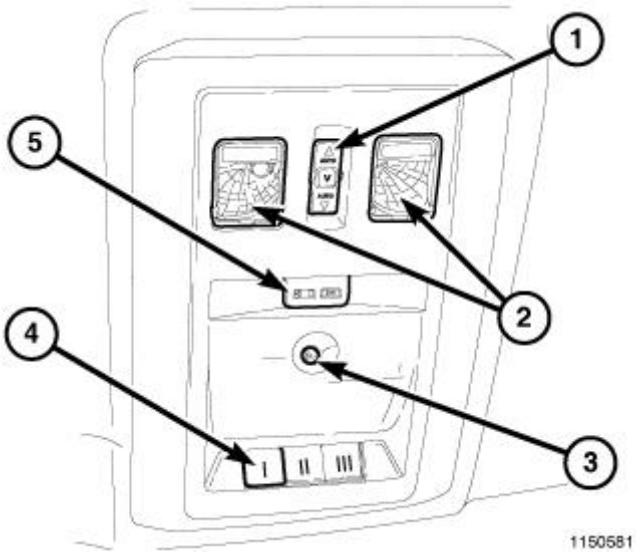

Fig. 1: View Of Electronic Overhead Module (EOM)
Courtesy of CHRYSLER GROUP, LLC

Each of the HomeLink® transceiver push buttons controls an independent radio transmitter channel. Each of these three channels can be trained to transmit a different radio frequency signal for the remote operation of garage door openers, motorized gate openers, home or office lighting, security systems or just about any other device that can be equipped with a radio receiver in the 286 to 399 Megahertz (MHz) frequency range for remote operation. The HomeLink® transceiver is capable of operating systems using either rolling code or non-rolling code technology. For information on programing, refer to **STANDARD PROCEDURE**.

The HomeLink® transceiver cannot be repaired, and is only available for service as part of the EOM. This unit includes the electronics and push button switches for the HomeLink® transceiver, the electronics for the Remote Compass Module (RCM) and the plastic module case. For service information, refer to **MODULE, COMPASS, REMOVAL** and **MODULE, COMPASS, INSTALLATION** .

OPERATION

OPERATION

The HomeLink® transceiver receives battery feed through the Ignition Off Draw (IOD) fuse circuit of the vehicle. It operates on a non-switched source of battery current so the unit will remain functional, regardless of the ignition switch position. It can learn and store three separate transmitter radio frequency codes to operate garage door openers, security gates and security lighting. The Electronic Vehicle Information Center (EVIC) display provides visual feedback to the driver, showing which transmitter button is pressed. The system will not send operating signals if the vehicle theft security alarm is armed. This prevents a perpetrator from breaking into a vehicle parked outside a home and using the HomeLink® transceiver system to enter the home.

DIAGNOSIS AND TESTING

DIAGNOSIS AND TESTING - HOMELINK® TRANSCEIVER

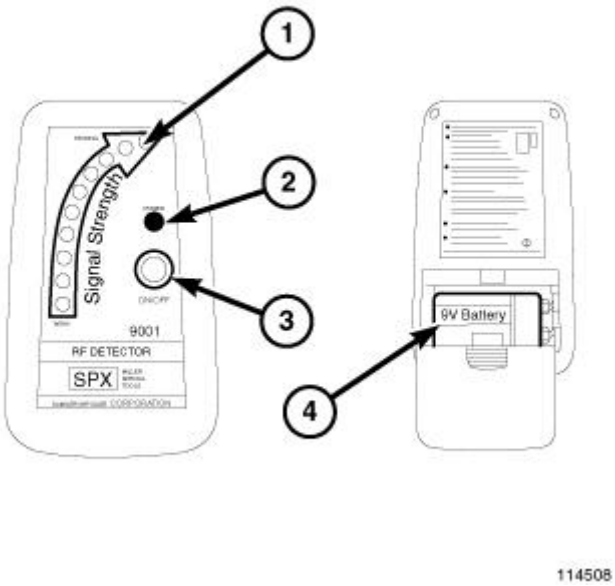

Fig. 2: Radio Frequency Detector #9001
Courtesy of CHRYSLER GROUP, LLC

If the HomeLink® transceiver is inoperative, but the Electronic Vehicle Information Center (EVIC) Vacuum-Fluorescent Display (VFD) is operating normally, for instructions on training the HomeLink® transceiver. Refer to **STANDARD PROCEDURE**. Retrain the HomeLink® transceiver with a known good hand held transmitter as instructed and test the HomeLink® transceiver operation again. If the unit is still inoperative, test it with the Radio Frequency Detector special tool (special tool #9001, Rf Detector) as described below:

1. Turn the Radio Frequency (RF) Detector ON. A "chirp" will sound and the green power Light Emitting Diode (LED) indicator will light. If the green LED does not light, replace the battery.
2. Hold the RF detector within one inch of the **TRAINED** HomeLink® transceiver and press any of the transceiver buttons.
3. The red signal detection LEDs will light and the tool will beep if a radio signal is detected. Repeat this test for each button. If any button is inoperative, replace the Electronic Overhead Module (EOM) module.

For complete circuit diagrams, refer to the appropriate wiring information. The wiring information

includes wiring diagrams, proper wire and connector repair procedures, details of wire harness routing and retention, connector pin-out information and location views for the various wire harness connectors, splices and grounds.

STANDARD PROCEDURE

PROGRAMMING HOMELINK® TRANSCEIVER CODES

WARNING: Vehicle exhaust contains carbon monoxide, a dangerous gas. Do not run the engine while training the universal transmitter. Failure to follow these instructions may result in possible serious or fatal injury.

WARNING: Your motorized door or gate may open and close while you are training the universal transmitter if the vehicle is in range of the motorized device. Do not train the universal transmitter if people or pets are in the path of the door or gate. A moving door or gate can cause serious injury or death to people and pets or damage to objects.

NOTE: When programming a garage door opener, it is advised to park outside the garage. It is also recommended that a new battery be placed in the hand-held transmitter of the device being programmed to the HomeLink® transceiver for quicker training and accurate transmission of the radio-frequency signal.

NOTE: If programing the HomeLink® transceiver is unsuccessful using the following procedure, refer to the Owner's Manual for the current customer assistance phone number.

PROGRAMMING COMMON HOMELINK® TRANSCEIVER CODES (ELECTRONIC VEHICLE INFORMATION CENTER (EVIC) EQUIPPED MODELS)

1. Press and hold the two outer HomeLink® transceiver buttons, the EVIC will display "CLEARING CHANNELS", do not release the buttons until "CHANNELS CLEARED" is displayed on the EVIC (after approximately 20 seconds). **Do not** hold the buttons for longer than 30 seconds and **do not** repeat step one to program a second and/or third hand-held transmitter to the remaining two HomeLink® transceiver buttons. The HomeLink® transceiver is now in the train (or learning) mode
2. Position the end of your hand-held transmitter 3-8 cm (1-3 inches) away from the HomeLink® transceiver buttons while keeping the EVIC display in view.
3. Simultaneously press and hold both the HomeLink® transceiver button that you want to train and the hand-held transmitter button. **Do not release the buttons until step 4 has been completed.** The EVIC will display "CHANNEL X TRAINING", once the HomeLink® transceiver is programmed the EVIC will display "CHANNEL X TRAINED". X refers to the desired channel being trained (1, 2 or 3).

NOTE: Some gate operators and garage door openers may require you to replace this Programming Step 3. Refer to <u>CANADIAN PROGRAMMING/GATE PROGRAMMING</u>.

4. Once "CHANNEL X TRAINED" is displayed on the EVIC, release both buttons. Programming is now complete. When the HomeLink® transceiver button is subsequently pressed, "CHANNEL X TRANSMIT" is displayed on the EVIC and your device should be activated, (garage door should open).

NOTE: **To program the remaining two buttons, begin with "Programming" step 2. Do not repeat step 1.**

If the EVIC display shows "CHANNEL X TRANSMIT" (where X is channel 1, 2 or 3) but your device does not activate, the device may be equipped with a "rolling code" system. Continue with the following steps five through seven to complete the programming of a rolling code equipped device (most commonly a garage door opener manufactured after 1995). The assistance of a second person may make the following programming steps quicker and easier.

5. At the garage door opener receiver (motor-head unit) in the garage, locate the "learn" or "smart" button. This can usually be found where the hanging antenna wire is attached to the motor-head unit.
6. Firmly press and release the "learn" or "smart" button. (The name and color of the button may vary by manufacturer.)

NOTE: **There are 30 seconds in which to initiate step 8.**

7. Return to the vehicle and firmly **press, hold for two seconds and release** the programmed HomeLink® transceiver button. Repeat the **"press/hold/release"** sequence a second time, and, depending on the brand of the garage door opener (or other rolling code equipped device), repeat this sequence a third time to complete the programming.

   The HomeLink® transceiver should now activate your rolling code equipped device.

NOTE: **To program the remaining two HomeLink® transceiver buttons, begin with "Programming" step 2. Do not repeat step 1.**

CANADIAN PROGRAMMING/GATE PROGRAMMING

Canadian radio-frequency laws require transmitter signals to "time-out" (or quit) after several seconds of transmission which may not be long enough for the HomeLink® transceiver to pick up the signal during programming. Similar to this Canadian law, some U.S. gate operators are designed to "time-out" in the same manner.

If you live in Canada or you are having difficulties programming a gate operator by using the "Programming" procedures (regardless of where you live), **replace "Programming Common HomeLink® Transceiver Codes" step 3** with the following:

NOTE: **When programming a garage door opener or gate operator, it is advised to unplug the device or move the vehicle out of range during the "cycling" process to prevent possible overheating.**

3. Continue to press and hold the HomeLink® transceiver button while you **press and release every two seconds** ("cycle") your hand-held transmitter until the frequency signal has successfully been accepted. On EVIC equipped vehicles, the EVIC will display "CHANNEL X TRAINING" and then "CHANNEL X TRAINED". Continue with "Programming". Refer to 4.

ERASING HOMELINK® TRANSCEIVER CODES

NOTE: Individual channels cannot be erased. Erasing the HomeLink® transceiver codes will erase ALL programmed codes.

ERASING HOMELINK® TRANSCEIVER CODES (ELECTRONIC VEHICLE INFORMATION CENTER (EVIC) EQUIPPED VEHICLES.

To erase programming from all three buttons (individual buttons cannot be erased but can be "reprogrammed"), follow the step noted:

- Press and hold the two outer HomeLink® transceiver buttons until the EVIC displays "CLEARING CHANNELS", do not release the buttons until "CHANNELS CLEARED" is displayed on the EVIC (after approximately 20 seconds). Release both buttons. Do not hold for longer that 30 seconds. HomeLink® is now in the train (or learning) mode and can be programmed at any time beginning with "Programming". Refer to **STANDARD PROCEDURE**.

REPROGRAMMING HOMELINK® TRANSCEIVER CODES

WARNING: **Vehicle exhaust contains carbon monoxide, a dangerous gas. Do not run the engine while training the universal transmitter. Failure to follow these instructions may result in possible serious or fatal injury.**

WARNING: **Your motorized door or gate may open and close while you are training the universal transmitter if the vehicle is in range of the motorized device. Do not train the universal transmitter if people or pets are in the path of the door or gate. A moving door or gate can cause serious injury or death to people and pets or damage to objects.**

NOTE: If programing the HomeLink® transceiver is unsuccessful using the following procedure, refer to the Owner's Manual for the current customer assistance phone number.

REPROGRAMMING BASIC HOMELINK® TRANSCEIVER CODES (ELECTRONIC VEHICLE INFORMATION CENTER (EVIC) EQUIPPED VEHICLES)

To program a device to the HomeLink® transceiver using a button previously trained, follow these steps:

1. Press and hold the desired HomeLink® transceiver button. **DO NOT** release the button. The EVIC will display "CHANNEL X TRANSMIT" for 20 seconds and then change to "CHANNEL X TRAINING". Without releasing the HomeLink® transceiver button, proceed to step 2.

2. Position the end of your hand-held transmitter 3-8 cm (1-3 inches) away from the HomeLink® transceiver button while keeping the EVIC display in view.
3. Simultaneously press and hold both the HomeLink® transceiver button that you want to train and the hand-held transmitter buttons. **Do not release the buttons until step 4 has been completed.** The EVIC will display "CHANNEL X TRAINING", once the HomeLink® transceiver is programmed the EVIC will display "CHANNEL X TRAINED". X refers to the desired channel being trained (1, 2 or 3).

NOTE: Some gate operators and garage door openers may require you to replace this Reprogramming Step 3. Refer to <u>CANADIAN PROGRAMMING/GATE PROGRAMMING</u>.

4. Once "CHANNEL X TRAINED" is displayed on the EVIC, release both buttons. Programming is now complete. When the HomeLink® transceiver button is subsequently pressed, "CHANNEL X TRANSMIT" is displayed on the EVIC and your device should be activated, (garage door should open).

NOTE: If the EVIC display shows "CHANNEL X TRANSMIT" (where X is channel 1, 2 or 3) but your device does not activate, the device may be equipped with a "rolling code" system. Continue with the following steps 5 through 7 to complete the programming of a rolling code equipped device (most commonly a garage door opener manufactured after 1995). The assistance of a second person may make the following programming steps quicker and easier.

5. At the garage door opener receiver (motor-head unit) in the garage, locate the "learn" or "smart" button. This can usually be found where the hanging antenna wire is attached to the motor-head unit.
6. Firmly press and release the "learn" or "smart" button. (The name and color of the button may vary by manufacturer.)

NOTE: There are 30 seconds in which to initiate step 7.

7. Return to the vehicle and firmly **press, hold for two seconds and release** the reprogrammed HomeLink® transceiver button. Repeat the **"press/hold/release"** sequence a second time, and, depending on the brand of the garage door opener (or other rolling code equipped device), repeat this sequence a third time to complete the reprogramming.

   The HomeLink® transceiver should now activate your rolling code equipped device.

CANADIAN PROGRAMMING/GATE PROGRAMMING

Canadian radio-frequency laws require transmitter signals to "time-out" (or quit) after several seconds of transmission which may not be long enough for the HomeLink® transceiver to pick up the signal during programming. Similar to this Canadian law, some U.S. gate operators are designed to "time-out" in the same manner.

If you live in Canada or you are having difficulties programming a gate operator by using the "Programming" procedures (regardless of where you live), **replace "Programming Common HomeLink® Transceiver**

Codes" step 3 with the following:

NOTE: **When programming a garage door opener or gate operator, it is advised to unplug the device or move the vehicle out of range during the "cycling" process to prevent possible overheating.**

3. Continue to press and hold the HomeLink® transceiver button while you **press and release every two seconds** ("cycle") your hand-held transmitter until the frequency signal has successfully been accepted. On EVIC equipped vehicles, the EVIC will display "CHANNEL X TRAINING" and then "CHANNEL X TRAINED". Continue with "Programming". Refer to 4.

DIAGNOSIS AND TESTING

SENTRY KEY IMMOBILIZER SYSTEM

WARNING: To avoid serious or fatal injury on vehicles equipped with airbags, disable the Supplemental Restraint System (SRS) before attempting any steering wheel, steering column, airbag, seat belt tensioner, impact sensor or instrument panel component diagnosis or service. Refer to WARNING . Disconnect and isolate the battery negative (ground) cable, then wait two minutes for the system capacitor to discharge before performing further diagnosis or service. This is the only sure way to disable the SRS. Failure to take the proper precautions could result in accidental airbag deployment.

The hard wired circuits between components related to the Sentry Key Immobilizer System (SKIS) may be diagnosed using conventional diagnostic tools and procedures. Refer to the appropriate wiring information. The wiring information includes wiring diagrams, proper wire and connector repair procedures, details of wire harness routing and retention, connector pin-out information and location views for the various wire harness connectors, splices and grounds.

However, conventional diagnostic methods will not prove conclusive in the diagnosis of the SKIS or the electronic controls or communication between other modules and devices that provide some features of the SKIS. The most reliable, efficient, and accurate means to diagnose the SKIS or the electronic controls and communication related to SKIS operation requires the use of a diagnostic scan tool. Refer to the appropriate diagnostic information.

CONDITION	POSSIBLE CAUSES	CORRECTION
SECURITY INDICATOR FAILS TO LIGHT DURING BULB TEST	1. Ineffective Light-Emitting Diode (LED).	1. Use a diagnostic scan tool to perform the instrument cluster actuator test. Refer to the appropriate diagnostic information.
	2. Ineffective fuse.	2. Check the WIN fused B(+) fuse and the fused ignition switch output (run-start) fuse in the Junction Block (JB). Replace the fuses, if required.
	3. Ineffective ground circuit.	3. Test and repair the open ground circuit at the connector for the WIN, if required.
	4. Ineffective battery feed circuit.	4. Test and repair the open battery feed circuit at the connector for the WIN, if required.
	5. Ineffective ignition feed	5. Test and repair the open ignition

	circuit.	feed circuit at the connector for the WIN, if required.
SECURITY INDICATOR FLASHES FOLLOWING BULB TEST	1. Invalid key in ignition switch lock cylinder.	1. Replace the key with a known valid key.
	2. Key-related fault.	2. Use a diagnostic scan tool and the appropriate diagnostic information for further diagnosis.
SECURITY INDICATOR LIGHTS SOLID FOLLOWING BULB TEST	1. SKIS system malfunction/fault detected.	1. Use a diagnostic scan tool and the appropriate diagnostic information for further diagnosis.
	2. SKIS system ineffective.	2. Use a diagnostic scan tool and the appropriate diagnostic information for further diagnosis.

VEHICLE THEFT SECURITY SYSTEM

WARNING: **To avoid serious or fatal injury on vehicles equipped with airbags, disable the Supplemental Restraint System (SRS) before attempting any steering wheel, steering column, airbag, seat belt tensioner, impact sensor or instrument panel component diagnosis or service. Refer to WARNING . Disconnect and isolate the battery negative (ground) cable, then wait two minutes for the system capacitor to discharge before performing further diagnosis or service. This is the only sure way to disable the SRS. Failure to take the proper precautions could result in accidental airbag deployment.**

The hard wired circuits between components related to the Vehicle Theft Security System (VTSS) may be diagnosed using conventional diagnostic tools and procedures. Refer to the appropriate wiring information. The wiring information includes wiring diagrams, proper wire and connector repair procedures, details of wire harness routing and retention, connector pin-out information and location views for the various wire harness connectors, splices and grounds.

However, conventional diagnostic methods will not prove conclusive in the diagnosis of the VTSS or the electronic controls or communication between other modules and devices that provide some features of the VSS. The most reliable, efficient, and accurate means to diagnose the VTSS or the electronic controls and communication related to VTSS operation requires the use of a diagnostic scan tool. See the **Vehicle Theft Security System** menu item on the scan tool. Refer to the appropriate diagnostic information.

Vehicle Theft Security - Service Information - Ram Pickup

DESCRIPTION

SENTRY KEY IMMOBILIZER SYSTEM

The Sentry Key Immobilizer System (SKIS) provides passive vehicle protection by preventing the engine from operating unless a valid electronically encoded key is detected in the ignition lock cylinder. The SKIS used in combination with the export premium version of the VTSS adds a steering shaft lock feature that provides passive protection by preventing the vehicle from being steered unless a valid electronically encoded key is detected in the ignition lock cylinder.

The SKIS includes the following major components, which are described in further detail elsewhere in this service information:

- **Powertrain Control Module (1) -** The Powertrain Control Module (PCM) is located in the engine compartment. Refer to appropriate Electrical Diagnostic article. .
- **Security Indicator -** A security indicator is integral to the ElectroMechanical Instrument Cluster (EMIC) (also known as the Cab Compartment Node/CCN). Refer to **DESCRIPTION** .
- **Sentry Key Remote Entry Module/Wireless Ignition Node (WIN) -** The WIN located on the right side of the steering column concealed beneath the instrument panel.
- **Sentry Key Transponder (3) -** The Sentry Key transponder is contained within the Remote Keyless Entry (RKE) transmitter on the ignition key.

VEHICLE THEFT SECURITY SYSTEM

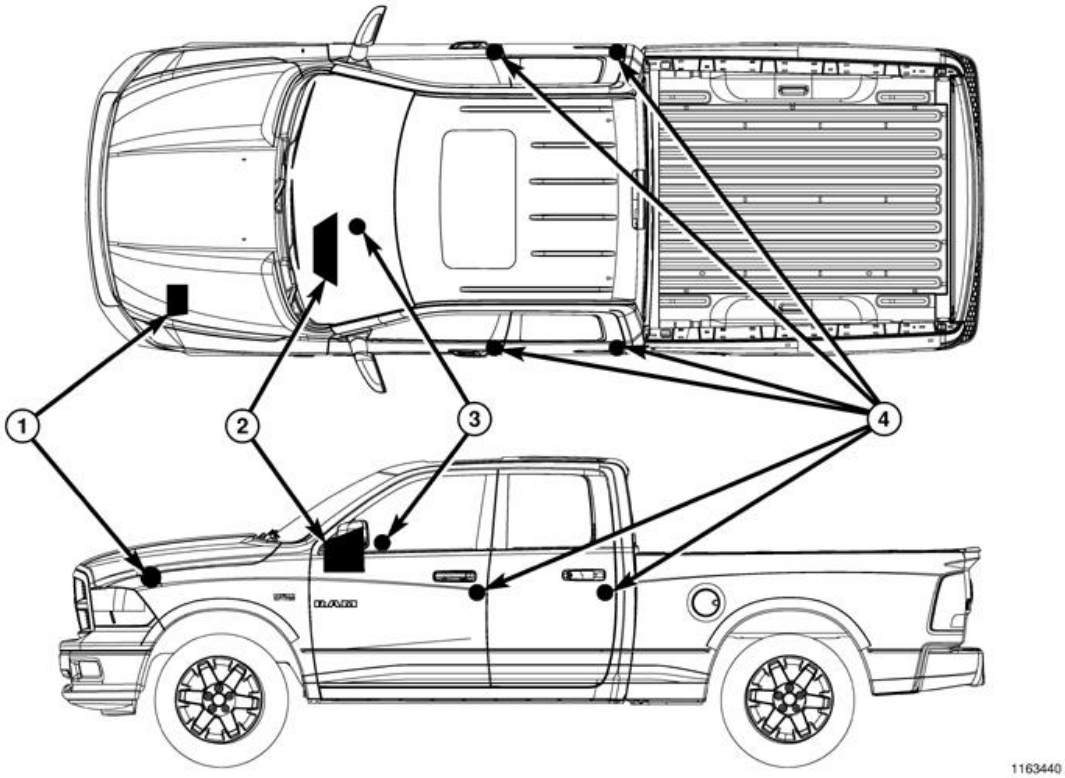

Fig. 1: Vehicle Theft Security System Components
Courtesy of CHRYSLER GROUP, LLC

The Vehicle Theft Security System (VTSS) is designed to provide perimeter protection against unauthorized use or tampering by monitoring the vehicle door ajar circuits, the power lock and unlock circuits, and the ignition switch circuit. If unauthorized use or tampering is detected, the system responds by pulsing the horn for up to about 3 minutes and flashing the hazard warning lamps for up to about 18 minutes.

The VTSS includes the following major components, which are described in further detail elsewhere in this service information:

- **Door Ajar Switches (4)** - A door ajar switch is integral to the door latch mechanism of each front door, as well as the rear doors on quad cab and mega cab vehicles. Refer to **SWITCH, DOOR AJAR, DESCRIPTION** .
- **ElectroMechanical Instrument Cluster (2)** - The ElectroMechanical Instrument Cluster (EMIC) is also known as the Cab Compartment Node (CCN) in this vehicle. The EMIC/CCN is located in the instrument panel above the steering column opening, directly in front of the driver. The EMIC provides the VTA system logic and security indicator control. Refer to **DESCRIPTION** .
- **Ignition Switch (3)** - The ignition switch is located on the steering column in the passenger compartment.
- **Security Indicator** - The security indicator is integral to the ElectroMechanical Instrument Cluster (EMIC) (also known as the Cab Compartment Node/CCN). Refer to **DESCRIPTION** .
- **Totally Integrated Power Module (1)** - The Totally Integrated Power Module (TIPM) is located in the engine compartment, near the battery. Refer to **DESCRIPTION** .

Hard wired circuitry connects the VTSS components to the electrical system of the vehicle. These hard wired

circuits are integral to several wire harnesses, which are routed throughout the vehicle and retained by many different methods. These circuits may be connected to each other, to the vehicle electrical system and to the VTSS components through the use of a combination of soldered splices, splice block connectors, and many different types of wire harness terminal connectors and insulators. Refer to the appropriate wiring information. The wiring information includes wiring diagrams, proper wire and connector repair procedures, further details on wire harness routing and retention, as well as pin-out and location views for the various wire harness connectors, splices and grounds.

OPERATION

IMMOBILIZER SYSTEM

The Immobilizer System is designed to provide passive protection against unauthorized vehicle use by disabling the engine after about two seconds of running, whenever any method other than a valid Sentry Key is used to start the vehicle. The Immobilizer System is considered a passive protection system because it is always active when the ignition system is energized and does not require any customer intervention. The Immobilizer System uses Radio Frequency (RF) communication to obtain confirmation that the key in the ignition switch is a valid key for operating the vehicle. The Immobilizer System hardware and software also uses electronic messages to communicate with other electronic modules in the vehicle over the Controller Area Network (CAN) data bus. Refer to **COMMUNICATION, OPERATION** .

Pre-programmed Sentry Key transponders are provided with the vehicle from the factory. Each Wireless Ignition Node (WIN) will recognize a maximum of eight Sentry Keys. If the customer would like additional keys other than those provided with the vehicle, they may be purchased from any authorized dealer. These additional keys must be programmed to the WIN in the vehicle in order for the system to recognize them as valid keys. This can be done by the dealer using a diagnostic scan tool or, if Customer Learn programming is an available Immobilizer System feature in the market where the vehicle was purchased, the customer can program the additional keys, as long as at least two valid Sentry Keys are already available. Refer to **STANDARD PROCEDURE** .

The hard wired circuits between components related to the Immobilizer System may be diagnosed using conventional diagnostic tools and procedures. Refer to the appropriate wiring information. The wiring information includes wiring diagrams, proper wire and connector repair procedures, details of wire harness routing and retention, connector pin-out information and location views for the various wire harness connectors, splices and grounds.

However, conventional diagnostic methods will not prove conclusive in the diagnosis of the Immobilizer System or the electronic controls or communication between other modules and devices that provide some features of the Immobilizer System. The most reliable, efficient, and accurate means to diagnose the Immobilizer System or the electronic controls and communication related to Immobilizer System operation requires the use of a diagnostic scan tool. Refer to the appropriate diagnostic information.

VEHICLE THEFT SECURITY SYSTEM

The ElectroMechanical Instrument Cluster (EMIC) (also known as the Cab Compartment Node/CCN) is used on this vehicle to control and integrate many of the functions and features included in the Vehicle Theft Security System (VTSS). In the VTSS, the EMIC receives inputs indicating the status of the door ajar switches and the ignition switch. The EMIC will process the information from all of these inputs, internally controls the

security indicator as appropriate, and sends electronic messages to the Totally Integrated Power Module (TIPM) over the Controller Area Network (CAN) data bus. The TIPM internally controls the output to the hazard warning lamps and sends a control output to energize or de-energize the horn relay as appropriate.

The hard wired circuits between components related to the VTSS may be diagnosed using conventional diagnostic tools and procedures. Refer to the appropriate wiring information. The wiring information includes wiring diagrams, proper wire and connector repair procedures, details of wire harness routing and retention, connector pin-out information and location views for the various wire harness connectors, splices and grounds.

However, conventional diagnostic methods will not prove conclusive in the diagnosis of the VTSS or the electronic controls or communication between modules and devices that provide some features of the VTSS. The most reliable, efficient, and accurate means to diagnose the VTSS or the electronic controls and communication related to VTSS operation requires the use of a diagnostic scan tool. See the **Vehicle Theft Security System** menu item on the scan tool. Refer to the appropriate diagnostic information.

Following are paragraphs describing the operation of each of the VTSS features. See the owner's manual in the vehicle glove box for more information on the features, use and operation of the VTSS.

ENABLING

The EMIC must have the VTSS function electronically enabled in order for the VTSS to perform as designed. The logic in the EMIC keeps its VTSS function dormant until it is enabled using a diagnostic scan tool. The VTSS function of the EMIC is enabled on vehicles equipped with the VTSS option at the factory, but a service replacement EMIC must be VTSS-enabled by the dealer using a diagnostic scan tool. Refer to the appropriate diagnostic information.

ARMING

Passive arming of the VTSS occurs when the vehicle is exited with the key removed from the ignition switch, the headlamps are turned OFF, and the doors are LOCKED while they are open using the power lock switch. Active arming occurs when the LOCK button on the Remote Keyless Entry (RKE) transmitter is depressed to lock the vehicle. For active arming to occur, the doors must be closed and the ignition switch must be in the OFF position when the RKE transmitter LOCK button is depressed. The power lock switch will not function if the key is in the ignition switch or the headlamps are turned ON with the driver side front door open.

Pre-arming of the VTSS is initiated when a door is open when the vehicle is locked using a power door lock switch or when the RKE transmitter LOCK button is depressed. Pre-arming will not occur if the key is in the ignition switch or the headlamps are turned ON with the driver side front door open. When the VTSS is pre-armed, the arming sequence is delayed until all of the doors have been closed. The VTSS will remain in pre-armed mode until after all doors have been closed, or until the interior lighting load shed threshold is surpassed (about eight minutes).

Once the VTSS begins the passive or active arming sequence, the security indicator in the instrument cluster will flash rapidly for about 16 seconds. This indicates that VTSS arming is in progress. If the ignition switch is turned to the ON position, a door is opened, a door is unlocked by any means, or the RKE PANIC button is depressed during the 16 second arming process, the security indicator will stop flashing and the arming process will abort. Once the 16 second arming sequence is successfully completed, the security indicator will flash at a slower rate, indicating that the VTSS is armed.

DISARMING

Since this vehicle is not equipped with lock cylinder switches, passive disarming of the VTSS is only possible if the vehicle is equipped with the optional Sentry Key Immobilizer System (SKIS). On vehicles with SKIS, turning the ignition switch to the ON position using a valid SKIS key will passively disarm VTSS. Active disarming of the VTSS occurs when the vehicle is unlocked by depressing the UNLOCK button of the RKE transmitter. Once the alarm has been activated, either disarming method will also deactivate the alarm. Depressing the PANIC button on the RKE transmitter will **not** disarm the VTSS.

POWER-UP MODE

When the armed VTSS senses that the battery has been disconnected and reconnected, it enters the power-up mode. In the power-up mode the alarm system remains armed following a battery failure or disconnect. If the VTSS was armed prior to a battery disconnect or failure, the technician or vehicle operator will have to actively or passively disarm the alarm system after the battery is reconnected. The power-up mode will also apply if the battery goes dead while the system is armed, and battery jump-starting is attempted. The VTSS will be armed until the technician or vehicle operator has actively or passively disarmed the alarm system. If the VTSS is in the disarmed mode prior to a battery disconnect or failure, it will remain disarmed after the battery is reconnected or replaced, or if jump-starting is attempted.

TAMPER ALERT

The VTSS tamper alert feature will pulse the horn 3 times upon VTSS disarming, if the alarm was triggered and has since timed-out (about 18 minutes), or if the battery has been disconnected and reconnected. This feature alerts the vehicle operator that the VTSS alarm was activated while the vehicle was unattended.

DIAGNOSIS AND TESTING

SENTRY KEY IMMOBILIZER SYSTEM

WARNING: **To avoid serious or fatal injury on vehicles equipped with airbags, disable the Supplemental Restraint System (SRS) before attempting any steering wheel, steering column, airbag, seat belt tensioner, impact sensor or instrument panel component diagnosis or service. Disconnect and isolate the battery negative (ground) cable, then wait two minutes for the system capacitor to discharge before performing further diagnosis or service. This is the only sure way to disable the SRS. Failure to take the proper precautions could result in accidental airbag deployment.**

The hard wired circuits between components related to the Sentry Key Immobilizer System (SKIS) may be diagnosed using conventional diagnostic tools and procedures. Refer to the appropriate wiring information. The wiring information includes wiring diagrams, proper wire and connector repair procedures, details of wire harness routing and retention, connector pin-out information and location views for the various wire harness connectors, splices and grounds.

However, conventional diagnostic methods will not prove conclusive in the diagnosis of the SKIS or the electronic controls or communication between other modules and devices that provide some features of the

SKIS. The most reliable, efficient, and accurate means to diagnose the SKIS or the electronic controls and communication related to SKIS operation requires the use of a diagnostic scan tool. Refer to the appropriate diagnostic information.

CONDITION	POSSIBLE CAUSES	CORRECTION
SECURITY INDICATOR FAILS TO LIGHT DURING BULB TEST	1. Ineffective Light-Emitting Diode (LED).	1. Use a diagnostic scan tool to perform the instrument cluster actuator test. Refer to the appropriate diagnostic information.
	2. Ineffective fuse.	2. Check the WIN fused B(+) fuse and the fused ignition switch output (run-start) fuse in the Junction Block (JB). Replace the fuses, if required.
	3. Ineffective ground circuit.	3. Test and repair the open ground circuit at the connector for the WIN, if required.
	4. Ineffective battery feed circuit.	4. Test and repair the open battery feed circuit at the connector for the WIN, if required.
	5. Ineffective ignition feed circuit.	5. Test and repair the open ignition feed circuit at the connector for the WIN, if required.
SECURITY INDICATOR FLASHES FOLLOWING BULB TEST	1. Invalid key in ignition switch lock cylinder.	1. Replace the key with a known valid key.
	2. Key-related fault.	2. Use a diagnostic scan tool and the appropriate diagnostic information for further diagnosis.
SECURITY INDICATOR LIGHTS SOLID FOLLOWING BULB TEST	1. SKIS system malfunction/fault detected.	1. Use a diagnostic scan tool and the appropriate diagnostic information for further diagnosis.
	2. SKIS system ineffective.	2. Use a diagnostic scan tool and the appropriate diagnostic information for further diagnosis.

VEHICLE THEFT SECURITY SYSTEM

WARNING: **To avoid serious or fatal injury on vehicles equipped with airbags, disable the Supplemental Restraint System (SRS) before attempting any steering wheel, steering column, airbag, seat belt tensioner, impact sensor or instrument panel component diagnosis or service. Disconnect and isolate the battery negative (ground) cable, then wait two minutes for the system capacitor to discharge before performing further diagnosis or service. This is the only sure way to disable the SRS. Failure to take the proper precautions could result in accidental airbag deployment.**

The hard wired circuits between components related to the Vehicle Theft Security System (VTSS) may be

diagnosed using conventional diagnostic tools and procedures. Refer to the appropriate wiring information. The wiring information includes wiring diagrams, proper wire and connector repair procedures, details of wire harness routing and retention, connector pin-out information and location views for the various wire harness connectors, splices and grounds.

However, conventional diagnostic methods will not prove conclusive in the diagnosis of the VTSS or the electronic controls or communication between other modules and devices that provide some features of the VSS. The most reliable, efficient, and accurate means to diagnose the VTSS or the electronic controls and communication related to VTSS operation requires the use of a diagnostic scan tool. See the **Vehicle Theft Security System** menu item on the scan tool. Refer to the appropriate diagnostic information.

STANDARD PROCEDURE

SKIS INITIALIZATION

The Sentry Key Immobilizer System (SKIS) must be initialized following a Wireless Ignition Node (WIN) replacement. SKIS initialization requires the use of a diagnostic scan tool. Initialization will also require that you have access to the unique four-digit PIN code that was assigned to the original WIN. The PIN code **must** be used to enter the Secured Access Mode in the WIN. This PIN number may be obtained from the vehicle owner, from the original vehicle invoice, or from the Chrysler Customer Center. Refer to **STANDARD PROCEDURE** .

NOTE: **If a Powertrain Control Module (PCM) is replaced on a vehicle equipped with the Sentry Key Immobilizer System (SKIS), the unique Secret Key data must be transferred from the Wireless Ignition Node (WIN) to the new PCM using the appropriate programming procedure. This procedure also requires the use of a diagnostic scan tool and the unique four-digit PIN code to enter the Secured Access Mode in the WIN. Refer to the appropriate diagnostic information for the proper PCM replacement procedures.**

SENTRY KEY TRANSPONDER PROGRAMMING

All Sentry Keys included with the vehicle are pre-programmed to work with the Sentry Key Immobilizer System (SKIS) when it is shipped from the factory. The Wireless Ignition Node (WIN) may be programmed to recognize up to a total of eight Sentry Keys. When programming a blank Sentry Key transponder, the key must first be cut to match the ignition switch lock cylinder in the vehicle for which it will be used. Once the additional or new key has been cut, the WIN must be programmed to recognize it as a valid key. There are two possible methods to program the WIN to recognize a new or additional valid key, the Secured Access Method and the Customer Learn Method. Following are the details of these two programming methods.

SECURED ACCESS METHOD

The Secured Access method applies to all vehicles. This method requires the use of a diagnostic scan tool. This method will also require that you have access to the unique four-digit PIN code that was assigned to the original WIN. The PIN code **must** be used to enter the Secured Access Mode in the WIN. This PIN number may be obtained from the vehicle owner, from the original vehicle invoice, or from the Chrysler Customer Center. Refer to **STANDARD PROCEDURE** .

CUSTOMER LEARN METHOD

NOTE: **The Customer Learn feature is only available on domestic vehicles, or those vehicles which have a U.S. country code designator. This programming method also requires access to at least two valid Sentry Keys. If two valid Sentry Keys are not available, or if the vehicle does not have a U.S. country code designator, the Secured Access Method MUST be used to program new or additional valid keys to the WIN.**

The Customer Learn programming method procedures are as follows:

1. Obtain the blank Sentry Key(s) that are to be programmed as valid keys for the vehicle. Cut the blank key (s) to match the ignition switch lock cylinder mechanical key codes.
2. Insert one of the two valid Sentry Keys into the ignition switch and turn the ignition switch to the ON position.
3. After the ignition switch has been in the ON position for longer than 3 seconds, but no more than 15 seconds, cycle the ignition switch back to the OFF position. Replace the first valid Sentry Key in the ignition switch lock cylinder with the second valid Sentry Key and turn the ignition switch back to the ON position. The second valid Sentry Key must be inserted in the lock cylinder within 15 seconds of removing the first valid key.
4. About 10 seconds after the completion of, the security indicator in the instrument cluster will start to flash to indicate that the system has entered the Customer Learn programming mode. Refer to 3.
5. Within 60 seconds of entering the Customer Learn programming mode, turn the ignition switch to the OFF position, replace the valid Sentry Key with a blank Sentry Key transponder, and turn the ignition switch back to the ON position.
6. About 10 seconds after the completion of, the security indicator will stop flashing, stay ON solid for 3 seconds, then turn OFF to indicate that the blank Sentry Key has been successfully programmed. Refer to 5. The SKIS will immediately exit the Customer Learn programming mode. After the ignition is cycled the vehicle may be started using the newly programmed valid Sentry Key.

Each of these steps must be repeated and completed in their entirety for each additional Sentry Key that is to be programmed. If the above steps are not completed in the given sequence, or within the allotted time, the WIN will exit the Customer Learn programming mode and the programming will be unsuccessful. The WIN will also automatically exit the Customer Learn programming mode if it sees a non-blank Sentry Key transponder when it should see a blank, if it has already programmed eight (8) valid Sentry Keys, or if the ignition switch is turned to the OFF position for more than about 50 seconds.

NOTE: **If an attempt is made to start the vehicle while in the Customer Learn mode (security indicator flashing), the SKIS will respond as though the vehicle were being started with an invalid key. In other words, the engine will stall after about two seconds of operation. No faults will be set.**

NOTE: **Once a Sentry Key has been programmed as a valid key to a vehicle, it cannot be programmed as a valid key for use on any other vehicle.**

SPECIFICATIONS

SPECIFICATIONS

TORQUE SPECIFICATIONS

DESCRIPTION	N.m	Ft. Lbs.	In. Lbs.
Hood Ajar Switch Mounting Bracket Screws	8	-	71
Wireless Ignition Node Mounting Screw	2	-	20
Steering Column Shroud Mounting Screws	2	-	20
Tilt Steering Column Actuator Knob Mounting Screw	2	-	20

KEY, TRANSPONDER

DESCRIPTION

DESCRIPTION

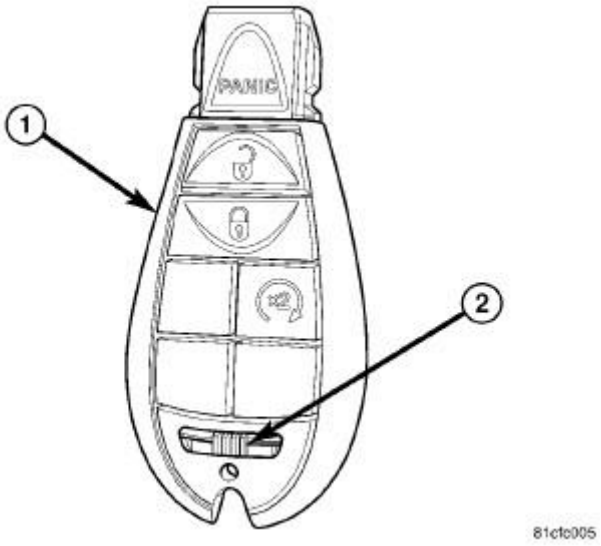

Fig. 2: Transponder Key
Courtesy of CHRYSLER GROUP, LLC

The Sentry Key Immobilizer System (SKIS) has a transponder chip included on the circuit board beneath the cover of each FOB with Integrated Key (FOBIK) (1) included with the vehicle. The FOBIK includes an integral mechanical valet key which is stored within the bottom of the FOBIK housing until it is released using the latch button (2). The valet key is cut to match the mechanical coding of the door and glove box lock cylinders. Each

new replacement FOBIK must be programmed for operation of the Remote Keyless Entry (RKE) system and has a unique transponder identification code that is permanently programmed into it by the manufacturer. This identification code must be programmed into the Wireless Ignition Node (WIN) to be recognized by the SKIS as a valid key.

The FOBIK transponder cannot be adjusted or repaired. If ineffective or damaged, the entire FOBIK and RKE transmitter unit must be replaced.

OPERATION

OPERATION

When the ignition switch is turned to the ON position, the Wireless Ignition Node (WIN) communicates through its antenna with the Sentry Key transponder within the FOB with Integrated Key (FOBIK) using a Low Frequency (LF) signal. The Sentry Key transponder chip is within the range of the WIN transceiver antenna ring when it is inserted into the ignition switch.

The WIN determines whether a valid FOBIK is present in the ignition switch based upon the signal from the transponder. If a valid FOBIK is detected, that fact is communicated by the WIN to the Powertrain Control Module (PCM) over the Controller Area Network (CAN) data bus, and the PCM allows the engine to start. If the PCM receives an **invalid key** message, or receives no message from the WIN over the CAN data bus, the engine will be disabled. The ElectroMechanical Instrument Cluster (EMIC) (also known as the Cab Compartment Node/CCN) will also respond to the **invalid key** message on the CAN data bus by flashing the security indicator ON and OFF.

Each Sentry Key FOBIK has a unique transponder identification code permanently programmed into it by the manufacturer. Likewise, the WIN has a unique Secret Key code programmed into it by the manufacturer. When a Sentry Key FOBIK is programmed into the memory of the WIN, the WIN stores the transponder identification code from the Sentry Key FOBIK and the Sentry Key FOBIK learns the Secret Key code from the WIN. Once the Sentry Key FOBIK learns the Secret Key code of the WIN, it is permanently stored in the memory of the transponder. Therefore, once a FOBIK has been programmed to a particular vehicle, it cannot be used on any other vehicle. Refer to **STANDARD PROCEDURE** .

The Sentry Key Immobilizer System (SKIS) performs a self-test each time the ignition switch is turned to the ON position, and will store key-related fault information in the form of a Diagnostic Trouble Code (DTC) in WIN memory if a Sentry Key FOBIK transponder problem is detected. The Sentry Key FOBIK transponder chip can be diagnosed, and any stored DTC can be retrieved using a diagnostic scan tool. Refer to the appropriate diagnostic information.

SWITCH, HOOD AJAR

DESCRIPTION

DESCRIPTION

There are two types of hood ajar switches used on this vehicle. One type is a stand-alone switch that is serviceable. The second type is integrated into the hood latch assembly and is not serviceable separately from the hood latch. The stand-alone hood ajar switches are a normally closed, single pole, spring-loaded plunger

actuated switch and the hood latch mounted hood ajar switch is a normally open single pole, spring-loaded plunger actuated switch. Only one type of switch is used per vehicle. Both types of hood ajar switches function with both the Vehicle Theft Alarm (VTA) system the optional remote starter system.

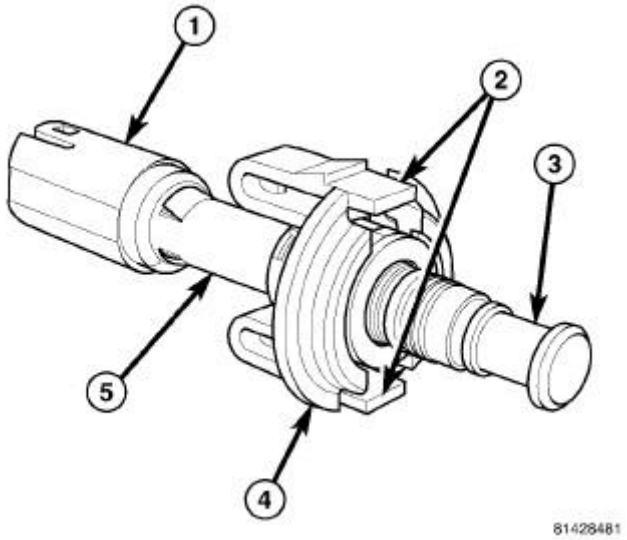

Fig. 3: Hood Ajar Switch
Courtesy of CHRYSLER GROUP, LLC

On the stand-alone switch the molded plastic switch body (5) has an integral molded connector receptacle (1) on the lower end containing two terminal pins. The switch is connected to the vehicle electrical system through a dedicated take out of the headlamp and dash wire harness. Two integral latches (2) lock the switch into a keyed mounting hole in the switch mounting bracket. The mounting bracket is secured to the upper radiator crossmember. A molded plastic striker secured to the underside of the hood panel inner reinforcement actuates the switch plunger as the hood panel is closed. The switch plunger (3) extends through a mounting collar (4) and a sleeve-like retainer ring on the upper end of the switch body. The retainer ring has a one time, self-adjustment feature that is activated after the switch is installed by closing the hood. The retainer ring is also color-coded to aid in identifying the switch application. A dark brown retainer ring identifies the underhood security switch application, while a white retainer ring identifies the remote starter system application.

Once a stand-alone hood ajar switch is installed it cannot be readjusted or repaired. If the switch is damaged, ineffective, or requires readjustment, it must be replaced with a new unit. The hood ajar switch striker is not intended for reuse. If the striker is removed from the hood inner reinforcement for any reason, it must be replaced with a new unit.

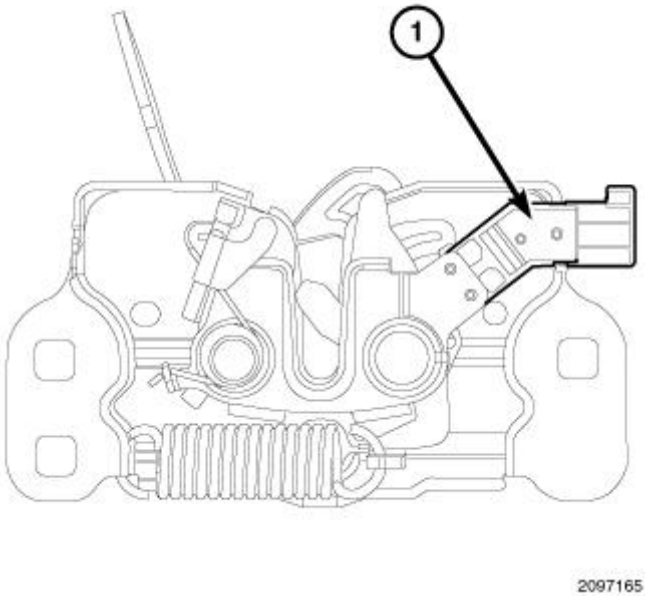

Fig. 4: Hood Latch Mounted Hood Ajar Switch
Courtesy of CHRYSLER GROUP, LLC

The hood latch mounted hood ajar switches are similar to the stand-alone hood ajar switches in the fact that they can not be adjusted or repaired. If damaged or inoperable this type of switch must be replaced but it is not serviceable separately from the hood latch and the hood latch assembly must be replaced.

REMOVAL

BRACKET

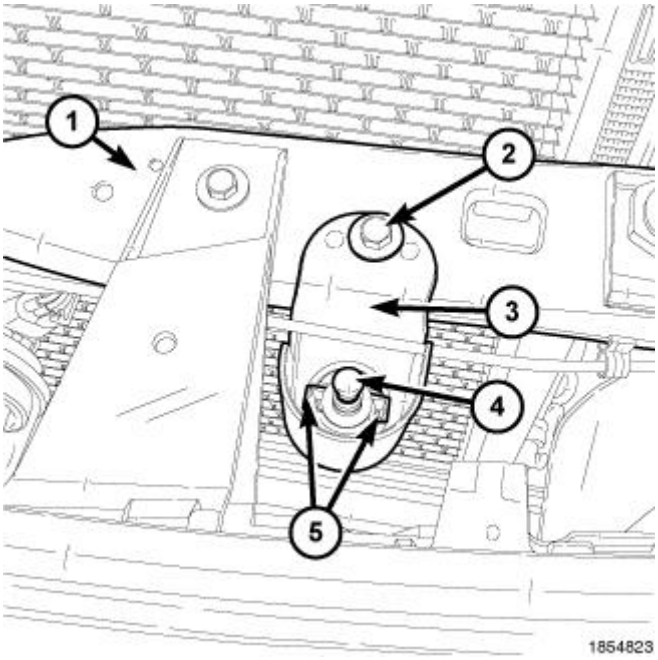

Fig. 5: Hood Ajar Switch & Mounting Bracket
Courtesy of CHRYSLER GROUP, LLC

1. Remove the hood ajar switch (4) from the mounting bracket (3).
2. Remove the fastener (2) that secure the hood ajar switch bracket (3) to the upper radiator cross member (1).
3. Remove the hood ajar switch mounting bracket from upper radiator cross member.

STRIKER

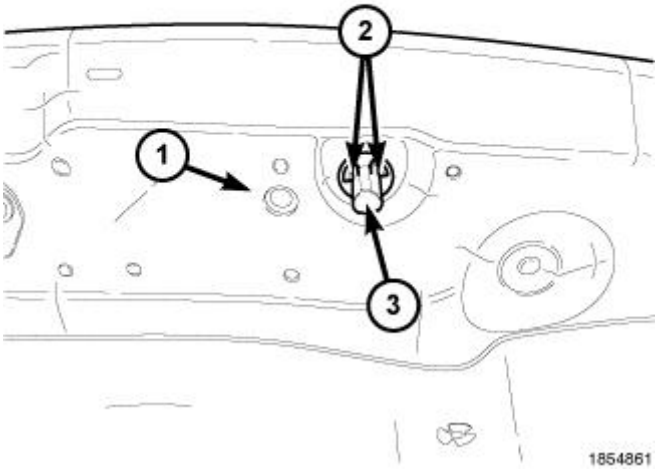

Fig. 6: Hood Striker & Lock Tabs
Courtesy of CHRYSLER GROUP, LLC

1. Unlatch and open the hood.
2. Release the three lock tabs (2) on the hood striker (3) and pull the striker away from the inner hood panel (1) to remove the striker from the vehicle.

SWITCH

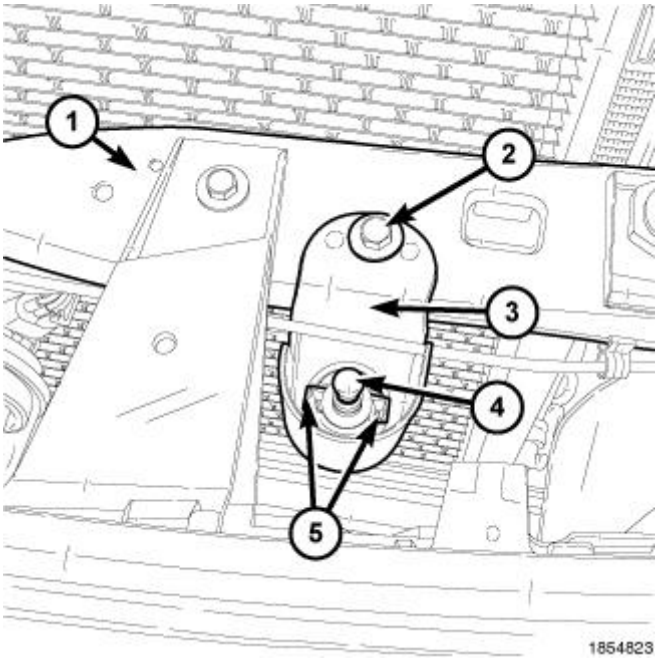

Fig. 7: Hood Ajar Switch & Mounting Bracket
Courtesy of CHRYSLER GROUP, LLC

NOTE: **Some vehicles are equipped with the hood ajar switch integrated into the hood latch assembly. This type of hood ajar switch is not serviced separately and the hood latch assembly must be replaced. Refer to LATCH, HOOD, REMOVAL .**

1. Unlatch and open the hood.
2. Disconnect and isolate the battery negative cable.
3. Remove the push pin retainers and upper radiator seal.
4. From the top of the mounting bracket (3) on the upper radiator cross member (1), squeeze the two hood ajar switch latch tabs (5) together and pull the switch (4) upward.
5. Pull the hood ajar switch up through the hole in the mounting bracket far enough to access and disconnect the jumper wire harness connector from the switch connector receptacle.
6. Remove the hood ajar switch from the mounting bracket.

INSTALLATION

BRACKET

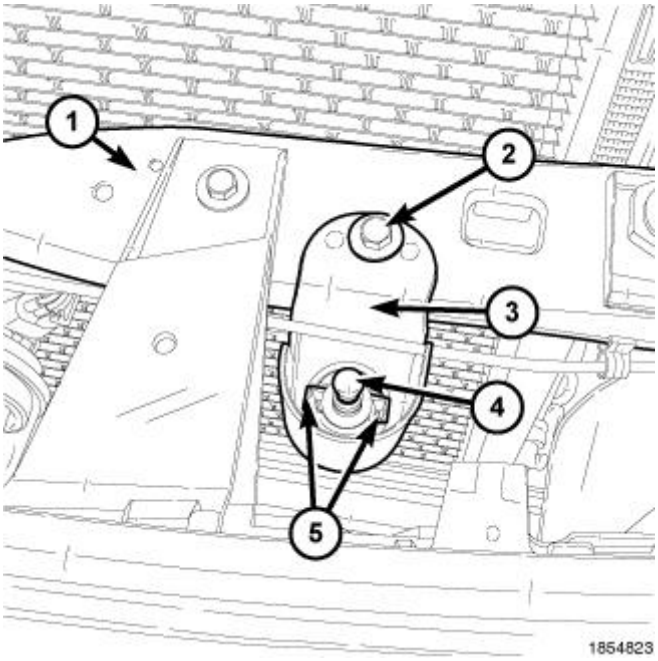

Fig. 8: Hood Ajar Switch & Mounting Bracket
Courtesy of CHRYSLER GROUP, LLC

1. Position the hood ajar switch mounting bracket (3) onto the upper radiator cross member (1)
2. Install and tighten the fastener (2) that secure the mounting bracket to the upper radiator cross member, tighten the bolt to 5.5 N.m (4 ft lbs.).
3. Reinstall the hood ajar switch (2) into the mounting bracket.

STRIKER

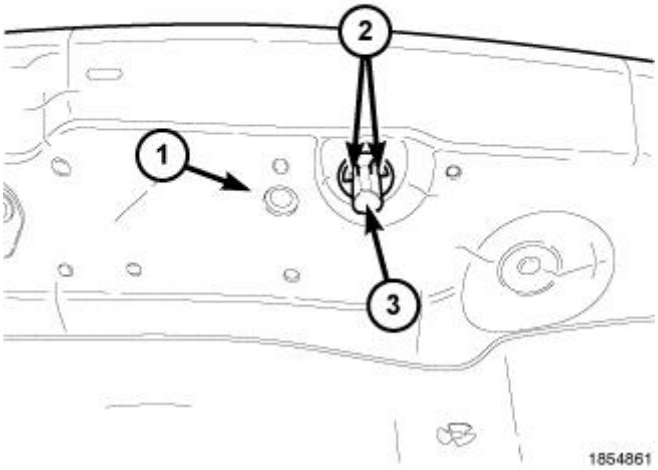

Fig. 9: Hood Striker & Lock Tabs
Courtesy of CHRYSLER GROUP, LLC

1. Position the hood ajar switch striker (3) over the mounting hole in the inner hood panel (1) over the hood ajar switch.
2. Using hand pressure, press the hood ajar switch striker (3) upward into the mounting hole in the inner hood panel (1) until all three integral lock tabs (2) are fully engaged.
3. Close and latch the hood.

SWITCH

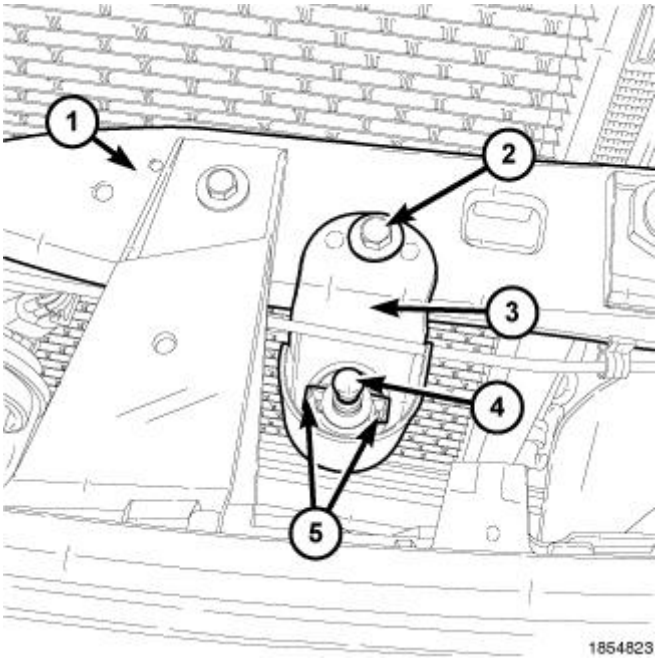

Fig. 10: Hood Ajar Switch & Mounting Bracket
Courtesy of CHRYSLER GROUP, LLC

NOTE: **Some vehicles are equipped with the hood ajar switch integrated into the hood latch assembly. This type of hood ajar switch is not serviced separately and the hood latch assembly must be replaced. Refer to LATCH, HOOD, INSTALLATION .**

1. Position the hood ajar switch (4) near the mounting bracket (3) on the upper radiator cross member (1).
2. Route the jumper wire harness connector through the switch mounting bracket and reconnect it to the switch.
3. From the top of the mounting bracket, press the switch downward into the mounting hole until the integral switch latch tabs lock it into place.
4. Install the upper radiator seal and push pin retainers.
5. Reconnect the battery negative cable.
6. Close and latch the hood.

DIAGNOSTIC CODE INDEX

DIAGNOSTIC CODE INDEX

DTC	Description
B142B	VES UNIT HIGH TEMPERATURE
B14CE	VES BRIGHTNESS UP INPUT BUTTON STUCK
B14CF	VES BRIGHTNESS DOWN INPUT BUTTON STUCK
B210A	SYSTEM VOLTAGE LOW
B210B	SYSTEM VOLTAGE HIGH
B210D	BATTERY VOLTAGE LOW
B210E	BATTERY VOLTAGE HIGH
B21A1	ECU RESET/RECOVERY OCCURRED
B222B	VEHICLE ENTERTAINMENT SYSTEM INTERNAL
B222C	VEHICLE CONFIGURATION NOT PROGRAMMED
U0010	CAN INTERIOR BUS
U0011	CAN INTERIOR BUS OFF PERFORMANCE
U0141	LOST COMMUNICATION WITH IPM (FCM/TIPM)
U0155	LOST COMMUNICATION WITH CLUSTER/CCN
U0168	LOST COMMUNICATION WITH VEHICLE SECURITY CONTROL MODULE (WIN)
U0184	LOST COMMUNICATION WITH RADIO
U1158	LOST COMMUNICATION WITH SATELLITE VIDEO RECEIVER (SDARV)

DIAGNOSIS AND TESTING

B142B-VES UNIT HIGH TEMPERATURE

For a complete wiring diagram, **refer to appropriate SYSTEM WIRING DIAGRAMS article** .

WHEN MONITORED:

With the ignition on. VES active.

SET CONDITION:

The Video Screen Module temperature is above 90°C (194°F).

POSSIBLE CAUSES

Possible Causes

VIDEO SCREEN MODULE HIGH TEMPERATURE

DIAGNOSTIC TEST

1. **VIDEO SCREEN MODULE HIGH TEMPERATURE**
    1. Turn the ignition on.
    2. With the scan tool, clear all VES DTCs.
    3. Turn the VES on.
    4. With the scan tool, read the DTC information.

    Does the scan tool read: B142B-VES UNIT HIGH TEMPERATURE?

    Yes

    - Turn the Video Screen Module off and allow the unit to cool.
    - Perform the BODY VERIFICATION TEST. Refer to **STANDARD PROCEDURE** .

    No

    - Test Complete.

B14CE-VES BRIGHTNESS UP INPUT BUTTON STUCK

For a complete wiring diagram, **refer to appropriate SYSTEM WIRING DIAGRAMS article** .

WHEN MONITORED:

With the ignition on. VES active.

SET CONDITION:

The Video Screen Module detects a closed switch for 60 seconds.

POSSIBLE CAUSES

Possible Causes
VIDEO SCREEN MODULE

DIAGNOSTIC TEST

1. **VERIFY OPERATION OF THE BUTTON**
    1. With the scan tool, erase DTCs.
    2. Press and release the button three times.
    3. Wait 30 seconds.
    4. With the scan tool, read DTCs.

Is DTC B14CE-VES BRIGHTNESS UP INPUT BUTTON STUCK active?

Yes

- Replace the Video Screen Module in accordance with the Service Information.
- Perform the BODY VERIFICATION TEST. Refer to **STANDARD PROCEDURE** .

No

- Test complete.
- Perform the BODY VERIFICATION TEST. Refer to **STANDARD PROCEDURE** .

B14CF-VES BRIGHTNESS DOWN INPUT BUTTON STUCK

For a complete wiring diagram, **refer to appropriate SYSTEM WIRING DIAGRAMS article** .

WHEN MONITORED:

With the ignition on. VES active.

SET CONDITION:

The Video Screen Module detects a closed switch for 60 seconds.

POSSIBLE CAUSES

Possible Causes
VIDEO SCREEN MODULE

DIAGNOSTIC TEST

1. **VERIFY OPERATION OF THE BUTTON**
    1. With the scan tool, erase DTCs.
    2. Press and release the button three times.
    3. Wait 30 seconds.
    4. With the scan tool, read DTCs.

    Is DTC: active?

    Yes

    - Replace the Video Screen Module in accordance with the Service Information.
    - Perform the BODY VERIFICATION TEST. Refer to **STANDARD PROCEDURE** .

    No

- Test complete.
- Perform the BODY VERIFICATION TEST. Refer to **STANDARD PROCEDURE** .

B210A-SYSTEM VOLTAGE LOW

For a complete wiring diagram, **refer to appropriate SYSTEM WIRING DIAGRAMS article** .

WHEN MONITORED:

With the ignition on.

SET CONDITION:

This is a CAN message that the battery voltage was below 10 volts for over 20 seconds.

POSSIBLE CAUSES

Possible Causes
LOW SYSTEM VOLTAGE
BATTERY OR CHARGING SYSTEM

DIAGNOSTIC TEST

1. **CHECK ENGINE DTCs**
    1. With the scan tool, read Engine DTCs.

       Are there any ENGINE Charging or Battery DTCs present?

       Yes

       - Perform the appropriate diagnostic procedure. Refer to Refer to **3.7L/4.7L/5.7L - DIAGNOSTIC CODE INDEX - NGC - 1500 & 2500** or **6.7L - DIAGNOSTIC CODE INDEX - 2500 & 3500** or **5.7L - DIAGNOSTIC CODE INDEX - 3500 CAB & CHASSIS** or **6.7L - DIAGNOSTIC CODE INDEX - 3500 CAB & CHASSIS, 4500 & 5500** and perform the appropriate diagnostic test procedure.

       No

       - This code is for information only. At some time there was a low battery system voltage. Check the battery and charging system in accordance with the Service Information.

B210B-SYSTEM VOLTAGE HIGH

For a complete wiring diagram, **refer to appropriate SYSTEM WIRING DIAGRAMS article** .

WHEN MONITORED:

With the ignition on.

SET CONDITION:

This is a CAN message that the battery voltage was above 16 volts for over 20 seconds.

POSSIBLE CAUSES

Possible Causes
HIGH SYSTEM VOLTAGE
BATTERY OR CHARGING SYSTEM

DIAGNOSTIC TEST

1. **CHECK ENGINE DTCs**
    1. With the scan tool, read Engine DTCs.

       Are there any ENGINE Charging or Battery DTCs present?

       Yes

       - Perform the appropriate diagnostic procedure. Refer to Refer to **3.7L/4.7L/5.7L - DIAGNOSTIC CODE INDEX - NGC - 1500 & 2500** or **6.7L - DIAGNOSTIC CODE INDEX - 2500 & 3500** or **5.7L - DIAGNOSTIC CODE INDEX - 3500 CAB & CHASSIS** or **6.7L - DIAGNOSTIC CODE INDEX - 3500 CAB & CHASSIS, 4500 & 5500** and perform the appropriate diagnostic test procedure.

       No

       - This code is for information only. At some time there was a low battery system voltage. Check the battery and charging system in accordance with the Service Information.

B210D-BATTERY VOLTAGE LOW

For a complete wiring diagram, **refer to appropriate SYSTEM WIRING DIAGRAMS article** .

WHEN MONITORED:

With the ignition on.

SET CONDITION:

Battery voltage less than 10 volts for more than 20 seconds.

POSSIBLE CAUSES

Possible Causes

RESISTANCE IN THE (A1) BATTERY POSITIVE CIRCUIT
RESISTANCE IN THE GENERATOR CASE GROUND
(K125) GENERATOR FIELD CONTROL CIRCUIT OPEN
(K125) GENERATOR FIELD CONTROL CIRCUIT SHORTED TO GROUND
(Z20) GROUND CIRCUIT OPEN
BATTERY
GENERATOR
POWERTRAIN CONTROL MODULE (PCM)

DIAGNOSTIC TEST

1. **CHECK FOR ANY POWERTRAIN CONTROL MODULES DTCS**

NOTE: **Make sure the Battery is in good condition. Using the Midtronics Battery Tester, test the Battery before continuing.**

NOTE: **Inspect the vehicle for after market accessories that may exceed the Generator System output.**

NOTE: **Make sure the generator drive belt is in good operating condition.**

NOTE: **Inspect the fuses in the IPM. If an open fuse is found, use the wire diagram/schematic as a guide, inspect the wiring and connectors for damage.**

1. Turn the ignition on.
2. With the scan tool, read active PCM DTCs.

   Does the scan tool display any active battery or charging DTCs?

   Yes

   - Refer to **CHARGING SYSTEM - DIAGNOSIS AND TESTING** and perform the appropriate charging system diagnostic procedure.

   No

   - Check the above conditions that can cause a low voltage condition. Repair as necessary.
   - Perform the BODY VERIFICATION TEST. Refer to **STANDARD PROCEDURE** .

B210E-BATTERY VOLTAGE HIGH

For a complete wiring diagram, **refer to appropriate SYSTEM WIRING DIAGRAMS article** .

WHEN MONITORED:

With the ignition on.

SET CONDITION:

Battery voltage greater than 16 volts for more than 20 seconds.

POSSIBLE CAUSES

Possible Causes
(K125) GENERATOR FIELD CONTROL CIRCUIT SHORTED TO BATTERY VOLTAGE
BATTERY
GENERATOR
POWERTRAIN CONTROL MODULE (PCM)

DIAGNOSTIC TEST

1. **CHECK FOR ANY POWERTRAIN CONTROL MODULES DTCS**

NOTE: **Make sure the Battery is in good condition. Using the Midtronics Battery Tester, test the Battery before continuing.**

NOTE: **Inspect the vehicle for after market accessories that may exceed the Generator System output.**

NOTE: **Make sure the generator drive belt is in good operating condition.**

NOTE: **Inspect the fuses in the IPM. If an open fuse is found, use the wire diagram/schematic as a guide, inspect the wiring and connectors for damage.**

1. Turn the ignition on.
2. With the scan tool, read active PCM DTCs.

   Does the scan tool display any active battery or charging system DTCs?

   Yes

   - Refer to **CHARGING SYSTEM - DIAGNOSIS AND TESTING** and perform the appropriate charging system diagnostic procedure.

   No

   - Check the above conditions that can cause a high voltage condition. Repair as necessary.

- Perform the BODY VERIFICATION TEST. Refer to **STANDARD PROCEDURE** .

B21A1-ECU RESET/RECOVERY OCCURRED

For a complete wiring diagram, **refer to appropriate SYSTEM WIRING DIAGRAMS article** .

WHEN MONITORED:

Ignition on.

SET CONDITION:

Video Screen Module experiences a reset event.

POSSIBLE CAUSES

Possible Causes
LOW BATTERY VOLTAGE

DIAGNOSTIC TEST

1. **LOW BATTERY VOLTAGE**
    1. Turn the ignition on.
    2. With the scan tool, clear all VES DTCs.
    3. Turn the ignition off, then on again.
    4. With the scan tool read VES DTCs.

    Does the scan tool display: B21A1-ECU RESET/RECOVERY OCCURRED?

    Yes

    - Check for intermittent condition by inspecting the wiring harness and cables for chafed, pierced, pinched, and partially broken wires.
    - Repair as necessary.
    - Perform the BODY VERIFICATION TEST. Refer to **STANDARD PROCEDURE** .

    No

    - Test Complete.

B222B-VEHICLE ENTERTAINMENT SYSTEM INTERNAL

For a complete wiring diagram, **refer to appropriate SYSTEM WIRING DIAGRAMS article** .

WHEN MONITORED:

With the ignition on.

SET CONDITION:

The Video Screen Module detects an internal failure.

POSSIBLE CAUSES

Possible Causes
VIDEO SCREEN MODULE

DIAGNOSTIC TEST

1. **REPLACE THE VIDEO SCREEN MODULE**
    1. When this DTC is active, replace the Video Screen Module.

    Repair

    - Replace the Video Screen Module in accordance with the Service Information.
    - Perform the BODY VERIFICATION TEST. Refer to **STANDARD PROCEDURE** .

B222C-VEHICLE CONFIGURATION NOT PROGRAMMED

For a complete wiring diagram, **refer to appropriate SYSTEM WIRING DIAGRAMS article** .

WHEN MONITORED:

With the ignition on.

SET CONDITION:

Vehicle configuration information not programmed into the TIPM.

POSSIBLE CAUSES

POSSIBLE CAUSES
NO COMMUNICATION WITH TOTALLY INTEGRATED CONTROL MODULE
ACTIVE TIPM DTCs
TOTALLY INTEGRATED CONTROL MODULE (TIPM)

DIAGNOSTIC TEST

1. **TEST FOR AN INTERMITTENT CONDITION**
    1. Turn the ignition on.
    2. Turn the ignition off, wait ten seconds then turn the ignition on.

3. With the scan tool, read DTCs.

   Does the scan tool display: B222C-VEHICLE CONFIGURATION NOT PROGRAMMED?

   Yes

   - Go To 2.

   No

   - Test complete, the condition or conditions that originally set this DTC are not present at this time. Using the wiring diagrams as a guide, check all related splices and connectors for signs of water intrusion, corrosion, pushed out or bent terminals and correct pin tension.
   - Perform the BODY VERIFICATION TEST. Refer to **STANDARD PROCEDURE** .

2. **VERIFY COMMUNICATION WITH TIPM**
   1. With the scan tool, read the active modules on the bus.

      D8s the scan tool show the TIPM active on the bus?

      Yes

      - Go To 3.

      No

      - Refer to **COMMUNICATION - DIAGNOSIS AND TESTING** and perform the No Response from TIPM diagnostic procedure.

3. **CHECK TIPM FOR ACTIVE DTCS**
   1. With the scan tool, erase TIPM DTCs.
   2. Turn the ignition off. Wait approximately ten seconds.
   3. Turn the ignition on.
   4. With the scan tool, read TIPM DTCs.

      Are any active DTCs present?

      Yes

      - Refer to **TIPM - DIAGNOSIS AND TESTING** and perform the appropriate diagnostic procedure.

      No

      - Go To 4.

4. **CHECK THE VEHICLE CONFIGURATION INFORMATION WITH SCAN TOOL**

1. With the scan tool run an ECU Details Report, read the Original and Current VINs, and the Body Style of the vehicle.

   Does the information displayed match the vehicle?

   Yes

   - Replace the Totally Integrated Power Module (TIPM) in accordance with the Service Information.
   - Perform the BODY VERIFICATION TEST. Refer to **STANDARD PROCEDURE** .

   No

   - Go To 5.

5. **RESTORE THE VEHICLE CONFIGURATION**
   1. With the scan tool, restore the vehicle configuration.
   2. Turn the ignition off, then back on.
   3. With the scan tool, read the active DTCs.

      Does the scan tool display B222C-VEHICLE CONFIGURATION NOT PROGRAMMED as active?

      Yes

      - Replace the Totally Integrated Power Module (TIPM) in accordance with the Service Information.
      - Perform the BODY VERIFICATION TEST. Refer to **STANDARD PROCEDURE** .

      No

      - Test complete, the condition or conditions that originally set this DTC are not present at this time. Using the wiring diagrams as a guide, check all related splices and connectors for signs of water intrusion, corrosion, pushed out or bent terminals and correct pin tension.
      - Perform the BODY VERIFICATION TEST. Refer to **STANDARD PROCEDURE** .

U0010-CAN INTERIOR BUS

For a complete wiring diagram, **refer to appropriate SYSTEM WIRING DIAGRAMS article** .

WHEN MONITORED:

Continuously when the ignition is on.

Battery voltage between 10 and 16 volts.

Ignition Off Draw (IOD) fuse installed.

SET CONDITION:

The controller detects a short to ground on the CAN Interior Bus (125K) (+) circuit or a short to voltage on the CAN Interior Bus (125K) (-) circuit.

POSSIBLE CAUSES

Possible Causes
(D265) CAN INTERIOR BUS(+) (125k) CIRCUIT SHORTED TO VOLTAGE
(D264) CAN INTERIOR BUS(-) (125k) CIRCUIT SHORTED TO GROUND
(D264) CAN INTERIOR BUS(-) (125k) CIRCUIT SHORTED TO THE (D265) CAN INTERIOR BUS (+) (125k) CIRCUIT
TOTALLY INTEGRATED POWER MODULE (TIPM)
ANY CAN INTERIOR BUS MODULE

DIAGNOSTIC TEST

1. **VERIFY DIAGNOSTIC TROUBLE CODE (DTC) IS ACTIVE**

   NOTE: Make sure the IOD fuse is installed and battery voltage is between 10 and 16 volts before proceeding.

   1. Using the scan tool, read active DTCs.

      Is this DTC active?

      Yes

      - **Refer to <u>TIPM - DIAGNOSIS AND TESTING</u>** and perform the U0010-CAN Interior Bus diagnostic procedure.

      No

      - **Refer to <u>COMMUNICATION - DIAGNOSIS AND TESTING</u>** and perform the Stored Lost Communication DTCs diagnostic procedure.

U0011-CAN INTERIOR BUS OFF PERFORMANCE

For a complete wiring diagram, **refer to appropriate SYSTEM WIRING DIAGRAMS article** .

WHEN MONITORED:

Continuously when the ignition is on.

Battery voltage between 10 and 16 volts.

Ignition Off Draw (IOD) fuse installed.

SET CONDITION:

The controller detects a short to ground on the CAN Interior Bus (125K) (+) circuit or a short to voltage on the CAN Interior Bus (125K) (-) circuit.

POSSIBLE CAUSES

Possible Causes
(D265) CAN INTERIOR BUS(+) (125k) CIRCUIT SHORTED TO VOLTAGE
(D264) CAN INTERIOR BUS(-) (125k) CIRCUIT SHORTED TO GROUND
(D264) CAN INTERIOR BUS(-) (125k) CIRCUIT SHORTED TO THE (D265) CAN INTERIOR BUS (+) (125k) CIRCUIT
TOTALLY INTEGRATED POWER MODULE (TIPM)
ANY CAN INTERIOR BUS MODULE

DIAGNOSTIC TEST

1. **VERIFY DIAGNOSTIC TROUBLE CODE (DTC) IS ACTIVE**

   NOTE: Make sure the IOD fuse is installed and battery voltage is between 10 and 16 volts before proceeding.

   1. Using the scan tool, read active DTCs.

      Is this DTC active?

      Yes

      - **Refer to <u>TIPM - DIAGNOSIS AND TESTING</u>** and perform the U0011-CAN Interior Bus Off Performance diagnostic procedure.

      No

      - **Refer to <u>COMMUNICATION - DIAGNOSIS AND TESTING</u>** and perform the Stored Lost Communication DTCs diagnostic procedure.

U0141-LOST COMMUNICATION WITH IPM (FCM/TIPM)

For a complete wiring diagram, **refer to appropriate SYSTEM WIRING DIAGRAMS article** .

WHEN MONITORED:

Continuously when the ignition is on.

The battery voltage between 10.0 and 16.0 Volts.

Ignition Off Draw (IOD) fuse installed.

Totally Integrated Power Module (TIPM) is configured correctly.

SET CONDITION:

Bus messages not received from the Totally Integrated Power Module (TIPM) for approximately two to five seconds.

POSSIBLE CAUSES

Possible Causes
CAN BUS CIRCUITS OPEN OR SHORTED
DTCS RELATED TO BATTERY VOLTAGE, IGNITION, OR VIN MESSAGES
TOTALLY INTEGRATED POWER MODULE POWER AND GROUND
TIPM NOT CONFIGURED CORRECTLY
TOTALLY INTEGRATED POWER MODULE (TIPM)
MODULE THAT SET THIS DTC

DIAGNOSTIC TEST

1. **VERIFY DTC IS ACTIVE**

   NOTE: Make sure the IOD fuse is installed and the battery is fully charged before proceeding.

   1. Turn the ignition on.
   2. With the scan tool, read active DTCs.

      Is this DTC active?

      Yes

      - **Refer to <u>TIPM - DIAGNOSIS AND TESTING</u>** and perform the U0141-Lost Communication with IPM (FCM/TIPM) diagnostic procedure.

      No

      - **Refer to <u>COMMUNICATION - DIAGNOSIS AND TESTING</u>** and perform the Stored Lost Communication DTCs diagnostic procedure.

U0155-LOST COMMUNICATION WITH CLUSTER/CCN

For a complete wiring diagram, **refer to appropriate SYSTEM WIRING DIAGRAMS article** .

WHEN MONITORED:

Continuously when the ignition is on.

The battery voltage is between 10 and 16 volts.

Ignition Off Draw (IOD) fuse installed.

Totally Integrated Power Module (TIPM) is configured correctly.

SET CONDITION:

Bus messages not received from the Instrument Cluster (CCN) for approximately two to five seconds.

POSSIBLE CAUSES

Possible Causes
CAN BUS CIRCUITS OPEN OR SHORTED
DTCS RELATED TO BATTERY VOLTAGE, IGNITION, OR VIN MESSAGES
INSTRUMENT CLUSTER POWER AND GROUND
TIPM NOT CONFIGURED CORRECTLY
INSTRUMENT CLUSTER (CCN)
MODULE THAT SET THIS DTC

DIAGNOSTIC TEST

1. **VERIFY THE DIAGNOSTIC TROUBLE CODE (DTC) IS ACTIVE**

   NOTE: Make sure the IOD fuse is installed and the battery is fully charged before proceeding.

   1. Turn the ignition on.
   2. With the scan tool, read active DTCs.

      Is this DTC active?

      Yes

      - **Refer to <u>TIPM - DIAGNOSIS AND TESTING</u>** and perform the U0155-Lost Communication with Cluster/CCN diagnostic procedure.

      No

      - **Refer to <u>COMMUNICATION - DIAGNOSIS AND TESTING</u>** and perform the Stored

Lost Communication DTCs diagnostic procedure.

U0168-LOST COMMUNICATION WITH VEHICLE SECURITY CONTROL MODULE (WIN)

For a complete wiring diagram, **refer to appropriate SYSTEM WIRING DIAGRAMS article** .

WHEN MONITORED:

With the ignition on.

Battery voltage between 10 and 16 volts.

Ignition Off Draw (IOD) fuse installed.

Totally Integrated Power Module (TIPM) is configured correctly.

SET CONDITION:

Bus messages not received from the Wireless Ignition Node (WIN) for approximately two to five seconds.

POSSIBLE CAUSES

Possible Causes
CAN BUS CIRCUITS OPEN OR SHORTED
DTCS RELATED TO BATTERY VOLTAGE, IGNITION, OR VIN MESSAGES
WIRELESS IGNITION NODE POWER AND GROUND
TIPM NOT CONFIGURED CORRECTLY
WIRELESS IGNITION NODE (WIN)
MODULE THAT SET THIS DTC

DIAGNOSTIC TEST

1. **VERIFY DTC IS ACTIVE**

   NOTE: Make sure the IOD fuse is installed and the battery is fully charged before proceeding.

   1. Turn the ignition on.
   2. With the scan tool, read active DTCs.

      Is this DTC active?

      Yes

      - **Refer to <u>TIPM - DIAGNOSIS AND TESTING</u>** and perform the U0168-Lost Communication with Vehicle Security Control Module (WIN) diagnostic procedure.

No

- **Refer to <u>COMMUNICATION - DIAGNOSIS AND TESTING</u>** and perform the Stored Lost Communication DTCs diagnostic procedure.

U0184-LOST COMMUNICATION WITH RADIO

For a complete wiring diagram, **refer to appropriate SYSTEM WIRING DIAGRAMS article** .

WHEN MONITORED:

Continuously when the ignition is on.

Battery voltage between 10 and 16 volts.

Ignition Off Draw (IOD) fused installed.

Totally Integrated Power Module (TIPM) is configured correctly.

SET CONDITION:

Bus messages not received from the Radio for approximately two to five seconds.

POSSIBLE CAUSES

Possible Causes
CAN BUS CIRCUITS OPEN OR SHORTED
DTCS RELATED TO BATTERY VOLTAGE, IGNITION, OR VIN MESSAGES
RADIO POWER AND GROUND
TIPM NOT CONFIGURED CORRECTLY
RADIO
MODULE THAT SET THIS DTC

DIAGNOSTIC TEST

1. **VERIFY THE DIAGNOSTIC TROUBLE CODE (DTC) IS ACTIVE**

NOTE: Make sure the IOD fuse is installed and the battery is fully charged before proceeding.

1. Turn the ignition on.
2. With the scan tool, read the active DTCs.

   Is this DTC active?

   Yes

- **Refer to TIPM - DIAGNOSIS AND TESTING** and perform the U0184-Lost Communication with Radio diagnostic procedure.

No

- **Refer to COMMUNICATION - DIAGNOSIS AND TESTING** and perform the Stored Lost Communication DTCs diagnostic procedure.

U1158-LOST COMMUNICATION WITH SATELLITE VIDEO RECEIVER (SDARV)

For a complete wiring diagram, **refer to appropriate SYSTEM WIRING DIAGRAMS article** .

WHEN MONITORED:

With the ignition on.

Battery voltage between 10 and 16 volts.

Ignition Off Draw (IOD) fuse installed.

Totally Integrated Power Module (TIPM) is configured correctly.

SET CONDITION:

Bus messages not received from the Satellite Video Receiver (SDARV) for approximately two to five seconds.

POSSIBLE CAUSES

Possible Causes
CAN BUS CIRCUITS OPEN OR SHORTED
DTCS RELATED TO BATTERY VOLTAGE, IGNITION, OR VIN MESSAGES
SATELLITE VIDEO RECEIVER POWER AND GROUND
TIPM NOT CONFIGURED CORRECTLY
SATELLITE VIDEO RECEIVER
MODULE THAT SET THE DTC

DIAGNOSTIC TEST

1. **VERIFY DTC IS ACTIVE**

NOTE: Make sure the IOD fuse is installed and the battery is fully charged before proceeding.

1. Turn the ignition on.
2. With the scan tool, read active DTCs.

Is this DTC active?

Yes

- **Refer to TIPM - DIAGNOSIS AND TESTING** and perform the U1158-Lost Communication with Satellite Video Receiver (SDARV) diagnostic procedure.

No

- **Refer to COMMUNICATION - DIAGNOSIS AND TESTING** and perform the Stored Lost Communication DTCs diagnostic procedure.

DIAGNOSIS AND TESTING

DIAGNOSIS AND TESTING - WIPER AND WASHER SYSTEM

WARNING: To avoid serious or fatal injury on vehicles equipped with airbags, disable the Supplemental Restraint System (SRS) before attempting any steering wheel, steering column, airbag, seat belt tensioner, impact sensor or instrument panel component diagnosis or service. Refer to WARNING . Disconnect and isolate the battery negative (ground) cable, then wait two minutes for the system capacitor to discharge before performing further diagnosis or service. This is the only sure way to disable the SRS. Failure to take the proper precautions could result in accidental airbag deployment.

If the wiper motor operates, but the wipers do not move on the windshield, replace the ineffective wiper linkage module. If the washer pump/motor operates, but no washer fluid is dispensed on the glass; or, if the wipers operate, but chatter, lift, or do not clear the glass, clean and inspect the wiper and washer system components as required. Refer to **CLEANING** and **INSPECTION** .

The hard wired wiper and washer system circuits and components may be diagnosed and tested using conventional diagnostic tools and procedures. Refer to the appropriate wiring information. The wiring information includes wiring diagrams, proper wire and connector repair procedures, details of wire harness routing and retention, connector pin-out information and location views for the various wire harness connectors, splices and grounds.

However, conventional diagnostic methods will not prove conclusive in the diagnosis of the wiper and washer system or the electronic controls or communication between other modules and devices that provide some features of the wiper and washer system. The most reliable, efficient, and accurate means to diagnose the wiper and washer system or the electronic controls and communication related to wiper and washer system operation requires the use of a diagnostic scan tool. Refer to the appropriate diagnostic information.

NOTE: The wiper and washer switches are integral to the multi-function switch/Steering Control Module (SCM), which communicates with the ElectroMechanical Instrument Cluster (EMIC)/Cab Compartment Node (CCN) over the Local Interface Network (LIN) data bus. Before performing any of the following tests, determine whether the other functions of the multi-function switch/SCM are operational. If other multi-function switch/SCM functions are ineffective, diagnose and repair that problem before attempting to repair the Wiper and Washer System.

CONDITION	POSSIBLE CAUSES	CORRECTION
WIPER MOTOR DOES NOT	1. Ineffective motor ground	1. Test and repair open wiper motor

OPERATE IN ANY SWITCH POSITION	circuit.	ground circuit if required.
	2. Ineffective motor feed circuits.	2. Test and repair low speed and high speed feed circuits between TIPM and wiper motor if required.
	3. Ineffective EMIC (CCN) inputs or outputs.	3. Use a diagnostic scan tool to test the EMIC (CCN) inputs and outputs. Refer to the appropriate diagnostic information.
	4. Ineffective TIPM inputs or outputs.	4. Use a diagnostic scan tool to test the TIPM inputs and outputs. Refer to the appropriate diagnostic information.
	5. Ineffective wiper motor.	5. Test and replace open or shorted wiper motor as required.
WIPER MOTOR OPERATES SLOWLY IN ALL SWITCH POSITIONS	1. Ineffective wiper motor.	1. Check amperage draw with linkage disconnected from wiper motor output shaft. Correct draw should be about 6 amperes. If incorrect, refer to the appropriate Possible Cause that follows:
	2. Amperage draw too low.	2. Test and repair shorted low and high speed feed circuits if required.
	3. Amperage draw too high.	3. With linkage disconnected from wiper motor output shaft, check linkage and pivots for binding. If binding is detected, repair or replace wiper linkage module if required. If no linkage binding detected, replace the wiper motor if required.
WIPERS RUN AT HIGH SPEED WITH SWITCH LOW SPEED SELECTED OR AT LOW SPEED WITH SWITCH HIGH SPEED SELECTED	1. Ineffective motor feed circuit wiring.	1. Test and repair low speed and high speed feed circuits between TIPM and wiper motor if required.

DESCRIPTION

DESCRIPTION

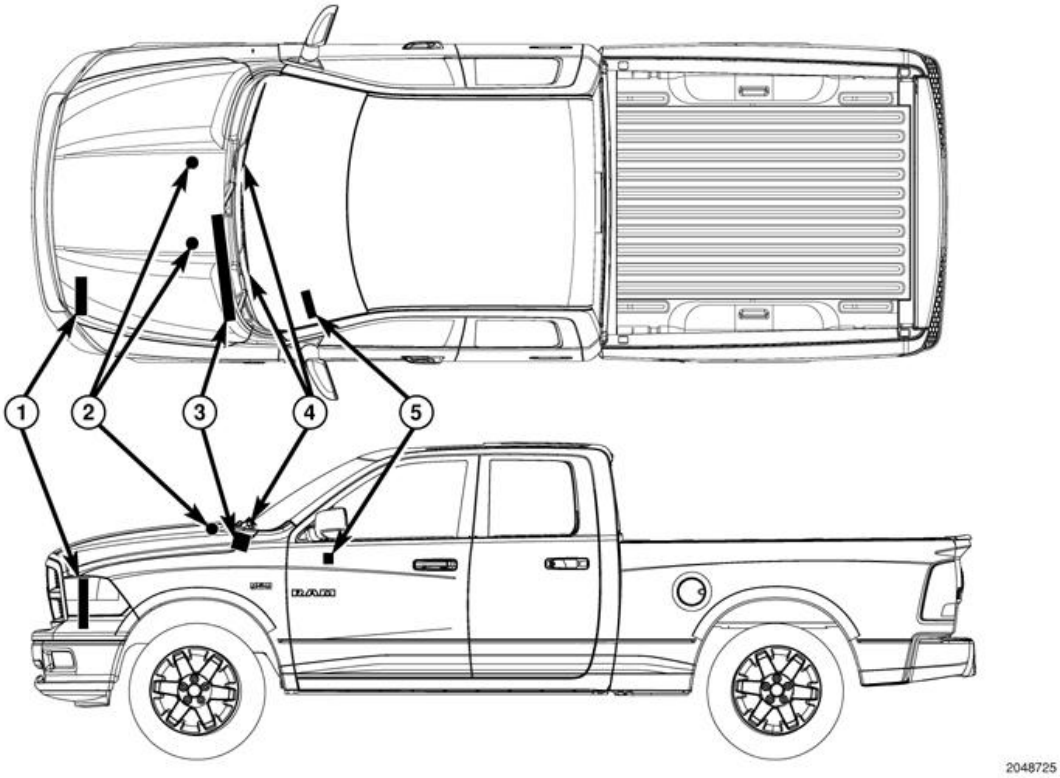

Fig. 1: Locating Wiper/Washer Components
Courtesy of CHRYSLER GROUP, LLC

An electrically operated intermittent wiper and washer system is standard factory-installed safety equipment on this vehicle. The wiper and washer system includes the following major components, which are described in further detail elsewhere in this service information:

- **ElectroMechanical Instrument Cluster -** The ElectroMechanical Instrument Cluster (EMIC) (also known as the Cab Compartment Node/CCN) is located on the instrument panel above the steering column opening, directly in front of the driver. Refer to **DESCRIPTION** .
- **Multi-Function Switch (5) -** The multi-function switch is secured to a bracket integral to the clockspring housing on the top of the steering column, just below the steering wheel. The Steering Control Module (SCM) is internal to the multi-function switch housing. Only the control stalk that extends from the left side of the steering column is visible, while the remainder of the switch housing containing the SCM is concealed beneath the steering column shrouds. The switch control stalk has a control knob on the end that is dedicated to providing all of the driver controls for the wiper and washer systems. Refer to **SWITCH, MULTIFUNCTION, DESCRIPTION** .

- **Steering Control Module** - The Steering Control Module (SCM) is internal to the multi-function switch housing, which is secured to a bracket integral to the left side of the clockspring housing on the top of the steering column just below the steering wheel. Only the switch control stalk extending from the left side of the steering column is visible, while the remainder of the switch housing containing the SCM is concealed beneath the steering column shrouds. Refer to **MODULE, STEERING COLUMN, DESCRIPTION** .
- **Totally Integrated Power Module** - The Totally Integrated Power Module (TIPM) is located in the engine compartment, near the battery. Refer to **MODULE, TOTALLY INTEGRATED POWER (TIPM), DESCRIPTION** .
- **Washer Fluid Level Switch** - On vehicles with a gasoline engine, the washer fluid level switch is located in a dedicated hole on the lower, rearward facing surface of the washer reservoir on the front of the Front End Module (FEM) carrier (also known as the radiator closure) just to the left of the cooling module. On vehicles with a diesel engine, the washer fluid level switch is located in a dedicated hole on the lower, forward facing surface of the washer reservoir on the back of the left vertical post of the left fender support hydroform just outboard of the FEM carrier.
- **Washer Nozzle (2)** - Two fluidic washer nozzles with integral check valves are secured by latch features to dedicated openings in the hood panel near the base of the windshield.
- **Washer Plumbing** - The plumbing for the washer system consists of rubber hoses and molded plastic fittings. The reservoir hose is routed from the washer pump near the base of the reservoir through a trough integral to the reservoir to the outboard side of the reservoir, then through the FEM carrier (also known as the radiator closure) to the engine compartment where it is joined to the engine compartment hose. The engine compartment hose is routed along the left side of the engine compartment from the FEM to the cowl along with the left headlamp and dash wire harness through a molded plastic trough. The engine compartment hose is joined to the hood hose near the left hood hinge. The hood hose is routed between the underside of the inner hood panel reinforcement and the hood silencer pad to the washer nozzles.
- **Washer Pump/Motor** - On vehicles with a gasoline engine, the electric washer pump/motor unit is located in a dedicated hole in a sump area on the lower, forward facing surface of the washer reservoir on the front of the FEM carrier (also known as the radiator closure), to the left of the cooling module. On vehicles with a diesel engine, the electric washer pump/motor unit is located in a dedicated hole in a sump area on the lower, forward facing surface of the washer reservoir on the back of the left vertical post of the left fender support hydroform just outboard of the FEM carrier.
- **Washer Reservoir (1)** - On vehicles with a gasoline engine, the washer reservoir is located on the front of the FEM carrier (also known as the radiator closure), to the left of the cooling module. On vehicles with a diesel engine, the washer reservoir is located on the back of the left vertical post of the left fender support hydroform just outboard of the FEM carrier. On all vehicles, regardless of engine type, the clearly identified washer reservoir filler cap is accessed from the left front corner of the engine compartment.
- **Wiper Arms and Blades (4)** - The two unique right and left wiper arms are secured with nuts to the threaded ends of the two wiper pivot shafts, which extend through the cowl plenum cover/grille panel located near the base of the windshield. The two equal length wiper blades are each secured to their wiper arm with an integral latch, and are parked on the glass near the bottom of the windshield when the wiper system is not in operation.
- **Wiper Linkage Module (3)** - The wiper pivot shafts are the only visible components of the wiper linkage module. The remainder of the module is concealed within the cowl plenum area beneath the cowl plenum cover/grille panel. The wiper linkage module includes the wiper linkage module bracket, three rubber-isolated wiper linkage module mounts, the wiper motor, the wiper motor crank arm, the two wiper drive

links, and the two wiper pivots.

Hard wired circuitry connects the wiper and washer system components to the electrical system of the vehicle. These hard wired circuits are integral to several wire harnesses, which are routed throughout the vehicle and retained by many different methods. These circuits may be connected to each other, to the vehicle electrical system and to the wiper and washer system components through the use of a combination of soldered splices, splice block connectors, and many different types of wire harness terminal connectors and insulators. Refer to the appropriate wiring information. The wiring information includes wiring diagrams, proper wire and connector repair procedures, further details on wire harness routing and retention, as well as pin-out and location views for the various wire harness connectors, splices and grounds.

OPERATION

OPERATION

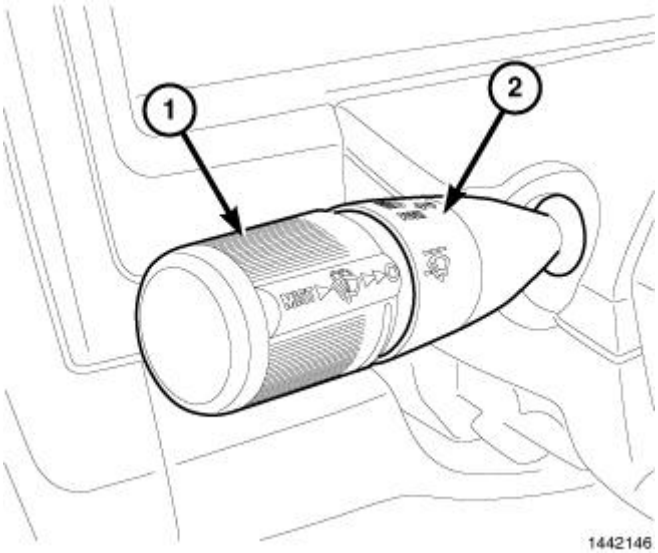

Fig. 2: Control Knob & Control Stalk
Courtesy of CHRYSLER GROUP, LLC

The wiper and washer system is designed to provide the vehicle operator with a convenient, safe, and reliable means of maintaining visibility through the windshield glass. The various components of this system are designed to convert electrical energy produced by the vehicle electrical system into the mechanical action of the wiper blades to wipe the outside surface of the glass, as well as into the hydraulic action of the washer system to apply washer fluid stored in an on-board reservoir to the area of the glass to be wiped. When combined, these components provide the means to effectively maintain clear visibility for the vehicle operator by removing excess accumulations of rain, snow, bugs, mud, or other minor debris from the outside windshield glass surface that might be encountered while driving the vehicle under numerous types of inclement operating conditions.

The vehicle operator initiates all wiper and washer system functions with the control knob (1) on the end of the control stalk (2) of the multi-function switch that extends from the left side of the steering column, just below the steering wheel. Rotating the control knob on the end of the control stalk, selects the OFF, DELAY, LOW, or HIGH wiper system operating modes. In the DELAY mode, the control knob also allows the vehicle operator to select from one of five intermittent wipe delay intervals.

Depressing the control knob towards the steering column to the first detent actuates a momentary switch and selects the MIST mode, which cycles the wiper blades for as long as the switch is held closed then completes the current cycle and parks the blades at the base of the windshield after the switch is released. Depressing the control knob to the second detent actuates the momentary washer system switch, which selects the WASH or WIPE-AFTER-WASH modes depending upon when and how long the switch is held closed.

The multi-function switch provides hard wired analog and resistor multiplexed inputs to the Steering Control Module (SCM) internal to the multi-function switch housing for all of the wiper and washer system functions. The SCM then sends electronic **wiper** and **washer switch** status messages to the ElectroMechanical Instrument Cluster (EMIC) (also known as the Cab Compartment Node/CCN) over a Local Interface Network (LIN) data bus. The EMIC responds to the SCM inputs by sending electronic **wiper** and **washer system** request messages to the Totally Integrated Power Module (TIPM) over the Controller Area Network (CAN) data bus requesting the appropriate wiper and washer system operating modes.

Wiper and washer system operation are completely controlled by the SCM, EMIC and TIPM logic circuits, and that logic will only allow these systems to operate when the ignition switch is in the ACCESSORY or ON positions. The TIPM uses intelligent, high current, self-protected high side switches to control wiper system operation by energizing or de-energizing the wiper motor low and high speed brushes. The TIPM uses a high side driver to control the operation of the washer pump/motor unit. The multi-function switch circuitry receives battery current and a clean ground output from the SCM, then provides analog and resistor multiplexed inputs to the SCM to indicate the selected wiper and washer system mode.

The hard wired circuits and components of the wiper and washer system may be diagnosed using conventional diagnostic tools and procedures. Refer to the appropriate wiring information. However, conventional diagnostic methods will not prove conclusive in the diagnosis of the wiper and washer system or the electronic controls or communication between other modules and devices that provide some features of the wiper and washer system. The most reliable, efficient, and accurate means to diagnose the wiper and washer system or the electronic controls and communication related to wiper and washer system operation requires the use of a diagnostic scan tool. Refer to the appropriate diagnostic information.

OPERATING MODES

Following are paragraphs that briefly describe the operation of each of the wiper and washer system operating modes.

CONTINUOUS WIPE MODE

When the LOW position of the control knob on the control stalk of the multi-function switch is selected the SCM sends an electronic **wiper switch low** status message to the EMIC over the LIN data bus, the EMIC relays an electronic **wiper switch low** request message to the TIPM over the CAN data bus, then the TIPM directs battery current to the low speed brush of the wiper motor, causing the wipers to cycle at low speed.

When the HIGH position of the control knob is selected the SCM sends an electronic **wiper switch high** status message to the EMIC, the EMIC relays an electronic **wiper switch high** request message to the TIPM, then the TIPM directs battery current to the high speed brush of the wiper motor, causing the wipers to cycle at high speed.

When the OFF position of the multi-function switch control knob is selected, the SCM sends an electronic

wiper switch off status message to the EMIC, the EMIC relays an electronic **wiper switch off** request message to the TIPM, then one of two events will occur. The event that occurs depends upon the position of the wiper blades on the windshield at the moment the OFF position is selected.

If the wiper blades are in the down position on the windshield when the OFF position is selected, the park switch that is integral to the wiper motor is closed to ground, which provides a hard wired park switch sense input to the TIPM. The TIPM then de-energizes the wiper motor and the wiper motor ceases to operate. If the wiper blades are not in the down position on the windshield at the moment the OFF position is selected, the park switch is an open circuit and the TIPM continues running the wiper motor at low speed until the wiper blades are in the down position on the windshield and the park switch input to the TIPM is again closed to ground.

INTERMITTENT WIPE MODE

When the control knob on the control stalk of the multi-function switch is moved to one of the five DELAY interval positions the SCM sends an electronic **wiper switch delay interval** status message to the EMIC, the EMIC relays an electronic **wiper switch delay interval** request message to the TIPM, then the TIPM electronic intermittent wipe logic circuit responds by calculating the correct length of time between wiper sweeps based upon the selected delay interval input.

The TIPM monitors the changing state of the wiper motor park switch through a hard wired park switch sense input. This input allows the TIPM to determine the proper intervals at which to energize and de-energize the wiper motor low speed brush to operate the wiper motor intermittently for one low speed cycle at a time.

The TIPM logic is also programmed to provide vehicle speed sensitivity to the selected intermittent wipe delay intervals. In order to provide this feature the TIPM monitors electronic **vehicle speed** messages from the Controller Antilock Brake (CAB) or the Powertrain Control Module (PCM) and doubles the selected delay interval whenever the vehicle speed is about 16 kilometers-per-hour (10 miles-per-hour) or less.

MIST WIPE MODE

When the control knob on the control stalk of the multi-function switch is depressed to the momentary MIST position, the SCM sends an electronic **wiper mist mode** status message to the EMIC, the EMIC relays an electronic **wiper mist mode** request message to the TIPM, then the TIPM energizes the low speed brush of the wiper motor for as long as the switch is held closed, then de-energizes the motor when the state of the switch changes to open, parking the wiper blades near the base of the windshield. The TIPM can operate the wiper motor in this mode for only one low speed cycle at a time, or for an indefinite number of sequential low speed cycles, depending upon how long the switch is held closed.

WASH MODE

When the control knob on the control stalk of the multi-function switch is depressed to the momentary WASH position for more than about one-half second with the wiper system operating, the SCM sends an electronic **washer switch** status message to the EMIC, the EMIC relays an electronic **washer switch** request message to the TIPM, then the TIPM directs battery current and ground to the washer pump/motor unit. This will cause the washer pump/motor unit to be energized for as long as the switch is held closed (up to approximately 10 seconds) and to be de-energized when the control knob is released.

When the control knob is depressed to the momentary WASH position while the wiper system is operating in one of the DELAY interval positions, the washer pump/motor operation is the same. However, the TIPM also overrides the selected delay interval and operates the wiper motor in a continuous low speed mode for as long as the control knob is held depressed, then reverts to the selected delay interval several wipe cycles after the control knob is released. If the WASH switch is held closed for more than approximately 10 seconds, the TIPM will suspend washer pump/motor operation until the knob is released for about 2 seconds, then cycled back to the WASH position.

WIPE-AFTER-WASH MODE

When the control knob on the control stalk of the multi-function switch is depressed to the momentary WASH position for more than about one-half second while the wiper system is not operating, the SCM sends an electronic **washer switch** status message to the EMIC, the EMIC relays an electronic **washer switch** request message to the TIPM, and the TIPM directs battery current and ground to the washer pump/motor unit and energizes the wiper motor in a continuous low speed mode for as long as the switch is held closed (up to approximately 10 seconds). When the control knob is released, the TIPM de-energizes the washer pump/motor immediately, but allows the wiper motor to operate for several additional wipe cycles before it de-energizes the wiper motor and parks the wiper blades near the base of the windshield.

If the control knob is held depressed for more than about 10 seconds, the TIPM will suspend washer pump/motor operation until the knob is released for about 2 seconds and then cycled back to the WASH position; however, the wipers will continue to operate for as long as the WASH switch is held closed. The TIPM monitors the changing state of the wiper motor park switch through a hard wired wiper park switch sense circuit input. This input allows the TIPM to count the number of wipe cycles that occur after the WASH switch is released, and to determine the proper interval at which to de-energize the wiper low speed brush to complete the WIPE-AFTER-WASH mode cycle.

DIAGNOSIS AND TESTING

DIAGNOSIS AND TESTING - WIPER AND WASHER SYSTEM

WARNING: **To avoid serious or fatal injury on vehicles equipped with airbags, disable the Supplemental Restraint System (SRS) before attempting any steering wheel, steering column, airbag, seat belt tensioner, impact sensor or instrument panel component diagnosis or service. Refer to WARNING . Disconnect and isolate the battery negative (ground) cable, then wait two minutes for the system capacitor to discharge before performing further diagnosis or service. This is the only sure way to disable the SRS. Failure to take the proper precautions could result in accidental airbag deployment.**

If the wiper motor operates, but the wipers do not move on the windshield, replace the ineffective wiper linkage module. If the washer pump/motor operates, but no washer fluid is dispensed on the glass; or, if the wipers operate, but chatter, lift, or do not clear the glass, clean and inspect the wiper and washer system components as required. Refer to **CLEANING** and **INSPECTION**.

The hard wired wiper and washer system circuits and components may be diagnosed and tested using

conventional diagnostic tools and procedures. Refer to the appropriate wiring information. The wiring information includes wiring diagrams, proper wire and connector repair procedures, details of wire harness routing and retention, connector pin-out information and location views for the various wire harness connectors, splices and grounds.

However, conventional diagnostic methods will not prove conclusive in the diagnosis of the wiper and washer system or the electronic controls or communication between other modules and devices that provide some features of the wiper and washer system. The most reliable, efficient, and accurate means to diagnose the wiper and washer system or the electronic controls and communication related to wiper and washer system operation requires the use of a diagnostic scan tool. Refer to the appropriate diagnostic information.

NOTE: **The wiper and washer switches are integral to the multi-function switch/Steering Control Module (SCM), which communicates with the ElectroMechanical Instrument Cluster (EMIC)/Cab Compartment Node (CCN) over the Local Interface Network (LIN) data bus. Before performing any of the following tests, determine whether the other functions of the multi-function switch/SCM are operational. If other multi-function switch/SCM functions are ineffective, diagnose and repair that problem before attempting to repair the Wiper and Washer System.**

CONDITION	POSSIBLE CAUSES	CORRECTION
WIPER MOTOR DOES NOT OPERATE IN ANY SWITCH POSITION	1. Ineffective motor ground circuit.	1. Test and repair open wiper motor ground circuit if required.
	2. Ineffective motor feed circuits.	2. Test and repair low speed and high speed feed circuits between TIPM and wiper motor if required.
	3. Ineffective EMIC (CCN) inputs or outputs.	3. Use a diagnostic scan tool to test the EMIC (CCN) inputs and outputs. Refer to the appropriate diagnostic information.
	4. Ineffective TIPM inputs or outputs.	4. Use a diagnostic scan tool to test the TIPM inputs and outputs. Refer to the appropriate diagnostic information.
	5. Ineffective wiper motor.	5. Test and replace open or shorted wiper motor as required.
WIPER MOTOR OPERATES SLOWLY IN ALL SWITCH POSITIONS	1. Ineffective wiper motor.	1. Check amperage draw with linkage disconnected from wiper motor output shaft. Correct draw should be about 6 amperes. If incorrect, refer to the appropriate Possible Cause that follows:
	2. Amperage draw too low.	2. Test and repair shorted low and high speed feed circuits if required.
	3. Amperage draw too high.	3. With linkage disconnected from wiper motor output shaft, check linkage and pivots for binding. If binding is detected, repair or replace wiper linkage module if required. If no linkage binding detected,

		replace the wiper motor if required.
WIPERS RUN AT HIGH SPEED WITH SWITCH LOW SPEED SELECTED OR AT LOW SPEED WITH SWITCH HIGH SPEED SELECTED	1. Ineffective motor feed circuit wiring.	1. Test and repair low speed and high speed feed circuits between TIPM and wiper motor if required.

SPECIFICATIONS

SPECIFICATIONS

TORQUE SPECIFICATIONS

DESCRIPTION	N.m	Ft. Lbs.	In. Lbs.
Wiper Arm Mounting Nut	24	18	-
Wiper Linkage Module Mounting Screws	8	-	75
Wiper Motor Crank Arm Nut	28	21	-
Wiper Motor Mounting Screws	12.5	-	110

CLEANING

CLEANING

WIPER SYSTEM

CAUTION: Protect the rubber squeegees of the wiper blades from any petroleum-based cleaners, solvents, or contaminants. These products can rapidly deteriorate the rubber squeegees.

The squeegees of wiper blades exposed to the elements for a long time tend to lose their wiping effectiveness. Periodic cleaning of the squeegees is suggested to remove any deposits of salt or road film. The wiper blades, arms, and windshield glass should only be cleaned using a sponge or soft cloth and windshield washer fluid, a mild detergent, or a non-abrasive cleaner. If the wiper blades continue to leave streaks, smears, hazing, or beading on the glass after thorough cleaning of the squeegees and the glass, the entire wiper blade assembly must be replaced.

WASHER SYSTEM

CAUTION: Never introduce petroleum-based cleaners, solvents, or contaminants into the washer system. These products can rapidly deteriorate the rubber seals and hoses of the washer system, as well as the rubber squeegees of the wiper blades.

CAUTION: Never use compressed air to flush the washer system plumbing. Compressed air pressures are too great for the washer system plumbing components and will result in further system damage. Never use sharp instruments to clear a plugged washer nozzle or damage to the nozzle orifice and improper nozzle spray patterns will result.

If the washer system is contaminated with foreign material, drain the washer reservoir by removing the washer pump/motor from the reservoir. Clean foreign material from the inside of the washer pump inlet filter screen and the washer reservoir using clean washer fluid, a mild detergent, or a non-abrasive cleaner. Flush foreign material from the washer system plumbing by first disconnecting the washer hoses from the washer nozzles, then running the washer pump/motor to run clean washer fluid or water through the system. Plugged or restricted washer nozzles should be carefully back-flushed using compressed air. If the washer nozzle obstruction cannot be cleared, replace the washer nozzle.

INSPECTION

INSPECTION

WIPER SYSTEM

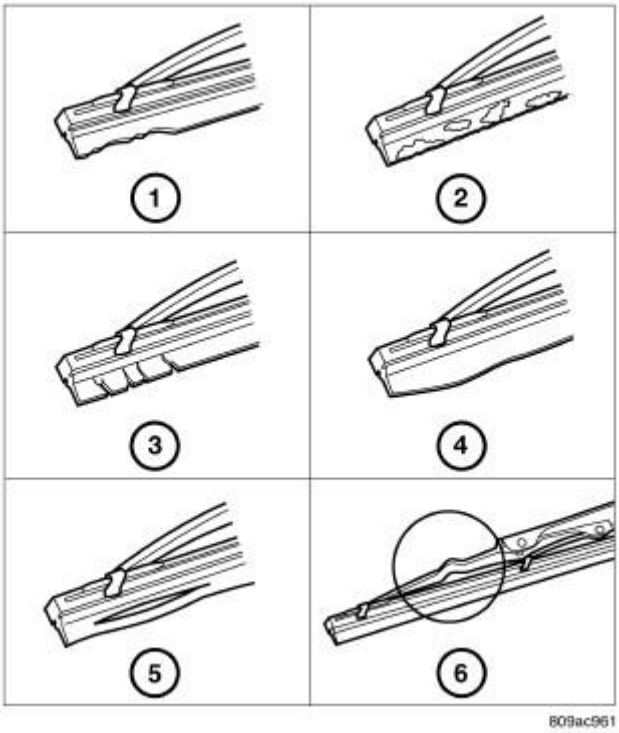

Fig. 3: Inspecting Wiper Blade
Courtesy of CHRYSLER GROUP, LLC

The wiper blades and wiper arms should be inspected periodically, not just when wiper performance problems are experienced. This inspection should include the following points:

1. Carefully inspect the wiper blades for any indications of worn or uneven edges (1), foreign material deposits (2), hardening or cracking (3), deformation or fatigue (4), or splitting (5). Inspect the wiper blade support components and the wiper arms for damage (6) or corrosion. If the wiper arms and blades are contaminated with any foreign material, clean them and the glass as required. Refer to **CLEANING**. If a wiper blade or arm is damaged, or if corrosion is evident, replace the affected wiper arm or blade with a new unit. Do not attempt to repair a wiper arm or blade that is damaged or corroded.
2. Carefully lift the wiper blade off of the glass. Note the action of the wiper arm hinge. The wiper arm should pivot freely at the hinge, but with no lateral looseness evident. If there is any binding evident in the wiper arm hinge, or there is evident lateral play in the wiper arm hinge, replace the wiper arm.

CAUTION: Do not allow the wiper arm to spring back against the glass without the wiper blade in place or the glass may be damaged.

3. Once proper hinge action of the wiper arm is confirmed, check the hinge for proper spring tension. Remove the wiper blade from the wiper arm. Either place a small postal scale between the blade end of the wiper arm and the glass, or carefully lift the blade end of the arm away from the glass using a small fish scale. On vehicles with unequal wiper arm lengths, be certain that measurements are taken at a point an equal distance from their wiper arm hinge pins. Compare the scale readings between the right and left wiper arms. Replace a wiper arm if it has comparatively lower spring tension, as evidenced by a lower scale reading.
4. After cleaning and inspecting the wiper components and the glass, if the wiper blade still fails to clear the glass without smearing, streaking, chattering, hazing, or beading, replace the wiper blade.

WASHER SYSTEM

The washer system components should be inspected periodically, not just when washer performance problems are experienced. This inspection should include the following points:

1. Check for ice or other foreign material in the washer reservoir. If contaminated, clean and flush the washer system. Refer to **CLEANING**.
2. Inspect the washer plumbing for pinched, leaking, deteriorated, or incorrectly routed hoses and damaged or disconnected hose fittings. Replace damaged or deteriorated hoses and hose fittings. Leaking washer hoses can sometimes be repaired by cutting the hose at the leak and splicing it back together using an in-line connector fitting. Similarly, sections of deteriorated hose can be cut out and replaced by splicing in new sections of hose using in-line connector fittings. Whenever routing a washer hose or a wire harness containing a washer hose, it must be routed away from hot, sharp, or moving parts. Also, sharp bends that might pinch the washer hose must be avoided.

ARM, WIPER

DESCRIPTION

DESCRIPTION

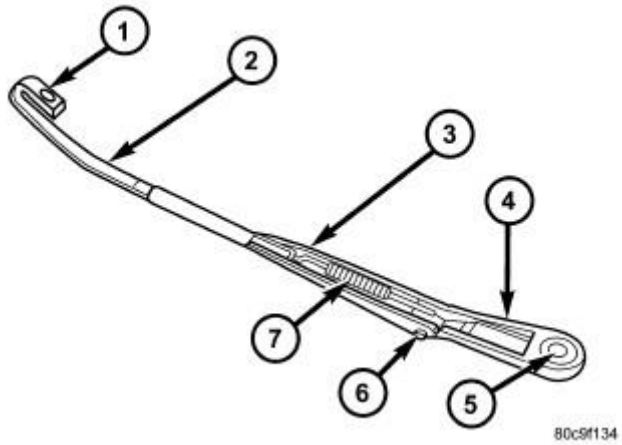

Fig. 4: Front Wiper Arm
Courtesy of CHRYSLER GROUP, LLC

The wiper arms are the rigid members located between the wiper pivots that protrude from the cowl plenum cover/grille panel near the base of the windshield and the wiper blades on the windshield glass. These wiper arms feature an over-center hinge that allows easy access to the windshield glass for cleaning.

The wiper arm has a die cast metal pivot end (4) with a large tapered mounting hole (5) at one end. A molded black plastic cap fits over the wiper arm retaining nut to conceal the nut and the mounting hole following wiper arm installation.

The wide end of a tapered, stamped steel channel (3) hinges on and is secured with a hinge pin (6) to the blade end of the wiper arm pivot end. One end of a long, rigid, stamped steel strap (2), with a small hole near its pivot end, is riveted and crimped within the narrow end of the stamped steel channel. The tip of the wiper blade end of this strap is bent back under itself to form a small hook (1). Concealed within the stamped steel channel is a long tension spring (7) which is engaged with a wire hook on the underside of the die cast pivot end and is hooked through a small hole in the steel strap. The entire wiper arm has a satin black finish applied to all of its visible surfaces.

The right and left wiper arms are unique and are not interchangeable. A wiper arm cannot be adjusted or repaired. If damaged or ineffective, the entire wiper arm unit must be replaced.

OPERATION

OPERATION

The wiper arms are designed to mechanically transmit the motion from the wiper pivots to the wiper blades. The wiper arm must be properly indexed to the wiper pivot in order to maintain the proper wiper blade travel on the glass. The tapered mounting hole in the wiper arm pivot end interlocks with the serrations on the tapered outer circumference of the wiper pivot shaft, allowing positive engagement and finite adjustment of this connection.

The mounting nuts lock the wiper arms to the threaded studs of the wiper pivot shafts. The spring-loaded wiper arm hinge controls the down-force applied through the tip of the wiper arm to the wiper blade on the glass. The

hook formation on the tip of the wiper arm provides a cradle for securing and latching the wiper blade pivot block to the wiper arm.

REMOVAL

REMOVAL

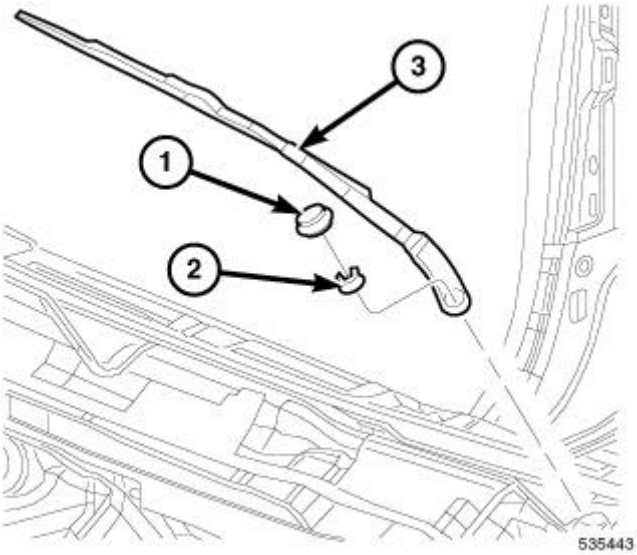

Fig. 5: Wiper Arm, Nut & Nut Cap
Courtesy of CHRYSLER GROUP, LLC

1. Lift the wiper arm (3) to its over-center position to hold the wiper blade off of the glass and relieve the spring tension on the wiper arm to pivot shaft connection.
2. Carefully pry the plastic nut cap (1) off of the nut (2) on the pivot end of the wiper arm.
3. Remove the nut that secures the wiper arm to the wiper pivot shaft.

CAUTION: The use of a battery terminal puller when removing the wiper arm is NOT recommended as this may damage the wiper arm.

4. Use a slight rocking action to disengage the wiper arm pivot end from the pivot shaft and remove the wiper arm.

INSTALLATION

INSTALLATION

NOTE: Be certain that the wiper motor is in the park position before attempting to install the wiper arms. Turn the ignition switch to the ON position and move the multi-function switch control knob to turn the wiper motor ON, then turn it back to the OFF position. Wait until the wiper pivot shafts stop moving, then turn the ignition switch back to the OFF position. The wiper motor is now in the park position.

NOTE: **The right and left wiper arms are not interchangeable. The right wiper arm is slightly longer than the left. Be certain that each wiper arm is installed on the proper wiper pivot.**

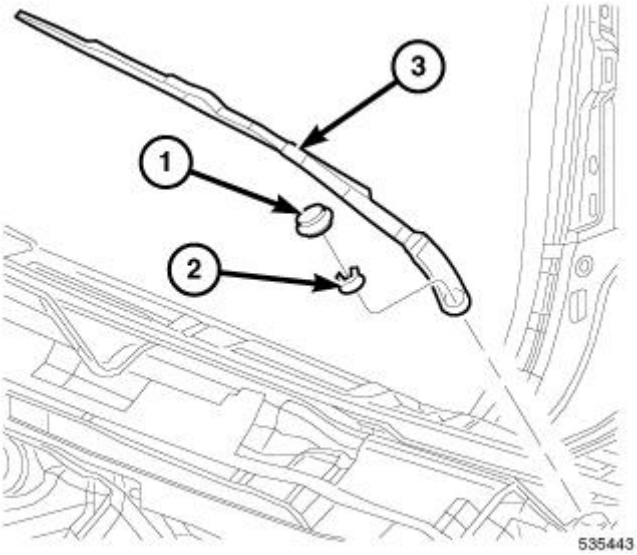

Fig. 6: Wiper Arm, Nut & Nut Cap
Courtesy of CHRYSLER GROUP, LLC

1. The wiper arms (3) must be indexed to the pivot shafts with the wiper motor in the park position to be properly installed. Loosely position the wiper arm pivot end onto the wiper pivot shaft so that the wiper blade is aligned with the wiper alignment line, which is a horizontal **T** mark located just above the upper margin of the lower windshield blackout area.
2. Once the wiper blade is aligned, hold the pivot end of the arm over the pivot shaft while lifting the wiper blade away from the windshield slightly to relieve the spring tension on the pivot end. Now push the pivot end of the wiper arm down firmly and evenly over the pivot shaft until it is fully engaged.
3. Install and tighten the nut (2) that secures the wiper arm to the pivot shaft. Tighten the nut to 24 N.m (18 ft. lbs.).
4. Wet the windshield glass, then operate the wipers. Turn the wiper switch to the OFF position, then check for correct wiper blade alignment and readjust as required.
5. Reinstall the plastic nut cap (1) onto the wiper arm mounting nut.

BLADE, WIPER

DESCRIPTION

DESCRIPTION

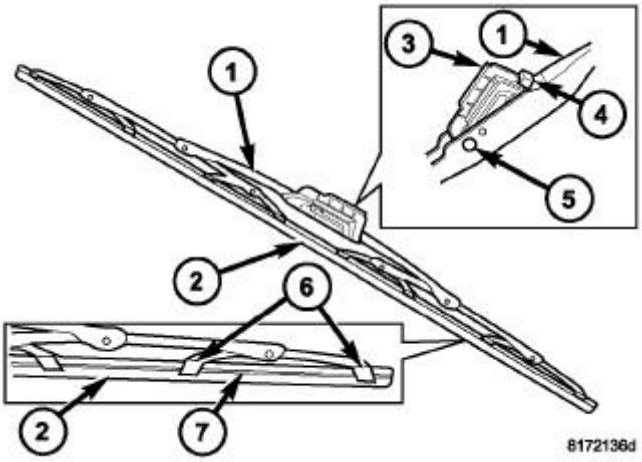

Fig. 7: Identifying Wiper Blade Components
Courtesy of CHRYSLER GROUP, LLC

Each wiper blade is secured by an integral latching pivot block (3) to the hook formation on the tip of each wiper arm, and rests on the glass near the base of the windshield when the wipers are not in operation. The wiper blade consists of the following components:

- **Superstructure (1) -** The superstructure includes several stamped steel bridges and links with claw formations (6) that grip the wiper blade element. Also included in this unit is the latching, molded plastic pivot block that secures the superstructure to the wiper arm. All of the metal components of the wiper blade have a satin black finish applied.
- **Element (2) -** The wiper element or squeegee is the resilient rubber member of the wiper blade that contacts the glass.
- **Flexor (7) -** The flexor is a rigid metal component running along the length of each side of the wiper element where it is gripped by the claws of the superstructure.

The right and left wiper blades are 56.50 centimeters (22.24 inches) long, and are interchangeable. They have non-replaceable rubber elements (squeegees). The wiper blades cannot be adjusted or repaired. If ineffective, worn, or damaged the entire wiper blade unit must be replaced.

OPERATION

OPERATION

The wiper blades are moved back and forth across the glass by the wiper arms when the wipers are being operated. The wiper blade superstructure is the flexible frame that grips the wiper blade element and evenly distributes the force of the spring-loaded wiper arm along the length of the element. The combination of the wiper arm force and the flexibility of the superstructure makes the element conform to and maintain proper contact with the glass, even as the blade is moved over the varied curvature that may be encountered across the glass surface.

The wiper element flexor provides the claws of the blade superstructure with a rigid, yet flexible component on the element which can be gripped. The rubber element is designed to be stiff enough to maintain an even

cleaning edge as it is drawn across the glass, yet resilient enough to conform to the glass surface and flip from one cleaning edge to the other each time the wiper blade changes directions.

REMOVAL

REMOVAL

CAUTION: Do not allow the wiper arm to spring back against the glass without the wiper blade in place or the glass may be damaged.

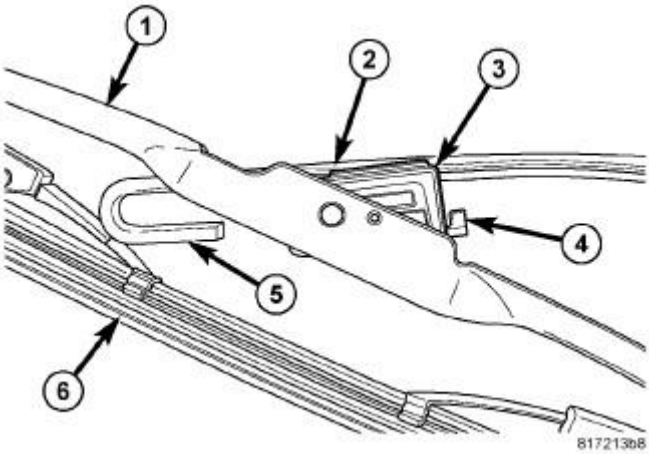

Fig. 8: Wiper Arm, Latch Release Tab, Pivot Block, Hook & Wiper Blade Superstructure
Courtesy of CHRYSLER GROUP, LLC

NOTE: The notched end of the wiper element flexor should always be oriented towards the end of the wiper blade that is nearest to the wiper pivot.

1. Lift the wiper arm (2) to raise the wiper blade and element (6) off of the glass, until the wiper arm hinge is in its over-center position.
2. To remove the blade from the arm, depress the latch release tab (4) on the pivot block (3) under the tip of the arm downward (toward the wiper element and away from the wiper arm) and slide the blade away from the tip towards the pivot end of the arm far enough to disengage the pivot block from the hook formation (5) on the end of the arm.
3. Extract the hook formation on the tip of the wiper arm through the opening in the wiper blade superstructure (1) just ahead of the pivot block.
4. Gently lower the tip of the wiper arm onto the glass.

INSTALLATION

INSTALLATION

CAUTION: Do not allow the wiper arm to spring back against the glass without the

wiper blade in place or the glass may be damaged.

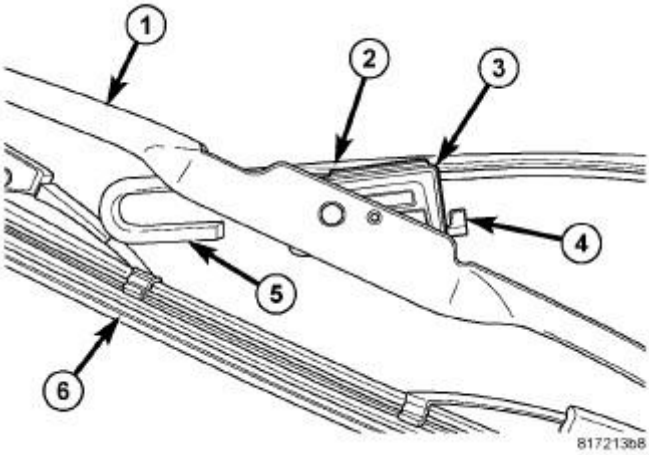

Fig. 9: Wiper Arm, Latch Release Tab, Pivot Block, Hook & Wiper Blade Superstructure
Courtesy of CHRYSLER GROUP, LLC

NOTE: **The notched end of the wiper element flexor should always be oriented towards the end of the wiper blade that is nearest to the wiper pivot.**

1. Lift the wiper arm (2) off of the windshield glass, until the wiper arm hinge is in its over-center position.
2. Position the wiper blade near the hook formation (5) on the tip of the arm with the notched end of the wiper element flexor oriented towards the end of the wiper arm that is nearest to the wiper pivot.
3. Insert the hook formation on the tip of the arm through the opening in the blade superstructure (1) ahead of the pivot block (3) far enough to engage the pivot block into the hook.
4. Slide the pivot block up into the hook formation on the tip of the wiper arm until the latch release tab (4) snaps into its locked position. Latch engagement will be accompanied by an audible click.
5. Gently lower the wiper blade and element (6) onto the glass.

HOSES AND TUBES, WASHER

DESCRIPTION

DESCRIPTION

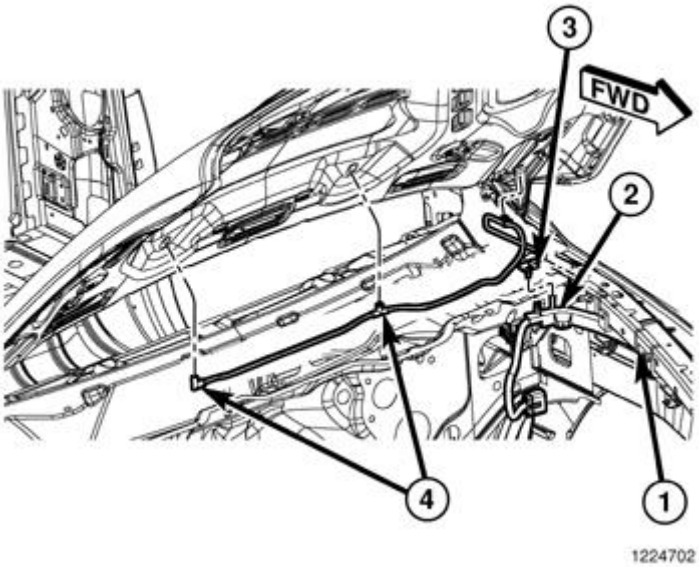

Fig. 10: Washer Hoses & Tubes
Courtesy of CHRYSLER GROUP, LLC

The washer plumbing consists of a small diameter rubber reservoir washer hose that is routed from the barbed outlet nipple of the electric washer pump/motor unit on the washer reservoir. On vehicles with a gasoline engine, the hose is routed through a trough molded into the front of the reservoir above the washer pump to the outboard side of the reservoir, then through the Front End Module (FEM) carrier (also known as the radiator closure) to the engine compartment to the left side of the cooling module. On vehicles with a diesel engine, the hose is also routed through a trough molded into the front of the reservoir above the washer pump to the outboard side of the reservoir, but the reservoir is already located inn the engine compartment to the left of the cooling module.

In the left front corner of the engine compartment, the washer reservoir hose is connected to the engine compartment washer hose. The engine compartment washer hose is contained within the left headlamp and dash wire harness (2), which is routed through the engine compartment along the top of the left front fender wheel house (1) to the dash panel. This hose is connected to the washer reservoir washer hose at one end and to the hood mounted washer tube at the other end with molded plastic in-line fittings.

The hood mounted washer hose (3) is routed from the engine compartment to the underside of the hood panel inner reinforcement near the left hood hinge. The hood washer hose is then routed between the hood reinforcement and the hood silencer pad to the left washer nozzle (4), then from the left washer nozzle to the right washer nozzle.

Washer hose is available for service only as roll stock, which must then be cut to length. The molded plastic washer hose fittings cannot be repaired. If these fittings are ineffective or damaged, they must be replaced.

OPERATION

OPERATION

Washer fluid in the washer reservoir is pressurized and fed by the washer pump/motor unit through the washer

system plumbing and fittings to the two washer nozzles. Whenever routing the washer hose or a wire harness containing a washer hose, it must be routed away from hot, sharp, or moving parts; and, sharp bends that might pinch the hose must be avoided.

LINKAGE, WIPER ARM

DESCRIPTION

DESCRIPTION

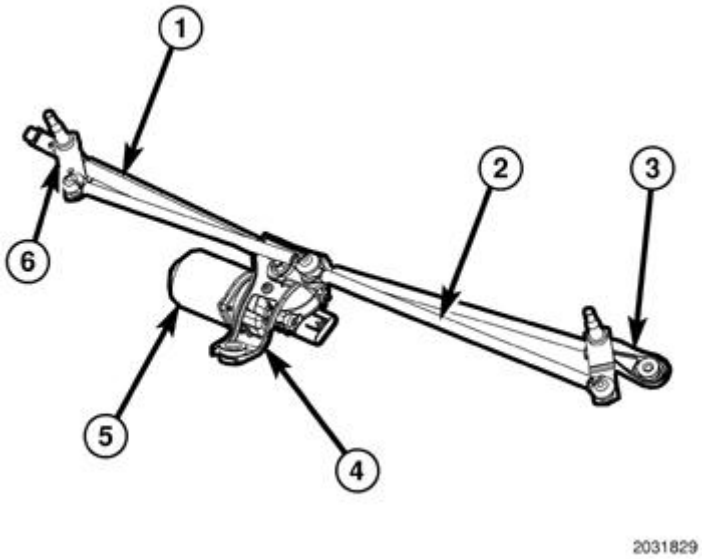

Fig. 11: Wiper Linkage Module
Courtesy of CHRYSLER GROUP, LLC

The wiper linkage module is secured by a rubber insulated mounting tab and two screws through two rubber grommet-type insulators to the cowl plenum panel. The module is concealed beneath the molded plastic cowl plenum cover/grille panel between the base of the windshield and the rear edge of the hood panel. The ends of the pivot shafts that protrude through openings in the cowl plenum cover/grille panel to drive the wiper arms and blades are the only visible components of the wiper linkage module. The wiper linkage module consists of the following major components:

- **Bracket -** The wiper linkage module bracket consists of two long tubular steel main members (1) that are each crimped at their outboard ends to a die cast pivot bracket (3) to which the two wiper pivots are secured. A die cast center motor bracket (4) is secured by crimps at the inboard ends of the tubular main members to provide both a mounting point for the wiper motor and a center support for mounting the wiper linkage module to the cowl plenum panel.
- **Crank Arm -** The wiper motor crank arm is a stamped steel unit with a hole on the driven end that is secured to the finely splined wiper motor output shaft with a nut, and has a long ball stud secured to the drive end to accept the wiper linkage.
- **Linkage -** Two tubular steel drive links (2) connect the wiper motor crank arm to the wiper pivot lever arms. The right side drive link has a plastic socket-type bushing on each end. The left side drive link has a

plastic socket-type bushing on one end, and a plastic sleeve-type bushing on the other end. The socket-type bushing on one end of each drive link is snap-fit over the ball stud on the lever arm of its respective pivot. The left side drive link sleeve-type bushing end is then fit over the motor crank arm ball stud, and the other socket-type bushing of the right side drive link is snap-fit over the exposed end of the wiper motor crank arm ball stud.

- **Motor** - The wiper motor (5) features a transmission housing from which the wiper motor output shaft exits, and has three mounting bosses with internal threads to which the motor is mounted to the center wiper linkage module bracket with screws. A nut secures the wiper motor crank arm to the motor output shaft. The two-speed permanent magnet wiper motor features an integral transmission, an internal park switch, and an internal automatic resetting circuit breaker. A short pigtail wire and connector connect the wiper motor to the vehicle electrical system through a dedicated take out and connector of the left headlamp and dash wire harness.
- **Pivots** - The two wiper pivots (6) are secured within the die cast pivot brackets on the outboard ends of the wiper linkage module main members. The lever arms that extend from the center of the pivot shafts each have a ball stud on their end. The upper end of each pivot shaft where the wiper arms will be fastened each has a finely splined and tapered driver with a threaded stud extending from the top. The lower ends of the pivot shafts are installed through permanently lubricated bushings in the pivot brackets.

The wiper linkage module cannot be adjusted or repaired. The wiper motor is available for separate service replacement. If any other component of the linkage module is ineffective or damaged, the entire wiper linkage module unit must be replaced.

OPERATION

OPERATION

The wiper linkage module operation is controlled by the battery current inputs received by the wiper motor from the Totally Integrated Power Module (TIPM). The wiper motor speed is controlled by current flow to either the low speed or the high speed set of brushes.

The park switch is a single pole, single throw, momentary switch within the wiper motor that is mechanically actuated by the wiper motor transmission components. The park switch alternately opens and closes the wiper park switch sense circuit to ground, depending upon the position of the wipers on the glass. This feature allows the motor to complete its current wipe cycle after the wiper system has been turned OFF, and to park the wiper blades in the lowest portion of the wipe pattern. The automatic resetting circuit breaker protects the motor from overloads.

The wiper motor crank arm, the two wiper linkage members, and the two driven wiper pivots mechanically convert the rotary output of the wiper motor to the back and forth wiping motion of the wiper arms and blades on the glass.

The hard wired inputs and outputs of the wiper motor may be diagnosed using conventional diagnostic tools and procedures. Refer to the appropriate wiring information. However, conventional diagnostic methods will not prove conclusive in the diagnosis of the electronic controls or communication between other modules and devices that provide some features of the wiper motor. The most reliable, efficient, and accurate means to diagnose the wiper motor or the electronic controls and communication related to wiper motor operation requires the use of a diagnostic scan tool. Refer to the appropriate diagnostic information.

REMOVAL

REMOVAL

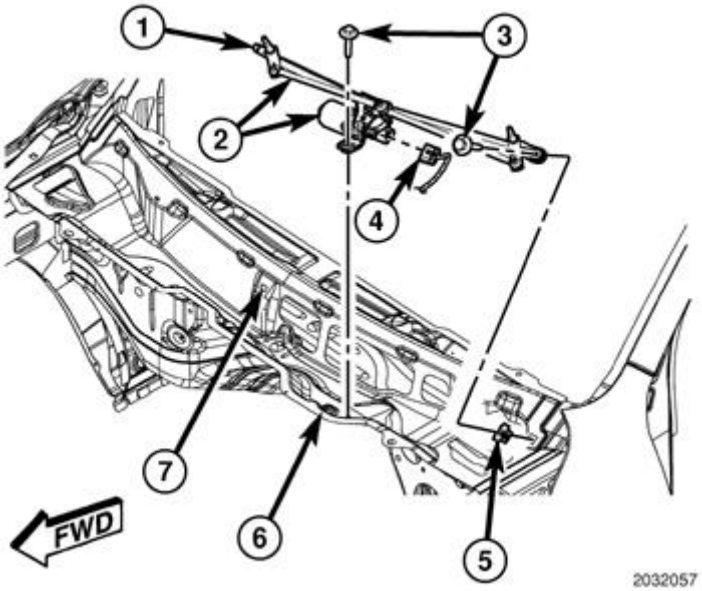

Fig. 12: Wiper Linkage Module & Wiper Motor Assembly
Courtesy of CHRYSLER GROUP, LLC

NOTE: **The wiper linkage module includes the wiper motor. The wiper motor is also available for separate service replacement and can be removed from the wiper linkage module without removing the module from the vehicle. Refer to MOTOR, WIPER, REMOVAL.**

1. Unlatch and open the hood.
2. Remove both wiper arms from the wiper pivots. Refer to **ARM, WIPER, REMOVAL**.
3. Disconnect and isolate the battery negative cable.
4. Remove the cowl plenum cover/grille panel from over the cowl plenum (6). Refer to **COVER, COWL PANEL, REMOVAL** .
5. Disconnect the left headlamp and dash wire harness connector (4) from the wiper motor pigtail wire connector.
6. Remove the two screws (3) that secure the wiper linkage module (2) to the top of the cowl plenum panel.
7. Lift the left end of the wiper linkage module upward out of the cowl plenum far enough to disengage the rubber insulated tab (1) on the end of the right pivot bracket from the slot (7) in the cowl plenum.
8. Remove the wiper linkage module from the cowl plenum panel as a unit.

INSTALLATION

INSTALLATION

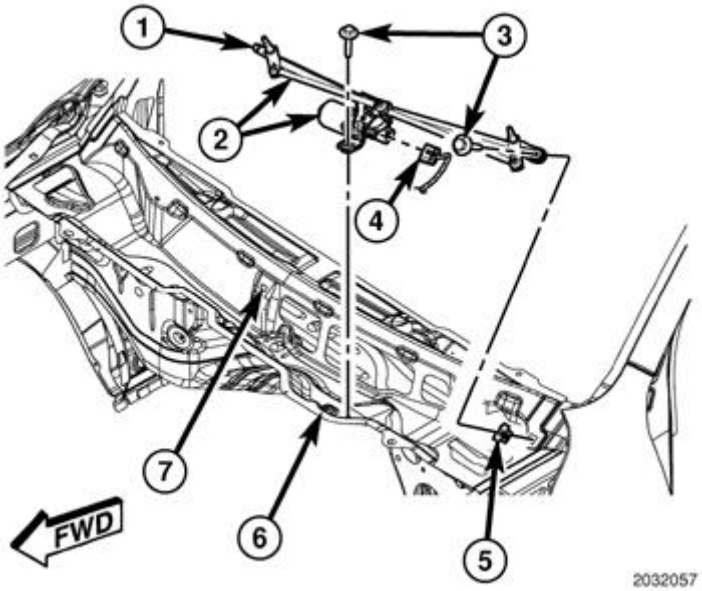

Fig. 13: Wiper Linkage Module & Wiper Motor Assembly
Courtesy of CHRYSLER GROUP, LLC

NOTE: **The wiper linkage module includes the wiper motor. The wiper motor is also available for separate service replacement and can be removed from the wiper linkage module without removing the module from the vehicle. Refer to MOTOR, WIPER, REMOVAL.**

1. Be certain that the spring nut (5) that secures the left end of the wiper linkage module is in position in the cowl plenum (6) and is in good condition.
2. Position the wiper linkage module (2) into the cowl plenum as a unit.
3. Lift the left end of the wiper linkage module upward out of the cowl plenum far enough to engage the rubber insulated tab (1) on the outboard end of the right pivot bracket into the slot (7) in the cowl plenum.
4. Lower the left end of the wiper linkage module into the cowl plenum and align it to the two mounting points.
5. Install the two screws (3) that secure the wiper linkage module to the top of the cowl plenum panel. Tighten the screw on the left (driver) side pivot bracket, followed by the screw on the center (motor) bracket. Tighten the screws to 8 N.m (75 in. lbs.).
6. Reconnect the left headlamp and dash wire harness connector (4) to the wiper motor pigtail wire connector.
7. Reinstall the cowl plenum cover/grille panel over the cowl plenum. Refer to **COVER, COWL PANEL, INSTALLATION** .
8. Reconnect the battery negative cable.
9. Reinstall both wiper arms onto the wiper pivots. Refer to **ARM, WIPER, INSTALLATION**.
10. Close and latch the hood.

MOTOR, WIPER

REMOVAL

REMOVAL

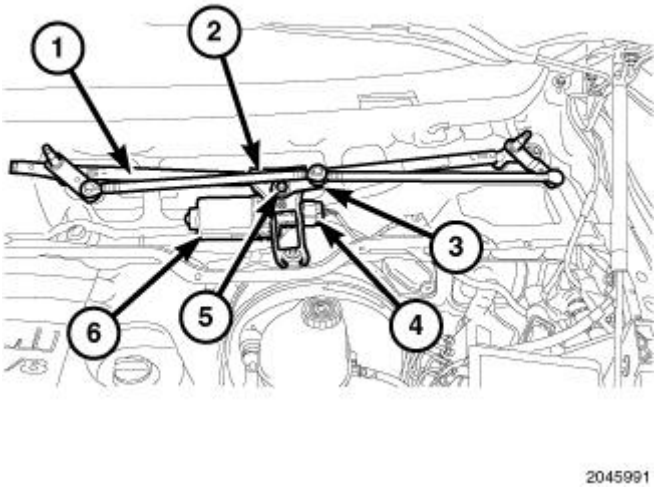

Fig. 14: Wiper Linkages & Wiper Motor
Courtesy of CHRYSLER GROUP, LLC

1. Unlatch and open the hood.
2. Remove both wiper arms from the wiper pivots. Refer to **ARM, WIPER, REMOVAL**.
3. Disconnect and isolate the battery negative cable.
4. Remove the cowl plenum cover/grille panel from over the cowl plenum. Refer to **COVER, COWL PANEL, REMOVAL** .
5. Disconnect the left headlamp and dash wire harness connector (4) from the wiper motor (6) pigtail wire connector.
6. Remove the nut (5) that secures the crank arm (3) to the wiper motor output shaft.

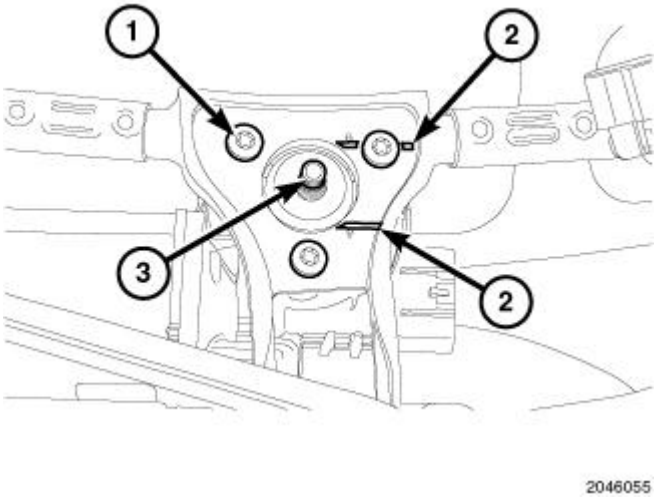

Fig. 15: Wiper Motor Bracket
Courtesy of CHRYSLER GROUP, LLC

7. Remove the three screws (1) that secure the wiper motor to the center bracket of the wiper linkage module.
8. Remove the wiper motor from under the wiper linkage module bracket and out of the cowl plenum.

INSTALLATION

INSTALLATION

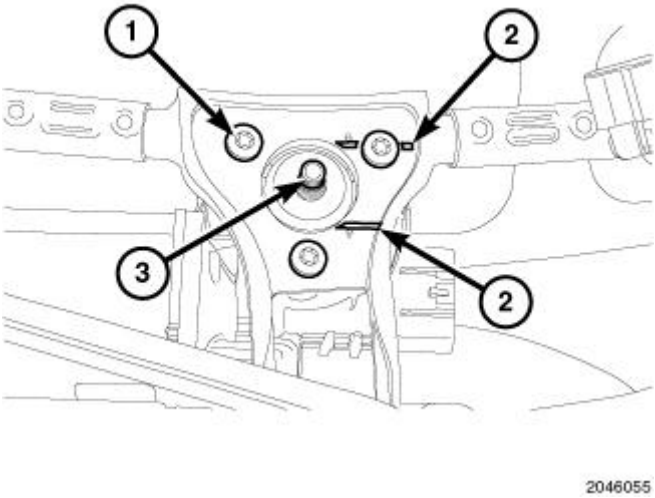

Fig. 16: Wiper Motor Bracket
Courtesy of CHRYSLER GROUP, LLC

1. Position the wiper motor beneath the wiper linkage module in the cowl plenum.
2. Align the mounting bosses of the wiper motor to the mounting holes of the wiper linkage module center

(motor) bracket.

3. Install and tighten the three screws (1) that secure the wiper motor to the center bracket of the wiper linkage module. Tighten the screws to 12.5 N.m (110 in. lbs.).
4. Reconnect the left headlamp and dash wire harness connector to the wiper motor pigtail wire connector.
5. Reconnect the battery negative cable.

NOTE: Be certain that the wiper motor is in the park position before attempting to reinstall the crank arm to the motor output shaft.

6. Turn the ignition switch to the ON position and move the multi-function switch control knob to turn the wiper motor ON. Turn the switch back to the OFF position. Wait until the wiper motor output shaft stops moving, then turn the ignition switch back to the OFF position. The wiper motor is now in the park position.
7. Position the crank arm onto the wiper motor output shaft (3) so that the crank arm is oriented between the two alignment marks (2) on the wiper linkage module center bracket, then press the crank arm down firmly over the output shaft.

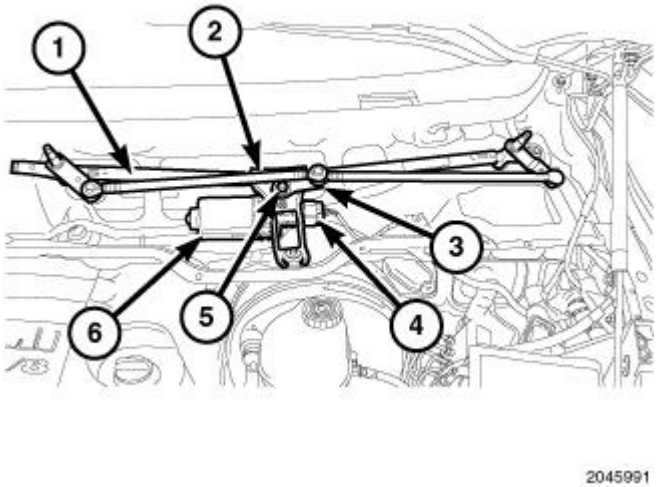

Fig. 17: Wiper Linkages & Wiper Motor
Courtesy of CHRYSLER GROUP, LLC

8. Install and tighten the nut (5) that secures the crank arm to the wiper motor (6) output shaft. Tighten the nut to 28 N.m (21 ft. lbs.).
9. Reinstall the cowl plenum cover/grille panel over the cowl plenum. Refer to **COVER, COWL PANEL, INSTALLATION** .
10. Reinstall both wiper arms onto the wiper pivots. Refer to **ARM, WIPER, INSTALLATION**.
11. Close and latch the hood.

NOZZLE, WASHER

DESCRIPTION

DESCRIPTION

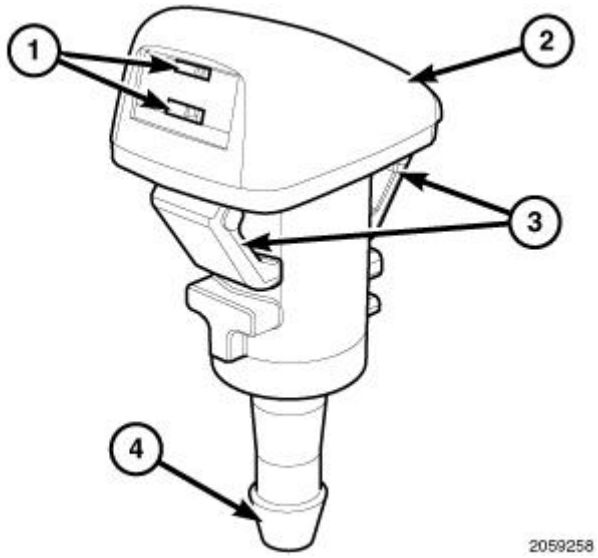

Fig. 18: Washer Nozzle
Courtesy of CHRYSLER GROUP, LLC

The fluidic washer nozzles are constructed of molded plastic and include an integral check valve. Each nozzle has two integral latches (3) that secure them in dedicated holes in the hood panel near the base of the windshield. The domed upper surface (2) of the washer nozzle is visible on the outside of the hood panel, and the dual nozzle orifices (1) are oriented towards the windshield glass.

An integral diaphragm type check valve is contained within the body of each nozzle. The washer plumbing fittings (4) for the washer nozzles extend below the hood panel and are accessible from the engine compartment.

The washer nozzles cannot be adjusted or repaired and, if ineffective or damaged, they must be replaced.

OPERATION

OPERATION

The two washer nozzles are designed to dispense washer fluid into the wiper pattern area on the outside of the windshield glass. Pressurized washer fluid is fed to each nozzle from the washer reservoir by the washer pump/motor unit through a single hose, which is attached to a barbed nipple on each washer nozzle below the inner hood panel. A fluidic matrix within the washer nozzle causes the pressurized washer fluid to be emitted from the two nozzle orifices as oscillating streams to more effectively cover a larger area of the glass to be cleaned.

The integral check valve in each nozzle prevents washer fluid from draining out of the washer supply hoses back to the washer reservoir. This drain-back would result in a lengthy delay after the washer switch is actuated until washer fluid was dispensed through the nozzles, because the washer pump would have to refill the washer plumbing from the reservoir to the nozzles. Such a drain-back condition could also result in water, dirt, or other outside contaminants being siphoned into the washer system through the washer nozzle orifice. This water

could subsequently freeze and plug or damage the nozzle, while other contaminants could interfere with proper nozzle operation and cause improper nozzle spray patterns. In addition, the check valve prevents washer fluid from siphoning through the washer nozzles after the washer pump stops operating.

When the washer pump pressurizes and pumps washer fluid from the reservoir through the washer plumbing, the fluid pressure unseats a diaphragm from over a sump well within the nozzle by overriding the spring pressure applied to it by a piston. With the diaphragm unseated, washer fluid is allowed to flow toward the nozzle orifice. When the washer pump stops operating, the spring pressure on the piston seats the diaphragm over the sump well in the nozzle and fluid flow in either direction within the washer plumbing is prevented.

REMOVAL

REMOVAL

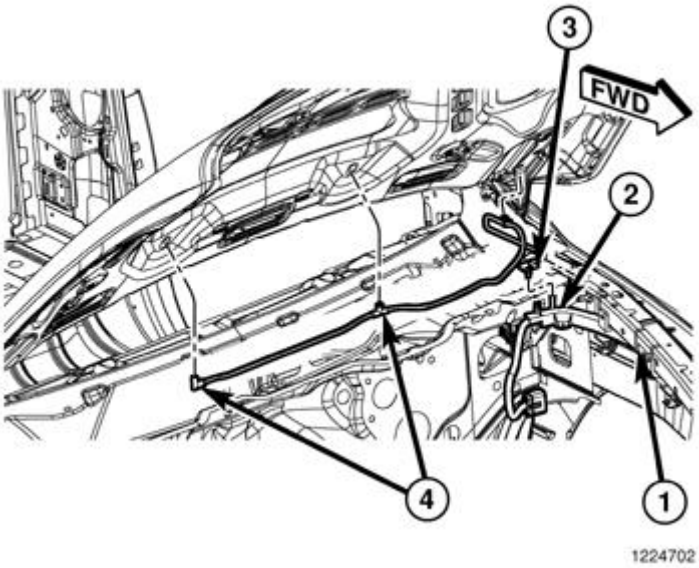

Fig. 19: Washer Hoses & Tubes
Courtesy of CHRYSLER GROUP, LLC

1. From the underside of the hood, remove the push-in retainers that secure the rear edge of the hood silencer pad to the inner hood reinforcement as necessary to access the washer nozzle hose connections (4).
2. From the underside of the hood, disconnect the washer nozzle hose from the barbed nipple of the washer nozzle.

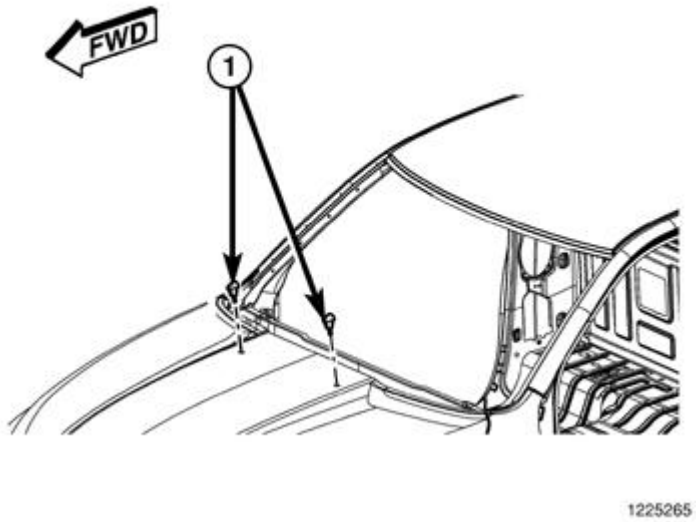

Fig. 20: Locating Washer Nozzles
Courtesy of CHRYSLER GROUP, LLC

3. From the underside of the hood, release the integral latch features of the washer nozzle (1) and push the nozzle out through the mounting hole toward the top side of the hood.
4. Remove the washer nozzle from the top of the hood panel.

INSTALLATION

INSTALLATION

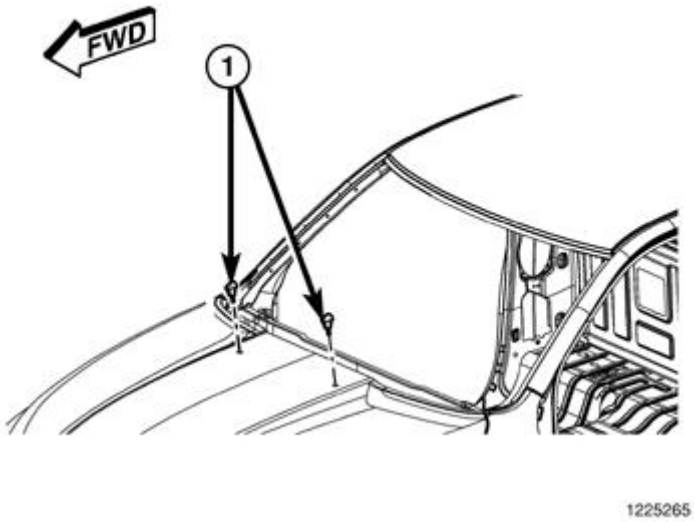

Fig. 21: Locating Washer Nozzles
Courtesy of CHRYSLER GROUP, LLC

1. From the top of the hood, position the washer nozzle (1) to the mounting hole on the outside of the hood panel.
2. Align the anti-rotation tabs of the nozzle with the anti-rotation notches in the mounting hole.
3. Using hand pressure, push firmly and evenly on the top of the washer nozzle until the integral latch features lock into place on the underside of the hood.

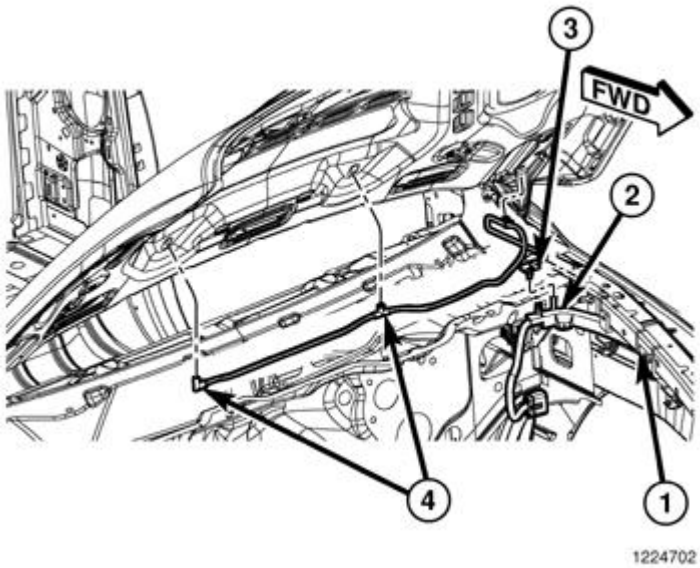

Fig. 22: Washer Hoses & Tubes
Courtesy of CHRYSLER GROUP, LLC

4. From the underside of the hood, reconnect the washer hose fitting (4) to the barbed nipple of the washer nozzle.
5. Reinstall the washer nozzle hose into its routing clips as necessary on the underside of the hood.
6. Reinstall the push-in retainers that secure the rear edge of the hood silencer pad to the inner hood reinforcement.

PUMP, WINDSHIELD WASHER

DESCRIPTION

DESCRIPTION

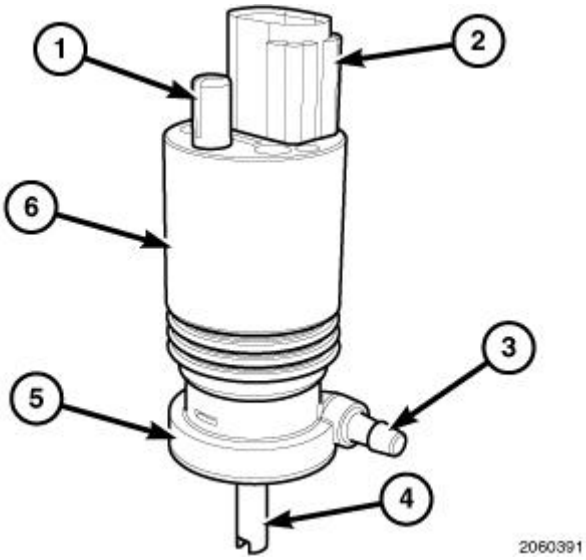

Fig. 23: Washer Pump/Motor Unit
Courtesy of CHRYSLER GROUP, LLC

On vehicles with a gasoline engine, the washer pump/motor unit is located on the top of a sump area on the forward facing side of the washer reservoir on the front of the Front End Module (FEM) carrier (also known as the radiator closure), to the left of the cooling module. On vehicles with a diesel engine, the washer pump/motor unit is located on the top of a sump area on the forward facing side of the washer reservoir on the back of the left vertical post of the left fender support hydroform just outboard of the FEM carrier. A small permanently lubricated and sealed electric motor (6) is coupled to the rotor-type washer pump (5).

An inlet nipple (4) on the bottom of the pump housing passes through a rubber grommet seal/filter screen installed in a dedicated mounting hole in the sump area near the base of the washer reservoir. When the pump is installed in the reservoir, a barbed outlet nipple (3) on the pump housing connects the unit to the reservoir washer hose, which is engaged in an integral trough molded into the reservoir unit.

The washer pump/motor unit is retained on the reservoir by the interference fit between the pump inlet nipple and the grommet seal, which is a light press fit. The top of the washer pump/motor unit is also secured to the washer reservoir by a light snap fit into a receptacle molded into the reservoir that allows for mounting of the washer pump without the use of additional fasteners. An integral connector receptacle (2) on the top of the motor housing connects the unit to the vehicle electrical system through a dedicated take out and connector of the FEM wire harness.

Service replacement washer pumps may also include a snap post (1) at the top of the pump motor housing, but this feature is not used in this application. The washer pump/motor unit cannot be repaired. If ineffective or damaged, the entire washer pump/motor unit must be replaced.

OPERATION

OPERATION

The washer pump/motor unit features a small Direct Current (DC) electric motor. The motor is connected to the vehicle electrical system through a single take out and two-cavity connector of the Front End Module (FEM)

wire harness. The motor is grounded at all times through another take out of the FEM wire harness with a single eyelet terminal connector that is secured by a screw to the left front fender upper hydroform support in the engine compartment.

The Totally Integrated Power Module (TIPM) controls the washer pump/motor control circuit through a high side driver based upon electronic **washer request** messages received over the Controller Area Network (CAN) data bus from the ElectroMechanical Instrument Cluster (EMIC) (also known as the Cab Compartment Node/CCN). The EMIC receives electronic **washer switch status** messages over a Local Interface Network (LIN) bus connection from the Steering Control Module (SCM) within the multi-function switch housing. The SCM monitors hard wired analog and multiplex inputs from the washer switch circuitry contained within the multi-function switch to determine the proper electronic messages to send.

Washer fluid is drawn through the pump inlet nipple from the washer reservoir to the inlet port of the washer pump housing. A filter screen integral to the pump grommet seal prevents most debris from entering the pump housing. When the pump motor is energized, the motor spins the rotor within the washer pump. The spinning pump rotor pressurizes the washer fluid and forces it through the pump outlet nipple, the washer plumbing, and the washer nozzles onto the windshield glass.

The washer pump/motor unit and the hard wired circuits connected to the unit may be diagnosed using conventional diagnostic tools and procedures. Refer to the appropriate wiring information. However, conventional diagnostic methods will not prove conclusive in the diagnosis of the electronic controls or communication between other modules and devices that provide many features of the wiper and washer system. The most reliable, efficient, and accurate means to diagnose the washer pump/motor unit or the electronic controls and communication related to washer pump/motor unit operation requires the use of a diagnostic scan tool. Refer to the appropriate diagnostic information.

REMOVAL

DIESEL ENGINE

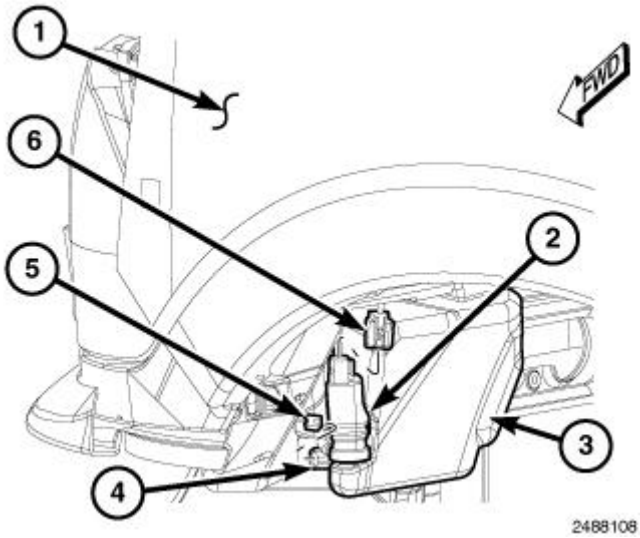

Fig. 24: Left Front Fender Wheel Housing
Courtesy of CHRYSLER GROUP, LLC

NOTE: **The washer pump/motor unit can be removed from the washer reservoir without removing the reservoir from the vehicle.**

1. Disconnect and isolate the battery negative cable.
2. Siphon the washer fluid from the washer reservoir (3) into a clean container for reuse.
3. Remove the splash shield from the left front fender (1) wheel housing of the vehicle. Refer to **SHIELD, SPLASH, FRONT WHEELHOUSE, REMOVAL** .
4. Disconnect the Front End Module (FEM) wire harness connector (6) from the washer pump/motor unit (2) connector receptacle on the top of the motor housing.
5. Pull lightly outward on the top of the washer pump/motor housing, away from the washer reservoir to disengage the top of the motor from the receptacle in the reservoir.
6. Pull the washer pump/motor unit straight up and out of the washer reservoir far enough to disengage the inlet nipple on the base of the pump housing from the rubber grommet seal/filter screen in the reservoir.
7. Raise the washer pump/motor unit far enough to access and disconnect the washer hose from the barbed pump outlet nipple.
8. Remove the washer pump/motor unit from the front of the washer reservoir.
9. Remove the rubber grommet seal/filter screen from the washer pump mounting hole in the reservoir and discard.

GASOLINE ENGINE

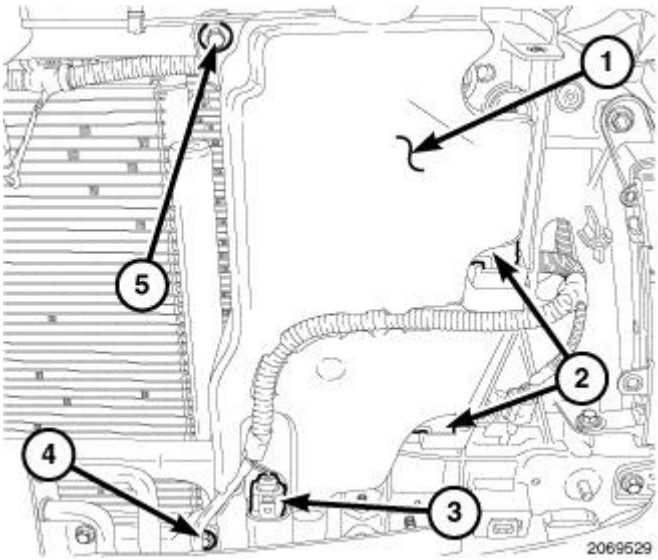

Fig. 25: Locating Washer Reservoir
Courtesy of CHRYSLER GROUP, LLC

NOTE: **The washer pump/motor unit can be removed from the washer reservoir without removing the reservoir from the vehicle.**

1. Disconnect and isolate the battery negative cable.
2. Siphon the washer fluid from the washer reservoir (1) into a clean container for reuse.

3. Remove the grille from the front of the vehicle. Refer to **GRILLE, REMOVAL** .
4. Disconnect the Front End Module (FEM) wire harness connector (3) from the washer pump/motor unit connector receptacle on the top of the motor housing.
5. Pull lightly outward on the top of the washer pump/motor housing, away from the washer reservoir to disengage the top of the motor from the receptacle in the reservoir.
6. Pull the washer pump/motor unit straight up and out of the washer reservoir far enough to disengage the inlet nipple on the base of the pump housing from the rubber grommet seal/filter screen in the reservoir.
7. Raise the washer pump/motor unit far enough to access and disconnect the washer hose (4) from the barbed pump outlet nipple.
8. Remove the washer pump/motor unit from the front of the washer reservoir.
9. Remove the rubber grommet seal/filter screen from the washer pump mounting hole in the reservoir and discard.

INSTALLATION

DIESEL ENGINE

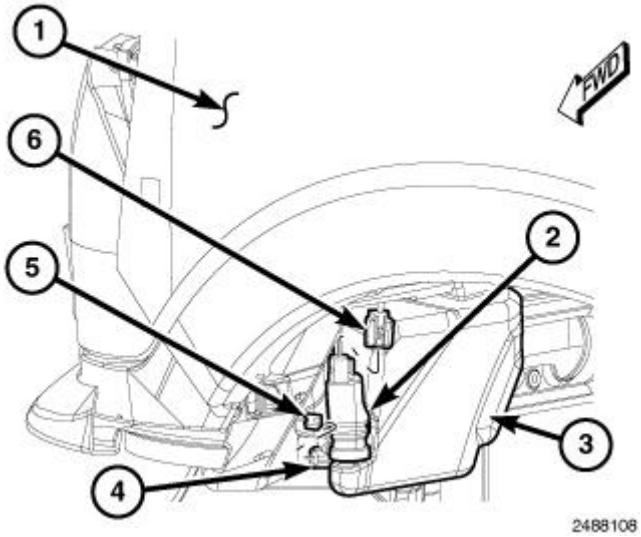

Fig. 26: Left Front Fender Wheel Housing
Courtesy of CHRYSLER GROUP, LLC

1. Install a new rubber grommet seal/filter screen into the washer pump mounting hole in the washer reservoir (3). Always use a new rubber grommet seal/filter screen on the reservoir.
2. Reconnect the reservoir washer hose to the barbed pump outlet nipple of the washer pump/motor unit (2).
3. Position the inlet nipple on the base of the pump housing of the washer pump/motor unit to the rubber grommet seal/filter screen in the reservoir.
4. Using hand pressure, press firmly and evenly downward on the top of washer pump/motor unit until the inlet nipple is fully seated in the rubber grommet seal/filter screen in the pump mounting hole of the reservoir.
5. Align the top of the washer pump/motor unit housing with the receptacle in the washer reservoir.

6. Using hand pressure, press firmly and evenly on the top of washer pump/motor unit until the housing snaps into the receptacle.
7. Reconnect the Front End Module (FEM) wire harness connector (6) to the washer pump/motor unit connector receptacle at the top of the motor housing.
8. Reinstall the splash shield into the front fender (1) wheel housing of the vehicle. Refer to **SHIELD, SPLASH, FRONT WHEELHOUSE, INSTALLATION** .
9. Refill the washer reservoir with the washer fluid drained from the reservoir during the removal procedure.
10. Reconnect the battery negative cable.

GASOLINE ENGINE

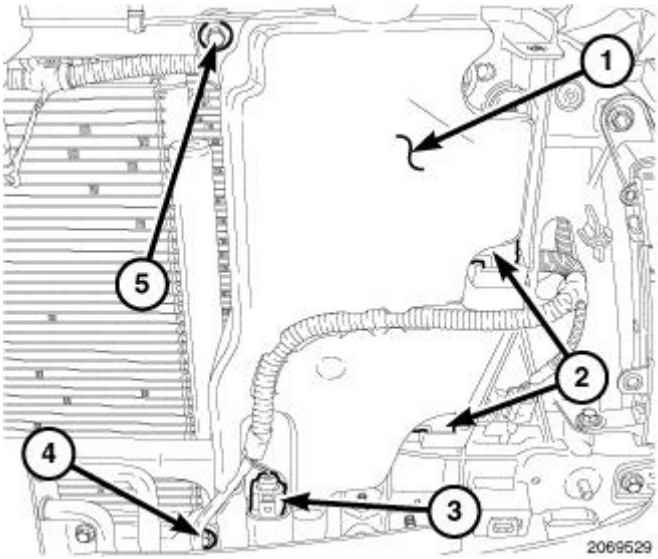

Fig. 27: Locating Washer Reservoir
Courtesy of CHRYSLER GROUP, LLC

1. Install a new rubber grommet seal/filter screen into the washer pump mounting hole in the washer reservoir (1). Always use a new rubber grommet seal/filter screen on the reservoir.
2. Reconnect the reservoir washer hose (4) to the barbed pump outlet nipple of the washer pump/motor unit.
3. Position the inlet nipple on the base of the pump housing of the washer pump/motor unit to the rubber grommet seal/filter screen in the reservoir.
4. Using hand pressure, press firmly and evenly downward on the top of washer pump/motor unit until the inlet nipple is fully seated in the rubber grommet seal/filter screen in the pump mounting hole of the reservoir.
5. Align the top of the washer pump/motor unit housing with the receptacle in the washer reservoir.
6. Using hand pressure, press firmly and evenly on the top of washer pump/motor unit until the housing snaps into the receptacle.
7. Reconnect the Front End Module (FEM) wire harness connector (3) to the washer pump/motor unit connector receptacle at the top of the motor housing.
8. Reinstall the grille onto the front of the vehicle. Refer to **GRILLE, INSTALLATION** .
9. Refill the washer reservoir with the washer fluid drained from the reservoir during the removal procedure.

10. Reconnect the battery negative cable.

RESERVOIR, WINDSHIELD WASHER

DESCRIPTION

DESCRIPTION

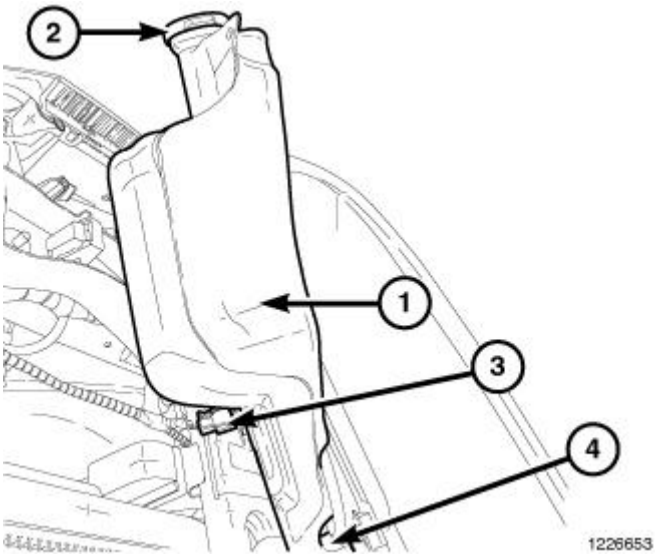

Fig. 28: Windshield Washer Reservoir (Gasoline)
Courtesy of CHRYSLER GROUP, LLC

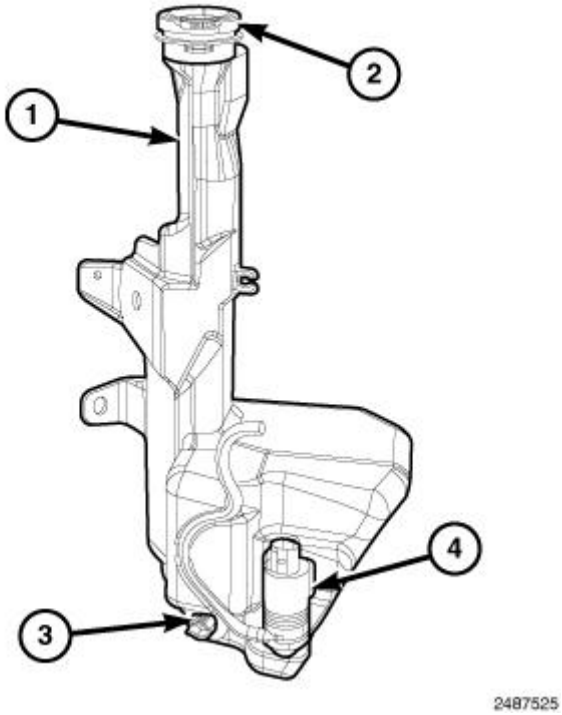

Fig. 29: Windshield Washer Reservoir (Diesel)
Courtesy of CHRYSLER GROUP, LLC

On vehicles with a gasoline engine, the molded plastic washer fluid reservoir (1) is mounted on the front of the Front End Module (FEM) carrier (also known as the radiator closure), just to the left of the cooling module. The filler neck for the reservoir extends upward just past the upper radiator closure member and through the upper radiator seal. On vehicles with a diesel engine, the molded plastic washer fluid reservoir is mounted on the back of the left vertical member of the left fender support hydroform. Both reservoirs are constructed of opaque black plastic, which does not allow the fluid level to be inspected without removing the reservoir filler cap (2).

The bright yellow plastic filler cap with a rubber seal and an International Control and Display Symbol icon for **Windshield Washer** molded into it snaps over the open end of the washer reservoir filler neck. The cap hinges on and is secured to an integral molded hook formation on the top of the reservoir just to the left of the filler neck when it is removed for inspecting or adjusting the fluid level in the reservoir.

On vehicles with a gasoline engine, the washer reservoir is secured through an integral mounting bracket at the top and bottom on the inboard side by two screws to the upper and lower members of the radiator closure. Two integral tabs on the outboard side of the reservoir engage through two slotted loops integral to the FEM carrier just inboard of the front lamp unit. On vehicles with a diesel engine, the washer reservoir is located and supported by an integral post formation on the bottom of the reservoir in a locator hole in the support bracket at the base of the left vertical member of the fender support hydroform, then secured by two screws through two integral tabs to the back of the vertical member.

There is a dedicated mounting hole in the top of the sump area at the front of the reservoir with a receptacle provided for the mounting of the washer/pump motor unit (4) without the use of fasteners. A separate dedicated mounting hole is provided in the rearward facing (gasoline engine) or forward facing (diesel engine) side of the reservoir for the washer fluid level switch (3). An integral molded routing trough for the washer hose and washer pump/motor unit wiring routes the hose and wiring bundle from the washer pump to the outboard side of the reservoir.

A washer reservoir cannot be repaired and, if ineffective or damaged, the unit must be replaced. The washer pump/motor unit, the washer fluid level switch, their rubber grommet seals, as well as the reservoir filler cap are each available for individual service replacement.

OPERATION

OPERATION

The washer fluid reservoir provides a secure, on-vehicle storage location for a large reserve of washer fluid for operation of the washer system. The washer reservoir filler cap provides a clearly marked and readily accessible point at which to add washer fluid to the reservoir.

The washer/pump motor unit is located in a sump area near the bottom of the reservoir to be certain that washer fluid will be available to the pump as the fluid level in the reservoir becomes depleted. The washer fluid level switch is mounted far enough above the washer pump inlet nipple in the sump area of the reservoir so that there will be adequate warning to the vehicle operator that the washer fluid level is low, well before the washer system will no longer operate.

REMOVAL

DIESEL ENGINE

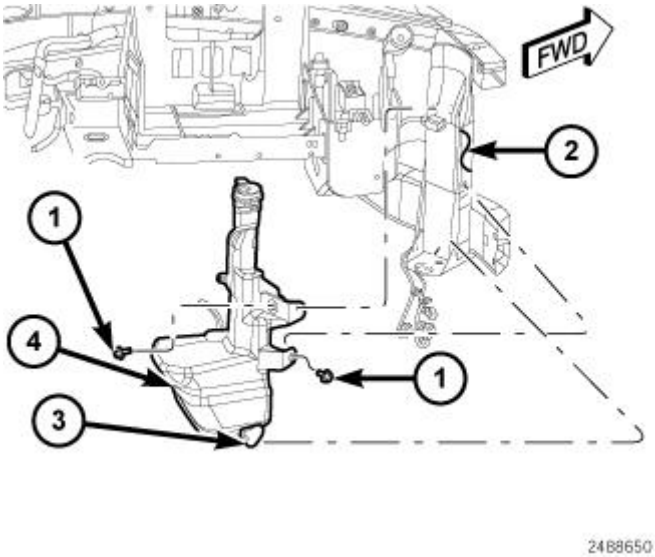

Fig. 30: Washer Reservoir, Vertical Member, Mounting Post & Screws
Courtesy of CHRYSLER GROUP, LLC

1. Disconnect and isolate the battery negative cable.
2. Siphon the washer fluid from the washer reservoir (4) into a clean container for reuse.
3. Remove the two screws (1) that secure the mounting brackets of the washer reservoir filler neck to the left fender support hydroform vertical member (2), just to the left of the cooling module.
4. Pull the washer reservoir upward just far enough to disengage the mounting post (3) integral to the bottom of the reservoir from the locator hole in the support bracket at the base of the hydroform vertical member.

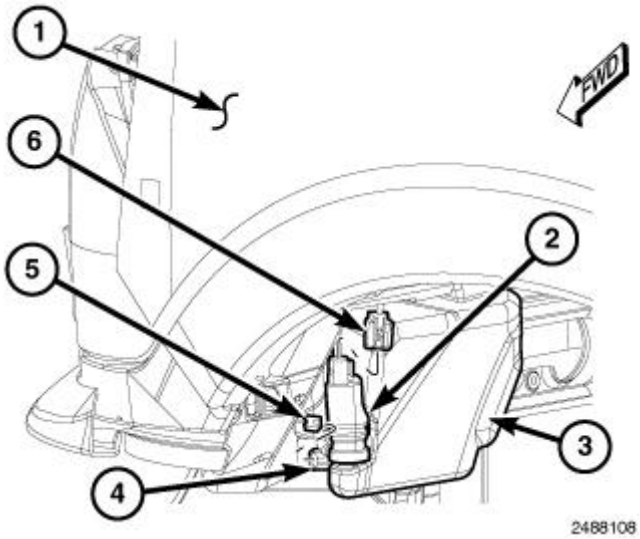

Fig. 31: Left Front Fender Wheel Housing

Courtesy of CHRYSLER GROUP, LLC

5. Remove the splash shield from the left front fender (1) wheel housing of the vehicle. Refer to **SHIELD, SPLASH, FRONT WHEELHOUSE, REMOVAL** .
6. Disconnect the Front End Module (FEM) wire harness connector (6) from the washer pump/motor unit (2) connector receptacle on the top of the motor housing.
7. Disconnect the FEM wire harness connector (5) from the washer fluid level switch connector receptacle (4) on the front of the reservoir.
8. Disconnect the reservoir washer hose from the barbed pump outlet nipple of the washer pump/motor unit.
9. Disengage the reservoir washer hose from the routing trough integral to the reservoir.
10. Move the washer reservoir away from the support bracket at the base of the hydroform vertical member far enough to enable lowering the reservoir down and out of the vehicle through the left front fender wheel housing.

GASOLINE ENGINE

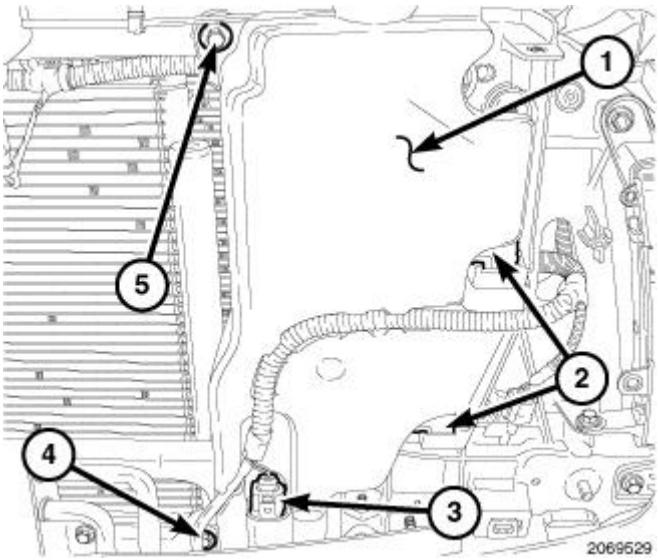

Fig. 32: Locating Washer Reservoir
Courtesy of CHRYSLER GROUP, LLC

1. Disconnect and isolate the battery negative cable.
2. Siphon the washer fluid from the washer reservoir (1) into a clean container for reuse.
3. Remove the grille from the front of the vehicle. Refer to **GRILLE, REMOVAL** .
4. Remove the two screws (5) that secure the inboard washer reservoir mounting brackets at the top and bottom members of the Front End Module (FEM) carrier (also known as the radiator closure), just to the left of the cooling module.
5. Pull the washer reservoir upward far enough to disengage the two mounting tabs (2) on the outboard side of the reservoir from the two slotted loops integral to the FEM carrier.
6. Disconnect the FEM wire harness connector (3) from the washer pump/motor unit connector receptacle on the top of the motor housing.

7. Disconnect the reservoir washer hose (4) from the barbed pump outlet nipple of the washer pump/motor unit.
8. Disengage the reservoir washer hose and FEM wiring bundle from the routing trough integral to the front of the reservoir.

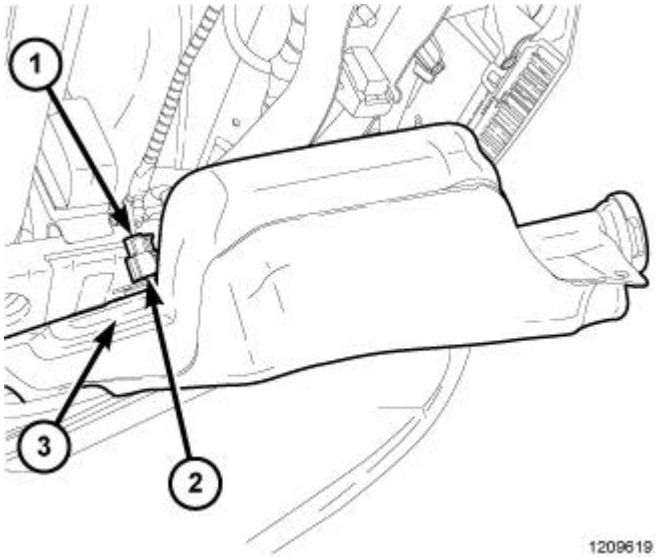

Fig. 33: Washer Reservoir & Level Switch Connector
Courtesy of CHRYSLER GROUP, LLC

9. Rotate the outboard side of the washer reservoir (3) away from the FEM carrier far enough to access and disconnect the FEM wire harness connector (1) from the washer fluid level switch connector receptacle (2) on the back of the reservoir.
10. Remove the washer reservoir from the left side of the FEM carrier.

INSTALLATION

DIESEL ENGINE

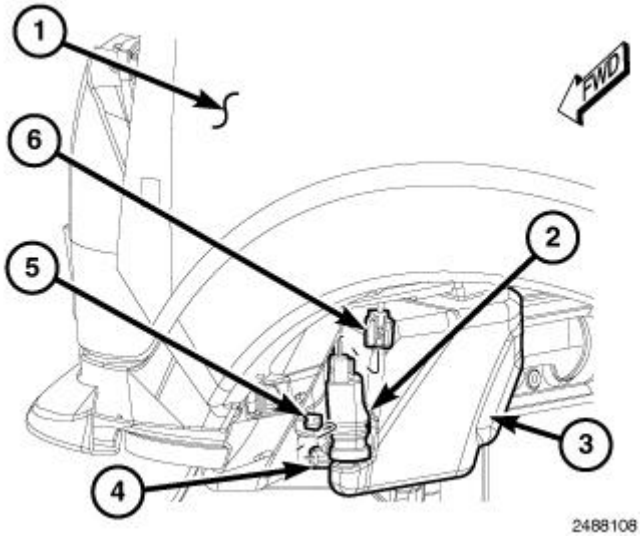

Fig. 34: Left Front Fender Wheel Housing
Courtesy of CHRYSLER GROUP, LLC

1. Position the washer reservoir (3) up into the vehicle through the left front fender (1) wheel housing and engage the post on the bottom of the reservoir in the locator hole in the support bracket at the base of the left front fender support hydroform vertical member.
2. Reconnect the reservoir washer hose to the barbed pump outlet nipple of the washer pump/motor unit (2).
3. Engage the reservoir washer hose into the routing trough integral to the reservoir.
4. Reconnect the Front End Module (FEM) wire harness connector (5) to the washer fluid level switch connector receptacle (4).
5. Reconnect the FEM wire harness connector (6) to the washer pump/motor unit connector receptacle at the top of the motor housing.
6. Reinstall the splash shield into the left front fender wheel housing of the vehicle. Refer to **SHIELD, SPLASH, FRONT WHEELHOUSE, INSTALLATION** .

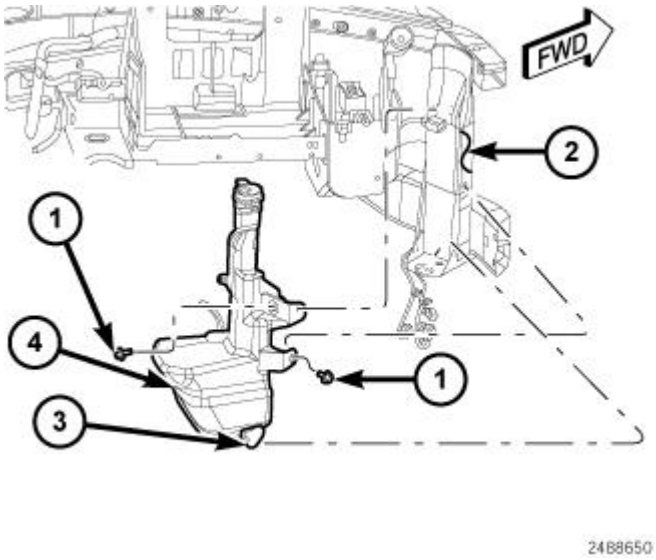

Fig. 35: Washer Reservoir, Vertical Member, Mounting Post & Screws
Courtesy of CHRYSLER GROUP, LLC

7. Push the washer reservoir (4) downward far enough to ensure the mounting post (3) integral to the bottom of the reservoir is fully seated in the locator hole in the support bracket at the base of the left fender support hydroform vertical member (2), just to the left of the cooling module.
8. Install and tighten the two screws (1) that secure the mounting brackets of the washer reservoir filler neck to the hydroform vertical member. Tighten the screws securely.
9. Refill the washer reservoir with the washer fluid drained from the reservoir during the removal procedure.
10. Reconnect the battery negative cable.

GASOLINE ENGINE

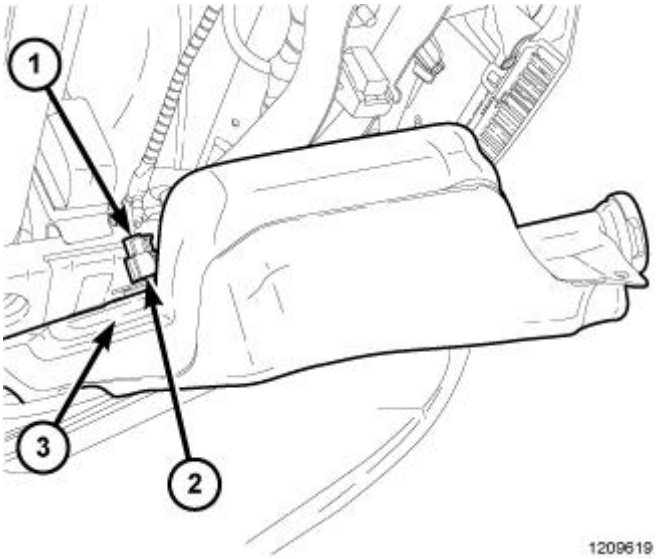

Fig. 36: Washer Reservoir & Level Switch Connector
Courtesy of CHRYSLER GROUP, LLC

1. Position the washer reservoir (3) to the left side of the Front End Module (FEM) carrier (also known as the radiator closure).
2. Rotate the outboard side of the washer reservoir away from the FEM carrier far enough to access and reconnect the FEM wire harness connector (1) to the washer fluid level switch connector receptacle (2) on the back of the reservoir.

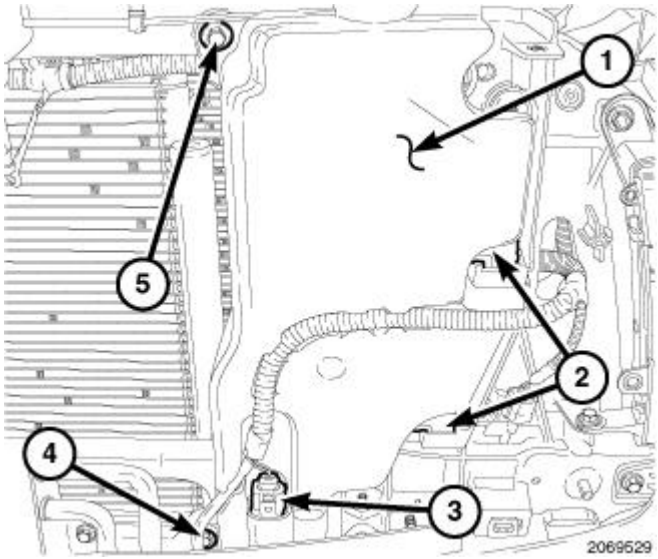

Fig. 37: Locating Washer Reservoir
Courtesy of CHRYSLER GROUP, LLC

3. Engage the reservoir washer hose (4) and FEM wiring bundle into the routing trough integral to the front of the reservoir (1).
4. Reconnect the reservoir washer hose to the barbed pump outlet nipple of the washer pump/motor unit.
5. Reconnect the FEM wire harness connector (3) to the washer pump/motor unit connector receptacle on the top of the motor housing.
6. Align and insert the two mounting tabs (2) on the outboard side of the reservoir into the two slotted loops integral to the FEM carrier.
7. Install and tighten the two screws (5) that secure the inboard washer reservoir mounting brackets at the top and bottom members of the FEM carrier, just to the left of the cooling module. Tighten the screws securely.
8. Reinstall the grille onto the front of the vehicle. Refer to **GRILLE, INSTALLATION** .
9. Refill the washer reservoir with the washer fluid drained from the reservoir during the removal procedure.
10. Reconnect the battery negative cable.

SWITCH, WASHER FLUID LEVEL

DESCRIPTION

DESCRIPTION

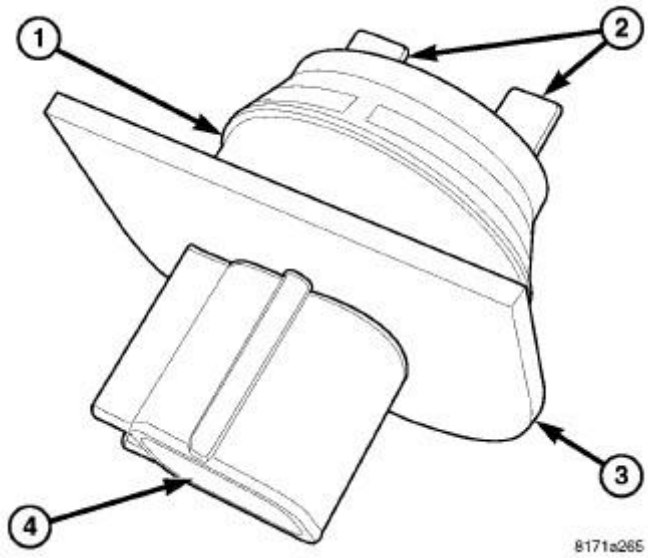

Fig. 38: Washer Fluid Level Switch
Courtesy of CHRYSLER GROUP, LLC

The washer fluid level switch (3) is a two-pin conductivity sensor with no moving parts. On vehicles with a gasoline engine, the switch is mounted on the rearward facing side of the washer reservoir on the front of the Front End Module (FEM) carrier (also known as the radiator closure), just to the left of the cooling module. On vehicles with a diesel engine, the washer fluid level switch is located in a dedicated hole on the lower, forward facing surface of the washer reservoir on the back of the left vertical post of the left fender support hydroform just outboard of the FEM carrier. Only the molded plastic switch mounting flange and the integral connector receptacle (4) are visible when the switch is installed in the reservoir.

A short nipple formation (1) extends from the inner surface of the switch mounting flange, and a barb on the nipple is pressed through a rubber grommet seal installed in the mounting hole of the reservoir. Two over-molded pins or electrodes (2) extend from the back of the nipple formation. The switch is connected to the vehicle electrical system through a dedicated take out and connector of the FEM wire harness.

The washer fluid level switch cannot be adjusted or repaired. If ineffective or damaged, the switch must be replaced.

OPERATION

OPERATION

The washer fluid level switch uses fluid conductivity to monitor the level of the washer fluid in the washer reservoir. Electricity is conducted between the two switch pins or electrodes only when they are immersed in the washer fluid, which closes the switch circuit. When the fluid level in the washer reservoir falls below the pins, electrical current cannot be conducted and the switch becomes an open circuit, which signals a low fluid condition.

In order to prevent an electrical charge from accumulating in the electrical leads of the switch, the switch receives current that is pulsed from the Totally Integrated Power Module (TIPM) located in the engine

compartment near the battery. The TIPM monitors the switch return signal and is programmed to respond to three consecutive open switch readings by sending an electronic **washer fluid indicator lamp-ON request** message to the ElectroMechanical Instrument Cluster (EMIC) (also known as the Cab Compartment Node/CCN) over the Controller Area Network (CAN) data bus. The EMIC responds to this message by illuminating the washer fluid indicator and by sounding an audible chime tone warning.

The washer fluid level switch is connected to the vehicle electrical system through a dedicated take out and connector of the Front End Module (FEM) wire harness. The switch is connected in series between a sensor return circuit and the washer fluid switch sense input to the TIPM.

The washer fluid level switch and the hard wired circuits between the switch and the TIPM may be diagnosed using conventional diagnostic tools and procedures. Refer to the appropriate wiring information. However, conventional diagnostic methods will not prove conclusive in the diagnosis of the washer fluid level indicator or the electronic controls or communication between other modules and devices that provide some features of the washer system. The most reliable, efficient, and accurate means to diagnose the washer fluid level indicator or the electronic controls and communication related to washer fluid level switch operation requires the use of a diagnostic scan tool. Refer to the appropriate diagnostic information.

REMOVAL

DIESEL ENGINE

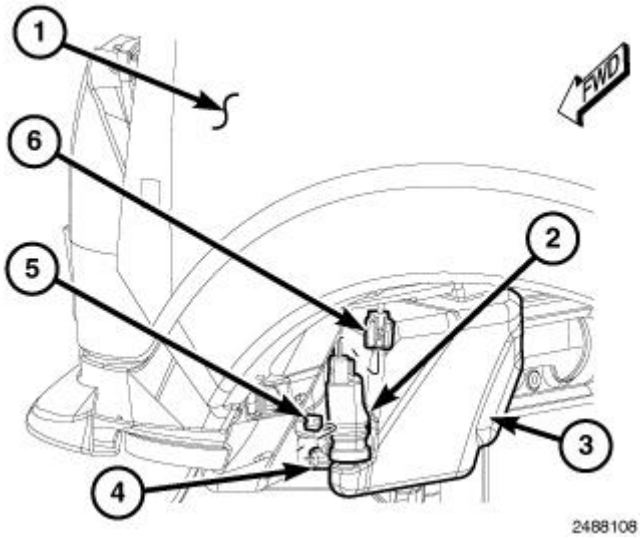

Fig. 39: Left Front Fender Wheel Housing
Courtesy of CHRYSLER GROUP, LLC

NOTE: The washer fluid level switch can be removed from the washer reservoir without removing the reservoir from the vehicle.

1. Disconnect and isolate the battery negative cable.
2. Siphon the washer fluid from the washer reservoir (3) into a clean container for reuse.
3. Remove the splash shield from the left front fender (1) wheel housing of the vehicle. Refer to **SHIELD,**

SPLASH, FRONT WHEELHOUSE, REMOVAL .

4. Disconnect the Front End Module (FEM) wire harness connector (5) from the washer fluid level switch connector receptacle (4) on the front of the reservoir.
5. Using a trim stick or another suitable wide flat-bladed tool, gently pry the barbed nipple of the washer fluid level switch out of the rubber grommet seal in the washer reservoir. Care must be taken not to damage the reservoir.
6. Remove the switch from the washer reservoir.
7. Remove the rubber grommet seal from the switch mounting hole in the washer reservoir and discard.

GASOLINE ENGINE

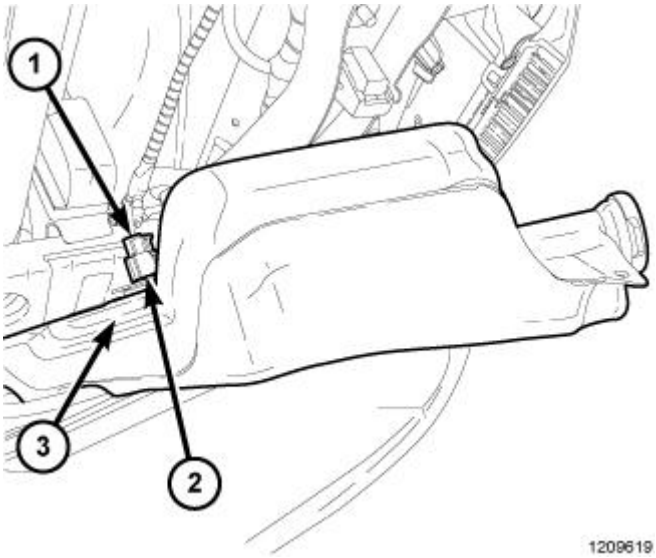

Fig. 40: Washer Reservoir & Level Switch Connector
Courtesy of CHRYSLER GROUP, LLC

1. Disconnect and isolate the battery negative cable.
2. Remove the windshield washer reservoir (3) from the Front End Module (FEM) carrier (also known as the radiator closure), but it is not necessary to disconnect the wiring or washer hose from the washer pump/motor unit. Refer to **RESERVOIR, WINDSHIELD WASHER, REMOVAL**.
3. Rotate the outboard side of the washer reservoir away from the FEM carrier far enough to access and disconnect the FEM wire harness connector (1) from the washer fluid level switch connector receptacle (2) on the back of the reservoir.
4. Using a trim stick or another suitable wide flat-bladed tool, gently pry the barbed nipple of the washer fluid level switch out of the rubber grommet seal in the washer reservoir. Care must be taken not to damage the reservoir.
5. Remove the switch from the washer reservoir.
6. Remove the rubber grommet seal from the switch mounting hole in the washer reservoir and discard.

INSTALLATION

DIESEL ENGINE

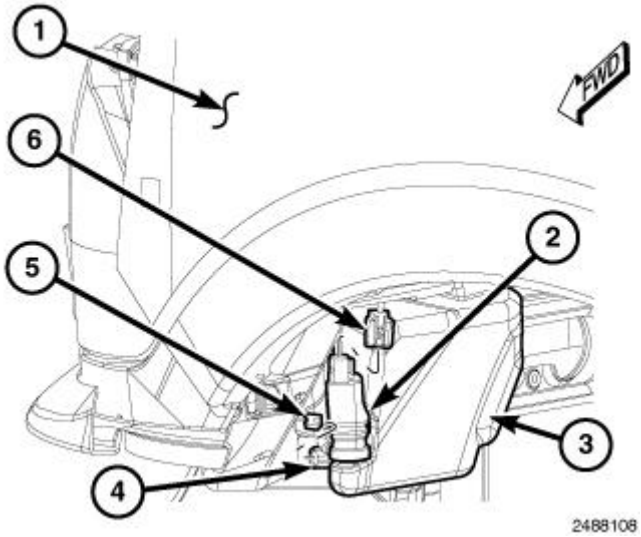

Fig. 41: Left Front Fender Wheel Housing
Courtesy of CHRYSLER GROUP, LLC

1. Install a new rubber grommet seal into the washer fluid level switch mounting hole of the washer reservoir (3). Always use a new rubber grommet seal on the reservoir.
2. Insert the nipple formation of the switch (4) through the rubber grommet seal in the reservoir.
3. Using hand pressure, press firmly and evenly on the switch mounting flange until the barbed nipple is fully seated in the rubber grommet seal in the reservoir. The flat edge of the switch mounting flange should be pointed upward.
4. Reconnect the Front End Module (FEM) wire harness connector (5) to the switch connector receptacle.
5. Reinstall the splash shield into the front fender (1) wheel housing of the vehicle. Refer to **SHIELD, SPLASH, FRONT WHEELHOUSE, INSTALLATION** .
6. Refill the washer reservoir with the washer fluid drained from the reservoir during the removal procedure.
7. Reconnect the battery negative cable.

GASOLINE ENGINE

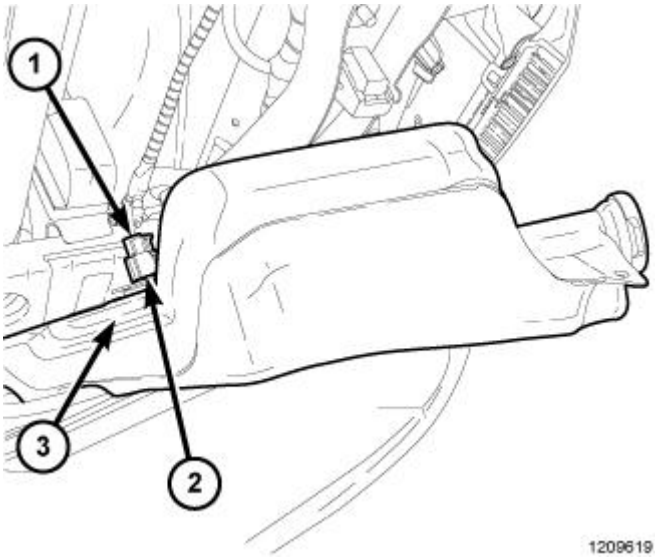

Fig. 42: Washer Reservoir & Level Switch Connector
Courtesy of CHRYSLER GROUP, LLC

1. Install a new rubber grommet seal into the washer fluid level switch mounting hole of the washer reservoir (3). Always use a new rubber grommet seal on the reservoir.
2. Insert the nipple formation of the switch (2) through the rubber grommet seal in the reservoir.
3. Using hand pressure, press firmly and evenly on the switch mounting flange until the barbed nipple is fully seated in the rubber grommet seal in the reservoir. The flat edge of the switch mounting flange should be pointed upward.
4. Reconnect the Front End Module (FEM) wire harness connector (1) to the switch connector receptacle.
5. Reinstall the washer reservoir onto the FEM carrier (also known as the radiator closure). Refer to **RESERVOIR, WINDSHIELD WASHER, INSTALLATION**.

DIAGNOSTIC CODE INDEX

DIAGNOSTIC CODE INDEX

DTC	Description
B1A08	RKE FOB 1 PERFORMANCE
B1A09	RKE FOB 2 PERFORMANCE
B1A0A	RKE FOB 3 PERFORMANCE
B1A0B	RKE FOB 4 PERFORMANCE
B1A0C	RKE FOB 5 PERFORMANCE
B1A0D	RKE FOB 6 PERFORMANCE
B1A0E	RKE FOB 7 PERFORMANCE
B1A0F	RKE FOB 8 PERFORMANCE
B1A10	RKE FOB 1 BATTERY LOW
B1A11	RKE FOB 2 BATTERY LOW
B1A12	RKE FOB 3 BATTERY LOW
B1A13	RKE FOB 4 BATTERY LOW
B1A14	RKE FOB 5 BATTERY LOW
B1A15	RKE FOB 6 BATTERY LOW
B1A16	RKE FOB 7 BATTERY LOW
B1A17	RKE FOB 8 BATTERY LOW
B1A24	KEY NOT PROGRAMMED
B1A25	INVALID KEY
B1A26	MAXIMUM NUMBER OF KEYS PROGRAMMED
B1A27	SKREEM PROGRAMMING PERFORMANCE
B1A28	ECM MISMATCH WITH SKIM
B1A29	SKIM BASESTATION MISMATCH
B1A35	UNIDENTIFIED KEY COMMUNICATION ERROR
B1A6C	SECRET KEY MISMATCH
B1A77	REMOTE START ANTENNA CIRCUIT LOW
B1A79	REMOTE START ANTENNA CIRCUIT OPEN OR NOT CONNECTED
B210A	SYSTEM VOLTAGE LOW
B210B	SYSTEM VOLTAGE HIGH
B210D	BATTERY VOLTAGE LOW - DD/DP
B210D	BATTERY VOLTAGE LOW - DS/DJ/D2
B210E	BATTERY VOLTAGE HIGH - DD/DP
B210E	BATTERY VOLTAGE HIGH - DS/DJ/D2
B2204	ECU CONFIGURATION MISMATCH
B2205	ORIGINAL VIN MISSING/MISMATCH

B2224	SKREEM INTERNAL
C0077	LOW TIRE PRESSURE
C1501	TIRE PRESSURE SENSOR 1 INTERNAL
C1502	TIRE PRESSURE SENSOR 2 INTERNAL
C1503	TIRE PRESSURE SENSOR 3 INTERNAL
C1504	TIRE PRESSURE SENSOR 4 INTERNAL
C151C	TIRE PRESSURE MONITORING (TPM) SENSORS MISSING
P0928	BTSI CONTROL CIRCUIT
U0001	CAN C BUS
U0100	LOST COMMUNICATION WITH THE ECM/PCM
U0121	LOST COMMUNICATION WITH ABS
U0146	LOST COMMUNICATION WITH CENTRAL GATEWAY (TIPM)
U1197	SECURITY SEED RESPONSE NOT RECEIVED FROM ECM/PCM

DIAGNOSIS AND TESTING

B1A08-RKE FOB 1 PERFORMANCE

For a complete wiring diagram, **refer to appropriate SYSTEM WIRING DIAGRAMS article** .

WHEN MONITORED:

Continuously.

SET CONDITION:

Scrambled messages to the Wireless Ignition Node (WIN) from the FOBIK transmitter.

POSSIBLE CAUSES

NOTE: **The most probable cause that sets this code is the RKE transmitter being pressed over 1023 times when it is out of range of the Wireless Ignition Node and it loses synchronization with the rolling code of the WIN. To correct, insert the FOBIK in the ignition and turn to the on position to synchronize the rolling code.**

Possible Causes
EXCESSIVE PRESSES FROM TRANSMITTER WHEN OUT OF RANGE
FOBIK TRANSMITTER

DIAGNOSTIC TEST

1. **TEST FOR INTERMITTENT CONDITION**
    1. Put the FOBIK in the ignition and turn the ignition on.

2. With the scan tool, record and erase DTCs.
3. Turn the ignition off and operate the FOBIK in all positions several times.
4. With the scan tool, read the DTCs.

   Does the scan tool display this DTC as active?

   Yes

   - Replace the FOBIK and program using the scan tool.
   - Refer to **STANDARD PROCEDURE** and perform the BODY VERIFICATION TEST.

   No

   - The conditions that caused this code to set are not present at this time. Inform the owner of the most probable cause for this code to set and therefore causes the RKE system to be inoperative.
   - Refer to **STANDARD PROCEDURE** and perform the BODY VERIFICATION TEST.

B1A09-RKE FOB 2 PERFORMANCE

For a complete wiring diagram, **refer to appropriate SYSTEM WIRING DIAGRAMS article** .

WHEN MONITORED:

Continuously.

SET CONDITION:

Scrambled messages to the Wireless Ignition Node (WIN) from the FOBIK transmitter.

POSSIBLE CAUSES

NOTE: **The most probable cause that sets this code is the FOBIK transmitter being pressed over 1024 times when it is out of range of the Wireless Ignition Node and it loses synchronization with the rolling code of the WIN. To correct, insert the FOBIK in the ignition and turn to the on position to synchronize the rolling code.**

Possible Causes
EXCESSIVE PRESSES FROM TRANSMITTER WHEN OUT OF RANGE
FOBIK TRANSMITTER

DIAGNOSTIC TEST

1. **TEST FOR INTERMITTENT CONDITION**

1. Put the FOBIK in the ignition and turn the ignition on.
2. With the scan tool, record and erase the DTCs.
3. Turn the ignition off and remove the FOBIK.
4. Operate the FOBIK in all positions several times.
5. With the scan tool, read the DTCs.

   Does the scan tool display this DTC as active?

   Yes

   - Replace and program the FOBIK using the scan tool.
   - Refer to **STANDARD PROCEDURE** and perform the BODY VERIFICATION TEST.

   No

   - The conditions that caused this code to set are not present at this time. Inform the owner of the most probable cause for this code to set and therefore causes the RKE to be inoperative.
   - Refer to **STANDARD PROCEDURE** and perform the BODY VERIFICATION TEST.

B1A0A-RKE FOB 3 PERFORMANCE

For a complete wiring diagram, **refer to appropriate SYSTEM WIRING DIAGRAMS article** .

WHEN MONITORED:

Continuously.

SET CONDITION:

Scrambled messages to the Wireless Ignition Node (WIN) from the FOBIK transmitter.

POSSIBLE CAUSES

NOTE: **The most probable cause that sets this code is the FOBIK transmitter being pressed over 1024 times when it is out of range of the Wireless Ignition Node and it loses synchronization with the rolling code of the WIN. To correct, insert the FOBIK in the ignition and turn to the on position to synchronize the rolling code.**

Possible Causes
EXCESSIVE PRESSES FROM TRANSMITTER WHEN OUT OF RANGE
FOBIK TRANSMITTER

DIAGNOSTIC TEST

1. **TEST FOR INTERMITTENT CONDITION**
    1. Put the FOBIK in the ignition and turn the ignition on.
    2. With the scan tool, record and erase the DTCs.
    3. Turn the ignition off and remove the FOBIK.
    4. Operate the FOBIK in all positions several times.
    5. With the scan tool, read the DTCs.

    Does the scan tool display this DTC as active?

    Yes

    - Replace and program the FOBIK transmitter using the scan tool.
    - Refer to **STANDARD PROCEDURE** and perform the BODY VERIFICATION TEST.

    No

    - The conditions that caused this code to set are not present at this time. Inform the owner of the most probable cause for this code to set and therefore causes the RKE system to be inoperative.
    - Refer to **STANDARD PROCEDURE** and perform the BODY VERIFICATION TEST.

B1A0B-RKE FOB 4 PERFORMANCE

For a complete wiring diagram, **refer to appropriate SYSTEM WIRING DIAGRAMS article** .

WHEN MONITORED:

Continuously.

SET CONDITION:

Scrambled messages to the Wireless Ignition Node (WIN) from the transmitter.

POSSIBLE CAUSES

NOTE: **The most probable cause that sets this code is the FOBIK transmitter being pressed over 1024 times when it is out of range of the Wireless Ignition Node and it loses synchronization with the rolling code of the WIN. To correct, insert the FOBIK in the ignition and turn to the on position to synchronize the rolling code.**

Possible Causes
EXCESSIVE PRESSES FROM TRANSMITTER WHEN OUT OF RANGE
FOBIK TRANSMITTER

DIAGNOSTIC TEST

1. **TEST FOR INTERMITTENT CONDITION**
    1. Put the FOBIK in the ignition and turn the ignition on.
    2. With the scan tool, record and erase the DTCs.
    3. Turn the ignition off and remove the FOBIK.
    4. Operate the FOBIK in all positions several times.
    5. With the scan tool, read the DTCs.

    Does the scan tool display this DTC as active?

    Yes

    - Replace and program the FOBIK transmitter using the scan tool.
    - Refer to **STANDARD PROCEDURE** and perform the BODY VERIFICATION TEST.

    No

    - The conditions that caused this code to set are not present at this time. Inform the owner of the most probable cause for this code to set and therefore causes the RKE system to be inoperative.
    - Refer to **STANDARD PROCEDURE** and perform the BODY VERIFICATION TEST.

B1A0C-RKE FOB 5 PERFORMANCE

For a complete wiring diagram, **refer to appropriate SYSTEM WIRING DIAGRAMS article** .

WHEN MONITORED:

Continuously.

SET CONDITION:

Scrambled messages to the Wireless Ignition Node (WIN) from the transmitter.

POSSIBLE CAUSES

NOTE: **The most probable cause that sets this code is the FOBIK transmitter being pressed over 1024 times when it is out of range of the Wireless Ignition Node and it loses synchronization with the rolling code of the WIN. To correct, insert the FOBIK in the ignition and turn to the on position to synchronize the rolling code.**

Possible Causes
EXCESSIVE PRESSES FROM TRANSMITTER WHEN OUT OF RANGE

DIAGNOSTIC TEST

1. **TEST FOR INTERMITTENT CONDITION**
    1. Put the FOBIK in the ignition and turn the ignition on.
    2. With the scan tool, record and erase the DTCs.
    3. Turn the ignition off and remove the FOBIK.
    4. Operate the FOBIK in all positions several times.
    5. With the scan tool, read the DTCs.

    Does the scan tool display this DTC as active?

    Yes

    - Replace and program the FOBIK transmitter using the scan tool.
    - Refer to **STANDARD PROCEDURE** and perform the BODY VERIFICATION TEST.

    No

    - The conditions that caused this code to set are not present at this time. Inform the owner of the most probable cause for this code to set and therefore causes the RKE system to be inoperative.
    - Refer to **STANDARD PROCEDURE** and perform the BODY VERIFICATION TEST.

B1A0D-RKE FOB 6 PERFORMANCE

For a complete wiring diagram, **refer to appropriate SYSTEM WIRING DIAGRAMS article** .

WHEN MONITORED:

Continuously.

SET CONDITION:

Scrambled messages to the Wireless Ignition Node (WIN) from the transmitter.

POSSIBLE CAUSES

NOTE: The most probable cause that sets this code is the FOBIK transmitter being pressed over 1024 times when it is out of range of the Wireless Ignition Node and it loses synchronization with the rolling code of the WIN. To correct, insert the FOBIK in the ignition and turn to the on position to synchronize the rolling code.

Possible Causes
EXCESSIVE PRESSES FROM TRANSMITTER WHEN OUT OF RANGE
FOBIK TRANSMITTER

DIAGNOSTIC TEST

1. **TEST FOR INTERMITTENT CONDITION**
    1. Put the FOBIK in the ignition and turn the ignition on.
    2. With the scan tool, record and erase the DTCs.
    3. Turn the ignition off and remove the FOBIK.
    4. Operate the FOBIK in all positions several times.
    5. With the scan tool, read the DTCs.

    Does the scan tool display this DTC as active?

    Yes

    - Replace and program the FOBIK using the scan tool.
    - Refer to **STANDARD PROCEDURE** and perform the BODY VERIFICATION TEST.

    No

    - The conditions that caused this code to set are not present at this time. Inform the owner of the most probable cause for this code to set and therefore causes the RKE system to be inoperative.
    - Refer to **STANDARD PROCEDURE** and perform the BODY VERIFICATION TEST.

B1A0E-RKE FOB 7 PERFORMANCE

For a complete wiring diagram, **refer to appropriate SYSTEM WIRING DIAGRAMS article** .

WHEN MONITORED:

Continuously.

SET CONDITION:

Scrambled messages to the Wireless Ignition Node (WIN) from the transmitter.

POSSIBLE CAUSES

NOTE: **The most probable cause that sets this code is the FOBIK transmitter being pressed over 1024 times when it is out of range of the Wireless Ignition Node and it loses synchronization with the rolling code of the WIN. To correct, insert the FOBIK in the ignition and turn to the on position to synchronize the rolling**

code.

Possible Causes
EXCESSIVE PRESSES FROM TRANSMITTER WHEN OUT OF RANGE
FOBIK TRANSMITTER

DIAGNOSTIC TEST

1. **TEST FOR INTERMITTENT CONDITION**
    1. Put the FOBIK in the ignition and turn the ignition on.
    2. With the scan tool, record and erase the DTCs.
    3. Turn the ignition off and remove the FOBIK.
    4. Operate the FOBIK in all positions several times.
    5. With the scan tool, read the DTCs.

    Does the scan tool display this DTC as active?

    Yes

    - Replace and program the FOBIK using the scan tool.
    - Refer to **STANDARD PROCEDURE** and perform the BODY VERIFICATION TEST.

    No

    - The conditions that caused this code to set are not present at this time. Inform the owner of the most probable cause for this code to set and therefore causes the RKE system to be inoperative.
    - Refer to **STANDARD PROCEDURE** and perform the BODY VERIFICATION TEST.

B1A0F-RKE FOB 8 PERFORMANCE

For a complete wiring diagram, **refer to appropriate SYSTEM WIRING DIAGRAMS article** .

WHEN MONITORED:

Continuously.

SET CONDITION:

Scrambled messages to the Wireless Ignition Node (WIN) from the transmitter.

POSSIBLE CAUSES

NOTE: The most probable cause that sets this code is the FOBIK transmitter being pressed over 1024 times when it is out of range of the Wireless Ignition Node

and it loses synchronization with the rolling code of the WIN. To correct, insert the FOBIK in the ignition and turn to the on position to synchronize the rolling code.

Possible Causes
EXCESSIVE PRESSES FROM TRANSMITTER WHEN OUT OF RANGE
FOBIK TRANSMITTER

DIAGNOSTIC TEST

1. **TEST FOR INTERMITTENT CONDITION**
    1. Put the FOBIK in the ignition and turn the ignition on.
    2. With the scan tool, record and erase the DTCs.
    3. Turn the ignition off and remove the FOBIK.
    4. Operate the FOBIK in all positions several times.
    5. With the scan tool, read the DTCs.

    Does the scan tool display this DTC as active?

    Yes

    - Replace and program the FOBIK using the scan tool.
    - Refer to **STANDARD PROCEDURE** and perform the BODY VERIFICATION TEST.

    No

    - The conditions that caused this code to set are not present at this time. Inform the owner of the most probable cause for this code to set and therefore causes the RKE system to be inoperative.
    - Refer to **STANDARD PROCEDURE** and perform the BODY VERIFICATION TEST.

B1A10-RKE FOB 1 BATTERY LOW

For a complete wiring diagram, **refer to appropriate SYSTEM WIRING DIAGRAMS article** .

WHEN MONITORED:

During key interrogation and when a valid RKE transmission is read.

SET CONDITION:

If the battery in the Fob-Integrated-Key (FOBIK) is low during key interrogation, with a valid key, this code will set. It may also set during a valid RKE button press.

POSSIBLE CAUSES

Possible Causes
LOW BATTERY
FOBIK TRANSMITTER

DIAGNOSTIC TEST

1. **TEST FOR INTERMITTENT CONDITION**

NOTE: Verify that the FOBIK in use is the FOBIK causing the DTC to set.

1. Turn the ignition on.
2. Using the scan tool, record and erase the DTCs.
3. Turn the ignition off and remove the FOBIK.
4. Operate the RKE transmitter in all positions several times.
5. Turn the ignition on.
6. Using the scan tool, read the active DTCs.

Does the scan tool display: B1A10-RKE FOB 1 BATTERY LOW as active?

Yes

- Replace the FOBIK battery. Test the FOBIK using the RF Detector (special tool #9001, Rf Detector). If the Strength Display does not display "Strong", replace and program the FOBIK using the scan tool.
- Refer to **STANDARD PROCEDURE** and perform the BODY VERIFICATION TEST.

No

- Test complete. The conditions that caused this code to set are not present at this time.
- Refer to **STANDARD PROCEDURE** and perform the BODY VERIFICATION TEST.

B1A11-RKE FOB 2 BATTERY LOW

For a complete wiring diagram, **refer to appropriate SYSTEM WIRING DIAGRAMS article** .

WHEN MONITORED:

During key interrogation and when a valid RKE transmission is read.

SET CONDITION:

If the battery in the Fob-Integrated-Key (FOBIK) is low during key interrogation, with a valid key, this code will set. It may also set during a valid RKE button press.

POSSIBLE CAUSES

Possible Causes
LOW BATTERY
FOBIK TRANSMITTER

DIAGNOSTIC TEST

1. **TEST FOR INTERMITTENT CONDITION**

NOTE: Verify that the FOBIK in use is the FOBIK causing the DTC to set.

1. Turn the ignition on.
2. Using the scan tool, record and erase the DTCs.
3. Turn the ignition off and remove the FOBIK.
4. Operate the FOBIK transmitter in all positions several times.
5. Turn the ignition on.
6. Using the scan tool, read the active DTCs.

Does the scan tool display: B1A11-RKE FOB 2 BATTERY LOW as active?

Yes

- Replace the FOBIK battery. Test the FOBIK using the RF Detector (special tool #9001, Rf Detector). If the Strength Display does not display "Strong", replace and program the FOBIK using the scan tool.
- Refer to **STANDARD PROCEDURE** and perform the BODY VERIFICATION TEST.

No

- Test complete. The conditions that caused this code to set are not present at this time.
- Refer to **STANDARD PROCEDURE** and perform the BODY VERIFICATION TEST.

B1A12-RKE FOB 3 BATTERY LOW

For a complete wiring diagram, **refer to appropriate SYSTEM WIRING DIAGRAMS article** .

WHEN MONITORED:

During key interrogation and when a valid RKE transmission is read.

SET CONDITION:

If the battery in the Fob-Integrated-Key (FOBIK) is low during key interrogation, with a valid key, this code will set. It may also set during a valid RKE button press.

POSSIBLE CAUSES

Possible Causes
LOW BATTERY
FOBIK TRANSMITTER

DIAGNOSTIC TEST

1. **TEST FOR INTERMITTENT CONDITION**
    1. Turn the ignition on.
    2. Using the scan tool, record and erase the DTCs.
    3. Turn the ignition off and remove the FOBIK.
    4. Operate the FOBIK in all positions several times.
    5. Turn the ignition on.
    6. Using the scan tool, read the active DTCs.

    Does the scan tool display: B1A12-RKE FOB 3 BATTERY LOW as active?

    Yes

    - Replace the FOBIK battery. Test the FOBIK using the RF Detector (special tool #9001, Rf Detector). If the Strength Display does not display "Strong", replace and program the FOBIK using the scan tool.
    - Refer to **STANDARD PROCEDURE** and perform the BODY VERIFICATION TEST.

    No

    - Test complete. The conditions that caused this code to set are not present at this time.
    - Refer to **STANDARD PROCEDURE** and perform the BODY VERIFICATION TEST.

B1A13-RKE FOB 4 BATTERY LOW

For a complete wiring diagram, **refer to appropriate SYSTEM WIRING DIAGRAMS article** .

WHEN MONITORED:

During key interrogation and when a valid RKE transmission is read.

SET CONDITION:

If the battery in the Fob-Integrated-Key (FOBIK) is low during key interrogation, with a valid key, this code will set. It may also set during a valid RKE button press.

POSSIBLE CAUSES

Possible Causes
LOW BATTERY

DIAGNOSTIC TEST

1. **TEST FOR INTERMITTENT CONDITION**

NOTE: Verify that the FOBIK in use is the FOBIK causing the DTC to set.

1. Turn the ignition on.
2. Using the scan tool, record and erase the DTCs.
3. Turn the ignition off and remove the FOBIK.
4. Operate the FOBIK transmitter in all positions several times.
5. Turn the ignition on.
6. Using the scan tool, read the active DTCs.

Does the scan tool display: B1A13-RKE FOB 4 BATTERY LOW as active?

Yes

- Replace the FOBIK battery. Test the FOBIK using the RF Detector (special tool #9001, Rf Detector). If the Strength Display does not display "Strong", replace and program the FOBIK using the scan tool.
- Refer to **STANDARD PROCEDURE** and perform the BODY VERIFICATION TEST.

No

- Test complete. The conditions that caused this code to set are not present at this time.
- Refer to **STANDARD PROCEDURE** and perform the BODY VERIFICATION TEST.

B1A14-RKE FOB 5 BATTERY LOW

For a complete wiring diagram, **refer to appropriate SYSTEM WIRING DIAGRAMS article** .

WHEN MONITORED:

During key interrogation and when a valid RKE transmission is read.

SET CONDITION:

If the battery in the Fob-Integrated-Key (FOBIK) is low during key interrogation, with a valid key, this code will set. It may also set during a valid RKE button press.

POSSIBLE CAUSES

Possible Causes

LOW BATTERY
FOBIK TRANSMITTER

DIAGNOSTIC TEST

1. **TEST FOR INTERMITTENT CONDITION**

   NOTE: Verify that the FOBIK in use is the FOBIK causing the DTC to set.

   1. Turn the ignition on.
   2. Using the scan tool, record and erase the DTCs
   3. Turn the ignition off and remove the FOBIK.
   4. Operate the RKE transmitter in all positions several times.
   5. Turn the ignition on.
   6. Using the scan tool, read the active DTCs.

   Does the scan tool display: B1A14-RKE FOB 5 BATTERY LOW as active?

   Yes

   - Replace the FOBIK battery. Test the FOBIK using the RF Detector (special tool #9001, Rf Detector). If the Strength Display does not display "Strong", replace and program the FOBIK using the scan tool.
   - Refer to **STANDARD PROCEDURE** and perform the BODY VERIFICATION TEST.

   No

   - Test complete. The conditions that caused this code to set are not present at this time.
   - Refer to **STANDARD PROCEDURE** and perform the BODY VERIFICATION TEST.

B1A15-RKE FOB 6 BATTERY LOW

For a complete wiring diagram, **refer to appropriate SYSTEM WIRING DIAGRAMS article** .

WHEN MONITORED:

During key interrogation and when a valid RKE transmission is read.

SET CONDITION:

If the battery in the Fob-Integrated-Key (FOBIK) is low during key interrogation, with a valid key, this code will set. It may also set during a valid RKE button press.

POSSIBLE CAUSES

Possible Causes
LOW BATTERY
FOBIK TRANSMITTER

DIAGNOSTIC TEST

1. **TEST FOR INTERMITTENT CONDITION**

NOTE: Verify that the FOBIK in use is the FOBIK causing the DTC to set.

1. Turn the ignition on.
2. Using the scan tool, record and erase the DTCs.
3. Turn the ignition off and remove the FOBIK.
4. Operate the FOBIK in all positions several times.
5. Turn the ignition on.
6. Using the scan tool, read the active DTCs.

Does the scan tool display; B1A15-RKE FOB 6 BATTERY LOW?

Yes

- Replace the FOBIK battery. Test the FOBIK using the RF Detector (special tool #9001, Rf Detector). If the Strength Display does not display "Strong", replace and program the FOBIK using the scan tool.
- Refer to **STANDARD PROCEDURE** and perform the BODY VERIFICATION TEST.

No

- Test complete The conditions that caused this code to set are not present at this time.
- Refer to **STANDARD PROCEDURE** and perform the BODY VERIFICATION TEST.

B1A16-RKE FOB 7 BATTERY LOW

For a complete wiring diagram, **refer to appropriate SYSTEM WIRING DIAGRAMS article** .

WHEN MONITORED:

During key interrogation and when a valid RKE transmission is read.

SET CONDITION:

If the battery in the Fob-Integrated-Key (FOBIK) is low during key interrogation, with a valid key, this code will set. It may also set during a valid RKE button press.

POSSIBLE CAUSES

Possible Causes
LOW BATTERY
FOBIK TRANSMITTER

DIAGNOSTIC TEST

1. **TEST FOR INTERMITTENT CONDITION**

NOTE: Verify that the FOBIK in use is the FOBIK causing the DTC to set.

1. Turn the ignition on.
2. Using the scan tool, record and erase the DTCs.
3. Turn the ignition off and remove the FOBIK.
4. Operate the FOBIK in all positions several times.
5. Turn the ignition on.
6. Using the scan tool, read the active DTCs.

Does the scan tool display: B1A16-RKE FOB 7 BATTERY LOW as active?

Yes

- Replace the FOBIK battery. Test the FOBIK using the RF Detector (special tool #9001, Rf Detector). If the Strength Display does not display "Strong", replace and program the FOBIK using the scan tool.
- Refer to **STANDARD PROCEDURE** and perform the BODY VERIFICATION TEST.

No

- Testy complete. The conditions that caused this code to set are not present at this time.
- Refer to **STANDARD PROCEDURE** and perform the BODY VERIFICATION TEST.

B1A17-RKE FOB 8 BATTERY LOW

For a complete wiring diagram, **refer to appropriate SYSTEM WIRING DIAGRAMS article** .

WHEN MONITORED:

During key interrogation and when a valid RKE transmission is read.

SET CONDITION:

If the battery in the Fob-Integrated-Key (FOBIK) is low during key interrogation, with a valid key, this code will set. It may also set during a valid RKE button press.

POSSIBLE CAUSES

Possible Causes
LOW BATTERY
FOBIK TRANSMITTER

DIAGNOSTIC TEST

1. **TEST FOR INTERMITTENT CONDITION**

NOTE: Verify that the FOBIK in use is the FOBIK causing the DTC to set.

1. Turn the ignition on.
2. Using the scan tool, record and erase the DTCs.
3. Turn the ignition off and remove the FOBIK.
4. Operate the RKE transmitter in all positions several times.
5. Turn the ignition on.
6. Using the scan tool, read the active DTCs.

Does the scan tool display: B1A17-RKE FOB 8 BATTERY LOW as active?

Yes

- Replace the FOBIK battery. Test the FOBIK using the RF Detector (special tool #9001, Rf Detector). If the Strength Display does not display "Strong", replace and program the FOBIK using the scan tool.
- Refer to **STANDARD PROCEDURE** and perform the BODY VERIFICATION TEST.

No

- Test complete. The conditions that caused this code to set are not present at this time.
- Refer to **STANDARD PROCEDURE** and perform the BODY VERIFICATION TEST.

B1A24-KEY NOT PROGRAMMED

For a complete wiring diagram, **refer to appropriate SYSTEM WIRING DIAGRAMS article** .

THEORY OF OPERATION

Whenever a Fob-Integrated-Key (FOBIK) is inserted in the Wireless Ignition Node (WIN) basestation, the WIN performs a self test and resynchronization routine. During the routine, the WIN interrogates the FOBIK, performing various validity and performance tests. The repair of this fault condition relies on the programmed status of the FOBIK.

WHEN MONITORED:

During interrogation, the FOBIK sends a low frequency (LF) signal to the WIN that includes the FOBIK

identification information.

SET CONDITION:

This DTC sets if the WIN receives the default, secret key status from a FOBIK. Once set, this DTC will remain active until a valid, programmed FOBIK is inserted in the basestation and rotated through the ON position.

POSSIBLE CAUSES

Possible Causes
FOBIK
WIRELESS IGNITION NODE (WIN)

Always perform the Pre-Diagnostic Troubleshooting procedure before proceeding. Refer to STANDARD PROCEDURE.

DIAGNOSTIC TEST

1. **VERIFY THAT THE DIAGNOSTIC TROUBLE CODE (DTC) IS ACTIVE**

   NOTE: Verify that the FOBIK in use is the FOBIK causing the DTC to set.

   1. Turn the ignition on.

      NOTE: Before continuing, review and check for the following:

      - **Review the repair history of the vehicle.**
      - **Make sure that the vehicle has the correct PCM and WIN installed by verifying the part numbers.**
      - **With the scan tool, make sure that the PCM and WIN are programmed correctly. Compare the PCM VIN to the WIN VIN and ensure the two VINs match.**

   2. With the scan tool, record and erase the DTCs.
   3. Perform two ignition cycles, leaving the ignition switch on for a minimum of one minute per cycle.
   4. With the scan tool, read the active DTCs.

      Does the scan tool display; B1A24-KEY NOT PROGRAMMED

      Yes

      - Go To 2.

      No

- Refer to **STANDARD PROCEDURE** and perform the WIN INTERMITTENT TEST.

2. **ENGINE WILL NOT CRANK**

NOTE: When diagnosing any WIN system concern, all the FOBIKS should be present

1. If this vehicle does not crank, use the table below to determine if the key is functional or not. With the scan tool under Data Display, Bussed Outputs, put the key in each position and check the "Ignition Status". Then with the key in the Run position, check "Valid Skim Key" and "SCREEM Status" reported by the WIN (or WCM). Compare all six readings with the "Good Key" column. If the engine does crank, answer "Yes" to the question below.

BUSSED OUTPUTS				
Ignition Status	**Good Key**	**Bad Key (Failed)**	**Wrong Key**	**New Key (Blank)**
Ignition Position = Lock	---------- --- or Lock	---------- --	---------- ----	---------- -- or Lock
Ignition Position = Acc.	Off/Acc.	---------- --	---------- ----	Off/Acc.
Ignition Position = Run Or ON	Run	Lock	Lock	Run
Ignition Position = Start Engine Off - Trans. in Gear	Start or Run	Lock	Lock	Run
SKREEM Status	Normal Status	Service SKREEM	Invalid Key	SNA (Signal Not Available)
Valid Skim Key	Yes/True	No/False	No/False	No/False
Trouble Code (DTC)		B1A35	B1A6C, B1A25	B1A24

Does the key (FOBIK) pass All Six Comparisons that are in the "Good Key" column?

Yes

- Replace the Wireless Ignition Node (WIN) in accordance with the Service Information. Refer to **RECEIVER, WIRELESS IGNITION NODE, REMOVAL** .
- Refer to **STANDARD PROCEDURE** and perform the WIN INTERMITTENT TEST.

No

- Go To 3.

3. **CHECK OPERATION OF THE FOBIK IN USE**
   1. Using the scan tool, program the FOBIK to the WIN.
   2. Use the scan tool and erase all codes in the WIN.
   3. Turn the Ignition Off, and wait 15 seconds before turning the Ignition On.
   4. Wait one minute, and read active codes.

   Does the scan tool display: B1A24-KEY NOT PROGRAMMED?

   Yes

   - Replace the key (FOBIK) and program using the scan tool.
   - Refer to **STANDARD PROCEDURE** and perform the BODY VERIFICATION TEST.

   No

   - Repair is complete.
   - Refer to **STANDARD PROCEDURE** and perform the BODY VERIFICATION TEST.

B1A25-INVALID KEY

For a complete wiring diagram, **refer to appropriate SYSTEM WIRING DIAGRAMS article** .

THEORY OF OPERATION

Whenever a Fob-Integrated-Key (FOBIK) is inserted in the Wireless Ignition Node (WIN) basestation, the WIN performs a self test and resynchronization routine. During the routine, the WIN interrogates the FOBIK, performing various validity and performance tests. The repair of this fault condition relies on whether the ID of the FOBIK is recognized as valid in the WIN.

WHEN MONITORED:

During interrogation, the FOBIK sends a low frequency (LF) signal to the WIN that includes the inserted FOBIK ID.

SET CONDITION:

This DTC sets if the WIN receives an ID from the FOBIK that does not match any of the eight possible FOBIK

IDs currently programmed in the WIN. This DTC will remain active until a valid, programmed FOBIK is inserted in the basestation and rotated through the ON position.

POSSIBLE CAUSES

Possible Causes
FOBIK
WIRELESS IGNITION NODE (WIN)

Always perform the Pre-Diagnostic Troubleshooting procedure before proceeding. Refer to STANDARD PROCEDURE.

DIAGNOSTIC TEST

1. **VERIFY THAT THE DIAGNOSTIC TROUBLE CODE (DTC) IS ACTIVE**

NOTE: **An external Radio-Frequency Identification (RFID) key (and/or pass/radio key), such as one used to gain access to a 24 hour gym, can cause this DTC to set and create a no start condition. Inspect the customer's key chain for any type of RFID key. If one is not found, question the customer to see if a spare key chain has this RFID key on it or if it was removed from the original key chain before the vehicle was released for service. If a RFID key is present, remove the ignition key from the vehicle and remove the RFID key from the key chain. For GPEC equipped vehicles, disconnect the battery and wait a minimum of five minutes, reconnect and attempt to start the vehicle. For NGC equipped vehicles, turn the ignition on a minimum for one hour, and then attempt to start the vehicle. If the vehicle does not start, continue with the diagnostic test.**

NOTE: **Verify that the FOBIK in use is the FOBIK causing this DTC to set.**

1. Turn the ignition on.

NOTE: **Before continuing, review and check for the following:**

- **Review the repair history of the vehicle.**
- **Make sure that the vehicle has the correct PCM and WIN installed by verifying the part numbers.**
- **With the scan tool, make sure that the PCM and WIN are programmed correctly. Compare the PCM VIN to the WIN VIN and make sure the two VINs match.**

2. With the scan tool, record and erase the DTCs.
3. Perform two ignition cycles, leaving the ignition switch on for a minimum of one minute per cycle.
4. With the scan tool, read the active DTCs.

Does the scan tool display; B1A25-INVALID KEY as active?

Yes

- If the engine does not crank, Go To 2.
- If the engine does crank, Go To 2 and answer "Yes" to the question in step 2.

No

- Refer to **STANDARD PROCEDURE** and perform the WIN INTERMITTENT TEST.

2. **ENGINE DOES NOT CRANK**

NOTE: When diagnosing any WIN system concern, all the FOBIKS should be present

1. If this vehicle does not crank, use the table below to determine if the key is functional or not. With the scan tool under Data Display, Bussed Outputs, put the key in each position and check the "Ignition Status". Then with the key in the Run position, check "Valid Skim Key" and "SCREEM Status" reported by the WIN (or WCM). Compare all six readings with the "Good Key" column.

BUSSED OUTPUTS				
Ignition Status	**Good Key**	**Bad Key (Failed)**	**Wrong Key**	**New Key (Blank)**
Ignition Position = Lock	---------- or Lock	----------	----------	---------- or Lock
Ignition Position = Acc.	Off/Acc.	----------	----------	Off/Acc.
Ignition Position = Run Or ON	Run	Lock	Lock	Run
Ignition Position = Start Engine Off - Trans. in Gear	Start or Run	Lock	Lock	Run
SKREEM Status	Normal Status	Service SKREEM	Invalid Key	SNA (Signal Not Available)
Valid	Yes/True	No/False	No/False	No/False

Skim Key				
Trouble Code (DTC)		B1A35	B1A6C, B1A25	B1A24

Does the key (FOBIK) pass All Six Comparisons that are in the "Good Key" column?

Yes

- Replace and program the Wireless Ignition Node (WIN). Refer to **RECEIVER, WIRELESS IGNITION NODE, REMOVAL** .
- Refer to **STANDARD PROCEDURE** and perform the WIN INTERMITTENT TEST.

No

- If the customer affirms that the FOBIK being used in this test is the correct one for this vehicle, use the scan tool and perform the "Program Ignition Keys or Key FOBs" routine. If the key fails, replace the key (FOBIK) and program using the scan tool.
- Refer to **STANDARD PROCEDURE** and perform the BODY VERIFICATION TEST.

B1A26-MAXIMUM NUMBER OF KEYS PROGRAMMED

For a complete wiring diagram, **refer to appropriate SYSTEM WIRING DIAGRAMS article** .

THEORY OF OPERATION

The Wireless Ignition Node (WIN) is preprogrammed from the factory with 2 Fob-Integrated-Keys (FOBIKS), with the capability to have a maximum of 8 FOBIKS programmed in total. Additional programmed FOBIKS are automatically learned to the next available FOBIK position in the WIN software and do not overwrite any previous positions. The repair of this fault condition relies on the current number of FOBIKS programmed into the WIN and the number of available positions in the WIN software.

WHEN MONITORED:

When the WIN is placed into FOBIK programming mode, the module references the number of unique FOBIK identifications stored in its memory.

SET CONDITION:

In the event the WIN detects the user is attempting to program a 9th FOBIK, this DTC will be set as active.

POSSIBLE CAUSES

Possible Causes
MAXIMUM NUMBER OF FOBIKS (8) HAVE BEEN PROGRAMMED

Always perform the Pre-Diagnostic Troubleshooting procedure before proceeding. Refer to STANDARD PROCEDURE.

DIAGNOSTIC TEST

1. **DETERMINE ACTIVE OR STORED DTC**

   Is the DTC active or stored?

   WIN - ACTIVE DTC

   - Go To 2.

   WIN - STORED DTC

   - Refer to **STANDARD PROCEDURE** and perform the WIRELESS IGNITION NODE (WIN) INTERMITTENT TEST.

2. **CLEAR FOBIKS PROGRAMMED INTO WIRELESS IGNITION NODE (WIN) AND REPROGRAM FOBIKS**

   NOTE: The below procedure clears all FOBIKS currently programmed in the WIN software. It is important to obtain all the customer FOBIKS so they may be reprogrammed to the module. Any FOBIKS not present for the following procedure will be inoperable and require additional programming to function.

   1. Using the scan tool, use the Erase All Ignition Keys feature under Miscellaneous Functions.
   2. Using the scan tool, use the Program Ignition Keys or Key Fobs feature under Miscellaneous Functions.
   3. Program all the customer key(s) into the WIN (up to eight).
   4. Use the scan tool and erase all DTCs in the WIN.
   5. Turn the Ignition Off, and wait 15 seconds before turning the Ignition On.
   6. Wait one minute, and read active DTCs.

   Does the scan tool display: B1A26-MAXIMUM NUMBER OF KEYS PROGRAMMED?

   Yes

   - Replace the Wireless Ignition Node (WIN) in accordance with the Service Information. Refer to **RECEIVER, WIRELESS IGNITION NODE, REMOVAL** .
   - Refer to **STANDARD PROCEDURE** and perform the WIN VERIFICATION TEST.

   No

- Repair is complete.
- Refer to **STANDARD PROCEDURE** and perform the BODY VERIFICATION TEST.

B1A27-SKREEM PROGRAMMING PERFORMANCE

For a complete wiring diagram, **refer to appropriate SYSTEM WIRING DIAGRAMS article** .

THEORY OF OPERATION

Sentry Key Remote Entry Module (SKREEM) is one of the many functions that is a subset of the Wireless Ignition Node (WIN). SKREEM programming takes place during the Fob-Integrated-Key (FOBIK) programming procedure. The repair of this fault condition is dependant on the programmed status of the FOBIK attempting to be programmed. Once the WIN requests the FOBIK to send its identification information, the FOBIK will attempt to send the information up to three times for redundancy to ensure "Good" information has been received.

WHEN MONITORED:

During FOBIK programming mode when the FOBIK and the WIN module are communicating over LF (low frequency) communication.

SET CONDITION:

The WIN will set this DTC if one or more of the three FOBIK transmissions, during FOBIK programming, failed to be properly received by the WIN. The FOBIK may still get programmed because the transmission was successful on one of the other attempts.

POSSIBLE CAUSES

Possible Causes
FOBIK
WIRELESS IGNITION NODE (WIN)

Always perform the Pre-Diagnostic Troubleshooting procedure before proceeding. Refer to STANDARD PROCEDURE.

NOTE: All FOBIKs programmed to this vehicle should be present before continuing.

DIAGNOSTIC TEST

1. **DELETE FOBIKS AND REPROGRAM**
    1. With the scan tool, use the "Erase All Ignition Keys" feature under Miscellaneous Functions to delete all stored FOBIKs.
    2. With the scan tool, use the "Program Ignition Keys or Key FOBs" feature under Miscellaneous Functions to reprogram all applicable FOBIKs.
    3. With the scan tool, erase the WIN DTCs.

4. Turn the ignition off, wait 15 seconds, turn the ignition on.
5. Wait one minute, and read the active DTCs.

   Does the scan tool display; B1A27-SKREEM PROGRAMMING PERFORMANCE?

   Yes

   - Replace the Wireless Ignition Node (WIN) in accordance with the Service Information. Refer to **RECEIVER, WIRELESS IGNITION NODE, REMOVAL** .
   - Refer to **STANDARD PROCEDURE** and perform the WIN VERIFICATION TEST.

   No

   - Repair is complete.
   - Refer to **STANDARD PROCEDURE** and perform the BODY VERIFICATION TEST.

B1A28-ECM MISMATCH WITH SKIM

For a complete wiring diagram, **refer to appropriate SYSTEM WIRING DIAGRAMS article** .

THEORY OF OPERATION

For the engine to start, the Sentry Key Immobilizer (SKIM) feature of the Wireless Ignition Node (WIN) and the Powertrain Control Module (PCM) must successfully communicate data over the data bus. Once the WIN sends the message that a valid Fob-Integrated-Key (FOBIK) is being used, the PCM and WIN perform a "handshake" routine, encrypted with the VIN, to validate this information, and a match allows the engine to run when the ignition state transitions to START. The repair of this fault is determined by the ability of the WIN and PCM/ECM to complete a successful handshake routine over the bus.

WHEN MONITORED:

Whenever a valid FOBIK is inserted in the basestation and turned to the ON position, the WIN/PCM handshake takes place. The WIN validates that the message is sent to and received by the PCM.

SET CONDITION:

When a valid FOBIK is used and the WIN receives a mismatching cryptology code from the PCM as part of the routine, the WIN will send the command to flash the Security warning lamp and set this DTC as active. The engine will not start and the DTC will remain active until the WIN and PCM complete a successful handshake.

POSSIBLE CAUSES

Possible Causes
WIRELESS IGNITION NODE (WIN)
POWERTRAIN CONTROL MODULE (PCM)

Always perform the Pre-Diagnostic Troubleshooting procedure before proceeding. Refer to STANDARD PROCEDURE.

DIAGNOSTIC TEST

1. **DETERMINE ACTIVE OR STORED DIAGNOSTIC TROUBLE CODE (DTC)**

   Is the DTC active or stored?

   WIN - ACTIVE DTC

   - Go To 2.

   WIN - STORED DTC

   - Refer to **STANDARD PROCEDURE** and perform the WIN VERIFICATION TEST.
2. **VERIFY THE VEHICLE IDENTIFICATION NUMBER (VIN) STORED IN THE POWERTRAIN CONTROL MODULE (PCM).**
   1. Using the scan tool, access the VIN number stored in the PCM.

      NOTE: Make sure that a VIN has been programmed into the PCM. If a VIN is not displayed, attempt to program the PCM with the correct VIN before continuing.

   2. Compare the VIN displayed, with the VIN of the vehicle.

      Does the VIN recorded in the PCM match the VIN of the vehicle?

      Yes

      - **Using the scan tool, verify the VIN in the WIN matches the VIN of the vehicle. If it DOES, Go To 3. If it does NOT match, replace the Wireless Ignition Node in accordance with the Service Information. Refer to RECEIVER, WIRELESS IGNITION NODE, REMOVAL . Prior to replacing the WIN, the RUN circuits must be checked at the PCM. A missing run circuit at the PCM can cause this DTC to set.**
      - Replace the Wireless Ignition Node (WIN) in accordance with the Service Information. Refer to **RECEIVER, WIRELESS IGNITION NODE, REMOVAL** .
      - Refer to **STANDARD PROCEDURE** and perform the WIN VERIFICATION TEST.

      No

      - Using the scan tool, perform the PCM Replaced Procedure to update the VIN in the PCM. Then, Go To 3.
3. **PCM STARTING DTCS**
   1. Use the scan tool and erase all DTCs in the WIN and PCM.

2. Turn the Ignition Off, and wait 15 seconds before turning the Ignition On.
3. Try to start the engine. If the engine starts, leave it run for one minute and then turn the engine off (ignition on)
4. Wait one minute, and read the active PCM DTCs.

   Does the scan tool display any Starting related DTCs?

   Yes

   - Refer to **DIAGNOSTIC CODE INDEX** for 3.7L/4.7L/5.7L or **DIAGNOSTIC CODE INDEX** for 6.7L and perform the appropriate Diagnostic Procedure.

   No

   - Go To 4.

4. **VERIFY PCM PROGRAMMING**
   1. Use the scan tool and erase all DTCs in the WIN and PCM.
   2. Turn the Ignition Off, and wait 15 seconds before turning the Ignition On.
   3. Wait one minute, and read the active WIN DTCs.

      Does the scan tool display: B1A28-ECM MISMATCH WITH SKIM as active?

      Yes

      - Replace and program the Powertrain Control Module in accordance with the Service Information. Refer to **MODULE, POWERTRAIN CONTROL, REMOVAL** .
      - Refer to **STANDARD PROCEDURE** for 3.7L/4.7L/5.7L or **STANDARD PROCEDURE** for 6.7L and perform the POWERTRAIN VERIFICATION TEST.

      No

      - Repair is complete.
      - Refer to **STANDARD PROCEDURE** and perform the BODY VERIFICATION TEST.

B1A29-SKIM BASESTATION MISMATCH

For a complete wiring diagram, **refer to appropriate SYSTEM WIRING DIAGRAMS article** .

THEORY OF OPERATION

For the engine to start, the Sentry Key Immobilizer (SKIM) feature of the Wireless Ignition Node (WIN) and the Powertrain Control Module (PCM) must successfully communicate VIN data over the serial data bus. Once the WIN sends the message that a valid Fob-in-Key (FOBIK) is being used, the PCM and WIN perform a "handshake" routine to validate this VIN information, including a positive response from the PCM which allows the engine to run when the ignition state transitions to START. The repair of this fault is determined by the

WIN recognition of a valid FOBIK and the ability of the WIN and PCM to complete a successful VIN handshake routine over the bus.

WHEN MONITORED:

Whenever a FOBIK is inserted in the basestation, the WIN determines its validity status. If determined valid, the WIN allows rotation to the ON position and the WIN/PCM handshake takes place.

SET CONDITION:

When an invalid FOBIK is used and the WIN receives a mismatching or no secret key data from the FOBIK, the WIN will send the command to illuminate the Security warning lamp, send an invalid key status in the handshake with the PCM, and set this DTC as active. The "B1A28 ECM/PCM Mismatch with SKIM" DTC will probably be accompanied along with this B1A29.

POSSIBLE CAUSES

Possible Causes
WIRELESS IGNITION NODE (WIN)
FOBIK

Always perform the WIN Pre-Diagnostic Troubleshooting procedure before proceeding. Refer to STANDARD PROCEDURE.

NOTE: When diagnosing any WIN system DTCs, all FOBIK used on the vehicle should be present.

DIAGNOSTIC TEST

1. **CHECK FOR AN INTERMITTENT CONDITION**
    1. Turn the ignition on.
    2. With the scan tool, record and erase the WIN DTCs.
    3. Cycle the ignition switch from on to off, wait five seconds and then back to on.
    4. With the scan tool, read the active WIN DTCs.

    NOTE: This DTC identifies two fault conditions together, an unknown or non communicating FOBIK and a negative response from the PCM to start the engine. First, root cause why the FOBIK is unknown or not responsive. Once the FOBIK issue is corrected, the B1A29 DTC should go to a stored status. Once the B1A29 becomes stored, the B1A28 DTC can be corrected.

    Does the scan tool display: B1A29-SKIM BASESTATION MISMATCH as Active?

    Yes

- Go To 2.

No

- Verify the FOBIK in use is the FOBIK that caused this DTC to set. If it was, refer to **STANDARD PROCEDURE** and perform the WIN INTERMITTENT TEST.

2. **VERIFY FOBIK COMMUNICATION**

NOTE: When diagnosing any WIN concern, all FOBIKs should be present

1. With the scan tool, read the WIN active DTCs again.

   Does the scan tool display; B1A35-UNIDENTIFIED KEY COMMUNICATION ERROR as Active?

   Yes

   - Go To 3.

   No

   - Go To 4.

3. **TEST LF COMMUNICATION**
   1. With the scan tool, in the WIN menu, go to Data Display, Bussed Outputs and check the "SKREEM Status" for the current FOBIK that is being used. Record that status.
   2. Remove the FOBIK.
   3. Insert one of the other known good FOBIKs used with this vehicle.

   NOTE: If another FOBIK is not available, insert a new unprogrammed FOBIK to test the WIN module's low frequency (LF) communication (do not program the FOBIK).

   4. Check the "SKREEM Status" for the current FOBIK. Verify that the status changed from the first FOBIK that was in the ignition.

      Did the "SKREEM Status" change?

      Yes

      - Replace and program the FOBIK in accordance with the Service Information.
      - Refer to **STANDARD PROCEDURE** and perform the WIN VERIFICATION TEST.

      No

      - Replace and program the Wireless Ignition Node (WIN) in accordance with the Service

Information. Refer to **RECEIVER, WIRELESS IGNITION NODE, REMOVAL** .
- Refer to **STANDARD PROCEDURE** and perform the WIN VERIFICATION TEST.

4. **VERIFY THE STATE OF THE WIN MODULE**
   1. Currently the secret key in the FOBIK does not match the secret key in the WIN module. Find out which component has the correct secret key for this vehicle.

      Has the WIN module just been replaced?

      Yes

      - Go To 5.

      No

      - Replace and program the FOBIK in accordance with the Service Information.
      - Refer to **STANDARD PROCEDURE** and perform the WIN VERIFICATION TEST.
5. **VERIFY THE WIN MODULE HAS BEEN INITIALIZED**
   1. Using the scan tool, go to Miscellaneous Functions and run the "Reset WIN" routine.
   2. Enter the unique 4 digit PIN number assigned to this vehicle.

      Was the 4 digit PIN accepted?

      Yes

      - Replace and program the FOBIK in accordance with the Service Information.
      - Refer to **STANDARD PROCEDURE** and perform the WIN VERIFICATION TEST.

      No

      NOTE: **If the PCM was replaced at the same time the WIN was, install the old PCM before continuing or else the correct secret key value will not get transferred and replacing all FOBIKs will be necessary.**

      -
      - Using the scan tool, go to Miscellaneous Functions and run the "WIN Replaced" routine.
      - Using the scan tool, go to Miscellaneous Functions and run the "Program Ignition Keys or Key Fobs" routine.
      - Refer to **STANDARD PROCEDURE** and perform the WIN VERIFICATION TEST.

B1A35-UNIDENTIFIED KEY COMMUNICATION ERROR

For a complete wiring diagram, **refer to appropriate SYSTEM WIRING DIAGRAMS article** .

THEORY OF OPERATION

Whenever a Fob-Integrated-Key (FOBIK) is inserted in the Wireless Ignition Node (WIN) basestation, the WIN performs a self test and resynchronization routine. During the routine, the WIN interrogates the FOBIK, performing various validity and performance tests. The repair of this fault condition relies on whether the FOBIK ID is received by the WIN.

WHEN MONITORED:

During interrogation, the FOBIK sends an LF (Low frequency) signal to the WIN that includes the programmed FOBIK ID.

SET CONDITION:

This Diagnostic Trouble Code (DTC) sets if a FOBIK is inserted in the WIN basestation but the WIN does not receive or is unable to read an ID from the FOBIK. This DTC will remain active until a valid programmed FOBIK is inserted in the WIN and its ID is received.

POSSIBLE CAUSES

Possible Causes
FOBIK
WIRELESS IGNITION NODE (WIN)

Always perform the Pre-Diagnostic Troubleshooting procedure before proceeding. Refer to STANDARD PROCEDURE.

DIAGNOSTIC TEST

1. **CHECK FOR AN INTERMITTENT CONDITION**

NOTE: **An external Radio-Frequency Identification (RFID) key (and/or pass/radio key), such as one used to gain access to a 24 hour gym, can cause this DTC to set and create a no start condition. Inspect the customer's key chain for any type of RFID key. If one is not found, question the customer to see if a spare key chain has this RFID key on it or if it was removed from the original key chain before the vehicle was released for service. If a RFID key is present, remove the ignition key from the vehicle and remove the RFID key from the key chain. For GPEC equipped vehicles, disconnect the battery and wait a minimum of five (5) minutes, reconnect and attempt to start the vehicle. For NGC equipped vehicles, turn the ignition on a minimum for one hour, and then attempt to start the vehicle. If the vehicle does not start, continue with the diagnostic test.**

NOTE: **Verify the FOBIK in use is the FOBIK causing this DTC to set.**

1. Turn the ignition on.

2. With the scan tool, record and erase the WIN DTCs.
3. Cycle the ignition switch from on to off, wait five seconds and then crank the engine.
4. Turn the engine off, key on.
5. With the scan tool, read the active WIN DTCs.

   Does the scan tool display: B1A35-UNIDENTIFIED KEY COMMUNICATION ERROR as Active?

   Yes

   - Go To 2.

   No

   - Refer to **STANDARD PROCEDURE** and perform the WIN VERIFICATION TEST.

2. **TEST LF COMMUNICATION**
   1. With the scan tool, in the WIN menu, go to Data Display, Bussed Outputs and check the "SKREEM Status" for the current FOBIK that is being used. Record that status.
   2. Turn the ignition off and remove the FOBIK.
   3. Insert one of the other known good FOBIKs used with this vehicle.

      NOTE: If another FOBIK is not available, insert a new FOBIK (Do not program) to test the WIN module's low frequency (LF) communication

   4. Check the "SKREEM Status" for the current FOBIK. Verify that the status changed from the first FOBIK that was in the ignition.

      Did the "SKREEM Status" change?

      Yes

      - Replace and program the FOBIK in accordance with the Service Information.
      - Refer to **STANDARD PROCEDURE** and perform the WIN VERIFICATION TEST.

      No

      - Replace and program the Wireless Ignition Node (WIN) in accordance with the Service Information. Refer to **RECEIVER, WIRELESS IGNITION NODE, REMOVAL** .

        NOTE: With the scan tool, perform the "PEM Replace" routine in the Passive Entry Module (PEM) after the FOBIKs have been programmed.

      - Refer to **STANDARD PROCEDURE** and perform the WIN VERIFICATION TEST.

B1A6C-SECRET KEY MISMATCH

For a complete wiring diagram, **refer to appropriate SYSTEM WIRING DIAGRAMS article** .

THEORY OF OPERATION

Whenever a Fob-Integrated-Key (FOBIK) is inserted in the Wireless Ignition Node (WIN) basestation, the WIN performs a self test and resynchronization routine. During the routine, the WIN interrogates the FOBIK for the secret key information and start the vehicle. The repair of this fault condition relies on whether the current secret key in the FOBIK is recognized by the WIN.

WHEN MONITORED:

During interrogation, the FOBIK sends a low frequency (LF) signal to the WIN that includes the current secret key.

SET CONDITION:

This Diagnostic Trouble Code (DTC) sets if the WIN receives a secret key ID from the FOBIK that is not the correct secret key value stored in the WIN. This DTC will remain active until a valid, programmed FOBIK, with the correct secret key is inserted in the basestation and rotated through the ON position.

POSSIBLE CAUSES

Possible Causes
FOBIK
WIRELESS IGNITION NODE (WIN)

Always perform the Pre-Diagnostic Troubleshooting procedure before proceeding. Refer to STANDARD PROCEDURE.

DIAGNOSTIC TEST

1. **VERIFY THAT THE DIAGNOSTIC TROUBLE CODE (DTC) IS ACTIVE**

   NOTE: When diagnosing any WIN system concern, all the FOBIKS should be present.

   1. Turn the ignition on.

      NOTE: Before continuing, review and check for the following:

      - **Review the repair history of the vehicle.**
      - **Make sure that the vehicle has the correct PCM and WIN installed by verifying the part numbers.**
      - **With the scan tool, ensure that the PCM and WIN are**

programmed correctly. Compare the PCM VIN to the WIN VIN and ensure the two VINs match.

2. With the scan tool, record and erase the DTCs.
3. Perform five ignition cycles, leaving the ignition switch on for a minimum of one minute per cycle.
4. With the scan tool, read the active DTCs.

   Does the scan tool display; B1A6C-SECRET KEY MISMATCH as active?

   Yes

   - If the engine does not crank, Go To 2.
   - If the engine does crank, Go To 3.

   No

   - Refer to **STANDARD PROCEDURE** and perform the WIN VERIFICATION TEST.

2. **ENGINE DOES NOT CRANK**
   1. If this vehicle does not crank, use the table below to determine if the key is functional or not. With the scan tool under Data Display, Bussed Outputs, put the key in each position and check the "Ignition Status". Then with the key in the Run position, check "Valid Skim Key" and "SKREEM Status" reported by the WIN (or WCM). Compare all six readings with the "Good Key" column.

BUSSED OUTPUTS				
Ignition Status	**Good Key**	**Bad Key (Failed)**	**Wrong Key**	**New Key (Blank)**
Ignition Position = Lock	---------- or Lock	----------	----------	---------- or Lock
Ignition Position = Acc.	Off/Acc.	----------	----------	Off/Acc.
Ignition Position = Run Or ON	Run	Lock	Lock	Run
Ignition Position = Start Engine Off - Trans. in Gear	Start or Run	Lock	Lock	Run
SKREEM	Normal	Service	Invalid	"SNA" Signal

Status	Status	SKREEM	Key	Not Available
Valid Skim Key	Yes/True	No/False	No/False	No/False
Trouble Code (DTC)		B1A35	B1A6C, B1A25	B1A24

Does the key (FOBIK) pass All Six Comparisons that are in the "Good Key" column?

Yes

- Replace and program the Wireless Ignition Node (WIN) in accordance with the Service Information. Refer to **RECEIVER, WIRELESS IGNITION NODE, REMOVAL** .
- Refer to **STANDARD PROCEDURE** and perform the WIN VERIFICATION TEST.

No

- Go To 3.

3. **VERIFY THE WIN HAS BEEN PROPERLY INITIALIZED**
   1. Using the scan tool, read the Number of Key/Fobs Programmed under Data Display.

      Does the scan tool show any Key/Fobs Programmed?

      Yes

      - Go To 4.

      No

      - Using the scan tool, program the FOBIKS.
      - Refer to **STANDARD PROCEDURE** and perform the WIN VERIFICATION TEST.

4. **CHECK OPERATION OF THE FOBIK IN USE**

   NOTE: Verify the FOBIK in use is the FOBIK causing the DTC to set.

   1. Replace the FOBIK currently in use.
   2. Using the scan tool, program the new FOBIK to the WIN.
   3. Use the scan tool and erase all codes in the WIN.
   4. Turn the Ignition Off, and wait 15 seconds before turning the Ignition On.
   5. Wait one minute, and read active codes.

      Does the scan tool display this DTC as active?

Yes

- Replace and program the Wireless Ignition Node (WIN) in accordance with the Service Information. Refer to **RECEIVER, WIRELESS IGNITION NODE, REMOVAL** .
- Refer to **STANDARD PROCEDURE** and perform the WIN VERIFICATION TEST.

No

- Repair is complete.
- Refer to **STANDARD PROCEDURE** and perform the BODY VERIFICATION TEST.

B1A77- REMOTE START ANTENNA CIRCUIT LOW

For a complete wiring diagram, **refer to appropriate SYSTEM WIRING DIAGRAMS article** .

WHEN MONITORED:

With the ignition on. Remote start present and configured.

SET CONDITION:

Short to ground detected on the Remote Start Antenna.

POSSIBLE CAUSES

Possible Causes
REMOTE START ANTENNA
WIRELESS IGNITION NODE (WIN)

Always perform the Pre-Diagnostic Troubleshooting procedure before proceeding. Refer to STANDARD PROCEDURE.

DIAGNOSTIC TEST

1. **CHECK FOR AN INTERMITTENT CONDITION**
    1. Turn the ignition on.
    2. With the scan tool, record and erase the WIN DTCs.
    3. Cycle the ignition switch from on to off, wait five seconds and then back to on.
    4. With the scan tool, read the active WIN DTCs.

    Does the scan tool display: B1A77- REMOTE START ANTENNA CIRCUIT LOW as Active?

    Yes

    - Go To 2.

No

- Verify the FOBIK in use is the FOBIK that caused this DTC to set. If it was, refer to **STANDARD PROCEDURE** and perform the WIN INTERMITTENT TEST.

2. **CHECK WIN**
    1. Unplug the Remote Start Antenna from the WIN module.
    2. With the scan tool, record and erase the WIN DTCs.
    3. Cycle the ignition switch from on to off, wait five seconds and then back to on, wait five seconds.
    4. With the scan tool, read the active WIN DTCs.

    Does the scan tool display; "B1A79-Remote Start Antenna Circuit Open or Not Connected" as Active?

    Yes

    - Replace the Remote Start Antenna in accordance with the Service Information.
    - Refer to **STANDARD PROCEDURE** and perform the WIN VERIFICATION TEST.

    No

    - Replace and program the Wireless Ignition Node (WIN) in accordance with the Service Information. Refer to **RECEIVER, WIRELESS IGNITION NODE, REMOVAL** .
    - Refer to **STANDARD PROCEDURE** and perform the WIN VERIFICATION TEST.

B1A79- REMOTE START ANTENNA CIRCUIT OPEN OR NOT CONNECTED

For a complete wiring diagram, **refer to appropriate SYSTEM WIRING DIAGRAMS article** .

WHEN MONITORED:

With the ignition on. Remote start present and configured.

SET CONDITION:

No Remote Start Antenna detected by the Wireless Ignition Node (WIN).

POSSIBLE CAUSES

Possible Causes
REMOTE START ANTENNA NOT CONNECTED
REMOTE START ANTENNA
WIRELESS IGNITION NODE (WIN)

DIAGNOSTIC TEST

1. **REMOTE START ANTENNA NOT CONNECTED**
    1. Verify that the Remote Start Antenna is connected to the WIN.
    2. Disconnect the Remote Start Antenna and reconnect it to make sure that it is seated correctly.
    3. Turn the ignition on.
    4. With the scan tool, record and erase the WIN DTCs.
    5. Cycle the ignition switch from on to off, wait five seconds and then back to on, wait five seconds.
    6. With the scan tool, read the active WIN DTCs.

    Does the scan tool display: B1A79- REMOTE START ANTENNA CIRCUIT OPEN OR NOT CONNECTED as Active?

    Yes

    - Go To 2.

    No

    - Test complete.
    - Refer to **STANDARD PROCEDURE** and perform the BODY VERIFICATION TEST.
2. **CHECK REMOTE START ANTENNA**
    1. Turn the ignition off.
    2. Secure a new Remote Start Antenna and connect the connector to the WIN.
    3. Turn the ignition on.
    4. With the scan tool, record and erase the WIN DTCs.
    5. Cycle the ignition switch from on to off, wait five seconds and then back to on.
    6. With the scan tool, read the active WIN DTCs.

    Does the scan tool display: B1A79- REMOTE START ANTENNA CIRCUIT OPEN OR NOT CONNECTED as Active?

    Yes

    - Replace and program the Wireless Ignition Node (WIN) in accordance with the Service Information. Refer to **RECEIVER, WIRELESS IGNITION NODE, REMOVAL** .
    - Refer to **STANDARD PROCEDURE** and perform the WIN VERIFICATION TEST.

    No

    - Finish the installation of the Remote Start Antenna in accordance with the Service Information.
    - Refer to **STANDARD PROCEDURE** and perform the BODY VERIFICATION TEST.

B210A-SYSTEM VOLTAGE LOW

For a complete wiring diagram, **refer to appropriate SYSTEM WIRING DIAGRAMS article** .

WHEN MONITORED:

At all times.

SET CONDITION:

This is a CAN message that the battery voltage was below 10.0 volts for over 15 seconds.

POSSIBLE CAUSES

POSSIBLE CAUSES
LOW SYSTEM VOLTAGE BATTERY OR CHARGING SYSTEM

DIAGNOSTIC TEST

1. **CHECK POWERTRAIN CONTROL MODULE DTCs**
    1. With the scan tool, read Powertrain DTCs.

       Are there any Powertrain Charging or Battery DTCs present?

       Yes

       - Refer to **DIAGNOSTIC CODE INDEX** for 3.7L/4.7L/5.7L or **DIAGNOSTIC CODE INDEX** for 6.7L and perform the appropriate Diagnostic Procedure.

       No

       - This code is for information only. At some time there was a low battery system voltage. Check the battery and charging system in accordance with the Service Information.
       - Refer to **STANDARD PROCEDURE** and perform the BODY VERIFICATION TEST.

B210B-SYSTEM VOLTAGE HIGH

For a complete wiring diagram, **refer to appropriate SYSTEM WIRING DIAGRAMS article** .

WHEN MONITORED:

At all times.

SET CONDITION:

This is a CAN message that the system voltage was above 16.0 volts for over 15 seconds.

POSSIBLE CAUSES

POSSIBLE CAUSES
HIGH BATTERY SYSTEM VOLTAGE CHARGING SYSTEM

DIAGNOSTIC TEST

1. **CHECK POWERTRAIN DTCs**
    1. With the scan tool, read Powertrain Control Module DTCs.

       Are there any Powertrain Charging or Battery DTCs present?

       Yes

       - Refer to **DIAGNOSTIC CODE INDEX** for 3.7L/4.7L/5.7L or **DIAGNOSTIC CODE INDEX** for 6.7L and perform the appropriate Diagnostic Procedure.

       No

       - This code is a CAN system message for information only. Check the charging system in accordance with the Service Information.
       - Refer to **STANDARD PROCEDURE** and perform the BODY VERIFICATION TEST.

B210D-BATTERY VOLTAGE LOW - DD/DP

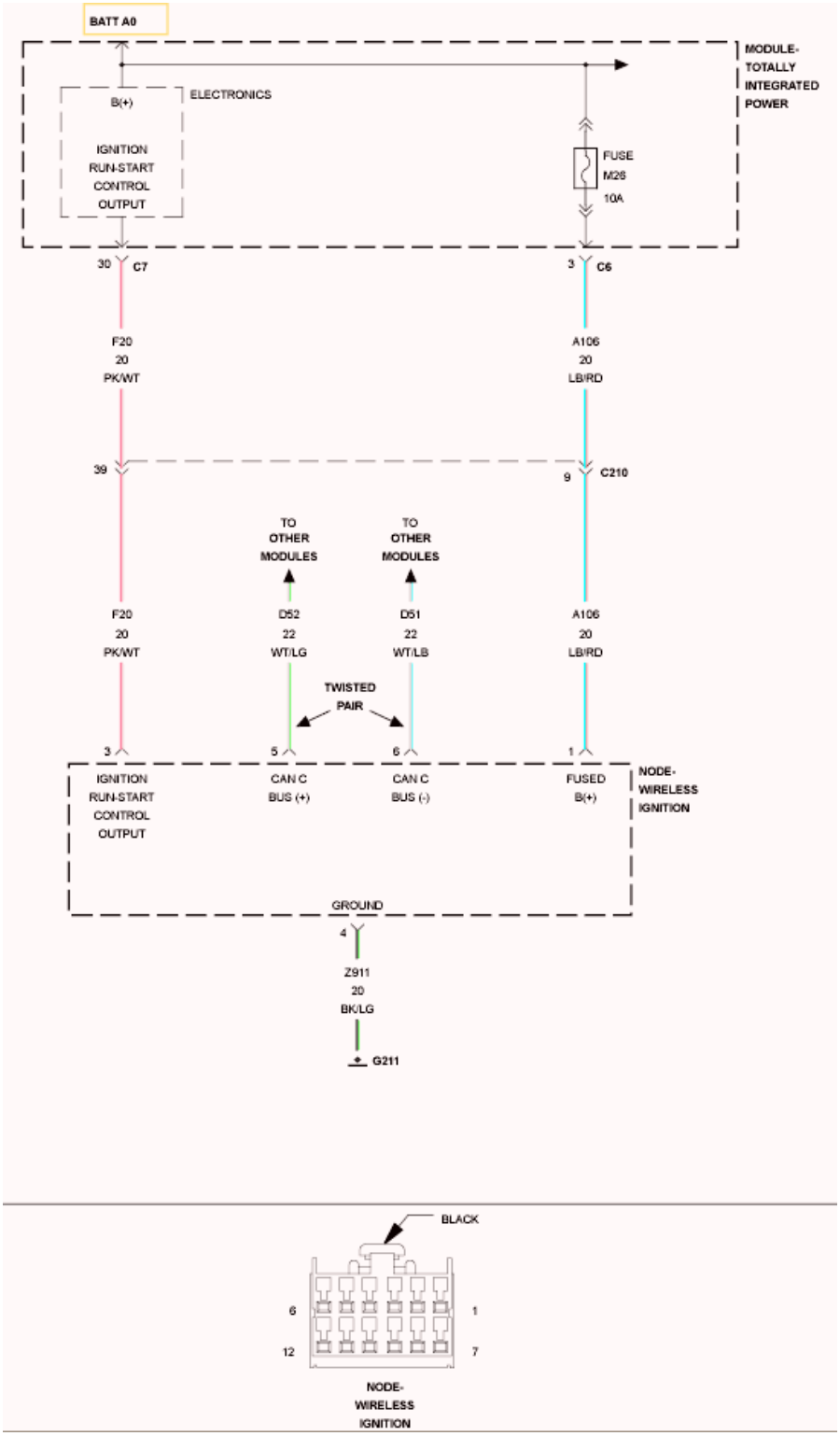

Fig. 1: Wireless Ignition Node (WIN) CAN C Bus & Fused B+ Wiring Diagram
Courtesy of CHRYSLER GROUP, LLC

For a complete wiring diagram, **refer to appropriate SYSTEM WIRING DIAGRAMS article** .

WHEN MONITORED:

With the ignition switch on.

SET CONDITION:

The Wireless Ignition Node (WIN) has detected the Fused (B+) input voltage was below 10.5 volts for over 15 seconds except during cranking or when the FOBIK removal process is engaged.

POSSIBLE CAUSES

Possible Causes
RESISTANCE IN THE BATTERY POSITIVE CIRCUIT
RESISTANCE IN THE GENERATOR CASE GROUND
GENERATOR OPERATION
(K20) GENERATOR FIELD CONTROL CIRCUIT OPEN
(K20) GENERATOR FIELD CONTROL CIRCUIT SHORTED TO GROUND
(Z911) GROUND CIRCUIT RESISTED
(A106) FUSED (B+) CIRCUIT RESISTED
POWERTRAIN CONTROL MODULE (PCM)
WIRELESS IGNITION NODE (WIN)

DIAGNOSTIC TEST

1. **CHECK PCM FOR CHARGING SYSTEM DTCs**

   NOTE: Be sure the battery is fully charged before proceeding.

   1. With a scan tool, read the Powertrain Control Module (PCM) DTCs.

      Are there any Charging or Starting System DTCs set in the PCM?

      Yes

      - Refer to **DIAGNOSTIC CODE INDEX** for 3.7L/4.7L/5.7L or **DIAGNOSTIC CODE INDEX** for 6.7L and perform the appropriate Diagnostic Procedure.

      No

      - Go To 2.

2. **VERIFY THAT DTC B210D-BATTERY VOLTAGE LOW IS ACTIVE**
   1. With the scan tool, record and erase the DTCs.
   2. Turn the ignition switch to the OFF position then start the engine and let run for one minute.
   3. With the scan tool, read the WIN active DTCs.

Does the scan tool display: B210D-BATTERY VOLTAGE LOW active?

Yes

- Go To 3.

No

- Test complete, the condition or conditions that originally set this DTC are not present at this time. Using the wiring diagrams as a guide, check all related splices and connectors for signs of water intrusion, corrosion, pushed out or bent terminals and poor pin fit.
- Refer to **STANDARD PROCEDURE** and perform the BODY VERIFICATION TEST.

3. **(A106) FUSED (B+) CIRCUIT OR (Z911) GROUND CIRCUIT HAS HIGH RESISTANCE**

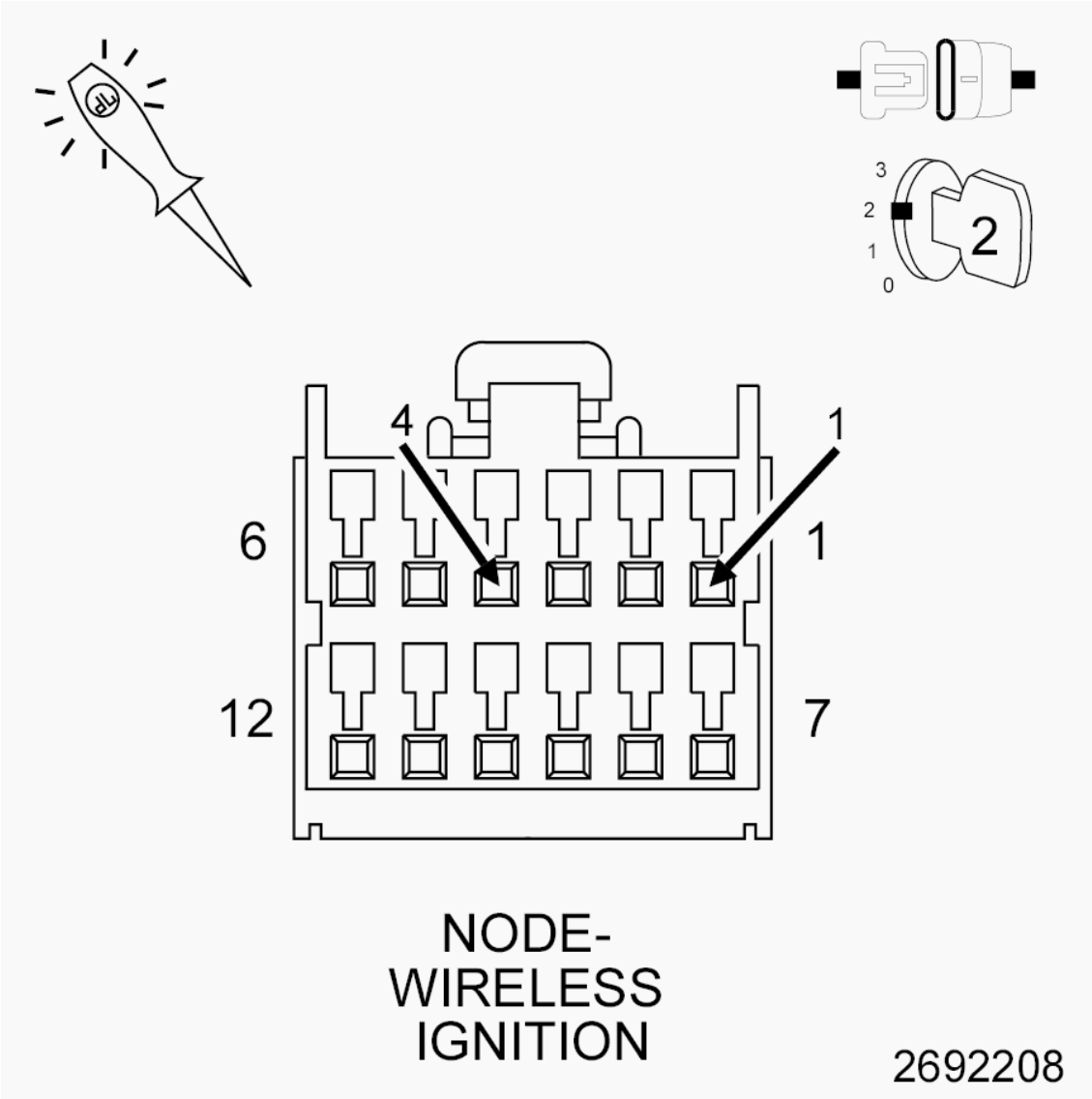

Fig. 2: Checking Fused (B+) Circuit Or Ground Circuit Has High Resistance

Courtesy of CHRYSLER GROUP, LLC

NOTE: **Check the related fuses to the Fused (B+) circuit. If the fuse is found to be open, repair the circuit for a shorted condition.**

1. Turn the ignition off.
2. Disconnect the WIN harness connector.
3. Turn the ignition on.
4. Using a 12-volt test light, connect it between the (A106) Fused (B+) circuit and the (Z911) Ground circuit in the WIN harness connector.
5. The test light must illuminate brightly. Compare the brightness to that of a direct connection to the battery.

   Is the test light as bright at the module as it is at the battery?

   Yes

   - Replace and program the Wireless Ignition Node (WIN) in accordance with the Service Information. Refer to **RECEIVER, WIRELESS IGNITION NODE, REMOVAL** .
   - Refer to **STANDARD PROCEDURE** and perform the WIN VERIFICATION TEST.

   No

   - Test the (A106) Fused B(+) circuit and the Ground circuit to determine which one has the high resistance. Repair the Fused B(+) circuit or the Ground circuit for high resistance.
   - Refer to **STANDARD PROCEDURE** and perform the BODY VERIFICATION TEST.

B210D-BATTERY VOLTAGE LOW - DS/DJ/D2

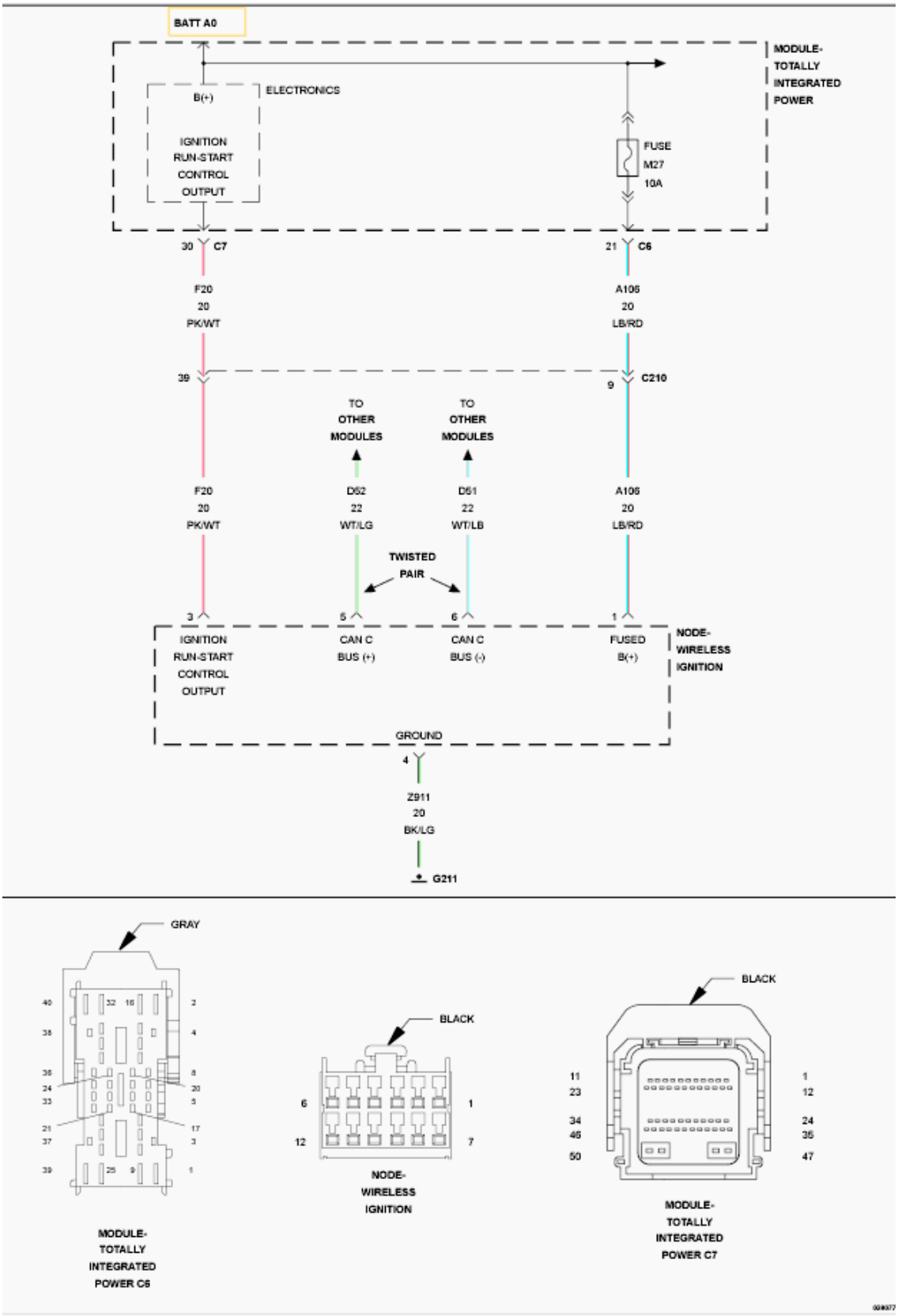

Fig. 3: Wireless Ignition Node (WIN) CAN C Bus & Fused B+ Wiring Diagram

Courtesy of CHRYSLER GROUP, LLC

For a complete wiring diagram, **refer to appropriate SYSTEM WIRING DIAGRAMS article** .

WHEN MONITORED:

With the ignition switch on.

SET CONDITION:

The Wireless Ignition Node (WIN) has detected the Fused (B+) input voltage was below 10.5 volts for over 15 seconds except during cranking or when the FOBIK removal process is engaged.

POSSIBLE CAUSES

Possible Causes
RESISTANCE IN THE BATTERY POSITIVE CIRCUIT
RESISTANCE IN THE GENERATOR CASE GROUND
GENERATOR OPERATION
(K20) GENERATOR FIELD CONTROL CIRCUIT OPEN
(K20) GENERATOR FIELD CONTROL CIRCUIT SHORTED TO GROUND
(Z911) GROUND CIRCUIT RESISTED
(A106) FUSED (B+) CIRCUIT RESISTED
POWERTRAIN CONTROL MODULE (PCM)
WIRELESS IGNITION NODE (WIN)

DIAGNOSTIC TEST

1. **CHECK PCM FOR CHARGING SYSTEM DTCs**

   NOTE: Be sure the battery is fully charged before proceeding.

   1. With a scan tool, read the Powertrain Control Module (PCM) DTCs.

      Are there any Charging or Starting System DTCs set in the PCM?

      Yes

      - Refer to **DIAGNOSTIC CODE INDEX** for 3.7L/4.7L/5.7L or **DIAGNOSTIC CODE INDEX** for 6.7L and perform the appropriate Diagnostic Procedure.

      No

      - Go To 2.

2. **VERIFY THAT DTC B210D-BATTERY VOLTAGE LOW IS ACTIVE**
   1. With the scan tool, record and erase the DTCs.

2. Turn the ignition switch to the OFF position then start the engine and let run for one minute.
3. With the scan tool, read the WIN active DTCs.

   Does the scan tool display: B210D-BATTERY VOLTAGE LOW active?

   Yes

   - Go To 3.

   No

   - Test complete, the condition or conditions that originally set this DTC are not present at this time. Using the wiring diagrams as a guide, check all related splices and connectors for signs of water intrusion, corrosion, pushed out or bent terminals and poor pin fit.
   - Refer to **STANDARD PROCEDURE** and perform the BODY VERIFICATION TEST.

3. **(A106) FUSED (B+) CIRCUIT OR (Z911) GROUND CIRCUIT HAS HIGH RESISTANCE**

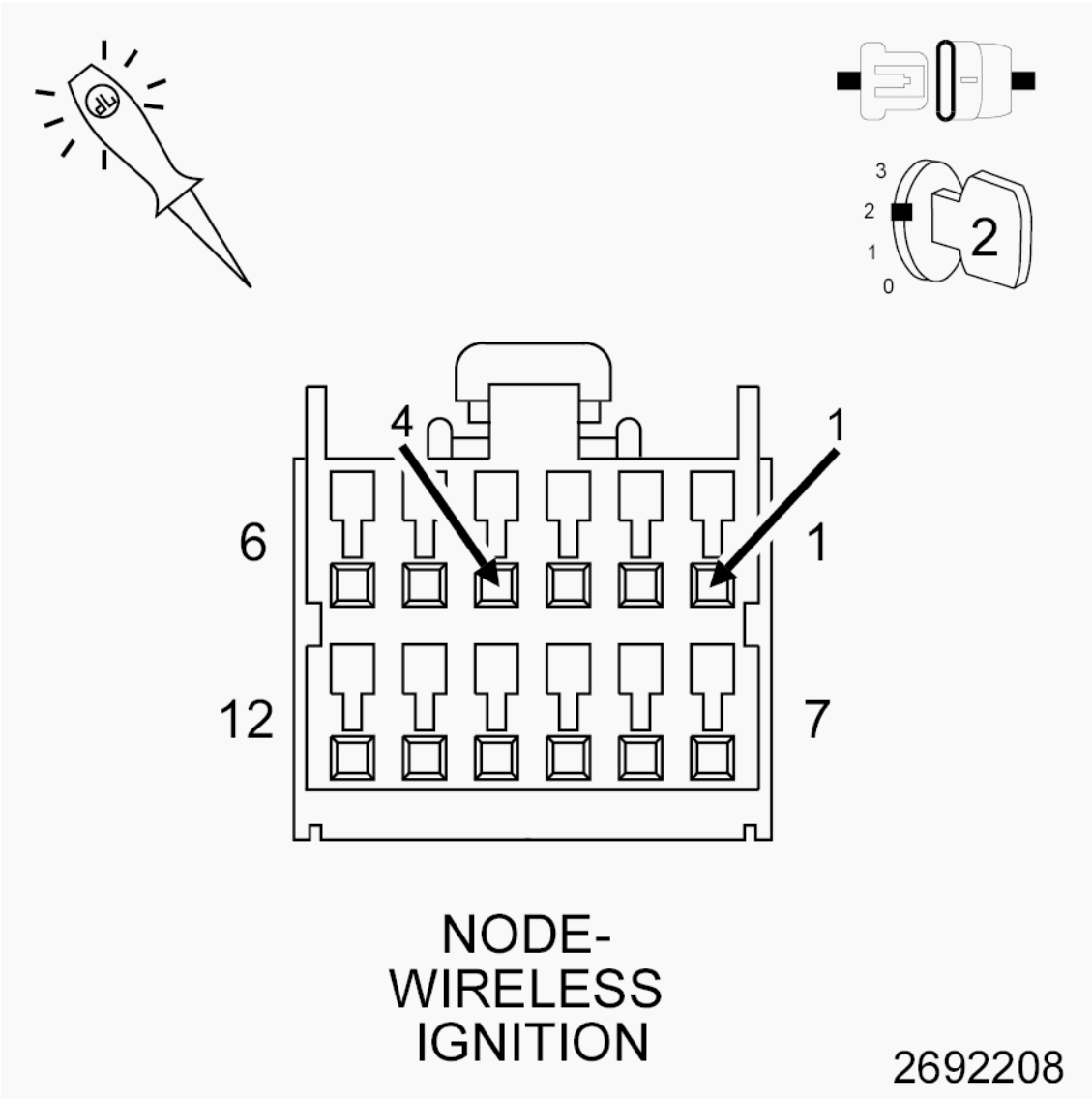

Fig. 4: Checking Fused (B+) Circuit Or Ground Circuit Has High Resistance
Courtesy of CHRYSLER GROUP, LLC

NOTE: **Check the related fuses to the Fused (B+) circuit. If the fuse is found to be open, repair the circuit for a shorted condition.**

1. Turn the ignition off.
2. Disconnect the WIN harness connector.
3. Turn the ignition on.
4. Using a 12-volt test light, connect it between the (A106) Fused (B+) circuit and the (Z911) Ground circuit in the WIN harness connector.
5. The test light must illuminate brightly. Compare the brightness to that of a direct connection to the battery.

Is the test light as bright at the module as it is at the battery?

Yes

- Replace and program the Wireless Ignition Node (WIN) in accordance with the Service Information. Refer to **RECEIVER, WIRELESS IGNITION NODE, REMOVAL** .
- Refer to **STANDARD PROCEDURE** and perform the WIN VERIFICATION TEST.

No

- Test the (A106) Fused B(+) circuit and the Ground circuit to determine which one has the high resistance. Repair the Fused B(+) circuit or the Ground circuit for high resistance.
- Refer to **STANDARD PROCEDURE** and perform the BODY VERIFICATION TEST.

B210E-BATTERY VOLTAGE HIGH - DD/DP

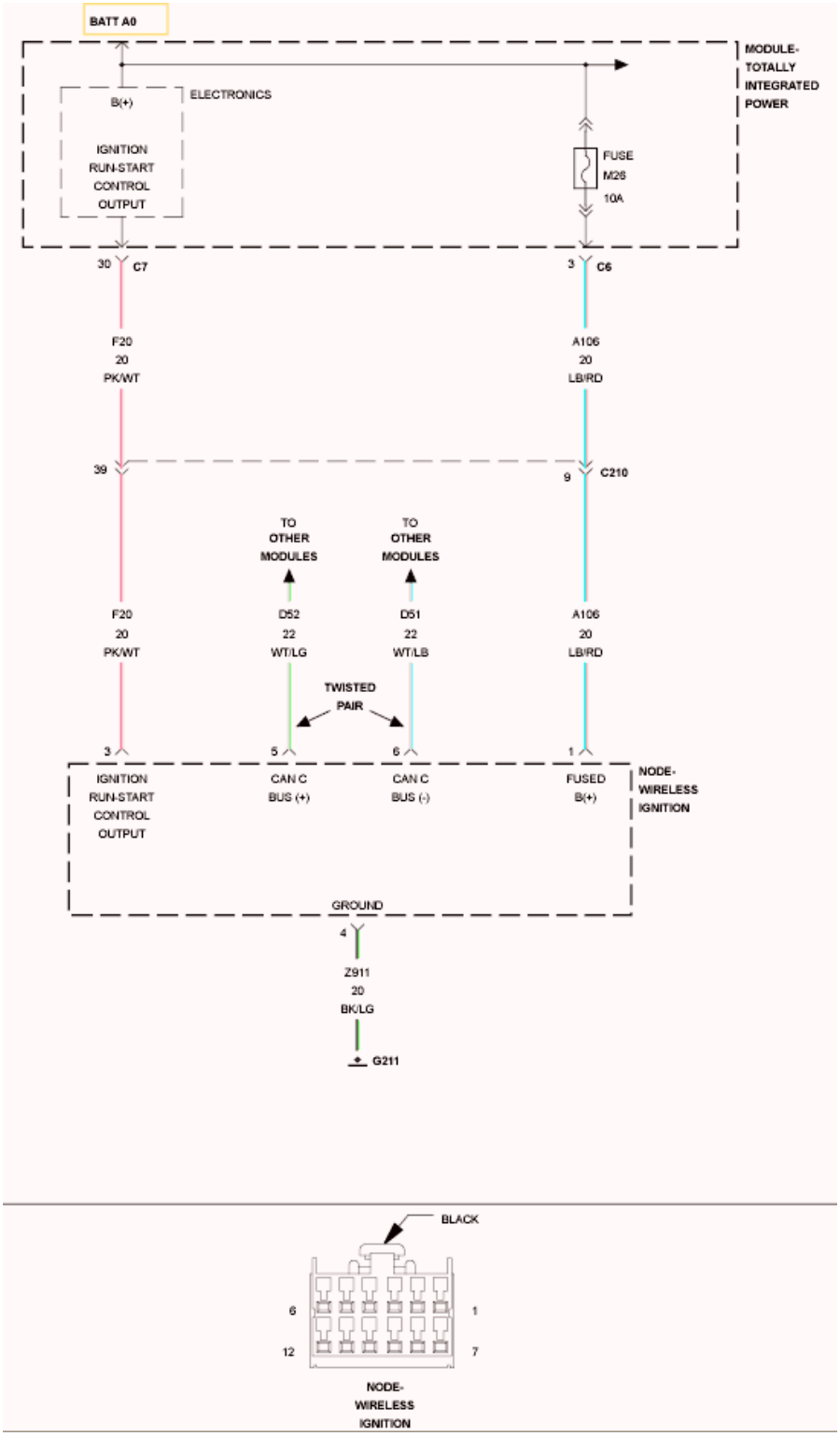

Fig. 5: Wireless Ignition Node (WIN) CAN C Bus & Fused B+ Wiring Diagram
Courtesy of CHRYSLER GROUP, LLC

For a complete wiring diagram, **refer to appropriate SYSTEM WIRING DIAGRAMS article** .

WHEN MONITORED:

With the ignition switch on.

SET CONDITION:

The Wireless Ignition Node (WIN) has detected the Fused (B+) input voltage to be above 15.5 volts for over 15 seconds.

POSSIBLE CAUSES

Possible Causes
(K20) GENERATOR FIELD CONTROL CIRCUIT SHORTED TO BATTERY VOLTAGE
(Z911) GROUND CIRCUIT RESISTED
GENERATOR
POWERTRAIN CONTROL MODULE (PCM)
WIRELESS IGNITION NODE (WIN)

DIAGNOSTIC TEST

1. **CHECK FOR CHARGING SYSTEM RELATED DTCs IN THE POWERTRAIN CONTROL MODULE (PCM)**

   NOTE: Make sure the Battery is in good condition. Using the Midtronics Battery Tester, test the Battery before continuing.

   1. Turn the ignition on.
   2. With the scan tool in ECU View, select PCM and check for any Battery or Charging System related DTCs.

      Does the scan tool display any Battery or Charging System related DTCs?

      Yes

      - Refer to **DIAGNOSTIC CODE INDEX** for 3.7L/4.7L/5.7L or **DIAGNOSTIC CODE INDEX** for 6.7L and perform the appropriate Diagnostic Procedure.

      No

      - Go To 2.
2. **INTERMITTENT CONDITION**

   NOTE: Be sure the battery is fully charged before proceeding.

   1. With the scan tool, record and erase the WIN DTCs.

2. Perform five ignition cycles, leaving the ignition switch on for a minimum of one minute per cycle.
3. Start the engine and run for two minutes.
4. With the scan tool, read the active WIN DTCs.

   Does the scan tool display: B210E-BATTERY VOLTAGE HIGH?

   Yes

   - Go To 3.

   No

   - Test complete, the condition or conditions that originally set this DTC are not present at this time. Using the wiring diagrams as a guide, check all related splices and connectors for signs of water intrusion, corrosion, pushed out or bent terminals and poor pin fit.
   - Refer to **STANDARD PROCEDURE** and perform the BODY VERIFICATION TEST.

3. **CHECK THE GROUND CIRCUIT AT THE WIN**

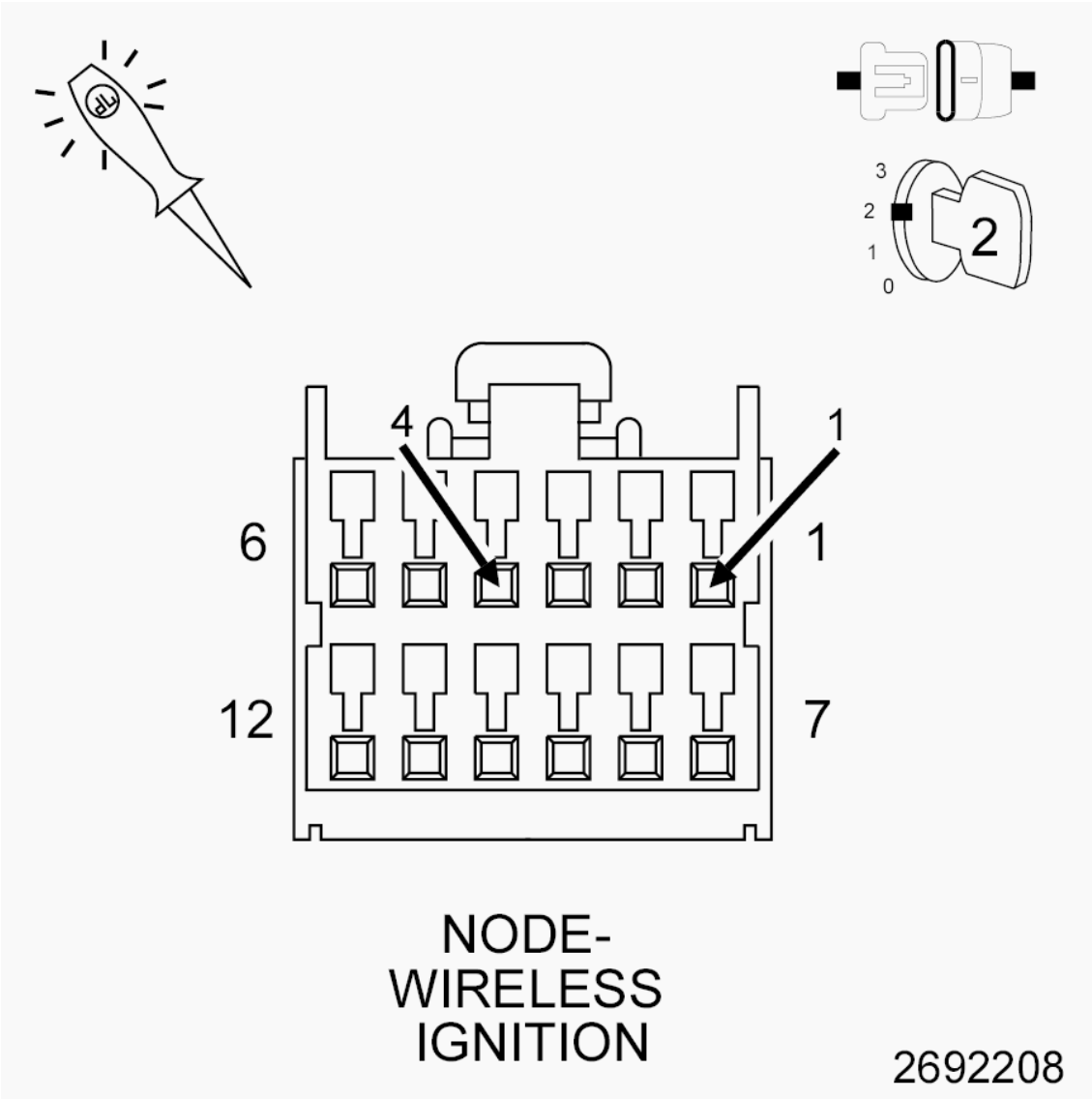

Fig. 6: Checking The Ground Circuit At The WIN
Courtesy of CHRYSLER GROUP, LLC

NOTE: A dirty (partial) ground can cause abnormal conditions within a system.

1. Turn the ignition off.
2. Disconnect the WIN connector.
3. Using a 12-volt test light, connect it between the (A106) Fused (B+) circuit and the (Z911) Ground circuit in the WIN harness connector.
4. The test light must illuminate brightly. Compare the brightness to that of a direct connection to the battery.

   Is the test light as bright at the module connector as it is at the battery?

   Yes

- Replace and program the Wireless Ignition Node (WIN) in accordance with the Service Information. Refer to **RECEIVER, WIRELESS IGNITION NODE, REMOVAL** .
- Refer to **STANDARD PROCEDURE** and perform the WIN VERIFICATION TEST.

No

- Repair the (Z911) Ground circuit for high resistance.
- Refer to **STANDARD PROCEDURE** and perform the BODY VERIFICATION TEST.

B210E-BATTERY VOLTAGE HIGH - DS/DJ/D2

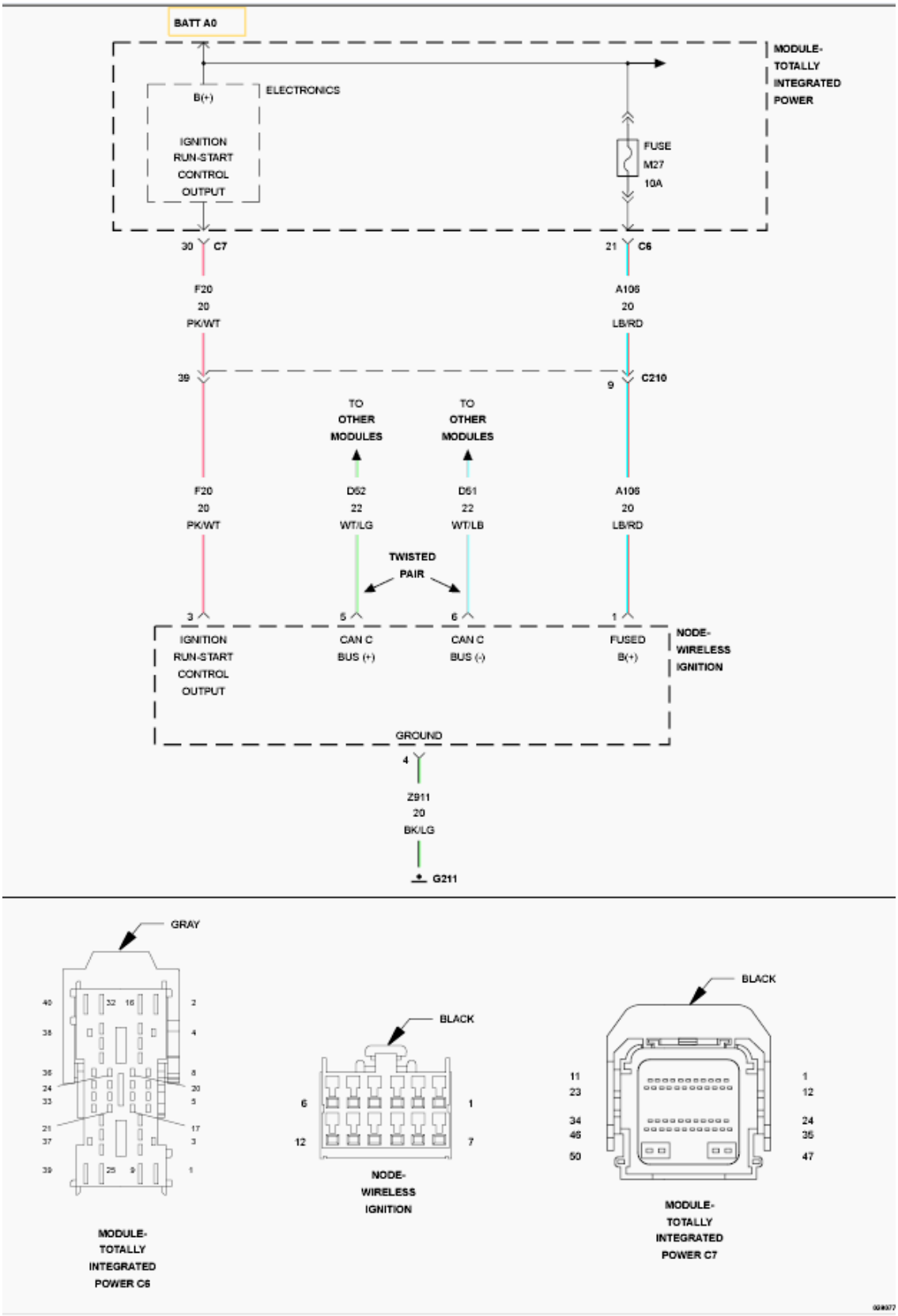

Fig. 7: Wireless Ignition Node (WIN) CAN C Bus & Fused B+ Wiring Diagram

Courtesy of CHRYSLER GROUP, LLC

For a complete wiring diagram, **refer to appropriate SYSTEM WIRING DIAGRAMS article** .

WHEN MONITORED:

With the ignition switch on.

SET CONDITION:

The Wireless Ignition Node (WIN) has detected the Fused (B+) input voltage to be above 15.5 volts for over 15 seconds.

POSSIBLE CAUSES

Possible Causes
(K20) GENERATOR FIELD CONTROL CIRCUIT SHORTED TO BATTERY VOLTAGE
(Z911) GROUND CIRCUIT RESISTED
GENERATOR
POWERTRAIN CONTROL MODULE (PCM)
WIRELESS IGNITION NODE (WIN)

DIAGNOSTIC TEST

1. **CHECK FOR CHARGING SYSTEM RELATED DTCs IN THE POWERTRAIN CONTROL MODULE (PCM)**

   NOTE: Make sure the Battery is in good condition. Using the Midtronics Battery Tester, test the Battery before continuing.

   1. Turn the ignition on.
   2. With the scan tool in ECU View, select PCM and check for any Battery or Charging System related DTCs.

      Does the scan tool display any Battery or Charging System related DTCs?

      Yes

      - Refer to **DIAGNOSTIC CODE INDEX** for 3.7L/4.7L/5.7L or **DIAGNOSTIC CODE INDEX** for 6.7L and perform the appropriate Diagnostic Procedure.

      No

      - Go To 2.
2. **INTERMITTENT CONDITION**

NOTE: Be sure the battery is fully charged before proceeding.

1. With the scan tool, record and erase the WIN DTCs.
2. Perform five ignition cycles, leaving the ignition switch on for a minimum of one minute per cycle.
3. Start the engine and run for two minutes.
4. With the scan tool, read the active WIN DTCs.

   Does the scan tool display: B210E-BATTERY VOLTAGE HIGH?

   Yes

   - Go To 3.

   No

   - Test complete, the condition or conditions that originally set this DTC are not present at this time. Using the wiring diagrams as a guide, check all related splices and connectors for signs of water intrusion, corrosion, pushed out or bent terminals and poor pin fit.
   - Refer to **STANDARD PROCEDURE** and perform the BODY VERIFICATION TEST.

3. **CHECK THE GROUND CIRCUIT AT THE WIN**

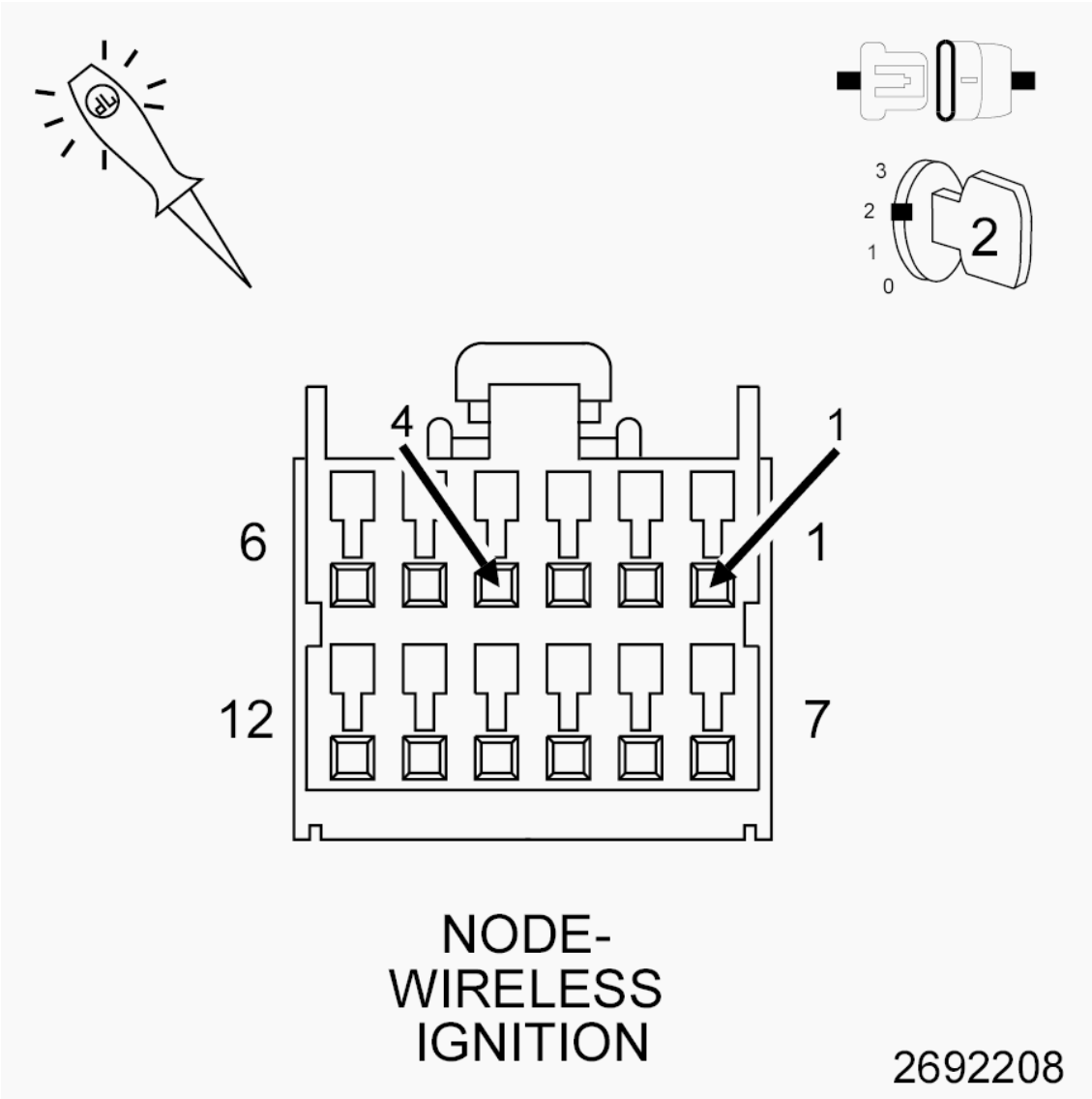

Fig. 8: Checking The Ground Circuit At The WIN
Courtesy of CHRYSLER GROUP, LLC

NOTE: A dirty (partial) ground can cause abnormal conditions within a system.

1. Turn the ignition off.
2. Disconnect the WIN connector.
3. Using a 12-volt test light, connect it between the (A106) Fused (B+) circuit and the (Z911) Ground circuit in the WIN harness connector.
4. The test light must illuminate brightly. Compare the brightness to that of a direct connection to the battery.

   Is the test light as bright at the module connector as it is at the battery?

   Yes

- Replace and program the Wireless Ignition Node (WIN) in accordance with the Service Information. Refer to **RECEIVER, WIRELESS IGNITION NODE, REMOVAL** .
- Refer to **STANDARD PROCEDURE** and perform the WIN VERIFICATION TEST.

No

- Repair the (Z911) Ground circuit for high resistance.
- Refer to **STANDARD PROCEDURE** and perform the BODY VERIFICATION TEST.

B2204-ECU CONFIGURATION MISMATCH

For a complete wiring diagram, **refer to appropriate SYSTEM WIRING DIAGRAMS article** .

THEORY OF OPERATION

The Wireless Ignition Node (WIN) must be configured for various parameters such as model year and vehicle line, after a service replacement. The WIN checks for the proper configuration by comparing the values stored to those sent out on the serial data bus. The repair of this fault does not involve any external circuitry and centers on verifying the module is configured correctly.

WHEN MONITORED:

The WIN checks the feature configuration at power up during the initialization process, and continuously through the ignition cycle.

SET CONDITION:

This DTC sets when the WIN detects a mismatch of Model Year, vehicle line, body style or market country between the current vehicle configuration of the module and the information sent out on the CAN bus. Once set, this DTC is latched for the entire ignition cycle.

POSSIBLE CAUSES

Possible Causes
WIRELESS IGNITION NODE

Always perform the Pre-Diagnostic Troubleshooting procedure before proceeding. Refer to STANDARD PROCEDURE.

DIAGNOSTIC TEST

1. **DETERMINE ACTIVE OR STORED DTC**

   Is the DTC active or stored?

   WIN - ACTIVE DTC

- Go To 2.

WIN - STORED DTC

- Refer to **STANDARD PROCEDURE** and perform the WIRELESS IGNITION NODE (WIN) INTERMITTENT TEST.

2. **RESET/RECONFIGURE THE TOTALLY INTEGRATED POWER MODULE (TIPM)**
   1. Turn the ignition on.
   2. Using the scan tool, select ECU View. This will list the modules on the vehicle. Read and record the listed modules.

      NOTE: A Scan Report will list all the modules on the vehicle.

   3. Using the scan tool, select the Totally Integrated Power Module (TIPM) and then press Miscellaneous Functions.
   4. Press Reset ECU.
   5. Cycle the ignition from on to off three times and read the active WIN DTCs.

      Does the scan tool display: B2204-ECU CONFIGURATION MISMATCH active?

      Yes

      - Go To 3.

      No

      - Repair is complete.
      - Refer to **STANDARD PROCEDURE** and perform the BODY VERIFICATION TEST.

3. **RESET/RECONFIGURE THE WIN**
   1. Using the scan tool, select the WIN and then press Miscellaneous Functions.
   2. Press Reset ECU.
   3. Cycle the ignition from on to off three times and read the active WIN DTCs.

      Does the scan tool display: B2204-ECU CONFIGURATION MISMATCH active?

      Yes

      - Replace and program the Wireless Ignition Node (WIN) in accordance with the Service Information. Refer to **RECEIVER, WIRELESS IGNITION NODE, REMOVAL** .
      - Refer to **STANDARD PROCEDURE** and perform the WIN VERIFICATION TEST.

      No

      - Repair is complete.

- Refer to **STANDARD PROCEDURE** and perform the BODY VERIFICATION TEST.

B2205-ORIGINAL VIN MISSING/MISMATCH

For a complete wiring diagram, **refer to appropriate SYSTEM WIRING DIAGRAMS article** .

THEORY OF OPERATION

When a valid Fob-Integrated-Key (FOBIK) is used and the ignition is rotated to the RUN position, the Wireless Ignition Node (WIN) "listens" to the CAN C bus for the broadcast of the Vehicle Identification Number (VIN) by the Powertrain Control Module (PCM).

WHEN MONITORED:

The WIN monitors the VIN broadcast on the CAN C bus three times, when the ignition is turned to the RUN position. When the full VIN has been received by the WIN, all further broadcasts of the VIN are ignored for that ignition cycle.

SET CONDITION:

When the VIN received from the CAN C bus does not match the VIN stored in the memory of the Wireless Ignition Node, the WIN will send the command to flash the Security warning lamp and set this DTC as active and the vehicle will immobilize. The DTC will remain active until a VIN matching the one stored in WIN memory is received by the module from the bus.

POSSIBLE CAUSES

Possible Causes
WIRELESS IGNITION NODE (WIN)
POWERTRAIN CONTROL MODULE (PCM)

Always perform the Pre-Diagnostic Troubleshooting procedure before proceeding. Refer to STANDARD PROCEDURE.

DIAGNOSTIC TEST

1. **DETERMINE ACTIVE OR STORED DIAGNOSTIC TROUBLE CODE (DTC)**

   Is the DTC active or stored?

   WIN - ACTIVE DTC

   - Go To 2.

   WIN - STORED DTC

   - Refer to **STANDARD PROCEDURE** and perform the WIRELESS IGNITION NODE (WIN)

INTERMITTENT TEST.

2. **CHECK THE VIN STORED IN THE PCM**
    1. Using the scan tool, compare the VIN that is stored in the PCM to the VIN of the vehicle's VIN plate.

       Does the VIN stored in the PCM match the vehicle's VIN?

       Yes

       - Replace and program the Wireless Ignition Node (WIN) in accordance with the Service Information. Refer to **RECEIVER, WIRELESS IGNITION NODE, REMOVAL** .
       - Refer to **STANDARD PROCEDURE** and perform the WIN VERIFICATION TEST.

       No

       - Replace the Powertrain Control Module in accordance with the Service Information. Refer to **MODULE, POWERTRAIN CONTROL, REMOVAL** .
       - Refer to **STANDARD PROCEDURE** for 3.7L/4.7L/5.7L or **STANDARD PROCEDURE** for 6.7L and perform the POWERTRAIN VERIFICATION TEST.

B2224-SKREEM INTERNAL

For a complete wiring diagram, **refer to appropriate SYSTEM WIRING DIAGRAMS article** .

WHEN MONITORED:

During key insertion and removal and at module power up.

SET CONDITION:

When the internal memory is corrupted. This DTC can also set if the vehicle is equipped with a Steering Column Lock module (BUX). If after any three consecutive unsuccessful Steering Column Lock and/or Unlock (ELV) attempts, which could be caused by an encoded data mismatch or the bolt did not reach the intended position when requested.

POSSIBLE CAUSES

Possible Causes
WIRELESS IGNITION NODE (WIN)

DIAGNOSTIC TEST

1. **VERIFY THAT THE DIAGNOSTIC TROUBLE CODE (DTC) IS ACTIVE**
    1. Turn the ignition on.

       NOTE: Before continuing, review and check for the following:

- **Review the repair history of the vehicle.**
- **Make sure that the vehicle has the correct PCM and WIN installed by verifying the part numbers.**
- **With the scan tool, ensure that the PCM and WIN are programmed correctly. Compare the PCM VIN to the WIN VIN and ensure the two VINs match.**

2. With the scan tool, erase the DTCs.
3. Perform three ignition cycles, leaving the ignition switch on for a minimum of one minute per cycle.
4. With the scan tool, read the active DTCs.

   Does the scan tool display: B2224-SKREEM INTERNAL as active?

   Yes

   - Replace and program the Wireless Ignition Node (WIN) in accordance with the Service Information. Refer to **RECEIVER, WIRELESS IGNITION NODE, REMOVAL** .
   - Refer to **STANDARD PROCEDURE** and perform the WIN VERIFICATION TEST.

   No

   - Refer to **STANDARD PROCEDURE** and perform the WIRELESS IGNITION NODE (WIN) INTERMITTENT TEST.

C0077-LOW TIRE PRESSURE

For a complete wiring diagram, **refer to appropriate SYSTEM WIRING DIAGRAMS article** .

WHEN MONITORED:

Continuously.

SET CONDITION:

A low pressure condition will exist when the tire pressure falls below or is equal to the low pressure threshold value as specified for the vehicle.

POSSIBLE CAUSES

Possible Causes
INCORRECT TIRE PRESSURE
INCORRECT PLACARD VALUES
TIRE PRESSURE MONITORING (TPM) SENSOR

DIAGNOSTIC TEST

1. **DTC STATUS**

NOTE: **If the incorrect Placard Values were programmed into the WIN, a DTC could be set. Before continuing with any TPM diagnostic test, using the scan tool, check that the correct Placard Values have been programmed in to the module.**

NOTE: **If any the following conditions are present repair them first before continuing with this test.**

- **Low Tire Pressure**
- **Individual Low Tire Pressure Sensor DTCs**
- **Tire Pressure Monitoring (TPM) Sensor Internal fault**
- **Spare Tire is not equipped with a TPM Sensor and is currently on the vehicle**

NOTE: **Seasonal temperature changes will affect tire pressure, and may have caused the tire pressure to fall below the low pressure warning threshold. Tire pressure should always be set based on cold inflation tire pressure (placard). This is defined as the tire pressure after a vehicle has not been driven for more then three hours, and in outside ambient temperatures.**

1. Correct all tire pressures to the recommended cold inflation tire pressure specifications and wait two minutes for the system to update.
2. Ignition on engine not running.
3. With the scan tool, record and erase the DTCs.
4. Test drive the vehicle at speeds greater than 15 mph (24 km/h) for minimum of 10 minutes.
5. With the scan tool, read the DTCs.

Is the DTC status Active at this time?

Yes

- Go To 2.

No

- Go To 8.

2. **LOW TIRE PRESSURE**

NOTE: **This DTC can be caused by many different factors and might not be a TPM Sensor or a WIN fault. Interference from other elements can over power the sensor/transmitter RF frequency to the WIN making erratic operation to the TPM system. Check the vehicle for aftermarket accessories that could compromise the RF frequency signal before diagnosing the TPM system.**

1. Correct all tire pressures to the recommended cold inflation tire pressure specifications and wait two minutes for the system to update.
2. With the scan tool, erase DTCs.
3. With the scan tool, read DTCs.

   Does the DTC reset or is the status Active for this DTC?

   Yes

   - Go To 3.

   No

   - Go To 8.

3. **TIRE PRESSURE MONITORING (TPM) SENSOR**

NOTE: **The following tests are used to locate the Tire Pressure Sensor/Transmitter that is setting the low pressure fault. If the tires have been rotated, the Tire Pressure Sensor/Transmitter is no longer in sequence from the factory. Faults are linked to the sensor/transmitter IDs. You MUST locate the correct Tire Pressure Sensor/Transmitter that set the fault before.**

NOTE: **Before continuing with any TPM diagnostic test, using the scan tool and read first set of the Tire Placard Pressure Front and Tire Placard Pressure Rear under Data Display in the WIN. (under the Left Rear Transponder Status) Confirm that the values match the Tire Inflation Pressure (Placard) label located on the Drivers Side B-Pillar. If the incorrect Placard Values have been programmed in the WIN, go to Update Pressure Thresholds under Miscellaneous Functions for the WIN and follow the procedure.**

If the vehicle is equipped with a WIN Module, go into the Totally Integrated Power Module (TIPM), select Data Display and read "Tire Placard Pressure - Front" and "Tire Placard Pressure - Rear" to confirm the values were programmed correctly. If the Placard values are incorrect in the TIPM, select the Totally Integrated Power Module (TIPM) then under "Miscellaneous" select "Update Pressure Threshold" and enter the placard pressure value as seen on the Tire Inflation Pressure (Placard) label. Repeat step 2 for Diagnostics.

1. With the scan tool, select View Data Display in the WIN and find the compensated tire pressure values located under each of the Sensor Identification locations.

   Are any of the compensated tire pressure values below the Placard Value?

   Yes

   - Replace the Tire Pressure Monitoring (TPM) Sensor in accordance with the service information. Refer to **SENSOR, TIRE PRESSURE MONITORING (TPM), REMOVAL** .
   - Refer to **STANDARD PROCEDURE** and perform the TPM VERIFICATION TEST.

   No

   - Go To 4.

4. **TPM/RKE ANALYZER**

   Is their a TPM/RKE Analyzer CH9936 available?

   Yes

   - Go To 5.

   No

   - Go To 7.

5. **TIRE PRESSURE MONITORING (TPM) SENSOR NON-RESPONSIVE**
   1. With the TPM-RKE Analyzer (special tool #CH9936, Analyzer, TPM/RKE), check to see if the any of the TPM Sensors do not respond after repeated attempts or display the following:
      - "Damaged Accel"
      - "Damaged Temp"
      - "Damaged Temp"
      - "Damaged Press"

      Are any of the TPM Sensors not responding or displaying the information listed above?

      Yes

      - Replace the Tire Pressure Monitoring (TPM) Sensor in accordance with the service information. Refer to **SENSOR, TIRE PRESSURE MONITORING (TPM), REMOVAL** .
      - Refer to **STANDARD PROCEDURE** and perform the TPM VERIFICATION TEST.

      No

- Go To 6.

6. **TPM SENSOR INTERNAL FAULT SET USING TPM/RKE ANALYZER**

NOTE: **The following procedure is used to locate the TPM Sensor that is setting the sensor internal fault. If the tires have been rotated, the Tire Pressure Sensor is no longer in sequence from the factory. Faults are linked to the sensor/transmitter IDs. You MUST locate the correct Tire Pressure Sensor that set the fault before continuing. Use the following method below at every tire location.**

NOTE: **If the sensor IDs do not match, it may be necessary to move the vehicle to a location away from other TPM sensors and repeat this step.**

1. With the scan tool, select Data Display for the WIN.
2. Check to see if the Sensor IDs match what is programmed into the WIN.

Has the Tire Pressure Sensor been located?

Yes

- Replace the Tire Pressure Monitoring (TPM) Sensor in accordance with the service information. Refer to **SENSOR, TIRE PRESSURE MONITORING (TPM), REMOVAL** .
- Refer to **STANDARD PROCEDURE** and perform the TPM VERIFICATION TEST.

No

- Replace the Wireless Ignition Node (WIN) in accordance with the Service Information. Refer to **RECEIVER, WIRELESS IGNITION NODE, REMOVAL** .
- Refer to **STANDARD PROCEDURE** and perform the TPM VERIFICATION TEST.

7. **TIRE PRESSURE SENSOR INTERNAL FAULT SET**

NOTE: **Some vehicles will not receive TPM Sensor data when the vehicle is stationary. The vehicle may need to be driven at speeds greater than 15 mph (24 km/h) for about a minute in order to receive TPM Sensor data.**

1. Starting with the left front wheel, deflate the tire to 20 PSI, wait two minutes, and check the scan tool for changes to any compensated tire pressure values
2. Look for a tire location whose sensor ID that is not responding.
3. Repeat this test on each wheel on the vehicle until the sensor in question has been identified

Has the Tire Pressure Sensor been located?

Yes

- Replace the Tire Pressure Monitoring (TPM) Sensor in accordance with the service information. Refer to **SENSOR, TIRE PRESSURE MONITORING (TPM), REMOVAL** .
- Refer to **STANDARD PROCEDURE** and perform the TPM VERIFICATION TEST.

No

- Replace the Wireless Ignition Node (WIN) in accordance with the Service Information. Refer to **RECEIVER, WIRELESS IGNITION NODE, REMOVAL** .
- Refer to **STANDARD PROCEDURE** and perform the TPM VERIFICATION TEST.

8. **INTERMITTENT TIRE PRESSURE MONITORING (TPM) SENSOR DTC**
   1. The conditions necessary to set this DTC are not present at this time.
   2. Perform any Technical Service Bulletins that may apply to this condition.
   3. With the scan tool, erase DTCs.
   4. Test drive the vehicle for a minimum of 10 minutes with vehicle speed greater than 24 km/h (15 mph).
   5. With the scan tool, read the DTCs.

   Does the DTC reset or is the status Active for this DTC?

   Yes

   - Repair as necessary.
   - Refer to **STANDARD PROCEDURE** and perform the TPM VERIFICATION TEST.

   No

   - Test complete, the condition or conditions that originally set this DTC are not present at this time. Using the wiring diagrams as a guide, check all related splices and connectors for signs of water intrusion, corrosion, pushed out or bent terminals, and correct pin tension.

C1501-TIRE PRESSURE SENSOR 1 INTERNAL

For a complete wiring diagram, **refer to appropriate SYSTEM WIRING DIAGRAMS article** .

THEORY OF OPERATION

The tire pressure sensor actively monitors the air pressure and air temperature inside the tire, the sensor internal battery status, and the radial acceleration of the wheel. Each sensor has a unique ID code.

WHEN MONITORED:

With vehicle speed greater than 24 km/h (15 mph).

SET CONDITION:

The Wireless Ignition Node (WIN) will monitor the signals from the four active road tire sensors. A loss of signal error is detected when eight consecutive blocks of data are not received or cannot be accurately decoded. An internal sensor hardware error condition will be set when an error in the accelerometer, pressure sensor, or temperature sensor is detected.

POSSIBLE CAUSES

Possible Causes
INCORRECT SENSORS
TIRE PRESSURE MONITORING (TPM) SENSOR
WIRELESS IGNITION NODE (WIN)

DIAGNOSTIC TEST

1. **DTC STATUS IS ACTIVE**

   NOTE: Seasonal temperature changes will affect tire pressure, and may have caused the tire pressure to fall below the low pressure warning threshold. Tire pressure should always be set based on cold inflation tire pressure (placard). This is defined as the tire pressure after a vehicle has not been driven for more then three hours, and in outside ambient temperatures.

   1. Correct all tire pressures to the recommended cold inflation tire pressure specifications and wait two minutes for the system to update.
   2. Ignition on engine not running.
   3. With the scan tool, record and erase DTCs.
   4. Test drive the vehicle at a speed greater than 24 km/h (15 mph) for a minimum of 10 minutes in order to receive TPM Sensor data and allow for the system to update.
   5. With the scan tool, read the DTCs.

   Is the DTC status Active at this time?

   Yes

   - Go To 2.

   No

   - Go To 9.

2. **TPM-RKE ANALYZER CH9936**

   Is there a TPM-RKE Analyzer CH9936 available?

   Yes

- Go To 3.

No

- Go To 8.

3. **TIRE PRESSURE MONITORING (TPM) SENSOR INTERNAL DTC**

NOTE: **This fault can be set if the incorrect or no TPM Sensor is installed on the vehicle. If the spare tire is currently installed on the vehicle, and it is not equipped with a TPM Sensor, this DTC can be set. Replace the spare with a TPM Sensor equipped wheel and tire assembly. Test drive the vehicle. If the DTC resets, continue with the diagnostic procedure.**

1. Perform a visual inspection to verify that all road wheels are equipped with a TPM Sensor.
2. With the TPM-RKE Analyzer (special tool #CH9936, Analyzer, TPM/RKE) verify the correct TPM Sensor is on the vehicle.

   Is the correct TPM Sensor installed on the vehicle?

   Yes

   - Go To 4.

   No

   - Replace the Tire Pressure Monitoring (TPM) Sensor in accordance with the service information. Refer to **SENSOR, TIRE PRESSURE MONITORING (TPM), REMOVAL** .
   - Refer to **STANDARD PROCEDURE** and perform the TPM VERIFICATION TEST.

4. **TIRE PRESSURE MONITORING (TPM) SENSOR INTERNAL FAULT SET USING TPM-RKE ANALYZER**

NOTE: **The following procedure is used to locate the TPM Sensor that is setting the internal fault. If the tires have been rotated, the TPM Sensor is no longer in sequence from the factory. Faults are linked to the TPM Sensor IDs. You MUST locate the TPM Sensor that set the fault before continuing. Use the following method below at every tire location.**

1. Use a TPM-RKE Analyzer (special tool #CH9936, Analyzer, TPM/RKE) to scan each TPM Sensor for a response, and store in the proper location in the TPM-RKE Analyzer (special tool #CH9936, Analyzer, TPM/RKE). If you receive no response from any of the TPM Sensors, check to make sure that the TPM-RKE Analyzer is set correctly and repeat the process on each non-responsive wheel.

   Has the faulty TPM Sensor been located?

Yes

- Replace the Tire Pressure Monitoring (TPM) Sensor in accordance with the service information. Refer to **SENSOR, TIRE PRESSURE MONITORING (TPM), REMOVAL** .
- Refer to **STANDARD PROCEDURE** and perform the TPM VERIFICATION TEST.

No

- Go To 5.

5. **TIRE PRESSURE MONITORING (TPM) SENSOR INTERNAL FAULT - MISMATCHED ID**

NOTE: **If the TPM Sensor IDs do not match, it may be necessary to move the vehicle to a location away from other TPM Sensors and repeat this step.**

1. Use a TPM-RKE Analyzer (special tool #CH9936, Analyzer, TPM/RKE) to verify the TPM Sensor IDs match what is programmed into the WIN. The TPM Sensor Identifications are located under "Data Display" for the WIN.

   Do the TPM Sensor IDs match what is stored in the WIN?

   Yes

   - Replace the Wireless Ignition Node (WIN) in accordance with the Service Information.
   - Refer to **STANDARD PROCEDURE** and perform the TPM VERIFICATION TEST.

   No

   - Go To 6.

6. **TIRE PRESSURE MONITORING (TPM) SENSOR INTERNAL FAULT**
   1. Using the data taken by the TPM-RKE Analyzer (special tool #CH9936, Analyzer, TPM/RKE), program the current sensor ID's into the WIN module in the corresponding locations.
   2. With the scan tool, erase the DTCs.
   3. Drive the vehicle for a minimum of 20 minutes with the vehicle speed greater than 24 km/h (15 mph) to verify that the DTC does not return in an active state.
   4. With the scan tool, read the active DTCs.

   Does the scan tool display: C1501-TIRE PRESSURE SENSOR 1 INTERNAL

   Yes

   - Replace the Wireless Ignition Node (WIN) in accordance with the Service Information. Refer to **RECEIVER, WIRELESS IGNITION NODE, REMOVAL** .
   - Refer to **STANDARD PROCEDURE** and perform the TPM VERIFICATION TEST.

No

- Go To 7.

7. **TIRE PRESSURE MONITORING (TPM) SENSOR INTERNAL FAULT - MISMATCHED ID**
   1. With the TPM-RKE Analyzer, read the sensor ID's.

      Do the sensor ID's match the ID's just learned in the previous step?

      Yes

      - Test complete.
      - Refer to **STANDARD PROCEDURE** and perform the TPM VERIFICATION TEST.

      No

      - Replace the Wireless Ignition Node (WIN) in accordance with the Service Information. Refer to **RECEIVER, WIRELESS IGNITION NODE, REMOVAL** .
      - Refer to **STANDARD PROCEDURE** and perform the TPM VERIFICATION TEST.
8. **TIRE PRESSURE MONITORING (TPM) SENSOR INTERNAL FAULT SET**

   NOTE: Some vehicles will not receive the TPM Sensor data when the vehicle is stationary. The vehicle may need to be driven at speeds greater than 24 km/h (15 mph) for about a minute in order to receive TPM Sensor data.

   1. Starting with the left front wheel, deflate the tire to 20 PSI, wait two minutes, and check the scan tool for changes to any compensated tire pressure values.
   2. Look for a tire location with a non-responsive TPM Sensor ID.
   3. Repeat this test on each wheel on the vehicle until the TPM Sensor in question has been identified.

      Has the faulty TPM Sensor been located?

      Yes

      - Replace the Tire Pressure Monitoring (TPM) Sensor in accordance with the service information. Refer to **SENSOR, TIRE PRESSURE MONITORING (TPM), REMOVAL** .
      - Refer to **STANDARD PROCEDURE** and perform the TPM VERIFICATION TEST.

      No

      - Replace the Wireless Ignition Node (WIN) in accordance with the Service Information. Refer to **RECEIVER, WIRELESS IGNITION NODE, REMOVAL** .
      - Refer to **STANDARD PROCEDURE** and perform the TPM VERIFICATION TEST.
9. **INTERMITTENT TIRE PRESSURE MONITORING (TPM) SENSOR DTC**

1. The conditions necessary to set this DTC are not present at this time.
2. Perform any Technical Service Bulletins that may apply to this condition.
3. With the scan tool, clear DTCs in the Wireless Ignition Node (WIN) Module.
4. Test drive the vehicle for a minimum of 10 minutes with vehicle speed greater than 24 km/h (15 mph).
5. With the scan tool, select View DTCs in the Wireless Ignition Node (WIN) Module.

   Does the DTC reset or is the status Active for this DTC?

   Yes

   - Return to the beginning of this test and perform the diagnostic procedure as necessary.

   No

   - Test complete, the condition or conditions that originally set this DTC are not present at this time. Using the wiring diagrams as a guide, check all related splices and connectors for signs of water intrusion, corrosion, pushed out or bent terminals, and correct pin tension.

C1502-TIRE PRESSURE SENSOR 2 INTERNAL

For a complete wiring diagram, **refer to appropriate SYSTEM WIRING DIAGRAMS article** .

THEORY OF OPERATION

The tire pressure sensor actively monitors the air pressure and air temperature inside the tire, the sensor internal battery status, and the radial acceleration of the wheel. Each sensor has a unique ID code. The sensor transmits the data at regular intervals via an encoded signal to a receiver circuit located in the Wireless Ignition Node (WIN).

WHEN MONITORED:

With vehicle speed greater than 24 km/h (15 mph).

SET CONDITION:

The Wireless Ignition Node (WIN) will monitor the signals from the four active road tire sensors. A loss of signal error is detected when eight consecutive blocks of data are not received or cannot be accurately decoded. An internal sensor hardware error condition will be set when an error in the accelerometer, pressure sensor, or temperature sensor is detected.

POSSIBLE CAUSES

Possible Causes
INCORRECT SENSORS
TIRE PRESSURE MONITORING (TPM) SENSOR

DIAGNOSTIC TEST

1. **DTC STATUS IS ACTIVE**

   NOTE: **Seasonal temperature changes will affect tire pressure, and may have caused the tire pressure to fall below the low pressure warning threshold. Tire pressure should always be set based on cold inflation tire pressure (placard). This is defined as the tire pressure after a vehicle has not been driven for more then three hours, and in outside ambient temperatures.**

   1. Correct all tire pressures to the recommended cold inflation tire pressure specifications and wait two minutes for the system to update.
   2. Ignition on engine not running.
   3. With the scan tool, record and erase DTCs.
   4. Test drive the vehicle at a speed greater than 24 km/h (15 mph) for a minimum of 10 minutes in order to receive TPM Sensor data and allow for the system to update.
   5. With the scan tool, read DTCs.

   Is the DTC status Active at this time?

   Yes

   - Go To 2.

   No

   - Go To 9.

2. **TPM-RKE ANALYZER CH9936**

   Is there a TPM-RKE Analyzer CH9936 available?

   Yes

   - Go To 3.

   No

   - Go To 8.

3. **TIRE PRESSURE MONITORING (TPM) SENSOR INTERNAL DTC**

   NOTE: **This fault can be set if the incorrect or no TPM Sensor is installed on the vehicle. If the spare tire is currently installed on the vehicle, and it is not equipped with a TPM Sensor, this DTC can be set. Replace the spare with**

a TPM Sensor equipped wheel and tire assembly. Test drive the vehicle. If the DTC resets, continue with the diagnostic procedure.

1. Perform a visual inspection to verify that all road wheels are equipped with a TPM Sensor.
2. With the TPM-RKE Analyzer (special tool #CH9936, Analyzer, TPM/RKE) verify the correct TPM Sensor is on the vehicle.

   Is the correct TPM Sensor installed on the vehicle?

   Yes

   - Go To 4.

   No

   - Replace the Tire Pressure Monitoring (TPM) Sensor in accordance with the service information. Refer to **SENSOR, TIRE PRESSURE MONITORING (TPM), REMOVAL** .
   - Refer to **STANDARD PROCEDURE** and perform the TPM VERIFICATION TEST.

4. **TIRE PRESSURE MONITORING (TPM) SENSOR INTERNAL FAULT SET USING TPM-RKE ANALYZER**

NOTE: **The following procedure is used to locate the TPM Sensor that is setting the internal fault. If the tires have been rotated, the TPM Sensor is no longer in sequence from the factory. Faults are linked to the TPM Sensor IDs. You MUST locate the TPM Sensor that set the fault before continuing. Use the following method below at every tire location.**

1. Use a TPM-RKE Analyzer (special tool #CH9936, Analyzer, TPM/RKE) to scan each TPM Sensor for a response, and store in the proper location in the TPM-RKE Analyzer (special tool #CH9936, Analyzer, TPM/RKE). If you receive no response from any of the TPM Sensors, check to make sure that the TPM-RKE Analyzer is set correctly and repeat the process on each non-responsive wheel.

   Has the faulty TPM Sensor been located?

   Yes

   - Replace the Tire Pressure Monitoring (TPM) Sensor in accordance with the service information. Refer to **SENSOR, TIRE PRESSURE MONITORING (TPM), REMOVAL** .
   - Refer to **STANDARD PROCEDURE** and perform the TPM VERIFICATION TEST.

   No

   - Go To 5.

5. **TIRE PRESSURE MONITORING (TPM) SENSOR INTERNAL FAULT - MISMATCHED ID**

NOTE: **If the TPM Sensor IDs do not match, it may be necessary to move the vehicle to a location away from other TPM Sensors and repeat this step.**

1. Use a TPM-RKE Analyzer (special tool #CH9936, Analyzer, TPM/RKE) to verify the TPM Sensor IDs match what is programmed into the WIN. The TPM Sensor Identifications are located under "Data Display" for the WIN.

   Do the TPM Sensor IDs match what is stored in the WIN?

   Yes

   - Replace the Wireless Ignition Node (WIN) in accordance with the Service Information. Refer to **RECEIVER, WIRELESS IGNITION NODE, REMOVAL** .
   - Refer to **STANDARD PROCEDURE** and perform the TPM VERIFICATION TEST.

   No

   - Go To 6.

6. **TIRE PRESSURE MONITORING (TPM) SENSOR INTERNAL FAULT**
   1. Using the data taken by the TPM-RKE Analyzer (special tool #CH9936, Analyzer, TPM/RKE), program the current sensor ID's into the WIN module in the corresponding locations.
   2. With the scan tool, erase the DTCs.
   3. Drive the vehicle for a minimum of 20 minutes with the vehicle speed greater than 24 km/h (15 mph) to verify that the DTC does not return in an active state.
   4. With the scan tool, read the active DTCs.

      Does the scan tool display: C1502-TIRE PRESSURE SENSOR 2 INTERNAL

      Yes

      - Replace the Wireless Ignition Node (WIN) in accordance with the Service Information. Refer to **RECEIVER, WIRELESS IGNITION NODE, REMOVAL** .
      - Refer to **STANDARD PROCEDURE** and perform the TPM VERIFICATION TEST.

      No

      - Go To 7.

7. **TIRE PRESSURE MONITORING (TPM) SENSOR INTERNAL FAULT - MISMATCHED ID**
   1. With the TPM-RKE Analyzer, read the sensor ID's.

      Do the sensor ID's match the ID's just learned in the previous step?

Yes

- Test complete.
- Refer to **STANDARD PROCEDURE** and perform the TPM VERIFICATION TEST.

No

- Replace the Wireless Ignition Node (WIN) in accordance with the Service Information. Refer to **RECEIVER, WIRELESS IGNITION NODE, REMOVAL** .
- Refer to **STANDARD PROCEDURE** and perform the TPM VERIFICATION TEST.

8. **TIRE PRESSURE MONITORING (TPM) SENSOR INTERNAL FAULT SET**

NOTE: **Some vehicles will not receive the TPM Sensor data when the vehicle is stationary. The vehicle may need to be driven at speeds greater than 24 km/h (15 mph) for about a minute in order to receive TPM Sensor data.**

1. Starting with the left front wheel, deflate the tire to 20 PSI, wait two minutes, and check the scan tool for changes to any compensated tire pressure values.
2. Look for a tire location with a non-responsive TPM Sensor ID.
3. Repeat this test on each wheel on the vehicle until the TPM Sensor in question has been identified.

Has the faulty TPM Sensor been located?

Yes

- Replace the Tire Pressure Monitoring (TPM) Sensor in accordance with the service information. Refer to **SENSOR, TIRE PRESSURE MONITORING (TPM), REMOVAL** .
- Refer to **STANDARD PROCEDURE** and perform the TPM VERIFICATION TEST.

No

- Replace the WIN module in accordance with the Service Information. Refer to **RECEIVER, WIRELESS IGNITION NODE, REMOVAL** .
- Refer to **STANDARD PROCEDURE** and perform the TPM VERIFICATION TEST.

9. **INTERMITTENT TIRE PRESSURE MONITORING (TPM) SENSOR DTC**

1. The conditions necessary to set this DTC are not present at this time.
2. Perform any Technical Service Bulletins that may apply to this condition.
3. With the scan tool, clear DTCs in the Wireless Ignition Node (WIN) Module.
4. Test drive the vehicle for a minimum of 10 minutes with vehicle speed greater than 24 km/h (15 mph).
5. With the scan tool, select View DTCs in the Wireless Ignition Node (WIN) Module.

Does the DTC reset or is the status Active for this DTC?

Yes

- Return to the beginning of this test and perform the diagnostic procedure as necessary.

No

- Test complete, the condition or conditions that originally set this DTC are not present at this time. Using the wiring diagrams as a guide, check all related splices and connectors for signs of water intrusion, corrosion, pushed out or bent terminals, and correct pin tension.

C1503-TIRE PRESSURE SENSOR 3 INTERNAL

For a complete wiring diagram, **refer to appropriate SYSTEM WIRING DIAGRAMS article** .

THEORY OF OPERATION

The tire pressure sensor actively monitors the air pressure and air temperature inside the tire, the sensor internal battery status, and the radial acceleration of the wheel. Each sensor has a unique ID code. The sensor transmits the data at regular intervals via an encoded signal to a receiver circuit located in the Wireless Ignition Node (WIN).

WHEN MONITORED:

With vehicle speed greater than 24 km/h (15 mph).

SET CONDITION:

The Wireless Ignition Node (WIN) will monitor the signals from the four active road tire sensors. A loss of signal error is detected when eight consecutive blocks of data are not received or cannot be accurately decoded. An internal sensor hardware error condition will be set when an error in the accelerometer, pressure sensor, or temperature sensor is detected.

POSSIBLE CAUSES

Possible Causes
INCORRECT SENSORS
TIRE PRESSURE MONITORING (TPM) SENSOR
WIRELESS IGNITION NODE (WIN)

DIAGNOSTIC TEST

1. **DTC STATUS IS ACTIVE**

NOTE: **Seasonal temperature changes will affect tire pressure, and may have caused the tire pressure to fall below the low pressure warning threshold. Tire pressure should always be set based on cold inflation tire pressure (placard). This is defined as the tire pressure after a vehicle has not been**

driven for more then three hours, and in outside ambient temperatures.

1. Correct all tire pressures to the recommended cold inflation tire pressure specifications and wait two minutes for the system to update.
2. Ignition on engine not running.
3. Using the scan tool, record and erase DTCs.
4. Test drive the vehicle at a speed greater than 24 km/h (15 mph) for a minimum of 10 minutes in order to receive TPM Sensor data and allow for the system to update.
5. Using the scan tool, read DTCs.

   Is the DTC status Active at this time?

   Yes

   - Go To 2.

   No

   - Go To 9.

2. **TPM-RKE ANALYZER CH9936**

   Is there a TPM-RKE Analyzer CH9936 available?

   Yes

   - Go To 3.

   No

   - Go To 8.

3. **TIRE PRESSURE MONITORING (TPM) SENSOR INTERNAL DTC**

   NOTE: **This fault can be set if the incorrect or no TPM Sensor is installed on the vehicle. If the spare tire is currently installed on the vehicle, and it is not equipped with a TPM Sensor, this DTC can be set. Replace the spare with a TPM Sensor equipped wheel and tire assembly. Test drive the vehicle. If the DTC resets, continue with the diagnostic procedure.**

   1. Perform a visual inspection to verify that all road wheels are equipped with a TPM Sensor.
   2. With the TPM-RKE Analyzer (special tool #CH9936, Analyzer, TPM/RKE) verify the correct TPM Sensor is on the vehicle.

      Is the correct TPM Sensor installed on the vehicle?

      Yes

- Go To 4.

No

- Replace the Tire Pressure Monitoring (TPM) Sensor in accordance with the service information. Refer to **SENSOR, TIRE PRESSURE MONITORING (TPM), REMOVAL** .
- Refer to **STANDARD PROCEDURE** and perform the TPM VERIFICATION TEST.

4. **TIRE PRESSURE MONITORING (TPM) SENSOR INTERNAL FAULT SET USING TPM-RKE ANALYZER**

NOTE: **The following procedure is used to locate the TPM Sensor that is setting the internal fault. If the tires have been rotated, the TPM Sensor is no longer in sequence from the factory. Faults are linked to the TPM Sensor IDs. You MUST locate the TPM Sensor that set the fault before continuing. Use the following method below at every tire location.**

1. Use a TPM-RKE Analyzer (special tool #CH9936, Analyzer, TPM/RKE) to scan each TPM Sensor for a response, and store in the proper location in the TPM-RKE Analyzer (special tool #CH9936, Analyzer, TPM/RKE). If you receive no response from any of the TPM Sensors, check to make sure that the TPM-RKE Analyzer is set correctly and repeat the process on each non-responsive wheel.

   Has the faulty TPM Sensor been located?

   Yes

   - Replace the Tire Pressure Monitoring (TPM) Sensor in accordance with the service information. Refer to **SENSOR, TIRE PRESSURE MONITORING (TPM), REMOVAL** .
   - Refer to **STANDARD PROCEDURE** and perform the TPM VERIFICATION TEST.

   No

   - Go To 5.

5. **TIRE PRESSURE MONITORING (TPM) SENSOR INTERNAL FAULT - MISMATCHED ID**

NOTE: **If the TPM Sensor IDs do not match, it may be necessary to move the vehicle to a location away from other TPM Sensors and repeat this step.**

1. Use a TPM-RKE Analyzer (special tool #CH9936, Analyzer, TPM/RKE) to verify the TPM Sensor IDs match what is programmed into the WIN. The TPM Sensor Identifications are located under "Data Display" for the WIN.

   Do the TPM Sensor IDs match what is stored in the WIN?

Yes

- Replace the Wireless Ignition Node (WIN) in accordance with the Service Information. Refer to **RECEIVER, WIRELESS IGNITION NODE, REMOVAL** .
- Refer to **STANDARD PROCEDURE** and perform the TPM VERIFICATION TEST.

No

- Go To 6.

6. **TIRE PRESSURE MONITORING (TPM) SENSOR INTERNAL FAULT**
   1. Using the data taken by the TPM-RKE Analyzer (special tool #CH9936, Analyzer, TPM/RKE), program the current sensor ID's into the WIN module in the corresponding locations.
   2. With the scan tool, erase the DTCs.
   3. Drive the vehicle for a minimum of 20 minutes with the vehicle speed greater than 24 km/h (15 mph) to verify that the DTC does not return in an active state.
   4. With the scan tool, read the active DTCs.

      Does the scan tool display: C1503-TIRE PRESSURE SENSOR 3 INTERNAL

      Yes

      - Replace the Wireless Ignition Node (WIN) in accordance with the Service Information. Refer to **RECEIVER, WIRELESS IGNITION NODE, REMOVAL** .
      - Refer to **STANDARD PROCEDURE** and perform the TPM VERIFICATION TEST.

      No

      - Go To 7.

7. **TIRE PRESSURE MONITORING (TPM) SENSOR INTERNAL FAULT - MISMATCHED ID**
   1. With the TPM-RKE Analyzer, read the sensor ID's.

      Do the sensor ID's match the ID's just learned in the previous step?

      Yes

      - Test complete.
      - Refer to **STANDARD PROCEDURE** and perform the TPM VERIFICATION TEST.

      No

      - Replace the Wireless Ignition Node (WIN) in accordance with the Service Information. Refer to **RECEIVER, WIRELESS IGNITION NODE, REMOVAL** .
      - Refer to **STANDARD PROCEDURE** and perform the TPM VERIFICATION TEST.

8. **TIRE PRESSURE MONITORING (TPM) SENSOR INTERNAL FAULT SET**

NOTE: **Some vehicles will not receive the TPM Sensor data when the vehicle is stationary. The vehicle may need to be driven at speeds greater than 24 km/h (15 mph) for about a minute in order to receive TPM Sensor data.**

1. Starting with the left front wheel, deflate the tire to 20 PSI, wait two minutes, and check the scan tool for changes to any compensated tire pressure values.
2. Look for a tire location with a non-responsive TPM Sensor ID.
3. Repeat this test on each wheel on the vehicle until the TPM Sensor in question has been identified.

   Has the faulty TPM Sensor been located?

   Yes

   - Replace the Tire Pressure Monitoring (TPM) Sensor in accordance with the service information. Refer to **SENSOR, TIRE PRESSURE MONITORING (TPM), REMOVAL** .
   - Refer to **STANDARD PROCEDURE** and perform the TPM VERIFICATION TEST.

   No

   - Replace the Wireless Ignition Node (WIN) in accordance with the Service Information. Refer to **RECEIVER, WIRELESS IGNITION NODE, REMOVAL** .
   - Refer to **STANDARD PROCEDURE** and perform the TPM VERIFICATION TEST.

9. **INTERMITTENT TIRE PRESSURE MONITORING (TPM) SENSOR DTC**
   1. The conditions necessary to set this DTC are not present at this time.
   2. Perform any Technical Service Bulletins that may apply to this condition.
   3. Using the scan tool, clear DTCs in the Wireless Ignition Node (WIN) Module.
   4. Test drive the vehicle for a minimum of 10 minutes with vehicle speed greater than 24 km/h (15 mph).
   5. Using the scan tool, select View DTCs in the Wireless Ignition Node (WIN) Module.

      Does the DTC reset or is the status Active for this DTC?

      Yes

      - Return to the beginning of this test and perform the diagnostic procedure as necessary.

      No

      - Test complete, the condition or conditions that originally set this DTC are not present at this time. Using the wiring diagrams as a guide, check all related splices and connectors for signs of water intrusion, corrosion, pushed out or bent terminals, and correct pin tension.

C1504-TIRE PRESSURE SENSOR 4 INTERNAL

For a complete wiring diagram, **refer to appropriate SYSTEM WIRING DIAGRAMS article** .

THEORY OF OPERATION

The tire pressure sensor actively monitors the air pressure and air temperature inside the tire, the sensor internal battery status, and the radial acceleration of the wheel. Each sensor has a unique ID code. The sensor transmits the data at regular intervals via an encoded signal to a receiver circuit located in the Wireless Ignition Node (WIN).

WHEN MONITORED:

With vehicle speed greater than 15 m.p.h. (24 km/h).

SET CONDITION:

The Wireless Ignition Node (WIN) will monitor the signals from the four active road tire sensors. A loss of signal error is detected when eight consecutive blocks of data are not received or cannot be accurately decoded. An internal sensor hardware error condition will be set when an error in the accelerometer, pressure sensor, or temperature sensor is detected.

POSSIBLE CAUSES

Possible Causes
INCORRECT SENSORS
TIRE PRESSURE MONITORING (TPM) SENSOR
WIRELESS IGNITION NODE (WIN)

DIAGNOSTIC TEST

1. **DTC STATUS IS ACTIVE**

NOTE: **Seasonal temperature changes will affect tire pressure, and may have caused the tire pressure to fall below the low pressure warning threshold. Tire pressure should always be set based on cold inflation tire pressure (placard). This is defined as the tire pressure after a vehicle has not been driven for more then three hours, and in outside ambient temperatures.**

1. Correct all tire pressures to the recommended cold inflation tire pressure specifications and wait two minutes for the system to update.
2. Ignition on engine not running.
3. Using the scan tool, record and erase DTCs.
4. Test drive the vehicle at a speed greater than 24 km/h (15 mph) for a minimum of 10 minutes in order to receive TPM Sensor data and allow for the system to update.
5. Using the scan tool, read DTCs.

   Is the DTC status Active at this time?

Yes

- Go To 2.

No

- Go To 9.

2. **TPM-RKE ANALYZER CH9936**

   Is there a TPM-RKE Analyzer CH9936 available?

   Yes

   - Go To 3.

   No

   - Go To 8.

3. **TIRE PRESSURE MONITORING (TPM) SENSOR INTERNAL DTC**

   NOTE: **This fault can be set if the incorrect or no TPM Sensor is installed on the vehicle. If the spare tire is currently installed on the vehicle, and it is not equipped with a TPM Sensor, this DTC can be set. Replace the spare with a TPM Sensor equipped wheel and tire assembly. Test drive the vehicle. If the DTC resets, continue with the diagnostic procedure.**

   1. Perform a visual inspection to verify that all road wheels are equipped with a TPM Sensor.
   2. With the TPM-RKE Analyzer (special tool #CH9936, Analyzer, TPM/RKE) verify the correct TPM Sensor is on the vehicle.

      Is the correct TPM Sensor installed on the vehicle?

      Yes

      - Go To 4.

      No

      - Replace the Tire Pressure Monitoring (TPM) Sensor in accordance with the service information. Refer to **SENSOR, TIRE PRESSURE MONITORING (TPM), REMOVAL** .
      - Refer to **STANDARD PROCEDURE** and perform the TPM VERIFICATION TEST.

4. **TIRE PRESSURE MONITORING (TPM) SENSOR INTERNAL FAULT SET USING TPM-RKE ANALYZER**

NOTE: **The following procedure is used to locate the TPM Sensor that is setting the internal fault. If the tires have been rotated, the TPM Sensor is no longer in sequence from the factory. Faults are linked to the TPM Sensor IDs. You MUST locate the TPM Sensor that set the fault before continuing. Use the following method below at every tire location.**

1. Use a TPM-RKE Analyzer (special tool #CH9936, Analyzer, TPM/RKE) to scan each TPM Sensor for a response, and store in the proper location in the TPM-RKE Analyzer (special tool #CH9936, Analyzer, TPM/RKE). If you receive no response from any of the TPM Sensors, check to make sure that the TPM-RKE Analyzer is set correctly and repeat the process on each non-responsive wheel.

   Has the faulty TPM Sensor been located?

   Yes

   - Replace the Tire Pressure Monitoring (TPM) Sensor in accordance with the service information. Refer to **SENSOR, TIRE PRESSURE MONITORING (TPM), REMOVAL** .
   - Refer to **STANDARD PROCEDURE** and perform the TPM VERIFICATION TEST.

   No

   - Go To 5.

5. **TIRE PRESSURE MONITORING (TPM) SENSOR INTERNAL FAULT - MISMATCHED ID**

NOTE: **If the TPM Sensor IDs do not match, it may be necessary to move the vehicle to a location away from other TPM Sensors and repeat this step.**

1. Use a TPM-RKE Analyzer (special tool #CH9936, Analyzer, TPM/RKE) to verify the TPM Sensor IDs match what is programmed into the WIN. The TPM Sensor Identifications are located under "Data Display" for the WIN.

   Do the TPM Sensor IDs match what is stored in the WIN?

   Yes

   - Replace the Wireless Ignition Node (WIN) in accordance with the Service Information. Refer to **RECEIVER, WIRELESS IGNITION NODE, REMOVAL** .
   - Refer to **STANDARD PROCEDURE** and perform the TPM VERIFICATION TEST.

   No

   - Go To 6.

6. **TIRE PRESSURE MONITORING (TPM) SENSOR INTERNAL FAULT**

1. Using the data taken by the TPM-RKE Analyzer (special tool #CH9936, Analyzer, TPM/RKE), program the current sensor ID's into the WIN module in the corresponding locations.
2. With the scan tool, erase the DTCs.
3. Drive the vehicle for a minimum of 20 minutes with the vehicle speed greater than 24 km/h (15 mph) to verify that the DTC does not return in an active state.
4. With the scan tool, read the active DTCs.

   Does the scan tool display: C1504-TIRE PRESSURE SENSOR 4 INTERNAL

   Yes

   - Replace the Wireless Ignition Node (WIN) in accordance with the Service Information. Refer to **RECEIVER, WIRELESS IGNITION NODE, REMOVAL** .
   - Refer to **STANDARD PROCEDURE** and perform the TPM VERIFICATION TEST.

   No

   - Go To 7.

7. **TIRE PRESSURE MONITORING (TPM) SENSOR INTERNAL FAULT - MISMATCHED ID**
   1. With the TPM-RKE Analyzer, read the sensor ID's.

      Do the sensor ID's match the ID's just learned in the previous step?

      Yes

      - Test complete.
      - Refer to **STANDARD PROCEDURE** and perform the TPM VERIFICATION TEST.

      No

      - Replace the Wireless Ignition Node (WIN) in accordance with the Service Information. Refer to **RECEIVER, WIRELESS IGNITION NODE, REMOVAL** .
      - Refer to **STANDARD PROCEDURE** and perform the TPM VERIFICATION TEST.

8. **TIRE PRESSURE MONITORING (TPM) SENSOR INTERNAL FAULT SET**

   NOTE: Some vehicles will not receive the TPM Sensor data when the vehicle is stationary. The vehicle may need to be driven at speeds greater than 24 km/h (15 mph) for about a minute in order to receive TPM Sensor data.

   1. Starting with the left front wheel, deflate the tire to 20 PSI, wait two minutes, and check the scan tool for changes to any compensated tire pressure values.
   2. Look for a tire location with a non-responsive TPM Sensor ID.
   3. Repeat this test on each wheel on the vehicle until the TPM Sensor in question has been identified.

Has the TPM Sensor been located?

Yes

- Replace the Tire Pressure Monitoring (TPM) Sensor in accordance with the service information. Refer to **SENSOR, TIRE PRESSURE MONITORING (TPM), REMOVAL** .
- Refer to **STANDARD PROCEDURE** and perform the TPM VERIFICATION TEST.

No

- Replace the Wireless Ignition Node (WIN) in accordance with the Service Information. Refer to **RECEIVER, WIRELESS IGNITION NODE, REMOVAL** .
- Refer to **STANDARD PROCEDURE** and perform the TPM VERIFICATION TEST.

9. **INTERMITTENT TIRE PRESSURE MONITORING (TPM) SENSOR DTC**
    1. The conditions necessary to set this DTC are not present at this time.
    2. Perform any Technical Service Bulletins that may apply to this condition.
    3. Using the scan tool, clear DTCs in the Wireless Ignition Node (WIN) Module.
    4. Test drive the vehicle for a minimum of 10 minutes with vehicle speed greater than 24 km/h (15 mph).
    5. Using the scan tool, select View DTCs in the Wireless Ignition Node (WIN) Module.

    Does the DTC reset or is the status Active for this DTC?

    Yes

    - Return to the beginning of this test and perform the diagnostic procedure as necessary.

    No

    - Test complete, the condition or conditions that originally set this DTC are not present at this time. Using the wiring diagrams as a guide, check all related splices and connectors for signs of water intrusion, corrosion, pushed out or bent terminals, and correct pin tension.

C151C-TIRE PRESSURE MONITORING (TPM) SENSORS MISSING

For a complete wiring diagram, **refer to appropriate SYSTEM WIRING DIAGRAMS article** .

THEORY OF OPERATION

When installing a new Wireless Ignition Node (WIN), the module is programed with universal IDs for the Tire Pressure Monitoring (TPM) Sensors. The WIN must be programmed with the correct TPM Sensor IDs.

WHEN MONITORED:

During vehicle TPM Sensor ID locate process.

SET CONDITION:

When installing a new Wireless Ignition Node (WIN).

POSSIBLE CAUSES

Possible Causes
INCORRECT TIRE PRESSURE MONITORING (TPM) SENSOR ID(S)
TIRE PRESSURE MONITORING (TPM) SENSOR
WIRELESS IGNITION NODE (WIN)

DIAGNOSTIC TEST

1. **VERIFY DTC IS ACTIVE**

   NOTE: **The DTC can be caused by many different factors and might not be a sensor/transmitter or a WIN fault. Interference from other elements will over power the sensor/transmitter RF frequency making erratic operation to the TPM system. Check the vehicle for aftermarket accessories that could compromise the RF frequency signal before diagnosing the TPM system.**

   1. Correct all tire pressures to the recommended cold inflation tire pressure specifications and wait two minutes for the system to update.
   2. Ignition on, engine not running.
   3. With the scan tool, record and erase DTCs.
   4. Test drive the vehicle at a speed greater than 24 km/h (15 mph) for a minimum of 10 minutes in order to receive TPM data and allow for the system to update.
   5. With the scan tool, read DTCs.

   Is the DTC status Active at this time?

   Yes

   - Go To 2.

   No

   - Go To 5.

2. **TPM-RKE ANALYZER CH9936**

   Is there a TPM-RKE Analyzer CH9936 available?

Yes

- Go To 3.

No

- Go To 4.

3. **WITH TPM-RKE ANALYZER CHECK TIRE PRESSURE MONITORING (TPM) SENSOR ID (S)**

NOTE: **Always be certain to select the proper vehicle line and model year when using this tool, as the tool will automatically use the correct protocol to attempt to read the Sensor. If the incorrect vehicle line and/or model year is selected, the Sensor will not respond to the tool.**

NOTE: **If you receive no response from any of the tire pressure sensors, check to make sure that the TPM-RKE Analyzer is set correctly, and repeat the process on each of the non-responsive wheel(s)**

1. Use a TPM-RKE Analyzer (special tool #CH9936, Analyzer, TPM/RKE) to scan each TPM Sensor for an ID, store in the proper location in the TPM-RKE Analyzer.
2. Use a TPM-RKE Analyzer (special tool #CH9936, Analyzer, TPM/RKE) to upload the correct IDs and proper locations in the scan tool.
3. With the scan tool, select the TIPM Module under "Miscellaneous Functions", follow the procedure for uploading TPM Sensor IDs.
4. With the scan tool, erase DTCs.
5. Test drive the vehicle at a speed greater than 24 km/h (15 mph) for a minimum of 10 minutes in order to receive TPM data and allow for the system to update.
6. With the scan tool, check to see if the TPM Module IDs match what is programmed into the WIN.

   Do the TPM IDs match?

   Yes

   - Test complete.
   - Refer to **STANDARD PROCEDURE** and perform the TPM VERIFICATION TEST.

   No

   - Replace the Wireless Ignition Node (WIN) in accordance with the Service Information. Refer to **RECEIVER, WIRELESS IGNITION NODE, REMOVAL** .
   - Refer to **STANDARD PROCEDURE** and perform the TPM VERIFICATION TEST.

4. **WITHOUT TPM-RKE TOOL CHECK TIRE PRESSURE MONITORING (TPM) SENSOR ID(S)**
   1. Starting with the left front wheel, deflate the tire to 20 PSI, wait two minutes, and check the scan

tool for changes to any compensated tire pressure values.

2. Repeat the above step on each wheel of the vehicle.
3. With the scan tool, erase DTCs.
4. Test drive the vehicle at a speed greater than 24 km/h (15 mph) for a minimum of 10 minutes in order to receive TPM data and allow for the system to update.
5. With the scan tool, check to see if the TPM IDs are programmed into the WIN.

   Are the TPM Sensor IDs in the WIN?

   Yes

   - Test complete.
   - Refer to **STANDARD PROCEDURE** and perform the TPM VERIFICATION TEST.

   No

   - Replace the Wireless Ignition Node (WIN) in accordance with the Service Information. Refer to **RECEIVER, WIRELESS IGNITION NODE, REMOVAL** .
   - Refer to **STANDARD PROCEDURE** and perform the TPM VERIFICATION TEST.

5. **INTERMITTENT TIRE PRESSURE SENSOR DTC**

NOTE: **The DTC can be caused by many different factors and might not be a sensor/transmitter or a WIN fault. Interference from other elements will over power the sensor/transmitter RF frequency making erratic operation to the TPM system. Check the vehicle for aftermarket accessories that could compromise the RF frequency signal before diagnosing the TPM system.**

1. Perform any Technical Service Bulletins that may apply to this condition.
2. With the scan tool, erase DTCs.
3. Test drive the vehicle at a speed greater than 24 km/h (15 mph) for a minimum of 10 minutes in order to receive TPM data and allow for the system to update.
4. With the scan tool, read DTCs.

   Does the DTC reset or is the status Active for this DTC?

   Yes

   - Go To 2.

   No

   - Test complete, the condition or conditions that originally set this DTC are not present at this time. Using the wiring diagrams as a guide, check all related splices and connectors for signs

of water intrusion, corrosion, pushed out or bent terminals, and correct pin tension.

P0928-BTSI CONTROL CIRCUIT

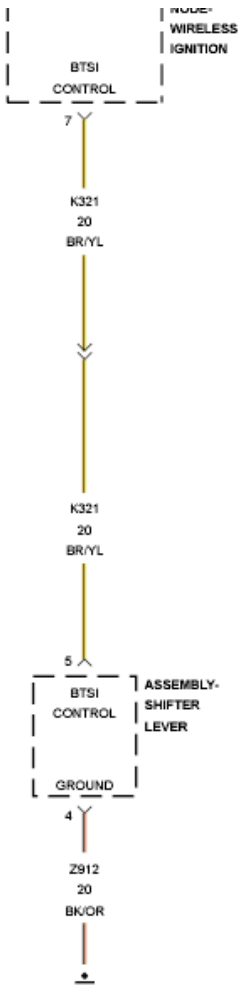

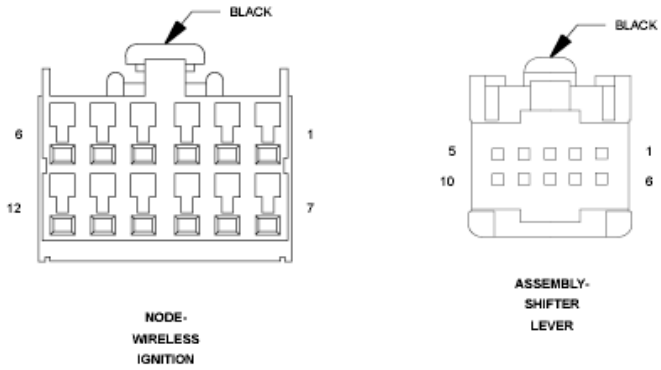

Fig. 9: Shift Lever Assembly (SLA) Circuit Wiring Diagram

Courtesy of CHRYSLER GROUP, LLC

For a complete wiring diagram, **refer to appropriate SYSTEM WIRING DIAGRAMS article** .

THEORY OF OPERATION

The brake switch signal must be active before the shift lever can be moved out of the park position. The Shifter Lever Assembly (SLA) Electronic Shift Module (ESM) receives two brake switch signals. The first signal is a CAN C Bus message sent to the shifter lever assembly. The second signal is a hard wired brake switch signal to the shifter lever assembly from the Wireless Ignition Node (WIN). The CAN C Bus message is the primary brake switch signal and the hard wired signal serves as the backup brake switch signal. These two brake switch signals are compared against each other to verify proper brake switch operation.

WHEN MONITORED:

Continuously with the ignition on.

SET CONDITION:

The Diagnostic Trouble Code (DTC) will set if the high side driver detects a short to ground for 10 seconds.

POSSIBLE CAUSES

Possible Causes
ENGINE BRAKE DTCS PRESENT
(K321) BRAKE TRANSMISSION SHIFT INTERLOCK (BTSI) CONTROL CIRCUIT SHORT TO GROUND
(K321) BTSI CONTROL CIRCUIT OPEN
(K321) BTSI CONTROL CIRCUIT SHORTED TO VOLTAGE
SHIFTER ASSEMBLY
WIRELESS IGNITION NODE (WIN)

DIAGNOSTIC TEST

1. **ENGINE DTCS PRESENT**
    1. With the scan tool, read PCM DTCs.

       Are there any Powertrain Control Module (PCM) brake switch related DTCs present?

       Yes

       - Refer to **DIAGNOSTIC CODE INDEX** for 3.7L/4.7L/5.7L or **DIAGNOSTIC CODE INDEX** for 6.7L and perform the appropriate Diagnostic Procedure.

       No

- Go To 2.

2. **CHECK THE (K321) BTSI CONTROL CIRCUIT**

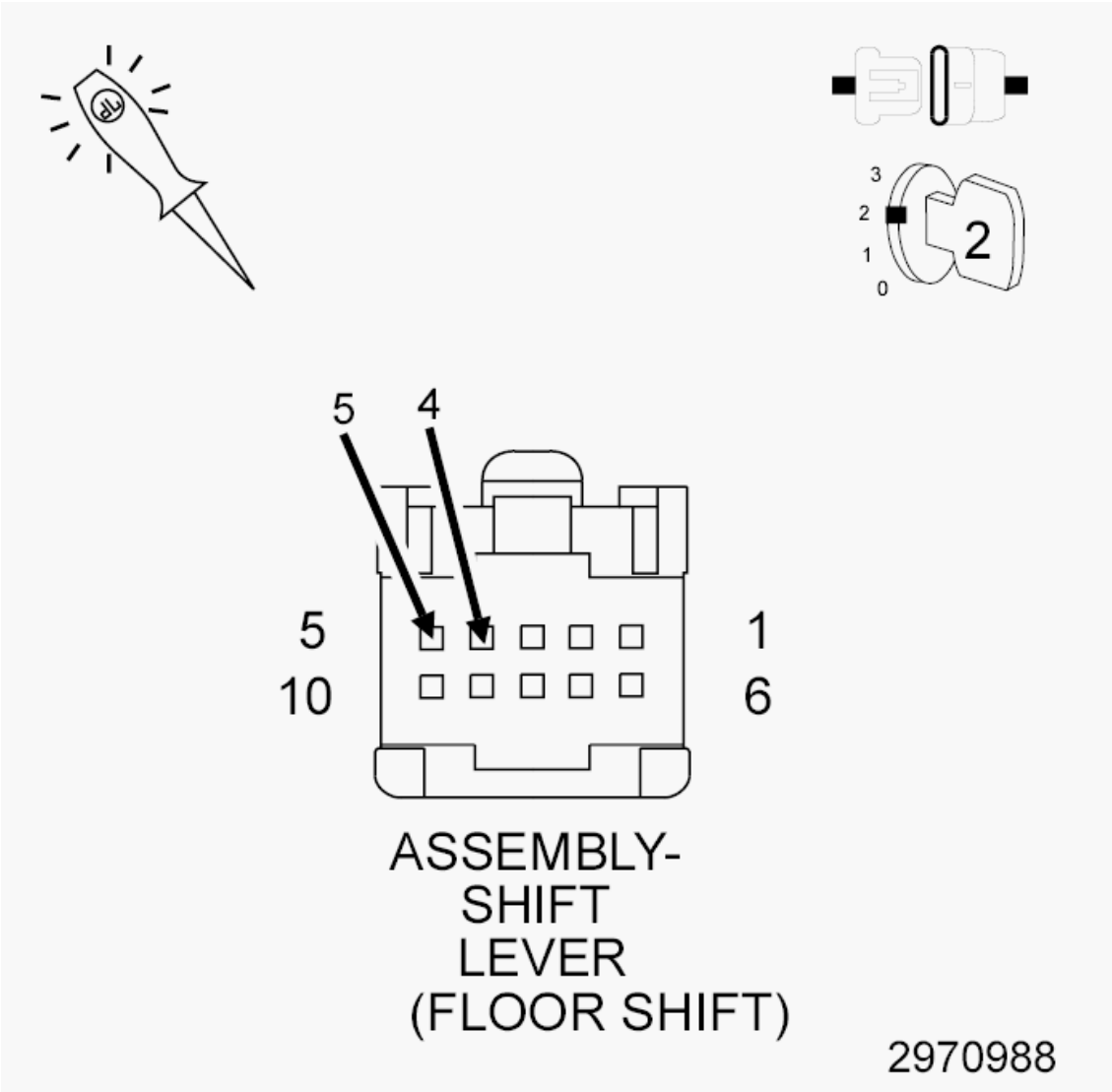

Fig. 10: Checking BTSI Control Circuit
Courtesy of CHRYSLER GROUP, LLC

1. Turn the ignition off to the lock position.
2. Disconnect the Shift Lever Assembly harness connector.

NOTE: Check connectors - Clean/repair as necessary.

3. Using a 12-volt test light, connect one end to the (Z911) Ground circuit and the other to the (K321) BTSI Control circuit in the Shifter connector.
4. Turn the Ignition on, engine not running.
5. With the scan tool under WIN, select Actuators and actuate the BTSI.

Does the test light illuminate brightly while the actuator is cycling the (K321) BTSI Control circuit on and off?

Yes

- Replace the Shift Lever Assembly in accordance with the Service Information.
- Refer to **STANDARD PROCEDURE** and perform the BODY VERIFICATION TEST.

No

- With the scan tool, stop the actuation.
- Go To 3.

3. **CHECK THE (Z911) GROUND CIRCUIT**

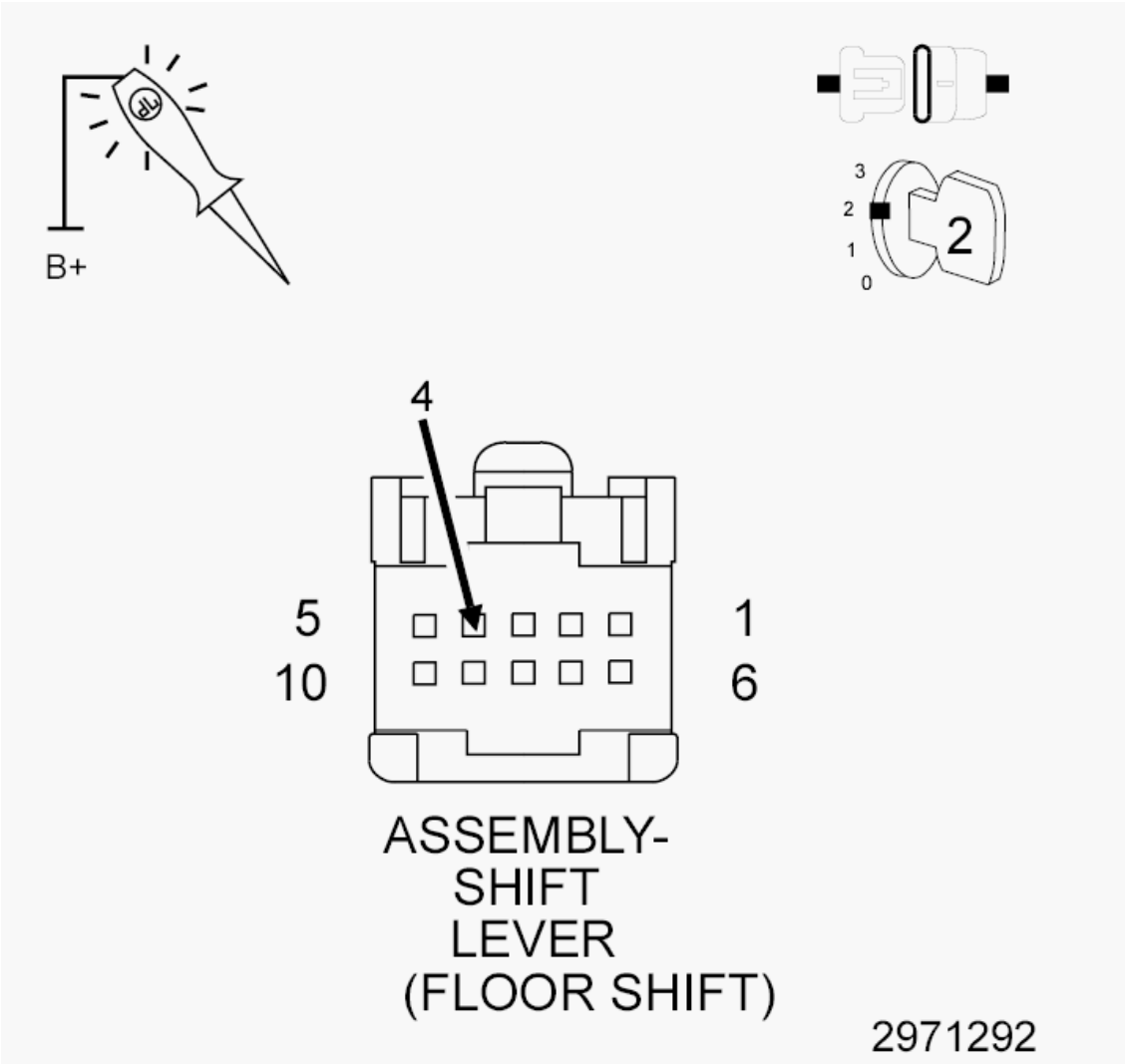

Fig. 11: Checking Ground Circuit In Shifter Connector
Courtesy of CHRYSLER GROUP, LLC

1. Using a 12-volt test light connected to 12-volts, check the (Z911) Ground circuit in the Shifter connector.

   Does the test light illuminate brightly?

   Yes

   - Go To 4.

   No

   - Repair the open in the (Z911) Ground circuit.
   - Refer to **STANDARD PROCEDURE** and perform the BODY VERIFICATION TEST.

4. **(K321) BTSI CONTROL CIRCUIT SHORT TO GROUND**

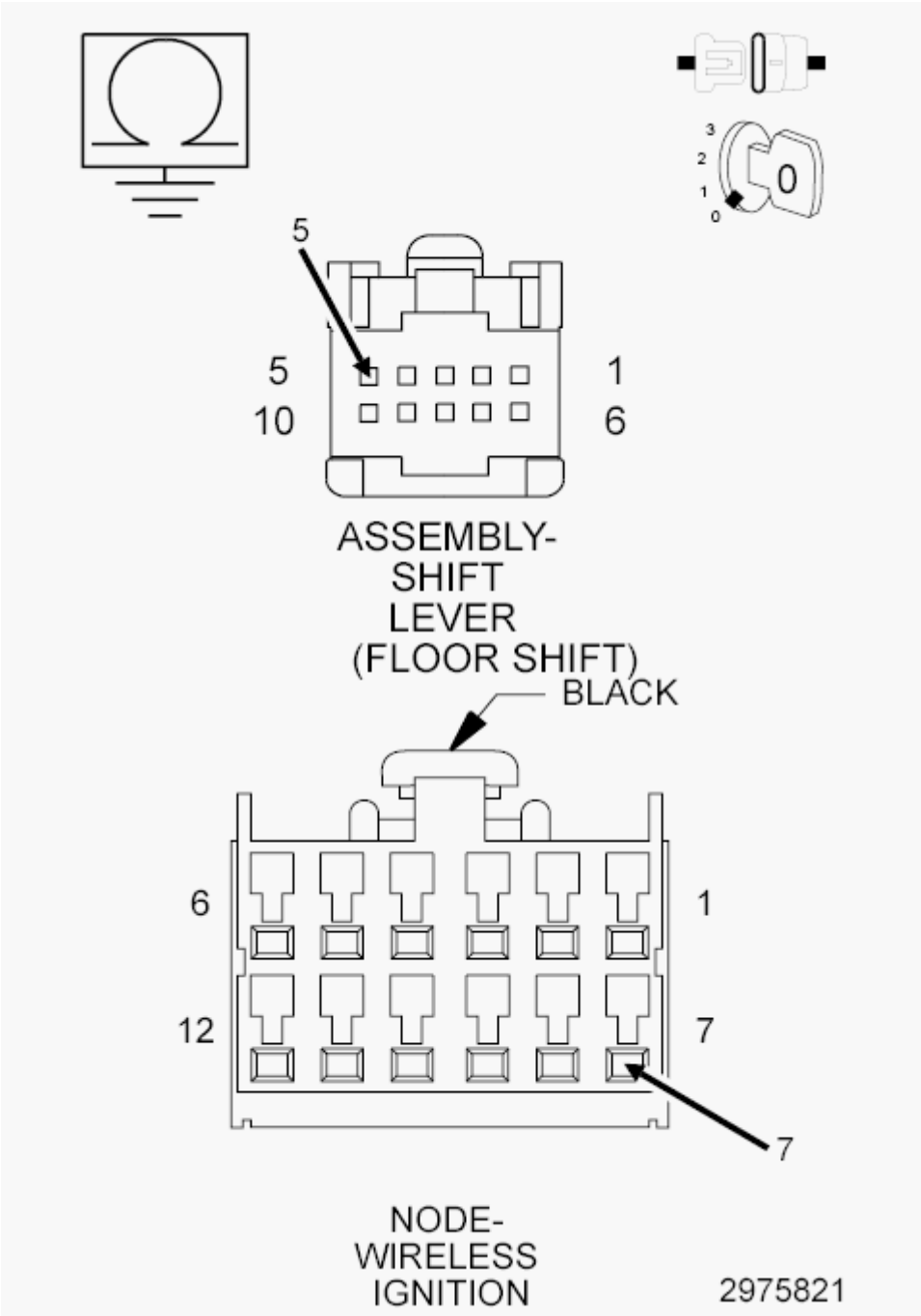

Fig. 12: Checking BTSI Control Circuit For Short To Ground
Courtesy of CHRYSLER GROUP, LLC

1. Turn the ignition off.
2. Disconnect the WIN harness connector.

NOTE: Check connectors - Clean/repair as necessary.

3. Measure the resistance between ground and the (K321) BTSI Control circuit in the WIN and the

Shift Lever connectors.

Is the resistance below 10k Ohms at either connector?

Yes

- Repair the short to ground in the (K321) BTSI Control circuit.
- Refer to **STANDARD PROCEDURE** and perform the BODY VERIFICATION TEST.

No

- Go To 5.

5. **(K321) BTSI CONTROL CIRCUIT OPEN**

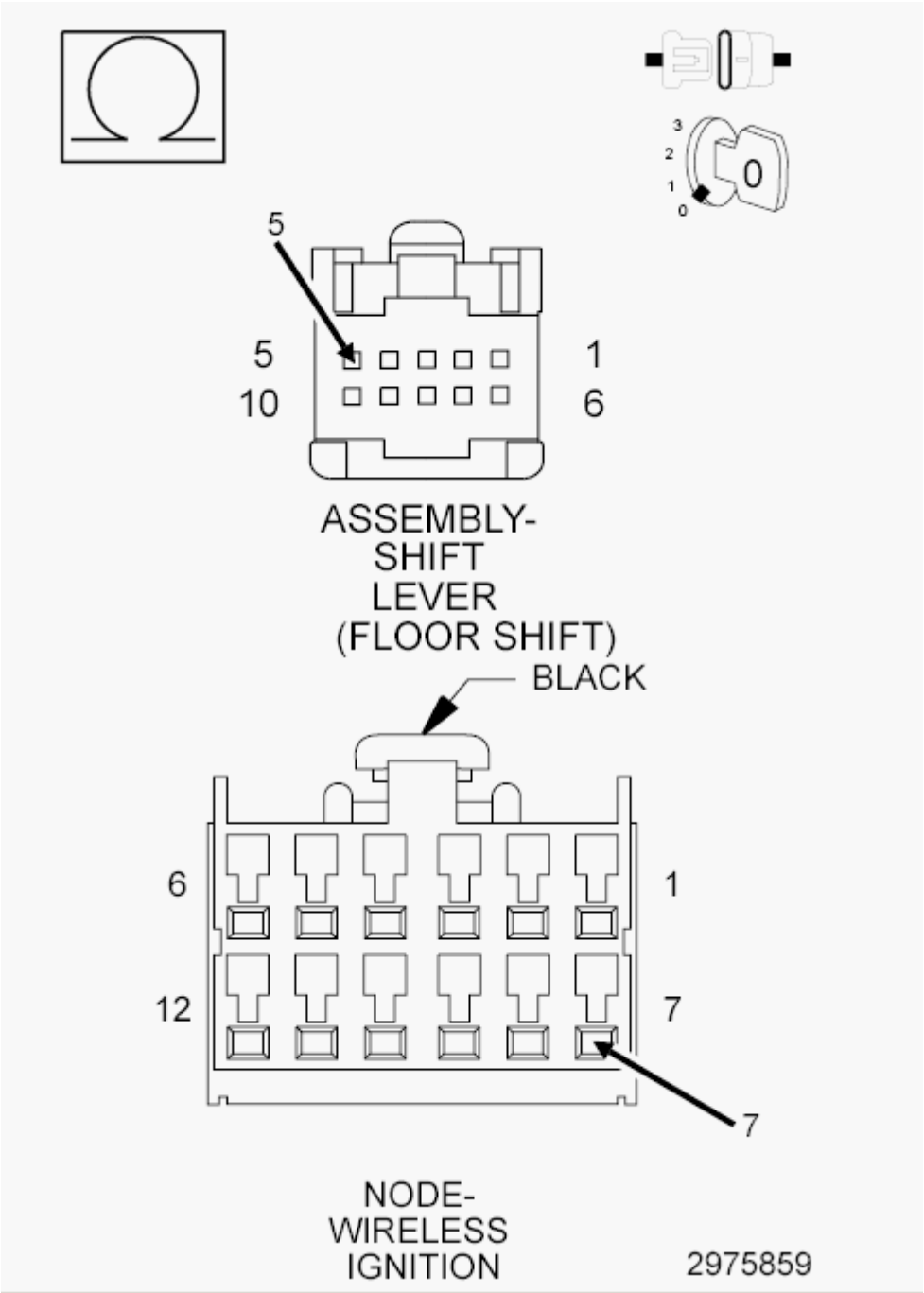

Fig. 13: Measuring Resistance Of BTSI Control Circuit Between Shift Lever Harness Connector & WIN Harness Connector
Courtesy of CHRYSLER GROUP, LLC

1. Measure the resistance of the (K321) BTSI Control circuit between the Shift Lever harness connector and the WIN harness connector.

   Is the resistance above 5.0 Ohms?

Yes

- Repair the open in the (K321) BTSI Control circuit.
- Refer to **STANDARD PROCEDURE** and perform the BODY VERIFICATION TEST.

No

- Go To 6.

6. **(K321) BTSI CONTROL CIRCUIT SHORTED TO VOLTAGE**

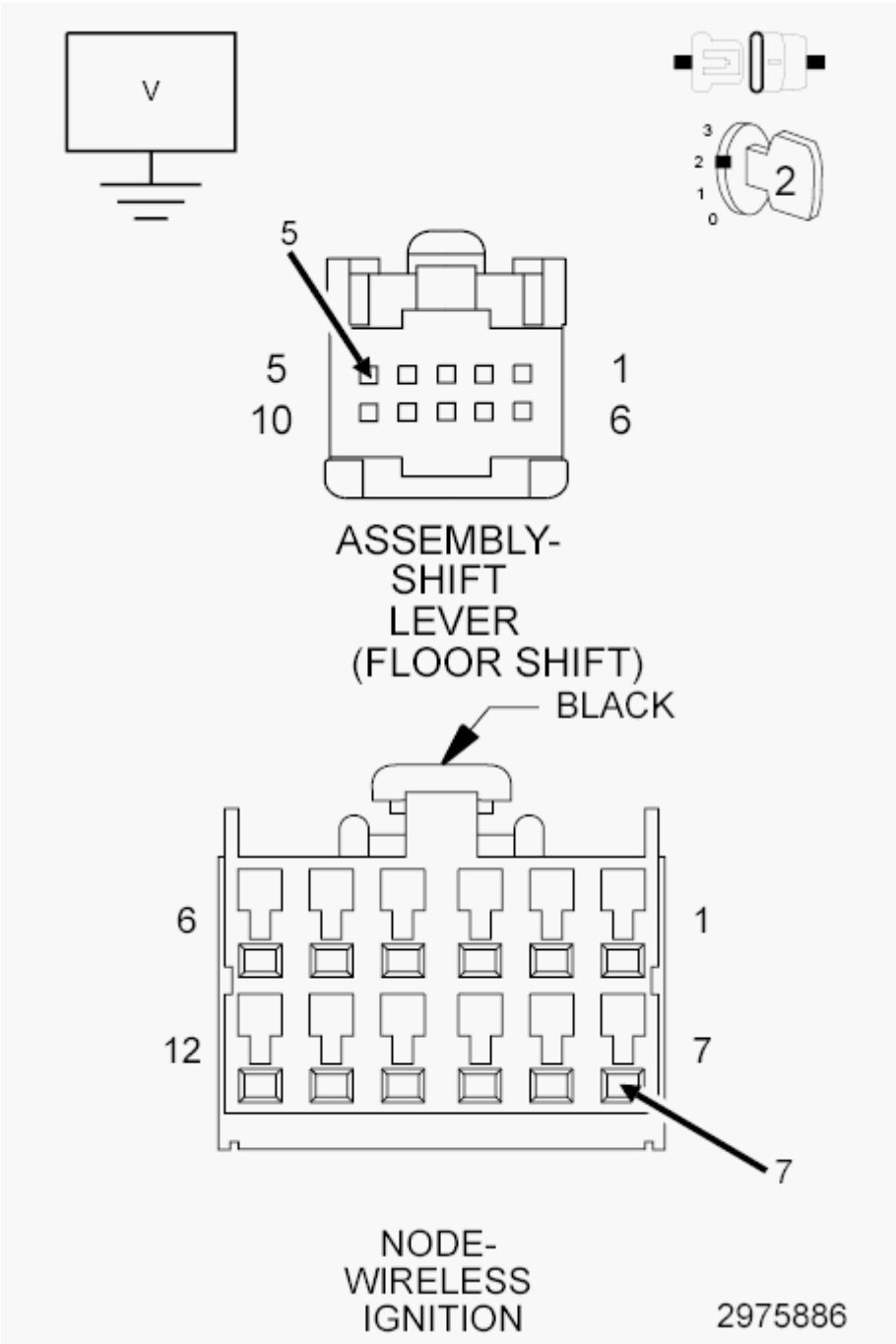

Fig. 14: Measuring Voltage Between Ground & BTSI Control Circuit In Shift Lever Harness Connector & WIN Harness Connector
Courtesy of CHRYSLER GROUP, LLC

1. Turn the ignition on.
2. Measure the voltage between ground and the (K321) BTSI Control circuit in the Shift Lever harness connector and the WIN harness connector.

   Is there any voltage present at either connector?

Yes

- Repair the short to voltage in the (K321) BTSI Control circuit.
- Refer to **STANDARD PROCEDURE** and perform the BODY VERIFICATION TEST.

No

- Replace the Wireless Ignition Node in accordance with the Service Information.
- Refer to **STANDARD PROCEDURE** and perform the BODY VERIFICATION TEST.

U0001-CAN C BUS

For a complete wiring diagram, **refer to appropriate SYSTEM WIRING DIAGRAMS article** .

WHEN MONITORED:

With the ignition on.

SET CONDITION:

Whenever the CAN C Bus (+) or CAN C Bus (-) circuit is open, shorted to voltage or shorted to ground.

POSSIBLE CAUSES

Possible Causes
CAN C BUS CIRCUITS OPEN OR SHORTED
DIAGNOSTIC TROUBLE CODES (DTC) RELATED TO BATTERY VOLTAGE, IGNITION, OR VIN MESSAGES PRESENT
TOTALLY INTEGRATED POWER MODULE (TIPM) NOT CONFIGURED CORRECTLY
TOTALLY INTEGRATED POWER MODULE (TIPM) POWER AND GROUND
TOTALLY INTEGRATED POWER MODULE (TIPM)
ANY CAN C MODULE SHORTED

DIAGNOSTIC TEST

1. **CHECK FOR ACTIVE DTCS**
    1. With the scan tool, read the active WIN DTCs.
    2. Cycle the ignition switch from off to on at least 3 times, leaving the ignition on for a minimum of one minute per cycle.
    3. With the scan tool, read the active WIN DTCs.

    Does the scan tool display: U0001-CAN C BUS as active?

    Yes

- **Refer to DIAGNOSIS AND TESTING** and perform the U0001-CAN C Bus diagnostic procedure.

No

- **Refer to DIAGNOSIS AND TESTING** and perform the Stored Lost Communication DTCs diagnostic procedure.

U0100-LOST COMMUNICATION WITH THE ECM/PCM

For a complete wiring diagram, **refer to appropriate SYSTEM WIRING DIAGRAMS article** .

WHEN MONITORED:

Ignition run time is greater than one second.

Battery voltage between 9 and 16 volts.

Engine run time greater than three seconds.

SET CONDITION:

Bus messages not received from the Totally Integrated Power Module (TIPM) for approximately two to five seconds.

POSSIBLE CAUSES

Possible Causes
CAN BUS CIRCUITS OPEN OR SHORTED
DTCS RELATED TO BATTERY VOLTAGE, IGNITION, OR VIN MESSAGES
TOTALLY INTEGRATED POWER MODULE POWER AND GROUND
TIPM NOT CONFIGURED CORRECTLY
TOTALLY INTEGRATED POWER MODULE (TIPM)
MODULE THAT SET THIS DTC

DIAGNOSTIC TEST

1. **ACTIVE DTC**
    1. Ignition on, engine not running.
    2. With the scan tool, select view DTCs.

    Does the scan tool display as active: U0100-LOST COMMUNICATION WITH THE ECM/PCM?

    Yes

    - **Refer to DIAGNOSIS AND TESTING** and perform the U0100-Lost Communication with

PCM diagnostic procedure.

No

- **Refer to DIAGNOSIS AND TESTING** and perform the Stored Lost Communication DTCs diagnostic procedure.

U0121-LOST COMMUNICATION WITH ABS

For a complete wiring diagram, **refer to appropriate SYSTEM WIRING DIAGRAMS article** .

WHEN MONITORED:

Ignition run time is greater than one second.

Battery voltage between 9 and 16 volts.

Engine run time greater than three seconds.

SET CONDITION:

Bus messages not received from the Anti Lock Brake Module (ABS) for approximately two to five seconds.

POSSIBLE CAUSES

Possible Causes
CAN BUS CIRCUITS OPEN OR SHORTED
ABS MODULE
DTCS RELATED TO BATTERY VOLTAGE, IGNITION, OR VIN MESSAGES
TOTALLY INTEGRATED POWER MODULE POWER AND GROUND
TIPM NOT CONFIGURED CORRECTLY
TOTALLY INTEGRATED POWER MODULE (TIPM)
MODULE THAT SET THIS DTC

DIAGNOSTIC TEST

1. **ACTIVE DTC**
    1. Ignition on, engine not running.
    2. With the scan tool, select view DTCs.

    Is the DTC Active at this time?

    Yes

    - **Refer to DIAGNOSIS AND TESTING** and perform the U0121-Lost Communication with Anti-Lock Brake Module diagnostic procedure.

No

- **Refer to DIAGNOSIS AND TESTING** and perform the Stored Lost Communication DTCs diagnostic procedure.

U0146-LOST COMMUNICATION WITH CENTRAL GATEWAY (TIPM)

For a complete wiring diagram, **refer to appropriate SYSTEM WIRING DIAGRAMS article** .

WHEN MONITORED:

Continuously when the ignition is on.

The battery voltage between 10.0 and 16.0 Volts.

Ignition Off Draw (IOD) fuse installed.

Totally Integrated Power Module (TIPM) is configured correctly.

SET CONDITION:

Bus messages not received from the Totally Integrated Power Module (TIPM) for approximately two to five seconds.

POSSIBLE CAUSES

Possible Causes
CAN BUS CIRCUITS OPEN OR SHORTED
DTCS RELATED TO BATTERY VOLTAGE, IGNITION, OR VIN MESSAGES
TOTALLY INTEGRATED POWER MODULE POWER AND GROUND
TIPM NOT CONFIGURED CORRECTLY
TOTALLY INTEGRATED POWER MODULE (TIPM)
MODULE THAT SET THIS DTC

DIAGNOSTIC TEST

1. **VERIFY DTC IS ACTIVE**

   NOTE: Make sure the IOD fuse is installed and the battery is fully charged before proceeding.

   1. Turn the ignition on.
   2. With the scan tool, read the active DTCs.

      Does the scan tool display active: U0146-LOST COMMUNICATION WITH CENTRAL GATEWAY?

Yes

- **Refer to DIAGNOSIS AND TESTING** and perform the U0141-Lost Communication with IPM (FCM/TIPM) diagnostic procedure.

No

- **Refer to DIAGNOSIS AND TESTING** and perform the Stored Lost Communication DTCs diagnostic procedure.

U1197-SECURITY SEED RESPONSE NOT RECEIVED FROM ECM/PCM

For a complete wiring diagram, **refer to appropriate SYSTEM WIRING DIAGRAMS article** .

THEORY OF OPERATION

Whenever a Fob Integrated Key (FOBIK) is inserted in the Wireless Ignition Node (WIN), the WIN performs a self test and resynchronization routine. During the routine, the WIN interrogates the FOBIK for the secret key information and performs a CAN Bus message handshake with the Powertrain Control Module (PCM). The PCM must reply to the WIN that the secret key information matches to initiate the start sequence or this code will set on the third attempt.

WHEN MONITORED:

Whenever a FOBIK is rotated to the Run position.

SET CONDITION:

This DTC sets if the WIN does not receive a CAN Bus message from the ECM/PCM. This code will set on the 20th start attempt.

POSSIBLE CAUSES

Possible Causes
PCM PROGRAMMING

DIAGNOSTIC TEST

1. **VERIFY PCM PROGRAMMING**
    1. Using the scan tool, record and erase all DTCs in the PCM.
    2. Turn the Ignition Off, and wait fifteen seconds before turning the Ignition On.
    3. Wait one minute, and read the active PCM DTCs.

    Does the scan tool display: U1197-SECURITY SEED RESPONSE NOT RECEIVED FROM ECM/PCM as active?

    Yes

- Refer to **STANDARD PROCEDURE** for 3.7L/4.7L/5.7L or **STANDARD PROCEDURE** for 6.7L and perform the PCM/ECM REPROGRAMMING procedure.
- Refer to **STANDARD PROCEDURE** for 3.7L/4.7L/5.7L or **STANDARD PROCEDURE** for 6.7L and perform the POWERTRAIN VERIFICATION TEST.

No

- Repair is complete.
- Refer to **STANDARD PROCEDURE** and perform the BODY VERIFICATION TEST.

STANDARD PROCEDURE

WIRELESS IGNITION NODE (WIN) INTERMITTENT TEST

For a complete wiring diagram, **refer to appropriate SYSTEM WIRING DIAGRAMS article** .

DIAGNOSTIC TEST

1. **RECORD AND ERASE ALL WIN DIAGNOSTIC TROUBLE CODES (DTCS)**

   Using the scan tool, record and erase all DTCs from the WIN. Monitor for any active codes as you work through the following steps.

   - Review the code monitor and set conditions for any DTCs that are stored and attempt to reproduce the conditions listed.
   - Wiggle the wiring harness and connectors of the related circuit, sensor or component.
   - Turn the ignition off. Perform any Technical Service Bulletins (TSBs) that may apply.

   Was the source of the customer complaint found or did any DTCs appear and stay active?

   Yes

   - Make the appropriate repairs and perform the WIN VERIFICATION TEST, Refer to **STANDARD PROCEDURE** or **DIAGNOSIS AND TESTING** and perform the appropriate diagnostic procedure.

   No

   - Go To 2.
2. **ATTEMPT TO REPRODUCE THE CONDITION**

   In the event the customer complaint cannot be duplicated due to an intermittent condition in the theft/security system, the following may aid in attempting to reproduce the condition.

   - Using the wiring diagram/schematic as a guide, inspect the wiring and connectors related to the stored code or component in question.

- Look for chafed, pierced, pinched, or partially broken wires and broken, bent, pushed out, spread, corroded, or contaminated terminals.
- If the customer concern was related to a specific Fob-Integrated-Key (FOBIK), ensure the FOBIK in question is used while attempting reproduce the condition.
- Reconnect any disconnected components and harness connectors and ensure they are properly seated.
- If numerous trouble codes were set, use a schematic and inspect any common ground or supply circuits.

Was the source of the intermittent condition located?

Yes

- Make the appropriate repairs and perform the WIN VERIFICATION TEST. Refer to **STANDARD PROCEDURE**.

No

- The problem cannot be found at this time. If repeated intermittent failures are encountered that cannot be reproduced and the condition has prompted multiple customer visits to the dealership, document any findings on the repair order.

WIRELESS IGNITION NODE (WIN) PRE-DIAGNOSTIC PROCEDURE

Before attempting to repair any WIN system, technicians should be familiar with and fully understand the system operation. for complete details. Refer to **OPERATION** . The following should be used as a checklist to be completed in its entirety prior to referencing specific WIN diagnostic procedures.

DIAGNOSTIC TEST

1. **FOLLOW THE BASIC OUTLINE SET FORTH IN THE SIX-STEP TROUBLESHOOTING PROCEDURE**
    1. Verification of complaint.
    2. Verification of any related symptoms.
    3. Symptom analysis.
    4. Problem isolation.
    5. Repair of isolated problem.
    6. Verification of proper operation.
2. **TAKE INTO ACCOUNT CURRENT VEHICLE CONDITION, REPAIR HISTORY, AND TECHNICAL SERVICE BULLETINS (TSBs)**
    - Verify there are no outward signs of vehicle damage that could impact the proper operation of the theft or security system. Check for aftermarket vehicle accessories that may have been installed improperly or could interfere with the system
    - Check the vehicle repair history for repairs that may relate to the current condition.

- Perform a check of current Technical Service Bulletins (TSB) for the WIN system related to the customer concern. If a TSB applies, follow the procedure outlined in the TSB.

3. **DIAGNOSE ONLY THOSE FAILURES THAT ARE ACTIVE AND CAN BE REPRODUCED**
   - Check the control module that is central to the subsystem which is exhibiting the condition for the active DTCs.
   - For an intermittent failure that is not current at the time of vehicle inspection, Refer to **STANDARD PROCEDURE** and perform the WIN INTERMITTENT TEST and document the event on the repair order.
4. **ADDRESS ACTIVE DIAGNOSTIC TROUBLE CODES (DTCS) IN THE CORRECT ORDER**

   As a general rule, for any WIN module that exhibits more than one active DTC, address the codes in the order indicated:

   1. Low/High Voltage and Serial Data Loss of Communication Codes
   2. Module Internal Failure and Configuration Mismatch Codes
   3. Circuit specific DTC failures

   Should the malfunction still be present after conducting this Pre-diagnostic Procedure, technicians should continue to the appropriate DTC procedure or symptom diagnostic.

WIRELESS IGNITION NODE (WIN) VERIFICATION

For a complete wiring diagram, **refer to appropriate SYSTEM WIRING DIAGRAMS article** .

Perform the following after completion of a diagnostic repair:

NOTE: **When entering the Personal Identification Number (PIN), care should be taken because the WIN will only allow three consecutive attempts to enter the correct PIN. If three consecutive incorrect PIN's are entered the WIN will Lock Out the scan tool. To exit Lock Mode, the ignition key must remain in the Run position for one hour. All accessories must be off. A battery charger connected to the battery during this time period is recommended.**

NOTE: **On vehicles equipped with a Base Tire Pressure Monitoring (TPM) system, when the WIN and/or the spare tire pressure sensor is replaced with a new unit, a diagnostic scan tool MUST be used to run a routine that allows the WIN to be programmed with the ID number and location of the spare tire pressure sensor mounted in the wheel of the spare tire. Follow the programming steps outlined in the diagnostic scan tool for "Learn Spare Tire Sensor ID" under "Miscellaneous Functions" for the "WIN" menu item as appropriate. In addition, if the WIN is replaced, the spare tire must be dismounted from its wheel to access and note the ID number on the spare tire pressure sensor so that the ID code for that sensor can be programmed into the new WIN.**

1. Reconnect the previously disconnected components and connectors.

2. Obtain the vehicle's unique Personal Identification Number (PIN) assigned to it's original WIN. This number can be obtained from the original vehicle invoice or from your Service Manager or Parts Manager.

NOTE: If the Powertrain Control Module (PCM) and the WIN are replaced at the same time, program the PCM VIN into the PCM first.

NOTE: The PCM stores the secret key information. If the WIN ever needs to be replaced, the secret key information can be retrieved from the PCM and then transferred to the WIN for security use.

During PCM/ECM replacement, use the following steps to verify the transfer of the secret key information from the WIN to the new PCM:

1. If the PCM is to be replaced, first, replace the PCM/ECM with the original WIN still connected to the vehicle. If the PCM is not being replaced, go to step 3.
2. Using the appropriate Service Information to program the new PCM/ECM. (This will verify the Secret Key Transfer from the original WIN into the new PCM/ECM).
3. Now replace and program (WIN Replaced) the WIN (if necessary). This will cause the WIN to receive the Secret Key from the PCM/ECM back into the new WIN.

   NOTE: If this vehicle is equipped with a Steering Column Lock Module, it must be replaced along with the WIN. Whenever a WIN is replaced the Steering Wheel Lock Module MUST be replaced.

4. Using the scan tool, select Miscellaneous Functions, WIN. Then select the desired procedure and follow the display on the scan tool.
5. If the vehicle is equipped with the Base Tire Pressure Monitoring System, program the Placard Pressure Values into the WIN.
6. Make sure all the customer's keys have been programmed into the new module if necessary.
7. Using the scan tool, erase all DTCs. Perform five ignition key cycles, leaving the key on for at least 90 seconds per cycle.
8. Using the scan tool, read WIN DTCs.

DIAGNOSTIC TEST

1. Are there any WIN DTCs present?

   Yes

   - Repair not complete, refer to **DIAGNOSTIC CODE INDEX** and perform the appropriate diagnostic procedure.

   No

- Repair is complete.

TPM VERIFICATION

For a complete wiring diagram, **refer to appropriate SYSTEM WIRING DIAGRAMS article** .

DIAGNOSTIC TEST

1. **TIRE PRESSURE MONITORING (TPM)**

   Was the Wireless Ignition Node (WIN) replaced during the test procedure?

   Yes

   - Go To 2.

   No

   - Go To 3.
2. **WIRELESS IGNITION NODE (WIN)**

   NOTE: When entering the PIN, care should be taken because the WIN will only allow three consecutive attempts to enter the correct PIN. If three consecutive incorrect PIN's are entered the WIN will Lock Out the scan tool. To exit Lock Mode, the ignition key must remain in the Run position for one hour. All accessories must be off. A battery charger connected to the battery during this time period is recommended.

   1. Reconnect the previously removed and/or disconnected components and connectors.
   2. Obtain the vehicle's unique Personal Identification Number (PIN) assigned to its original WIN. This number can be obtained from the vehicle invoice or from the Chrysler Customer Center (Phone 1-800-992-1997).
   3. With the scan tool, select Miscellaneous Functions, Wireless Ignition Node (WIN). Then select the desired procedure and follow the display on the scan tool.
   4. If the WIN was replaced, all the customer's keys must be programmed to the new module. Use the scan tool and the Program Key procedure
   5. With the scan tool, erase all DTCs. Perform five ignition key cycles, leaving the key on for at least 90 seconds per cycle.
   6. Drive the vehicle for a minimum of 10 minutes while maintaining a continuous speed above 15 mph (24 km/h). During this time the system will learn the new sensor ID code and will clear any DTC(s) automatically.
   7. With the scan tool, read DTCs.

   Are there any DTCs present?

Yes

- Repair not complete, perform the appropriate diagnostic procedure.

No

- Repair is complete.

3. **TIRE PRESSURE SENSOR REPLACE**
    1. Reconnect the previously removed and/or disconnected components and harness connectors.
    2. If available, use a TPM-RKE Analyzer tool with the scan tool to program the WIN with the tire pressure sensors ID's on the vehicle.
    3. Drive the vehicle for a minimum of 10 minutes while maintaining a continuous speed above 15 mph (24 km/h). During this time the system will learn the new sensor IDs.
    4. With the scan tool, read DTCs.

Are there any DTCs present?

Yes

- Repair not complete, refer to **DIAGNOSTIC CODE INDEX** perform the appropriate diagnostic procedure.

No

- Repair is complete.

WARNING

WARNINGS

WARNING: Use an Occupational Safety and Health Administration (OSHA) approved breathing filter, when spraying paint or solvents in a confined area. Failure to follow these instructions may result in possible serious or fatal injury.

- **avoid prolonged skin contact with petroleum or alcohol based cleaning solvents.**
- **do not stand under a hoisted vehicle that is not properly supported on safety stands. Failure to follow these instructions may result in possible serious or fatal injury.**

CAUTION: When holes are drilled or punched in an inner body panel, verify the depth of space to the outer body panel, electrical wiring or other components. Damage to the vehicle can result.

- **do not weld exterior panels unless combustible material on the interior of vehicle is removed from the repair area. Fire or hazardous conditions, can result.**
- **always have a fire extinguisher ready for use when welding.**
- **disconnect the negative (-) cable clamp from the battery when servicing electrical components that are live when the ignition is off. Damage to electrical system can result.**
- **do not use abrasive chemicals or compounds on painted surfaces. Damage to finish can result.**
- **do not use harsh alkaline based cleaning solvents on painted or upholstered surfaces. Damage to finish or color can result.**
- **do not hammer or pound on plastic trim panel when servicing interior trim. Plastic panels can break.**

RESTRAINT WARNINGS

WARNING: To avoid potential physical injury, or damage to sensitive electronic circuits and systems, always disconnect and isolate the battery negative (ground) cable and the positive cable, then ground the positive cable to discharge the ORC capacitor before performing any welding operations on the vehicle. Failure to take the proper precautions could result in accidental airbag deployment, possible damage to the Supplemental

Restraint System (SRS) circuits and components, and possible damage to other electronic circuits and components. Whenever a welding process is being performed within 30 cm (12 in) of an electronic module/harness, then that module/harness should be relocated out of the way, or disconnected. Always protect against component or vehicle damage from weld spatter by using weld blankets and screens. Failure to follow these instructions may result in serious or fatal injury.

WARNING: **To avoid serious or fatal injury on vehicles equipped with the Supplemental Restraint System (SRS), never attempt to repair the electrically conductive circuits or wiring components related to the SRS for which there is no MOPAR wiring repair kit. It is important to use ONLY the recommended splicing kit and procedure. For applicable and available MOPAR wiring repair kits, please visit the MOPAR Connector Web Site at the following address on the internet: (http://dto.vftis.com/mopar/disclaimer.asp). Inappropriate repairs can compromise the conductivity and current carrying capacity of those critical electrical circuits, which may cause SRS components not to deploy when required, or to deploy when not required. Only minor cuts or abrasions of wire and terminal insulation where the conductive material has not been damaged, or connector insulators where the integrity of the latching and locking mechanisms have not been compromised may be repaired using appropriate methods.**

WARNING: **To avoid serious or fatal injury during and following any seat belt or child restraint anchor service, carefully inspect all seat belts, buckles, mounting hardware, retractors, tether straps, and anchors for proper installation, operation, or damage. Replace any belt that is cut, frayed, or torn. Straighten any belt that is twisted. Tighten any loose fasteners. Replace any belt that has a damaged or ineffective buckle or retractor. Replace any belt that has a bent or damaged latch plate or anchor plate. Replace any child restraint anchor or the unit to which the anchor is integral that has been bent or damaged. Never attempt to repair a seat belt or child restraint component. Always replace damaged or ineffective seat belt and child restraint components with the correct, new and unused replacement parts listed in the Chrysler Mopar® Parts Catalog. Failure to follow these instructions may result in possible serious or fatal injury.**

WARNING: **To avoid serious or fatal injury on vehicles equipped with side curtain airbags, disable the Supplemental Restraint System (SRS) before attempting any Occupant Restraint Controller (ORC) diagnosis or service. The ORC contains a rollover sensor, which enables the system to deploy the side curtain airbags in the event of a vehicle rollover event. If an ORC is accidentally rolled during service while still connected to battery power, the side curtain airbags will deploy. Disconnect and isolate the**

battery negative (ground) cable, then wait two minutes for the system capacitor to discharge before performing further diagnosis or service. This is the only sure way to disable the SRS. Failure to take the proper precautions could result in accidental airbag deployment.

WARNING: **To avoid serious or fatal injury on vehicles equipped with airbags, disable the Supplemental Restraint System (SRS) before attempting any steering wheel, steering column, airbag, Occupant Classification System (OCS), seat belt tensioner, impact sensor or instrument panel component diagnosis or service. Disconnect and isolate the battery negative (ground) cable, then wait two minutes for the system capacitor to discharge before performing further diagnosis or service. This is the only sure way to disable the SRS. Failure to follow these instructions may result in accidental airbag deployment.**

WARNING: **To avoid potential physical injury or damage to sensitive electronic circuits and systems, always disconnect and isolate the battery negative (ground) cable and the positive cable, then ground the positive cable to discharge the Occupant Restraint Controller (ORC) capacitor before performing any welding operations on the vehicle. Failure to take the proper precautions could result in accidental airbag deployment, possible damage to the Supplemental Restraint System (SRS) circuits and components, and possible damage to other electronic circuits and components. Whenever a welding process is being performed within 12 inches (30 centimeters) of an electronic module or wiring harness, then that module or harness should be relocated out of the way, or disconnected. Always protect against component or vehicle damage from weld spatter by using weld blankets and screens.**

WARNING: **To avoid serious or fatal injury, do not attempt to dismantle an airbag unit or tamper with its inflator. Do not puncture, incinerate or bring into contact with electricity. Do not store at temperatures exceeding 93° C (200° F). An airbag inflator unit may contain sodium azide and potassium nitrate. These materials are poisonous and extremely flammable. Contact with acid, water, or heavy metals may produce harmful and irritating gases (sodium hydroxide is formed in the presence of moisture) or combustible compounds. An airbag inflator unit may also contain a gas canister pressurized to over 17.24 kPa (2500 psi). Failure to follow these instructions may result in possible serious or fatal injury.**

WARNING: **To avoid serious or fatal injury when handling a seat belt tensioner retractor. Exercise proper care to keep fingers out from under the retractor cover and away from the seat belt webbing where it exits from the retractor cover. Failure to follow these instructions may result in possible serious or fatal injury.**

WARNING: **To avoid serious or fatal injury, replace all Supplemental Restraint System (SRS) components only with parts specified in the Chrysler Mopar® Parts Catalog. Substitute parts may appear interchangeable, but internal differences may result in inferior occupant protection.**

WARNING: **To avoid serious or fatal injury, the fasteners, screws, and bolts originally used for the Supplemental Restraint System (SRS) components must never be replaced with any substitutes. These fasteners have special coatings and are specifically designed for the SRS. Anytime a new fastener is needed, replace it with the correct fasteners provided in the service package or specified in the Chrysler Mopar® Parts Catalog.**

WARNING: **To avoid serious or fatal injury when a steering column has an airbag unit attached, never place the column on the floor or any other surface with the steering wheel or airbag unit face down. Failure to follow these instructions may result in possible serious or fatal injury.**

USE OF HEAT DURING REPAIR

WARNING: **Chrysler Group LLC engineering's position on the use of heat during collision repair is as follows:**

- **Any body panel or frame component damaged which is to be repaired and reused, must be repaired using the "cold straightening" method. No heat may be used during the straightening process.**
- **During rough straightening prior to panel replacement, damaged panels or frame components may be heated to assist in body/frame realignment. The application of heat must be constrained to the parts which will be replaced and not allowed to affect any other components.**

This "no heat" recommendation is due to the extensive use of high strength and advanced high strength steels in Chrysler Group LLC products. High-strength materials can be substantially and negatively affected from heat input which will not be obviously known to the repairer or consumer.

Ignoring these recommendations may lead to serious compromises in the ability to protect occupants in a future collision event, reduce the engineered qualities and attributes, or decrease the durability and reliability of the vehicle.

This statement supersedes any previously released information by the Chrysler Group LLC.

Failure to follow these instructions may result in serious or fatal injury.

DIAGNOSIS AND TESTING

GENERAL WATER LEAKS

Water leaks can be caused by poor sealing, improper body component alignment, body seam porosity, missing plugs, or blocked drain holes. Centrifugal and gravitational force can cause water to drip from a location away from the actual leak point, making leak detection difficult. All body sealing points should be water tight in normal wet-driving conditions. Water flowing downward from the front of the vehicle should not enter the passenger or luggage compartment. Moving sealing surfaces will not always seal water tight under all conditions. At times, side glass or door seals will allow water to enter the passenger compartment during high pressure washing or hard driving rain (severe) conditions. Overcompensating on door or glass adjustments to stop a water leak that occurs under severe conditions can cause premature seal wear and excessive closing or latching effort. After completing a repair, water test vehicle to verify leak has stopped before returning vehicle to use.

VISUAL INSPECTION BEFORE WATER LEAK TESTS

Verify that floor and body plugs are in place, body drains are clear, and body components are properly aligned and sealed. If component alignment or sealing is necessary, refer to the appropriate service information for proper procedures.

WATER LEAK TESTS

WARNING: Do not use electric shop lights or tools in water test area. Personal injury can result.

When the conditions causing a water leak have been determined, simulate the conditions as closely as possible.

- If a leak occurs with the vehicle parked in a steady light rain, flood the leak area with an open-ended garden hose.
- If a leak occurs while driving at highway speeds in a steady rain, test the leak area with a reasonable velocity stream or fan spray of water. Direct the spray in a direction comparable to actual conditions.
- If a leak occurs when the vehicle is parked on an incline, hoist the end or side of the vehicle to simulate this condition. This method can be used when the leak occurs when the vehicle accelerates, stops or turns. If the leak occurs on acceleration, hoist the front of the vehicle. If the leak occurs when braking, hoist the back of the vehicle. If the leak occurs on left turns, hoist the left side of the vehicle. If the leak occurs on right turns, hoist the right side of the vehicle. For hoisting recommendations. Refer to **HOISTING, STANDARD PROCEDURE** .

WATER LEAK DETECTION

To detect a water leak point-of-entry, do a water test and watch for water tracks or droplets forming on the inside of the vehicle. If necessary, remove interior trim covers or panels to gain visual access to the leak area. If the hose cannot be positioned without being held, have someone help do the water test.

Some water leaks must be tested for a considerable length of time to become apparent. When a leak appears,

find the highest point of the water track or drop. The highest point usually will show the point of entry. After leak point has been found, repair the leak and water test to verify that the leak has stopped.

Locating the entry point of water that is leaking into a cavity between panels can be difficult. The trapped water may splash or run from the cavity, often at a distance from the entry point. Most water leaks of this type become apparent after accelerating, stopping, turning, or when on an incline.

MIRROR INSPECTION METHOD

When a leak point area is visually obstructed, use a suitable mirror to gain visual access. A mirror can also be used to deflect light to a limited-access area to assist in locating a leak point.

BRIGHT LIGHT LEAK TEST METHOD

Some water leaks in the luggage compartment can be detected without water testing. Position the vehicle in a brightly lit area. From inside the darkened luggage compartment inspect around seals and body seams. If necessary, have a helper direct a drop light over the suspected leak areas around the luggage compartment. If light is visible through a normally sealed location, water could enter through the opening.

PRESSURIZED LEAK TEST METHOD

When a water leak into the passenger compartment cannot be detected by water testing, pressurize the passenger compartment and soap test exterior of the vehicle. To pressurize the passenger compartment, close all doors and windows, start engine, and set heater control to high blower in HEAT position. If engine can not be started, connect a charger to the battery to ensure adequate voltage to the blower. With interior pressurized, apply dish detergent solution to suspected leak area on the exterior of the vehicle. Apply detergent solution with spray device or soft bristle brush. If soap bubbles occur at a body seam, joint, seal or gasket, the leak entry point could be at that location.

WATER LEAKS

GENERAL NOTES

NOTE:

- **This service information applies to all Ram models, 2009 MY and beyond.**
- **Each leak area can have multiple root causes, as noted in the diagnosis chart. It is important to water test each repair before starting the next.**
- **If a leak cannot be reproduced, it is due to the period of time the vehicle is under wet conditions. Some leaks may take hours before leaking.**
- **If a leak cannot be reproduced, apply all the repairs as noted in the diagnosis chart.**
- **It is important to understand where the leak ENDS up when diagnosing the vehicle. Where the leak ends up, does not always explain where the leak originates. Refer to DIAGNOSIS CHART when determining which repairs to perform.**
- **This repair procedure does NOT cover every possible water leak on the RAM. The issues identified in this document are the severe leaks that may**

occur in the field.

- **Generally, a car wash is the preferred method to diagnose a vehicle.**
- **The content identifies the known areas of water leaks, the critical characteristics of each area and how to repair them.**

DIAGNOSIS CHART

	Water Leak Conditions	
Water entering the vehicle through the grab handle or overhead console	**Water entering the vehicle at the back glass area (C-pillars)**	**Water is on the rear carpet between the rear seats**
Refer to **REPAIR PROCEDURE FOR WINDSHIELD URETHANE**.	Refer to **REPAIR PROCEDURE FOR CHMSL (3RD BRAKE LIGHT)**.	Refer to **REPAIR PROCEDURE FOR CAB-BACK EXHAUSTER**.
Refer to **REPAIR PROCEDURE FOR ROOF/BODY SEAMS**.	Refer to **REPAIR PROCEDURE FOR BACK-GLASS/POWER SLIDER**.	
Refer to **REPAIR PROCEDURE FOR SUNROOF DRAIN SYSTEM**.	Refer to **REPAIR PROCEDURE FOR ROOF/BODY SEAMS**.	
Refer to **REPAIR PROCEDURE FOR SUNROOF GLASS SYSTEM**.	Refer to **REPAIR PROCEDURE FOR APERTURE/CAB-BACK SEAMS**.	
	Refer to **REPAIR PROCEDURE FOR SUNROOF DRAIN SYSTEM**.	

WATER ENTERING THE VEHICLE THROUGH THE GRAB HANDLE OR OVERHEAD CONSOLE

REPAIR PROCEDURE FOR WINDSHIELD URETHANE

Required Parts:

- Mopar Glass Sealer
- Paintable Clear Seam Sealer

Potential Parts Required:

- Molding, Windshield, Right (Only replace if damage occurs during removal)
- Molding, Windshield, Left (Only replace if damage occurs during removal)

TWO METHODS OF TESTING:

METHOD 1:

With a person inside the vehicle, run water around windshield starting at the lower left or right side A-Pillar

slowly moving up the A-pillar and watch for water to drip inside the vehicle from A-Pillar and/or Grab Handle. Next, move across the top of the windshield. If water is seen dripping from any area, stop running water and proceed with the applicable repair procedure below.

METHOD 2:

Gain access to both body exhausters and tape off to block air escaping. Turn the ignition to the run position and turn the HVAC blower on High. Make sure all windows are up and close all the doors. Depending on the size of cabin area will affect the time it could take to pressurize the cabin. Next, spray soapy water or foaming window cleaner around the windshield molding. As cabin begins to pressurize inspect for air bubbles to form around windshield molding. If any air bubbles are noticed proceed with the applicable repair procedure below.

WINDSHIELD URETHANE SKIP REPAIR

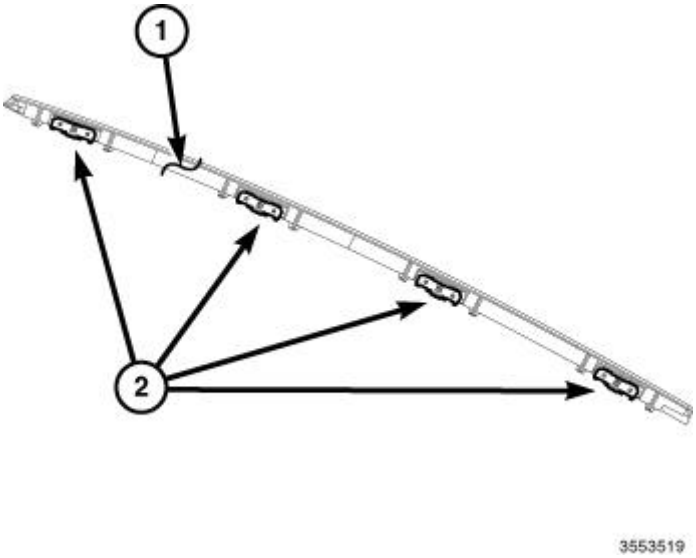

Fig. 1: A-Pillar Windshield Molding
Courtesy of CHRYSLER GROUP, LLC

1. If the leak is determined to be adjacent to the windshield, then the A-Pillar windshield molding (1) should be removed. The windshield molding can be removed pulling it away from the cab at its four attach points (2), Refer to **WEATHERSTRIP, WINDSHIELD, A-PILLAR, REMOVAL**.

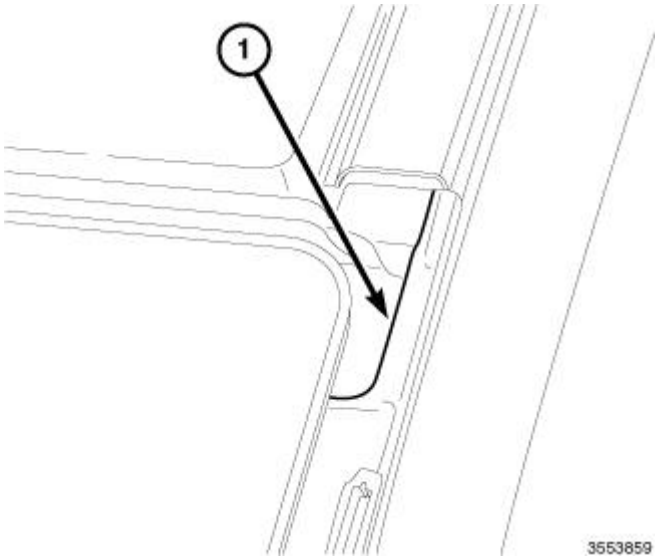

Fig. 2: Exposed Body Seam
Courtesy of CHRYSLER GROUP, LLC

NOTE: **Sealer skips or pinholes can be seen along the exposed body seams (1)**

NOTE: **A special area of concern is where the windshield and body seams meet at the upper a-pillar (1), which is shown in illustration.**

2. Once the windshield molding is removed, inspect for sealer skips. Apply Mopar Glass Sealer to any skip in the urethane around windshield.
3. For sealer skips in the A-Pillar body seam apply a Clear Hi-Flow Paintable Seam Sealer.
4. Prior to re-assembly, re-test the area to ensure it is properly sealed.
5. Carefully reinstall windshield molding. Refer to **WEATHERSTRIP, WINDSHIELD, A-PILLAR, INSTALLATION**.

REPAIR PROCEDURE FOR ROOF/BODY SEAMS

Required Parts:

- Paintable Clear Seam Sealer

Potential Parts Required:

- Molding - Roof Ditch Right
- Molding - Roof Ditch Left

1. Gain access to the A-Pillar body seam and roof ditch seam by removing the windshield A-Pillar molding and roof ditch molding. Refer to **WEATHERSTRIP, WINDSHIELD, A-PILLAR, REMOVAL**.

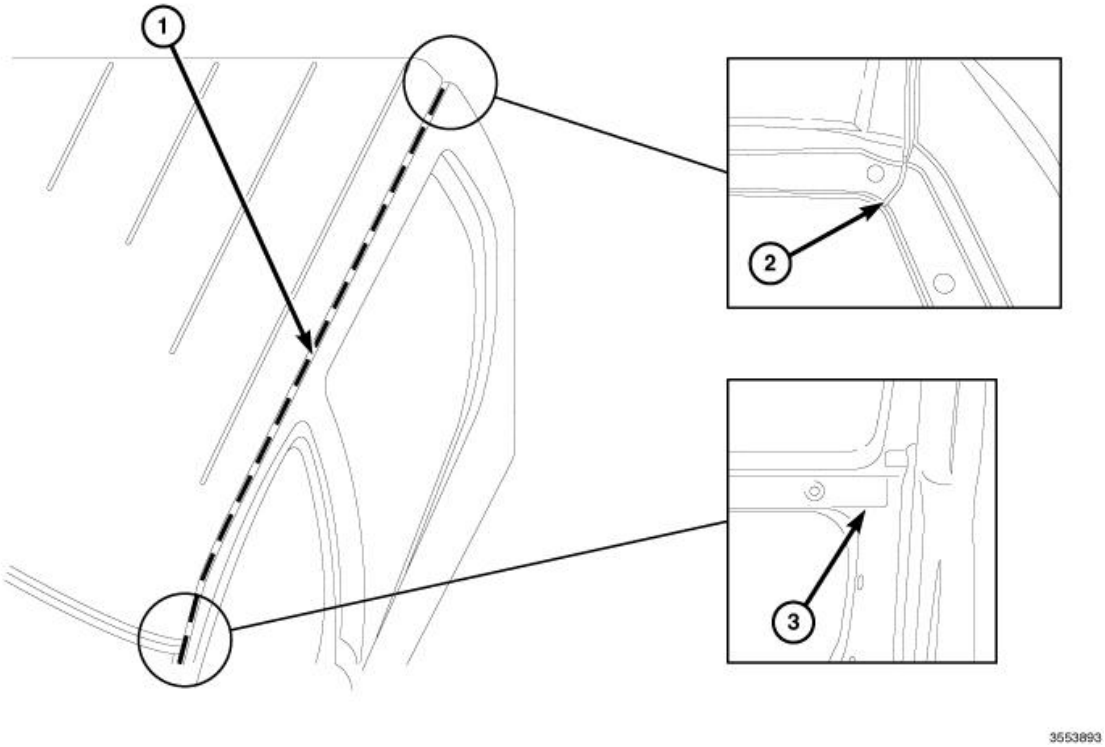

Fig. 3: Roof Ditch Molding
Courtesy of CHRYSLER GROUP, LLC

NOTE: Dashed line indicates starting and ending points (path) for clear sealer

2. Using the diagram above apply Paintable Clear Seam Sealer along the whole length of the roof ditch (1), beginning at the A-pillar (3) and ending at the Roof to Aperture/Rap Joint (2). Be certain to cover any and all pin holes.
3. Prior to re-assembly, re-test the area to be certain it is properly sealed.
4. Reinstall windshield A-Pillar molding and Roof Ditch molding. Refer to **WEATHERSTRIP, WINDSHIELD, A-PILLAR, INSTALLATION**.

REPAIR PROCEDURE FOR SUNROOF DRAIN SYSTEM

1. Inspect for water dripping from Overhead Console, also inspect for water marks/stains and/or dampness on Headliner.

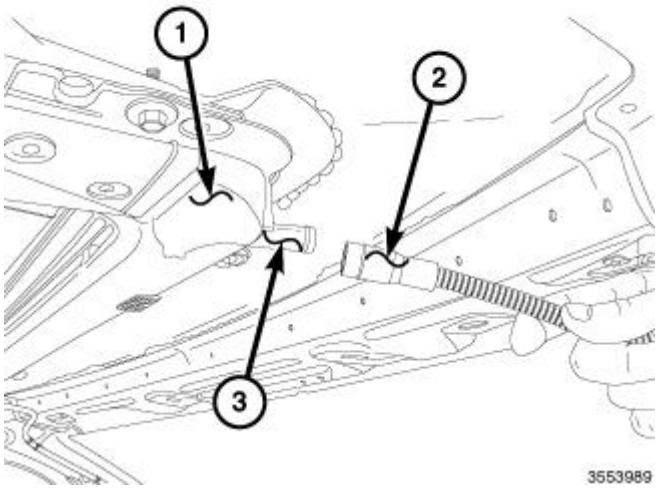

Fig. 4: Sunroof Drain Tubes
Courtesy of CHRYSLER GROUP, LLC

2. Lower the headliner. Inspect all four sunroof drain tubes (2) and make certain all connections are secure to each barb (3). Refer to **HEADLINER, REMOVAL**.
3. Verify that all four drain tubes are securely fastened, prior to re-assembly. Re-test the area by opening sunroof and using a small cup of water, slowly pour water into sunroof trough (1) to make certain water flows and the drains are properly sealed.
4. Install Headliner. Refer to **HEADLINER, INSTALLATION**.

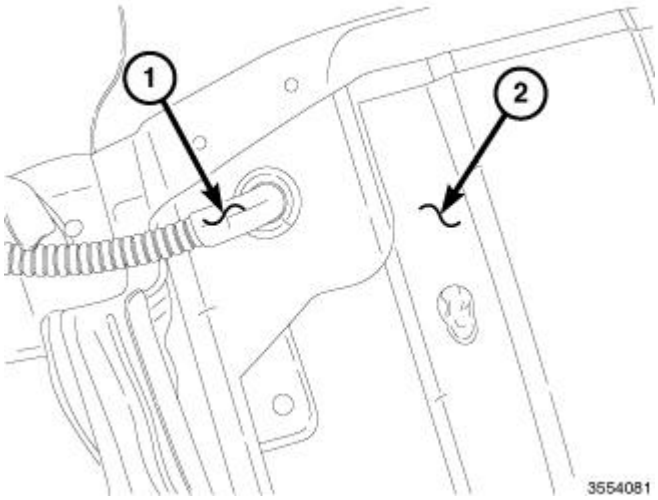

Fig. 5: Sunroof Drain Tube Grommets
Courtesy of CHRYSLER GROUP, LLC

5. Inspect both rear sunroof drain tube grommets (1) behind rear seat to make sure they are fully seated into the inner rear cab (2).

REPAIR PROCEDURE FOR SUNROOF GLASS SYSTEM

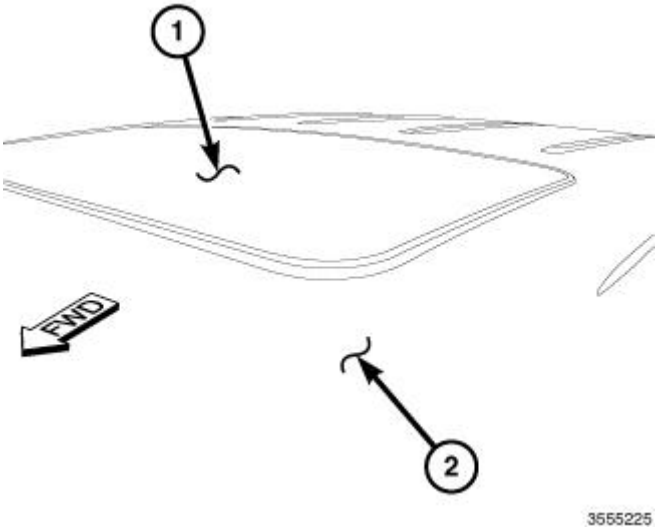

Fig. 6: Checking Sunroof Glass Flushness
Courtesy of CHRYSLER GROUP, LLC

1. Using the specifications listed, Visually inspect sunroof glass (1) flushness to roof panel (2). Refer to **GLASS, SUNROOF, ADJUSTMENTS**.
2. If adjustments need to be made to the sunroof glass (1) height and gap tolerances, refer to **GLASS, SUNROOF, ADJUSTMENTS**.

WATER ENTERING THE VEHICLE AT THE BACK GLASS AREA (C-PILLARS)

REPAIR PROCEDURE FOR CHMSL (3RD BRAKE LIGHT)

Parts Required:

- Mopar Glass Sealer

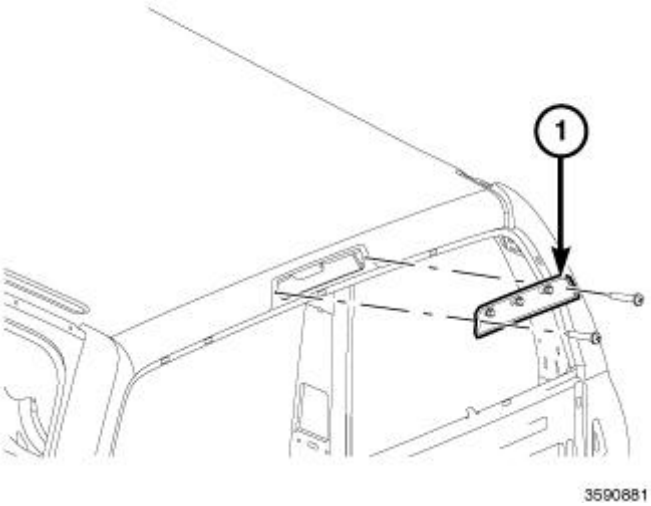

Fig. 7: Center High Mounted Stop Lamp Assembly
Courtesy of CHRYSLER GROUP, LLC

1. Remove the CHMSL (Center High Mounted Stop Lamp) assembly. Refer to **LAMP, CENTER HIGH MOUNTED STOP, REMOVAL** .

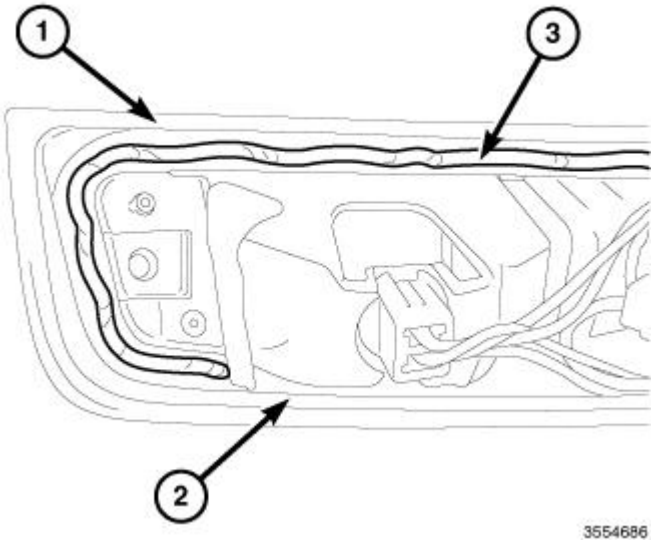

Fig. 8: Bead Of Heavy Bodied Sealer
Courtesy of CHRYSLER GROUP, LLC

2. Apply 1/8 inch bead of Heavy Bodied Sealer (3) around the lamp (1) on the foam gasket material (2), leaving no gaps.
3. Install the CHMSL assembly. Refer to **LAMP, CENTER HIGH MOUNTED STOP, INSTALLATION** .
4. Remove any excess sealer that squeezes out onto the painted surface or exterior lamp assembly.

REPAIR PROCEDURE FOR BACK-GLASS/POWER SLIDER

Parts Required:

- Mopar Glass Sealer

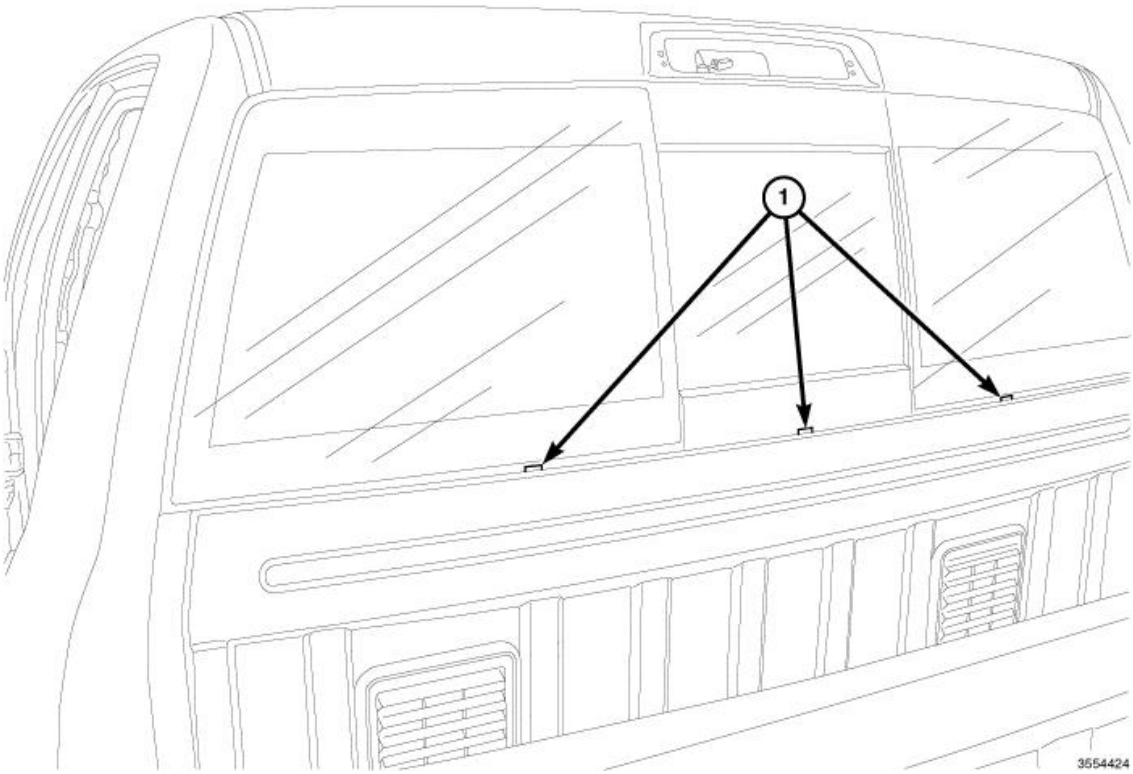

Fig. 9: Back Glass Drains
Courtesy of CHRYSLER GROUP, LLC

1. For the back-glass drains (1) being plugged or restricted the back-glass will have to be removed and replaced.
2. If the water leak is found around the parameter of the back-glass due to urethane skips it is recommended to apply Mopar Glass Sealer.
3. Water test area inspecting for water entering vehicle. If water still enters vehicle, back-glass will have to be replaced.

REPAIR PROCEDURE FOR APERTURE/CAB-BACK SEAMS

Parts Required:

- Paintable Clear Seam Sealer

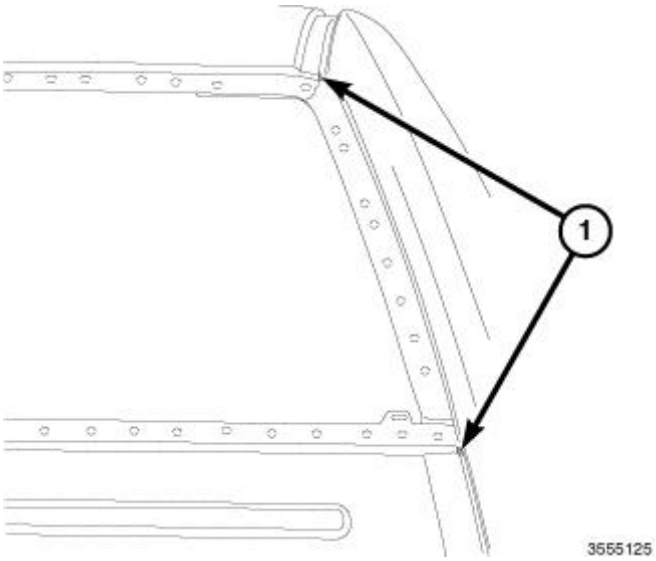

Fig. 10: Rat Hole Locations
Courtesy of CHRYSLER GROUP, LLC

1. Inspect both areas indicated.
2. If a skip crack or pinhole is found use Paintable Clear Seam Sealer. Apply sealer as indicated in illustrations below.

NOTE: **It is important to fill the entire seam located within the brackets to be certain of full coverage and proper sealing of the rat hole.**

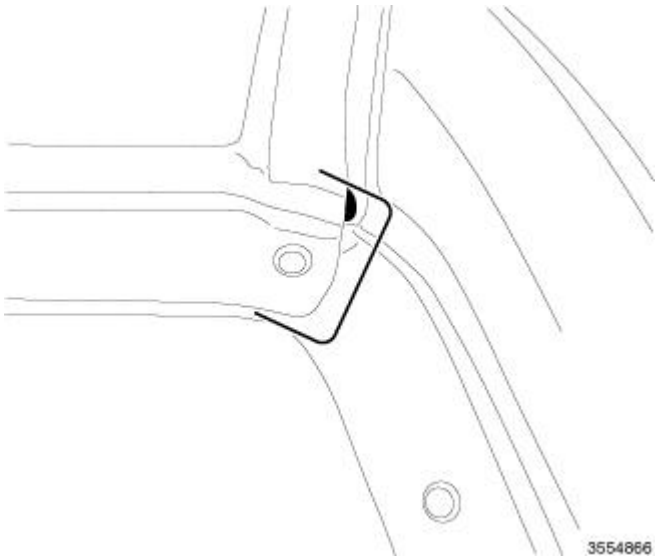

Fig. 11: Roof/Aperture Rap Joint
Courtesy of CHRYSLER GROUP, LLC

3. Apply clear sealer on entire seam indicated within the bracket.

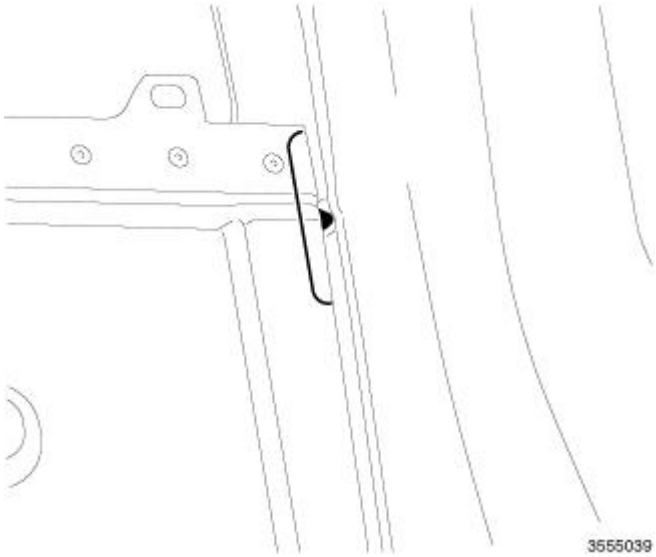

Fig. 12: Cab Back/Body Seam
Courtesy of CHRYSLER GROUP, LLC

4. Apply clear sealer on entire seam indicated within the bracket.

WATER IS ON THE REAR CARPET BETWEEN THE REAR SEATS

REPAIR PROCEDURE FOR CAB-BACK EXHAUSTER

1. Review examples below of what to look for and make certain they are properly installed and seated against the body of the vehicle. Example1: Seal folded - Example 2: Exhauster not fully seated
2. If any of the conditions are found remove exhauster from vehicle inspect for tearing or ripping of the seal. If seal has no tears or rips then reinstall on to vehicle making sure it clicks in on all four corners and that the seal is not rolled.
3. If seal is damaged or torn then replace body exhauster.

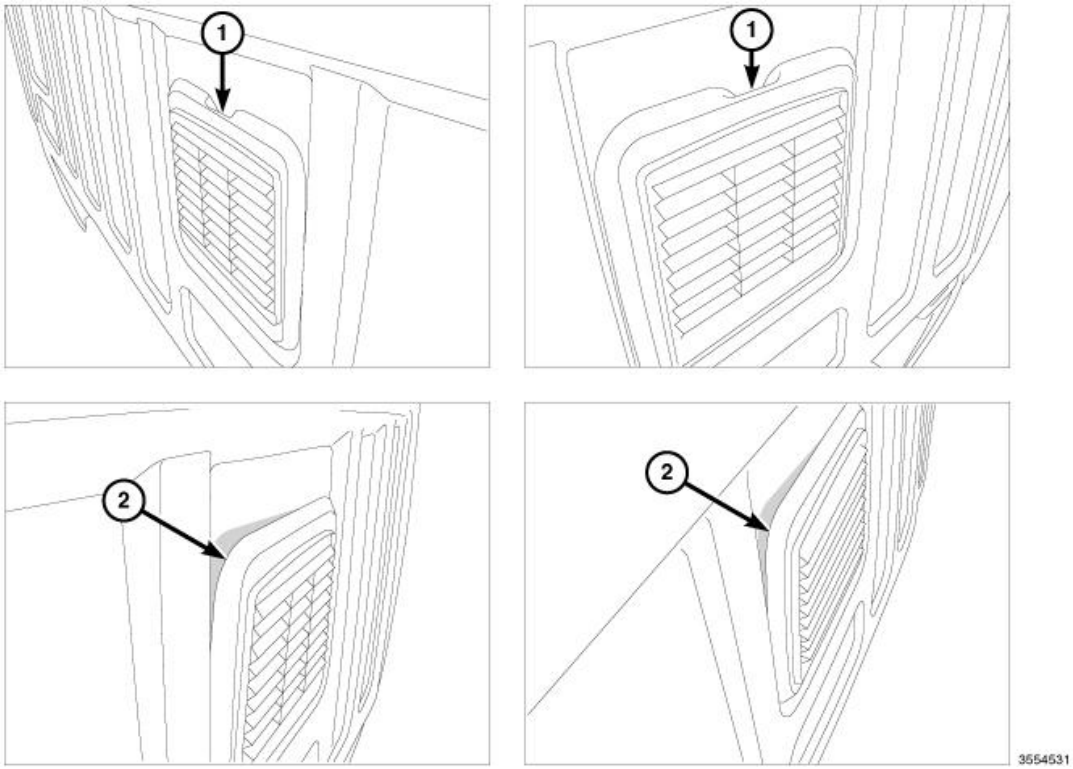

Fig. 13: Cab-Back Exhauster
Courtesy of CHRYSLER GROUP, LLC

WIND NOISE

Wind noise is the result of most air leaks. Air leaks can be caused by poor sealing, improper body component alignment, body seam porosity, or missing plugs in the engine compartment or door hinge pillar areas. All body sealing points should be airtight in normal driving conditions. Moving sealing surfaces will not always seal airtight under all conditions. At times, side glass or door seals will allow wind noise to be noticed in the passenger compartment during high cross winds. Over compensating on door or glass adjustments to stop wind noise that occurs under severe conditions can cause premature seal wear and excessive closing or latching effort. After a repair procedure has been performed, test vehicle to verify noise has stopped before returning vehicle to use.

VISUAL INSPECTION BEFORE TESTS

Verify that floor and body plugs are in place and body components are aligned and sealed. If component alignment or sealing is necessary, refer to the appropriate service information for proper procedures.

ROAD TESTING WIND NOISE

1. Drive the vehicle to verify the general location of the wind noise.
2. Apply 50 mm (2 in.) masking tape in 150 mm (6 in.) lengths along weatherstrips, weld seams or moldings. After each length is applied, drive the vehicle. If noise goes away after a piece of tape is applied, remove tape, locate, and repair defect.

POSSIBLE CAUSE OF WIND NOISE

- Moldings standing away from body surface can catch wind and whistle.
- Gaps in sealed areas behind overhanging body flanges can cause wind-rushing sounds.
- Misaligned movable components.
- Missing or improperly installed plugs in pillars.
- Weld burn through holes.
- Improperly installed roof rack cross bars.
- Side door mirror leaks.

STANDARD PROCEDURE

BODY LUBRICATION

LUBRICATION REQUIREMENTS

Locks and all body pivot points, including such items as seat tracks, door hinge pivot points and rollers, liftgate, tailgate, sliding doors and hood hinges, should be lubricated periodically with a lithium based grease such as Mopar ® Spray White Lube to ensure quiet, easy operation and to protect against rust and wear. Prior to the application of any lubricant, wipe the parts clean, to remove dust and grit. After lubricating, excess oil and grease should be removed. Particular attention should also be given to hood latching components to make sure they function properly. When performing other underhood services, clean and lubricate the hood latch release mechanism and safety catch.

The external lock cylinders should be lubricated twice a year, preferably in the fall and spring. Apply a small amount of a high quality lubricant such as Mopar ® Lock Cylinder Lubricant directly into the lock cylinder.

LUBRICANT APPLICATION

DOOR LOCK CYLINDERS

1. Apply a small amount of lubricant directly into the lock cylinder.
2. Apply a small amount of lubricant to the key.
3. Insert key into lock cylinder and cycle the mechanism from the locked to the unlocked position.

   NOTE: Do not add more lubricant.

4. Cycle the lock cylinder mechanism several times to allow the lubricant to flow throughout the cylinder.
5. Wipe all lubricant from exterior of lock cylinder and key.

ALL OTHER BODY MECHANISMS

1. Clean component as described above.
2. Apply specified lubricant to all pivoting and sliding contact areas of component.

LUBRICANT USAGE

Engine Oil

- door hinges - hinge pin and pivot contact areas
- hood hinges - pivot points
- liftgate hinges

Mopar ® Spray White Lube or Equivalent

- door check straps
- liftgate latches
- liftgate prop pivots
- ash receiver
- fuel filler door remote control latch mechanism
- parking brake mechanism
- sliding seat tracks
- liftgate latch

Mopar ® Multipurpose Grease or Equivalent

- all other hood mechanisms

Mopar ® Lock Cylinder Lubricant or Equivalent

- door lock cylinders
- liftgate lock cylinder

HEAT STAKING

1. Remove trim panel.
2. Bend or move the trim panel components at the heat staked joints. Observe the heat staked locations and/or component seams for looseness.
3. Heat stake the components.
    1. If the heat staked or component seam location is loose, hold the two components tightly together and using a soldering gun with a flat tip, melt the material securing the components together. Do not over heat the affected area, damage to the exterior of the trim panel may occur.
    2. If the heat staked material is broken or missing, use a hot glue gun to apply new material to the area to be repaired. The panels that are being heat staked must be held together while the applying the glue. Once the new material is in place, it may be necessary to use a soldering gun to melt the newly applied material. Do not over heat the affected area, damage to the exterior of the trim panel may occur.
4. Allow the repaired area to cool and verify the repair.

5. Install trim panel.

BUZZ, SQUEAK AND RATTLE

Buzz, squeak and rattles (BSR) may be caused by any one or more of the following and may be corrected as indicated:

- Loose fasteners should be tightened to specifications.
- Damaged or missing clips should be replaced.
- Damaged trim panels should be replaced.
- Incorrectly installed trim panels should be reinstalled properly.

Many BSR complaints such as loose trim, can be serviced using the Mopar® Parts BSR Noise Reduction Kit. This kit contains various tapes including foam, flock and anti-squeak used to eliminate noises caused by metal, plastic and vinyl components. Long life lubricants and greases can also be used on a variety of components. Refer to **BUZZ, SQUEAK AND RATTLE KIT**.

BUZZ, SQUEAK AND RATTLE KIT

ITEM	FEATURES	APPLICATIONS	SERVICE TEMP
Itch And Squeak Tape	An abrasion resistant material thin enough to conform to most irregular surfaces. Stops most itches and squeaks.	Between metal and metal, metal and plastic, metal and vinyl, vinyl and plastic. Interior. Examples: Trim panels and bezels.	-40° to 107° C (-40° to 225° F)
Black Nylon Flock	Nylon Flock with an aggressive acrylic adhesive. Provides for cushioning and compression fit, also isolates components. Water-resistant.	Between metal and metal, metal and plastic, vinyl and plastic. Examples: Pull cups, bezels, clips, ducts, top cover to glass, cowl panel.	-40° to 82° C (-40° to 180° F)
High Density Urethane Foam	Tear resistant, highly resilient and durable.	Between metal and metal, metal and plastic. Water-resistant. Examples: I/P, heavy metal rattles, isolating brackets.	-40° to 82° C (-40° to 180° F)
Open Cell Foam Tape	Soft foam conforms to irregular surfaces.	Wire harness and connector wrap. Examples: Seals, gasket, wiring, heat ducts.	-40° to 82° C (-40° to 180° F)
Closed Cell Low Density Foam Tape	Soft, conformable. Water-resistant.	Wherever bulk is needed. Prevents closing flutters and rattles when applied to door watershield. Examples: Door, I/P.	-40° to 82° C (-40° to 180° F)
NYE® Grease 880	Long life.	Suspensions.	-40° to 200° C

		Examples: Strut bushings, sway bars.	(-40° to 390° F)
Krytox® Oil	Long life. Will not dry out or harm plastics or rubber.	When access is not possible, oil will migrate to condition. Vinyl, rubber, plastic, metal. Examples: Convertible top bushings, pull cups trim panel inserts.	-34° to 205° C (-30° to 400° F)
Krytox® Grease	Long life. Will not dry out or harm plastics or rubber.	Vinyl, rubber, plastic, metal, glass. Examples: Weather-strips, backlite and windshield moldings.	-34° to 205° C (-30° to 400° F)

NET, FORM AND PIERCE REPAIR

CAUTION: Failure to follow these recommendations could result in damage or failure to the part and the related parts.

Net, form and pierce is a manufacturing process which takes place during the original build of the vehicle. The original part will have a beveled platform that will decrease toward the fastener location mounting hole. Replacement parts in these areas may not include bevel (form) and / or fastener hole (pierce) and will need to be adapted for proper fit and finish.

The primary locations which may utilize net, form and pierce are:

- Fender Reinforcement (at front end module mount)
- Fender Tower Mounts
- Hood Hinge (lower half)
- Rear Body Header (liftgate hinge mounts)
- Strut Tower (at upper control arm mount)

NOTE: Shock tower is net, pierce only.

NOTE: The thickness of shims is not to exceed the original thickness of the factory bevel. If more shims are needed damage is still present and must be repaired properly.

If the replacement part did not come with a fastener hole, one of equal size and location will have to be drilled. Body shims should be used in the fender reinforcement to front end module. The hood hinge area, fender tower mounts, and rear body header will utilize washers as spacers where a specific spacer does not exist. The shims and spacers should be sealed between each other and to the stationary surface. Care should be taken when smoothing sealer around washers to ensure undetectable repair. Refinish the repair area per the paint manufacturers recommendations for corrosion resistance and appearance purposes.

PLASTIC BODY PANEL REPAIR

There are many different types of plastics used in today's automotive environment. We group plastics in three different categories: Rigid, Semi-Rigid, and Flexible. Any of these plastics may require the use of an adhesion promoter for repair. These types of plastic are used extensively on Chrysler LLC vehicles. Always follow repair material manufacturer's plastic identification and repair procedures.

RIGID PLASTICS:

Examples of rigid plastic use: Fascias, Hoods, Doors, and other Body Panels, which include SMC, ABS, and Polycarbonates.

SEMI-RIGID PLASTICS:

Examples of semi-rigid plastic use: Interior Panels, Under Hood Panels, and other Body Trim Panels.

FLEXIBLE PLASTICS:

Examples of flexible plastic use: Fascias, Body Moldings, and upper and lower Fascia Covers.

REPAIR PROCEDURE:

The repair procedure for all three categories of plastics is basically the same. The one difference is the material used for the repair. The materials must be specific for each substrate, rigid repair material for rigid plastic repair, semi-rigid repair material for semi-rigid plastic repair and flexible repair material for flexible plastic repair.

ADHESION PROMOTER/SURFACE MODIFIER:

Adhesion Promoters/Surface Modifiers are required for certain plastics. All three categories may have plastics that require the use of adhesion promoter/surface modifiers. Always follow repair material manufacturer's plastic identification and repair procedures.

SAFETY PRECAUTION AND WARNINGS

WARNING:

- **Eye protection should be used when servicing components. Personal injury can result.**
- **Use an OSHA approved breathing mask when mixing epoxy, grinding, and spraying paint or solvents in a confined area. Personal injury can result.**
- **Avoid prolonged skin contact with resin, petroleum, or alcohol based solvents. Personal injury can result.**
- **Do not venture under a hoisted vehicle that is not properly supported on safety stands. Personal injury can result.**

WARNING: Failure to follow these instructions may result in serious or fatal injury.

NOTE:

- **When holes must be drilled or cut in body panels, verify locations of internal body components and electrical wiring. Damage to vehicle can result.**
- **Do not use abrasive chemicals or compounds on undamaged painted surfaces around repair areas. Damage to finish can result.**

RIGID, SEMI-RIGID, AND FLEXIBLE PLASTIC PARTS TYPES

CODE	FAMILY NAME	COMMON TRADE NAME	TYPICAL APPLICATION
ASA	ACRYLONITRILE STYRENE ACRYLITE	LURAN S	CONSOLES, GRILLES
ABS	ACRYLONITRILE BUTADIENE STYRENE	TERLURAN	"A" PILLARS, CONSOLES, GRILLES
ABS/PC	ABS/PC ALLOY	PULSE, PROLOY, BAYBLEND	DOORS, INSTRUMENT PANELS
ABS/PVC	ABS/PV ALLOY	PROLOY, PULSE, LUSTRAN, CYCLOVIN	DOOR PANELS, GRILLES, TRIM
BMC	BULK MOLDING COMPOUND	BMC	FENDER EXTENSIONS
EMA	EHTYLENE METHYL ACRYLATE/IONOMER	SURLYN, EMA, IONOMER	BUMPER GUARDS, PADS
METTON	METTON	METTON	GRILLES, KICK PANELS, RUNNING BOARDS
MPPO	MODIFIED POLYPHENYLENE OXIDE	MPPO	SPOILER ASSEMBLY
PA	POLYAMID	ZYTEL, VYDYNE, PA, MINLON	FENDERS, QUARTER PANELS
PET	THERMOPLASTIC POLYESTER	RYNITE	TRIM
PBT/PPO	PBT/PPO ALLOY	GERMAX	CLADDINGS
PBTP	POLYBUTYLENE THEREPTHALATE	PBT, PBTP, POCAN, VALOX	WHEEL COVERS, FENDERS, GRILLES
PBTP/EEBC	POLYBUTYLENE THEREPTHALATE/EEBC ALLOY	BEXLOY, "M", PBTP/EEBC	FASCIAS, ROCKER PANEL, MOLDINGS
PC	POLYCARBONATE	LEXAN, MERLON, CALIBRE, MAKROLON PC	TAIL LIGHT LENSES, IP TRIM, VALANCE PANELS
PC/ABS	PC/ABS ALLOY	GERMAX, BAY BLENDS, PULSE	DOORS, INSTRUMENT PANELS
PPO	POLYPHENYLENE OXIDE	AZDEL, HOSTALEN,	INTERIOR TRIM, DOOR

		MARLEX, PRFAX, NORYL, GTX, PPO	PANELS, SPLASH SHIELDS, STEERING COLUMN SHROUD
PPO/PA	POLYPHENYLENE/POLYAMID	PPO/PA, GTX 910	FENDERS, QUARTER PANELS
PR/FV	FIBERGLASS REINFORCED PLASTIC	FIBERGLASS, FV, PR/FV	BODY PANELS
PS	POLYSTYRENE	LUSTREX, STYRON, PS	DOOR PANELS, DASH PANELS
RTM	RESIN TRANSFER MOLDING COMPOUND	RTM	BODY PANELS
SMC	SHEET MOLDED COMPOUND	SMC	BODY PANELS
TMC	TRANSFER MOLDING COMPOUND	TMC	GRILLES
UP	UNSATURATED POLYESTER (THERMOSETTING)	SMC, BMC, TMC, ZMC, IMC, XSMC, UP	GRILLE OPENING PANEL, LIFTGATES, FLARESIDE FENDERS, FENDER EXTENSIONS
EEBC	ETHER/ESTER BLOCKED CO-POLYMER	EEBC	BUMPERS
EEBC/PBTP	EEBC/POLYBUTYLENE TEREPTHALATE	EEBC, PBTP, BEXLOY	BUMPER, ROCKER PANELS
EMPP	ETHYLENE MODIFIED POLYPROPYLENE	EMPP	BUMPER COVERS
EPDM	ETHYLENE/PROPROPYLENE DIENE MONOMER	EPDM, NORDEL, VISTALON	BUMPERS
EPM	ETHYLENE/PROPROPYLENE CO-POLYMER	EPM	FENDERS
MPU	FOAM POLYURETHANE	MPU	SPOILERS
PE	POLYETHYLENE	ALATHON, DYLAN, LUPOLEN, MARLEX	"?
PP	POLYPROPYLENE (BLENDS)	NORYL, AZDEL, MARLOX, DYLON, PRAVEX	INNER FENDER, SPOILERS, KICK PANELS
PP/EPDM	PP/EPDM ALLOY	PP/EPDM	SPOILERS, GRILLES
PUR	POLYURETHANE	COLONELS, PUR, PU	FASCIAS, BUMPERS
PUR/PC	PUR/PC ALLOY	TEXIN	BUMPERS
PVC	POLYVINYL CHLORIDE	APEX, GEON, VINYLITE	BODY MOLDINGS, WIRE INSULATION, STEERING WHEELS
RIM	REACTION INJECTED MOLDED POLYURETHANE	RIM, BAYFLEX	FRONT FASCIAS, MODULAR WINDOWS
RRIM	REINFORCED REACTION INJECTED MOLDED	PUR, RRIM	FASCIAS, BODY PANELS, BODY TRIMS

TPE	THERMO POLYETHYLENE	TPE, HYTREL, BEXLOY-V	FASCIAS, BUMPERS, CLADDINGS
TPO	THERMOPOLYOLEFIN	POLYTROPE, RENFLEX, SANTOPRENE, VISAFLEX, ETA, APEX, TPO, SHIELDS, CLADDINGS	BUMPERS, END CAPS, TELCAR, RUBBER, STRIPS, SIGHT, INTERIOR B POST
TPP	THERMO-POLYPROPYLENE	TPP	BUMPERS
TPU	THERMOPOLYURETHANE, POLYESTER	TPU, HYTREL, TEXIN, ESTANE	BUMPERS, BODY SIDE, MOLDINGS, FENDERS, FASCIAS

PANEL SECTIONING

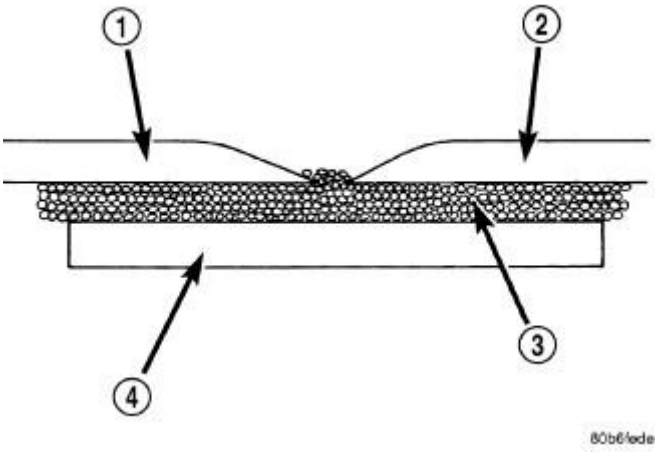

Fig. 14: Panel Sectioning
Courtesy of CHRYSLER GROUP, LLC

1 - EXISTING PANEL 2 - NEW PANEL 3 - PANEL ADHESIVE 4 - BONDING STRIP

If it is required to section a large panel for a plastic repair, it will be necessary to reinforce the panel. To bond two plastic panels together, a reinforcement must overlap both panels. The panels must be "V'd" at a 20 degree angle. The area to be reinforced should be washed, then sanded. Be sure to wipe off any excess soap and water when finished. Lightly sand or abrade the plastic with an abrasive pad or sandpaper. Blow off any dust with compressed air or wipe with a clean dry rag.

When bonding plastic panels, follow repair material manufacturers recommendations. Be sure that enough adhesive has been applied to allow squeeze out and to fill the full bond line. Once the pieces have been brought together, do not move them until the adhesive is cured. The assembly can be held together with clamps, rivets, etc. A faster cure can be obtained by heating with a heat lamp or heat gun. After the parts have been bonded and have had time to cure, rough sand the seam and apply the final adhesive filler to the area being repaired. Smooth

the filler with a spreader, wooden tongue depressor, or squeegee. For fine texturing, a small amount of water can be applied to the filler surface while smoothing. The cured filler can be sanded as necessary and, as a final step, cleanup can be done with soapy water. Wipe the surface clean with a dry cloth allowing time for the panel to dry before moving on with the repair.

PANEL REINFORCEMENT

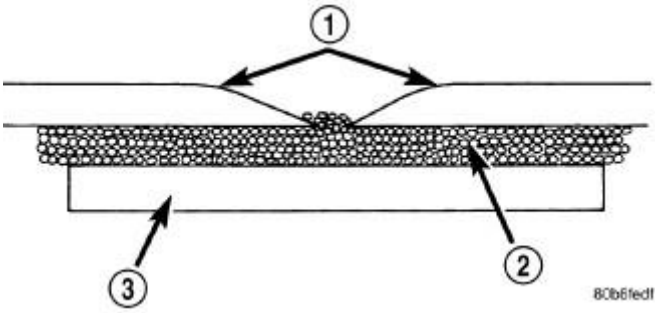

Fig. 15: Identifying Softened Edges, Panel Adhesive, & Bonding Strip
Courtesy of CHRYSLER GROUP, LLC

1 - SOFTENED EDGES 2 - PANEL ADHESIVE 3 - BONDING STRIP

Structural repair procedures for rigid panels with large cracks and holes will require a reinforcement backing. Reinforcements can be made with several applications of glass cloth saturated with structural adhesive. Semi-rigid or flexible repair materials should be used for semi-rigid or flexible backing reinforcement and open meshed fiberglass dry wall tape can be used to form a reinforcement. The dry wall tape allows the resin to penetrate through and make a good bond between the panel and the adhesive. Structurally, the more dry wall tape used, the stronger the repair.

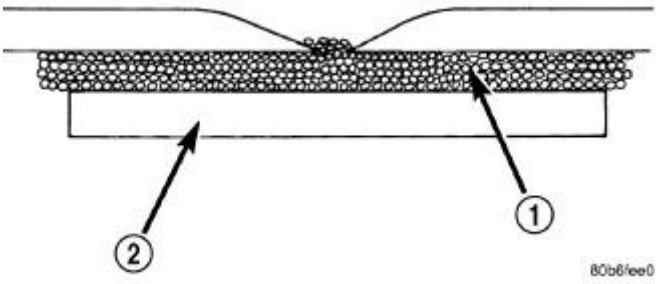

Fig. 16: Panel Reinforcement
Courtesy of CHRYSLER GROUP, LLC

1 - PANEL ADHESIVE 2 - REINFORCEMENT

Another kind of repair that can be done to repair large cracks and holes is to use a scrap piece of similar plastic and bond with structural adhesive. The reinforcement should cover the entire break and should have a generous

amount of overlap on either side of the cracked or broken area.

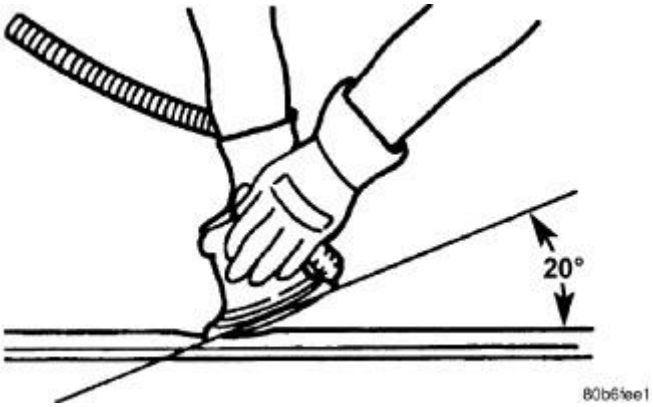

Fig. 17: Beveling Area Around Crack At 20 Degree Angle
Courtesy of CHRYSLER GROUP, LLC

When repairing plastic, the damaged area is first "V'd" out, or beveled. Large bonding areas are desirable when repairing plastic because small repairs are less likely to hold permanently. Beveling the area around a crack at a 20° angle will increase the bonding surface for a repair. It is recommended that sharp edges be avoided because the joint may show through after the panel is refinished.

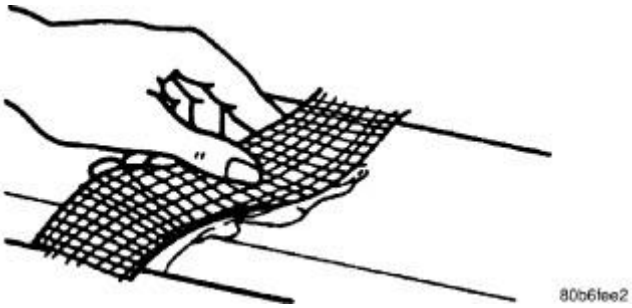

Fig. 18: Identifying Bonding Surface Repair Area
Courtesy of CHRYSLER GROUP, LLC

- Panel repair for both flexible and rigid panels are basically the same. The primary difference between flexible panel repair and rigid panel repair is in the adhesive materials used.
- The technician should first decide what needs to be done when working on any type of body panel. One should determine if it is possible to return the damage part to its original strength and appearance without exceeding the value of the replacement part.
- When plastic repairs are required, it is recommended that the part be left on the vehicle when ever possible. That will save time, and the panel will remain stationary during the repair. Misalignment can cause stress in the repair areas and can result in future failure.

VISUAL INSPECTION

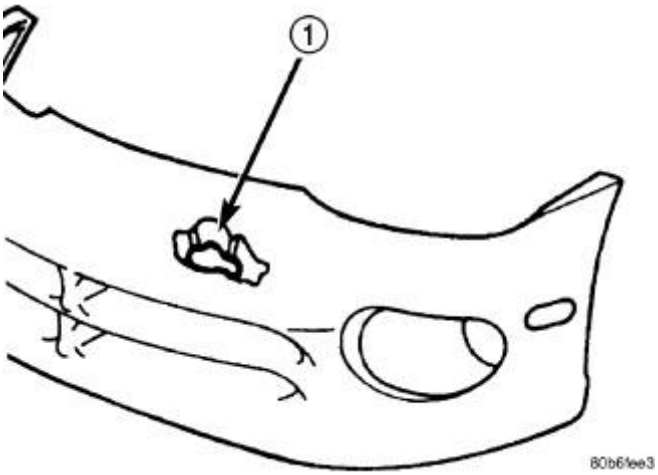

Fig. 19: Puncture
Courtesy of CHRYSLER GROUP, LLC

1 - PUNCTURE

Composite materials can mask the severity of an accident. Adhesive bond lines, interior structure of the doors, and steel structures need to be inspected carefully to get a true damage assessment. Close inspection may require partial removal of interior trim or inner panels.

Identify the type of repair: Puncture (1) or Crack - Damage that has penetrated completely through the panel. Damage is confined to one general area; a panel section is not required. However, a backer panel, open fiberglass tape, or matted material must be bonded from behind.

PANEL SURFACE PREPARATION

If a body panel has been punctured, cracked, or crushed, the damaged area must be removed from the panel to achieve a successful repair. All spider web cracks leading away from a damaged area must be stopped or removed. To stop a running crack in a panel, drill a 6 mm (0.250 in.) hole at the end of the crack farthest away from the damage. If spider web cracks can not be stopped, the panel would require replacement. The surfaces around the damaged area should be stripped of paint and freed from wax and oil. Sand surfaces around repair area with 80 -120 grit sandpaper, or equivalent, to assure adhesion of repair materials.

PATCHING PANELS

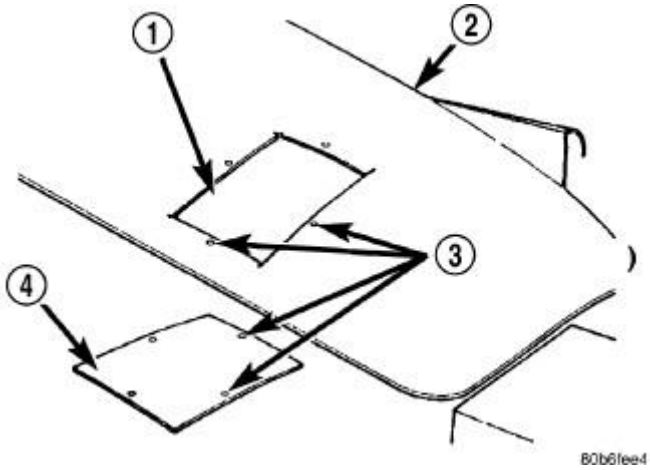

Fig. 20: Damaged Panel, Cutout & Patch
Courtesy of CHRYSLER GROUP, LLC

1 - CUTOUT 2 - DAMAGED BODY PANEL 3 - 4 MM (0.160 IN.) HOLES 4 - PATCH CUT TO SIZE

A panel that has extensive puncture type damage can be repaired by cutting out the damaged material. Use a suitable reciprocating saw or cut off wheel to remove the section of the panel that is damaged. The piece cut out can be used as a template to shape the new patch. It is not necessary to have access to the back of the panel to install a patch. Bevel edges of cutout at 20° to expose a larger bonding area on the outer side. This will allow for an increased reinforcement areas.

PANEL PATCH FABRICATIONS

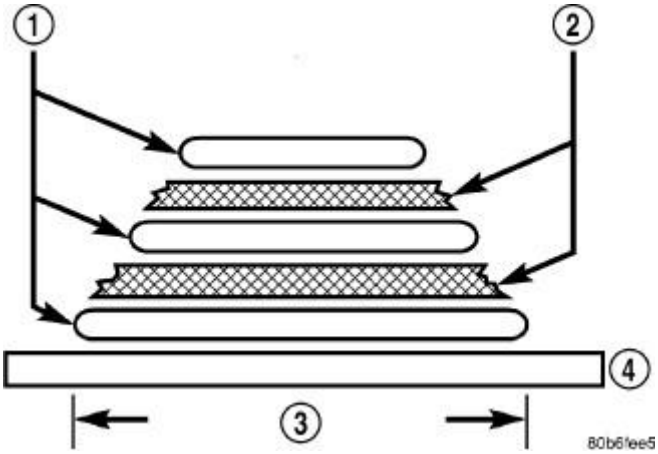

Fig. 21: Fabricated Panel
Courtesy of CHRYSLER GROUP, LLC

1 - STRUCTURAL ADHESIVE 2 - FIBERGLASS CLOTH OR FIBERGLASS MESH TAPE

3 - WIDTH OF V-GROOVE
4 - WAXED PAPER

A patch can be fabricated from any rigid fiberglass panel that has comparable contour with the repair area. Lift gates and fenders can be used to supply patch material. If existing material is not available or compatible, a patch can be constructed with adhesive and reinforcement mesh (dry wall tape). Perform the following operation if required:

1. Cover waxed paper or plastic with adhesive backed nylon mesh (dry wall tape) larger than the patch required.
2. Tape waxed paper or plastic sheet with mesh to a surface that has a compatible contour to the repair area.
3. Apply a liberal coat of adhesive over the reinforcement mesh. If necessary apply a second or third coat of adhesive and mesh after first coat has cured. The thickness of the patch should be the same as the repair area.
4. After patch has cured, peel waxed paper or plastic from the back of the patch.
5. If desired, a thin film coat of adhesive can be applied to the back of the patch to cover mesh for added strength.

PANEL PATCH INSTALLATION

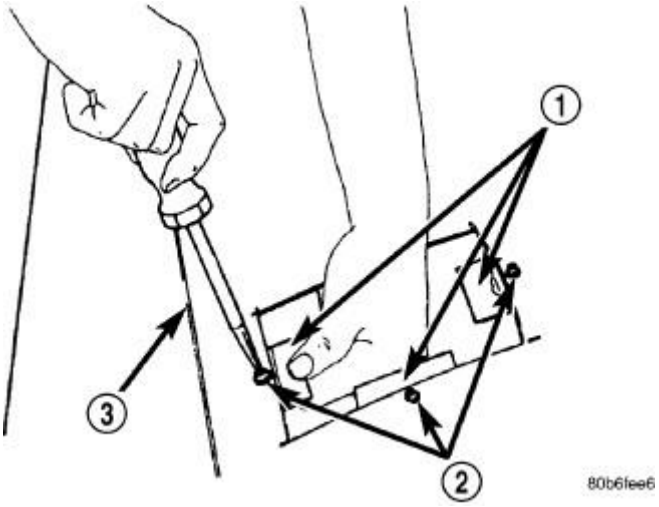

Fig. 22: Securing Support Squares To Body Panel
Courtesy of CHRYSLER GROUP, LLC

1 - SUPPORT SQUARES
2 - SCREWS
3 - DAMAGED BODY PANEL

1. Make a paper or cardboard pattern the size and shape of the cutout hole in the panel.
2. Trim 3 mm (0.125 in.) from edges of pattern so patch will have a gap between connecting surfaces.
3. Using the pattern as a guide, cut the patch to size.
4. Cut scrap pieces of patch material into 50 mm (2 in.) squares to use as patch supports to sustain the patch

in the cutout.

5. Drill 4 mm (0.160 in.) holes 13 mm (0.5 in.) in from edge of cutout hole.
6. Drill 4 mm (0.160 in.) holes 13 mm (0.5 in.) away from edge of patch across from holes drilled around cutout.
7. Drill 3 mm (0.125 in.) holes in the support squares 13 mm (0.5 in.) from the edge in the center of one side.
8. Scuff the backside of the body panel around the cutout hole with a scuff pad or sandpaper.
9. Mix enough adhesive to cover one side of all support squares.
10. Apply adhesive to cover one side of all support squares.
11. Using number 8 sheet metal screws, secure support squares to back side of body panel with adhesive sandwiched between the panel and squares.

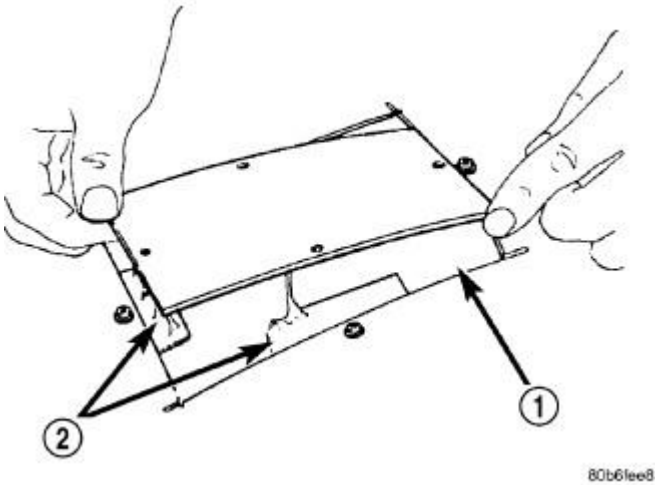

Fig. 23: Identifying Cutout & Support Squares
Courtesy of CHRYSLER GROUP, LLC

1 - CUTOUT 2 - SUPPORT SQUARES

12. Position patch in cutout (1) against support squares (2) and adjust patch until the gap is equal along all sides.
13. Drill 3 mm (0.125 in.) holes in the support squares through the pre-drilled holes in the patch.

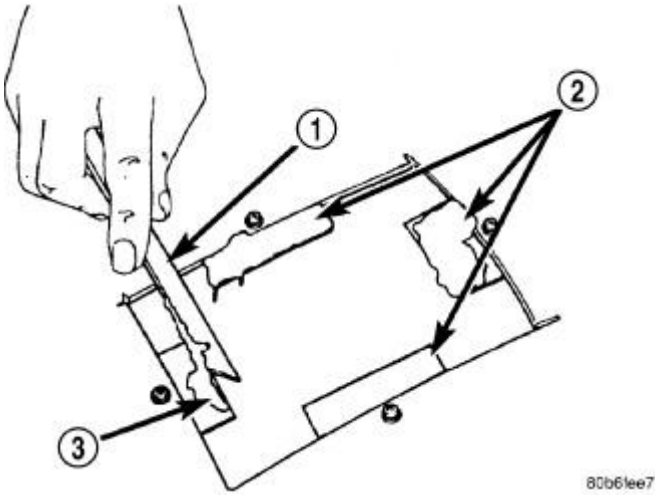

Fig. 24: Applying Adhesive
Courtesy of CHRYSLER GROUP, LLC

1 - APPLICATOR 2 - SUPPORT SQUARES 3 - ADHESIVE

14. Apply a coat of adhesive (3) to the exposed ends of the support squares (2).

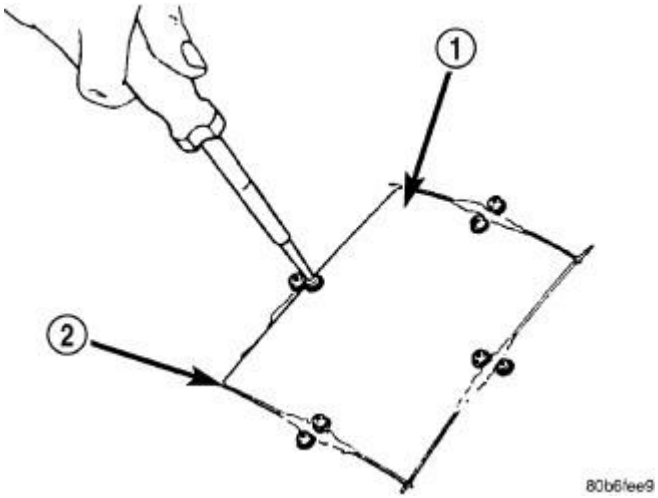

Fig. 25: Installing Screws Holding Patch To Support Squares
Courtesy of CHRYSLER GROUP, LLC

1 - PATCH 2 - GAP

15. Install screws to hold the patch (1) to support squares. Tighten screws until patch surface is flush with panel surface.
16. Allow adhesive to cure, and remove all screws.

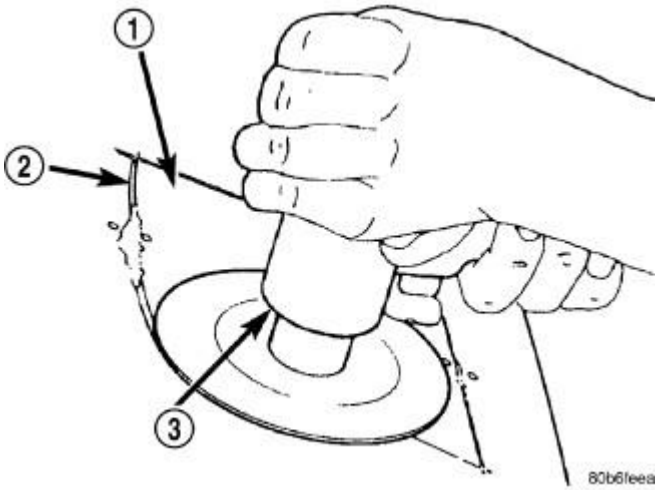

Fig. 26: Grinding Surface
Courtesy of CHRYSLER GROUP, LLC

1 - PATCH 2 - GAP 3 - DISC GRINDER

17. Using a 125 mm (5 in.) 24 grit disc grinder (3), grind a 50 mm (2 in.) to 75 mm (3 in.) wide and 75% - 80% deep (original material thickness) path across the gaps (2) around the patch (1). With compressed air, blow dust from around patch.

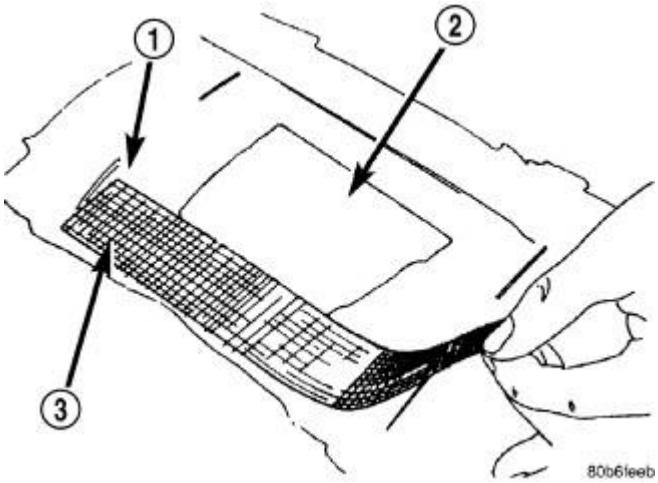

Fig. 27: Covering Gaps With Mesh
Courtesy of CHRYSLER GROUP, LLC

1 - GROUND DOWN AREA 2 - PATCH 3 - MESH

18. Apply adhesive backed nylon mesh (dry wall tape) over gaps around patch.

19. Mix enough adhesive to cover the entire patch area.

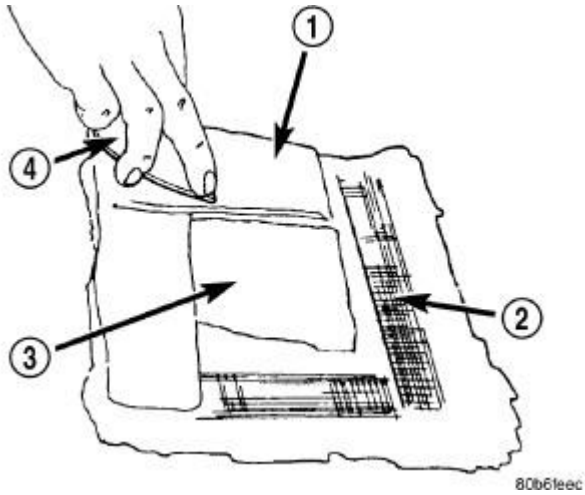

Fig. 28: Applying Adhesive Over Mesh Around Patch
Courtesy of CHRYSLER GROUP, LLC

1 - ADHESIVE 2 - MESH 3 - PATCH 4 - SPREADER

20. Apply adhesive over the mesh around patch, and smooth epoxy with a wide spreader to reduce finish grinding. Use two to three layers of mesh and adhesive to create a stronger repair.

PATCHED PANEL SURFACING

After patch panel is installed, the patch area can be finished using the same methods as finishing other types of body panels. If mesh material is exposed in the patched area, grind surface down, and apply a coat of high quality rigid plastic body filler. Prime, block sand, and paint as required.

SPECIFICATIONS

SPECIFICATIONS

Description	N.m	Ft. Lbs	In. Lbs.
A-pillar bolts	5	-	44
Body isolator nuts	68	50	-
B-pillar grab handle bolts	5	-	44
Cab mounting bolts	108	80	-
Cargo box mounting bolts	108	80	-
Cargo tie down bolts	34	25	-

Door striker bolts	30	22	-
Floor console floor bracket screws	7	5	62.0
Front door carrier plate bolts	5.5	-	49
Front door exterior handle bolts	7	5	62.0
Front door hinge to pillar bolts	24	18	-
Front door latch screws	7	5	62.0
Front door lower belt channel shut face screw	8	6	71
Front door striker bolts	30	22	-
Front door to hinge nuts	22	16	-
Front seat back bolts	40	29.5	-
Front seat belt buckle bolts	50	37	-
Front seat lumbar motor bolts	10	7	89
Front seat mounting bolts	47	35	-
Hood hinge to fender rail bolts	19	14	-
Hood hinge to hood nuts	18	13	-
Hood latch bolts	11	8	97
Hood striker bolts	17	12.5	-
Instrument panel center mounting bolts	12	9	-
Instrument panel fence line bolts	12	9	-
Instrument panel side mounting bolts	12	9	-
Lower seat belt anchor bolts rear	40	29.5	-
Ram box mounting bolts	7	5	62.0
Rear door exterior handle bolts	7	5	62.0
Rear door hinge to pillar bolts	24	18	-
Rear door striker bolts	26	19	-
Rear door to hinge bolts	22	16	-
Rear outer seat belt			

anchor bolts	40	29.5	-
Rear seat armrest fasteners	28	21	-
Rear seat back pivot bolts	28	21	-
Rear seat belt buckle bolts	47	35	-
Rear seat belt turning loop bolts	40	29.5	-
Rear seat cushion frame bolts	55	41	-
Rear seat storage lid bolts	28	21	-
Rear view mirror set screw	1	-	9
Seat belt turning loop bolts	40	29.5	-
Sunroof assembly screws	9	-	80
Sunroof glass screws	3.5	-	31
Tailgate handle nuts	6	-	53
Tailgate latch bolts	23	17.0	-
Tailgate striker	34	25	-

CAUTION: ** Whenever a body isolator bolts requires servicing or tightening, it is necessary to remove the bolt and install new thread locker compound to the threads.

SPECIAL TOOLS

SPECIAL TOOLS

	C-4755 - Trim Stick (Originally Shipped In Kit Number(s) 9299, 9299CC, 9299CC, 9300A-CAN.)

DECKLID/HATCH/LIFTGATE/TAILGATE

CABLE, TAILGATE

REMOVAL

REMOVAL

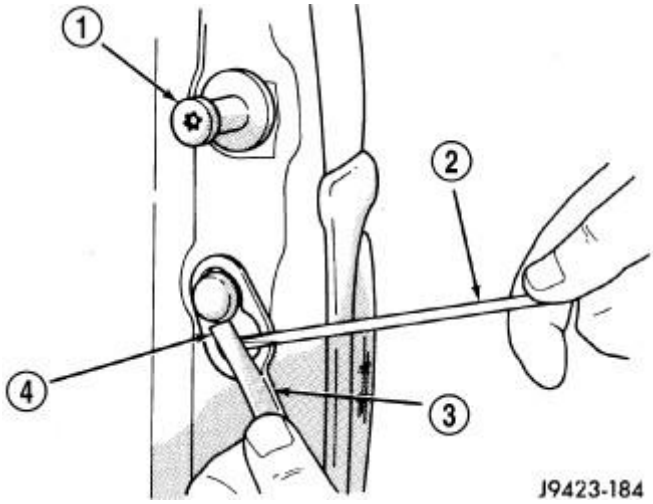

Fig. 29: Tailgate Check Cable Lock Tab
Courtesy of CHRYSLER GROUP, LLC

1. Open the tailgate and locate the tailgate check cable (3) on the left and right of the cargo box below the tailgate striker (1) as necessary.
2. Pry the cable lock tab(s) (4) outward using a screwdriver or flat bladed tool (2) and remove the tailgate check cable(s) from the cargo box.

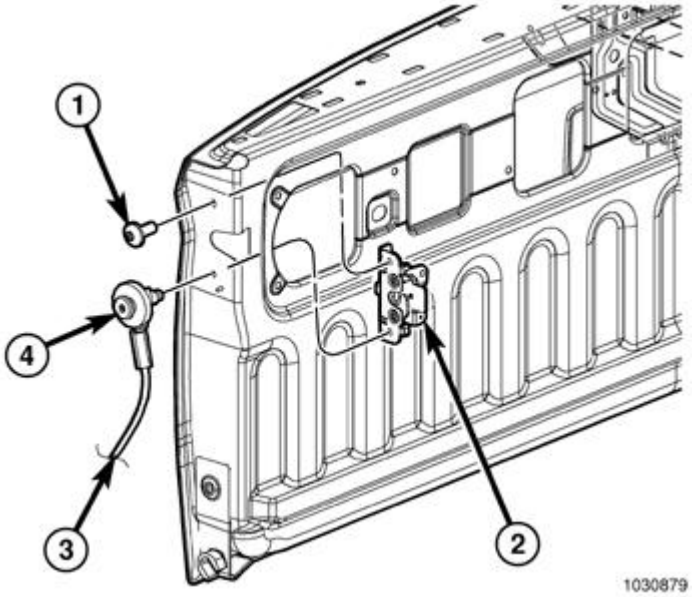

Fig. 30: Tailgate Check Cable & Bolt
Courtesy of CHRYSLER GROUP, LLC

3. Remove the bolt (4) that secures the tailgate check cable (3) to the left and right side of the tailgate.
4. Remove the tailgate check cable(s) from the tailgate.

INSTALLATION

INSTALLATION

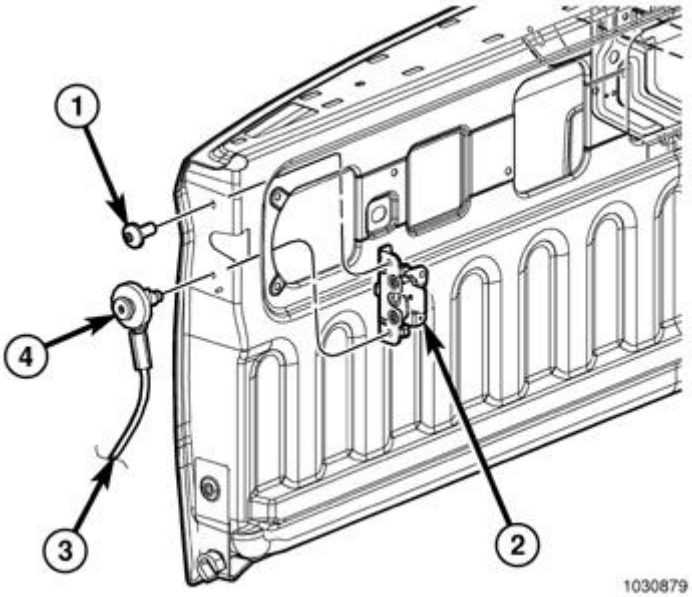

Fig. 31: Tailgate Check Cable & Bolt
Courtesy of CHRYSLER GROUP, LLC

1. Position the tailgate check cable (3) onto the left and right side of the tailgate as necessary.
2. Install the bolt (4) that secures the small end of the tailgate check cable(s) to the tailgate and tighten the bolt(s) to 23 N.m (17 ft. lbs.).

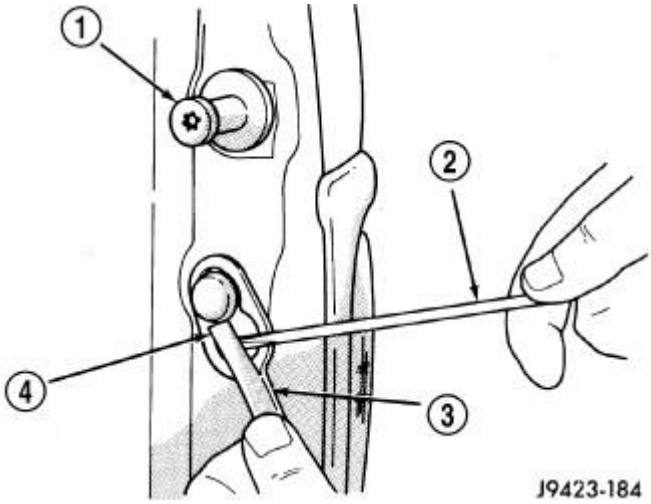

Fig. 32: Tailgate Check Cable Lock Tab
Courtesy of CHRYSLER GROUP, LLC

3. Position the tailgate check cable (3) to the left and right side of the cargo box below the tailgate striker (1) as necessary.
4. Install the large end of the tailgate check cable(s) onto the cargo box. Make sure that the cable lock tab(s) (4) fully engage.

COVER, TAILGATE

REMOVAL

REMOVAL

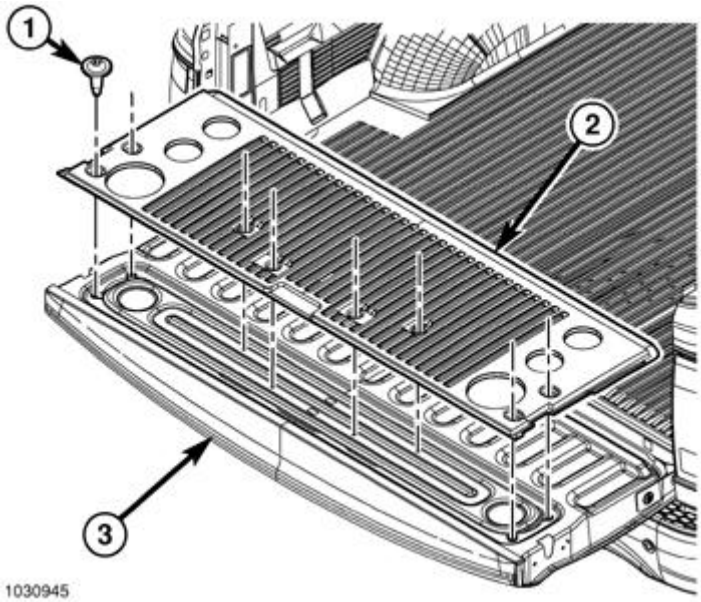

Fig. 33: Tailgate Liner
Courtesy of CHRYSLER GROUP, LLC

1. Open the tailgate (3).
2. Remove the screws (1) and remove the tailgate liner (2), if equipped.

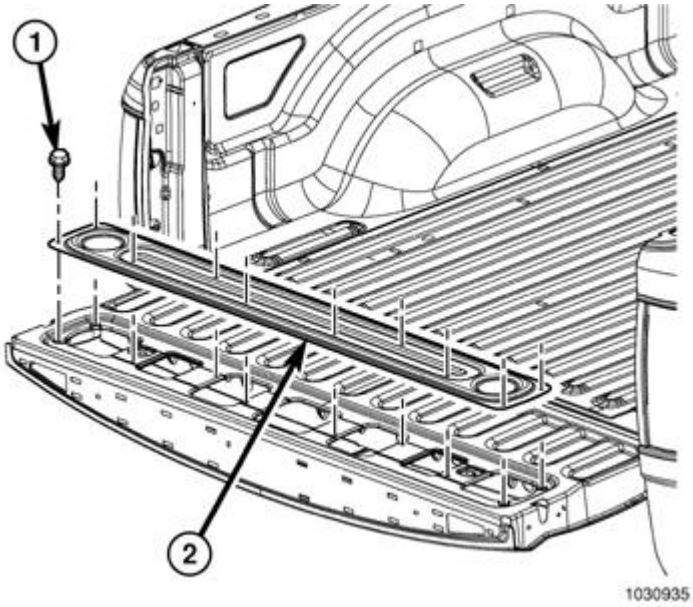

Fig. 34: Tailgate Cover
Courtesy of CHRYSLER GROUP, LLC

3. Remove the bolts (1) that secure the tailgate cover (2) to the inside of the tailgate and remove the cover.

INSTALLATION

INSTALLATION

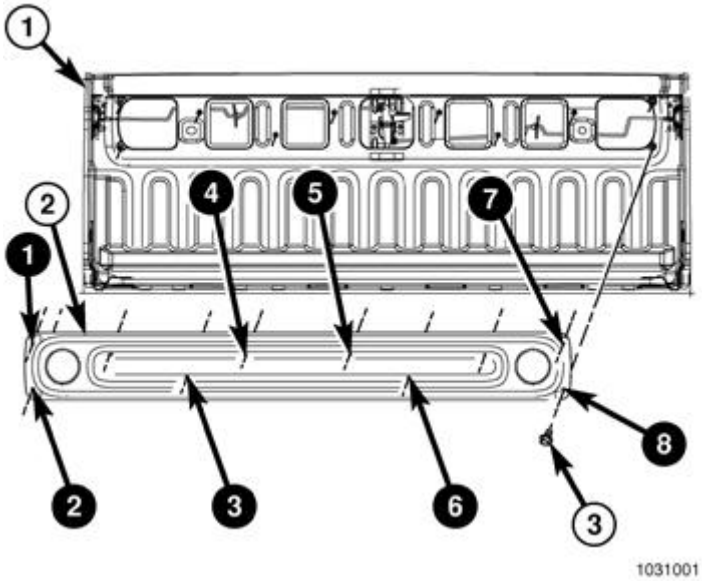

Fig. 35: Tailgate Cover
Courtesy of CHRYSLER GROUP, LLC

1. For vehicles without a tailgate liner, install the cover (2) onto the tailgate (1) and install the bolts (3).
2. Tighten the bolts using the sequence shown in illustration.

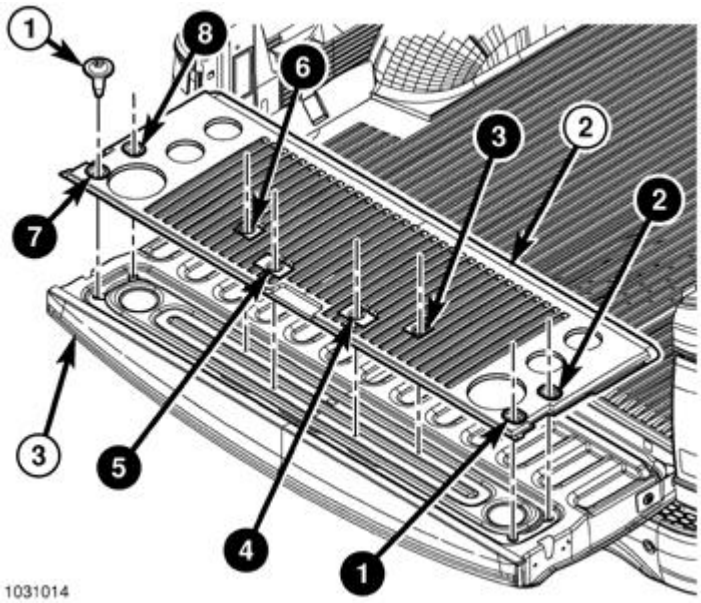

Fig. 36: Tailgate Liner

Courtesy of CHRYSLER GROUP, LLC

3. On vehicles with a tailgate liner, position the tailgate cover onto the inside of the tailgate (3).
4. Install the liner (2) onto the tailgate.
5. Install the screws (1) that secure the tailgate cover to the tailgate.
6. Tighten the screws using the sequence shown in illustration.

CYLINDER, LOCK

REMOVAL

REMOVAL

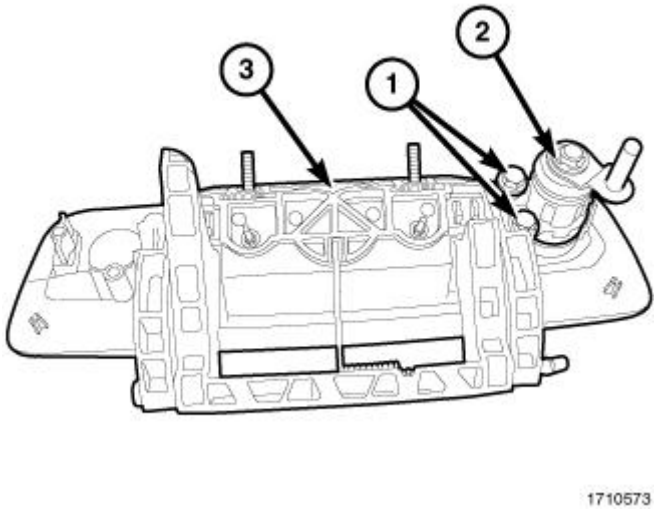

Fig. 37: Lock Cylinder & Handle
Courtesy of CHRYSLER GROUP, LLC

1. Remove the latch release handle (3). Refer to **HANDLE, LATCH RELEASE, REMOVAL**.
2. Remove the screws (1) and remove the lock cylinder (2).

INSTALLATION

INSTALLATION

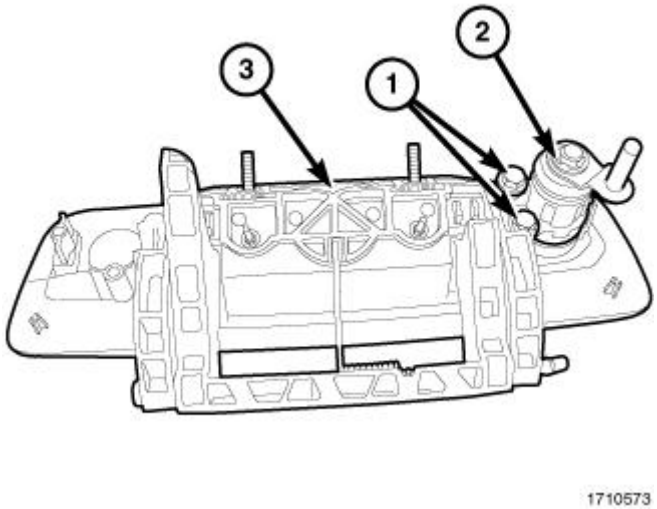

Fig. 38: Lock Cylinder & Handle
Courtesy of CHRYSLER GROUP, LLC

1. Install the lock cylinder (2) and install the screws (1).
2. Install the latch release handle (3). Refer to **HANDLE, LATCH RELEASE, INSTALLATION**.

LOCK CYLINDER CODING INSTRUCTIONS

1. If present, remove the protective label off of the new lock cylinder.
2. Insert the key that is intended for everyday use, fully into the cylinder.
3. Slowly rotate the key clockwise, while maintaining full key insertion, to 180 degrees or slightly more (6 or 7 o'clock position).

NOTE: The lock will code at 180 degrees.

4. Then rotate the key counter-clockwise to 90 degrees or 3 o'clock.
5. You will hear the lock activate, then rotate the key to vertical key-out position and remove the key.

HANDLE, LATCH RELEASE

REMOVAL

REMOVAL

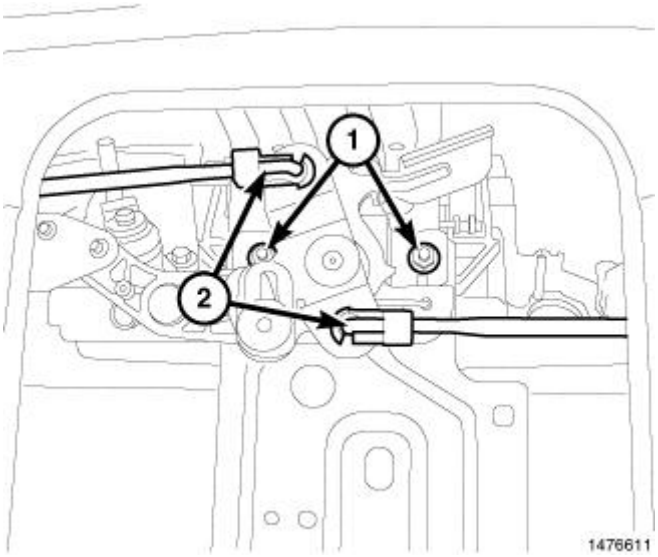

Fig. 39: Tailgate Control Rod
Courtesy of CHRYSLER GROUP, LLC

1. Open the tailgate and remove the cover and liner, if equipped. Refer to **REMOVAL**.
2. Using a grease pencil or equivalent, mark the location of the actuator rods (2) at the control.
3. Disconnect the actuator rods from the control.

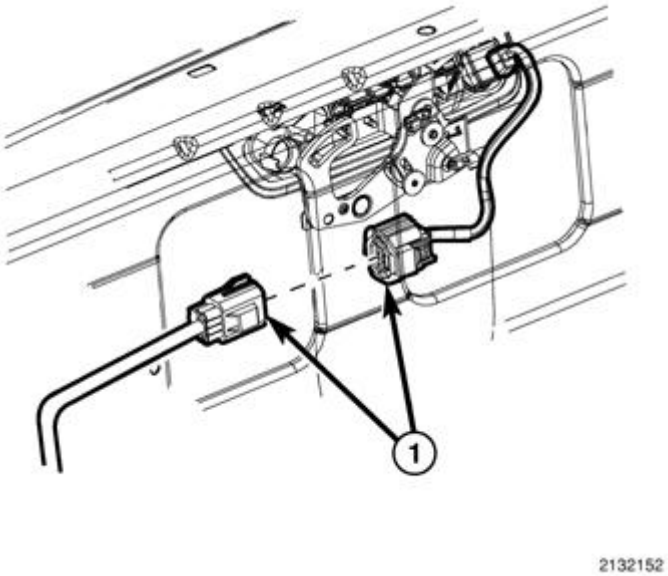

Fig. 40: Backup Camera Electrical Connector
Courtesy of CHRYSLER GROUP, LLC

4. Disconnect the backup camera electrical connector (1), if equipped.

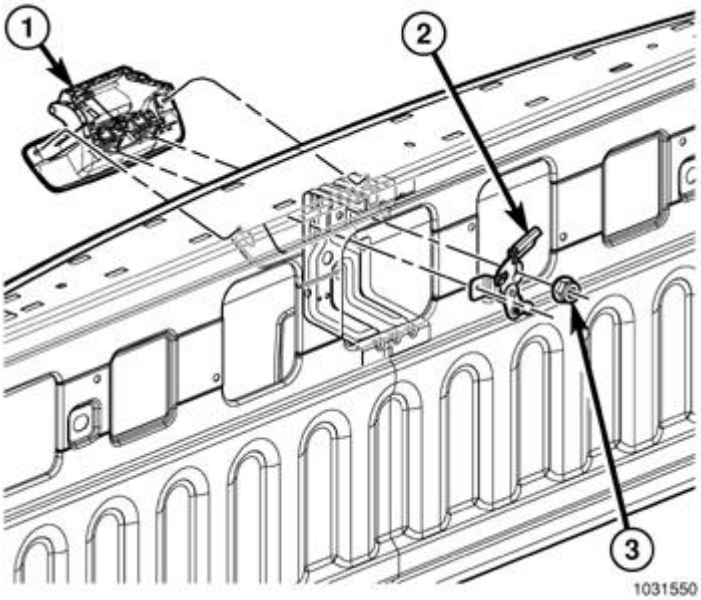

Fig. 41: Tailgate Release Handle & Actuator Rods
Courtesy of CHRYSLER GROUP, LLC

5. Remove the two nuts (3) that secure the release handle (1) and the control (2) to the tailgate.
6. Remove the control (2) and the release handle (1) from the tailgate.

INSTALLATION

INSTALLATION

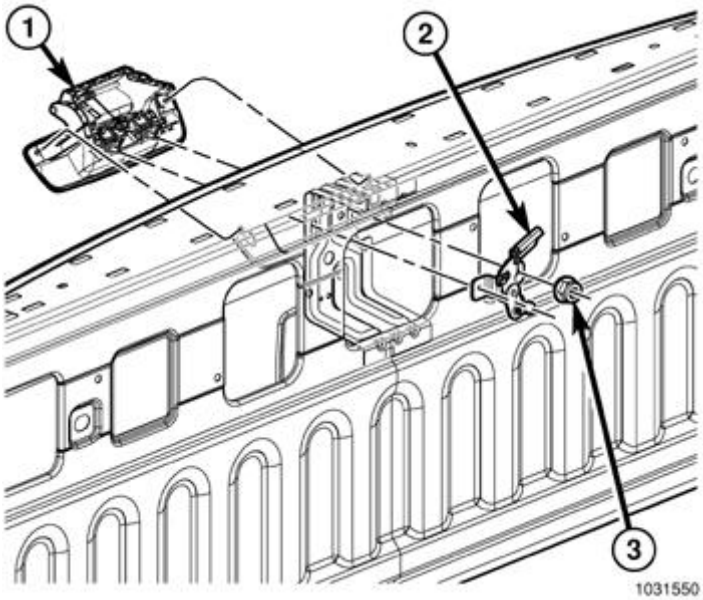

Fig. 42: Tailgate Release Handle & Actuator Rods
Courtesy of CHRYSLER GROUP, LLC

1. Position the release handle (1) and the control (2) onto the tailgate.

2. Install the two nuts (3) that secure the release handle and control to the tailgate. Tighten the nuts to 6 N.m (53 in. lbs.).

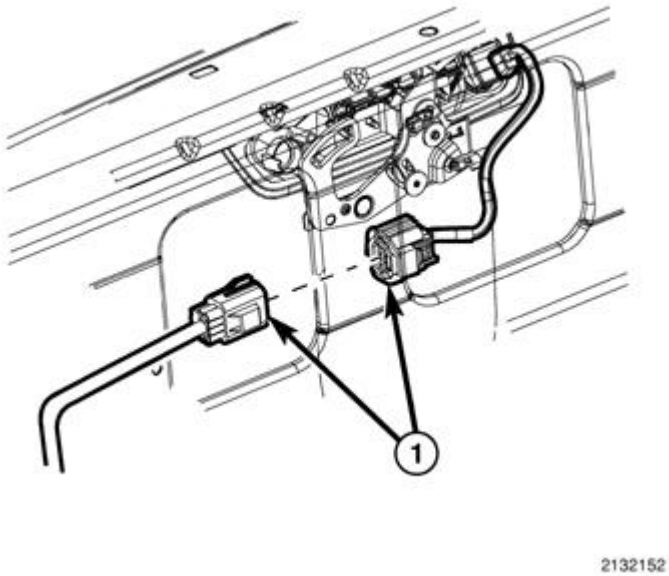

Fig. 43: Backup Camera Electrical Connector
Courtesy of CHRYSLER GROUP, LLC

3. Connect the backup camera electrical connector (1), if equipped.

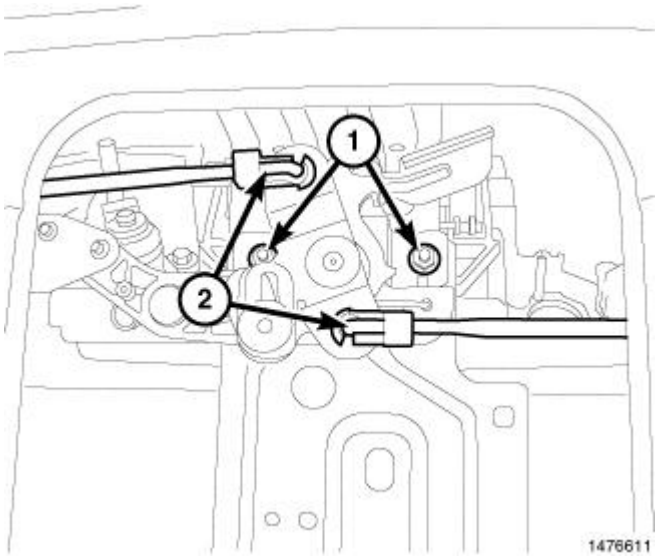

Fig. 44: Tailgate Control Rod
Courtesy of CHRYSLER GROUP, LLC

4. Locate the actuator rods (2) to the control using the reference marks made during the removal procedure and connect the rods to the control.
5. Install the tailgate cover and liner, if equipped. Refer to **COVER, TAILGATE, INSTALLATION**.

LATCH

REMOVAL

REMOVAL

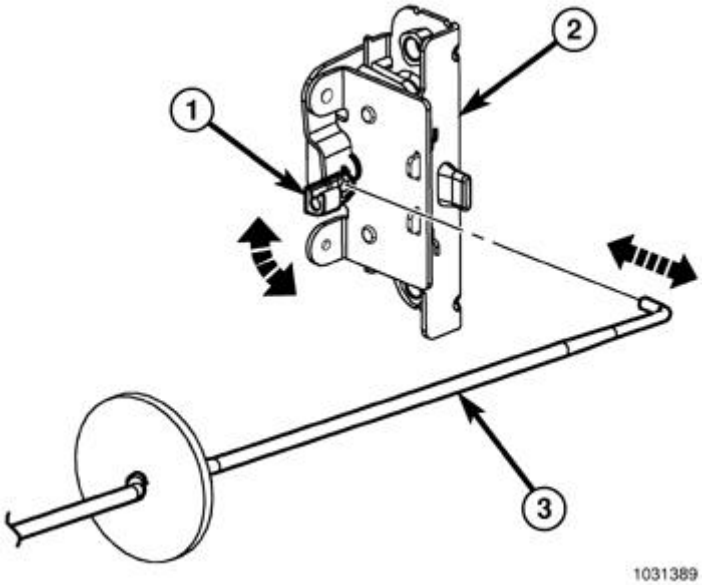

Fig. 45: Actuator Rod
Courtesy of CHRYSLER GROUP, LLC

1. Remove the tailgate cover. Refer to **COVER, TAILGATE, REMOVAL**.
2. Using a grease pencil or equivalent, mark the actuator rod (3) at the control (2) for the latch (1) being serviced.
3. Disconnect the actuator rod from the control.

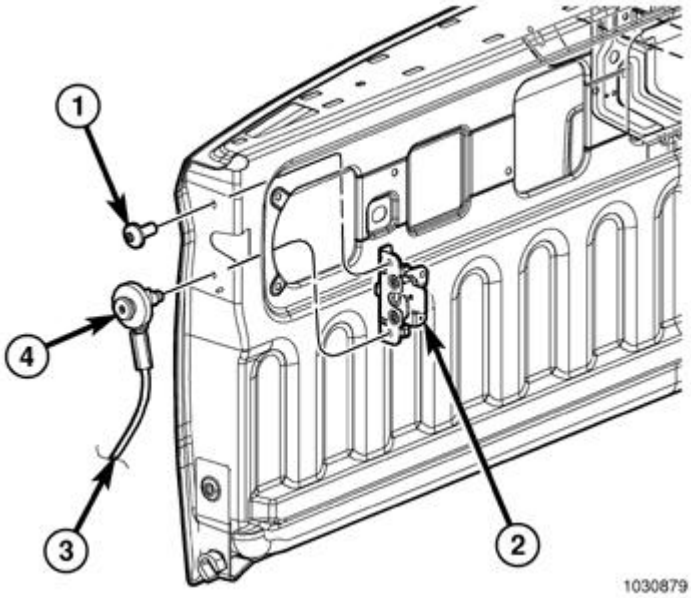

Fig. 46: Tailgate Check Cable & Bolt
Courtesy of CHRYSLER GROUP, LLC

4. Remove the two bolts (1 and 4) that secure the latch (2) to the tailgate and position the tailgate check cable (6) out of the way.
5. Remove the latch from the tailgate.

INSTALLATION

INSTALLATION

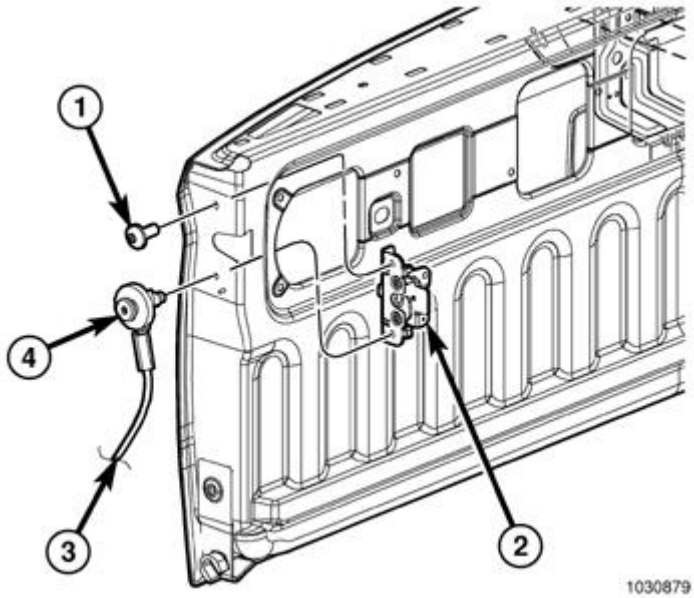

Fig. 47: Tailgate Check Cable & Bolt
Courtesy of CHRYSLER GROUP, LLC

1. Loose assemble the latch (2) to the tailgate.
2. Install the cable and anchor bolt (4) to the latch.
3. Install the bolt (1) securing the latch (2).
4. Tighten the fasteners to 23 N.m (17 ft. lbs.).

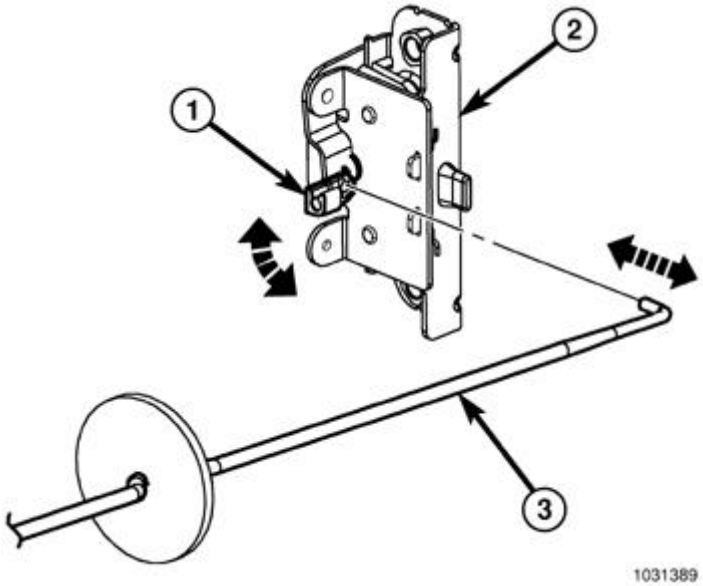

Fig. 48: Actuator Rod
Courtesy of CHRYSLER GROUP, LLC

5. Install the actuator rod (3) and secure the clip (1) fully.
6. Install the tailgate cover. Refer to **COVER, TAILGATE, INSTALLATION**.

SPOILER

REMOVAL

REMOVAL

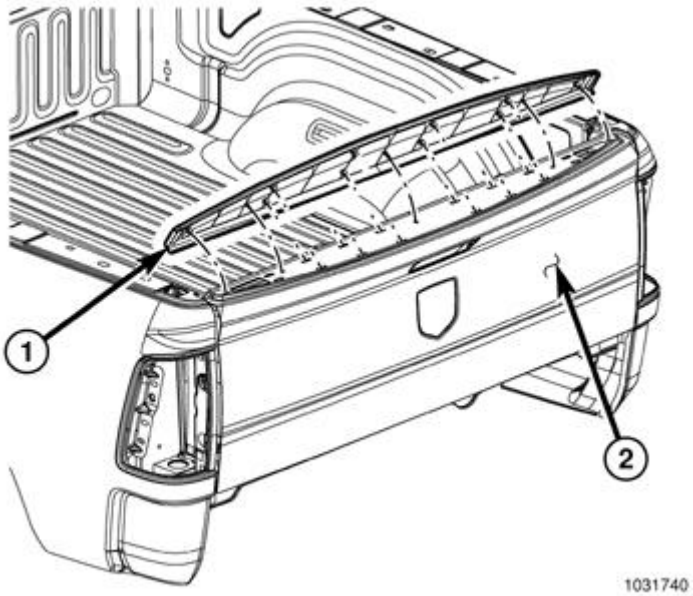

Fig. 49: Spoiler
Courtesy of CHRYSLER GROUP, LLC

1. Using trim stick (special tool #C-4755, Trim Stick) or equivalent, release the retaining clips and remove the spoiler (1) from the tailgate (2).

INSTALLATION

INSTALLATION

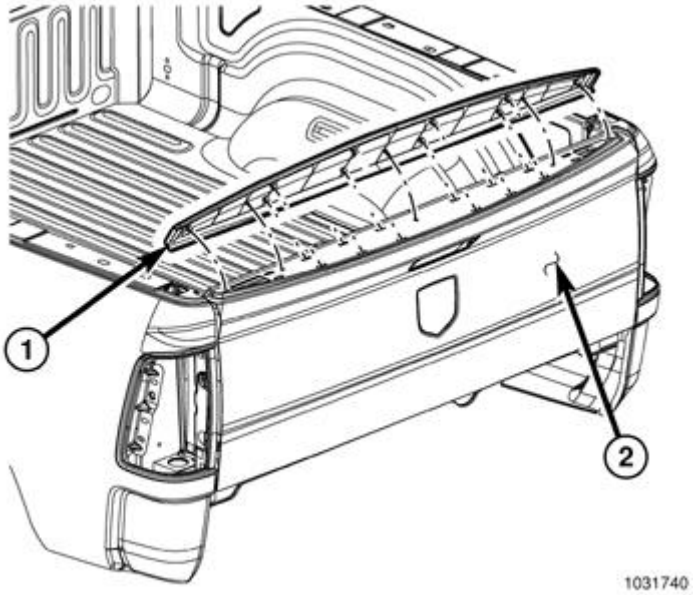

Fig. 50: Spoiler
Courtesy of CHRYSLER GROUP, LLC

1. Position the spoiler (1) to the holes in the top of the tailgate (2).
2. Insert the locating pin into the center of the tailgate top and line up the retaining clips into the holes.
3. Working from the center out tap the retaining clips into the holes fully.

STRIKER, LATCH

REMOVAL

REMOVAL

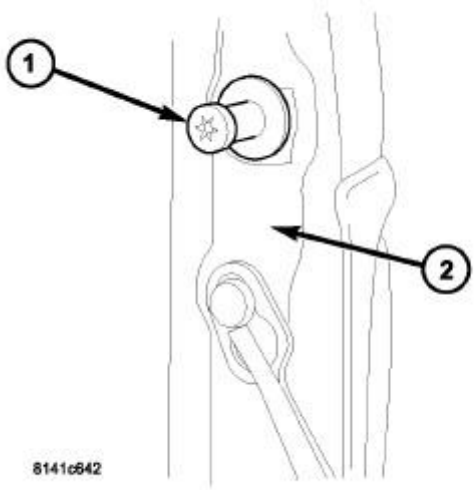

Fig. 51: Identifying Tailgate Latch Striker
Courtesy of CHRYSLER GROUP, LLC

1. Open the tailgate and using a grease pencil or equivalent, mark the location of the tailgate striker (1) being serviced.
2. Remove the striker from the cargo box (2).

INSTALLATION

INSTALLATION

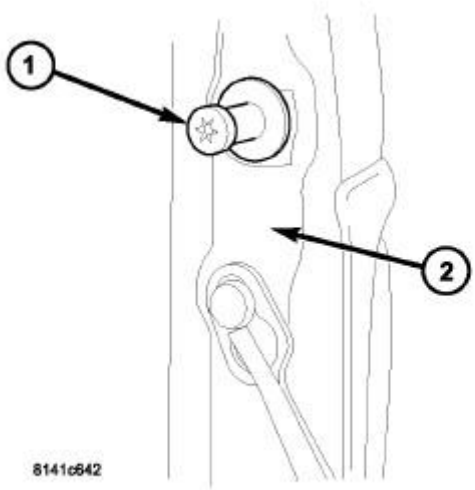

Fig. 52: Identifying Tailgate Latch Striker
Courtesy of CHRYSLER GROUP, LLC

1. Position the striker (1) onto the cargo box (2) using the reference mark made during the removal procedure.
2. Tighten the striker to 34 N.m (25 ft. lbs.).

TAILGATE

REMOVAL

REMOVAL

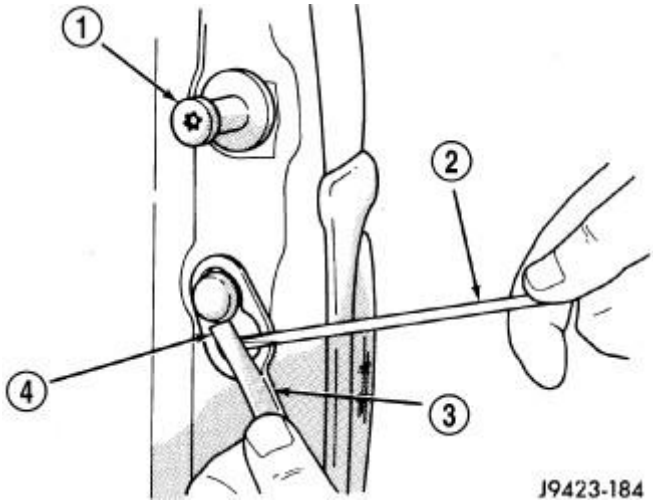

Fig. 53: Tailgate Check Cable Lock Tab
Courtesy of CHRYSLER GROUP, LLC

1. Open the tailgate and locate the tailgate check cable (3) on the left and right of the cargo box below the tailgate striker (1) as necessary.
2. Pry the cable lock tab(s) (4) outward using a screwdriver or flat bladed tool (2) and remove the tailgate check cable(s) from the cargo box.

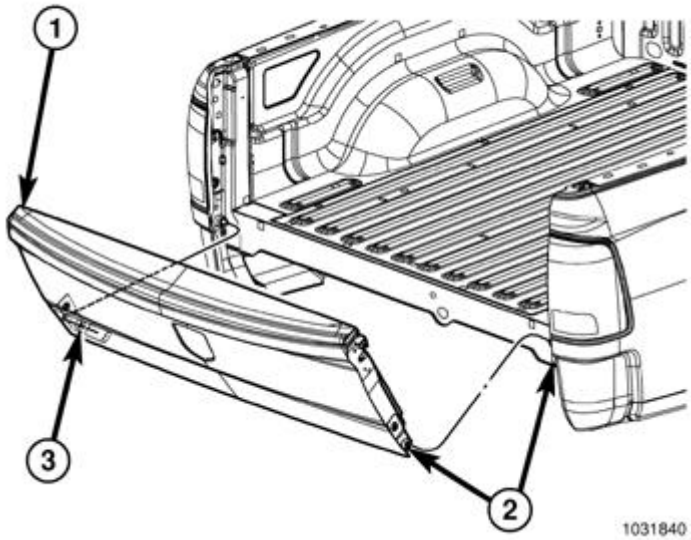

Fig. 54: Tailgate
Courtesy of CHRYSLER GROUP, LLC

3. If equipped, disconnect the electrical connectors.
4. Partially close the tailgate so that the notch in the right side tailgate pivot pocket (2) aligns with the flats on the right side tailgate pivot pin.
5. Lift the tailgate upward far enough to disengage the tailgate pivot pocket from the right side tailgate pivot pin.
6. Carefully slide the tailgate to the right far enough to disengage it from the left side tailgate pivot pin and remove the tailgate.

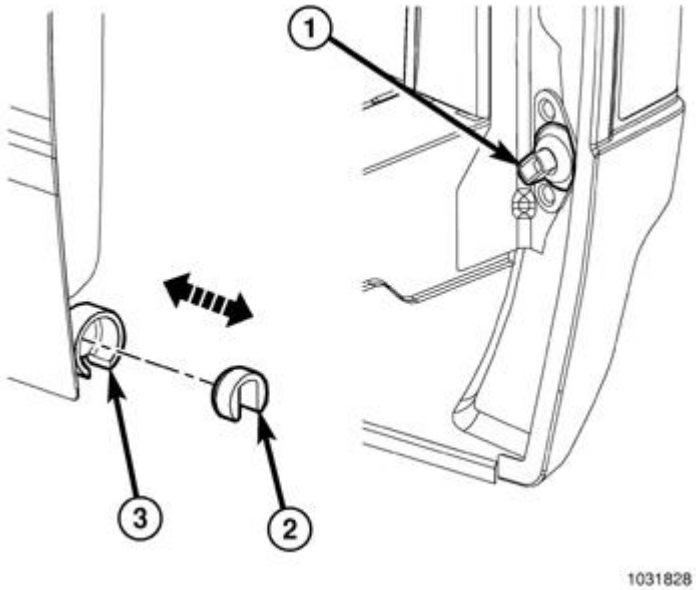

Fig. 55: Tailgate Pivot Pocket & Bushing
Courtesy of CHRYSLER GROUP, LLC

7. If required, remove the bushing (2) from each tailgate pivot pocket (3).

INSTALLATION

INSTALLATION

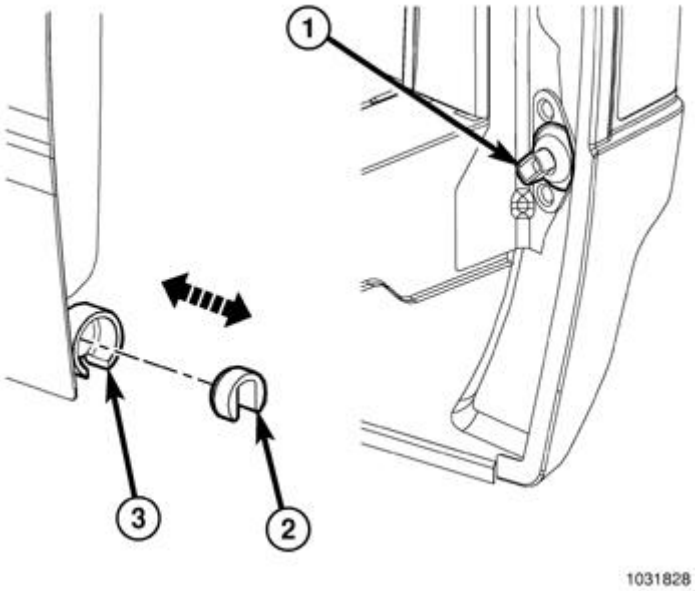

Fig. 56: Tailgate Pivot Pocket & Bushing
Courtesy of CHRYSLER GROUP, LLC

1. If removed, install the bushing (2) into each tailgate pivot pocket (3).

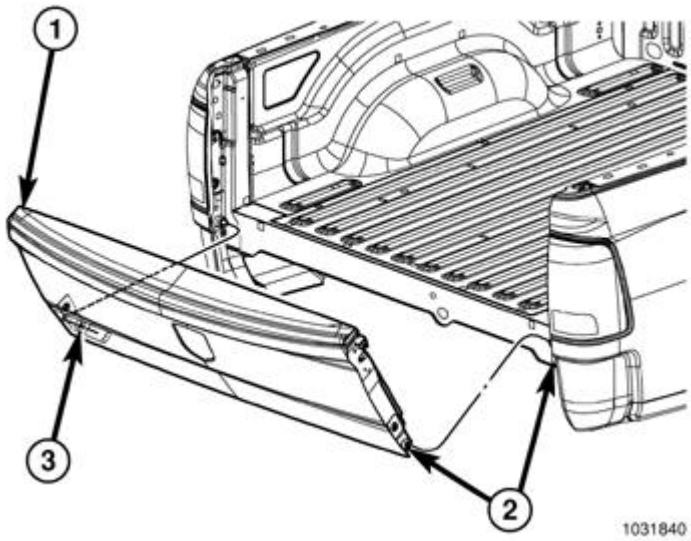

Fig. 57: Tailgate
Courtesy of CHRYSLER GROUP, LLC

2. Position the tailgate (1) onto the left side tailgate pivot pin (3).
3. Partially close the tailgate so that the notch in the right side tailgate pivot pocket (2) aligns with the flats on the right side tailgate pivot pin.
4. Lower the tailgate onto the right side tailgate pivot pin.

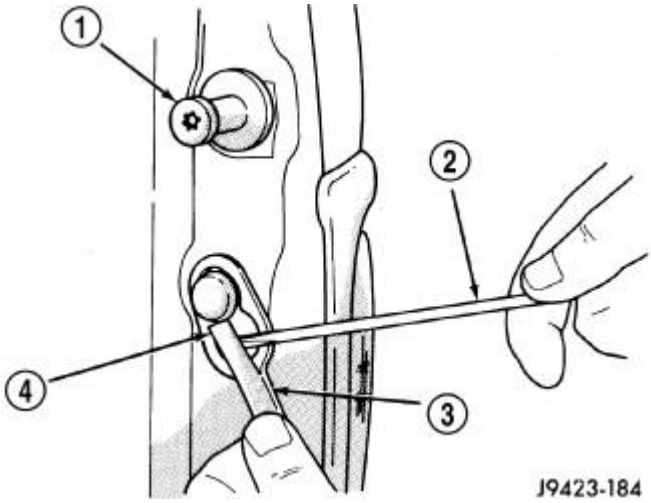

Fig. 58: Tailgate Check Cable Lock Tab
Courtesy of CHRYSLER GROUP, LLC

5. If equipped, connect the electrical connectors.
6. Connect the tailgate check cables (3) to the cable bolts (2) located below each tailgate striker (1). Refer to **CABLE, TAILGATE, INSTALLATION**.

DOOR - FRONT

CYLINDER, DOOR LOCK

REMOVAL

REMOVAL

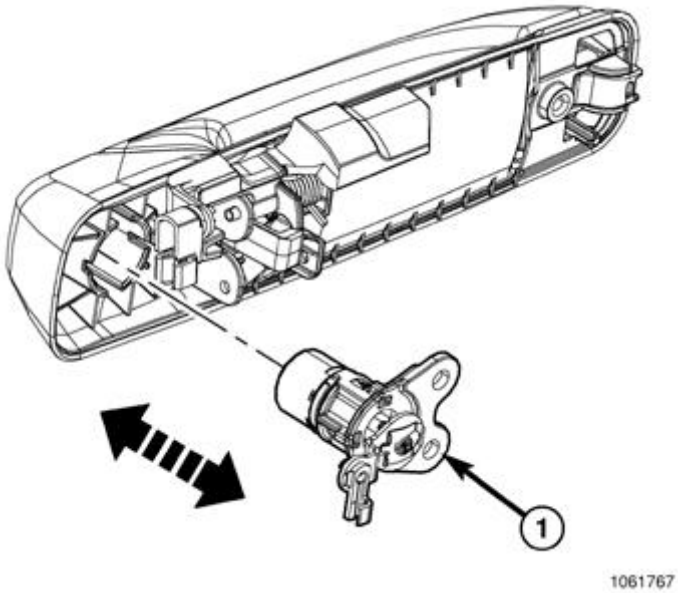

Fig. 59: Lock Cylinder
Courtesy of CHRYSLER GROUP, LLC

1. Remove the exterior door handle. Refer to **HANDLE, EXTERIOR, REMOVAL**.
2. Separate the lock cylinder (1) from the handle.

INSTALLATION

INSTALLATION

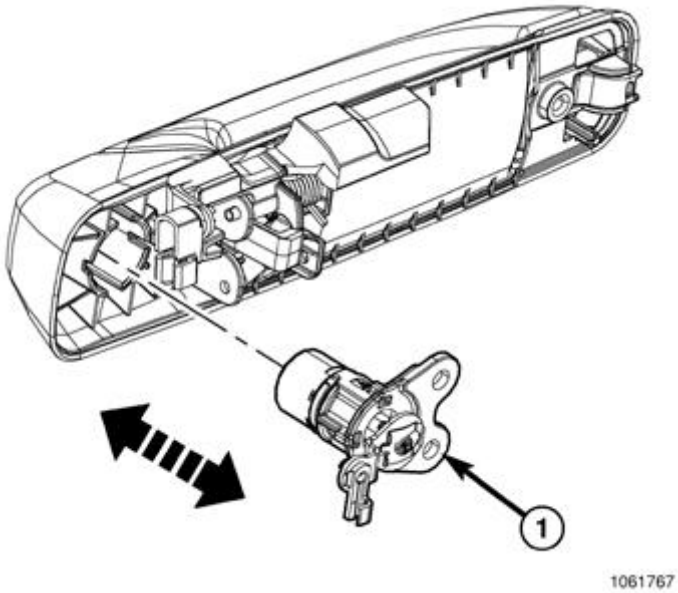

Fig. 60: Lock Cylinder
Courtesy of CHRYSLER GROUP, LLC

1. Position the door lock cylinder (1) into the exterior door handle.

2. Install the exterior handle. Refer to **HANDLE, EXTERIOR, INSTALLATION**.

DOOR

ADJUSTMENTS

ADJUSTMENTS

NOTE: **For quad cab vehicles, it is recommended that you adjust the rear door before adjusting the front door. Refer to DOOR, REAR, ADJUSTMENTS.**

- **Door adjustment measurements should be taken from stationary or welded body panels like the roof, rocker or quarter panels.**
- **During adjustment procedures, it is recommended that all the hinge fasteners be loosened except for the upper most fasteners. Adjustments can be made using the upper bolts to hold the door with final torque of the fasteners occurring after correct door positioning is achieved.**
- **A suitable body sealant should be used when removing or moving the hinges.**

FORE/AFT

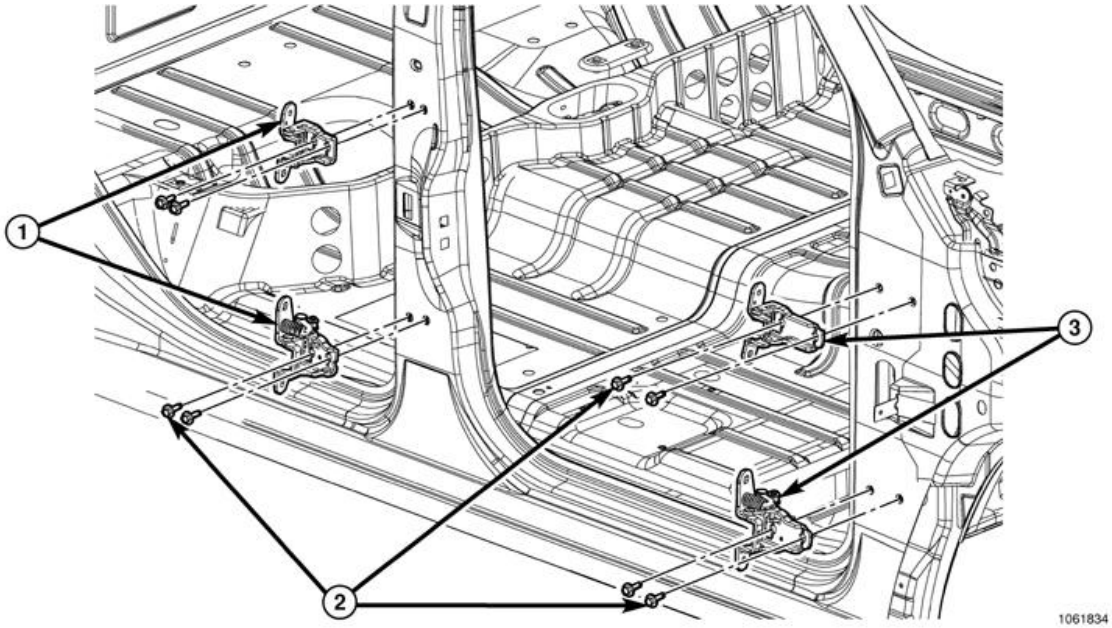

Fig. 61: Hinge Pillar & Bolts
Courtesy of CHRYSLER GROUP, LLC

NOTE: **Fore/aft (lateral) door adjustment is done by loosening the hinge to the hinge pillar fasteners one hinge at a time and moving the door to the correct position.**

1. Support the door with a suitable lifting device.

2. Loosen the upper and lower hinge to hinge pillar fasteners (2). Refer to **HINGE, DOOR, REMOVAL**.
3. Adjust the door to the correct position. Refer to **GAP AND FLUSH, SPECIFICATIONS**.
4. Tighten the hinge to hinge pillar bolts (2) to 24 N.m (18 ft. lbs.).

UP/DOWN

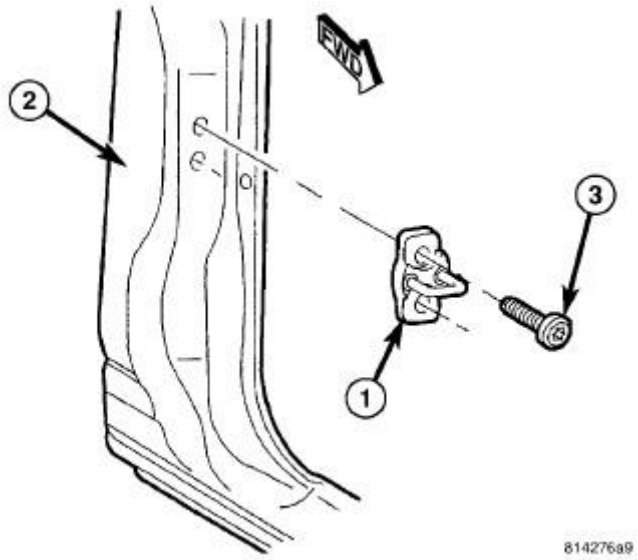

Fig. 62: Door Latch Striker & Bolts
Courtesy of CHRYSLER GROUP, LLC

NOTE: **Up/down door adjustment is done by loosening either the hinge to the hinge pillar fasteners or the hinge to door fasteners and moving the door to the correct position.**

NOTE: **When the up/down adjustments are done correctly, the top of the door is positioned over flush to the roof. Refer to GAP AND FLUSH, SPECIFICATIONS.**

1. Support the door with a suitable lifting device.
2. Remove the latch striker (1). Refer to **STRIKER, DOOR LATCH, REMOVAL**.

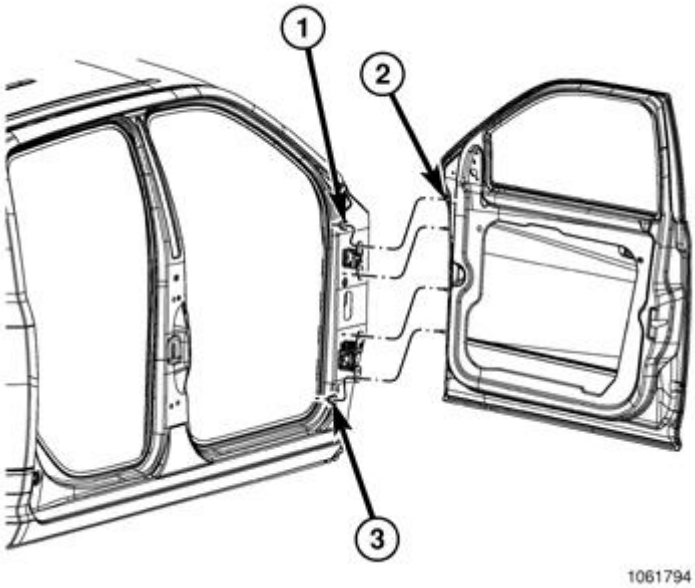

Fig. 63: Door Hinges
Courtesy of CHRYSLER GROUP, LLC

3. If necessary, loosen the hinge to door fasteners (1) and (3). Refer to **DOOR, REMOVAL**.

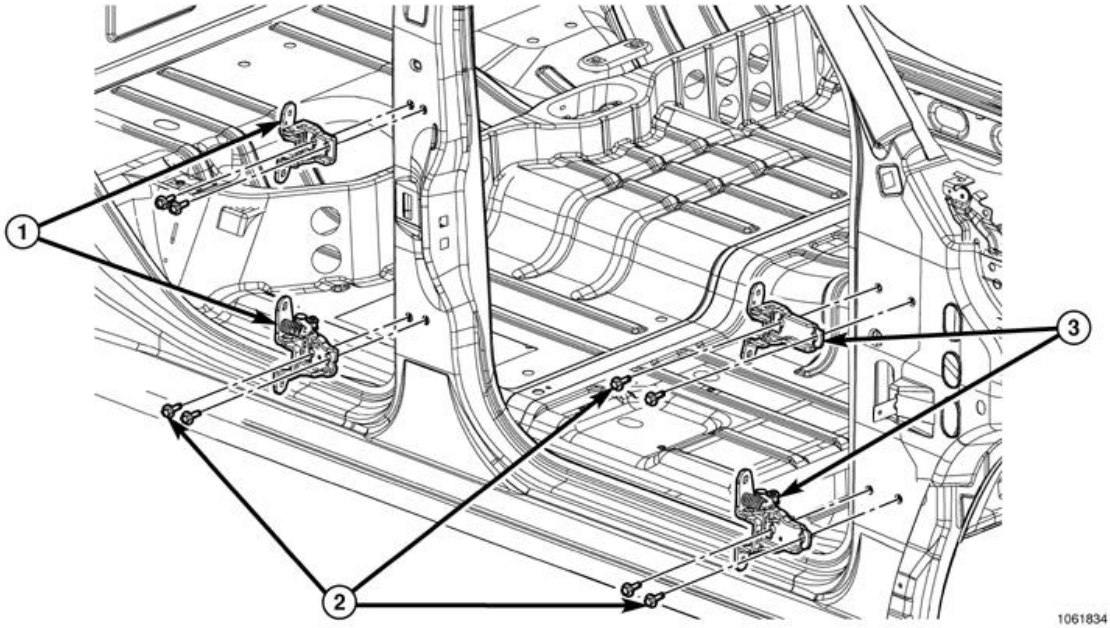

Fig. 64: Hinge Pillar & Bolts
Courtesy of CHRYSLER GROUP, LLC

4. If necessary, loosen the hinge to hinge pillar fasteners (2). Refer to **HINGE, DOOR, REMOVAL**.
5. Adjust the door to the correct position. Refer to **GAP AND FLUSH, SPECIFICATIONS**.

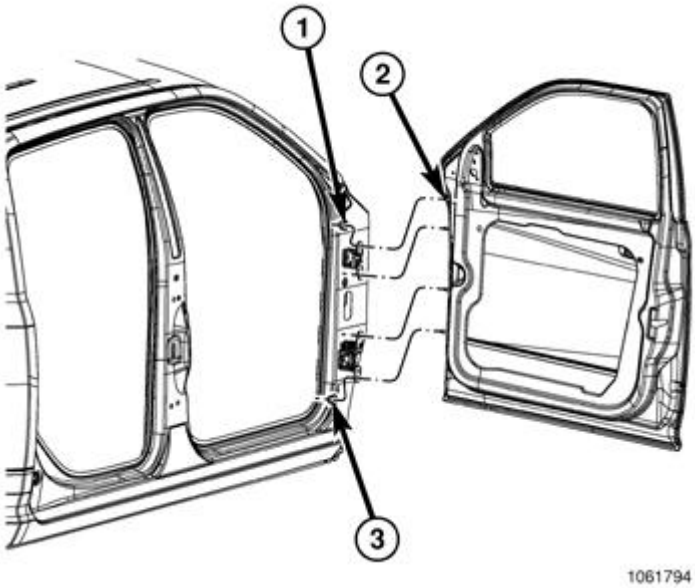

Fig. 65: Door Hinges
Courtesy of CHRYSLER GROUP, LLC

6. Tighten the door to hinge fasteners to 22 N.m (16 ft. lbs.)

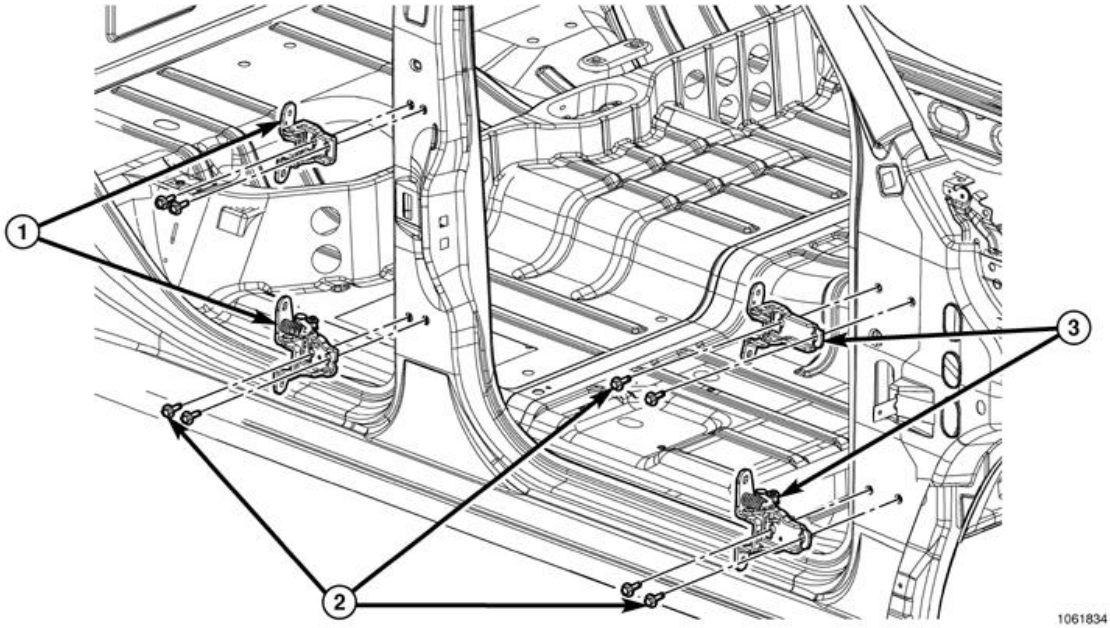

Fig. 66: Hinge Pillar & Bolts
Courtesy of CHRYSLER GROUP, LLC

7. Tighten the hinge to hinge pillar bolts (2) to 24 N.m (18 ft. lbs.).

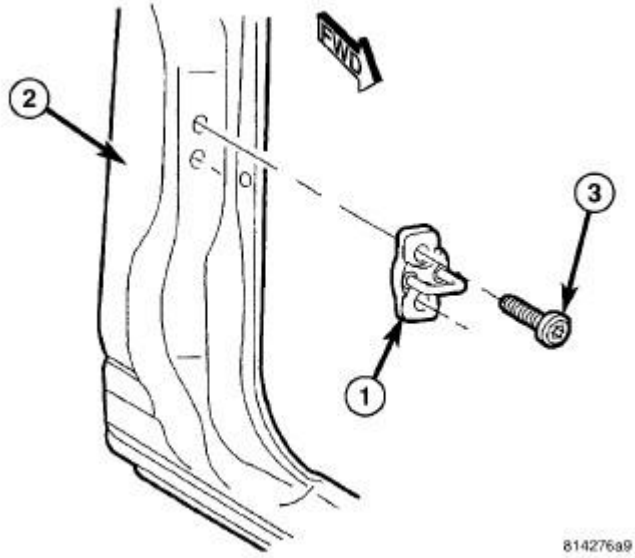

Fig. 67: Door Latch Striker & Bolts
Courtesy of CHRYSLER GROUP, LLC

8. Install the latch striker (1). Refer to **STRIKER, DOOR LATCH, INSTALLATION**.

IN/OUT

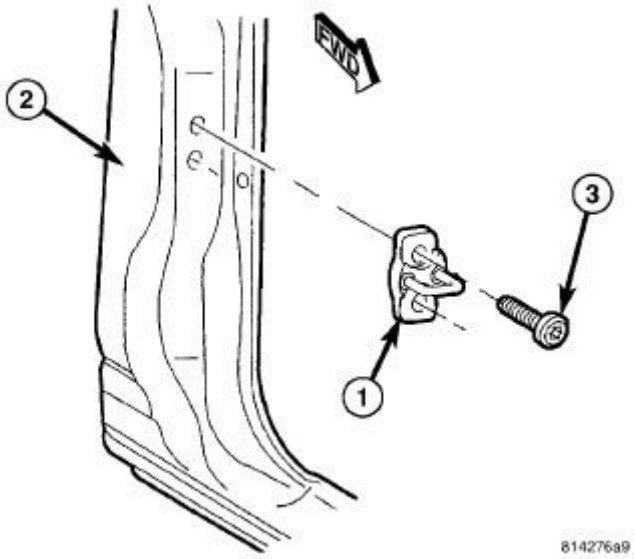

Fig. 68: Door Latch Striker & Bolts
Courtesy of CHRYSLER GROUP, LLC

NOTE: **In/out door adjustment is done by loosening the hinge to door fasteners one hinge at a time and moving the door to the correct position.**

NOTE: **When adjustment of the door requires the loosening of the door to hinge fasteners, it will be necessary to separate the epoxy bonded washers with a chisel or other suitable tool.**

1. Support the door with a suitable lifting device.
2. Remove the latch striker (1). Refer to **STRIKER, DOOR LATCH, REMOVAL**.

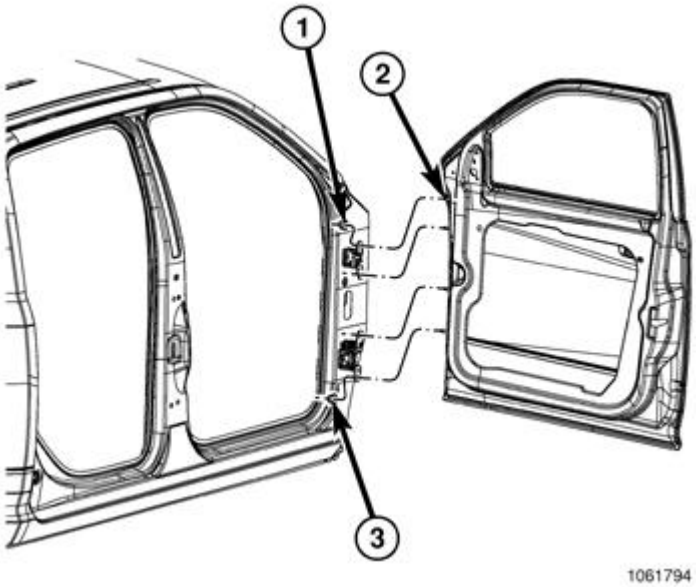

Fig. 69: Door Hinges
Courtesy of CHRYSLER GROUP, LLC

3. Loosen the hinge to door fasteners. Refer to **DOOR, REMOVAL**.
4. Adjust the door to the correct position. Refer to **GAP AND FLUSH, SPECIFICATIONS**.
5. Tighten the door to hinge fasteners to 22 N.m (16 ft. lbs.).

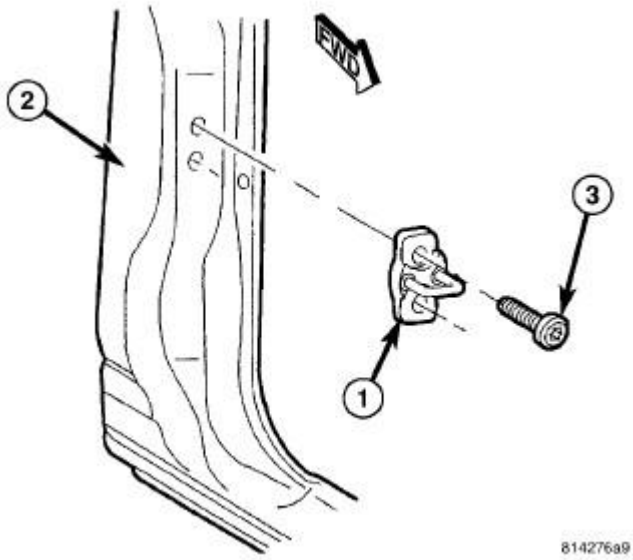

Fig. 70: Door Latch Striker & Bolts
Courtesy of CHRYSLER GROUP, LLC

6. Install the latch striker (1). Refer to **STRIKER, DOOR LATCH, INSTALLATION**.

REMOVAL

REMOVAL

1. Disconnect and isolate the negative battery cable.
2. Disconnect the door electrical connector.

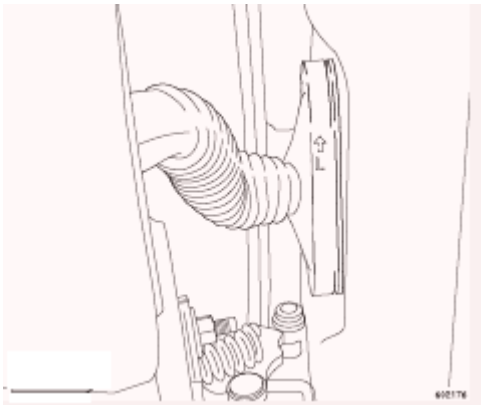

Fig. 71: Door Harness Connector
Courtesy of CHRYSLER GROUP, LLC

NOTE: The following illustration shows a typical door harness connector.

3. Peel the A Pillar grommet (1) off of the connector/retainer and move it up the wire harness.
4. Grasp the wire harness (2) by the convolute section of the grommet and gently pull the wire harness down

towards the floor to expose the connector lock tabs.

CAUTION: Do not force the locking tab past the connector body, as damage to the connector may occur.

5. While still pulling down on the harness, use a small slotted screw driver (3) to **gently** push one of the top lock tabs until the lock feature is flush with the connector/retainer body.
6. Repeat the step 3 for the remaining top lock tab.
7. The connector should now be able to rock out of the sheet metal hole without causing any damage to the connector or sheet metal.

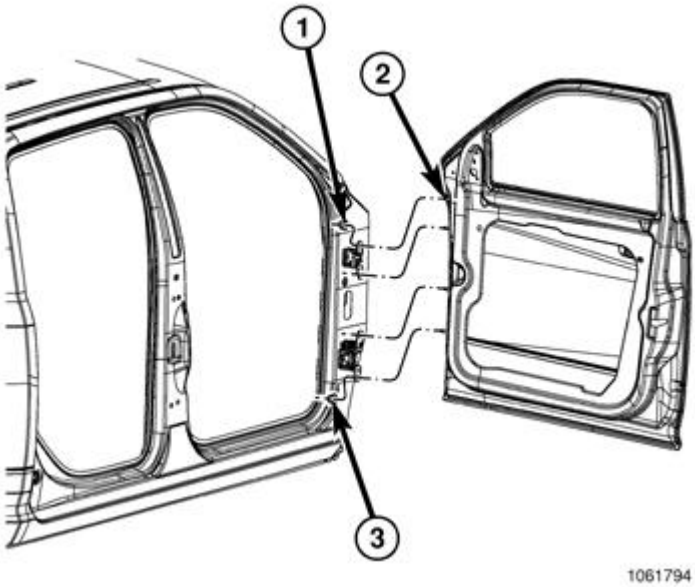

Fig. 72: Door Hinges
Courtesy of CHRYSLER GROUP, LLC

8. Using a grease pencil or equivalent, mark the location of the door hinges on the door.
9. Support the door with a suitable lifting device and remove the nuts (1 and 3) that secure the door to the hinges.
10. Carefully remove the door from the hinges.

INSTALLATION

INSTALLATION

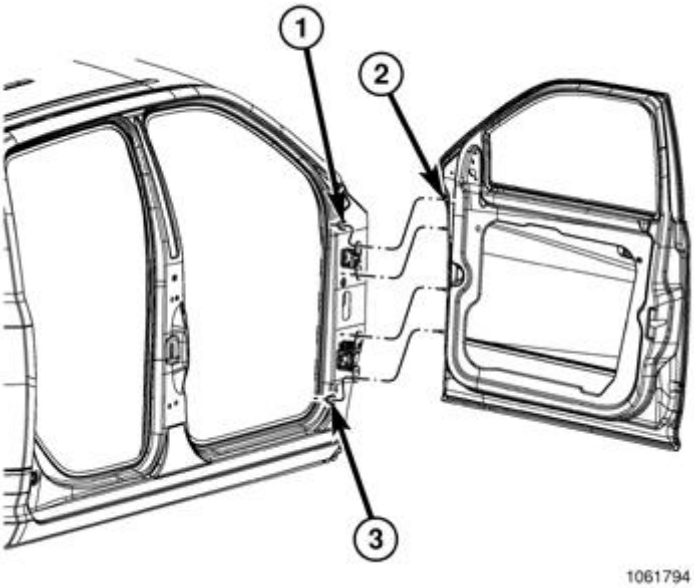

Fig. 73: Door Hinges
Courtesy of CHRYSLER GROUP, LLC

1. Carefully position the door studs (2) onto the hinges and support the door with a suitable lifting device.
2. Loosely install the nuts (1 and 3) secure the door to the hinges.
3. Align the door to the hinges using the reference marks made during the removal procedure
4. Tighten the nuts to 22 N.m (16 ft. lbs.) using the following sequence;
    1. Tighten the upper nut of the top hinge.
    2. Tighten the lower nut of the bottom hinge.
    3. Tighten the upper nut of the bottom hinge.
    4. Tighten the lower nut of the top hinge.
5. Connect the door wire harness to the body wire harness.
6. Install the grommet over the connector and seat the connector into the A-pillar fully.
7. Reconnect the negative battery cable.
8. If necessary, adjust the door. Refer to **DOOR, ADJUSTMENTS**.

FLAG, MIRROR

REMOVAL

REMOVAL

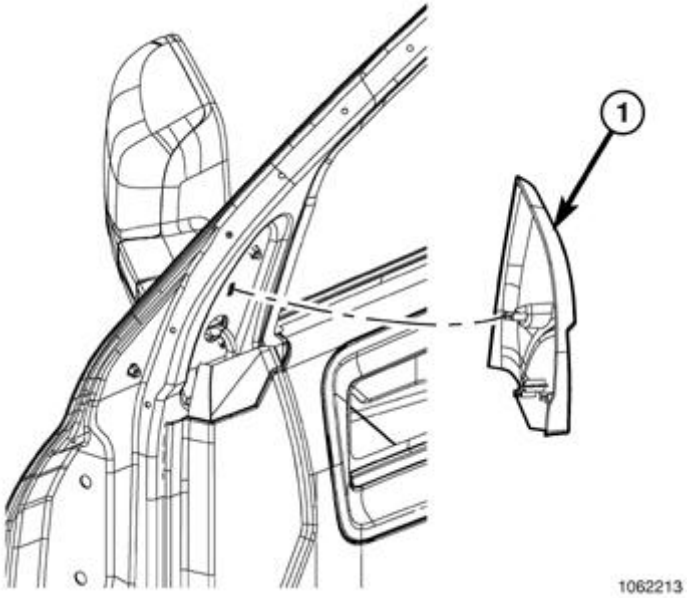

Fig. 74: Mirror Flag
Courtesy of CHRYSLER GROUP, LLC

1. Using trim stick (special tool #C-4755, Trim Stick) or equivalent, remove the mirror flag (1).

INSTALLATION

INSTALLATION

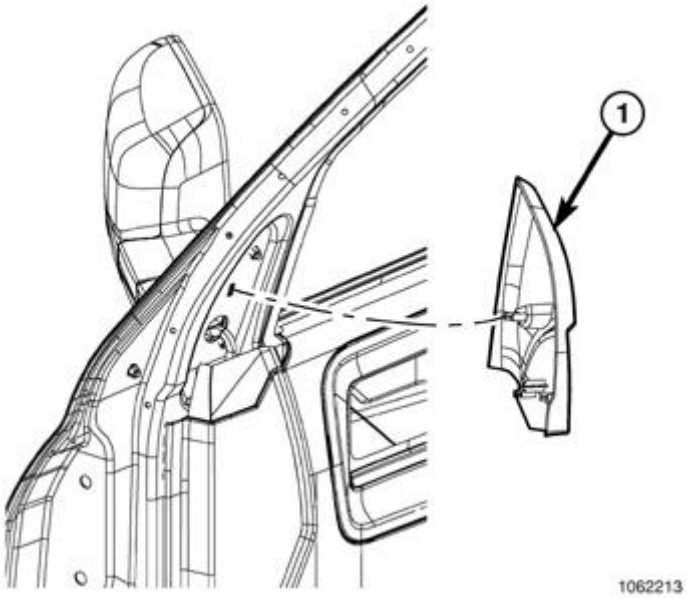

Fig. 75: Mirror Flag
Courtesy of CHRYSLER GROUP, LLC

1. Position the mirror flag (1) onto the door and seat the clips fully.

GLASS, DOOR

REMOVAL

REMOVAL

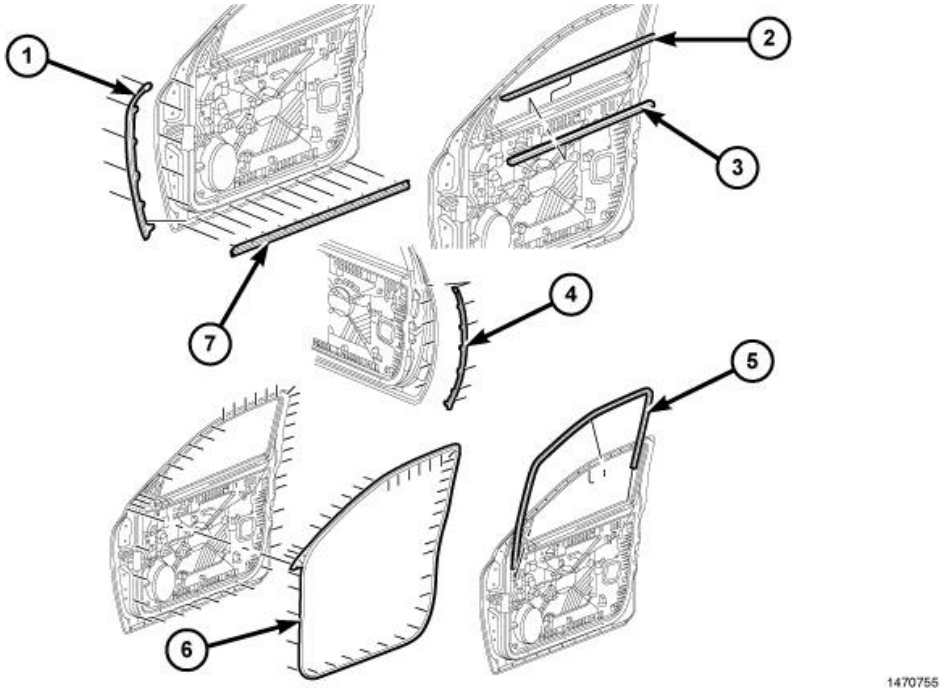

Fig. 76: Belt Moldings & Seals
Courtesy of CHRYSLER GROUP, LLC

1. Remove the trim panel. Refer to **PANEL, DOOR TRIM, REMOVAL**.
2. Remove the door speaker. Refer to **SPEAKER, REMOVAL** .
3. Remove the inner belt molding (3).

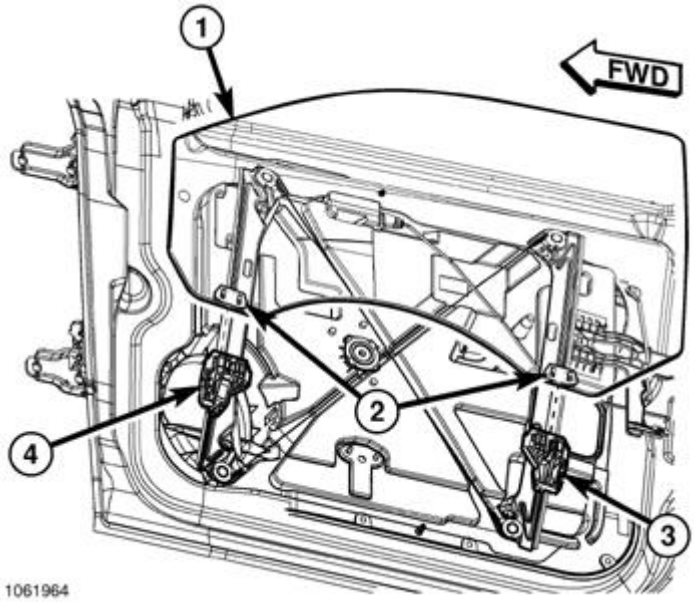

Fig. 77: Window Switch
Courtesy of CHRYSLER GROUP, LLC

4. Install the window switch if required and lower the glass (1) down in the door to position the glass attachment clips (2) for access through the speaker opening and the service access plug.
5. Separate the glass clips (2) from the regulator lift plates (3 and 4).

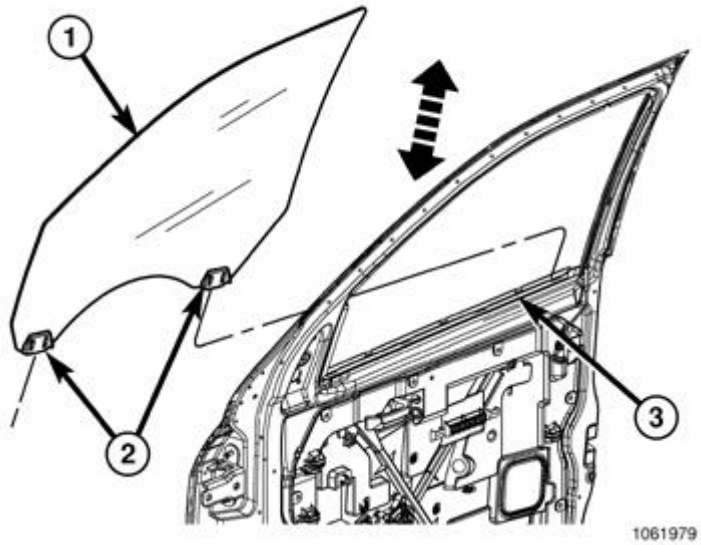

Fig. 78: Door Glass
Courtesy of CHRYSLER GROUP, LLC

6. Rotate the top of the glass (1) forward in the door to release the glass from the run channels.
7. Remove the door glass (1) from the door (3) and separate the clips (2) if necessary.

INSTALLATION

INSTALLATION

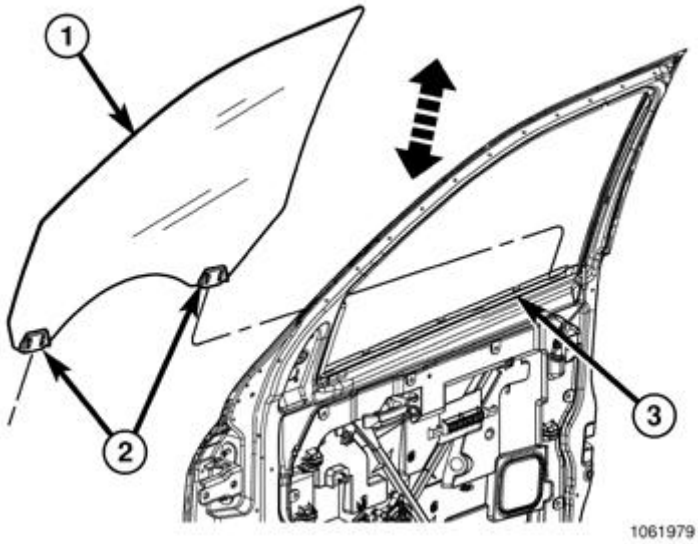

Fig. 79: Door Glass
Courtesy of CHRYSLER GROUP, LLC

1. Install the mounting clips (2) onto the glass, if necessary.
2. Insert the narrow end of the glass (1) into the door through the opening between the inner and outer panels (3). Then engage the front edge of the glass into the front portion of the glass run weatherstrip before rotating the back edge of the glass rearward into the B-pillar portion of the weatherstrip.

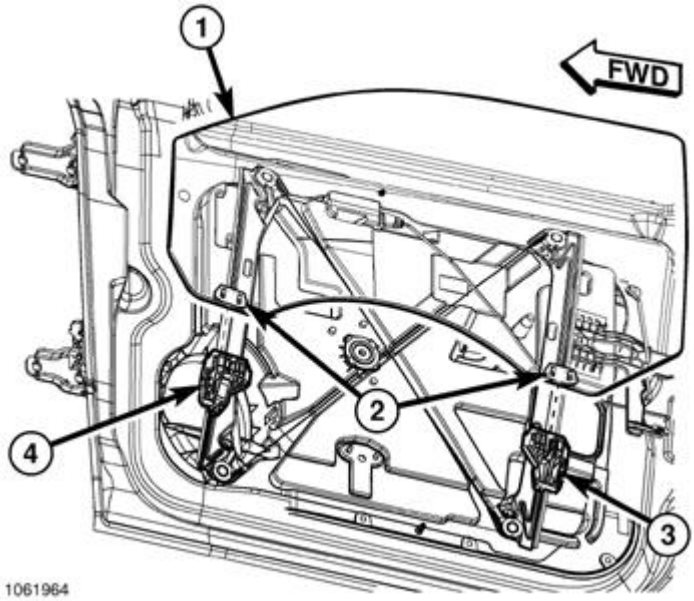

Fig. 80: Window Switch
Courtesy of CHRYSLER GROUP, LLC

3. Pull the glass upward evenly far enough so it can be verified that the glass is seated into both glass run channels.
4. Push the glass down to seat the clips (2) into regulator lift plates (3 and 4) fully.
5. Pull up on the glass and make sure that it is secure.

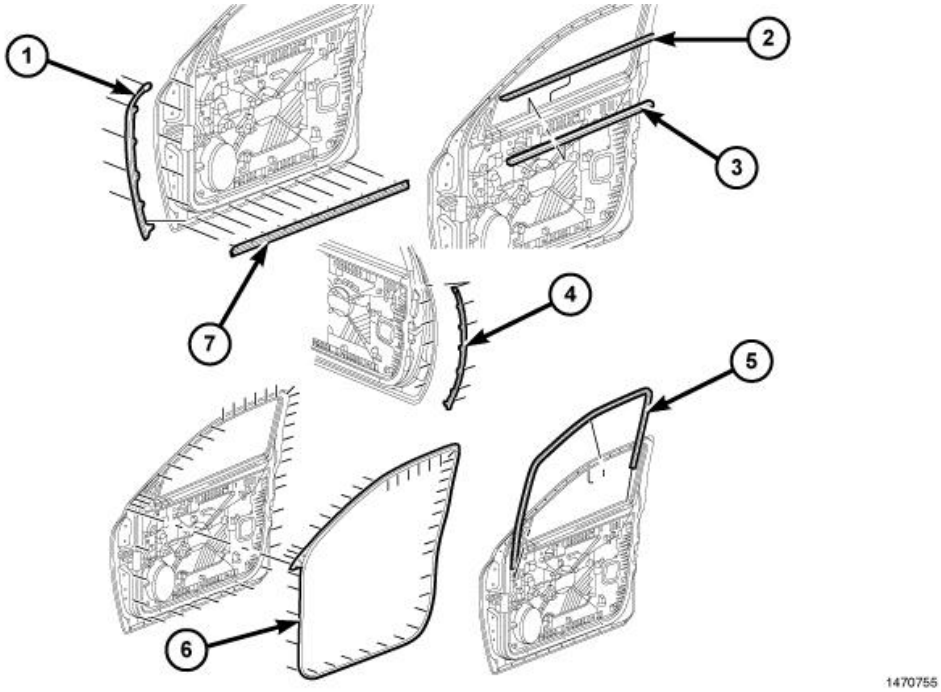

Fig. 81: Belt Moldings & Seals
Courtesy of CHRYSLER GROUP, LLC

6. Install the inner belt molding (3) onto the door and seat fully.
7. Install the door speaker. Refer to **SPEAKER, INSTALLATION** .
8. Install the trim panel. Refer to **PANEL, DOOR TRIM, INSTALLATION**.

HANDLE, INTERIOR

REMOVAL

REMOVAL

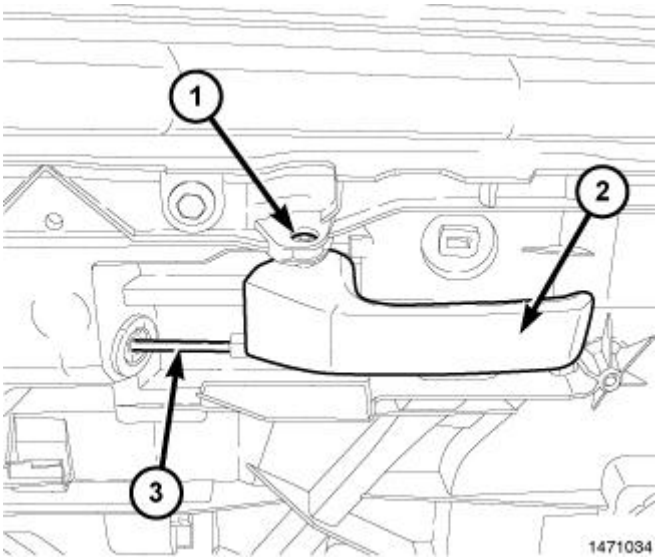

Fig. 82: Interior Handle
Courtesy of CHRYSLER GROUP, LLC

1. Remove the door trim panel.
2. Remove the handle mounting screw (1).
3. Disconnect the control rod (3) from the handle (2).
4. Remove the handle from the door.

INSTALLATION

INSTALLATION

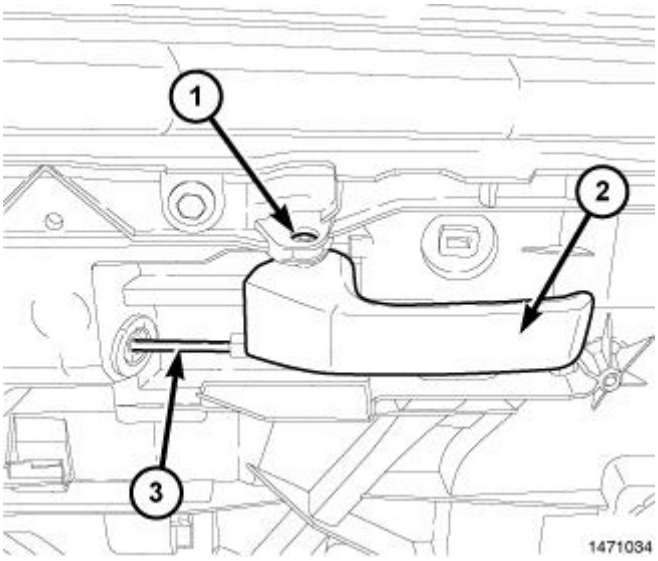

Fig. 83: Interior Handle
Courtesy of CHRYSLER GROUP, LLC

1. Place the handle (2) into position at the door.

2. Connect the control rod (3) to the handle.
3. Install the handle mounting screw (1).
4. Install the door trim panel.

HANDLE, EXTERIOR

REMOVAL

REMOVAL

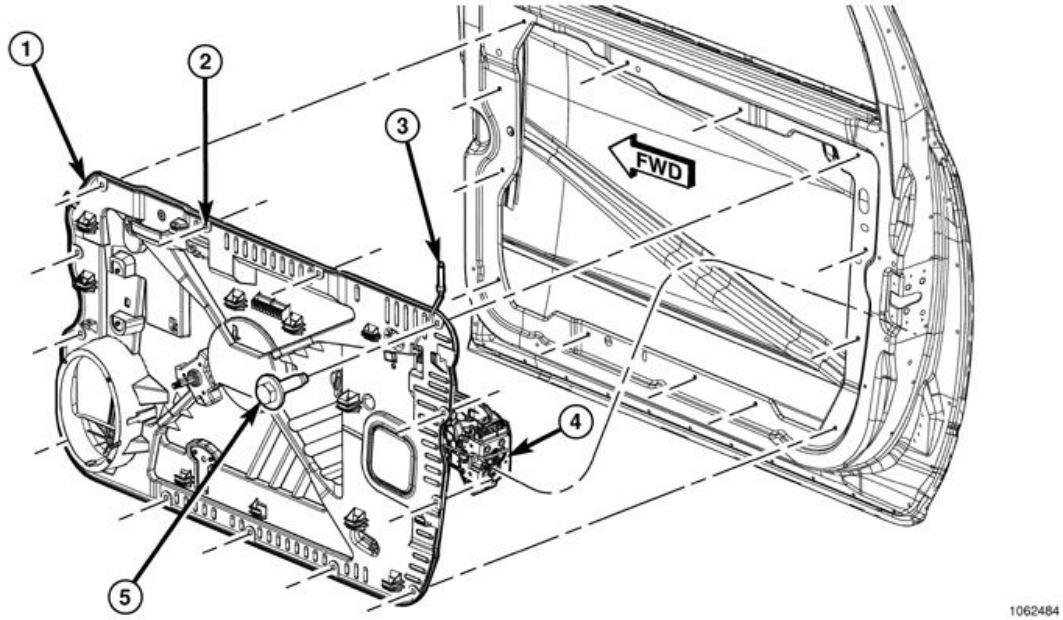

Fig. 84: Carrier Plate Assembly
Courtesy of CHRYSLER GROUP, LLC

1. Disconnect and isolate the battery negative cable.
2. Remove the carrier plate (1). Refer to **PLATE, CARRIER, REMOVAL**.

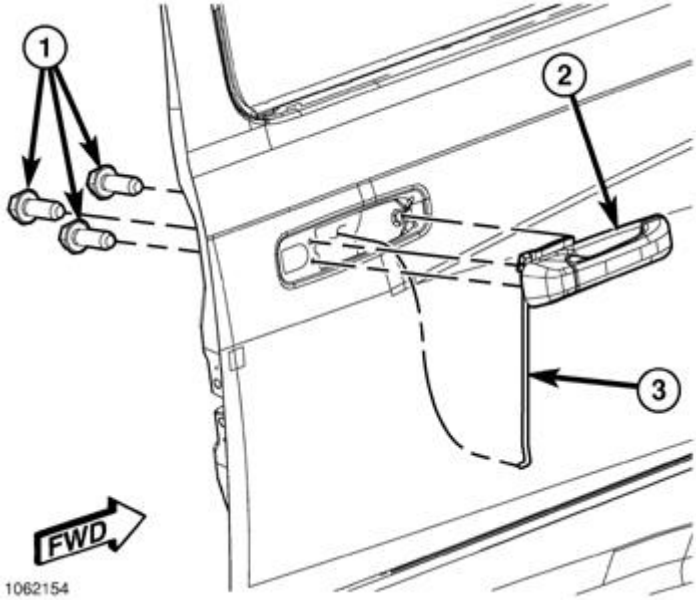

Fig. 85: Exterior Handle Bolts
Courtesy of CHRYSLER GROUP, LLC

3. Remove the bolts (1) and remove the exterior handle (2) from the door.

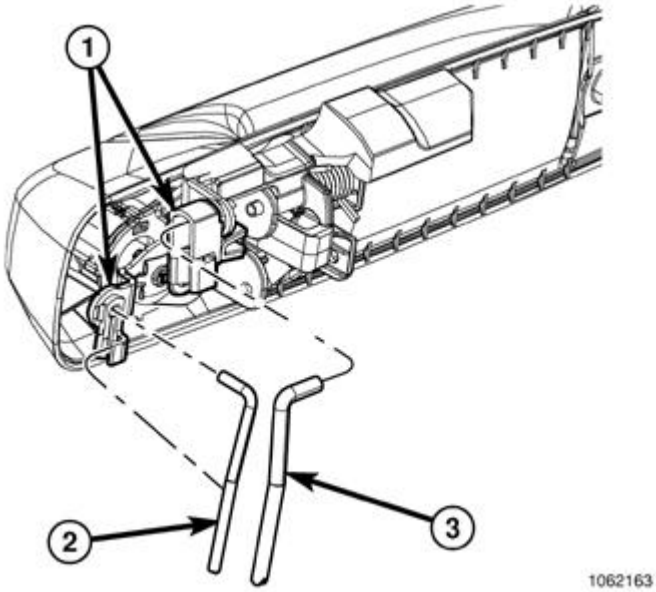

Fig. 86: Exterior Handle Linkages
Courtesy of CHRYSLER GROUP, LLC

4. Release the clips (1) and disconnect the linkages (2 and 3) from the handle.

INSTALLATION

INSTALLATION

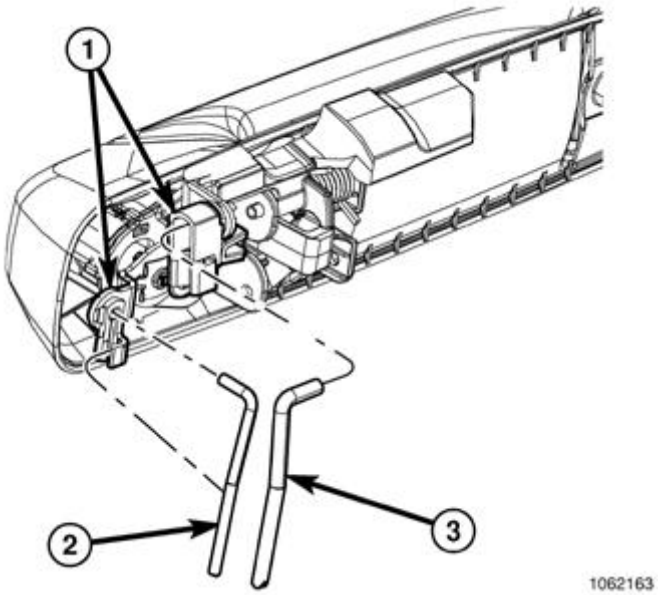

Fig. 87: Exterior Handle Linkages
Courtesy of CHRYSLER GROUP, LLC

1. Install the linkages (2 and 3) onto the door handle and secure the clips (1).

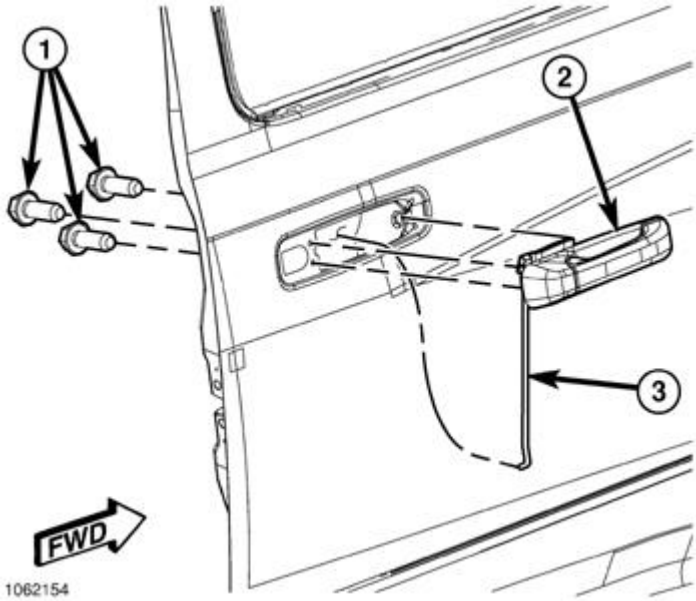

Fig. 88: Exterior Handle Bolts
Courtesy of CHRYSLER GROUP, LLC

2. Position the linkages (3) into the door and install the handle (2).
3. Install the bolts (1) and tighten to 7 N.m (62 in. lbs.).

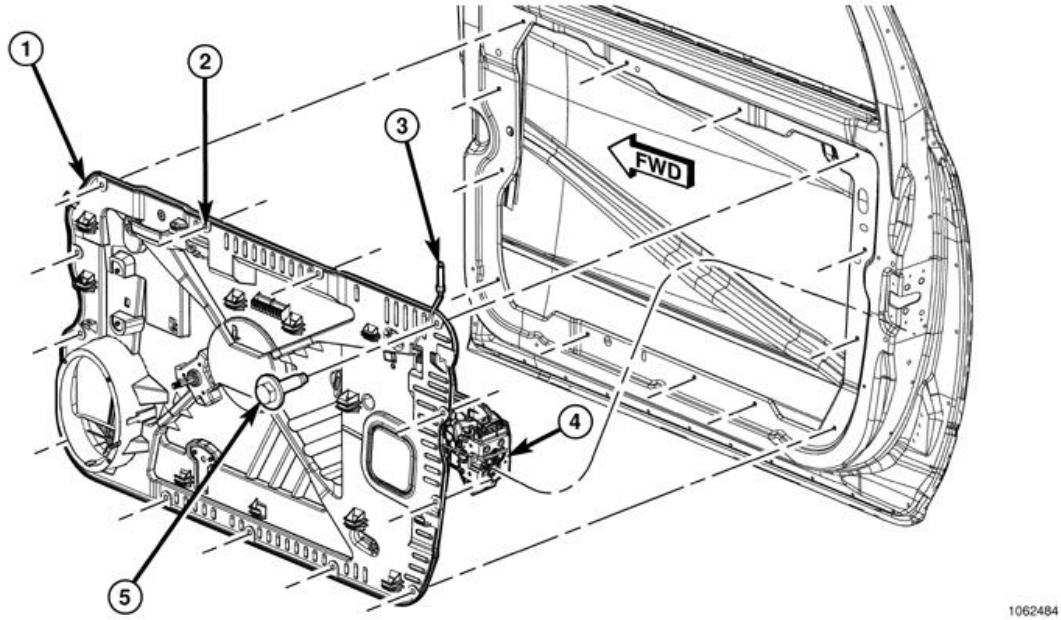

Fig. 89: Carrier Plate Assembly
Courtesy of CHRYSLER GROUP, LLC

4. Install the carrier plate. Refer to **PLATE, CARRIER, INSTALLATION**.
5. Connect the battery negative cable.

HINGE, DOOR

STANDARD PROCEDURE

STANDARD PROCEDURE - HINGE LUBRICATION

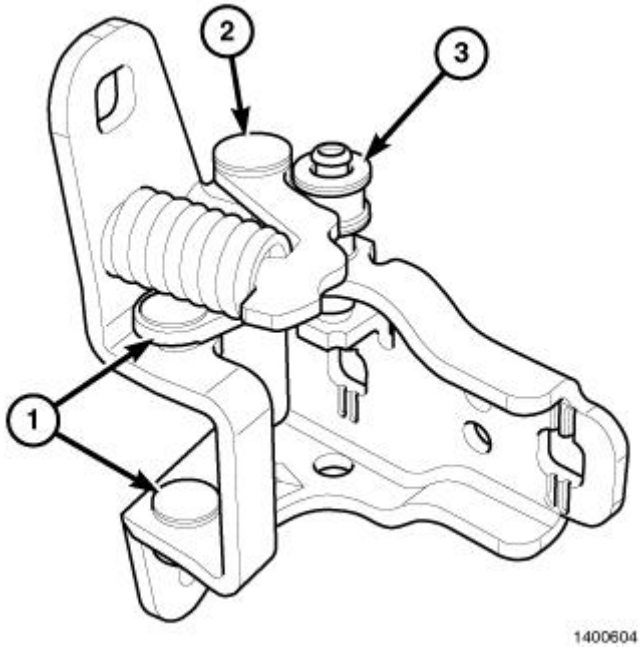

Fig. 90: Door Hinge
Courtesy of CHRYSLER GROUP, LLC

CAUTION: Door hinge pivot points (1) including the roller (3) and detent lever (2), should be lubricated periodically using Mopar ® Spray White Lube with Lithium or equivalent.

1. Spray parts as necessary using Mopar ® Spray White Lube with Lithium or equivalent.
2. Remove any excess grease.

REMOVAL

REMOVAL

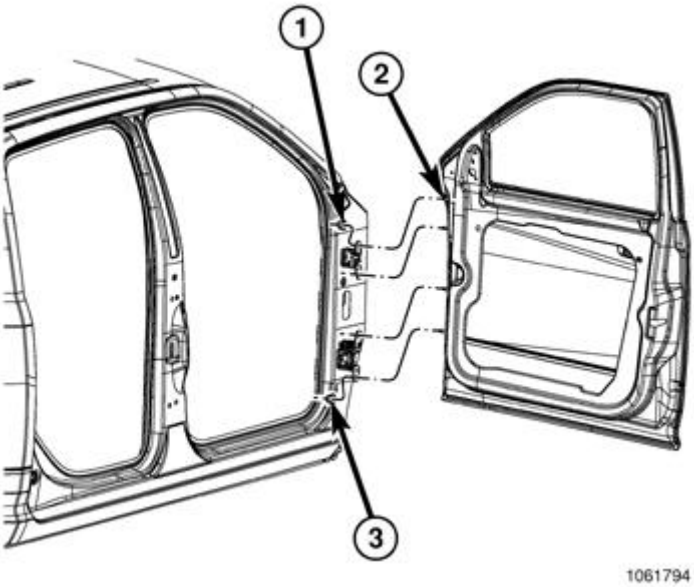

Fig. 91: Door Hinges
Courtesy of CHRYSLER GROUP, LLC

NOTE: A suitable body sealant should be used when removing or moving the hinges.

1. Remove the door. Refer to **DOOR, REMOVAL**.

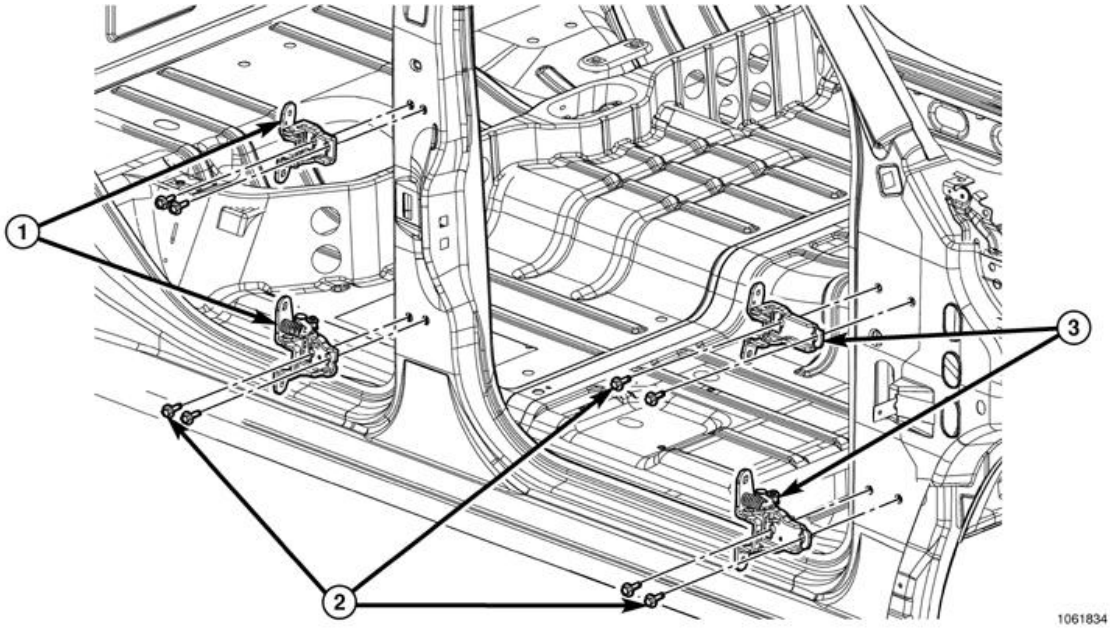

Fig. 92: Hinge Pillar & Bolts
Courtesy of CHRYSLER GROUP, LLC

2. Using a grease pencil or equivalent, mark the hinge location and remove the bolts (2) for the hinge being serviced.

INSTALLATION

INSTALLATION

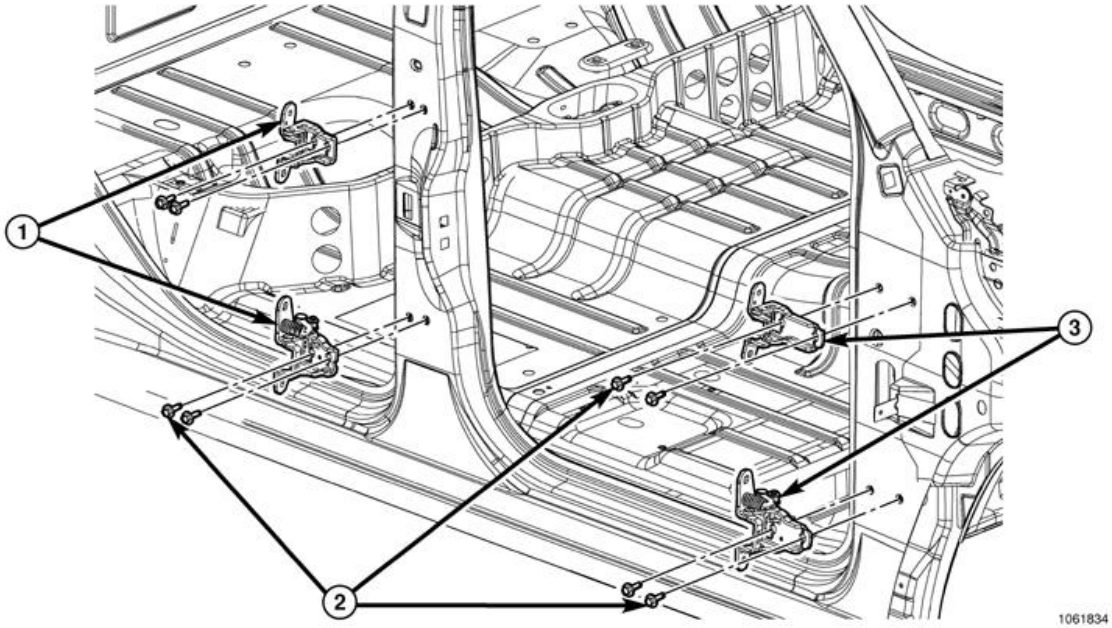

Fig. 93: Hinge Pillar & Bolts
Courtesy of CHRYSLER GROUP, LLC

NOTE: A suitable body sealant should be used when removing or moving the hinges.

1. Install the hinges (3) and bolts (2).
2. Tighten the hinge bolts to 24 N.m (18 ft. lbs.).

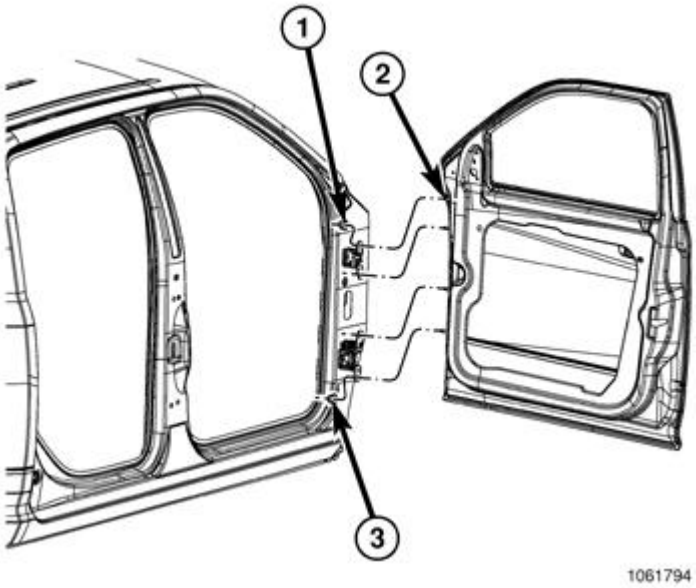

Fig. 94: Door Hinges
Courtesy of CHRYSLER GROUP, LLC

3. Install the door. Refer to **DOOR, INSTALLATION**.

LATCH, DOOR

REMOVAL

REMOVAL

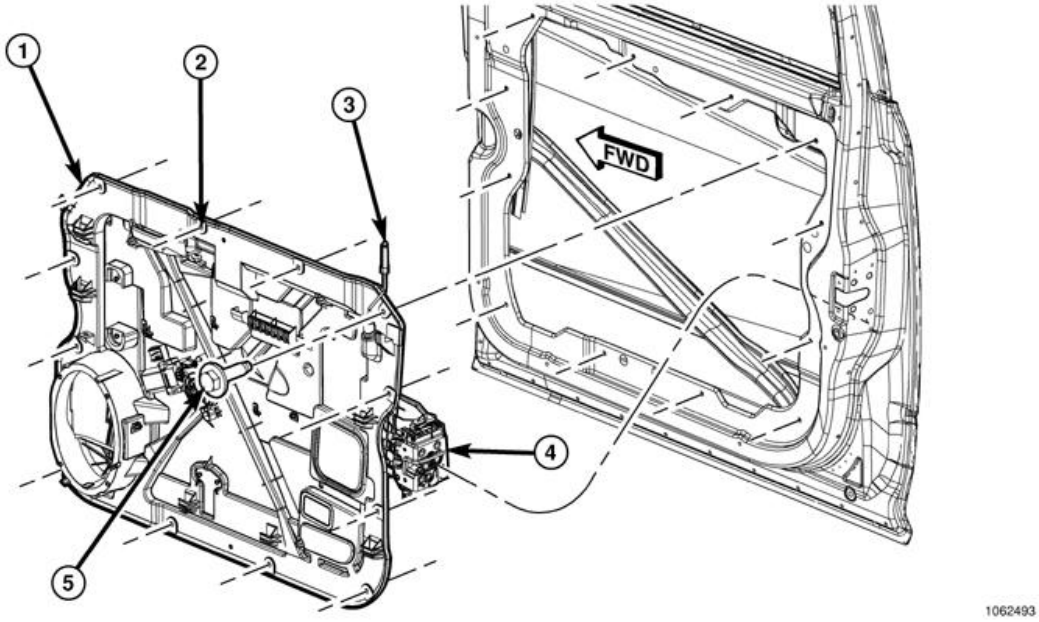

Fig. 95: Carrier Plate Assembly
Courtesy of CHRYSLER GROUP, LLC

1. Remove the carrier plate (1). Refer to **PLATE, CARRIER, REMOVAL**.
2. Disconnect the door wire harness connector from the door latch (4).
3. Separate the latch assembly from the latch presenter bracket and remove.

INSTALLATION

INSTALLATION

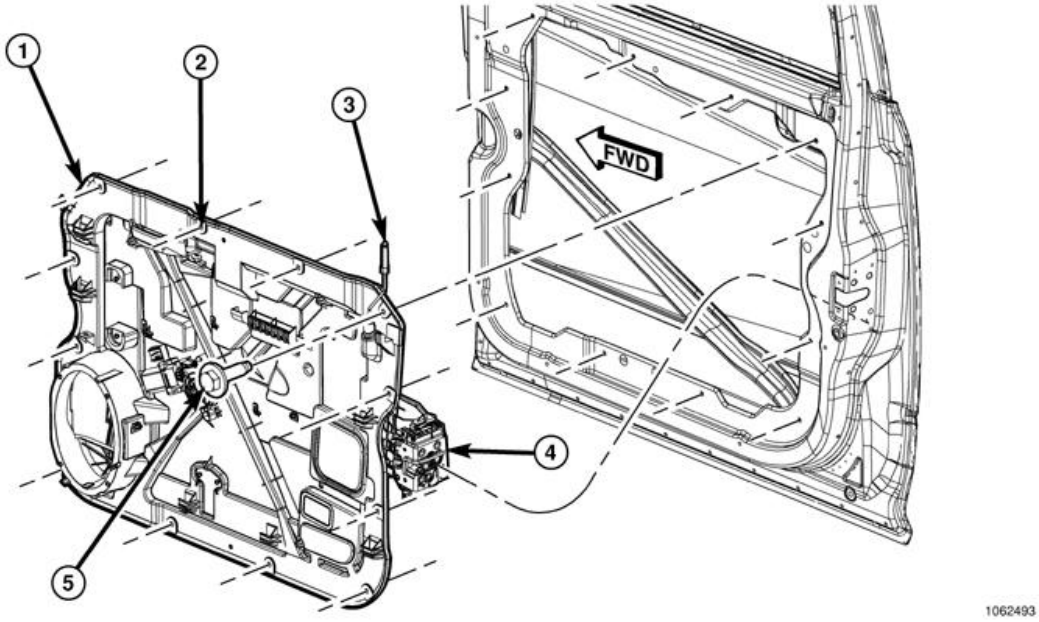

Fig. 96: Carrier Plate Assembly

Courtesy of CHRYSLER GROUP, LLC

1. Seat the latch (4) onto the presenter bracket fully.
2. Connect the door wire harness electrical connector to the latch.
3. Install the carrier plate (1). Refer to **PLATE, CARRIER, INSTALLATION**.

MOLDING, DOOR BELT, INNER

REMOVAL

REMOVAL

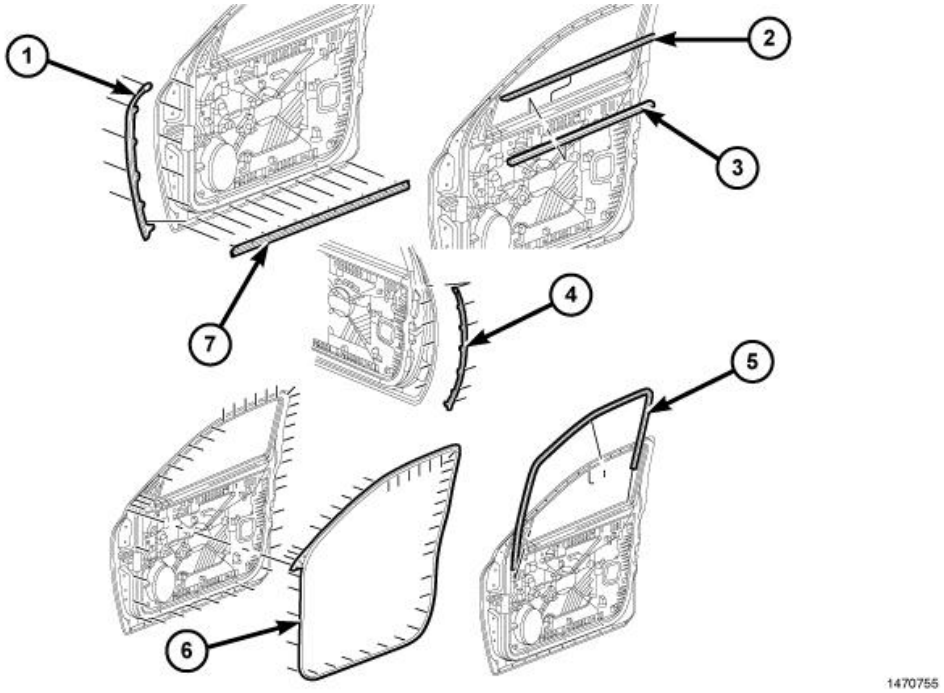

Fig. 97: Belt Moldings & Seals
Courtesy of CHRYSLER GROUP, LLC

1. Remove the door trim panel. Refer to **PANEL, DOOR TRIM, REMOVAL**.
2. Separate the belt molding (3) from the door mounting flange from the back to the front.

INSTALLATION

INSTALLATION

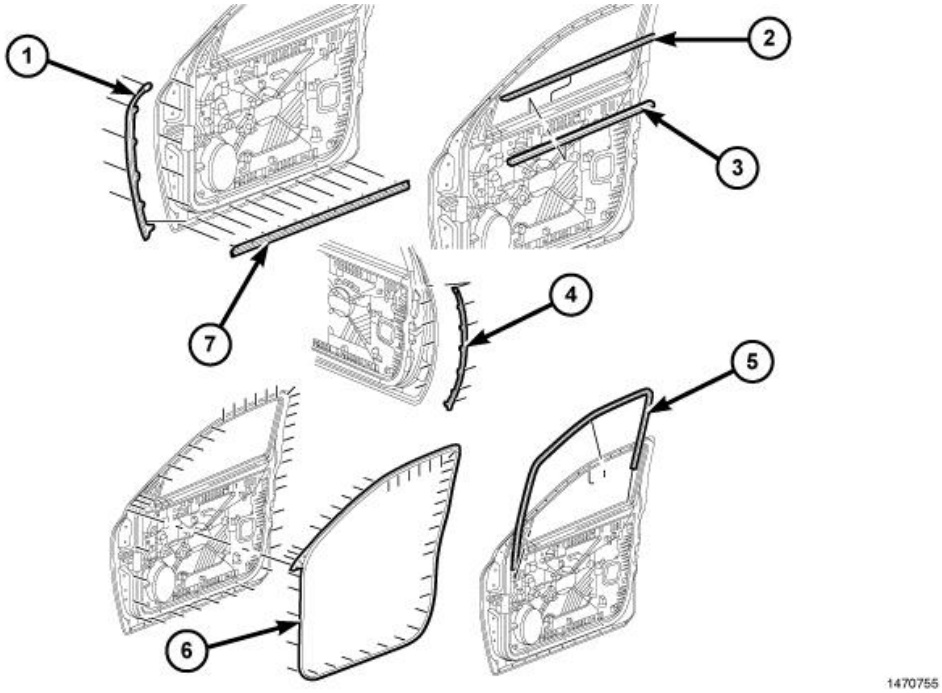

Fig. 98: Belt Moldings & Seals
Courtesy of CHRYSLER GROUP, LLC

1. Position the belt molding (3) and seat onto the door mounting flange fully.
2. Install the door trim panel. Refer to **PANEL, DOOR TRIM, INSTALLATION**.

MOLDING, DOOR BELT, OUTER

REMOVAL

REMOVAL

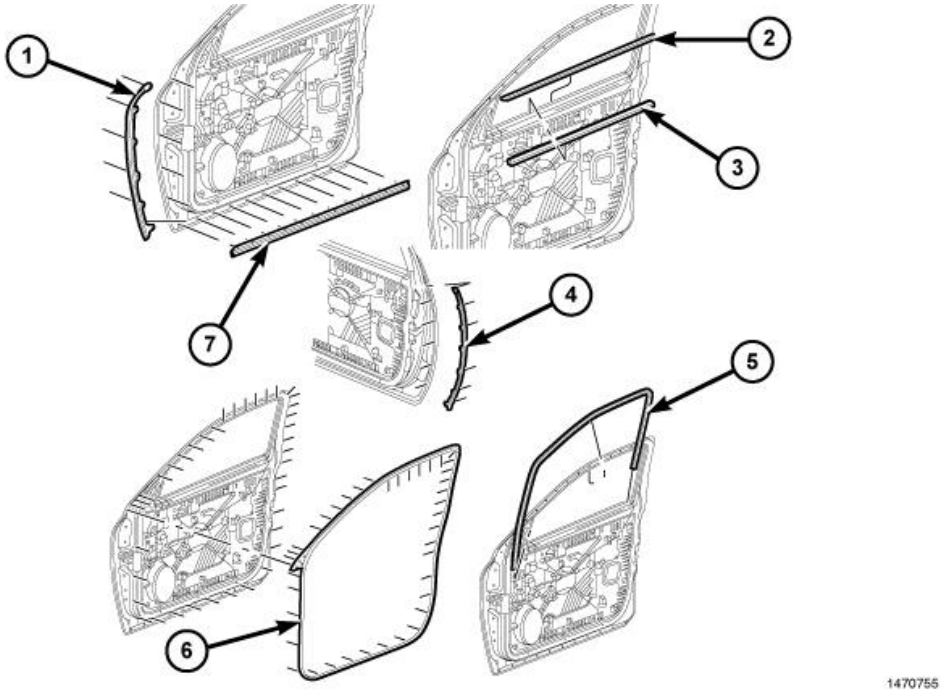

Fig. 99: Belt Moldings & Seals
Courtesy of CHRYSLER GROUP, LLC

1. Remove the screw from the rear of the outer belt molding (2).
2. Starting from the rear of the door, carefully lift the belt molding upward and disengage the inner portion of the molding from the tabs on the door.
3. Pull the molding rearward to disengage the molding from the outside mirror.
4. Remove the belt molding from the door.

INSTALLATION

INSTALLATION

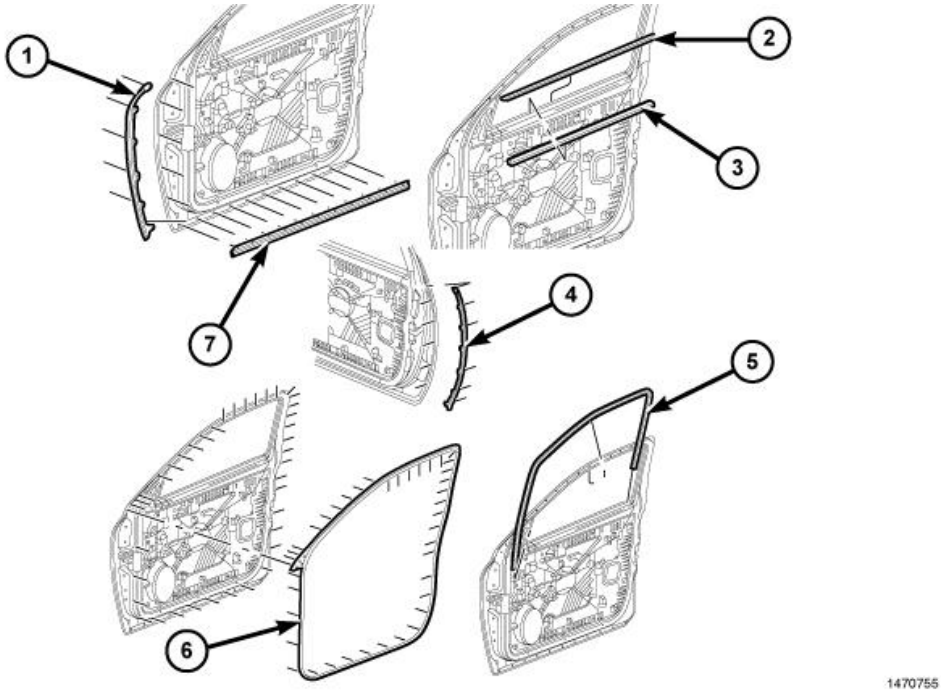

Fig. 100: Belt Moldings & Seals
Courtesy of CHRYSLER GROUP, LLC

1. Place the belt molding (2) into position and insert the front portion under the outside mirror housing.
2. Working from the front of the door, press down on the molding and engage the clips to the door.
3. Install the screw at the rear of the belt molding.

PANEL, DOOR TRIM

REMOVAL

REMOVAL

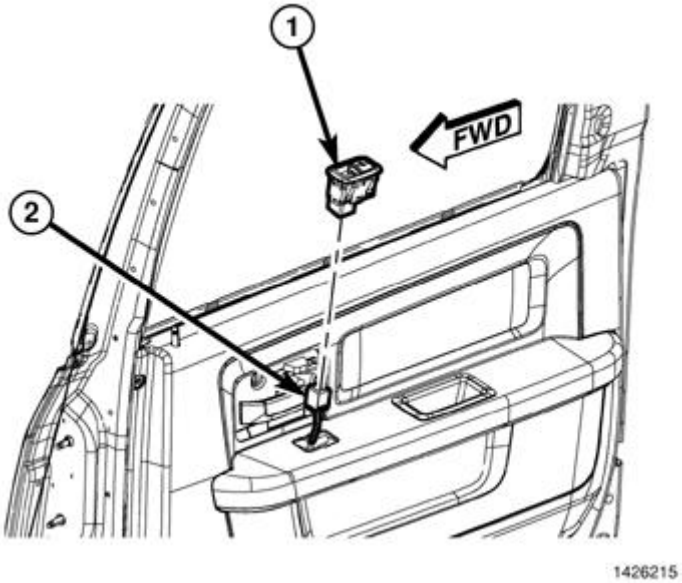

Fig. 101: Door Switch/Bezel
Courtesy of CHRYSLER GROUP, LLC

NOTE: Rear door switch shown in illustration, front doors are similar.

1. Using trim stick (special tool #C-4755, Trim Stick) or equivalent, release the door switch/bezel (1) from the door trim and disconnect the electrical connectors (2), if equipped.

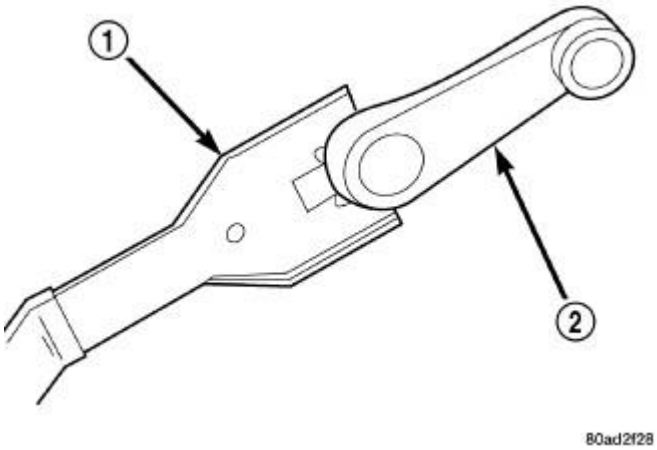

Fig. 102: Removing Manual Window Crank
Courtesy of CHRYSLER GROUP, LLC

2. If equipped, remove the manual window crank (1) using a window crank removal tool (2).

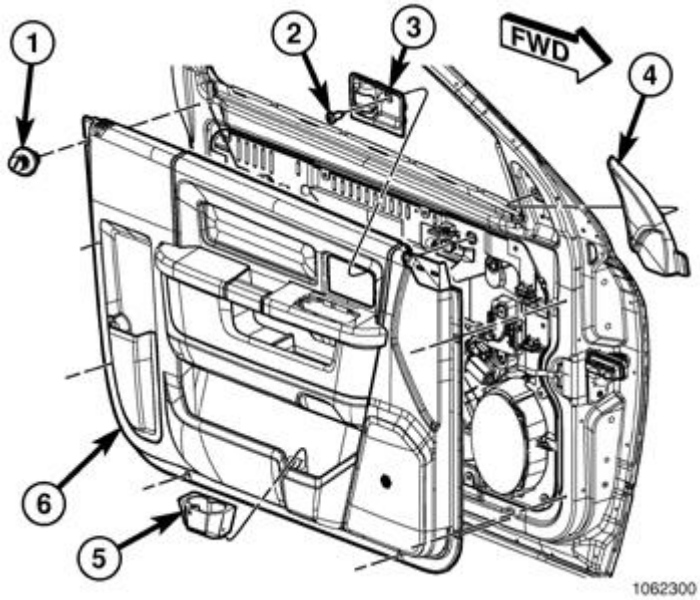

Fig. 103: Interior Door Handle Trim & Interior Door Panel
Courtesy of CHRYSLER GROUP, LLC

3. Using trim stick (special tool #C-4755, Trim Stick) or equivalent, remove the mirror flag (4).
4. Remove the screw (2) and remove the interior handle bezel (3).
5. Release the plastic push pins (1).
6. Raise the trim panel (6) upward far enough to disengage the hooks on the back of the panel from the inner door and the door lock knob from the top of the panel.

INSTALLATION

INSTALLATION

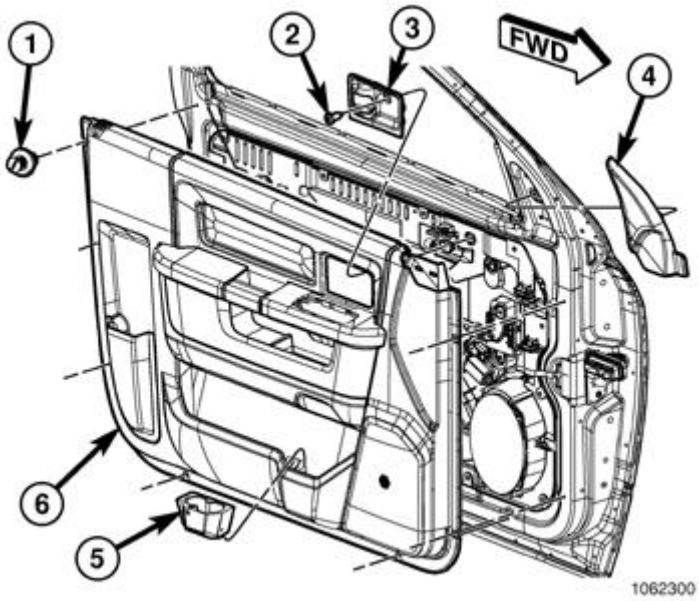

Fig. 104: Interior Door Handle Trim & Interior Door Panel
Courtesy of CHRYSLER GROUP, LLC

1. Position the lower end of the trim panel (6) to the carrier plate on the inner door aligning the hooks on the back of the panel to the slotted holes in the carrier. Then, using a rotating arc motion, feed the lock knob through the hole at the upper rear corner of the trim panel, and align and push down the trim panel to seat the hooks into the holes in the carrier plate.

NOTE: Make sure the upper flange of trim is fully seated into inner belt molding.

2. Install the plastic push pins (1) around the perimeter of the panel and seat fully.
3. Install the interior handle bezel (3) and install the screw (2).
4. Position the mirror flag (4) onto the door and seat the clips fully.
5. If equipped, verify that the window handle clip is installed correctly and seat the handle onto the window regulator shaft fully.

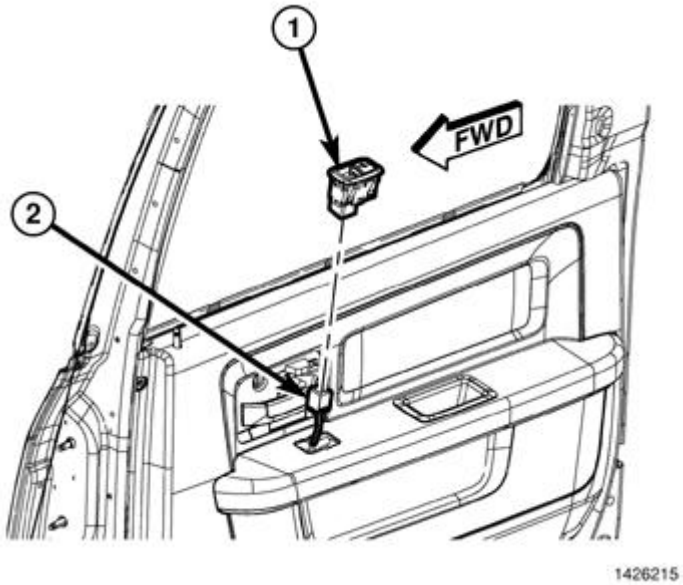

Fig. 105: Door Switch/Bezel
Courtesy of CHRYSLER GROUP, LLC

NOTE: Rear door switch shown in illustration, front doors are similar.

6. If equipped, connect the window switch electrical connectors (2) and seat the window switch/bezel into the door trim fully.

PLATE, CARRIER

REMOVAL

REMOVAL

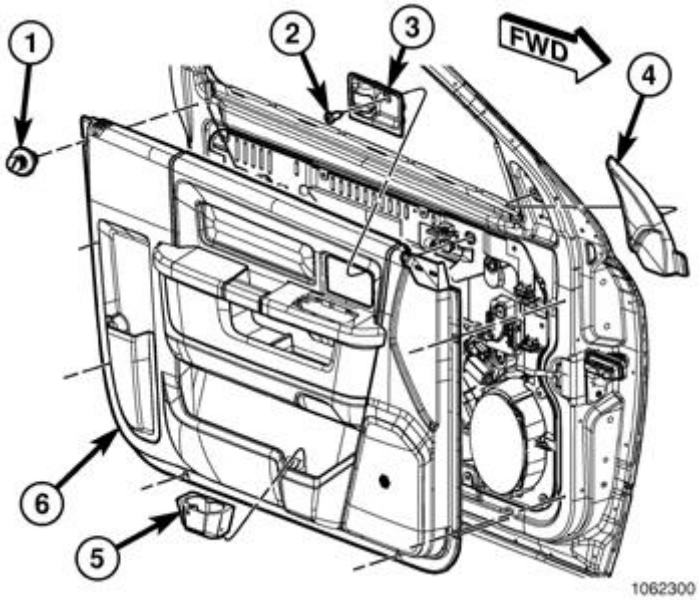

Fig. 106: Interior Door Handle Trim & Interior Door Panel
Courtesy of CHRYSLER GROUP, LLC

1. Remove the trim panel (6). Refer to **PANEL, DOOR TRIM, REMOVAL**.
2. Remove the door speaker. Refer to **SPEAKER, REMOVAL** .

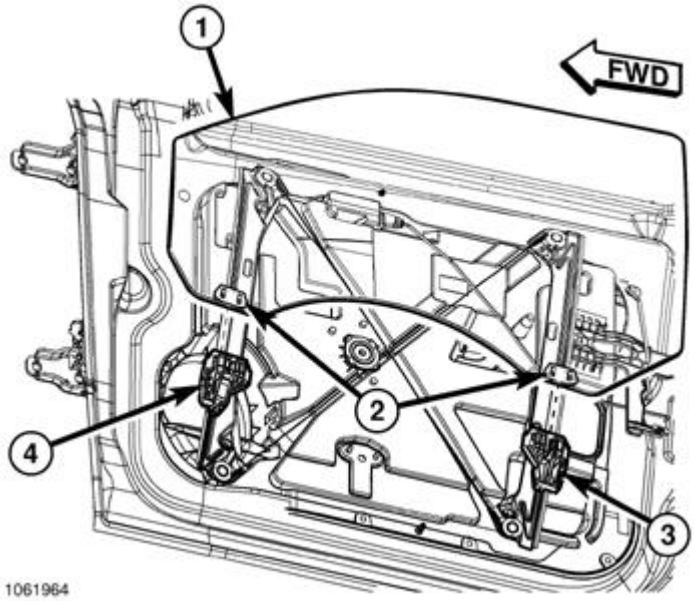

Fig. 107: Window Switch
Courtesy of CHRYSLER GROUP, LLC

3. If required, reinstall the regulator handle or window switch to enable lowering of the glass (1) for access to the glass attachment clips (2) through the speaker opening and the service access plug.
4. Separate the glass clips (2) from the regulator lift plates (3 and 4).
5. Raise the glass (1) into the full up position and secure in place using tape or equivalent.

6. Disconnect the door electrical connector.

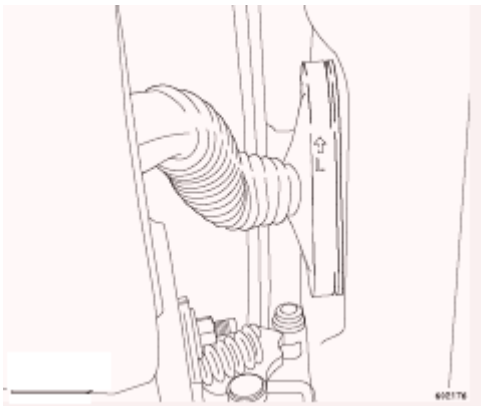

Fig. 108: Door Harness Connector
Courtesy of CHRYSLER GROUP, LLC

NOTE: The following illustration shows a typical door harness connector.

7. Peel the A Pillar grommet (1) off of the connector/retainer and move it up the wire harness.
8. Grasp the wire harness (2) by the convolute section of the grommet and gently pull the wire harness down towards the floor to expose the connector lock tabs.

CAUTION: Do not force the locking tab past the connector body, as damage to the connector may occur.

9. While still pulling down on the harness, use a small slotted screw driver (3) to **gently** push one of the top lock tabs until the lock feature is flush with the connector/retainer body.
10. Repeat the step 3 for the remaining top lock tab.
11. The connector should now be able to rock out of the sheet metal hole without causing any damage to the connector or sheet metal.

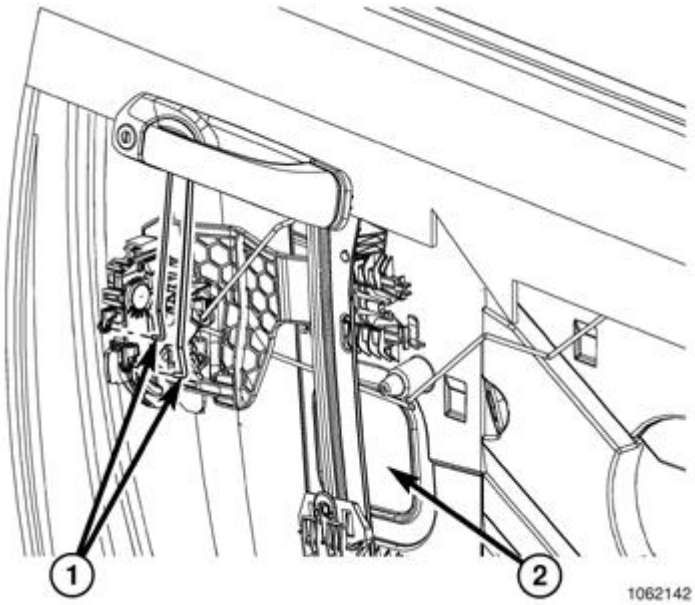

Fig. 109: Exterior Handle
Courtesy of CHRYSLER GROUP, LLC

12. Remove the service access plug (2) and disconnect the exterior handle linkages (1).

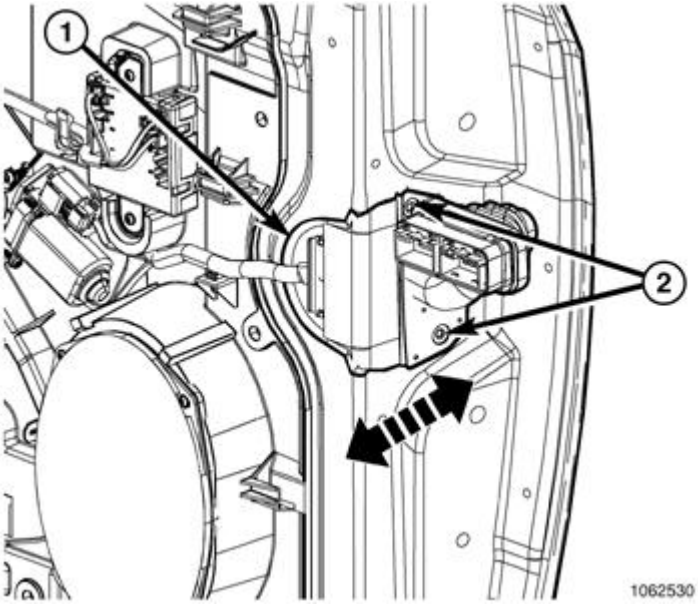

Fig. 110: Door Wire Harness Connector
Courtesy of CHRYSLER GROUP, LLC

13. Remove the screws (2) and separate the wire harness (1) from the door.

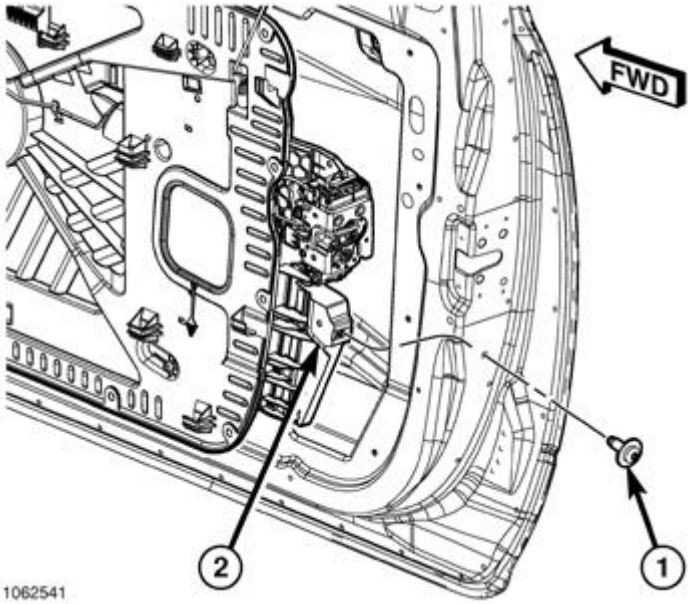

Fig. 111: Lower Belt Channel
Courtesy of CHRYSLER GROUP, LLC

14. On standard cab models only, remove the lower belt channel (2) shut face screw (1).

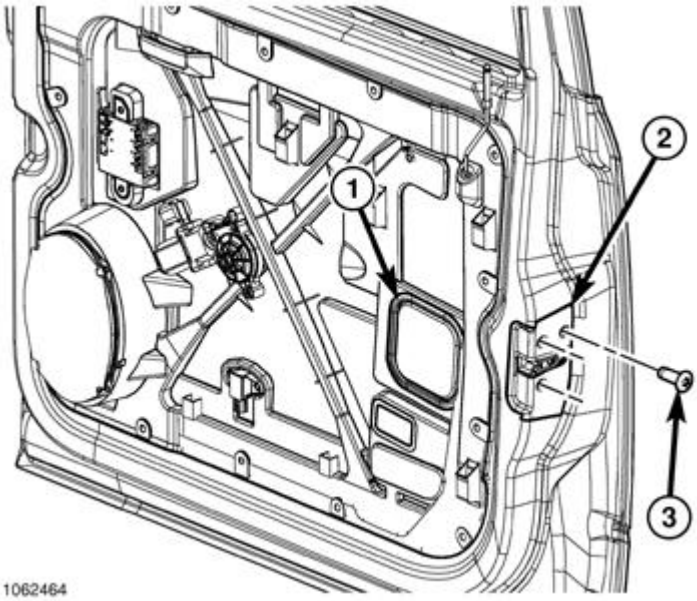

Fig. 112: Door Latch Mounting Screws
Courtesy of CHRYSLER GROUP, LLC

15. Remove the door latch (2) mounting screws (3).

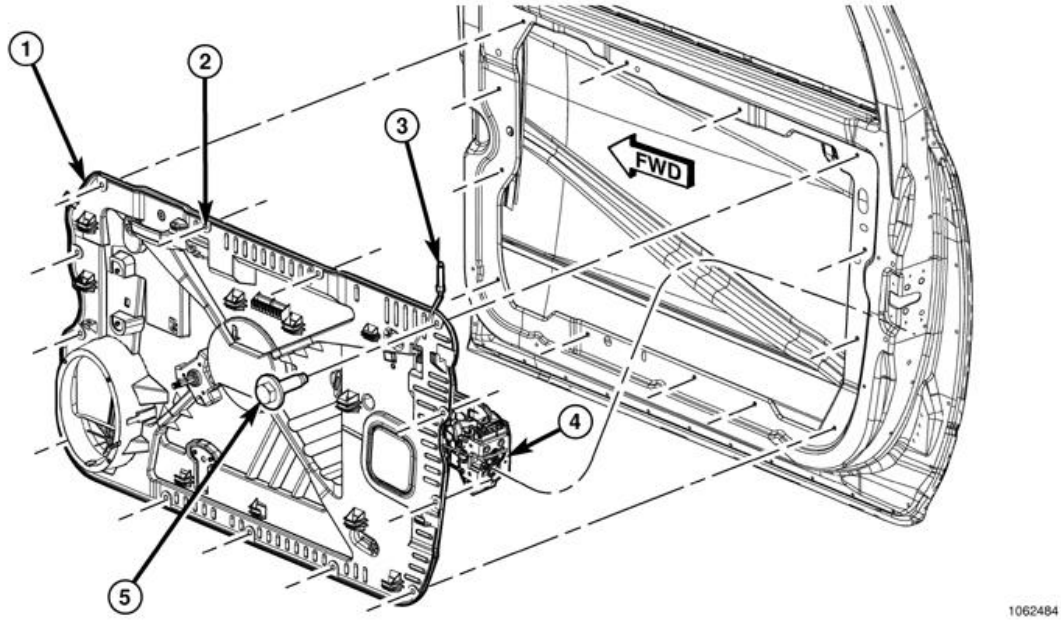

Fig. 113: Carrier Plate Assembly
Courtesy of CHRYSLER GROUP, LLC

NOTE: Standard cab model shown in illustration, all others similar.

16. Remove the bolts (5) (quantity of 13 on standard cab, 12 on all other models) and remove the carrier plate assembly (1) from the door.

INSTALLATION

INSTALLATION

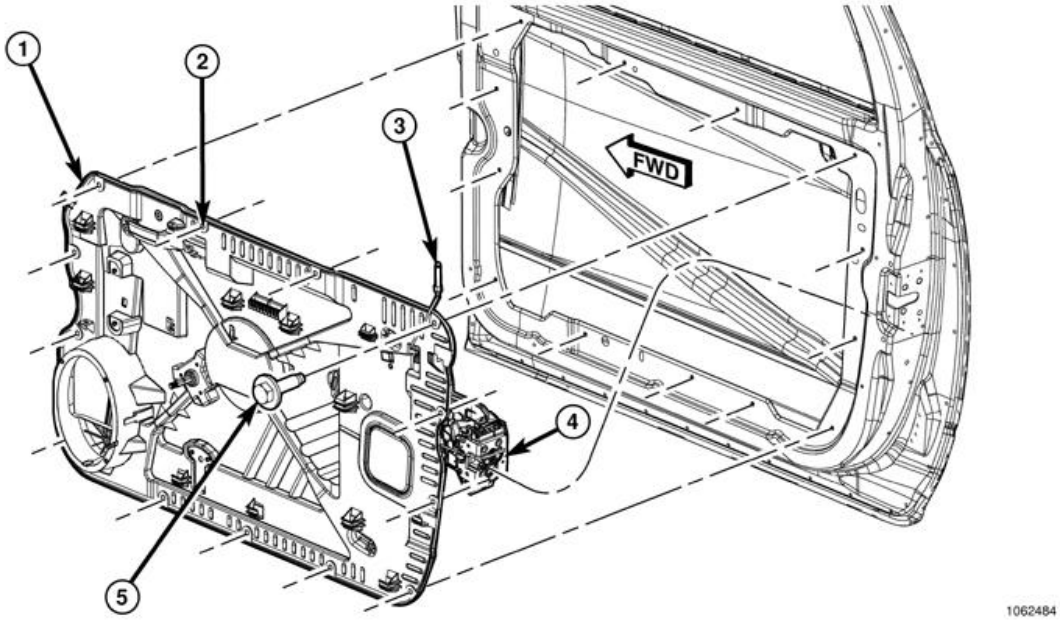

Fig. 114: Carrier Plate Assembly
Courtesy of CHRYSLER GROUP, LLC

NOTE: On standard cab models perform the following steps.

1. Insert the carrier plate assembly (1) into door, latch (4) side first, and tip the regulator rails into place through the door opening.
2. Lift the carrier plate and seat the two locating pins into the locating holes.
3. Install the 13 bolts (5) and, moving clockwise starting at position (2), tighten the bolts in a clockwise direction to 5.5 N.m (49 in. lbs.).

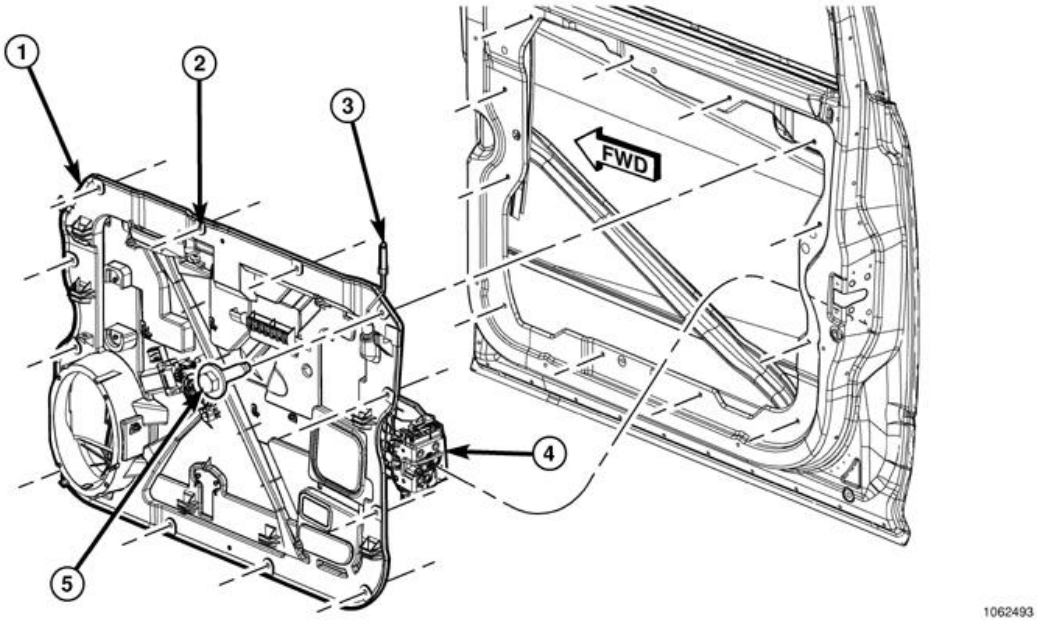

Fig. 115: Carrier Plate Assembly
Courtesy of CHRYSLER GROUP, LLC

NOTE: On crew/club cab models perform the following steps.

4. Insert the carrier plate assembly (1) into door, latch (4) side first, and tip the regulator rails into place through the door opening.
5. Lift the carrier plate and seat the two locating pins into the locating holes.
6. Install the 12 bolts (5) and, moving clockwise starting at position (2), tighten the bolts in a clockwise direction to 5.5 N.m (49 in. lbs.).

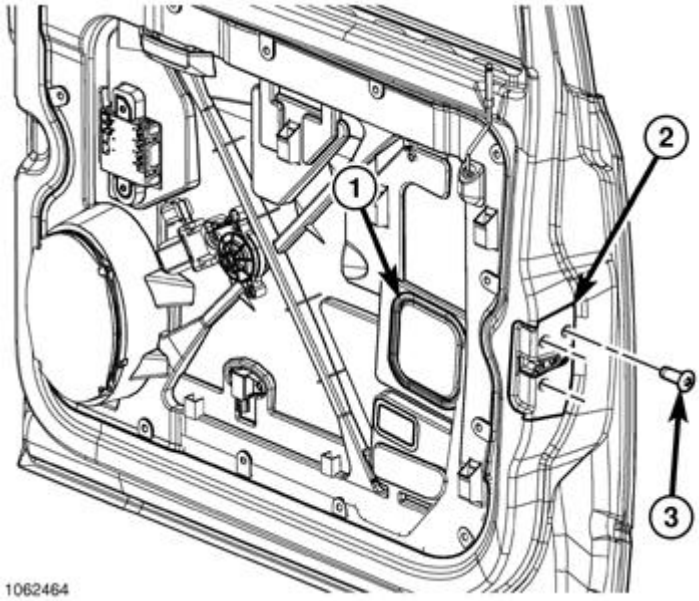

Fig. 116: Door Latch Mounting Screws
Courtesy of CHRYSLER GROUP, LLC

7. Install the latch screws (3) and tighten to 7 N.m (62. in. lbs.)

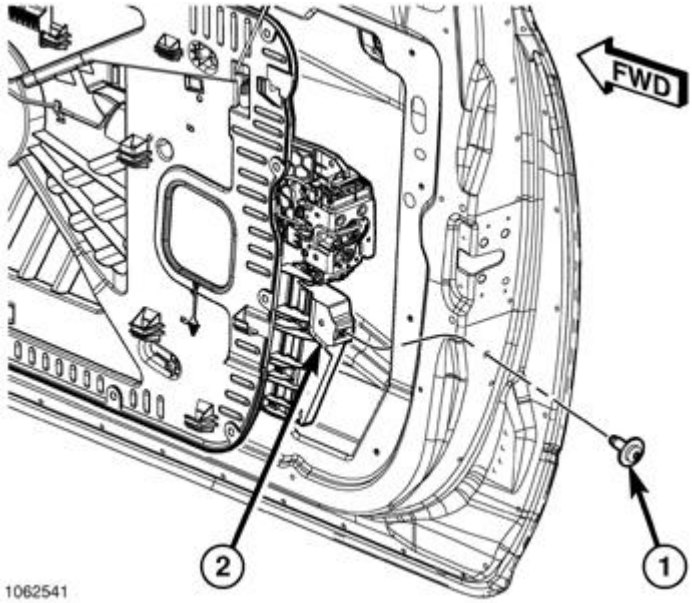

Fig. 117: Lower Belt Channel
Courtesy of CHRYSLER GROUP, LLC

8. On standard cab models only, install the lower belt channel (2) shut face screw (1) and tighten to 8 N.m (71 in. lbs.).

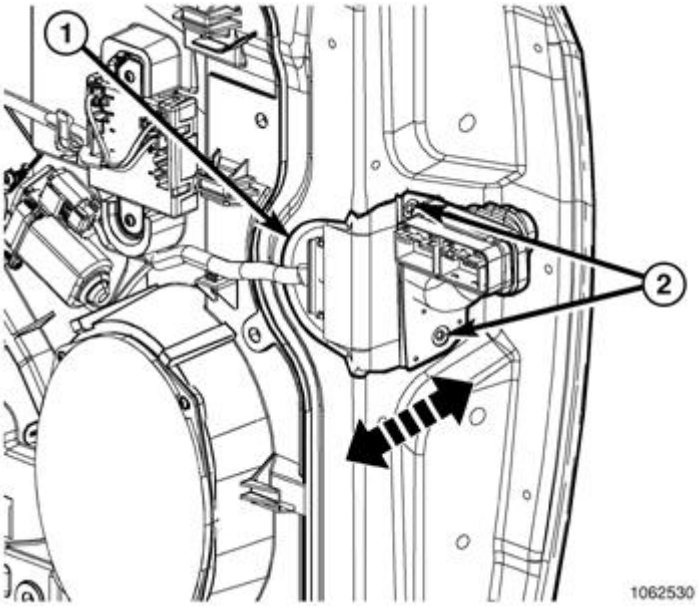

Fig. 118: Door Wire Harness Connector
Courtesy of CHRYSLER GROUP, LLC

9. Install the wire harness (1) and install the screws (2).

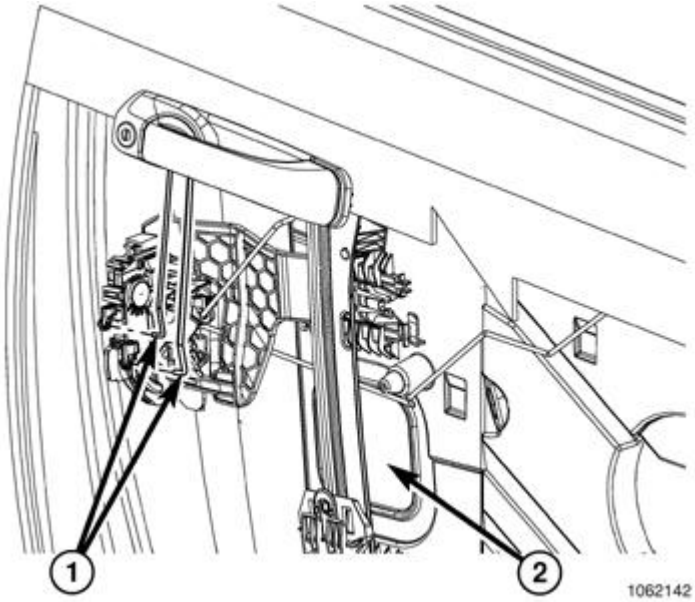

Fig. 119: Exterior Handle
Courtesy of CHRYSLER GROUP, LLC

10. Connect the linkages (1) to the latch and secure the clips.

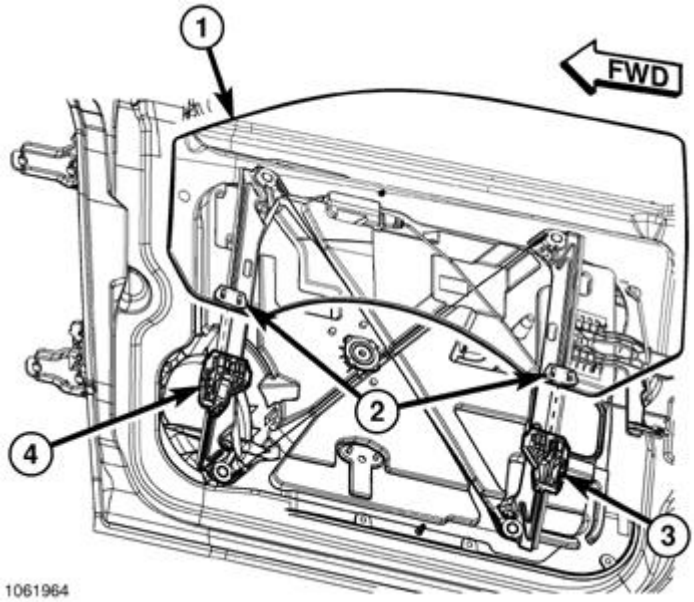

Fig. 120: Window Switch
Courtesy of CHRYSLER GROUP, LLC

11. Pull the glass up evenly so front of glass can be verified it is seated into both glass run channels.
12. Push the glass down to seat the clips (2) into regulator liftplates (3 and 4) fully.
13. Pull up on the glass and make sure that it is secure.
14. Install the door speaker. Refer to **SPEAKER, INSTALLATION** .

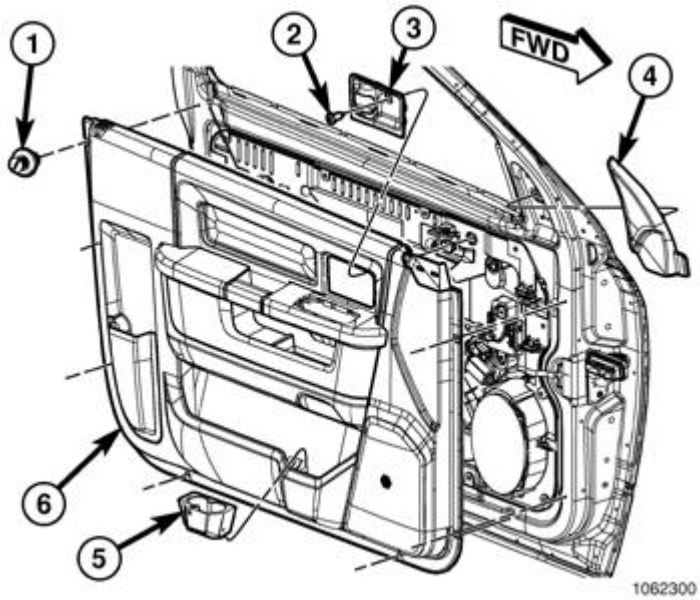

Fig. 121: Interior Door Handle Trim & Interior Door Panel
Courtesy of CHRYSLER GROUP, LLC

15. Install the door trim panel. Refer to **PANEL, DOOR TRIM, INSTALLATION**.

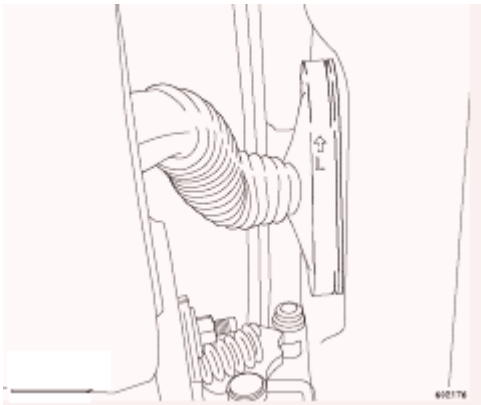

Fig. 122: Door Harness Connector
Courtesy of CHRYSLER GROUP, LLC

NOTE: The following illustration shows a typical door harness connector.

16. Connect the electrical connector and secure the grommet (1) back over the connector/retainer and seat the connector into the pillar fully.

REGULATOR, WINDOW, MANUAL

DESCRIPTION

DESCRIPTION

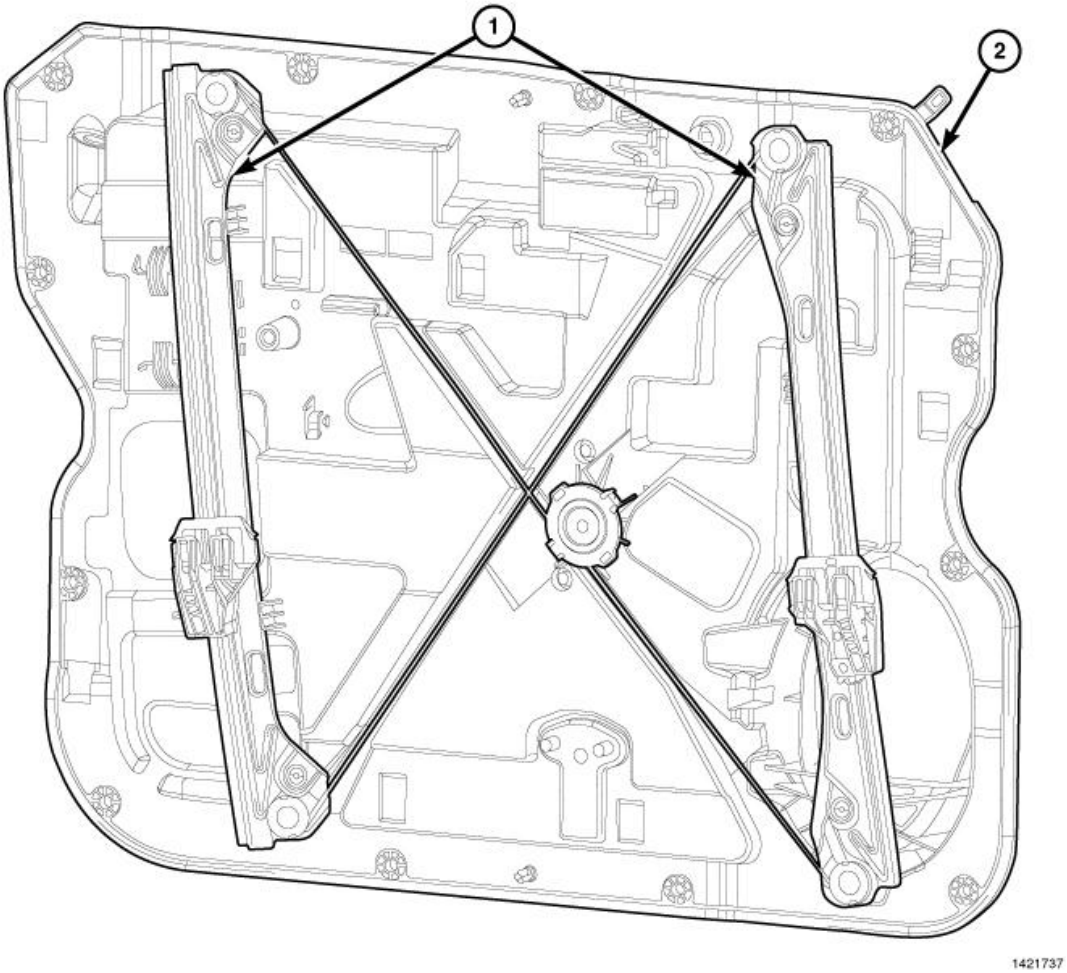

Fig. 123: Window Regulators & Carrier Plate (Manual)
Courtesy of CHRYSLER GROUP, LLC

The window regulators (1) are serviced as an assembly with the carrier plate (2) and include the following parts:

- glass bumpers
- lock grommets
- release rod grommet
- handle bumper
- service plug

Refer to **PLATE, CARRIER, REMOVAL**.

REGULATOR, WINDOW, POWER

DESCRIPTION

DESCRIPTION

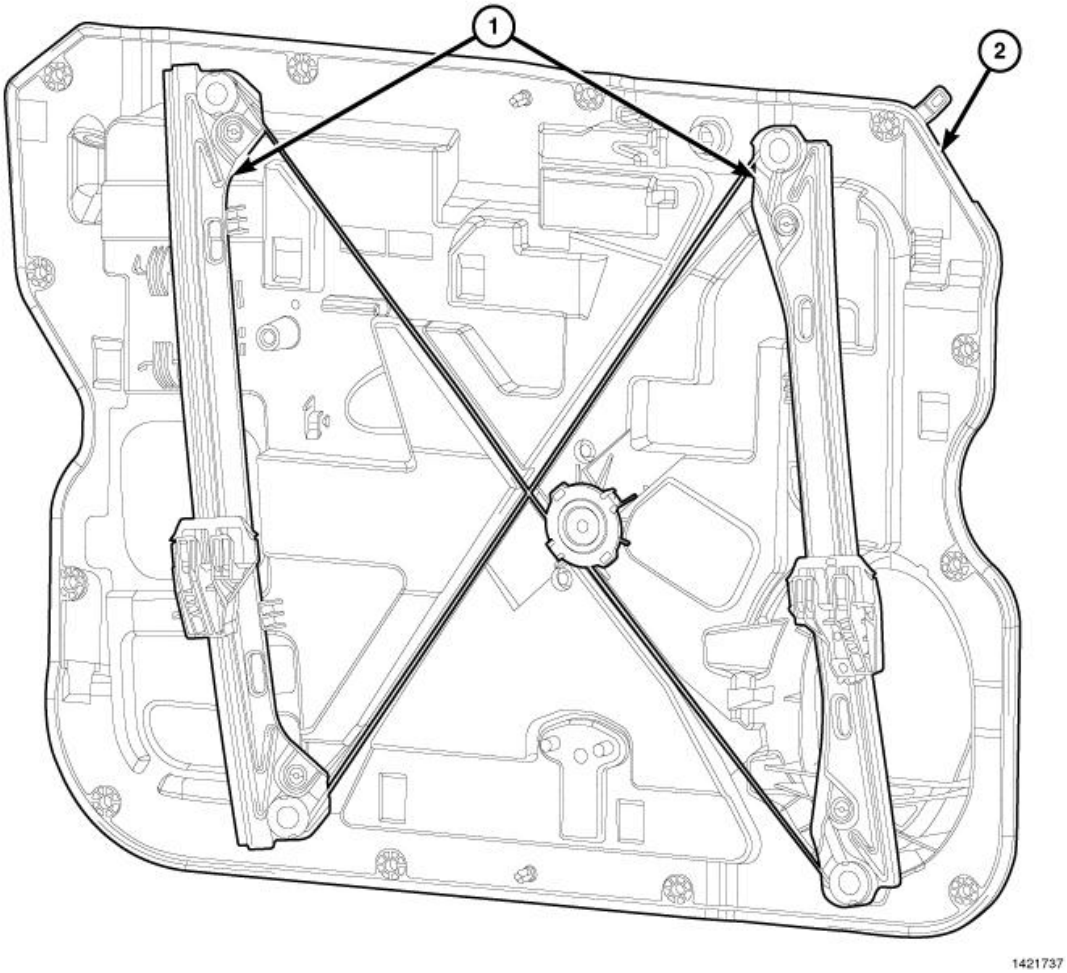

Fig. 124: Window Regulators & Carrier Plate (Manual)
Courtesy of CHRYSLER GROUP, LLC

The window regulators (1) are serviced as an assembly with the carrier plate (2) and include the following parts:

- glass bumpers
- lock grommets
- release rod grommet
- handle bumper
- service plug

Refer to **PLATE, CARRIER, REMOVAL**.

STRIKER, DOOR LATCH

ADJUSTMENTS

ADJUSTMENTS

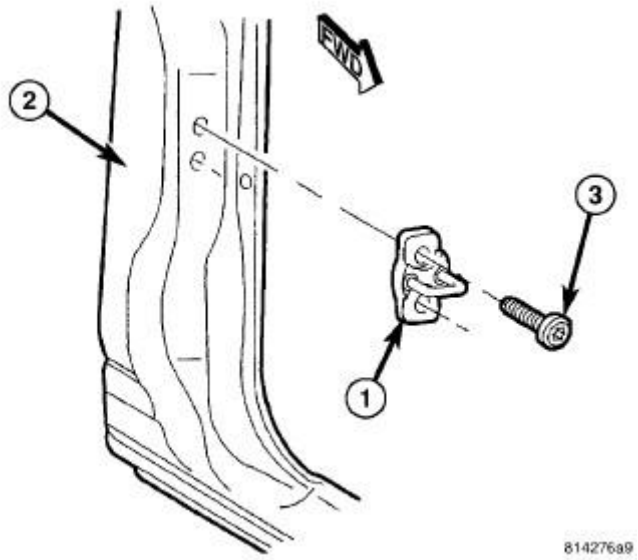

Fig. 125: Door Latch Striker & Bolts
Courtesy of CHRYSLER GROUP, LLC

1. Using a grease pencil or equivalent, mark the location of the door latch striker (1) on the B-pillar (2) to aid in adjustment.
2. Loosen the two bolts (3) that secure the door latch striker to the B-pillar.
3. To adjust the rear gap and flush measurement, change the position of the door latch striker and then tighten the two bolts to 30 N.m (22 ft. lbs.). Refer to **GAP AND FLUSH, SPECIFICATIONS**.
4. Verify correct door and latch position.

REMOVAL

REMOVAL

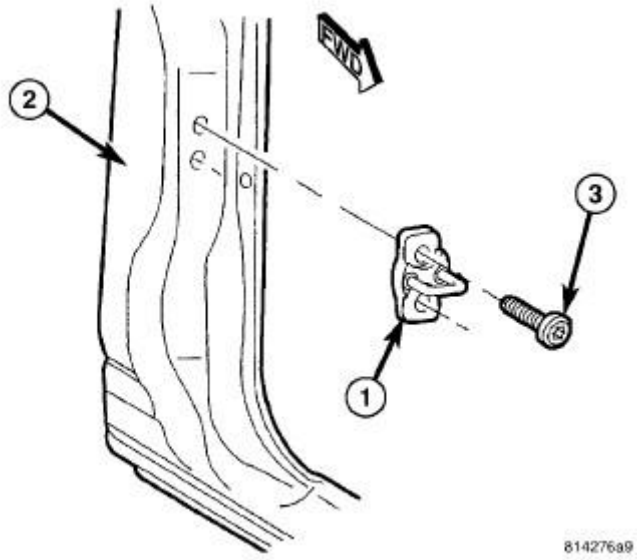

Fig. 126: Door Latch Striker & Bolts
Courtesy of CHRYSLER GROUP, LLC

1. Using a grease pencil or equivalent, mark the location of the door latch striker (1) on the B-pillar (2).
2. Remove the two bolts (3) that secure the door latch striker to the B-pillar and remove the striker.

INSTALLATION

INSTALLATION

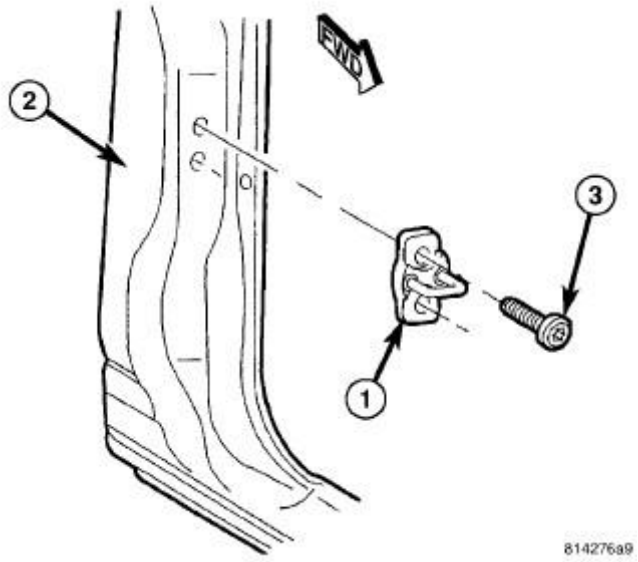

Fig. 127: Door Latch Striker & Bolts
Courtesy of CHRYSLER GROUP, LLC

1. Position the door latch striker (1) onto the B-pillar (2) and loosely install the two bolts (3).
2. Align the door latch striker to the B-pillar using the reference marks made during the removal procedure and tighten the bolts to 30 N.m (22 ft. lbs.).
3. If necessary, adjust the door latch striker. Refer to **STRIKER, DOOR LATCH, ADJUSTMENTS**.

DOORS - REAR

DOOR, REAR

ADJUSTMENTS

ADJUSTMENTS

NOTE: **For quad cab vehicles, it is recommended that you adjust the rear door before adjusting the front door.**

- **Door adjustment measurements should be taken from stationary or**

welded body panels like the roof, rocker or quarter panels.

- **During adjustment procedures, it is recommended that all the hinge fasteners be loosened except for the upper most fasteners. Adjustments can be made using the upper fasteners to hold the door with final torque of the fasteners occurring after correct door positioning is achieved.**
- **A suitable body sealant should be used when removing or moving the hinges.**

FORE/AFT

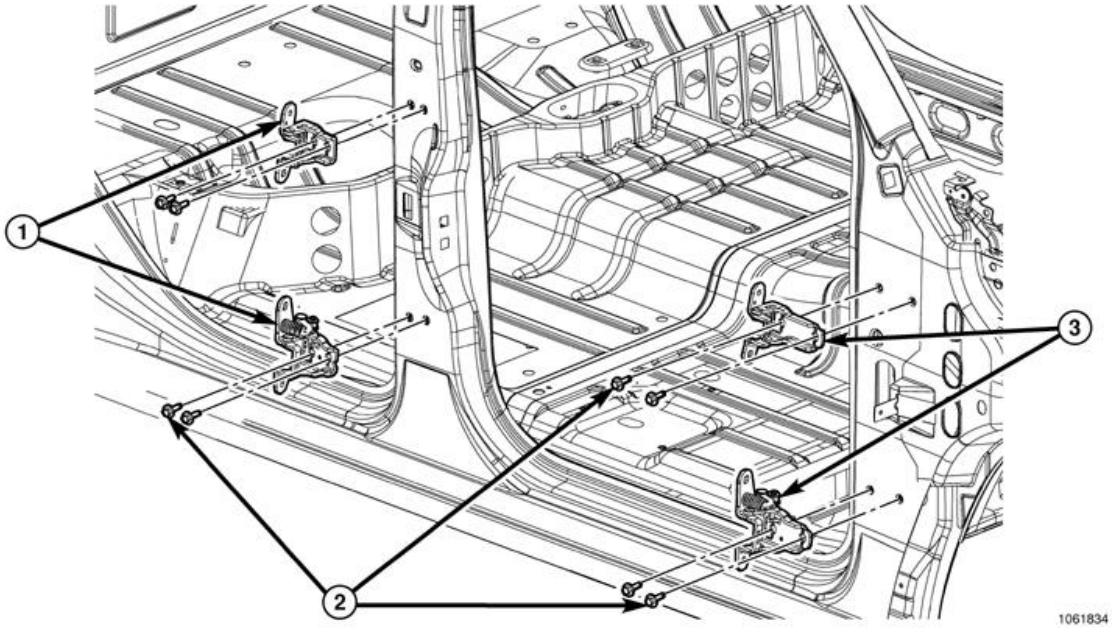

Fig. 128: Hinge Pillar & Bolts
Courtesy of CHRYSLER GROUP, LLC

NOTE: **Fore/aft (lateral) door adjustment is done by loosening the hinge to the hinge pillar fasteners one hinge at a time and moving the door to the correct position.**

1. Support the door with a suitable lifting device.
2. Loosen the upper and lower (2) hinge to hinge pillar fasteners. Refer to **HINGE, DOOR, REMOVAL**.
3. Adjust the door to the correct position. Refer to **GAP AND FLUSH, SPECIFICATIONS**.
4. Tighten the remaining hinge to hinge pillar bolts (2) to 24 N.m (18 ft. lbs.).

UP/DOWN

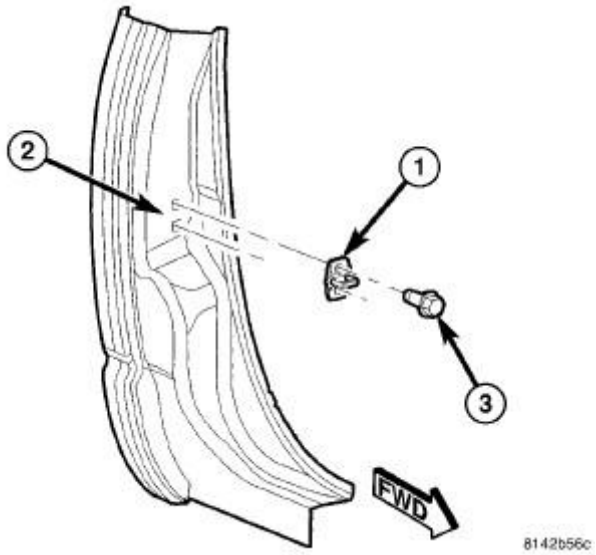

Fig. 129: Rear Door Striker
Courtesy of CHRYSLER GROUP, LLC

NOTE: **Up/down door adjustment is done by loosening either the hinge to the hinge pillar fasteners or the hinge to door fasteners and moving the door to the correct position.**

NOTE: **When the up/down adjustments are done correctly, the top of the door is positioned over flush to the roof. Refer to GAP AND FLUSH, SPECIFICATIONS.**

1. Support the door with a suitable lifting device.
2. Remove the latch striker (1). Refer to **STRIKER, DOOR LATCH, REMOVAL**.

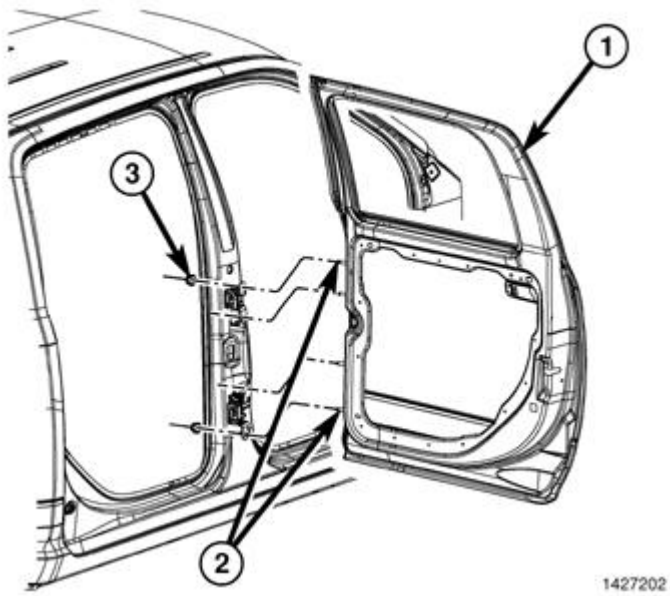

Fig. 130: Rear Door
Courtesy of CHRYSLER GROUP, LLC

3. If necessary, loosen the hinge to door fasteners (3). Refer to **HINGE, DOOR, REMOVAL**.

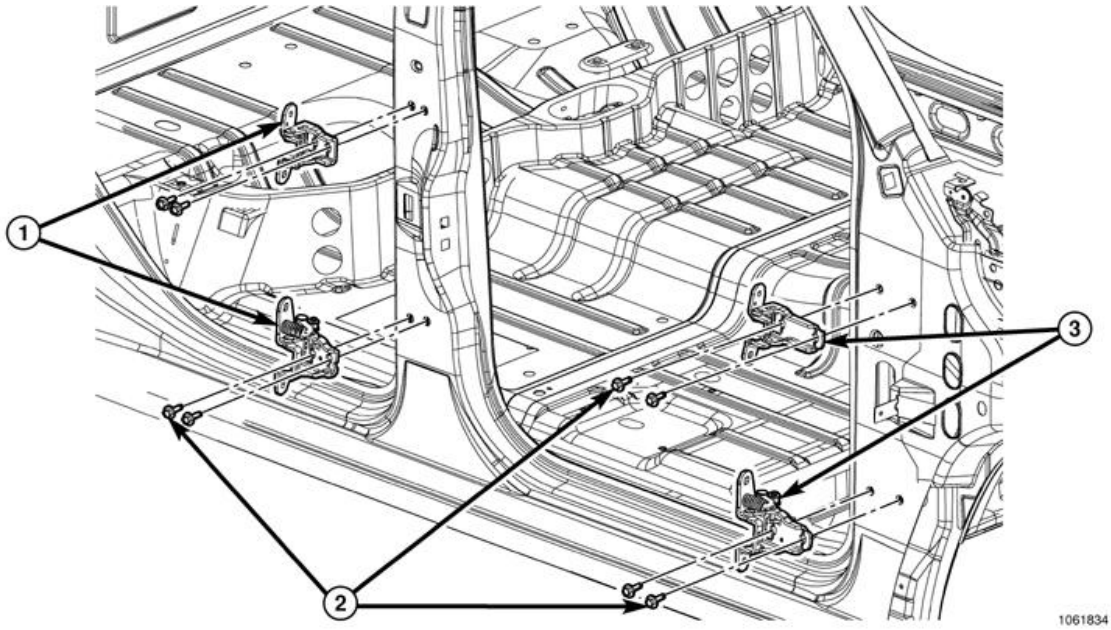

Fig. 131: Hinge Pillar & Bolts
Courtesy of CHRYSLER GROUP, LLC

4. If necessary, loosen the hinge to hinge pillar fasteners (2). Refer to **DOOR, REAR, REMOVAL**.
5. Adjust the door to the correct position. Refer to **GAP AND FLUSH, SPECIFICATIONS**.

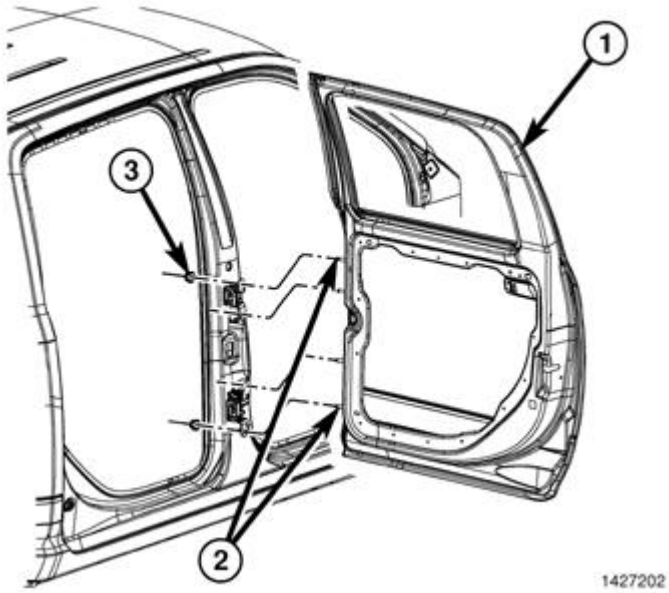

Fig. 132: Rear Door
Courtesy of CHRYSLER GROUP, LLC

6. Tighten the door to hinges fasteners to 22 N.m (16 ft. lbs.)

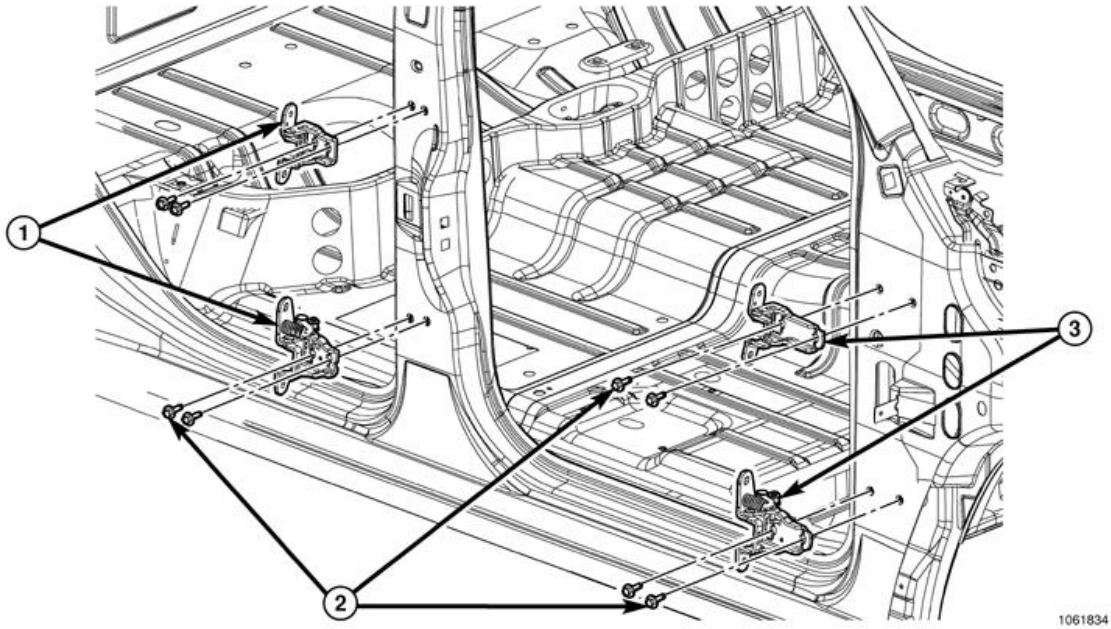

Fig. 133: Hinge Pillar & Bolts
Courtesy of CHRYSLER GROUP, LLC

7. Tighten the hinge to hinge pillar bolts (2) to 24 N.m (18 ft. lbs.).

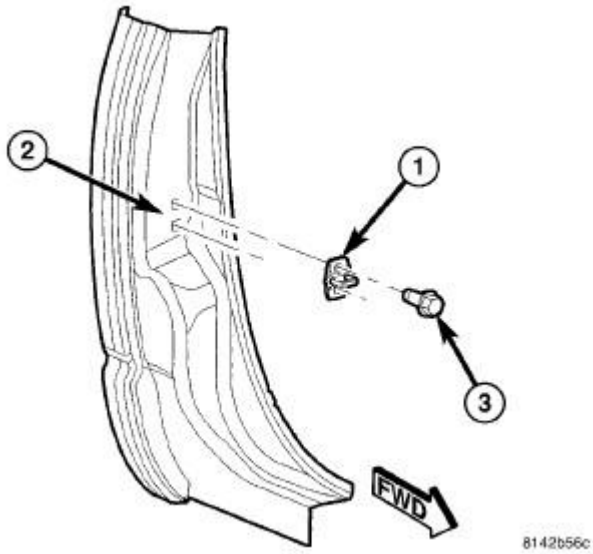

Fig. 134: Rear Door Striker
Courtesy of CHRYSLER GROUP, LLC

8. Install the latch striker. Refer to **STRIKER, DOOR LATCH, INSTALLATION**.

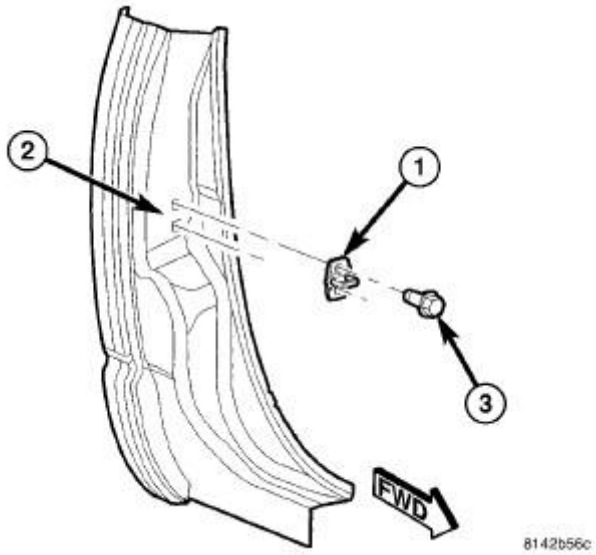

Fig. 135: Rear Door Striker
Courtesy of CHRYSLER GROUP, LLC

NOTE: **In/out door adjustment is done by loosening the hinge to door fasteners one hinge at a time and moving the door to the correct position.**

NOTE: **When adjustment of the door requires the loosening of the door to hinge fasteners, it will be necessary to separate the epoxy bonded washers with a chisel or other suitable tool.**

1. Support the door with a suitable lifting device.
2. Remove the latch striker. Refer to **STRIKER, DOOR LATCH, REMOVAL**.

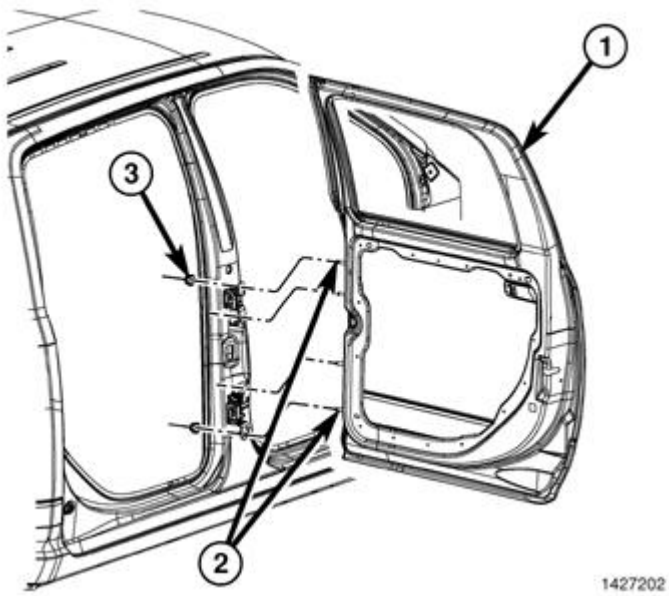

Fig. 136: Rear Door
Courtesy of CHRYSLER GROUP, LLC

3. Loosen the hinge to door fasteners (3). Refer to **DOOR, REAR, REMOVAL**.
4. Adjust the front of the door to the correct position. Refer to **GAP AND FLUSH, SPECIFICATIONS**.
5. Tighten the door to hinges fasteners to 22 N.m (16 ft. lbs.).

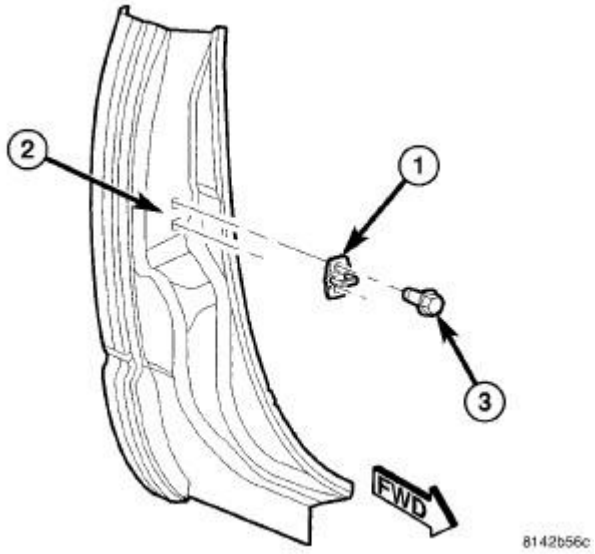

Fig. 137: Rear Door Striker
Courtesy of CHRYSLER GROUP, LLC

6. Install the latch striker (1). Refer to **STRIKER, DOOR LATCH, INSTALLATION**.

REMOVAL

REMOVAL

1. Disconnect and isolate the negative battery cable.
2. Disconnect the door electrical connector.
    - **GROMMET - A PILLAR**

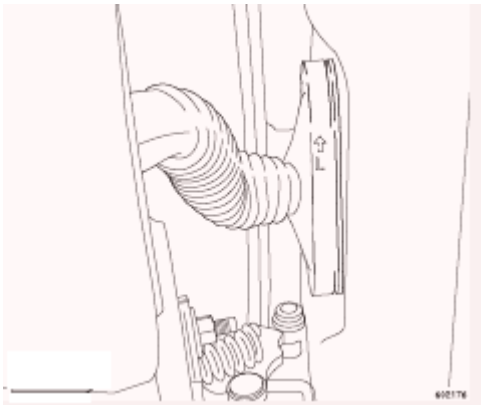

Fig. 138: Door Harness Connector
Courtesy of CHRYSLER GROUP, LLC

NOTE: The following illustration shows a typical door harness connector.

1. Peel the A Pillar grommet (1) off of the connector/retainer and move it up the wire harness.
2. Grasp the wire harness (2) by the convolute section of the grommet and gently pull the wire harness down towards the floor to expose the connector lock tabs.

CAUTION: Do not force the locking tab past the connector body, as damage to the connector may occur.

3. While still pulling down on the harness, use a small slotted screw driver (3) to **gently** push one of the top lock tabs until the lock feature is flush with the connector/retainer body.
4. Repeat the step 3 for the remaining top lock tab.
5. The connector should now be able to rock out of the sheet metal hole without causing any damage to the connector or sheet metal.

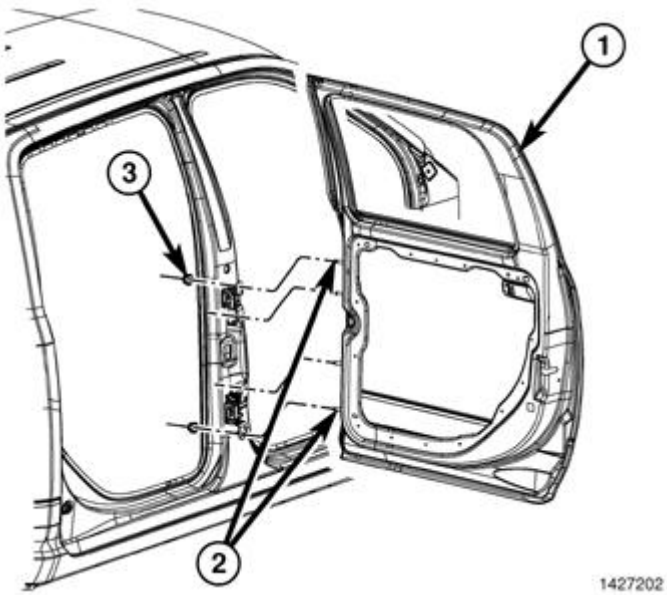

Fig. 139: Rear Door
Courtesy of CHRYSLER GROUP, LLC

3. Using a grease pencil or equivalent, mark the location of the door hinges on the door (1).
4. Support the door with a suitable lifting device and remove the nuts (3) that secure the door to the hinges.
5. Carefully remove the door from the hinges.

INSTALLATION

INSTALLATION

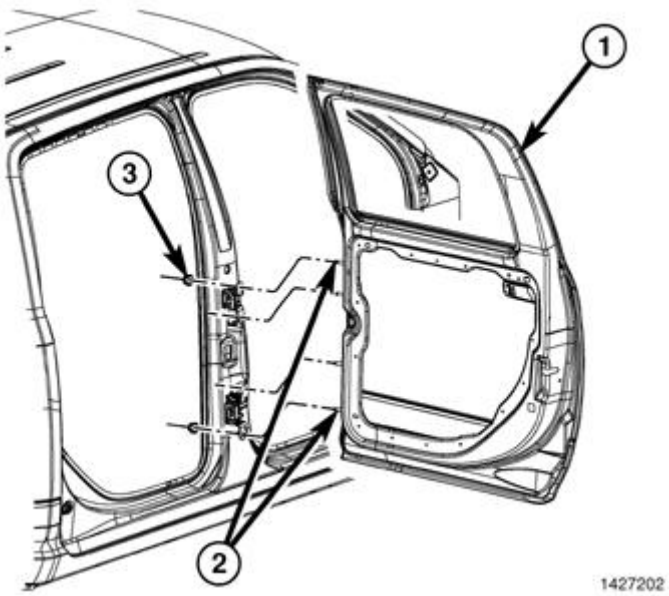

Fig. 140: Rear Door
Courtesy of CHRYSLER GROUP, LLC

1. Carefully position the door studs (2) onto the hinges and support the door with a suitable lifting device.
2. Loosely install the nuts (3) and secure the door to the hinges.
3. Align the door to the hinges using the reference marks made during the removal procedure
4. Tighten the nuts to 22 N.m (16 ft. lbs.) using the following sequence;
    1. Tighten the upper nut of the top hinge.
    2. Tighten the lower nut of the bottom hinge.
    3. Tighten the upper nut of the bottom hinge.
    4. Tighten the lower nut of the top hinge.
5. Connect the door wire harness to the body wire harness.
6. Install the grommet over the connector and seat the connector into the A-pillar fully.
7. Reconnect the negative battery cable.
8. If necessary, adjust the door. Refer to **DOOR, REAR, ADJUSTMENTS**.

GLASS, DOOR

REMOVAL

REMOVAL

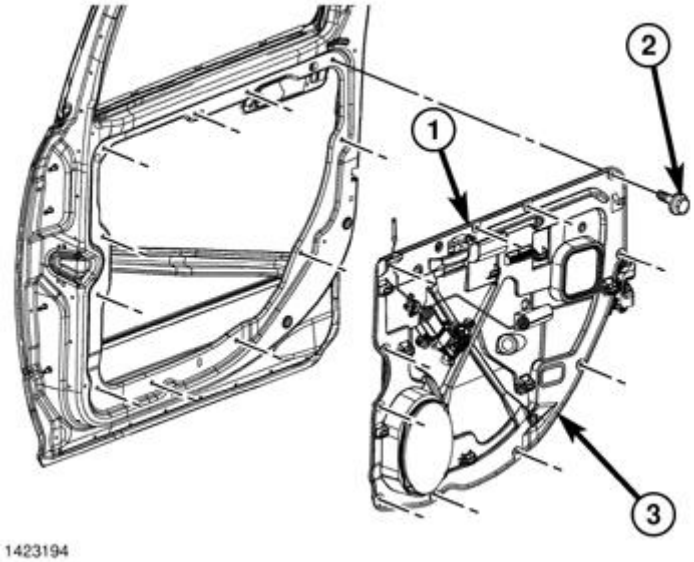

Fig. 141: Carrier Plate
Courtesy of CHRYSLER GROUP, LLC

1. Remove the carrier plate (3). Refer to **PLATE, CARRIER, REMOVAL**.

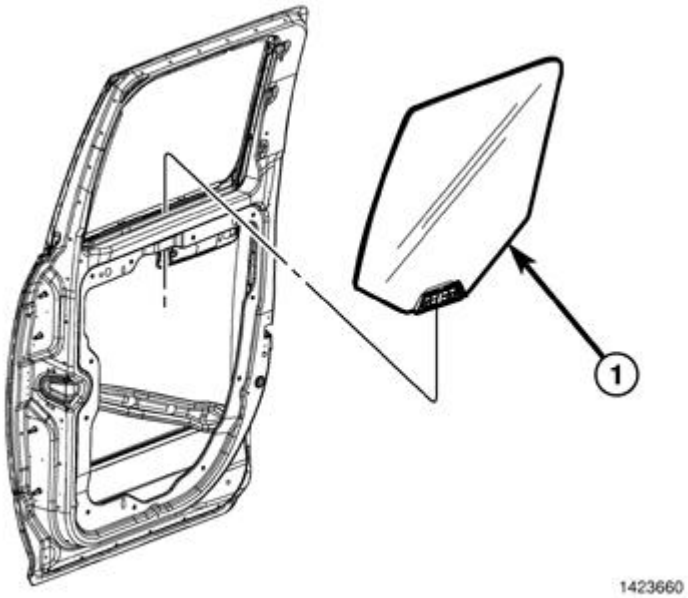

Fig. 142: Door Glass
Courtesy of CHRYSLER GROUP, LLC

2. Lower the glass (1) and remove from the lower door opening.

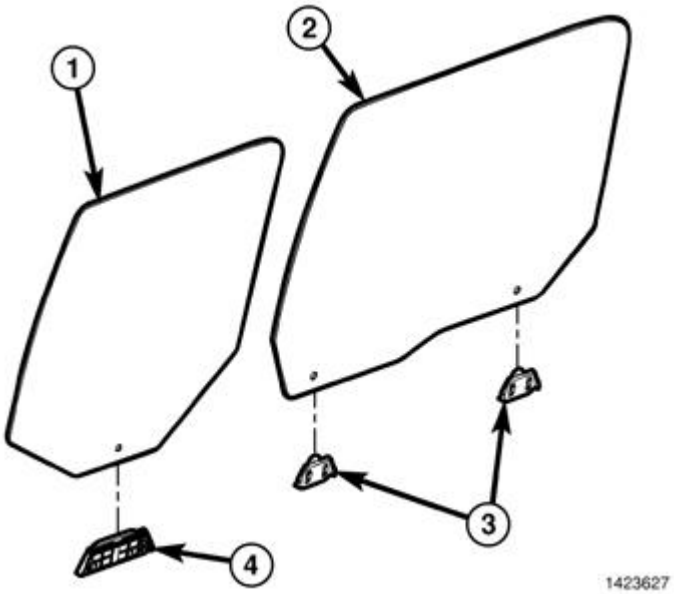

Fig. 143: Glass Clips
Courtesy of CHRYSLER GROUP, LLC

3. If necessary, remove the glass clips (3 - 4) from the glass.

INSTALLATION

INSTALLATION

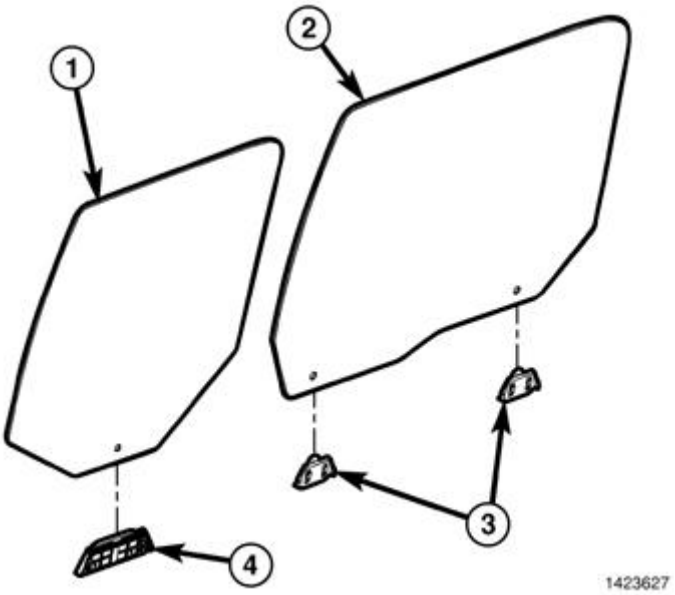

Fig. 144: Glass Clips
Courtesy of CHRYSLER GROUP, LLC

1. Install the mounting clips (3 - 4) onto the glass, if necessary.

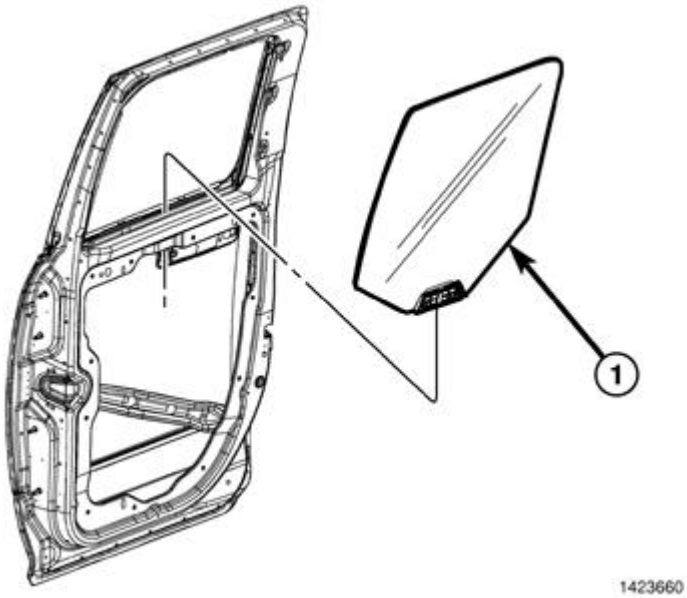

Fig. 145: Door Glass
Courtesy of CHRYSLER GROUP, LLC

2. Install the glass (1) into the door through the lower door opening and secure in the full up position using tape or equivalent.

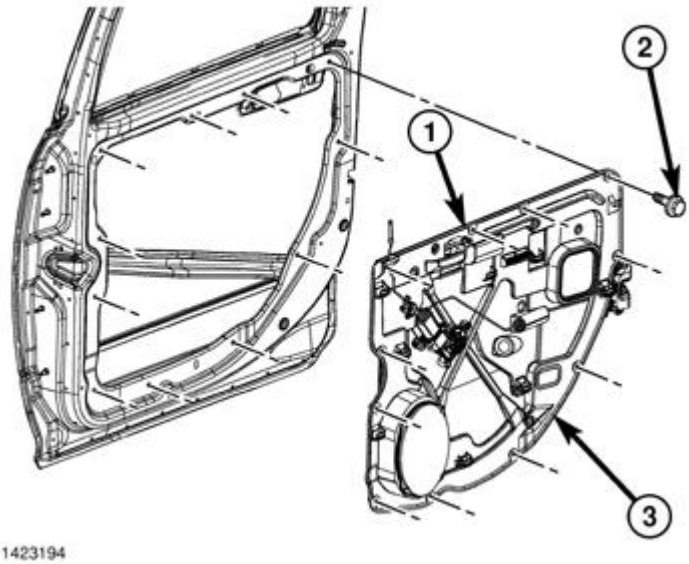

Fig. 146: Carrier Plate
Courtesy of CHRYSLER GROUP, LLC

3. Install the carrier plate (3). Refer to **PLATE, CARRIER, INSTALLATION**.

HANDLE, INTERIOR

REMOVAL

REMOVAL

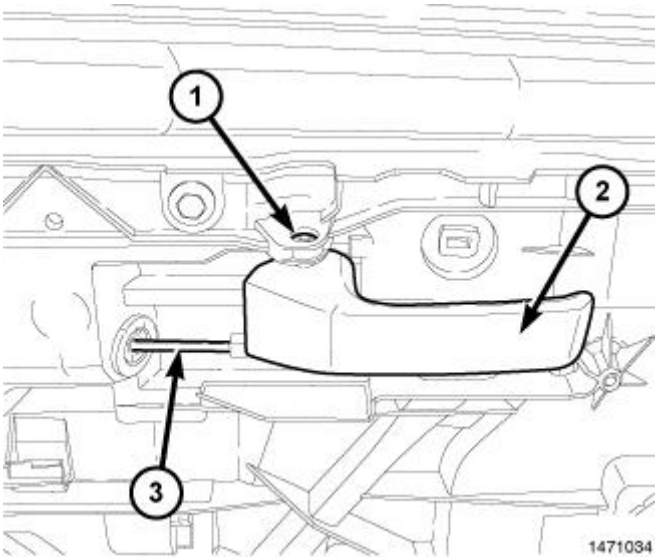

Fig. 147: Interior Handle
Courtesy of CHRYSLER GROUP, LLC

NOTE: Front door shown in illustration, rear door similar.

1. Remove the door trim panel.
2. Remove the handle mounting screw (1).
3. Disconnect the control rod (3) from the handle (2).
4. Remove the handle from the door.

INSTALLATION

INSTALLATION

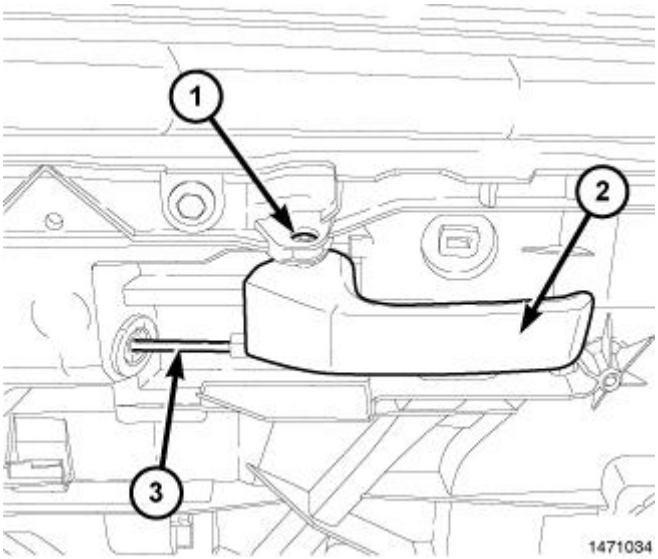

Fig. 148: Interior Handle
Courtesy of CHRYSLER GROUP, LLC

NOTE: Front door shown in illustration, rear door similar.

1. Place the handle (2) into position at the door.
2. Connect the control rod (3) to the handle.
3. Install the handle mounting screw (1).
4. Install the door trim panel.

HANDLE, EXTERIOR

REMOVAL

REMOVAL

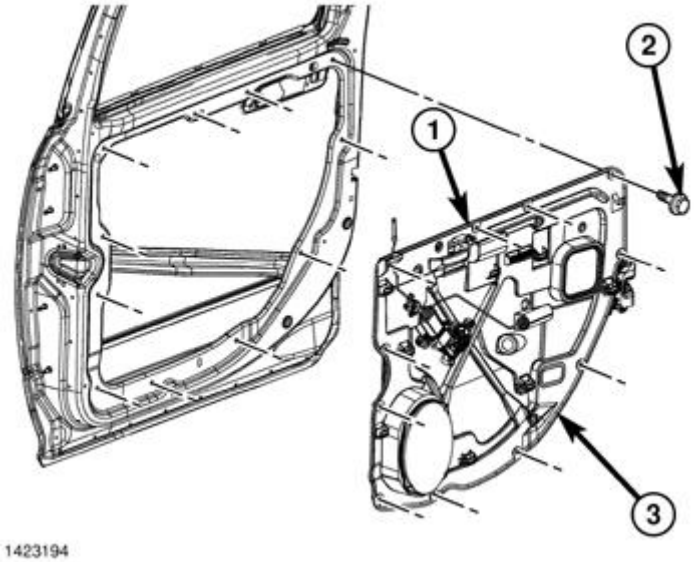

Fig. 149: Carrier Plate
Courtesy of CHRYSLER GROUP, LLC

1. Remove the carrier plate (3). Refer to **PLATE, CARRIER, REMOVAL**.

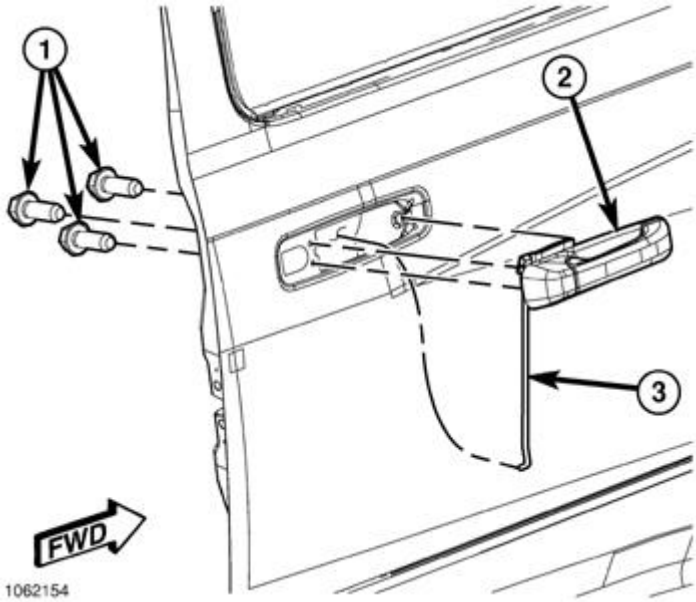

Fig. 150: Exterior Handle Bolts
Courtesy of CHRYSLER GROUP, LLC

2. Remove the bolts (1) and remove the exterior handle (2) from the door.

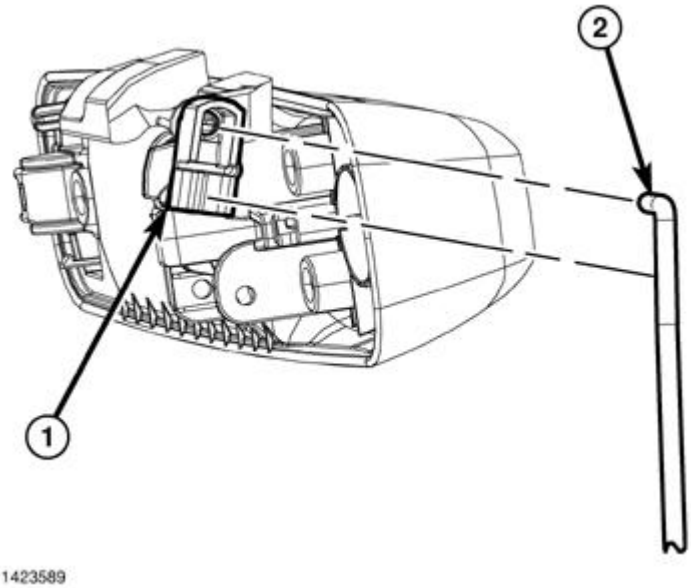

Fig. 151: Door Handle Linkage
Courtesy of CHRYSLER GROUP, LLC

3. Release the clips (1) and disconnect the linkage (2) from the handle.

INSTALLATION

INSTALLATION

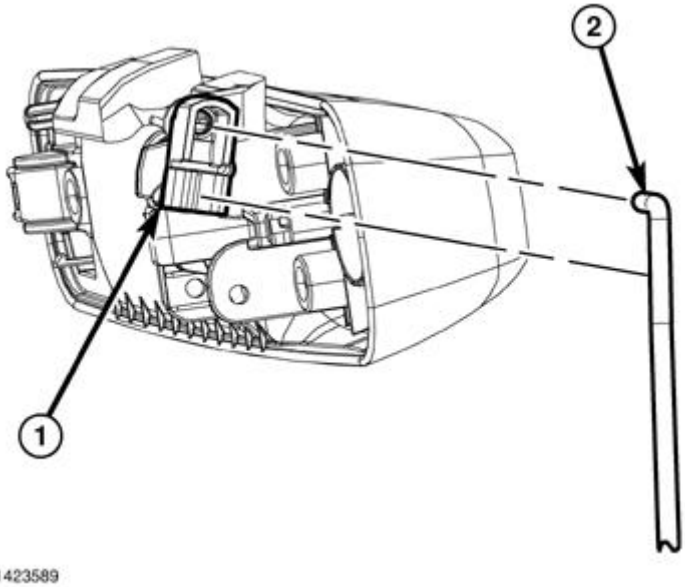

Fig. 152: Door Handle Linkage
Courtesy of CHRYSLER GROUP, LLC

1. Install the linkage (2) onto the door handle and secure the clips (1).

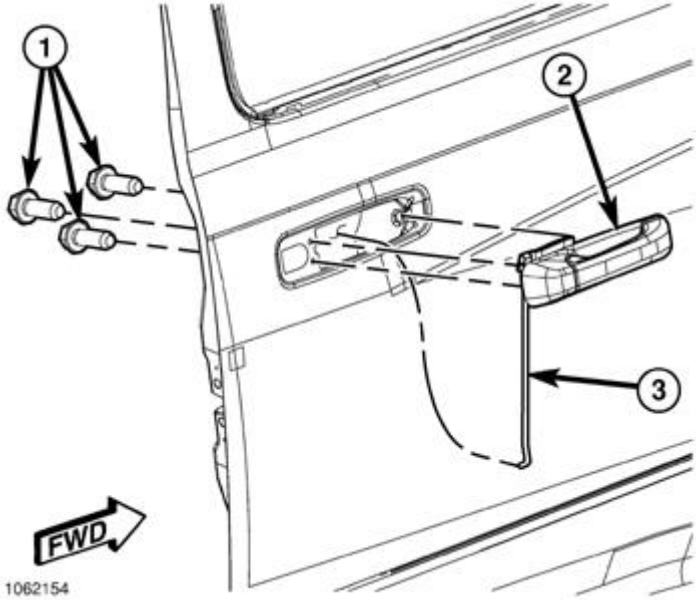

Fig. 153: Exterior Handle Bolts
Courtesy of CHRYSLER GROUP, LLC

NOTE: Front door shown in illustration, rear doors are similar.

2. Position the linkages (3) into the door and install the handle (2).
3. Install the bolts (1) and tighten to 7 N.m (62 in. lbs.)

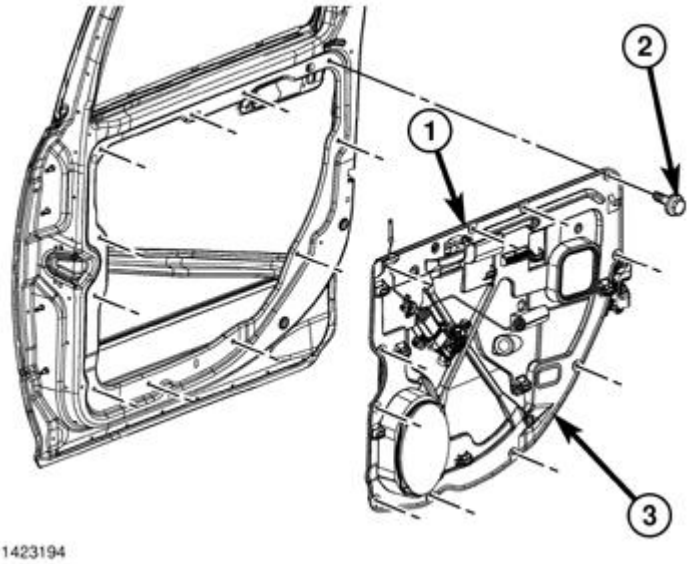

Fig. 154: Carrier Plate
Courtesy of CHRYSLER GROUP, LLC

4. Install the carrier plate (3). Refer to **PLATE, CARRIER, INSTALLATION**.

HINGE, DOOR

STANDARD PROCEDURE

STANDARD PROCEDURE - HINGE LUBRICATION

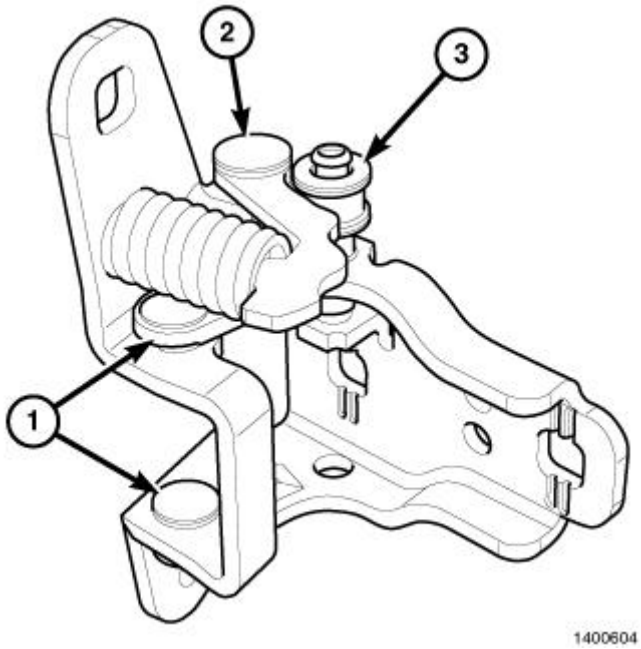

Fig. 155: Door Hinge
Courtesy of CHRYSLER GROUP, LLC

CAUTION: Door hinge pivot points (1) including the roller (3) and detent lever (2), should be lubricated periodically using Mopar ® Spray White Lube with Lithium or equivalent.

1. Spray parts as necessary using Mopar ® Spray White Lube W/Lithium or equivalent.
2. Remove any excess grease.

REMOVAL

REMOVAL

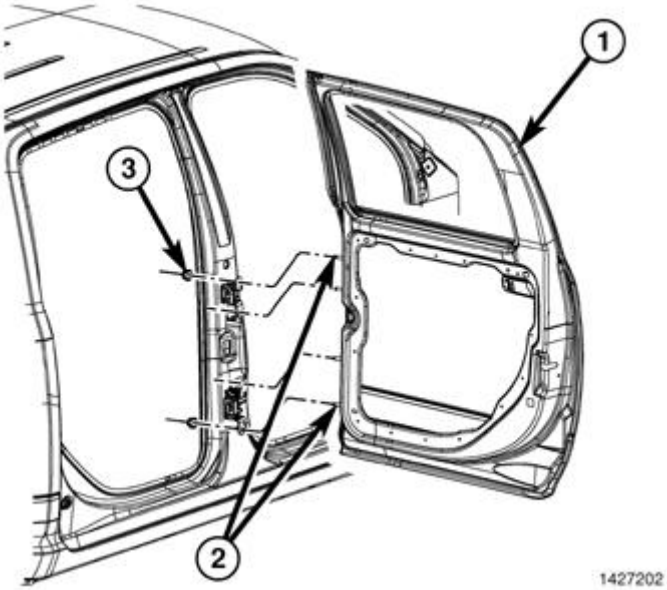

Fig. 156: Rear Door
Courtesy of CHRYSLER GROUP, LLC

NOTE: **It is not necessary to remove the door to replace the hinges if they are replaced one at a time.**

NOTE: **A suitable body sealant should be used when removing or moving the hinges.**

1. Open the front door
2. Using a grease pencil or equivalent, mark the position of the hinge on the door and B-pillar.
3. Remove the nuts (3) attaching the hinge to the door (1).

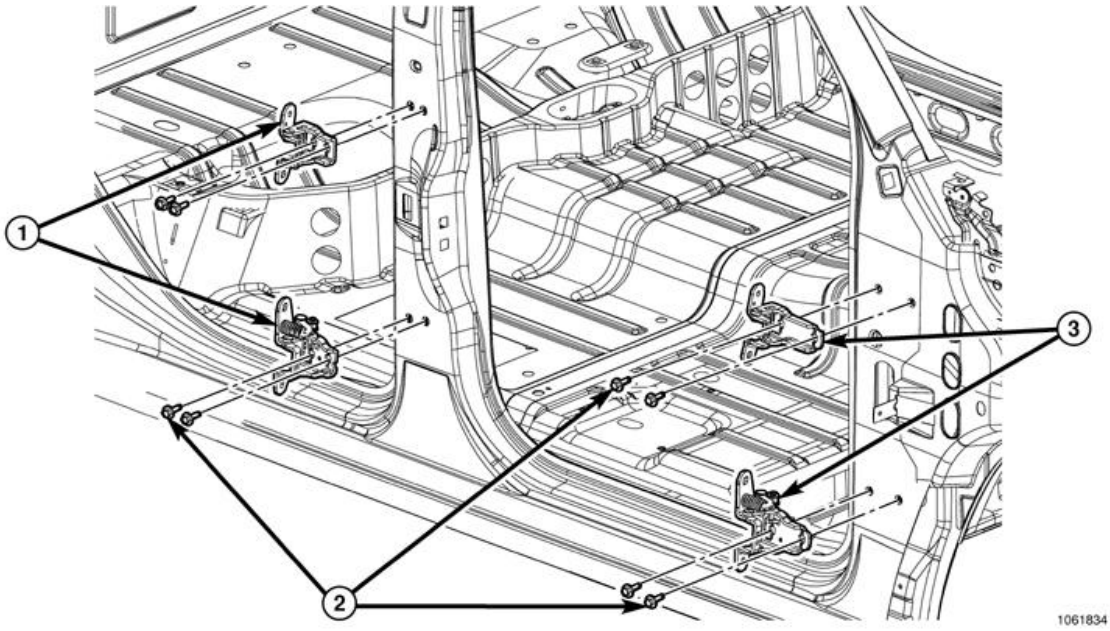

Fig. 157: Hinge Pillar & Bolts
Courtesy of CHRYSLER GROUP, LLC

4. Remove the bolts (2) attaching the hinge (1) to the B-pillar and remove the hinge.

INSTALLATION

INSTALLATION

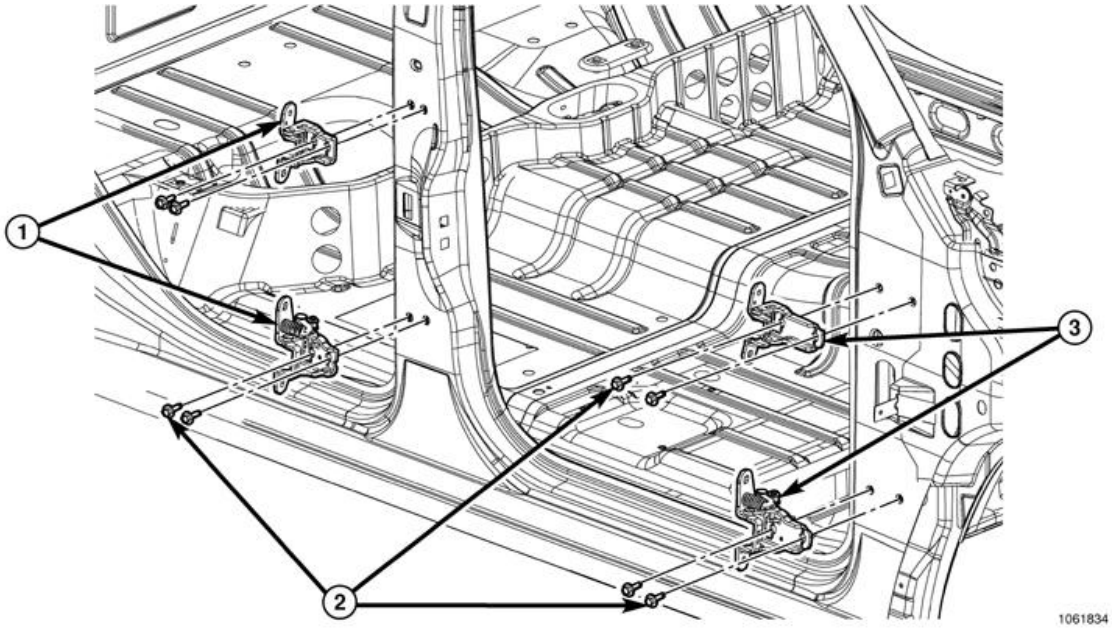

Fig. 158: Hinge Pillar & Bolts
Courtesy of CHRYSLER GROUP, LLC

NOTE: A suitable body sealant should be used when removing or moving the hinges.

1. Install the hinge (1) and install the B-pillar bolts (2).
2. Tighten the bolts to 24 N.m (18 ft. lbs.).

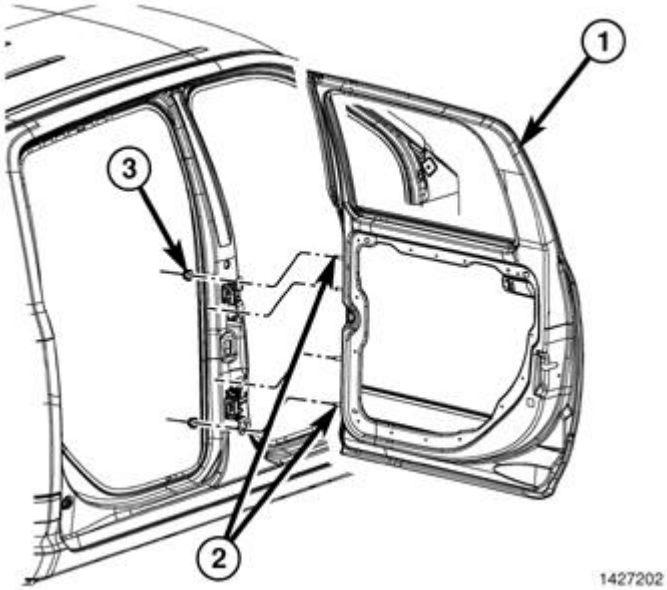

Fig. 159: Rear Door
Courtesy of CHRYSLER GROUP, LLC

3. Position rear door assy studs (2), through appropriate holes in hinge assy.

NOTE: **The shoulders of the studs (2) must be fully engaged into hinges, prior to securing.**

4. Install the nuts and tighten to 22 N.m (16 ft. lbs.).
5. Adjust the door if needed. Refer to **DOOR, REAR, ADJUSTMENTS**.

LATCH, DOOR

REMOVAL

REMOVAL

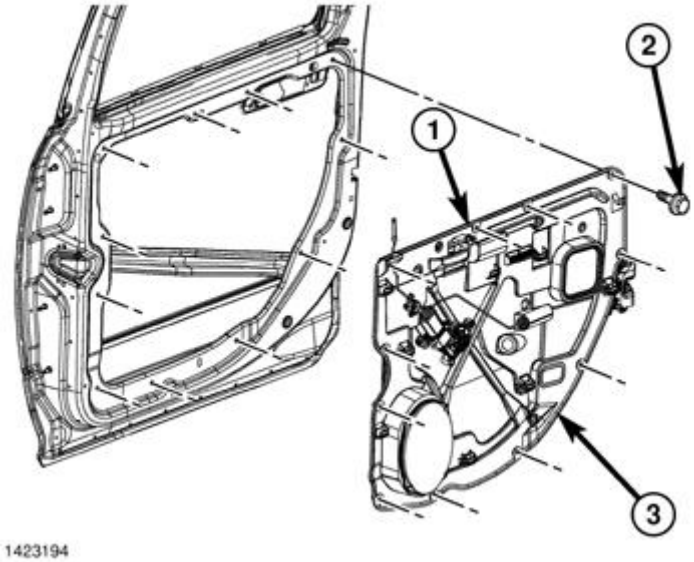

Fig. 160: Carrier Plate
Courtesy of CHRYSLER GROUP, LLC

1. Remove the carrier plate (1). Refer to **PLATE, CARRIER, REMOVAL**.
2. Disconnect the door wire harness connector from the door latch (4).
3. Separate the latch assembly from the latch presenter bracket and remove.

INSTALLATION

INSTALLATION

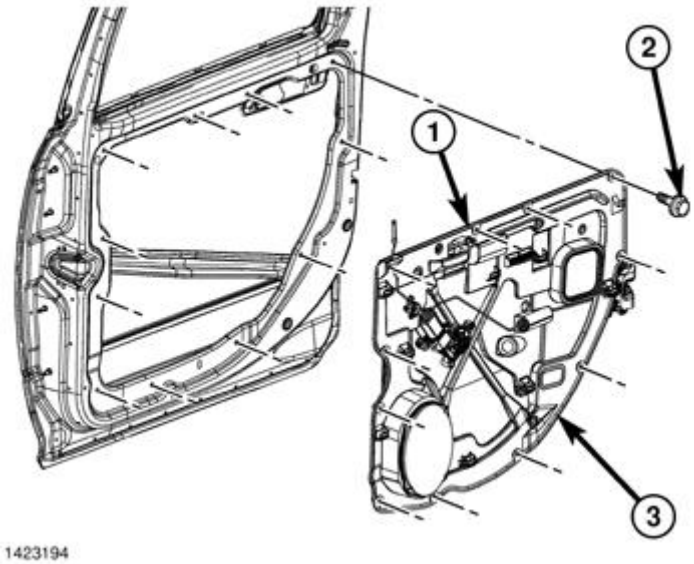

Fig. 161: Carrier Plate
Courtesy of CHRYSLER GROUP, LLC

1. Seat the latch onto the presenter bracket fully.
2. Connect the electrical connector.
3. Install the carrier plate (1). Refer to **PLATE, CARRIER, INSTALLATION**.

MOLDING, DOOR BELT, INNER

REMOVAL

REMOVAL

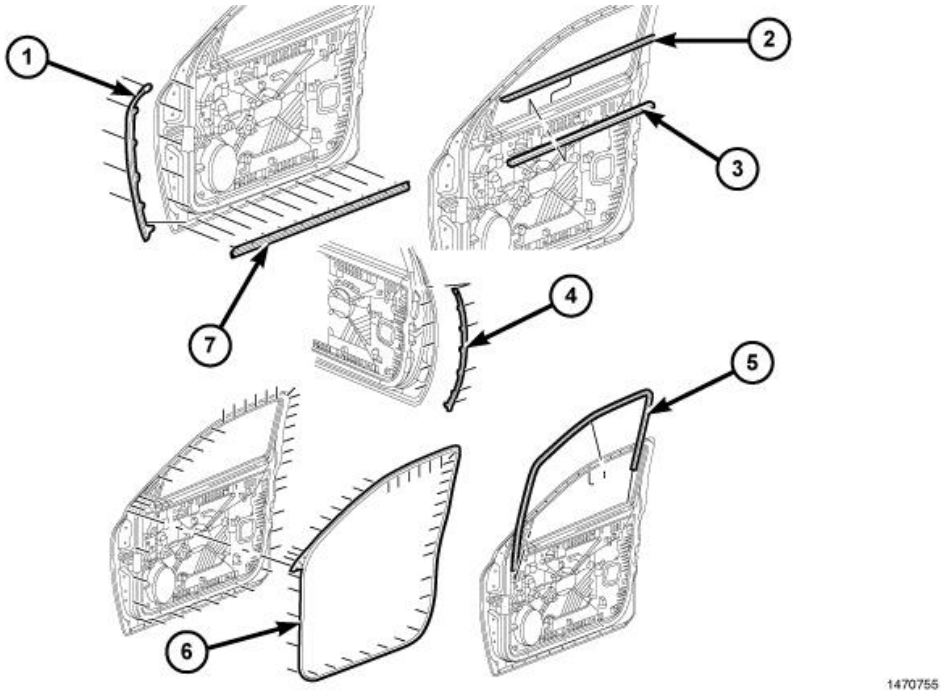

Fig. 162: Belt Moldings & Seals
Courtesy of CHRYSLER GROUP, LLC

NOTE: Front door shown in illustration, rear door similar.

1. Remove the door trim panel. Refer to **PANEL, DOOR TRIM, REMOVAL**.
2. Separate the belt molding (3) the door mounting flange from the back to the front.

INSTALLATION

INSTALLATION

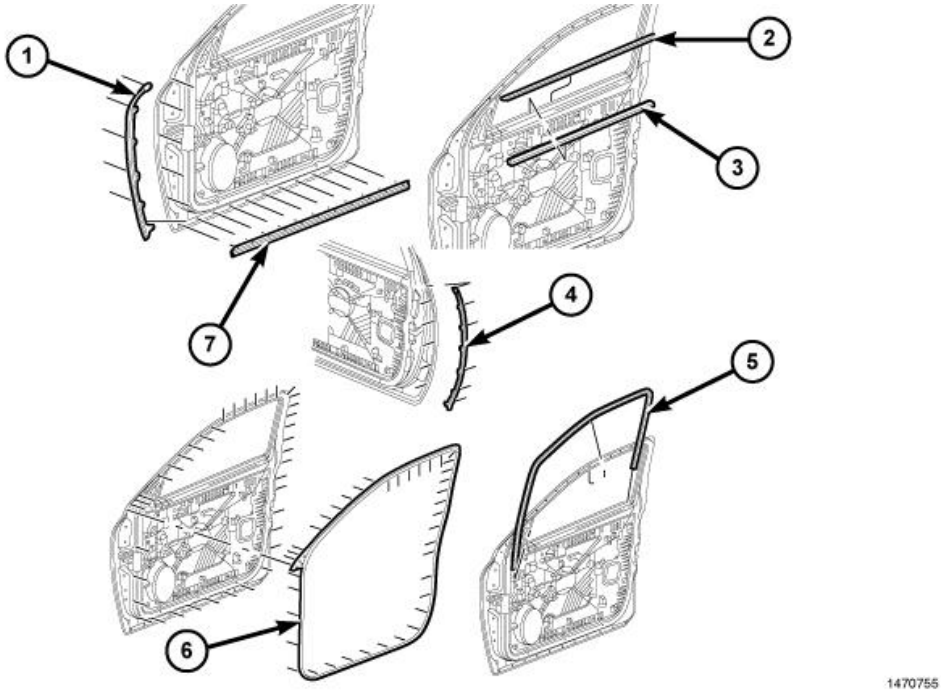

Fig. 163: Belt Moldings & Seals
Courtesy of CHRYSLER GROUP, LLC

NOTE: Front door shown in illustration, rear door similar.

1. Position the belt molding (3) and seat onto the door mounting flange fully.
2. Install the door trim panel. Refer to **PANEL, DOOR TRIM, INSTALLATION**.

MOLDING, DOOR BELT, OUTER

REMOVAL

REMOVAL

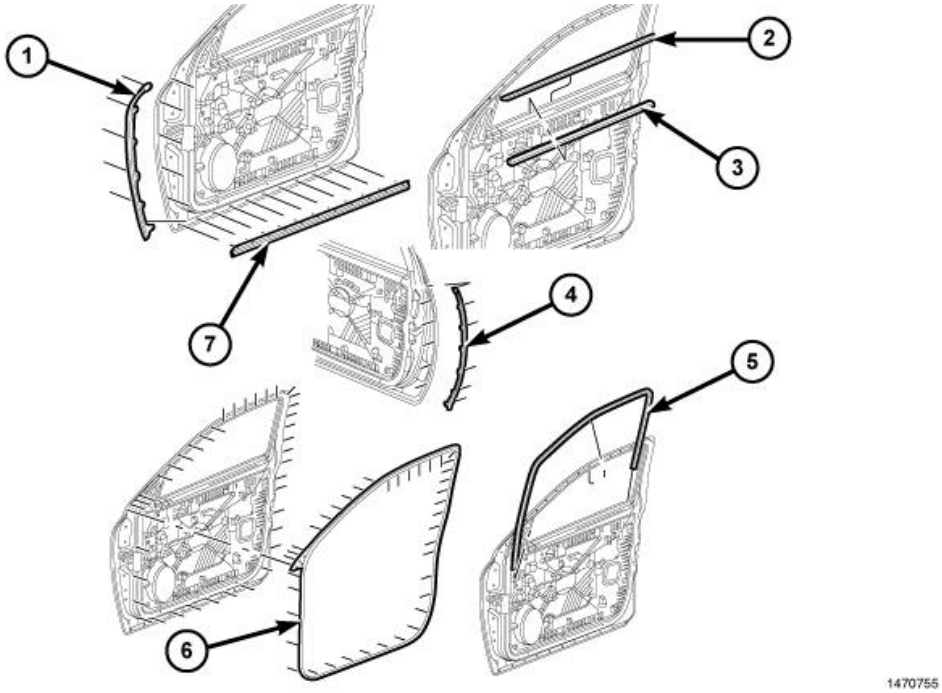

Fig. 164: Belt Moldings & Seals
Courtesy of CHRYSLER GROUP, LLC

NOTE: Front door shown in illustration, rear door similar

1. Remove the screw from the rear of the outer belt molding (2).
2. Starting from the rear of the door, carefully lift the belt molding upward and disengage the inner portion of the molding from the tabs on the door.
3. Pull the molding rearward to disengage the molding from the outside mirror.
4. Remove the belt molding from the door.

INSTALLATION

INSTALLATION

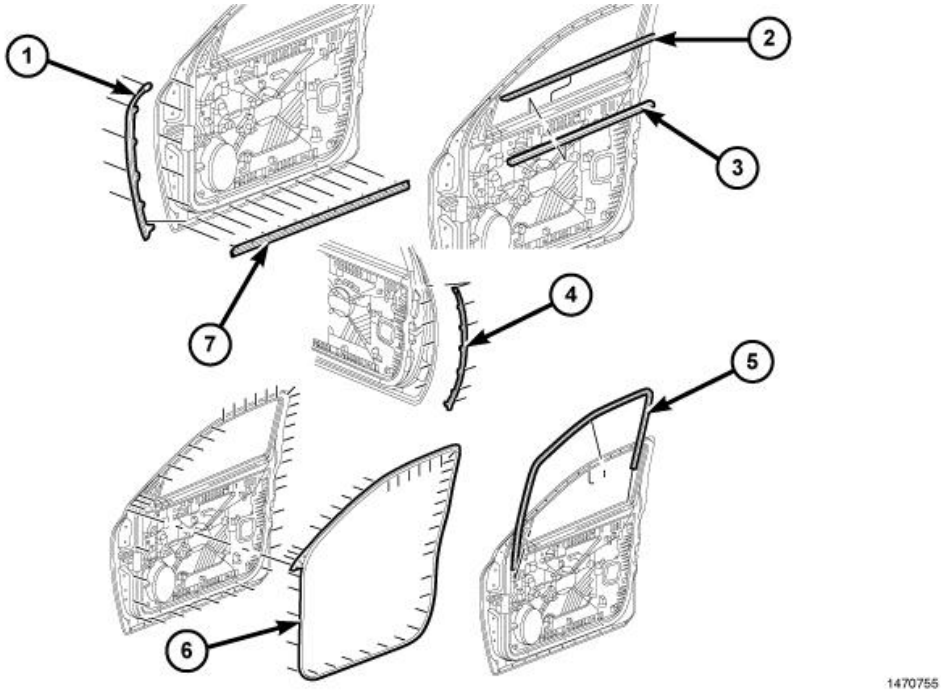

Fig. 165: Belt Moldings & Seals
Courtesy of CHRYSLER GROUP, LLC

NOTE: Front door shown in illustration, rear door similar.

1. Place the belt molding (2) into position and insert the front portion under the outside mirror housing.
2. Working from the front of the door, press down on the molding and engage the clips to the door.
3. Install the screw at the rear of the belt molding.

PANEL, REAR DOOR TRIM

REMOVAL

REMOVAL

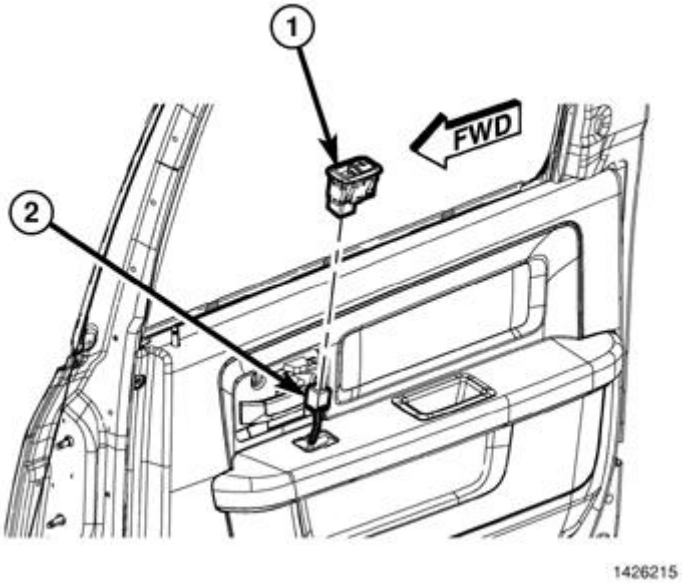

Fig. 166: Door Switch/Bezel
Courtesy of CHRYSLER GROUP, LLC

1. Using trim stick (special tool #C-4755, Trim Stick) or equivalent, release the door switch/bezel (1) from the door trim and disconnect the electrical connectors (2).

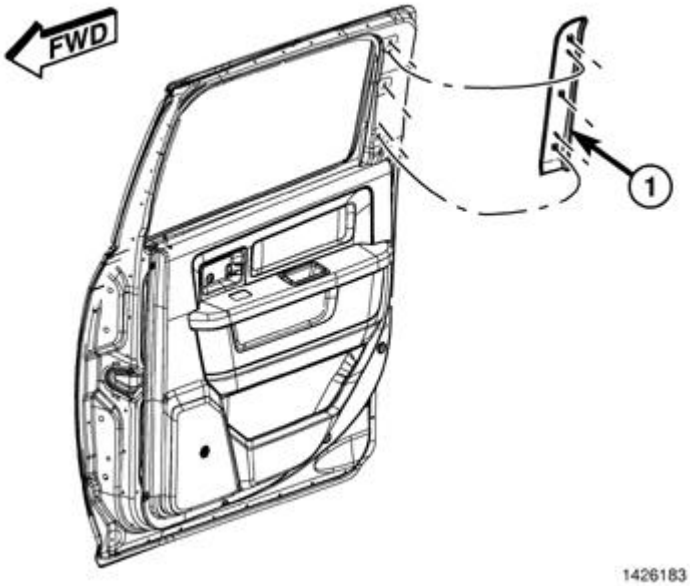

Fig. 167: Upper Trim Bezel
Courtesy of CHRYSLER GROUP, LLC

2. Using trim stick (special tool #C-4755, Trim Stick) or equivalent, release the upper trim bezel (1).

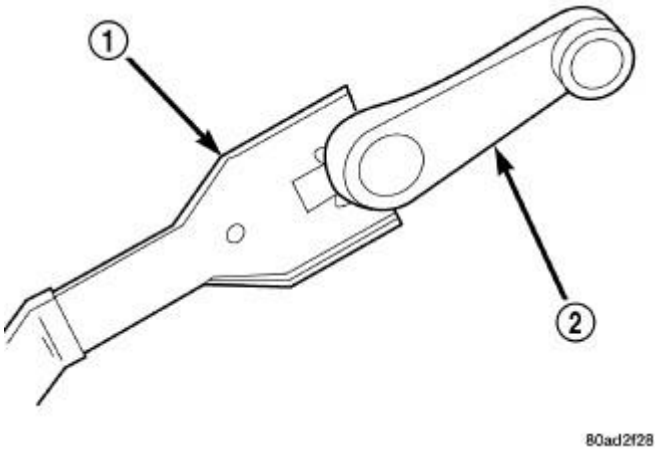

Fig. 168: Removing Manual Window Crank
Courtesy of CHRYSLER GROUP, LLC

3. If equipped, remove the manual window crank (1) using a window crank removal tool (2).

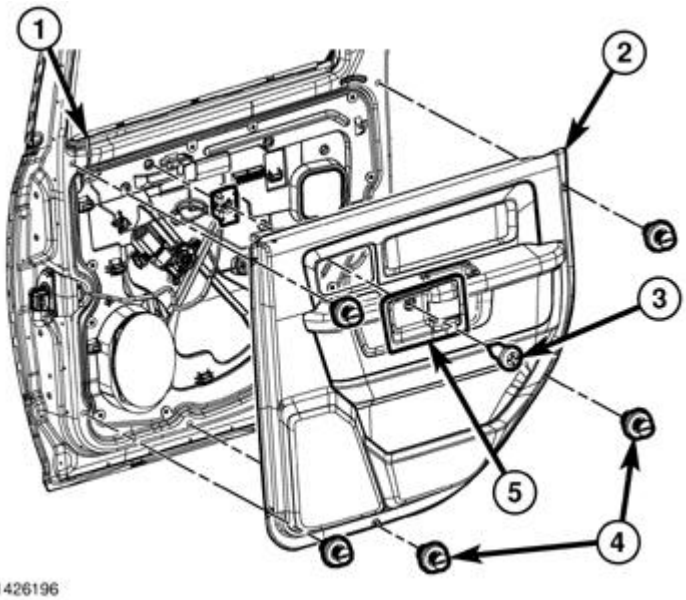

Fig. 169: Door Trim Panel
Courtesy of CHRYSLER GROUP, LLC

4. Remove the screw (3) and remove the interior handle bezel (5).
5. Release the plastic screw/rivets (4).
6. Raise the trim panel (2) up and off the hooks and door lock knob (1).

INSTALLATION

INSTALLATION

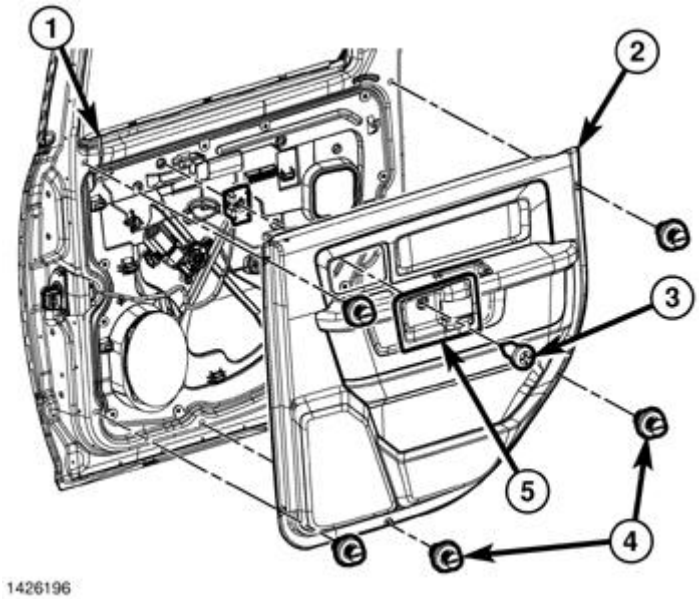

Fig. 170: Door Trim Panel
Courtesy of CHRYSLER GROUP, LLC

1. Load the trim panel (2) bottom first on an angle then rotate toward inner aligning window crank shaft, feed lock knob (1) through the trim panel (2), then align and push down hooks into holes in door module, (this will be an arc motion).

NOTE: Make sure the upper flange of trim is fully seated into inner belt molding.

2. Install the plastic screw/rivets (4) and seat fully.
3. Install the interior handle bezel (5) and install the screw (3).
4. If equipped, verify that the window handle clip is installed correctly and seat the handle onto the window regulator shaft fully.

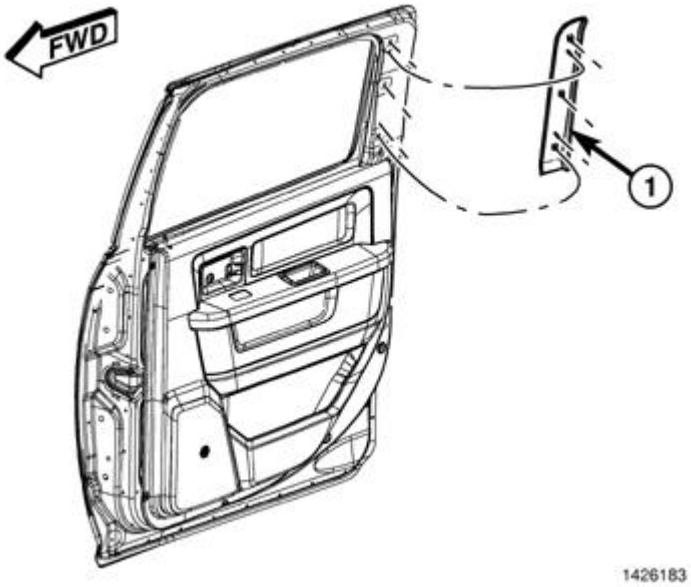

Fig. 171: Upper Trim Bezel
Courtesy of CHRYSLER GROUP, LLC

5. Position the trim bezel (1) onto the door and seat the clips fully.

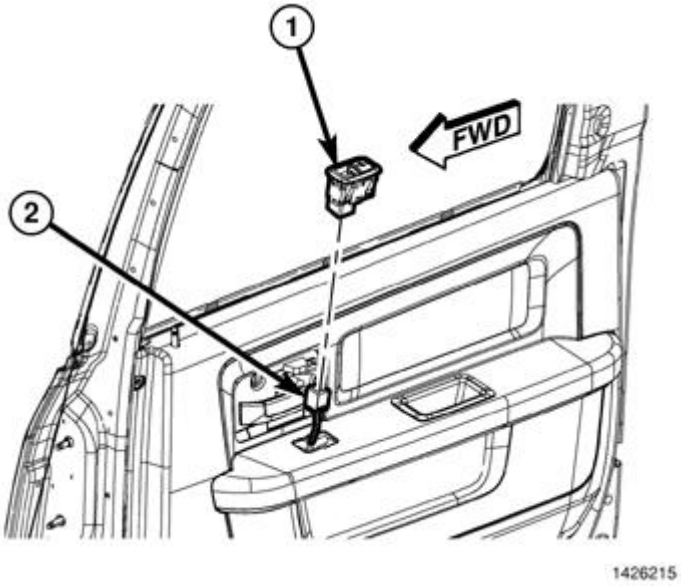

Fig. 172: Door Switch/Bezel
Courtesy of CHRYSLER GROUP, LLC

6. If equipped, connect the window switch electrical connectors (2) and seat the window switch/bezel into the door trim fully.

PLATE, CARRIER

REMOVAL

REMOVAL

Club Cab

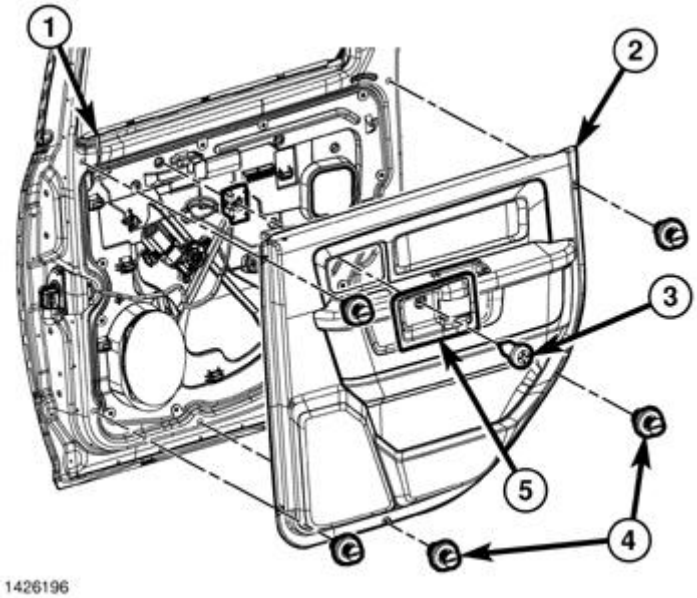

Fig. 173: Door Trim Panel
Courtesy of CHRYSLER GROUP, LLC

1. Remove the trim panel. Refer to **PANEL, DOOR TRIM, REMOVAL**.

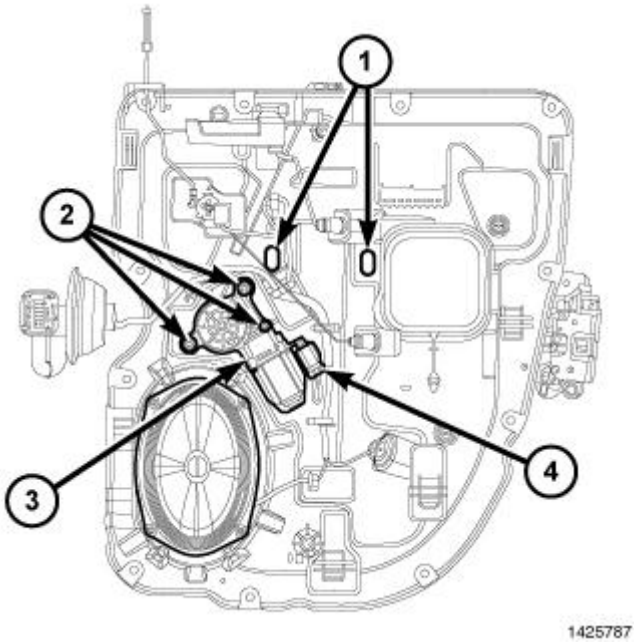

Fig. 174: Power Window Motor
Courtesy of CHRYSLER GROUP, LLC

2. If equipped, using a punch or similar tool, carefully remove the glass disconnect hole plugs (1).
3. Install the window switch if required and lower the glass down in the door to position the glass attachment clip for access through the service access plug (1).
4. Release the two glass retainer tabs and separate the glass clip from the regulator lift plate.
5. Raise the glass into the full up position and secure in place using tape or equivalent.

Crew Cab

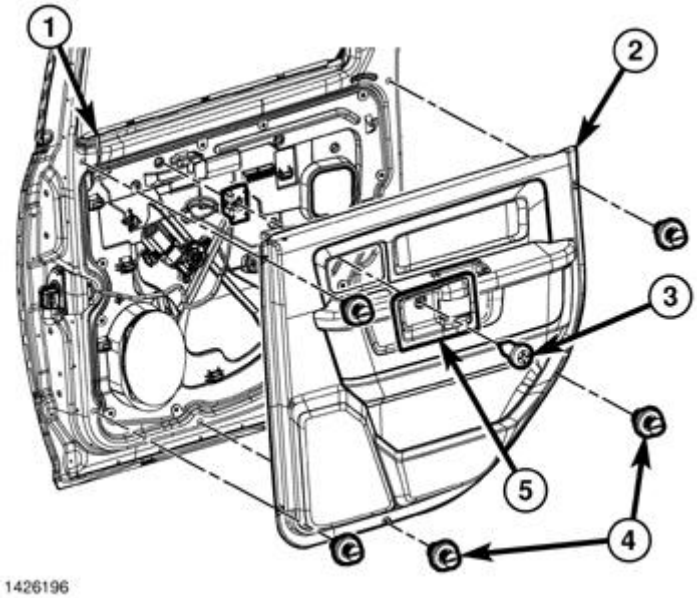

Fig. 175: Door Trim Panel
Courtesy of CHRYSLER GROUP, LLC

1. Remove the trim panel. Refer to **PANEL, DOOR TRIM, REMOVAL**.
2. Remove the door speaker. Refer to **SPEAKER, REMOVAL** .

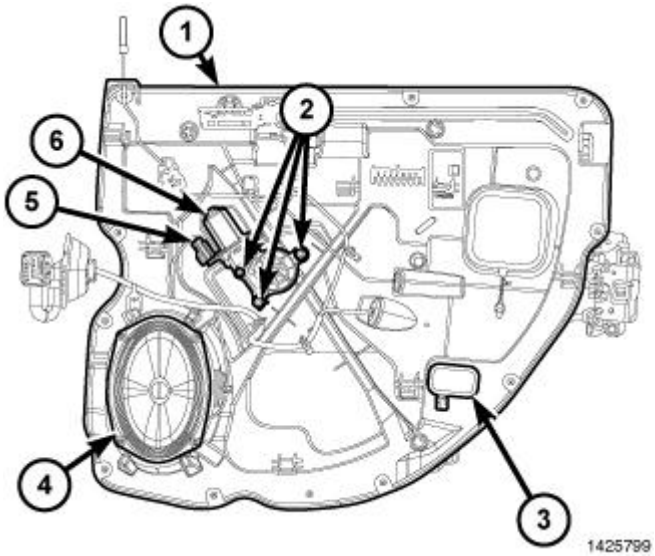

Fig. 176: Power Window Motor
Courtesy of CHRYSLER GROUP, LLC

3. Install the window switch if required and lower the glass down in the door to position the glass attachment clips for access through the speaker opening (4) and the service access plug.
4. Release the two glass retainer tabs and separate the glass clip from the regulator lift plate.
5. Raise the glass into the full up position and secure in place using tape or equivalent.

- **GROMMET - A PILLAR**

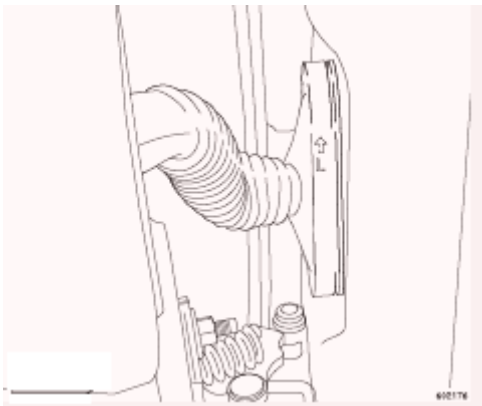

Fig. 177: Door Harness Connector
Courtesy of CHRYSLER GROUP, LLC

1. Disconnect the door electrical connector.

NOTE: The following illustration shows a typical door harness connector.

2. Peel the A Pillar grommet (1) off of the connector/retainer and move it up the wire harness.
3. Grasp the wire harness (2) by the convolute section of the grommet and gently pull the wire harness down towards the floor to expose the connector lock tabs.

CAUTION: Do not force the locking tab past the connector body, as damage to the connector may occur.

4. While still pulling down on the harness, use a small slotted screw driver (3) to **gently** push one of the top lock tabs until the lock feature is flush with the connector/retainer body.
5. Repeat the step 3 for the remaining top lock tab.
6. The connector should now be able to rock out of the sheet metal hole without causing any damage to the connector or sheet metal.

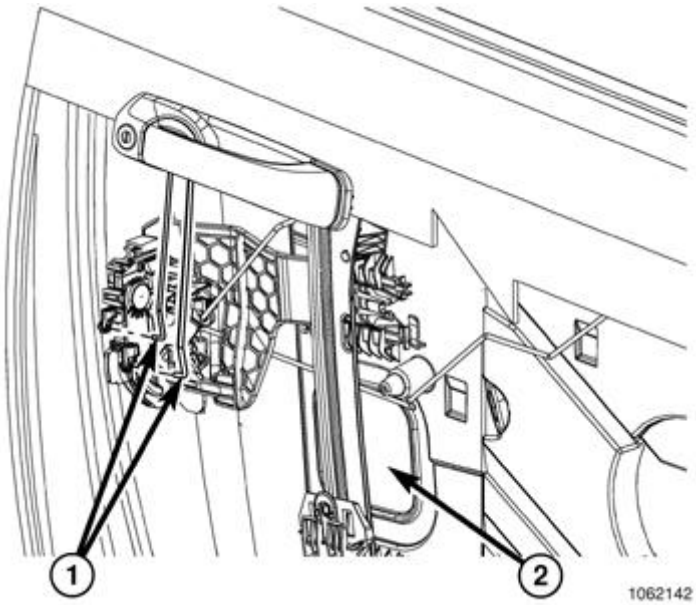

Fig. 178: Exterior Handle
Courtesy of CHRYSLER GROUP, LLC

NOTE: Front door shown in illustration, rear doors are similar.

1. Remove the service access plug (2) and disconnect the exterior handle linkages (1).

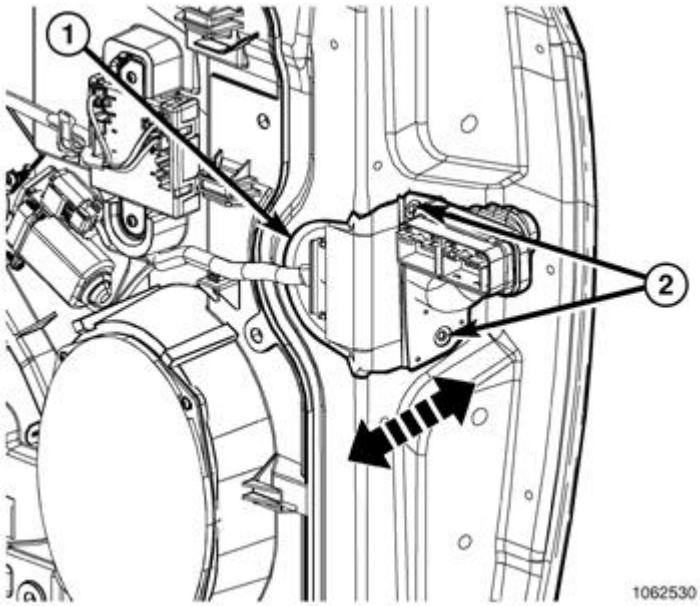

Fig. 179: Door Wire Harness Connector
Courtesy of CHRYSLER GROUP, LLC

NOTE: Front door shown in illustration, rear doors are similar.

2. Remove the screws (2) and separate the wire harness (1) from the door.

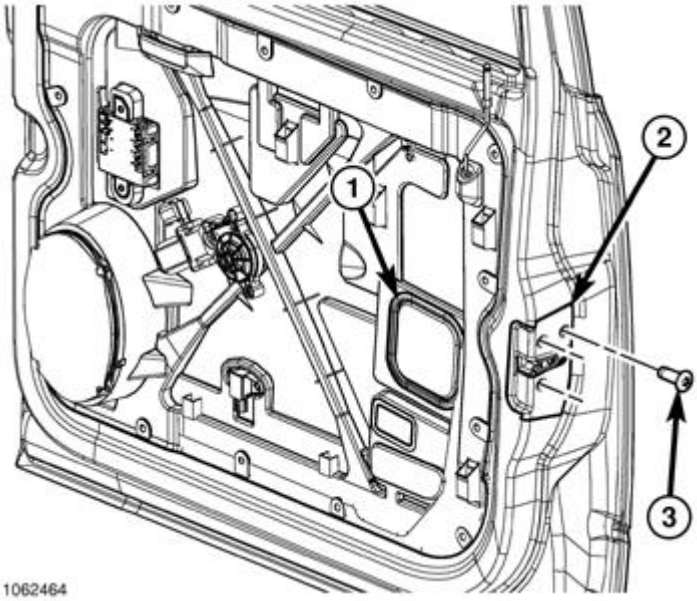

Fig. 180: Door Latch Mounting Screws
Courtesy of CHRYSLER GROUP, LLC

3. Remove the door latch (2) mounting screws (3).

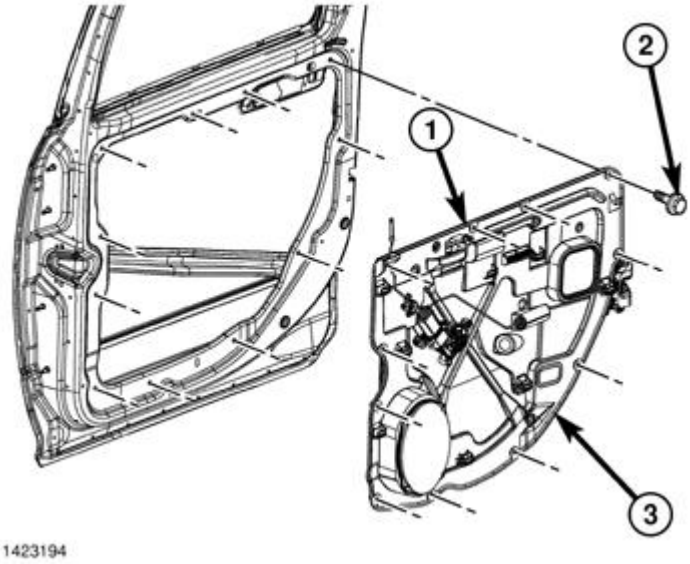

Fig. 181: Carrier Plate
Courtesy of CHRYSLER GROUP, LLC

4. Remove the 11 bolts (2) on the club cab or the 12 bolts on the crew cab model and remove the carrier plate assembly (3) from the door.

INSTALLATION

INSTALLATION

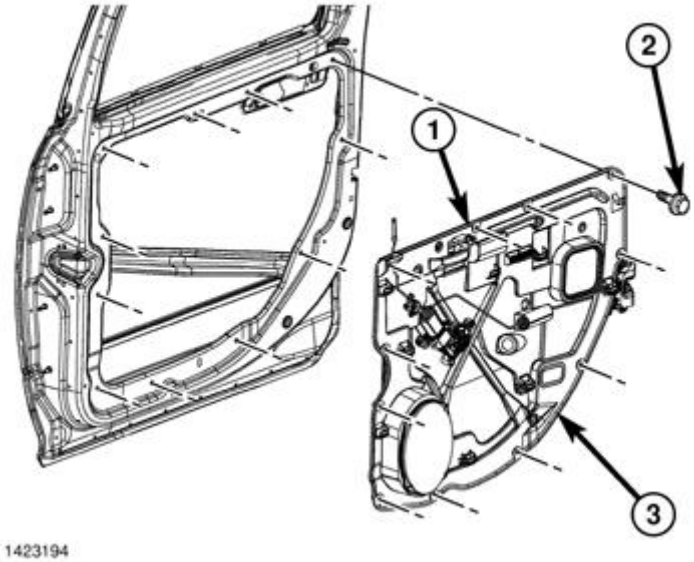

Fig. 182: Carrier Plate
Courtesy of CHRYSLER GROUP, LLC

1. Insert the carrier plate assembly (3) into door, latch side first, and tip the regulator rails into place through the door opening.
2. Lift the carrier plate and seat the two locating pins into the retaining holes.
3. Install the bolts (2) and starting at position (1) tighten the bolts in a clockwise direction to 5.5 N.m (49 in. lbs.)

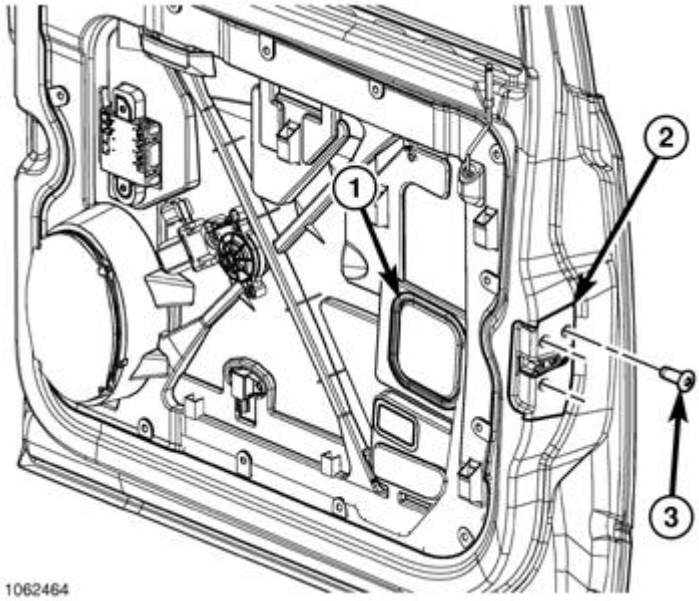

Fig. 183: Door Latch Mounting Screws
Courtesy of CHRYSLER GROUP, LLC

4. Install the latch screws (3) and tighten to 7 N.m (62. in. lbs.)

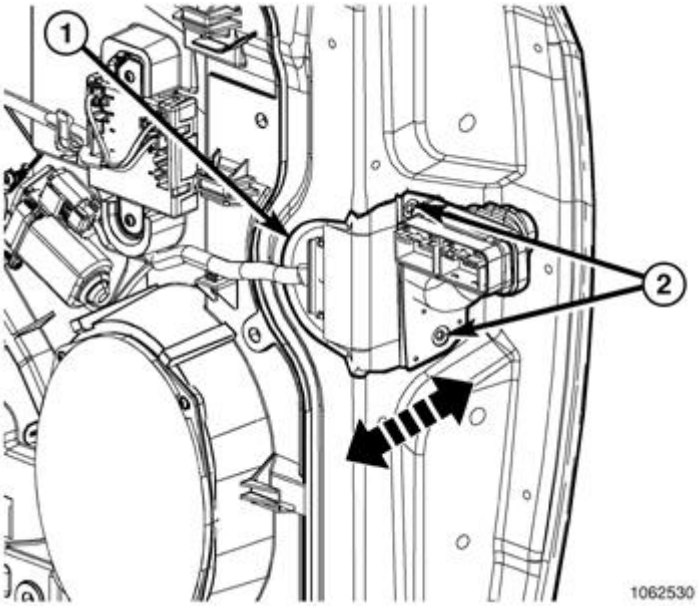

Fig. 184: Door Wire Harness Connector
Courtesy of CHRYSLER GROUP, LLC

5. Install the wire harness (1) and install the screws (2).

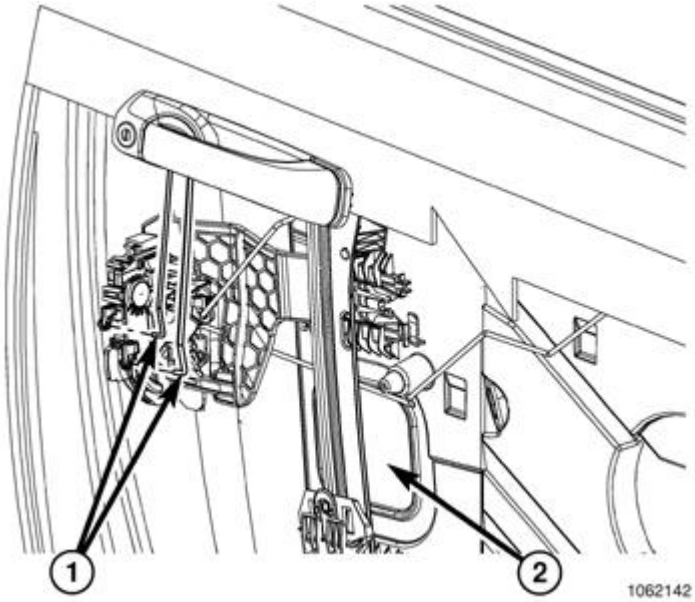

Fig. 185: Exterior Handle
Courtesy of CHRYSLER GROUP, LLC

6. Connect the linkages (1) to the latch and secure the clips.

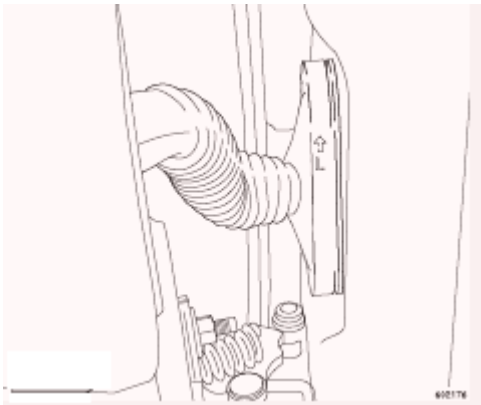

Fig. 186: Door Harness Connector
Courtesy of CHRYSLER GROUP, LLC

NOTE: The following illustration shows a typical door harness connector.

7. Connect the electrical connector and secure the grommet (1) back over the connector/retainer and seat the connector into the pillar fully.

CLUB CAB

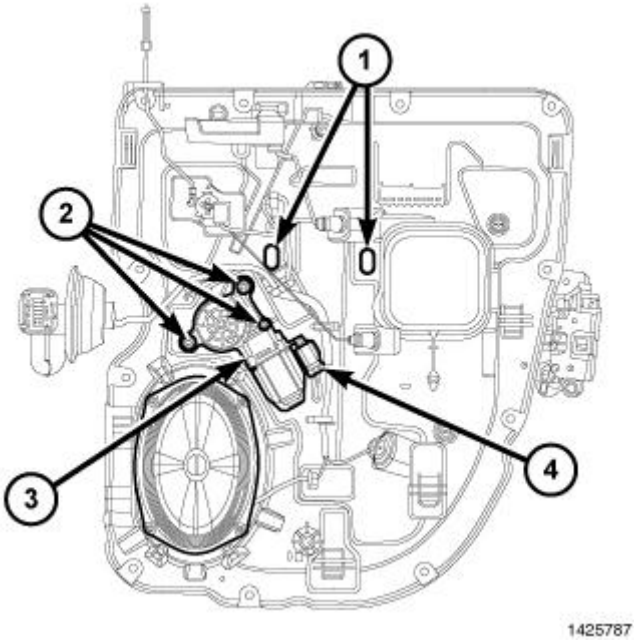

Fig. 187: Power Window Motor
Courtesy of CHRYSLER GROUP, LLC

1. Pull the glass up evenly so front of glass can be verified it is seated into both glass run channels.
2. Push the glass down to seat the clips into regulator liftplates fully.
3. Pull up on the glass and make sure that it is secure.
4. Seal the glass disconnect holes (1) with a suitable foam tape or equivalent.

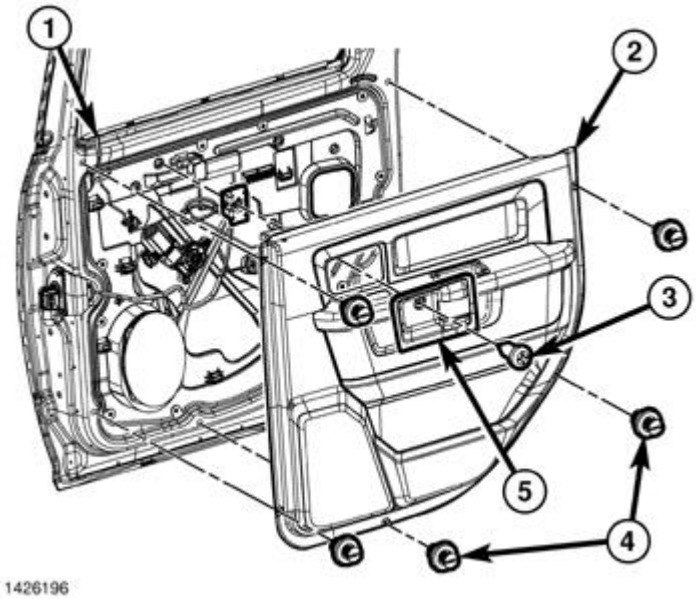

Fig. 188: Door Trim Panel
Courtesy of CHRYSLER GROUP, LLC

5. Install the door trim panel. Refer to **PANEL, REAR DOOR TRIM, INSTALLATION**.

CREW CAB

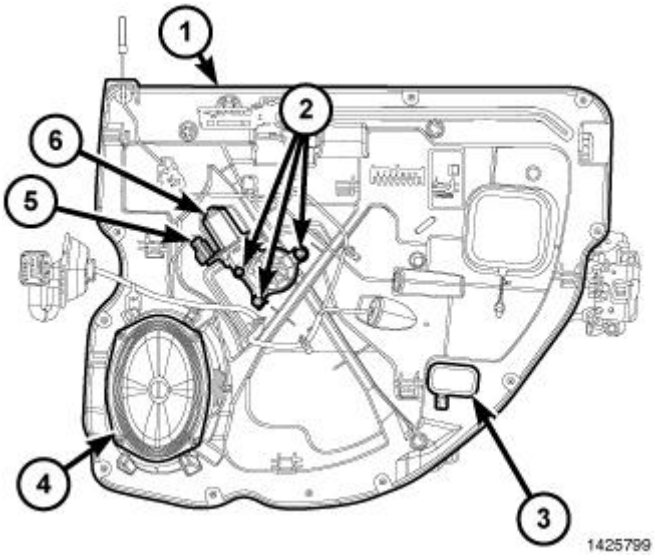

Fig. 189: Power Window Motor
Courtesy of CHRYSLER GROUP, LLC

1. Pull the glass up evenly so front of glass can be verified it is seated into both glass run channels.
2. Push the glass down to seat the clips into regulator liftplates fully.
3. Pull up on the glass and make sure that it is secure.
4. Seal the glass disconnect holes (3) with a suitable foam tape or equivalent.

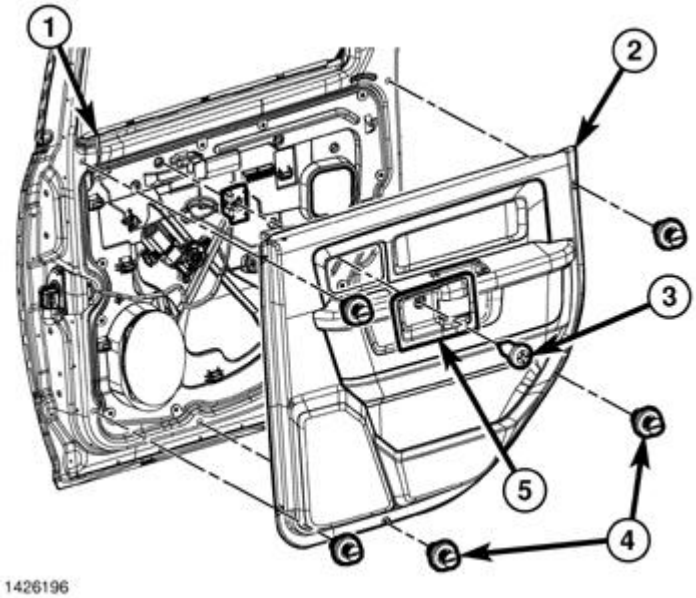

Fig. 190: Door Trim Panel
Courtesy of CHRYSLER GROUP, LLC

5. Install the door speaker. Refer to **SPEAKER, INSTALLATION** .
6. Install the door trim panel. Refer to **PANEL, REAR DOOR TRIM, INSTALLATION**.

REGULATOR, WINDOW, MANUAL

DESCRIPTION

DESCRIPTION

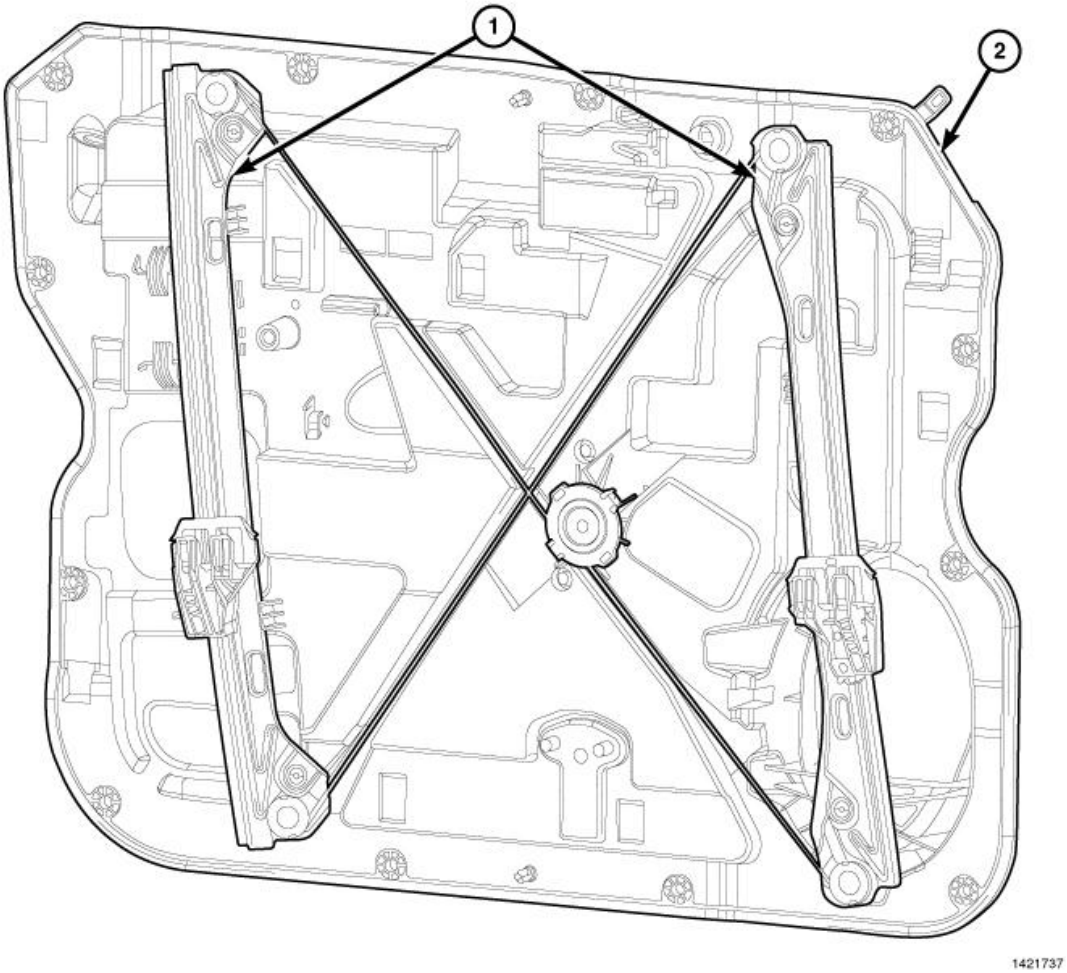

Fig. 191: Window Regulators & Carrier Plate (Manual)
Courtesy of CHRYSLER GROUP, LLC

The window regulators (1) are serviced as an assembly with the carrier plate (2) and include the following parts:

- glass bumpers
- lock grommets
- release rod grommet
- handle bumper
- service plug

Refer to **PLATE, CARRIER, REMOVAL**.

REGULATOR, WINDOW, POWER

DESCRIPTION

DESCRIPTION

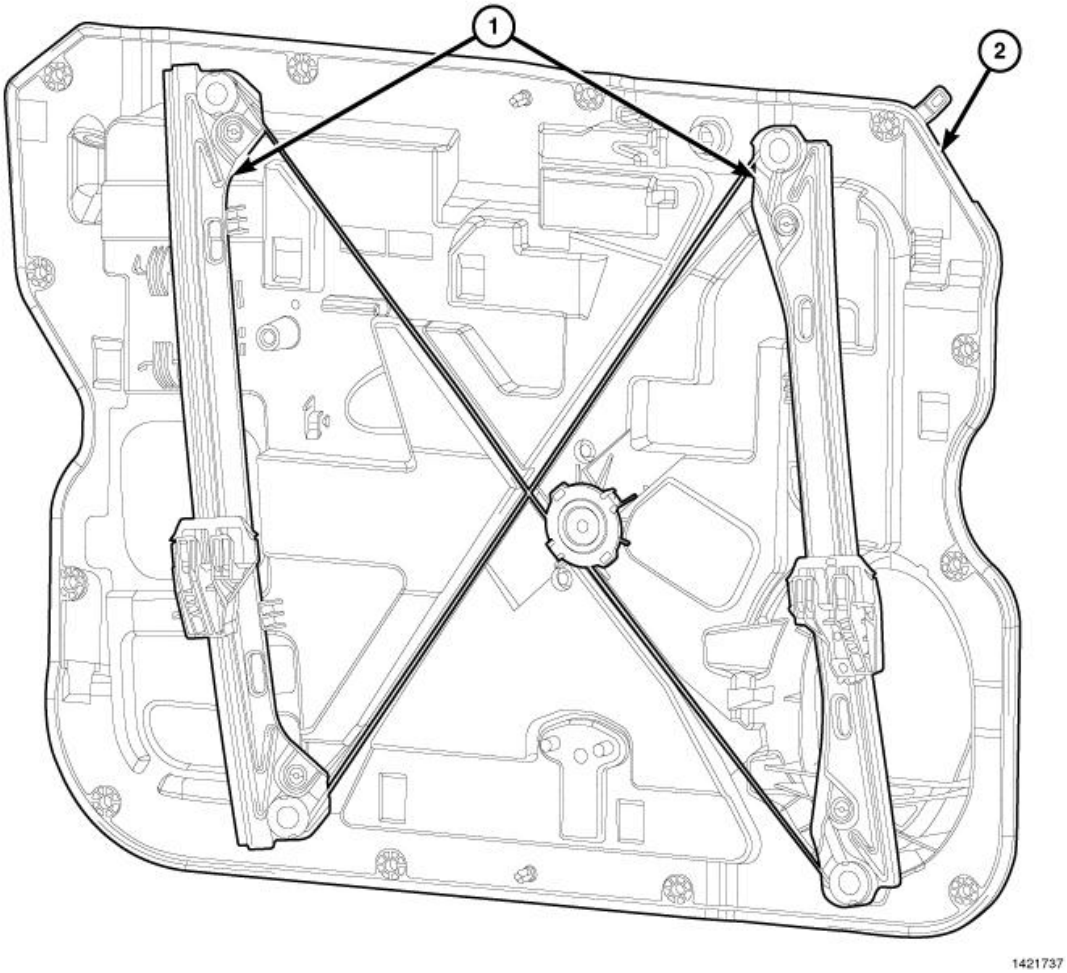

Fig. 192: Window Regulators & Carrier Plate (Manual)
Courtesy of CHRYSLER GROUP, LLC

The window regulators (1) are serviced as an assembly with the carrier plate (2) and include the following parts:

- glass bumpers
- lock grommets
- release rod grommet
- handle bumper
- service plug

Refer to **PLATE, CARRIER, REMOVAL**.

STRIKER, DOOR LATCH

ADJUSTMENTS

ADJUSTMENTS

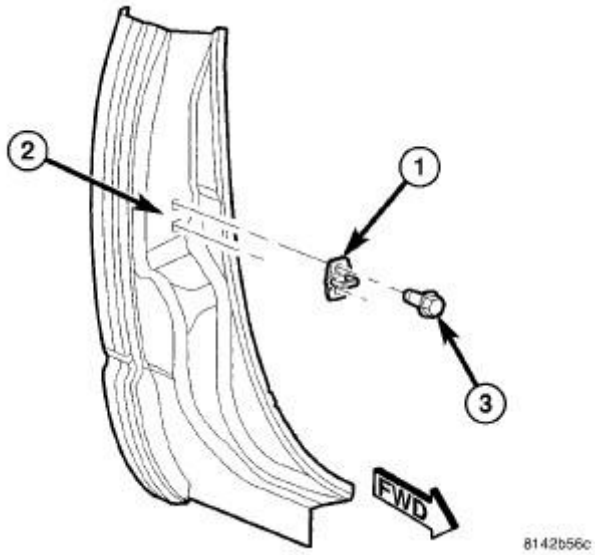

Fig. 193: Rear Door Striker
Courtesy of CHRYSLER GROUP, LLC

1. Using a grease pencil or equivalent, mark the location of the door latch striker (1) on the C-pillar (2) to aid in adjustment.
2. Loosen the two bolts (3) that secure the door latch striker to the C-pillar.
3. To adjust the rear gap and flush measurement, change the position of the door latch striker and then tighten the two bolts to 28 N.m (21 ft. lbs.). Refer to **GAP AND FLUSH, SPECIFICATIONS**.
4. Verify correct door and latch position.

REMOVAL

REMOVAL

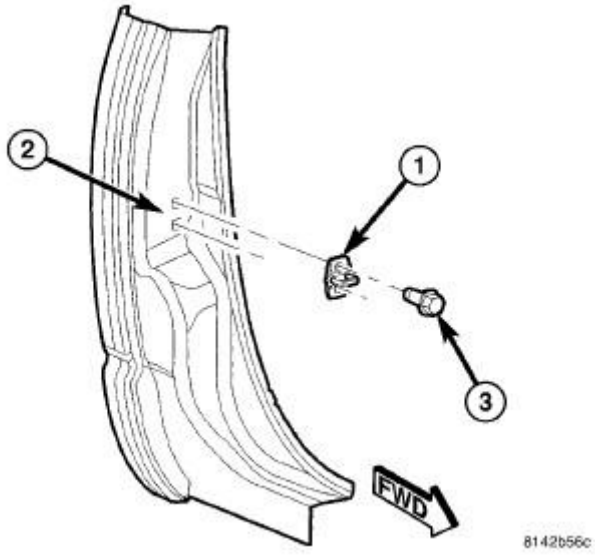

Fig. 194: Rear Door Striker
Courtesy of CHRYSLER GROUP, LLC

1. Using a grease pencil or equivalent, mark the location of the door latch striker (1) on the C-pillar (2).
2. Remove the two bolts (3) that secure the door latch striker to the C-pillar and remove the striker.

INSTALLATION

INSTALLATION

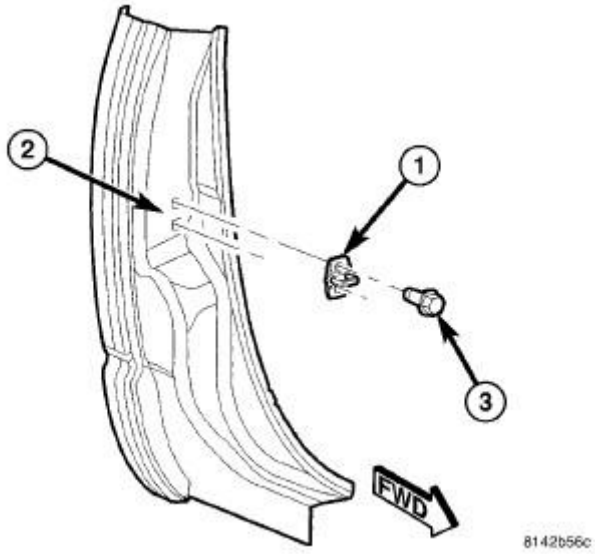

Fig. 195: Rear Door Striker
Courtesy of CHRYSLER GROUP, LLC

1. Position the door latch striker (1) onto the C-pillar (2) and loosely install the two bolts (3).
2. Align the door latch striker to the C-pillar using the reference marks made during the removal procedure and tighten the bolts to 28 N.m (21 ft. lbs.).
3. If necessary, adjust the door latch striker. Refer to **STRIKER, DOOR LATCH, ADJUSTMENTS**.

EXTERIOR

BOX, PICKUP

REMOVAL

PICKUP BOX

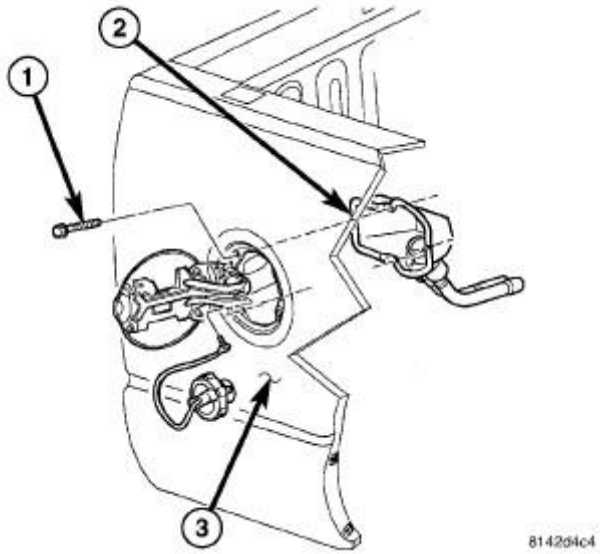

Fig. 196: Fuel Filler
Courtesy of CHRYSLER GROUP, LLC

NOTE: Long cargo box shown in illustration. Short cargo box similar.

1. Disconnect the fuel filler neck from the fuel tank. Refer to **TANK, FUEL, REMOVAL** or **TANK, FUEL, REMOVAL** .
2. Remove the fuel filler from the cargo box and position it out of the way.
3. If necessary, remove the fuel filler door from the cargo box. Refer to **DOOR, FUEL FILL, REMOVAL**.

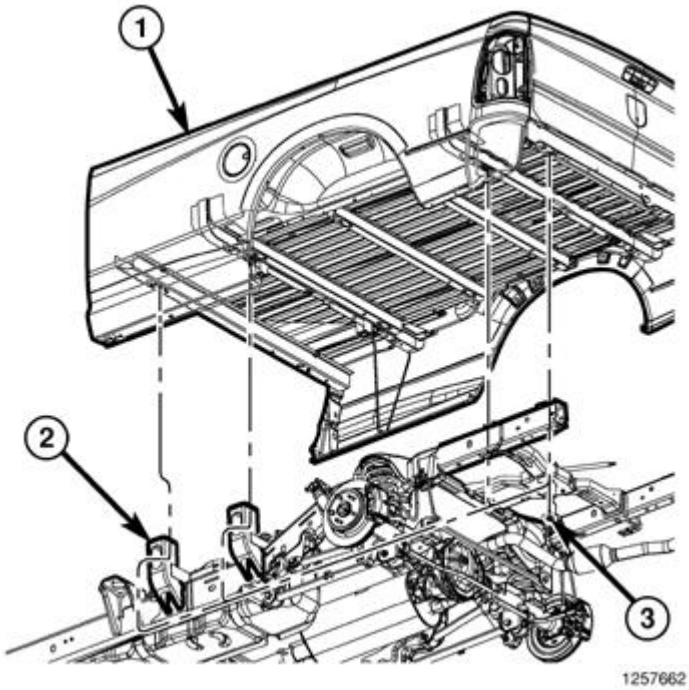

Fig. 197: Pickup Box
Courtesy of CHRYSLER GROUP, LLC

4. Disconnect the tail lamp wire harness from the underbody wire harness.
5. If necessary, remove the tail lamp units and wire harness from the cargo box. Refer to **LAMP, TAIL STOP TURN, REMOVAL** .
6. If necessary, remove the tailgate. Refer to **TAILGATE, REMOVAL**.
7. If necessary, remove the rear bumper. Refer to **BUMPER, REAR, REMOVAL** .
8. Remove the bolts (3) that secure the cargo box (1) to the frame (2) (six short box, eight long box) and remove the cargo box.

RAM BOX LOCK CYLINDER

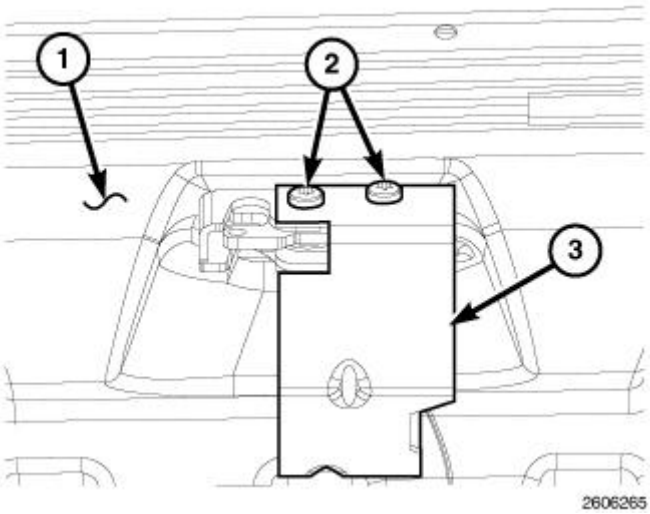

Fig. 198: Lock Cylinder Cover
Courtesy of CHRYSLER GROUP, LLC

1. Open the Ram Box lid (1).
2. Remove the two screws (2) that secure the cover (3) to the lid latch.

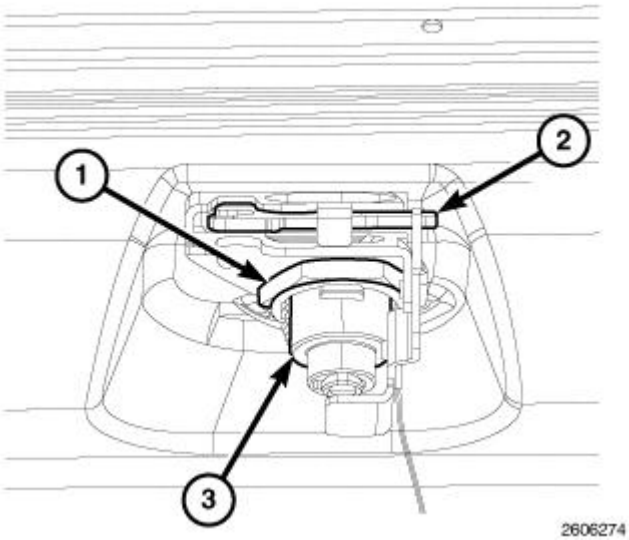

Fig. 199: Lock Cylinder
Courtesy of CHRYSLER GROUP, LLC

3. Remove the nut (1) that secures the lock cylinder (3) to the lid latch (2).
4. Push the lock cylinder out through the latch and remove it from the outside of the lid.

RAM BOX STORAGE

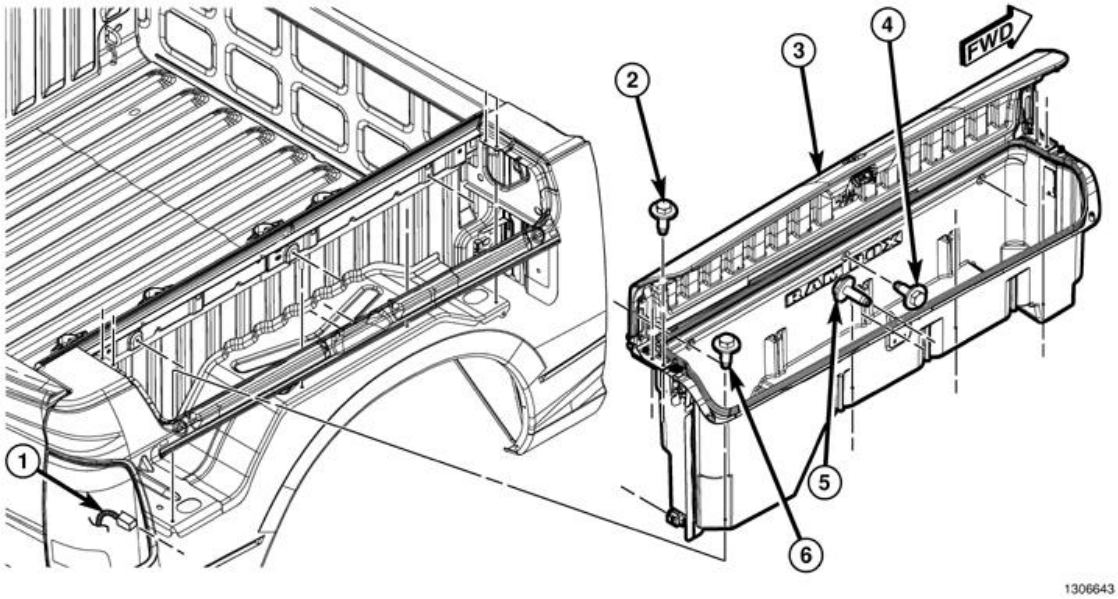

Fig. 200: Removing/Installing Ram Box
Courtesy of CHRYSLER GROUP, LLC

1. Open the Ram Box lid (3).
2. Remove the four hinge bolts (2).
3. Remove the four bolts from the bottom (6).

4. Remove the two outboard bolts (5).
5. Remove the three inboard bolts (4).
6. Disconnect the electrical connector (1) and remove the ram box.

BED LINER

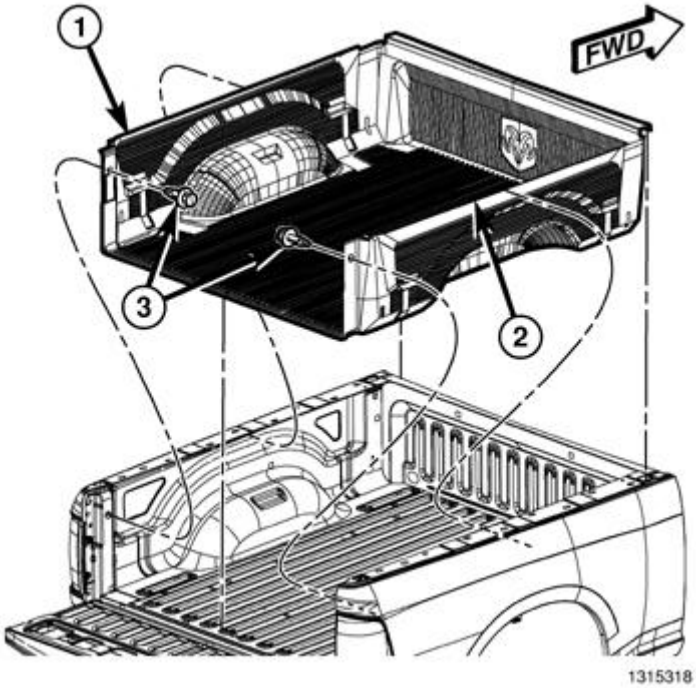

Fig. 201: Bed Liner
Courtesy of CHRYSLER GROUP, LLC

1. Open the tailgate.
2. Remove the plastic screw type rivets (3).
3. Lift up the center of the bottom of the linger and release the sides (2) from the box rails.
4. Remove the liner (1).

INSTALLATION

PICKUP BOX

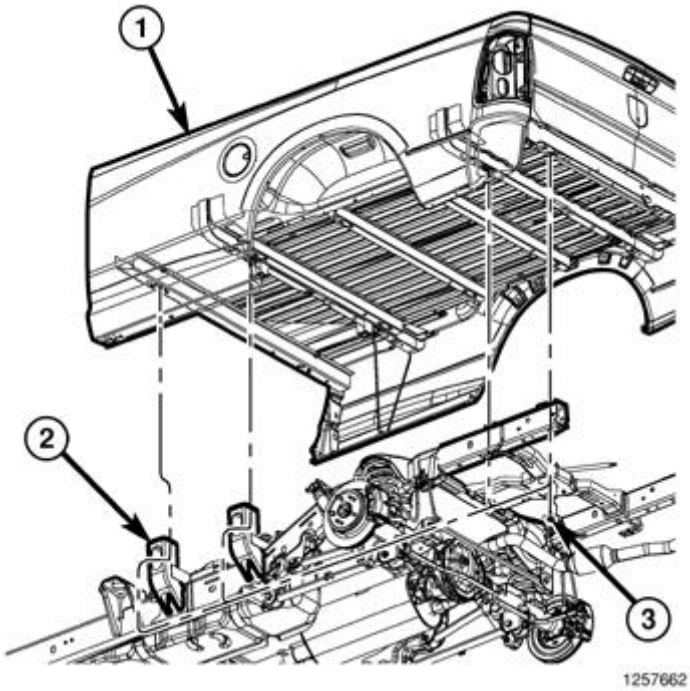

Fig. 202: Pickup Box
Courtesy of CHRYSLER GROUP, LLC

NOTE: Long cargo box shown in illustration. Short cargo box similar.

1. Position the cargo box (1) onto the frame (2) and loosely install the bolts (3) (six short box, eight long box).
2. Align the cargo box to the cab and tighten the bolts to 108 N.m (80 ft. lbs.).
3. If removed, install tail lamp units and wire harness onto the cargo box. Refer to **LAMP, TAIL STOP TURN, INSTALLATION** .
4. Connect the tail lamp wire harness to the underbody wire harness.
5. If removed, install the tailgate. Refer to **TAILGATE, INSTALLATION**.
6. If removed, install the rear bumper. Refer to **BUMPER, REAR, INSTALLATION** .

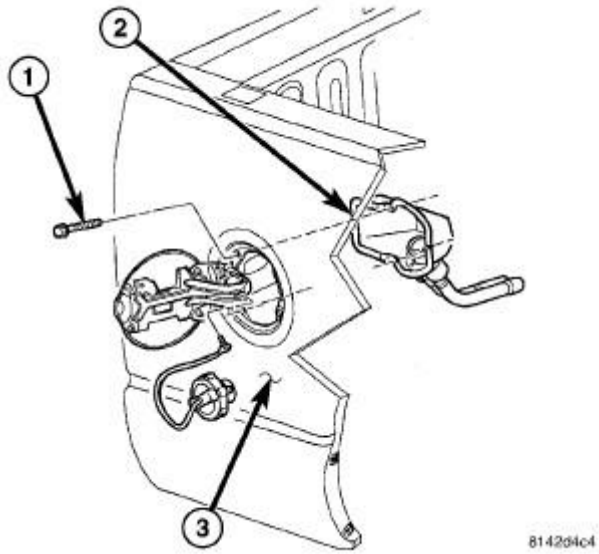

Fig. 203: Fuel Filler
Courtesy of CHRYSLER GROUP, LLC

7. If removed, install the fuel filler door. Refer to **DOOR, FUEL FILL, INSTALLATION**.
8. Position the fuel filler (2) to the cargo box (3).
9. Connect the fuel filler neck at the fuel tank. Refer to **TANK, FUEL, INSTALLATION** or **TANK, FUEL, INSTALLATION** .

RAM BOX LOCK CYLINDER

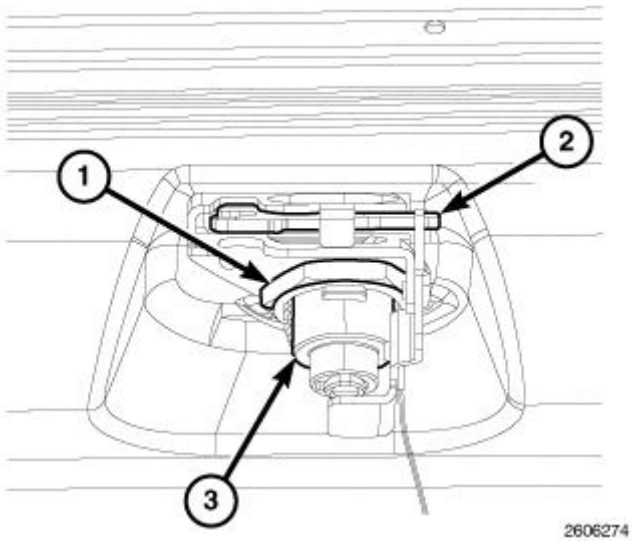

Fig. 204: Lock Cylinder
Courtesy of CHRYSLER GROUP, LLC

1. Position the lock cylinder (3) to the outside of the Ram Box lid and push it through the lid latch (2).

2. Install and tighten the nut (1) that secures the lock cylinder to the lid latch. Tighten the nut to 8.6 N.m (6 ft. lbs.).

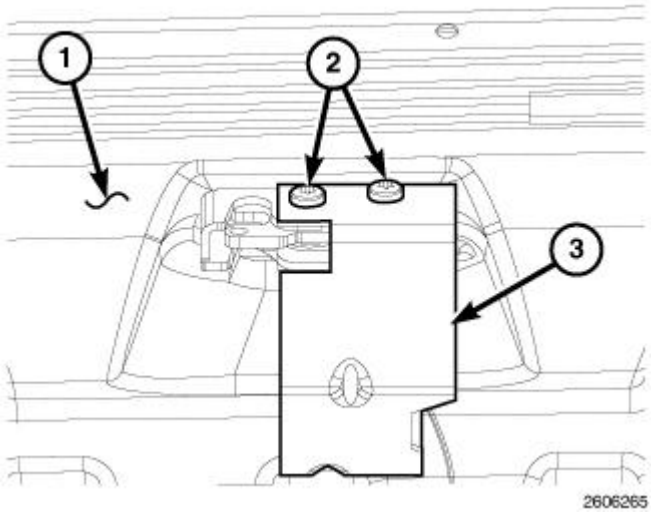

Fig. 205: Lock Cylinder Cover
Courtesy of CHRYSLER GROUP, LLC

3. Position the cover (3) over the latch on the underside of the lid (1).
4. Install and tighten the two screws (2) that secure the cover to the lid latch.
5. Close the Ram Box lid.

LOCK CYLINDER CODING INSTRUCTIONS

1. If present, remove the protective label from over the key slot on the face of the new lock cylinder.
2. Fully insert the key into the lock cylinder.
3. Slowly rotate the key clockwise 270 degrees.
4. Rotate the key counterclockwise back to the vertical position.
5. Remove the key from the lock cylinder.

RAM BOX STORAGE

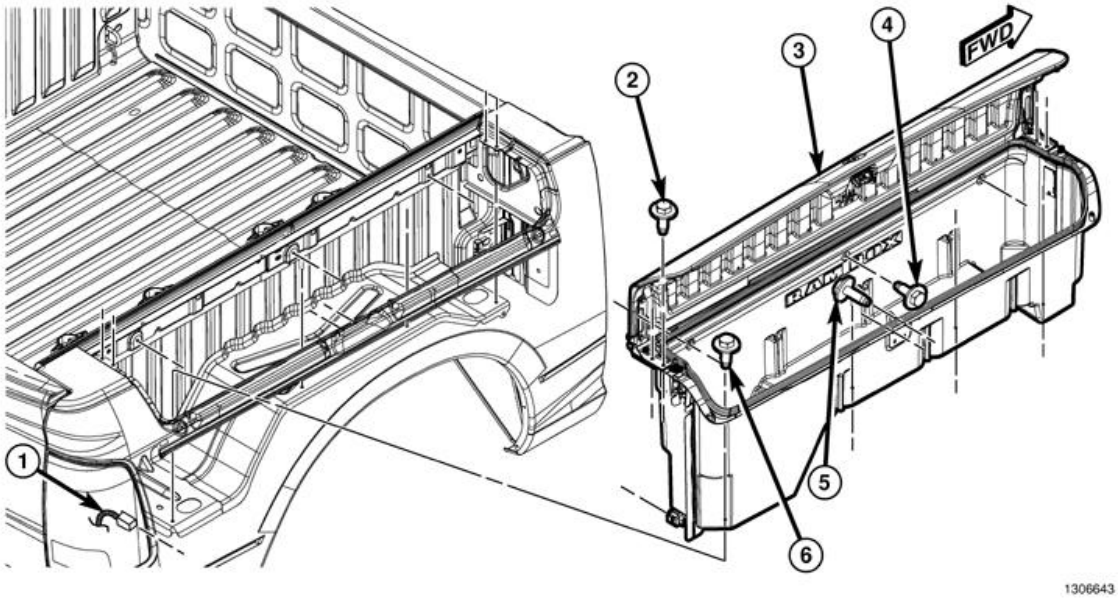

Fig. 206: Removing/Installing Ram Box
Courtesy of CHRYSLER GROUP, LLC

1. Install the ram box.
2. Install the three inboard bolts (4).
3. Install the two outboard bolts (5).
4. Install the four bolts from the bottom (6).
5. Install the four hinge bolts (2).
6. Connect the electrical connector (1).

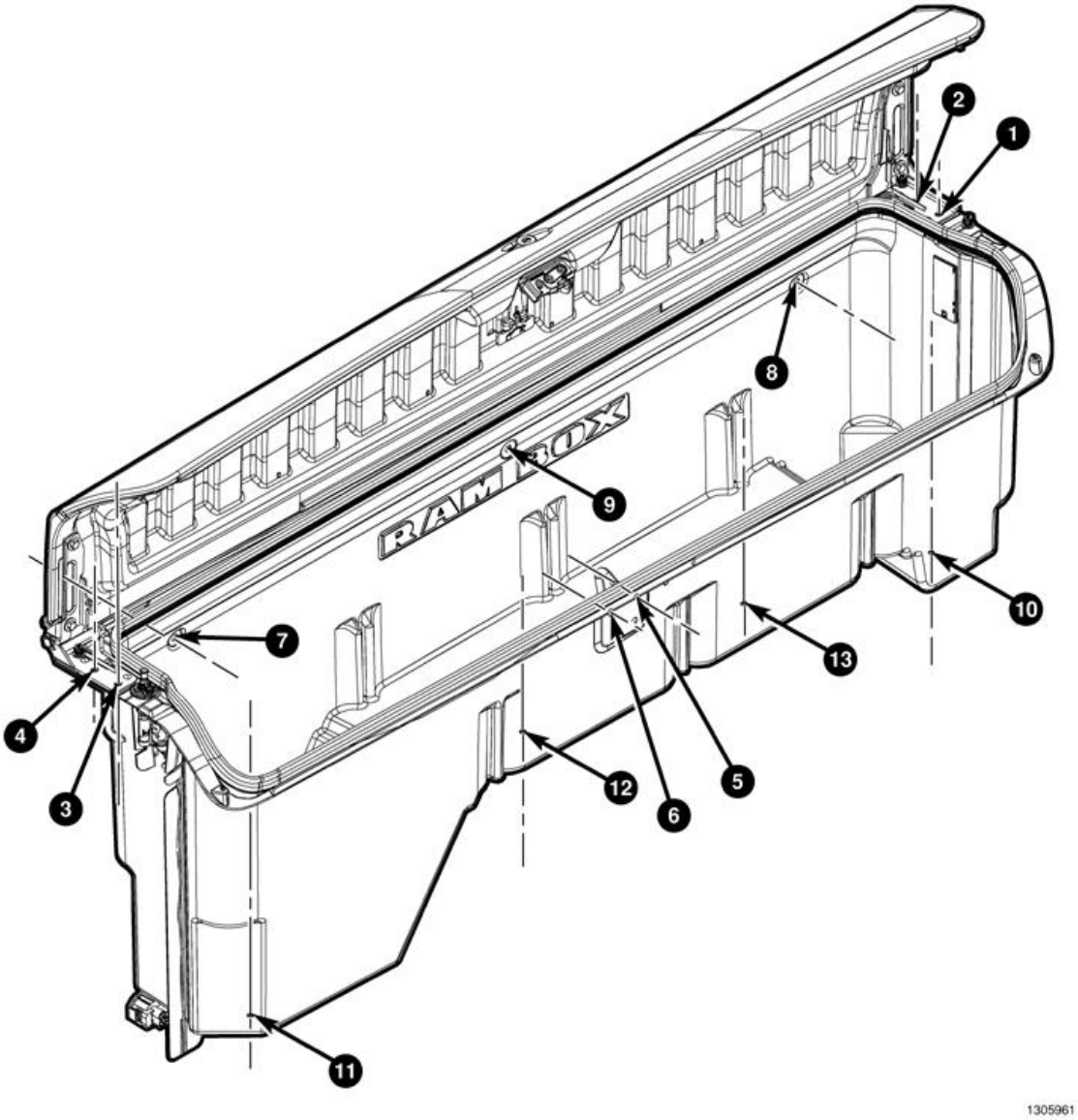

Fig. 207: Box Storage Mounting Bolts
Courtesy of CHRYSLER GROUP, LLC

7. Tighten the bolts to 7 N.m (5 ft. lbs.) using the sequence shown in the illustration.

BED LINER

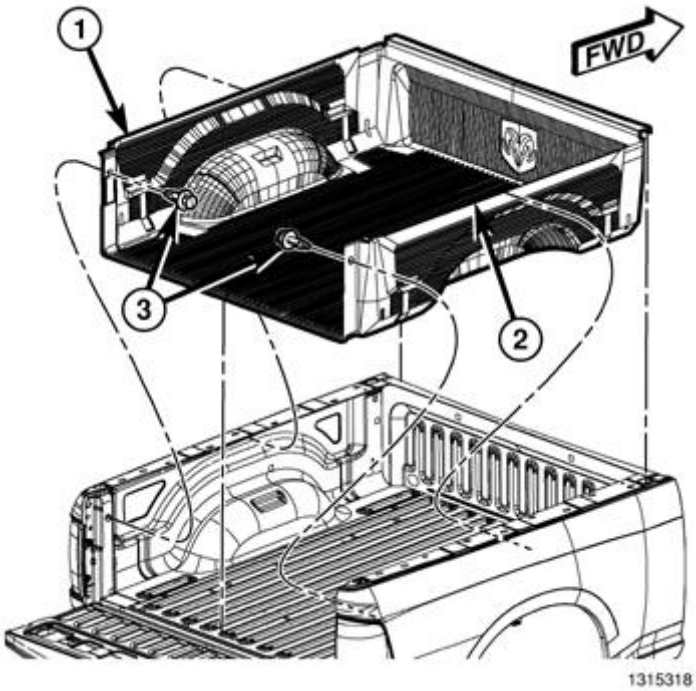

Fig. 208: Bed Liner
Courtesy of CHRYSLER GROUP, LLC

1. Place the liner (1) into the cargo box with the liner extension on top of the box front panel. Bend the liner along the middle of the floor and position the sides of the bed liner (2) under the box side rails.
2. Adjust as necessary to square the bed liner to the cargo box.
3. Drive the rivets (3) through the holes in the liner and into the holes in the d-pillar using a rubber mallet or equivalent.

COVER, COWL PANEL

REMOVAL

REMOVAL

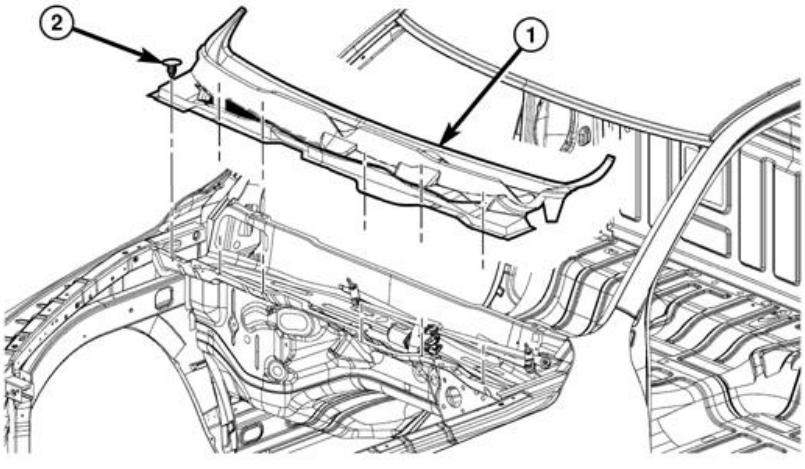

Fig. 209: Front Cowl Cover
Courtesy of CHRYSLER GROUP, LLC

1. Remove the wiper arms. Refer to **ARM, WIPER, REMOVAL** .
2. Remove the push pins (2) that secure the front of the cowl cover (1) to the dash panel.
3. Pull the cowl cover forward to disengage the hooks from the windshield.
4. If necessary, remove the washer hose from the cowl cover.

INSTALLATION

INSTALLATION

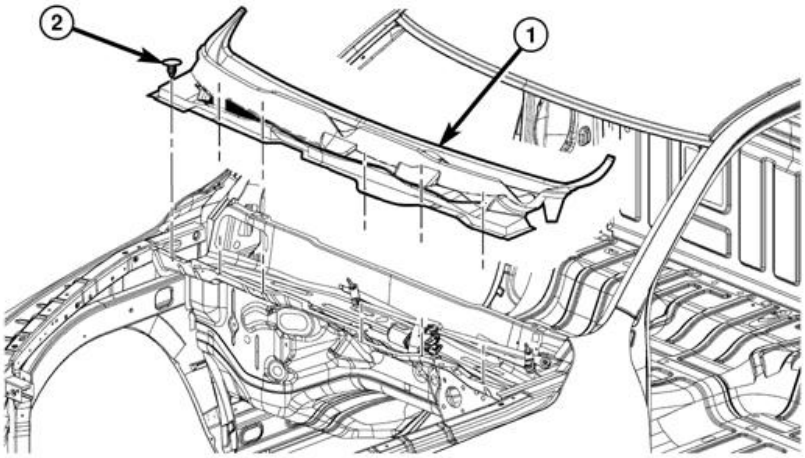

1470837

Fig. 210: Front Cowl Cover
Courtesy of CHRYSLER GROUP, LLC

1. Position the panel assembly cowl cover (1) over the pivot shafts.
2. Push down on the cowl cover while moving it forward to make sure the six hooks are forward of the windshield edge.
3. Center cowl cover over the wiper pivot shafts, push down on the cowl cover then push rearward with both hands and slide hooks under the edge of the windshield.
4. Secure the front edge to the cowl by installing the push pins (2).
5. Fit soft rubber ends to fender by pulling up molded in feature to engage to fender flange.
6. Install the wiper arms. Refer to **ARM, WIPER, INSTALLATION** .

DOOR, FUEL FILL

REMOVAL

REMOVAL

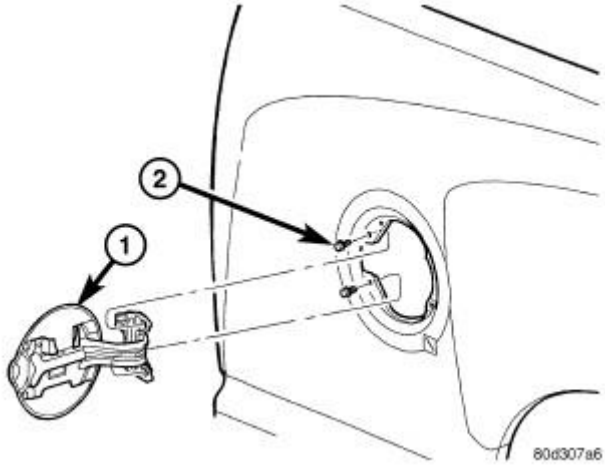

Fig. 211: Removing/Installing Fuel Fill Door
Courtesy of CHRYSLER GROUP, LLC

1. Open the fuel filler door (1).
2. Remove the two bolts (2) that secure the fuel filler door to the cargo box and remove the door.

INSTALLATION

INSTALLATION

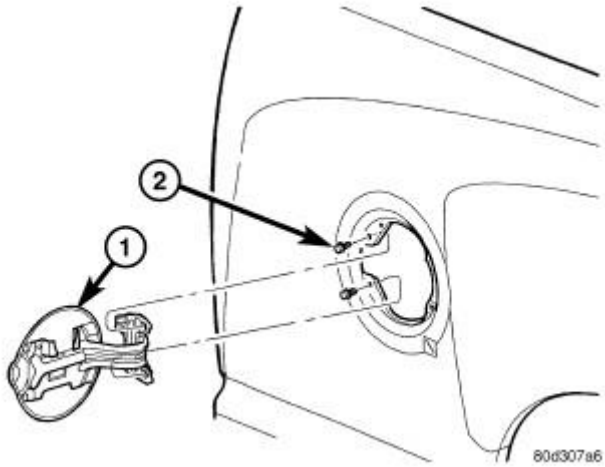

Fig. 212: Removing/Installing Fuel Fill Door
Courtesy of CHRYSLER GROUP, LLC

1. Position and align the fuel filler door (1) to the cargo box.
2. Install the two bolts (2) that secure the fuel filler door to the cargo box. Tighten the bolts to 9 N.m (80 in. lbs.).

FENDER, FRONT

REMOVAL

REMOVAL

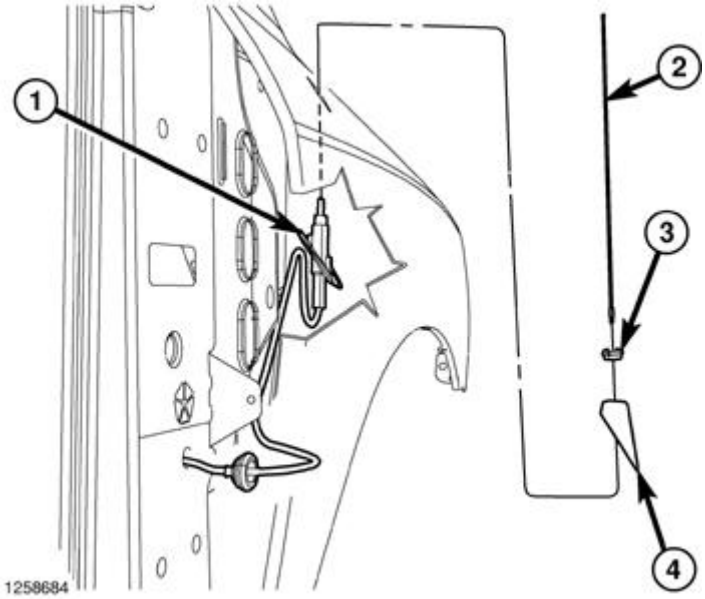

Fig. 213: Radio Antenna Connector
Courtesy of CHRYSLER GROUP, LLC

1. Remove the radio antenna if necessary. Refer to **MAST, ANTENNA, REMOVAL** .

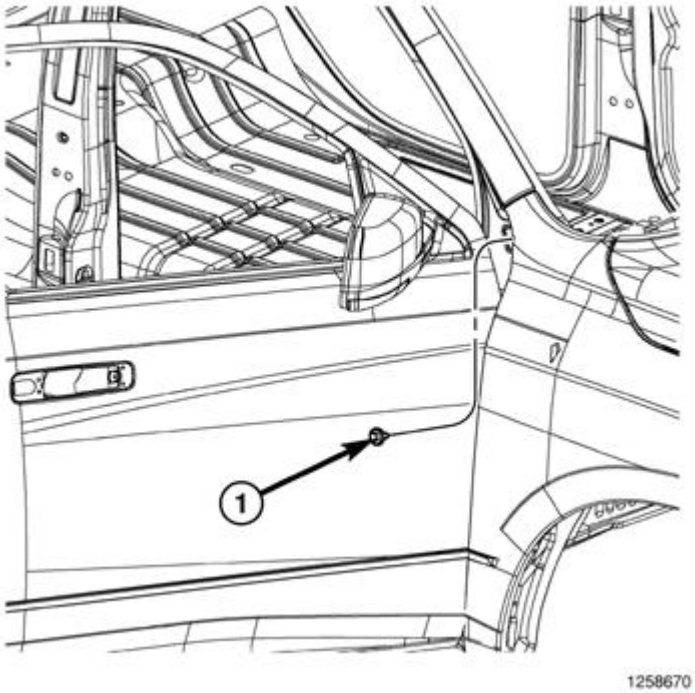

Fig. 214: Rear Upper Screw
Courtesy of CHRYSLER GROUP, LLC

2. Remove the headlamp unit. Refer to **UNIT, FRONT LAMP, REMOVAL** .
3. Open the door and remove the rear upper screw (1).

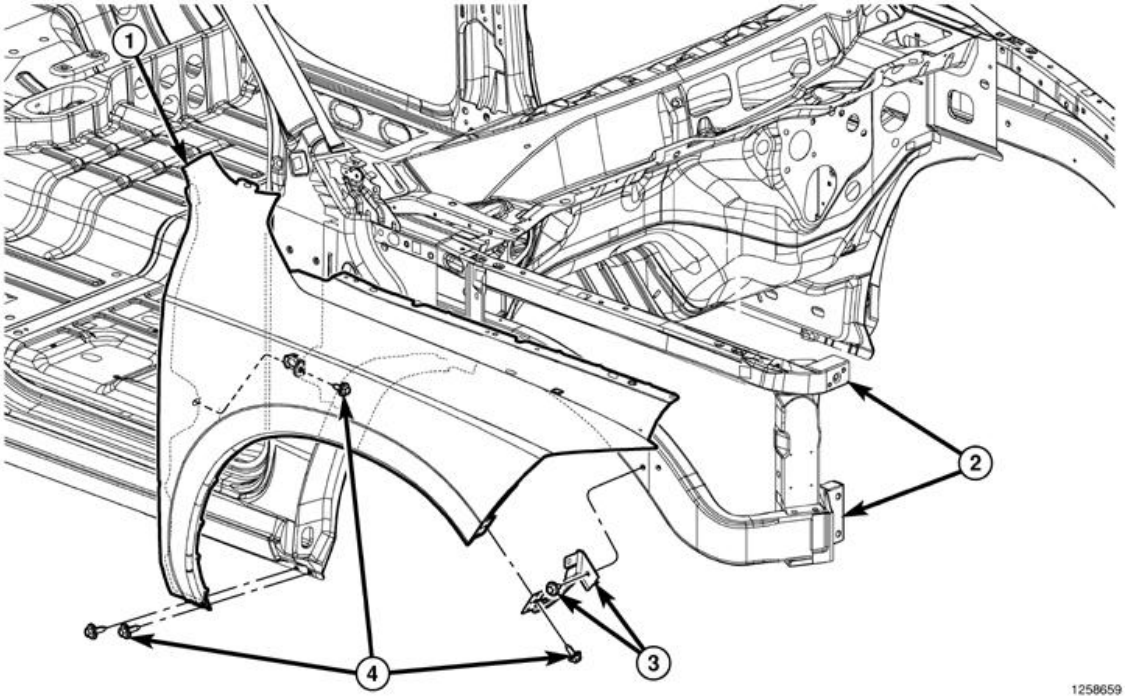

Fig. 215: Support Screws
Courtesy of CHRYSLER GROUP, LLC

4. Remove the front fascia. Refer to **FASCIA, FRONT, REMOVAL** .
5. Remove the front wheel opening molding. Refer to **MOLDING, FRONT WHEEL OPENING, REMOVAL**.
6. Remove the wheelhouse splash shield. Refer to **SHIELD, SPLASH, FRONT WHEELHOUSE, REMOVAL**.
7. Remove the support screws (4).

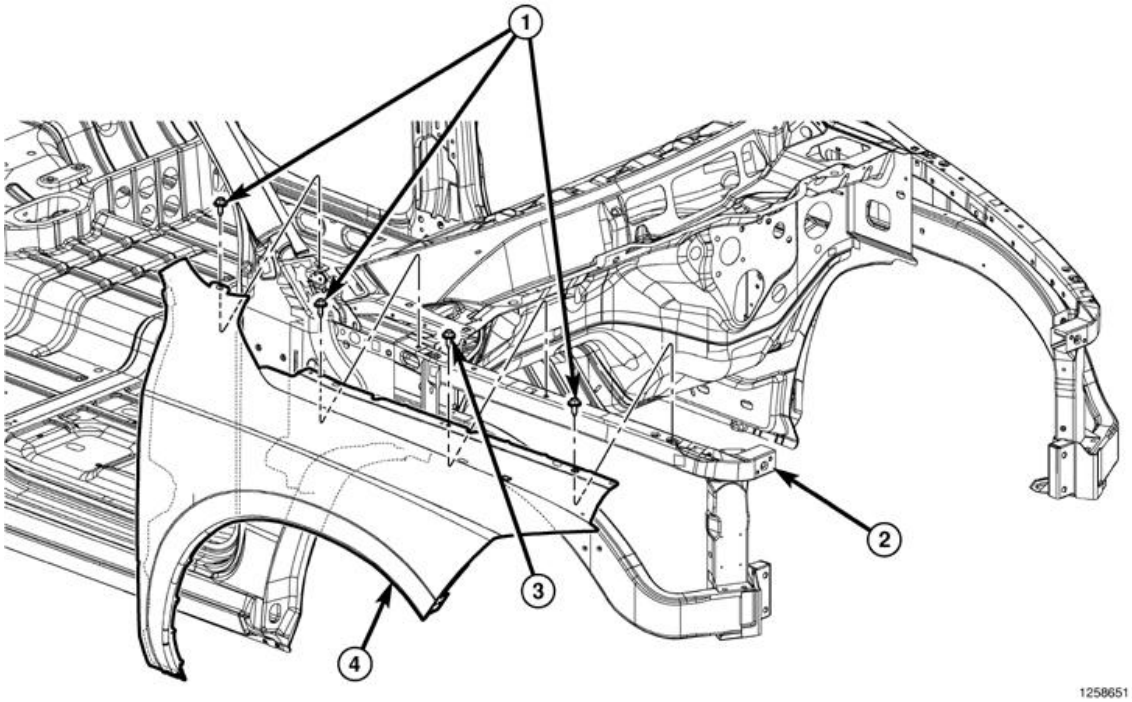

Fig. 216: Fender Bolts
Courtesy of CHRYSLER GROUP, LLC

8. Remove the battery tray (depending on fender being serviced). Refer to **TRAY, BATTERY, REMOVAL** .
9. Remove the bolts (1) and on the right side (3) and remove the fender (4).

INSTALLATION

INSTALLATION

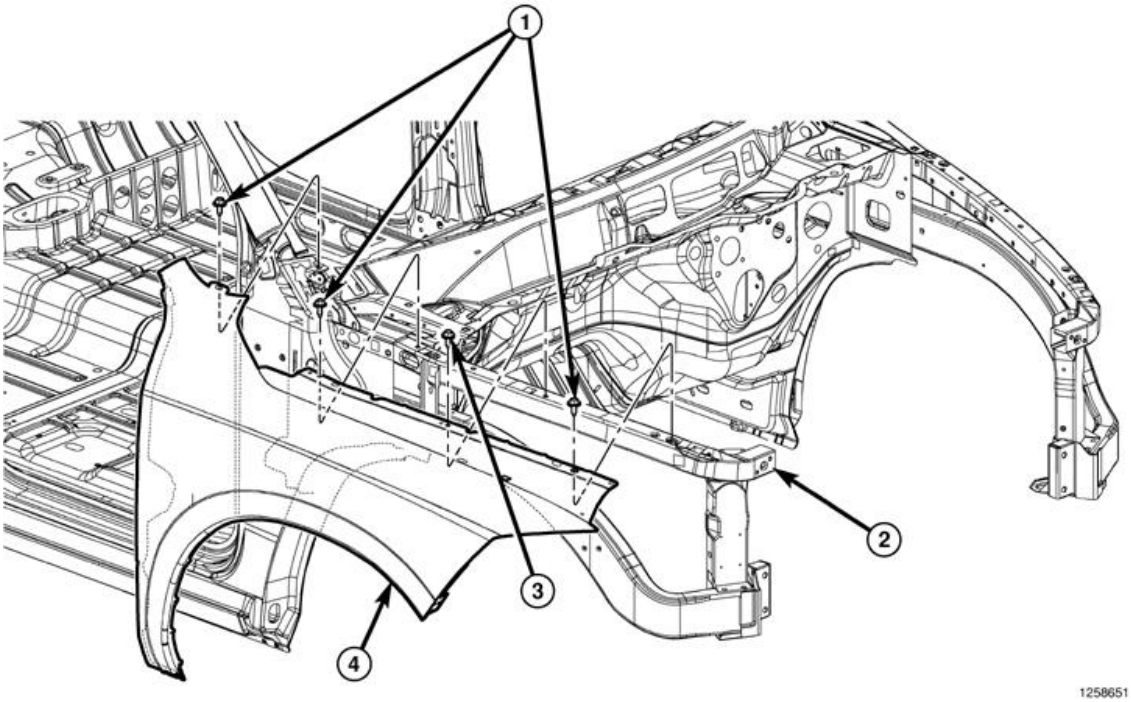

Fig. 217: Fender Bolts
Courtesy of CHRYSLER GROUP, LLC

1. Position the fender (4) onto the hydroform fender supports (2).
2. Loosely install the bolts (1) and (3) for the right side.

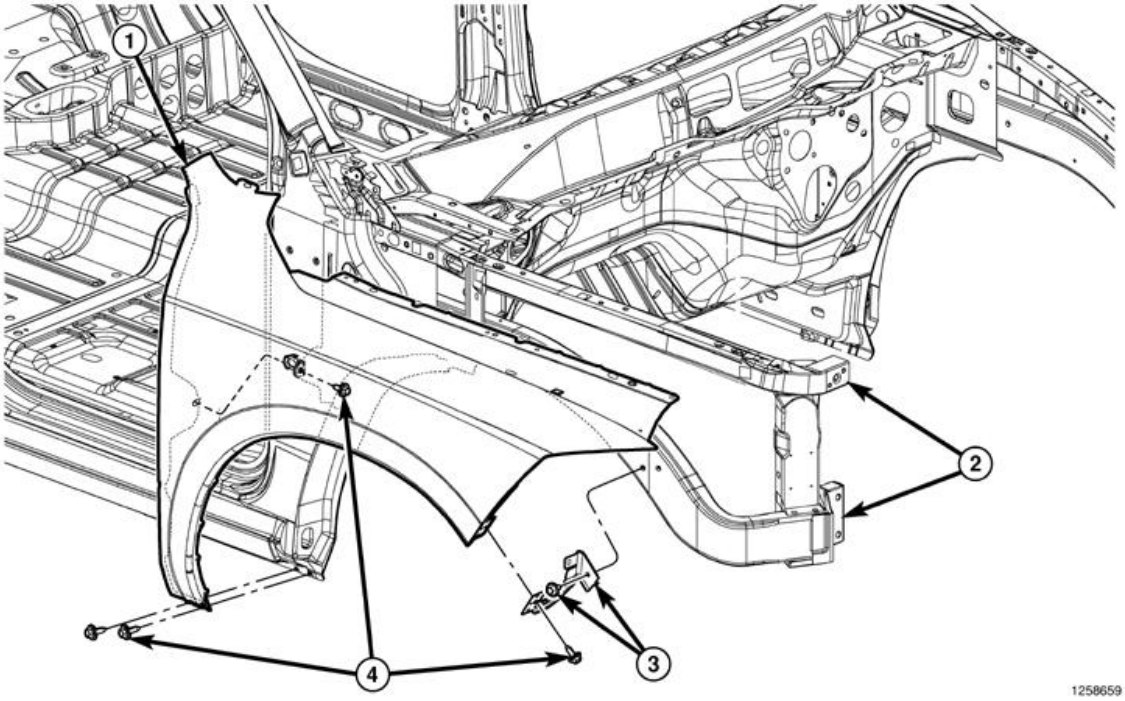

Fig. 218: Support Screws
Courtesy of CHRYSLER GROUP, LLC

3. Loosely install the support bolts (4).
4. Check and adjust the fender gap and flush. Refer to **GAP AND FLUSH, SPECIFICATIONS**.
5. Tighten all the bolts to 9 N.m (80 in. lbs.).

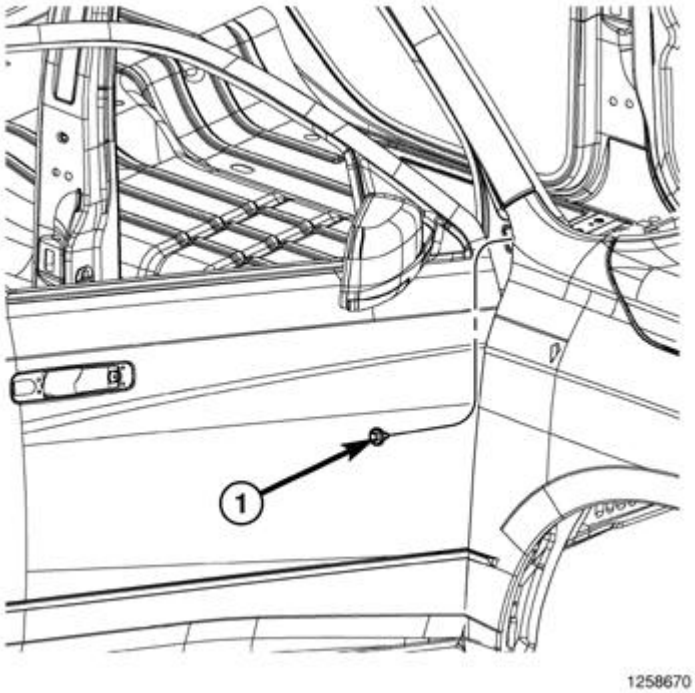

Fig. 219: Rear Upper Screw
Courtesy of CHRYSLER GROUP, LLC

6. Install the bolt (1) and tighten to 9 N.m (80 in. lbs.).
7. Install the battery tray, if required. Refer to **TRAY, BATTERY, INSTALLATION** .
8. Install the wheelhouse splash shield. Refer to **SHIELD, SPLASH, FRONT WHEELHOUSE, INSTALLATION**.
9. Install the front wheel opening molding. Refer to **MOLDING, FRONT WHEEL OPENING, INSTALLATION**.
10. Install the front fascia. Refer to **FASCIA, FRONT, INSTALLATION** .
11. Install the headlamp unit. Refer to **UNIT, FRONT LAMP, INSTALLATION** .

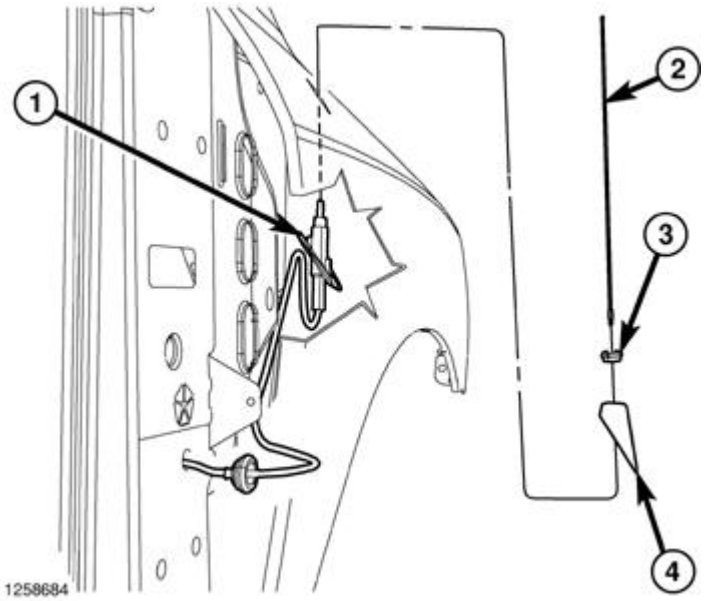

Fig. 220: Radio Antenna Connector
Courtesy of CHRYSLER GROUP, LLC

12. Install the antenna, if necessary. Refer to **MAST, ANTENNA, INSTALLATION** .

GRILLE

REMOVAL

REMOVAL

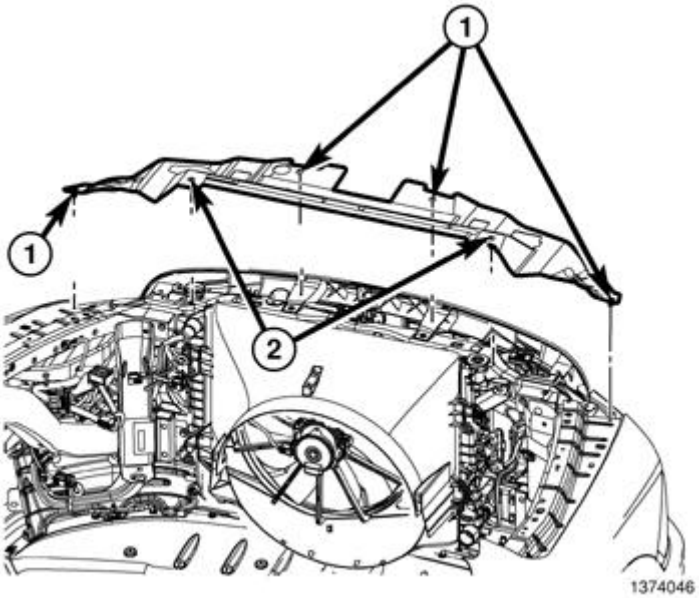

Fig. 221: Upper Radiator Seal
Courtesy of CHRYSLER GROUP, LLC

1. Remove the four push pins (1).
2. Remove the two plastic rivets (2) and remove the upper radiator seal.

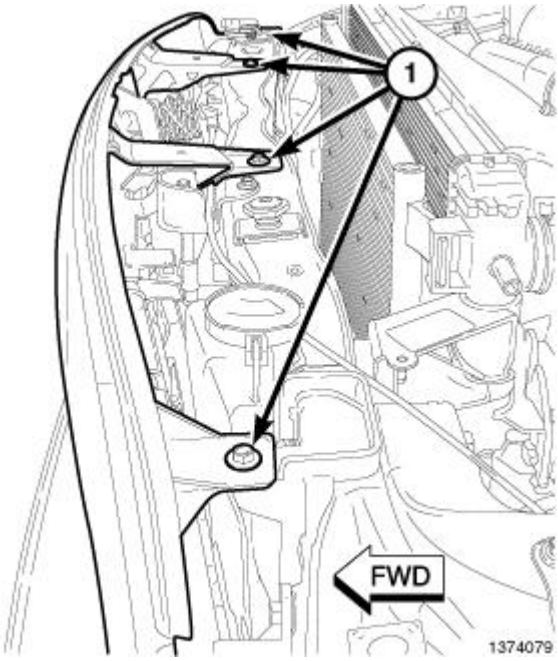

Fig. 222: Upper Grille Support Bolts
Courtesy of CHRYSLER GROUP, LLC

3. Remove the four upper grille support bolts (1).

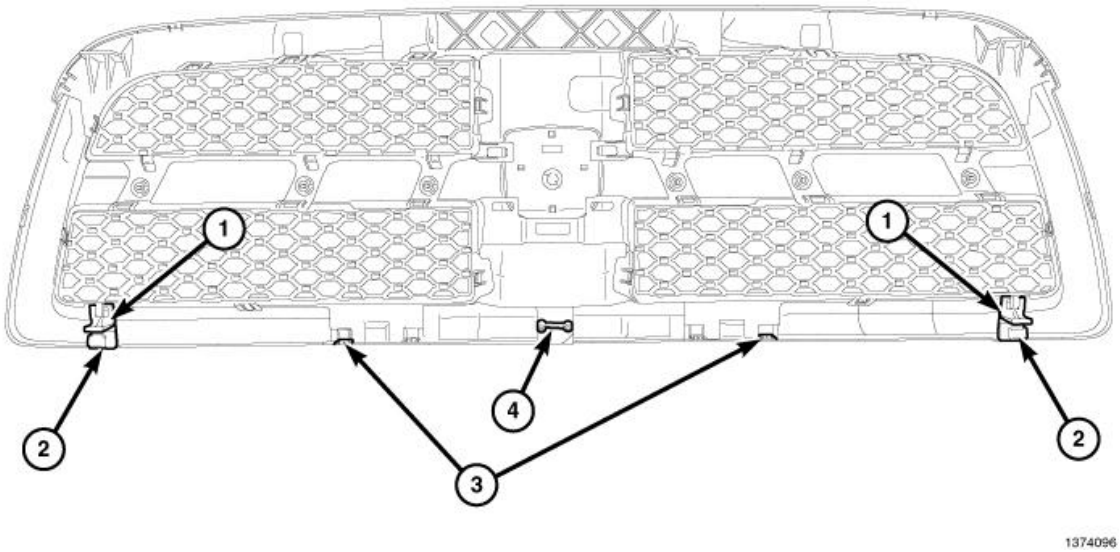

Fig. 223: Grille Lower Spring Clips & Hooks
Courtesy of CHRYSLER GROUP, LLC

4. Using trim stick (special tool #C-4755, Trim Stick) or equivalent, separate the two lower spring clips (2).

5. Release the two lower hooks (1) and remove the grille.

INSTALLATION

INSTALLATION

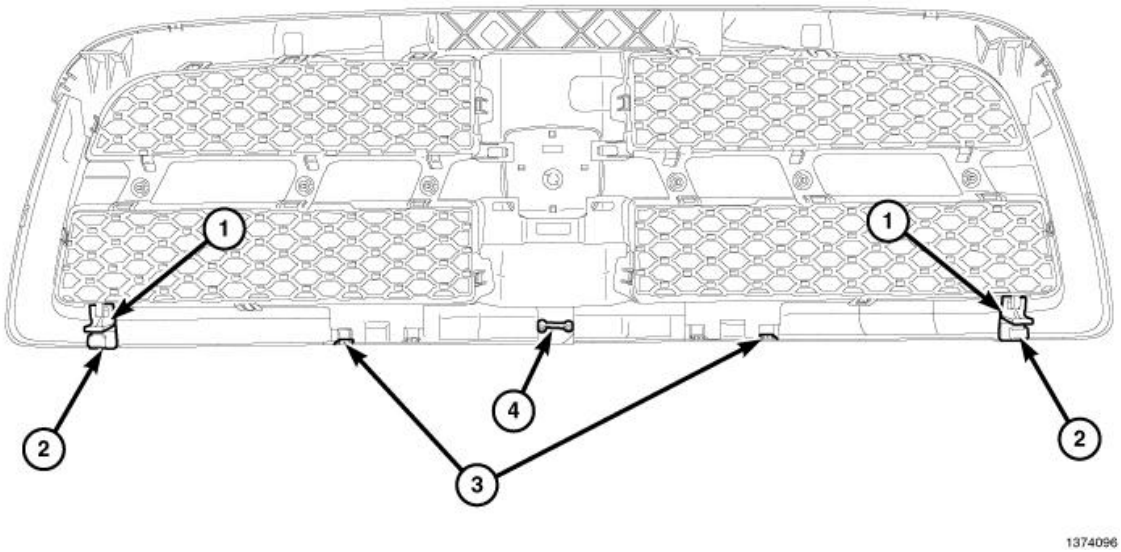

Fig. 224: Grille Lower Spring Clips & Hooks
Courtesy of CHRYSLER GROUP, LLC

1. Position the grille onto the front of the vehicle and locate using the tab (4).
2. Working from behind the grille, make sure the lower tabs (3) are positioned through the slots in the fascia.
3. Seat the lower spring clips (2) fully.

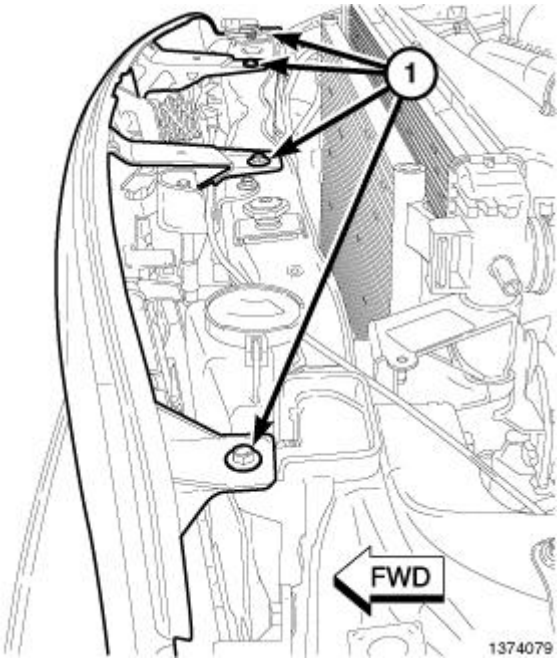

Fig. 225: Upper Grille Support Bolts
Courtesy of CHRYSLER GROUP, LLC

4. Install the four upper bolts (1).

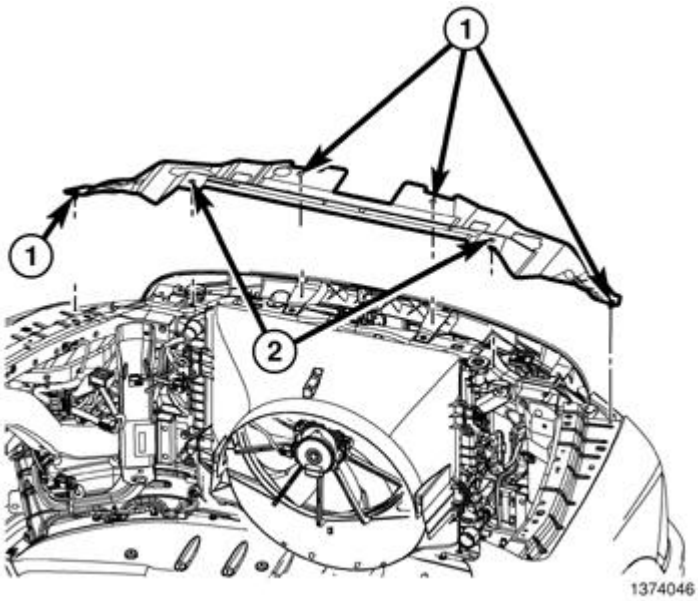

Fig. 226: Upper Radiator Seal
Courtesy of CHRYSLER GROUP, LLC

5. Position the upper radiator seal back into place over the radiator.
6. Install the four push pin fasteners (1) and seat fully.
7. Install the two plastic rivets (2) and seat fully.

ISOLATOR, BODY

REMOVAL

REMOVAL

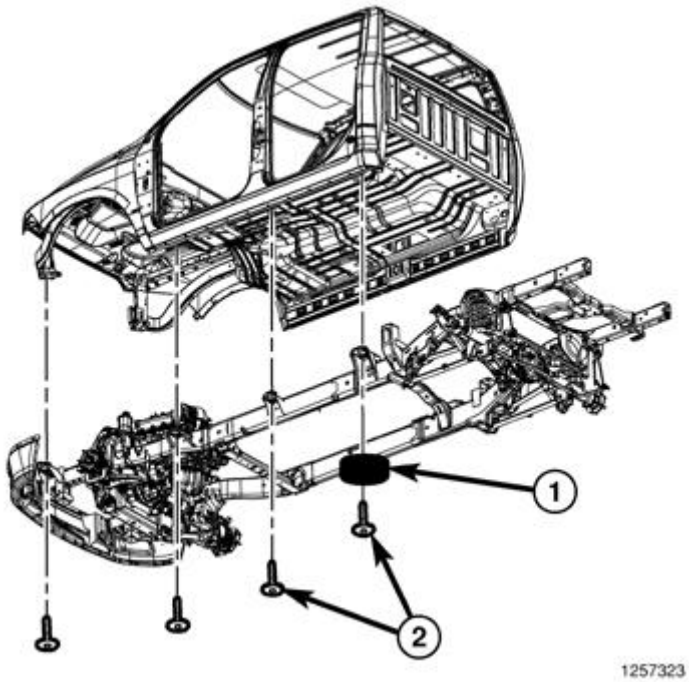

Fig. 227: Mounting Bolts & Body Isolators
Courtesy of CHRYSLER GROUP, LLC

NOTE: Quad and club cab model shown in the illustration. Body isolators for regular cab models are similar.

1. Loosen all cab to frame mounting bolts (2) (six regular cab, eight quad and club cab).

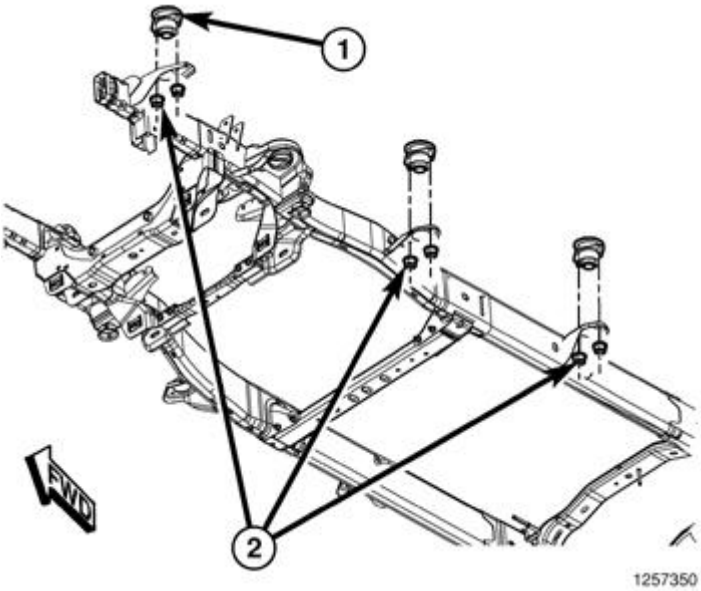

Fig. 228: Body Isolators & Nuts
Courtesy of CHRYSLER GROUP, LLC

2. Using a suitable lifting device, lift the body to gain access to the isolators (1).
3. Remove the nuts (2) and remove the isolators as necessary.

INSTALLATION

INSTALLATION

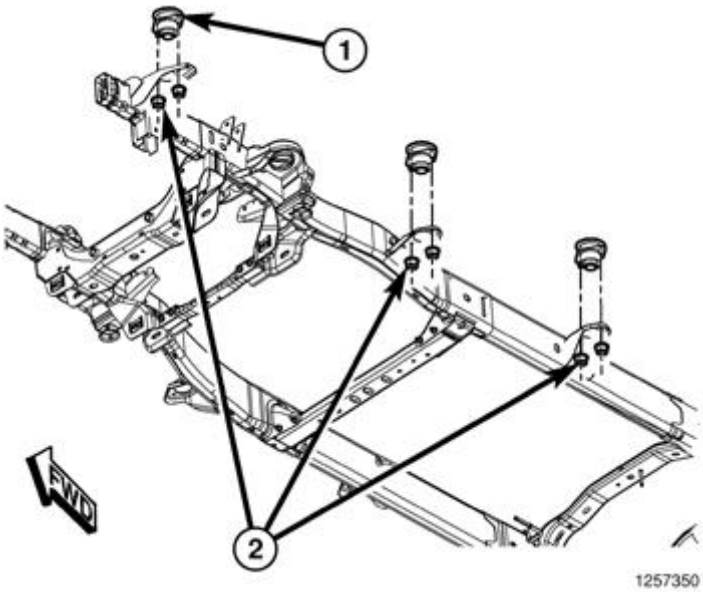

Fig. 229: Body Isolators & Nuts
Courtesy of CHRYSLER GROUP, LLC

CAUTION: Whenever a body isolator bolt requires servicing or tightening, it is necessary to remove the bolt and install new thread locker compound to the threads.

NOTE: Quad cab model shown in the illustration. Body isolators for regular and club cab models are similar.

1. Position the isolators (1) under the cab as necessary.
2. Install the nuts (2).
3. Lower the cab onto the isolators (1) and install the mounting nuts (2).
4. Tighten the nuts to 68 N.m (50 ft. lbs.).

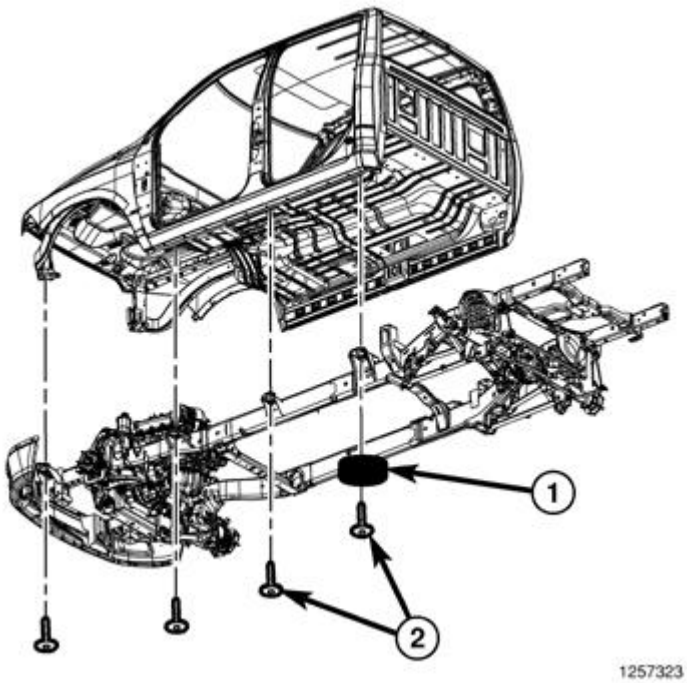

Fig. 230: Mounting Bolts & Body Isolators
Courtesy of CHRYSLER GROUP, LLC

5. Lower the cab onto the isolators and install the mounting bolts (2) and mass damper (1) as necessary (six Regular cab, eight Quad Cab).
6. Tighten the mounting bolts to 108 N.m (80 ft. lbs.).

MIRROR, OUTSIDE REARVIEW

REMOVAL

REMOVAL

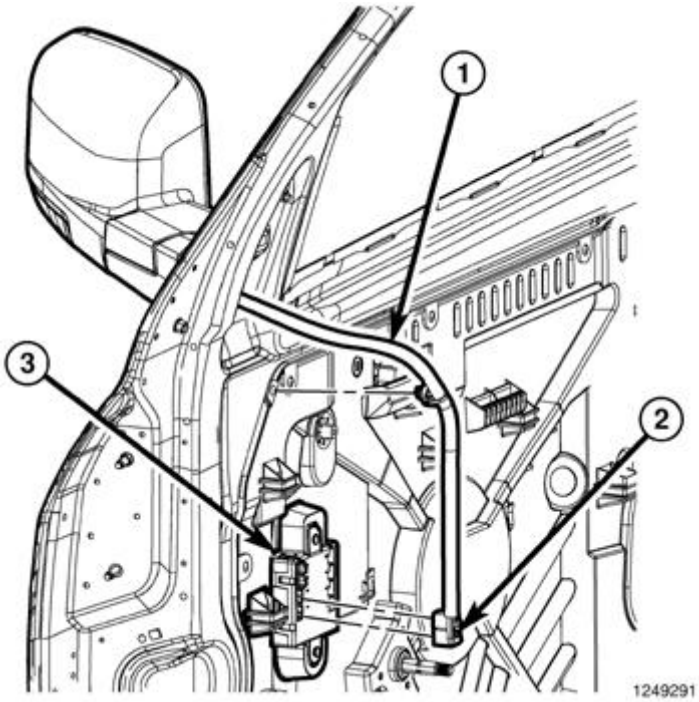

Fig. 231: Door Module & Outside Rearview Mirror Harness Connector
Courtesy of CHRYSLER GROUP, LLC

1. Remove the door trim panel as necessary to gain access to the mirror. Refer to **PANEL, DOOR TRIM, REMOVAL**.
2. If equipped, disconnect the wire harness connector (2) from the door module (3) and separate the support clip.

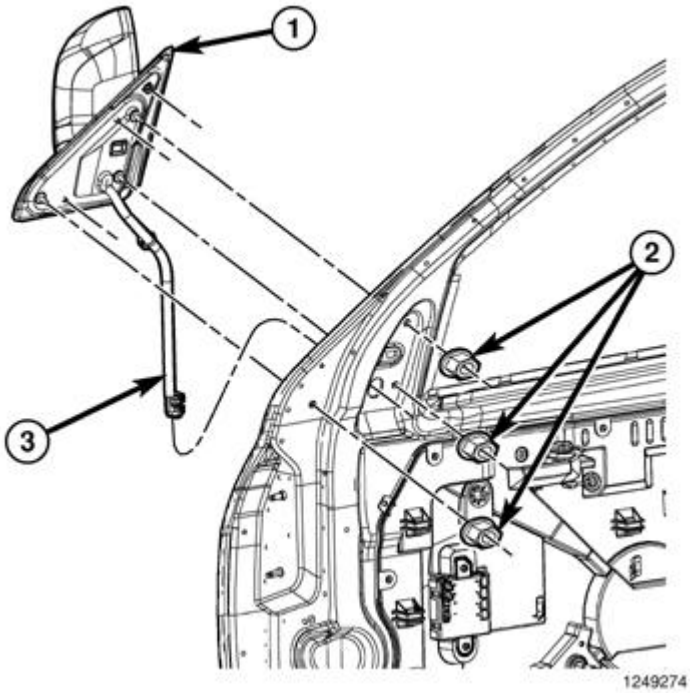

Fig. 232: Outside Rearview Mirror & Harness Connector
Courtesy of CHRYSLER GROUP, LLC

3. Remove the three nuts (2) that secure the mirror to the door and carefully remove the mirror.

INSTALLATION

INSTALLATION

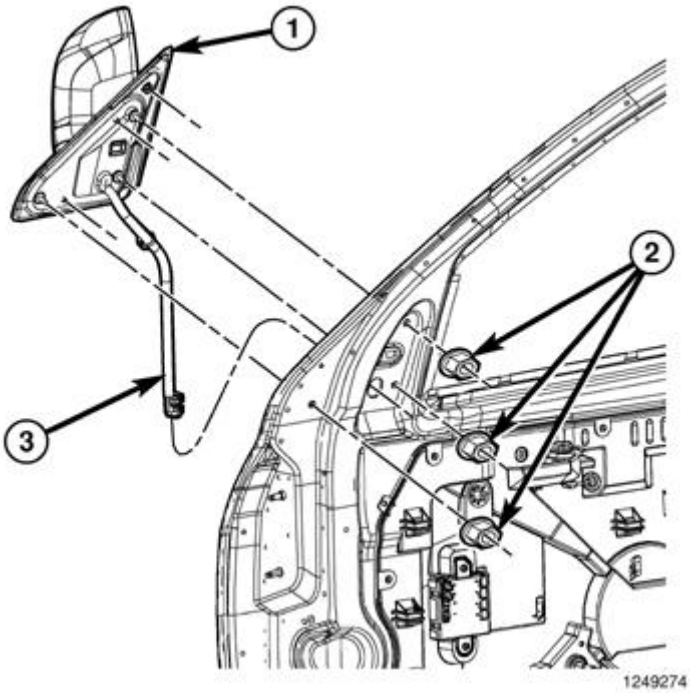

Fig. 233: Outside Rearview Mirror & Harness Connector
Courtesy of CHRYSLER GROUP, LLC

1. If equipped, position the wire harness (3) through the door.
2. Position the mirror (1) onto the door.
3. Install the three nuts (2) that secure the mirror to the door. Tighten the nuts to 7 N.m (60 in. lbs.).

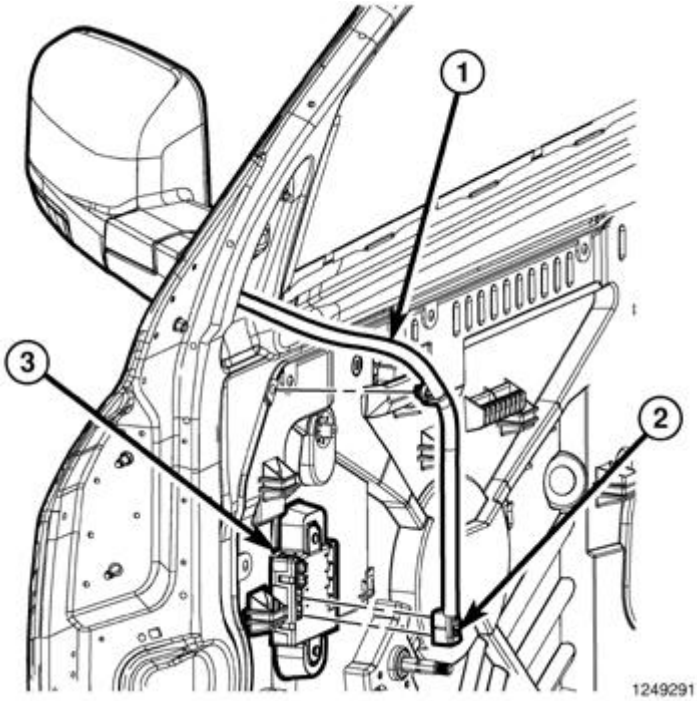

Fig. 234: Door Module & Outside Rearview Mirror Harness Connector
Courtesy of CHRYSLER GROUP, LLC

4. If equipped, connect the wire harness connector (2) to the door module (3).
5. Install the door trim panel. Refer to **PANEL, DOOR TRIM, INSTALLATION**.

MIRROR, OUTSIDE REARVIEW, GLASS

REMOVAL

REMOVAL

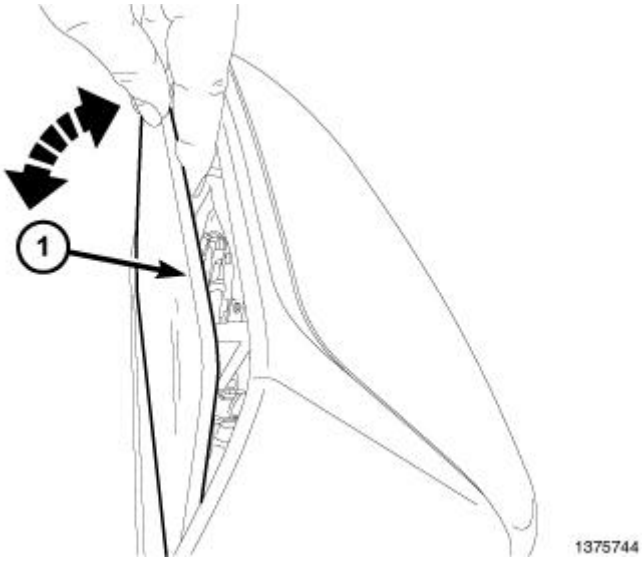

Fig. 235: Mirror Glass Assembly
Courtesy of CHRYSLER GROUP, LLC

1. Move the mirror into the full down position.
2. Firmly and carefully grasp the mirror at the top (1) and pull out to separate the upper mounting clips.

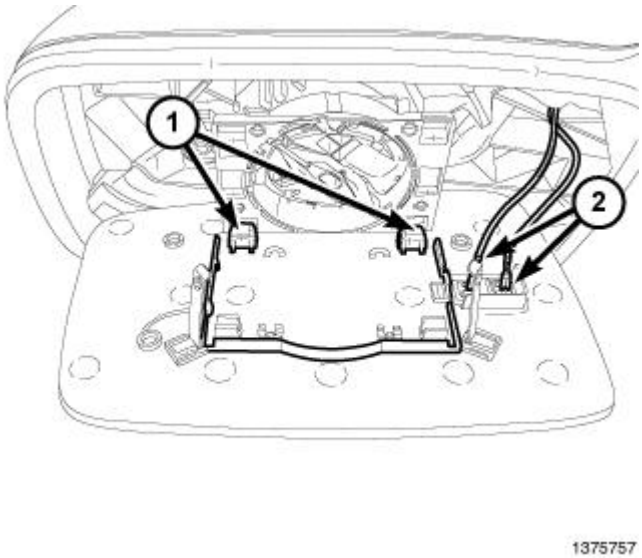

Fig. 236: Hinge Type Clips
Courtesy of CHRYSLER GROUP, LLC

3. Separate the lower hinge type clips (1) and remove the mirror glass assembly.
4. Disconnect the electrical connectors (2), if equipped.

INSTALLATION

INSTALLATION

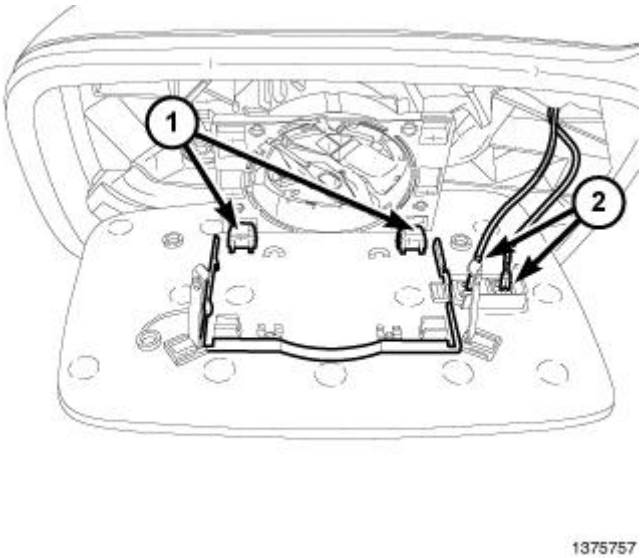

Fig. 237: Hinge Type Clips
Courtesy of CHRYSLER GROUP, LLC

1. Connect the electrical connectors (2), if equipped.
2. Position the mirror glass assembly into the housing and seat the lower hinge type clips (1) fully.

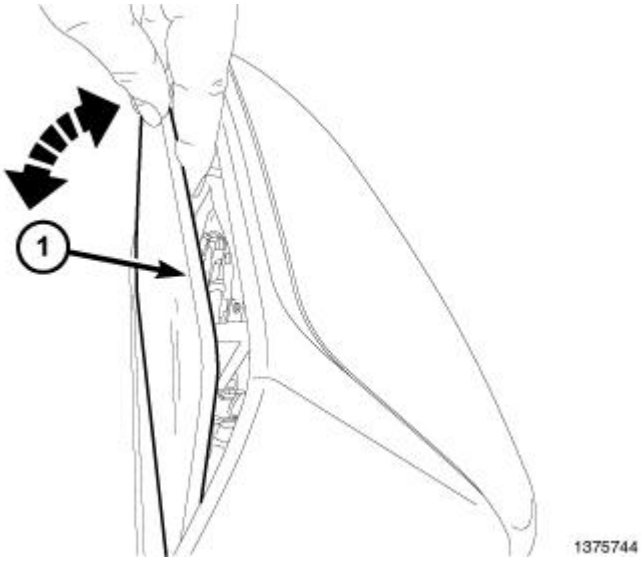

Fig. 238: Mirror Glass Assembly
Courtesy of CHRYSLER GROUP, LLC

3. Push the top of the glass (1) back into the housing and seat the mounting clips fully.

MOLDING, FRONT WHEEL OPENING

REMOVAL

REMOVAL

1500 LIGHT DUTY

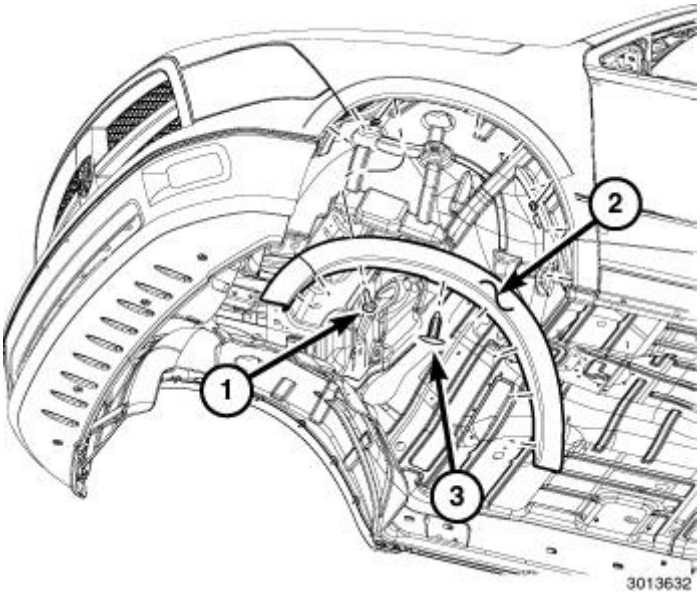

Fig. 239: Front Fender Flare & Center Push-Pin
Courtesy of CHRYSLER GROUP, LLC

1. Remove the seven fender flare retainers (1).

NOTE: Make sure the push-pin is completely removed.

2. Cut off the alignment push-pin (3) located in the middle of the fender flare.

CAUTION: Use of a trim stick maybe necessary to remove the fender flare. Use care not to scratch the paint.

3. Remove the fender flare (2) by starting at the bottom rear of the fender flare.

NOTE: Make sure all adhesive tape is removed.

4. Remove the adhesive tape from the fender using 3M General Purpose Adhesive Cleaner or equivalent.

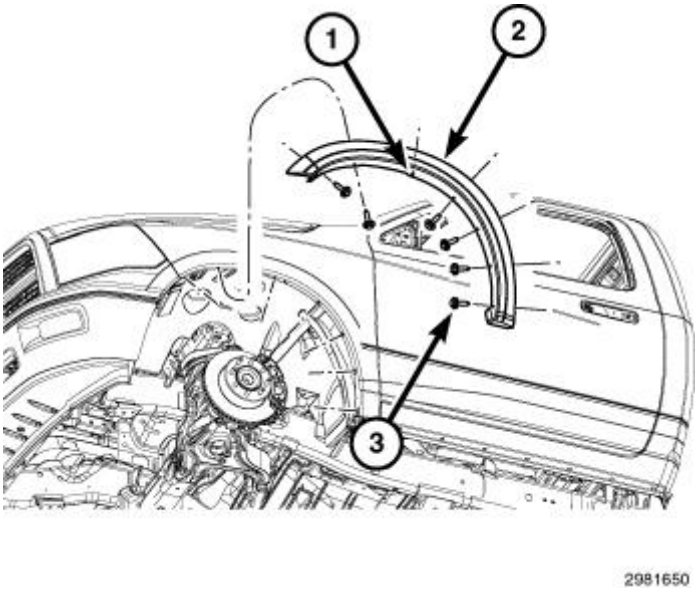

Fig. 240: Front Fender Flare & Center Push-Pin (Heavy Duty)
Courtesy of CHRYSLER GROUP, LLC

1. Remove the six fender flare retainers (3).

NOTE: Make sure the push-pin is completely removed.

2. Cut off the alignment push-pin (1) located in the middle of the fender flare.

CAUTION: Use of a trim stick maybe necessary to remove the fender flare. Use care not to scratch the paint.

3. Remove the fender flare by starting at the bottom rear of the fender flare.

NOTE: Make sure all adhesive tape is removed.

4. Remove the adhesive tape from the fender using 3M General Purpose Adhesive Cleaner or equivalent.

FLARE MOLDING

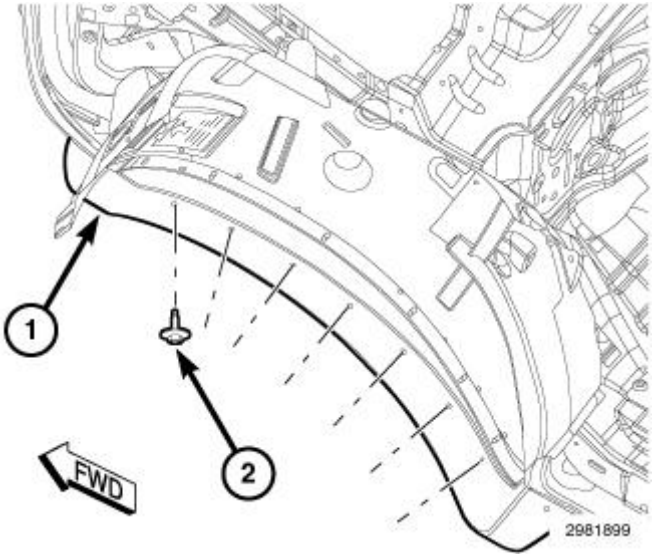

Fig. 241: Flare Molding Push Pins
Courtesy of CHRYSLER GROUP, LLC

1. Remove the seven fender flare retainers (2).

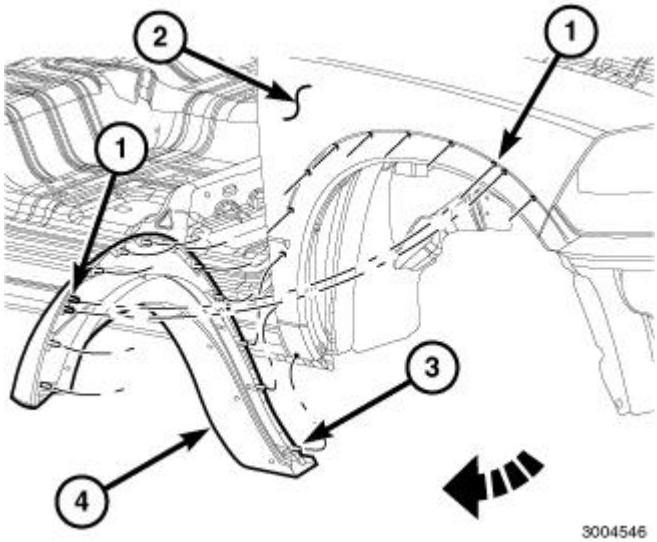

Fig. 242: Flare Molding
Courtesy of CHRYSLER GROUP, LLC

NOTE: Make sure the push-pin is completely removed.

2. Cut off the alignment push-pins (1) located in the middle of the fender flare.

CAUTION: Use of a trim stick maybe necessary to remove the fender flare. Use care not to scratch the paint.

3. Remove the fender flare by starting at the bottom rear of the fender flare.

FLARE EXTENSION MOLDING

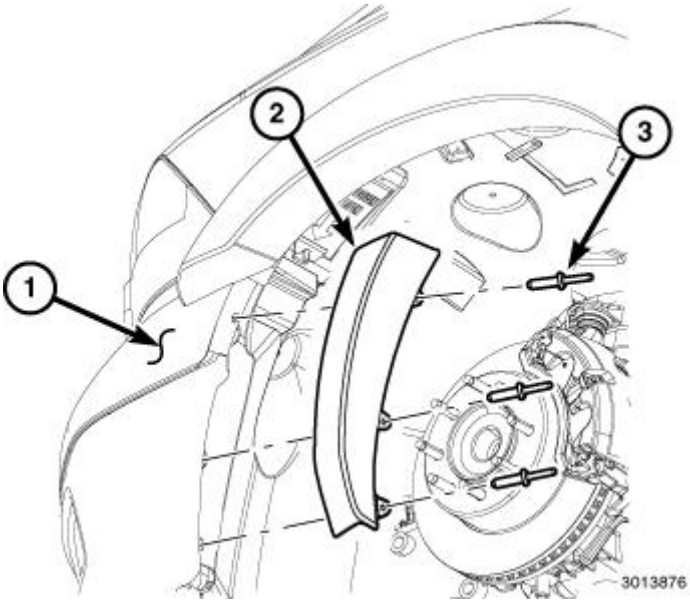

Fig. 243: Flare Extension Molding Rivets
Courtesy of CHRYSLER GROUP, LLC

1. Remove the rivets (3).
2. Remove the flare extension (2) from the front bumper assembly (1).

INSTALLATION

INSTALLATION

1500 LIGHT DUTY

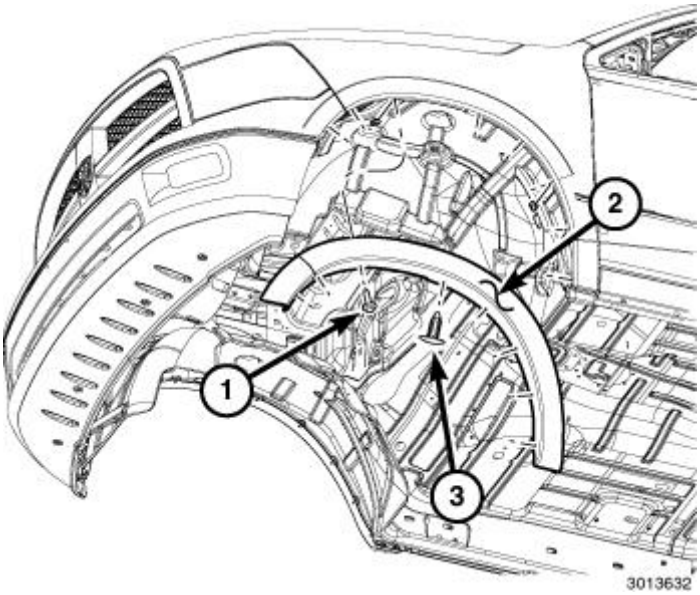

Fig. 244: Front Fender Flare & Center Push-Pin
Courtesy of CHRYSLER GROUP, LLC

NOTE: Be sure the surface is clean and dry before installing the fender flare.

1. Wipe the fender surface with alcohol or equivalent and let dry for three minutes.
2. Align new front fender flare (2) by installing the center push-pin (3) first.

NOTE: It is important for a correct fit to hold the flare tight against the fender as the screws are tightened.

3. Loosely install the seven fender flare retainers (1).

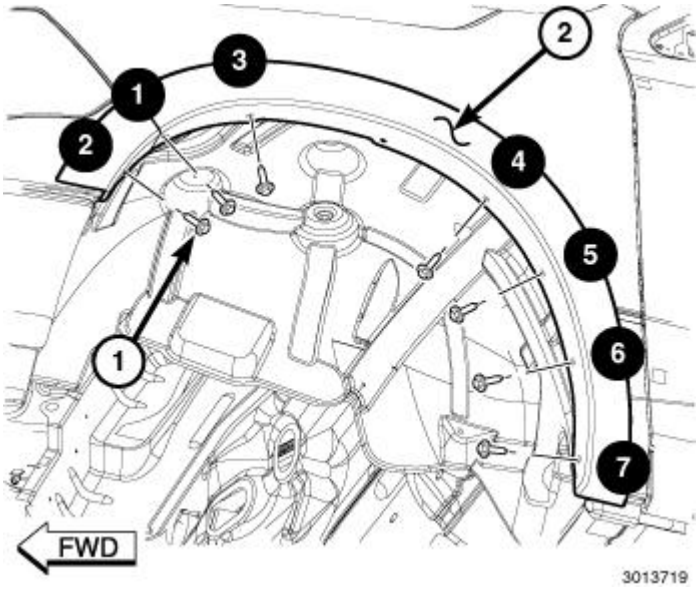

Fig. 245: Retainer Tightening Sequence

Courtesy of CHRYSLER GROUP, LLC

4. Tighten the seven retainers (1) to 2.8 N.m (25 In. lbs.) using the sequence shown in illustration.
5. If any gaps are found, loosen the nearest retainers, apply pressure to the gap area and retighten the retainers. Repeat until all gaps are gone.

NOTE: Do not remove protective film until fender flare is secured and fits with no gaps.

6. Remove the protective film from the back of the fender flare and apply inward pressure the whole length of the fender flare.

2500/3500 HEAVY DUTY

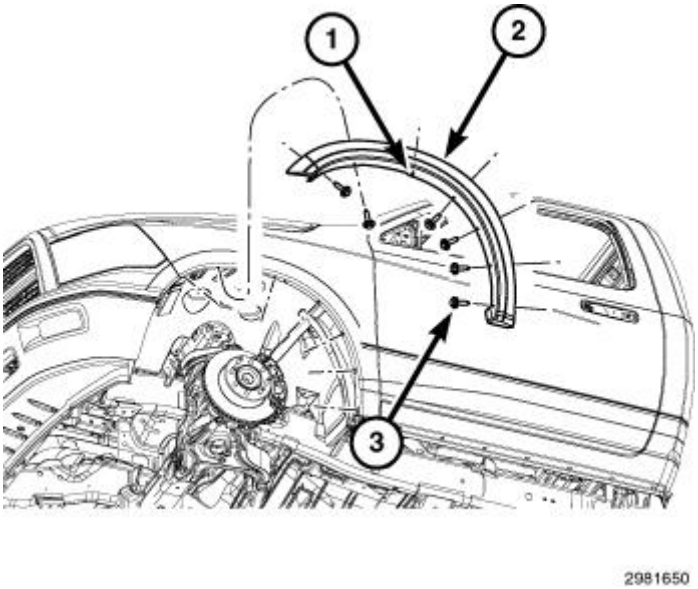

Fig. 246: Front Fender Flare & Center Push-Pin (Heavy Duty)
Courtesy of CHRYSLER GROUP, LLC

NOTE: Be sure the surface is clean and dry before installing the fender flare.

1. Wipe the fender surface with alcohol or equivalent and let dry for three minutes.
2. Align new front fender flare (2) by installing the center push-pin (1) first.

NOTE: It is important for a correct fit to hold the flare tight against the fender as the screws are tightened.

3. Loosely install the six fender flare retainers (3).

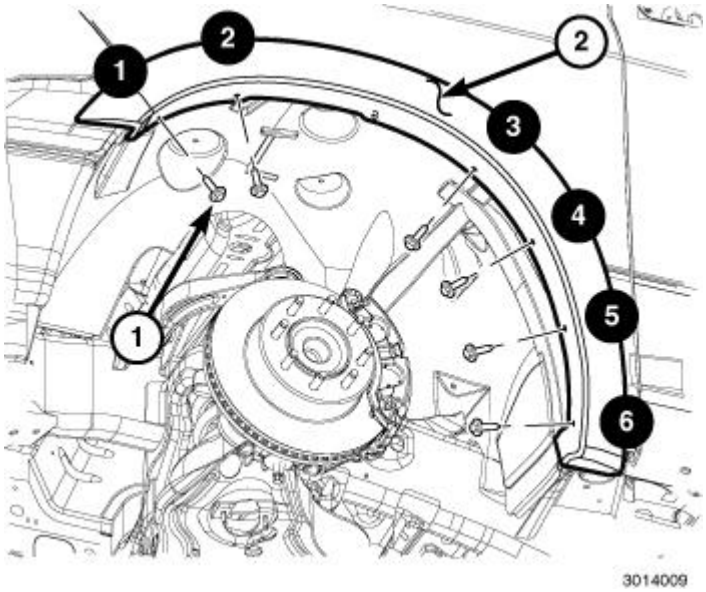

Fig. 247: Retainer Tightening Sequence (Heavy Duty)
Courtesy of CHRYSLER GROUP, LLC

4. Tighten the six retainers (1) to 2.8 N.m (25 In. lbs.) using the sequence shown in illustration.
5. If any gaps are found, loosen the nearest retainers, apply pressure to the gap area and retighten the retainers. Repeat until all gaps are gone.

NOTE: Do not remove adhesive tape protective film until fender flare is secured and fits with no gaps.

6. Remove the protective film from the back of the fender flare and apply inward pressure the whole length of the fender flare.

FLARE MOLDING

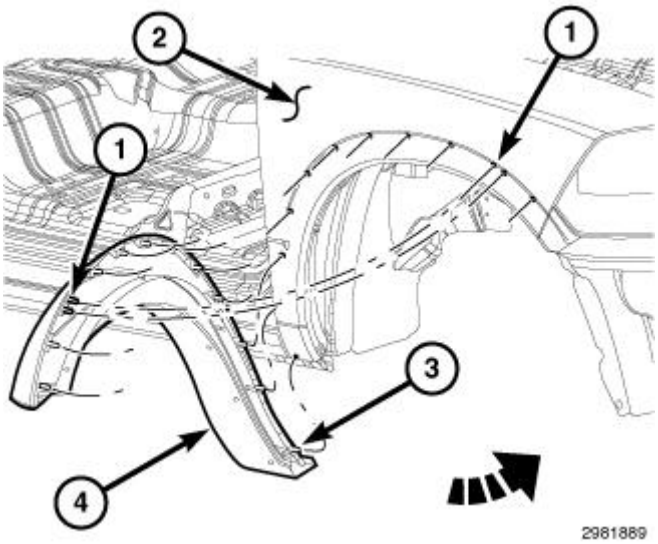

Fig. 248: Flare Molding
Courtesy of CHRYSLER GROUP, LLC

NOTE: It is important for a correct fit to hold the flare tight against the fender as the screws are tightened.

1. Position the flare (4) onto the vehicle and insert the alignment push pins (1) first to hold the flare in place.

   NOTE: Lift and push to the inside of the vehicle the rear portion of the wheel fender in order to reduce the gap between the flare and the sheet metal.

2. While lifting and holding the flare (4) to the rear lower portion of the fender (2) seat the remaining push pins (3) fully.

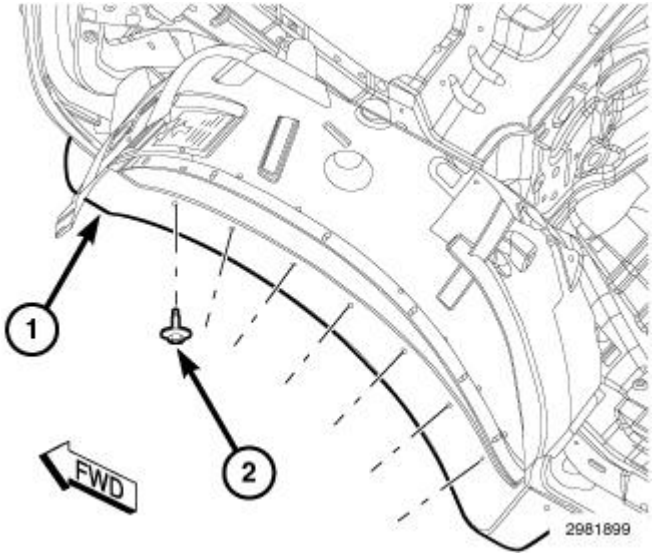

Fig. 249: Flare Molding Push Pins
Courtesy of CHRYSLER GROUP, LLC

3. Tighten the sever retainers (2) in sequence starting from the front screw, then the remaining screws in the direction from front to rear.

   Tighten retainers to 2.8 N.m (25 In. lbs.).

4. If any gaps are found, loosen the nearest retainers, apply pressure to the gap area and retighten the retainers. Repeat until all gaps are gone.

FLARE EXTENSION MOLDING

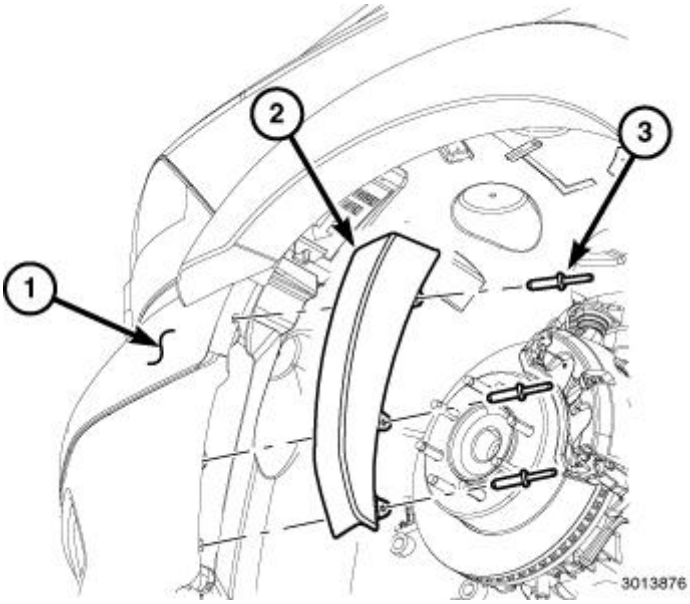

Fig. 250: Flare Extension Molding Rivets
Courtesy of CHRYSLER GROUP, LLC

1. Install the flare extension (2) onto the front bumper assembly (1) and install the rivets (3).

MOLDING, REAR WHEEL OPENING

REMOVAL

REMOVAL

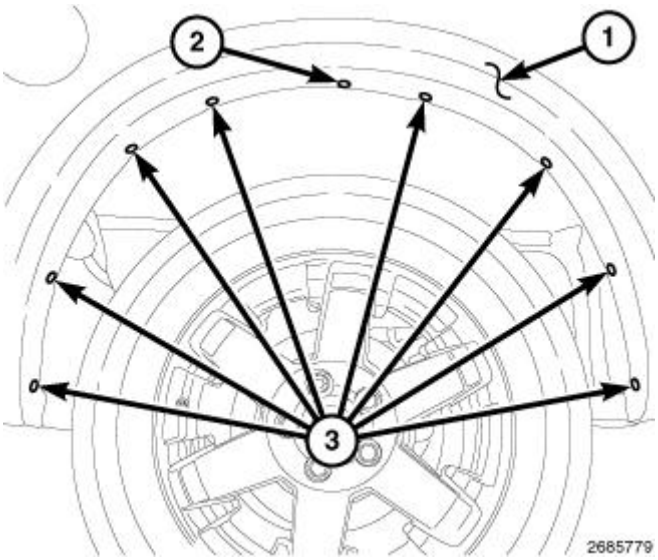

Fig. 251: Fender Flare Retainers
Courtesy of CHRYSLER GROUP, LLC

1. Remove the eight fender flare retainers (3).

NOTE: Make sure the push-pin is completely removed.

2. Cut off the alignment push-pin (2) located in the middle of the fender flare.

CAUTION: Use of a trim stick maybe necessary to remove the fender flare. Use care not to scratch the paint.

3. Pull the fender flare off, starting at the bottom rear of the fender flare.

NOTE: Make sure all adhesive tape is removed.

4. Remove the adhesive tape from the fender using 3M General Purpose Adhesive Cleaner or equivalent.

INSTALLATION

INSTALLATION

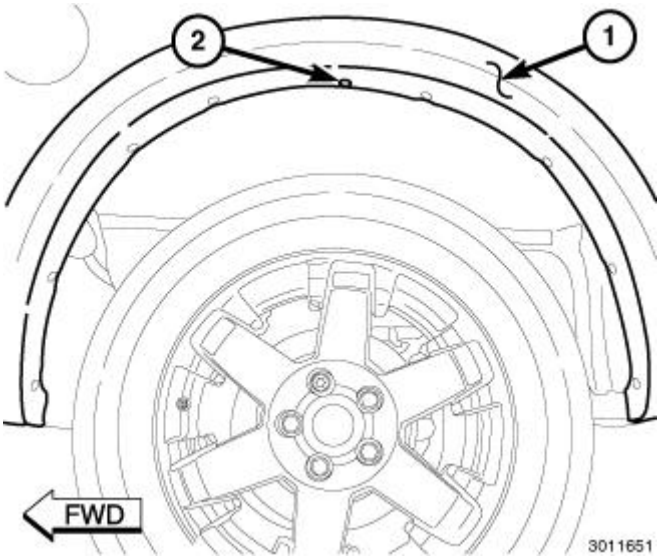

Fig. 252: Rear Fender Flare & Center Push-Pin
Courtesy of CHRYSLER GROUP, LLC

NOTE: Be sure the surface is clean and dry before installing the rear fender flare.

1. Wipe the fender surface with alcohol and let dry for three minutes.
2. Align new rear fender flare (1) by installing the center push-pin (2) first.

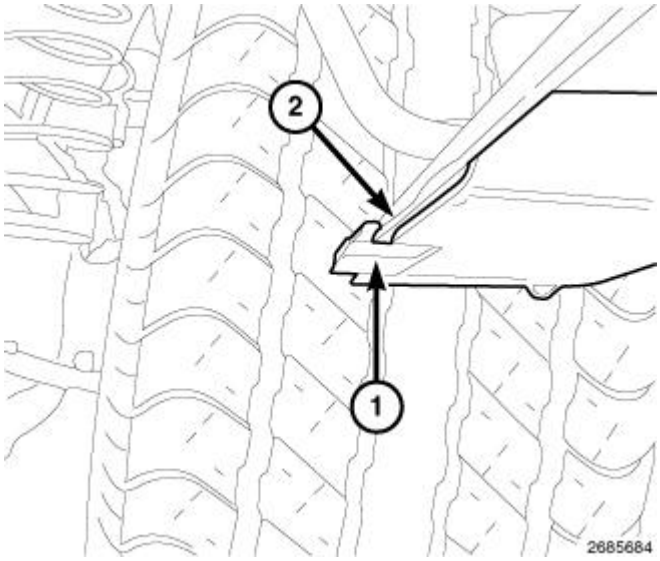

Fig. 253: Aligning Fender Flare Groove
Courtesy of CHRYSLER GROUP, LLC

NOTE: **Incorrect fender flare to fender flange installation will cause gaps between the fender and fender flare.**

3. Align the fender flare so that the groove at the bottom of the fender flare (1) completely wraps around the fender flange (2).

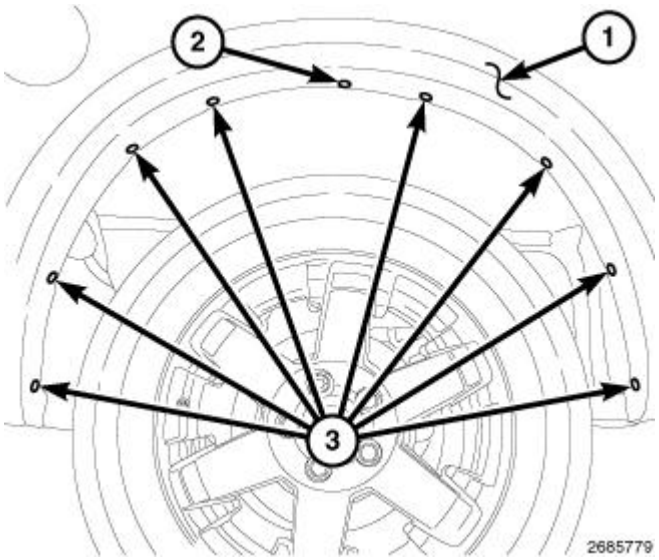

Fig. 254: Fender Flare Retainers
Courtesy of CHRYSLER GROUP, LLC

NOTE: **It is important for a correct fit to hold the flare tight against the fender as the screws are tightened.**

4. Loosely install the eight fender flare retainers (3).

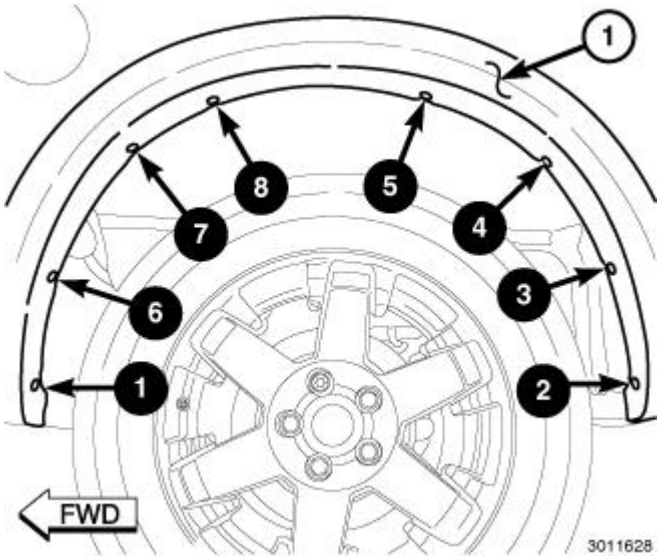

Fig. 255: Rear Retainer Tightening Sequence
Courtesy of CHRYSLER GROUP, LLC

5. Tighten the retainers to 2.8 N.m (25 In. Lbs.) on fender flare (1) using the sequence shown in illustration.
6. If any gaps are found, loosen nearest retainer, apply pressure to the gap area and retighten the retainer. Repeat until all gaps are gone.

NOTE: **Do not remove protective film until fender flare is secured and fits with no gaps.**

7. Remove the protective film from the back of the fender flare and apply inward pressure the whole length of the fender flare.

NAMEPLATE

REMOVAL

REMOVAL

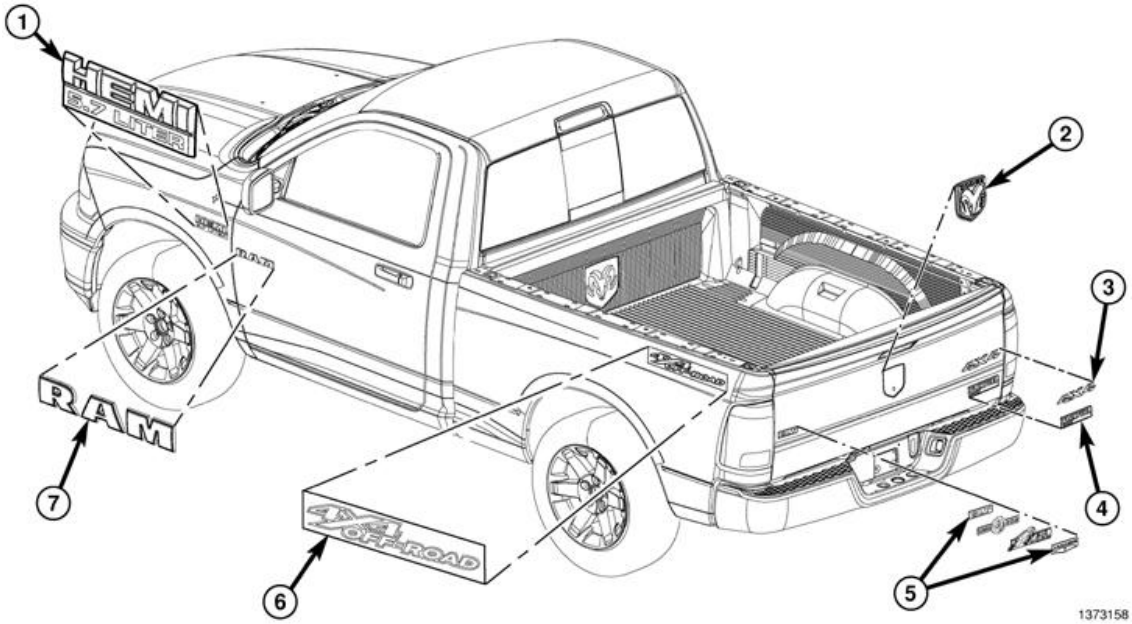

Fig. 256: Name Plates
Courtesy of CHRYSLER GROUP, LLC

1 - "HEMI 5.7 LITER"
2 - "RAM HEAD MEDALLION"
3 - "4X4"
4 - "FLEX FUEL E85 ETHANOL"
5 - "SLT", "LONE STAR", "BIG HORN", "LARAMIE"
6 - "TRX4 OFF-ROAD"
7- "RAM"

NOTE: Standard Cab model shown in the illustration. Exterior name plates and decals for all other cab models are similar. Exterior name plate and decal usage vary by model.

1. As a guide for installation, apply a length of masking tape on the body, parallel to the top edge and, to one end of the name plate or decal being removed.

CAUTION: Do not exceed 52° C (120° F) when heating name plates, decals or body panels. Failure to follow this caution may result in damage to the name plates, decals and/or the vehicle paint finish.

2. If the temperature is below 21° C (70° F), warm the name plate or decal with a heat lamp or heat gun.

NOTE: The exterior name plates are attached to the body with adhesive tape.

3. Using a trim stick (special tool #C-4755, Trim Stick) or equivalent, carefully remove the name plate or decal from the body panel, as necessary.

INSTALLATION

INSTALLATION

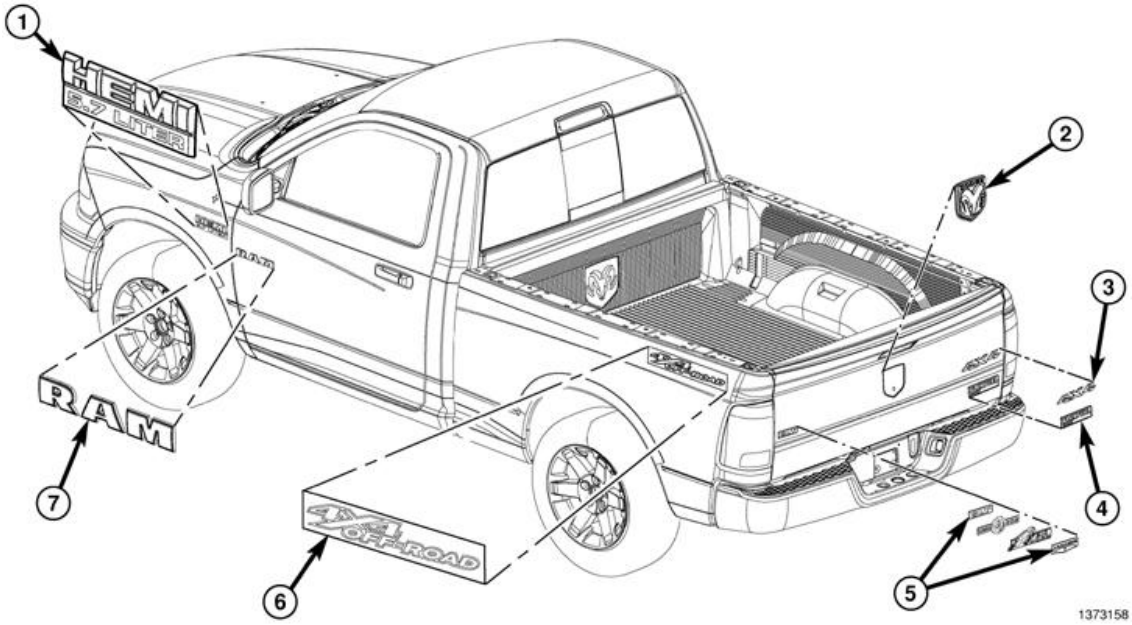

Fig. 257: Name Plates
Courtesy of CHRYSLER GROUP, LLC

1 - "RAM"
2 - "TRX4 OFF-ROAD"
3 - "SLT", "LONE STAR", "BIG HORN", "LARAMIE"
4 - "FLEX FUEL E85 ETHANOL"
5 - "4X4"
6 - "RAM HEAD MEDALLION"

NOTE: Standard Cab model shown in the illustration. Exterior name plates and decals for all other cab models are similar. Exterior name plate and decal usage vary by model.

1. Thoroughly clean all residue from the name plate or decal attachment areas of the body.
2. Wipe the attachment areas with a clean, lint-free cloth, moistened with a 50% solution of water and alcohol and then wipe dry the areas immediately with a dry, lint-free cloth.

CAUTION: Do not exceed 52° C (120° F) when heating name plates, decals or body panels. Failure to follow this caution may result in damage to the name plates, decals and/or the vehicle paint finish.

NOTE: If ambient temperatures are below 21° C (70° F), warm the name plate or decal and body panel with a heat lamp or gun to assure proper adhesion.

3. Remove the protective covering from the back of name plate or decal and position the name plate or decal onto the body using the previously installed guide tape.

NOTE: **To ensure proper name plate or decal adhesion, apply consistent and uniform pressure of approximately 40 p.s.i. over the entire surface of each name plate or decal.**

4. Install the name plate or decal onto the body.

PANEL, CLOSURE, RADIATOR

REMOVAL

REMOVAL

1. Disconnect and isolate battery negative cable.
2. Remove the grille. Refer to **GRILLE, REMOVAL**.
3. Remove the washer bottle, if necessary. Refer to **RESERVOIR, WINDSHIELD WASHER, REMOVAL** .
4. Remove the coolant bottle, if necessary. Refer to **BOTTLE, COOLANT RECOVERY, REMOVAL** .
5. Remove the hood latch. Refer to **LATCH, HOOD, REMOVAL**.
6. Remove the front bumper. Refer to **BUMPER, FRONT, REMOVAL** .
7. Remove the A/C condenser, if equipped. Refer to **CONDENSER, A/C, REMOVAL** .
8. Remove the charge air cooler, if equipped. Refer to **COOLER AND HOSES, CHARGE AIR, REMOVAL, 6.7L** .
9. Remove the headlamps. Refer to **UNIT, FRONT LAMP, REMOVAL** .
10. Remove the air cleaner. Refer to **AIR CLEANER, REMOVAL, 3.7L** or **AIR CLEANER, REMOVAL, 4.7L** or **AIR CLEANER, REMOVAL, 5.7L** or **AIR CLEANER, REMOVAL, 6.7L** .

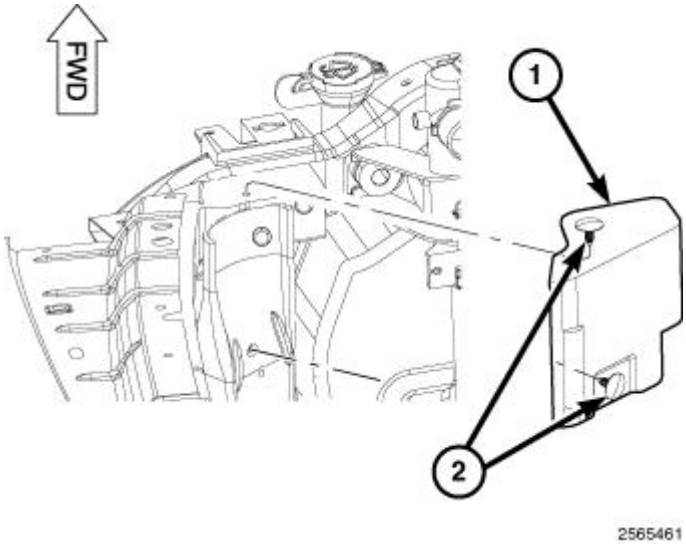

Fig. 258: Foam & Push Pin Fasteners

Courtesy of CHRYSLER GROUP, LLC

11. Separate the push pin fasteners (2) and remove the foam (1).
12. Remove the upper radiator bolts and position back supported in the vehicle.
13. Disconnect the TIPM.
14. Remove the trim pieces below the headlights, if equipped.
15. Open the access covers in the wheelhouse splash shields and remove the bolts supporting the fender on each side.
16. Remove the bolts and disconnect any ground cables as necessary.

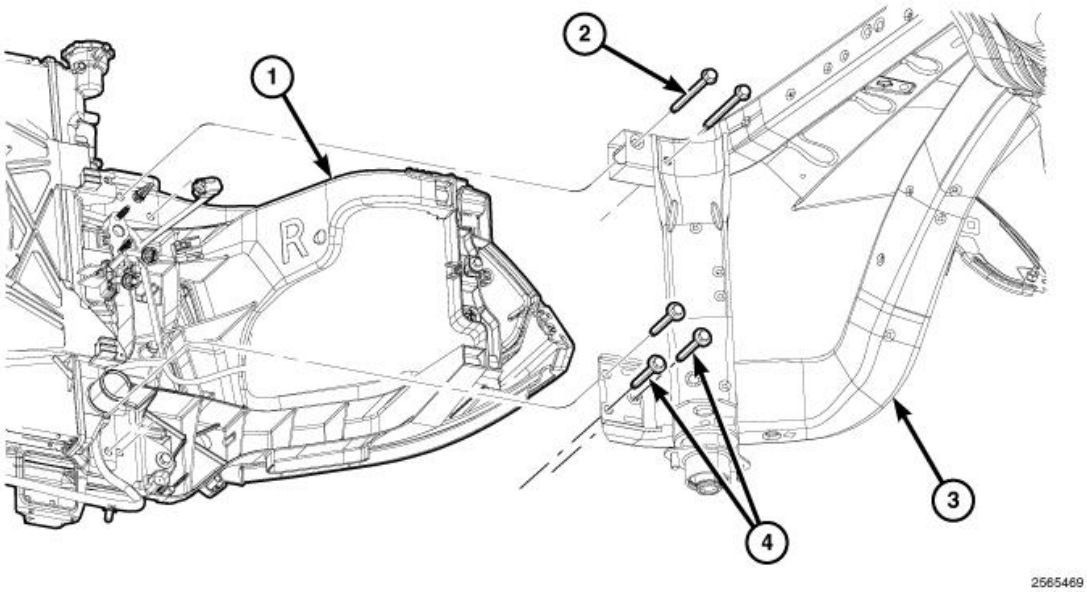

Fig. 259: Closure Panel & Front End Sheet Metal Mounting
Courtesy of CHRYSLER GROUP, LLC

17. Remove the upper (2) and lower (4) bolts supporting the closure panel (1) to the front end sheet metal mounting (3).
18. Carefully remove the closure making sure the paint on the front edge of the fenders is protected from damage.

INSTALLATION

INSTALLATION

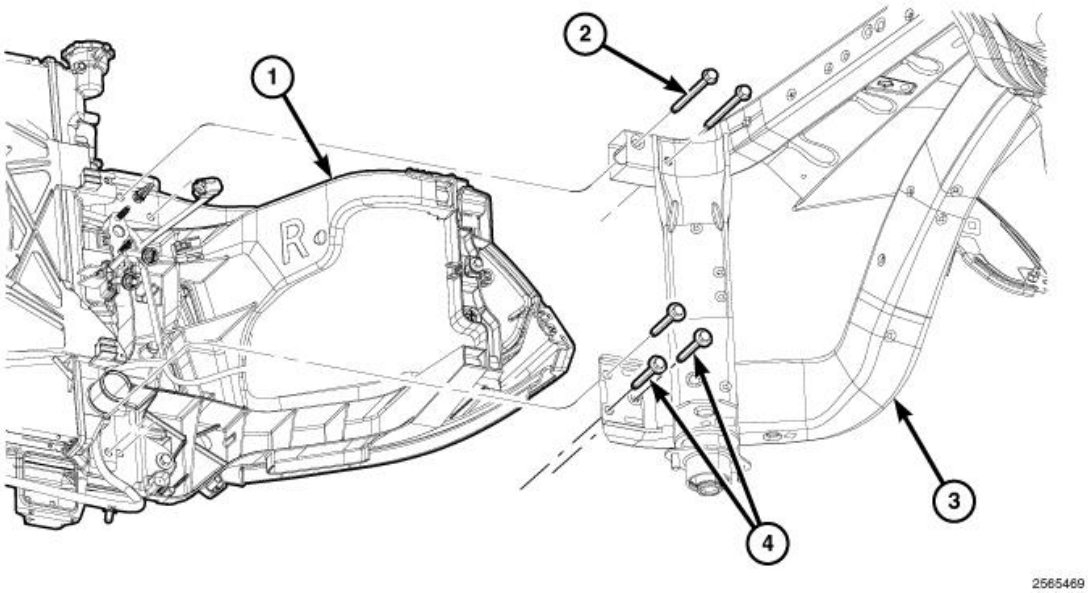

Fig. 260: Closure Panel & Front End Sheet Metal Mounting
Courtesy of CHRYSLER GROUP, LLC

1. Carefully position the closure assembly (1) up onto the front end sheet metal mounting (3) and avoid damaging the front edges of the fenders.
2. Install the lower bolts (4) and tighten to 20 N.m (15 ft. lbs.)
3. Install the upper bolts (2) and tighten to 20 N.m (15 ft. lbs.)
4. Install the ground cables and install the bolts if necessary.
5. Install the fender support bolt from inside the wheelhouse splash shield.
6. Install the trim pieces below the headlights, if equipped.
7. Connect the TIPM electrical connectors and position the TIPM back into place.
8. Position the radiator back and insert the lower radiator mounts.
9. Install the upper radiator bolts.

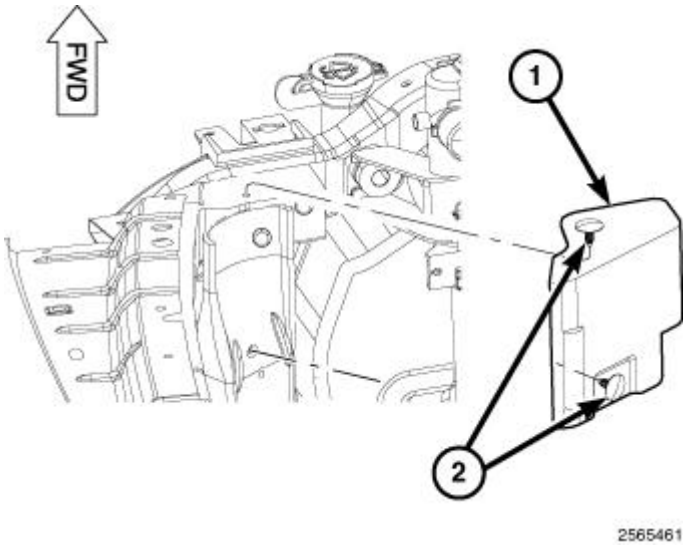

Fig. 261: Foam & Push Pin Fasteners
Courtesy of CHRYSLER GROUP, LLC

10. Install the foam (1) and seat the push pin fasteners (2) fully.
11. Install the air cleaner assembly. Refer to **AIR CLEANER, INSTALLATION, 3.7L** or **AIR CLEANER, INSTALLATION, 4.7L** or **AIR CLEANER, INSTALLATION, 5.7L** or **AIR CLEANER, INSTALLATION, 6.7L** .
12. Install the headlamps. Refer to **UNIT, FRONT LAMP, INSTALLATION** .
13. Install the charge air cooler, if equipped. Refer to **COOLER AND HOSES, CHARGE AIR, INSTALLATION, 6.7L** .
14. Install the A/C condenser, if equipped. Refer to **CONDENSER, A/C, INSTALLATION** .
15. Install the front bumper. Refer to **BUMPER, FRONT, INSTALLATION** .
16. Install the hood latch. Refer to **LATCH, HOOD, INSTALLATION**.
17. Install the coolant bottle, if necessary. Refer to **BOTTLE, COOLANT RECOVERY, INSTALLATION** .
18. Install the washer bottle, if necessary. Refer to **RESERVOIR, WINDSHIELD WASHER, INSTALLATION** .
19. Install the grille. Refer to **GRILLE, INSTALLATION**.

SHIELD, SPLASH, FRONT WHEELHOUSE

REMOVAL

REMOVAL

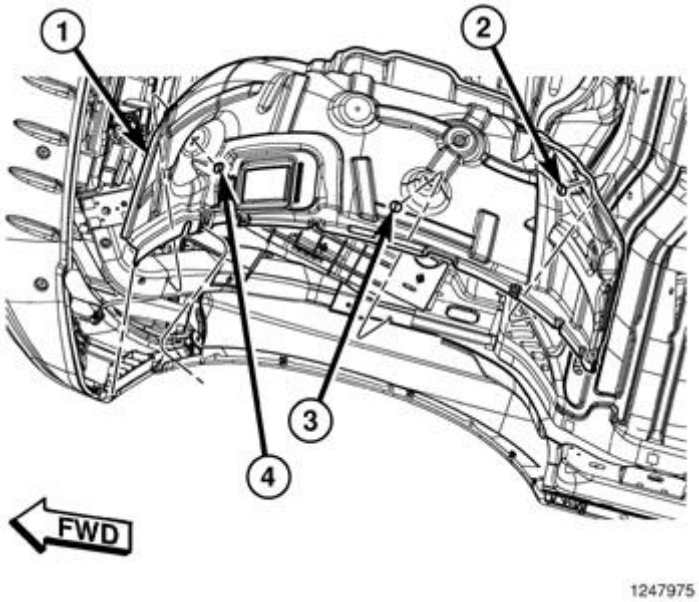

Fig. 262: Inner Shield Push Pins
Courtesy of CHRYSLER GROUP, LLC

1. Release the ABS harness push pin from the inner shield.
2. Remove the push pins (2, 3, 4).

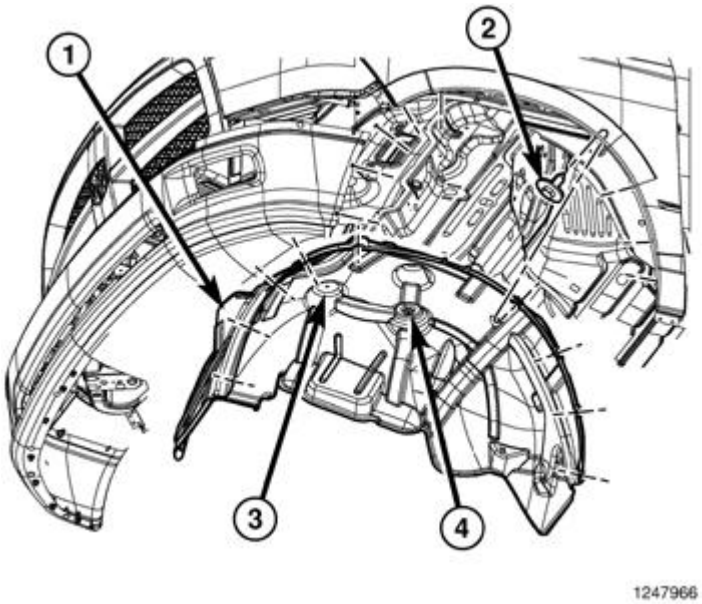

Fig. 263: Inner Shield Screws
Courtesy of CHRYSLER GROUP, LLC

3. Remove the inner screws (3 and 4).
4. Remove the screws securing the shield to the fascia and the outer fender flange (2).
5. Release the outboard edge of the shield (1) from the fender flange and remove the shield (1).

INSTALLATION

INSTALLATION

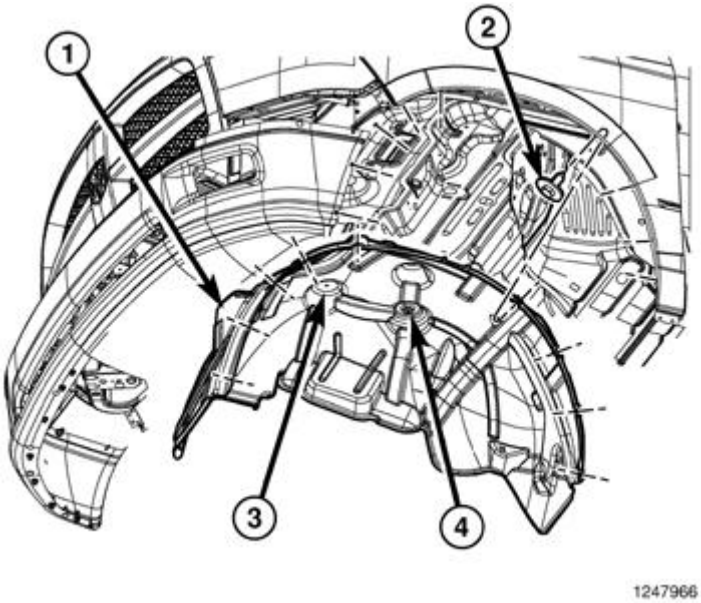

Fig. 264: Inner Shield Screws
Courtesy of CHRYSLER GROUP, LLC

1. Position the shield (1) inside the wheelhouse opening and tuck the outboard edge of the shield behind the flange on the fender outer panel.
2. Align and secure the outboard edge of the splash shield to the outer fender. Drive the screws (2) through the fender flange and into the shield.
3. Install the screw (3) and install the screw (4).

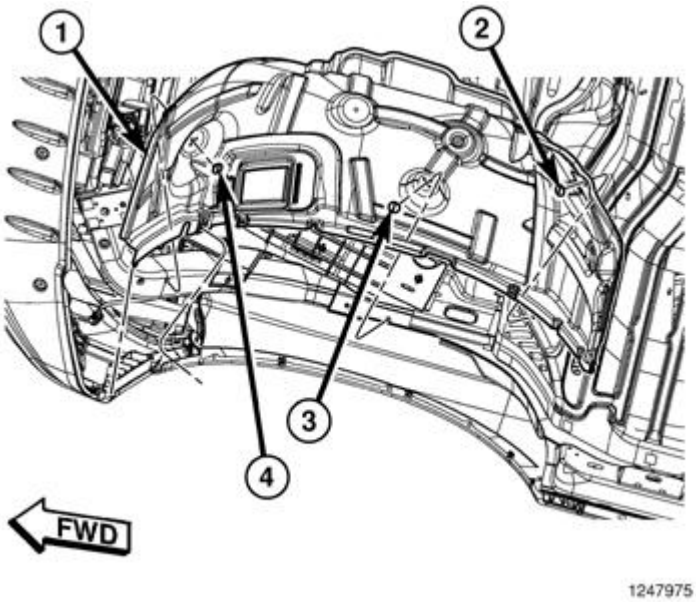

Fig. 265: Inner Shield Push Pins
Courtesy of CHRYSLER GROUP, LLC

4. Install the push pin (2) and seat fully.
5. Install the push pin (4) and seat fully.
6. Install the push pin (3) and seat fully.
7. Secure the ABS harness push pin to the inner shield and seat fully.

SHIELD, SPLASH, REAR WHEELHOUSE

REMOVAL

REMOVAL

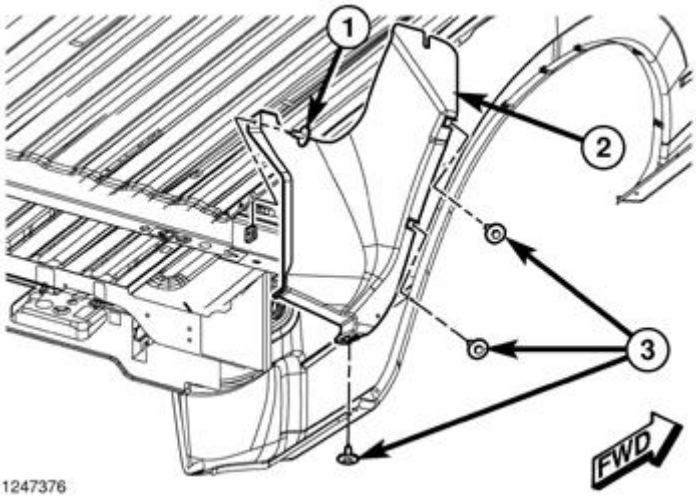

Fig. 266: Rear Wheelhouse Splash Shield Screws
Courtesy of CHRYSLER GROUP, LLC

1. Remove the inner screw (1).
2. Remove the three screws (3) and remove the splash shield (2).

INSTALLATION

INSTALLATION

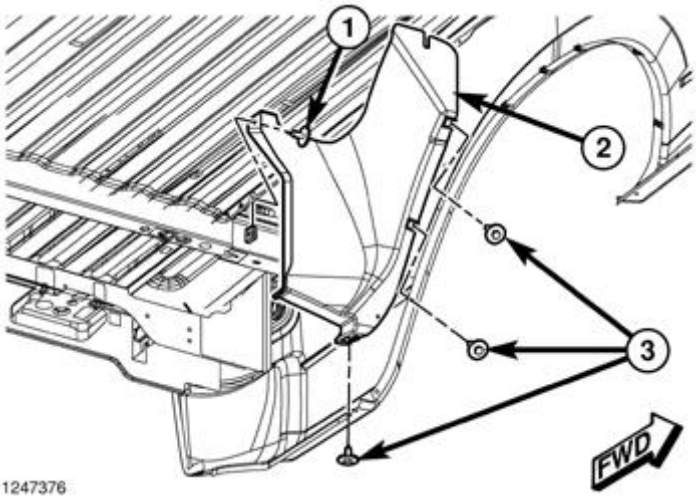

Fig. 267: Rear Wheelhouse Splash Shield Screws
Courtesy of CHRYSLER GROUP, LLC

1. Position the rear splash shield (2) onto the cargo box.
2. Install the three screws (3).
3. Install the inner screw (1).

TIE DOWN, PICKUP BOX

REMOVAL

REMOVAL

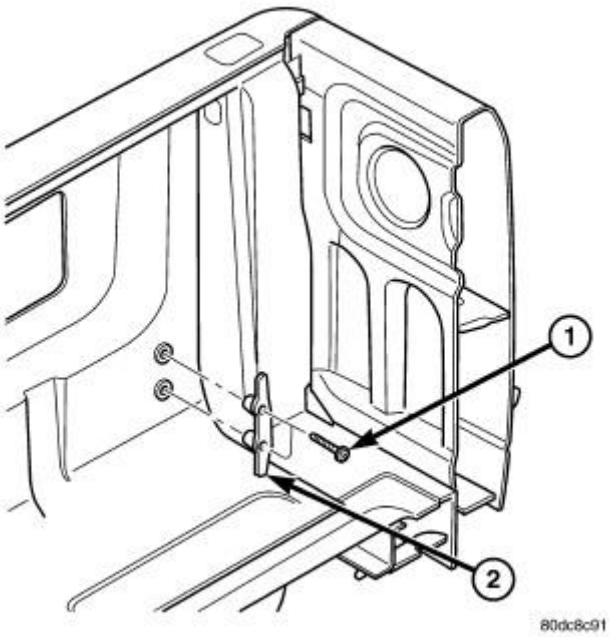

Fig. 268: Tie Down Cleat
Courtesy of CHRYSLER GROUP, LLC

1. Remove the two bolts (1) that secure each cargo box tie down (2) to the cargo bed and remove the cleats as necessary.

INSTALLATION

INSTALLATION

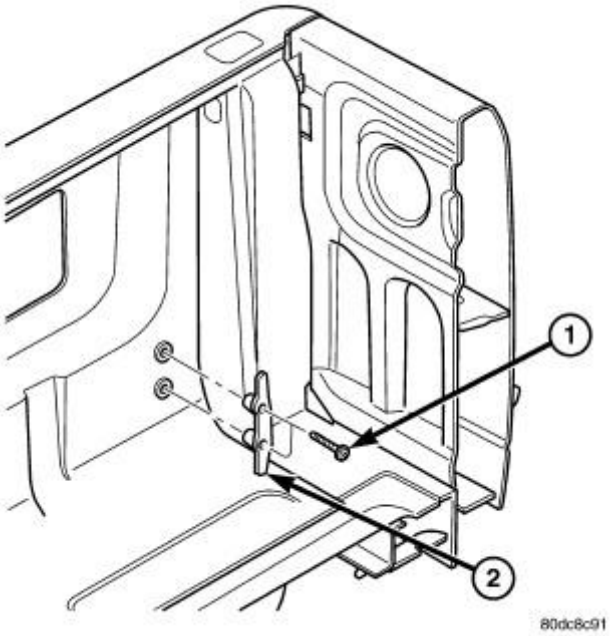

Fig. 269: Tie Down Cleat
Courtesy of CHRYSLER GROUP, LLC

1. Position the cargo box tie downs (2) to the cargo box as necessary.
2. Install the two bolts (1) that secure each cargo box tie down to the cargo box. Tighten the bolts to 34 N.m (25 ft. lbs.).

HOOD

CABLE, HOOD RELEASE

REMOVAL

REMOVAL

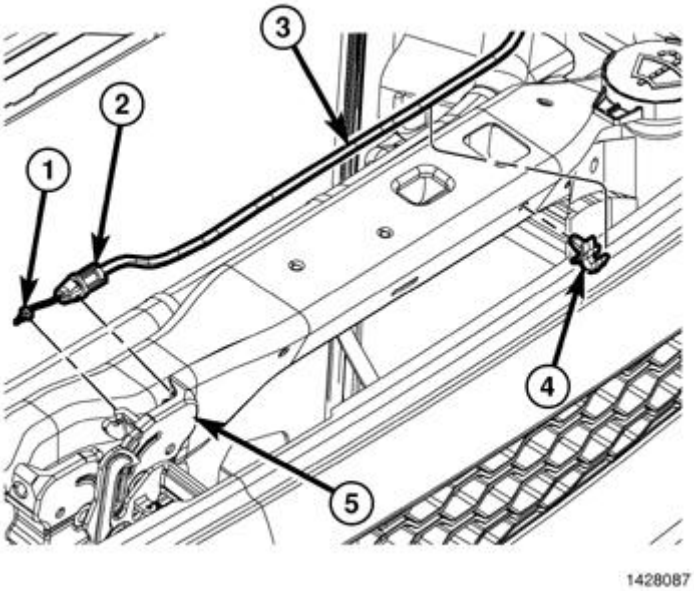

Fig. 270: Hood Release Cable
Courtesy of CHRYSLER GROUP, LLC

1. Release the cable end (1) from the latch mechanism (5) and release the collar (2) from the latch.
2. Release the support clip (4).

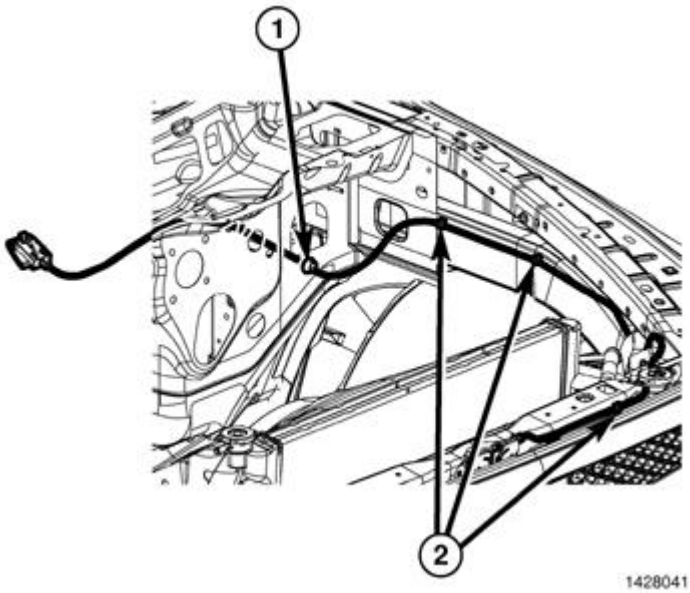

Fig. 271: Hood Release Cable Retainers
Courtesy of CHRYSLER GROUP, LLC

3. Remove the three hood release cable retainers (2) from the upper radiator crossmember and the left fender rail.

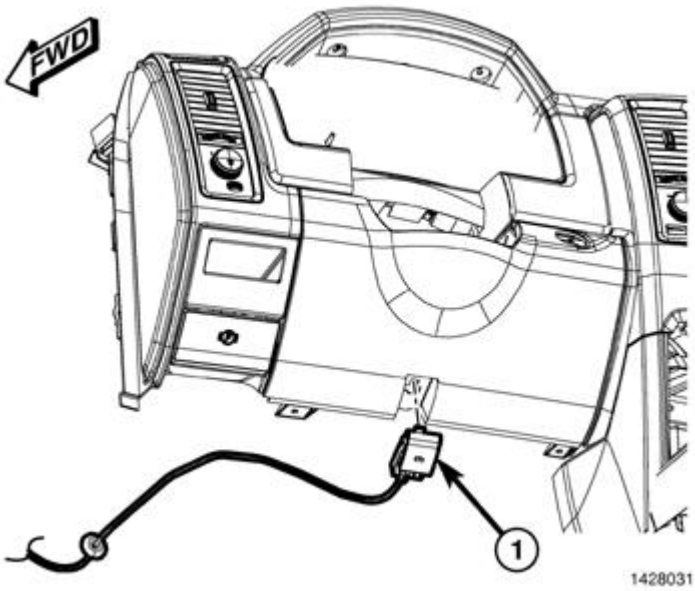

Fig. 272: Hood Release Handle
Courtesy of CHRYSLER GROUP, LLC

4. From inside the vehicle, release the clips attaching the hood release handle to the instrument panel.
5. Remove the grommet from the cowl panel and remove the hood release cable and handle assembly.

INSTALLATION

INSTALLATION

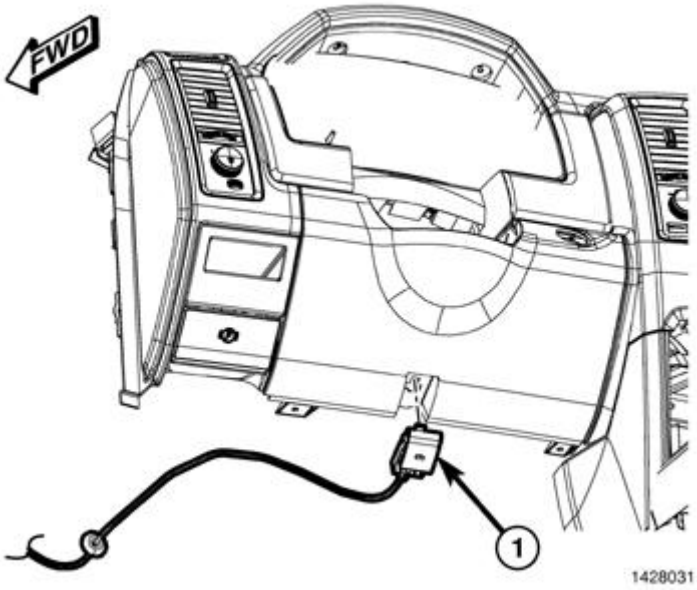

Fig. 273: Hood Release Handle
Courtesy of CHRYSLER GROUP, LLC

1. Position the handle (1) and align the clips to the instrument panel feature location.

2. Press handle to seat the clips to the instrument panel.

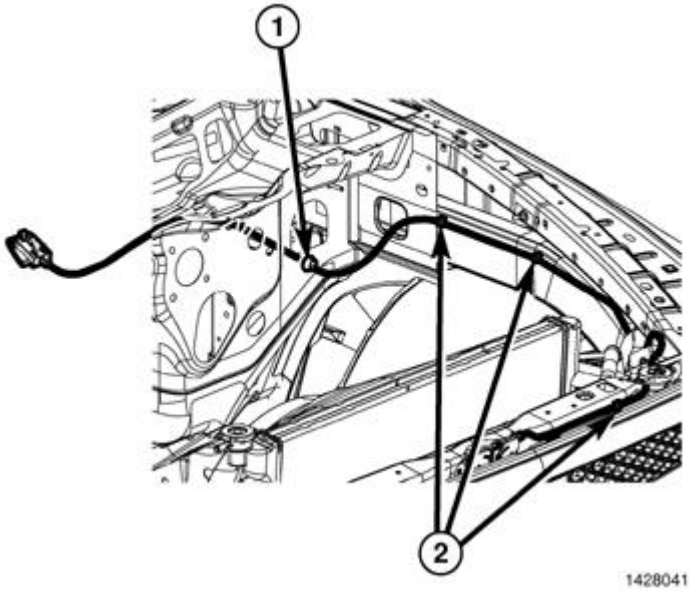

Fig. 274: Hood Release Cable Retainers
Courtesy of CHRYSLER GROUP, LLC

3. Route the latch end of hood latch release cable tube through the dash panel and into the engine compartment. Feed the entire length of the cable through the dash panel.
4. Press the grommet (1) into the hole in the dash panel by hand until fully seated.
5. Route the cable along the fender rail and to the outboard and front of the vertical support post and seat the mounting clips (2) fully.

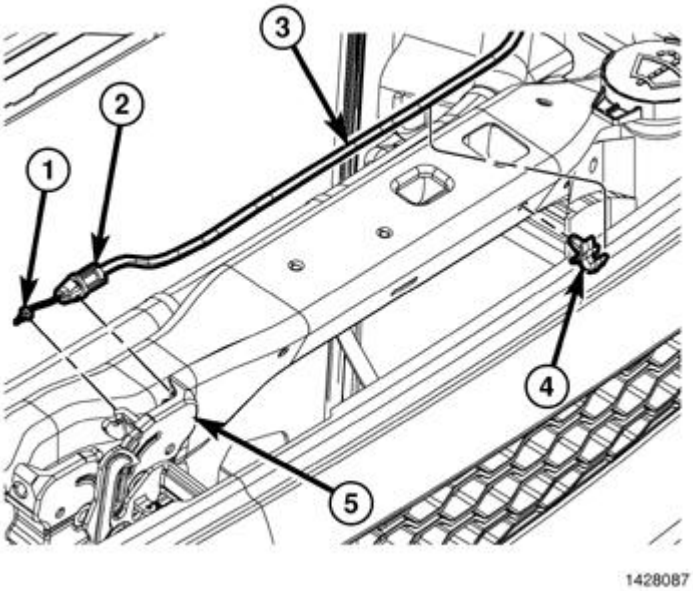

Fig. 275: Hood Release Cable
Courtesy of CHRYSLER GROUP, LLC

6. Route cable (3) through the front end module and on to the latch (5).
7. Align and insert end of cable (1) to the mechanism on the latch (5).
8. Press the collar (2) into the hole and snap into place.
9. Seat the mounting clips (4) fully.

HINGE, HOOD

REMOVAL

REMOVAL

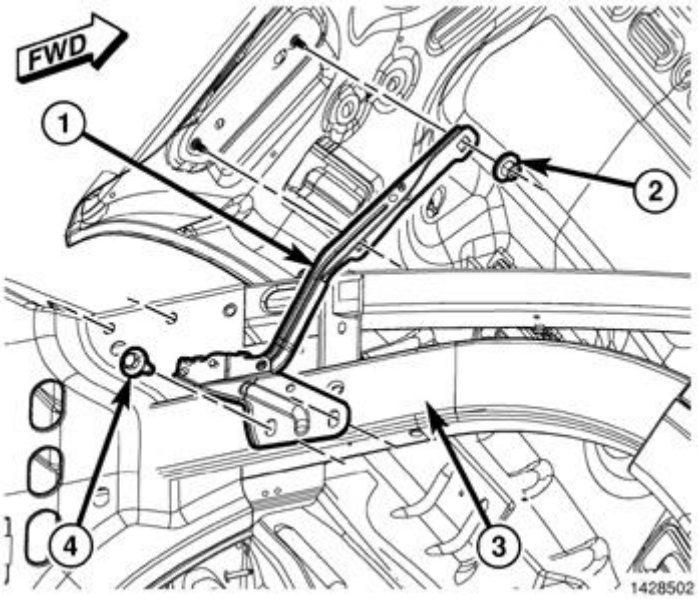

Fig. 276: Hood Hinge
Courtesy of CHRYSLER GROUP, LLC

NOTE: **It is not necessary to remove the hood to replace the hood hinges. Hood hinges can be replaced one at a time.**

1. Using a grease pencil or equivalent, mark the position of the hood hinge (1) on the hood for the hinge being serviced.
2. Support the hood and disconnect the gas prop from the hood. Refer to **PROP, GAS, REMOVAL**.
3. Remove the two nuts (2) that secure the hood to the hood hinge.
4. Remove the wheelhouse splash shield. Refer to **SHIELD, SPLASH, FRONT WHEELHOUSE, REMOVAL**.
5. Remove the bolts (4) that secure the hood hinge (1) to the fender rail (3).
6. Slide the hood hinge forward and remove the hinge.

INSTALLATION

INSTALLATION

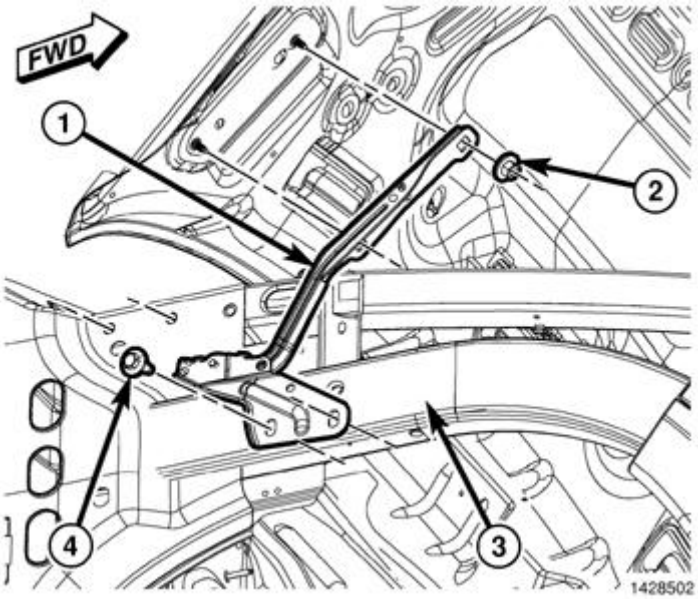

Fig. 277: Hood Hinge
Courtesy of CHRYSLER GROUP, LLC

NOTE: **It is not necessary to remove the hood to replace the hood hinges. Hood hinges can be replaced one at a time.**

1. Position the hood hinge (2) onto the fender rail (1) and slide it rearward to its installed location.
2. Install the bolts (4) that secure the hood hinge to the fender rail and tighten to 19 N.m (14 ft. lbs.).
3. Loosely install the two nuts (2) that secure the hood to the hood hinge.
4. Align the hood to the hood hinge using the reference marks made during the Removal procedure and tighten the nuts to 18 N.m (13 ft. lbs.).
5. Install the support cylinder. Refer to **PROP, GAS, INSTALLATION**.
6. If required, adjust the hood to the correct position. Refer to **GAP AND FLUSH, SPECIFICATIONS**.
7. Install the wheelhouse splash shield. Refer to **SHIELD, SPLASH, FRONT WHEELHOUSE, INSTALLATION**.
8. Install the cowl grille. Refer to **COVER, COWL PANEL, INSTALLATION**.

HOOD

REMOVAL

REMOVAL

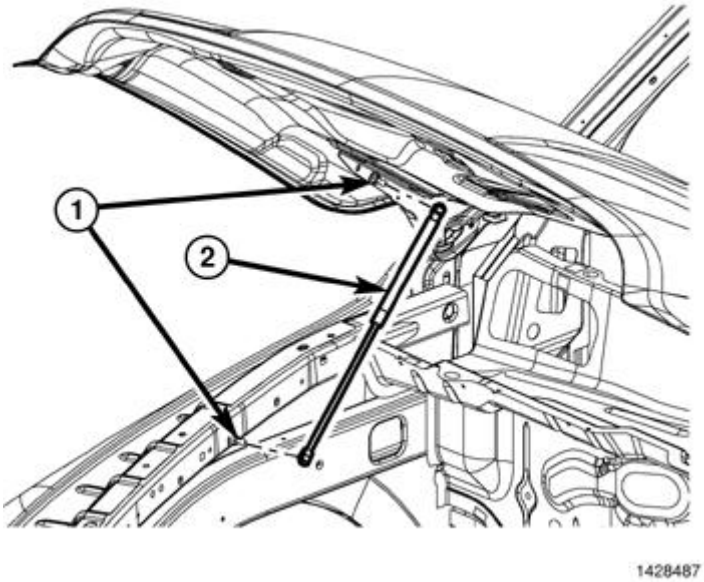

Fig. 278: Hood Gas Prop
Courtesy of CHRYSLER GROUP, LLC

1. Disconnect and isolate the negative battery cable.
2. Using a grease pencil or equivalent, mark the position of the hood hinges (2) on the hood.
3. Support the hood and disconnect the gas prop (2) from the hood. Refer to **PROP, GAS, REMOVAL**.

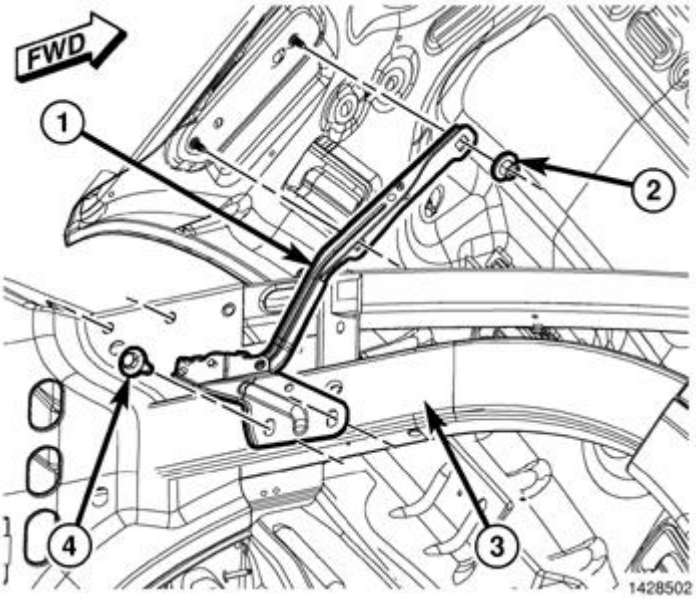

Fig. 279: Hood Hinge
Courtesy of CHRYSLER GROUP, LLC

4. Remove the two nuts (2) that secure the hood to each hood hinge (1) and remove the hood.

INSTALLATION

INSTALLATION

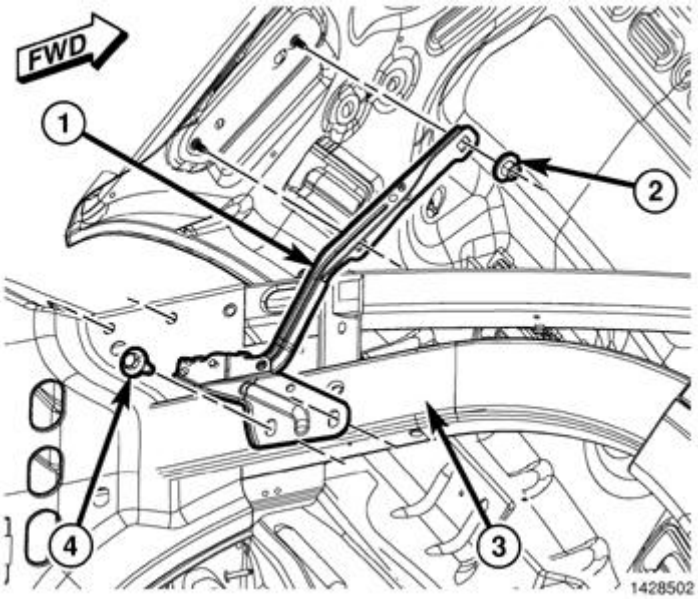

Fig. 280: Hood Hinge
Courtesy of CHRYSLER GROUP, LLC

NOTE: **The Vehicle Emission Control Information (VECI) label(s) must be in place for the life of the vehicle. When replacing the component in which the VECI label is adhered, a new VECI label must also be adhered to the new component.**

1. Position the hood onto the hood hinges (1) and loosely install the two nuts (2) that secure the hood to each hood hinge.
2. Align the hood to the hood hinges using the reference marks made during the Removal procedure and tighten the nuts to 18 N.m (13 ft. lbs.).
3. Install the support cylinders to the hood. Refer to **PROP, GAS, INSTALLATION**.
4. Reconnect the negative battery cable.
5. If required, adjust the hood to the correct position. Refer to **GAP AND FLUSH, SPECIFICATIONS**.

LATCH, HOOD

REMOVAL

REMOVAL

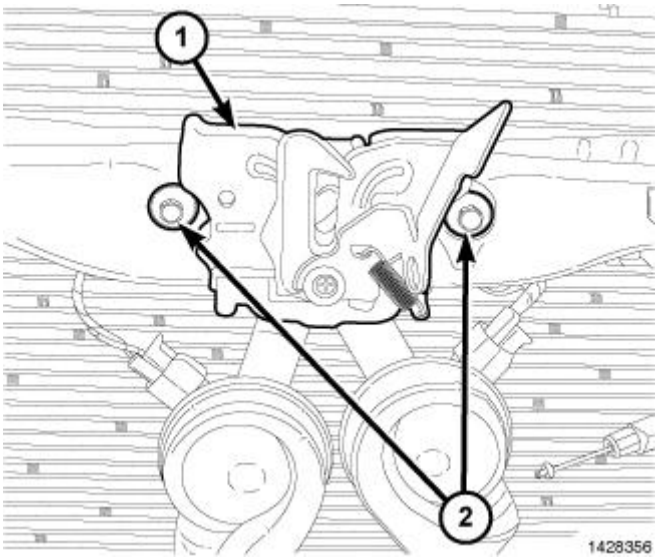

Fig. 281: Hood Latch
Courtesy of CHRYSLER GROUP, LLC

1. Remove the grille. Refer to **GRILLE, REMOVAL**.
2. Using a grease pencil or equivalent, mark the position of the hood latch (1) on the upper radiator crossmember.
3. Remove the two bolts (3) that secure the hood latch to the upper radiator crossmember.

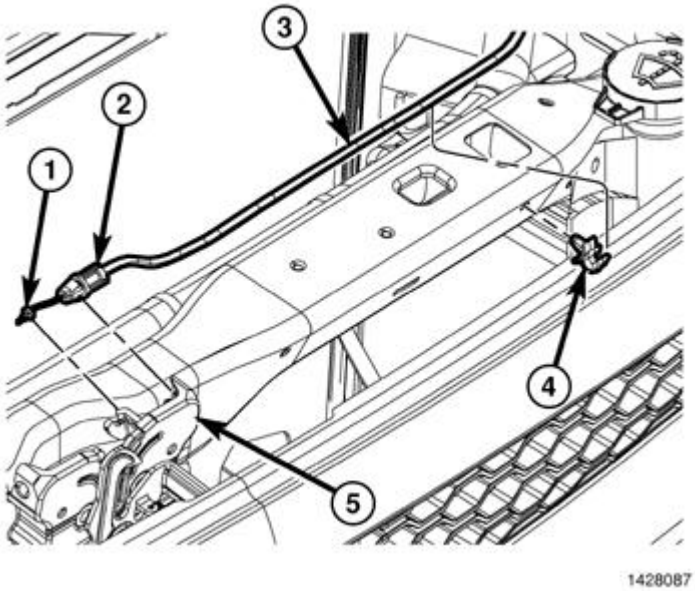

Fig. 282: Hood Release Cable
Courtesy of CHRYSLER GROUP, LLC

4. Disconnect the hood latch cable (1) from the hood latch and remove the latch.

INSTALLATION

INSTALLATION

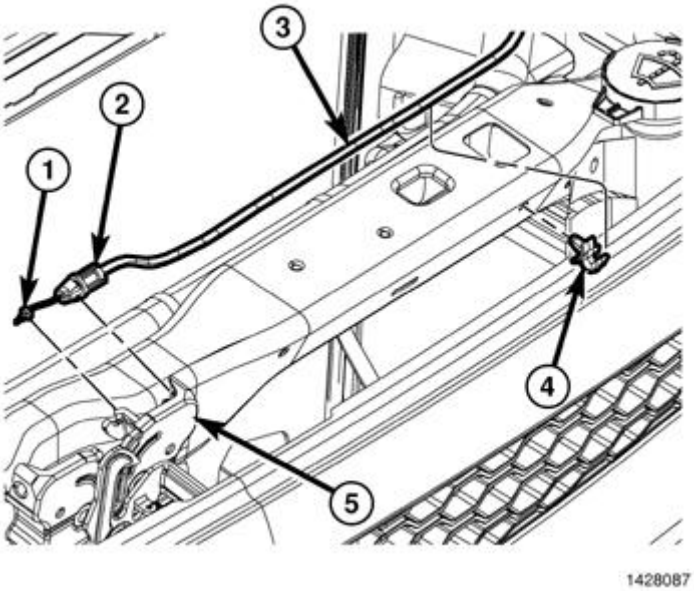

Fig. 283: Hood Release Cable
Courtesy of CHRYSLER GROUP, LLC

1. Connect the hood latch cable (1) to the hood latch (5).

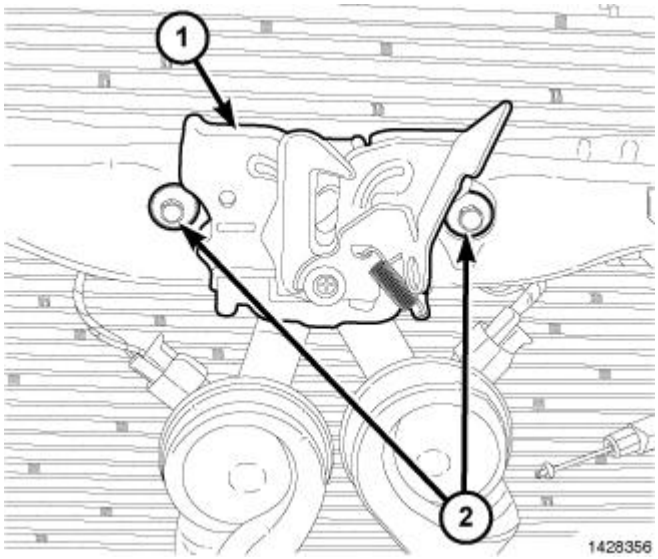

Fig. 284: Hood Latch
Courtesy of CHRYSLER GROUP, LLC

2. Position the hood latch to the upper radiator crossmember and loosely install the two bolts (2) that secure the latch to the crossmember.
3. Align the hood latch to the upper radiator crossmember using the reference marks made during the Removal procedure and tighten the bolts to 11 N.m (8 ft. lbs.).
4. If required, adjust the hood to the correct position. Refer to **GAP AND FLUSH, SPECIFICATIONS**.

PROP, GAS

REMOVAL

REMOVAL

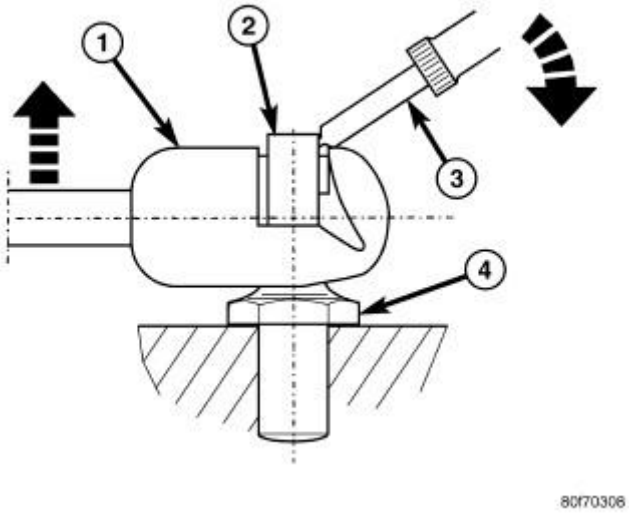

Fig. 285: Releasing Retaining Clip While Pulling Ball Socket Away From Ball Stud
Courtesy of CHRYSLER GROUP, LLC

NOTE: The hood support cylinders can be replaced one at a time.

1. Open and support the hood.

CAUTION: Do not pull on the hood support cylinders at the middle of the support cylinder during removal. Failure to follow this caution can result in damage to the hood support cylinders.

2. Using a small flat bladed tool, or equivalent (3), release the retaining clip (2) at each end of the support cylinder while carefully pulling the ball socket (1) away from the ball stud (4).

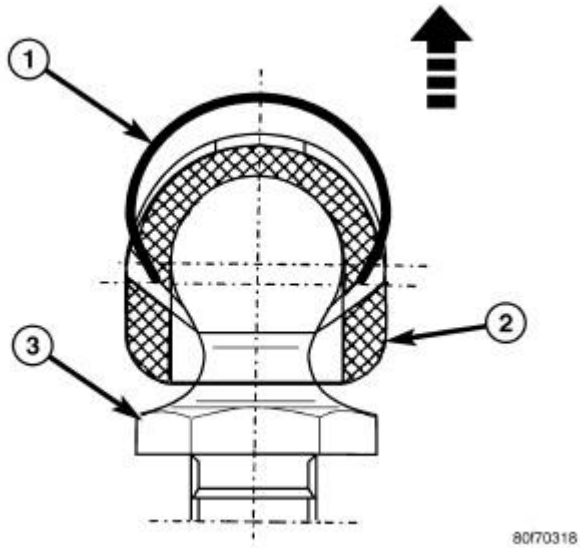

Fig. 286: Support Cylinder Retaining Clip
Courtesy of CHRYSLER GROUP, LLC

1 - RETAINING CLIP
2 - BALL SOCKET
3 - BALL STUD

NOTE: Lift the clips (1) only enough to release the ball studs (3).

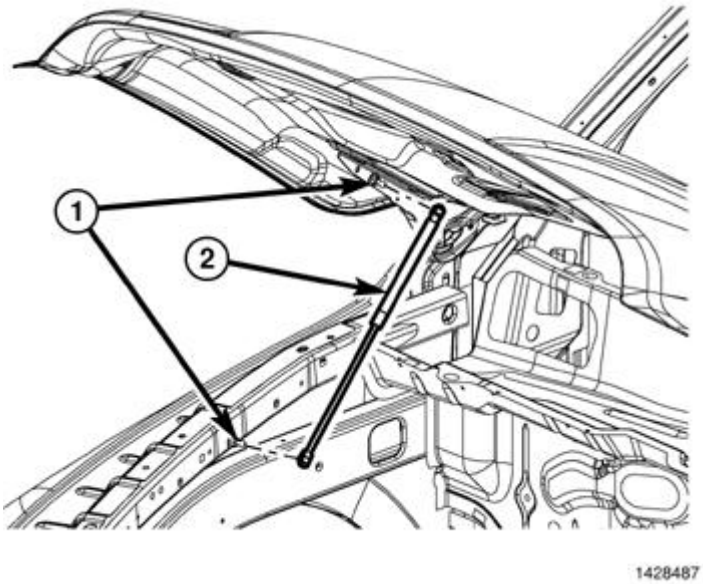

Fig. 287: Hood Gas Prop
Courtesy of CHRYSLER GROUP, LLC

3. Disconnect the hood support cylinder (2) from the hood and the fender rail (1).

INSTALLATION

INSTALLATION

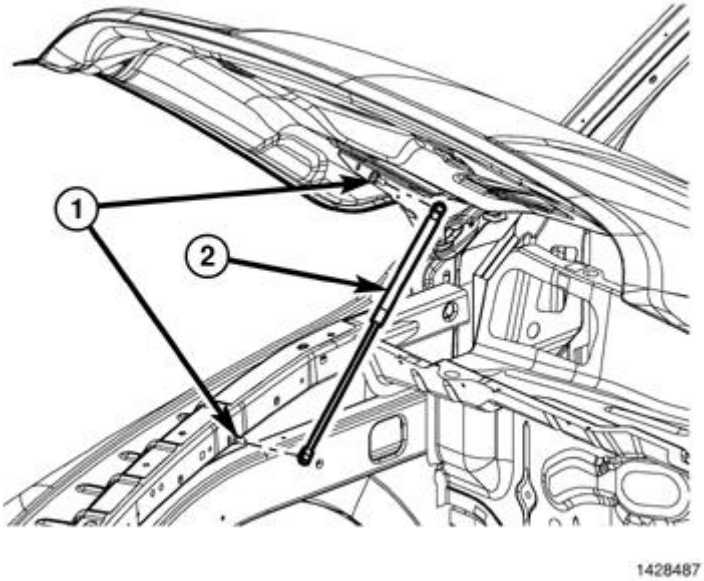

Fig. 288: Hood Gas Prop
Courtesy of CHRYSLER GROUP, LLC

CAUTION: Do not push on the hood support cylinders at the middle of the support cylinder during installation. Failure to follow this caution can result in damage to the hood support cylinders.

NOTE: Install the hood support cylinders with the cylinder end connected to the hood as shown in illustration.

NOTE: If required, only release each retaining clip enough to install the ball socket onto the ball stud.

1. Install the hood support cylinder (2) over the upper and lower ball studs and fully engage the retaining clips.

STRIKER, HOOD

REMOVAL

REMOVAL

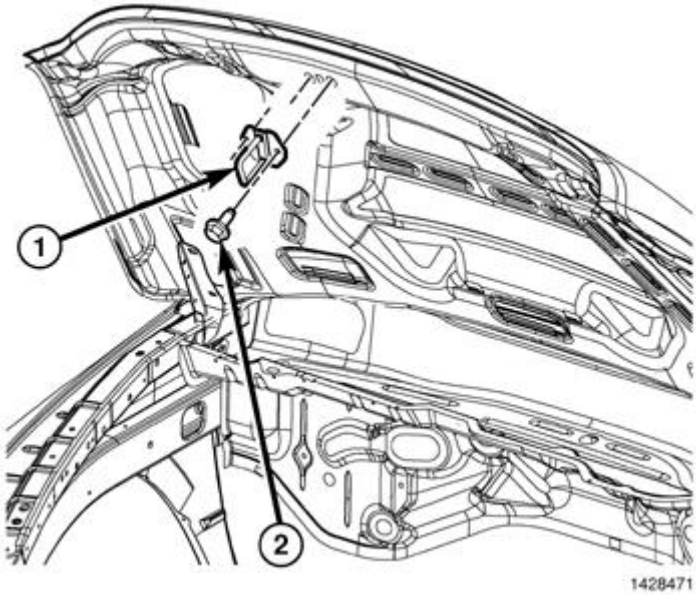

Fig. 289: Hood Striker
Courtesy of CHRYSLER GROUP, LLC

1. Remove the two bolts (2) that fasten the striker to the hood and remove the striker (1).

INSTALLATION

INSTALLATION

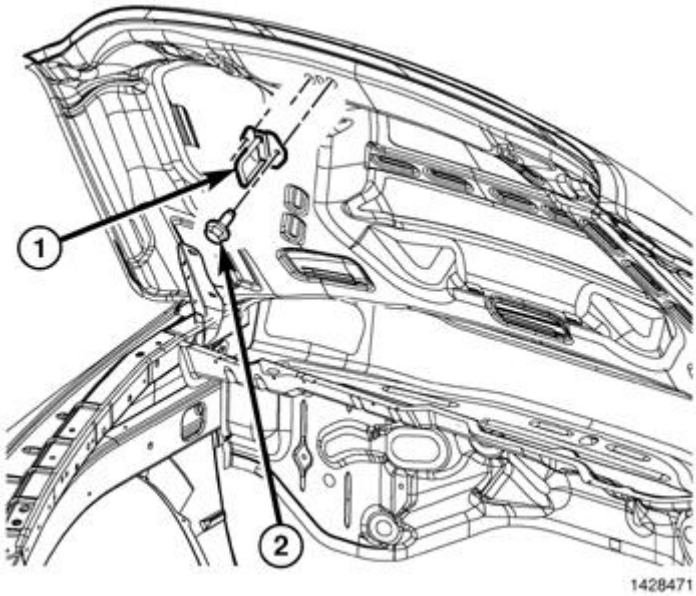

Fig. 290: Hood Striker
Courtesy of CHRYSLER GROUP, LLC

CAUTION: Make sure the striker assembly is seated into the pocket on the hood inner. If not seated correctly, the striker will damage the paint when

secured.

1. Install the striker and install the bolts.
2. Tighten the bolts to 17 N.m (12.5 ft. lbs.)

INSTRUMENT PANEL

WARNING

WARNING

WARNING: **To avoid serious or fatal injury on vehicles equipped with the Supplemental Restraint System (SRS), never attempt to repair the electrically conductive circuits or wiring components related to the SRS for which there is no MOPAR wiring repair kit. It is important to use ONLY the recommended splicing kit and procedure. For applicable and available MOPAR wiring repair kits, please visit the MOPAR Connector Web Site at the following address on the internet: (http://dto.vftis.com/mopar/disclaimer.asp). Inappropriate repairs can compromise the conductivity and current carrying capacity of those critical electrical circuits, which may cause SRS components not to deploy when required, or to deploy when not required. Only minor cuts or abrasions of wire and terminal insulation where the conductive material has not been damaged, or connector insulators where the integrity of the latching and locking mechanisms have not been compromised may be repaired using appropriate methods.**

WARNING: **To avoid serious or fatal injury during and following any seat belt or child restraint anchor service, carefully inspect all seat belts, buckles, mounting hardware, retractors, tether straps, and anchors for proper installation, operation, or damage. Replace any belt that is cut, frayed, or torn. Straighten any belt that is twisted. Tighten any loose fasteners. Replace any belt that has a damaged or ineffective buckle or retractor. Replace any belt that has a bent or damaged latch plate or anchor plate. Replace any child restraint anchor or the unit to which the anchor is integral that has been bent or damaged. Never attempt to repair a seat belt or child restraint component. Always replace damaged or ineffective seat belt and child restraint components with the correct, new and unused replacement parts listed in the Chrysler Mopar® Parts Catalog. Failure to follow these instructions may result in possible serious or fatal injury.**

WARNING: **To avoid serious or fatal injury on vehicles equipped with airbags, disable the Supplemental Restraint System (SRS) before attempting any steering wheel, steering column, airbag, seat belt tensioner, impact sensor or instrument panel component diagnosis or service. Disconnect and isolate**

the battery negative (ground) cable, then wait two minutes for the system capacitor to discharge before performing further diagnosis or service. This is the only sure way to disable the SRS. Failure to take the proper precautions could result in accidental airbag deployment.

WARNING: **To avoid potential physical injury or damage to sensitive electronic circuits and systems, always disconnect and isolate the battery negative (ground) cable and the positive cable, then ground the positive cable to discharge the Occupant Restraint Controller (ORC) capacitor before performing any welding operations on the vehicle. Failure to take the proper precautions could result in accidental airbag deployment, possible damage to the Supplemental Restraint System (SRS) circuits and components, and possible damage to other electronic circuits and components. Whenever a welding process is being performed within 12 inches (30 centimeters) of an electronic module or wiring harness, then that module or harness should be relocated out of the way, or disconnected. Always protect against component or vehicle damage from weld spatter by using weld blankets and screens.**

WARNING: **To avoid serious or fatal injury, do not attempt to dismantle an airbag unit or tamper with its inflator. Do not puncture, incinerate or bring into contact with electricity. Do not store at temperatures exceeding 93° C (200° F). An airbag inflator unit may contain sodium azide and potassium nitrate. These materials are poisonous and extremely flammable. Contact with acid, water, or heavy metals may produce harmful and irritating gases (sodium hydroxide is formed in the presence of moisture) or combustible compounds. An airbag inflator unit may also contain a gas canister pressurized to over 17.24 kPa (2500 psi). Failure to follow these instructions may result in possible serious or fatal injury.**

WARNING: **To avoid serious or fatal injury when handling a seat belt tensioner retractor. Exercise proper care to keep fingers out from under the retractor cover and away from the seat belt webbing where it exits from the retractor cover. Failure to follow these instructions may result in possible serious or fatal injury.**

WARNING: **To avoid serious or fatal injury, replace all Supplemental Restraint System (SRS) components only with parts specified in the Chrysler Mopar® Parts Catalog. Substitute parts may appear interchangeable, but internal differences may result in inferior occupant protection.**

WARNING: **To avoid serious or fatal injury, the fasteners, screws, and bolts originally used for the Supplemental Restraint System (SRS) components must never be replaced with any substitutes. These fasteners have special coatings and are specifically designed for the SRS. Anytime a new fastener is needed, replace it with the correct fasteners provided in the**

service package or specified in the Chrysler Mopar® Parts Catalog.

WARNING: **To avoid serious or fatal injury when a steering column has an airbag unit attached, never place the column on the floor or any other surface with the steering wheel or airbag unit face down. Failure to follow these instructions may result in possible serious or fatal injury.**

BEZEL, INSTRUMENT CLUSTER

REMOVAL

REMOVAL

WARNING: **On vehicles equipped with airbags, disable the airbag system before attempting any steering wheel, steering column, seat belt tensioner, or instrument panel component diagnosis or service. Refer to WARNING . Disconnect and isolate the battery negative (ground) cable, then wait two minutes for the airbag system capacitor to discharge before performing further diagnosis or service. This is the only sure way to disable the airbag system. Failure to take the proper precautions could result in accidental airbag deployment and personal or fatal injury.**

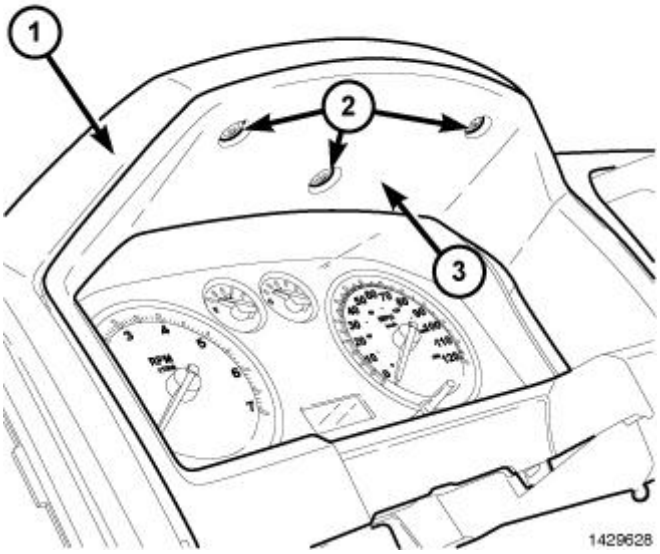

Fig. 291: Instrument Cluster Bezel, Instrument Panel & Fasteners
Courtesy of CHRYSLER GROUP, LLC

1. Disconnect and isolate the negative battery cable.
2. Remove the fasteners (2) that secure the top of the instrument cluster bezel (3) to the instrument panel (1).

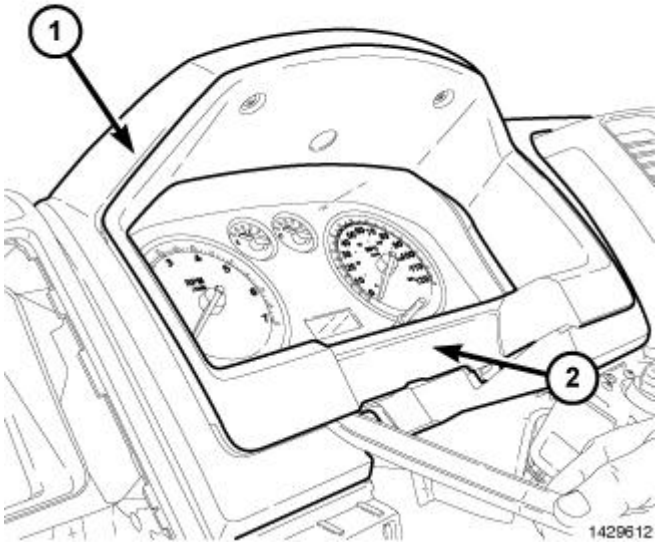

Fig. 292: Instrument Panel Cluster Bezel
Courtesy of CHRYSLER GROUP, LLC

3. Using a trim stick (special tool #C-4755, Trim Stick) or equivalent, disengage the retainer clips that secure the instrument cluster bezel (2) to the instrument panel (1) and remove the bezel.

INSTALLATION

INSTALLATION

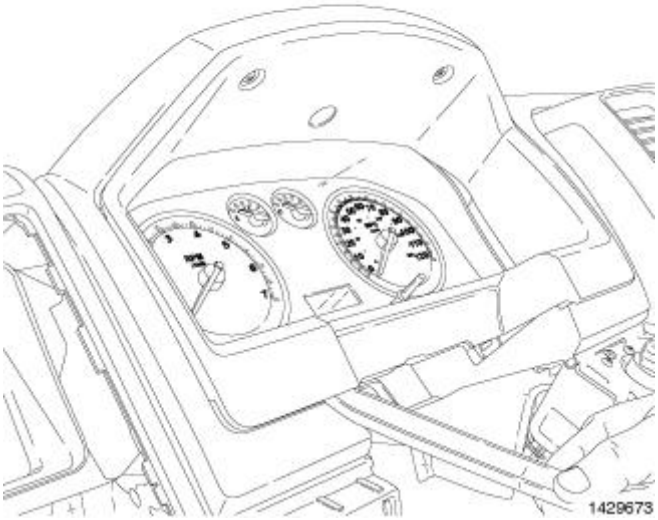

Fig. 293: Instrument Cluster Bezel

Courtesy of CHRYSLER GROUP, LLC

1. Install the instrument cluster bezel onto the instrument panel and fully engage the retainer clips to the instrument panel.

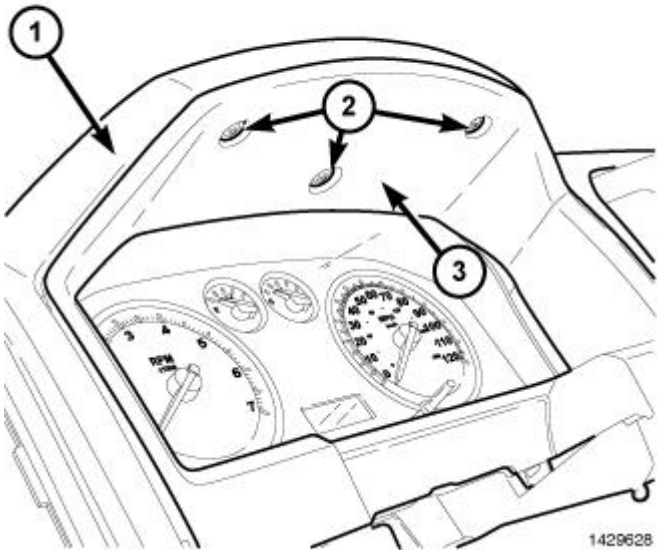

Fig. 294: Instrument Cluster Bezel, Instrument Panel & Fasteners
Courtesy of CHRYSLER GROUP, LLC

2. Install the fasteners (2) that secure the instrument cluster bezel (3) to the instrument panel (1).
3. Connect the negative battery cable.

BEZEL, INSTRUMENT PANEL, CENTER

REMOVAL

REMOVAL

WARNING: On vehicles equipped with airbags, disable the airbag system before attempting any steering wheel, steering column, seat belt tensioner, or instrument panel component diagnosis or service. Refer to WARNING . Disconnect and isolate the battery negative (ground) cable, then wait two minutes for the airbag system capacitor to discharge before performing further diagnosis or service. This is the only sure way to disable the airbag system. Failure to take the proper precautions could result in accidental airbag deployment and personal or fatal injury.

1. Disconnect and isolate the negative battery cable.

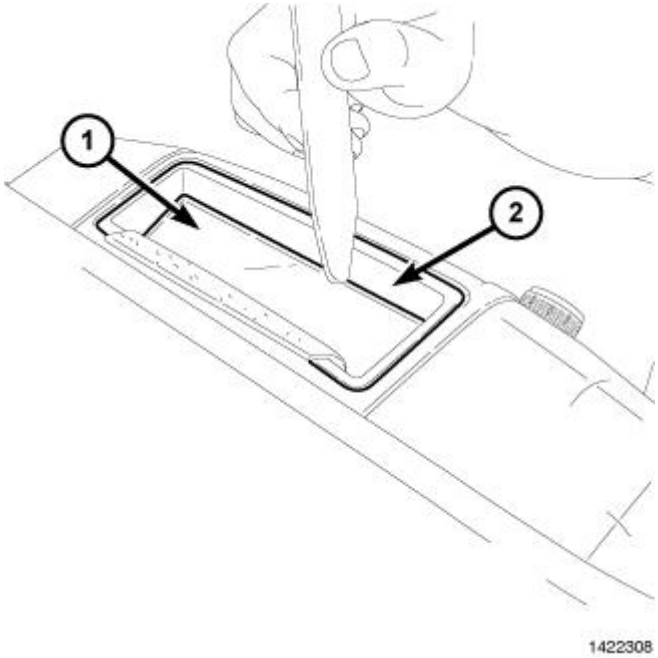

Fig. 295: Upper Center Bezel Tray Liner
Courtesy of CHRYSLER GROUP, LLC

2. Remove the upper and lower center bezel tray liners (1).

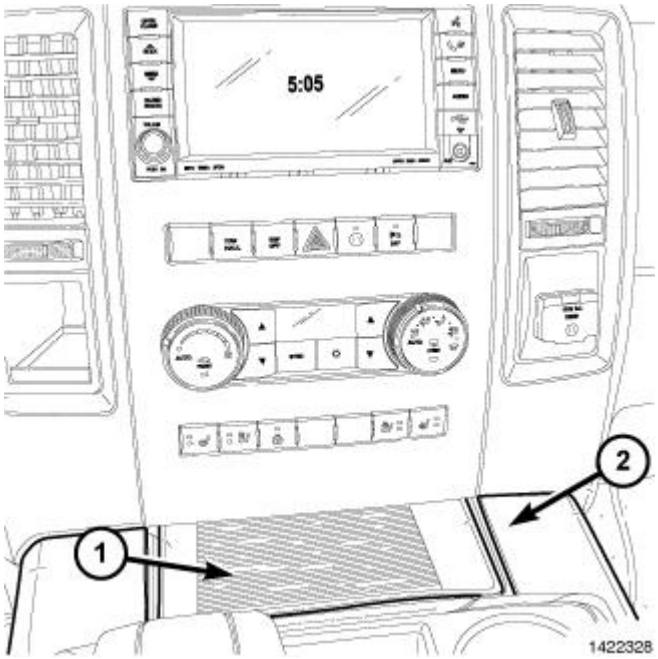

Fig. 296: Lower Center Bezel Tray Liner
Courtesy of CHRYSLER GROUP, LLC

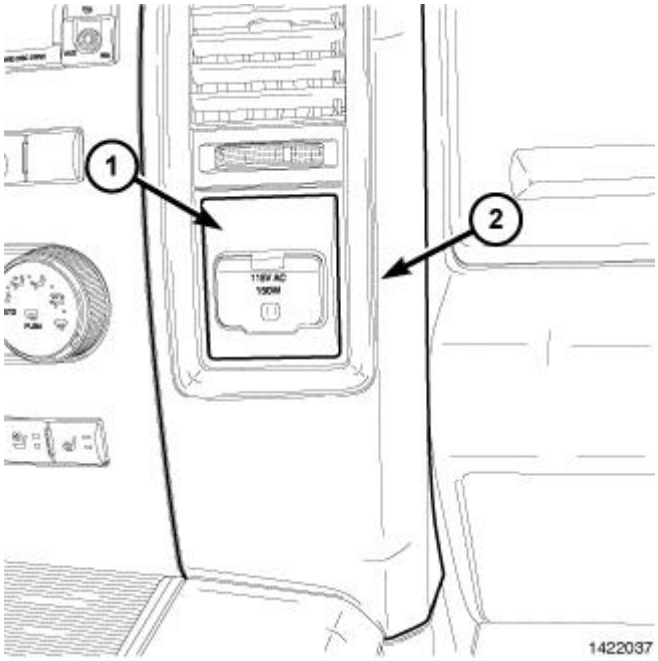

Fig. 297: Power Outlet Trim Bezel
Courtesy of CHRYSLER GROUP, LLC

3. Using a trim stick (special tool #C-4755, Trim Stick) or equivalent, disengage the retainer clips that secure the power outlet trim bezel (1) to the center bezel (2).

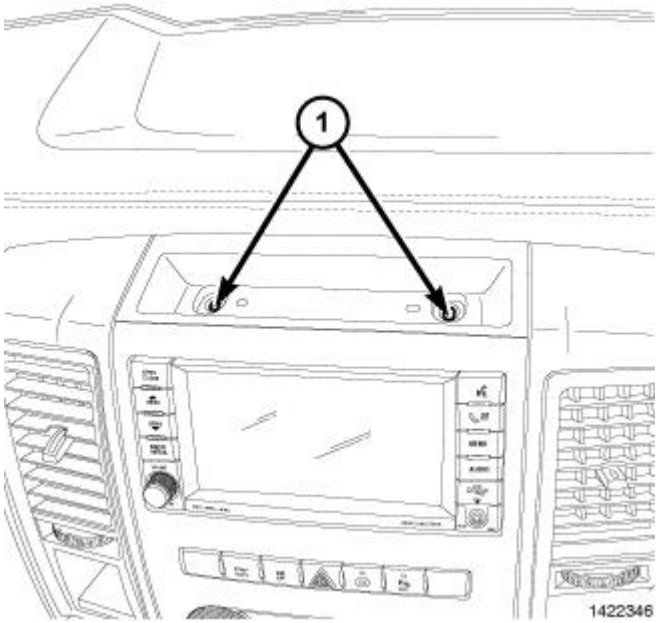

Fig. 298: Top Center Bezel Fasteners
Courtesy of CHRYSLER GROUP, LLC

4. Remove the five center bezel fasteners (1).

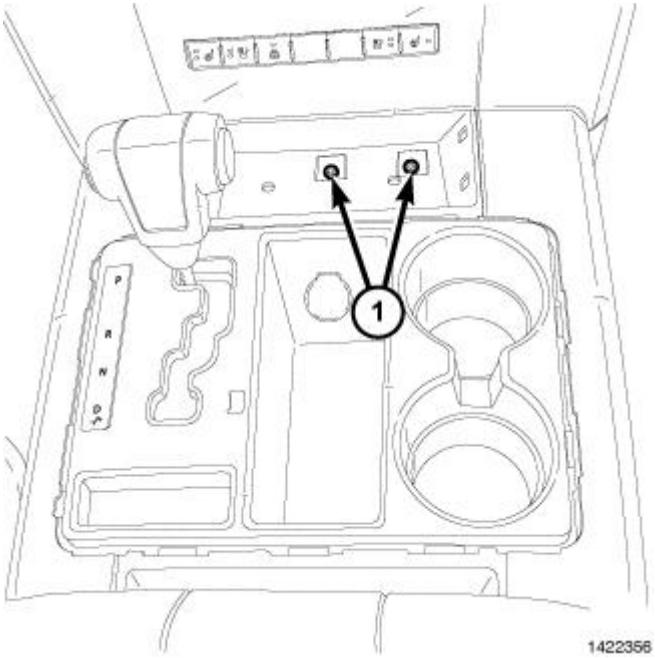

Fig. 299: Console Bin Fasteners
Courtesy of CHRYSLER GROUP, LLC

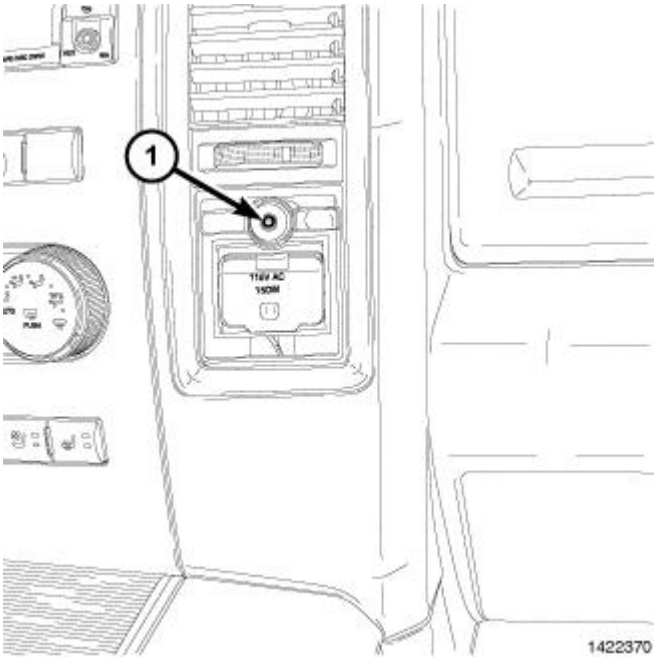

Fig. 300: Power Outlet Fastener
Courtesy of CHRYSLER GROUP, LLC

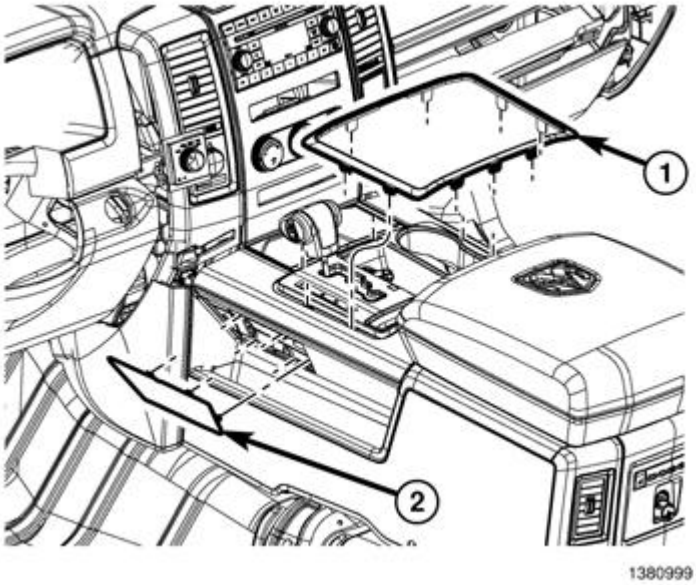

Fig. 301: Shifter Bezel Trim Ring
Courtesy of CHRYSLER GROUP, LLC

5. Using a trim stick (special tool #C-4755, Trim Stick) or equivalent, disengage the retainer clips that secure the trim ring to the floor console.

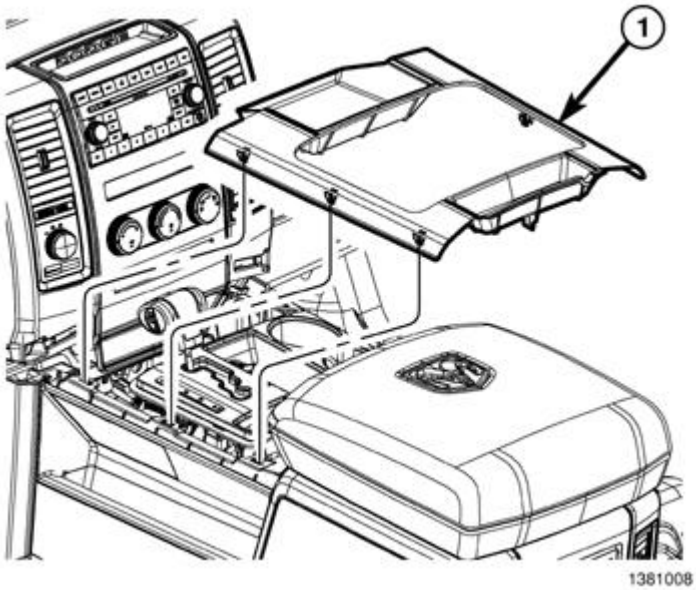

Fig. 302: Console Bezel
Courtesy of CHRYSLER GROUP, LLC

6. Using a trim stick (special tool #C-4755, Trim Stick) or equivalent, disengage the retainer clips that secure the shifter bezel to the floor console

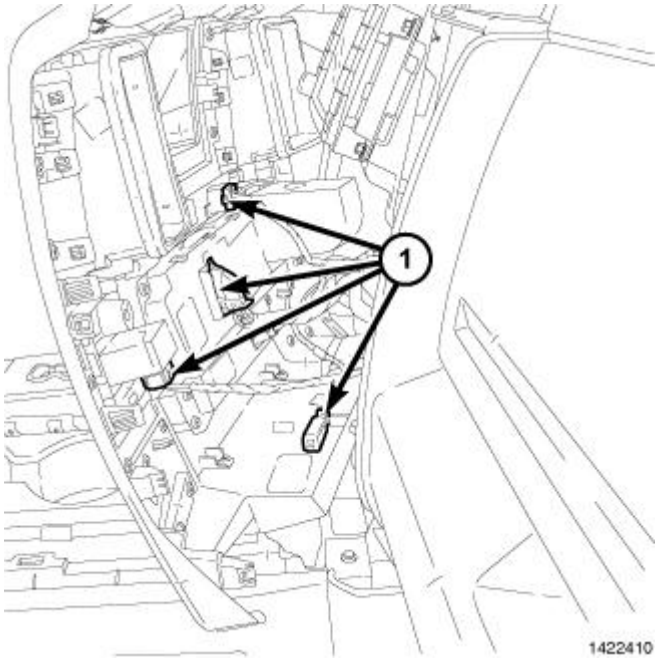

Fig. 303: Instrument Panel Center Bezel Retaining Clips
Courtesy of CHRYSLER GROUP, LLC

7. Using a trim stick (special tool #C-4755, Trim Stick) or equivalent, disengage the retainer clips that secure the instrument panel center bezel (1) to the instrument panel.
8. Disconnect the wire harness connectors (4) and remove the center bezel from the vehicle.

INSTALLATION

INSTALLATION

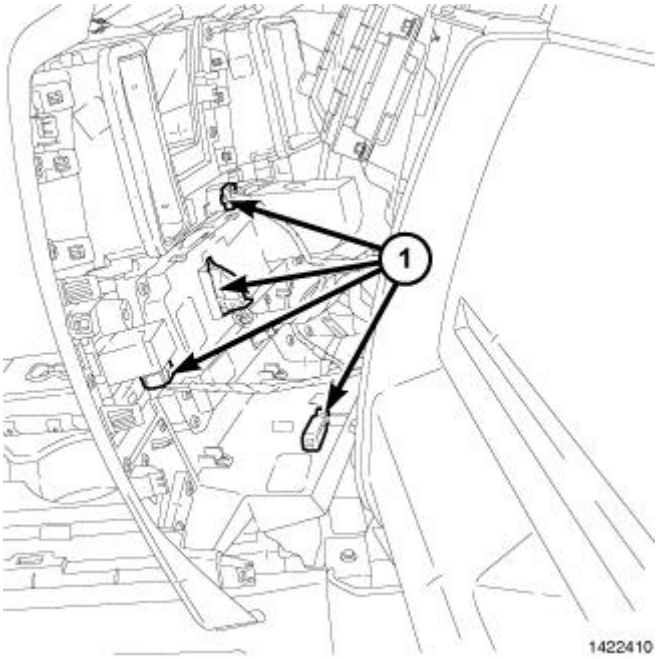

Fig. 304: Instrument Panel Center Bezel Retaining Clips
Courtesy of CHRYSLER GROUP, LLC

1. Position the instrument panel center bezel (1) near the instrument panel and connect the wire harness connectors (4).
2. Install the instrument panel center bezel (1) onto the instrument panel and fully engage the retainer clips.

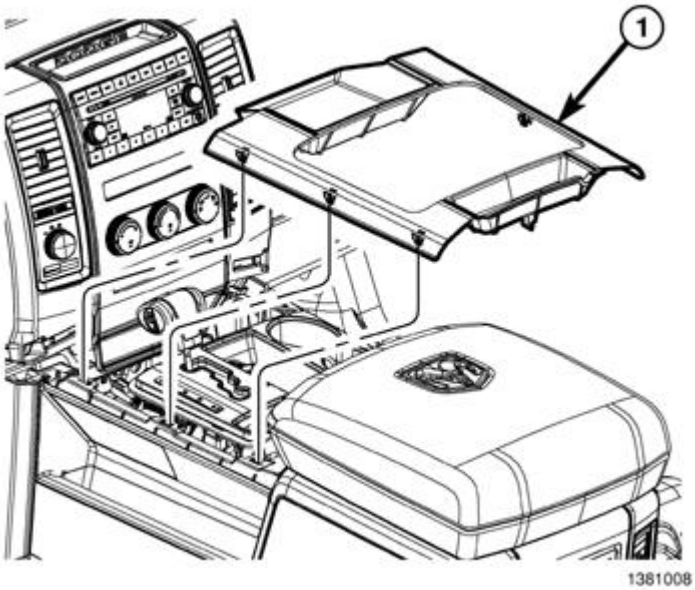

Fig. 305: Console Bezel
Courtesy of CHRYSLER GROUP, LLC

3. Install the shifter bezel to the floor console and fully engage the retainer clips.

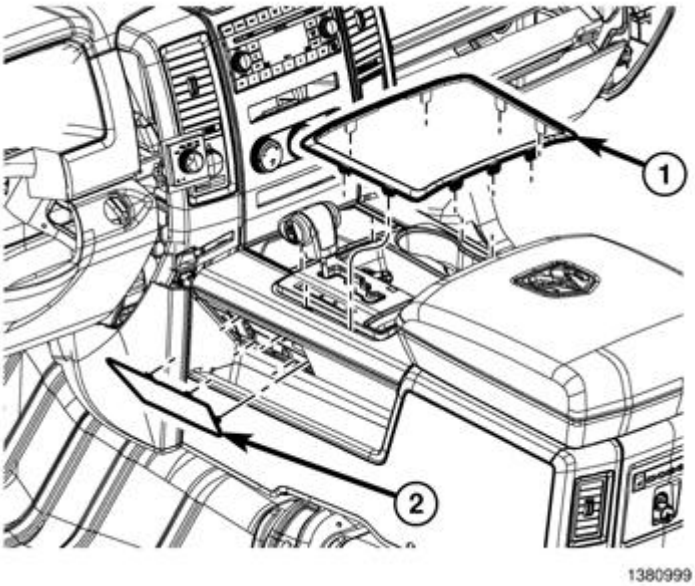

Fig. 306: Shifter Bezel Trim Ring

Courtesy of CHRYSLER GROUP, LLC

4. Install the shifter bezel trim ring and fully engage the retainer clips.

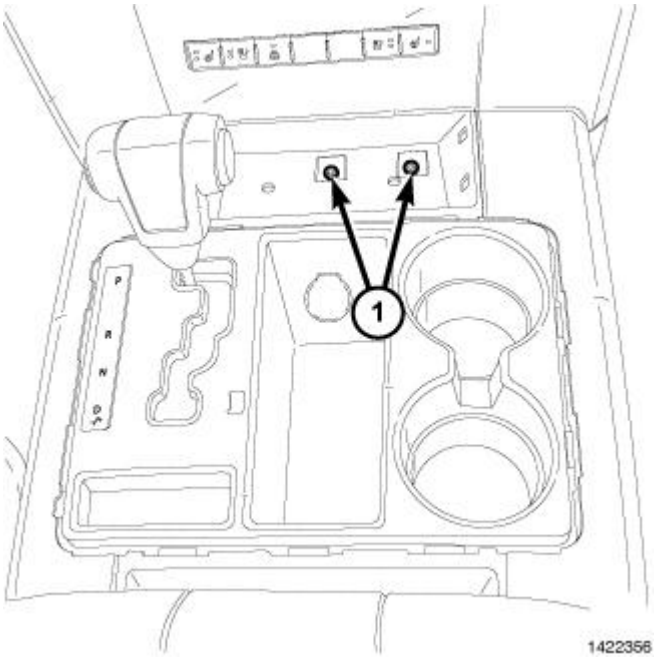

Fig. 307: Console Bin Fasteners
Courtesy of CHRYSLER GROUP, LLC

5. Install the five instrument panel fasteners.

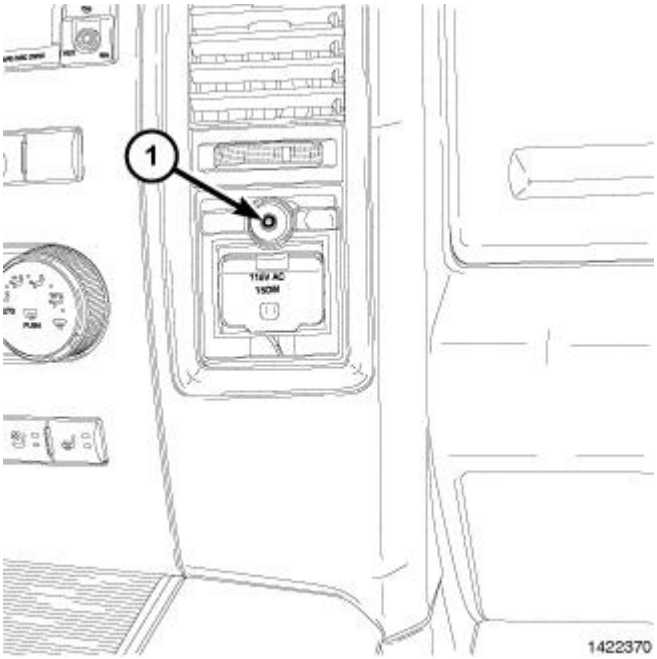

Fig. 308: Power Outlet Fastener
Courtesy of CHRYSLER GROUP, LLC

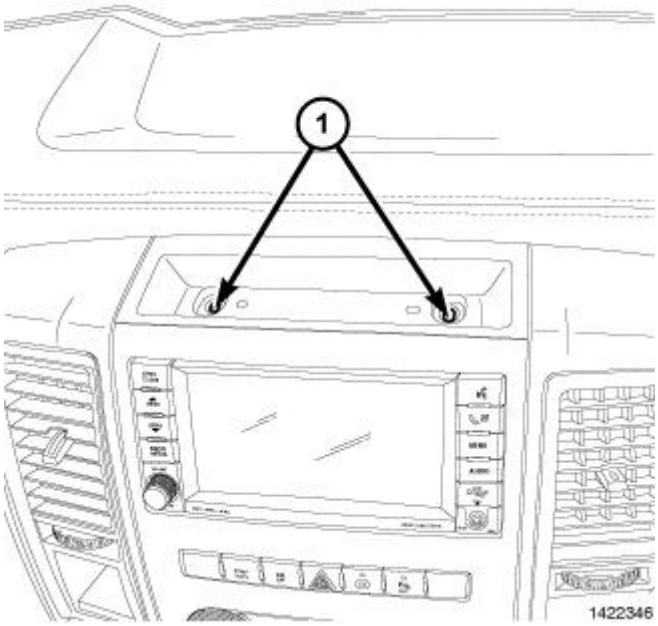

Fig. 309: Top Center Bezel Fasteners
Courtesy of CHRYSLER GROUP, LLC

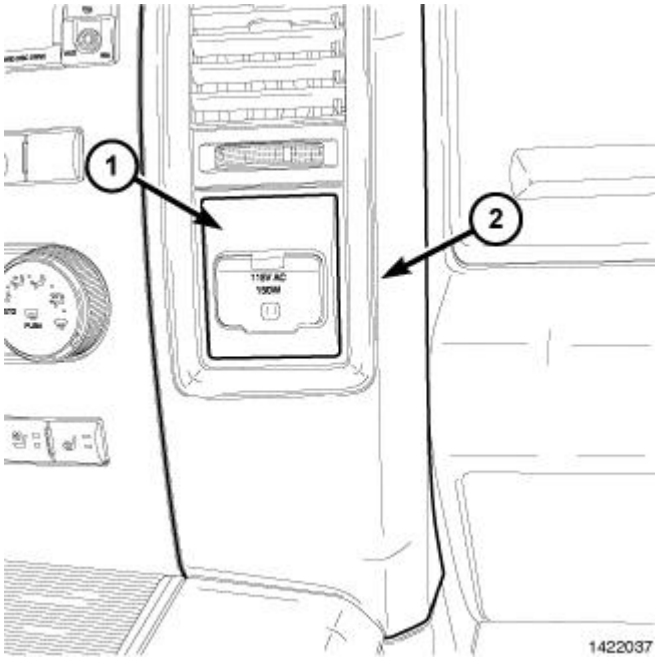

Fig. 310: Power Outlet Trim Bezel
Courtesy of CHRYSLER GROUP, LLC

6. Install the power outlet trim bezel (1), to the center bezel (2), fully engaging the retainer clips.

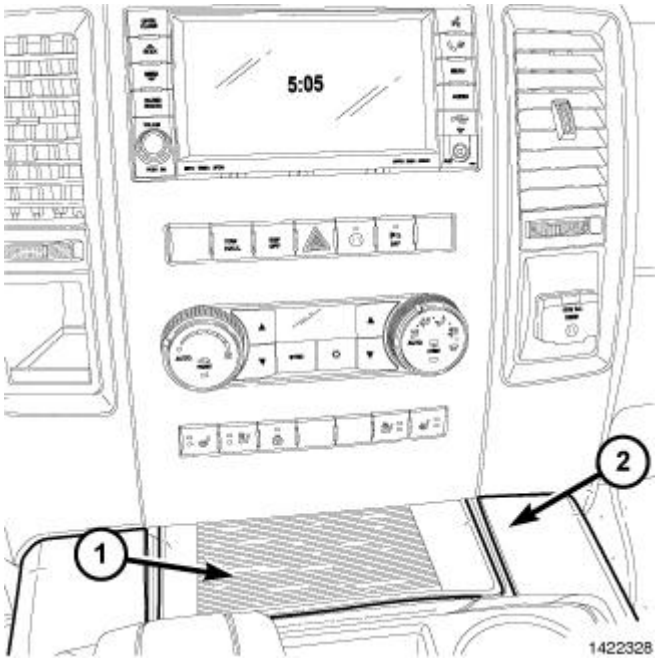

Fig. 311: Lower Center Bezel Tray Liner
Courtesy of CHRYSLER GROUP, LLC

7. Install the upper and lower center bezel tray liners (1).
8. Connect the negative battery cable.

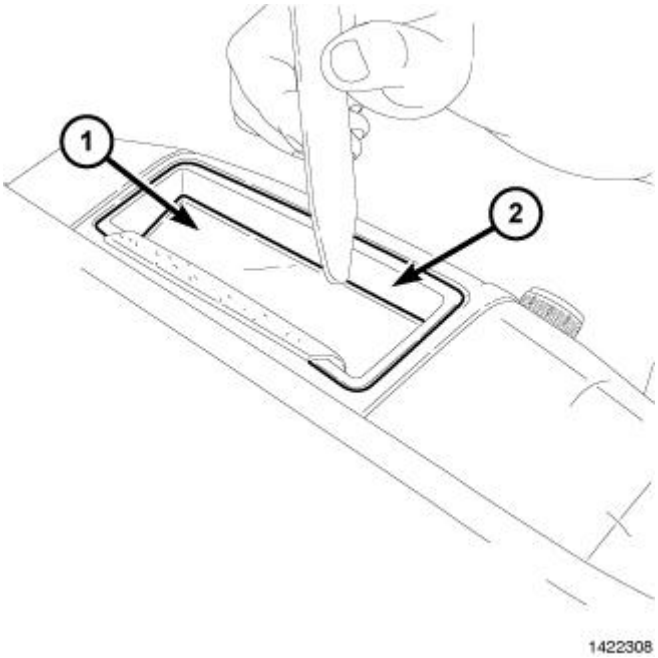

Fig. 312: Upper Center Bezel Tray Liner
Courtesy of CHRYSLER GROUP, LLC

BEZEL, INSTRUMENT PANEL, DRIVER SIDE

REMOVAL

REMOVAL

WARNING: On vehicles equipped with airbags, disable the airbag system before attempting any steering wheel, steering column, seat belt tensioner, or instrument panel component diagnosis or service. Refer to WARNING . Disconnect and isolate the battery negative (ground) cable, then wait two minutes for the airbag system capacitor to discharge before performing further diagnosis or service. This is the only sure way to disable the airbag system. Failure to take the proper precautions could result in accidental airbag deployment and personal or fatal injury.

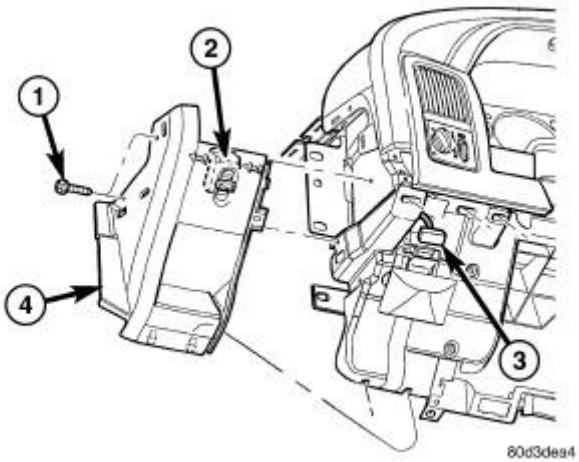

Fig. 313: Lower Drivers Side Bezel
Courtesy of CHRYSLER GROUP, LLC

1. Disconnect and isolate the negative battery cable.
2. Using a trim stick (special tool #C-4755, Trim Stick) or equivalent, from the notch on the bottom, remove the left instrument panel side cover.
3. Remove the left cowl trim panel. Refer to **PANEL, COWL TRIM, REMOVAL**.
4. Remove the two screws (1) that secure the lower driver side instrument panel bezel (4) to the instrument panel.
5. Using a trim stick (special tool #C-4755, Trim Stick) or equivalent, disengage the retaining clips that secure the top of the lower driver side instrument panel bezel to the instrument panel.
6. Tilt the top of the lower driver side instrument panel bezel downward and, If equipped, disconnect the wire harness connector (3) from the adjustable pedal switch (2).
7. Remove the lower driver side instrument panel bezel from the lower retaining hooks and remove the bezel.

INSTALLATION

INSTALLATION

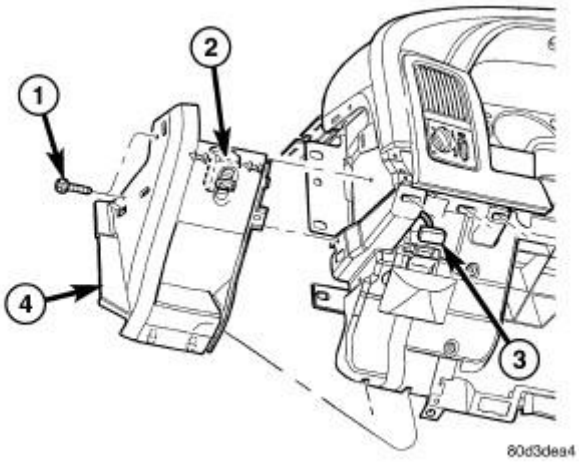

Fig. 314: Lower Drivers Side Bezel
Courtesy of CHRYSLER GROUP, LLC

1. Position the lower driver side instrument panel bezel onto the lower retaining hoods located on the instrument panel.
2. If equipped, connect the wire harness connector (3) to the adjustable pedal switch (2).
3. Tilt the top of the lower driver side instrument panel bezel upward and fully engage the bezel retaining clips to the instrument panel.
4. Install the two screws (1) that secure the lower driver side instrument panel bezel to the instrument panel. Tighten the screws to 2 N.m (17 in. lbs.).
5. Install the left side cowl trim panel. Refer to **PANEL, COWL TRIM, INSTALLATION**.
6. Install the left instrument panel side cover.
7. Reconnect the negative battery cable.

BIN, INSTRUMENT PANEL

REMOVAL

REMOVAL

NOTE: Add graphic of Storage box fastener.

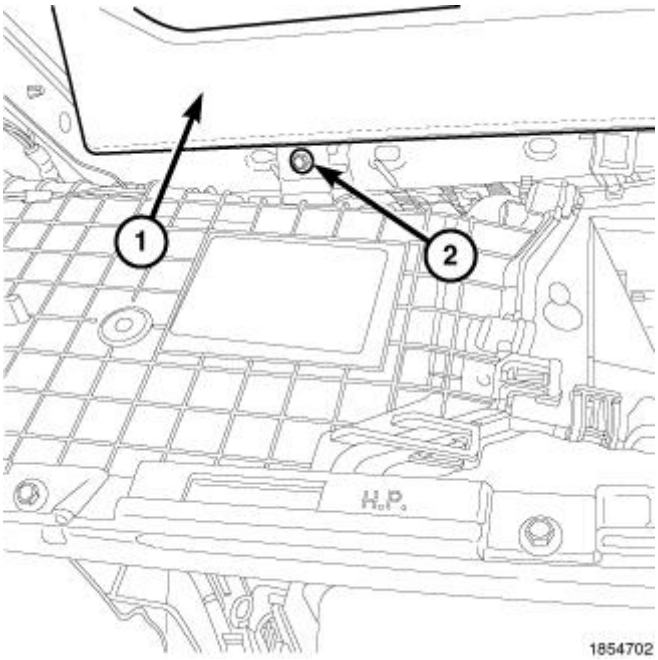

Fig. 315: Storage Bin Fastener
Courtesy of CHRYSLER GROUP, LLC

1. Remove glove box from instrument panel. Refer to **GLOVE BOX, INSTRUMENT PANEL, REMOVAL**.
2. Through the glove box opening remove storage bin fastener (2) located at the back of the storage bin (1).

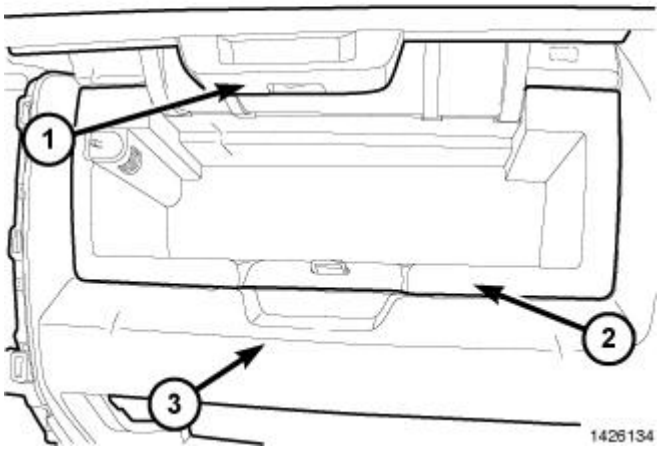

Fig. 316: Storage Bin
Courtesy of CHRYSLER GROUP, LLC

3. Open storage bin door (1).

4. Disengage the retainer clips that secure the storage bin (2) to the instrument panel (3).
5. Partial remove the storage bin and disconnect the storage bin light electrical connector.
6. Remove storage bin (2) from vehicle.

INSTALLATION

INSTALLATION

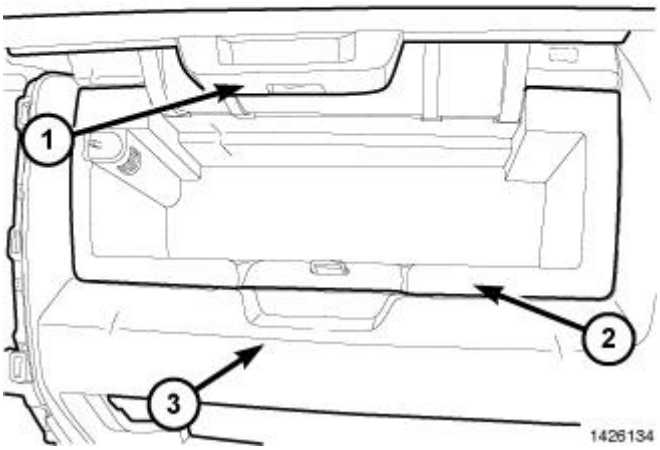

Fig. 317: Storage Bin
Courtesy of CHRYSLER GROUP, LLC

1. Partial install the storage bin and connect the storage bin light electrical connector.
2. Engage the storage bin retainer clips and fully seat the storage bin (2) to the instrument panel (3).
3. Close storage bin door (1).

NOTE: Insert storage bin fastener graphic

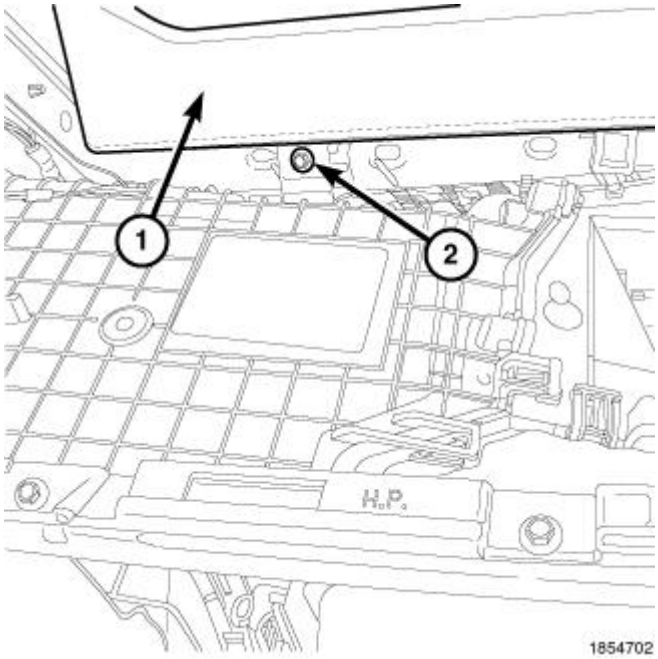

Fig. 318: Storage Bin Fastener
Courtesy of CHRYSLER GROUP, LLC

4. Through the glove box opening install the storage bin fastener (2) at rear of storage bin (1).
5. Install the glove box to the instrument panel. Refer to **GLOVE BOX, INSTRUMENT PANEL, INSTALLATION**.

COVER, INSTRUMENT PANEL

REMOVAL

REMOVAL

WARNING: **On vehicles equipped with airbags, disable the airbag system before attempting any steering wheel, steering column, seat belt tensioner, or instrument panel component diagnosis or service. Refer to WARNING . Disconnect and isolate the battery negative (ground) cable, then wait two minutes for the airbag system capacitor to discharge before performing further diagnosis or service. This is the only sure way to disable the airbag system. Failure to take the proper precautions could result in accidental airbag deployment and personal or fatal injury.**

1. Disconnect and isolate the negative battery cable.
2. Remove the steering column opening cover. Refer to **COVER, STEERING COLUMN OPENING, REMOVAL**.
3. Remove the steering column as necessary. Refer to **COLUMN, REMOVAL** .
4. Remove the Wireless Ignition Node from the vehicle. Refer to **RECEIVER, WIRELESS IGNITION NODE, REMOVAL** .

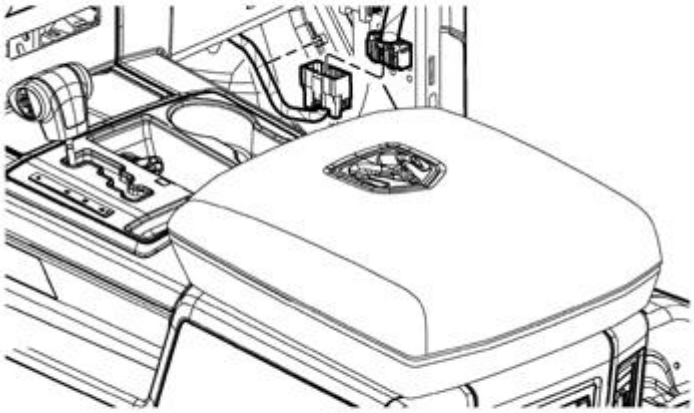

1433313

Fig. 319: Floor Console
Courtesy of CHRYSLER GROUP, LLC

5. Remove the floor console, if equipped. Refer to **CONSOLE, FLOOR, REMOVAL**.
6. Using a trim stick (special tool #C-4755, Trim Stick) or equivalent remove the Lower Center Bezel.

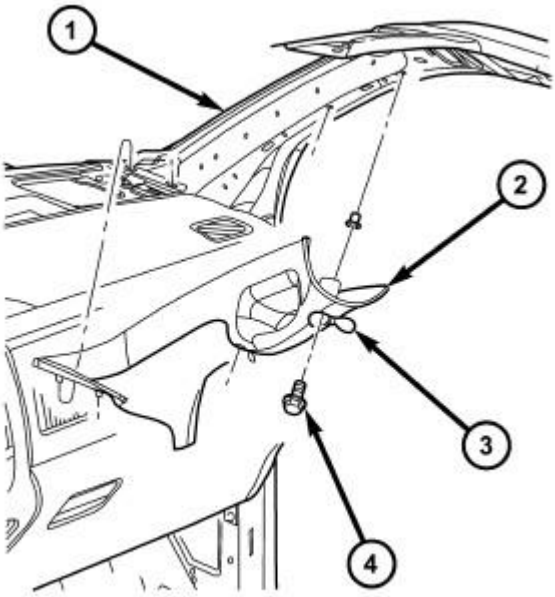

80d407a9

Fig. 320: A-Pillar Trim/Grab Handle
Courtesy of CHRYSLER GROUP, LLC

NOTE: Right side shown in illustration, left side similar.

7. Remove the left and right A-pillar trim. Refer to **PANEL, A-PILLAR TRIM, WITH GRAB HANDLE, REMOVAL**.
8. Remove the Defroster Grille

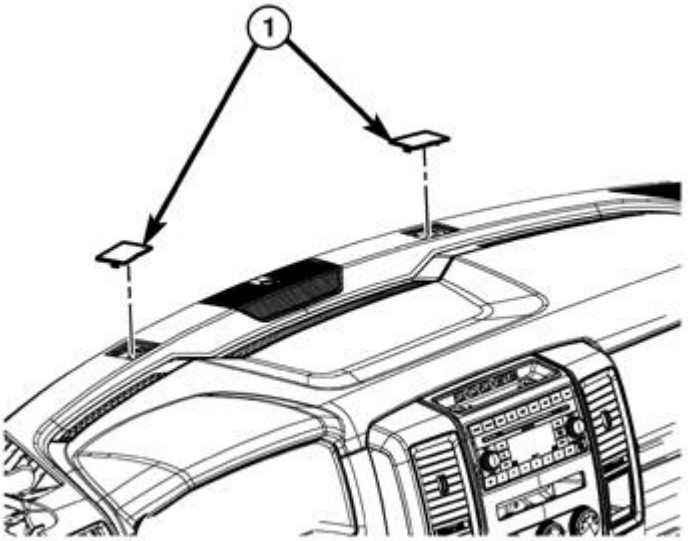

Fig. 321: Fence Line Bolt Access Covers
Courtesy of CHRYSLER GROUP, LLC

9. Remove fence line bolt access covers.
10. Remove fence line bolts.
11. Remove the instrument panel center bezel. Refer to **BEZEL, INSTRUMENT PANEL, CENTER, REMOVAL**.
12. Remove the Radio. Refer to **RADIO, REMOVAL** .
13. Remove right and left power outlets and bezels.

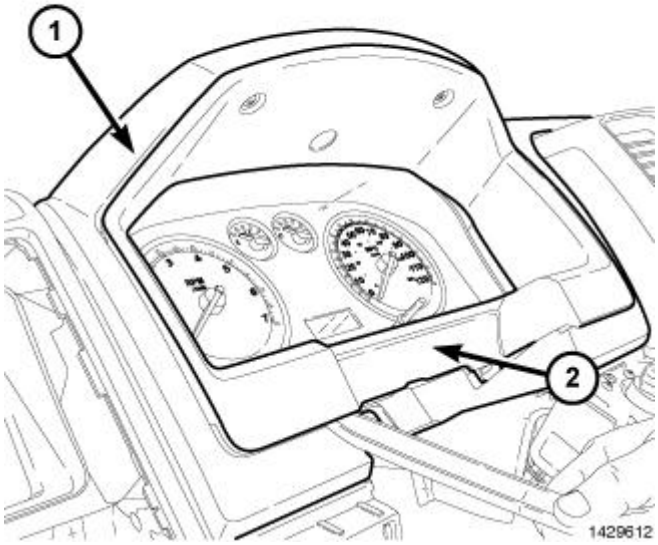

Fig. 322: Instrument Panel Cluster Bezel
Courtesy of CHRYSLER GROUP, LLC

14. Remove the instrument panel cluster bezel. Refer to **BEZEL, INSTRUMENT CLUSTER, REMOVAL**.

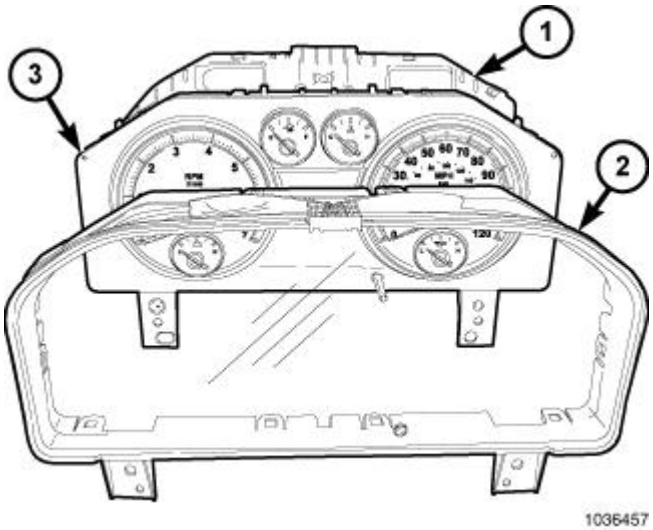

Fig. 323: Instrument Cluster Housing, Rear Cover & Hood Unit
Courtesy of CHRYSLER GROUP, LLC

15. Remove the instrument cluster. Refer to **REMOVAL** .
16. Remove the parking brake Lever bezel. Refer to **HANDLE, PARKING BRAKE RELEASE, REMOVAL** .

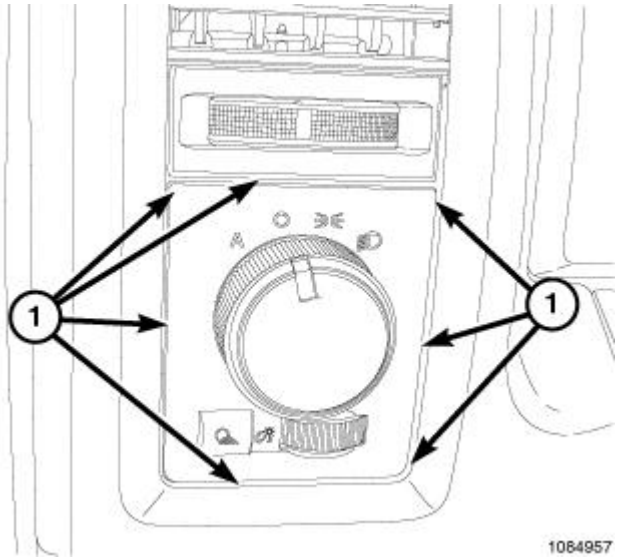

Fig. 324: Headlamp Switch & Left Distribution Register
Courtesy of CHRYSLER GROUP, LLC

17. Remove the headlamp switch / left distribution register. Refer to **SWITCH, HEADLAMP, REMOVAL** .
18. Remove the left and right instrument panel speakers. Refer to **SPEAKER, REMOVAL** .

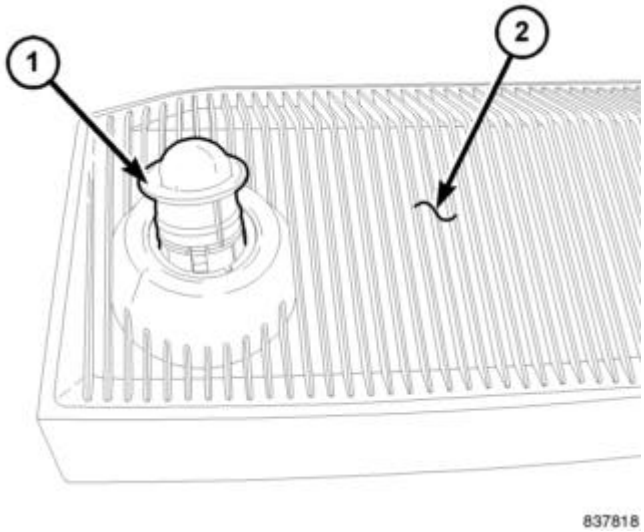

Fig. 325: Sun Sensor & Trim Panel
Courtesy of CHRYSLER GROUP, LLC

19. Remove the center Instrument panel speaker and sun sensor. Refer to **SPEAKER, REMOVAL** .

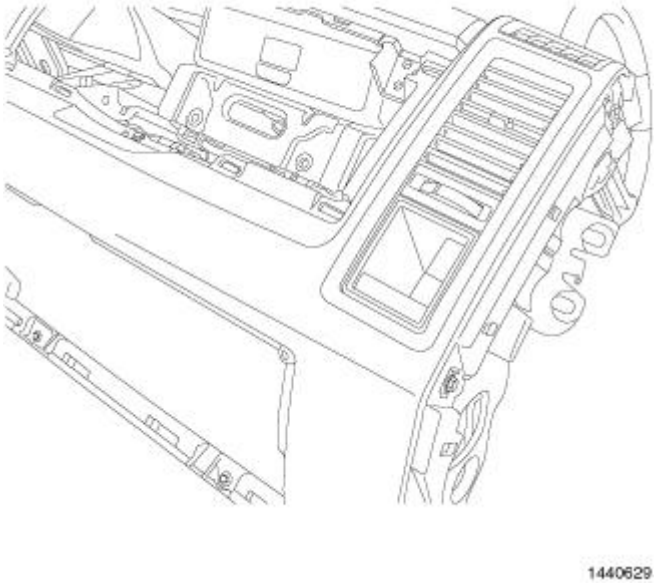

Fig. 326: Right Distribution Register
Courtesy of CHRYSLER GROUP, LLC

20. Remove the right distribution register. Refer to **OUTLET, AIR, REMOVAL** .

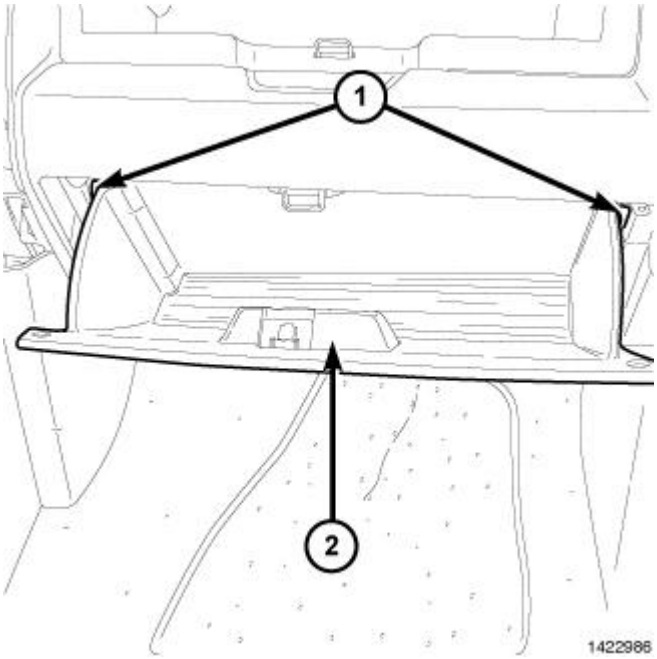

Fig. 327: Glove Box
Courtesy of CHRYSLER GROUP, LLC

21. Remove the glove box (2) from the instrument panel. Refer to **GLOVE BOX, INSTRUMENT PANEL, REMOVAL**.

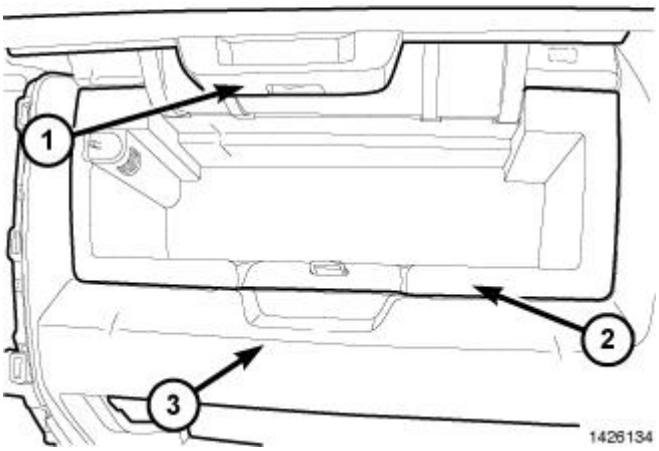

Fig. 328: Storage Bin
Courtesy of CHRYSLER GROUP, LLC

22. Remove the instrument panel storage bin. (2). Refer to **BIN, INSTRUMENT PANEL, REMOVAL**.

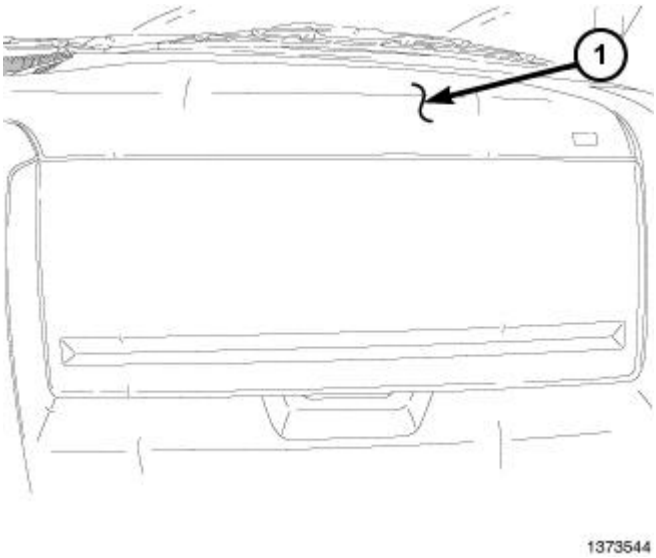

Fig. 329: Passenger Air Bag
Courtesy of CHRYSLER GROUP, LLC

23. Remove the passenger air bag (1). Refer to **AIR BAG, PASSENGER, REMOVAL** .
24. Remove the 23 instrument panel cover fasteners.
25. Partial remove the instrument panel cover to access and disconnect the PAB harness.
26. Remove the instrument panel cover from the vehicle.

INSTALLATION

INSTALLATION

1. Partial install the instrument panel cover into the vehicle access and connect the PAB harness.
2. Install the 23 instrument panel cover fasteners.

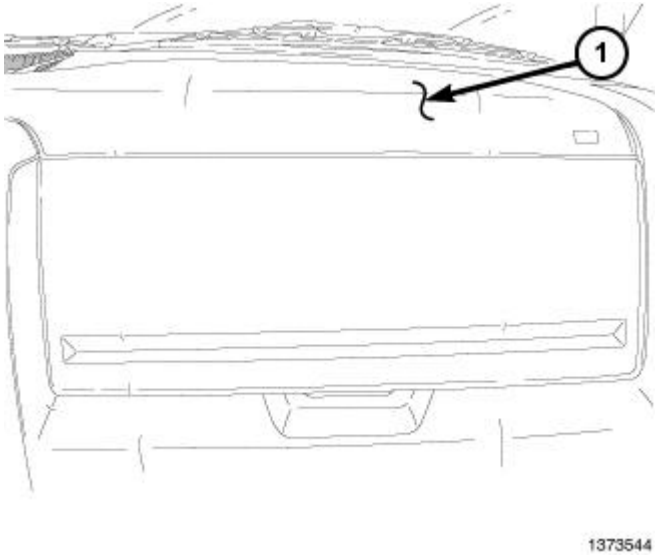

Fig. 330: Passenger Air Bag
Courtesy of CHRYSLER GROUP, LLC

3. Install the passenger air bag. Refer to **AIR BAG, PASSENGER, INSTALLATION** .

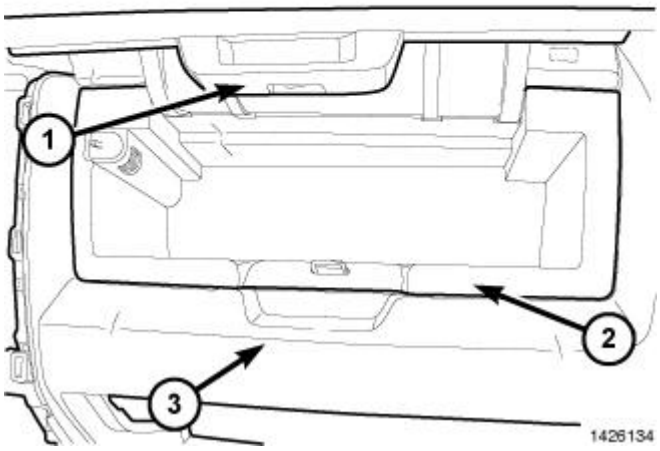

Fig. 331: Storage Bin
Courtesy of CHRYSLER GROUP, LLC

4. Install the instrument panel storage bin. Refer to **BIN, INSTRUMENT PANEL, INSTALLATION**.

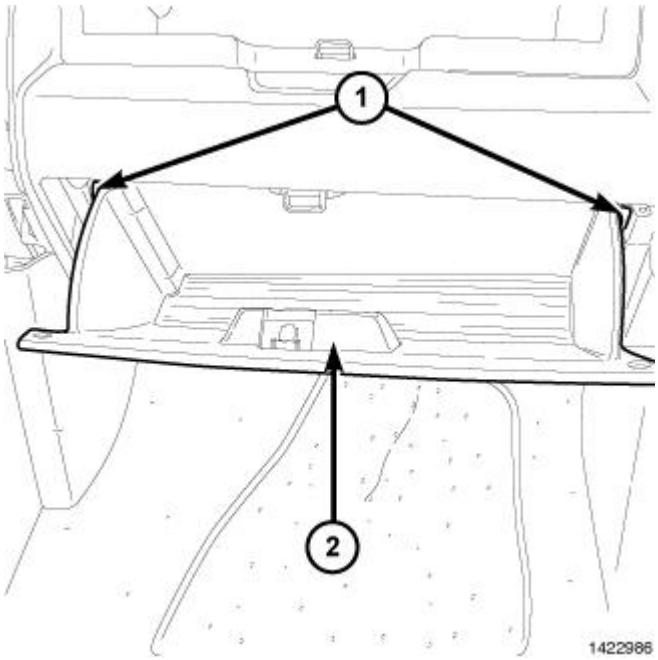

Fig. 332: Glove Box
Courtesy of CHRYSLER GROUP, LLC

5. Install the glove box from the instrument panel. Refer to **GLOVE BOX, INSTRUMENT PANEL, INSTALLATION**.

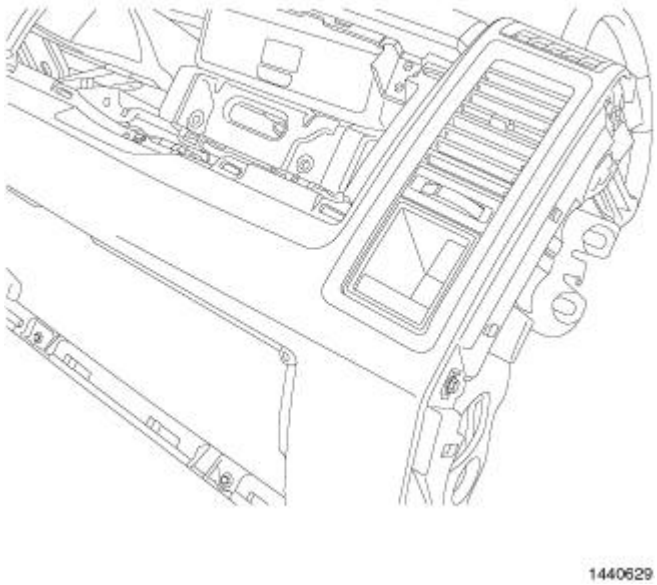

Fig. 333: Right Distribution Register
Courtesy of CHRYSLER GROUP, LLC

6. Install the right distribution register. Refer to **OUTLET, AIR, INSTALLATION** .

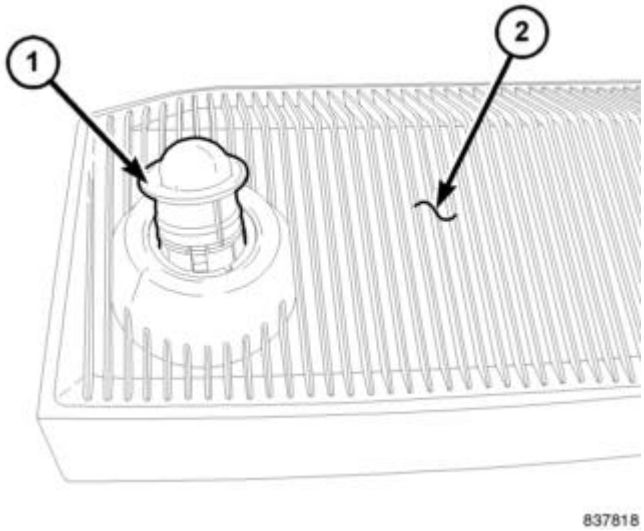

Fig. 334: Sun Sensor & Trim Panel
Courtesy of CHRYSLER GROUP, LLC

7. Install the center Instrument panel speaker and sun sensor. Refer to **SPEAKER, INSTALLATION** .
8. Install the left and right instrument panel speakers. Refer to **SPEAKER, INSTALLATION** .

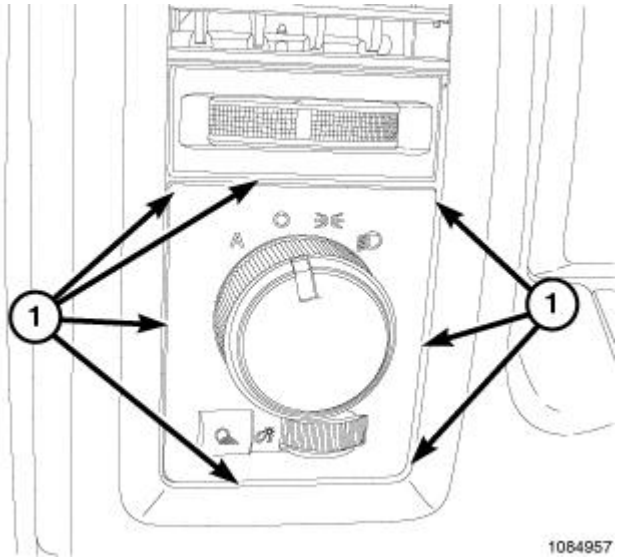

Fig. 335: Headlamp Switch & Left Distribution Register
Courtesy of CHRYSLER GROUP, LLC

9. Install the headlamp switch / left distribution register. Refer to **SWITCH, HEADLAMP, INSTALLATION** .
10. Install the parking brake Lever bezel.

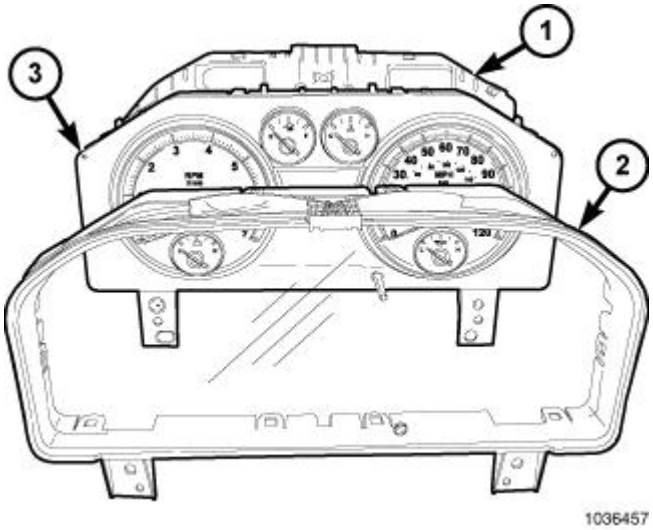

Fig. 336: Instrument Cluster Housing, Rear Cover & Hood Unit
Courtesy of CHRYSLER GROUP, LLC

11. Install the instrument cluster. Refer to **INSTALLATION** .

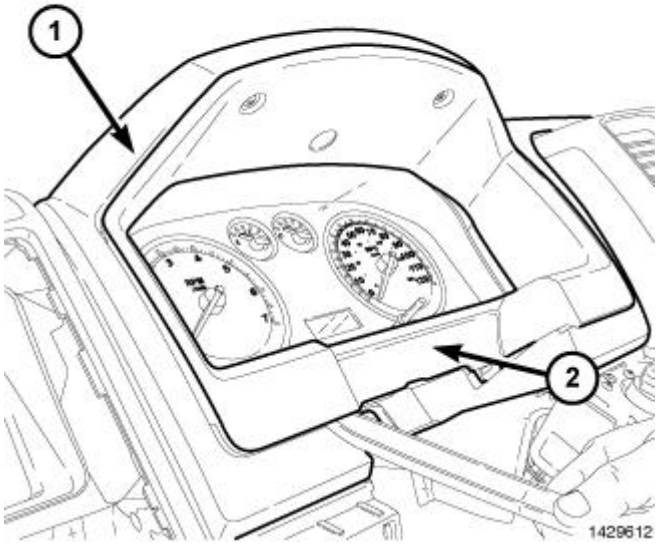

Fig. 337: Instrument Panel Cluster Bezel
Courtesy of CHRYSLER GROUP, LLC

12. Install the instrument panel cluster bezel. Refer to **BEZEL, INSTRUMENT CLUSTER, INSTALLATION**.
13. Install right and left power outlets and bezels.
14. Install the Radio. Refer to **RADIO, INSTALLATION** .
15. Install the instrument panel center bezel. Refer to **BEZEL, INSTRUMENT PANEL, CENTER, INSTALLATION**.

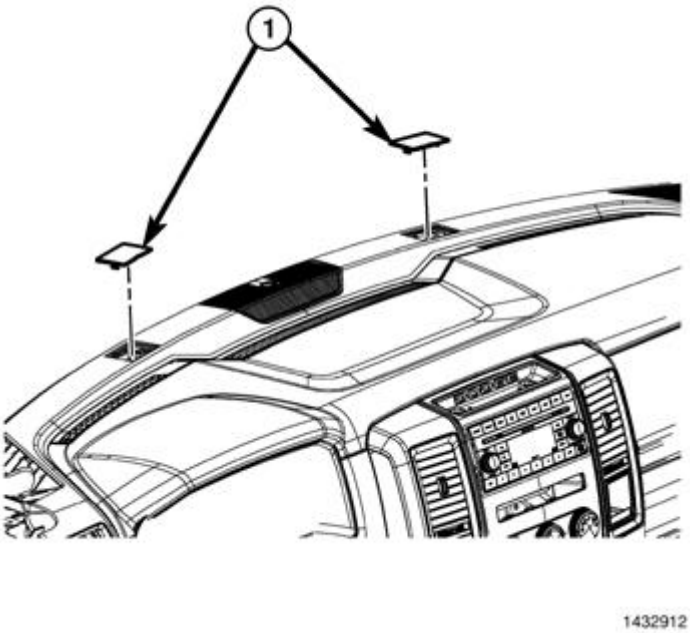

Fig. 338: Fence Line Bolt Access Covers
Courtesy of CHRYSLER GROUP, LLC

16. Install fence line bolt access covers.
17. Install fence line bolts.
18. Install the Defroster Grille

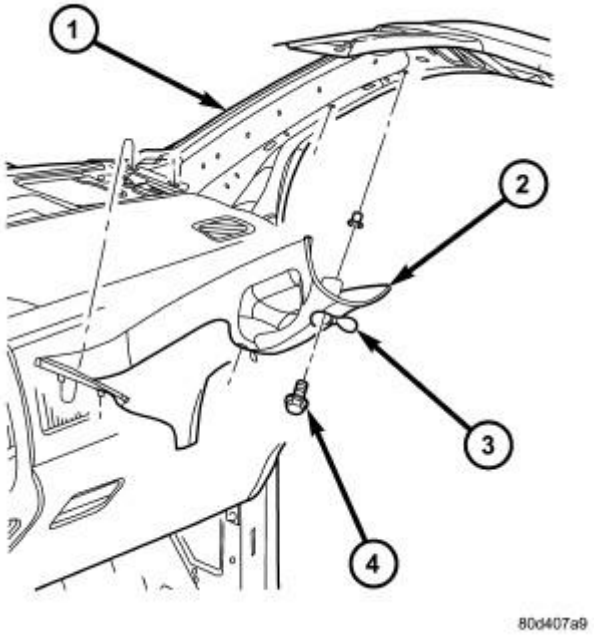

Fig. 339: A-Pillar Trim/Grab Handle

Courtesy of CHRYSLER GROUP, LLC

NOTE: Right side shown in illustration, left side similar.

19. Install the left and right A-pillar trim. Refer to **PANEL, A-PILLAR TRIM, WITH GRAB HANDLE, INSTALLATION**.
20. Install the Lower Center Bezel.

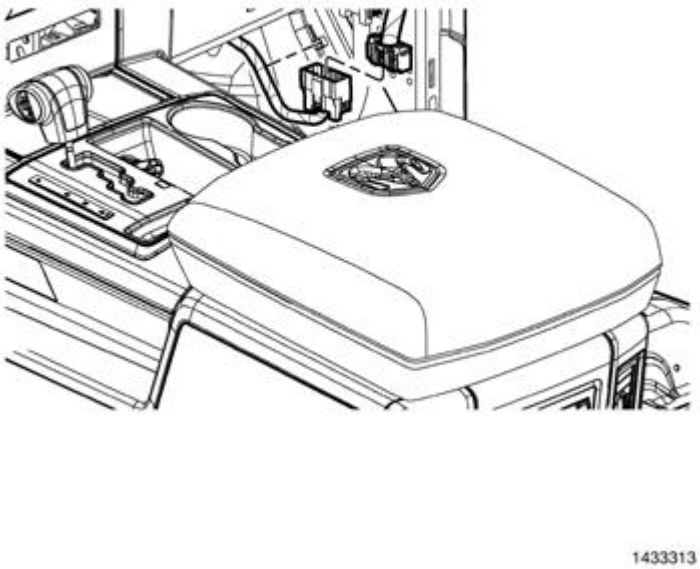

Fig. 340: Floor Console
Courtesy of CHRYSLER GROUP, LLC

21. Install the floor console, if equipped. Refer to **CONSOLE, FLOOR, INSTALLATION**.
22. Install the WIC Module and install the WIC Module fasteners.
23. Connect the WIC Module electrical connectors.
24. Install the steering column as necessary. Refer to **COLUMN, INSTALLATION** .
25. Install the steering column opening cover. Refer to **COVER, STEERING COLUMN OPENING, INSTALLATION**.
26. Connect the negative battery cable.

COVER, STEERING COLUMN OPENING

REMOVAL

REMOVAL

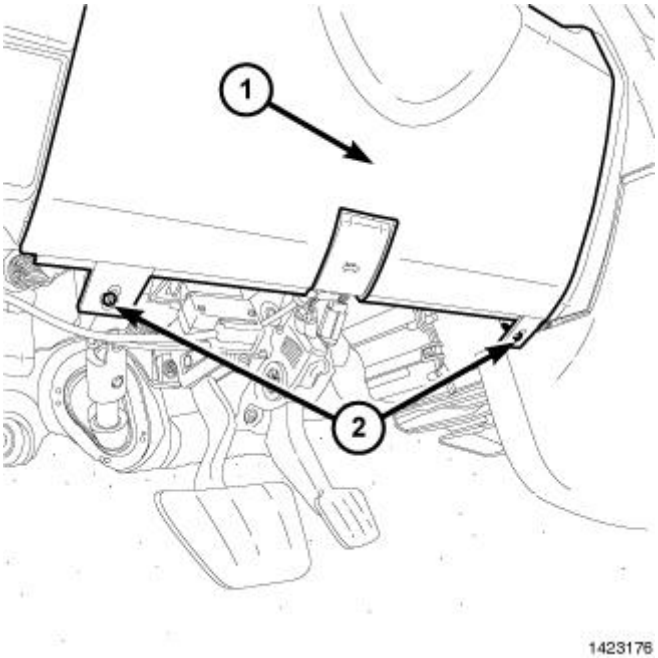

Fig. 341: Steering Column Opening Cover & Fasteners
Courtesy of CHRYSLER GROUP, LLC

1. Using a trim stick (special tool #C-4755, Trim Stick) or equivalent, disengage the retainer clip that secures the hood release to the steering column opening cover, and remove the hood release handle from the cover.
2. Remove the two fasteners (2) that secure the bottom of the steering column opening cover (1) to the instrument panel.

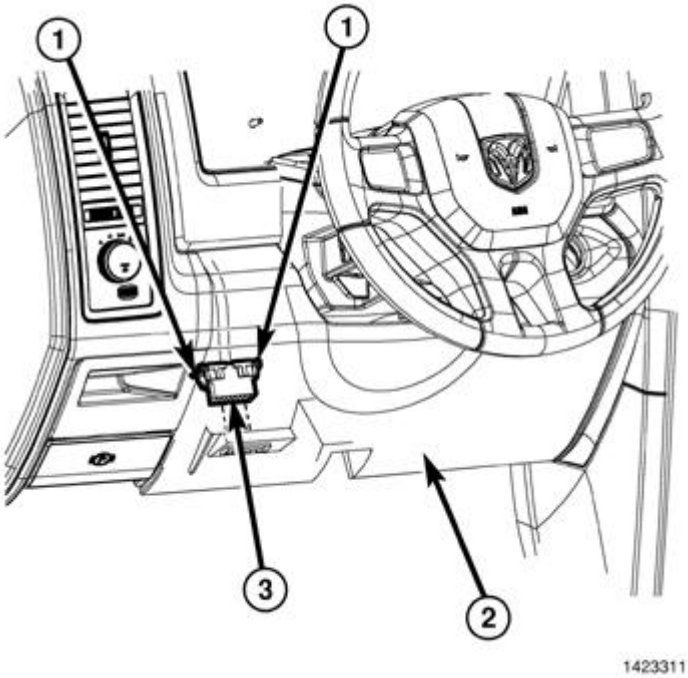

Fig. 342: Data Link Connector
Courtesy of CHRYSLER GROUP, LLC

3. Remove the Data Link Connector (3) from the steering column opening cover (2) by pressing in the tabs (1) and pushing the connector through the opening on the back side of the cover.

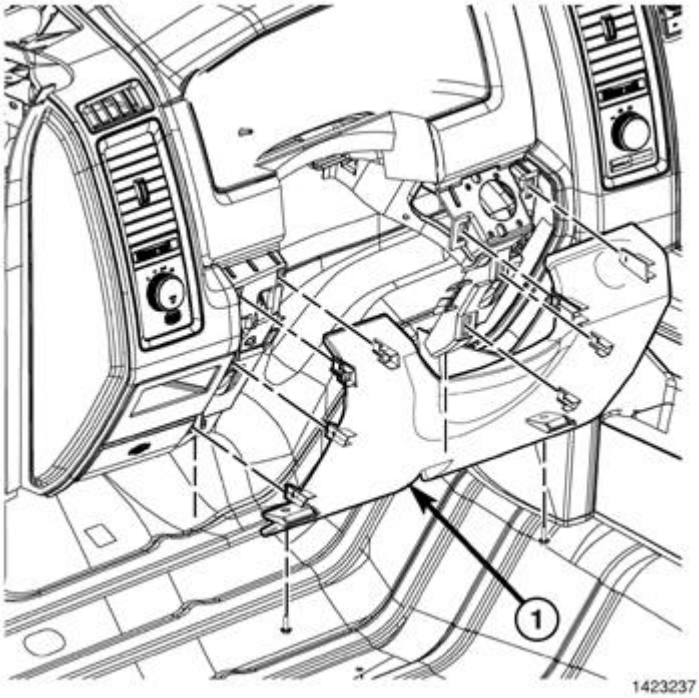

Fig. 343: Steering Column Opening Cover
Courtesy of CHRYSLER GROUP, LLC

4. Using a trim stick (special tool #C-4755, Trim Stick) or equivalent, release the retainer clips that secure the steering column opening cover (1) to the instrument panel and remove the cover.

INSTALLATION

INSTALLATION

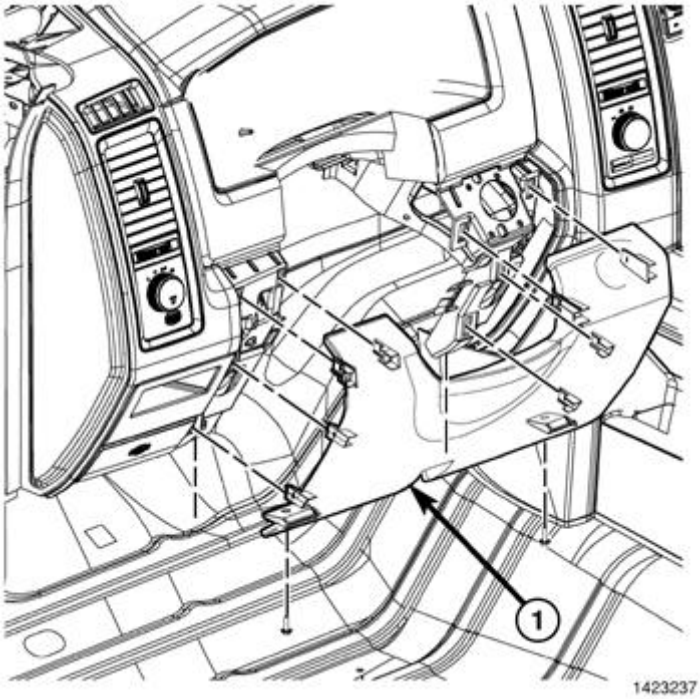

Fig. 344: Steering Column Opening Cover
Courtesy of CHRYSLER GROUP, LLC

1. Position the steering column opening cover (2) to the instrument panel and fully engage the retainer clips to the instrument panel.

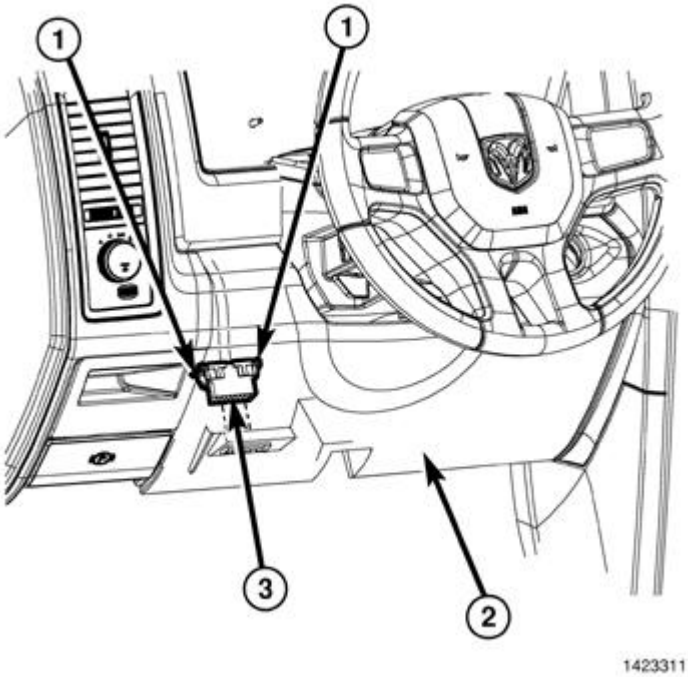

Fig. 345: Data Link Connector
Courtesy of CHRYSLER GROUP, LLC

2. Install the Data Link Connector (3) to the steering column opening cover (2) by pushing the connector through the opening on the back side of the cover and fully engaging the lock tabs (1) of the connector.

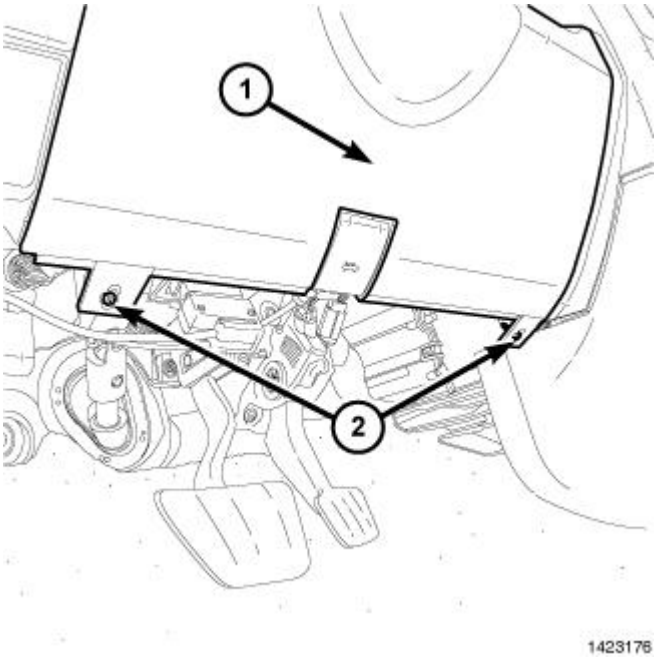

Fig. 346: Steering Column Opening Cover & Fasteners
Courtesy of CHRYSLER GROUP, LLC

3. Install the two fasteners (2) that secure the steering column opening cover (1) to the instrument panel.
4. Position the hood release hand onto the column opening cover and fully engage the retainer clip that secures the hood release handle to the steering column opening cover.

CUPHOLDER, INSTRUMENT PANEL

REMOVAL

REMOVAL

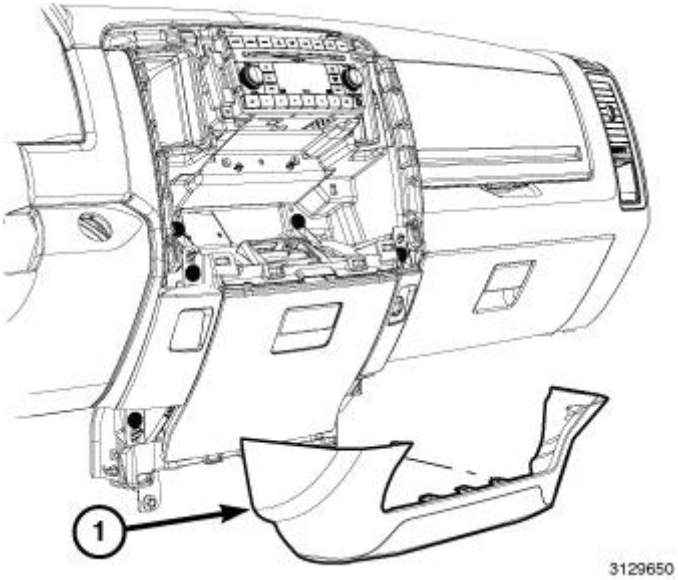

Fig. 347: Lower Closeout Trim
Courtesy of CHRYSLER GROUP, LLC

1. Remove the center bezel. Refer to **BEZEL, INSTRUMENT PANEL, CENTER, REMOVAL**.
2. Remove the lower closeout trim (1).

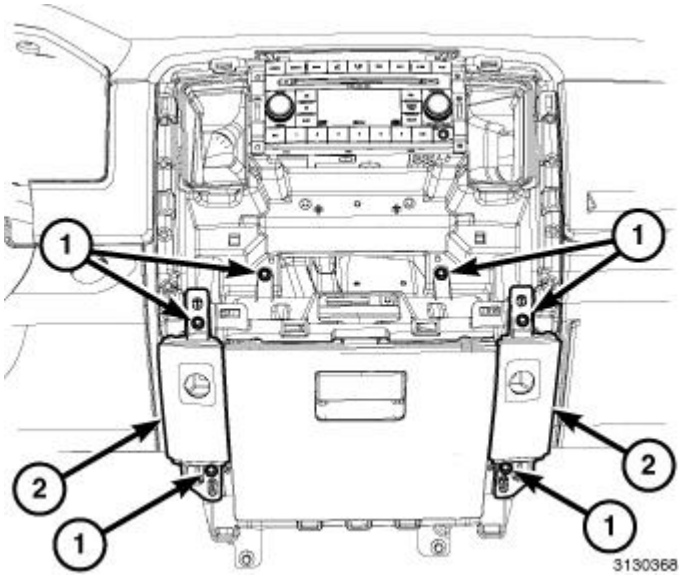

Fig. 348: Side Trim & Screws
Courtesy of CHRYSLER GROUP, LLC

3. Remove the screws (1) and separate the side trim (2).

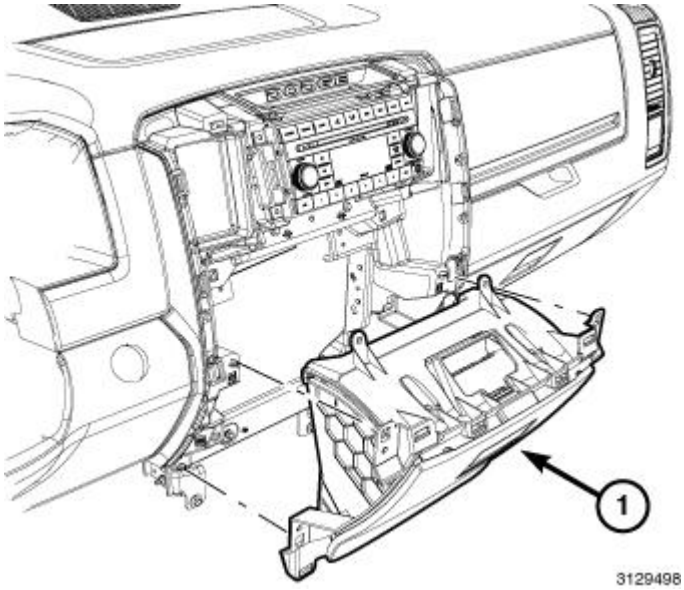

Fig. 349: Cup Holder
Courtesy of CHRYSLER GROUP, LLC

4. Remove the cup holder (1).

INSTALLATION

INSTALLATION

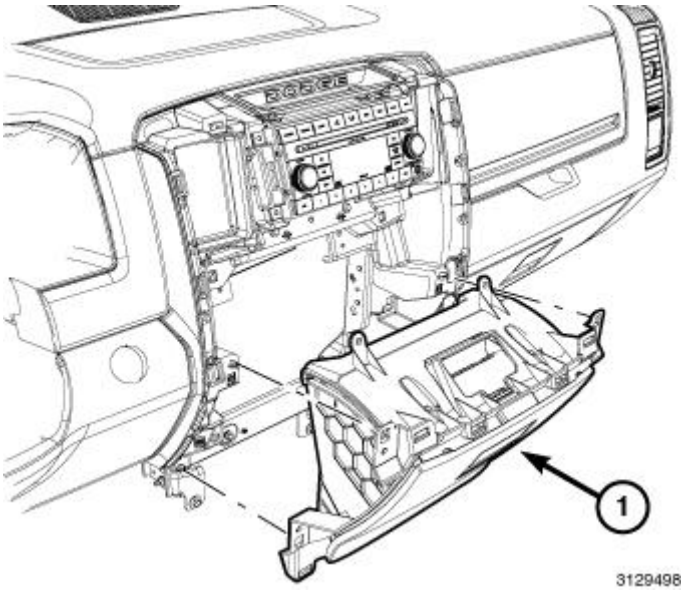

Fig. 350: Cup Holder
Courtesy of CHRYSLER GROUP, LLC

1. Position the cup holder (1) onto the alignment tabs and seat fully.

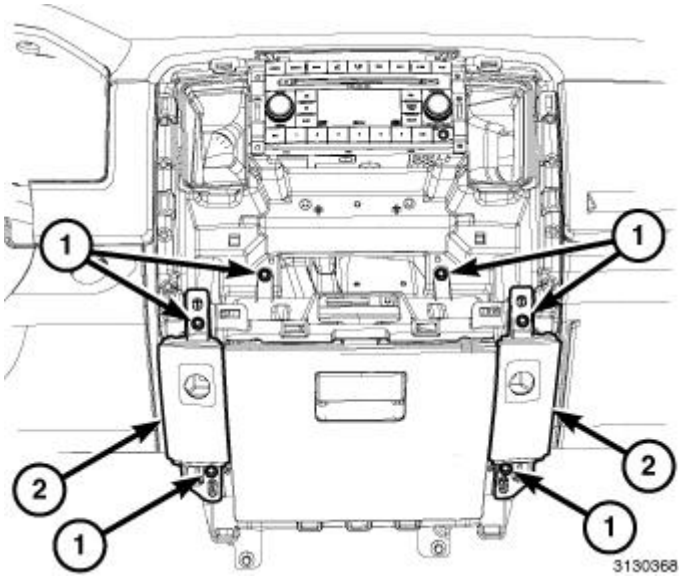

Fig. 351: Side Trim & Screws
Courtesy of CHRYSLER GROUP, LLC

2. Install the lower side trim panels (2) and install the screws (1).

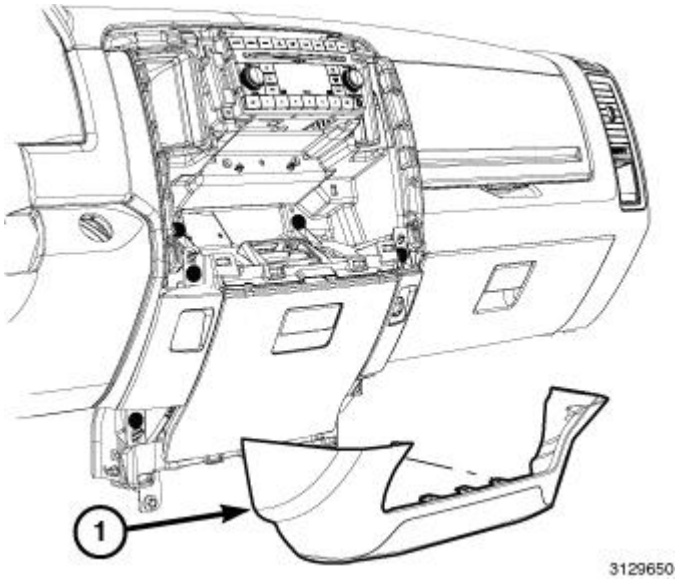

Fig. 352: Lower Closeout Trim
Courtesy of CHRYSLER GROUP, LLC

3. Position the lower closeout trim (1) back and seat the clips fully.
4. Install the center bezel. Refer to **BEZEL, INSTRUMENT PANEL, CENTER, INSTALLATION**.

GLOVE BOX, INSTRUMENT PANEL

REMOVAL

REMOVAL

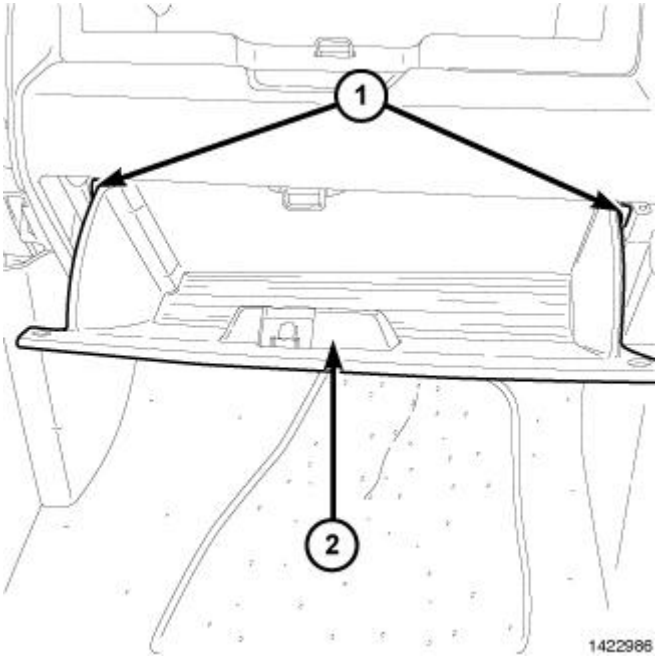

Fig. 353: Glove Box
Courtesy of CHRYSLER GROUP, LLC

1. Open the glove box (2).
2. Release the two glove box stops (1) and lower the glove box (2) downward past the stops.

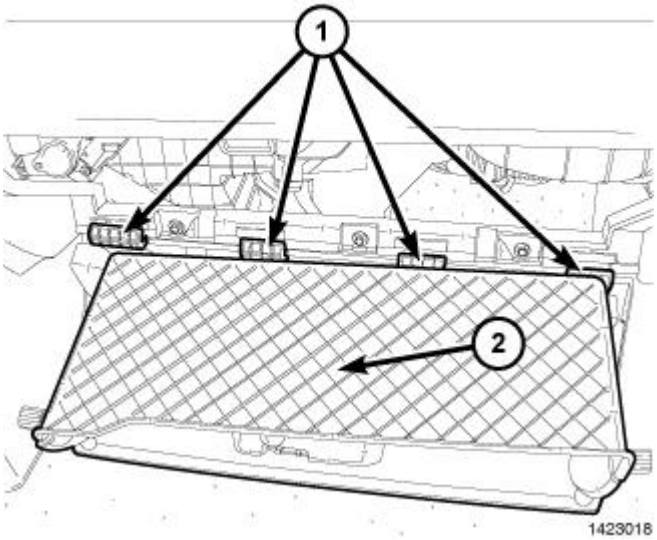

Fig. 354: Glove Box Hinges
Courtesy of CHRYSLER GROUP, LLC

3. Disengage the glove box hinges (1) from the instrument panel and remove the glove box (2).

INSTALLATION

INSTALLATION

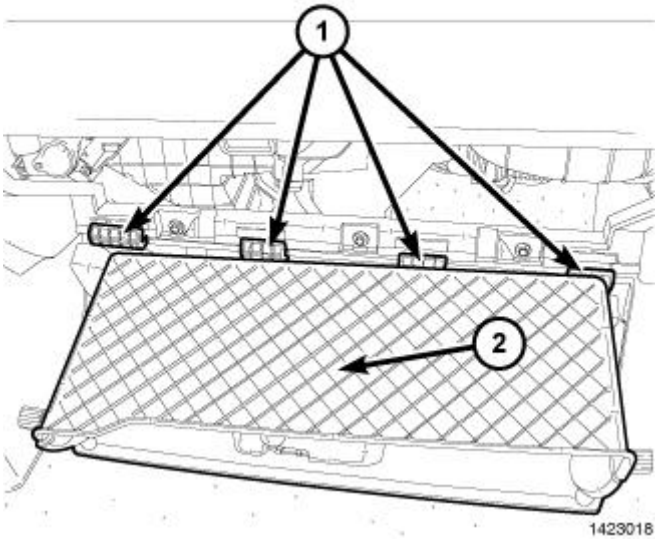

Fig. 355: Glove Box Hinges
Courtesy of CHRYSLER GROUP, LLC

1. Engage the hinges (1) of the glove box (2) to the instrument panel.

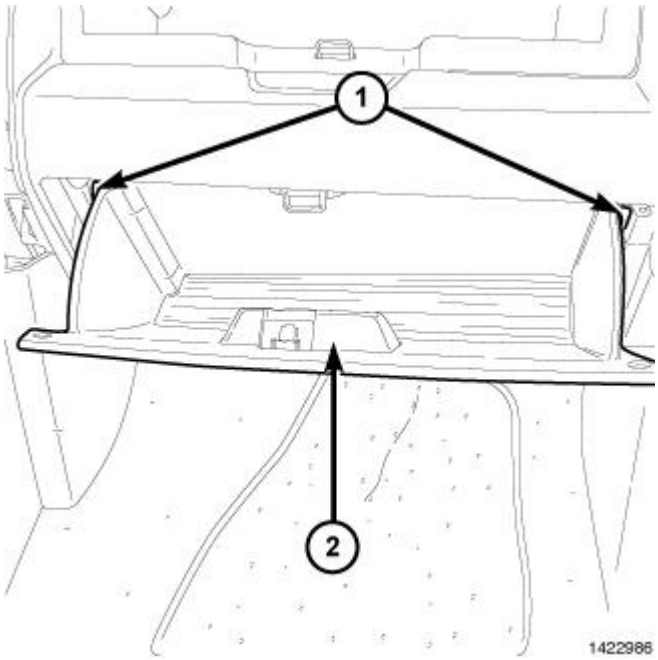

Fig. 356: Glove Box
Courtesy of CHRYSLER GROUP, LLC

2. Press downward on the back edge of the glove box (2) and raise the glove box past the two stops (1).
3. Close the glove box.

PANEL, INSTRUMENT

REMOVAL

REMOVAL

WARNING: On vehicles equipped with airbags, disable the airbag system before attempting any steering wheel, steering column, seat belt tensioner, or instrument panel component diagnosis or service. Refer to WARNING . Disconnect and isolate the battery negative (ground) cable, then wait two minutes for the airbag system capacitor to discharge before performing further diagnosis or service. This is the only sure way to disable the airbag system. Failure to take the proper precautions could result in accidental airbag deployment and personal or fatal injury.

1. Disconnect and isolate the negative battery cable.
2. Remove the front seat assembly. Refer to **SEAT, FRONT, REMOVAL** and **SEAT, FRONT CENTER, REMOVAL**.

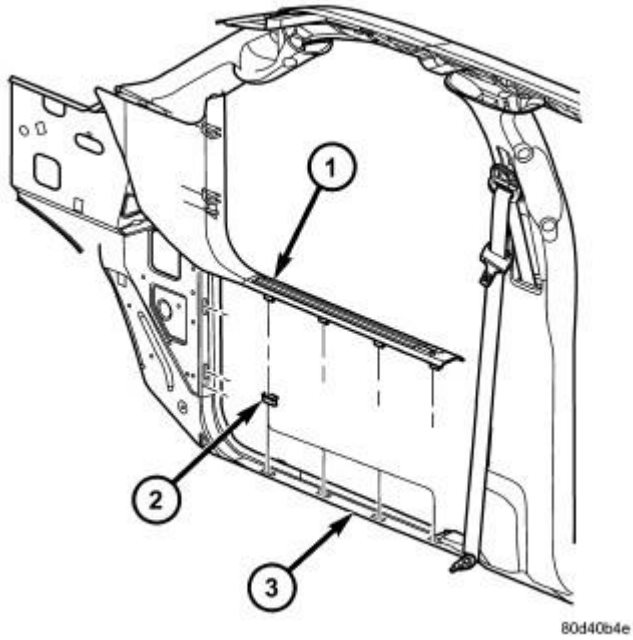

Fig. 357: Cowl Trim Panel & Retainer Clips
Courtesy of CHRYSLER GROUP, LLC

NOTE: Right side shown in illustration, left side similar.

3. Remove the left cowl trim panel. Refer to **PANEL, COWL TRIM, REMOVAL**.

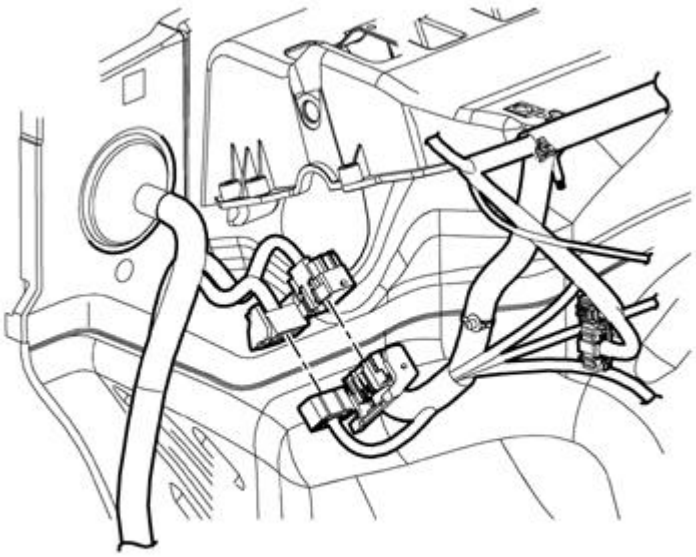

1433349

Fig. 358: Instrument Panel Wire Harness Connector
Courtesy of CHRYSLER GROUP, LLC

4. Remove the steering column opening cover. Refer to **COVER, STEERING COLUMN OPENING, REMOVAL**.
5. Disconnect the instrument panel wire harness connector (2) located above the brake pedal from the bulkhead wire harness connector (1).
6. Remove the steering column as necessary. Refer to **COLUMN, REMOVAL** .

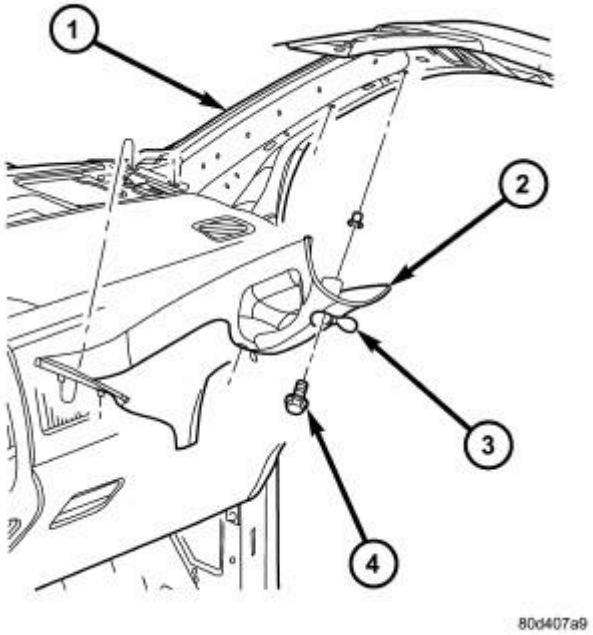

Fig. 359: A-Pillar Trim/Grab Handle
Courtesy of CHRYSLER GROUP, LLC

NOTE: Right side shown in illustration, left side similar.

7. Remove the left A-pillar trim. Refer to **PANEL, A-PILLAR TRIM, WITH GRAB HANDLE, REMOVAL**.

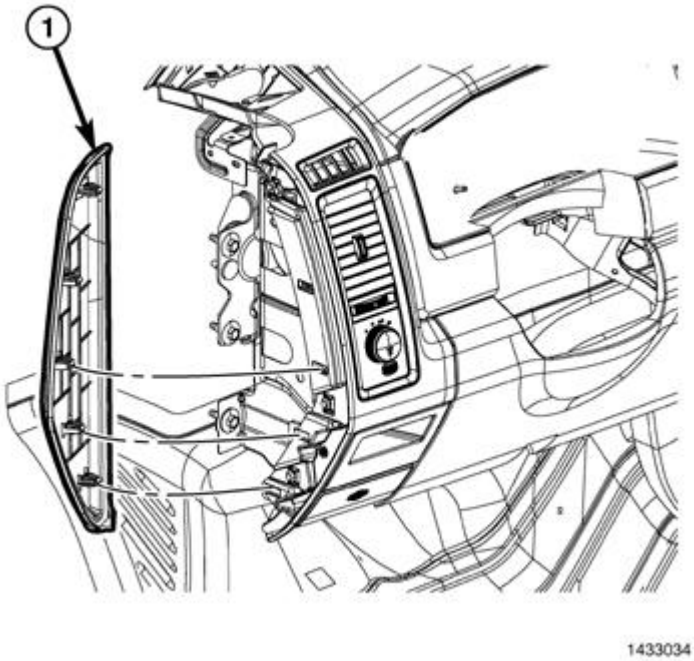

Fig. 360: Instrument Panel Side Cover
Courtesy of CHRYSLER GROUP, LLC

8. Using a trim stick (special tool #C-4755, Trim Stick) or equivalent, from the notch on the bottom, remove the left instrument panel side cover.

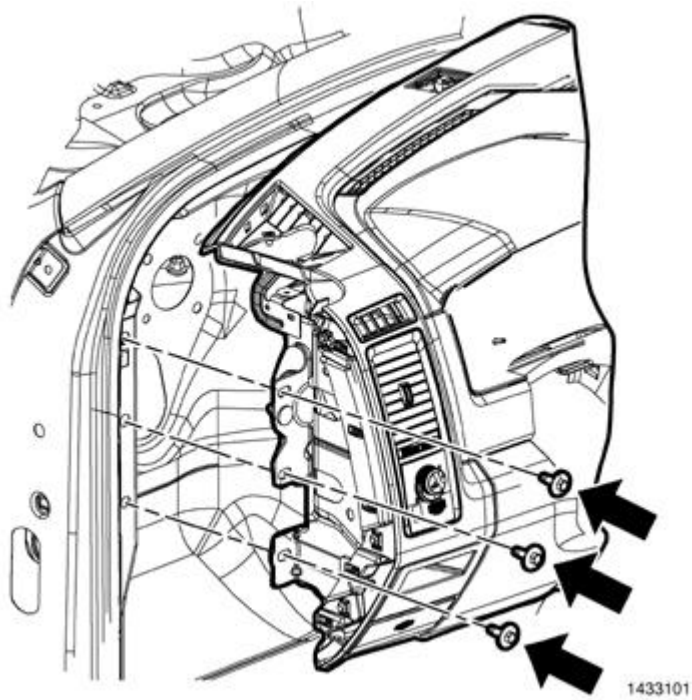

Fig. 361: Left Side Of Instrument Panel To Dash Panel Bolts
Courtesy of CHRYSLER GROUP, LLC

9. Remove the three bolts (1) that secure the left side of the instrument panel to the dash panel.

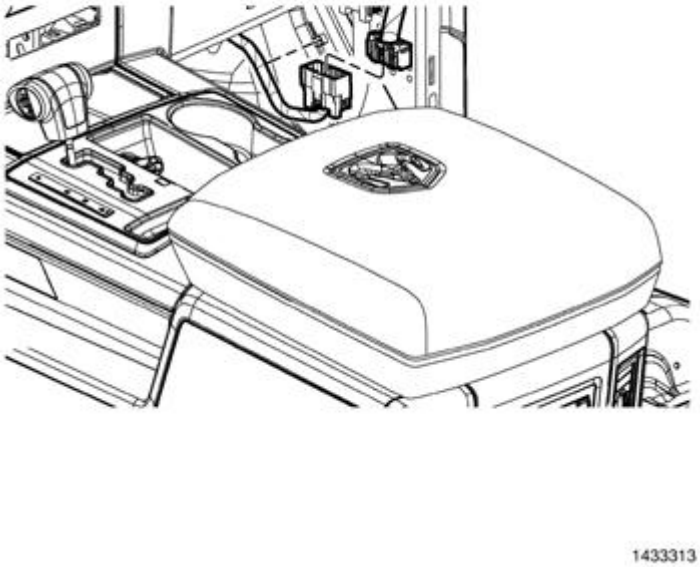

Fig. 362: Floor Console
Courtesy of CHRYSLER GROUP, LLC

10. Remove the floor console, if equipped. Refer to **CONSOLE, FLOOR, REMOVAL**.
11. Remove the Brake Sled to I/P Bolts

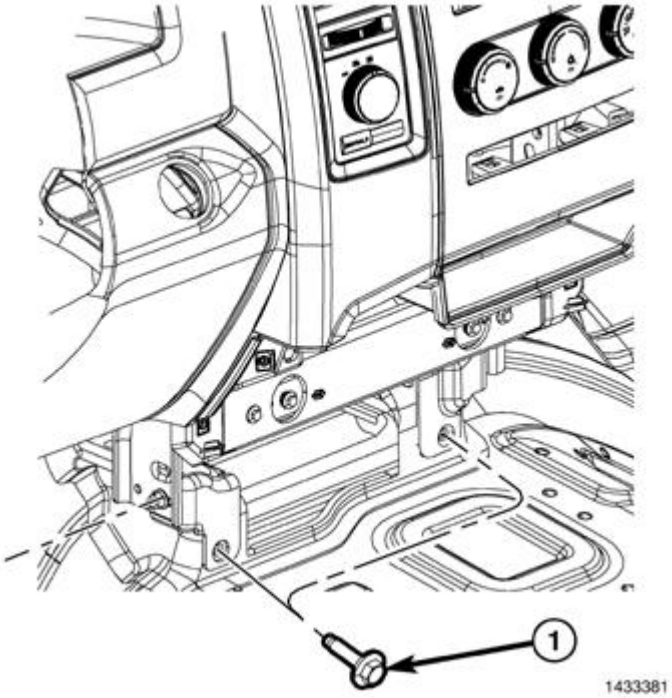

Fig. 363: Instrument Panel To Center Of Floor Panel Bolt
Courtesy of CHRYSLER GROUP, LLC

12. Remove the two bolts (1) that secure the instrument panel to the center of the floor panel.

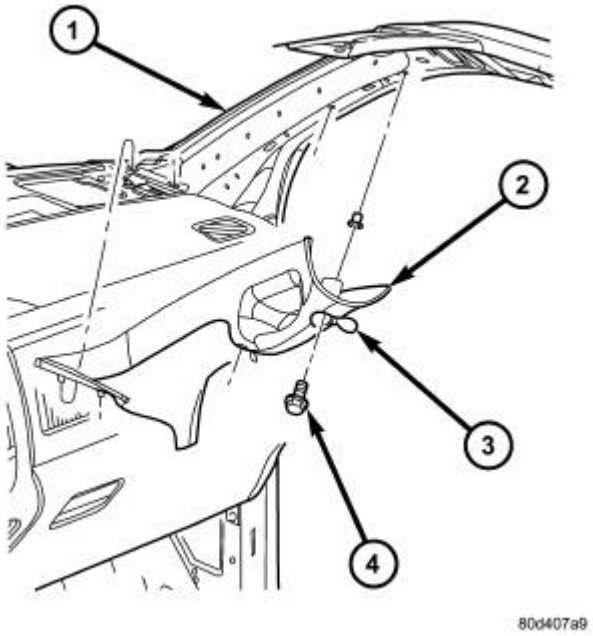

Fig. 364: A-Pillar Trim/Grab Handle
Courtesy of CHRYSLER GROUP, LLC

13. Remove the right A-pillar trim. Refer to **PANEL, A-PILLAR TRIM, WITH GRAB HANDLE, REMOVAL**.

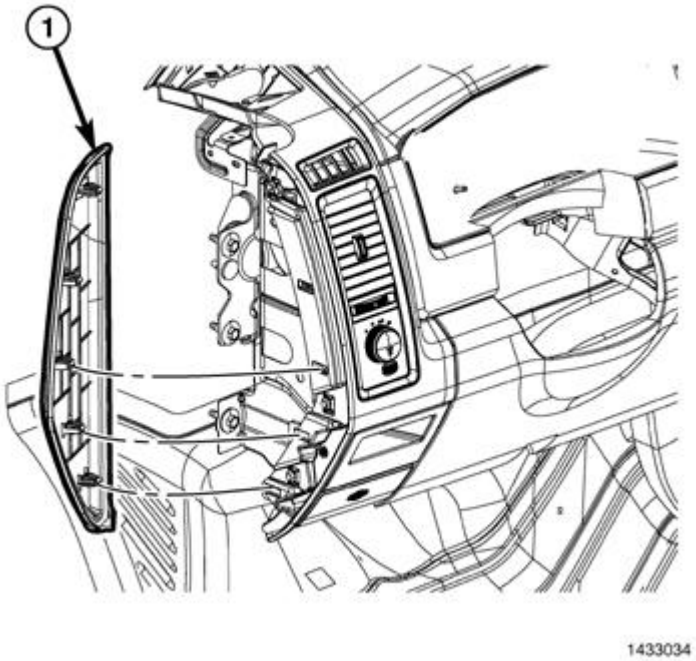

Fig. 365: Instrument Panel Side Cover
Courtesy of CHRYSLER GROUP, LLC

NOTE: Left side shown in illustration, right side similar

14. Using a trim stick (special tool #C-4755, Trim Stick) or equivalent, from the notch on the bottom, remove the right instrument panel side cover (1) from the instrument panel.

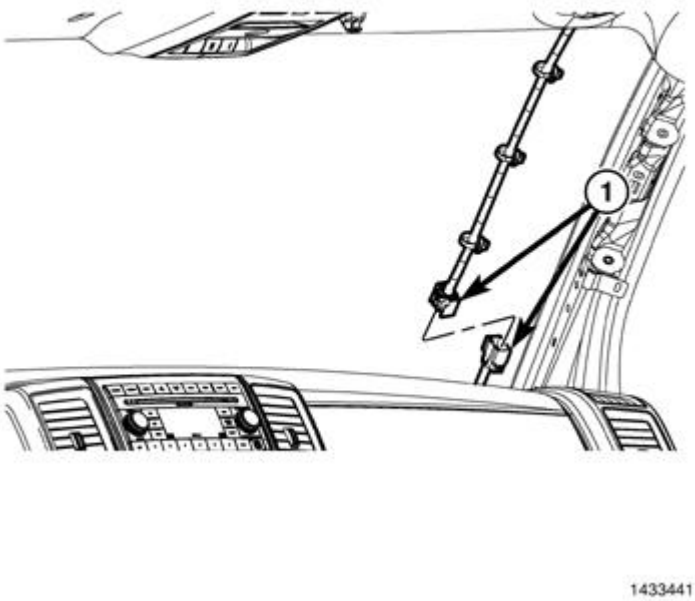

Fig. 366: Headliner Wire Harness Connector
Courtesy of CHRYSLER GROUP, LLC

15. Disconnect the headliner wire harness connector located at the A-pillar.
16. Remove the glove box from the instrument panel. Refer to **GLOVE BOX, INSTRUMENT PANEL, REMOVAL**.

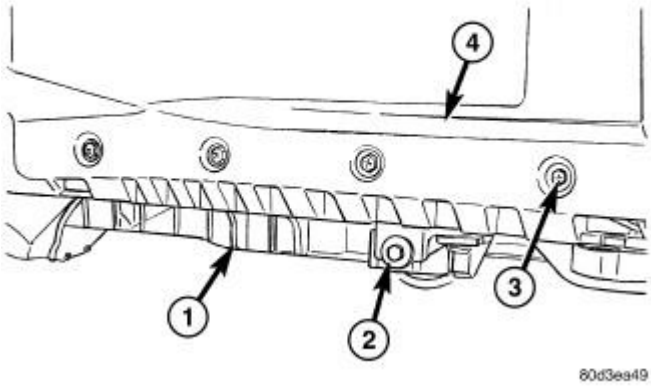

Fig. 367: HVAC/Instrument Panel Mounting
Courtesy of CHRYSLER GROUP, LLC

17. Remove the one bolt (2) that secures the instrument panel (3) to the HVAC housing (1) behind the glove box opening (4).

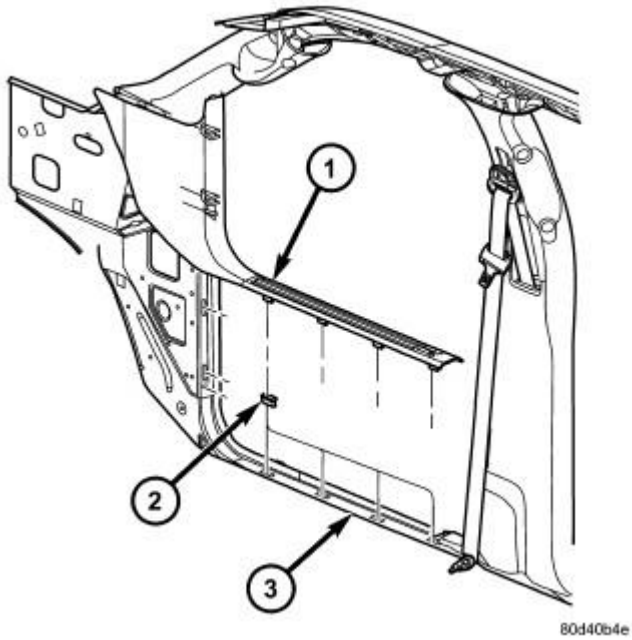

Fig. 368: Cowl Trim Panel & Retainer Clips
Courtesy of CHRYSLER GROUP, LLC

18. Remove the right cowl trim cover. Refer to **PANEL, COWL TRIM, REMOVAL**.

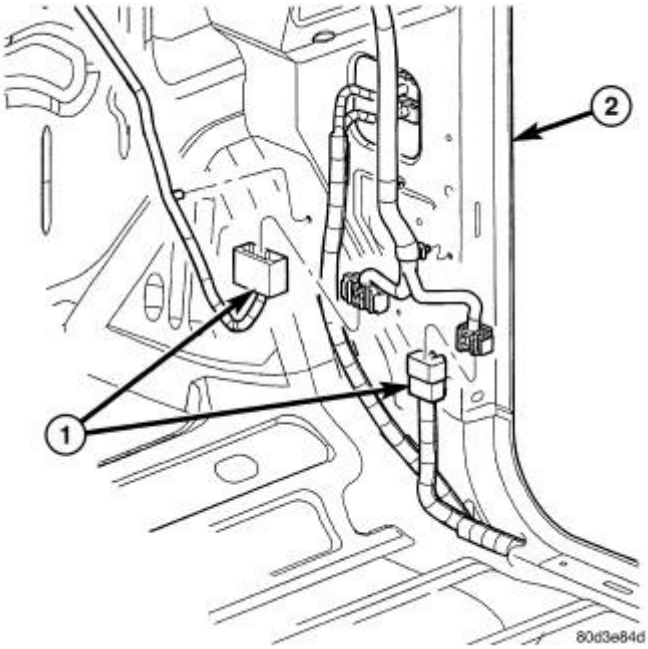

Fig. 369: Right Side Wire Harness Connections
Courtesy of CHRYSLER GROUP, LLC

19. Disconnect the two instrument panel wire harness connectors from the two body wire harness connectors (1) located on the right side of the cowl panel (2).

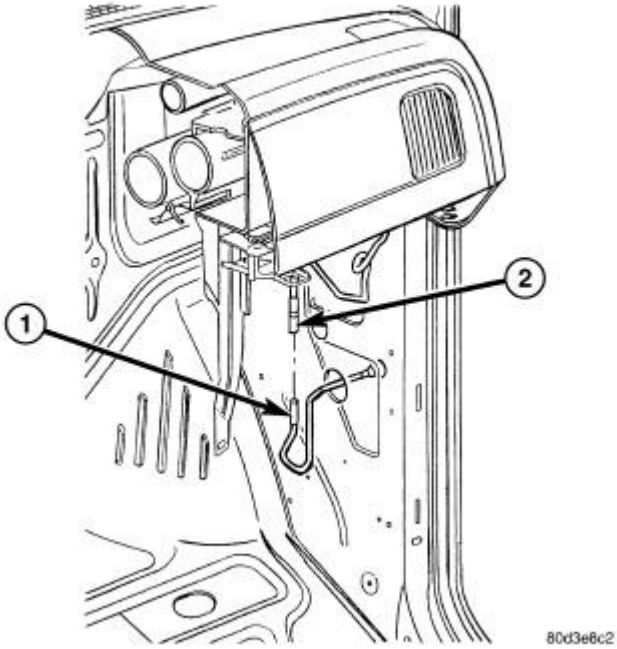

Fig. 370: Antenna Connection
Courtesy of CHRYSLER GROUP, LLC

20. Disconnect the antenna coaxial cable connector (1) from the radio coaxial cable connector (2) located on the right side of the cowl panel.

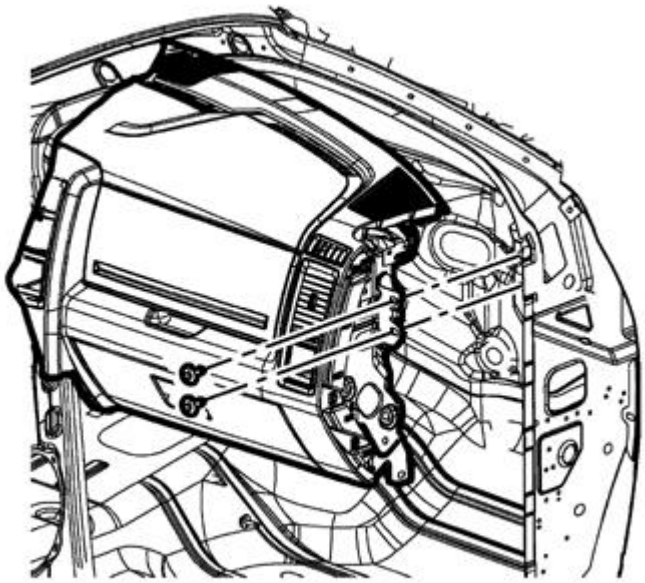

1433198

Fig. 371: Right Side Instrument Panel Bracket To Dash Panel Bolts
Courtesy of CHRYSLER GROUP, LLC

21. Remove the three bolts (1) that secure the right side instrument panel bracket to the dash panel.

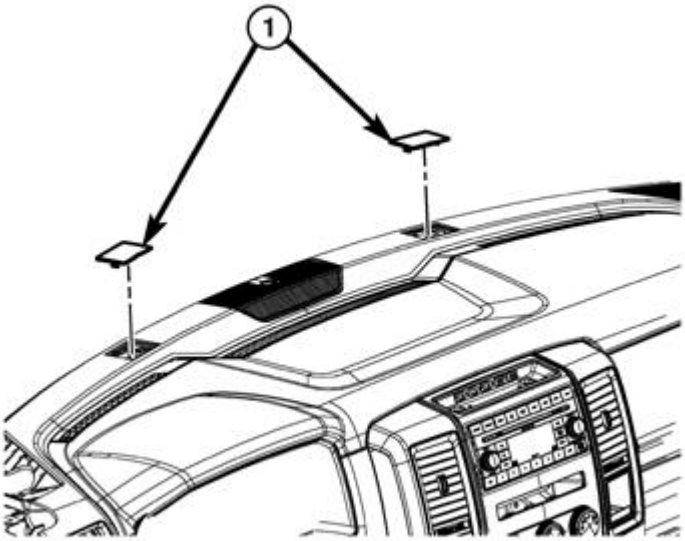

1432912

Fig. 372: Fence Line Bolt Access Covers
Courtesy of CHRYSLER GROUP, LLC

22. Remove fence line bolt access covers.
23. Remove fence line bolts.
24. Pull carpet back as necessary to remove the ground eyelet fastener at ORC/YAWL Modules
25. Disconnect the ORC Module electrical connector and remove the wiring from under the carpet.
26. With the help of an assistant, lift the instrument panel up and off of the cowl panel and remove the instrument panel from the vehicle.

INSTALLATION

INSTALLATION

1. With the help of an assistant, position the instrument panel (5) into the vehicle and install the right side guide pin and the left side guide hook to the sides of the cowl panel.
2. Connect the ORC Module electrical connector and position the wiring under the carpet.
3. Install the ground eyelet fastener at ORC/YAWL Modules and position the carpet back as necessary.

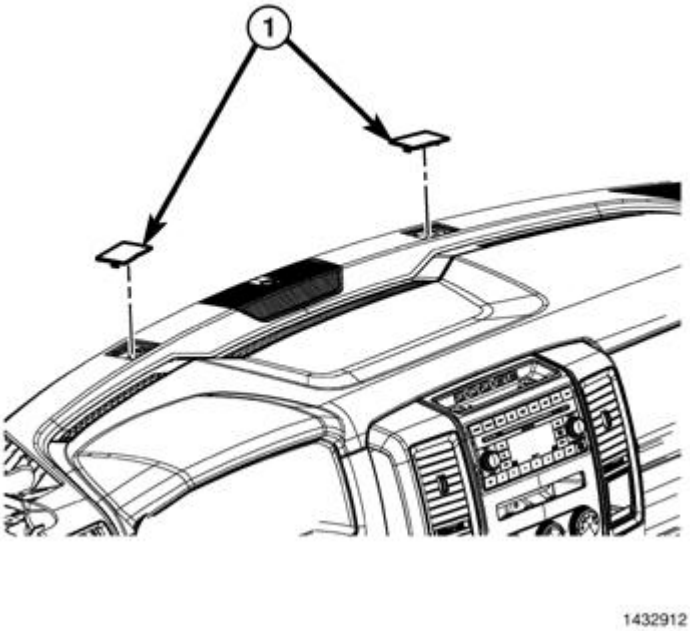

Fig. 373: Fence Line Bolt Access Covers
Courtesy of CHRYSLER GROUP, LLC

4. Install the fence line bolts on top of I/P.
5. Tighten the bolts to 12 N.m (9 ft. lbs.).
6. Install the fence line bolt access covers.

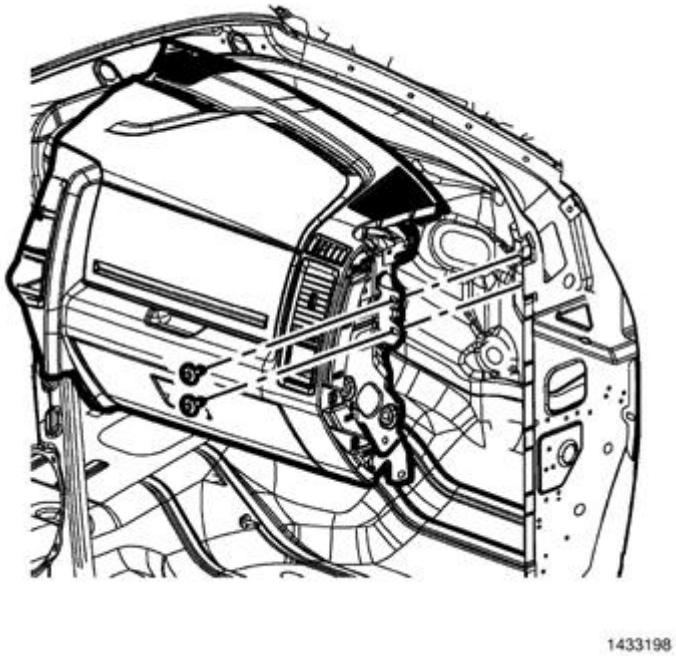

Fig. 374: Right Side Instrument Panel Bracket To Dash Panel Bolts
Courtesy of CHRYSLER GROUP, LLC

7. Install the three bolts (1) that secure the right side instrument panel bracket to the cowl panel.
8. Tighten the bolts to 12 N.m (9 ft. lbs.).

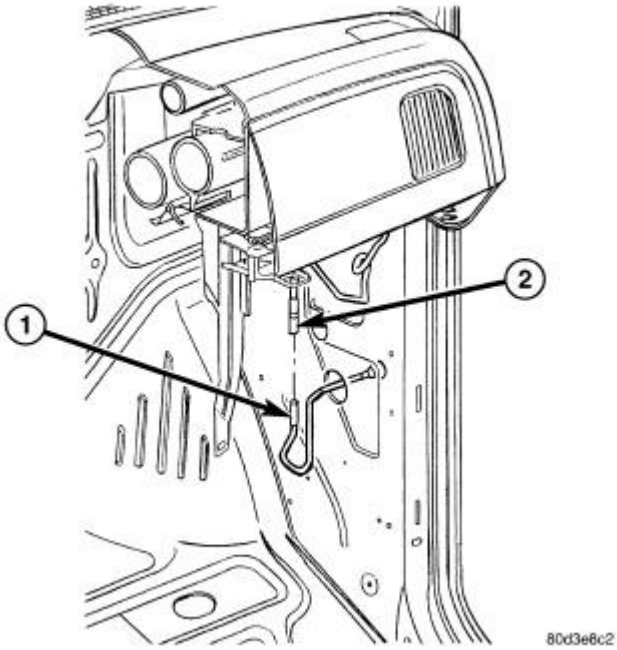

Fig. 375: Antenna Connection
Courtesy of CHRYSLER GROUP, LLC

9. Connect the radio coaxial cable connector (2) to the antenna coaxial cable connector (1) located on the right side of the cowl panel.

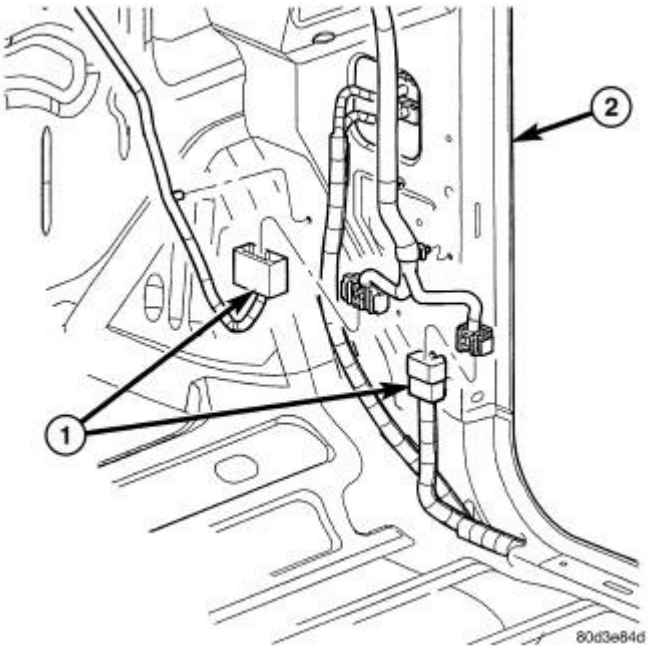

Fig. 376: Right Side Wire Harness Connections
Courtesy of CHRYSLER GROUP, LLC

10. Connect the two instrument panel wire harness connectors to the two body wire harness connectors (1) located on the right side of the cowl panel (2).

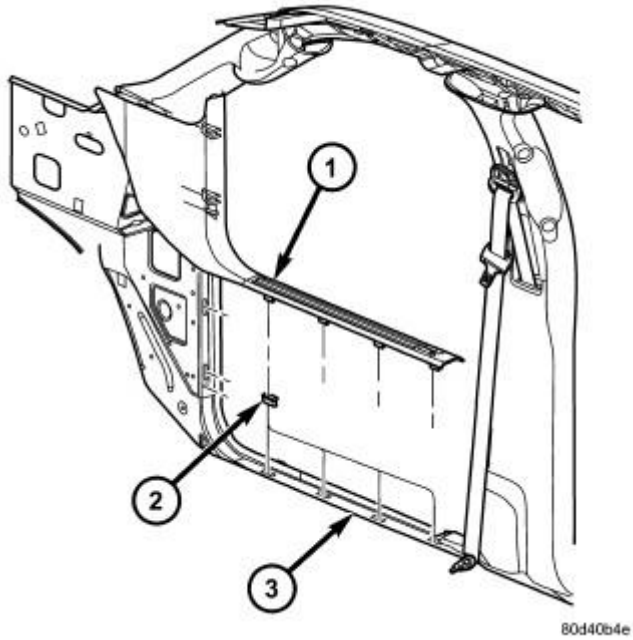

Fig. 377: Cowl Trim Panel & Retainer Clips
Courtesy of CHRYSLER GROUP, LLC

11. Install the right cowl trim panel. Refer to **PANEL, COWL TRIM, INSTALLATION**.

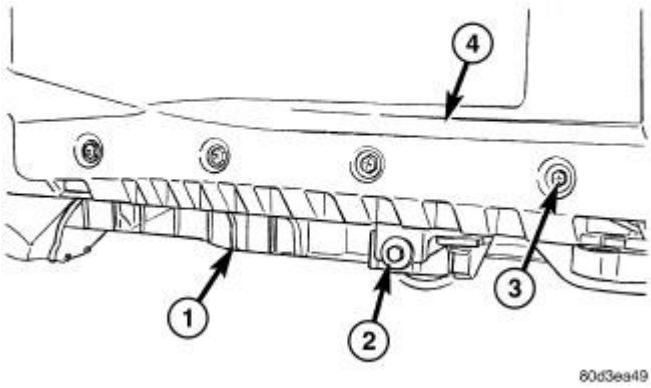

Fig. 378: HVAC/Instrument Panel Mounting
Courtesy of CHRYSLER GROUP, LLC

12. Install the one bolt (2) that secures the instrument panel (4) to the HVAC housing (1) below the glove box opening.
13. Install the glove box to the instrument panel. Refer to **GLOVE BOX, INSTRUMENT PANEL, INSTALLATION**.

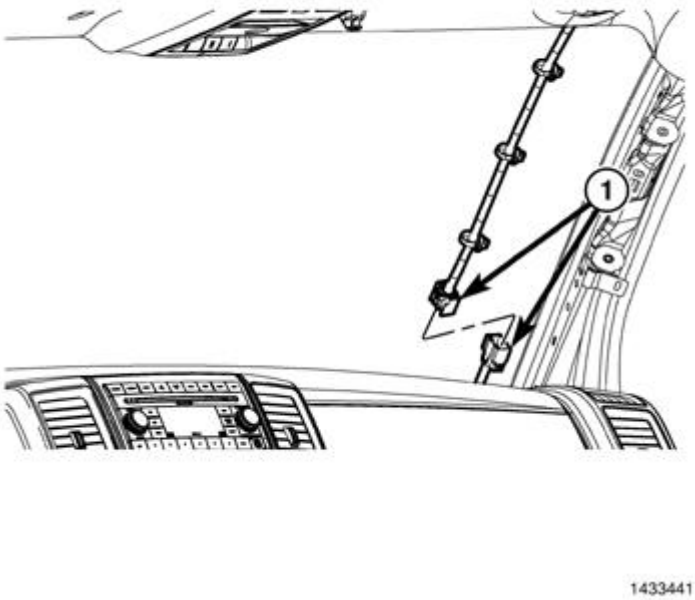

Fig. 379: Headliner Wire Harness Connector
Courtesy of CHRYSLER GROUP, LLC

14. Connect the headliner wire harness connector located at the A-pillar.

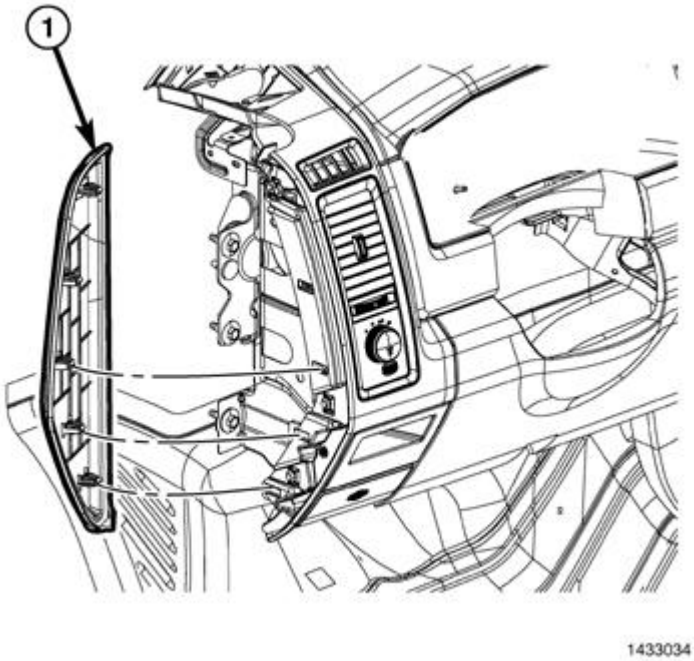

Fig. 380: Instrument Panel Side Cover
Courtesy of CHRYSLER GROUP, LLC

NOTE: Left side shown in illustration, right side similar.

15. Install the right instrument panel side cover.

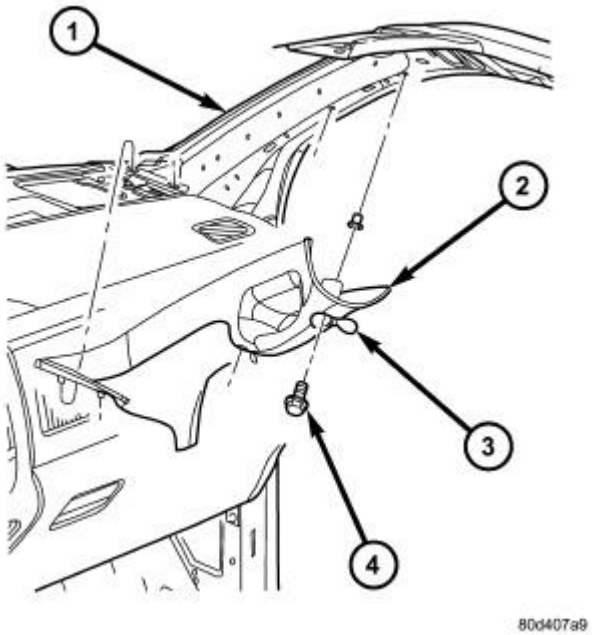

Fig. 381: A-Pillar Trim/Grab Handle
Courtesy of CHRYSLER GROUP, LLC

16. Install the right A-pillar trim. Refer to **PANEL, A-PILLAR TRIM, WITH GRAB HANDLE, INSTALLATION**.

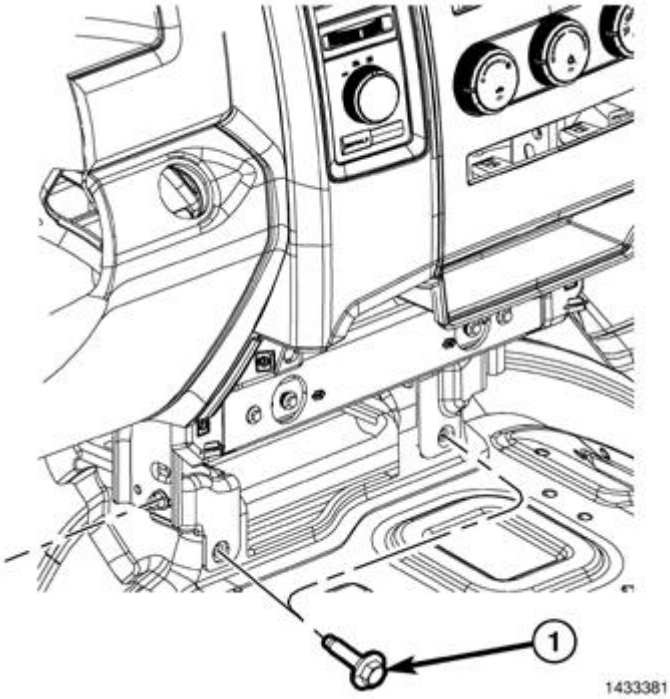

Fig. 382: Instrument Panel To Center Of Floor Panel Bolt
Courtesy of CHRYSLER GROUP, LLC

17. Install the two bolts (1) that secure the instrument panel to the center of the floor panel.
18. Tighten the bolts to 12 N.m (9 ft. lbs.).
19. Install the Brake Sled to I/P Bolts

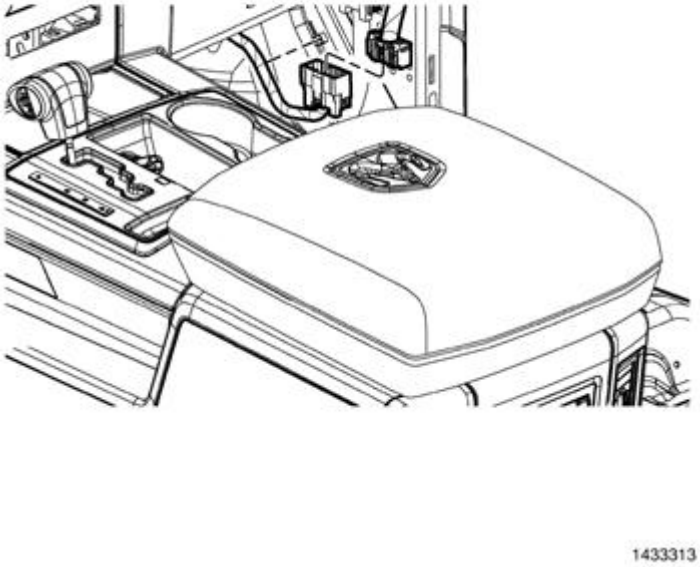

Fig. 383: Floor Console

Courtesy of CHRYSLER GROUP, LLC

20. Install the floor console, if equipped. Refer to **CONSOLE, FLOOR, INSTALLATION**.

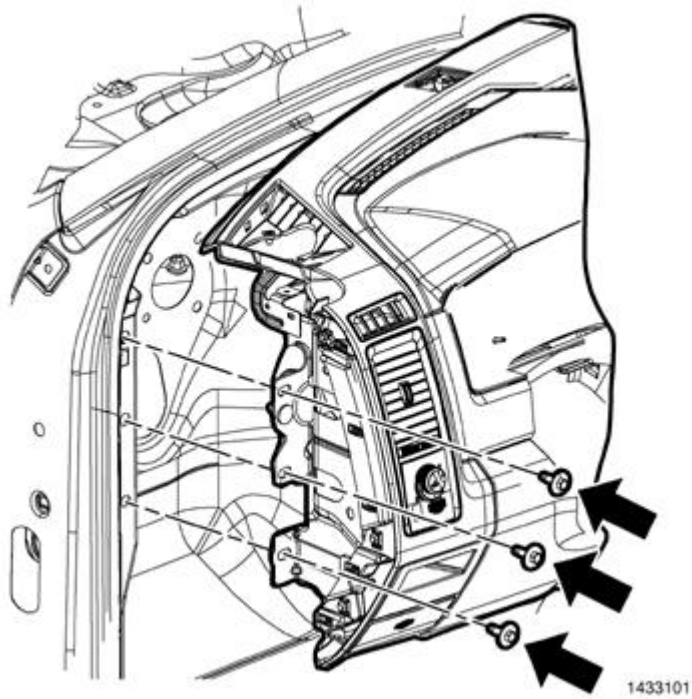

Fig. 384: Left Side Of Instrument Panel To Dash Panel Bolts
Courtesy of CHRYSLER GROUP, LLC

21. Install the three bolts (1) that secure the left side of the instrument panel to the dash panel.

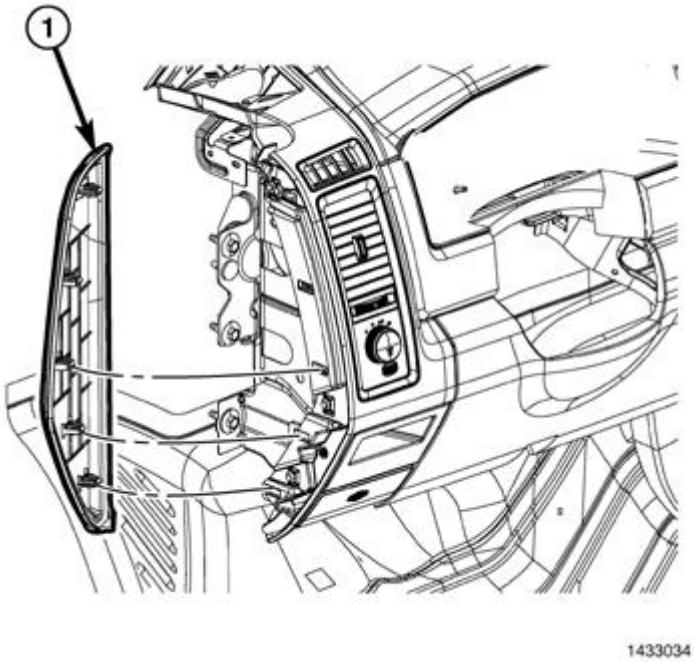

Fig. 385: Instrument Panel Side Cover
Courtesy of CHRYSLER GROUP, LLC

22. Install the left instrument panel side cover fully engaging the retainer clips.

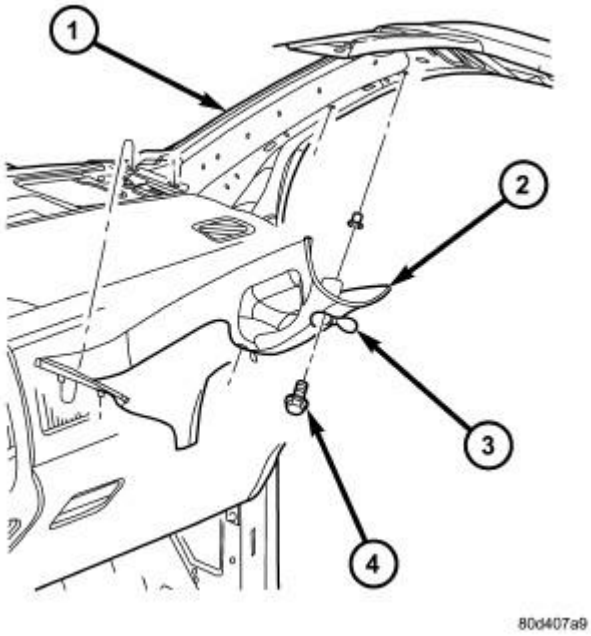

Fig. 386: A-Pillar Trim/Grab Handle
Courtesy of CHRYSLER GROUP, LLC

23. Install the left A-pillar trim. Refer to **PANEL, A-PILLAR TRIM, WITH GRAB HANDLE, INSTALLATION**.
24. Install the steering column as necessary. Refer to **COLUMN, INSTALLATION** .

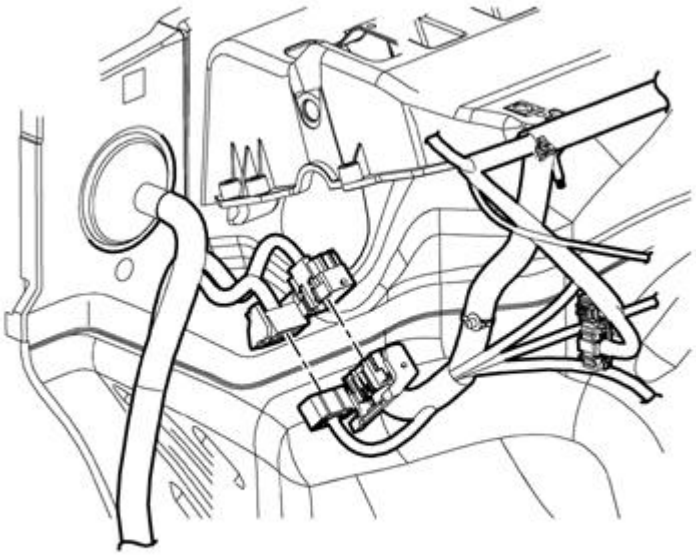

Fig. 387: Instrument Panel Wire Harness Connector
Courtesy of CHRYSLER GROUP, LLC

25. Connect the instrument panel wire harness connector (2) located above the brake pedal to the bulkhead wire harness connector (1).
26. Install the steering column opening cover Refer to **COVER, STEERING COLUMN OPENING, INSTALLATION**.

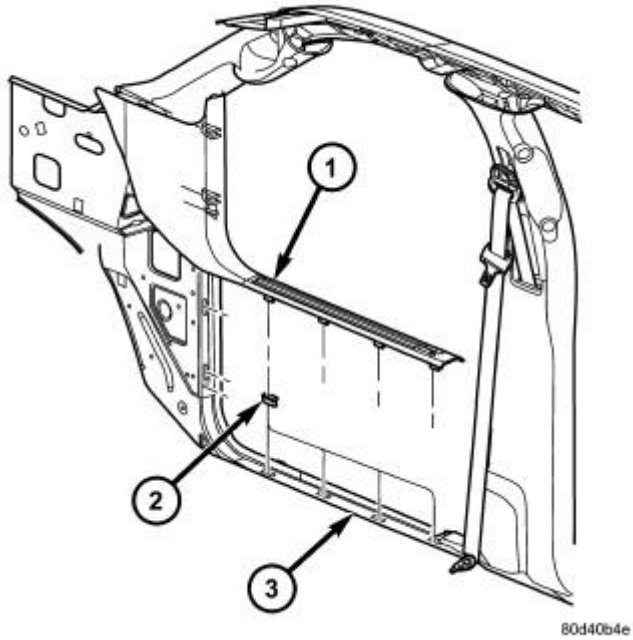

Fig. 388: Cowl Trim Panel & Retainer Clips
Courtesy of CHRYSLER GROUP, LLC

27. Install the left cowl trim panel. Refer to **PANEL, COWL TRIM, INSTALLATION**.
28. Install the front seat assembly. Refer to **SEAT, FRONT, INSTALLATION** and **SEAT, FRONT CENTER, INSTALLATION**.
29. Reconnect the negative battery cable.

INTERIOR

CAUTION

CAUTION

CAUTION: Do not attempt to remove interior trim panels or moldings without first removing the necessary adjacent trim panels or moldings. To avoid damaging the trim panels, ensure that all the fasteners are removed or disengaged before attempting to remove interior trim panels or moldings. Trim panels are somewhat flexible but can be damaged if handled improperly.

BEZEL, CENTER CONSOLE

REMOVAL

REMOVAL

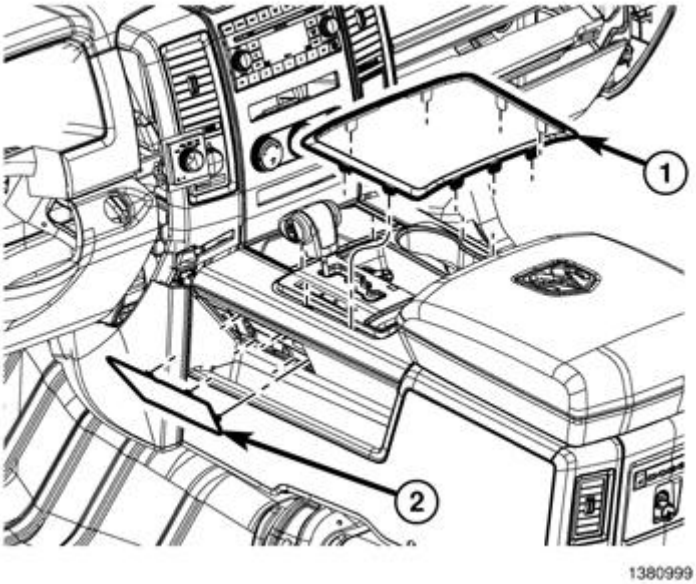

Fig. 389: Shifter Bezel Trim Ring
Courtesy of CHRYSLER GROUP, LLC

1. Using trim stick (special tool #C-4755, Trim Stick) or equivalent, remove shift bezel trim ring (1).

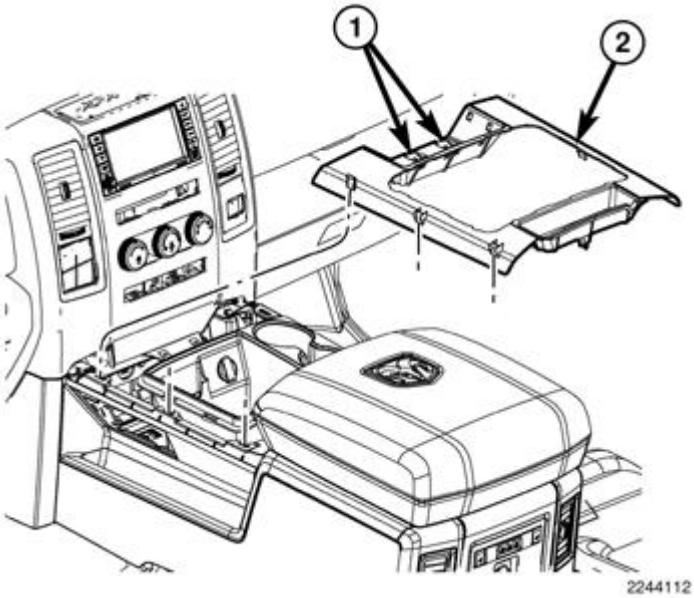

Fig. 390: Shift Bezel
Courtesy of CHRYSLER GROUP, LLC

2. Remove the rubber mat and remove the screws (1).
3. Using trim stick (special tool #C-4755, Trim Stick) or equivalent, remove shift bezel (1).

INSTALLATION

INSTALLATION

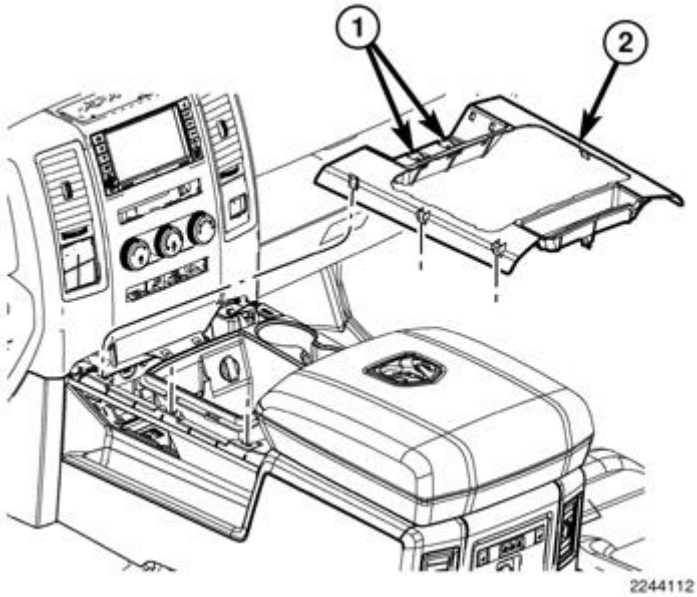

Fig. 391: Shift Bezel
Courtesy of CHRYSLER GROUP, LLC

1. Position the shift bezel (2) in place and seat the retaining tabs fully.
2. Install the screws (1) and install the rubber mat.

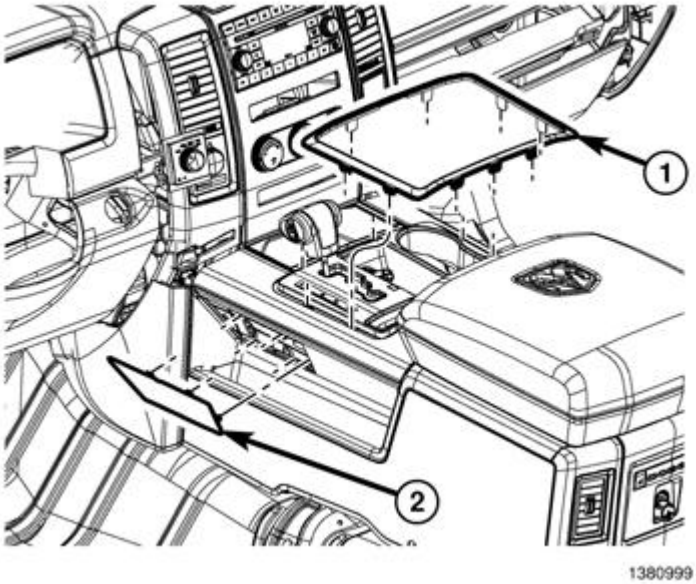

Fig. 392: Shifter Bezel Trim Ring
Courtesy of CHRYSLER GROUP, LLC

3. Position the trim ring (1) into place and seat the retaining tabs fully.

BIN, STORAGE

REMOVAL

REMOVAL

STORAGE BIN

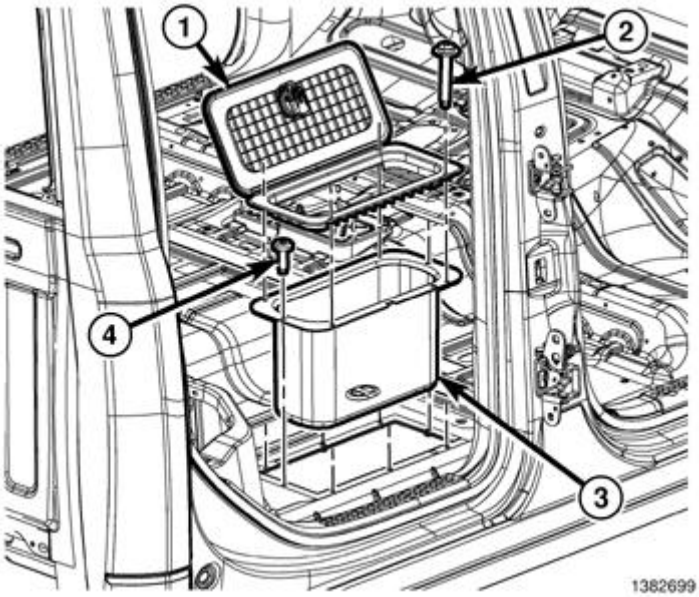

Fig. 393: Storage Bin
Courtesy of CHRYSLER GROUP, LLC

1. Remove the six bolts (4) that secure the storage bin (3) to the floor panel and remove the storage bin.

REAR STORAGE COMPARTMENT

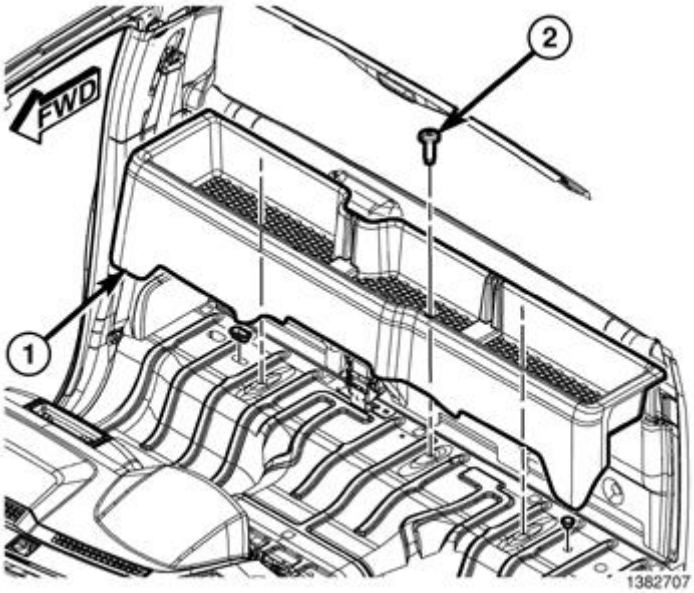

Fig. 394: Rear Storage Compartment
Courtesy of CHRYSLER GROUP, LLC

1. Remove the three bolts (2) that secure the rear storage compartment (1) to the floor panel and remove the storage compartment from the rear cab trim panel.

INSTALLATION

INSTALLATION

STORAGE BIN

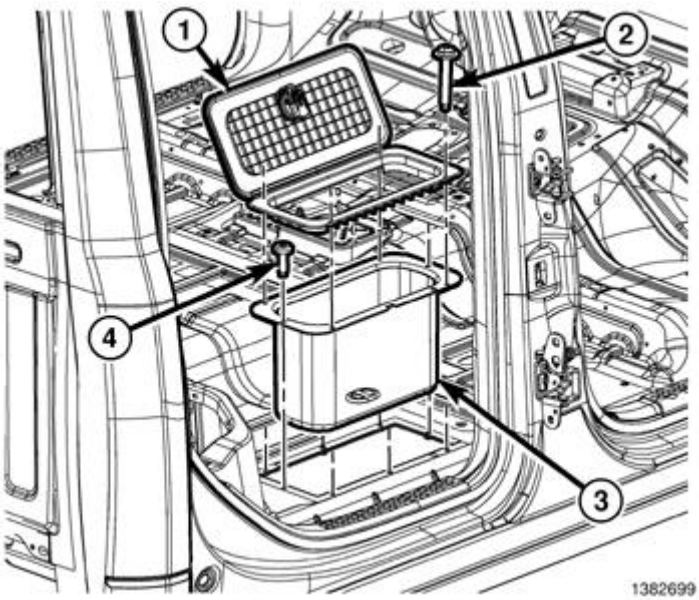

Fig. 395: Storage Bin
Courtesy of CHRYSLER GROUP, LLC

1. Position the storage bin (3) in the floor panel and install the six bolts (4).

REAR STORAGE COMPARTMENT

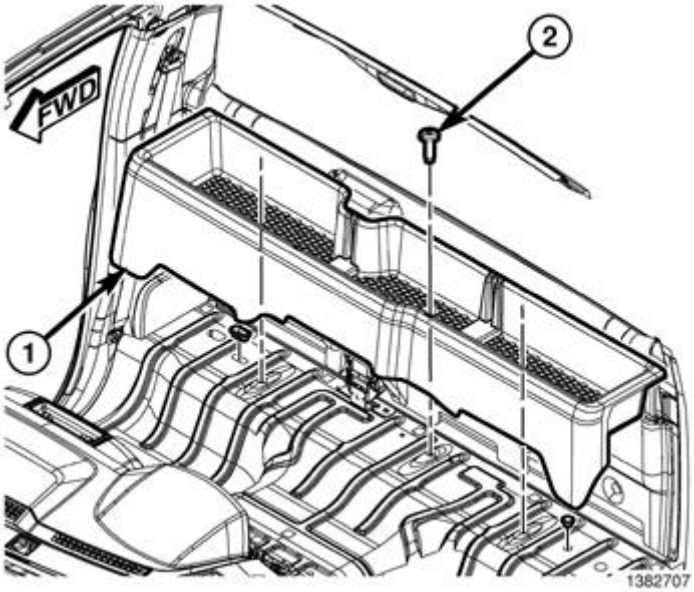

Fig. 396: Rear Storage Compartment
Courtesy of CHRYSLER GROUP, LLC

1. Position the rear storage compartment (1) onto the rear cab trim panel and install the three bolts (2).

CARPET, FLOOR

REMOVAL

REMOVAL

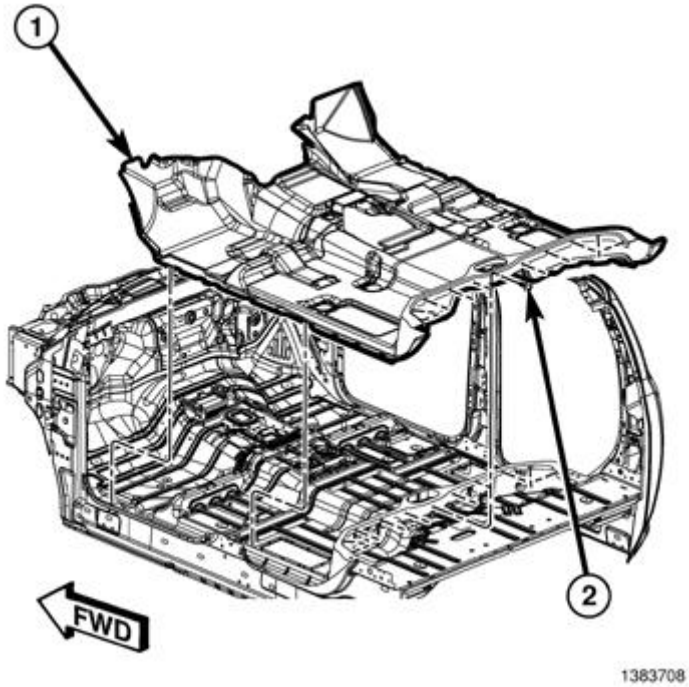

Fig. 397: Floor Carpet
Courtesy of CHRYSLER GROUP, LLC

NOTE: **Carpet for quad can model shown in illustration. Regular cab similar.**

NOTE: **The floor mat hook is serviced separately from the carpet, do not replace the carpet do to a broken floor mat hook.**

1. Remove the front seats. Refer to **SEAT, FRONT, REMOVAL** and **SEAT, FRONT CENTER, REMOVAL**.
2. If equipped, remove the floor console. Refer to **CONSOLE, FLOOR, REMOVAL**.
3. If equipped, remove the storage bins. Refer to **BIN, STORAGE, REMOVAL**.
4. If equipped, remove the rear sub-woofer. Refer to **SPEAKER, REMOVAL** .
5. Remove the lower B-pillar trim panels. Refer to **PANEL, B-PILLAR TRIM, LOWER, REMOVAL**.
6. Remove the jack assemblies.
7. Remove the nine push pin fasteners (2) on the quad cab models.
8. Remove the carpet (1) from the vehicle.

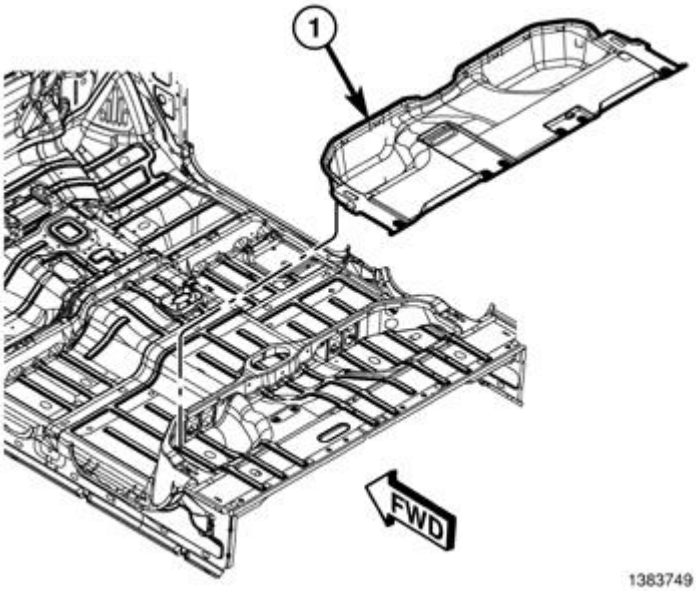

Fig. 398: Rear Storage Bin Carpet
Courtesy of CHRYSLER GROUP, LLC

9. If required, separate the seat belts from the floor on both sides. Refer to **SEAT BELT, REMOVAL** .
10. Remove the rear storage bin carpet (1), if equipped.

INSTALLATION

INSTALLATION

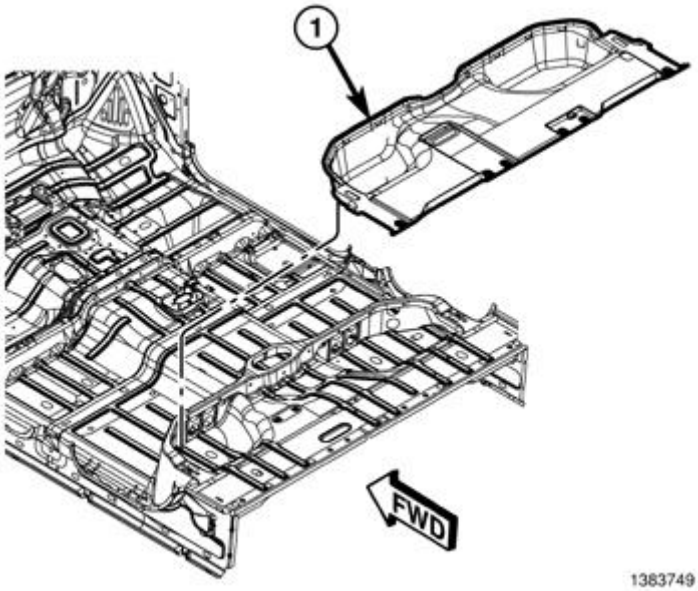

Fig. 399: Rear Storage Bin Carpet
Courtesy of CHRYSLER GROUP, LLC

1. Install the rear storage bin carpet (1), if equipped.
2. If required, install the seatbelts to the floor. Refer to **SEAT BELT, INSTALLATION** .

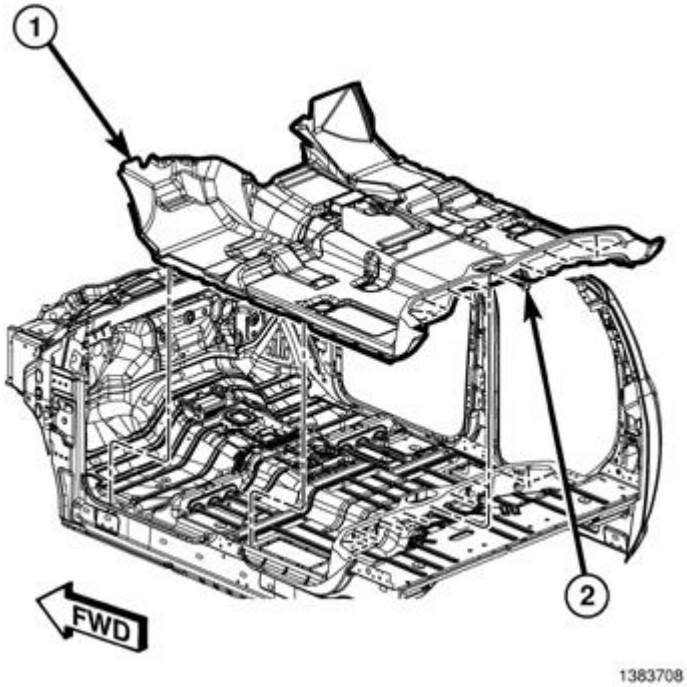

Fig. 400: Floor Carpet
Courtesy of CHRYSLER GROUP, LLC

NOTE: Carpet for quad cab model shown in illustration. Regular cab similar.

3. Position the carpet (1) into the vehicle.
4. On quad cab models, install the nine push-pin fasteners (2) that secure the carpet to the floor panel.
5. Install the lower B-pillar trim panels. Refer to **PANEL, B-PILLAR TRIM, LOWER, INSTALLATION**.
6. If equipped, install the sub-woofers. Refer to **SPEAKER, INSTALLATION** .
7. Install the storage bins, if equipped. Refer to **BIN, STORAGE, INSTALLATION**.
8. If equipped, install the floor console. Refer to **CONSOLE, FLOOR, INSTALLATION**.
9. Install the front seats. Refer to **SEAT, FRONT, INSTALLATION** and **SEAT, FRONT CENTER, INSTALLATION**.

CONSOLE, FLOOR

REMOVAL

REMOVAL

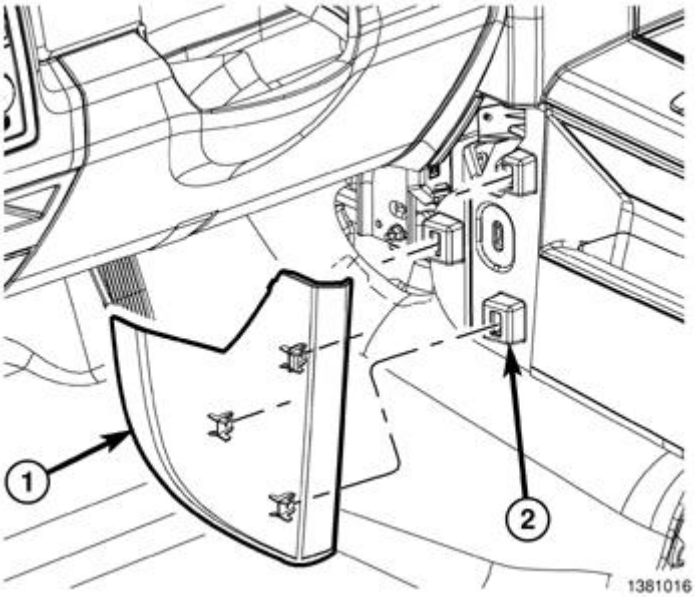

Fig. 401: Side Trim Covers
Courtesy of CHRYSLER GROUP, LLC

1. Remove the side trim covers (1).

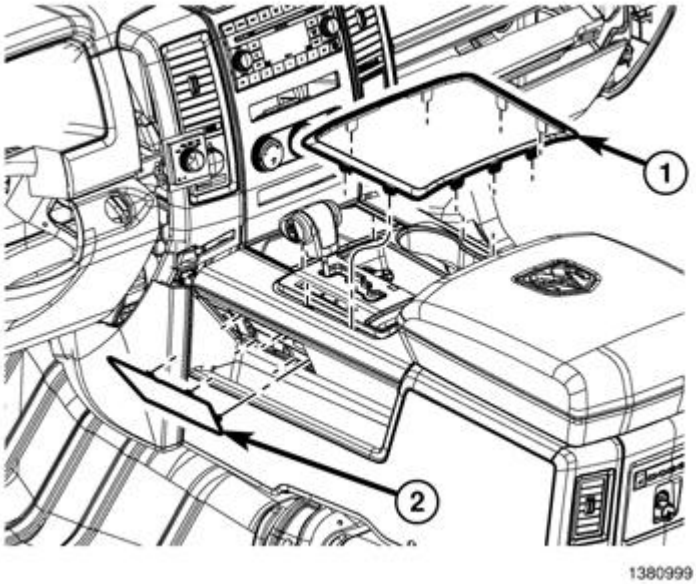

Fig. 402: Shifter Bezel Trim Ring
Courtesy of CHRYSLER GROUP, LLC

2. Using trim stick (special tool #C-4755, Trim Stick) or equivalent, remove shift bezel trim ring (1) and the shift cable cover (2).

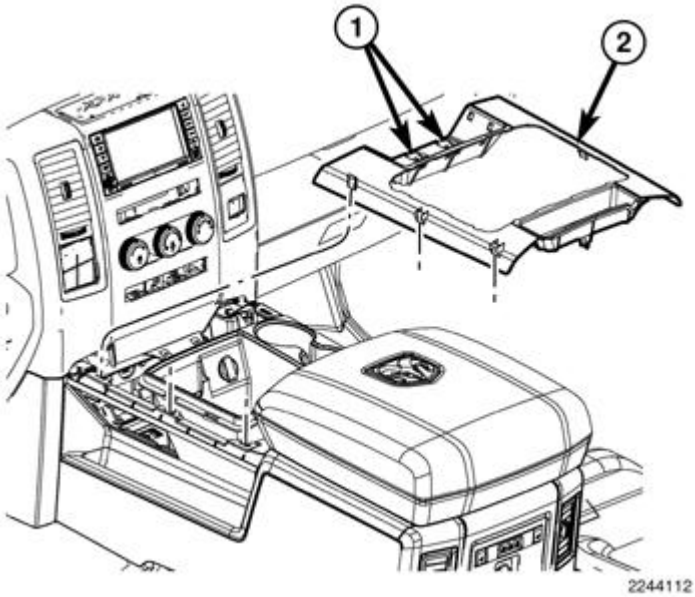

Fig. 403: Shift Bezel
Courtesy of CHRYSLER GROUP, LLC

3. Remove the screws (1).
4. Using trim stick (special tool #C-4755, Trim Stick) or equivalent, remove shift bezel (1).

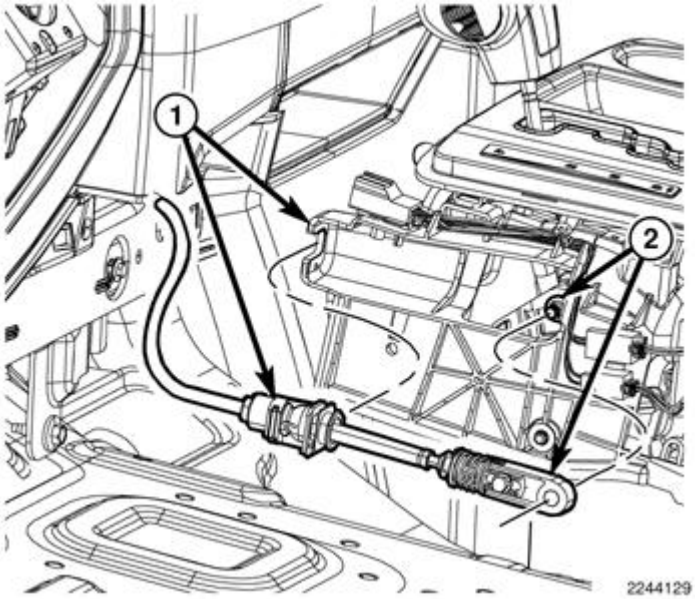

Fig. 404: Shift Cable End
Courtesy of CHRYSLER GROUP, LLC

5. Separate the shift cable end (2) from the shifter.
6. Release the clip and separate the shift cable housing (1) from the shifter assembly.

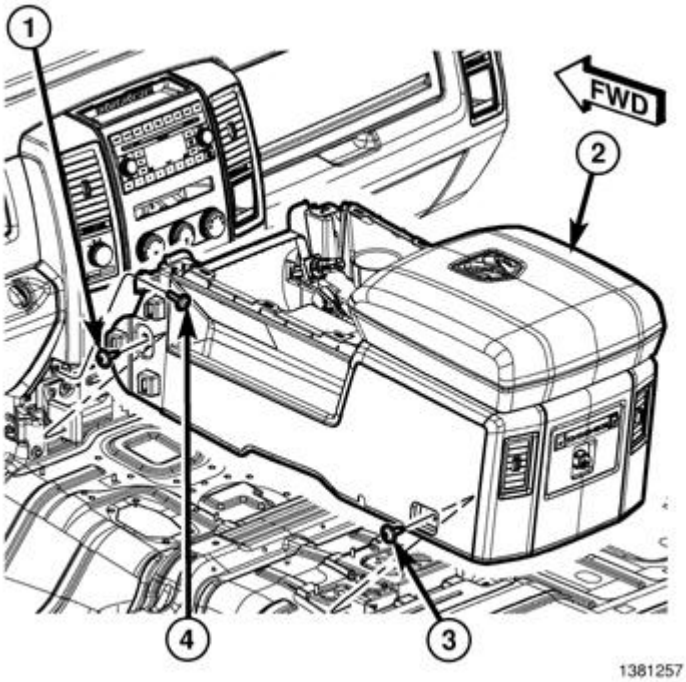

Fig. 405: Floor Console & Screws
Courtesy of CHRYSLER GROUP, LLC

7. Remove the screws (1, 3 and 4).

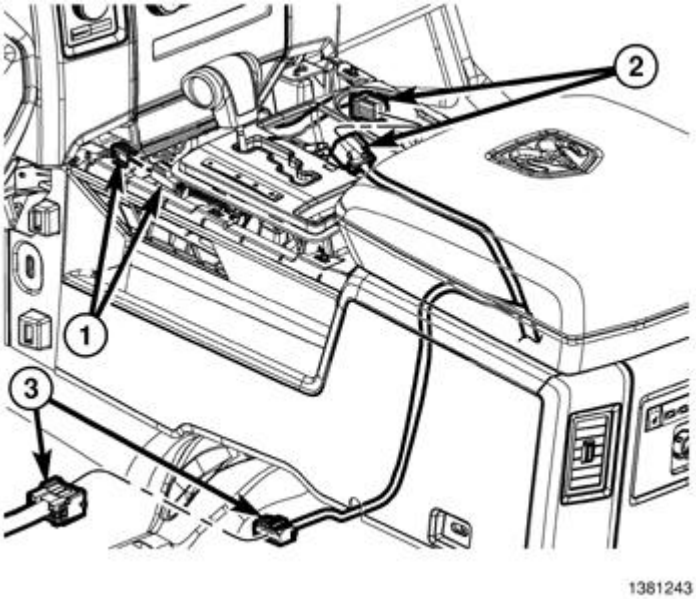

Fig. 406: Electrical Connectors To Console
Courtesy of CHRYSLER GROUP, LLC

8. Disconnect the power outlet electrical connector, if equipped.
9. Disconnect the electrical connectors (1, 2 and 3) and remove the console.

INSTALLATION

INSTALLATION

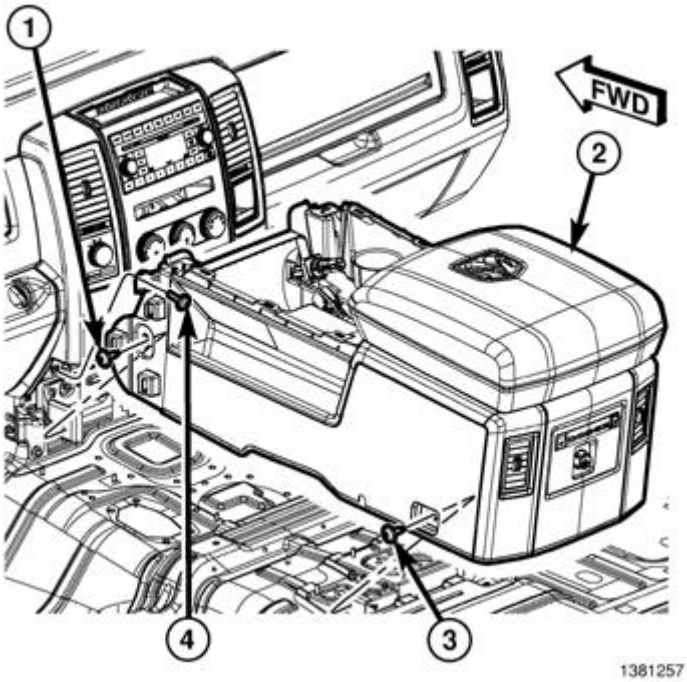

Fig. 407: Floor Console & Screws

Courtesy of CHRYSLER GROUP, LLC

1. Position the floor console inside the vehicle and over the support brackets.

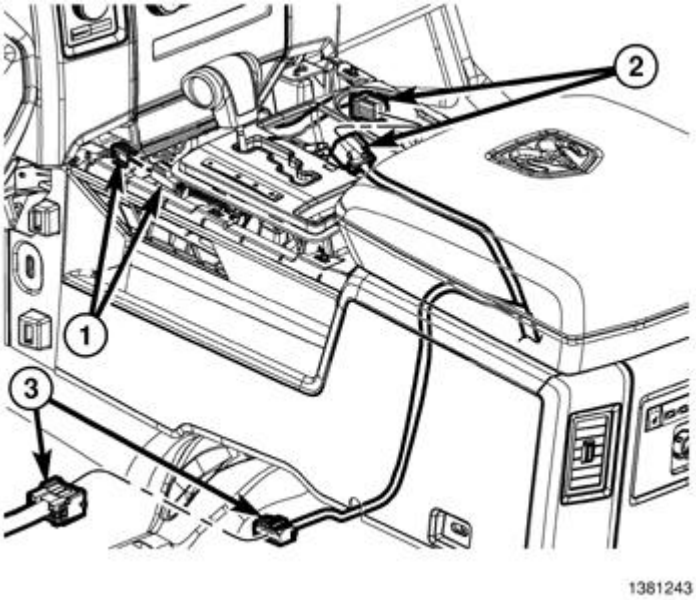

Fig. 408: Electrical Connectors To Console
Courtesy of CHRYSLER GROUP, LLC

2. Connect the power outlet electrical connector, if equipped.
3. Connect the electrical connectors (1, 2 and 3).

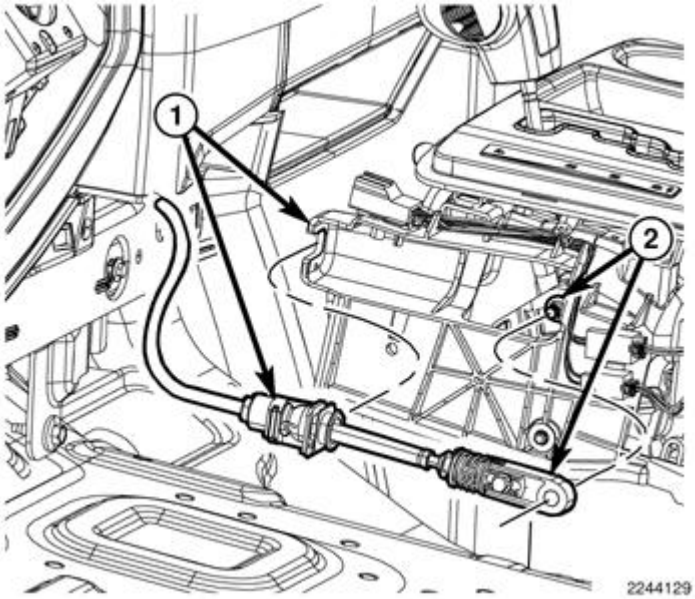

Fig. 409: Shift Cable End
Courtesy of CHRYSLER GROUP, LLC

4. Position the shift cable back into place and secure the housing to the shifter assembly (1).
5. Seat the cable end onto the shifter stud (2) fully.

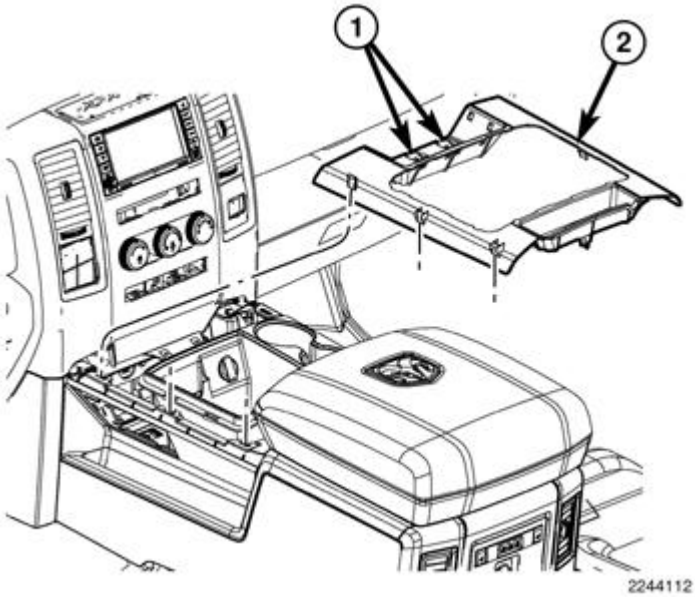

Fig. 410: Shift Bezel
Courtesy of CHRYSLER GROUP, LLC

6. Position the shift bezel (2) in place and seat the retaining tabs fully.
7. Install the screws (1).

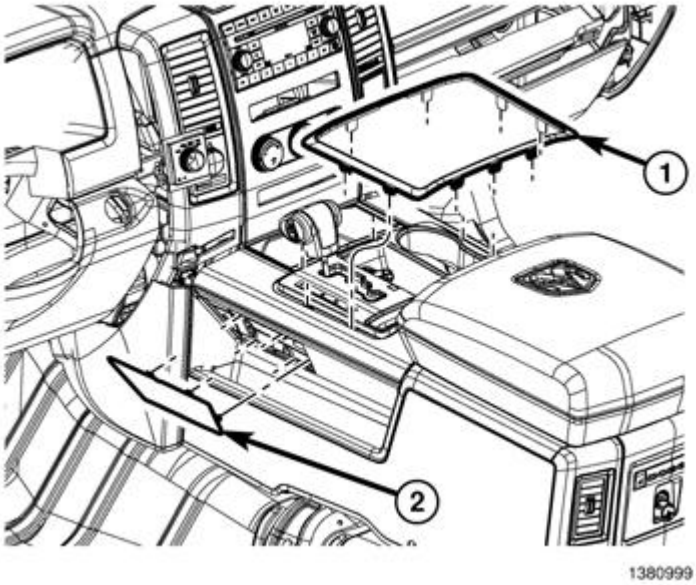

Fig. 411: Shifter Bezel Trim Ring
Courtesy of CHRYSLER GROUP, LLC

8. Install the shift cable cover (2) and seat the retaining clips fully.

9. Position the trim ring (1) into place and seat the retaining tabs fully.

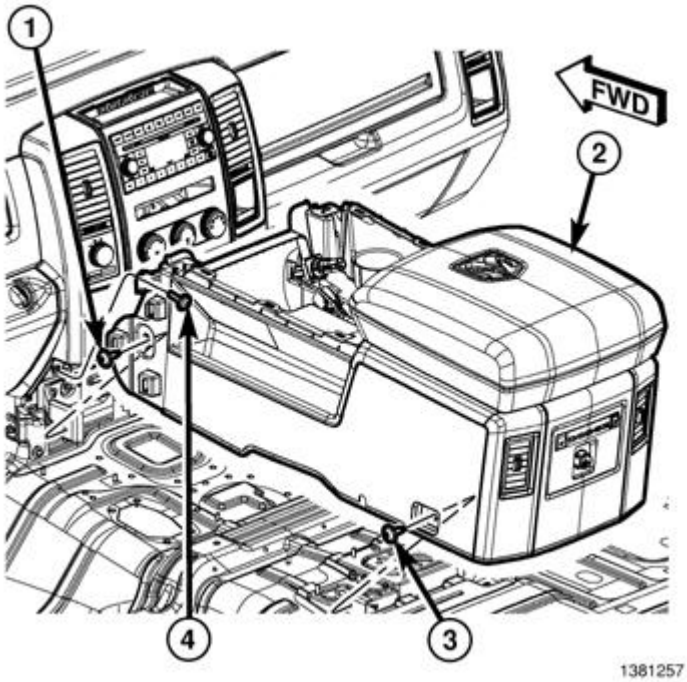

Fig. 412: Floor Console & Screws
Courtesy of CHRYSLER GROUP, LLC

10. Install the screws (3) and tighten to 7 N.m (62 in. lbs.).
11. Install the screws (1) and tighten to 7 N.m (62 in. lbs.).
12. Install the screws (4).

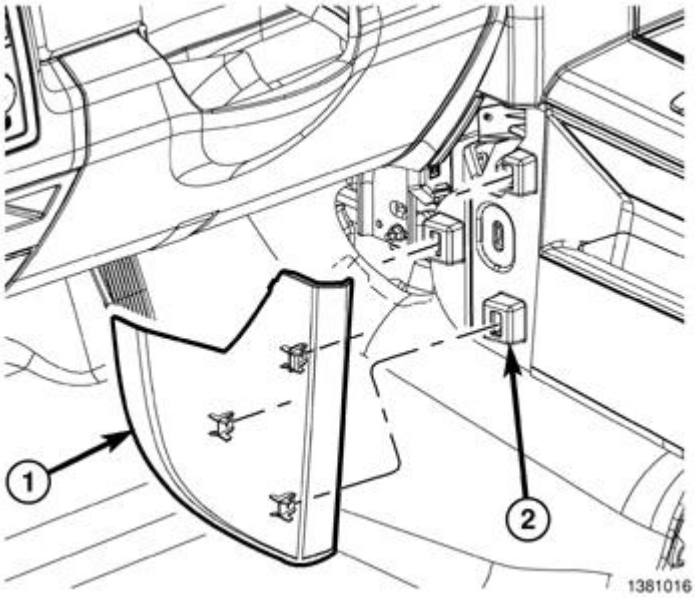

Fig. 413: Side Trim Covers

Courtesy of CHRYSLER GROUP, LLC

13. Position the side trim (1) into place and seat the clips fully (2).

CONSOLE, OVERHEAD, FRONT

DESCRIPTION

DESCRIPTION

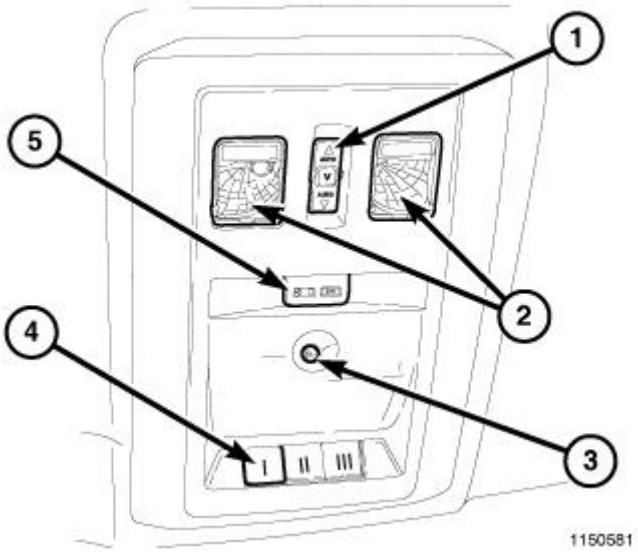

Fig. 414: Overhead Console Assembly
Courtesy of CHRYSLER GROUP, LLC

A front overhead console is standard factory-installed equipment on this model. All overhead consoles are equipped with two reading and courtesy lamps (2). On vehicles equipped with a power sunroof, the overhead console will contain a three button switch (1) directly between the two reading and courtesy lamps. The front overhead console will contain a two button switch (5) on vehicles equipped with rear power sliding glass, and a three button HomeLink® transceiver switch (4) - if equipped. On vehicles equipped with automatic climate control an infrared temperature sensor is located between the two switch banks.

NOTE: The overhead console reading lamp switches, bulb holders and wiring harness are serviced only as a unit and are not available individually for service.

An overhead console (1) is available on this vehicle and may include many of the following components:

- Front map/reading lamps (2)
- HomeLink® transceiver (3) - if equipped
- Compass module - if equipped
- Power sunroof switch - if equipped
- Power sliding glass switch - if equipped

REMOVAL

REMOVAL

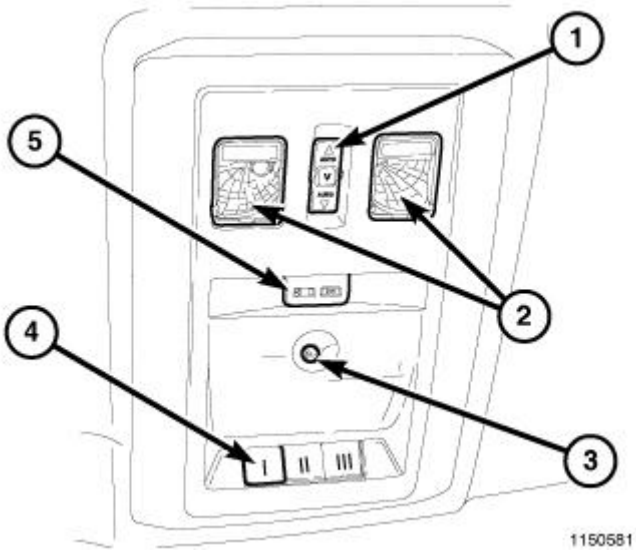

Fig. 415: Overhead Console Assembly
Courtesy of CHRYSLER GROUP, LLC

1. Disconnect and isolate the battery negative cable.
2. Using your fingertips, grasp the sides of the overhead console and pull straight down evenly to disengage the four snap clips.

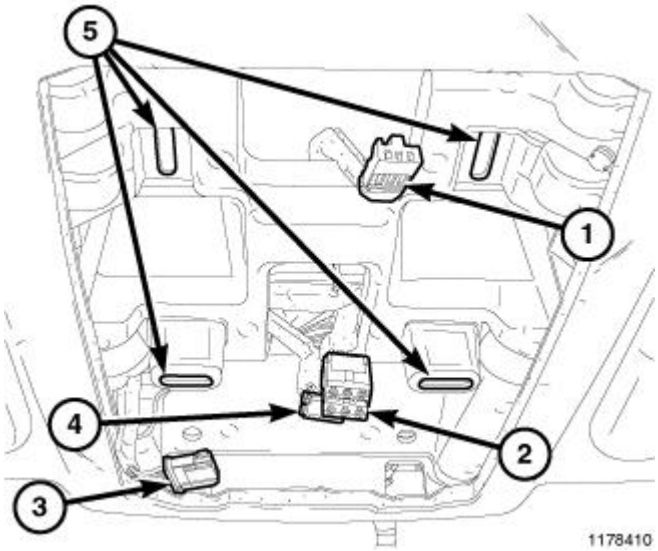

Fig. 416: Overhead Console Harness Connectors
Courtesy of CHRYSLER GROUP, LLC

3. Lower the overhead console from the headliner far enough to access the wire harness connectors.
4. Disconnect the reading lamp wire harness connector (1).

5. Disconnect the sunroof switch wire harness connector, if equipped.
6. Disconnect the inferred temperature sensor wire harness connector (4), if equipped.
7. Disconnect the power sliding glass wire harness connector (2), if equipped.
8. Disconnect the Homelink® transceiver wire harness connector (3), if equipped.
9. Remove the overhead console from the vehicle.

INSTALLATION

INSTALLATION

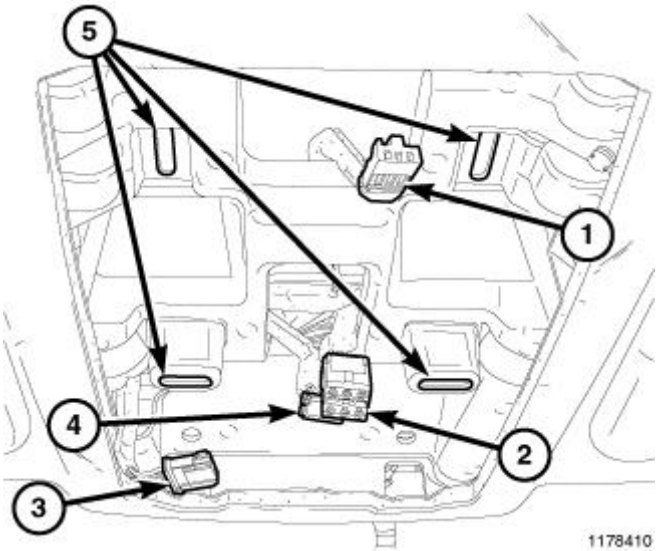

Fig. 417: Overhead Console Harness Connectors
Courtesy of CHRYSLER GROUP, LLC

1. Position the overhead console near the mounting location on the headliner and connect the wire harness connectors.
2. Connect the reading lamp wire harness connector (1).
3. If equipped, connect the sunroof switch wire harness connector.
4. If equipped, connect the inferred temperature sensor wire harness connector (4).
5. If equipped, connect the power sliding glass wire harness connector (2).
6. If equipped, connect the Homelink® transceiver wire harness connector (3).
7. Align the snap clips on the overhead console housing with their receptacles (5) in the overhead console bracket.
8. Push upward firmly and evenly on the sides of the overhead console housing over the snap clip locations until the snap clips are fully engaged with the receptacles in the overhead console bracket.
9. Reconnect the battery negative cable.

EXHAUSTER

REMOVAL

REMOVAL

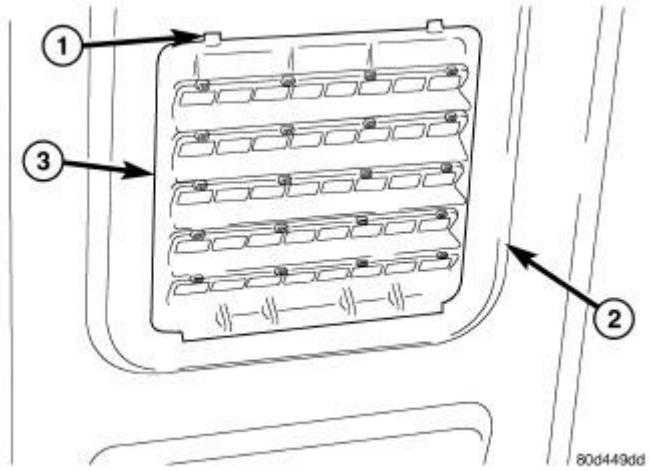

Fig. 418: Body Vent
Courtesy of CHRYSLER GROUP, LLC

1. Remove the rear cab trim panel. Refer to **PANEL, CAB BACK TRIM, REMOVAL**.
2. Disengage the retaining tabs (1) that secure the body vent (3) to the cab back panel (2).
3. Remove the vent through the opening in the cab back panel.

INSTALLATION

INSTALLATION

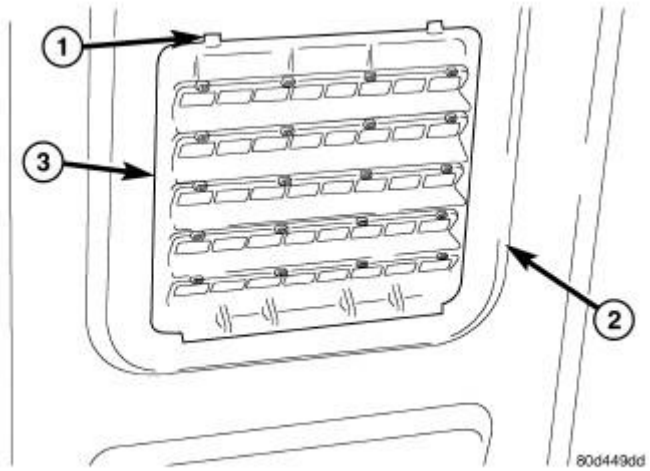

Fig. 419: Body Vent
Courtesy of CHRYSLER GROUP, LLC

1. Position the body vent (3) into the opening of the cab back panel (2).
2. Install the body vent into the cab back panel and fully engage the retaining tabs (1).

3. Install the rear cab trim panel. Refer to **PANEL, CAB BACK TRIM, INSTALLATION**.

HEADLINER

REMOVAL

REMOVAL

STANDARD CAB

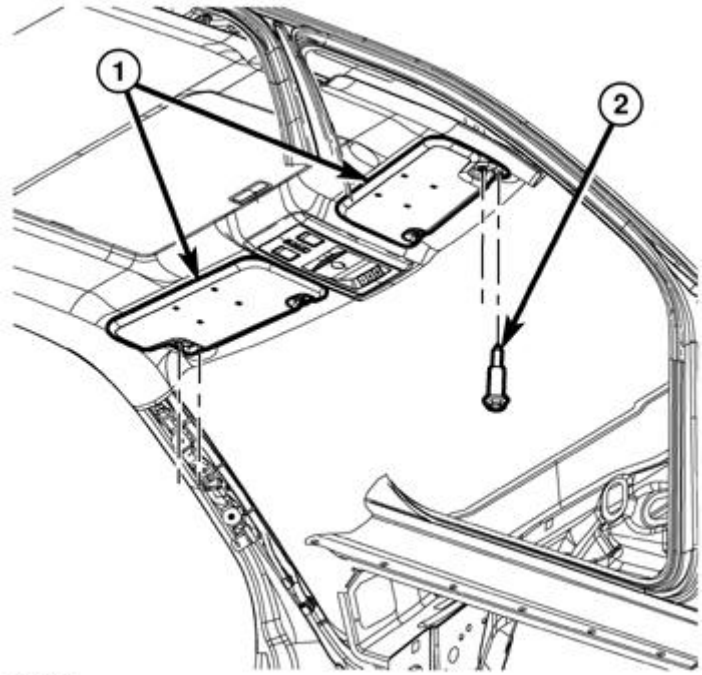

Fig. 420: Visor Support Screws
Courtesy of CHRYSLER GROUP, LLC

CAUTION: Hands should be clean or clean cloth gloves used when handling the headliner to avoid damage to the headliner.

1. Remove the A-pillar trim. Refer to **PANEL, A-PILLAR TRIM, WITH GRAB HANDLE, REMOVAL**.
2. Remove the upper B-pillar trim. Refer to **PANEL, B-PILLAR TRIM, UPPER, REMOVAL**.
3. Remove the screws and remove the visor supports.
4. Remove the screws (2) and remove the visors (1). Disconnect the electrical connectors, if equipped.

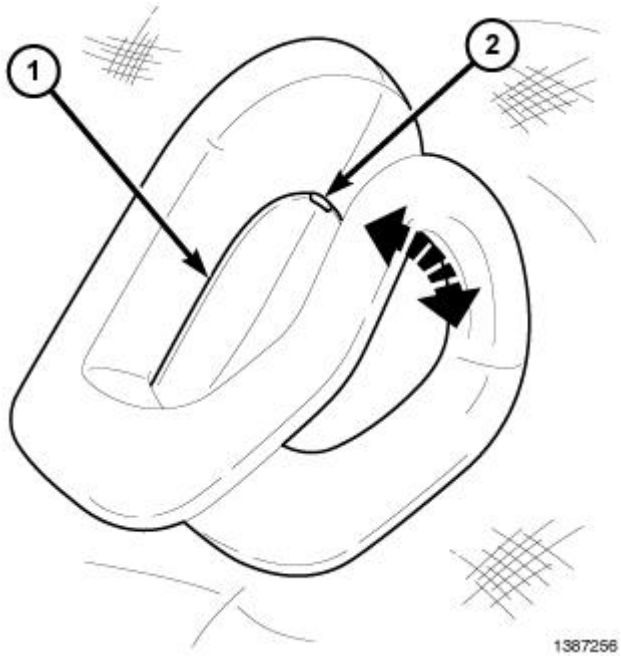

Fig. 421: Coat Hook
Courtesy of CHRYSLER GROUP, LLC

5. Using a small flat bladed tool, open the coat hook screw cover (2) and remove the screws and coat hooks.

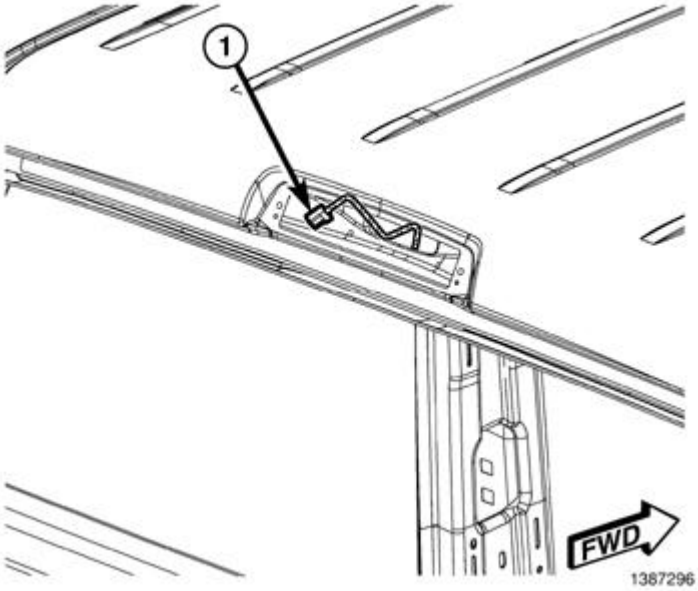

Fig. 422: CHMSL Wiring Electrical Connector
Courtesy of CHRYSLER GROUP, LLC

6. Disconnect the CHMSL wiring electrical connector.

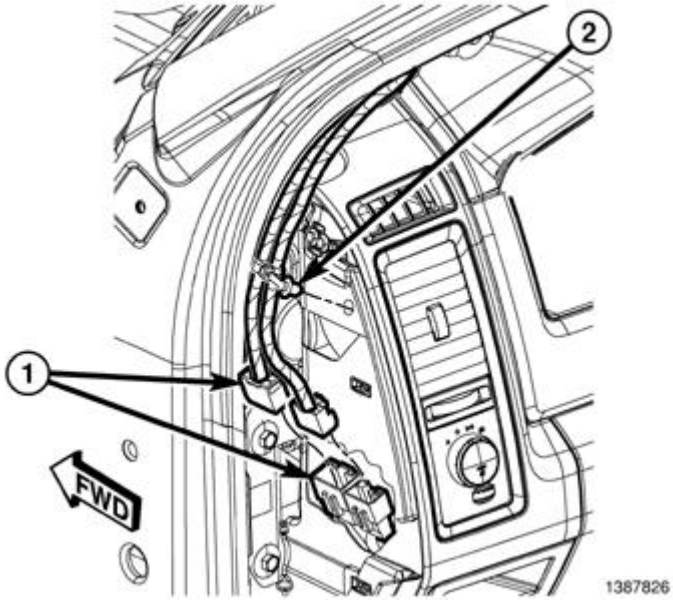

Fig. 423: Electrical Connectors
Courtesy of CHRYSLER GROUP, LLC

7. Remove the instrument panel side trim covers and disconnect the electrical connectors (1).
8. Separate the support push pin fasteners (2).

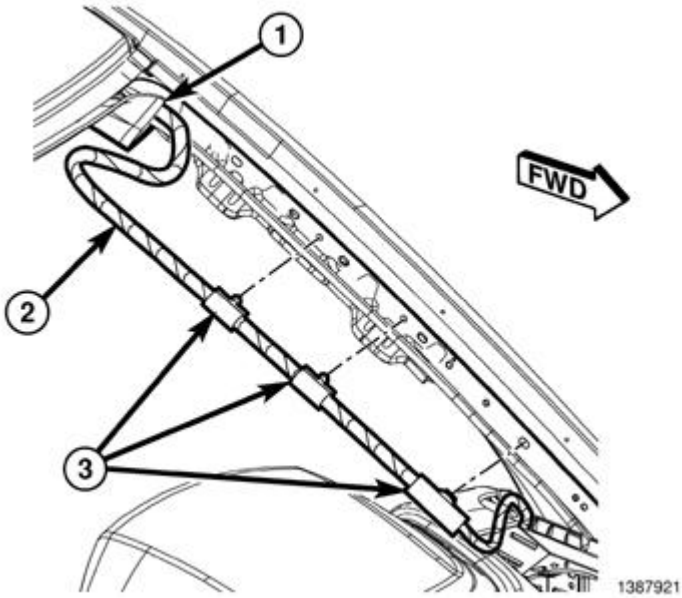

Fig. 424: A-Pillar Wiring & Clips
Courtesy of CHRYSLER GROUP, LLC

9. Disconnect the A-pillar wiring and clips (3).
10. Remove the headliner.

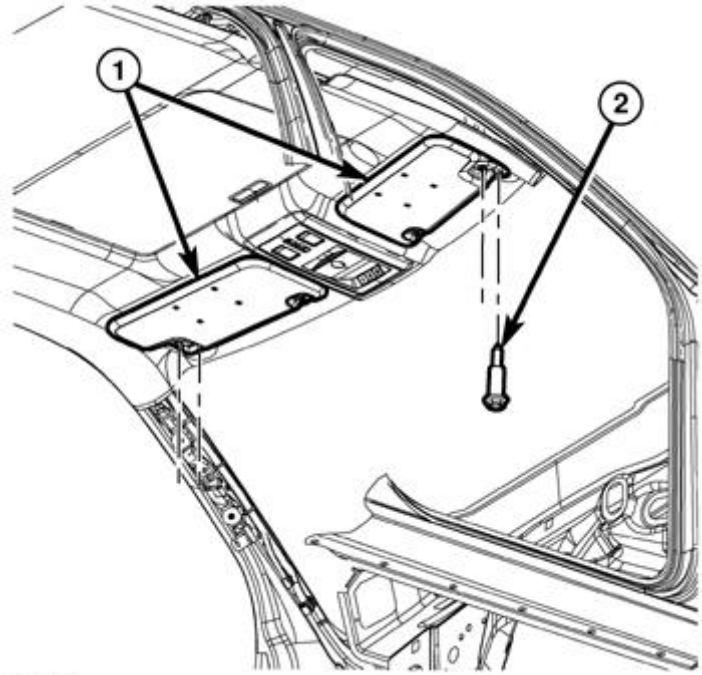

Fig. 425: Visor Support Screws
Courtesy of CHRYSLER GROUP, LLC

CAUTION: Hands should be clean or clean cloth gloves used when handling the headliner to avoid damage to the headliner.

1. Remove the windshield. Refer to **WINDSHIELD, REMOVAL**.
2. Remove the upper B-pillar trim. Refer to **PANEL, B-PILLAR TRIM, UPPER, REMOVAL**.
3. Remove the upper C-pillar trim, if equipped. Refer to **PANEL, C-PILLAR TRIM, UPPER, REMOVAL**.

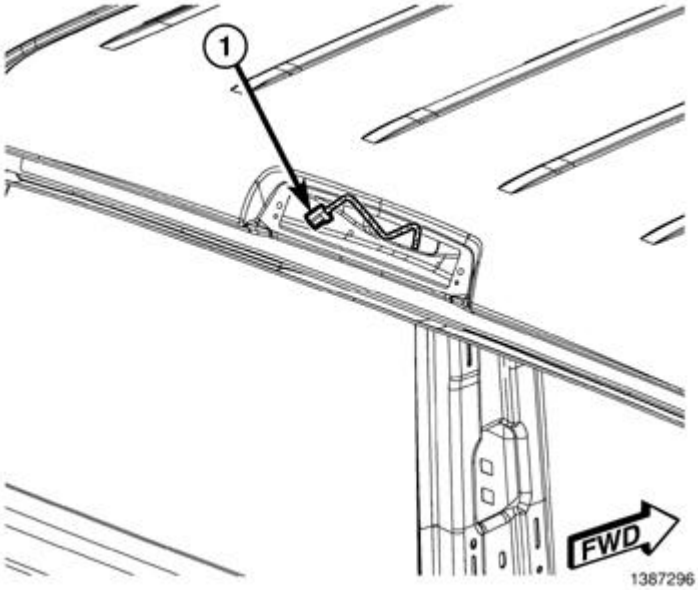

Fig. 426: CHMSL Wiring Electrical Connector
Courtesy of CHRYSLER GROUP, LLC

4. Disconnect the CHMSL wiring electrical connector.

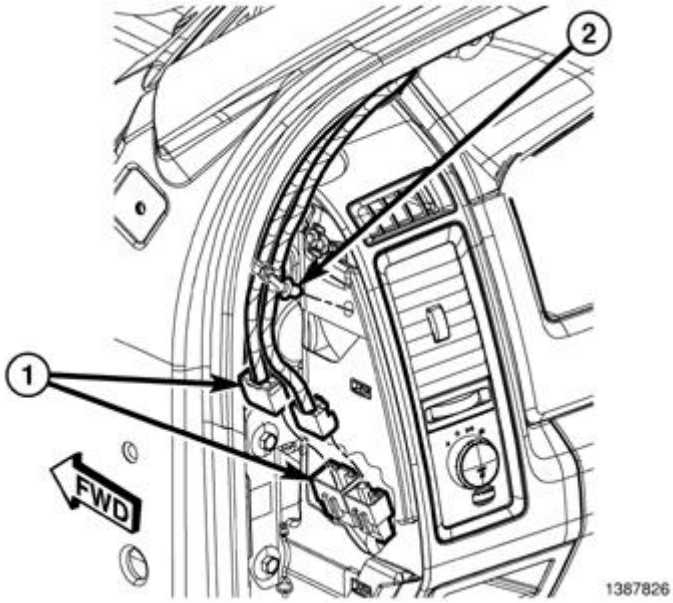

Fig. 427: Electrical Connectors
Courtesy of CHRYSLER GROUP, LLC

5. Remove the instrument panel side trim covers and disconnect the electrical connectors (1).
6. Separate the support push pin fasteners (2).

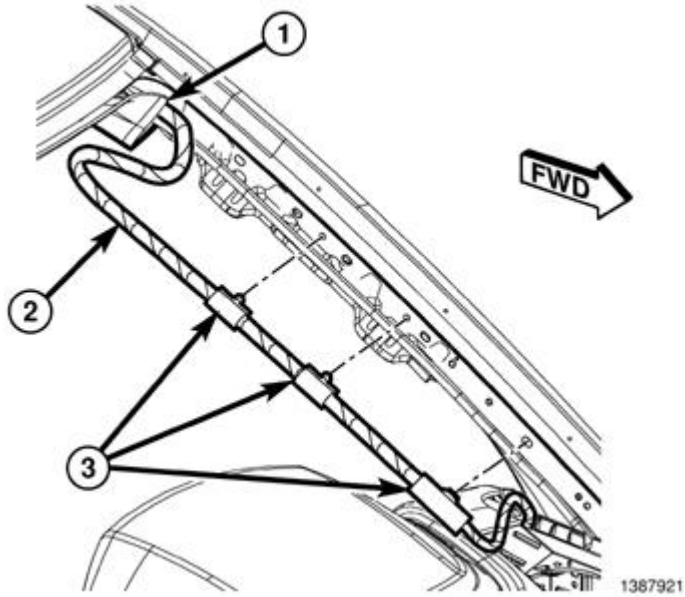

Fig. 428: A-Pillar Wiring & Clips
Courtesy of CHRYSLER GROUP, LLC

7. Disconnect the A-pillar wiring and clips (3).
8. Disengage the sunroof trim ring if equipped.

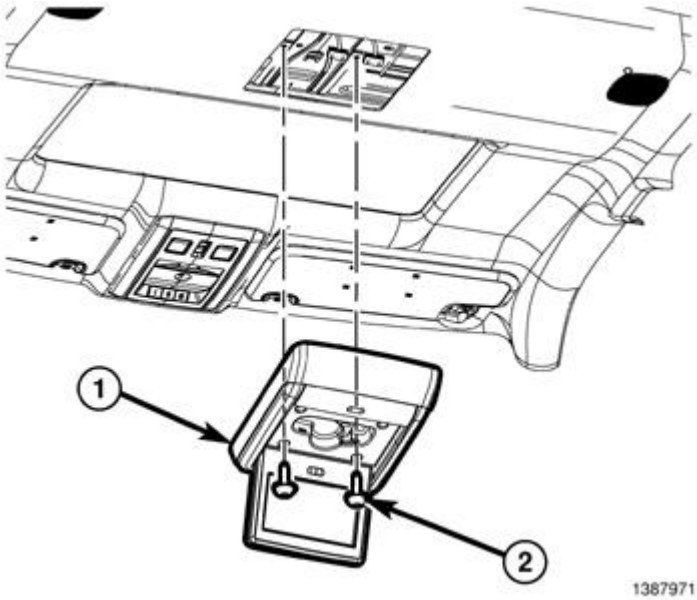

Fig. 429: DVD Monitor & Screws
Courtesy of CHRYSLER GROUP, LLC

9. Remove the DVD monitor screws (2) and separate the monitor (1) from the roof, if equipped.

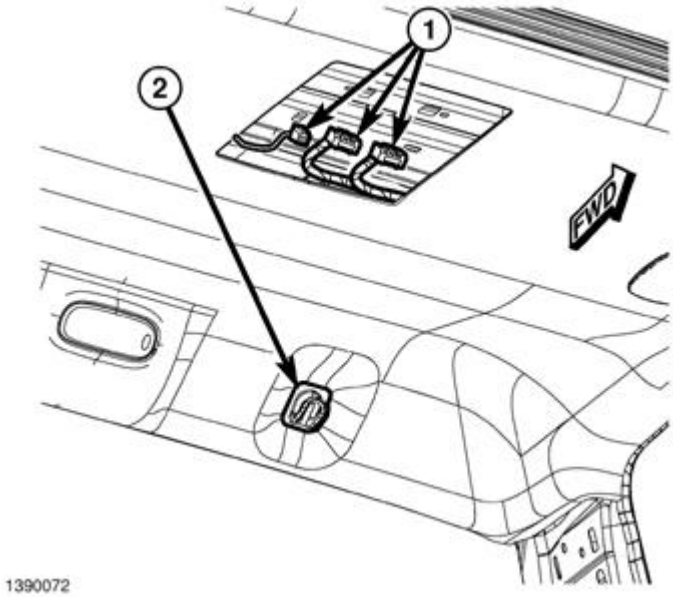

Fig. 430: DVD Housing Electrical Connectors
Courtesy of CHRYSLER GROUP, LLC

10. Disconnect the DVD housing electrical connectors (1), if equipped.
11. Remove the overhead console. Refer to **CONSOLE, OVERHEAD, FRONT, REMOVAL**.

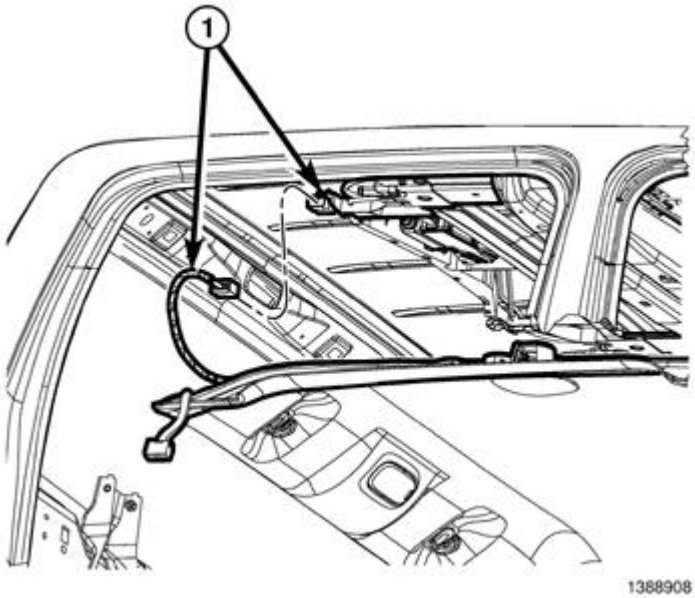

Fig. 431: Sunroof Module Electrical Connector
Courtesy of CHRYSLER GROUP, LLC

12. Disconnect the sunroof module electrical connector (1) from the sunroof module takeout, if equipped.

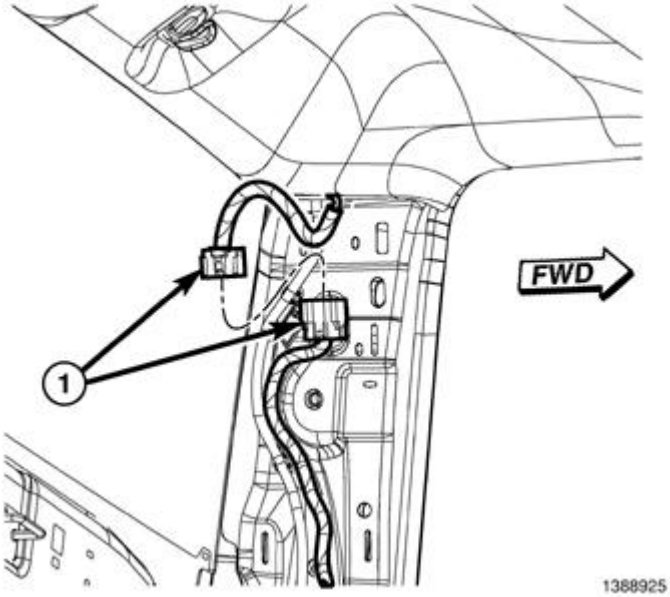

Fig. 432: Body Harness At Left C-Pillar
Courtesy of CHRYSLER GROUP, LLC

13. Disconnect the electrical connector (1) from the body harness at the C-pillar left hand side.
14. Remove the body harness clip from the C-pillar inner left hand side, if equipped.
15. Disconnect the main harness from the body harness at the C-pillar inner right hand side.

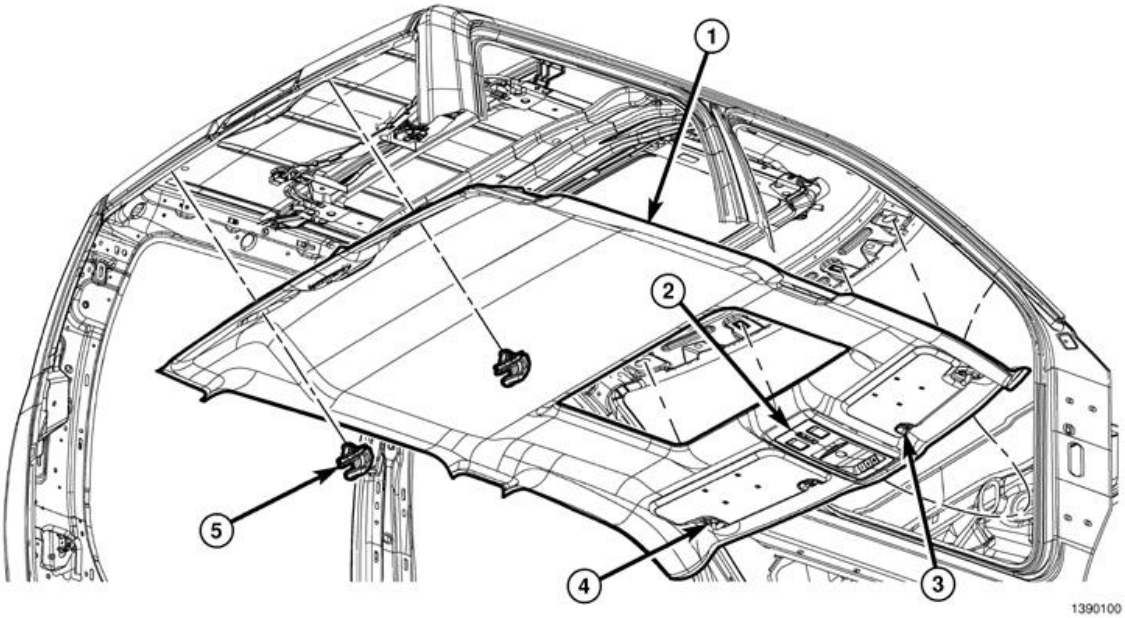

Fig. 433: Headliner
Courtesy of CHRYSLER GROUP, LLC

16. Remove the headliner through the windshield opening.
17. Remove the visor outboard retainer from the body.

18. Remove the overhead console backing plate from the body taking care not to break the backing plate.
19. Remove the visor center support mounting clips.
20. Remove the coat hook mounting clips.
21. Remove the DVD mounting clips.

INSTALLATION

INSTALLATION

STANDARD CAB

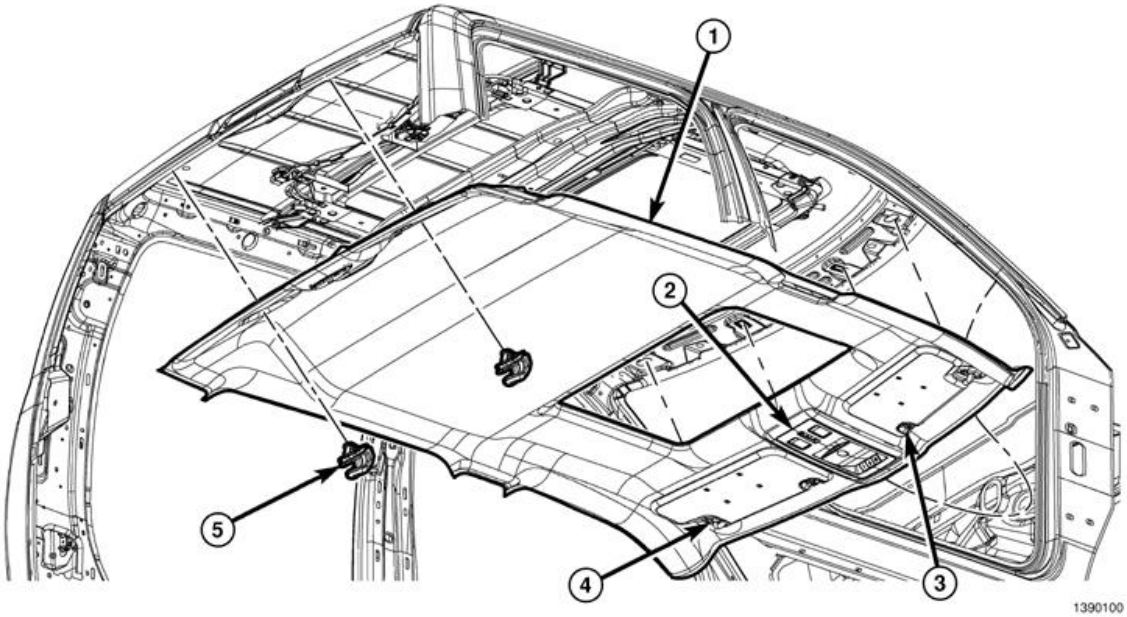

Fig. 434: Headliner
Courtesy of CHRYSLER GROUP, LLC

CAUTION: Hands should be clean or clean cloth gloves used when handling the headliner to avoid damage to the headliner.

NOTE: Quad cab shown in illustration, standard cab is similar.

1. Position the coat hooks (5) onto the headliner and install the screws into the mounting clips.
2. Close the screw caps fully.
3. Position the visor supports (3) onto the headliner and install the screws into the mounting clips.
4. Install the overhead console (2). Refer to **CONSOLE, OVERHEAD, FRONT, INSTALLATION**.
5. Position the visors onto the headliner and install the screws (4) into the mounting clips.
6. Install the headliner through the front passenger door.
7. Lift the headliner into position and engage the visor center supports.

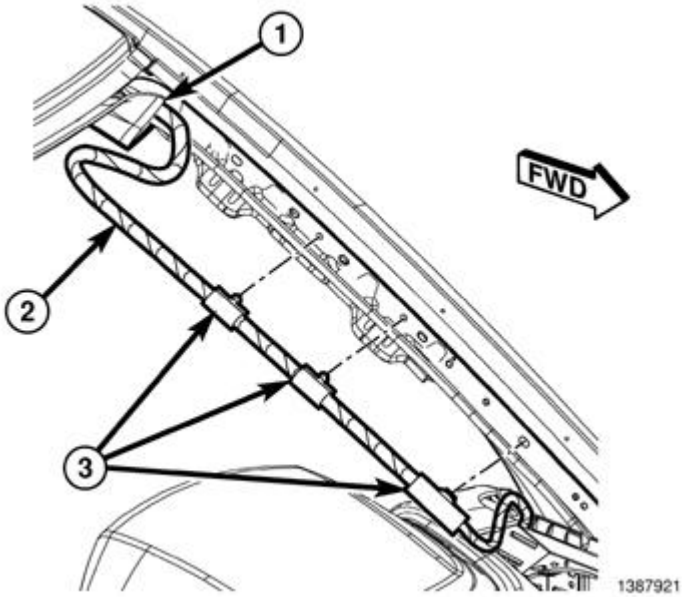

Fig. 435: A-Pillar Wiring & Clips
Courtesy of CHRYSLER GROUP, LLC

8. Position the wire harness on the A-pillar and seat the support clips (3) fully.

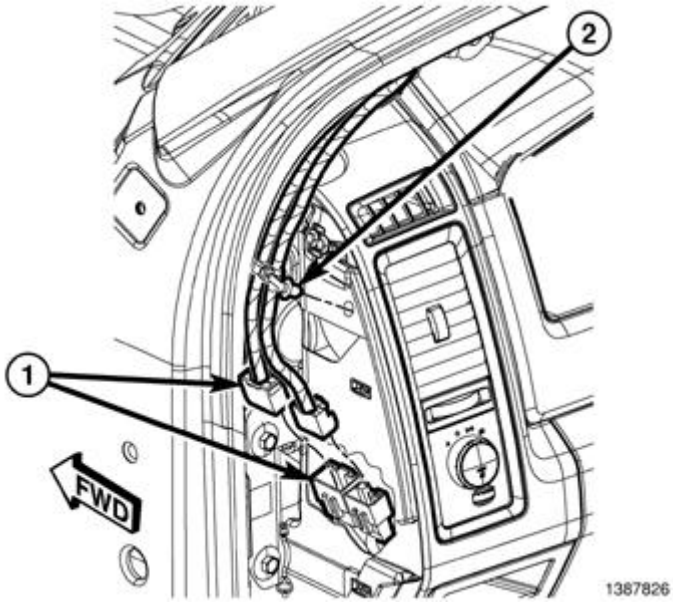

Fig. 436: Electrical Connectors
Courtesy of CHRYSLER GROUP, LLC

9. Connect the electrical connectors (1) and seat the support clip (2) fully.
10. Position the instrument panel side covers onto the instrument panel and seat fully.

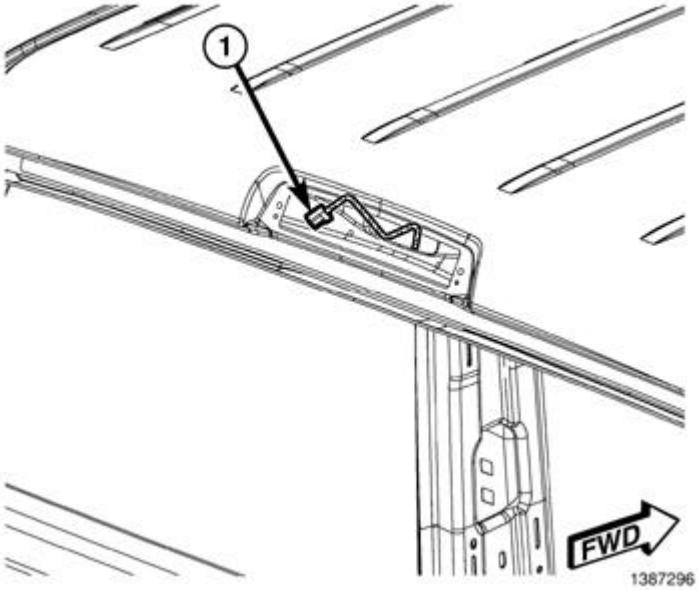

Fig. 437: CHMSL Wiring Electrical Connector
Courtesy of CHRYSLER GROUP, LLC

11. Connect the CHMSL wiring electrical connector.
12. Install the floor console. Refer to **CONSOLE, FLOOR, INSTALLATION**.
13. Install the upper B-pillar trim. Refer to **PANEL, B-PILLAR TRIM, UPPER, INSTALLATION**.
14. Install the A-pillar trim. Refer to **PANEL, A-PILLAR TRIM, WITH GRAB HANDLE, INSTALLATION**.

QUAD/CREW/MEGA CAB

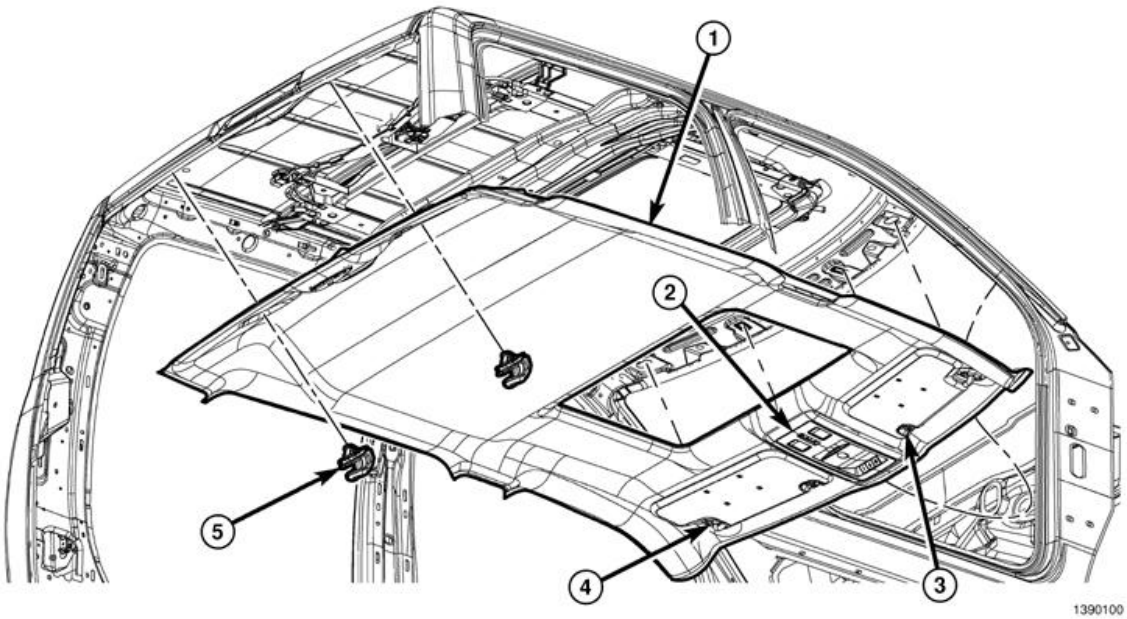

Fig. 438: Headliner

Courtesy of CHRYSLER GROUP, LLC

CAUTION: Hands should be clean or clean cloth gloves used when handling the headliner to avoid damage to the headliner.

1. Install the DVD monitor to the headliner, if equipped. Refer to **MONITOR, MEDIA SYSTEM, INSTALLATION** .
2. Position the coat hooks (5) onto the headliner and install the screws into the mounting clips.
3. Close the screw caps fully.
4. Position the visor supports (3) onto the headliner and install the screws into the mounting clips.
5. Install the overhead console (2). Refer to **CONSOLE, OVERHEAD, FRONT, INSTALLATION**.
6. Position the visors onto the headliner and install the screws (4) into the mounting clips.
7. Install the headliner through the front passenger door.
8. Lift the headliner into position and engage the drivers side visor center support.

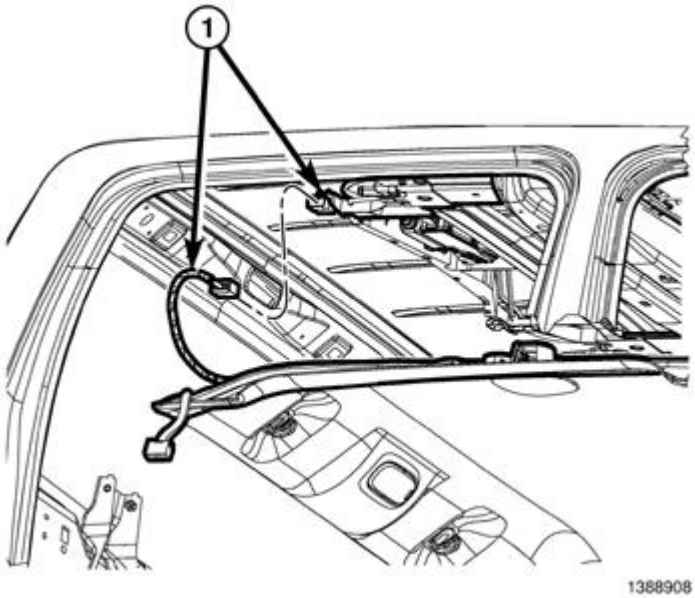

Fig. 439: Sunroof Module Electrical Connector
Courtesy of CHRYSLER GROUP, LLC

9. Connect the electrical connectors (1) for the sunroof module, if equipped.

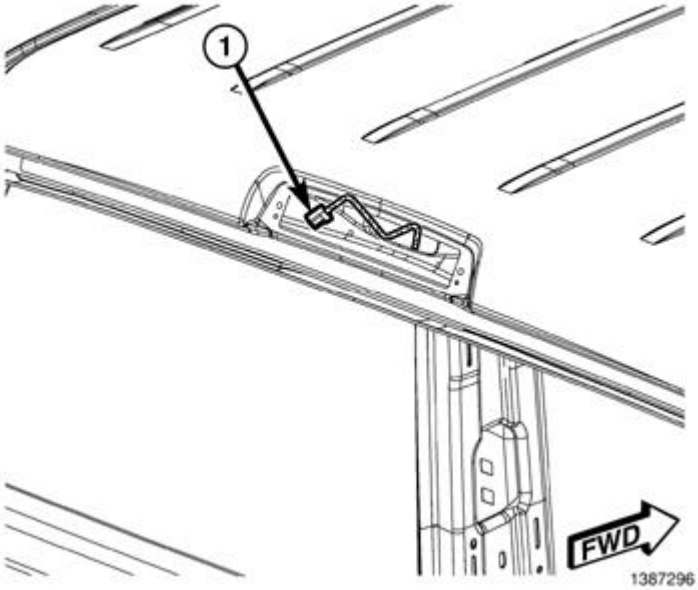

Fig. 440: CHMSL Wiring Electrical Connector
Courtesy of CHRYSLER GROUP, LLC

10. Connect the CHMSL electrical connector (1).

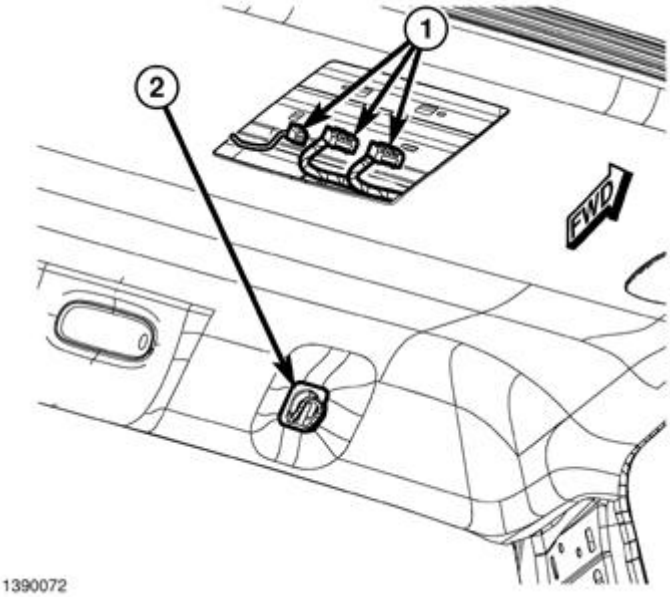

Fig. 441: DVD Housing Electrical Connectors
Courtesy of CHRYSLER GROUP, LLC

11. Connect the DVD monitor electrical connectors (1), if equipped.

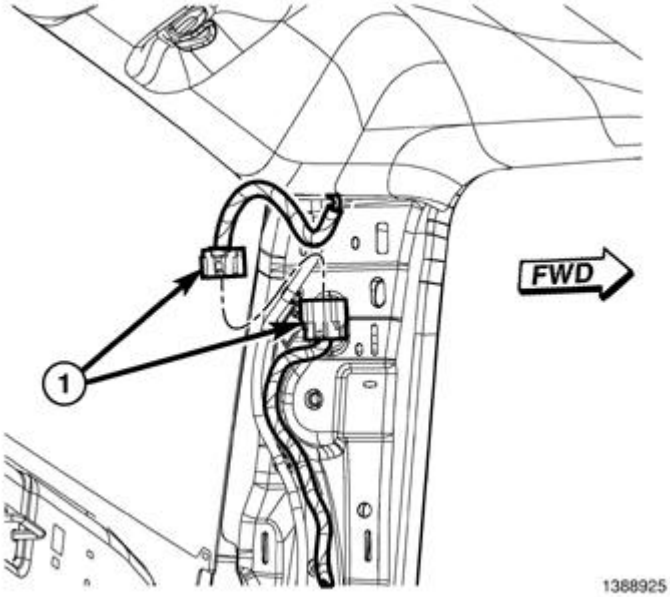

Fig. 442: Body Harness At Left C-Pillar
Courtesy of CHRYSLER GROUP, LLC

12. Connect the C-pillar electrical connectors (1).
13. Insert the passenger side coat hook.
14. Insert the passenger side visor center support.
15. Install the visor outboard screws.
16. Connect the body harness electrical connector and install the body clip right hand side.
17. Install the DVD unit mounting clips into the sheet metal.
18. Install the two remaining DVD screws.
19. Seat the sunroof trim ring if equipped.

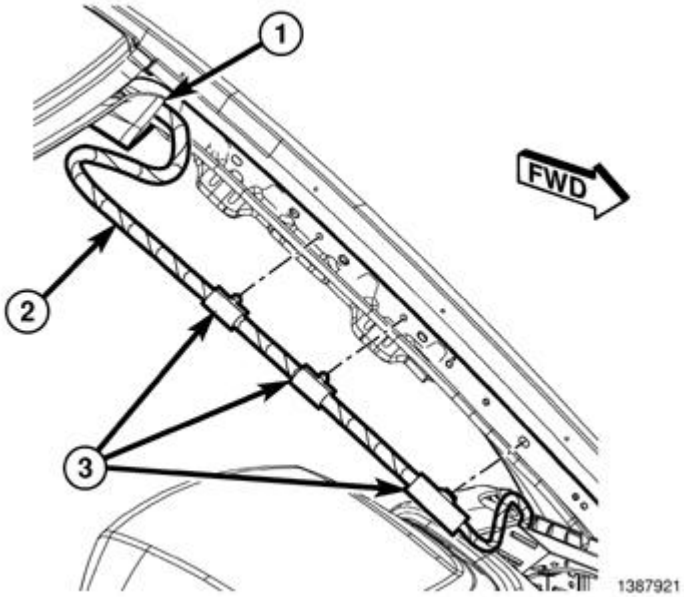

Fig. 443: A-Pillar Wiring & Clips
Courtesy of CHRYSLER GROUP, LLC

20. Position the wire harness on the A-pillar and seat the support clips (3) fully.

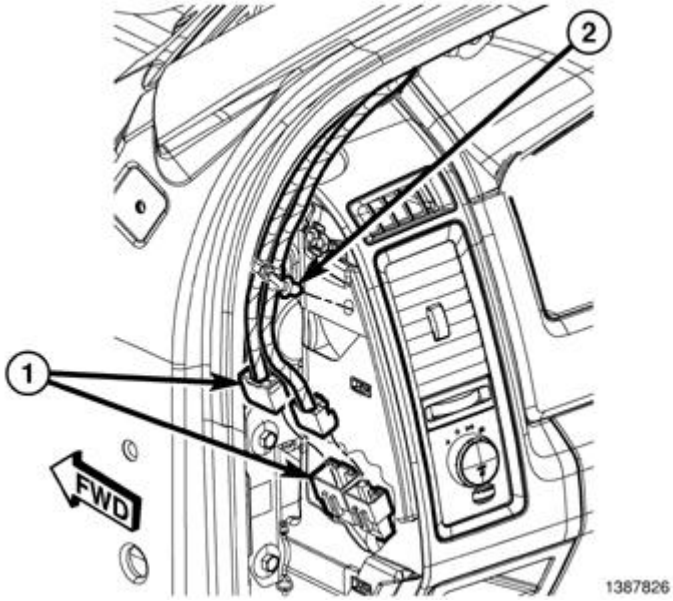

Fig. 444: Electrical Connectors
Courtesy of CHRYSLER GROUP, LLC

21. Connect the electrical connectors (1) and seat the support clip (2) fully.
22. Position the instrument panel side covers onto the instrument panel and seat fully.
23. Install the upper C-pillar trim. Refer to **PANEL, C-PILLAR TRIM, UPPER, INSTALLATION**.
24. Install the upper B-pillar trim. Refer to **PANEL, B-PILLAR TRIM, UPPER, INSTALLATION**.
25. Install the windshield. Refer to **WINDSHIELD, INSTALLATION**.

LOAD FLOOR, NON-SLIDING

REMOVAL

REMOVAL

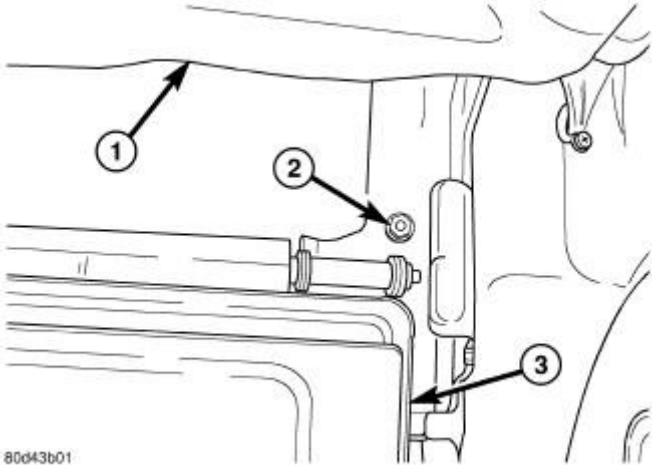

Fig. 445: Load Floor & Nuts
Courtesy of CHRYSLER GROUP, LLC

1. Move the rear seat cushion (1) to the up position.
2. Remove the two nuts (2) that secure the rear of the load floor (3) to the floor panel.

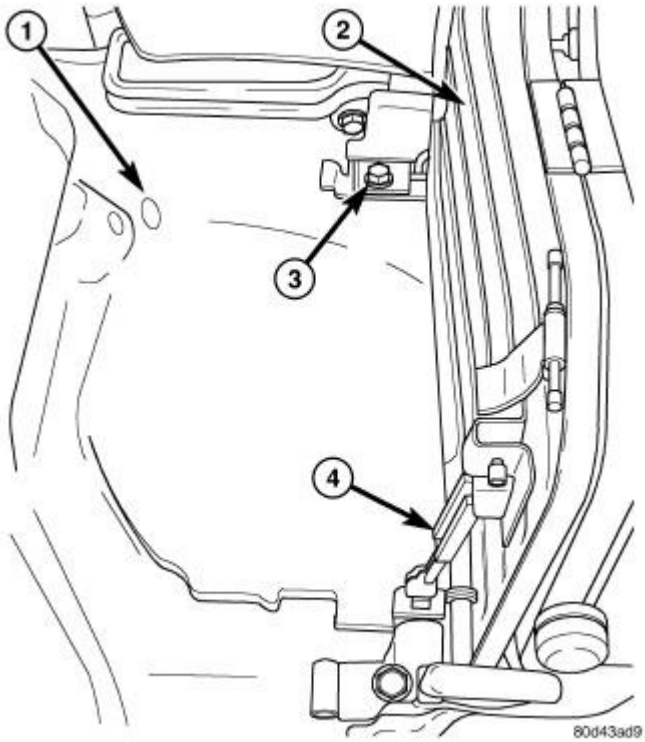

Fig. 446: Load Floor & Bolts
Courtesy of CHRYSLER GROUP, LLC

3. Move the load floor (2) to the up position.

4. Remove the two bolts (3) that secure the load floor to the floor panel (1) and remove the load floor.
5. If required, remove the support cylinder (4).

INSTALLATION

INSTALLATION

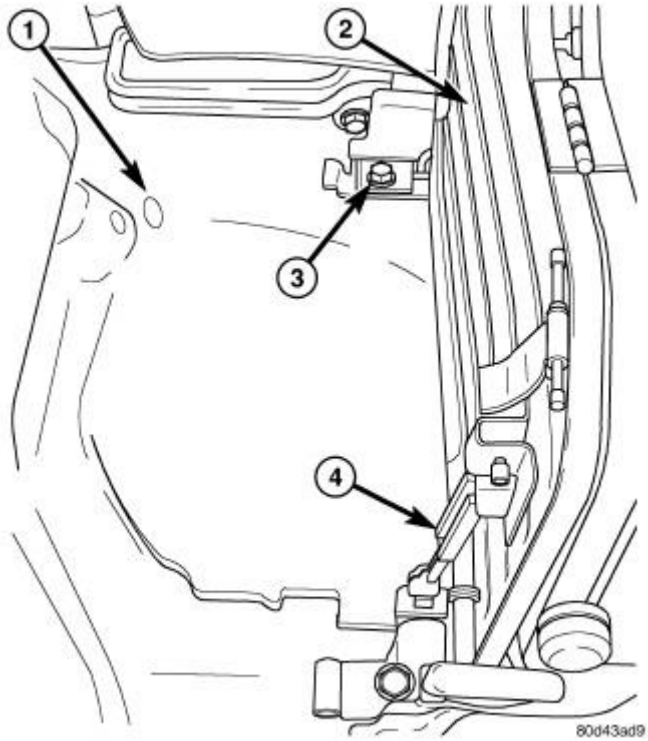

Fig. 447: Load Floor & Bolts
Courtesy of CHRYSLER GROUP, LLC

1. If removed, install the load floor support cylinder (4).
2. Position the load floor (2) into the vehicle and install the two bolts (3) that secure it to the floor panel (1). Tighten the bolts to 40 N.m (30 ft. lbs.).

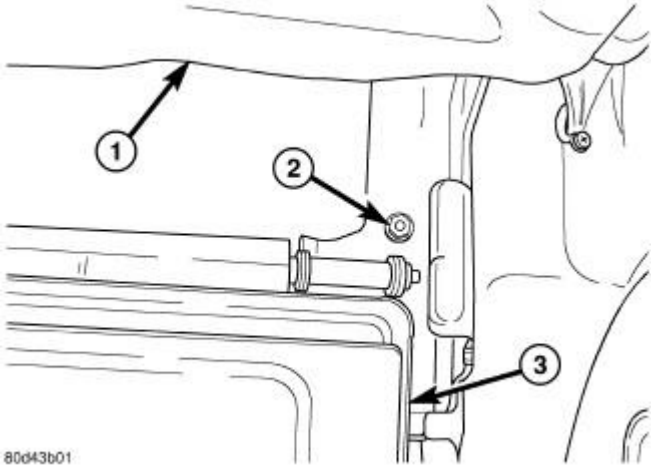

Fig. 448: Load Floor & Nuts
Courtesy of CHRYSLER GROUP, LLC

3. Move the load floor (3) to the down position and install the two nuts (2) that secure the load floor to the floor panel. Tighten the nuts to 25 N.m (18 ft. lbs.).
4. Move the rear seat cushion (1) to the down position.

MIRROR, REARVIEW

REMOVAL

REMOVAL

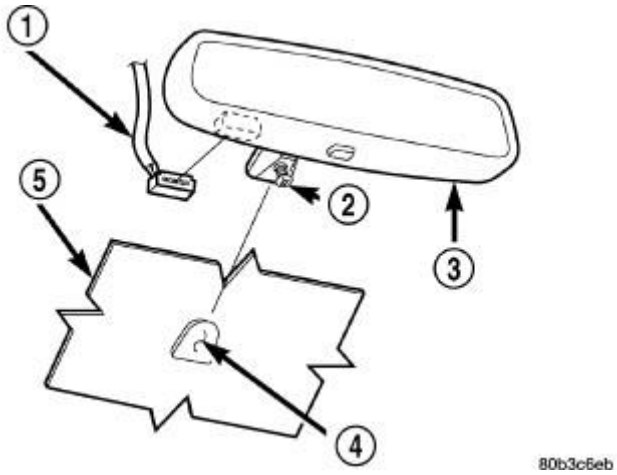

Fig. 449: Connector, Rear View Mirror, Screw, Support Button & Windshield
Courtesy of CHRYSLER GROUP, LLC

1. If equipped, disconnect the wire harness connector (1) from the rear view mirror (3).
2. Loosen the set screw (2) that secures the rear view mirror to the mounting bracket (4).
3. Slide the base of the rear view mirror upward and remove the mirror from the mounting bracket.

4. If required, remove the mirror mounting bracket from the windshield (5).

INSTALLATION

INSTALLATION

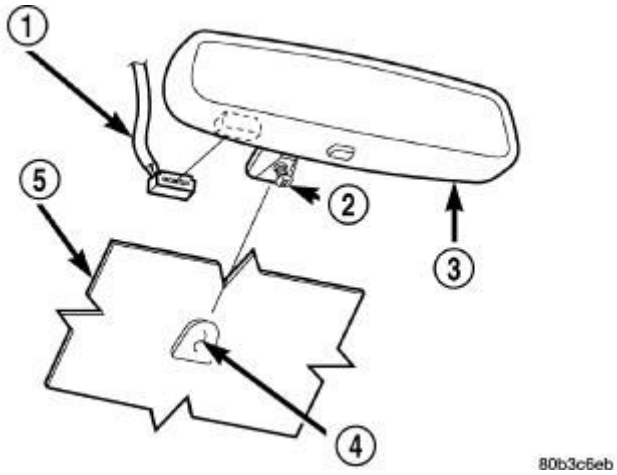

Fig. 450: Connector, Rear View Mirror, Screw, Support Button & Windshield
Courtesy of CHRYSLER GROUP, LLC

1. If required, install the mounting bracket (4) to the windshield (5).
2. Position the base of the rear view mirror (3) onto the mounting bracket and slide the mirror downward until it is fully engaged on the mounting bracket.
3. Tighten the set screw (2) that secures the rear view mirror to the mounting bracket to 1 N.m (15 in. lbs.).
4. If equipped, connect the wire harness connector (1) to the rear view mirror.

REAR VIEW MIRROR MOUNTING BRACKET

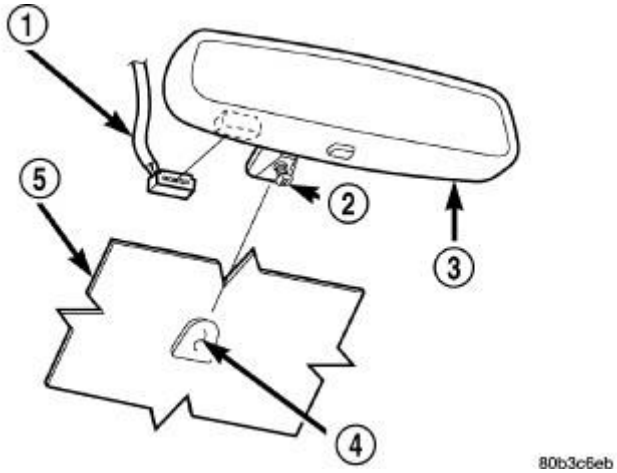

Fig. 451: Connector, Rear View Mirror, Screw, Support Button & Windshield
Courtesy of CHRYSLER GROUP, LLC

1. Mark the position for the mirror mounting bracket (4) on the outside of the windshield glass (5) with a

wax pencil.

2. Clean the bracket contact area on the glass. Use a mild powdered cleanser on a cloth saturated with isopropyl (rubbing) alcohol. Finally, clean the glass with a paper towel dampened with alcohol.
3. Sand the surface on the mounting bracket with a fine grit sandpaper. Wipe the mounting bracket surface clean with a paper towel.
4. Apply accelerator to the surface on the mounting bracket according to the following instructions:
    1. Crush the vial to saturate the felt applicator.
    2. Remove the paper sleeve.
    3. Apply accelerator to the contact surface on the mounting bracket.
    4. Allow the accelerator to dry for five minutes.
    5. Do not touch the bracket contact surface after the accelerator has been applied.
5. Apply adhesive accelerator to the bracket contact surface on the windshield glass. Allow the accelerator to dry for one minute. Do not touch the glass contact surface after the accelerator has been applied.
6. Install the mounting bracket according to the following instructions:
    1. Apply one drop of adhesive at the center of the bracket contact-surface on the windshield glass.
    2. Apply an even coat of adhesive to the contact surface on the mounting bracket.
    3. Align the mounting bracket with the marked position on the windshield glass.
    4. Press and hold the mounting bracket in place for at least one minute.

NOTE: Verify that the mirror mounting bracket is correctly aligned, because the adhesive will cure rapidly.

7. Allow the adhesive to cure for 8-10 minutes. Remove any excess adhesive with an alcohol-dampened cloth.
8. Allow the adhesive to cure for an additional 8-10 minutes before installing the rear view mirror (3). Refer to **MIRROR, REARVIEW, INSTALLATION**.

PANEL, A-PILLAR TRIM, WITH GRAB HANDLE

REMOVAL

REMOVAL

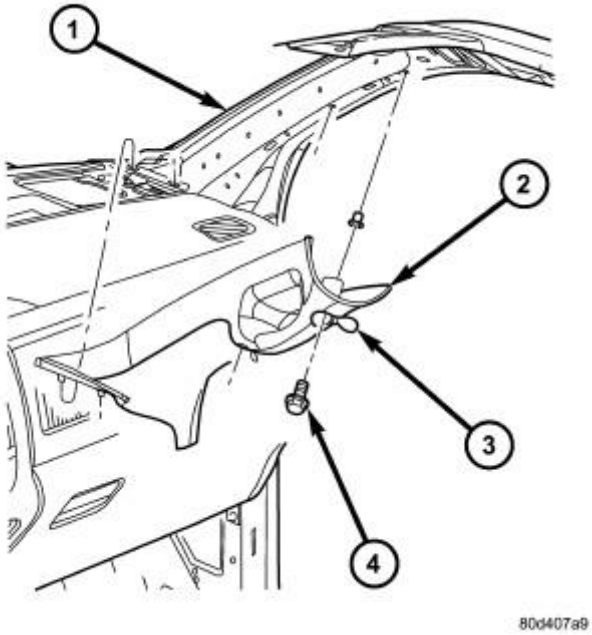

Fig. 452: A-Pillar Trim/Grab Handle
Courtesy of CHRYSLER GROUP, LLC

1. Using a small flat-bladed tool, carefully open the two fastener covers (3) located in the a-pillar trim panel (2).
2. Remove the two bolts (4) that secure the a-pillar trim panel to the a-pillar (1) and remove the trim panel.

INSTALLATION

INSTALLATION

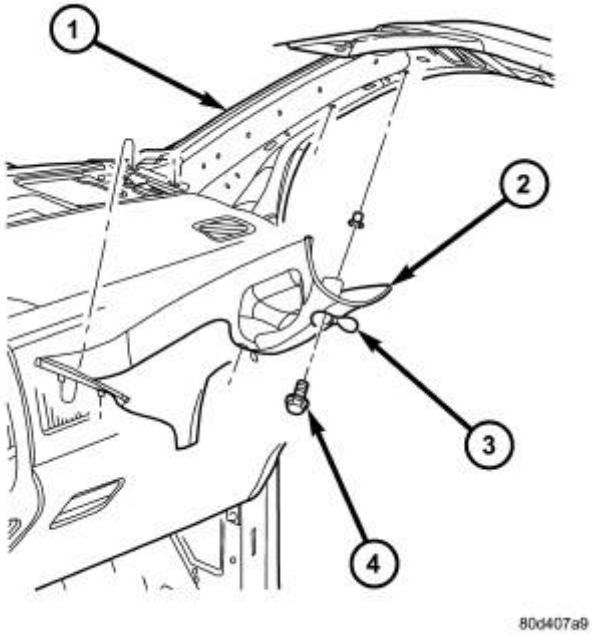

Fig. 453: A-Pillar Trim/Grab Handle
Courtesy of CHRYSLER GROUP, LLC

1. Position the locating tab of the A-pillar trim panel (2) into the slot located in the top of the instrument panel.
2. Install the A-pillar trim panel onto the A-pillar (1) and install the two bolts (4). Tighten the bolts to 5 N.m (44 in. lbs.).
3. Close the two fastener covers (3) located in the A-pillar trim panel.

PANEL, B-PILLAR TRIM, LOWER

REMOVAL

REMOVAL

STANDARD CAB

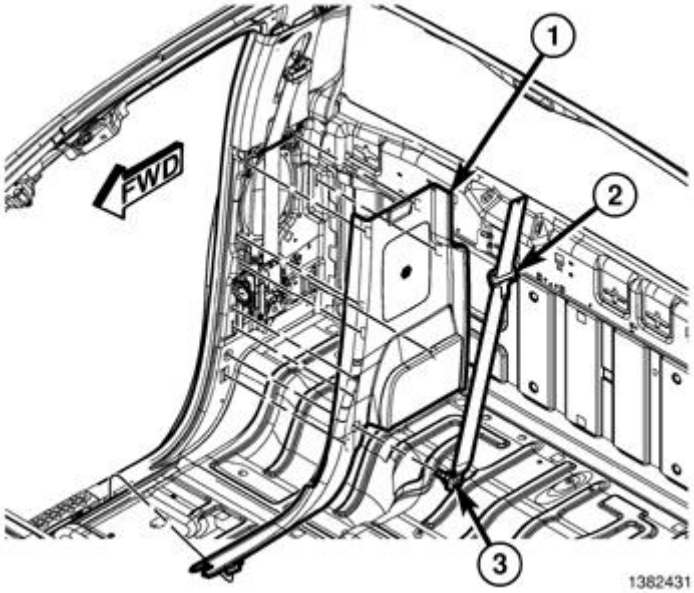

Fig. 454: B-Pillar Lower Trim
Courtesy of CHRYSLER GROUP, LLC

1. If equipped, remove the rear storage bin. Refer to **BIN, STORAGE, REMOVAL**.
2. Remove the lower seat belt anchor bolt (3).
3. Separate the forward clip.
4. Separate the remaining retaining clips and remove the lower trim (1).

QUAD CAB

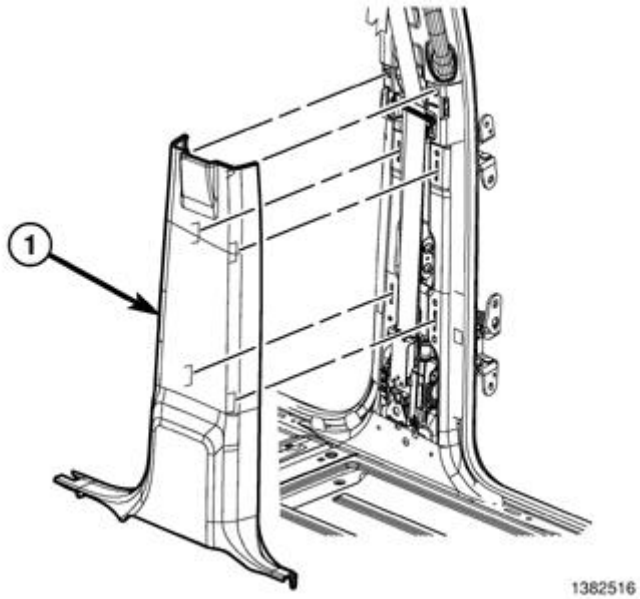

Fig. 455: B-Pillar Lower Trim Panel (Quad Cab)
Courtesy of CHRYSLER GROUP, LLC

1. Remove the front door cowl trim panel. Refer to **PANEL, COWL TRIM, REMOVAL**.
2. Remove the rear door scuff plate. Refer to **PLATE, SCUFF, REAR DOOR SILL, REMOVAL**.
3. Release the retaining clips and remove the trim panel (1).

INSTALLATION

INSTALLATION

STANDARD CAB

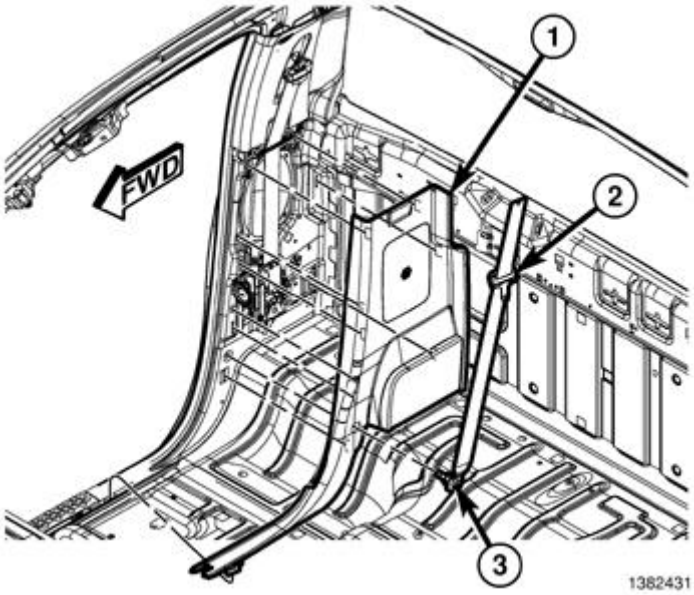

Fig. 456: B-Pillar Lower Trim
Courtesy of CHRYSLER GROUP, LLC

1. Position the lower trim (1) back into place and line up the retaining clips.
2. Seat the upper clips fully.
3. Seat the lower clips fully
4. Clip the forward foot into the sheet metal.
5. Install the lower seat belt anchor and tighten to 40 N.m (30 ft. lbs.).
6. If equipped, install the rear storage bin. Refer to **BIN, STORAGE, INSTALLATION**.

QUAD CAB

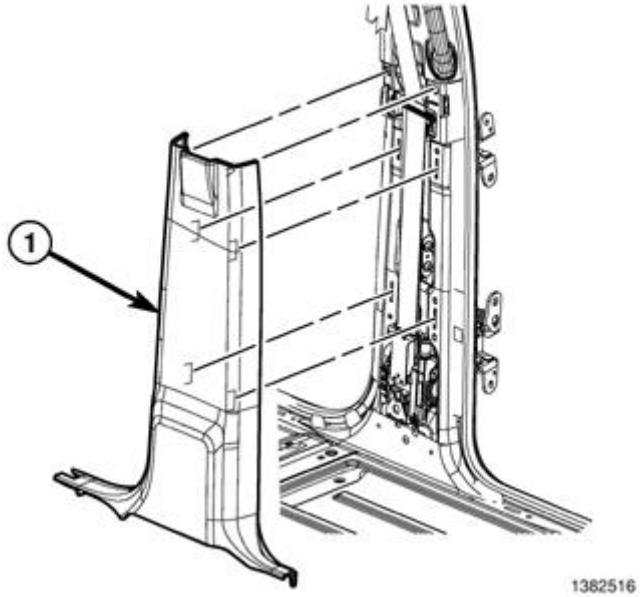

Fig. 457: B-Pillar Lower Trim Panel (Quad Cab)
Courtesy of CHRYSLER GROUP, LLC

1. Position the trim (1) back and seat the clips fully.
2. Install the rear door scuff plate. Refer to **PLATE, SCUFF, REAR DOOR SILL, INSTALLATION**.
3. Install the front door cowl trim panel. Refer to **PANEL, COWL TRIM, INSTALLATION**.

PANEL, B-PILLAR TRIM, UPPER

REMOVAL

REMOVAL

STANDARD CAB

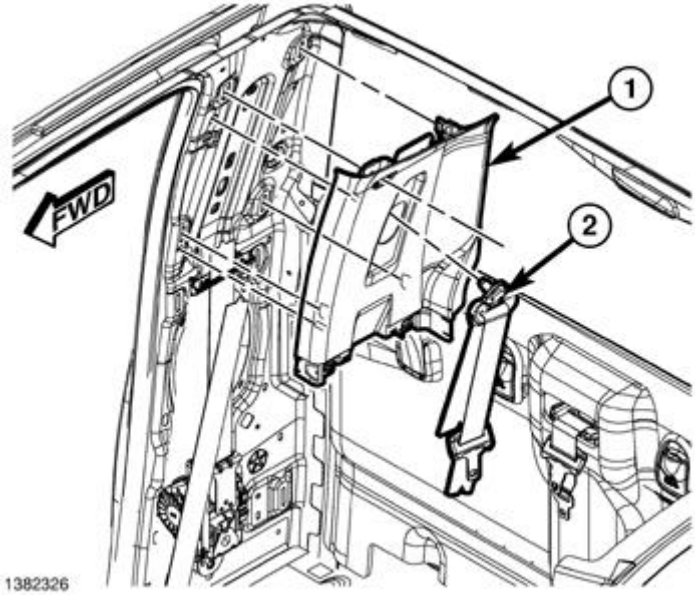

Fig. 458: B-Pillar Upper Trim
Courtesy of CHRYSLER GROUP, LLC

1. Remove the lower B-pillar trim. Refer to **PANEL, B-PILLAR TRIM, LOWER, REMOVAL**.
2. Separate the turning loop cover (2) and remove the turning loop bolt.
3. Pull the upper trim (1) off and release the retaining clips.

QUAD CAB

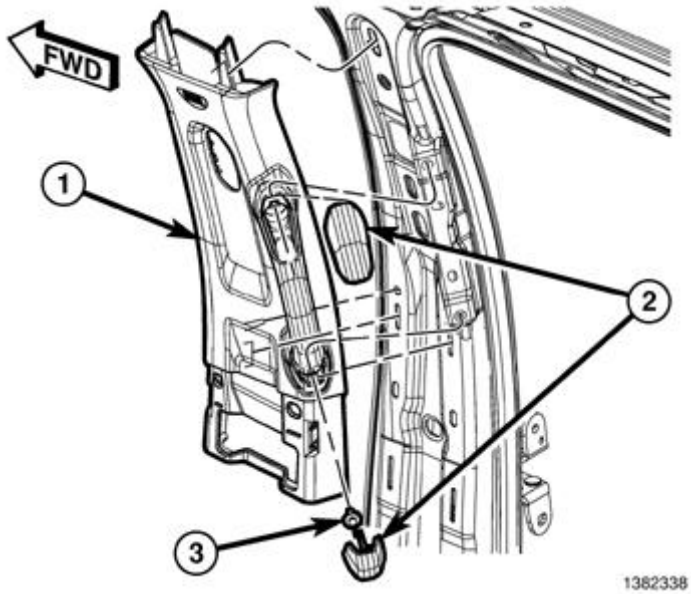

Fig. 459: B-Pillar Upper Trim Panel (Quad Cab)
Courtesy of CHRYSLER GROUP, LLC

1. Remove the lower B-pillar trim. Refer to **PANEL, B-PILLAR TRIM, LOWER, REMOVAL**.

2. Using a small flat-bladed tool, carefully open the two fastener covers (2) located on the grab handle.
3. Remove the two bolts (3) that secure the grab handle to the B-pillar and remove the grab handle.
4. Separate the seat belt turning loop cover and remove the turning loop bolt.
5. Using a trim stick (special tool #C-4755, Trim Stick) or equivalent, disengage the retaining clips that secure the upper trim (1) to the pillar and remove the trim panel.
6. Remove the seat belt from the trim.

INSTALLATION

INSTALLATION

STANDARD CAB

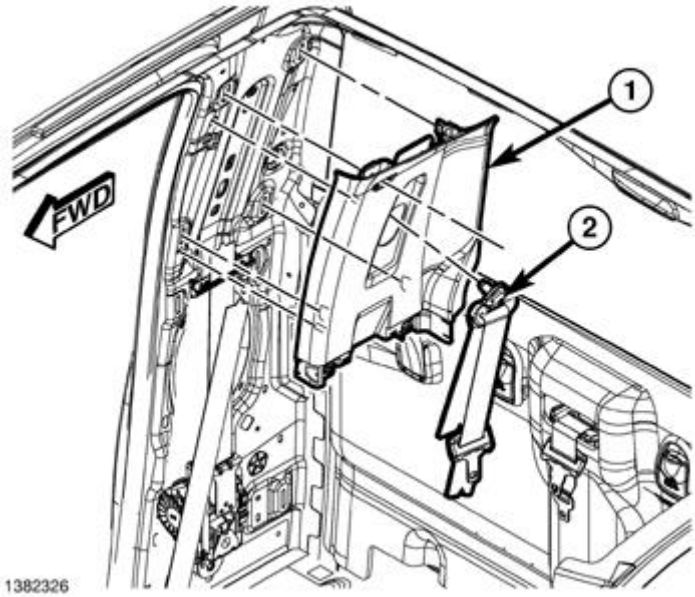

Fig. 460: B-Pillar Upper Trim
Courtesy of CHRYSLER GROUP, LLC

1. Position the upper trim (1) back in place and seat the clips fully.
2. Install the turning loop bolt (2) and tighten to 40 N.m (30 ft. lbs.).
3. Install the turning loop cover.
4. Install the lower B-pillar trim. Refer to **PANEL, B-PILLAR TRIM, LOWER, INSTALLATION**.

QUAD CAB

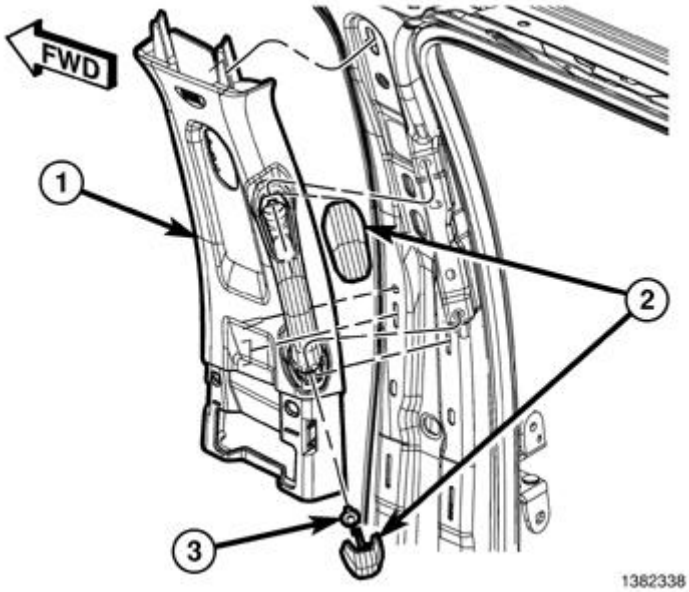

Fig. 461: B-Pillar Upper Trim Panel (Quad Cab)
Courtesy of CHRYSLER GROUP, LLC

1. Position the seat belt through the hole in the trim.
2. Position the upper trim (1) back in place and seat the clips fully.
3. Install the turning loop bolt (2) and tighten to 40 N.m (30 ft. lbs.).
4. Install the turning loop cover.
5. Install the grab handle bolts and tighten to 5 N.m (44 in. lbs.).
6. Seat the grab handle bolt caps fully.
7. Install the lower B-pillar trim. Refer to **PANEL, B-PILLAR TRIM, LOWER, INSTALLATION**.

PANEL, C-PILLAR TRIM, LOWER

REMOVAL

REMOVAL

CREW CAB

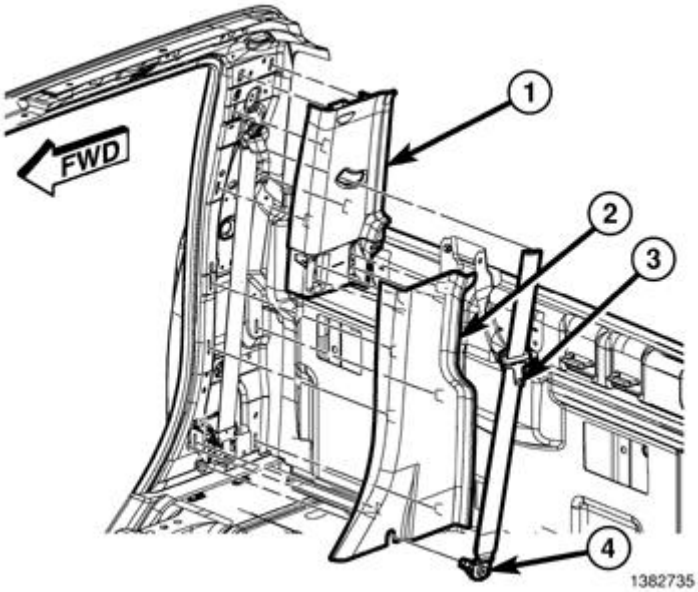

Fig. 462: C-Pillar Upper & Lower Trim (Crew Cab)
Courtesy of CHRYSLER GROUP, LLC

1. Remove the rear seat assembly. Refer to **SEAT, REAR, REMOVAL**.
2. Remove the seat belt anchor (4).
3. Separate the lower trim retaining clips from the pillar and the rear door scuff plate.
4. Remove the trim (2).

QUAD CAB

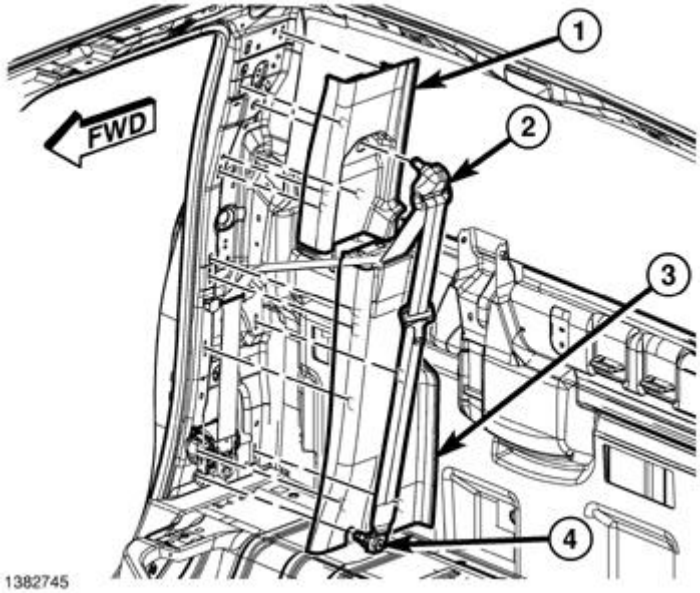

Fig. 463: C-Pillar Upper & Lower Trim (Quad Cab)
Courtesy of CHRYSLER GROUP, LLC

1. Remove the rear seat assembly. Refer to **SEAT, REAR, REMOVAL**.
2. Remove the seat belt anchor (4).
3. Separate the lower trim retaining clips from the pillar and the rear door scuff plate.
4. Remove the seat belt (2) from the hole in the trim and remove the trim.

MEGA CAB

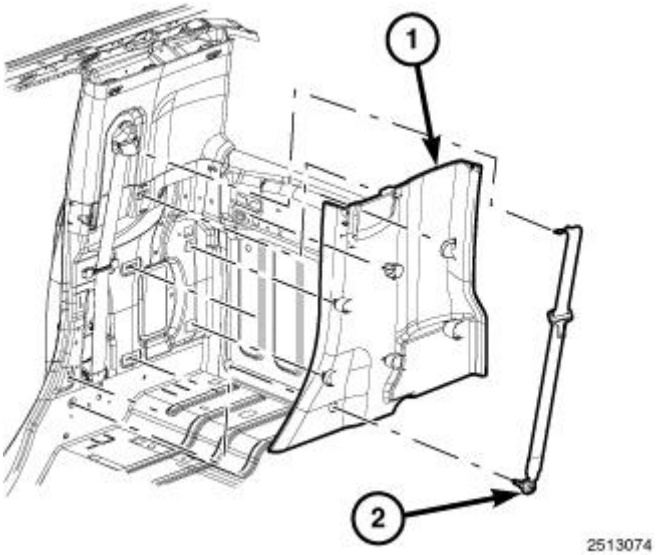

Fig. 464: Lower Trim & Seat Belt Anchor
Courtesy of CHRYSLER GROUP, LLC

1. Remove the rear seat assembly. Refer to **SEAT, MEGA CAB REAR, REMOVAL**.
2. Remove the seat belt anchor (2).
3. Separate the lower trim retaining clips from the pillar and the rear door scuff plate.

INSTALLATION

INSTALLATION

CREW CAB

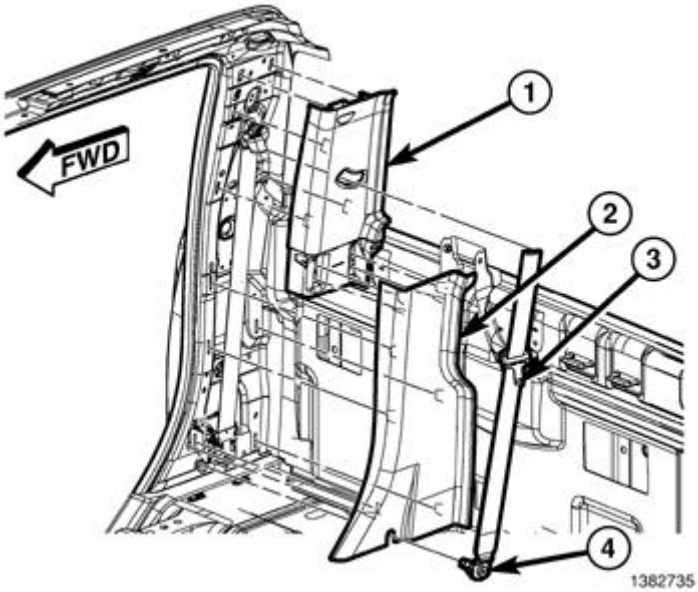

Fig. 465: C-Pillar Upper & Lower Trim (Crew Cab)
Courtesy of CHRYSLER GROUP, LLC

1. Position the lower trim (2) into place and line up the clips to the pillar and rear door scuff plate.
2. Seat the retaining clips fully.
3. Install the lower seat belt anchor and tighten to 40 N.m (30 ft. lbs.).

QUAD CAB

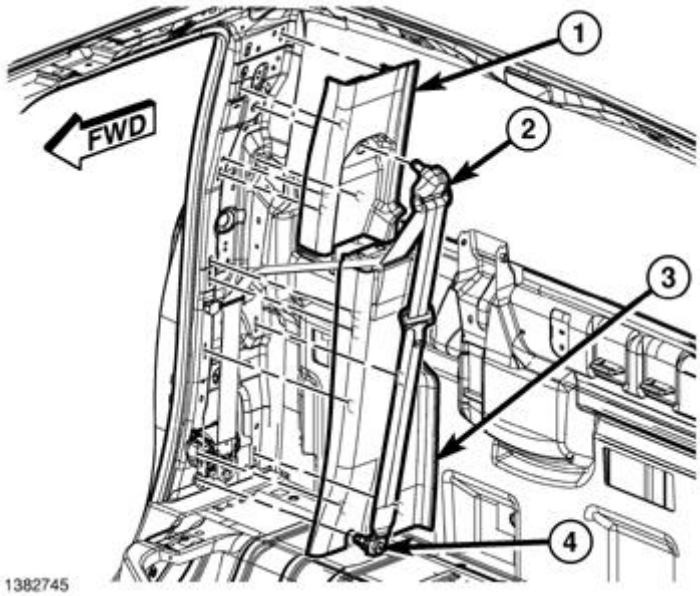

Fig. 466: C-Pillar Upper & Lower Trim (Quad Cab)
Courtesy of CHRYSLER GROUP, LLC

1. Position the seat belt (2) through the hold in the trim (3).

2. Position the lower trim (2) into place and line up the clips to the pillar and rear door scuff plate.
3. Seat the retaining clips fully.
4. Install the lower seat belt anchor and tighten to 40 N.m (30 ft. lbs.).

MEGA CAB

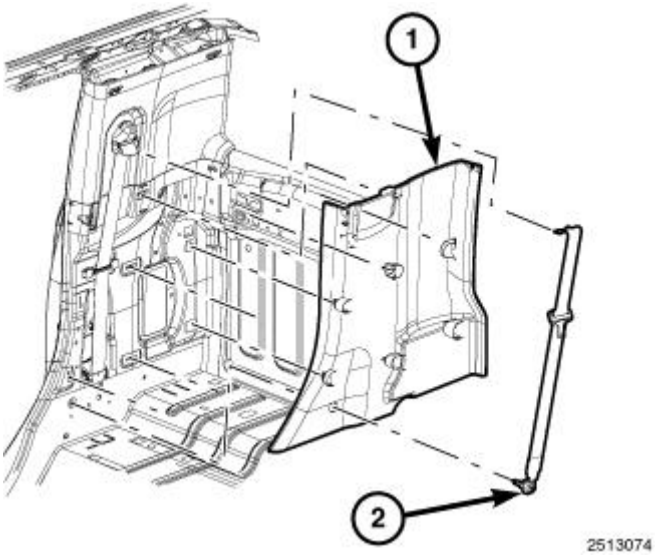

Fig. 467: Lower Trim & Seat Belt Anchor
Courtesy of CHRYSLER GROUP, LLC

1. Position the lower trim (2) into place and line up the clips to the pillar and rear door scuff plate.
2. Install the lower seat belt anchor and tighten to 40 N.m (30 ft. lbs.).
3. Install the rear seat assembly. Refer to **SEAT, MEGA CAB REAR, INSTALLATION**.

PANEL, C-PILLAR TRIM, UPPER

REMOVAL

REMOVAL

CREW CAB

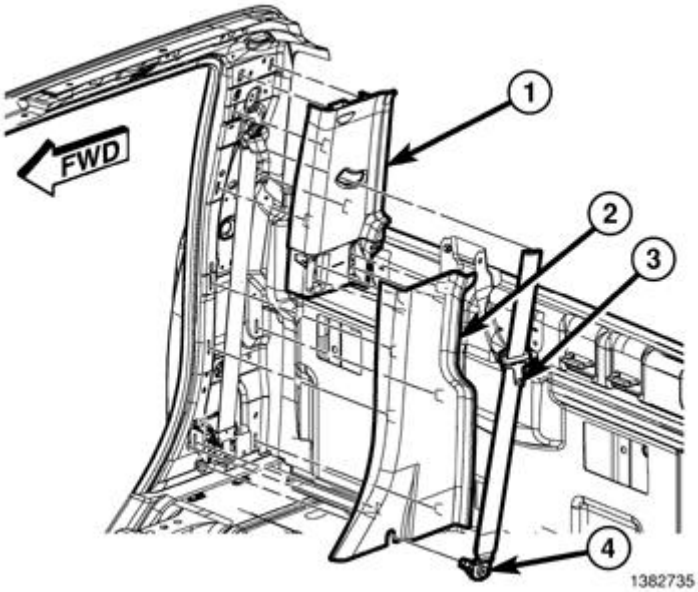

Fig. 468: C-Pillar Upper & Lower Trim (Crew Cab)
Courtesy of CHRYSLER GROUP, LLC

1. Remove the lower C-pillar trim (2). Refer to **PANEL, C-PILLAR TRIM, LOWER, REMOVAL**.
2. Pull the upper trim (1) off and release the retaining clips.
3. Pull the seat belt (3) through the trim and remove the trim.

QUAD CAB

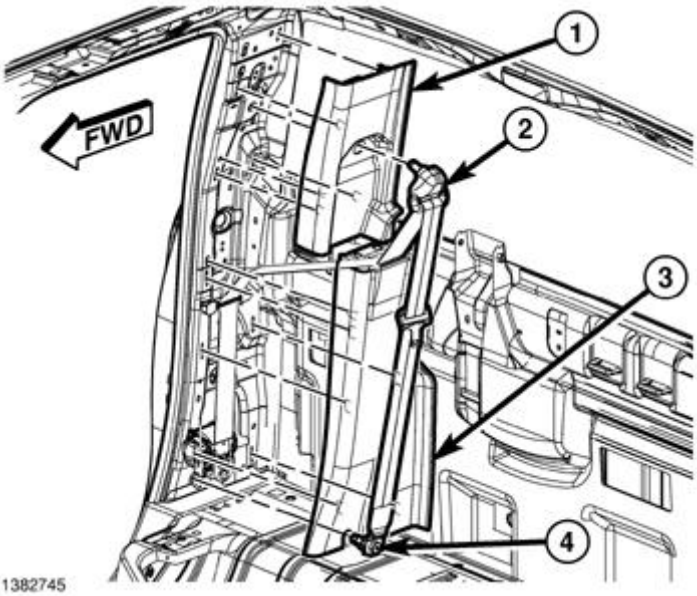

Fig. 469: C-Pillar Upper & Lower Trim (Quad Cab)
Courtesy of CHRYSLER GROUP, LLC

1. Remove the lower C-pillar trim (3). Refer to **PANEL, C-PILLAR TRIM, LOWER, REMOVAL**.

2. Separate the turning loop cover (2) and remove the turning loop bolt.
3. Pull the upper trim (1) off and release the retaining clips.

MEGA CAB

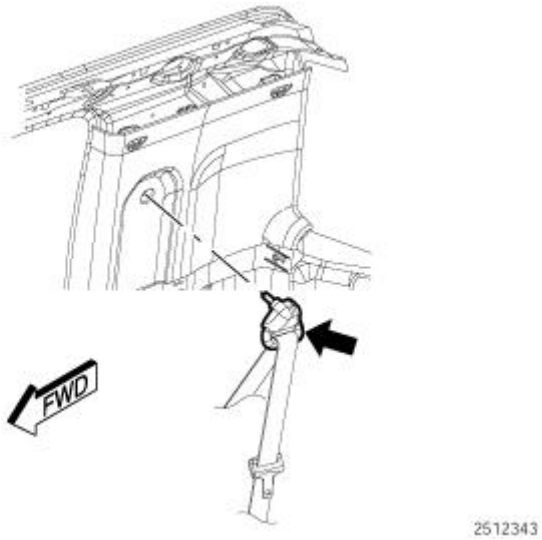

Fig. 470: Turning Loop Bolt
Courtesy of CHRYSLER GROUP, LLC

1. Remove the lower C-pillar trim. Refer to **PANEL, C-PILLAR TRIM, LOWER, REMOVAL**.
2. Separate the turning loop cover and remove the turning loop bolt. Refer to **ADJUSTER, SEAT BELT TURNING LOOP, REMOVAL** .

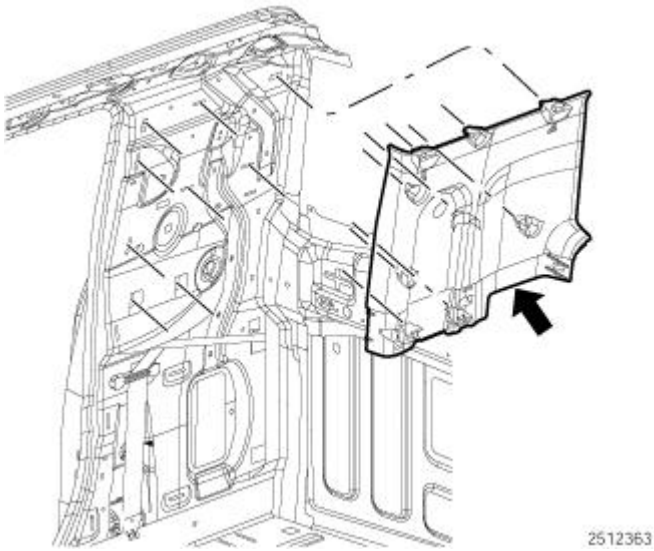

Fig. 471: C-Pillar Upper Trim
Courtesy of CHRYSLER GROUP, LLC

3. Pull the upper trim off and release the retaining clips.

INSTALLATION

INSTALLATION

CREW CAB

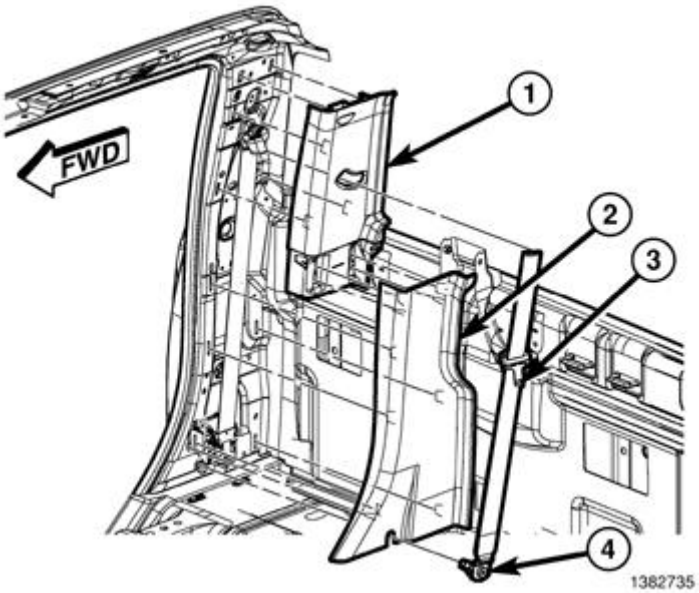

Fig. 472: C-Pillar Upper & Lower Trim (Crew Cab)
Courtesy of CHRYSLER GROUP, LLC

1. Position the seat belt (3) through the hold in the trim (1).
2. Position the upper trim (1) back in place and seat the clips fully.
3. Install the lower C-pillar trim (2). Refer to **PANEL, C-PILLAR TRIM, LOWER, INSTALLATION**.

QUAD CAB

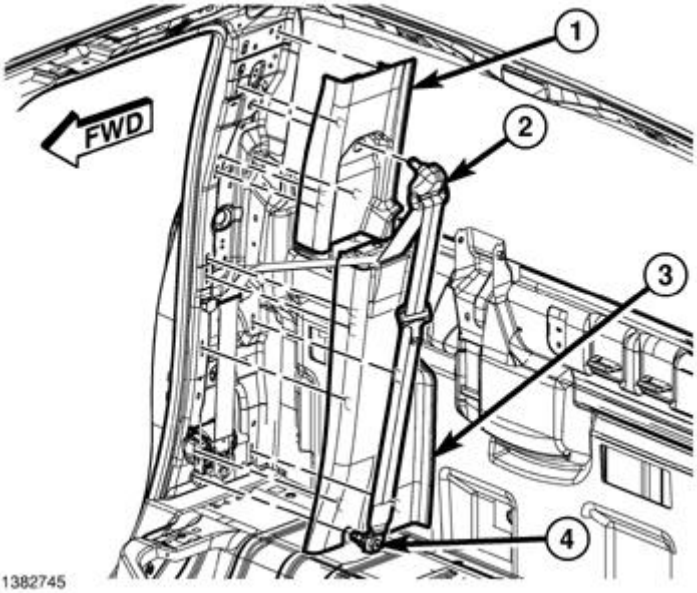

Fig. 473: C-Pillar Upper & Lower Trim (Quad Cab)
Courtesy of CHRYSLER GROUP, LLC

1. Position the upper trim (1) back in place and seat the clips fully.
2. Install the turning loop bolt (2) and tighten to 40 N.m (30 ft. lbs.).
3. Install the turning loop cover.
4. Install the lower C-pillar trim (2). Refer to **PANEL, C-PILLAR TRIM, LOWER, INSTALLATION**.

MEGA CAB

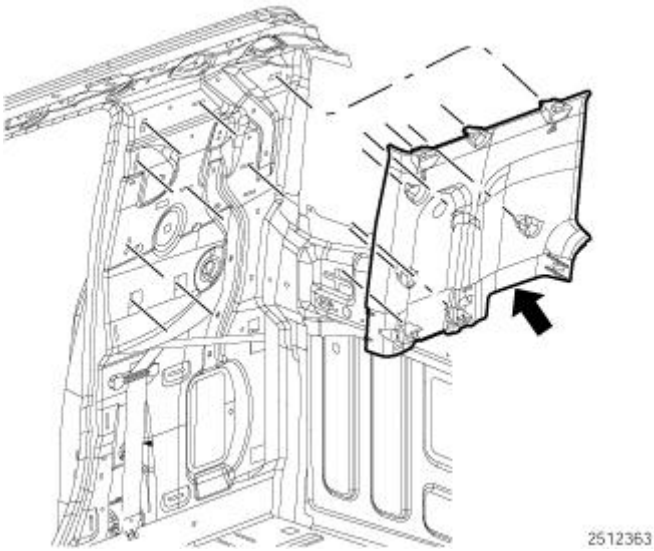

Fig. 474: C-Pillar Upper Trim
Courtesy of CHRYSLER GROUP, LLC

1. Position the upper trim back in place and seat the clips fully.

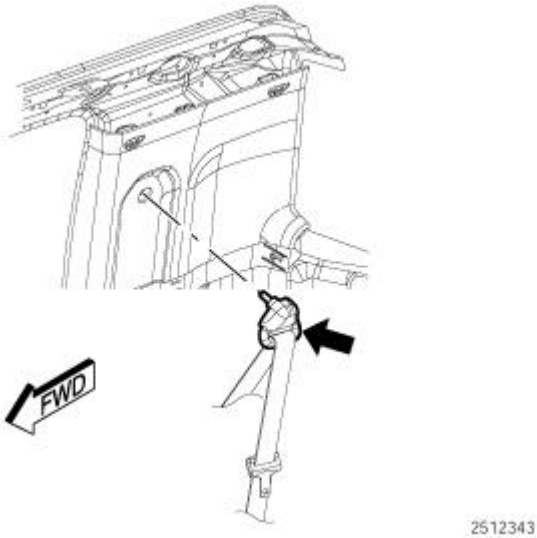

Fig. 475: Turning Loop Bolt
Courtesy of CHRYSLER GROUP, LLC

2. Install the turning loop bolt (2) and tighten to 40 N.m (30 ft. lbs.).
3. Install the lower C-pillar trim. Refer to **PANEL, C-PILLAR TRIM, LOWER, INSTALLATION**.

PANEL, CAB BACK TRIM

REMOVAL

REMOVAL

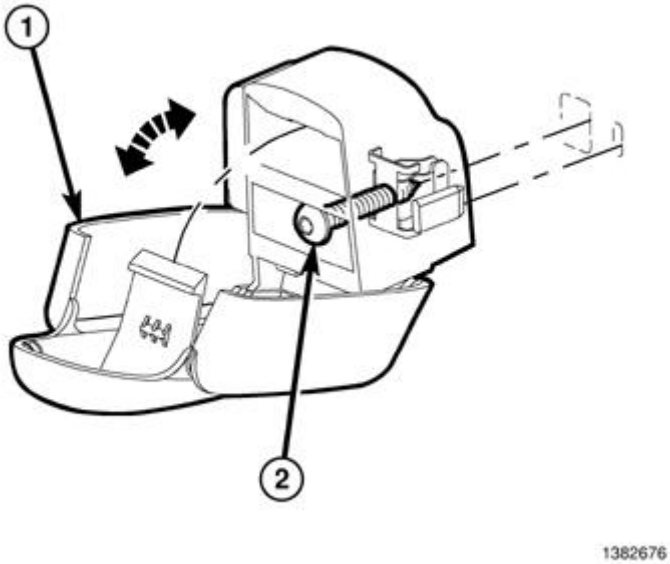

Fig. 476: Utility Hook
Courtesy of CHRYSLER GROUP, LLC

1. If equipped, remove the rear storage compartment. Refer to **BIN, STORAGE, REMOVAL**.
2. If equipped, using a (special tool #C-4755, Trim Stick) or equivalent, disengage the latch (1) for the utility hook cover and open the cover to gain access to the screw (2) that secures the utility hook to the rear cab back panel.

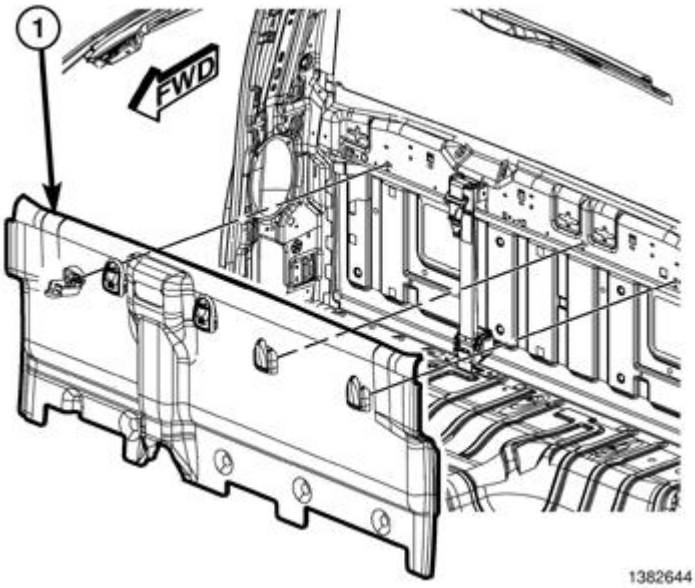

Fig. 477: Cab Back Panel
Courtesy of CHRYSLER GROUP, LLC

3. On two door models, remove the lower B-pillar trim panels. Refer to **PANEL, B-PILLAR TRIM, LOWER, REMOVAL**.
4. On two door models, remove the lower seat belt anchor and remove the cab back panel (1).

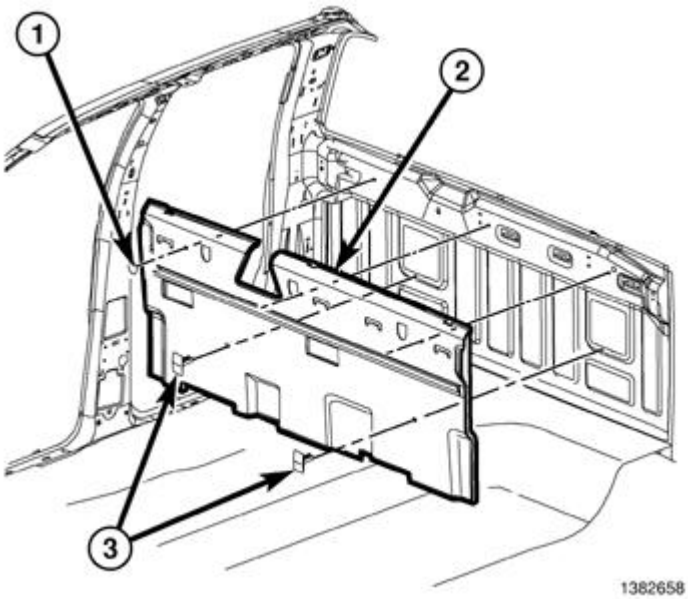

Fig. 478: Rear Cab Back Panel

Courtesy of CHRYSLER GROUP, LLC

5. On four door models, remove the child seat tether straps from the rear cab back panel (2). Refer to **ANCHOR, CHILD SEAT, REMOVAL** .
6. On four door models, remove the center seat belt trim bezel. Refer to **RETRACTOR, SEAT BELT, REMOVAL** .
7. On four door models, remove the lower C-pillar trim panels. Refer to **PANEL, C-PILLAR TRIM, LOWER, REMOVAL**.
8. On four door models, remove the push-pin fasteners (1 and 3) that secure the rear cab trim panel (2) to the rear cab back panel and remove the trim panel.

INSTALLATION

INSTALLATION

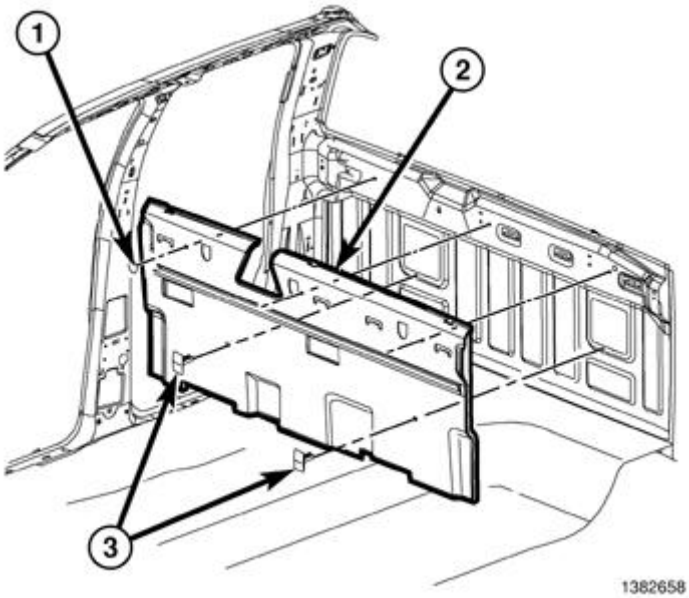

Fig. 479: Rear Cab Back Panel
Courtesy of CHRYSLER GROUP, LLC

1. On four door models, position the rear cab trim panel (2) onto the rear cab back panel and install the push-pin fasteners (1 and 3).
2. On four door models, install the lower C-pillar trim panels. Refer to **PANEL, C-PILLAR TRIM, LOWER, INSTALLATION**.
3. On four door models, install the center seat belt trim bezel. Refer to **RETRACTOR, SEAT BELT, INSTALLATION** .
4. On four door models, install the child seat tether straps. Refer to **ANCHOR, CHILD SEAT, INSTALLATION** .

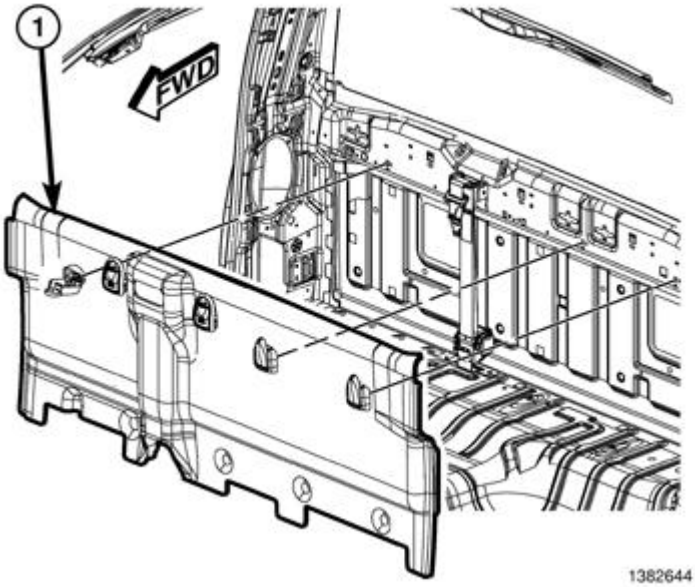

Fig. 480: Cab Back Panel
Courtesy of CHRYSLER GROUP, LLC

5. On two door models, position the rear cab trim panel (1) onto the rear cab back panel and install the utility hooks.

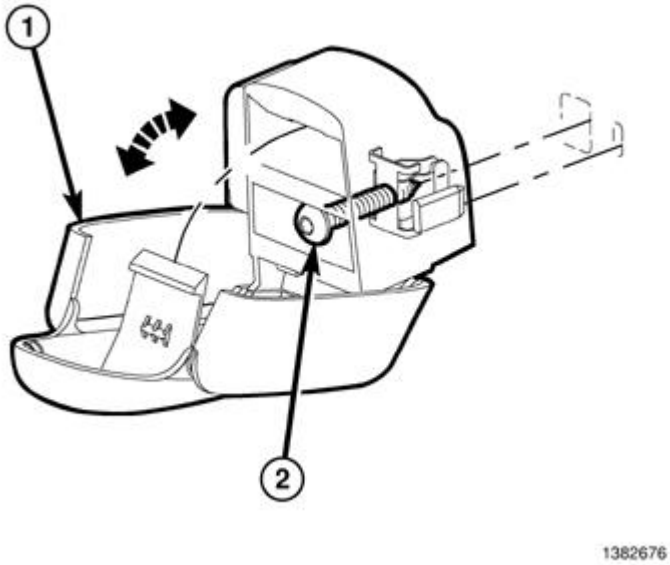

Fig. 481: Utility Hook
Courtesy of CHRYSLER GROUP, LLC

6. Install the lower seat belt anchor. Refer to **SEAT BELT, INSTALLATION** .
7. With the utility hook cover (1) open, install the screws (2) and close the utility hook covers.
8. On two door models, install the lower B-pillar trim panels. Refer to **PANEL, B-PILLAR TRIM, LOWER, INSTALLATION**.

9. If equipped, install the rear storage compartment. Refer to **BIN, STORAGE, INSTALLATION**.

PANEL, COWL TRIM

REMOVAL

REMOVAL

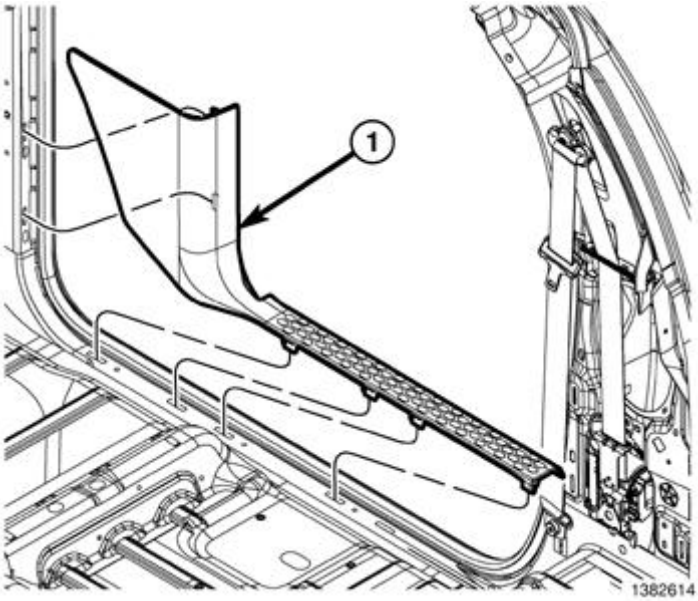

Fig. 482: Cowl Trim Panel
Courtesy of CHRYSLER GROUP, LLC

1. Using a (special tool #C-4755, Trim Stick) or equivalent, disengage the retaining tabs of the cowl trim panel (1) from the retainer clips in the door sill.
2. Pull the cowl trim panel rearward and remove it from the vehicle.

INSTALLATION

INSTALLATION

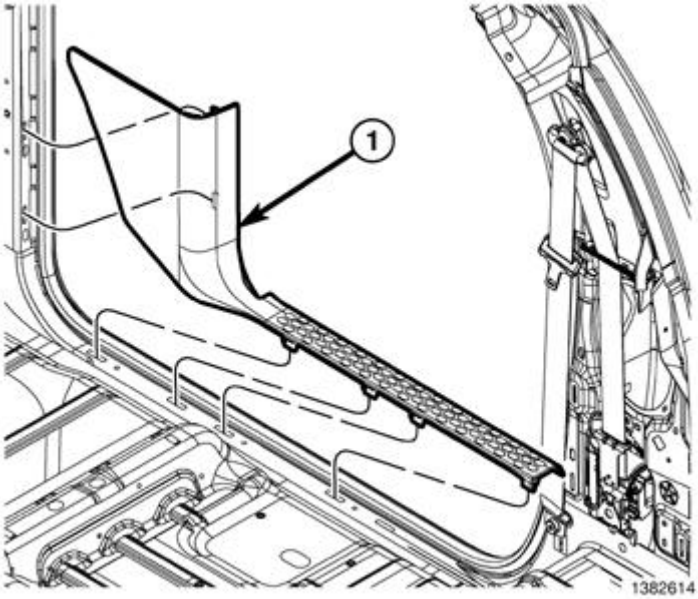

Fig. 483: Cowl Trim Panel
Courtesy of CHRYSLER GROUP, LLC

1. Position the cowl trim panel (1) onto the door sill.
2. Push the cowl trim panel forward and then engage the retaining tabs that secure the sill trim panel to the rear door sill.

PLATE, SCUFF, REAR DOOR SILL

REMOVAL

REMOVAL

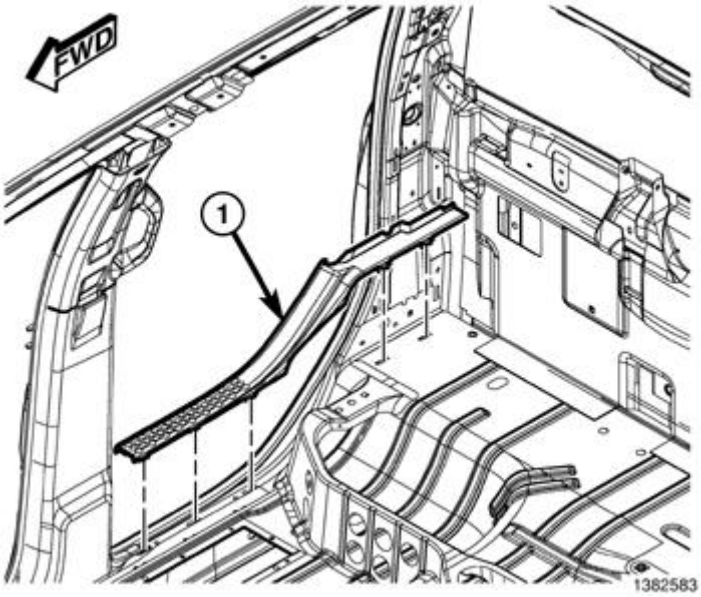

Fig. 484: Rear Door Sill Scuff Plate

Courtesy of CHRYSLER GROUP, LLC

1. Using a trim stick (special tool #C-4755, Trim Stick) or equivalent, disengage the retaining tabs of the sill trim panel (1) from the retainer clips in the rear door sill and remove the trim panel.

INSTALLATION

INSTALLATION

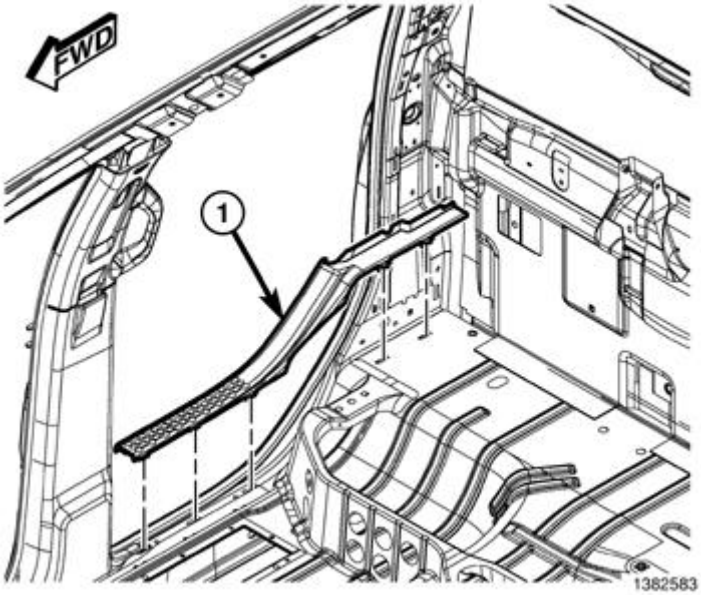

Fig. 485: Rear Door Sill Scuff Plate
Courtesy of CHRYSLER GROUP, LLC

1. Position the sill trim panel (1) onto the rear door sill.
2. Seat the retaining tabs that secure the sill trim panel to the rear door sill fully.

SUPPORT, VISOR

REMOVAL

REMOVAL

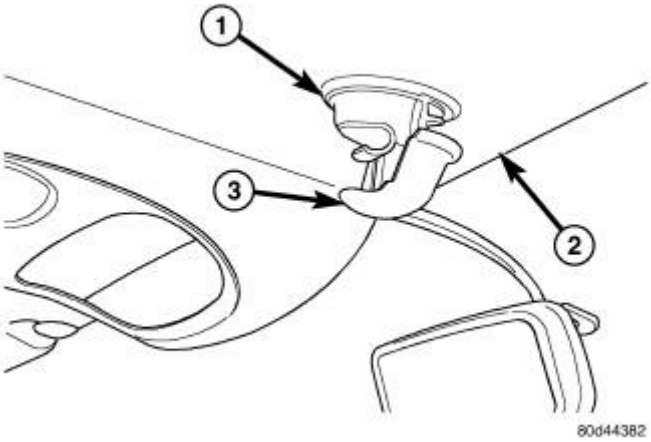

Fig. 486: Sun Visor Support
Courtesy of CHRYSLER GROUP, LLC

1. Using a trim stick (special tool #C-4755, Trim Stick) or equivalent, disengage the release clip (3) as shown in illustration and remove the sun visor support (1) from the headliner (2)

INSTALLATION

INSTALLATION

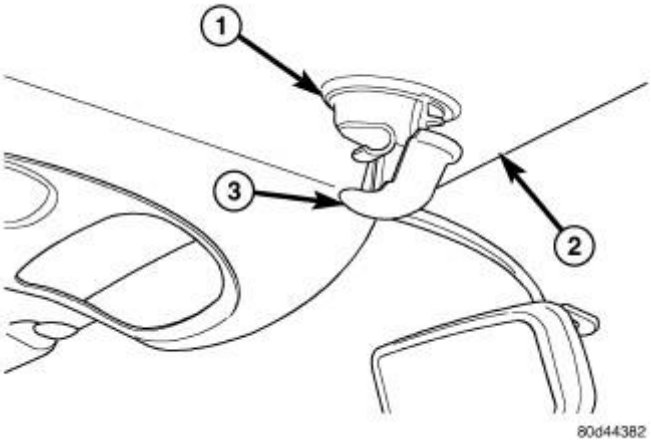

Fig. 487: Sun Visor Support
Courtesy of CHRYSLER GROUP, LLC

1. Position the sun visor support (1) through the headliner (2) and fully seat the base of the support to the roof panel.
2. Engage the release clip (3).

VISOR

REMOVAL

REMOVAL

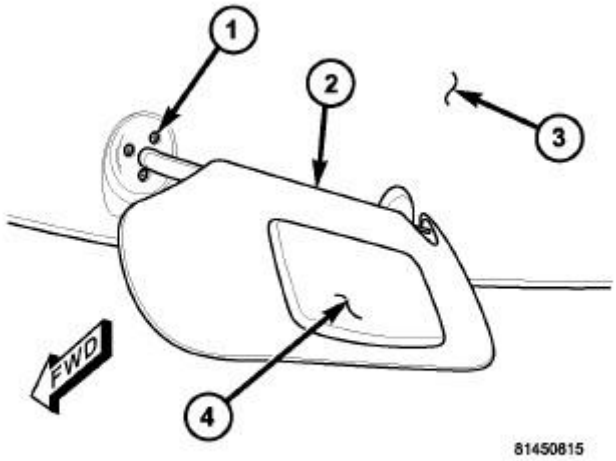

Fig. 488: Sun Visor, Vanity Mirror & Screws
Courtesy of CHRYSLER GROUP, LLC

CAUTION: When removing or installing the screws (1), be certain to avoid any wiring or drain tube interference.

1. Remove the three screws (1) that secure each sun visor (2) to the roof panel and remove the visor from the headliner (3).
2. If equipped, disconnect the wire harness connector for the illuminated vanity mirror (4).

INSTALLATION

INSTALLATION

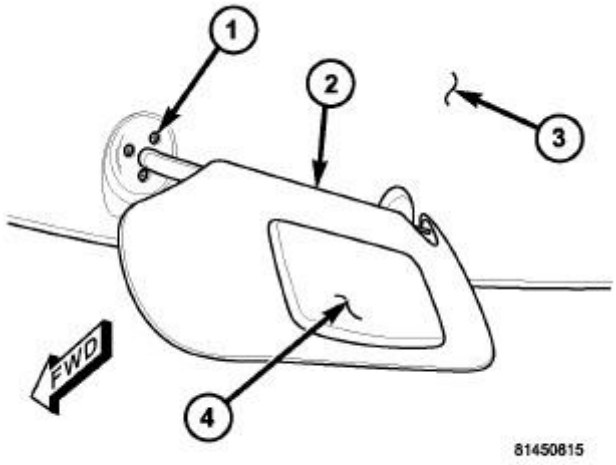

Fig. 489: Sun Visor, Vanity Mirror & Screws
Courtesy of CHRYSLER GROUP, LLC

CAUTION: When removing or installing the screws (1), be certain to avoid any wiring or drain tube interference.

1. If equipped, connect the wire harness connector for the illuminated vanity mirror (4).
2. Position the sun visor (2) onto the headliner (3).
3. Install the three screws (1) that secure each sun visor to the roof panel. Tighten the screws to 2.2 N.m (20 in. lbs.).

PAINT

SPECIFICATIONS

SPECIFICATIONS

NOTE: Because of late model changes to the available paint colors. Refer to VEHICLE CERTIFICATION LABEL, DESCRIPTION .

EXTERIOR COLORS

EXTERIOR COLOR	CHRYSLER CODE
Austin Tan Pearlcoat	PKL
Black	DX8
Blackberry	HBV
Blazing Saddle	PUS
Bright Silver Metallic Clearcoat	WS2
Bright White Clearcoat	GW7

Brilliant Black Crystal Pearlcoat	AXR
Deep Cherry Red Crystal	JRP
Deep Forest Green	JGT
Deep Water Blue Pearlcoat	GBS
Flame Red Clearcoat	PR4
Gold Rush	JYK
Inferno Red Pearlcoat	ARH
Light Greystone Pearlcoat	EDA
Mango Tango Pearlcoat	HVG
Mineral Grey Metallic Clearcoat	CDM
Rugged Brown Pearlcoat	GTW
Sarsaparilla Sage	JGX
White Gold Metallic	HWL

INTERIOR COLORS

INTERIOR COLOR	CHRYSLER CODE
Dark Slate Gray	DV
Dark Slate Gray/ Medium Greystone	V3
Dark Slate Gray/ Russet	DE
Light Pebble Beige/ Bark Brown	KT

SEATS

WARNING

WARNING

WARNING: **To avoid serious or fatal injury on vehicles equipped with the Supplemental Restraint System (SRS), never attempt to repair the electrically conductive circuits or wiring components related to the SRS for which there is no MOPAR wiring repair kit. It is important to use ONLY the recommended splicing kit and procedure. For applicable and available MOPAR wiring repair kits, please visit the MOPAR Connector Web Site at the following address on the internet: (http://dto.vftis.com/mopar/disclaimer.asp). Inappropriate repairs can compromise the conductivity and current carrying capacity of those critical electrical circuits, which may cause SRS components not to deploy when required, or to deploy when not required. Only minor cuts or abrasions of wire and terminal insulation where the conductive material has not been damaged, or connector insulators where the integrity of the latching and locking mechanisms have not been compromised may be repaired using appropriate methods.**

WARNING: **To avoid serious or fatal injury during and following any seat belt or child**

restraint anchor service, carefully inspect all seat belts, buckles, mounting hardware, retractors, tether straps, and anchors for proper installation, operation, or damage. Replace any belt that is cut, frayed, or torn. Straighten any belt that is twisted. Tighten any loose fasteners. Replace any belt that has a damaged or ineffective buckle or retractor. Replace any belt that has a bent or damaged latch plate or anchor plate. Replace any child restraint anchor or the unit to which the anchor is integral that has been bent or damaged. Never attempt to repair a seat belt or child restraint component. Always replace damaged or ineffective seat belt and child restraint components with the correct, new and unused replacement parts listed in the Chrysler Mopar® Parts Catalog. Failure to follow these instructions may result in possible serious or fatal injury.

WARNING: **To avoid serious or fatal injury on vehicles equipped with airbags, disable the Supplemental Restraint System (SRS) before attempting any steering wheel, steering column, airbag, seat belt tensioner, impact sensor or instrument panel component diagnosis or service. Disconnect and isolate the battery negative (ground) cable, then wait two minutes for the system capacitor to discharge before performing further diagnosis or service. This is the only sure way to disable the SRS. Failure to take the proper precautions could result in accidental airbag deployment.**

WARNING: **To avoid potential physical injury or damage to sensitive electronic circuits and systems, always disconnect and isolate the battery negative (ground) cable and the positive cable, then ground the positive cable to discharge the Occupant Restraint Controller (ORC) capacitor before performing any welding operations on the vehicle. Failure to take the proper precautions could result in accidental airbag deployment, possible damage to the Supplemental Restraint System (SRS) circuits and components, and possible damage to other electronic circuits and components. Whenever a welding process is being performed within 12 inches (30 centimeters) of an electronic module or wiring harness, then that module or harness should be relocated out of the way, or disconnected. Always protect against component or vehicle damage from weld spatter by using weld blankets and screens.**

WARNING: **To avoid serious or fatal injury, do not attempt to dismantle an airbag unit or tamper with its inflator. Do not puncture, incinerate or bring into contact with electricity. Do not store at temperatures exceeding 93° C (200° F). An airbag inflator unit may contain sodium azide and potassium nitrate. These materials are poisonous and extremely flammable. Contact with acid, water, or heavy metals may produce harmful and irritating gases (sodium hydroxide is formed in the presence of moisture) or combustible compounds. An airbag inflator unit may also contain a gas canister pressurized to over 17.24 kPa (2500 psi). Failure to follow these**

instructions may result in possible serious or fatal injury.

WARNING: To avoid serious or fatal injury when handling a seat belt tensioner retractor. Exercise proper care to keep fingers out from under the retractor cover and away from the seat belt webbing where it exits from the retractor cover. Failure to follow these instructions may result in possible serious or fatal injury.

WARNING: To avoid serious or fatal injury, replace all Supplemental Restraint System (SRS) components only with parts specified in the Chrysler Mopar® Parts Catalog. Substitute parts may appear interchangeable, but internal differences may result in inferior occupant protection.

WARNING: To avoid serious or fatal injury, the fasteners, screws, and bolts originally used for the Supplemental Restraint System (SRS) components must never be replaced with any substitutes. These fasteners have special coatings and are specifically designed for the SRS. Anytime a new fastener is needed, replace it with the correct fasteners provided in the service package or specified in the Chrysler Mopar® Parts Catalog.

WARNING: To avoid serious or fatal injury when a steering column has an airbag unit attached, never place the column on the floor or any other surface with the steering wheel or airbag unit face down. Failure to follow these instructions may result in possible serious or fatal injury.

COVER, SEAT BACK, MEGA CAB REAR

REMOVAL

REMOVAL

1. Fold both rear seats flat.
2. Remove the filler panels from the rear seat to storage compartment.
3. Separate the J-straps at the bottom of the seat back.
4. Remove both hinge covers from the back section being worked on.
5. Remove the lower anchor for the center seat belt.
6. Disconnect the lower cable attachment from the seat back release.
7. Remove the four bolts and remove the seat back from the seat.
8. Mark the location of the cables at the cushion and remove.
9. Remove the upper cushion pivot bolts.
10. Remove the lower cushion pivot bolts.
11. Remove the cushion from the seat.
12. Remove the seat release/recline handle.

13. Separate the J-straps for the cover to the seat pan.
14. Remove the cover/cushion from the seat pan and separate the foam from the cover.

INSTALLATION

INSTALLATION

1. Place cover over the foam and install onto the seat pan.
2. Connect the J-straps to the pan.
3. Install the release/recliner handle.
4. Install the cushion assembly onto the seat assembly.
5. Install the lower cushion pivot bolts.
6. Install the upper cushion pivot bolts.
7. Install the cables at the cushion using the marks made during removal.
8. Install the seat back onto the seat and install the four bolts.
9. Connect the lower cable attachment for the seat back release.
10. Install the lower anchor for the center seat belt.
11. Install the hinge covers.
12. Connect the J-straps at the bottom of the seat back being worked on.
13. Install the filler panels.

COVER, SEAT CUSHION, FRONT

REMOVAL

REMOVAL

NOTE: While servicing seat assemblies, refer to DESCRIPTION. .

MANUAL

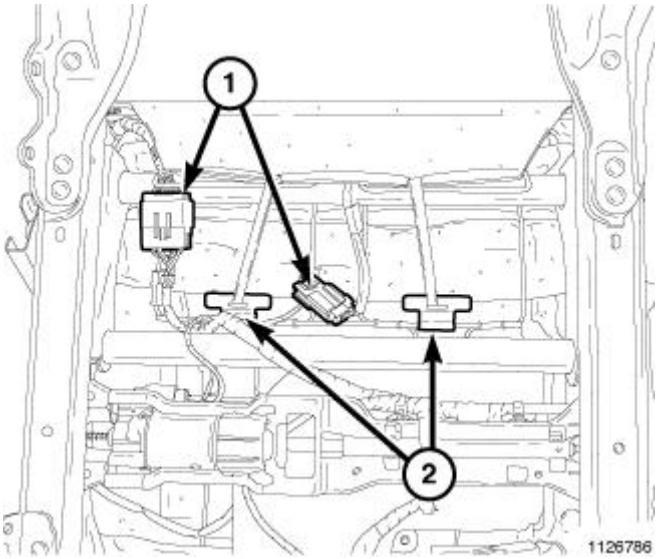

Fig. 490: Seat Back Cover Straps
Courtesy of CHRYSLER GROUP, LLC

1. Separate the seat back cover straps (2) from under the seat cushion.

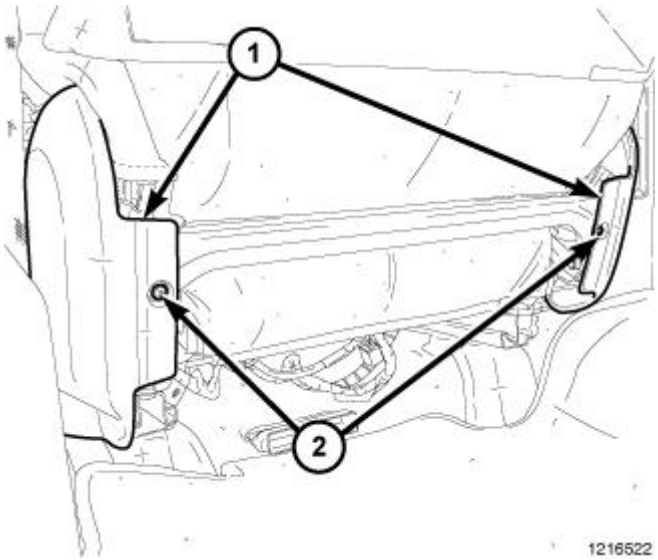

Fig. 491: Side Shield Screws
Courtesy of CHRYSLER GROUP, LLC

2. Remove the side shield screws (2) in the back.

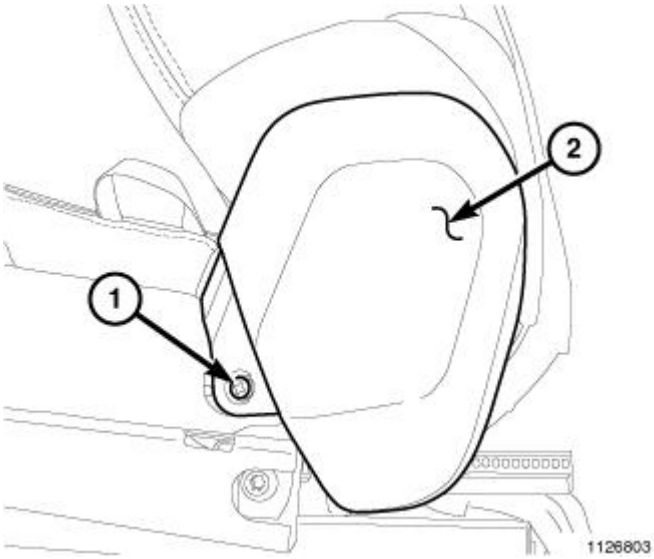

Fig. 492: Inboard Shield
Courtesy of CHRYSLER GROUP, LLC

3. Remove the inboard shield screw (1).
4. Remove the inboard side shield (2).

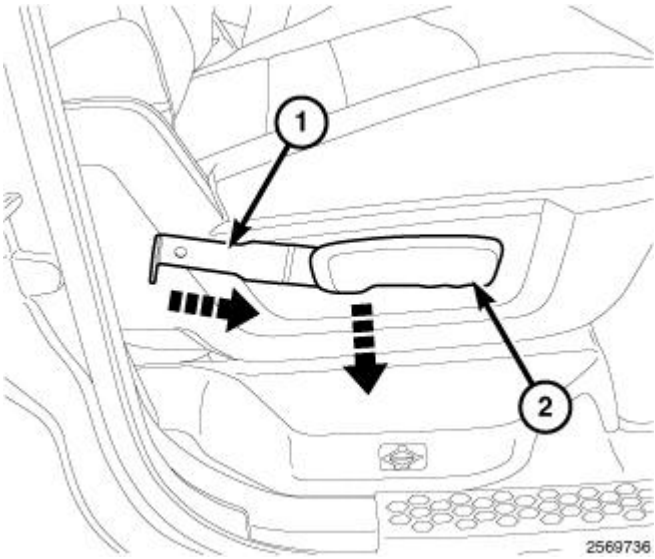

Fig. 493: Door Handle Clip Tool
Courtesy of CHRYSLER GROUP, LLC

5. Using a door handle clip tool (1) or equivalent, release the clip holding the handle (2) onto the seat and remove the handle.
6. Using trim stick (special tool #C-4755, Trim Stick) or equivalent, release the seven tabs and separate the center bezel from the outboard side shield.
7. Pull the bezel rearward and release the front retaining tab.

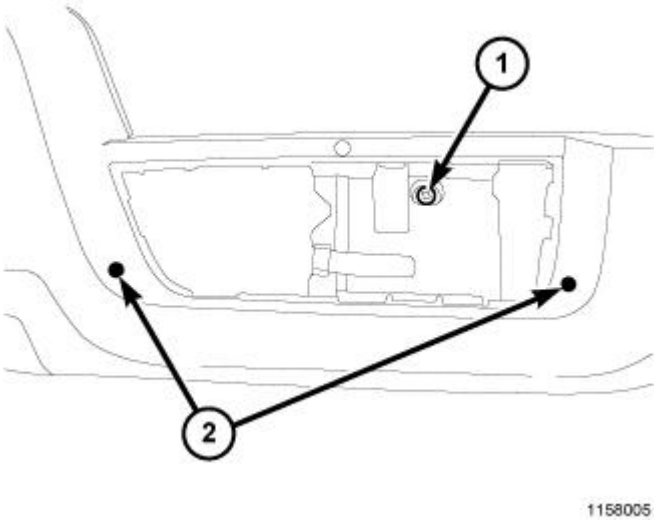

Fig. 494: Outer Side Shield
Courtesy of CHRYSLER GROUP, LLC

8. Remove the screw (1).
9. Release the retaining clips (2) and remove the outer side shield.

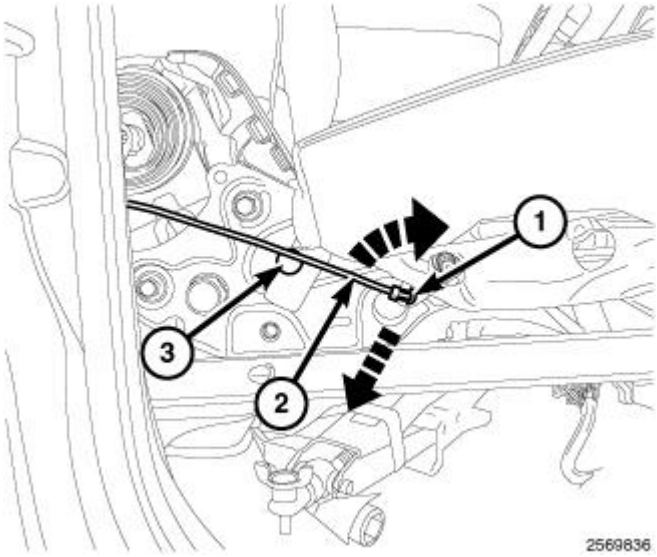

Fig. 495: Recliner Rod
Courtesy of CHRYSLER GROUP, LLC

10. Separate the clip (1) and separate the recliner rod (2) from the lever.
11. Remove the push pin fastener (3).

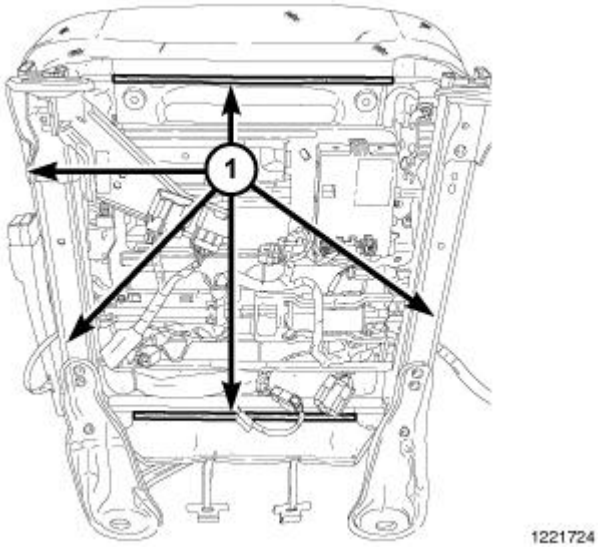

Fig. 496: J-Straps
Courtesy of CHRYSLER GROUP, LLC

12. Separate the cover J-straps (1) from the sides and remove the foam/cover assembly.

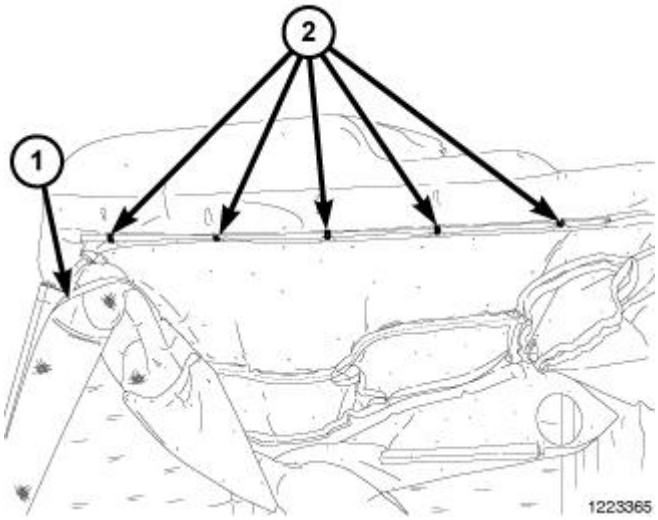

Fig. 497: Hog Rings
Courtesy of CHRYSLER GROUP, LLC

13. Remove the 10 hog rings (2) and separate the cover (1) from the foam.

POWER WITHOUT VENTED SEAT

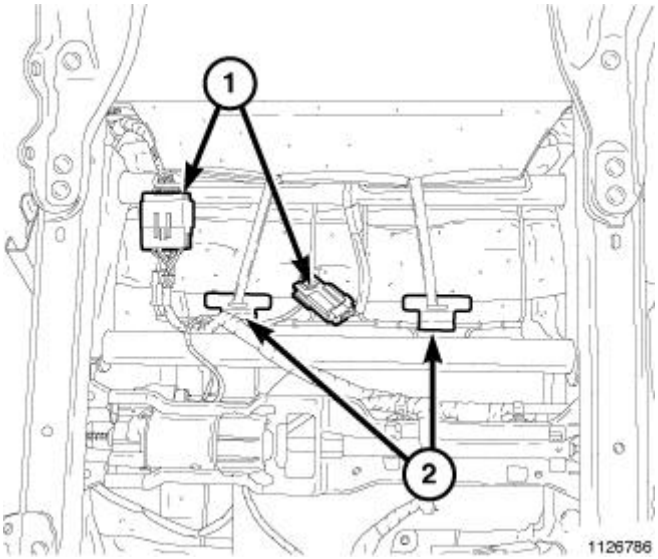

Fig. 498: Seat Back Cover Straps
Courtesy of CHRYSLER GROUP, LLC

1. Remove the front seat. Refer to **SEAT, FRONT, REMOVAL** and **SEAT, FRONT CENTER, REMOVAL**.
2. Separate the seat back cover straps (2) from under the seat cushion and disconnect the electrical connectors (1).

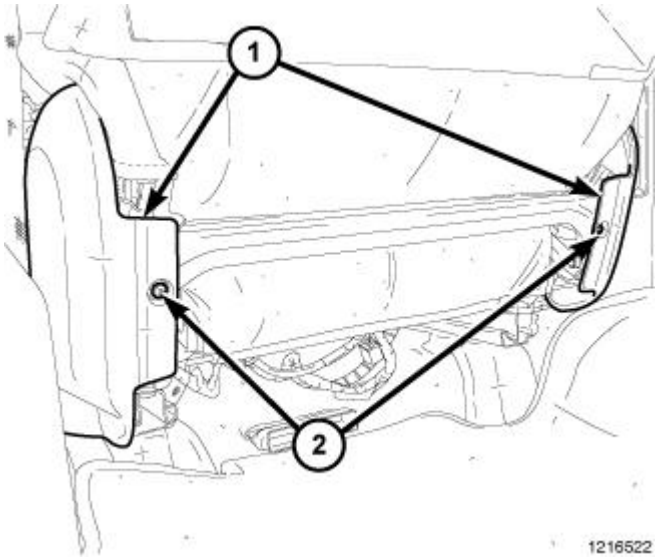

Fig. 499: Side Shield Screws
Courtesy of CHRYSLER GROUP, LLC

3. Remove the side shield screws (2) in the back.

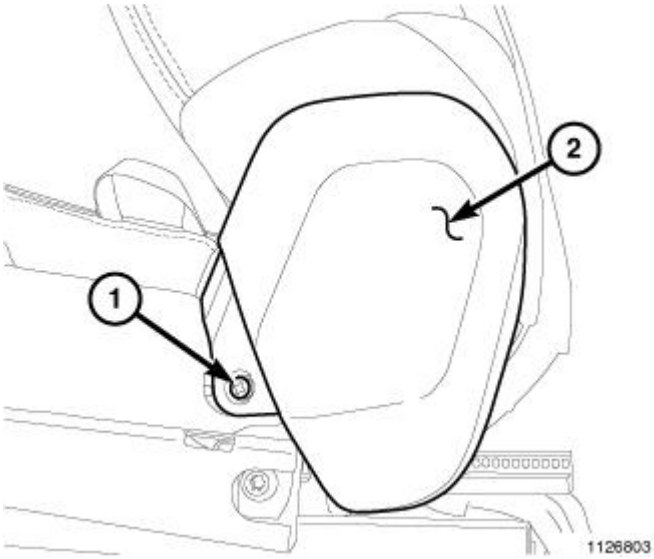

Fig. 500: Inboard Shield
Courtesy of CHRYSLER GROUP, LLC

4. Remove the inboard shield screw.
5. Remove the inboard side shield.

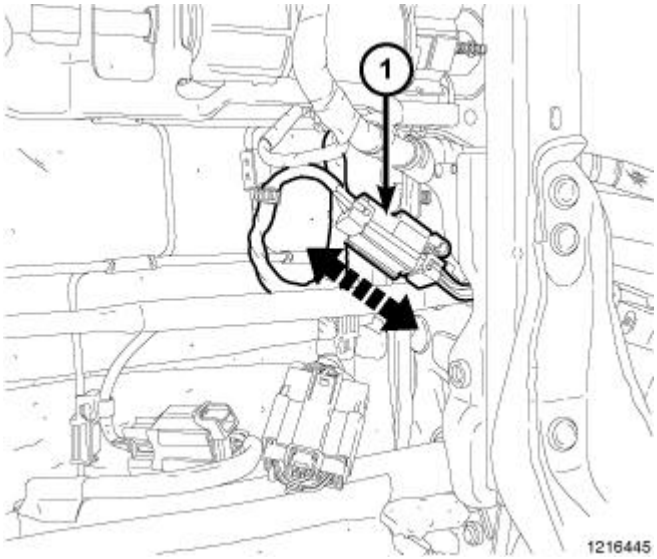

Fig. 501: Lumbar Switch Electrical Connector
Courtesy of CHRYSLER GROUP, LLC

CAUTION: Disconnect the lumbar control switch electrical connector beneath the seat, prior to removing the power seat switch bezel from the seat. Failure to follow these instructions can result in damage to the lumbar control switch.

6. If equipped, disconnect the lumbar control switch electrical connector (1).

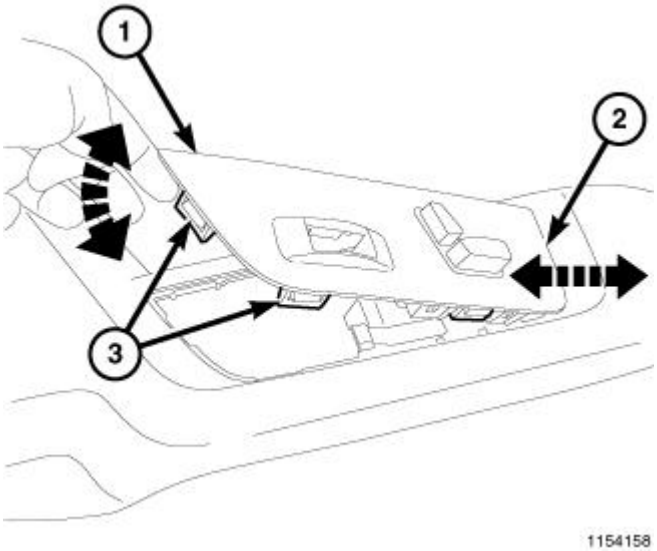

Fig. 502: Switch Bezel
Courtesy of CHRYSLER GROUP, LLC

7. Using trim stick (special tool #C-4755, Trim Stick) or equivalent, release the seven tabs (3) and separate the bezel (1) from the outboard side shield.
8. Pull the bezel (1) rearward and release the front retaining tab (2).
9. Disconnect the wire harness connectors from the power seat switch and memory seat switch, if equipped.

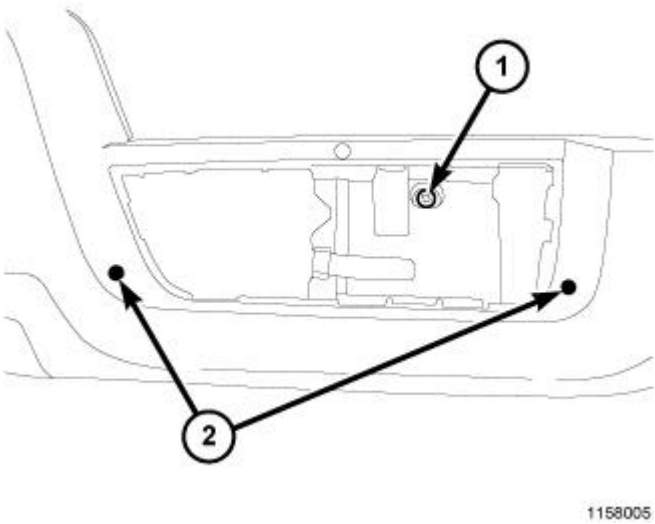

Fig. 503: Outer Side Shield
Courtesy of CHRYSLER GROUP, LLC

10. Remove the screw (1).
11. Release the retaining clips (2) and remove the outer side shield.

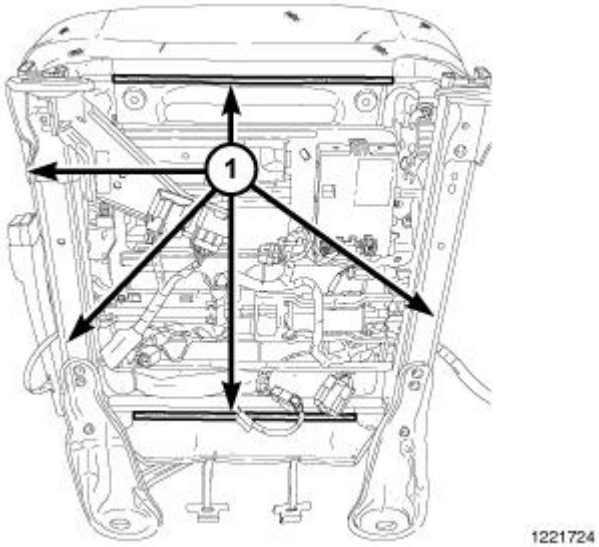

Fig. 504: J-Straps
Courtesy of CHRYSLER GROUP, LLC

12. Separate the cover J-straps (1) from the sides and remove the foam/cover assembly.

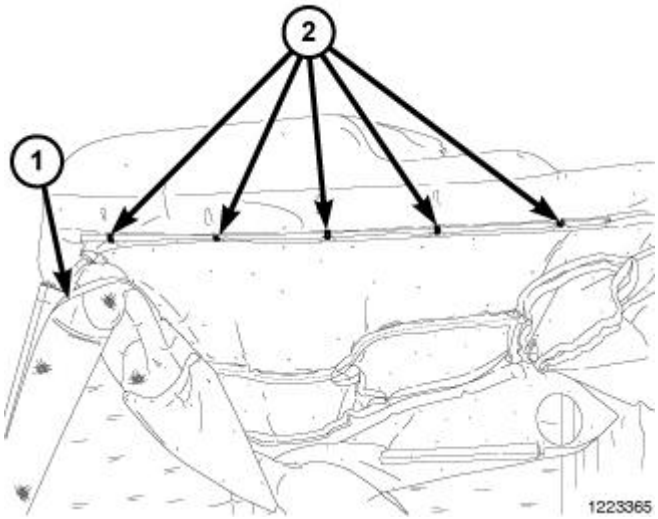

Fig. 505: Hog Rings
Courtesy of CHRYSLER GROUP, LLC

13. Remove the 10 hog rings (2) and separate the cover (1) from the foam.

POWER WITH VENTED SEAT

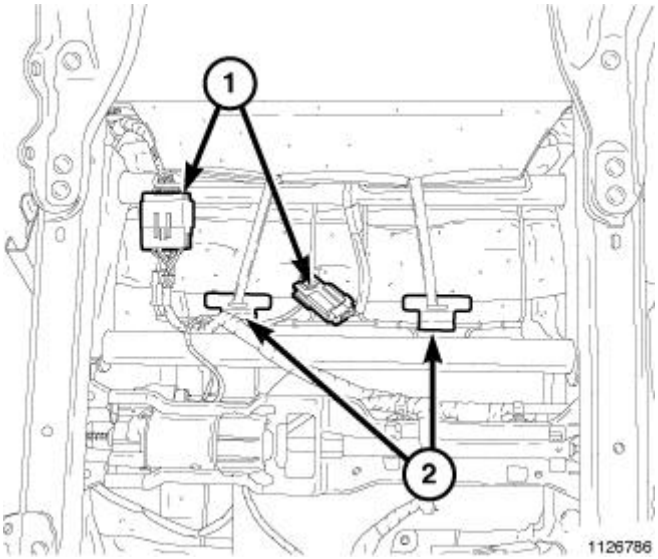

Fig. 506: Seat Back Cover Straps
Courtesy of CHRYSLER GROUP, LLC

1. Remove the front seat. Refer to **SEAT, FRONT, REMOVAL** and **SEAT, FRONT CENTER, REMOVAL**.
2. Separate the seat back cover straps (2) from under the seat cushion and disconnect the electrical connectors (1).

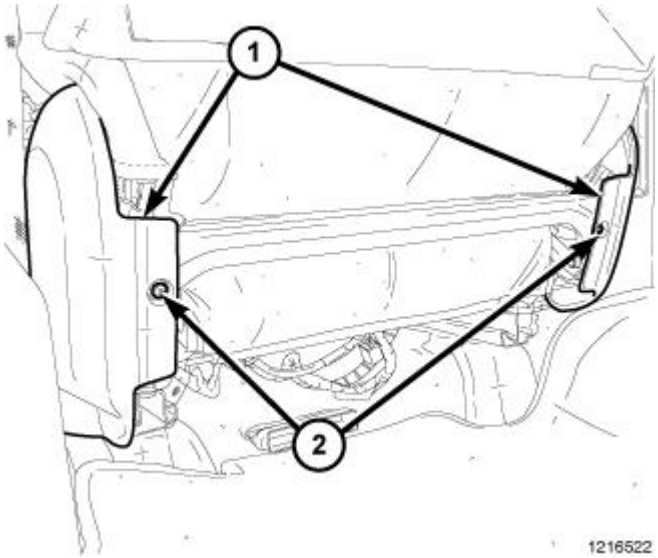

Fig. 507: Side Shield Screws
Courtesy of CHRYSLER GROUP, LLC

3. Remove the side shield screws (2) in the back.

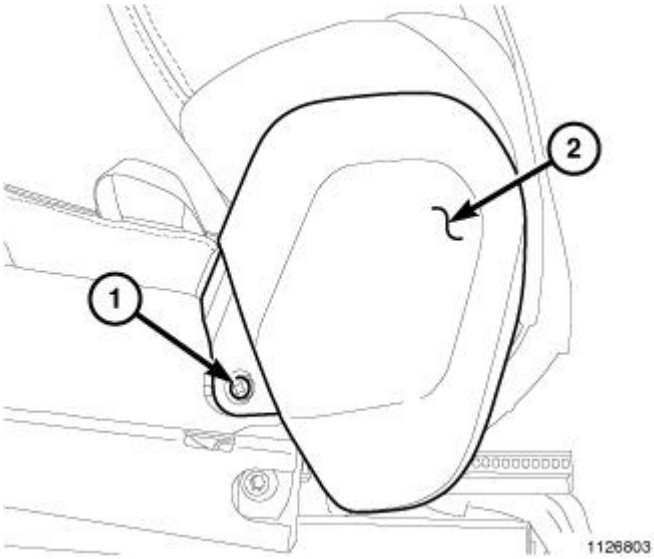

Fig. 508: Inboard Shield
Courtesy of CHRYSLER GROUP, LLC

4. Remove the inboard shield screw.
5. Remove the inboard side shield.

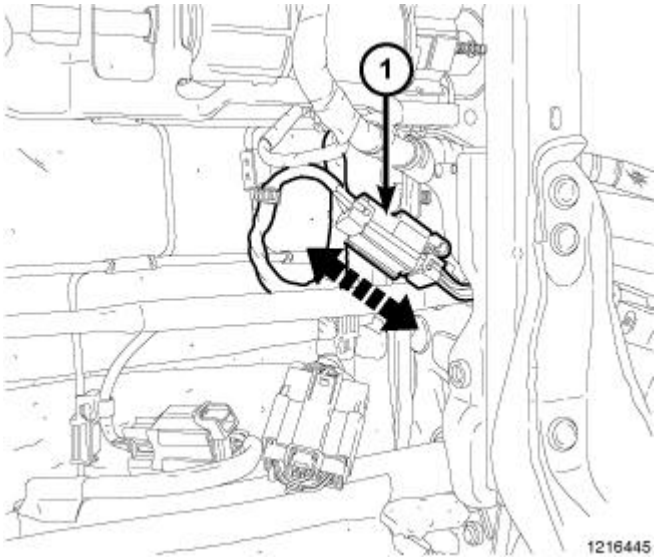

Fig. 509: Lumbar Switch Electrical Connector
Courtesy of CHRYSLER GROUP, LLC

CAUTION: Disconnect the lumbar control switch electrical connector beneath the seat, prior to removing the power seat switch bezel from the seat. Failure to follow these instructions can result in damage to the lumbar control switch.

6. If equipped, disconnect the lumbar control switch electrical connector (1).

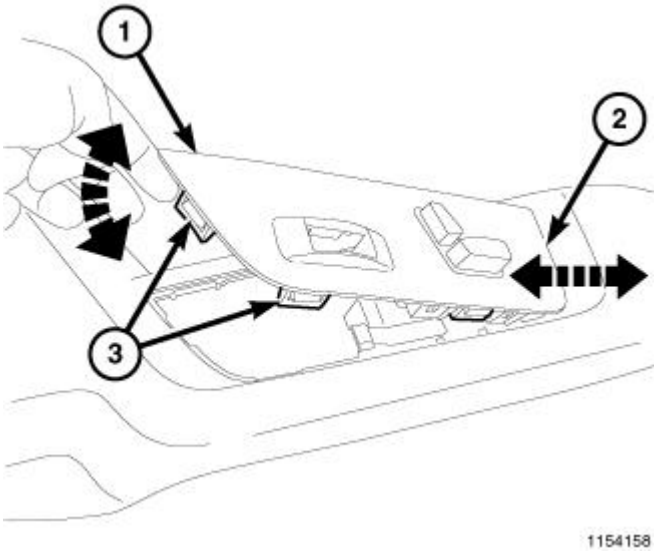

Fig. 510: Switch Bezel
Courtesy of CHRYSLER GROUP, LLC

NOTE: Power seat bezel shown in illustration, manual seat bezel similar.

7. Using trim stick (special tool #C-4755, Trim Stick) or equivalent, release the seven tabs (3) and separate the bezel (1) from the outboard side shield.
8. Pull the bezel (1) rearward and release the front retaining tab (2).
9. Disconnect the wire harness connectors from the power seat switch and memory seat switch, if equipped.

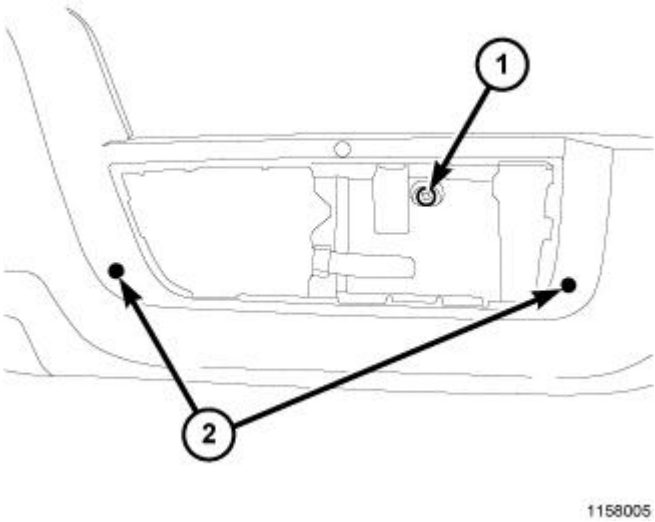

Fig. 511: Outer Side Shield
Courtesy of CHRYSLER GROUP, LLC

10. Remove the screw (1).
11. Release the retaining clips (2) and remove the outer side shield.

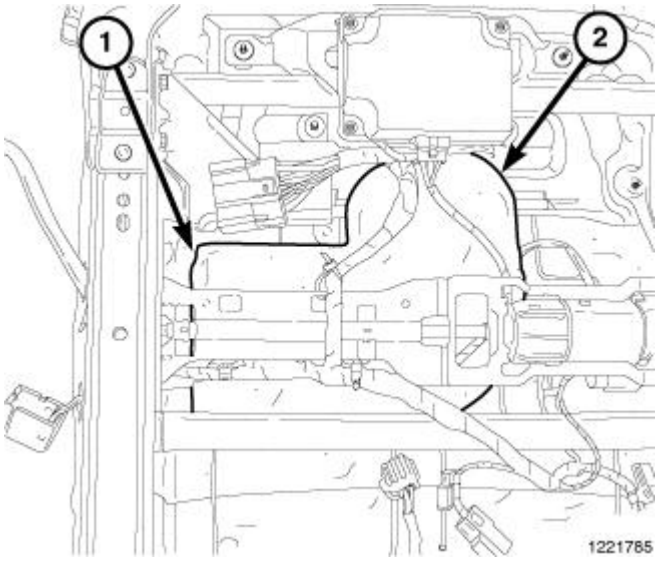

Fig. 512: Vented Seat Pad
Courtesy of CHRYSLER GROUP, LLC

12. Disconnect the vented seat pad (1) from the motor (2).
13. Disconnect the electrical connectors, if equipped.

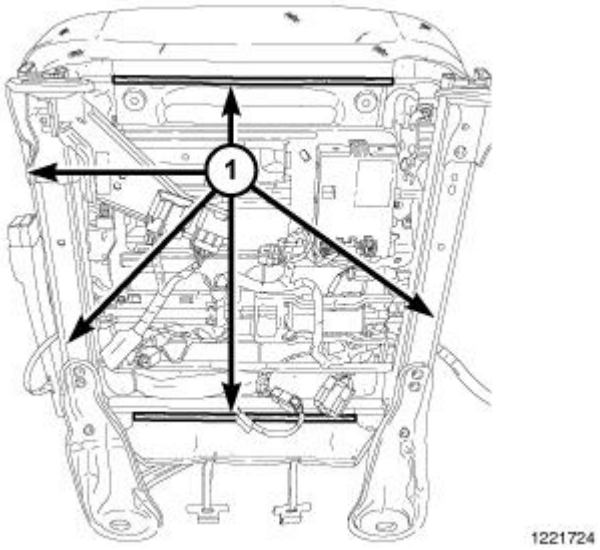

Fig. 513: J-Straps
Courtesy of CHRYSLER GROUP, LLC

14. Separate the cover J-straps (1) from the sides and remove the foam/cover assembly.

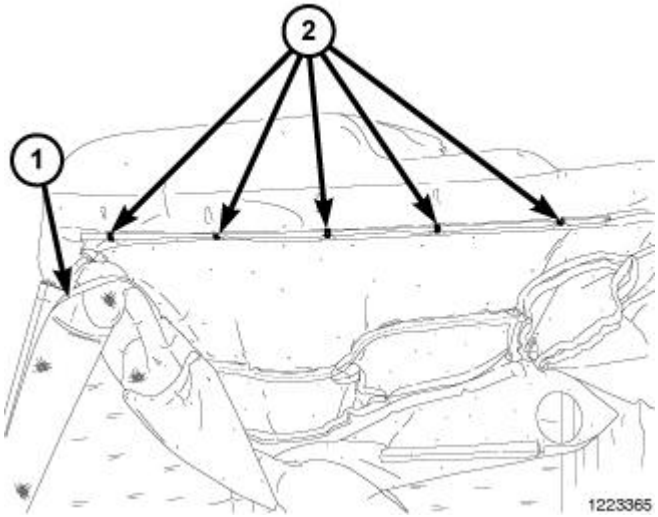

Fig. 514: Hog Rings
Courtesy of CHRYSLER GROUP, LLC

15. Remove the 10 hog rings (2) and separate the cover (1) from the foam.

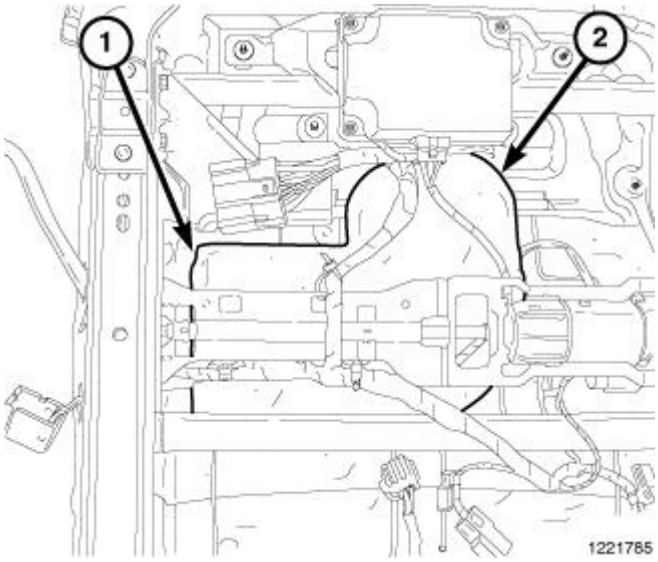

Fig. 515: Vented Seat Pad
Courtesy of CHRYSLER GROUP, LLC

16. Pull the vent pad (1) through the foam.

INSTALLATION

INSTALLATION

MANUAL

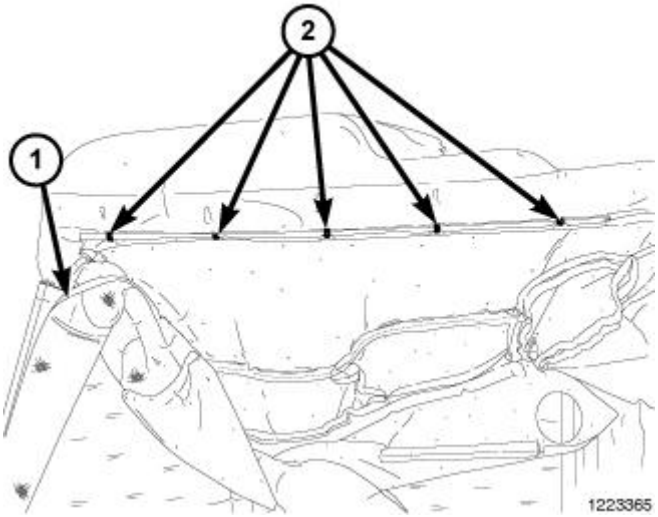

Fig. 516: Hog Rings
Courtesy of CHRYSLER GROUP, LLC

1. Position the cover (1) onto the foam and install 10 new hog rings (2).

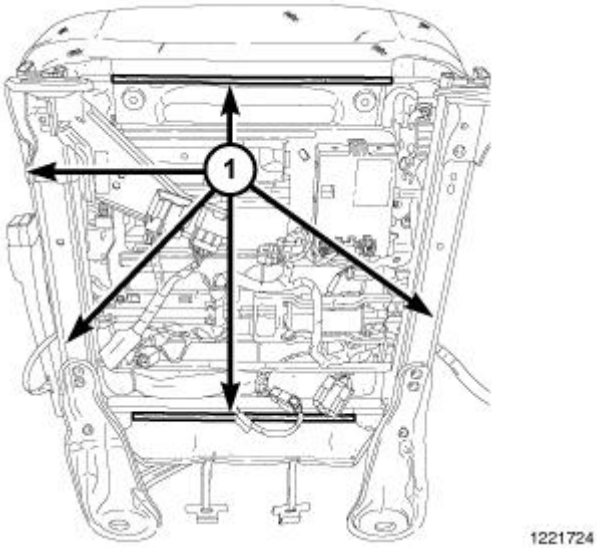

Fig. 517: J-Straps
Courtesy of CHRYSLER GROUP, LLC

2. Position the foam/cover assembly onto the seat cushion frame and secure the J-straps (1) on the sides.

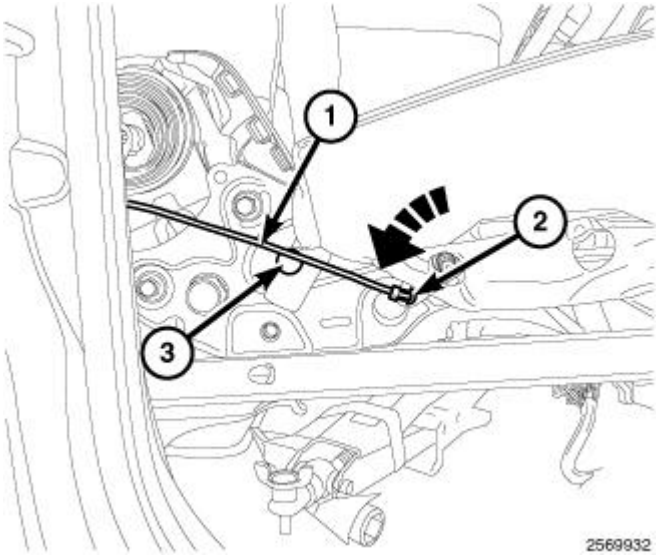

Fig. 518: Recliner Rod
Courtesy of CHRYSLER GROUP, LLC

3. Install the push pin fastener (3) and seat fully.
4. Install the recliner rod (1) and seat the retaining clip (2) fully.

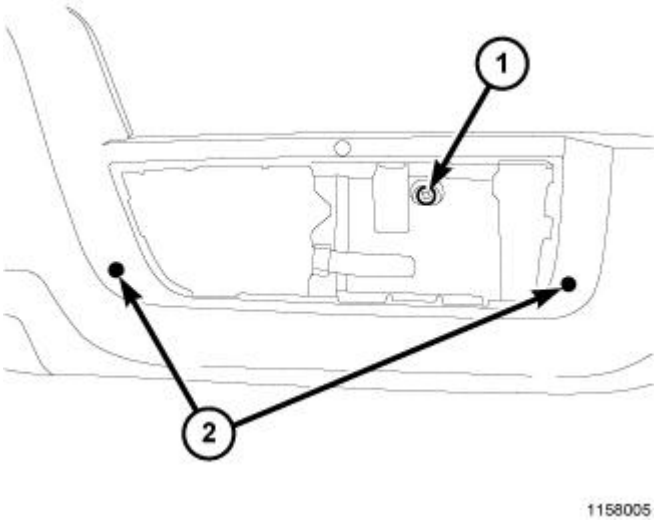

Fig. 519: Outer Side Shield
Courtesy of CHRYSLER GROUP, LLC

5. Install the outer side shield and seat the clips (2) fully.
6. Install the screw (1).

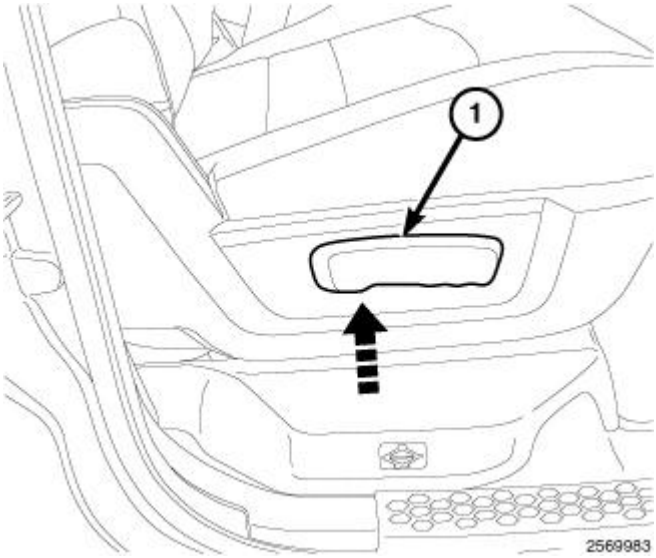

Fig. 520: Recliner Handle
Courtesy of CHRYSLER GROUP, LLC

7. Position the bezel to the outboard side shield and engage the front retaining tab.
8. Seat the remaining tabs (3) fully.
9. Position the recliner handle (1) onto the splined shaft and seat fully.

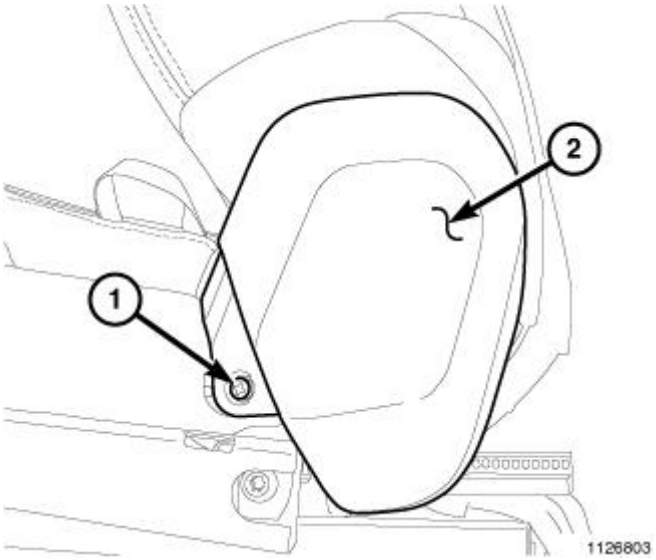

Fig. 521: Inboard Shield
Courtesy of CHRYSLER GROUP, LLC

10. Install the inboard shield (2) and install the screw (1).

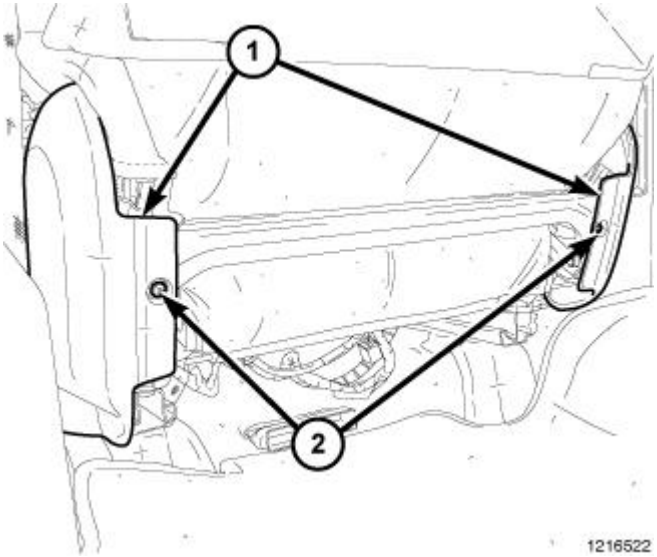

Fig. 522: Side Shield Screws
Courtesy of CHRYSLER GROUP, LLC

11. Install the side shield screws (2) in the back.

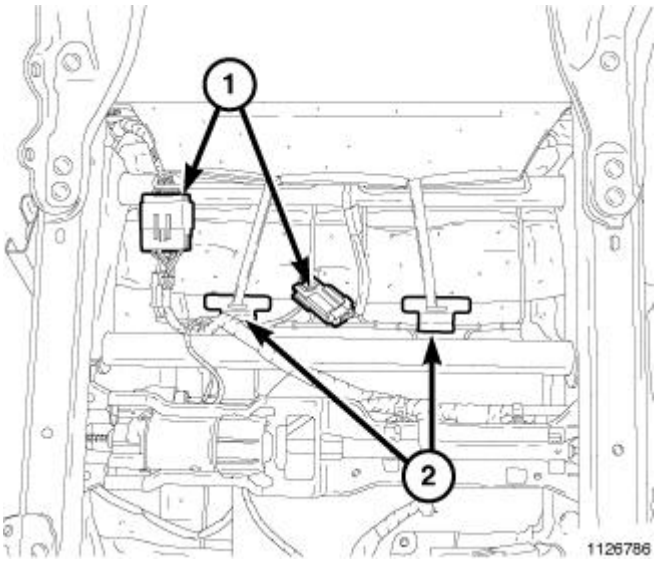

Fig. 523: Seat Back Cover Straps
Courtesy of CHRYSLER GROUP, LLC

12. Secure the seat back cover straps (2) to suspension mat.

POWER WITHOUT VENTED SEAT

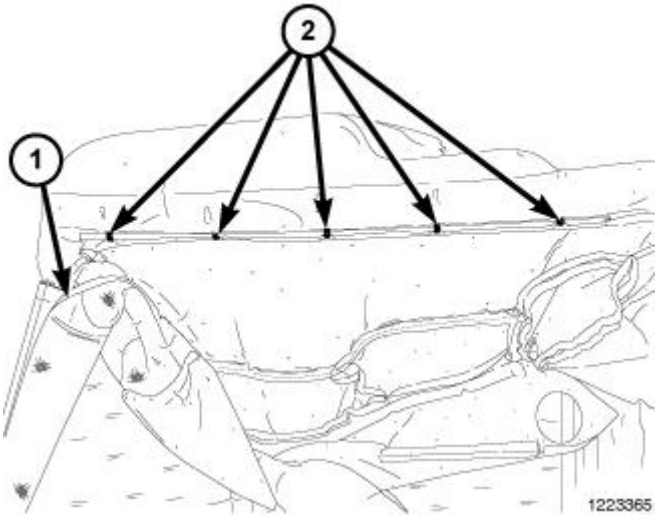

Fig. 524: Hog Rings
Courtesy of CHRYSLER GROUP, LLC

1. Position the cover (1) onto the foam and install 10 new hog rings (2).

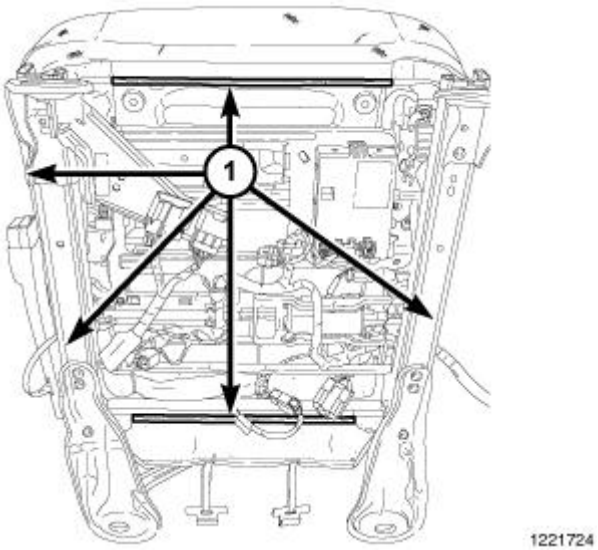

Fig. 525: J-Straps
Courtesy of CHRYSLER GROUP, LLC

2. Position the foam/cover assembly onto the seat cushion frame and secure the J-straps (1) on the sides.

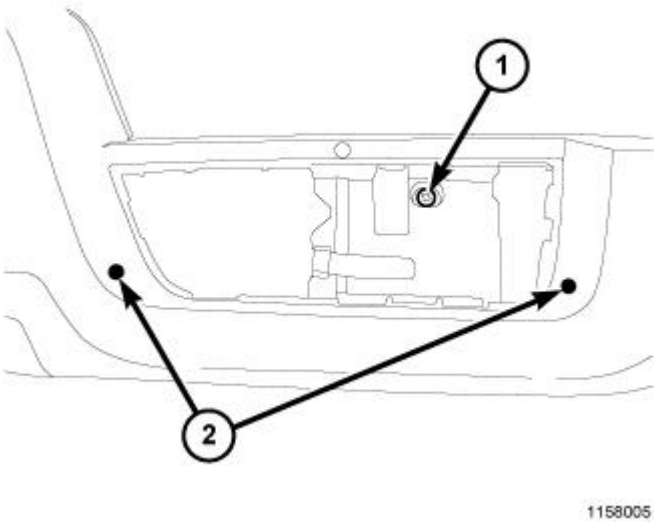

Fig. 526: Outer Side Shield
Courtesy of CHRYSLER GROUP, LLC

3. Install the outer side shield and seat the clips (2) fully.
4. Install the screw (1).

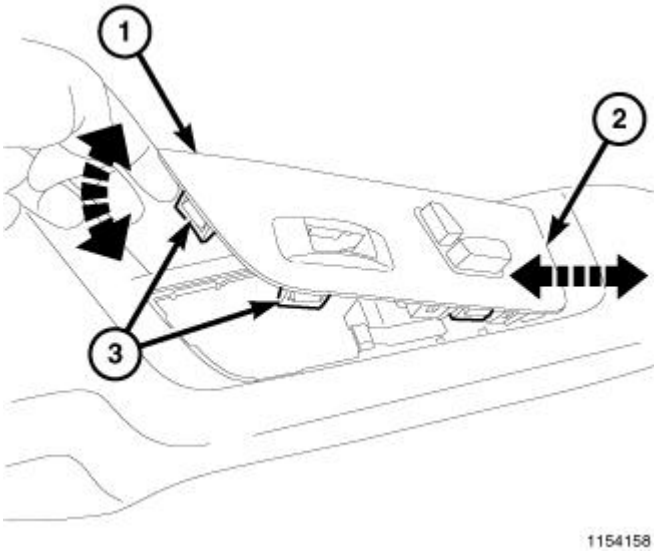

Fig. 527: Switch Bezel
Courtesy of CHRYSLER GROUP, LLC

5. Connect the wire harness connectors to the power seat switch and memory seat switch, if equipped.
6. Position the bezel (1) back into place and secure the front tab (2).
7. Seat the remaining tabs (3) fully.

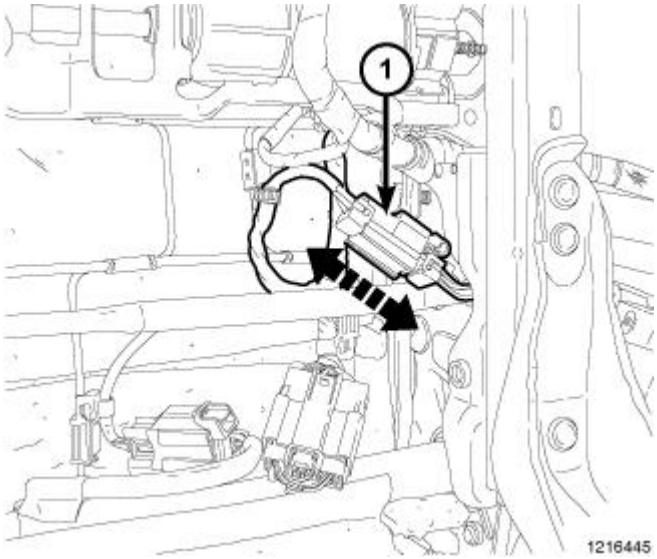

Fig. 528: Lumbar Switch Electrical Connector
Courtesy of CHRYSLER GROUP, LLC

8. If equipped, connect the lumbar switch electrical connector (1).

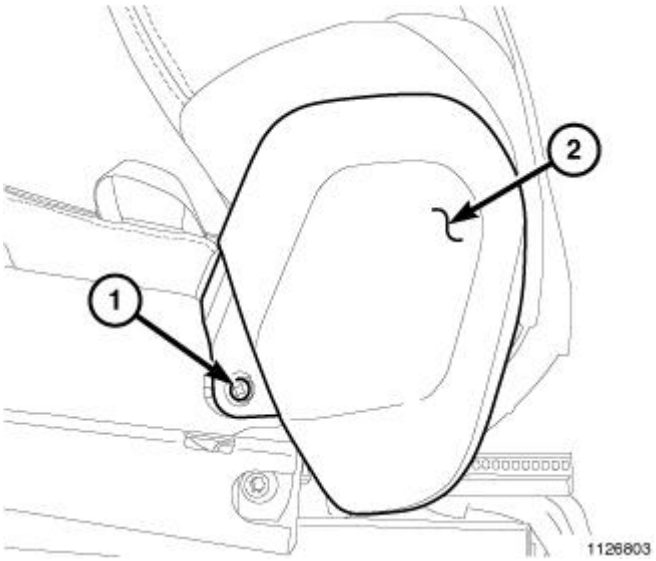

Fig. 529: Inboard Shield
Courtesy of CHRYSLER GROUP, LLC

9. Install the inboard shield (2) and install the screw (1).

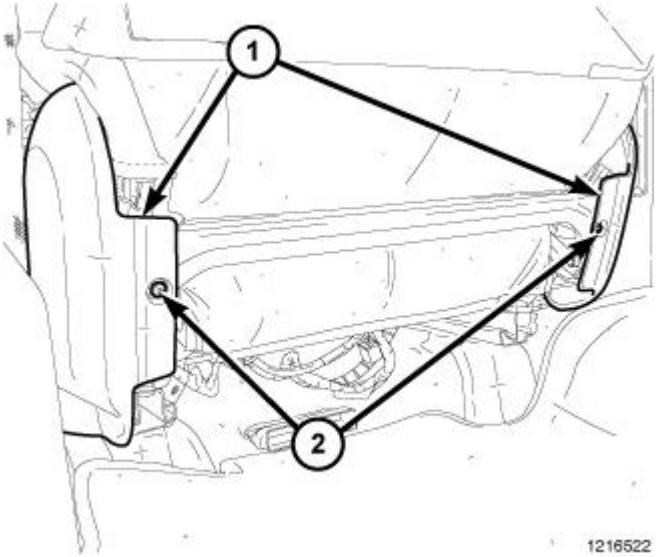

Fig. 530: Side Shield Screws
Courtesy of CHRYSLER GROUP, LLC

10. Install the side shield screws (2) in the back.

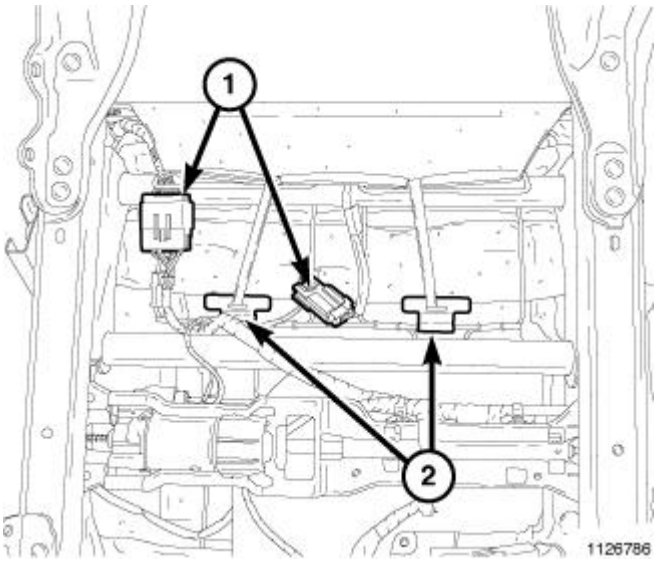

Fig. 531: Seat Back Cover Straps
Courtesy of CHRYSLER GROUP, LLC

11. Secure the seat back cover straps (2).
12. Connect the electrical connectors (1).
13. Install the front seat. Refer to **SEAT, FRONT, INSTALLATION** and **SEAT, FRONT CENTER, INSTALLATION**.

POWER WITH VENTED SEAT

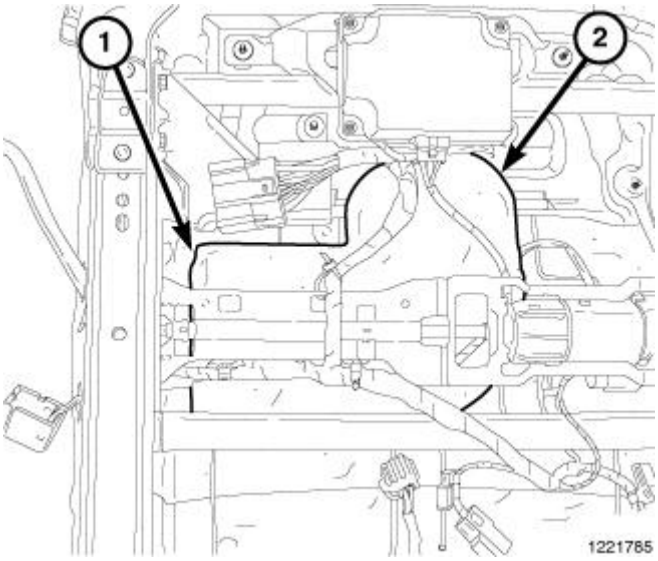

Fig. 532: Vented Seat Pad
Courtesy of CHRYSLER GROUP, LLC

1. Pull the vent pad (1) through the foam.

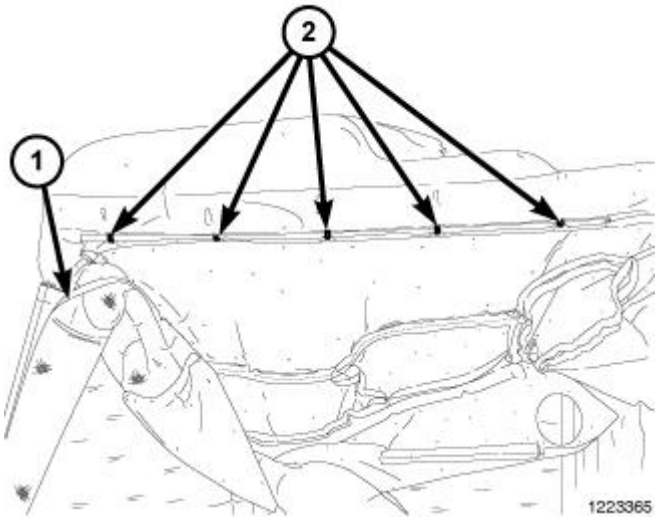

Fig. 533: Hog Rings
Courtesy of CHRYSLER GROUP, LLC

2. Position the cover (1) onto the foam and install 10 new hog rings (2).

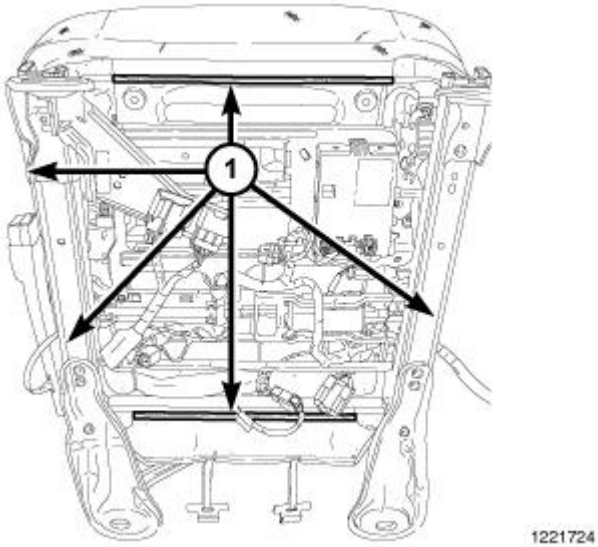

Fig. 534: J-Straps
Courtesy of CHRYSLER GROUP, LLC

3. Position the foam/cover assembly onto the seat cushion frame and secure the J-straps (1) on the sides.

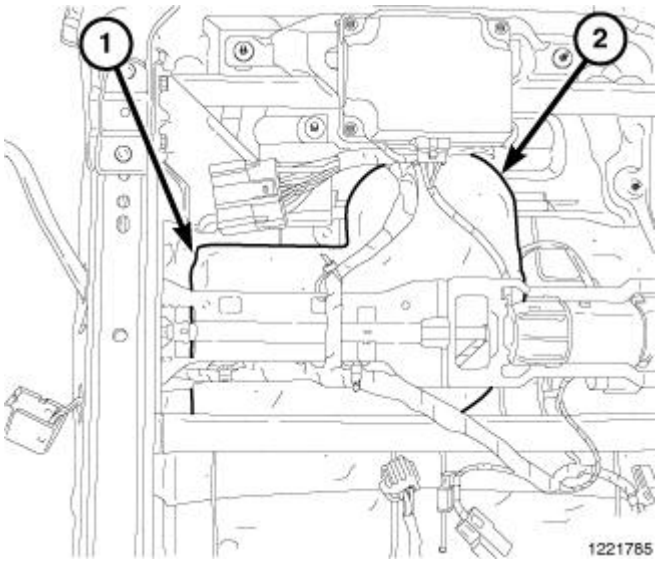

Fig. 535: Vented Seat Pad
Courtesy of CHRYSLER GROUP, LLC

4. Position the vented seat pad (2) onto the vent motor if equipped, and seat the clips fully.
5. Connect the electrical connectors, if equipped.

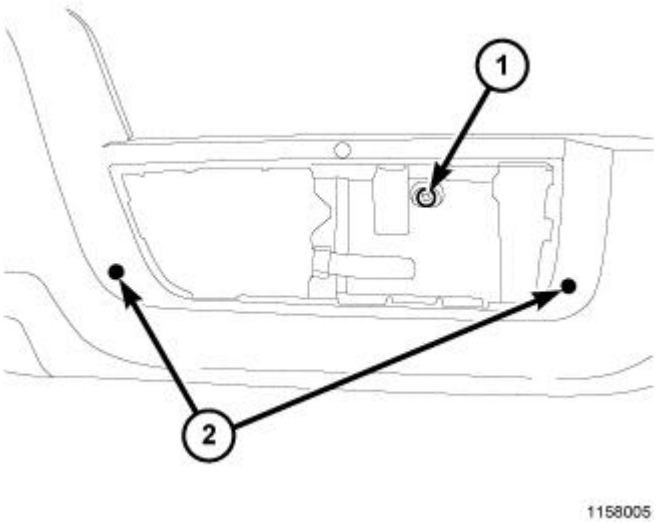

Fig. 536: Outer Side Shield
Courtesy of CHRYSLER GROUP, LLC

6. Install the outer side shield and seat the clips (2) fully.
7. Install the screw (1).

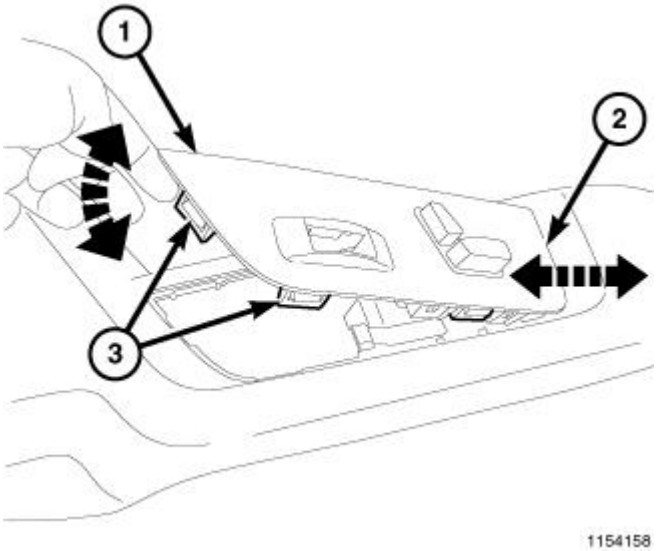

Fig. 537: Switch Bezel
Courtesy of CHRYSLER GROUP, LLC

8. Connect the wire harness connectors to the power seat switch and memory seat switch, if equipped.
9. Position the bezel (1) back into place and secure the front tab (2).
10. Seat the remaining tabs (3) fully.

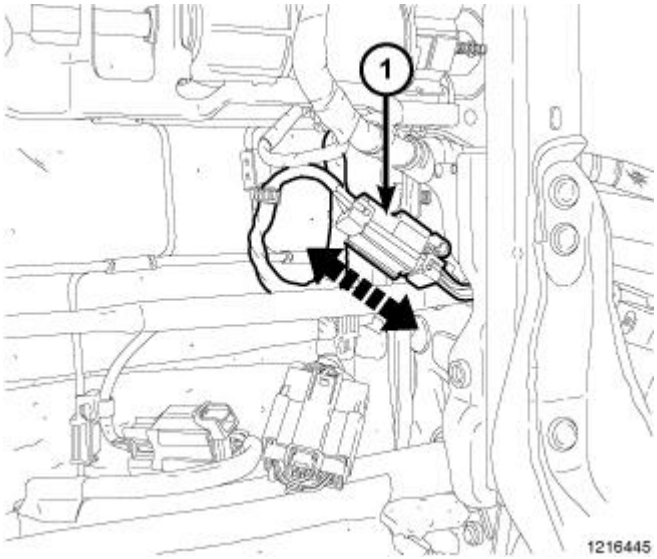

Fig. 538: Lumbar Switch Electrical Connector
Courtesy of CHRYSLER GROUP, LLC

11. If equipped, connect the lumbar switch electrical connector (1).

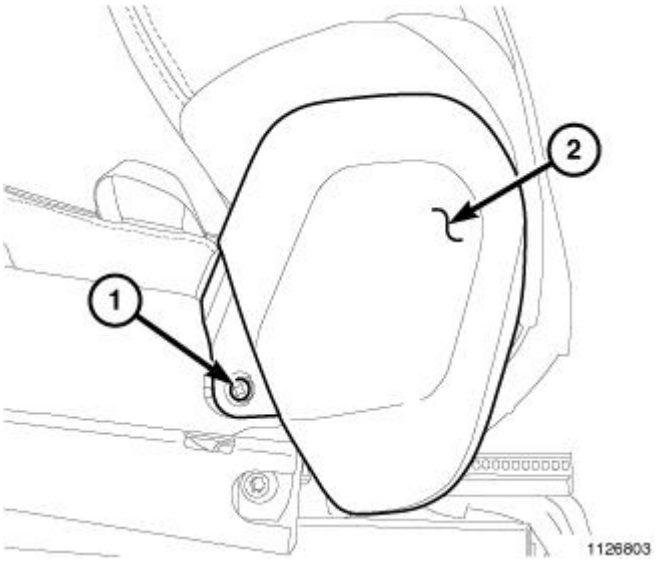

Fig. 539: Inboard Shield
Courtesy of CHRYSLER GROUP, LLC

12. Install the inboard shield (2) and install the screw (1).

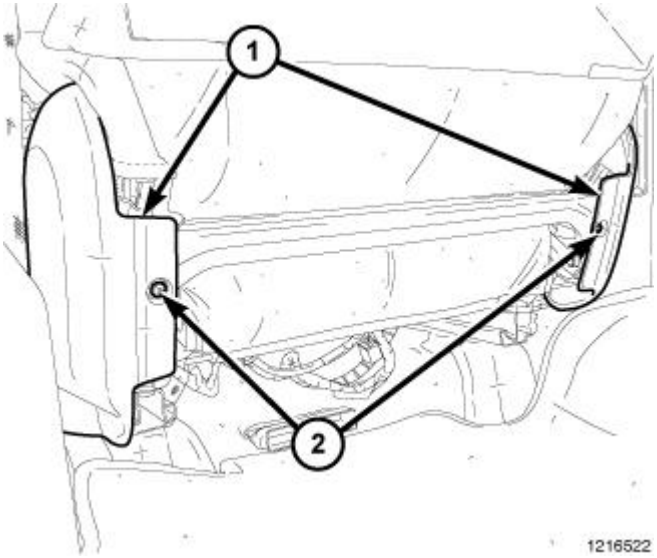

Fig. 540: Side Shield Screws
Courtesy of CHRYSLER GROUP, LLC

13. Install the side shield screws (2) in the back.

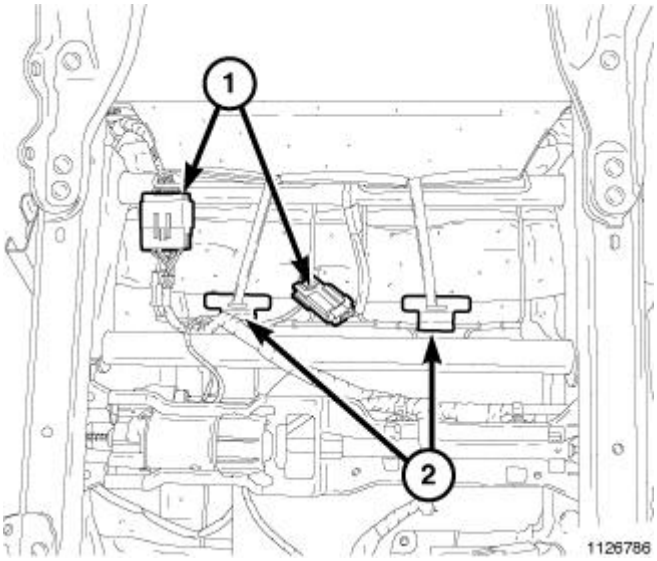

Fig. 541: Seat Back Cover Straps
Courtesy of CHRYSLER GROUP, LLC

14. Secure the seat back cover straps (2).
15. Connect the electrical connectors (1).
16. Install the front seat. Refer to **SEAT, FRONT, INSTALLATION** and **SEAT, FRONT CENTER, INSTALLATION**.

COVER, SEAT CUSHION, REAR

REMOVAL

REMOVAL

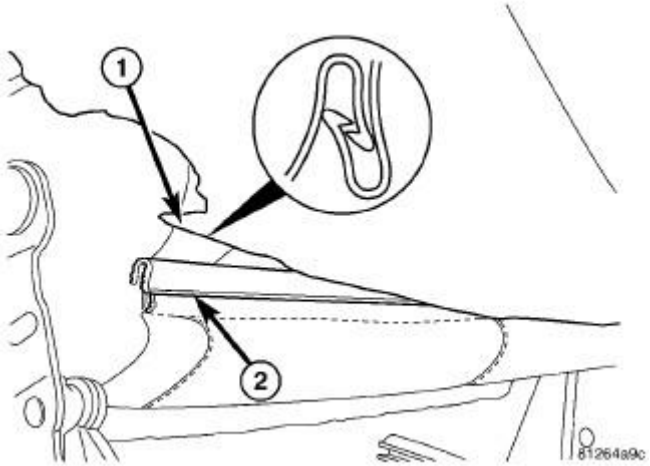

Fig. 542: J-Straps
Courtesy of CHRYSLER GROUP, LLC

NOTE: **It is not necessary to remove the rear seat assembly in order to remove the seat cushion foam and cover.**

1. Place the cushion into the up position.
2. Disconnect the seat cushion heat mat electrical connector, if equipped.
3. Release the J-straps (2) and remove the foam/cover (1) from the seat cushion frame.

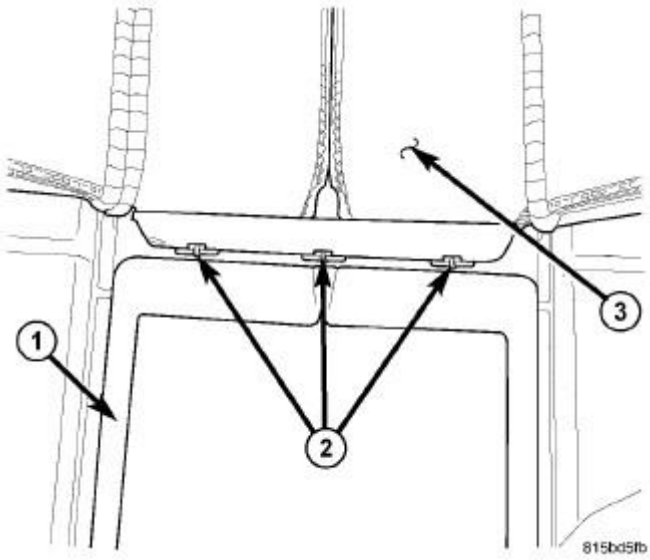

Fig. 543: Seat Back Hog Rings
Courtesy of CHRYSLER GROUP, LLC

4. Roll the cover (3) off of the foam (1) and remove the hog rings (2).

5. Separate the cover from the foam.
6. Remove the seat cushion frame bolts and remove the seat cushion frame. Refer to **DESCRIPTION**. .

INSTALLATION

INSTALLATION

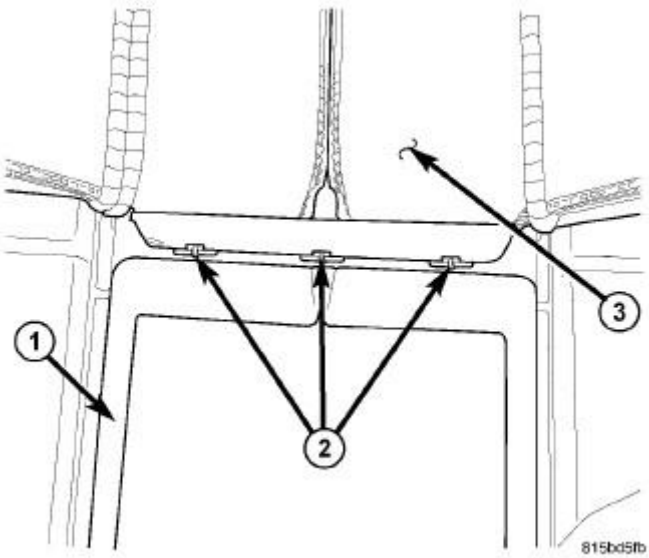

Fig. 544: Seat Back Hog Rings
Courtesy of CHRYSLER GROUP, LLC

NOTE: It is not necessary to remove the rear seat assembly in order to remove the seat cushion foam and cover.

1. Install the seat cushion frame and install the seat cushion frame bolts. Refer to **DESCRIPTION**. .
2. Tighten the seat cushion frame bolts to 55 N.m (41 ft. lbs.)
3. Position the cover (3) on to the foam (1) and install three new hog rings (2).
4. Position the foam and cover assembly over the seat cushion frame.

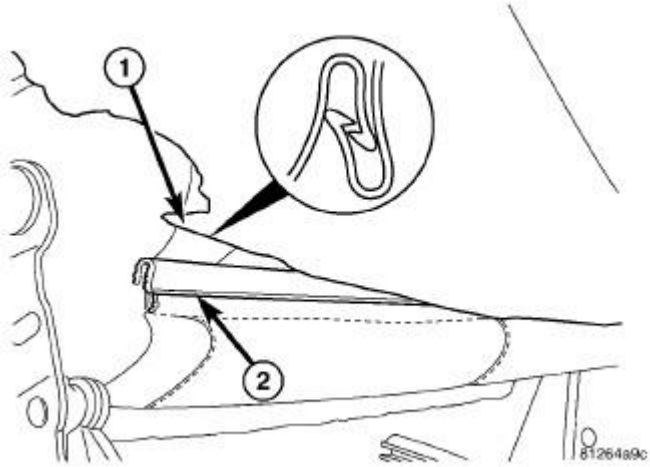

Fig. 545: J-Straps
Courtesy of CHRYSLER GROUP, LLC

5. Install the seat cushion foam/cover (1) over the seat cushion frame and secure the J-straps (2).
6. Connect the seat cushion heat mat electrical connector, if equipped.

COVER, SEAT CUSHION, MEGA CAB REAR

REMOVAL

REMOVAL

1. Fold both rear seats flat.
2. Remove the filler panels from the rear seat to storage compartment.
3. Separate the J-straps at the bottom of the seat back.
4. Remove both hinge covers from the back section being worked on.
5. Remove the lower anchor for the center seat belt.
6. Disconnect the lower cable attachment from the seat back release.
7. Remove the four bolts and remove the seat back from the seat.
8. Remove the screw and remove the seat back release bezel.
9. Mark the location of the release cables at the cushion and remove.
10. Remove the upper cushion pivot bolts.
11. Remove the lower cushion pivot bolts.
12. Remove the cushion from the seat.
13. Remove the seat release lever from the cushion.
14. Separate the J-straps securing the cover to the seat pan.
15. Remove the foam and cover from the seat pan.
16. Separate the foam from the cover.

INSTALLATION

INSTALLATION

1. Position the seat cushion foam into the cover.
2. Position the cushion assembly onto the seat pan.
3. Connect the J-straps securing the cover to the seat pan.
4. Install the seat release lever.
5. Install the cushion assembly onto the seat assembly.
6. Install the lower cushion pivot bolts.
7. Install the upper cushion pivot bolts.
8. Install the release cables using the marks created during removal.
9. Install the seat back release bezel and install the screw.
10. Install the seat back and install the four bolts.
11. Connect the lower cable attachment from the seat back release.
12. Install the lower anchor fro the center seat belt.
13. Install both hinge covers for the back section seat back.
14. Connect the J-straps at the bottom of the seat back.
15. Install the filler panels for the rear storage compartment.

SEAT, FRONT

DESCRIPTION

DESCRIPTION

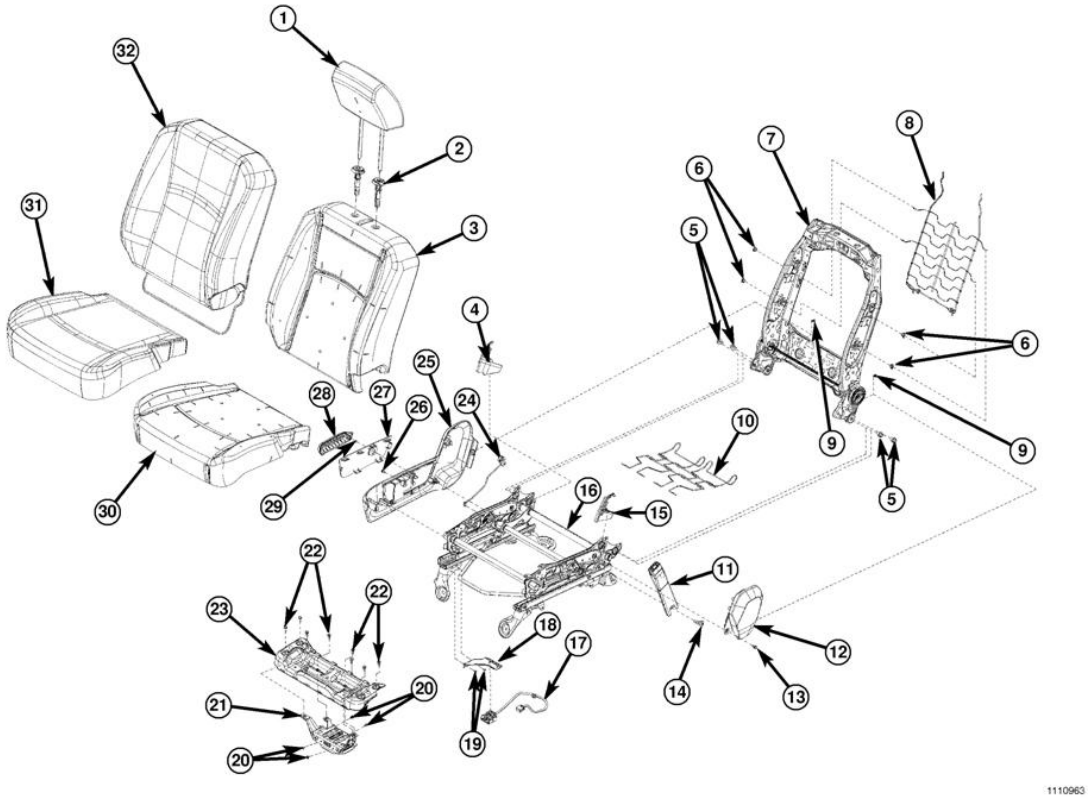

Fig. 546: Exploded View Of Two Way Manual Seat - Passenger Side
Courtesy of CHRYSLER GROUP, LLC

1 - HEADREST	17 - WIRE HARNESS
2 - HEADREST SLEEVES	18 - CONNECTOR BRACKET
3 - SEAT BACK FOAM	19 - BRACKET SCREWS
4 - INNER SIDE SHIELD	20 - INVERTER ASSEMBLY SCREWS 10 N.m (89 in. lbs.)
5 - SEAT BACK BOLTS 40 N.m (30 ft. lbs.)	21 - INVERTER ASSEMBLY
6 - CLIPS (4)	22 - CUSHION FRAME SCREWS (8)
7 - SEAT BACK FRAME	23 - CUSHION FRAME
8 - SUPPORT SPRING	24 - REMOTE ACTUATION LINK
9 - SIDE CUSHION SCREWS - REAR	25 - OUTER SIDE SHIELD
10 - SEAT CUSHION SUSPENSION MAT	26 - OUTER SIDE SHIELD SCREW
11 - BELT BUCKLE ASSEMBLY	27 - SWITCH BEZEL
12 - OUTER SIDE SHIELD	28 - MANUAL RECLINE HANDLE
13 - SIDE SHIELD SCREW	29 - CLIP RECLINER LEVER RETAINING
14 - BELT BUCKLE BOLT 50 N.m (37 ft. lbs.)	30 - SEAT CUSHION FOAM
15 - INNER SIDE SHIELD	31 - SEAT CUSHION COVER
16 - MANUAL ADJUSTER ASSEMBLY	32 - SEAT BACK COVER

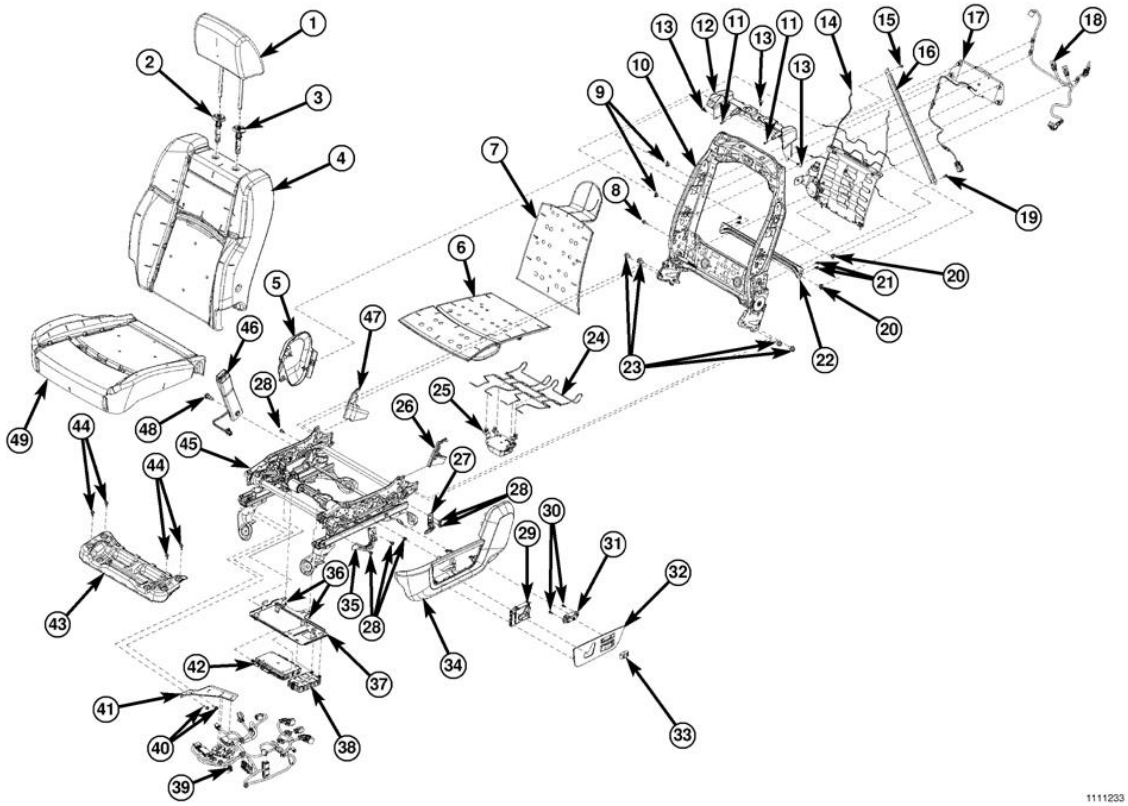

Fig. 547: Exploded View Of Six Way Power Seat - Driver Side
Courtesy of CHRYSLER GROUP, LLC

1 - HEADREST	26 - INNER SIDE SHIELD
2 - HEADREST SLEEVE - SLAVE	27 - SIDE SHIELD MOUNTING BRACKET
3 - HEADREST SLEEVE - MASTER	28 - BRACKET SCREWS
4 - SEAT BACK FOAM/COVER	29 - SEAT POSITION SWITCH
5 - OUTER SIDE SHIELD - INBOARD	30 - MEMORY SWITCH SCREWS
6 - SEAT CUSHION VENT BAG	31 - MEMORY SWITCH
7 - SEAT BACK VENT BAG	32 - SWITCH BEZEL
8 - LUMBAR MOTOR BOLT 10 N.m (89 in. lbs.)	33 - LUMBAR SWITCH
9 - CLIPS (4)	34 - OUTER SIDE SHIELD
10 - SEAT BACK FRAME ASSEMBLY	35 - SIDE SHIELD MOUNTING BRACKET
11 - FOAM SUPPORT SCREWS	36 - MODULE BRACKET SCREWS
12 - PLASTIC FOAM SUPPORT	37 - MODULE BRACKET
13 - FOAM SUPPORT PUSH PINS	38 - HEATED SEAT MODULE
14 - LUMBAR ASSEMBLY	39 - WIRE HARNESS - LOWER POWER HEAT/COOL
15 - DIAGONAL SUPPORT BRACE SCREWS (2)	40 - BRACKET SCREWS
16 - BACK FRAME DIAGONAL SUPPORT BRACE	41 - BRACKET
17 - VENTED SEAT BACK BLOWER MOTOR	42 - MEMORY MODULE

18 - WIRE HARNESS - BACK POWER HEAT	43 - CUSHION FRAME
19 - DIAGONAL SUPPORT BRACE SCREW	44 - CUSHION FRAME SCREWS
20 - CLIPS	45 - 6 WAY POWER ADJUSTER ASSEMBLY
21 - LOWER BACK FRAME BRACE SCREWS (4)	46 - BELT BUCKLE ASSEMBLY
22 - LOWER BACK FRAME BRACE	47 - INNER SIDE SHIELD
23 - SEAT BACK BOLTS 40 N.m (30 Ft. lbs.)	48 - BELT BUCKLE BOLT 50 N.m (37 Ft. lbs.)
24 - SEAT CUSHION SUSPENSION MAT	49 - SEAT CUSHION FOAM/COVER
25 - VENTED SEAT CUSHION BLOWER MOTOR	

REMOVAL

REMOVAL

DRIVER SIDE

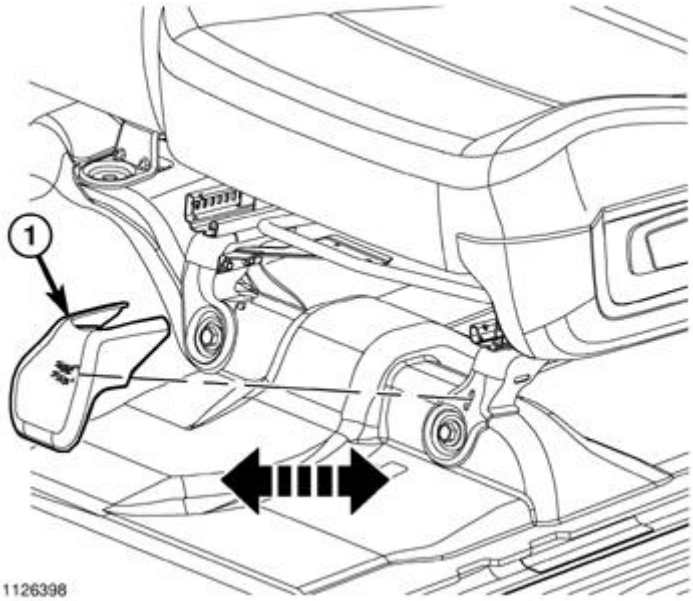

Fig. 548: Trim Cover
Courtesy of CHRYSLER GROUP, LLC

1. Before proceeding with the following repair procedure, review all warnings and cautions. Refer to **SEATS, WARNING**.
2. Remove the trim cover (1).

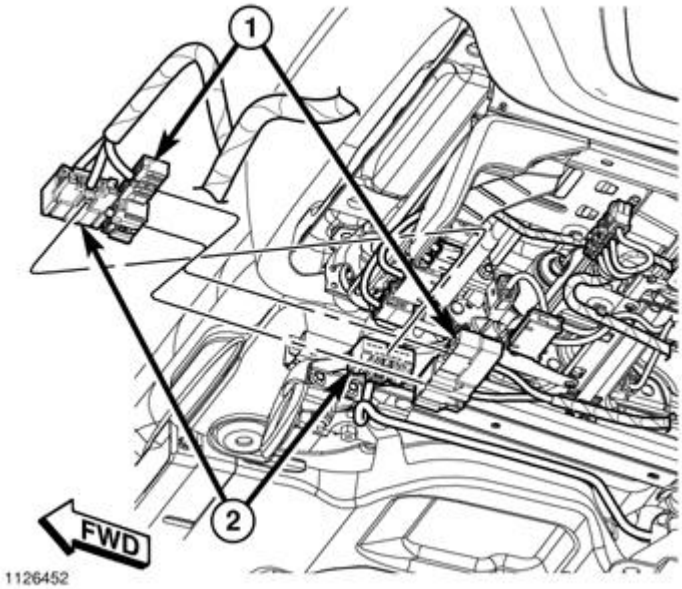

Fig. 549: Front Seat Electrical Connectors (Driver)
Courtesy of CHRYSLER GROUP, LLC

3. Disconnect the electrical connectors (1) and (2), if equipped.

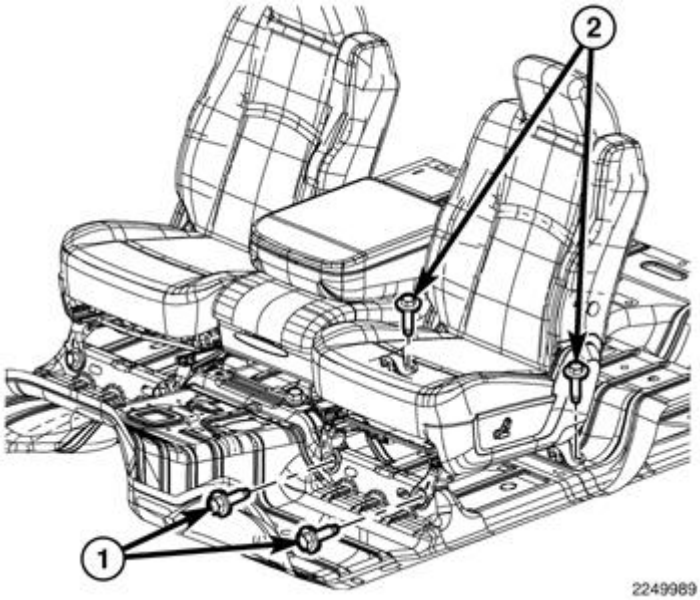

Fig. 550: Mounting Bolts
Courtesy of CHRYSLER GROUP, LLC

4. Remove the front mounting bolts (1) from the driver side seat.
5. Remove the rear bolts (2) and remove the diver seat.

PASSENGER SIDE

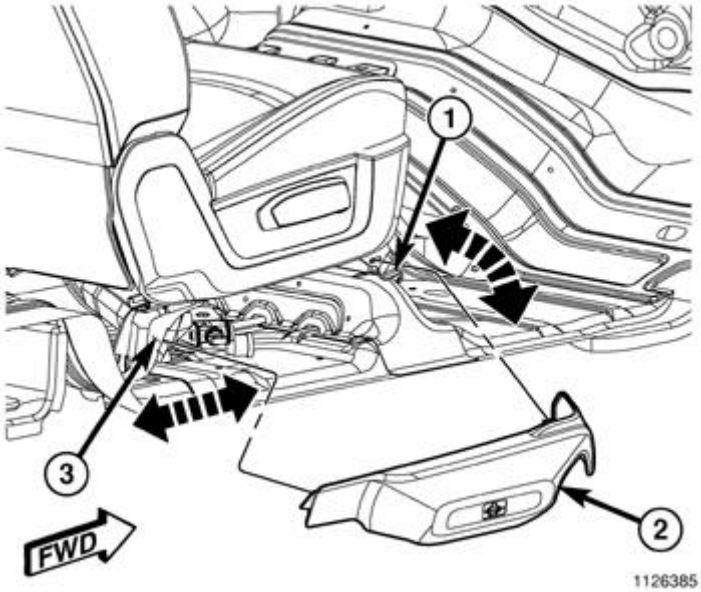

Fig. 551: Jack Cover
Courtesy of CHRYSLER GROUP, LLC

1. Before proceeding with the following repair procedure, review all warnings and cautions. Refer to **SEATS, WARNING**.
2. Carefully release the front clip and separate the jack cover (2) from the front of the riser (1).
3. Carefully pull the cover forward and release the rear hook from the rear of the riser (3).

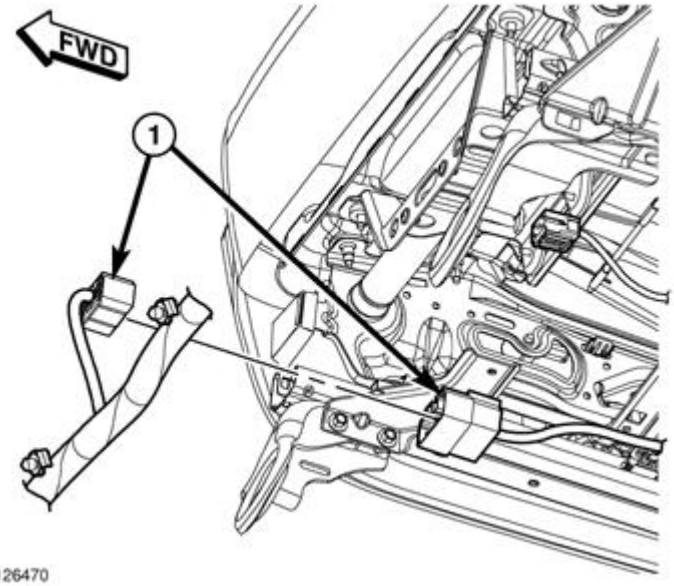

Fig. 552: Front Seat Electrical Connector (Passenger)
Courtesy of CHRYSLER GROUP, LLC

4. Disconnect the electrical connector (1), if equipped.

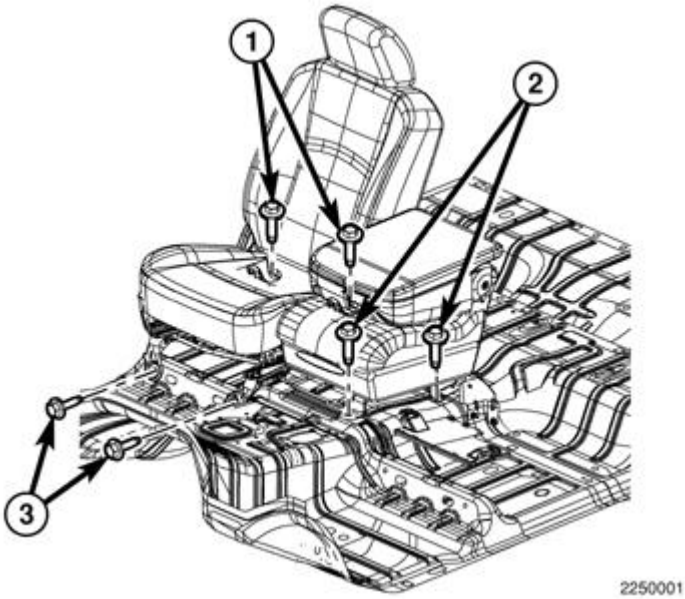

Fig. 553: Seat Bolts
Courtesy of CHRYSLER GROUP, LLC

5. Remove the front passenger seat bolts (3).
6. Remove the center seat bolts (2), if equipped with the center seat.
7. Remove the rear bolts (1) and remove the passenger seat assembly.

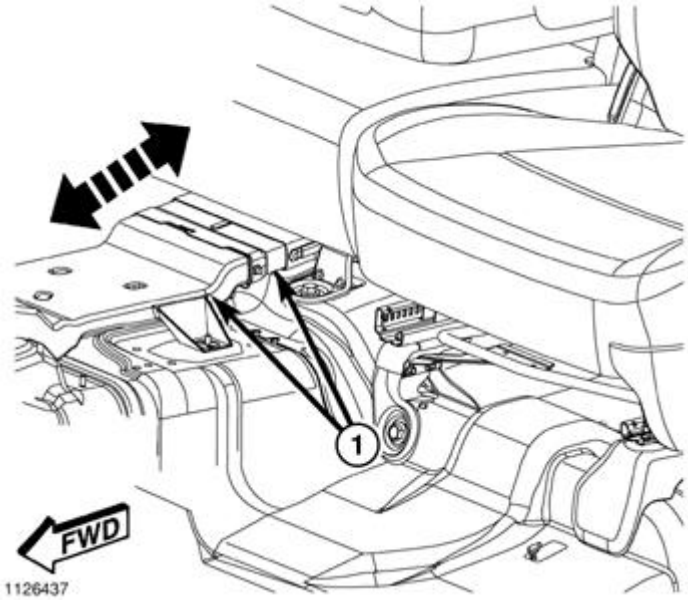

Fig. 554: Rear Air Duct
Courtesy of CHRYSLER GROUP, LLC

8. Disconnect the rear air duct (1) by sliding the telescoping duct section, attached to the seat, rearward.

INSTALLATION

INSTALLATION

DRIVER SIDE

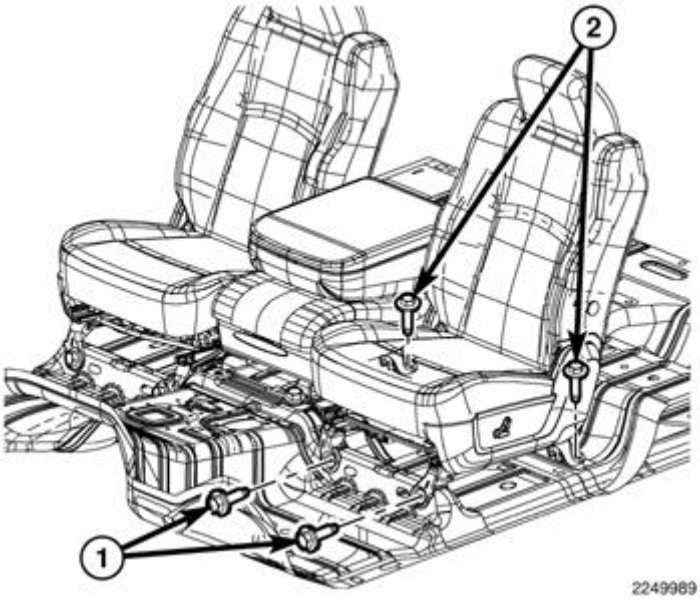

Fig. 555: Mounting Bolts
Courtesy of CHRYSLER GROUP, LLC

1. Before proceeding with the following repair procedure, review all warnings and cautions. Refer to **SEATS, WARNING**.
2. Install the driver seat and loosely install the front bolts (1).
3. Loosely install the driver seat rear bolts (2).

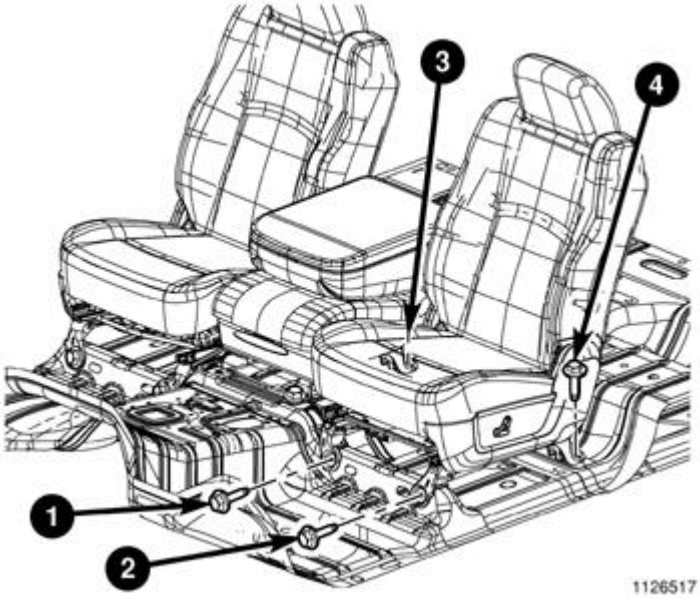

Fig. 556: Mounting Bolts Tightening Sequence
Courtesy of CHRYSLER GROUP, LLC

4. Tighten the driver seat bolts to 47 N.m (35 ft. lbs.) using the sequence shown in illustration.

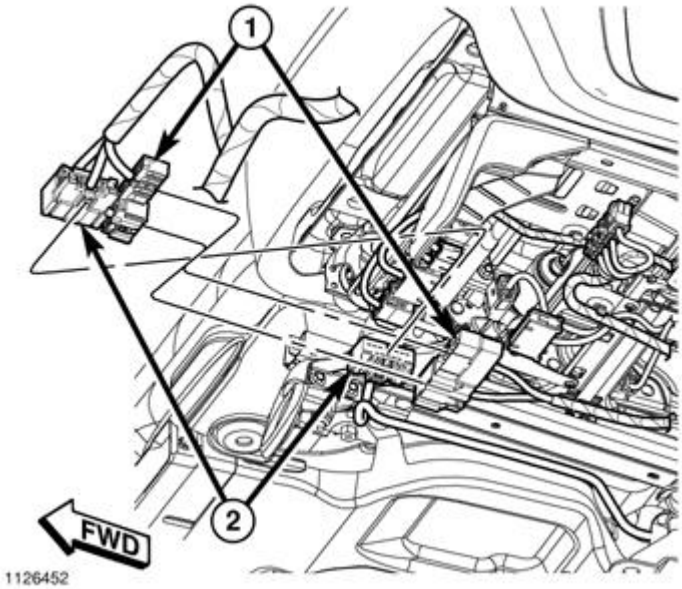

Fig. 557: Front Seat Electrical Connectors (Driver)
Courtesy of CHRYSLER GROUP, LLC

5. Connect the electrical connectors (1 and 2), if equipped.

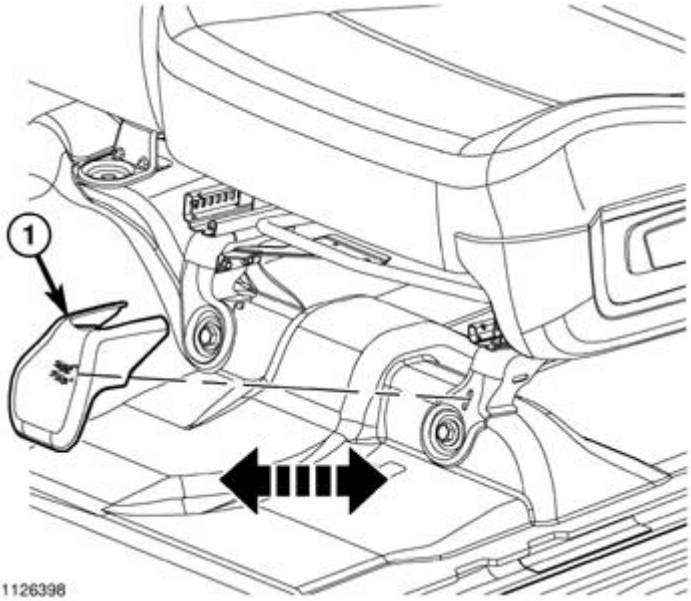

Fig. 558: Trim Cover
Courtesy of CHRYSLER GROUP, LLC

6. Install the trim cover (1) and seat the clip fully.

PASSENGER SIDE

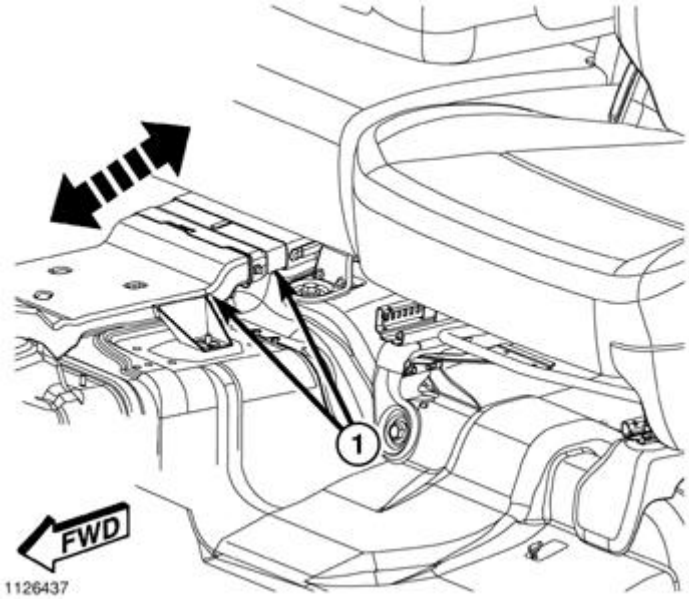

Fig. 559: Rear Air Duct
Courtesy of CHRYSLER GROUP, LLC

1. Before proceeding with the following repair procedure, review all warnings and cautions. Refer to **SEATS, WARNING**.
2. Position the passenger seat assembly into the vehicle and connect the air duct (1), if equipped.

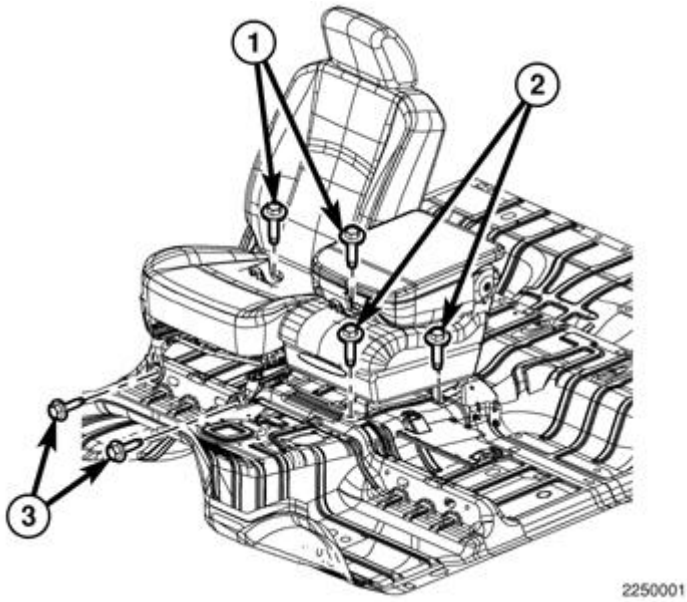

Fig. 560: Seat Bolts
Courtesy of CHRYSLER GROUP, LLC

3. Loosely install the passenger seat front bolts (3).
4. If equipped with the center seat, loosely install the bolts (2).
5. Loosely install the passenger seat rear bolts (1).

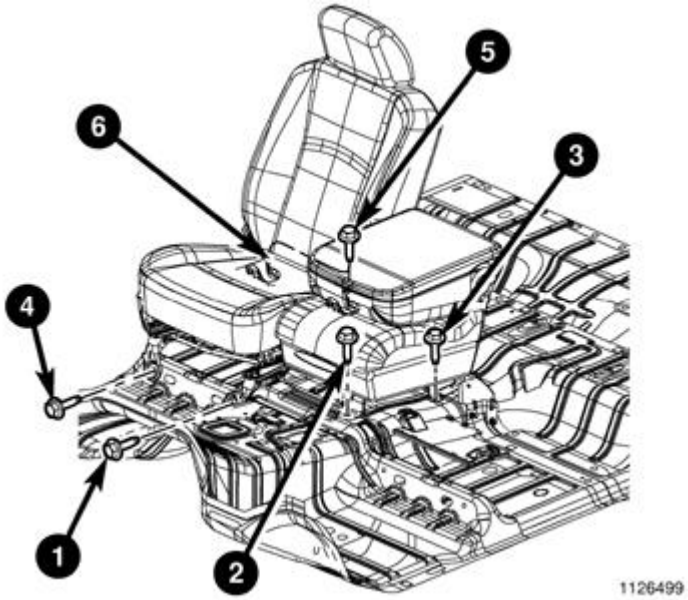

Fig. 561: Seat Bolts Tightening Sequence
Courtesy of CHRYSLER GROUP, LLC

6. Tighten the passenger seat bolts to 47 N.m (35 ft. lbs.) using the sequence shown in illustration.

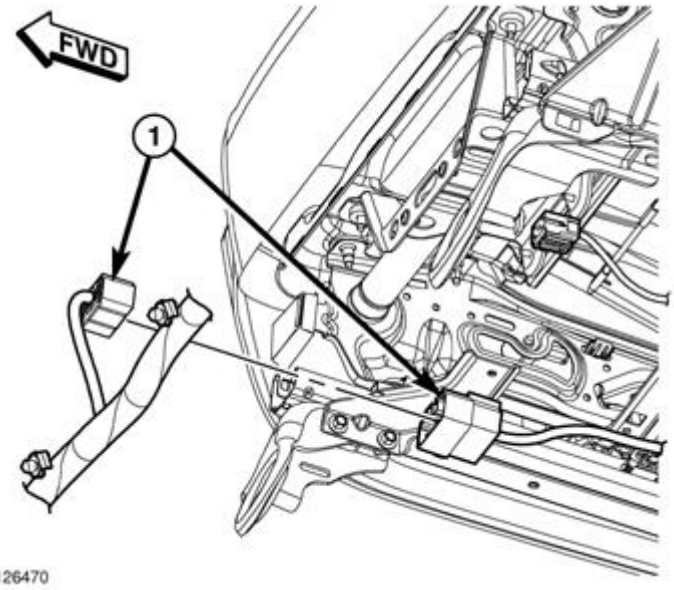

Fig. 562: Front Seat Electrical Connector (Passenger)
Courtesy of CHRYSLER GROUP, LLC

7. Connect the electrical connectors (1), if equipped.

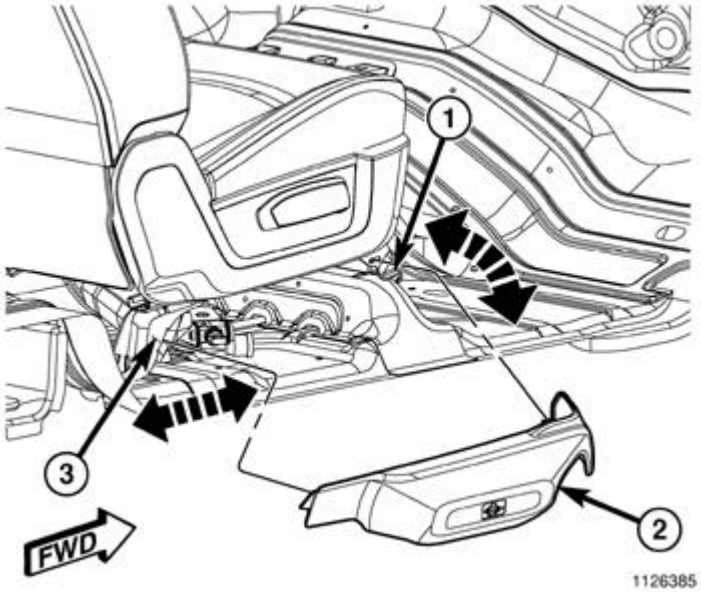

Fig. 563: Jack Cover
Courtesy of CHRYSLER GROUP, LLC

8. Secure the jack cover rear hook on the rear riser (3).
9. Position the front of the side shield (2) on the front of the riser (1) and seat the clip fully.

SEAT, FRONT CENTER

DESCRIPTION

DESCRIPTION

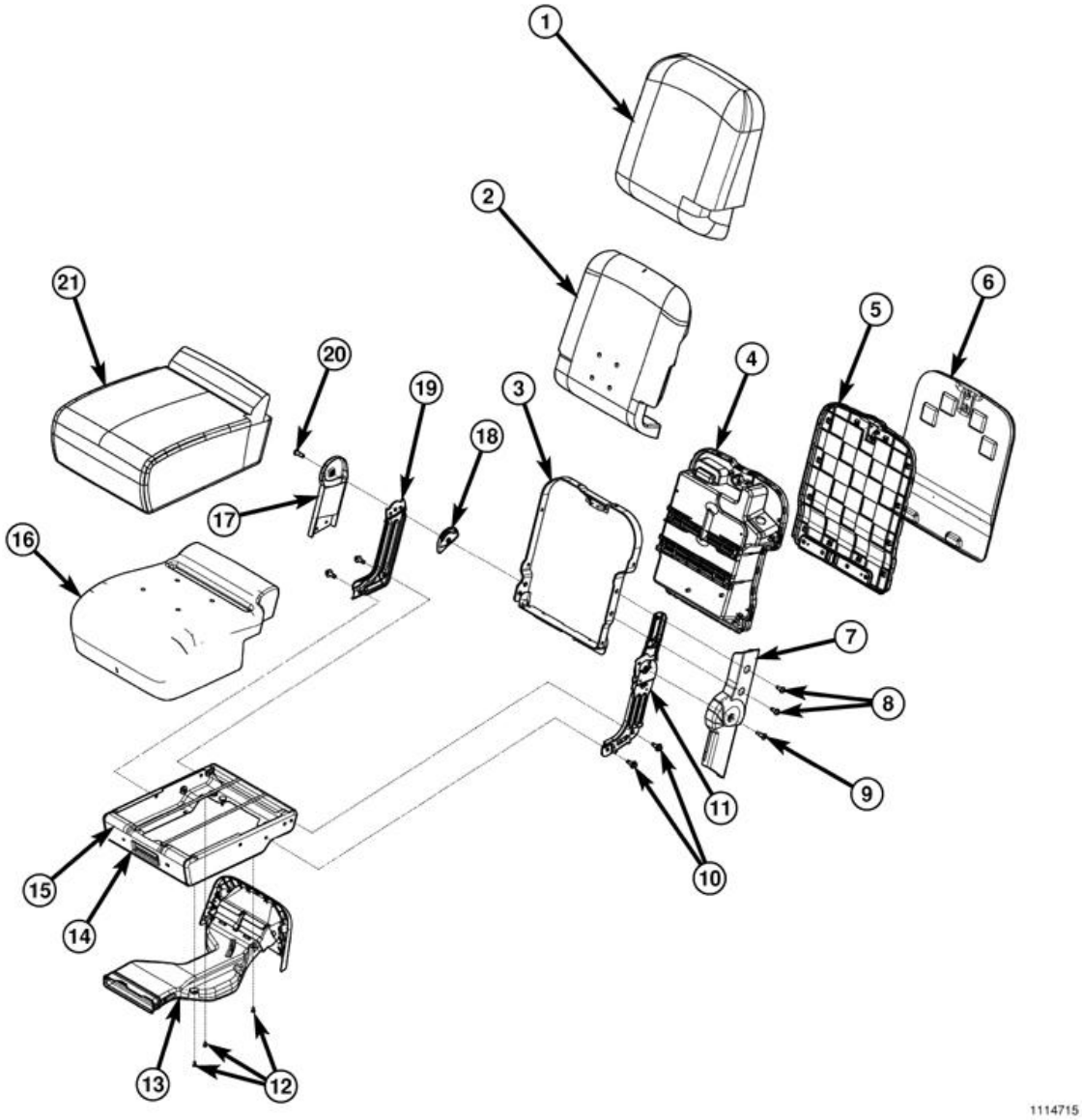

Fig. 564: Exploded View Of Center Seat - W/O Storage
Courtesy of CHRYSLER GROUP, LLC

1 - SEAT BACK COVER	12 - HVAC DUCT SCREWS
2 - SEAT BACK FOAM	13 - HVAC DUCT
3 - SEAT BACK FRAME	14 - CUSHION FRAME
4 - TRAY	15 - CUSHION FRAME
5 - INNER LID	16 - CUSHION FOAM
6 - FOAM PAD - LID	17 - PIVOT SIDE SHIELD
7 - PIVOT SIDE SHIELD	18 - PIVOT DETENT GUIDE
8 - INERTIA LATCH BOLTS 25 N.m (18 Ft. lbs.)	19 - PIVOT BRACKET
9 - SCREW	20 - SCREW
10 - INERTIA LATCH BOLTS 25 N.m (18 Ft. lbs.)	21 - SEAT CUSHION COVER

11 - INERTIA LATCH ASSEMBLY	

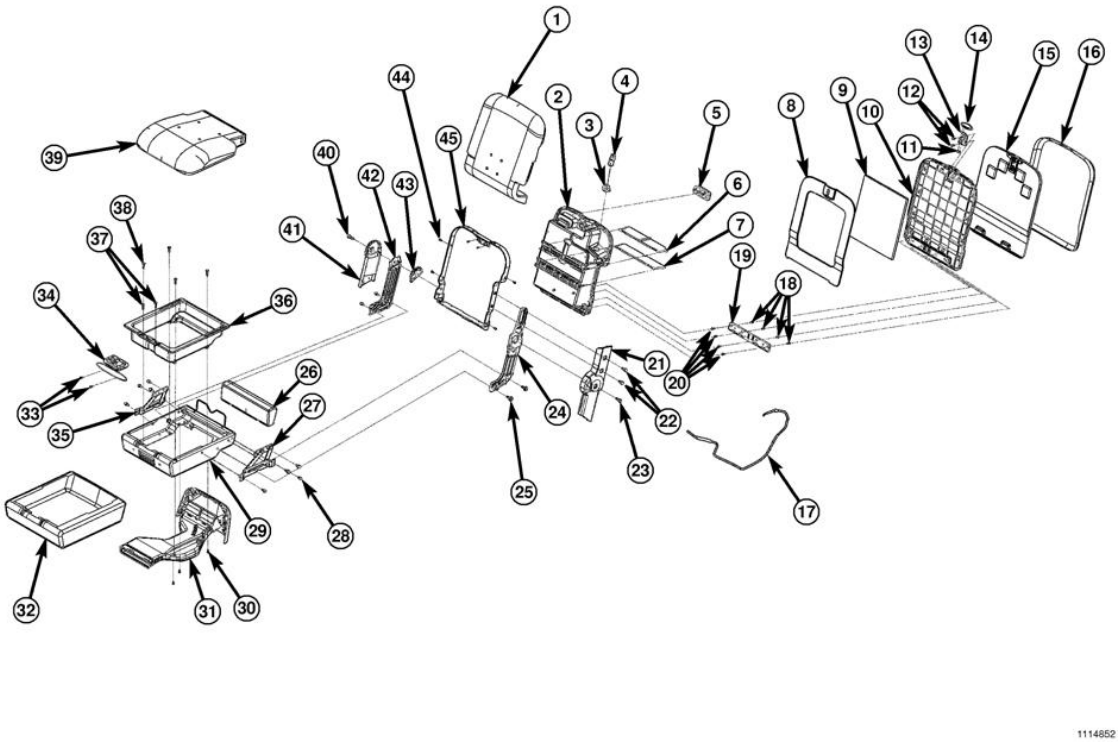

Fig. 565: Exploded View Of Center Seat - W/Storage
Courtesy of CHRYSLER GROUP, LLC

1 - SEAT BACK FOAM/COVER	24 - INERTIA LATCH ASSEMBLY
2 - TRAY	25 - INERTIA LATCH BOLTS 25 N.m (18 Ft. lbs.)
3 - POWERPOINT CAP	26 - FOAM PAD
4 - 12V POWERPOINT	27 - CUSHION LINKAGE
5 - COIN HOLDER	28 - LINKAGE SCREWS (8)
6 - DIVIDER	29 - CUSHION FRAME
7 - REAR DIVIDER	30 - HVAC DUCT SCREWS
8 - BACK LID BEZEL	31 - HVAC DUCT
9 - PAD INSERT	32 - LOWER CUSHION COVER
10 - INNER LID	33 - SCREWS
11 - SCREWS	34 - CUSHION LATCH/HANDLE
12 - SCREWS	35 - CUSHION LINKAGE
13 - LID LATCH	36 - TRAY
14 - BACK HANDLE	37 - SCREWS
15 - FOAM PAD - LID	38 - SCREWS
16 - COVER	39 - SEAT CUSHION FOAM/COVER
17 - WIRE HARNESS	40 - SCREW

18 - HINGE SCREWS	41 - PIVOT SIDE SHIELD
19 - HINGE	42 - PIVOT BRACKET
20 - HINGE SCREWS	43 - PIVOT DETENT GUIDE
21 - PIVOT SIDE SHIELD	44 - SCREWS (6)
22 - INERTIA LATCH BOLTS 25 N.m (18 Ft. lbs.)	45 - SEAT BACK FRAME
23 - SCREW	

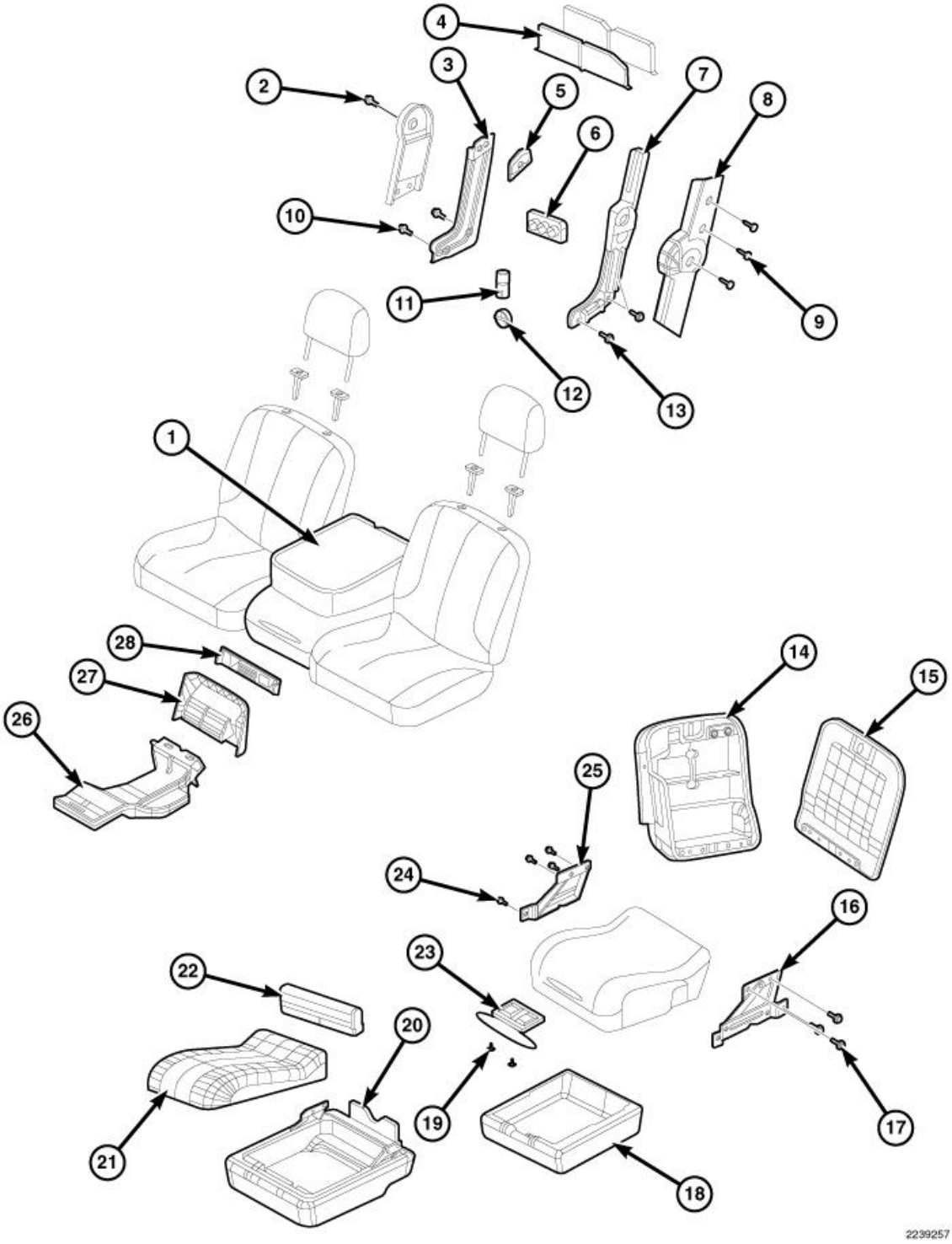

Fig. 566: Center Seat - W/Storage
Courtesy of CHRYSLER GROUP, LLC

1 - CENTER SEAT ASSEMBLY	15 - STORAGE BIN LID
2 - SHIELD PIVOT SCREWS (2)	16 - STORAGE COMPARTMENT HINGE

3 - PIVOT BRACKET	17 - LINKAGE SCREWS (6)
4 - STORAGE BIN DIVIDERS	18 - ARMREST BIN LID
5 - PIVOT DETENT GUIDE	19 - BIN LATCH SCREWS (2)
6 - COIN HOLDER	20 - STORAGE BIN
7 - INERTIA LATCH ASSEMBLY	21 - BIN LATCH
8 - PIVOT SIDE SHIELD	22 - BOLSTER
9 - INERTIA LATCH BOLTS 25 N.m (18 Ft. lbs.)	23 - BIN LATCH
10 - INERTIA LATCH BOLTS 25 N.m (18 Ft. lbs.)	24 - LINKAGE SCREWS (2)
11 - POWER OUTLET	25 - STORAGE COMPARTMENT HINGE
12 - POWER OUTLET CAP	26 - VENT
13 - INERTIA LATCH BOLTS 25 N.m (18 Ft. lbs.)	27 - ARMREST BEZEL
14 - ARMREST	28 - ARMREST BEZEL

REMOVAL

REMOVAL

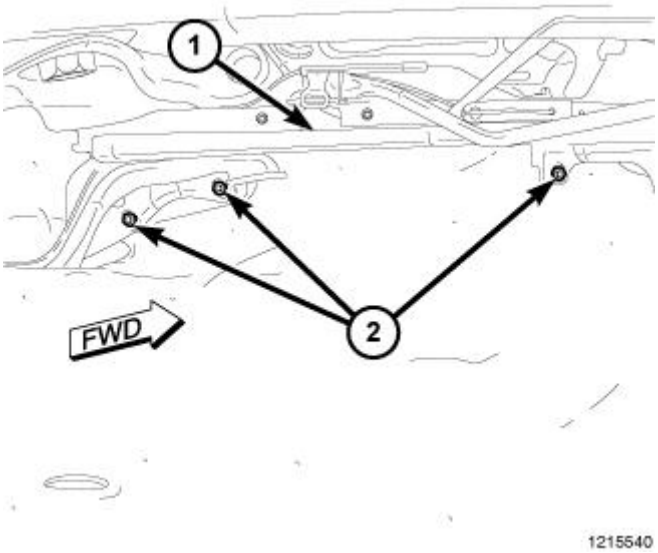

Fig. 567: Center Seat Assembly Fasteners
Courtesy of CHRYSLER GROUP, LLC

1. Remove the front passenger seat assembly. Refer to **SEAT, FRONT, REMOVAL** and **SEAT, FRONT CENTER, REMOVAL**.
2. Remove the fasteners (2) attaching the center seat assembly to the seat adjuster (1) and separate the center seat.

INSTALLATION

INSTALLATION

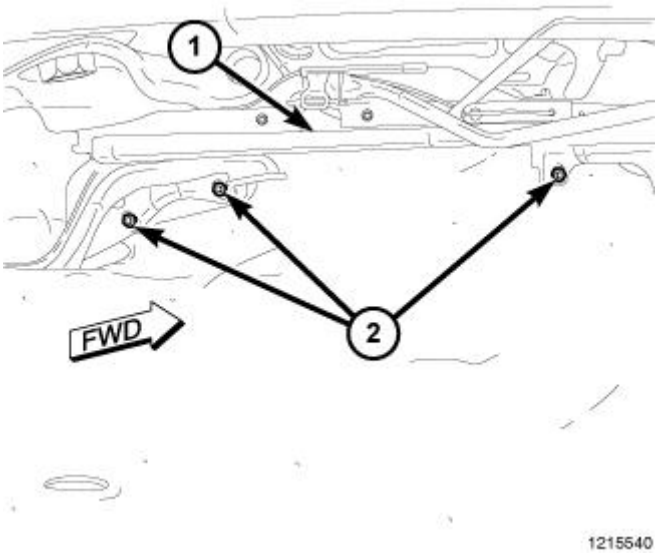

Fig. 568: Center Seat Assembly Fasteners
Courtesy of CHRYSLER GROUP, LLC

1. Position the center seat assembly onto the passenger seat.
2. Install and tighten the fasteners (2).
3. Install the passenger seat assembly. Refer to **SEAT, FRONT, INSTALLATION** and **SEAT, FRONT CENTER, INSTALLATION**.

SEAT, REAR

DESCRIPTION

DESCRIPTION

INDEX

DESCRIPTION	FIGURE
CREW CAB	
REAR BENCH SEAT - CREW CAB	Refer to **Fig. 569**.
REAR 60% SEAT - CREW CAB	Refer to **Fig. 570**.
REAR 40% SEAT - CREW CAB	Refer to **Fig. 571**.
QUAD CAB	
REAR BENCH SEAT - QUAD CAB	Refer to **Fig. 572**.
REAR 60% SEAT - QUAD CAB	Refer to **Fig. 573**.
REAR 40% SEAT - QUAD CAB	Refer to **Fig. 574**.

CREW CAB

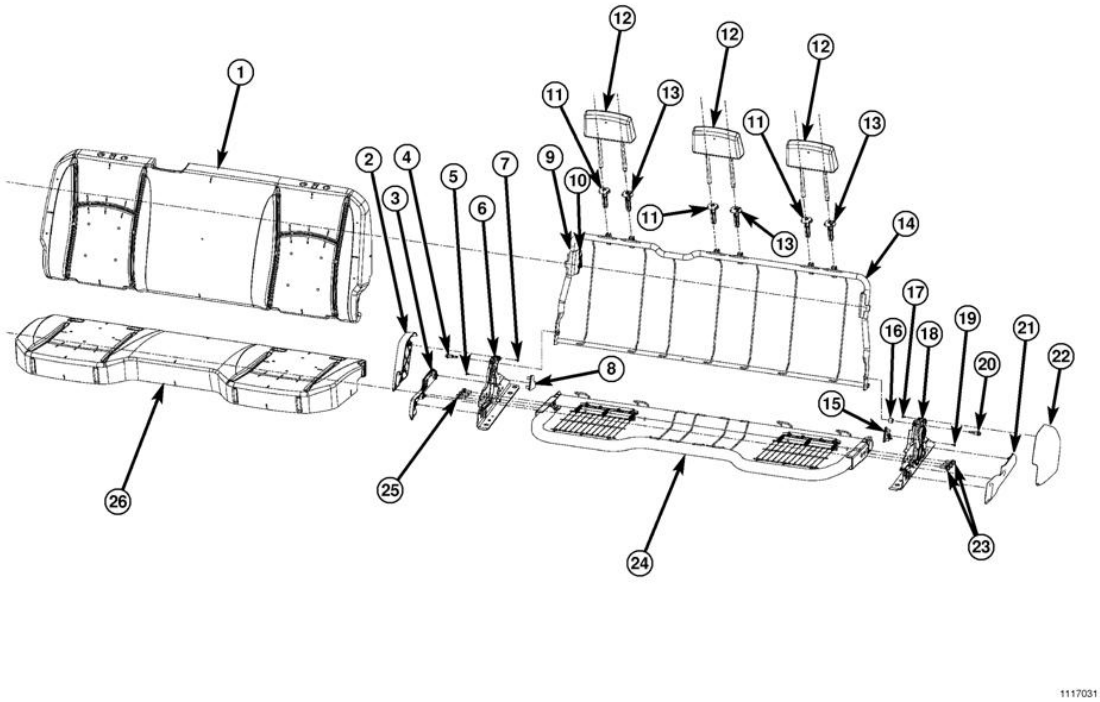

Fig. 569: Exploded View Of Rear Bench Seat - Crew Cab
Courtesy of CHRYSLER GROUP, LLC

1 - SEAT BACK FOAM/COVER	14 - SEAT BACK FRAME
2 - OUTER PIVOT COVER	15 - INNER COVER
3 - RISER COVER	16 - BACK PIVOT SPACER
4 - SEAT BACK PIVOT BOLT 28 N.m (21 ft. lbs.)	17 - OUTER PIVOT COVER SCREW
5 - INNER COVER SCREW	18 - LATCH ASSEMBLY
6 - LATCH ASSEMBLY	19 - INNER COVER SCREW
7 - OUTER PIVOT COVER SCREW	20 - SEAT BACK PIVOT BOLT 28 N.m (21 ft. lbs.)
8 - INNER COVER	21 - RISER COVER
9 - CAB HOOK ISOLATOR	22 - OUTER PIVOT COVER
10 - PUSH PIN	23 - SEAT CUSHION FRAME BOLTS 55 N.m (41 ft. lbs.)
11 - HEADREST SLEEVE - SLAVE	24 - SEAT CUSHION FRAME
12 - HEADREST	25 - SEAT CUSHION FRAME BOLTS 55 N.m (41 ft. lbs.)
13 - HEADREST SLEEVE - MASTER	26 - SEAT CUSHION FOAM/COVER

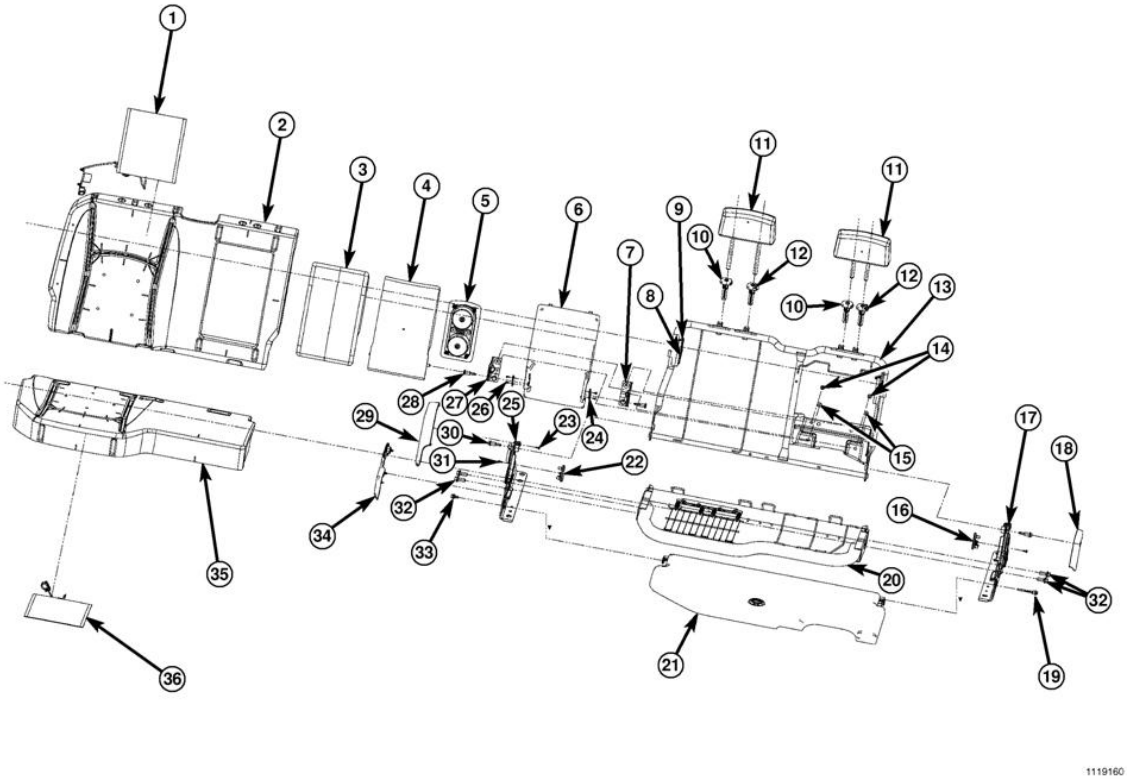

Fig. 570: Exploded View Of Rear 60% Seat - Crew Cab
Courtesy of CHRYSLER GROUP, LLC

1 - HEAT MAT - BACK	19 - STORAGE LID BOLT 18 N.m (13 ft. lbs.)
2 - SEAT BACK FOAM/COVER	20 - SEAT CUSHION FRAME
3 - ARMREST COVER	21 - STORAGE BIN LID
4 - ARMREST FOAM	22 - INNER COVER
5 - CUPHOLDER	23 - OUTER PIVOT COVER SCREW
6 - ARMREST CLOSE-OUT PANEL	24 - ARMREST DETENT ISOLATOR
7 - PIVOT ASSEMBLY	25 - LATCH ASSEMBLY
8 - CAB HOOK ISOLATOR	26 - ARMREST DETENT ISOLATOR
9 - PUSH PIN	27 - PIVOT ASSEMBLY
10 - HEADREST SLEEVE - SLAVE	28 - ARMREST PIVOT BOLTS (2)
11 - HEADREST	29 - OUTER PIVOT COVER
12 - HEADREST SLEEVE - MASTER	30 - SEAT BACK PIVOT BOLTS (2) 18 N.m (13 ft. lbs.)
13 - SEAT BACK FRAME	31 - INNER COVER SCREWS (2)
14 - ARMREST SCREWS 28 N.m (21 ft. lbs.)	32 - SEAT CUSHION FRAME BOLTS (4) 55 N.m (41 ft. lbs.)
15 - ARMREST NUTS 28 N.m (21 ft. lbs.)	33 - STORAGE LID BOLT 28 N.m (21 ft. lbs.)
16 - INNER COVER	34 - RISER COVER
17 - LATCH ASSEMBLY	35 - SEAT CUSHION FOAM/COVER
18 - OUTER PIVOT COVER	36 - HEAT MAT - CUSHION

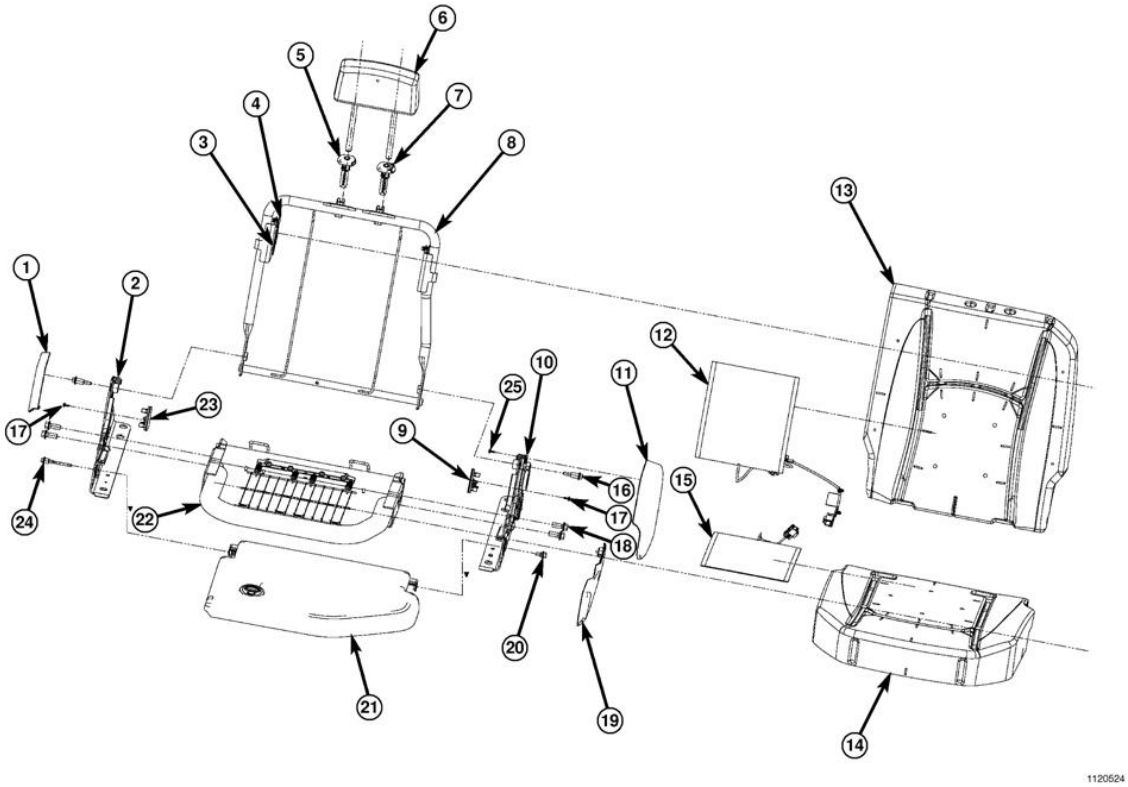

Fig. 571: Exploded View Of Rear 40% Seat - Crew Cab
Courtesy of CHRYSLER GROUP, LLC

1 - OUTER PIVOT COVER - INBOARD	14 - SEAT CUSHION - FOAM/COVER
2 - LATCH ASSEMBLY	15 - HEAT MAT - CUSHION
3 - CAB HOOK ISOLATOR	16 - SEAT BACK PIVOT BOLTS (2) 28 N.m (21 ft. lbs.)
4 - PUSH PIN	17 - INNER COVER SCREW
5 - HEADREST SLEEVE - SLAVE	18 - SEAT CUSHION FRAME BOLTS (4) 55 N.m (41 ft. lbs.)
6 - HEADREST	19 - RISER COVER
7 - HEADREST SLEEVE - MASTER	20 - STORAGE LID BOLT 18 N.m (13 ft. lbs.)
8 - SEAT BACK FRAME	21 - STORAGE BIN LID
9 - INNER COVER	22 - SEAT CUSHION FRAME
10 - LATCH ASSEMBLY	23 - INNER COVER
11 - OUTER PIVOT COVER	24 - STORAGE LID BOLT 18 N.m (13 ft. lbs.)
12 - HEAT MAT - BACK	25 - OUTER PIVOT COVER SCREW
13 - SEAT BACK - FOAM/COVER	

QUAD CAB

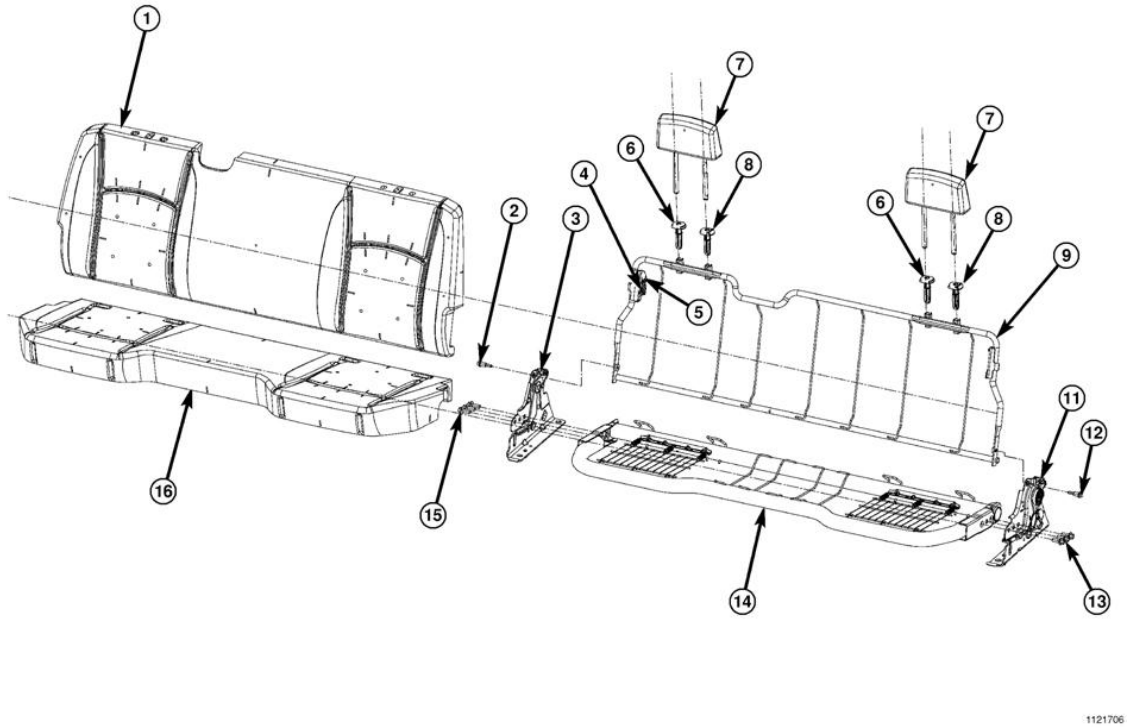

Fig. 572: Exploded View Of Rear Bench Seat - Quad Cab
Courtesy of CHRYSLER GROUP, LLC

1 - SEAT BACK - FOAM/COVER	9 - SEAT BACK FRAME
2 - SEAT BACK PIVOT BOLT 28 N.m (21 ft. lbs.)	11 - LATCH ASSEMBLY
3 - LATCH ASSEMBLY	12 - SEAT BACK PIVOT BOLT 28 N.m (21 ft. lbs.)
4 - CAB HOOK ISOLATOR (2)	13 - SEAT CUSHION FRAME BOLTS 55 N.m (41 ft. lbs.)
5 - CAB HOOK ISOLATOR PUSH PIN (4)	14 - SEAT CUSHION FRAME
6 - HEADREST SLEEVE - SLAVE	15 - SEAT CUSHION FRAME BOLTS 55 N.m (41 ft. lbs.)
7 - HEADREST	16 - SEAT CUSHION FOAM/COVER
8 - HEADREST SLEEVE - MASTER	

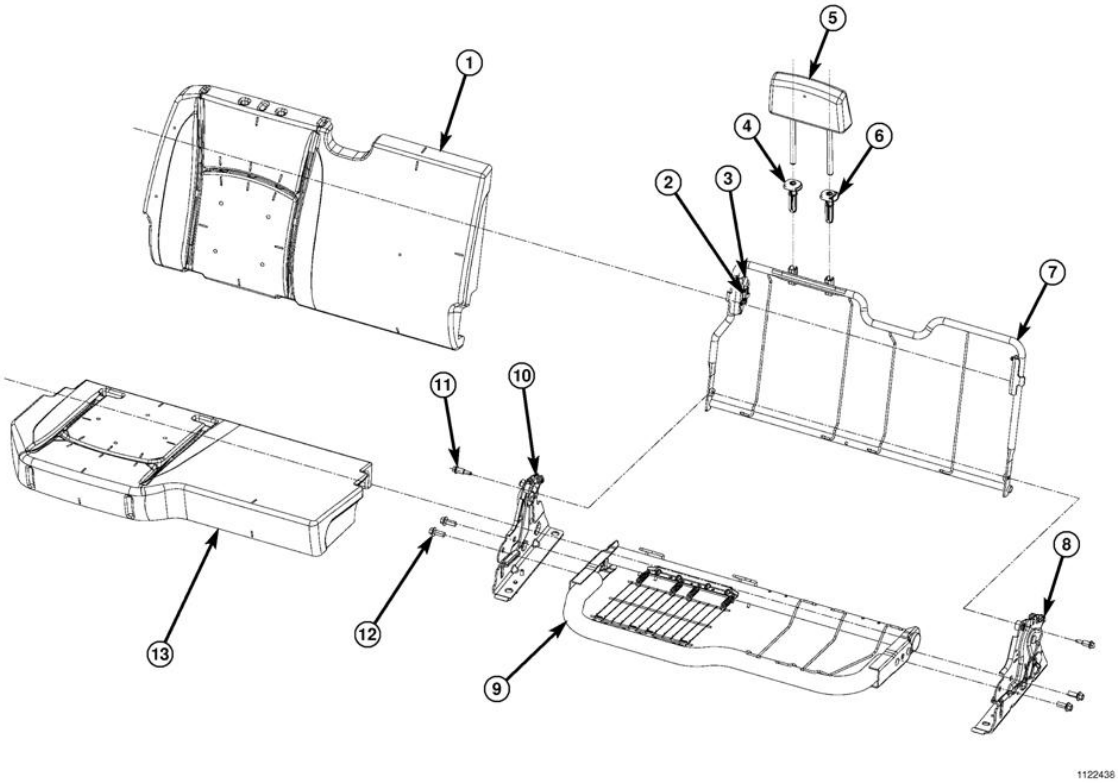

Fig. 573: Exploded View Of Rear 60% Seat - Quad Cab
Courtesy of CHRYSLER GROUP, LLC

1 - SEAT BACK FOAM/COVER	8 - LATCH ASSEMBLY
2 - CAB HOOK ISOLATOR	9 - SEAT CUSHION FRAME
3 - PUSH PIN	10 - LATCH ASSEMBLY
4 - HEADREST SLEEVE - SLAVE	11 - SEAT BACK PIVOT BOLTS (2) 28 N.m (21 ft. lbs.)
5 - HEADREST	12 - SEAT CUSHION FRAME BOLTS (4) 55 N.m (41 ft. lbs.)
6 - HEADREST SLEEVE - MASTER	13 - SEAT CUSHION FOAM/COVER
7 - SEAT BACK FRAME	

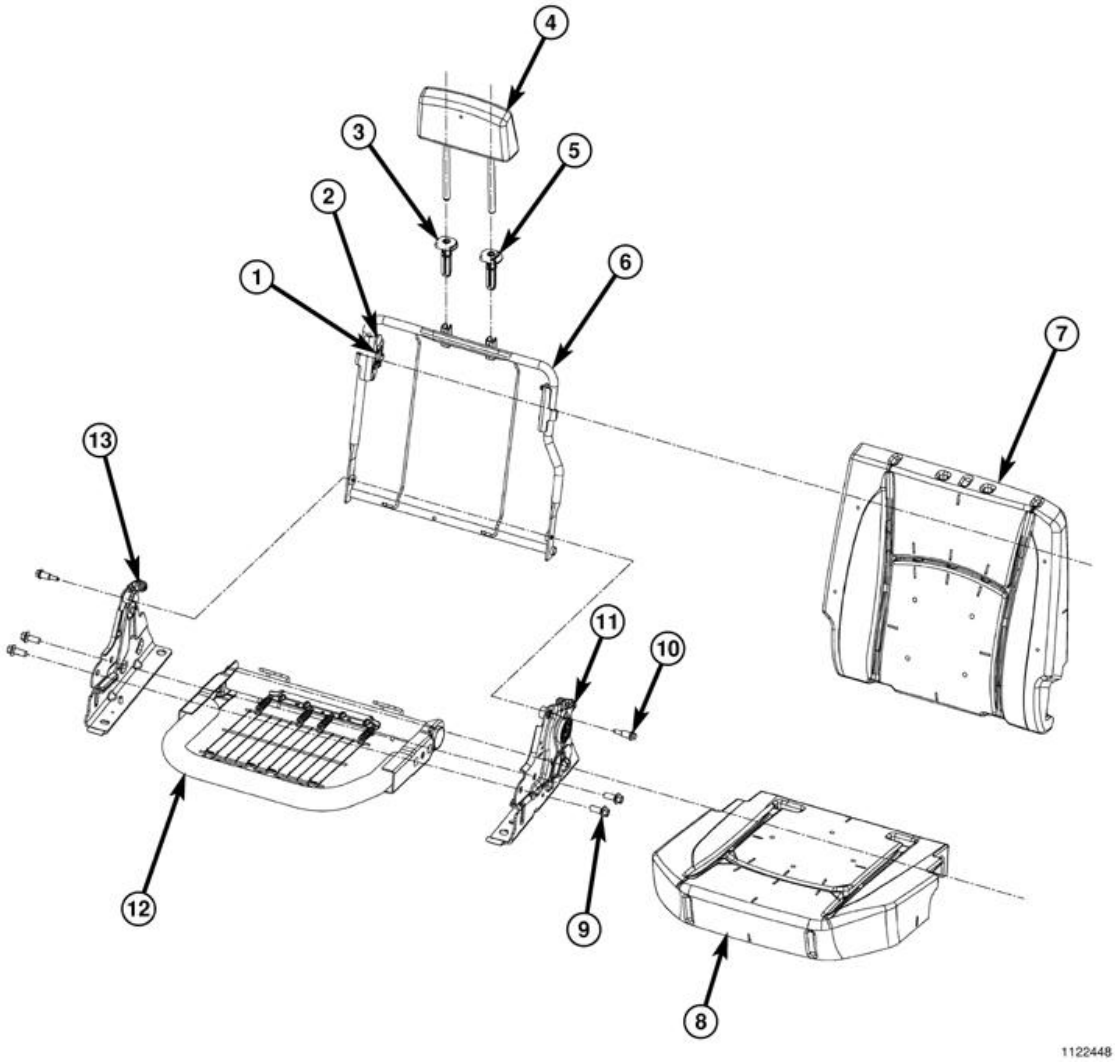

Fig. 574: Exploded View Of Rear 40% Seat - Quad Cab
Courtesy of CHRYSLER GROUP, LLC

1 - CAB HOOK ISOLATOR	8 - SEAT CUSHION FOAM/COVER
2 - PUSH PIN	9 - SEAT CUSHION FRAME BOLTS (4) 55 N.m (41 ft. lbs.)
3 - HEADREST SLEEVE - SLAVE	10 - SEAT BACK PIVOT BOLTS (2) 28 N.m (21 ft. lbs.)
4 - HEADREST	11 - LATCH ASSEMBLY
5 - HEADREST SLEEVE - MASTER	12 - SEAT CUSHION FRAME
6 - SEAT BACK FRAME	13 - LATCH ASSEMBLY
7 - SEAT BACK FOAM/COVER	

REMOVAL

REMOVAL

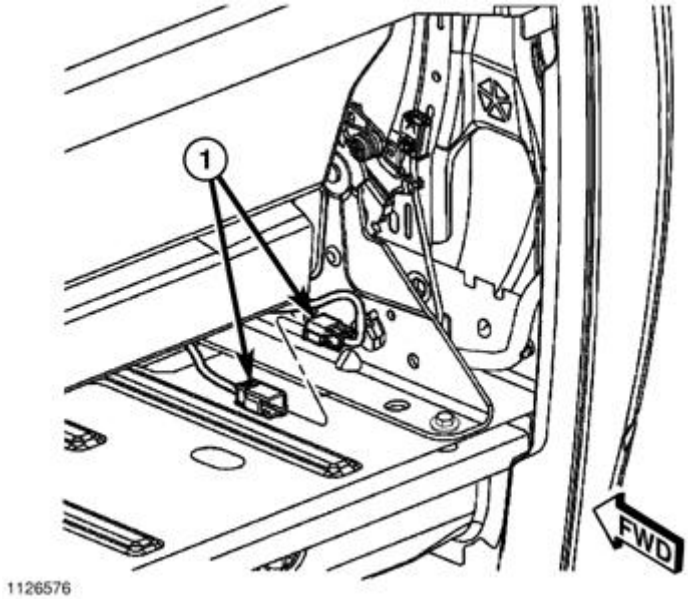

Fig. 575: Rear Seat Electrical Connector
Courtesy of CHRYSLER GROUP, LLC

NOTE: 60/40 bench seat shown in illustration, solid bench seat similar.

1. Disconnect the electrical connector (1), if equipped.

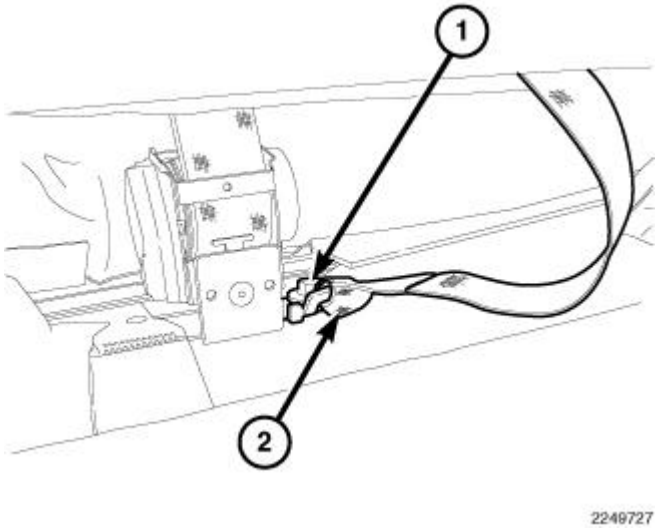

Fig. 576: Center Shoulder Belt
Courtesy of CHRYSLER GROUP, LLC

2. Remove the bolt (1) attaching the center shoulder belt (2) to the retractor and position the shoulder belt out of the way.

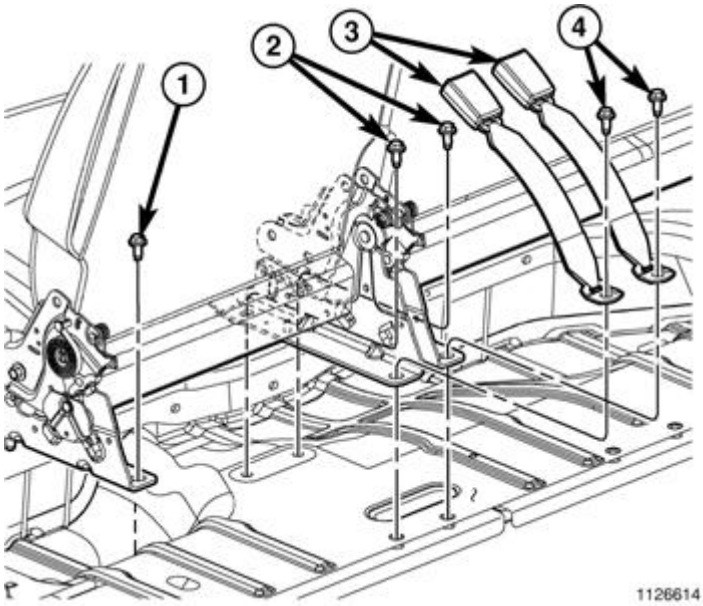

Fig. 577: Rear Inner Belts & Buckles
Courtesy of CHRYSLER GROUP, LLC

3. Remove the rear outer bolts.
4. Remove the rear inner bolts (3) and buckles (2) as necessary.

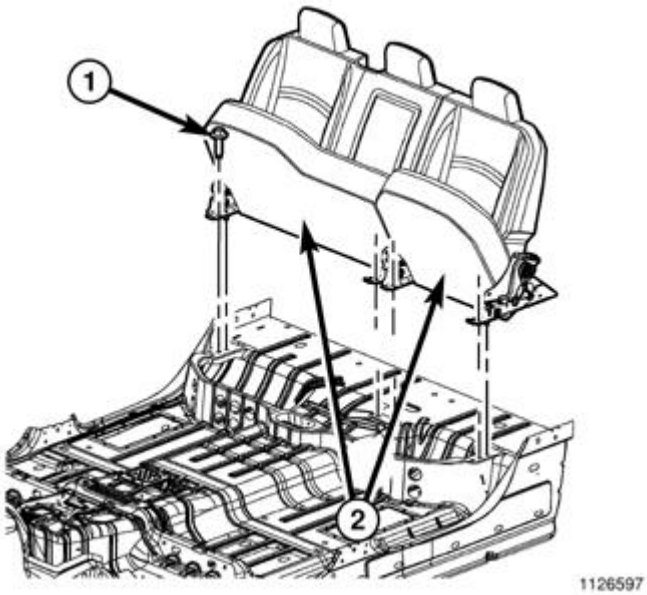

Fig. 578: Front Mounting Bolts
Courtesy of CHRYSLER GROUP, LLC

5. Remove the front fasteners (1).

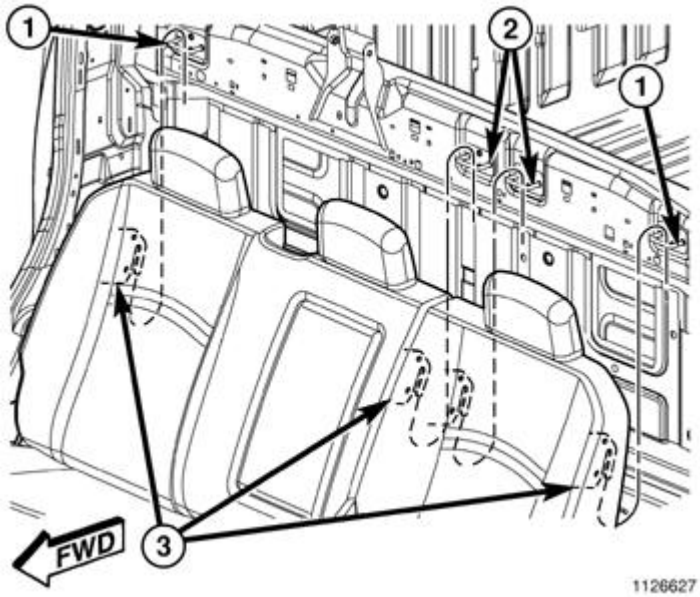

Fig. 579: Cab Hooks
Courtesy of CHRYSLER GROUP, LLC

6. Lift the seat assemblies up and separate the cab hooks (3) from the loops (1 and 2).
7. Remove the seat assembly from the vehicle.

INSTALLATION

INSTALLATION

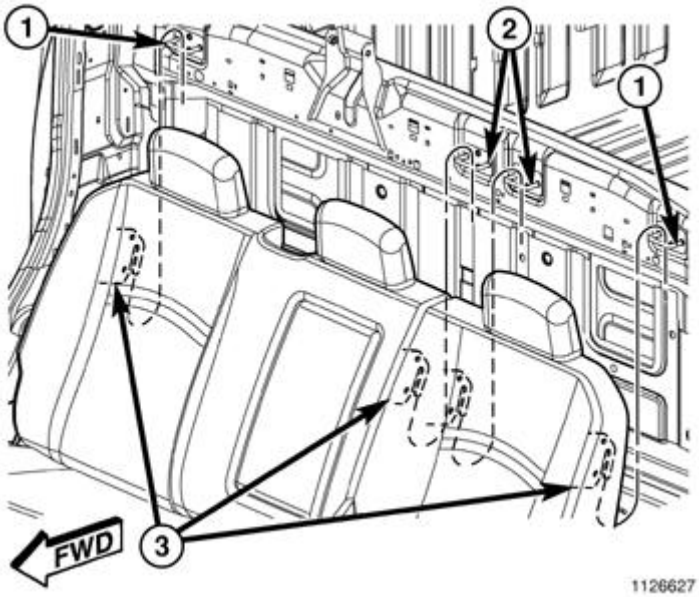

Fig. 580: Cab Hooks
Courtesy of CHRYSLER GROUP, LLC

NOTE: 60/40 bench seat shown in illustration, solid bench seat similar.

1. Position the rear seat assembly into the vehicle and secure the hooks (3) to the loops (1 and 2).

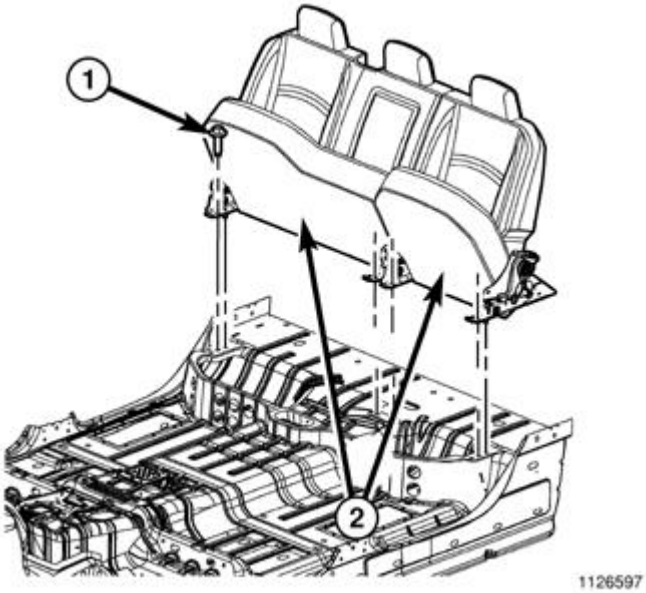

Fig. 581: Front Mounting Bolts
Courtesy of CHRYSLER GROUP, LLC

2. Install the front mounting bolts (1).

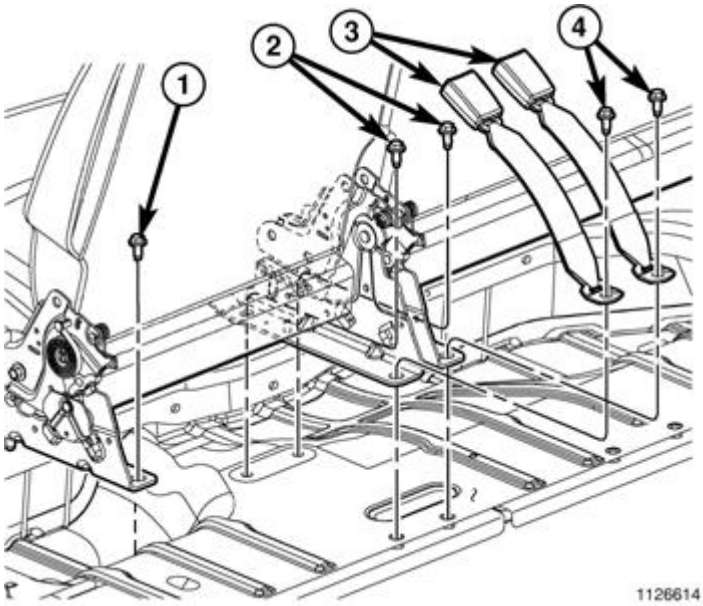

Fig. 582: Rear Inner Belts & Buckles
Courtesy of CHRYSLER GROUP, LLC

3. Install the remaining bolts (1, 4) and tighten all bolts to 47 N.m (35 ft. lbs.).

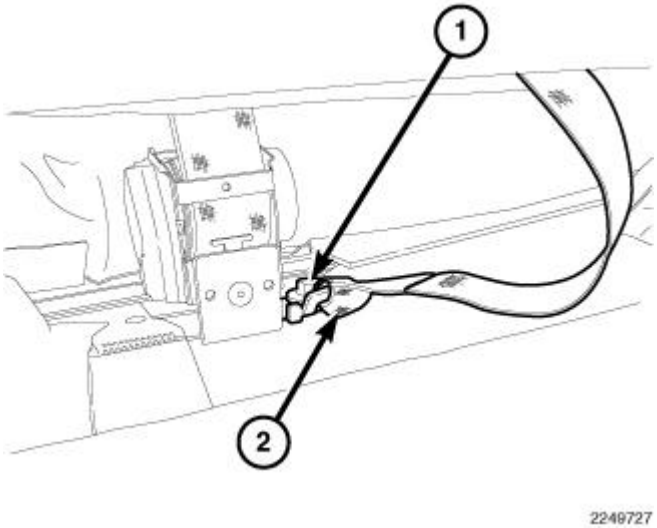

Fig. 583: Center Shoulder Belt
Courtesy of CHRYSLER GROUP, LLC

4. Position the shoulder belt (2) back into place and install the bolt (1).
5. Tighten the bolt to 23 N.m (17 ft. lbs.).

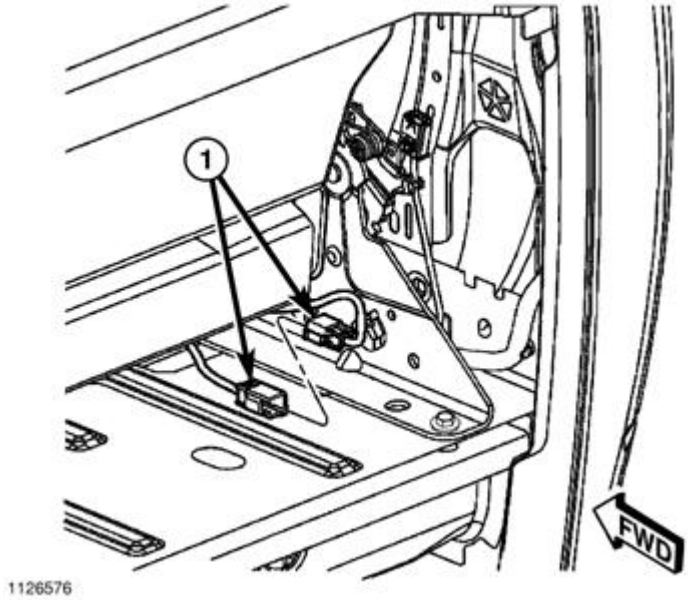

Fig. 584: Rear Seat Electrical Connector
Courtesy of CHRYSLER GROUP, LLC

6. Connect the electrical connectors (1), if equipped.

SEAT BACK, FRONT

REMOVAL

REMOVAL

NOTE: While servicing seat assemblies, refer to DESCRIPTION. .

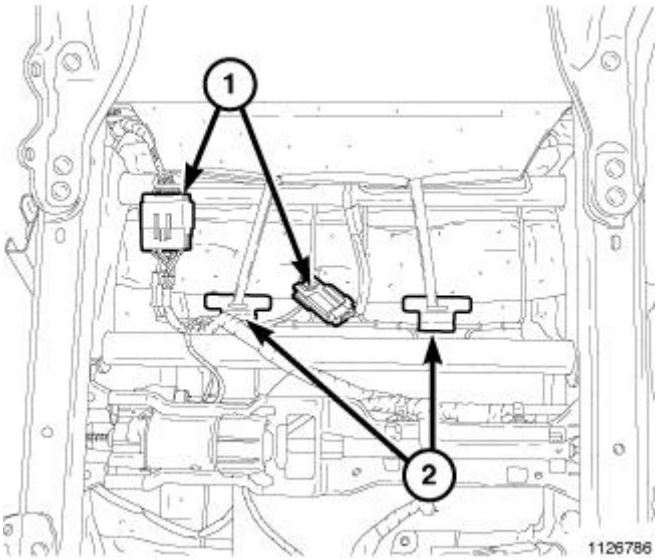

Fig. 585: Seat Back Cover Straps
Courtesy of CHRYSLER GROUP, LLC

1. Remove the front seat. Refer to **SEAT, FRONT, REMOVAL** and **SEAT, FRONT CENTER, REMOVAL**.
2. Separate the seat back cover straps (2) from under the seat cushion and disconnect the electrical connectors (1).

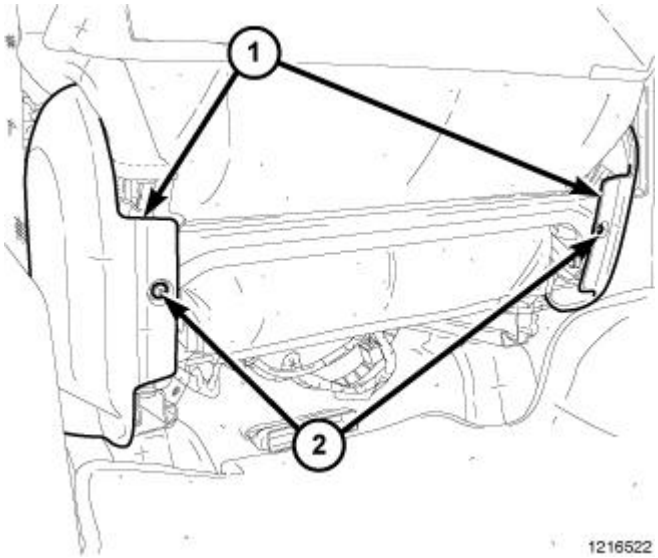

Fig. 586: Side Shield Screws
Courtesy of CHRYSLER GROUP, LLC

3. Remove the side shield screws (2) in the back.

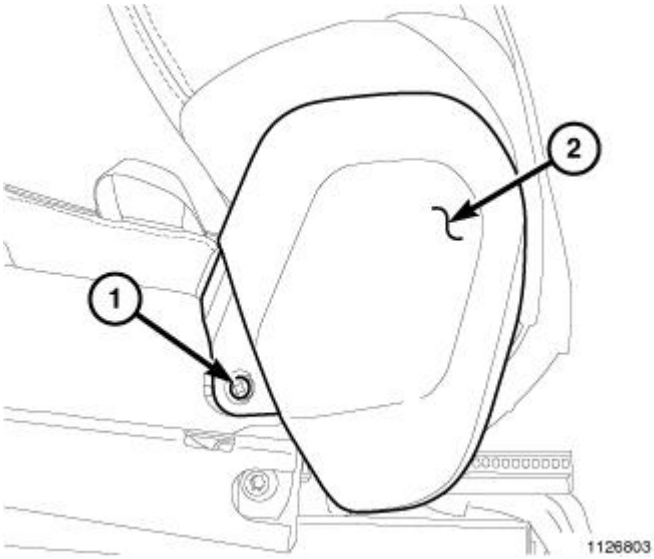

Fig. 587: Inboard Shield
Courtesy of CHRYSLER GROUP, LLC

4. Remove the inboard shield screw.
5. Remove the inboard side shield.

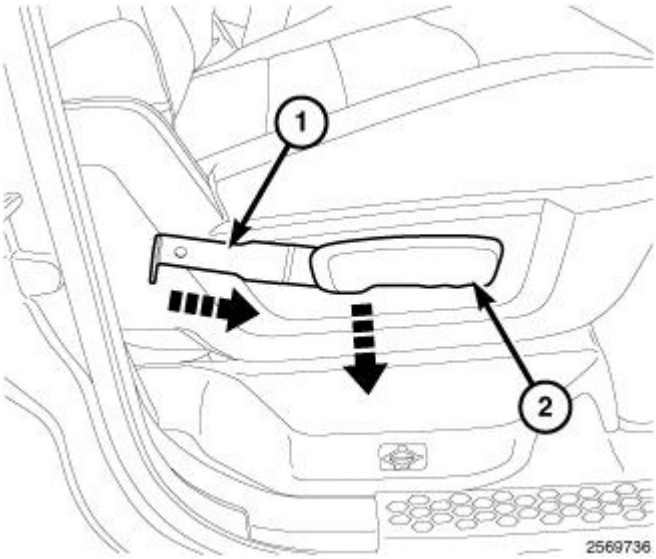

Fig. 588: Door Handle Clip Tool
Courtesy of CHRYSLER GROUP, LLC

6. If equipped with manual seat, using a door handle clip tool (1) or equivalent, release the clip holding the handle (2) onto the seat and remove the handle.

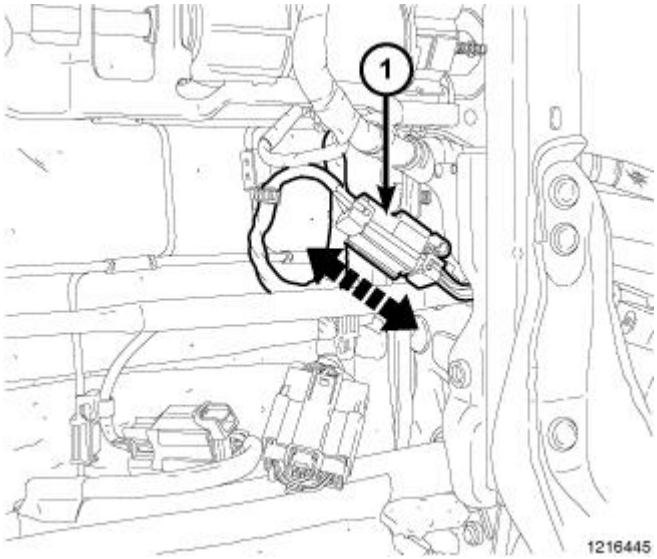

Fig. 589: Lumbar Switch Electrical Connector
Courtesy of CHRYSLER GROUP, LLC

CAUTION: Disconnect the lumbar control switch electrical connector beneath the seat, prior to removing the power seat switch bezel from the seat. Failure to follow these instructions can result in damage to the lumbar control switch.

7. If equipped, disconnect the lumbar control switch electrical connector (1).

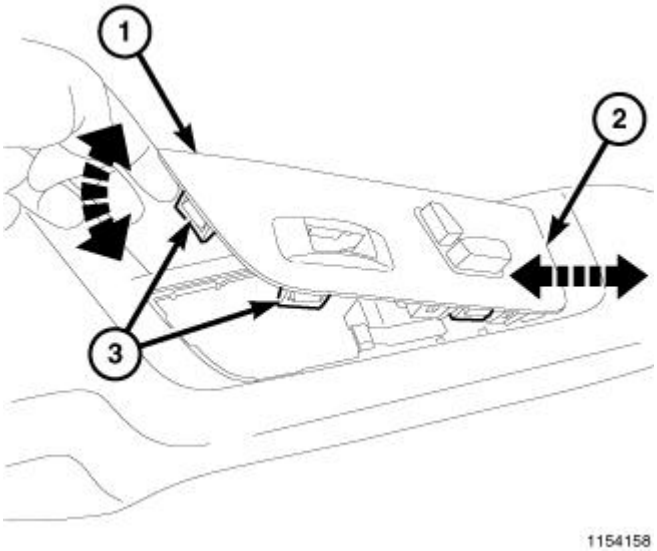

Fig. 590: Switch Bezel
Courtesy of CHRYSLER GROUP, LLC

NOTE: Power seat bezel shown in illustration, manual seat bezel similar.

8. Using trim stick (special tool #C-4755, Trim Stick) or equivalent, release the seven tabs (3) and separate

the bezel (1) from the outboard side shield.

9. Pull the bezel (1) rearward and release the front retaining tab (2).
10. Disconnect the wire harness connectors from the power seat switch and memory seat switch, if equipped.

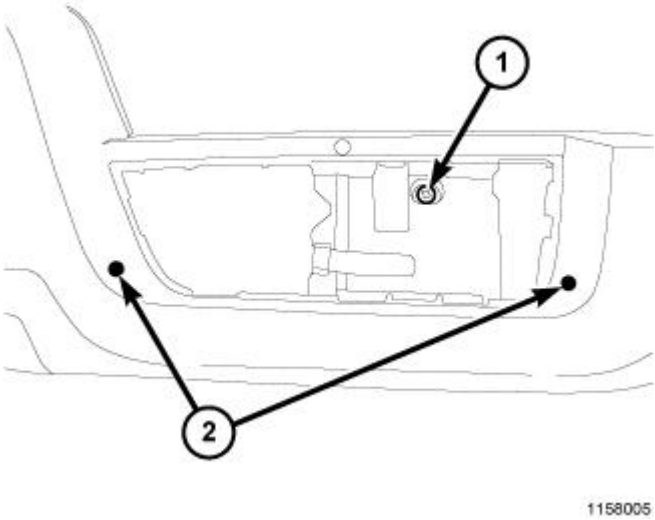

Fig. 591: Outer Side Shield
Courtesy of CHRYSLER GROUP, LLC

11. Remove the screw (1).
12. Release the retaining clips (2) and remove the outer side shield.

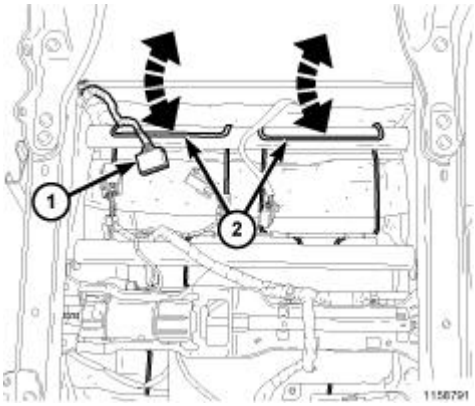

Fig. 592: Seat Cushion Suspension Mat
Courtesy of CHRYSLER GROUP, LLC

13. Release the seat cushion suspension mat (2) from the cross brace and separate the electrical connector (1).

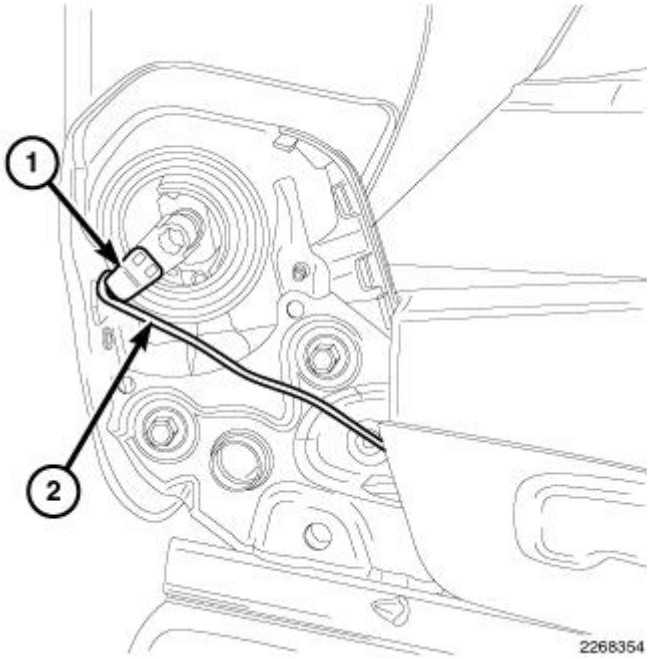

Fig. 593: Recliner Rod
Courtesy of CHRYSLER GROUP, LLC

14. On manual reclining seats, remove the clip (1) and separate the recliner rod (2) from the lever.

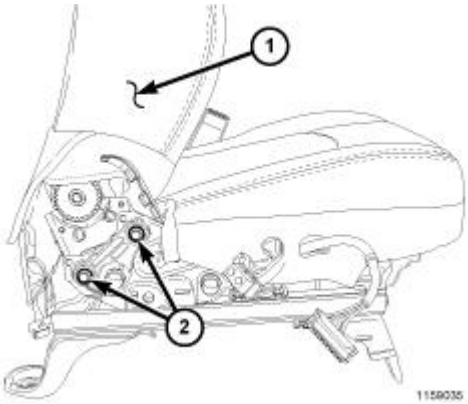

Fig. 594: Seat Back Assembly & Bolts
Courtesy of CHRYSLER GROUP, LLC

15. Remove the bolts (2) and remove the seat back assembly (1).

DISASSEMBLY

DISASSEMBLY

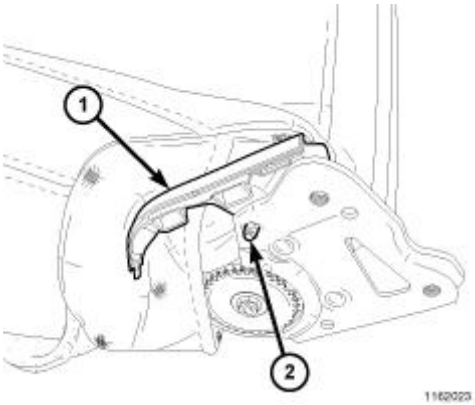

Fig. 595: Side Shield
Courtesy of CHRYSLER GROUP, LLC

NOTE: While servicing seat assemblies, refer to DESCRIPTION. .

1. Remove the seat back. Refer to **SEAT BACK, FRONT, REMOVAL**.
2. Separate the side shield from the seat back (2) and remove the side shields (1).

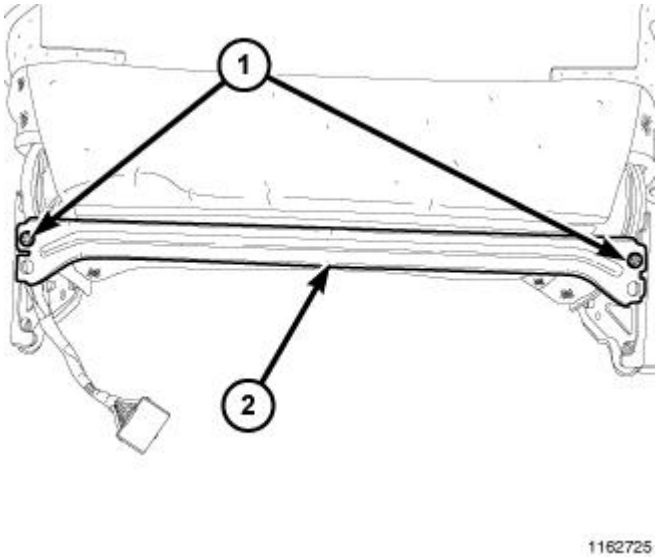

Fig. 596: Brace
Courtesy of CHRYSLER GROUP, LLC

3. Remove the two screws (1) and remove the brace (2).

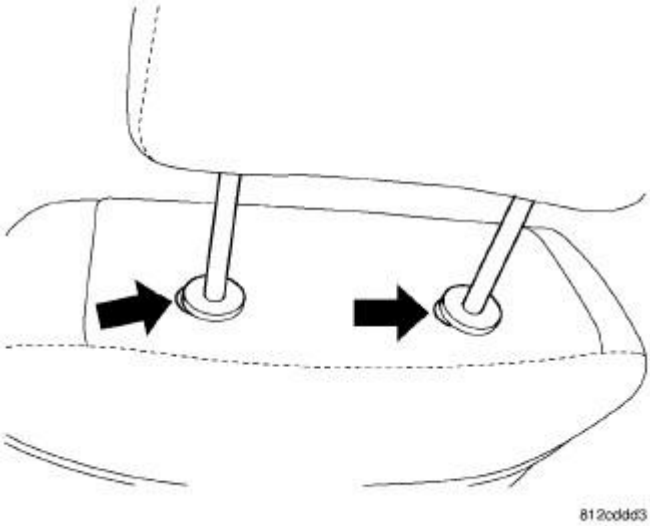

Fig. 597: Headrest Release Tabs
Courtesy of CHRYSLER GROUP, LLC

4. Push in the buttons on both headrest sleeves, pull the headrest up and remove.

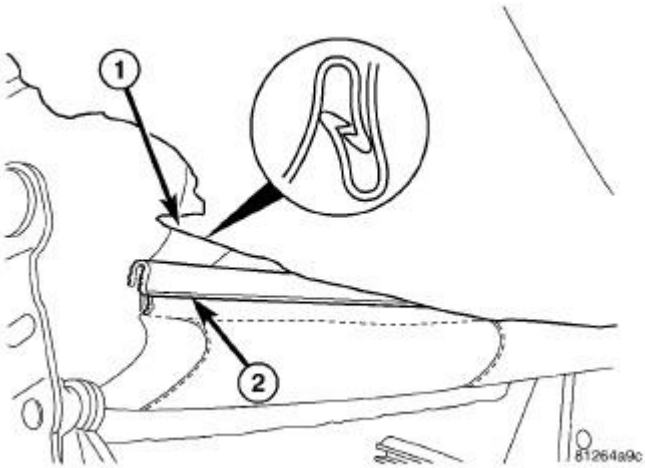

Fig. 598: J-Straps
Courtesy of CHRYSLER GROUP, LLC

5. Separate the J-straps (1 and 2) and pull cover up over frame.

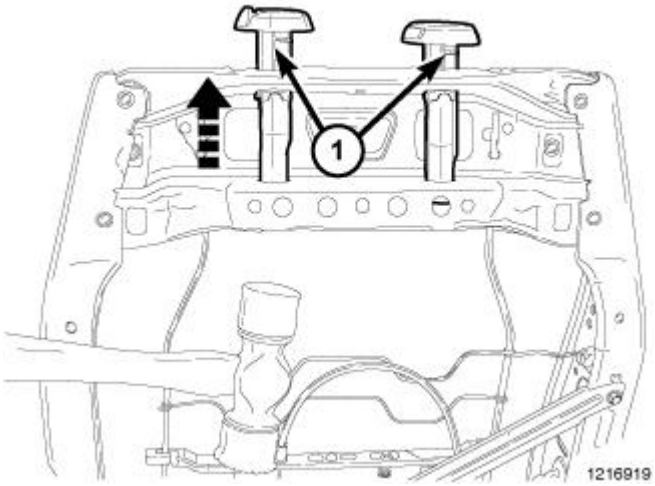

Fig. 599: Headrest Sleeves
Courtesy of CHRYSLER GROUP, LLC

6. Position the foam aside and strike the bottom of the headrest sleeves (1) with a rubber mallet or equivalent, and remove.
7. Remove the cover.

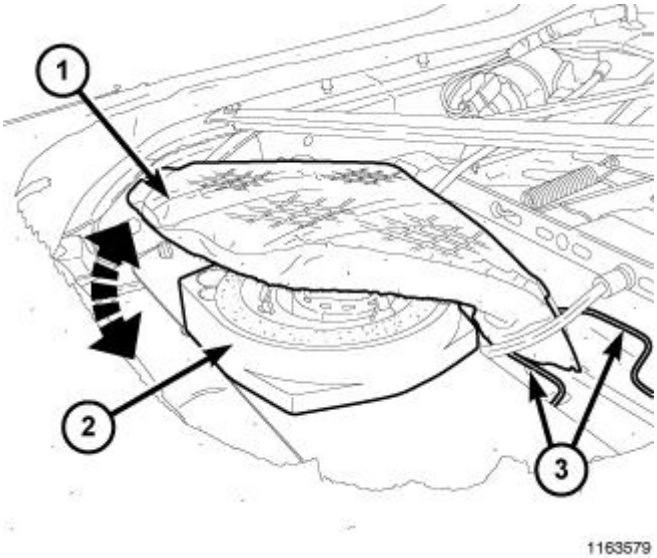

Fig. 600: Vented Seat Bag
Courtesy of CHRYSLER GROUP, LLC

8. Release the vented seat bag (1) from the vent motor (2) clips.
9. Remove the foam cushion from the seat back frame.

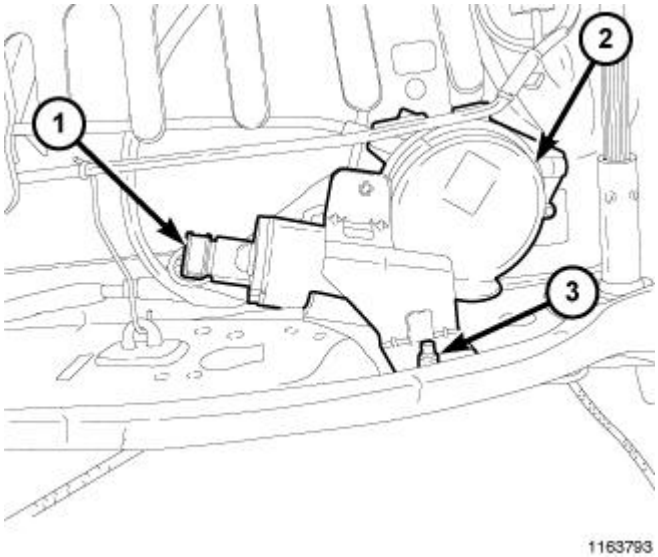

Fig. 601: Lumbar Motor
Courtesy of CHRYSLER GROUP, LLC

10. Disconnect the lumbar motor electrical connector (1) and remove the bolt (3).

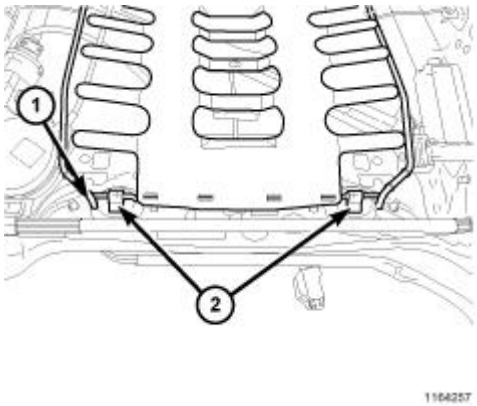

Fig. 602: Lower Lumbar Mat
Courtesy of CHRYSLER GROUP, LLC

11. Separate the lower lumbar mat (1) from the clips (2).

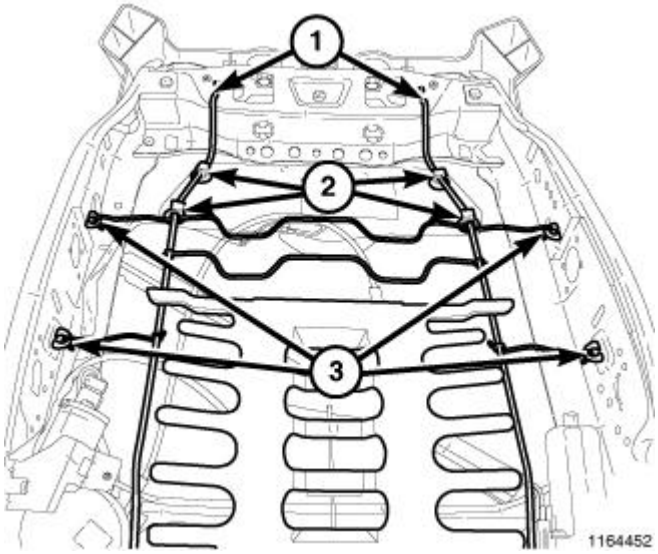

Fig. 603: Lumbar Mat Side Wires
Courtesy of CHRYSLER GROUP, LLC

12. Release the lumbar mat side wires (3) by pulling out on the wire supports and then pulling them in.
13. Release the clips (2) and separate the vented seat motor from the lumbar support, if equipped.
14. Pull the upper support wires (1) down and release the lumbar mat from the seat back frame.

ASSEMBLY

ASSEMBLY

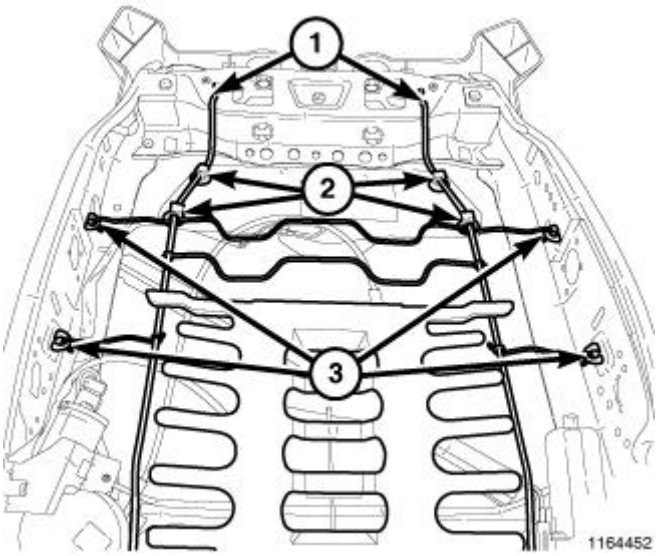

Fig. 604: Lumbar Mat Side Wires
Courtesy of CHRYSLER GROUP, LLC

NOTE: While servicing seat assemblies, refer to DESCRIPTION. .

1. Connect the upper support wires (1) to the seat back frame.
2. Secure the lumbar mat side wires (3).
3. Secure the vented seat motor clips (2) to the lumbar support, if equipped.

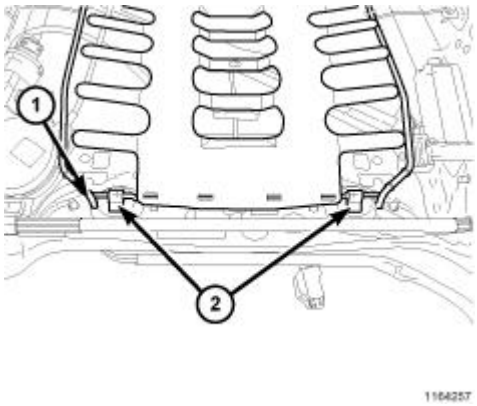

Fig. 605: Lower Lumbar Mat
Courtesy of CHRYSLER GROUP, LLC

4. Secure the lower lumbar mat (1) to the clips (2).

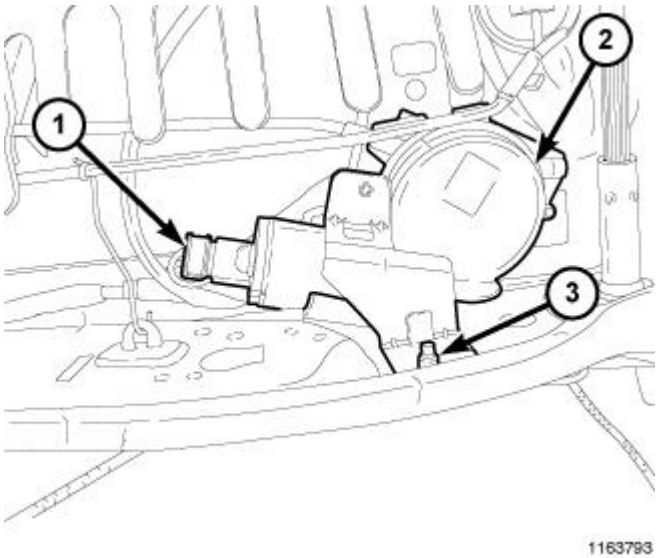

Fig. 606: Lumbar Motor
Courtesy of CHRYSLER GROUP, LLC

5. If equipped, position the lumbar motor (2) onto the seat back frame and install the bolt (3).
6. Tighten the bolt (3) to 10 N.m (89 in. lbs.).
7. Connect the electrical connector (1).

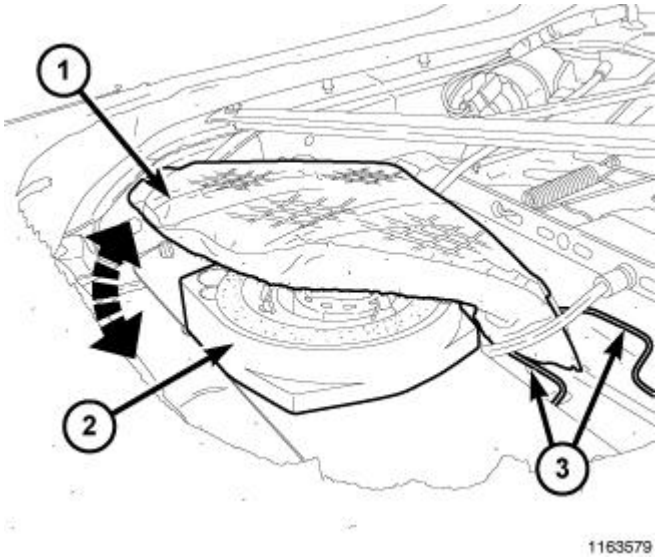

Fig. 607: Vented Seat Bag
Courtesy of CHRYSLER GROUP, LLC

8. Position the vented seat bag (1) through the seat back support spring (3).
9. Position the vented seat bag (1) onto the vent motor (2) and seat the clips fully.

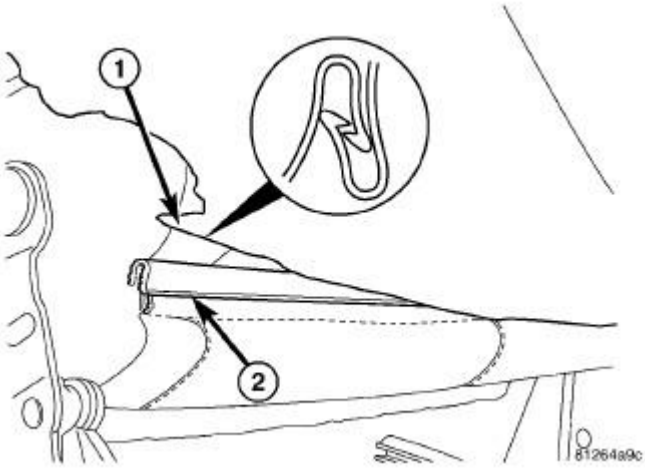

Fig. 608: J-Straps
Courtesy of CHRYSLER GROUP, LLC

10. Seat the foam and cover assembly over the seat back frame fully and secure the J-straps (1 and 2).

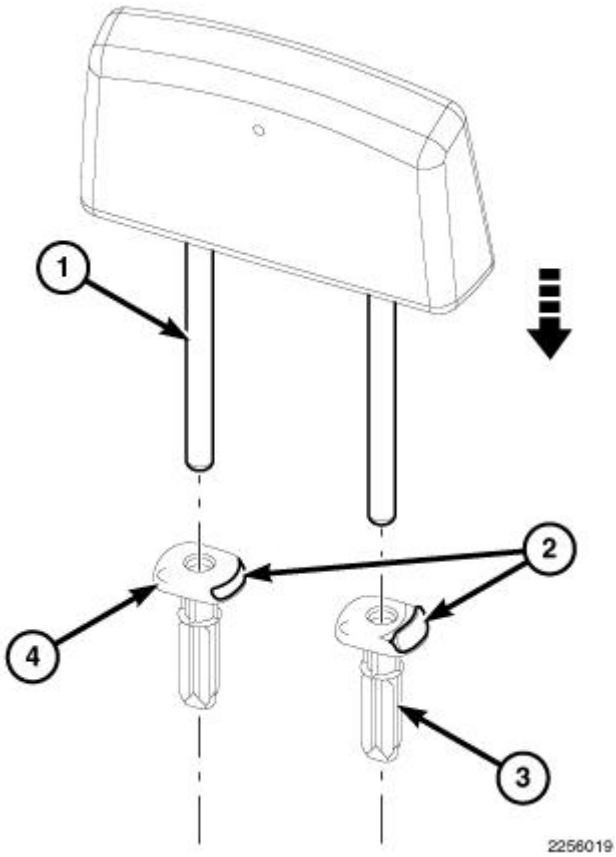

Fig. 609: Head Restraint Sleeves With Slave Sleeve
Courtesy of CHRYSLER GROUP, LLC

11. Install the new head restraint sleeves with slave sleeve (4) in the right position and master sleeve (3) in the left position.
12. Press the lock buttons (2) on the sleeves and insert the head restraint tubes (1) into the head restraint guide sleeves, ensuring proper forward facing orientation of the head restraint.

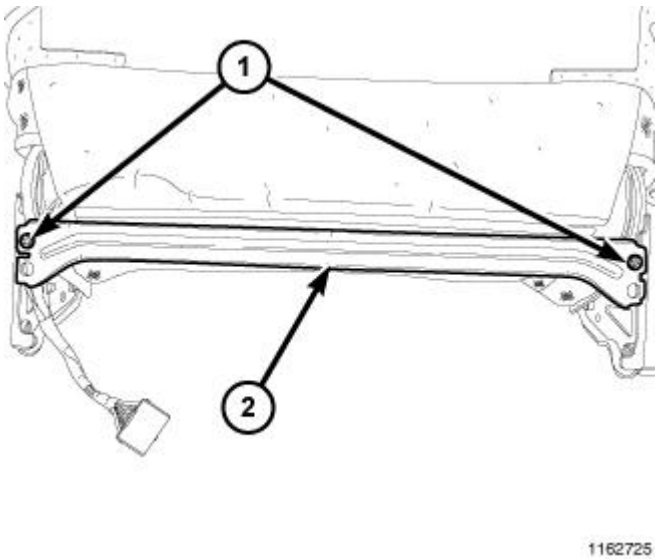

Fig. 610: Brace
Courtesy of CHRYSLER GROUP, LLC

13. Install the brace (2) and install the screws (1).

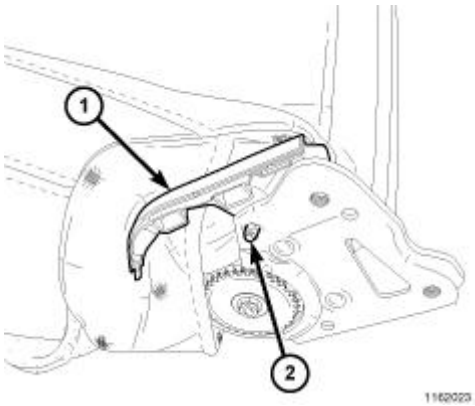

Fig. 611: Side Shield
Courtesy of CHRYSLER GROUP, LLC

14. Position the inner shields (1) back and seat the locator pin (2) fully.
15. Install the seat back. Refer to **SEAT BACK, FRONT, INSTALLATION**.

INSTALLATION

INSTALLATION

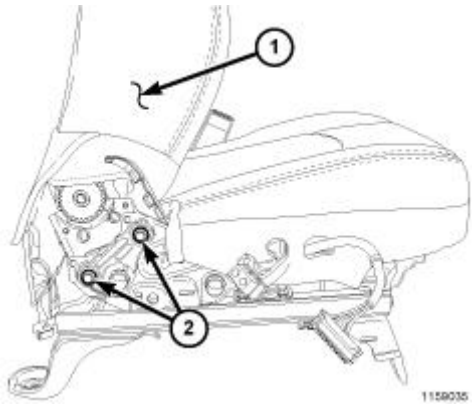

Fig. 612: Seat Back Assembly & Bolts
Courtesy of CHRYSLER GROUP, LLC

1. Install the seat back (1) onto the seat cushion assembly and install the four bolts (2).
2. Tighten the bolts (2) to 40 N.m (30 ft. lbs.).

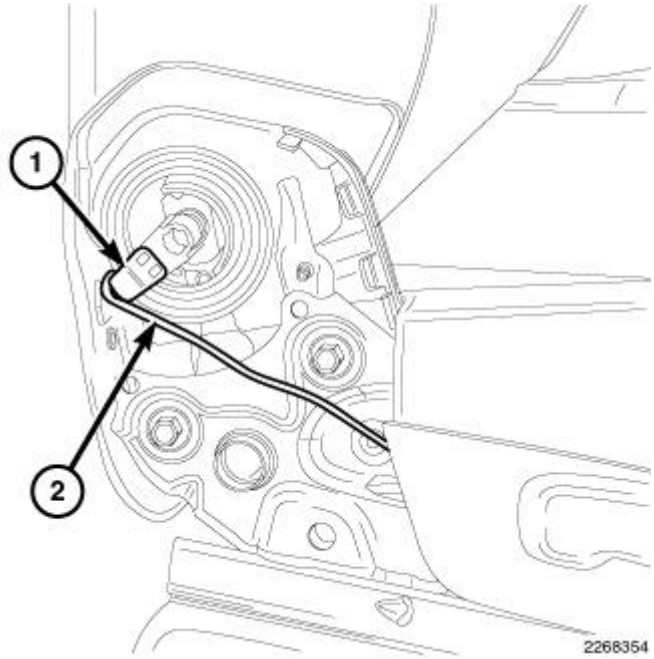

Fig. 613: Recliner Rod
Courtesy of CHRYSLER GROUP, LLC

3. On manual reclining seats, install the recliner rod (2) onto the recliner lever and fully seat the clip (1).

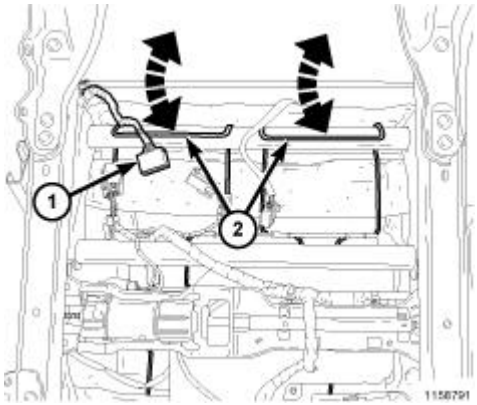

Fig. 614: Seat Cushion Suspension Mat
Courtesy of CHRYSLER GROUP, LLC

4. Position the wire harness (1) through the suspension mat (2).
5. Secure the suspension mat (2) to the cross brace.

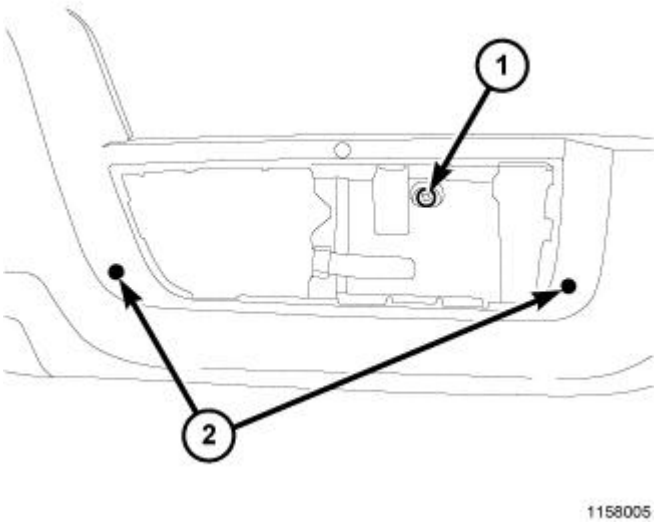

Fig. 615: Outer Side Shield
Courtesy of CHRYSLER GROUP, LLC

6. Install the outer side shield and seat the clips (2) fully.
7. Install the screw (1).

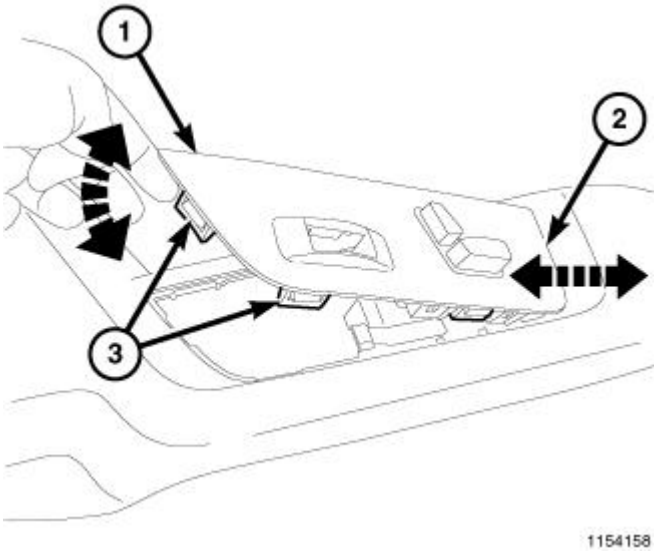

Fig. 616: Switch Bezel
Courtesy of CHRYSLER GROUP, LLC

NOTE: Power seat bezel shown in illustration, manual seat bezel similar.

8. Connect the wire harness connectors to the power seat switch and memory seat switch, if equipped.
9. Position the bezel (1) back into place and secure the front tab (2).
10. Seat the remaining tabs (3) fully.

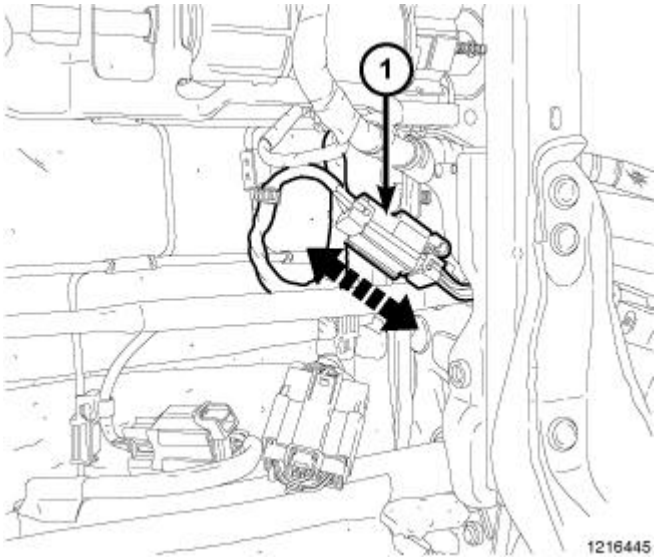

Fig. 617: Lumbar Switch Electrical Connector
Courtesy of CHRYSLER GROUP, LLC

11. If equipped, connect the lumbar switch electrical connector (1).

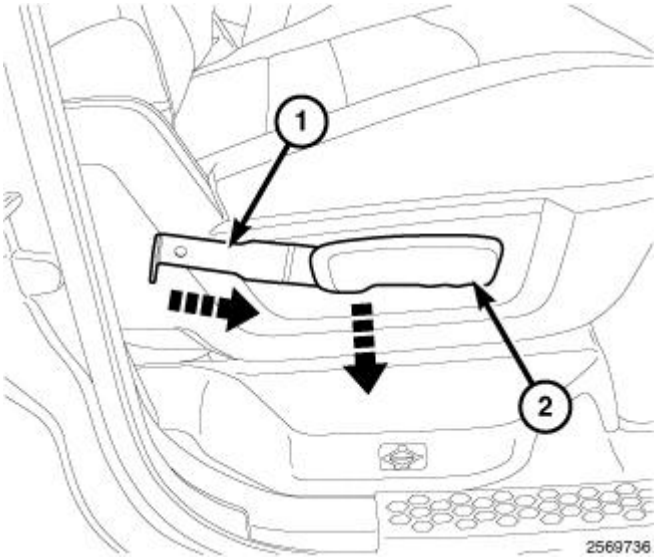

Fig. 618: Door Handle Clip Tool
Courtesy of CHRYSLER GROUP, LLC

12. If equipped with manual seat, install the seat recline handle. Make sure the clip holding the handle is fully engaged.

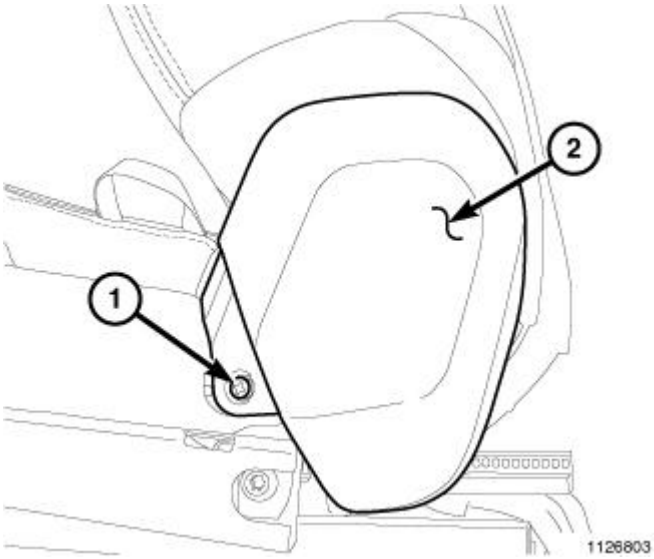

Fig. 619: Inboard Shield
Courtesy of CHRYSLER GROUP, LLC

13. Install the inboard shield (2) and install the screw (1).

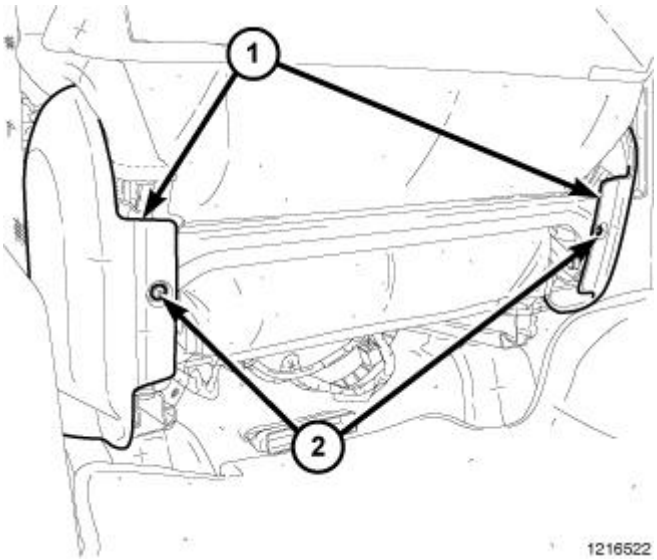

Fig. 620: Side Shield Screws
Courtesy of CHRYSLER GROUP, LLC

14. Install the side shield screws (2).

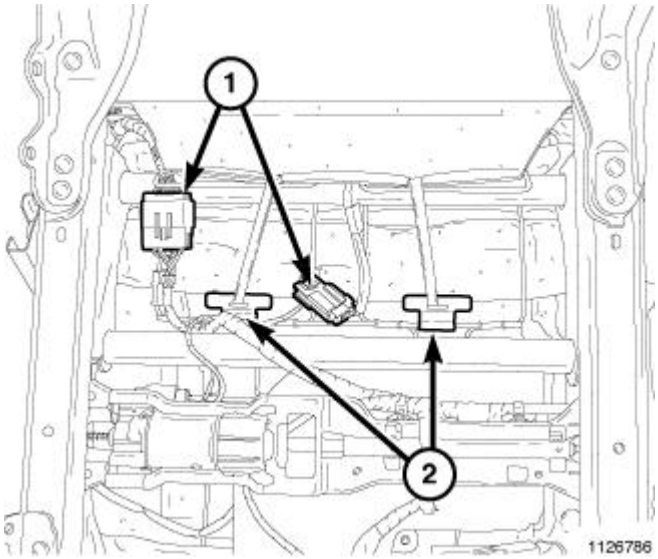

Fig. 621: Seat Back Cover Straps
Courtesy of CHRYSLER GROUP, LLC

15. Secure the seat back cover straps (2).
16. Connect the electrical connectors (1).
17. Install the front seat. Refer to **SEAT, FRONT, INSTALLATION** and **SEAT, FRONT CENTER, INSTALLATION**.

SEAT BACK, REAR

REMOVAL

REMOVAL

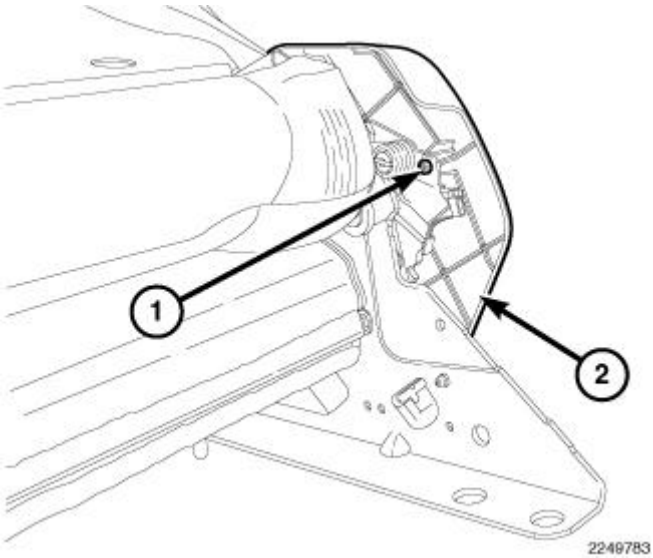

Fig. 622: Side Shield Screws
Courtesy of CHRYSLER GROUP, LLC

1. Remove the rear seat assembly. Refer to **SEAT, REAR, REMOVAL**.
2. Remove the screws (1) and remove the side shields (2).

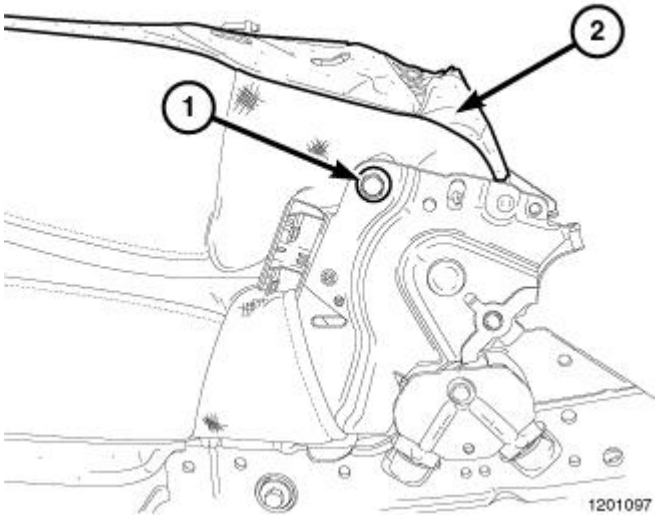

Fig. 623: Seat Back Assembly & Bolt
Courtesy of CHRYSLER GROUP, LLC

3. Remove the bolts (1).
4. Remove the seat back assembly (2).

DISASSEMBLY

DISASSEMBLY

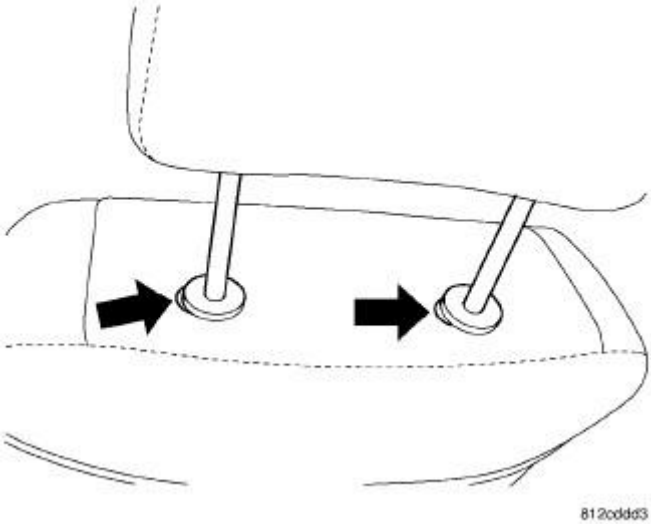

Fig. 624: Headrest Release Tabs
Courtesy of CHRYSLER GROUP, LLC

1. Remove the seat back. Refer to **SEAT BACK, REAR, REMOVAL**.
2. Press master and slave buttons on head restraint guides simultaneously and remove the headrests.

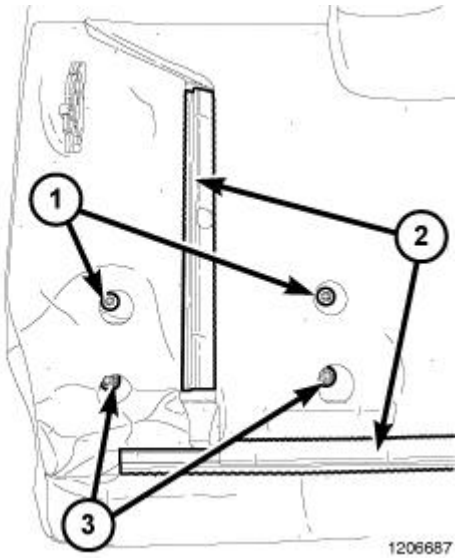

Fig. 625: J-Straps
Courtesy of CHRYSLER GROUP, LLC

3. Separate the J-straps (2).

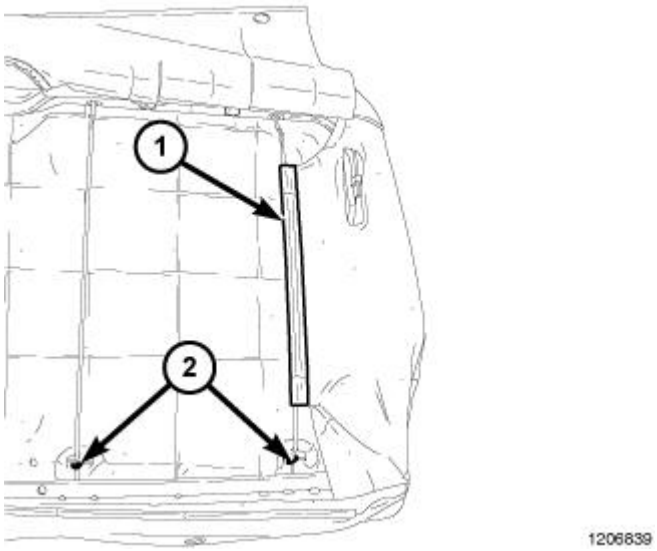

Fig. 626: J-Straps & Hog Rings
Courtesy of CHRYSLER GROUP, LLC

4. Separate the J-strap (1).
5. Remove the two rear hog rings (2).

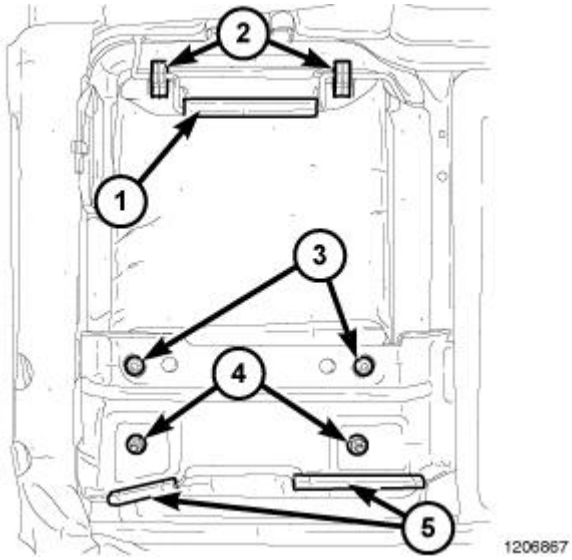

Fig. 627: Hooks, J-Straps & Hog Rings
Courtesy of CHRYSLER GROUP, LLC

6. Remove the two bolts (3).
7. Remove the two nuts (4).
8. Pull the bottom of the armrest out and away from the seat back.
9. Release the two top hooks (2) and remove the armrest.
10. Separate the remaining J-straps (1 and 5).

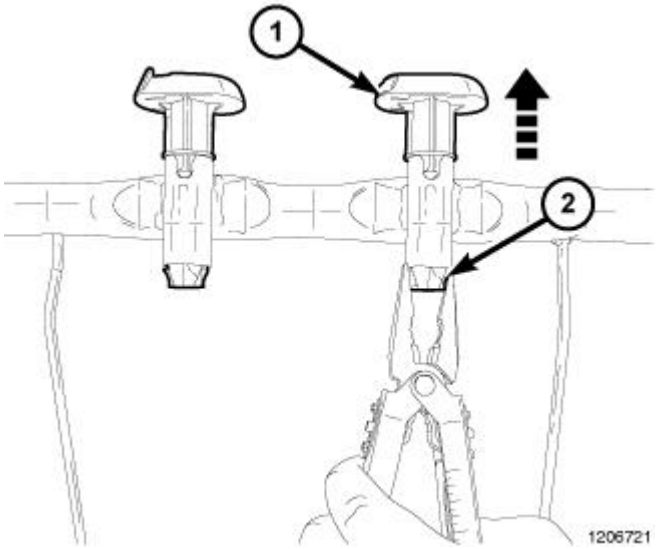

Fig. 628: Headrest Sleeves
Courtesy of CHRYSLER GROUP, LLC

11. Using pliers or equivalent, squeeze the locking tabs and remove the headrest sleeves.

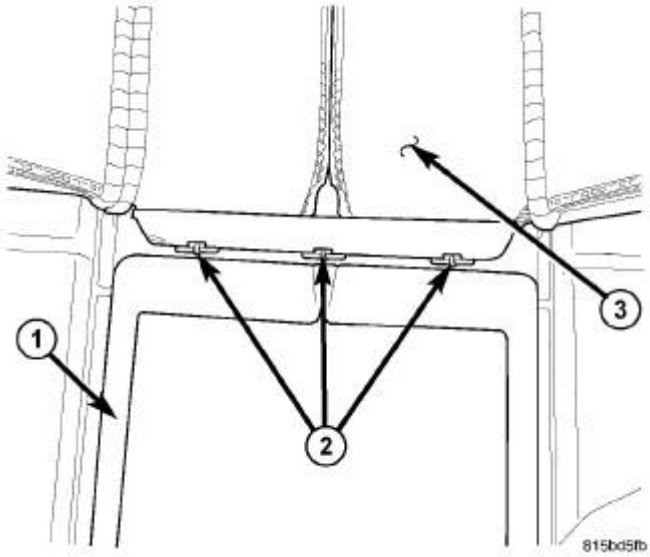

Fig. 629: Seat Back Hog Rings
Courtesy of CHRYSLER GROUP, LLC

12. Remove the foam and cover assembly.
13. Remove the hog rings (2) attaching the cover (3) to the foam (1).

CENTER ARM REST

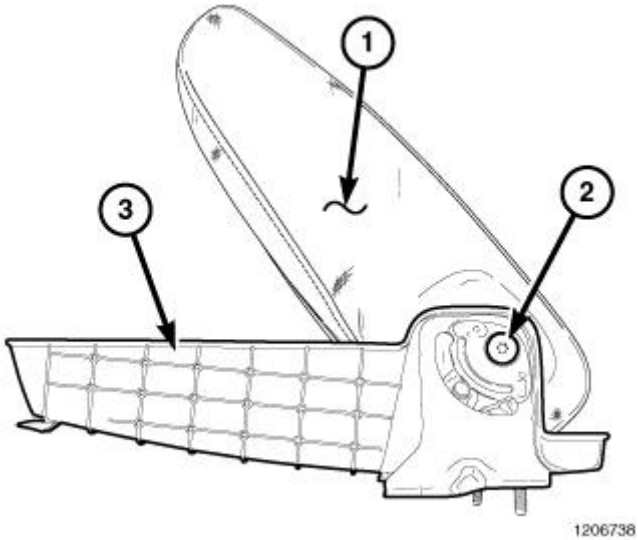

Fig. 630: Armrest
Courtesy of CHRYSLER GROUP, LLC

1. Remove the pivot bolts (2) and separate the armrest (1) from the tray (3).

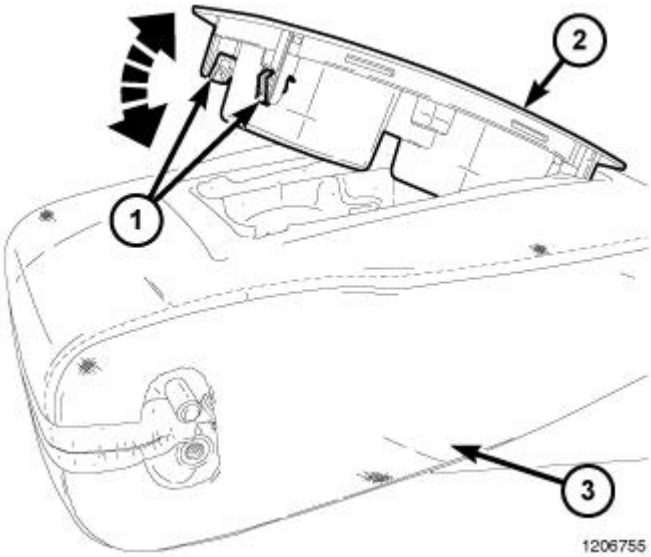

Fig. 631: Cup Holder
Courtesy of CHRYSLER GROUP, LLC

2. Using trim stick (special tool #C-4755, Trim Stick) or equivalent, disengage the clips (1) and remove the cup holder (2).

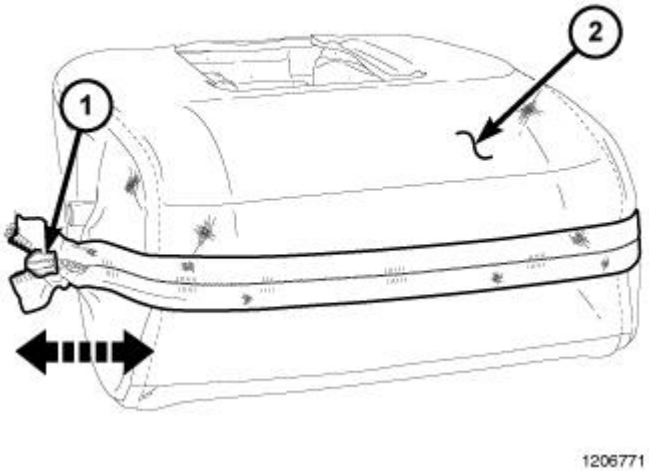

Fig. 632: Armrest Foam & Cover
Courtesy of CHRYSLER GROUP, LLC

3. Unzip the cover (1) and separate the foam and cover (2) from the armrest frame.

ASSEMBLY

ASSEMBLY

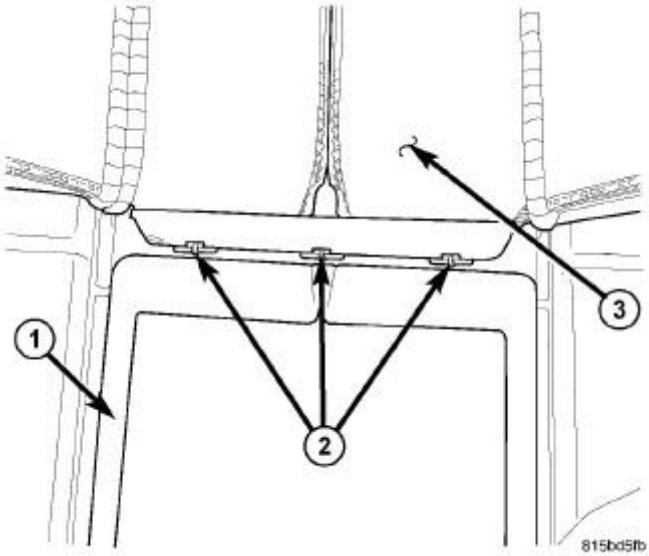

Fig. 633: Seat Back Hog Rings
Courtesy of CHRYSLER GROUP, LLC

1. Position the cover (3) on to the foam (1) and install three new hog rings (2).
2. Position the foam and cover assembly over the seat back frame.

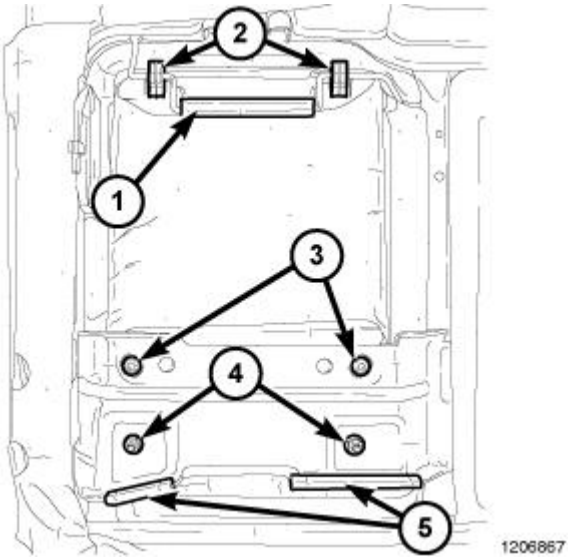

Fig. 634: Hooks, J-Straps & Hog Rings
Courtesy of CHRYSLER GROUP, LLC

3. Secure the J-straps (1 and 5)
4. Position the armrest into the seat cavity and secure the upper hooks (2).
5. Seat the armrest fully into the seat cavity and install the screws (3) and nuts (4).
6. Tighten the screws and nuts to 28 N.m (21 ft. lbs.)

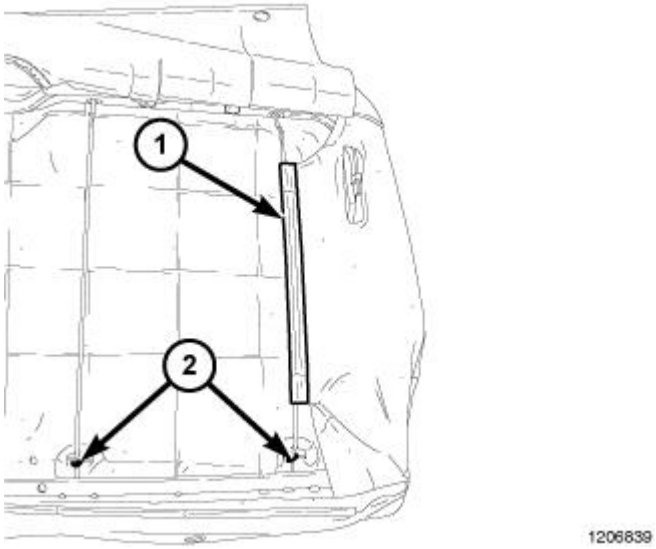

Fig. 635: J-Straps & Hog Rings
Courtesy of CHRYSLER GROUP, LLC

7. Secure the J-strap (1).
8. Install two new rear hog rings (2).

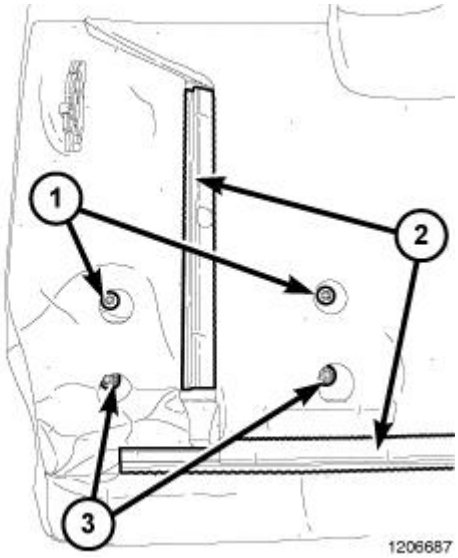

Fig. 636: J-Straps
Courtesy of CHRYSLER GROUP, LLC

9. Secure the J-straps (2).

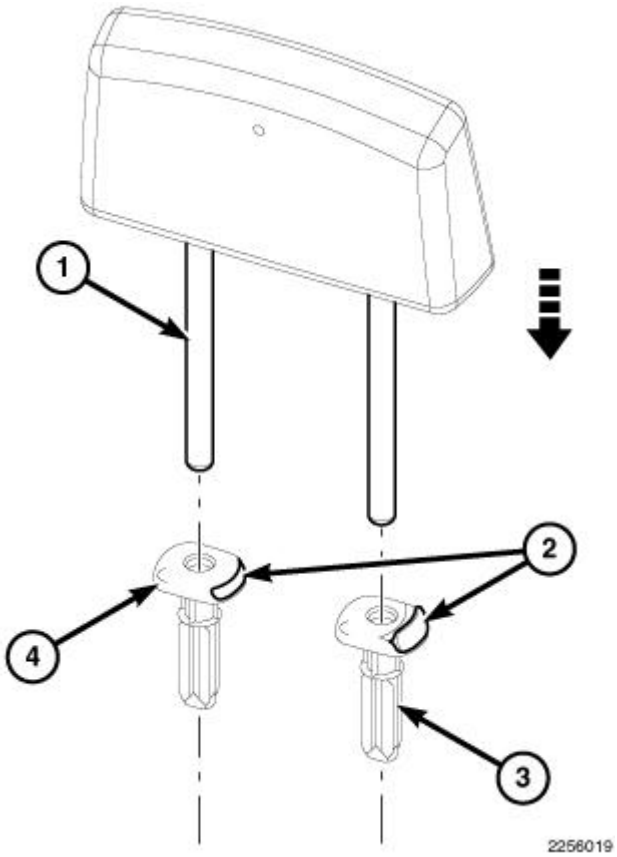

Fig. 637: Head Restraint Sleeves With Slave Sleeve
Courtesy of CHRYSLER GROUP, LLC

10. Install the new head restraint sleeves with slave sleeve (4) in the right position and master sleeve (3) in the left position.
11. Press the lock buttons (2) on the sleeves and insert the head restraint tubes (1) into the head restraint guide sleeves, ensuring proper forward facing orientation of the head restraint.
12. Install the seat back. Refer to **SEAT BACK, REAR, INSTALLATION**.

CENTER ARM REST

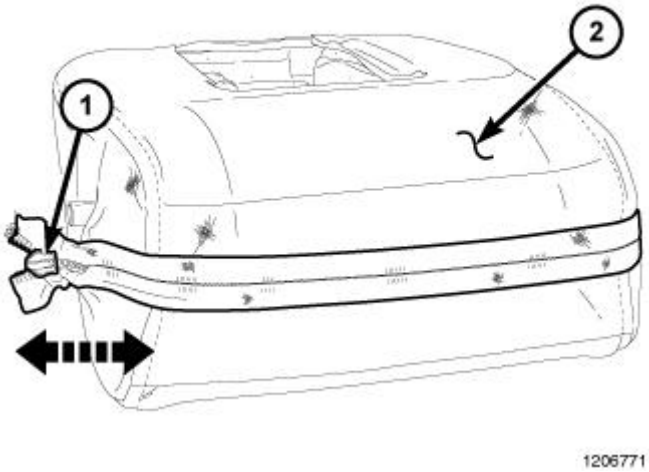

Fig. 638: Armrest Foam & Cover
Courtesy of CHRYSLER GROUP, LLC

1. Position the foam and cover (2) over the armrest frame and secure the zipper (1).

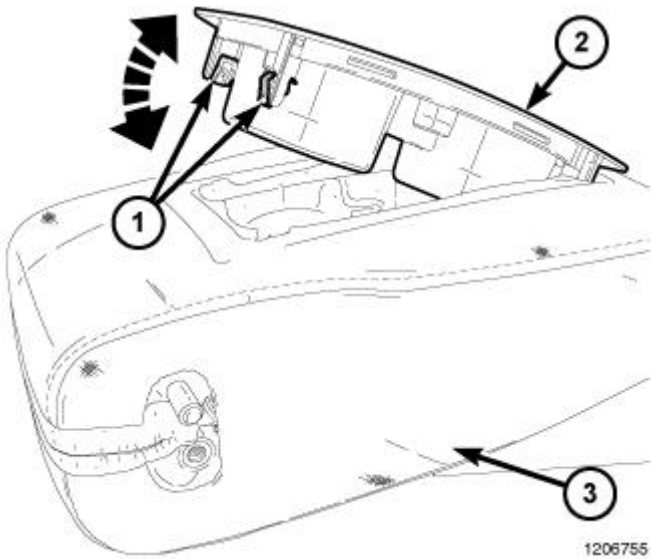

Fig. 639: Cup Holder
Courtesy of CHRYSLER GROUP, LLC

2. Position the cupholder (2) onto the armrest (3) and seat the four clips (1) fully.

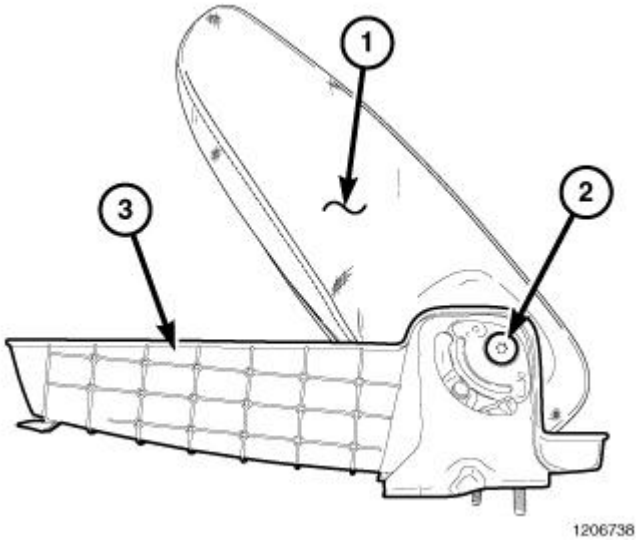

Fig. 640: Armrest
Courtesy of CHRYSLER GROUP, LLC

3. Install the armrest assembly (1) onto the tray (3) and install the pivot brackets.
4. Install the pivot bolts and tighten to 28 N.m (21 ft. lbs.).

INSTALLATION

INSTALLATION

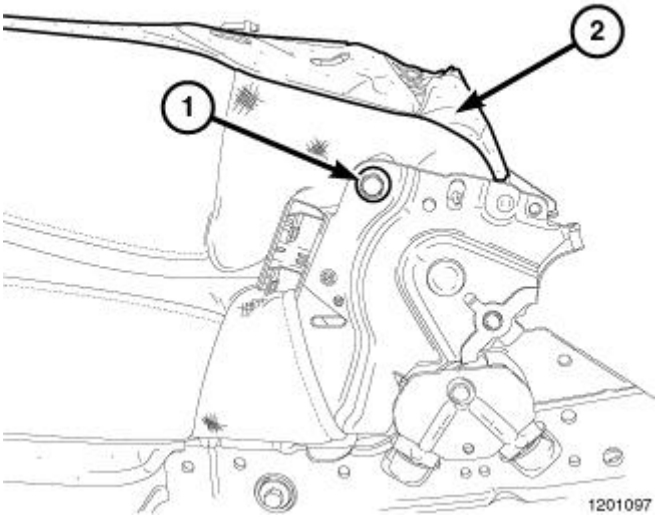

Fig. 641: Seat Back Assembly & Bolt
Courtesy of CHRYSLER GROUP, LLC

1. Position the seat back assembly (2) onto the seat latches and install the pivot bolts (1).
2. Tighten the bolts (1) to 28 N.m (21 ft. lbs.).

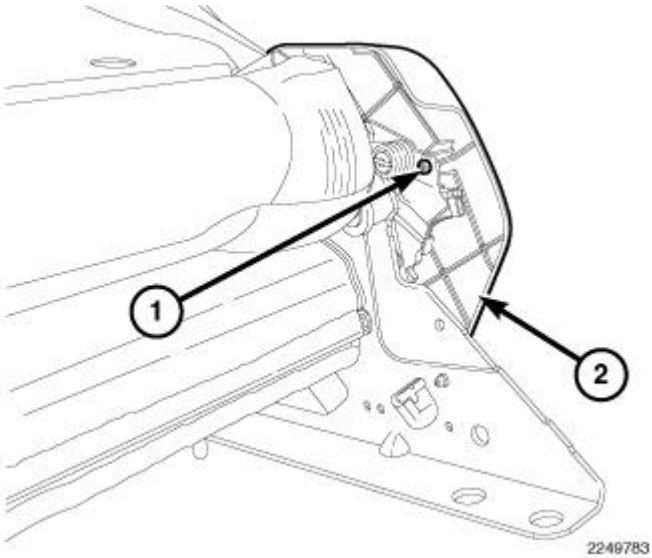

Fig. 642: Side Shield Screws
Courtesy of CHRYSLER GROUP, LLC

3. Install the side shields (2) and install the screws (1).
4. Install the rear seat assembly. Refer to **SEAT, REAR, INSTALLATION**.

SEAT, MEGA CAB REAR

DESCRIPTION

DESCRIPTION

MEGA CAB	
REAR 60% SEAT - MEGA CAB	Refer to **Fig. 643**.
REAR 40% SEAT - MEGA CAB	Refer to **Fig. 644**.
REAR SEAT MOUNTING BRACKETS - MEGA CAB	Refer to **Fig. 645**.

MEGA CAB

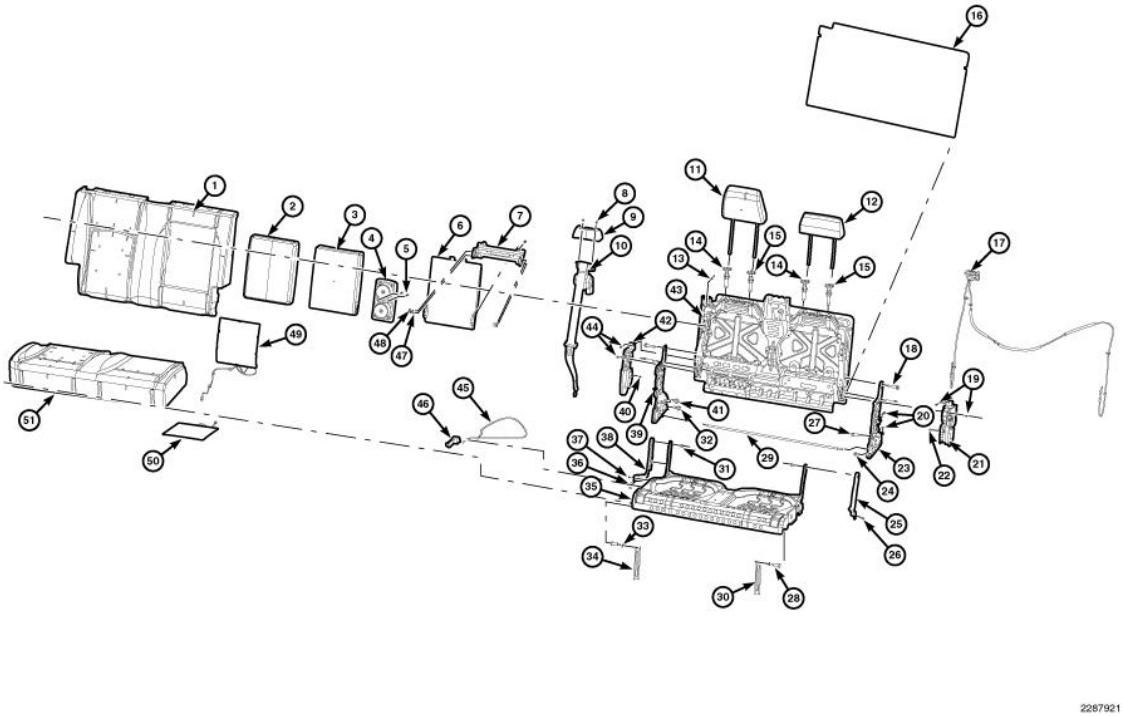

Fig. 643: Exploded View Of Rear 60% Seat - Mega Cab
Courtesy of CHRYSLER GROUP, LLC

1 - SEAT BACK CUSHION/COVER ASSEMBLY	27 - REAR MOUNTING BRACKET BOLT 28 N.m (21 ft. lbs.)
2 - ARMREST COVER	28 - PIVOT LEG TO CUSHION BOLTS (2) 28 N.m (21 ft. lbs.)
3 - ARMREST FOAM	29 - CONNECTING ROD
4 - CUPHOLDER	30 - FRONT PIVOT MOUNTING LEG BRACKET
5 - CUPHOLDER SCREWS (2)	31 - STOW PIVOT BOLTS (2) 28 N.m (21 ft. lbs.)
6 - ARMREST BACK PANEL	32 - REAR MOUNTING BRACKET BOLTS (2) 28 N.m (21 ft. lbs.)
7 - ARMREST PIVOT ASSEMBLY	33 - PIVOT LEG TO CUSHION WASHERS (2)
8 - RETRACTOR COVER SCREWS (2)	34 - FRONT PIVOT MOUNTING LEG BRACKET
9 - RETRACTOR COVER	35 - SEAT CUSHION FRAME ASSEMBLY
10 - RETRACTOR	36 - RECLINER HANDLE BRACKET SCREWS (2)
11 - HEADREST	37 - SIDE COVER SCREW
12 - CENTER HEADREST	38 - SEAT CUSHION FRAME SIDE COVER
13 - SCREWS (2)	39 - RECLINER - OUTBOARD
14 - HEADREST SLEEVE - SLAVE	40 - RETRACTOR BEZEL SCREW
15 - HEADREST SLEEVE - MASTER	41 - REAR MOUNTING BRACKET BOLT 28 N.m (21 ft. lbs.)

16 - SEAT BACK PANEL	42 - RECLINER COVER
17 - FOLD-TABLE CABLE ASSEMBLY	43 - SEAT BACK FRAME ASSEMBLY
18 - SEAT BACK TO RECLINER BOLTS (4) 48 N.m (35 ft. lbs.)	44 - RECLINER COVER SCREWS
19 - RECLINER COVER SCREWS	45 - RECLINER CABLE ASSEMBLY
20 - SCREWS	46 - RECLINER HANDLE
21 - RECLINER COVER	47 - ARMREST FRAME PIVOT BOLTS (2) 8 N.m (71 in. lbs.)
22 - SCREW	48 - ARMREST PIVOT TO FRAME BOLTS (2) 8 N.m (71 in. lbs.)
23 - RECLINER - INBOARD	49 - SEAT BACK HEAT MAT
24 - REAR MOUNTING BRACKET BOLTS (2) 48 N.m (35 ft. lbs.)	50 - SEAT CUSHION HEAT MAT
25 - SEAT CUSHION FRAME SIDE COVER	51 - SEAT CUSHION/COVER ASSEMBLY
26 - SIDE COVER SCREW	

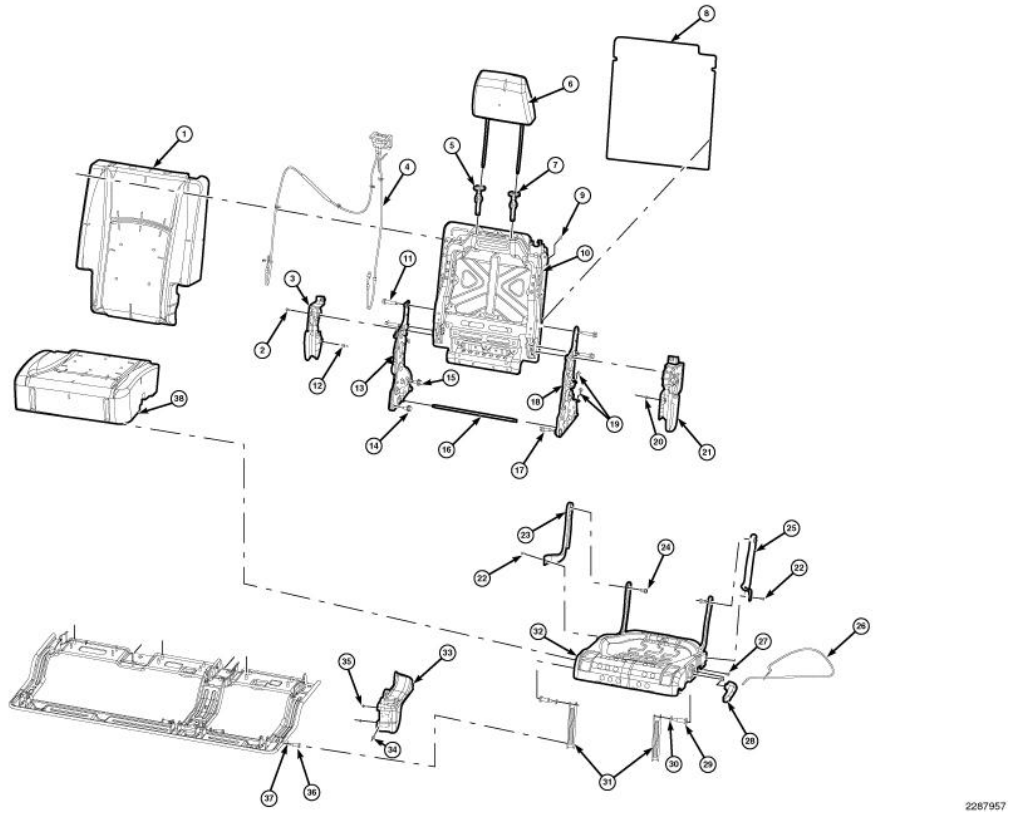

Fig. 644: Exploded View Of Rear 40% Seat - Mega Cab
Courtesy of CHRYSLER GROUP, LLC

1 - SEAT BACK CUSHION/COVER ASSEMBLY	20 - SCREW
2 - RECLINER COVER SCREWS	21 - RECLINER COVER
3 - RECLINER COVER	22 - SIDE COVER SCREW
4 - FOLD-TABLE CABLE ASSEMBLY	23 - SEAT CUSHION FRAME SIDE COVER

5 - HEADREST SLEEVE - SLAVE
6 - HEADREST
7 - HEADREST SLEEVE - MASTER

8 - SEAT BACK PANEL
9 - SCREWS (2)

10 - SEAT BACK FRAME ASSEMBLY
11 - SEAT BACK TO RECLINER BOLTS (4) 48 N.m (35 ft. lbs.)
12 - RETRACTOR BEZEL SCREW
13 - RECLINER - INBOARD
14 - REAR MOUNTING BRACKET BOLTS (2) 28 N.m (21 ft. lbs.)
15 - REAR MOUNTING BRACKET BOLTS (2) 48 N.m (35 ft. lbs.)

16 - CONNECTING ROD
17 - REAR MOUNTING BRACKET BOLT 28 N.m (21 ft. lbs.)
18 - RECLINER - OUTBOARD
19 - SCREWS

24 - STOW PIVOT BOLTS (2) 28 N.m (21 ft. lbs.)
25 - SEAT CUSHION FRAME SIDE COVER
26 - RECLINER CABLE ASSEMBLY
27 - RECLINER HANDLE BRACKET SCREWS (2)
28 - RECLINER HANDLE
29 - PIVOT LEG TO CUSHION BOLTS (2) 28 N.m (21 ft. lbs.)

30 - FRONT PIVOT MOUNTING LEG BRACKET
31 - SEAT CUSHION FRAME ASSEMBLY
32 - RISER COVER ASSEMBLY

33 - RISER COVER SCREW

34 - RISER COVER SCREWS (2)
35 - PIVOT LEG TO BRACKET BOLTS (2) 28 N.m (21 ft. lbs.)

36 - PIVOT LEG TO BRACKET WASHERS (2)
37 - SEAT CUSHION/COVER ASSEMBLY

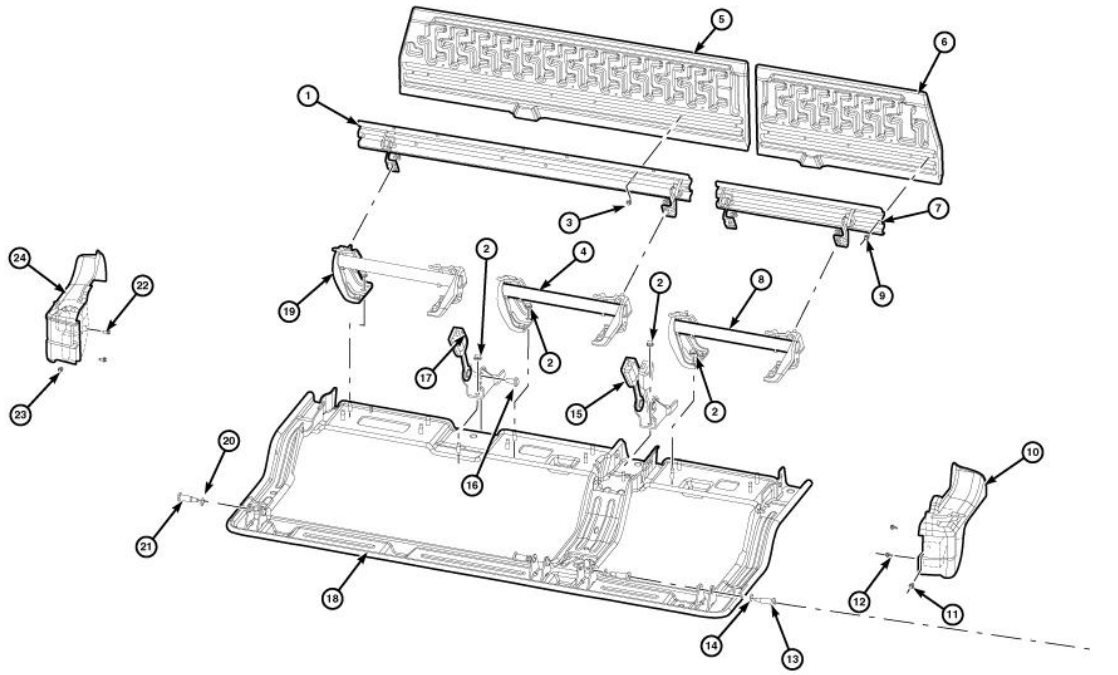

Fig. 645: Exploded View Of Rear Seat Mounting Brackets - Mega Cab
Courtesy of CHRYSLER GROUP, LLC

1 - FLIPPER PANEL BRACKET ASSEMBLY - 60	13 - PIVOT LEG TO BRACKET BOLTS - 40 (2) 28 N.m (21 ft. lbs.)
2 - MOUNTING NUTS (16) 28 N.m (21 ft. lbs.)	14 - PIVOT LEG TO BRACKET WASHERS - 40 (2)
3 - FLIPPER PANEL SCREWS - 60 (11)	15 - SEAT BUCKLE ASSEMBLY INBOARD - 40
4 - CENTER ISOFIX TUBE ASSEMBLY	16 - BELT BUCKLE BOLT 47 N.m (35 ft. lbs.)
5 - FLIPPER PANEL - 60	17 - SEAT BUCKLE ASSEMBLY CENTER
6 - FLIPPER PANEL - 40	18 - FLOOR MOUNTING BRACKET ASSEMBLY
7 - FLIPPER PANEL BRACKET ASSEMBLY - 40	19 - OUTBOARD ISOFIX TUBE ASSEMBLY - 40
8 - OUTBOARD ISOFIX TUBE ASSEMBLY - 40	20 - PIVOT LEG TO BRACKET WASHERS - 60 (2)
9 - FLIPPER PANEL SCREWS - 40 (9)	21 - PIVOT LEG TO BRACKET BOLTS - 60 (2) 28 N.m (21 ft. lbs.)
10 - RISER COVER ASSEMBLY	22 - RISER COVER SCREWS (2)
11 - RISER COVER SCREW	23 - RISER COVER SCREW
12 - RISER COVER SCREWS (2)	24 - RISER COVER ASSEMBLY

REMOVAL

REMOVAL

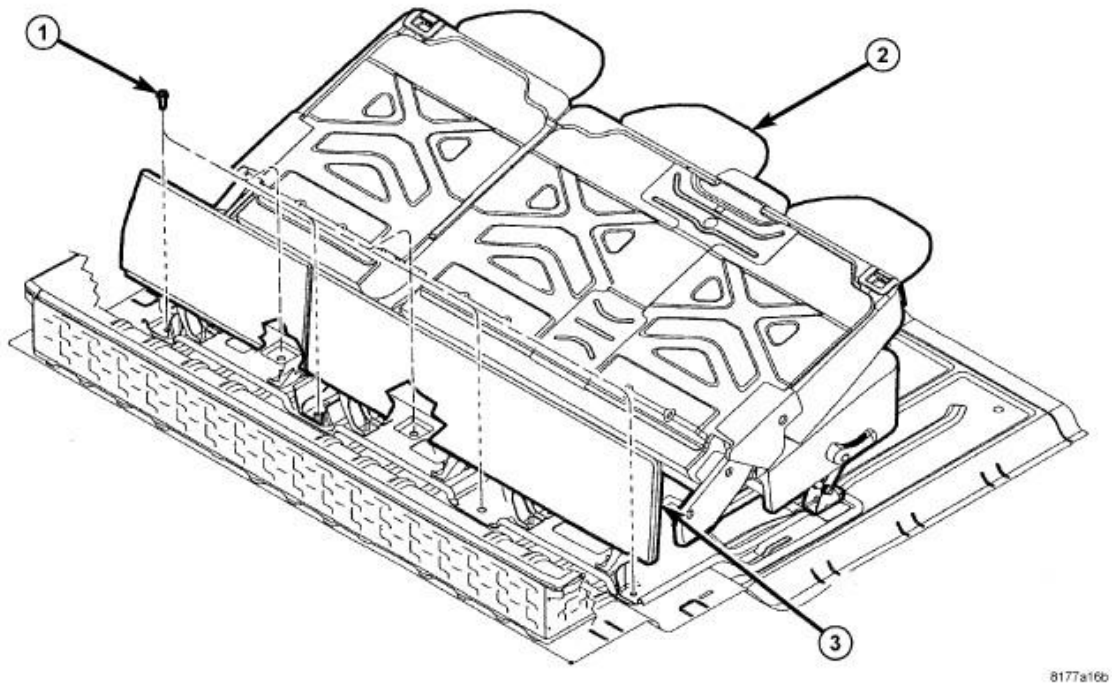

Fig. 646: Rear Fasteners
Courtesy of CHRYSLER GROUP, LLC

1. Fold the seat backs (2) forward.
2. Remove the filler panels (3).
3. Remove the rear bolts (1).

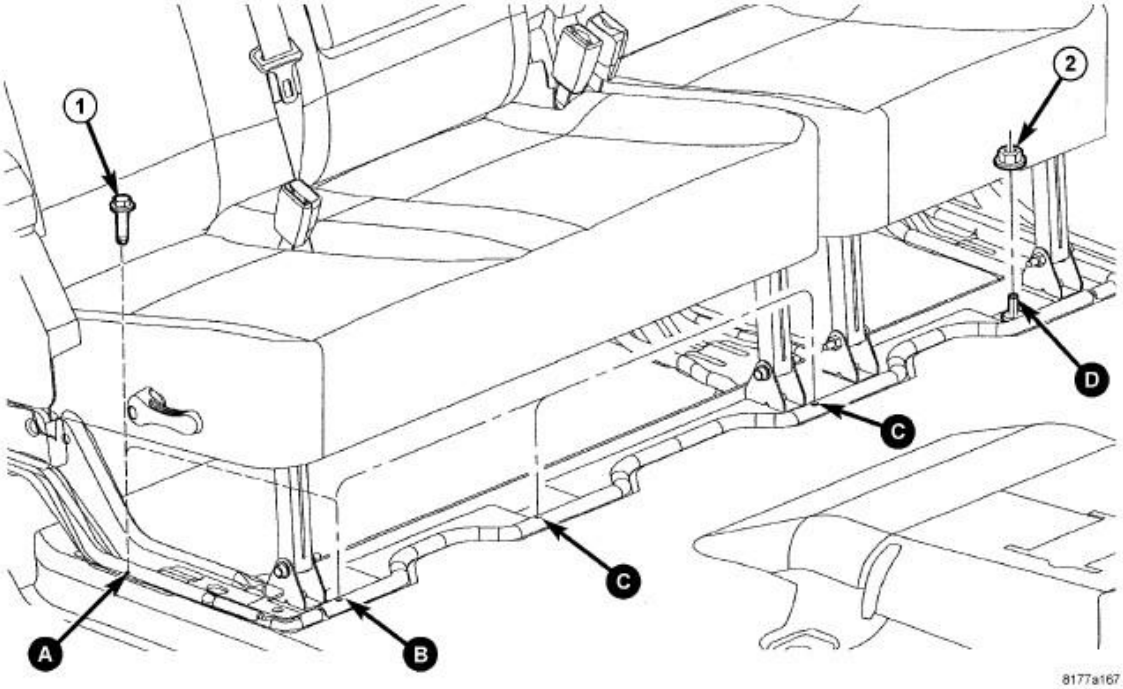

Fig. 647: Front Bolts & Nut
Courtesy of CHRYSLER GROUP, LLC

4. Remove the front bolts (1) and nut (2).

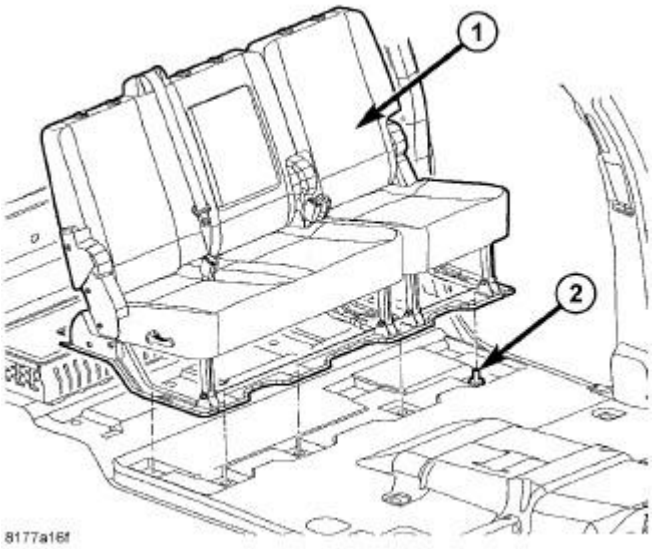

Fig. 648: Rear Seat Assembly

Courtesy of CHRYSLER GROUP, LLC

5. Remove the seat assembly (1).

INSTALLATION

INSTALLATION

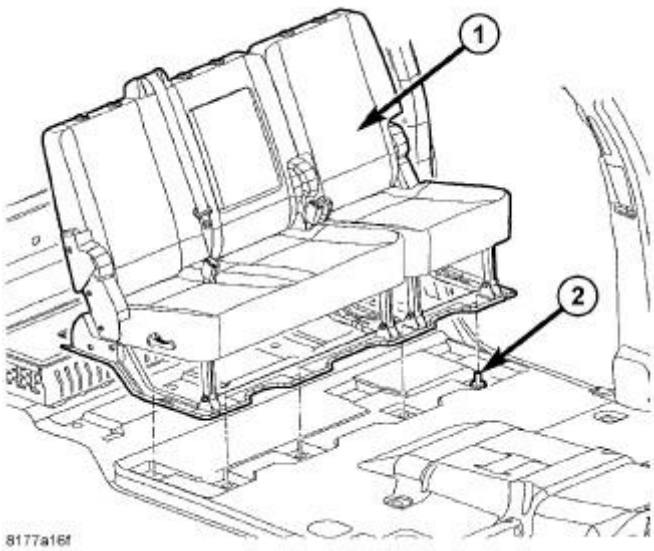

Fig. 649: Rear Seat Assembly
Courtesy of CHRYSLER GROUP, LLC

1. Install the seat assembly (1) into the vehicle and position over the front stud (2).

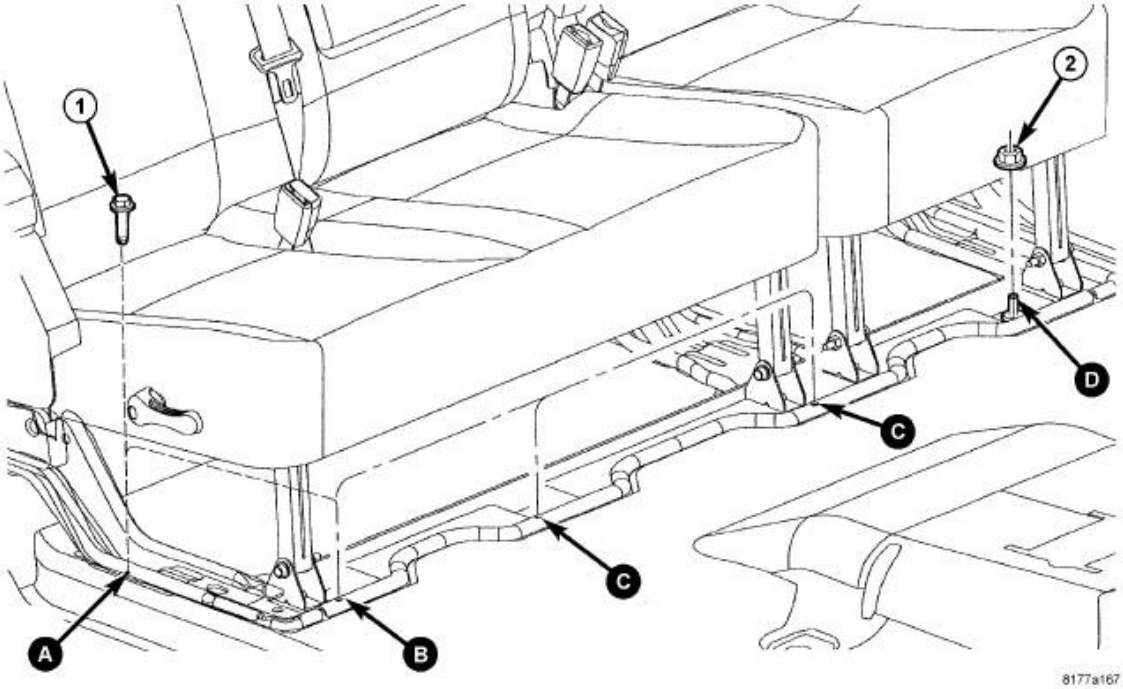

Fig. 650: Front Bolts & Nut
Courtesy of CHRYSLER GROUP, LLC

2. Install the nut (2) and bolts (1).
3. Tighten the fasteners to 47.5 N.m (35 ft. lbs.) using the sequence shown in illustration.

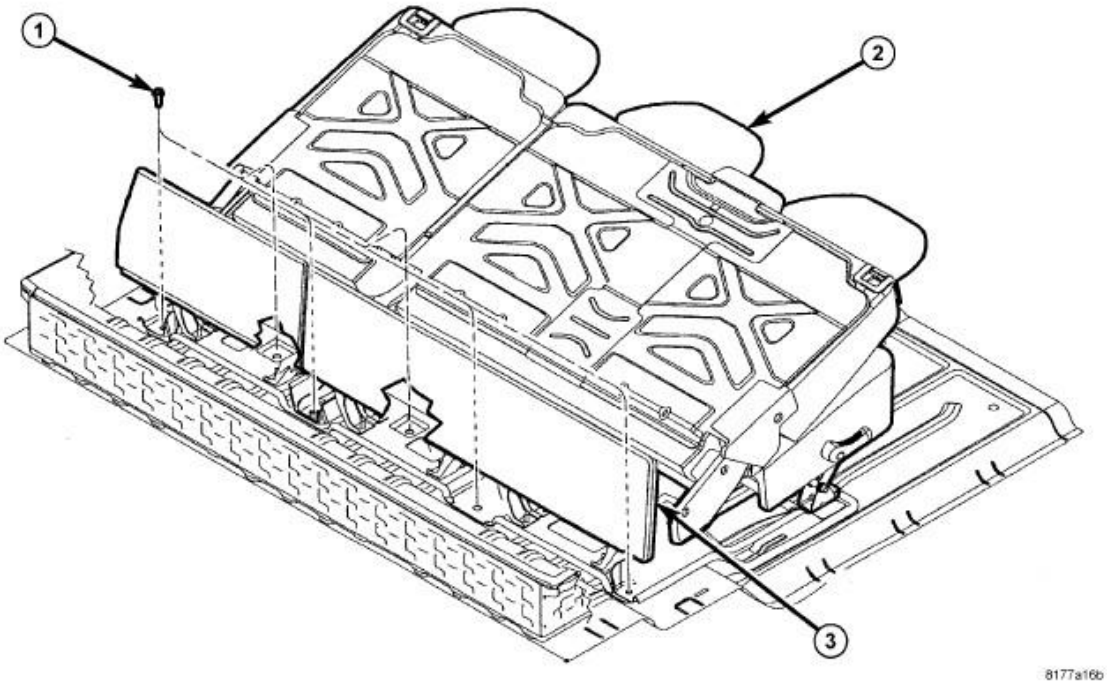

Fig. 651: Rear Fasteners
Courtesy of CHRYSLER GROUP, LLC

4. Install the rear bolts and tighten to 47.5 N.m (35 ft. lbs.).

STATIONARY GLASS

BACKLITE

REMOVAL

REMOVAL

MANUAL

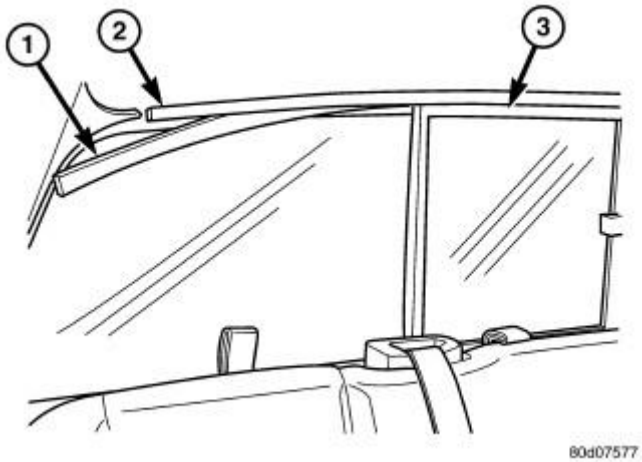

Fig. 652: Upper Run Channel, Frame & Vent Glass
Courtesy of CHRYSLER GROUP, LLC

1. Slide the upper run channel (1) out of the window frame (2).
2. Slide the vent glass (3) upward to remove from the lower window frame (2).
3. Lower the glass (3) out of the upper window frame (2) and remove.

CREW/QUAD CAB

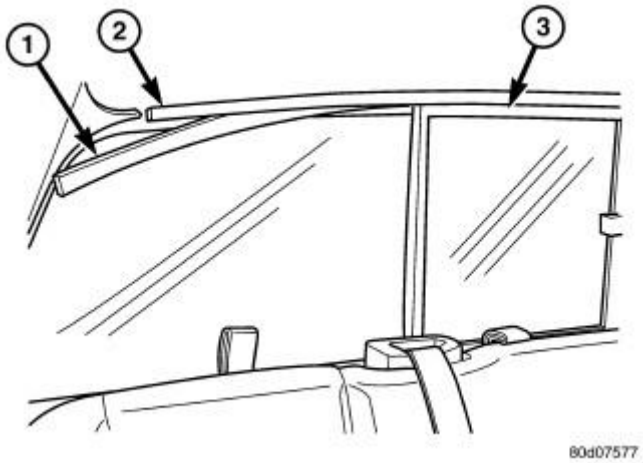

Fig. 653: Upper Run Channel, Frame & Vent Glass
Courtesy of CHRYSLER GROUP, LLC

1. Remove the rear seats. Refer to **SEAT, REAR, REMOVAL**.
2. Slide the upper run channel (1) out of the window frame (2).
3. Separate the cable housing block from the lower left glass run channel and disconnect the left side cable from the glass.
4. Slide the vent glass (3) upward to remove from the lower window frame (2).
5. Lower the glass (3) out of the upper window frame (2) and remove.
6. Disconnect the right side cable and remove the glass.

MEGA CAB

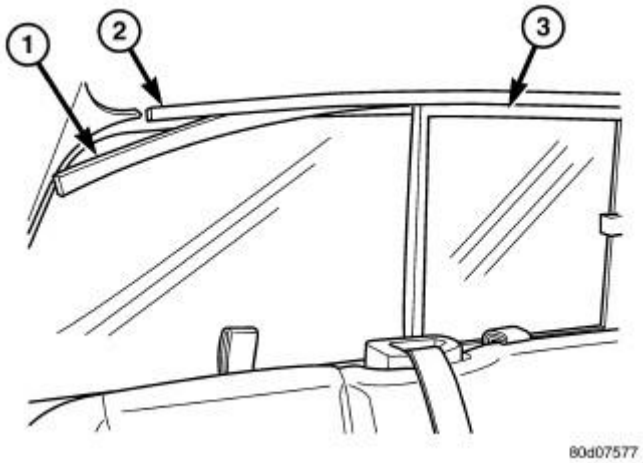

Fig. 654: Upper Run Channel, Frame & Vent Glass
Courtesy of CHRYSLER GROUP, LLC

1. Tumble the rear seat assembly into the full down position.
2. Slide the upper run channel (1) out of the window frame (2).

3. Separate the cable housing block from the lower left glass run channel and disconnect the left side cable from the glass.
4. Slide the vent glass (3) upward to remove from the lower window frame (2).
5. Lower the glass (3) out of the upper window frame (2) and remove.
6. Disconnect the right side cable and remove the glass.

INSTALLATION

INSTALLATION

MANUAL

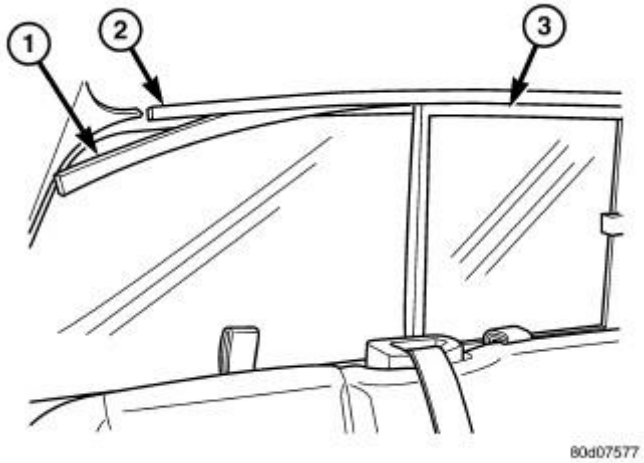

Fig. 655: Upper Run Channel, Frame & Vent Glass
Courtesy of CHRYSLER GROUP, LLC

1. Slide the vent glass (3) upper edge into window frame (2) and insert the lower edge into the lower molding.
2. Position the upper run channel (1) into the window frame (2) and slide it into place.
3. Verify vent glass (3) operation.

CREW/QUAD CAB

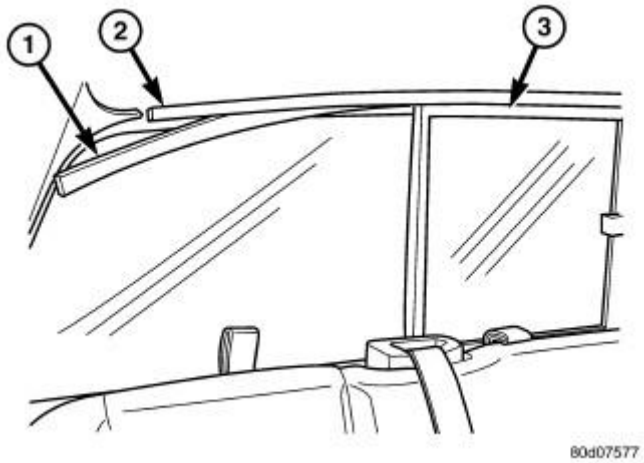

Fig. 656: Upper Run Channel, Frame & Vent Glass
Courtesy of CHRYSLER GROUP, LLC

1. Position the glass (3) and connect the right side cable.
2. Slide the vent glass (3) upper edge into window frame (2) and insert the lower edge into the lower molding.
3. Connect the left side cable to the glass and secure the cable housing block into the lower glass channel.
4. Position the upper run channel (1) into the window frame (2) and slide it into place.
5. Install the rear seats. Refer to **SEAT, REAR, INSTALLATION**.

MEGA CAB

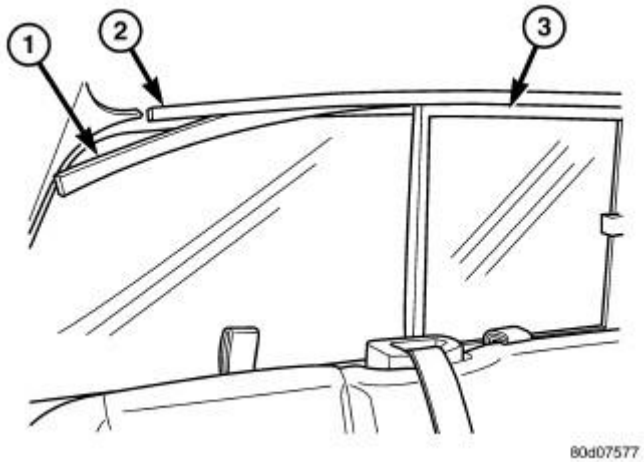

Fig. 657: Upper Run Channel, Frame & Vent Glass
Courtesy of CHRYSLER GROUP, LLC

1. Position the glass (3) and connect the right side cable.
2. Slide the vent glass (3) upper edge into window frame (2) and insert the lower edge into the lower molding.

3. Connect the left side cable to the glass and secure the cable housing block into the lower glass channel.
4. Position the upper run channel (1) into the window frame (2) and slide it into place.

BACKLITE, SLIDING

REMOVAL

REMOVAL

MANUAL

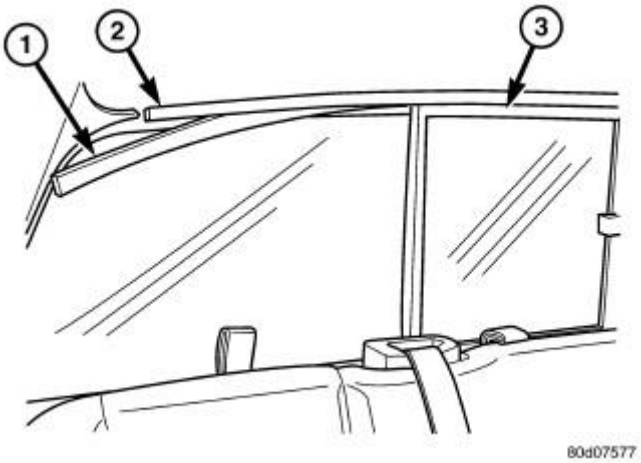

Fig. 658: Upper Run Channel, Frame & Vent Glass
Courtesy of CHRYSLER GROUP, LLC

1. Slide the upper run channel (1) out of the window frame (2).
2. Slide the vent glass (3) upward to remove from the lower window frame (2).
3. Lower the glass (3) out of the upper window frame (2) and remove.

CREW/QUAD CAB

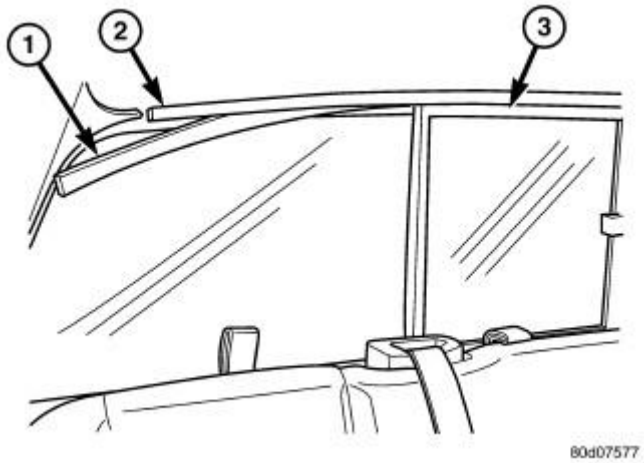

Fig. 659: Upper Run Channel, Frame & Vent Glass
Courtesy of CHRYSLER GROUP, LLC

1. Remove the rear seats. Refer to **SEAT, REAR, REMOVAL**.
2. Slide the upper run channel (1) out of the window frame (2).
3. Separate the cable housing block from the lower left glass run channel and disconnect the left side cable from the glass.
4. Slide the vent glass (3) upward to remove from the lower window frame (2).
5. Lower the glass (3) out of the upper window frame (2) and remove.
6. Disconnect the right side cable and remove the glass.

MEGA CAB

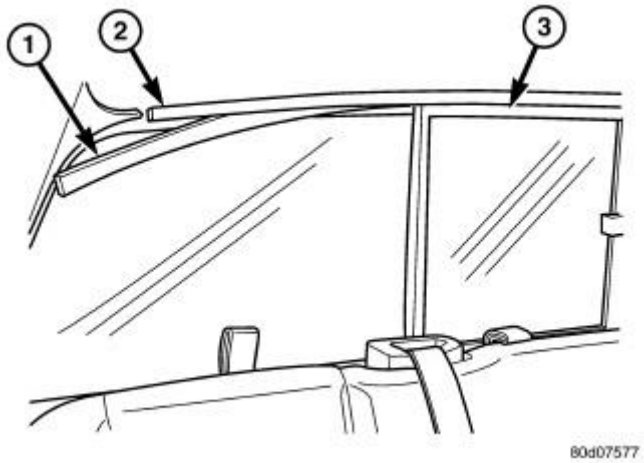

Fig. 660: Upper Run Channel, Frame & Vent Glass
Courtesy of CHRYSLER GROUP, LLC

1. Tumble the rear seat assembly into the full down position.
2. Slide the upper run channel (1) out of the window frame (2).

3. Separate the cable housing block from the lower left glass run channel and disconnect the left side cable from the glass.
4. Slide the vent glass (3) upward to remove from the lower window frame (2).
5. Lower the glass (3) out of the upper window frame (2) and remove.
6. Disconnect the right side cable and remove the glass.

INSTALLATION

INSTALLATION

MANUAL

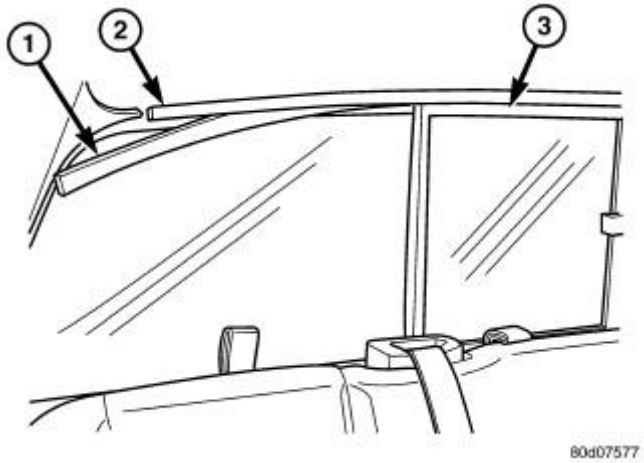

Fig. 661: Upper Run Channel, Frame & Vent Glass
Courtesy of CHRYSLER GROUP, LLC

1. Slide the vent glass (3) upper edge into window frame (2) and insert the lower edge into the lower molding.
2. Position the upper run channel (1) into the window frame (2) and slide it into place.
3. Verify vent glass (3) operation.

CREW/QUAD CAB

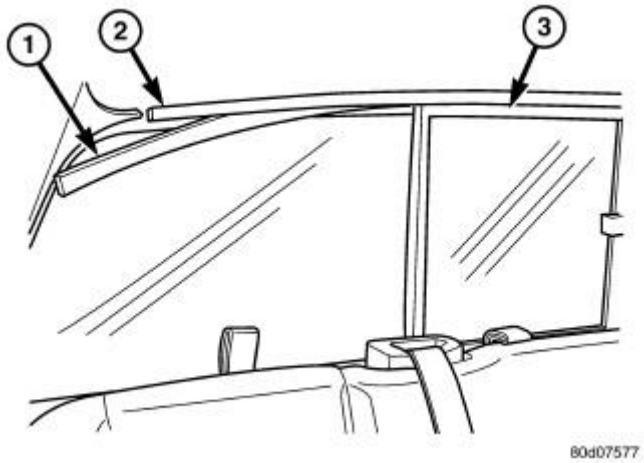

Fig. 662: Upper Run Channel, Frame & Vent Glass
Courtesy of CHRYSLER GROUP, LLC

1. Position the glass (3) and connect the right side cable.
2. Slide the vent glass (3) upper edge into window frame (2) and insert the lower edge into the lower molding.
3. Connect the left side cable to the glass and secure the cable housing block into the lower glass channel.
4. Position the upper run channel (1) into the window frame (2) and slide it into place.
5. Install the rear seats. Refer to **SEAT, REAR, INSTALLATION**.

MEGA CAB

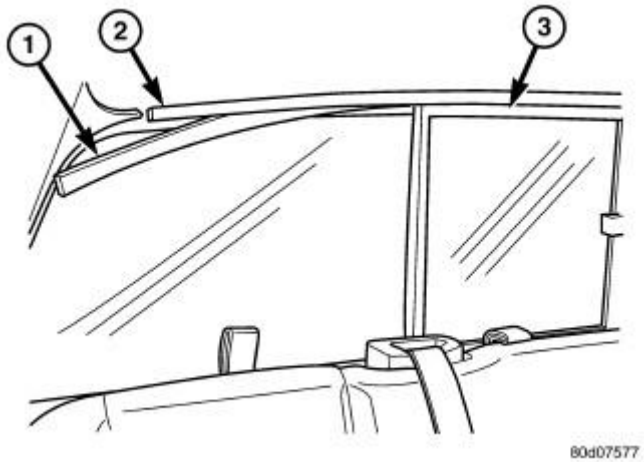

Fig. 663: Upper Run Channel, Frame & Vent Glass
Courtesy of CHRYSLER GROUP, LLC

1. Position the glass (3) and connect the right side cable.
2. Slide the vent glass (3) upper edge into window frame (2) and insert the lower edge into the lower molding.

3. Connect the left side cable to the glass and secure the cable housing block into the lower glass channel.
4. Position the upper run channel (1) into the window frame (2) and slide it into place.

REGULATOR, BACKLITE GLASS

REMOVAL

REMOVAL

1. Disconnect and isolate the battery negative cable.
2. Remove the rear cab back panel. Refer to **PANEL, CAB BACK TRIM, REMOVAL**.

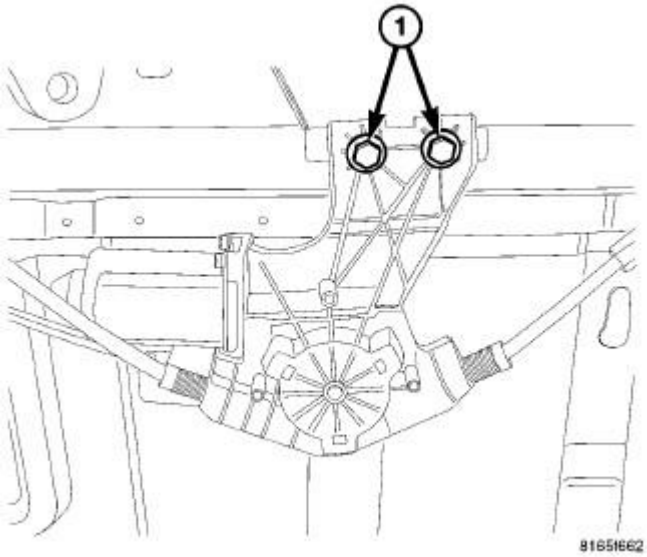

Fig. 664: Backlite Glass Regulator Mounting Bolts
Courtesy of CHRYSLER GROUP, LLC

3. Remove the two mounting bolts (1).
4. Disconnect the electrical connector to the power motor.

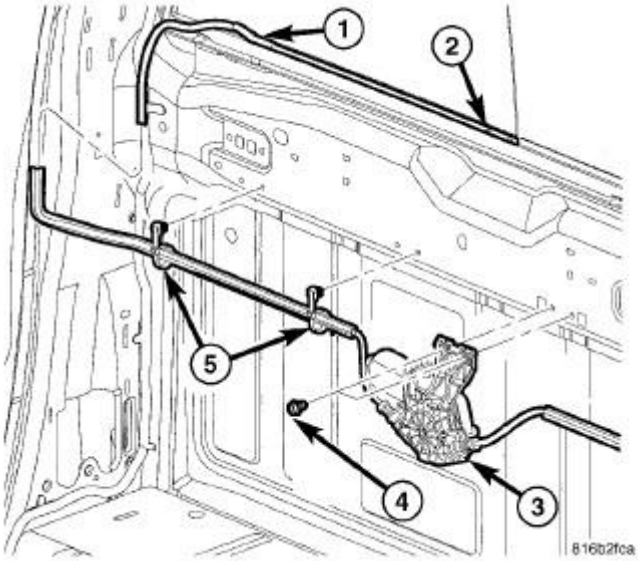

Fig. 665: Glass Track, Vent Glass, Regulator Assembly & Support Clips
Courtesy of CHRYSLER GROUP, LLC

5. Separate the cable housings from the glass track (1).
6. Disconnect the cable ends from the vent glass (2).
7. Separate the support clips (5) and remove the regulator assembly (3).

INSTALLATION

INSTALLATION

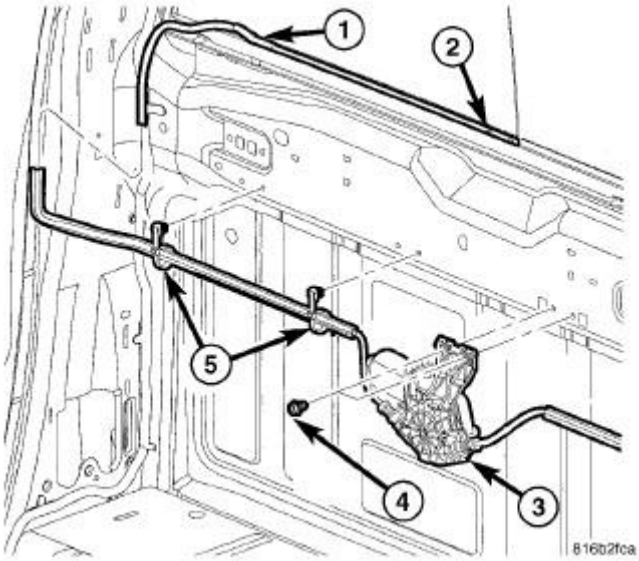

Fig. 666: Glass Track, Vent Glass, Regulator Assembly & Support Clips
Courtesy of CHRYSLER GROUP, LLC

1. Connect the cable ends to the vent glass (2).
2. Install the cable housings into the glass tracks (1).
3. Fasten the support clips (5).

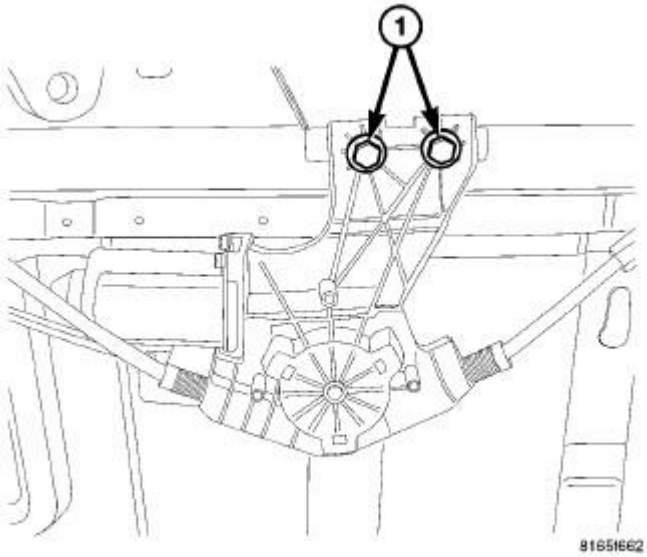

Fig. 667: Backlite Glass Regulator Mounting Bolts
Courtesy of CHRYSLER GROUP, LLC

4. Install the 2 mounting bolts (1).
5. Install the rear cab back panel. Refer to **PANEL, CAB BACK TRIM, INSTALLATION**.
6. Connect the battery negative cable.

WINDSHIELD

WARNING

WARNING

WARNING: Do not operate the vehicle within 24 hours of windshield installation. It takes at least 24 hours for urethane adhesive to cure. If it is not cured, the windshield may not perform properly in an accident.

Failure to follow these instructions may result in serious or fatal injury.

- **Urethane adhesives are applied as a system. Use glass cleaner, glass prep solvent, glass primer, PVC (vinyl) primer and pinch weld (fence) primer provided by the adhesive manufacturer. If not, structural integrity could be compromised.**
- **Chrysler LLC does not recommend glass adhesive by brand. Technicians should review product labels and technical data sheets,**

and use only adhesives that their manufactures warranty and will restore a vehicle to the requirements of fmvss 212. Technicians should also insure that primers and cleaners are compatible with the particular adhesive used.

- **Be sure to refer to the urethane manufacturer's directions for curing time specifications and do not use adhesive after its expiration date.**
- **Vapors that are emitted from the urethane adhesive or primer could cause personal injury or death. Use them in a well-ventilated area.**
- **Skin contact with urethane adhesive should be avoided. Personal injury or death may result.**
- **Always wear eye and hand protection when working with glass.**

CAUTION: Protect all painted and trimmed surfaces from coming in contact with urethane or primers.

Be careful not to damage painted surfaces when removing moldings or cutting urethane around windshield.

REMOVAL

REMOVAL

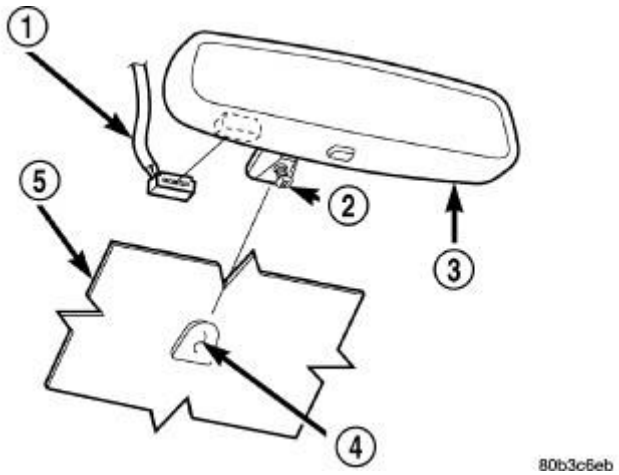

Fig. 668: Connector, Rear View Mirror, Screw, Support Button & Windshield
Courtesy of CHRYSLER GROUP, LLC

1. Remove inside rear view mirror (3). Refer to **MIRROR, REARVIEW, REMOVAL**.

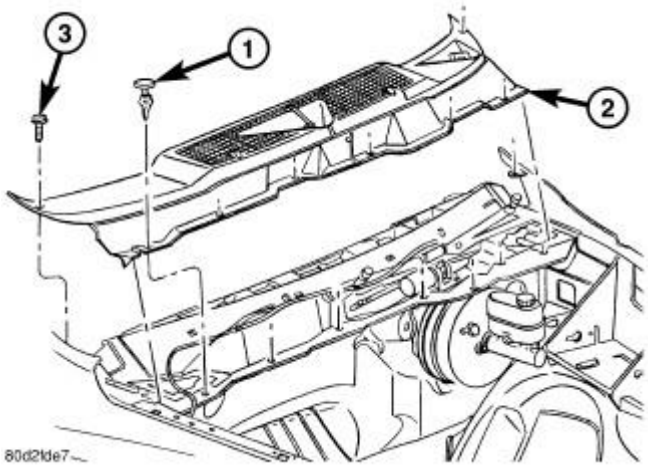

Fig. 669: Cowl Grille
Courtesy of CHRYSLER GROUP, LLC

2. Remove cowl grille (2). Refer to **COVER, COWL PANEL, REMOVAL**.

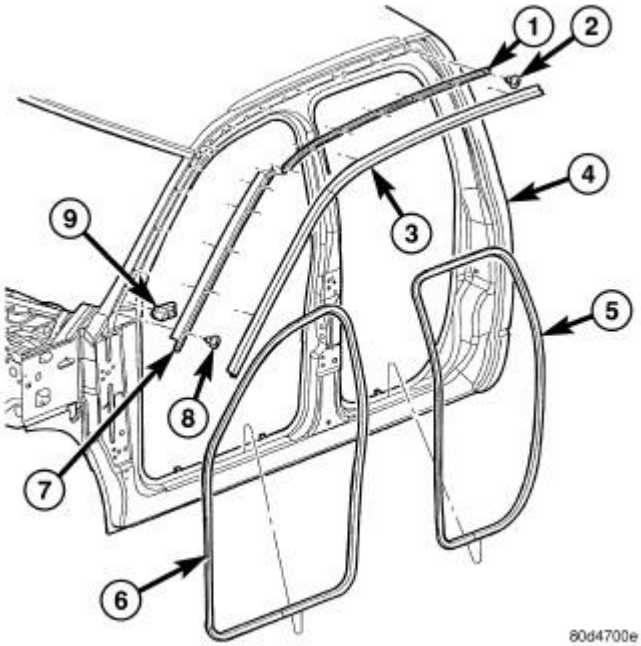

Fig. 670: Door Opening Weatherstrips/Seals
Courtesy of CHRYSLER GROUP, LLC

3. Remove the A-pillar weatherstrip retainer (1).

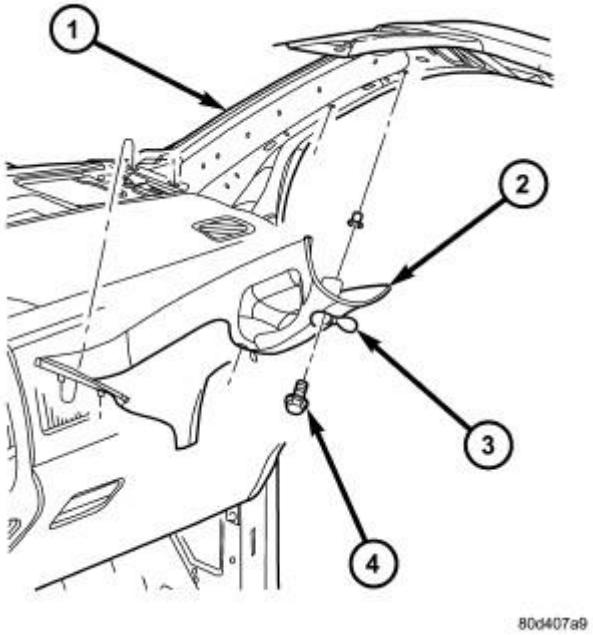

Fig. 671: A-Pillar Trim/Grab Handle
Courtesy of CHRYSLER GROUP, LLC

4. Remove the A-pillar trim panels (2). Refer to **PANEL, A-PILLAR TRIM, WITH GRAB HANDLE, REMOVAL**.

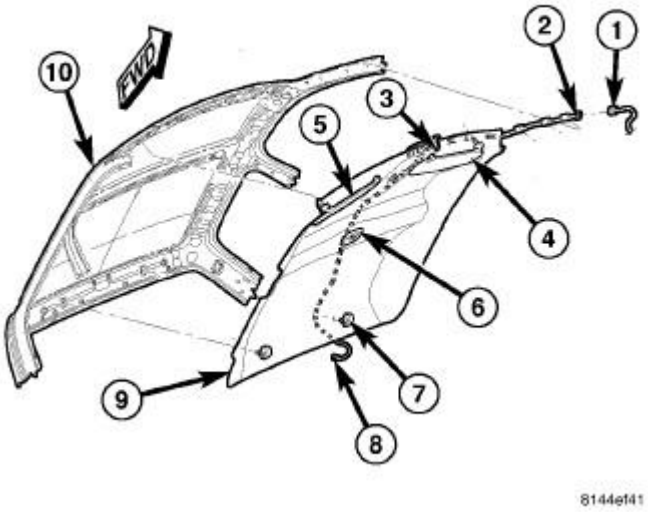

Fig. 672: Head Liner-Quad Cab
Courtesy of CHRYSLER GROUP, LLC

5. Lower the headliner (9) as needed and using windshield removal tool such as an extractor or equivalent, start at the rear section of the glass and work around the parameter to remove urethane. A pneumatic

cutting device can be used but is not recommended. Refer to **HEADLINER, REMOVAL**.

6. Separate windshield from vehicle.

INSTALLATION

INSTALLATION

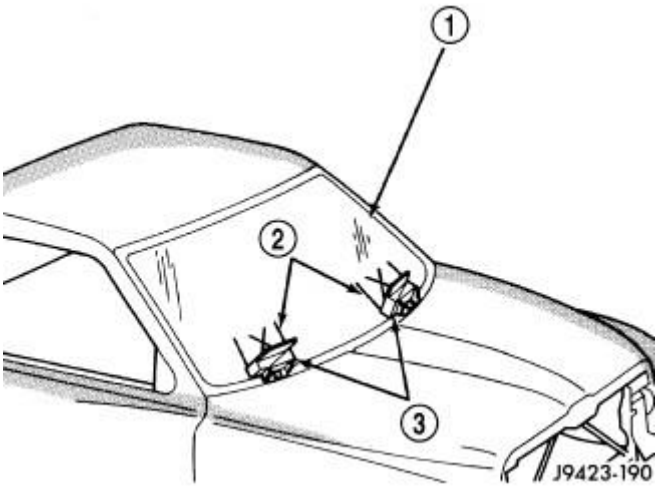

Fig. 673: Windshield & Support Spacers
Courtesy of CHRYSLER GROUP, LLC

WARNING: Allow the urethane at least 24 hours to cure before returning the vehicle to use.

CAUTION: Roll down the left and right front door glass and open the rear glass slider (if available) before installing windshield. This is to avoid pressurizing the passenger compartment if a door is slammed before the urethane is cured. The potential for water leaks can result.

The windshield fence should be cleaned of most of its old urethane bonding material. A small amount of old urethane, approximately 1-2 mm in height, should remain on the fence. Do not grind off or completely remove all old urethane from the fence, the paint finish and bonding strength will be adversely affected.

1. Place replacement windshield (1) into windshield opening and position glass in the center of the opening against the support spacers (3). Mark the outside surface of the glass at the support spacers (3) with a grease pencil or pieces of masking tape and ink pen to use as a reference (2) for installation. Remove replacement windshield from windshield opening.

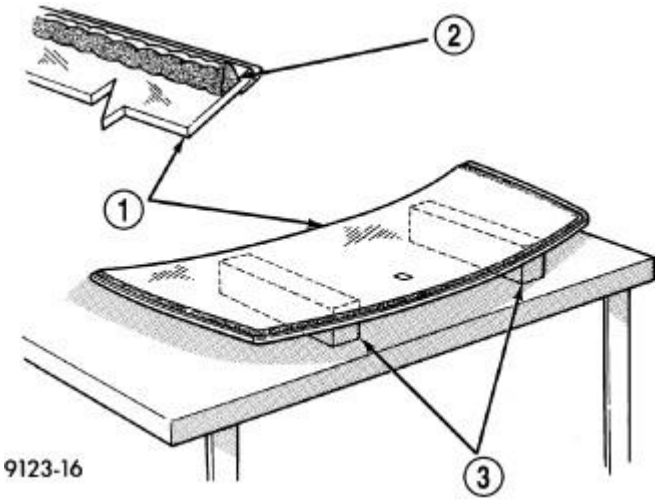

Fig. 674: Windshield, Blocks & Glass Primer
Courtesy of CHRYSLER GROUP, LLC

2. Position the windshield (1) inside up on a suitable work surface with two padded, wood 10 cm by 10 cm by 50 cm (4 in. by 4 in. by 20 in.) blocks (3), placed parallel 75 cm (2.5 ft.) apart.
3. Clean inside of windshield with MOPAR® Glass Cleaner and lint-free cloth.
4. Apply clear glass primer 25 mm (1 in.) wide around perimeter of windshield and wipe with a new clean and dry lint- free cloth.
5. Apply black-out primer onto the glass using the windshield molding as a guide. The primer should be 15 mm (5/8 in.) wide on the top and sides of the glass and 25 mm (1 in.) on the bottom of windshield. Allow at least three minutes drying time.

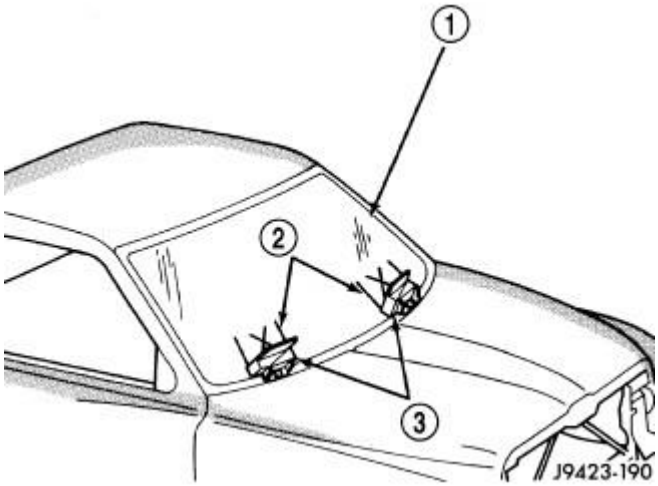

Fig. 675: Windshield & Support Spacers
Courtesy of CHRYSLER GROUP, LLC

6. Locate **NEW** support spacers (3) on support brackets and adjust to lowest height.

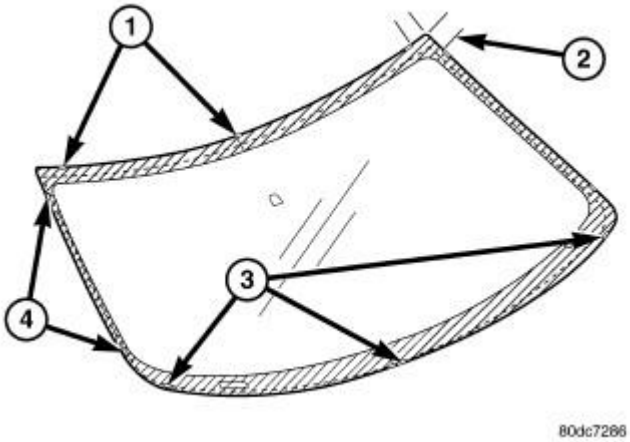

Fig. 676: Positioning Foam Spacers
Courtesy of CHRYSLER GROUP, LLC

7. Position seven new foam spacers (4 and 3) on the inside surface of the windshield, flush with the lower and side edges.
8. Position three new foam spacers (1) on the inside surface of the windshield, at a minimum distance of 3 mm (0.12 in.) from the top edge of the windshield.

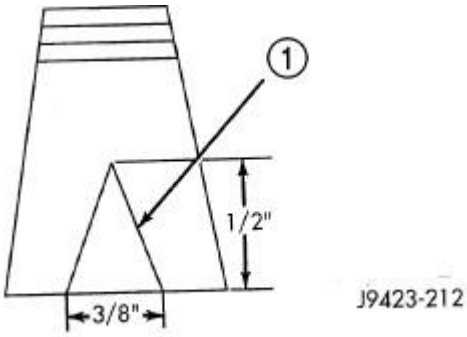

Fig. 677: Applicator Tip
Courtesy of CHRYSLER GROUP, LLC

9. The urethane bead should be shaped in a triangular cross-section, this can be achieved by notching the tip of the applicator.

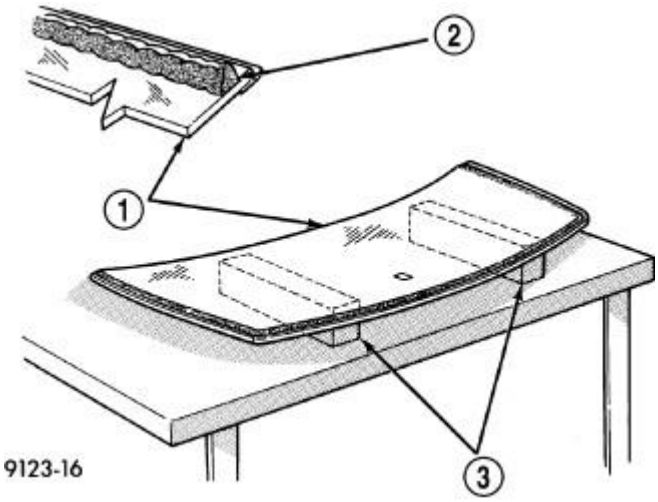

Fig. 678: Windshield, Blocks & Urethane
Courtesy of CHRYSLER GROUP, LLC

10. Apply a 13 mm (1/2 in.) high and 10 mm (3/8 in.) wide bead of urethane around the perimeter of windshield (2). At the top, apply the bead 7 mm (1/4 in.) inboard from the glass edge. On the other three sides apply the bead 14 mm (0.55 in.) inboard from the glass edge.

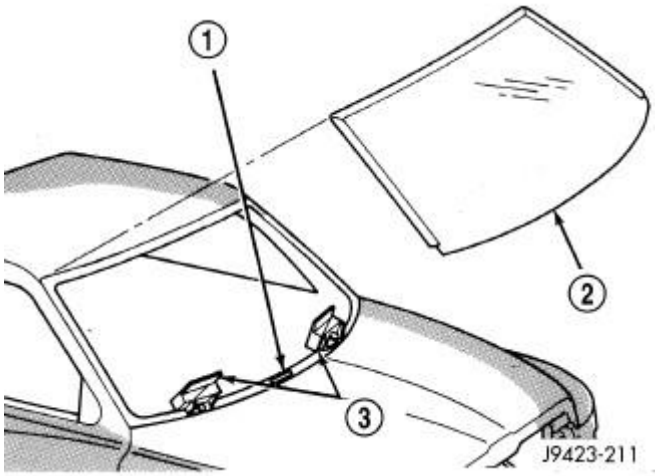

Fig. 679: Installing Windshield
Courtesy of CHRYSLER GROUP, LLC

11. With the aid of a helper, position the windshield (2) over the windshield opening. Align the reference marks at the bottom of the windshield to the support spacers (3).
12. Slowly lower windshield glass (2) to the fence opening guiding the lower corners into proper position. Beginning at the bottom and continuing to the top, push glass (2) onto fence along the A-Pillars. Push windshield (2) inward to the fence at the bottom corners.
13. Push windshield (2) upward, setting the windshield to roof gap to 1.5 mm (0.06 in.) to 3 mm (0.12 in.) and ratchet up the adjustable support brackets.
14. Using clean water, lightly mist the support spacers (3).

15. Clean excess urethane from exterior with MOPAR® Super Clean or equivalent.

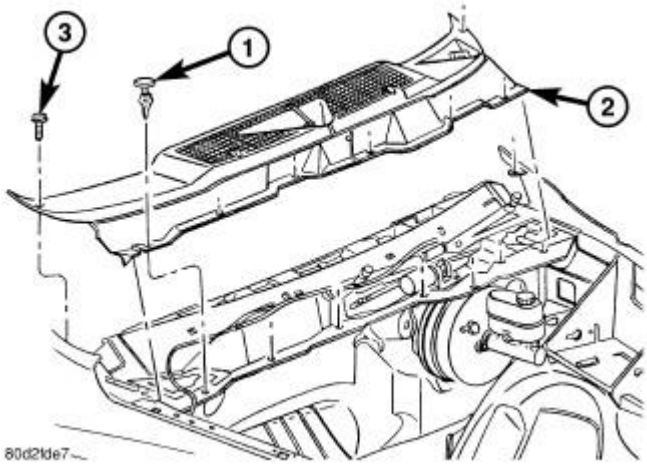

Fig. 680: Cowl Grille
Courtesy of CHRYSLER GROUP, LLC

16. Install cowl grille (2). Refer to **COVER, COWL PANEL, INSTALLATION**.

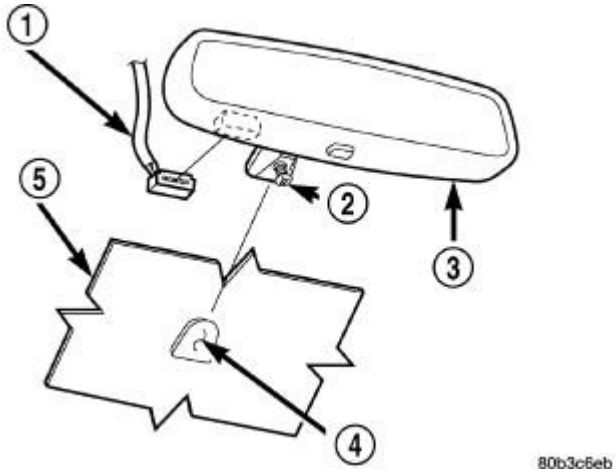

Fig. 681: Connector, Rear View Mirror, Screw, Support Button & Windshield
Courtesy of CHRYSLER GROUP, LLC

17. Install rear view mirror support bracket (4). Refer to **MIRROR, REARVIEW, INSTALLATION**.
18. Install rear view mirror (3). Refer to **MIRROR, REARVIEW, INSTALLATION**.

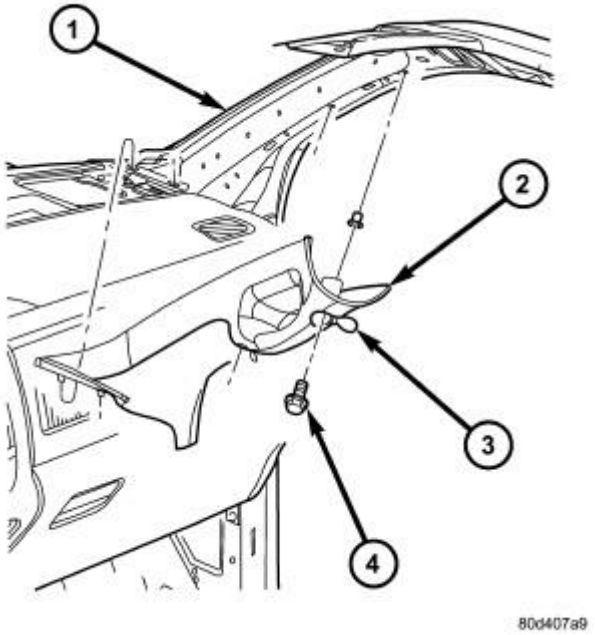

Fig. 682: A-Pillar Trim/Grab Handle
Courtesy of CHRYSLER GROUP, LLC

19. Install the A-pillar trim (2). Refer to **PANEL, A-PILLAR TRIM, WITH GRAB HANDLE, INSTALLATION**.

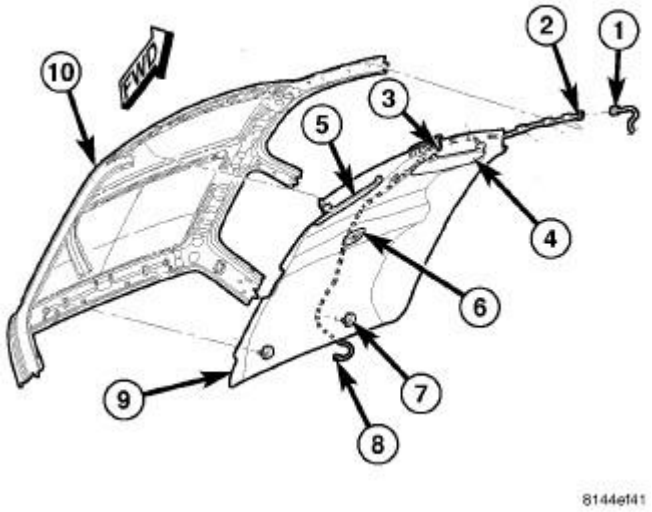

Fig. 683: Head Liner-Quad Cab
Courtesy of CHRYSLER GROUP, LLC

20. Install the headliner (6). Refer to **HEADLINER, INSTALLATION**.

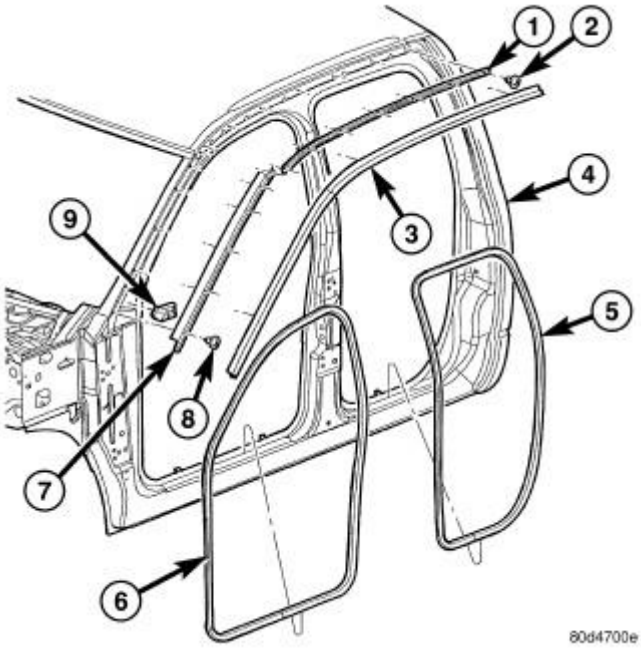

Fig. 684: Door Opening Weatherstrips/Seals
Courtesy of CHRYSLER GROUP, LLC

21. Install the A-pillar weatherstrip retainer (1).
22. After urethane has cured, remove tape strips and water test windshield to verify repair.

SUNROOF

DESCRIPTION

DESCRIPTION

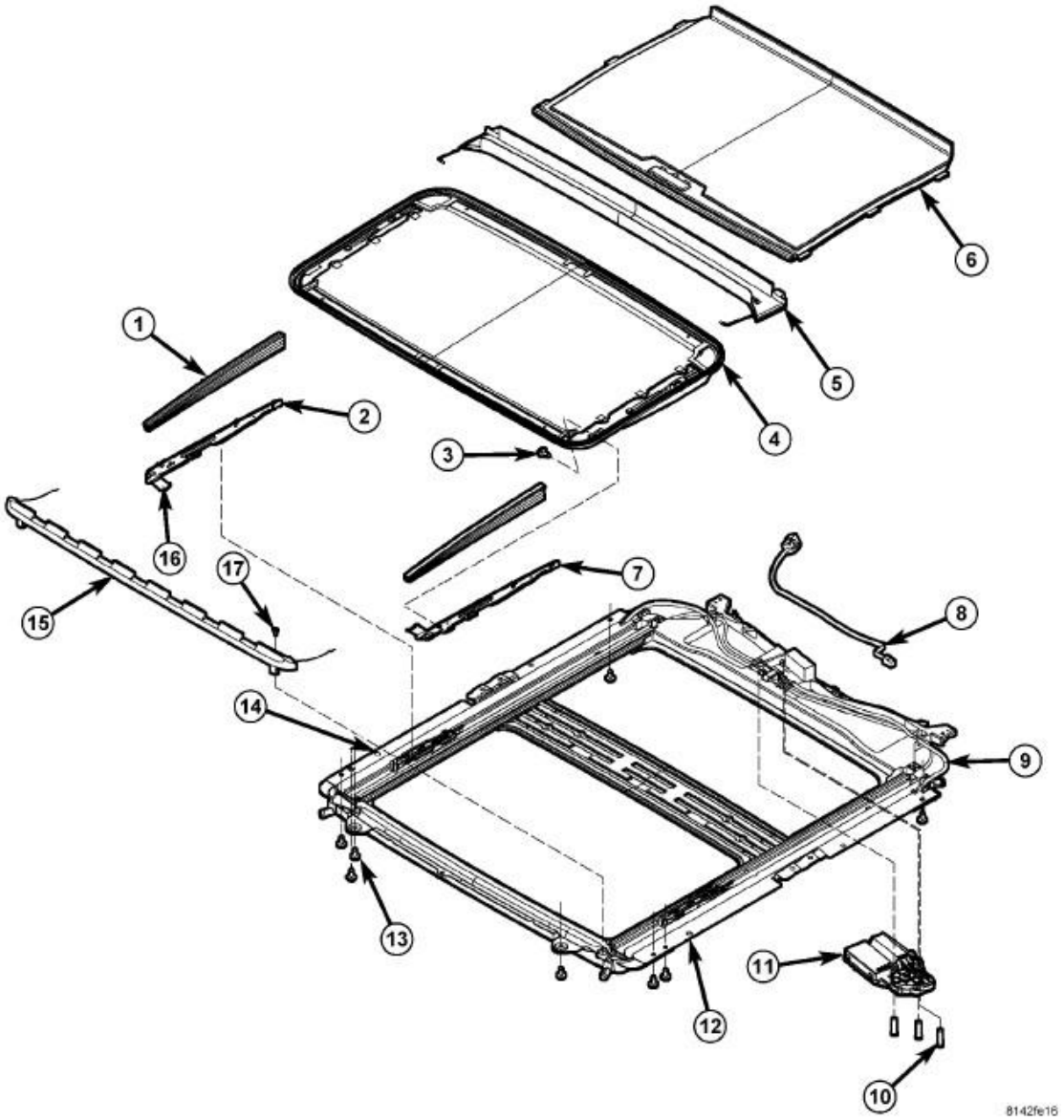

Fig. 685: Exploded View Of Sunroof Components
Courtesy of CHRYSLER GROUP, LLC

1 - MECHANISM COVERS (2)	10 - MOTOR FASTENERS (3)
2 - RIGHT HAND GLASS GUIDE	11 - SUNROOF MOTOR/MODULE ASSEMBLY
3 - GLASS FASTENERS (4)	12 - ALIGNMENT HOLE
4 - GLASS ASSEMBLY	13 - ASSEMBLY FASTENERS (8)
5 - DRAIN CHANNEL	14 - ALIGNMENT HOLE
6 - SUNSHADE	15 - WIND DEFLECTOR
7 - LEFT SUNROOF GLASS GUIDE	16 - GLASS GUIDE FOOT
8 - WIRE HARNESS	17 - WIND DEFLECTOR STRAP SCREWS (2)

The power sunroof system allows the sunroof to be opened, closed or placed in the vent position electrically by actuating a switch in the overhead console. The sunroof will operate normally with the key in any position, while the Accessory Delay system is active.

The sunroof glass panel tilts upward at the rear for ventilation and slides rearward under the roof when open. The glass panel seals flush with the roof in the closed position to eliminate wind noise. The sunroof includes a manual-sliding sunshade to cover the deep-tinted glass panel.

In addition to the standard power sunroof operation, this vehicle offers several additional features. There is an express (one-touch) opening and closing feature as well as Excessive Force Limitation (EFL). The EFL function detects obstacles trapped between the glass and the vehicle roof during a closing motion. Upon sensing an obstacle the EFL function will reverse direction of the glass to allow removal of the obstacle.

The main components of the power sunroof system are:

- The motor/module assembly
- The power sunroof glass and frame assembly
- The power sunroof switch
- The manual-sliding sunshade

OPERATION

OPERATION

This vehicle has a vent, tilt and slide power sunroof system with express (one-touch) open and closing feature. The sunroof system receives constant battery feed through a fuse in the Power Distribution Center (PDC). The sunroof will operate normally with the key in the "RUN" or "ACCESSORY" position. If the sunroof is moving when the key is turned to the START position (crank engine), all motions will stop. The sunroof will also stop a requested motion if the key is turned "OFF".

A combination push-button and rocker switch module mounted in the overhead console controls sunroof operation. The sunroof switch is a rocker design with a push button in the center of the two halves of the rocker. Pressing the rocker towards the front of the car commands the sunroof closed. Pressing the rocker towards the rear of the car commands the sunroof open. Pressing the center push button commands the sunroof up into the vent position (Rear of sunroof glass raises above the vehicle roof with glass still covering the sunroof opening). All switch commands operate with the glass starting in any position. for additional information, refer to **SWITCH, SUNROOF, OPERATION** .

An electronic control system, integral to the motor/module assembly, provides the express open and close functions. During express opening, the sunroof glass panel will first open to the "Comfort Stop" position. A second press of the "OPEN" button on the rocker switch will move the glass panel to the full open position. Pressing the "close" end of the rocker switch moves the sunroof glass panel to the full closed position. During express closing, anytime an obstacle is detected in the way of the glass, the motor will stop and reverse travel to avoid pinching an occupant's finger, ice in the track, etc. This function is called Excessive Force Limitation (EFL). There are two methods of overriding the EFL function.

1. When three EFL events occur without the glass being allowed to fully close, the next close attempt will only move while the close switch is continuously actuated. This allows the sunroof to be forced closed if multiple close attempts fail.
2. If the sunroof close switch is continuously actuated during an EFL event, through the reversal, and during a two second wait time, then continuing to hold the close switch will cause the roof to move towards close with the EFL protection disabled. This allows the sunroof to be forced closed if it is known that a reversal will occur. This secondary EFL override may be necessary when known debris (ice blockage for example) is preventing the glass panel from closing.

While in EFL override, the closing motion will cease if the sunroof switch is released at any time.

DIAGNOSIS AND TESTING

DIAGNOSIS AND TESTING - SUNROOF

For sunroof electrical system diagnosis and testing procedures. Refer to **DIAGNOSIS AND TESTING** .

WATER DRAINAGE AND WIND NOISE DIAGNOSIS

The sliding glass panel is designed to seal water entry with a snug fit between the roof and the seal. The fit can be checked by inserting a business card or equivalent, between the roof and the seal. The piece of paper should have some resistance when pulled out when the glass panel is in the closed position. The sunroof housing will drain off a minimum amount of water. Excessive wind noise could result if the gap clearances are exceeded. The sunroof glass panel may need to be adjusted. Refer to **GLASS, SUNROOF, ADJUSTMENTS**.

Adequate drainage is provided by a drain trough in the sunroof housing which encircles the sliding glass panel and leads to drain hoses. If a wet headliner or other water leak complaints are encountered, before performing any adjustments, first ensure that the drainage system is not plugged or disconnected. Use a pint container to pour water into the sunroof housing drain trough. If water flow is restricted, use compressed air to blow out any material plugging the drain system. Retest system again.

To further check for a disconnected drain hose:

NOTE: Care must be taken not to fold or kink the headliner upon removal.

1. Lower headliner as necessary to gain access to sunroof housing drain tubes. Refer to **HEADLINER, REMOVAL**.
2. Repair as necessary.

CHANNEL, SUNROOF DRAIN

REMOVAL

REMOVAL

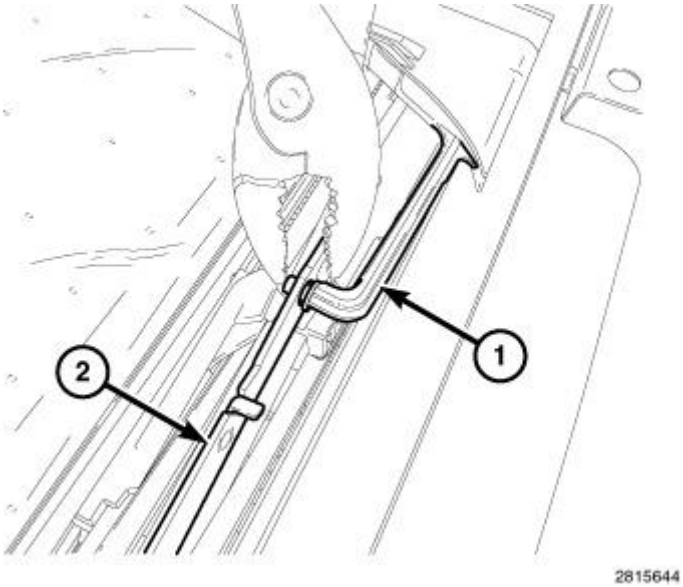

Fig. 686: Drain Channel Arm & Guide Mechanisms
Courtesy of CHRYSLER GROUP, LLC

NOTE: Left side shown in illustration, right side typical.

1. Remove glass panel. Refer to **GLASS, SUNROOF, REMOVAL**.
2. Using pliers, disengage the drain channel arm (1) from the guide mechanisms (2) one at a time by pushing the drain channel arm retaining tab through the retention hole located in the guide mechanism.**Do not use excessive force to remove.**

CAUTION: Disengage the drain channel arms one at a time. Do not disengage both sides at the same time.

CAUTION: Do not pull or pry the channel arms. Doing so will result in breaking the channel arms. Only disengage the channel arms as shown in illustration.

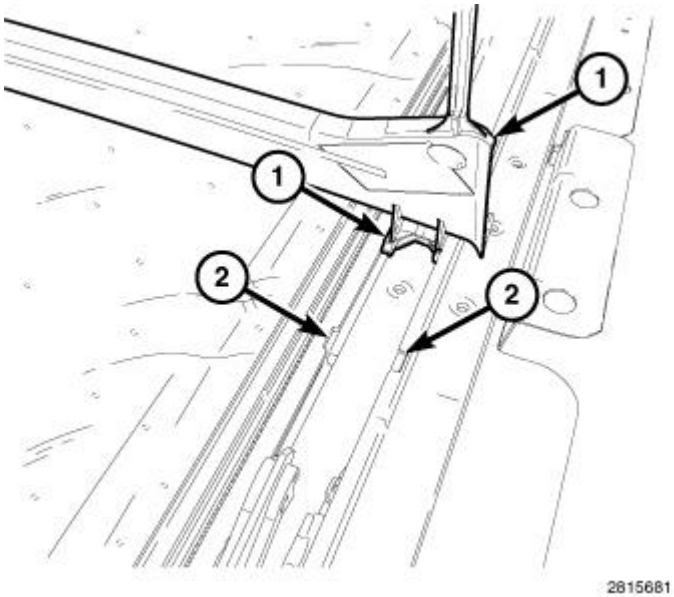

Fig. 687: Drain Channel & Notches
Courtesy of CHRYSLER GROUP, LLC

3. Carefully slide the drain channel (1) forward to the notches (2) in the track assy. Pull up on one side to disengage, repeat on the opposite side and remove the drain channel.

INSTALLATION

INSTALLATION

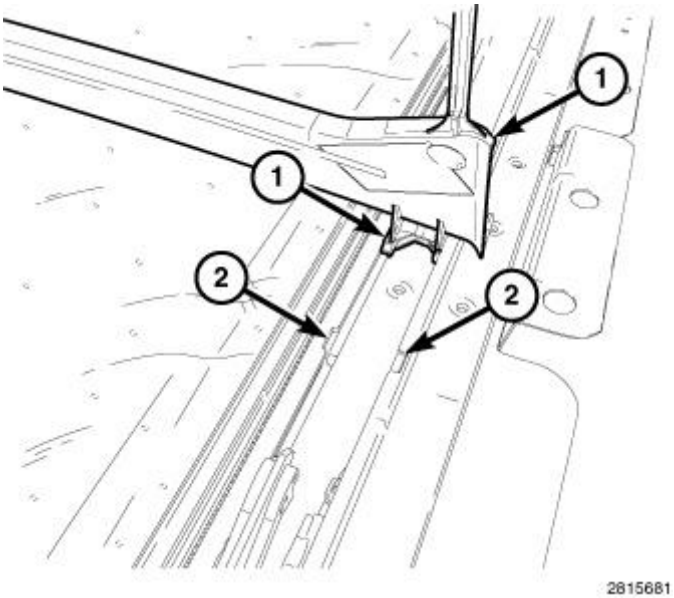

Fig. 688: Drain Channel & Notches
Courtesy of CHRYSLER GROUP, LLC

NOTE: Left side shown in illustration, right side typical.

1. Carefully position the drain channel (1) one side at a time into the notches (2) in the track assembly. Once positioned, push down until it engages into the track assembly. Repeat steps on the opposite side and slide the drain channel assembly rearward.

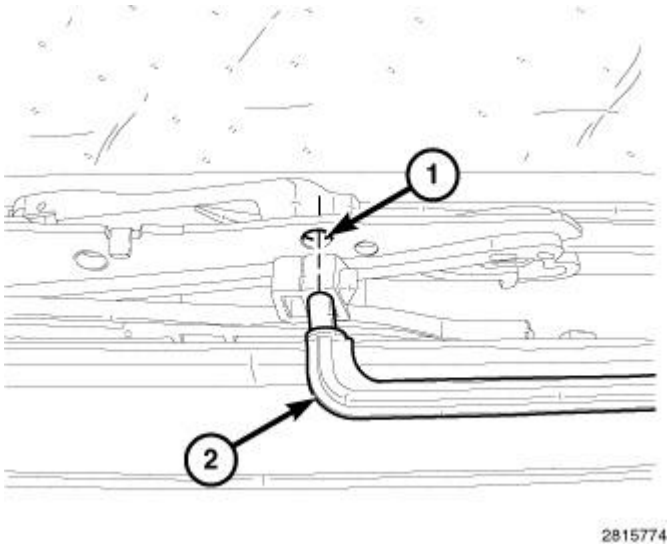

Fig. 689: Drain Channel Arms & Mechanism Holes
Courtesy of CHRYSLER GROUP, LLC

2. Install the drain channel arms (2) into the mechanism holes (1) one at a time.

CAUTION: Do not push the guide arms at the same time or you could break the guide mechanism. Do not use excessive force to install.

3. Install the sunroof glass. Refer to **GLASS, SUNROOF, INSTALLATION**.

COVER, SUNROOF MECHANISM

REMOVAL

REMOVAL

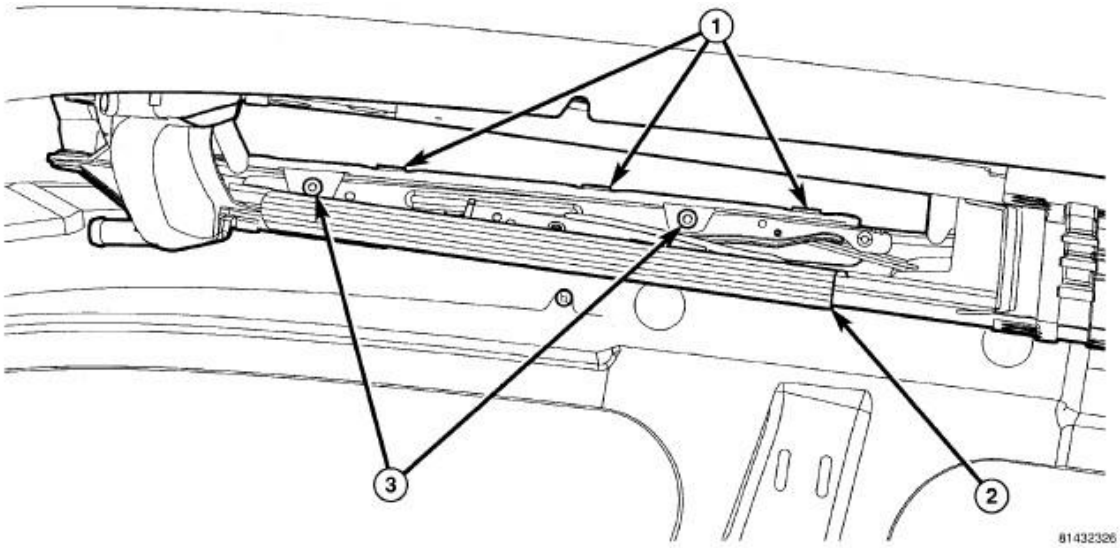

Fig. 690: Mechanism Covers, Tabs & Screws
Courtesy of CHRYSLER GROUP, LLC

1. Move the glass panel to the full closed position.
2. Slide sunshade rearward to the open position.
3. Separate the mechanism covers (2) from the tabs (1) on the glass panel.

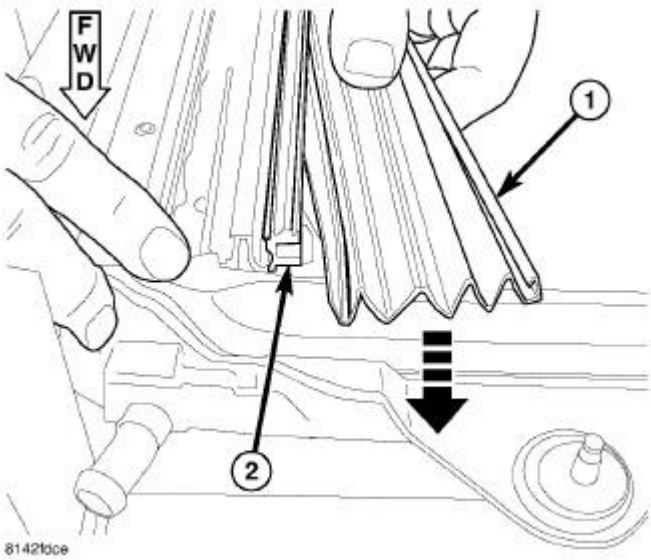

Fig. 691: Mechanism Covers & Frame
Courtesy of CHRYSLER GROUP, LLC

4. Hold both mechanism covers down and open the sunroof fully.
5. Slide the mechanism covers (1) out the front of the guide in the frame (2).

INSTALLATION

INSTALLATION

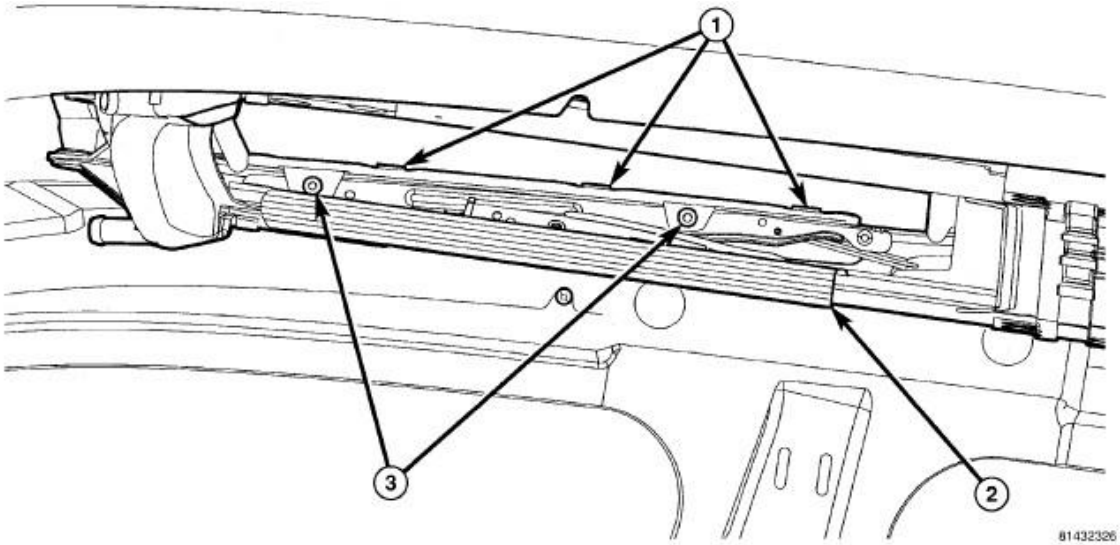

Fig. 692: Mechanism Covers, Tabs & Screws
Courtesy of CHRYSLER GROUP, LLC

1. With the sunroof in the open position, snap the mechanism cover (2) into the lower guide channel.
2. Hold down each cover and close the sunroof.
3. Snap the upper portion of the cover (2) into the retaining clips (1) on the glass panel between the locating features.

DEFLECTOR, WIND

REMOVAL

REMOVAL

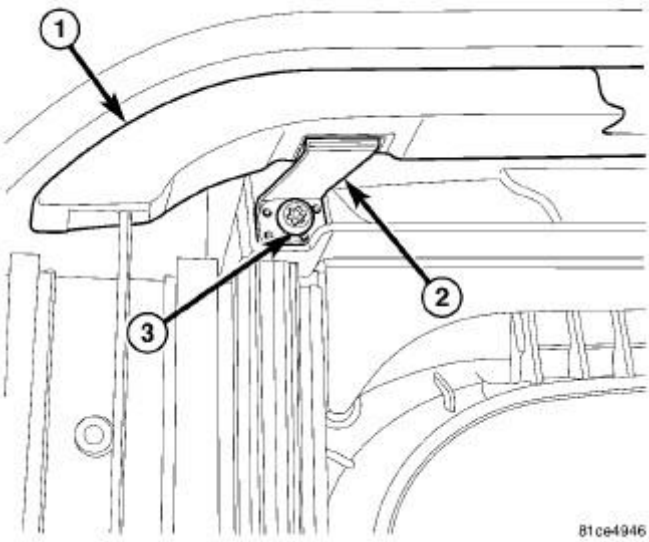

Fig. 693: Deflector Strap Screw
Courtesy of CHRYSLER GROUP, LLC

1. Open the sunroof fully.
2. Remove the strap screws (3) from the beam area (1) and release the strap (2).

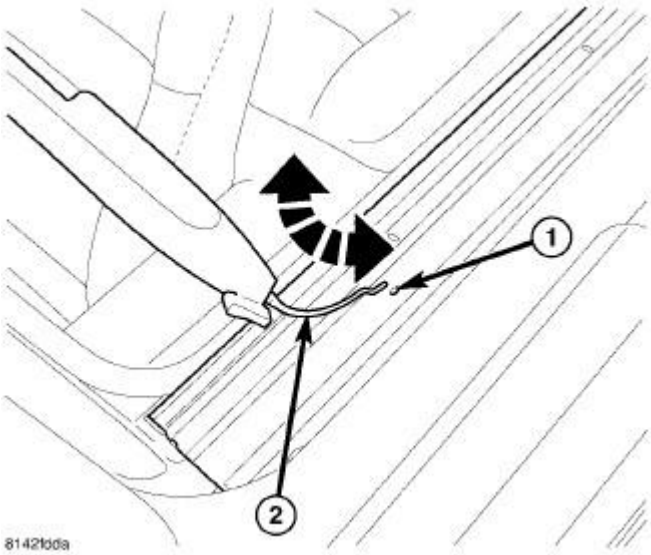

Fig. 694: Deflector Spring & Frame
Courtesy of CHRYSLER GROUP, LLC

3. Rotate the deflector up and remove springs (2) from the holes in the frame (1).

INSTALLATION

INSTALLATION

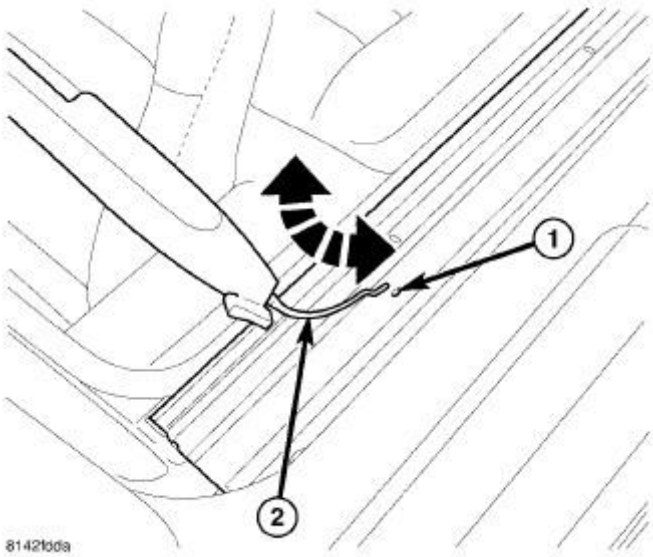

Fig. 695: Deflector Spring & Frame
Courtesy of CHRYSLER GROUP, LLC

1. Position the deflector spring arms (2) into the holes of the frame (1).

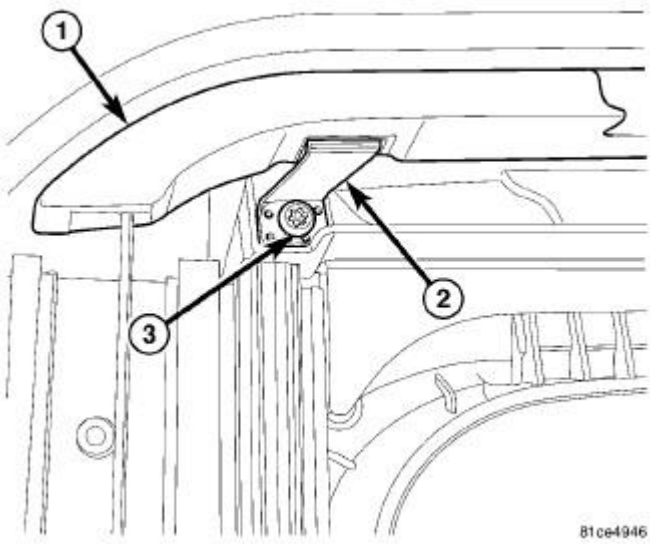

Fig. 696: Deflector Strap Screw
Courtesy of CHRYSLER GROUP, LLC

2. Rotate the deflector down, attach the straps (2) and install the strap screws (1).
3. Verify sunroof operation and alignment.

GLASS, SUNROOF

ADJUSTMENTS

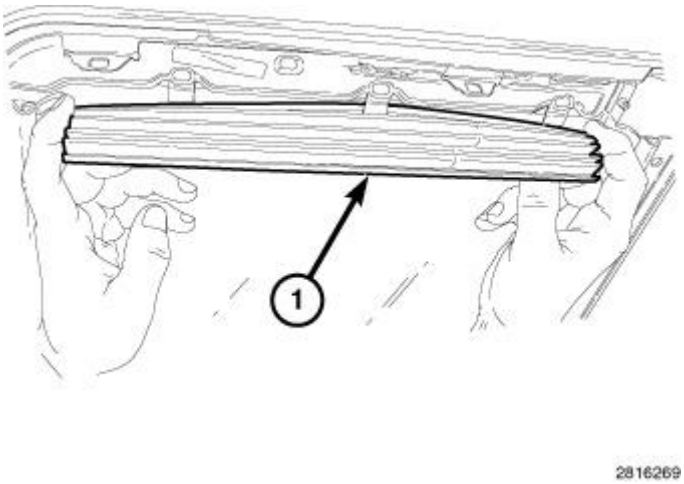

Fig. 697: Mechanism Cover
Courtesy of CHRYSLER GROUP, LLC

1. Move the sunshade rearward to the open position.
2. Separate the mechanism covers (1) from the tabs on the glass panel by pulling the top edge of the cover inboard from both sides.

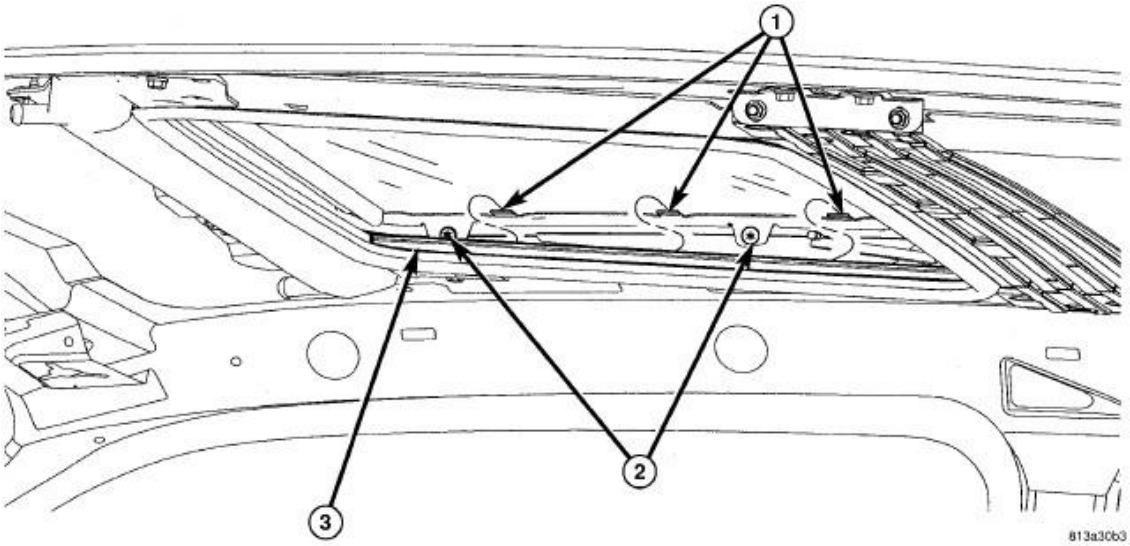

Fig. 698: Glass Fasteners
Courtesy of CHRYSLER GROUP, LLC

3. Verify the sunroof glass panel is in the fully closed position.
4. Loosen the forward attaching screws (2) on each side enough to permit the front of the glass to adjust up or down.
5. Adjust the front surface of the sunroof glass panel 0.00 mm to 2 mm (0.00 in. to 0.08 in.) **below** the top surface of the roof.
6. Tighten the front glass panel attaching screws to 5.5 N.m (49 in. lbs.).

7. Loosen the rear screws (2) on each side enough to make the rear adjustment.
8. Adjust the rear surface of the sunroof glass panel 0.00 mm to 2 mm (0.00 in. to 0.08 in.) **above** the top surface of the roof.
9. Tighten the rear glass panel attaching screws to 5.5 N.m (49 in. lbs.).
10. Check for proper fit by inserting a business card between the glass seal and roof. Slide the card around the entire perimeter of the glass. The effort to slide the card should be uniform through the entire perimeter. If the effort is not uniform, repeat the glass panel adjustment.

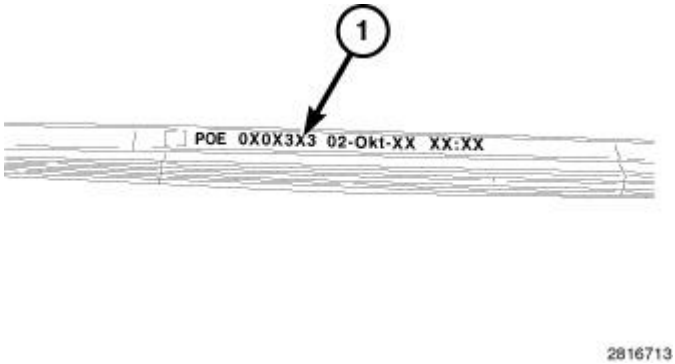

Fig. 699: Locating Top Of Mechanism Cover
Courtesy of CHRYSLER GROUP, LLC

11. Locate the top of the mechanism cover by printed text (1).

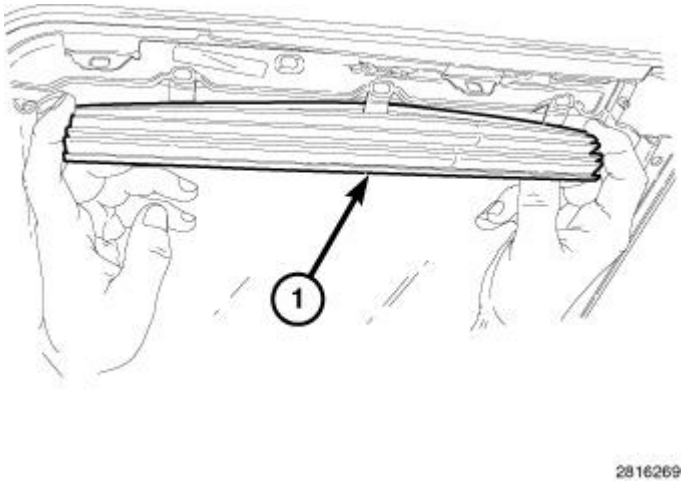

Fig. 700: Mechanism Cover
Courtesy of CHRYSLER GROUP, LLC

12. Position the mechanism covers (1) over the glass tabs between the locating features and seat fully by pushing the top edges of the cover outboard.
13. Verify sunroof operation and alignment.

REMOVAL

REMOVAL

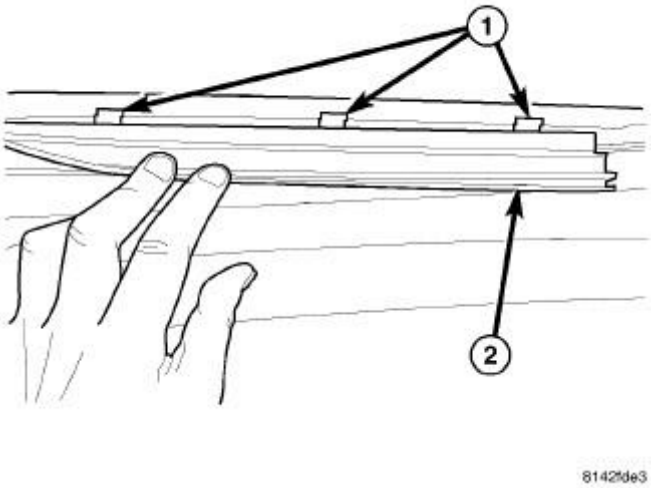

Fig. 701: Mechanism Cover & Tabs
Courtesy of CHRYSLER GROUP, LLC

1. Move the glass panel to the full closed position.
2. Slide sunshade rearward to the open position.
3. Separate the mechanism covers (2) from the tabs (1) on the glass panel.

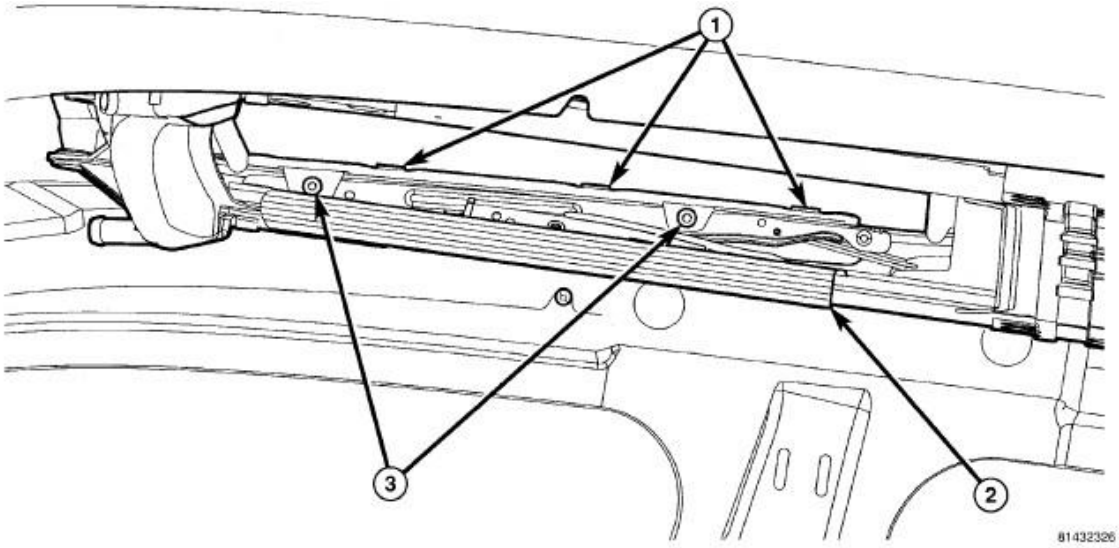

Fig. 702: Mechanism Covers, Tabs & Screws
Courtesy of CHRYSLER GROUP, LLC

4. Remove the glass panel screws (3).
5. Lift off glass panel and remove from vehicle.

INSTALLATION

INSTALLATION

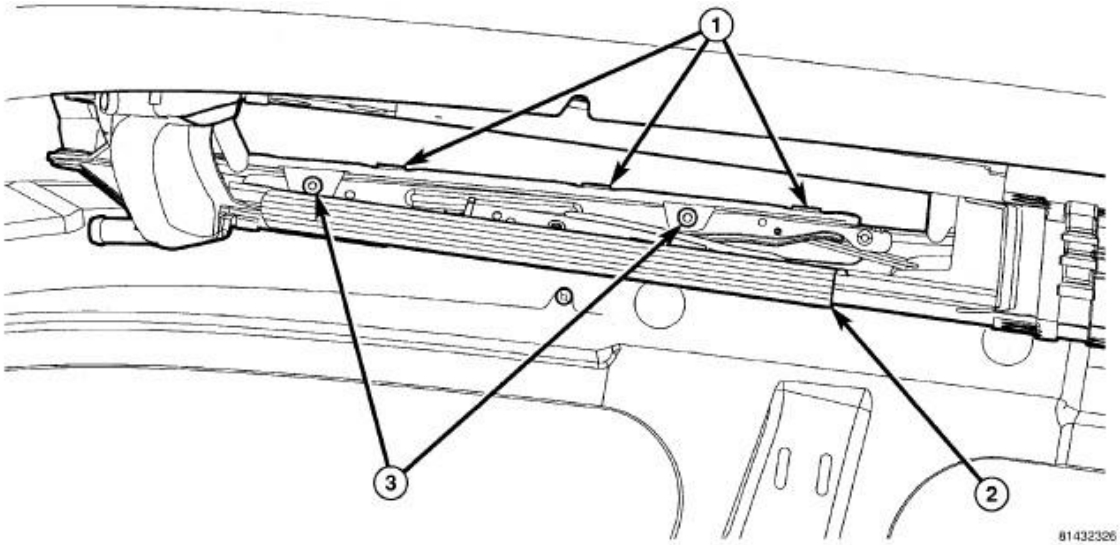

Fig. 703: Mechanism Covers, Tabs & Screws
Courtesy of CHRYSLER GROUP, LLC

1. Position glass panel on to mechanism lift arms.

CAUTION: Verify that the retaining tabs are located on the INSIDE of the guide mechanism arms.

2. Start the attaching screws (3).
3. Connect a 12v power supply and verify that the sunroof is in the closed position.
4. Adjust sunroof glass to fit flush with roof line. Refer to **GLASS, SUNROOF, ADJUSTMENTS**.
5. Tighten the screws (3) to 3.5 N.m (30 in. lbs.).
6. Position the mechanism covers (2) over the glass tabs (1) between the locating features and seat fully.
7. Verify sunroof operation and alignment.

GUIDE, SUNROOF, GLASS

REMOVAL

REMOVAL

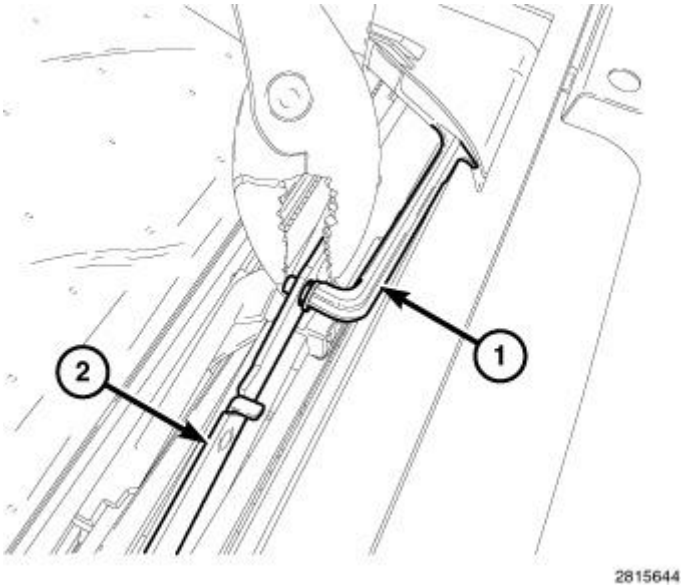

Fig. 704: Drain Channel Arm & Guide Mechanisms
Courtesy of CHRYSLER GROUP, LLC

NOTE: Left side shown in illustration, right side typical.

1. Open the sunroof into the "vent" position.
2. Turn off the ignition and disconnect the negative battery cable to disable the sunroof operation.
3. Remove the glass panel. Refer to **GLASS, SUNROOF, REMOVAL**.
4. Separate the drain channel arms (1) from the guide mechanisms (2) one at a time.

CAUTION: Disengage the drain channel arms one at a time. Do not disengage both sides at the same time.

CAUTION: Do not pry the guide arms apart at the same time, damage to the guide mechanism may occur.

5. Slide the drain channel rearward out of the way.

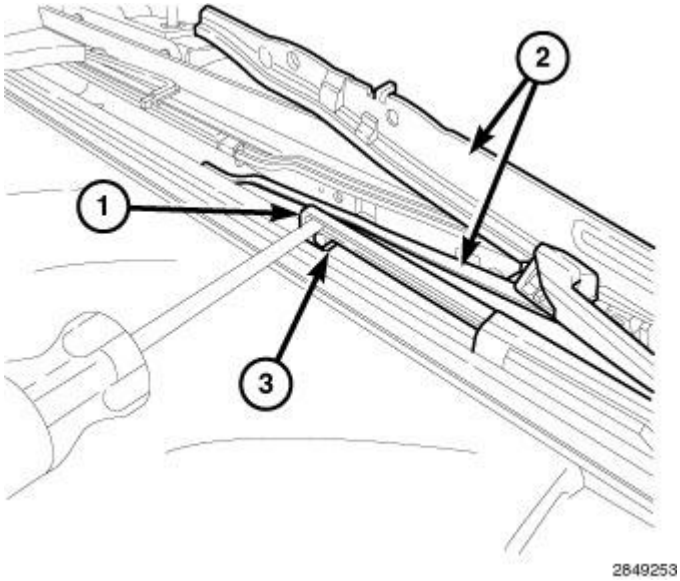

Fig. 705: Holding Locking Lever Out Of Notch
Courtesy of CHRYSLER GROUP, LLC

6. Using a small flat blade screwdriver, slightly lift and hold the locking lever (1) out of the notch (3) in the track assembly.
7. Slide the glass guide/guide carriage assembly (2) rearward approximately 25-30 mm.

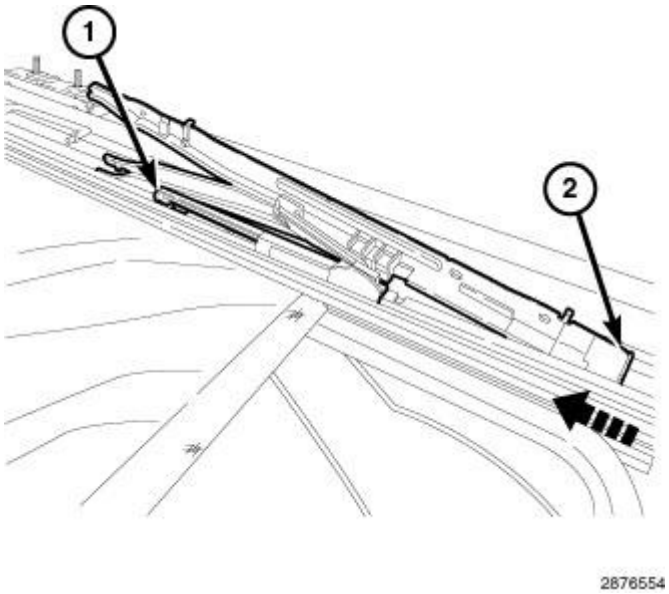

Fig. 706: Locking Lever & Glass Guide
Courtesy of CHRYSLER GROUP, LLC

8. Push rearward at the front of the glass guide (2). The locking lever (1) can be released after 12mm of rearward movement.

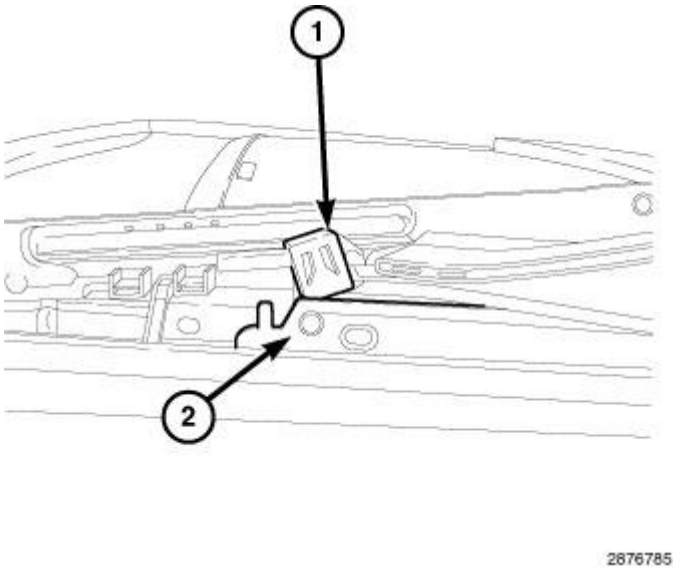

Fig. 707: Driving Wedge & Guide Carriage
Courtesy of CHRYSLER GROUP, LLC

9. Make sure the driving wedge (1) is not forward of the position shown in illustration in order to remain engaged with the guide carriage (2).

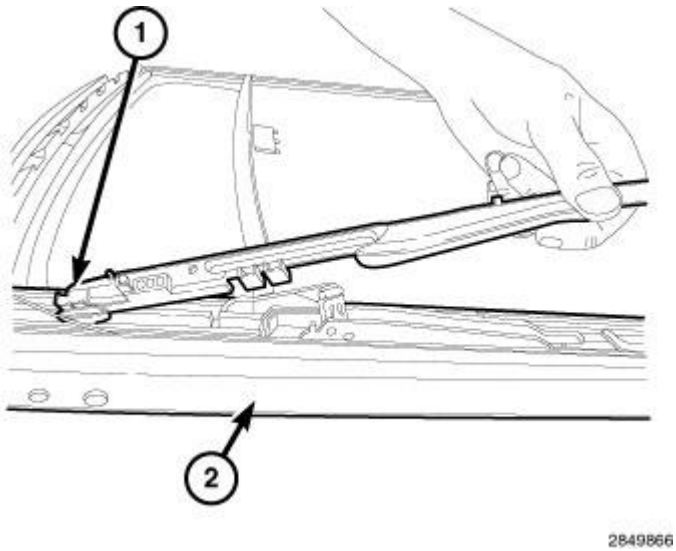

Fig. 708: Glass Guide Foot & Track Assembly
Courtesy of CHRYSLER GROUP, LLC

10. Lift and rotate the glass guide out to release the glass guide foot (1) from the track assembly (2).
11. If necessary, repeat steps for the opposite side.

INSTALLATION

INSTALLATION

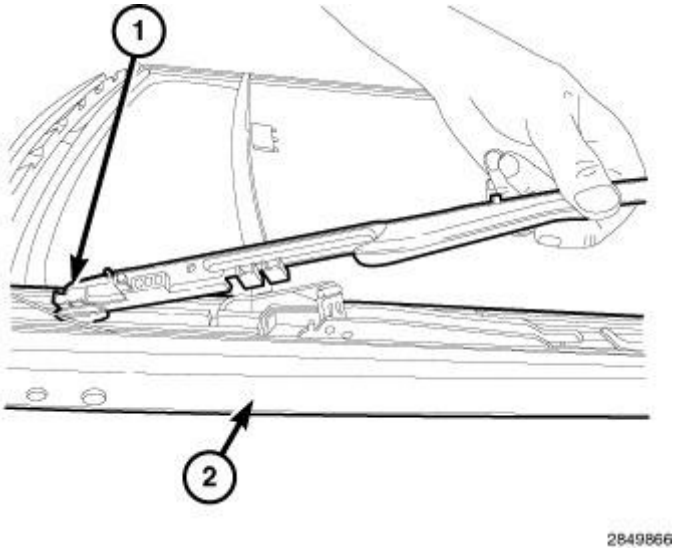

Fig. 709: Glass Guide Foot & Track Assembly
Courtesy of CHRYSLER GROUP, LLC

1. Insert the front foot (1) into the track assembly (2) and rotate inboard to engage.

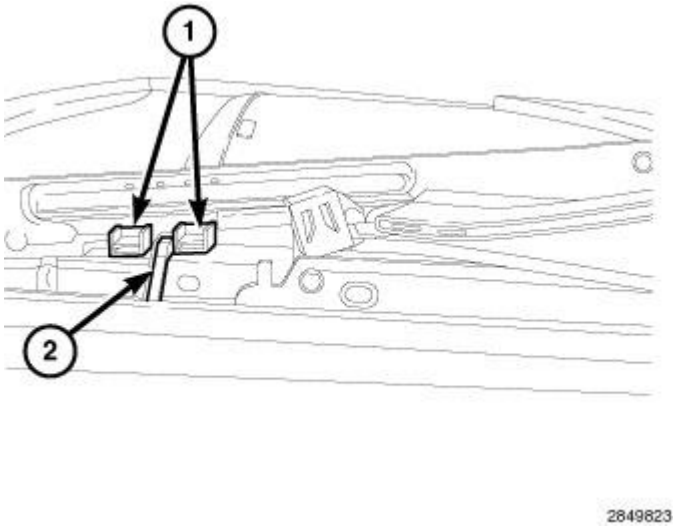

Fig. 710: Glass Guide Bosses & Guide Carriage Foot
Courtesy of CHRYSLER GROUP, LLC

2. Align the opening between the glass guide bosses (1) with the guide carriage foot (2) and lower the glass guide to engage.

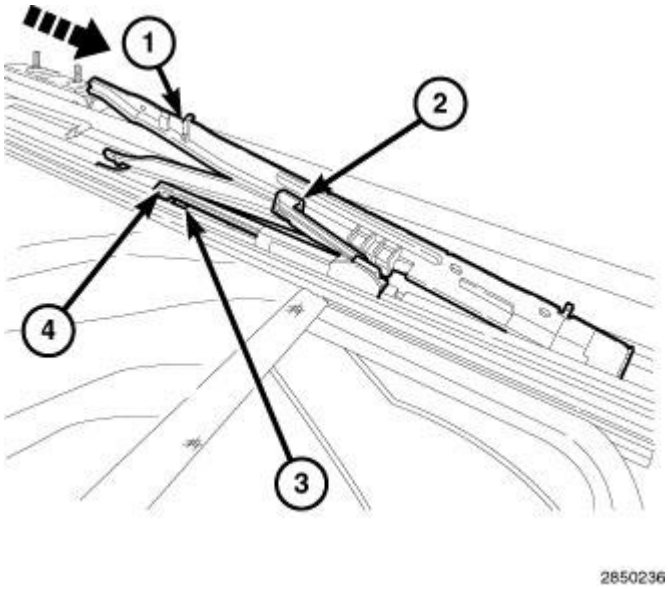

Fig. 711: Glass Guide & Driving Wedge
Courtesy of CHRYSLER GROUP, LLC

3. Push the glass guide (1) forward and engage into the driving wedge (2).

NOTE: **The guide carriage assembly should move together with the glass guide. If the guide carriage assembly does not move with the glass guide, repeat the alignment procedure in step 2.**

4. Continue pushing the guide carriage and glass guide forward until the locking lever (4) engages into the track assembly notch (3).

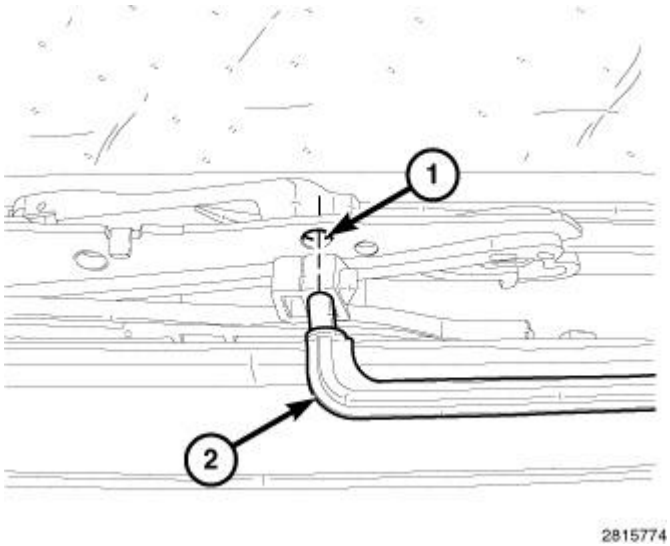

Fig. 712: Drain Channel Arms & Mechanism Holes
Courtesy of CHRYSLER GROUP, LLC

5. Install the drain channel arms (2) into the mechanism holes (1) one at a time.

6. If necessary, repeat steps for the opposite side.

CAUTION: Do not push the guide arms at the same time or you could break the guide mechanism. Do not use excessive force to install.

7. Re-connect the negative battery cable and turn the key to the accessory run position.
8. Cycle the mechanism through all of it's functions to verify proper operation.
9. Cycle the mechanism to the closed position.
10. Install the glass as necessary. Refer to **GLASS, SUNROOF, INSTALLATION**.
11. Adjust the sunroof glass to fit flush with the roof line. Refer to **GLASS, SUNROOF, ADJUSTMENTS**.
12. Verify proper operation of the power sunroof system.

SUNROOF

REMOVAL

REMOVAL

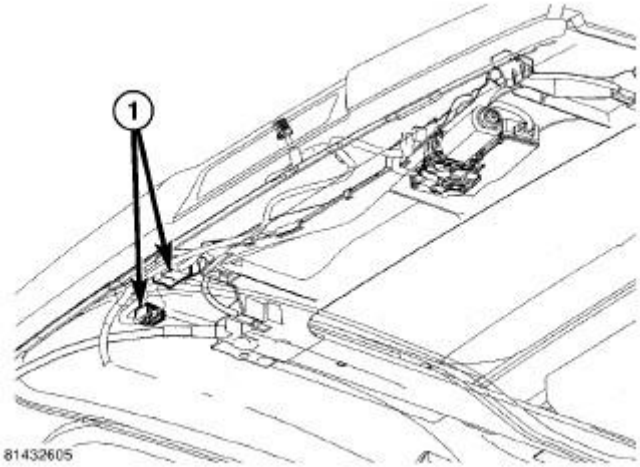

Fig. 713: Sunroof Wire Harness Electrical Connector
Courtesy of CHRYSLER GROUP, LLC

WARNING: The Excessive Force Limitation (EFL) feature must be calibrated any time a sunroof motor/module is replaced with a new component. Failure to perform this procedure could result in vehicle damage and/or personal injury. Failure to follow these instructions may result in serious or fatal injury. For the appropriate procedure. Refer to MOTOR, SUNROOF, STANDARD PROCEDURE .

1. Remove the glass. Refer to **GLASS, SUNROOF, REMOVAL**.
2. Disconnect and isolate the battery negative cable.

3. Remove headliner. Refer to **HEADLINER, REMOVAL**.
4. Disconnect the sunroof wire harness electrical connector (1).

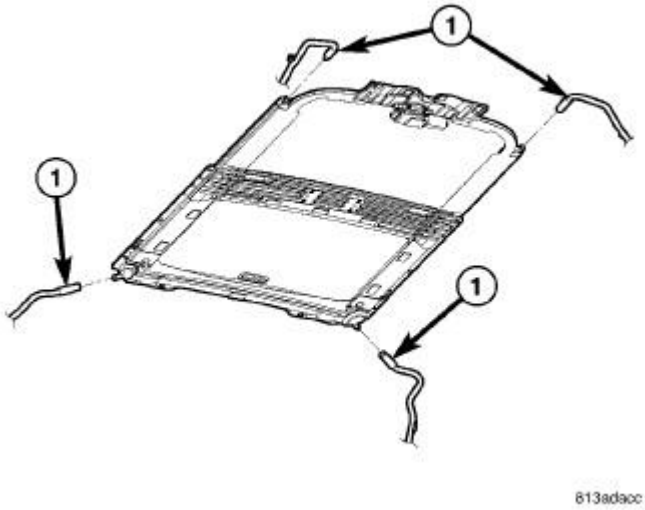

Fig. 714: Drain Tubes
Courtesy of CHRYSLER GROUP, LLC

5. Disconnect the four drain tubes (1) from sunroof housing.

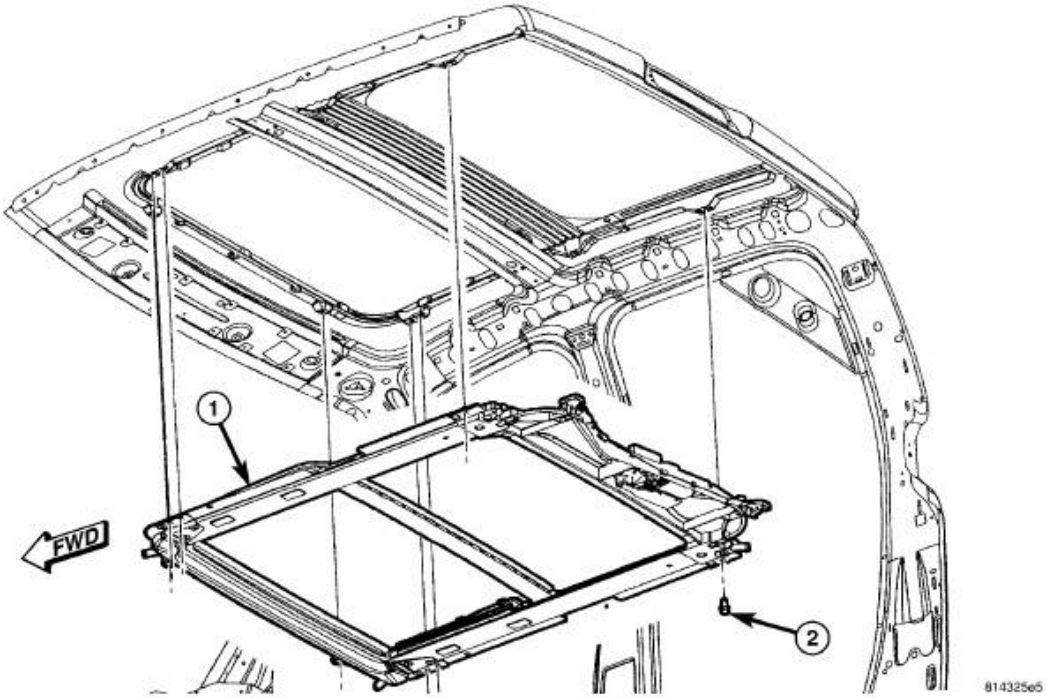

Fig. 715: Sunroof Assembly & Fasteners
Courtesy of CHRYSLER GROUP, LLC

6. With the aid of a helper, support the sunroof and remove the eight fasteners (2) attaching sunroof assembly (1) to roof panel.
7. Remove the sunroof (1) from vehicle.

INSTALLATION

INSTALLATION

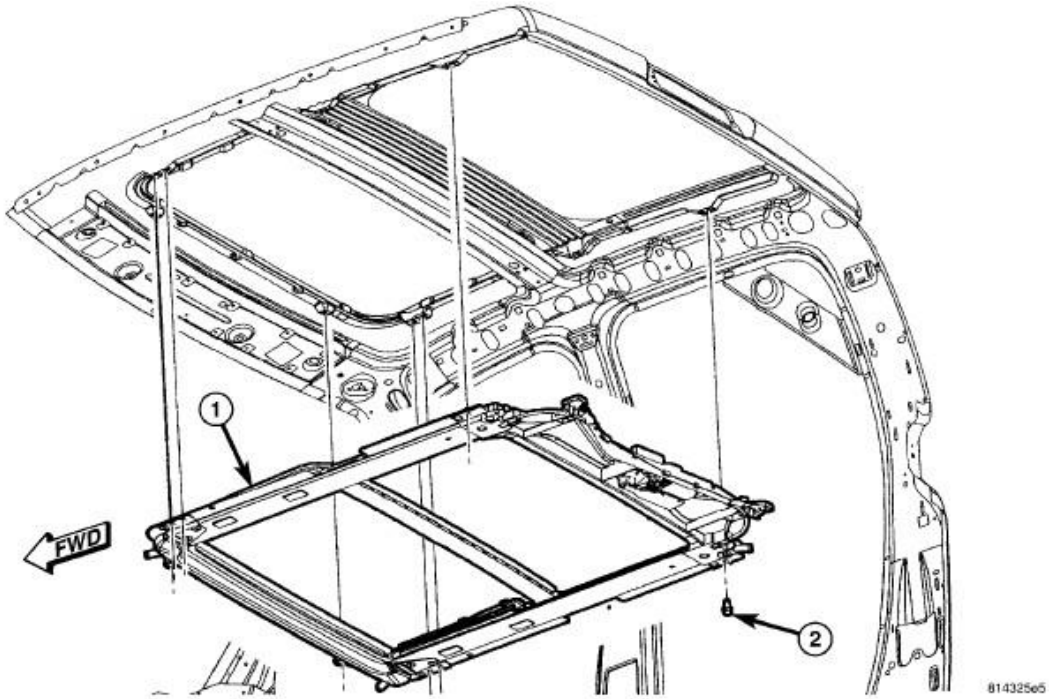

Fig. 716: Sunroof Assembly & Fasteners
Courtesy of CHRYSLER GROUP, LLC

WARNING: **The Excessive Force Limitation (EFL) feature must be calibrated any time a sunroof motor/module is replaced with a new component. Failure to perform this procedure could result in vehicle damage and/or personal injury. Failure to follow these instructions may result in serious or fatal injury. For the appropriate procedure. Refer to MOTOR, SUNROOF, STANDARD PROCEDURE .**

1. Raise sunroof module assembly (1) and guide it carefully into position.
2. Hand start the eight screws (2).
3. Line up the locating holes and tighten the attaching screws (2) to 9 N.m (80 in. lbs.).

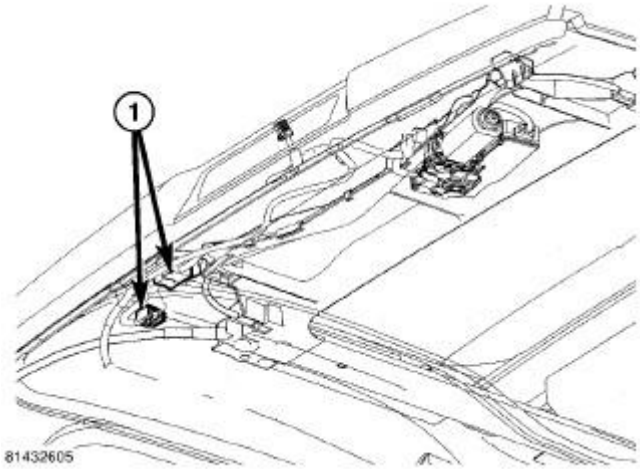

Fig. 717: Sunroof Wire Harness Electrical Connector
Courtesy of CHRYSLER GROUP, LLC

4. Connect the electrical connector (1).

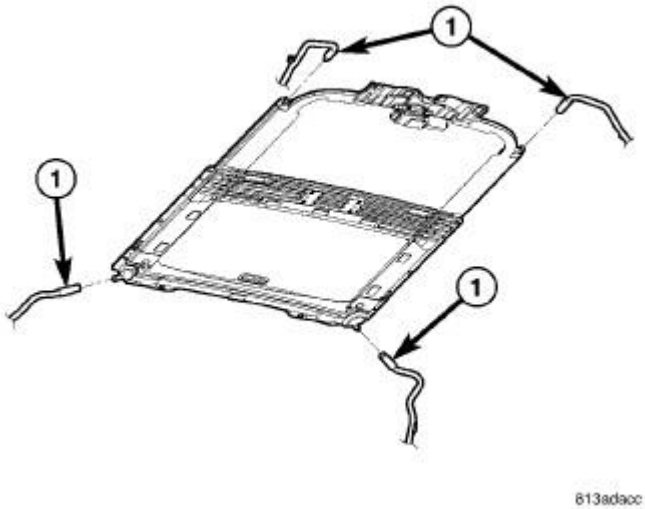

Fig. 718: Drain Tubes
Courtesy of CHRYSLER GROUP, LLC

5. Connect the drain tubes (1) to the sunroof.
6. Connect battery negative cable.
7. Install the glass. Refer to **GLASS, SUNROOF, INSTALLATION**.
8. Install the vehicle headliner. Refer to **HEADLINER, INSTALLATION**.
9. Perform the sunroof position calibration. Refer to **MOTOR, SUNROOF, STANDARD PROCEDURE** .
10. Verify proper operation of the power sunroof system.

SUNSHADE, SUNROOF

REMOVAL

REMOVAL

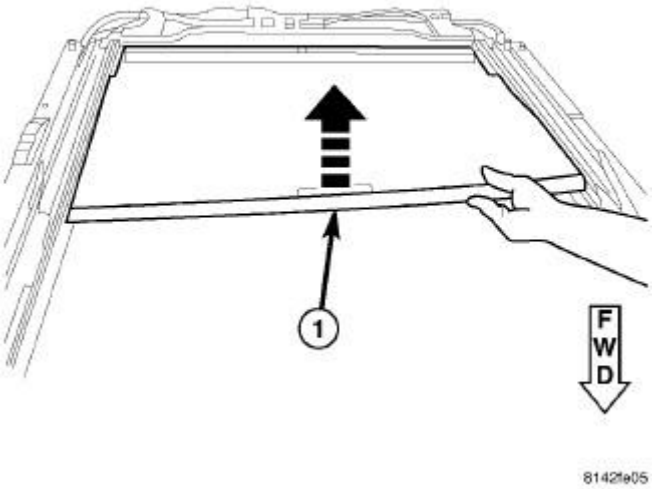

Fig. 719: Pushing Up Front Center Of Sunshade
Courtesy of CHRYSLER GROUP, LLC

1. Remove the drain channel. Refer to **TUBE, SUNROOF DRAIN, REMOVAL**.
2. Push up the front center of the sunshade (1) to pop out the front two feet.

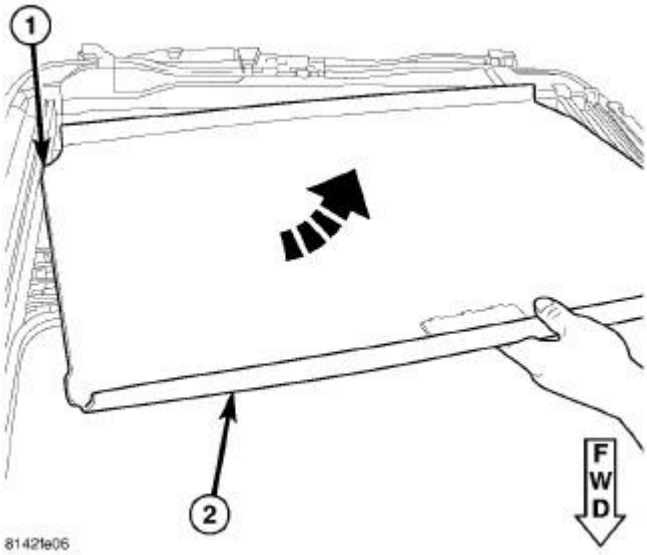

Fig. 720: Rotating Sunshade
Courtesy of CHRYSLER GROUP, LLC

3. Rotate the sunshade (2) so that the other feet (1) are removed from the guide track.

INSTALLATION

INSTALLATION

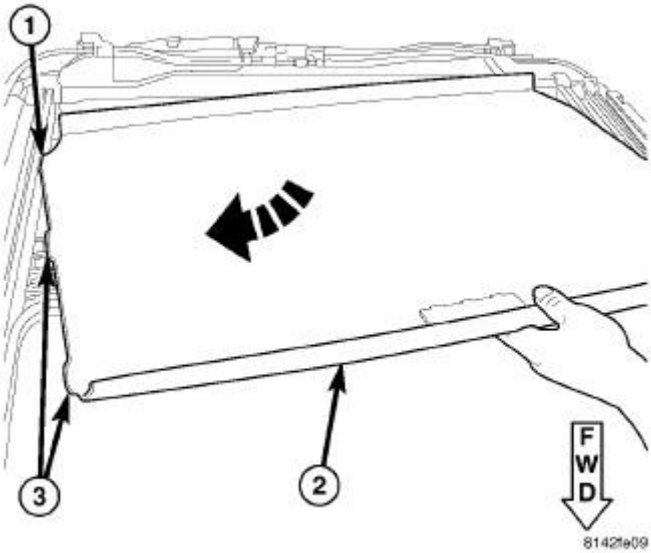

Fig. 721: Rotating Sunshade So Feet Are In Track
Courtesy of CHRYSLER GROUP, LLC

1. Verify the sunshade track is free of obstructions like the trim lace/ring.
2. Start with sunshade (2) at an angle with one foot (1) in the track.
3. Rotate the sunshade so the other rear foot is in the track as well as the 2 other feet (3) on the same side as the first foot.

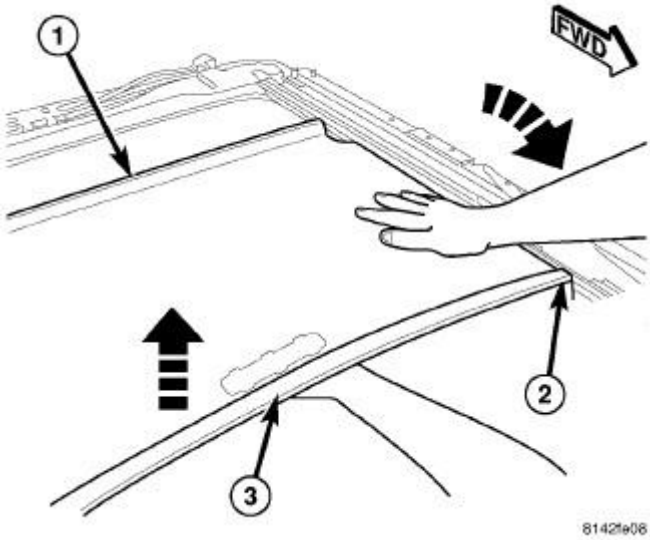

Fig. 722: Applying Force To Middle Front Of Sunshade
Courtesy of CHRYSLER GROUP, LLC

4. To insert the remaining two feet (2) apply force to the middle front of sunshade (3) and guide them into the track.
5. Check that all the feet are in the right track and verify sunshade operation.
6. Install the drain channel. Refer to **CHANNEL, SUNROOF DRAIN, INSTALLATION**.

TRIM RING, SUNROOF

REMOVAL

REMOVAL

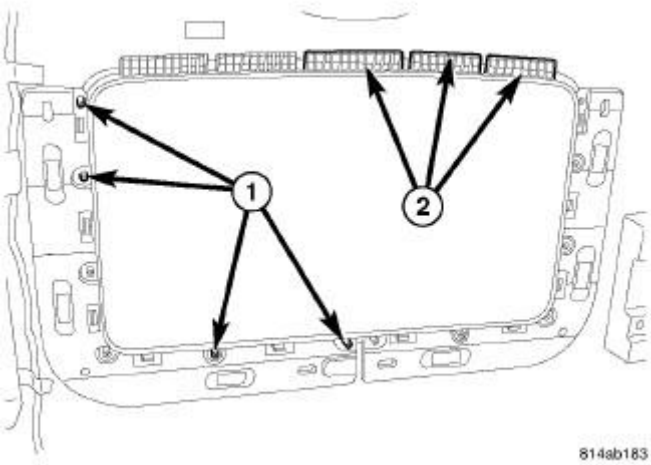

Fig. 723: Retaining Flanges & Nuts
Courtesy of CHRYSLER GROUP, LLC

1. Remove the headliner. Refer to **HEADLINER, REMOVAL**.
2. Remove the 12 nuts (1) and roll the trim ring off the headliner off the retaining flanges (2).

INSTALLATION

INSTALLATION

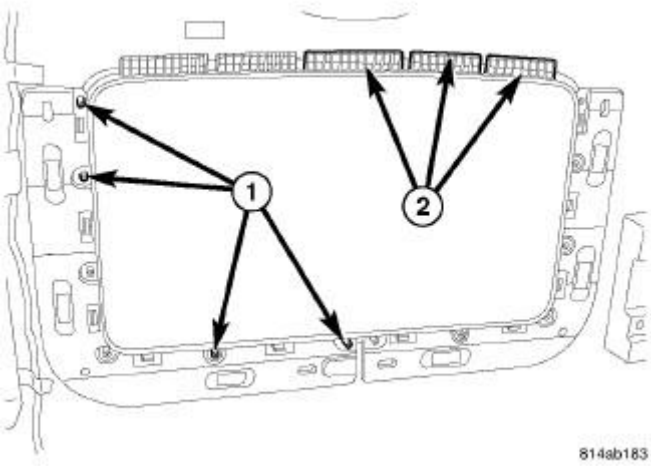

Fig. 724: Retaining Flanges & Nuts
Courtesy of CHRYSLER GROUP, LLC

1. Position trim ring support flanges (2) over the headliner and seat the trim ring fully.
2. Install the 12 nuts (1) onto the support studs.

TUBE, SUNROOF DRAIN

REMOVAL

REMOVAL

FRONT HOSES

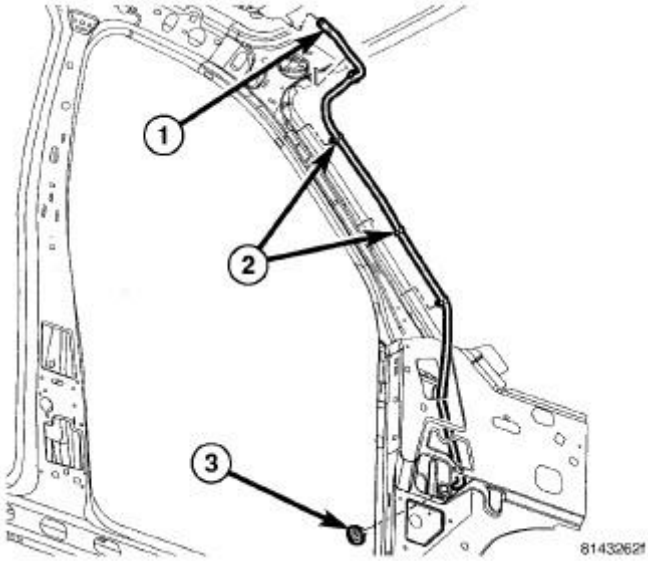

Fig. 725: Sunroof Housing, Clips & Grommet
Courtesy of CHRYSLER GROUP, LLC

1. Remove headliner. Refer to **HEADLINER, REMOVAL**.
2. Disconnect the drain hose from the sunroof housing (1).
3. Separate the lower tube from the grommet in the body (3).
4. Drain any liquid from hose connection, if necessary.
5. Release the clips (2) and remove the tube.

REAR HOUSING HOSE

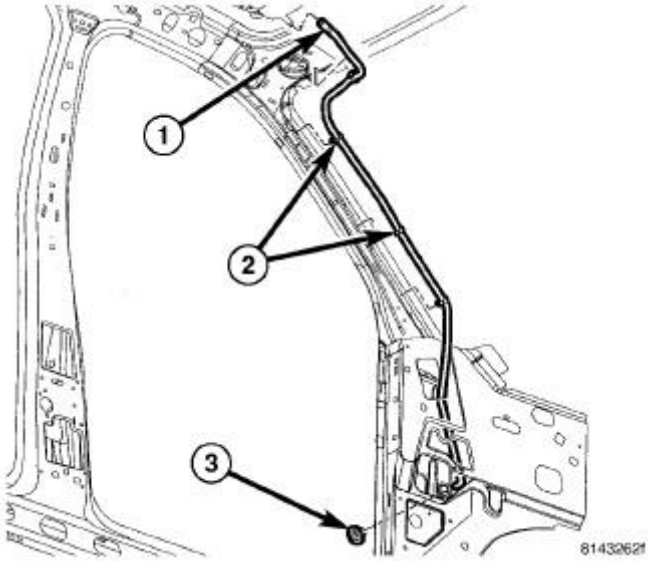

Fig. 726: Sunroof Housing, Clips & Grommet
Courtesy of CHRYSLER GROUP, LLC

1. Remove headliner. Refer to **HEADLINER, REMOVAL**.
2. Disconnect the drain hose from the sunroof housing (1).

   * Front tube shown in illustration, rear tube similar.

3. Drain any liquid from hose connection, if necessary.
4. Release the push pin fasteners (2) and separate the lower tube from the grommet in the body (3).

INSTALLATION

INSTALLATION

FRONT HOSES

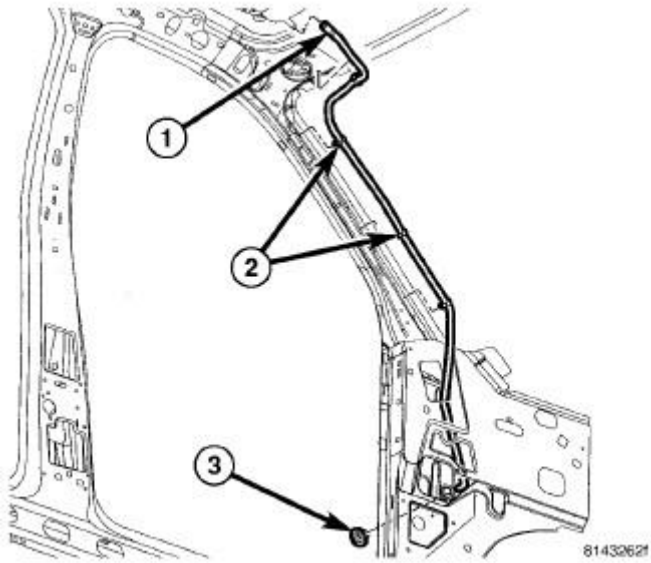

Fig. 727: Sunroof Housing, Clips & Grommet
Courtesy of CHRYSLER GROUP, LLC

1. Position the lower portion through the grommet in the body (3).
2. Connect the new drain tube to the sunroof housing (1) and test drainage.
3. Position the tube support clips (2) and seat fully.
4. Install headliner. Refer to **HEADLINER, INSTALLATION**.

REAR HOUSING HOSE

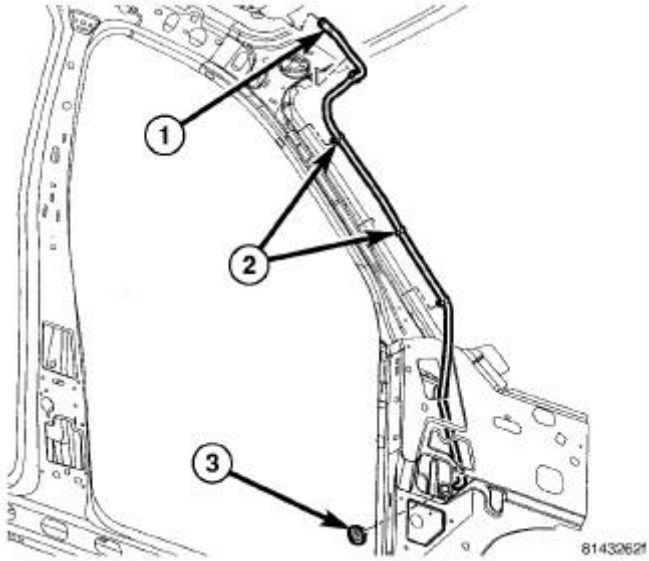

Fig. 728: Sunroof Housing, Clips & Grommet
Courtesy of CHRYSLER GROUP, LLC

1. Install the rear tube and seat the push pin fasteners (2) fully.

   Front tube shown in illustration, rear similar.

2. Position the lower portion through the grommet in the body (3).
3. Connect the new drain tube to the sunroof housing (1) and test drainage.
4. Install headliner. Refer to **HEADLINER, INSTALLATION**.

WEATHERSTRIP/SEALS

SEAL, A-PILLAR

REMOVAL

REMOVAL

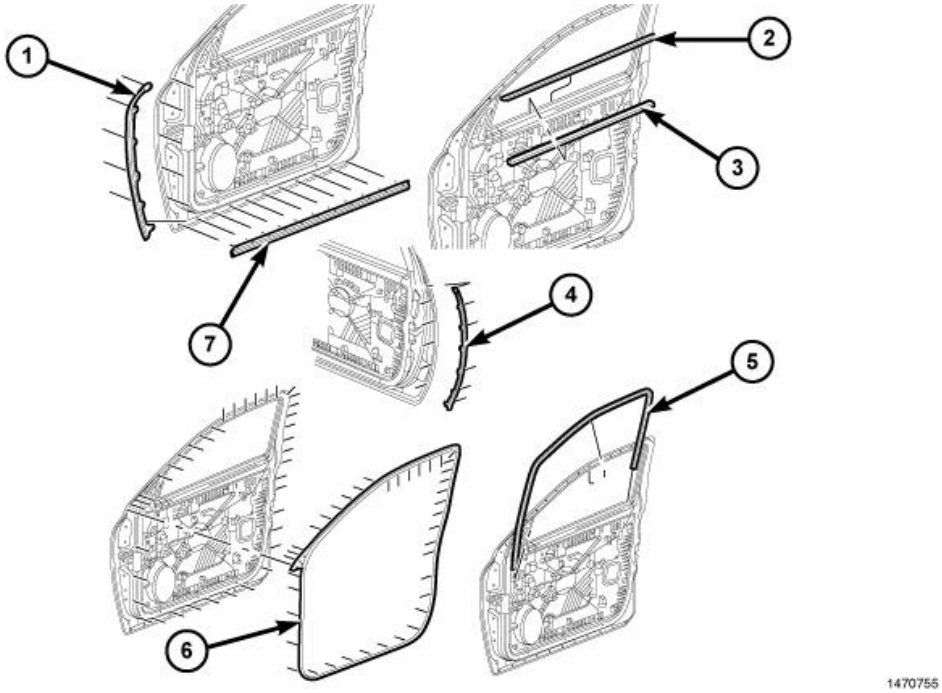

Fig. 729: Belt Moldings & Seals
Courtesy of CHRYSLER GROUP, LLC

1. Open the appropriate door.
2. Carefully remove the A-pillar seal (1) from the retainers on the door sheet metal.
3. Remove the seal from the door.

INSTALLATION

INSTALLATION

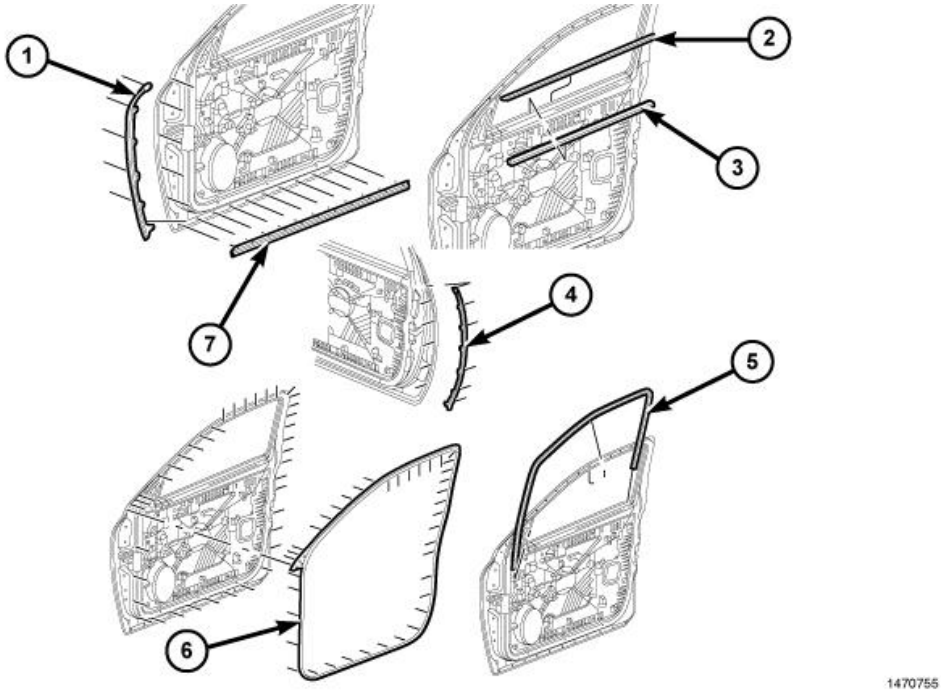

Fig. 730: Belt Moldings & Seals
Courtesy of CHRYSLER GROUP, LLC

1. Place the A-pillar seal (1) into position to the door.
2. Install the seal to the seal retainers on the door.
3. Close the door and verify a proper seal.

SEAL, B-PILLAR, LOWER

REMOVAL

REMOVAL

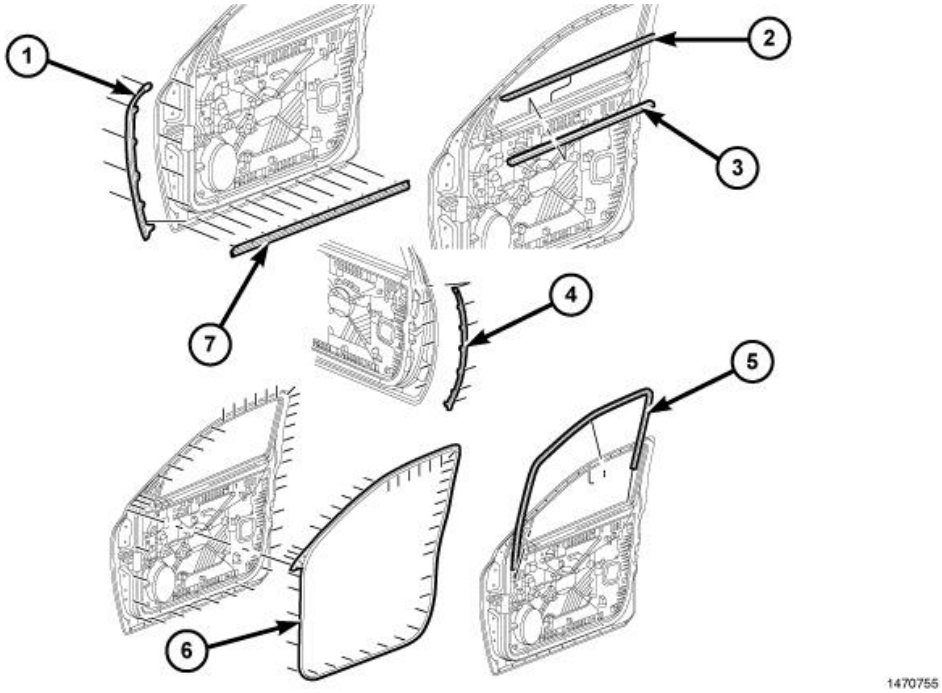

Fig. 731: Belt Moldings & Seals
Courtesy of CHRYSLER GROUP, LLC

1. Open the appropriate door.
2. Carefully pry off the B-pillar seal (4) and remove from the retainers in the door.
3. Remove the seal from the door.

INSTALLATION

INSTALLATION

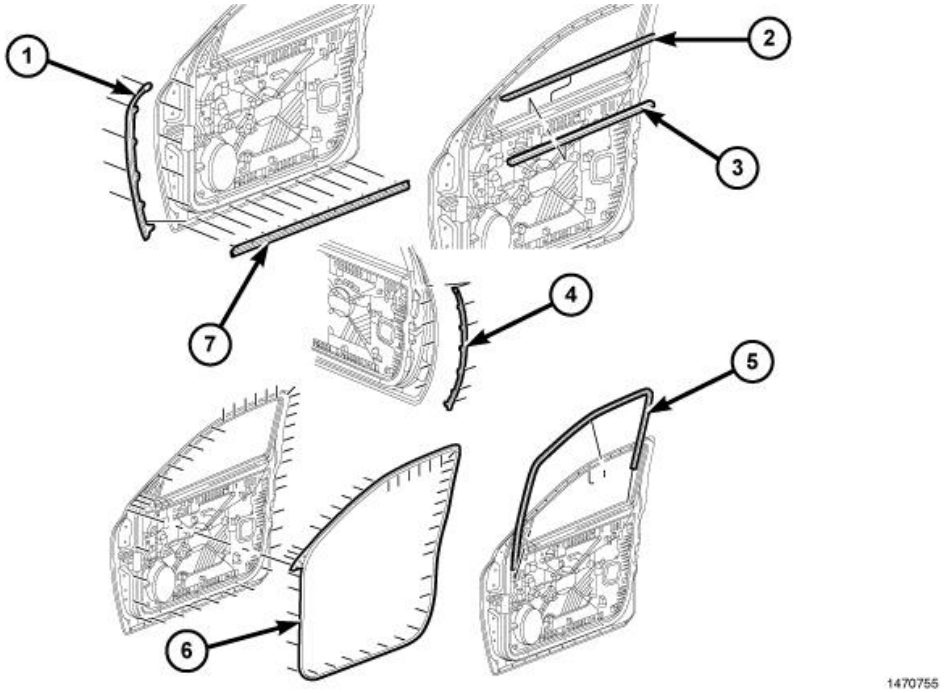

Fig. 732: Belt Moldings & Seals
Courtesy of CHRYSLER GROUP, LLC

1. Place the B-pillar seal (4) into position to the door.
2. Install the seal to the door engaging the retainers.
3. Close the door and verify proper seal.

SEAL, DOOR OPENING

REMOVAL

REMOVAL

FRONT DOOR SEAL

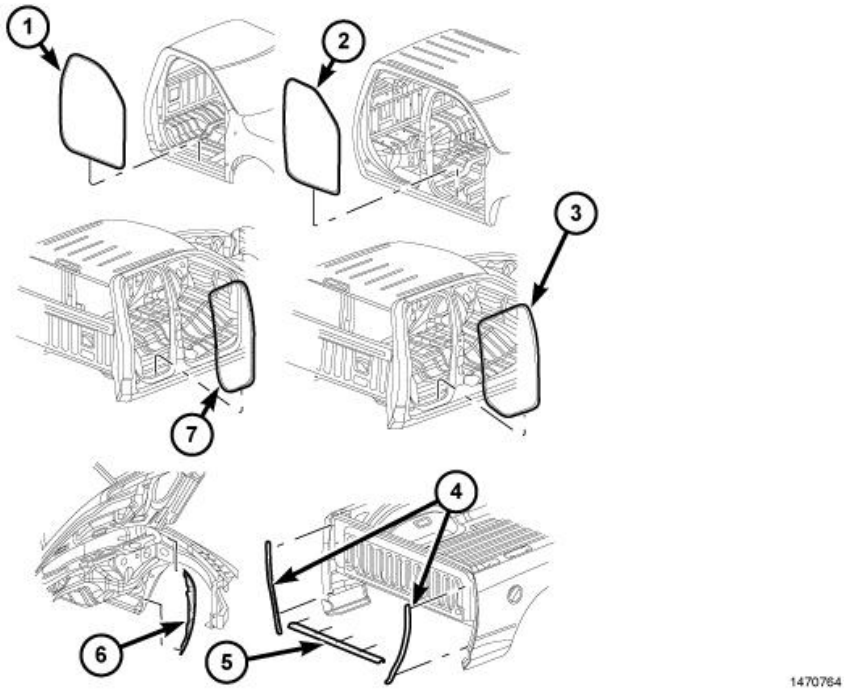

Fig. 733: Door Seals
Courtesy of CHRYSLER GROUP, LLC

1. Remove the cowl trim panel. Refer to **PANEL, COWL TRIM, REMOVAL**.
2. Remove the lower B-pillar trim panel. Refer to **PANEL, B-PILLAR TRIM, LOWER, REMOVAL**.
3. Separate the front door opening seal (2 and 3) from the door opening flange.

REAR DOOR SEAL

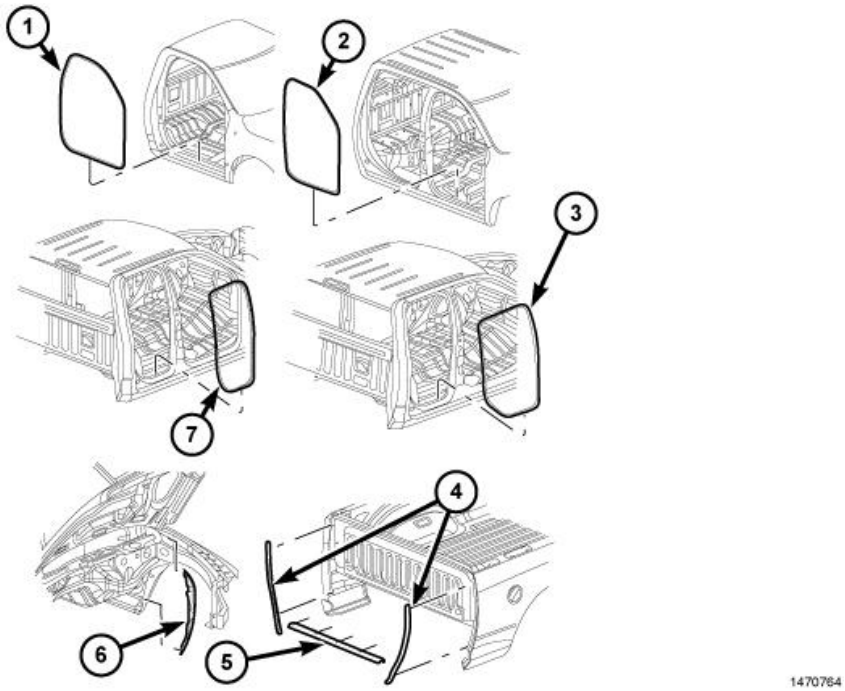

Fig. 734: Door Seals
Courtesy of CHRYSLER GROUP, LLC

1. Remove the lower B-pillar trim panel. Refer to **PANEL, B-PILLAR TRIM, LOWER, REMOVAL**.
2. Remove the lower C-pillar trim. Refer to **PANEL, C-PILLAR TRIM, LOWER, REMOVAL**.
3. Separate the rear door opening seal (1 and 7) from the door opening flange.

INSTALLATION

INSTALLATION

FRONT DOOR SEAL

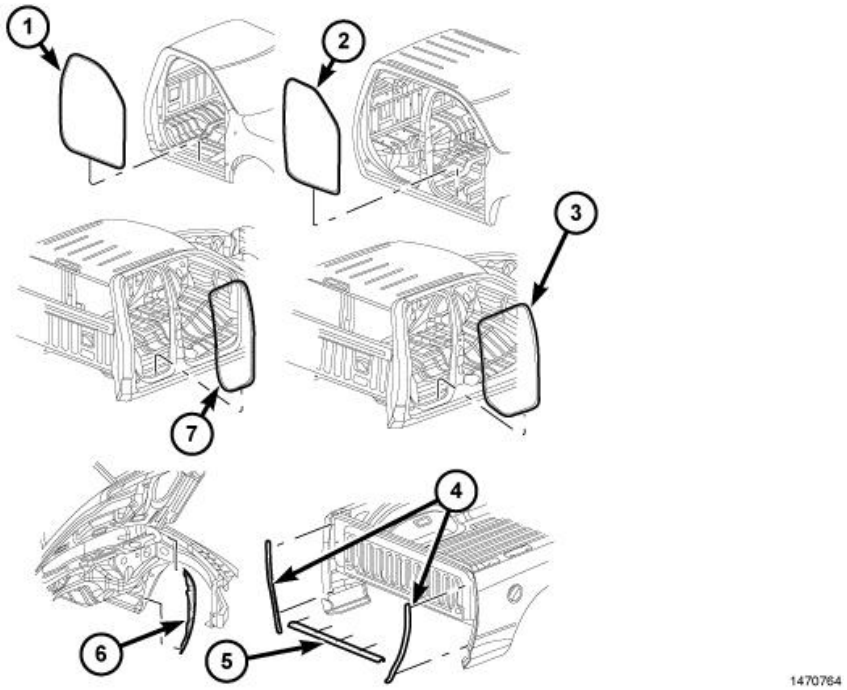

Fig. 735: Door Seals
Courtesy of CHRYSLER GROUP, LLC

1. Position the front door seal (2 and 3) to the bottom of the door opening, with bulb facing outboard, starting the installation at the center of the lower flange. Press the seal onto the sill flange and work around the perimeter of the door opening until fully seated. Work in one direction, smoothing the seal to avoid puckers or wrinkles.
2. Install the lower B-pillar trim. Refer to **PANEL, B-PILLAR TRIM, LOWER, INSTALLATION**.
3. Install the cowl trim panel. Refer to **PANEL, COWL TRIM, INSTALLATION**.

NOTE: **When installing a new weatherstrip on the front door opening, remove the tear strip starting at the splice and moving around the front of the door to the back of the opening.**

REAR DOOR SEAL

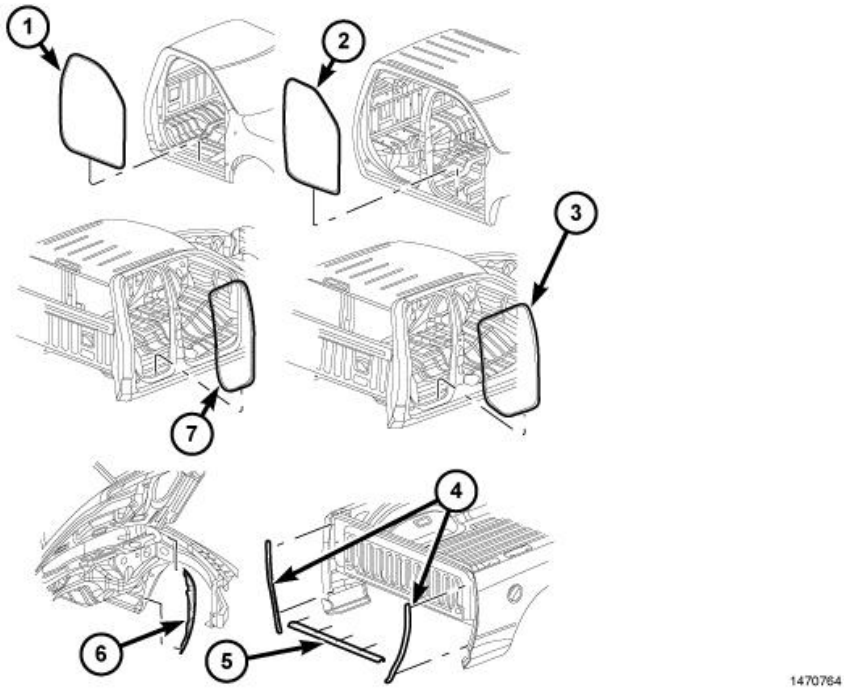

Fig. 736: Door Seals
Courtesy of CHRYSLER GROUP, LLC

1. Position the rear door seal (1 and 7) to the bottom of the door opening, with bulb facing outboard, starting the installation at the center of the lower flange. Press the seal onto the sill flange and work around the perimeter of the door opening until fully seated. Work in one direction, smoothing the seal to avoid puckers or wrinkles.
2. Install the lower C-pillar trim. Refer to **PANEL, C-PILLAR TRIM, LOWER, INSTALLATION**.
3. Install the lower B-pillar trim. Refer to **PANEL, B-PILLAR TRIM, LOWER, INSTALLATION**.

NOTE: **When installing a new weatherstrip on the rear door opening, remove the tear strip starting at the splice and moving around the back of the door to the front of the opening.**

WEATHERSTRIP, DOOR

REMOVAL

REMOVAL

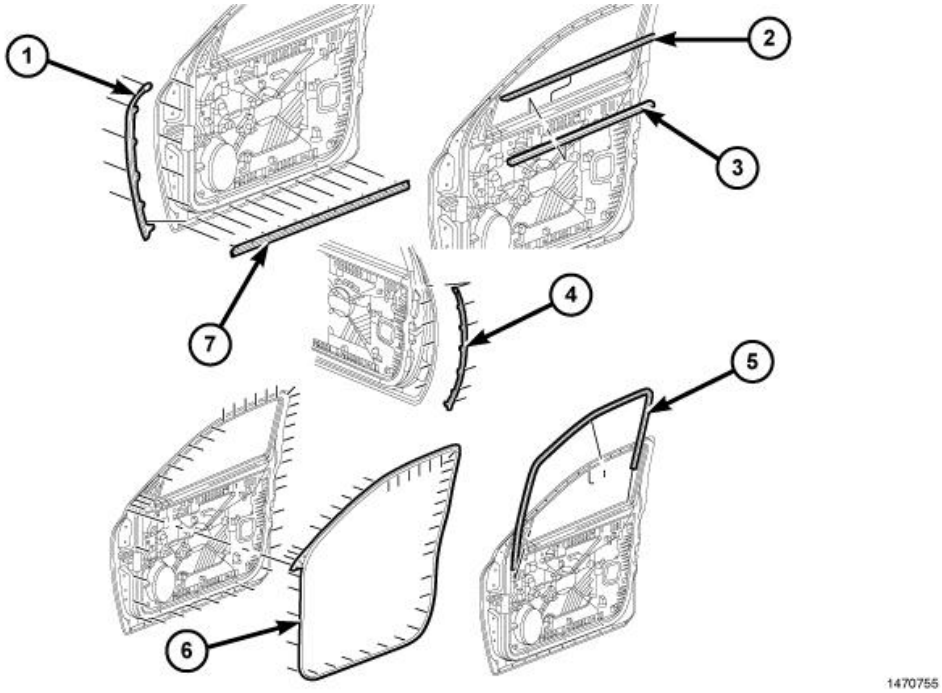

Fig. 737: Belt Moldings & Seals
Courtesy of CHRYSLER GROUP, LLC

1. Open the appropriate door.
2. If removing the rear door seal, using a trim stick or equivalent, remove the rear trim from the rear door.
3. Carefully remove the door seal (6) from the door retainers.
4. Remove the seal from the door.

INSTALLATION

INSTALLATION

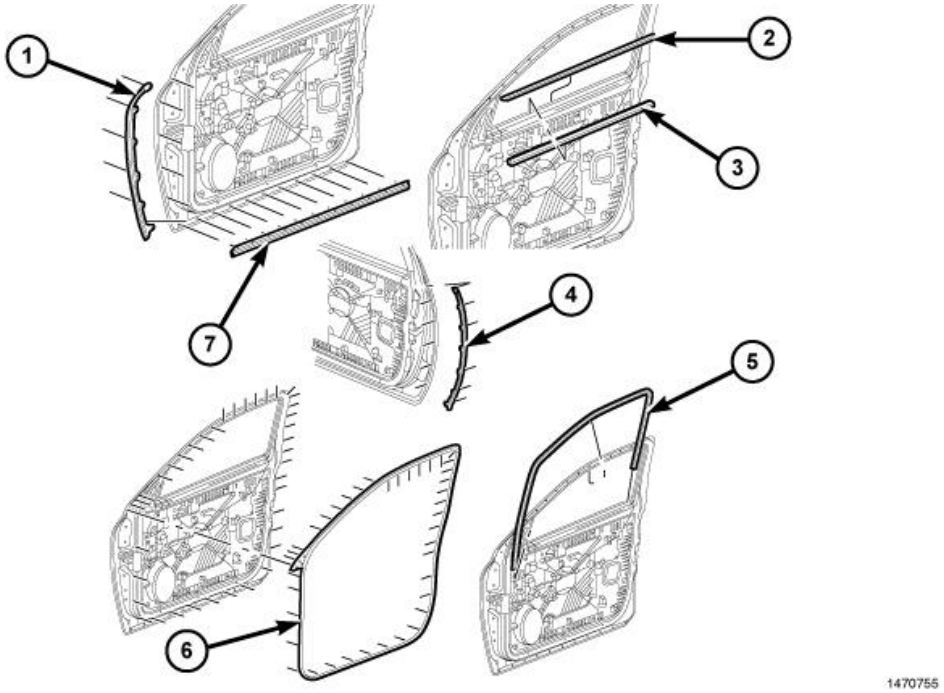

Fig. 738: Belt Moldings & Seals
Courtesy of CHRYSLER GROUP, LLC

1. Position the door seal (6) to the door.
2. Install the door seal being sure to engage the retainers into the seal.
3. Secure the seal around the perimeter of the door.
4. If required, install the rear trim to the rear door.
5. Shut the door and verify proper seal.

WEATHERSTRIP, GLASS RUN

REMOVAL

REMOVAL

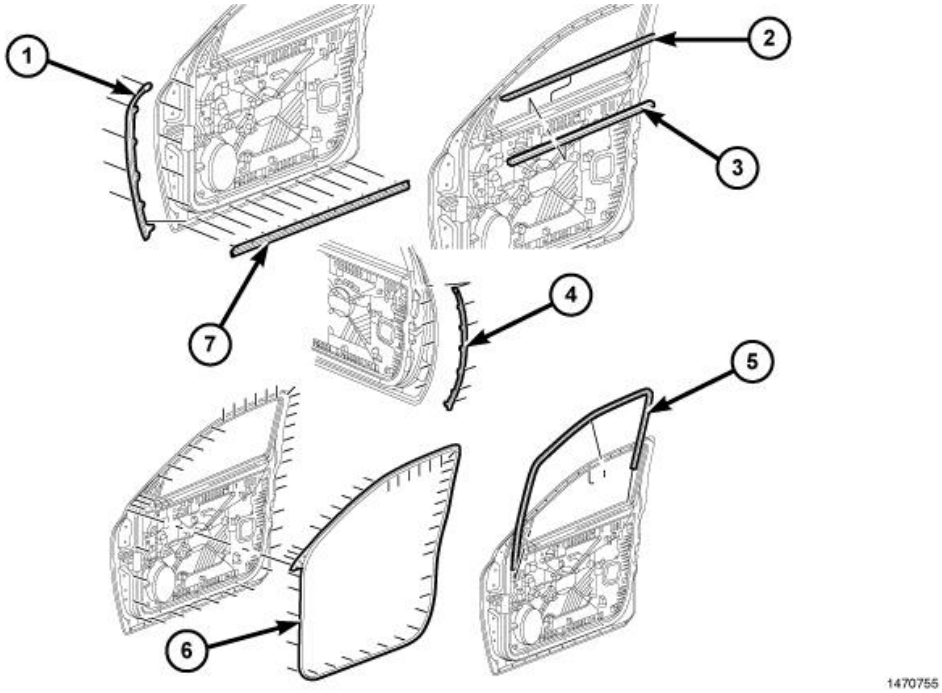

Fig. 739: Belt Moldings & Seals
Courtesy of CHRYSLER GROUP, LLC

1. Remove the door glass. Refer to **GLASS, DOOR, REMOVAL** or **GLASS, DOOR, REMOVAL**.
2. Remove the inner belt molding (3).
3. Carefully pull the top of the window run seal (5) down and remove from the top of the door.
4. Pull the sides of the seal upward out of the door.

INSTALLATION

INSTALLATION

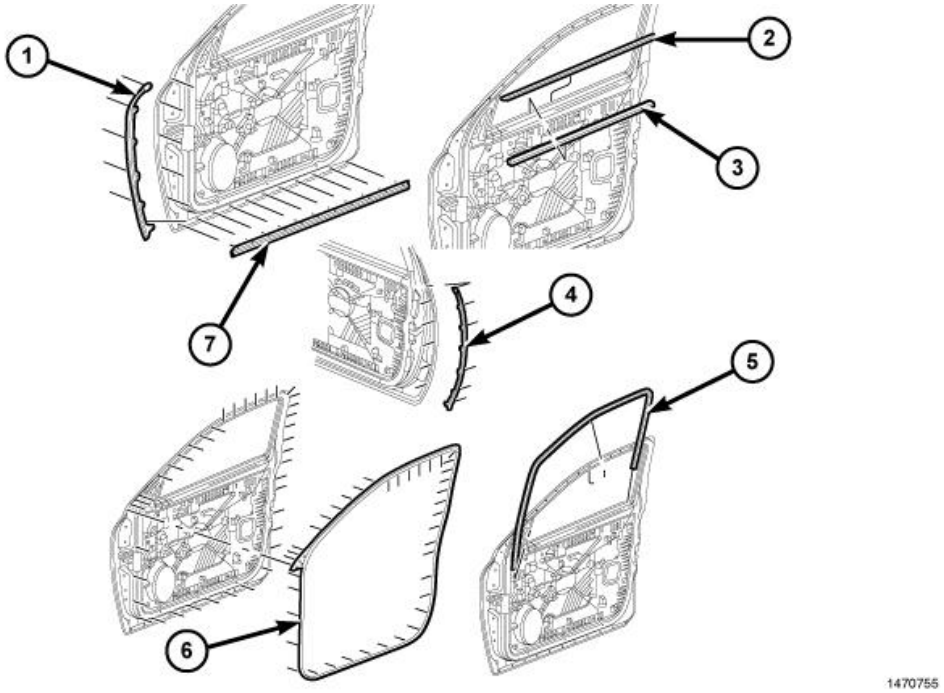

Fig. 740: Belt Moldings & Seals
Courtesy of CHRYSLER GROUP, LLC

1. Insert the sides of the window run seal (5) into the door.
2. Firmly seat the top of the seal to the top of the door.
3. Install the door glass. Refer to **GLASS, DOOR, INSTALLATION** or **GLASS, DOOR, INSTALLATION**.

WEATHERSTRIP, HEADER, ROOF

REMOVAL

REMOVAL

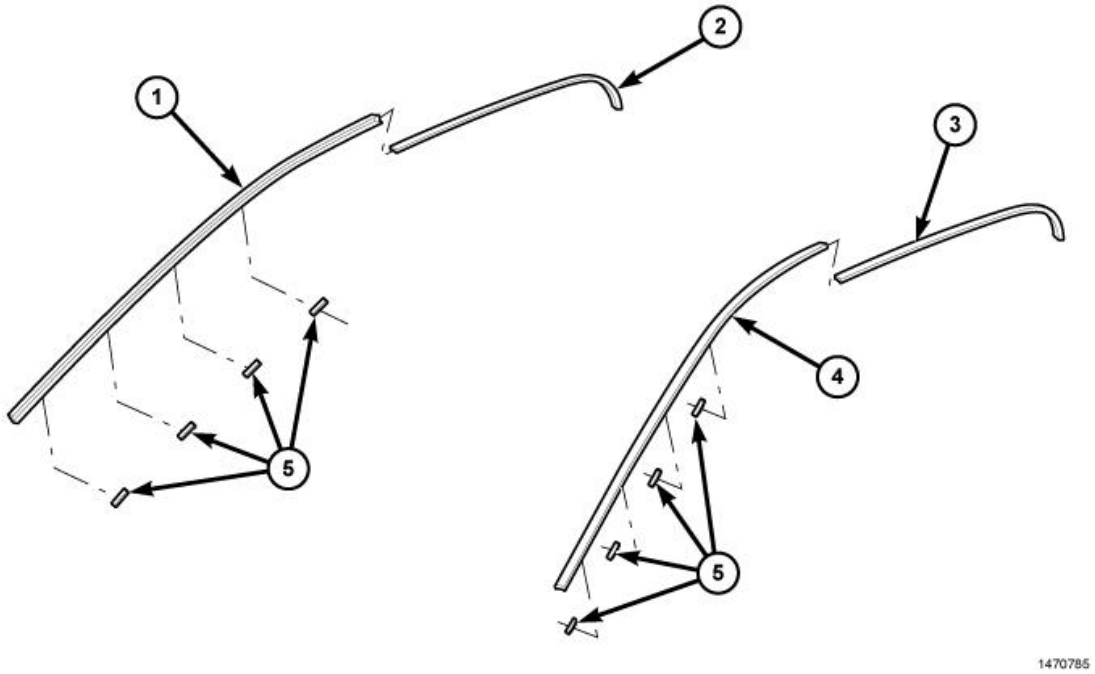

Fig. 741: Roof Header Seal
Courtesy of CHRYSLER GROUP, LLC

1. Carefully peel the roof header seal (2) from the roof.
2. Clean any access adhesive off of the seal trough.

INSTALLATION

INSTALLATION

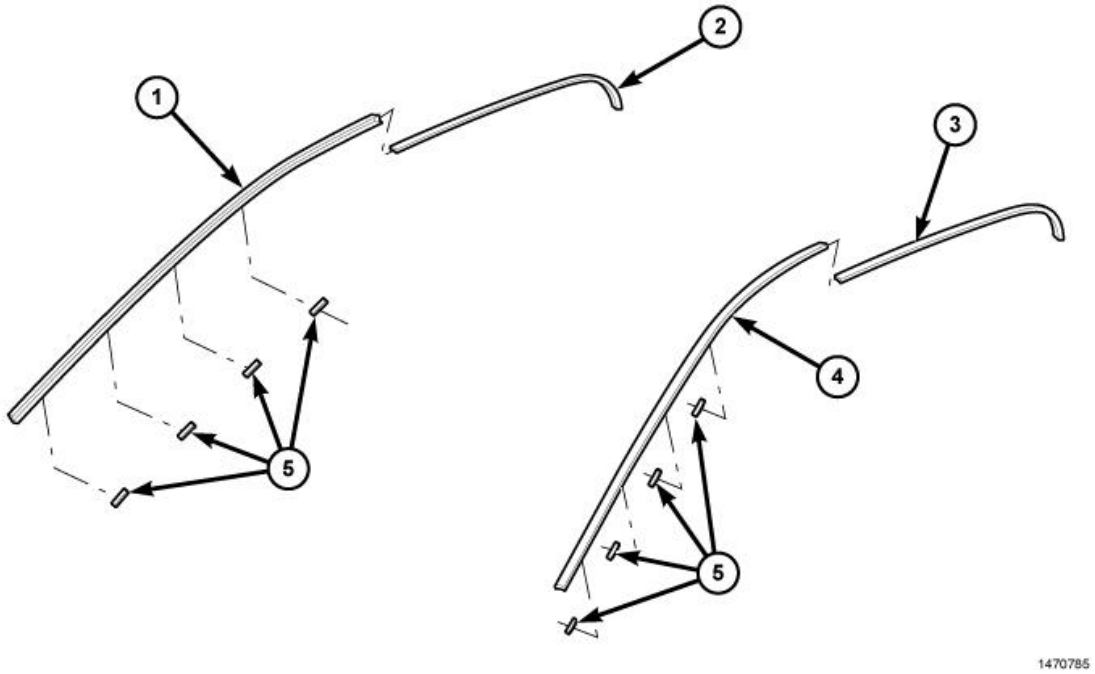

Fig. 742: Roof Header Seal
Courtesy of CHRYSLER GROUP, LLC

1. Ensure that the roof header seal (2) trough is clean and free of debris.
2. Starting at the front firmly seat the seal into the trough and press down firmly to ensure proper adhesion to the sheet metal.

WEATHERSTRIP, WINDSHIELD, A-PILLAR

REMOVAL

REMOVAL

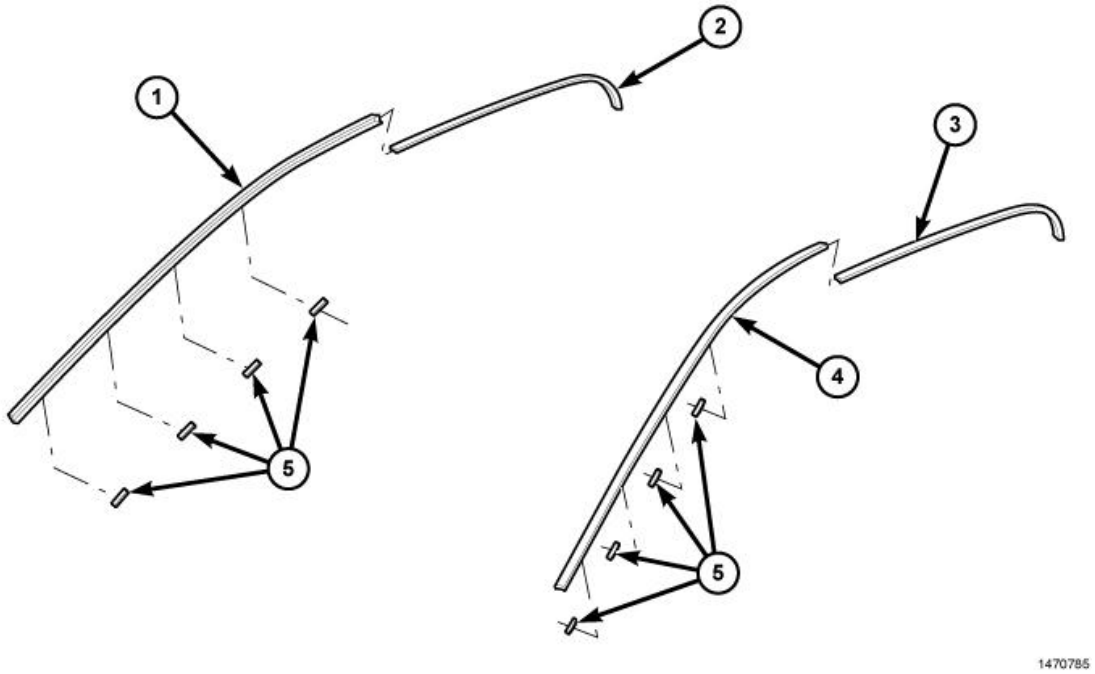

Fig. 743: Roof Header Seal
Courtesy of CHRYSLER GROUP, LLC

1. Starting at the rear of the windshield weatherstrip (1) carefully peel the seal away from the sheet metal working towards the front of the vehicle.
2. Remove the weatherstrip from the retainers along the side of the windshield.
3. Clean any access adhesive from the sheet metal.

INSTALLATION

INSTALLATION

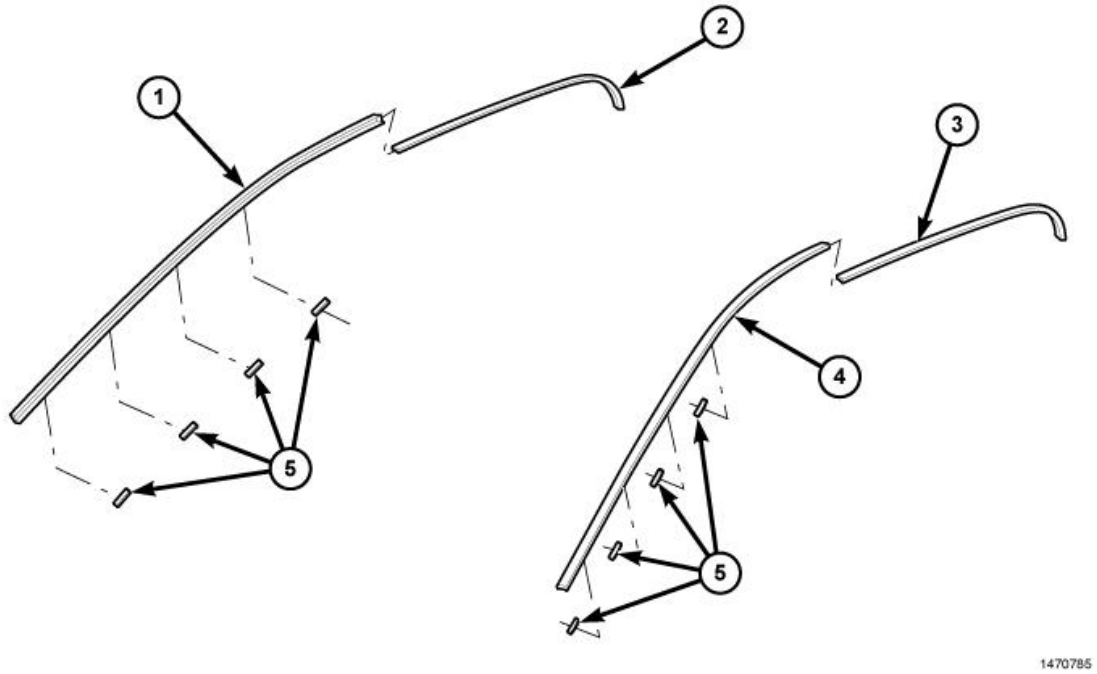

Fig. 744: Roof Header Seal
Courtesy of CHRYSLER GROUP, LLC

1. Ensure the sheet metal is clean and free of debris.
2. Starting at the front of the windshield, install the windshield weatherstrip (1) to the vehicle.
3. Ensure to engage the retainers along the side of the windshield.
4. Continue to install the weatherstrip pressing down firmly to ensure proper adhesion.

WINCH

WARNING

WARNING

WARNING: **Disconnect and isolate battery negative cable before attempting any troubleshooting or repairs.**

- **Do not disengage the clutch if the winch is under a load or wire rope is under tension.**
- **Do not route electrical cables across sharp edges.**
- **Do not route electrical cables through or near moving parts.**
- **Always wear heavy leather gloves when handling a wire rope.**
- **Never let wire rope slip through your hands.**
- **Always keep hands clear of wire rope, hook loop, hook and fairlead opening during installation, operation, and when spooling in or out.**

- **Always use supplied hook strap whenever spooling wire rope in or out, during installation or operation.**

Failure to follow these instructions may result in personal injury.

CAUTION: Do not leave the remote plugged into the winch when not in use. Leaving the remote plugged in, may result in a dangerous condition and/or battery drain.

- **Always make sure the clutch is fully engaged or disengaged.**

DESCRIPTION

DESCRIPTION

The winch uses the electrical power from the vehicle charging system to power a motor that winds wire rope into the winch drum by means of planetary gear reduction.

The winch assembly includes the following:

- **Motor:** The winch motor is powered by the vehicle electrical system and features a thermal protection switch that automatically stops the motor function in the power-in direction if the motor gets too hot.
- **Winch Drum:** The winch drum allows the wire rope to be stored on the winch and transmits force to the wire rope.
- **Wire Rope:** The wire rope allows the winch to be connected to an anchor to provide a pulling force.
- **Fairlead:** The fairlead consists of four rollers and acts as guide for the wire rope and minimizes damage to the rope.
- **Automatic Brake:** The winch is equipped with an automatic brake that will stop rotation of the winch drum if the winch motor is stopped.
- **Clutch Lever:** The clutch lever allows the winch drum to be disconnected from the winch motor to allow the wire rope to be pulled from the winch by hand.
- **Remote Socket:** The remote socket allows the remote control to be attached to the control pack to allow the winch to function.
- **Remote Control:** The remote control provides the interface between the winch operator and the winch. The remote control provides the ability to power the winch in, out, and stop the winch.

OPERATION

OPERATION

Winch: The winch uses the electrical power from the vehicle charging system to power a motor that winds wire rope into the winch drum via planetary gear reduction. By nature, a winch is capable of generating very high forces and should be used with care. Do not operate the winch without reading and understanding the complete winch owner's manual.

Low Voltage Interrupt: The winch is equipped with a device that will interrupt winch function if the vehicle charging system voltage drops to a low level. The winch will not power-in or out for 30 seconds if this device is tripped. If the interrupt is tripped, the vehicle should be operated at high idle for a few minutes to allow the vehicle charging system to recover before continuing to winch.

Winch Motor Thermal Protection: The winch is equipped with a thermal protection device in the motor. If the winch is operated for an excessive duration, the device may interrupt motor function to protect the winch motor. During this time the winch will power-out but will not power-in. Allow the winch motor to cool for a few minutes before continuing operation of the winch. The winch will resume normal function once the motor cools.

Remote Control: To operate the winch, the toggle switch is pressed down to power the winch in and up to power the winch out. The winch will stop if the switch is left in the neutral (center) position.

Clutch Lever: The clutch lever is used to allow free spooling of the winch drum. Rotate the clutch lever on the winch to disengage the clutch.

DIAGNOSIS AND TESTING

DIAGNOSIS AND TESTING - WINCH

CONDITION	POSSIBLE CAUSES	CORRECTION
Winch does not hold the load.	Faulty winch drum brake.	Replace the winch assembly. Refer to **WINCH, REMOVAL**.
	Load exceeds rating for the winch.	Refer to operators manual for the correct line pull rating for the winch.
Brake overheats and will not hold the load.	The wire rope is on the drum backwards.	Remove all the wire rope and respool in the proper direction.
	The wire rope is spool onto the drum in the wrong direction and working against the brake in the "power in" mode.	The wire rope must always spool onto the drum as indicated by the drum rotation label on the winch. Winches are equipped with an automatic brake and **WILL NOT FUNCTION** if the wire rope spools in the opposite direction. The wire rope spooling can accidentally be reversed by running the wire rope all the way out and re-spooling in with the control switch in the "power out" mode.
	Load exceeds rating for winch	Refer to operators manual for the correct line pull rating for the winch.
	After a very long "power out" cycle, in excess of 50 feet under high loads, the	These winches are rated for intermittent duty operations only.

	brake has overheated and needs a cool down cycle of approximately 30 minutes.	As the load is increased, the duration of power out cycles must be reduced to limit the brake temperature. Allow adequate time for the brake to cool between uses when performing extended power out cycles.
Difficult to spool the wire rope off the drum by hand.	Bent drum flanges or worn drum bushings.	Rotate the drum while it is still on the winch to see if the drum flanges appear to be bent. If the flanges appear to be bent, the winch will have to be replaced.
	Free spool clutch is damaged inside the gear train.	Replace winch. Refer to **WINCH, REMOVAL**.
	Wire rope is bound up on the drum.	Should the wire rope become bound onto the drum, connect the hook to a load, then by alternately "powering in" then "powering out", the wire rope will usually work itself free. **WARNING:** **Do not put your hands anywhere near the wire rope when working a bind free.**
	Winch is not mounted correctly, causing the drum to bind.	Check winch mounting and repair as necessary.
Winch lacks power or will not run at all.	Faulty ground cable attachment to the motor housing.	Verify that the ground cable is correctly installed to the threaded hole in the motor housing. Refer to **MOTOR GROUND TEST**.
	The vehicle battery is inadequate in size, terminals are corroded, is defective or worn out, or is not fully charged.	Use a fully charged conventional automotive battery with a minimum of 650 cold cranking amps rating to obtain peak performance from the winch. Make sure all terminals are clean and the battery is fully charged. Replace battery if necessary.
	Faulty cable connections on battery or motor terminals	Clean and tighten all terminals.
	Faulty power supply to the winch.	Check for proper power supply. Refer to **POWER TEST**.
	Faulty remote control switch or cord.	Check for faulty switch. Refer to **REMOTE SWITCH TEST**. Replace the remote switch is

		necessary.
When remote control switch is activated, there is only a "clicking" sound, and the winch does not operate in either "power in" or "power out" modes.	Low battery charge, corroded terminals, defective battery.	Use a fully charged conventional automotive battery with a minimum of 650 cold cranking amps rating to obtain peak performance from the winch. Make sure all terminals are clean and the battery is fully charged. Replace battery if necessary. Check for proper power supply. Refer to **POWER TEST**.
	Faulty ground cable attachment to the motor housing.	Check for proper ground. Refer to **MOTOR GROUND TEST**.
	Faulty motor armature, brushes, or water in the motor.	Replace the motor. Refer to **MOTOR, WINCH, REMOVAL**.
	Faulty control relay.	Check and replace relays as necessary. Refer to **RELAY PACK TEST**. Refer to **RELAY, WINCH, REMOVAL**.
Winch runs slowly and lacks power when pulling a load, won't pull load, or stalls easily.	The wire rope is spool onto the drum in the wrong direction and working against the brake in the "power in" mode.	The wire rope must always spool onto the drum as indicated by the drum rotation label on the winch. Winches are equipped with an automatic brake and WILL NOT FUNCTION if the wire rope spools in the opposite direction. The wire rope spooling can accidentally be reversed by running the wire rope all the way out and re-spooling in with the control switch in the "power out" mode.
When the remote control is activated, the winch will operate only in one direction.	One or more of the control pack relays is damaged	Check and replace relays as necessary. Refer to **RELAY PACK TEST**. Refer to **RELAY, WINCH, REMOVAL**.
	The remote control switch is damaged.	Check and replace switch as necessary. Refer to **REMOTE SWITCH TEST**.
Power-out mode only.	Tripped or damaged thermal switch	Let motor cool for at least 30 minutes, then try to power-in again.
		Check thermal switch. Refer to

		THERMAL SWITCH TEST. Replace the motor if the thermal switch is faulty. Refer to **MOTOR, WINCH, REMOVAL**.
When the remote control is activated, the winch will not operate and no "clicking" sound is heard.	Tripped or damaged Low Voltage Interrupt (LVI)	Use a fully charged conventional automotive battery with a minimum of 650 cold cranking amps rating to obtain peak performance from the winch. Make sure all terminals are clean and the battery is fully charged. Replace battery if necessary.
		Check LVI. Refer to **LOW VOLTAGE INTERRUPT (LVI) TEST**. Replace the relay pack if the LVI is faulty. Refer to **RELAY PACK, WINCH, REMOVAL**.

RELAY TEST

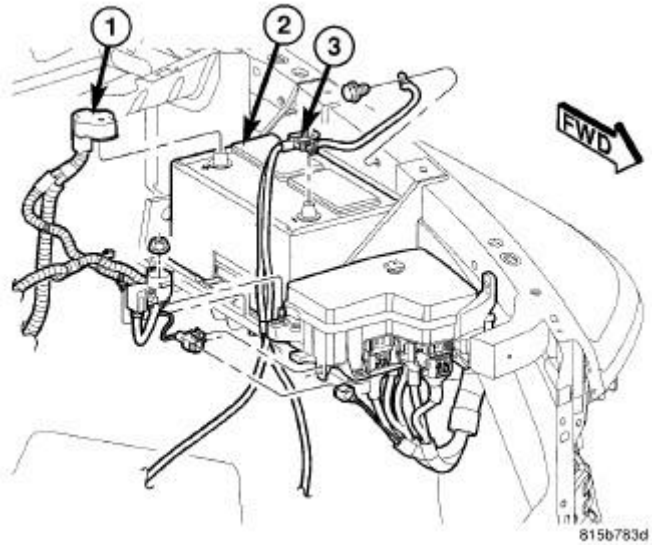

Fig. 745: Battery Cables
Courtesy of CHRYSLER GROUP, LLC

1. Disconnect the red (+) battery cable (1).

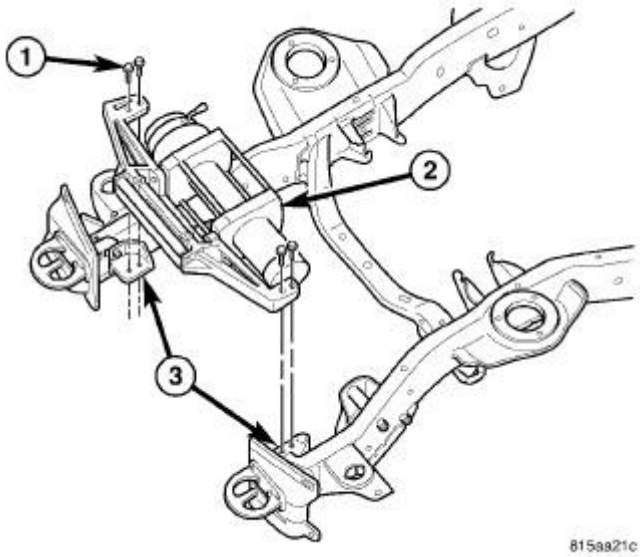

Fig. 746: Winch Assembly & Bolts
Courtesy of CHRYSLER GROUP, LLC

2. Remove the winch assembly (2) as necessary to gain access to the relay pack and cover. Refer to **WINCH, REMOVAL**.

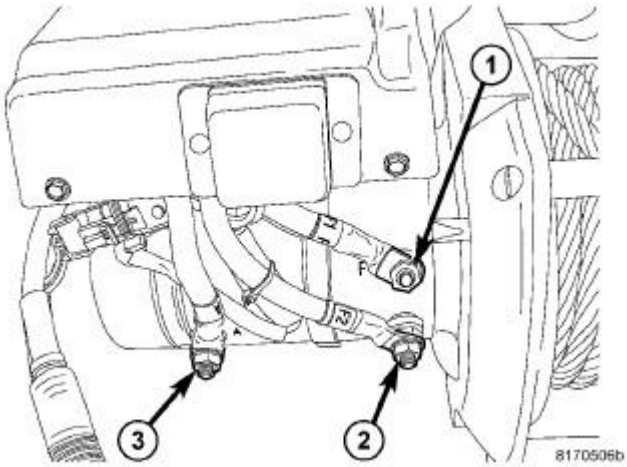

Fig. 747: Power Cable Connections
Courtesy of CHRYSLER GROUP, LLC

3. Disconnect the three cables connected to the motor on the studs marked F1 (2), F2 (1) and A (3).

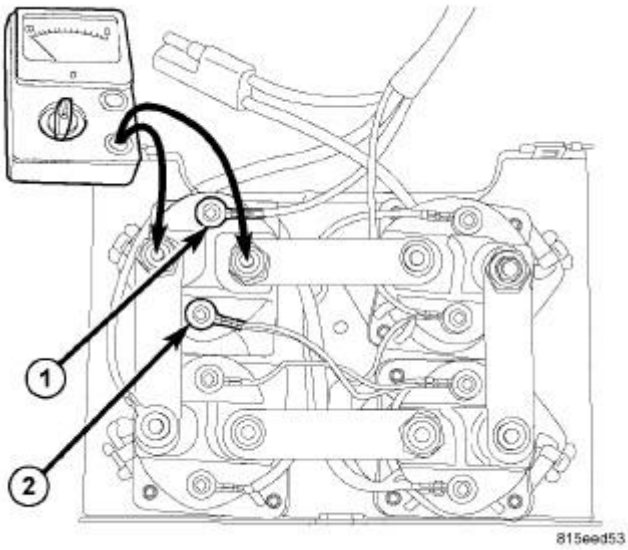

Fig. 748: Measuring Resistance Between Studs On Relay 1
Courtesy of CHRYSLER GROUP, LLC

4. Remove the nut and disconnect the terminal wire (1).
   A. Measure the resistance between the two large studs on relay #1.
      - The resistance should be greater than 1 megaohm.
   B. Apply 12 volts to the small terminal (1) and apply ground to the small terminal (2).
      - Measure the resistance between the two large studs on relay #1.
      - The resistance should be less than 1 ohm.

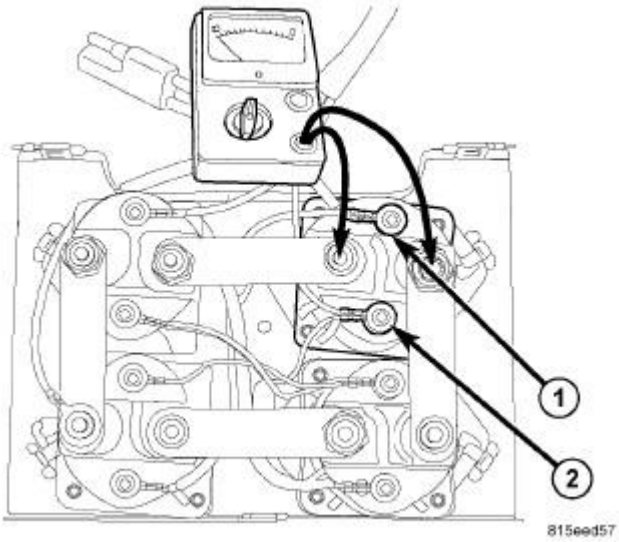

Fig. 749: Measuring Resistance Between Studs On Relay 2
Courtesy of CHRYSLER GROUP, LLC

5. Remove the nut and disconnect the terminal wire (1).
   A. Measure the resistance between the two large studs on relay #2.
      - The resistance should be greater than 1 megaohm.
   B. Apply 12 volts to the small terminal (1) and apply ground to the small terminal (2).
      - Measure the resistance between the two large studs on relay #2.
      - The resistance should be less than 1 ohm.

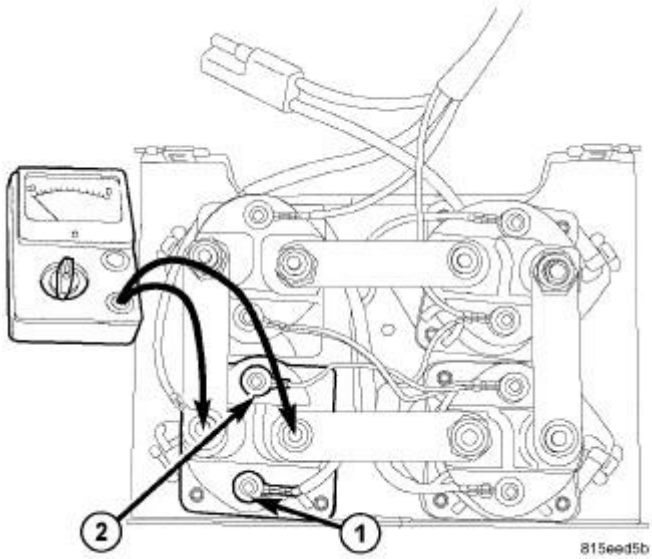

Fig. 750: Measuring Resistance Between Studs On Relay 3
Courtesy of CHRYSLER GROUP, LLC

6. Remove the nut and disconnect the terminal wire (1).
   A. Measure the resistance between the two large studs on relay #3.
      - The resistance should be greater than 1 megaohm.
   B. Apply 12 volts to the small terminal (1) and apply ground to the small terminal (2).
      - Measure the resistance between the two large studs on relay #3.
      - The resistance should be less than 1 ohm.

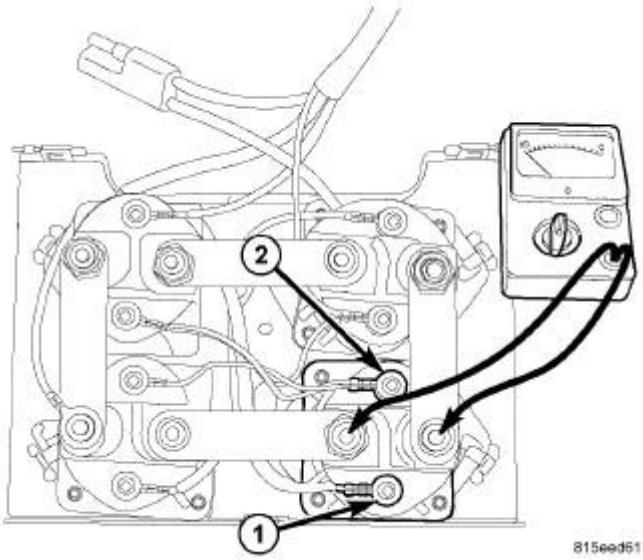

Fig. 751: Measuring Resistance Between Studs On Relay 4
Courtesy of CHRYSLER GROUP, LLC

7. Remove the nut and disconnect the terminal wire (1).
   A. Measure the resistance between the two large studs on relay #4.
      - The resistance should be greater than 1 megaohm.
   B. Apply 12 volts to the small terminal (1) and apply ground to the small terminal (2).
      - Measure the resistance between the two large studs on relay #4.
      - The resistance should be less than 1 ohm.
8. If the resistance across any of the relays doesn't go from open to closed (megaohms to tenths) then the relay is bad and needs to be replaced. Refer to **RELAY, WINCH, REMOVAL**.

REMOTE SWITCH TEST

1. To check switch, follow the steps below to check for switch continuity.

   Power-Out

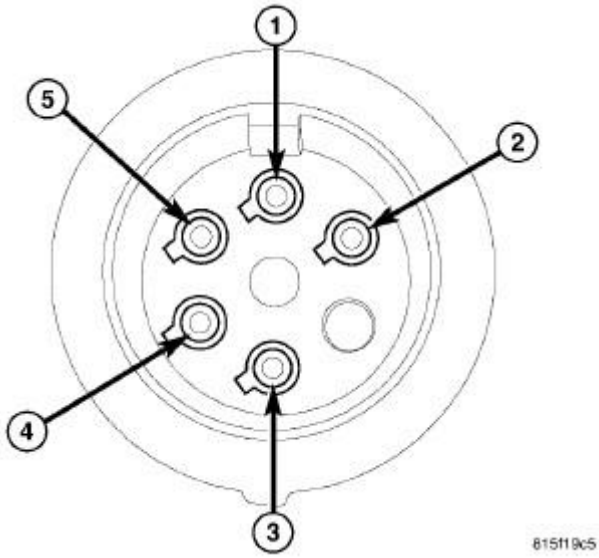

Fig. 752: Remote Switch Connector Terminal Identification
Courtesy of CHRYSLER GROUP, LLC

1. Move switch to the power-out position.
2. Check for continuity between pins (1) and (4).
3. Check for continuity between pins (2) and (5).

Power-In

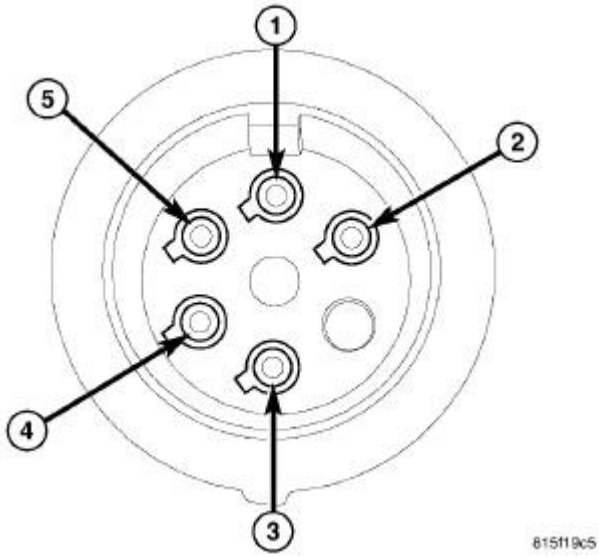

Fig. 753: Remote Switch Connector Terminal Identification
Courtesy of CHRYSLER GROUP, LLC

1. Move switch to the power-in position.

    2. Check for continuity between pins (1) and (4).
    3. Check for continuity between pins (2) and (3).
2. If there is no continuity, then the remote switch is bad and needs to be replaced.

THERMAL SWITCH TEST

The motor will not power-in if the thermal switch is open or if its terminals are in contact with the motor case. The switch should normally open when the temperature at the motor brushes reaches 205+°C (400+°F).

If the Thermal Switch is suspected to be failing check the following:

1. Disconnect the switch.
2. Measure the resistance of the switch at the electrical connector.
3. If the switch is open at room temperature then replace the motor.
4. If the switch is closed then the switch is good.
5. Check for resistance between both terminals and the motor case.
6. If the resistance is less than 1 megaohm then the winch is grounded. Replace the motor. Refer to **MOTOR, WINCH, REMOVAL**.

LOW VOLTAGE INTERRUPT (LVI) TEST

If the LVI is suspected to be failing check the following:

1. Check to make sure the battery has 10.5 to 12 volts.
2. If low, charge battery.
3. Wait for 30 seconds or more.
4. Check for a ground on pin 4.
5. If no ground then check control ground. Refer to **RELAY PACK TEST**.
6. If ground good then replace the relay pack. Refer to **RELAY PACK, WINCH, REMOVAL**.

MOTOR TEST

If the motor is suspected to be failing check the following:

1. Disconnect the motor power connectors F1, F2 and A.
2. Measure the resistance between F1 and F2. Resistance should be less than 1?.
3. Measure the resistance between A and ground. Resistance should be less than 1?.
4. If the resistance is greater than 1? the motor brushes could be worn or the internal wiring could be burned. Replace the motor. Refer to **MOTOR, WINCH, REMOVAL**.

POWER TEST

1. Check for a tight fit of all connections.
2. Using a volt meter, verify 12 ± 2 volts a the bus bar connecting relays #1 and #3.

MOTOR GROUND TEST

1. Check for continuity between the ground stud and the battery.
2. If no continuity then repair the ground cable from the batter to the motor.

RELAY PACK TEST

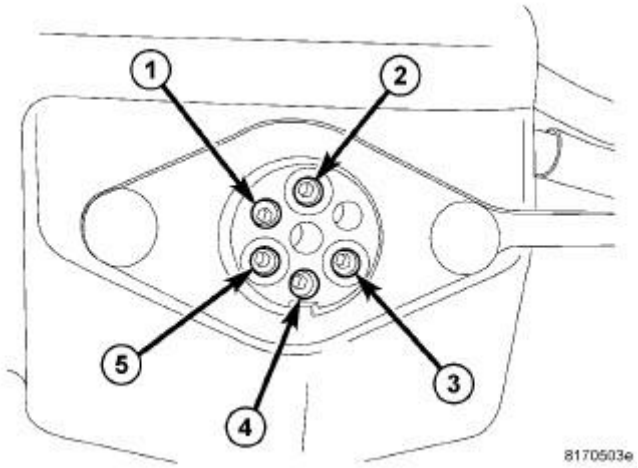

Fig. 754: Control Pack Connector Terminal Identification
Courtesy of CHRYSLER GROUP, LLC

Measurement between pins	Resistance Ohms	Voltage (V)	Results	Correction
"4" to "5"	2	-	Yes	Relay pack OK.
			No	1. Check for any faulty relay or motor electrical connections and repair if necessary. 2. Check for a faulty relay and replace as necessary. Refer to **RELAY TEST**.
"4" to "2"	2	-	Yes	Relay pack OK.
			No	1. Check for any faulty relay or motor electrical connections and repair if necessary. 2. Check for a faulty relay and replace as necessary. Refer to **RELAY TEST**.
"1" to "2"	Greater than 100K	-	Yes	Relay pack OK.
			No	Check for shorted Thermal Switch. Refer to **THERMAL SWITCH**

				TEST.
"1" to "3"	-	12	Yes	Relay pack OK.
			No	1. Check for any faulty relay or motor electrical connections and repair if necessary. 2. Check for faulty LVI. Refer to **LOW VOLTAGE INTERRUPT (LVI) TEST**.

REMOVAL

REMOVAL

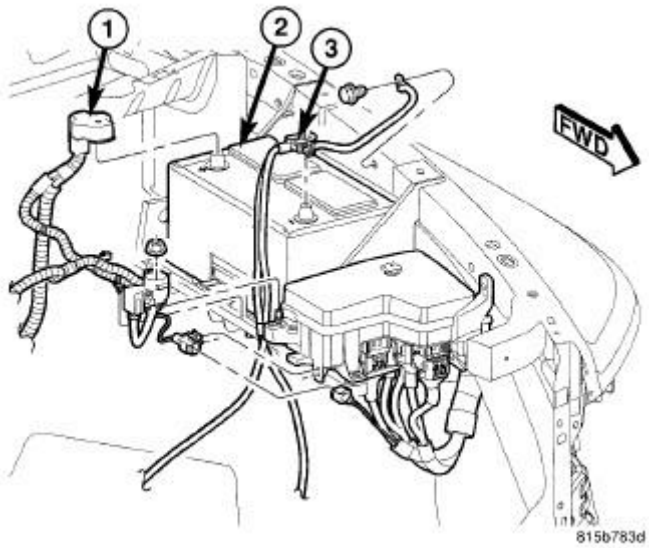

Fig. 755: Battery Cables
Courtesy of CHRYSLER GROUP, LLC

1. Disconnect and isolate battery negative (3) and positive (1) cables.

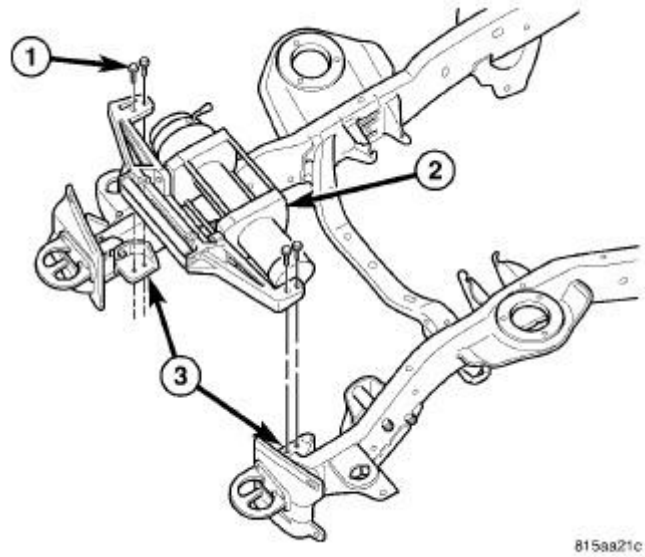

Fig. 756: Winch Assembly & Bolts
Courtesy of CHRYSLER GROUP, LLC

2. Remove the winch support bolts (1).

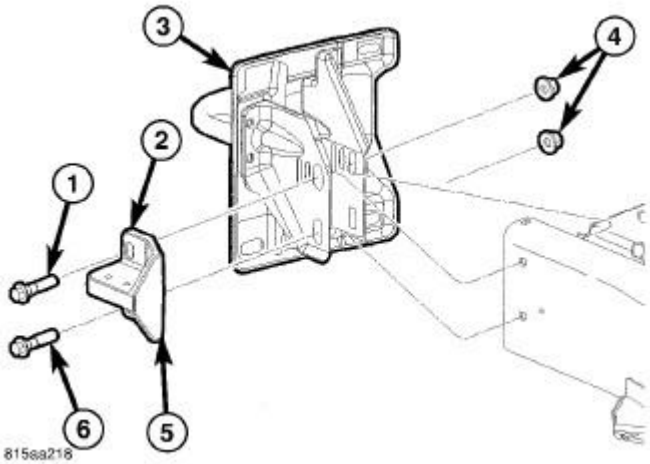

Fig. 757: Frame Bracket
Courtesy of CHRYSLER GROUP, LLC

3. Remove the lower frame bracket (2) bolts (6) and loosen the upper bolts (1).

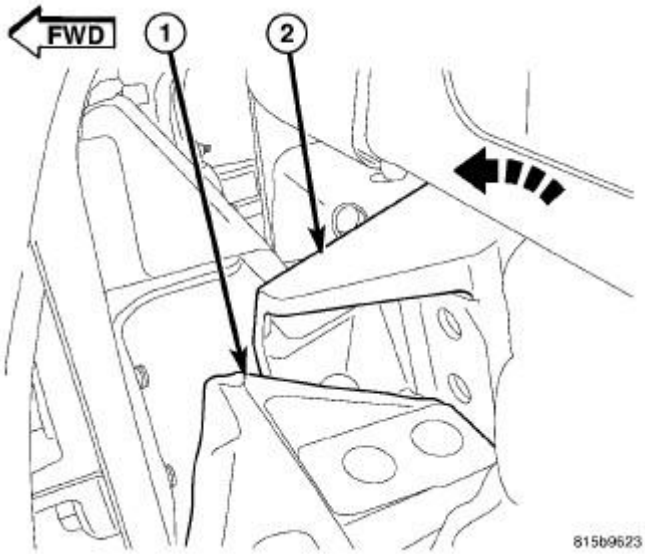

Fig. 758: Frame Support Brackets
Courtesy of CHRYSLER GROUP, LLC

4. Support the winch using a jack or other suitable lift device.
5. Lift the winch assembly off the support brackets.
6. Pivot the frame support brackets (2) up and position out of the way.
7. Carefully lower the winch assembly out of the vehicle.

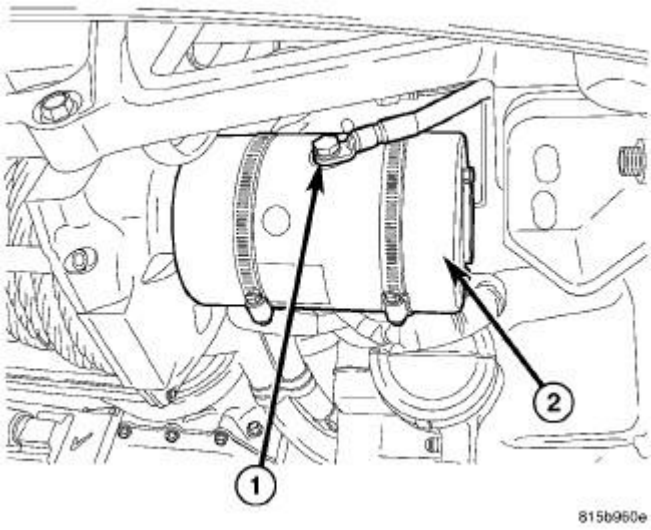

Fig. 759: Ground Cable Connection
Courtesy of CHRYSLER GROUP, LLC

8. Remove the nut and disconnect the ground cable (1) from the motor (2).

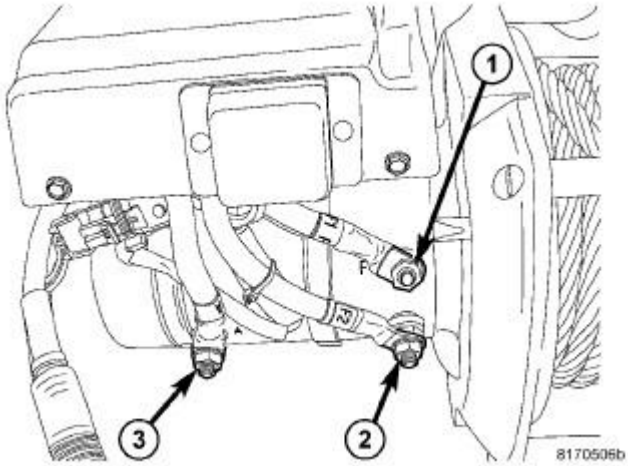

Fig. 760: Power Cable Connections
Courtesy of CHRYSLER GROUP, LLC

9. Disconnect the three cables connected to the motor on the studs marked F1 (2), F2 (1) and A (3).
10. Disconnect the thermal switch electrical connector.

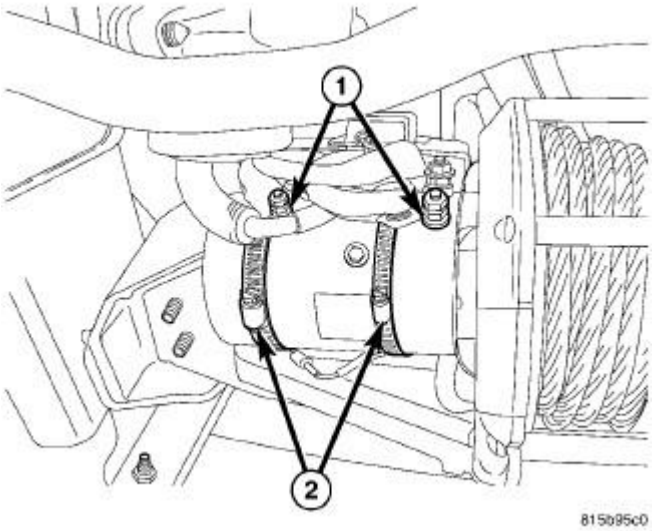

Fig. 761: Coil Pack Clamps & Power Connections
Courtesy of CHRYSLER GROUP, LLC

11. Remove the clamps (2) and separate the coil pack from the motor.

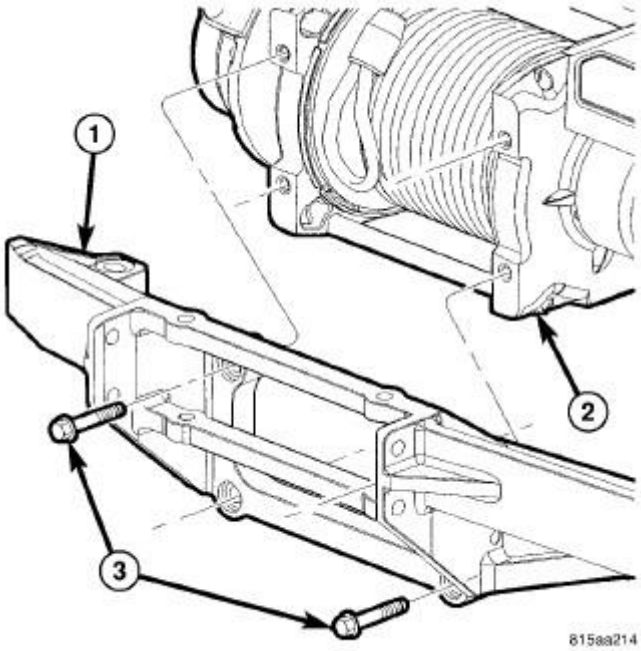

Fig. 762: Winch Mounting Bracket Assembly & Bolts
Courtesy of CHRYSLER GROUP, LLC

12. Remove the four winch mounting and roller bracket bolts (3).
13. Separate the mounting bracket assembly (1) from the winch assembly.

INSTALLATION

INSTALLATION

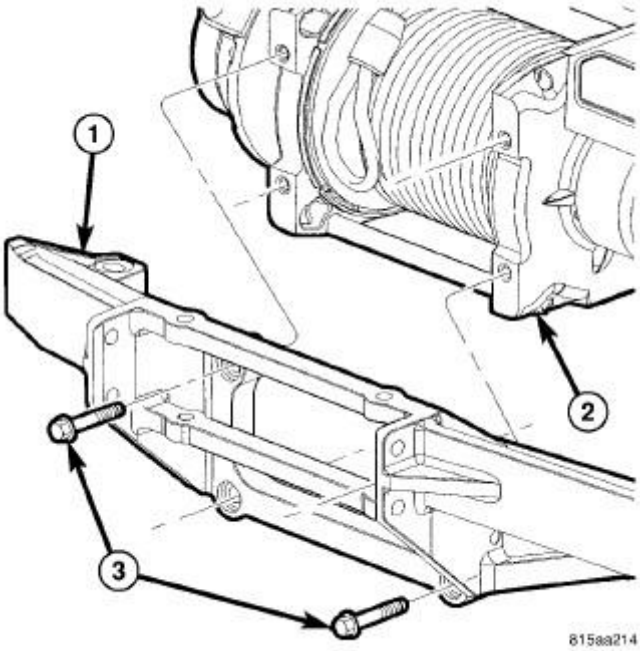

Fig. 763: Winch Mounting Bracket Assembly & Bolts
Courtesy of CHRYSLER GROUP, LLC

1. Position the winch (2) onto the support bracket (1) and install the bolts (3).
2. Tighten the bolts to 108 N.m (80 ft. lbs.)

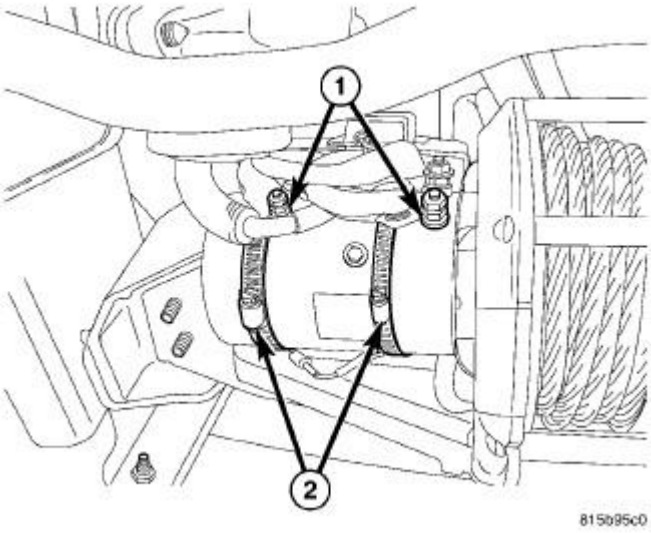

Fig. 764: Coil Pack Clamps & Power Connections
Courtesy of CHRYSLER GROUP, LLC

3. Position the relay pack onto the motor and tighten the band clamps (2).
4. Connect the thermal switch electrical connector.

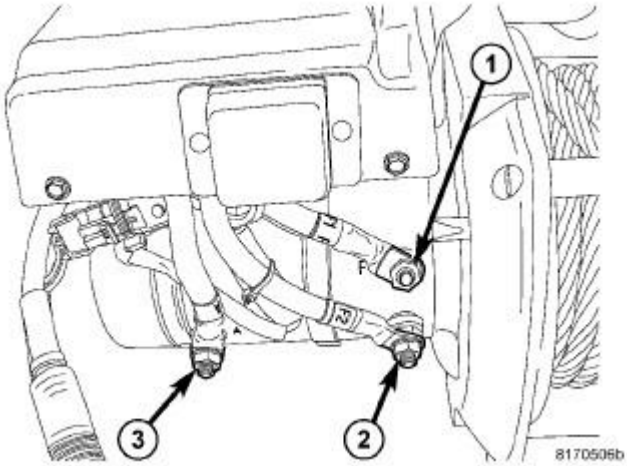

Fig. 765: Power Cable Connections
Courtesy of CHRYSLER GROUP, LLC

5. Connect the three cables connected to the motor on the studs marked F1 (2), F2 (1) and A (3).
6. Tighten the nuts to 7 N.m (60 in. lbs.).

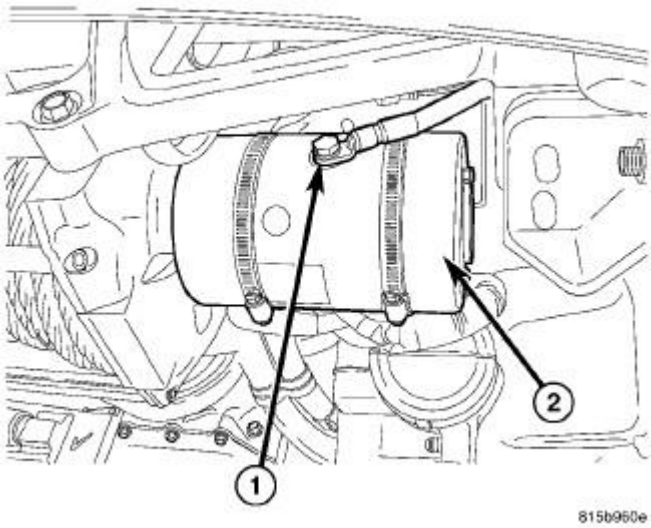

Fig. 766: Ground Cable Connection
Courtesy of CHRYSLER GROUP, LLC

7. Install the ground cable and install the bolt (1).
8. Tighten the bolt to 14 N.m (10 ft. lbs.).

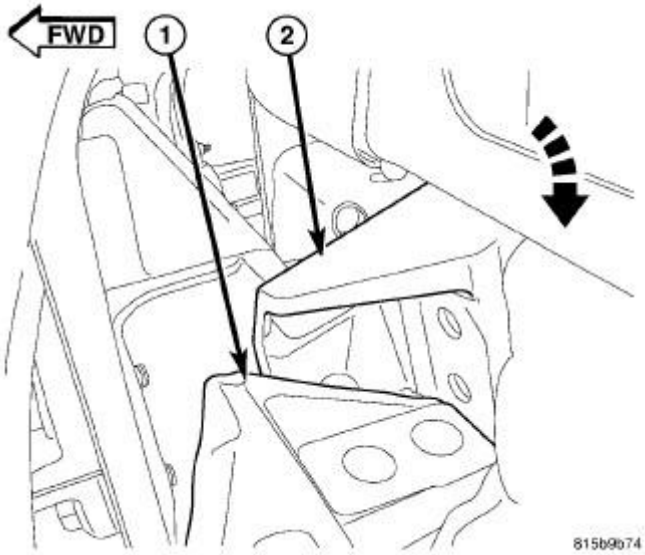

Fig. 767: Winch Mounting & Frame Support Brackets
Courtesy of CHRYSLER GROUP, LLC

9. Raise the winch assembly into position.
10. Pivot the frame support brackets (2) down under the winch mounting bracket (1).

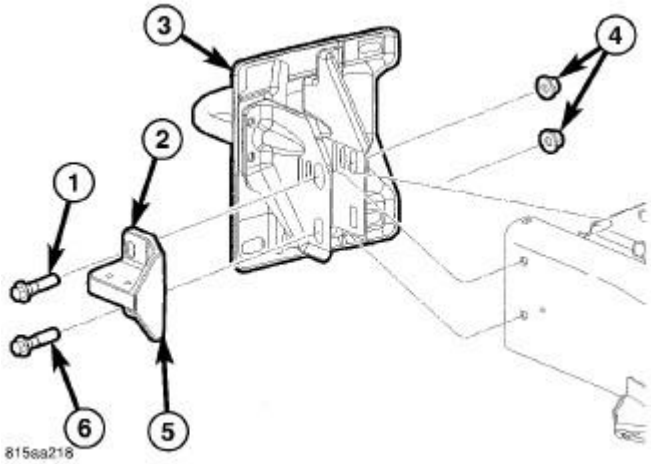

Fig. 768: Frame Bracket
Courtesy of CHRYSLER GROUP, LLC

11. Install the lower frame bracket bolt (6) and nut (4).
12. Check and adjust the bumper alignment as necessary. Refer to **GAP AND FLUSH, SPECIFICATIONS**.
13. Tighten the bolts and nuts to 95 N.m (70 ft. lbs.).

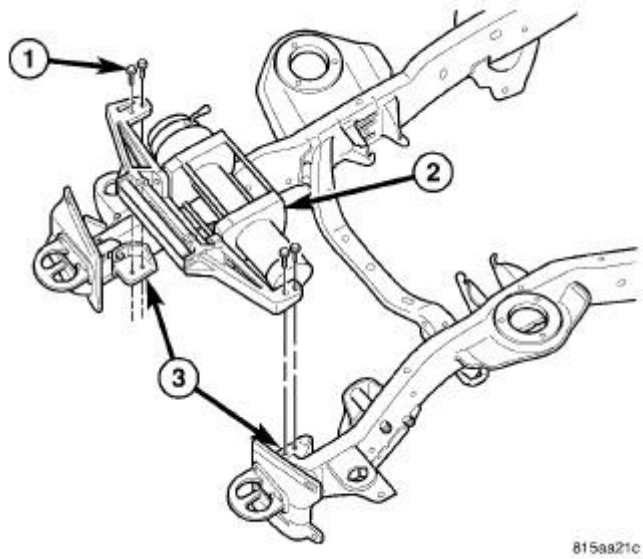

Fig. 769: Winch Assembly & Bolts
Courtesy of CHRYSLER GROUP, LLC

14. Install the winch mounting bolts (1) and tighten to 41 N.m (30 ft. lbs.)

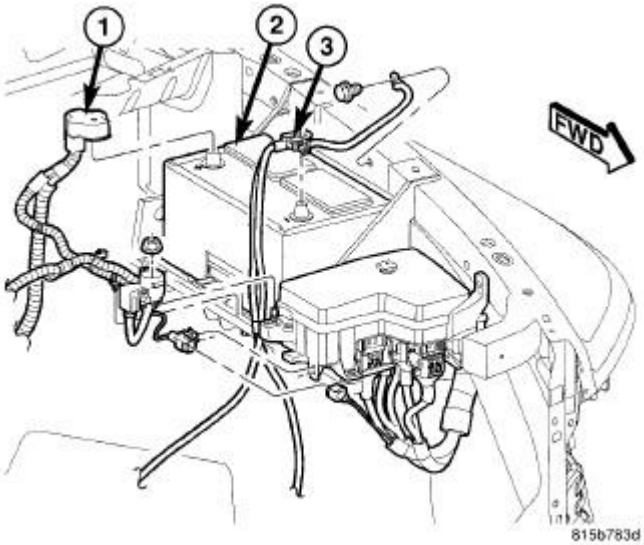

Fig. 770: Battery Cables
Courtesy of CHRYSLER GROUP, LLC

15. Connect battery negative cable (3).
16. Verify the operation of the winch.

BRACKET

REMOVAL

REMOVAL

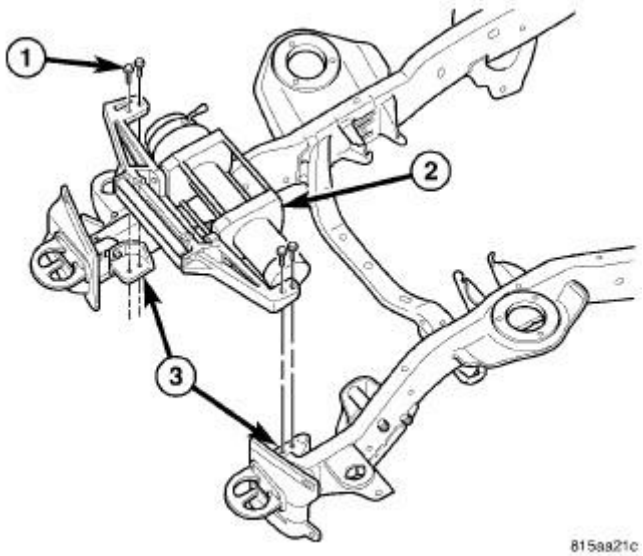

Fig. 771: Winch Assembly & Bolts
Courtesy of CHRYSLER GROUP, LLC

1. Remove the winch (2). Refer to **WINCH, REMOVAL**.

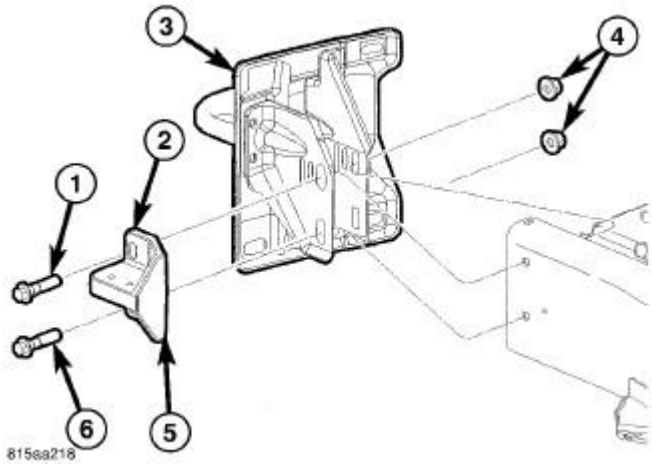

Fig. 772: Frame Bracket
Courtesy of CHRYSLER GROUP, LLC

2. Remove the upper bolts (1) and remove the frame brackets (2).

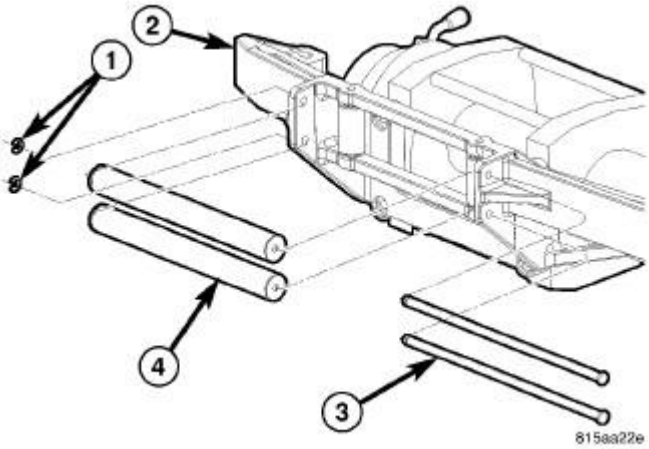

Fig. 773: Roller, Shaft & Clips
Courtesy of CHRYSLER GROUP, LLC

3. Separate one of the roller shaft clips (1), remove the shaft (3) and the roller (4).

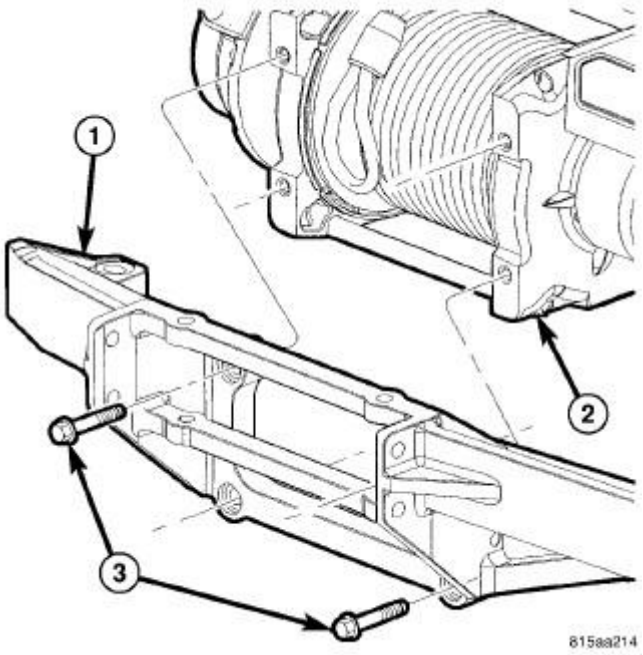

Fig. 774: Winch Mounting Bracket Assembly & Bolts
Courtesy of CHRYSLER GROUP, LLC

4. Remove the bolts (3) and separate the support bracket (1) from the winch assembly (2).

INSTALLATION

INSTALLATION

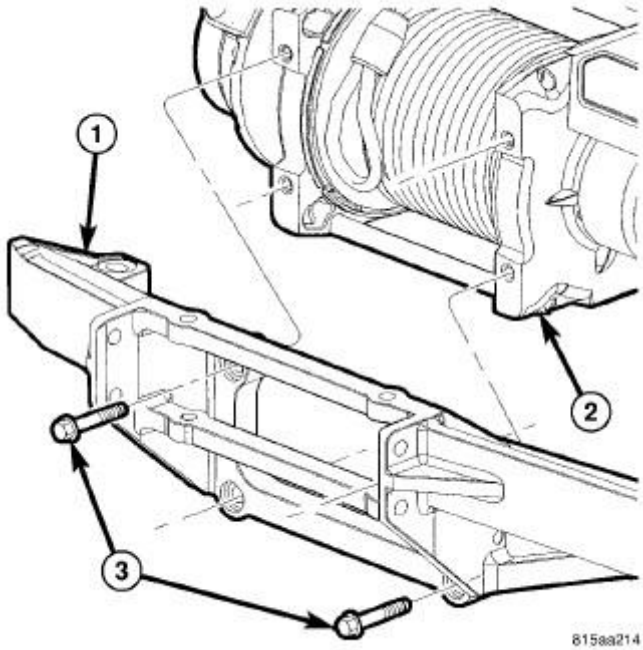

Fig. 775: Winch Mounting Bracket Assembly & Bolts
Courtesy of CHRYSLER GROUP, LLC

1. Install the support bracket (1) and install the bolts (3).
2. Tighten the bolts to 108 N.m (80 ft. lbs.).

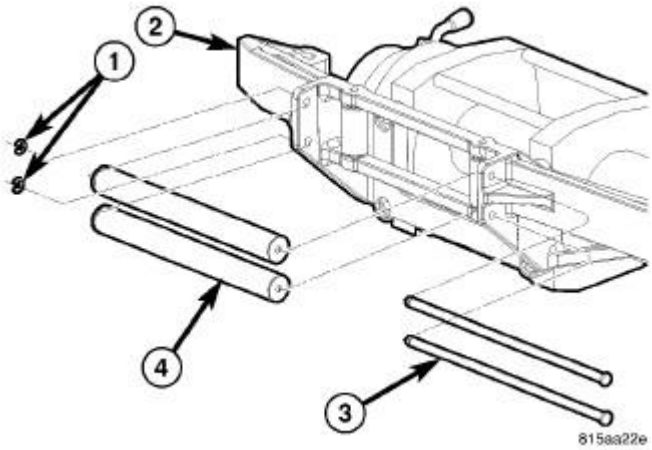

Fig. 776: Roller, Shaft & Clips
Courtesy of CHRYSLER GROUP, LLC

3. Position the wire rope through the roller opening and install the roller (4), shaft (3) and clip (1).

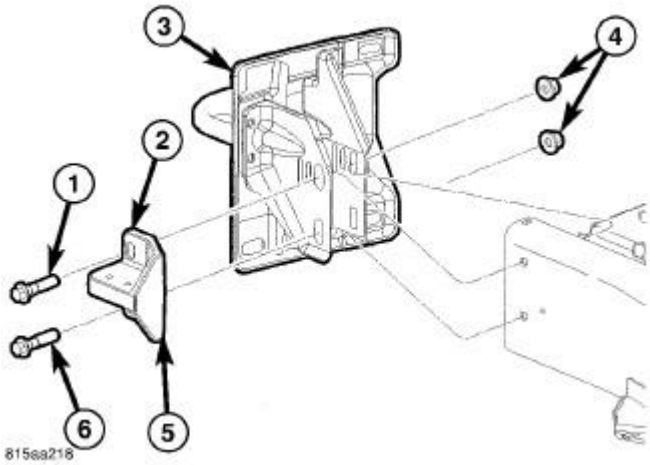

Fig. 777: Frame Bracket
Courtesy of CHRYSLER GROUP, LLC

4. Install the frame bracket (2) and install the upper bolt (1) and nut (4) and hand tighten.

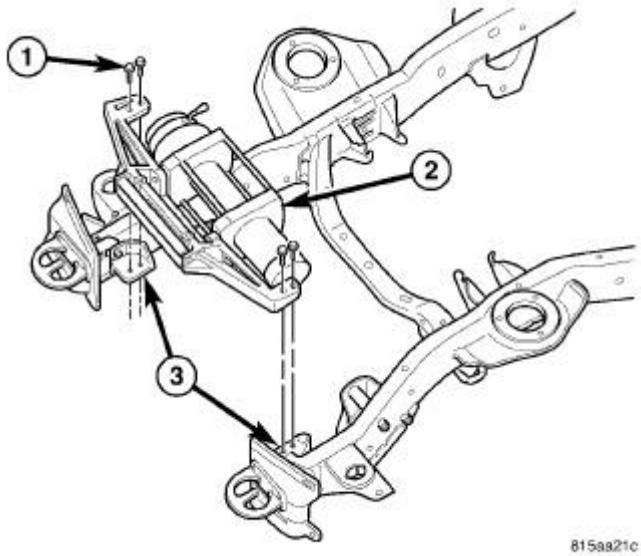

Fig. 778: Winch Assembly & Bolts
Courtesy of CHRYSLER GROUP, LLC

5. Install the winch (2). Refer to **WINCH, INSTALLATION**.

MOTOR, WINCH

DESCRIPTION

DESCRIPTION

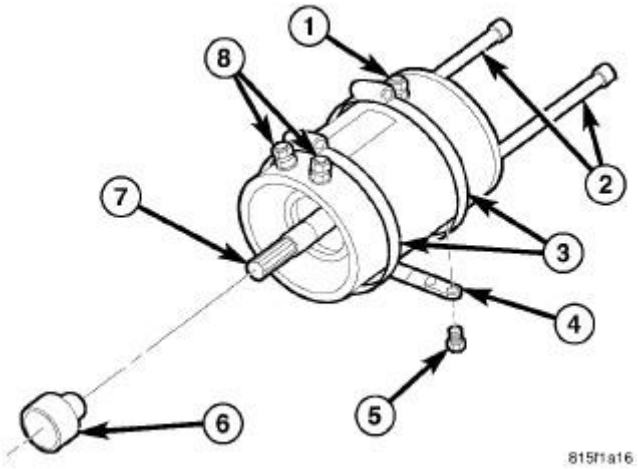

Fig. 779: Motor Winch Components
Courtesy of CHRYSLER GROUP, LLC

1 - ARMATURE STUD/NUT 7 N.m (60 in. lbs.)
2 - MOTOR BOLTS (2) 9 N.m (82 in. lbs.)
3 - MOUNTING BAND CLAMPS
4 - GROUND CABLE
5 - GROUND BOLT 14 N.m (10 ft. lbs.)
6 - MOTOR COUPLER
7 - MOTOR DRIVE SHAFT
8 - FIELD STUDS/NUTS 7 N.m (60 in. lbs.)

The winch is driven on one end by a two direction electric motor powered by the vehicle electrical system. The motor is internally protected by a thermal switch that is activated when the motor gets too hot to operate efficiently.

Winch motor controls consist of a relay pack mounted to the motor, and a remote control connected to the relay pack with a cord. The winch power source cables are connected to the relay pack which in turn feeds power to the winch motor through electrical cable connections. The main function of the relay pack is to allow the operator to switch the winch on and off in both directions. The winch relay pack also includes a Low Voltage Interrupt (LVI) used to prevent winch operation in the event of battery power dropping below 10 volts.

REMOVAL

REMOVAL

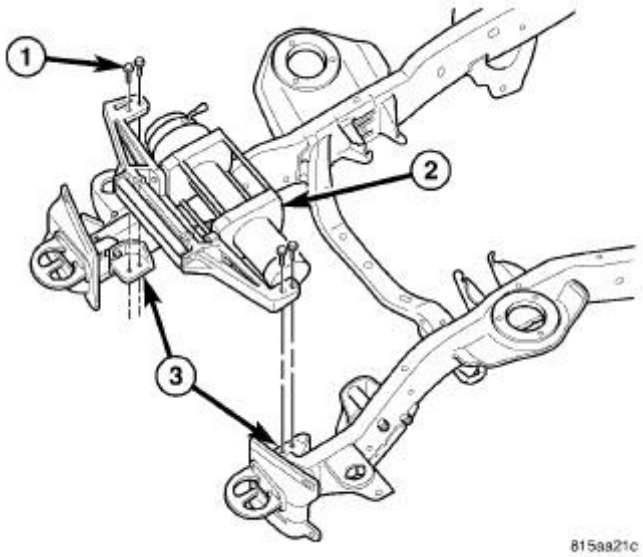

Fig. 780: Winch Assembly & Bolts
Courtesy of CHRYSLER GROUP, LLC

1. Remove the winch assembly (2). Refer to **WINCH, REMOVAL**.

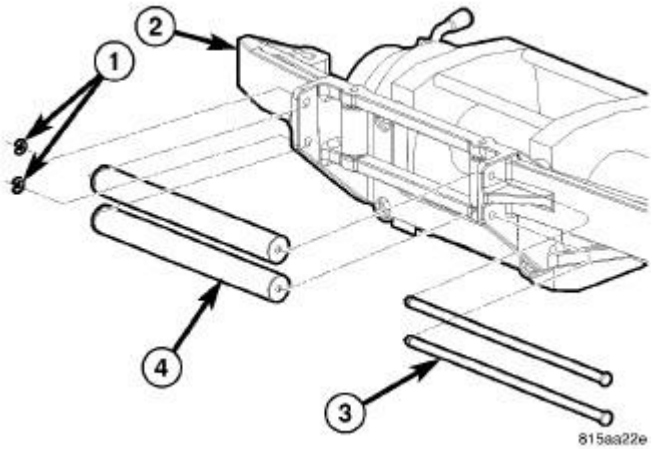

Fig. 781: Roller, Shaft & Clips
Courtesy of CHRYSLER GROUP, LLC

2. Separate one of the roller shaft clips (1), remove the shaft (3) and the roller (4).

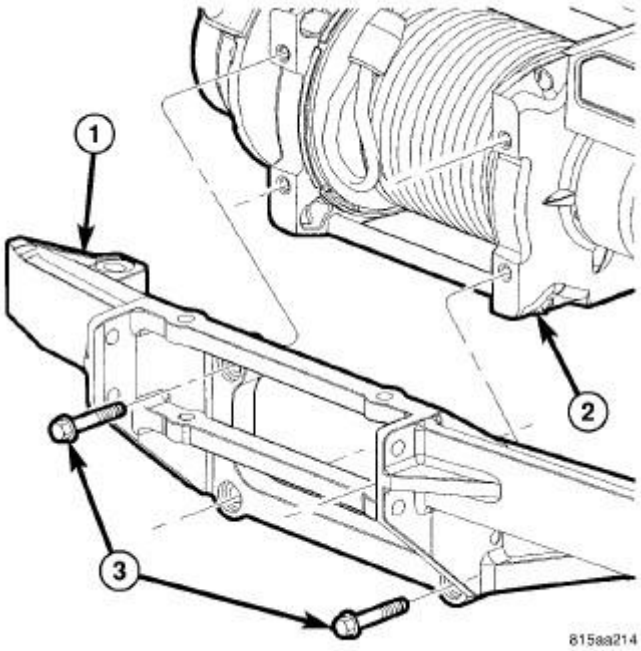

Fig. 782: Winch Mounting Bracket Assembly & Bolts
Courtesy of CHRYSLER GROUP, LLC

3. Remove the bolts (3) and separate the support bracket (1) from the winch assembly (2).

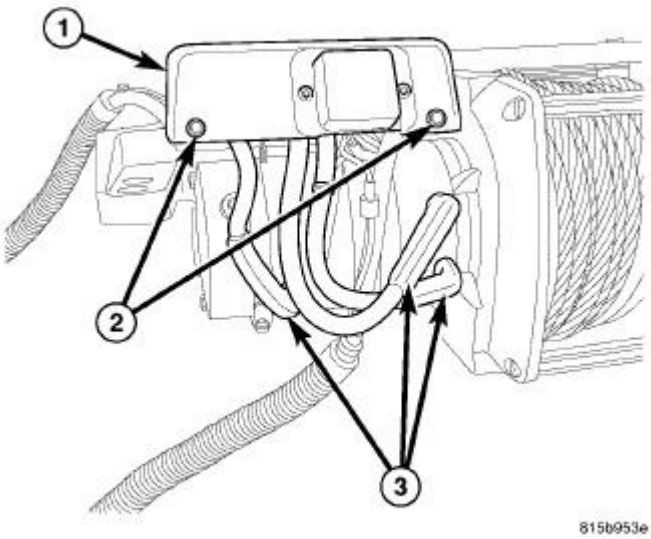

Fig. 783: Relay Pack Cover
Courtesy of CHRYSLER GROUP, LLC

4. Remove the relay pack (1). Refer to **RELAY PACK, WINCH, REMOVAL**.

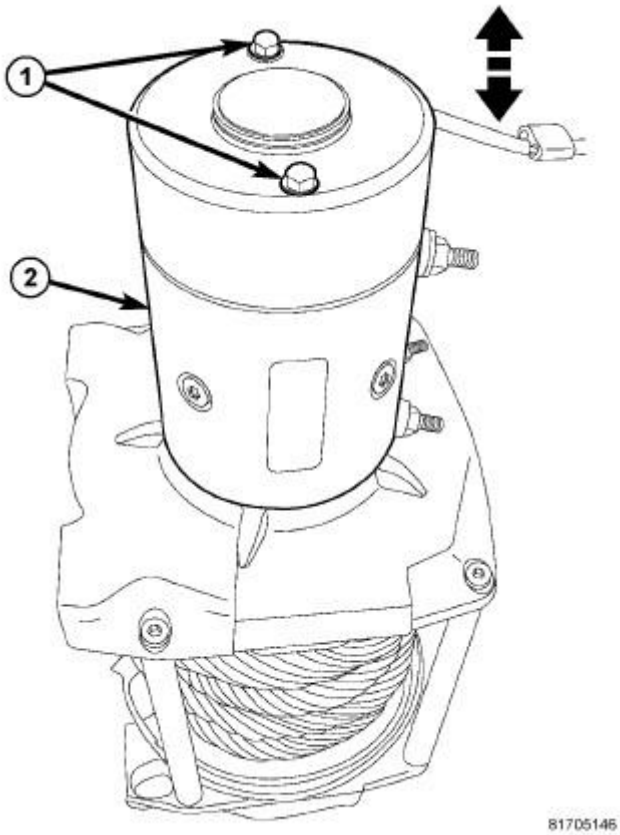

Fig. 784: Motor & Mounting Bolts
Courtesy of CHRYSLER GROUP, LLC

5. Stand winch assembly on the clutch end with the motor up to make it easier to align the motor coupler and drive shaft.
6. Remove the two motor mounting bolts (1) and carefully lift the motor (2) off of the drum assembly.

INSTALLATION

INSTALLATION

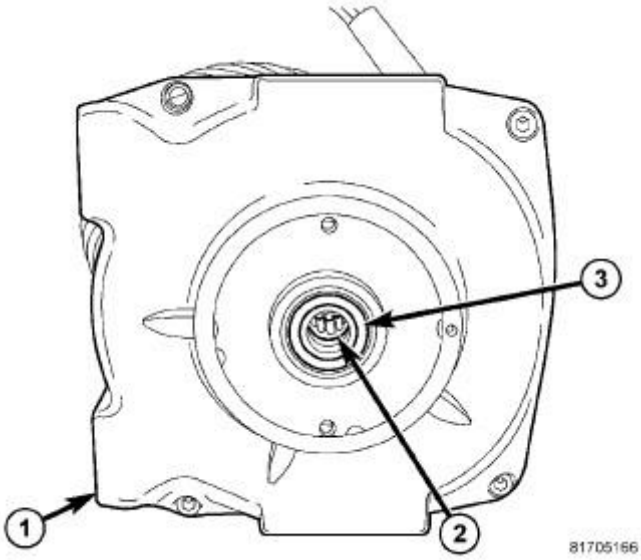

Fig. 785: Centering Motor Coupler In Drive Shaft Opening
Courtesy of CHRYSLER GROUP, LLC

1. With the winch assembly (1) standing on the clutch side verify that the motor coupler (2) is centered in the drive shaft opening (3).

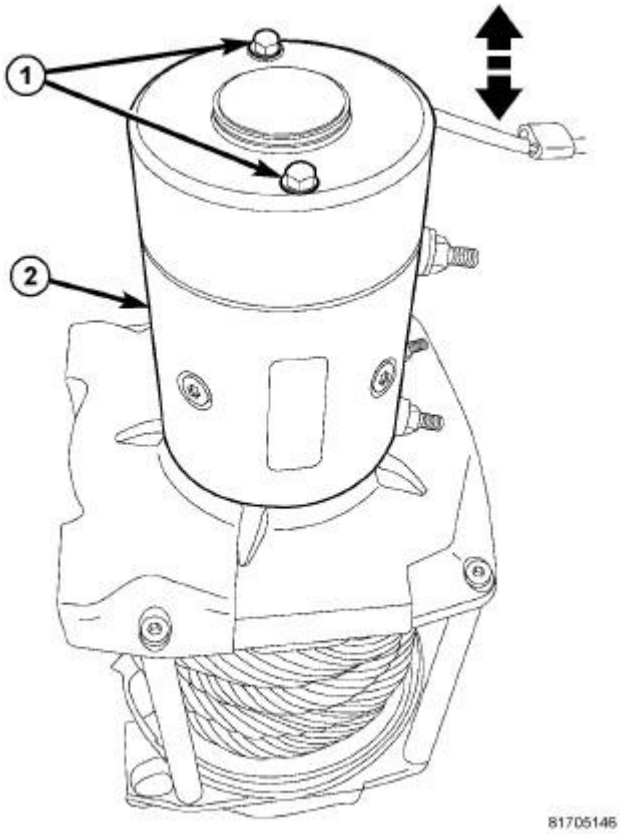

Fig. 786: Motor & Mounting Bolts
Courtesy of CHRYSLER GROUP, LLC

2. Position the motor drive shaft into the motor coupler splines and install the motor (2).
3. Install the bolts (1) and tighten to 9 N.m (82 in. lbs.).

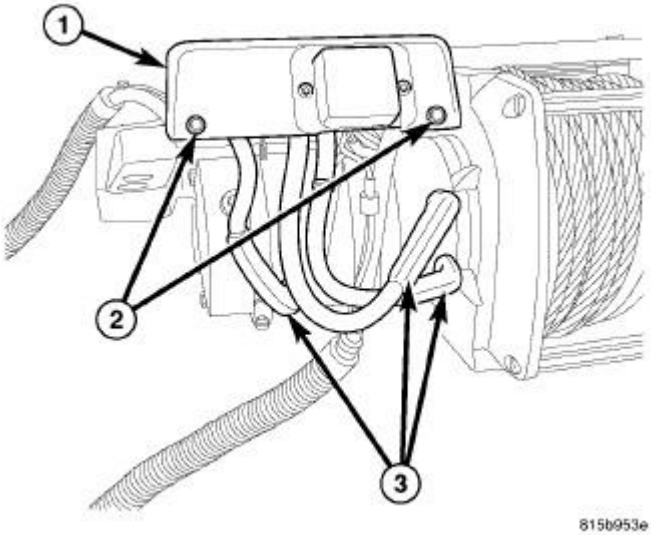

Fig. 787: Relay Pack Cover
Courtesy of CHRYSLER GROUP, LLC

4. Install the relay pack (1). Refer to **RELAY PACK, WINCH, INSTALLATION**.

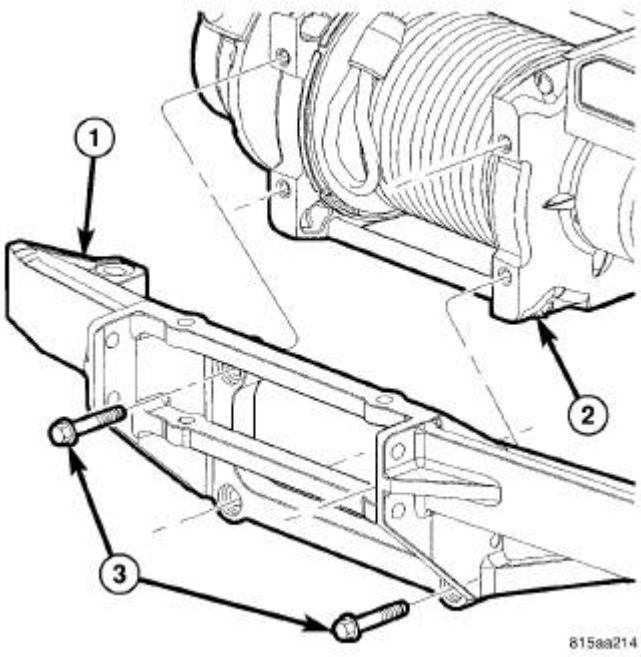

Fig. 788: Winch Mounting Bracket Assembly & Bolts
Courtesy of CHRYSLER GROUP, LLC

5. Install the support bracket (1) and install the bolts (3).
6. Tighten the bolts to 108 N.m (80 ft. lbs.).

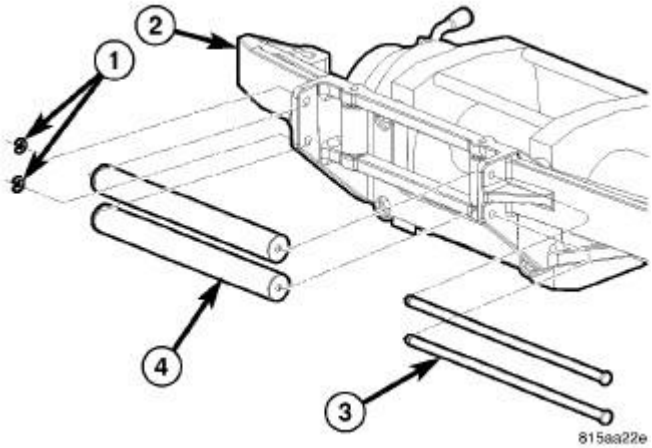

Fig. 789: Roller, Shaft & Clips
Courtesy of CHRYSLER GROUP, LLC

7. Position the wire rope through the roller opening and install the roller (4), shaft (3) and clip (1).

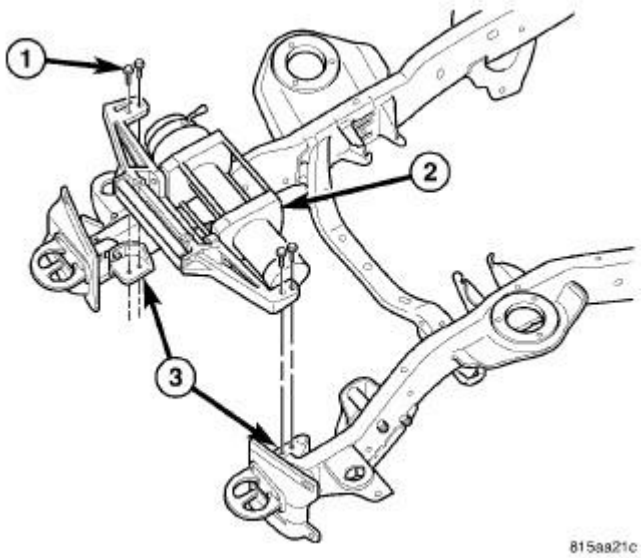

Fig. 790: Winch Assembly & Bolts
Courtesy of CHRYSLER GROUP, LLC

8. Install the winch assembly (2). Refer to **WINCH, INSTALLATION**.

RELAY PACK, WINCH

DESCRIPTION

DESCRIPTION

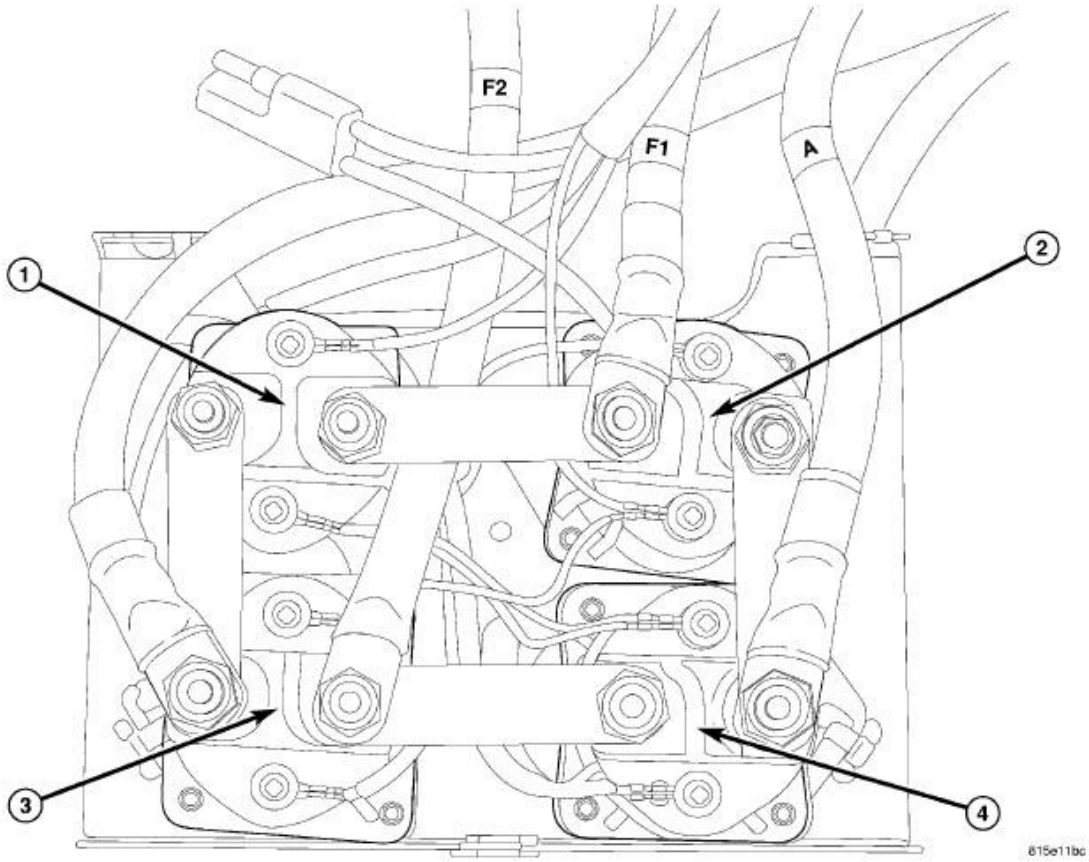

Fig. 791: Identifying Relays in Relay Pack
Courtesy of CHRYSLER GROUP, LLC

1 - RELAY #1
2 - RELAY #2
3 - RELAY #3
4 - RELAY #4
F2 - FIELD #2 LEAD
F1 - FIELD #1 LEAD
A - ARMATURE LEAD

Electrical operation of the control assembly consists of four heavy duty relays, a thermal-switch located on the motor armature brush holder and a Low Voltage Interrupt (LVI) located in the control assembly. The thermal-switch interrupts the power-in function and the LVI affects both the power-in and power-out functions and must be reset by allowing the charging circuit voltage to rise above 10 volts for more than 30 seconds. The thermal switch is reset only by allowing the winch motor to cool adequately (about 30 minutes). Relay number 1 and 3 control current flow through the field windings and relay number 2 and 4 supply current to the motor armature.

OPERATION

OPERATION

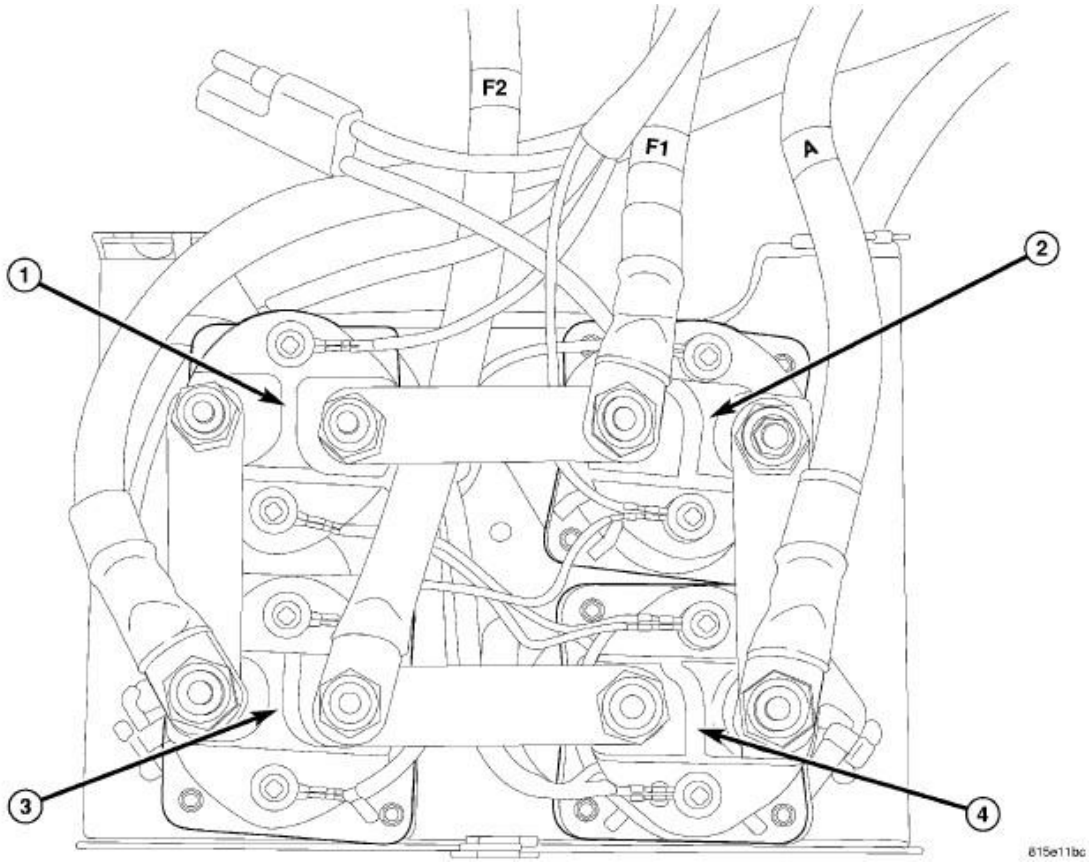

Fig. 792: Identifying Relays in Relay Pack
Courtesy of CHRYSLER GROUP, LLC

1 - RELAY #1
2 - RELAY #2
3 - RELAY #3
4 - RELAY #4
F2 - FIELD #2 LEAD
F1 - FIELD #1 LEAD
A - ARMATURE LEAD

In the power-out mode, relay number 2 and 3 are energized by the remote control switch. Current flows from the positive battery terminal through relay number 3 then through the black motor cable to the number 2 and number 1 field windings. From the black motor cable current then flows through solenoid number 2 to the motor armature to ground.

In power-in mode, relay number 1 and 4 are energized. Current again flows from the battery positive cable, but this time current flows through solenoid number 1 then through field winding number 1. Current flowing in the reverse direction through the field windings cause the motor to turn in the opposite direction. From the red

motor cable current then flows through relay number 4 to the black cable going to the motor armature to ground.

REMOVAL

REMOVAL

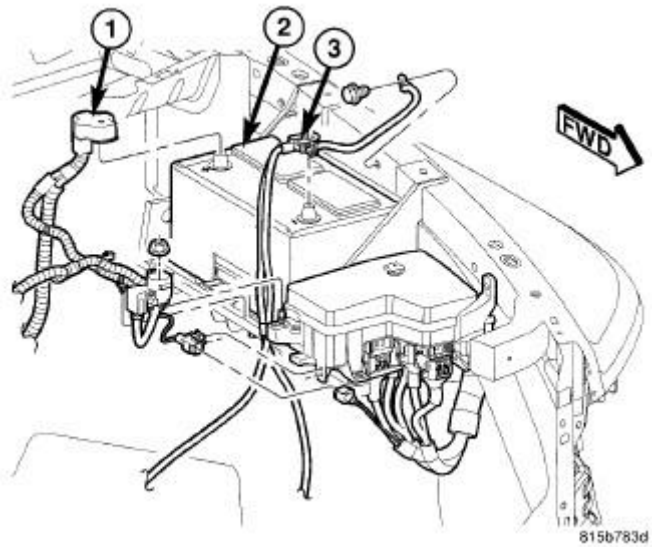

Fig. 793: Battery Cables
Courtesy of CHRYSLER GROUP, LLC

1. Disconnect and isolate battery negative cable (3).

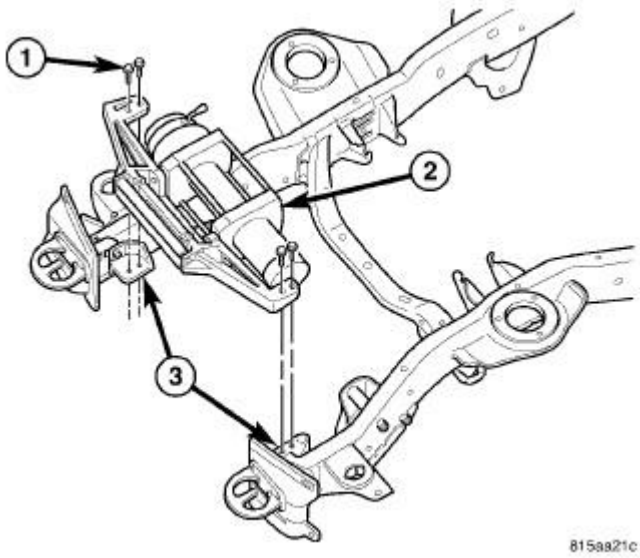

Fig. 794: Winch Assembly & Bolts
Courtesy of CHRYSLER GROUP, LLC

2. Remove the winch assembly (2). Refer to **WINCH, REMOVAL**.

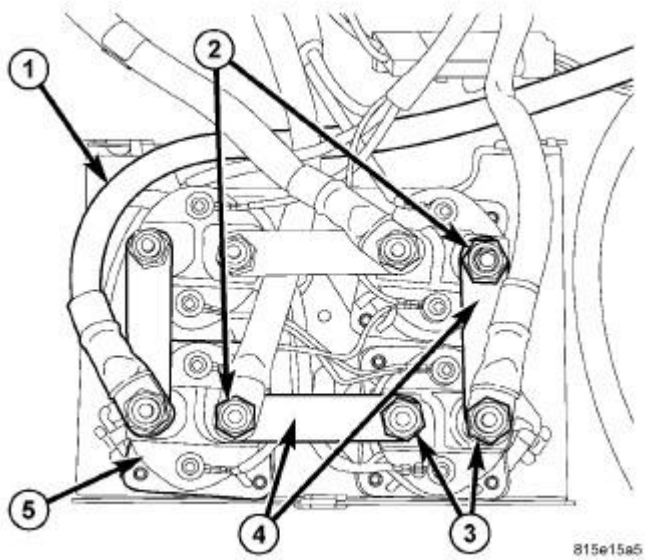

Fig. 795: Cables, Bus Straps & Nuts
Courtesy of CHRYSLER GROUP, LLC

3. Remove the nut and disconnect the red battery positive cable (1).

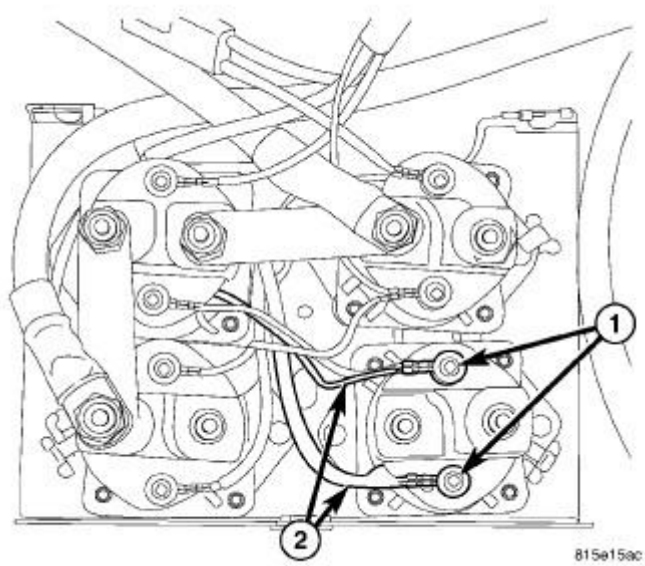

Fig. 796: Control Wires & Nuts
Courtesy of CHRYSLER GROUP, LLC

NOTE: Relay #4 shown in illustration, all others similar.

4. Remove the control wire nuts (1) and disconnect the control wires (2) from each relay.

INSTALLATION

INSTALLATION

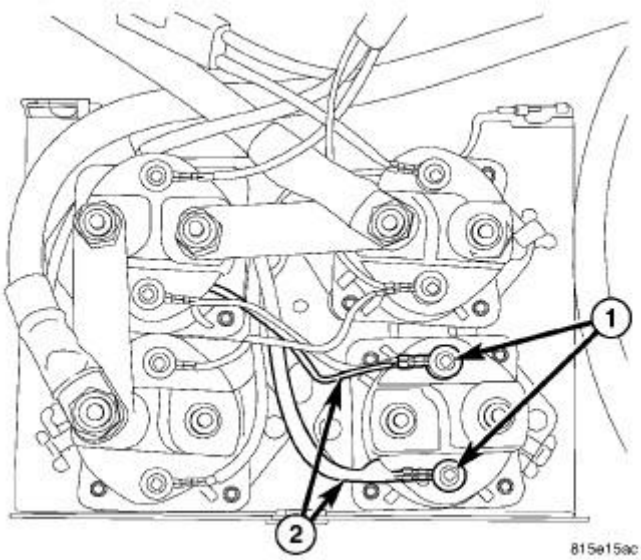

Fig. 797: Control Wires & Nuts
Courtesy of CHRYSLER GROUP, LLC

NOTE: Relay #4 shown in illustration, all others similar.

1. Install the control wires (2) to all the relays and install the nuts (1).
2. Tighten the nuts to 3 N.m (25 in. lbs.).

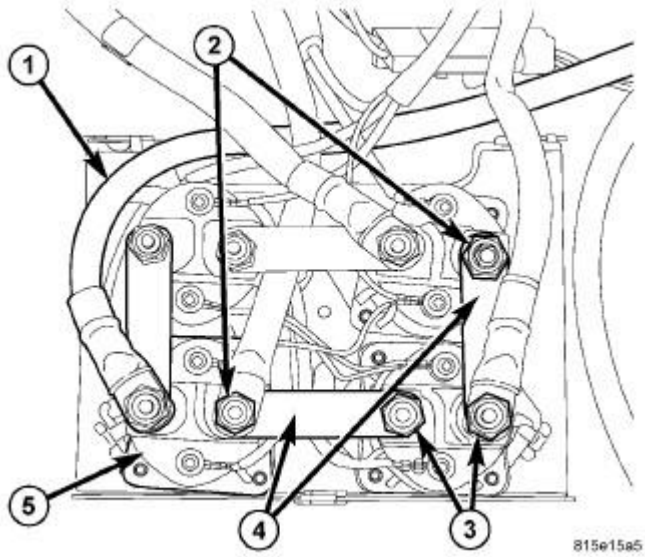

Fig. 798: Cables, Bus Straps & Nuts

Courtesy of CHRYSLER GROUP, LLC

3. Install the red battery positive cable (1) and install the switch wire.
4. Install the nut and tighten to 10 N.m (85 in. lbs.).

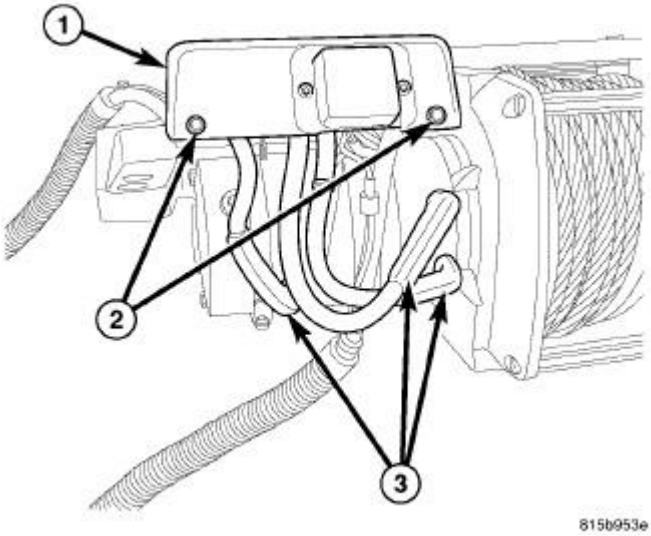

Fig. 799: Relay Pack Cover
Courtesy of CHRYSLER GROUP, LLC

5. Install the relay pack cover (1) and install the three screws (2).

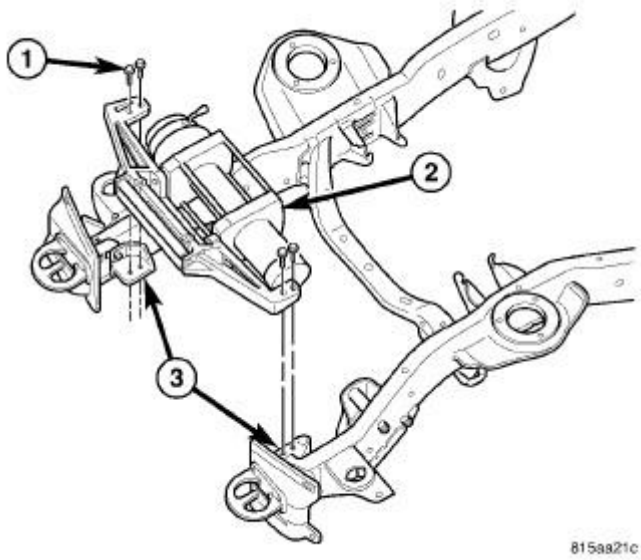

Fig. 800: Winch Assembly & Bolts
Courtesy of CHRYSLER GROUP, LLC

6. Install the winch assembly (2). Refer to **WINCH, INSTALLATION**.

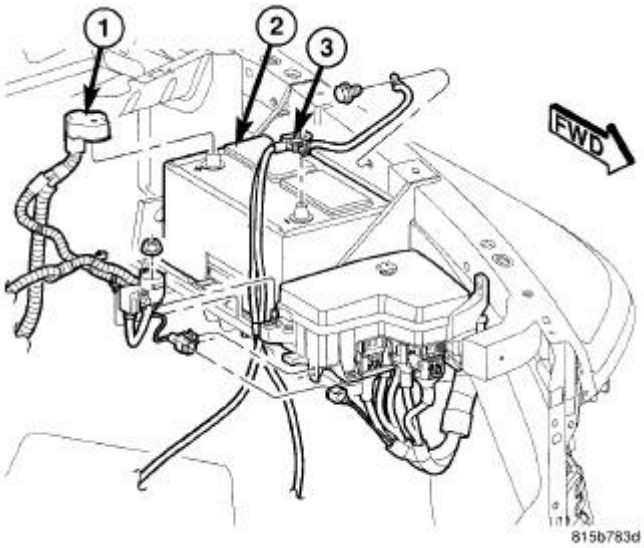

Fig. 801: Battery Cables
Courtesy of CHRYSLER GROUP, LLC

7. Connect the battery negative cable (3) and verify winch operation.

RELAY, WINCH

REMOVAL

REMOVAL

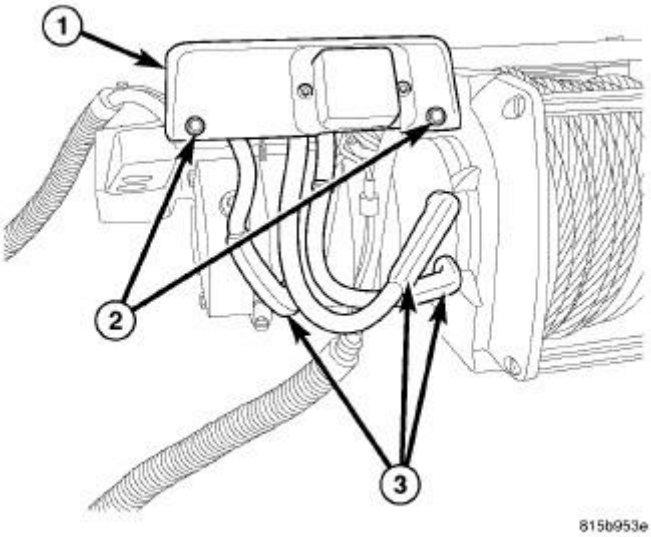

Fig. 802: Relay Pack Cover
Courtesy of CHRYSLER GROUP, LLC

1. Remove the relay pack (1). Refer to **RELAY PACK, WINCH, REMOVAL**.

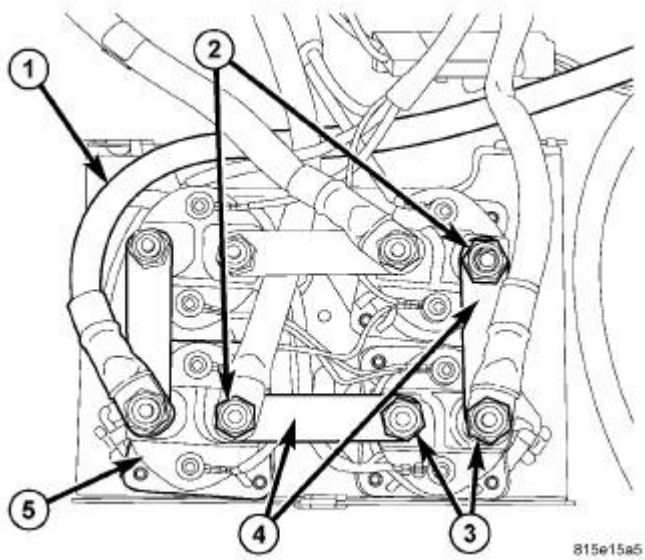

Fig. 803: Cables, Bus Straps & Nuts
Courtesy of CHRYSLER GROUP, LLC

2. Remove the nuts (2 AND 3), disconnect the cables and remove the bus straps (4).

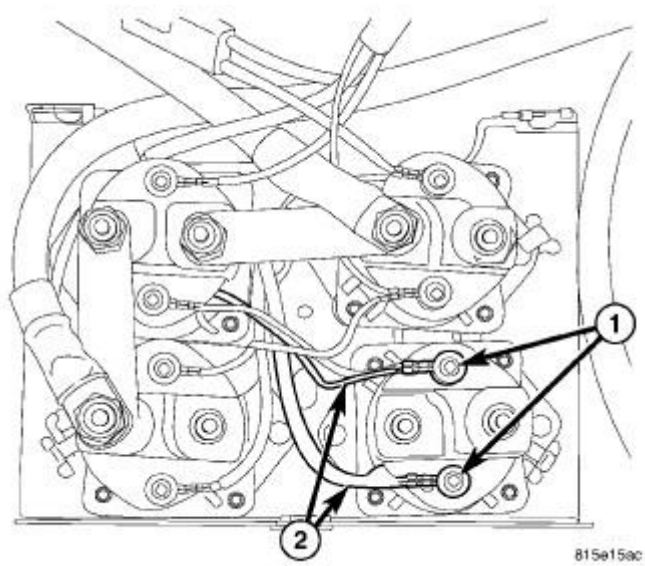

Fig. 804: Control Wires & Nuts
Courtesy of CHRYSLER GROUP, LLC

NOTE: Relay #4 shown in illustration, all others similar.

3. Remove the nuts (1) and disconnect the control wires (2).

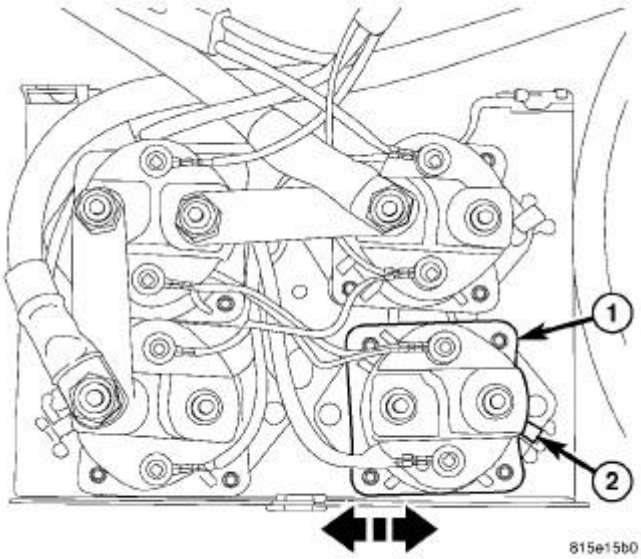

Fig. 805: Relay & Retaining Tab
Courtesy of CHRYSLER GROUP, LLC

4. Slide the relay (1) out of the retaining tab (2) and remove.

INSTALLATION

INSTALLATION

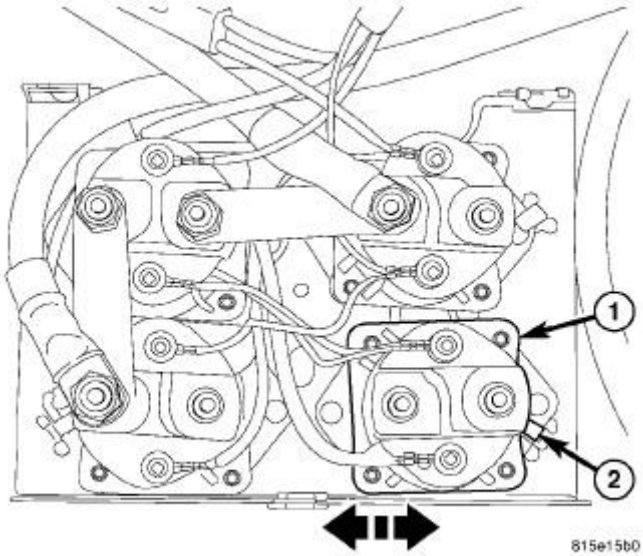

Fig. 806: Relay & Retaining Tab
Courtesy of CHRYSLER GROUP, LLC

NOTE: Relay #4 shown in illustration, all others similar.

1. Slide the relay (1) into the retaining tab (2).

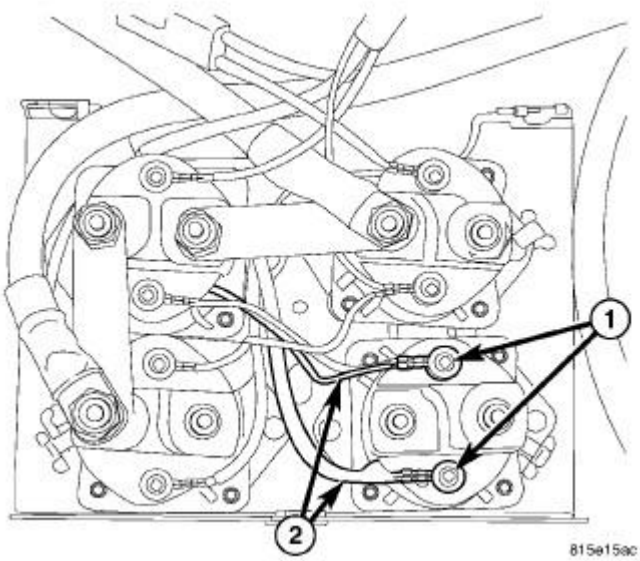

Fig. 807: Control Wires & Nuts
Courtesy of CHRYSLER GROUP, LLC

2. Install the control wires (2) and install the nuts (1).
3. Tighten the nuts to 3 N.m (25 in. lbs.).

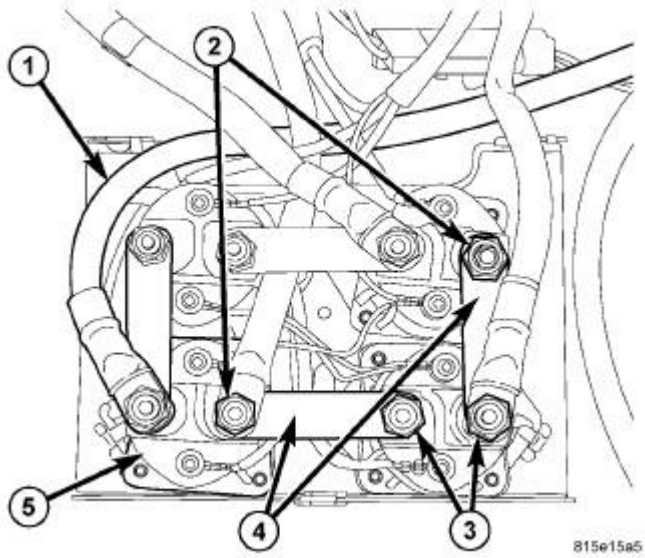

Fig. 808: Cables, Bus Straps & Nuts
Courtesy of CHRYSLER GROUP, LLC

4. Install the bus straps (4) and connect the cables.
5. Install the nuts (2 AND 3) and tighten to 9.5 N.m (85 in. lbs.).

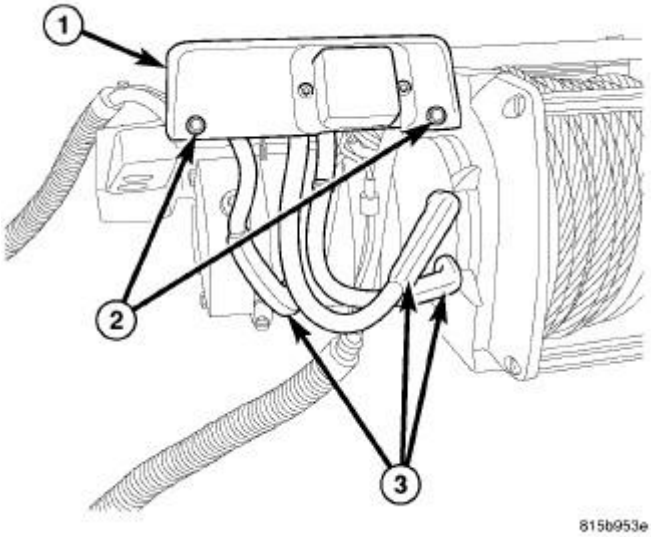

Fig. 809: Relay Pack Cover
Courtesy of CHRYSLER GROUP, LLC

6. Install the relay pack (1). Refer to **RELAY PACK, WINCH, INSTALLATION**.

ROLLERS, WIRE ROPE GUIDE

REMOVAL

REMOVAL

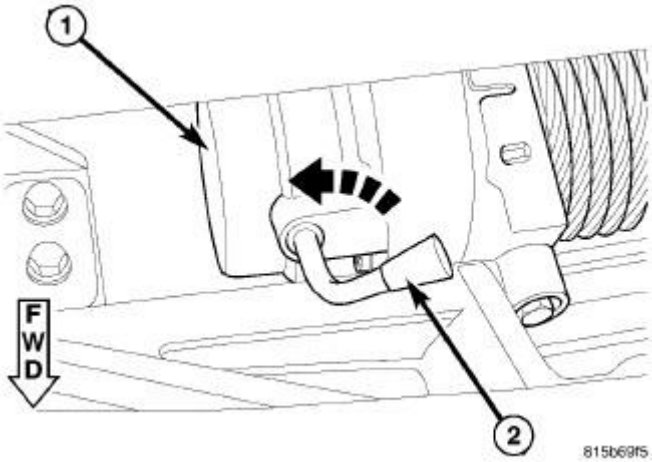

Fig. 810: Moving Clutch Lever To "Free Spool"
Courtesy of CHRYSLER GROUP, LLC

1. Move the clutch lever (2) to "Free Spool" and disengage the wire rope. Pull out a portion to give it some slack.

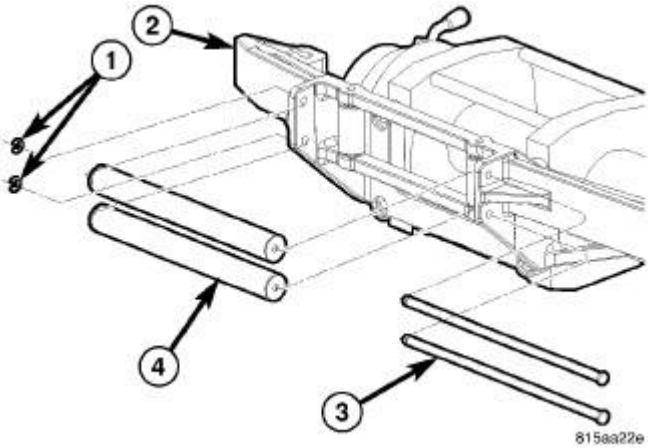

Fig. 811: Roller, Shaft & Clips
Courtesy of CHRYSLER GROUP, LLC

2. Remove the clips (1).
3. Remove the roller axle rods (3) and remove the rollers (4) from the support bracket (2).

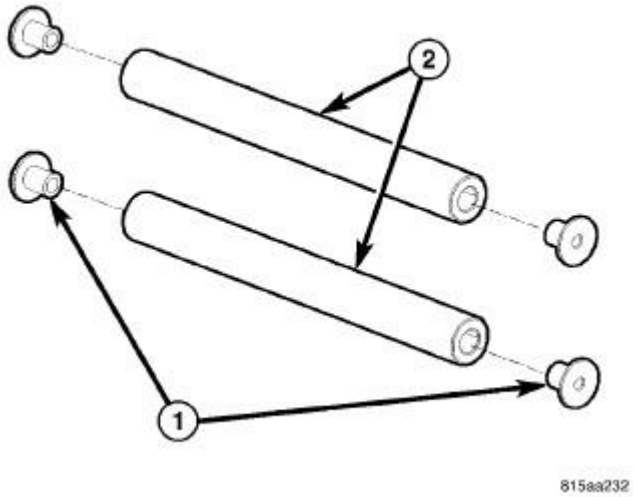

Fig. 812: Horizontal Rollers Bushings
Courtesy of CHRYSLER GROUP, LLC

4. Separate the bushings (1) from the rollers (2) and replace if necessary.

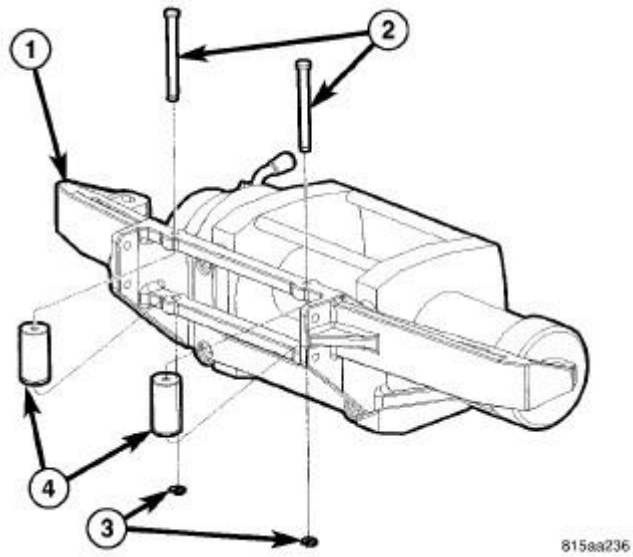

Fig. 813: Vertical Rollers & Axle Rods
Courtesy of CHRYSLER GROUP, LLC

5. Remove the clips (3).
6. Remove the roller axle rods (2) and remove the rollers (4) from the support bracket (1).

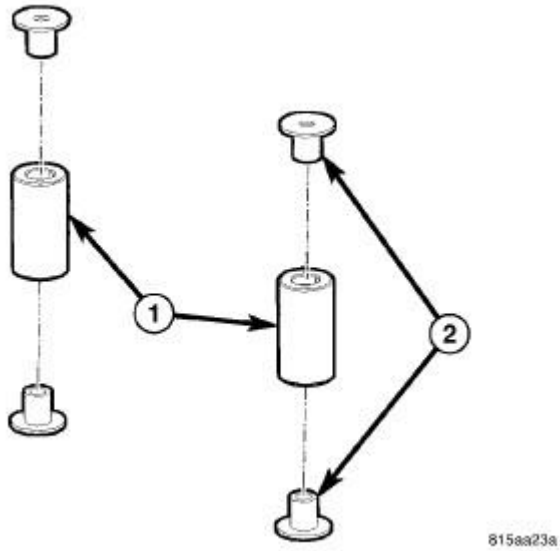

Fig. 814: Vertical Rollers & Bushings
Courtesy of CHRYSLER GROUP, LLC

7. Separate the bushings (2) from the rollers (1) and replace if necessary.

INSTALLATION

INSTALLATION

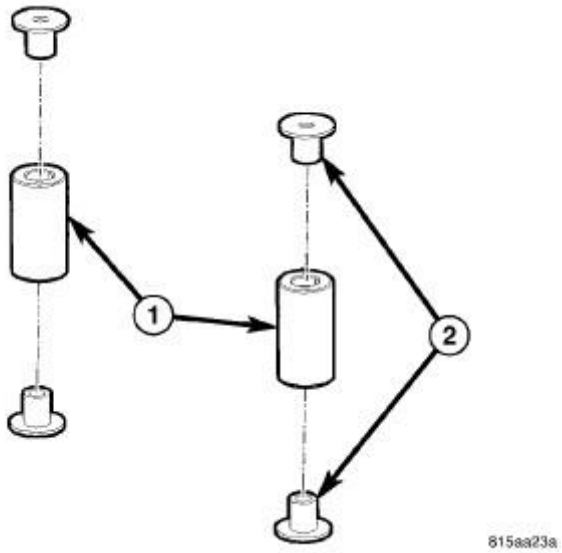

Fig. 815: Vertical Rollers & Bushings
Courtesy of CHRYSLER GROUP, LLC

1. Install the roller bushings (2) onto the rollers (1).

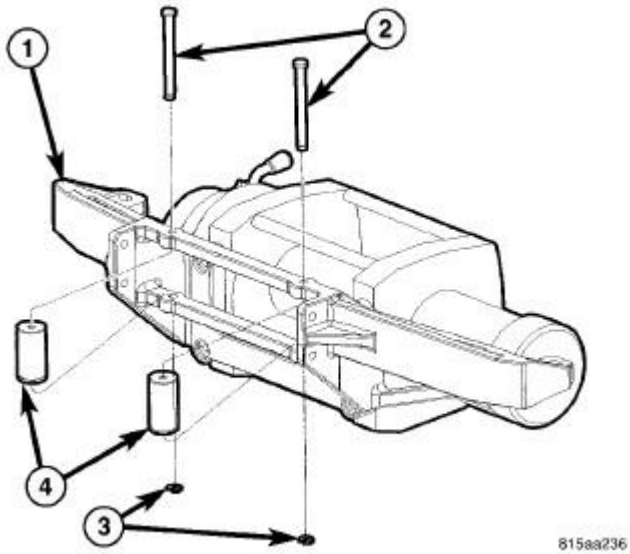

Fig. 816: Vertical Rollers & Axle Rods
Courtesy of CHRYSLER GROUP, LLC

2. Install the rollers (4) and install the axle rods (2).
3. Install the clips (3).

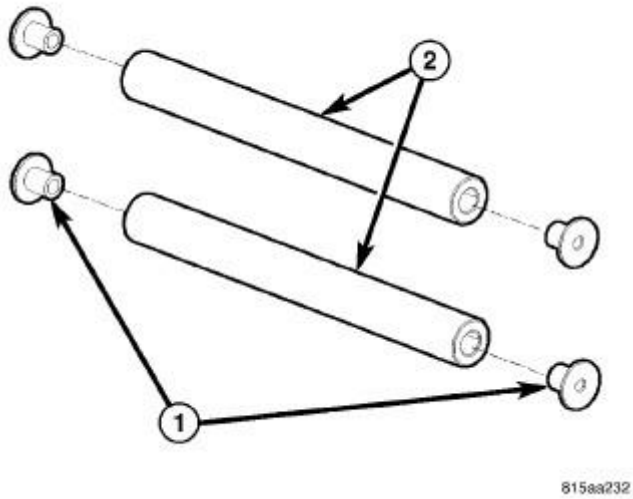

Fig. 817: Horizontal Rollers Bushings
Courtesy of CHRYSLER GROUP, LLC

4. Install the roller bushings (1) onto the rollers (2).

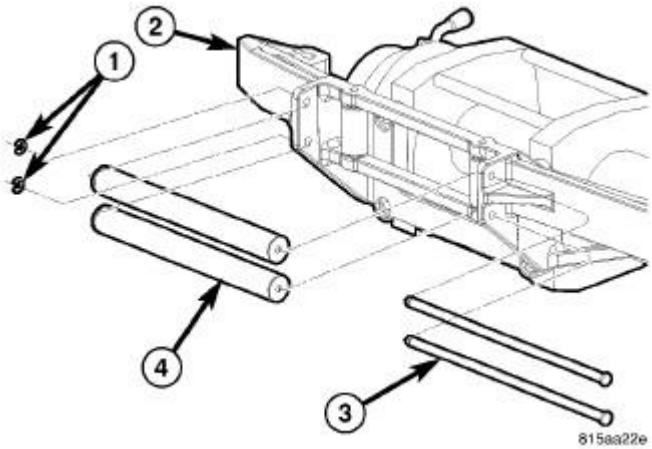

Fig. 818: Roller, Shaft & Clips
Courtesy of CHRYSLER GROUP, LLC

5. Install the roller axle rods (3) and install the rollers (4) onto the support bracket (2).
6. Install the clips (1).

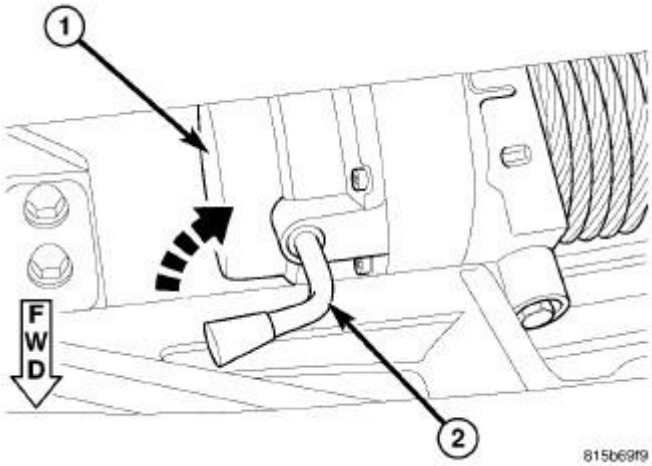

Fig. 819: Rotating Clutch Lever On Winch To "Engage"
Courtesy of CHRYSLER GROUP, LLC

7. Store the winch hook on the most outboard loop of the tow hook.
8. Engage the clutch lever (2) and remove the slack from the wire rope.

ROPE, WIRE

REMOVAL

REMOVAL

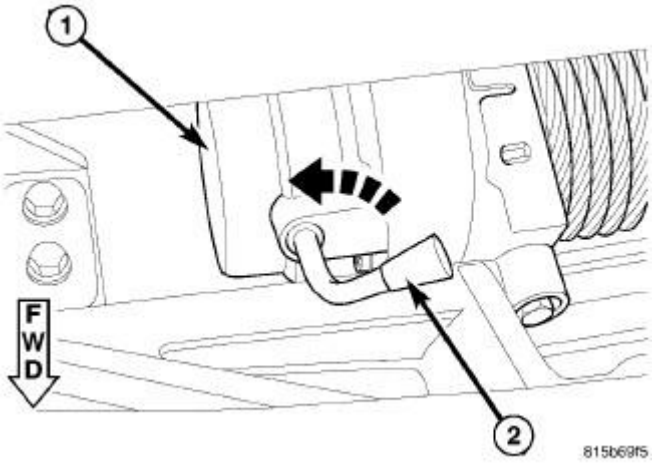

Fig. 820: Moving Clutch Lever To "Free Spool"
Courtesy of CHRYSLER GROUP, LLC

1. Move the clutch lever (2) to "Free Spool" and disengage the wire rope. Pull out a portion to give it some slack.

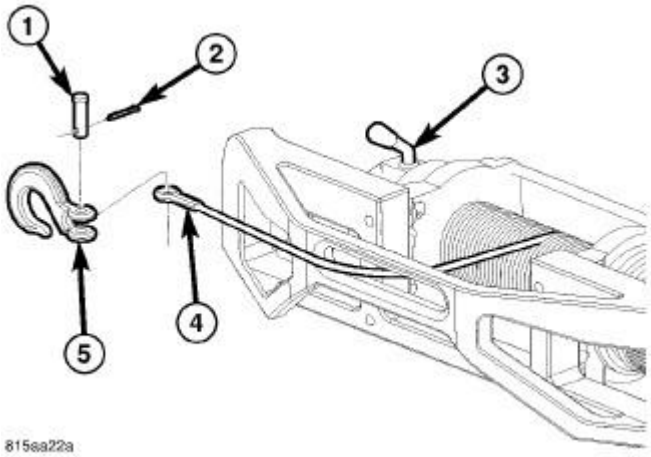

Fig. 821: Hook, Clip & Wire Rope
Courtesy of CHRYSLER GROUP, LLC

2. Remove the clip (2), pin (1) and remove the hook (5) from the wire rope (4).

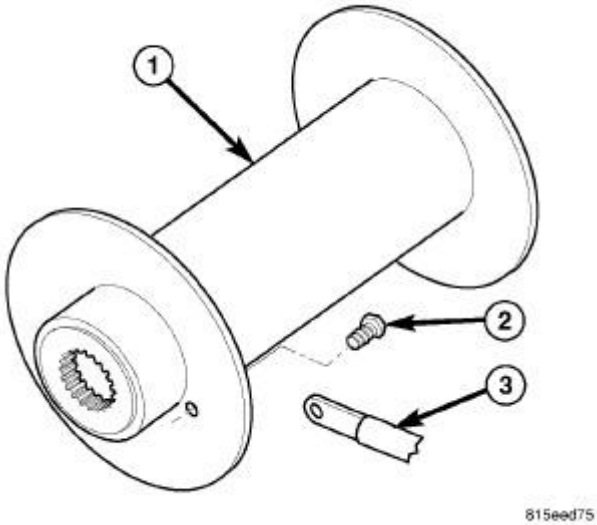

Fig. 822: Wire Rope Connection
Courtesy of CHRYSLER GROUP, LLC

3. Pull the wire rope out and unwind the winch drum (1).
4. Remove the bolt (2) and remove the rope (3).

INSTALLATION

INSTALLATION

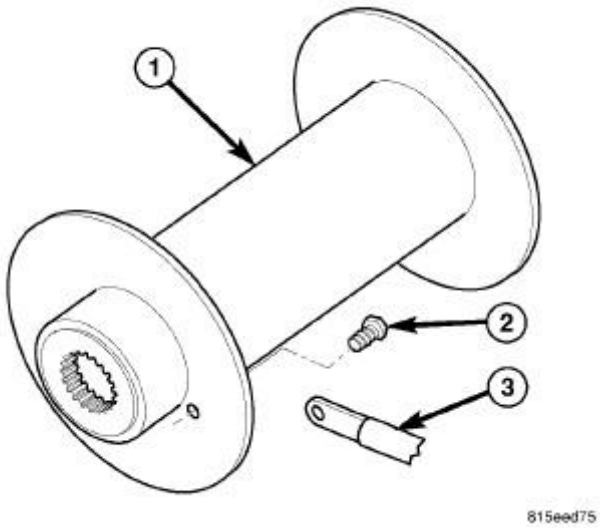

Fig. 823: Wire Rope Connection
Courtesy of CHRYSLER GROUP, LLC

WARNING: Always keep hands and clothing clear of the wire rope, hook and fairlead opening during operation and when spooling. Failure to follow these instructions may result in personal injury or death.

CAUTION: Wire rope must spool on the winch drum in the direction indicated.

1. Feed the new wire rope end (3) through the guide rollers.
2. Attach the flat side of the wire rope end (3) to the winch drum (1), apply red thread locker to the threads and install the bolt (2).
3. Wrap the wire rope around the spool approximately one time, in the direction indicated on the spool.
4. Tighten the bolt to 3 N.m (25 in. lbs.).

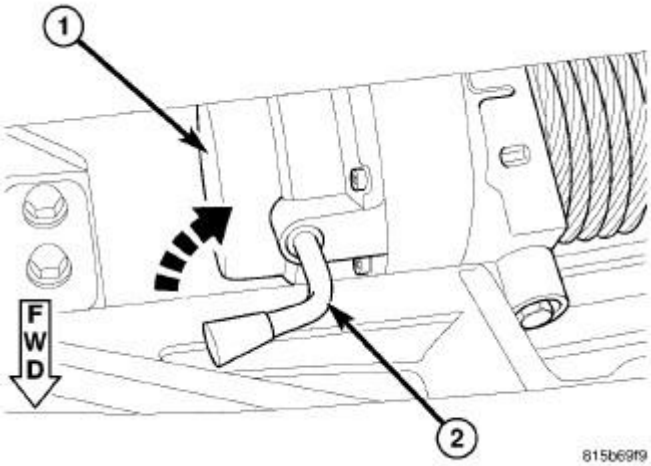

Fig. 824: Rotating Clutch Lever On Winch To "Engage"
Courtesy of CHRYSLER GROUP, LLC

5. Arrange the wire rope so it will not kink or tangle when spooled.
6. Lock the winch drum by rotating the clutch lever (2) on the winch to "Engage."

NOTE: Always make sure the clutch is engaged or disengaged fully.

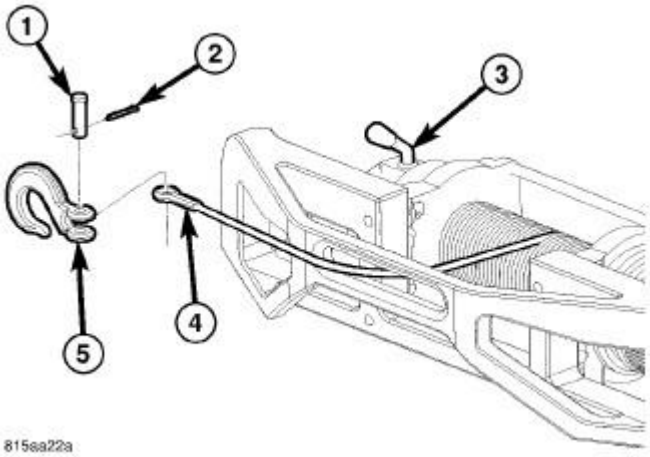

Fig. 825: Hook, Clip & Wire Rope
Courtesy of CHRYSLER GROUP, LLC

7. Connect the remote control to the socket.
8. Install the hook (5), the pin (1) and clip (2) to the end of the wire rope (4).
9. Keep the rope under light tension and spool the rope back onto the winch drum in even layers.
10. Stop frequently to tighten and straighten the layers as necessary.
11. Repeat this process until the winch hook (5) is the same distance from the winch as the full length of the remote control.

12. Using the hook strap, walk the wire rope towards the guide rollers, carefully spooling in the remaining wire rope by pulsing the remote control switch.

NOTE: **If you do not have the hook strap, use a length of cord or similar when handling the hook during servicing of the winch.**

13. Store the winch hook on the most outboard loop of the tow hook and remove the slack from the wire rope.

TIE RODS, WINCH MOTOR

REMOVAL

REMOVAL

1. Remove the winch assembly. Refer to **WINCH, REMOVAL**.
2. Remove the bolts and remove the damaged tie rod(s).

INSTALLATION

INSTALLATION

1. Install the tie rod(s) and install the bolts.
2. Tighten the bolts to 23 N.m (17 ft. lbs.).
3. Install the winch assembly. Refer to **WINCH, INSTALLATION**.

BODY STRUCTURE

WARNING

SAFETY NOTICE

CAUTION: ALL SERVICE AND REBUILDING INSTRUCTIONS CONTAINED HEREIN ARE APPLICABLE TO, AND FOR THE CONVENIENCE OF, THE AUTOMOTIVE TRADE ONLY.

All rest and repair procedures on components or assemblies in con-automotive applications should be repaired in accordance with instructions supplied by the manufacturer of the total product.

Proper service and repair is important to the safe, reliable operation of all motor vehicles. The service produces recommended and described in this publication were developed for professional service personnel, and are effective methods for performing vehicle repair. Following these procedures will help ensure efficient economical vehicle performance and service reliability. Some service procedures require the use of special

tools designed for specific procedures. These special tools should be used as recommended throughout this publication.

Special attention should be exercised when working with spring-or tension-loaded fasteners and devices such as E-Clips, Circlips, Snap rings, etc., since careless removal may cause personal injury. Always wear safety goggles when working on vehicles or vehicle components.

It is important to note that this publication contains various Cautions and Warnings. These should be read carefully in order to minimize risk of personal injury or the possibility that improper service methods may damage the vehicle or render it unsafe. It is important to note that these Cautions and Warnings cover only the situations and procedures Chrysler Group LLC has encountered and recommended. Chrysler Group LLC cannot possibly know, evaluate, and advise the service trade of all conceivable ways in which service may be performed, or of the possible hazards of each. Consequently, Chrysler has not undertaken any such broad service review. Accordingly, anyone uses a service procedure or tool that is not recommended in this publication must be certain that neither personal safety, nor vehicle safety, will be jeopardized by the service methods they select.

USE OF HEAT DURING REPAIR

WARNING: **Chrysler Group LLC engineering's position on the use of heat during collision repair is as follows:**

- **Any body panel or frame component damaged which is to be repaired and reused, must be repaired using the "cold straightening" method. No heat may be used during the straightening process.**
- **During rough straightening prior to panel replacement, damaged panels or frame components may be heated to assist in body/frame realignment. The application of heat must be constrained to the parts which will be replaced and not allowed to affect any other components.**

This "no heat" recommendation is due to the extensive use of high strength and advanced high strength steels in Chrysler Group LLC products. High-strength materials can be substantially and negatively affected from heat input which will not be obviously known to the repairer or consumer.

Ignoring these recommendations may lead to serious compromises in the ability to protect occupants in a future collision event, reduce the engineered qualities and attributes, or decrease the durability and reliability of the vehicle.

This statement supersedes any previously released information by the Chrysler Group LLC.

Failure to follow these instructions may result in serious or fatal injury.

GAP AND FLUSH

SPECIFICATIONS

SPECIFICATIONS

GAP AND FLUSH DIMENSIONS INDEX

DESCRIPTION	FIGURE
REGULAR CAB	Refer to **Fig. 826**.
QUAD CAB	Refer to **Fig. 827**.
CREW CAB	Refer to **Fig. 828**.

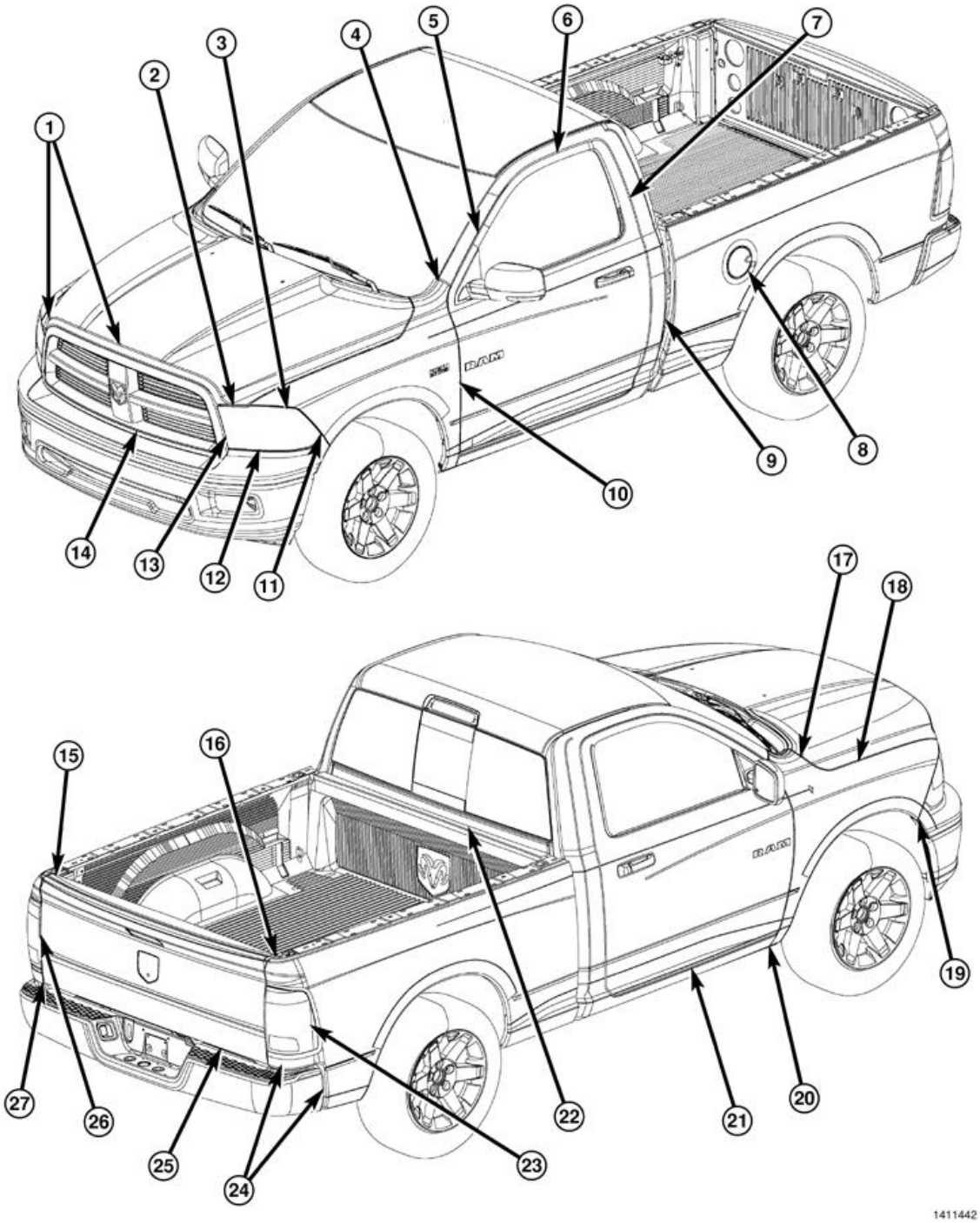

Fig. 826: Regular Cab
Courtesy of CHRYSLER GROUP, LLC

NOTE:	
All measurements are in millimeters.	
O/F = Over Flush	**U/F = Under Flush**
U/D = Up/Down	**F/A = Fore/Aft**

DIMENSION	DESCRIPTION	GAP	FLUSH
1	Hood to grille (along top)	7.0 +/- 2.0 transition to 4.5 after corner	Hood O/F 7.0 @ center to 5.5 @ corner to 1.0 around corner +/- 2.0
2	Headlamp to hood	7.0 +/- 2.0 Parallel within 2.0 Side to side within 3.0	Headlamp O/F 4.0 +/- 2.0 Parallel within 2.0 Side to side within 2.0
3	Fender to headlamp	2.5 +/- 2.0 Parallel within 2.0 Side to side within 3.0	Fender O/F 2.0 +/- 2.0 Parallel within 2.0 Side to side within 3.0
4	Fender to a-pillar	3.0 +/- 1.5 Parallel within 1.5 Side to side within 2.0	Fender O/F 0.75 +/- 1.5 Parallel within 1.5 Side to side within 2.0
5	Aperture to front door @ a-pillar	4.5 +/- 1.5 Parallel within 1.5 Front to back within 1.5	Aperture O/F 1.5 +/- 1.5 Parallel within 1.5 Front to back within 1.5
6	Aperture to front door @ roof	4.5 +/- 1.5 Parallel within 1.5 Front to back within 1.5	Aperture O/F 1.5 +/- 1.5 Parallel within 1.5 Front to back within 1.5
7	Aperture to rear door @ roof	4.5 +/- 1.5 Parallel within 1.5 Front to back within 1.5	Aperture O/F 1.5 +/- 1.5 Parallel within 1.5
8	Box outer to fuel filler door	4.5 +/- 1.5 Parallel within 1.5	0.0 +/- 1.5 Parallel within 1.5
9	Cab to box	35.0 +/- 4.0 Parallel within 3.0	Cab O/F 6.0 +/- 4.0 Parallel within 3.0
10	Fender to front door	4.5 +/- 1.5 Parallel within 1.5 Top to bottom within 1.5	Box outer O/F 0.5 +/- 1.5 Parallel within 1.5 Top to bottom within 1.5

11	Fascia to fender	Net to 2.0 Parallel within 2.0	0.0 +/- 2.0 Parallel within 2.0
12	Headlamp to fascia	4.5 +/- 2.0 Parallel within 2.0 Side to side within 3.0	0.0 +/- 2.0 Parallel within 2.0 Side to side within 2.0
13	Grille to headlamp	3.7 +/- 2.0 Parallel within 2.0 Side to side within 3.0	-
14	Grille to fascia	3.5 +/- 2.0 Parallel within 2.0 Side to side within 2.0	-
15	Deflector to tailgate inner	F/A 0.0 +2.0/- 0.0 Parallel within 2.0	-
16	Box cab to tailgate deflector	-	U/D 0.0 +/- 2.0
17	Fender to hood @ cowl	4.5 +/- 1.5 Parallel within 1.5 Side to side within 2.0	Fender U/D-U/F 0.75 +/-1.5 Cross/car 0.0 +/- 1.5
18	Fender to hood	4.5 +/- 1.5 Parallel within 1.5 Side to side within 2.0	Fender O/F 0.5 +/- 1.5
19	Wheel flare to fascia	1.0 +2.0/- 1.0 Parallel within 2.0	0.0 +/- 2.0 Parallel within 2.0
20	Fender to sill	4.5 +/- 1.5 Parallel within 1.5 Side to side within 2.0	Fender O/F 1.0 +/- 1.5
21	Sill to front door	6.0 +/- 1.5 Parallel within 1.5 Front to back within 1.5	Sill O/F 4.5 +/- 1.5 Parallel within 1.5 Front to back within 1.5
22	Cab to box	32.0 +/- 3.5 Parallel within 3.0	-
23	Box outer to tail lamp	2.5 +/- 2.0 Parallel within 2.0	0.0 +/- 2.0
24	Rear bumper to box outer	F/A 30.4 +/- 5.0 Parallel within 5.0	+/- 1.5 Parallel within 1.5

		U/D 26.0 +/- 3.0 Parallel within 4.0	
25	Bumper to tailgate	33.4 +/- 3.0 Parallel within 4.0	-
26	Tail lamp to tailgate	5.0 +/- 2.0 Parallel within 2.0 Side to side within 2.0	Tail lamp O/F 1.5 +/- 2.0
27	Box outer to tailgate	5.0 +/- 1.5 Parallel within 1.5 Side to side within 1.5	Box outer O/F 1.5 +/- 1.5 Parallel within 1.5 Side to side within 1.5

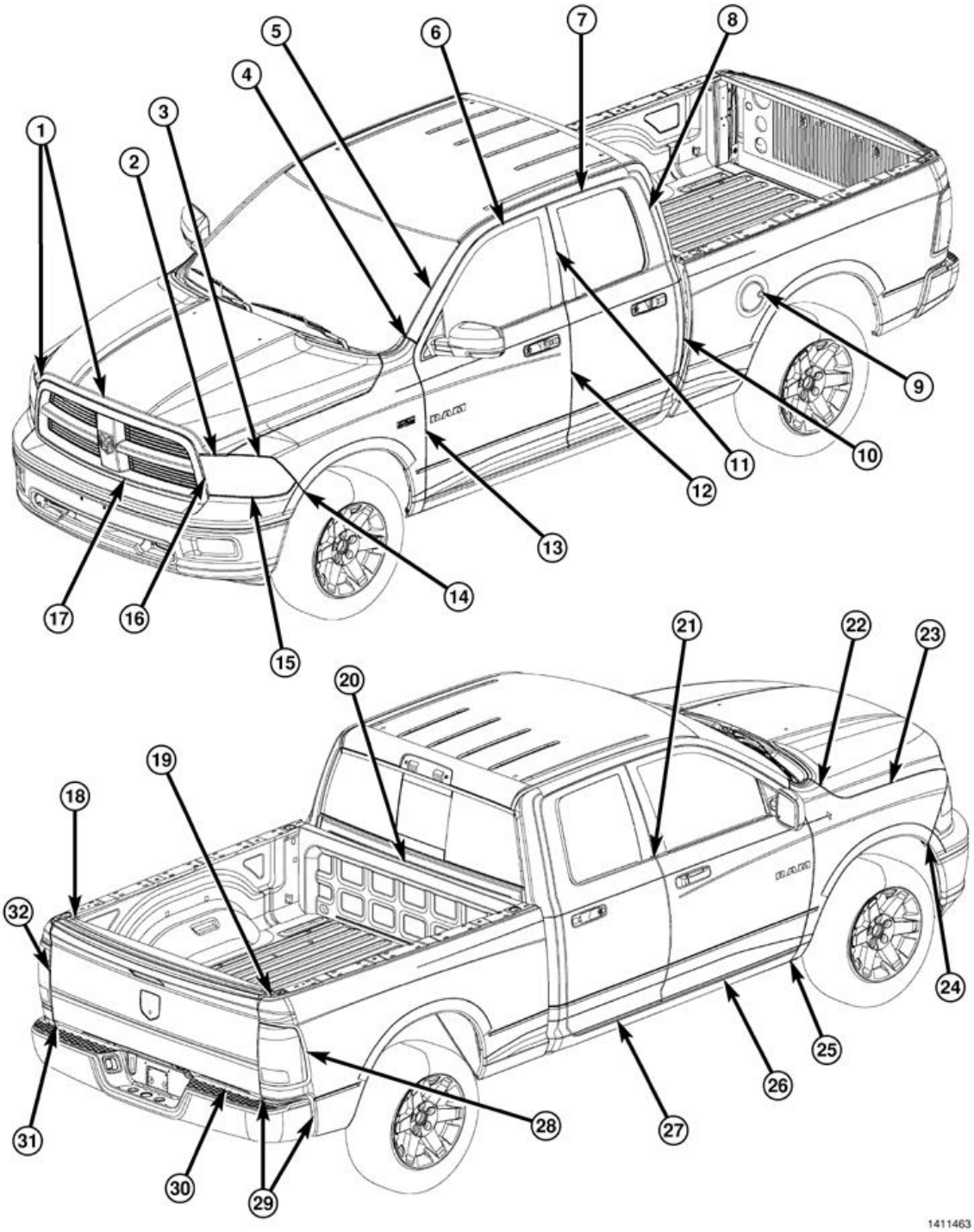

Fig. 827: Quad Cab
Courtesy of CHRYSLER GROUP, LLC

NOTE:	
All measurements are in millimeters.	
O/F = Over Flush	**U/D = Up/Down**
U/F = Under Flush	**F/A = Fore/Aft**

DIMENSION	DESCRIPTION	GAP	FLUSH
1	Hood to grille (along top)	7.0 +/- 2.0 transition to 4.5 after corner	Hood O/F 7.0 @ center to 5.5 @ corner to 1.0 around corner +/- 2.0
2	Headlamp to hood	7.0 +/- 2.0 Parallel within 2.0 Side to side within 3.0	Headlamp O/F 4.0 +/- 2.0 Parallel within 2.0 Side to side within 2.0
3	Fender to headlamp	2.5 +/- 2.0 Parallel within 2.0 Side to side within 3.0	Fender O/F 2.0 +/- 2.0 Parallel within 2.0 Side to side within 3.0
4	Fender to a-pillar	3.0 +/- 1.5 Parallel within 1.5 Side to side within 2.0	Fender O/F 0.75 +/- 1.5 Parallel within 1.5 Side to side within 2.0
5	Aperture to front door @ a-pillar	4.5 +/- 1.5 Parallel within 1.5 Front to back within 1.5	Aperture O/F 1.5 +/- 1.5 Parallel within 1.5 Front to back within 1.5
6	Aperture to front door @ roof	4.5 +/- 1.5 Parallel within 1.5 Front to back within 1.5	Aperture O/F 1.5 +/- 1.5 Parallel within 1.5 Front to back within 1.5
7	Aperture to rear door @ roof	4.5 +/- 1.5 Parallel within 1.5 Front to back within 1.5	Aperture O/F 1.5 +/- 1.5 Parallel within 1.5
8	Quarter panel to rear door	4.5 +/- 1.5 Parallel within 1.5 Top to bottom within 1.5	0.0 +/- 1.5 Parallel within 1.5
9	Box outer to fuel filler door	4.5 +/- 1.5 Parallel within 1.5	Box outer O/F 0.5 +/- 1.5 Parallel within 1.5
10	Cab to box	35.0 +/- 4.0 Parallel within 3.0	Cab O/F 6.0+/- 4.0 Parallel within 3.0

11	Front door to rear door above belt	4.5 +/- 1.5 Parallel within 1.5 Top to bottom within 1.5	0.0 +/- 1.5 Parallel within 1.5
12	Front door to rear door below belt	4.5 +/- 1.5 Parallel within 1.5 Top to bottom within 1.5	Front door O/F 1.0 Between belt and character line +/- 1.5 Parallel within 1.5 1.0 to 0.0 below character line +/- 1.5
13	Fender to front door	4.5 +/- 1.5 Parallel within 1.5 Top to bottom within 1.5	Fender O/F 1.0 +/- 1.5 Parallel within 1.5 Top to bottom within 1.5
14	Fascia to fender	Net to 2.0 Parallel within 2.0	0.0 +/- 2.0 Parallel within 2.0
15	Headlamp to fascia	4.5 +/- 2.0 Parallel within 2.0 Side to side within 3.0	0.0 +/- 2.0 Parallel within 2.0 Side to side within 2.0
16	Grille to headlamp	3.7 +/- 2.0 Parallel within 2.0 Side to side within 3.0	-
17	Grille to fascia	3.5 +/- 2.0 Parallel within 2.0 Side to side within 2.0	-
18	Deflector to tailgate inner	F/A 0.0 +2.0/- 0.0 Parallel within 2.0	-
19	Box cab to tailgate deflector	-	U/D 0.0 +/- 2.0
20	Cab to box	32.0 +/- 3.5 Parallel within 3.0	-
21	Front door belt to rear door belt	U/D alignment: 0 +/- 2.0	-
22	Fender to hood @ cowl	4.5 +/- 1.5 Parallel within 1.5 Side to side within	Fender U/D-U/F 0.75 +/-1.5 Cross/car 0.0 +/- 1.5

		2.0	
23	Fender to hood	4.5 +/- 1.5 Parallel within 1.5 Side to side within 2.0	Fender O/F 0.5 +/- 1.5
24	Wheel flare to fascia	1.0 +2.0/- 1.0 Parallel within 2.0	0.0 +/- 2.0 Parallel within 2.0
25	Fender to sill	4.5 +/- 1.5 Parallel within 1.5 Side to side within 2.0	Fender O/F 1.0 +/- 1.5
26	Sill to front door	6.0 +/- 1.5 Parallel within 1.5 Front to back within 1.5	Sill O/F 4.5 +/- 1.5 Parallel within 1.5 Front to back within 1.5
27	Sill to rear door	6.0 +/- 1.5 Parallel within 1.5 Front to back within 1.5	Sill O/F 4.5 +/- 1.5 Parallel within 1.5 Front to back within 1.5
28	Box outer to tail lamp	2.5 +/- 2.0 Parallel within 2.0	0.0 +/- 2.0
29	Rear bumper to box outer	F/A 30.4 +/- 5.0 Parallel within 5.0 U/D 26.0 +/- 3.0 Parallel within 4.0	+/- 1.5 Parallel within 1.5
30	Bumper to tailgate	33.4 +/- 3.0 Parallel within 4.0	-
31	Box outer to tailgate	5.0 +/- 1.5 Parallel within 1.5 Side to side within 1.5	Box outer O/F 1.5 +/- 1.5 Parallel within 1.5 Side to side within 1.5
32	Tail lamp to tailgate	5.0 +/- 2.0 Parallel within 2.0 Side to side within 2.0	Tail lamp O/F 1.5 +/- 2.0

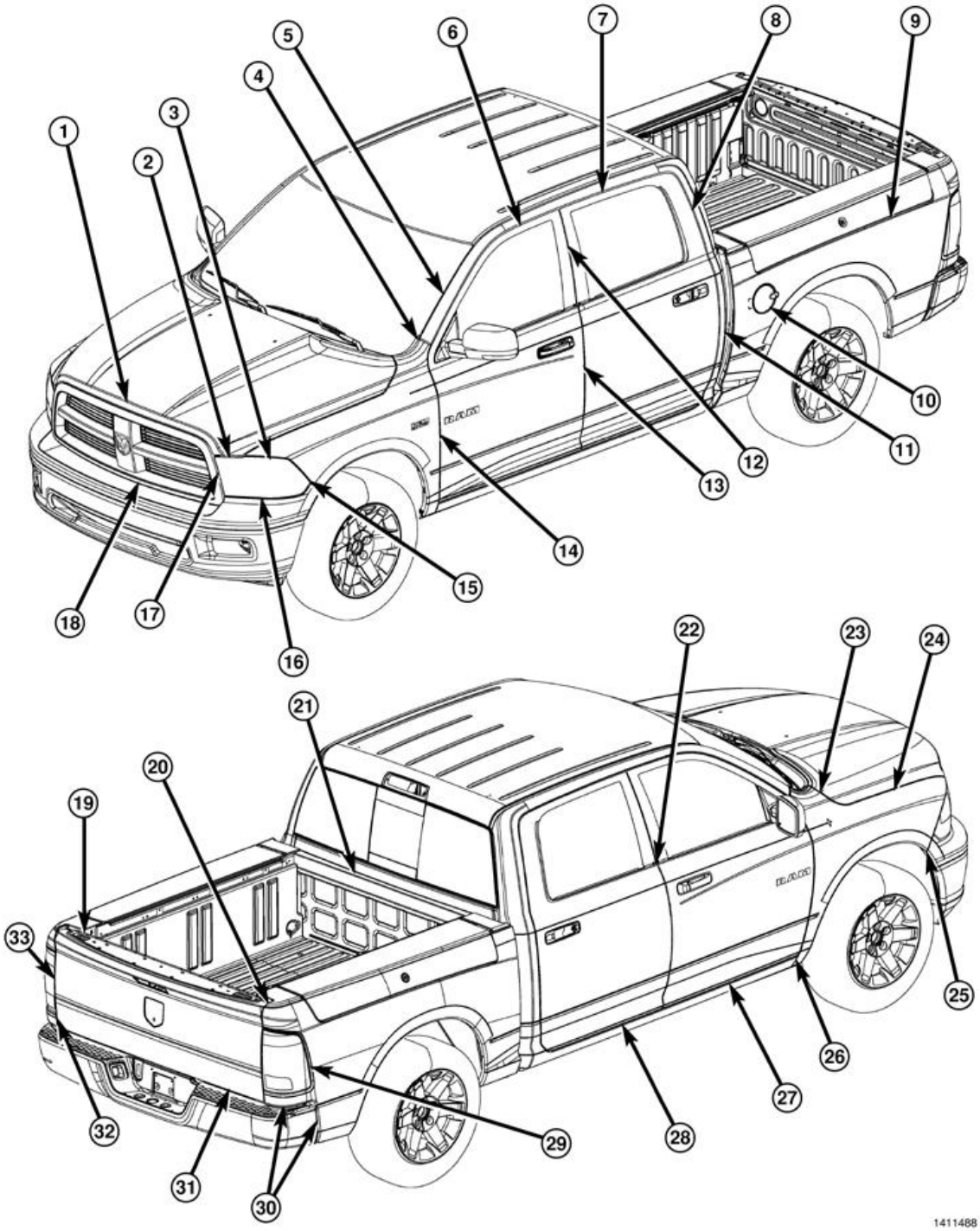

Fig. 828: Crew Cab
Courtesy of CHRYSLER GROUP, LLC

NOTE:	
All measurements are in millimeters.	
O/F = Over Flush	U/D = Up/Down
U/F = Under Flush	F/A = Fore/Aft

DIMENSION	DESCRIPTION	GAP	FLUSH
1	Hood to grille (along top)	7.0 +/- 2.0 transition to 4.5 after corner	Hood O/F 7.0 @ center to 5.5 @ corner to 1.0 around corner +/- 2.0
2	Headlamp to hood	7.0 +/- 2.0 Parallel within 2.0 Side to side within 3.0	Headlamp O/F 4.0 +/- 2.0 Parallel within 2.0 Side to side within 2.0
3	Fender to headlamp	2.5 +/- 2.0 Parallel within 2.0 Side to side within 3.0	Fender O/F 2.0 +/- 2.0 Parallel within 2.0 Side to side within 3.0
4	Fender to a-pillar	3.0 +/- 1.5 Parallel within 1.5 Side to side within 2.0	Fender O/F 0.75 +/- 1.5 Parallel within 1.5 Side to side within 2.0
5	Aperture to front door @ a-pillar	4.5 +/- 1.5 Parallel within 1.5 Front to back within 1.5	Aperture O/F 1.5 +/- 1.5 Parallel within 1.5 Front to back within 1.5
6	Aperture to front door @ roof	4.5 +/- 1.5 Parallel within 1.5 Front to back within 1.5	Aperture O/F 1.5 +/- 1.5 Parallel within 1.5 Front to back within 1.5
7	Aperture to rear door @ roof	4.5 +/- 1.5 Parallel within 1.5 Front to back within 1.5	Aperture O/F 1.5 +/- 1.5 Parallel within 1.5
8	Quarter panel to rear door	4.5 +/- 1.5 Parallel within 1.5 Top to bottom within 1.5	0.0 +/- 1.5 Parallel within 1.5
9	Ram box to box outer	5.0 +/- 2.0	Flush +/- 2.0
10	Box outer to fuel filler door	4.5 +/- 1.5 Parallel within 1.5	Box Outer O/F 0.5 +/- 1.5 Parallel within 1.5

11	Cab to box	35.0 +/- 4.0 Parallel within 3.0	Cab O/F 6.0 +/- 4.0 Parallel within 3.0
12	Front door to rear door above belt	4.5 +/- 1.5 Parallel within 1.5 Top to bottom within 1.5	0.0 +/- 1.5 Parallel within 1.5
13	Front door to rear door below belt	4.5 +/- 1.5 Parallel within 1.5 Top to bottom within 1.5	Front Door O/F 1.0 Between belt and Character line +/- 1.5 Parallel within 1.5 1.0 to 0.0 below Character line +/- 1.5
14	Fender to front door	4.5 +/- 1.5 Parallel within 1.5 Top to bottom within 1.5	Fender O/F 1.0 +/- 1.5 Parallel within 1.5 Top to bottom within 1.5
15	Fascia to fender	Net to 2.0 Parallel within 2.0	0.0 +/- 2.0 Parallel within 2.0
16	Headlamp to fascia	4.5 +/- 2.0 Parallel within 2.0 Side to side within 3.0	0.0 +/- 2.0 Parallel within 2.0 Side to side within 2.0
17	Grille to headlamp	3.7 +/- 2.0 Parallel within 2.0 Side to side within 3.0	-
18	Grille to fascia	3.5 +/- 2.0 Parallel within 2.0 Side to side within 2.0	-
19	Deflector to tailgate inner	F/A 0.0 +2.0/- 0.0 Parallel within 2.0	-
20	Box cab to tailgate deflector	-	U/D 0.0 +/- 2.0
21	Cab to box	32.0 +/- 3.5 Parallel within 3.0	-
22	Front door belt to rear door belt	U/D Alignment: 0 +/- 2.0	-
	Fender to hood @ cowl	4.5 +/- 1.5 Parallel within 1.5	Fender U/D-U/F 0.75 +/-1.5 Cross/Car 0.0 +/-

23		Side to side within 2.0	1.5
24	Fender to hood	4.5 +/- 1.5 Parallel within 1.5 Side to side within 2.0	Fender O/F 0.5 +/- 1.5
25	Wheel flare to fascia	1.0 +2.0/- 1.0 Parallel within 2.0	0.0 +/- 2.0 Parallel within 2.0
26	Fender to sill	4.5 +/- 1.5 Parallel within 1.5 Side to side within 2.0	Fender O/F 1.0 +/- 1.5
27	Sill to front door	6.0 +/- 1.5 Parallel within 1.5 Front to back within 1.5	Sill O/F 4.5 +/- 1.5 Parallel within 1.5 Front to back within 1.5
28	Sill to rear door	6.0 +/- 1.5 Parallel within 1.5 Front to back within 1.5	Sill O/F 4.5 +/- 1.5 Parallel within 1.5 Front to back within 1.5
29	Box outer to tail lamp	2.5 +/- 2.0 Parallel within 2.0	0.0 +/- 2.0
30	Rear bumper to box outer	F/A 30.4 +/- 5.0 Parallel within 5.0 U/D 26.0 +/- 3.0 Parallel within 4.0	+/- 1.5 Parallel within 1.5
31	Bumper to tailgate	33.4 +/- 3.0 Parallel within 4.0	-
32	Box outer to tailgate	5.0 +/- 1.5 Parallel within 1.5 Side to side within 1.5	Box Outer O/F 1.5 +/- 1.5 Parallel within 1.5 Side to side within 1.5
33	Tail lamp to tailgate	5.0 +/- 2.0 Parallel within 2.0 Side to side within 2.0	Tail Lamp O/F 1.5 +/- 2.0

SPECIAL TOOLS

SPECIAL TOOLS

	C-4755 - Trim Stick (Originally Shipped In Kit Number(s) 9299, 9299CC, 9299CC, 9300A-CAN.)

BUMPERS

SPECIFICATIONS

SPECIFICATIONS

Description	N.m	Ft. Lbs	In. Lbs.
Front bumper support nuts - 1500 Light Duty	95	70	-
Front bumper support nuts - 2500 - 5500 Heavy Duty	95	70	-
Front bumper bracket nuts - 2500 - 5500 Heavy Duty	95	70	-
Rear bumper support bolts	54	40	-

BUMPER, FRONT

REMOVAL

REMOVAL

SPORT BUMPER

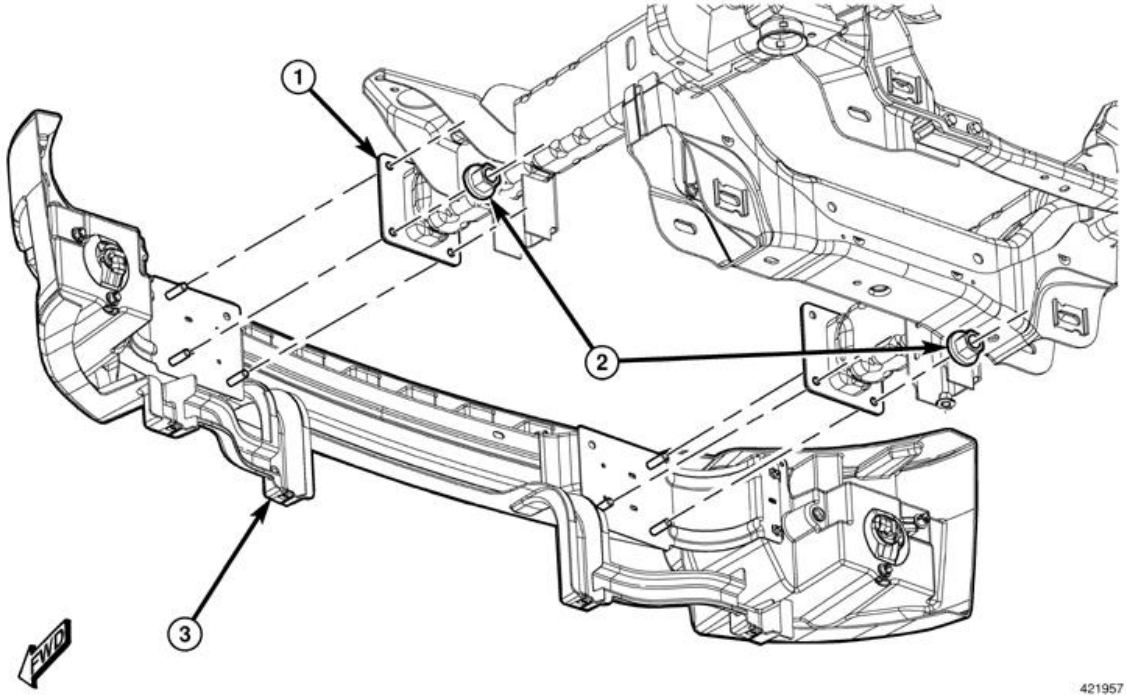

Fig. 1: Frame Tip Brackets, Nuts & Sport Bumper
Courtesy of CHRYSLER GROUP, LLC

1. Remove the front fascia. Refer to **FASCIA, FRONT, REMOVAL**.
2. Disconnect the electrical connectors.
3. Support the bumper with a suitable lifting device.
4. Remove the nuts (2) and remove the bumper (3).

NON SPORT BUMPER

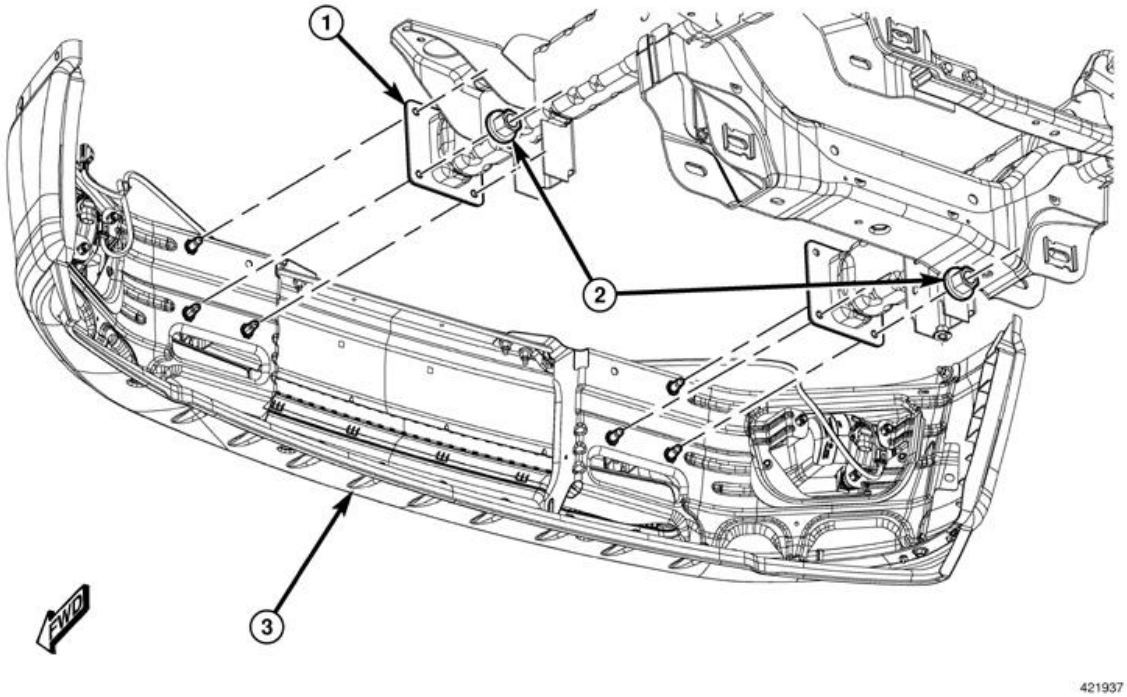

Fig. 2: Frame Tip Brackets, Nuts & Non Sport Bumper
Courtesy of CHRYSLER GROUP, LLC

1. Remove the front fascia. Refer to **FASCIA, FRONT, REMOVAL**.
2. Disconnect the electrical connectors.
3. Support the bumper with a suitable lifting device.
4. Remove the nuts (2) and remove the bumper (3).

2500 - 5500 HEAVY DUTY

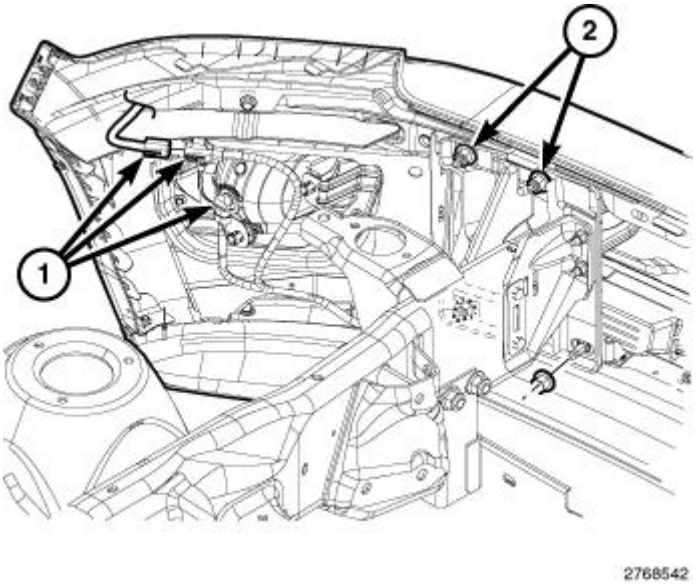

Fig. 3: Identifying Front Bumper Electrical Connectors & Nuts

Courtesy of CHRYSLER GROUP, LLC

1. Remove the grille. Refer to **GRILLE, REMOVAL** .
2. Disconnect the electrical connectors (1), if equipped.
3. Remove the eight nuts (2) and remove the bumper.

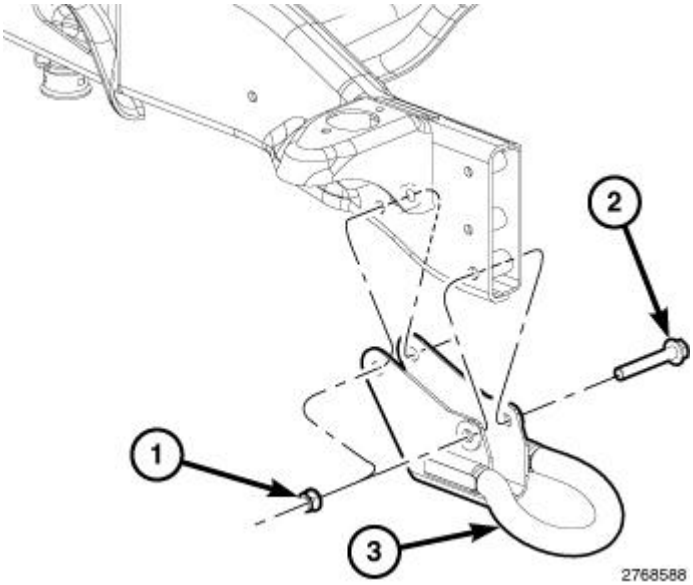

Fig. 4: Identifying Tow Hooks With Nuts & Bolts
Courtesy of CHRYSLER GROUP, LLC

4. Remove the nuts (1) and bolts (2) and remove the tow hooks (3), if equipped.

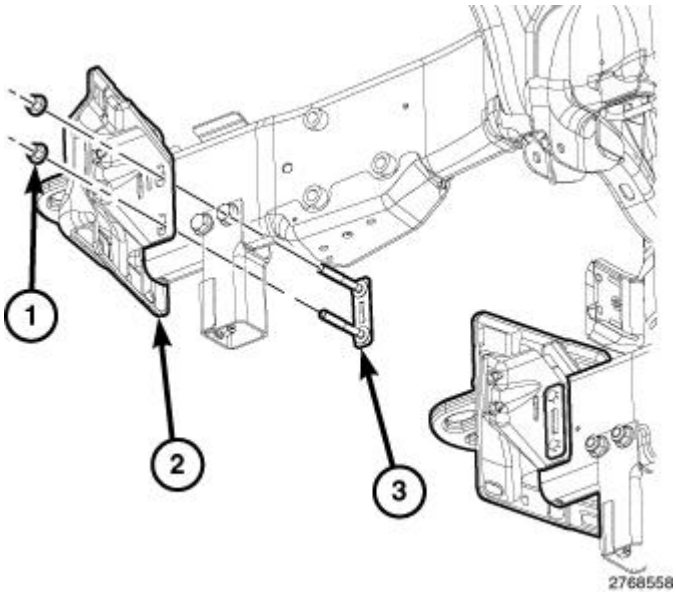

Fig. 5: Identifying Bumper Brackets With Bolts & Nuts
Courtesy of CHRYSLER GROUP, LLC

5. Position aside the charge air cooler, if necessary. Refer to **COOLER AND HOSES, CHARGE AIR, REMOVAL, 6.7L** .
6. Remove the nuts and bolts.
7. Remove the bumper brackets.

INSTALLATION

INSTALLATION

SPORT BUMPER

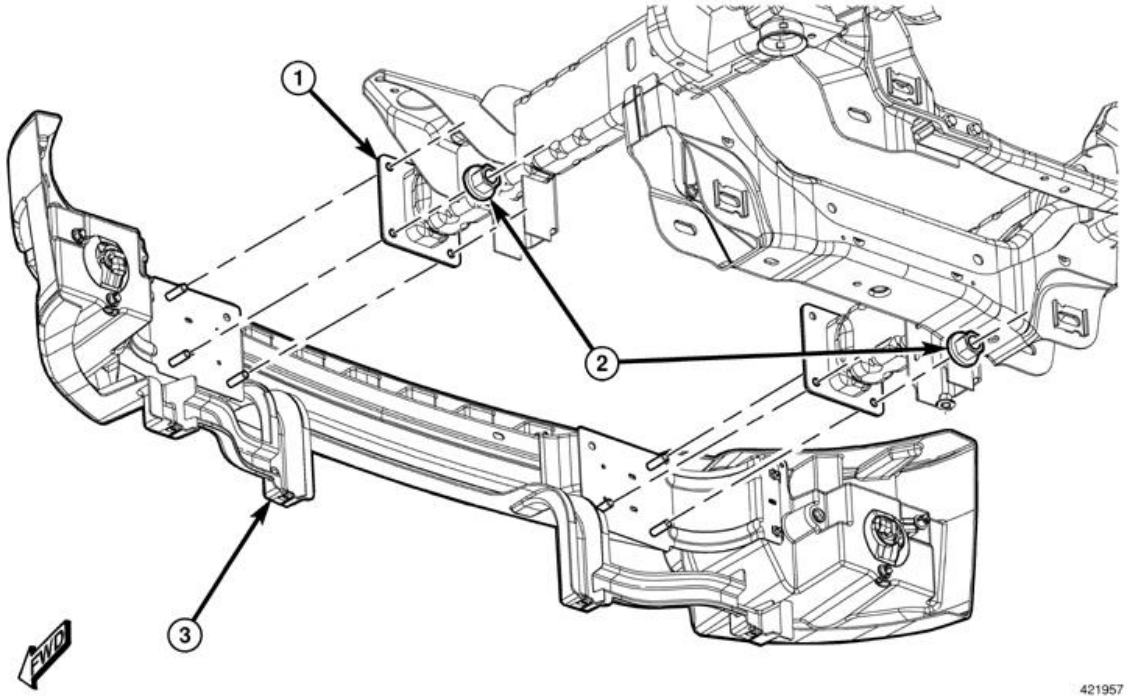

Fig. 6: Frame Tip Brackets, Nuts & Sport Bumper
Courtesy of CHRYSLER GROUP, LLC

1. Position the bumper (3) onto the frame tip brackets (1) and install the nuts (2).
2. Check and adjust the bumper alignment as necessary. Refer to **GAP AND FLUSH, SPECIFICATIONS** .
3. Tighten the nuts (2) to 95 N.m (70 ft. lbs.).

NON SPORT BUMPER

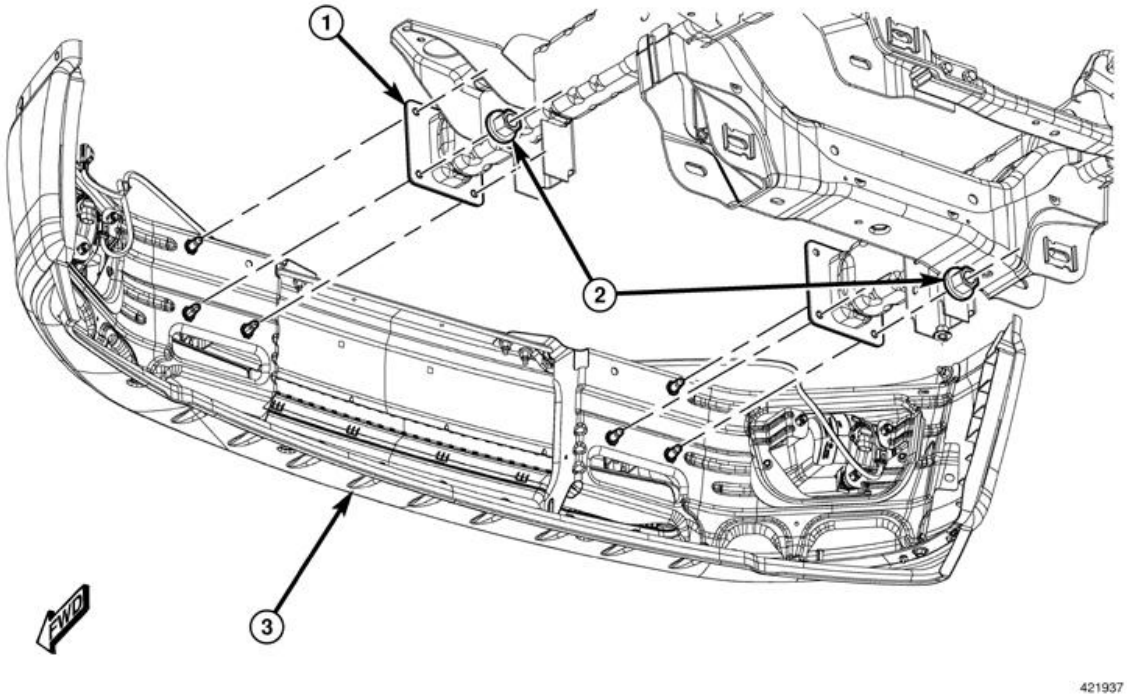

Fig. 7: Frame Tip Brackets, Nuts & Non Sport Bumper
Courtesy of CHRYSLER GROUP, LLC

1. Position the bumper (3) onto the frame tip brackets (1) and install the nuts (2).
2. Check and adjust the bumper alignment as necessary. Refer to **GAP AND FLUSH, SPECIFICATIONS** .
3. Tighten the nuts (2) to 95 N.m (70 ft. lbs.).

2500 - 5500 HEAVY DUTY

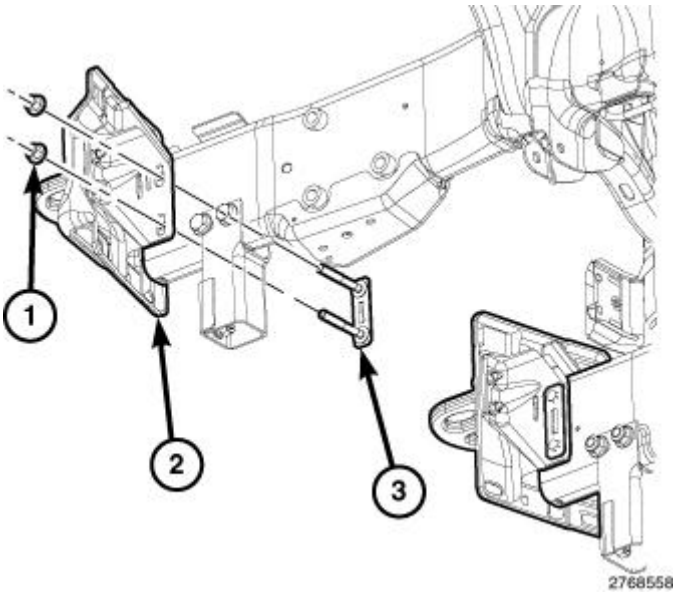

Fig. 8: Identifying Bumper Brackets With Bolts & Nuts

Courtesy of CHRYSLER GROUP, LLC

1. Install the bumper brackets (2) and install the bolts (3) and nuts (1). Do not tighten the nuts at this time.

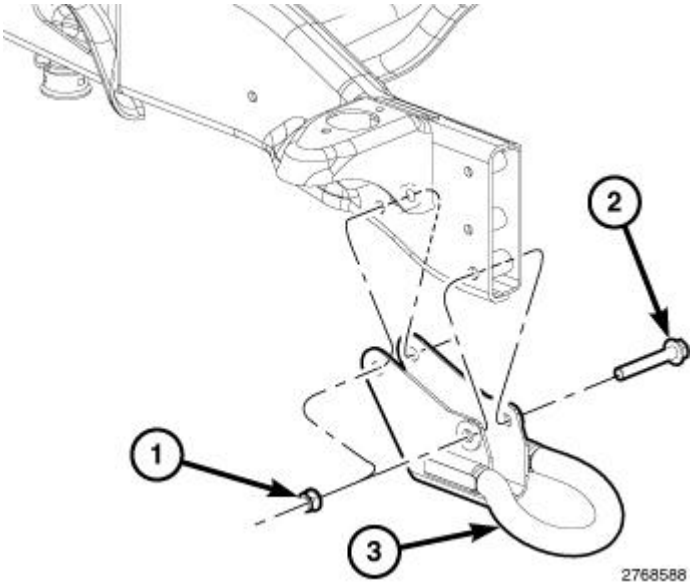

Fig. 9: Identifying Tow Hooks With Nuts & Bolts
Courtesy of CHRYSLER GROUP, LLC

2. If equipped, install the tow hooks (3) and install the bolts (2) and nuts (1).
3. Tighten the nuts to 275 N.m (203 ft. lbs.).

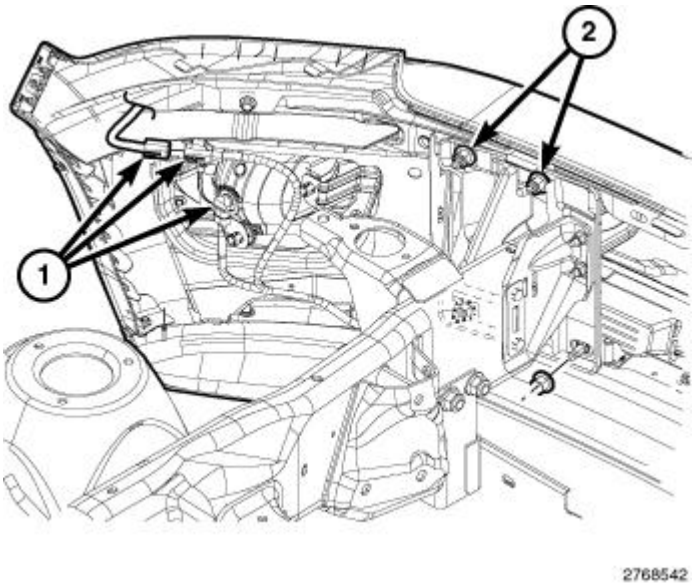

Fig. 10: Identifying Front Bumper Electrical Connectors & Nuts
Courtesy of CHRYSLER GROUP, LLC

4. Position the bumper onto the frame tip brackets and install the eight nuts (2).

5. Connect the electrical connectors (1), if equipped.

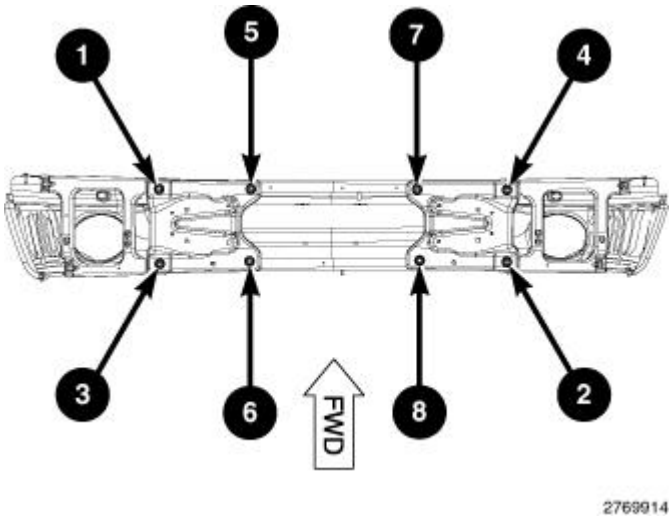

Fig. 11: Identifying Front Bumper Nut Tightening Sequence
Courtesy of CHRYSLER GROUP, LLC

6. Tighten the eight bumper nuts using the sequence shown in illustration, to 95 N.m (70 ft. lbs.).

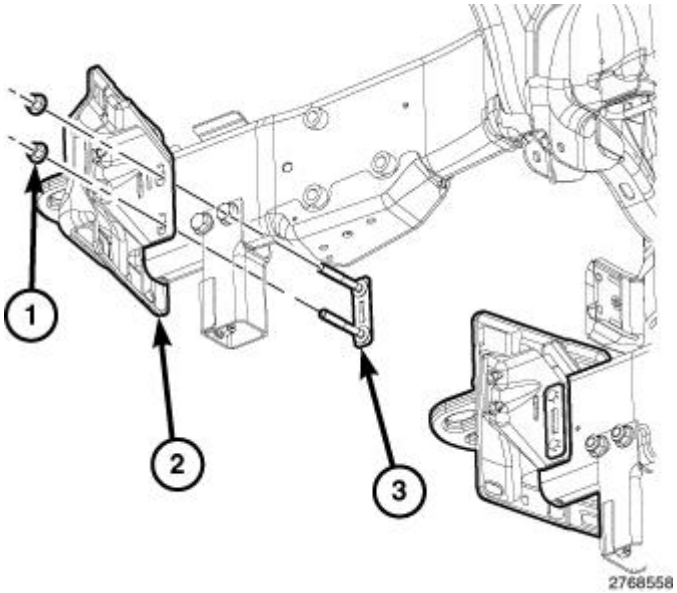

Fig. 12: Identifying Bumper Brackets With Bolts & Nuts
Courtesy of CHRYSLER GROUP, LLC

7. Check and adjust the bumper alignment as necessary. Refer to **GAP AND FLUSH, SPECIFICATIONS** .
8. Tighten the nuts (1) to 95 N.m (70 ft. lbs.).
9. Install the charge air cooler, if necessary. Refer to **COOLER AND HOSES, CHARGE AIR, INSTALLATION, 6.7L** .
10. Install the grille. Refer to **GRILLE, INSTALLATION** .

BUMPER, REAR

REMOVAL

REMOVAL

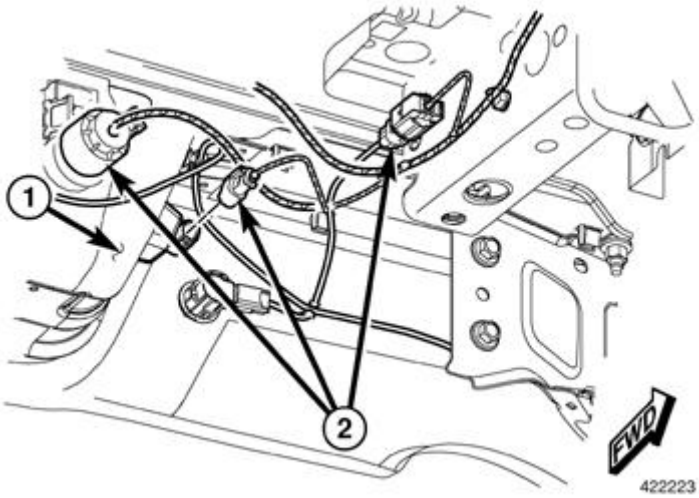

Fig. 13: Rear Bumper Electrical Connectors
Courtesy of CHRYSLER GROUP, LLC

1. Disconnect the electrical connectors (2).

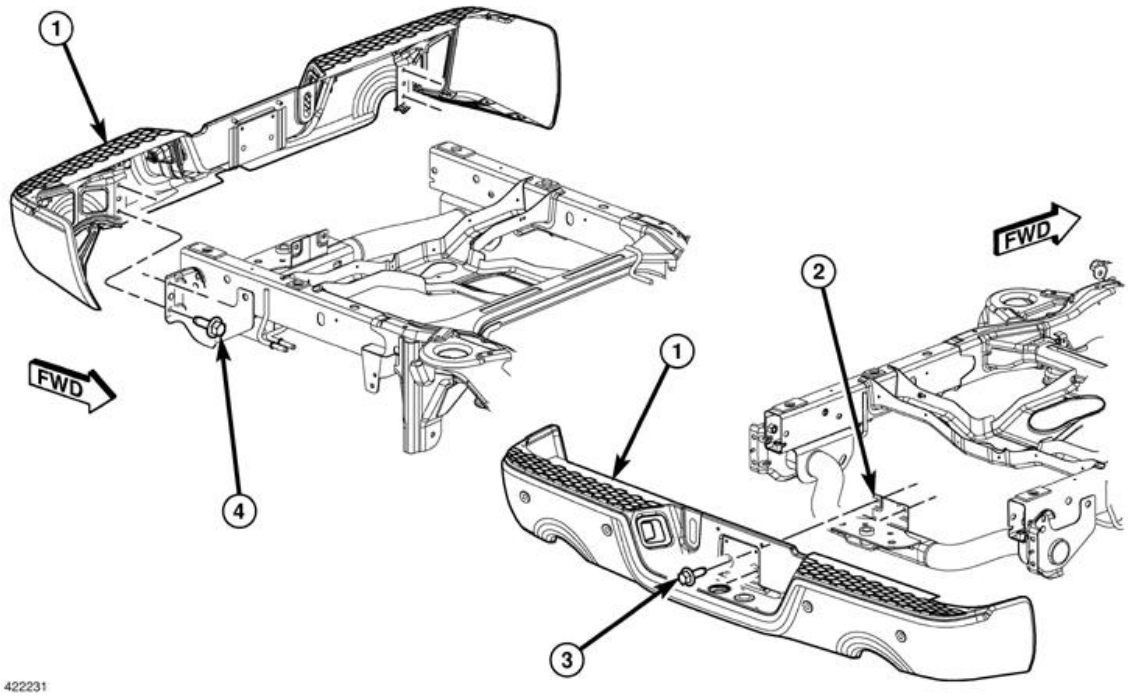

Fig. 14: Rear Bumper, Trailer Hitch & Bolts
Courtesy of CHRYSLER GROUP, LLC

2. Raise and support the vehicle. Refer to **HOISTING, STANDARD PROCEDURE** .
3. Remove the license plate.
4. Remove the bolts behind the plate (3).
5. Support the bumper with a suitable lifting device.
6. Remove the bolts attaching the bumper support brackets (4) to the trailer hitch (2).

INSTALLATION

INSTALLATION

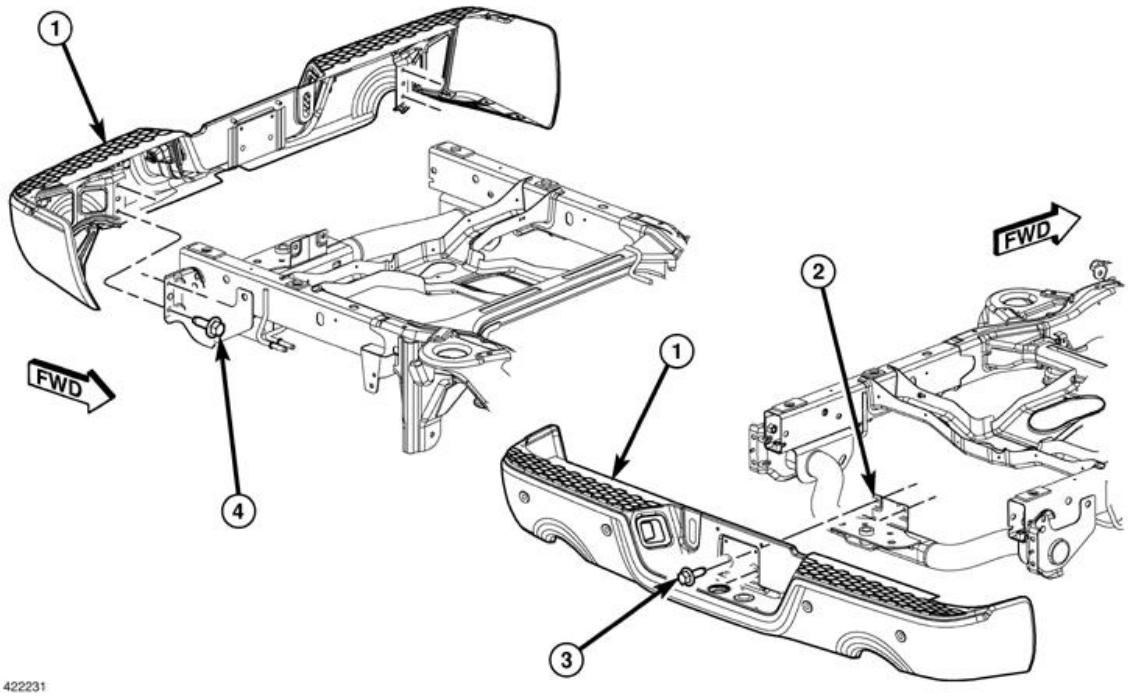

Fig. 15: Rear Bumper, Trailer Hitch & Bolts
Courtesy of CHRYSLER GROUP, LLC

1. Position the bumper (1) onto the vehicle and line up the pins on the sides.
2. Install the bolts (3 and 4).
3. Tighten the bolts (3) to 54 N.m (40 ft. lbs.).
4. Tighten the bolts (4) to 54 N.m (40 ft. lbs.).

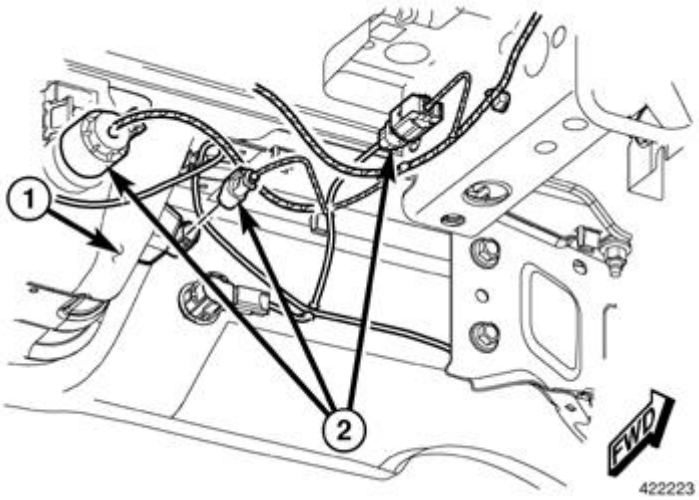

Fig. 16: Rear Bumper Electrical Connectors
Courtesy of CHRYSLER GROUP, LLC

5. Connect the electrical connectors (2).

FASCIA, FRONT

REMOVAL

REMOVAL

UPPER

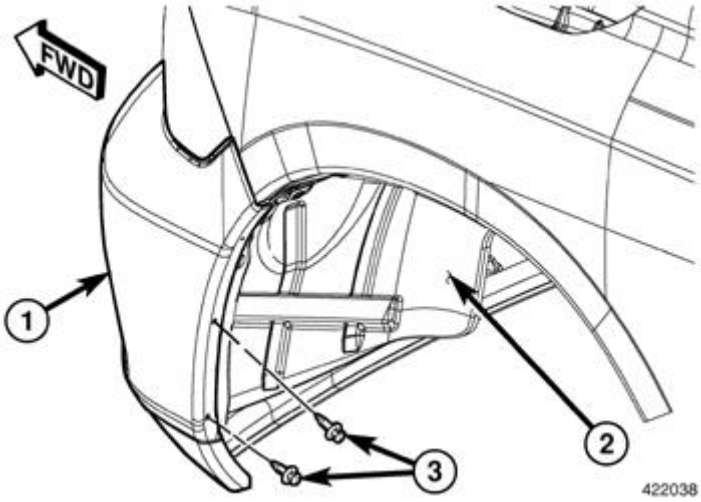

Fig. 17: Wheelhouse Splash Shield & Push Pins
Courtesy of CHRYSLER GROUP, LLC

NOTE: Sport fascia shown in illustration, upper fascia similar.

1. Remove the push pins (3) and position the wheelhouse splash shield (2) aside.

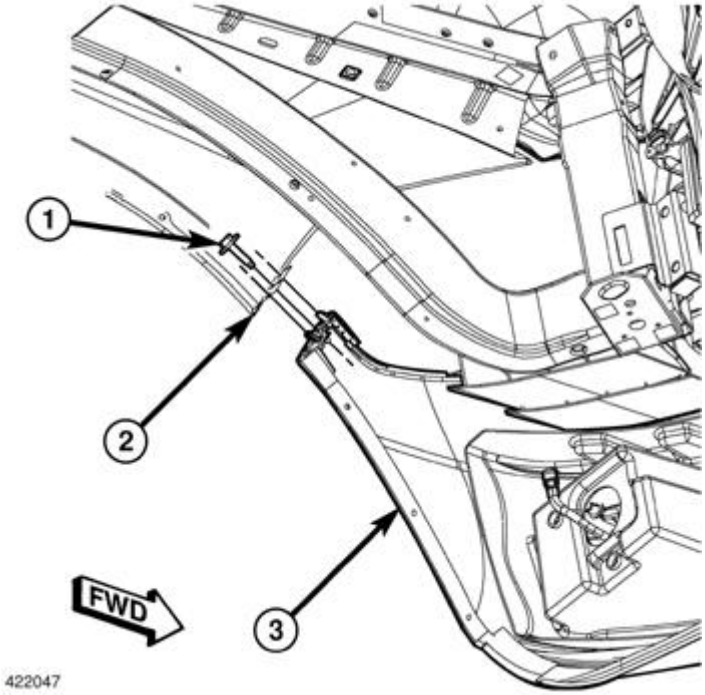

Fig. 18: Screws, Fascia & Fender
Courtesy of CHRYSLER GROUP, LLC

NOTE: Sport fascia shown in illustration, upper fascia similar.

2. Remove the fender screws (1).

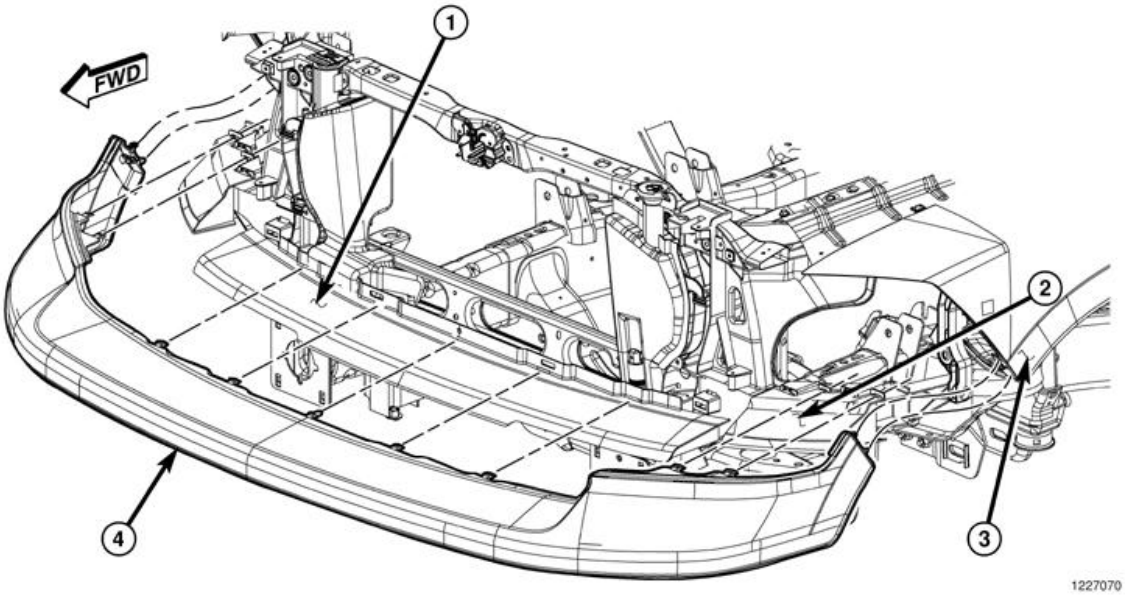

Fig. 19: Removing/Installing Upper Fascia
Courtesy of CHRYSLER GROUP, LLC

3. Remove the grille. Refer to **GRILLE, REMOVAL** .
4. Using trim stick (special tool #C-4755, Trim Stick) or equivalent, separate the upper clips and remove the fascia (4).

SPORT

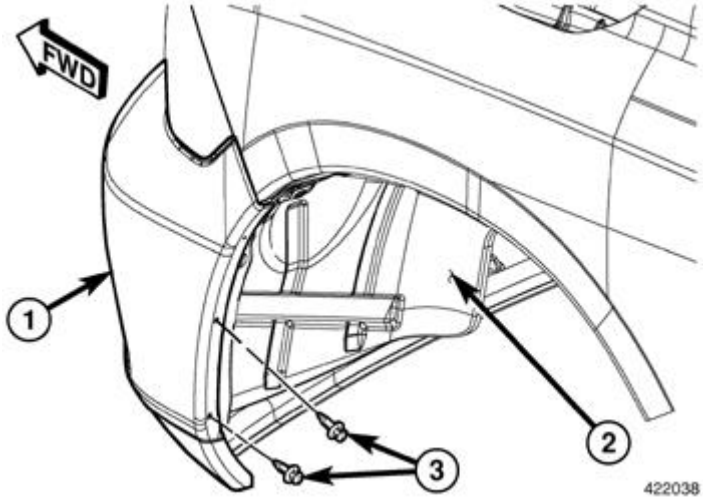

Fig. 20: Wheelhouse Splash Shield & Push Pins
Courtesy of CHRYSLER GROUP, LLC

1. Remove the push pins (3) and position aside the wheelhouse splash shields (2).

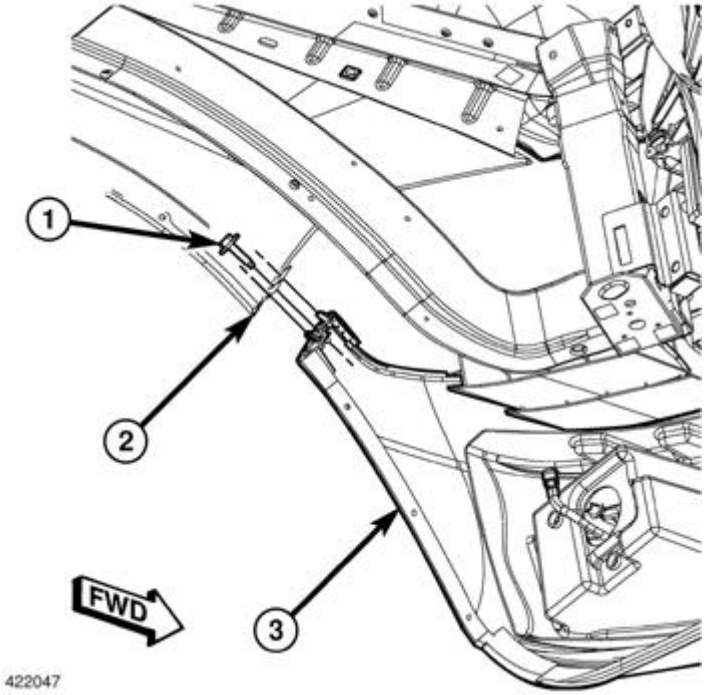

Fig. 21: Screws, Fascia & Fender
Courtesy of CHRYSLER GROUP, LLC

2. Remove the screws (1) and separate the fascia (3) from the fender (2).

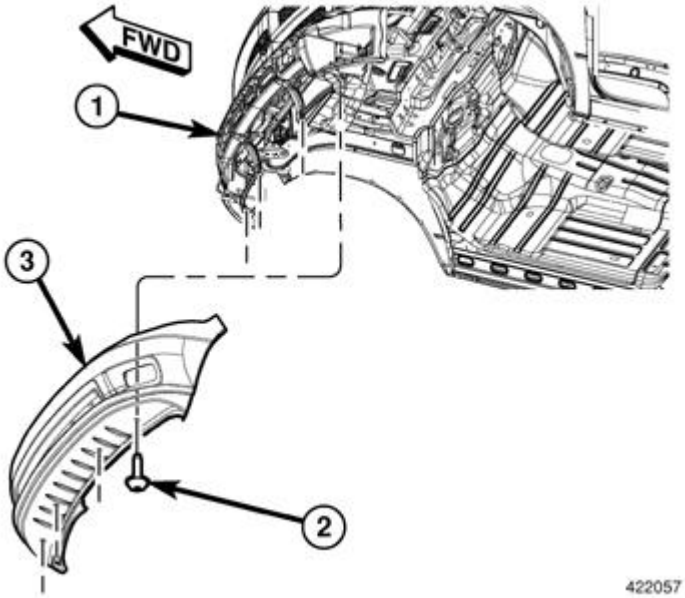

Fig. 22: Sport Bumper Lower Fasteners
Courtesy of CHRYSLER GROUP, LLC

3. Remove the four lower fasteners (2).

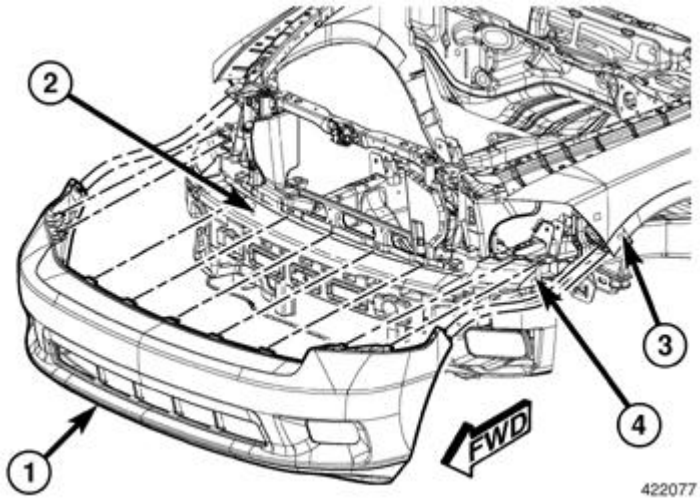

Fig. 23: Removing/Installing Upper Clips & Sport Fascia
Courtesy of CHRYSLER GROUP, LLC

4. Remove the grille. Refer to **GRILLE, REMOVAL** .
5. Using trim stick (special tool #C-4755, Trim Stick) or equivalent, separate the upper clips and remove the fascia (4).

INSTALLATION

INSTALLATION

UPPER

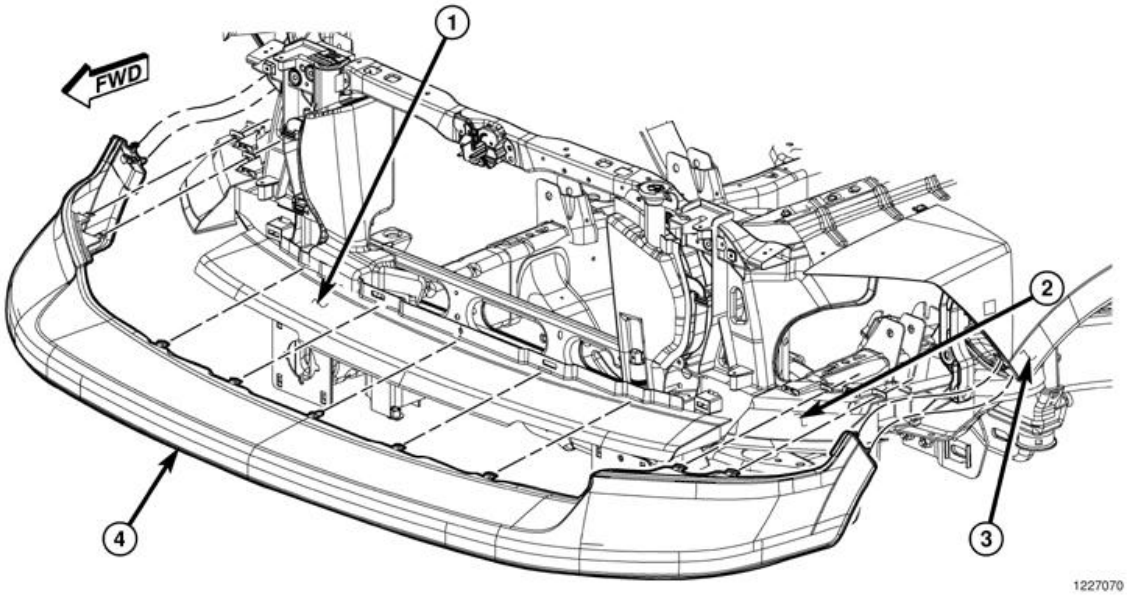

Fig. 24: Removing/Installing Upper Fascia
Courtesy of CHRYSLER GROUP, LLC

1. Locate the end wings under the headlamp (3) and roll down into position.
2. Position the center locator pin in the center of the fascia to the retainer hole and seat fully.
3. Working from the center out, seat all the clips fully.
4. Install the grille. Refer to **GRILLE, INSTALLATION** .

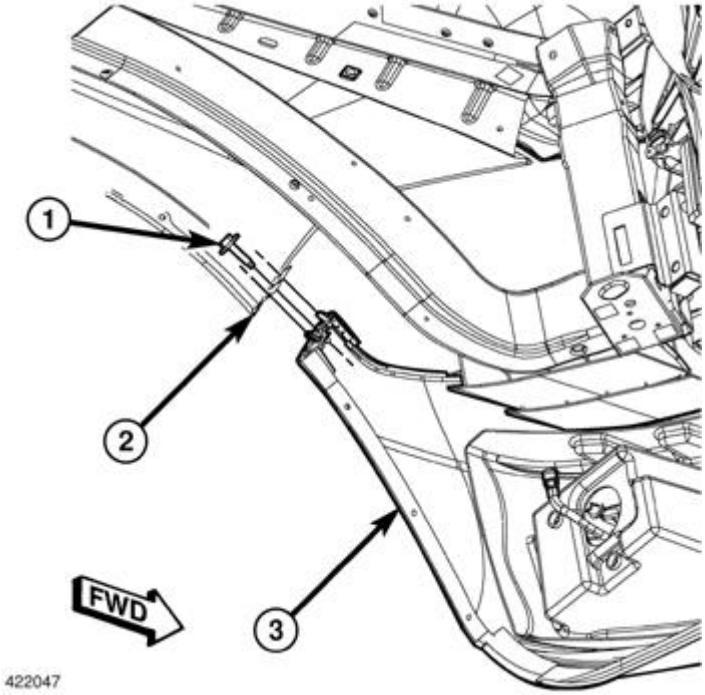

Fig. 25: Screws, Fascia & Fender
Courtesy of CHRYSLER GROUP, LLC

NOTE: Sport fascia shown in illustration, upper fascia similar.

5. Install the screws (1) attaching the fascia (3) to the fender (2).

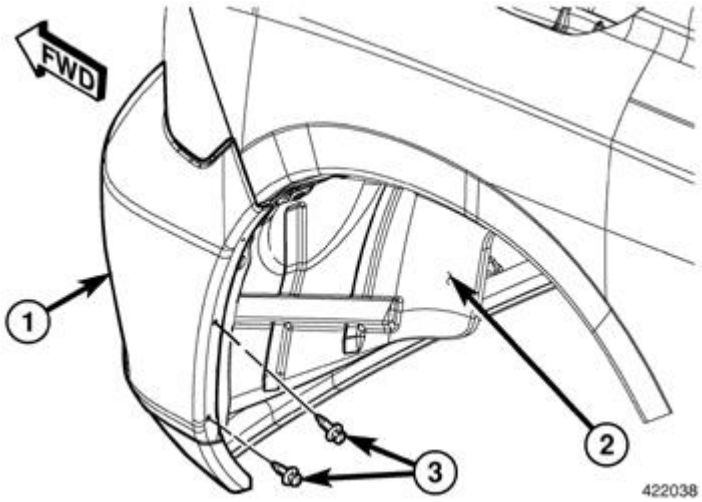

Fig. 26: Wheelhouse Splash Shield & Push Pins
Courtesy of CHRYSLER GROUP, LLC

6. Position the wheelhouse splash shield back and install the push pins (3).

SPORT

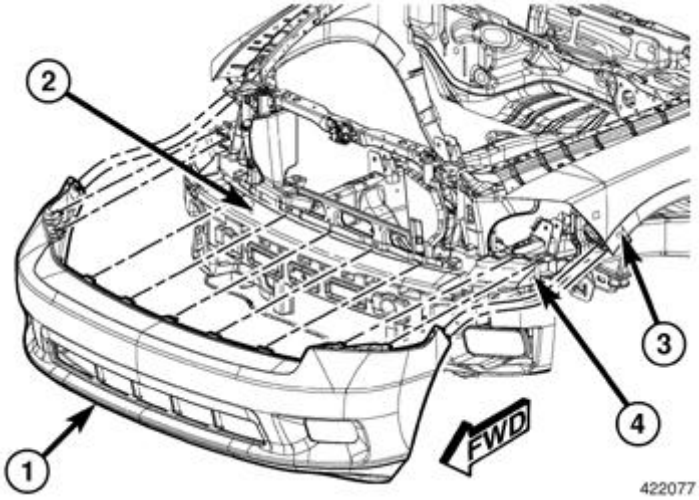

Fig. 27: Removing/Installing Upper Clips & Sport Fascia
Courtesy of CHRYSLER GROUP, LLC

1. Locate the fascia (1) over the upper surface of the bumper beam (2).
2. Position the center locator pin in the center of the fascia to the retainer hole and seat fully.
3. Pry or bend the outer ears of the fascia (1) around the headlamps and align to the fender (3).
4. Confirm that the fascia (1) and the bumper (2) are lined up correctly and seat the upper clips fully.
5. Install the grille. Refer to **GRILLE, INSTALLATION** .

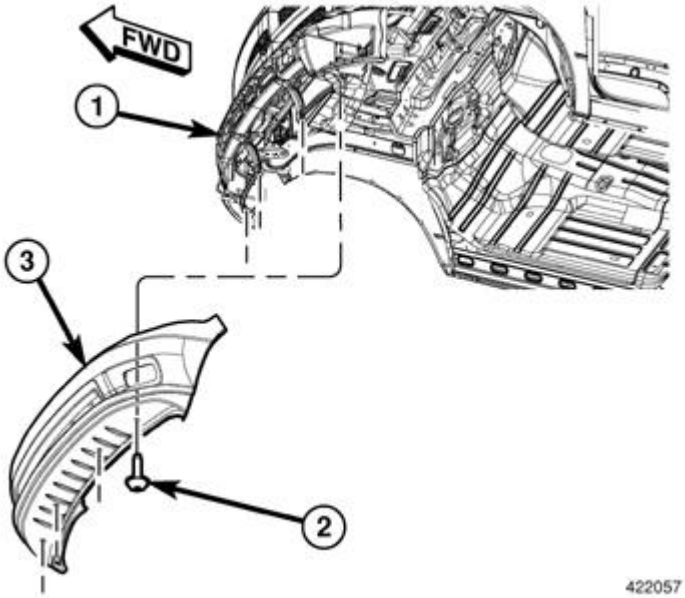

Fig. 28: Sport Bumper Lower Fasteners
Courtesy of CHRYSLER GROUP, LLC

6. Install the four lower fasteners (2).

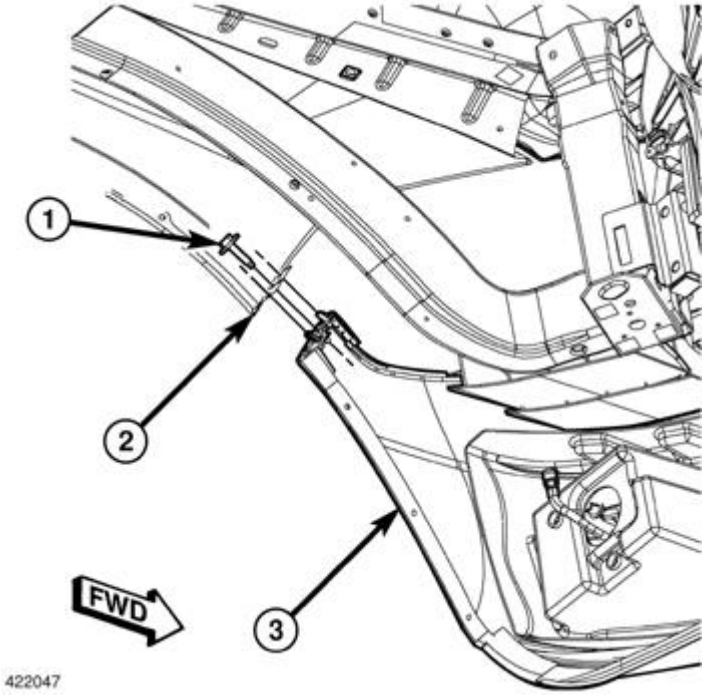

Fig. 29: Screws, Fascia & Fender
Courtesy of CHRYSLER GROUP, LLC

7. Install the screws (1) attaching the fascia (3) to the fender (2).

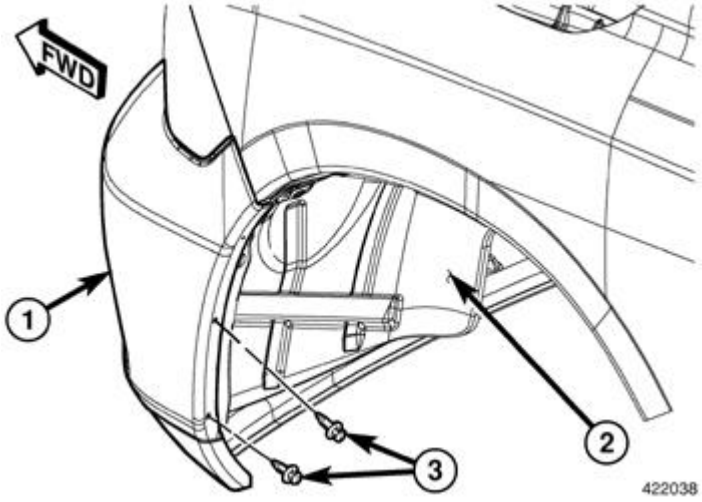

Fig. 30: Wheelhouse Splash Shield & Push Pins
Courtesy of CHRYSLER GROUP, LLC

8. Position the wheelhouse splash shield back and install the push pins (3).

FRAME

WARNING

USE OF HEAT DURING REPAIR

WARNING: Chrysler Group LLC engineering's position on the use of heat during collision repair is as follows:

- **Any body panel or frame component damaged which is to be repaired and reused, must be repaired using the "cold straightening" method. No heat may be used during the straightening process.**
- **During rough straightening prior to panel replacement, damaged panels or frame components may be heated to assist in body/frame realignment. The application of heat must be constrained to the parts which will be replaced and not allowed to affect any other components.**

This "no heat" recommendation is due to the extensive use of high strength and advanced high strength steels in Chrysler Group LLC products. High-strength materials can be substantially and negatively affected from heat input which will not be obviously known to the repairer or consumer.

Ignoring these recommendations may lead to serious compromises in the ability to protect occupants in a future collision event, reduce the engineered qualities and attributes, or decrease the durability and reliability of the vehicle.

This statement supersedes any previously released information by the Chrysler Group LLC.

Failure to follow these instructions may result in serious or fatal injury.

WARNINGS

WARNING: Use an Occupational Safety and Health Administration (OSHA) approved breathing filter, when spraying paint or solvents in a confined area. Failure to follow these instructions may result in possible serious or fatal injury.

- **avoid prolonged skin contact with petroleum or alcohol based cleaning solvents.**
- **do not stand under a hoisted vehicle that is not properly supported on safety stands. Failure to follow these instructions may result in possible serious or fatal injury.**

CAUTION: When holes are drilled or punched in an inner body panel, verify the depth of space to the outer body panel, electrical wiring or other components. Damage to the vehicle can result.

- **do not weld exterior panels unless combustible material on the interior of vehicle is removed from the repair area. Fire or hazardous conditions, can result.**
- **always have a fire extinguisher ready for use when welding.**
- **disconnect the negative (-) cable clamp from the battery when servicing electrical components that are live when the ignition is off. Damage to electrical system can result.**
- **do not use abrasive chemicals or compounds on painted surfaces. Damage to finish can result.**
- **do not use harsh alkaline based cleaning solvents on painted or upholstered surfaces. Damage to finish or color can result.**
- **do not hammer or pound on plastic trim panel when servicing interior trim. Plastic panels can break.**

RESTRAINT WARNINGS

WARNING: **To avoid potential physical injury, or damage to sensitive electronic circuits and systems, always disconnect and isolate the battery negative (ground) cable and the positive cable, then ground the positive cable to discharge the ORC capacitor before performing any welding operations on the vehicle. Failure to take the proper precautions could result in accidental airbag deployment, possible damage to the Supplemental Restraint System (SRS) circuits and components, and possible damage to other electronic circuits and components. Whenever a welding process is being performed within 30 cm (12 in) of an electronic module/harness, then that module/harness should be relocated out of the way, or disconnected. Always protect against component or vehicle damage from weld spatter by using weld blankets and screens. Failure to follow these instructions may result in serious or fatal injury.**

WARNING: **To avoid serious or fatal injury on vehicles equipped with the Supplemental Restraint System (SRS), never attempt to repair the electrically conductive circuits or wiring components related to the SRS for which there is no MOPAR wiring repair kit. It is important to use ONLY the recommended splicing kit and procedure. For applicable and available MOPAR wiring repair kits, please visit the MOPAR Connector Web Site at the following address on the Internet: (http://dto.vftis.com/mopar/disclaimer.asp). Inappropriate repairs can compromise the conductivity and current carrying capacity of those critical electrical circuits, which may cause SRS components not to deploy when required, or to deploy when not required. Only minor cuts or abrasions of wire and terminal insulation where the conductive material has not been damaged, or connector insulators where the integrity of the latching and locking mechanisms have not been compromised may be repaired using appropriate methods.**

WARNING: **To avoid serious or fatal injury during and following any seat belt or child restraint anchor service, carefully inspect all seat belts, buckles, mounting hardware, retractors, tether straps, and anchors for proper installation, operation, or damage. Replace any belt that is cut, frayed, or torn. Straighten any belt that is twisted. Tighten any loose fasteners. Replace any belt that has a damaged or ineffective buckle or retractor. Replace any belt that has a bent or damaged latch plate or anchor plate. Replace any child restraint anchor or the unit to which the anchor is integral that has been bent or damaged. Never attempt to repair a seat belt or child restraint component. Always replace damaged or ineffective seat belt and child restraint components with the correct, new and unused replacement parts listed in the Chrysler Mopar® Parts Catalog. Failure to follow these instructions may result in possible serious or fatal injury.**

WARNING: **To avoid serious or fatal injury on vehicles equipped with side curtain airbags, disable the Supplemental Restraint System (SRS) before attempting any Occupant Restraint Controller (ORC) diagnosis or service. The ORC contains a rollover sensor, which enables the system to deploy the side curtain airbags in the event of a vehicle rollover event. If an ORC is accidentally rolled during service while still connected to battery power, the side curtain airbags will deploy. Disconnect and isolate the battery negative (ground) cable, then wait two minutes for the system capacitor to discharge before performing further diagnosis or service. This is the only sure way to disable the SRS. Failure to take the proper precautions could result in accidental airbag deployment.**

WARNING: **To avoid serious or fatal injury on vehicles equipped with airbags, disable the Supplemental Restraint System (SRS) before attempting any steering wheel, steering column, airbag, Occupant Classification System (OCS), seat belt tensioner, impact sensor or instrument panel component diagnosis or service. Disconnect and isolate the battery negative (ground) cable, then wait two minutes for the system capacitor to discharge before performing further diagnosis or service. This is the only sure way to disable the SRS. Failure to follow these instructions may result in accidental airbag deployment.**

WARNING: **To avoid potential physical injury or damage to sensitive electronic circuits and systems, always disconnect and isolate the battery negative (ground) cable and the positive cable, then ground the positive cable to discharge the Occupant Restraint Controller (ORC) capacitor before performing any welding operations on the vehicle. Failure to take the proper precautions could result in accidental airbag deployment, possible damage to the Supplemental Restraint System (SRS) circuits and components, and possible damage to other electronic circuits and components. Whenever a welding process is being performed within 12**

inches (30 centimeters) of an electronic module or wiring harness, then that module or harness should be relocated out of the way, or disconnected. Always protect against component or vehicle damage from weld spatter by using weld blankets and screens.

WARNING: To avoid serious or fatal injury, do not attempt to dismantle an airbag unit or tamper with its inflator. Do not puncture, incinerate or bring into contact with electricity. Do not store at temperatures exceeding 93° C (200° F). An airbag inflator unit may contain sodium azide and potassium nitrate. These materials are poisonous and extremely flammable. Contact with acid, water, or heavy metals may produce harmful and irritating gases (sodium hydroxide is formed in the presence of moisture) or combustible compounds. An airbag inflator unit may also contain a gas canister pressurized to over 17.24 kPa (2500 psi). Failure to follow these instructions may result in possible serious or fatal injury.

WARNING: To avoid serious or fatal injury when handling a seat belt tensioner retractor. Exercise proper care to keep fingers out from under the retractor cover and away from the seat belt webbing where it exits from the retractor cover. Failure to follow these instructions may result in possible serious or fatal injury.

WARNING: To avoid serious or fatal injury, replace all Supplemental Restraint System (SRS) components only with parts specified in the Chrysler Mopar® Parts Catalog. Substitute parts may appear interchangeable, but internal differences may result in inferior occupant protection.

WARNING: To avoid serious or fatal injury, the fasteners, screws, and bolts originally used for the Supplemental Restraint System (SRS) components must never be replaced with any substitutes. These fasteners have special coatings and are specifically designed for the SRS. Anytime a new fastener is needed, replace it with the correct fasteners provided in the service package or specified in the Chrysler Mopar® Parts Catalog.

WARNING: To avoid serious or fatal injury when a steering column has an airbag unit attached, never place the column on the floor or any other surface with the steering wheel or airbag unit face down. Failure to follow these instructions may result in possible serious or fatal injury.

SPECIFICATIONS

SPECIFICATIONS

	TRUCK PLATFORM			
		2500/3500	3500	4500/5500

DESCRIPTION	1500		STANDARD CHASSIS		CAB CHASSIS		CAB CHASSIS	
	N.m	Ft. Lbs	N.m	Ft. Lbs	N.m	Ft. Lbs	N.m	Ft. Lbs
Front Skid Plate **BOLT**	18	13	-	-	-	-	-	-
Front Tow Hook **BOLT**	85	63	-	-	-	-	275	203
Lower Control Arm Crossmember **NUT**	102	75	64	47	-	-	-	-
Trailer Hitch **BOLT**	190	140	169	125	-	-	-	-
Transfercase Skid Plate **BOLT**	18	13	24	18	37	27	37	27
Transfercase Skid Plate Crossmember **BOLTS**	18	13	24	18	-	-	-	-
Transmission Crossmember **NUT**	122	90	122	90	127	94	127	94
Transmission Mount To Crossmember **NUT**	61	45	61	45	61	45	61	45

CROSSMEMBER, LOWER CONTROL ARM

REMOVAL

REMOVAL

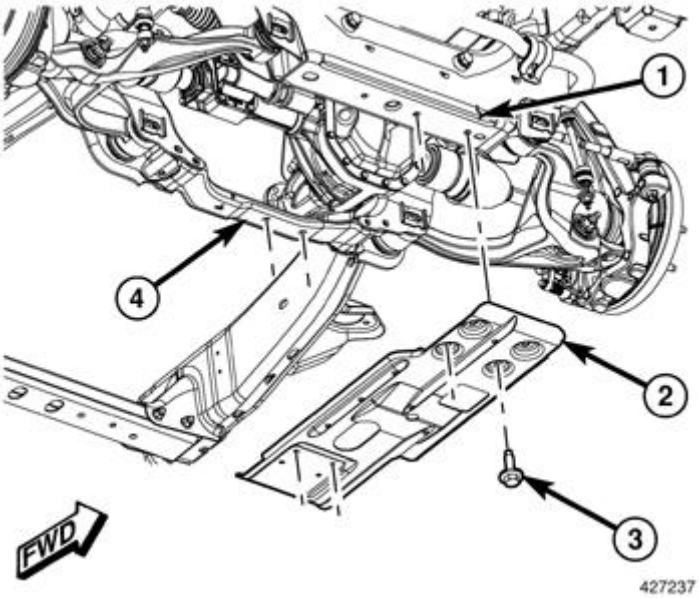

Fig. 31: Removing/Installing Front Skid Plate
Courtesy of CHRYSLER GROUP, LLC

1. Raise and support the vehicle. Refer to **HOISTING, STANDARD PROCEDURE** .
2. Remove the front skid plate (2), if equipped. Refer to **PLATE, SKID, FRONT, REMOVAL**.

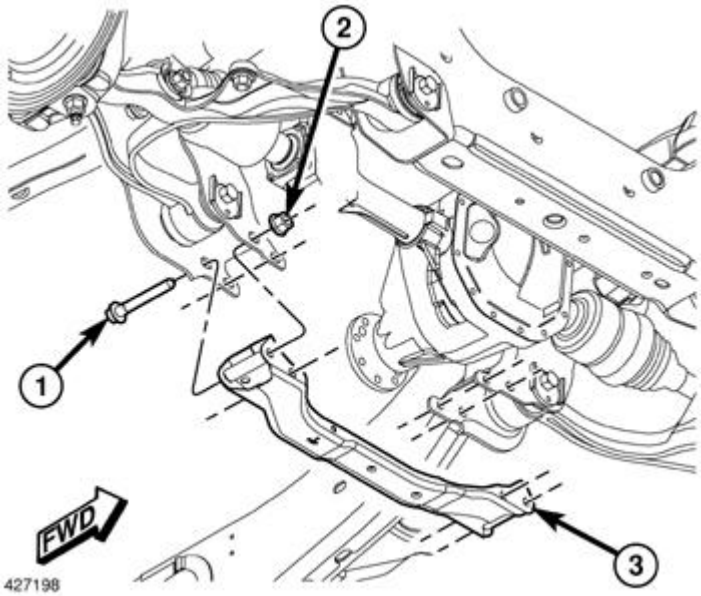

Fig. 32: Removing/Installing Crossmember
Courtesy of CHRYSLER GROUP, LLC

3. Remove the bolts (1) and remove the crossmember (3).

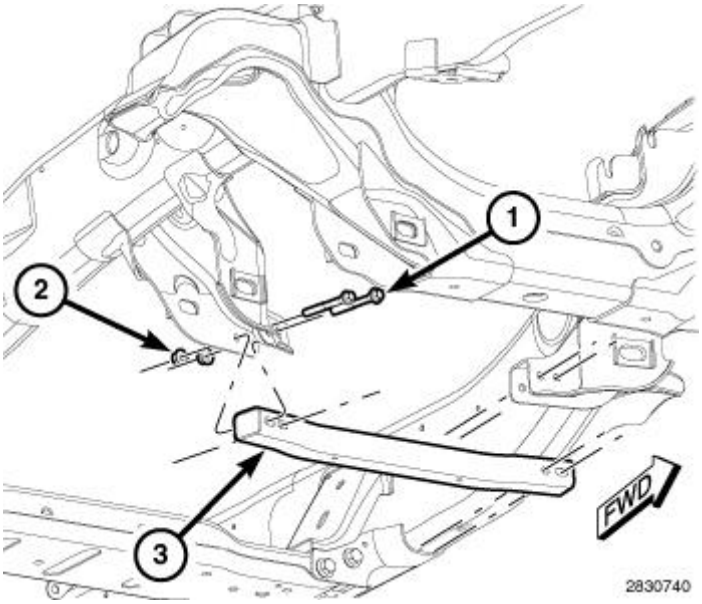

Fig. 33: 2500 Heavy Duty 4x2 Crossmember
Courtesy of CHRYSLER GROUP, LLC

INSTALLATION

INSTALLATION

1500 Light Duty

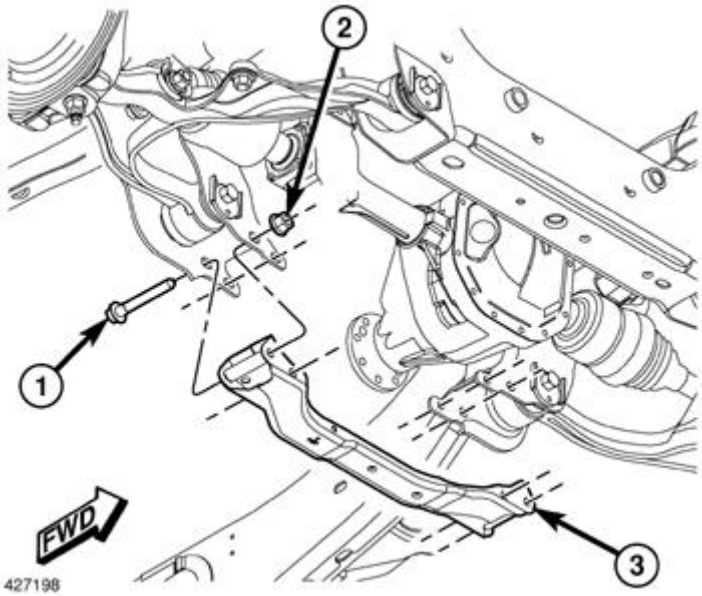

Fig. 34: Removing/Installing Crossmember
Courtesy of CHRYSLER GROUP, LLC

1. Install the crossmember (3).
2. Install the bolts (1) and nuts (2). Tighten the nuts to 102 N.m (75 ft. lbs.).

2500 Heavy Duty 4X2

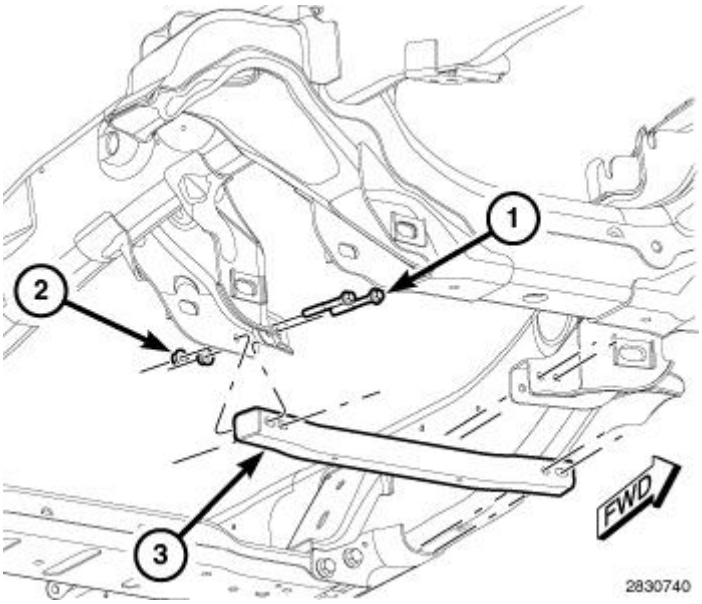

Fig. 35: 2500 Heavy Duty 4x2 Crossmember
Courtesy of CHRYSLER GROUP, LLC

1. Install the crossmember (3).
2. Install the bolts (1) and nuts (2). Tighten the nuts to 64 N.m (47 ft. lbs.).

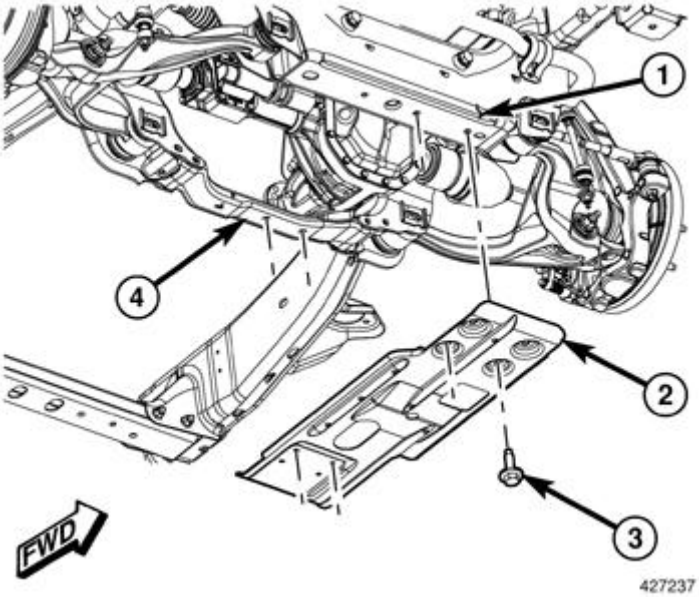

Fig. 36: Removing/Installing Front Skid Plate
Courtesy of CHRYSLER GROUP, LLC

1. Install the front skid plate, if equipped (2). Refer to **PLATE, SKID, FRONT, INSTALLATION**.

CROSSMEMBER, TRANSMISSION

REMOVAL

REMOVAL

1500 LIGHT DUTY

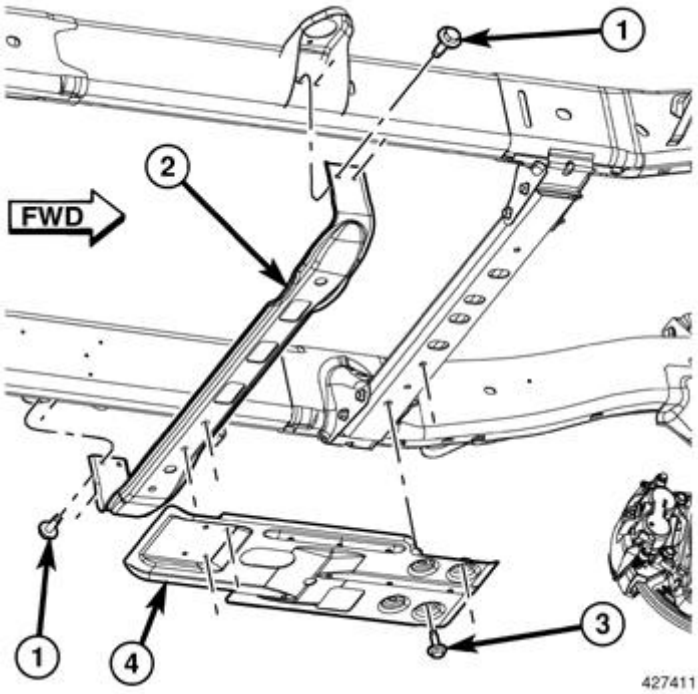

Fig. 37: Crossmember, Skid Plate & Bolts
Courtesy of CHRYSLER GROUP, LLC

1. Raise and support the vehicle. Refer to **HOISTING, STANDARD PROCEDURE** .
2. Remove the transfer case skid plate (4) and crossmember (2), if equipped. Refer to **PLATE, SKID, TRANSFER CASE, REMOVAL**.

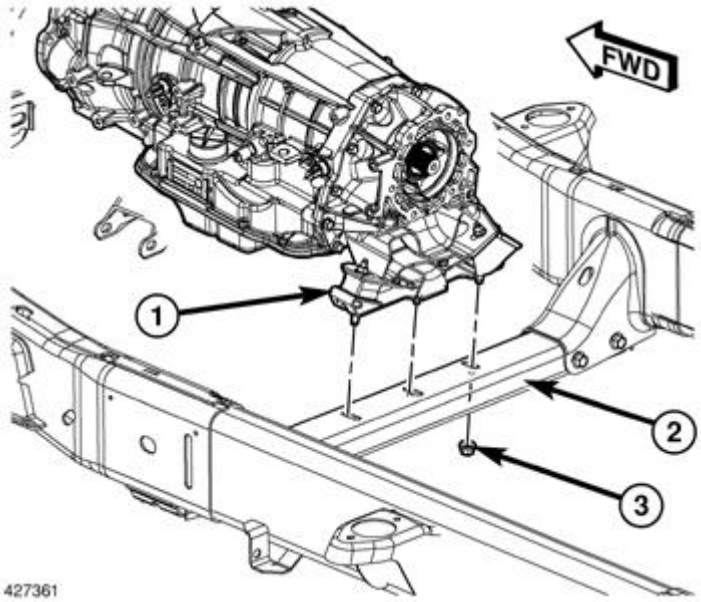

Fig. 38: Transmission Mount, Crossmember & Nuts
Courtesy of CHRYSLER GROUP, LLC

3. Remove the nuts (3) fastening the transmission mount (1) to the transmission crossmember (2).

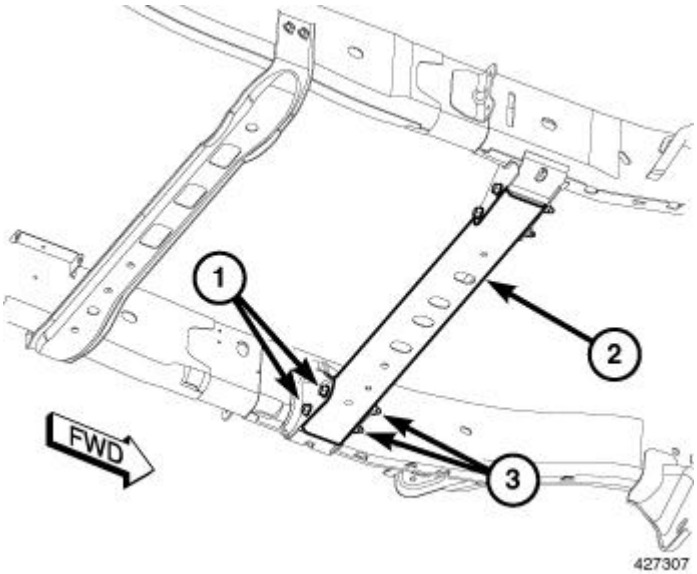

Fig. 39: Crossmember & Bolts
Courtesy of CHRYSLER GROUP, LLC

4. Support the transmission with a transmission jack or suitable lifting device.
5. Remove the four bolts (1) and remove the transmission crossmember (2).

2500 - 3500 HEAVY DUTY

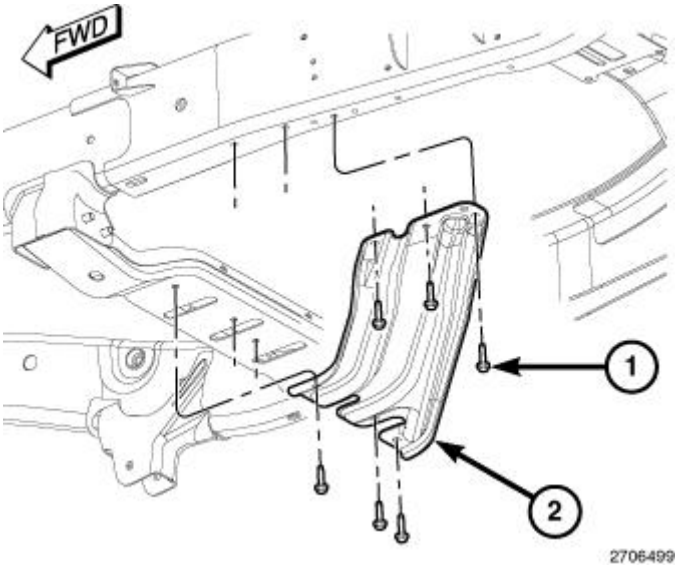

Fig. 40: Transfer Case Skid Plate & Bolts
Courtesy of CHRYSLER GROUP, LLC

1. Remove the transfer case skid plate (2), if equipped. Refer to **PLATE, SKID, TRANSFER CASE, REMOVAL**.

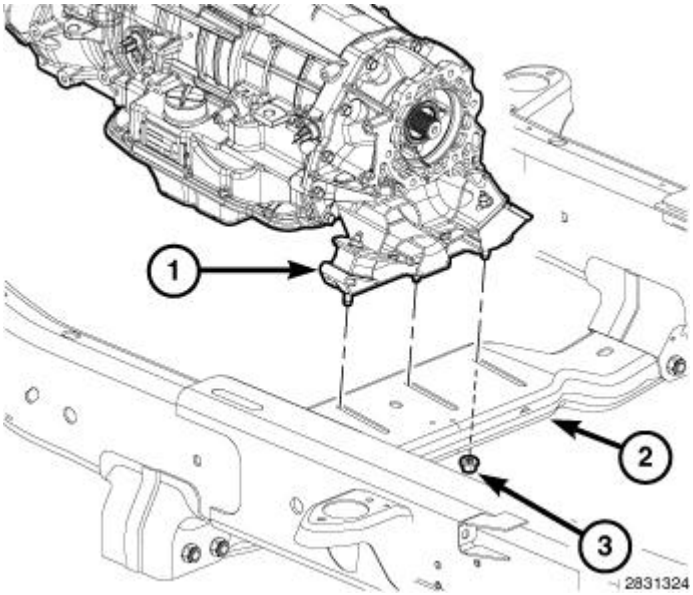

Fig. 41: Identifying Transmission Mount Nuts
Courtesy of CHRYSLER GROUP, LLC

2. Remove the nuts (3) fastening the transmission mount (1) to the transmission crossmember (2).

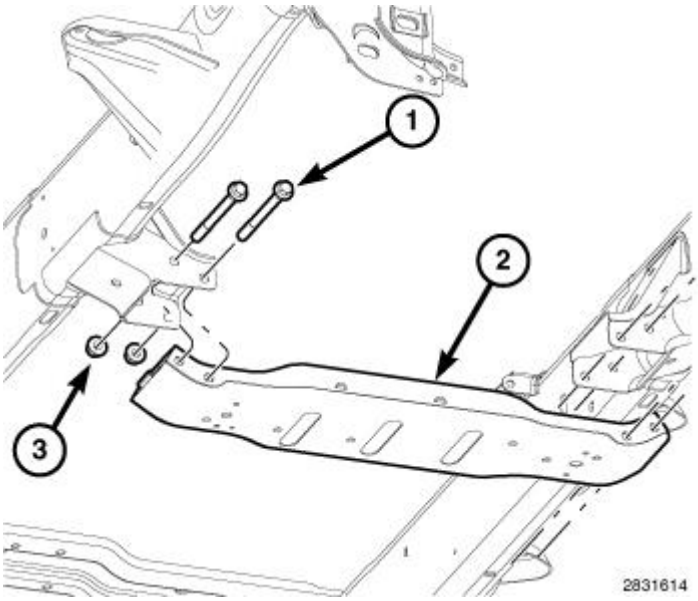

Fig. 42: Identifying Crossmember With Bolts & Nuts
Courtesy of CHRYSLER GROUP, LLC

3. Support the transmission with a transmission jack or suitable lifting device.
4. Remove the four bolts (1) and nuts (3) and remove the transmission crossmember (2).

INSTALLATION

INSTALLATION

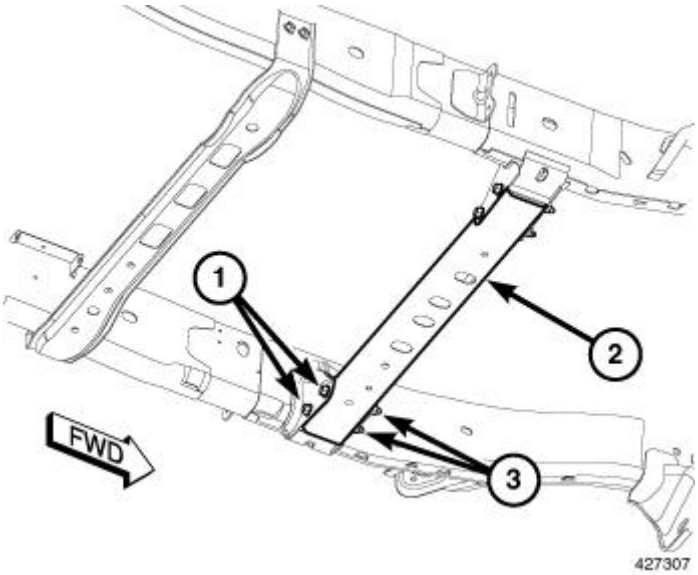

Fig. 43: Crossmember & Bolts
Courtesy of CHRYSLER GROUP, LLC

1. Install the transmission crossmember (2), the bolts (1) and nuts (3). Tighten the bolts to 122 N.m (90 ft. lbs.).

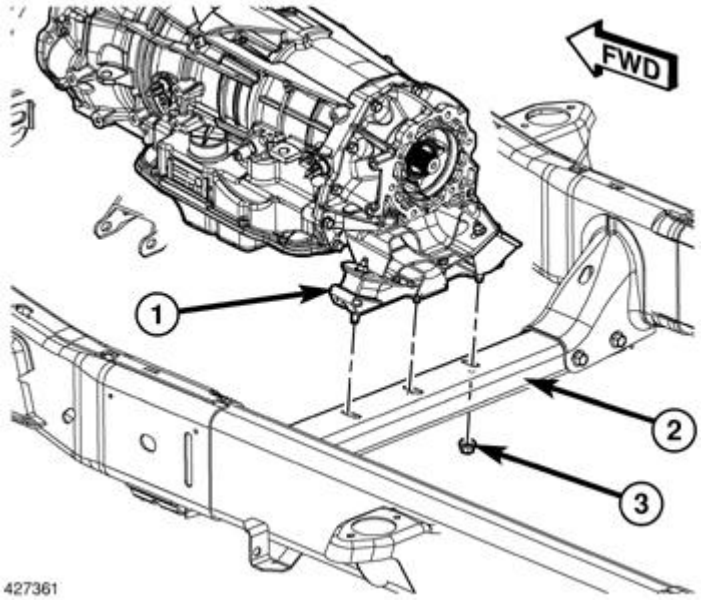

Fig. 44: Transmission Mount, Crossmember & Nuts
Courtesy of CHRYSLER GROUP, LLC

2. Remove the transmission support and install the transmission mount nuts (3).
3. Tighten the nuts (3) to 61 N.m (45 ft. lbs.).

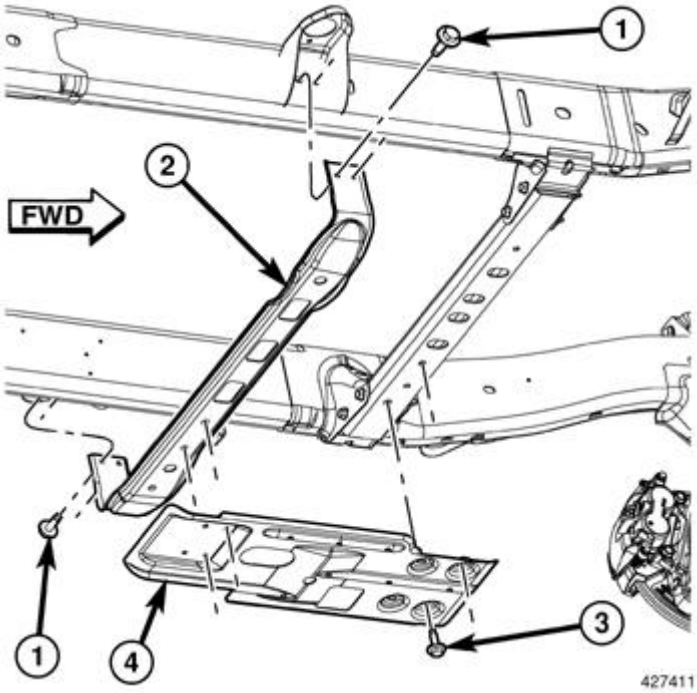

Fig. 45: Crossmember, Skid Plate & Bolts
Courtesy of CHRYSLER GROUP, LLC

4. Install the transfer case skid plate (4) and crossmember (2), if equipped. Refer to **PLATE, SKID, TRANSFER CASE, INSTALLATION**.

2500 - 3500 HEAVY DUTY STANDARD CAB

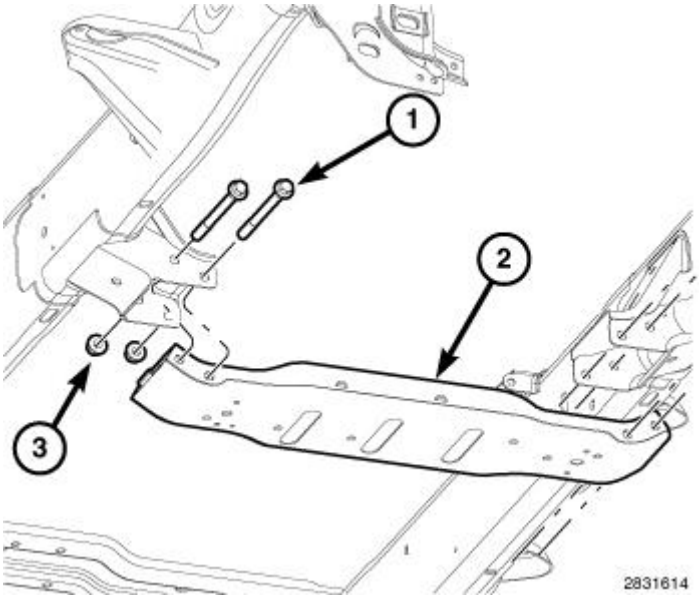

Fig. 46: Identifying Crossmember With Bolts & Nuts
Courtesy of CHRYSLER GROUP, LLC

1. Install the crossmember (2), the bolts (1) and the nuts (3). Tighten the nuts to 122 N.m (90 ft. lbs.).

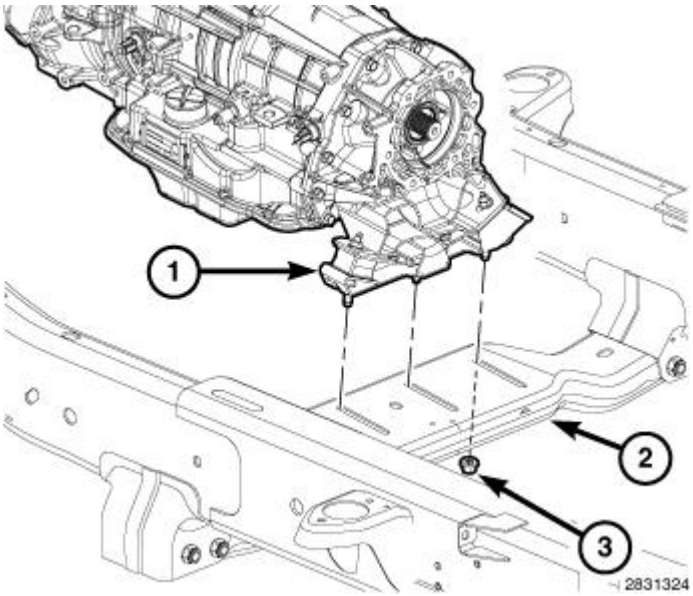

Fig. 47: Identifying Transmission Mount Nuts
Courtesy of CHRYSLER GROUP, LLC

2. Remove the transmission support and install the transmission mount nuts (3).
3. Tighten the nuts (3) to 61 N.m (45 ft. lbs.).

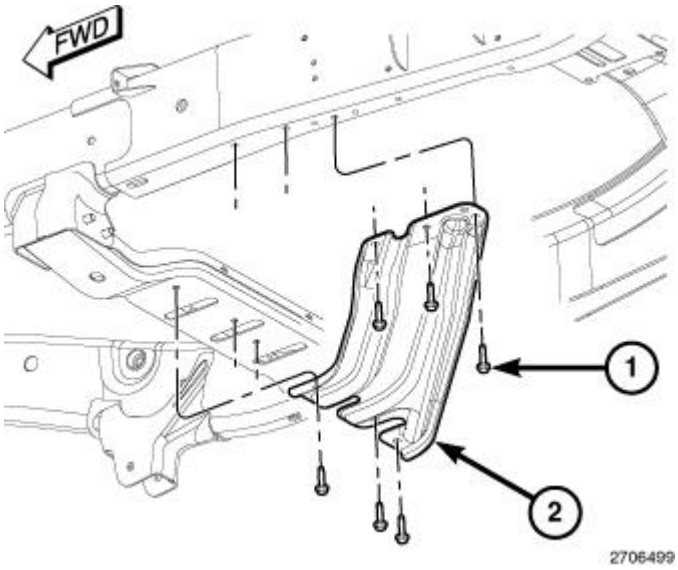

Fig. 48: Transfer Case Skid Plate & Bolts
Courtesy of CHRYSLER GROUP, LLC

4. Install the transfer case skid plate (2), if equipped. Refer to **PLATE, SKID, TRANSFER CASE, INSTALLATION**.

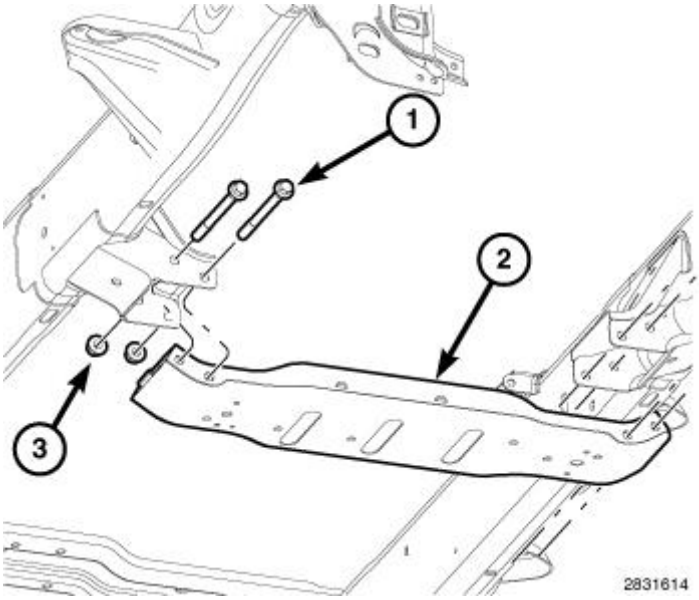

Fig. 49: Identifying Crossmember With Bolts & Nuts
Courtesy of CHRYSLER GROUP, LLC

1. Install the crossmember (2), the bolts (1) and the nuts (3). Tighten the nuts to 127 N.m (94 ft. lbs.).

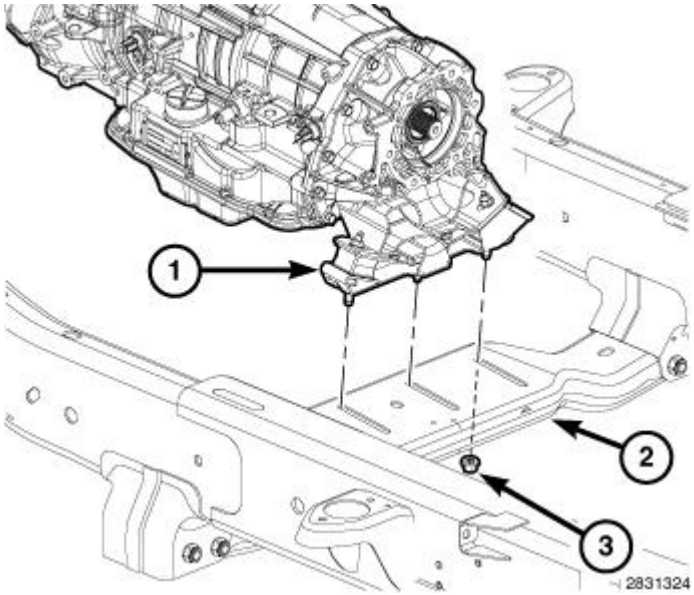

Fig. 50: Identifying Transmission Mount Nuts
Courtesy of CHRYSLER GROUP, LLC

2. Remove the transmission support and install the transmission mount nuts (3).
3. Tighten the nuts (3) to 61 N.m (45 ft. lbs.).

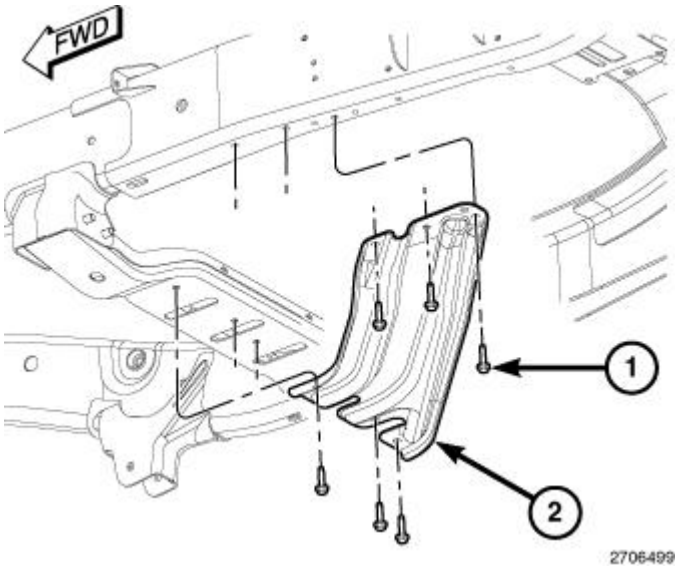

Fig. 51: Transfer Case Skid Plate & Bolts
Courtesy of CHRYSLER GROUP, LLC

4. Install the transfer case skid plate (2), if equipped. Refer to **PLATE, SKID, TRANSFER CASE, INSTALLATION**.

HITCH, TRAILER

REMOVAL

REMOVAL

1500 LIGHT DUTY

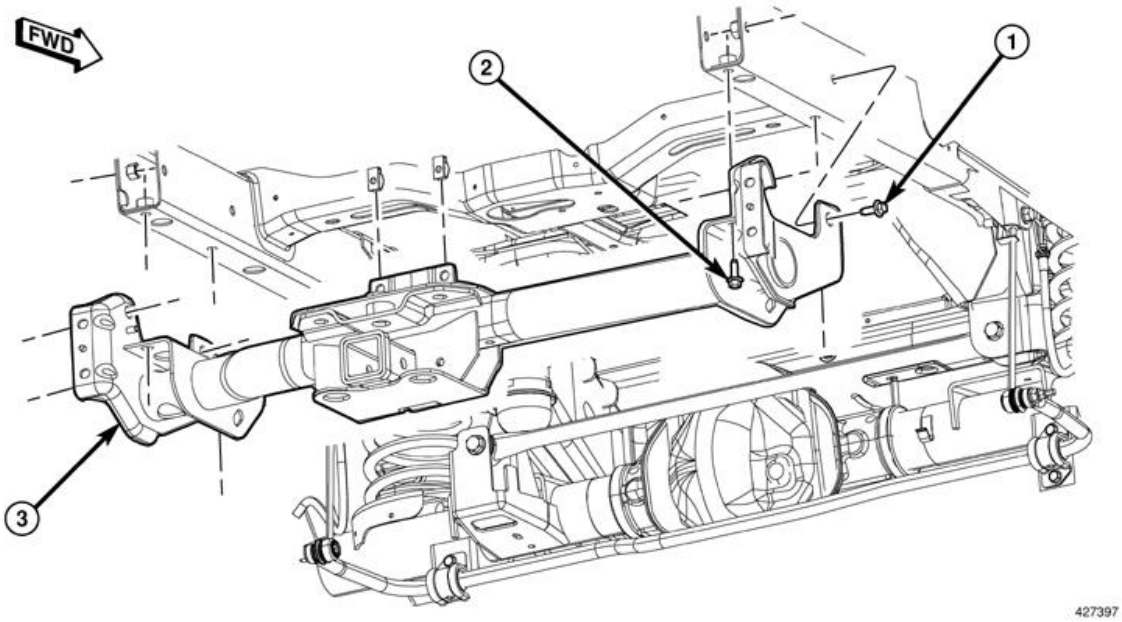

Fig. 52: Hitch & Bolts

Courtesy of CHRYSLER GROUP, LLC

1. Remove the rear bumper. Refer to **BUMPER, REAR, REMOVAL**.
2. Remove the hitch bolts (1).
3. Support the hitch (3) with a suitable lifting device and remove the remaining hitch bolts (2).

2500 - 3500 HEAVY DUTY

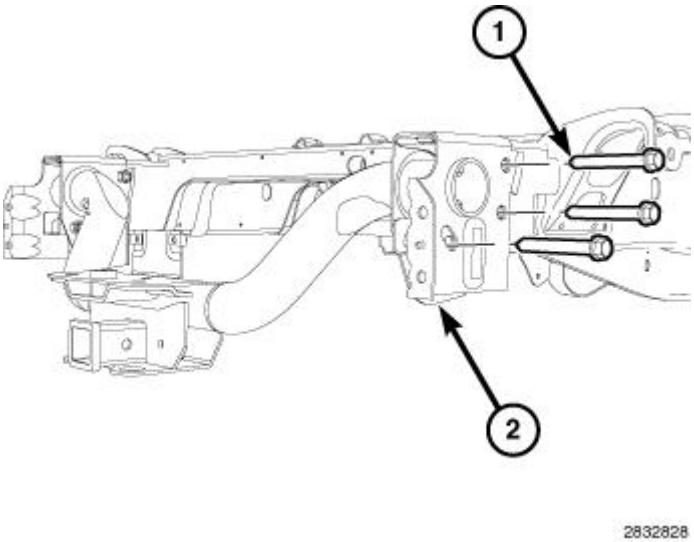

Fig. 53: Hitch & Bolts (HD)
Courtesy of CHRYSLER GROUP, LLC

1. Remove the rear bumper. Refer to **BUMPER, REAR, REMOVAL**.
2. Remove the hitch bolts (1).

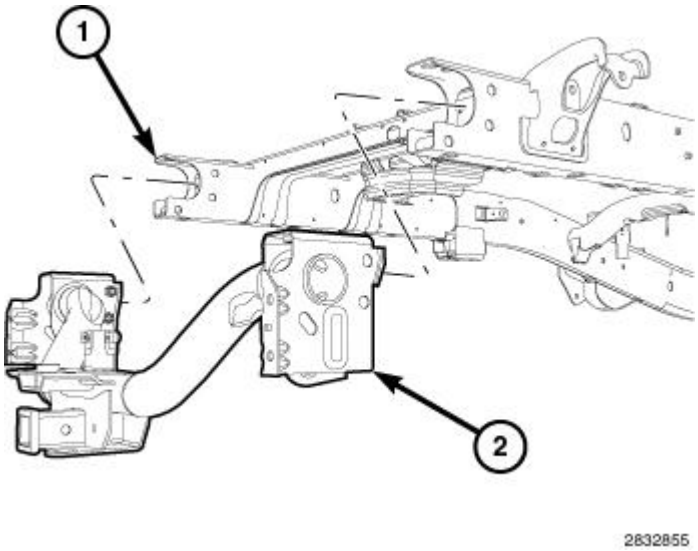

Fig. 54: Hitch & Frame
Courtesy of CHRYSLER GROUP, LLC

3. Support the hitch (2) with a suitable lifting device and remove the hitch from the frame (1).

INSTALLATION

INSTALLATION

1500 LIGHT DUTY

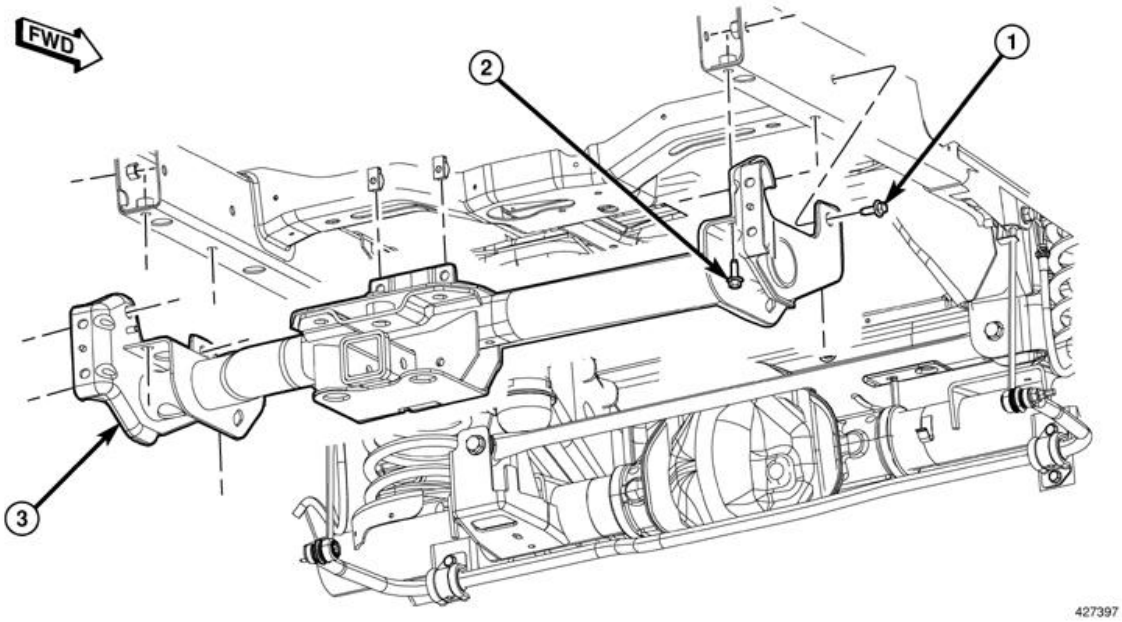

Fig. 55: Hitch & Bolts
Courtesy of CHRYSLER GROUP, LLC

1. Install the hitch (3) and install the four bolts (2).
2. Install the four bolts (1).
3. Tighten the bolts (2) to 190 N.m (140 ft. lbs.).
4. Tighten the bolts (1) to 190 N.m (140 ft. lbs.).
5. Install the rear bumper. Refer to **BUMPER, REAR, INSTALLATION**.

2500 - 3500 HEAVY DUTY

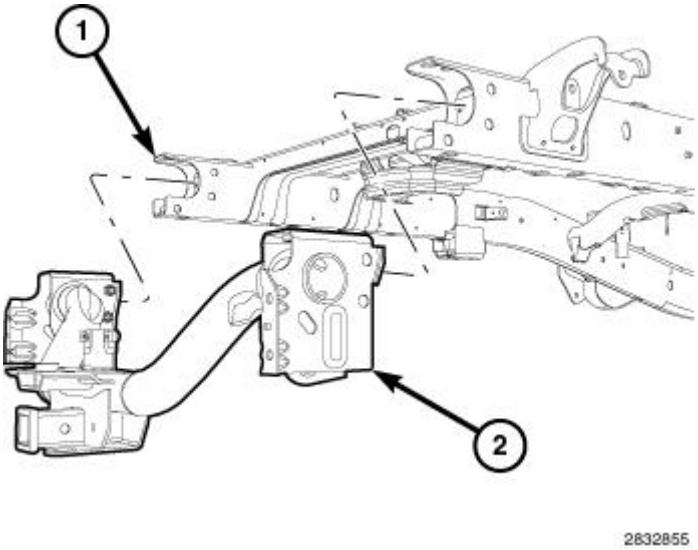

Fig. 56: Hitch & Frame
Courtesy of CHRYSLER GROUP, LLC

1. Install the hitch (2) onto the frame (1).

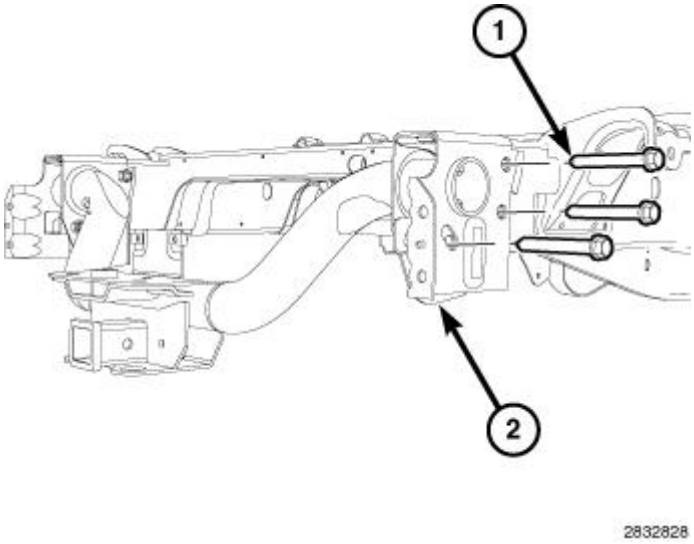

Fig. 57: Hitch & Bolts (HD)
Courtesy of CHRYSLER GROUP, LLC

2. Install the six bolts (1).
3. Tighten the bolts (1) to 169 N.m (125 ft. lbs.).
4. Install the rear bumper. Refer to **BUMPER, REAR, INSTALLATION**.

HOOK(S), TOW, FRONT

REMOVAL

REMOVAL

1500 LIGHT DUTY

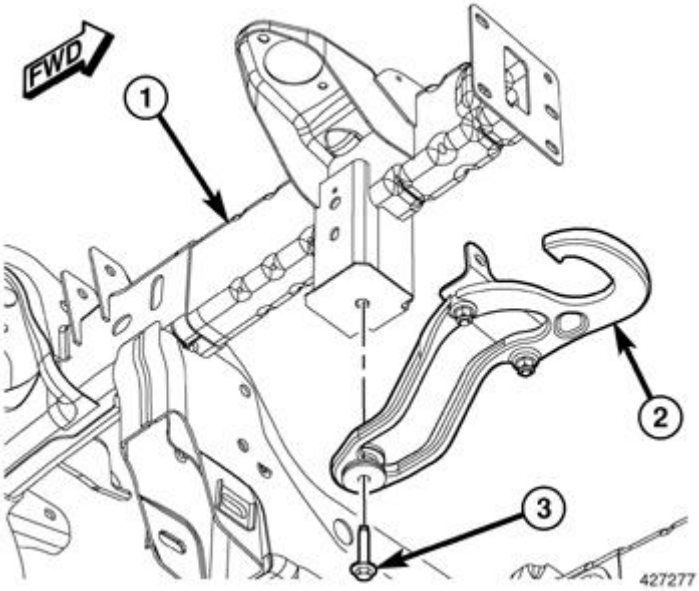

Fig. 58: Frame Tip, Tow Hook & Bolt
Courtesy of CHRYSLER GROUP, LLC

1. Remove the front bumper. Refer to **BUMPER, FRONT, REMOVAL**.
2. Remove the bolts (3) and remove the tow hook assembly (2).

2500 - 5500 HEAVY DUTY

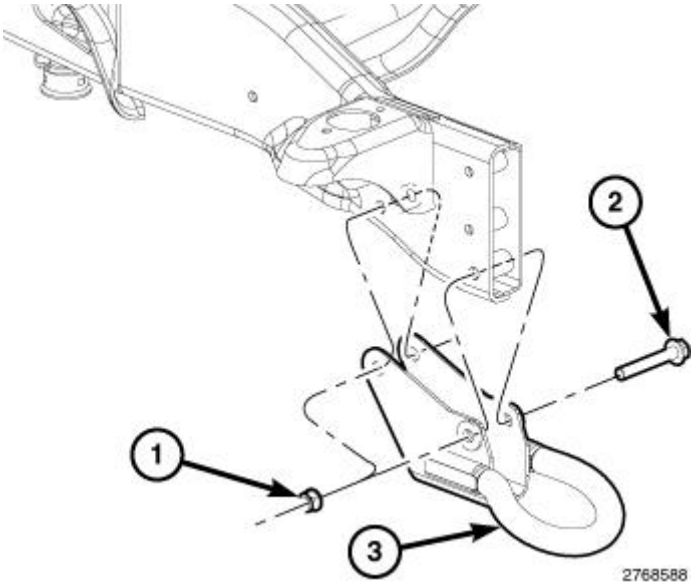

Fig. 59: Identifying Tow Hooks With Nuts & Bolts
Courtesy of CHRYSLER GROUP, LLC

1. Remove the front bumper. Refer to **BUMPER, FRONT, REMOVAL**.

2. Remove the nuts (1) and bolts (2) and remove the tow hooks (3), if equipped.

INSTALLATION

INSTALLATION

1500 LIGHT DUTY

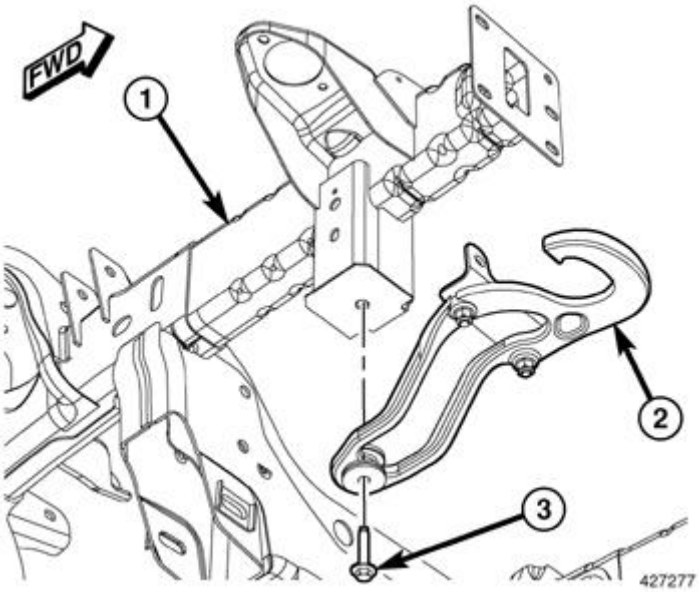

Fig. 60: Frame Tip, Tow Hook & Bolt
Courtesy of CHRYSLER GROUP, LLC

1. Install the tow hook (2) onto the frame tip (1) and install the bolt (3).
2. Make sure the hook is positioned fully against the bumper mount and tighten the bolt (3) to 85 N.m (63 ft. lbs.)
3. Install the front bumper. Refer to **BUMPER, FRONT, INSTALLATION**.

2500 - 5500 HEAVY DUTY

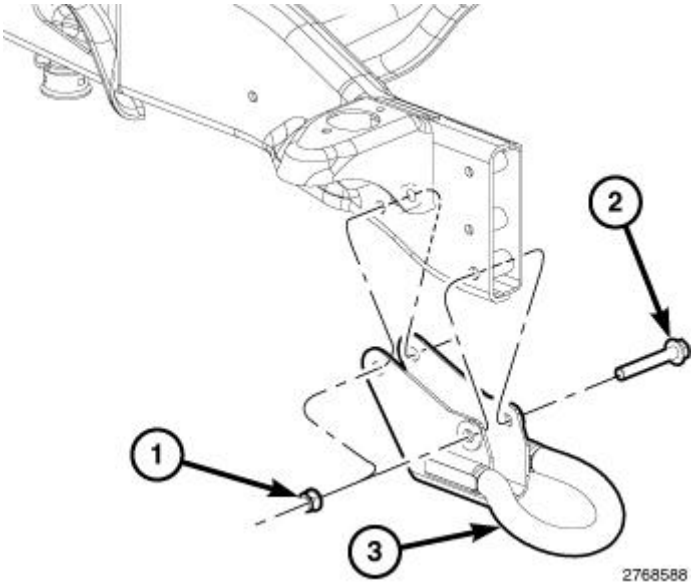

Fig. 61: Identifying Tow Hooks With Nuts & Bolts
Courtesy of CHRYSLER GROUP, LLC

1. If equipped, install the tow hooks (3) and install the bolts (2) and nuts (1).
2. Tighten the bolts to 275 N.m (203 ft. lbs.).
3. Install the front bumper. Refer to **BUMPER, FRONT, INSTALLATION**.

UNDER BODY PROTECTION

PLATE, SKID, FRONT

REMOVAL

REMOVAL

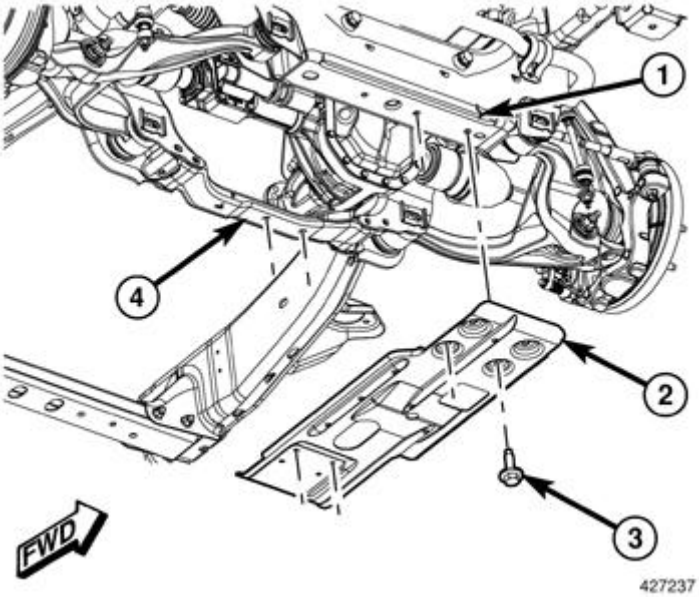

Fig. 62: Removing/Installing Front Skid Plate
Courtesy of CHRYSLER GROUP, LLC

1. Raise and support the vehicle. Refer to **HOISTING, STANDARD PROCEDURE** .
2. Remove the bolts (3).
3. Remove the skid plate (2).

INSTALLATION

INSTALLATION

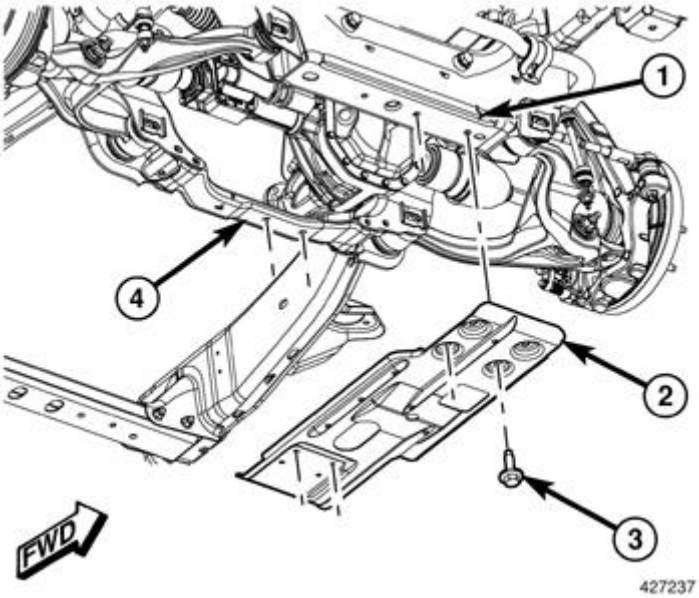

Fig. 63: Removing/Installing Front Skid Plate
Courtesy of CHRYSLER GROUP, LLC

1. Position the skid plate (2) onto the vehicle and line up the holes.
2. Install the bolts (3) and tighten to 18 N.m (13 ft. lbs.).

PLATE, SKID, TRANSFER CASE

REMOVAL

REMOVAL

1500 - 3500 STANDARD CHASSIS

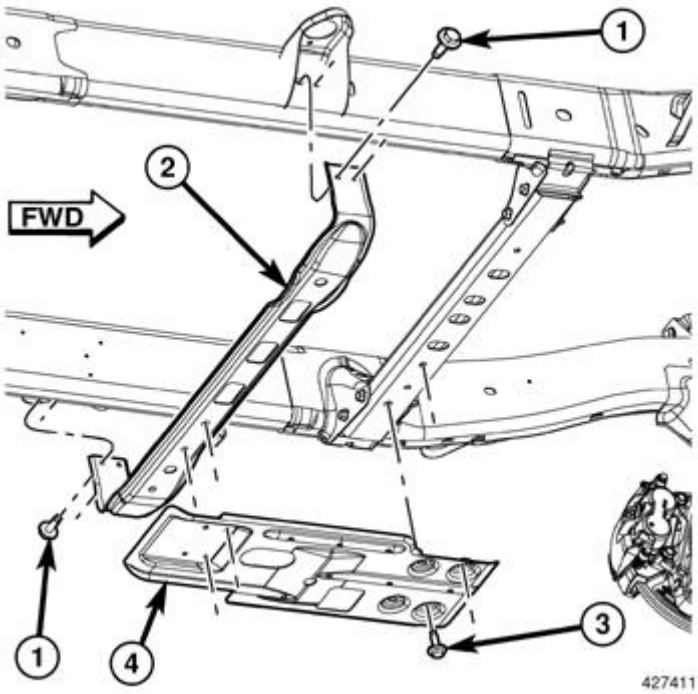

Fig. 64: Crossmember, Skid Plate & Bolts
Courtesy of CHRYSLER GROUP, LLC

1. Raise and support the vehicle. Refer to **HOISTING, STANDARD PROCEDURE** .
2. Support the skid plate (4) and remove the bolts (3).
3. Remove the skid plate (4).
4. Support the skid plate crossmember (2) and remove the bolts (1).
5. Remove the skid plate crossmember (2).

3500 - 5500 HEAVY DUTY - CAB CHASSIS

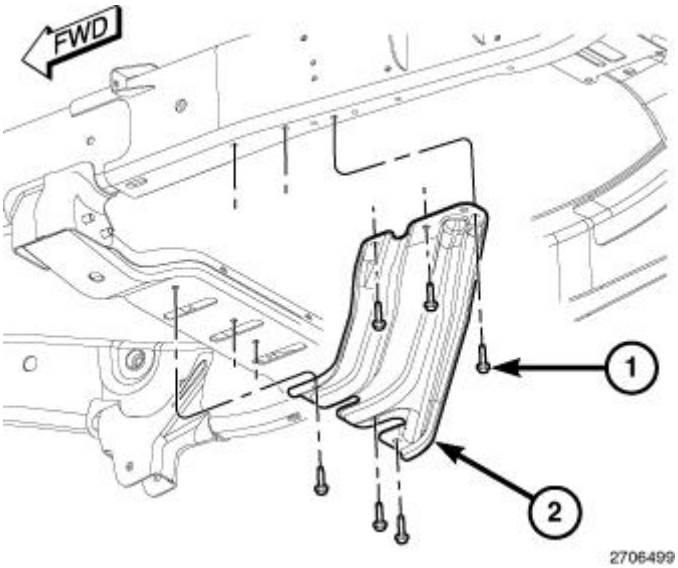

Fig. 65: Transfer Case Skid Plate & Bolts
Courtesy of CHRYSLER GROUP, LLC

1. Raise and support the vehicle. Refer to **HOISTING, STANDARD PROCEDURE** .
2. Support the skid plate (2) and remove the bolts (1).
3. Remove the skid plate (3).

INSTALLATION

INSTALLATION

1500 STANDARD CHASSIS

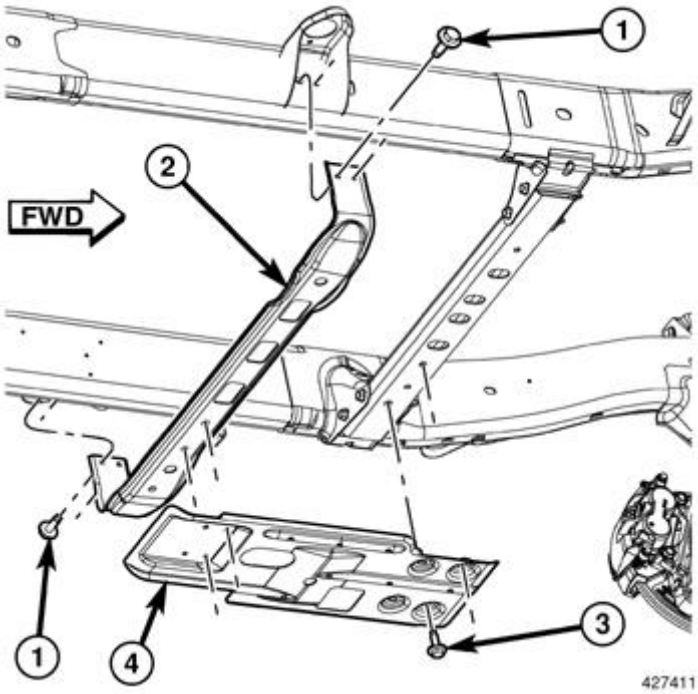

Fig. 66: Crossmember, Skid Plate & Bolts
Courtesy of CHRYSLER GROUP, LLC

1. Install the skid plate crossmember (2) and bolts (1).
2. Tighten the bolts (1) to 18 N.m (13 ft. lbs.).
3. Install the skid plate (4) and bolts (3).
4. Tighten the bolts (3) to 18 N.m (13 ft. lbs.).

2500/3500 STANDARD CHASSIS

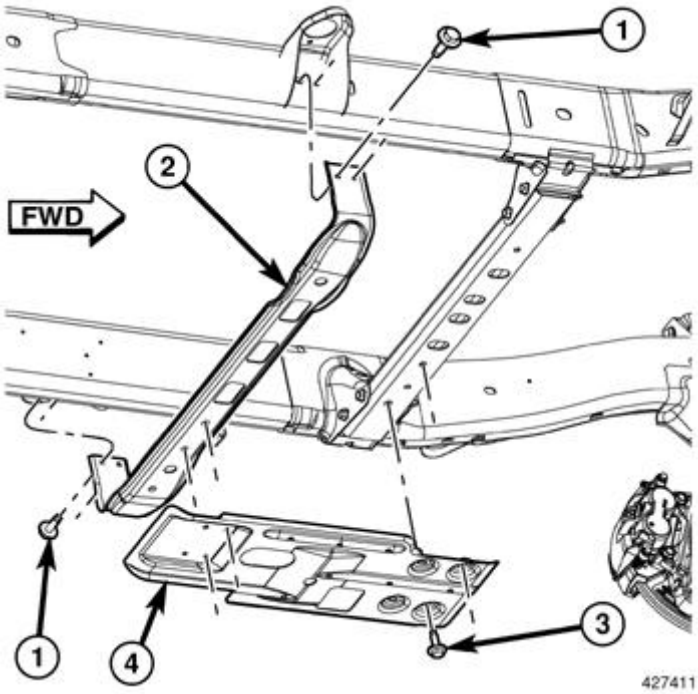

Fig. 67: Crossmember, Skid Plate & Bolts
Courtesy of CHRYSLER GROUP, LLC

NOTE: 1500 Standard Chassis shown in illustration, 2500/3500 similar

1. Install the skid plate crossmember (2) and bolts (1).
2. Tighten the bolts (1) to 24 N.m (18 ft. lbs.).
3. Install the skid plate (4) and bolts (3).
4. Tighten the bolts (3) to 24 N.m (18 ft. lbs.).

3500 - 5500 HEAVY DUTY - CAB CHASSIS

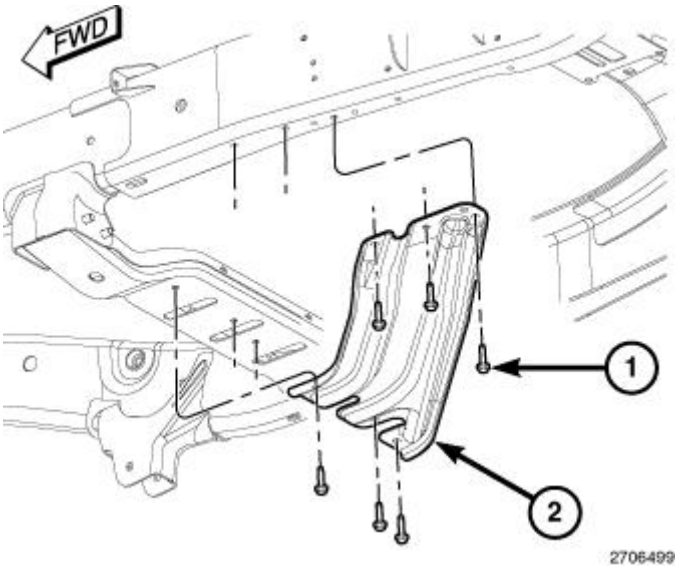

Fig. 68: Transfer Case Skid Plate & Bolts
Courtesy of CHRYSLER GROUP, LLC

1. Install the skid plate (2) and bolts (1).
2. Tighten the bolts (1) to 37 N.m (27 ft. lbs.).

DESCRIPTION

DESCRIPTION

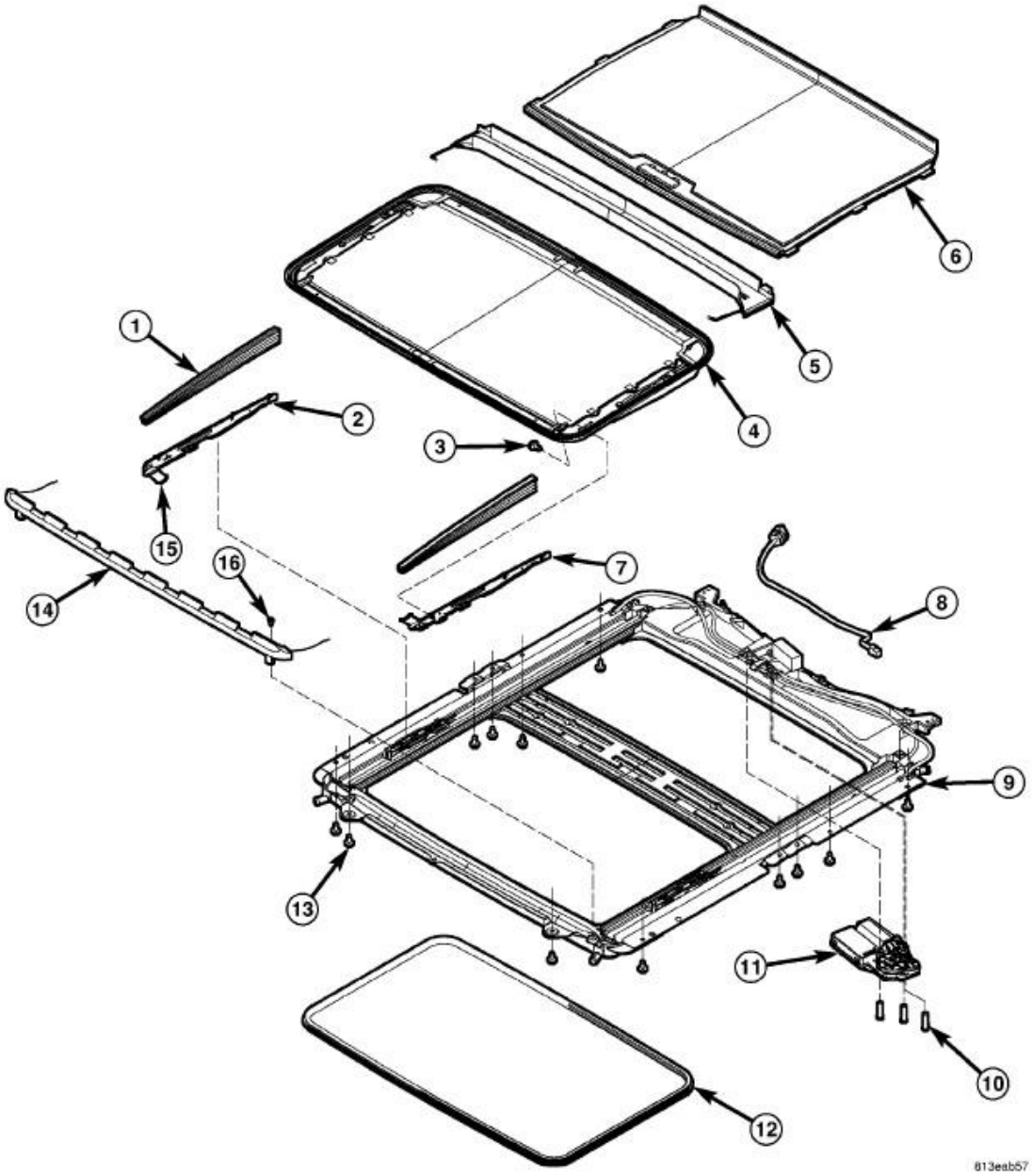

Fig. 1: Exploded View Of Power Sunroof System
Courtesy of CHRYSLER GROUP, LLC

The power sunroof system allows the sunroof to be opened, closed or placed in the vent position electrically by

actuating a switch in the overhead console. The sunroof system receives battery feed through a fuse in the Totally Integrated Power Module (TIPM). The sunroof will operate normally with the key in the "RUN" or "ACCESSORY" position.

The sunroof glass panel tilts upward at the rear for ventilation and slides rearward under the roof when open. The panel seals flush with the roof in the closed position to eliminate wind noise. The sunroof includes a manual-sliding sunshade to cover the deep-tinted glass panel.

In addition to the standard power sunroof operation, this vehicle offers several additional features. There is an express (one-touch) opening and closing feature as well as Excessive Force Limitation (EFL). The EFL function detects obstacles trapped between the glass and the vehicle roof during a closing motion. Upon sensing an obstacle the EFL function will reverse direction of the glass to allow removal of the obstacle.

The main components of the power sunroof system are:

- The motor/module assembly
- The power sunroof glass and frame assembly
- The power sunroof switch
- The manual-sliding sunshade

OPERATION

OPERATION

This vehicle has a vent, tilt and slide power sunroof system with express (one-touch) open and closing feature. The sunroof system receives constant battery feed through a fuse in the Totally Integrated Power Module (TIPM). The sunroof will operate normally with the key in the "RUN" or "ACCESSORY" position. If the sunroof is moving when the key is turned to the START position (crank engine), all motions will stop. The sunroof will also stop a requested motion if the key is turned "OFF".

A combination push-button and rocker switch module mounted in the overhead console controls sunroof operation. The sunroof switch is a rocker design with a push button in the center of the two halves of the rocker. Pressing the rocker towards the front of the car commands the sunroof closed. Pressing the rocker towards the rear of the car commands the sunroof open. Pressing the center push button commands the sunroof up into the vent position (Rear of sunroof glass raises above the vehicle roof with glass still covering the sunroof opening). All switch commands operate with the glass starting in any position.

An electronic control system, integral to the motor/module assembly, provides the express open and close functions. During express opening, the sunroof glass panel will first open to the "Comfort Stop" position. A second press of the "OPEN" button on the rocker switch will move the glass panel to the full open position. Pressing the "close" end of the rocker switch moves the sunroof glass panel to the full closed position. During express closing, anytime an obstacle is detected in the way of the glass, the motor will stop and reverse travel to avoid pinching an occupant's finger, ice in the track, etc. This function is called Excessive Force Limitation (EFL). There are two methods of overriding the EFL function.

1. When three EFL events occur without the glass being allowed to fully close, the next close attempt will only move while the close switch is continuously actuated. This allows the sunroof to be forced closed if

multiple close attempts fail.

2. If the sunroof close switch is continuously actuated during an EFL event, through the reversal, and during a two second wait time, then continuing to hold the close switch will cause the roof to move towards close with the EFL protection disabled. This allows the sunroof to be forced closed if it is known that a reversal will occur. This secondary EFL override may be necessary when known debris (ice blockage for example) is preventing the glass panel from closing.

While in EFL override, the closing motion will cease if the sunroof switch is released at any time.

DIAGNOSIS AND TESTING

DIAGNOSIS AND TESTING - SUNROOF

Any diagnosis of the power sunroof system should begin with the use of a scan tool and the proper Diagnostic Procedures Information. The scan tool can provide confirmation that the Controller Area Network (CAN) Data Bus is functional, that all of the electronic modules are sending and receiving the proper messages on the CAN Data Bus, and that the power sunroof motor is being sent the proper hard wired output by the sunroof switch.

Check the condition of the circuit protection and inspect all wiring connector pins for proper engagement and continuity. For complete circuit diagrams, refer to the appropriate wiring information. The wiring information includes wiring diagrams, proper wire and connector repair procedures, details of wire harness routing and retention, connector pin-out information and location views for the various wire harness connectors, splices and grounds.

Refer to the appropriate diagnostic information.

NOTE: If there is no sunroof movement when the "OPEN" or "CLOSED" button are pushed but the sunroof operates when the "VENT" button is pushed and held the sunroof motor/module is out of calibration. Complete the sunroof position calibration procedure prior to performing any sunroof diagnostics. Refer to MOTOR, SUNROOF, STANDARD PROCEDURE.

For possible causes, refer to **SUNROOF DIAGNOSIS CHART**. Before beginning sunroof diagnostics verify that all other power accessories are in proper operating condition. If not, a common electrical problem may exist.

SUNROOF DIAGNOSIS CHART

SYMPTOM	POSSIBLE CAUSE	CORRECTION
Sunroof completely inoperative.	Inoperative control switch.	Perform sunroof switch diagnostics. Refer to **SWITCH, SUNROOF, DIAGNOSIS AND TESTING**.
	Inoperative circuit ground between sunroof motor/module and body harness.	Inspect ground connections and wiring. Repair as necessary.
	Inoperative power circuit between sunroof motor/module,	Check the condition of the circuit protection and inspect all wiring. Repair as

	control switch, and body harness.	necessary.
	Inoperative sunroof motor/module.	Replace the sunroof motor/module. Refer to **MOTOR, SUNROOF, REMOVAL**.
Audible whine when switch is depressed, sunroof does not operate.	Inoperative sunroof motor/module.	Replace the sunroof motor/module. Refer to **MOTOR, SUNROOF, REMOVAL**.
	Binding cable.	Repair or replace binding cable as necessary.
Audible clicking or ratcheting when switch is pressed, sunroof does not operate.	Broken or worn drive cable.	Repair or replace binding cable as necessary.
	Worn drive motor gear.	Replace the sunroof motor/module. Refer to **MOTOR, SUNROOF, REMOVAL**.
	Sunroof glass panel out of adjustment.	Perform sunroof glass panel adjustment procedure. Refer to **GLASS, SUNROOF, ADJUSTMENTS** .
Sunroof vents and opens, but does not close.	Broken or disengaged trough guide.	Repair trough guide as necessary.
	Binding cable.	Repair or replace binding cable as necessary.
	Inoperative sunroof "CLOSE" circuit.	Check the condition of the circuit, connections and wiring. Repair as necessary.
	Inoperative control switch.	Perform sunroof switch diagnostics. Refer to **SWITCH, SUNROOF, DIAGNOSIS AND TESTING**.
	Inoperative sunroof motor/module.	Replace the sunroof motor/module. Refer to **MOTOR, SUNROOF, REMOVAL**.
Sunroof vents and closes, but does not open.	Binding cable or mechanism.	Repair or replace binding cable as necessary.
	Inoperative sunroof "OPEN" circuit.	Check the condition of the circuit, connections and wiring. Repair as necessary.
	Inoperative control switch.	Perform sunroof switch diagnostics. Refer to **SWITCH, SUNROOF, DIAGNOSIS AND TESTING**.
	Inoperative sunroof motor/module.	Replace the sunroof motor/module. Refer to **MOTOR, SUNROOF, REMOVAL**.
Sunroof does not vent	Binding cable or mechanism.	Repair or replace binding cable as necessary.
	Inoperative sunroof "VENT" circuit.	Check the condition of the circuit, connections and wiring. Repair as necessary.
	Inoperative control switch.	Perform sunroof switch diagnostics. Refer to **SWITCH, SUNROOF, DIAGNOSIS AND TESTING**.

	Inoperative sunroof motor/module.	Replace the sunroof motor/module. Refer to **MOTOR, SUNROOF, REMOVAL**.
Glass movement not consistent or glass does not operate smoothly	Sunroof glass panel out of adjustment.	Perform sunroof glass panel adjustment procedure. Refer to **GLASS, SUNROOF, ADJUSTMENTS** .

MOTOR, SUNROOF

DIAGNOSIS AND TESTING

DIAGNOSIS AND TESTING - MOTOR/MODULE - SUNROOF

Any diagnosis of the power sunroof system should begin with the use of a scan tool and the proper Diagnostic Procedures Information. The scan tool can provide confirmation that the Controller Area Network (CAN) Data Bus is functional, that all of the electronic modules are sending and receiving the proper messages on the CAN Data Bus, and that the power sunroof motor is being sent the proper hard wired output by the sunroof switch.

Refer to the appropriate diagnostic information.

NOTE: If there is no sunroof movement when the "OPEN" or "CLOSED" button are pushed but the sunroof operates when the "VENT" button is pushed and held the sunroof motor/module is out of calibration. Complete the sunroof position calibration procedure prior to performing any sunroof diagnostics. Refer to MOTOR, SUNROOF, STANDARD PROCEDURE.

The wire harness connectors for the sunroof motor/module are located above the vehicle headliner. Removal of the headliner may be necessary for access to the connector and proper diagnosis of the motor/module. Refer to **HEADLINER, REMOVAL** . **For complete circuit diagrams, refer to the appropriate wiring information.** The wiring information includes wiring diagrams, proper wire and connector repair procedures, details of wire harness routing and retention, connector pin-out information and location views for the various wire harness connectors, splices and grounds.

1. Verify that all other power accessories are in proper operating condition. If not, a common electrical problem may exist.
2. Disconnect the sunroof motor/module connector directly at the motor/module (not at the headliner in-line connector). Connect a test light between the harness connector pin 6 and a known good B+ circuit. The test light should illuminate brightly. If OK, refer to 3. If not OK repair the ground circuit as necessary.
3. Connect a test light between the harness connector pin 8 and a known good ground. The test light should illuminate brightly. If OK, refer to 4. If not OK repair the B+ circuit as necessary.
4. Using an ohmmeter check the sunroof switch feed circuit for continuity between the sunroof motor/module and sunroof switch. Continuity should be present. If OK replace the inoperative motor/module. Refer to **MOTOR, SUNROOF, REMOVAL**. If not OK repair the sunroof switch feed circuit as necessary.

STANDARD PROCEDURE

SUNROOF POSITION CALIBRATION

Press the power sunroof switch (Open, Closed, and Vent). If no movement occurs when either the open switch or closed switch is pressed, but the system does move when the vent button is pressed and held, the system is not calibrated. Perform the following procedure to position calibrate the power sunroof system.

1. Turn the ignition to the RUN position.
2. Press the vent button on the power sunroof switch and hold until the sunroof glass panel has moved to the full vent position and the motor movement has stopped for at least 1 second.
3. Press the close switch on the power sunroof switch and hold for a moment (at least 100ms) and release. The sunroof glass panel should continue travel to the full close position. If the sunroof glass panel does not return to the fully closed position, refer to **DIAGNOSIS AND TESTING** for full system diagnosis.
4. Verify proper system operation.

MOTOR/MODULE INITIALIZATION

NOTE: Verify the battery is in good condition prior to performing this procedure. Do not leave the vehicle on a battery charger while performing this procedure. If the voltage at the sunroof motor/module drops below 11 volts or exceeds 15 volts at anytime while this procedure is being performed, the motor/module initialization procedure will not be properly completed.

1. Turn the ignition to the RUN position.
2. Press the vent button on the power sunroof switch and hold until the sunroof glass panel has moved to the full vent position and the motor movement has stopped for at least 1 second.
3. Press the close position on the power sunroof switch and release. The sunroof glass panel should continue travel to the full closed position. **This will be considered the first sunroof closed position in a series of four sunroof closes.**
4. Press the vent button on the power sunroof switch and release. The sunroof glass panel should move to the full vent position. After the sunroof motor/module has stopped, press the close position on the power sunroof switch and release. The sunroof glass panel should continue travel to the full closed position. **This will be considered the second sunroof closed position in a series of four sunroof closes.**
5. Continue to move the sunroof glass to the "vent" then "closed" positions two more times so that the sunroof glass has moved to the closed position a total of four times starting with the first sunroof close in step 3.
6. Press the open position on the power sunroof switch and release. The sunroof glass panel should continue travel to the full open position.
7. Press the close position on the power sunroof switch and release. The sunroof glass panel should continue travel to the full closed position. **This will be considered the first sunroof closed position in a series of five sunroof closes.**
8. Press the open position on the power sunroof switch and release. The sunroof glass panel should move to the full open position. After the sunroof motor/module has stopped, press the close position on the power sunroof switch and release. The sunroof glass panel should continue travel to the full closed position. **Continue to move the sunroof glass to the "open" then "closed" position four more times so that the sunroof glass has moved to the closed position a total of five times starting with the first sunroof**

close in step 7.

Verify proper EFL calibration by placing a standard pencil at the front of the sunroof and then moving the sunroof to the full closed position. The sunroof should reverse direction upon contact without damage to the pencil.

REMOVAL

REMOVAL

WARNING: Do not attempt to move or reposition the sunroof glass panel or drive cables with the sunroof motor and module unit removed. Damage to the vehicle, to the sunroof or personal injuries may result.

WARNING: The sunroof must first be calibrated and the Motor/Module Initialization Procedure must be completed any time a sunroof motor/module is replaced with a new component. Failure to perform this procedure could result in vehicle damage and/or personal injury. For the appropriate procedure, refer to MOTOR, SUNROOF, STANDARD PROCEDURE.

1. Disconnect the battery negative cable.
2. Remove the vehicle headliner. Refer to **HEADLINER, REMOVAL** .

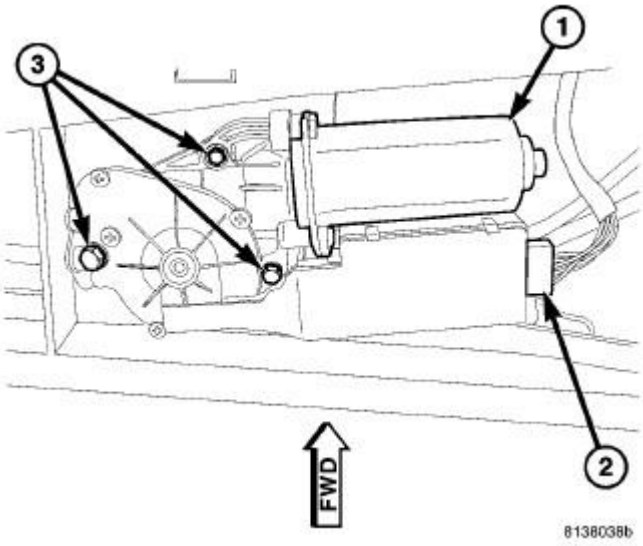

Fig. 2: Sunroof Motor/Module, Connector & Screws
Courtesy of CHRYSLER GROUP, LLC

3. Remove the power sunroof motor/module electrical connector (2).
4. Remove the retaining screws (3) and remove the motor/module (1) from the vehicle.

INSTALLATION

INSTALLATION

WARNING: Do not attempt to move or reposition the sunroof glass panel or drive cables with the sunroof motor and module unit removed. Damage to the vehicle, to the sunroof or personal injuries may result.

WARNING: The sunroof must first be calibrated and the Motor/Module Initialization Procedure must be completed any time a sunroof motor/module is replaced with a new component. Failure to perform this procedure could result in vehicle damage and/or personal injury. For the appropriate procedure, refer to MOTOR, SUNROOF, STANDARD PROCEDURE.

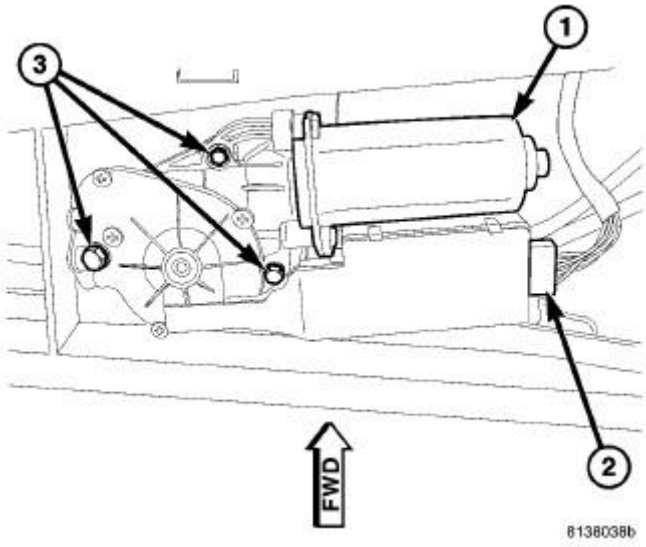

Fig. 3: Sunroof Motor/Module, Connector & Screws
Courtesy of CHRYSLER GROUP, LLC

1. Position the power sunroof motor/module (1) in the vehicle.
2. Install the motor/module retaining screws (3). Tighten the screws to 4 N.m (35 in. lbs.).
3. Connect the motor/module electrical connector (2).
4. Partially install the vehicle headliner and connect all remaining sunroof electrical connectors. Refer to **HEADLINER, INSTALLATION** .
5. Connect the battery negative cable.
6. Perform the sunroof position calibration. Refer to **MOTOR, SUNROOF, STANDARD PROCEDURE**.
7. Perform the Motor/Module Initialization Procedure. Refer to **MOTOR, SUNROOF, STANDARD PROCEDURE**.
8. Complete the vehicle headliner installation. Refer to **HEADLINER, INSTALLATION** .
9. Verify proper operation of the power sunroof system.

SWITCH, SUNROOF

DESCRIPTION

DESCRIPTION

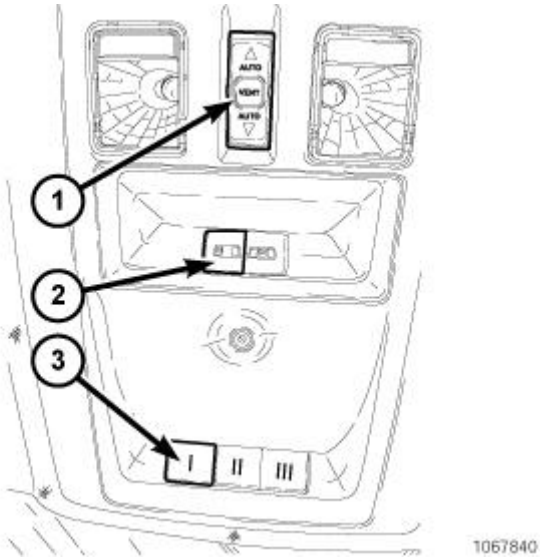

Fig. 4: Power Sunroof Switch
Courtesy of CHRYSLER GROUP, LLC

The power sunroof switch (1) is a combination push-button and rocker switch module mounted in the overhead console. The sunroof switch is a direct contact unit that is directly wired to the sunroof motor/module assembly. The sunroof switch performs the following functions:

- Power sunroof open (back of switch pushed)
- Power sunroof closed (front of switch pushed)
- Power sunroof vent (switch center button pushed)

The power sunroof switch is part of the overhead console assembly and cannot be replaced separately. If the switch is damaged or inoperative the overhead console must be replaced. Refer to CONSOLE, OVERHEAD, FRONT, REMOVAL .

OPERATION

OPERATION

The power sunroof switch is hard wired to the sunroof motor/module assembly. The switch receives battery current from the motor/module when the ignition switch is in the RUN and ACCESSORY positions. When one of the switch positions is pressed it sends battery current back to the motor/module, signaling it to move the power sunroof to the appropriate position. The motor/module will perform one of the following functions:

- Power sunroof open (back of switch pushed)

- Power sunroof closed (front of switch pushed)
- Power sunroof vent (switch center button pushed)

DIAGNOSIS AND TESTING

DIAGNOSIS AND TESTING - SWITCH - POWER SUNROOF

For complete circuit diagrams, refer to the appropriate wiring information. The wiring information includes wiring diagrams, proper wire and connector repair procedures, details of wire harness routing and retention, connector pin-out information and location views for the various wire harness connectors, splices and grounds. If completing the appropriate diagnostic information results in the sunroof switch being inoperative, perform the following test prior to switch replacement.

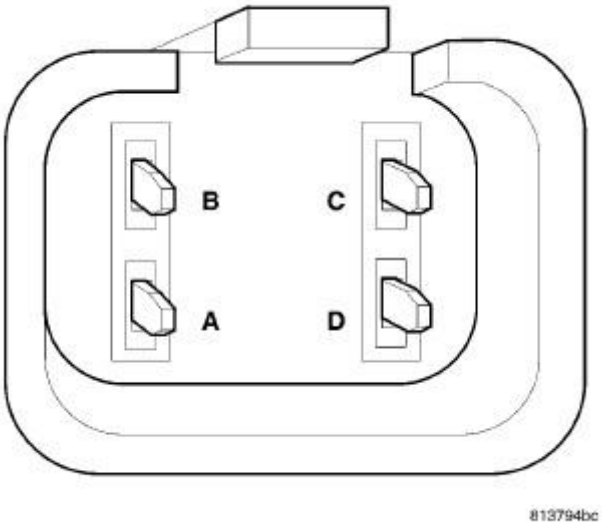

Fig. 5: Power Sunroof Switch Connector End View
Courtesy of CHRYSLER GROUP, LLC

1. Disconnect and isolate the battery negative cable.
2. Remove the overhead console. Refer to **CONSOLE, OVERHEAD, FRONT, REMOVAL** .
3. Disconnect the power sunroof switch wire harness connector.
4. Using an ohmmeter, test the continuity of the power sunroof switch in each switch position. Refer to **POWER SUNROOF SWITCH CONTINUITY TABLE**. If OK, inspect the wiring harness and connectors for damage. Use a scan tool and the proper Diagnostic Procedures Information to complete diagnosis of the power sunroof system. If not OK, replace the overhead console.

POWER SUNROOF SWITCH CONTINUITY TABLE

SWITCH POSITION	CONTINUITY BETWEEN PINS
OFF	NO CONTINUITY
SUNROOF OPEN	B AND D
SUNROOF CLOSED	B AND C

SUNROOF VENT	B AND A

DIAGNOSTIC CODE INDEX

DIAGNOSTIC CODE INDEX

DTC	Description
C1000	BRAKE PEDAL SWITCH 1 CIRCUIT PERFORMANCE
C1008	BRAKE FLUID LEVEL CIRCUIT HIGH
C1009	BRAKE FLUID LEVEL LOW
C100A	LEFT FRONT WHEEL SPEED SENSOR CIRCUIT
C1011	LEFT FRONT WHEEL SPEED SENSOR SIGNAL ERRATIC PERFORMANCE
C1014	LEFT FRONT WHEEL SPEED COMPARATIVE PERFORMANCE
C1015	RIGHT FRONT WHEEL SPEED SENSOR CIRCUIT
C101C	RIGHT FRONT WHEEL SPEED SENSOR SIGNAL ERRATIC PERFORMANCE
C101F	RIGHT FRONT WHEEL SPEED COMPARATIVE PERFORMANCE
C1020	LEFT REAR WHEEL SPEED SENSOR CIRCUIT
C1027	LEFT REAR WHEEL SPEED SENSOR SIGNAL ERRATIC PERFORMANCE
C102A	LEFT REAR WHEEL SPEED COMPARATIVE PERFORMANCE
C102B	RIGHT REAR WHEEL SPEED SENSOR CIRCUIT
C1032	RIGHT REAR WHEEL SPEED SENSOR SIGNAL ERRATIC PERFORMANCE
C1035	RIGHT REAR WHEEL SPEED COMPARATIVE PERFORMANCE
C1036	REAR WHEEL SPEED SENSOR CIRCUIT
C103D	REAR WHEEL SPEED SENSOR SIGNAL ERRATIC PERFORMANCE
C1040	REAR WHEEL SPEED COMPARATIVE PERFORMANCE
C104C	LEFT FRONT INLET VALVE CONTROL CIRCUIT LOW
C1050	RIGHT FRONT INLET VALVE CONTROL CIRCUIT LOW
C1054	LEFT REAR INLET VALVE CONTROL CIRCUIT LOW
C1058	RIGHT REAR INLET VALVE CONTROL CIRCUIT LOW
C105C	REAR INLET VALVE CONTROL CIRCUIT LOW
C1060	LEFT FRONT OUTLET VALVE CONTROL CIRCUIT LOW
C1064	RIGHT FRONT OUTLET VALVE CONTROL CIRCUIT LOW
C1068	LEFT REAR OUTLET VALVE CONTROL CIRCUIT LOW
C106C	RIGHT REAR OUTLET VALVE CONTROL CIRCUIT LOW
C1070	REAR OUTLET VALVE CONTROL CIRCUIT LOW
C1073	ABS MOTOR CONTROL CIRCUIT
C1078	TIRE REVOLUTIONS RANGE PERFORMANCE
C1079	TONE WHEEL TEETH COUNT RANGE PERFORMANCE
C107B	WHEEL SPEED COMPARATIVE PERFORMANCE
C107D	BRAKE PEDAL SWITCH 1/2 CORRELATION
C1086	ABS SYSTEM CONTROL TOO LONG

C1090	ABS BRAKE LAMP CONTROL CIRCUIT LOW
C1091	ABS BRAKE LAMP CONTROL CIRCUIT HIGH
C1201	FRONT TRACTION CONTROL INLET VALVE CONTROL CIRCUIT LOW
C1205	REAR TRACTION CONTROL INLET VALVE CONTROL CIRCUIT LOW
C1209	FRONT TRACTION CONTROL PRIME VALVE CONTROL CIRCUIT LOW
C120D	REAR TRACTION CONTROL PRIME VALVE CONTROL CIRCUIT LOW
C1213	G SENSOR INPUT SIGNAL STUCK
C1219	STEERING ANGLE SENSOR ERRATIC PERFORMANCE
C121C	TORQUE REQUEST SIGNAL DENIED
C121D	BRAKE PRESSURE SENSOR CIRCUIT
C121E	BRAKE PRESSURE SENSOR COMPARATIVE PERFORMANCE
C1231	DRIVE TEST: STEERING ANGLE SENSOR
C1232	DRIVE TEST: PRESSURE SENSOR
C1234	DRIVE TEST: SENSOR CLUSTER INSTALLATION
C1235	C1235 DRIVE TEST: TEST ACTIVE
C1238	DRIVE TEST: UNSUCCESSFUL
C1239	EMISSION ROLLS TEST ACTIVE
C123A	ESP SYSTEM SENSORS CALIBRATION
C123B	ESP SYSTEM CONTROL TOO LONG
C123F	STEERING ANGLE SENSOR COMPARATIVE PERFORMANCE
C1240	STEERING ANGLE SENSOR OVERTRAVEL PERFORMANCE
C1242	G SENSOR INPUT SIGNAL PERFORMANCE
C1243	G SENSOR NOT INITIALIZED
C2100	BATTERY VOLTAGE LOW
C2101	BATTERY VOLTAGE HIGH
C2105	ABS VALVE SUPPLY VOLTAGE CIRCUIT LOW
C2200	ANTILOCK BRAKE MODULE INTERNAL
C2202	ORIGINAL VIN MISMATCH / MISSING
C2204	DYNAMICS SENSOR INTERNAL
C2205	STEERING ANGLE SENSOR INTERNAL
C2206	VEHICLE CONFIGURATION MISMATCH
U0002	CAN C BUS OFF PERFORMANCE
U0100	LOST COMMUNICATION WITH THE ECM/PCM
U0101	LOST COMMUNICATION WITH TCM
U0102-00	LOST COMMUNICATION WITH TRANSFER CASE CONTROL MODULE / AWD
U0125	LOST COMMUNICATION WITH DYNAMICS SENSOR
U0126	LOST COMMUNICATION WITH STEERING ANGLE SENSOR
U0141	LOST COMMUNICATION WITH IPM (FCM/TIPM)
U0401	IMPLAUSIBLE DATA RECEIVED FROM ECM/PCM
U1003	ESP CAN C BUS PERFORMANCE

DIAGNOSIS AND TESTING

C1000-BRAKE PEDAL SWITCH 1 CIRCUIT PERFORMANCE

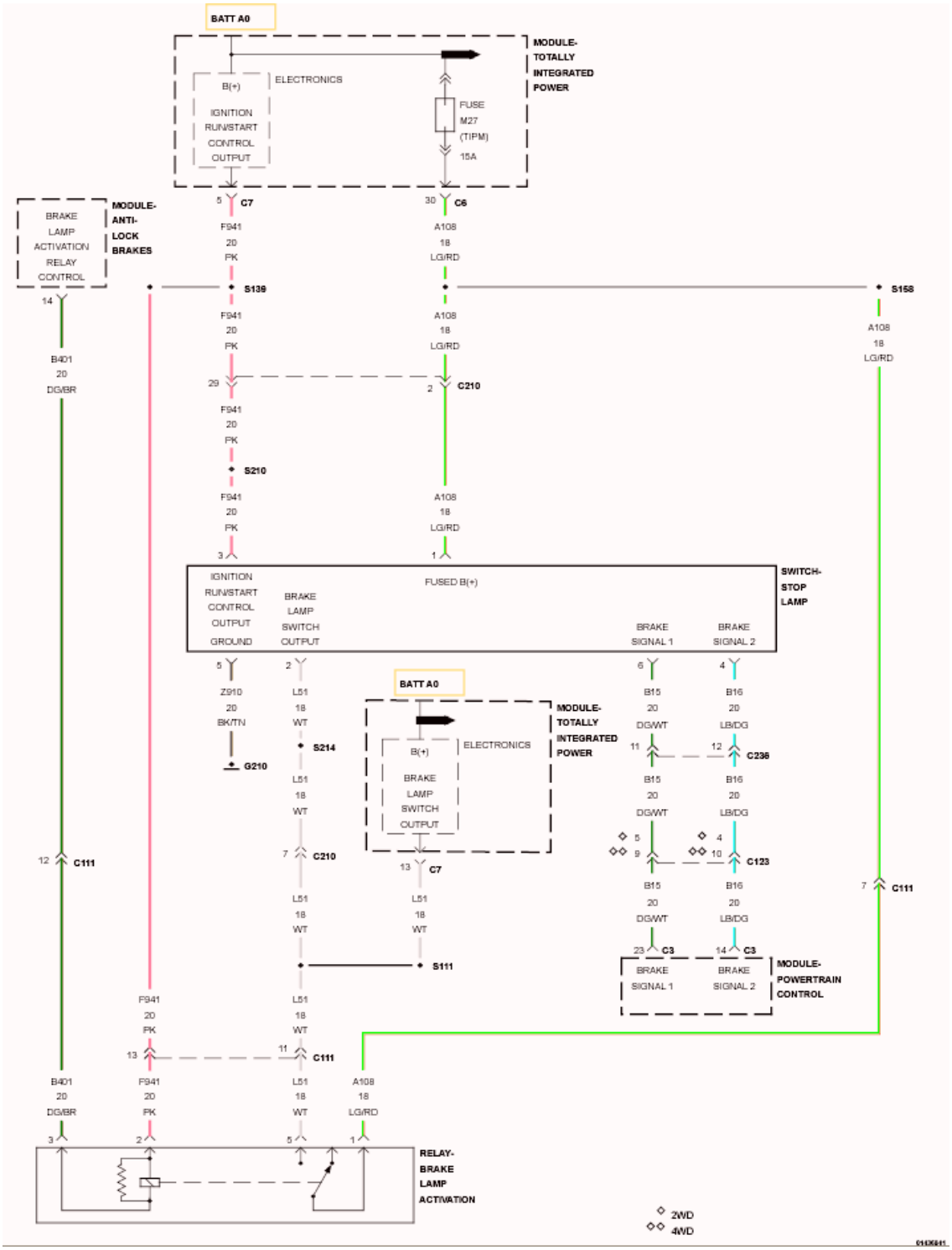

Fig. 1: Brake Pedal Switch Wiring Diagram
Courtesy of CHRYSLER GROUP, LLC

For a complete wiring diagram, **refer to appropriate SYSTEM WIRING DIAGRAMS article** .

THEORY OF OPERATION

The ABS Module detects an invalid signal between the master cylinder pressure applied and the Brake Lamp Switch Output Circuit for two minutes. If the Brake Lamp Switch Output circuit is still active with no pressure applied, code C1000 is set.

WHEN MONITORED:

Ignition Switch ON.

SET CONDITION:

POSSIBLE CAUSES

Possible Causes
(B15) BRAKE SIGNAL 1 CIRCUIT FOR A SHORT TO VOLTAGE
BRAKE LAMP SWITCH OPERATION
ANTILOCK BRAKE SYSTEM (ABS) MODULE
TOTALLY INTEGRATED POWER MODULE (TIPM)

DIAGNOSTIC TEST

1. **ACTIVE DTC**

NOTE: **Diagnose and repair all PCM and any communication faults that are present before continuing with this test procedure.**

NOTE: **If applicable make sure the Stop Lamp Switch is properly adjusted in accordance with Service Information before continuing.**

1. Ignition on, engine not running.
2. With a scan tool, record and erase the DTC's.
3. Cycle the ignition from off to on.
4. Press the brake pedal.
5. With a scan tool, read the DTC's.

Is the DTC Active at this time?

Yes

- Go To 2.

No

- Perform the ABS INTERMITTENT CONDITION diagnostic procedure. Refer to **ABS INTERMITTENT CONDITION**.

2. **(B15) BRAKE SIGNAL 1 CIRCUIT FOR A SHORT TO VOLTAGE**

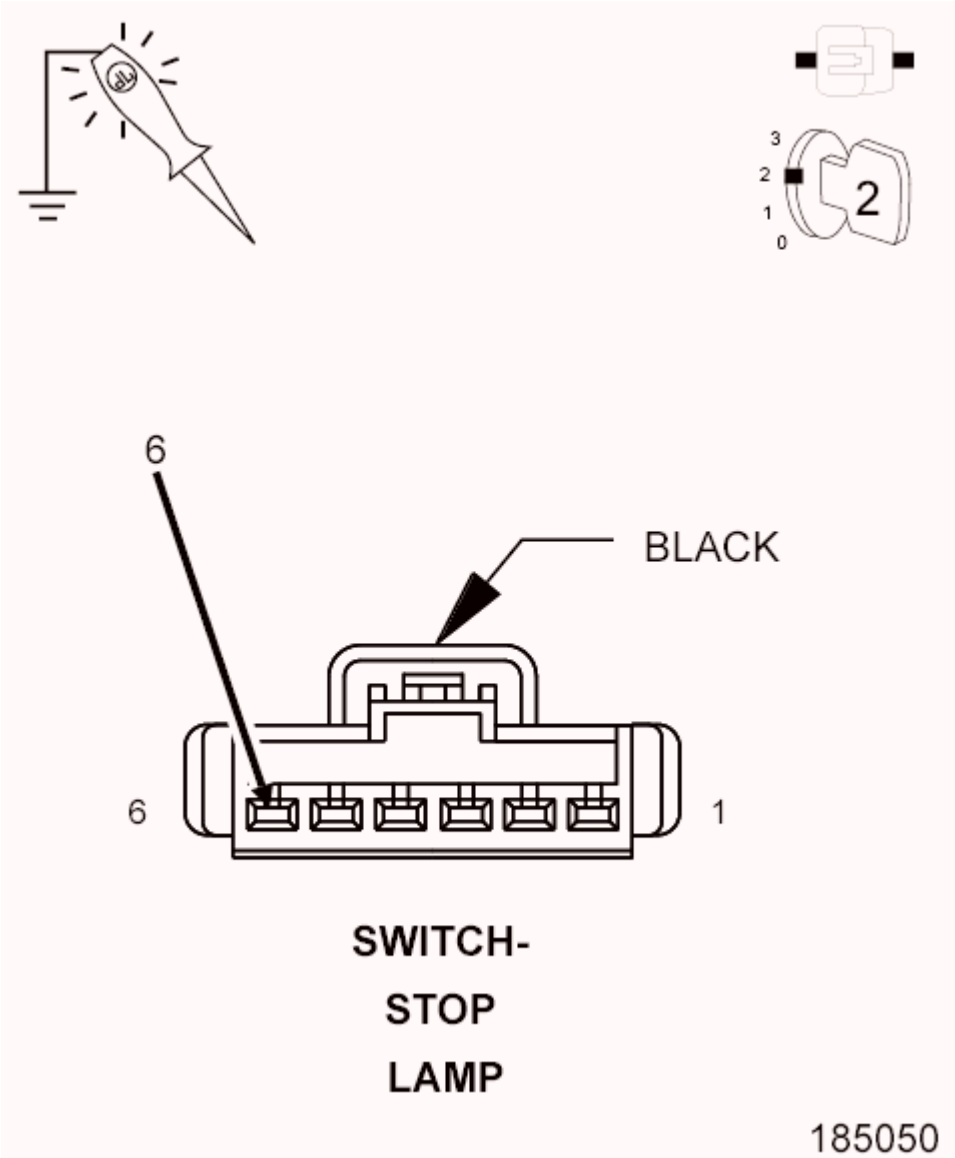

Fig. 2: Checking Brake Signal Circuit For A Short To Voltage
Courtesy of CHRYSLER GROUP, LLC

1. Ignition on, engine not running.
2. Using a 12-volt test light connected to ground, back probe the (B15) Brake Signal 1 circuit.

Does the test light illuminate brightly?

Yes

- Go To 3.

No

- Perform the ABS INTERMITTENT CONDITION diagnostic procedure. Refer to **ABS INTERMITTENT CONDITION**.

3. **STOP LAMP BRAKE PEDAL SWITCH SHORTED**

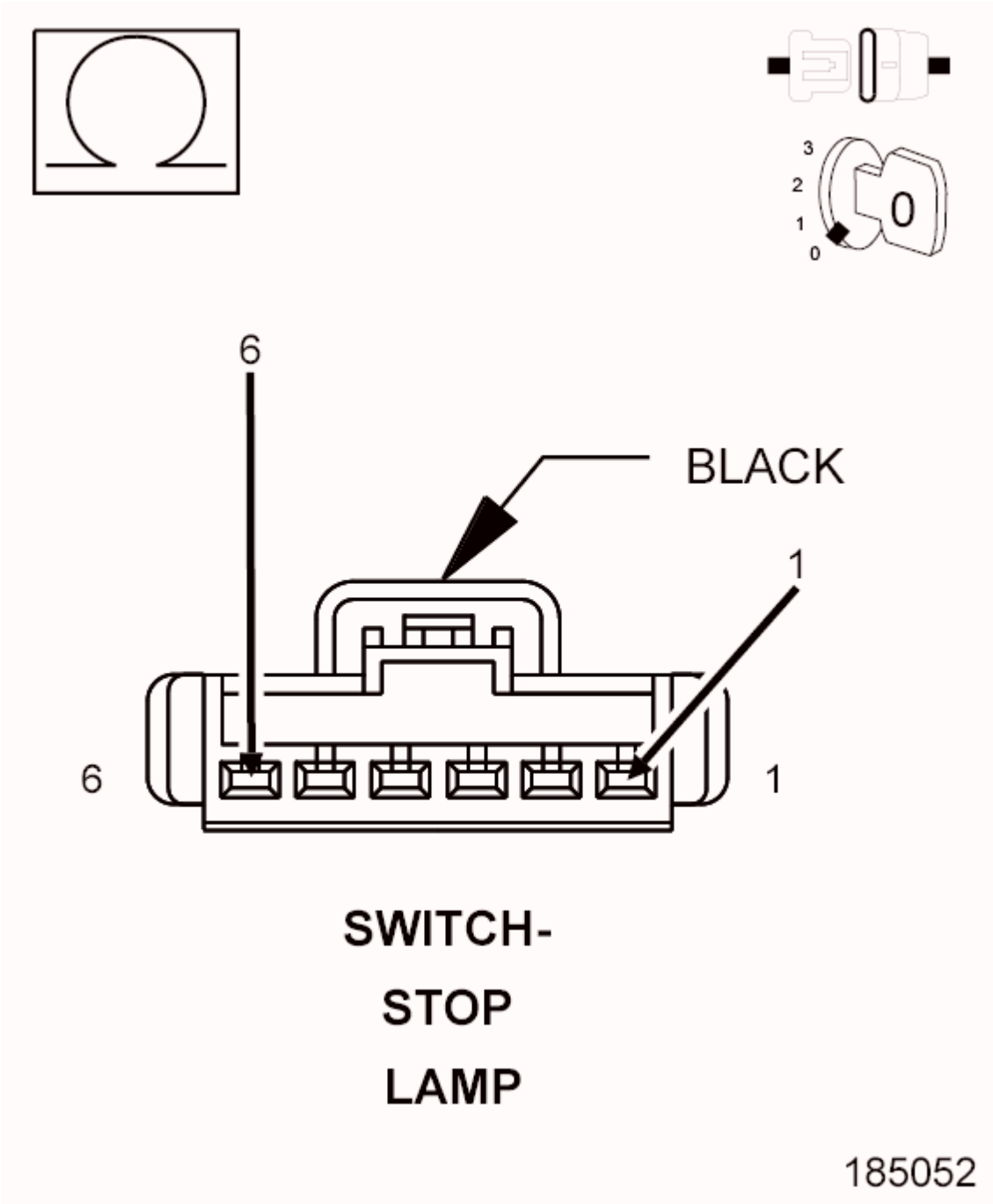

Fig. 3: Checking Stop Lamp Brake Pedal Switch For A Short
Courtesy of CHRYSLER GROUP, LLC

1. Turn the ignition off to the lock position.
2. Disconnect the Stop Lamp Switch harness connector.
3. Measure the resistance of the Stop Lamp Switch between (B15) Brake Signal 1 circuit and (A108) Fused B(+) circuit at the Stop Lamp Switch harness connector.

   Is there continuity?

Yes

- Replace the Stop Lamp Switch in accordance with the Service Information
- Go To 4.

No

- Go To 5.

4. **CHECK (B15) BRAKE SIGNAL 1 CIRCUIT FOR A SHORT TO VOLTAGE**

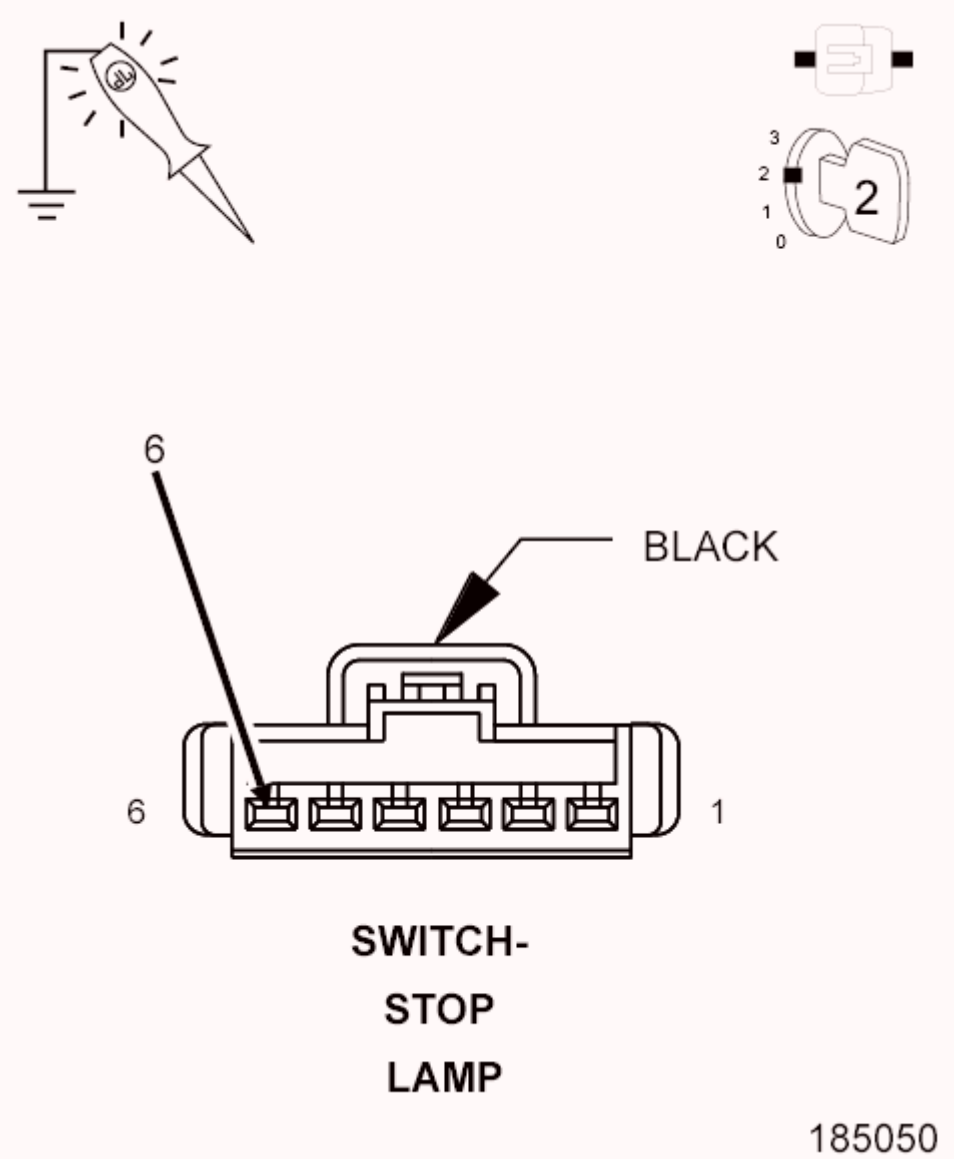

Fig. 4: Checking Brake Signal Circuit For A Short To Voltage
Courtesy of CHRYSLER GROUP, LLC

1. Connect the Stop Lamp Switch harness connector.

2. Ignition on, engine not running.
3. Using a 12-volt test light connected to ground, back probe the (B15) Brake Signal 1 circuit at the Stop Lamp Switch harness connector.

   Does the test light illuminate?

   Yes

   - Go To 5.

   No

   - Repair the short to voltage in the (B15) Brake Signal 1 circuit.
   - Perform the ABS VERIFICATION TEST. Refer to **ABS VERIFICATION TEST**.

5. **CHECK ABS MODULE BACKFEEDING VOLTAGE TO (B15) BRAKE SIGNAL 1 CIRCUIT**

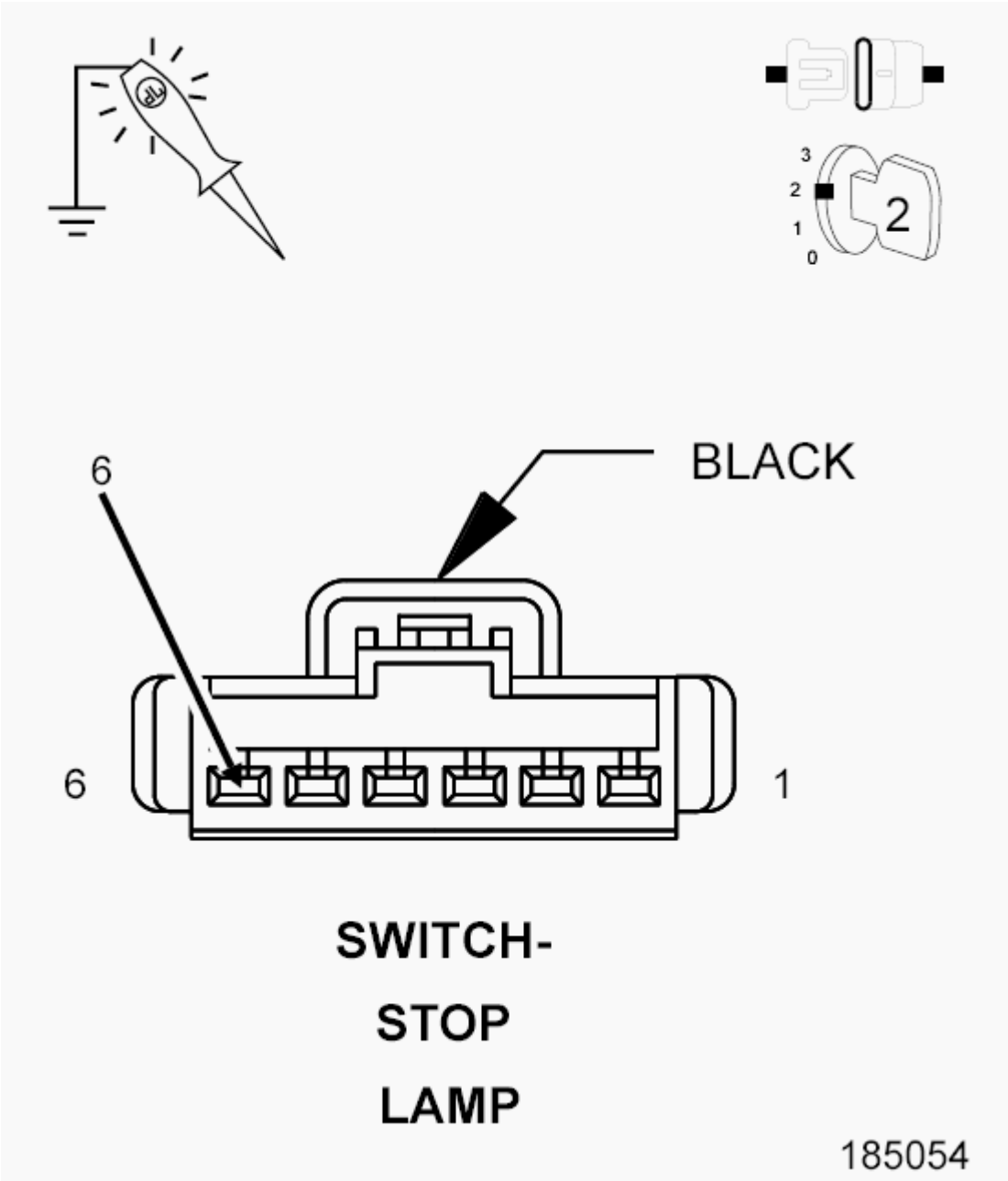

Fig. 5: Checking ABS Module Backfeeding Voltage To Brake Signal 1 Circuit
Courtesy of CHRYSLER GROUP, LLC

1. Turn ignition off to the lock position.
2. Disconnect the ABS Module harness connector.
3. Ignition on, engine not running.
4. Using a 12-volt test light connected to ground, test the (B15) Brake Signal 1 circuit at the Stop Lamp Switch harness connector.

   Does the test light illuminate?

Yes

- Go To 6.

No

- Replace the Antilock Brake System (ABS) Module in accordance with Service Information
- Perform the ABS VERIFICATION TEST. Refer to **ABS VERIFICATION TEST**.

6. **CHECK TIPM MODULE BACKFEEDING VOLTAGE TO (B15) BRAKE SIGNAL 1 CIRCUIT**

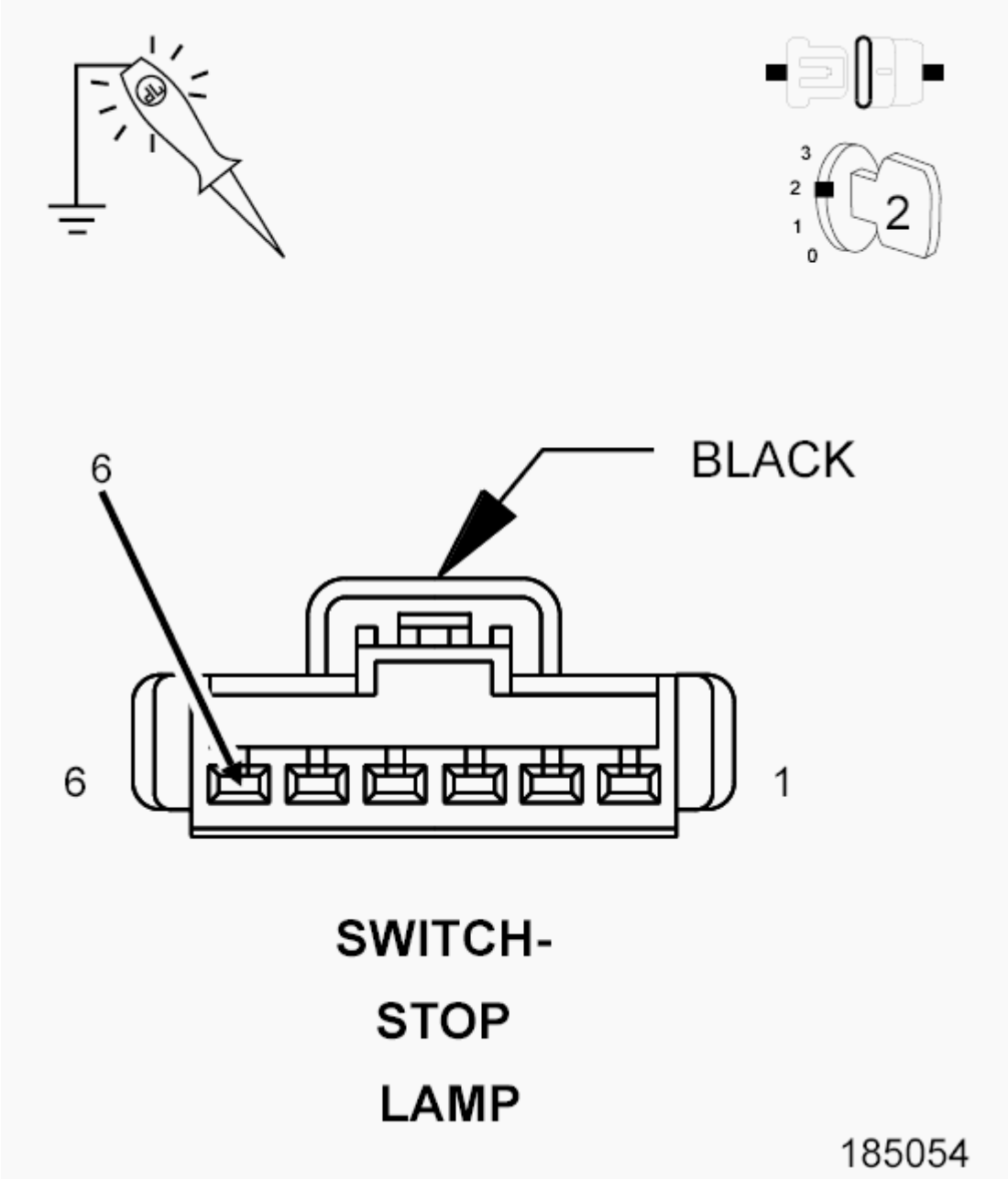

Fig. 6: Checking ABS Module Backfeeding Voltage To Brake Signal 1 Circuit

Courtesy of CHRYSLER GROUP, LLC

1. Turn the ignition off.
2. Disconnect the TIPM harness connector.
3. Ignition on, engine not running.
4. Using a 12-volt test light connected to ground, test the (B15) Brake Signal 1 circuit.

   Does the test light illuminate?

   Yes

   - Repair the short to voltage in the (B15) Brake Signal 1 circuit.
   - Perform the ABS VERIFICATION TEST. Refer to **ABS VERIFICATION TEST**.

   No

   - Replace and program the Totally Integrated Power Module (TIPM) in accordance with the Service Information.
   - Perform the BODY VERIFICATION TEST. Refer to **BODY VERIFICATION TEST** .

C1008-BRAKE FLUID LEVEL CIRCUIT HIGH

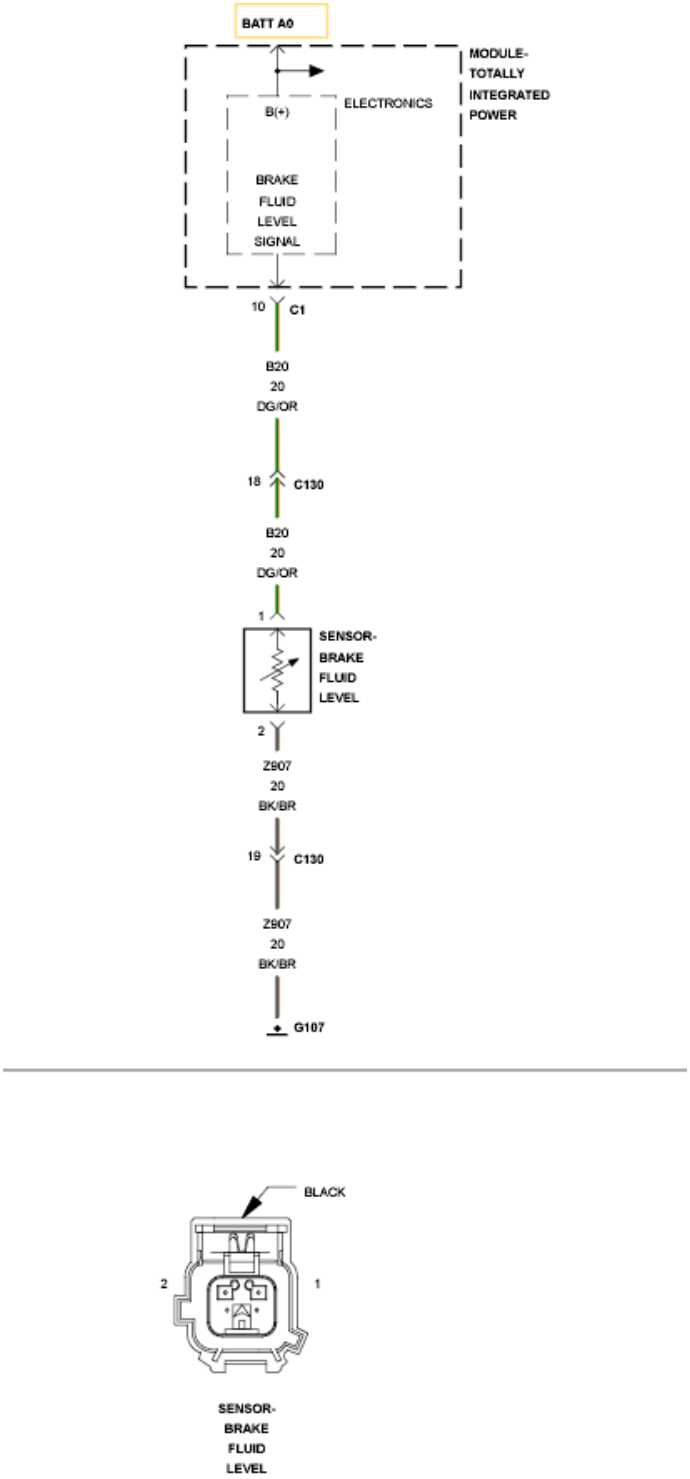

Fig. 7: Brake Fluid Level Sensor Wiring Diagram
Courtesy of CHRYSLER GROUP, LLC

For a complete wiring diagram, **refer to appropriate SYSTEM WIRING DIAGRAMS article** .

WHEN MONITORED:

With the ignition on.

SET CONDITION:

When the Totally Integrated Power Module (TIPM) detects the Brake Fluid Level Circuit voltage is greater than expected for more than five seconds.

POSSIBLE CAUSES

Possible Causes
(B20) BRAKE FLUID LEVEL SIGNAL CIRCUIT FOR AN OPEN
(B20) BRAKE FLUID LEVEL SIGNAL CIRCUIT SHORTED TO BATTERY VOLTAGE
BRAKE FLUID LEVEL SWITCH INTERNAL FAILURE
(Z907) GROUND CIRCUIT FOR AN OPEN
TOTALLY INTEGRATED POWER MODULE (TIPM)

DIAGNOSTIC TEST

1. **CHECK FOR ACTIVE DIAGNOSTIC TROUBLE CODE (DTC)**
    1. Turn the ignition on.
    2. With the scan tool, read the TIPM DTC's.

    Does the scan tool display this DTC as active?

    Yes

    - Go To 2.

    No

    - Test complete, the condition or conditions that originally set this DTC are not present at this time. Using the wiring diagrams as a guide, check all related splices and connectors for signs of water intrusion, corrosion, pushed out or bent terminals, and correct pin tension.
    - Perform the BODY VERIFICATION TEST. Refer to **BODY VERIFICATION TEST** .
2. **CHECK THE (B20) BRAKE FLUID LEVEL SIGNAL CIRCUIT FOR A SHORT TO VOLTAGE**

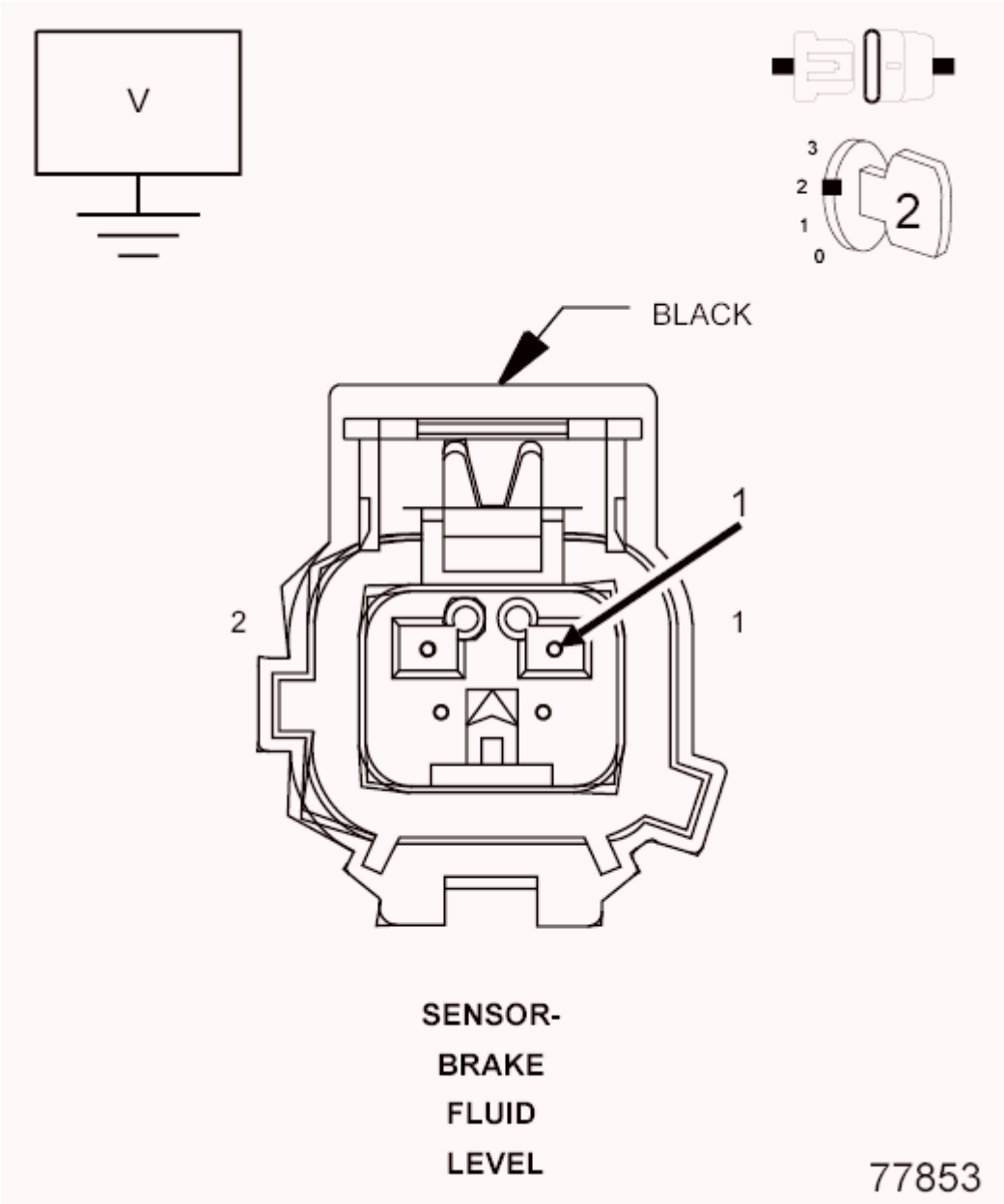

Fig. 8: Checking Brake Fluid Level Signal Circuit For A Short To Voltage
Courtesy of CHRYSLER GROUP, LLC

1. Turn the ignition off.
2. Disconnect the Brake Fluid Level Sensor harness connector.
3. Disconnect the TIPM C1 harness connector.
4. Turn the ignition on.
5. Measure the voltage between ground and the (B20) Brake Fluid Level Signal circuit.

   Is there any voltage present?

   Yes

- Repair the short to voltage in the (B20) Brake Fluid Level Signal circuit.
- Perform the BODY VERIFICATION TEST. Refer to **BODY VERIFICATION TEST** .

No

- Go To 3.

3. **CHECK THE (B20) BRAKE FLUID LEVEL SIGNAL CIRCUIT FOR AN OPEN**

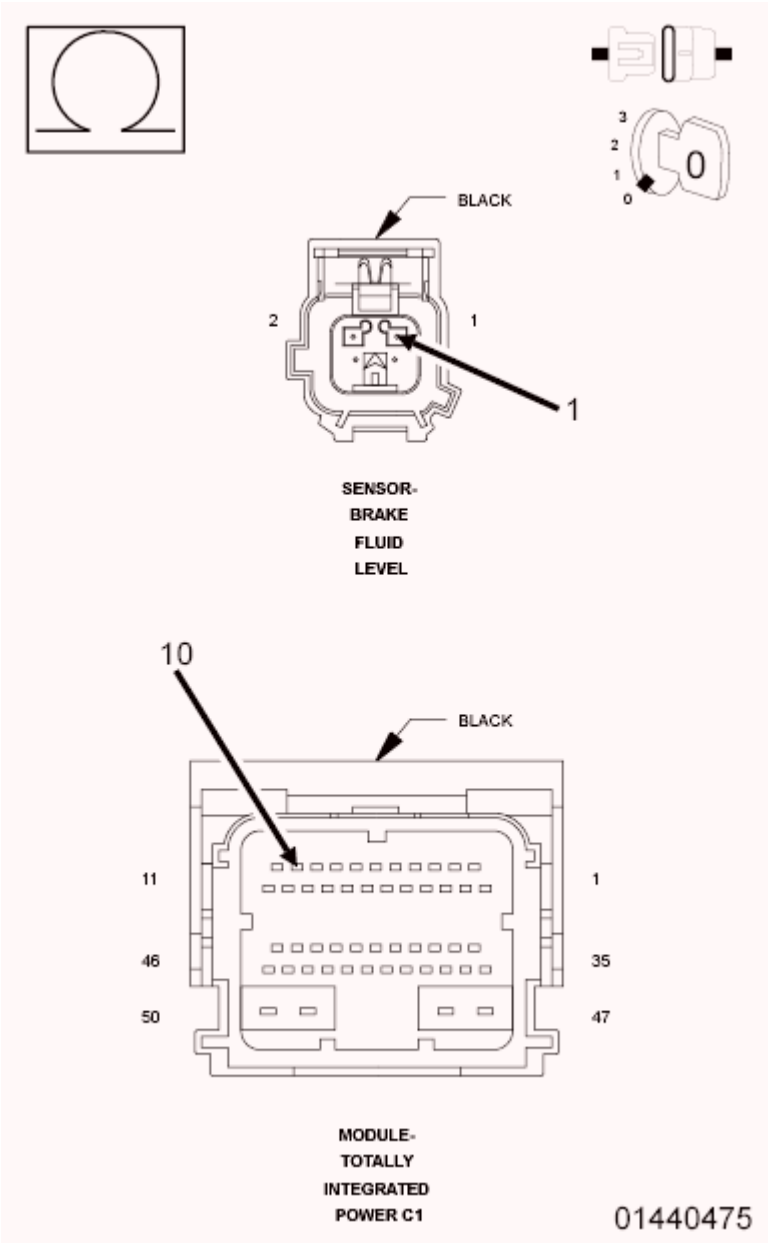

Fig. 9: Checking Brake Fluid Level Signal Circuit For An Open
Courtesy of CHRYSLER GROUP, LLC

1. Turn the ignition off.

2. Measure the resistance of the (B20) Brake Fluid Level Signal circuit between the Brake Fluid Level Sensor harness connector and the TIPM C1 harness connector.

   Is the resistance below 5.0 Ohms?

   Yes

   - Go To 4.

   No

   - Repair the open in the (B20) Brake Fluid Level Signal circuit.
   - Perform the BODY VERIFICATION TEST. Refer to **BODY VERIFICATION TEST** .

4. **CHECK THE (Z907) GROUND CIRCUIT FOR AN OPEN**

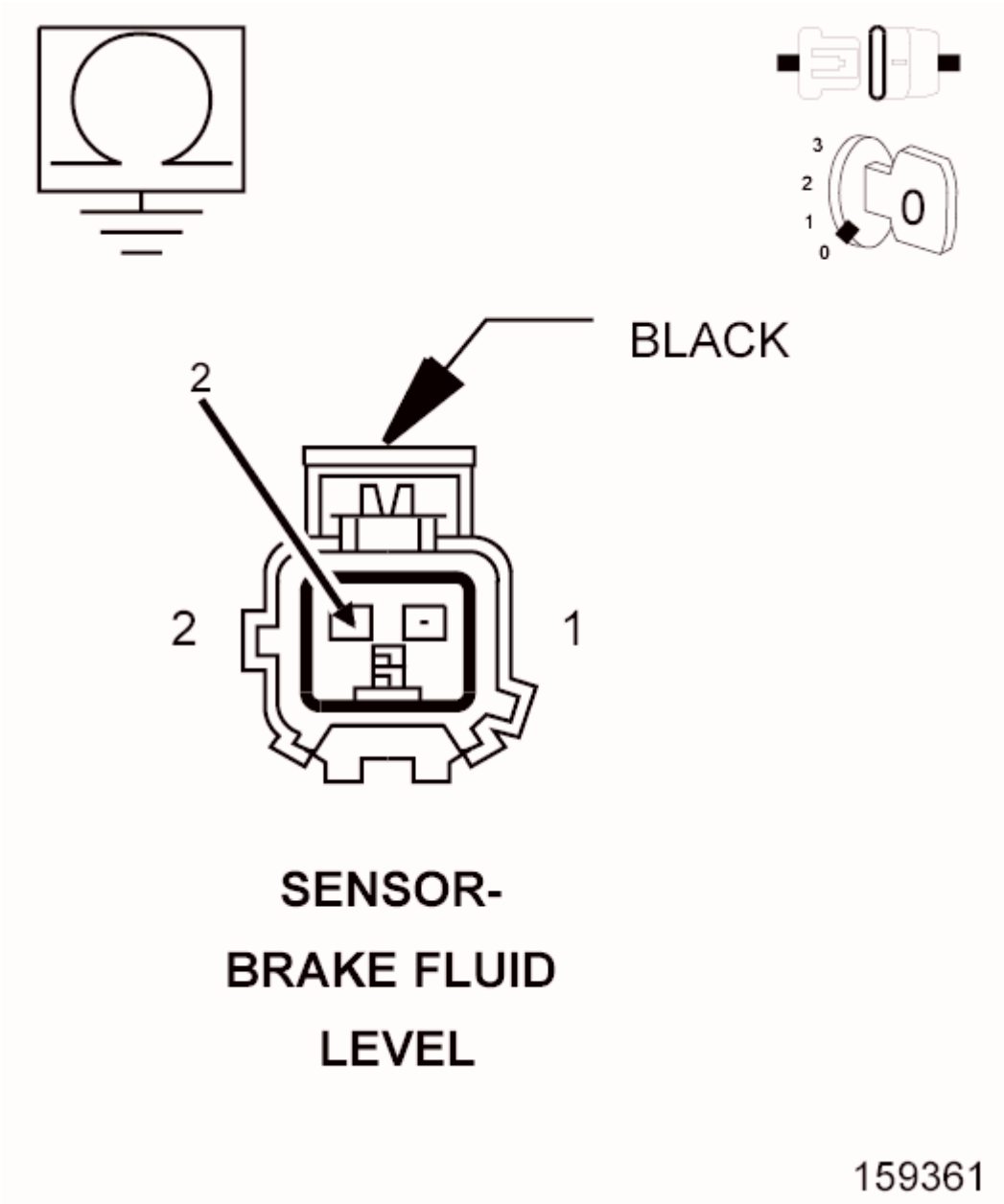

Fig. 10: Checking Brake Fluid Level Sensor For An Open
Courtesy of CHRYSLER GROUP, LLC

1. Measure the resistance between ground and the (Z907) Ground circuit.

   Is the resistance below 5.0 Ohms?

   Yes

   - Go To 5.

   No

- Repair the open in the (Z907) Ground circuit.
- Perform the BODY VERIFICATION TEST. Refer to **BODY VERIFICATION TEST** .

5. **BRAKE FLUID LEVEL SWITCH INTERNAL FAILURE**

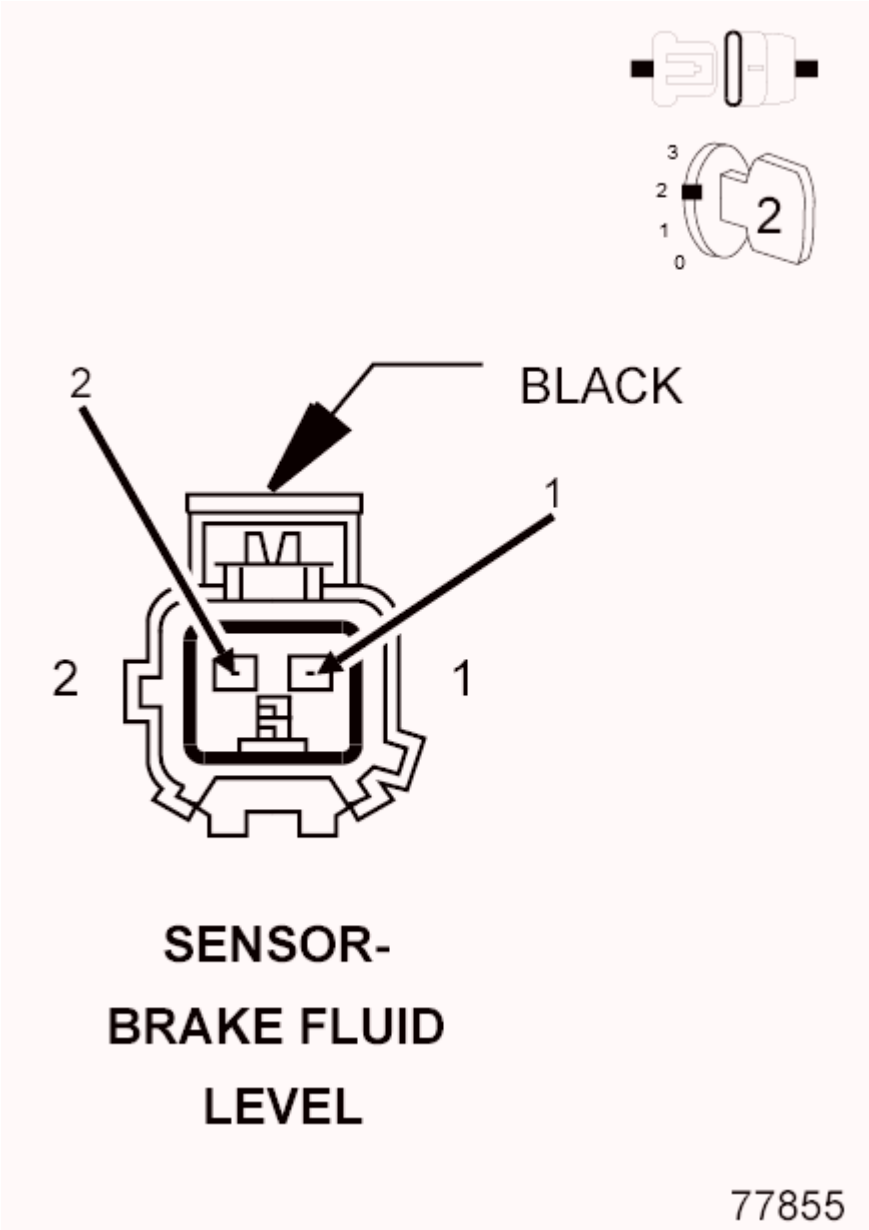

Fig. 11: Checking Brake Fluid Level Sensor For Internal Failure
Courtesy of CHRYSLER GROUP, LLC

1. Reconnect the TIPM C1 harness connector.
2. Connect a jumper wire between the (B20) Brake Fluid Level Signal circuit and the (Z907) Ground circuit in the Brake Fluid Level Sensor harness connector.
3. Turn the ignition on.
4. With the scan tool, read the Brake Fluid Level.

Does the scan tool display Low?

Yes

- Replace the Brake Fluid Level Sensor in accordance with the Service Information.
- Perform the BODY VERIFICATION TEST. Refer to **BODY VERIFICATION TEST** .

No

- Replace the TIPM in accordance with the Service Information.
- Perform the BODY VERIFICATION TEST. Refer to **BODY VERIFICATION TEST** .

C1009-BRAKE FLUID LEVEL LOW

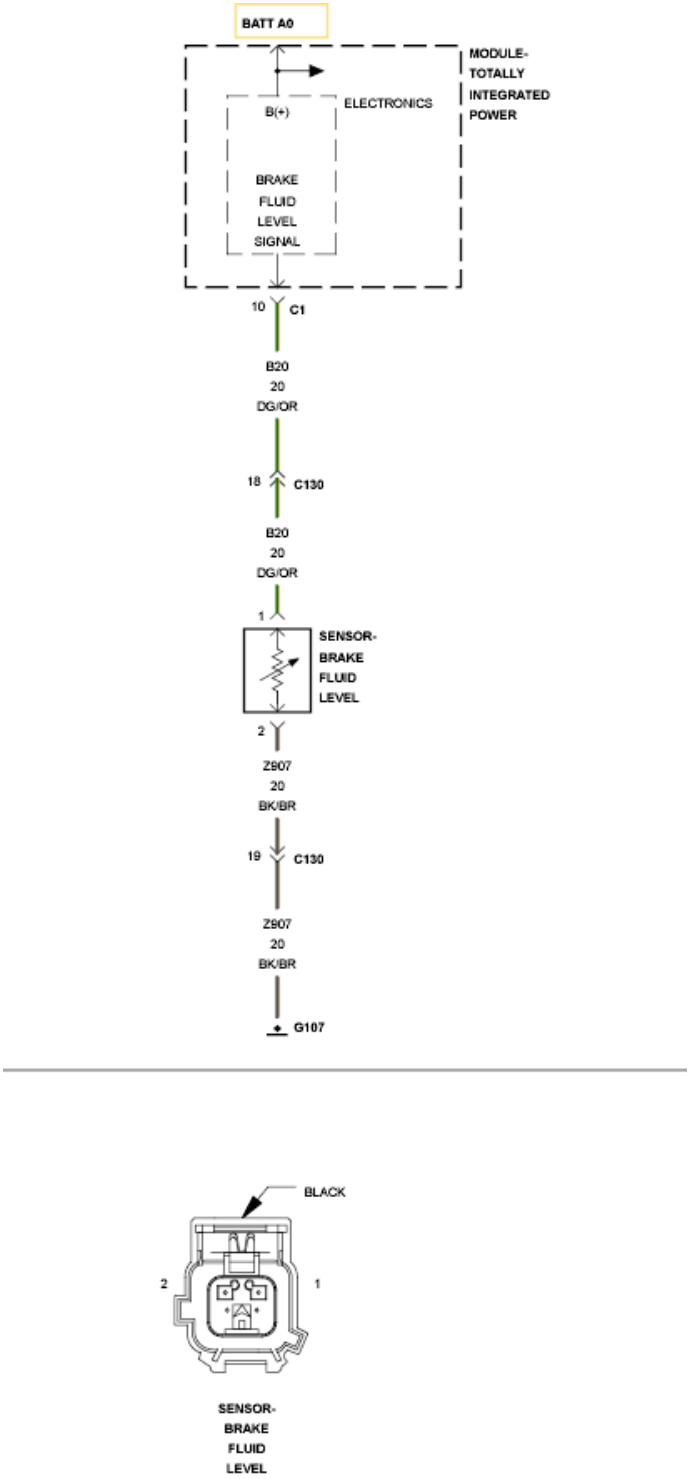

Fig. 12: Brake Fluid Level Sensor Wiring Diagram
Courtesy of CHRYSLER GROUP, LLC

For a complete wiring diagram, **refer to appropriate SYSTEM WIRING DIAGRAMS article** .

WHEN MONITORED:

With the ignition on.

SET CONDITION:

When the Totally Integrated Power Module (TIPM) indicates that the Brake Fluid Level Circuit is less then 0.10 of a volt.

POSSIBLE CAUSES

Possible Causes
BRAKE FLUID LEVEL LOW
(B20) BRAKE FLUID LEVEL SWITCH SIGNAL CIRCUIT IS SHORTED TO GROUND
BRAKE FLUID LEVEL SWITCH INTERNAL FAILURE
TOTALLY INTEGRATED POWER MODULE (TIPM)

DIAGNOSTIC TEST

1. **BRAKE FLUID LEVEL SWITCH SIGNAL VOLTAGE BELOW 0.10 OF A VOLT**

   NOTE: This DTC must be active for the results of this test to be valid.

   1. Ignition on, engine not running.
   2. With the scan tool, read Brake Fluid Level Switch Signal voltage.

      Is the voltage below 0.10 of a volt?

      Yes

      - Go To 2.

      No

      - Perform the INTERMITTENT CONDITION diagnostic procedure. Refer to **ABS INTERMITTENT CONDITION**.

2. **CHECK BRAKE FLUID LEVEL**

   NOTE: Visually inspect for worn brake linings or undersized rotors.

   Was low brake fluid level found?

   Yes

   - Repair as needed.

- Perform the ABS VERIFICATION TEST. Refer to **ABS VERIFICATION TEST**.

No

- Go To 3.

3. **BRAKE FLUID LEVEL SWITCH INTERNAL FAILURE**
   1. Turn the ignition off to the lock position.
   2. Disconnect the Brake Fluid Level Switch harness connector.
   3. Ignition on, engine not running.
   4. With the scan tool, read the Brake Fluid Level Switch voltage

      Is the voltage approximately 5 volts?

      Yes

      - Replace the Brake Fluid Level Switch in accordance with the Service Information.
      - Perform the ABS VERIFICATION TEST. Refer to **ABS VERIFICATION TEST**.

      No

      - Go To 4.

4. **CHECK THE (B20) BRAKE FLUID LEVEL SWITCH SIGNAL CIRCUIT FOR A SHORT TO GROUND**

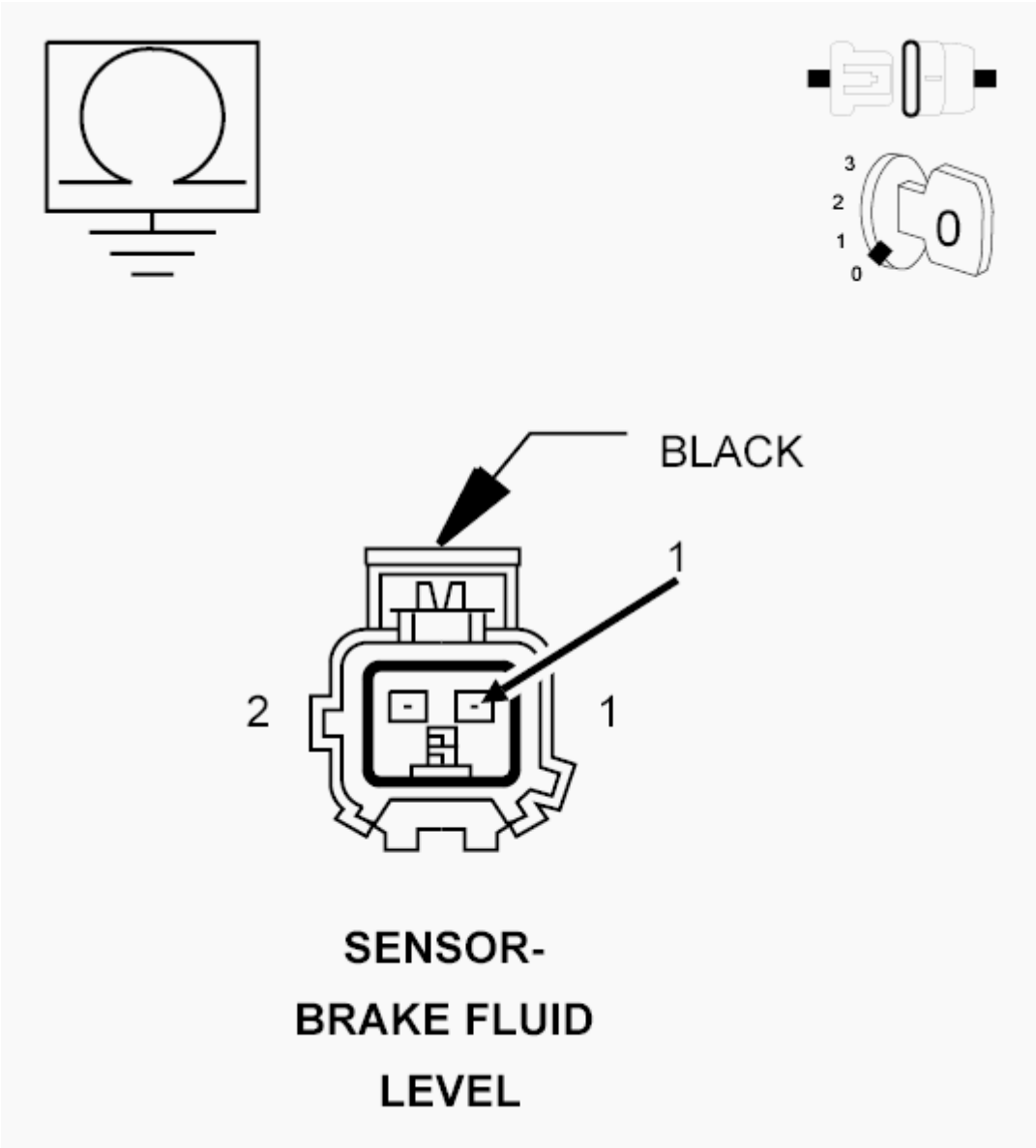

Fig. 13: Checking Brake Fluid Level Sensor Circuit For A Short To Ground
Courtesy of CHRYSLER GROUP, LLC

1. Turn the ignition off to the lock position.
2. Disconnect the TIPM C1 harness connector.
3. Measure the resistance of the (B20) Brake Fluid Level circuit in the Brake Fluid Level Switch harness connector to ground.

   Is the resistance below 100 Ohms?

   Yes

   - Repair the (B20) Brake Fluid Level circuit for a short to ground.
   - Perform the ABS VERIFICATION TEST. Refer to **ABS VERIFICATION TEST**.

No

- Go To 5.

5. **TOTALLY INTEGRATED POWER MODULE (TIPM)**

   Repair

   - Replace and program the Totally Integrated Power Module (TIPM) in accordance with the Service Information.
   - Perform the ABS VERIFICATION TEST. Refer to **ABS VERIFICATION TEST**.

C100A-LEFT FRONT WHEEL SPEED SENSOR CIRCUIT

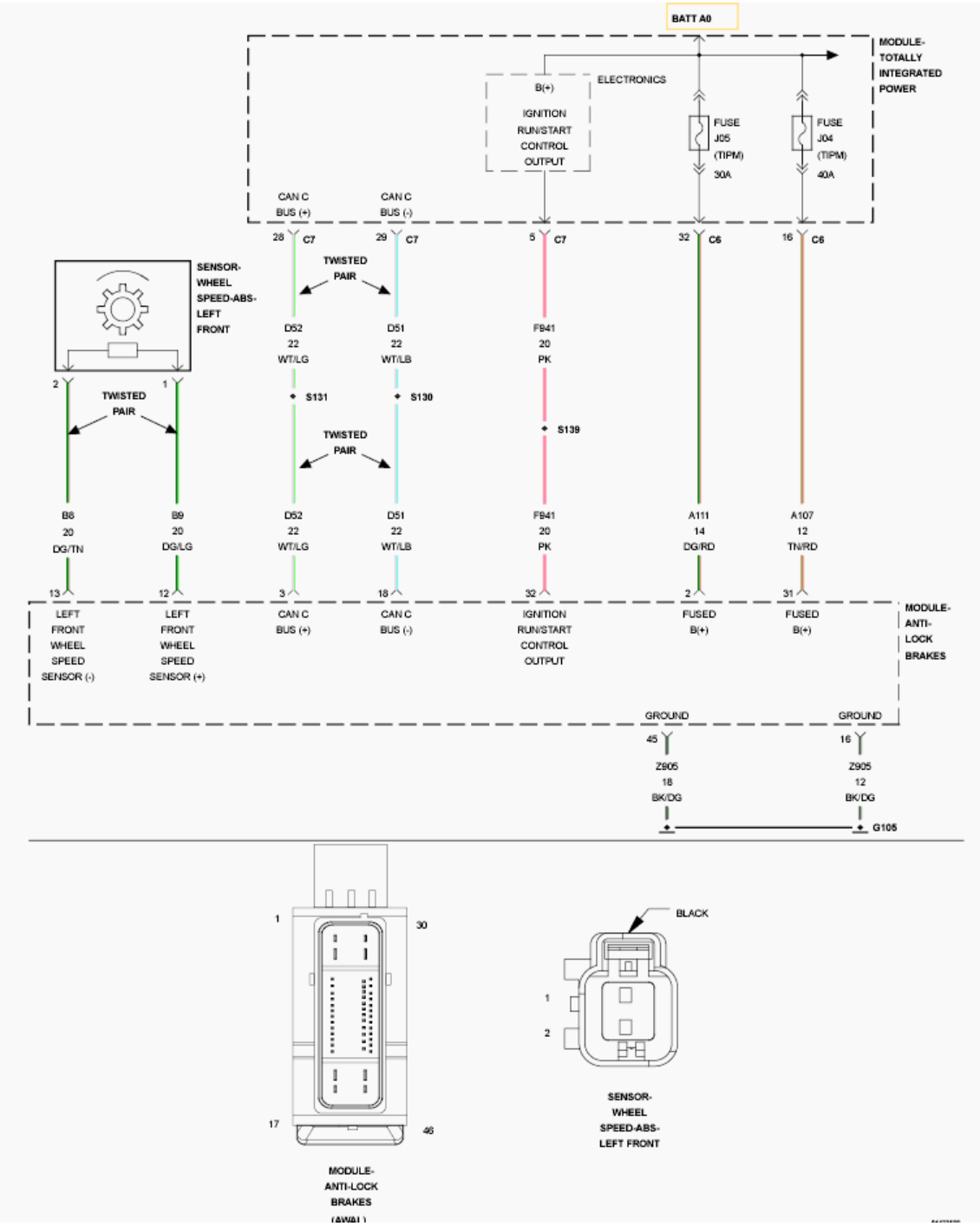

Fig. 14: Left Front Wheel Speed Sensor Wiring Diagram
Courtesy of CHRYSLER GROUP, LLC

For a complete wiring diagram, **refer to appropriate SYSTEM WIRING DIAGRAMS article** .

NOTE: **The Electronic Stability Control (ESC) may also be referred to as Electronic Stability Program (ESP) depending on the vehicle model year and configuration. Certain components may also reference ESP, ESC, or use the traction control**

symbol.

WHEN MONITORED:

With the ignition on and no system under voltage or over voltage condition present.

SET CONDITION:

If the measured wheel speed sensor feedback voltage is less than.304 of a volt, the sensor is considered open.

If the measured wheel speed sensor feedback voltage is greater than 1.39 volts, or if a sensor over current condition is detected, the sensor is considered shorted.

If a shorted or open condition is present for more than 100 msec, the DTC will set.

POSSIBLE CAUSES

Possible Causes
(B9) LEFT FRONT WHEEL SPEED SENSOR SUPPLY CIRCUIT FOR A SHORT TO GROUND
(B8) LEFT FRONT WHEEL SPEED SENSOR SIGNAL CIRCUIT FOR A SHORT TO GROUND
(B9) LEFT FRONT WHEEL SPEED SENSOR SUPPLY CIRCUIT FOR AN OPEN
(B8) LEFT FRONT WHEEL SPEED SENSOR SIGNAL CIRCUIT FOR AN OPEN
(B9) LEFT FRONT WHEEL SPEED SENSOR SUPPLY CIRCUIT FOR A SHORT TO VOLTAGE
(B8) LEFT FRONT WHEEL SPEED SENSOR SIGNAL CIRCUIT FOR A SHORT TO VOLTAGE
(B9) LEFT FRONT WHEEL SPEED SENSOR SUPPLY CIRCUIT SHORTED TO THE (B8) LEFT FRONT WHEEL SPEED SENSOR SIGNAL CIRCUIT
LEFT FRONT WHEEL SPEED SENSOR
ANTILOCK BRAKE SYSTEM (ABS) MODULE

DIAGNOSTIC TEST

1. **DTC IS ACTIVE**
    1. Ignition on, engine not running.
    2. With the scan tool, erase DTC's.
    3. Cycle the ignition switch from off to on.
    4. With the scan tool, select View DTC's.

    Is the status Active for this DTC?

    Yes

    - Go To 2.

    No

- The condition that caused the symptom is currently not present. Inspect the related wiring for a possible intermittent condition. Look for any chafed, pierced, pinched, or partially broken wires.
- Perform the ABS INTERMITTENT CONDITION diagnostic procedure. Refer to **ABS INTERMITTENT CONDITION**. **ABS INTERMITTENT CONDITION**.

2. **WHEEL SPEED SENSOR INSPECTION**
    1. Turn the ignition off to the lock position.
    2. Inspect the Wheel Speed Sensor for proper mounting.
    3. Inspect the Wheel Speed Sensor harness and connector.
    4. Inspect the Wheel Speed Sensor for excessive debris on the sensor.

    Were any problems found?

    Yes

    - Repair as necessary in accordance with the Service Information.
    - Perform the ABS VERIFICATION TEST. Refer to **ABS VERIFICATION TEST**.

    No

    - Go To 3.
3. **CHECK (B9) LEFT FRONT WHEEL SPEED SENSOR SUPPLY CIRCUIT VOLTAGE**

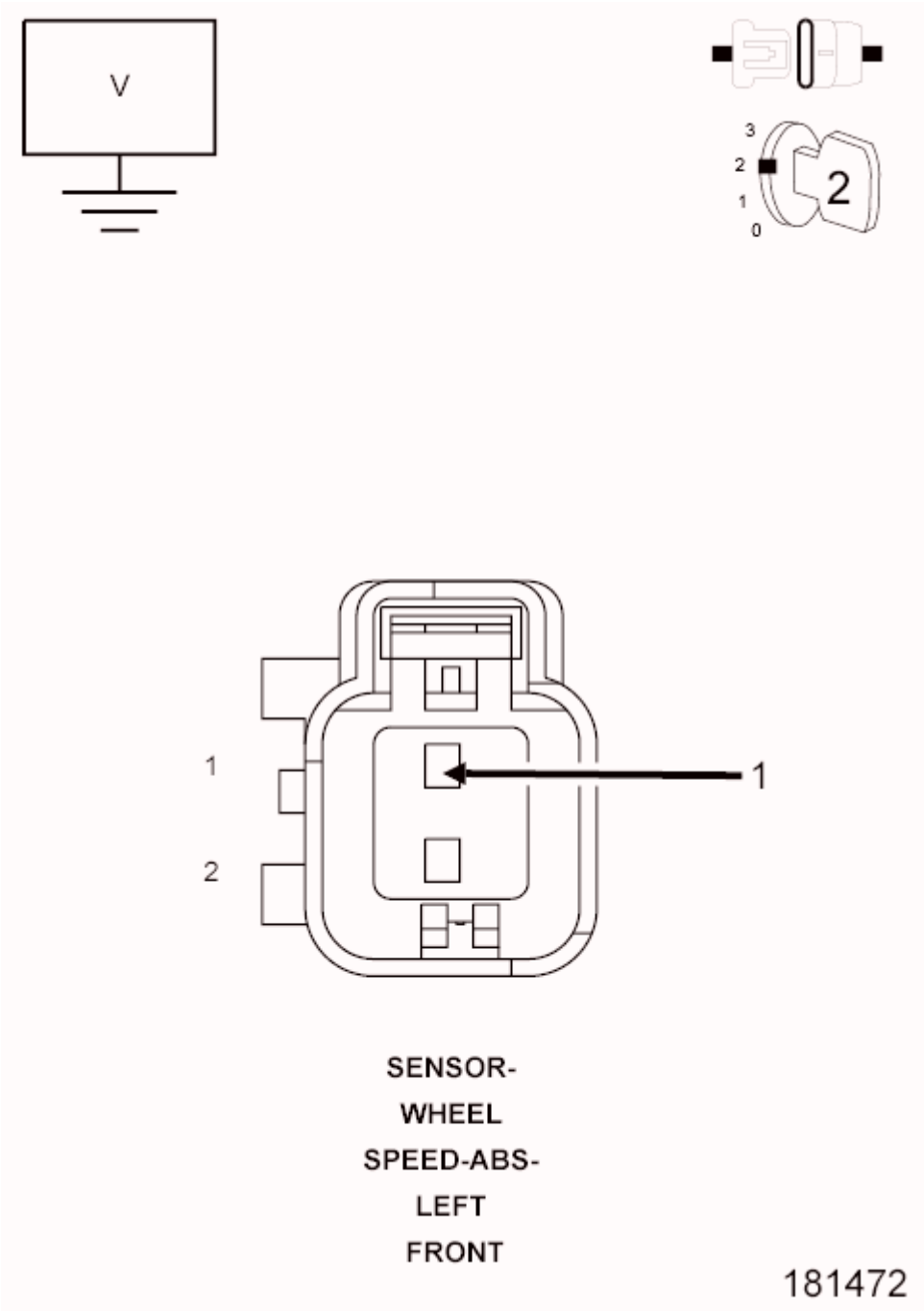

Fig. 15: Measuring Left Front Wheel Speed Sensor Supply Circuit Voltage
Courtesy of CHRYSLER GROUP, LLC

1. Disconnect the Left Front Wheel Speed Sensor harness connector.
2. Turn the ignition on.
3. Measure the voltage between the (B9) Left Front Wheel Speed Sensor Supply circuit and ground.

   Is the voltage above 10 volts?

Yes

- Go To 4.

No

- Go To 6.

4. **(B9) LEFT FRONT WHEEL SPEED SENSOR SUPPLY CIRCUIT FOR A SHORT TO VOLTAGE**

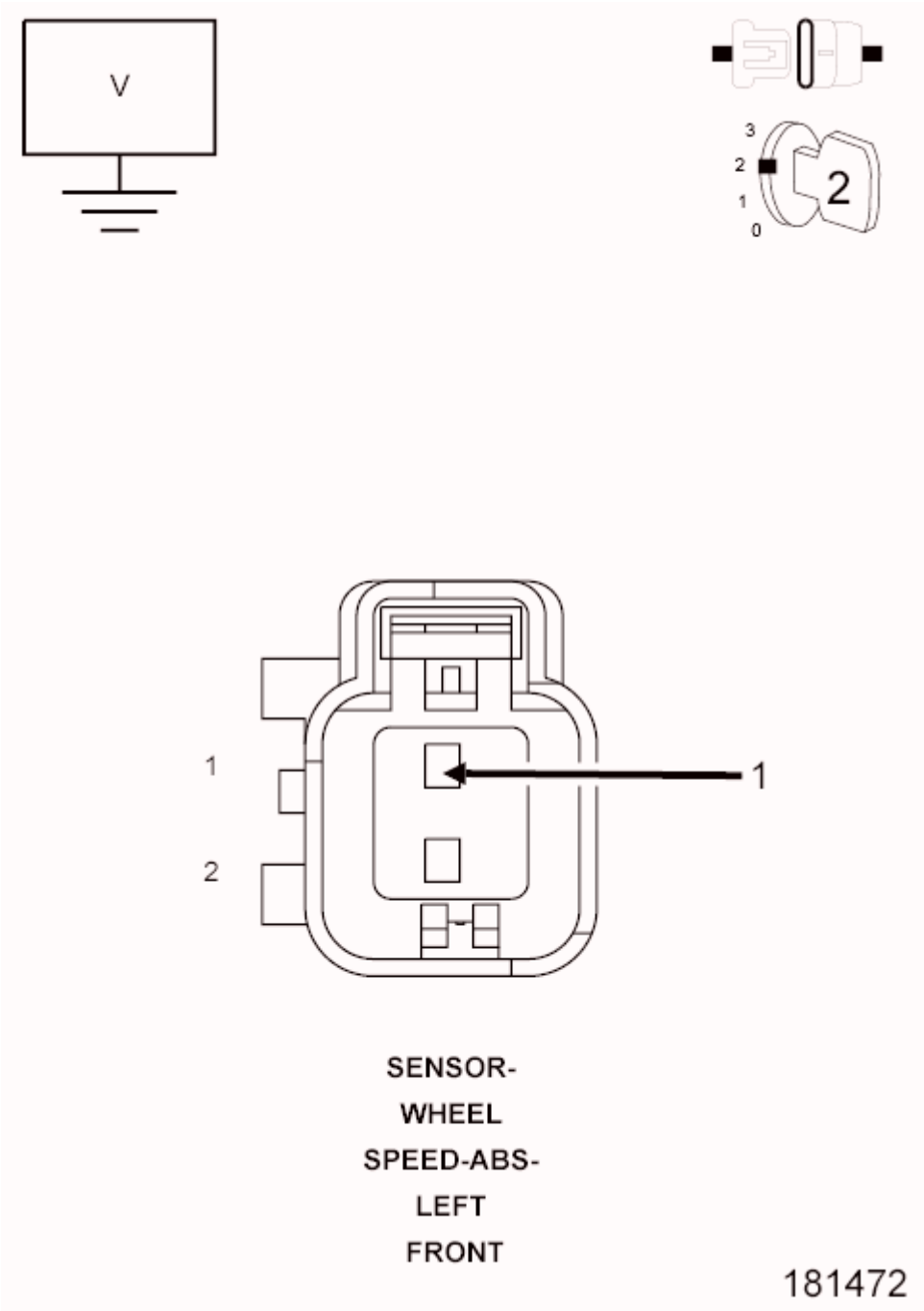

Fig. 16: Measuring Left Front Wheel Speed Sensor Supply Circuit Voltage
Courtesy of CHRYSLER GROUP, LLC

1. Turn the ignition off to the lock position.
2. Disconnect the ABS Module harness connector.
3. Ignition on, engine not running.
4. Measure the voltage of the (B9) Left Front Wheel Speed Sensor Supply circuit at the Left Front Wheel Speed Sensor harness connector.

Is there any voltage present?

Yes

- Repair (B9) Left Front Wheel Speed Sensor Supply circuit for a short to voltage.
- Perform the ABS VERIFICATION TEST. Refer to **ABS VERIFICATION TEST**.

No

- Go To 5.

5. **(B8) LEFT FRONT WHEEL SPEED SENSOR SIGNAL CIRCUIT FOR A SHORT TO GROUND**

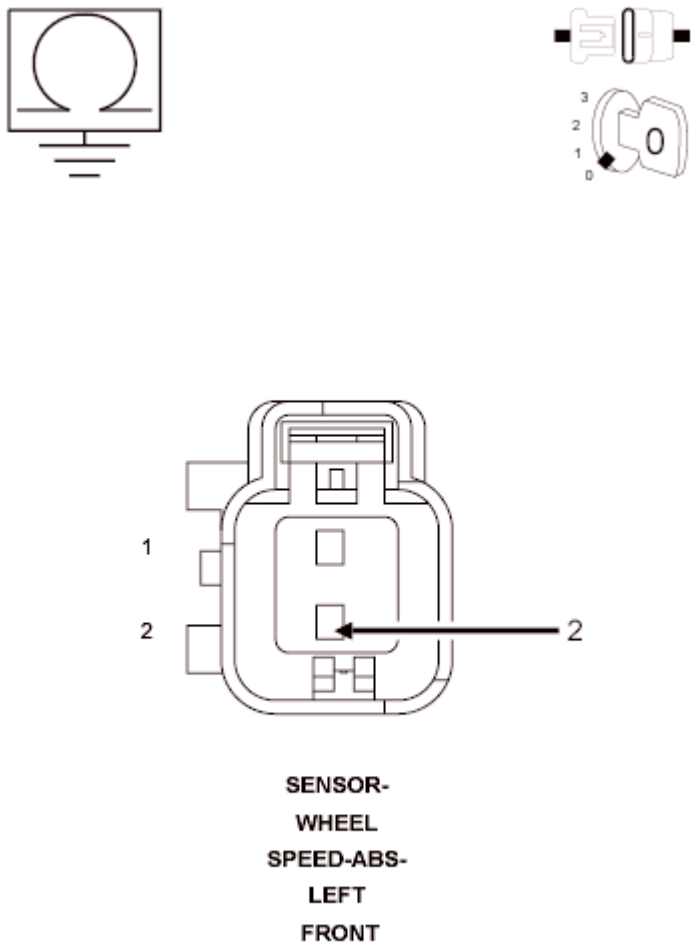

Fig. 17: Checking Front Wheel Speed Sensor Circuit For A Short To Ground
Courtesy of CHRYSLER GROUP, LLC

1. Turn the ignition off.
2. Measure the resistance between the (B8) Left Front Wheel Speed Sensor Signal circuit and ground.

Is the resistance above 5.0 Ohms?

Yes

- Replace the Left Front Wheel Speed Sensor in accordance with the Service Information.
- Perform the ABS VERIFICATION TEST. Refer to **ABS VERIFICATION TEST**.

No

- Repair the (B8) Left Front Wheel Speed Sensor Signal circuit for a short to ground.
- Perform the ABS VERIFICATION TEST. Refer to **ABS VERIFICATION TEST**.

6. **(B9) LEFT FRONT WHEEL SPEED SENSOR SUPPLY CIRCUIT FOR A SHORT TO GROUND**

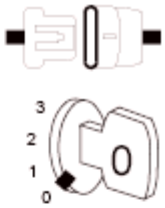

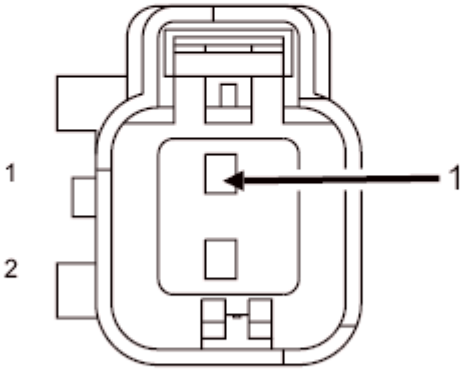

SENSOR-
WHEEL
SPEED-ABS-
LEFT
FRONT

181464

Fig. 18: Checking Left Front Wheel Speed Sensor Supply Circuit For A Short To Ground
Courtesy of CHRYSLER GROUP, LLC

1. Turn the ignition off.
2. Disconnect the ABS Module harness connector.
3. Measure the resistance between the (B9) Left Front Wheel Speed Sensor Supply circuit and ground.

   Is the resistance above 5.0 Ohms?

   Yes

   - Go To 7.

   No

   - Repair the (B9) Left Front Wheel Speed Sensor Supply circuit for a short to ground.
   - Perform the ABS VERIFICATION TEST. Refer to **ABS VERIFICATION TEST**.

7. **(B9) LEFT FRONT WHEEL SPEED SENSOR SUPPLY CIRCUIT FOR AN OPEN**

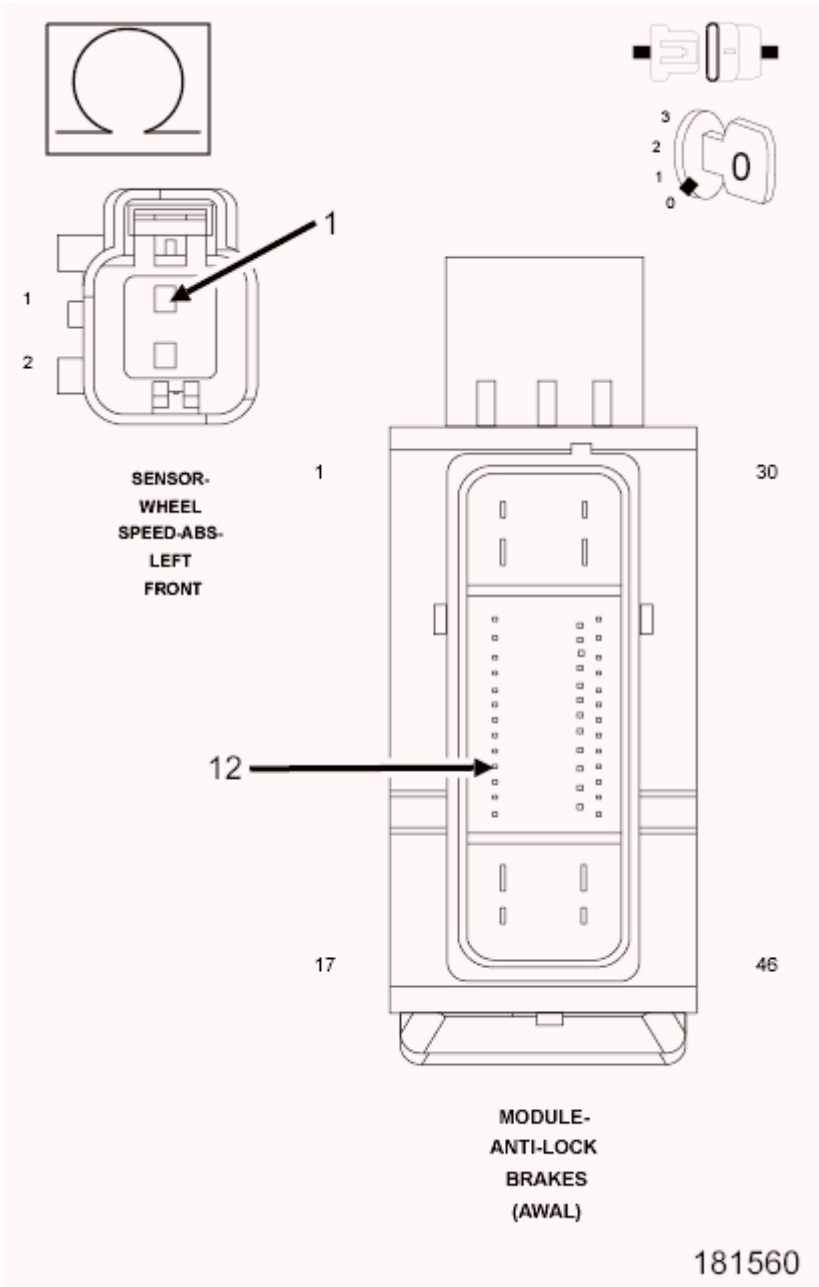

Fig. 19: Checking Left Front Wheel Speed Sensor Supply Circuit For An Open
Courtesy of CHRYSLER GROUP, LLC

1. Measure the resistance of the (B9) Left Front Wheel Speed Sensor Supply circuit between the Left Front Wheel Speed Sensor harness connector and the ABS harness connector.

   Is the resistance below 5 Ohms?

   Yes

   - Go To 8.

No

- Repair the open (B9) Left Front Wheel Speed Sensor Supply circuit.
- Perform the ABS VERIFICATION TEST. Refer to **ABS VERIFICATION TEST**.

8. **(B8) LEFT FRONT WHEEL SPEED SENSOR SIGNAL CIRCUIT FOR AN OPEN**

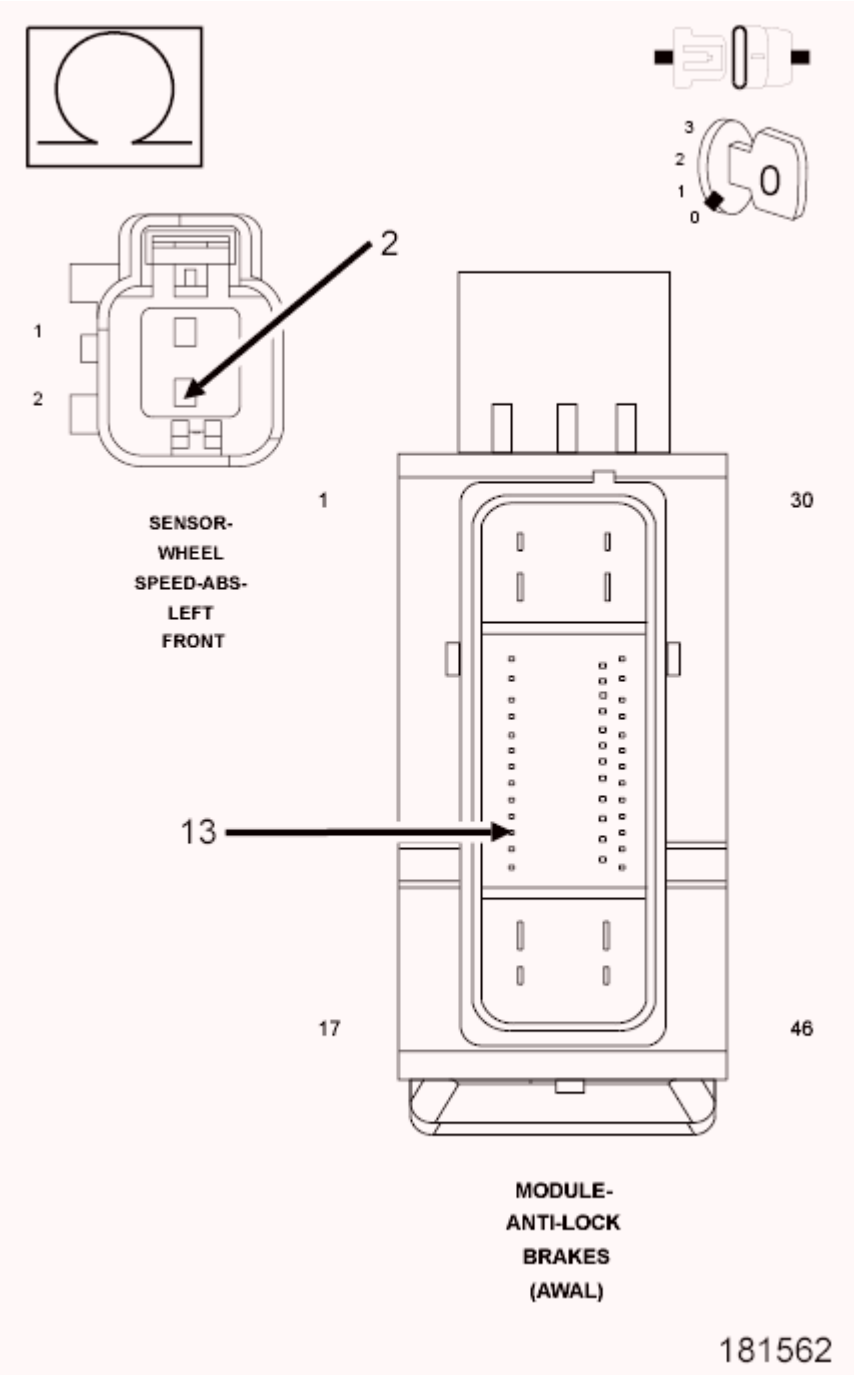

Fig. 20: Checking Left Front Wheel Speed Sensor Signal Circuit For An Open
Courtesy of CHRYSLER GROUP, LLC

1. Measure the resistance of the (B8) Left Front Wheel Speed Sensor Signal circuit between the Left Front Wheel Speed Sensor harness connector and the ABS harness connector.

   Is the resistance below 5 Ohms?

   Yes

   - Go To 9.

   No

   - Repair the open (B8) Left Front Wheel Speed Sensor Signal circuit.
   - Perform the ABS VERIFICATION TEST. Refer to **ABS VERIFICATION TEST**.

9. **(B8) LEFT FRONT WHEEL SPEED SENSOR SIGNAL CIRCUIT FOR A SHORT TO VOLTAGE**

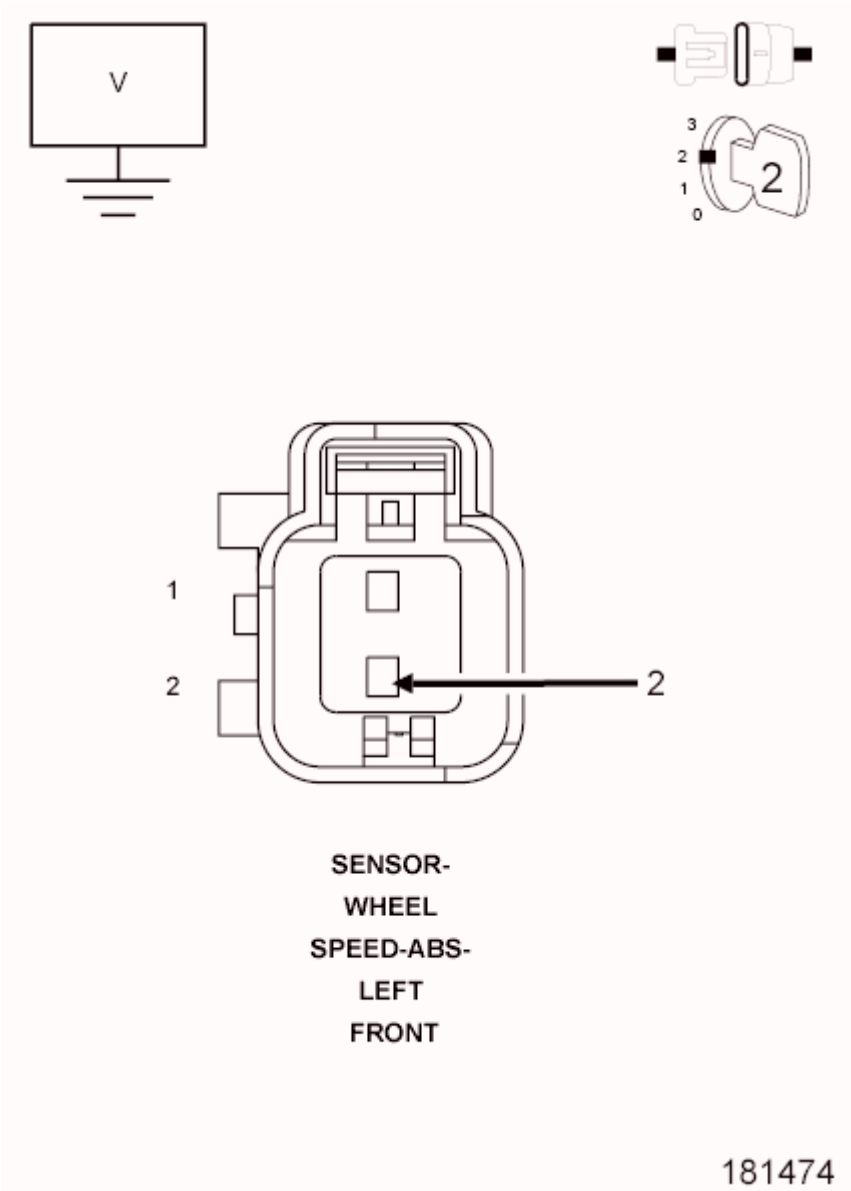

Fig. 21: Checking Left Front Wheel Speed Sensor Signal Circuit For A Short To Voltage
Courtesy of CHRYSLER GROUP, LLC

1. Turn the ignition on.
2. Measure the voltage of the (B8) Left Front Wheel Speed Sensor Signal circuit at the Left Front Wheel Speed Sensor harness connector.

   Is there any voltage present?

   Yes

   - Repair the (B8) Left Front Wheel Speed Sensor Signal circuit for a short to voltage.
   - Perform the ABS VERIFICATION TEST. Refer to **ABS VERIFICATION TEST**.

No

- Go To 10.

10. **(B9) LEFT FRONT WHEEL SPEED SENSOR SUPPLY CIRCUIT SHORTED TO THE (B8) LEFT FRONT WHEEL SPEED SENSOR SIGNAL CIRCUIT**

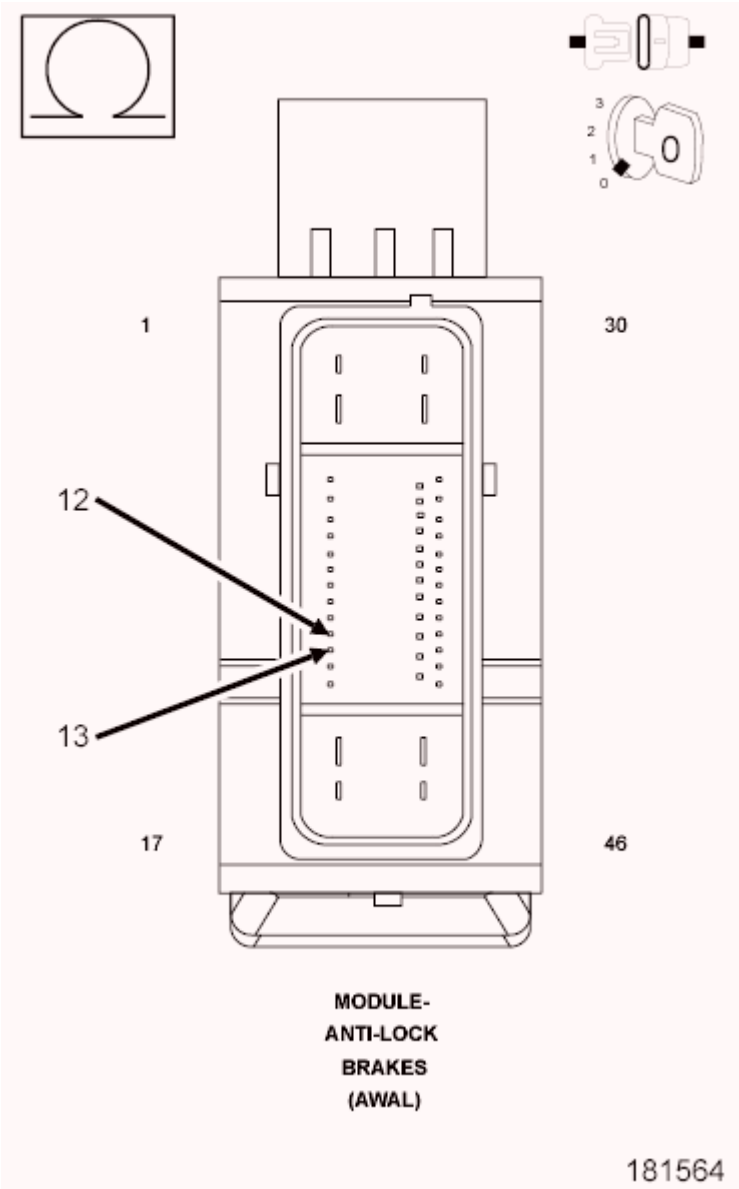

Fig. 22: Checking Left Front Wheel Speed Sensor Supply Circuit For A Short To The Left Front Wheel Speed Sensor Signal Circuit
Courtesy of CHRYSLER GROUP, LLC

1. Turn the ignition off to the lock position.
2. Measure the resistance between the (B9) Left Front Wheel Speed Sensor Supply circuit and the (B8) Left Front Wheel Speed Sensor Signal circuit at the ABS Module harness connector.

Is the resistance below 5.0 Ohms?

Yes

- Repair (B9) Left Front Wheel Speed Sensor Supply circuit for a short to the (B8) Left Front Wheel Speed Sensor Signal circuit.
- Perform the ABS VERIFICATION TEST. Refer to **ABS VERIFICATION TEST**.

No

- Replace the Antilock Brakes Module in accordance with the Service Information.
- Perform the ABS VERIFICATION TEST. Refer to **ABS VERIFICATION TEST**.

C1011-LEFT FRONT WHEEL SPEED SENSOR SIGNAL ERRATIC PERFORMANCE

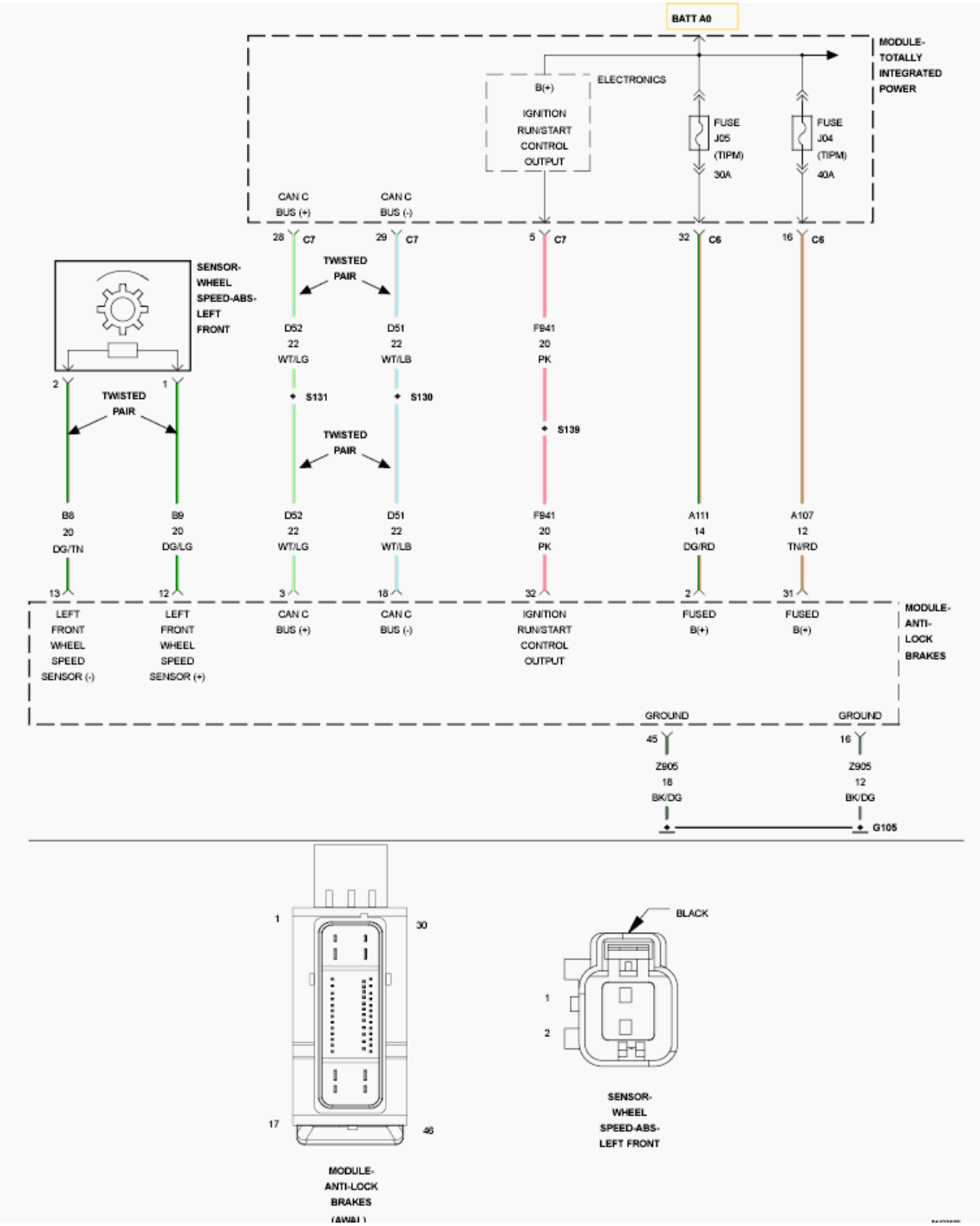

Fig. 23: Left Front Wheel Speed Sensor Wiring Diagram
Courtesy of CHRYSLER GROUP, LLC

For a complete wiring diagram, **refer to appropriate SYSTEM WIRING DIAGRAMS article** .

NOTE: **The Electronic Stability Control (ESC) may also be referred to as Electronic Stability Program (ESP) depending on the vehicle model year and configuration. Certain components may also reference ESP, ESC, or use the traction control**

symbol.

WHEN MONITORED:

With the ignition on and no system under voltage or over voltage condition present.

SET CONDITION:

Each time excessive wheel speed sensor acceleration or deceleration is detected, a fault counter increments. If the fault counter exceeds a specified value, the DTC will set.

POSSIBLE CAUSES

Possible Causes
(B9) LEFT FRONT WHEEL SPEED SENSOR SUPPLY CIRCUIT SHORT TO GROUND
(B8) LEFT FRONT WHEEL SPEED SENSOR SIGNAL CIRCUIT SHORT TO GROUND
(B9) LEFT FRONT WHEEL SPEED SENSOR SUPPLY CIRCUIT FOR AN OPEN
(B8) LEFT FRONT WHEEL SPEED SENSOR SIGNAL CIRCUIT FOR AN OPEN
(B9) LEFT FRONT WHEEL SPEED SENSOR SUPPLY CIRCUIT FOR A SHORT TO VOLTAGE
(B8) LEFT FRONT WHEEL SPEED SENSOR SIGNAL CIRCUIT FOR A SHORT TO VOLTAGE
(B9) LEFT FRONT WHEEL SPEED SENSOR SUPPLY CIRCUIT SHORTED TO THE (B8) LEFT FRONT WHEEL SPEED SENSOR SIGNAL CIRCUIT
TONE WHEEL
EXCESSIVE LEFT FRONT WHEEL SPEED SENSOR AIR GAP
WHEEL BEARING
LEFT FRONT WHEEL SPEED SENSOR (WSS)
ANTILOCK BRAKE SYSTEM (ABS) MODULE

DIAGNOSTIC TEST

1. **DTC IS ACTIVE**
    1. Ignition on, engine not running.
    2. With the scan tool, clear DTC's.
    3. Turn the ignition off to the lock position.
    4. Ignition on, engine not running.
    5. With the scan tool, select View DTC's.

    Is the status Active for this DTC?

    Yes

    - Go To 2.

    No

- The condition that caused the symptom is currently not present. Inspect the related wiring for a possible intermittent condition. Look for any chafed, pierced, pinched, or partially broken wires.
- Perform the ABS INTERMITTENT CONDITION diagnostic procedure. Refer to **ABS INTERMITTENT CONDITION**.

2. **WHEEL SPEED SENSOR INSPECTION**
   1. Turn the ignition off to the lock position.
   2. Inspect the Wheel Speed Sensor for proper mounting.
   3. Inspect the Wheel Speed Sensor harness and connector.
   4. Inspect the Wheel Speed Sensor for excessive debris on the sensor.

   Were any problems found?

   Yes

   - Repair as necessary in accordance with the Service Information.
   - Perform the ABS VERIFICATION TEST. Refer to **ABS VERIFICATION TEST**.

   No

   - Go To 3.

3. **TONE WHEEL DAMAGED/MISSING**
   1. Inspect the Tone Wheel in accordance with the Service Information.

   NOTE: The Tone Wheel Teeth should be perfectly square, not bent or nicked.

   Were any problems found?

   Yes

   - Replace the Tone Wheel in accordance with the Service Information.
   - Perform the ABS VERIFICATION TEST. Refer to **ABS VERIFICATION TEST**.

   No

   - Go To 4.

4. **EXCESSIVE WHEEL SPEED SENSOR AIR GAP**
   1. Measure the Wheel Speed Sensor Air Gap in accordance with the Service Information.

   Were any problems found?

   Yes

   - Repair as necessary in accordance with the Service Information.

- Perform the ABS VERIFICATION TEST. Refer to **ABS VERIFICATION TEST**.

No

- Go To 5.

5. **WHEEL BEARING LOOSE/BINDING**
   1. Inspect the wheel bearings for excessive run out or improper clearance in accordance with the Service Information.

      Were any problems found?

      Yes

      - Repair as necessary in accordance with the Service Information.
      - Perform the ABS VERIFICATION TEST. Refer to **ABS VERIFICATION TEST**.

      No

      - Go To 6.

6. **CHECK (B9) LEFT FRONT WHEEL SPEED SENSOR SUPPLY CIRCUIT VOLTAGE**

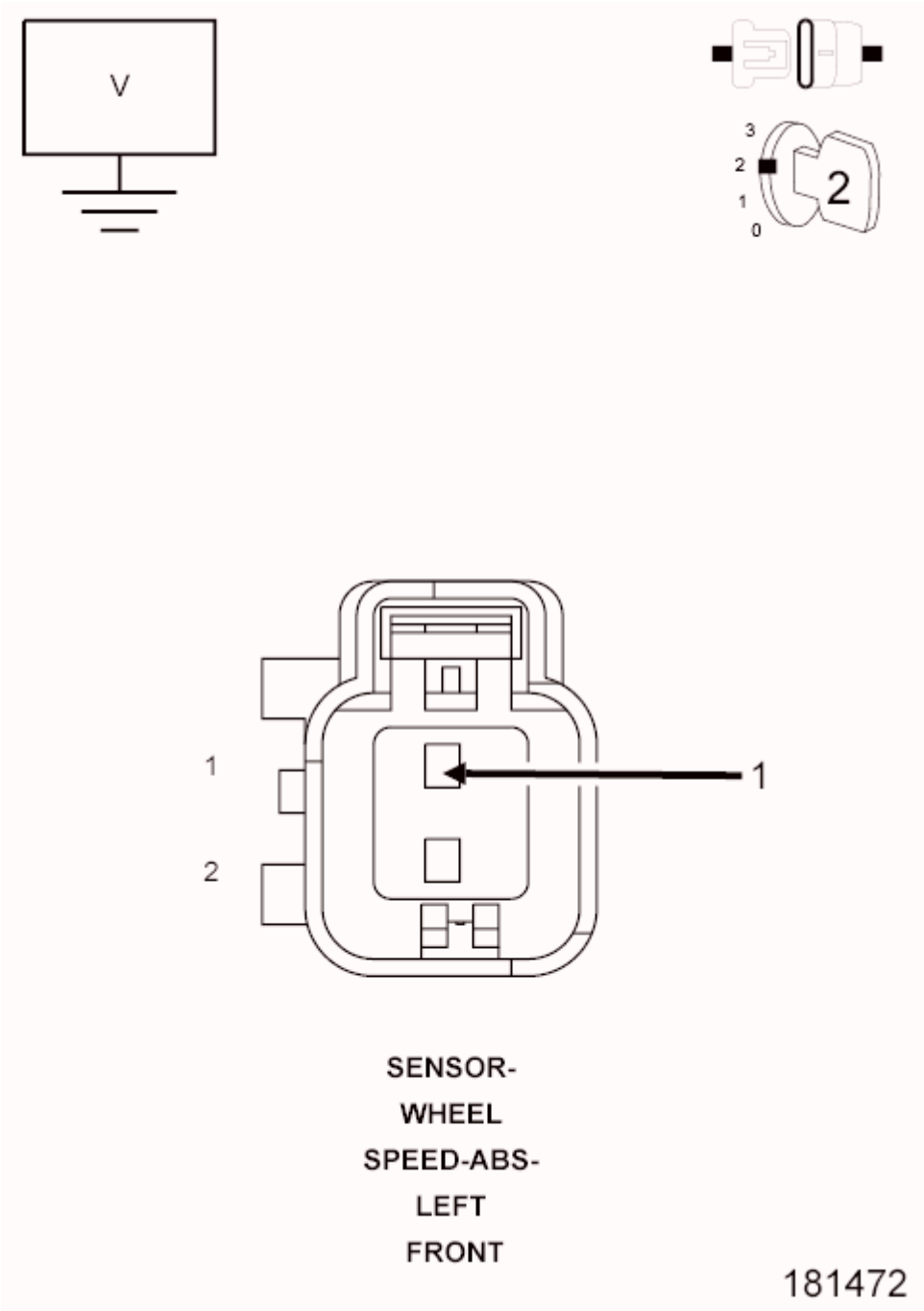

Fig. 24: Measuring Left Front Wheel Speed Sensor Supply Circuit Voltage
Courtesy of CHRYSLER GROUP, LLC

1. Disconnect the Left Front Wheel Speed Sensor harness connector.
2. Turn the ignition on.
3. Measure the voltage between the (B9) Left Front Wheel Speed Sensor Supply circuit and ground.

   Is the voltage above 10 volts?

Yes

- Go To 7.

No

- Go To 9.

7. **(B9) LEFT FRONT WHEEL SPEED SENSOR SUPPLY CIRCUIT FOR A SHORT TO VOLTAGE**

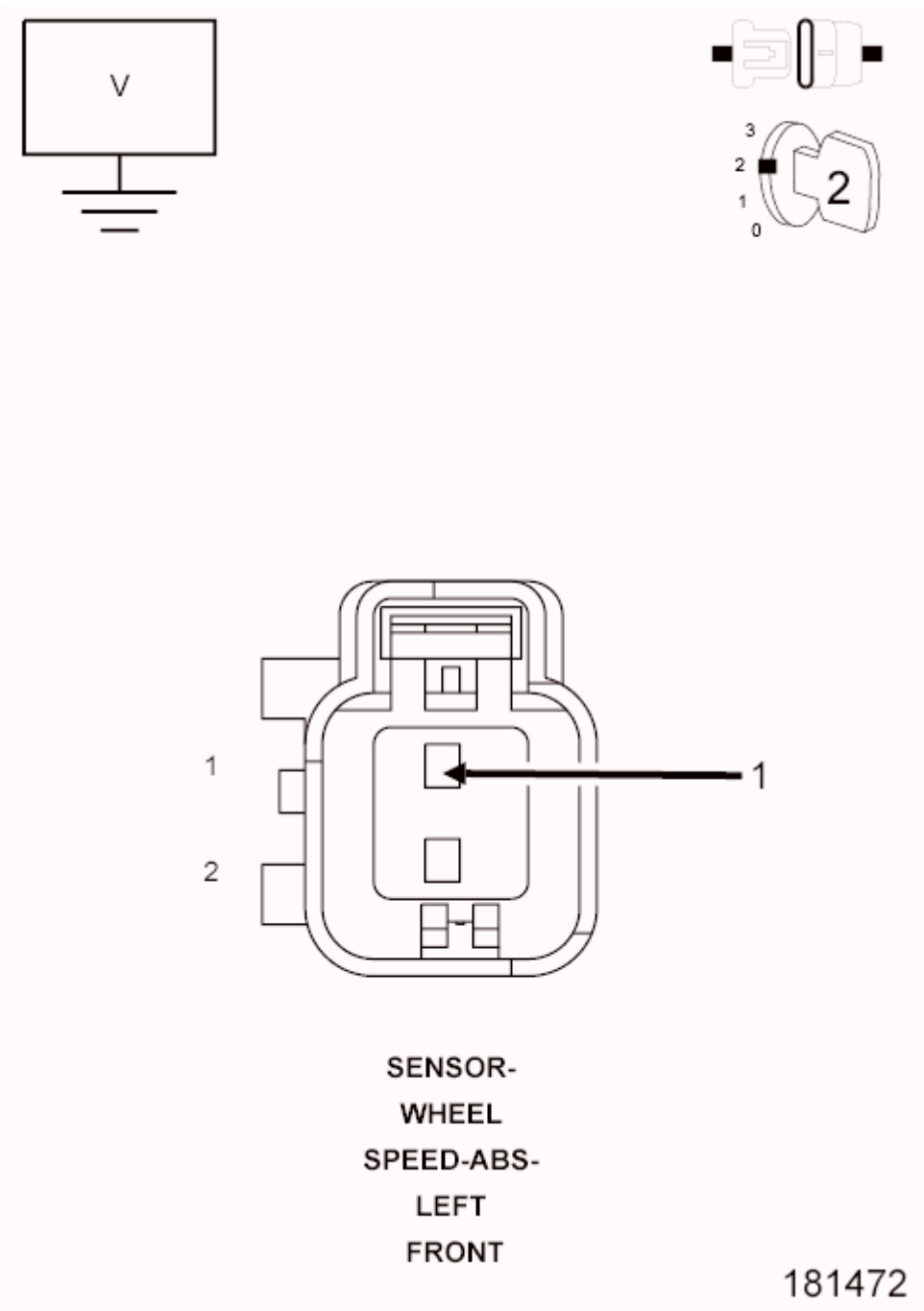

Fig. 25: Measuring Left Front Wheel Speed Sensor Supply Circuit Voltage
Courtesy of CHRYSLER GROUP, LLC

1. Turn the ignition off to the lock position.
2. Disconnect the ABS Module harness connector.
3. Ignition on, engine not running.
4. Measure the voltage of the (B9) Left Front Wheel Speed Sensor Supply circuit at the Left Front Wheel Speed Sensor harness connector.

Is there any voltage present?

Yes

- Repair (B9) Left Front Wheel Speed Sensor Supply circuit for a short to voltage.
- Perform the ABS VERIFICATION TEST. Refer to **ABS VERIFICATION TEST**.

No

- Go To 8.

8. **(B8) LEFT FRONT WHEEL SPEED SENSOR SIGNAL CIRCUIT FOR A SHORT TO GROUND**

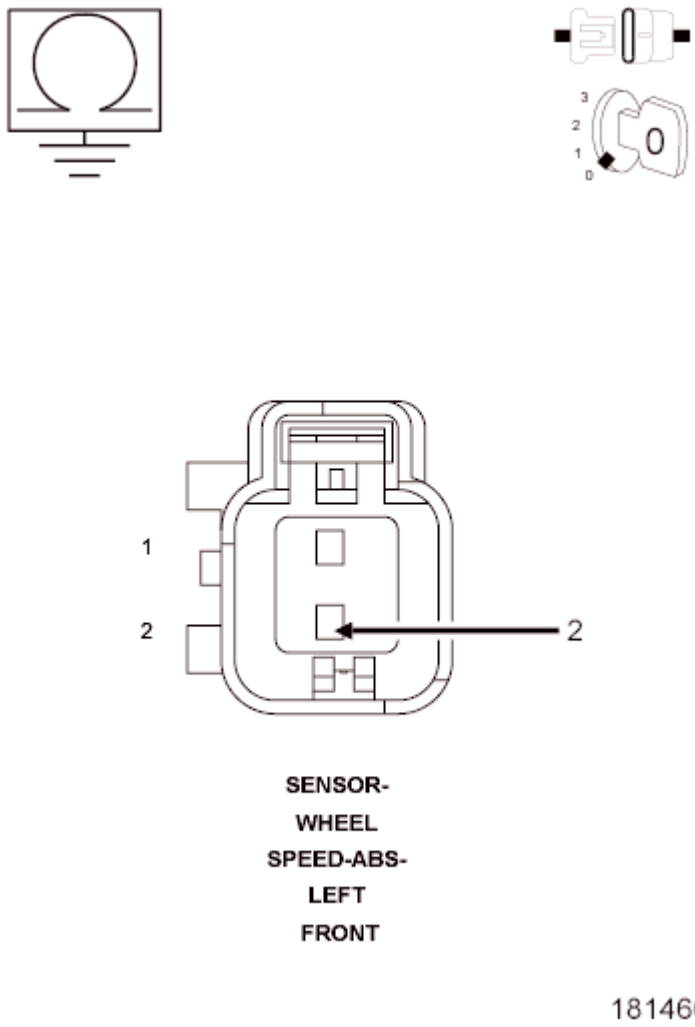

Fig. 26: Checking Front Wheel Speed Sensor Circuit For A Short To Ground
Courtesy of CHRYSLER GROUP, LLC

1. Turn the ignition off.
2. Measure the resistance between the (B8) Left Front Wheel Speed Sensor Signal circuit and ground.

Is the resistance above 5.0 Ohms?

Yes

- Replace the Left Front Wheel Speed Sensor in accordance with the Service Information.
- Perform the ABS VERIFICATION TEST. Refer to **ABS VERIFICATION TEST**.

No

- Repair the (B8) Left Front Wheel Speed Sensor Signal circuit for a short to ground.
- Perform the ABS VERIFICATION TEST. Refer to **ABS VERIFICATION TEST**.

9. **(B9) LEFT FRONT WHEEL SPEED SENSOR SUPPLY CIRCUIT FOR A SHORT TO GROUND**

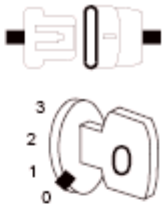

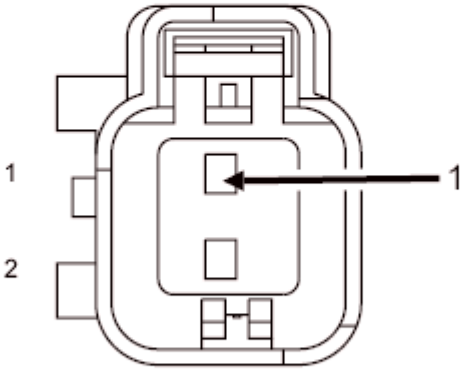

SENSOR-
WHEEL
SPEED-ABS-
LEFT
FRONT

181464

Fig. 27: Checking Left Front Wheel Speed Sensor Supply Circuit For A Short To Ground
Courtesy of CHRYSLER GROUP, LLC

1. Turn the ignition off.
2. Disconnect the ABS Module harness connector.
3. Measure the resistance between the (B9) Left Front Wheel Speed Sensor Supply circuit and ground.

   Is the resistance above 5.0 Ohms?

   Yes

   - Go To 10.

   No

   - Repair the (B9) Left Front Wheel Speed Sensor Supply circuit for a short to ground.
   - Perform the ABS VERIFICATION TEST. Refer to **ABS VERIFICATION TEST**.

10. **(B9) LEFT FRONT WHEEL SPEED SENSOR SUPPLY CIRCUIT FOR AN OPEN**

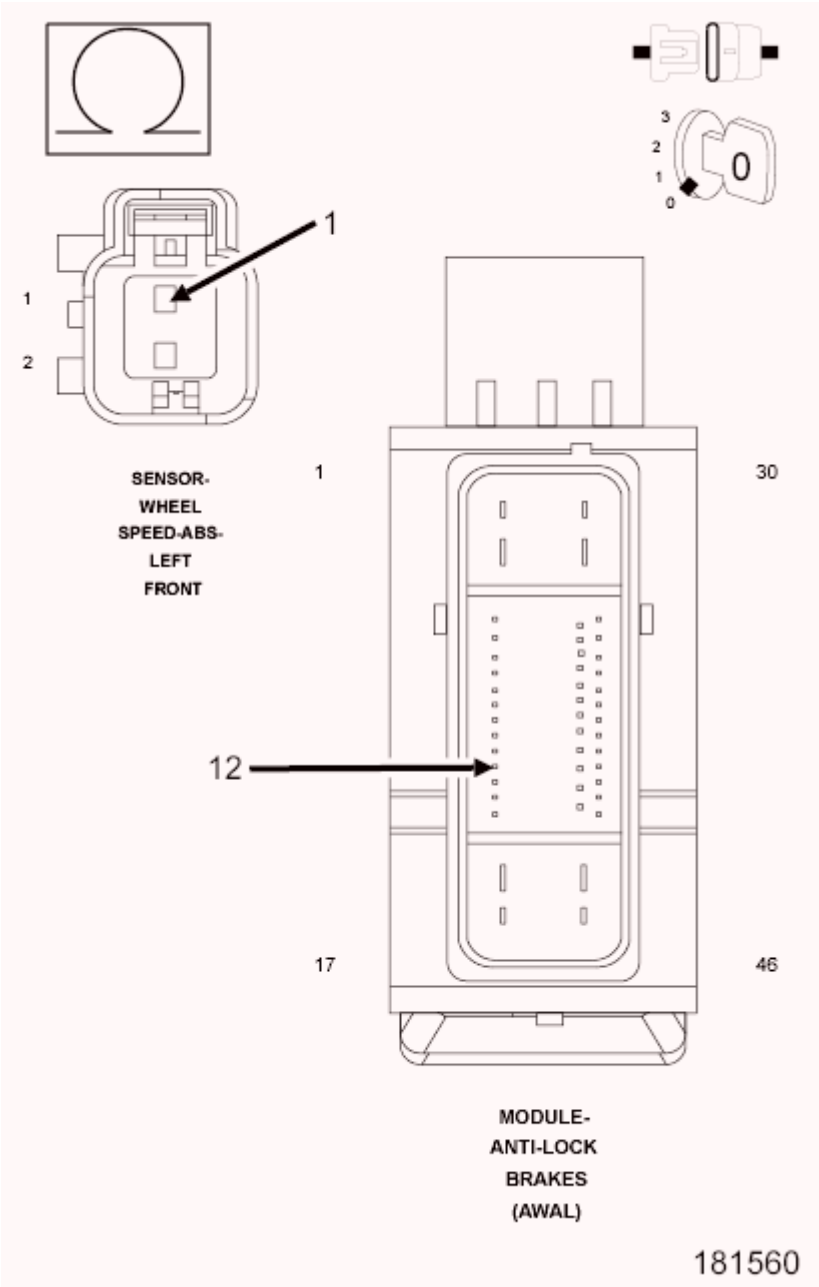

Fig. 28: Checking Left Front Wheel Speed Sensor Supply Circuit For An Open
Courtesy of CHRYSLER GROUP, LLC

1. Measure the resistance of the (B9) Left Front Wheel Speed Sensor Supply circuit between the Left Front Wheel Speed Sensor harness connector and the ABS harness connector.

   Is the resistance below 5 Ohms?

   Yes

   - Go To 11.

No

- Repair the open (B9) Left Front Wheel Speed Sensor Supply circuit.
- Perform the ABS VERIFICATION TEST. Refer to **ABS VERIFICATION TEST**.

11. **(B8) LEFT FRONT WHEEL SPEED SENSOR SIGNAL CIRCUIT FOR AN OPEN**

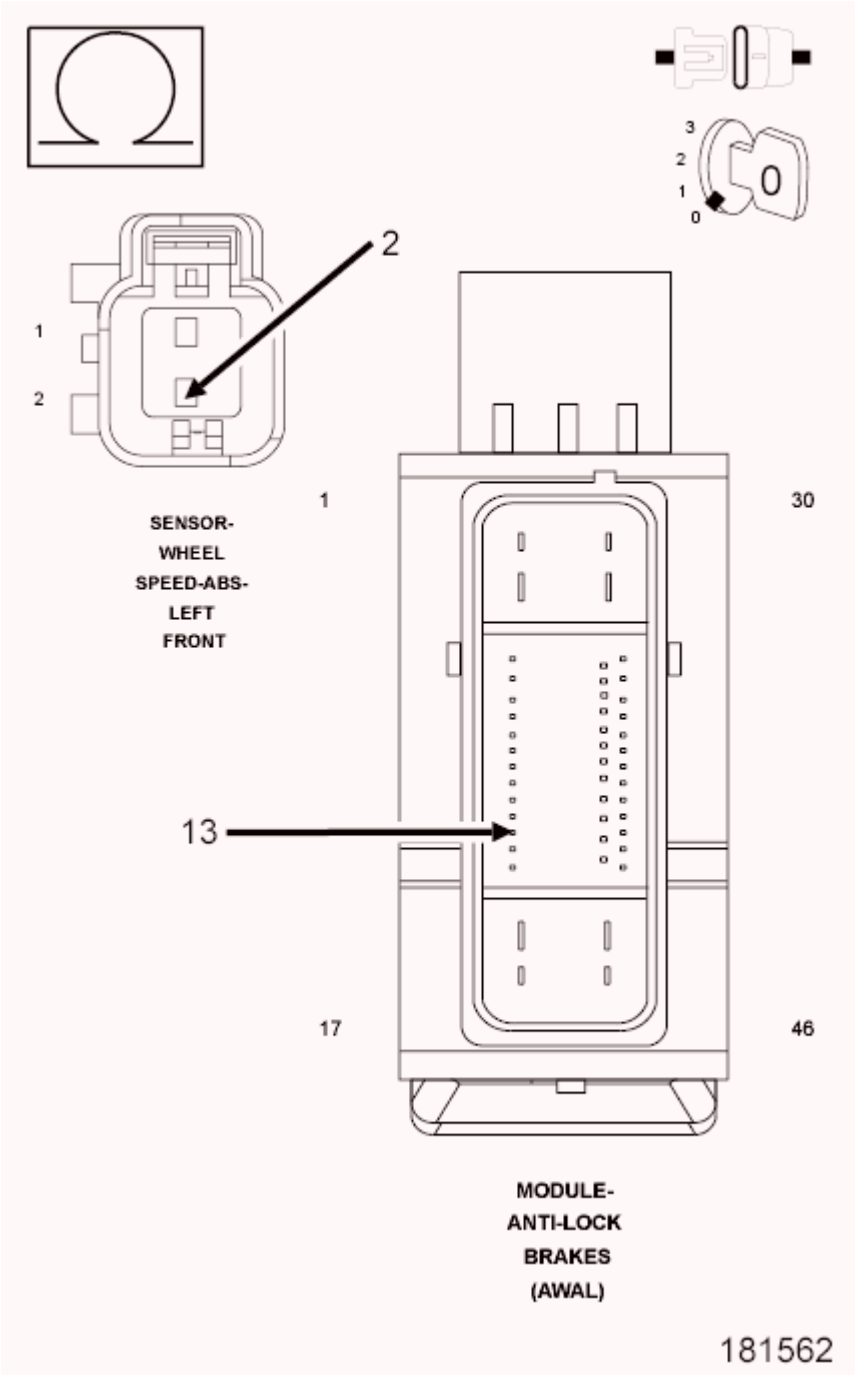

Fig. 29: Checking Left Front Wheel Speed Sensor Signal Circuit For An Open
Courtesy of CHRYSLER GROUP, LLC

1. Measure the resistance of the (B8) Left Front Wheel Speed Sensor Signal circuit between the Left Front Wheel Speed Sensor harness connector and the ABS harness connector.

   Is the resistance below 5 Ohms?

   Yes

   - Go To 12.

   No

   - Repair the open (B8) Left Front Wheel Speed Sensor Signal circuit.
   - Perform the ABS VERIFICATION TEST. Refer to **ABS VERIFICATION TEST**.

12. **(B8) LEFT FRONT WHEEL SPEED SENSOR SIGNAL CIRCUIT FOR A SHORT TO VOLTAGE**

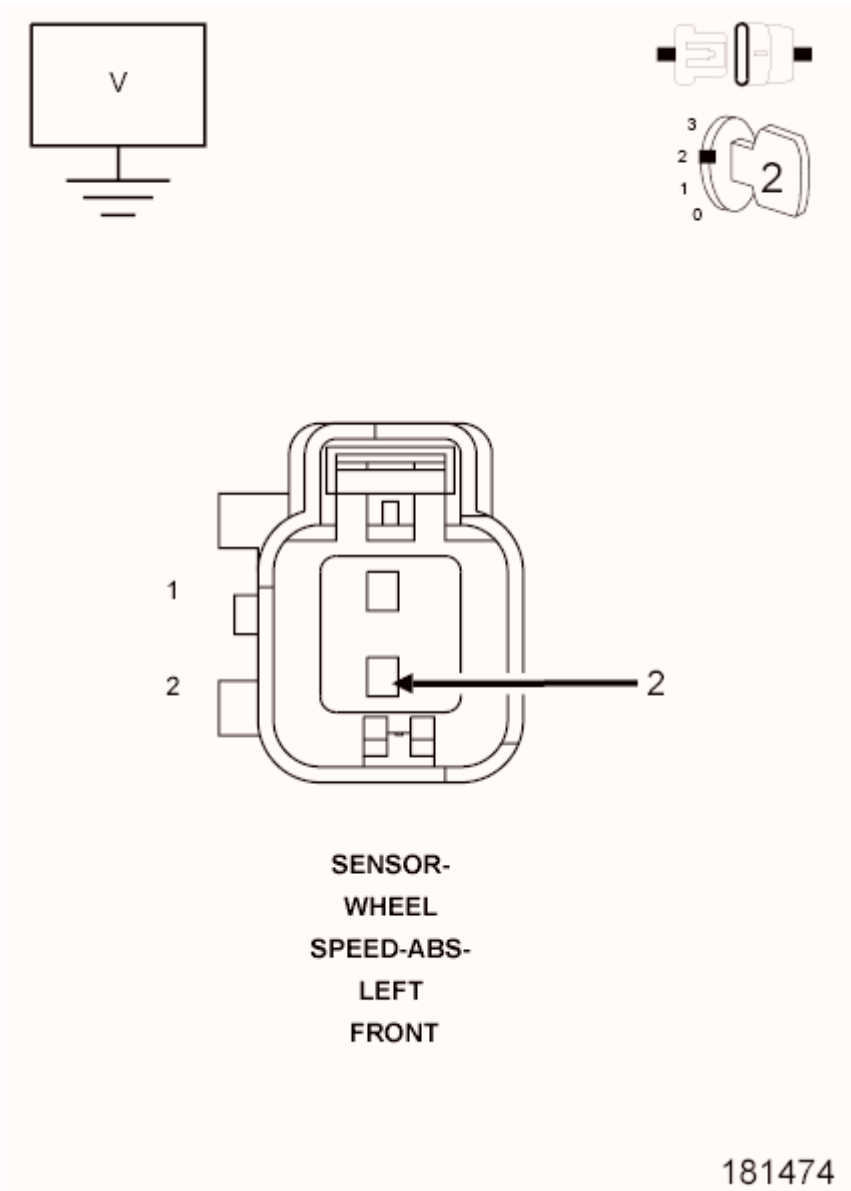

Fig. 30: Checking Left Front Wheel Speed Sensor Signal Circuit For A Short To Voltage
Courtesy of CHRYSLER GROUP, LLC

1. Turn the ignition on.
2. Measure the voltage of the (B8) Left Front Wheel Speed Sensor Signal circuit at the Left Front Wheel Speed Sensor harness connector.

   Is there any voltage present?

   Yes

   - Repair the (B8) Left Front Wheel Speed Sensor Signal circuit for a short to voltage.
   - Perform the ABS VERIFICATION TEST. Refer to **ABS VERIFICATION TEST**.

No

- Go To 13.

13. **(B9) LEFT FRONT WHEEL SPEED SENSOR SUPPLY CIRCUIT SHORTED TO THE (B8) LEFT FRONT WHEEL SPEED SENSOR SIGNAL CIRCUIT**

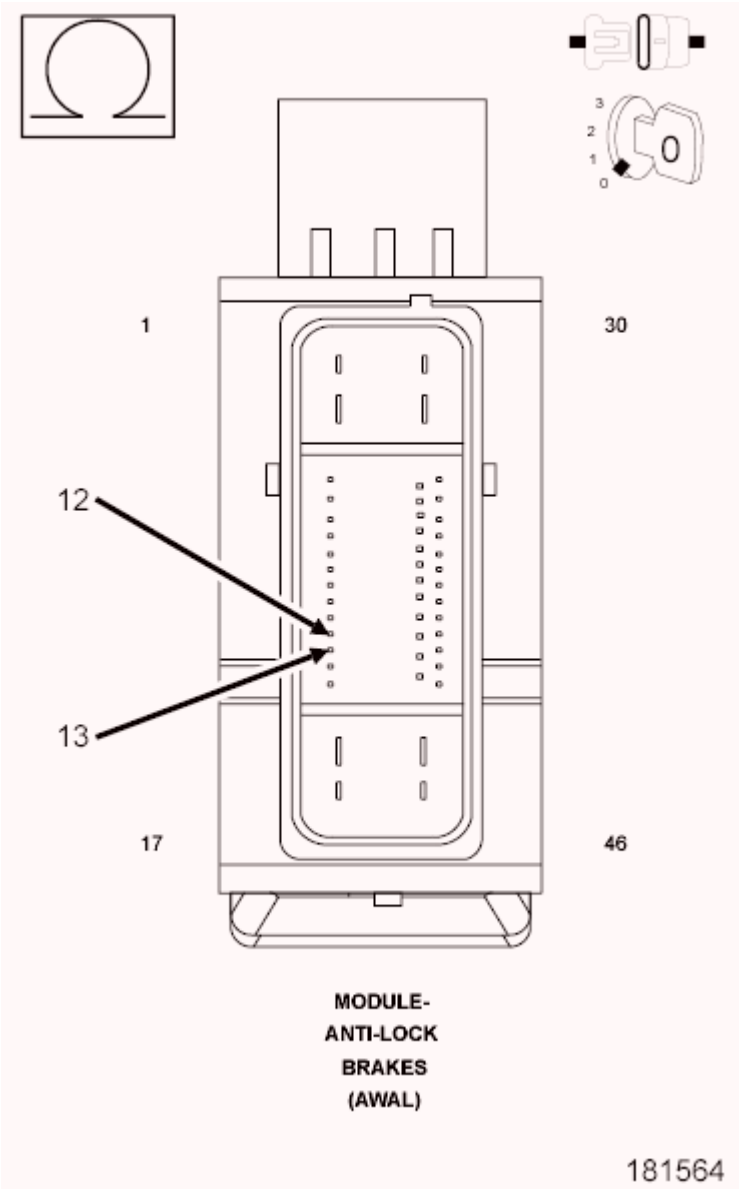

Fig. 31: Checking Left Front Wheel Speed Sensor Supply Circuit For A Short To The Left Front Wheel Speed Sensor Signal Circuit
Courtesy of CHRYSLER GROUP, LLC

1. Turn the ignition off to the lock position.
2. Measure the resistance between the (B9) Left Front Wheel Speed Sensor Supply circuit and the (B8) Left Front Wheel Speed Sensor Signal circuit at the ABS Module harness connector.

Is the resistance below 5.0 Ohms?

Yes

- Repair (B9) Left Front Wheel Speed Sensor Supply circuit for a short to the (B8) Left Front Wheel Speed Sensor Signal circuit.
- Perform the ABS VERIFICATION TEST. Refer to **ABS VERIFICATION TEST**.

No

- Replace the Antilock Brakes Module in accordance with the Service Information.
- Perform the ABS VERIFICATION TEST. Refer to **ABS VERIFICATION TEST**.

C1014-LEFT FRONT WHEEL SPEED COMPARATIVE PERFORMANCE

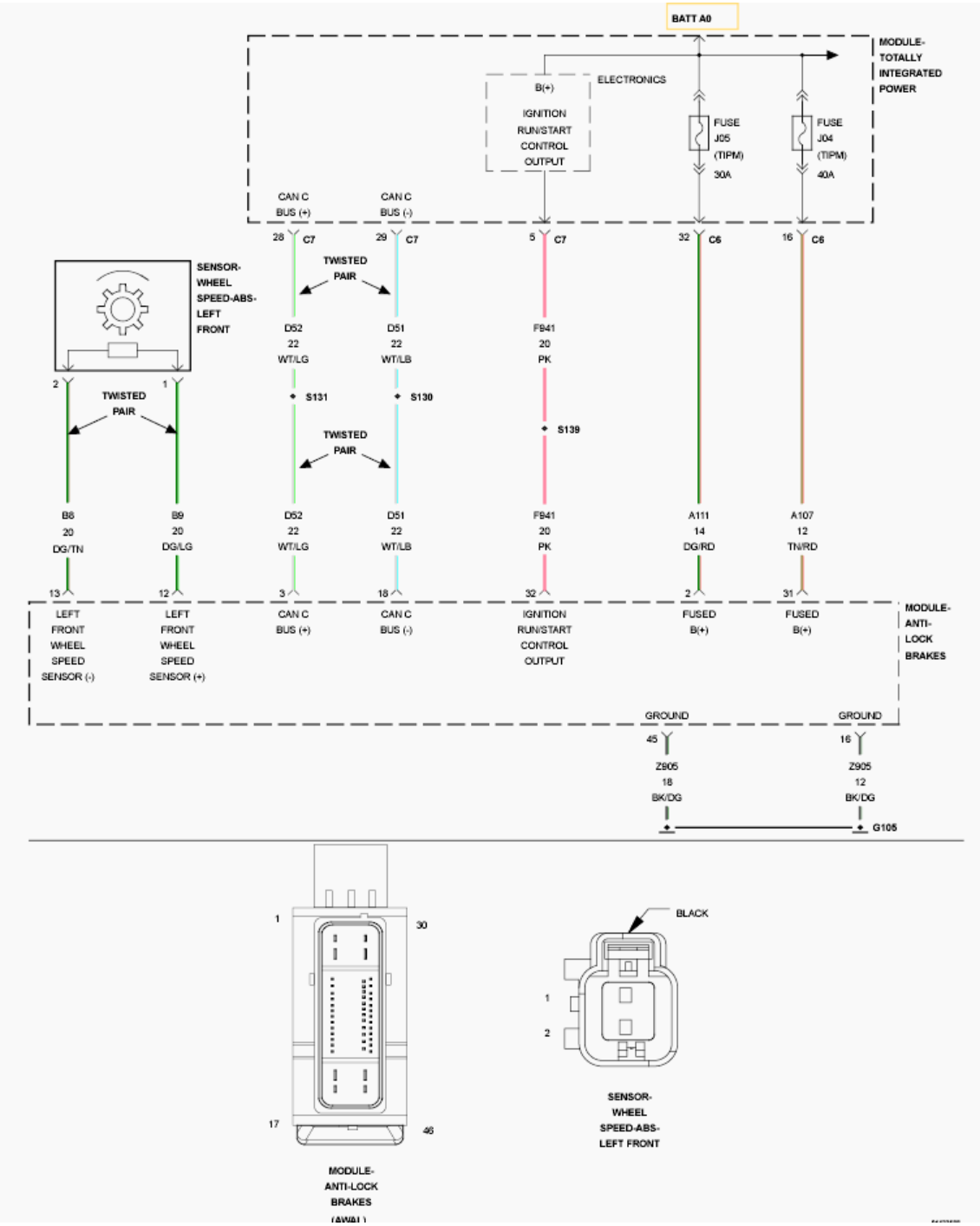

Fig. 32: Left Front Wheel Speed Sensor Wiring Diagram
Courtesy of CHRYSLER GROUP, LLC

For a complete wiring diagram, **refer to appropriate SYSTEM WIRING DIAGRAMS article** .

NOTE: **The Electronic Stability Control (ESC) may also be referred to as Electronic Stability Program (ESP) depending on the vehicle model year and configuration. Certain components may also reference ESP, ESC, or use the traction control**

symbol.

WHEN MONITORED:

With the ignition on, no system under voltage or over voltage condition present, no open or shorted wheel speed sensor DTC's set, vehicle not under high acceleration, and vehicle speed greater than 0.

SET CONDITION:

This DTC will set if either one wheel is sensed above a predetermined range for 5000 msec while the other wheels are below 20% of maximum velocity of all wheels OR if more than one wheel is sensed at below 20% of maximum velocity of all wheels while at least one wheel is sensed above a predetermined range. The condition must exist for two minutes for this DTC to set.

If the number of missing sensors changes at any update, the fault monitor is reset.

POSSIBLE CAUSES

Possible Causes
(B9) LEFT FRONT WHEEL SPEED SENSOR SUPPLY CIRCUIT SHORT TO GROUND
(B8) LEFT FRONT WHEEL SPEED SENSOR SIGNAL CIRCUIT SHORT TO GROUND
(B9) LEFT FRONT WHEEL SPEED SENSOR SUPPLY CIRCUIT FOR AN OPEN
(B8) LEFT FRONT WHEEL SPEED SENSOR SIGNAL CIRCUIT FOR AN OPEN
(B9) LEFT FRONT WHEEL SPEED SENSOR SUPPLY CIRCUIT FOR A SHORT TO VOLTAGE
(B8) LEFT FRONT WHEEL SPEED SENSOR SIGNAL CIRCUIT FOR A SHORT TO VOLTAGE
(B9) LEFT FRONT WHEEL SPEED SENSOR SUPPLY CIRCUIT SHORTED TO THE (B8) LEFT FRONT WHEEL SPEED SENSOR SIGNAL CIRCUIT
TONE WHEEL
EXCESSIVE LEFT FRONT WHEEL SPEED SENSOR AIR GAP
WHEEL BEARING
LEFT FRONT WHEEL SPEED SENSOR (WSS)
ANTILOCK BRAKE SYSTEM (ABS) MODULE

DIAGNOSTIC TEST

1. **DTC IS ACTIVE**
    1. Ignition on, engine not running.
    2. With the scan tool, clear DTC's.
    3. Turn the ignition off to the lock position.
    4. Ignition on, engine not running.
    5. With the scan tool, select View DTC's.

    Is the status Active for this DTC?

Yes

- Go To 2.

No

- The condition that caused the symptom is currently not present. Inspect the related wiring for a possible intermittent condition. Look for any chafed, pierced, pinched, or partially broken wires.
- Perform the ABS INTERMITTENT CONDITION diagnostic procedure. Refer to **ABS INTERMITTENT CONDITION**.

2. **WHEEL SPEED SENSOR INSPECTION**
   1. Turn the ignition off to the lock position.
   2. Inspect the Wheel Speed Sensor for proper mounting.
   3. Inspect the Wheel Speed Sensor harness and connector.
   4. Inspect the Wheel Speed Sensor for excessive debris on the sensor.

   Were any problems found?

   Yes

   - Repair as necessary in accordance with the Service Information.
   - Perform the ABS VERIFICATION TEST. Refer to **ABS VERIFICATION TEST**.

   No

   - Go To 3.

3. **TONE WHEEL DAMAGED/MISSING**
   1. Inspect the Tone Wheel in accordance with the Service Information.

   NOTE: The Tone Wheel Teeth should be perfectly square, not bent or nicked.

   Were any problems found?

   Yes

   - Replace the Tone Wheel in accordance with the Service Information.
   - Perform the ABS VERIFICATION TEST. Refer to **ABS VERIFICATION TEST**.

   No

   - Go To 4.

4. **EXCESSIVE WHEEL SPEED SENSOR AIR GAP**
   1. Measure the Wheel Speed Sensor Air Gap in accordance with the Service Information.

Were any problems found?

Yes

- Repair as necessary in accordance with the Service Information.
- Perform the ABS VERIFICATION TEST. Refer to **ABS VERIFICATION TEST**.

No

- Go To 5.

5. **WHEEL BEARING LOOSE/BINDING**
   1. Inspect the wheel bearings for excessive run out or improper clearance in accordance with the Service Information.

   Were any problems found?

   Yes

   - Repair as necessary in accordance with the Service Information.
   - Perform the ABS VERIFICATION TEST. Refer to **ABS VERIFICATION TEST**.

   No

   - Go To 6.

6. **CHECK (B9) LEFT FRONT WHEEL SPEED SENSOR SUPPLY CIRCUIT VOLTAGE**

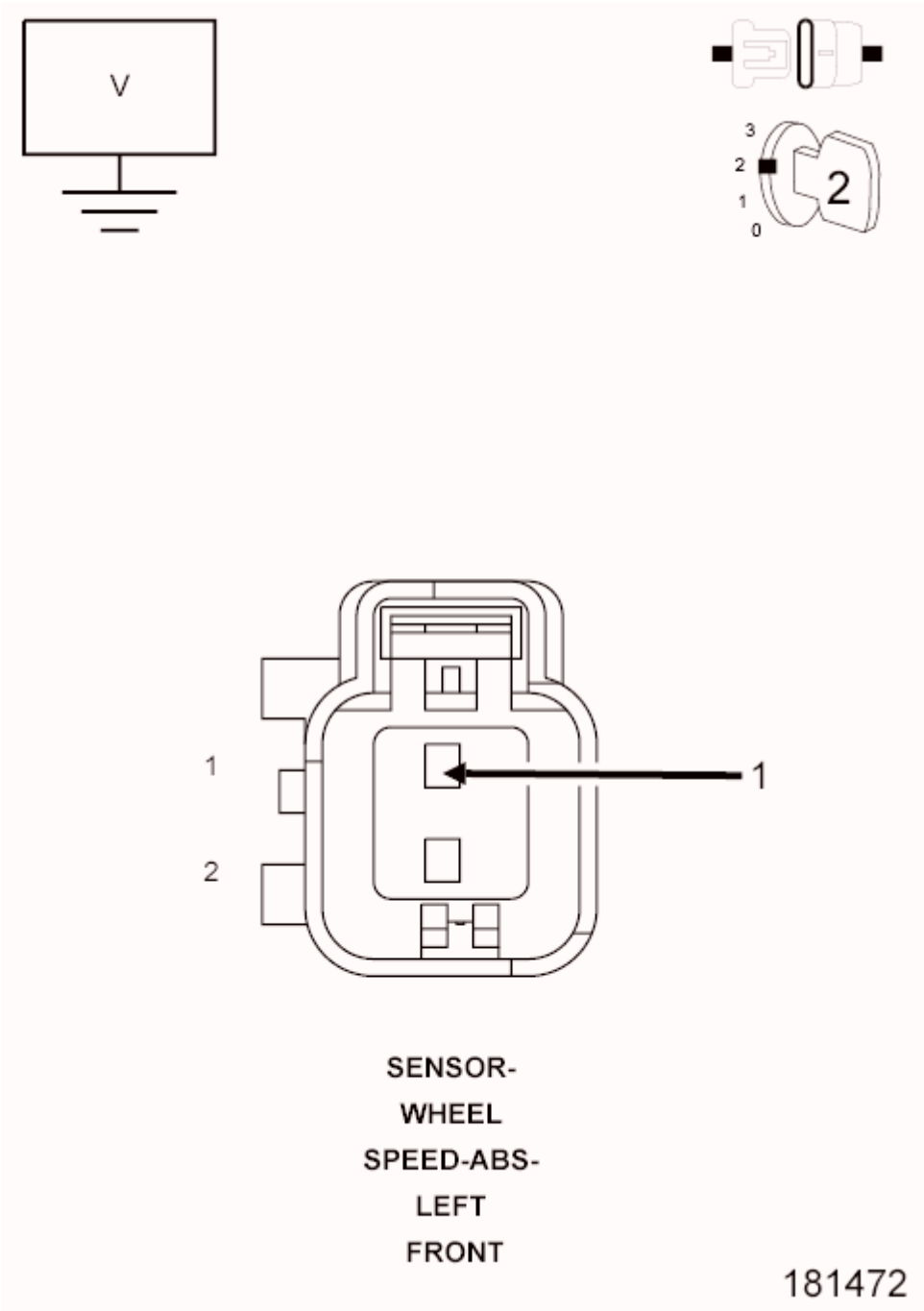

Fig. 33: Measuring Left Front Wheel Speed Sensor Supply Circuit Voltage
Courtesy of CHRYSLER GROUP, LLC

1. Disconnect the Left Front Wheel Speed Sensor harness connector.
2. Turn the ignition on.
3. Measure the voltage between the (B9) Left Front Wheel Speed Sensor Supply circuit and ground.

   Is the voltage above 10 volts?

Yes

- Go To 7.

No

- Go To 9.

7. **(B9) LEFT FRONT WHEEL SPEED SENSOR SUPPLY CIRCUIT FOR A SHORT TO VOLTAGE**

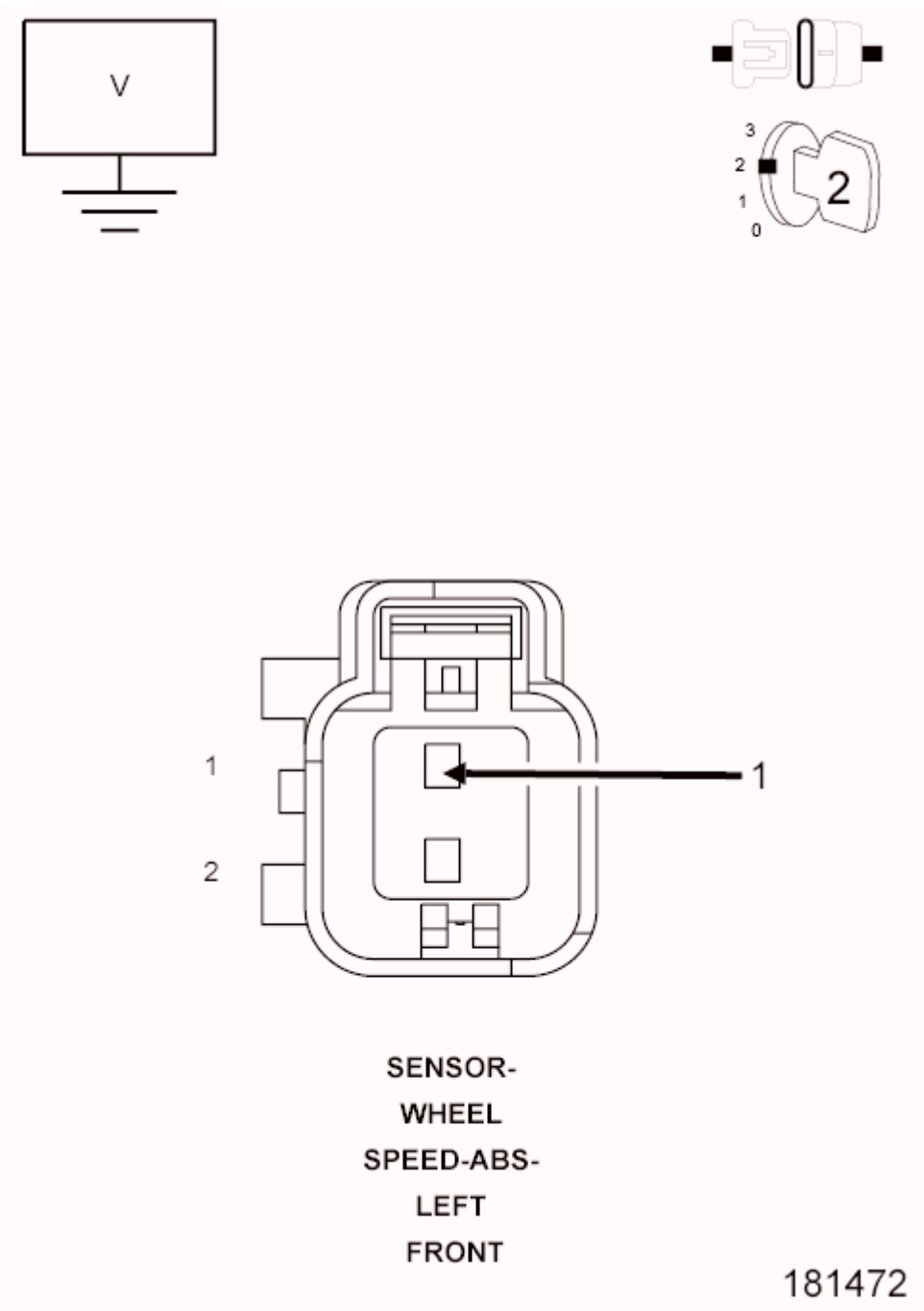

Fig. 34: Measuring Left Front Wheel Speed Sensor Supply Circuit Voltage
Courtesy of CHRYSLER GROUP, LLC

1. Turn the ignition off to the lock position.
2. Disconnect the ABS Module harness connector.
3. Ignition on, engine not running.
4. Measure the voltage of the (B9) Left Front Wheel Speed Sensor Supply circuit at the Left Front Wheel Speed Sensor harness connector.

Is there any voltage present?

Yes

- Repair (B9) Left Front Wheel Speed Sensor Supply circuit for a short to voltage.
- Perform the ABS VERIFICATION TEST. Refer to **ABS VERIFICATION TEST**.

No

- Go To 8.

8. **(B8) LEFT FRONT WHEEL SPEED SENSOR SIGNAL CIRCUIT FOR A SHORT TO GROUND**

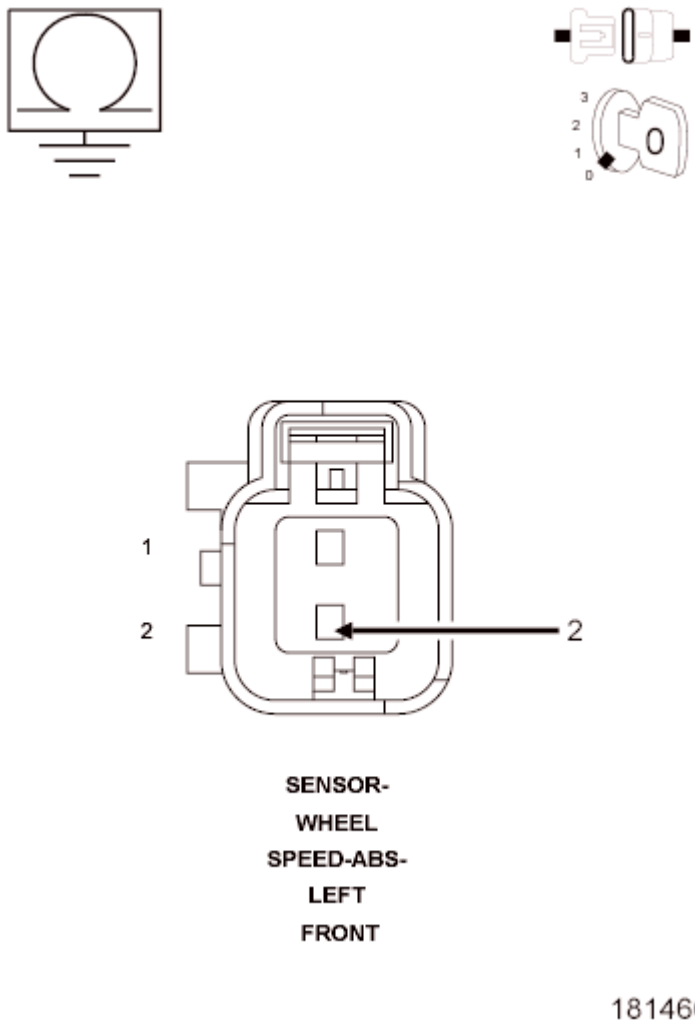

Fig. 35: Checking Front Wheel Speed Sensor Circuit For A Short To Ground
Courtesy of CHRYSLER GROUP, LLC

1. Turn the ignition off.
2. Measure the resistance between the (B8) Left Front Wheel Speed Sensor Signal circuit and ground.

Is the resistance above 5.0 Ohms?

Yes

- Replace the Left Front Wheel Speed Sensor in accordance with the Service Information.
- Perform the ABS VERIFICATION TEST. Refer to **ABS VERIFICATION TEST**.

No

- Repair the (B8) Left Front Wheel Speed Sensor Signal circuit for a short to ground.
- Perform the ABS VERIFICATION TEST. Refer to **ABS VERIFICATION TEST**.

9. **(B9) LEFT FRONT WHEEL SPEED SENSOR SUPPLY CIRCUIT FOR A SHORT TO GROUND**

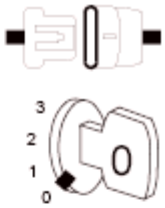

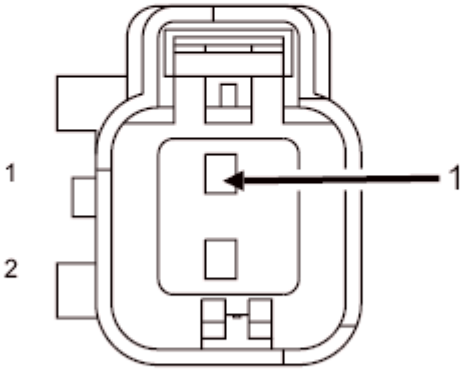

SENSOR-
WHEEL
SPEED-ABS-
LEFT
FRONT

181464

Fig. 36: Checking Left Front Wheel Speed Sensor Supply Circuit For A Short To Ground
Courtesy of CHRYSLER GROUP, LLC

1. Turn the ignition off.
2. Disconnect the ABS Module harness connector.
3. Measure the resistance between the (B9) Left Front Wheel Speed Sensor Supply circuit and ground.

   Is the resistance above 5.0 Ohms?

   Yes

   - Go To 10.

   No

   - Repair the (B9) Left Front Wheel Speed Sensor Supply circuit for a short to ground.
   - Perform the ABS VERIFICATION TEST. Refer to **ABS VERIFICATION TEST**.

10. **(B9) LEFT FRONT WHEEL SPEED SENSOR SUPPLY CIRCUIT FOR AN OPEN**

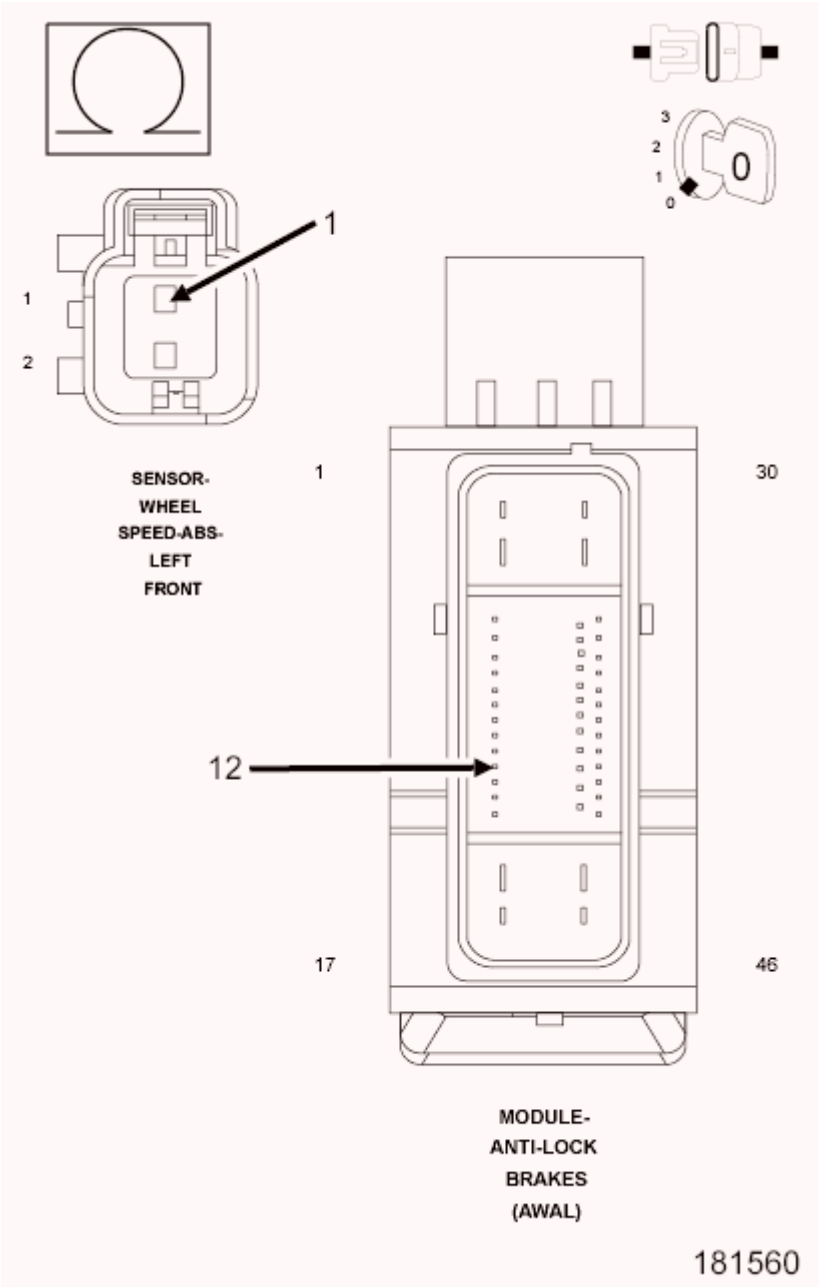

Fig. 37: Checking Left Front Wheel Speed Sensor Supply Circuit For An Open
Courtesy of CHRYSLER GROUP, LLC

1. Measure the resistance of the (B9) Left Front Wheel Speed Sensor Supply circuit between the Left Front Wheel Speed Sensor harness connector and the ABS harness connector.

   Is the resistance below 5 Ohms?

   Yes

   - Go To 11.

No

- Repair the open (B9) Left Front Wheel Speed Sensor Supply circuit.
- Perform the ABS VERIFICATION TEST. Refer to **ABS VERIFICATION TEST**.

11. **(B8) LEFT FRONT WHEEL SPEED SENSOR SIGNAL CIRCUIT FOR AN OPEN**

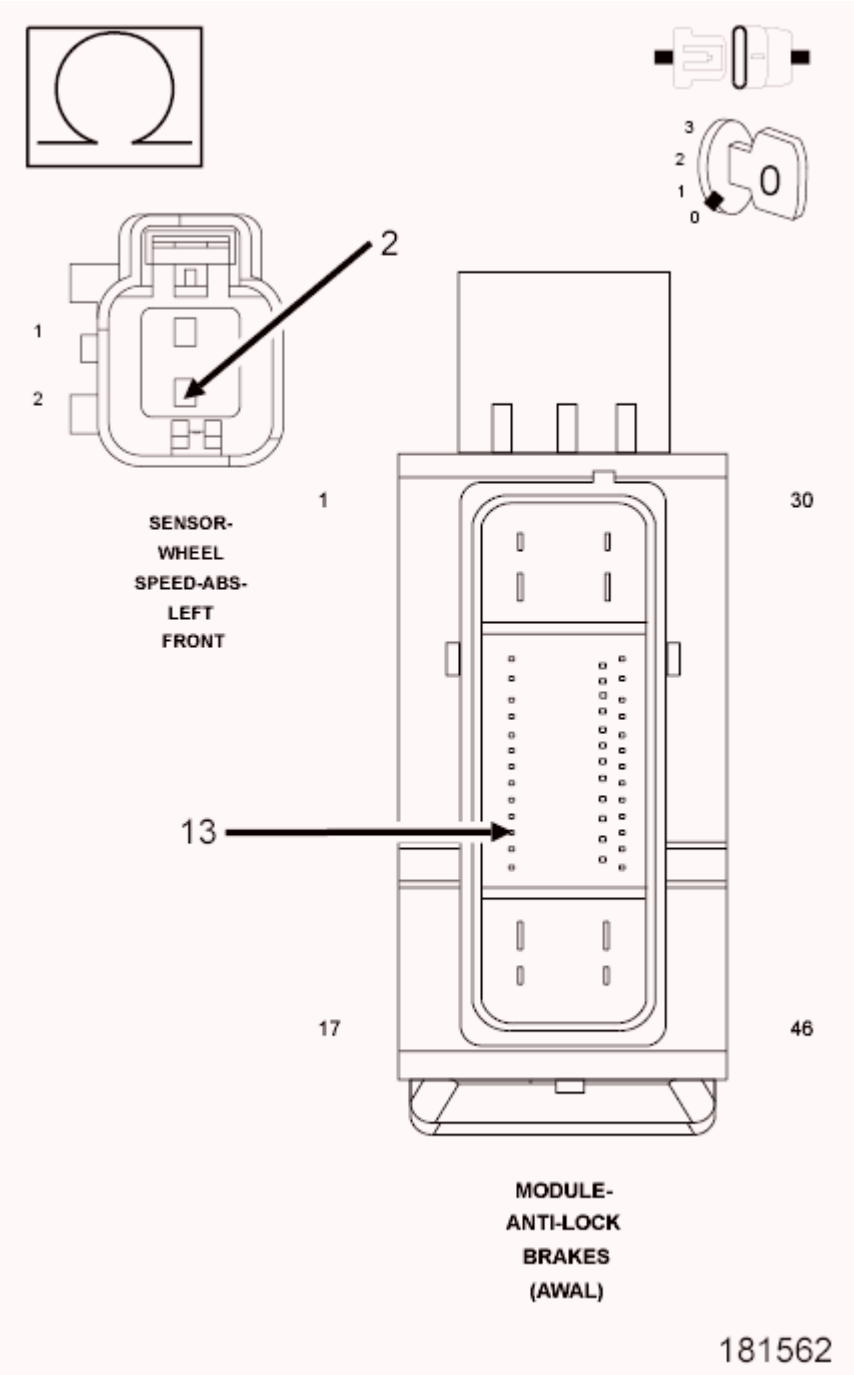

Fig. 38: Checking Left Front Wheel Speed Sensor Signal Circuit For An Open
Courtesy of CHRYSLER GROUP, LLC

1. Measure the resistance of the (B8) Left Front Wheel Speed Sensor Signal circuit between the Left Front Wheel Speed Sensor harness connector and the ABS harness connector.

   Is the resistance below 5 Ohms?

   Yes

   - Go To 12.

   No

   - Repair the open (B8) Left Front Wheel Speed Sensor Signal circuit.
   - Perform the ABS VERIFICATION TEST. Refer to **ABS VERIFICATION TEST**.

12. **(B8) LEFT FRONT WHEEL SPEED SENSOR SIGNAL CIRCUIT FOR A SHORT TO VOLTAGE**

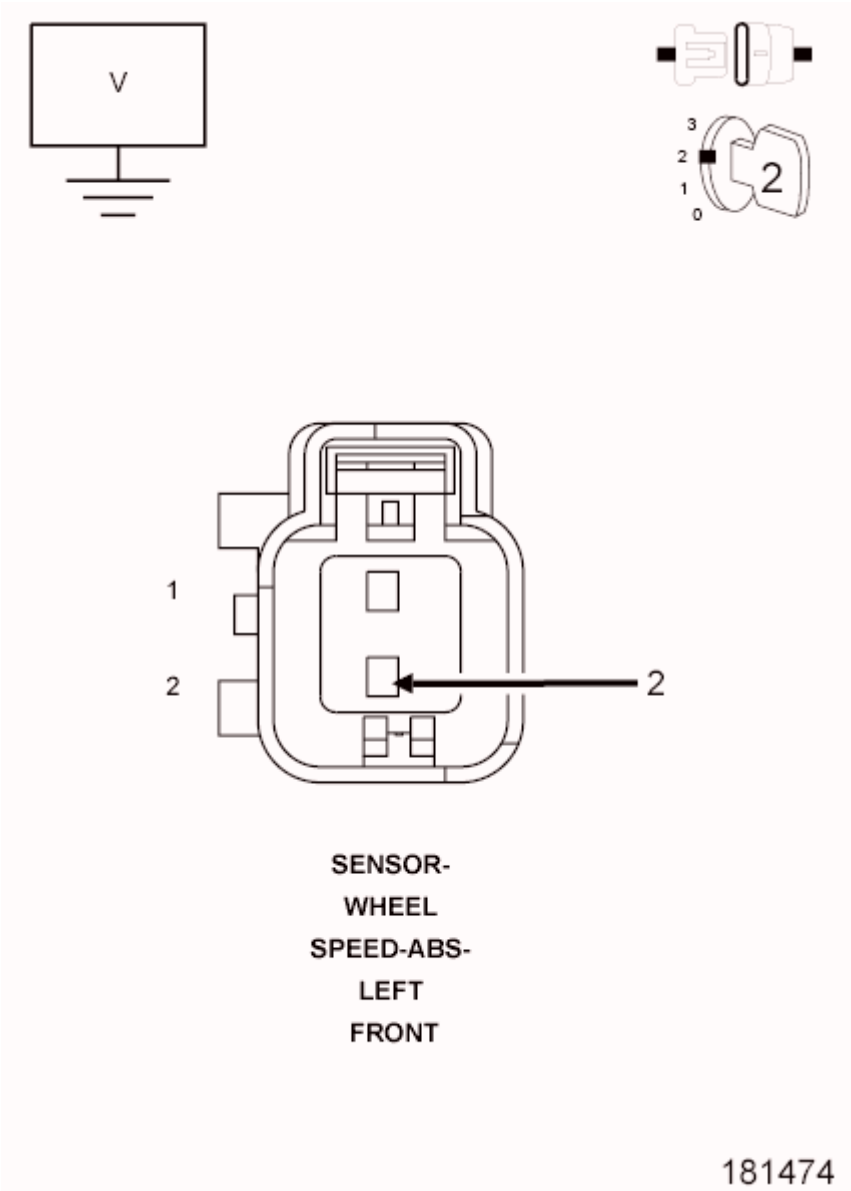

Fig. 39: Checking Left Front Wheel Speed Sensor Signal Circuit For A Short To Voltage
Courtesy of CHRYSLER GROUP, LLC

1. Turn the ignition on.
2. Measure the voltage of the (B8) Left Front Wheel Speed Sensor Signal circuit at the Left Front Wheel Speed Sensor harness connector.

   Is there any voltage present?

   Yes

   - Repair the (B8) Left Front Wheel Speed Sensor Signal circuit for a short to voltage.
   - Perform the ABS VERIFICATION TEST. Refer to **ABS VERIFICATION TEST**.

No

- Go To 13.

13. **(B9) LEFT FRONT WHEEL SPEED SENSOR SUPPLY CIRCUIT SHORTED TO THE (B8) LEFT FRONT WHEEL SPEED SENSOR SIGNAL CIRCUIT**

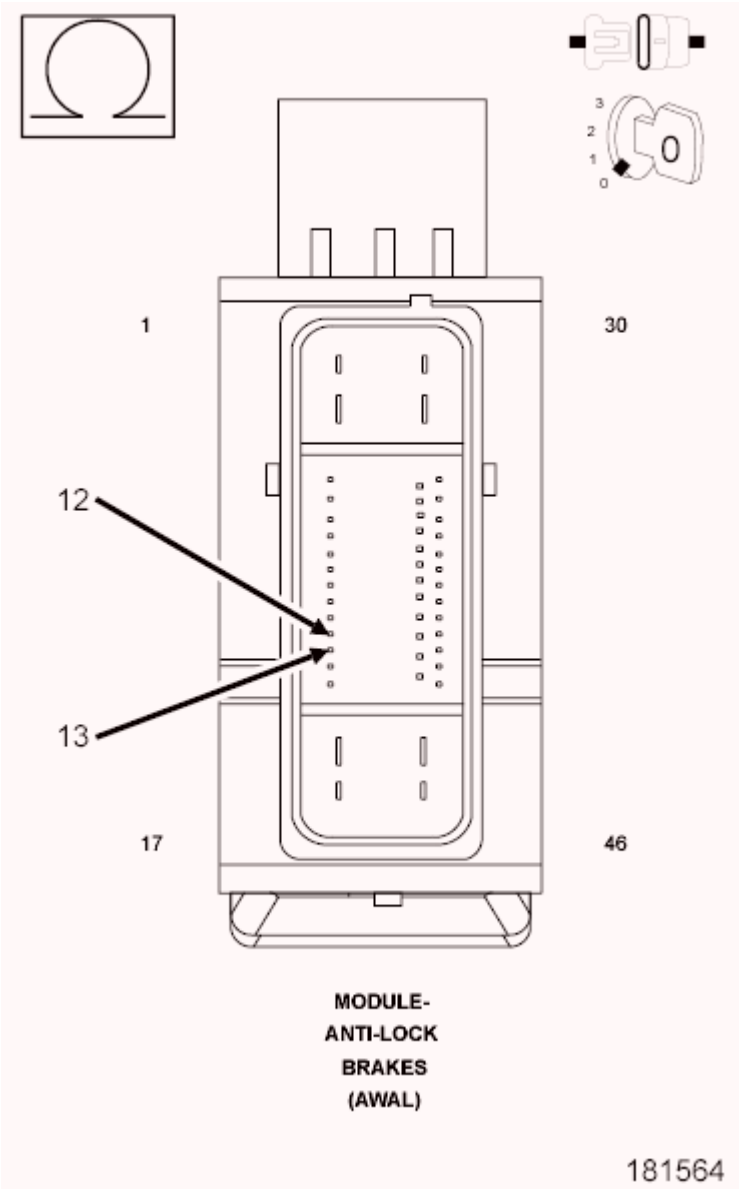

Fig. 40: Checking Left Front Wheel Speed Sensor Supply Circuit For A Short To The Left Front Wheel Speed Sensor Signal Circuit
Courtesy of CHRYSLER GROUP, LLC

1. Turn the ignition off to the lock position.
2. Measure the resistance between the (B9) Left Front Wheel Speed Sensor Supply circuit and the (B8) Left Front Wheel Speed Sensor Signal circuit at the ABS Module harness connector.

Is the resistance below 5.0 Ohms?

Yes

- Repair (B9) Left Front Wheel Speed Sensor Supply circuit for a short to the (B8) Left Front Wheel Speed Sensor Signal circuit.
- Perform the ABS VERIFICATION TEST. Refer to **ABS VERIFICATION TEST**.

No

- Replace the Antilock Brakes Module in accordance with the Service Information.
- Perform the ABS VERIFICATION TEST. Refer to **ABS VERIFICATION TEST**.

C1015-RIGHT FRONT WHEEL SPEED SENSOR CIRCUIT

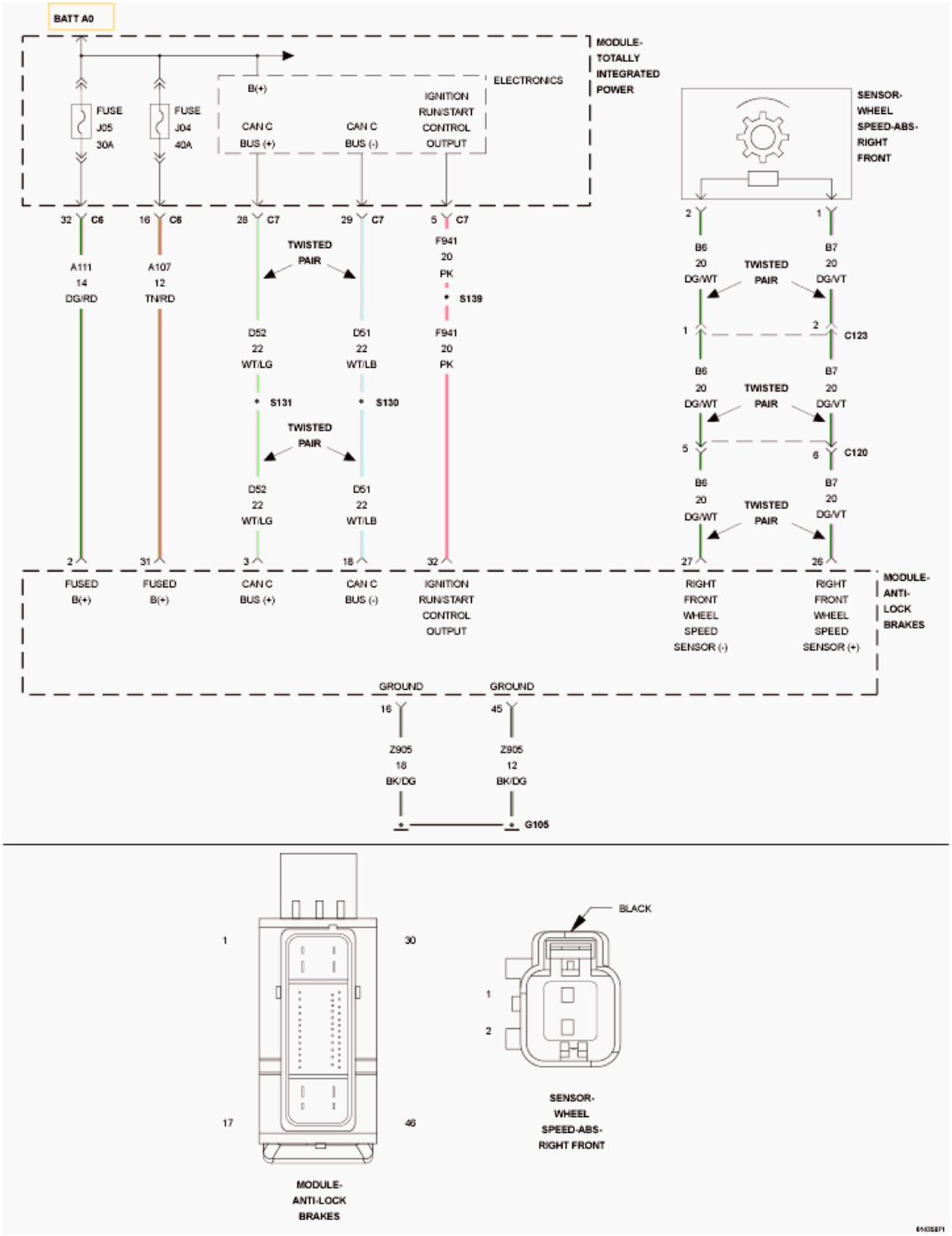

Fig. 41: Right Front Wheel Speed Sensor Wiring Diagram
Courtesy of CHRYSLER GROUP, LLC

For a complete wiring diagram, **refer to appropriate SYSTEM WIRING DIAGRAMS article** .

NOTE: The Electronic Stability Control (ESC) may also be referred to as Electronic

Stability Program (ESP) depending on the vehicle model year and configuration. Certain components may also reference ESP, ESC, or use the traction control symbol.

WHEN MONITORED:

With the ignition on and no system under voltage or over voltage condition present.

SET CONDITION:

If the measured wheel speed sensor feedback voltage is less than.304 of a volt, the sensor is considered open.

If the measured wheel speed sensor feedback voltage is greater than 1.39 volts, or if a sensor over current condition is detected, the sensor is considered shorted.

If a shorted or open condition is present for more than 100 msec, the DTC will set.

POSSIBLE CAUSES

Possible Causes
(B7) RIGHT FRONT WHEEL SPEED SENSOR SUPPLY CIRCUIT FOR A SHORT TO GROUND
(B6) RIGHT FRONT WHEEL SPEED SENSOR SIGNAL CIRCUIT FOR A SHORT TO GROUND
(B7) RIGHT FRONT WHEEL SPEED SENSOR SUPPLY CIRCUIT FOR AN OPEN
(B6) RIGHT FRONT WHEEL SPEED SENSOR SIGNAL CIRCUIT FOR AN OPEN
(B7) RIGHT FRONT WHEEL SPEED SENSOR SUPPLY CIRCUIT FOR A SHORT TO VOLTAGE
(B6) RIGHT FRONT WHEEL SPEED SENSOR SIGNAL CIRCUIT FOR A SHORT TO VOLTAGE
(B7) RIGHT FRONT WHEEL SPEED SENSOR SUPPLY CIRCUIT SHORTED TO THE (B6) RIGHT FRONT WHEEL SPEED SENSOR SIGNAL CIRCUIT
RIGHT FRONT WHEEL SPEED SENSOR (WSS)
ANTILOCK BRAKE SYSTEM (ABS) MODULE

DIAGNOSTIC TEST

1. **DTC IS ACTIVE**
    1. Ignition on, engine not running.
    2. With the scan tool, clear DTC's.
    3. Turn the ignition off to the lock position.
    4. Ignition on, engine not running.
    5. With the scan tool, select View DTC's.

    Is the status Active for this DTC?

    Yes

- Go To 2.

No

- The condition that caused the symptom is currently not present. Inspect the related wiring for a possible intermittent condition. Look for any chafed, pierced, pinched, or partially broken wires.
- Perform the ABS INTERMITTENT CONDITION diagnostic procedure. Refer to **ABS INTERMITTENT CONDITION**.

2. **WHEEL SPEED SENSOR INSPECTION**
   1. Turn the ignition off to the lock position.
   2. Inspect the Wheel Speed Sensor for proper mounting.
   3. Inspect the Wheel Speed Sensor harness and connector.
   4. Inspect the Wheel Speed Sensor for excessive debris on the sensor.

   Were any problems found?

   Yes

   - Repair as necessary in accordance with the Service Information.
   - Perform the ABS VERIFICATION TEST. Refer to **ABS VERIFICATION TEST**.

   No

   - Go To 3.

3. **CHECK (B7) RIGHT FRONT WHEEL SPEED SENSOR SUPPLY CIRCUIT VOLTAGE**

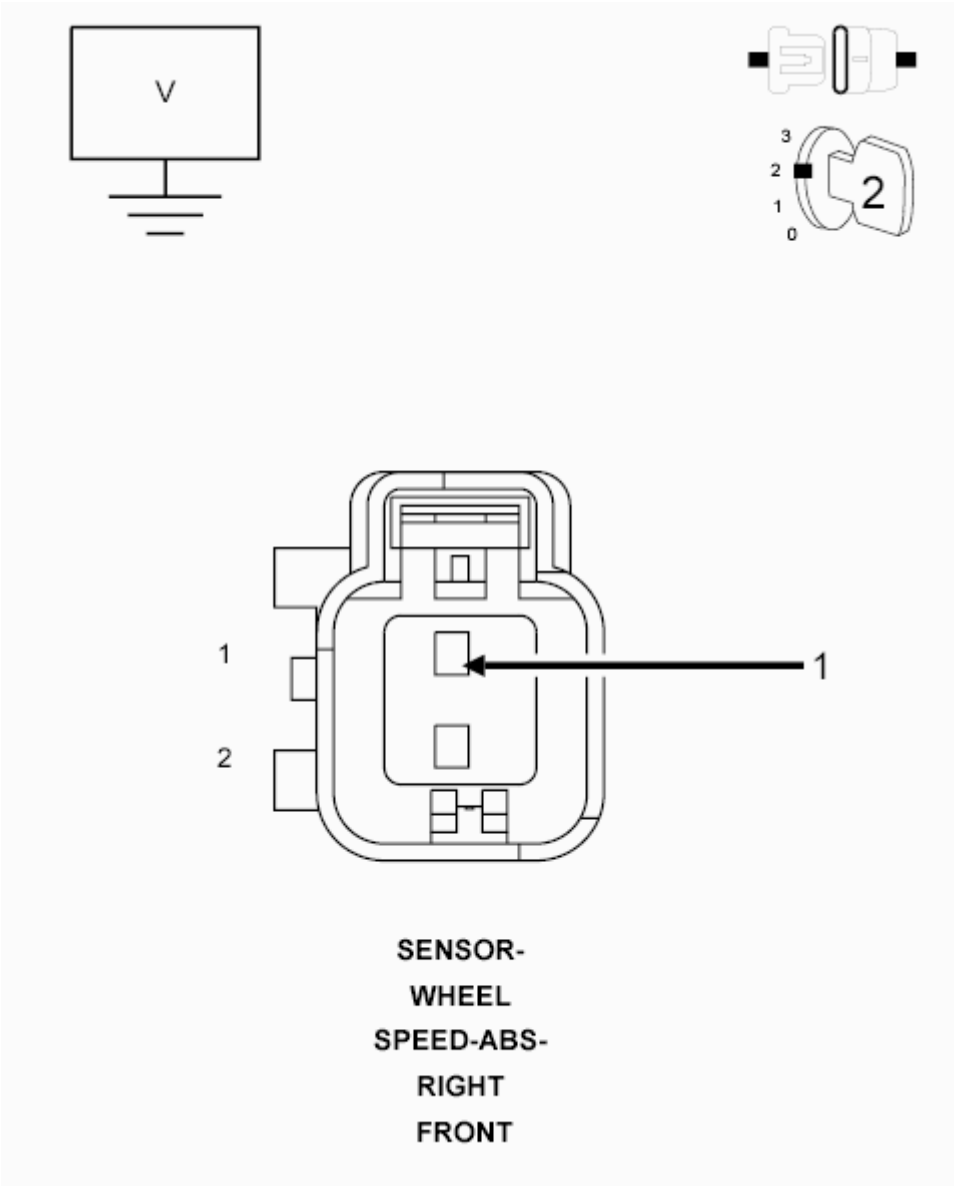

Fig. 42: Measuring Right Front Wheel Speed Sensor Supply Circuit Voltage
Courtesy of CHRYSLER GROUP, LLC

1. Disconnect the Right Front Wheel Speed Sensor harness connector.
2. Turn the ignition on.
3. Measure the voltage between the (B7) Right Front Wheel Speed Sensor Supply circuit and ground.

   Is the voltage above 10 volts?

   Yes

   - Go To 4.

   No

- Go To 6.

4. **(B7) RIGHT FRONT WHEEL SPEED SENSOR SUPPLY CIRCUIT FOR A SHORT TO VOLTAGE**

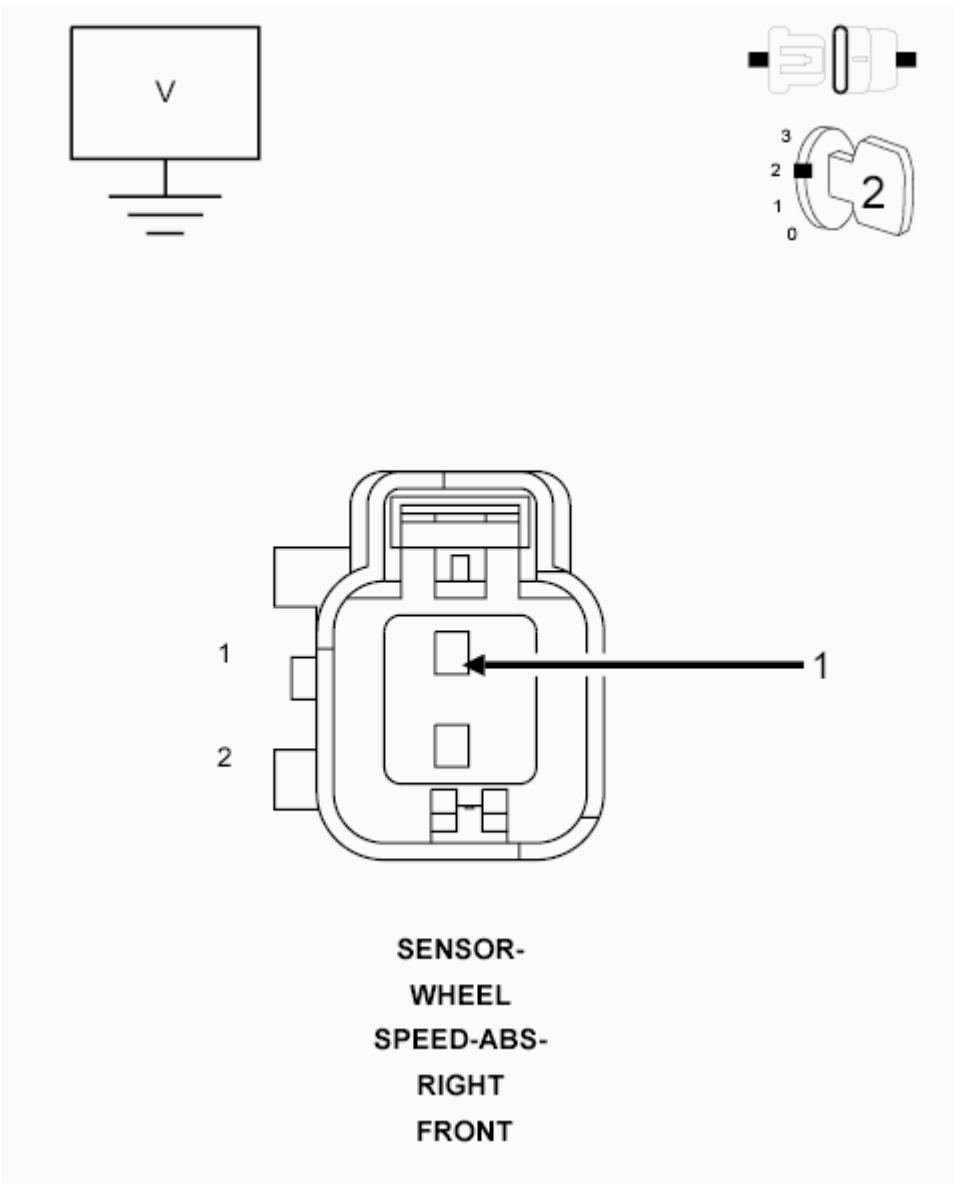

Fig. 43: Measuring Right Front Wheel Speed Sensor Supply Circuit Voltage
Courtesy of CHRYSLER GROUP, LLC

1. Turn the ignition off to the lock position.
2. Disconnect the ABS Module harness connector.
3. Ignition on, engine not running.
4. Measure the voltage of the (B7) Right Front Wheel Speed Sensor Supply circuit at the Right Front Wheel Speed Sensor harness connector.

Is there any voltage present?

Yes

- Repair (B7) Right Front Wheel Speed Sensor Supply circuit for a short to voltage.
- Perform the ABS VERIFICATION TEST. Refer to **ABS VERIFICATION TEST**.

No

- Go To 5.

5. **(B6) RIGHT FRONT WHEEL SPEED SENSOR SIGNAL CIRCUIT FOR A SHORT TO GROUND**

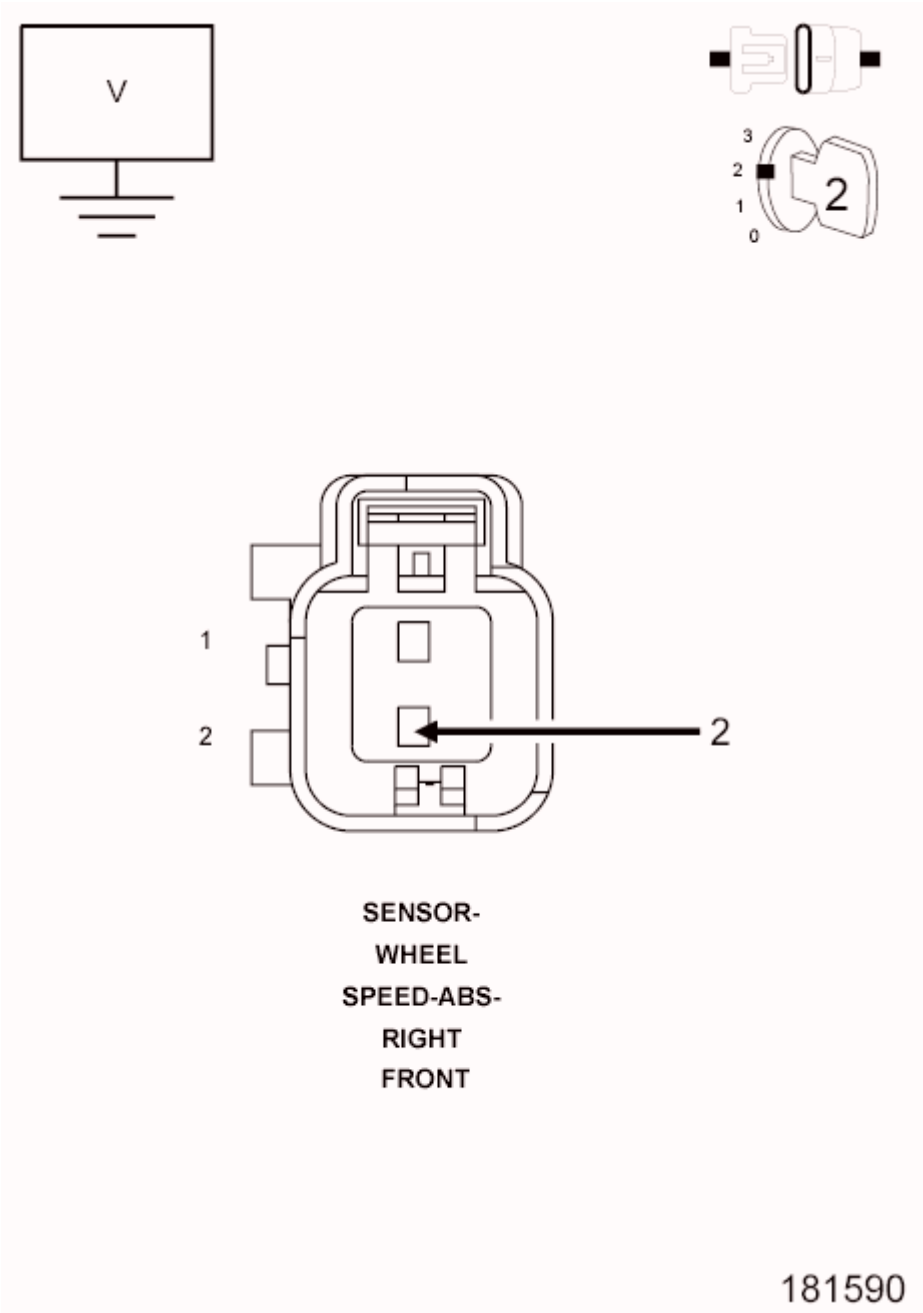

Fig. 44: Checking Right Front Wheel Speed Sensor Signal Circuit For A Short To Ground
Courtesy of CHRYSLER GROUP, LLC

1. Turn the ignition off.
2. Measure the resistance between the (B6) Right Front Wheel Speed Sensor Signal circuit and ground.

   Is the resistance above 5.0 Ohms?

   Yes

- Replace the Right Front Wheel Speed Sensor in accordance with the Service Information.
- Perform the ABS VERIFICATION TEST. Refer to **ABS VERIFICATION TEST**.**ABS VERIFICATION TEST**.

No

- Repair the (B6) Right Front Wheel Speed Sensor Signal circuit for a short to ground.
- Perform the ABS VERIFICATION TEST. Refer to **ABS VERIFICATION TEST**.**ABS VERIFICATION TEST**.

6. **(B7) RIGHT FRONT WHEEL SPEED SENSOR SUPPLY CIRCUIT FOR A SHORT TO GROUND**

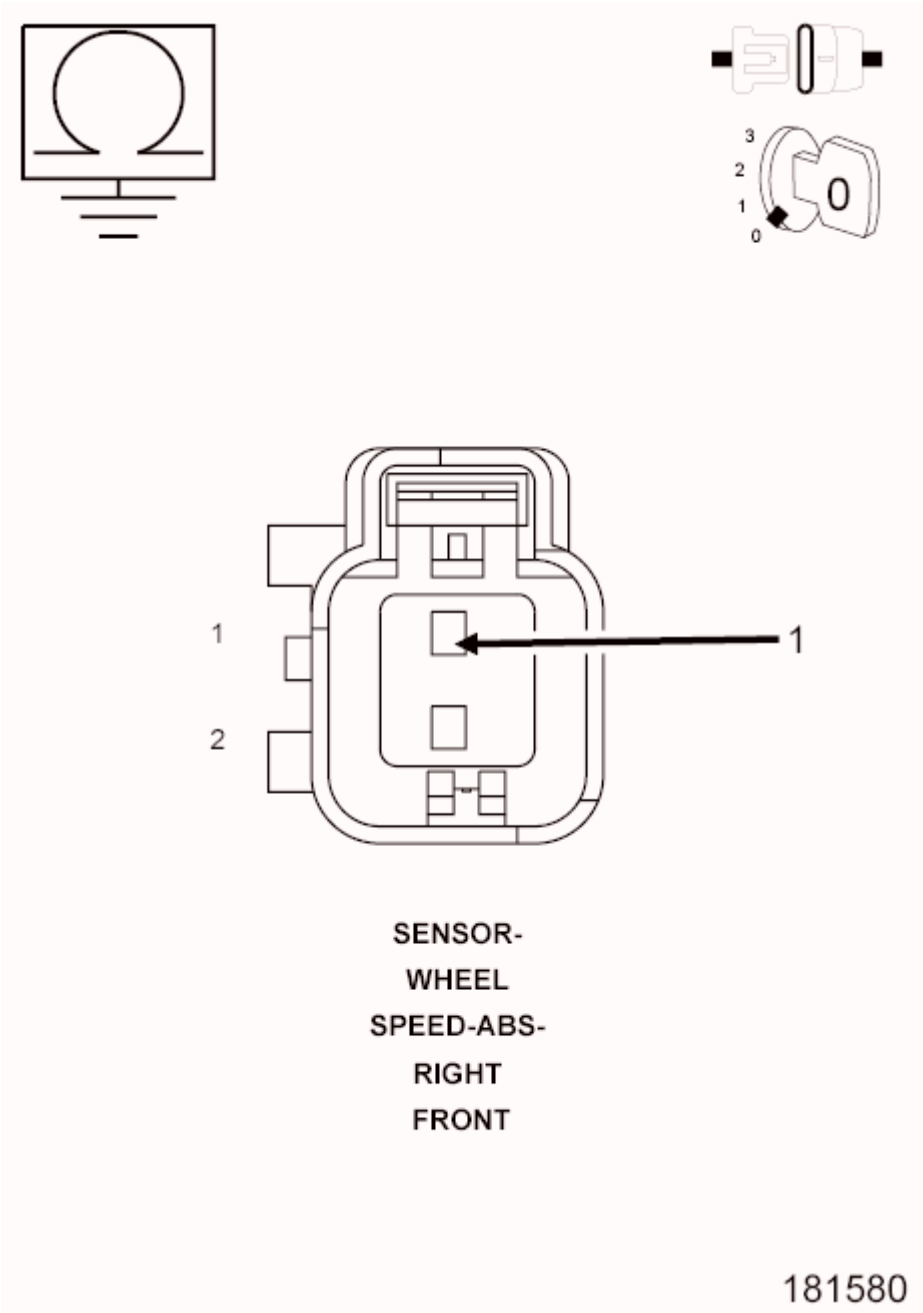

Fig. 45: Checking Right Front Wheel Speed Sensor Supply Circuit For A Short To Ground
Courtesy of CHRYSLER GROUP, LLC

1. Turn the ignition off to the lock position.
2. Disconnect the ABS Module harness connector.
3. Measure the resistance between the (B7) Right Front Wheel Speed Sensor Supply circuit and ground.

   Is the resistance above 5.0 Ohms?

Yes

- Go To 7.

No

- Repair the (B7) Right Front Wheel Speed Sensor Supply circuit for a short to ground.
- Perform the ABS VERIFICATION TEST. Refer to **ABS VERIFICATION TEST**.

7. **(B7) RIGHT FRONT WHEEL SPEED SENSOR SUPPLY CIRCUIT FOR AN OPEN**

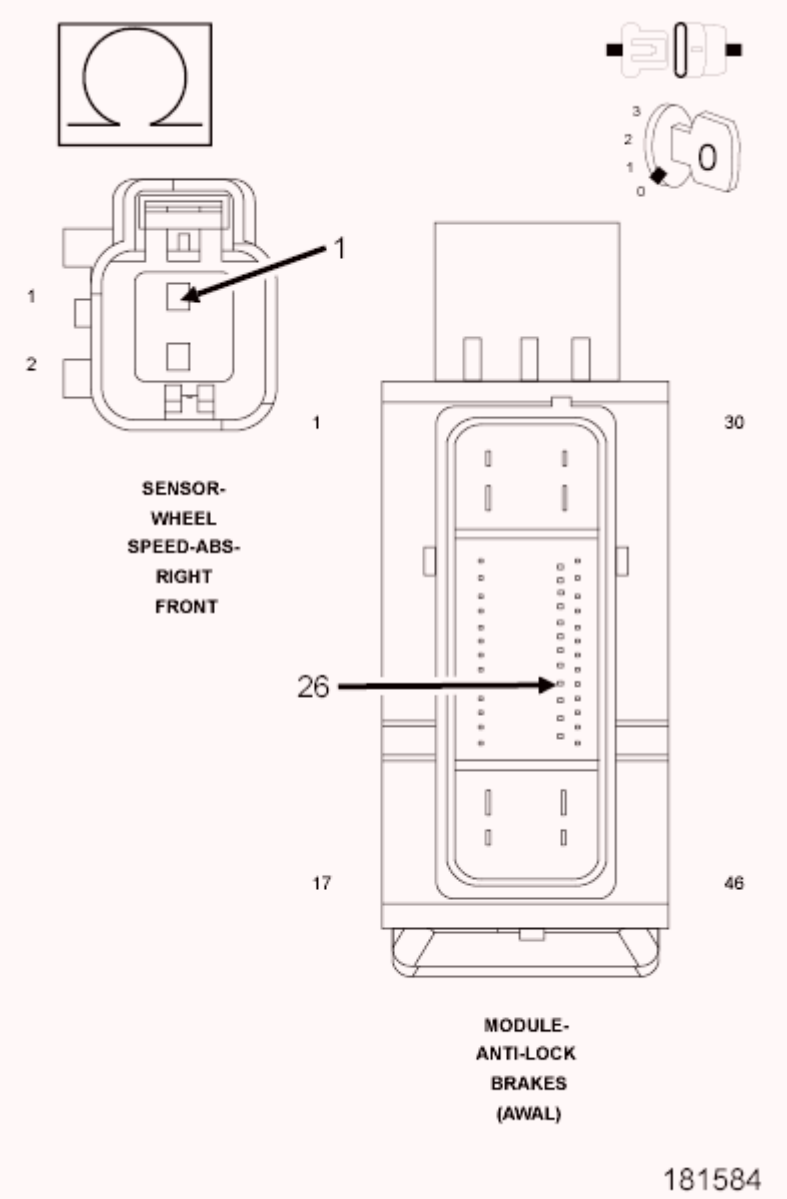

Fig. 46: Checking Right Front Wheel Speed Sensor Supply Circuit For An Open
Courtesy of CHRYSLER GROUP, LLC

1. Measure the resistance of the (B7) Right Front Wheel Speed Sensor Supply circuit between the ABS harness connector and the Right Front Wheel Speed Sensor harness connector.

   Is the resistance below 5 Ohms?

   Yes

   - Go To 8.

   No

   - Repair the open (B7) Right Front Wheel Speed Sensor Supply circuit.
   - Perform the ABS VERIFICATION TEST. Refer to **ABS VERIFICATION TEST**.

8. **(B6) RIGHT FRONT WHEEL SPEED SENSOR SIGNAL CIRCUIT FOR AN OPEN**

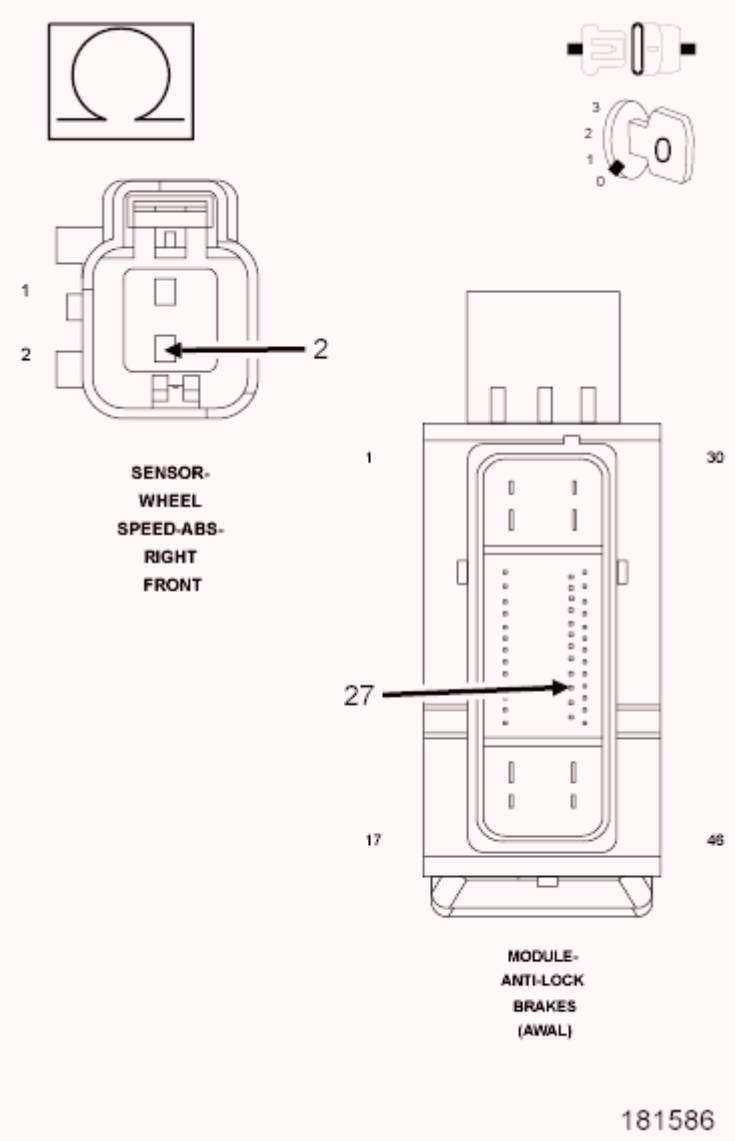

Fig. 47: Checking Front Wheel Speed Sensor Signal Circuit For An Open
Courtesy of CHRYSLER GROUP, LLC

1. Measure the resistance of the (B6) Right Front Wheel Speed Sensor Signal circuit between the ABS harness connector and the Right Front Wheel Speed Sensor harness connector.

   Is the resistance below 5 Ohms?

   Yes

   - Go To 9.

   No

   - Repair the open (B6) Right Front Wheel Speed Sensor Signal circuit.
   - Perform the ABS VERIFICATION TEST. Refer to **ABS VERIFICATION TEST**.

9. **(B6) RIGHT FRONT WHEEL SPEED SENSOR SIGNAL CIRCUIT FOR A SHORT TO VOLTAGE**

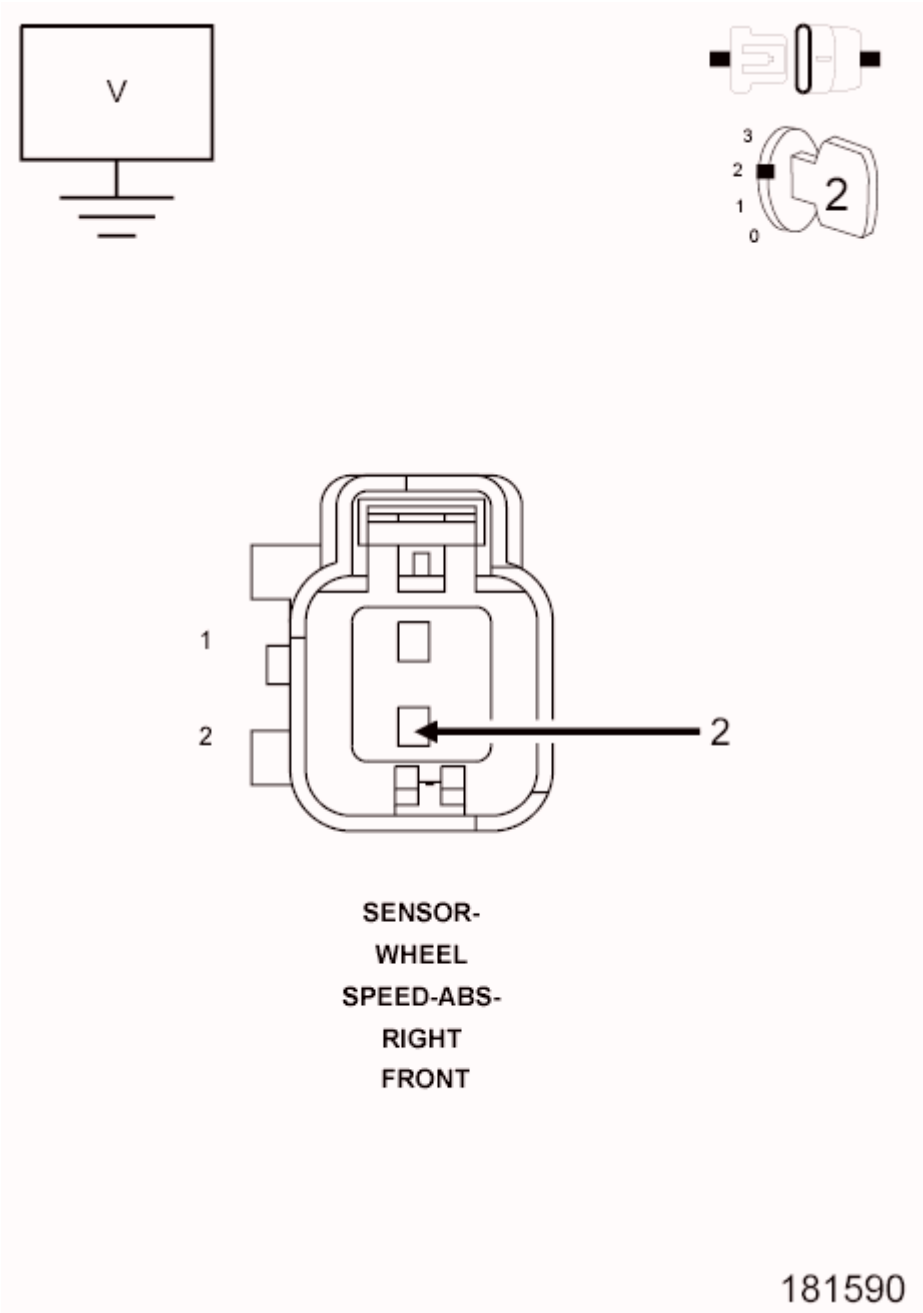

Fig. 48: Checking Right Front Wheel Speed Sensor Signal Circuit For A Short To Ground
Courtesy of CHRYSLER GROUP, LLC

1. Turn the ignition on.
2. Measure the voltage of the (B6) Right Front Wheel Speed Sensor Signal circuit at the Right Front Wheel Speed Sensor harness connector.

   Is there any voltage present?

   Yes

- Repair the (B6) Right Front Wheel Speed Sensor Signal circuit for a short to voltage.
- Perform the ABS VERIFICATION TEST. Refer to **ABS VERIFICATION TEST**.

No

- Go To 10.

10. **(B7) RIGHT FRONT WHEEL SPEED SENSOR SUPPLY CIRCUIT SHORTED TO THE (B6) RIGHT FRONT WHEEL SPEED SENSOR SIGNAL CIRCUIT**

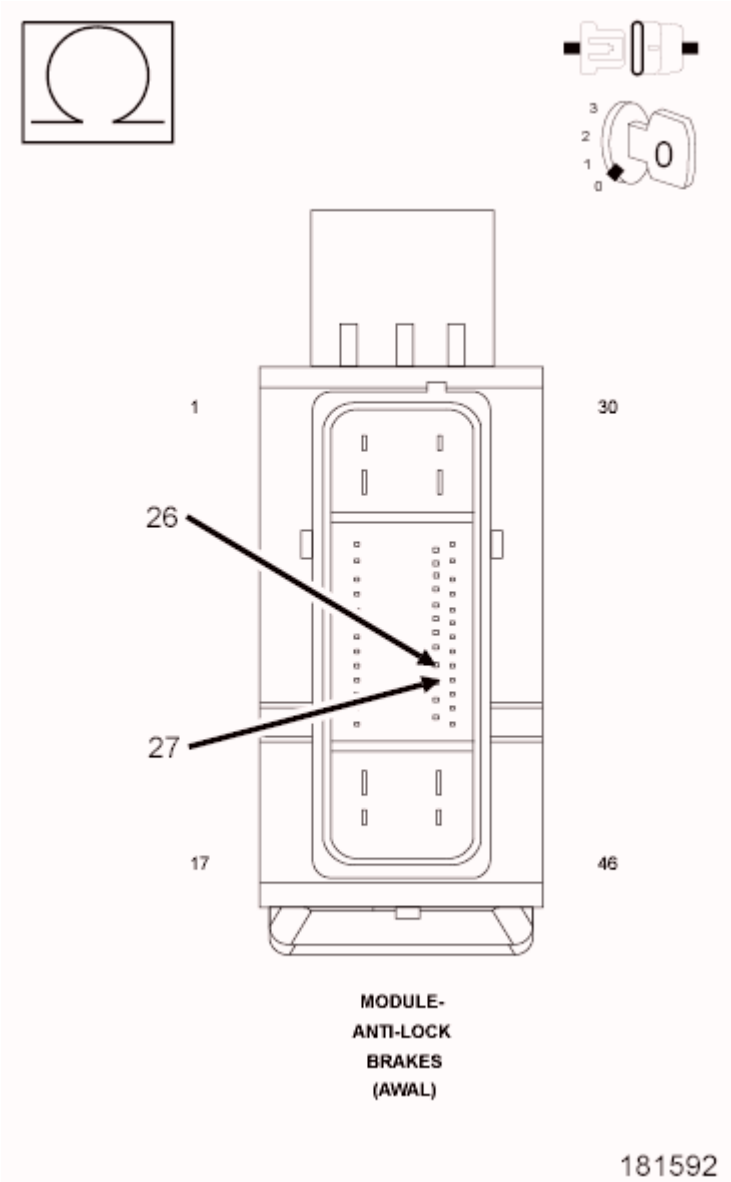

Fig. 49: Checking Right Front Wheel Speed Sensor Supply Circuit For A Short To The Right Front Wheel Speed Sensor Signal Circuit
Courtesy of CHRYSLER GROUP, LLC

1. Turn the ignition off to the lock position.

2. Measure the resistance between the (B7) Right Front Wheel Speed Sensor Supply circuit and the (B6) Right Front Wheel Speed Sensor Signal circuit at the ABS Module harness connector.

   Is the resistance below 5.0 Ohms?

   Yes

   - Repair (B7) Right Front Wheel Speed Sensor Supply circuit for a short to the (B6) Right Front Wheel Speed Sensor Signal circuit.
   - Perform the ABS VERIFICATION TEST. Refer to **ABS VERIFICATION TEST**.

   No

   - Replace the Antilock Brakes Module in accordance with the Service Information.
   - Perform the ABS VERIFICATION TEST. Refer to **ABS VERIFICATION TEST**.

C101C-RIGHT FRONT WHEEL SPEED SENSOR SIGNAL ERRATIC PERFORMANCE

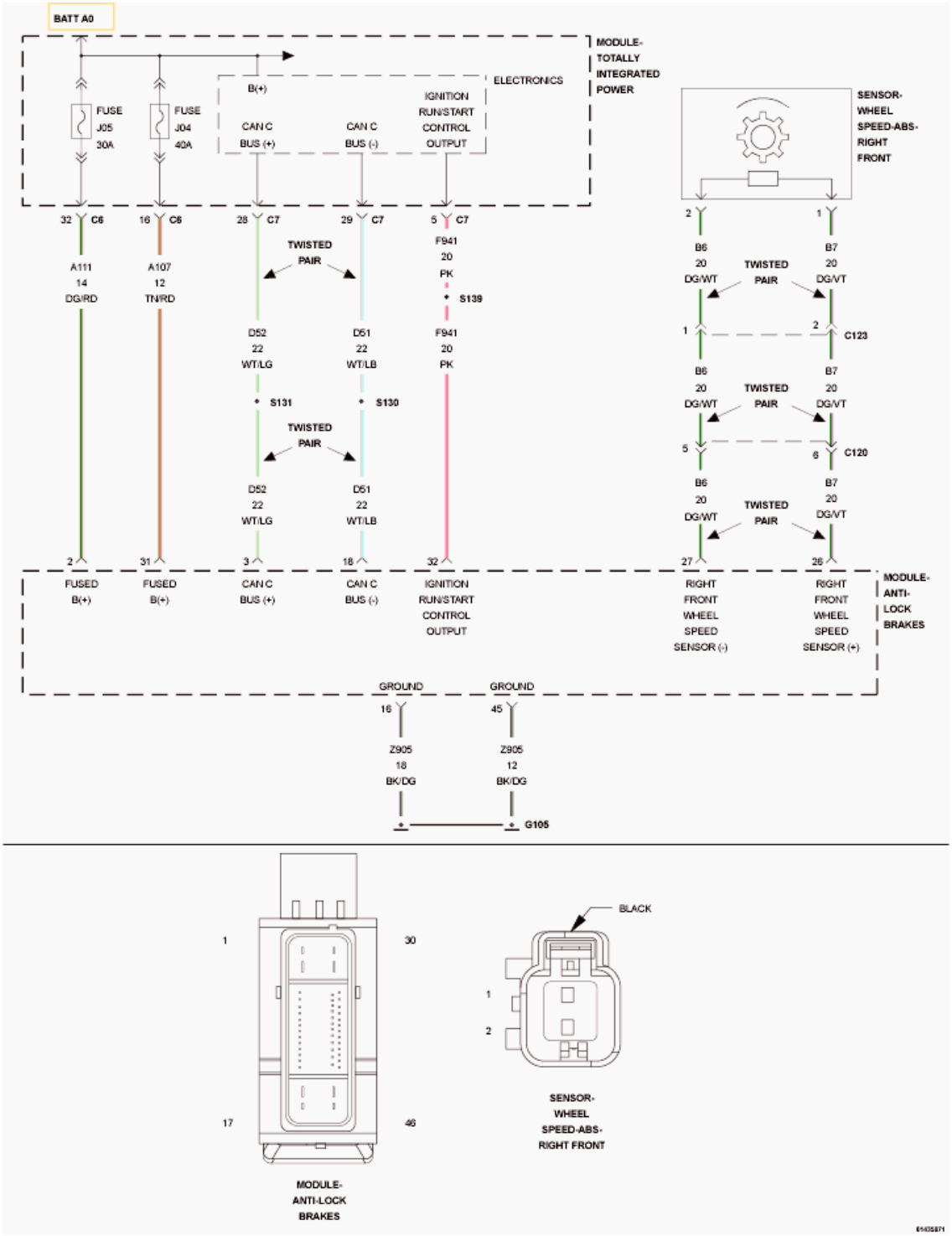

Fig. 50: Right Front Wheel Speed Sensor Wiring Diagram
Courtesy of CHRYSLER GROUP, LLC

For a complete wiring diagram, **refer to appropriate SYSTEM WIRING DIAGRAMS article** .

NOTE: The Electronic Stability Control (ESC) may also be referred to as Electronic

Stability Program (ESP) depending on the vehicle model year and configuration. Certain components may also reference ESP, ESC, or use the traction control symbol.

WHEN MONITORED:

With the ignition on and no system under voltage or over voltage condition present.

SET CONDITION:

Each time excessive wheel speed sensor acceleration or deceleration is detected, a fault counter increments. If the fault counter exceeds a specified value, the DTC will set.

POSSIBLE CAUSES

Possible Causes
(B7) RIGHT FRONT WHEEL SPEED SENSOR SUPPLY CIRCUIT SHORT TO GROUND
(B6) RIGHT FRONT WHEEL SPEED SENSOR SIGNAL CIRCUIT SHORT TO GROUND
(B7) RIGHT FRONT WHEEL SPEED SENSOR SUPPLY CIRCUIT FOR AN OPEN
(B6) RIGHT FRONT WHEEL SPEED SENSOR SIGNAL CIRCUIT FOR AN OPEN
(B7) RIGHT FRONT WHEEL SPEED SENSOR SUPPLY CIRCUIT FOR A SHORT TO VOLTAGE
(B6) RIGHT FRONT WHEEL SPEED SENSOR SIGNAL CIRCUIT FOR A SHORT TO VOLTAGE
(B7) RIGHT FRONT WHEEL SPEED SENSOR SUPPLY CIRCUIT SHORTED TO THE (B6) RIGHT FRONT WHEEL SPEED SENSOR SIGNAL CIRCUIT
TONE WHEEL
EXCESSIVE RIGHT FRONT WHEEL SPEED SENSOR AIR GAP
WHEEL BEARING
RIGHT FRONT WHEEL SPEED SENSOR (WSS)
ANTILOCK BRAKE SYSTEM (ABS) MODULE

DIAGNOSTIC TEST

1. **DTC IS ACTIVE**
    1. Ignition on, engine not running.
    2. With the scan tool, erase DTC's.
    3. Turn the ignition off to the lock position.
    4. Ignition on, engine not running.
    5. With the scan tool, select View DTC's.

    Is the status Active for this DTC?

    Yes

    - Go To 2.

No

- The condition that caused the symptom is currently not present. Inspect the related wiring for a possible intermittent condition. Look for any chafed, pierced, pinched, or partially broken wires.
- Perform the ABS INTERMITTENT CONDITION diagnostic procedure. Refer to **ABS INTERMITTENT CONDITION**.

2. **WHEEL SPEED SENSOR INSPECTION**
   1. Turn the ignition off to the lock position.
   2. Inspect the Wheel Speed Sensor for proper mounting.
   3. Inspect the Wheel Speed Sensor harness and connector.
   4. Inspect the Wheel Speed Sensor for excessive debris on the sensor.

   Were any problems found?

   Yes

   - Repair as necessary in accordance with the Service Information.
   - Perform the ABS VERIFICATION TEST. Refer to **ABS VERIFICATION TEST**.

   No

   - Go To 3.

3. **TONE WHEEL DAMAGED/MISSING**
   1. Inspect the Tone Wheel in accordance with the Service Information.

   NOTE: The Tone Wheel Teeth should be perfectly square, not bent or nicked.

   Were any problems found?

   Yes

   - Replace the Tone Wheel in accordance with the Service Information.
   - Perform the ABS VERIFICATION TEST. Refer to **ABS VERIFICATION TEST**.

   No

   - Go To 4.

4. **EXCESSIVE WHEEL SPEED SENSOR AIR GAP**
   1. Measure the Wheel Speed Sensor Air Gap in accordance with the Service Information.

   Were any problems found?

   Yes

- Repair as necessary in accordance with the Service Information.
- Perform the ABS VERIFICATION TEST. Refer to **ABS VERIFICATION TEST**.

No

- Go To 5.

5. **WHEEL BEARING LOOSE/BINDING**
   1. Inspect the wheel bearings for excessive run out or improper clearance in accordance with the Service Information.

      Were any problems found?

      Yes

      - Repair as necessary in accordance with the Service Information.
      - Perform the ABS VERIFICATION TEST. Refer to **ABS VERIFICATION TEST**.

      No

      - Go To 6.

6. **CHECK (B7) RIGHT FRONT WHEEL SPEED SENSOR SUPPLY CIRCUIT VOLTAGE**

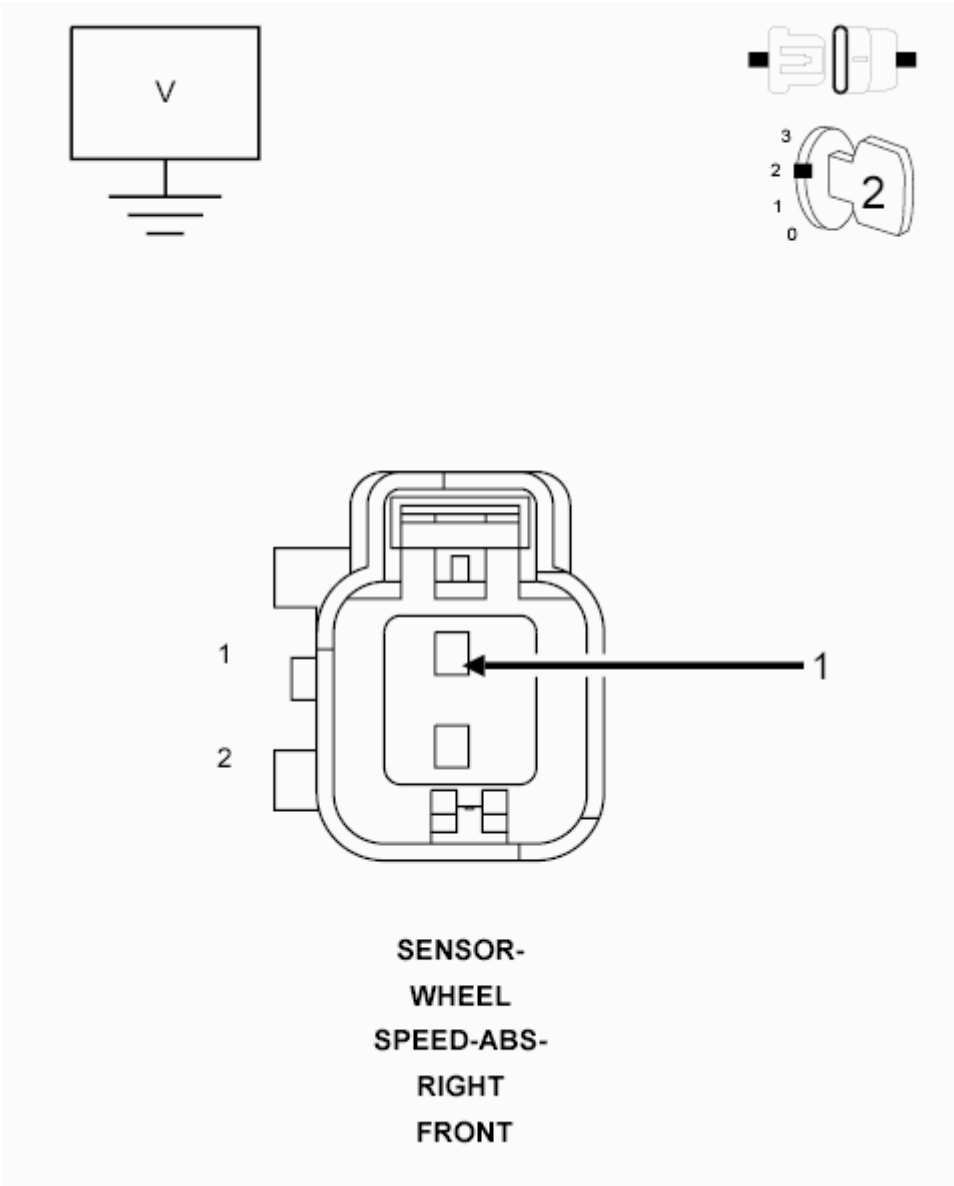

Fig. 51: Measuring Right Front Wheel Speed Sensor Supply Circuit Voltage
Courtesy of CHRYSLER GROUP, LLC

1. Disconnect the Right Front Wheel Speed Sensor harness connector.
2. Turn the ignition on.
3. Measure the voltage between the (B7) Right Front Wheel Speed Sensor Supply circuit and ground.

   Is the voltage above 10 volts?

   Yes

   - Go To 7.

   No

- Go To 9.

7. **(B7) RIGHT FRONT WHEEL SPEED SENSOR SUPPLY CIRCUIT FOR A SHORT TO VOLTAGE**

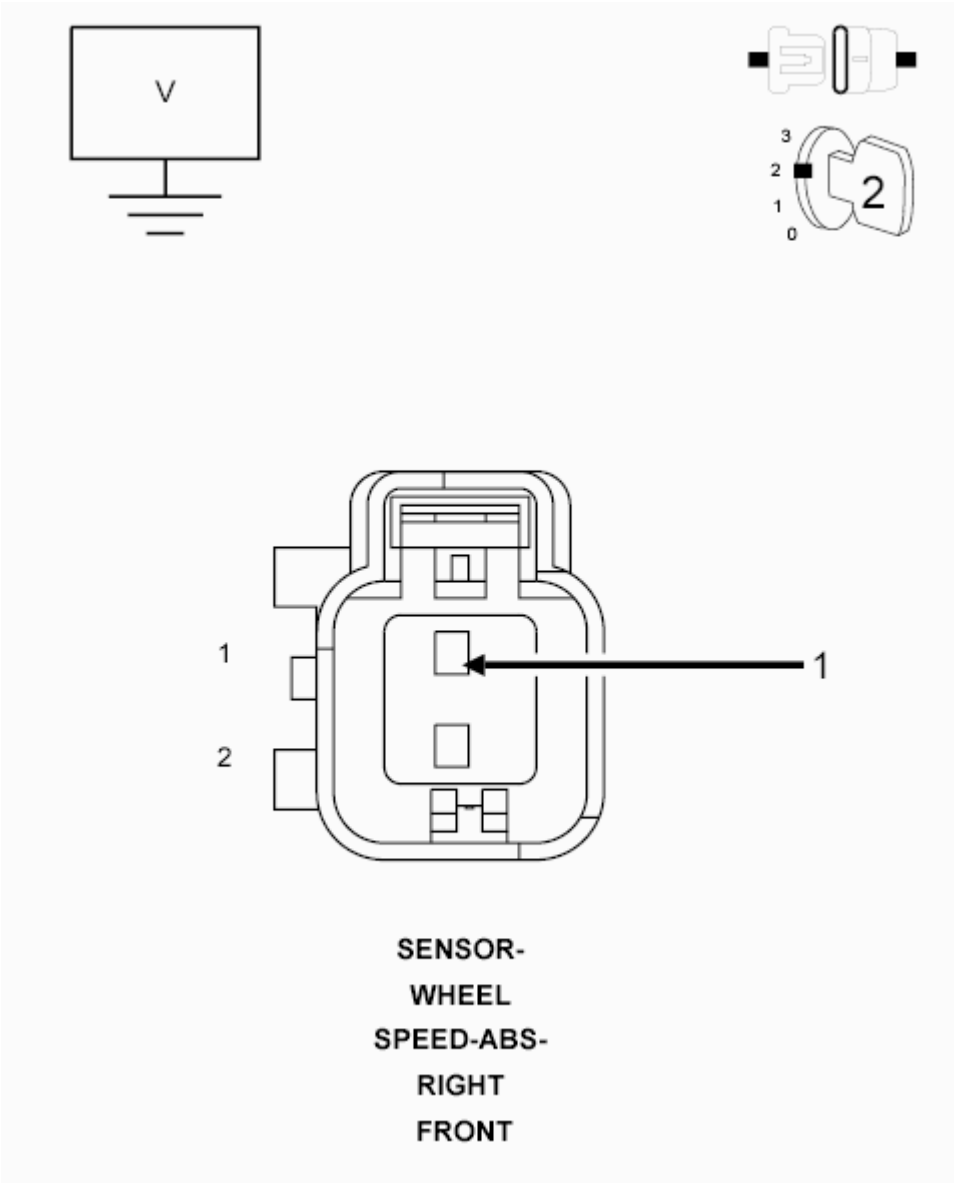

Fig. 52: Measuring Right Front Wheel Speed Sensor Supply Circuit Voltage
Courtesy of CHRYSLER GROUP, LLC

1. Turn the ignition off to the lock position.
2. Disconnect the ABS Module harness connector.
3. Ignition on, engine not running.
4. Measure the voltage of the (B7) Right Front Wheel Speed Sensor Supply circuit at the Right Front Wheel Speed Sensor harness connector.

Is there any voltage present?

Yes

- Repair (B7) Right Front Wheel Speed Sensor Supply circuit for a short to voltage.
- Perform the ABS VERIFICATION TEST. Refer to **ABS VERIFICATION TEST**.

No

- Go To 8.

8. **(B6) RIGHT FRONT WHEEL SPEED SENSOR SIGNAL CIRCUIT FOR A SHORT TO GROUND**

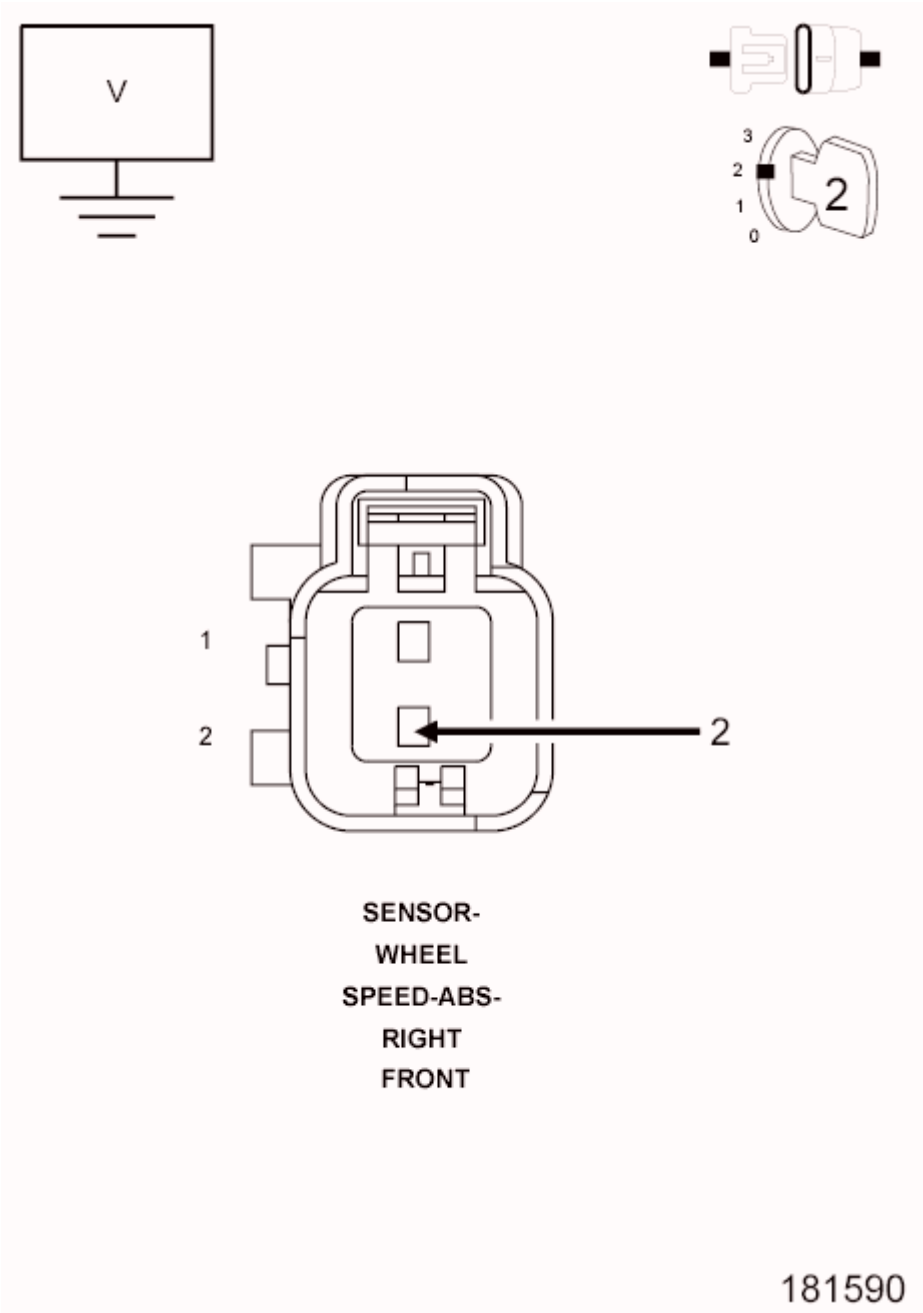

Fig. 53: Checking Right Front Wheel Speed Sensor Signal Circuit For A Short To Ground
Courtesy of CHRYSLER GROUP, LLC

1. Turn the ignition off.
2. Measure the resistance between the (B6) Right Front Wheel Speed Sensor Signal circuit and ground.

   Is the resistance above 5.0 Ohms?

   Yes

- Replace the Right Front Wheel Speed Sensor in accordance with the Service Information.
- Perform the ABS VERIFICATION TEST. Refer to **ABS VERIFICATION TEST**.

No

- Repair the (B6) Right Front Wheel Speed Sensor Signal circuit for a short to ground.
- Perform the ABS VERIFICATION TEST. Refer to **ABS VERIFICATION TEST**.

9. **(B7) RIGHT FRONT WHEEL SPEED SENSOR SUPPLY CIRCUIT FOR A SHORT TO GROUND**

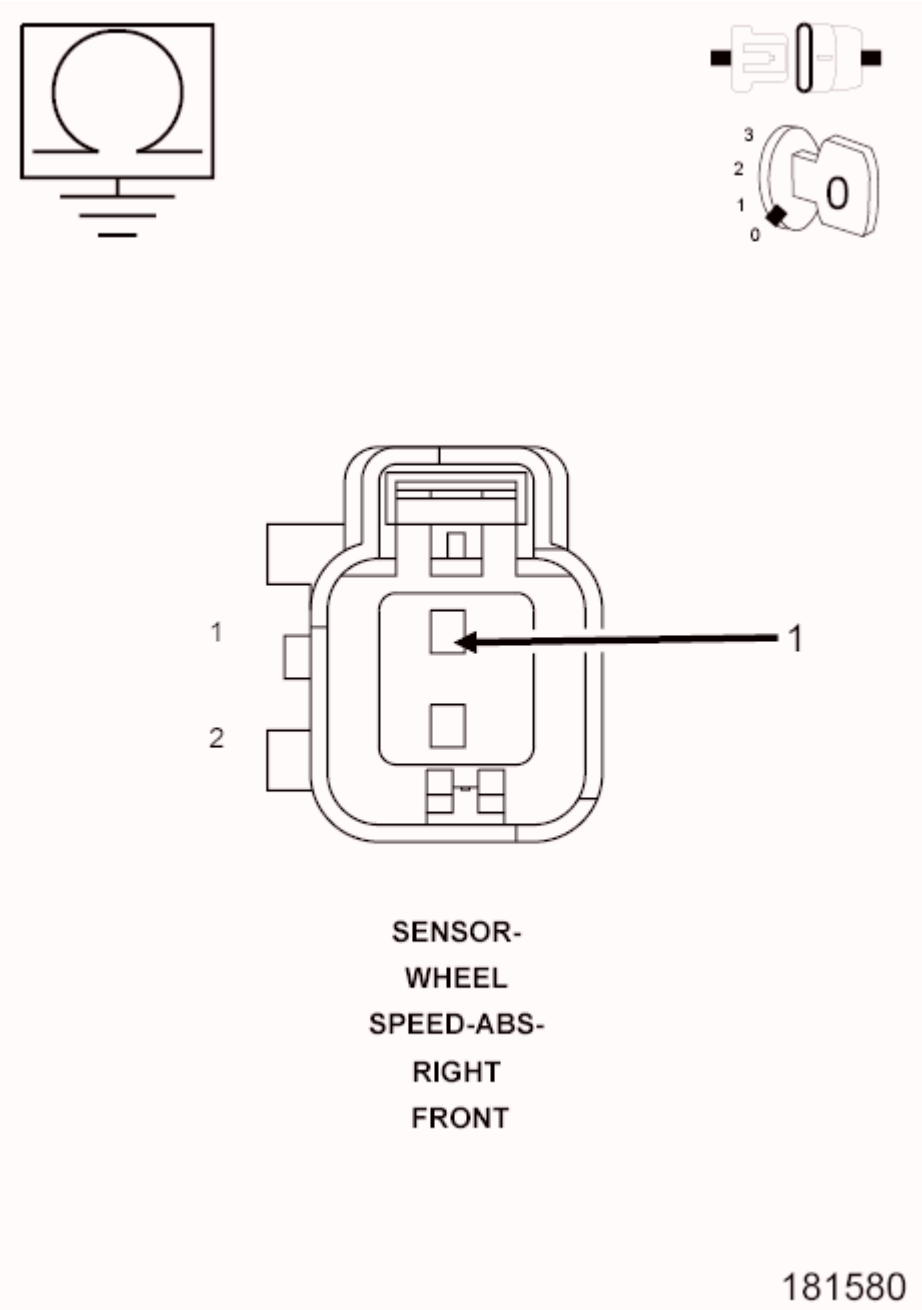

Fig. 54: Checking Right Front Wheel Speed Sensor Supply Circuit For A Short To Ground
Courtesy of CHRYSLER GROUP, LLC

1. Turn the ignition off to the lock position.
2. Disconnect the ABS Module harness connector.
3. Measure the resistance between the (B7) Right Front Wheel Speed Sensor Supply circuit and ground.

   Is the resistance above 5.0 Ohms?

   Yes

   - Go To 10.

   No

   - Repair the (B7) Right Front Wheel Speed Sensor Supply circuit for a short to ground.
   - Perform the ABS VERIFICATION TEST. Refer to **ABS VERIFICATION TEST**.

10. **(B7) RIGHT FRONT WHEEL SPEED SENSOR SUPPLY CIRCUIT FOR AN OPEN**

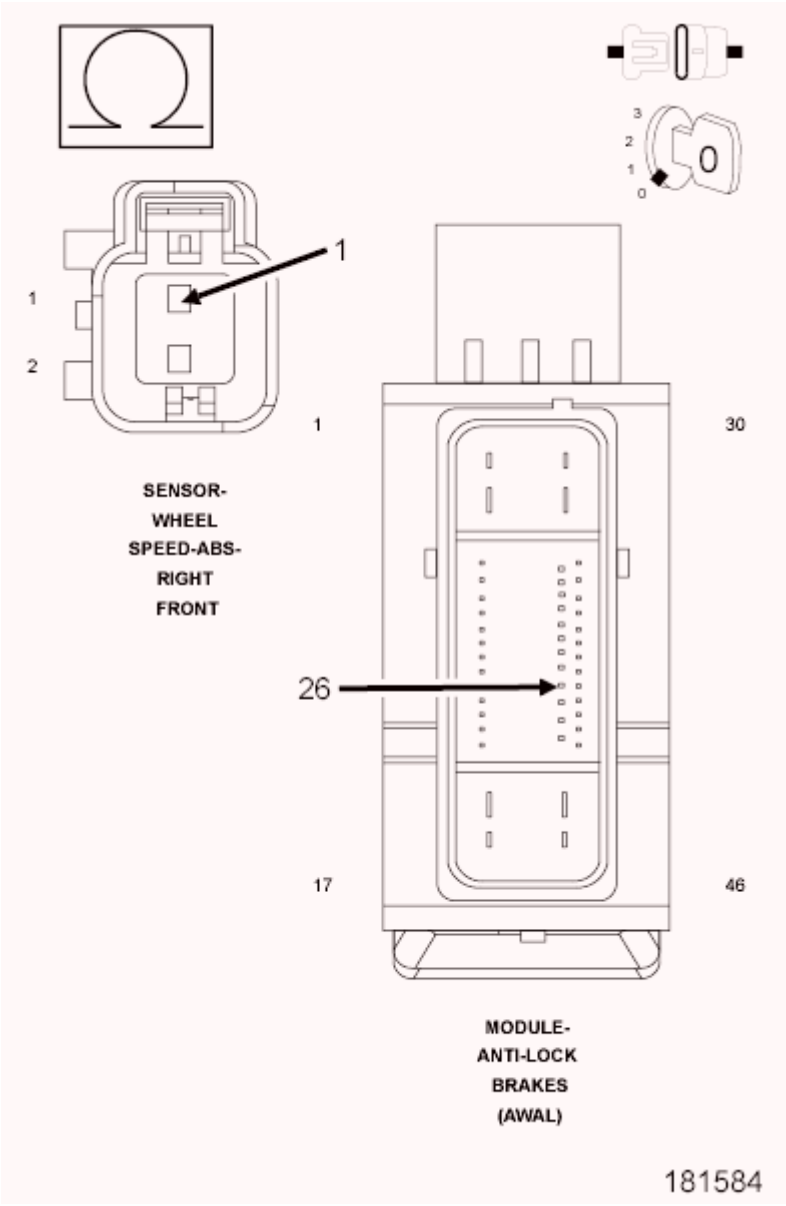

Fig. 55: Checking Right Front Wheel Speed Sensor Supply Circuit For An Open
Courtesy of CHRYSLER GROUP, LLC

1. Measure the resistance of the (B7) Right Front Wheel Speed Sensor Supply circuit between the ABS harness connector and the Right Front Wheel Speed Sensor harness connector.

   Is the resistance below 5 Ohms?

   Yes

   - Go To 11.

   No

- Repair the open (B7) Right Front Wheel Speed Sensor Supply circuit.
- Perform the ABS VERIFICATION TEST. Refer to **ABS VERIFICATION TEST**.

11. **(B6) RIGHT FRONT WHEEL SPEED SENSOR SIGNAL CIRCUIT FOR AN OPEN**

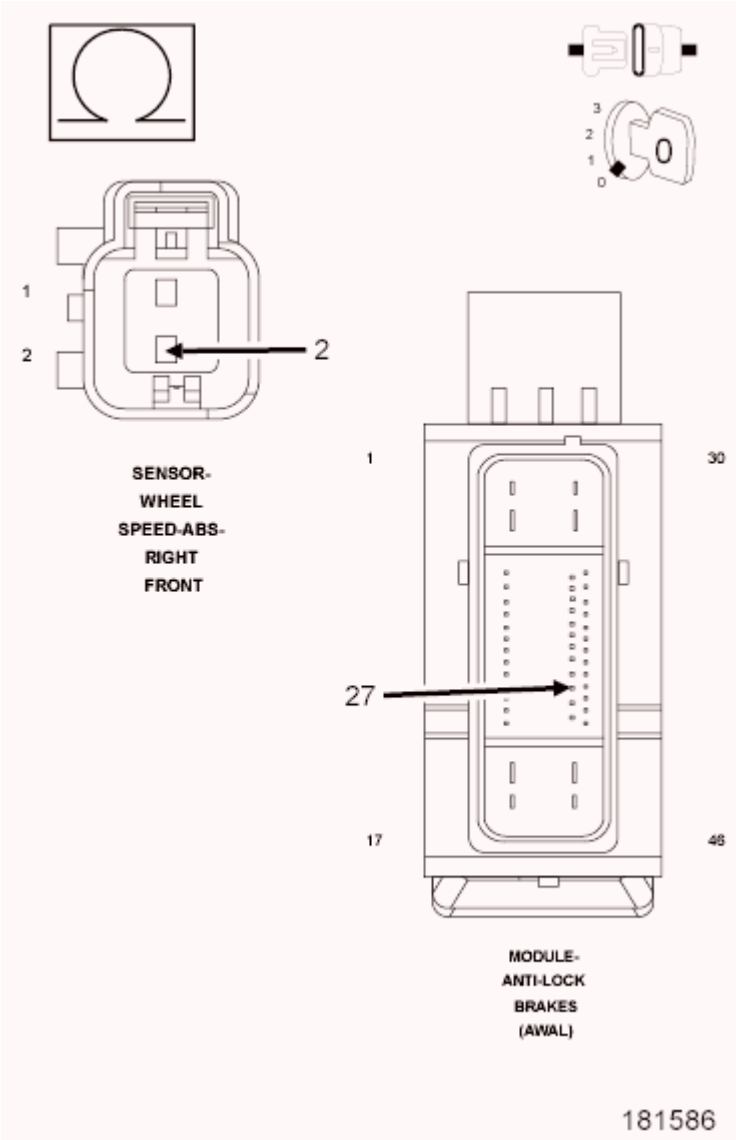

Fig. 56: Checking Front Wheel Speed Sensor Signal Circuit For An Open
Courtesy of CHRYSLER GROUP, LLC

1. Measure the resistance of the (B6) Right Front Wheel Speed Sensor Signal circuit between the ABS harness connector and the Right Front Wheel Speed Sensor harness connector.

   Is the resistance below 5 Ohms?

   Yes

   - Go To 12.

No

- Repair the open (B6) Right Front Wheel Speed Sensor Signal circuit.
- Perform the ABS VERIFICATION TEST. Refer to **ABS VERIFICATION TEST**.

12. **(B6) RIGHT FRONT WHEEL SPEED SENSOR SIGNAL CIRCUIT FOR A SHORT TO VOLTAGE**

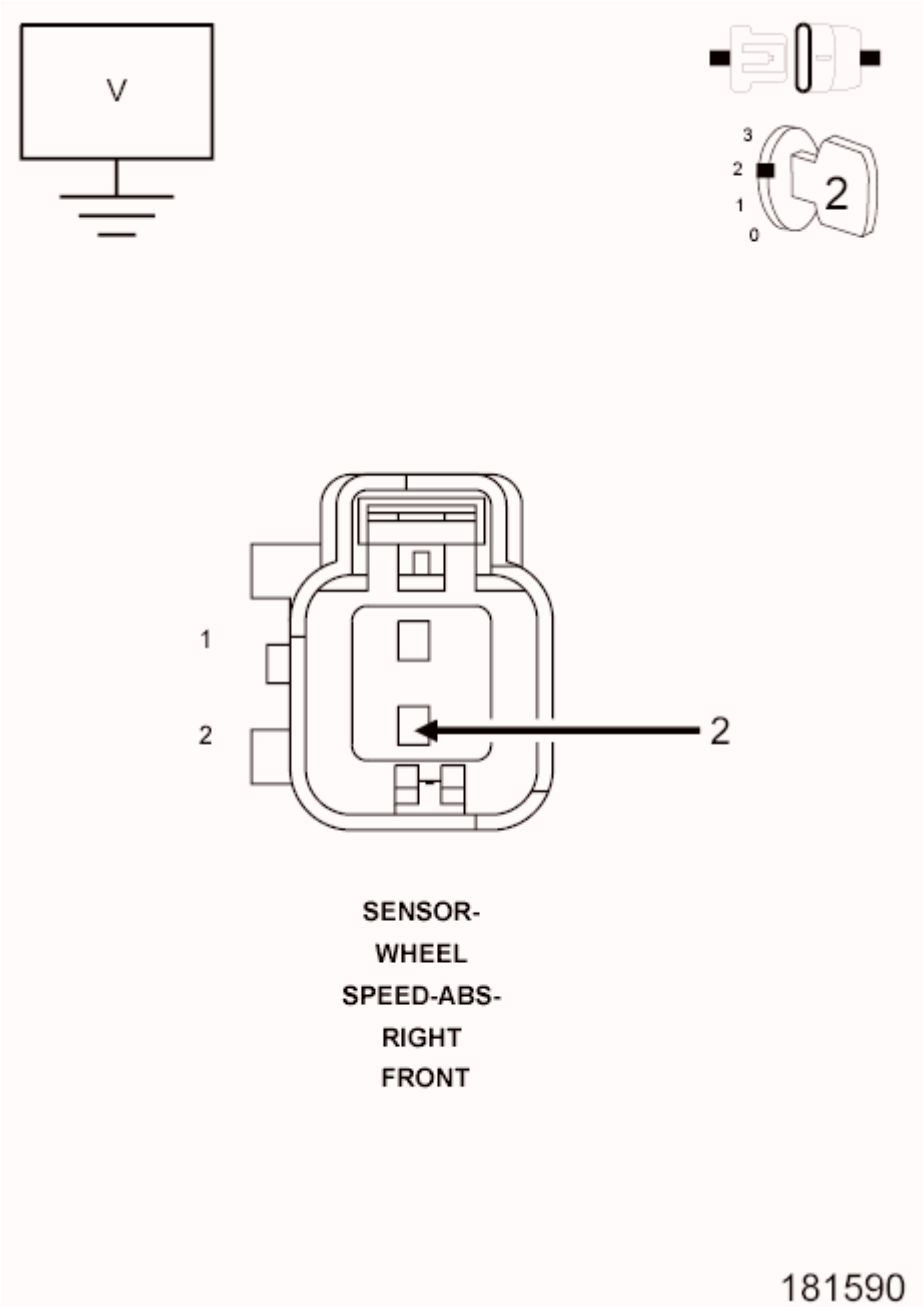

Fig. 57: Checking Right Front Wheel Speed Sensor Signal Circuit For A Short To Ground
Courtesy of CHRYSLER GROUP, LLC

1. Turn the ignition on.
2. Measure the voltage of the (B6) Right Front Wheel Speed Sensor Signal circuit at the Right Front Wheel Speed Sensor harness connector.

   Is there any voltage present?

   Yes

   - Repair the (B6) Right Front Wheel Speed Sensor Signal circuit for a short to voltage.
   - Perform the ABS VERIFICATION TEST. Refer to **ABS VERIFICATION TEST**.

   No

   - Go To 13.

13. **(B7) RIGHT FRONT WHEEL SPEED SENSOR SUPPLY CIRCUIT SHORTED TO THE (B6) RIGHT FRONT WHEEL SPEED SENSOR SIGNAL CIRCUIT**

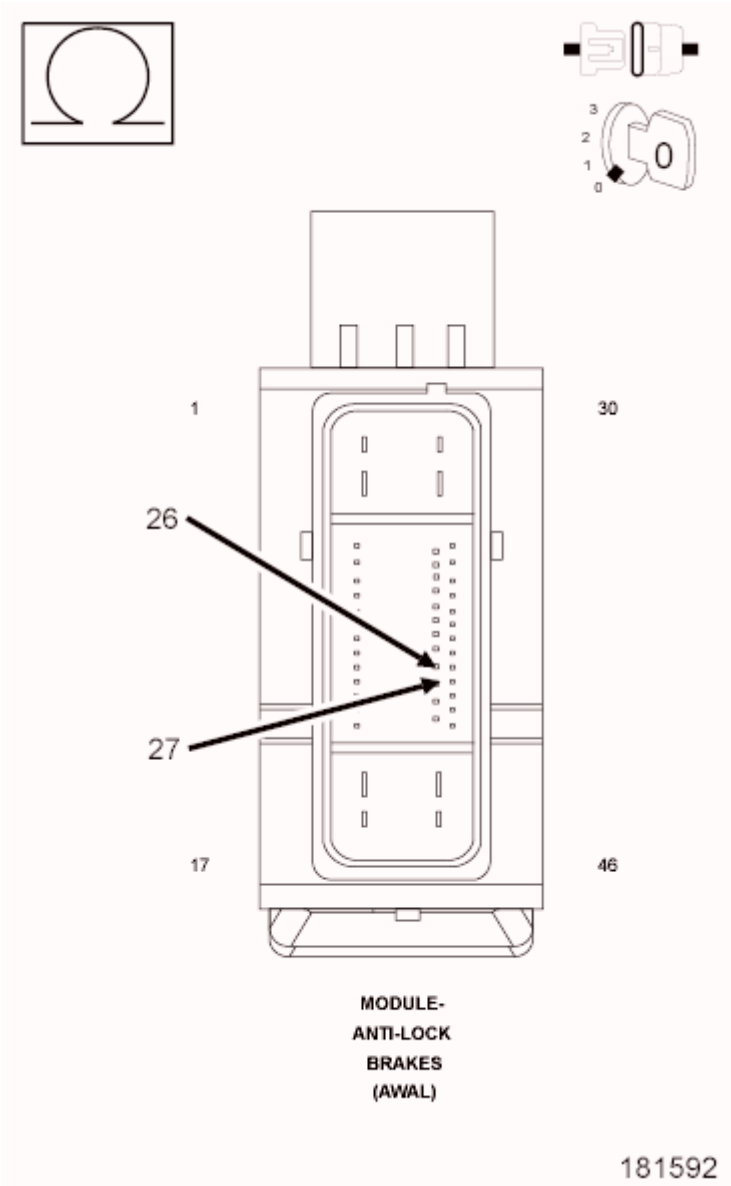

Fig. 58: Checking Right Front Wheel Speed Sensor Supply Circuit For A Short To The Right Front Wheel Speed Sensor Signal Circuit
Courtesy of CHRYSLER GROUP, LLC

1. Turn the ignition off to the lock position.
2. Measure the resistance between the (B7) Right Front Wheel Speed Sensor Supply circuit and the (B6) Right Front Wheel Speed Sensor Signal circuit at the ABS Module harness connector.

   Is the resistance below 5.0 Ohms?

   Yes

   - Repair (B7) Right Front Wheel Speed Sensor Supply circuit for a short to the (B6) Right Front Wheel Speed Sensor Signal circuit.

- Perform the ABS VERIFICATION TEST. Refer to **ABS VERIFICATION TEST**.

No

- Replace the Antilock Brakes Module in accordance with the Service Information.
- Perform the ABS VERIFICATION TEST. Refer to **ABS VERIFICATION TEST**.

C101F-RIGHT FRONT WHEEL SPEED COMPARATIVE PERFORMANCE

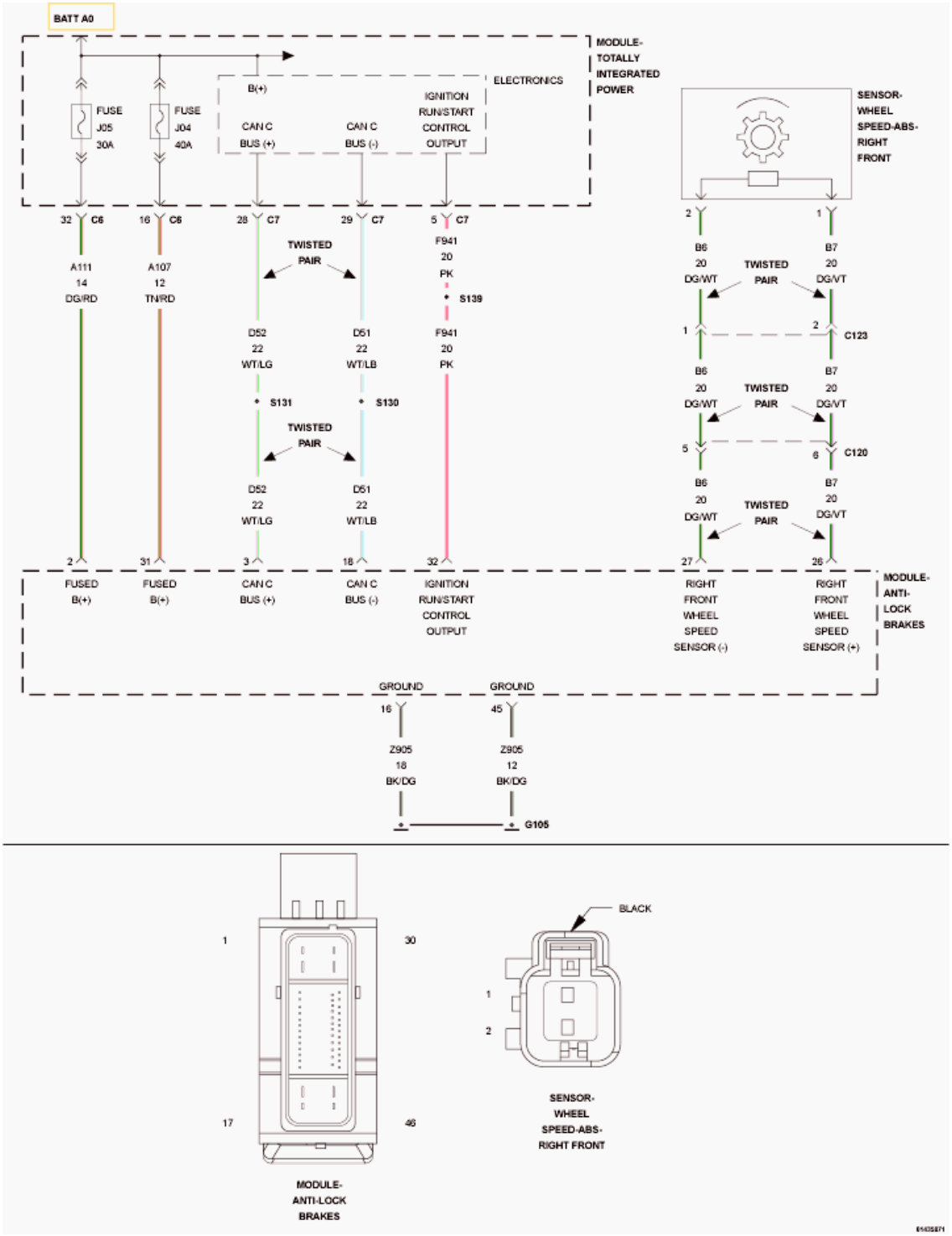

Fig. 59: Right Front Wheel Speed Sensor Wiring Diagram
Courtesy of CHRYSLER GROUP, LLC

For a complete wiring diagram, **refer to appropriate SYSTEM WIRING DIAGRAMS article** .

NOTE: The Electronic Stability Control (ESC) may also be referred to as Electronic

Stability Program (ESP) depending on the vehicle model year and configuration. Certain components may also reference ESP, ESC, or use the traction control symbol.

WHEN MONITORED:

With the ignition on, no system under voltage or over voltage condition present, no open or shorted wheel speed sensor DTC's set, vehicle not under high acceleration, and vehicle speed greater than 0.

SET CONDITION:

This DTC will set if either one wheel is sensed above a predetermined range for 5000 msec while the other wheels are below 20% of maximum velocity of all wheels OR if more than one wheel is sensed at below 20% of maximum velocity of all wheels while at least one wheel is sensed above a predetermined range. The condition must exist for two minutes for this DTC to set.

If the number of missing sensors changes at any update, the fault monitor is reset.

POSSIBLE CAUSES

Possible Causes
(B7) RIGHT FRONT WHEEL SPEED SENSOR SUPPLY CIRCUIT SHORT TO GROUND
(B6) RIGHT FRONT WHEEL SPEED SENSOR SIGNAL CIRCUIT SHORT TO GROUND
(B7) RIGHT FRONT WHEEL SPEED SENSOR SUPPLY CIRCUIT FOR AN OPEN
(B6) RIGHT FRONT WHEEL SPEED SENSOR SIGNAL CIRCUIT FOR AN OPEN
(B7) RIGHT FRONT WHEEL SPEED SENSOR SUPPLY CIRCUIT FOR A SHORT TO VOLTAGE
(B6) RIGHT FRONT WHEEL SPEED SENSOR SIGNAL CIRCUIT FOR A SHORT TO VOLTAGE
(B7) RIGHT FRONT WHEEL SPEED SENSOR SUPPLY CIRCUIT SHORTED TO THE (B6) RIGHT FRONT WHEEL SPEED SENSOR SIGNAL CIRCUIT
TONE WHEEL
EXCESSIVE RIGHT FRONT WHEEL SPEED SENSOR AIR GAP
WHEEL BEARING
RIGHT FRONT WHEEL SPEED SENSOR (WSS)
ANTILOCK BRAKE SYSTEM (ABS) MODULE

DIAGNOSTIC TEST

1. **DTC IS ACTIVE**
    1. Ignition on, engine not running.
    2. With the scan tool, erase DTC's.
    3. Turn the ignition off to the lock position.
    4. Ignition on, engine not running.
    5. With the scan tool, select View DTC's.

Is the status Active for this DTC?

Yes

- Go To 2.

No

- The condition that caused the symptom is currently not present. Inspect the related wiring for a possible intermittent condition. Look for any chafed, pierced, pinched, or partially broken wires.
- Perform the ABS INTERMITTENT CONDITION diagnostic procedure. Refer to **ABS INTERMITTENT CONDITION**.

2. **WHEEL SPEED SENSOR INSPECTION**
   1. Turn the ignition off to the lock position.
   2. Inspect the Wheel Speed Sensor for proper mounting.
   3. Inspect the Wheel Speed Sensor harness and connector.
   4. Inspect the Wheel Speed Sensor for excessive debris on the sensor.

   Were any problems found?

   Yes

   - Repair as necessary in accordance with the Service Information.
   - Perform the ABS VERIFICATION TEST. Refer to **ABS VERIFICATION TEST**.

   No

   - Go To 3.

3. **TONE WHEEL DAMAGED/MISSING**
   1. Inspect the Tone Wheel in accordance with the Service Information.

   NOTE: The Tone Wheel Teeth should be perfectly square, not bent or nicked.

   Were any problems found?

   Yes

   - Replace the Tone Wheel in accordance with the Service Information.
   - Perform the ABS VERIFICATION TEST. Refer to **ABS VERIFICATION TEST**.

   No

   - Go To 4.

4. **EXCESSIVE WHEEL SPEED SENSOR AIR GAP**
    1. Measure the Wheel Speed Sensor Air Gap in accordance with the Service Information.

       Were any problems found?

       Yes

       - Repair as necessary in accordance with the Service Information.
       - Perform the ABS VERIFICATION TEST. Refer to **ABS VERIFICATION TEST**.

       No

       - Go To 5.
5. **WHEEL BEARING LOOSE/BINDING**
    1. Inspect the wheel bearings for excessive run out or improper clearance in accordance with the Service Information.

       Were any problems found?

       Yes

       - Repair as necessary in accordance with the Service Information.
       - Perform the ABS VERIFICATION TEST. Refer to **ABS VERIFICATION TEST**.

       No

       - Go To 6.
6. **CHECK (B7) RIGHT FRONT WHEEL SPEED SENSOR SUPPLY CIRCUIT VOLTAGE**

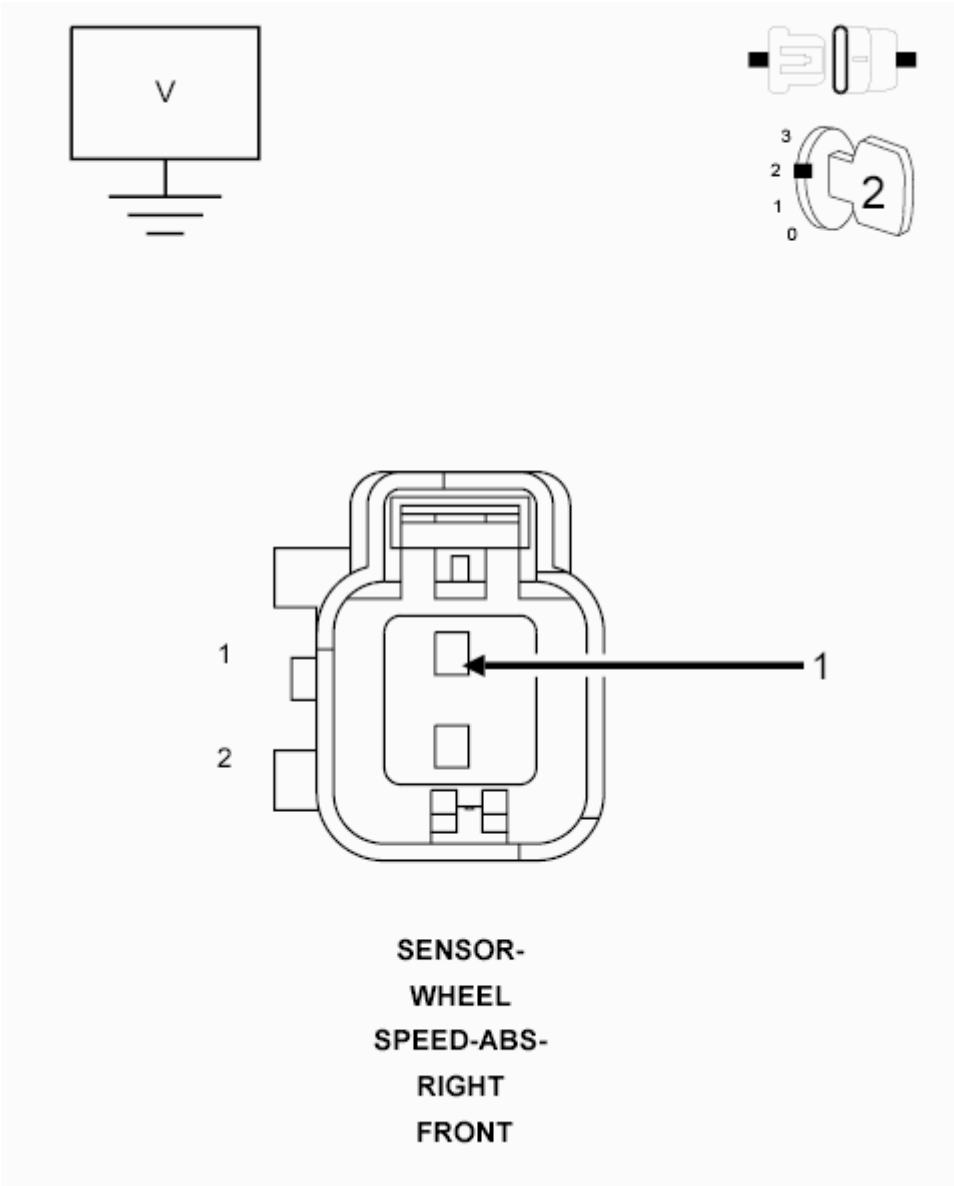

Fig. 60: Measuring Right Front Wheel Speed Sensor Supply Circuit Voltage
Courtesy of CHRYSLER GROUP, LLC

1. Disconnect the Right Front Wheel Speed Sensor harness connector.
2. Turn the ignition on.
3. Measure the voltage between the (B7) Right Front Wheel Speed Sensor Supply circuit and ground.

   Is the voltage above 10 volts?

   Yes

   - Go To 7.

   No

- Go To 9.

7. **(B7) RIGHT FRONT WHEEL SPEED SENSOR SUPPLY CIRCUIT FOR A SHORT TO VOLTAGE**

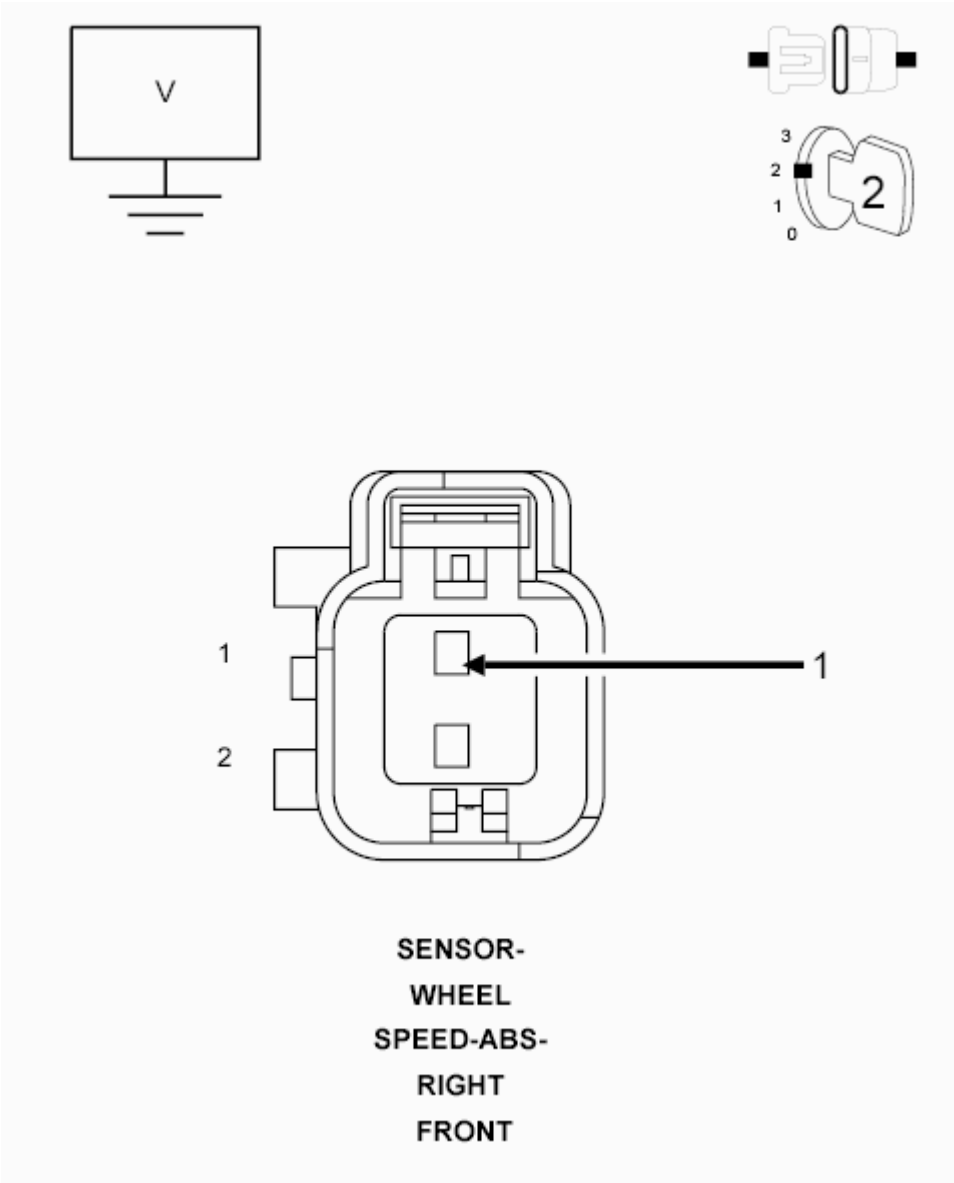

Fig. 61: Measuring Right Front Wheel Speed Sensor Supply Circuit Voltage
Courtesy of CHRYSLER GROUP, LLC

1. Turn the ignition off to the lock position.
2. Disconnect the ABS Module harness connector.
3. Ignition on, engine not running.
4. Measure the voltage of the (B7) Right Front Wheel Speed Sensor Supply circuit at the Right Front Wheel Speed Sensor harness connector.

Is there any voltage present?

Yes

- Repair (B7) Right Front Wheel Speed Sensor Supply circuit for a short to voltage.
- Perform the ABS VERIFICATION TEST. Refer to **ABS VERIFICATION TEST**.

No

- Go To 8.

8. **(B6) RIGHT FRONT WHEEL SPEED SENSOR SIGNAL CIRCUIT FOR A SHORT TO GROUND**

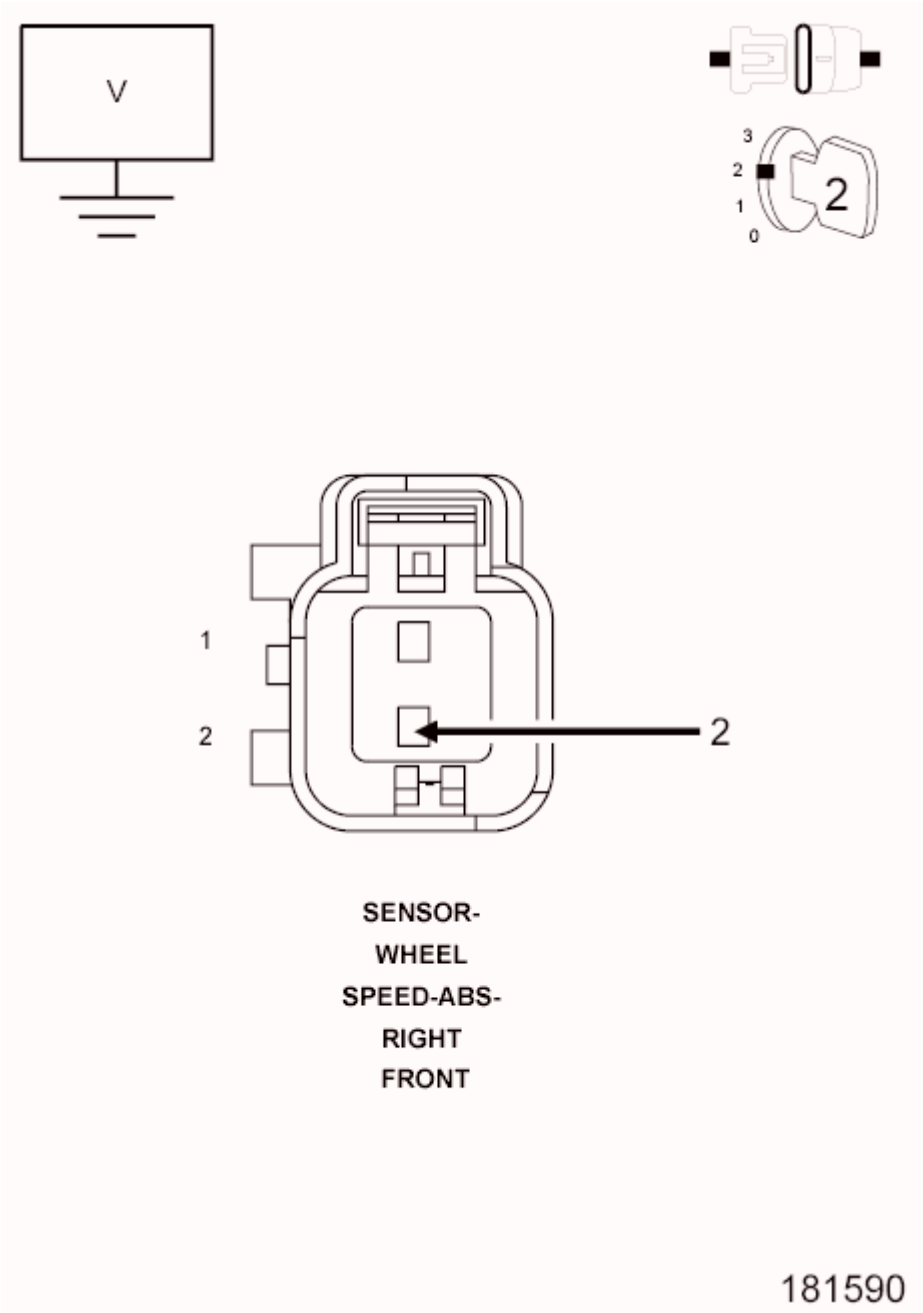

Fig. 62: Checking Right Front Wheel Speed Sensor Signal Circuit For A Short To Ground
Courtesy of CHRYSLER GROUP, LLC

1. Turn the ignition off.
2. Measure the resistance between the (B6) Right Front Wheel Speed Sensor Signal circuit and ground.

   Is the resistance above 5.0 Ohms?

   Yes

- Replace the Right Front Wheel Speed Sensor in accordance with the Service Information.
- Perform the ABS VERIFICATION TEST. Refer to **ABS VERIFICATION TEST**.

No

- Repair the (B6) Right Front Wheel Speed Sensor Signal circuit for a short to ground.
- Perform the ABS VERIFICATION TEST. Refer to **ABS VERIFICATION TEST**.

9. **(B7) RIGHT FRONT WHEEL SPEED SENSOR SUPPLY CIRCUIT FOR A SHORT TO GROUND**

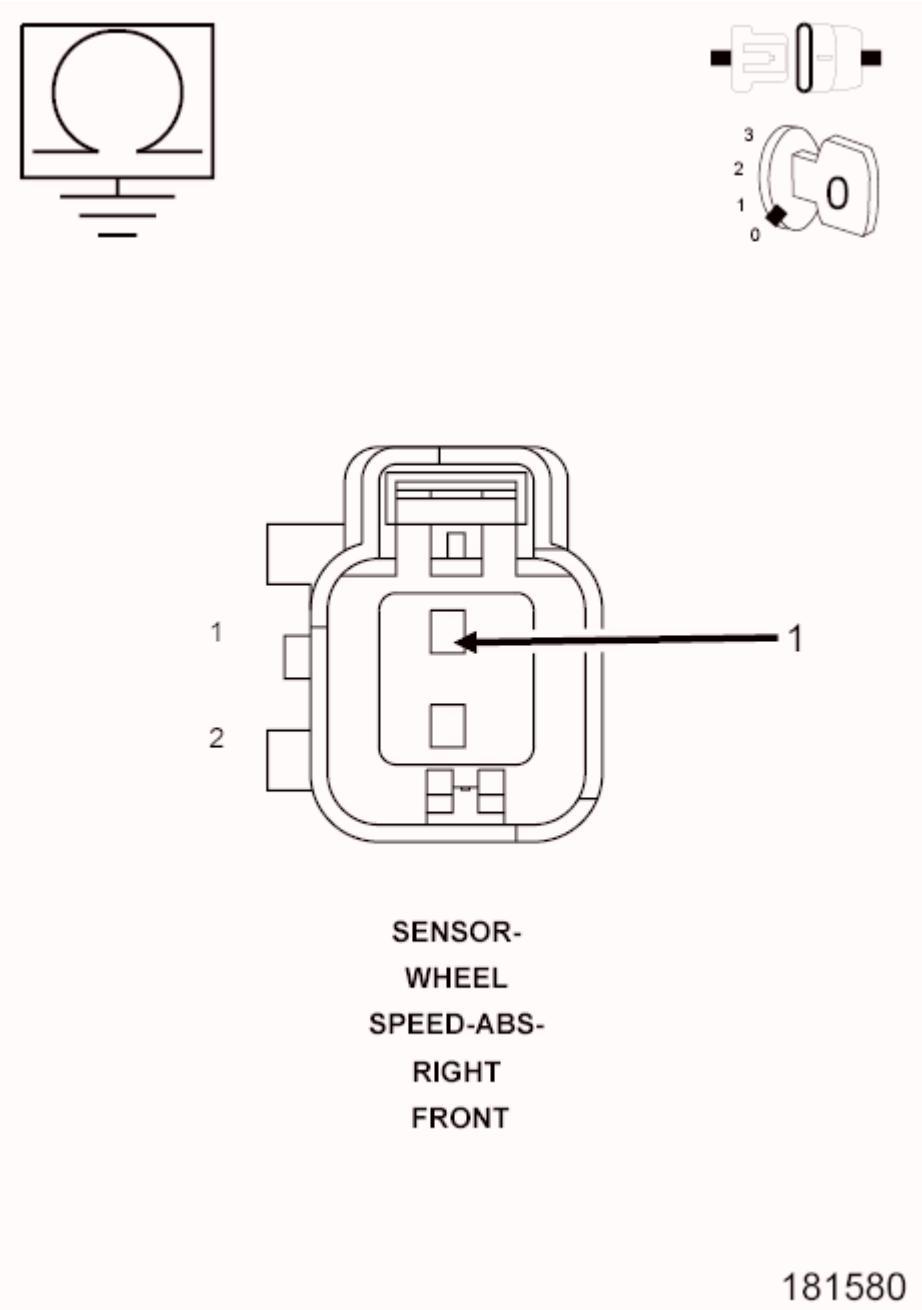

Fig. 63: Checking Right Front Wheel Speed Sensor Supply Circuit For A Short To Ground
Courtesy of CHRYSLER GROUP, LLC

1. Turn the ignition off to the lock position.
2. Disconnect the ABS Module harness connector.
3. Measure the resistance between the (B7) Right Front Wheel Speed Sensor Supply circuit and ground.

   Is the resistance above 5.0 Ohms?

   Yes

   - Go To 10.

   No

   - Repair the (B7) Right Front Wheel Speed Sensor Supply circuit for a short to ground.
   - Perform the ABS VERIFICATION TEST. Refer to **ABS VERIFICATION TEST**.

10. **(B7) RIGHT FRONT WHEEL SPEED SENSOR SUPPLY CIRCUIT FOR AN OPEN**

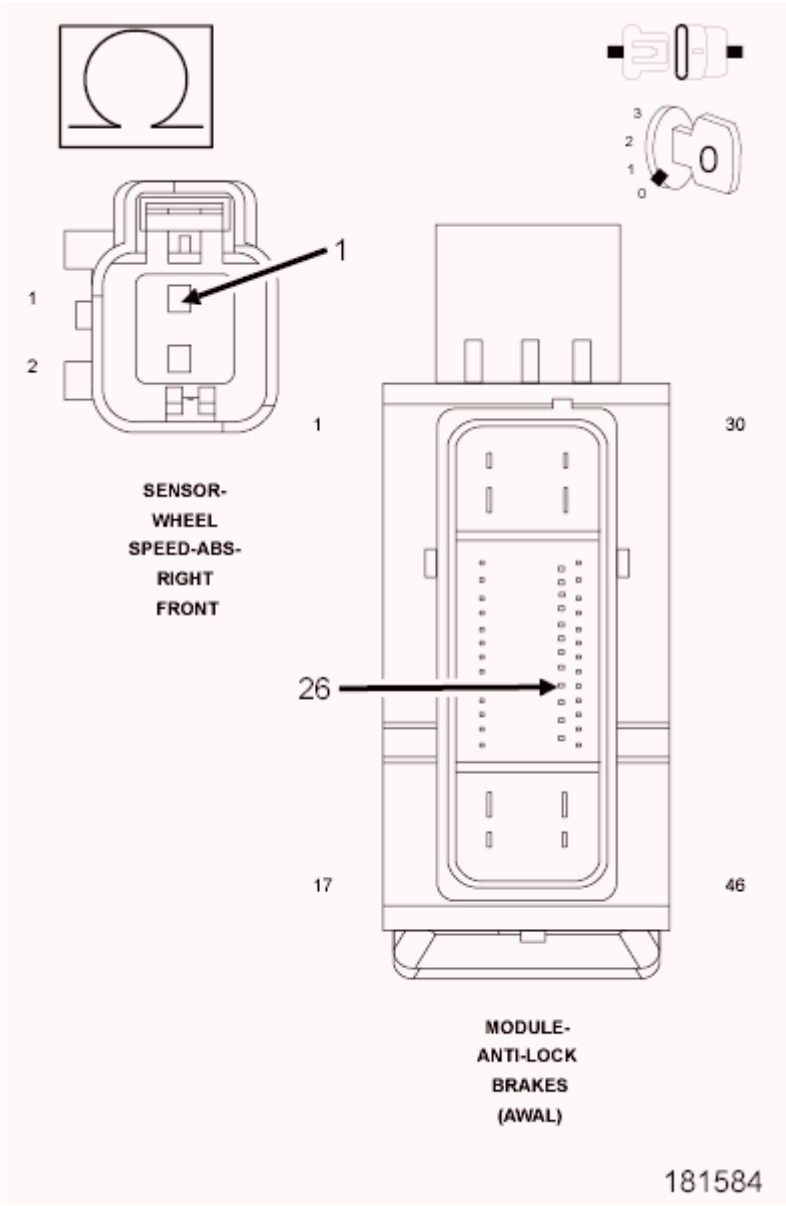

Fig. 64: Checking Right Front Wheel Speed Sensor Supply Circuit For An Open
Courtesy of CHRYSLER GROUP, LLC

1. Measure the resistance of the (B7) Right Front Wheel Speed Sensor Supply circuit between the ABS harness connector and the Right Front Wheel Speed Sensor harness connector.

   Is the resistance below 5 Ohms?

   Yes

   - Go To 11.

   No

- Repair the open (B7) Right Front Wheel Speed Sensor Supply circuit.
- Perform the ABS VERIFICATION TEST. Refer to **ABS VERIFICATION TEST**.

11. **(B6) RIGHT FRONT WHEEL SPEED SENSOR SIGNAL CIRCUIT FOR AN OPEN**

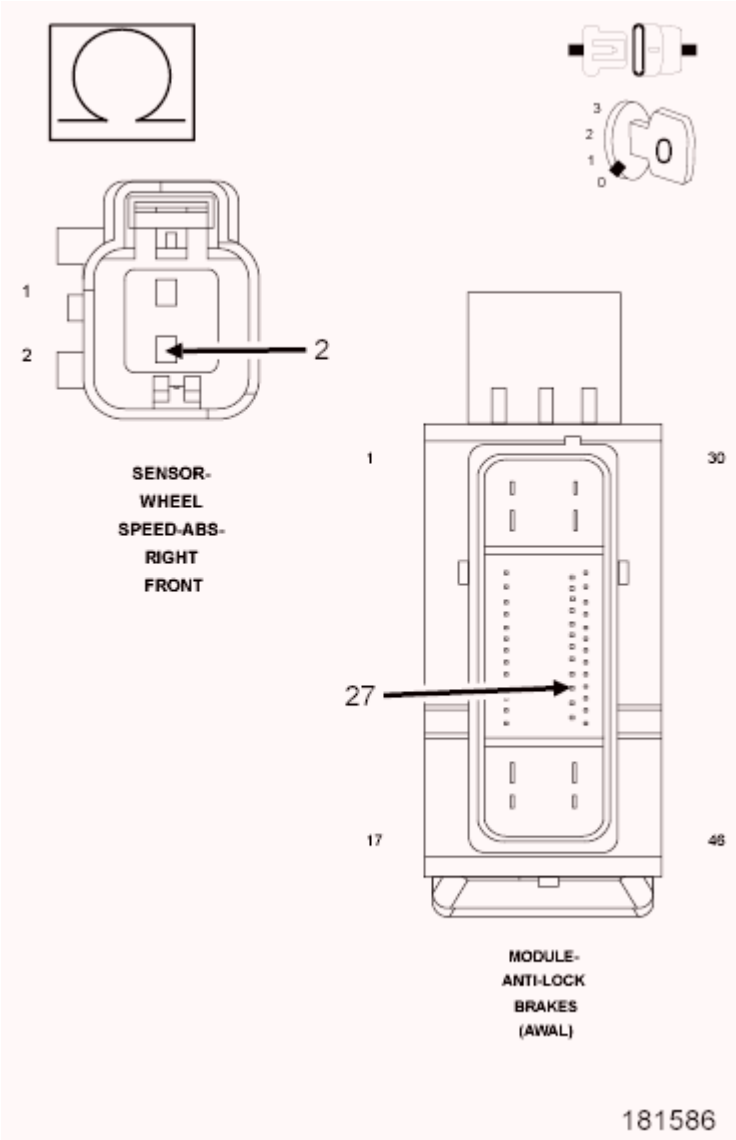

Fig. 65: Checking Front Wheel Speed Sensor Signal Circuit For An Open
Courtesy of CHRYSLER GROUP, LLC

1. Measure the resistance of the (B6) Right Front Wheel Speed Sensor Signal circuit between the ABS harness connector and the Right Front Wheel Speed Sensor harness connector.

   Is the resistance below 5 Ohms?

   Yes

   - Go To 12.

No

- Repair the open (B6) Right Front Wheel Speed Sensor Signal circuit.
- Perform the ABS VERIFICATION TEST. Refer to **ABS VERIFICATION TEST**.

12. **(B6) RIGHT FRONT WHEEL SPEED SENSOR SIGNAL CIRCUIT FOR A SHORT TO VOLTAGE**

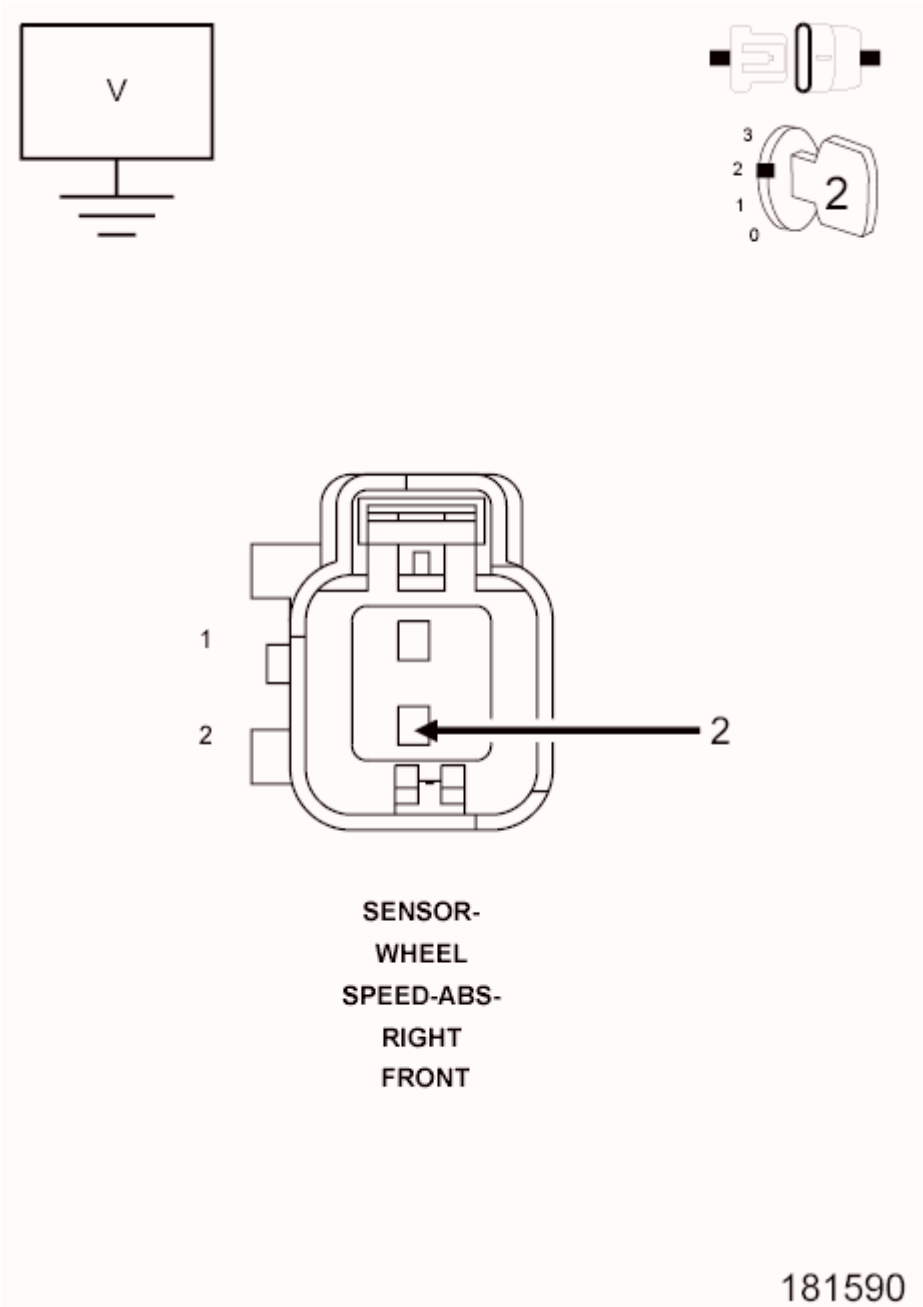

Fig. 66: Checking Right Front Wheel Speed Sensor Signal Circuit For A Short To Ground
Courtesy of CHRYSLER GROUP, LLC

1. Turn the ignition on.
2. Measure the voltage of the (B6) Right Front Wheel Speed Sensor Signal circuit at the Right Front Wheel Speed Sensor harness connector.

   Is there any voltage present?

   Yes

   - Repair the (B6) Right Front Wheel Speed Sensor Signal circuit for a short to voltage.
   - Perform the ABS VERIFICATION TEST. Refer to **ABS VERIFICATION TEST**.

   No

   - Go To 13.

13. **(B7) RIGHT FRONT WHEEL SPEED SENSOR SUPPLY CIRCUIT SHORTED TO THE (B6) RIGHT FRONT WHEEL SPEED SENSOR SIGNAL CIRCUIT**

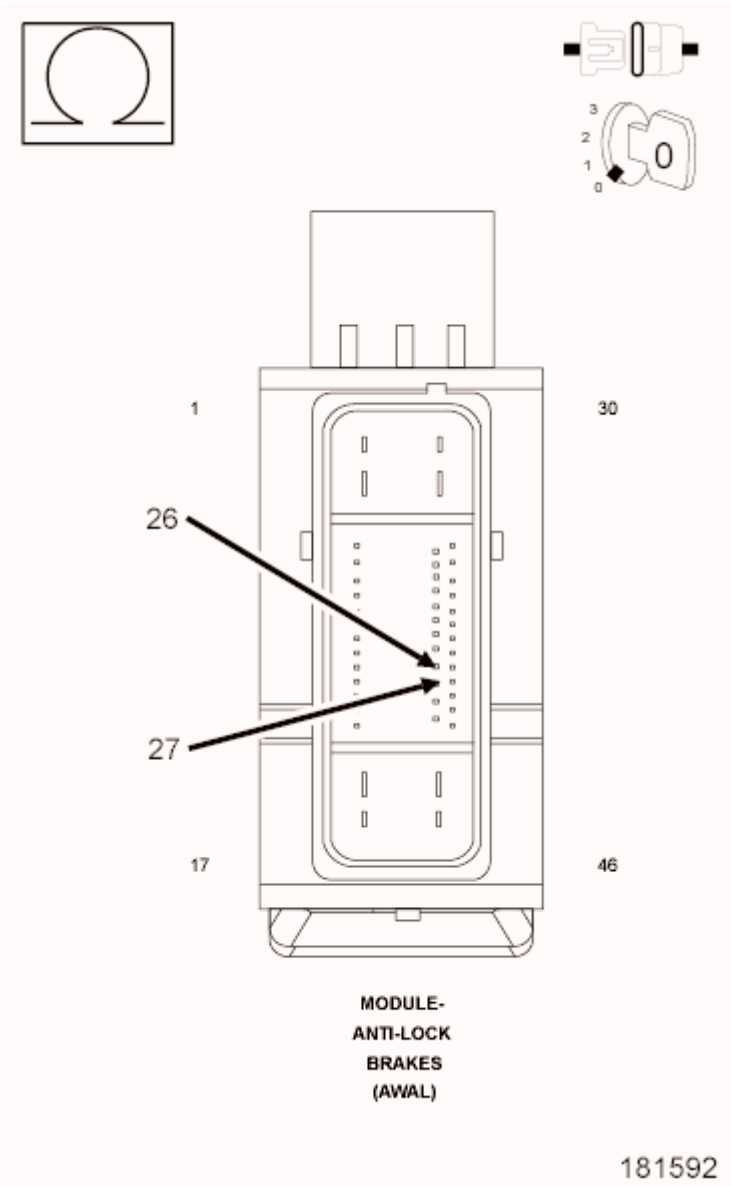

Fig. 67: Checking Right Front Wheel Speed Sensor Supply Circuit For A Short To The Right Front Wheel Speed Sensor Signal Circuit
Courtesy of CHRYSLER GROUP, LLC

1. Turn the ignition off to the lock position.
2. Measure the resistance between the (B7) Right Front Wheel Speed Sensor Supply circuit and the (B6) Right Front Wheel Speed Sensor Signal circuit at the ABS Module harness connector.

   Is the resistance below 5.0 Ohms?

   Yes

   - Repair (B7) Right Front Wheel Speed Sensor Supply circuit for a short to the (B6) Right Front Wheel Speed Sensor Signal circuit.

- Perform the ABS VERIFICATION TEST. Refer to **ABS VERIFICATION TEST**.

No

- Replace the Antilock Brakes Module in accordance with the Service Information.
- Perform the ABS VERIFICATION TEST. Refer to **ABS VERIFICATION TEST**.

C1020-LEFT REAR WHEEL SPEED SENSOR CIRCUIT

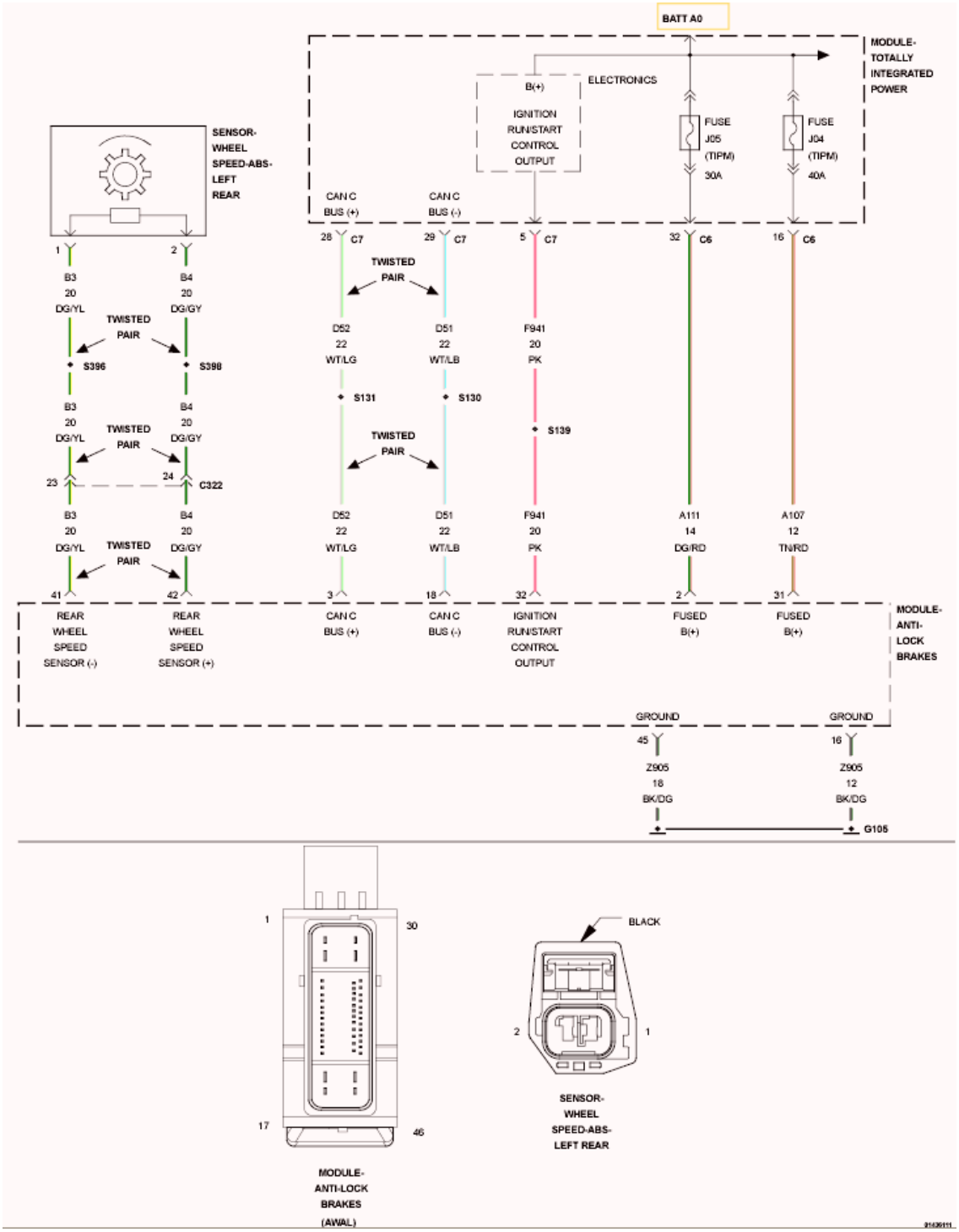

Fig. 68: Left Rear Wheel Speed Sensor Wiring Diagram
Courtesy of CHRYSLER GROUP, LLC

For a complete wiring diagram, **refer to appropriate SYSTEM WIRING DIAGRAMS article** .

NOTE: **The Electronic Stability Control (ESC) may also be referred to as Electronic Stability Program (ESP) depending on the vehicle model year and configuration.**

Certain components may also reference ESP, ESC, or use the traction control symbol.

WHEN MONITORED:

With the ignition on and no system under voltage or over voltage condition present.

SET CONDITION:

If the measured wheel speed sensor feedback voltage is less than.304 of a volt, the sensor is considered open.

If the measured wheel speed sensor feedback voltage is greater than 1.39 volts, or if a sensor over current condition is detected, the sensor is considered shorted.

If a shorted or open condition is present for more than 100 msec, the DTC will set.

POSSIBLE CAUSES

Possible Causes
(B4) LEFT REAR WHEEL SPEED SENSOR SUPPLY CIRCUIT FOR A SHORT TO GROUND
(B3) LEFT REAR WHEEL SPEED SENSOR SIGNAL CIRCUIT FOR A SHORT TO GROUND
(B4) LEFT REAR WHEEL SPEED SENSOR SUPPLY CIRCUIT FOR AN OPEN
(B3) LEFT REAR WHEEL SPEED SENSOR SIGNAL CIRCUIT FOR AN OPEN
(B4) LEFT REAR WHEEL SPEED SENSOR SUPPLY CIRCUIT FOR A SHORT TO VOLTAGE
(B3) LEFT REAR WHEEL SPEED SENSOR SIGNAL CIRCUIT FOR A SHORT TO VOLTAGE
(B4) LEFT REAR WHEEL SPEED SENSOR SUPPLY CIRCUIT SHORTED TO THE (B3) LEFT REAR WHEEL SPEED SENSOR SIGNAL CIRCUIT
LEFT REAR WHEEL SPEED SENSOR (WSS)
ANTILOCK BRAKE SYSTEM (ABS) MODULE

DIAGNOSTIC TEST

1. **DTC IS ACTIVE**
    1. Ignition on, engine not running.
    2. With the scan tool, erase DTC's.
    3. Turn the ignition off to the lock position.
    4. Ignition on, engine not running.
    5. With the scan tool, read DTC's.

    Is the status Active for this DTC?

    Yes

    - Go To 2.

No

- The condition that caused the symptom is currently not present. Inspect the related wiring for a possible intermittent condition. Look for any chafed, pierced, pinched, or partially broken wires.
- Perform the ABS INTERMITTENT CONDITION diagnostic procedure. Refer to **ABS INTERMITTENT CONDITION**.

2. **WHEEL SPEED SENSOR INSPECTION**
   1. Turn the ignition off to the lock position.
   2. Inspect the Wheel Speed Sensor for proper mounting.
   3. Inspect the Wheel Speed Sensor harness and connector.
   4. Inspect the Wheel Speed Sensor for excessive debris on the sensor.

   Were any problems found?

   Yes

   - Repair as necessary in accordance with the Service Information.
   - Perform the ABS VERIFICATION TEST. Refer to **ABS VERIFICATION TEST**.

   No

   - Go To 3.

3. **CHECK (B4) LEFT REAR WHEEL SPEED SENSOR SUPPLY CIRCUIT VOLTAGE**

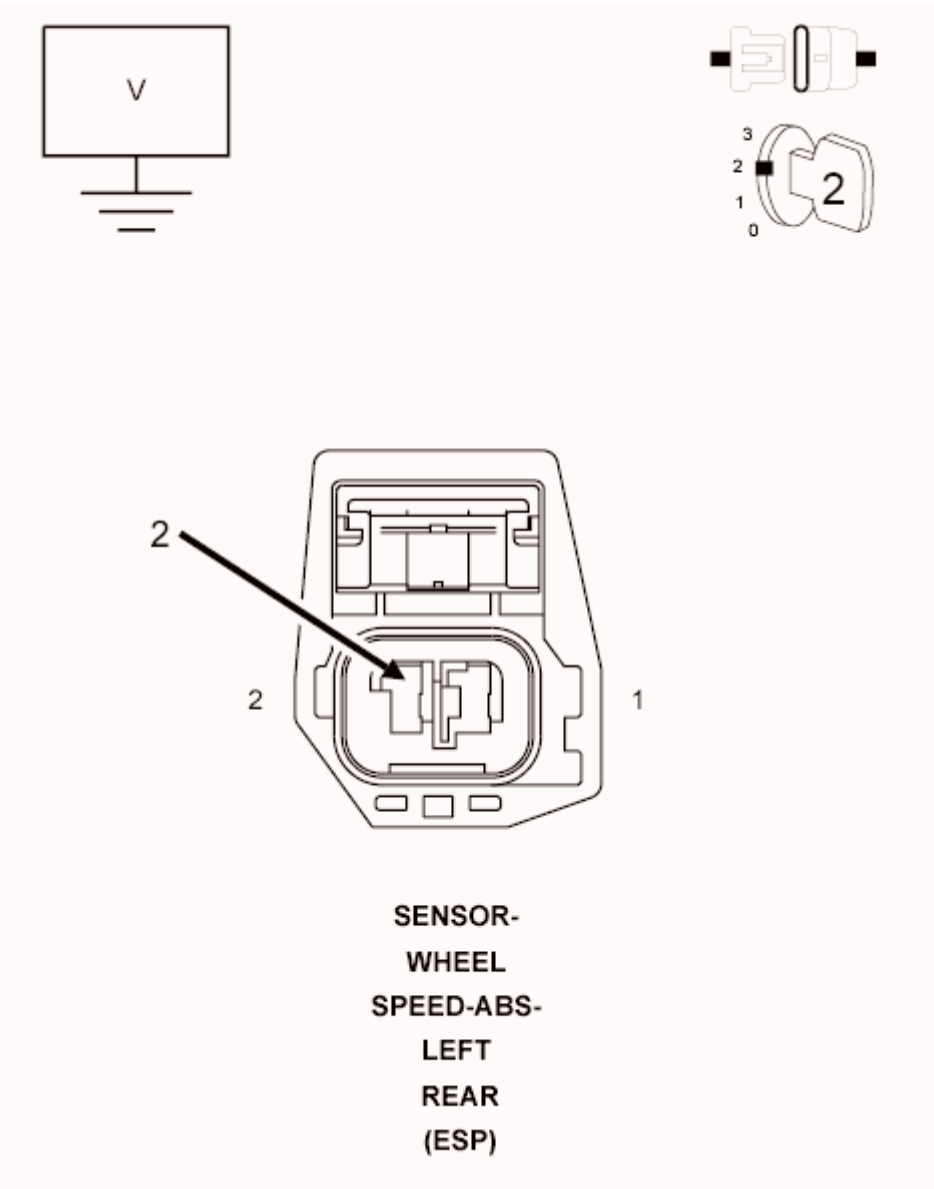

Fig. 69: Measuring Left Rear Wheel Speed Sensor Supply Circuit Voltage
Courtesy of CHRYSLER GROUP, LLC

1. Disconnect the Left Rear Wheel Speed Sensor harness connector.
2. Turn the ignition on.
3. Measure the voltage between the (B4) Left Rear Wheel Speed Sensor Supply circuit and ground.

   Is the voltage above 10 volts?

   Yes

   - Go To 4.

   No

- Go To 6.

4. **(B4) LEFT REAR WHEEL SPEED SENSOR SUPPLY CIRCUIT FOR A SHORT TO VOLTAGE**

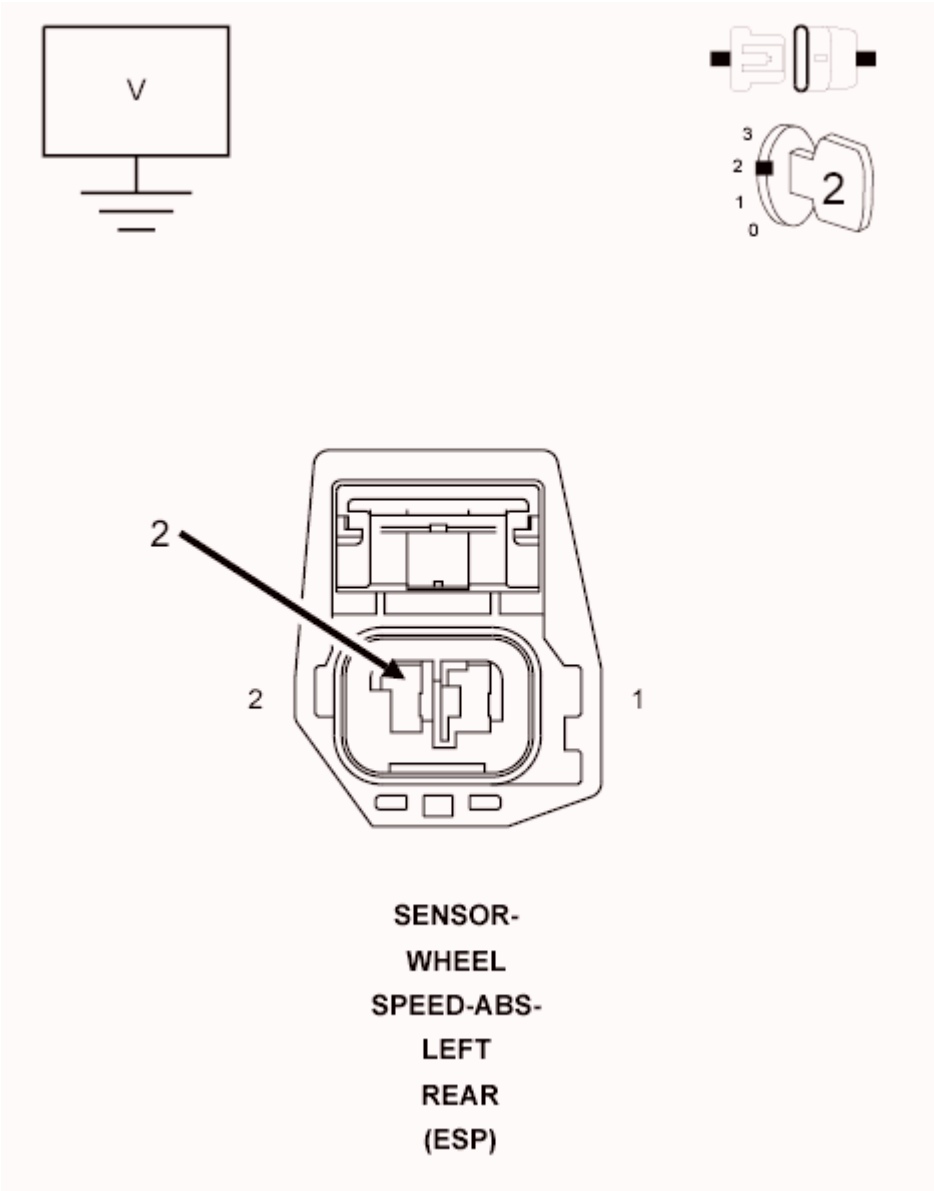

Fig. 70: Measuring Left Rear Wheel Speed Sensor Supply Circuit Voltage
Courtesy of CHRYSLER GROUP, LLC

1. Turn the ignition off to the lock position.
2. Disconnect the ABS Module harness connector.
3. Ignition on, engine not running.
4. Measure the voltage of the (B4) Left Rear Wheel Speed Sensor Supply circuit.

   Is there any voltage present?

Yes

- Repair (B4) Left Rear Wheel Speed Sensor Supply circuit for a short to voltage.
- Perform the ABS VERIFICATION TEST. Refer to **ABS VERIFICATION TEST**.

No

- Go To 5.

5. **(B3) LEFT REAR WHEEL SPEED SENSOR SIGNAL CIRCUIT FOR A SHORT TO GROUND**

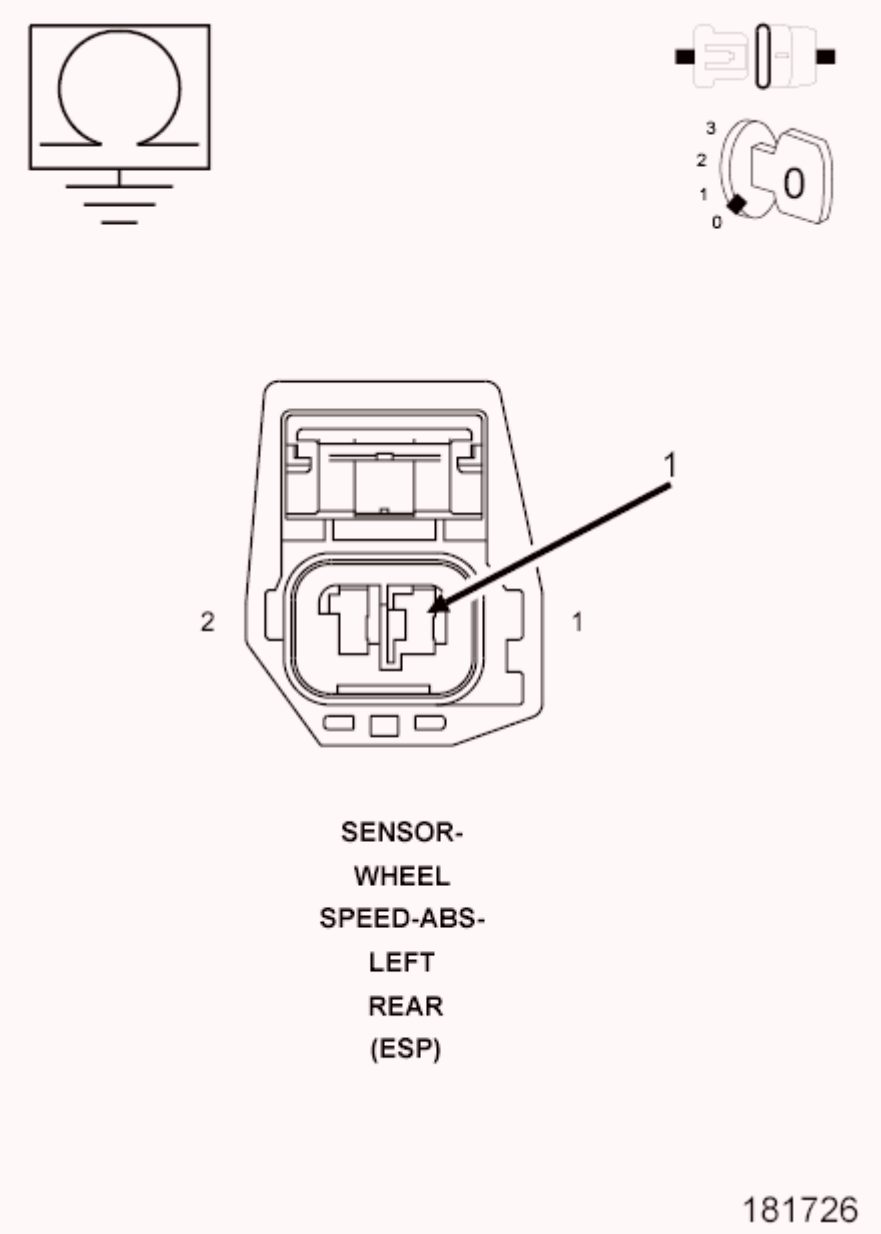

Fig. 71: Checking Left Rear Wheel Speed Sensor Signal Circuit For A Short To Ground
Courtesy of CHRYSLER GROUP, LLC

1. Turn the ignition off.
2. Measure the resistance between the (B3) Left Rear Wheel Speed Sensor Signal circuit and ground.

   Is the resistance above 5.0 Ohms?

   Yes

   - Replace the Left Rear Wheel Speed Sensor in accordance with the Service Information.
   - Perform the ABS VERIFICATION TEST. Refer to **ABS VERIFICATION TEST**.

   No

   - Repair the (B3) Left Rear Wheel Speed Sensor Signal circuit for a short to ground.
   - Perform the ABS VERIFICATION TEST. Refer to **ABS VERIFICATION TEST**.

6. **(B4) LEFT REAR WHEEL SPEED SENSOR SUPPLY CIRCUIT FOR A SHORT TO GROUND**

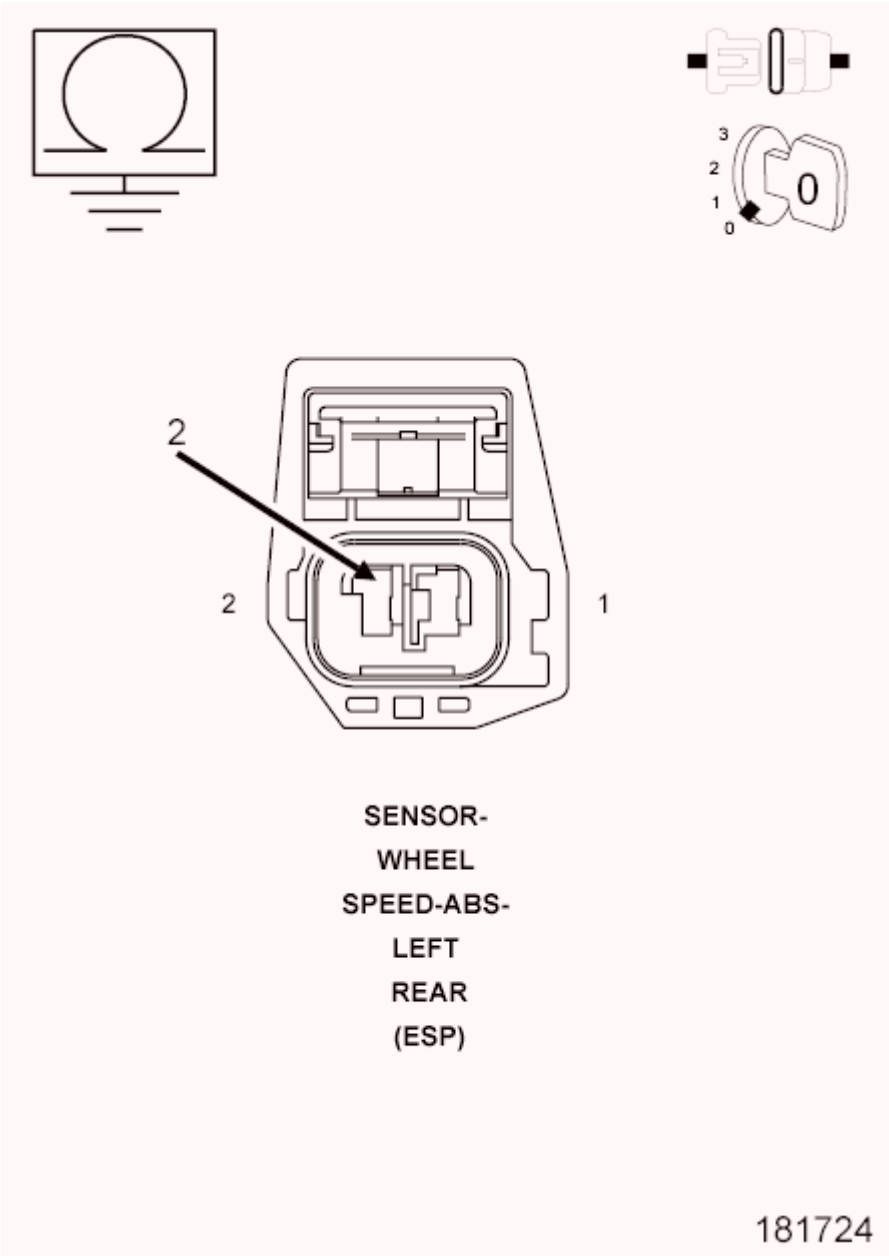

Fig. 72: Checking Left Rear Wheel Speed Sensor Supply Circuit For A Short To Ground
Courtesy of CHRYSLER GROUP, LLC

1. Turn the ignition off to the lock position.
2. Disconnect the ABS Module harness connector.
3. Measure the resistance between the (B4) Left Rear Wheel Speed Sensor Supply circuit and ground.

   Is the resistance above 5.0 Ohms?

   Yes

   - Go To 7.

No

- Repair the (B4) Left Rear Wheel Speed Sensor Supply circuit for a short to ground.
- Perform the ABS VERIFICATION TEST. Refer to **ABS VERIFICATION TEST**.

7. **(B4) LEFT REAR WHEEL SPEED SENSOR SUPPLY CIRCUIT FOR AN OPEN**

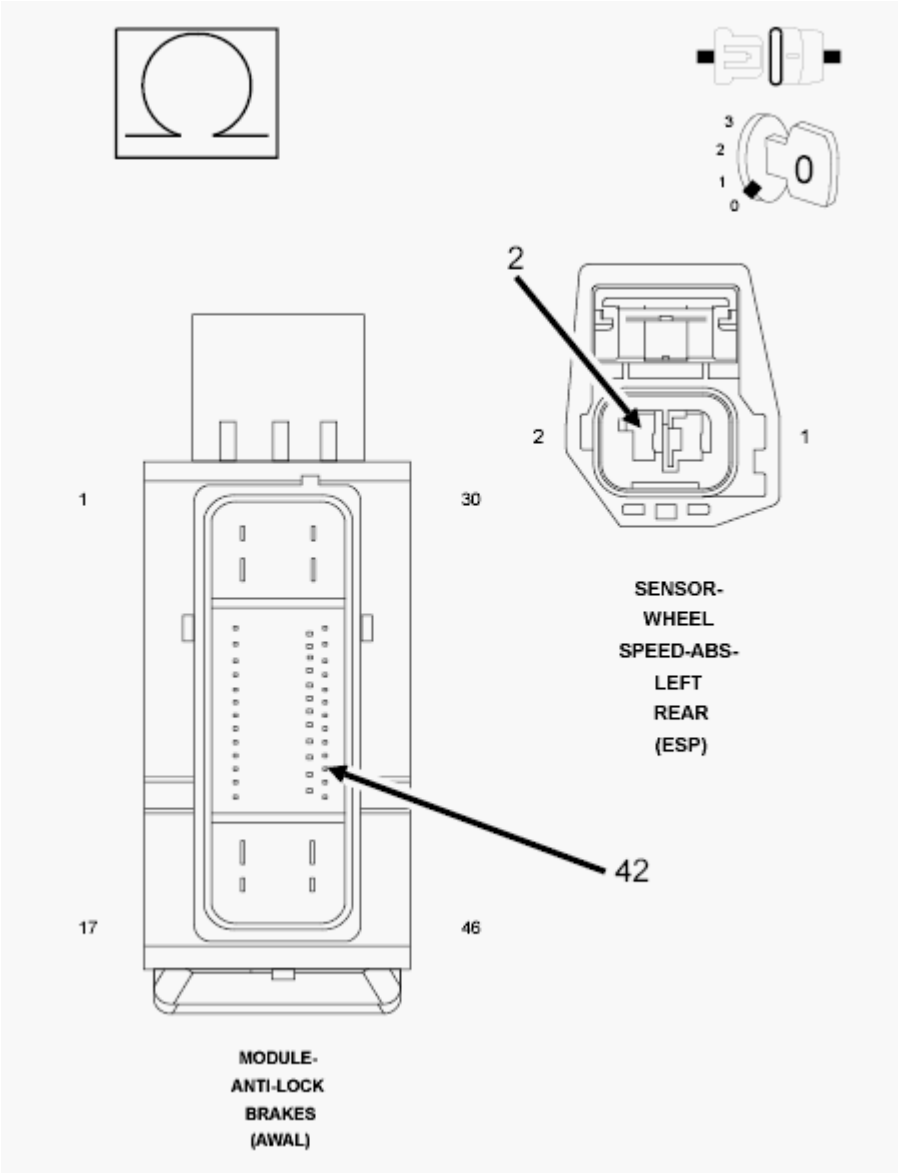

Fig. 73: Checking Left Rear Wheel Speed Sensor Supply Circuit For An Open
Courtesy of CHRYSLER GROUP, LLC

1. Measure the resistance of the (B4) Left Rear Wheel Speed Sensor Supply circuit between the ABS harness connector and the Left Rear Wheel Speed Sensor harness connector.

   Is the resistance below 5 Ohms?

Yes

- Go To 8.

No

- Repair the open (B4) Left Rear Wheel Speed Sensor Supply circuit.
- Perform the ABS VERIFICATION TEST. Refer to **ABS VERIFICATION TEST**.

8. **(B3) LEFT REAR WHEEL SPEED SENSOR SIGNAL CIRCUIT FOR AN OPEN**

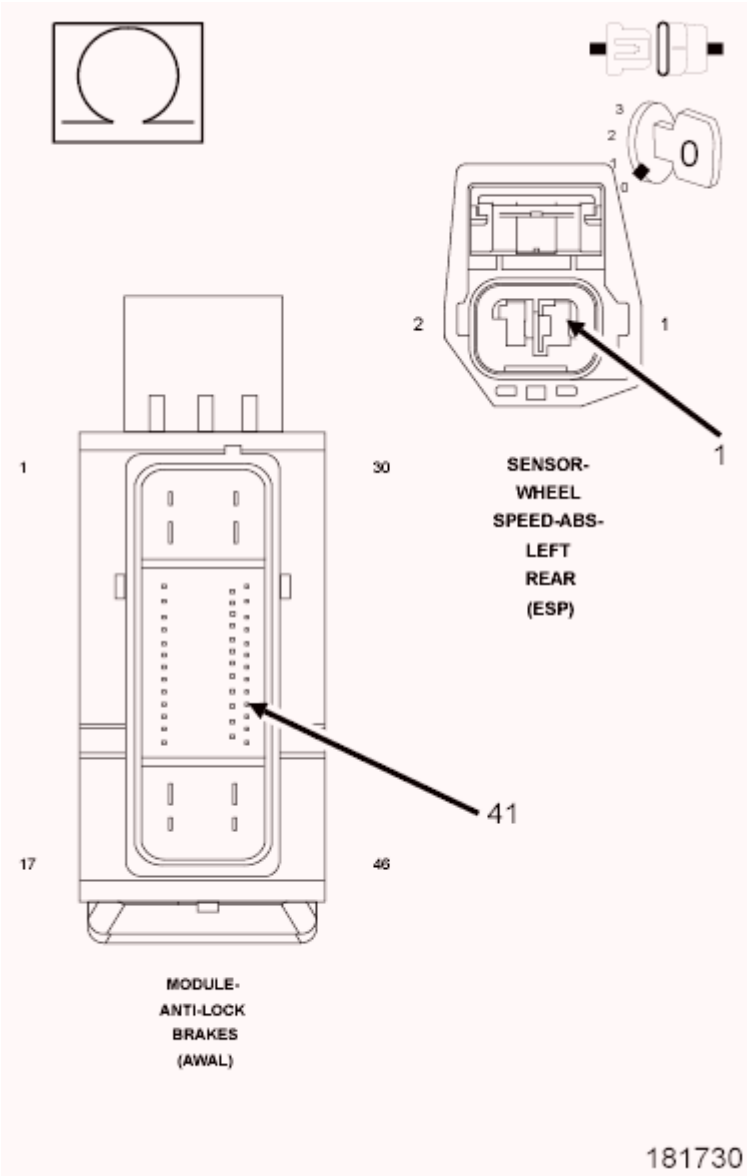

Fig. 74: Checking Left Rear Wheel Speed Sensor Signal Circuit For An Open
Courtesy of CHRYSLER GROUP, LLC

1. Measure the resistance of the (B3) Left Rear Wheel Speed Sensor Signal circuit between the ABS

harness connector and the Left Rear Wheel Speed Sensor harness connector.

Is the resistance below 5 Ohms?

Yes

- Go To 9.

No

- Repair the open (B3) Left Rear Wheel Speed Sensor Signal circuit.
- Perform the ABS VERIFICATION TEST. Refer to **ABS VERIFICATION TEST**.

9. **(B3) LEFT REAR WHEEL SPEED SENSOR SIGNAL CIRCUIT FOR A SHORT TO VOLTAGE**

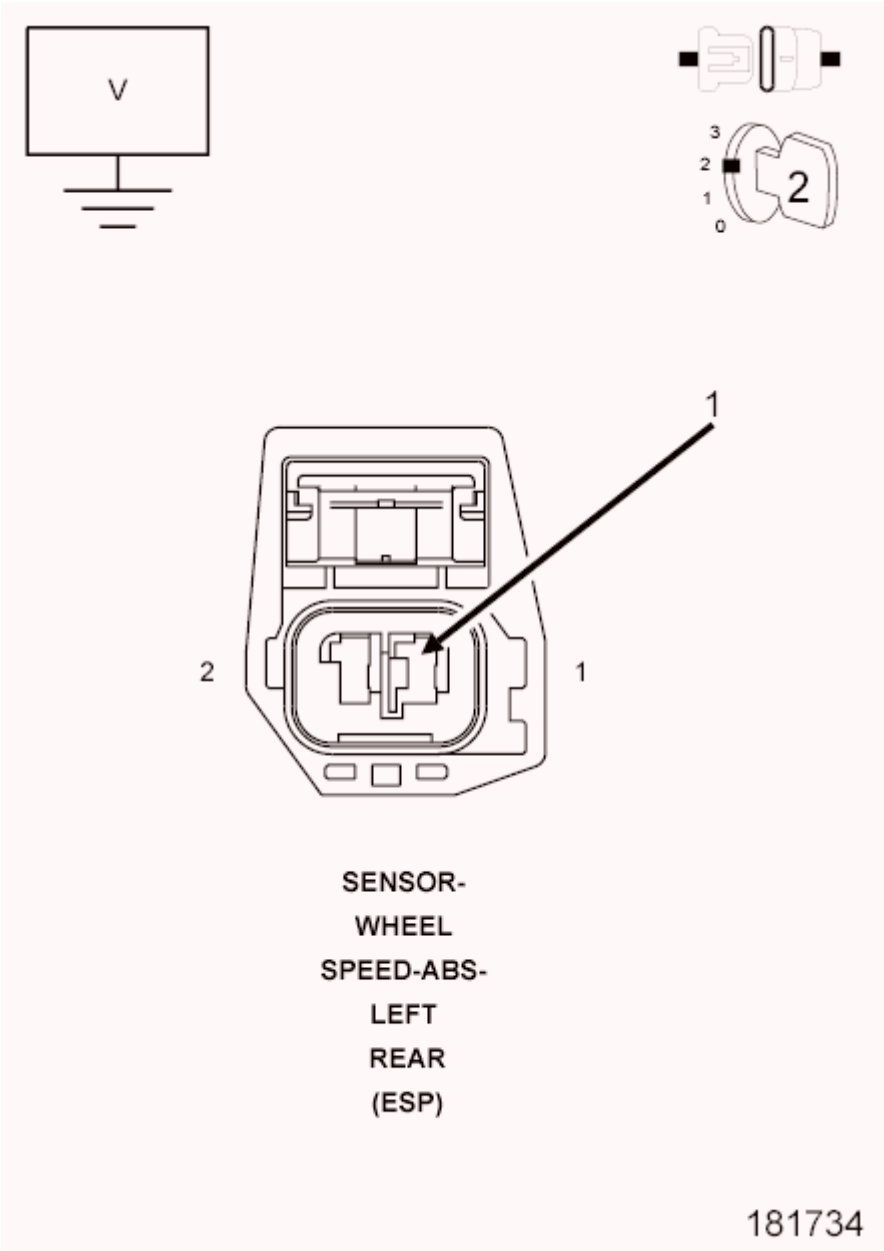

Fig. 75: Checking Left Rear Wheel Speed Sensor Signal Circuit For A Short To Voltage
Courtesy of CHRYSLER GROUP, LLC

1. Turn the ignition on.
2. Measure the voltage of the (B3) Left Rear Wheel Speed Sensor Signal circuit at the Left Rear Wheel Speed Sensor harness connector.

   Is there any voltage present?

   Yes

   - Repair the (B3) Left Rear Wheel Speed Sensor Signal circuit for a short to voltage.

- Perform the ABS VERIFICATION TEST. Refer to **ABS VERIFICATION TEST**.

No

- Go To 10.

10. **(B4) LEFT REAR WHEEL SPEED SENSOR SUPPLY CIRCUIT SHORTED TO THE (B3) LEFT REAR WHEEL SPEED SENSOR SIGNAL CIRCUIT**

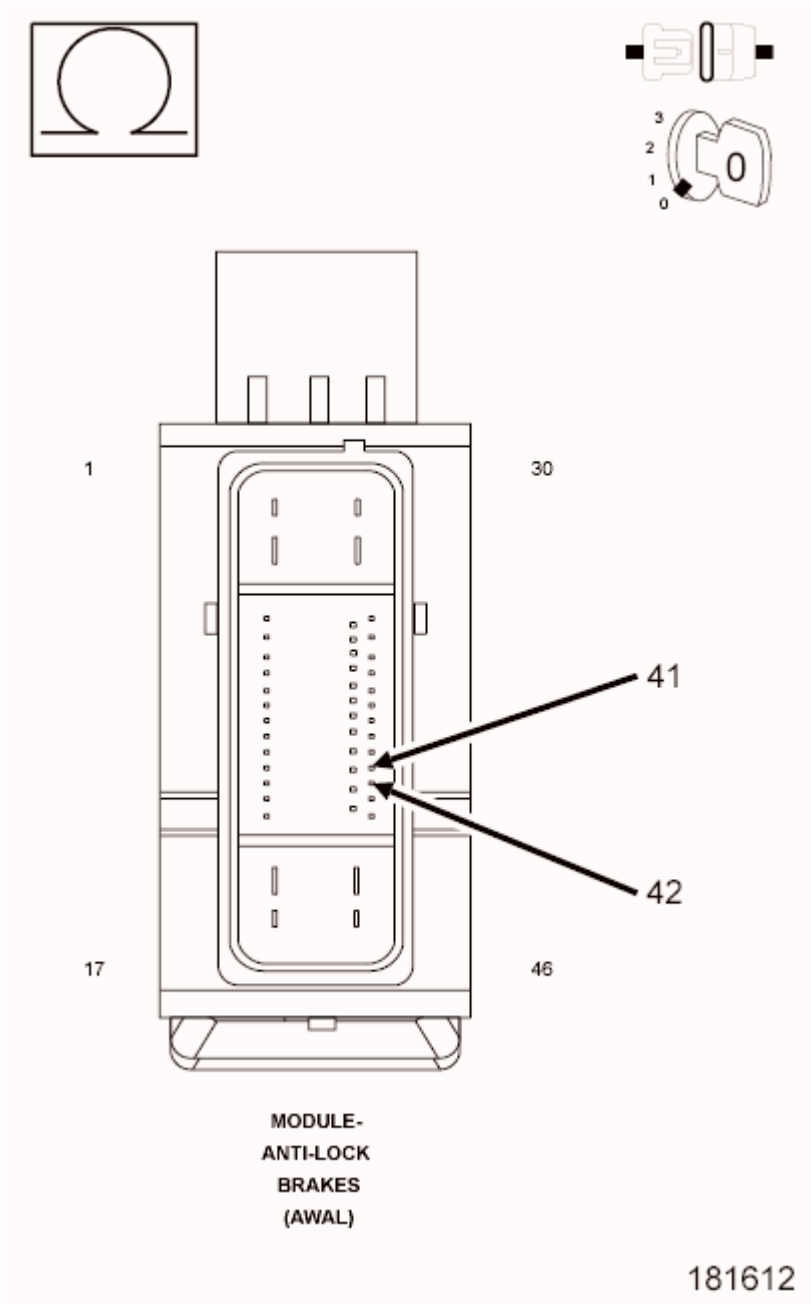

Fig. 76: Checking Left Rear Wheel Speed Sensor Supply Circuit For A Short To The Left Rear Wheel Speed Sensor Signal Circuit
Courtesy of CHRYSLER GROUP, LLC

1. Turn the ignition off to the lock position.
2. Measure the resistance between the (B4) Left Rear Wheel Speed Sensor Supply circuit and the (B3) Left Rear Wheel Speed Sensor Signal circuit at the ABS Module harness connector.

   Is the resistance below 5.0 Ohms?

   Yes

   - Repair (B4) Left Rear Wheel Speed Sensor Supply circuit for a short to the (B3) Left Rear Wheel Speed Sensor Signal circuit.
   - Perform the ABS VERIFICATION TEST. Refer to **ABS VERIFICATION TEST**.

   No

   - Replace the Antilock Brakes Module in accordance with the Service Information.
   - Perform the ABS VERIFICATION TEST. Refer to **ABS VERIFICATION TEST**.

C1027-LEFT REAR WHEEL SPEED SENSOR SIGNAL ERRATIC PERFORMANCE

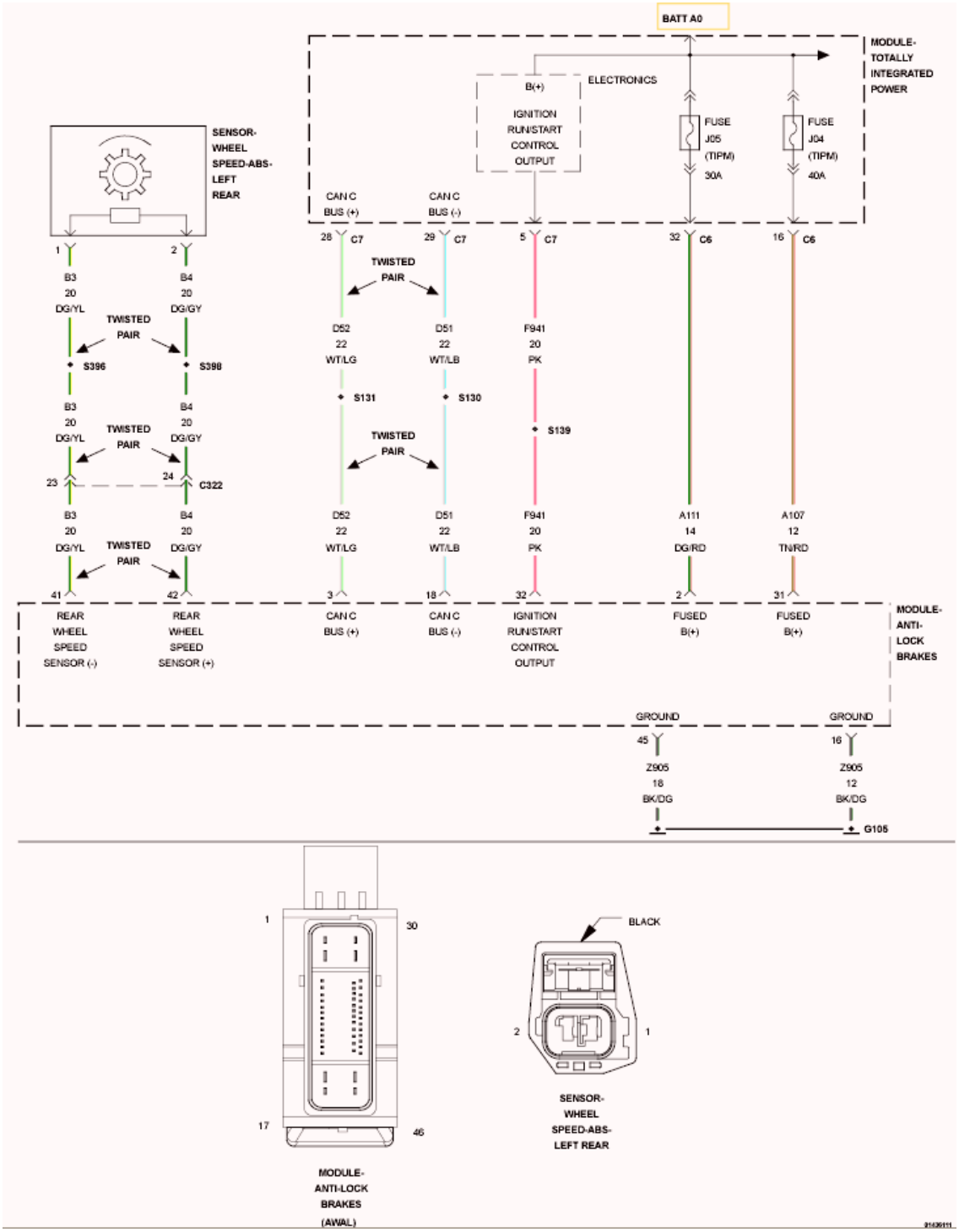

Fig. 77: Left Rear Wheel Speed Sensor Wiring Diagram
Courtesy of CHRYSLER GROUP, LLC

For a complete wiring diagram, **refer to appropriate SYSTEM WIRING DIAGRAMS article** .

NOTE: **The Electronic Stability Control (ESC) may also be referred to as Electronic Stability Program (ESP) depending on the vehicle model year and configuration.**

Certain components may also reference ESP, ESC, or use the traction control symbol.

WHEN MONITORED:

With the ignition on.

SET CONDITION:

When the Left Rear WSS Signal is intermittently missing a vehicle speed above 40 km/h (25 mph) or erratic wheel speed signal during acceleration or sensed wheel speed is different from other wheels.

POSSIBLE CAUSES

Possible Causes
(B4) LEFT REAR WHEEL SPEED SENSOR SUPPLY CIRCUIT SHORT TO GROUND
(B3) LEFT REAR WHEEL SPEED SENSOR SIGNAL CIRCUIT SHORT TO GROUND
(B4) LEFT REAR WHEEL SPEED SENSOR SUPPLY CIRCUIT FOR AN OPEN
(B3) LEFT REAR WHEEL SPEED SENSOR SIGNAL CIRCUIT FOR AN OPEN
(B4) LEFT REAR WHEEL SPEED SENSOR SUPPLY CIRCUIT FOR A SHORT TO VOLTAGE
(B3) LEFT REAR WHEEL SPEED SENSOR SIGNAL CIRCUIT FOR A SHORT TO VOLTAGE
(B4) LEFT REAR WHEEL SPEED SENSOR SUPPLY CIRCUIT SHORTED TO THE (B3) LEFT REAR WHEEL SPEED SENSOR SIGNAL CIRCUIT
TONE WHEEL
EXCESSIVE REAR WHEEL SPEED SENSOR AIR GAP
WHEEL BEARING
LEFT REAR WHEEL SPEED SENSOR (WSS)
ANTILOCK BRAKE SYSTEM (ABS) MODULE

DIAGNOSTIC TEST

1. **DTC IS ACTIVE**
    1. Ignition on, engine not running.
    2. With the scan tool, erase DTC's.
    3. Turn the ignition off to the lock position.
    4. Ignition on, engine not running.
    5. With the scan tool, read DTC's.

    Is the status Active for this DTC?

    Yes

    - Go To 2.

No

- The condition that caused the symptom is currently not present. Inspect the related wiring for a possible intermittent condition. Look for any chafed, pierced, pinched, or partially broken wires.
- Perform the ABS INTERMITTENT CONDITION diagnostic procedure. Refer to **ABS INTERMITTENT CONDITION**.

2. **WHEEL SPEED SENSOR INSPECTION**
   1. Turn the ignition off to the lock position.
   2. Inspect the Wheel Speed Sensor for proper mounting.
   3. Inspect the Wheel Speed Sensor harness and connector.
   4. Inspect the Wheel Speed Sensor for excessive debris on the sensor.

   Were any problems found?

   Yes

   - Repair as necessary in accordance with the Service Information.
   - Perform the ABS VERIFICATION TEST. Refer to **ABS VERIFICATION TEST**.

   No

   - Go To 3.

3. **TONE WHEEL DAMAGED/MISSING**
   1. Inspect the Tone Wheel in accordance with the Service Information.

   NOTE: The Tone Wheel Teeth should be perfectly square, not bent or nicked.

   Were any problems found?

   Yes

   - Replace the Tone Wheel in accordance with the Service Information.
   - Perform the ABS VERIFICATION TEST. Refer to **ABS VERIFICATION TEST**.

   No

   - Go To 4.

4. **EXCESSIVE WHEEL SPEED SENSOR AIR GAP**
   1. Measure the Wheel Speed Sensor Air Gap in accordance with the Service Information.

   Were any problems found?

   Yes

- Repair as necessary in accordance with the Service Information.
- Perform the ABS VERIFICATION TEST. Refer to **ABS VERIFICATION TEST**.

No

- Go To 5.

5. **WHEEL BEARING LOOSE/BINDING**
   1. Inspect the wheel bearings for excessive run out or improper clearance in accordance with the Service Information.

      Were any problems found?

      Yes

      - Repair as necessary in accordance with the Service Information.
      - Perform the ABS VERIFICATION TEST. Refer to **ABS VERIFICATION TEST**.

      No

      - Go To 6.

6. **CHECK (B4) LEFT REAR WHEEL SPEED SENSOR SUPPLY CIRCUIT VOLTAGE**

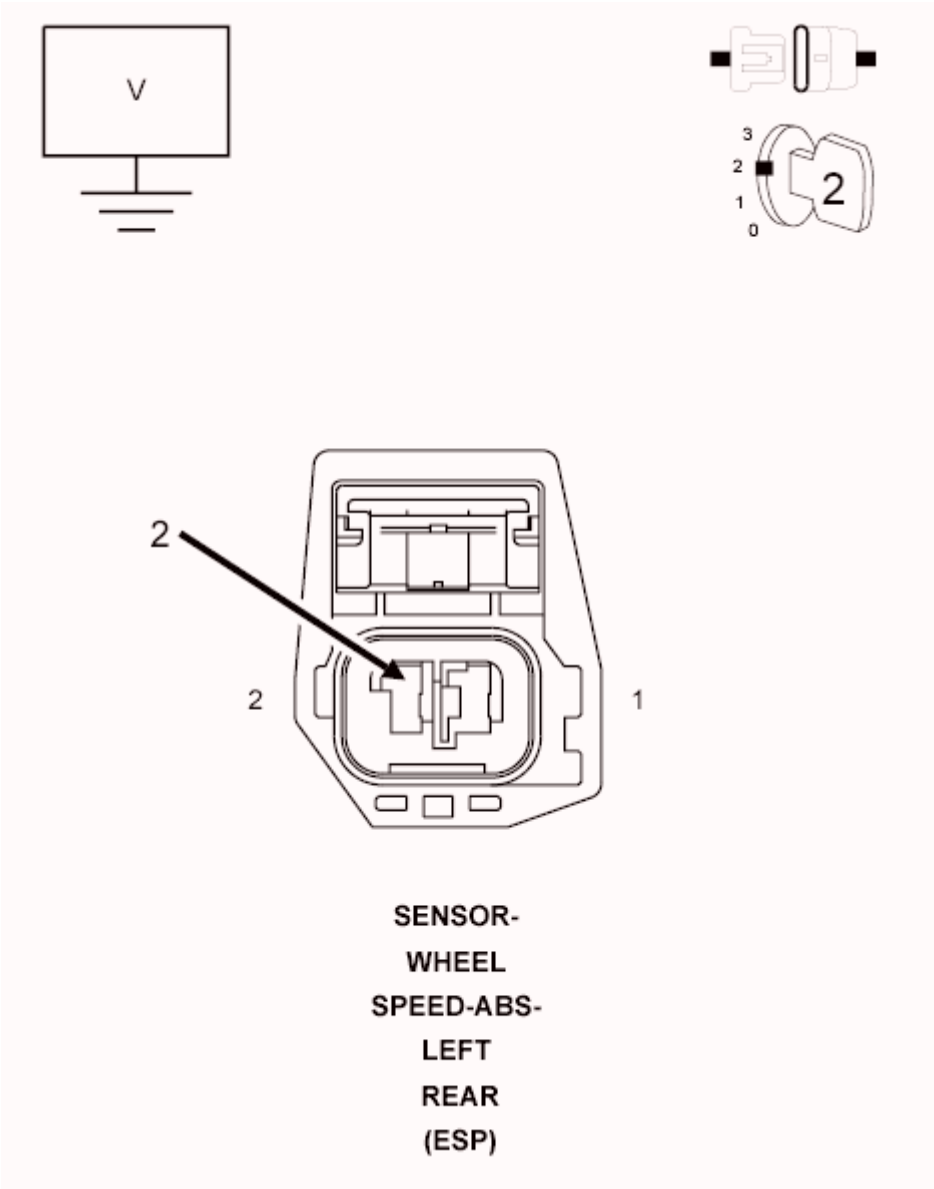

Fig. 78: Measuring Left Rear Wheel Speed Sensor Supply Circuit Voltage
Courtesy of CHRYSLER GROUP, LLC

1. Disconnect the Left Rear Wheel Speed Sensor harness connector.
2. Turn the ignition on.
3. Measure the voltage between the (B4) Left Rear Wheel Speed Sensor Supply circuit and ground.

   Is the voltage above 10 volts?

   Yes

   - Go To 7.

   No

- Go To 9.

7. **(B4) LEFT REAR WHEEL SPEED SENSOR SUPPLY CIRCUIT FOR A SHORT TO VOLTAGE**

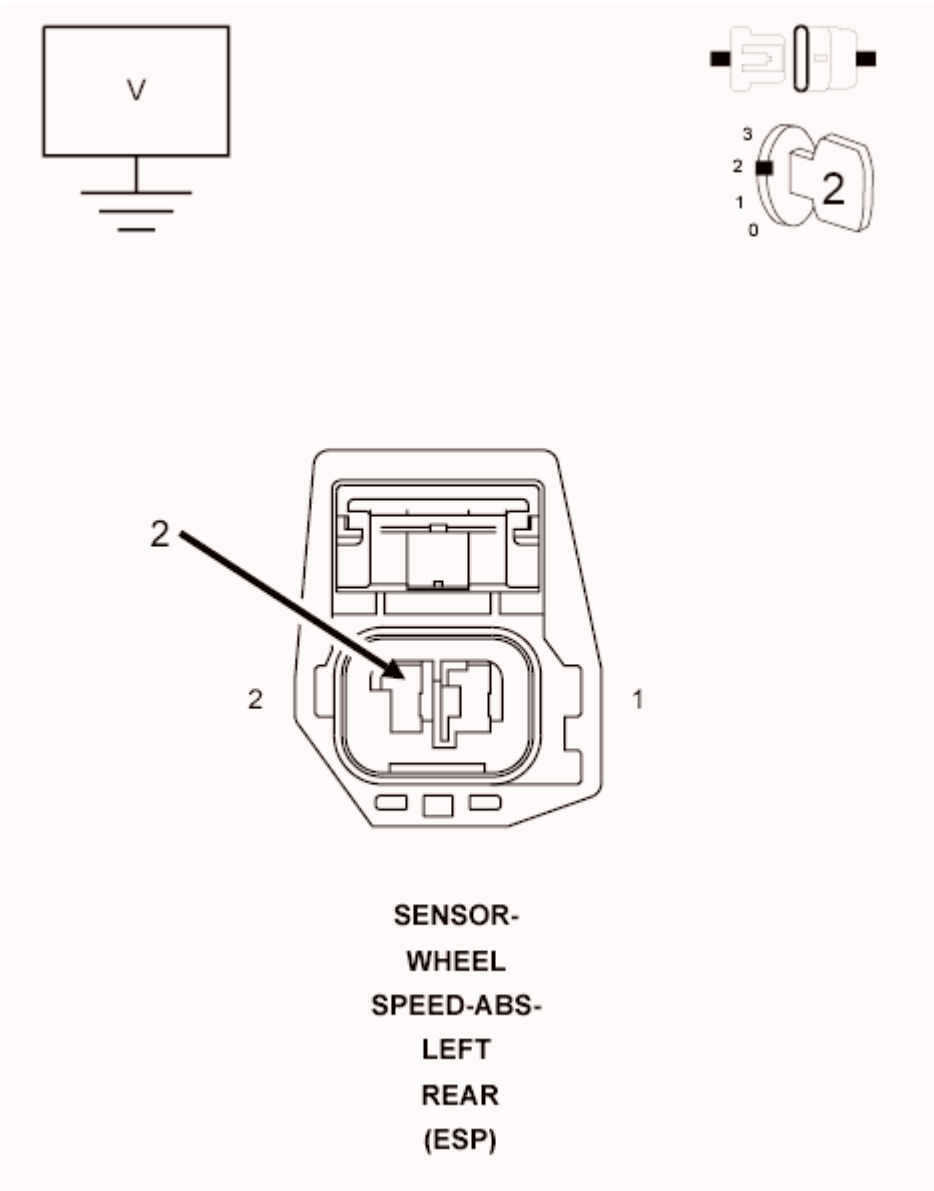

Fig. 79: Measuring Left Rear Wheel Speed Sensor Supply Circuit Voltage
Courtesy of CHRYSLER GROUP, LLC

1. Turn the ignition off to the lock position.
2. Disconnect the ABS Module harness connector.
3. Ignition on, engine not running.
4. Measure the voltage of the (B4) Left Rear Wheel Speed Sensor Supply circuit.

   Is there any voltage present?

Yes

- Repair (B4) Left Rear Wheel Speed Sensor Supply circuit for a short to voltage.
- Perform the ABS VERIFICATION TEST. Refer to **ABS VERIFICATION TEST**.

No

- Go To 8.

8. **(B3) LEFT REAR WHEEL SPEED SENSOR SIGNAL CIRCUIT FOR A SHORT TO GROUND**

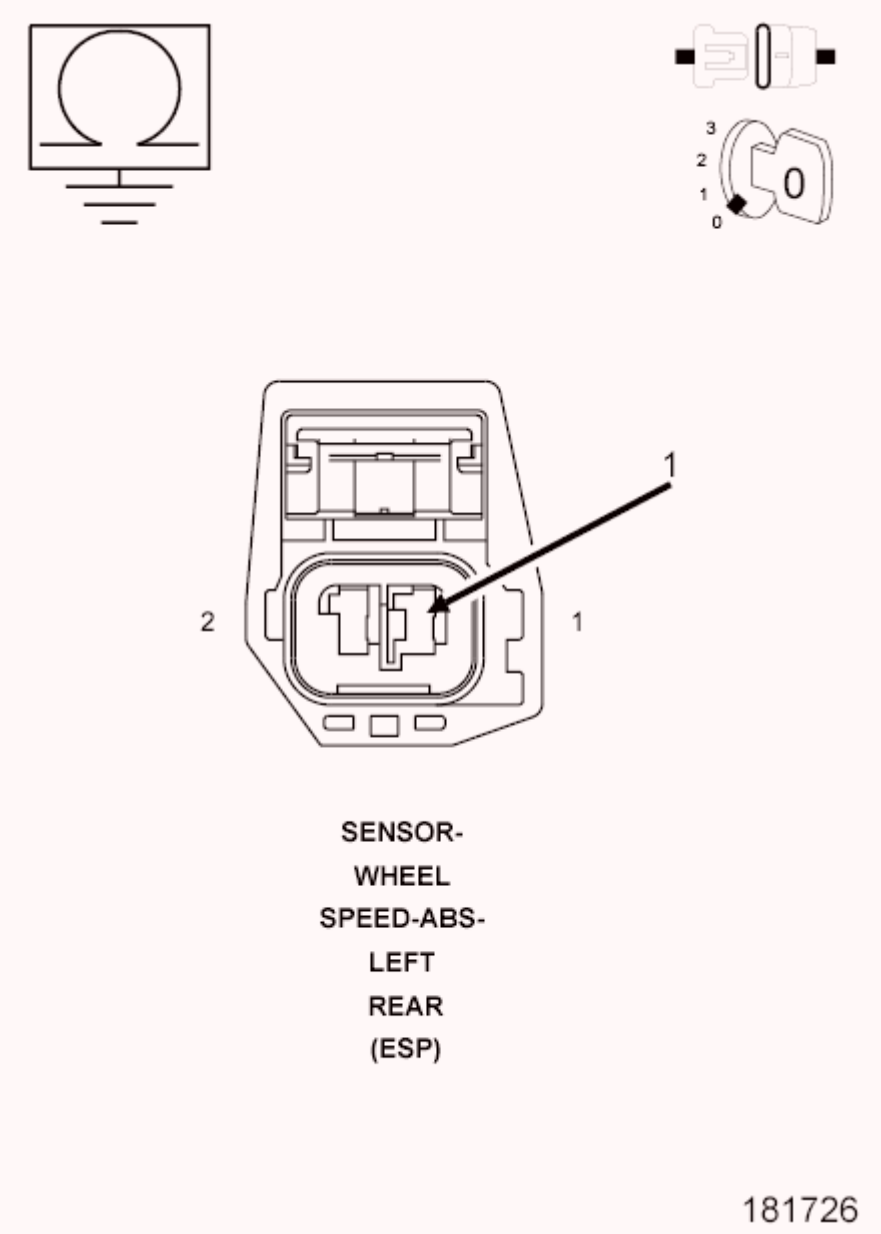

Fig. 80: Checking Left Rear Wheel Speed Sensor Signal Circuit For A Short To Ground
Courtesy of CHRYSLER GROUP, LLC

1. Turn the ignition off.
2. Measure the resistance between the (B3) Left Rear Wheel Speed Sensor Signal circuit and ground.

   Is the resistance above 5.0 Ohms?

   Yes

   - Replace the Left Rear Wheel Speed Sensor in accordance with the Service Information.
   - Perform the ABS VERIFICATION TEST. Refer to **ABS VERIFICATION TEST**.

   No

   - Repair the (B3) Left Rear Wheel Speed Sensor Signal circuit for a short to ground.
   - Perform the ABS VERIFICATION TEST. Refer to **ABS VERIFICATION TEST**.

9. **(B4) LEFT REAR WHEEL SPEED SENSOR SUPPLY CIRCUIT FOR A SHORT TO GROUND**

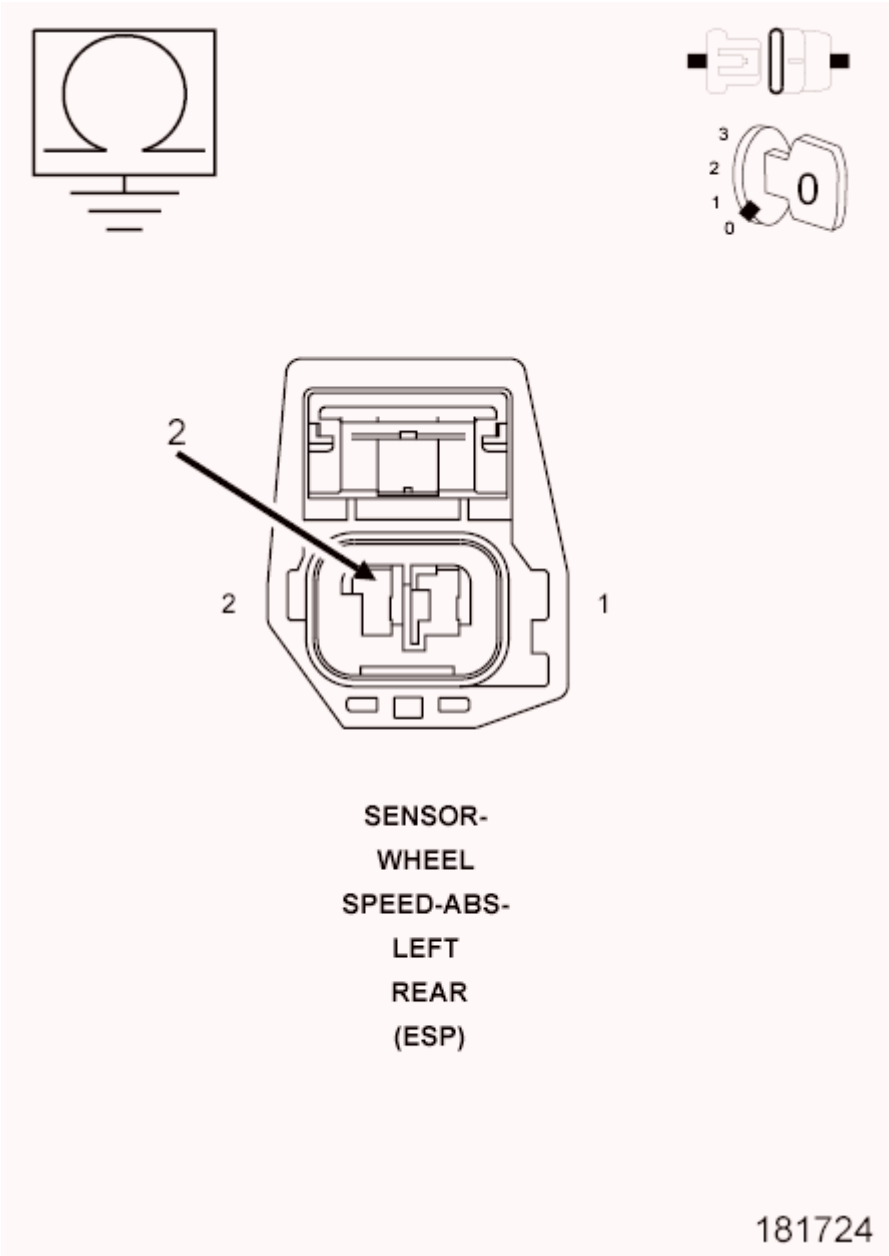

Fig. 81: Checking Left Rear Wheel Speed Sensor Supply Circuit For A Short To Ground
Courtesy of CHRYSLER GROUP, LLC

1. Turn the ignition off to the lock position.
2. Disconnect the ABS Module harness connector.
3. Measure the resistance between the (B4) Left Rear Wheel Speed Sensor Supply circuit and ground.

   Is the resistance above 5.0 Ohms?

   Yes

   - Go To 10.

No

- Repair the (B4) Left Rear Wheel Speed Sensor Supply circuit for a short to ground.
- Perform the ABS VERIFICATION TEST. Refer to **ABS VERIFICATION TEST**.

10. **(B4) LEFT REAR WHEEL SPEED SENSOR SUPPLY CIRCUIT FOR AN OPEN**

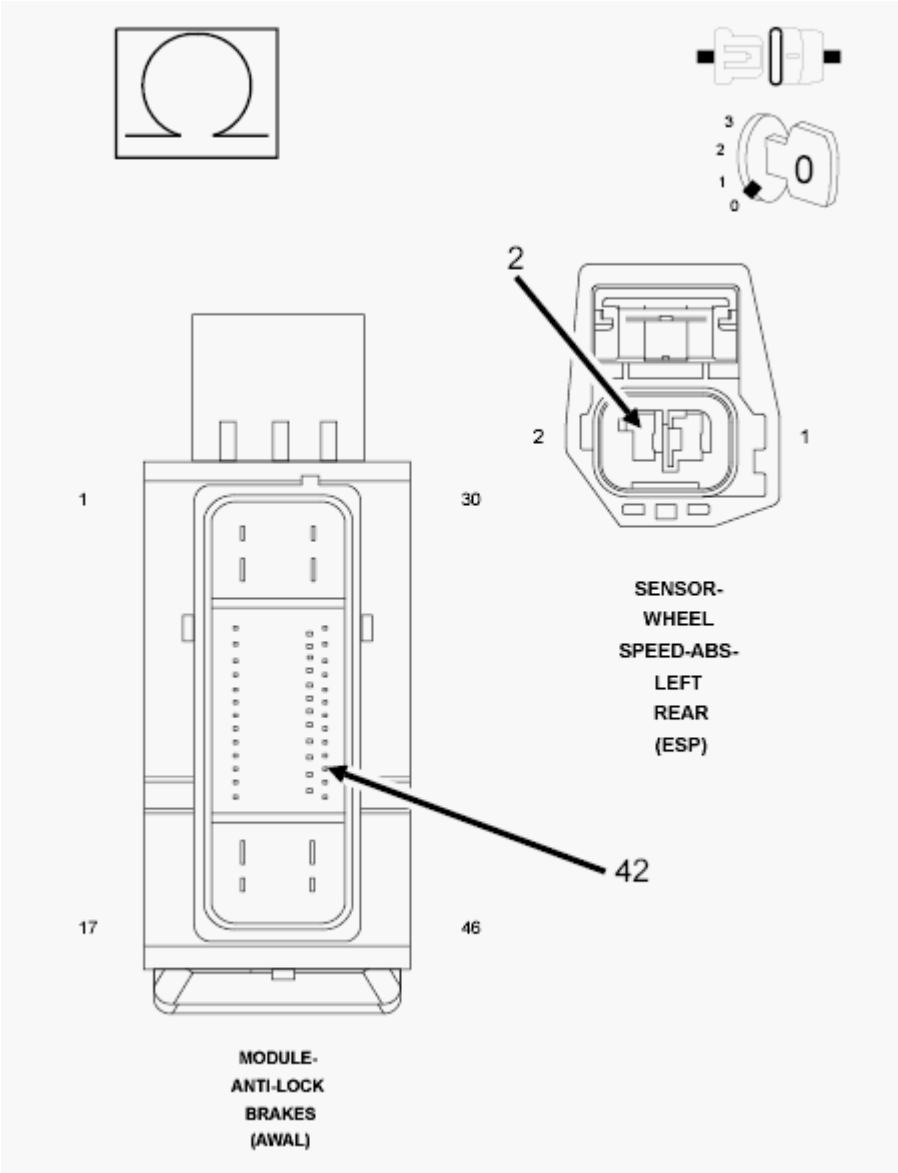

Fig. 82: Checking Left Rear Wheel Speed Sensor Supply Circuit For An Open
Courtesy of CHRYSLER GROUP, LLC

1. Measure the resistance of the (B4) Left Rear Wheel Speed Sensor Supply circuit between the ABS harness connector and the Left Rear Wheel Speed Sensor harness connector.

   Is the resistance below 5 Ohms?

Yes

- Go To 11.

No

- Repair the open (B4) Left Rear Wheel Speed Sensor Supply circuit.
- Perform the ABS VERIFICATION TEST. Refer to **ABS VERIFICATION TEST**.

11. **(B3) LEFT REAR WHEEL SPEED SENSOR SIGNAL CIRCUIT FOR AN OPEN**

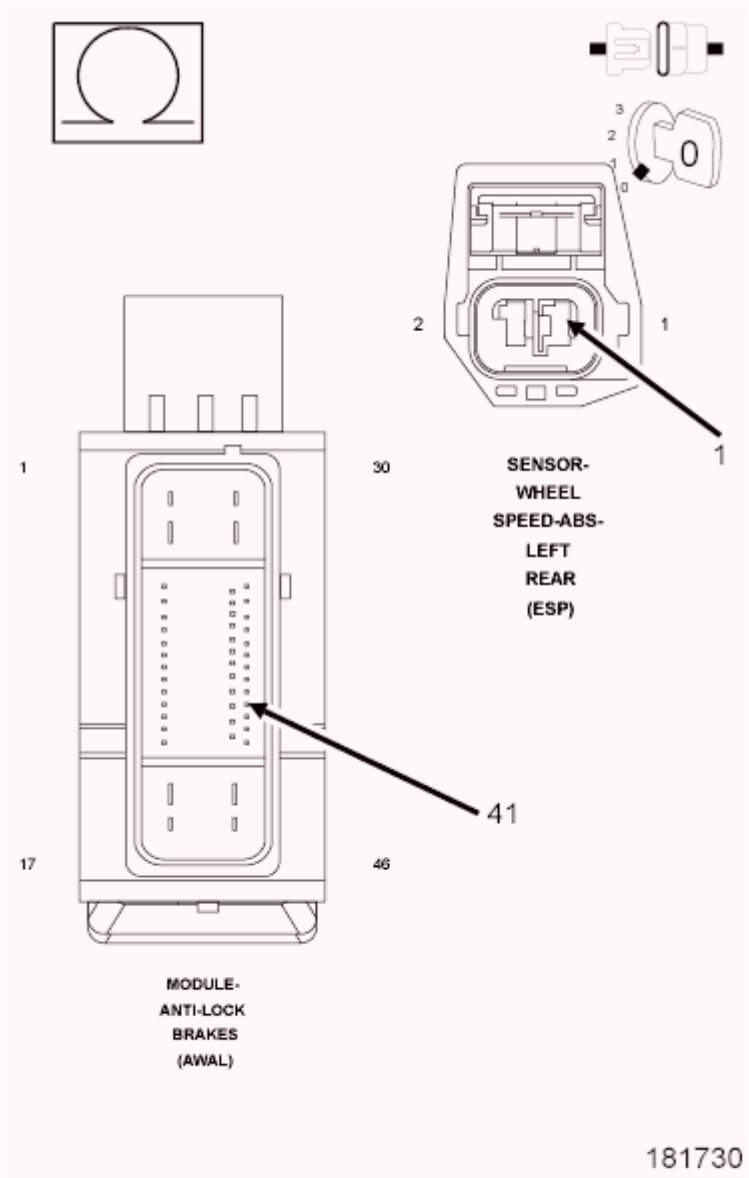

Fig. 83: Checking Left Rear Wheel Speed Sensor Signal Circuit For An Open
Courtesy of CHRYSLER GROUP, LLC

1. Measure the resistance of the (B3) Left Rear Wheel Speed Sensor Signal circuit between the ABS

harness connector and the Left Rear Wheel Speed Sensor harness connector.

Is the resistance below 5 Ohms?

Yes

- Go To 12.

No

- Repair the open (B3) Left Rear Wheel Speed Sensor Signal circuit.
- Perform the ABS VERIFICATION TEST. Refer to **ABS VERIFICATION TEST**.

12. **(B3) LEFT REAR WHEEL SPEED SENSOR SIGNAL CIRCUIT FOR A SHORT TO VOLTAGE**

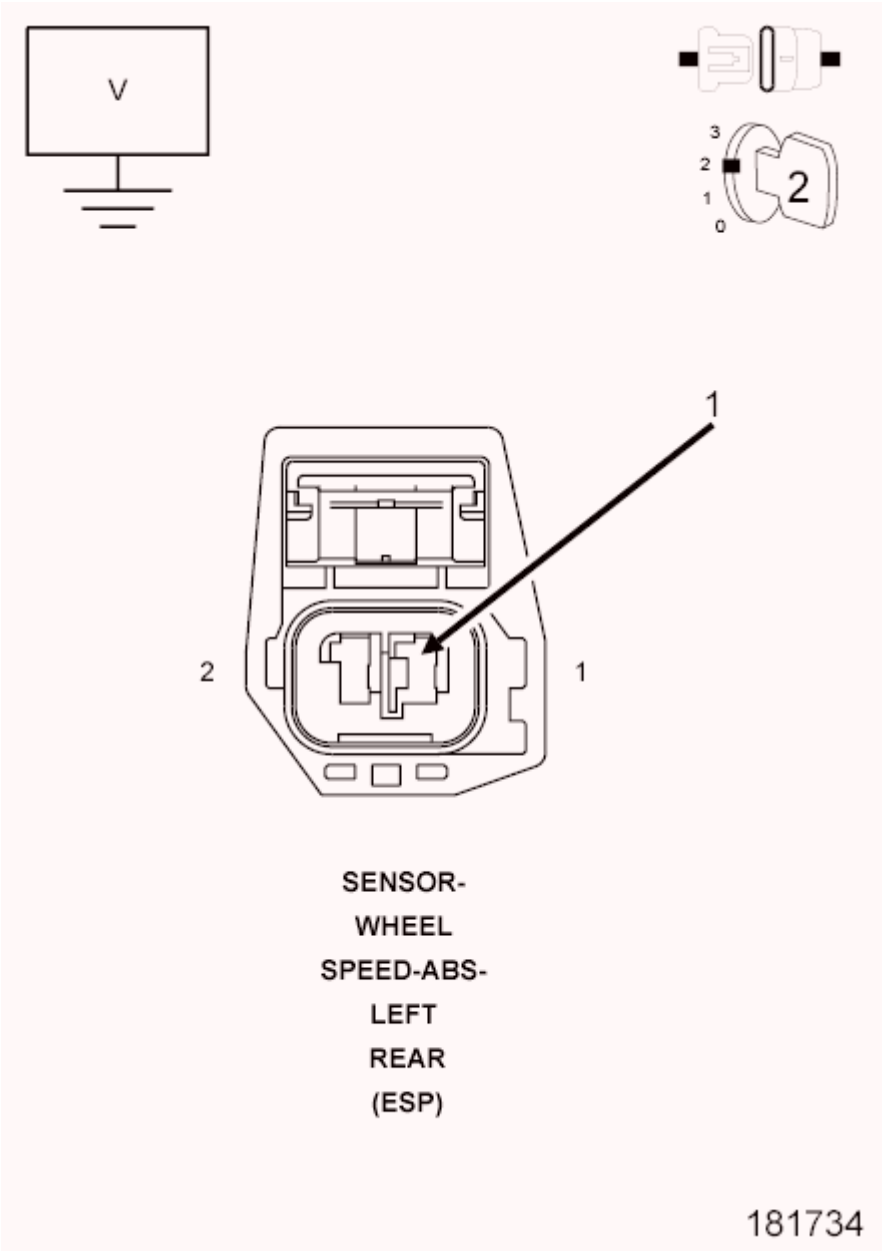

Fig. 84: Checking Left Rear Wheel Speed Sensor Signal Circuit For A Short To Voltage
Courtesy of CHRYSLER GROUP, LLC

1. Turn the ignition on.
2. Measure the voltage of the (B3) Left Rear Wheel Speed Sensor Signal circuit at the Left Rear Wheel Speed Sensor harness connector.

   Is there any voltage present?

   Yes

   - Repair the (B3) Left Rear Wheel Speed Sensor Signal circuit for a short to voltage.

- Perform the ABS VERIFICATION TEST. Refer to **ABS VERIFICATION TEST**.

No

- Go To 13.

13. **(B4) LEFT REAR WHEEL SPEED SENSOR SUPPLY CIRCUIT SHORTED TO THE (B3) LEFT REAR WHEEL SPEED SENSOR SIGNAL CIRCUIT**

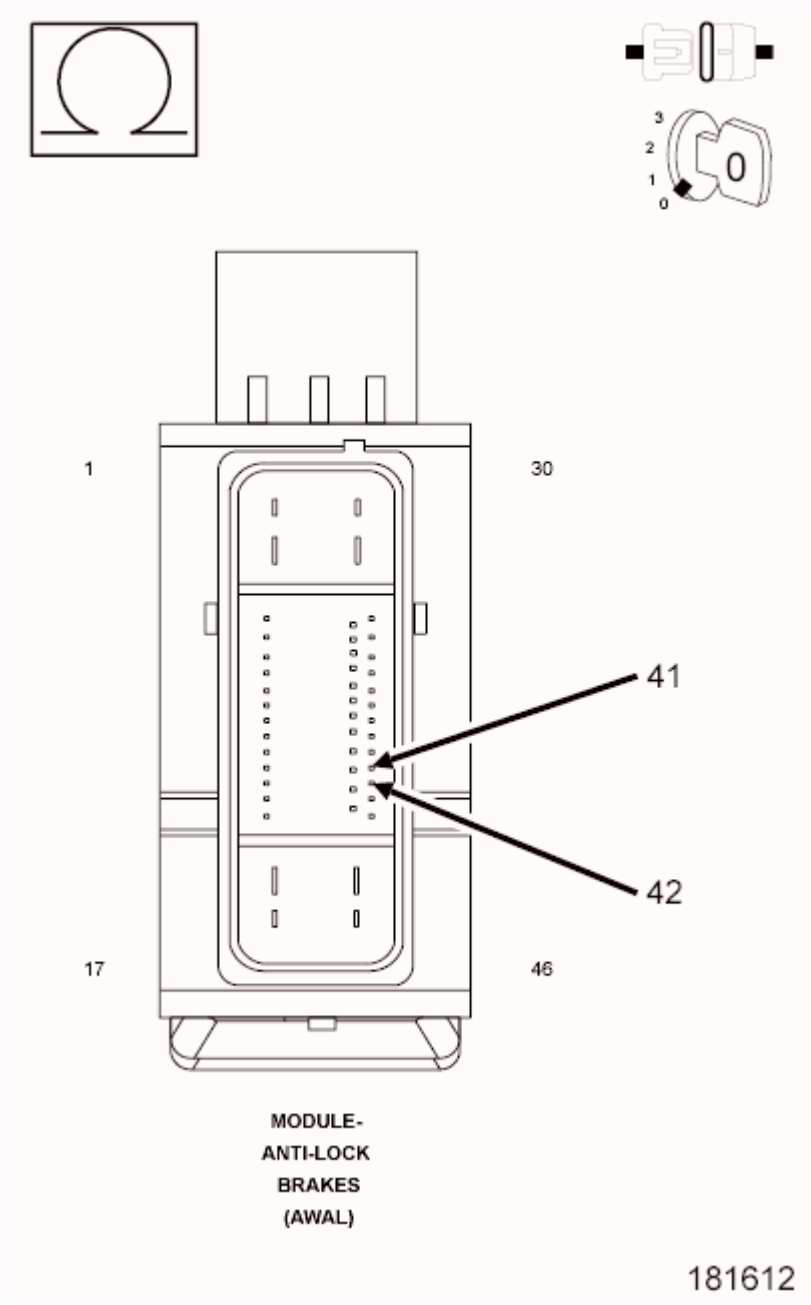

Fig. 85: Checking Left Rear Wheel Speed Sensor Supply Circuit For A Short To The Left Rear Wheel Speed Sensor Signal Circuit
Courtesy of CHRYSLER GROUP, LLC

1. Turn the ignition off to the lock position.
2. Measure the resistance between the (B4) Left Rear Wheel Speed Sensor Supply circuit and the (B3) Left Rear Wheel Speed Sensor Signal circuit at the ABS Module harness connector.

   Is the resistance below 5.0 Ohms?

   Yes

   - Repair (B4) Left Rear Wheel Speed Sensor Supply circuit for a short to the (B3) Left Rear Wheel Speed Sensor Signal circuit.
   - Perform the ABS VERIFICATION TEST. Refer to **ABS VERIFICATION TEST**.

   No

   - Replace the Antilock Brakes Module in accordance with the Service Information.
   - Perform the ABS VERIFICATION TEST. Refer to **ABS VERIFICATION TEST**.

C102A-LEFT REAR WHEEL SPEED COMPARATIVE PERFORMANCE

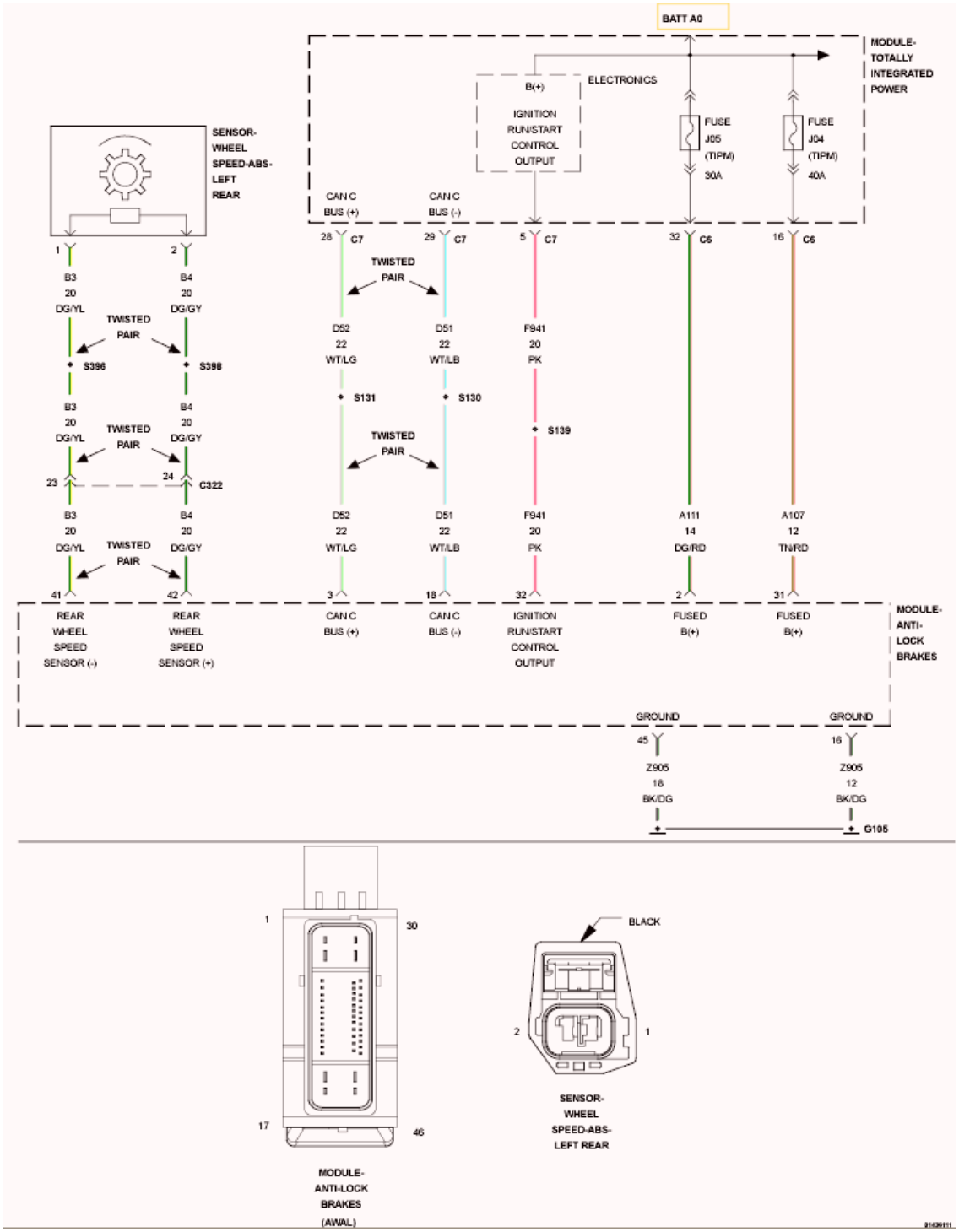

Fig. 86: Left Rear Wheel Speed Sensor Wiring Diagram
Courtesy of CHRYSLER GROUP, LLC

For a complete wiring diagram, **refer to appropriate SYSTEM WIRING DIAGRAMS article** .

NOTE: **The Electronic Stability Control (ESC) may also be referred to as Electronic Stability Program (ESP) depending on the vehicle model year and configuration.**

Certain components may also reference ESP, ESC, or use the traction control symbol.

WHEN MONITORED:

With the ignition on.

SET CONDITION:

When the Left Rear WSS reading is different from the readings received from the other WSS's at a vehicle speed above 40 km/h (25 mph). The Antilock Brake Module compares WSS readings from side-to-side on an axle and front-to-rear.

POSSIBLE CAUSES

Possible Causes
(B4) LEFT REAR WHEEL SPEED SENSOR SUPPLY CIRCUIT SHORT TO GROUND
(B3) LEFT REAR WHEEL SPEED SENSOR SIGNAL CIRCUIT SHORT TO GROUND
(B4) LEFT REAR WHEEL SPEED SENSOR SUPPLY CIRCUIT FOR AN OPEN
(B3) LEFT REAR WHEEL SPEED SENSOR SIGNAL CIRCUIT FOR AN OPEN
(B4) LEFT REAR WHEEL SPEED SENSOR SUPPLY CIRCUIT FOR A SHORT TO VOLTAGE
(B3) LEFT REAR WHEEL SPEED SENSOR SIGNAL CIRCUIT FOR A SHORT TO VOLTAGE
(B4) LEFT REAR WHEEL SPEED SENSOR SUPPLY CIRCUIT SHORTED TO THE (B3) LEFT REAR WHEEL SPEED SENSOR SIGNAL CIRCUIT
TONE WHEEL
EXCESSIVE REAR WHEEL SPEED SENSOR AIR GAP
WHEEL BEARING
LEFT REAR WHEEL SPEED SENSOR (WSS)
ANTILOCK BRAKE SYSTEM (ABS) MODULE

DIAGNOSTIC TEST

1. **DTC IS ACTIVE**
    1. Ignition on, engine not running.
    2. With the scan tool, erase DTC's.
    3. Turn the ignition off to the lock position.
    4. Ignition on, engine not running.
    5. With the scan tool, read DTC's.

    Is the status Active for this DTC?

    Yes

    - Go To 2.

No

- The condition that caused the symptom is currently not present. Inspect the related wiring for a possible intermittent condition. Look for any chafed, pierced, pinched, or partially broken wires.
- Perform the ABS INTERMITTENT CONDITION diagnostic procedure. Refer to **ABS INTERMITTENT CONDITION**.

2. **WHEEL SPEED SENSOR INSPECTION**
   1. Turn the ignition off to the lock position.
   2. Inspect the Wheel Speed Sensor for proper mounting.
   3. Inspect the Wheel Speed Sensor harness and connector.
   4. Inspect the Wheel Speed Sensor for excessive debris on the sensor.

   Were any problems found?

   Yes

   - Repair as necessary in accordance with the Service Information.
   - Perform the ABS VERIFICATION TEST. Refer to **ABS VERIFICATION TEST**.

   No

   - Go To 3.

3. **TONE WHEEL DAMAGED/MISSING**
   1. Inspect the Tone Wheel in accordance with the Service Information.

   NOTE: The Tone Wheel Teeth should be perfectly square, not bent or nicked.

   Were any problems found?

   Yes

   - Replace the Tone Wheel in accordance with the Service Information.
   - Perform the ABS VERIFICATION TEST. Refer to **ABS VERIFICATION TEST**.

   No

   - Go To 4.

4. **EXCESSIVE WHEEL SPEED SENSOR AIR GAP**
   1. Measure the Wheel Speed Sensor Air Gap in accordance with the Service Information.

   Were any problems found?

   Yes

- Repair as necessary in accordance with the Service Information.
- Perform the ABS VERIFICATION TEST. Refer to **ABS VERIFICATION TEST**.

No

- Go To 5.

5. **WHEEL BEARING LOOSE/BINDING**
   1. Inspect the wheel bearings for excessive run out or improper clearance in accordance with the Service Information.

      Were any problems found?

      Yes

      - Repair as necessary in accordance with the Service Information.
      - Perform the ABS VERIFICATION TEST. Refer to **ABS VERIFICATION TEST**.

      No

      - Go To 6.

6. **CHECK (B4) LEFT REAR WHEEL SPEED SENSOR SUPPLY CIRCUIT VOLTAGE**

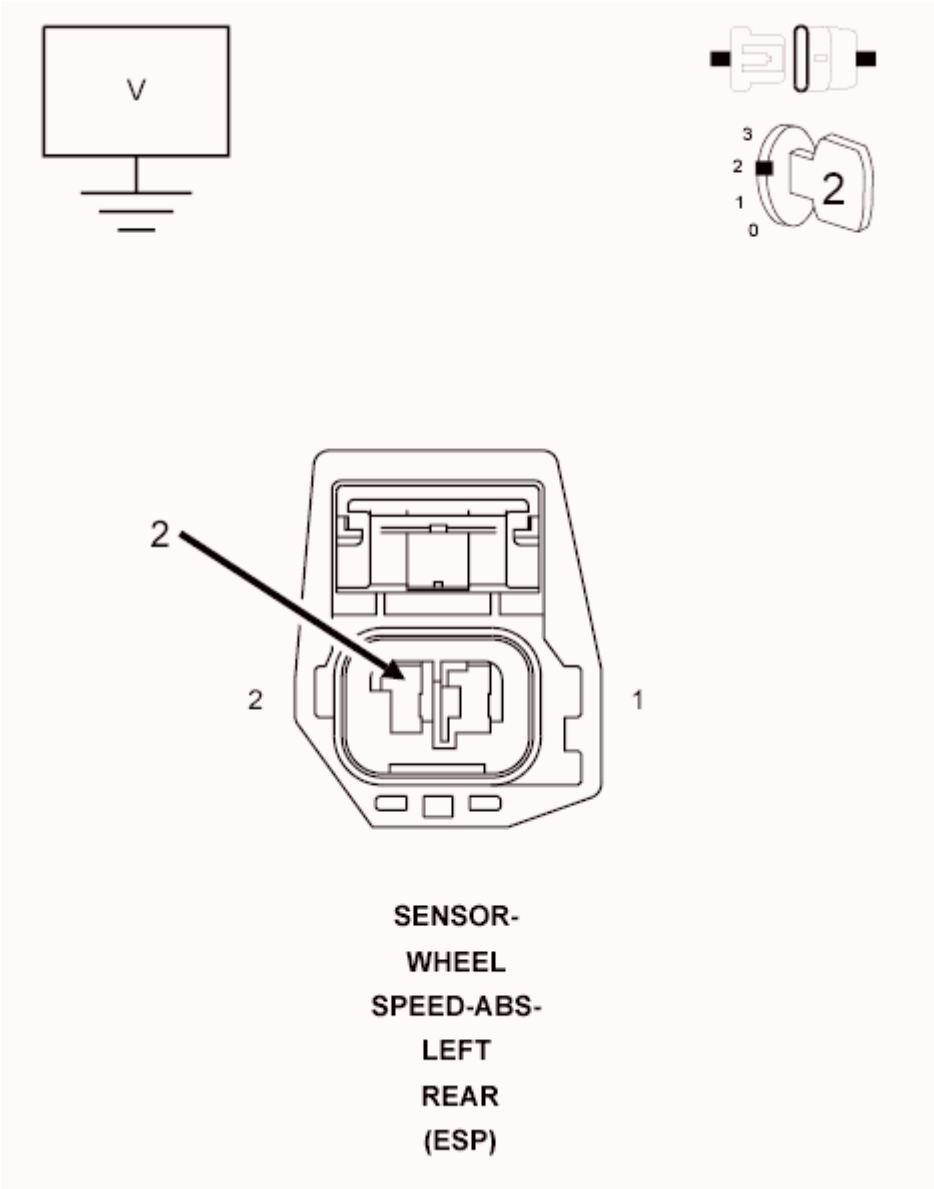

Fig. 87: Measuring Left Rear Wheel Speed Sensor Supply Circuit Voltage
Courtesy of CHRYSLER GROUP, LLC

1. Disconnect the Left Rear Wheel Speed Sensor harness connector.
2. Turn the ignition on.
3. Measure the voltage between the (B4) Left Rear Wheel Speed Sensor Supply circuit and ground.

   Is the voltage above 10 volts?

   Yes

   - Go To 7.

   No

- Go To 9.

7. **(B4) LEFT REAR WHEEL SPEED SENSOR SUPPLY CIRCUIT FOR A SHORT TO VOLTAGE**

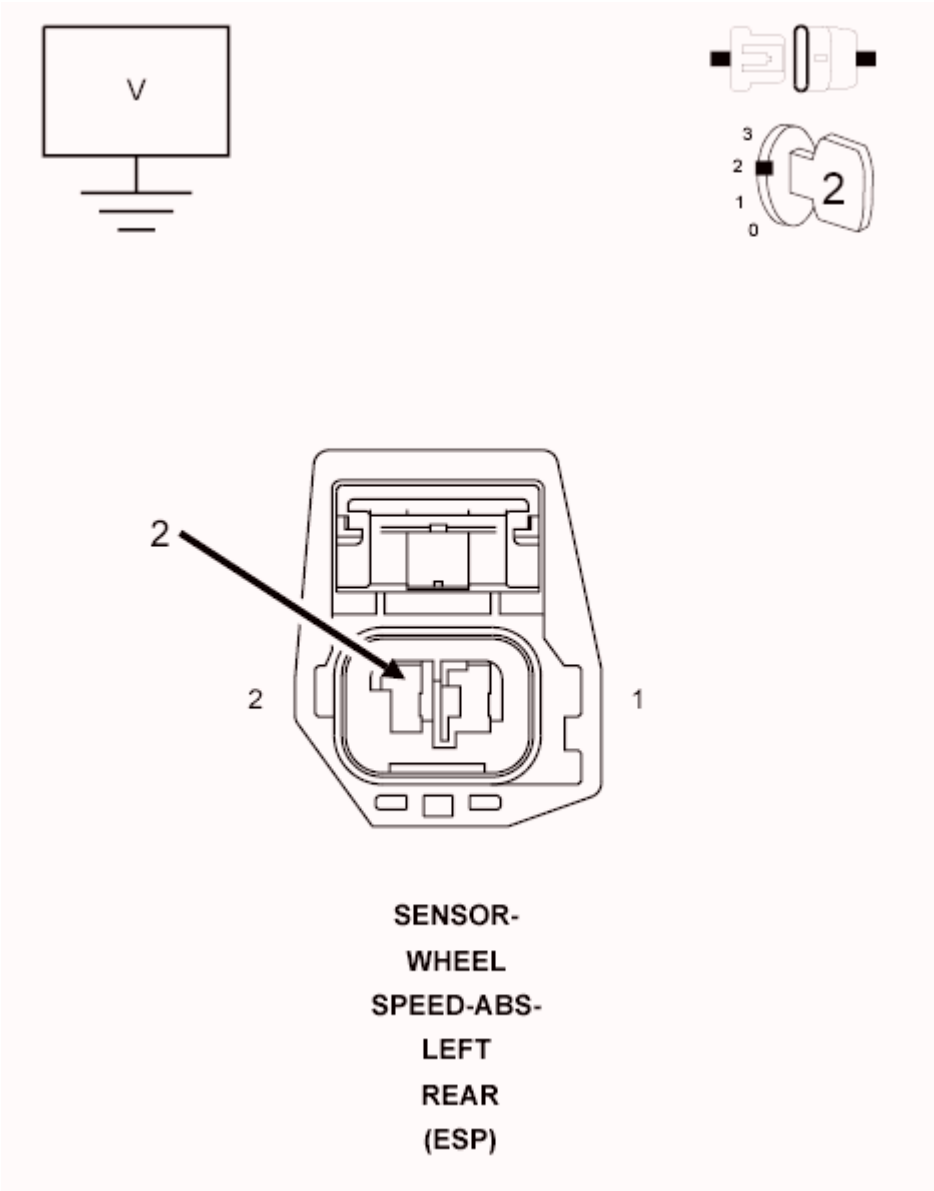

Fig. 88: Measuring Left Rear Wheel Speed Sensor Supply Circuit Voltage
Courtesy of CHRYSLER GROUP, LLC

1. Turn the ignition off to the lock position.
2. Disconnect the ABS Module harness connector.
3. Ignition on, engine not running.
4. Measure the voltage of the (B4) Left Rear Wheel Speed Sensor Supply circuit.

   Is there any voltage present?

Yes

- Repair (B4) Left Rear Wheel Speed Sensor Supply circuit for a short to voltage.
- Perform the ABS VERIFICATION TEST. Refer to **ABS VERIFICATION TEST**.

No

- Go To 8.

8. **(B3) LEFT REAR WHEEL SPEED SENSOR SIGNAL CIRCUIT FOR A SHORT TO GROUND**

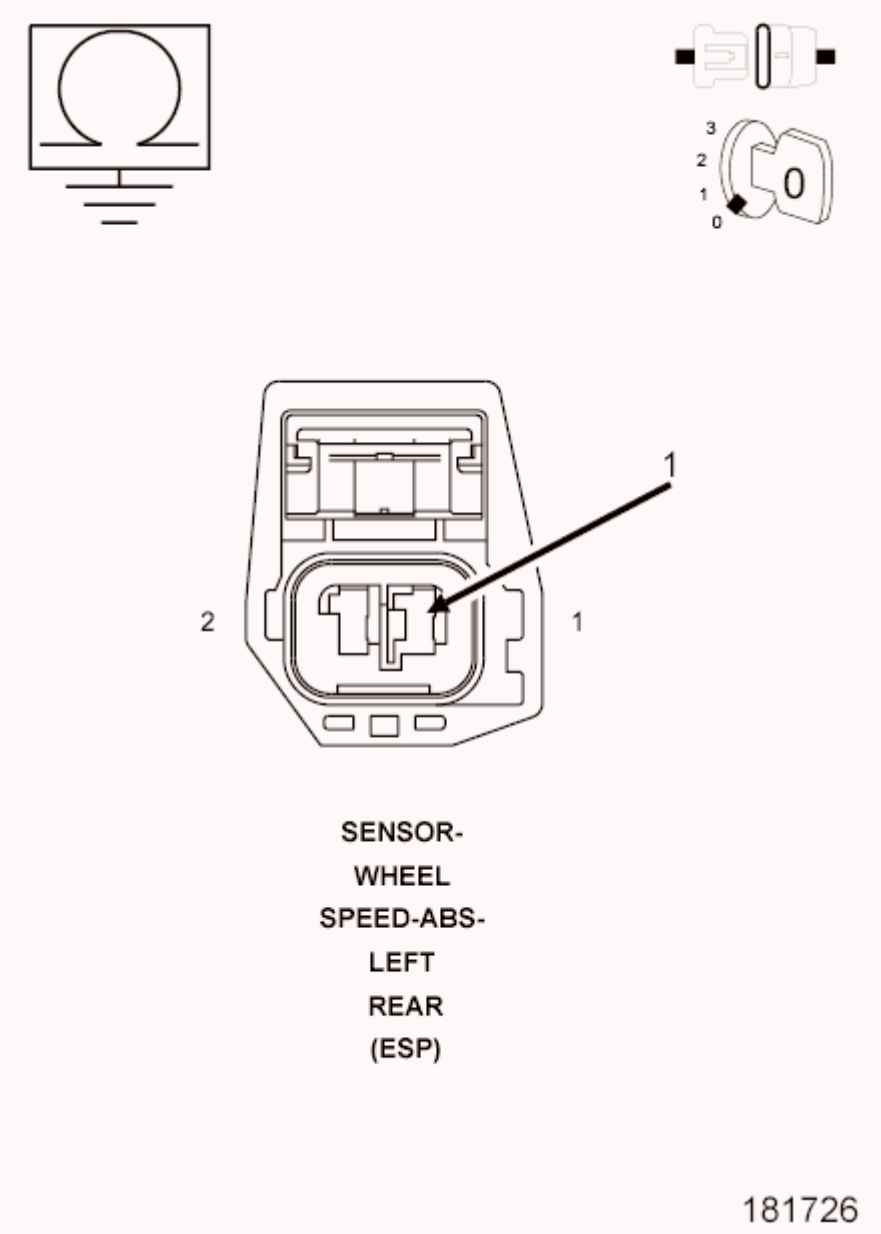

Fig. 89: Checking Left Rear Wheel Speed Sensor Signal Circuit For A Short To Ground
Courtesy of CHRYSLER GROUP, LLC

1. Turn the ignition off.
2. Measure the resistance between the (B3) Left Rear Wheel Speed Sensor Signal circuit and ground.

   Is the resistance above 5.0 Ohms?

   Yes

   - Replace the Left Rear Wheel Speed Sensor in accordance with the Service Information.
   - Perform the ABS VERIFICATION TEST. Refer to **ABS VERIFICATION TEST**.

   No

   - Repair the (B3) Left Rear Wheel Speed Sensor Signal circuit for a short to ground.
   - Perform the ABS VERIFICATION TEST. Refer to **ABS VERIFICATION TEST**.

9. **(B4) LEFT REAR WHEEL SPEED SENSOR SUPPLY CIRCUIT FOR A SHORT TO GROUND**

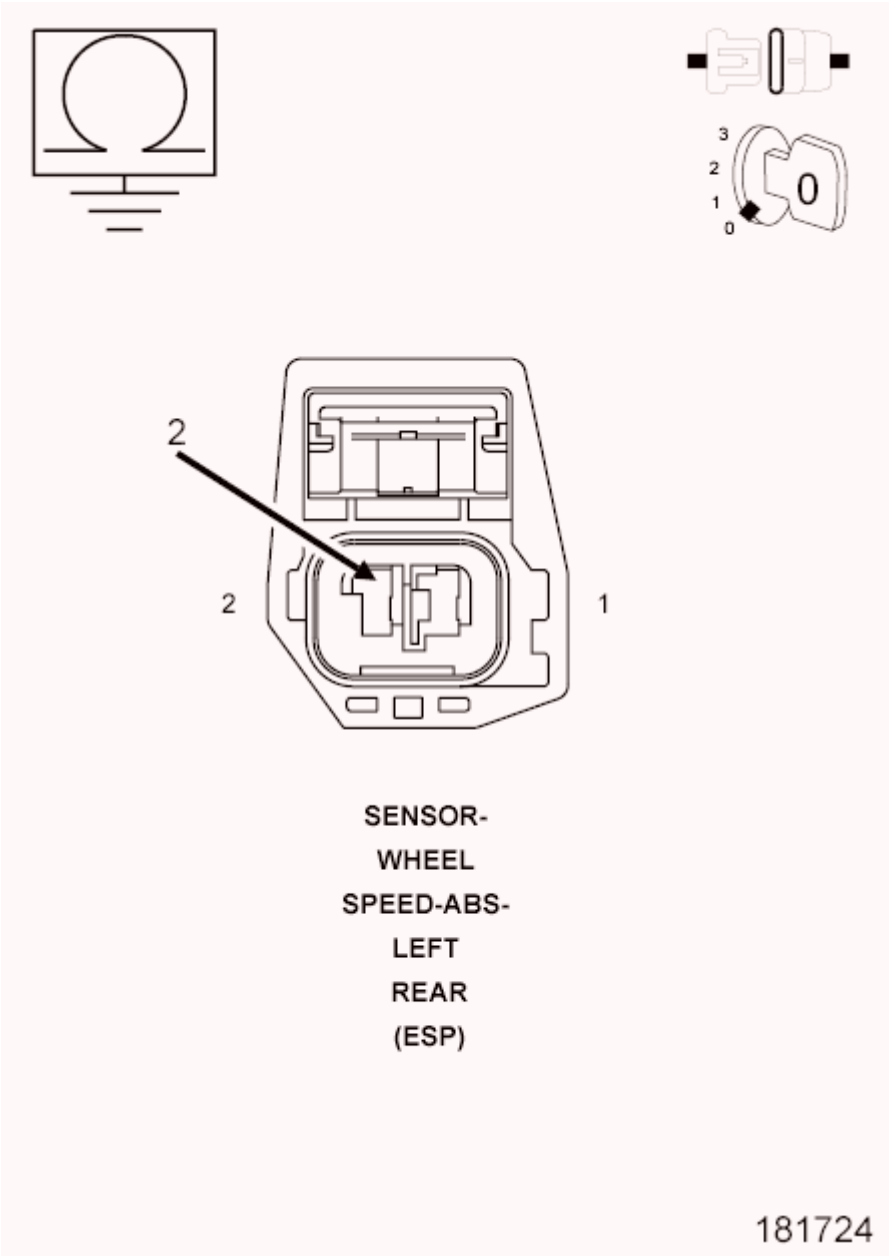

Fig. 90: Checking Left Rear Wheel Speed Sensor Supply Circuit For A Short To Ground
Courtesy of CHRYSLER GROUP, LLC

1. Turn the ignition off to the lock position.
2. Disconnect the ABS Module harness connector.
3. Measure the resistance between the (B4) Left Rear Wheel Speed Sensor Supply circuit and ground.

   Is the resistance above 5.0 Ohms?

   Yes

   - Go To 10.

No

- Repair the (B4) Left Rear Wheel Speed Sensor Supply circuit for a short to ground.
- Perform the ABS VERIFICATION TEST. Refer to **ABS VERIFICATION TEST**.

10. **(B4) LEFT REAR WHEEL SPEED SENSOR SUPPLY CIRCUIT FOR AN OPEN**

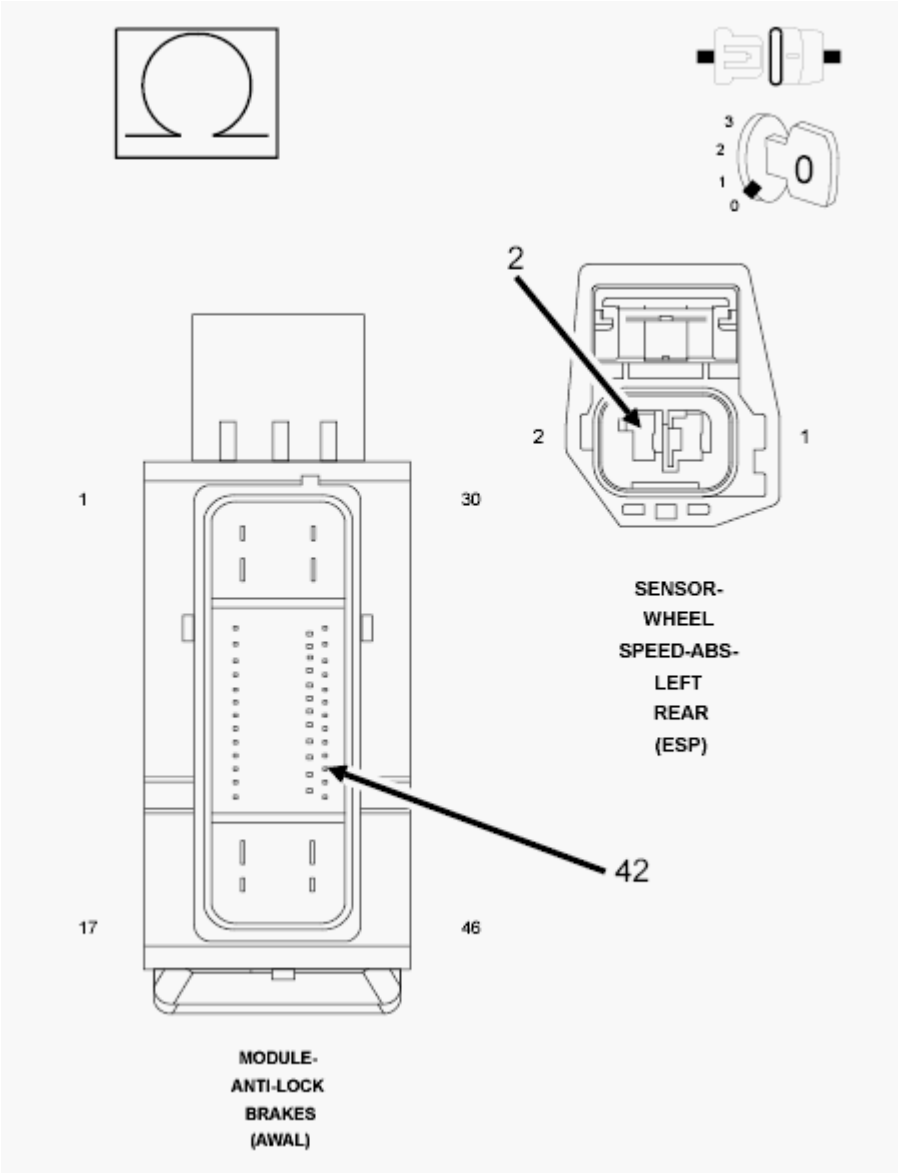

Fig. 91: Checking Left Rear Wheel Speed Sensor Supply Circuit For An Open
Courtesy of CHRYSLER GROUP, LLC

1. Measure the resistance of the (B4) Left Rear Wheel Speed Sensor Supply circuit between the ABS harness connector and the Left Rear Wheel Speed Sensor harness connector.

   Is the resistance below 5 Ohms?

Yes

- Go To 11.

No

- Repair the open (B4) Left Rear Wheel Speed Sensor Supply circuit.
- Perform the ABS VERIFICATION TEST. Refer to **ABS VERIFICATION TEST**.

11. **(B3) LEFT REAR WHEEL SPEED SENSOR SIGNAL CIRCUIT FOR AN OPEN**

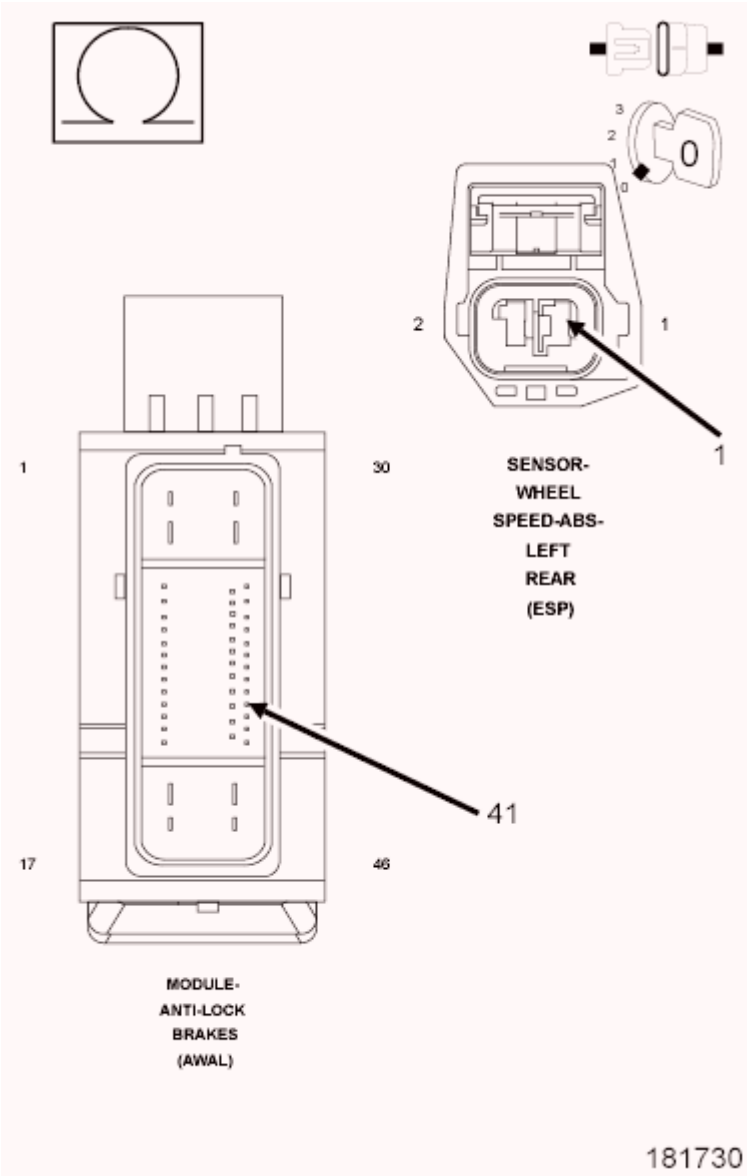

Fig. 92: Checking Left Rear Wheel Speed Sensor Signal Circuit For An Open
Courtesy of CHRYSLER GROUP, LLC

1. Measure the resistance of the (B3) Left Rear Wheel Speed Sensor Signal circuit between the ABS

harness connector and the Left Rear Wheel Speed Sensor harness connector.

Is the resistance below 5 Ohms?

Yes

- Go To 12.

No

- Repair the open (B3) Left Rear Wheel Speed Sensor Signal circuit.
- Perform the ABS VERIFICATION TEST. Refer to **ABS VERIFICATION TEST**.

12. **(B3) LEFT REAR WHEEL SPEED SENSOR SIGNAL CIRCUIT FOR A SHORT TO VOLTAGE**

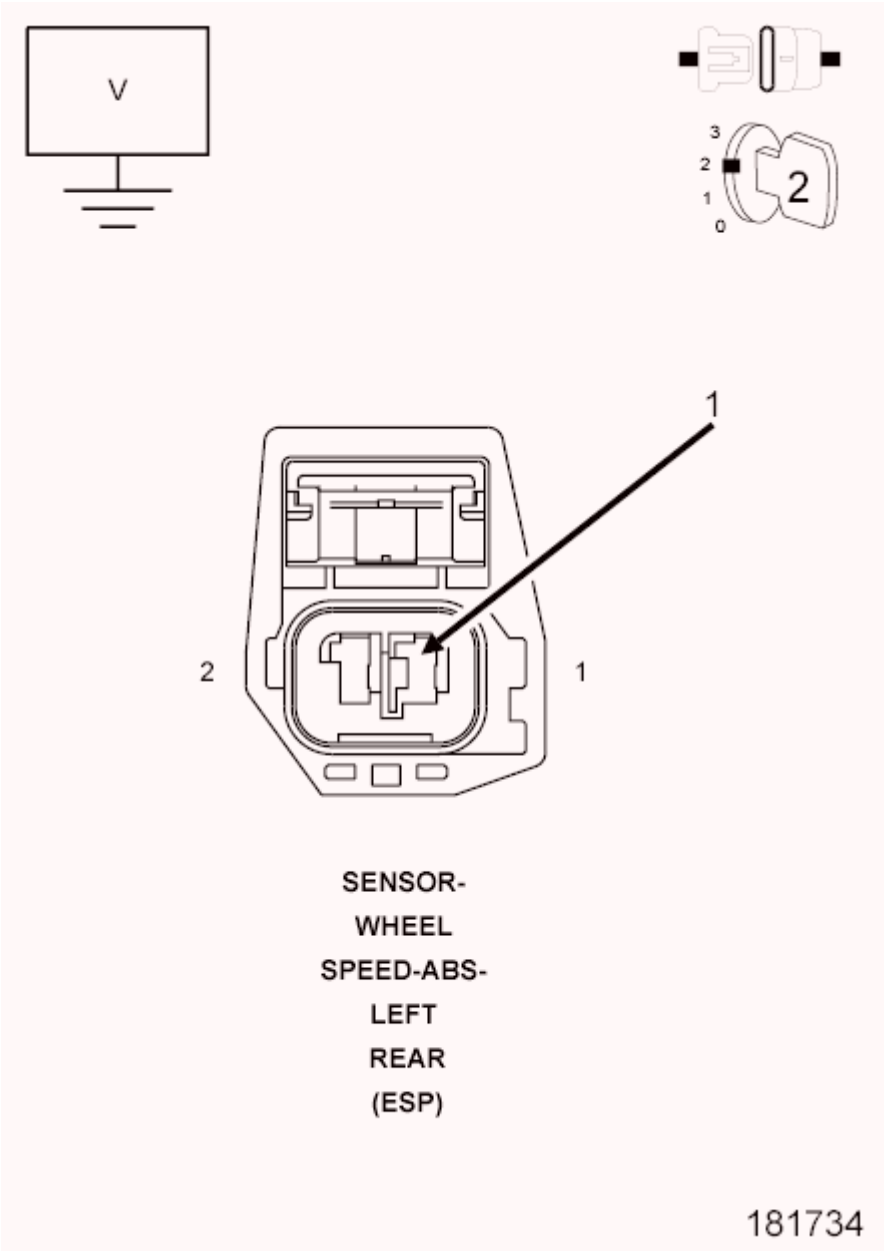

Fig. 93: Checking Left Rear Wheel Speed Sensor Signal Circuit For A Short To Voltage
Courtesy of CHRYSLER GROUP, LLC

1. Turn the ignition on.
2. Measure the voltage of the (B3) Left Rear Wheel Speed Sensor Signal circuit at the Left Rear Wheel Speed Sensor harness connector.

   Is there any voltage present?

   Yes

   - Repair the (B3) Left Rear Wheel Speed Sensor Signal circuit for a short to voltage.

- Perform the ABS VERIFICATION TEST. Refer to **ABS VERIFICATION TEST**.

No

- Go To 13.

13. **(B4) LEFT REAR WHEEL SPEED SENSOR SUPPLY CIRCUIT SHORTED TO THE (B3) LEFT REAR WHEEL SPEED SENSOR SIGNAL CIRCUIT**

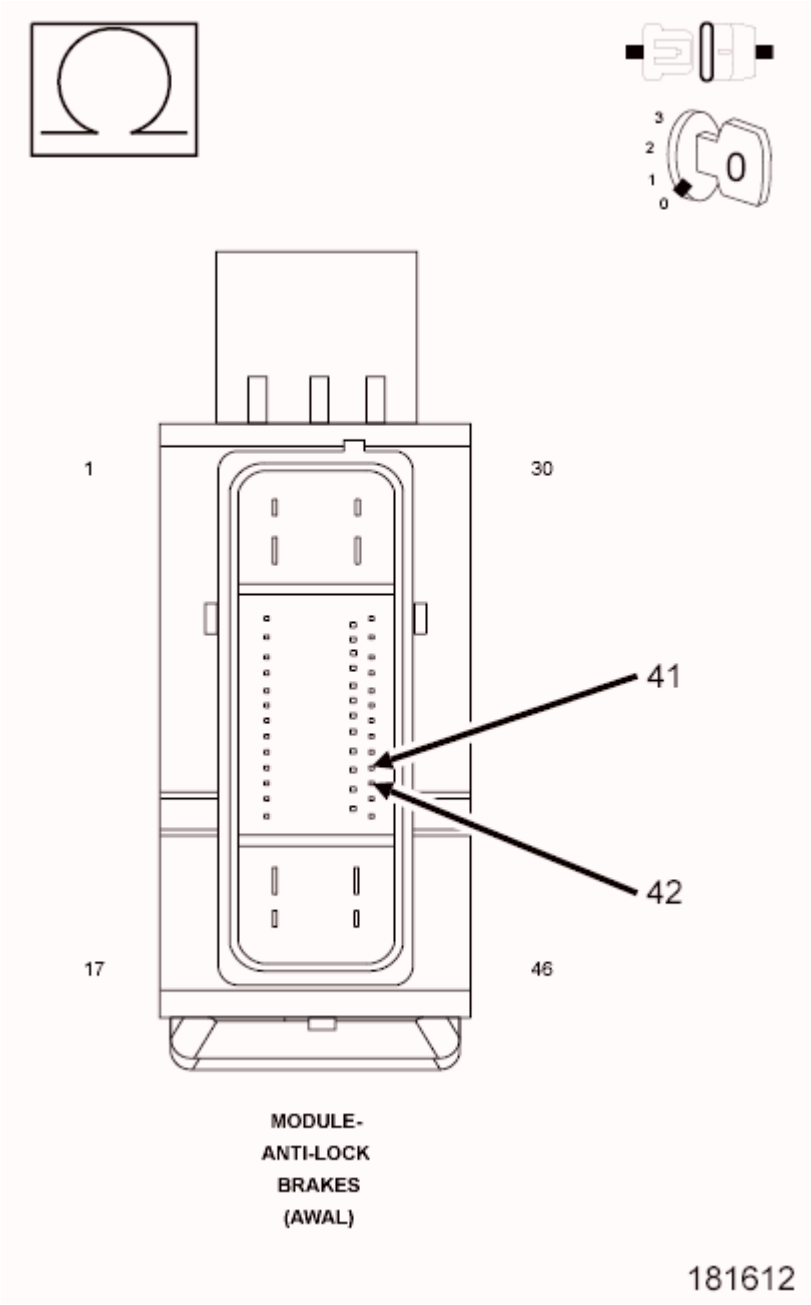

Fig. 94: Checking Left Rear Wheel Speed Sensor Supply Circuit For A Short To The Left Rear Wheel Speed Sensor Signal Circuit
Courtesy of CHRYSLER GROUP, LLC

1. Turn the ignition off to the lock position.
2. Measure the resistance between the (B4) Left Rear Wheel Speed Sensor Supply circuit and the (B3) Left Rear Wheel Speed Sensor Signal circuit at the ABS Module harness connector.

   Is the resistance below 5.0 Ohms?

   Yes

   - Repair (B4) Left Rear Wheel Speed Sensor Supply circuit for a short to the (B3) Left Rear Wheel Speed Sensor Signal circuit.
   - Perform the ABS VERIFICATION TEST. Refer to **ABS VERIFICATION TEST**.

   No

   - Replace the Antilock Brakes Module in accordance with the Service Information.
   - Perform the ABS VERIFICATION TEST. Refer to **ABS VERIFICATION TEST**.

C102B-RIGHT REAR WHEEL SPEED SENSOR CIRCUIT

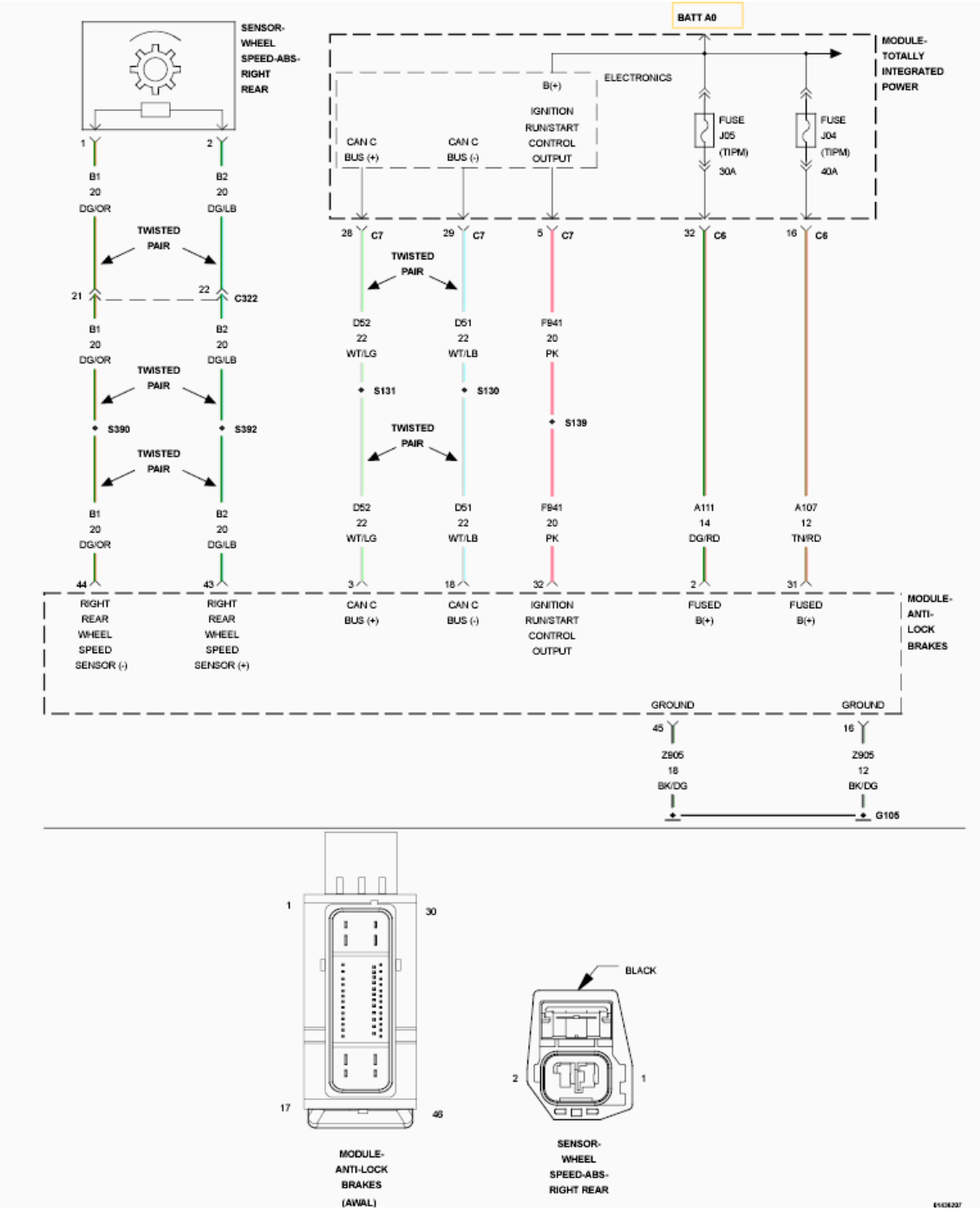

Fig. 95: Right Rear Wheel Speed Sensor Wiring Diagram
Courtesy of CHRYSLER GROUP, LLC

For a complete wiring diagram, **refer to appropriate SYSTEM WIRING DIAGRAMS article** .

NOTE: **The Electronic Stability Control (ESC) may also be referred to as Electronic Stability Program (ESP) depending on the vehicle model year and configuration. Certain components may also reference ESP, ESC, or use the traction control**

symbol.

WHEN MONITORED:

With the ignition on and no system under voltage or over voltage condition present.

SET CONDITION:

If the measured wheel speed sensor feedback voltage is less than.304 of a volt, the sensor is considered open.

If the measured wheel speed sensor feedback voltage is greater than 1.39 volts, or if a sensor over current condition is detected, the sensor is considered shorted.

If a shorted or open condition is present for more than 100 msec, the DTC will set.

POSSIBLE CAUSES

Possible Causes
(B2) RIGHT REAR WHEEL SPEED SENSOR SUPPLY CIRCUIT FOR A SHORT TO GROUND
(B1) RIGHT REAR WHEEL SPEED SENSOR SIGNAL CIRCUIT FOR A SHORT TO GROUND
(B2) RIGHT REAR WHEEL SPEED SENSOR SUPPLY CIRCUIT FOR AN OPEN
(B1) REAR WHEEL SPEED SENSOR SIGNAL CIRCUIT FOR AN OPEN
(B2) RIGHT REAR WHEEL SPEED SENSOR SUPPLY CIRCUIT FOR A SHORT TO VOLTAGE
(B1) RIGHT REAR WHEEL SPEED SENSOR SIGNAL CIRCUIT FOR A SHORT TO VOLTAGE
(B2) RIGHT REAR WHEEL SPEED SENSOR SUPPLY CIRCUIT SHORTED TO THE (B1) REAR WHEEL SPEED SENSOR SIGNAL CIRCUIT
RIGHT REAR WHEEL SPEED SENSOR (WSS)
ANTILOCK BRAKE SYSTEM (ABS) MODULE

DIAGNOSTIC TEST

1. **DTC IS ACTIVE**
    1. Ignition on, engine not running.
    2. With the scan tool, clear DTC's.
    3. Turn the ignition off to the lock position.
    4. Ignition on, engine not running.
    5. With the scan tool, select View DTC's.

    Is the status Active for this DTC?

    Yes

    - Go To 2.

No

- The condition that caused the symptom is currently not present. Inspect the related wiring for a possible intermittent condition. Look for any chafed, pierced, pinched, or partially broken wires.
- Perform the ABS INTERMITTENT CONDITION diagnostic procedure. Refer to **ABS INTERMITTENT CONDITION**.

2. **WHEEL SPEED SENSOR INSPECTION**
   1. Turn the ignition off to the lock position.
   2. Inspect the Wheel Speed Sensor for proper mounting.
   3. Inspect the Wheel Speed Sensor harness and connector.
   4. Inspect the Wheel Speed Sensor for excessive debris on the sensor.

   Were any problems found?

   Yes

   - Repair as necessary in accordance with the Service Information.
   - Perform the ABS VERIFICATION TEST. Refer to **ABS VERIFICATION TEST**.

   No

   - Go To 3.

3. **CHECK (B2) RIGHT REAR WHEEL SPEED SENSOR SUPPLY CIRCUIT VOLTAGE**

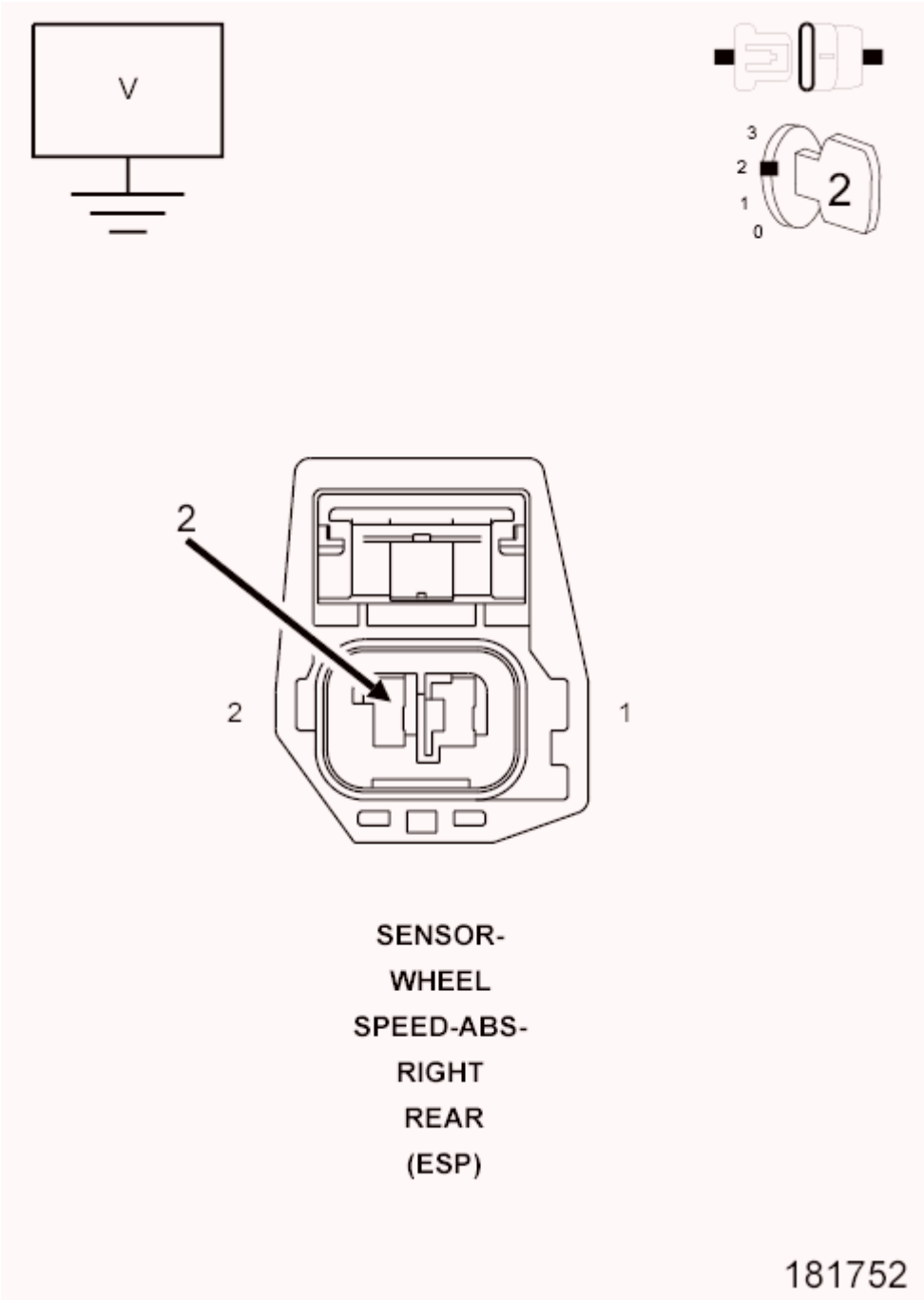

Fig. 96: Measuring Right Rear Wheel Speed Sensor Supply Circuit Voltage
Courtesy of CHRYSLER GROUP, LLC

1. Disconnect the Right Rear Wheel Speed Sensor harness connector.
2. Turn the ignition on.
3. Measure the voltage between the (B2) Right Rear Wheel Speed Sensor Supply circuit and ground.

   Is the voltage above 10 volts?

Yes

- Go To 4.

No

- Go To 6.

4. **(B2) RIGHT REAR WHEEL SPEED SENSOR SUPPLY CIRCUIT FOR A SHORT TO VOLTAGE**

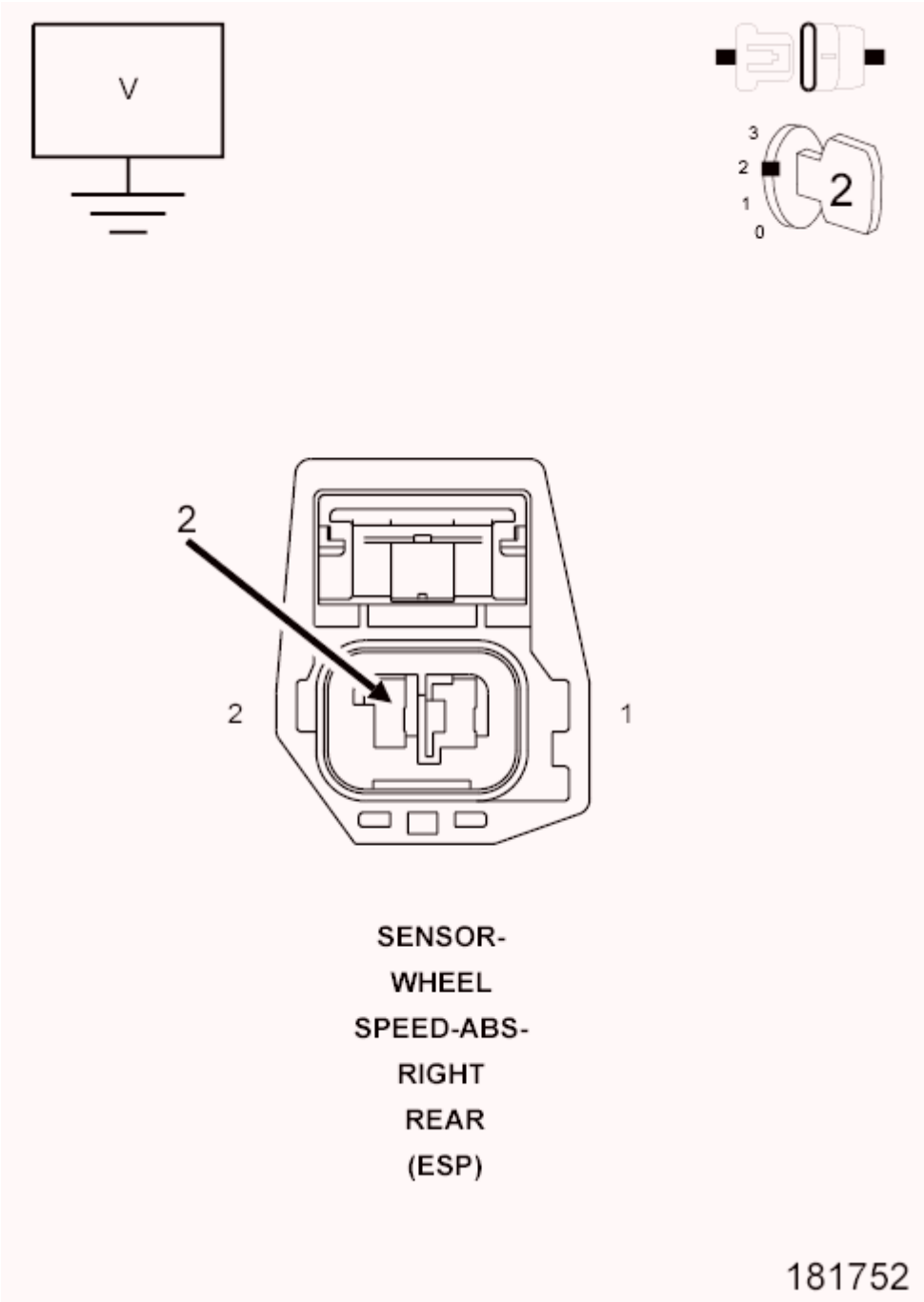

Fig. 97: Measuring Right Rear Wheel Speed Sensor Supply Circuit Voltage
Courtesy of CHRYSLER GROUP, LLC

1. Turn the ignition off to the lock position.
2. Disconnect the ABS Module harness connector.
3. Ignition on, engine not running.
4. Measure the voltage of the (B2) Right Rear Wheel Speed Sensor Supply circuit at the Right Rear Wheel Speed Sensor harness connector.

Is there any voltage present?

Yes

- Repair (B2) Right Rear Wheel Speed Sensor Supply circuit for a short to voltage.
- Perform the ABS VERIFICATION TEST. Refer to **ABS VERIFICATION TEST**.

No

- Go To 5.

5. **(B1) RIGHT REAR WHEEL SPEED SENSOR SIGNAL CIRCUIT FOR A SHORT TO GROUND**

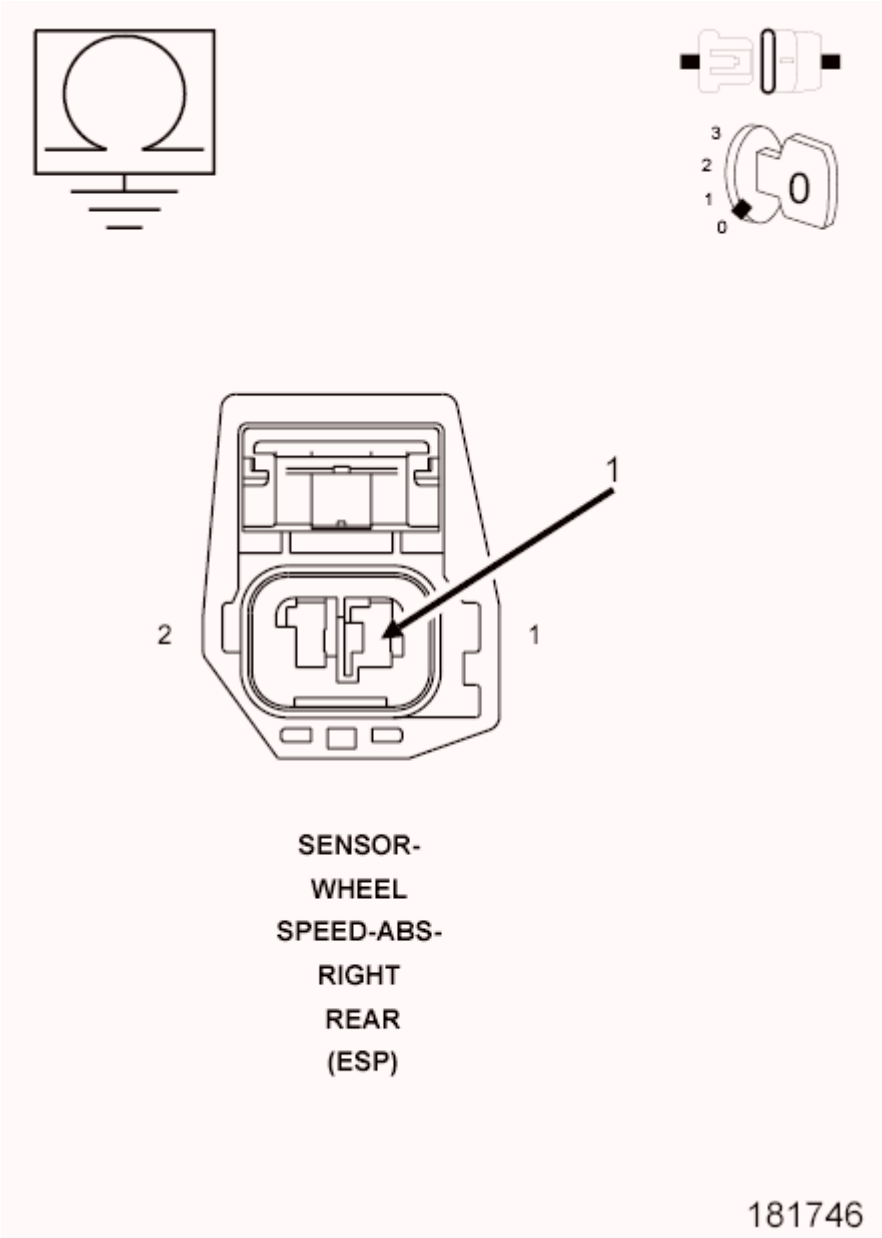

Fig. 98: Checking Right Rear Wheel Speed Sensor Signal Circuit For A Short To Ground
Courtesy of CHRYSLER GROUP, LLC

1. Turn the ignition off.
2. Measure the resistance between the (B1) Right Rear Wheel Speed Sensor Signal circuit and ground.

   Is the resistance above 5.0 Ohms?

   Yes

   - Replace the Right Rear Wheel Speed Sensor in accordance with the Service Information.
   - Perform the ABS VERIFICATION TEST. Refer to **ABS VERIFICATION TEST**.

   No

   - Repair the (B1) Right Rear Wheel Speed Sensor Signal circuit for a short to ground.
   - Perform the ABS VERIFICATION TEST. Refer to **ABS VERIFICATION TEST**.

6. **(B2) RIGHT REAR WHEEL SPEED SENSOR SUPPLY CIRCUIT FOR A SHORT TO GROUND**

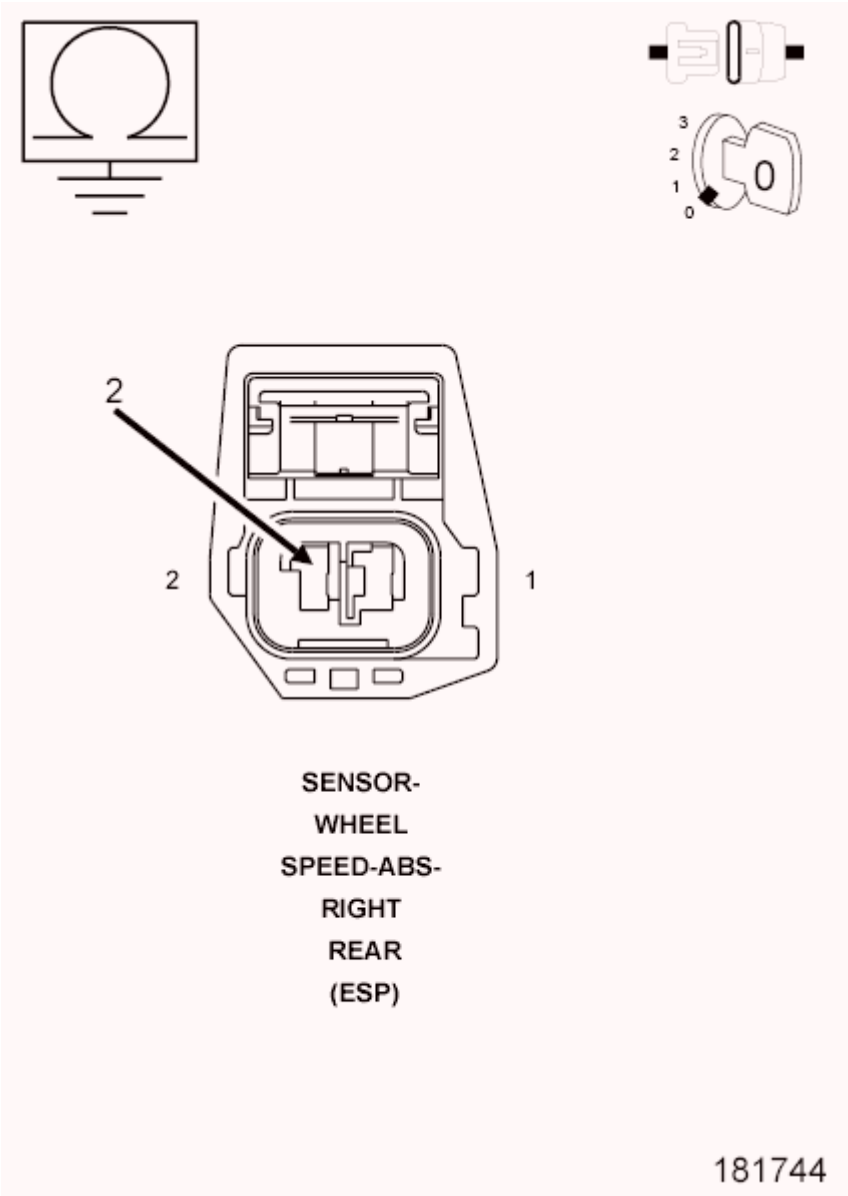

Fig. 99: Checking Right Rear Wheel Speed Sensor Supply Circuit For A Short To Ground
Courtesy of CHRYSLER GROUP, LLC

1. Turn the ignition off to the lock position.
2. Disconnect the ABS Module harness connector.
3. Measure the resistance between the (B2) Right Rear Wheel Speed Sensor Supply circuit and ground.

   Is the resistance above 5.0 Ohms?

   Yes

   - Go To 7.

No

- Repair the (B2) Right Rear Wheel Speed Sensor Supply circuit for a short to ground.
- Perform the ABS VERIFICATION TEST. Refer to **ABS VERIFICATION TEST**.

7. **(B2) RIGHT REAR WHEEL SPEED SENSOR SUPPLY CIRCUIT FOR AN OPEN**

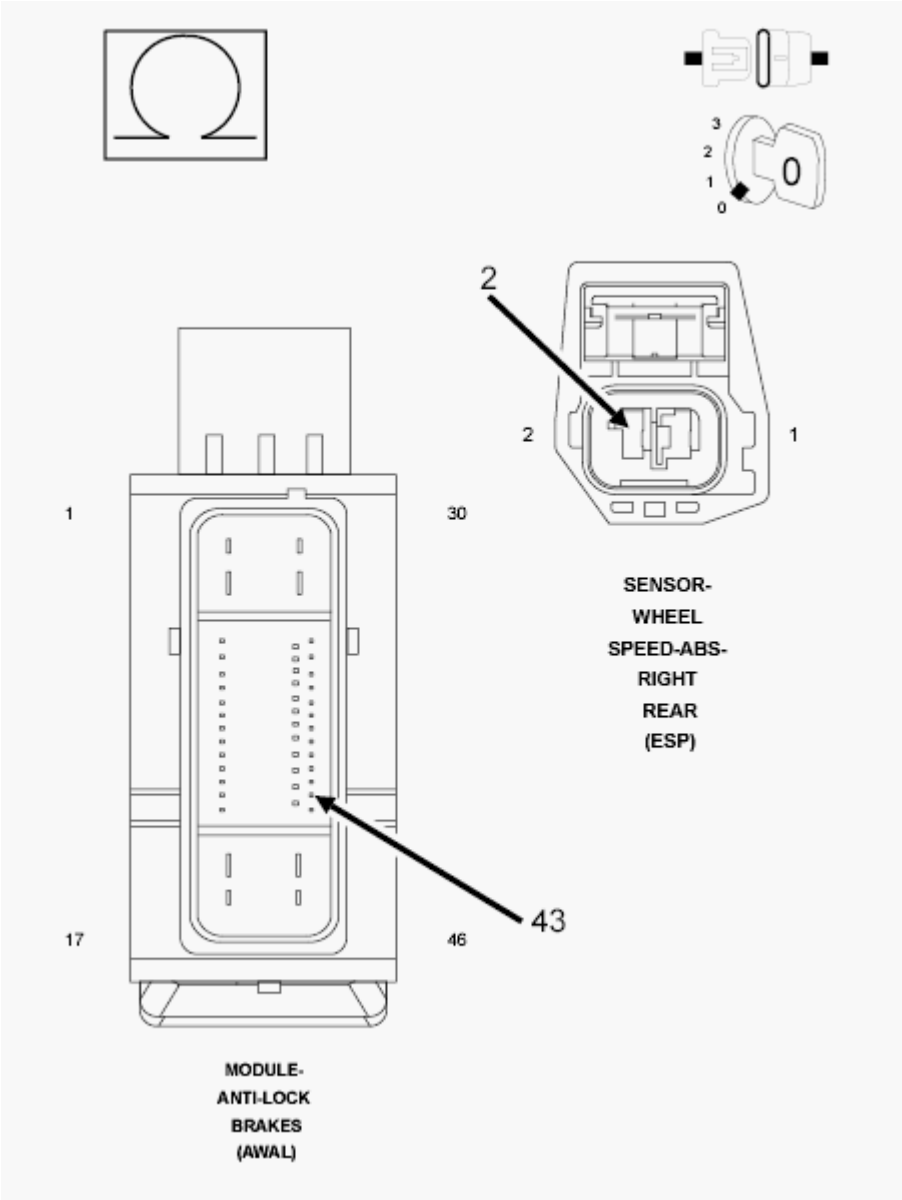

Fig. 100: Checking Right Rear Wheel Speed Sensor Supply Circuit For An Open
Courtesy of CHRYSLER GROUP, LLC

1. Measure the resistance of the (B2) Right Rear Wheel Speed Sensor Supply circuit between the ABS harness connector and the Right Rear Wheel Speed Sensor harness connector.

   Is the resistance below 5 Ohms?

Yes

- Go To 8.

No

- Repair the open (B2) Right Rear Wheel Speed Sensor Supply circuit.
- Perform the ABS VERIFICATION TEST. Refer to **ABS VERIFICATION TEST**.

8. **(B1) RIGHT REAR WHEEL SPEED SENSOR SIGNAL CIRCUIT FOR AN OPEN**

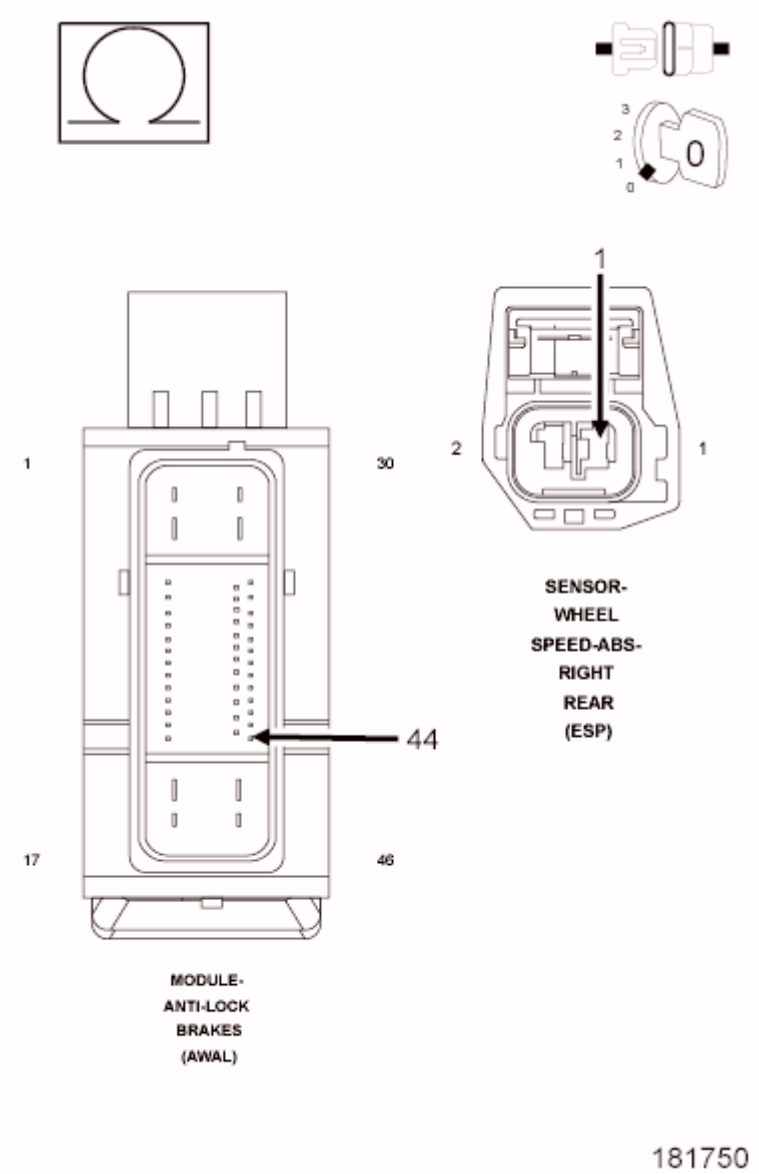

Fig. 101: Checking Right Rear Wheel Speed Sensor Signal Circuit For An Open
Courtesy of CHRYSLER GROUP, LLC

1. Measure the resistance of the (B1) Right Rear Wheel Speed Sensor Signal circuit between the ABS

harness connector and the Right Rear Wheel Speed Sensor harness connector.

Is the resistance below 5 Ohms?

Yes

- Go To 9.

No

- Repair the open (B1) Right Rear Wheel Speed Sensor Signal circuit.
- Perform the ABS VERIFICATION TEST. Refer to **ABS VERIFICATION TEST**.

9. **(B1) RIGHT REAR WHEEL SPEED SENSOR SIGNAL CIRCUIT FOR A SHORT TO VOLTAGE**

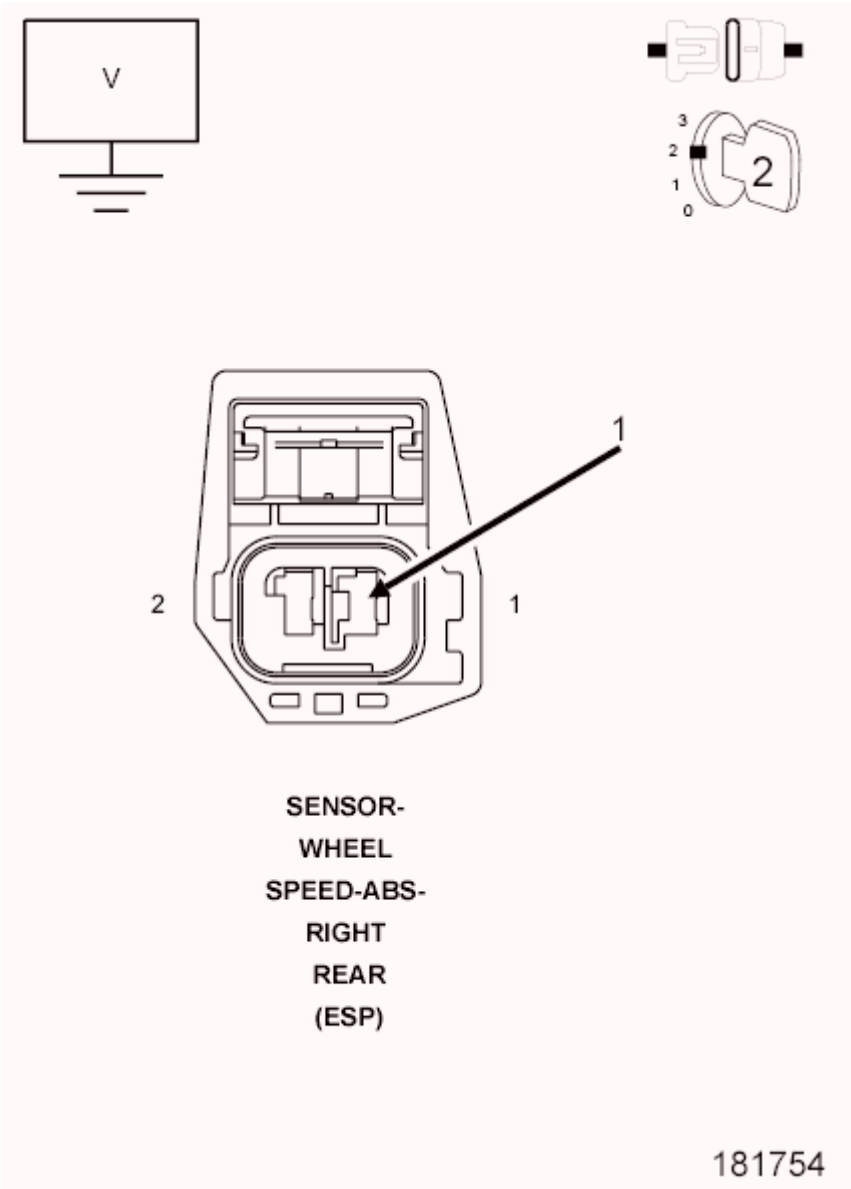

Fig. 102: Checking Right Rear Wheel Speed Sensor Signal Circuit For A Short To Voltage
Courtesy of CHRYSLER GROUP, LLC

1. Turn the ignition on.
2. Measure the voltage of the (B1) Right Rear Wheel Speed Sensor Signal circuit at the Right Rear Wheel Speed Sensor harness connector.

   Is there any voltage present?

   Yes

   - Repair the (B1) Right Rear Wheel Speed Sensor Signal circuit for a short to voltage.
   - Perform the ABS VERIFICATION TEST. Refer to **ABS VERIFICATION TEST**.

No

- Go To 10.

10. **(B2) RIGHT REAR WHEEL SPEED SENSOR SUPPLY CIRCUIT SHORTED TO THE (B1) RIGHT REAR WHEEL SPEED SENSOR SIGNAL CIRCUIT**

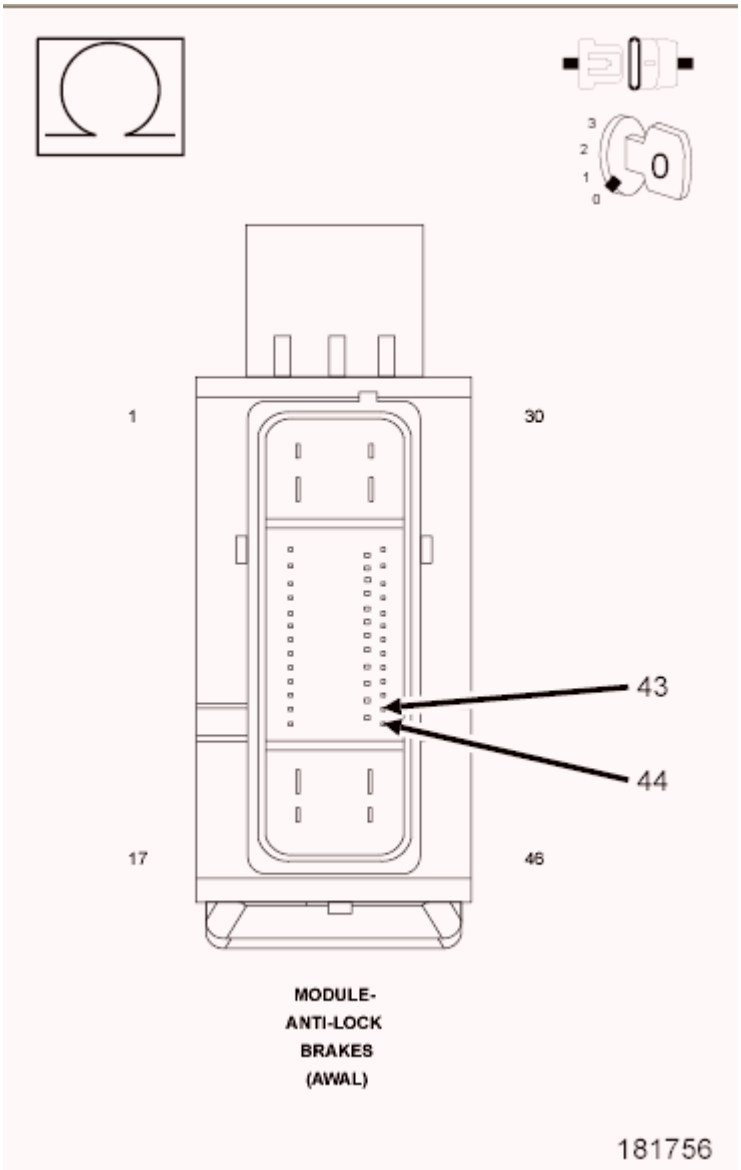

Fig. 103: Checking Right Rear Wheel Speed Sensor Supply Circuit For A Short To The Right Rear Wheel Speed Sensor Signal Circuit
Courtesy of CHRYSLER GROUP, LLC

1. Turn the ignition off to the lock position.
2. Measure the resistance between the (B2) Right Rear Wheel Speed Sensor Supply circuit and the (B1) Right Rear Wheel Speed Sensor Signal circuit at the ABS Module harness connector.

Is the resistance below 5.0 Ohms?

Yes

- Repair (B2) Right Rear Wheel Speed Sensor Supply circuit for a short to the (B1) Right Rear Wheel Speed Sensor Signal circuit.
- Perform the ABS VERIFICATION TEST. Refer to **ABS VERIFICATION TEST**.

No

- Replace the Antilock Brakes Module in accordance with the Service Information.
- Perform the ABS VERIFICATION TEST. Refer to **ABS VERIFICATION TEST**.

C1032-RIGHT REAR WHEEL SPEED SENSOR SIGNAL ERRATIC PERFORMANCE

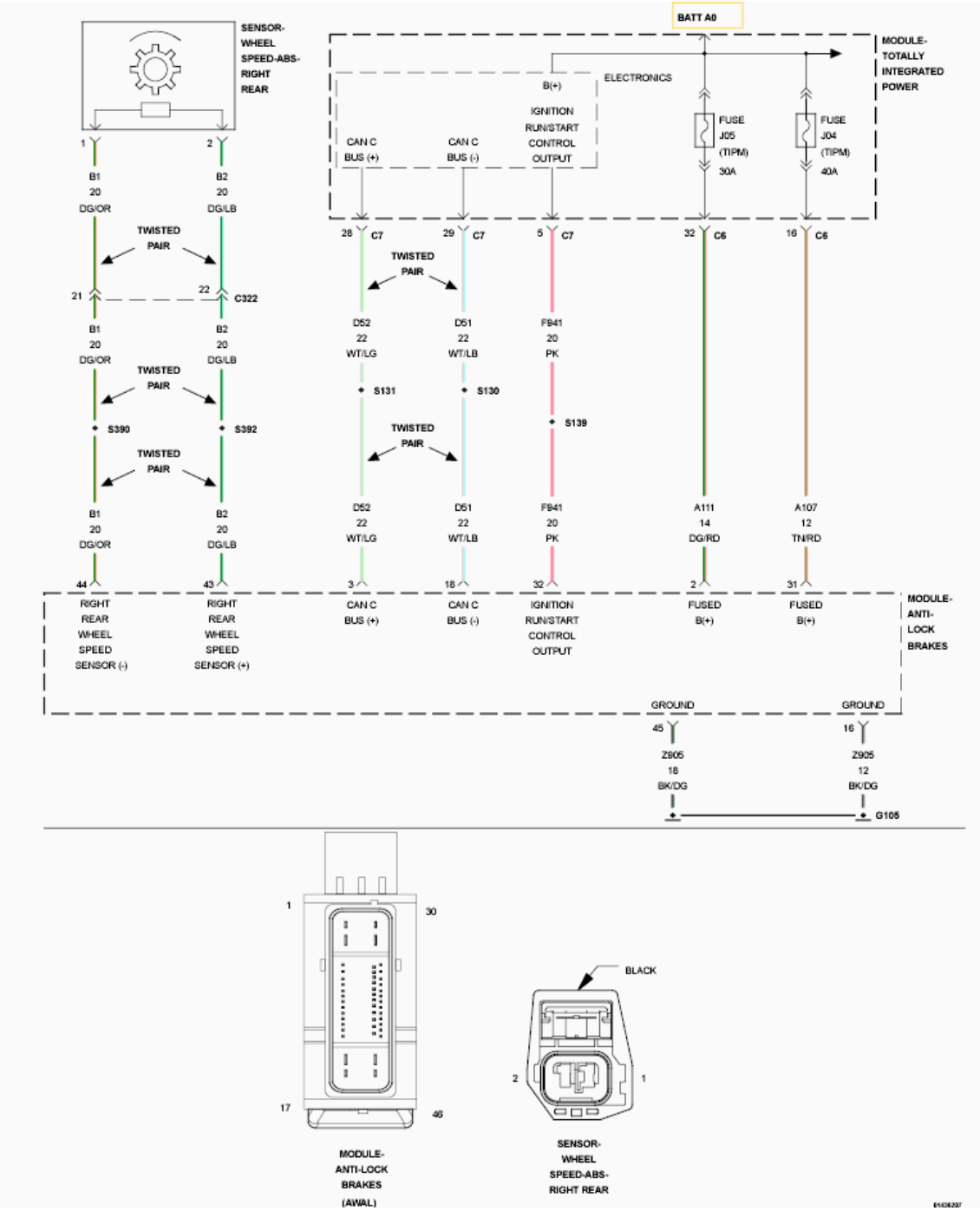

Fig. 104: Right Rear Wheel Speed Sensor Wiring Diagram
Courtesy of CHRYSLER GROUP, LLC

For a complete wiring diagram, **refer to appropriate SYSTEM WIRING DIAGRAMS article** .

NOTE: **The Electronic Stability Control (ESC) may also be referred to as Electronic Stability Program (ESP) depending on the vehicle model year and configuration. Certain components may also reference ESP, ESC, or use the traction control**

symbol.

WHEN MONITORED:

With the ignition on and no system under voltage or over voltage condition present.

SET CONDITION:

If the measured wheel speed sensor feedback voltage is less than.304 of a volt, the sensor is considered open.

If the measured wheel speed sensor feedback voltage is greater than 1.39 volts, or if a sensor over current condition is detected, the sensor is considered shorted.

If a shorted or open condition is present for more than 100 msec, the DTC will set.

POSSIBLE CAUSES

Possible Causes
(B2) REAR WHEEL SPEED SENSOR SUPPLY CIRCUIT FOR A SHORT TO GROUND
(B1) REAR WHEEL SPEED SENSOR SIGNAL CIRCUIT FOR A SHORT TO GROUND
(B2) REAR WHEEL SPEED SENSOR SUPPLY CIRCUIT FOR AN OPEN
(B1) REAR WHEEL SPEED SENSOR SIGNAL CIRCUIT FOR AN OPEN
(B2) RIGHT REAR WHEEL SPEED SENSOR SUPPLY CIRCUIT FOR A SHORT TO VOLTAGE
(B1) RIGHT REAR WHEEL SPEED SENSOR SIGNAL CIRCUIT FOR A SHORT TO VOLTAGE
(B2) RIGHT REAR WHEEL SPEED SENSOR SUPPLY CIRCUIT SHORTED TO THE (B1) REAR WHEEL SPEED SENSOR SIGNAL CIRCUIT
TONE WHEEL
EXCESSIVE REAR WHEEL SPEED SENSOR AIR GAP
WHEEL BEARING
RIGHT REAR WHEEL SPEED SENSOR (WSS)
ANTILOCK BRAKE SYSTEM (ABS) MODULE

DIAGNOSTIC TEST

1. **DTC IS ACTIVE**
    1. Ignition on, engine not running.
    2. With the scan tool, clear DTC's.
    3. Turn the ignition off to the lock position.
    4. Ignition on, engine not running.
    5. With the scan tool, select View DTC's.

    Is the status Active for this DTC?

    Yes

- Go To 2.

No

- The condition that caused the symptom is currently not present. Inspect the related wiring for a possible intermittent condition. Look for any chafed, pierced, pinched, or partially broken wires.
- Perform the ABS INTERMITTENT CONDITION diagnostic procedure. Refer to **ABS INTERMITTENT CONDITION**.

2. **WHEEL SPEED SENSOR INSPECTION**
   1. Turn the ignition off to the lock position.
   2. Inspect the Wheel Speed Sensor for proper mounting.
   3. Inspect the Wheel Speed Sensor harness and connector.
   4. Inspect the Wheel Speed Sensor for excessive debris on the sensor.

   Were any problems found?

   Yes

   - Repair as necessary in accordance with the Service Information.
   - Perform the ABS VERIFICATION TEST. Refer to **ABS VERIFICATION TEST**.

   No

   - Go To 3.

3. **TONE WHEEL DAMAGED/MISSING**
   1. Inspect the Tone Wheel in accordance with the Service Information.

   NOTE: The Tone Wheel Teeth should be perfectly square, not bent or nicked.

   Were any problems found?

   Yes

   - Replace the Tone Wheel in accordance with the Service Information.
   - Perform the ABS VERIFICATION TEST. Refer to **ABS VERIFICATION TEST**.

   No

   - Go To 4.

4. **EXCESSIVE WHEEL SPEED SENSOR AIR GAP**
   1. Measure the Wheel Speed Sensor Air Gap in accordance with the Service Information.

   Were any problems found?

Yes

- Repair as necessary in accordance with the Service Information.
- Perform the ABS VERIFICATION TEST. Refer to **ABS VERIFICATION TEST**.

No

- Go To 5.

5. **WHEEL BEARING LOOSE/BINDING**
   1. Inspect the wheel bearings for excessive run out or improper clearance in accordance with the Service Information.

      Were any problems found?

      Yes

      - Repair as necessary in accordance with the Service Information.
      - Perform the ABS VERIFICATION TEST. Refer to **ABS VERIFICATION TEST**.

      No

      - Go To 6.

6. **CHECK (B2) RIGHT REAR WHEEL SPEED SENSOR SUPPLY CIRCUIT VOLTAGE**

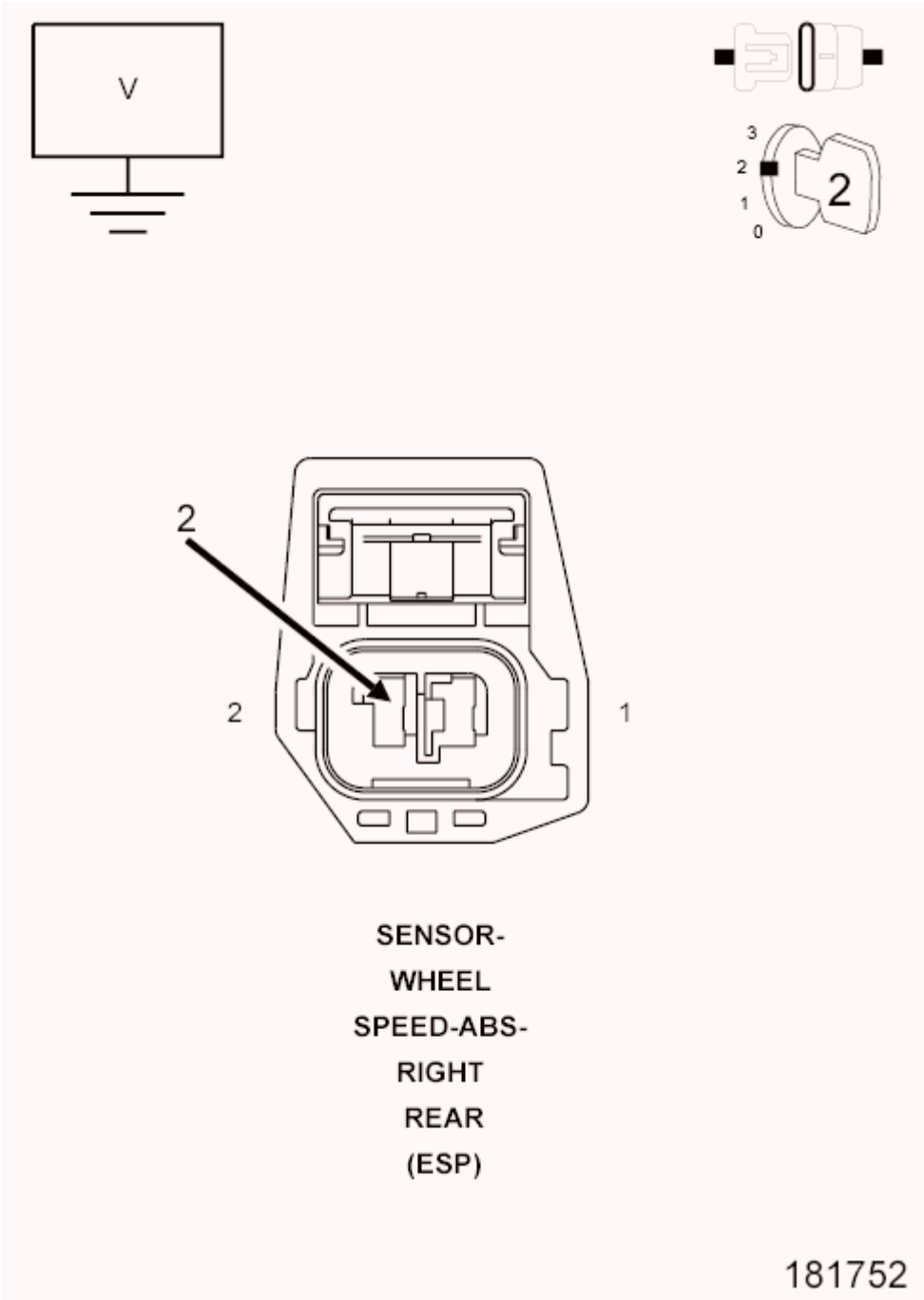

Fig. 105: Measuring Right Rear Wheel Speed Sensor Supply Circuit Voltage
Courtesy of CHRYSLER GROUP, LLC

1. Disconnect the Right Rear Wheel Speed Sensor harness connector.
2. Turn the ignition on.
3. Measure the voltage between the (B2) Right Rear Wheel Speed Sensor Supply circuit and ground.

   Is the voltage above 10 volts?

Yes

- Go To 7.

No

- Go To 9.

7. **(B2) RIGHT REAR WHEEL SPEED SENSOR SUPPLY CIRCUIT FOR A SHORT TO VOLTAGE**

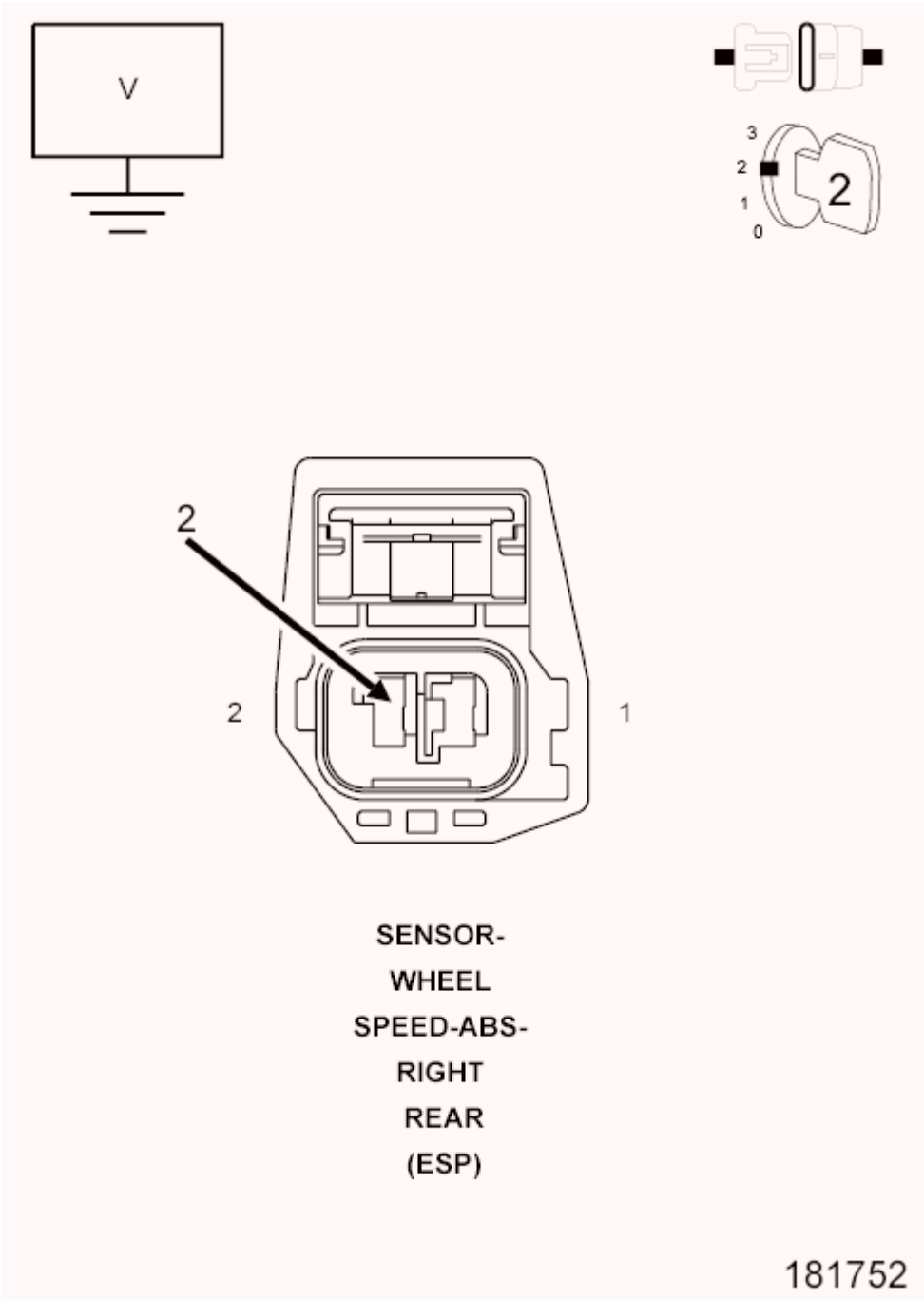

Fig. 106: Measuring Right Rear Wheel Speed Sensor Supply Circuit Voltage
Courtesy of CHRYSLER GROUP, LLC

1. Turn the ignition off to the lock position.
2. Disconnect the ABS Module harness connector.
3. Ignition on, engine not running.
4. Measure the voltage of the (B2) Right Rear Wheel Speed Sensor Supply circuit at the Right Rear Wheel Speed Sensor harness connector.

Is there any voltage present?

Yes

- Repair (B2) Right Rear Wheel Speed Sensor Supply circuit for a short to voltage.
- Perform the ABS VERIFICATION TEST. Refer to **ABS VERIFICATION TEST**.

No

- Go To 8.

8. **(B1) RIGHT REAR WHEEL SPEED SENSOR SIGNAL CIRCUIT FOR A SHORT TO GROUND**

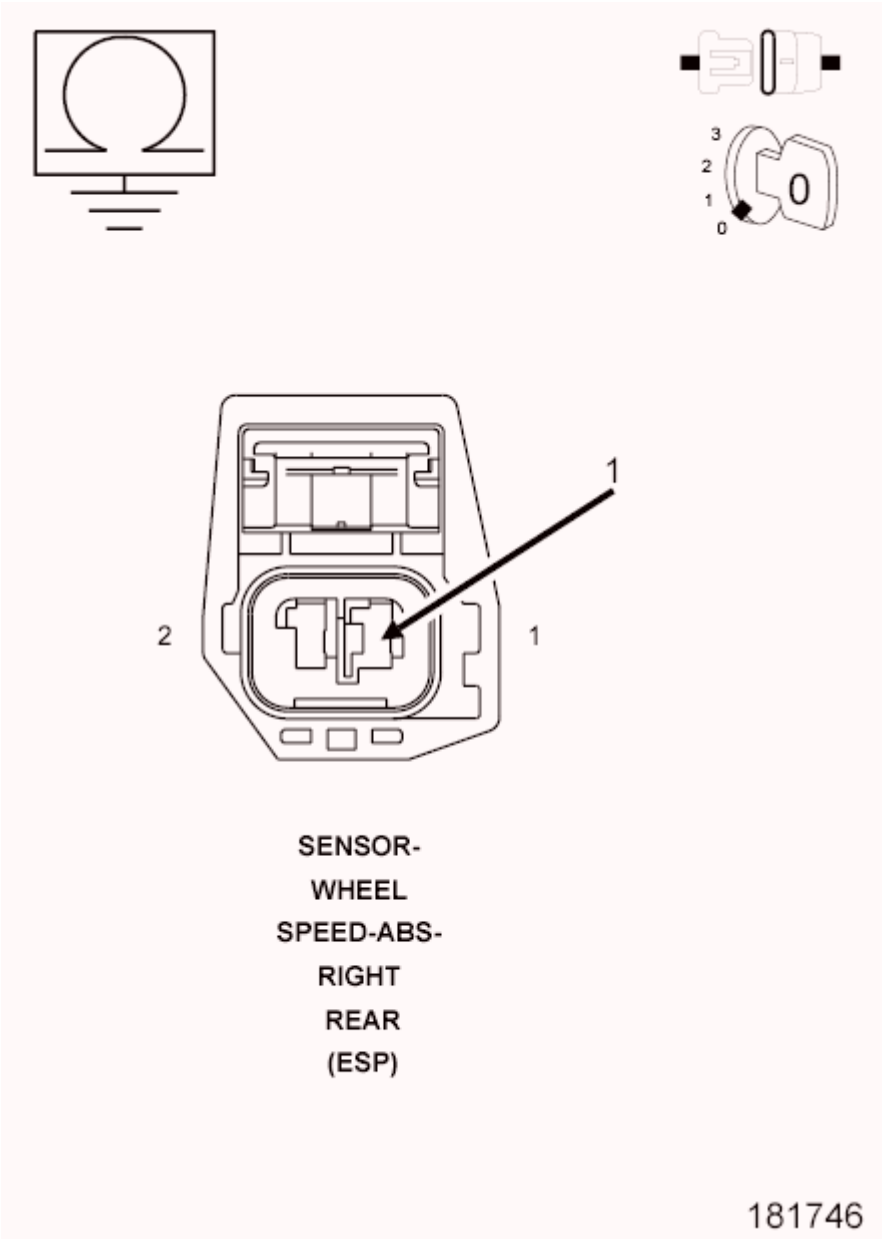

Fig. 107: Checking Right Rear Wheel Speed Sensor Signal Circuit For A Short To Ground
Courtesy of CHRYSLER GROUP, LLC

1. Turn the ignition off.
2. Measure the resistance between the (B1) Right Rear Wheel Speed Sensor Signal circuit and ground.

   Is the resistance above 5.0 Ohms?

   Yes

   - Replace the Right Rear Wheel Speed Sensor in accordance with the Service Information.
   - Perform the ABS VERIFICATION TEST. Refer to **ABS VERIFICATION TEST**.

   No

   - Repair the (B1) Right Rear Wheel Speed Sensor Signal circuit for a short to ground.
   - Perform the ABS VERIFICATION TEST. Refer to **ABS VERIFICATION TEST**.

9. **(B2) RIGHT REAR WHEEL SPEED SENSOR SUPPLY CIRCUIT FOR A SHORT TO GROUND**

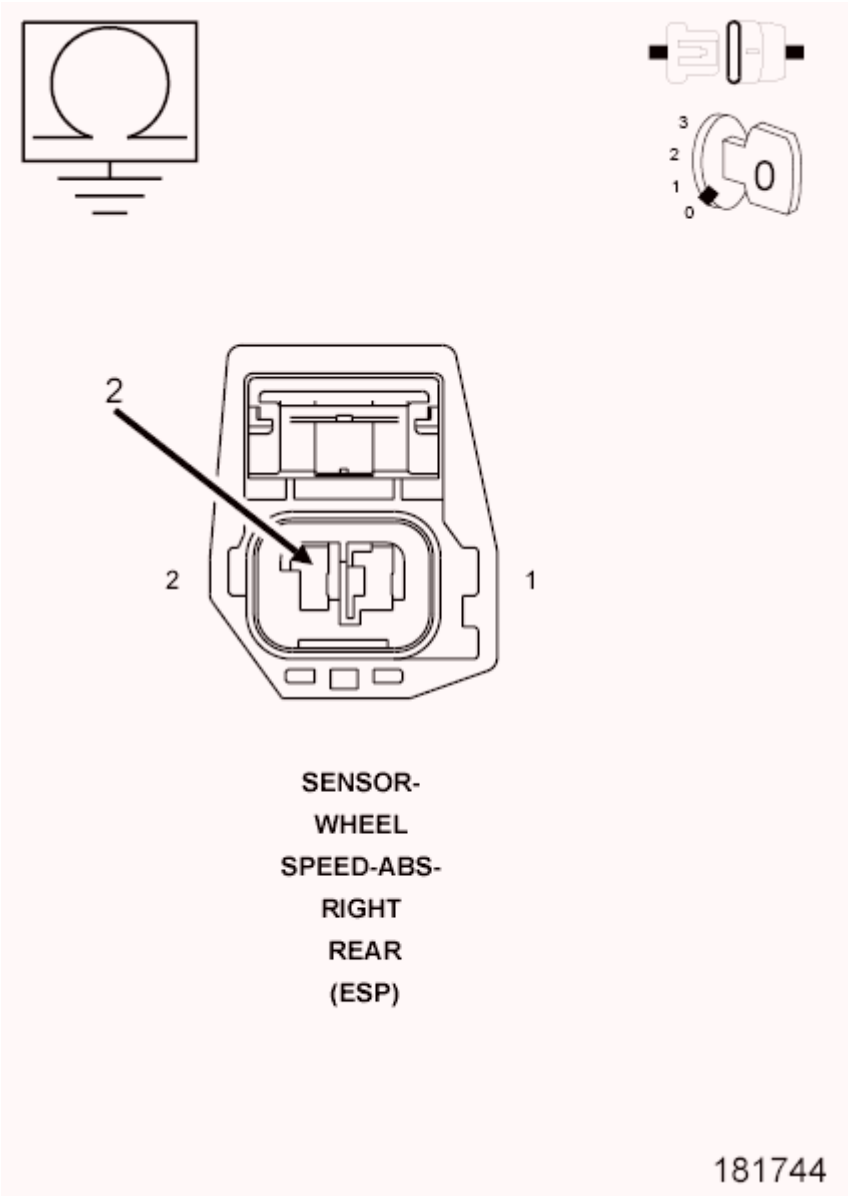

Fig. 108: Checking Right Rear Wheel Speed Sensor Supply Circuit For A Short To Ground
Courtesy of CHRYSLER GROUP, LLC

1. Turn the ignition off to the lock position.
2. Disconnect the ABS Module harness connector.
3. Measure the resistance between the (B2) Right Rear Wheel Speed Sensor Supply circuit and ground.

   Is the resistance above 5.0 Ohms?

   Yes

   - Go To 10.

No

- Repair the (B2) Right Rear Wheel Speed Sensor Supply circuit for a short to ground.
- Perform the ABS VERIFICATION TEST. Refer to **ABS VERIFICATION TEST**.

10. **(B2) RIGHT REAR WHEEL SPEED SENSOR SUPPLY CIRCUIT FOR AN OPEN**

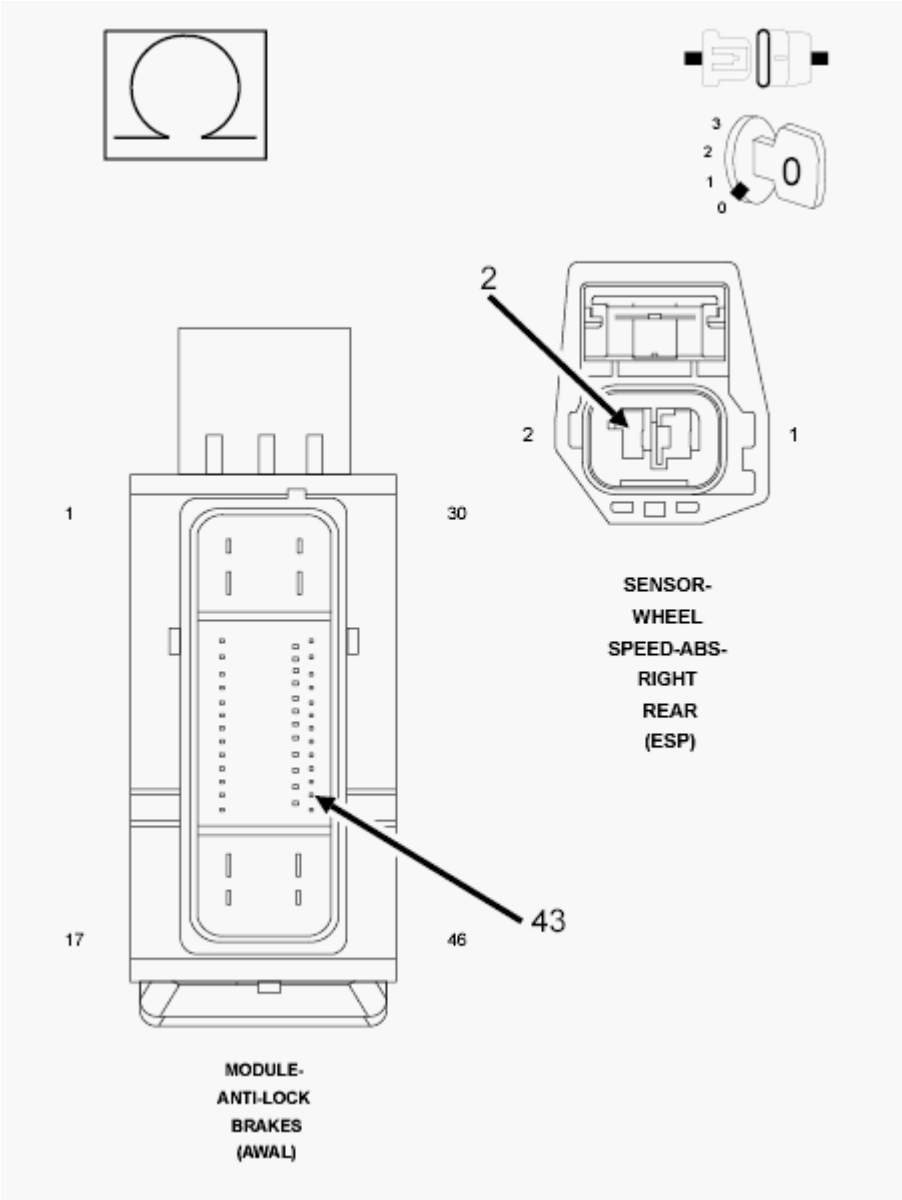

Fig. 109: Checking Right Rear Wheel Speed Sensor Supply Circuit For An Open
Courtesy of CHRYSLER GROUP, LLC

1. Measure the resistance of the (B2) Right Rear Wheel Speed Sensor Supply circuit between the ABS harness connector and the Right Rear Wheel Speed Sensor harness connector.

   Is the resistance below 5 Ohms?

Yes

- Go To 11.

No

- Repair the open (B2) Right Rear Wheel Speed Sensor Supply circuit.
- Perform the ABS VERIFICATION TEST. Refer to **ABS VERIFICATION TEST**.

11. **(B1) RIGHT REAR WHEEL SPEED SENSOR SIGNAL CIRCUIT FOR AN OPEN**

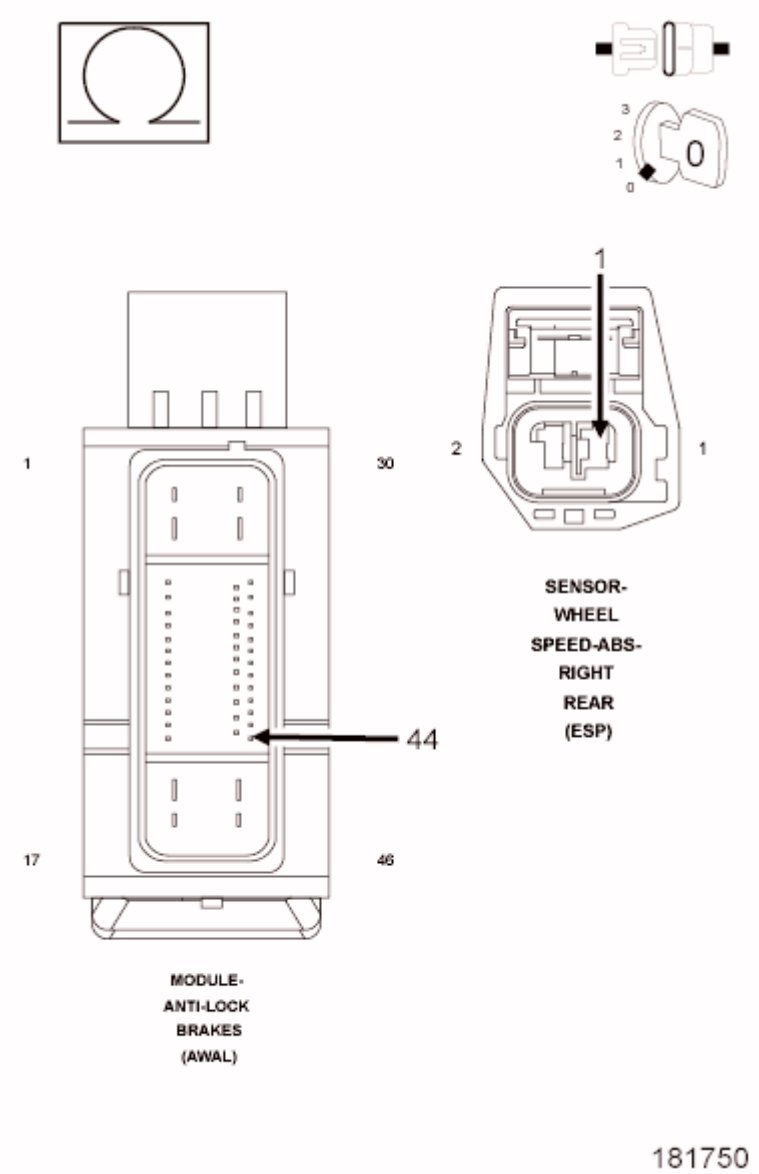

Fig. 110: Checking Right Rear Wheel Speed Sensor Signal Circuit For An Open
Courtesy of CHRYSLER GROUP, LLC

1. Measure the resistance of the (B1) Right Rear Wheel Speed Sensor Signal circuit between the ABS

harness connector and the Right Rear Wheel Speed Sensor harness connector.

Is the resistance below 5 Ohms?

Yes

- Go To 12.

No

- Repair the open (B1) Right Rear Wheel Speed Sensor Signal circuit.
- Perform the ABS VERIFICATION TEST. Refer to **ABS VERIFICATION TEST**.

12. **(B1) RIGHT REAR WHEEL SPEED SENSOR SIGNAL CIRCUIT FOR A SHORT TO VOLTAGE**

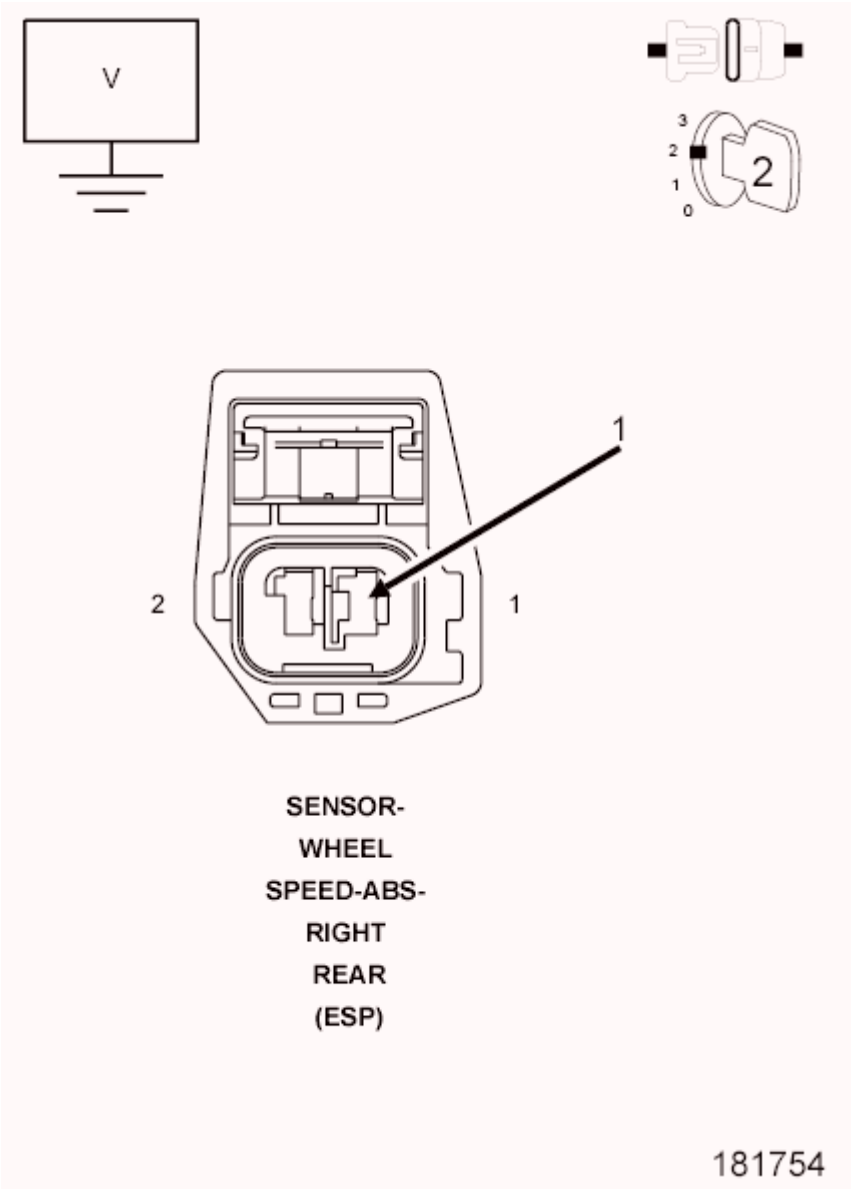

Fig. 111: Checking Right Rear Wheel Speed Sensor Signal Circuit For A Short To Voltage
Courtesy of CHRYSLER GROUP, LLC

1. Turn the ignition on.
2. Measure the voltage of the (B1) Right Rear Wheel Speed Sensor Signal circuit at the Right Rear Wheel Speed Sensor harness connector.

   Is there any voltage present?

   Yes

   - Repair the (B1) Right Rear Wheel Speed Sensor Signal circuit for a short to voltage.
   - Perform the ABS VERIFICATION TEST. Refer to **ABS VERIFICATION TEST**.

No

- Go To 13.

13. **(B2) RIGHT REAR WHEEL SPEED SENSOR SUPPLY CIRCUIT SHORTED TO THE (B1) RIGHT REAR WHEEL SPEED SENSOR SIGNAL CIRCUIT**

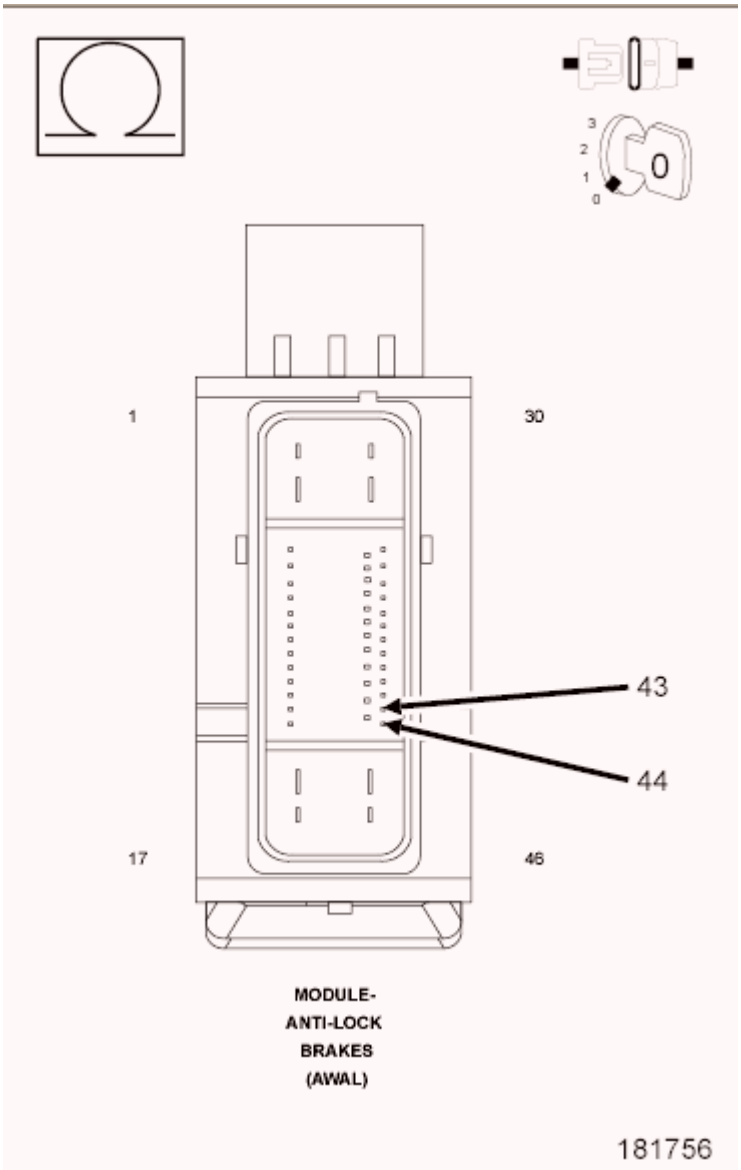

Fig. 112: Checking Right Rear Wheel Speed Sensor Supply Circuit For A Short To The Right Rear Wheel Speed Sensor Signal Circuit
Courtesy of CHRYSLER GROUP, LLC

1. Turn the ignition off to the lock position.
2. Measure the resistance between the (B2) Right Rear Wheel Speed Sensor Supply circuit and the (B1) Right Rear Wheel Speed Sensor Signal circuit at the ABS Module harness connector.

Is the resistance below 5.0 Ohms?

Yes

- Repair (B2) Right Rear Wheel Speed Sensor Supply circuit for a short to the (B1) Right Rear Wheel Speed Sensor Signal circuit.
- Perform the ABS VERIFICATION TEST. Refer to **ABS VERIFICATION TEST**.

No

- Replace the Antilock Brakes Module in accordance with the Service Information.
- Perform the ABS VERIFICATION TEST. Refer to **ABS VERIFICATION TEST**.

C1035-RIGHT REAR WHEEL SPEED COMPARATIVE PERFORMANCE

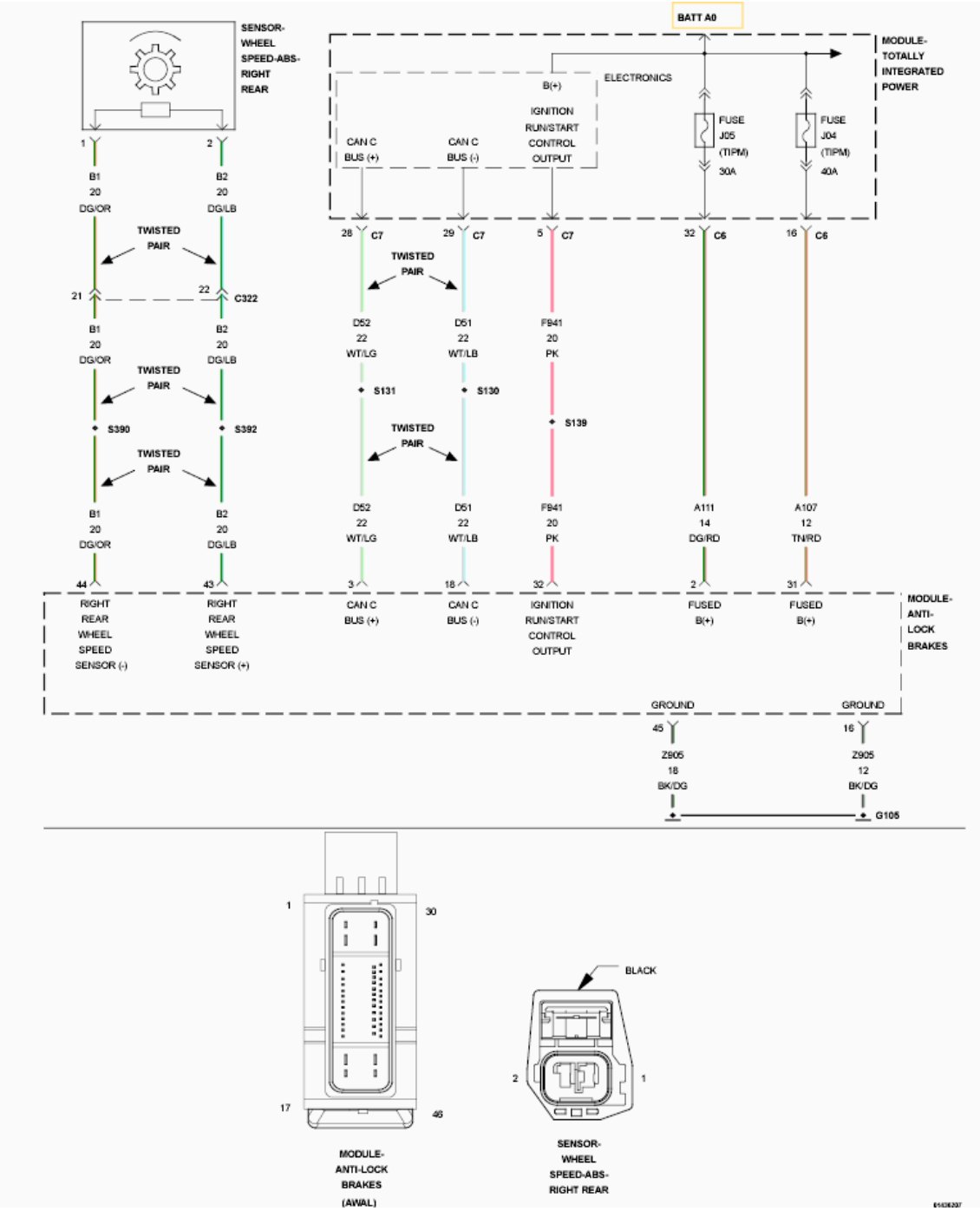

Fig. 113: Right Rear Wheel Speed Sensor Wiring Diagram
Courtesy of CHRYSLER GROUP, LLC

For a complete wiring diagram, **refer to appropriate SYSTEM WIRING DIAGRAMS article** .

NOTE: **The Electronic Stability Control (ESC) may also be referred to as Electronic Stability Program (ESP) depending on the vehicle model year and configuration. Certain components may also reference ESP, ESC, or use the traction control**

symbol.

WHEN MONITORED:

With the ignition on and no system under voltage or over voltage condition present.

SET CONDITION:

If the measured wheel speed sensor feedback voltage is less than.304 volts, the sensor is considered open.

If the measured wheel speed sensor feedback voltage is greater than 1.39 volts, or if a sensor over current condition is detected, the sensor is considered shorted.

If a shorted or open condition is present for more than 100 msec, the DTC will set.

POSSIBLE CAUSES

Possible Causes
(B2) REAR WHEEL SPEED SENSOR SUPPLY CIRCUIT FOR A SHORT TO GROUND
(B1) REAR WHEEL SPEED SENSOR SIGNAL CIRCUIT FOR A SHORT TO GROUND
(B2) REAR WHEEL SPEED SENSOR SUPPLY CIRCUIT FOR AN OPEN
(B1) REAR WHEEL SPEED SENSOR SIGNAL CIRCUIT FOR AN OPEN
(B2) RIGHT REAR WHEEL SPEED SENSOR SUPPLY CIRCUIT FOR A SHORT TO VOLTAGE
(B1) RIGHT REAR WHEEL SPEED SENSOR SIGNAL CIRCUIT FOR A SHORT TO VOLTAGE
(B2) RIGHT REAR WHEEL SPEED SENSOR SUPPLY CIRCUIT SHORTED TO THE (B1) REAR WHEEL SPEED SENSOR SIGNAL CIRCUIT
TONE WHEEL
EXCESSIVE REAR WHEEL SPEED SENSOR AIR GAP
WHEEL BEARING
RIGHT REAR WHEEL SPEED SENSOR (WSS)
ANTILOCK BRAKE SYSTEM (ABS) MODULE

DIAGNOSTIC TEST

1. **DTC IS ACTIVE**
    1. Ignition on, engine not running.
    2. With the scan tool, clear DTC's.
    3. Turn the ignition off to the lock position.
    4. Ignition on, engine not running.
    5. With the scan tool, select View DTC's.

    Is the status Active for this DTC?

    Yes

- Go To 2.

No

- The condition that caused the symptom is currently not present. Inspect the related wiring for a possible intermittent condition. Look for any chafed, pierced, pinched, or partially broken wires.
- Perform the ABS INTERMITTENT CONDITION diagnostic procedure. Refer to **ABS INTERMITTENT CONDITION**.

2. **WHEEL SPEED SENSOR INSPECTION**
   1. Turn the ignition off to the lock position.
   2. Inspect the Wheel Speed Sensor for proper mounting.
   3. Inspect the Wheel Speed Sensor harness and connector.
   4. Inspect the Wheel Speed Sensor for excessive debris on the sensor.

   Were any problems found?

   Yes

   - Repair as necessary in accordance with the Service Information.
   - Perform the ABS VERIFICATION TEST. Refer to **ABS VERIFICATION TEST**.

   No

   - Go To 3.

3. **TONE WHEEL DAMAGED/MISSING**
   1. Inspect the Tone Wheel in accordance with the Service Information.

   NOTE: The Tone Wheel Teeth should be perfectly square, not bent or nicked.

   Were any problems found?

   Yes

   - Replace the Tone Wheel in accordance with the Service Information.
   - Perform the ABS VERIFICATION TEST. Refer to **ABS VERIFICATION TEST**.

   No

   - Go To 4.

4. **EXCESSIVE WHEEL SPEED SENSOR AIR GAP**
   1. Measure the Wheel Speed Sensor Air Gap in accordance with the Service Information.

   Were any problems found?

Yes

- Repair as necessary in accordance with the Service Information.
- Perform the ABS VERIFICATION TEST. Refer to **ABS VERIFICATION TEST**.

No

- Go To 5.

5. **WHEEL BEARING LOOSE/BINDING**
   1. Inspect the wheel bearings for excessive run out or improper clearance in accordance with the Service Information.

      Were any problems found?

      Yes

      - Repair as necessary in accordance with the Service Information.
      - Perform the ABS VERIFICATION TEST. Refer to **ABS VERIFICATION TEST**.

      No

      - Go To 6.

6. **CHECK (B2) RIGHT REAR WHEEL SPEED SENSOR SUPPLY CIRCUIT VOLTAGE**

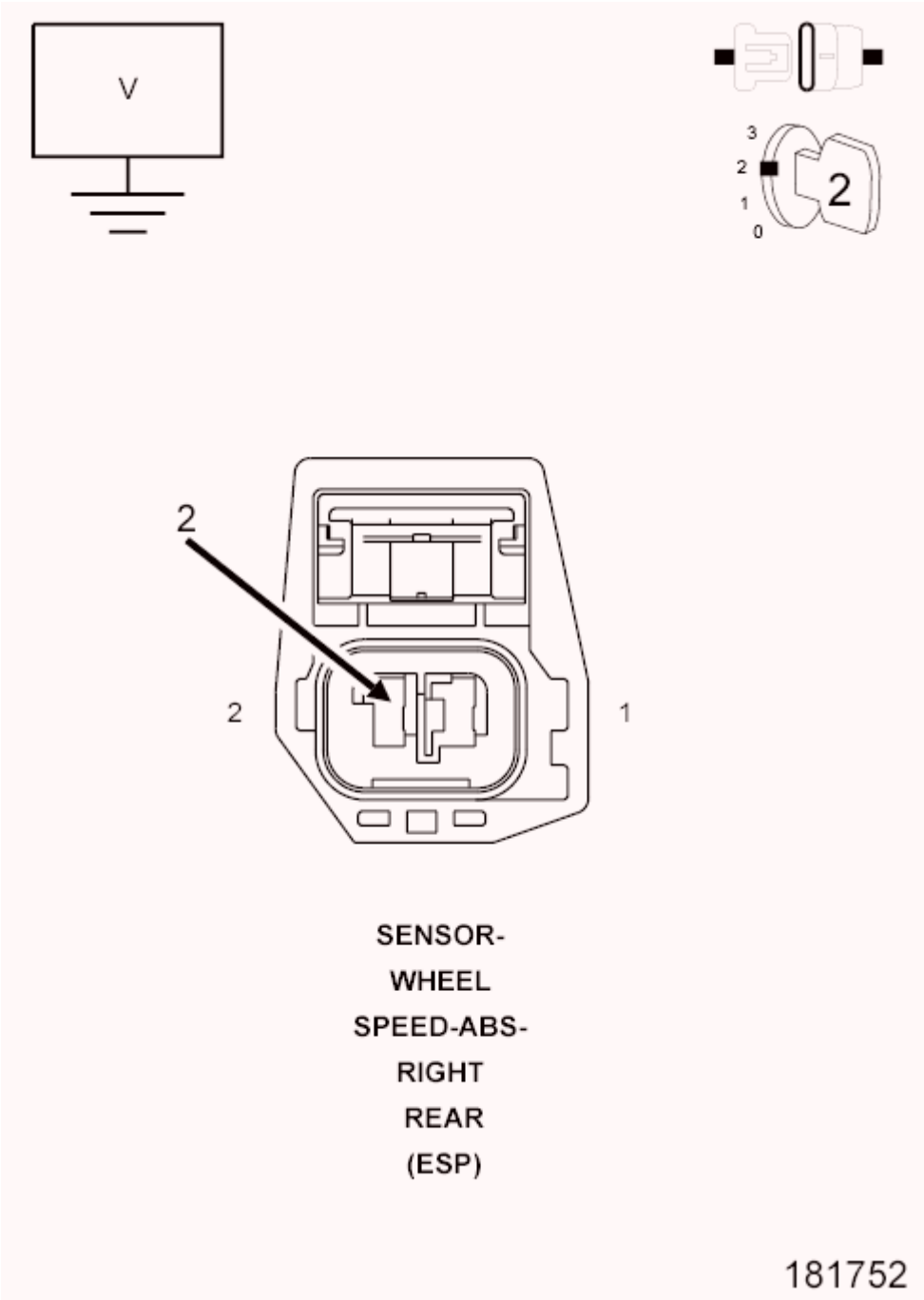

Fig. 114: Measuring Right Rear Wheel Speed Sensor Supply Circuit Voltage
Courtesy of CHRYSLER GROUP, LLC

1. Disconnect the Right Rear Wheel Speed Sensor harness connector.
2. Turn the ignition on.
3. Measure the voltage between the (B2) Right Rear Wheel Speed Sensor Supply circuit and ground.

   Is the voltage above 10 volts?

Yes

- Go To 7.

No

- Go To 9.

7. **(B2) RIGHT REAR WHEEL SPEED SENSOR SUPPLY CIRCUIT FOR A SHORT TO VOLTAGE**

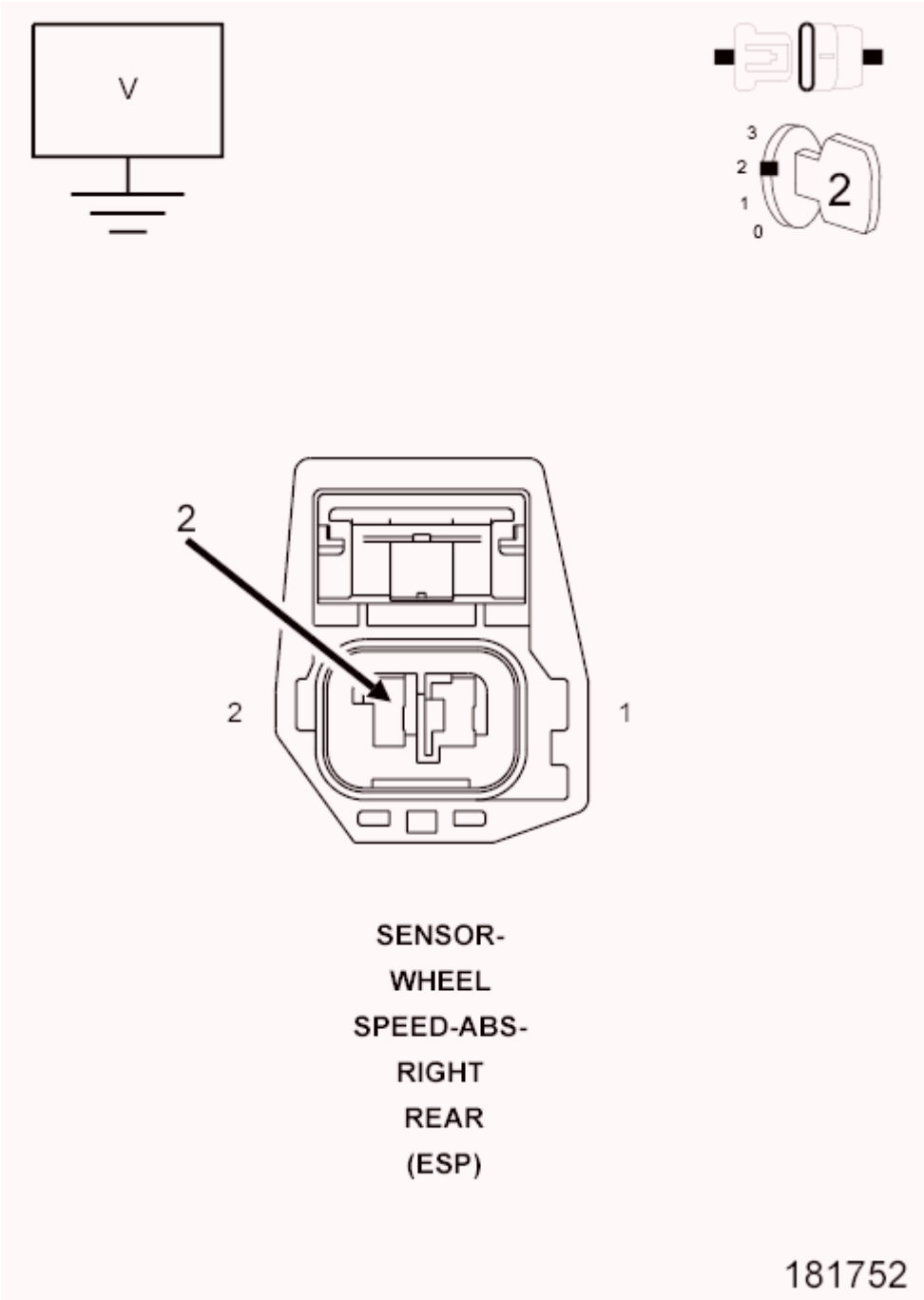

Fig. 115: Measuring Right Rear Wheel Speed Sensor Supply Circuit Voltage
Courtesy of CHRYSLER GROUP, LLC

1. Turn the ignition off to the lock position.
2. Disconnect the ABS Module harness connector.
3. Ignition on, engine not running.
4. Measure the voltage of the (B2) Right Rear Wheel Speed Sensor Supply circuit at the Right Rear Wheel Speed Sensor harness connector.

Is there any voltage present?

Yes

- Repair (B2) Right Rear Wheel Speed Sensor Supply circuit for a short to voltage.
- Perform the ABS VERIFICATION TEST. Refer to **ABS VERIFICATION TEST**.

No

- Go To 8.

8. **(B1) RIGHT REAR WHEEL SPEED SENSOR SIGNAL CIRCUIT FOR A SHORT TO GROUND**

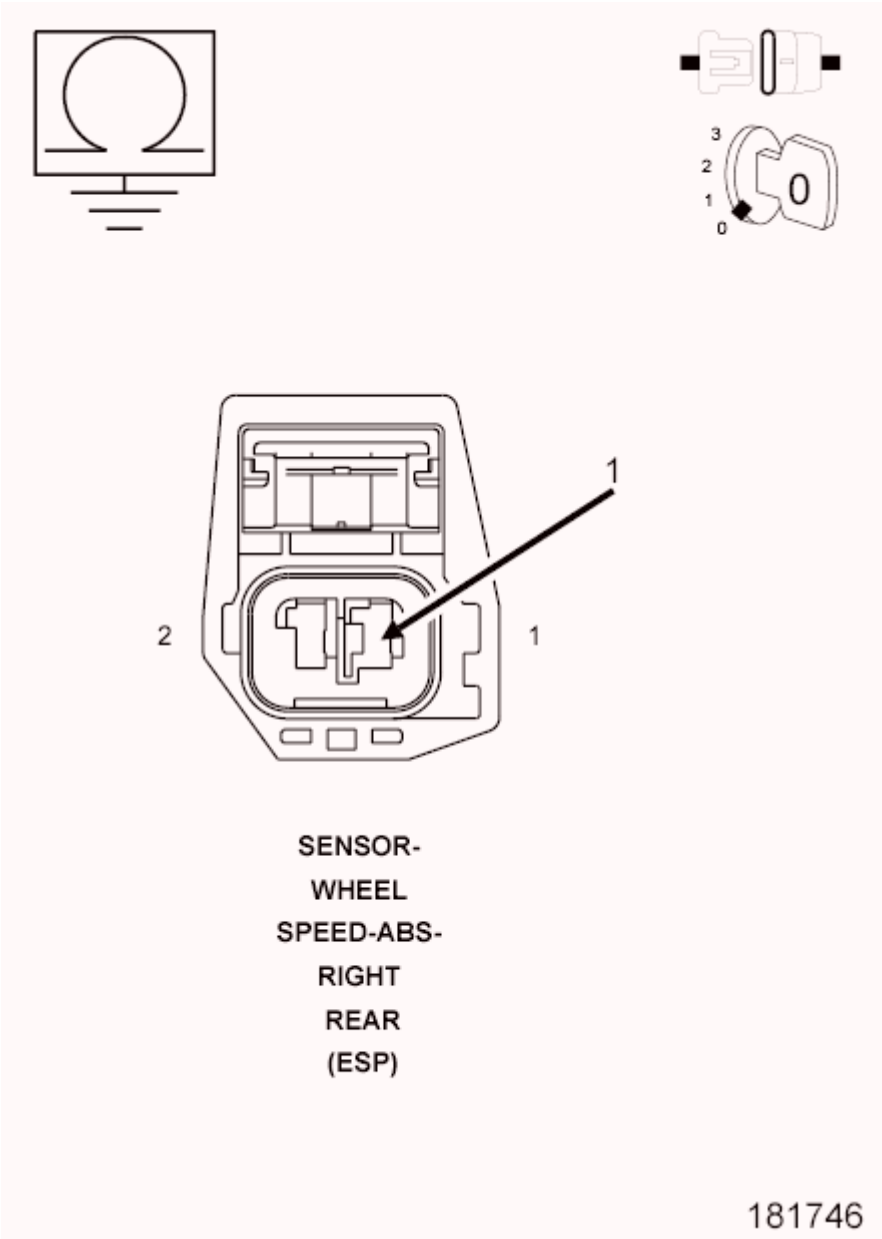

Fig. 116: Checking Right Rear Wheel Speed Sensor Signal Circuit For A Short To Ground
Courtesy of CHRYSLER GROUP, LLC

1. Turn the ignition off.
2. Measure the resistance between the (B1) Right Rear Wheel Speed Sensor Signal circuit and ground.

   Is the resistance above 5.0 Ohms?

   Yes

   - Replace the Right Rear Wheel Speed Sensor in accordance with the Service Information.
   - Perform the ABS VERIFICATION TEST. Refer to **ABS VERIFICATION TEST**.

   No

   - Repair the (B1) Right Rear Wheel Speed Sensor Signal circuit for a short to ground.
   - Perform the ABS VERIFICATION TEST. Refer to **ABS VERIFICATION TEST**.

9. **(B2) RIGHT REAR WHEEL SPEED SENSOR SUPPLY CIRCUIT FOR A SHORT TO GROUND**

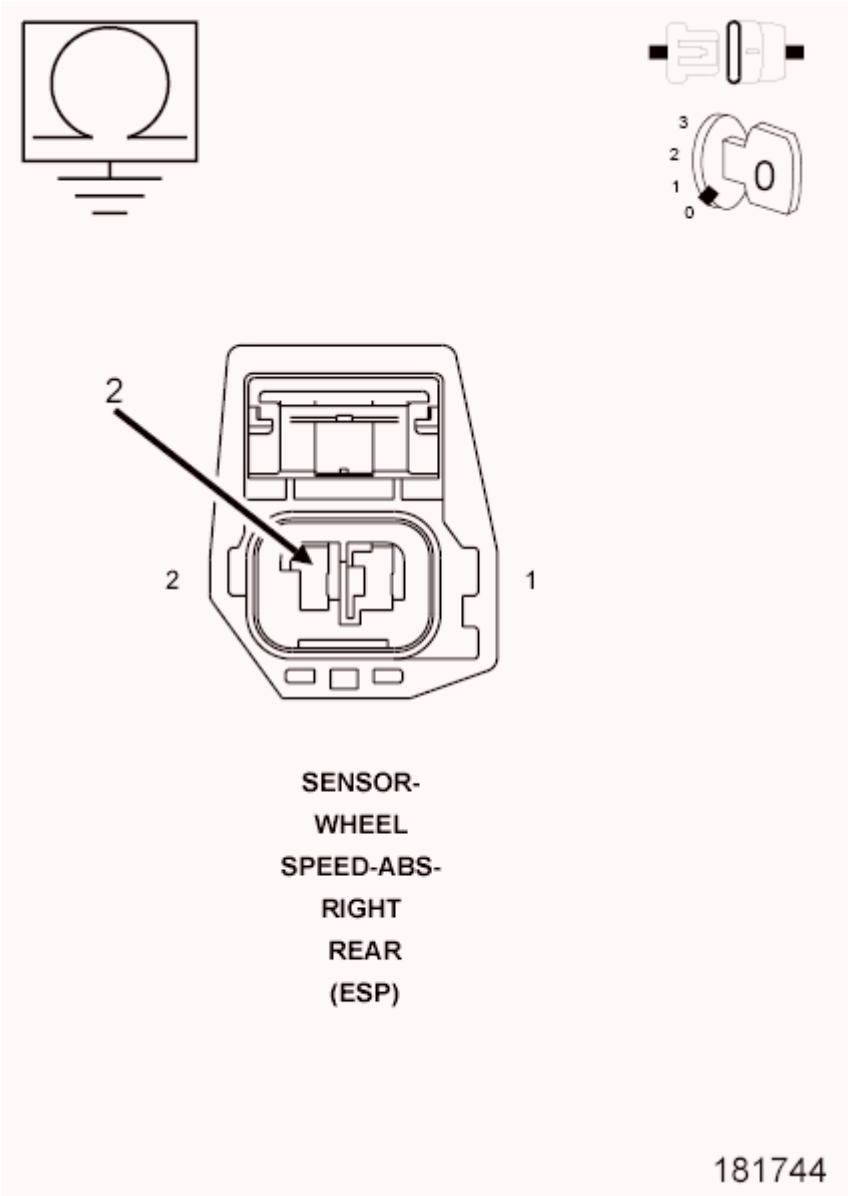

Fig. 117: Checking Right Rear Wheel Speed Sensor Supply Circuit For A Short To Ground
Courtesy of CHRYSLER GROUP, LLC

1. Turn the ignition off to the lock position.
2. Disconnect the ABS Module harness connector.
3. Measure the resistance between the (B2) Right Rear Wheel Speed Sensor Supply circuit and ground.

   Is the resistance above 5.0 Ohms?

   Yes

   - Go To 10.

No

- Repair the (B2) Right Rear Wheel Speed Sensor Supply circuit for a short to ground.
- Perform the ABS VERIFICATION TEST. Refer to **ABS VERIFICATION TEST**.

10. **(B2) RIGHT REAR WHEEL SPEED SENSOR SUPPLY CIRCUIT FOR AN OPEN**

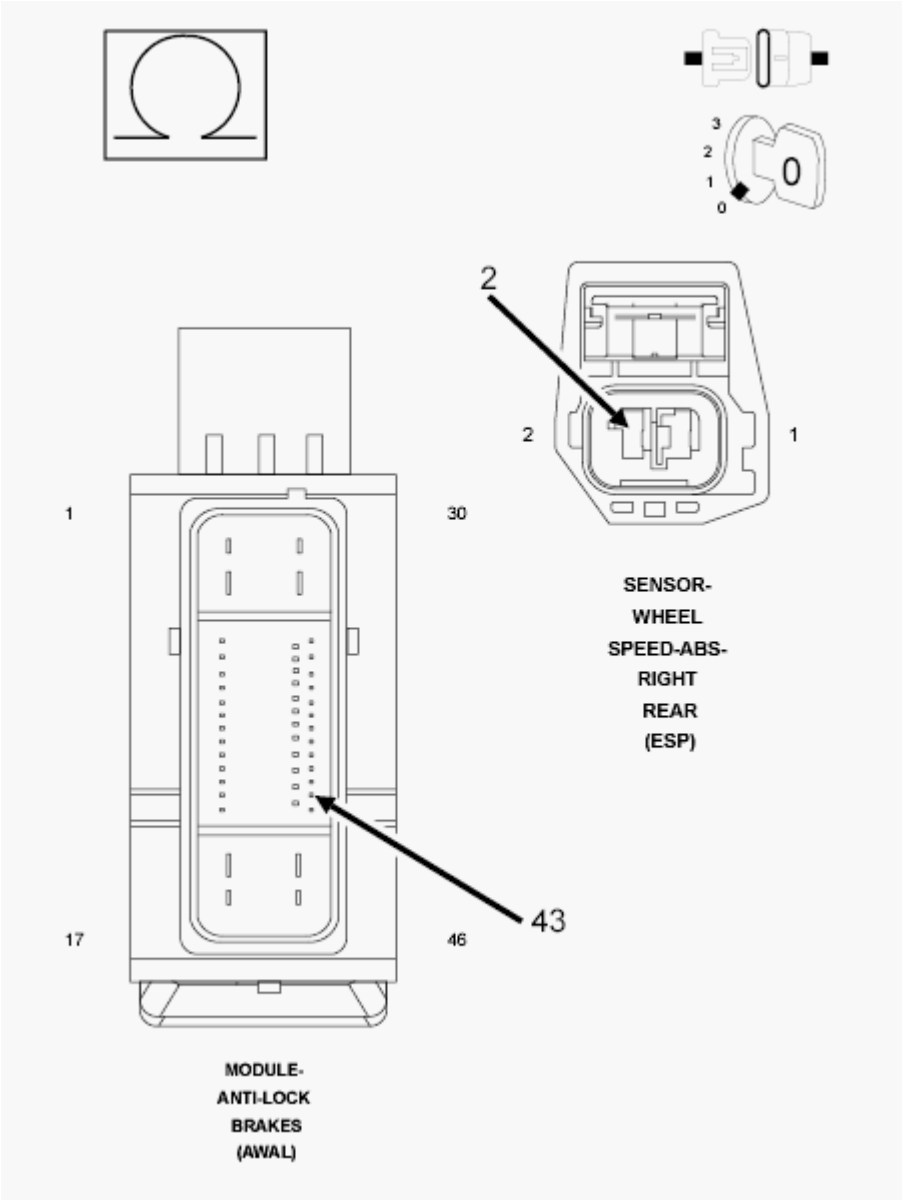

Fig. 118: Checking Right Rear Wheel Speed Sensor Supply Circuit For An Open
Courtesy of CHRYSLER GROUP, LLC

1. Measure the resistance of the (B2) Right Rear Wheel Speed Sensor Supply circuit between the ABS harness connector and the Right Rear Wheel Speed Sensor harness connector.

   Is the resistance below 5 Ohms?

Yes

- Go To 11.

No

- Repair the open (B2) Right Rear Wheel Speed Sensor Supply circuit.
- Perform the ABS VERIFICATION TEST. Refer to **ABS VERIFICATION TEST**.

11. **(B1) RIGHT REAR WHEEL SPEED SENSOR SIGNAL CIRCUIT FOR AN OPEN**

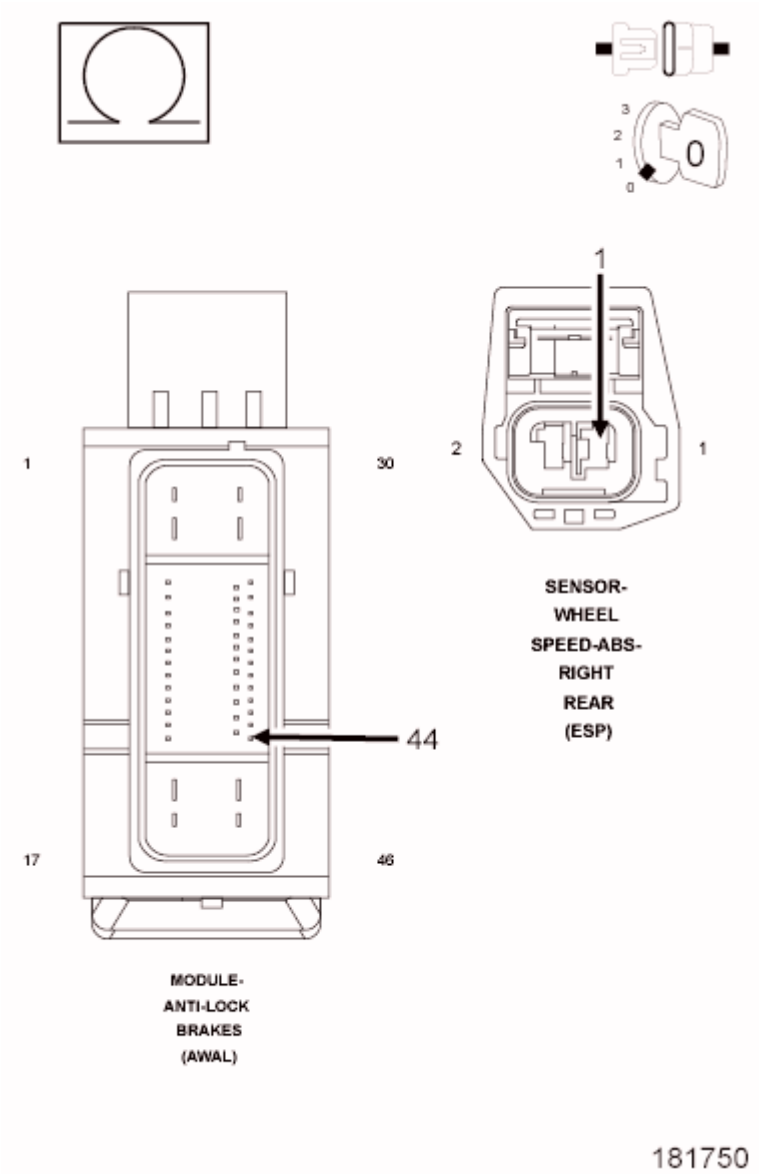

Fig. 119: Checking Right Rear Wheel Speed Sensor Signal Circuit For An Open
Courtesy of CHRYSLER GROUP, LLC

1. Measure the resistance of the (B1) Right Rear Wheel Speed Sensor Signal circuit between the ABS

harness connector and the Right Rear Wheel Speed Sensor harness connector.

Is the resistance below 5 Ohms?

Yes

- Go To 12.

No

- Repair the open (B1) Right Rear Wheel Speed Sensor Signal circuit.
- Perform the ABS VERIFICATION TEST. Refer to **ABS VERIFICATION TEST**.

12. **(B1) RIGHT REAR WHEEL SPEED SENSOR SIGNAL CIRCUIT FOR A SHORT TO VOLTAGE**

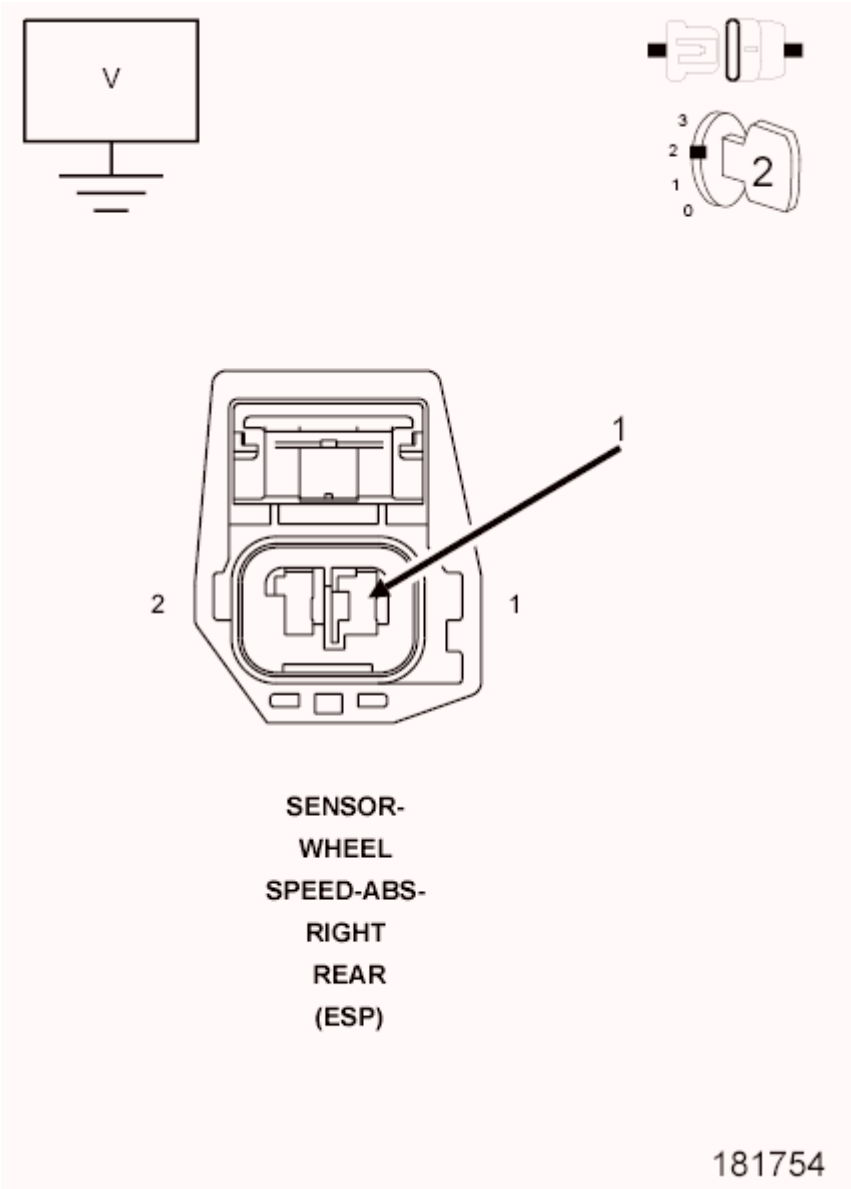

Fig. 120: Checking Right Rear Wheel Speed Sensor Signal Circuit For A Short To Voltage
Courtesy of CHRYSLER GROUP, LLC

1. Turn the ignition on.
2. Measure the voltage of the (B1) Right Rear Wheel Speed Sensor Signal circuit at the Right Rear Wheel Speed Sensor harness connector.

   Is there any voltage present?

   Yes

   - Repair the (B1) Right Rear Wheel Speed Sensor Signal circuit for a short to voltage.
   - Perform the ABS VERIFICATION TEST. Refer to **ABS VERIFICATION TEST**.

No

- Go To 13.

13. **(B2) RIGHT REAR WHEEL SPEED SENSOR SUPPLY CIRCUIT SHORTED TO THE (B1) RIGHT REAR WHEEL SPEED SENSOR SIGNAL CIRCUIT**

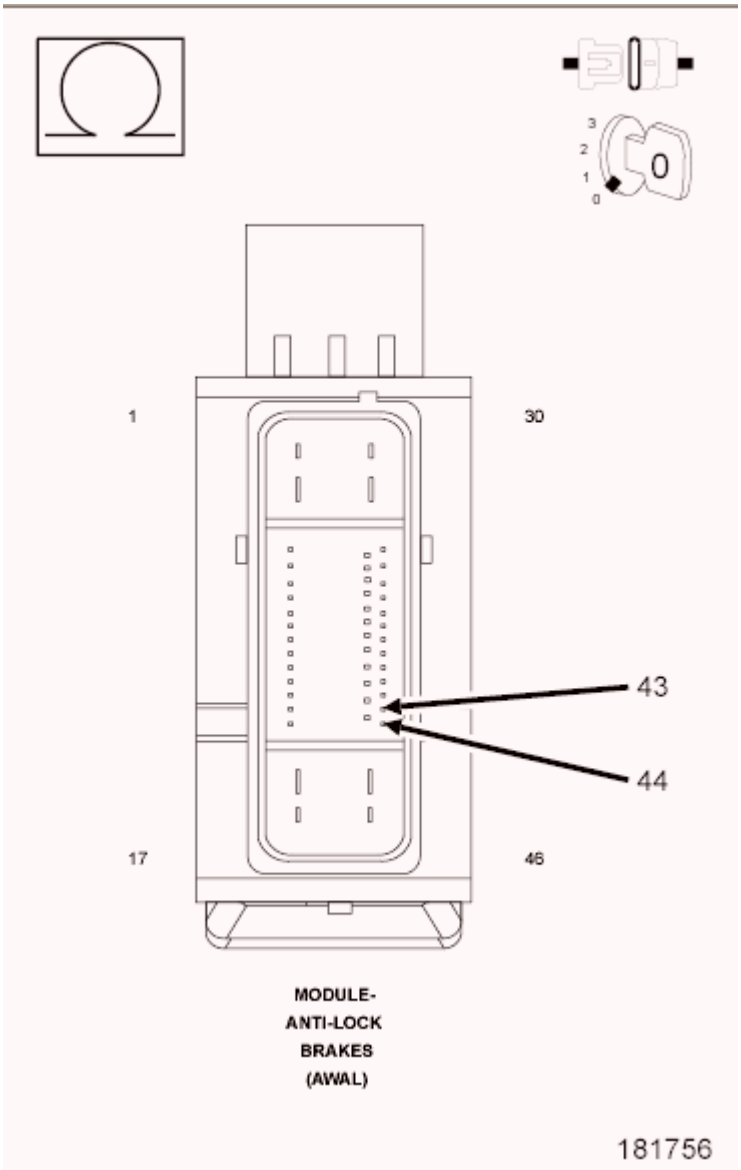

Fig. 121: Checking Right Rear Wheel Speed Sensor Supply Circuit For A Short To The Right Rear Wheel Speed Sensor Signal Circuit
Courtesy of CHRYSLER GROUP, LLC

1. Turn the ignition off to the lock position.
2. Measure the resistance between the (B2) Right Rear Wheel Speed Sensor Supply circuit and the (B1) Right Rear Wheel Speed Sensor Signal circuit at the ABS Module harness connector.

Is the resistance below 5.0 Ohms?

Yes

- Repair (B2) Right Rear Wheel Speed Sensor Supply circuit for a short to the (B1) Right Rear Wheel Speed Sensor Signal circuit.
- Perform the ABS VERIFICATION TEST. Refer to **ABS VERIFICATION TEST**.

No

- Replace the Antilock Brakes Module in accordance with the Service Information.
- Perform the ABS VERIFICATION TEST. Refer to **ABS VERIFICATION TEST**.

C1036-REAR WHEEL SPEED SENSOR CIRCUIT

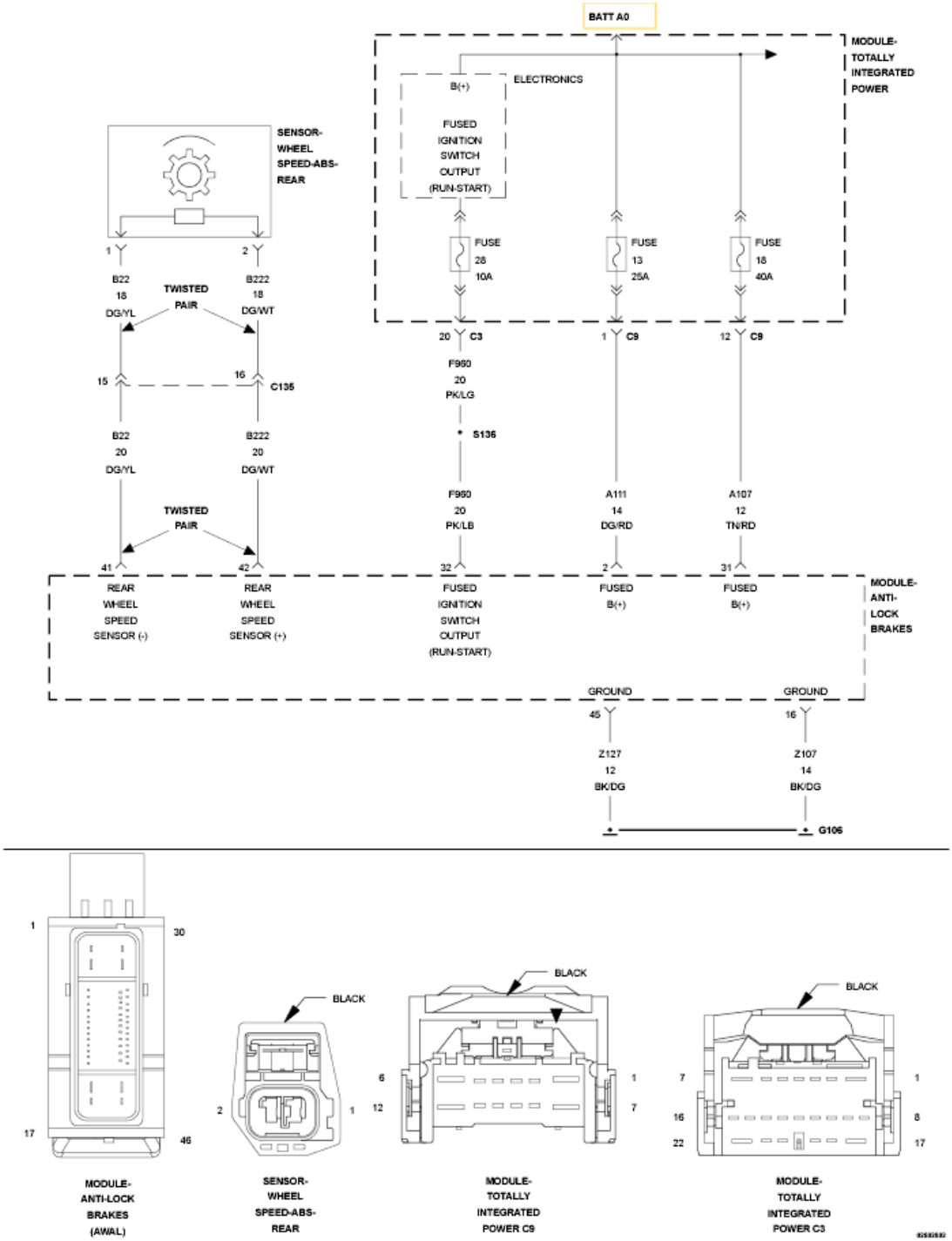

Fig. 122: Rear Wheel Speed Sensor Wiring Diagram
Courtesy of CHRYSLER GROUP, LLC

For a complete wiring diagram, **refer to appropriate SYSTEM WIRING DIAGRAMS article** .

NOTE: The Electronic Stability Control (ESC) may also be referred to as Electronic

Stability Program (ESP) depending on the vehicle model year and configuration. Certain components may also reference ESP, ESC, or use the traction control symbol.

WHEN MONITORED:

With the ignition on and no system under voltage or over voltage condition present.

SET CONDITION:

If the measured wheel speed sensor feedback voltage is less than.304 volts, the sensor is considered open.

If the measured wheel speed sensor feedback voltage is greater than 1.39 volts, or if a sensor over current condition is detected, the sensor is considered shorted.

If a shorted or open condition is present for more than 100 msec, the DTC will set.

POSSIBLE CAUSES

Possible Causes
(B222) REAR WHEEL SPEED SENSOR SUPPLY CIRCUIT FOR A SHORT TO GROUND
(B22) REAR WHEEL SPEED SENSOR SIGNAL CIRCUIT SHORT TO GROUND
(B222) REAR WHEEL SPEED SENSOR SUPPLY CIRCUIT FOR AN OPEN
(B22) REAR WHEEL SPEED SENSOR SIGNAL CIRCUIT FOR AN OPEN
(B222) REAR WHEEL SPEED SENSOR SUPPLY CIRCUIT FOR A SHORT TO VOLTAGE
(B22) REAR WHEEL SPEED SENSOR SIGNAL CIRCUIT FOR A SHORT TO VOLTAGE
(B222) REAR WHEEL SPEED SENSOR SUPPLY CIRCUIT SHORTED TO THE (B22) REAR WHEEL SPEED SENSOR SIGNAL CIRCUIT
REAR WHEEL SPEED SENSOR (WSS)
ANTILOCK BRAKE SYSTEM (ABS) MODULE

DIAGNOSTIC TEST

1. **DTC IS ACTIVE**
    1. Turn the ignition on.
    2. With the scan tool, clear DTC's.
    3. Turn the ignition off.
    4. Turn the ignition on.
    5. With the scan tool, select View DTC's.

    Is the status Active for this DTC?

    Yes

- Go To 2.

No

- The condition that caused the symptom is currently not present. Inspect the related wiring for a possible intermittent condition. Look for any chafed, pierced, pinched, or partially broken wires.
- Perform the ABS INTERMITTENT CONDITION diagnostic procedure. Refer to **ABS INTERMITTENT CONDITION**.

2. **WHEEL SPEED SENSOR INSPECTION**
   1. Turn the ignition off.
   2. Inspect the Wheel Speed Sensor for proper mounting.
   3. Inspect the Wheel Speed Sensor harness and connector.

   Were any problems found?

   Yes

   - Repair as necessary in accordance with the Service Information.
   - Perform the ABS VERIFICATION TEST. Refer to **ABS VERIFICATION TEST**.

   No

   - Go To 3.
3. **CHECK (B222) REAR WHEEL SPEED SENSOR SUPPLY CIRCUIT VOLTAGE**

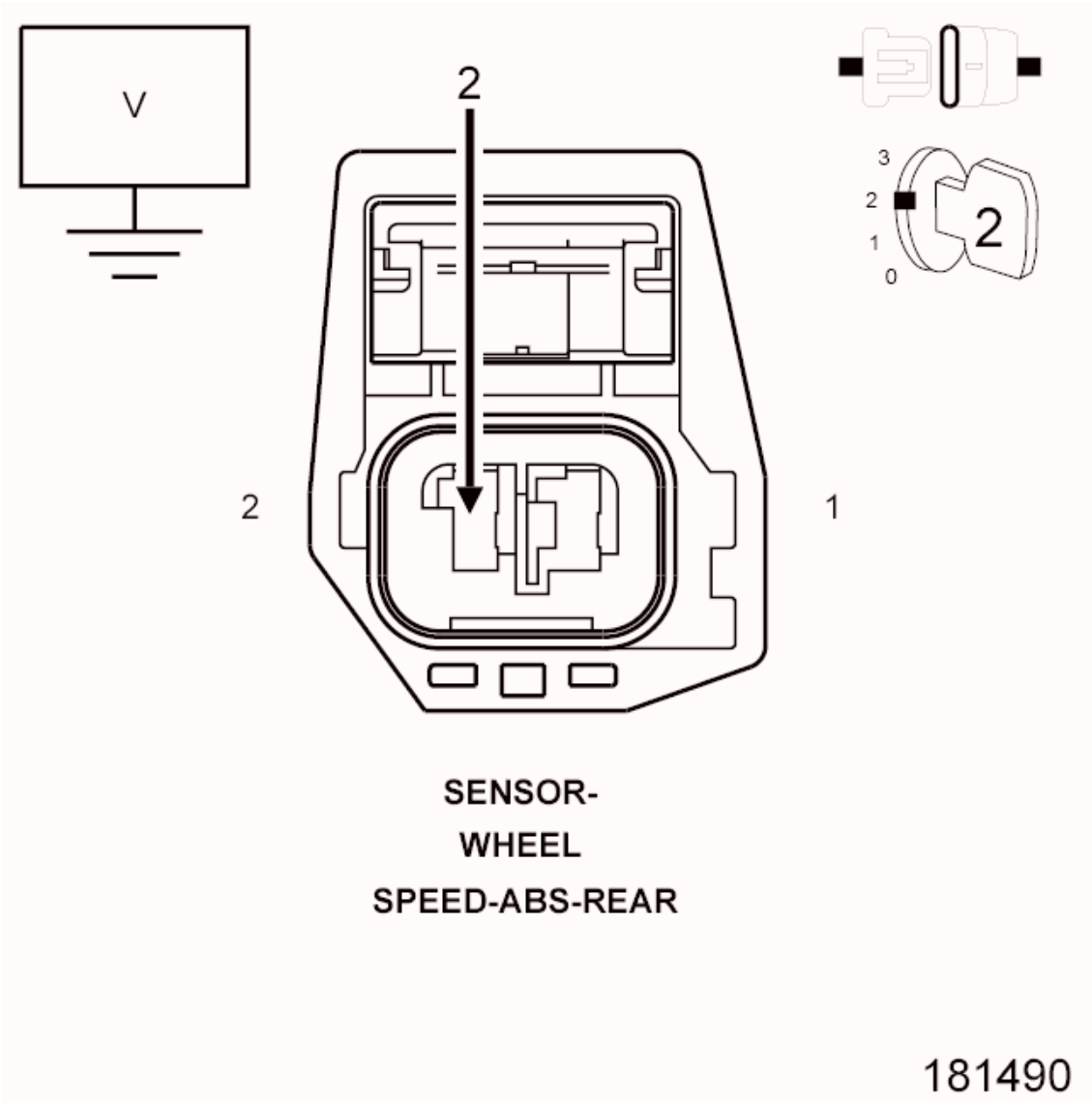

Fig. 123: Measuring Rear Wheel Speed Sensor Supply Circuit Voltage
Courtesy of CHRYSLER GROUP, LLC

1. Disconnect the Rear Wheel Speed Sensor harness connector.
2. Turn the ignition on.
3. Measure the voltage between the (B222) Rear Wheel Speed Sensor Supply circuit and ground.

   Is the voltage above 10 volts?

   Yes

   - Go To 4.

   No

- Go To 6.

4. **(B222) REAR WHEEL SPEED SENSOR SUPPLY CIRCUIT FOR A SHORT TO VOLTAGE**

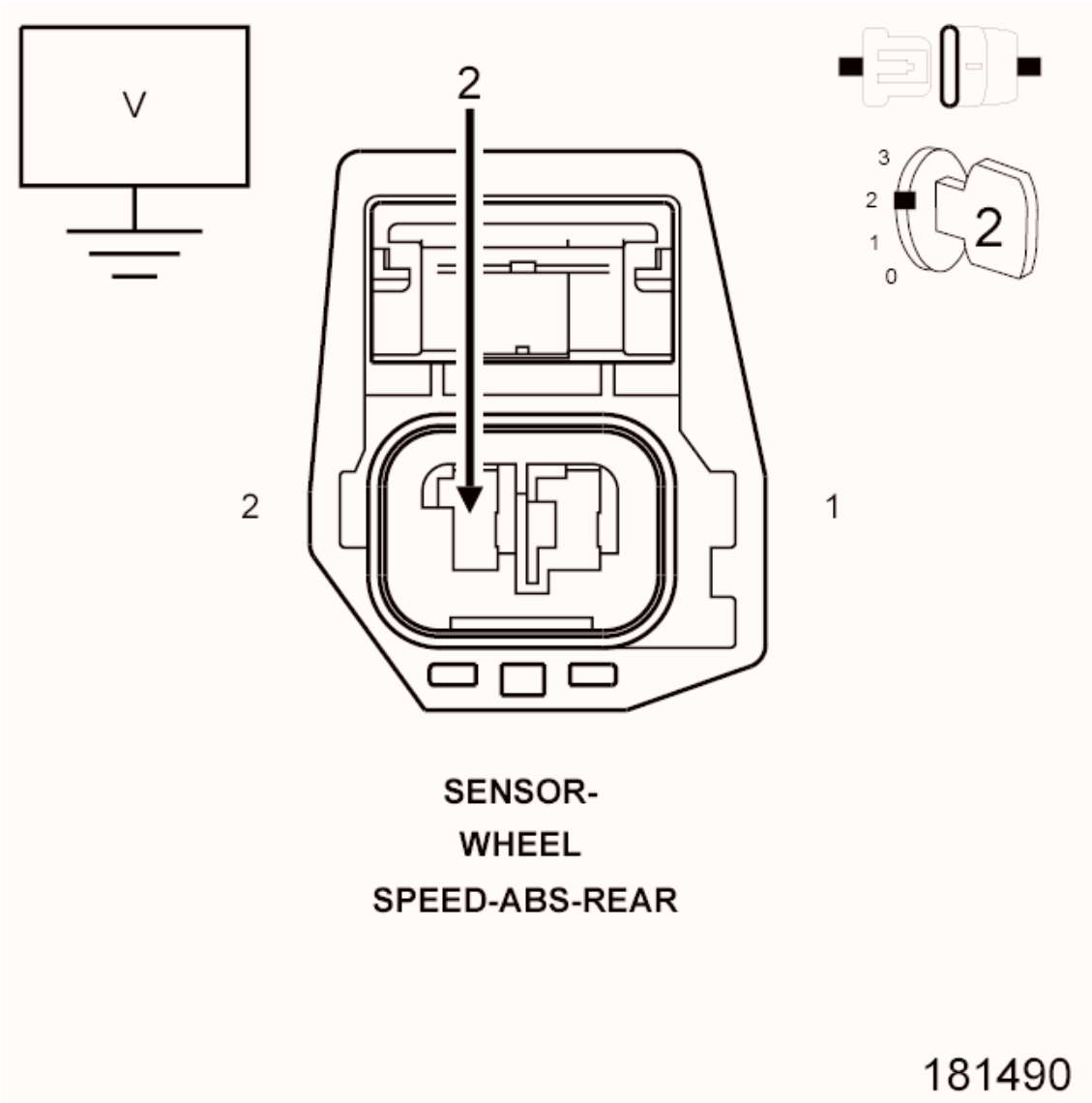

Fig. 124: Measuring Rear Wheel Speed Sensor Supply Circuit Voltage
Courtesy of CHRYSLER GROUP, LLC

1. Turn the ignition off.
2. Disconnect the ABS Module harness connector.
3. Turn the ignition on.
4. Measure the voltage of the (B222) Rear Wheel Speed Sensor Supply circuit.

   Is there any voltage present?

   Yes

- Repair the (B222) Rear Wheel Speed Sensor Supply circuit for a short to voltage.
- Perform the ABS VERIFICATION TEST. Refer to **ABS VERIFICATION TEST**.

No

- Go To 5.

5. **(B22) REAR WHEEL SPEED SENSOR SIGNAL CIRCUIT FOR A SHORT TO GROUND**

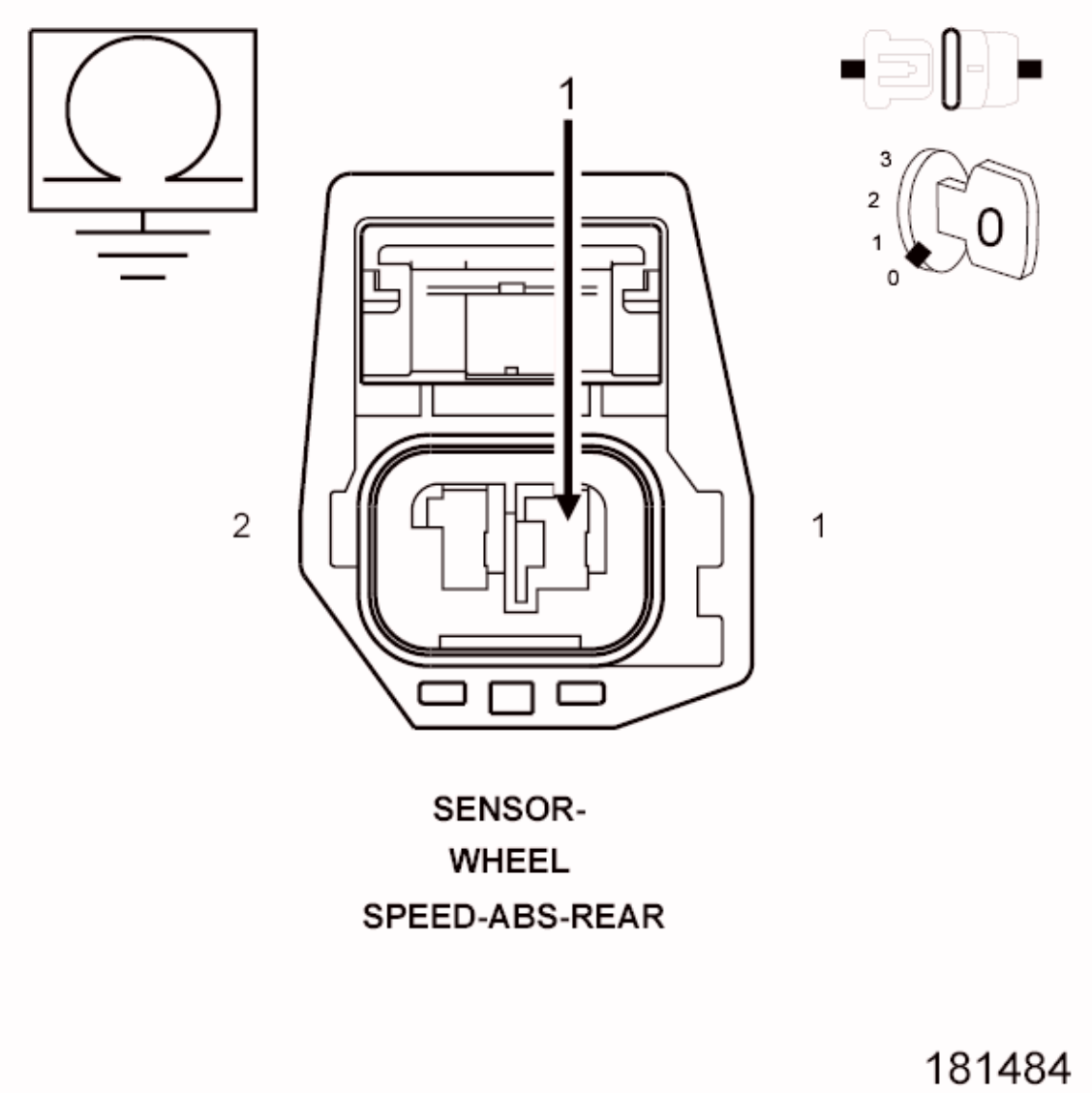

Fig. 125: Checking Rear Wheel Speed Sensor Signal Circuit For A Short To Ground
Courtesy of CHRYSLER GROUP, LLC

1. Turn the ignition off.
2. Measure the resistance between the (B22) Rear Wheel Speed Sensor Signal circuit and ground.

   Is the resistance above 5.0 ohms?

Yes

- Replace the Rear Wheel Speed Sensor in accordance with the Service Information.
- Perform the ABS VERIFICATION TEST. Refer to **ABS VERIFICATION TEST**.

No

- Repair the (B22) Rear Wheel Speed Sensor Signal circuit for a short to ground.
- Perform the ABS VERIFICATION TEST. Refer to **ABS VERIFICATION TEST**.

6. **(B222) REAR WHEEL SPEED SENSOR SUPPLY CIRCUIT FOR A SHORT TO GROUND**

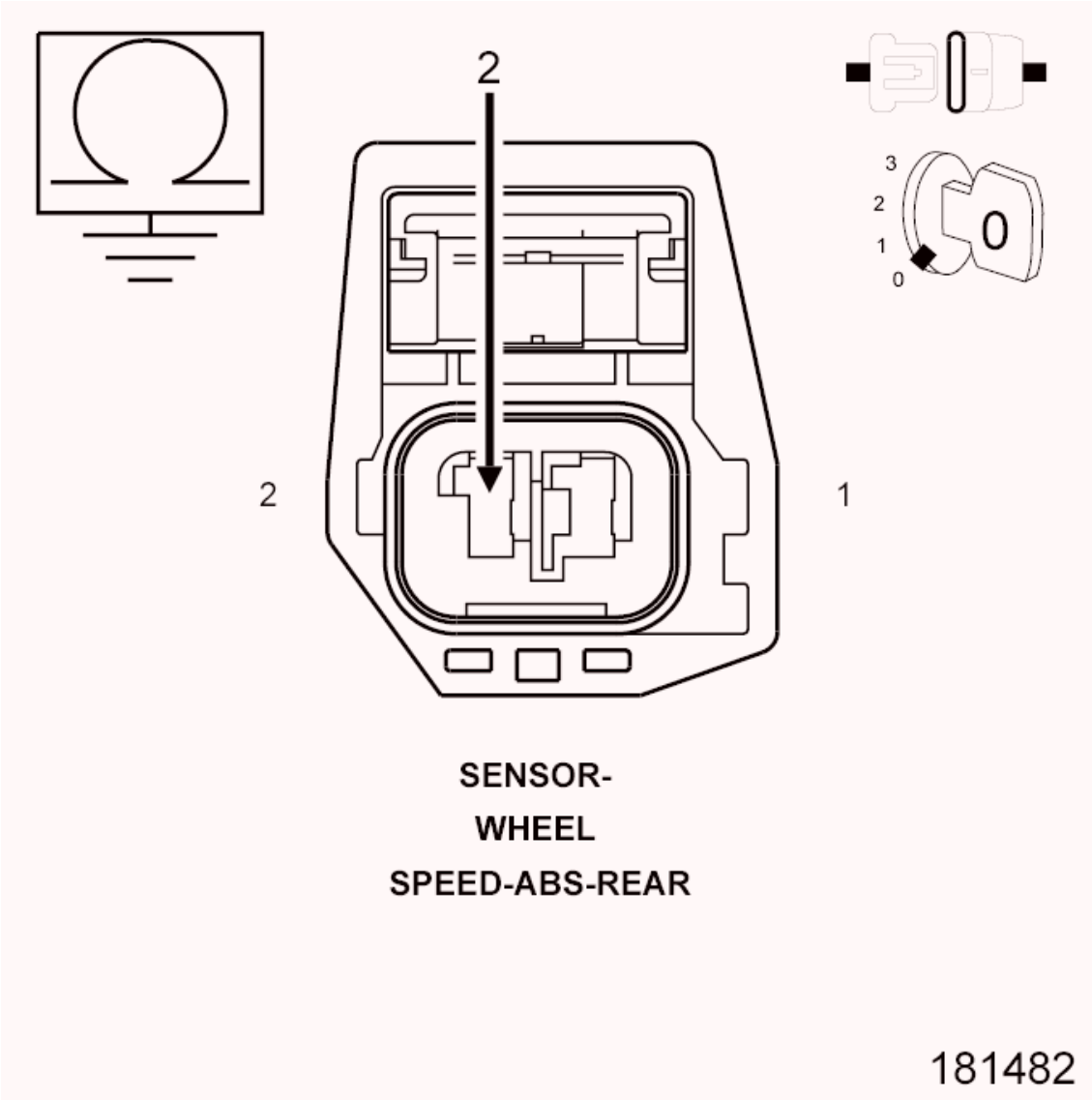

Fig. 126: Checking Rear Wheel Speed Sensor Supply Circuit For A Short To Ground
Courtesy of CHRYSLER GROUP, LLC

1. Turn the ignition off.

2. Disconnect the Antilock Brake Module harness connector.

   NOTE: Check connector - Clean/repair as necessary.

3. Measure the resistance between the (B222) Rear Wheel Speed Sensor Supply circuit and ground.

   Is the resistance above 5.0 Ohms?

   Yes

   - Go To 7.

   No

   - Repair the (B222) Rear Wheel Speed Sensor Supply circuit for a short to ground.
   - Perform the ABS VERIFICATION TEST. Refer to **ABS VERIFICATION TEST**.

7. **(B222) REAR WHEEL SPEED SENSOR SUPPLY CIRCUIT FOR AN OPEN**

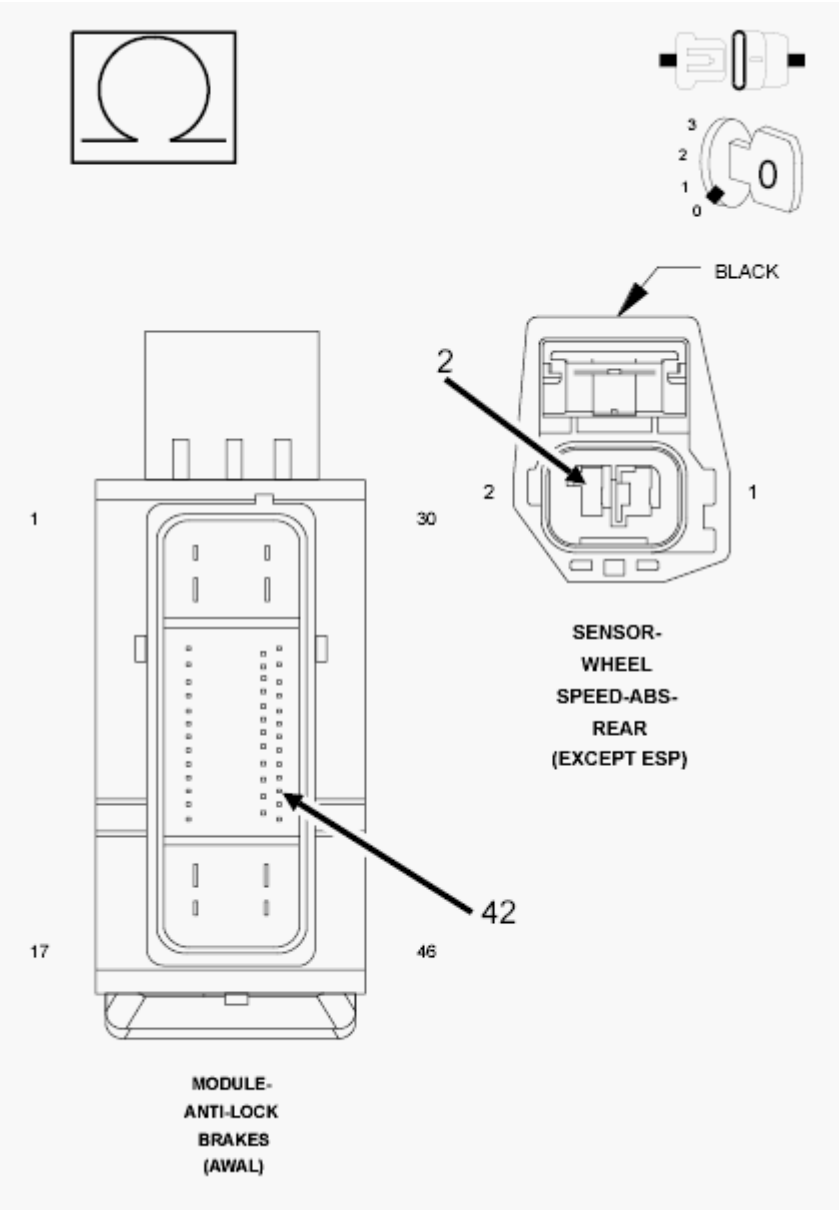

Fig. 127: Checking Rear Wheel Speed Sensor Supply Circuit For An Open
Courtesy of CHRYSLER GROUP, LLC

1. Measure the resistance of the (B222) Rear Wheel Speed Sensor Supply circuit.

   Is the resistance below 5 Ohms?

   Yes

   - Go To 8.

   No

   - Repair the open (B222) Rear Wheel Speed Sensor Supply circuit.

- Perform the ABS VERIFICATION TEST. Refer to **ABS VERIFICATION TEST**.

8. **(B22) REAR WHEEL SPEED SENSOR SIGNAL CIRCUIT FOR AN OPEN**

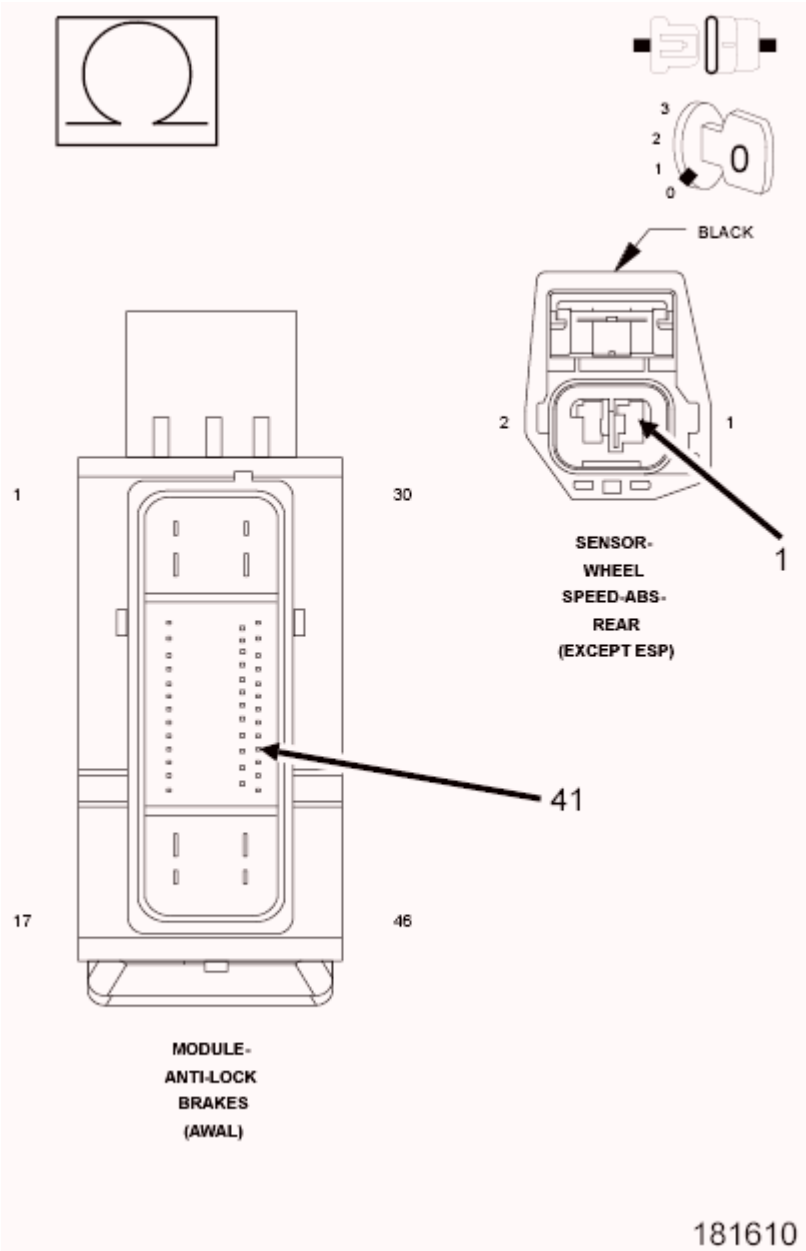

Fig. 128: Checking Rear Wheel Speed Sensor Signal Circuit For An Open
Courtesy of CHRYSLER GROUP, LLC

1. Measure the resistance of the (B22) Rear Wheel Speed Sensor Signal circuit.

   Is the resistance below 5 Ohms?

   Yes

- Go To 9.

No

- Repair the open (B22) Rear Wheel Speed Sensor Signal circuit.
- Perform the ABS VERIFICATION TEST. Refer to **ABS VERIFICATION TEST**.

9. **(B22) REAR WHEEL SPEED SENSOR SIGNAL CIRCUIT FOR A SHORT TO VOLTAGE**

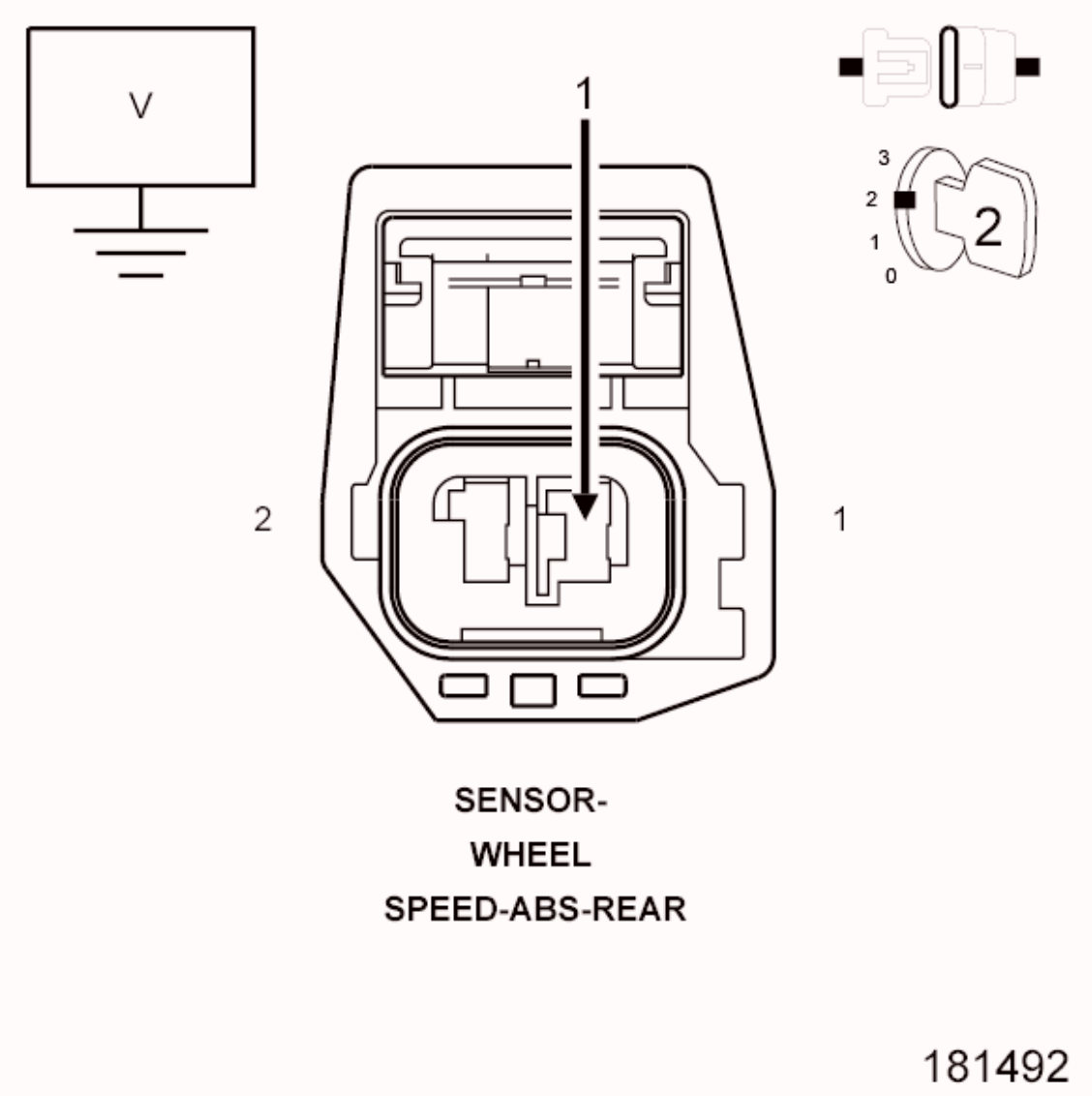

Fig. 129: Checking Rear Wheel Speed Sensor Signal Circuit For A Short To Voltage
Courtesy of CHRYSLER GROUP, LLC

1. Turn the ignition on.
2. Measure the voltage of the (B22) Rear Wheel Speed Sensor Signal circuit.

   Is there any voltage present?

Yes

- Repair the (B22) Rear Wheel Speed Sensor Signal circuit for a short to voltage.
- Perform the ABS VERIFICATION TEST. Refer to **ABS VERIFICATION TEST**.

No

- Go To 10.

10. **(B222) REAR WHEEL SPEED SENSOR SUPPLY CIRCUIT SHORTED TO THE (B22) REAR WHEEL SPEED SENSOR SIGNAL CIRCUIT**

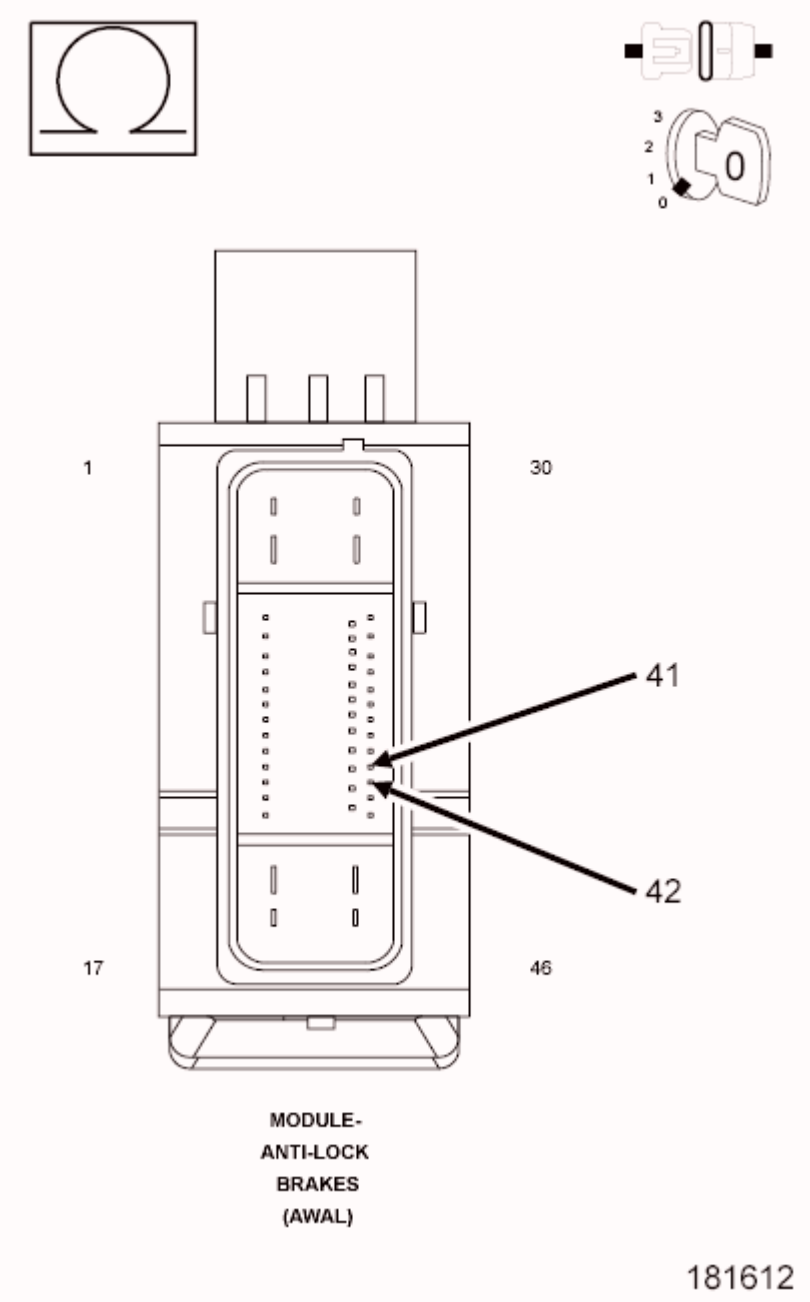

Fig. 130: Checking Left Rear Wheel Speed Sensor Supply Circuit For A Short To The Left Rear Wheel Speed Sensor Signal Circuit
Courtesy of CHRYSLER GROUP, LLC

1. Turn the ignition off.
2. Measure the resistance between the (B222) Rear Wheel Speed Sensor Supply circuit and the (B22) Rear Wheel Speed Sensor Signal circuit at the Antilock Brake Module harness connector.

   Is the resistance below 5.0 Ohms?

   Yes

   - Repair (B222) Rear Wheel Speed Sensor Supply circuit for a short to the (B22) Rear Wheel Speed Sensor Signal circuit.
   - Perform the ABS VERIFICATION TEST. Refer to **ABS VERIFICATION TEST**.

   No

   - Replace the Antilock Brakes Module in accordance with the Service Information.
   - Perform the ABS VERIFICATION TEST. Refer to **ABS VERIFICATION TEST**.

C103D-REAR WHEEL SPEED SENSOR SIGNAL ERRATIC PERFORMANCE

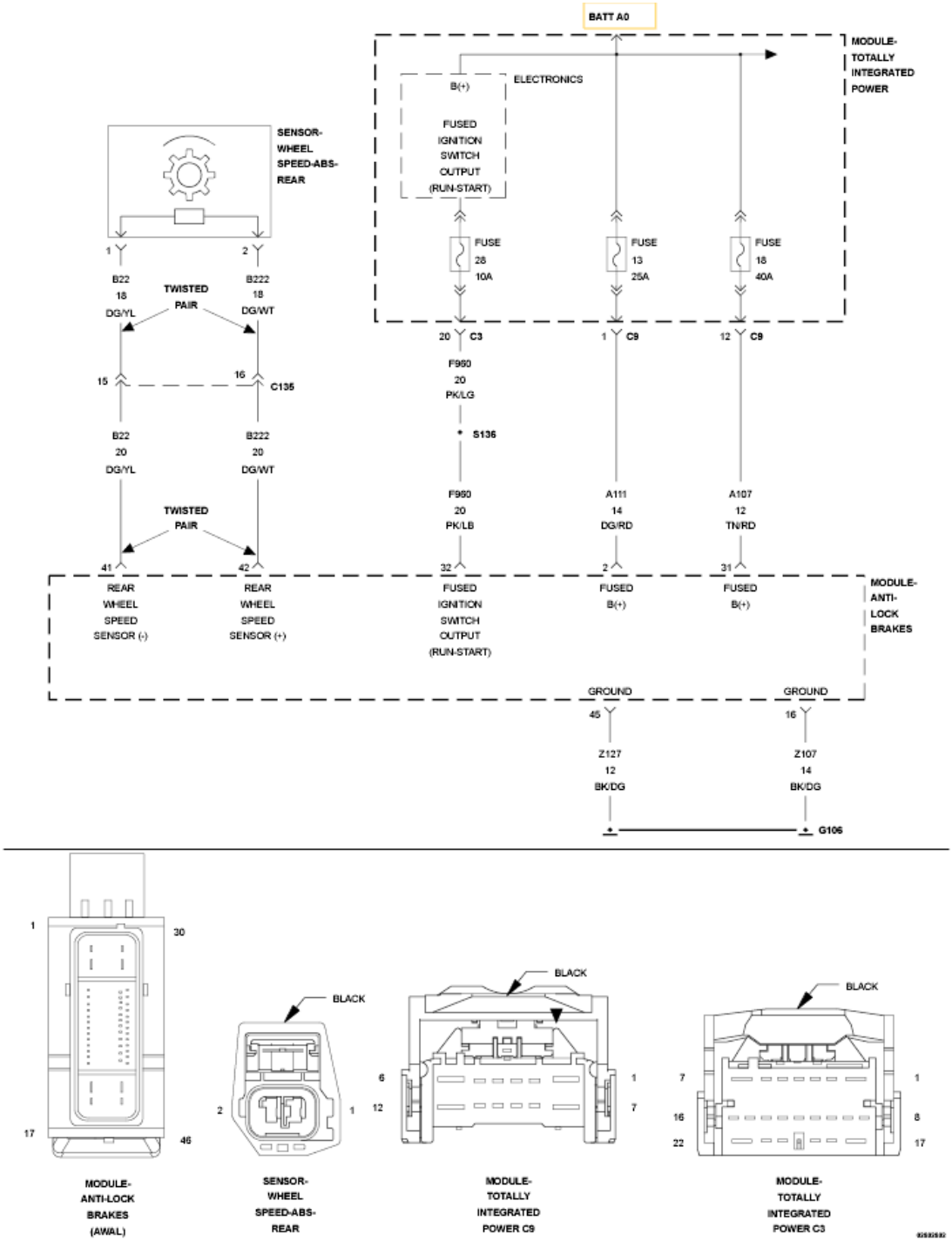

Fig. 131: Rear Wheel Speed Sensor Wiring Diagram
Courtesy of CHRYSLER GROUP, LLC

For a complete wiring diagram, **refer to appropriate SYSTEM WIRING DIAGRAMS article** .

NOTE: The Electronic Stability Control (ESC) may also be referred to as Electronic

Stability Program (ESP) depending on the vehicle model year and configuration. Certain components may also reference ESP, ESC, or use the traction control symbol.

WHEN MONITORED:

With the ignition on and no system under voltage or over voltage condition present.

SET CONDITION:

Each time excessive wheel speed sensor acceleration or deceleration is detected, a fault counter increments. If the fault counter exceeds a specified value, the DTC will set.

POSSIBLE CAUSES

Possible Causes
(B222) REAR WHEEL SPEED SENSOR SUPPLY CIRCUIT SHORT TO GROUND
(B22) REAR WHEEL SPEED SENSOR SIGNAL CIRCUIT SHORT TO GROUND
(B222) REAR WHEEL SPEED SENSOR SUPPLY CIRCUIT FOR AN OPEN
(B22) REAR WHEEL SPEED SENSOR SIGNAL CIRCUIT FOR AN OPEN
(B222) REAR WHEEL SPEED SENSOR SUPPLY CIRCUIT FOR A SHORT TO VOLTAGE
(B22) REAR WHEEL SPEED SENSOR SIGNAL CIRCUIT FOR A SHORT TO VOLTAGE
(B222) REAR WHEEL SPEED SENSOR SUPPLY CIRCUIT SHORTED TO THE (B22) REAR WHEEL SPEED SENSOR SIGNAL CIRCUIT
REAR WHEEL SPEED SENSOR (WSS)
ANTILOCK BRAKE SYSTEM (ABS) MODULE

DIAGNOSTIC TEST

1. **DTC IS ACTIVE**
    1. Turn the ignition on.
    2. With the scan tool, clear DTC's.
    3. Turn the ignition off.
    4. Turn the ignition on.
    5. With the scan tool, select View DTC's.

    Is the status Active for this DTC?

    Yes

    - Go To 2.

    No

- The condition that caused the symptom is currently not present. Inspect the related wiring for a possible intermittent condition. Look for any chafed, pierced, pinched, or partially broken wires.
- Perform the ABS INTERMITTENT CONDITION diagnostic procedure. Refer to **ABS INTERMITTENT CONDITION**.

2. **WHEEL SPEED SENSOR INSPECTION**
   1. Turn the ignition off.
   2. Inspect the Wheel Speed Sensor for proper mounting.
   3. Inspect the Wheel Speed Sensor harness and connector.

   Were any problems found?

   Yes

   - Repair as necessary in accordance with the Service Information.
   - Perform the ABS VERIFICATION TEST. Refer to **ABS VERIFICATION TEST**.

   No

   - Go To 3.
3. **CHECK (B222) REAR WHEEL SPEED SENSOR SUPPLY CIRCUIT VOLTAGE**

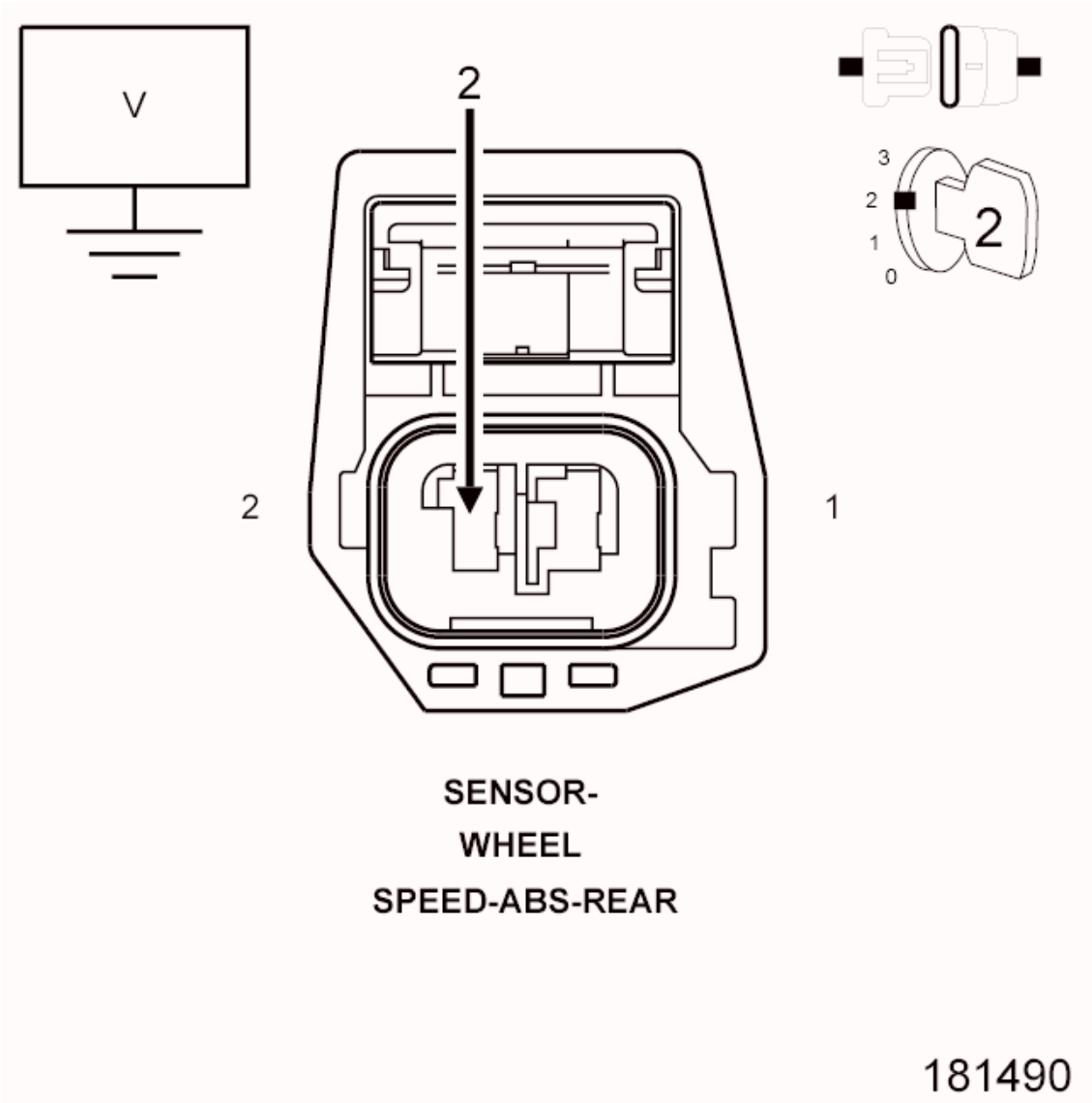

Fig. 132: Measuring Rear Wheel Speed Sensor Supply Circuit Voltage
Courtesy of CHRYSLER GROUP, LLC

1. Disconnect the Rear Wheel Speed Sensor harness connector.
2. Turn the ignition on.
3. Measure the voltage between the (B222) Rear Wheel Speed Sensor Supply circuit and ground.

   Is the voltage above 10 volts?

   Yes

   - Go To 4.

   No

- Go To 6.

4. **(B222) REAR WHEEL SPEED SENSOR SUPPLY CIRCUIT FOR A SHORT TO VOLTAGE**

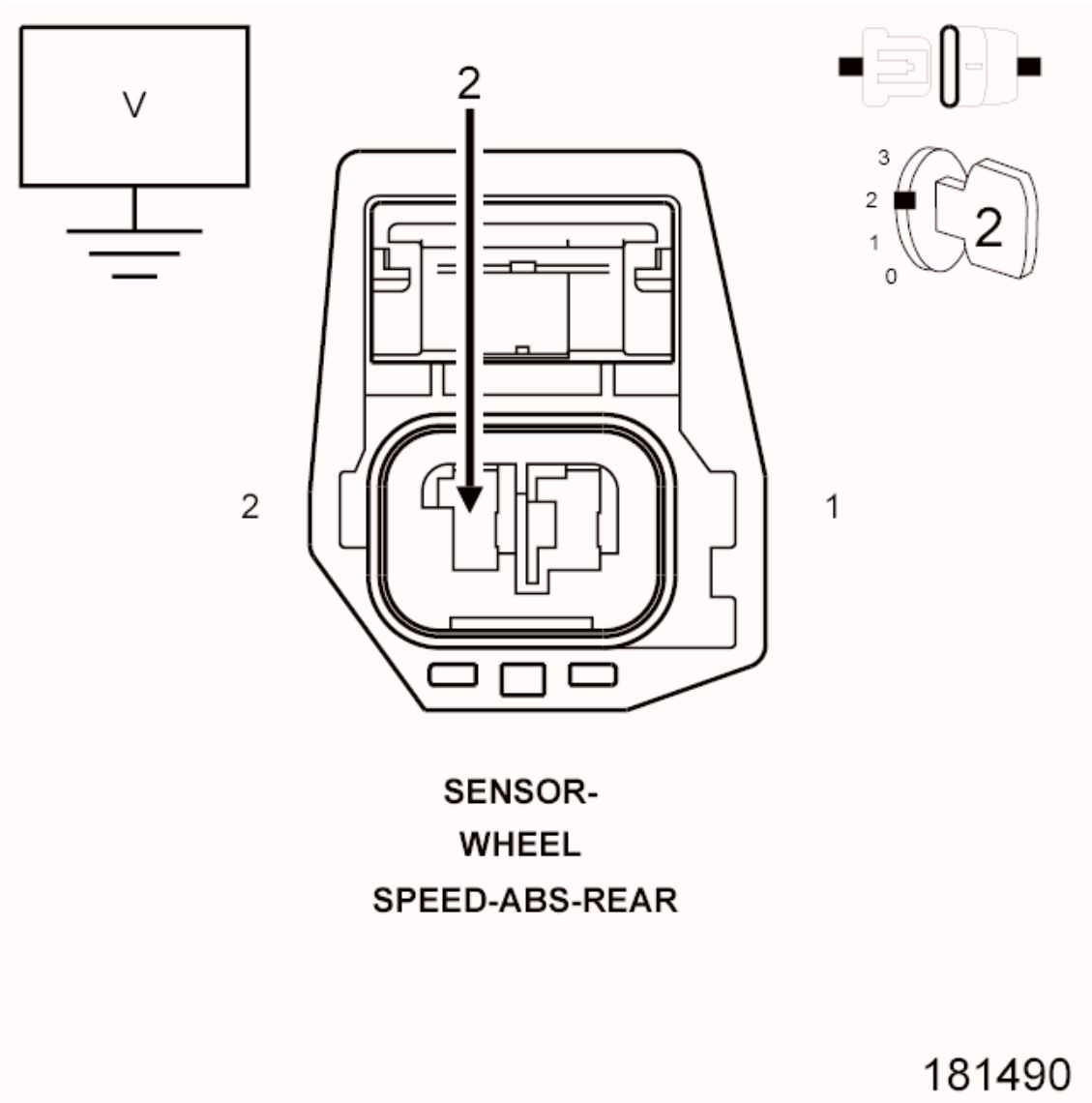

Fig. 133: Measuring Rear Wheel Speed Sensor Supply Circuit Voltage
Courtesy of CHRYSLER GROUP, LLC

1. Turn the ignition off.
2. Disconnect the ABS Module harness connector.
3. Turn the ignition on.
4. Measure the voltage of the (B222) Rear Wheel Speed Sensor Supply circuit.

   Is there any voltage present?

   Yes

- Repair the (B222) Rear Wheel Speed Sensor Supply circuit for a short to voltage.
- Perform the ABS VERIFICATION TEST. Refer to **ABS VERIFICATION TEST**.

No

- Go To 5.

5. **(B22) REAR WHEEL SPEED SENSOR SIGNAL CIRCUIT FOR A SHORT TO GROUND**

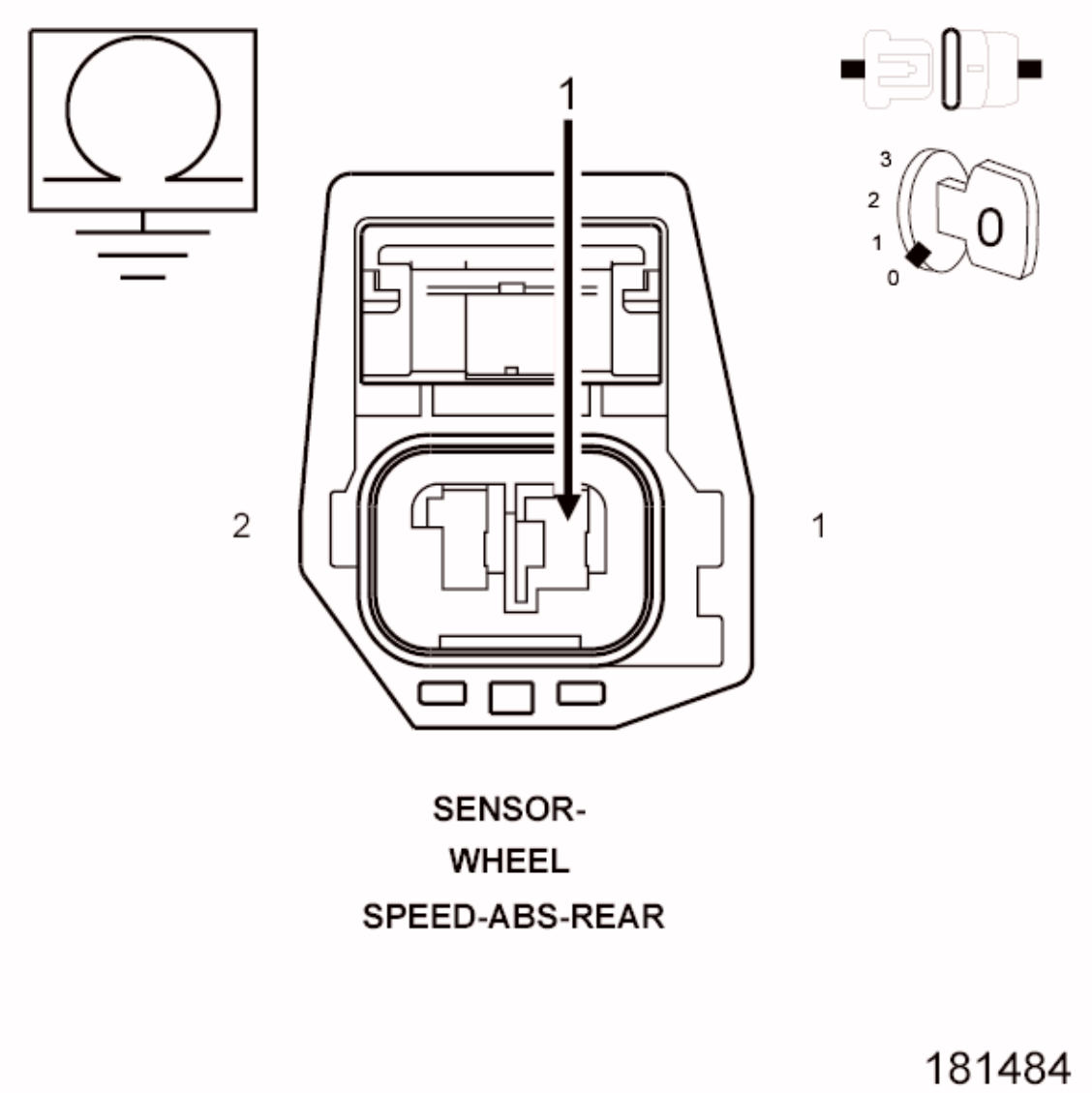

Fig. 134: Checking Rear Wheel Speed Sensor Signal Circuit For A Short To Ground
Courtesy of CHRYSLER GROUP, LLC

1. Turn the ignition off.
2. Measure the resistance between the (B22) Rear Wheel Speed Sensor Signal circuit and ground.

   Is the resistance above 5.0 ohms?

Yes

- Replace the Rear Wheel Speed Sensor in accordance with the Service Information.
- Perform the ABS VERIFICATION TEST. Refer to **ABS VERIFICATION TEST**.

No

- Repair the (B22) Rear Wheel Speed Sensor Signal circuit for a short to ground.
- Perform the ABS VERIFICATION TEST. Refer to **ABS VERIFICATION TEST**.

6. **(B222) REAR WHEEL SPEED SENSOR SUPPLY CIRCUIT FOR A SHORT TO GROUND**

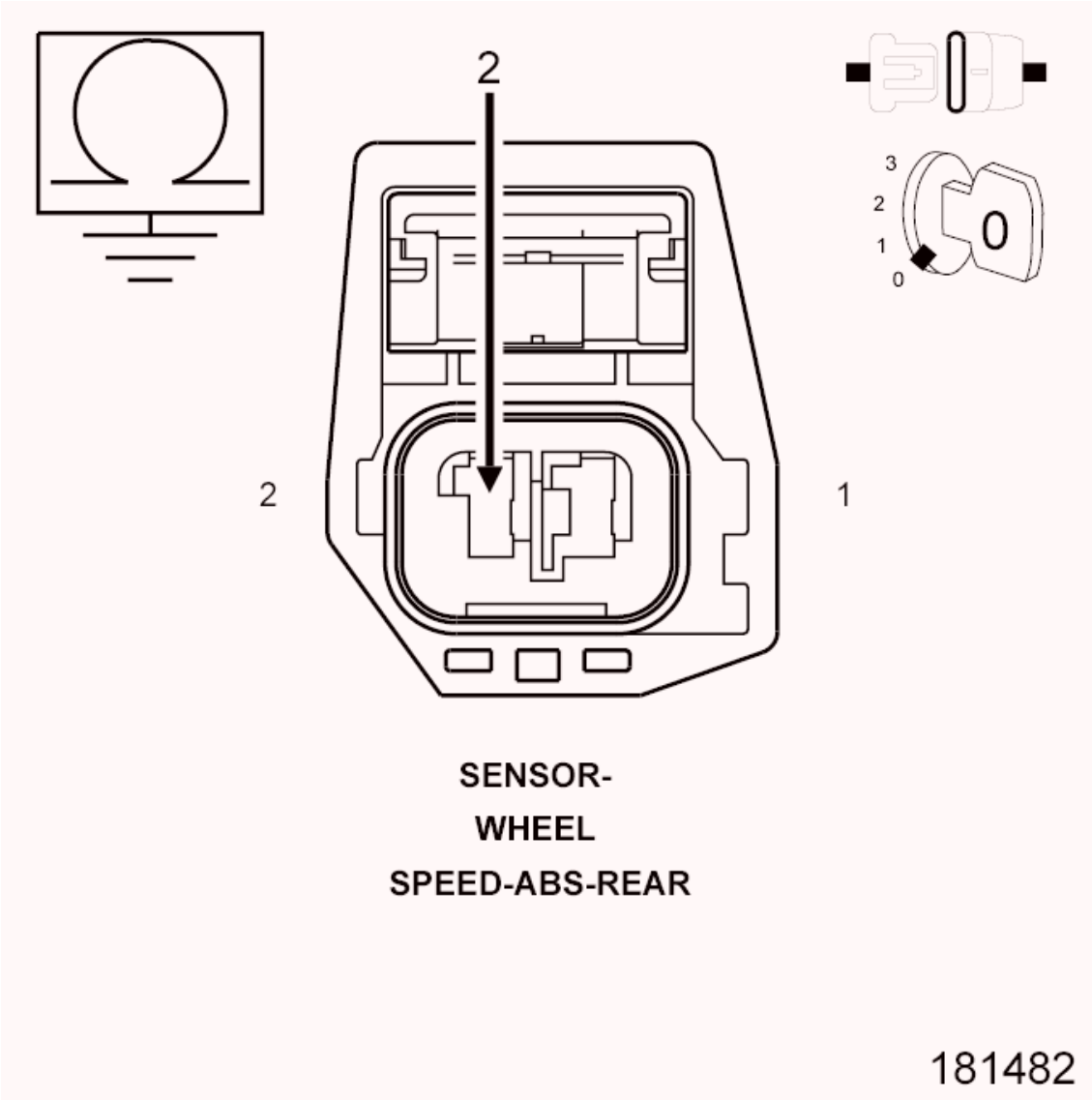

Fig. 135: Checking Rear Wheel Speed Sensor Supply Circuit For A Short To Ground
Courtesy of CHRYSLER GROUP, LLC

1. Turn the ignition off.

2. Disconnect the Antilock Brake Module harness connector.

   NOTE: Check connector - Clean/repair as necessary.

3. Measure the resistance between the (B222) Rear Wheel Speed Sensor Supply circuit and ground.

   Is the resistance above 5.0 Ohms?

   Yes

   - Go To 7.

   No

   - Repair the (B222) Rear Wheel Speed Sensor Supply circuit for a short to ground.
   - Perform the ABS VERIFICATION TEST. Refer to **ABS VERIFICATION TEST**.

7. **(B222) REAR WHEEL SPEED SENSOR SUPPLY CIRCUIT FOR AN OPEN**

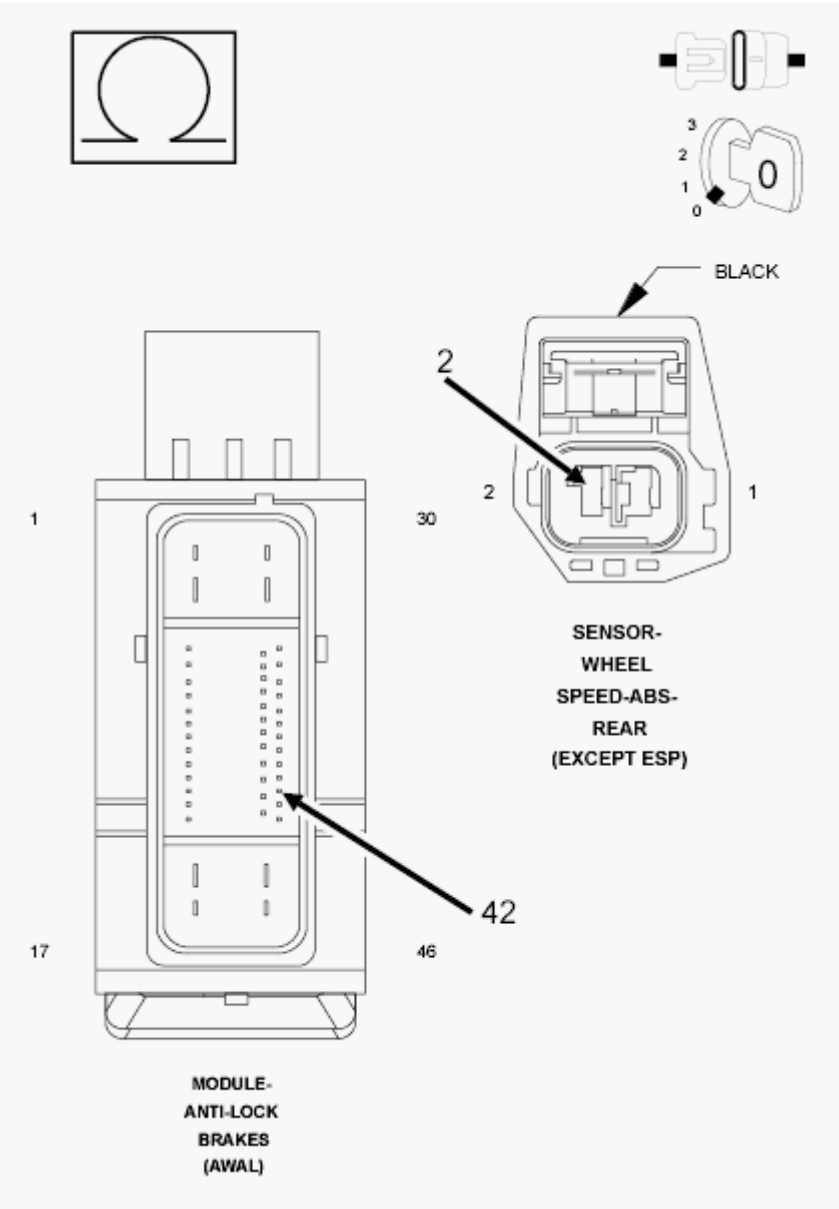

Fig. 136: Checking Rear Wheel Speed Sensor Supply Circuit For An Open
Courtesy of CHRYSLER GROUP, LLC

1. Measure the resistance of the (B222) Rear Wheel Speed Sensor Supply circuit.

   Is the resistance below 5 Ohms?

   Yes

   - Go To 8.

   No

   - Repair the open (B222) Rear Wheel Speed Sensor Supply circuit.

- Perform the ABS VERIFICATION TEST. Refer to **ABS VERIFICATION TEST**.

8. **(B22) REAR WHEEL SPEED SENSOR SIGNAL CIRCUIT FOR AN OPEN**

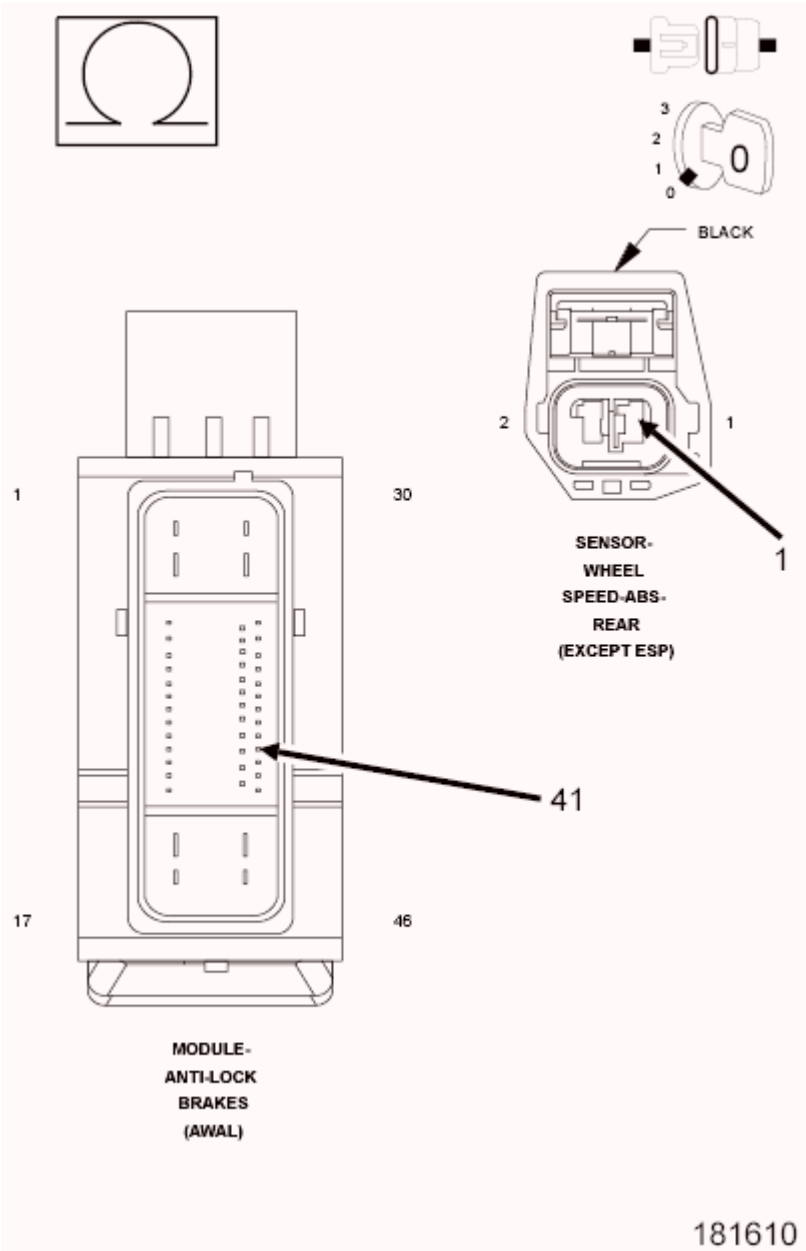

Fig. 137: Checking Rear Wheel Speed Sensor Signal Circuit For An Open
Courtesy of CHRYSLER GROUP, LLC

1. Measure the resistance of the (B22) Rear Wheel Speed Sensor Signal circuit.

   Is the resistance below 5 Ohms?

   Yes

- Go To 9.

No

- Repair the open (B22) Rear Wheel Speed Sensor Signal circuit.
- Perform the ABS VERIFICATION TEST. Refer to **ABS VERIFICATION TEST**.

9. **(B22) REAR WHEEL SPEED SENSOR SIGNAL CIRCUIT FOR A SHORT TO VOLTAGE**

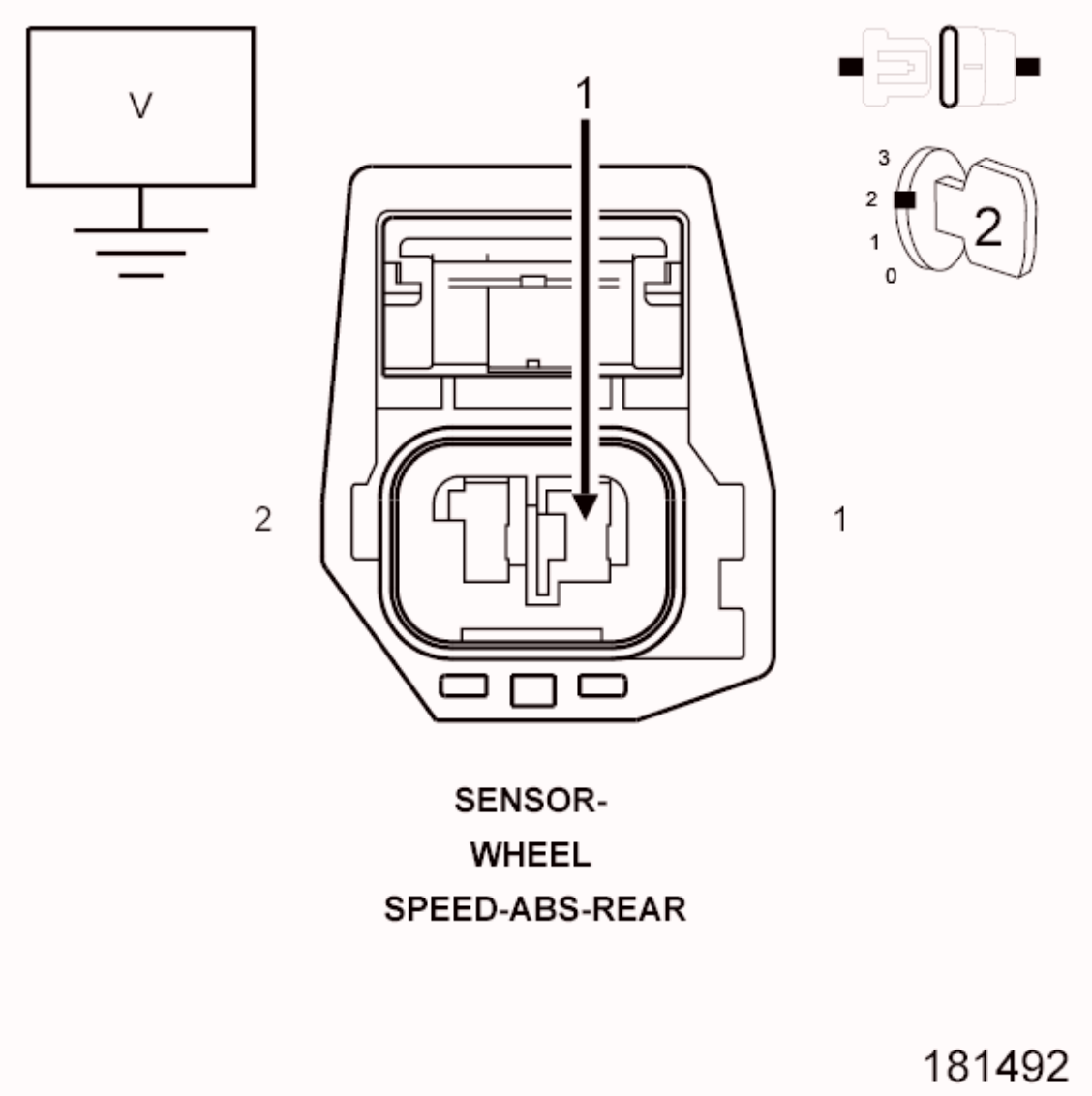

Fig. 138: Checking Rear Wheel Speed Sensor Signal Circuit For A Short To Voltage
Courtesy of CHRYSLER GROUP, LLC

1. Turn the ignition on.
2. Measure the voltage of the (B22) Rear Wheel Speed Sensor Signal circuit.

   Is there any voltage present?

Yes

- Repair the (B22) Rear Wheel Speed Sensor Signal circuit for a short to voltage.
- Perform the ABS VERIFICATION TEST. Refer to **ABS VERIFICATION TEST**.

No

- Go To 10.

10. **(B222) REAR WHEEL SPEED SENSOR SUPPLY CIRCUIT SHORTED TO THE (B22) REAR WHEEL SPEED SENSOR SIGNAL CIRCUIT**

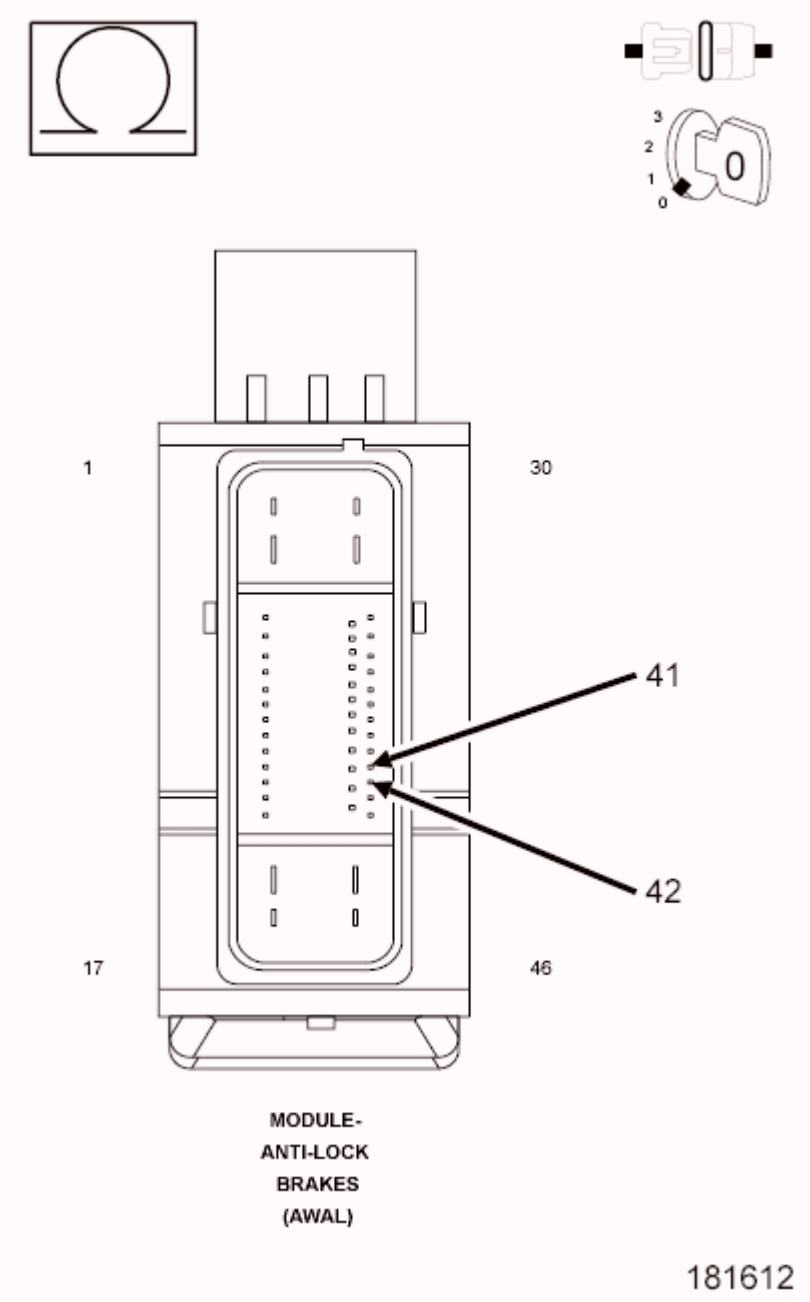

Fig. 139: Checking Left Rear Wheel Speed Sensor Supply Circuit For A Short To The Left Rear Wheel Speed Sensor Signal Circuit
Courtesy of CHRYSLER GROUP, LLC

1. Turn the ignition off.
2. Measure the resistance between the (B222) Rear Wheel Speed Sensor Supply circuit and the (B22) Rear Wheel Speed Sensor Signal circuit at the Antilock Brake Module harness connector.

   Is the resistance below 5.0 Ohms?

   Yes

   - Repair (B222) Rear Wheel Speed Sensor Supply circuit for a short to the (B22) Rear Wheel Speed Sensor Signal circuit.
   - Perform the ABS VERIFICATION TEST. Refer to **ABS VERIFICATION TEST**.

   No

   - Replace the Antilock Brakes Module in accordance with the Service Information.
   - Perform the ABS VERIFICATION TEST. Refer to **ABS VERIFICATION TEST**.

C1040-REAR WHEEL SPEED COMPARATIVE PERFORMANCE

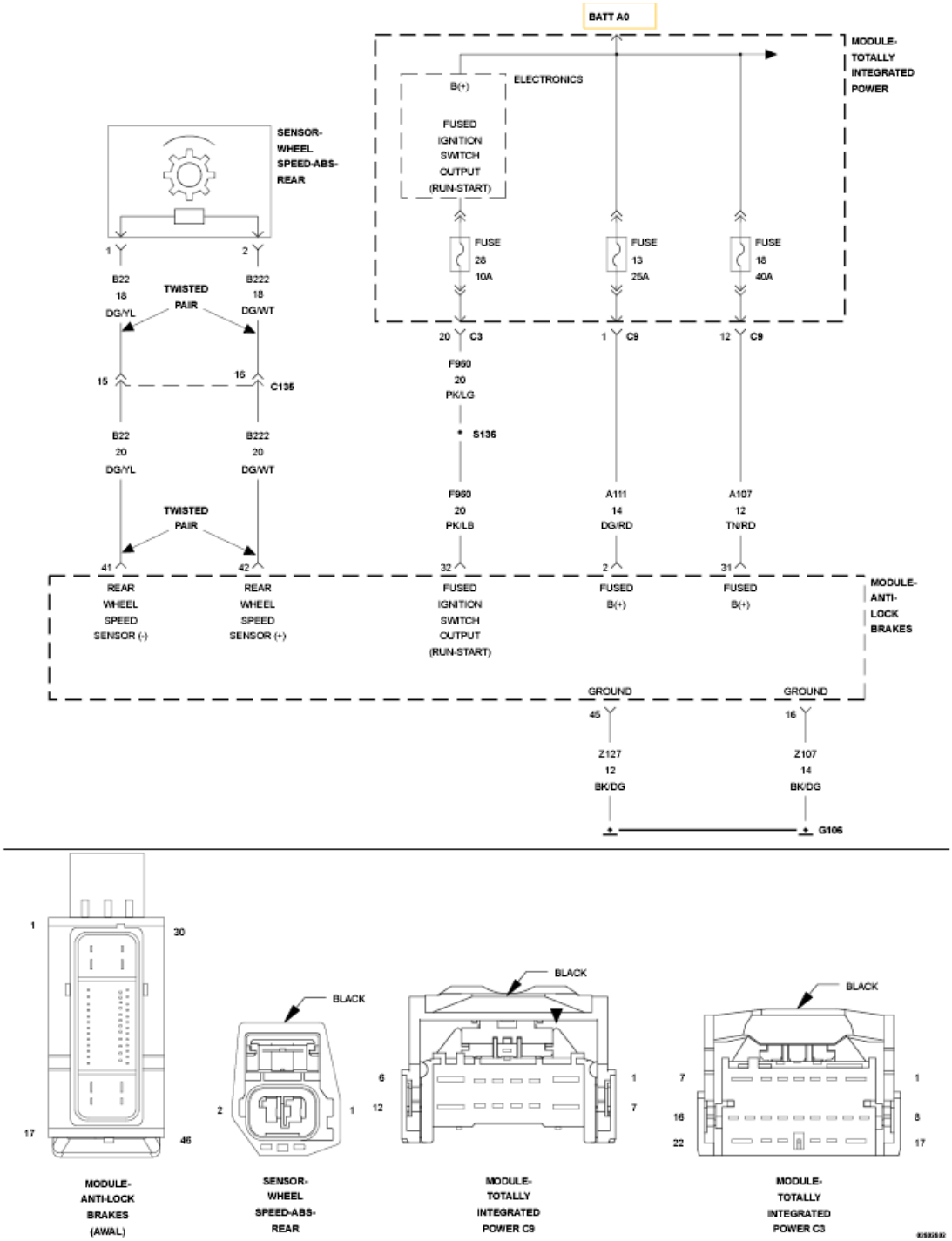

Fig. 140: Rear Wheel Speed Sensor Wiring Diagram
Courtesy of CHRYSLER GROUP, LLC

For a complete wiring diagram **refer to appropriate SYSTEM WIRING DIAGRAMS article** .

WHEN MONITORED:

With the ignition on and no system under voltage or over voltage condition present.

SET CONDITION:

Each time excessive wheel speed sensor acceleration or deceleration is detected, a fault counter increments. If the fault counter exceeds a specified value, the DTC will set.

POSSIBLE CAUSES

Possible Causes
(B222) REAR WHEEL SPEED SENSOR SUPPLY CIRCUIT SHORT TO GROUND
(B22) REAR WHEEL SPEED SENSOR SIGNAL CIRCUIT SHORT TO GROUND
(B222) REAR WHEEL SPEED SENSOR SUPPLY CIRCUIT FOR AN OPEN
(B22) REAR WHEEL SPEED SENSOR SIGNAL CIRCUIT FOR AN OPEN
(B222) REAR WHEEL SPEED SENSOR SUPPLY CIRCUIT FOR A SHORT TO VOLTAGE
(B22) REAR WHEEL SPEED SENSOR SIGNAL CIRCUIT FOR A SHORT TO VOLTAGE
(B222) REAR WHEEL SPEED SENSOR SUPPLY CIRCUIT SHORTED TO THE (B22) REAR WHEEL SPEED SENSOR SIGNAL CIRCUIT
REAR WHEEL SPEED SENSOR
ANTILOCK BRAKE SYSTEM (ABS) MODULE

DIAGNOSTIC TEST

1. **DTC IS ACTIVE**
    1. Turn the ignition on.
    2. With the scan tool, clear DTC's.
    3. Turn the ignition off.
    4. Turn the ignition on.
    5. With the scan tool, select View DTC's.

    Is the status Active for this DTC?

    Yes

    - Go To 2.

    No

    - The condition that caused the symptom is currently not present. Inspect the related wiring for a possible intermittent condition. Look for any chafed, pierced, pinched, or partially broken wires.
    - Perform the ABS INTERMITTENT CONDITION diagnostic procedure. Refer to **ABS INTERMITTENT CONDITION**.
2. **WHEEL SPEED SENSOR INSPECTION**

1. Turn the ignition off.
2. Inspect the Wheel Speed Sensor for proper mounting.
3. Inspect the Wheel Speed Sensor harness and connector.

   Were any problems found?

   Yes

   - Repair as necessary in accordance with the Service Information.
   - Perform the ABS VERIFICATION TEST. Refer to **ABS VERIFICATION TEST**.

   No

   - Go To 3.

3. **CHECK (B222) REAR WHEEL SPEED SENSOR SUPPLY CIRCUIT VOLTAGE**

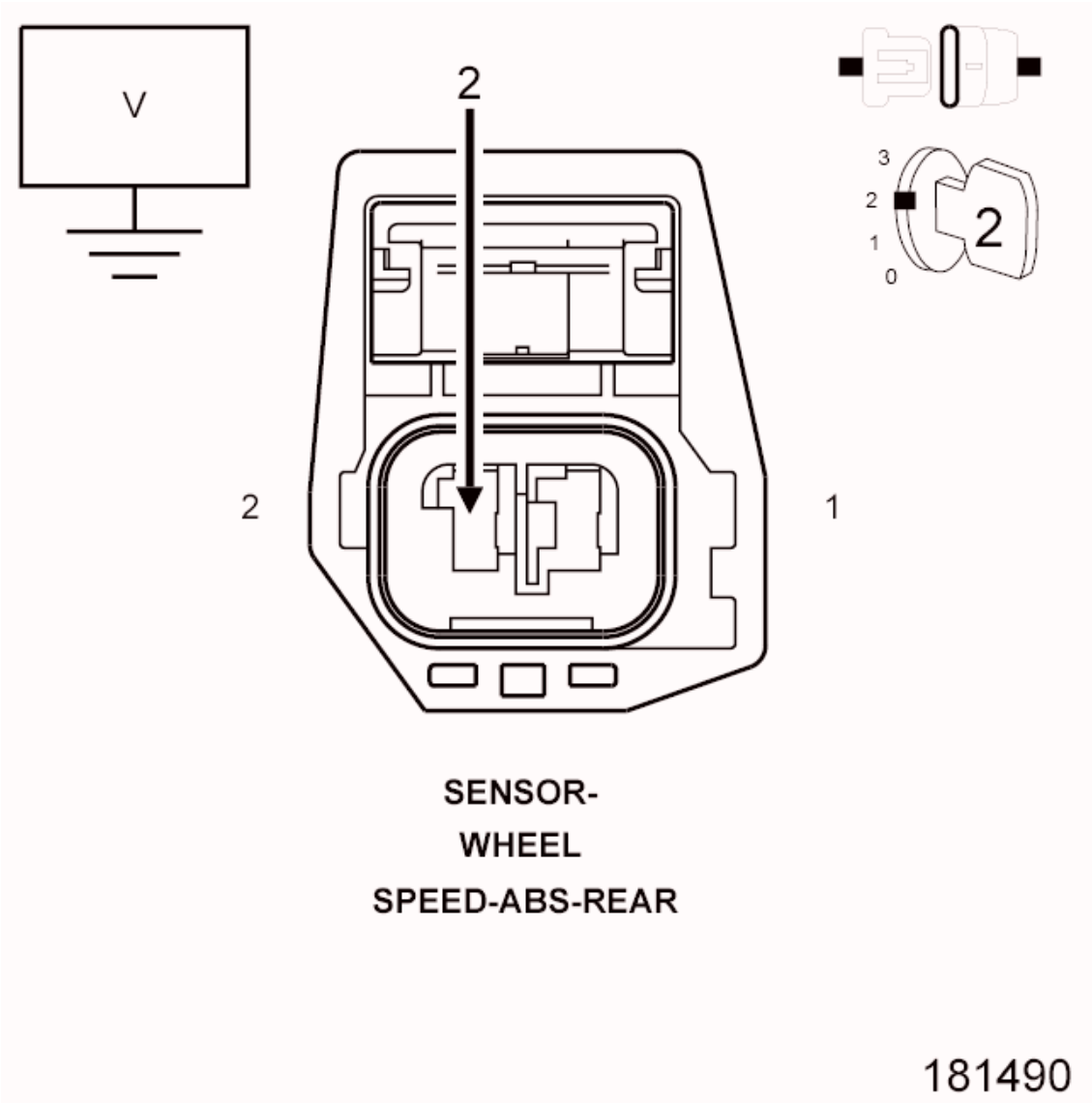

Fig. 141: Measuring Rear Wheel Speed Sensor Supply Circuit Voltage
Courtesy of CHRYSLER GROUP, LLC

1. Disconnect the Rear Wheel Speed Sensor harness connector.
2. Turn the ignition on.
3. Measure the voltage between the (B222) Rear Wheel Speed Sensor Supply circuit and ground.

   Is the voltage above 10 volts?

   Yes

   - Go To 4.

   No

- Go To 6.

4. **(B222) REAR WHEEL SPEED SENSOR SUPPLY CIRCUIT FOR A SHORT TO VOLTAGE**

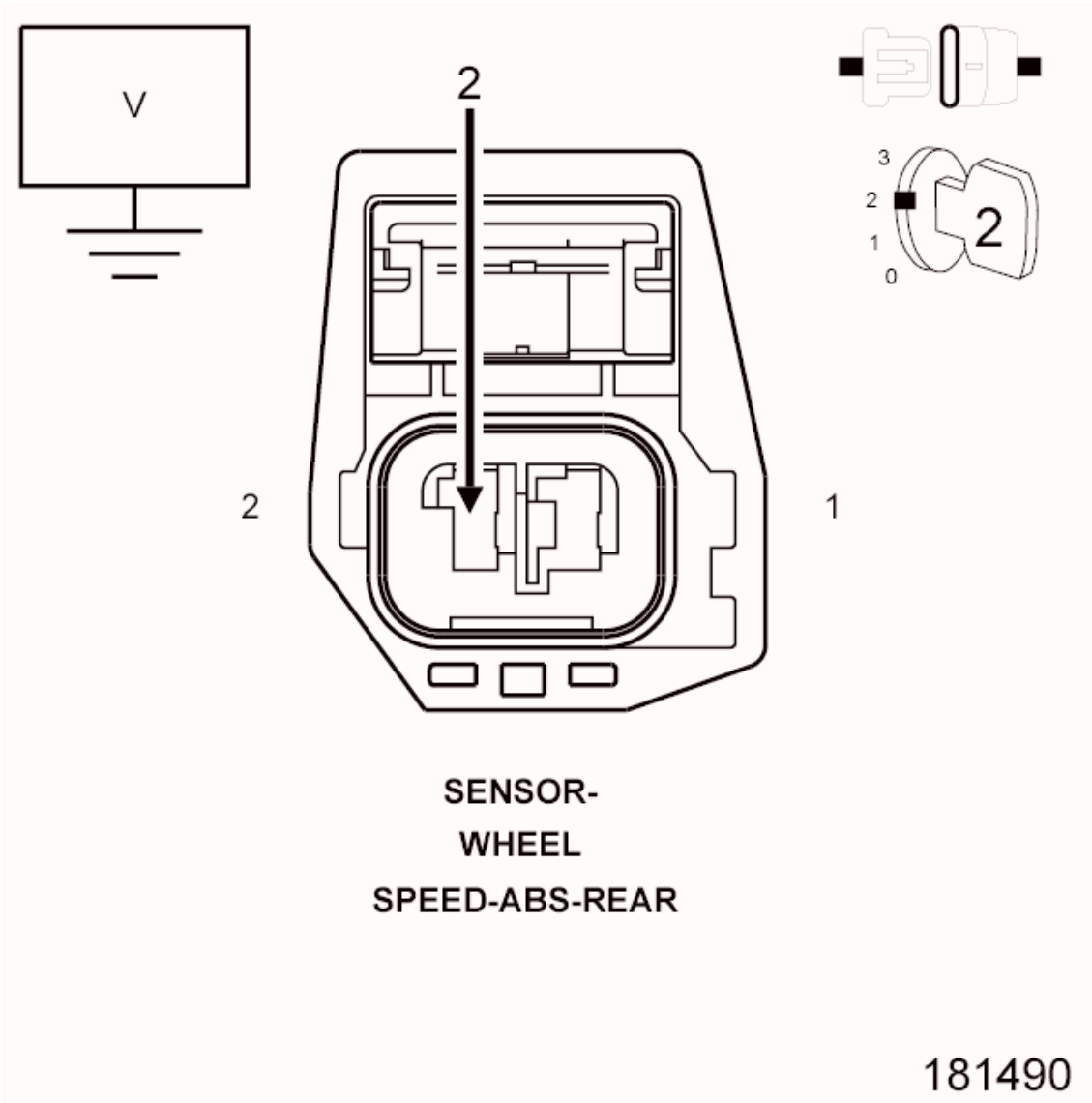

Fig. 142: Measuring Rear Wheel Speed Sensor Supply Circuit Voltage
Courtesy of CHRYSLER GROUP, LLC

1. Turn the ignition off.
2. Disconnect the ABS Module harness connector.
3. Turn the ignition on.
4. Measure the voltage of the (B222) Rear Wheel Speed Sensor Supply circuit.

   Is there any voltage present?

   Yes

- Repair the (B222) Rear Wheel Speed Sensor Supply circuit for a short to voltage.
- Perform the ABS VERIFICATION TEST. Refer to **ABS VERIFICATION TEST**.

No

- Go To 5.

5. **(B22) REAR WHEEL SPEED SENSOR SIGNAL CIRCUIT FOR A SHORT TO GROUND**

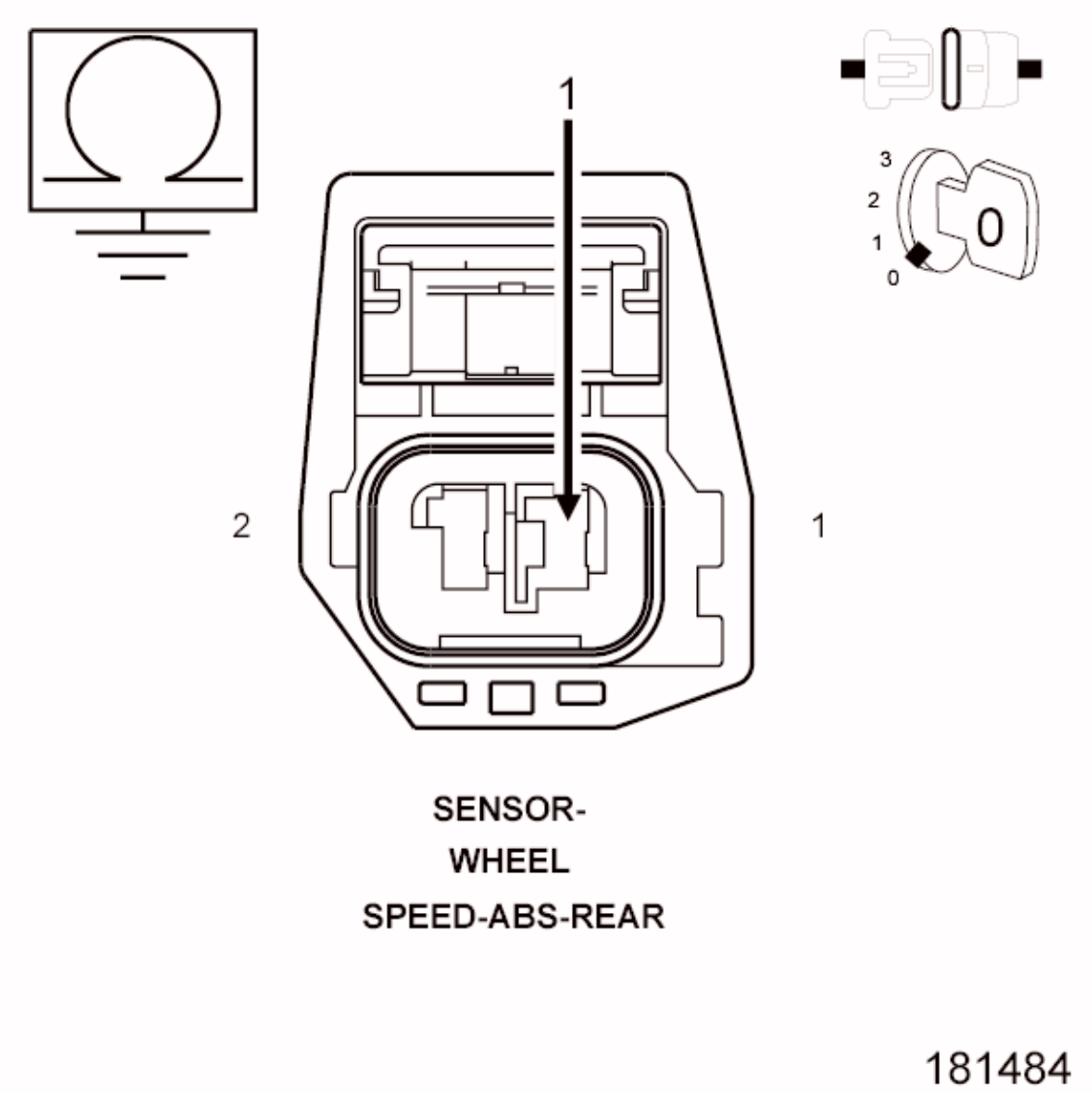

Fig. 143: Checking Rear Wheel Speed Sensor Signal Circuit For A Short To Ground
Courtesy of CHRYSLER GROUP, LLC

1. Turn the ignition off.
2. Measure the resistance between the (B22) Rear Wheel Speed Sensor Signal circuit and ground.

   Is the resistance above 5.0 ohms?

Yes

- Replace the Rear Wheel Speed Sensor in accordance with the Service Information.
- Perform the ABS VERIFICATION TEST. Refer to **ABS VERIFICATION TEST**.

No

- Repair the (B22) Rear Wheel Speed Sensor Signal circuit for a short to ground.
- Perform the ABS VERIFICATION TEST. Refer to **ABS VERIFICATION TEST**.

6. **(B222) REAR WHEEL SPEED SENSOR SUPPLY CIRCUIT FOR A SHORT TO GROUND**

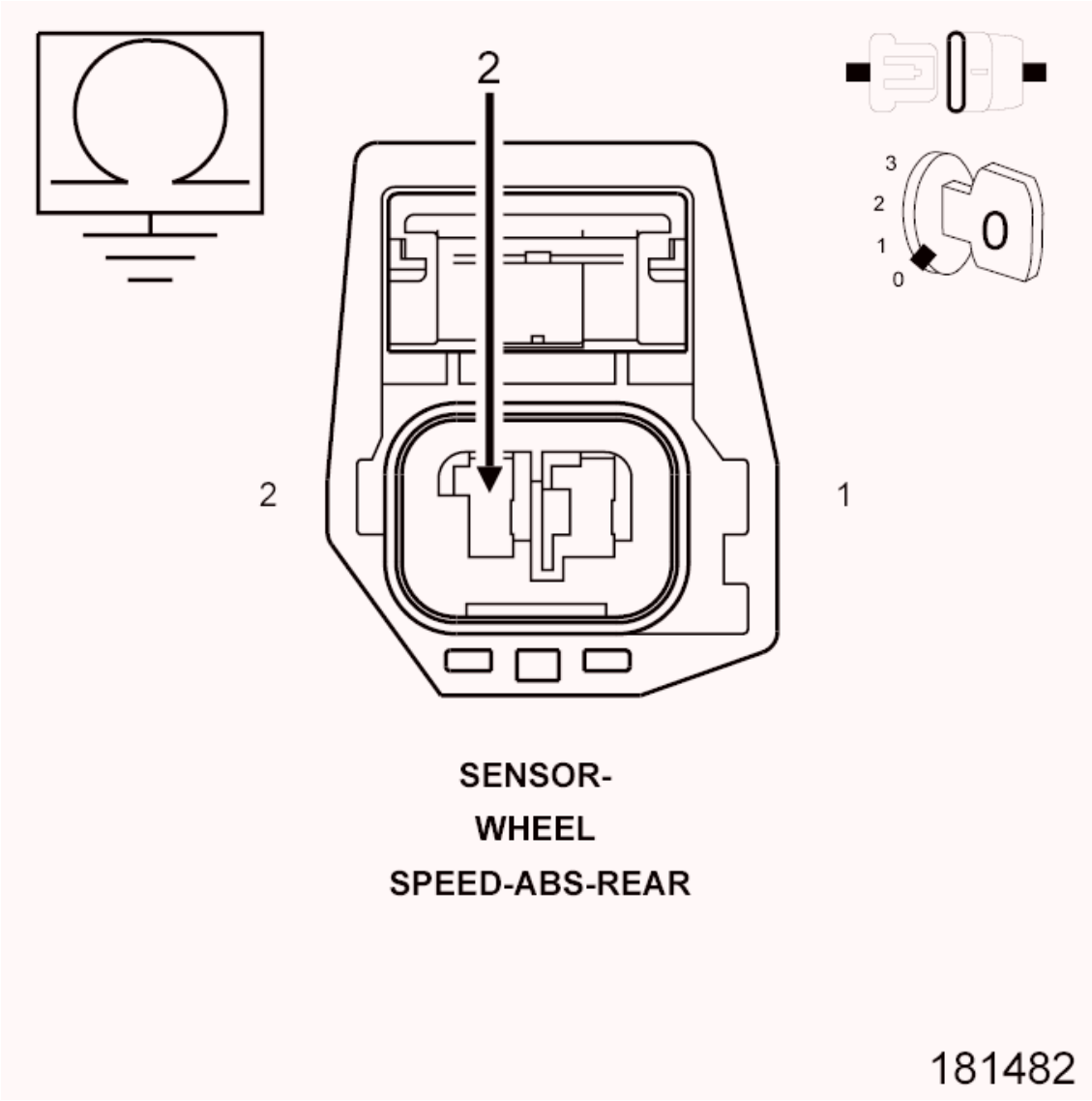

Fig. 144: Checking Rear Wheel Speed Sensor Supply Circuit For A Short To Ground
Courtesy of CHRYSLER GROUP, LLC

1. Turn the ignition off.

2. Disconnect the Antilock Brake Module harness connector.

   NOTE: Check connector - Clean/repair as necessary.

3. Measure the resistance between the (B222) Rear Wheel Speed Sensor Supply circuit and ground.

   Is the resistance above 5.0 Ohms?

   Yes

   - Go To 7.

   No

   - Repair the (B222) Rear Wheel Speed Sensor Supply circuit for a short to ground.
   - Perform the ABS VERIFICATION TEST. Refer to **ABS VERIFICATION TEST**.

7. **(B222) REAR WHEEL SPEED SENSOR SUPPLY CIRCUIT FOR AN OPEN**

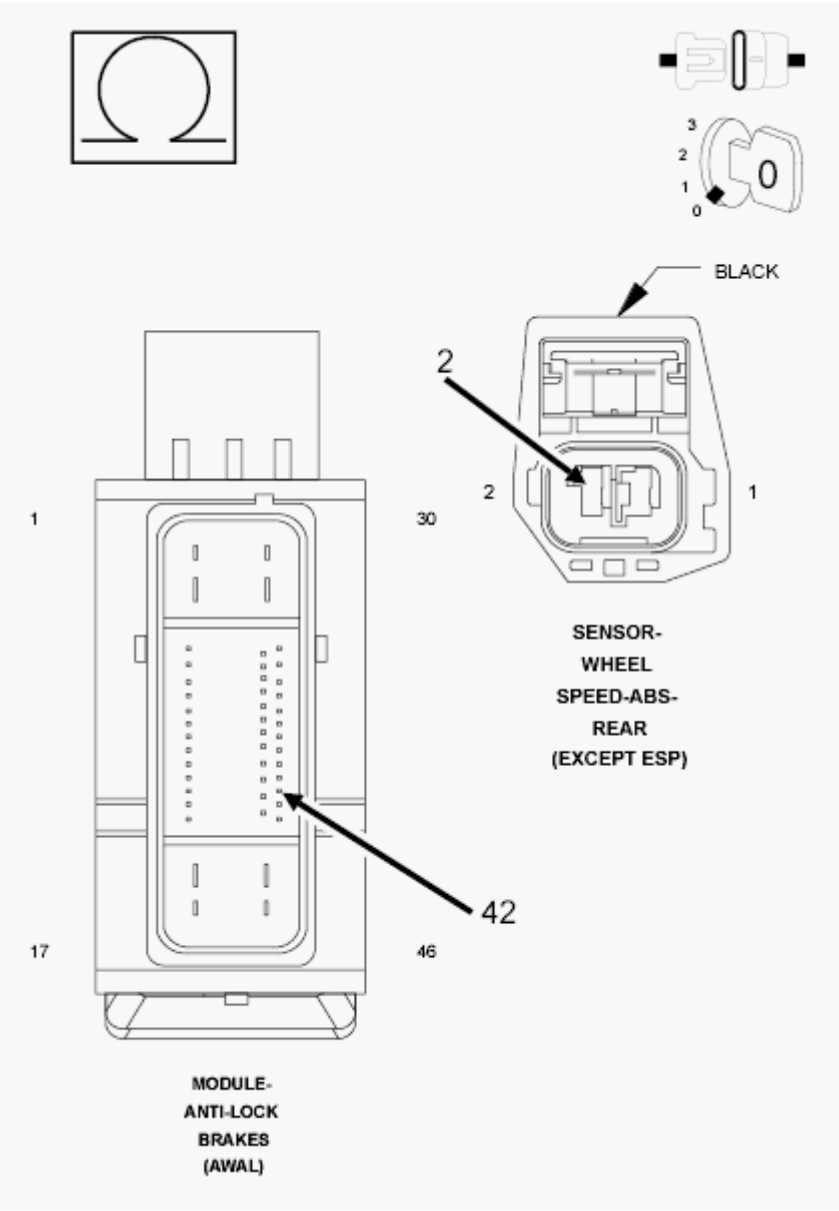

Fig. 145: Checking Rear Wheel Speed Sensor Supply Circuit For An Open
Courtesy of CHRYSLER GROUP, LLC

1. Measure the resistance of the (B222) Rear Wheel Speed Sensor Supply circuit.

   Is the resistance below 5 Ohms?

   Yes

   - Go To 8.

   No

   - Repair the open (B222) Rear Wheel Speed Sensor Supply circuit.

- Perform the ABS VERIFICATION TEST. Refer to **ABS VERIFICATION TEST**.

8. **(B22) REAR WHEEL SPEED SENSOR SIGNAL CIRCUIT FOR AN OPEN**

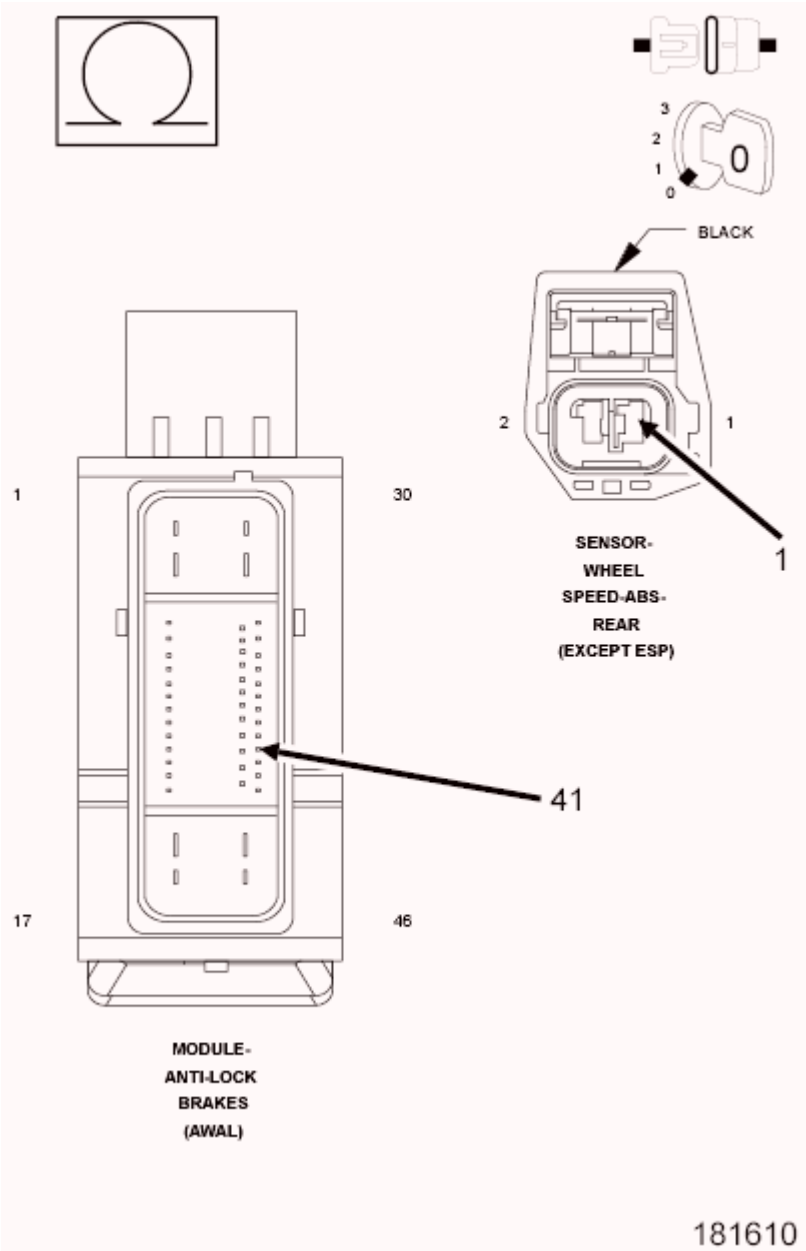

Fig. 146: Checking Rear Wheel Speed Sensor Signal Circuit For An Open
Courtesy of CHRYSLER GROUP, LLC

1. Measure the resistance of the (B22) Rear Wheel Speed Sensor Signal circuit.

   Is the resistance below 5 Ohms?

   Yes

- Go To 9.

No

- Repair the open (B22) Rear Wheel Speed Sensor Signal circuit.
- Perform the ABS VERIFICATION TEST. Refer to **ABS VERIFICATION TEST**.

9. **(B22) REAR WHEEL SPEED SENSOR SIGNAL CIRCUIT FOR A SHORT TO VOLTAGE**

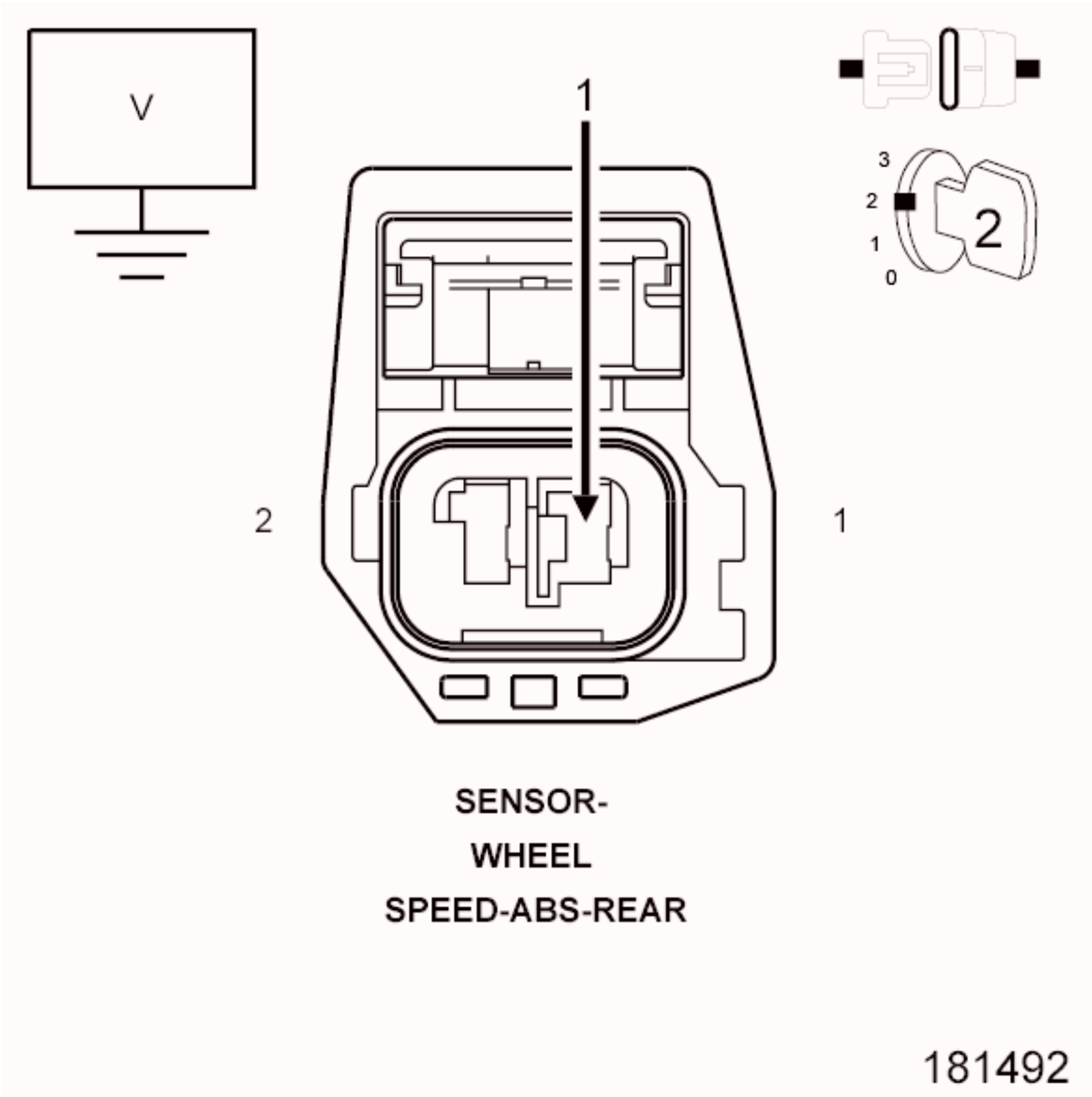

Fig. 147: Checking Rear Wheel Speed Sensor Signal Circuit For A Short To Voltage
Courtesy of CHRYSLER GROUP, LLC

1. Turn the ignition on.
2. Measure the voltage of the (B22) Rear Wheel Speed Sensor Signal circuit.

   Is there any voltage present?

Yes

- Repair the (B22) Rear Wheel Speed Sensor Signal circuit for a short to voltage.
- Perform the ABS VERIFICATION TEST. Refer to **ABS VERIFICATION TEST**.

No

- Go To 10.

10. **(B222) REAR WHEEL SPEED SENSOR SUPPLY CIRCUIT SHORTED TO THE (B22) REAR WHEEL SPEED SENSOR SIGNAL CIRCUIT**

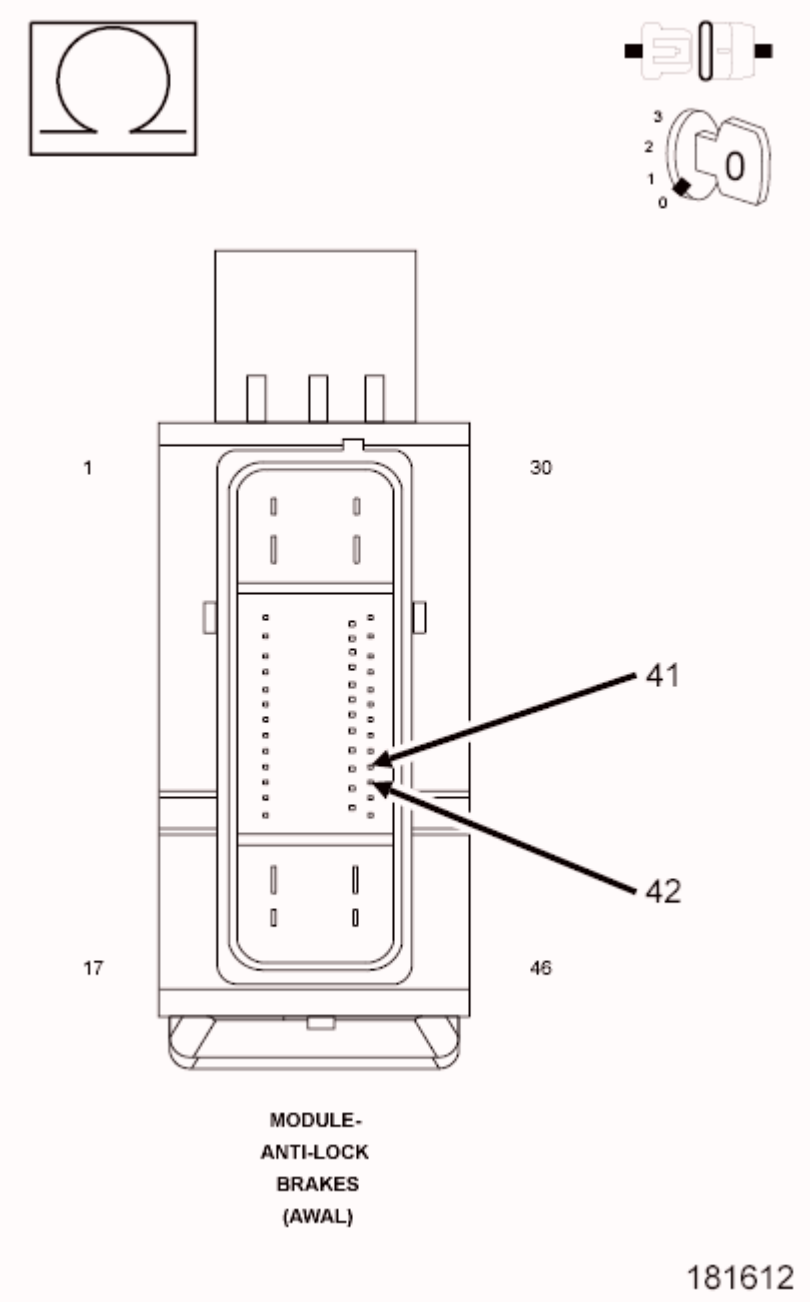

Fig. 148: Checking Left Rear Wheel Speed Sensor Supply Circuit For A Short To The Left Rear Wheel Speed Sensor Signal Circuit
Courtesy of CHRYSLER GROUP, LLC

1. Turn the ignition off.
2. Measure the resistance between the (B222) Rear Wheel Speed Sensor Supply circuit and the (B22) Rear Wheel Speed Sensor Signal circuit at the Antilock Brake Module harness connector.

   Is the resistance below 5.0 Ohms?

   Yes

   - Repair (B222) Rear Wheel Speed Sensor Supply circuit for a short to the (B22) Rear Wheel Speed Sensor Signal circuit.
   - Perform the ABS VERIFICATION TEST. Refer to **ABS VERIFICATION TEST**.

   No

   - Replace the Antilock Brakes Module in accordance with the Service Information.
   - Perform the ABS VERIFICATION TEST. Refer to **ABS VERIFICATION TEST**.

C104C-LEFT FRONT INLET VALVE CONTROL CIRCUIT LOW

For a complete wiring diagram **refer to appropriate SYSTEM WIRING DIAGRAMS article**

WHEN MONITORED:

Ignition on.

SET CONDITION:

The Antilock Brake Module has detected an internal error.

POSSIBLE CAUSES

Possible Causes
ANTILOCK BRAKE MODULE

DIAGNOSTIC TEST

1. **ANTILOCK BRAKE MODULE INTERNAL CONDITION**
   1. The Antilock Brake Module is reporting internal errors.

      NOTE: Before continuing, check the Antilock Brake Module harness connector terminals for corrosion, damage, or terminal push out. Repair as necessary.

2. Using the schematics as a guide, inspect the wire harness and connectors. Pay particular attention to all Power and Ground circuits.
3. Perform any Technical Service Bulletins that may apply.

   Were there any problems found?

   Yes

   - Repair as necessary.
   - Perform the ABS VERIFICATION TEST. Refer to **ABS VERIFICATION TEST**.

   No

   - Replace the Antilock Brake Module in accordance with the Service Information.
   - Perform the ABS VERIFICATION TEST. Refer to **ABS VERIFICATION TEST**.

C1050-RIGHT FRONT INLET VALVE CONTROL CIRCUIT LOW

For a complete wiring diagram **refer to appropriate SYSTEM WIRING DIAGRAMS article**

WHEN MONITORED:

Ignition on.

SET CONDITION:

The Antilock Brake Module has detected an internal error.

POSSIBLE CAUSES

Possible Causes
ANTILOCK BRAKE MODULE

DIAGNOSTIC TEST

1. **ANTILOCK BRAKE MODULE INTERNAL CONDITION**
   1. The Antilock Brake Module is reporting internal errors.

      NOTE: Before continuing, check the Antilock Brake Module harness connector terminals for corrosion, damage, or terminal push out. Repair as necessary.

   2. Using the schematics as a guide, inspect the wire harness and connectors. Pay particular attention to all Power and Ground circuits.
   3. Perform any Technical Service Bulletins that may apply.

Were there any problems found?

Yes

- Repair as necessary.
- Perform the ABS VERIFICATION TEST. Refer to **ABS VERIFICATION TEST**.

No

- Replace the Antilock Brake Module in accordance with the Service Information.
- Perform the ABS VERIFICATION TEST. Refer to **ABS VERIFICATION TEST**.

C1054-LEFT REAR INLET VALVE CONTROL CIRCUIT LOW

For a complete wiring diagram **refer to appropriate SYSTEM WIRING DIAGRAMS article** .

WHEN MONITORED:

Ignition on.

SET CONDITION:

The Antilock Brake Module has detected an internal error.

POSSIBLE CAUSES

Possible Causes
ANTILOCK BRAKE MODULE

DIAGNOSTIC TEST

1. **ANTILOCK BRAKE MODULE INTERNAL CONDITION**
   1. The Antilock Brake Module is reporting internal errors.

      NOTE: Before continuing, check the Antilock Brake Module harness connector terminals for corrosion, damage, or terminal push out. Repair as necessary.

   2. Using the schematics as a guide, inspect the wire harness and connectors. Pay particular attention to all Power and Ground circuits.
   3. Perform any Technical Service Bulletins that may apply.

      Were there any problems found?

      Yes

- Repair as necessary.
- Perform the ABS VERIFICATION TEST. Refer to **ABS VERIFICATION TEST**.

No

- Replace the Antilock Brake Module in accordance with the Service Information.
- Perform the ABS VERIFICATION TEST. Refer to **ABS VERIFICATION TEST**.

C1058-RIGHT REAR INLET VALVE CONTROL CIRCUIT LOW

For a complete wiring diagram **refer to appropriate SYSTEM WIRING DIAGRAMS article** .

WHEN MONITORED:

Ignition on.

SET CONDITION:

The Antilock Brake Module has detected an internal error.

POSSIBLE CAUSES

Possible Causes
ANTILOCK BRAKE MODULE

DIAGNOSTIC TEST

1. **ANTILOCK BRAKE MODULE INTERNAL CONDITION**
   1. The Antilock Brake Module is reporting internal errors.

      NOTE: Before continuing, check the Antilock Brake Module harness connector terminals for corrosion, damage, or terminal push out. Repair as necessary.

   2. Using the schematics as a guide, inspect the wire harness and connectors. Pay particular attention to all Power and Ground circuits.
   3. Perform any Technical Service Bulletins that may apply.

      Were there any problems found?

      Yes

      - Repair as necessary.
      - Perform the ABS VERIFICATION TEST. Refer to **ABS VERIFICATION TEST**.

No

- Replace the Antilock Brake Module in accordance with the Service Information.
- Perform the ABS VERIFICATION TEST. Refer to **ABS VERIFICATION TEST**.

C105C-REAR INLET VALVE CONTROL CIRCUIT LOW

For a complete wiring diagram, **refer to appropriate SYSTEM WIRING DIAGRAMS article** .

WHEN MONITORED:

Ignition on.

SET CONDITION:

The Antilock Brake System (ABS) Module has detected an internal error.

POSSIBLE CAUSES

Possible Causes
ANTILOCK BRAKE SYSTEM (ABS) MODULE

DIAGNOSTIC TEST

1. **ANTILOCK BRAKE MODULE INTERNAL CONDITION**
   1. The Antilock Brake Module is reporting internal errors.

      NOTE: Before continuing, check the Antilock Brake Module harness connector terminals for corrosion, damage, or terminal push out. Repair as necessary.

   2. Using the schematics as a guide, inspect the wire harness and connectors. Pay particular attention to all Power and Ground circuits.
   3. Perform any Technical Service Bulletins that may apply.

      Were there any problems found?

      Yes

      - Repair as necessary.
      - Perform the ABS VERIFICATION TEST. Refer to **ABS VERIFICATION TEST**.

      No

      - Replace the Antilock Brake Module in accordance with the Service Information.
      - Perform the ABS VERIFICATION TEST. Refer to **ABS VERIFICATION TEST**.

C1060-LEFT FRONT OUTLET VALVE CONTROL CIRCUIT LOW

For a complete wiring diagram **refer to appropriate SYSTEM WIRING DIAGRAMS article** .

WHEN MONITORED:

Ignition on.

SET CONDITION:

The Antilock Brake Module has detected an internal error.

POSSIBLE CAUSES

Possible Causes
ANTILOCK BRAKE MODULE

DIAGNOSTIC TEST

1. **ANTILOCK BRAKE MODULE INTERNAL CONDITION**
    1. The Antilock Brake Module is reporting internal errors.

        NOTE: Before continuing, check the Antilock Brake Module harness connector terminals for corrosion, damage, or terminal push out. Repair as necessary.

    2. Using the schematics as a guide, inspect the wire harness and connectors. Pay particular attention to all Power and Ground circuits.
    3. Refer to any Technical Service Bulletins that may apply.

        Were there any problems found?

        Yes

        - Repair as necessary.
        - Perform the ABS VERIFICATION TEST. Refer to **ABS VERIFICATION TEST**.

        No

        - Replace the Antilock Brake Module in accordance with the Service Information.
        - Perform the ABS VERIFICATION TEST. Refer to **ABS VERIFICATION TEST**.

C1064-RIGHT FRONT OUTLET VALVE CONTROL CIRCUIT LOW

For a complete wiring diagram **refer to appropriate SYSTEM WIRING DIAGRAMS article**

WHEN MONITORED:

Ignition on.

SET CONDITION:

The Antilock Brake Module has detected an internal error.

POSSIBLE CAUSES

Possible Causes
ANTILOCK BRAKE MODULE

DIAGNOSTIC TEST

1. **ANTILOCK BRAKE MODULE INTERNAL CONDITION**
    1. The Antilock Brake Module is reporting internal errors.

        NOTE: Before continuing, check the Antilock Brake Module harness connector terminals for corrosion, damage, or terminal push out. Repair as necessary.

    2. Using the schematics as a guide, inspect the wire harness and connectors. Pay particular attention to all Power and Ground circuits.
    3. Perform any Technical Service Bulletins that may apply.

        Were there any problems found?

        Yes

        - Repair as necessary.
        - Perform the ABS VERIFICATION TEST. Refer to **ABS VERIFICATION TEST**.

        No

        - Replace the Antilock Brake Module in accordance with the Service Information.
        - Perform the ABS VERIFICATION TEST. Refer to **ABS VERIFICATION TEST**.

C1068-LEFT REAR OUTLET VALVE CONTROL CIRCUIT LOW

For a complete wiring diagram, **refer to appropriate SYSTEM WIRING DIAGRAMS article** .

WHEN MONITORED:

Ignition on.

SET CONDITION:

The Antilock Brake Module has detected an internal error.

POSSIBLE CAUSES

Possible Causes
ANTILOCK BRAKE MODULE

DIAGNOSTIC TEST

1. **ANTILOCK BRAKE MODULE INTERNAL CONDITION**
    1. The Antilock Brake Module is reporting internal errors.

        NOTE: Before continuing, check the Antilock Brake Module harness connector terminals for corrosion, damage, or terminal push out. Repair as necessary.

    2. Using the schematics as a guide, inspect the wire harness and connectors. Pay particular attention to all Power and Ground circuits.
    3. Perform any Technical Service Bulletins that may apply.

        Were there any problems found?

        Yes

        - Repair as necessary.
        - Perform the ABS VERIFICATION TEST. Refer to **ABS VERIFICATION TEST**.

        No

        - Replace the Antilock Brake Module in accordance with the Service Information.
        - Perform the ABS VERIFICATION TEST. Refer to **ABS VERIFICATION TEST**.

C106C-RIGHT REAR OUTLET VALVE CONTROL CIRCUIT LOW

For a complete wiring diagram **refer to appropriate SYSTEM WIRING DIAGRAMS article**

WHEN MONITORED:

Ignition on.

SET CONDITION:

The Antilock Brake Module has detected an internal error.

POSSIBLE CAUSES

Possible Causes
ANTILOCK BRAKE MODULE

DIAGNOSTIC TEST

1. **ANTILOCK BRAKE MODULE INTERNAL CONDITION**
    1. The Antilock Brake Module is reporting internal errors.

        NOTE: Before continuing, check the Antilock Brake Module harness connector terminals for corrosion, damage, or terminal push out. Repair as necessary.

    2. Using the schematics as a guide, inspect the wire harness and connectors. Pay particular attention to all Power and Ground circuits.
    3. Perform any Technical Service Bulletins that may apply.

        Were there any problems found?

        Yes

        - Repair as necessary.
        - Perform the ABS VERIFICATION TEST. Refer to **ABS VERIFICATION TEST**.

        No

        - Replace the Antilock Brake Module in accordance with the Service Information.
        - Perform the ABS VERIFICATION TEST. Refer to **ABS VERIFICATION TEST**.

C1070-REAR OUTLET VALVE CONTROL CIRCUIT LOW

For a complete wiring diagram, **refer to appropriate SYSTEM WIRING DIAGRAMS article** .

WHEN MONITORED:

Ignition on.

SET CONDITION:

The Antilock Brake System (ABS) Module has detected an internal error.

POSSIBLE CAUSES

Possible Causes

DIAGNOSTIC TEST

1. **ANTILOCK BRAKE MODULE INTERNAL CONDITION**
    1. The Antilock Brake System (ABS) Module is reporting internal errors.

        NOTE: Before continuing, check the Antilock Brake Module harness connector terminals for corrosion, damage, or terminal push out. Repair as necessary.

    2. Using the schematics as a guide, inspect the wire harness and connectors. Pay particular attention to all Power and Ground circuits.
    3. Perform any Technical Service Bulletins that may apply.

    Were there any problems found?

    Yes

    - Repair as necessary.
    - Perform the ABS VERIFICATION TEST. Refer to **ABS VERIFICATION TEST**.

    No

    - Replace the Antilock Brake Module in accordance with the Service Information.
    - Perform the ABS VERIFICATION TEST. Refer to **ABS VERIFICATION TEST**.

C1073-ABS MOTOR CONTROL CIRCUIT

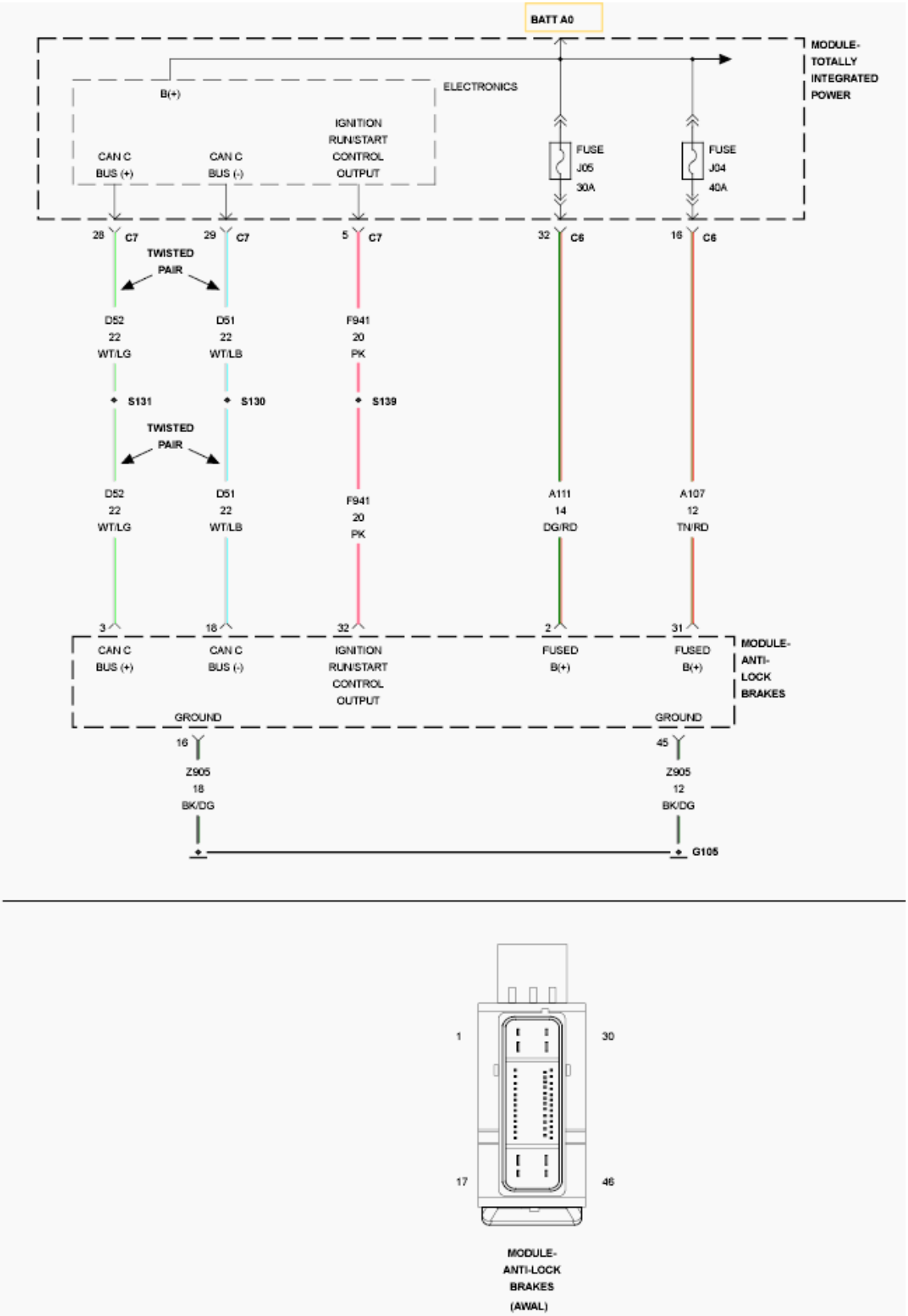

Fig. 149: ABS Motor Control Wiring Diagram
Courtesy of CHRYSLER GROUP, LLC

For a complete wiring diagram, **refer to appropriate SYSTEM WIRING DIAGRAMS article** .

WHEN MONITORED:

With the ignition on and no system under voltage condition present.

SET CONDITION:

OPEN CIRCUIT: If pump motor feedback remains greater than 0.75 of a volt for more than 50 msec (+/- 5 msec) after monitoring conditions are met, the DTC will set.

LOCKED MOTOR: If the module detects that the motor is spinning at less than 500 RPM. after monitoring conditions are met, the DTC will set.

LOW VOLTAGE: The voltage of the supply is monitored every 3 msec. If the voltage is low for 150 msec, the DTC will set.

POSSIBLE CAUSES

Possible Causes
FUSE J04 (40A)
INTERMITTENT ABS MOTOR CONTROL CIRCUIT DTC
(A107) FUSED B+ CIRCUIT FOR AN OPEN OR HIGH RESISTANCE
(Z107) OR (Z127) GROUND CIRCUIT FOR AN OPEN OR HIGH RESISTANCE
ANTILOCK BRAKE SYSTEM (ABS) MODULE

DIAGNOSTIC TEST

1. **DTC IS ACTIVE**
    1. Ignition on, engine not running.
    2. With the scan tool, clear DTC's.
    3. Turn the ignition off to the lock position.
    4. Ignition on, engine not running.
    5. With the scan tool, actuate the ABS pump motor.

    Did the Pump Motor operate when actuated?

    No

    - Go To 2.

    Yes

    - Go To 5.
2. **(A107) FUSED B+ CIRCUIT FOR AN OPEN OR HIGH RESISTANCE**

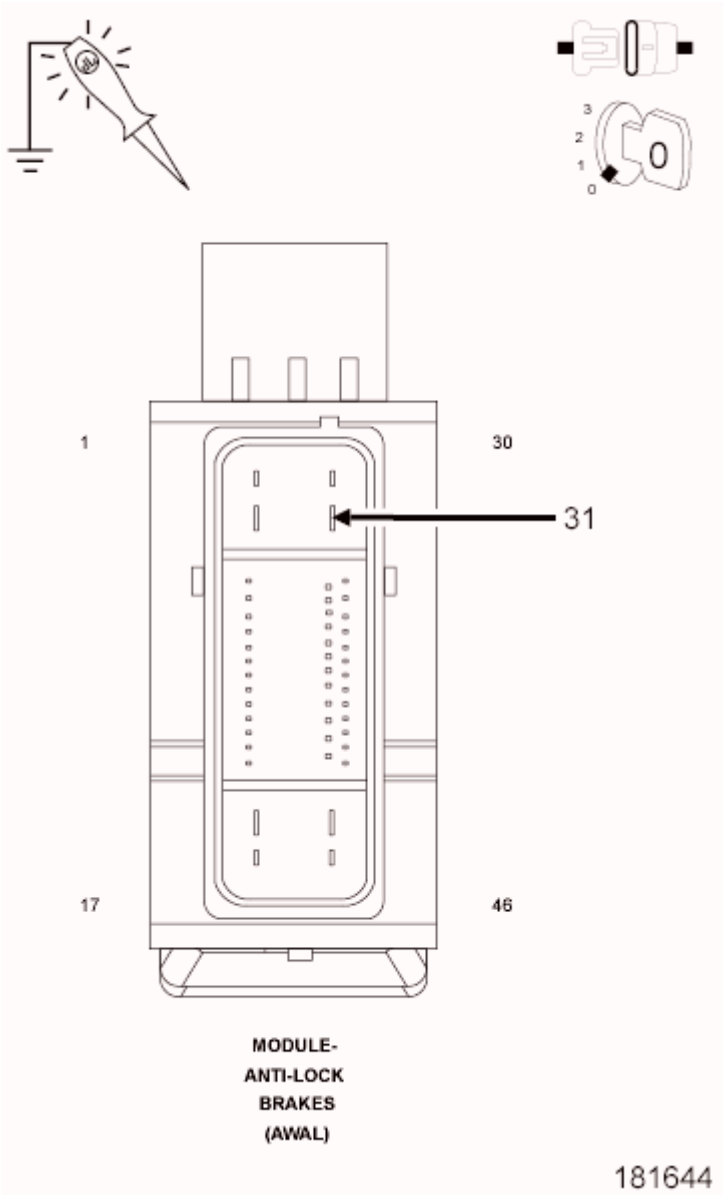

Fig. 150: Checking Fused B+ Circuit For An Open Or High Resistance
Courtesy of CHRYSLER GROUP, LLC

1. Turn the ignition off to the lock position.
2. Disconnect the ABS Module harness connector.

NOTE: **Check connector - Clean/repair as necessary.**

3. Using a 12-volt test light connected to ground, check the (A107) Fused B+ Circuit.

NOTE: **The test light should be illuminated and bright. Compare the brightness to that of a direct connection to the battery.**

Is the test light illuminated and bright?

Yes

- Go To 3.

No

- Repair the (A107) Fused B+ Circuit for an open circuit or high resistance.
- Perform the ABS VERIFICATION TEST. Refer to **ABS VERIFICATION TEST**.

3. **(Z107) or (Z127) GROUND CIRCUIT FOR AN OPEN OR HIGH RESISTANCE**

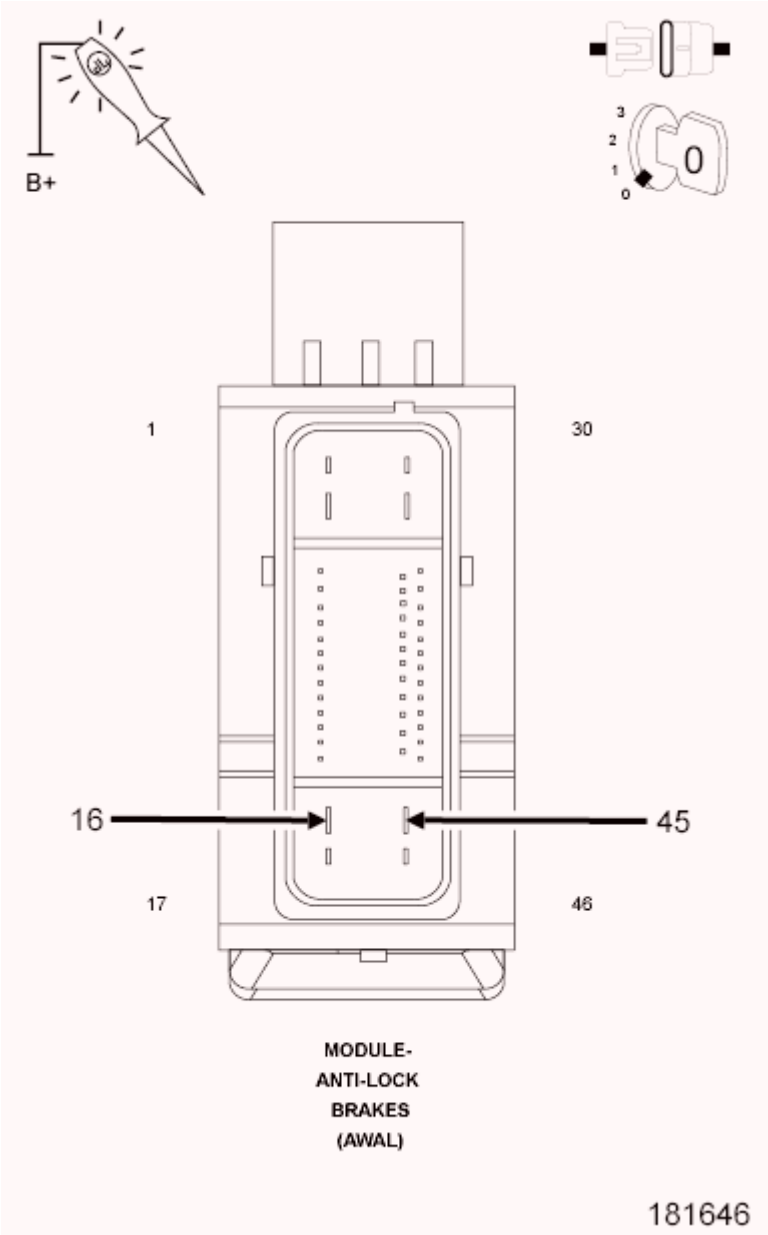

Fig. 151: Checking Ground Circuit For An Open Or High Resistance
Courtesy of CHRYSLER GROUP, LLC

1. Using a 12-volt test light connected to 12-volts, check the (Z107) and (Z127) Ground circuits.

   NOTE: The test light should be illuminated and bright. Compare the brightness to that of a direct connection to the battery.

   Is the test light illuminated and bright?

   Yes

   - Go To 4.

   No

   - Repair the (Z107) or (Z127) Ground Circuit(s) for an open circuit or high resistance.
   - Perform the ABS VERIFICATION TEST. Refer to **ABS VERIFICATION TEST**.

4. **ANTILOCK BRAKE SYSTEM (ABS) MODULE**
   1. Turn the ignition off to the lock position.
   2. Inspect the related wiring harness. Look for any chafed, pierced, pinched, or partially broken wires.
   3. Inspect the related wire harness connectors. Look for broken, bent, pushed out, or corroded terminals.
   4. Perform any Technical Service Bulletins that may apply.

   Were any problems found?

   Yes

   - Repair as necessary.
   - Perform the ABS VERIFICATION TEST. Refer to **ABS VERIFICATION TEST**.

   No

   - If no other problems are found, replace the Antilock Brake Module in accordance with the Service Information.
   - Perform the ABS VERIFICATION TEST. Refer to **ABS VERIFICATION TEST**.

5. **WIRING HARNESS INSPECTION**
   1. Turn the ignition off to the lock position.
   2. Inspect the related wiring harness. Look for any chafed, pierced, pinched, or partially broken wires.
   3. Inspect the related wire harness connectors. Look for broken, bent, pushed out, or corroded terminals.
   4. Perform any Technical Service Bulletins that may apply.

Were any problems found?

Yes

- Repair as necessary.
- Perform the ABS VERIFICATION TEST. Refer to **ABS VERIFICATION TEST**.

No

- Test Complete.

C1078-TIRE REVOLUTIONS RANGE PERFORMANCE

For a complete wiring diagram, **refer to appropriate SYSTEM WIRING DIAGRAMS article** .

WHEN MONITORED:

With the ignition on.

SET CONDITION:

The DTC will set if the stored tire size is out of range as received from the Totally Integrated Power Module (TIPM).

POSSIBLE CAUSES

Possible Causes
INTERMITTENT TIRE REVOLUTIONS RANGE PERFORMANCE DTC
INCORRECT TIRE SIZE PROGRAMMED INTO TOTALLY INTEGRATED POWER MODULE (TIPM)

DIAGNOSTIC TEST

1. **DTC CONDITION IS PRESENT**
    1. Turn the ignition on.
    2. Observe the ABS Warning Indicator.

    Is the ABS Warning Indicator Flashing?

    Yes

    - Go To 2.

    No

    - Go To 3.

2. **INCORRECT TIRES PROGRAMMED INTO TIPM**

TIRE SIZE	BODY STYLE	ENGINE SIZE	SALES CODE	TIRE CIRCUMFERENCE
305/40R22 GENERAL ALL SEASON	DS	ALL	TY4	2461mm (97in)
305/40R22 GENERAL ALL SEASON	DS	ALL	TYE	2461mm (97in)
P245/70R17 BSW GOOD YEAR ALL SEASON	DS	ALL	TSB	2353mm (93in)
P275/60R20 BSW GOOD YEAR ALL SEASON	DS	ALL	TTJ	2538mm (100in)
LT275/70R17C OWL GOOD YEAR ALL TERRAIN	DS	ALL	TTL	2480mm (98in)
P265/70R17 BSW GOOD YEAR ALL SEASON	DS	ALL	TTM	2450mm (96in)
P265/70R17 BSW GOOD YEAR ON/OFF ROAD	DS	ALL	TTS	2420mm (95in)
P265/70R17 OWL GOOD YEAR ON/OFF ROAD	DS	ALL	TTK	2435mm (96in)
P265/70R17 OWL GOOD YEAR ON/OFF ROAD	DS	ALL	TTT	2435mm (96in)
P265/70R17 OWL GOOD YEAR ALL SEASON	DS	ALL	TTY	2450mm (96in)
P275/60R20 OWL GOOD YEAR ALL SEASON	DS	ALL	TUK	2538mm (100in)

1. Inspect all four tires on the vehicle and note the size of each tire.

   NOTE: **A non-production size tire cannot be programmed into the TIPM. The production Powertrain, with the production size tires, is the only emissions certified configuration that is available for reprogramming.**

2. Verify the correct Tire/wheel information is programmed in the TIPM.

   Is the correct value programmed in the TIPM according to the chart?

Yes

- Test complete.
- Perform the ABS VERIFICATION TEST. Refer to **ABS VERIFICATION TEST**.

No

- Program the correct Tire/Wheel information in the TIPM.
- Perform the ABS VERIFICATION TEST. Refer to **ABS VERIFICATION TEST**.

3. **WIRING HARNESS INSPECTION**
   1. Turn the ignition off.
   2. Visually inspect the related wiring harness. Look for any chafed, pierced, pinched, or partially broken wires.
   3. Visually inspect the related wire harness connectors. Look for broken, bent, pushed out, or corroded terminals.
   4. Perform any Hotline letters or Technical Service Bulletins that may apply.

   Were any problems found?

   Yes

   - Repair as necessary.
   - Perform the ABS VERIFICATION TEST. Refer to **ABS VERIFICATION TEST**.

   No

   - Test Complete.

C1079-TONE WHEEL TEETH COUNT RANGE PERFORMANCE

For a complete wiring diagram **refer to appropriate SYSTEM WIRING DIAGRAMS article**

WHEN MONITORED:

Ignition on.

SET CONDITION:

The DTC will set if the stored tone wheel tooth count is out of range as received from the TIPM.

POSSIBLE CAUSES

Possible Causes
TONE WHEEL TOOTH COUNT NOT PROGRAMED IN THE TIPM TONE RING/AXLE SIZE MISMATCH

DIAGNOSTIC TEST

1. **TONE RING/AXLE SIZE MISMATCH**
    1. Turn the ignition on.
    2. With the scan tool, determine the axle size that is programmed into the Antilock Brake Module.
    3. Inspect and identify the vehicle axle size.
    4. Compare the axle size programmed into the Antilock Brake Module, and the actual axle size installed into the vehicle.

    Does the programmed axle size match the installed axle?

    Yes

    - Replace the Antilock Brake Module in accordance with the Service Information.
    - Perform the ABS VERIFICATION TEST. Refer to **ABS VERIFICATION TEST**.

    No

    - Reprogram the Antilock Brake Module in accordance with the Service Information.
    - Perform the ABS VERIFICATION TEST. Refer to **ABS VERIFICATION TEST**.

C107B-WHEEL SPEED COMPARATIVE PERFORMANCE

For a complete wiring diagram, **refer to appropriate SYSTEM WIRING DIAGRAMS article** .

WHEN MONITORED:

With the ignition on.

SET CONDITION:

When one or more WSS reading is different from the readings received from the other WSS's. The Antilock Brake Module compares WSS readings from side-to-side on an axle and front-to-rear.

POSSIBLE CAUSES

Possible Causes
UNDER INFLATED TIRE
WRONG TIRE SIZE
WSS LOOSE - SIGNAL, SUPPLY CIRCUITS/CONNECTOR/TERMINAL DAMAGE
BRAKE SYSTEM FAULT
TONE WHEEL DAMAGE
WSS - INTERNAL FAULT

DIAGNOSTIC TEST

1. **CHECK FOR DTC C107B-WHEEL SPEED COMPARATIVE PERFORMANCE**

   NOTE: This DTC must be active for the results of this test to be valid.

   1. Turn the ignition on.
   2. With the scan tool, record and erase DTC's.
   3. Cycle the ignition switch from off to on.
   4. With the scan tool, read DTC's

      NOTE: The Antilock Brake Module must sense ALL 4 wheels at 12 km/h (7.5 m.p.h.) before it will extinguish the ABS indicators.

      Does the scan tool display: C107B-WHEEL SPEED COMPARATIVE PERFORMANCE?

      Yes

      - Go To 2.

      No

      - Perform the ABS INTERMITTENT CONDITION diagnostic procedure. Refer to **ABS INTERMITTENT CONDITION**.

2. **CHECK WHEEL SPEED SENSOR SIGNALS**
   1. Turn the ignition on.
   2. With the scan tool, monitor ALL the WSS speeds while an assistant drives the vehicle.
   3. Slowly accelerate as straight as possible from a stop to 40 km/h (25 m.p.h.).

      Is one or more WSS speeds showing 0 km/h (0 m.p.h.) or not matching other wheel speeds?

      Yes

      - Go To 3.

      No

      - Perform the ABS INTERMITTENT CONDITION diagnostic procedure. Refer to **ABS INTERMITTENT CONDITION**.

3. **CHECK WSS LOOSENESS, INSPECT SIGNAL, SUPPLY CIRCUITS/CONNECTORS/TERMINALS FOR DAMAGE**

NOTE: Check all terminals for broken, bent, pushed out, or corroded terminals.

1. Turn the ignition off.
2. Inspect the Antilock Brake Module harness connector, each WSS, and each WSS harness connector.
3. Inspect each WSS for looseness and not properly fastened.
4. Inspect each WSS Signal and WSS Supply circuits between each WSS and Antilock Brake Module for damage.

   Is any WSS loose or any of the wiring/connectors/terminals damaged?

   Yes

   - Repair as necessary.
   - Perform the ABS VERIFICATION TEST. Refer to **ABS VERIFICATION TEST**.

   No

   - Go To 4.

4. **CHECK BRAKE SYSTEM**
   1. Turn the ignition off.
   2. Check the brake fluid level.
   3. Check for trapped air in brake lines.
   4. Inspect for brake fluid leakage on vehicle.
   5. Inspect for loose mounted brake hardware.

   Are any of the above conditions present?

   Yes

   - Repair as necessary.
   - Perform the ABS VERIFICATION TEST. Refer to **ABS VERIFICATION TEST**.

   No

   - Go To 5.

5. **CHECK EACH TONE WHEEL FOR DAMAGE**
   1. Turn the ignition off.
   2. Inspect each Tone Wheel for damage, missing teeth, cracks, or looseness.

   NOTE: The Tone Wheel teeth should be perfectly square, not bent, or nicked.

   Is the Tone Wheels damaged?

Yes

- Repair as necessary.
- Perform the ABS VERIFICATION TEST. Refer to **ABS VERIFICATION TEST**.

No

- Go To 6.

6. **ANTILOCK BRAKE MODULE - INTERNAL FAULT**
   1. Turn the ignition off.
   2. Replace WSS in question and perform the ABS VERIFICATION TEST. Refer to **ABS VERIFICATION TEST**.
   3. With the scan tool, erase DTC's.
   4. Road test the vehicle over 40 km/h (25 m.p.h.).
   5. Turn the ignition on.
   6. With the scan tool, read DTC's

   Did the DTC C107B-WHEEL SPEED COMPARATIVE PERFORMANCE reset?

   Yes

   - Replace the Antilock Brake Module in accordance with the Service Information.
   - Perform the ABS VERIFICATION TEST. Refer to **ABS VERIFICATION TEST**.

   No

   - Test Complete.

C107D-BRAKE PEDAL SWITCH 1/2 CORRELATION

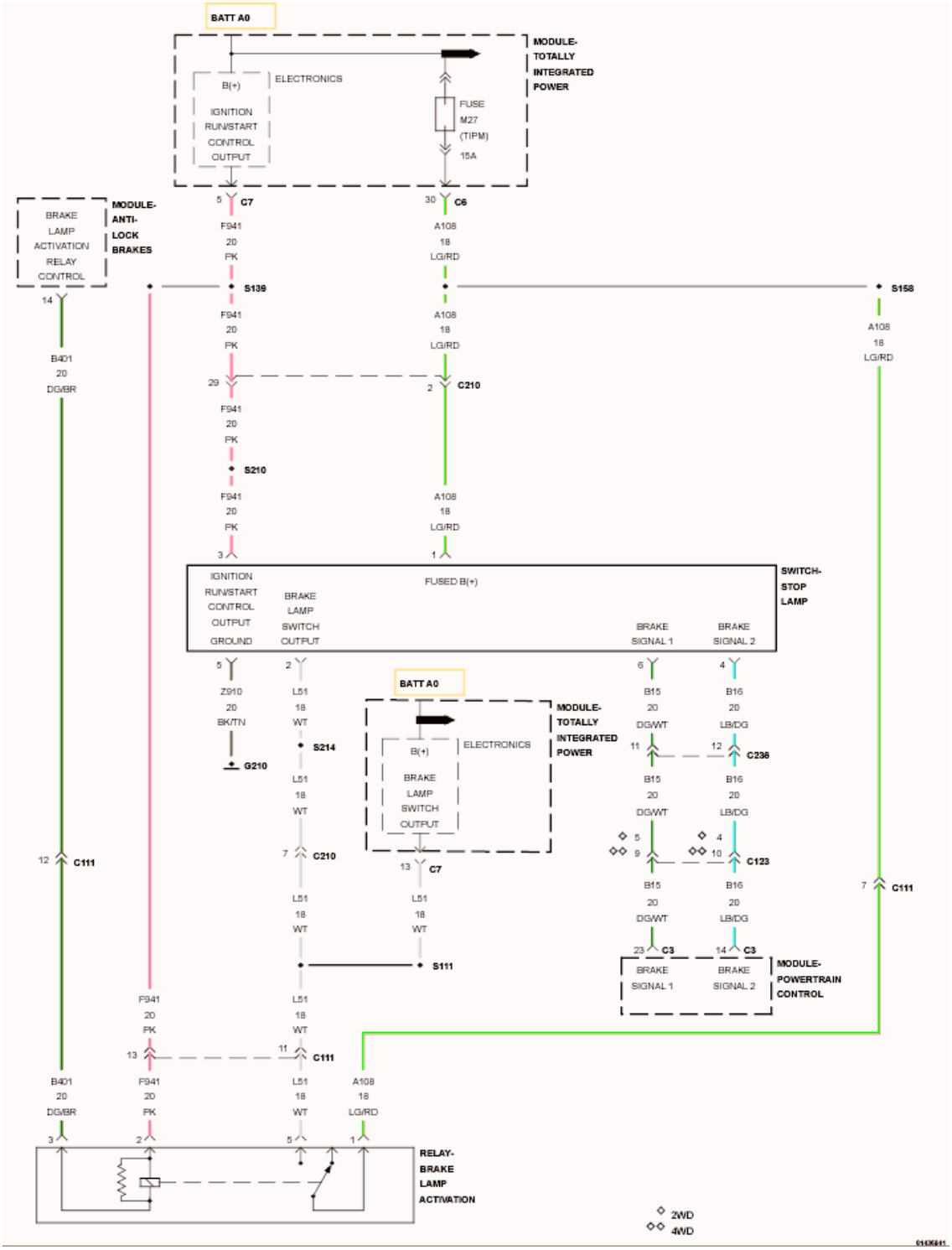

Fig. 152: Brake Pedal Switch Wiring Diagram
Courtesy of CHRYSLER GROUP, LLC

For a complete wiring diagram, **refer to appropriate SYSTEM WIRING DIAGRAMS article** .

NOTE: **The Electronic Stability Control (ESC) may also be referred to as Electronic**

Stability Program (ESP) depending on the vehicle model year and configuration. Certain components may also reference ESP, ESC, or use the traction control symbol.

WHEN MONITORED:

When the vehicle is driven.

SET CONDITION:

If the Powertrain Control Module (PCM) detects an implausible signal from the Stop Lamp Switch and sends a message to the ABS Module via the CAN C bus.

POSSIBLE CAUSES

Possible Causes
WIRING HARNESS, TERMINAL, CONNECTOR DAMAGE
STOP LAMP RELATED DTC's OR SYMPTOMS PRESENT FUSE OPEN
MISADJUSTED PEDAL SWITCH
(B15) BRAKE SIGNAL 1 CIRCUIT FOR A SHORT TO GROUND
(B15) BRAKE SIGNAL 1 SIGNAL CIRCUIT FOR AN OPEN
(Z910) GROUND CIRCUIT FOR AN OPEN
STOP LAMP SWITCH
ANTILOCK BRAKES SYSTEM (ABS) MODULE

DIAGNOSTIC TEST

1. **VERIFY DTC IS ACTIVE**

NOTE: **Diagnose and repair all Pressure Sensor and Voltage related DTC's and all Stop Lamp related DTC's and symptoms before diagnosing this DTC.**

1. Ignition on, engine not running.
2. With the scan tool, read DTC's.
3. With the scan tool, read and record Environmental Data (EV Data).
4. With the scan tool, erase DTC's.
5. Cycle the ignition switch.

WARNING: **Make sure brake capability is available before road testing.**

6. Test drive the vehicle as follows: Drive for more than six minutes at a speed greater than 40 km/h (25 mph) and accelerate to a speed greater than 40 km/h (25 mph) and then decelerate to a speed lower than 3 km/h (2 mph) five consecutive times.

7. Park the vehicle.
8. With the scan tool, read DTC's.

   Is the DTC active?

   Yes

   - Go To 2.

   No

   - Perform the ABS INTERMITTENT CONDITION. Refer to **ABS INTERMITTENT CONDITION**.

2. **INSPECT RELATED WIRING HARNESS, TERMINALS, AND CONNECTORS**
   1. Turn ignition off to the lock position.
   2. Visually inspect the related wiring harness. Look for any pinched, chafed, pierced, and partially broken wires.
   3. Visually inspect the related wiring harness connectors. Look for broken, bent, pushed out, and corroded terminals.

      Were any problems found?

      Yes

      - Repair as necessary.
      - Perform the ABS VERIFICATION TEST. Refer to **ABS VERIFICATION TEST**.

      No

      - Go To 3.

3. **CHECK (B15) BRAKE SIGNAL 1 CIRCUIT FUNCTION WHILE PRESSING AND RELEASING THE BRAKE PEDAL**

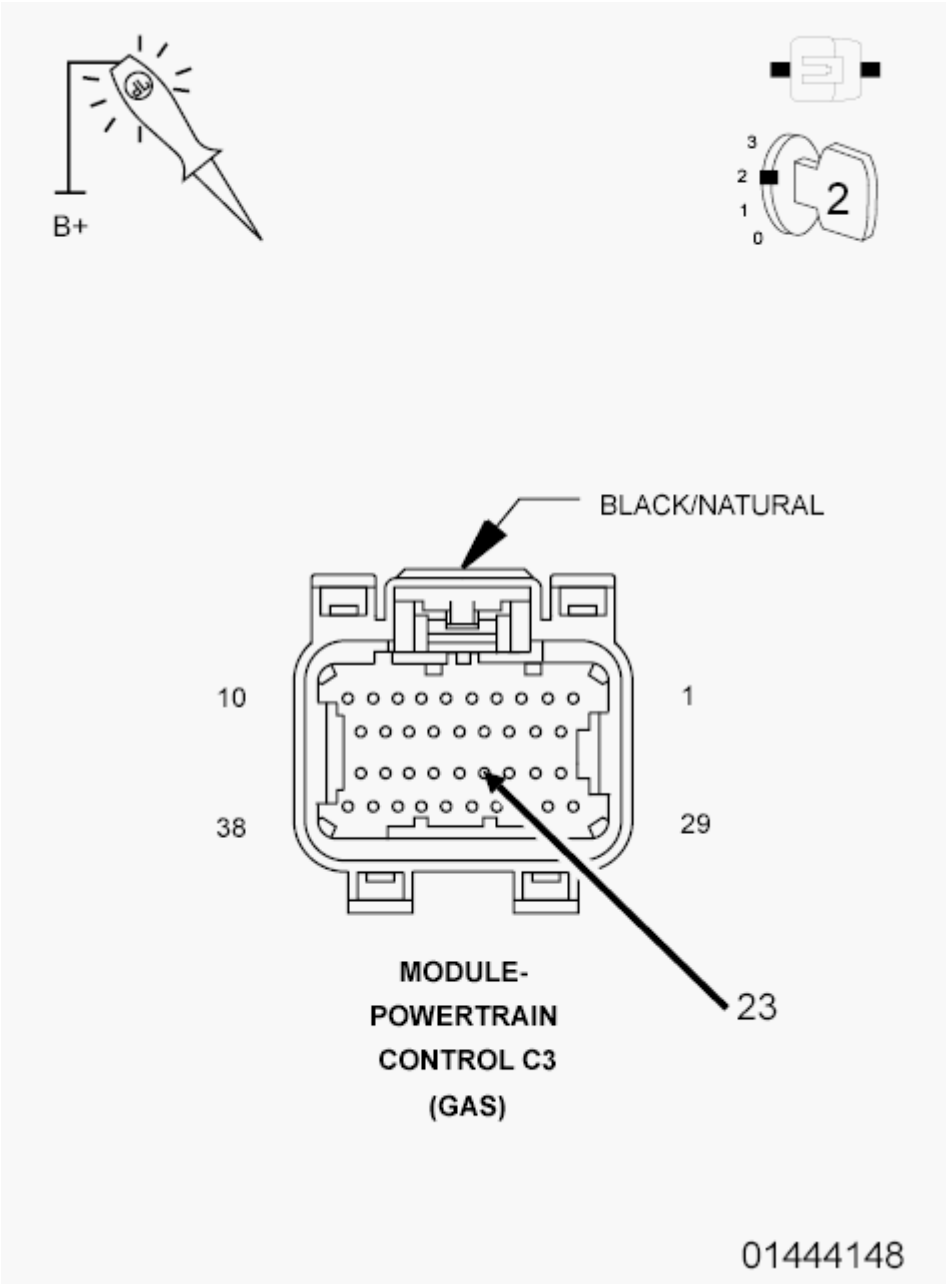

Fig. 153: Checking Brake Signal 1 Circuit Function While Pressing And Releasing The Brake Pedal
Courtesy of CHRYSLER GROUP, LLC

1. Ignition on, engine not running.
2. Using a 12-volt test light connected to 12 volts, backprobe the (B15) Brake Switch No. 1 Signal circuit at the PCM C3 harness connector.
3. Press and release the brake pedal.

   Does the test light illumination toggle from off to on?

   Yes

- Go To 7.

No

- Go To 4.

4. **CHECK (B15) BRAKE SIGNAL 1 CIRCUIT FOR A SHORT TO GROUND**

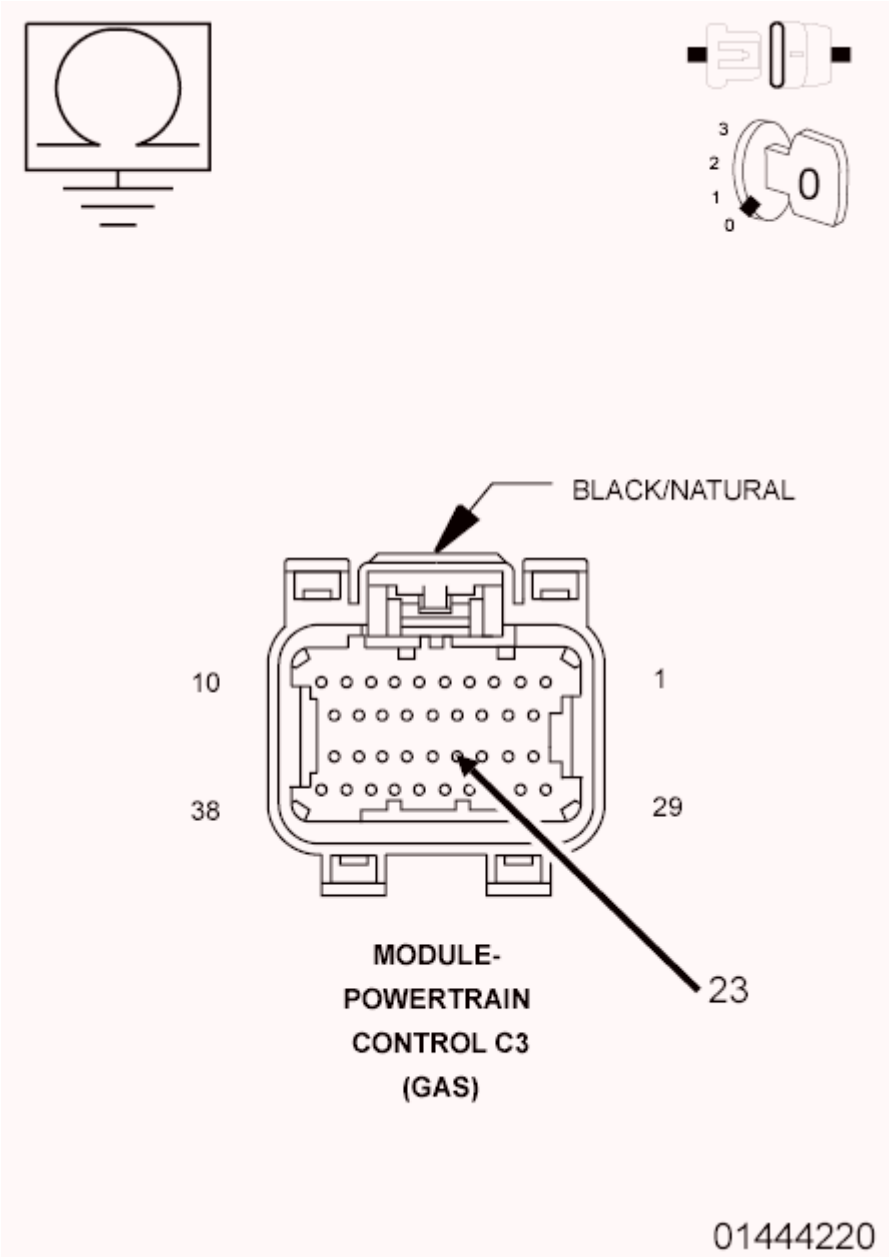

Fig. 154: Checking Brake Signal 1 Circuit For A Short To Ground
Courtesy of CHRYSLER GROUP, LLC

1. Turn ignition off to the lock position.
2. Disconnect the PCM C3 harness connector.

3. Disconnect the Stop Lamp Switch harness connector.
4. Measure the resistance of the (B15) Brake Signal 1 circuit between ground and the PCM C3 harness connector.

   Is the resistance below 5.0 Ohms?

   Yes

   - Repair the (B15) Brake Signal 1 circuit for a short to ground.
   - Perform the ABS VERIFICATION TEST. Refer to **ABS VERIFICATION TEST**.

   No

   - Go To 5.

5. **CHECK (B15) BRAKE SIGNAL 1 CIRCUIT FOR AN OPEN**

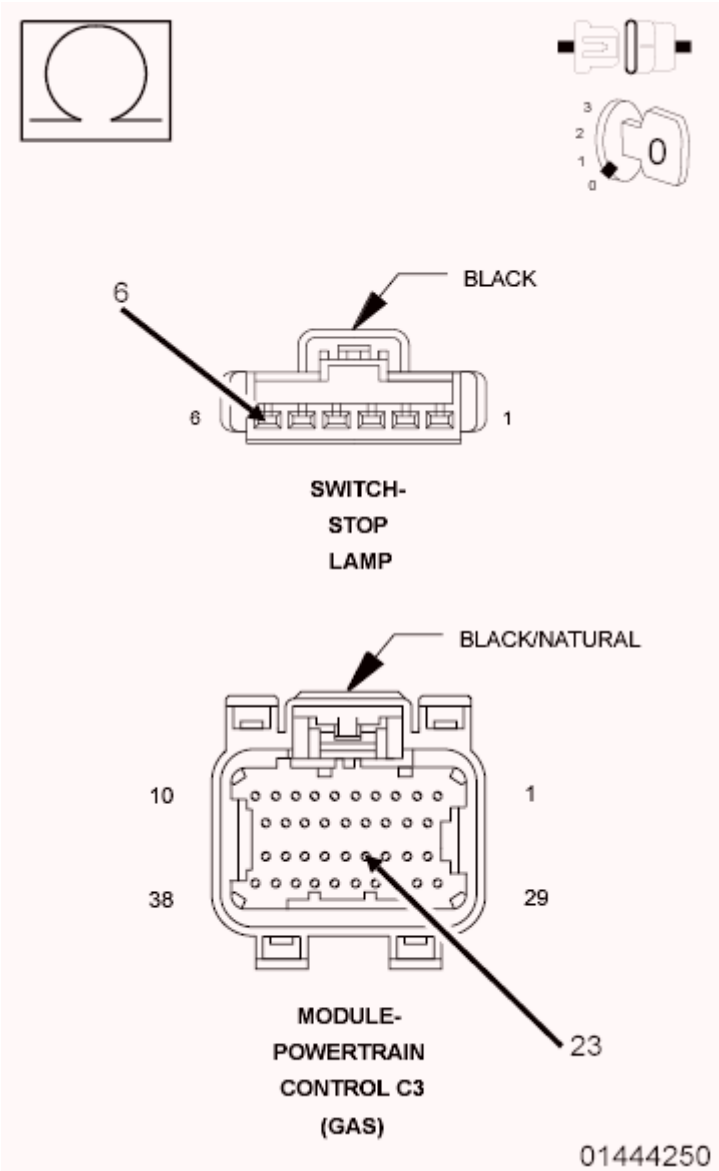

Fig. 155: Checking Brake Signal 1 Circuit For An Open
Courtesy of CHRYSLER GROUP, LLC

1. Measure the resistance of the (B15) Brake Signal 1 circuit between the ABS Module harness connector and the Stop Lamp Switch harness connector.

   Is the resistance below 5.0 Ohms?

   Yes

   - Go To 6.

   No

   - Repair the (B15) Brake Signal 1 circuit for an open.

- Perform the ABS VERIFICATION TEST. Refer to **ABS VERIFICATION TEST**.

6. **CHECK (Z910) GROUND CIRCUIT FOR A OPEN**

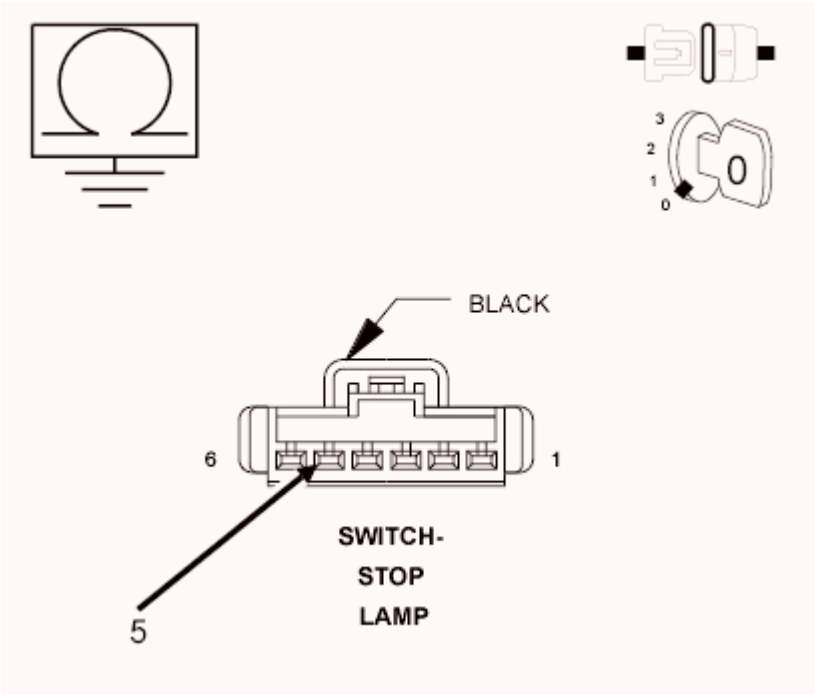

Fig. 156: Checking Ground Circuit For A Open
Courtesy of CHRYSLER GROUP, LLC

1. Measure the resistance on the (Z910) Ground circuit and ground in the Stop Lamp Switch harness connector.

   Is the resistance below 5 Ohms?

   Yes

   - Replace the Stop Lamp Switch in accordance with the Service Information.
   - Perform the ABS VERIFICATION TEST. Refer to **ABS VERIFICATION TEST**.

   No

   - Repair the open in the (Z910) Ground circuit.
   - Perform the ABS VERIFICATION TEST. Refer to **ABS VERIFICATION TEST**.

7. **CHECK BRAKE PEDAL ADJUSTMENT**

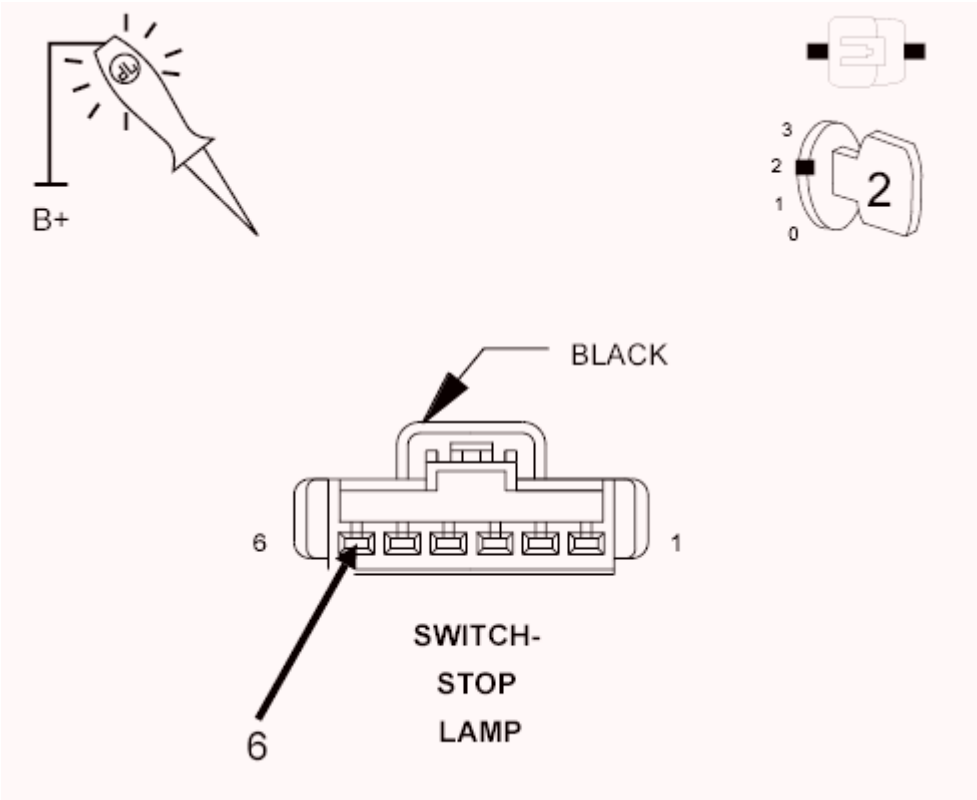

Fig. 157: Checking Brake Switch No. 1 Signal Circuit In The Stop Lamp Switch Harness Connector
Courtesy of CHRYSLER GROUP, LLC

1. Connect the Stop Lamp Switch harness connector.
2. Using a 12-volt test light connected to 12 volts, backprobe the (B15) Brake Switch No. 1 Signal circuit in the Stop Lamp Switch harness connector.
3. Ignition on, engine not running.
4. Press and release the brake pedal.

   Does the test light illumination toggle from off to on within 4-5 mm of brake pedal travel?

   Yes

   - Replace the Antilock Bakes System (ABS) Module in accordance with the Service Information.
   - Perform the ABS VERIFICATION TEST. Refer to **ABS VERIFICATION TEST**.

   No

   - Replace the Stop Lamp Switch in accordance with the Service Information.
   - Perform the ABS VERIFICATION TEST. Refer to **ABS VERIFICATION TEST**.

C1086-ABS SYSTEM CONTROL TOO LONG

For a complete wiring diagram **refer to appropriate SYSTEM WIRING DIAGRAMS article**

WHEN MONITORED:

With the ignition on.

SET CONDITION:

When the Antilock Brake Module receives 5 seconds of dump activation without wheel speed recovery.

POSSIBLE CAUSES

Possible Causes
ABS, TCS, ESP CONTROL TOO LONG
AIR IN BRAKE SYSTEM/WORN MECHANICAL COMPONENTS
HYDRAULIC CONTROL UNIT (HCU) INTERNAL FAILURE

DIAGNOSTIC TEST

1. **CHECK FOR ACTIVE DTC**

   NOTE: If other DTC's are set they must be repaired before continuing. This DTC must be active for the results of this test to be valid and this DTC may set while driving under excessive driving conditions.

   1. Turn the ignition on.
   2. With the scan tool, read and record DTC's.
   3. With the scan tool, erase DTC's.
   4. Depress and release the brake pedal.
   5. With the scan tool, read and record DTC's.

   Does the scan tool display: C1086-ABS SYSTEM CONTROL TOO LONG?

   Yes

   - Go To 2.

   No

   - Perform the ABS INTERMITTENT CONDITION diagnostic procedure. Refer to **ABS INTERMITTENT CONDITION**.

2. **CHECK FOR AIR IN BRAKE SYSTEM AND WORN MECHANICAL COMPONENTS**

   NOTE: Visually inspect for worn brake linings, undersized rotors, binding or frozen calipers. Repair as necessary.

NOTE: **Before continuing the brake system must be bled to verify there is no air in the brake system.**

Were any problems found?

Yes

- Repair as necessary.
- Perform the ABS VERIFICATION TEST. Refer to **ABS VERIFICATION TEST**.

No

- Replace the Hydraulic Control Unit in accordance with the Service Information.
- Perform the ABS VERIFICATION TEST. Refer to **ABS VERIFICATION TEST**.

C1090-ABS BRAKE LAMP CONTROL CIRCUIT LOW

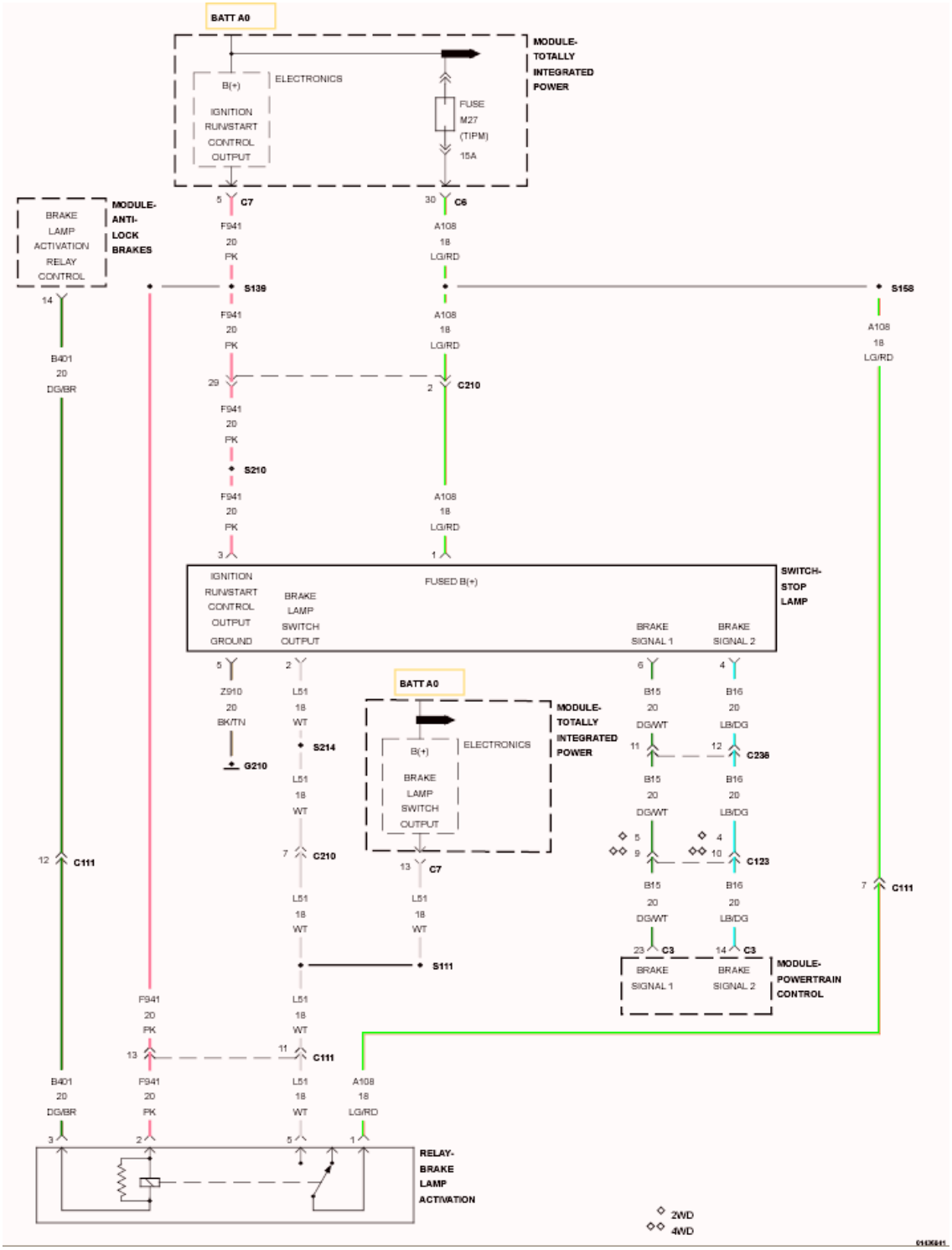

Fig. 158: Brake Pedal Switch Wiring Diagram
Courtesy of CHRYSLER GROUP, LLC

For a complete wiring diagram, **refer to appropriate SYSTEM WIRING DIAGRAMS article** .

WHEN MONITORED:

With the ignition on.

SET CONDITION:

When monitoring the Brake Lamp Activation Relay Control circuit the module detects a short to ground.

POSSIBLE CAUSES

Possible Causes
FUSE
(B401) BRAKE LAMP ACTIVATION RELAY OPEN OR SHORTED TO GROUND
(A108) FUSED B(+)T CIRCUIT FOR AN OPEN OR SHORTED TO GROUND
BRAKE LAMP ACTIVATION RELAY
ANTILOCK BRAKE SYSTEM (ABS) MODULE

DIAGNOSTIC TEST

1. **CHECK FOR DTC C1090-ABS BRAKE LAMP CONTROL CIRCUIT LOW**

   NOTE: This DTC must be active for the results of this test to be valid.

   1. Ignition on, engine not running.
   2. With the scan tool, record and erase DTC's.
   3. Start the engine.
   4. Apply brake pedal firmly with at least 80 bar (1160 psi.).
   5. With the scan tool, read DTC's.

   Does the scan tool display: C1090-ABS BRAKE LAMP CONTROL CIRCUIT LOW?

   Yes

   - Go To 2.

   No

   - Perform the ABS INTERMITTENT CONDITION diagnostic procedure. Refer to **ABS INTERMITTENT CONDITION**.

2. **CHECK CONNECTOR/TERMINAL FOR DAMAGE**

   NOTE: Check all terminals for broken, bent, pushed out, or corroded terminals.

   1. Turn ignition off to the lock position.
   2. Inspect the Antilock Brake System (ABS) Module harness connector and the Brake Lamp Activation Relay harness connector.

Is the Antilock Brake Module or any of the connectors/terminals damaged?

Yes

- Repair as necessary.
- Perform the ABS VERIFICATION TEST. Refer to **ABS VERIFICATION TEST**.

No

- Go To 3.

3. **CHECK (B401) BRAKE LAMP ACTIVATION RELAY SHORTED TO GROUND**

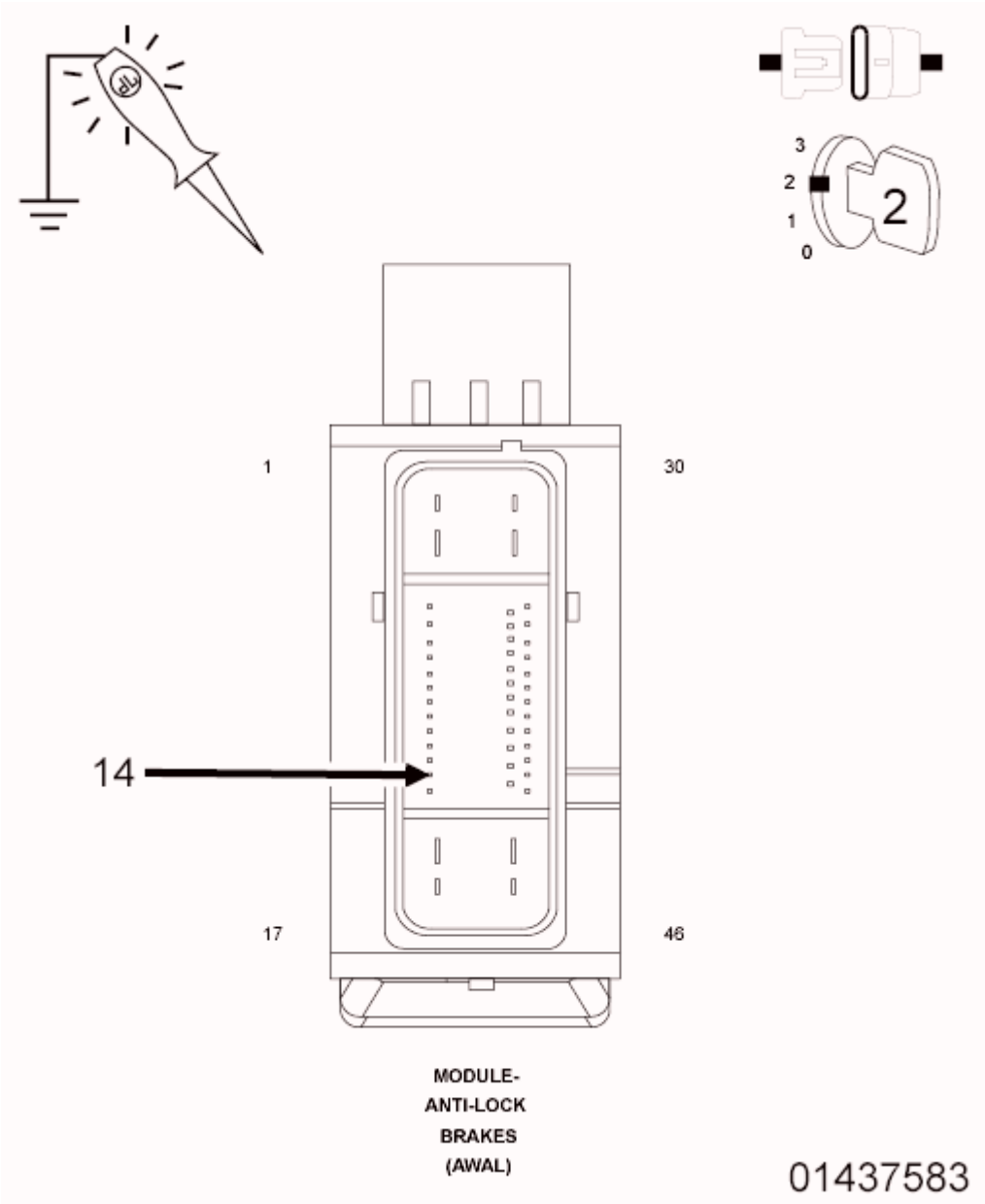

Fig. 159: Checking Brake Lamp Activation Relay For A Short To Ground
Courtesy of CHRYSLER GROUP, LLC

1. Turn the ignition off to the lock position.
2. Disconnect the ABS Module.
3. Ignition on, engine not running.
4. Using a 12-volt test light connected to ground, probe the (B401) Brake Lamp Activation Relay Circuit at the ABS Module harness connector.

   Does the test light illuminate brightly?

   Yes

   - Replace the Antilock Brake System (ABS) Module in accordance with the service information.
   - Perform the ABS VERIFICATION TEST. Refer to **ABS VERIFICATION TEST**.

   No

   - Go To 4.

4. **CHECK (A108) FUSED B(+)**

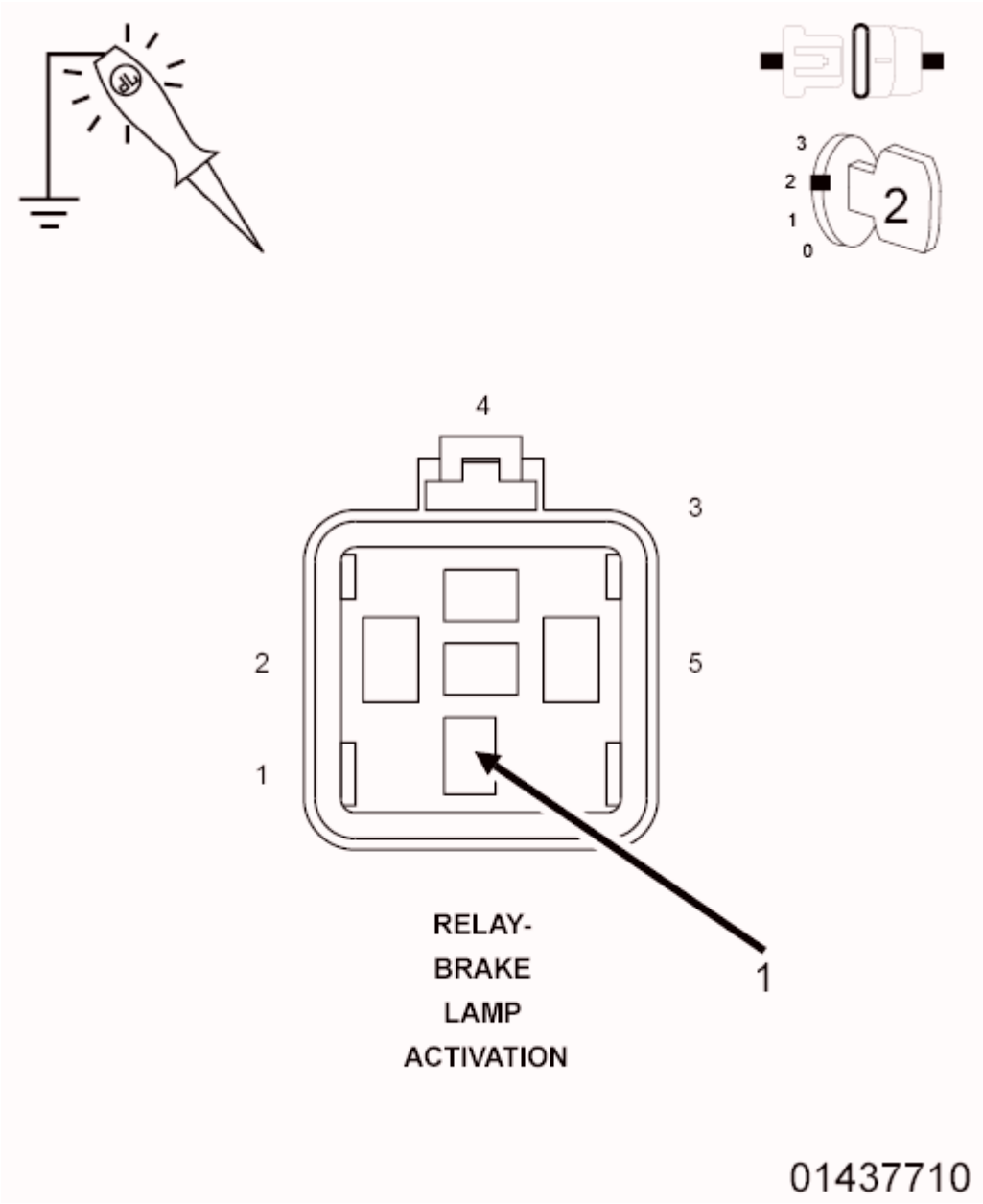

Fig. 160: Measuring Voltage Fused B(+)T Circuit At The Brake Lamp Activation Relay Harness Connector
Courtesy of CHRYSLER GROUP, LLC

1. Turn the ignition off to the lock position.
2. Disconnect the Brake Lamp Activation Relay.
3. Ignition on engine not running.
4. Using a 12-volt test light connected to ground, probe the (A108) Fused B(+)t Circuit at the Brake Lamp Activation Relay harness connector.

   Does the test light illuminate brightly?

Yes

- Go To 5.

No

- Check for open Fuse, if ok repair open or short to ground in the (A108) Fused B(+)t Circuit or short to ground in (B401) Brake Lamp Inhibit Relay circuit.
- Perform the ABS VERIFICATION TEST. Refer to **ABS VERIFICATION TEST**.

5. **BRAKE LAMP ACTIVATION RELAY**

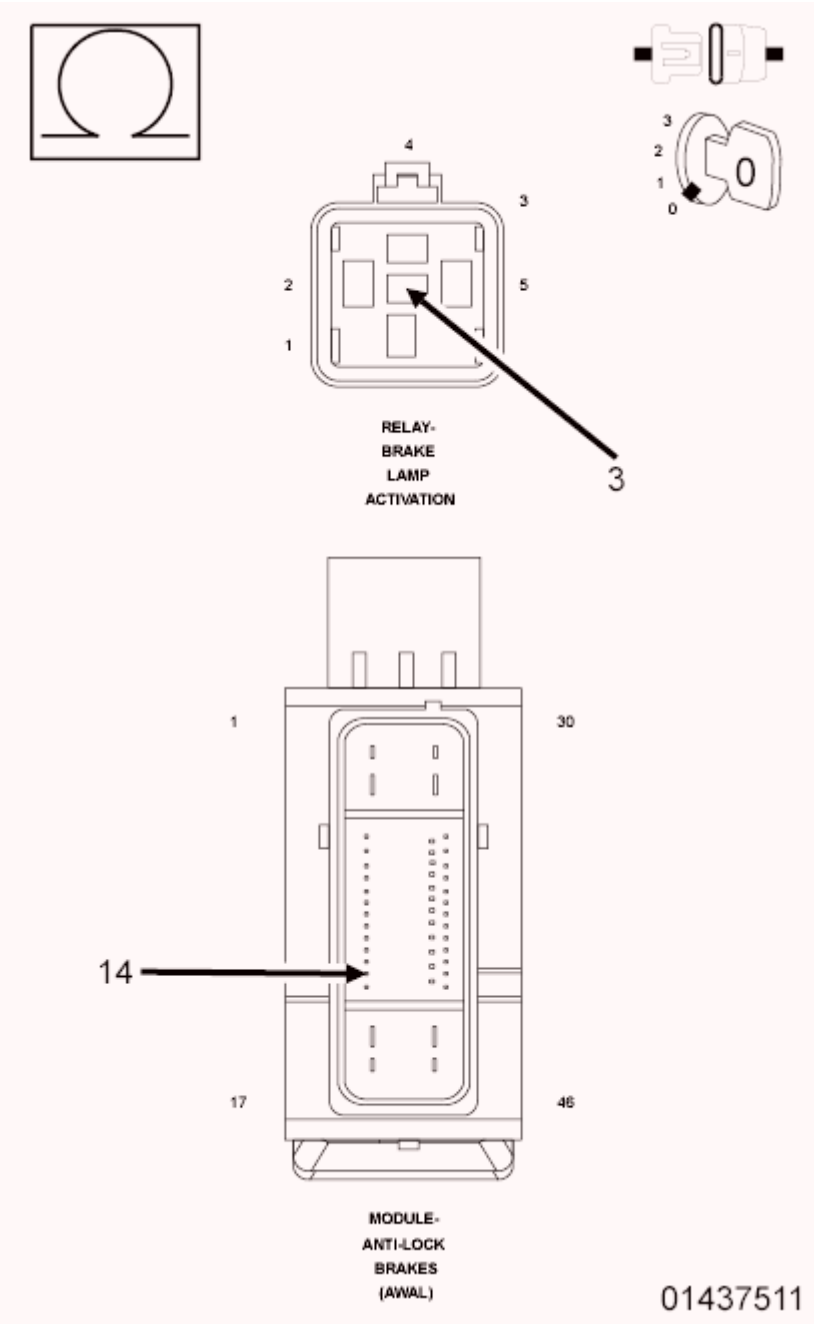

Fig. 161: Checking Brake Lamp Activation Relay Circuit
Courtesy of CHRYSLER GROUP, LLC

1. Turn ignition off to the lock position.
2. Measure the resistance of the (B401) Brake Lamp Activation Relay Circuit between the Brake Lamp Activation relay and the ABS Module harness connector.

   Is the resistance 5 Ohms ?

   Yes

- Replace the Brake Lamp Activation Relay in accordance with the Service Information.
- Perform the ABS VERIFICATION TEST. Refer to **ABS VERIFICATION TEST**.

No

- Repair open in the (B401) Brake Lamp Inhibit Relay circuit.
- Perform the ABS VERIFICATION TEST. Refer to **ABS VERIFICATION TEST**.

C1091-ABS BRAKE LAMP CONTROL CIRCUIT HIGH

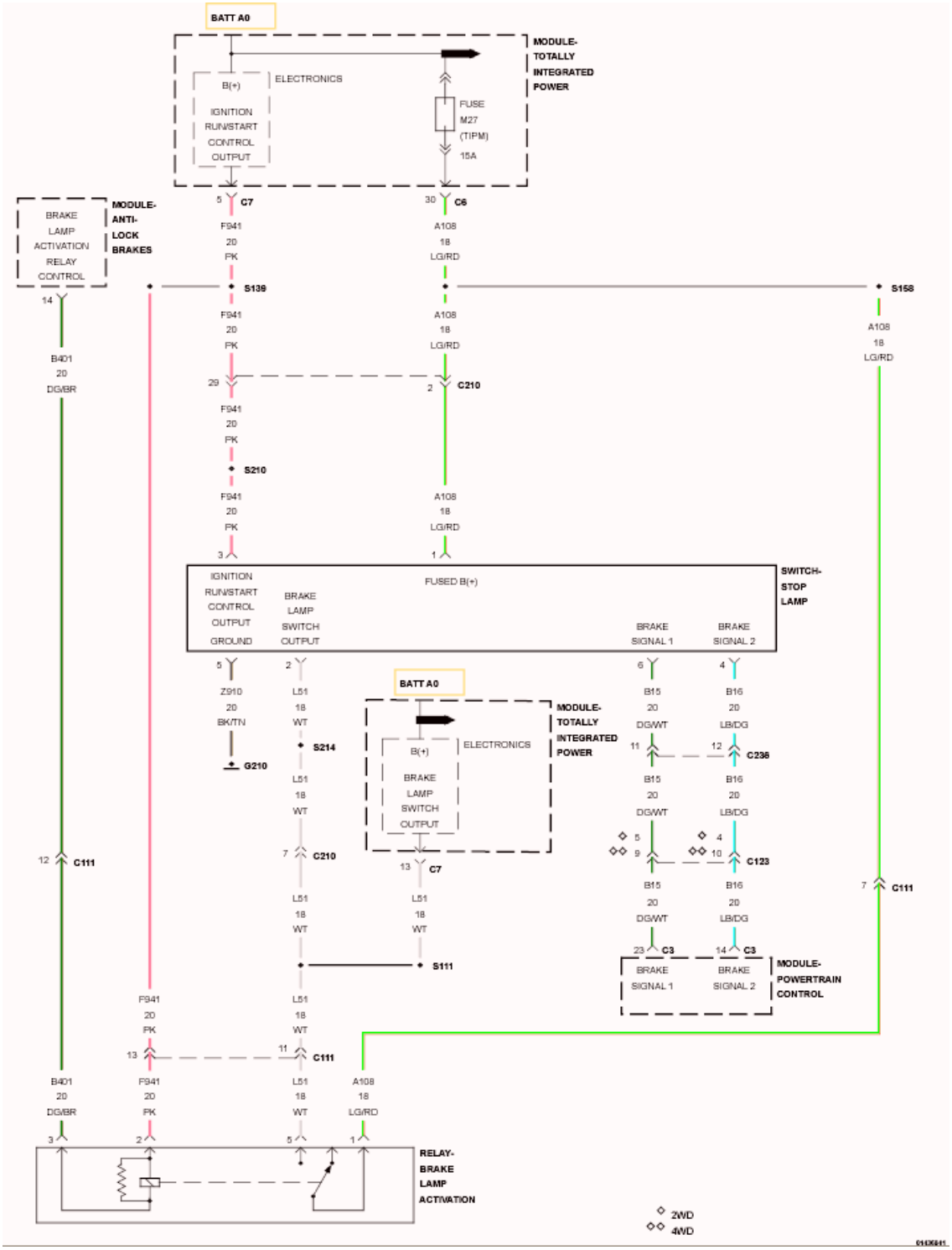

Fig. 162: Brake Pedal Switch Wiring Diagram
Courtesy of CHRYSLER GROUP, LLC

For a complete wiring diagram, **refer to appropriate SYSTEM WIRING DIAGRAMS article** .

NOTE: **The Electronic Stability Control (ESC) may also be referred to as Electronic**

Stability Program (ESP) depending on the vehicle model year and configuration. Certain components may also reference ESP, ESC, or use the traction control symbol.

WHEN MONITORED:

With the ignition on and no system under voltage or over voltage condition present.

SET CONDITION:

When monitoring the Brake Lamp Activation Relay circuit the module detects a short to voltage.

POSSIBLE CAUSES

Possible Causes
(B401) BRAKE LAMP ACTIVATION RELAY CONTROL SHORTED TO VOLTAGE
BRAKE LAMP ACTIVATION RELAY
ANTILOCK BRAKE SYSTEM (ABS) MODULE

DIAGNOSTIC TEST

1. **CHECK FOR DTC C1091-ABS BRAKE LAMP CONTROL CIRCUIT HIGH**

   NOTE: This DTC must be active for the results of this test to be valid.

   1. Ignition on, engine not running.
   2. With the scan tool, record and erase DTC's.
   3. Start the engine.
   4. Apply brake pedal firmly with at least 80 bar (1160 psi.).
   5. With the scan tool, read DTC's.

   Does the scan tool display: C1091-ABS BRAKE LAMP CONTROL CIRCUIT HIGH?

   Yes

   - Go To 2.

   No

   - Perform the ABS INTERMITTENT CONDITION diagnostic procedure. Refer to **ABS INTERMITTENT CONDITION**.

2. **CHECK CONNECTOR/TERMINAL FOR DAMAGE**

   NOTE: Check all terminals for broken, bent, pushed out, or corroded terminals.

1. Turn ignition off to the lock position.
2. Inspect the Antilock Brake System (ABS) Module harness connector and the Brake Lamp Activation Relay harness connector.

   Is the Antilock Brake System (ABS) Module or any of the connectors/terminals damaged?

   Yes

   - Repair as necessary.
   - Perform the ABS VERIFICATION TEST. Refer to **ABS VERIFICATION TEST**.

   No

   - Go To 3.

3. **CHECK (B401) BRAKE LAMP ACTIVATION RELAY CONTROL SHORTED TO VOLTAGE**

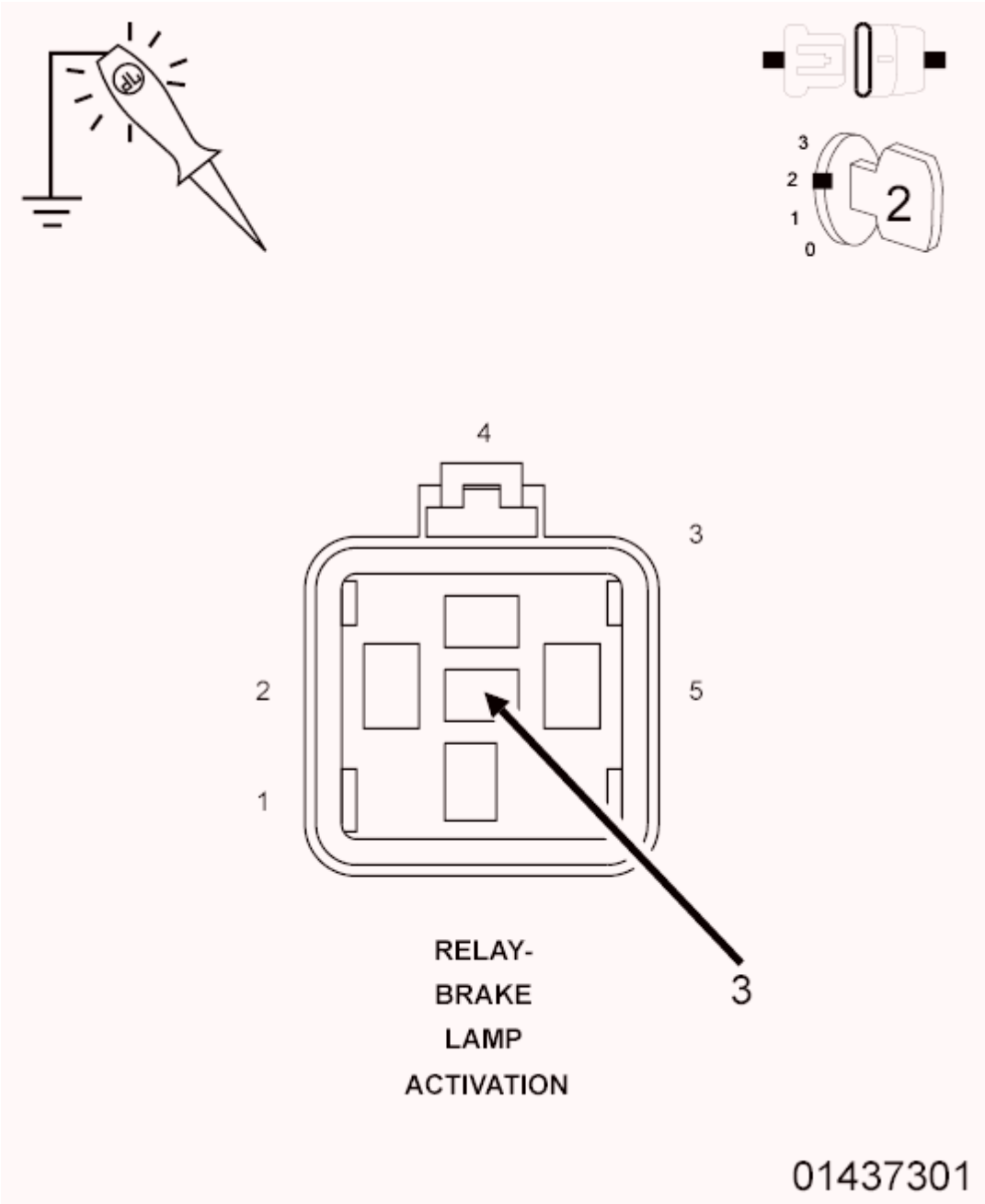

Fig. 163: Checking Brake Lamp Activation Relay Control For A Short To Voltage
Courtesy of CHRYSLER GROUP, LLC

1. Turn ignition off to the lock position.
2. Disconnect the ABS Module.
3. Disconnect the Brake Lamp Activation Relay.
4. Ignition on, engine not running.
5. Using a 12-volt test light connected to ground, probe the (B401) Brake Lamp Activation Relay Control Circuit at the Brake Lamp Activation Relay harness connector.

Does the test light illuminate brightly?

Yes

- Repair the short to voltage in the (B401) Brake Lamp Inhibit Relay Control circuit.
- Perform the ABS VERIFICATION TEST. Refer to **ABS VERIFICATION TEST**.

No

- Go To 4.

4. **BRAKE LAMP ACTIVATION RELAY**

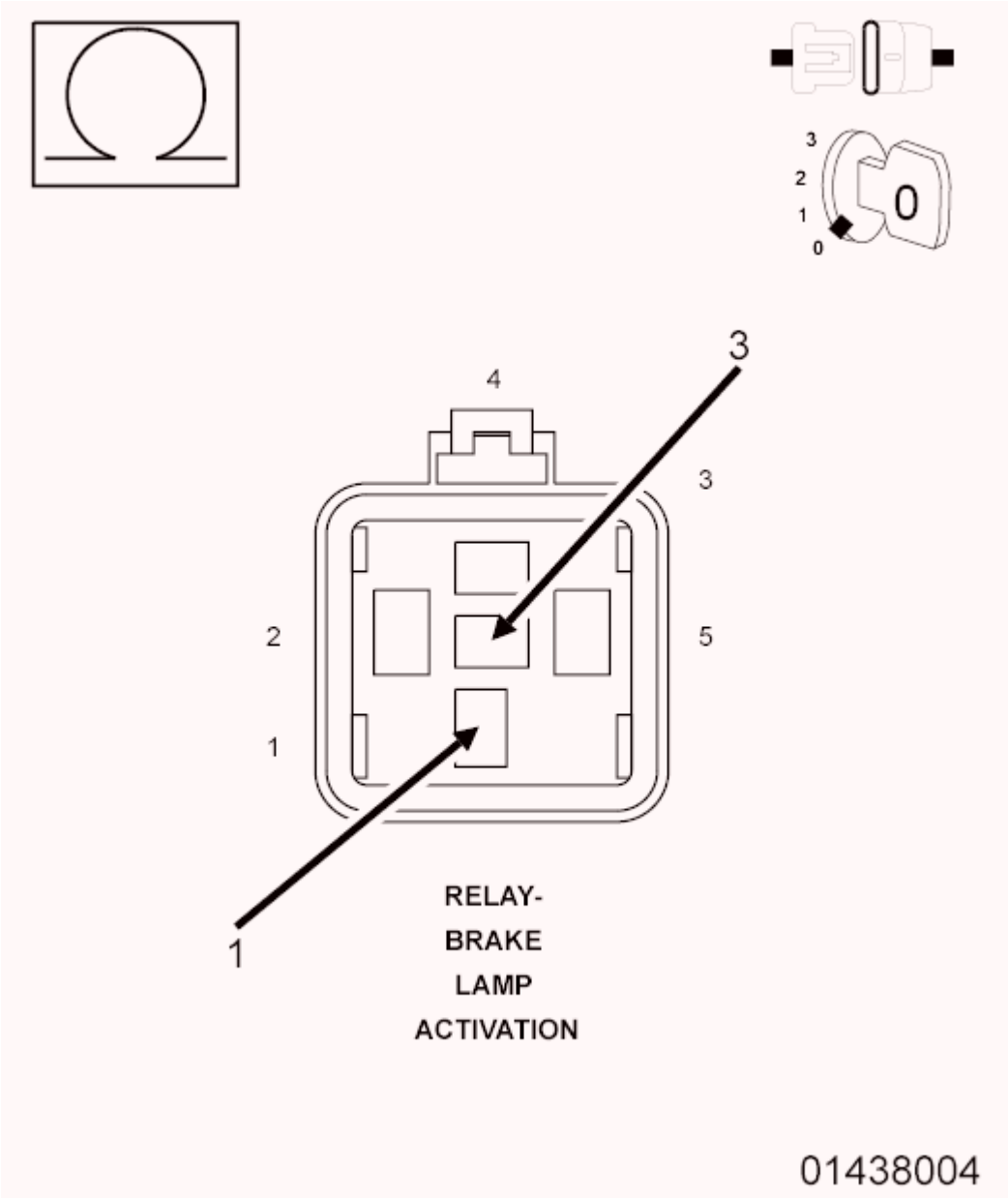

Fig. 164: Checking Brake Lamp Activation Relay Control Circuit
Courtesy of CHRYSLER GROUP, LLC

1. Turn ignition off to the lock position.
2. Measure the resistance across the relay between the (B401) Brake Lamp Activation Relay Control Circuit and the (A108) Fused B(+) at the Brake Lamp Activation Relay harness connector.

   Is the resistance 75 Ohms ±5 Ohms?

   Yes

   - Replace the Antilock Brake System (ABS) Module in accordance with the service information.
   - Perform the ABS VERIFICATION TEST. Refer to **ABS VERIFICATION TEST**.

   No

   - Replace the Brake Lamp Activation Relay in accordance with the Service Information.
   - Perform the ABS VERIFICATION TEST. Refer to **ABS VERIFICATION TEST**.

C1201-FRONT TRACTION CONTROL INLET VALVE CONTROL CIRCUIT LOW

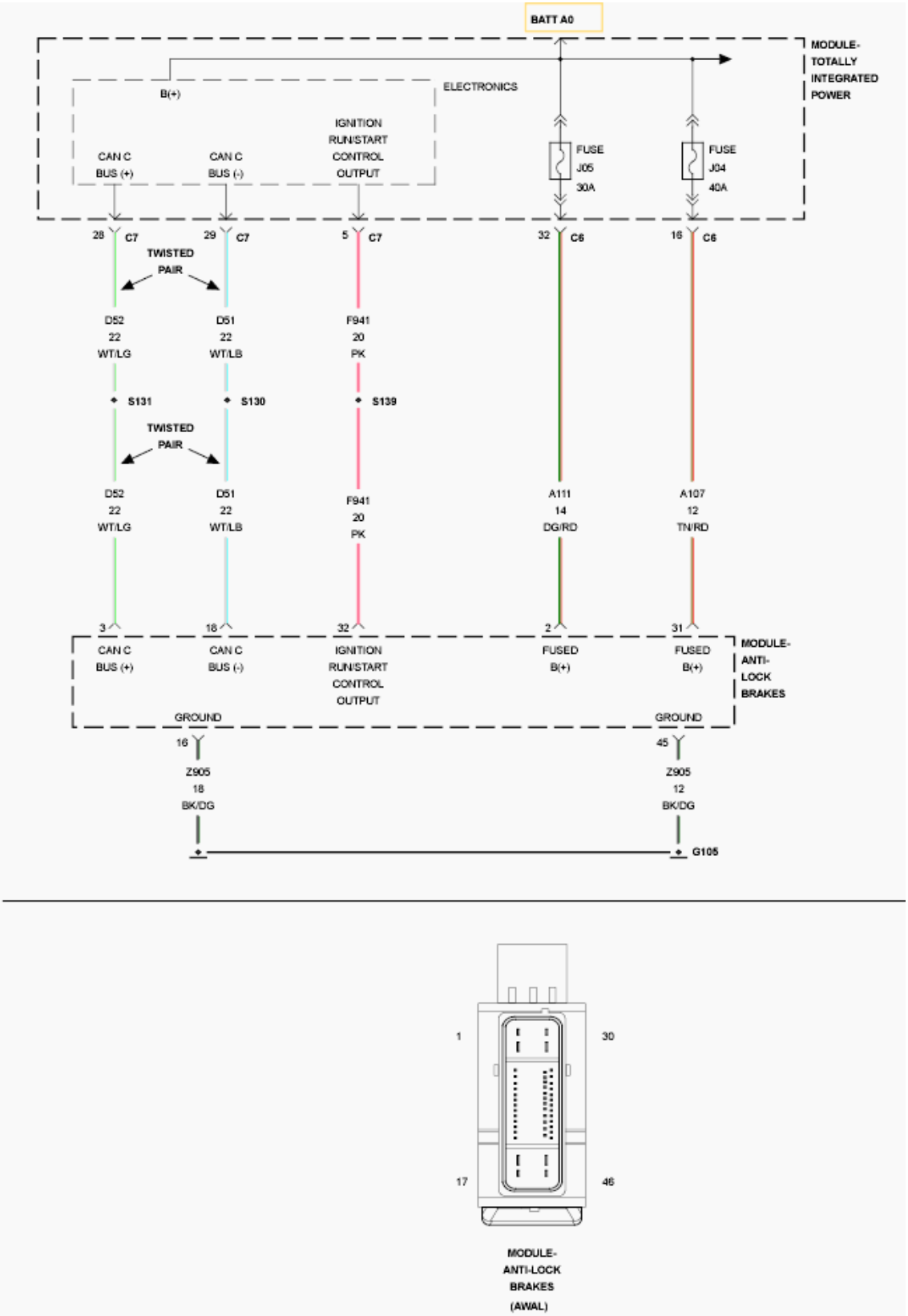

Fig. 165: ABS Motor Control Wiring Diagram
Courtesy of CHRYSLER GROUP, LLC

For a complete wiring diagram, **refer to appropriate SYSTEM WIRING DIAGRAMS article** .

WHEN MONITORED:

Continuous

SET CONDITION:

The electrical feedback of the power stage does not correspond with the activation of the respective valve.

POSSIBLE CAUSES

Possible Causes
B+ CIRCUITS OPEN OR HIGH RESISTANCE
GROUND CIRCUITS OPEN OR HIGH RESISTANCE
ANTILOCK BRAKE SYSTEM (ABS) MODULE INTERNAL

DIAGNOSTIC TEST

1. **B+ CIRCUITS OPEN OR HIGH RESISTANCE**

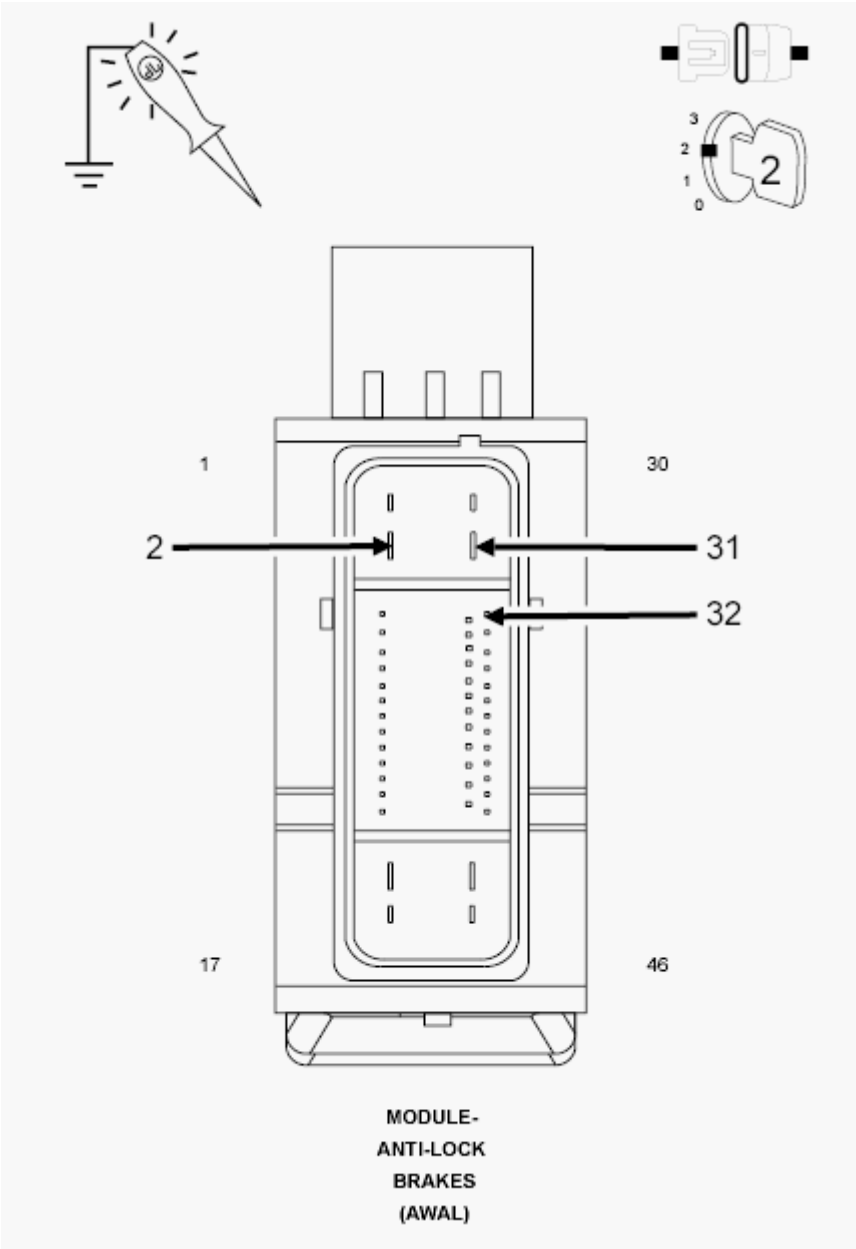

Fig. 166: Checking ABS Module B+ Circuits For An Open Or High Resistance
Courtesy of CHRYSLER GROUP, LLC

1. Turn ignition off to the lock position.
2. Disconnect the ABS Module harness connector.

NOTE: Check connector - Clean/repair as necessary.

3. Ignition on, engine not running.
4. With a test light connected to ground check (A107) Fused B+, (A111) Fused B+ and (F941) Fused ignition switch output circuits at the ABS harness connector.

Does the test light illuminate brightly?

Yes

- Go To 2.

No

- Repair the B+ circuits for an open or high resistance.
- Perform the ABS VERIFICATION TEST. Refer to **ABS VERIFICATION TEST**.

2. **GROUND CIRCUITS OPEN OR HIGH RESISTANCE**

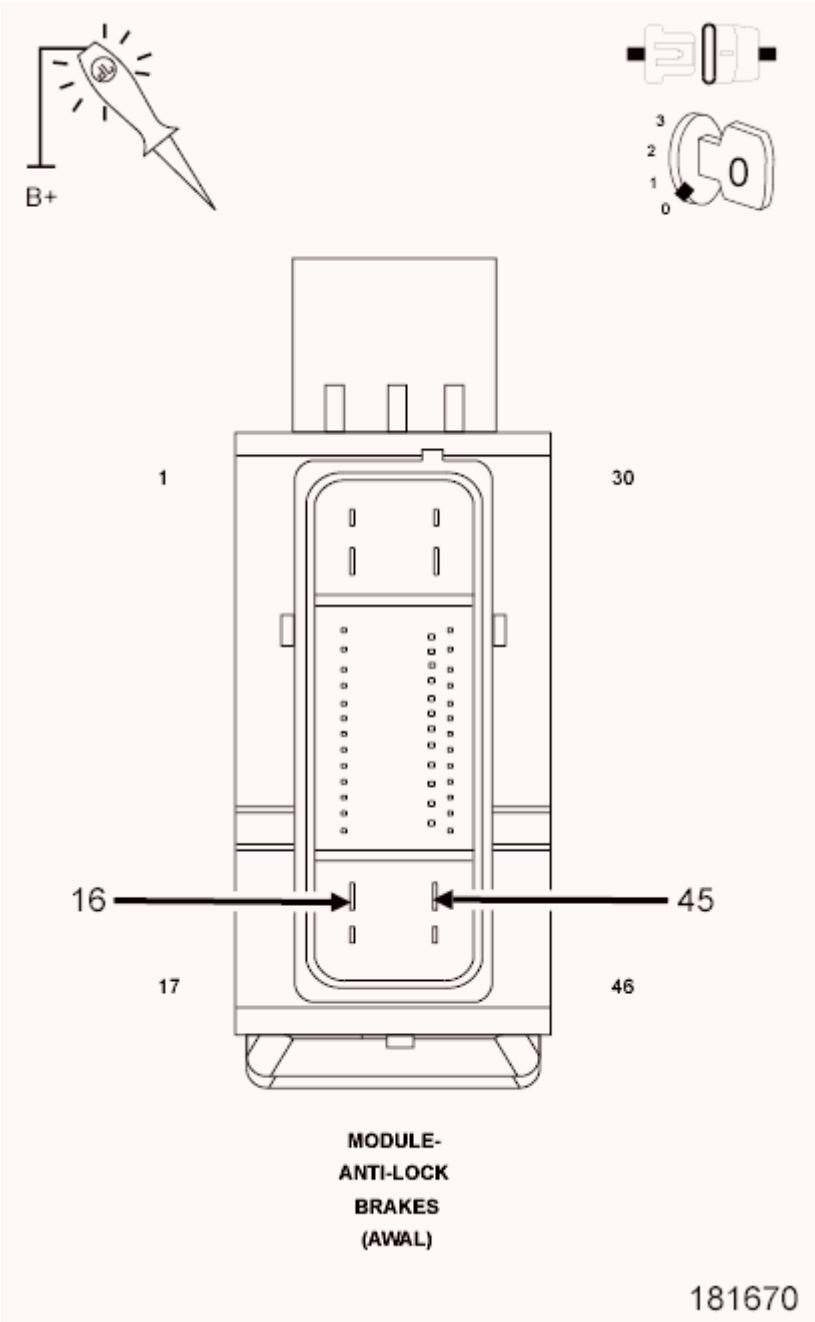

Fig. 167: Checking ABS Module Ground Circuits For An Open Or High Resistance
Courtesy of CHRYSLER GROUP, LLC

1. Turn ignition off to the lock position.
2. With a test light Connected to B+ check (Z905) Ground circuits at the ABS harness connector.

   Does the test light illuminate brightly?

   Yes

- Replace the Antilock System Brake (ABS) Module in accordance with the service information.
- Perform the ABS VERIFICATION TEST. Refer to **ABS VERIFICATION TEST**.

No

- Repair the Ground circuits for an open or high resistance.
- Perform the ABS VERIFICATION TEST. Refer to **ABS VERIFICATION TEST**.

C1205-REAR TRACTION CONTROL INLET VALVE CONTROL CIRCUIT LOW

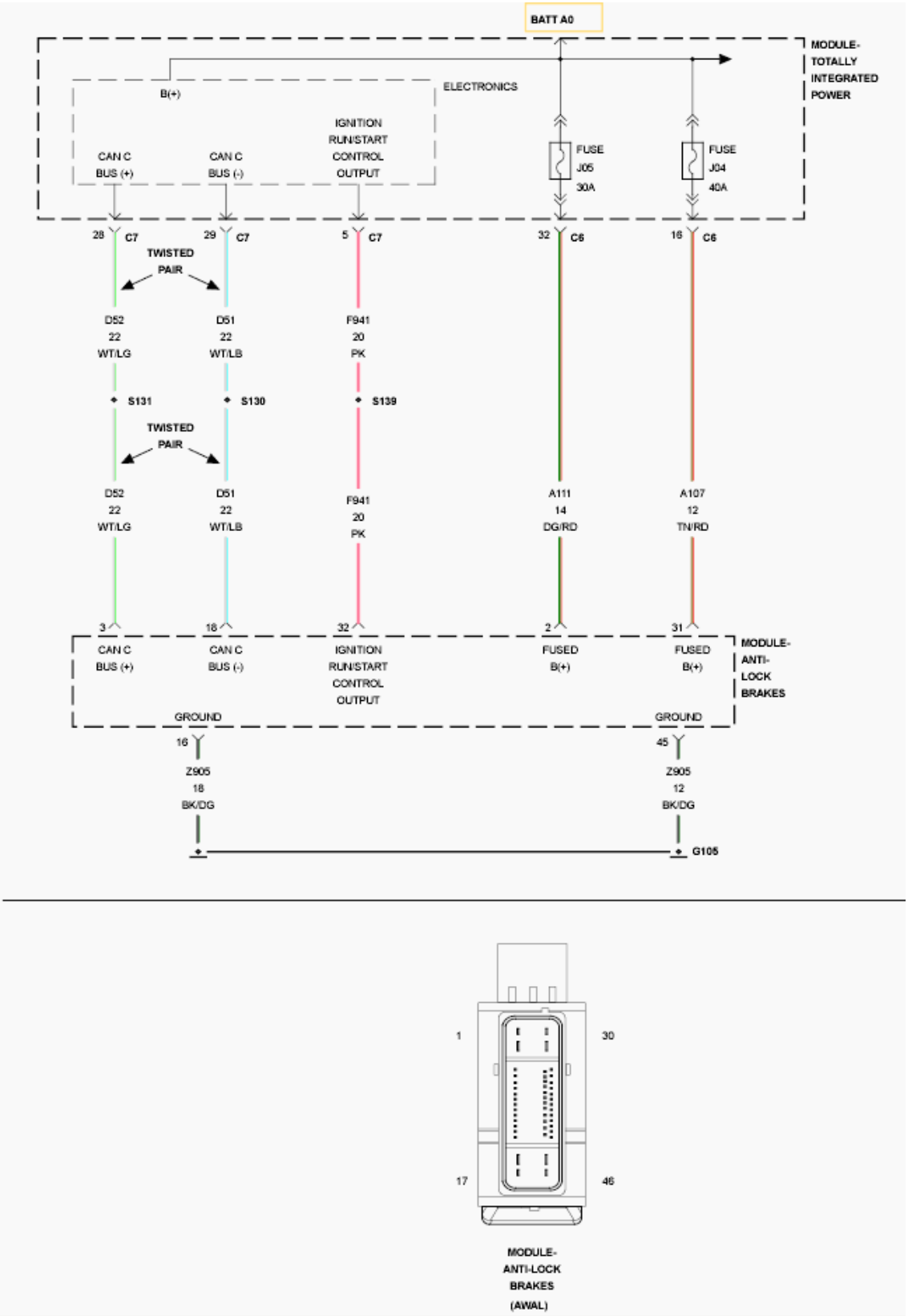

Fig. 168: ABS Motor Control Wiring Diagram
Courtesy of CHRYSLER GROUP, LLC

For a complete wiring diagram, **refer to appropriate SYSTEM WIRING DIAGRAMS article** .

WHEN MONITORED:

Continuous

SET CONDITION:

The electrical feedback of the power stage does not correspond with the activation of the respective valve.

POSSIBLE CAUSES

Possible Causes
B+ CIRCUITS OPEN OR HIGH RESISTANCE
GROUND CIRCUITS OPEN OR HIGH RESISTANCE
ANTILOCK BRAKE SYSTEM (ABS) MODULE INTERNAL

DIAGNOSTIC TEST

1. **B+ CIRCUITS OPEN OR HIGH RESISTANCE**

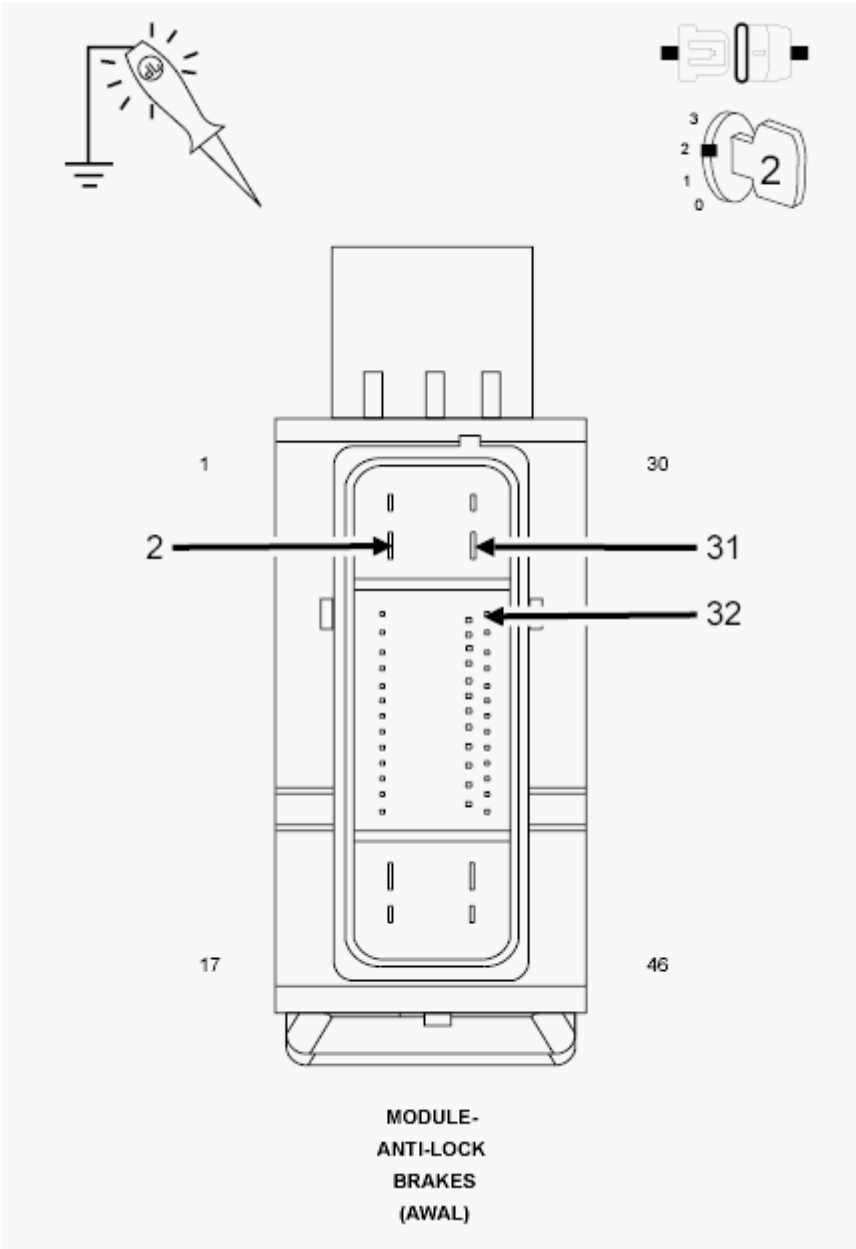

Fig. 169: Checking ABS Module B+ Circuits For An Open Or High Resistance
Courtesy of CHRYSLER GROUP, LLC

1. Turn ignition off to the lock position.
2. Disconnect the ABS Module harness connector.

NOTE: Check connector - Clean/repair as necessary.

3. Ignition on, engine not running.
4. With a test light connected to ground check (A107) Fused B+, (A111) Fused B+ and (F941) Fused ignition switch output circuits at the ABS harness connector.

Does the test light illuminate brightly?

Yes

- Go To 2.

No

- Repair the B+ circuits for an open or high resistance.
- Perform the ABS VERIFICATION TEST. Refer to **ABS VERIFICATION TEST**.

2. **GROUND CIRCUITS OPEN OR HIGH RESISTANCE**

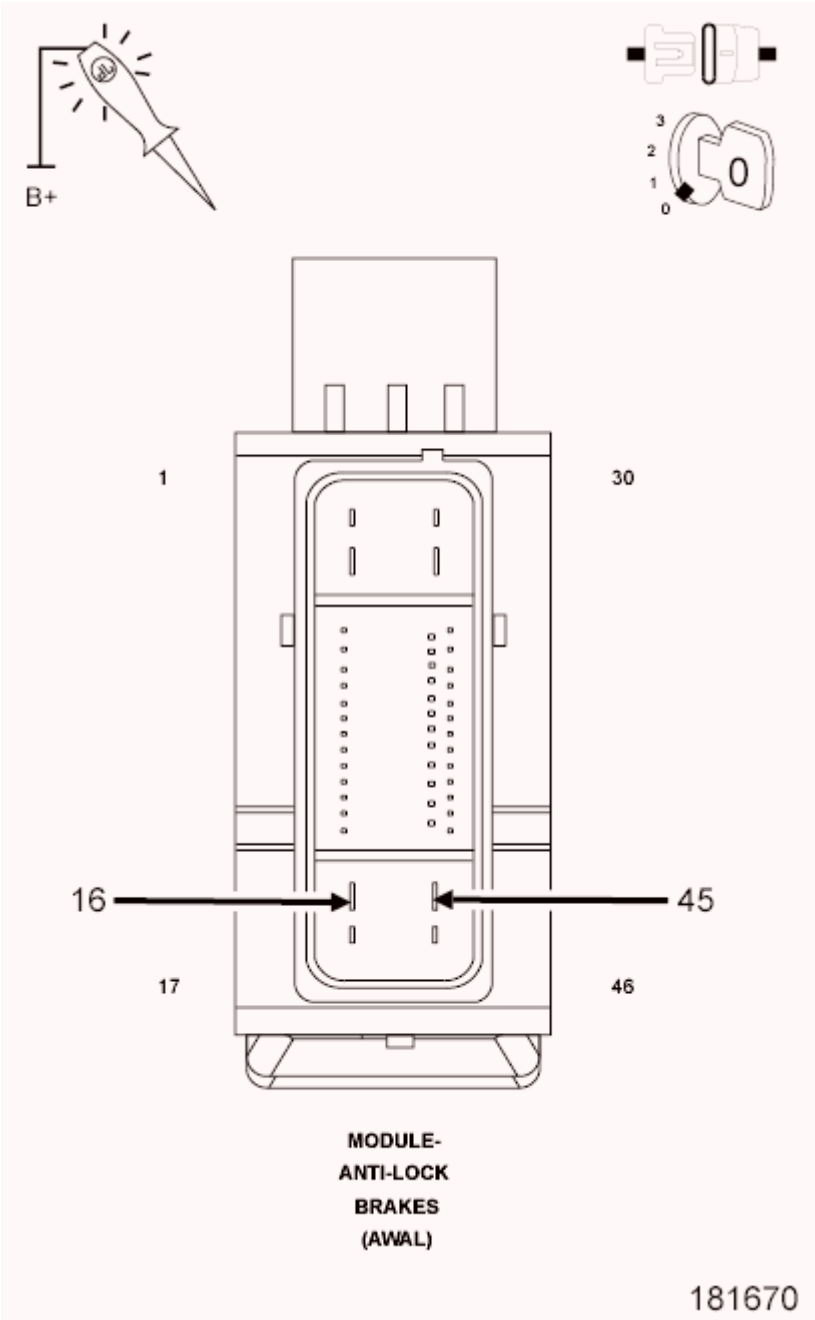

Fig. 170: Checking ABS Module Ground Circuits For An Open Or High Resistance
Courtesy of CHRYSLER GROUP, LLC

1. Turn ignition off to the lock position.
2. With a test light Connected to B+ check (Z905) Ground circuits at the ABS harness connector.

   Does the test light illuminate brightly?

   Yes

- Replace the Antilock System Brake (ABS) Module in accordance with the service information.
- Perform the ABS VERIFICATION TEST. Refer to **ABS VERIFICATION TEST**.

No

- Repair the Ground circuits for an open or high resistance.
- Perform the ABS VERIFICATION TEST. Refer to **ABS VERIFICATION TEST**.

C1209-FRONT TRACTION CONTROL PRIME VALVE CONTROL CIRCUIT LOW

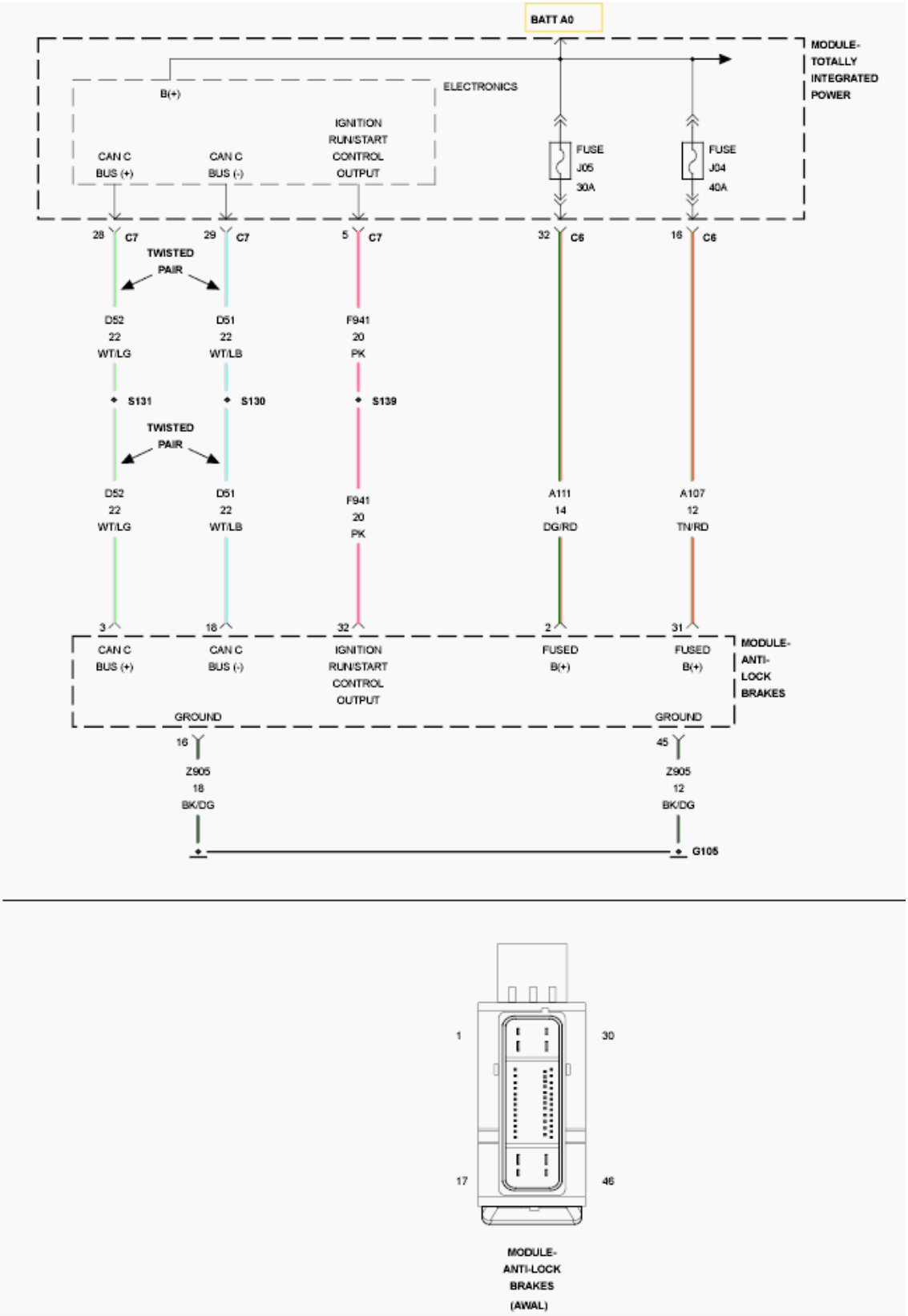

Fig. 171: ABS Motor Control Wiring Diagram
Courtesy of CHRYSLER GROUP, LLC

For a complete wiring diagram, **refer to appropriate SYSTEM WIRING DIAGRAMS article** .

WHEN MONITORED:

Continuous

SET CONDITION:

The electrical feedback of the power stage does not correspond with the activation of the respective valve.

POSSIBLE CAUSES

Possible Causes
B+ CIRCUITS OPEN OR HIGH RESISTANCE
GROUND CIRCUITS OPEN OR HIGH RESISTANCE
ANTILOCK BRAKE SYSTEM (ABS) MODULE INTERNAL

DIAGNOSTIC TEST

1. **HIGH RESISTANCE IN B+ CIRCUITS**

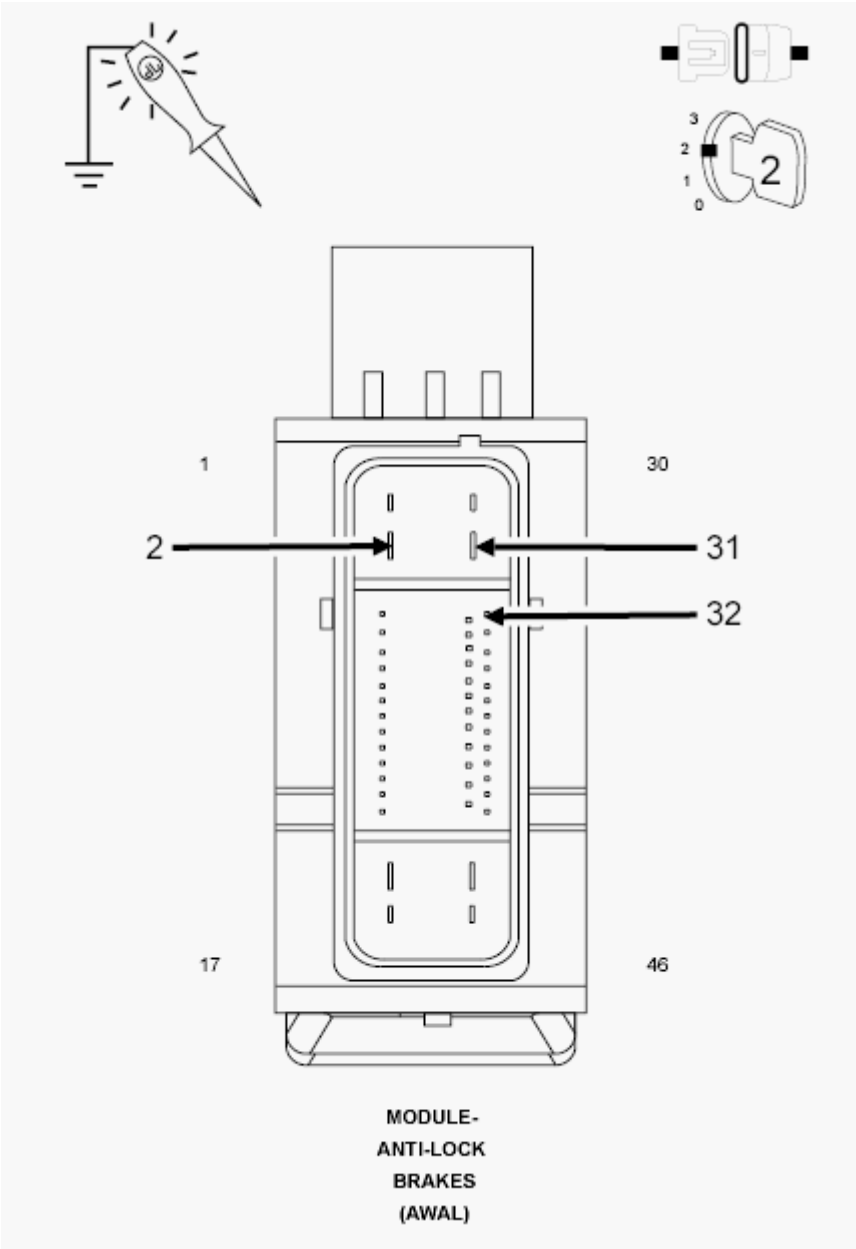

Fig. 172: Checking ABS Module B+ Circuits For An Open Or High Resistance
Courtesy of CHRYSLER GROUP, LLC

1. Turn ignition off to the lock position.
2. Disconnect the ABS Module harness connector.

NOTE: Check connector - Clean/repair as necessary.

3. Ignition on, engine not running.
4. With a test light connected to ground check (A107) Fused B+, (A111) Fused B+ and (F941) Fused ignition switch output at the ABS harness connector.

Does the test light illuminate brightly?

Yes

- Go To 2.

No

- Repair the B+ circuits for an open or high resistance.
- Perform the ABS VERIFICATION TEST. Refer to **ABS VERIFICATION TEST**.

2. **HIGH RESISTANCE IN GROUND CIRCUITS**

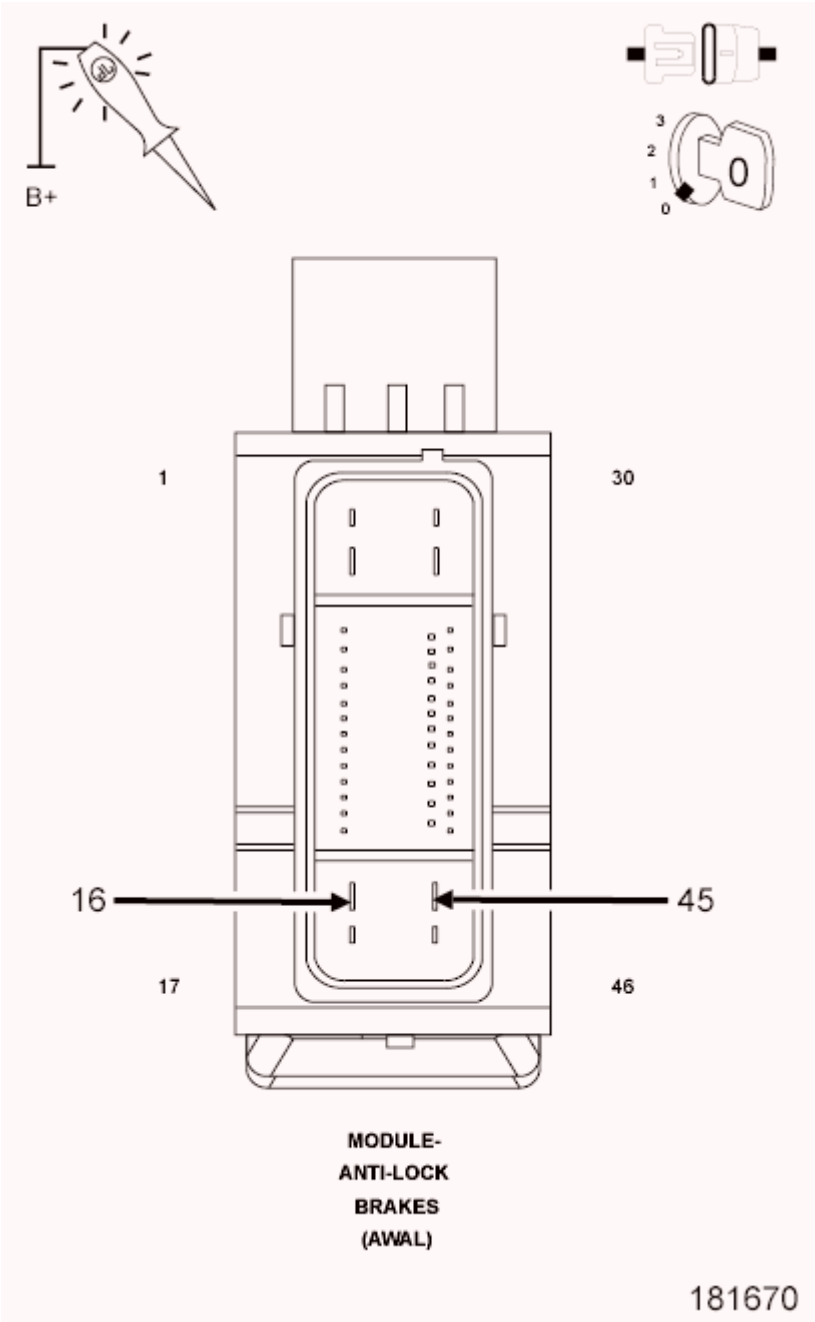

Fig. 173: Checking ABS Module Ground Circuits For An Open Or High Resistance
Courtesy of CHRYSLER GROUP, LLC

1. Turn ignition off to the lock position.
2. With a test light Connected to B+ check (Z905) Grounds at the ABS harness connector.

   Does the test light illuminate brightly?

   Yes

- Replace the ABS Module in accordance with the service information.
- Perform the ABS VERIFICATION TEST. Refer to **ABS VERIFICATION TEST**.

No

- Repair the Ground circuits for an open or high resistance.
- Perform the ABS VERIFICATION TEST. Refer to **ABS VERIFICATION TEST**.

C120D-REAR TRACTION CONTROL PRIME VALVE CONTROL CIRCUIT LOW

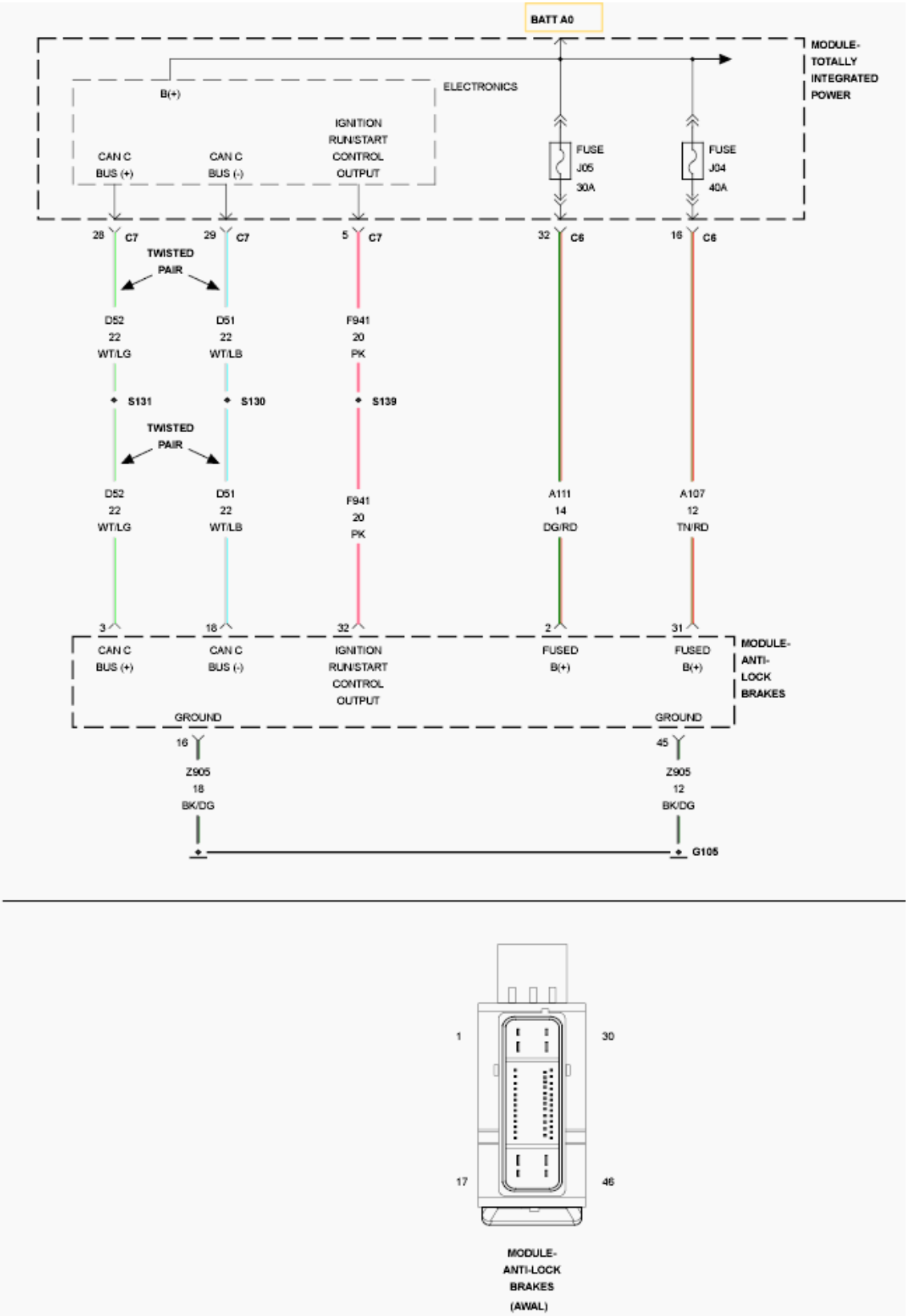

Fig. 174: ABS Motor Control Wiring Diagram
Courtesy of CHRYSLER GROUP, LLC

For a complete wiring diagram, **refer to appropriate SYSTEM WIRING DIAGRAMS article** .

WHEN MONITORED:

Continuous

SET CONDITION:

The electrical feedback of the power stage does not correspond with the activation of the respective valve.

POSSIBLE CAUSES

Possible Causes
B+ CIRCUITS OPEN OR HIGH RESISTANCE
GROUND CIRCUITS OPEN OR HIGH RESISTANCE
ANTILOCK BRAKE SYSTEM (ABS) MODULE INTERNAL

DIAGNOSTIC TEST

1. **B+ CIRCUITS OPEN OR HIGH RESISTANCE**

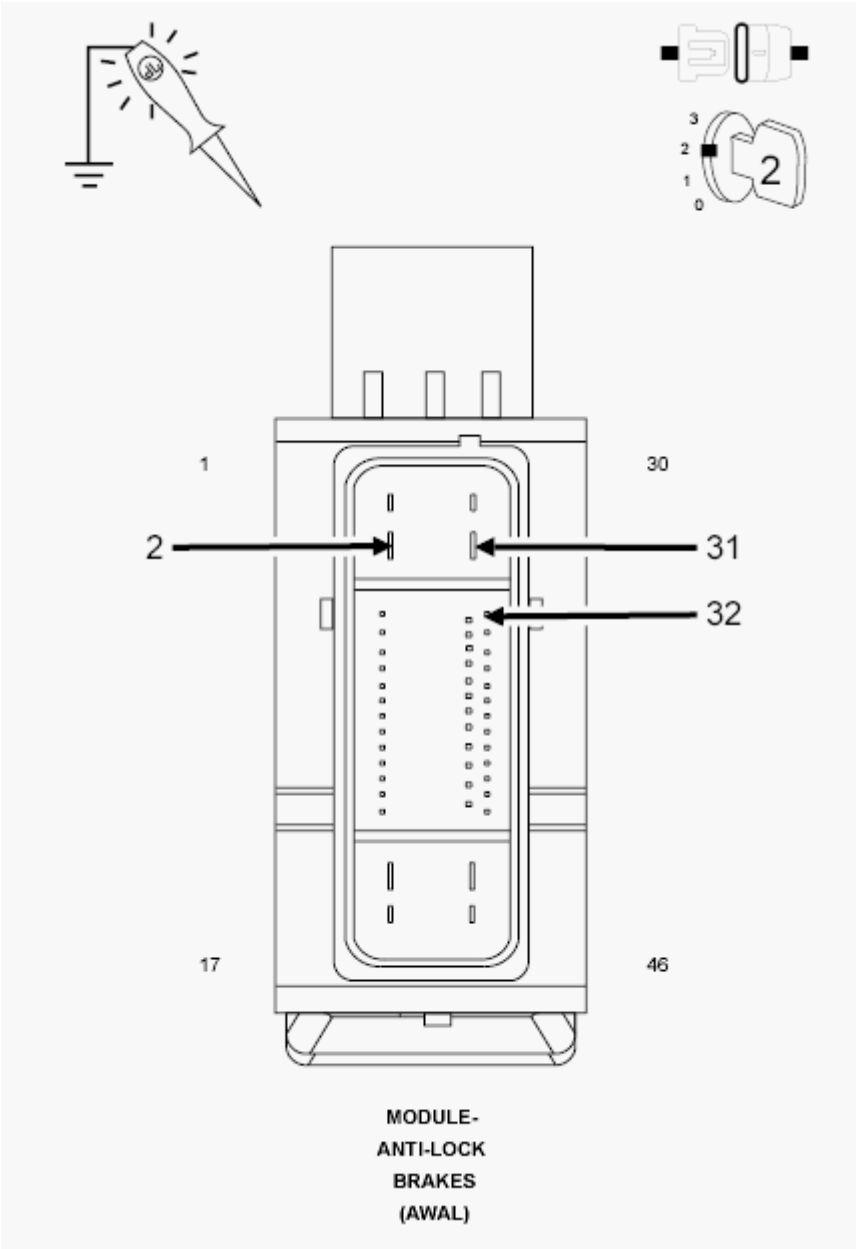

Fig. 175: Checking ABS Module B+ Circuits For An Open Or High Resistance
Courtesy of CHRYSLER GROUP, LLC

1. Turn ignition off to the lock position.
2. Disconnect the ABS Module harness connector.

NOTE: Check connector - Clean/repair as necessary.

3. Ignition on, engine not running.
4. With a test light connected to ground check (A107) Fused B+, (A111) Fused B+ and (F941) Fused ignition switch output circuits at the ABS harness connector.

Does the test light illuminate brightly?

Yes

- Go To 2.

No

- Repair the B+ circuits for an open or high resistance.
- Perform the ABS VERIFICATION TEST. Refer to **ABS VERIFICATION TEST**.

2. **GROUND CIRCUITS OPEN OR HIGH RESISTANCE**

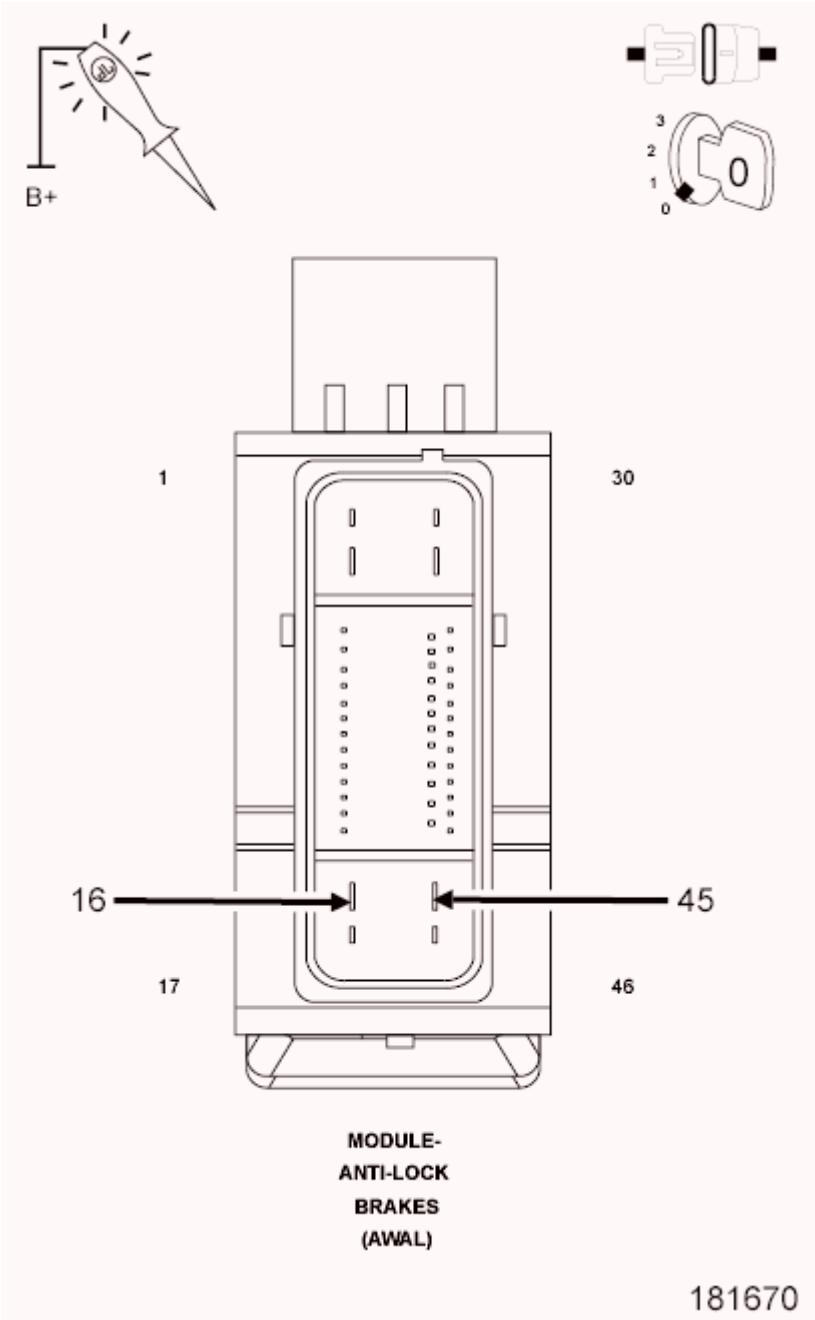

Fig. 176: Checking ABS Module Ground Circuits For An Open Or High Resistance
Courtesy of CHRYSLER GROUP, LLC

1. Turn ignition off to the lock position.
2. With a test light Connected to B+ check (Z905) Ground circuits at the ABS harness connector.

   Does the test light illuminate brightly?

   Yes

- Replace the Antilock System Brake (ABS) Module in accordance with the service information.
- Perform the ABS VERIFICATION TEST. Refer to **ABS VERIFICATION TEST**.

No

- Repair the Ground circuits for an open or high resistance.
- Perform the ABS VERIFICATION TEST. Refer to **ABS VERIFICATION TEST**.

C1213-G SENSOR INPUT SIGNAL STUCK

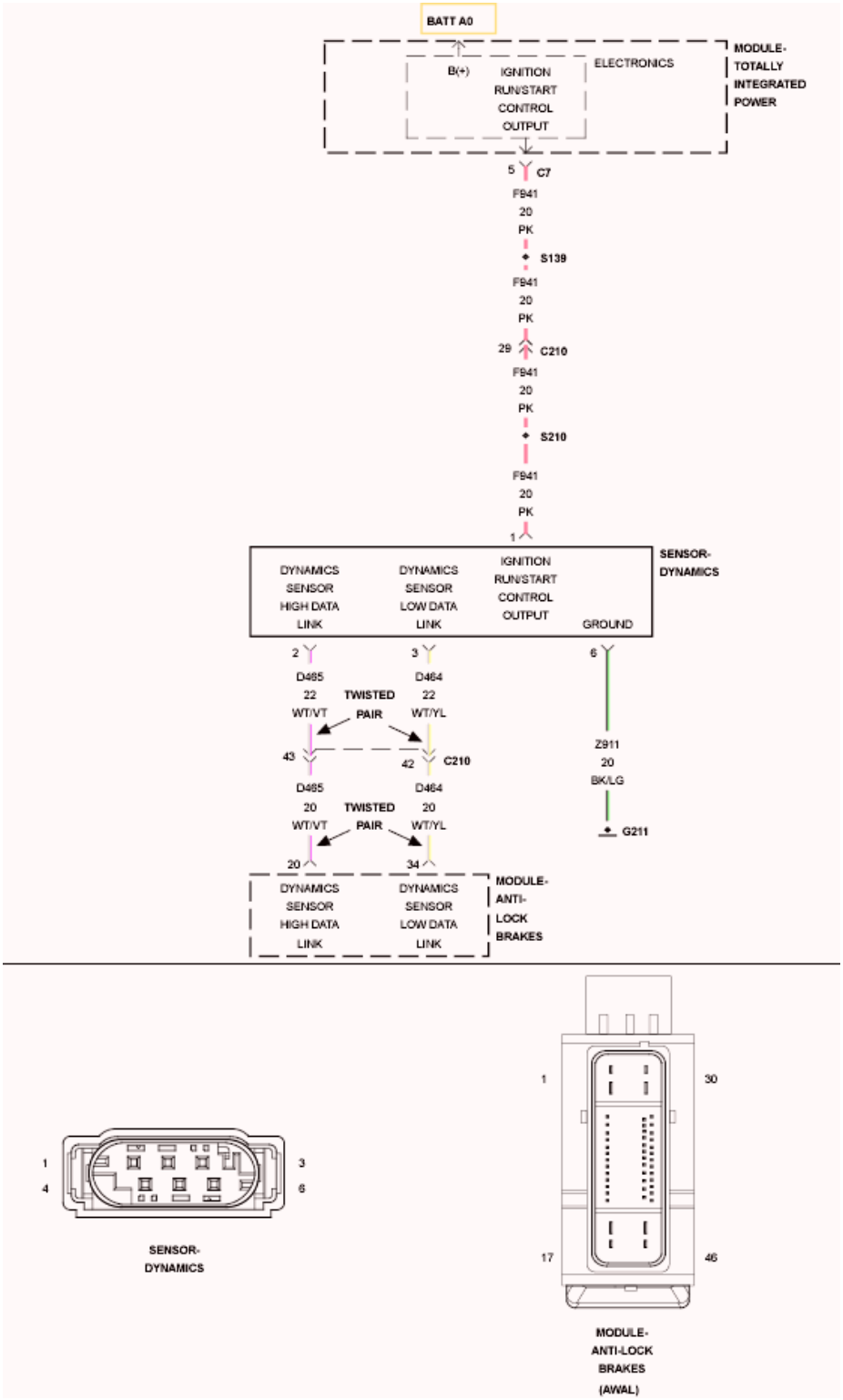

Fig. 177: G Sensor Input Signal Wiring Diagram
Courtesy of CHRYSLER GROUP, LLC

For a complete wiring diagram, **refer to appropriate SYSTEM WIRING DIAGRAMS article** .

WHEN MONITORED:

Ignition on. Continuously monitored when speed is greater than 2 km/h (1 mph).

SET CONDITION:

When the ABS Module detects a condition outside programmed parameters from the Dynamics Sensor.

POSSIBLE CAUSES

Possible Causes
(F941) DYNAMICS SENSOR FUSED IGNITION SWITCH OUTPUT (RUN/START) CIRCUIT FOR AN OPEN
(Z911) GROUND CIRCUIT FOR AN OPEN
(D465) DYNAMICS SENSOR HIGH DATA LINK CIRCUIT SHORTED TO (D464) DYNAMICS SENSOR LOW DATA LINK CIRCUIT
(D465) DYNAMICS SENSOR HIGH DATA LINK CIRCUIT FOR A SHORT TO VOLTAGE
(D465) DYNAMICS SENSOR HIGH DATA LINK CIRCUIT FOR AN OPEN
(D465) DYNAMICS SENSOR HIGH DATA LINK CIRCUIT FOR A SHORT TO GROUND
(D464) DYNAMICS SENSOR LOW DATA LINK CIRCUIT FOR A SHORT TO VOLTAGE
(D464) DYNAMICS SENSOR LOW DATA LINK CIRCUIT FOR AN OPEN
(D464) DYNAMICS SENSOR LOW DATA LINK CIRCUIT FOR A SHORT TO GROUND
DYNAMICS SENSOR

DIAGNOSTIC TEST

1. **VERIFY DTC IS ACTIVE**
    1. Ignition on, engine not running.
    2. With the scan tool, read and record ABS DTC's.
    3. With the scan tool, read and record Environmental Data (EV Data).
    4. With the scan tool, erase ABS DTC's.
    5. Cycle the ignition switch.

    WARNING: To avoid possible serious or fatal injury, check brake capability is available before road testing.

    6. Test drive the vehicle by turning the vehicle left or right in a curving manner at a velocity between 10 and 20 km/hr (6 and 12 m.p.h.).
    7. Park the vehicle.
    8. With the scan tool, read ABS DTC's.

    Does this DTC reset?

Yes

- Go To 2.

No

- Perform the ABS INTERMITTENT CONDITION diagnostic procedure. Refer to **ABS INTERMITTENT CONDITION**.

2. **CHECK THE DYNAMICS SENSOR INSTALLATION**

NOTE: Dynamics Sensor installation and mounting bolt torque is crucial for proper operation.

1. Turn the ignition off to the lock position.
2. Check the Dynamics Sensor for damaged, modified, and bent mounting brackets.
3. Check the Dynamics Sensor mounting bolts for a loose or over tightened condition.

Were any problems found?

Yes

- Repair as necessary.
- Perform the ABS VERIFICATION TEST. Refer to **ABS VERIFICATION TEST**.

No

- Go To 3.

3. **(F941) DYNAMICS SENSOR FUSED IGNITION SWITCH OUTPUT (RUN/START) CIRCUIT FOR AN OPEN**

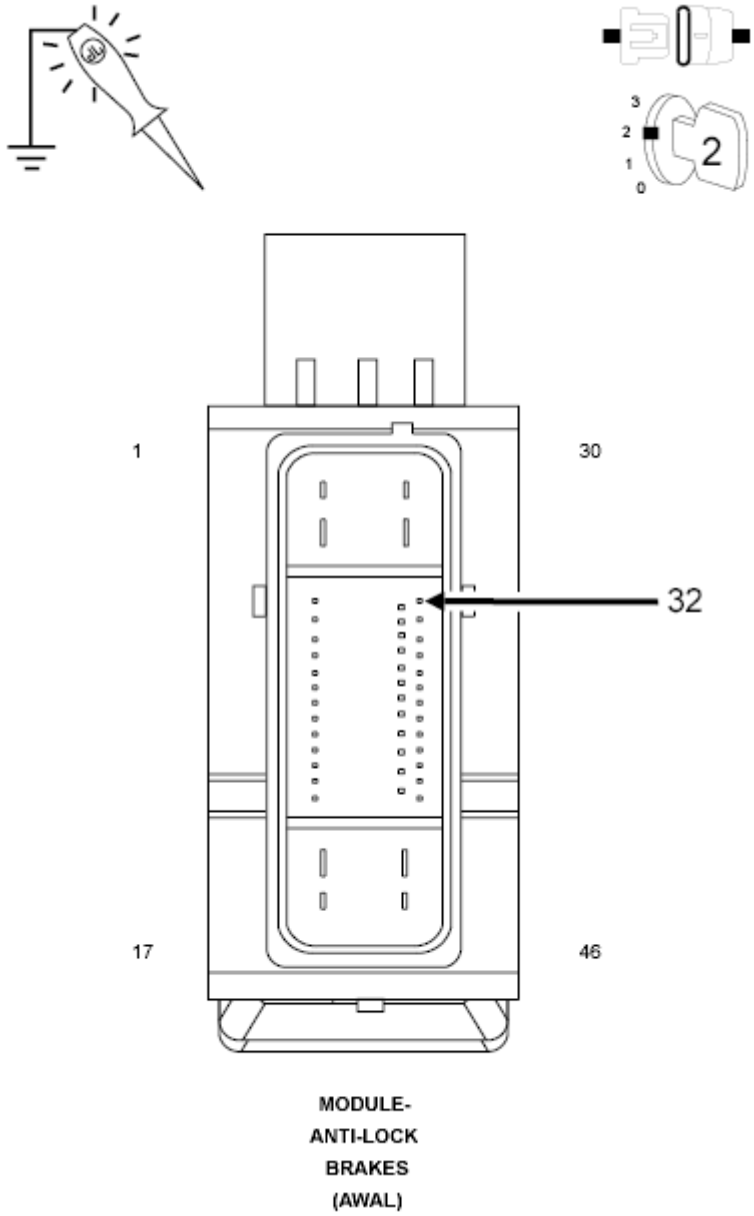

Fig. 178: Checking Dynamics Sensor Fused Ignition Switch Output (Run/Start) Circuit For An Open
Courtesy of CHRYSLER GROUP, LLC

1. Disconnect the Dynamics Sensor harness connector.
2. Ignition on, engine not running.

NOTE: Check connector - Clean/repair as necessary.

3. Using a 12-volt test light connected to ground, check the (F941) Dynamics Sensor Fused Ignition Switch Output (RUN/START) Circuit in the ABS Module harness connector.

NOTE: **The test light should be illuminated and bright. Compare the brightness to that of a direct connection to the battery.**

Does the test light illuminate brightly?

Yes

- Go To 4.

No

- Repair the (F941) Dynamics Sensor Fused Ignition Switch Output (RUN/START) circuit for an open or high resistance.
- Perform the ABS VERIFICATION TEST. Refer to **ABS VERIFICATION TEST**.

4. **(Z911) GROUND CIRCUIT FOR AN OPEN**

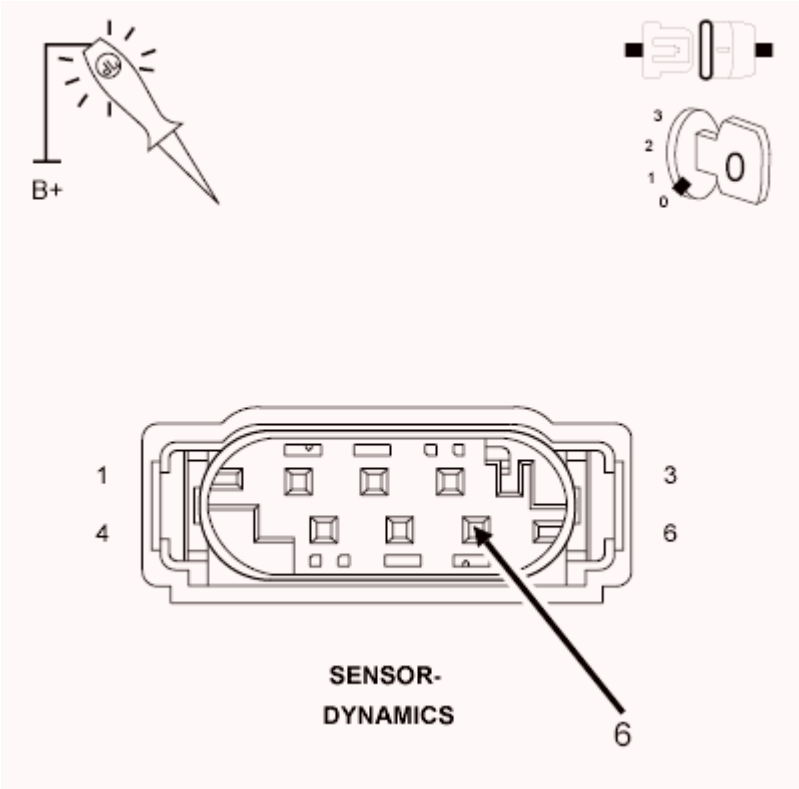

Fig. 179: Checking Dynamics Sensor Ground Circuit For An Open
Courtesy of CHRYSLER GROUP, LLC

1. Turn the ignition off to the lock position.
2. Using a 12-volt test light connected to B+, check the (Z911) Ground Circuit in the Dynamics Sensor harness connector.

NOTE: **The test light should be illuminated and bright. Compare the**

brightness to that of a direct connection to the battery.

Does the test light illuminate brightly?

Yes

- Go To 5.

No

- Repair the (Z911) Ground Circuit for an open or high resistance.
- Perform the ABS VERIFICATION TEST. Refer to **ABS VERIFICATION TEST**.

5. **(D465) DYNAMICS SENSOR HIGH DATA LINK CIRCUIT SHORTED TO THE (D464) DYNAMICS SENSOR LOW DATA LINK CIRCUIT**

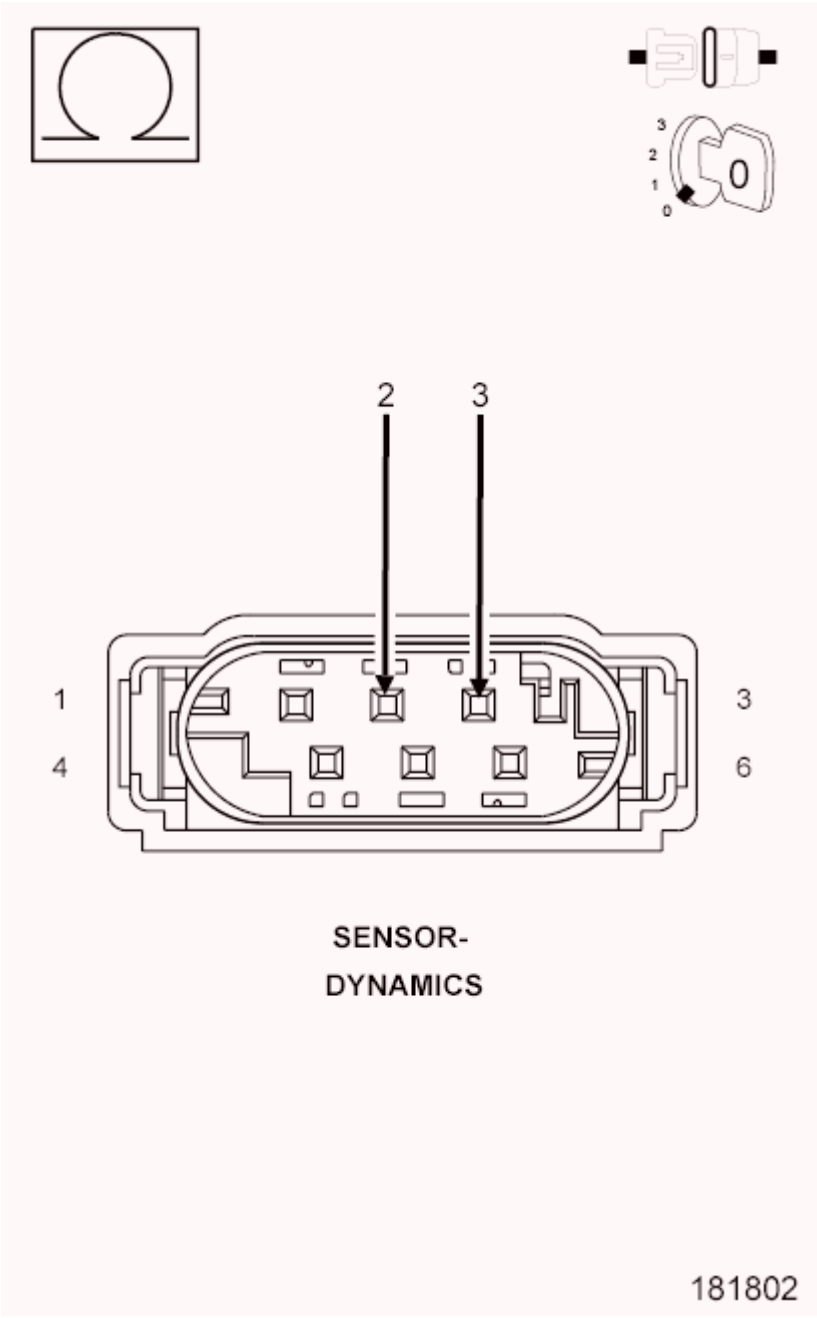

Fig. 180: Checking Dynamics Sensor High Data Link Circuit For A Short To The Dynamics Sensor Low Data Link Circuit
Courtesy of CHRYSLER GROUP, LLC

1. Turn the ignition off to the lock position.
2. Measure the resistance between the (D465) Dynamics Sensor High Data circuit and the (D464) Dynamics Sensor Low Data circuit at the Dynamics Sensor harness connector.

   Is the resistance above 5 Ohms?

   Yes

- Go To 6.

No

- Repair the short between (D465) Dynamics Sensor High Data circuit and the (D464) Dynamics Sensor Low Data circuit.
- Perform the ABS VERIFICATION TEST. Refer to **ABS VERIFICATION TEST**.

6. **(D465) DYNAMICS SENSOR HIGH DATA LINK CIRCUIT FOR A SHORT TO VOLTAGE**

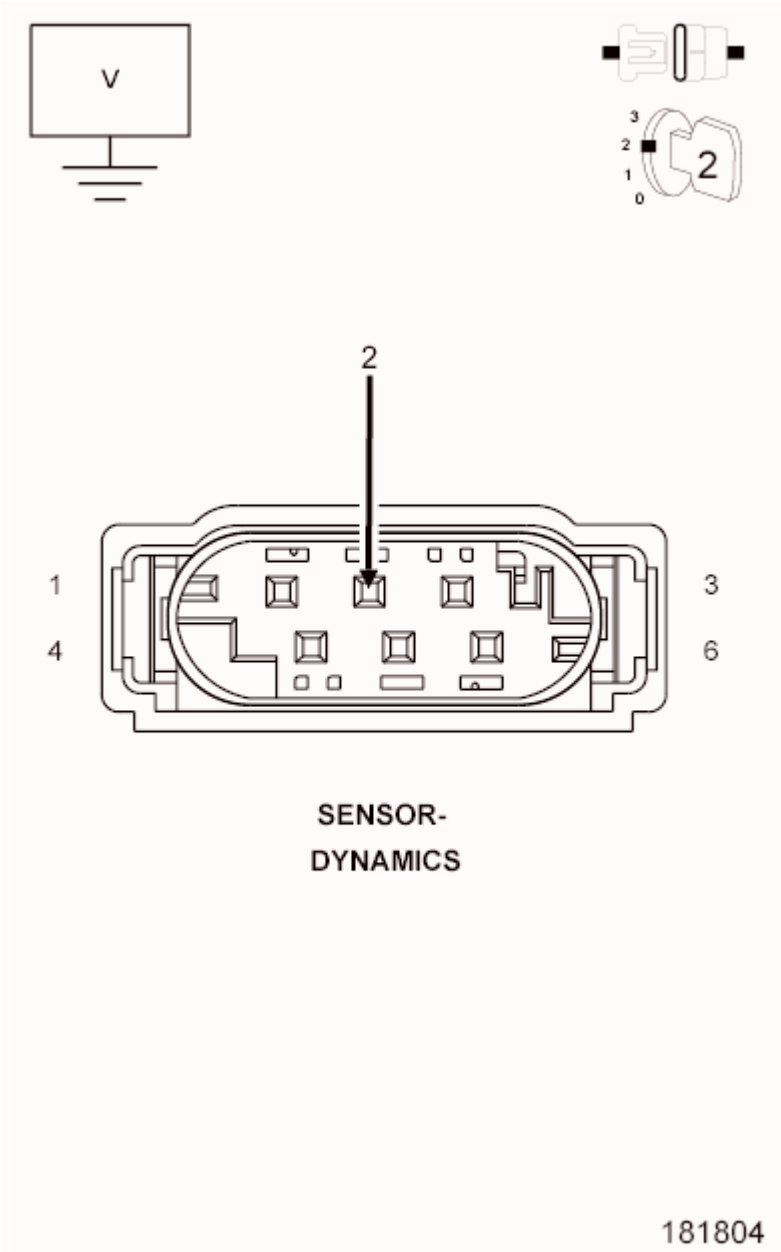

Fig. 181: Checking Dynamics Sensor High Data Link Circuit For A Short To Voltage
Courtesy of CHRYSLER GROUP, LLC

1. Ignition on, engine not running.
2. Measure the voltage between ground and (D465) Dynamics Sensor High Data Link circuit in the Dynamics Sensor harness connector.

   Is there any voltage present?

   Yes

   - Repair the (D465) Dynamics Sensor High Data Link circuit for a short to voltage.
   - Perform the ABS VERIFICATION TEST. Refer to **ABS VERIFICATION TEST**.

   No

   - Go To 7.

7. **(D465) DYNAMICS SENSOR HIGH DATA LINK CIRCUIT FOR AN OPEN**

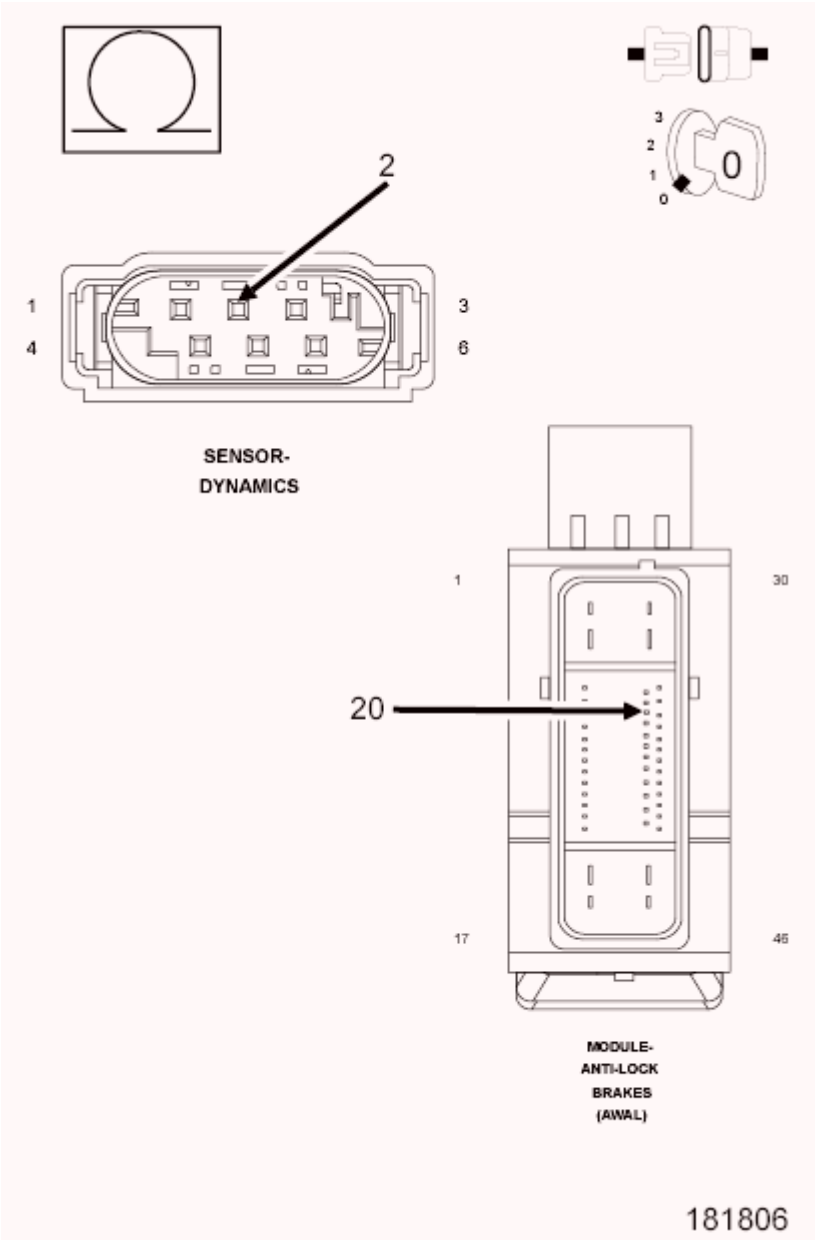

Fig. 182: Checking Dynamics Sensor High Data Link Circuit For An Open
Courtesy of CHRYSLER GROUP, LLC

1. Turn the ignition off to the lock position.
2. Measure the resistance of the (D465) Dynamics Sensor High Data Link circuit between the ABS Module harness connector and the Dynamics Sensor harness connector.

   Is the resistance above 5 Ohms?

   Yes

   - Repair the (D465) Dynamics Sensor High Data Link Circuit for an open.

- Perform the ABS VERIFICATION TEST. Refer to **ABS VERIFICATION TEST**.

No

- Go To 8.

8. **(D465) DYNAMICS SENSOR HIGH DATA LINK CIRCUIT FOR A SHORT TO GROUND**

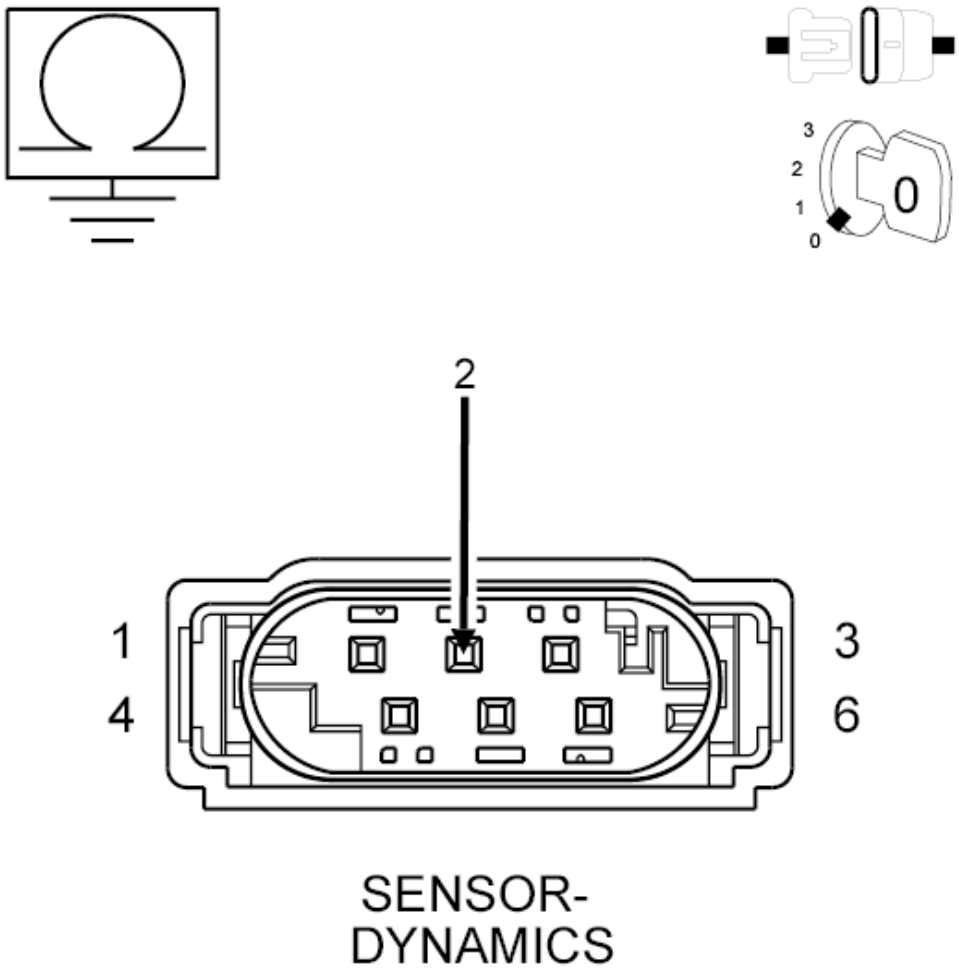

Fig. 183: Checking Dynamics Sensor High Data Link Circuit For Short To Ground
Courtesy of CHRYSLER GROUP, LLC

1. Measure the resistance between ground and the (D465) Dynamics Sensor High Data Link circuit in the Dynamics Sensor harness connector.

   Is the resistance below 5 Ohms?

   Yes

- Repair the (D465) Dynamics Sensor High Data Link CIRCUIT FOR A SHORT TO GROUND.
- Perform the ABS VERIFICATION TEST. Refer to **ABS VERIFICATION TEST**.

No

- Go To 9.

9. **(D464) DYNAMICS SENSOR LOW DATA LINK CIRCUIT FOR A SHORT TO VOLTAGE**

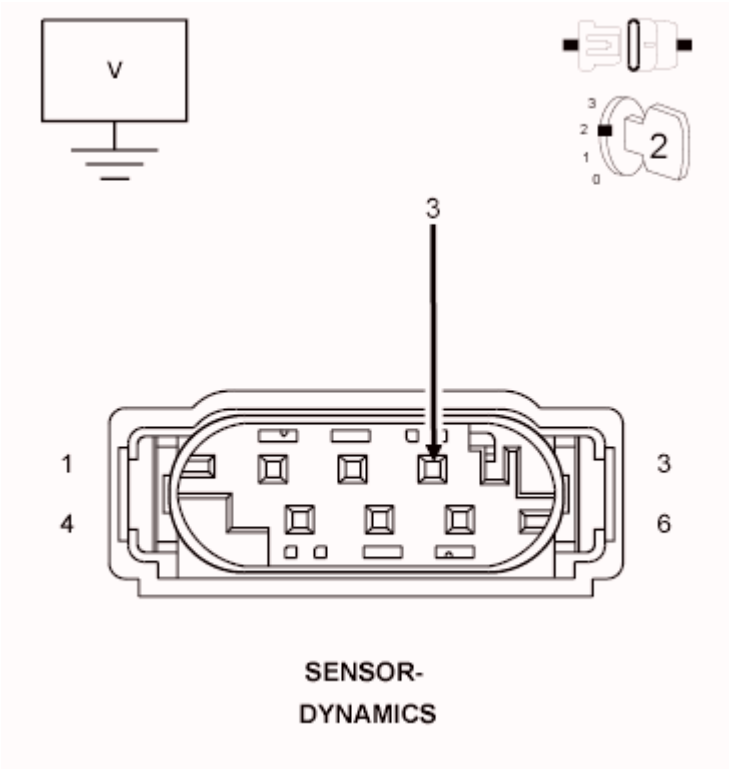

Fig. 184: Checking Dynamics Sensor Low Data Link Circuit For A Short To Voltage
Courtesy of CHRYSLER GROUP, LLC

1. Ignition on, engine not running.
2. Measure the voltage between ground and (D464) Dynamics Sensor Low Data Link circuit in the Dynamics Sensor harness connector.

   Is there any voltage present?

   Yes

   - Repair the (D464) Dynamics Sensor Low Data Link circuit for a short to voltage.
   - Perform the ABS VERIFICATION TEST. Refer to **ABS VERIFICATION TEST**.

   No

- Go To 10.

10. **(D464) DYNAMICS SENSOR LOW DATA LINK CIRCUIT FOR AN OPEN**

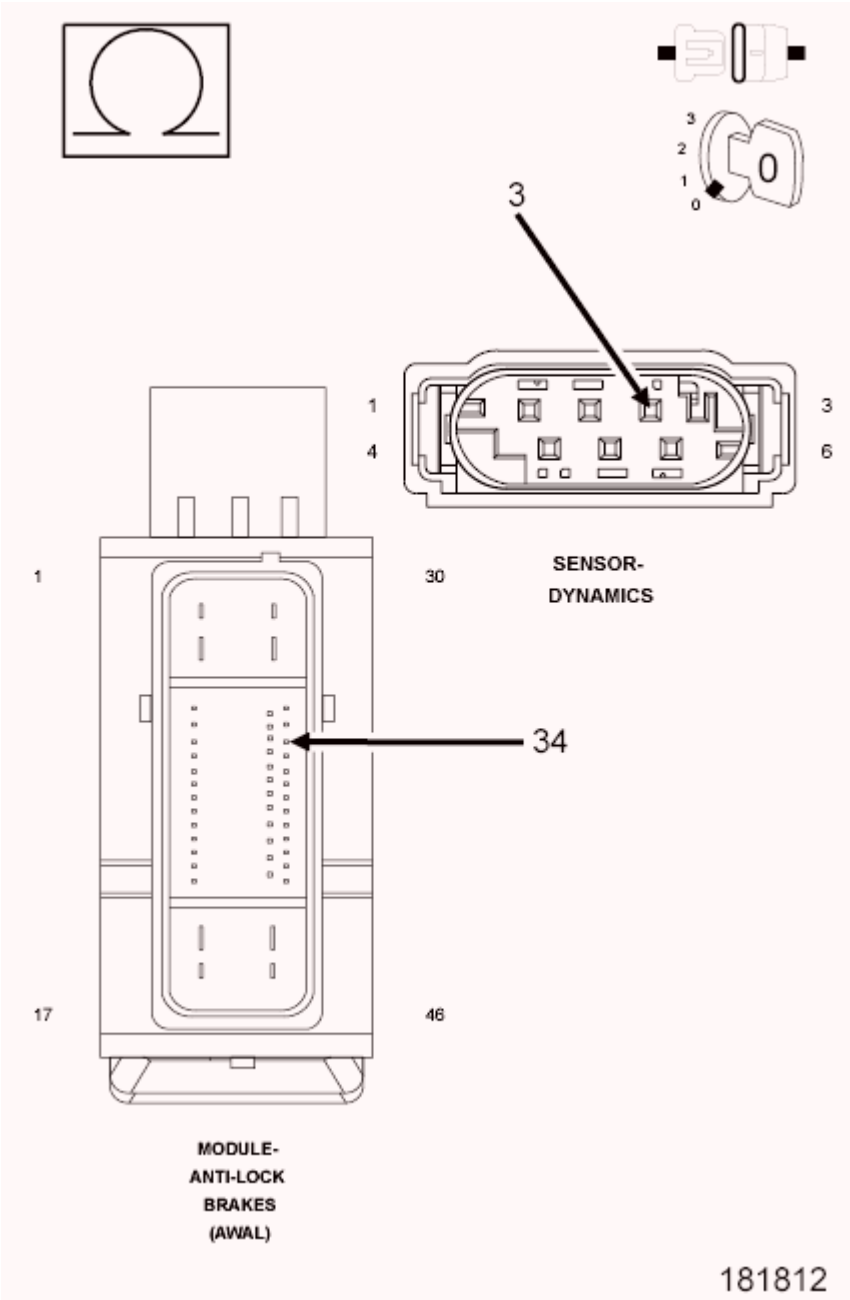

Fig. 185: Checking Dynamics Sensor Low Data Link Circuit For An Open
Courtesy of CHRYSLER GROUP, LLC

1. Turn the ignition off to the lock position.
2. Measure the resistance of the (D464) Dynamics Sensor Low Data Link circuit between the ABS Module harness connector and the Dynamics Sensor harness connector.

Is the resistance above 5 Ohms?

Yes

- Repair the (D464) Dynamics Sensor High Data Link circuit for an open.
- Perform the ABS VERIFICATION TEST. Refer to **ABS VERIFICATION TEST**.

No

- Go To 11.

11. **(D464) DYNAMICS SENSOR LOW DATA LINK CIRCUIT FOR A SHORT TO GROUND**

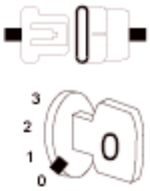

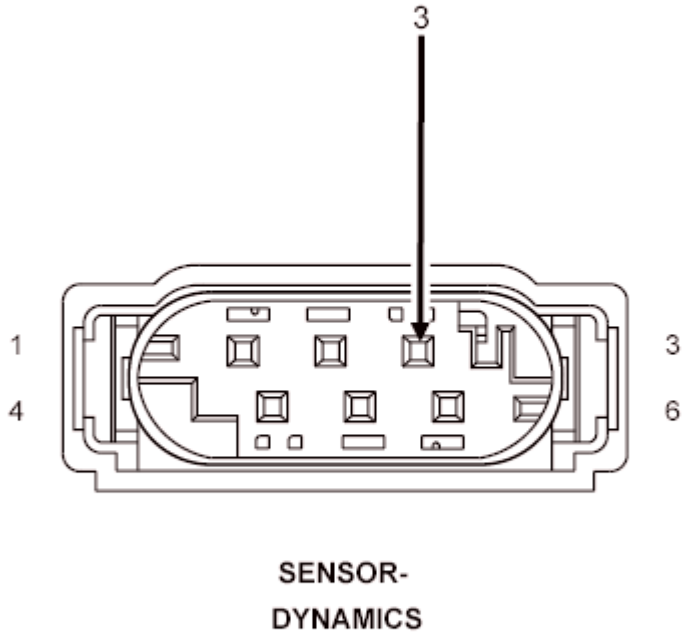

181814

Fig. 186: Checking Dynamics Sensor Low Data Link Circuit For A Short To Ground
Courtesy of CHRYSLER GROUP, LLC

1. Measure the resistance of the (D464) Dynamics Sensor Low Data circuit from the Dynamics Sensor harness connector to ground.

   Is the resistance below 5 Ohms?

   Yes

   - Repair the (D464) Dynamics Sensor Return CIRCUIT FOR A SHORT TO GROUND.
   - Perform the ABS VERIFICATION TEST. Refer to **ABS VERIFICATION TEST**.

   No

   - Replace the Dynamics Sensor in accordance with the Service Information.
   - Perform the ABS VERIFICATION TEST. Refer to **ABS VERIFICATION TEST**.

C1219-STEERING ANGLE SENSOR ERRATIC PERFORMANCE

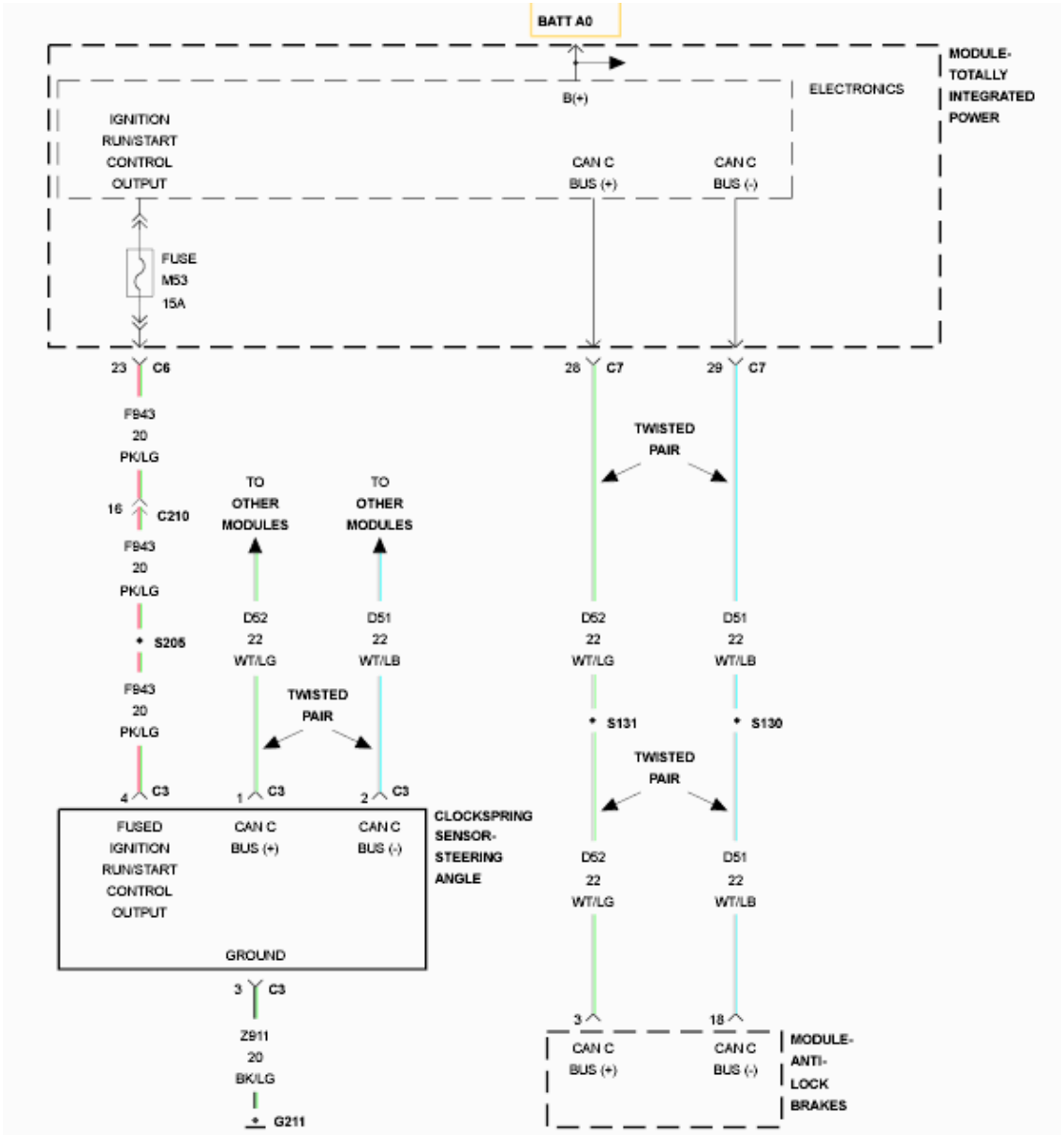

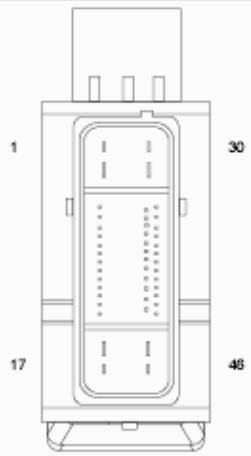

MODULE-
ANTI-LOCK

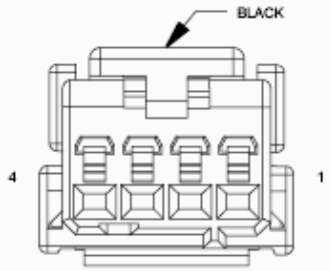

CLOCKSPRING C3
(SAS)

Fig. 187: Steering Angle Sensor Wiring Diagram
Courtesy of CHRYSLER GROUP, LLC

For a complete wiring diagram, **refer to appropriate SYSTEM WIRING DIAGRAMS article** .

WHEN MONITORED:

With the ignition on.

SET CONDITION:

When the Antilock Brake (ABS) Module detects too rapid of a change in the Steering Angle Sensor.

POSSIBLE CAUSES

Possible Causes
TERMINAL/CONNECTOR/WIRING HARNESS DAMAGE
(F943) FUSED B(+) CIRCUIT FOR AN OPEN
(G211) GROUND CIRCUIT FOR AN OPEN
CLOCKSPRING (SAS)
ANTILOCK BRAKE SYSTEM (ABS) MODULE

DIAGNOSTIC TEST

1. **CHECK FOR A DTC C1219-STEERING ANGLE SENSOR ERRATIC PERFORMANCE**

NOTE: **This DTC must be active for the results of this test to be valid. Repair all other Steering Angle Sensor codes before proceeding.**

1. Ignition on, engine not running.
2. With the scan tool, read and record DTC's.
3. With the scan tool, read and record Freeze Frame information.
4. With the scan tool, erase DTC's.
5. Cycle the ignition switch from off to on.
6. With the scan tool, read and record DTC's.

Does the scan tool display: C1219-Steering Angle Sensor Erratic Performance?

Yes

- Go To 2.

No

- Perform the ABS INTERMITTENT CONDITION diagnostic procedure. Refer to **ABS**

INTERMITTENT CONDITION.

2. **CHECK FOR STEERING ANGLE SENSOR ERRATIC SIGNAL**
   1. With the scan tool, graph Steering Angle while turning the steering wheel from lock to lock.

      Is Steering Angle Signal erratic?

      Yes

      - Replace the Clockspring (SAS) in accordance with service information.
      - Perform the ABS VERIFICATION TEST. Refer to **ABS VERIFICATION TEST**.

      No

      - Go To 3.
3. **CHECK THE TERMINALS/CONNECTORS/WIRING HARNESS FOR DAMAGE**

   WARNING: **To avoid serious or fatal injury on vehicles equipped with airbags, disable the Supplemental Restraint System (SRS) before attempting any steering wheel, steering column, airbag, seat belt tensioner, impact sensor, or instrument panel component diagnosis or service. Disconnect and isolate the battery negative (ground) cable, then wait two minutes for the system capacitor to discharge before performing further diagnosis or service. This is the only sure way to disable the SRS. Failure to take the proper precautions could result in accidental airbag deployment.**

   NOTE: Proper Clockspring (SAS) installation is crucial for proper operation.

   1. Check the Clockspring (SAS) installation.
   2. Check all related wiring for bruised, chafed, pierced, or partially broken wires.
   3. Check all related connectors for broken, bent, pushed out, or corroded terminals.

      Were any problems found?

      Yes

      - Repair as necessary.
      - Perform the ABS VERIFICATION TEST. Refer to **ABS VERIFICATION TEST**.

      No

      - Go To 4.
4. **CHECK THE VOLTAGE ON THE (F943) FUSED B(+) CIRCUIT**

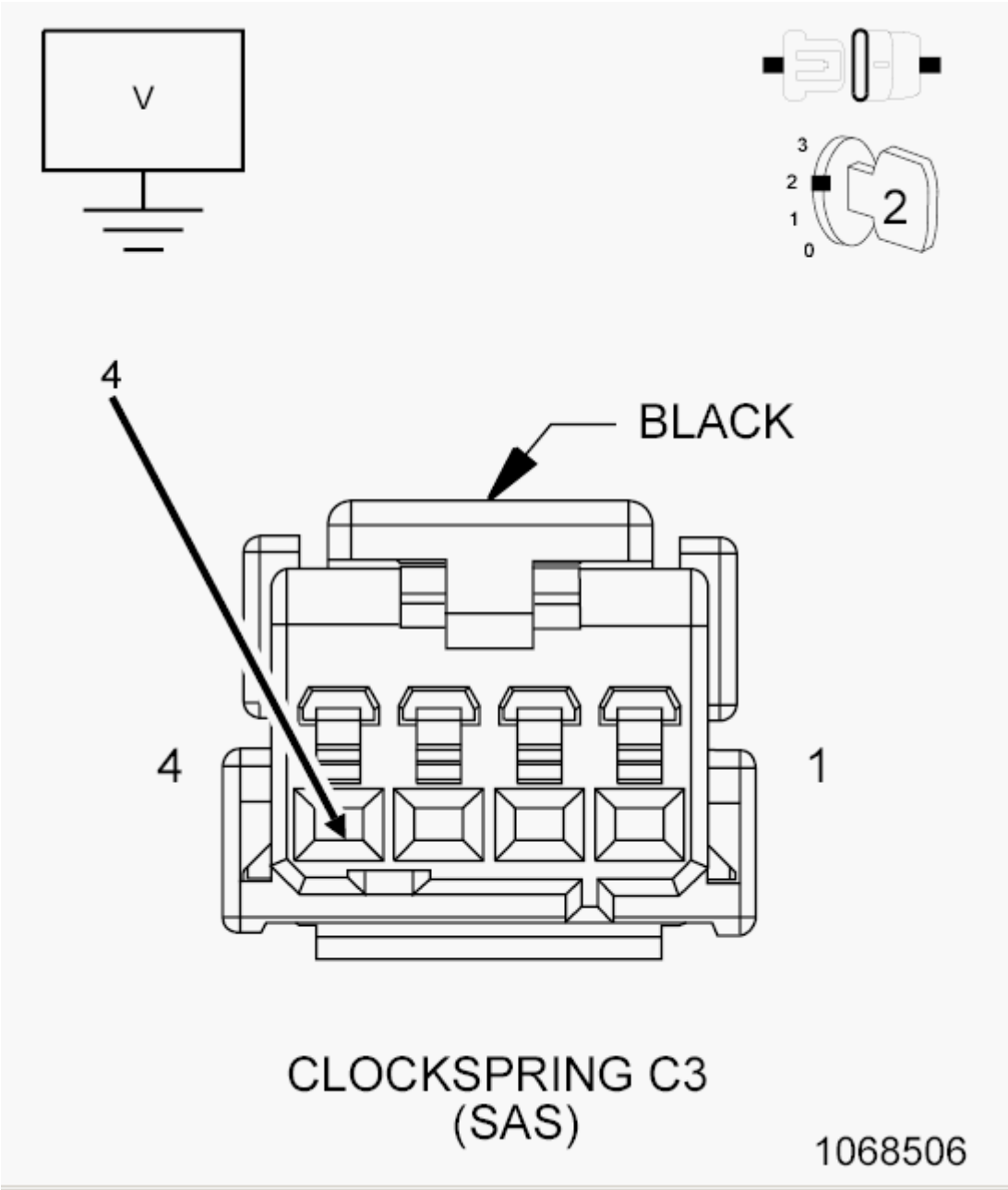

Fig. 188: Measuring Voltage On The Fused B(+) Circuit
Courtesy of CHRYSLER GROUP, LLC

1. Turn the ignition off to the lock position.
2. Disconnect the Clockspring C3 (SAS) harness connector.
3. Ignition on, engine not running.
4. Measure the voltage of the (F943) Fused B(+) circuit and ground.

   Is the voltage above 10 volts?

   Yes

- Go To 5.

No

- Repair the (F943) Fused B(+) circuit for an open.
- Perform the ABS VERIFICATION TEST. Refer to **ABS VERIFICATION TEST**.

5. **CHECK THE RESISTANCE OF THE (G211) GROUND CIRCUIT**

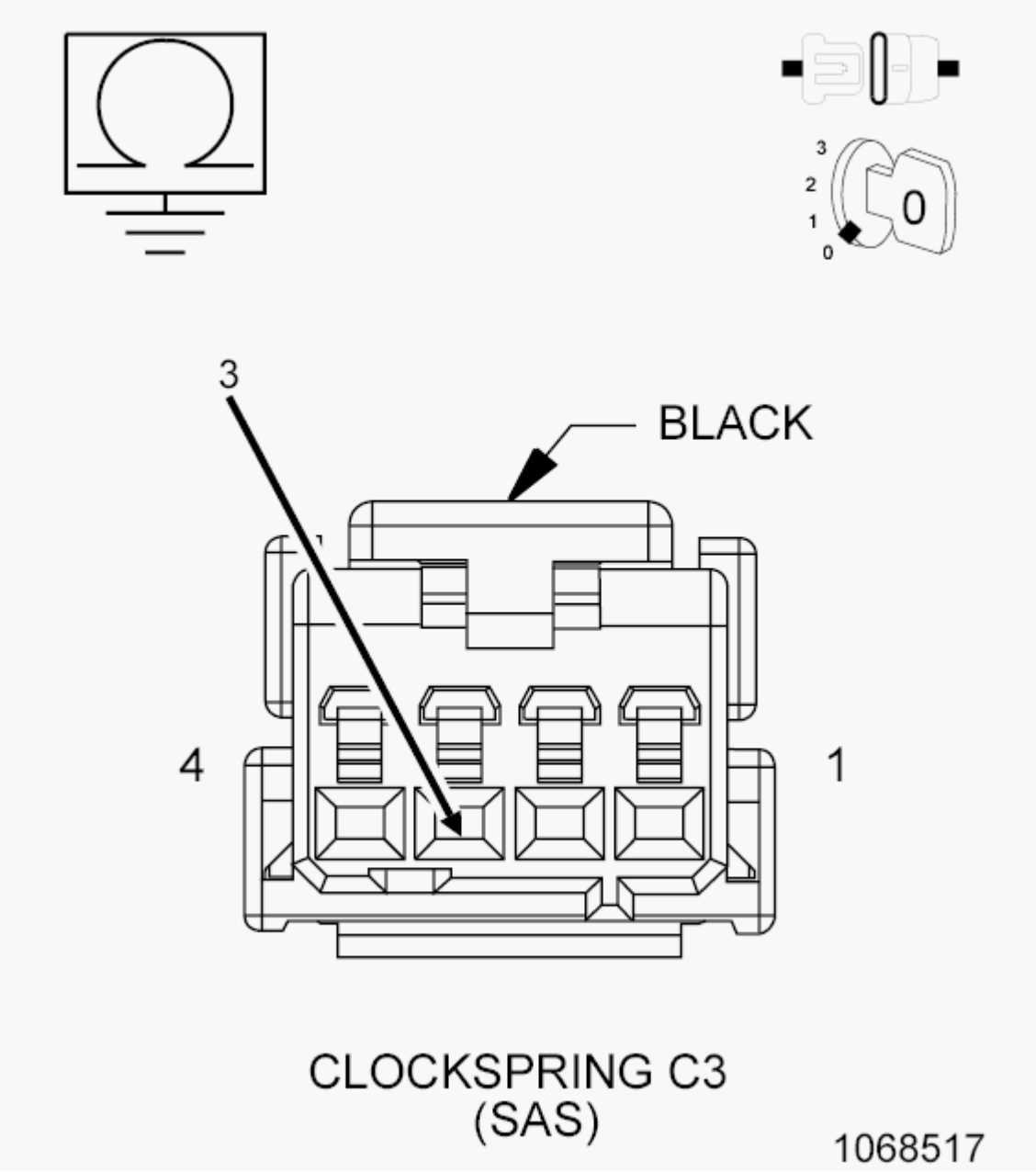

Fig. 189: Measuring Resistance Of The Ground Circuit
Courtesy of CHRYSLER GROUP, LLC

1. Turn the ignition off.
2. Measure the resistance between the (G211) Ground circuit and ground.

   Is the resistance below 5.0 Ohms?

   Yes

   - Replace Antilock Brake System (ABS) Module in accordance with service information.
   - Perform the ABS VERIFICATION TEST. Refer to **ABS VERIFICATION TEST**.

   No

   - Repair the (G211) Ground circuit for an open.
   - Perform the ABS VERIFICATION TEST. Refer to **ABS VERIFICATION TEST**.

C121C-TORQUE REQUEST SIGNAL DENIED

For a complete wiring diagram **refer to appropriate SYSTEM WIRING DIAGRAMS article**

WHEN MONITORED:

With the ignition on.

SET CONDITION:

When the Antilock Brake Module indicates if engine management relevant for Automatic Yaw Control/Traction Control System control can be accomplished.

POSSIBLE CAUSES

Possible Causes
EXCESSIVE LOAD ON ENGINE
TRACTION CONTROL OPERATING FOR TO LONG
ANTILOCK BRAKE MODULE
POWERTRAIN CONTROL MODULE

DIAGNOSTIC TEST

1. **CHECK FOR A DTC C121C-TORQUE REQUEST SIGNAL DENIED**

   NOTE: This DTC must be active for the results of this test to be valid and this DTC may set while driving under severe load conditions.

   1. Turn the ignition on.
   2. With the scan tool, read and record DTC's.

3. With the scan tool, read and record Freeze Frame information.
4. With the scan tool, erase DTC's.
5. Cycle the ignition switch from off to on.
6. Start Engine.
7. With the scan tool, read and record DTC's.

   Does the scan tool display: C121C-TORQUE REQUEST SIGNAL DENIED?

   Yes

   - Go To 2.

   No

   - Perform the ABS INTERMITTENT CONDITION diagnostic procedure. Refer to **ABS INTERMITTENT CONDITION**.

2. **CHECK THE POWERTRAIN DTC's**
   1. With the scan tool, read and record Powertrain DTC's.

      Were any Powertrain ESP related DTC's found?

      Yes

      - Replace the Powertrain Module in accordance with the Service Information.
      - Perform the POWERTRAIN VERIFICATION TEST. Refer to **3500 CAB & CHASSIS - POWERTRAIN VERIFICATION TEST** or **3500 CAB & CHASSIS, 4500 & 5500 - POWERTRAIN VERIFICATION TEST - 6.7L** .

      No

      - Replace the Antilock Brake Module in accordance with the Service Information.
      - Perform ABS VERIFICATION TEST - VER 1. Refer to **ABS VERIFICATION TEST**.

C121D-BRAKE PRESSURE SENSOR CIRCUIT

WHEN MONITORED:

With the ignition on.

SET CONDITION:

When the Antilock Brake Module indicates that the Brake Pressure Sensor Signal is out of range.

POSSIBLE CAUSES

Possible Causes
ANTILOCK BRAKE MODULE
ELECTRONIC CONTROL UNIT (ECU)

DIAGNOSTIC TEST

1. **CHECK FOR A DTC C121D-BRAKE PRESSURE SENSOR CIRCUIT**

   NOTE: This DTC must be active for the results of this test to be valid.

   1. Turn the ignition on.
   2. With the scan tool, read and record DTC's.
   3. With the scan tool, read and record Freeze Fame information.
   4. With the scan tool, erase DTC's.
   5. Start the engine.
   6. Depress and release the brake pedal.
   7. With the scan tool, read and record DTC's.

   Does the scan tool display: C121D-BRAKE PRESSURE SENSOR CIRCUIT?

   Yes

   - Go To 2.

   No

   - Perform the ABS INTERMITTENT CONDITION diagnostic procedure. Refer to **ABS INTERMITTENT CONDITION**.

2. **RECHECK FOR A DTC C121D-BRAKE PRESSURE SENSOR CIRCUIT**
   1. Turn the ignition on.
   2. With the scan tool, read and record DTC's.
   3. With the scan tool, read and record Freeze Frame information.
   4. With the scan tool, erase DTC's.
   5. Start the engine.
   6. Depress and release the brake pedal.
   7. With the scan tool, read and record DTC's.

   Does the scan tool display: C121D-BRAKE PRESSURE SENSOR CIRCUIT?

   Yes

   - Replace the ECU in accordance with the Service Information.

- Perform the ABS VERIFICATION TEST. Refer to **ABS VERIFICATION TEST**.

No

- Test complete

C121E-BRAKE PRESSURE SENSOR COMPARATIVE PERFORMANCE

For a complete wiring diagram **refer to appropriate SYSTEM WIRING DIAGRAMS article**

WHEN MONITORED:

With the ignition on.

SET CONDITION:

When the Antilock Brake Module indicates that the Brake Pressure Sensor Signal is irrational.

POSSIBLE CAUSES

Possible Causes
AIR IN BRAKE SYSTEM
BRAKE SWITCH SIGNAL OPEN
INTEGRATED CONTROL UNIT

DIAGNOSTIC TEST

1. **CHECK FOR A DTC C121E-BRAKE PRESSURE SENSOR COMPARATIVE PERFORMANCE**
    1.
    2. Turn the ignition on.
    3. With the scan tool, read and record DTC's.
    4. With the scan tool, read and record Freeze Frame information.
    5. With the scan tool, erase DTC's.
    6. Start the engine.
    7. Depress and release the brake pedal.
    8. With the scan tool, read and record DTC's.

    Does the scan tool display: C121E-BRAKE PRESSURE SENSOR COMPARATIVE PERFORMANCE?

    Yes

    - Go To 2.

    No

- Perform the ABS INTERMITTENT CONDITION diagnostic procedure. Refer to **ABS INTERMITTENT CONDITION**.

2. **CHECK BRAKE SWITCH**
   1. With the scan tool look at the Brake Switch Signal.
   2. Apply the brakes on and off while checking for a Brake Switch Signal change.

   Did the Brake Switch Signal change?

   Yes

   - Go To 3.

   No

   - Repair as needed.

3. **CHECK BRAKE PRESSURE SENSOR**
   1. With the scan tool look at Pressure Sensor Signal and the Brake Switch Signal.
   2. With the brakes not applied the Pressure Sensor should read ± 15 bar (218 psi).
   3. Apply the brakes hard, the Pressure Sensor should read above 15 bar (218 psi).

   Did Brake Pressure Sensor increase above 15 bar (218 psi)?

   Yes

   - Replace the Integrated Control Unit in accordance with the Service Information.
   - Perform the ABS VERIFICATION TEST. Refer to **ABS VERIFICATION TEST**.

   No

   - Go To 4.

4. **CHECK FOR AIR IN BRAKE SYSTEM**

   NOTE: Before continuing the brake system must be bled to verify there is no air in the brake system.

   1. Turn ignition off.
   2. Bleed brake system.

   Was there any air in the brake system?

   Yes

   - Repair as needed.
   - Perform the ABS VERIFICATION TEST. Refer to **ABS VERIFICATION TEST**.

No

- Replace the Integrated Control Unit in accordance with the Service Information.
- Perform the ABS VERIFICATION TEST. Refer to **ABS VERIFICATION TEST**.

C1231-DRIVE TEST: STEERING ANGLE SENSOR

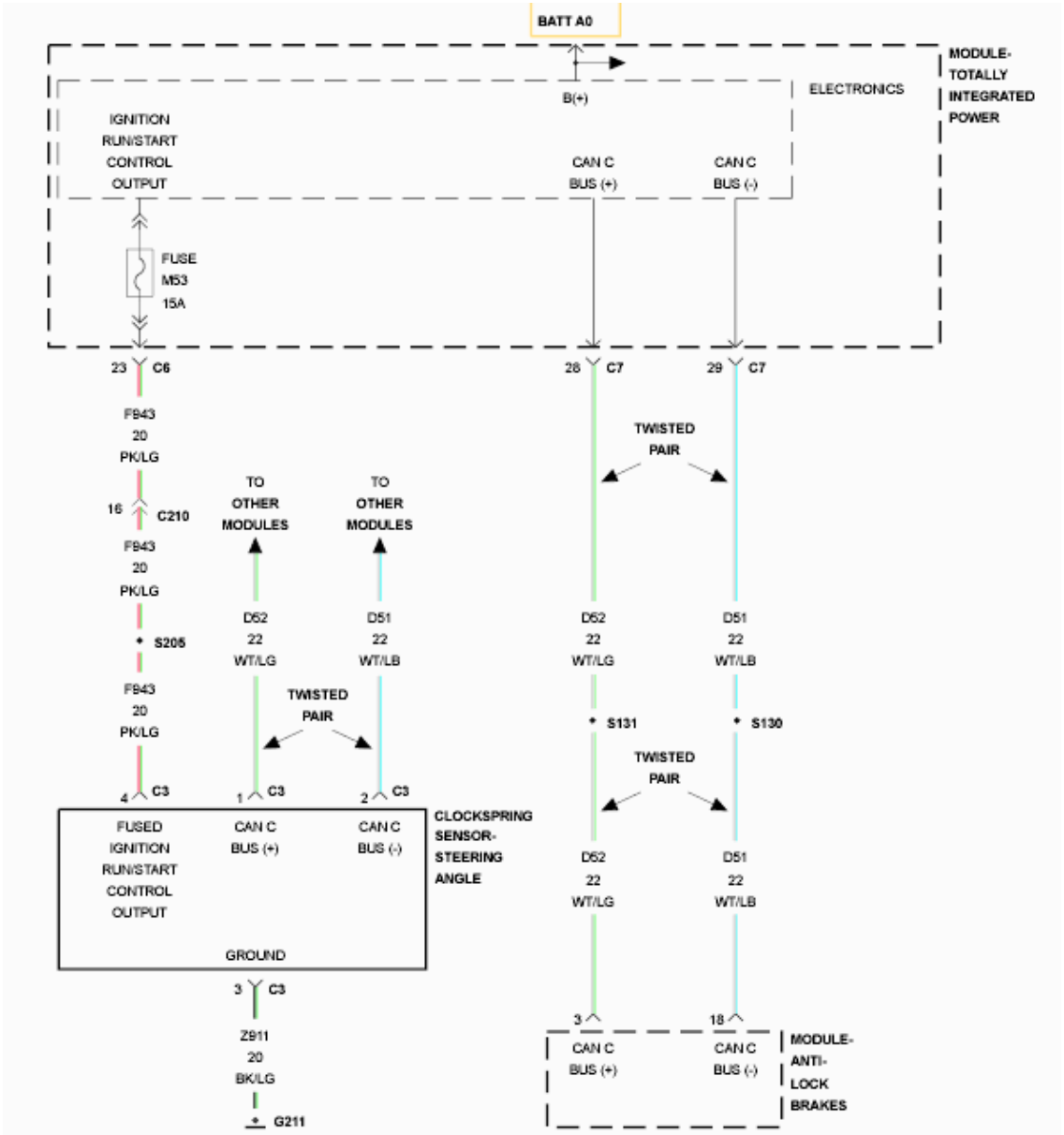

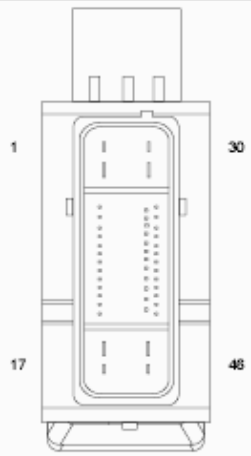

MODULE-
ANTI-LOCK

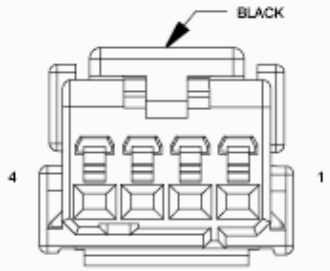

CLOCKSPRING C3
(SAS)

Fig. 190: Steering Angle Sensor Wiring Diagram
Courtesy of CHRYSLER GROUP, LLC

For a complete wiring diagram, **refer to appropriate SYSTEM WIRING DIAGRAMS article** .

NOTE: The Electronic Stability Control (ESC) may also be referred to as Electronic Stability Program (ESP) depending on the vehicle model year and configuration. Certain components may also reference ESP, ESC, or use the traction control symbol.

WHEN MONITORED:

During the Drive Test.

SET CONDITION:

If the Antilock Brakes System (ABS) Module detects implausible Steering Angle Sensor (SAS) data.

POSSIBLE CAUSES

Possible Causes
CLOCKSPRING INSTALLATION
CLOCKSPRING (SAS)
ANTILOCK BRAKES SYSTEM (ABS) MODULE

DIAGNOSTIC TEST

1. **CHECK FOR A DTC C1231-DRIVE TEST: STEERING ANGLE SENSOR**

   NOTE: This DTC must be active for the results of this test to be valid.

   1. Ignition on, engine not running.
   2. Using the scan tool, read and record DTC's.
   3. Using the scan tool, read and record Freeze Frame information.
   4. Perform ECU initialization with drive test. Perform the ABS VERIFICATION TEST. Refer to **ABS VERIFICATION TEST**.
   5. Start the engine.
   6. Using the scan tool, read and record DTC's.

   Does the scan tool display: C1231-DRIVE TEST: STEERING ANGLE SENSOR?

   Yes

   - Go To 2.

No

- Perform the ABS INTERMITTENT CONDITION diagnostic procedure. Refer to **ABS INTERMITTENT CONDITION**.

2. **VERIFY THAT THE STEERING ANGLE SENSOR IS ACTIVE ON THE BUS**
   1. Using the scan tool, select ECU View.
   2. Verify that the Steering Angle Sensor is active on the bus.

   Is the Steering Angle Sensor active on the bus?

   Yes

   - Go To 3.

   No

   - Refer to **NO RESPONSE FROM THE STEERING ANGLE SENSOR (SAS)** and perform the diagnostic procedure.

3. **CHECK STEERING ANGLE**
   1. Turn steering wheel so wheels point in a straight ahead position.
   2. With scan tool check steering angle.

   Is the Steering Angle reading within ±15 degrees?

   Yes

   - Go To 4.

   No

   - Go To 5.

4. **CHECK STEERING ANGLE CHANGE**
   1. Turn steering wheel so wheels point in a straight ahead position.
   2. With scan tool check steering angle.
   3. Rotate steering wheel to the right and the degrees will decrease and rotating steering wheel to the left the degrees will increase.

   Did the steering angle change accordingly?

   Yes

   - Replace the Antilock Brake System (ABS) Module in accordance with the Service Information.
   - Perform the ABS VERIFICATION TEST. Refer to **ABS VERIFICATION TEST**.

No

- Replace the Clockspring (SAS) in accordance with the Service Information. Refer to **CLOCKSPRING, INSTALLATION** .

5. **CHECK STEERING ANGLE SENSOR INSTALLATION**

WARNING: To avoid serious or fatal injury on vehicles equipped with airbags, disable the Supplemental Restraint System (SRS) before attempting any steering wheel, steering column, airbag, seat belt tensioner, impact sensor, or instrument panel component diagnosis or service. Disconnect and isolate the battery negative (ground) cable, then wait two minutes for the system capacitor to discharge before performing further diagnosis or service. This is the only sure way to disable the SRS. Failure to take the proper precautions could result in accidental airbag deployment.

NOTE: Proper Clockspring (SAS) installation is crucial for proper operation.

1. Turn ignition off to the lock position.
2. Verify that the Clockspring (SAS) is properly installed. Refer to **CLOCKSPRING, INSTALLATION** .

Is the Clockspring (SAS) properly installed?

Yes

- Replace the Antilock Brake System (ABS) Module in accordance with the Service Information.
- Perform the ABS VERIFICATION TEST. Refer to **ABS VERIFICATION TEST**.

No

- Repair as necessary.
- Perform the ABS VERIFICATION TEST. Refer to **ABS VERIFICATION TEST**.

C1232-DRIVE TEST: PRESSURE SENSOR

For a complete wiring diagram **refer to appropriate SYSTEM WIRING DIAGRAMS article**

WHEN MONITORED:

During the Drive Test.

SET CONDITION:

If the Pressure Sensor fails to activate.

POSSIBLE CAUSES

Possible Causes
HYDRAULIC / BRAKE SYSTEM COMPONENT INSTALLATION
ELECTRONIC CONTROL UNIT (ECU)
PRESSURE SENSOR (HYDRAULIC CONTROL UNIT)

DIAGNOSTIC TEST

1. **CHECK FOR A DTC C1232-DRIVE TEST: PRESSURE SENSOR**

   NOTE: This DTC must be active for the results of this test to be valid.

   1. Turn the ignition on.
   2. With the scan tool, read and record DTC's.
   3. With the scan tool, read and record Freeze Frame information.
   4. Perform ECU initialization with drive test. Refer to ABS VERIFICATION TEST. Refer to **ABS VERIFICATION TEST**.
   5. Start the engine.
   6. With the scan tool, read and record DTC's.

   Does the scan tool display: C1232-DRIVE TEST: PRESSURE SENSOR?

   Yes

   - Go To 2.

   No

   - Perform the ABS INTERMITTENT CONDITION diagnostic procedure. Refer to **ABS INTERMITTENT CONDITION**.

2. **CHECK HYDRAULIC SYSTEM AND BRAKE SYSTEM COMPONENT INSTALLATION AND FUNCTION**
   1. Verify that the Antilock Brakes Module and Hydraulic Control Unit are properly installed.
   2. Verify that the hydraulic system is properly filled and bled.
   3. Verify that the brake system components are installed and functioning properly.

   Were any problems found?

   Yes

   - Repair as necessary.
   - Perform the ABS VERIFICATION TEST. Refer to **ABS VERIFICATION TEST**.

No

- Replace the ECU in accordance with the Service Information.
- Perform the ABS VERIFICATION TEST. Refer to **ABS VERIFICATION TEST**.

C1234-DRIVE TEST: SENSOR CLUSTER INSTALLATION

For a complete wiring diagram **refer to appropriate SYSTEM WIRING DIAGRAMS article**

NOTE: The Electronic Stability Control (ESC) may also be referred to as Electronic Stability Program (ESP) depending on the vehicle model year and configuration. Certain components may also reference ESP, ESC, or use the traction control symbol.

WHEN MONITORED:

During the Drive Test.

SET CONDITION:

If the Antilock Brake System (ABS) Module detects implausible Dynamics Sensor data.

POSSIBLE CAUSES

Possible Causes
DYNAMICS SENSOR INSTALLATION
DYNAMICS SENSOR
ANTILOCK BRAKE SYSTEM (ABS) MODULE

DIAGNOSTIC TEST

1. **CHECK FOR A DTC C1234-DRIVE TEST: SENSOR CLUSTER INSTALLATION**

   NOTE: This DTC must be active for the results of this test to be valid.

   1. Turn the ignition on.
   2. With the scan tool, read and record DTC's.
   3. With the scan tool, read and record Freeze Frame information.
   4. Perform ECU initialization with drive test. Refer to Perform the ABS VERIFICATION TEST. Refer to **ABS VERIFICATION TEST**.
   5. Start the engine.
   6. With the scan tool, read and record DTC's.

   Does the scan tool display: C1234-DRIVE TEST: SENSOR CLUSTER INSTALLATION?

Yes

- Go To 2.

No

- Perform the ABS INTERMITTENT CONDITION diagnostic procedure. Refer to **ABS INTERMITTENT CONDITION**.

2. **CHECK THE DYNAMICS SENSOR INSTALLATION**

NOTE: Dynamics Sensor installation and mounting bolt torque is crucial for proper operation.

1. Turn the ignition off.
2. Check the Dynamics Sensor for damaged, modified, and bent mounting brackets.
3. Check the Dynamics Sensor mounting bolts for a loose or over tightened condition.

Were any problems found?

Yes

- Repair as necessary.
- Perform the ABS VERIFICATION TEST. Refer to **ABS VERIFICATION TEST**.

No

- Go To 3.

3. **REPLACE DYNAMICS SENSOR AND VERIFY IF DTC IS STILL ACTIVE**

1. Replace the Dynamics Sensor in accordance with the Service Information. Perform ABS VERIFICATION TEST - VER 1. Refer to **ABS VERIFICATION TEST**.

WARNING: Make sure brake capability is available before road testing.

2. Park the vehicle.
3. With the scan tool, read ABS DTC's.

Does this DTC reset?

Yes

- Replace the Antilock Brakes Module in accordance with the Service Information.
- Perform the ABS VERIFICATION TEST. Refer to **ABS VERIFICATION TEST**.

No

- Test complete.
- Perform the ABS VERIFICATION TEST. Refer to **ABS VERIFICATION TEST**.

C1235 DRIVE TEST: TEST ACTIVE

For a complete wiring diagram **refer to appropriate SYSTEM WIRING DIAGRAMS article**

WHEN MONITORED:

With ignition on.

SET CONDITION:

Conditions for running drive test not met.

POSSIBLE CAUSES

Possible Causes
DRIVE TEST ACTIVATED BUT NOT RUN
ANTILOCK BRAKE MODULE

DIAGNOSTIC TEST

1. **CHECK FOR A DTC C1235-DRIVE TEST: TEST ACTIVE**

   NOTE: This DTC must be active for the results of this test to be valid.

   1. Turn the ignition on.
   2. With the scan tool, read and record DTC's.
   3. With the scan tool, read and record Freeze Frame information.
   4. Perform ECU initialization with drive test. Refer to Perform the ABS VERIFICATION TEST. Refer to **ABS VERIFICATION TEST**.

      NOTE: Drive test must be performed correctly for ECU to initialize.

   5. With the scan tool, erase DTC's.
   6. Start the engine.
   7. With the scan tool, read and record DTC's.

   Does the scan tool display: C1235-DRIVE TEST: TEST ACTIVE?

   Yes

- Go To 2.

No

- Perform the ABS INTERMITTENT CONDITION diagnostic procedure. Refer to **ABS INTERMITTENT CONDITION**.

2. **DRIVE TEST ACTIVATED BUT NOT RUN**
   1. With scan tool rerun drive test.

      WAS DRIVE TEST COMPLETED?

      Yes

      - Replace the Antilock Brake Module in accordance with the Service Information.
      - Perform the ABS VERIFICATION TEST. Refer to **ABS VERIFICATION TEST**.

      No

      - Rerun drive test.

C1238-DRIVE TEST: UNSUCCESSFUL

For a complete wiring diagram **refer to appropriate SYSTEM WIRING DIAGRAMS article** .

WHEN MONITORED:

During the Drive Test.

SET CONDITION:

If the Antilock Brakes Module detects a fault with the Steering Angle Sensor, the Pressure Sensor, or the Dynamics Sensor.

POSSIBLE CAUSES

Possible Causes
STEERING ANGLE SENSOR
PRESSURE SENSOR
DYNAMICS SENSOR
ANTILOCK BRAKES MODULE

DIAGNOSTIC TEST

1. **DIAGNOSE AND REPAIR ALL DTC's**

   Repair

- Diagnose and repair all DTC's.

C1239-EMISSION ROLLS TEST ACTIVE

For a complete wiring diagram, **refer to appropriate SYSTEM WIRING DIAGRAMS article** .

NOTE: The Electronic Stability Control (ESC) may also be referred to as Electronic Stability Program (ESP) depending on the vehicle model year and configuration. Certain components may also reference ESP, ESC, or use the traction control symbol.

WHEN MONITORED:

Continuously with the ignition on and no BUS communication failure DTC's present.

SET CONDITION:

If the Antilock Brake Module receives two messages in a row indicating that the extended diagnostic session is active. ABS is inhibited during the extended diagnostic session.

POSSIBLE CAUSES

Possible Causes
CAN COMMUNICATION DTC's PRESENT
TIPM ROLLS MODE COMMAND ACTIVE
ANTILOCK BRAKE SYSTEM (ABS) MODULE

DIAGNOSTIC TEST

1. **DTC IS PRESENT**

   NOTE: Make sure the battery is fully charged.

   1. Turn the ignition on.
   2. With the scan tool clear DTC's.
   3. Turn the ignition off.
   4. Turn the ignition on.
   5. Using the scan tool, read DTC's.

   Is the status Active for this DTC?

   Yes

   - Go To 2.

No

- Go To 3.

2. **ANTILOCK BRAKE MODULE**
   1. Turn the ignition on.
   2. Using the scan tool, select View DTC's in each module on the CAN B BUS and the CAN C BUS.

      Are there CAN BUS communication DTC's present in any other module?

      Yes

      - Perform the appropriate diagnostic procedure before continuing with this test. Refer to **TIPM - DIAGNOSIS AND TESTING** .
      - Perform the ABS VERIFICATION TEST. Refer to **ABS VERIFICATION TEST**.

      No

      - Replace the Antilock Brake System (ABS) Module in accordance with the Service Information.
      - Perform the ABS VERIFICATION TEST. Refer to **ABS VERIFICATION TEST**.
3. **INTERMITTENT COMMUNICATION DTC**
   1. The condition necessary to set this DTC is not present at this time.
   2. This DTC will set if the ABS Module receives two messages in a row from the TIPM indicating that the Emissions Rolls test is active.
   3. Using the scan tool, select View DTC's in each of the modules on the CAN B BUS and the CAN C BUS. If there are any communications DTC's present, perform the appropriate diagnostic procedure. Refer to **TIPM - DIAGNOSIS AND TESTING** .
   4. Perform any Technical Service Bulletins that may apply.

      Were any problems found?

      Yes

      - Repair as necessary.
      - Perform the ABS VERIFICATION TEST. Refer to **ABS VERIFICATION TEST**.

      No

      - Test complete, the condition or conditions that originally set this DTC are not present at this time.

C123A-ESP SYSTEM SENSORS CALIBRATION

For a complete wiring diagram, **refer to appropriate SYSTEM WIRING DIAGRAMS article** .

NOTE: **The Electronic Stability Control (ESC) may also be referred to as Electronic Stability Program (ESP) depending on the vehicle model year and configuration. Certain components may also reference ESP, ESC, or use the traction control symbol.**

WHEN MONITORED:

Once per ignition cycle.

SET CONDITION:

If the calculated checksum does not match the stored checksum.

POSSIBLE CAUSES

Possible Causes
ANTILOCK BRAKE SYSTEM (ABS) MODULE

DIAGNOSTIC TEST

1. **INITIALIZE ANTILOCK BRAKES MODULE**
    1. Initialize the ECU, Perform the ABS VERIFICATION TEST. Refer to **ABS VERIFICATION TEST**.

       Does this DTC reset?

       Yes

       - Replace the Antilock Brake System (ABS) Module in accordance with the Service Information.
       - Perform the ABS VERIFICATION TEST. Refer to **ABS VERIFICATION TEST**.

       No

       - Test complete, the condition or conditions that originally set this DTC are not present at this time. Using the wiring diagrams as a guide, check all related splices and connectors for signs of water intrusion, corrosion, pushed out or bent terminals, and correct pin tension.

C123B-ESP SYSTEM CONTROL TOO LONG

For a complete wiring diagram, **refer to appropriate SYSTEM WIRING DIAGRAMS article** .

NOTE: **The Electronic Stability Control (ESC) may also be referred to as Electronic Stability Program (ESP) depending on the vehicle model year and configuration. Certain components may also reference ESP, ESC, or use the traction control symbol.**

WHEN MONITORED:

With the ignition on.

SET CONDITION:

When the Antilock Brake System (ABS) Module indicates excessive valve control lasting longer the 15 seconds.

POSSIBLE CAUSES

Possible Causes
HYDRAULIC/BRAKE ISSUE DYNAMICS SENSOR INTEGRATED CONTROL UNIT

DIAGNOSTIC TEST

1. **VERIFY DIAGNOSTIC TROUBLE CODE (DTC) IS ACTIVE**

NOTE: **If other DTC's are set they must be repaired before continuing. This DTC must be active for the results of this test to be valid and this DTC may set while driving under excessive driving conditions.**

1. Turn the ignition on.
2. Using the scan tool, read and record ABS DTC's.
3. Using the scan tool, read and record Environmental Data (EV Data).
4. Using the scan tool, erase ABS DTC's.
5. Cycle the ignition switch.

WARNING: **Make sure brake capability is available before road testing.**

6. Test drive the vehicle by turning the vehicle left or right in a curving manner at a velocity between 10 and 20 km/hr (6 and 12 m.p.h.).
7. Park the vehicle.
8. Using the scan tool, read ABS DTC's.

Does this DTC reset?

Yes

- Go To 2.

No

- Perform the ABS INTERMITTENT CONDITION diagnostic procedure. Refer to **ABS INTERMITTENT CONDITION**.

2. **CHECK HYDRAULIC SYSTEM AND BRAKE SYSTEM COMPONENT INSTALLATION AND FUNCTION**
   1. Verify that the Antilock Brakes Module and Hydraulic Control Unit are properly installed.
   2. Verify that the hydraulic system is properly filled and bled.
   3. Verify that the brake system components are installed and functioning properly.

   Were any problems found?

   Yes

   - Repair as necessary.
   - Perform the ABS VERIFICATION TEST. Refer to **ABS VERIFICATION TEST**.

   No

   - Replace the Dynamics Sensor in accordance with the Service Information.
   - Perform the ABS VERIFICATION TEST. Refer to **ABS VERIFICATION TEST**.

C123F-STEERING ANGLE SENSOR COMPARATIVE PERFORMANCE

For a complete wiring diagram, **refer to appropriate SYSTEM WIRING DIAGRAMS article** .

WHEN MONITORED:

With ignition on, but not if a checksum failure of the stored offset values is detected.

Or, a CAN time-out failure is detected.

Or, a failure is detected by the Steering Angle Sensor.

SET CONDITION:

If the Antilock Brakes System (ABS) Module detects that either the calculated steering wheel angle offset or the steering wheel angle signal measured output is out of range.

POSSIBLE CAUSES

Possible Causes
VEHICLE DAMAGE
STEERING COLUMN / INTERMEDIATE SHAFT DAMAGE
STEERING WHEEL ALIGNMENT

STEERING ANGLE SENSOR (SAS) LOOSE
CLOCKSPRING (SAS) IMPROPERLY INSTALLED (WRONG MOUNTING POSITION)
CLOCKSPRING (SAS)
ANTILOCK BRAKE SYSTEM (ABS) MODULE

DIAGNOSTIC TEST

1. **PERFORM TEST DRIVE AND VERIFY DTC IS STILL ACTIVE**

   NOTE: If present, diagnose and repair DTC C1219-STEERING ANGLE SENSOR ERRATIC PERFORMANCE, C121A-STEERING ANGLE SENSOR NOT INITIALIZED, or C1240-STEERING ANGLE SENSOR OVERTRAVEL PERFORMANCE before diagnosing this DTC.

   1. Ignition on, engine not running.
   2. With the scan tool, erase ABS DTC's.
   3. Cycle the ignition switch.

      WARNING: **To avoid possible serious or fatal injury, check brake capability is available before road testing.**

   4. Test drive the vehicle by turning the vehicle left or right in a curving manner at a velocity between 10 and 25 km/hr (6 and 15 m.p.h.).
   5. Park the vehicle.
   6. With the scan tool, read ABS DTC's.

      Does this DTC reset?

      Yes

      - Go To 2.

      No

      - Perform the ABS INTERMITTENT CONDITION diagnostic procedure. Refer to **ABS INTERMITTENT CONDITION**.

2. **CHECK STEERING ANGLE SENSOR OUTPUT**
   1. Start the engine.
   2. Turn the steering wheel so wheels point in a straight ahead position.
   3. With the scan tool, read the Steering Angle Sensor position.

      Is the Steering Angle Sensor Position within ± 15° degrees?

Yes

- Go To 5.

No

- Go To 3.

3. **INSPECT VEHICLE, STEERING COLUMN, AND INTERMEDIATE SHAFT FOR DAMAGE**

NOTE: If possible, check vehicle repair history for collision damage.

1. Turn ignition off to the lock position.
2. Inspect the vehicle for damage causing tracking problems or steering wheel misalignment.
3. Inspect the steering column and intermediate shaft for damage.

Were any problems found?

Yes

- Repair as necessary.
- Perform the ABS VERIFICATION TEST. Refer to **ABS VERIFICATION TEST**.

No

- Go To 4.

4. **CHECK CLOCKSPRING (SAS) INSTALLATION**

WARNING: To avoid serious or fatal injury on vehicles equipped with airbags, disable the Supplemental Restraint System (SRS) before attempting any steering wheel, steering column, airbag, seat belt tensioner, impact sensor, or instrument panel component diagnosis or service. Disconnect and isolate the battery negative (ground) cable, then wait two minutes for the system capacitor to discharge before performing further diagnosis or service. This is the only sure way to disable the SRS. Failure to take the proper precautions could result in accidental airbag deployment.

NOTE: Proper Clockspring (SAS) installation is crucial for proper operation.

1. Verify that the Clockspring (SAS) is properly installed.

Is the Steering Angle Sensor properly installed?

Yes

- Go To 5.

No

- Repair as necessary and clear offsets by initializing ECU with wheels pointing straight ahead.
- Perform the ABS VERIFICATION TEST. Refer to **ABS VERIFICATION TEST**.

5. **RE-INITIALIZE THE ESC MODULE**
   1. Perform ECU initialization with drive test to clear offsets. Perform the ABS VERIFICATION TEST. Refer to **ABS VERIFICATION TEST**.

      Is DTC C123F-STEERING ANGLE SENSOR COMPARATIVE PERFORMANCE still active?

      Yes

      - Go To 6.

      No

      - Sensor was probably loose or calibrated with wheels not centered to vehicle. Test complete.
      - Perform the ABS VERIFICATION TEST. Refer to **ABS VERIFICATION TEST**.

6. **CHECK STEERING ANGLE SENSOR OUTPUT WHILE ROTATING THE STEERING WHEEL**
   1. With the scan tool, read the Steering Angle Sensor position while rotating the steering wheel to the right and then to the left. The Steering Angle Sensor position should decrease when rotating the steering wheel to the right and increase when rotating the steering wheel to the left.

      Did the steering angle change accordingly?

      Yes

      - Replace the Antilock Brake System (ABS) Module in accordance with the Service Information.
      - Perform the ABS VERIFICATION TEST. Refer to **ABS VERIFICATION TEST**.

      No

      - Replace the Clockspring (SAS) in accordance with the Service Information. Refer to **CLOCKSPRING, INSTALLATION** .

C1240-STEERING ANGLE SENSOR OVERTRAVEL PERFORMANCE

For a complete wiring diagram, **refer to appropriate SYSTEM WIRING DIAGRAMS article** .

NOTE: **The Electronic Stability Control (ESC) may also be referred to as Electronic Stability Program (ESP) depending on the vehicle model year and configuration.**

Certain components may also reference ESP, ESC, or use the traction control symbol.

WHEN MONITORED:

With ignition on, but not if a CAN time out failure is detected.

Or, if a fault is detected by the Steering Angle Sensor (SAS).

SET CONDITION:

If the Antilock Brakes System (ABS) Module detects sensor overtravel over 720 degrees.

POSSIBLE CAUSES

Possible Causes
STEERING COLUMN IMPROPERLY INSTALLED
STEERING ANGLE SENSOR (SAS) LOOSE
CLOCKSPRING (SAS) / STEERING WHEEL IMPROPERLY INSTALLED
CLOCKSPRING (SAS)
ANTILOCK BRAKE SYSTEM (ABS) MODULE

DIAGNOSTIC TEST

1. **CHECK FOR A DTC C1240-STEERING ANGLE SENSOR OVERTRAVEL PERFORMANCE**

   NOTE: This DTC must be active for the results of this test to be valid.

   1. Ignition on, engine not running.
   2. Using the scan tool, read and record DTC's.
   3. Using the scan tool, read and record Freeze Frame information.
   4. Using the scan tool, erase DTC's.
   5. Start the engine.
   6. Turn steering wheel from lock to lock.
   7. Using the scan tool, read and record DTC's.

   Does the scan tool display: C1240-STEERING ANGLE SENSOR OVERTRAVEL PERFORMANCE?

   Yes

   - Go To 2.

   No

- Perform the ABS INTERMITTENT CONDITION diagnostic procedure. Refer to **ABS INTERMITTENT CONDITION**.

2. **VERIFY THAT THE STEERING ANGLE SENSOR IS ACTIVE ON THE BUS**
   1. Using the scan tool, select ECU View.
   2. Verify that the Steering Angle Sensor is active on the bus.

      Is the Steering Angle Sensor active on the bus?

      Yes

      - Go To 3.

      No

      - Refer to **NO RESPONSE FROM THE STEERING ANGLE SENSOR (SAS)** and perform the diagnostic procedure.

3. **CHECK STEERING ANGLE**
   1. Turn steering wheel so wheels point in a straight ahead position.
   2. With scan tool check steering angle.

      Is the Steering Angle reading within ±15 degrees?

      Yes

      - Go To 4.

      No

      - Go To 5.

4. **CHECK STEERING ANGLE CHANGE**
   1. Turn steering wheel so wheels point in a straight ahead position.
   2. With scan tool check steering angle if reading travels to 720 degrees whiling rotating wheel from lock to lock.

      NOTE: Sensor damage can occur if wheel is turned over 720 degrees.

   3. Rotate steering wheel to the right and the degrees will decrease and rotating steering wheel to the left the degrees will increase.

      Did the steering angle change accordingly and display less the 720 degrees from lock to lock?

      Yes

      - Replace the Antilock Brake System (ABS) Module in accordance with the Service

Information.

- Perform the ABS VERIFICATION TEST. Refer to **ABS VERIFICATION TEST**.

No

- Replace the Clockspring (SAS) in accordance with the Service Information. Refer to **CLOCKSPRING, INSTALLATION** .

5. **CHECK CLOCKSPRING (SAS) INSTALLATION**

WARNING: To avoid serious or fatal injury on vehicles equipped with airbags, disable the Supplemental Restraint System (SRS) before attempting any steering wheel, steering column, airbag, seat belt tensioner, impact sensor, or instrument panel component diagnosis or service. Disconnect and isolate the battery negative (ground) cable, then wait two minutes for the system capacitor to discharge before performing further diagnosis or service. This is the only sure way to disable the SRS. Failure to take the proper precautions could result in accidental airbag deployment.

NOTE: Proper Clockspring (SAS) installation is crucial for proper operation.

1. Turn the ignition off.
2. Verify that the Clockspring (SAS) is properly installed. Refer to **CLOCKSPRING, INSTALLATION** .

Is the Clockspring (SAS) properly installed?

Yes

- Replace the Antilock Brake System (ABS) Module in accordance with the Service Information.
- Perform the ABS VERIFICATION TEST. Refer to **ABS VERIFICATION TEST**.

No

- Repair as necessary.
- Perform the ABS VERIFICATION TEST. Refer to **ABS VERIFICATION TEST**.

C1242-G SENSOR INPUT SIGNAL PERFORMANCE

For a complete wiring diagram, **refer to appropriate SYSTEM WIRING DIAGRAMS article** .

WHEN MONITORED:

Continuously, with ignition on, until vehicle speed exceeds 20 km/h (12.4 m.p.h.) for the first time, but not if

the sensor voltage is out of range,

Or, during diagnostic mode.

Or, if the monitoring was inhibited by a corresponding diagnostics command.

Or, if the vehicle speed has exceeded 20 km/h (12.4 m.p.h.) during the actual ignition cycle.

Or, if at least one over spinning wheel is detected.

Or, if one of the control functions is active.

SET CONDITION:

Potential issue with yaw/lat/long sensors (dynamics sensor).

POSSIBLE CAUSES

Possible Causes
DYNAMICS SENSOR INSTALLATION
DYNAMICS SENSOR OR ANTILOCK BRAKE MODULE
ANTILOCK BRAKES MODULE

DIAGNOSTIC TEST

1. **VERIFY DTC IS ACTIVE**
    1. Turn the ignition on.
    2. With the scan tool, read and record ABS DTC's.
    3. With the scan tool, read and record Environmental Data (EV Data).
    4. With the scan tool, erase ABS DTC's.
    5. Cycle the ignition switch.

    WARNING: **To avoid possible serious or fatal injury, check brake capability is available before road testing.**

    6. Test drive the vehicle by turning the vehicle left or right in a curving manner at a velocity between 10 and 20 km/hr (6 and 12 m.p.h.).
    7. Park the vehicle.
    8. With the scan tool, read ABS DTC's.

    Does this DTC reset?

    Yes

- Go To 2.

No

- Perform the ABS INTERMITTENT CONDITION diagnostic procedure. Refer to **ABS INTERMITTENT CONDITION**.

2. **CHECK THE DYNAMICS SENSOR INSTALLATION**

NOTE: Dynamics Sensor installation and mounting bolt torque is crucial for proper operation.

1. Turn the ignition off.
2. Check the Dynamics Sensor for damaged, modified, and bent mounting brackets.
3. Check the Dynamics Sensor mounting bolts for a loose or over tightened condition.

Were any problems found?

Yes

- Repair as necessary.
- Perform the ABS VERIFICATION TEST. Refer to **ABS VERIFICATION TEST**.

No

NOTE: Vehicles without a Dynamics Sensor replace Antilock Brake Module.

- Replace the Dynamics Sensor or Antilock Brake Module in accordance with the Service Information.
- Perform the ABS VERIFICATION TEST. Refer to **ABS VERIFICATION TEST**.

C1243-G SENSOR NOT INITIALIZED

For a complete wiring diagram, **refer to appropriate SYSTEM WIRING DIAGRAMS article** .

WHEN MONITORED:

Once after ignition on.

SET CONDITION:

If the stored zero point calibration value of the longitudinal acceleration sensor is invalid.

POSSIBLE CAUSES

Possible Causes
DYNAMICS SENSOR NOT CALIBRATED
DYNAMICS SENSOR
ANTILOCK BRAKES MODULE

DIAGNOSTIC TEST

1. **PERFORM ECU INITIALIZATION**
    1. Turn the ignition on.
    2. With the scan tool, erase ABS DTC's.
    3. Cycle the ignition switch.

    WARNING: To avoid possible serious or fatal injury, check brake capability is available before road testing.

    4. Perform ECU initialization with drive test refer to ABS VERIFICATION TEST. Refer to **ABS VERIFICATION TEST**.

    NOTE: The ECU Initialization process must include driving the vehicle into a 90° turn.

    5. Park the vehicle.
        - Go To 2.
2. **VERIFY IF DTC IS STILL ACTIVE**
    1. Cycle the ignition switch.

    WARNING: To avoid possible serious or fatal injury, check brake capability is available before road testing.

    2. Test drive the vehicle by turning the vehicle left or right in a curving manner at a velocity between 10 and 25 km/h (6 and 15 mph).
    3. Park the vehicle.
    4. With the scan tool, read ABS DTC's.

    Does this DTC reset?

    Yes

    - Replace the Dynamics Sensor or Antilock Brake Module in accordance with the Service Information.

    NOTE: Vehicles without a Dynamics Sensor replace Antilock Brake

Module.

- Perform the ABS VERIFICATION TEST. Refer to **ABS VERIFICATION TEST**.

No

- Perform the ABS INTERMITTENT CONDITION diagnostic procedure. Refer to **ABS INTERMITTENT CONDITION**.

C2100-BATTERY VOLTAGE LOW

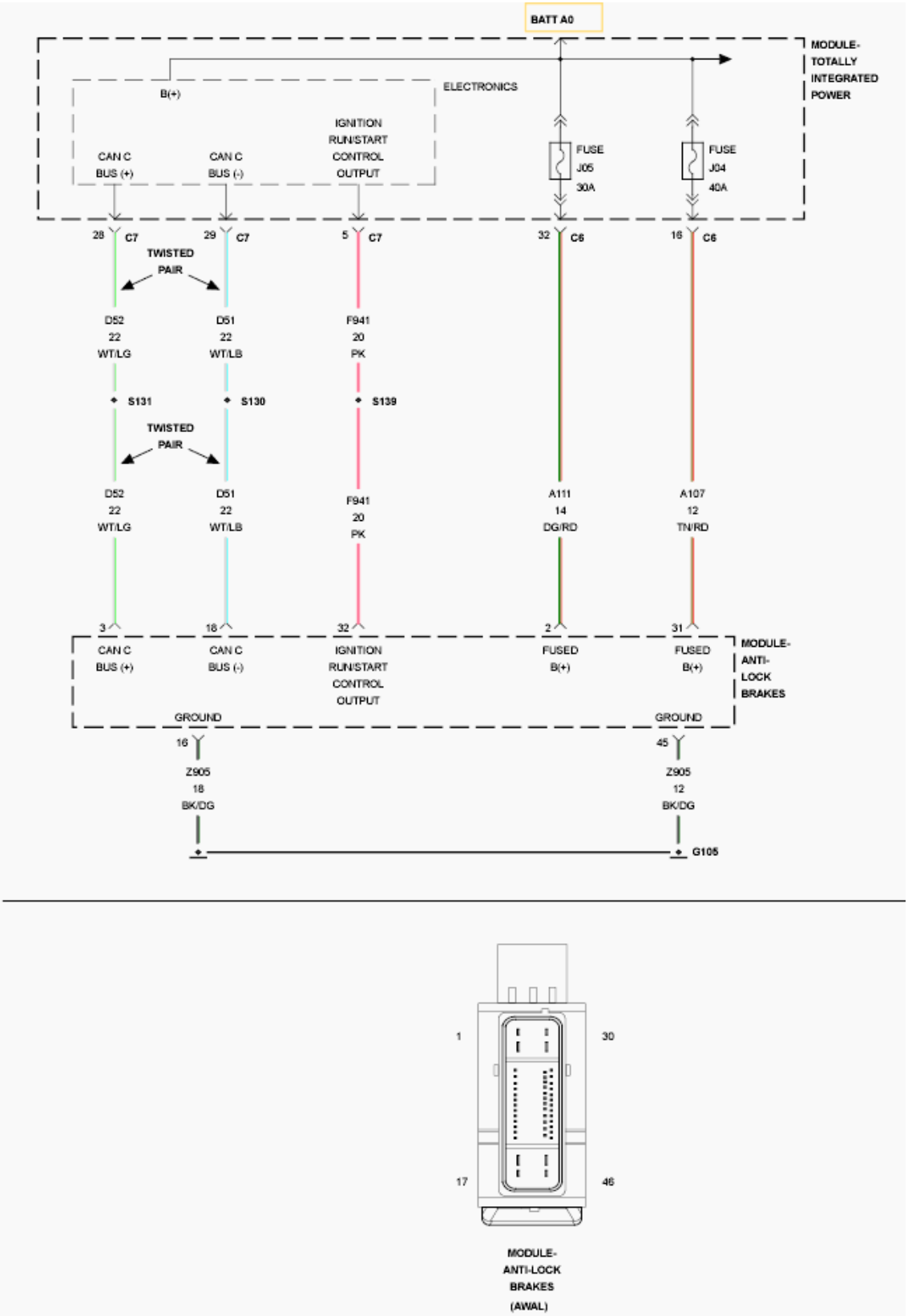

Fig. 191: ABS Motor Control Wiring Diagram
Courtesy of CHRYSLER GROUP, LLC

For a complete wiring diagram, **refer to appropriate SYSTEM WIRING DIAGRAMS article** .

WHEN MONITORED:

Ignition on.

SET CONDITION:

If the sensed ignition voltage drops below 9.5 volts for 100 msec.

POSSIBLE CAUSES

Possible Causes
INTERMITTENT BATTERY VOLTAGE LOW DTC
(F941) IGNITION RUN/START CONTROL OUTPUT CIRCUIT FOR AN OPEN OR HIGH RESISTANCE
(Z905) GROUND CIRCUIT(S) OPEN OR HIGH RESISTANCE
ANTILOCK BRAKE SYSTEM (ABS) MODULE

DIAGNOSTIC TEST

1. **DTC IS ACTIVE**

   NOTE: Diagnose and repair any powertrain Charging system DTC's before continuing with this procedure.

   NOTE: Make sure the battery is fully charged.

   1. Ignition on, engine not running.
   2. With the scan tool, record and erase DTC's.
   3. Turn ignition off to the lock position.
   4. Start the engine.
   5. With the scan tool, read DTC's.

   Is the status Active for this DTC?

   Yes

   - Go To 2.

   No

   - Perform ABS INTERMITTENT TEST. Refer to **ABS INTERMITTENT CONDITION**.

2. **(F941) IGNITION RUN/START CONTROL OUTPUT CIRCUIT FOR AN OPEN OR HIGH RESISTANCE**

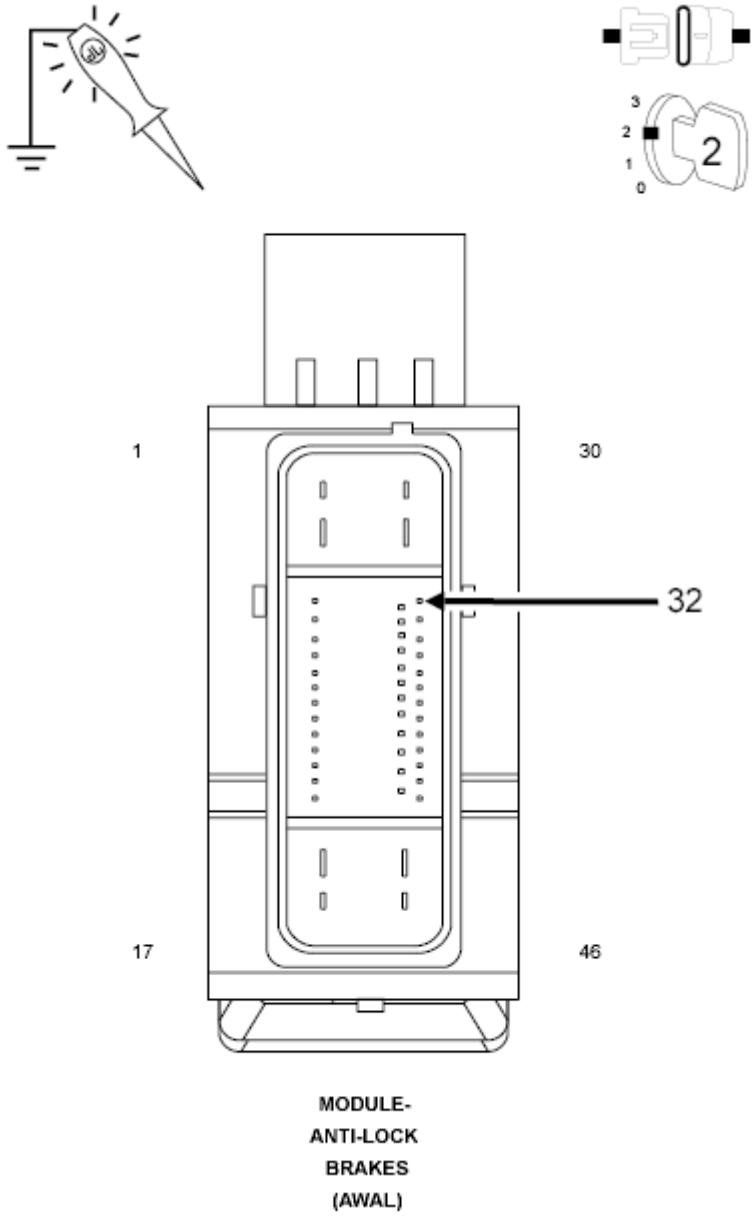

Fig. 192: Checking Dynamics Sensor Fused Ignition Switch Output (Run/Start) Circuit For An Open
Courtesy of CHRYSLER GROUP, LLC

1. Turn ignition off to the lock position.
2. Disconnect the Antilock Brake Module harness connector.
3. Check connectors - Clean/repair as necessary.
4. Ignition on, engine not running.
5. Using a 12-volt test light connected to ground, check the (F941) Ignition Run/Start Control Output circuit.

NOTE: Compare the brightness to that of a direct connection to the battery.

Does the test light illuminate brightly?

Yes

- Go To 3.

No

- Repair the (F941) Ignition Run/Start Control Output circuit for an open circuit or high resistance.
- Perform the ABS VERIFICATION TEST. Refer to **ABS VERIFICATION TEST**.

3. **(Z905) GROUND CIRCUITS OPEN OR HIGH RESISTANCE**

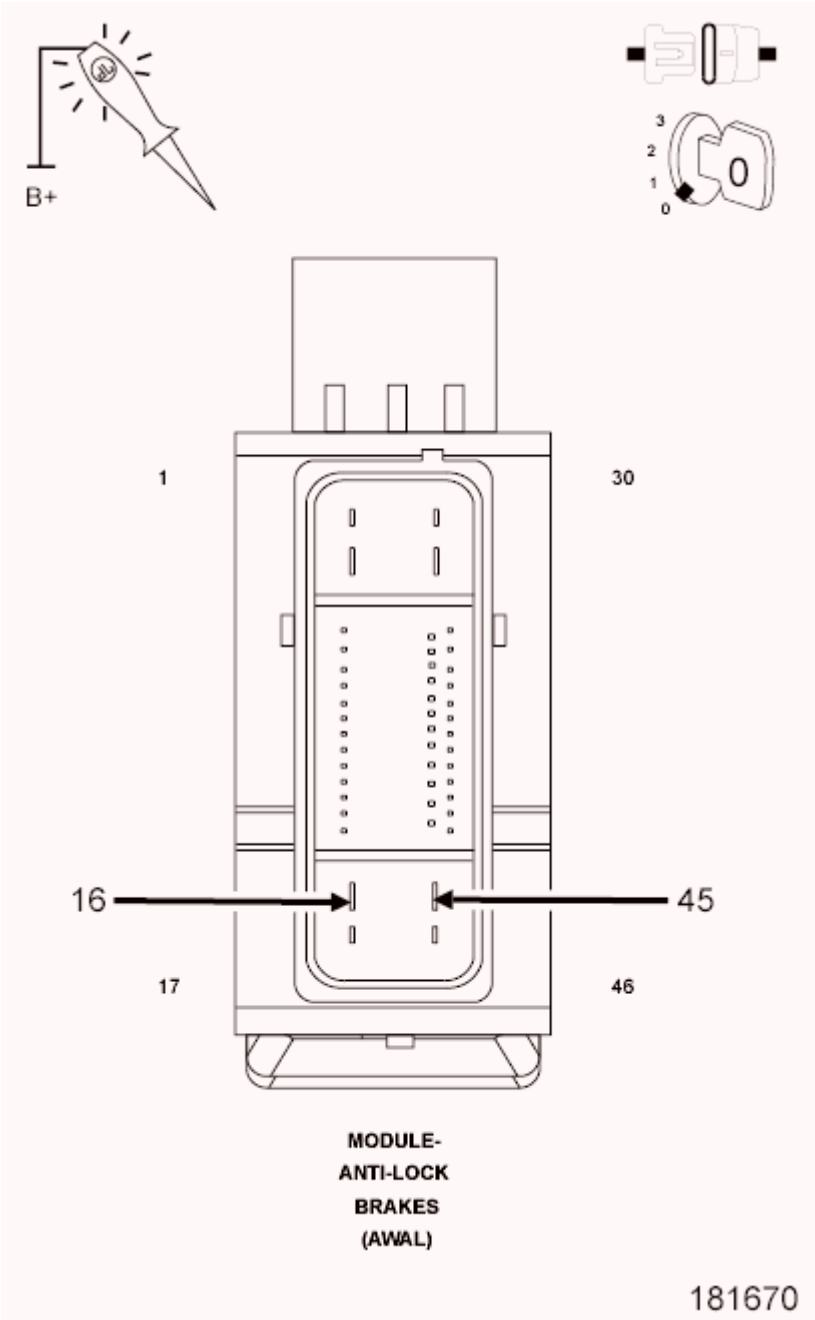

Fig. 193: Checking ABS Module Ground Circuits For An Open Or High Resistance
Courtesy of CHRYSLER GROUP, LLC

1. Turn ignition off to the lock position.
2. Using a 12-volt test light connected to B+, check the (Z905) Ground circuits.

NOTE: Compare the brightness to that of a direct connection to the battery.

Does the test light illuminate brightly?

Yes

- Replace the Antilock Brake System (ABS) Module in accordance with the Service Information.
- Perform the ABS VERIFICATION TEST. Refer to **ABS VERIFICATION TEST**.

No

- Repair the (Z905) Ground circuit(s) for an open circuit or high resistance.
- Perform the ABS VERIFICATION TEST. Refer to **ABS VERIFICATION TEST**.

C2101-BATTERY VOLTAGE HIGH

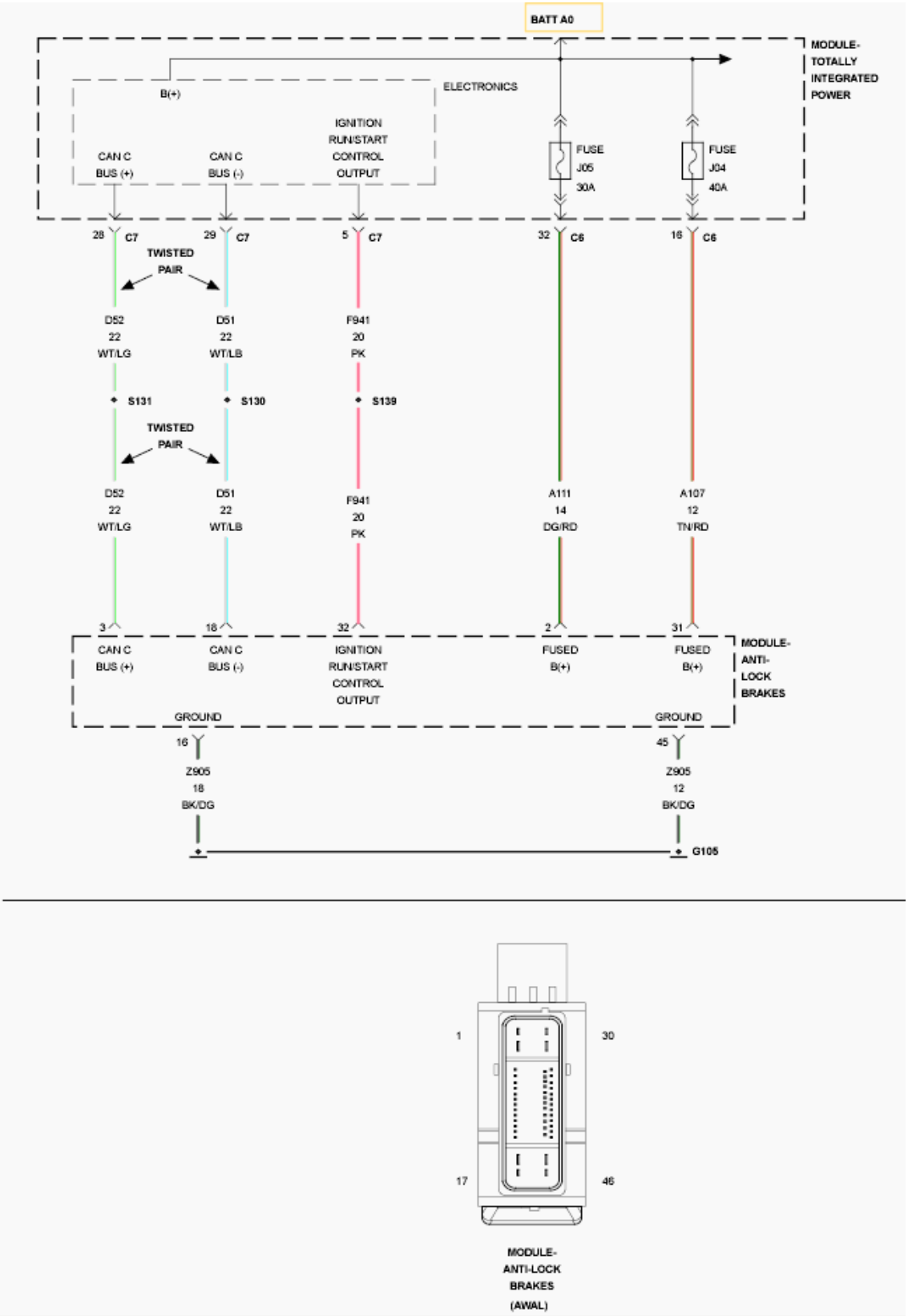

Fig. 194: ABS Motor Control Wiring Diagram
Courtesy of CHRYSLER GROUP, LLC

For a complete wiring diagram, **refer to appropriate SYSTEM WIRING DIAGRAMS article** .

WHEN MONITORED:

Ignition on and no system undervoltage DTC active.

SET CONDITION:

If the sensed ignition voltage is greater than 16.5 volts for 100 msec.

POSSIBLE CAUSES

Possible Causes
INTERMITTENT BATTERY VOLTAGE HIGH DTC
POWERTRAIN CONTROL MODULE (PCM) CHARGING SYSTEM DTCS PRESENT
ANTILOCK BRAKE SYSTEM (ABS) MODULE

DIAGNOSTIC TEST

1. **CHARGING SYSTEM DTCS PRESENT**
    1. Ignition on, engine not running.
    2. With the scan tool, read DTC's in the PCM.

    Are there any Charging System or related voltage DTC's present?

    Yes

    - Perform the appropriate Charging System DTC diagnostic procedures before continuing with this test. Refer to **SPECIFICATIONS - CHARGING SYSTEM** .

    No

    - Go To 2.
2. **DTC IS ACTIVE**
    1. Ignition on, engine not running.
    2. With the scan tool, record and erase DTC's.
    3. Turn ignition off to the lock position.
    4. Start the engine.
    5. With the scan tool, read DTC's.

    Is the status Active for this DTC?

    Yes

    - Replace the Antilock Brake System (ABS) Module in accordance with the Service

Information.

- Perform the ABS VERIFICATION TEST. Refer to **ABS VERIFICATION TEST**.

No

- Perform ABS INTERMITTENT TEST. Refer to **ABS INTERMITTENT CONDITION**.

C2105-ABS VALVE SUPPLY VOLTAGE CIRCUIT LOW

For a complete wiring diagram **refer to appropriate SYSTEM WIRING DIAGRAMS article**

WHEN MONITORED:

Ignition on.

SET CONDITION:

The Antilock Brake Module has detected an internal error.

POSSIBLE CAUSES

Possible Causes
ANTILOCK BRAKE MODULE

DIAGNOSTIC TEST

1. **ANTILOCK BRAKE MODULE INTERNAL CONDITION**
   1. The Antilock Brake Module is reporting internal errors.

      NOTE: Before continuing, check the Antilock Brake Module harness connector terminals for corrosion, damage, or terminal push out. Repair as necessary.

   2. Using the schematics as a guide, inspect the wire harness and connectors. Pay particular attention to all Power and Ground circuits.
   3. Perform any Technical Service Bulletins that may apply.

      Were there any problems found?

      Yes

      - Repair as necessary.
      - Perform the ABS VERIFICATION TEST. Refer to **ABS VERIFICATION TEST**.

      No

- Replace the Antilock Brake Module in accordance with the Service Information.
- Perform the ABS VERIFICATION TEST. Refer to **ABS VERIFICATION TEST**.

C2200-ANTILOCK BRAKE MODULE INTERNAL

For a complete wiring diagram **refer to appropriate SYSTEM WIRING DIAGRAMS article**

WHEN MONITORED:

Ignition on.

SET CONDITION:

The Antilock Brake Module has detected an error after a system self test.

POSSIBLE CAUSES

Possible Causes
ANTILOCK BRAKE MODULE

DIAGNOSTIC TEST

1. **ANTILOCK BRAKE MODULE INTERNAL CONDITION**
   1. The Antilock Brake Module is reporting internal errors.

      NOTE: Before continuing, check the Antilock Brake Module harness connector terminals for corrosion, damage, or terminal push out. Repair as necessary.

   2. Using the schematics as a guide, inspect the wire harness and connectors. Pay particular attention to all Power and Ground circuits.
   3. Perform any Technical Service Bulletins that may apply.

      Were there any problems found?

      Yes

      - Repair as necessary.
      - Perform the ABS VERIFICATION TEST. Refer to **ABS VERIFICATION TEST**.

      No

      - Replace the Antilock Brake Module in accordance with the Service Information.
      - Perform the ABS VERIFICATION TEST. Refer to **ABS VERIFICATION TEST**.

C2202-ORIGINAL VIN MISMATCH / MISSING

For a complete wiring diagram, **refer to appropriate SYSTEM WIRING DIAGRAMS article**

WHEN MONITORED:

Ignition on.

SET CONDITION:

This DTC will set if the current VIN does not match the broadcast VIN.

POSSIBLE CAUSES

Possible Causes
COMMUNICATIONS DTC(S) PRESENT
POWERTRAIN CONTROL MODULE (PCM)
ANTILOCK BRAKE SYSTEM (ABS) MODULE

DIAGNOSTIC TEST

1. **DTC IS ACTIVE**
    1. Ignition on, engine not running.
    2. With the scan tool, erase DTC's.
    3. Turn ignition off to the lock position.
    4. Ignition on, engine not running.
    5. Wait ten seconds.
    6. With the scan tool, read DTC's.

    Is the status Active for this DTC?

    Yes

    - Go To 2.

    No

    - Go To 3.
2. **WRONG VIN PROGRAMMED IN PCM**
    1. Ignition on, engine not running.
    2. With the scan tool, read the VIN in the PCM.
    3. Compare VIN in the PCM to the vehicle VIN.

    Is the correct VIN programmed in the PCM?

Yes

- Replace the Antilock Brake System (ABS) Module in accordance with the Service Information.
- Perform the ABS VERIFICATION TEST. Refer to **ABS VERIFICATION TEST**.

No

- Replace the Powertrain Control Module (PCM) in accordance with the Service Information.
- Perform PCM VERIFICATION TEST. Refer to **3500 CAB & CHASSIS - POWERTRAIN VERIFICATION TEST** or **3500 CAB & CHASSIS, 4500 & 5500 - POWERTRAIN VERIFICATION TEST - 6.7L** .

3. **COMMUNICATION DTCS PRESENT**
   1. Turn ignition off to the lock position.
   2. With the scan tool, read DTC's in all other modules. If any communications DTC's are present, refer to the appropriate diagnostic procedure. Refer to **TIPM - DIAGNOSIS AND TESTING** .
   3. Perform any Technical Service Bulletins that may apply.

   Were any problems found?

   Yes

   - Repair as necessary.
   - Perform the ABS VERIFICATION TEST. Refer to **ABS VERIFICATION TEST**.

   No

   - Test Complete.

C2204-DYNAMICS SENSOR INTERNAL

For a complete wiring diagram, **refer to appropriate SYSTEM WIRING DIAGRAMS article** .

NOTE: **The Electronic Stability Control (ESC) may also be referred to as Electronic Stability Program (ESP) depending on the vehicle model year and configuration. Certain components may also reference ESP, ESC, or use the traction control symbol.**

WHEN MONITORED:

Continuously, with ignition on, until vehicle speed exceeds 20 km/h (12.4 mph) for the first time, but not if the sensor voltage is out of range.

Or, during diagnostic mode.

Or, if the monitoring was inhibited by a corresponding diagnostics command.

Or, if the vehicle speed has exceeded 20 km/h (12.4 mph) during the actual ignition cycle.

Or, if at least one over spinning wheel is detected.

Or, if one of the control functions is active.

SET CONDITION:

Internal problem with Dynamics Sensor.

POSSIBLE CAUSES

Possible Causes
DYNAMICS SENSOR INSTALLATION
DYNAMICS SENSOR

DIAGNOSTIC TEST

1. **VERIFY DIAGNOSTIC TROUBLE CODE (DTC) IS ACTIVE**
    1. Turn the ignition on.
    2. Using the scan tool, read and record ABS DTC's.
    3. Using the scan tool, read and record Environmental Data (EV Data).
    4. Using the scan tool, erase ABS DTC's.
    5. Cycle the ignition switch.

    WARNING: Make sure brake capability is available before road testing.

    6. Test drive the vehicle by turning the vehicle left or right in a curving manner at a velocity between 10 and 20 km/hr (6 and 12 mph).
    7. Park the vehicle.
    8. Using the scan tool, read ABS DTC's.

    Does this DTC reset?

    Yes

    - Go To 2.

    No

    - Perform the ABS INTERMITTENT CONDITION diagnostic procedure. Refer to **ABS**

INTERMITTENT CONDITION.

2. **CHECK THE DYNAMICS SENSOR INSTALLATION**

NOTE: Dynamics Sensor installation and mounting bolt torque is crucial for proper operation.

1. Turn the ignition off.
2. Check the Dynamics Sensor for damaged, modified, and bent mounting brackets.
3. Check the Dynamics Sensor mounting bolts for a loose or over tightened condition.

Were any problems found?

Yes

- Repair as necessary.
- Perform the ABS VERIFICATION TEST. Refer to **ABS VERIFICATION TEST**.

No

- Replace the Dynamics Sensor in accordance with the Service Information.
- Perform the ABS VERIFICATION TEST. Refer to **ABS VERIFICATION TEST**.

C2205-STEERING ANGLE SENSOR INTERNAL

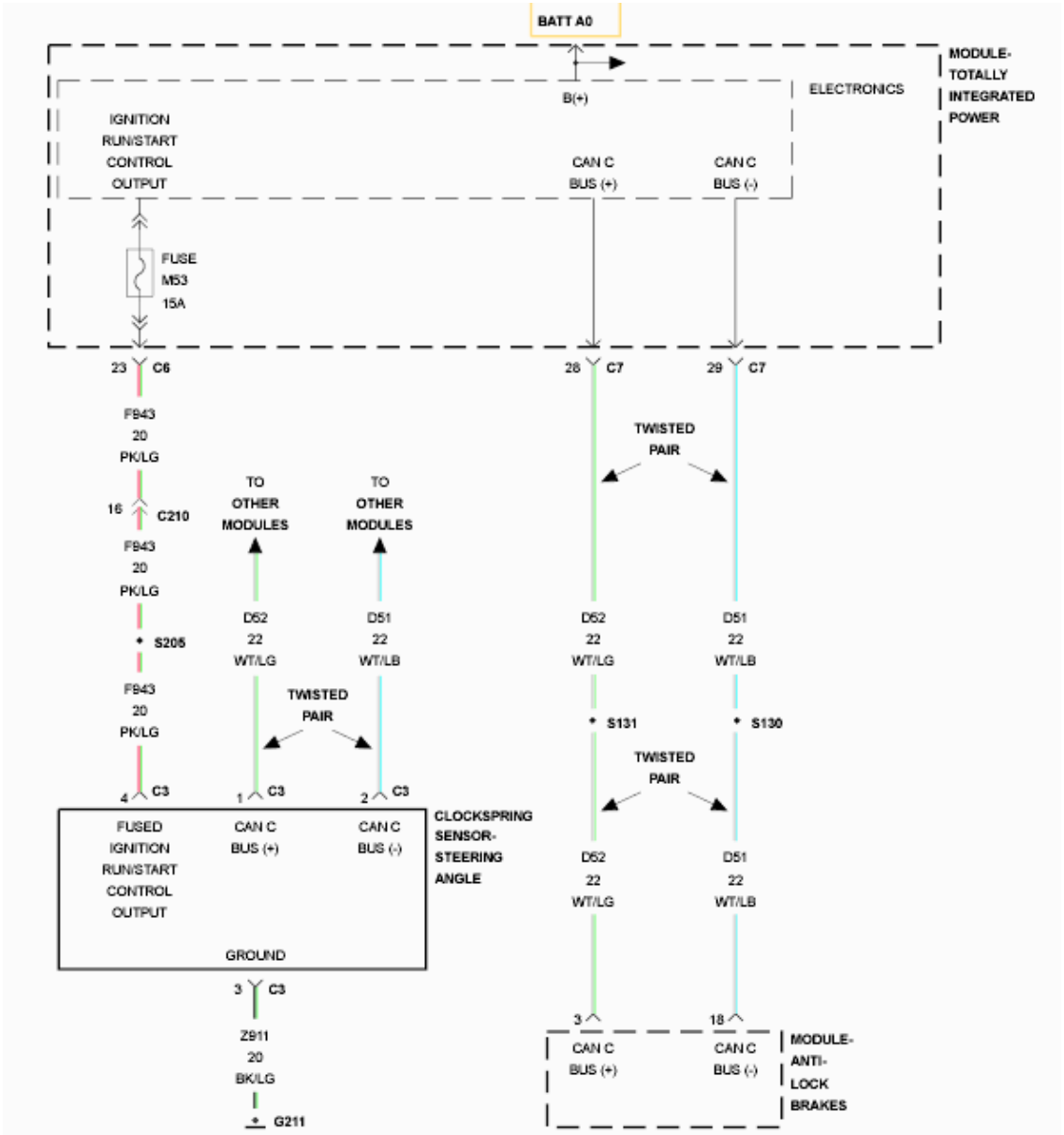

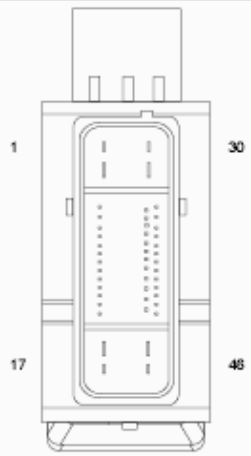

MODULE-
ANTI-LOCK

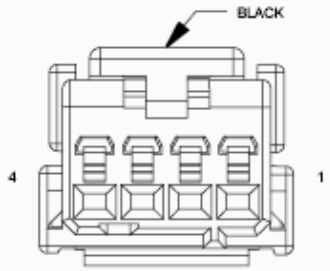

CLOCKSPRING C3
(SAS)

Fig. 195: Steering Angle Sensor Wiring Diagram
Courtesy of CHRYSLER GROUP, LLC

For a complete wiring diagram, **refer to appropriate SYSTEM WIRING DIAGRAMS article** .

WHEN MONITORED:

With the ignition on.

SET CONDITION:

When the Antilock Brake System (ABS) Module detects the Steering Angle Sensor (SAS) has sent the internal failure status.

POSSIBLE CAUSES

Possible Causes
WIRING HARNESS, TERMINAL, CONNECTOR DAMAGE
(F943) FUSED B(+) CIRCUIT FOR AN OPEN
(G211) GROUND CIRCUIT FOR AN OPEN
CLOCKSPRING (SAS)

DIAGNOSTIC TEST

1. **CHECK FOR A DTC C2205-STEERING ANGLE SENSOR INTERNAL**

   NOTE: This DTC must be active for the results of this test to be valid.

   1. Turn the ignition on, engine not running.
   2. With the scan tool, read and record DTC's.
   3. With the scan tool, read and record Freeze Frame information.
   4. With the scan tool, erase DTC's.
   5. Turn the steering wheel lock to lock.
   6. With the scan tool, read and record DTC's.

   Does the scan tool display: C2205-STEERING ANGLE SENSOR INTERNAL?

   Yes

   - Go To 2.

   No

   - Perform the ABS INTERMITTENT CONDITION diagnostic procedure. Refer to **ABS INTERMITTENT CONDITION**.

2. **CHECK THE WIRING HARNESS, TERMINALS, AND CONNECTORS**

WARNING: To avoid serious or fatal injury on vehicles equipped with airbags, disable the Supplemental Restraint System (SRS) before attempting any steering wheel, steering column, airbag, seat belt tensioner, impact sensor, or instrument panel component diagnosis or service. Disconnect and isolate the battery negative (ground) cable, then wait two minutes for the system capacitor to discharge before performing further diagnosis or service. This is the only sure way to disable the SRS. Failure to take the proper precautions could result in accidental airbag deployment.

NOTE: Proper Clockspring (SAS) installation is crucial for proper operation.

1. Turn the ignition off to the lock position.
2. Check the Clockspring (SAS) installation.
3. Visually inspect the related wiring harness. Look for any bruised, chafed, pierced, or partially broken wires.
4. Visually inspect the related wiring harness connectors. Look for broken, bent, pushed out, or corroded terminals.

Were any problems found?

Yes

- Repair as necessary.
- Perform the ABS VERIFICATION TEST. Refer to **ABS VERIFICATION TEST**.

No

- Go To 3.

3. **CHECK THE VOLTAGE ON THE (F943) STEERING ANGLE SENSOR SUPPLY CIRCUIT**

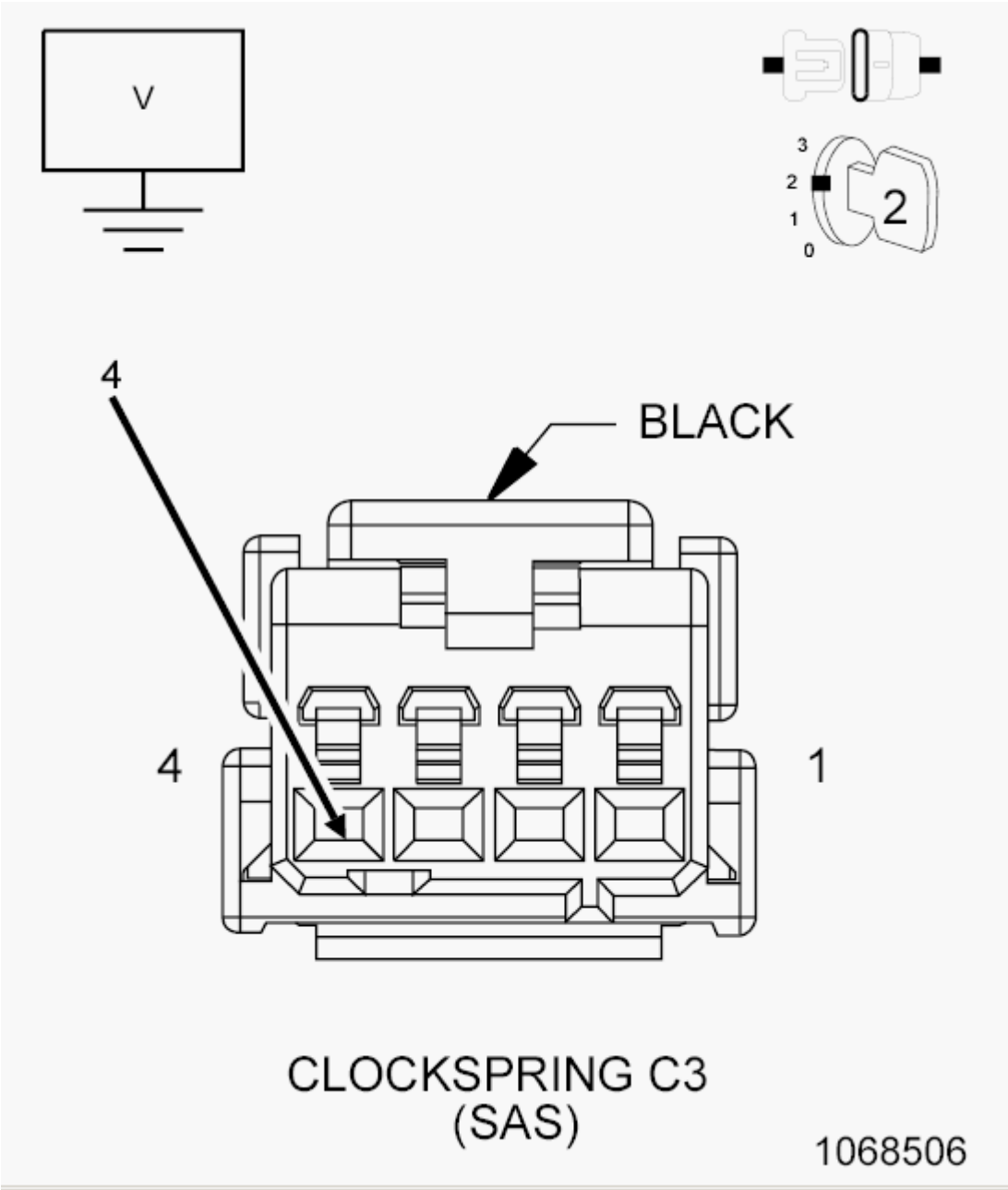

Fig. 196: Measuring Voltage On The Fused B(+) Circuit
Courtesy of CHRYSLER GROUP, LLC

1. Turn the ignition off to the lock position.
2. Disconnect the Clockspring C3 (SAS) harness connector.
3. Turn the ignition on, engine not running.
4. Measure the voltage between ground and the (F943) Steering Angle Sensor Supply circuit at the Clockspring C3 (SAS) harness connector.

   Is the voltage above 10 volts?

Yes

- Go To 4.

No

- Repair the (F943) Steering Angle Sensor Supply circuit for an open.
- Perform the ABS VERIFICATION TEST. Refer to **ABS VERIFICATION TEST**.

4. **CHECK THE RESISTANCE OF THE (G211) GROUND CIRCUIT**

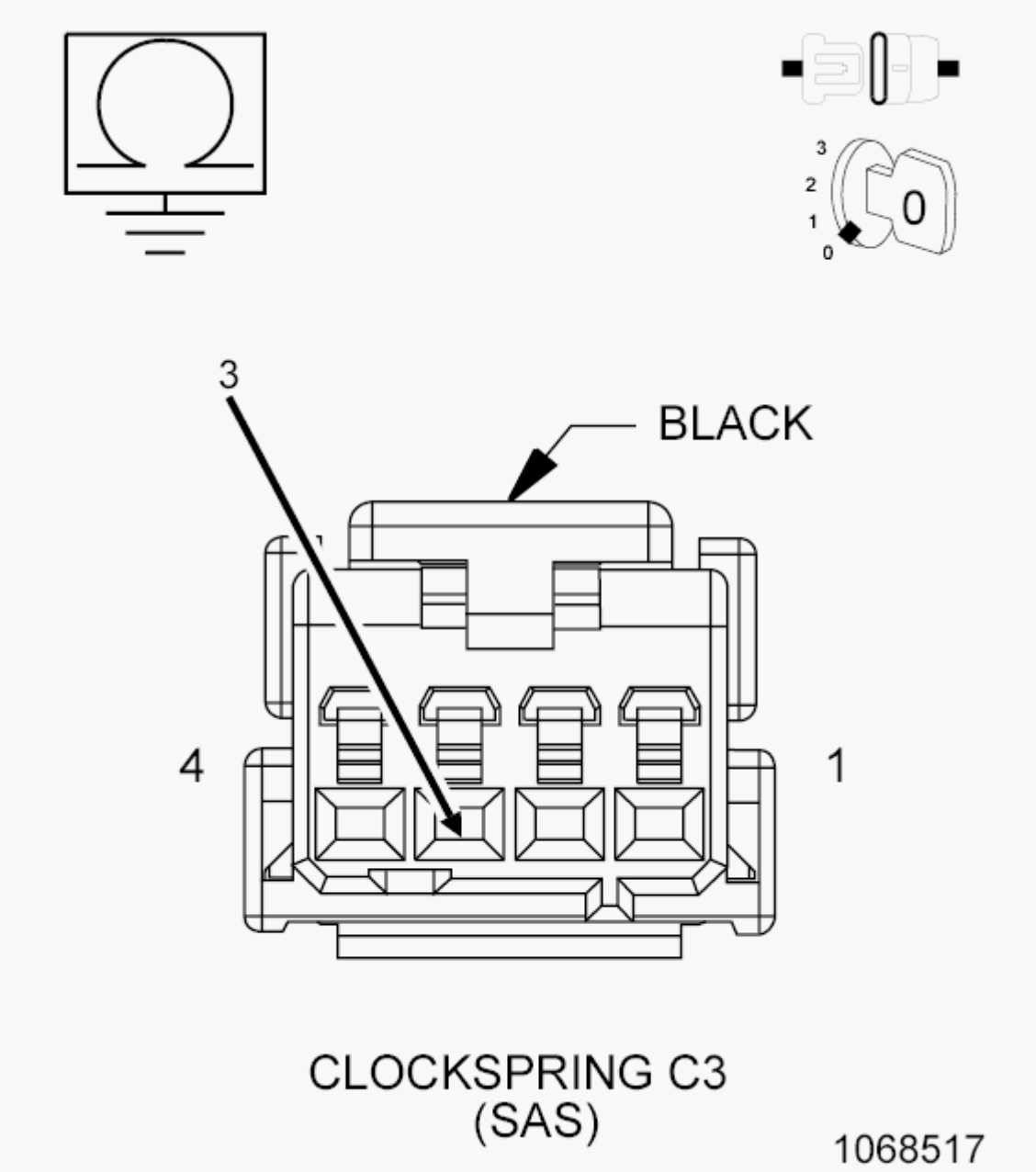

Fig. 197: Measuring Resistance Of The Ground Circuit

Courtesy of CHRYSLER GROUP, LLC

1. Turn ignition off to the lock position.
2. Measure the resistance between the (G211) Steering Angle Sensor Ground Circuit and Ground at the Clockspring C3 (SAS) harness connector.

   Is the resistance below 5.0 Ohm?

   Yes

   - Replace the Clockspring (SAS) in accordance with the Service Information. Refer to **CLOCKSPRING, INSTALLATION** .

   No

   - Repair the (G211) Steering Angle Sensor Ground circuit for an open.
   - Perform the ABS VERIFICATION TEST. Refer to **ABS VERIFICATION TEST**.

C2206-VEHICLE CONFIGURATION MISMATCH

For a complete wiring diagram, **refer to appropriate SYSTEM WIRING DIAGRAMS article**

NOTE: **The Electronic Stability Control (ESC) may also be referred to as Electronic Stability Program (ESP) depending on the vehicle model year and configuration. Certain components may also reference ESP, ESC, or use the traction control symbol.**

WHEN MONITORED:

Ignition on.

SET CONDITION:

This DTC will set if the vehicle type is not identified or incorrectly identified.

POSSIBLE CAUSES

Possible Causes
ANTILOCK BRAKE SYSTEM (ABS) MODULE
TOTALLY INTEGRATED POWER MODULE (TIPM)

DIAGNOSTIC TEST

1. **ANTILOCK BRAKE SYSTEM (ABS) MODULE**

   NOTE: **Diagnose and repair any Powertrain Control Module VIN or**

Communication DTC's before continuing with this test.

NOTE: **If C2202-Original VIN Mismatch / Missing is set along with this DTC, perform the diagnostic procedure for C2202 before continuing with this test.**

1. Ignition on, engine not running.
2. Using the scan tool, erase DTC's.
3. Turn ignition off to the lock position.
4. Ignition on, engine not running.
5. Using the scan tool, select View DTC's.

   Is the status Active for this DTC?

   Yes

   - Check vehicle configuration in TIPM. Refer to TIPM information for procedure. If configuration incorrect, fix and reinitialize ABS module. Refer to **TIPM - DIAGNOSIS AND TESTING** .
   - Perform the ABS VERIFICATION TEST. Refer to **ABS VERIFICATION TEST**.

   No

   - Use the scan tool to read DTC's in all other modules. If any communication DTC's are present, perform the appropriate diagnostic procedure. Perform any Technical Service Bulletins that apply. If no problems are found, test is complete.

U0002-CAN C BUS OFF PERFORMANCE

For a complete wiring diagram, **refer to appropriate SYSTEM WIRING DIAGRAMS article** .

WHEN MONITORED:

Ignition run time is greater than one second.

Battery voltage between 9 and 16 volts.

Engine run time greater than three seconds.

SET CONDITION:

Bus messages not received from the Totally Integrated Power Module (TIPM) for approximately two to five seconds.

POSSIBLE CAUSES

Possible Causes
CAN BUS CIRCUITS OPEN OR SHORTED DTCS RELATED TO BATTERY VOLTAGE, IGNITION, OR VIN MESSAGES TOTALLY INTEGRATED POWER MODULE POWER AND GROUND TIPM NOT CONFIGURED CORRECTLY TOTALLY INTEGRATED POWER MODULE (TIPM) MODULE THAT SET THIS DTC

DIAGNOSTIC TEST

1. **ACTIVE DTC**
    1. Ignition on, engine not running.
    2. With the scan tool, select view DTC's.

       Is the DTC Active at this time?

       Yes

       - **Diagnose the U0002-CAN C BUS OFF PERFORMANCE as the U0001-CAN C BUS CIRCUIT test. Refer to U0001-CAN C BUS** and perform the diagnostic procedure.

       No

       - **Refer to STORED LOST COMMUNICATION DTCS** and perform the diagnostic procedure.

U0100-LOST COMMUNICATION WITH THE ECM/PCM

For a complete wiring diagram, **refer to appropriate SYSTEM WIRING DIAGRAMS article** .

WHEN MONITORED:

Ignition run time is greater than one second.

Battery voltage between 9 and 16 volts.

Engine run time greater than three seconds.

SET CONDITION:

Bus messages not received from the Powertrain Control Module (ECM/PCM) for approximately two to five seconds.

POSSIBLE CAUSES

Possible Causes

CAN BUS CIRCUITS OPEN OR SHORTED DTCS RELATED TO BATTERY VOLTAGE, IGNITION, OR VIN MESSAGES POWERTRAIN CONTROL MODULE POWER AND GROUND TIPM NOT CONFIGURED CORRECTLY POWERTRAIN CONTROL MODULE (ECM/PCM) MODULE THAT SET THIS DTC

DIAGNOSTIC TEST

1. **ACTIVE DTC**
    1. Ignition on, engine not running.
    2. With the scan tool, select view DTC's.

    Is the DTC Active at this time?

    Yes

    - **Refer to U0100-LOST COMMUNICATION WITH ECM/PCM** and perform the diagnostic procedure.

    No

    - **Refer to STORED LOST COMMUNICATION DTCS** and perform the diagnostic procedure.

U0101-LOST COMMUNICATION WITH TCM

For a complete wiring diagram, **refer to appropriate SYSTEM WIRING DIAGRAMS article**

WHEN MONITORED:

SET CONDITION:

If the Antilock Brakes System (ABS) Module fails to receive bus messages from the Transmission Control Module (TCM) for approximately 500 ms.

POSSIBLE CAUSES

Possible Causes
DTC's RELATED TO BATTERY VOLTAGE, IGNITION, OR VIN MESSAGES
CAN C BUS CIRCUITS OPEN OR SHORTED
TRANSMISSION CONTROL MODULE (TCM) POWER AND GROUND
POWERTRAIN CONTROL MODULE (PCM) DTC's PRESENT
TRANSMISSION CONTROL MODULE (TCM)
ANTILOCK BRAKES SYSTEM (ABS) MODULE

DIAGNOSTIC TEST

1. **VERIFY DTC IS ACTIVE**

   NOTE: Verify the IOD fuse is installed and battery voltage is between 10 and 16 volts before proceeding.

   NOTE: If present, diagnose and repair DTC U0002-CAN C BUS OFF PERFORMANCE, DTC U0146-LOST COMMUNICATION WITH CENTRAL GATEWAY, or DTC U1502-IMPLAUSIBLE MESSAGE DATA LENGTH RECEIVED FROM FCM / BCM before diagnosing this DTC.

   1. Ignition on, engine not running.
   2. With the scan tool, read and record ABS DTC's.
   3. With the scan tool, read and record Environmental Data (EV Data).
   4. With the scan tool, erase ABS DTC's.
   5. Cycle the ignition switch.
   6. With the scan tool, read ABS DTC's.

   Does this DTC reset?

   Yes

   - Go To 2.

   No

   - Perform the Stored Lost Communication test procedure. Refer to **STORED LOST COMMUNICATION DTCS** .
   - Perform BODY VERIFICATION TEST. Refer to **STANDARD PROCEDURE** .

2. **CHECK FOR ANY OF THE FOLLOWING ACTIVE DTC's**

   1. With the scan tool, read all active DTC's from all CAN C Bus modules.

      NOTE: Check for CAN C hardware electrical, VIN Missing/Mismatch, battery or ignition related DTC's.

      Does the scan tool display any active DTC's related to the conditions listed above?

      Yes

      - Diagnose and repair the DTC's. Refer to appropriate Electrical Diagnostic Information.

      No

- Go To 3.

3. **VERIFY THAT THE TCM IS ACTIVE ON THE BUS**
    1. With the scan tool, select ECU View.
    2. Verify that the TCM is active on the bus.

    Is the TCM active on the bus?

    Yes

    - Go To 4.

    No

    - Perform the Stored Lost Communication test procedure. Refer to **STORED LOST COMMUNICATION DTCS** .
    - Perform BODY VERIFICATION TEST. Refer to **STANDARD PROCEDURE** .

4. **CHECK FOR ADDITIONAL COMMUNICATION RELATED DTC's**
    1. With the scan tool, select Network View and select Advanced.

    Is there more than one module with active DTC's "Logged Against" the TCM?

    Yes

    - Replace/update the Transmission Control Module (TCM) in accordance with the service information.
    - Perform TCM VERIFICATION TEST. Refer to **AS68RC TRANSMISSION VERIFICATION TEST** .

    No

    - Replace the Antilock Brakes System (ABS) Module in accordance with the service information.
    - Perform the ABS VERIFICATION TEST. Refer to **ABS VERIFICATION TEST**.

U0102-00-LOST COMMUNICATION WITH TRANSFER CASE CONTROL MODULE / AWD

For a complete wiring diagram, **refer to appropriate SYSTEM WIRING DIAGRAMS article** .

WHEN MONITORED:

Ignition run time is greater than one second.

Battery voltage between 9 and 16 volts.

Engine run time greater than three seconds.

SET CONDITION:

Bus messages not received from the Totally Integrated Power Module (TIPM) for approximately two to five seconds.

POSSIBLE CAUSES

Possible Causes
CAN BUS CIRCUITS OPEN OR SHORTED DTCS RELATED TO BATTERY VOLTAGE, IGNITION, OR VIN MESSAGES TOTALLY INTEGRATED POWER MODULE POWER AND GROUND TIPM NOT CONFIGURED CORRECTLY TOTALLY INTEGRATED POWER MODULE (TIPM) MODULE THAT SET THIS DTC

DIAGNOSTIC TEST

1. **ACTIVE DTC**
    1. Ignition on, engine not running.
    2. With the scan tool, select view DTC's.

    Is the DTC Active at this time?

    Yes

    - **Refer to U0102-LOST COMMUNICATION WITH TRANSFER CASE CONTROL MODULE / AWD** and perform the diagnostic procedure.

    No

    - **Refer to STORED LOST COMMUNICATION DTCS** and perform the diagnostic procedure.

U0125-LOST COMMUNICATION WITH DYNAMICS SENSOR

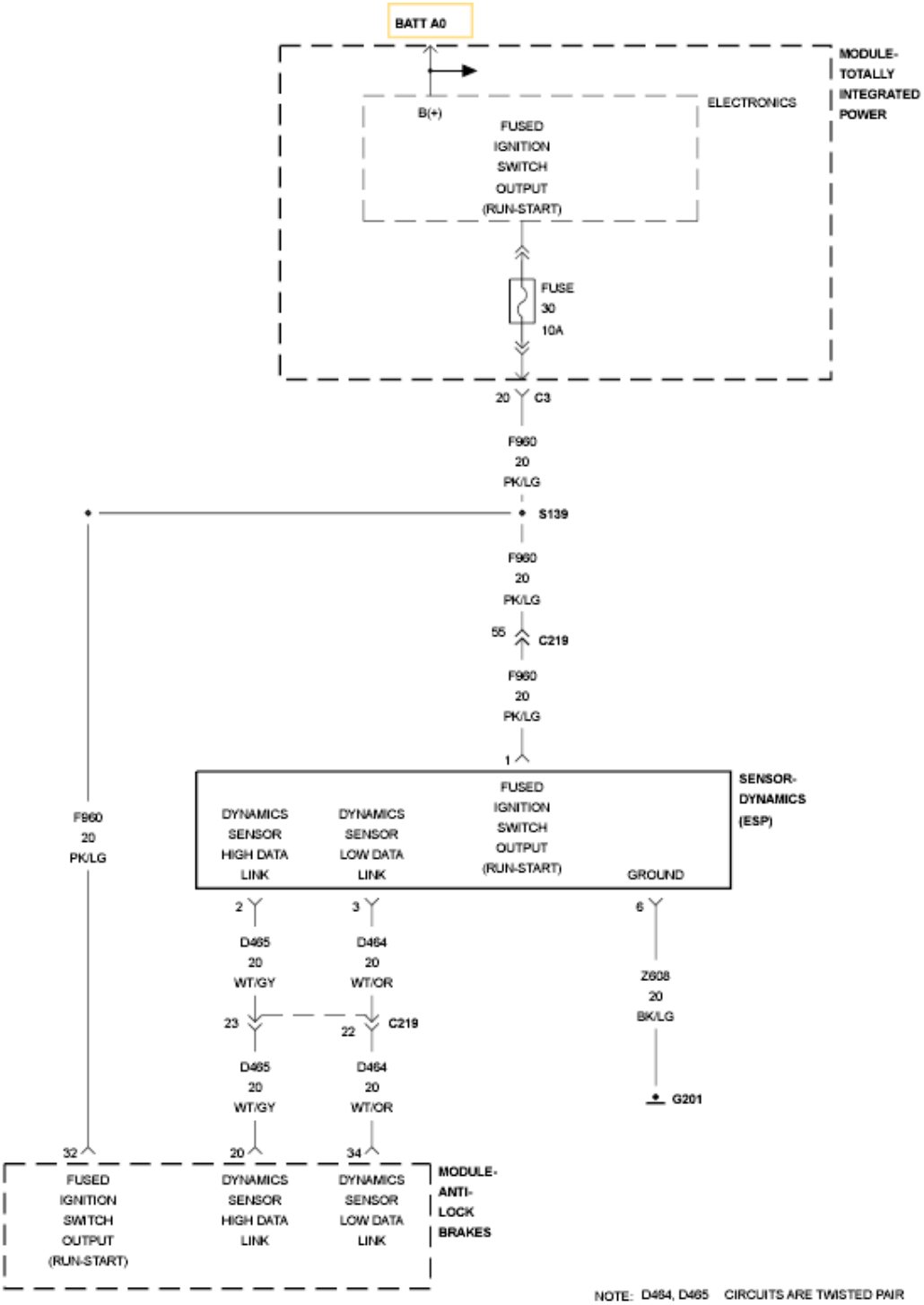

NOTE: D464, D465 CIRCUITS ARE TWISTED PAIR

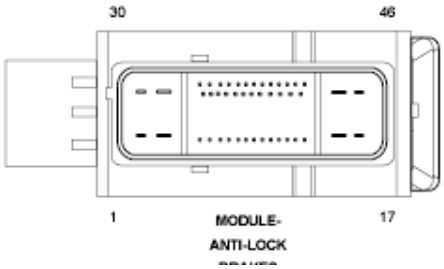

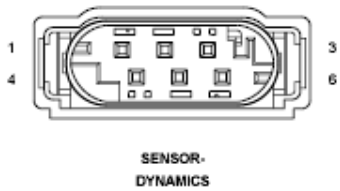

Fig. 198: Dynamics Sensor Wiring Diagram
Courtesy of CHRYSLER GROUP, LLC

For a complete wiring diagram, **refer to appropriate SYSTEM WIRING DIAGRAMS article** .

NOTE: **The Electronic Stability Control (ESC) may also be referred to as Electronic Stability Program (ESP) depending on the vehicle model year and configuration. Certain components may also reference ESP, ESC, or use the traction control symbol.**

WHEN MONITORED:

With the ignition on.

SET CONDITION:

If the Antilock Brakes Module fails to receive bus messages from the Dynamics Sensor.

POSSIBLE CAUSES

Possible Causes
WIRING HARNESS, TERMINAL, CONNECTOR DAMAGE
(D465) DYNAMICS SENSOR HIGH DATA LINK CIRCUIT FOR A SHORT TO VOLTAGE
(D465) DYNAMICS SENSOR HIGH DATA LINK CIRCUIT FOR A SHORT TO GROUND
(D465) DYNAMICS SENSOR HIGH DATA LINK CIRCUIT FOR AN OPEN
(D464) DYNAMICS SENSOR LOW DATA LINK CIRCUIT FOR A SHORT TO VOLTAGE
(D464) DYNAMICS SENSOR LOW DATA LINK CIRCUIT FOR A SHORT TO GROUND
(D464) DYNAMICS SENSOR LOW DATA LINK CIRCUIT FOR AN OPEN
(D464) DYNAMICS SENSOR LOW DATA LINK CIRCUIT SHORTED TO (D465) DYNAMICS SENSOR HIGH DATA LINK CIRCUIT
DYNAMICS SENSOR

DIAGNOSTIC TEST

1. **VERIFY DIAGNOSTIC TROUBLE CODE (DTC) IS ACTIVE**

   NOTE: **If present, diagnose and repair DTC C2114-DYNAMICS SENSOR SUPPLY VOLTAGE LOW or DTC C2115-DYNAMICS SENSOR SUPPLY VOLTAGE HIGH before proceeding.**

   1. Turn the ignition on.
   2. Using the scan tool, read and record ABS DTC's.
   3. Using the scan tool, read and record Environmental Data (EV Data).
   4. Using the scan tool, erase ABS DTC's.

5. Cycle the ignition switch.
6. Using the scan tool, read ABS DTC's.

   Does this DTC reset?

   Yes

   - Go To 2.

   No

   - Perform the ABS INTERMITTENT CONDITION diagnostic procedure. Refer to **ABS INTERMITTENT CONDITION**.

2. **INSPECT RELATED WIRING HARNESS, TERMINALS, AND CONNECTORS**

   WARNING: To avoid serious or fatal injury on vehicles equipped with airbags, disable the Supplemental Restraint System (SRS) before attempting any steering wheel, steering column, airbag, seat belt tensioner, impact sensor, or instrument panel component diagnosis or service. Disconnect and isolate the battery negative (ground) cable, then wait two minutes for the system capacitor to discharge before performing further diagnosis or service. This is the only sure way to disable the SRS. Failure to take the proper precautions could result in accidental airbag deployment.

   NOTE: Proper Steering Angle Sensor installation is crucial for proper operation.

   1. Visually inspect the related wiring harness. Look for any pinched, chafed, pierced, and partially broken wires.
   2. Visually inspect the related wiring harness connectors. Look for broken, bent, pushed out, and corroded terminals.

      Were any problems found?

      Yes

      - Repair as necessary.
      - Perform the ABS VERIFICATION TEST. Refer to **ABS VERIFICATION TEST**.

      No

      - Go To 3.

3. **CHECK THE (D465) DYNAMICS SENSOR HIGH DATA LINK CIRCUIT FOR A SHORT TO VOLTAGE**

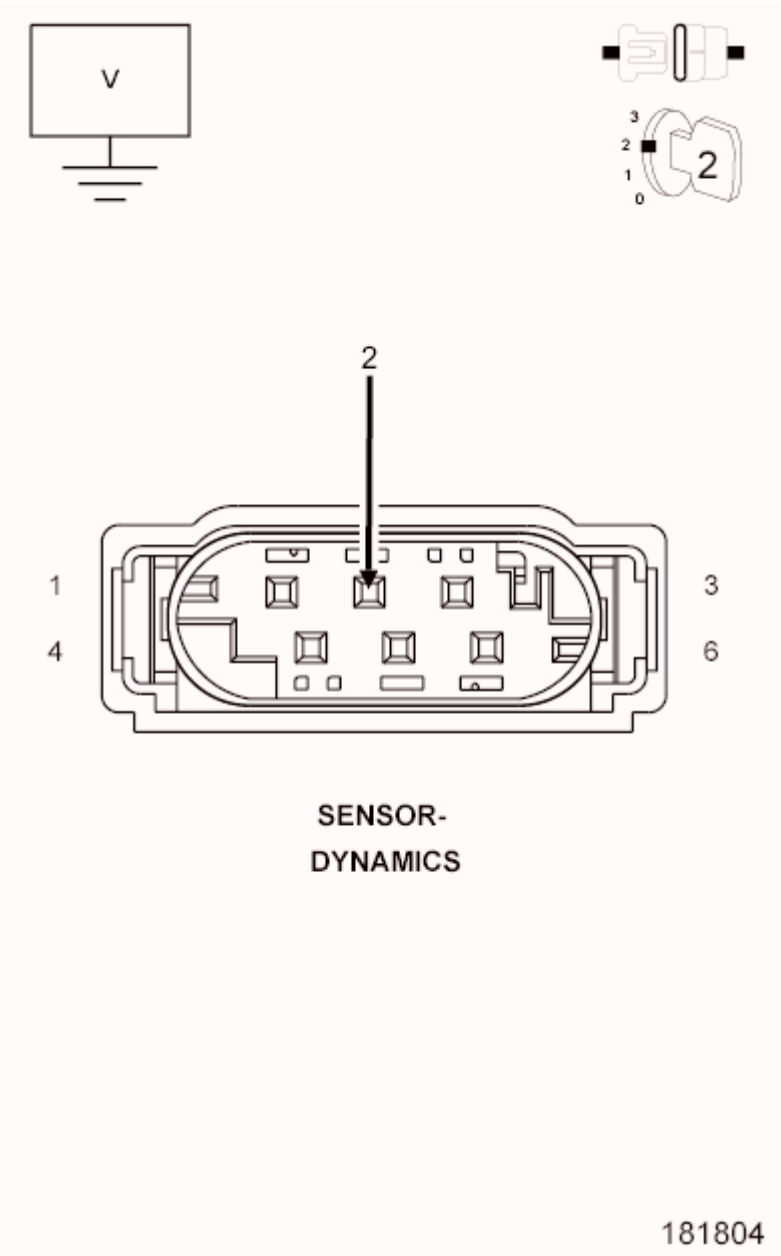

Fig. 199: Checking Dynamics Sensor High Data Link Circuit For A Short To Voltage
Courtesy of CHRYSLER GROUP, LLC

1. Disconnect the Antilock Brakes Module harness connector.
2. Disconnect the Dynamics Sensor harness connector.
3. Turn the ignition on.
4. Measure the voltage of the (D465) Dynamics Sensor High Data Link circuit.

   Is there any voltage present?

   Yes

- Repair the (D465) Dynamics Sensor High Data Link circuit for a short to voltage.
- Perform the ABS VERIFICATION TEST. Refer to **ABS VERIFICATION TEST**.

No

- Go To 4.

4. **CHECK THE (D465) DYNAMICS SENSOR HIGH DATA LINK CIRCUIT FOR A SHORT TO GROUND**

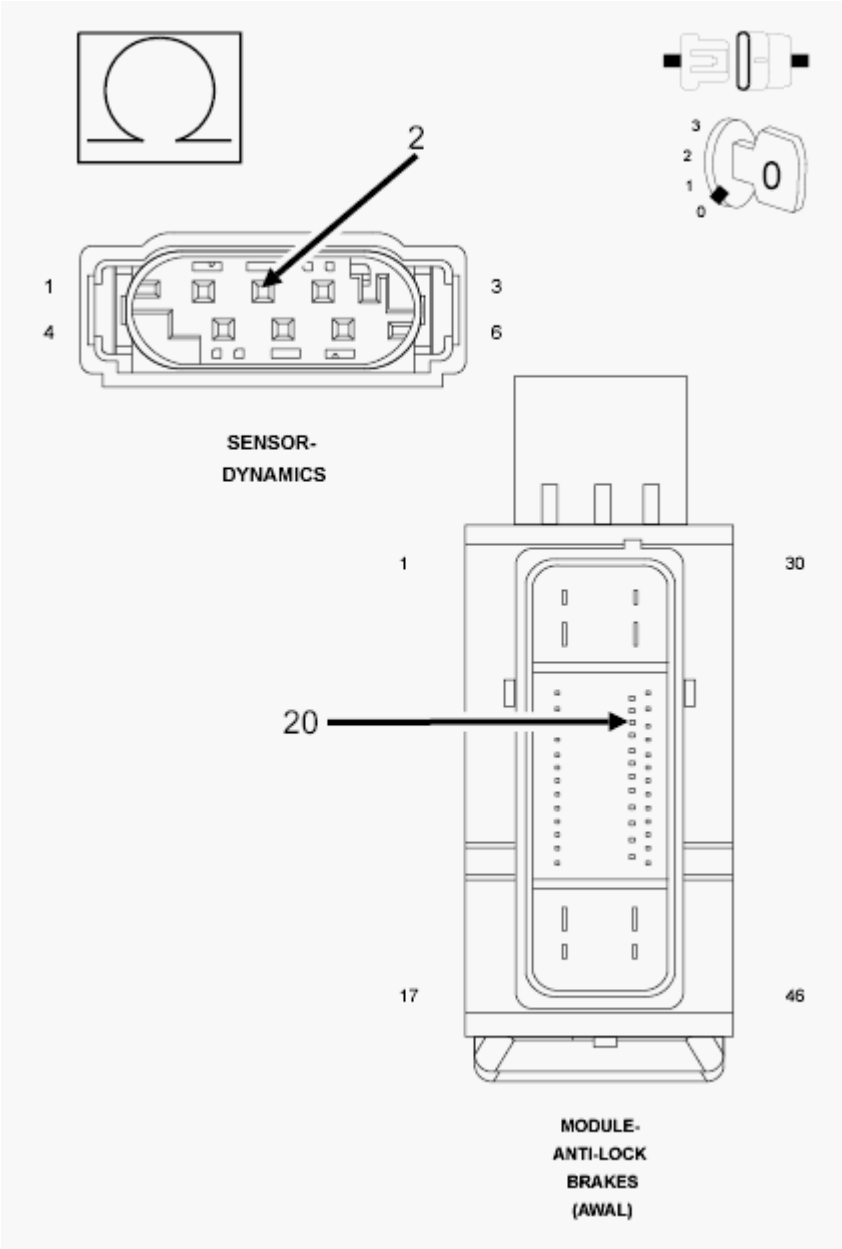

Fig. 200: Checking Dynamics Sensor High Data Link Circuit For A Short To Ground
Courtesy of CHRYSLER GROUP, LLC

1. Turn the ignition off.
2. Measure the resistance of the (D465) Dynamics Sensor High Data Link circuit between ground and the Dynamics Sensor harness connector.

   Is the resistance below 5.0 Ohms?

   Yes

   - Repair the (D465) Dynamics Sensor High Data Link circuit for a short to ground.
   - Perform the ABS VERIFICATION TEST. Refer to **ABS VERIFICATION TEST**.

   No

   - Go To 5.

5. **CHECK THE (D465) DYNAMICS SENSOR HIGH DATA LINK CIRCUIT FOR AN OPEN**

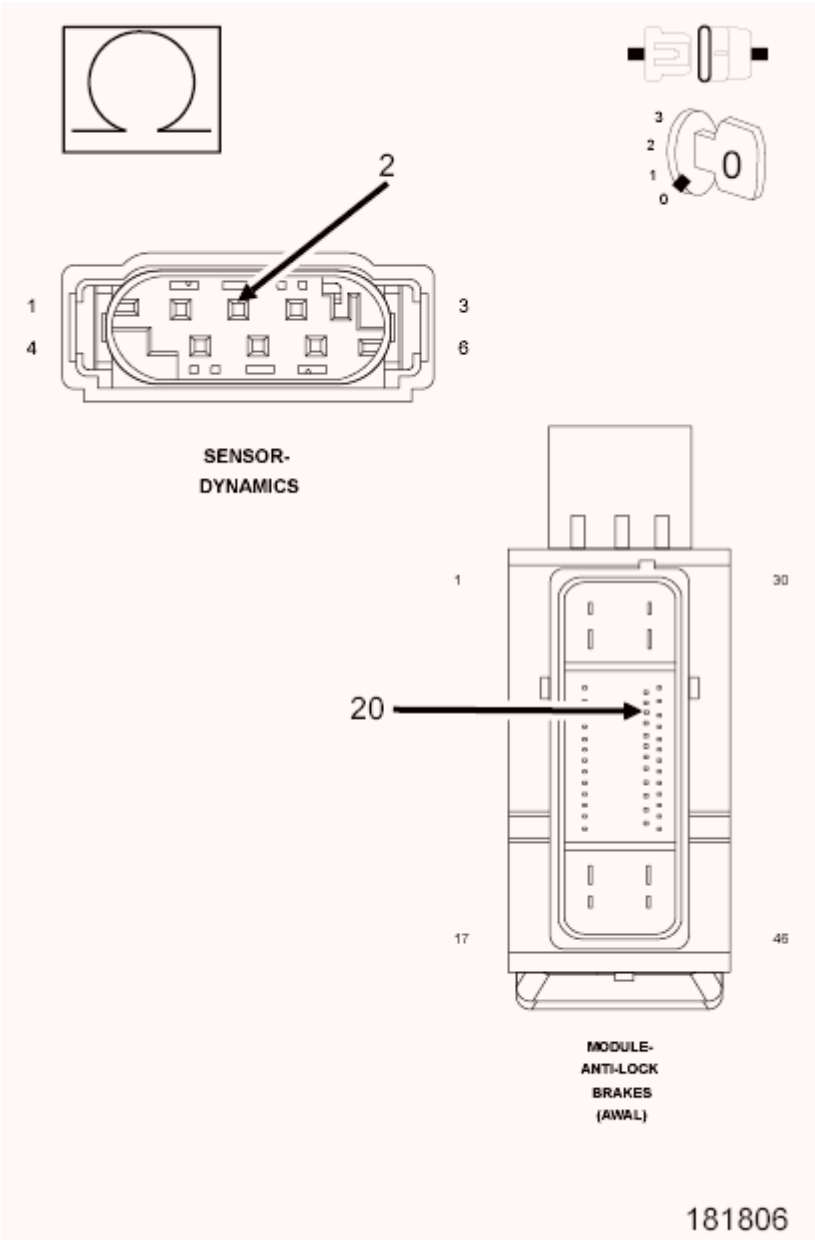

Fig. 201: Checking Dynamics Sensor High Data Link Circuit For An Open
Courtesy of CHRYSLER GROUP, LLC

1. Measure the resistance of the (D465) Dynamics Sensor High Data Link circuit between the Dynamics Sensor harness connector and the Antilock Brakes Module harness connector.

   Is the resistance below 5.0 Ohms?

   Yes

   - Go To 6.

   No

- Repair the (D465) Dynamics Sensor High Data Link circuit for an open.
- Perform the ABS VERIFICATION TEST. Refer to **ABS VERIFICATION TEST**.

6. **CHECK THE (D464) DYNAMICS SENSOR LOW DATA LINK CIRCUIT FOR A SHORT TO VOLTAGE**

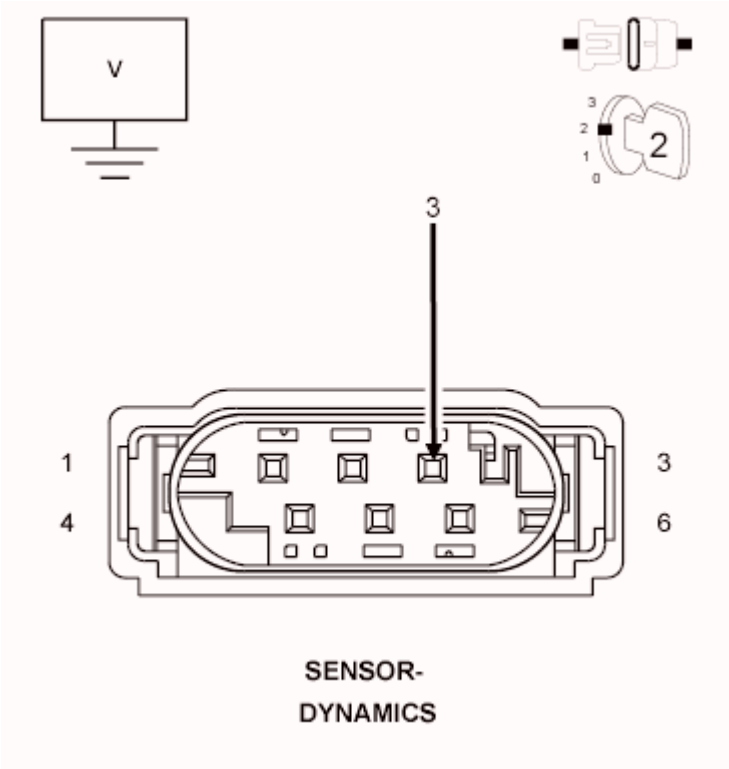

Fig. 202: Checking Dynamics Sensor Low Data Link Circuit For A Short To Voltage
Courtesy of CHRYSLER GROUP, LLC

1. Turn the ignition on.
2. Measure the voltage of the (D464) Dynamics Sensor Low Data Link circuit.

   Is there any voltage present?

   Yes

   - Repair the (D464) Dynamics Sensor Low Data Link circuit for a short to voltage.
   - Perform the ABS VERIFICATION TEST. Refer to **ABS VERIFICATION TEST**.

   No

   - Go To 7.

7. **CHECK THE (D464) DYNAMICS SENSOR LOW DATA LINK CIRCUIT FOR A SHORT TO GROUND**

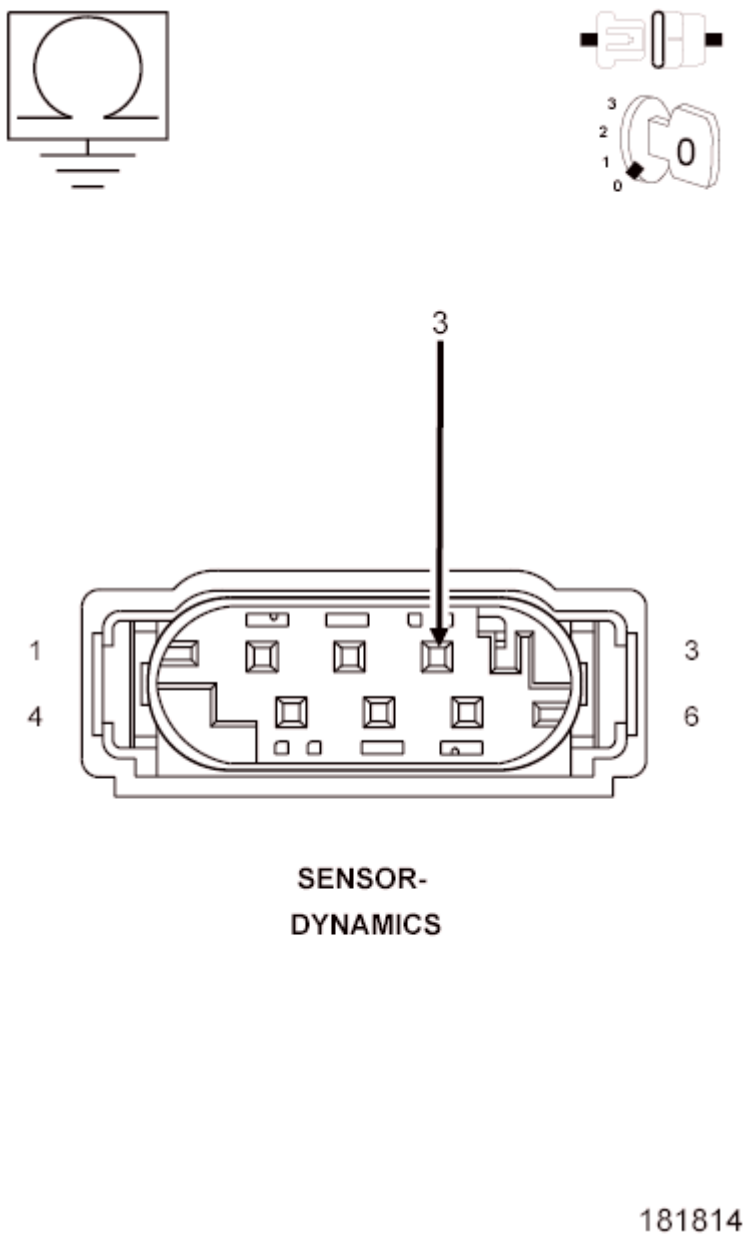

Fig. 203: Checking Dynamics Sensor Low Data Link Circuit For A Short To Ground
Courtesy of CHRYSLER GROUP, LLC

1. Turn the ignition off.
2. Measure the resistance of the (D464) Dynamics Sensor Low Data Link circuit between ground and the Dynamics Sensor harness connector.

   Is the resistance below 5.0 Ohms?

   Yes

   - Repair the (D464) Dynamics Sensor Low Data Link circuit for a short to ground.

- Perform the ABS VERIFICATION TEST. Refer to **ABS VERIFICATION TEST**.

No

- Go To 8.

8. **CHECK THE (D464) DYNAMICS SENSOR LOW DATA LINK CIRCUIT FOR AN OPEN**

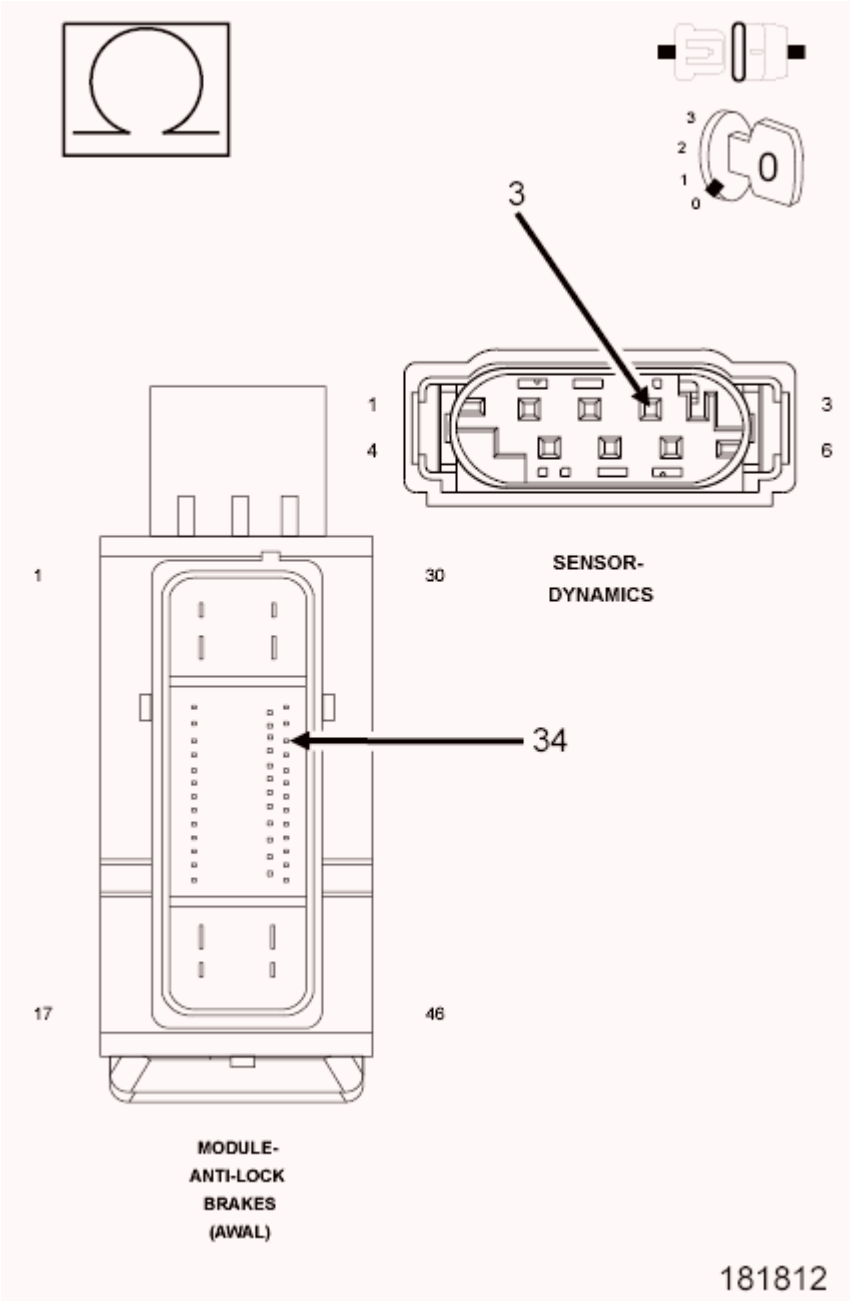

Fig. 204: Checking Dynamics Sensor Low Data Link Circuit For An Open
Courtesy of CHRYSLER GROUP, LLC

1. Measure the resistance of the (D464) Dynamics Sensor Low Data Link circuit between the

Dynamics Sensor harness connector and the Antilock Brakes Module harness connector.

Is the resistance below 5.0 Ohms?

Yes

- Go To 9.

No

- Repair the (D464) Dynamics Sensor Low Data Link circuit for an open.
- Perform the ABS VERIFICATION TEST. Refer to **ABS VERIFICATION TEST**.

9. **(D465) DYNAMICS SENSOR HIGH DATA LINK CIRCUIT SHORTED TO THE (D464) DYNAMICS SENSOR LOW DATA LINK CIRCUIT**

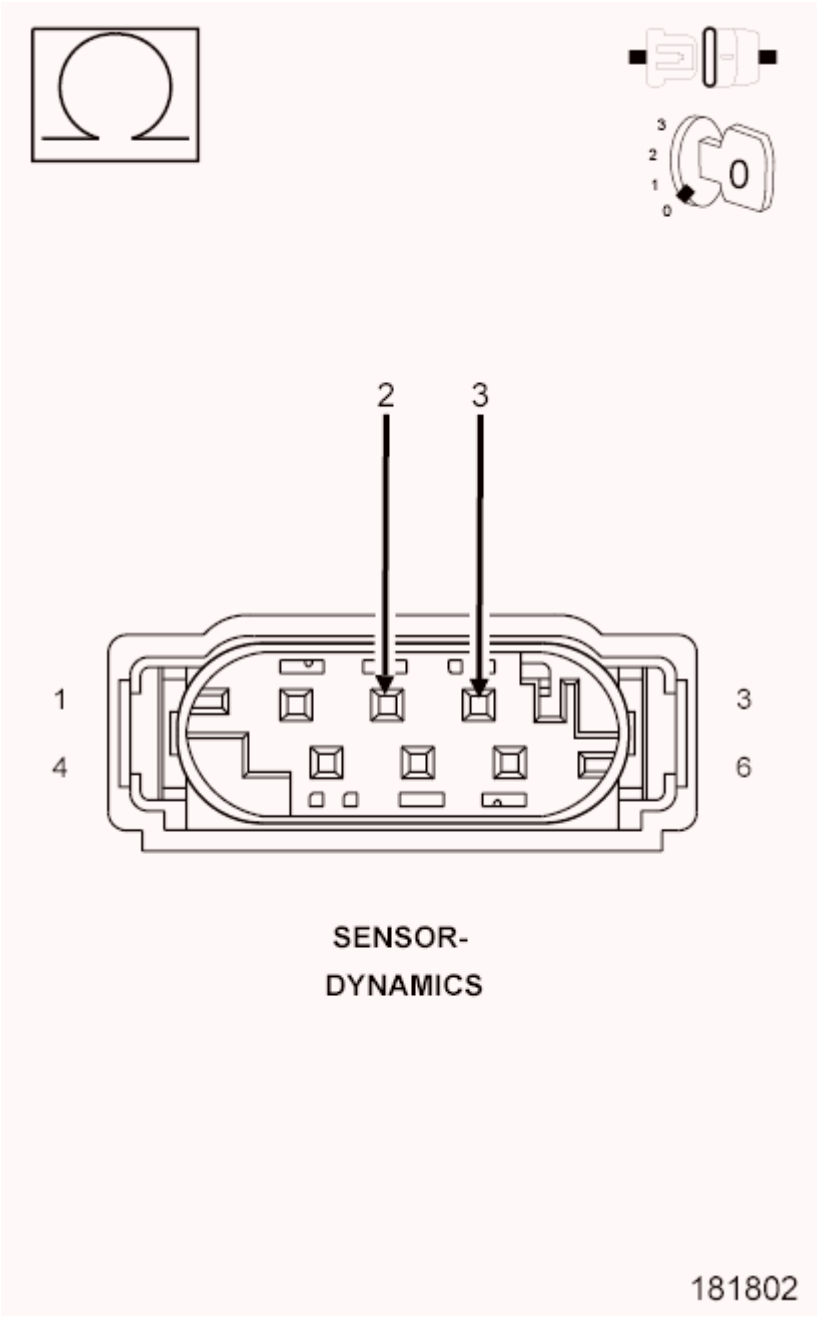

Fig. 205: Checking Dynamics Sensor High Data Link Circuit For A Short To The Dynamics Sensor Low Data Link Circuit
Courtesy of CHRYSLER GROUP, LLC

1. Turn the ignition off.
2. Measure the resistance between the (D465) Dynamics Sensor High Data Link circuit and the (D464) Dynamics Sensor Low Data Link circuit at the Antilock Brake Module harness connector.

   Is the resistance below 5.0 Ohms?

   Yes

- Repair the (D464) Dynamics Sensor Low Data Link circuit for a short to (D465) Dynamics Sensor High Data Link circuit.
- Perform the ABS VERIFICATION TEST. Refer to **ABS VERIFICATION TEST**.

No

- Replace the Dynamics Sensor in accordance with the Service Information.
- Perform the ABS VERIFICATION TEST. Refer to **ABS VERIFICATION TEST**.

U0126-LOST COMMUNICATION WITH STEERING ANGLE SENSOR

For a complete wiring diagram, **refer to appropriate SYSTEM WIRING DIAGRAMS article** .

NOTE: The Electronic Stability Control (ESC) may also be referred to as Electronic Stability Program (ESP) depending on the vehicle model year and configuration. Certain components may also reference ESP, ESC, or use the traction control symbol.

WHEN MONITORED:

SET CONDITION:

If the Antilock Brakes System (ABS) Module fails to receive bus messages from the Steering Angle Sensor (SAS) for approximately 100 ms.

POSSIBLE CAUSES

Possible Causes
CAN B OR CAN C BUS CIRCUITS OPEN OR SHORTED
DTCS RELATED TO BATTERY VOLTAGE, IGNITION, OR VIN MESSAGES
ANTILOCK BRAKE SYSTEM (ABS) MODULE NOT CONFIGURED CORRECTLY
STEERING ANGLE SENSOR (SAS) POWER AND GROUND
CLOCKSPRING (SAS)
MODULE THAT SET THIS DTC

DIAGNOSTIC TEST

1. **VERIFY DIAGNOSTIC TROUBLE CODE (DTC) IS ACTIVE**

NOTE: Make sure the IOD fuse is installed and battery voltage is between 10 and 16 Volts before proceeding.

1. Using the scan tool, read active DTC's.

   Is this DTC active?

Yes

- Go To 2.

No

- Perform the ABS INTERMITTENT CONDITION diagnostic procedure. Refer to **ABS INTERMITTENT CONDITION**.

2. **VERIFY THAT THE STEERING ANGLE SENSOR IS ACTIVE ON THE BUS**
   1. Turn the ignition on.
   2. Using the scan tool, select Network Diagnostics.
   3. Verify that the Steering Angle Sensor is active on the bus.

   Is the Steering Angle Sensor active on the bus?

   Yes

   - Go To 3.

   No

   - Refer to **NO RESPONSE FROM THE STEERING ANGLE SENSOR (SAS)** and perform the diagnostic procedure.

3. **CLOCKSPRING (SAS)**

   WARNING: **To avoid serious or fatal injury on vehicles equipped with airbags, disable the Supplemental Restraint System (SRS) before attempting any steering wheel, steering column, airbag, seat belt tensioner, impact sensor, or instrument panel component diagnosis or service. Disconnect and isolate the battery negative (ground) cable, then wait two minutes for the system capacitor to discharge before performing further diagnosis or service. This is the only sure way to disable the SRS. Failure to take the proper precautions could result in accidental airbag deployment.**

   NOTE: **Proper Clockspring (SAS) installation is crucial for proper operation.**

   1. Replace the Clockspring (SAS) in accordance with the Service Information. Refer to **CLOCKSPRING, INSTALLATION** .
   2. Perform the ABS VERIFICATION TEST. Refer to **ABS VERIFICATION TEST**.
   3. Using the scan tool, read ABS DTC's.

   Did DTC U0126-LOST COMMUNICATION WITH STEERING ANGLE SENSOR reset?

   Yes

- Replace the Antilock Brakes System (ABS) Module in accordance with the Service Information.
- Perform the ABS VERIFICATION TEST. Refer to **ABS VERIFICATION TEST**.

No

- Test Complete.

U0141-LOST COMMUNICATION WITH IPM (FCM/TIPM)

For a complete wiring diagram, **refer to appropriate SYSTEM WIRING DIAGRAMS article** .

WHEN MONITORED:

Continuously when the ignition is on.

The battery voltage between 10.0 and 16.0 Volts.

Ignition Off Draw (IOD) fuse installed.

Totally Integrated Power Module (TIPM) is configured correctly.

SET CONDITION:

Bus messages not received from the Totally Integrated Power Module (TIPM) for approximately two to five seconds.

POSSIBLE CAUSES

Possible Causes
CAN BUS CIRCUITS OPEN OR SHORTED
DTCS RELATED TO BATTERY VOLTAGE, IGNITION, OR VIN MESSAGES
TOTALLY INTEGRATED POWER MODULE POWER AND GROUND
TIPM NOT CONFIGURED CORRECTLY
TOTALLY INTEGRATED POWER MODULE (TIPM)
MODULE THAT SET THIS DTC

DIAGNOSTIC TEST

1. **VERIFY DTC IS ACTIVE**

NOTE: Make sure the IOD fuse is installed and the battery is fully charged before proceeding.

1. Turn the ignition on.

2. With the scan tool, read active DTC's.

   Is this DTC active?

   Yes

   - **Refer to U0141-LOST COMMUNICATION WITH IPM (FCM/TIPM)** and perform the diagnostic procedure.

   No

   - **Refer to STORED LOST COMMUNICATION DTCS** and perform the diagnostic procedure.

U0401-IMPLAUSIBLE DATA RECEIVED FROM ECM/PCM

For a complete wiring diagram **refer to appropriate SYSTEM WIRING DIAGRAMS article**

WHEN MONITORED:

Continuously with the ignition on, one valid CAN message received at least once, and no U0002-CAN C Bus Off Performance DTC present.

SET CONDITION:

When the Antilock Brake Module detects an incorrect CAN message from the Engine Control Module (ECM).

POSSIBLE CAUSES

Possible Causes
ABM CAN BUS DTCS
ENGINE DTCS
ANTILOCK BRAKE MODULE

DIAGNOSTIC TEST

1. **CHECK FOR DTC U0401-IMPLAUSIBLE DATA RECEIVED FROM ECM/PCM**

   NOTE: This DTC must be active for the results of this test to be valid.

   1. Turn the ignition on.
   2. With the scan tool, record and erase DTC's.
   3. Cycle the ignition switch from off to on.
   4. With the scan tool, read DTC's.

Does the scan tool display: U0401-IMPLAUSIBLE DATA RECEIVED FROM ECM/PCM?

Yes

- Go To 2.

No

- Perform the ABS INTERMITTENT CONDITION diagnostic procedure. Refer to **ABS INTERMITTENT CONDITION**.

2. **CHECK IF TIPM CAN BUS DTCS ARE PRESENT**
   1. With the scan tool, read FCM DTC's.

      Are there any TIPM CAN BUS DTC's present?

      Yes

      - Perform the appropriate diagnostic procedures. Refer to **TIPM - DIAGNOSIS AND TESTING** .
      - Perform the ABS VERIFICATION TEST. Refer to **ABS VERIFICATION TEST**.

      No

      - Go To 3.

3. **CHECK IF ENGINE DTCS ARE PRESENT**
   1. With the scan tool, read Engine DTC's.

      Are there any Engine DTC's present?

      Yes

      - Perform the appropriate diagnostic procedures. Refer to **5.7L - DIAGNOSTIC CODE INDEX - 3500 CAB & CHASSIS** and/or **6.7L - DIAGNOSTIC CODE INDEX - 3500 CAB & CHASSIS, 4500 & 5500** .

      No

      - Using the schematics as a guide, check the Antilock Brake Module pins, terminals, and connectors for corrosion, damage, or terminal push out. Pay particular attention to all power and ground circuits. If no problems are found, replace the Antilock Brake Module per the Service Information.
      - Perform the ABS VERIFICATION TEST. Refer to **ABS VERIFICATION TEST**.

U1003-ESP CAN C BUS PERFORMANCE

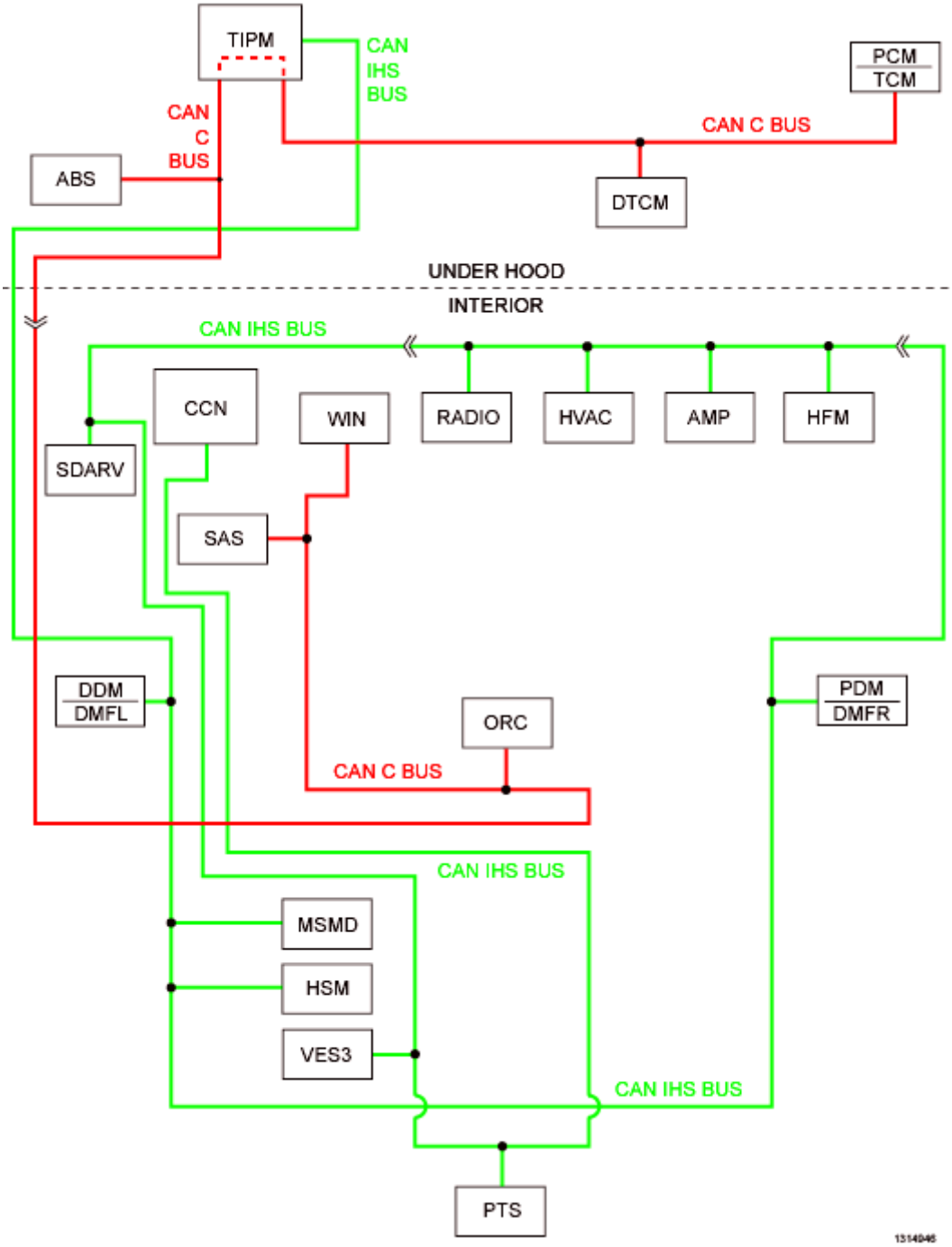

Fig. 206: CAN IHS BUS & TIPM CAN C BUS Communication Diagram
Courtesy of CHRYSLER GROUP, LLC

For a complete wiring diagram **refer to appropriate SYSTEM WIRING DIAGRAMS article**

WHEN MONITORED:

Continuously.

SET CONDITION:

One of the CAN messages that is assigned to the basic CAN channel was missed by the CAN driver. This means that the whole system was very slow in responding to the CAN interrupts.

POSSIBLE CAUSES

Possible Causes
INTERMITTENT ESP CAN C BUS PERFORMANCE DTC
CAN C BUS DTC's SET IN TOTALLY INTEGRATED POWER MODULE (TIPM)
(D52) CAN C BUS (+) CIRCUIT FOR AN OPEN
(D51) CAN C BUS (-) CIRCUIT FOR AN OPEN
ANTILOCK BRAKE SYSTEM (ABS) MODULE

DIAGNOSTIC TEST

1. **DTC IS ACTIVE**
    1. Ignition on, engine not running.
    2. With the scan tool, clear DTC's in the ABS Module.
    3. Cycle the ignition from off to on at least 5 times, leaving the ignition on for a minimum of 90 seconds per cycle.
    4. With the scan tool, select View DTC's in the Antilock Brake Module.

    Does the DTC reset and/or remain active?

    Yes

    - Go to 2.

    No

    - Go to 6.
2. **CAN C BUS DTC's SET IN TOTALLY INTEGRATED POWER MODULE (TIPM)**
    1. With the scan tool, select View DTC's in the TIPM.

    Are there any active CAN C Bus DTC's?

    Yes

    - Perform the appropriate diagnostic procedures. Refer to **TIPM - DIAGNOSIS AND TESTING** .

    No

    - Go to 3.

•

3. **(D52) CAN C BUS (+) CIRCUIT FOR AN OPEN**

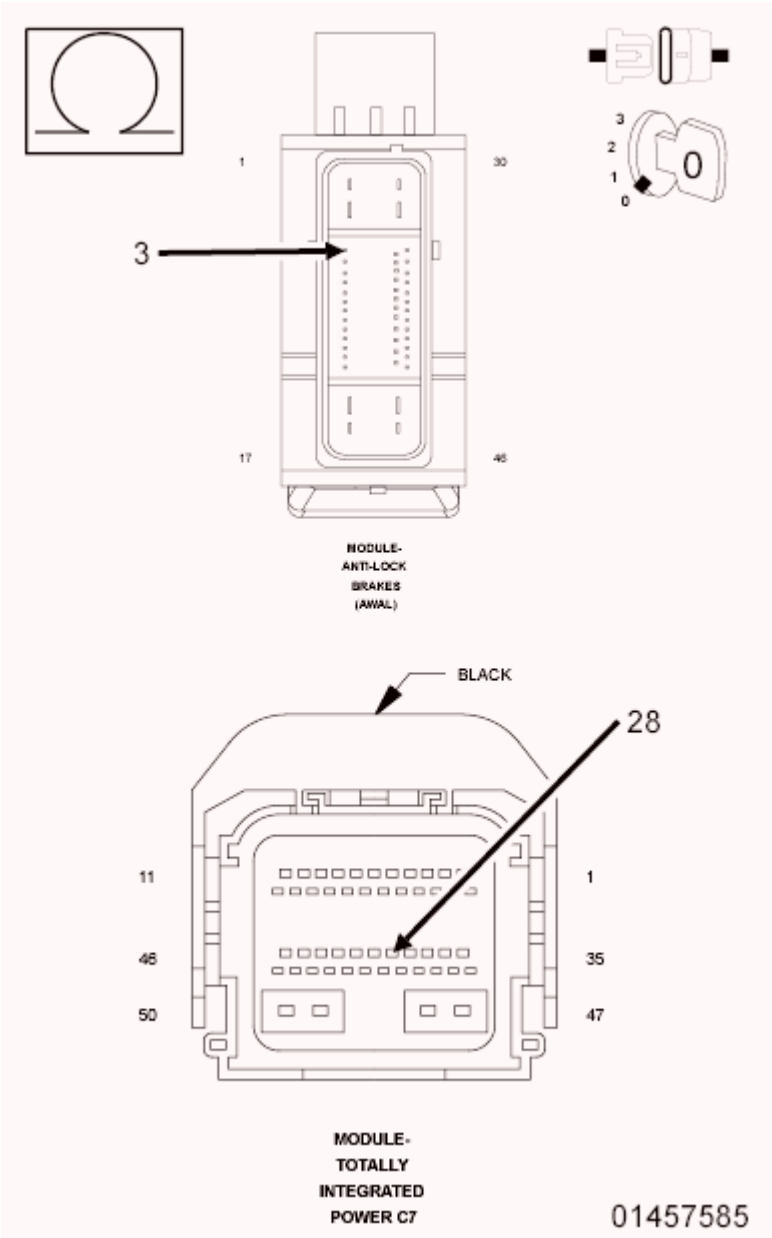

Fig. 207: Checking Can C Bus (+) Circuit For An Open
Courtesy of CHRYSLER GROUP, LLC

1. Turn the ignition off.
2. Disconnect the ABS Module harness connector.
3. Disconnect the TIPM C7 harness connector.
4. Measure the resistance of the (D52) CAN C Bus (+) circuit between the ABS Module harness connector and the TIPM C7 harness connector.

Is the resistance above 2.0 ohms?

Yes

- Repair the (D52) CAN C Bus (+) circuit for an open.
- Perform the ABS VERIFICATION TEST. Refer to **ABS VERIFICATION TEST**.

No

- Go to 4.

4. **(D51) CAN C BUS (-) CIRCUIT FOR AN OPEN**

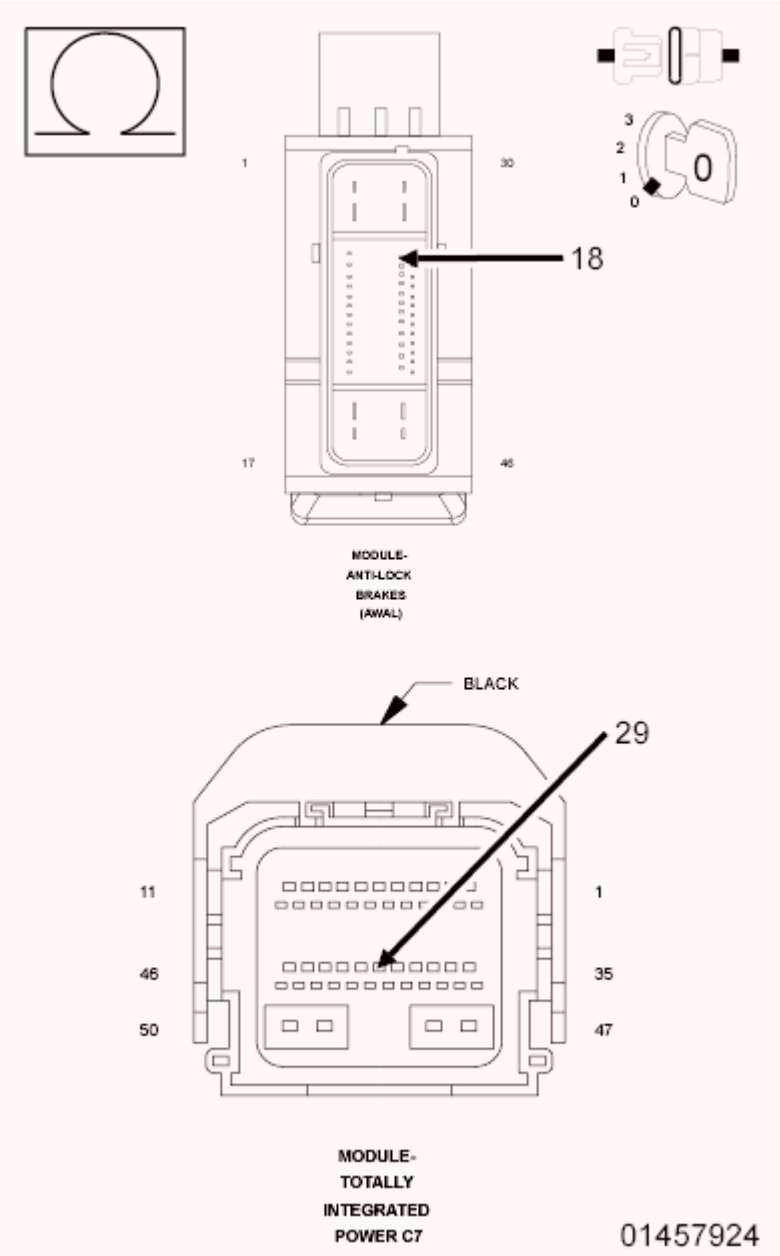

Fig. 208: Checking Can C Bus (+) Circuit For An Open
Courtesy of CHRYSLER GROUP, LLC

1. Measure the resistance of the (D51) CAN C Bus (-) circuit between the ABS Module harness connector and the TIPM C7 harness connector.

   Is the resistance above 2.0 ohms?

   Yes

   - Repair the (D51) CAN C Bus (-) circuit for an open.
   - Perform the ABS VERIFICATION TEST. Refer to **ABS VERIFICATION TEST**.

   No

   - Go to 5.

5. **ANTILOCK BRAKE SYSTEM (ABS) MODULE**
   1. Inspect the wiring between the ABS Module harness connector and the TIPM harness connector. If any problems are found, repair as necessary. If no problems are found, view repair.

      Repair

      - Replace the Antilock Brake System (ABS) Module in accordance with the Service Information.
      - Perform the ABS VERIFICATION TEST. Refer to **ABS VERIFICATION TEST**.

6. **INTERMITTENT ESP CAN C BUS PERFORMANCE DTC**
   1. The conditions necessary to set this DTC are not present at this time.
   2. Using the wiring diagram/schematic as a guide, inspect the wiring and connectors.
   3. While monitoring the scan tool data relative to this circuit, wiggle test the wiring and connectors.
   4. Look for the data to change or for the DTC to reset during the wiggle test.

      Were any problems found?

      Yes

      - Repair as necessary.
      - Perform the ABS VERIFICATION TEST. Refer to **ABS VERIFICATION TEST**.

      No

      - Test complete.

U1004-CAN C BUS TRANSMIT PERFORMANCE

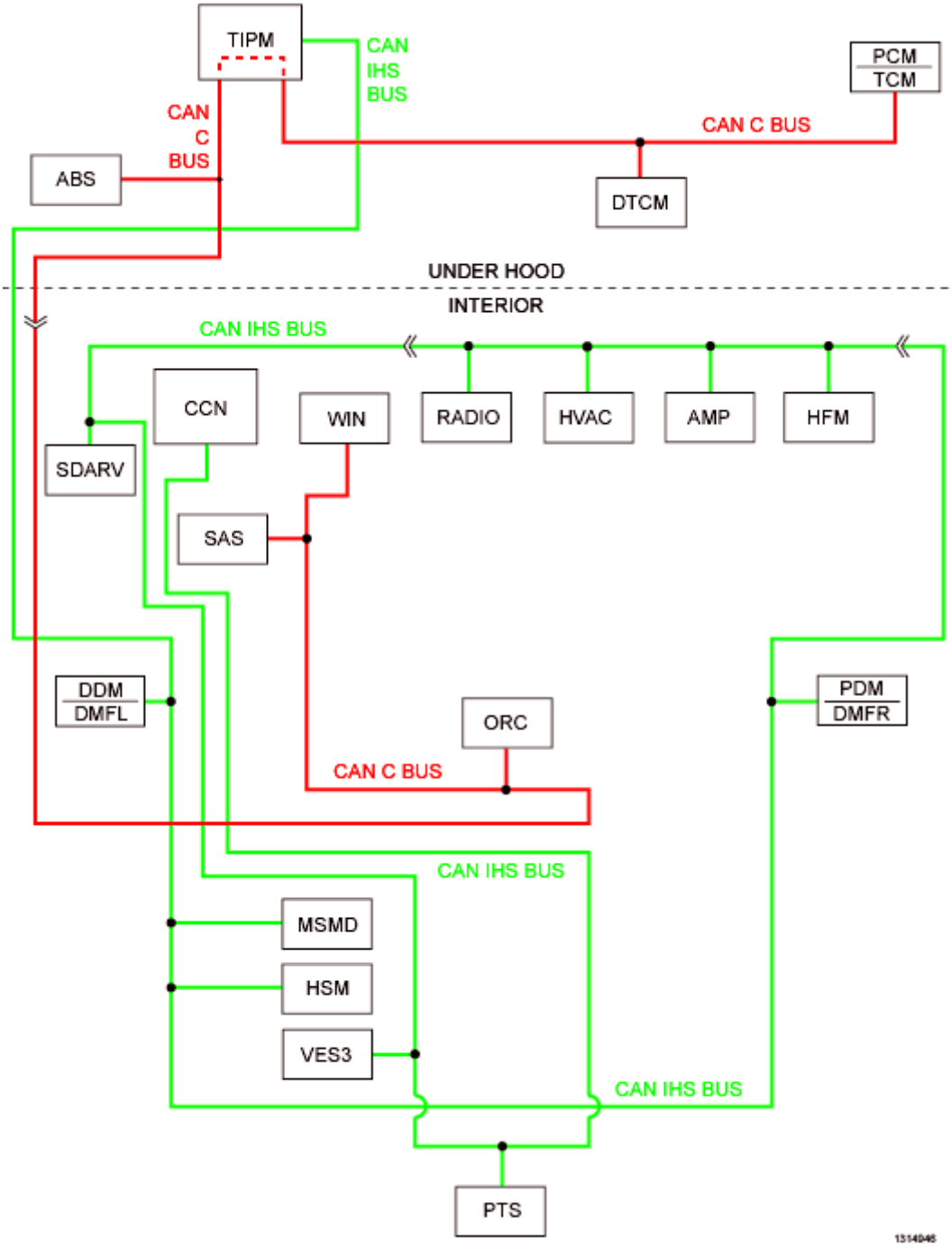

Fig. 209: CAN IHS BUS & TIPM CAN C BUS Communication Diagram
Courtesy of CHRYSLER GROUP, LLC

For a complete wiring diagram, **refer to appropriate SYSTEM WIRING DIAGRAMS article** .

NOTE: **The Electronic Stability Control (ESC) may also be referred to as Electronic Stability Program (ESP) depending on the vehicle model year and configuration. Certain components may also reference ESP, ESC, or use the traction control**

symbol.

WHEN MONITORED:

Continuously.

SET CONDITION:

The CAN frame does not receive acknowledgment for a predefined amount of time.

POSSIBLE CAUSES

Possible Causes
INTERMITTENT CAN C BUS TRANSMIT PERFORMANCE DTC
CAN C BUS DTC's SET IN TOTALLY INTEGRATED POWER MODULE (TIPM)
(D52) CAN C BUS (+) CIRCUIT FOR AN OPEN
(D51) CAN C BUS (-) CIRCUIT FOR AN OPEN
ANTILOCK BRAKE SYSTEM (ABS) MODULE

DIAGNOSTIC TEST

1. **DIAGNOSTIC TROUBLE CODE (DTC) IS ACTIVE**
    1. Ignition on, engine not running.
    2. Using the scan tool, select erase DTC's.
    3. Cycle the ignition from off to on at least five times, leaving the ignition on for a minimum of 90 seconds per cycle.
    4. Using the scan tool, select read DTC's.

    Does the DTC reset and/or remain active?

    Yes

    - Go To 2.

    No

    - Go To 6.
2. **CAN C BUS DTC's SET IN TOTALLY INTEGRATED POWER MODULE (TIPM)**
    1. Using the scan tool, read DTC's in the TIPM.

    Are there any active CAN C Bus DTC's?

    Yes

    - Refer to **COMMUNICATION - DIAGNOSIS AND TESTING** and perform the

appropriate diagnostic procedure.

No

- Go To 3.

3. **(D52) CAN C BUS (+) CIRCUIT FOR AN OPEN**

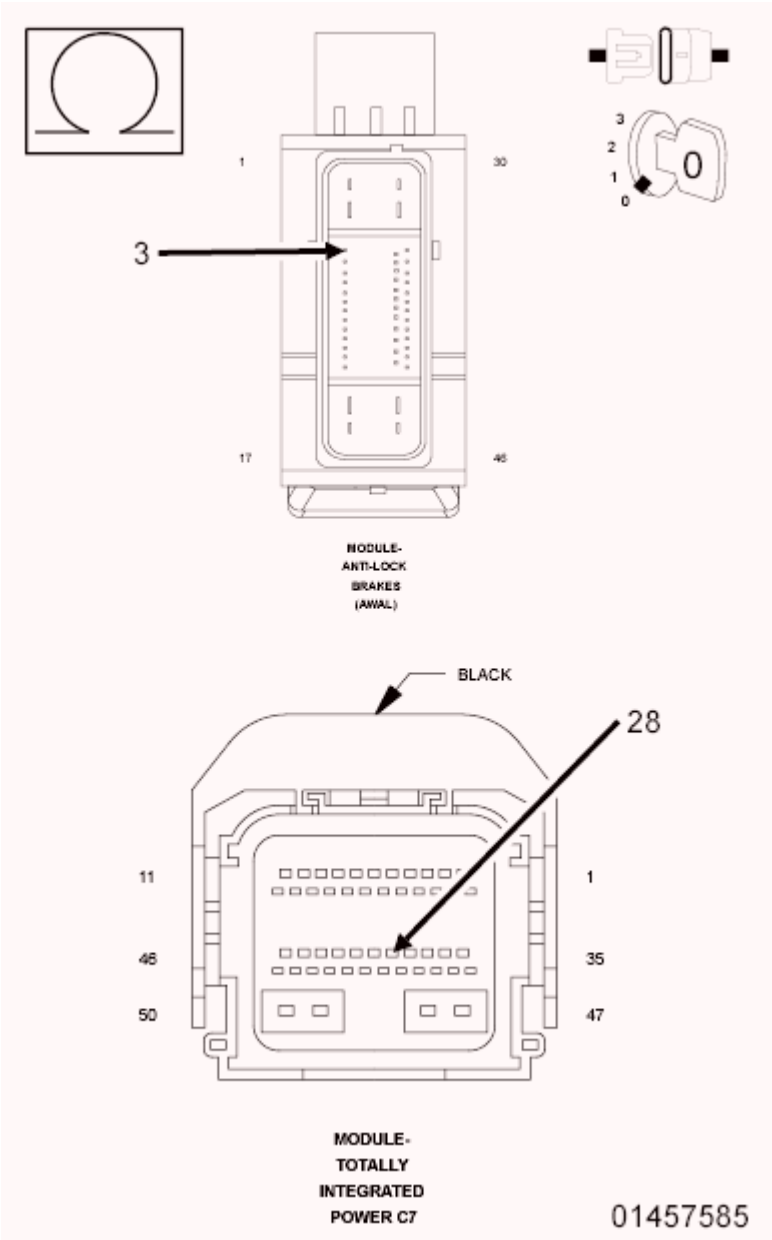

Fig. 210: Checking Can C Bus (+) Circuit For An Open
Courtesy of CHRYSLER GROUP, LLC

1. Turn the ignition off.
2. Disconnect the Antilock Brake Module harness connector.

3. Disconnect the TIPM C7 harness connector.
4. Measure the resistance of the (D52) CAN C Bus (+) circuit between the Antilock Brake Module harness connector and the TIPM C7 harness connector.

   Is the resistance above 2.0 Ohms?

   Yes

   - Repair the (D52) CAN C Bus (+) circuit for an open.
   - Perform the ABS VERIFICATION TEST. Refer to **ABS VERIFICATION TEST**.

   No

   - Go To 4.

4. **(D51) CAN C BUS (-) CIRCUIT FOR AN OPEN**

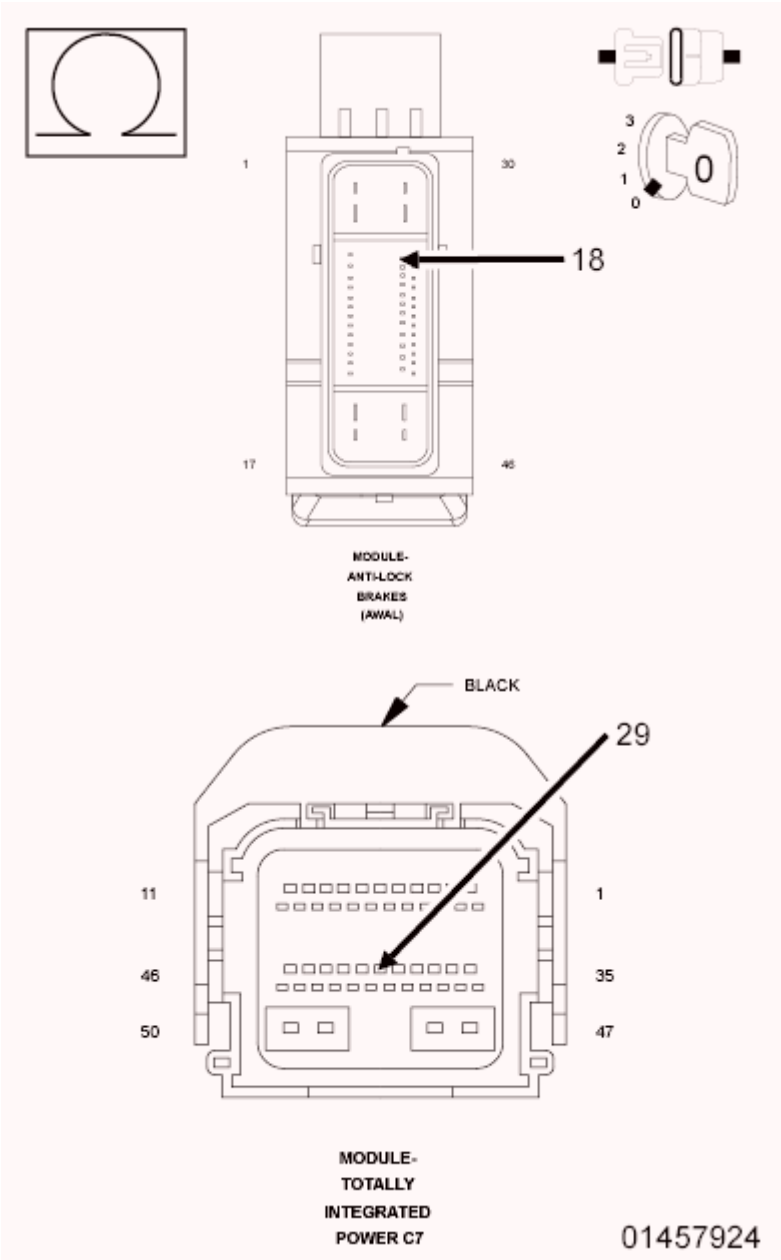

Fig. 211: Checking Can C Bus (+) Circuit For An Open
Courtesy of CHRYSLER GROUP, LLC

1. Measure the resistance of the (D51) CAN C Bus (-) circuit between the Antilock Brake Module harness connector and the TIPM C7 harness connector.

   Is the resistance above 2.0 Ohms?

   Yes

   - Repair the (D51) CAN C Bus (-) circuit for an open.
   - Perform the ABS VERIFICATION TEST. Refer to **ABS VERIFICATION TEST**.

No

- Go To 5.

5. **ANTILOCK BRAKE SYSTEM (ABS) MODULE**
   1. Inspect the wiring between the ABS Module harness connector and the TIPM harness connector. If any problems are found, repair as necessary. If no problems are found, view repair.

      Repair

      - Replace the Antilock Brake Module in accordance with the Service Information.
      - Perform the ABS VERIFICATION TEST. Refer to **ABS VERIFICATION TEST**.
6. **INTERMITTENT CAN C BUS TRANSMIT PERFORMANCE DTC**
   1. The conditions necessary to set this DTC are not present at this time.
   2. Using the wiring diagram/schematic as a guide, inspect the wiring and connectors.
   3. While monitoring the scan tool data relative to this circuit, wiggle test the wiring and connectors.
   4. Look for the data to change or for the DTC to reset during the wiggle test.

      Were any problems found?

      Yes

      - Repair as necessary.
      - Perform the ABS VERIFICATION TEST. Refer to **ABS VERIFICATION TEST**.

      No

      - Test complete, the condition or conditions that originally set this DTC are not present at this time.

STANDARD PROCEDURE

ABS VERIFICATION TEST

DIAGNOSTIC TEST

1. **ABS VERIFICATION TEST**

WARNING: To avoid possible serious or fatal injury, check brake capability is available before road testing.

NOTE: If the Antilock Brake System (ABS) Module, Steering Angle Sensor (SAS), or the Dynamics Sensor was replaced, it must be initialized using the scan tool. If not initialized, the ABS indicator will flash continuously with no DTC's. To initialize the ABS Module and clear offsets have wheels pointing

straight ahead and follow the directions on the scan tool. The drive test requires a 90° turn. If the Dynamics Sensor was replaced, test drive the vehicle by turning the vehicle left or right in a curving manner at a velocity between 10 and 25 km/h (6 and 15 mph).

1. Turn the ignition off.
2. Connect all previously disconnected components and connectors.
3. Verify all accessories are turned off and the battery is fully charged.
4. Verify that the ignition is on, with the scan tool, erase all Diagnostic Trouble Codes (DTC's) from All modules. Start the engine and allow it to run for two minutes and fully operate the system that was indicating the failure.
5. Turn the ignition off and wait five seconds. Turn the ignition on and using the scan tool, read DTC's from all modules.
6. If any Diagnostic Trouble Codes are present, Refer to **ABS - DIAGNOSIS AND TESTING** and perform the diagnostic procedure.
7. **NOTE: For Sensor Signal and Pump Motor faults, the ABS Module must sense all 4 wheels at 12 km/h (7.5 mph) before it will extinguish the ABS indicator.**
8. If there are no DTC's present after turning ignition on, road test the vehicle for at least five minutes. Perform several antilock braking stops.
9. Again, with the scan tool read DTC's. If any DTC's are present, for the diagnostic procedure and troubleshoot the new or recurring DTC. Refer to **ABS - DIAGNOSIS AND TESTING**.
10. If there are no Diagnostic Trouble Codes (DTC's) present, and the customer's concern can no longer be duplicated, the repair is complete.

    Are any DTC's present or is the original concern still present?

    Yes

    - Repair is not complete, perform the appropriate diagnostic procedure. Refer to **ABS - DIAGNOSIS AND TESTING**.

    No

    - Repair is complete.

ABS INTERMITTENT CONDITION

For a complete wiring diagram, **refer to appropriate SYSTEM WIRING DIAGRAMS article** .

DIAGNOSTIC TEST

1. **PERFORM ABS INTERMITTENT CONDITION TEST**

NOTE: **The conditions that set the DTC are not present at this time. The following list may help in identifying the intermittent condition.**

WARNING: When the engine is operating, do not stand in direct line with the fan. Do not put your hands near the pulleys, belts or fan. Do not wear loose clothing. Failure to follow these instructions may result in possible serious or fatal injury.

1. Refer to any Technical Service Bulletins (TSBs) that may apply.
2. Review the scan tool Environmental Data (EV Data). If possible, try to duplicate the conditions under which the DTC set.
3. Turn the ignition off.
4. Visually inspect the related wire harness. Disconnect all the related harness connectors. Look for any chafed, pierced, pinched, partially broken wires and broken, bent, pushed out, or corroded terminals.
5. Wiggle the wires while checking for shorts and open circuits.
6. Perform a voltage drop test on the related circuits between the suspected inoperative component and the Antilock Brake Module.
7. Inspect and clean all PCM, ABS, engine, and chassis grounds that are related to the most current DTC.
8. If numerous trouble codes were set, use a wire schematic and look for any common ground or supply circuits
9. For any Relay DTC's, actuate the Relay with the scan tool and wiggle the related wire harness to try to interrupt the actuation.
10. Use the scan tool to perform a System Test if one applies to failing component.
11. A co-pilot, data recorder, or lab scope should be used to help diagnose intermittent conditions.

Were any problems found during the above inspections?

Yes

- Perform the necessary repairs.
- Perform the ABS VERIFICATION TEST. Refer to **ABS VERIFICATION TEST**.

No

- Test Complete.

Antilock Brake System (ABS) - Service Information - Ram Pickup

DESCRIPTION

1500/2500/3500

The antilock brake system (ABS) is an electronically operated, four channel brake control system which is part of Electronic Stability Control (ESC). The vehicle also has Electronic Variable Brake Proportioning (EVBP) designed into the system which eliminates the combination/proportioning valve.

The system is designed to prevent wheel lockup and maintain steering control during braking. Preventing lockup is accomplished by modulating fluid pressure to the wheel brake units.

The hydraulic system is a four channel design. All wheel brakes are controlled individually. The ABS electrical system is separate from other electrical circuits in the vehicle. A specially programmed controller antilock brake unit operates the system components.

ABS system major components include:

- Antilock Brake Module (ABM)
- Hydraulic Control Unit (HCU)
- Wheel Speed Sensors (WSS)
- ABS Warning Light

CAB CHASSIS/4500/5500

The antilock brake system (ABS) is an electronically operated, three channel brake control system. The vehicle has Electronic Variable Brake Proportioning (EVBP) designed into the system which eliminates the combination/proportioning valve.

The system is designed to prevent wheel lockup and maintain steering control during braking. Preventing lockup is accomplished by modulating fluid pressure to the wheel brake units.

The hydraulic system is a three channel design. The front wheel brakes are controlled individually and the rear wheel brakes in tandem. The ABS electrical system is separate from other electrical circuits in the vehicle. A specially programmed controller antilock brake unit operates the system components.

ABS system major components include:

- Antilock Brake Module (ABM)
- Hydraulic Control Unit (HCU)
- Wheel Speed Sensors (WSS)
- ABS Warning Light

OPERATION

1500/2500/3500

Battery voltage is supplied to the ABM. The ABM performs a system initialization procedure at start up along with an ABS motor check. Initialization consists of a static and dynamic self check of system electrical components.

The static and dynamic checks occurs at ignition start up. During the dynamic check, the ABM briefly cycles solenoids to verify operation. An audible noise may be heard during this self check. This noise should be considered normal.

If an ABS component exhibits a fault during initialization, the ABM illuminates the amber warning light and registers a fault code in the microprocessor memory.

The ABM monitors wheel speed sensor inputs continuously while the vehicle is in motion. However, the ABM will not activate any ABS components as long as sensor inputs indicate normal braking.

During normal braking, the master cylinder, power booster and wheel brake units all function as they would in a vehicle without ABS. The HCU components are not activated.

The purpose of the antilock system is to prevent wheel lockup. Preventing lockup helps maintain vehicle braking action and steering control.

The antilock ABM activates the system whenever sensor signals indicate periods of wheel slip.

The antilock system prevents lockup during a wheel slip condition by modulating fluid apply pressure to the wheel brake units.

Brake fluid apply pressure is modulated according to wheel speed, degree of slip and rate of deceleration. Sensors at each wheel convert wheel speed into electrical signals. These signals are transmitted to the ABM for processing and determination of wheel slip and deceleration rate.

The ABS system has four fluid pressure control channels. Each wheel brakes are controlled separately. A speed sensor input signal indicating a wheel slip condition activates the ABM antilock program.

There are Two solenoid valves (Isolation and Dump valve) which are used in each antilock control channel. The valves are all located within the HCU valve body and work in pairs to either increase, hold, or decrease apply pressure as needed in the individual control channels.

During an ABS stop the ISO valve is energized which acts to prevent further pressure build-up to the calipers. Then the Dump valve dumps off pressure until the wheel unlocks. This will continue until the wheels quit slipping altogether.

CAB CHASSIS/4500/5500

Battery voltage is supplied to the ABM. The ABM performs a system initialization procedure at start up along

with an ABS motor check. Initialization consists of a static and dynamic self check of system electrical components.

The static and dynamic checks occurs at ignition start up. During the dynamic check, the ABM briefly cycles solenoids to verify operation. An audible noise may be heard during this self check. This noise should be considered normal.

If an ABS component exhibits a fault during initialization, the ABM illuminates the amber warning light and registers a fault code in the microprocessor memory.

The ABM monitors wheel speed sensor inputs continuously while the vehicle is in motion. However, the ABM will not activate any ABS components as long as sensor inputs indicate normal braking.

During normal braking, the master cylinder, power booster and wheel brake units all function as they would in a vehicle without ABS. The HCU components are not activated.

The purpose of the antilock system is to prevent wheel lockup. Preventing lockup helps maintain vehicle braking action and steering control.

The antilock ABM activates the system whenever sensor signals indicate periods of wheel slip.

The antilock system prevents lockup during a wheel slip condition by modulating fluid apply pressure to the wheel brake units.

Brake fluid apply pressure is modulated according to wheel speed, degree of slip and rate of deceleration. Sensors at each front wheel convert wheel speed into electrical signals. These signals are transmitted to the ABM for processing and determination of wheel slip and deceleration rate.

The ABS system has three fluid pressure control channels. The front brakes are controlled separately and the rear brakes in tandem. A speed sensor input signal indicating a wheel slip condition activates the ABM antilock program.

There are Two solenoid valves (Isolation and Dump valve) which are used in each antilock control channel. The valves are all located within the HCU valve body and work in pairs to either increase, hold, or decrease apply pressure as needed in the individual control channels.

During an ABS stop the ISO valve is energized which acts to prevent further pressure build-up to the calipers. Then the Dump valve dumps off pressure until the wheel unlocks. This will continue until the wheels quit slipping altogether.

STANDARD PROCEDURE

STANDARD PROCEDURE - ABS BRAKE BLEEDING

ABS system bleeding requires conventional bleeding methods plus use of a scan tool. The procedure involves performing a base brake bleeding, followed by use of the scan tool to cycle and bleed the HCU pump and solenoids. A second base brake bleeding procedure is then required to remove any air remaining in the system.

1. Perform base brake bleeding. Refer to **STANDARD PROCEDURE** . .
2. Connect scan tool to the Data Link Connector.
3. Select ANTILOCK BRAKES, followed by MISCELLANEOUS, then ABS BRAKES. Follow the instructions displayed. When scan tool displays TEST COMPLETE, disconnect scan tool and proceed.
4. Perform base brake bleeding a second time. Refer to **STANDARD PROCEDURE** . .
5. Top off master cylinder fluid level and verify proper brake operation before moving vehicle.

SPECIFICATIONS

SPECIFICATIONS

DESCRIPTION	N.m	Ft. Lbs.	In. Lbs.
ABS Assembly Mounting Bolts	15	11	-
ABS Assembly ABM Screws	3.5	-	31
ABS Assembly Brake Line Fittings	19	-	170
Dynamics Sensor	11	-	97
Wheel Speed Sensors, Front Sensor Bolt	21	-	190
Wheel Speed Sensors, Bracket To Knuckle	6.7	-	60
Wheel Speed Sensors, Rear Sensor Stud	22.5	-	200
ABM Mounting Screws	6	-	53
RWAL Module Mounting Bolts	15	11	-
RWAL Valve Brake Line Fittings	19	-	170
Rear Wheel Speed Sensor Mounting Bolt	24	-	200

ELECTRICAL

DIAGNOSIS AND TESTING

DIAGNOSIS AND TESTING - ELECTRICAL

Diagnosis of base brake conditions which are mechanical in nature should be performed first. This includes brake noise, lack of power assist, parking brake, or vehicle vibration during normal braking.

The antilock brake system performs several self-tests every time the ignition switch is turned on and the vehicle is driven. The Antilock Brake Module (ABM) monitors the system inputs and outputs circuits to verify the

system is operating properly. If the ABM senses a malfunction in the system it will set a DTC into memory and trigger the warning lamp.

NOTE: A scan tool must be used to diagnose the Antilock Brake system.

SENSOR, DYNAMICS

DESCRIPTION

DESCRIPTION

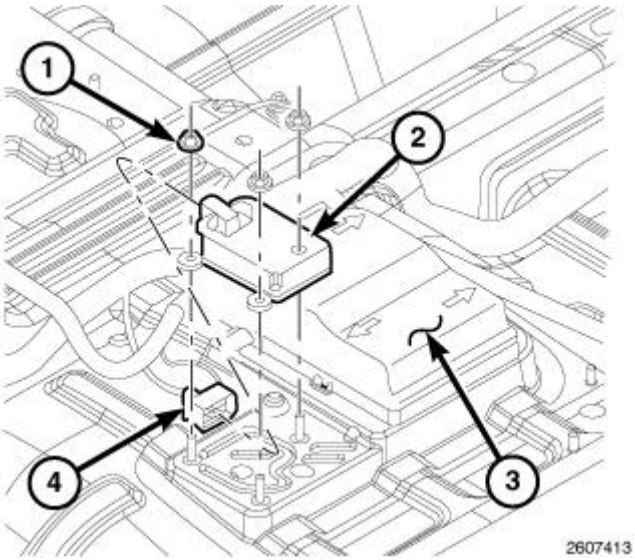

Fig. 1: Dynamics Sensor, Connector & Nuts
Courtesy of CHRYSLER GROUP, LLC

The yaw rate, lateral acceleration and longitudinal acceleration sensors are housed into one unit known as the dynamics sensor (2). The sensor is used to measure vehicle rotational sensing (how fast the vehicle is turning - yaw), side-to-side (lateral) motion and longitudinal acceleration (forward). The dynamics sensor (2) is located on the floor panel transmission tunnel under the center floor console (or if equipped with a bench seat, under the front center seat section) next to the Occupant Restraint Controller (ORC) (3).

NOTE: If the dynamics sensor is replaced, it must be initialized using the scan tool.

The yaw rate and lateral acceleration sensors cannot be serviced separately. The entire dynamics sensor (2) must be replaced when necessary.

REMOVAL

REMOVAL

NOTE: If the dynamics sensor is replaced, it must be initialized using the scan tool.

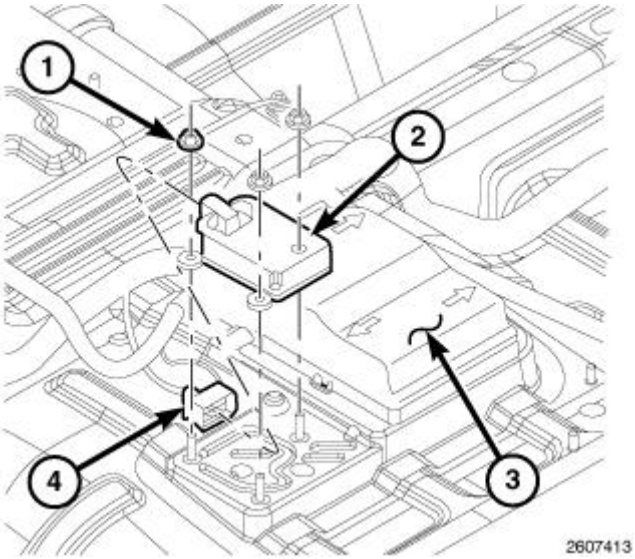

Fig. 2: Dynamics Sensor, Connector & Nuts
Courtesy of CHRYSLER GROUP, LLC

1. Disconnect and isolate the battery negative cable.
2. If equipped with a center floor console, remove the console. Refer to **CONSOLE, FLOOR, REMOVAL** .
3. If equipped with a 40/20/40 bench seat, remove the passenger seat. Refer to **SEAT, FRONT, REMOVAL** .
4. Disconnect the electrical connector (4) for the dynamics sensor (2).
5. Remove the three mounting nuts (1) for the sensor (2).
6. Remove the sensor (2) from the vehicle.

INSTALLATION

INSTALLATION

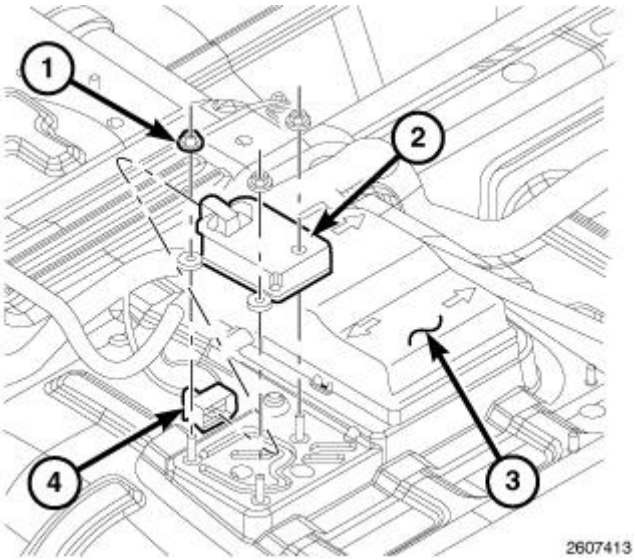

Fig. 3: Dynamics Sensor, Connector & Nuts
Courtesy of CHRYSLER GROUP, LLC

1. Position the dynamics sensor on the mounting studs.
2. Install the three mounting nuts (1) and tighten to 11 N.m (97 in. lbs.).
3. Connect the electrical connector (4).
4. If equipped with a center floor console, install the console. Refer to **CONSOLE, FLOOR, INSTALLATION** .
5. If equipped with a 40/20/40 bench seat, install the Passenger Seat. Refer to **SEAT, FRONT, INSTALLATION** .
6. Install negative battery cable to the battery.
7. Connect the scan tool and initialize the ABM by performing the ABS Verification Test. Refer to **ABS VERIFICATION TEST** . .

SENSOR, WHEEL SPEED, FRONT

DESCRIPTION

DESCRIPTION

1500/2500/3500

The ABS brake system uses four wheel speed sensors. A sensor is mounted to each hub/bearing.

CAB CHASSIS/4500/5500

The ABS brake system uses 3 wheel speed sensors. A sensor is mounted to each front hub/bearings. The third sensor is mounted on top of the rear axle differential housing.

OPERATION

OPERATION

The sensors convert wheel speed into an electrical signal. This signal and amperage is changed by magnetic induction when the toothed tone wheel passes the wheel speed sensor. This signal is sent to the ABM which measures the voltage and amperage of the digital signal for each wheel to determine wheel speed.

The signal strength is affected by the distance between the sensor and the tone ring. If the "Air Gap" between the sensor and the tone ring/wheel is too large, the signal can drop out at low speed, (below 40 mph) and can cause an ABS activation. No adjustment is available for the air gap.

REMOVAL

REMOVAL

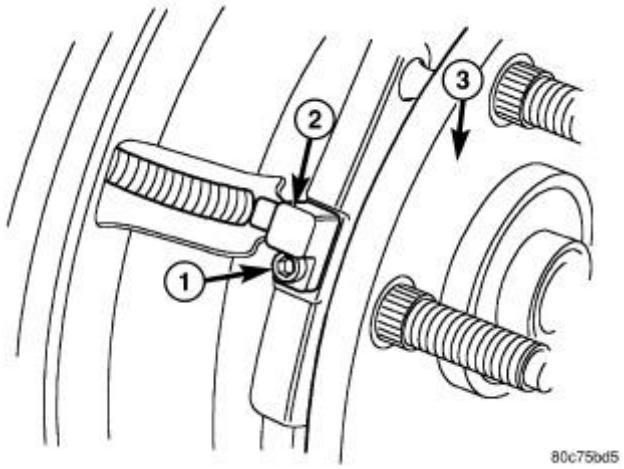

Fig. 4: Identifying Front Wheel Speed Sensor
Courtesy of CHRYSLER GROUP, LLC

1 - WHEEL SPEED SENSOR MOUNTING BOLT
2 - WHEEL SPEED SENSOR
3 - HUB/BEARING

1. Remove the front rotor. Refer to **ROTOR, BRAKE, REMOVAL** .
2. Remove the wheel speed sensor mounting bolt (1) from the hub (3).
3. Remove the wheel speed sensor (2) from the hub (3).
4. Remove the wiring from the clips and disconnect the electrical connector.

INSTALLATION

INSTALLATION

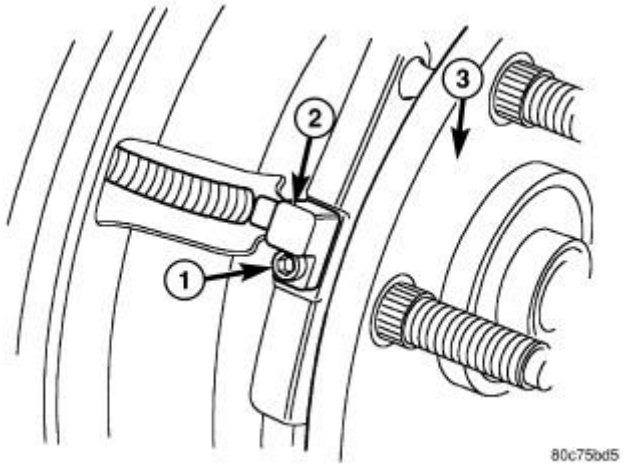

Fig. 5: Identifying Front Wheel Speed Sensor
Courtesy of CHRYSLER GROUP, LLC

1 - WHEEL SPEED SENSOR MOUNTING BOLT
2 - WHEEL SPEED SENSOR
3 - HUB/BEARING

1. Install the wiring to the clips and connect the electrical connector.
2. Install the wheel speed sensor (2) to the hub (3).
3. Install the wheel speed sensor mounting bolt (1) to the hub (3). For **1500** , tighten to 21 N.m (190 in. lbs.). For **2500/3500** , tighten to 13 N.m (115 in. lbs.).
4. Install the front rotor and brake caliper assembly. Refer to **ROTOR, BRAKE, INSTALLATION** .

SENSOR, WHEEL SPEED, REAR

REMOVAL

1500/2500/3500

NOTE: All views typical.

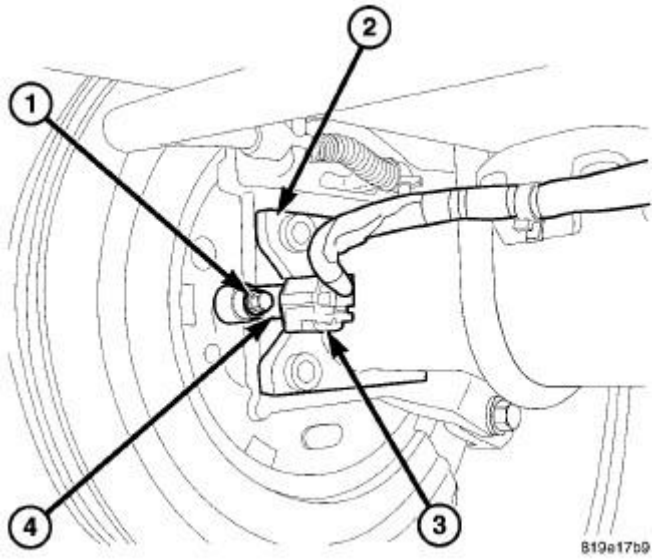

Fig. 6: Rear Wheel Speed Sensor & Mounting Bolt
Courtesy of CHRYSLER GROUP, LLC

1. Raise and support the vehicle. Refer to **HOISTING, STANDARD PROCEDURE** .
2. Disconnect the wheel speed sensor electrical connector (3).
3. Remove the mounting bolt (1) from the sensor (4).
4. Remove the sensor (4) from the brake caliper adapter.

CAB CHASSIS/4500/5500

NOTE: **All views typical.**

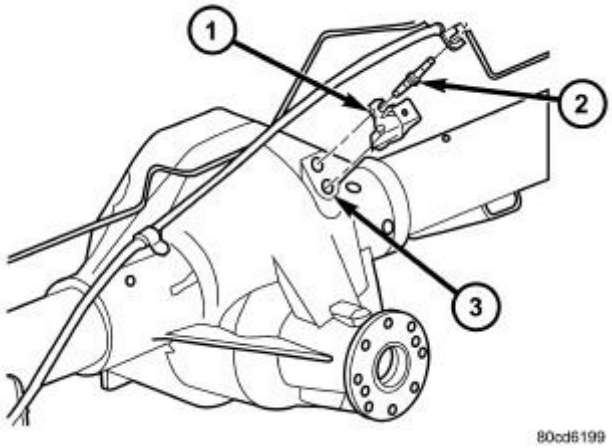

Fig. 7: Rear Wheel Speed Sensor
Courtesy of CHRYSLER GROUP, LLC

1 - WHEEL SPEED SENSOR
2 - MOUNTING STUD
3 - AXLE HOUSING

1. Raise and support the vehicle. Refer to **HOISTING, STANDARD PROCEDURE** .
2. Remove the brake line mounting nut and remove the brake line from the sensor stud.
3. Remove the mounting stud (2) from the sensor (1) and shield.
4. Remove the sensor (1) and shield from the differential housing (3).
5. Disconnect the sensor wire harness and remove the sensor (1).

INSTALLATION

1500/2500/3500

NOTE: **All views typical.**

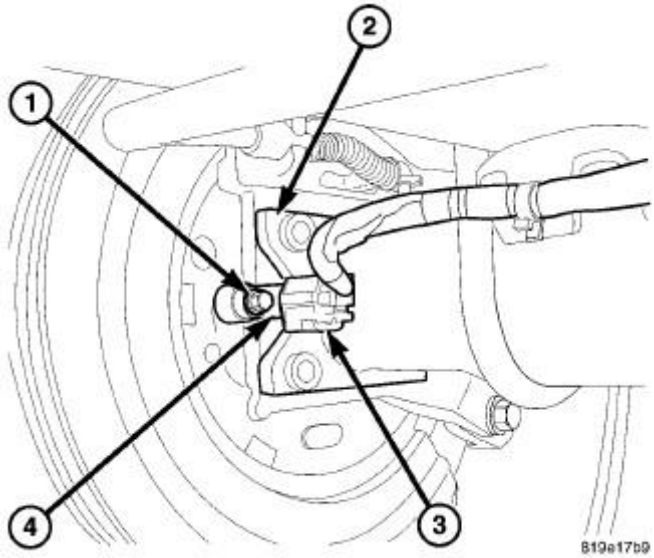

Fig. 8: Rear Wheel Speed Sensor & Mounting Bolt
Courtesy of CHRYSLER GROUP, LLC

1. Insert the wheel speed sensor (4) in the brake caliper adapter.
2. Install the sensor mounting bolt (1) and tighten to 24 N.m (200 in. lbs.).
3. Reconnect the electrical wiring connector (3) to the sensor (4).
4. Remove the support and lower the vehicle.

CAB CHASSIS/4500/5500

NOTE: All views typical.

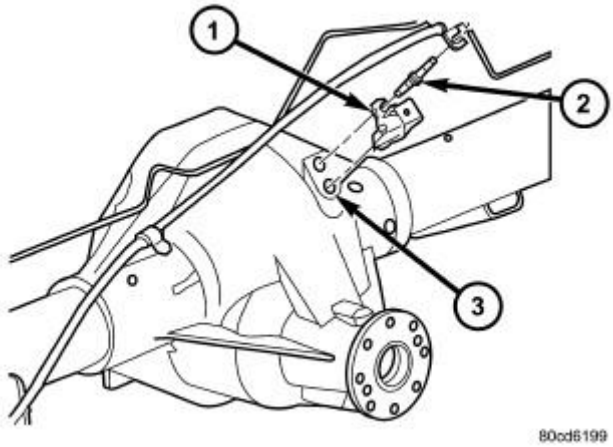

Fig. 9: Rear Wheel Speed Sensor
Courtesy of CHRYSLER GROUP, LLC

1 - WHEEL SPEED SENSOR
2 - MOUNTING STUD
3 - AXLE HOUSING

1. Connect the harness to the sensor. **Be sure the seal is securely in place between the sensor and the wiring connector.**
2. Install the O-ring on the sensor (if removed).
3. Insert the sensor (1) in the differential housing (3).
4. Install the sensor shield.
5. Install the sensor mounting stud (2) and tighten to 24 N.m (200 in. lbs.).
6. Install the brake line on the sensor stud (2) and install the nut.
7. Remove the support and lower the vehicle.

SWITCH, ELECTRONIC STABILITY PROGRAM (ESP)

DESCRIPTION

DESCRIPTION

NOTE: **The Electronic Stability Control (ESC) may also be referred to as Electronic Stability Program (ESP) depending on the vehicle model year and configuration. Certain components may also reference ESP, ESC, or use the traction control symbol.**

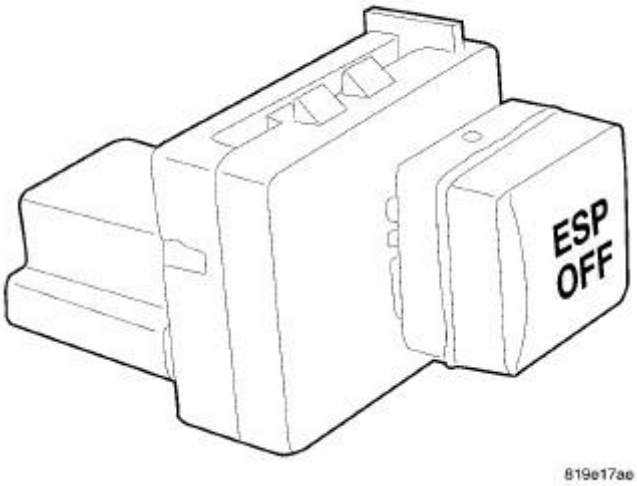

Fig. 10: Identifying ESP Switch
Courtesy of CHRYSLER GROUP, LLC

The Electronic Stability Control (ESC) switch is located just above the heater and air conditioner controls in the

center stack area of the instrument panel.

REMOVAL

REMOVAL

NOTE: **The Electronic Stability Control (ESC) may also be referred to as Electronic Stability Program (ESP) depending on the vehicle model year and configuration. Certain components may also reference ESP, ESC, or use the traction control symbol.**

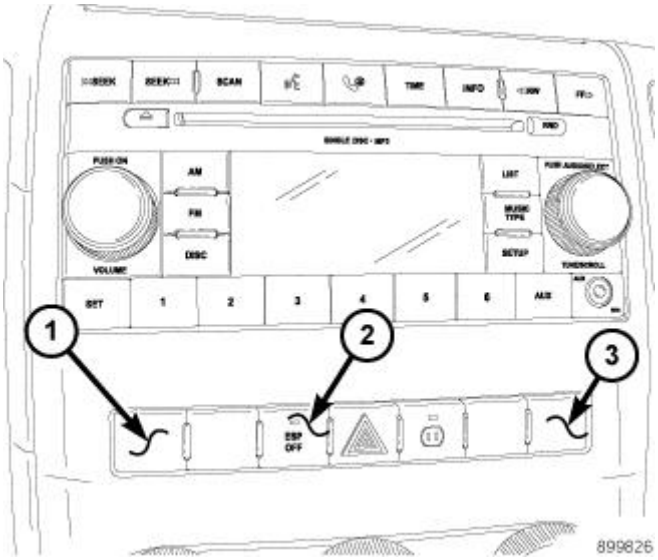

Fig. 11: Switch Bank
Courtesy of CHRYSLER GROUP, LLC

1. Remove the instrument panel center bezel. Refer to **BEZEL, INSTRUMENT PANEL, CENTER, REMOVAL** .
2. Disconnect the Electronic Stability Control (ESC) electrical connector from the radio trim panel.
3. Remove the ESC switch (2) from the switch bank.

INSTALLATION

INSTALLATION

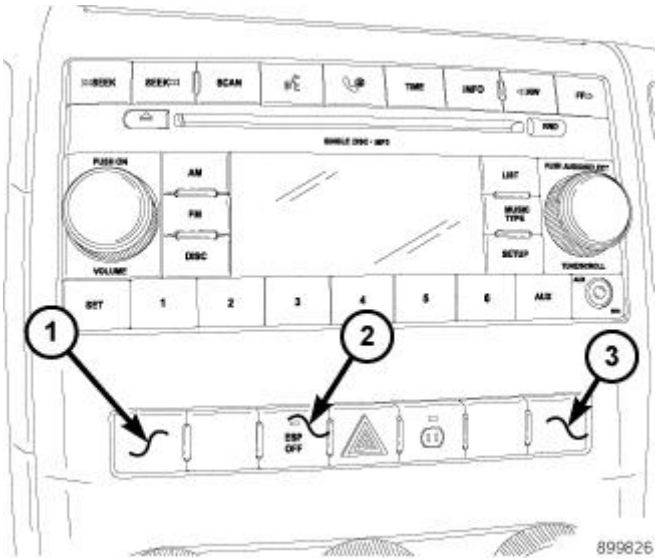

Fig. 12: Switch Bank
Courtesy of CHRYSLER GROUP, LLC

1. Install the new switch (2) in the switch bank.
2. Reconnect the electrical connector for the switch.
3. Install the instrument panel center bezel. Refer to **BEZEL, INSTRUMENT PANEL, CENTER, INSTALLATION** .

HYDRAULIC/MECHANICAL

DESCRIPTION

DESCRIPTION

Vehicles equipped with ABS use electronic variable brake proportioning (EVBP) to balance front-to-rear braking. The EVBP is used in place of a rear proportioning valve. The EVBP system uses the ABS system to control the slip of the rear wheels in partial braking range. The braking force of the rear wheels is controlled electronically by using the inlet and outlet valves located in the integrated control unit (ICU).

OPERATION

OPERATION

EVBP is able to decrease, hold and increase rear brake pressure without activating full ABS control. Upon entry into EVBP the inlet valve for the rear brake circuit is switched on so that the fluid supply from the master cylinder is shut off. In order to decrease the rear brake pressure, the outlet valve for the rear brake circuit is pulsed. This allows fluid to enter the low pressure accumulator (LPA) in the hydraulic control unit (HCU) resulting in a drop in fluid pressure to the rear brakes. In order to increase the rear brake pressure, the outlet valve is switched off and the inlet valve is pulsed. This increases the pressure to the rear brakes.

The EVBP will remain functional during many ABS fault modes. If both the red BRAKE and amber ABS

warning indicators are illuminated, the EVBP may not be functioning.

HYDRAULIC CONTROL UNIT (HCU)

DESCRIPTION

DESCRIPTION

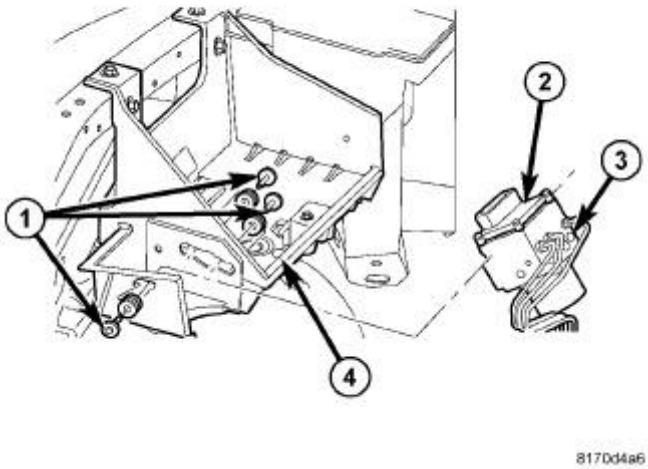

Fig. 13: HCU/ABM & Mounting Bolts
Courtesy of CHRYSLER GROUP, LLC

The HCU (3) consists of a valve body, pump motor, low pressure accumulators, inlet valves, outlet valves and noise attenuators.

OPERATION

OPERATION

Accumulators in the valve body store extra fluid released to the system for ABS mode operation. The pump provides the fluid volume needed and is operated by a DC type motor. The motor is controlled by the ABM.

The valves modulate brake pressure during antilock braking and are controlled by the ABM.

During antilock braking, the solenoid valves are opened and closed as needed.

During normal braking, the HCU solenoid valves and pump are not activated. The master cylinder and power booster operate the same as a vehicle without an ABS brake system.

NOTE: The three modes mentioned below do occur but not necessarily in the order listed every time.

During antilock braking, solenoid valve pressure modulation occurs in three stages, pressure increase, pressure hold, and pressure decrease. The valves are all contained in the valve body portion of the HCU.

PRESSURE DECREASE

The outlet valve is opened and the inlet valve is closed during the pressure decrease cycle.

A pressure decrease cycle is initiated when speed sensor signals indicate high wheel slip at one or more wheels. At this point, the ABM closes the inlet then opens the outlet valve, which also opens the return circuit to the accumulators. Fluid pressure is allowed to bleed off (decrease) as needed to prevent wheel lock.

Once the period of high wheel slip has ended, the ABM closes the outlet valve and begins a pressure increase or hold cycle as needed.

PRESSURE HOLD

Both solenoid valves are closed in the pressure hold cycle but only the inlet valve is energized. Fluid apply pressure in the control channel is maintained at a constant rate. The ABM maintains the hold cycle until sensor inputs indicate a pressure change is necessary.

PRESSURE INCREASE

The inlet valve is open and the outlet valve is closed during the pressure increase cycle. The pressure increase cycle is used to reapply the brakes. This cycle controls re-application of fluid apply pressure.

REMOVAL

REMOVAL

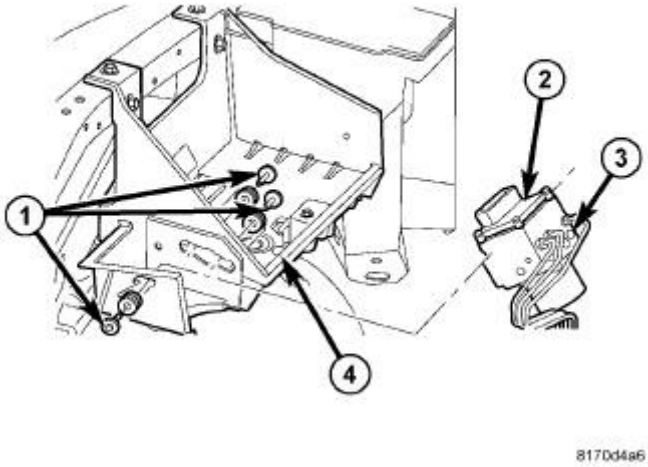

Fig. 14: HCU/ABM & Mounting Bolts
Courtesy of CHRYSLER GROUP, LLC

1. Disconnect the battery cables from the battery.
2. Remove the battery.
3. Disconnect the electrical harness connectors.
4. Remove the brake lines from the HCU (3).
5. Remove HCU/ABM mounting bolts (1) and remove the HCU/ABM (3) from the battery tray (4).

INSTALLATION

INSTALLATION

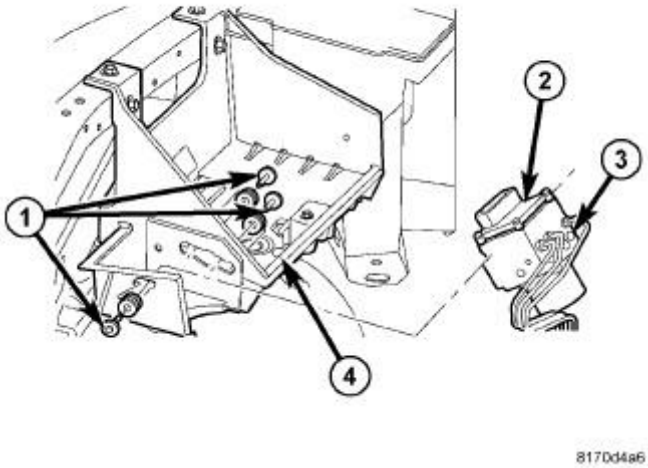

Fig. 15: HCU/ABM & Mounting Bolts
Courtesy of CHRYSLER GROUP, LLC

1. Install HCU/ABM (3) on the mounts to the battery tray (4) and tighten to 15 N.m (11 ft. lbs.).
2. Install the brake lines to the HCU (3) and tighten to 19 N.m (170 in. lbs.).
3. Install the electrical harness connectors to the HCU/ABM (3) and push down on the release to secure the connectors.
4. Install the battery.
5. Install the battery cables to the battery.
6. Bleed ABS brake system. Refer to **STANDARD PROCEDURE**. .

WARNING

WARNING

WARNING: Chrysler LLC does not manufacture any vehicles or replacement parts that contain asbestos. Aftermarket products may or may not contain asbestos. Refer to aftermarket product packaging for product information. Whether the product contains asbestos or not, dust and dirt can accumulate on brake parts during normal use. Follow practices prescribed by appropriate regulations for the handling, processing and disposing of dust and debris.

CAUTION: Never use gasoline, kerosene, alcohol, motor oil, transmission fluid, or any fluid containing mineral oil to clean the system components. These fluids damage rubber cups and seals. Use only fresh brake fluid or Mopar brake cleaner to clean or flush brake system components. These are the only cleaning materials recommended. If system contamination is suspected, check the fluid for dirt, discoloration, or separation into distinct layers. Also check the reservoir cap seal for distortion. Drain and flush the system with new brake fluid if contamination is suspected.

CAUTION: Use Mopar brake fluid, or an equivalent quality fluid meeting SAE/DOT standards J1703 and DOT 3. Brake fluid must be clean and free of contaminants. Use fresh fluid from sealed containers only to ensure proper antilock component operation.

CAUTION: Use Mopar multi-mileage or high temperature grease to lubricate caliper slide surfaces, drum brake pivot pins, and shoe contact points on the backing plates. Use multi-mileage grease or GE 661 or Dow 111 silicone grease on caliper slide pins to ensure proper operation.

DIAGNOSIS AND TESTING

DIAGNOSIS AND TESTING - BASE BRAKE SYSTEM

Base brake components consist of the brake pads, calipers, brake drum in hat rotor in the rear, rotors, brake lines, master cylinder, booster, and parking brake components.

Brake diagnosis involves determining if the problem is related to a mechanical, hydraulic, or vacuum operated component.

The first diagnosis step is the preliminary check.

PRELIMINARY BRAKE CHECK

1. Check condition of tires and wheels. Damaged wheels and worn, damaged, or underinflated tires can cause pull, shudder, vibration, and a condition similar to grab.
2. If complaint was based on noise when braking, check suspension components. Jounce front and rear of vehicle and listen for noise that might be caused by loose, worn or damaged suspension or steering components.
3. Inspect brake fluid level and condition. Note that the brake reservoir fluid level will decrease in proportion to normal lining wear. **Also note that brake fluid tends to darken over time. This is normal and should not be mistaken for contamination.**
    1. If fluid level is abnormally low, look for evidence of leaks at calipers, wheel cylinders, brake lines, and master cylinder.
    2. If fluid appears contaminated, drain out a sample to examine. System will have to be flushed if fluid is separated into layers, or contains a substance other than brake fluid. The system seals and cups will also have to be replaced after flushing. Use clean brake fluid to flush the system.
4. Check parking brake operation. Verify free movement and full release of cables and pedal. Also note if vehicle was being operated with parking brake partially applied.
5. Check brake pedal operation. Verify that pedal does not bind and has adequate free play. If pedal lacks free play, check pedal and power booster for being loose or for bind condition. Do not road test until condition is corrected.
6. Check booster vacuum check valve and hose.
7. If components checked appear OK, road test the vehicle.

ROAD TESTING

1. If complaint involved low brake pedal, pump pedal and note if it comes back up to normal height.
2. Check brake pedal response with transmission in Neutral and engine running. Pedal should remain firm under constant foot pressure.
3. During road test, make normal and firm brake stops in 25-40 mph range. Note faulty brake operation such as low pedal, hard pedal, fade, pedal pulsation, pull, grab, drag, noise, etc.
4. Attempt to stop the vehicle with the parking brake only and note grab, drag, noise, etc.

PEDAL FALLS AWAY

A brake pedal that falls away under steady foot pressure is generally the result of a system leak or fluid contamination. The leak point could be at a brake line, fitting, hose, or caliper/wheel cylinder. If leakage is severe, fluid will be evident at or around the leaking component.

Internal leakage (seal by-pass) in the master cylinder caused by worn or damaged piston cups, may also be the problem cause.

An internal leak in the ABS or RWAL system may also be the problem with no physical evidence.

LOW PEDAL

If a low pedal is experienced, pump the pedal several times. If the pedal comes back up worn linings, rotors, drums, or rear brakes out of adjustment are the most likely causes. The proper course of action is to inspect and replace all worn component and make the proper adjustments.

SPONGY PEDAL

A spongy pedal is most often caused by air in the system. However, thin brake drums or substandard brake lines and hoses can also cause a spongy pedal. The proper course of action is to bleed the system, and replace thin drums and substandard quality brake hoses if suspected.

HARD PEDAL OR HIGH PEDAL EFFORT

A hard pedal or high pedal effort may be due to lining that is water soaked, contaminated, glazed, or badly worn. The power booster or check valve or a vacuum hose could also be faulty.

PEDAL PULSATION

Pedal pulsation is caused by components that are loose, or beyond tolerance limits.

The primary cause of pulsation are disc brake rotors with excessive lateral runout or thickness variation, or out of round brake drums. Other causes are loose wheel bearings or calipers and worn, damaged tires.

NOTE: Some pedal pulsation may be felt during ABS activation.

BRAKE DRAG

Brake drag occurs when the lining is in constant contact with the rotor or drum. Drag can occur at one wheel, all wheels, fronts only, or rears only.

Drag is a product of incomplete brake shoe release. Drag can be minor or severe enough to overheat the linings, rotors and drums.

Minor drag will usually cause slight surface charring of the lining. It can also generate hard spots in rotors and drums from the overheat-cool down process. In most cases, the rotors, drums, wheels and tires are quite warm to the touch after the vehicle is stopped.

Severe drag can char the brake lining all the way through. It can also distort and score rotors and drums to the point of replacement. The wheels, tires and brake components will be extremely hot. In severe cases, the lining may generate smoke as it chars from overheating.

Common causes of brake drag are:

- Seized or improperly adjusted parking brake cables.
- Loose/worn wheel bearing.
- Seized caliper or wheel cylinder piston.
- Caliper binding on corroded bushings or rusted slide surfaces.
- Loose caliper mounting.

- Drum brake shoes binding on worn/damaged support plates.
- Mis-assembled components.
- Long booster output rod.

If brake drag occurs at all wheels, the problem may be related to a blocked master cylinder return port, or faulty power booster (binds-does not release).

BRAKE FADE

Brake fade is usually a product of overheating caused by brake drag. However, brake overheating and resulting fade can also be caused by riding the brake pedal, making repeated high deceleration stops in a short time span, or constant braking on steep mountain roads. Refer to **BRAKE DRAG**.

BRAKE PULL

Front brake pull condition could result from:

- Contaminated lining in one caliper
- Seized caliper piston
- Binding caliper
- Loose caliper
- Rusty caliper slide surfaces
- Improper brake pads
- Damaged rotor
- Front wheel alignment (caster, camber, and toe are possibly out of spec)

A worn, damaged wheel bearing or suspension component are further causes of pull. A damaged front tire (bruised, ply separation) can also cause pull.

A common and frequently misdiagnosed pull condition is where direction of pull changes after a few stops. The cause is a combination of brake drag followed by fade at one of the brake units.

As the dragging brake overheats, efficiency is so reduced that fade occurs. Since the opposite brake unit is still functioning normally, its braking effect is magnified. This causes pull to switch direction in favor of the normally functioning brake unit.

An additional point when diagnosing a change in pull condition concerns brake cool down. Remember that pull will return to the original direction, if the dragging brake unit is allowed to cool down (and is not seriously damaged).

REAR BRAKE GRAB OR PULL

Rear grab or pull is usually caused by improperly adjusted or seized parking brake cables, contaminated lining, bent or binding shoes and support plates, or improperly assembled components. This is particularly true when only one rear wheel is involved. However, when both rear wheels are affected, the master cylinder or

proportioning valve could be at fault.

BRAKES DO NOT HOLD AFTER DRIVING THROUGH DEEP WATER PUDDLES

This condition is generally caused by water soaked lining. If the lining is only wet, it can be dried by driving with the brakes very lightly applied for a mile or two. However, if the lining is both soaked and dirt contaminated, cleaning and/or replacement will be necessary.

BRAKE LINING CONTAMINATION

Brake lining contamination is mostly a product of leaking calipers or worn seals, driving through deep water puddles, or lining that has become covered with grease and grit during repair. Contaminated lining should be replaced to avoid further brake problems.

WHEEL AND TIRE PROBLEMS

Some conditions attributed to brake components may actually be caused by a wheel or tire problem.

A damaged wheel can cause shudder, vibration and pull. A worn or damaged tire can also cause pull.

Severely worn tires with very little tread left can produce a grab-like condition as the tire loses and recovers traction. Flat-spotted tires can cause vibration and generate shudder during brake operation. A tire with internal damage such as a severe bruise, cut, or ply separation can cause pull and vibration.

BRAKE NOISES

Some brake noise is common with rear drum brakes and on some disc brakes during the first few stops after a vehicle has been parked overnight or stored. This is primarily due to the formation of trace corrosion (light rust) on metal surfaces. This light corrosion is typically cleared from the metal surfaces after a few brake applications causing the noise to subside.

BRAKE SQUEAK/SQUEAL

Brake squeak or squeal may be due to linings that are wet or contaminated with brake fluid, grease, or oil. Glazed linings and rotors with hard spots can also contribute to squeak. Dirt and foreign material embedded in the brake lining will also cause squeak/squeal.

A very loud squeak or squeal is frequently a sign of severely worn brake lining. If the lining has worn through to the brake pads in spots, metal-to-metal contact occurs. If the condition is allowed to continue, rotors can become so scored that replacement is necessary.

BRAKE CHATTER

Brake chatter is usually caused by loose or worn components, or glazed/burnt lining. Rotors with hard spots can also contribute to chatter. Additional causes of chatter are out-of-tolerance rotors, brake lining not securely attached to the shoes, loose wheel bearings and contaminated brake lining.

THUMP/CLUNK NOISE

Thumping or clunk noises during braking are frequently **not** caused by brake components. In many cases, such noises are caused by loose or damaged steering, suspension, or engine components. However, calipers that bind on the slide surfaces can generate a thump or clunk noise.

STANDARD PROCEDURE

MANUAL BLEEDING

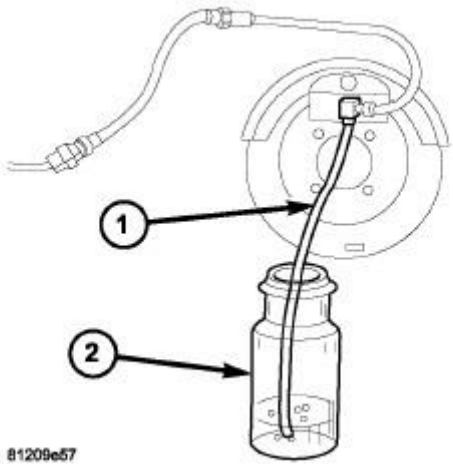

Fig. 1: Bleeding Brakes
Courtesy of CHRYSLER GROUP, LLC

Use Mopar brake fluid, or an equivalent quality fluid meeting SAE J1703-F and DOT 3 standards only. Use fresh, clean fluid from a sealed container at all times.

1. Remove reservoir filler caps and fill reservoir.
2. If calipers were overhauled, open all caliper bleed screws. Then close each bleed screw as fluid starts to drip from it. Top off master cylinder reservoir once more before proceeding.
3. Attach one end of bleed hose (1) to bleed screw and insert opposite end in glass container (2) partially filled with brake fluid. Be sure end of bleed hose is immersed in fluid.

NOTE: Bleed procedure should be in this order (1) Right rear (2) Left rear (3) Right front (4) Left front.

4. Open up bleeder, then have a helper press down the brake pedal. Once the pedal is down, hold the pedal down while closing the bleeder. Repeat bleeding until fluid stream is clear and free of bubbles. Then move to the next wheel.
5. Before moving the vehicle verify the pedal is firm and not mushy.
6. Top off the brake fluid and install the reservoir cap.

PRESSURE BLEEDING

Use Mopar brake fluid, or an equivalent quality fluid meeting SAE J1703-F and DOT 3 standards only. Use

fresh, clean fluid from a sealed container at all times.

Follow the manufacturers instructions carefully when using pressure equipment. Do not exceed the tank manufacturers pressure recommendations. Generally, a tank pressure of 15-20 psi is sufficient for bleeding.

Fill the bleeder tank with recommended fluid and purge air from the tank lines before bleeding.

Do not pressure bleed without a proper master cylinder adapter. The wrong adapter can lead to leakage, or drawing air back into the system.

SPECIAL TOOLS

SPECIAL TOOLS

	10186 - Wrench, Caliper Bolt (Originally Shipped In Kit Number(s) 10186.) C-3339A - Set, Dial Indicator (Originally Shipped In Kit Number(s) 9202.) C-3716-A - Installer, Bearing (Originally Shipped In Kit Number(s) 9975.) C-3919 - Gauge, Brake Shoes C-4171 - Driver Handle, Universal (Originally Shipped In Kit Number(s) 9202, 9202A-CAN, 9202CC, 9299, 9299CC, 9299CC, 9300A-CAN.)

ELECTRICAL

MOTOR, ADJUSTABLE PEDALS

DESCRIPTION

DESCRIPTION

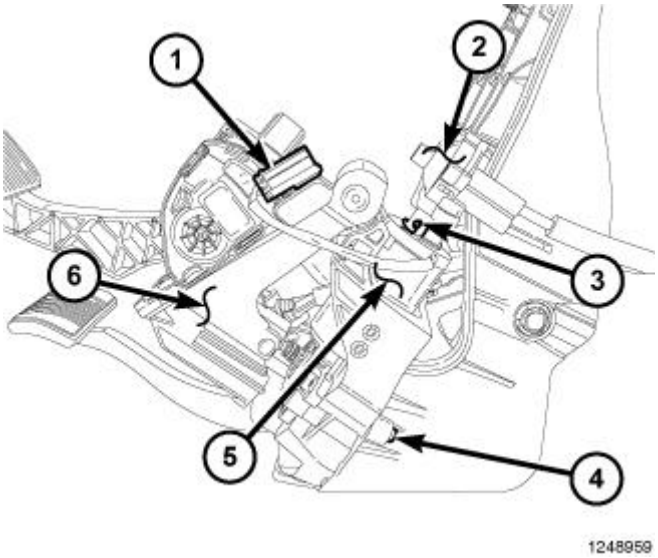

Fig. 2: Adjustable Pedals System Components
Courtesy of CHRYSLER GROUP, LLC

The Adjustable Pedals System (APS) is designed to enable the fore and aft repositioning of the brake and accelerator pedals. This results in improved ergonomics in relation to the steering wheel for taller and shorter drivers. Being able to adjust the pedal positions also allows the driver to set steering wheel tilt and seat position to the most comfortable position. The position of the brake and accelerator pedals can be adjusted without compromising safety or comfort in actuating the pedals.

Change of pedal position is accomplished by means of a motor driven screw. Operating the adjustable pedal switch activates the pedal drive motor (5). The pedal drive motor turns a screw that changes the position of the brake and accelerator pedals (6). The pedals can be moved rearward (closer to the driver) or forward (away from driver). The brake pedal is moved on its drive screw to a position where the driver feels most comfortable.

The accelerator pedal (6) is moved at the same time and the same distance as the brake pedal.

Neither the pedal drive motor (5) nor drive mechanism (2) are subject to the mechanical stress of brake or accelerator application.

- SYSTEM FEATURES:
  a. Range of Adjustment: The pedals may be adjusted up to 3 in. (75 mm)
  b. Pedal Adjustment Speed: 0.5 in./sec (12.5 mm/sec)
  c. Pedal Adjustment Inhibitors: Pedal adjustment is inhibited when the vehicle is in reverse or when cruise control is activated.

REMOVAL

REMOVAL

NOTE: If equipped with adjustable pedals: When replacing the components both pedal assemblies must be in the fully down position toward the floor for proper

adjustment. Pedals can be moved manually by rotating the cable on the component not being replaced. New components come in the correct position until activated.

1. Remove the pedal assembly. Refer to **PEDAL(S), BRAKE AND/OR ACCELERATOR, REMOVAL**.

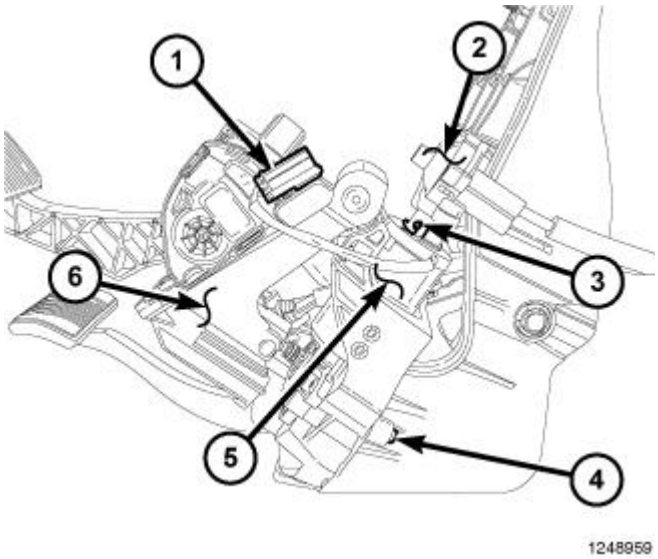

Fig. 3: Adjustable Pedals System Components
Courtesy of CHRYSLER GROUP, LLC

NOTE: The adjustable pedal motor has three locking tabs (3) that prevent easy twisting when removing drive cable from housing.

2. Disconnect the drive cable (2) from the adjustable pedal motor (5) by twisting clockwise and lifting from motor.

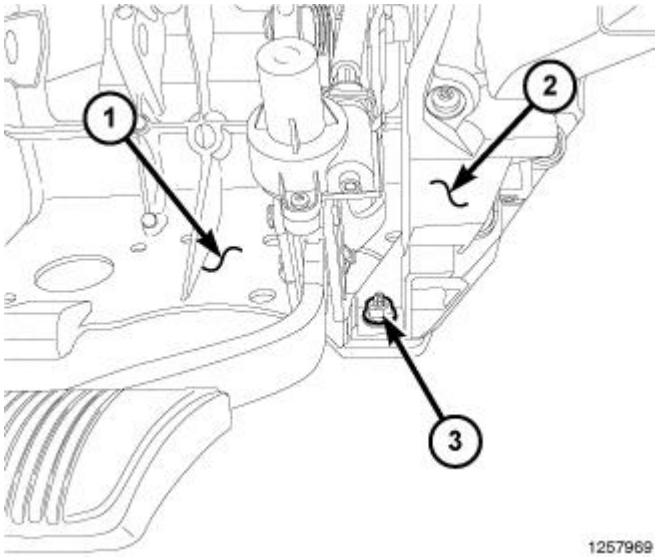

Fig. 4: Accelerator Sub-Assembly Bracket Nut

Courtesy of CHRYSLER GROUP, LLC

3. Remove the accelerator subassembly bracket mounting nut (3).

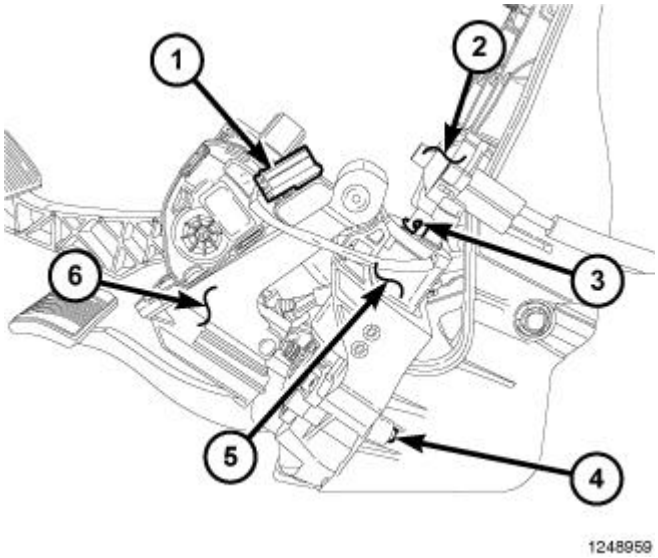

Fig. 5: Adjustable Pedals System Components
Courtesy of CHRYSLER GROUP, LLC

4. Remove the accelerator subassembly mounting screw (4).
5. Remove the accelerator subassembly (6).

INSTALLATION

INSTALLATION

NOTE: **If equipped with adjustable pedals: When replacing the components both pedal assemblies must be in the fully down position toward the floor for proper adjustment. Pedals can be moved manually by rotating the cable on the component not being replaced. New components come in the correct position until activated.**

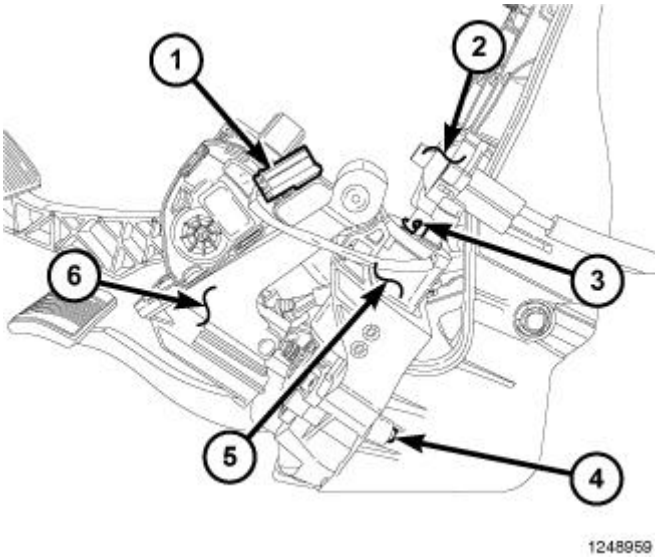

Fig. 6: Adjustable Pedals System Components
Courtesy of CHRYSLER GROUP, LLC

1. Position the accelerator subassembly (6) and install the rear mounting screw (4).

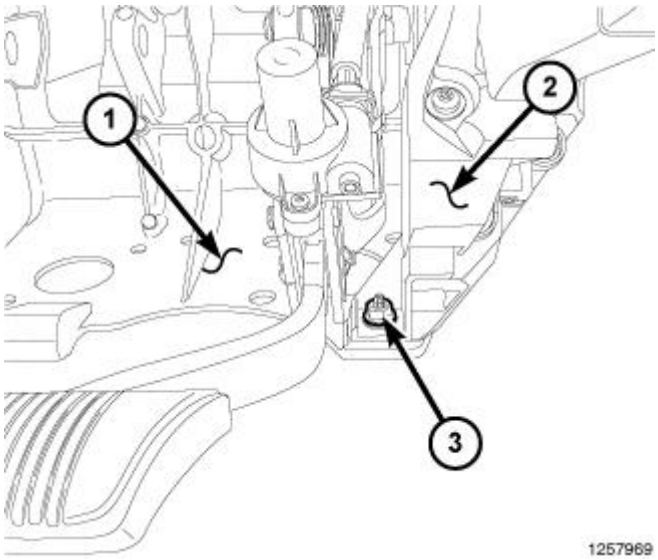

Fig. 7: Accelerator Sub-Assembly Bracket Nut
Courtesy of CHRYSLER GROUP, LLC

2. Install the accelerator subassembly front mounting nut (3).

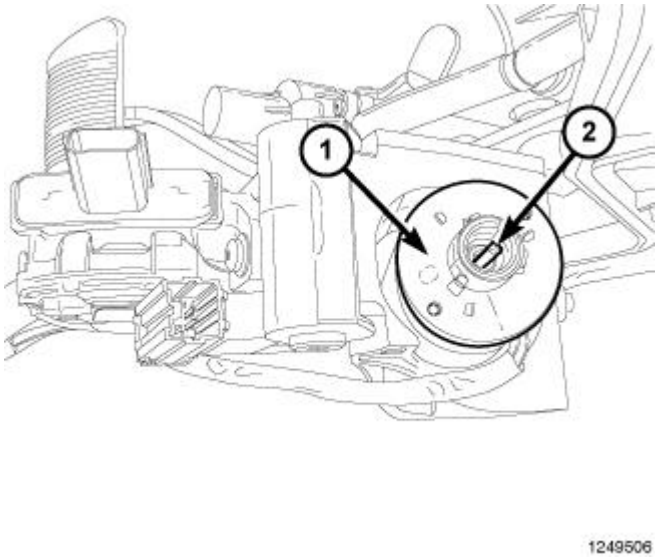

Fig. 8: Drive Cable To Motor Housing Adapter
Courtesy of CHRYSLER GROUP, LLC

NOTE: **Drive cable to motor housing adapter (2) can be turned manually within the motor housing (1) to allow proper alignment for drive cable attachment to motor.**

3. Verify the drive cable to motor housing adapter (2) is properly inserted in motor housing (1) before attaching drive cable.

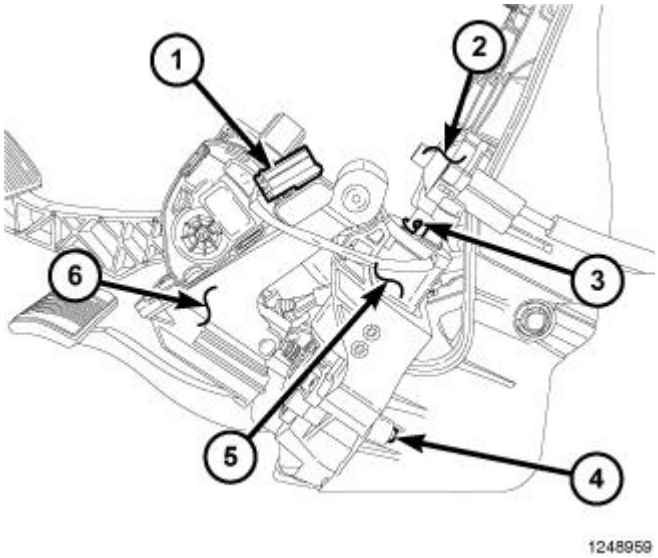

Fig. 9: Adjustable Pedals System Components
Courtesy of CHRYSLER GROUP, LLC

NOTE: **A snap sound should be heard when drive cable locks into position.**

4. Align drive cable housing to motor tabs/slots (3), and using light hand pressure push drive cable (2) into

position on the drive motor (5). Turn counter clockwise to lock into position.

5. Install the pedal assembly. Refer to **PEDAL(S), BRAKE AND/OR ACCELERATOR, INSTALLATION**.

SWITCH, ADJUSTABLE PEDALS

REMOVAL

REMOVAL

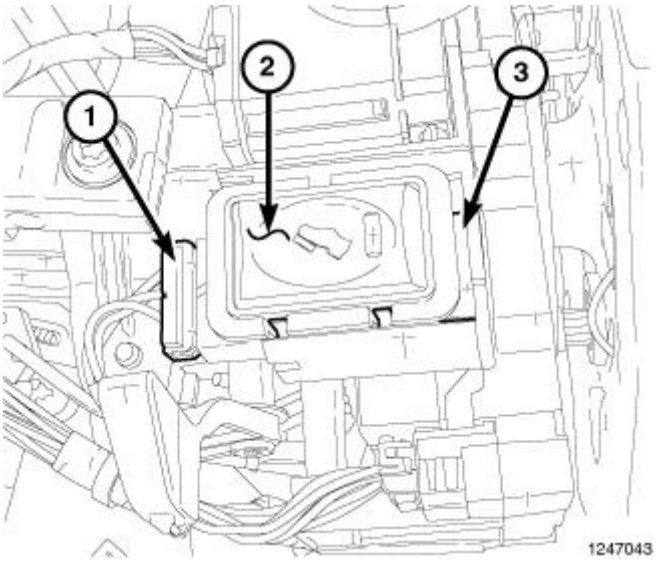

Fig. 10: Adjustable Pedal Switch
Courtesy of CHRYSLER GROUP, LLC

1. Remove the lower steering column shroud. Refer to **SHROUD, STEERING COLUMN, REMOVAL** .
2. Disconnect the electrical connector (1) from the adjustable pedal switch (2).
3. Remove the switch (2) from the steering column by releasing the retaining tab (3) and pulling the switch away from the column.

INSTALLATION

INSTALLATION

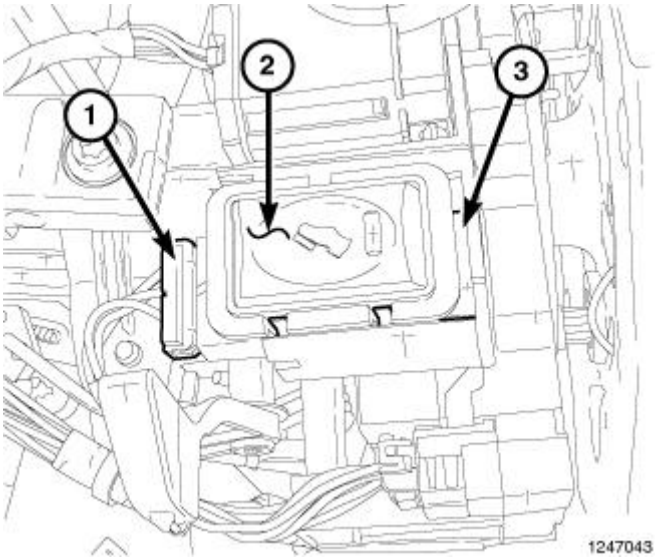

Fig. 11: Adjustable Pedal Switch
Courtesy of CHRYSLER GROUP, LLC

1. Install the switch (2) to the steering column by pushing the switch inward and seating the retaining clip.
2. Reconnect the electrical connector (1) to the adjustable pedal switch (2).
3. Install the lower steering column shroud. Refer to **SHROUD, STEERING COLUMN, INSTALLATION** .

SWITCH, BRAKE FLUID LEVEL

REMOVAL

REMOVAL

NOTE: All views are typical.

1. Thoroughly clean all surfaces of brake fluid reservoir and master cylinder. Use only Mopar® Brake Parts Cleaner or equivalent.

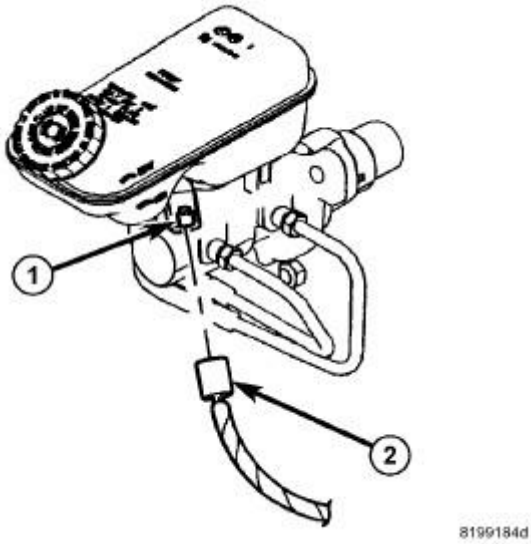

Fig. 12: Fluid Level Switch & Connector
Courtesy of CHRYSLER GROUP, LLC

2. Disconnect wiring harness connector (2) from brake fluid level switch (1) in master cylinder brake fluid reservoir.

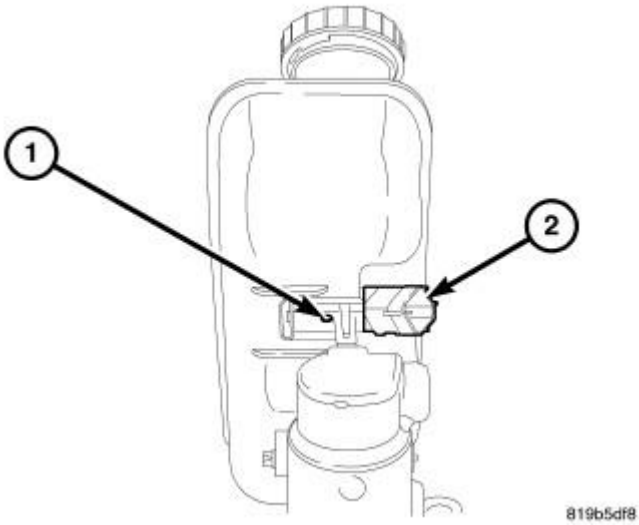

Fig. 13: Brake Fluid Level Switch Release Tab
Courtesy of CHRYSLER GROUP, LLC

NOTE: A small angled hex wrench can be used to depress the switch release tab.

3. Depress tab (1) on bottom of reservoir, then grasp the connector end of brake fluid level switch (2) and pull it out of reservoir.

INSTALLATION

INSTALLATION

NOTE: All views are typical.

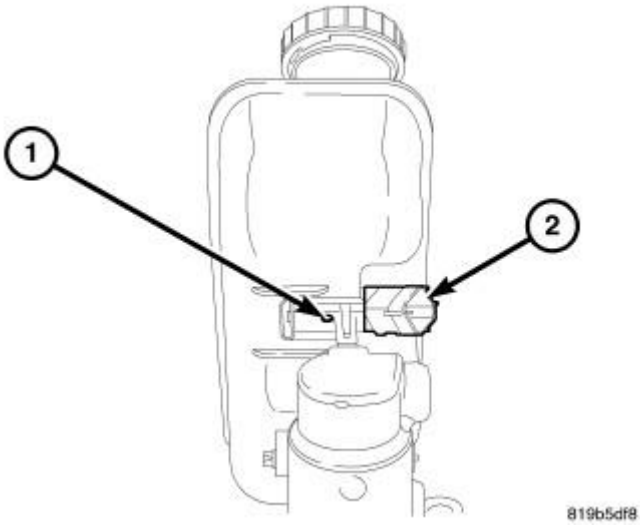

Fig. 14: Brake Fluid Level Switch Release Tab
Courtesy of CHRYSLER GROUP, LLC

1. Insert brake fluid level switch (2) into left side of reservoir. Be to push switch in until retaining tab (1) locks into place in reservoir.

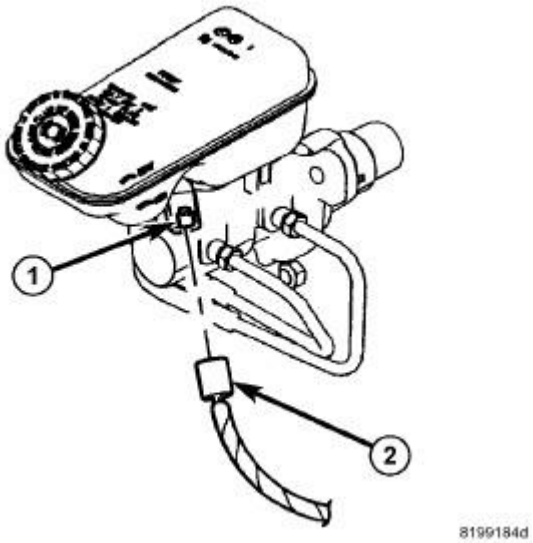

Fig. 15: Fluid Level Switch & Connector
Courtesy of CHRYSLER GROUP, LLC

2. Connect wiring harness connector (2) to brake fluid level switch (1) mounted in brake fluid reservoir.

HYDRAULIC/MECHANICAL

SPECIFICATIONS

BASE BRAKE

SPECIFICATIONS

DESCRIPTION	SPECIFICATION
Front Disc Brake Caliper Type	Dual Piston Sliding
Rear Disc Brake Caliper Type (1500)	Single Piston Sliding
Rear Disc Brake Caliper Type (2500 and 3500)	Dual Piston Sliding
Front Disc Brake Caliper (1500)	2x54 mm (2.12 in.)
Front Disc Brake Caliper (2500 and 3500)	2x60 mm (2.36 in.)
Front Disc Brake Rotor (1500)	336 X 28 mm (13.2 X 1.1 in.)
Front Disc Brake Rotor (2500 and 3500)	360 X 39.0 mm (13.89 X 1.535 in.)
Front/Rear Disc Brake Rotor Max. Runout (1500)	0.050 mm (0.002 in.)
Front/Rear Disc Brake Rotor Max. Runout (2500 and 3500 SRW)	0.025 mm (0.0009 in.)
Rear Disc Brake Rotor Max. Runout (2500 and 3500 DRW)	0.025 mm (0.0009 in.)
Front/Rear Disc Brake Rotor Max. Thickness Variation (1500)	0.015 mm (0.00059 in.)
Front/Rear Disc Brake Rotor Max. Thickness Variation (2500 and 3500)	0.010 mm (0.00039 in.) Loose Rotor
Front Rotor Minimum Thickness (1500)	26.4 mm (1.039 in.)
Front Rotor Minimum Thickness (2500 and 3500)	37.4 mm (1.47 in.)
Rear Rotor Minimum Thickness (1500)	20.4 mm (.803 in)
Rear Rotor Minimum Thickness (2500 and 3500)	32.4 mm (1.27 in)
Rear Disc Brake Caliper (1500)	1x54 mm (2.12 in)
Rear Disc Brake Caliper (2500 and 3500 SRW)	2x45 mm (1.77 in)
Rear Disc Brake Caliper (2500 and 3500 DRW)	2x51 mm (2.00 in)
Rear Disc Brake Rotor (1500)	350x22 mm (13.77 X.86 in)
Rear Disc Brake Rotor (2500 and 3500)	358x34 mm (14.09 X 1.33 in)
Rear Disc Brake Rotor Max Drum Diameter, (2500 and 3500)	207.2 mm (8.157 in.)
Brake Booster Type (Gas Engines)	Vacuum Dual Diaphragm
Brake Booster Type (Diesel Engines)	Hydroboost

TORQUE SPECIFICATIONS

1500, 2500, 3500

DESCRIPTION	N.m	Ft. Lbs.	In. Lbs.
Brake Booster Mounting	28	21	250

Nuts			
Master Cylinder Mounting Nuts	18	-	160
Reservoir Retaining Screws	8	6	71
Caliper Bleed Screws	19	14	169
Caliper Mounting Pins, Front	32	24	-
Caliper Mounting Pins, Rear	30	22	-
Caliper Adapter Mounting Bolts, Front (1500)	176	130	-
Caliper Adapter Mounting Bolts, Front (2500/3500)	373	275	-
Caliper Adapter Mounting Bolts, Rear (1500)	163	120	-
Caliper Adapter Mounting Bolts, Rear **Upper** (2500 and 3500)	226	163	-
Caliper Adapter Mounting Bolts, Rear **Lower** (2500 and 3500)	264	190	-
Junction Block Bolts, Front (1500)	19	14	169
Junction Block Bolts, Rear (1500)	24	18	213
Junction Block Bolts, Rear (2500/3500)	10	7.5	-
Brake Pedal Assembly Bracket Bolts (1500)	31	23	-
Brake Pedal Assembly Bracket Nuts (2500/3500)	28	21	-
Support Plate Mounting Bolts/Nuts (1500)	102	75	-
Support Plate Mounting Bolts/Nuts (2500/3500)	203	150	-
Brake Line Fittings, Master Cylinder	19	14	169
Brake Line Fittings, Junction Block (Both)	19	14	169
Caliper Brake Line Banjo Bolt, Front	27	20	245

Caliper Brake Line Banjo Bolt, Rear	28	20	245
Brake Hose Bolts To Frame, Front	10	7.5	89
Brake Hose Fitting	19	14	169
Parking Brake Pedal Assembly (1500)	25	18	-
Parking Brake Pedal Assembly (2500/3500)	19	14	-
Hub/Bearing Bolts (1500)	163	120	-
Rotor to Hub Bolt, Rear (2500 and 3500 DRW)	154.5	114	-
Extension to Rotor Nut, Front (2500 and 3500 DRW)	173.5	128	-
Hub/Bearing Bolts, Front (2500 and 3500 4X2)	176	130	-

3500 CAB CHASSIS, 4500, 5500

DESCRIPTION	N•m	Ft. Lbs.	In. Lbs.
Brake Booster Mounting Nuts	28	21	250
Master Cylinder Mounting Nuts	18	-	160
Master Cylinder Mounting Nuts (4500 and 5500)	37.5	28	332
Reservoir Retaining Screws	8	6	71
Caliper Bleed Screws	19	14	168
Caliper Bleed Screws (4500 and 5500)	12	9	-
Caliper Mounting Pins, Front (Cab Chassis)	32	24	-
Caliper Mounting Pins, Front (4500 and 5500)	133	98	-
Caliper Mounting Pins, Rear (Cab Chassis)	30	22	-
Caliper Mounting Pins, Rear (4500 and 5500)	133	98	-
Caliper Adapter Mounting Bolts, Front (Cab Chassis)	373	275	-
Caliper Adapter			

Mounting Bolts, Front (4500 and 5500)	530	400	-
Caliper Adapter Mounting Bolts, Rear **Upper** (Cab Chassis)	226	163	-
Caliper Adapter Mounting Bolts, Rear **Lower** (Cab Chassis)	264	190	-
Caliper Adapter Mounting Bolts, Rear **Upper** (4500 and 5500)	465	343	-
Caliper Adapter Mounting Bolts, Rear **Lower** (4500 and 5500)	530	400	-
Junction Block, Bolts To Frame	10	7.5	-
Brake Hose Front Bolts to Axle (4500 and 5500)	31	23	275
Brake Pedal Assembly Bracket Nuts	28	21	-
Support Plate Mounting Bolts/Nuts (Cab Chassis)	203	150	-
Brake Line Fittings Master Cylinder	19	14	170
Brake Line Fittings, Junction Block	19	14	170
Caliper Brake Line Banjo Bolt	28	21	250
Brake Hose Bolts To Frame, Front (Cab Chassis)	10	7.5	-
Brake Hose Bolts To Frame, Front (4500 and 5500)	31	23	275
Brake Hose Fitting, Front	19	14	250
Brake Hose/Tube, Rear (4500 and 5500)	24	18	213
Brake Hose Fitting, Rear	19	14	250
Brake Hose, Rear (4500 and 5500)	24	18	213
Brake Line Fitting, Rear (4500 and 5500)	19	14	170
Parking Brake Pedal Assembly	19	14	250
Parking Brake Pedal			

Assembly (4500 and 5500)	28	21	-
Rotor to Hub Bolt, Rear (Cab Chassis DRW)	154.5	114	-
Rotor to Hub Bolt, Rear (4500 and 5500 DRW)	156	115	-
Extension to Rotor Nut, Front (Cab Chassis DRW)	173.5	128	-
Extension to Rotor Nut, Front (4500 and 5500 DRW)	176	130	-
Hub/Bearing Bolts, Front (Cab Chassis 4x2)	176	130	-
Hub/Bearing Bolts, Front (4500 and 5500)	200	147	-

ADAPTER, DISC BRAKE CALIPER

REMOVAL

FRONT

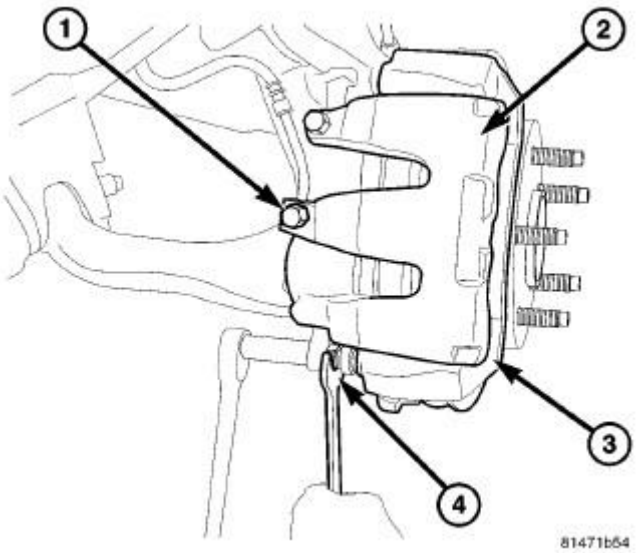

Fig. 16: Caliper Slide Pin Bolts
Courtesy of CHRYSLER GROUP, LLC

1. Raise and support the vehicle. Refer to **HOISTING, STANDARD PROCEDURE** .
2. Remove the front wheel and tire assembly.
3. Remove the caliper slide pin bolts (4). Refer to **CALIPER, DISC BRAKE, REMOVAL**.

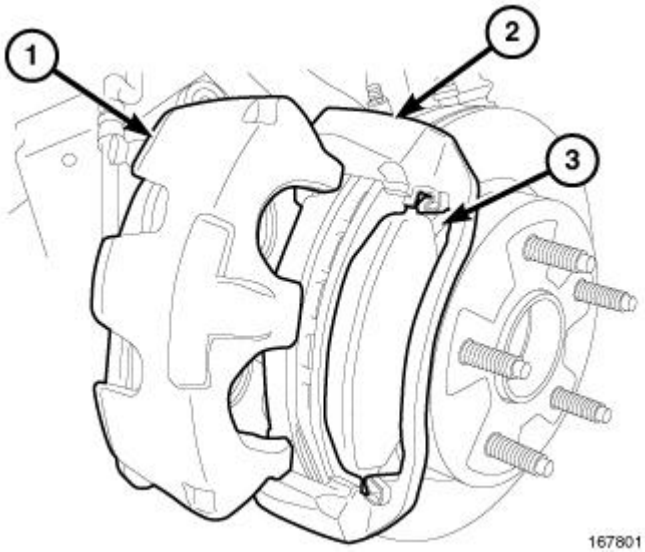

Fig. 17: Brake Caliper & Adapter
Courtesy of CHRYSLER GROUP, LLC

CAUTION: Never allow the disc brake caliper to hang from the brake hose. Damage to the brake hose will result. Provide a suitable support to hang the caliper securely.

4. Remove the disc brake caliper (1) from the adapter (2).

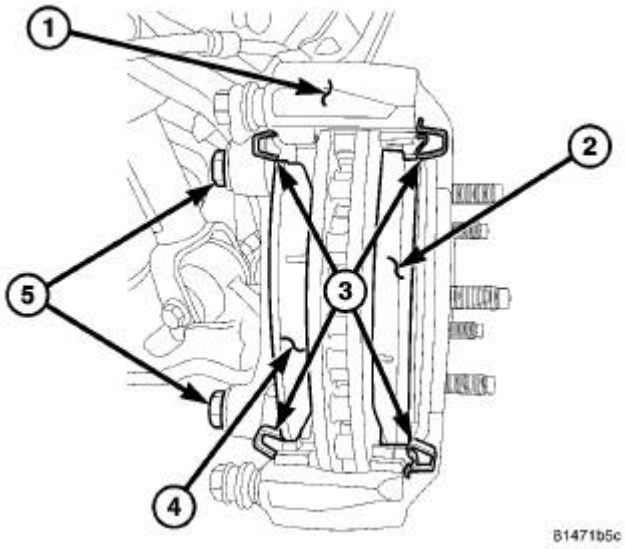

Fig. 18: Brake Pads, Caliper & Bolts
Courtesy of CHRYSLER GROUP, LLC

5. Remove the inboard (4) and outboard (2) brake pads.
6. Remove the caliper adapter mounting bolts (5).

7. Remove and transfer any necessary components.

REAR

1. Raise and support the vehicle. Refer to **HOISTING, STANDARD PROCEDURE** .
2. Remove the wheel and tire assembly.
3. Drain a small amount of fluid from master cylinder brake reservoir with a **clean** suction gun.
4. Bottom the caliper pistons into the caliper by prying the caliper over.
5. Remove the caliper slide bolts.
6. Remove the disc brake caliper from the mount.

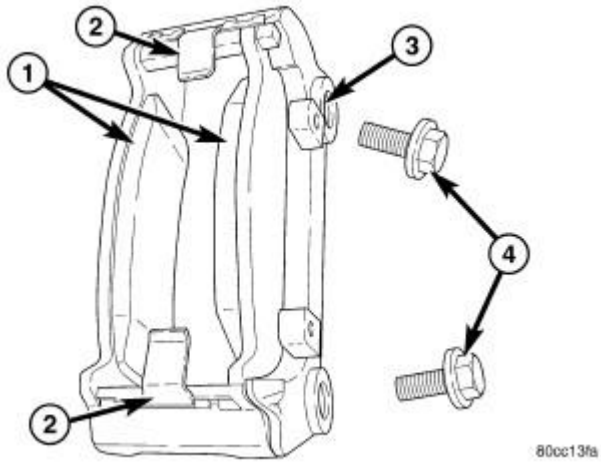

Fig. 19: Caliper Adapter & Mount Bolts
Courtesy of CHRYSLER GROUP, LLC

CAUTION: Never allow the disc brake caliper to hang from the brake hose. Damage to the brake hose will result. Provide a suitable support to hang the caliper securely.

7. Remove the inboard and outboard brake pads (1).
8. Remove the anti-rattle clips (2).
9. Remove the caliper adapter mounting bolts (4).
10. Remove the caliper adapter.

INSTALLATION

FRONT

NOTE: Petroleum based grease should not be used on any of the rubber components of the caliper, Use only a Non-Petroleum based grease, such as Dow Corning-807® grease.

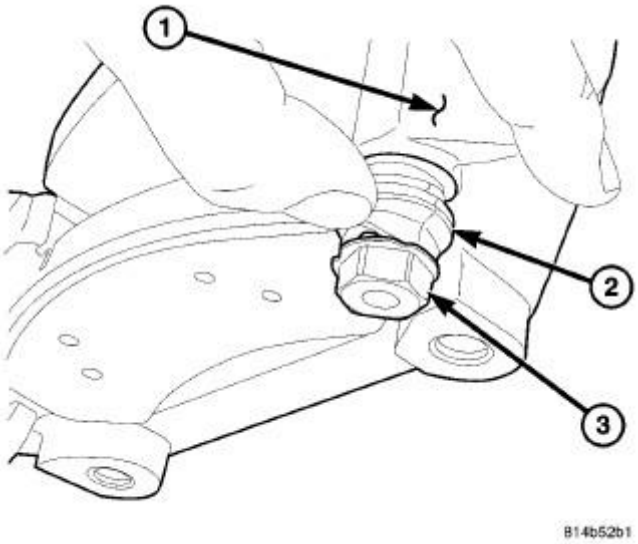

Fig. 20: Caliper Slide Pin & Boot
Courtesy of CHRYSLER GROUP, LLC

NOTE: Clean slide pin bores thoroughly to remove any old grease.

NOTE: Use grease packets included with kit or Dow Corning-807® grease.

1. Thoroughly coat the new slide pins (3) on all working surfaces.
2. Install the boot (2) onto the slide pin (3) and then insert into the adapter (1).
3. Push the pin (3) all the way into the adapter (1) and carefully expel the trapped air by gently pushing on the boot (2) near the slide pin head (3).

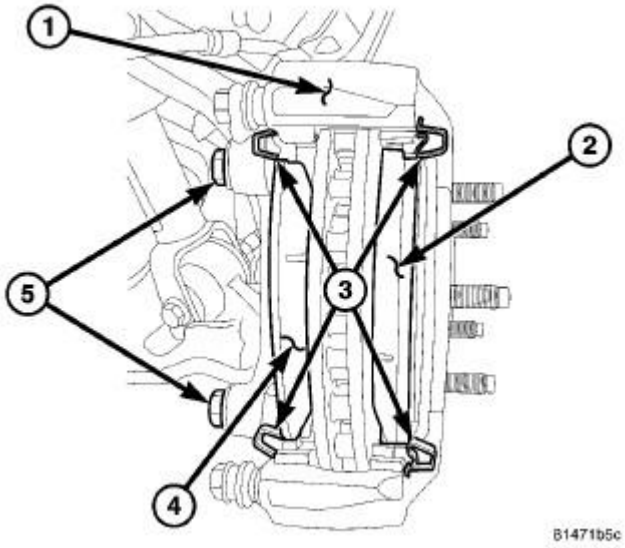

Fig. 21: Brake Pads, Caliper & Bolts

Courtesy of CHRYSLER GROUP, LLC

4. Install the caliper adapter mounting bolts (5). For **1500** , tighten to 176 N.m (130 ft.lbs). For **3500** , tighten to 339 N.m (250 ft.lbs).
5. Install the inboard (4) and outboard (2) pads. Refer to **PADS, BRAKE, INSTALLATION**.

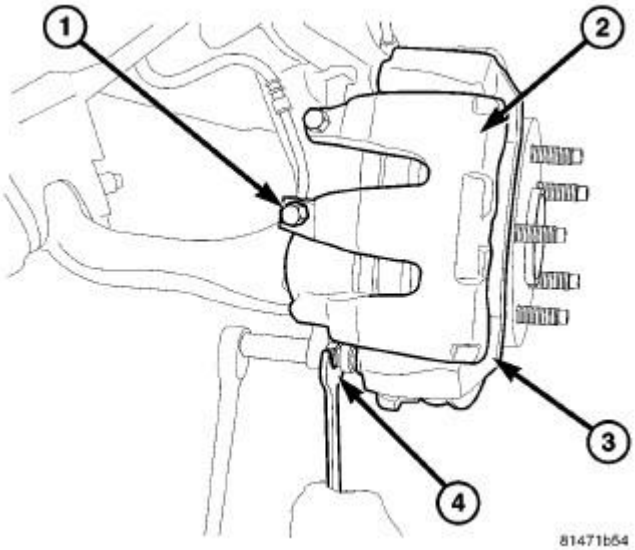

Fig. 22: Caliper Slide Pin Bolts
Courtesy of CHRYSLER GROUP, LLC

6. Install the caliper (2) and the caliper slide pin bolts (4). Refer to **CALIPER, DISC BRAKE, INSTALLATION**.
7. Install the tire and wheel assembly. Refer to **WHEELS, STANDARD PROCEDURE** .

REAR

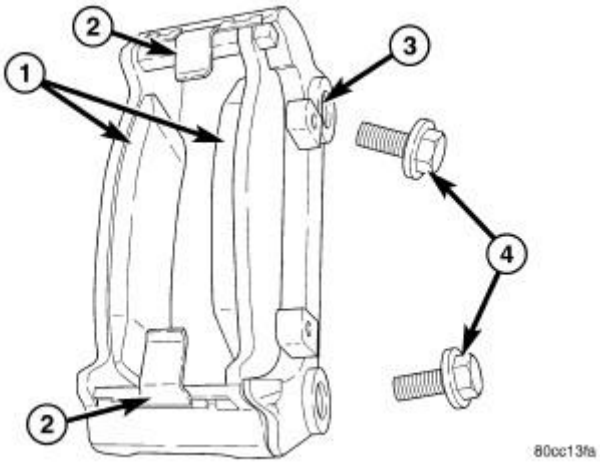

Fig. 23: Caliper Adapter & Mount Bolts

Courtesy of CHRYSLER GROUP, LLC

NOTE: **Caliper Adapter Wrench (special tool #10186, Wrench, Caliper Bolt) must be used to torque the upper caliper adapter bolts for the 2500 and 3500 series trucks.**

1. Install the caliper adapter mounting bolts (4) and tighten to specifications per the Adapter Bolt Torque chart. Use the proper Caliper Adapter Wrench for the upper bolts only.
2. Install the anti-rattle clips (2).
3. Install the inboard and outboard pads (1).
4. Install the caliper mounting bolts and tighten to 30 N.m (22 ft. lbs).
5. Install the tire and wheel assembly. Refer to **WHEELS, STANDARD PROCEDURE** .

ADAPTER BOLT TORQUE

DESCRIPTION	N.m	Ft. Lbs.	In. Lbs.
Caliper Adapter Mounting Bolts (1500)	163	120	-
Caliper Adapter Mounting Bolts **Upper** (2500 and 3500)	226	163	-
Caliper Adapter Mounting Bolts **Lower** (2500 and 3500)	264	190	-

BOOSTER, POWER BRAKE

DESCRIPTION

DESCRIPTION

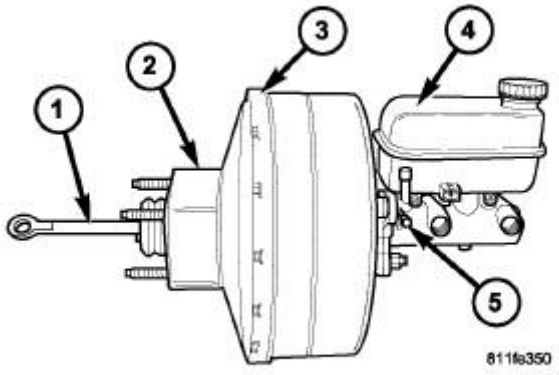

Fig. 24: Identifying Power Brake Booster Components
Courtesy of CHRYSLER GROUP, LLC

All models use a tandem diaphragm, power brake booster (3).

NOTE: **The power brake booster is not a repairable component. The booster must be replaced as an assembly if diagnosis indicates a malfunction has occurred.**

OPERATION

OPERATION

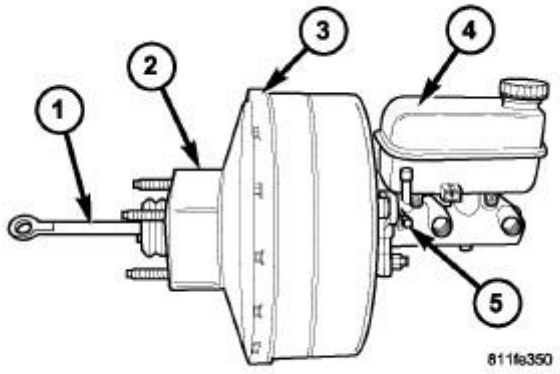

Fig. 25: Identifying Power Brake Booster Components
Courtesy of CHRYSLER GROUP, LLC

The booster unit consists of a single housing divided into two by a tandem diaphragm (3). The outer edge of the diaphragm is secured to the housing. A spacer block (2) is located in between the cowl and the booster housing. The booster push rod (1), connects the booster to the brake pedal and master cylinder (4), is attached to the center of the diaphragm. A check valve (5) is used in the booster outlet connected to the engine intake manifold. Power assist is generated by utilizing a combination of vacuum and atmospheric pressure to boost brake assist.

DIAGNOSIS AND TESTING

DIAGNOSIS AND TESTING - MASTER CYLINDER/POWER BOOSTER

1. Start the engine and check the booster vacuum hose connections. A hissing noise indicates a vacuum leak. Correct any vacuum leaks before proceeding.
2. Stop the engine and pump the brake pedal until all vacuum reserve in the booster is depleted.
3. Press and hold the brake pedal under light foot pressure. The pedal should hold firm. If the pedal falls away, there may be an external leak or the master cylinder is faulty (internal leakage).
4. Start the engine and note pedal action. It should fall away slightly under light foot pressure, then hold firm. If no pedal action is discernible, the power booster, vacuum supply or vacuum check valve is faulty, refer to **POWER BOOSTER VACUUM TEST**.
5. If the POWER BOOSTER VACUUM TEST passes, rebuild the booster vacuum reserve as follows: Release the brake pedal. Increase engine speed to 1500 RPM, close the throttle and immediately turn off the ignition to stop the engine.

6. Wait a minimum of 90 seconds and try brake action again. The booster should provide two or more vacuum assisted pedal applications. If the vacuum assist is not provided, the booster is faulty.

POWER BOOSTER VACUUM TEST

1. Connect a vacuum gauge to the booster check valve with a short length of hose and T-fitting.
2. Start and run the engine at curb idle for one minute.
3. Observe the vacuum supply. If the vacuum supply is less that 12 inches HG (406 millibars), repair the vacuum supply.
4. Clamp the hose shut between the intake vacuum source and the check valve.
5. Stop the engine and observe the vacuum gauge.
6. If the vacuum drops more than one inch HG (33 millibars) within 15 seconds, the booster diaphragm or check valve is faulty.

POWER BOOSTER CHECK VALVE TEST

1. Remove the power booster check valve from the power booster.
2. Using a hand operated vacuum pump, apply 15-20 inches HG (508-677 millibars) vacuum at the booster side of the check valve.
3. The vacuum should hold steady. If the gauge on the pump indicates vacuum loss, the check valve is faulty and should be replaced.

REMOVAL

REMOVAL

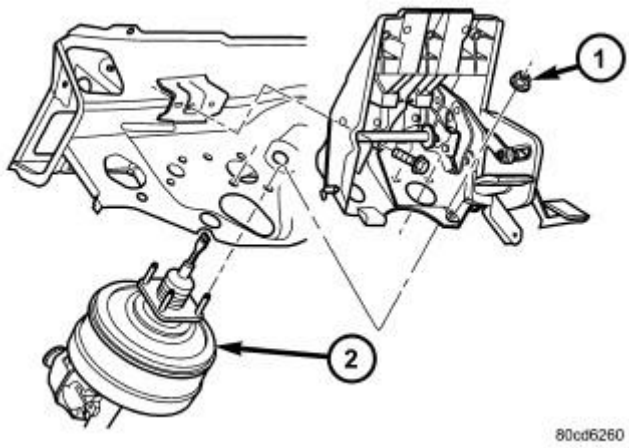

Fig. 26: Power Brake Booster & Mounting Nut
Courtesy of CHRYSLER GROUP, LLC

1 - MOUNTING NUT
2 - POWER BRAKE BOOSTER

1. Remove the master cylinder. Refer to **MASTER CYLINDER, BRAKE, REMOVAL**.
2. Disconnect the vacuum line at the booster.
3. Remove the clip securing the booster push rod to the brake pedal.
4. Remove the brake lamp switch. Refer to **SWITCH, STOP LAMP, REMOVAL** .
5. Remove the nuts (1) from the booster mounting studs.
6. Remove the booster (2) and gasket from front cowl panel.

INSTALLATION

INSTALLATION

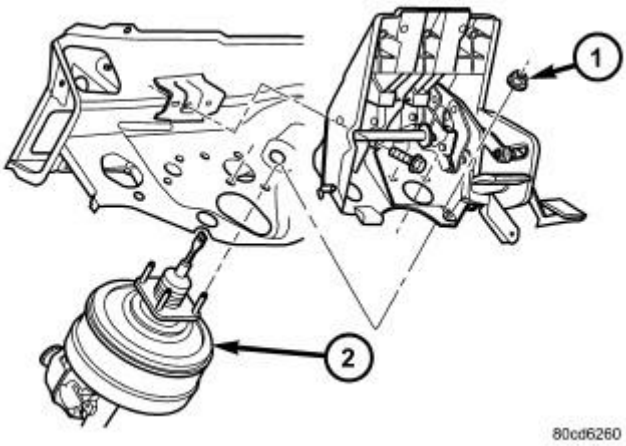

Fig. 27: Power Brake Booster & Mounting Nut
Courtesy of CHRYSLER GROUP, LLC

1 - MOUNTING NUT
2 - POWER BRAKE BOOSTER

1. Guide the booster (2) studs into the cowl panel holes and seat the booster on the panel.
2. Install and tighten the new booster attaching nuts (1) to 28 N.m (250 in. lbs.).
3. Install the booster push rod on the brake pedal and install clip.
4. Install the brake lamp switch. Refer to **SWITCH, STOP LAMP, INSTALLATION** .
5. Install the booster check valve if removed and connect the vacuum hose to the check valve.
6. Install the master cylinder. Refer to **MASTER CYLINDER, BRAKE, INSTALLATION**.
7. Fill and bleed the brake system. Refer to **STANDARD PROCEDURE**. .

BOOSTER, POWER BRAKE, HYDRO-BOOST

DIAGNOSIS AND TESTING

DIAGNOSIS AND TESTING - HYDRAULIC BOOSTER

The hydraulic booster uses hydraulic pressure from the power steering pump. Before diagnosing a booster problem, first verify the power steering pump is operating properly. Perform the following checks.

- Check the power steering fluid level.
- Check the brake fluid level.
- Check all power steering hoses and lines for leaks and restrictions.
- Check power steering pump pressure.

HISSING

A hissing noise may be noticed when above normal brake pedal pressure is applied, 40 lbs. or above. The noise will be more noticeable if the vehicle is not moving. The noise will increase with the brake pedal pressure and an increase of system operating temperature.

CLUNK-CHATTER-CLICKING

A clunk-chatter-clicking may be noticed when the brake pedal is released quickly, after above normal brake pedal pressure is applied 50-100 lbs.

NOISES

The hydraulic booster unit will produce certain characteristic booster noises. The noises may occur when the brake pedal is used in a manner not associated with normal braking or driving habits.

BOOSTER FUNCTION TEST

With the engine off depress the brake pedal several times to discharge the accumulator. Then depress the brake pedal using 40 lbs. of force and start the engine. The brake pedal should fall and then push back against your foot. This indicates the booster is operating properly.

ACCUMULATOR LEAKDOWN

1. Start the engine, apply the brakes and turn the steering wheel from lock to lock. This will ensure the accumulator is charged. Turn off the engine and let the vehicle sit for one hour. After one hour there should be at least two power assisted brake application with the engine off. If the system does not retain a charge the booster must be replaced.
2. With the engine off depress the brake pedal several times to discharge the accumulator. Grasp the accumulator and see if it wobbles or turns. If it does the accumulator has lost a gas charge and the booster must be replaced.

SEAL LEAKAGE

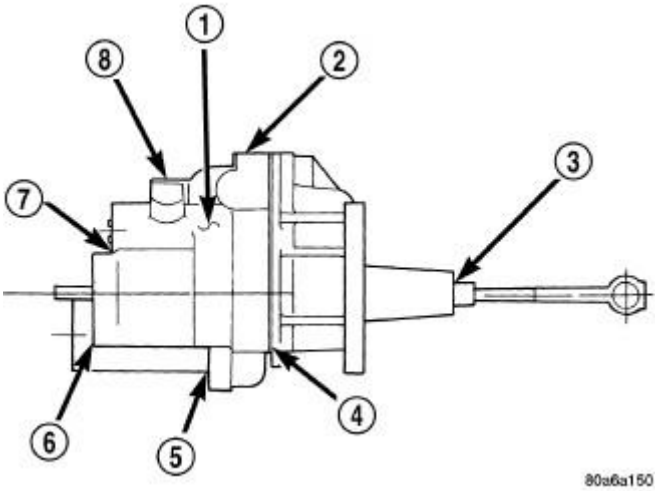

Fig. 28: Hydraulic Booster Components
Courtesy of CHRYSLER GROUP, LLC

1 - PUMP
2 - GEAR
3 - INPUT SEAL
4 - HOUSING SEAL
5 - ACCUMULATOR SEAL
6 - PISTON SEAL
7 - SPOOL PLUG SEAL
8 - RETURN PORT FITTING SEAL

If the booster leaks from any of the seals the booster assembly must be replaced.

- **INPUT ROD SEAL (3):** Fluid leakage from rear end of the booster.
- **PISTON SEAL (6):** Fluid leakage from vent at front of booster.
- **HOUSING SEAL (4):** Fluid leakage between housing and housing cover.
- **SPOOL VALVE SEAL (7):** Fluid leakage near spool plug.
- **RETURN PORT FITTING SEAL (8):** Fluid leakage from port fitting.

HYDRAULIC BOOSTER DIAGNOSIS CHART

CONDITION	POSSIBLE CAUSES	CORRECTION
Slow Brake Pedal Return	1. Excessive seal friction in booster.	1. Replace booster.
	2. Faulty spool valve action.	2. Replace booster.
	3. Restriction in booster return hose.	3. Replace hose.
	4. Damaged input rod.	4. Replace booster.
Excessive Brake Pedal Effort.	1. Internal or external seal	1. Replace booster.

	leakage.	
	2. Faulty steering pump.	2. Replace pump.
Brakes Self Apply	1. Dump valve faulty.	1. Replace booster.
	2. Contamination in hydraulic system.	2. Flush hydraulic system and replace booster.
	3. Restriction in booster return hose.	3. Replace hose.
Booster Chatter, Pedal Vibration	1. Slipping pump belt.	1. Replace power steering belt.
	2. Low pump fluid level.	2. Fill pump and check for leaks.
Grabbing Brakes	1. Low pump flow.	1. Test and repair/replace pump.
	2. Faulty spool valve action.	2. Replace booster.

STANDARD PROCEDURE

STANDARD PROCEDURE - BLEEDING

The hydraulic booster is generally self-bleeding, this procedure will normally bleed the air from the booster. Normal driving and operation of the unit will remove any remaining trapped air.

1. Fill power steering pump reservoir.
2. Disconnect fuel shutdown relay and crank the engine for several seconds. Refer to appropriate electrical information for relay location and WARNING.
3. Check fluid level and add if necessary.
4. Connect fuel shutdown relay and start the engine.
5. Turn the steering wheel slowly from lock to lock twice.
6. Stop the engine and discharge the accumulator by depressing the brake pedal 5 times.

NOTE: If fluid foaming occurs, wait for foam to dissipate and repeat steps 7 and 8.

7. Start the engine and turn the steering wheel slowly from lock to lock twice.
8. Turn off the engine and check fluid level and add if necessary.

REMOVAL

REMOVAL

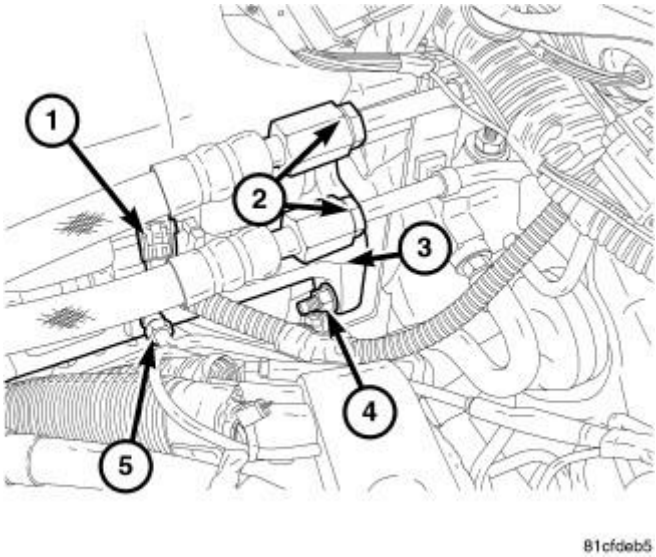

Fig. 29: Identifying Nut, Electrical Connector, Brake Lines & Master Cylinder
Courtesy of CHRYSLER GROUP, LLC

NOTE: If the booster is being replaced because the power steering fluid is contaminated, flush the power steering system before replacing the booster.

1. With engine off depress the brake pedal 5 times to discharge the accumulator.
2. Remove brake lines (5) from master cylinder (3).
3. Remove mounting nuts (4) from the master cylinder.
4. Remove the master cylinder (3).
5. Remove the return hose and the two pressure lines (2) from the hydraulic booster.
6. From inside the vehicle remove the booster push rod clip, washer and rod remove from the brake pedal.
7. Remove the brake lamp switch. Refer to **SWITCH, STOP LAMP, REMOVAL** .
8. Remove the mounting nuts from the hydraulic booster and remove the booster.

INSTALLATION

INSTALLATION

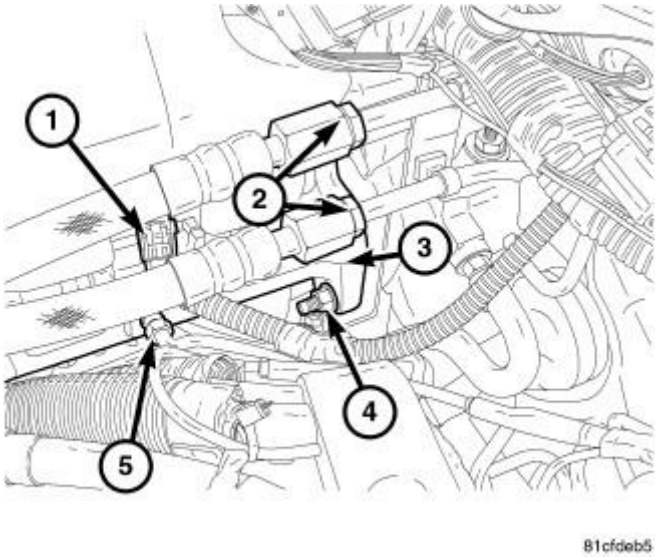

Fig. 30: Identifying Nut, Electrical Connector, Brake Lines & Master Cylinder
Courtesy of CHRYSLER GROUP, LLC

1. Install the hydraulic booster and tighten the mounting nuts to 28 N.m (21 ft. lbs.).
2. Install the booster push rod, washer and clip onto the brake pedal.
3. Install the brake lamp switch. Refer to **SWITCH, STOP LAMP, INSTALLATION** .
4. Install the master cylinder on the mounting studs and tighten the mounting nuts (4) to 23 N.m (17 ft. lbs.).
5. Install the brake lines (5) to the master cylinder (3) and tighten to 19 N.m (170 in. lbs.).

NOTE: Inspect the o-rings on the pressure line fittings to insure they are in good condition before installation. Replace the o-rings if necessary.

6. Install the hydraulic booster pressure lines (2) to the booster and tighten to 41 N.m (30 ft. lbs.).
7. Install the return hose to the booster.
8. Bleed the base brake system. Refer to **STANDARD PROCEDURE**. .

CAUTION: MOPAR (MS-9602) ATF+4 is to be used in the power steering system. No other power steering or automatic transmission fluid is to be used in the system. Damage may result to the power steering pump and system if any other fluid is used, and do not overfill.

9. Fill the power steering pump with fluid. Refer to **PUMP, STANDARD PROCEDURE** .
10. Bleed the hydraulic booster. Refer to **BOOSTER, POWER BRAKE, HYDRO-BOOST, STANDARD PROCEDURE**.

BRACKET, CALIPER MOUNTING

REMOVAL

REMOVAL

NOTE: **Leaf spring system shown in illustration, coil spring system similar.**

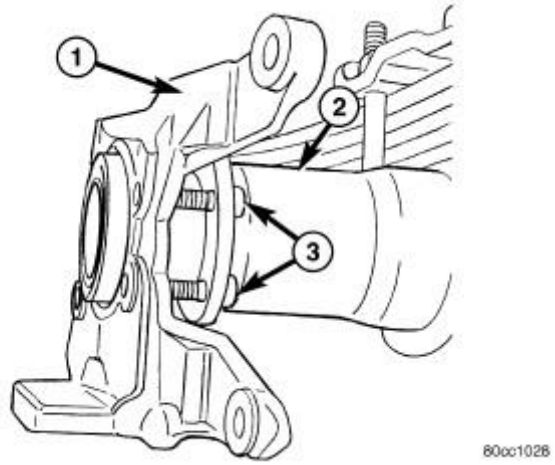

Fig. 31: Rear Caliper Adapter Mount
Courtesy of CHRYSLER GROUP, LLC

1 - CALIPER ADAPTER MOUNT
2 - AXLE TUBE
3 - MOUNTING STUDS

1. Remove wheel and tire assembly.
2. Remove the disc brake caliper. Refer to **CALIPER, DISC BRAKE, REMOVAL**.
3. Remove the caliper adapter. Refer to **ADAPTER, DISC BRAKE CALIPER, REMOVAL**.
4. Remove the rotor. Refer to **ROTOR, BRAKE, REMOVAL**.
5. Remove the axle shaft. Refer to **REMOVAL** .
6. Remove the park brake shoes. Refer to **SHOES, PARKING BRAKE, REMOVAL**.
7. Remove the parking brake cable from the brake lever.
8. Remove the nuts (3) attaching the support plate to the axle and remove the support plate.
9. Remove the caliper adapter mount (1) from the axle housing (2).

INSTALLATION

INSTALLATION

NOTE: **Leaf spring system shown in illustration, coil spring system similar.**

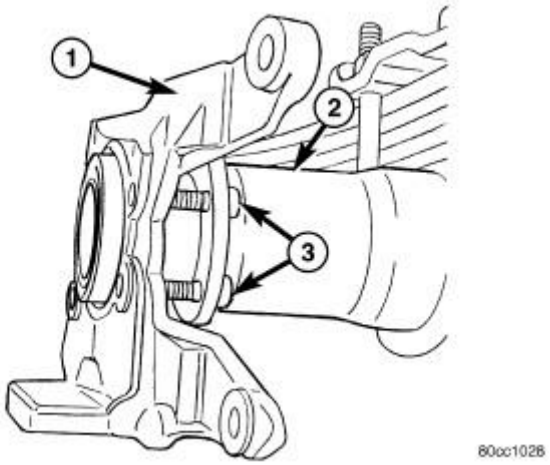

Fig. 32: Rear Caliper Adapter Mount
Courtesy of CHRYSLER GROUP, LLC

1 - CALIPER ADAPTER MOUNT
2 - AXLE TUBE
3 - MOUNTING STUDS

1. Install the caliper adapter mount (1) on the axle housing (2).
2. Install support plate on axle flange. Tighten attaching nuts (3) to 102 N.m (75 ft. lbs.).
3. Install parking brake cable in the brake lever.
4. Install the park brake shoes. Refer to **SHOES, PARKING BRAKE, INSTALLATION**.
5. Install axle shaft. Refer to **INSTALLATION** .
6. Adjust brake shoes to drum with brake gauge. Refer to **SHOES, PARKING BRAKE, ADJUSTMENTS**.
7. Install the rotor. Refer to **ROTOR, BRAKE, INSTALLATION**.
8. Install the caliper adapter. Refer to **ADAPTER, DISC BRAKE CALIPER, INSTALLATION**.
9. Install the caliper. Refer to **CALIPER, DISC BRAKE, INSTALLATION**.
10. Install wheel and tire assembly. Refer to **WHEELS, STANDARD PROCEDURE** .

CALIPER, DISC BRAKE

DESCRIPTION

DESCRIPTION

NOTE: **Petroleum based grease should not be used on any of the rubber components of the caliper, Use only Non-Petroleum based grease.**

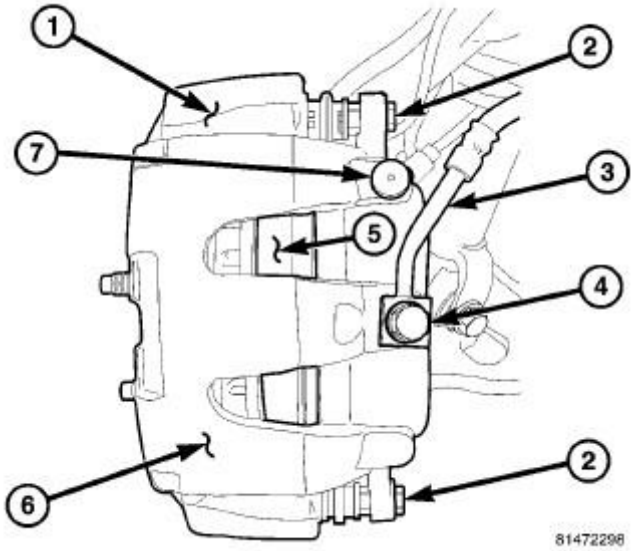

Fig. 33: Identifying Disc Brake Caliper Components
Courtesy of CHRYSLER GROUP, LLC

The calipers are a dual piston type. The calipers are free to slide laterally, this allows continuous compensation for lining wear.

OPERATION

OPERATION

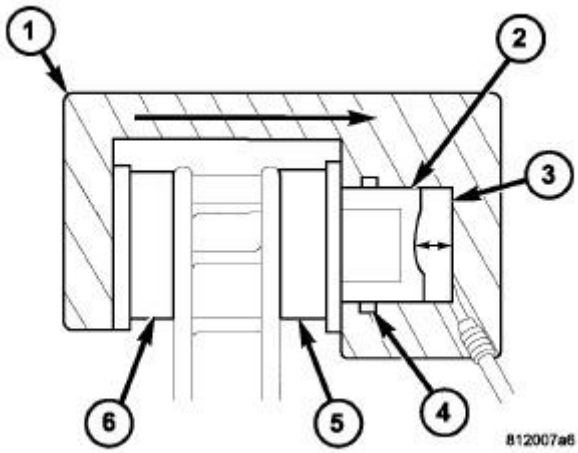

Fig. 34: CutawayView of Disc Brake Caliper Components
Courtesy of CHRYSLER GROUP, LLC

When the brakes are applied fluid pressure is exerted against the caliper piston (2). The fluid pressure is exerted equally and in all directions. This means pressure exerted against the caliper piston and within the caliper bore will be equal.

Fluid pressure applied to the piston is transmitted directly to the inboard brake pad (5). This forces the pad lining against the inner surface of the disc brake rotor. At the same time, fluid pressure within the piston bore forces the caliper to slide inward on the mounting bolts. This action brings the outboard brake pad lining (6) into contact with the outer surface of the disc brake rotor.

In summary, fluid pressure acting simultaneously on both piston and caliper, produces a strong clamping action. When sufficient force is applied, friction will attempt to stop the rotors from turning and bring the vehicle to a stop.

Application and release of the brake pedal generates only a very slight movement of the caliper and piston. Upon release of the pedal, the caliper and piston return to a rest position. The brake pads do not retract an appreciable distance from the rotor. In fact, clearance is usually at, or close to zero. The reasons for this are to keep road debris from getting between the rotor and lining and in wiping the rotor surface clear each revolution.

The caliper piston seal (4) controls the amount of piston (2) extension needed to compensate for normal lining wear.

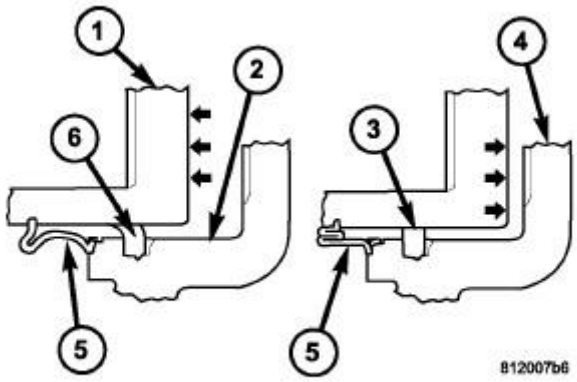

Fig. 35: Caliper Operation
Courtesy of CHRYSLER GROUP, LLC

During brake application, the seal is deflected outward by fluid pressure and piston movement (6). When the brakes (and fluid pressure) are released, the seal relaxes and retracts the piston (3).

The amount of piston retraction is determined by the amount of seal deflection. Generally the amount is just enough to maintain contact between the piston and inboard brake pad.

REMOVAL

FRONT

NOTE: 1500 shown in illustration, others similar.

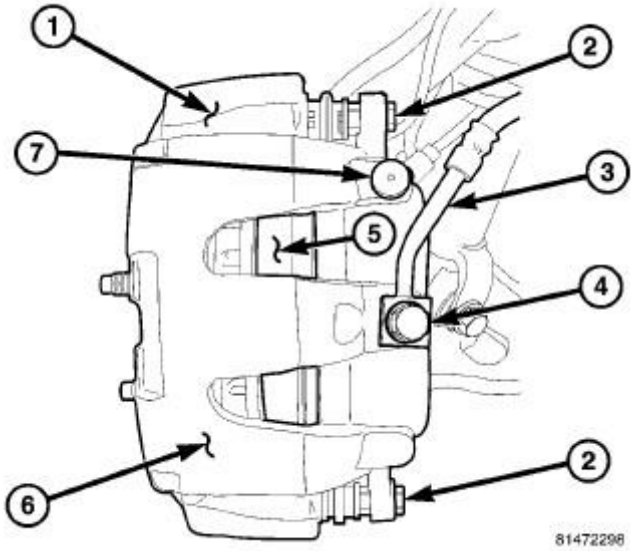

Fig. 36: Identifying Disc Brake Caliper Components
Courtesy of CHRYSLER GROUP, LLC

CAUTION: Never allow the disc brake caliper to hang from the brake hose. Damage to the brake hose will result. Provide a suitable support to hang the caliper securely.

1. Install prop rod on the brake pedal to keep pressure on the brake system, Holding pedal in this position will isolate master cylinder from hydraulic brake system and will not allow brake fluid to drain out of brake fluid reservoir while brake lines are open. This will allow you to bleed out the area of repair instead of the entire system.
2. Raise and support the vehicle. Refer to **HOISTING, STANDARD PROCEDURE** .
3. Remove the tire and wheel assembly.
4. Compress the disc brake caliper (6).
5. Remove the banjo bolt (4) and discard the copper washers.

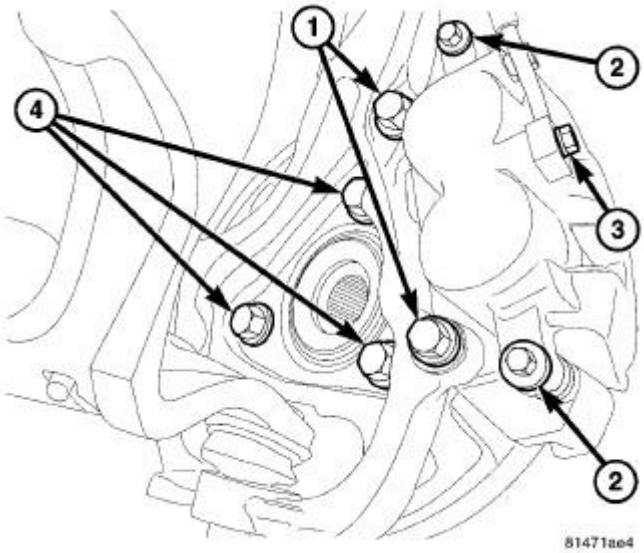

Fig. 37: Identifying Caliper Slide Pin Bolts
Courtesy of CHRYSLER GROUP, LLC

6. Remove the caliper slide pin bolts (2).

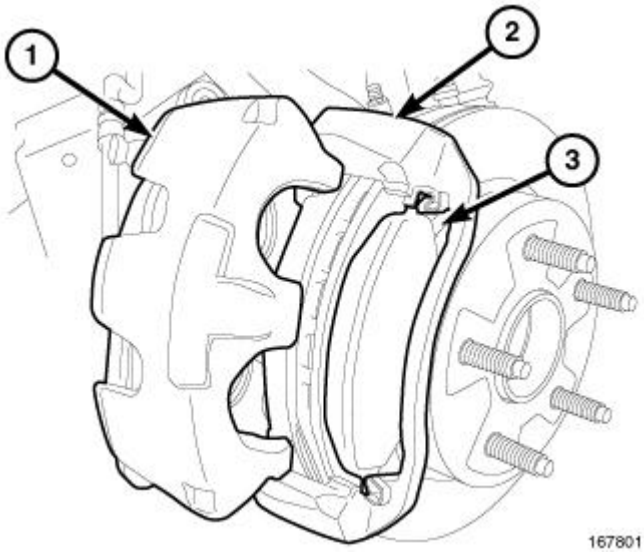

Fig. 38: Brake Caliper & Adapter
Courtesy of CHRYSLER GROUP, LLC

7. Remove the disc brake caliper (1) from the caliper adapter (2).

REAR

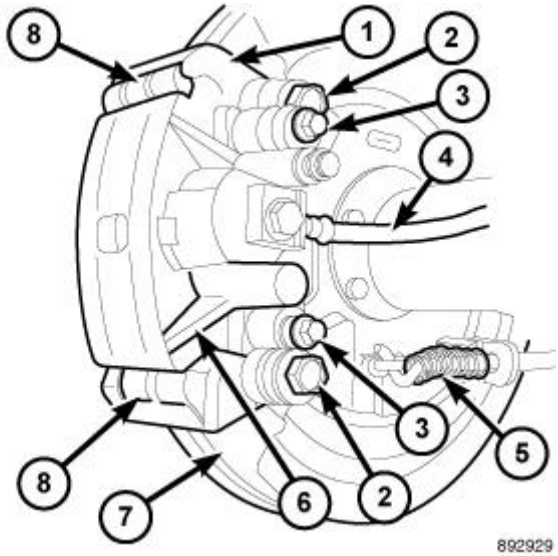

Fig. 39: Brake Caliper, Bolts, Hose & Cable
Courtesy of CHRYSLER GROUP, LLC

CAUTION: Never allow the disc brake caliper to hang from the brake hose. Damage to the brake hose will result. Provide a suitable support to hang the caliper securely.

1. Install prop rod on the brake pedal to keep pressure on the brake system, Holding pedal in this position will isolate master cylinder from hydraulic brake system and will not allow brake fluid to drain out of brake fluid reservoir while brake lines are open. This will allow you to bleed out the area of repair instead of the entire system.
2. Raise and support vehicle.
3. Remove the wheel and tire assembly.
4. Drain small amount of fluid from master cylinder brake reservoir with suction gun.
5. Remove the brake hose banjo bolt and discard the copper washers if replacing caliper.
6. Remove the caliper slide bolts (3).
7. Remove the caliper (6) from vehicle.

DISASSEMBLY

LIGHT DUTY

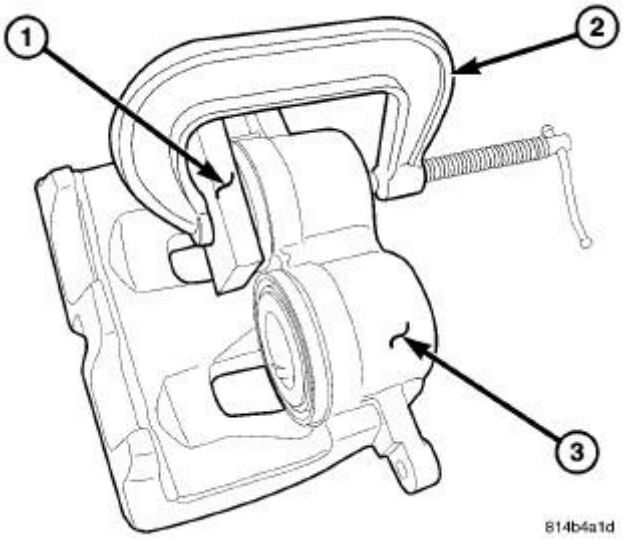

Fig. 40: C-Clamp & Block Of Wood
Courtesy of CHRYSLER GROUP, LLC

1. Drain the brake fluid from caliper.
2. C-clamp (2) a block of wood (1) over one piston.

CAUTION: Do not blow the piston out of the bore with sustained air pressure. This could result in a cracked piston.

WARNING: Never attempt to catch the piston as it leaves the bore. This could result in personal injury.

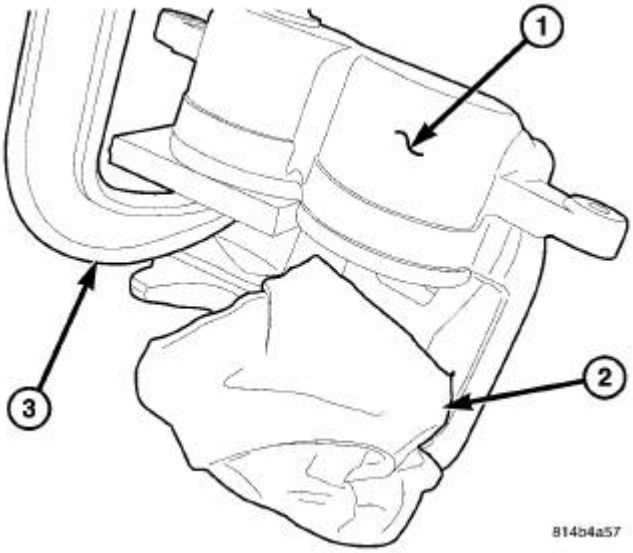

Fig. 41: Padding Wood With Shop Towels
Courtesy of CHRYSLER GROUP, LLC

3. Take another piece of wood and pad it with one-inch thickness of shop towels (2). Place this piece in the outboard shoe side of the caliper in front of the other piston. This will cushion and protect caliper piston during removal.
4. To remove the caliper piston direct **short bursts of low pressure air** with a blow gun through the caliper brake hose port. Use only enough air pressure to ease the piston out.
5. Remove the C-clamp and block of wood from the caliper and clamp it over the dust boot of the first piston removed. This will seal the empty piston bore.
6. Move the padded piece of wood in front of the other piston.
7. Remove the second piston using the same procedure with **short bursts of low pressure air** .

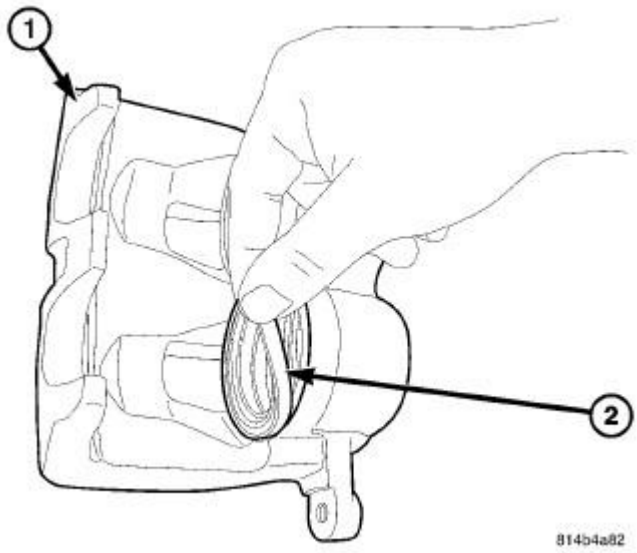

Fig. 42: Dust Boot
Courtesy of CHRYSLER GROUP, LLC

8. Remove piston dust boots (2) by hand.

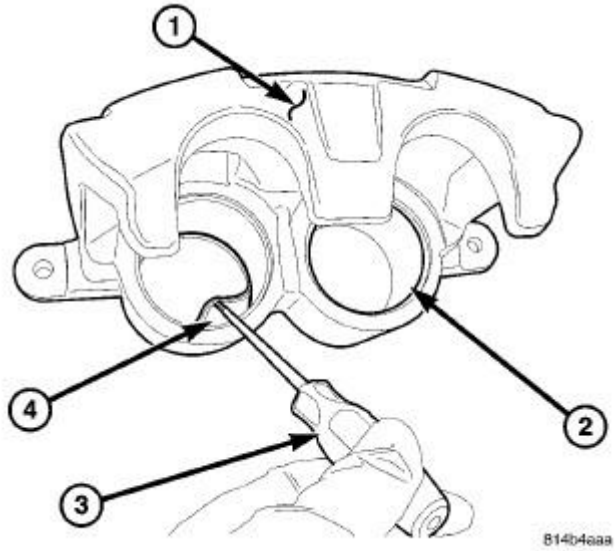

Fig. 43: Removing Lip Seal
Courtesy of CHRYSLER GROUP, LLC

CAUTION: Do not scratch piston bore while removing the seals.

9. Remove the lip seal from the groove (4) with a pick tool (3).

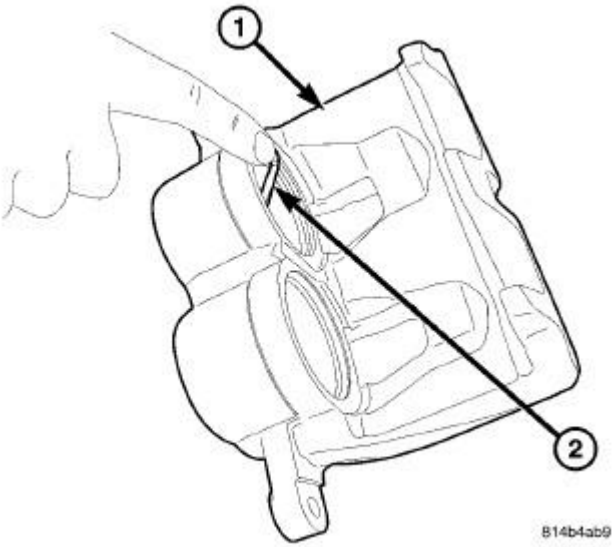

Fig. 44: Piston Seals
Courtesy of CHRYSLER GROUP, LLC

10. Remove piston seals (2) from caliper (1) by hand.

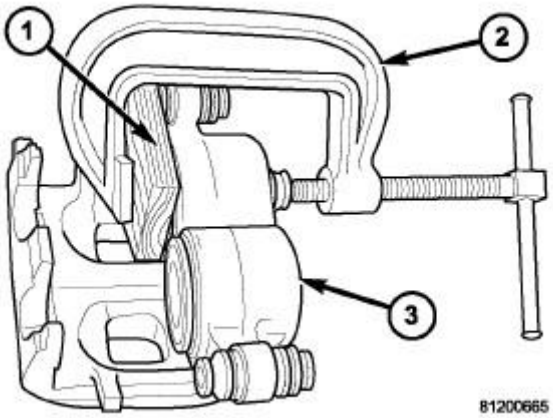

Fig. 45: Clamping Block Of Wood Over Caliper Piston
Courtesy of CHRYSLER GROUP, LLC

1. Drain the brake fluid from caliper.
2. C-clamp (2) a block of wood (1) over one piston.

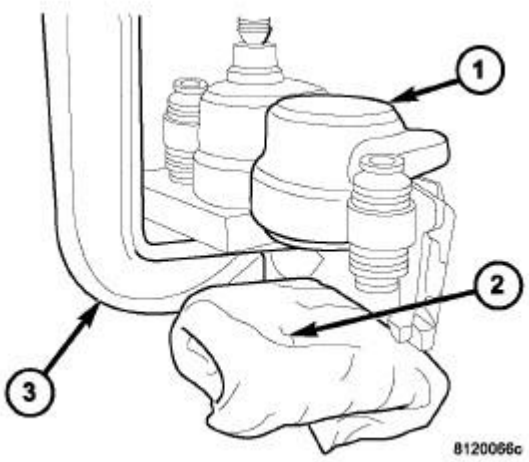

Fig. 46: Wrapping Wood Block With Shop Towels to Protect Caliper Piston
Courtesy of CHRYSLER GROUP, LLC

3. Take another piece of wood and pad it with one-inch thickness of shop towels (2). Place this piece in the outboard shoe side of the caliper in front of the other piston. This will cushion and protect caliper piston during removal.

CAUTION: Do not blow the piston out of the bore with sustained air pressure. This could result in a cracked piston.

WARNING: NEVER ATTEMPT TO CATCH THE PISTON AS IT LEAVES THE BORE. THIS COULD RESULT IN PERSONAL INJURY.

4. To remove the caliper piston direct **short bursts of low pressure air** with a blow gun through the caliper brake hose port. Use only enough air pressure to ease the piston out.
5. Remove the C-clamp and block of wood from the caliper and clamp it over the dust boot of the first piston removed. This will seal the empty piston bore.
6. Move the padded piece of wood in front of the other piston.
7. Remove the second piston using the same procedure with **short bursts of low pressure air** .

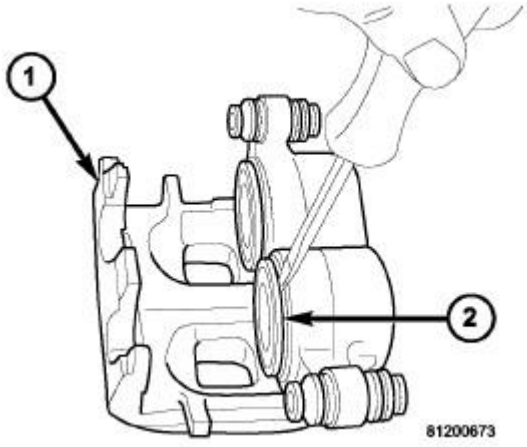

Fig. 47: Removing Piston Dust Boots
Courtesy of CHRYSLER GROUP, LLC

8. Remove piston dust boots (2) with a suitable pry tool.

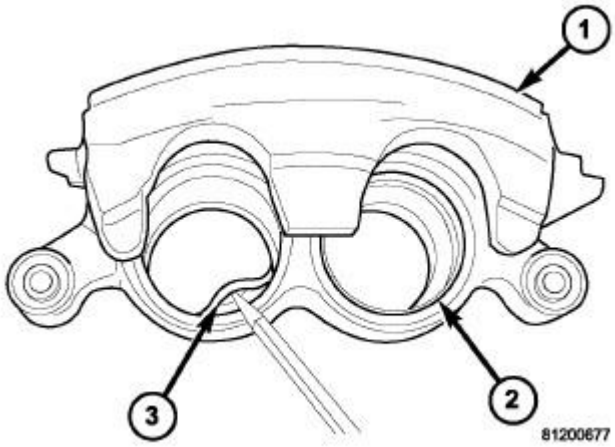

Fig. 48: Removing Piston Seals
Courtesy of CHRYSLER GROUP, LLC

CAUTION: Do not scratch piston bore while removing the seals.

9. Remove piston seals (3) from caliper (1).

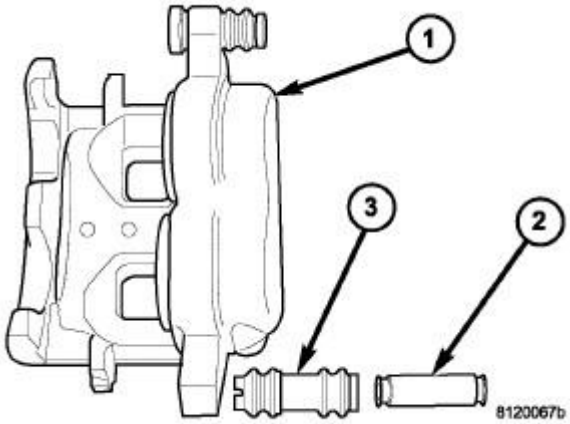

Fig. 49: Caliper, Mounting Bolt Bushings & Seals
Courtesy of CHRYSLER GROUP, LLC

10. Push caliper mounting bolt bushings (3) out of the boot seals (2) and remove the boot seals from the caliper (1).
11. Remove caliper bleed screw.

ASSEMBLY

LIGHT DUTY

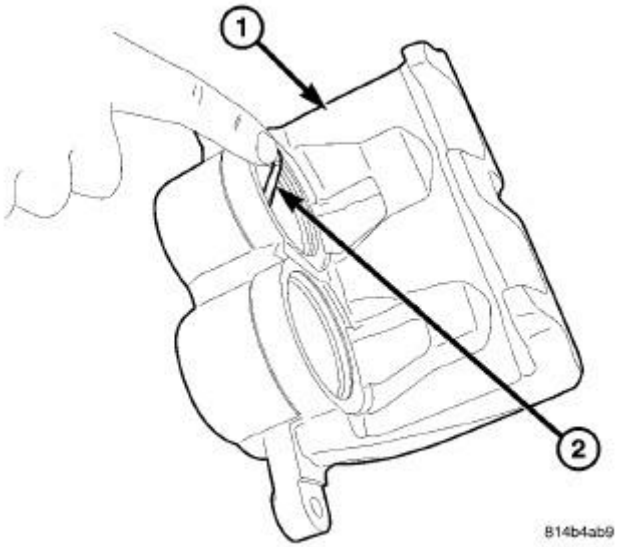

Fig. 50: Piston Seals
Courtesy of CHRYSLER GROUP, LLC

CAUTION: Dirt, oil, and solvents can damage caliper seals. Insure assembly area is clean and dry.

1. Lubricate caliper pistons, piston seals and piston bores with clean, fresh brake fluid.

NOTE: Verify seal is fully seated and not twisted.

2. Install new piston seals (2) into caliper bores (1).

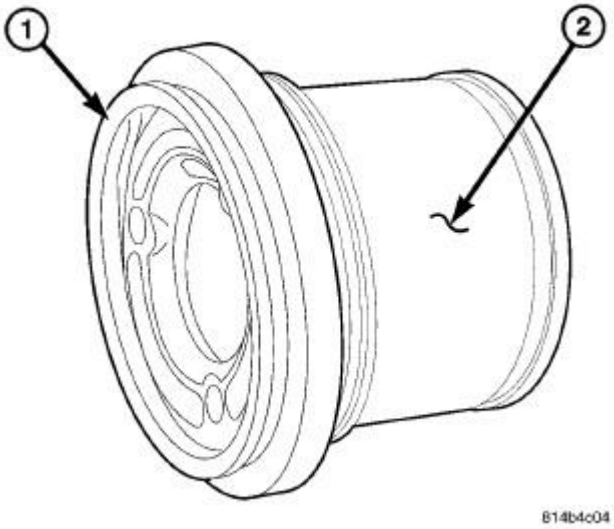

Fig. 51: Identifying Boot & Piston
Courtesy of CHRYSLER GROUP, LLC

3. Leave boot (1) dry and slip onto end of piston (2).

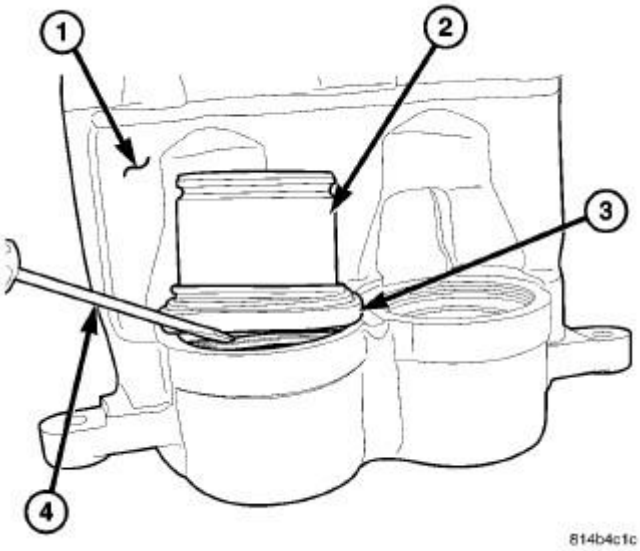

Fig. 52: Installing Piston Boot
Courtesy of CHRYSLER GROUP, LLC

NOTE: The dust boot lip must be inserted before the piston

4. Slightly pull out lip portion of piston boot (3) so it protrudes past the bottom of the piston (2) and work lip into outermost groove on caliper housing (1).
5. Carefully press the lip (3) into the groove with a suitable tool (4) **Avoid using sharp-edged tools** This will ensure that the lip is nested into the groove all around before pushing the piston into the bore.

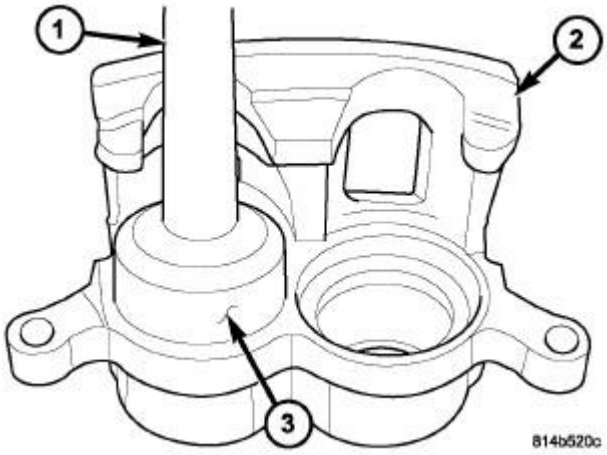

Fig. 53: Seating Piston Boot
Courtesy of CHRYSLER GROUP, LLC

6. Press the piston fully into the bore using Bearing Installer (special tool #C-3716-A, Installer, Bearing) (3) with Universal Driver Handle (special tool #C-4171, Driver Handle, Universal) (1).
7. Once the piston is pressed into the bottom of the bore, Check to see that the dust boot bellows are not

inflated with air. **If needed, push in between the dust boot and piston to expel any trapped air** .

HEAVY DUTY

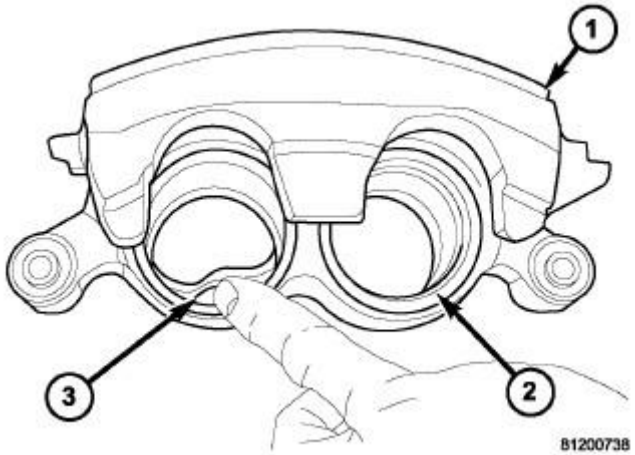

Fig. 54: Installing Piston Seals
Courtesy of CHRYSLER GROUP, LLC

CAUTION: Dirt, oil, and solvents can damage caliper seals. Insure assembly area is clean and dry.

1. Lubricate caliper pistons, piston seals and piston bores with clean, fresh brake fluid.

NOTE: Verify seal is fully seated and not twisted.

2. Install new piston seals (3) into caliper bores (2).

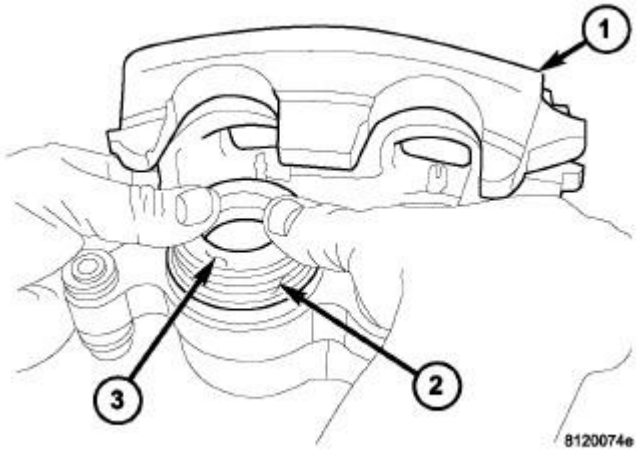

Fig. 55: Installing Piston Into Bore
Courtesy of CHRYSLER GROUP, LLC

3. Lightly lubricate lip of new boot with silicone grease. Install boot on piston and work boot lip into the groove at the top of piston (3).
4. Stretch boot (2) rearward to straighten boot folds, then move boot forward until folds snap into place.
5. Install piston (3) into caliper bore and press piston down to the bottom of the caliper bore by hand or with hammer handle.

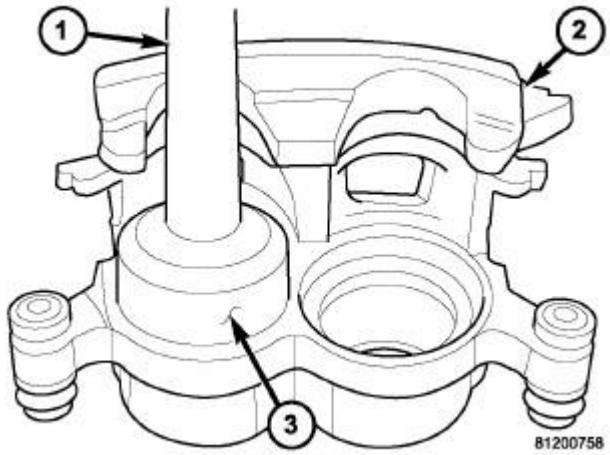

Fig. 56: Seating Dust Boot
Courtesy of CHRYSLER GROUP, LLC

6. Seat dust boot in caliper (2) with Handle (special tool #C-4171, Driver Handle, Universal) (1) and Installer (3):
   - 54 mm caliper: Installer C-3716-A
7. Install the second piston and dust boot.
8. Lubricate caliper mounting bolt bushings, boot seals and bores with Mopar brake grease or Dow Corning® 807 grease only.

CAUTION: Use of alternative grease may cause damage to the boots seals.

9. Install the boot seals into the caliper seal bores and center the seals in the bores.
10. Install mounting bolt bushings into the boot seals and insure seal lip is engaged into the bushing grooves at either end of the bushing.
11. Install caliper bleed screw.

INSTALLATION

FRONT - LIGHT DUTY

NOTE: Petroleum based grease should not be used on any of the rubber components of the caliper, Use only Non-Petroleum based grease.

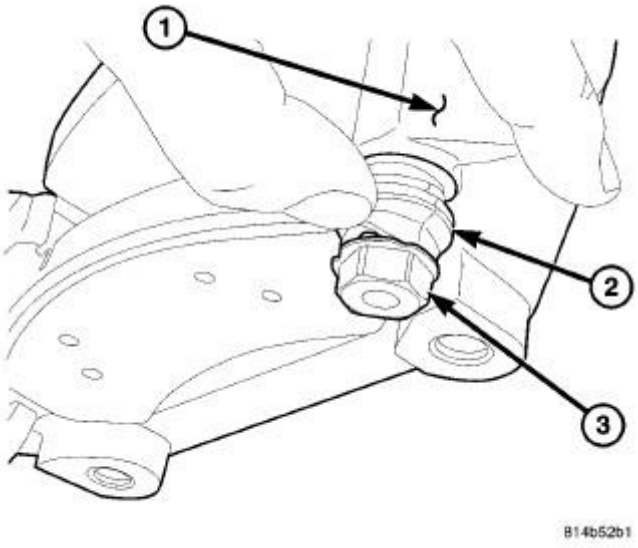

Fig. 57: Caliper Slide Pin & Boot
Courtesy of CHRYSLER GROUP, LLC

NOTE: Clean slide pin bores thoroughly to remove any old grease.

NOTE: Use grease packets included with kit or Dow Corning-807® grease.

1. Thoroughly coat the new slide pins (3) on all working surfaces.
2. Install the boot (2) onto the slide pin (3) and then insert into the adapter (1).
3. Push the pin (3) all the way into the adapter (1) and carefully expel the trapped air by gently pushing on the boot (2) near the slide pin head (3).

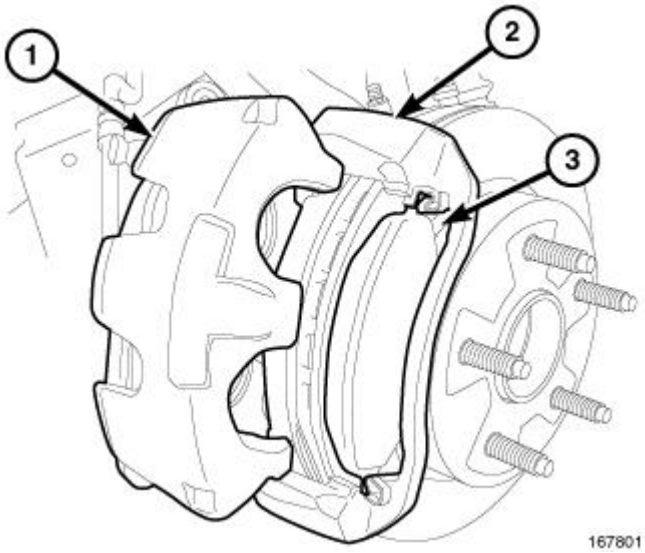

Fig. 58: Brake Caliper & Adapter
Courtesy of CHRYSLER GROUP, LLC

4. Install the disc brake caliper (1) to the brake caliper adapter (2).

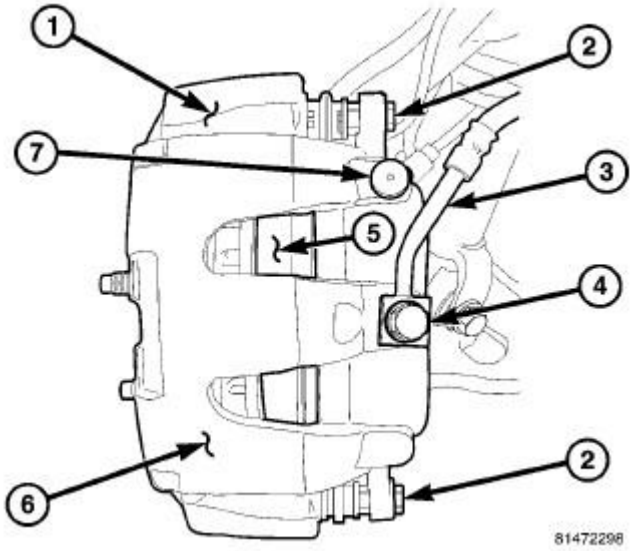

Fig. 59: Identifying Disc Brake Caliper Components
Courtesy of CHRYSLER GROUP, LLC

NOTE: Install a new copper washers on the banjo bolt when installing

5. Install the banjo bolt (4) with new copper washers to the caliper (6). Tighten to 28 N.m (245 in. lbs.)
6. Install the caliper slide pin bolts (2). Tighten to 32 N.m (24 ft. lbs.)
7. Remove the prop rod from the brake pedal.
8. Bleed the area of repair for the brake system.**If a proper pedal is not felt during bleeding an area of repair then a base bleed system must be performed.** . Refer to **STANDARD PROCEDURE**. .
9. Install the tire and wheel assembly. Refer to **WHEELS, STANDARD PROCEDURE** .
10. Remove the supports and lower the vehicle.

FRONT - HEAVY DUTY

NOTE: Install a new copper washers on the banjo bolt when installing

1. Install the disc brake caliper.

CAUTION: Verify that the brake hose is not twisted or kinked before tightening the fitting bolt.

2. Install the banjo bolt with new copper washers to the caliper. Tighten to 27 N.m (20 ft. lbs.)
3. Install the caliper slide pin bolts. tighten to 32 N.m (24 ft. lbs.)
4. Remove the prop rod from the brake pedal.

5. Bleed the area of repair for the brake system, **If a proper pedal is not felt during bleeding an area of repair then a base bleed system must be performed.** . Refer to **STANDARD PROCEDURE**. .
6. Install the tire and wheel assembly. Refer to **WHEELS, STANDARD PROCEDURE** .
7. Remove the supports and lower the vehicle.

REAR - LIGHT DUTY

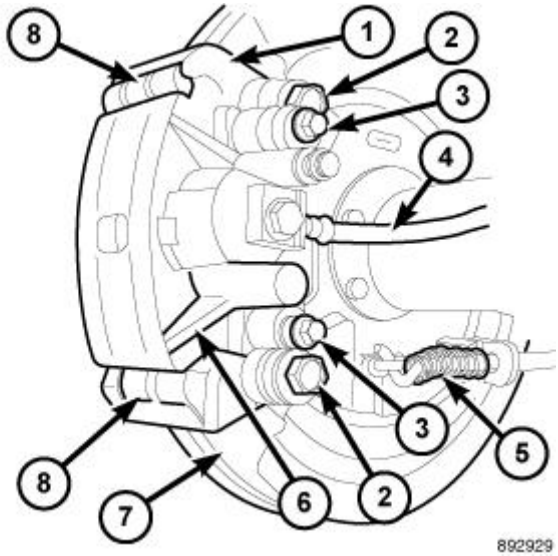

Fig. 60: Brake Caliper, Bolts, Hose & Cable
Courtesy of CHRYSLER GROUP, LLC

1 - CALIPER ADAPTER
2 - CALIPER ADAPTER MOUNTING BOLTS
3 - CALIPER SLIDE BOLTS
4 - BRAKE HOSE
5 - PARK BRAKE CABLE
6 - CALIPER
7 - ROTOR
8 - ANTI-RATTLE CLIPS

1. Install caliper (6) to the caliper adapter (1).
2. Coat the caliper mounting slide pin bolts (3) with silicone grease. Then install and tighten the bolts to 30 N.m (22 ft. lbs.).

CAUTION: Verify that the brake hose is not twisted or kinked before tightening the fitting bolt.

NOTE: Install a new copper washers on the banjo bolt when installing

3. Install the brake hose (4) to the caliper (6) with new copper washers and tighten fitting bolt to 28 N.m

(245 in. lbs.).

4. Remove the prop rod from the brake pedal.
5. Bleed the area of repair for the brake system. **If a proper pedal is not felt during bleeding an area of repair then a base bleed system must be performed.** . Refer to **STANDARD PROCEDURE**. .
6. Install the wheel and tire assemblies. Refer to **WHEELS, STANDARD PROCEDURE** .
7. Remove the supports and lower the vehicle.
8. Verify a firm pedal before moving the vehicle.

REAR - HEAVY DUTY

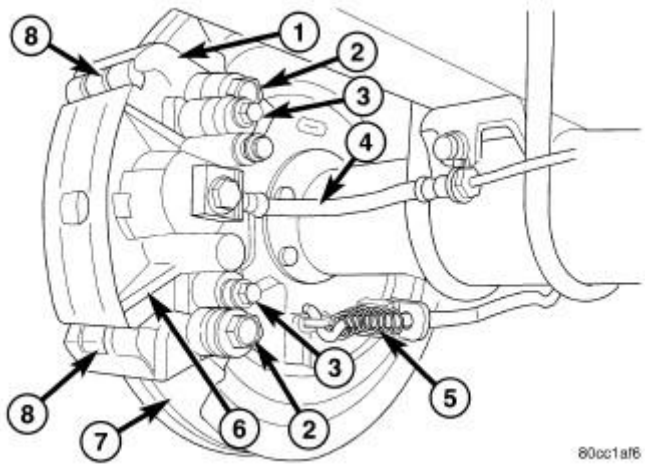

Fig. 61: Brake Caliper, Bolts, Hose & Cable (Heavy Duty)
Courtesy of CHRYSLER GROUP, LLC

1 - CALIPER ADAPTER
2 - CALIPER ADAPTER MOUNTING BOLTS
3 - CALIPER SLIDE BOLTS
4 - BRAKE HOSE
5 - PARK BRAKE CABLE
6 - CALIPER
7 - ROTOR
8 - ANTI-RATTLE CLIPS

1. Install caliper (6) to the caliper adapter (1).
2. Coat the caliper mounting slide pin bolts (3) with silicone grease. Then install and tighten the bolts to 30 N.m (22 ft. lbs.).

CAUTION: Verify that the brake hose is not twisted or kinked before tightening the fitting bolt.

3. Install the brake hose (4) to the caliper (6) with **new seal washers** and tighten fitting bolt to 27 N.m (245

in. lbs.).

4. Remove the prop rod from the brake pedal.
5. Bleed the area of repair for the brake system, **If a proper pedal is not felt during bleeding an area of repair then a base bleed system must be performed.** . Refer to **STANDARD PROCEDURE**. .
6. Install the wheel and tire assemblies. Refer to **WHEELS, STANDARD PROCEDURE** .
7. Remove the supports and lower the vehicle.
8. Verify a firm pedal before moving the vehicle.

FLUID

DESCRIPTION

BRAKE FLUID

The brake fluid used in this vehicle must conform to DOT 3 specifications and SAE J1703 standards. No other type of brake fluid is recommended or approved for usage in the vehicle brake system. Use only Mopar brake fluid or an equivalent from a tightly sealed container.

CAUTION: Never use reclaimed brake fluid or fluid from a container which has been left open. An open container of brake fluid will absorb moisture from the air and contaminate the fluid.

CAUTION: Never use any type of a petroleum-based fluid in the brake hydraulic system. Use of such type fluids will result in seal damage of the vehicle brake hydraulic system causing a failure of the vehicle brake system. Petroleum based fluids would be items such as engine oil, transmission fluid, power steering fluid, etc.

DIAGNOSIS AND TESTING

DIAGNOSIS AND TESTING - BRAKE FLUID CONTAMINATION

Indications of fluid contamination are swollen or deteriorated rubber parts.

Swollen rubber parts indicate the presence of petroleum in the brake fluid.

To test for contamination, put a small amount of drained brake fluid in clear glass jar. If fluid separates into layers, there is mineral oil or other fluid contamination of the brake fluid.

If brake fluid is contaminated, drain and thoroughly flush system. Replace master cylinder, proportioning valve, caliper seals, wheel cylinder seals, Antilock Brakes hydraulic unit and all hydraulic fluid hoses.

JUNCTION BLOCK, BRAKE TUBE

REMOVAL

FRONT JUNCTION BLOCK

1. Install a prop rod on the brake pedal to keep pressure on the brake system. Holding pedal in this position will isolate the master cylinder from the hydraulic brake system and will not allow brake fluid to drain out of the brake fluid reservoir while the brake lines are open. This will allow you to bleed out the area of repair instead of the entire system.

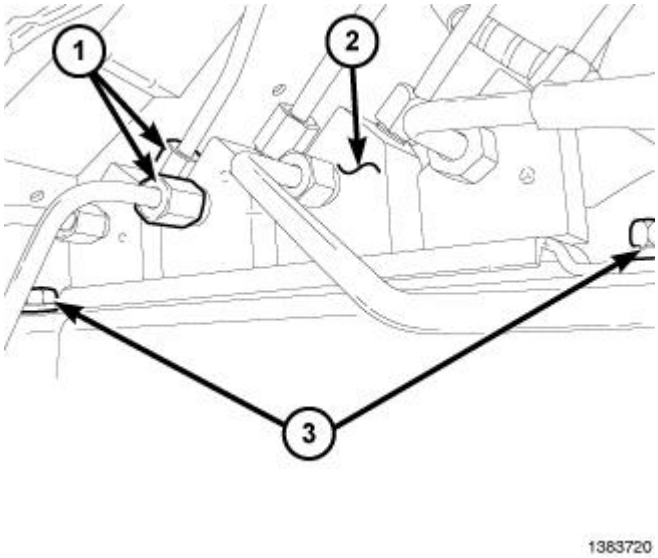

Fig. 62: Junction Block, Brake Lines & Bolts
Courtesy of CHRYSLER GROUP, LLC

2. Raise and support the vehicle. Refer to **HOISTING, STANDARD PROCEDURE** .
3. Remove the eight brake lines (1) from the junction block (2).
4. Remove the junction block mounting bolts (3) and remove the junction block (2) from the frame.

REAR JUNCTION BLOCK

1. Install prop rod on the brake pedal to keep pressure on the brake system. Holding pedal in this position will isolate the master cylinder from the hydraulic brake system and will not allow brake fluid to drain out of the brake fluid reservoir while the brake lines are open. This will allow you to bleed out the area of repair instead of the entire system.

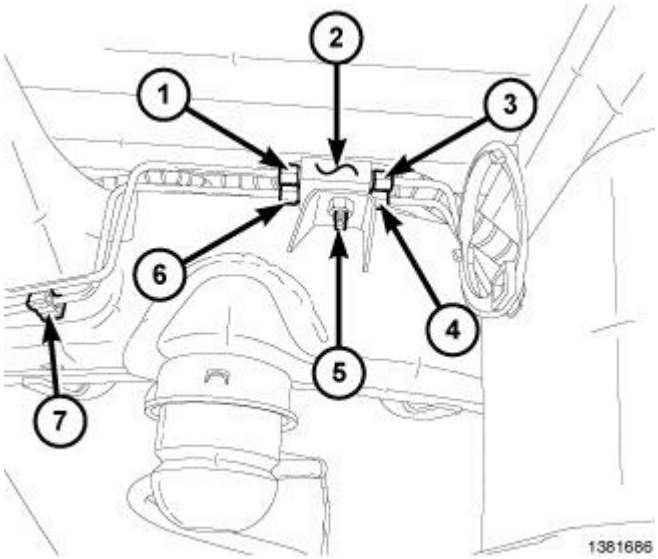

Fig. 63: Junction Block, Brake Lines, Clips & Bolts
Courtesy of CHRYSLER GROUP, LLC

2. Raise and support the vehicle. Refer to **HOISTING, STANDARD PROCEDURE** .
3. Remove the brake lines (1, 3, 4, 6) from the junction block (2).
4. Remove the junction block mounting bolt (5) and remove the junction block from the frame.

INSTALLATION

FRONT JUNCTION BLOCK

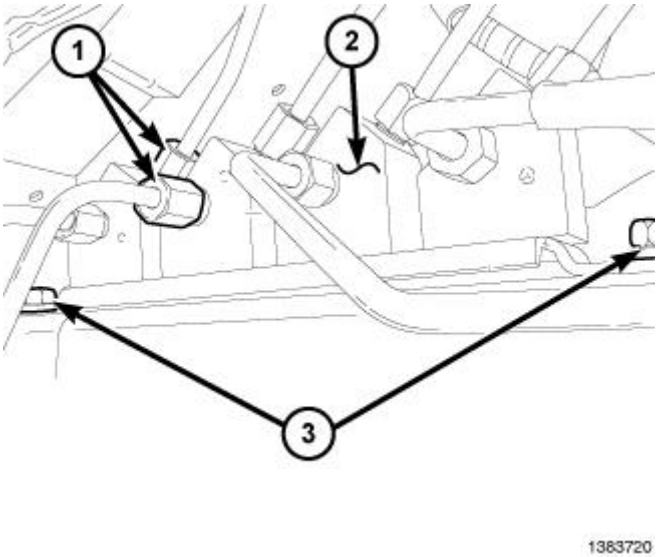

Fig. 64: Junction Block, Brake Lines & Bolts
Courtesy of CHRYSLER GROUP, LLC

1. Position the junction block (2) on the frame.
2. Install the junction block mounting bolts (3) and tighten to 19 N.m (169 in. lbs.).

3. Install the eight brake lines (1) into the junction block (2) and tighten to 19 N.m (169 in. lbs.).
4. Remove the supports and lower the vehicle.
5. Remove the prop rod and bleed the base brake system. Refer to **STANDARD PROCEDURE**. .

REAR JUNCTION BLOCK

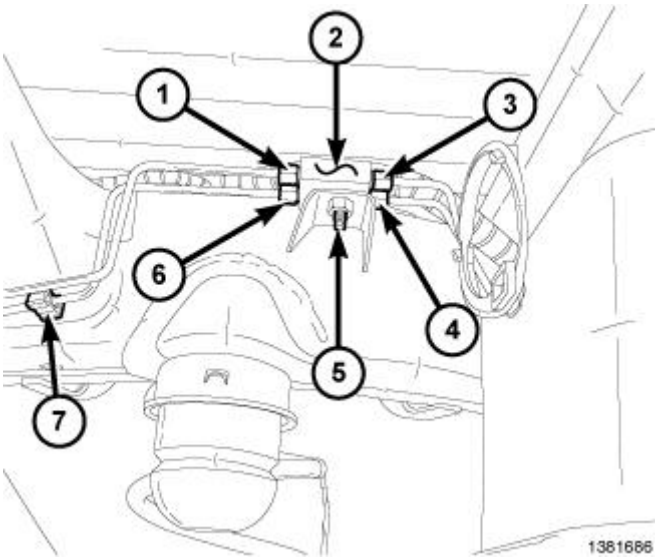

Fig. 65: Junction Block, Brake Lines, Clips & Bolts
Courtesy of CHRYSLER GROUP, LLC

1. Position the junction block (2) on the frame.
2. Install the junction block mounting bolt (5) and tighten to 24 N.m (18 ft. lbs.).
3. Install the brake lines (1, 3, 4, 6) into the junction block (2) and tighten to 19 N.m (169 in. lbs.).
4. Remove the supports and lower the vehicle.
5. Remove the prop rod and bleed the base brake system. Refer to **STANDARD PROCEDURE**. .

MASTER CYLINDER, BRAKE

DESCRIPTION

DESCRIPTION

A two-piece master cylinder is used on all models. The cylinder body containing the primary and secondary pistons is made of aluminum. The removable fluid reservoir is made of nylon reinforced with glass fiber. The reservoir stores reserve brake fluid for the hydraulic brake circuits and has a switch for indicating low fluid levels. The reservoir is the only serviceable component.

The fluid compartments of the nylon reservoir are interconnected to permit fluid level equalization. However, the equalization feature does not affect circuit separation in the event of a front or rear brake malfunction. The reservoir compartments will retain enough fluid to operate the functioning hydraulic circuit.

Care must be exercised when removing/installing the master cylinder connecting lines. The threads in the

cylinder fluid ports can be damaged if care is not exercised. Start all brake line fittings by hand to avoid cross threading.

The cylinder reservoir can be replaced when necessary. However, the aluminum body section of the master cylinder is not a repairable component.

NOTE: **If diagnosis indicates that an internal malfunction has occurred, the aluminum body section must be replaced as an assembly.**

OPERATION

OPERATION

The master cylinder bore contains a primary and secondary piston. The primary piston supplies hydraulic pressure to the front brakes. The secondary piston supplies hydraulic pressure to the rear brakes.

DIAGNOSIS AND TESTING

DIAGNOSIS AND TESTING - MASTER CYLINDER/POWER BOOSTER

1. Start the engine and check the booster vacuum hose connections. A hissing noise indicates a vacuum leak. Correct any vacuum leaks before proceeding.
2. Stop the engine and pump the brake pedal until all vacuum reserve in the booster is depleted.
3. Press and hold the brake pedal under light foot pressure. The pedal should hold firm. If the pedal falls away, there may be an external leak or the master cylinder is faulty (internal leakage).
4. Start the engine and note pedal action. It should fall away slightly under light foot pressure, then hold firm. If no pedal action is discernible, the power booster, vacuum supply or vacuum check valve is faulty, refer to **POWER BOOSTER VACUUM TEST**.
5. If the POWER BOOSTER VACUUM TEST passes, rebuild the booster vacuum reserve as follows: Release the brake pedal. Increase engine speed to 1500 RPM, close the throttle and immediately turn off the ignition to stop the engine.
6. Wait a minimum of 90 seconds and try brake action again. The booster should provide two or more vacuum assisted pedal applications. If the vacuum assist is not provided, the booster is faulty.

POWER BOOSTER VACUUM TEST

1. Connect a vacuum gauge to the booster check valve with a short length of hose and T-fitting.
2. Start and run the engine at curb idle for one minute.
3. Observe the vacuum supply. If the vacuum supply is less that 12 inches HG (406 millibars), repair the vacuum supply.
4. Clamp the hose shut between the intake vacuum source and the check valve.
5. Stop the engine and observe the vacuum gauge.
6. If the vacuum drops more than one inch HG (33 millibars) within 15 seconds, the booster diaphragm or check valve is faulty.

POWER BOOSTER CHECK VALVE TEST

1. Remove the power booster check valve from the power booster.
2. Using a hand operated vacuum pump, apply 15-20 inches HG (508-677 millibars) vacuum at the booster side of the check valve.
3. The vacuum should hold steady. If the gauge on the pump indicates vacuum loss, the check valve is faulty and should be replaced.

STANDARD PROCEDURE

STANDARD PROCEDURE - MASTER CYLINDER BLEEDING

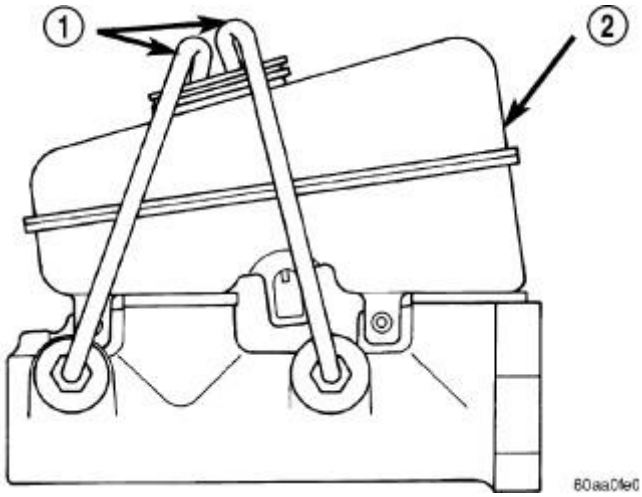

Fig. 66: Bleeding Master Cylinder
Courtesy of CHRYSLER GROUP, LLC

1 - BLEEDING TUBES
2 - RESERVOIR

A new master cylinder should be bled before installation on the vehicle. Required bleeding tools include bleed tubes and a wood dowel to stroke the pistons. Bleed tubes can be fabricated from brake line.

1. Mount master cylinder in vise.
2. Attach bleed tubes to cylinder outlet ports (1). Then position each tube end into reservoir (2).
3. Fill reservoir with fresh brake fluid.
4. Press cylinder pistons inward with wood dowel. Then release pistons and allow them to return under spring pressure. Continue bleeding operations until air bubbles are no longer visible in fluid.

REMOVAL

ALL EXCEPT HYDROBOOST

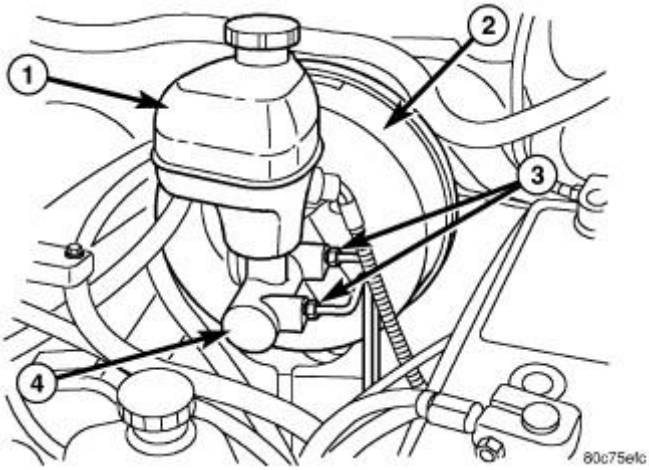

Fig. 67: Master Cylinder, Reservoir & Brake Lines
Courtesy of CHRYSLER GROUP, LLC

1 - MASTER CYLINDER RESERVOIR
2 - POWER BRAKE BOOSTER
3 - BRAKE LINES
4 - MASTER CYLINDER

1. Depress the brake pedal five times to deplete any vacuum that may remain in the booster unit.
2. Siphon and drain the fluid from the reservoir.
3. Disconnect the electrical connector for the low fluid level.
4. Place a towel or rag under the master cylinder outlet port area to protect the vehicle from brake fluid damage.
5. Remove the brake lines (3) from the master cylinder (4).
6. Remove the mounting nuts from the master cylinder (4).

NOTE: **Gently ease the master cylinder and reservoir assembly away from the booster, During removal the master cylinder should be kept as perpendicular to the front of the booster as possible to avoid excess interference with the booster output rod and in order not to dislodge the output rod from its seat inside the booster.**

7. Remove the master cylinder (4).

HYDROBOOST

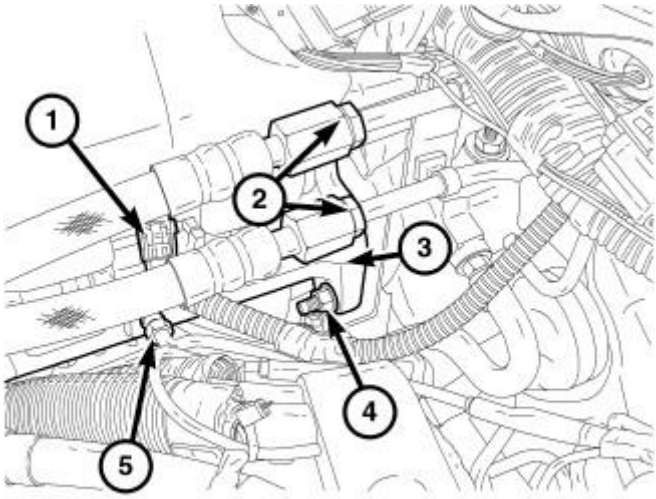

81cfdeb5

Fig. 68: Identifying Nut, Electrical Connector, Brake Lines & Master Cylinder
Courtesy of CHRYSLER GROUP, LLC

1. Remove the brake lines (5) from the master cylinder (3).
2. Disconnect the electrical connector (1) for the low fluid level.
3. Remove the mounting nut (4) from bottom of the master cylinder (3).

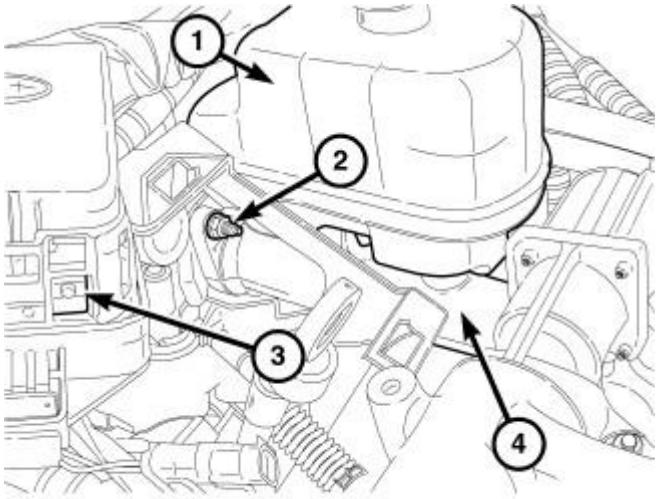

81cfdeae

Fig. 69: Identifying Wiring Box, Mounting Nut & Master Cylinder
Courtesy of CHRYSLER GROUP, LLC

4. Unclip the wiring box (3) next to the master cylinder (4) and move out of the way.
5. Remove the upper mounting nut (2) for the master cylinder.

NOTE: **Using care remove the master cylinder directly forward in order not to dislodge the output rod from its seat inside the booster.**

6. Remove the master cylinder (4).

INSTALLATION

ALL EXCEPT HYDROBOOST

NOTE: **If master cylinder is replaced bleed cylinder before installation.**

NOTE: **Make sure the output rod of the brake booster is in position and retained by a output rod retaining ring, by looking into the boosters master cylinder mounting hole. This position will enable the output rod to enter inside of the master cylinder plunger sleeve during installation. Proper position is obtained when the output rod is centered perpendicular to the master cylinder mounting hole.**

NOTE: **Prior to installing the master cylinder assembly check that there is a vacuum seal present at the shoulder of the master cylinder flange and it's neck. A square seal must be present to ensure vacuum integrity with the booster.**

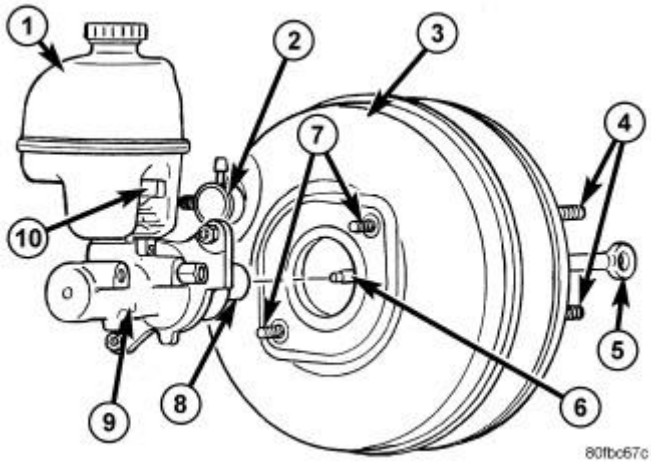

Fig. 70: Installing Master Cylinder
Courtesy of CHRYSLER GROUP, LLC

1 - MASTER CYLINDER RESERVOIR
2 - CHECK VALVE
3 - VACUUM BOOST UNIT
4 - BOOSTER MOUNTING STUDS
5 - INPUT ROD
6 - OUTPUT ROD
7 - MASTER CYLINDER MOUNTING STUDS
8 - MASTER CYLINDER PLUNGER SLEEVE
9- MASTER CYLINDER

NOTE: **Take precautions to locate the master cylinder plunger over the booster output rod, before installing the master cylinder. If correctly fitted the master cylinder should slide easily onto the booster output rod before the mounting studs are engaged in the flange holes of the master cylinder.**

1. Gently install the master cylinder (9) on the mounting studs (7).
2. Install new mounting nuts and tighten to 25 N.m (221 in. lbs.)
3. Install the brake lines and tighten to 19 N.m (170 in. lbs.)
4. Reconnect the electrical connector for the low fluid level switch.
5. Fill and bleed the base brake system. Refer to **STANDARD PROCEDURE**. .

HYDROBOOST

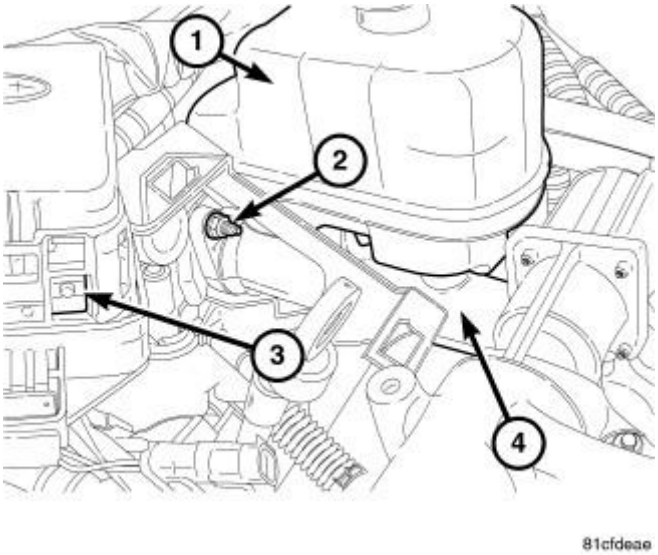

Fig. 71: Identifying Wiring Box, Mounting Nut & Master Cylinder
Courtesy of CHRYSLER GROUP, LLC

NOTE: **If master cylinder is replaced bleed cylinder before installation.**

1. Install the master cylinder (4) on the booster mounting studs.
2. Install a new upper mounting nut (2) and tighten to 25 N.m (221 in. lbs.).
3. Reinstall the wiring box (3) back into position and reclip.

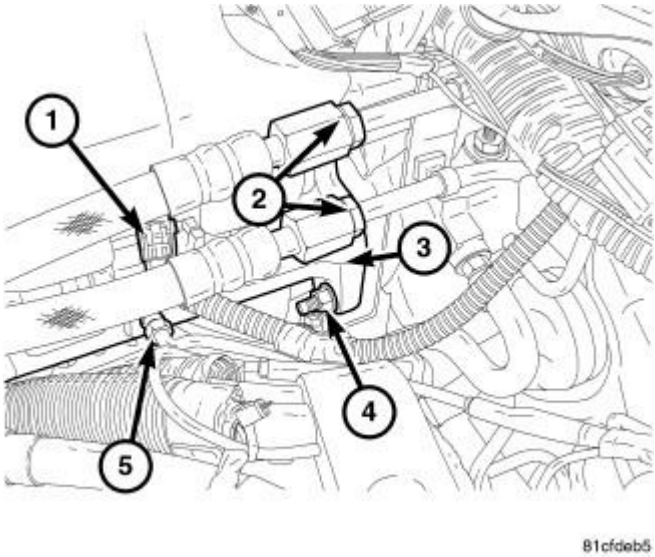

Fig. 72: Identifying Nut, Electrical Connector, Brake Lines & Master Cylinder
Courtesy of CHRYSLER GROUP, LLC

4. Install a new lower mounting nut (4) and tighten to 25 N.m (221 in. lbs.).
5. Install the brake lines (5) and tighten to 19 N.m (170 in. lbs.)
6. Reconnect the electrical connector (1) for the low fluid level switch.
7. Fill and bleed the base brake system. Refer to **STANDARD PROCEDURE**. .

PADS, BRAKE

REMOVAL

FRONT - LIGHT DUTY

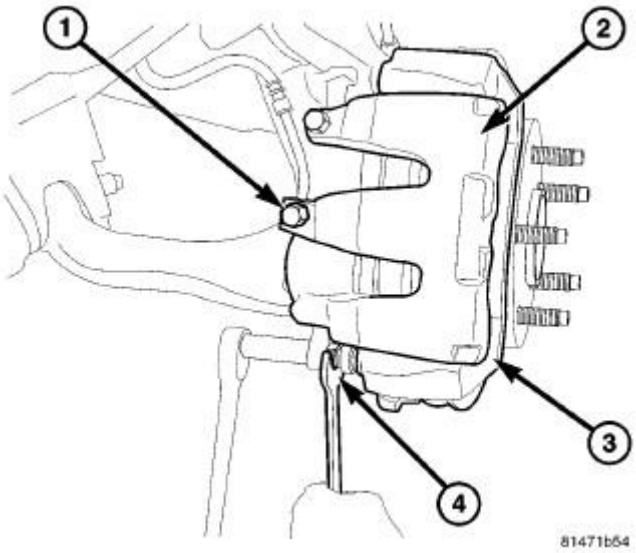

Fig. 73: Caliper Slide Pin Bolts

Courtesy of CHRYSLER GROUP, LLC

1. Raise and support vehicle. Refer to **HOISTING, STANDARD PROCEDURE** .
2. Remove the wheel and tire assemblies.
3. Compress the caliper (2).
4. Remove the caliper slide pin bolts (4).

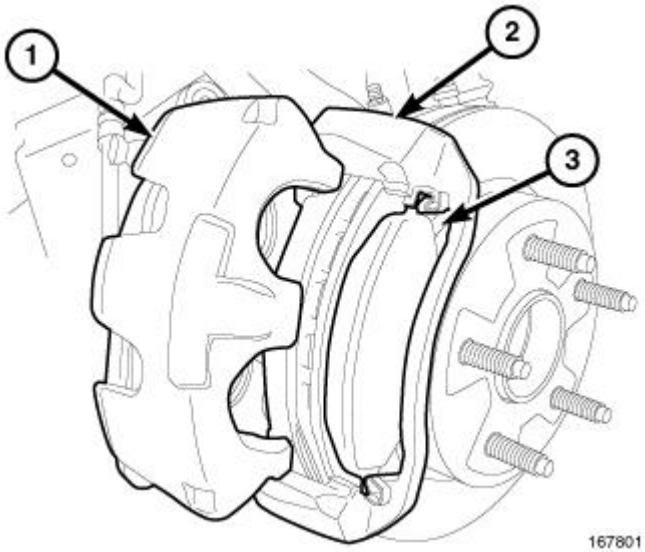

Fig. 74: Brake Caliper & Adapter
Courtesy of CHRYSLER GROUP, LLC

5. Remove the caliper (1) from the caliper adapter (2).

NOTE: Do not allow brake hose to support caliper assembly.

6. Support and hang the caliper.

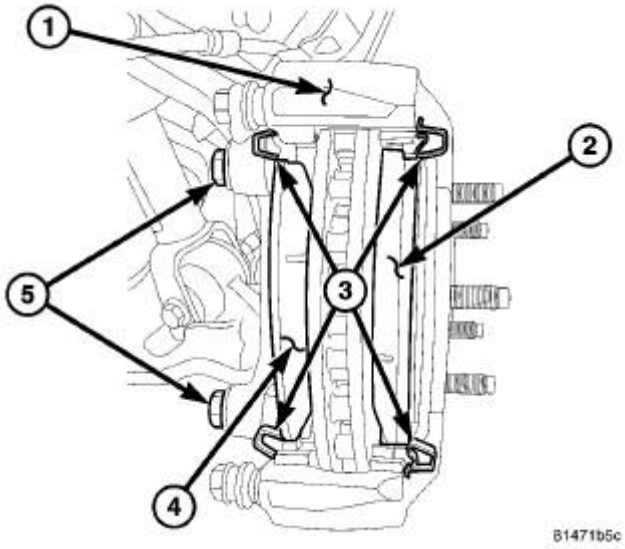

Fig. 75: Brake Pads, Caliper & Bolts
Courtesy of CHRYSLER GROUP, LLC

7. Remove the inboard brake pad (4) from the caliper adapter (1).
8. Remove the outboard brake pad (2) from the caliper adapter (1).

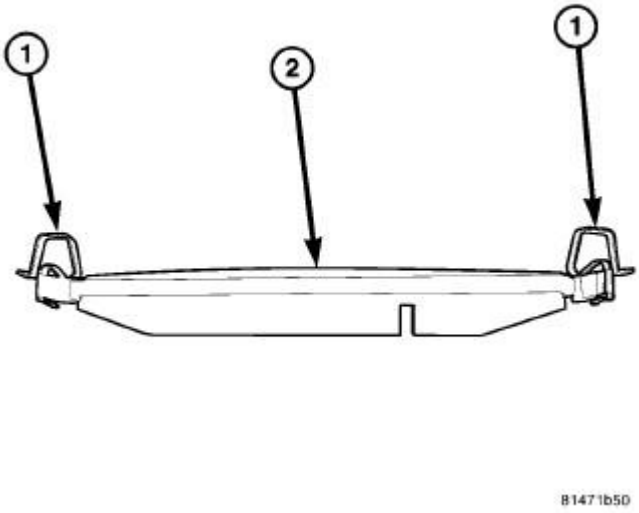

Fig. 76: Identifying Brake Pad Anti-Rattle Clips
Courtesy of CHRYSLER GROUP, LLC

9. Remove the anti-rattle clips (1) from the pad (2).

FRONT - HEAVY DUTY

1. Raise and support vehicle. Refer to **HOISTING, STANDARD PROCEDURE** .

2. Remove the wheel and tire assemblies.
3. Compress the caliper.
4. Remove the caliper slide bolts.
5. Remove the caliper by tilting the top up and off the caliper adapter.

NOTE: Do not allow brake hose to support caliper assembly.

6. Support and hang the caliper.

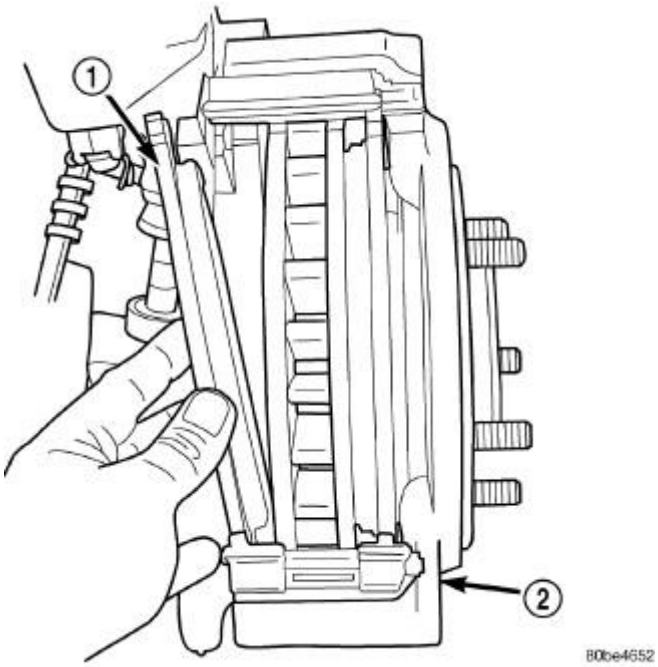

Fig. 77: Inboard Brake Shoe
Courtesy of CHRYSLER GROUP, LLC

1 - INBOARD SHOE
2 - CALIPER ADAPTER

7. Remove the inboard brake shoe (1) from the caliper adapter (2).

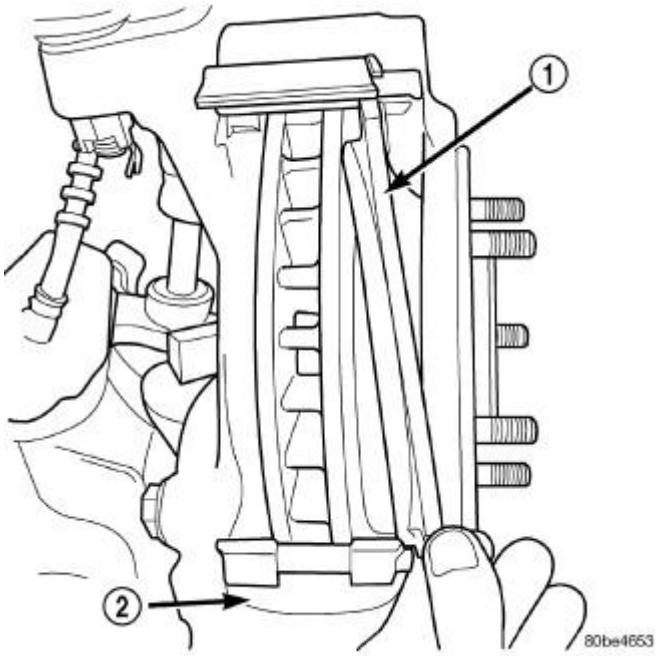

Fig. 78: Outboard Brake Shoe
Courtesy of CHRYSLER GROUP, LLC

1 - OUTBOARD SHOE
2 - CALIPER ADAPTER

8. Remove the outboard brake shoe (1) from the caliper adapter (2).

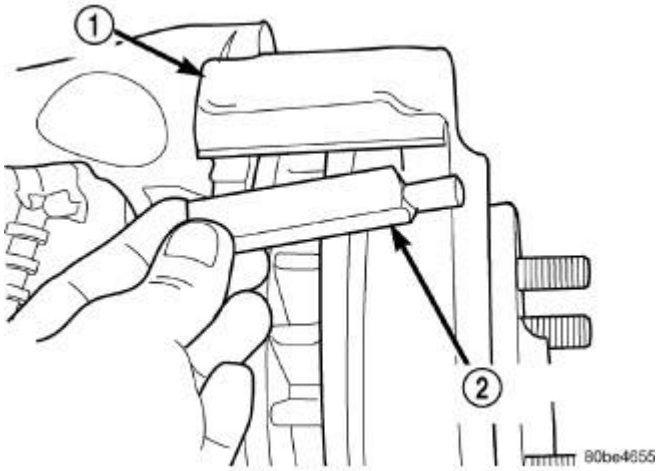

Fig. 79: Top Anti-Rattle Spring
Courtesy of CHRYSLER GROUP, LLC

1 - CALIPER ADAPTER
2 - ANTI-RATTLE SPRING

NOTE: Anti-rattle springs are not interchangeable.

9. Remove the top anti-rattle springs (2) from the caliper adapter (1).

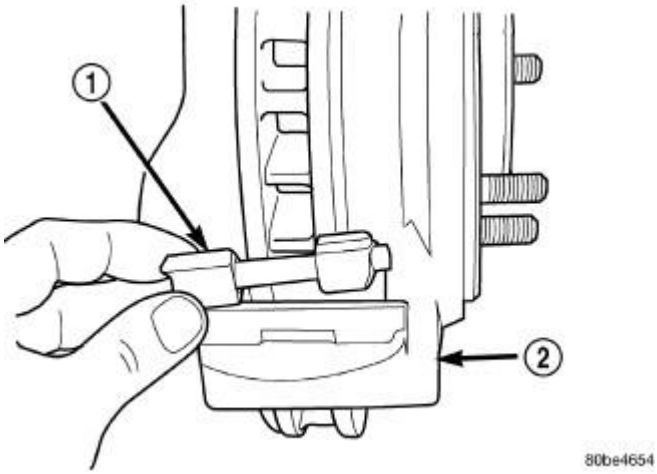

Fig. 80: Bottom Anti-Rattle Spring
Courtesy of CHRYSLER GROUP, LLC

1 - ANTI-RATTLE SPRING
2 - CALIPER ADAPTER

10. Remove the bottom anti-rattle springs (1) from the caliper adapter (2).

REAR

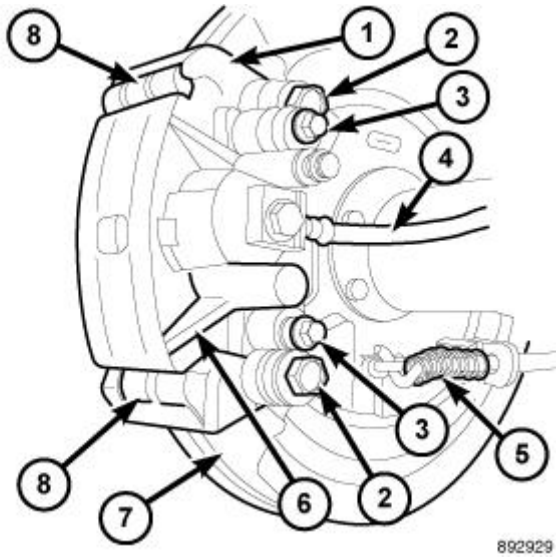

Fig. 81: Brake Caliper, Bolts, Hose & Cable
Courtesy of CHRYSLER GROUP, LLC

1. Raise and support the vehicle. Refer to **HOISTING, STANDARD PROCEDURE** .
2. Remove the rear wheel and tire assemblies.
3. Compress the caliper.
4. Remove caliper slide bolts (3).

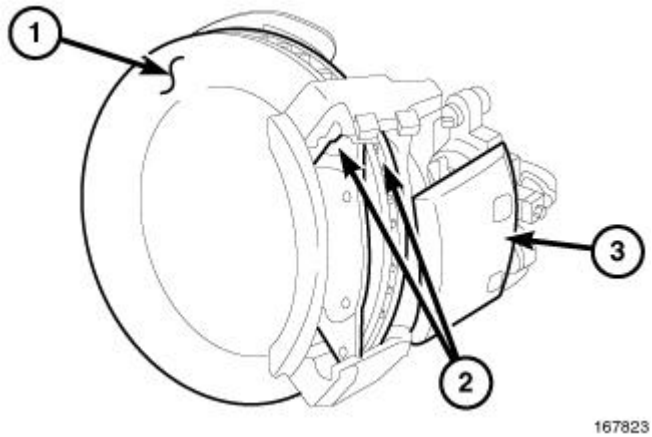

Fig. 82: Rotor / Pads/ Caliper Dual Rear Wheels
Courtesy of CHRYSLER GROUP, LLC

1 - Rotor 2 - Brake Shoes
3 - Disc Brake Caliper

NOTE: Do not allow brake hose to support caliper assembly.

5. Remove the caliper (3), by tilting the top out and off the caliper adapter.

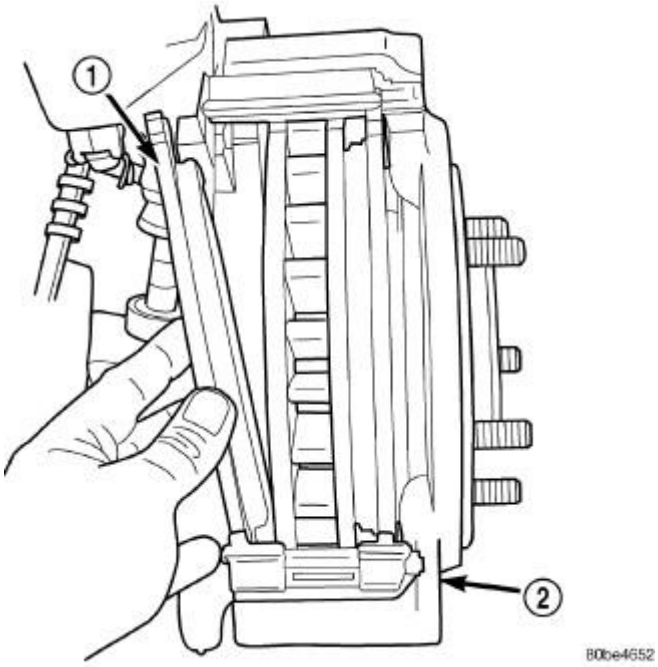

Fig. 83: Inboard Brake Shoe
Courtesy of CHRYSLER GROUP, LLC

1 - INBOARD SHOE
2 - CALIPER ADAPTER

6. Remove inboard brake shoe (1) from the caliper adapter (2).

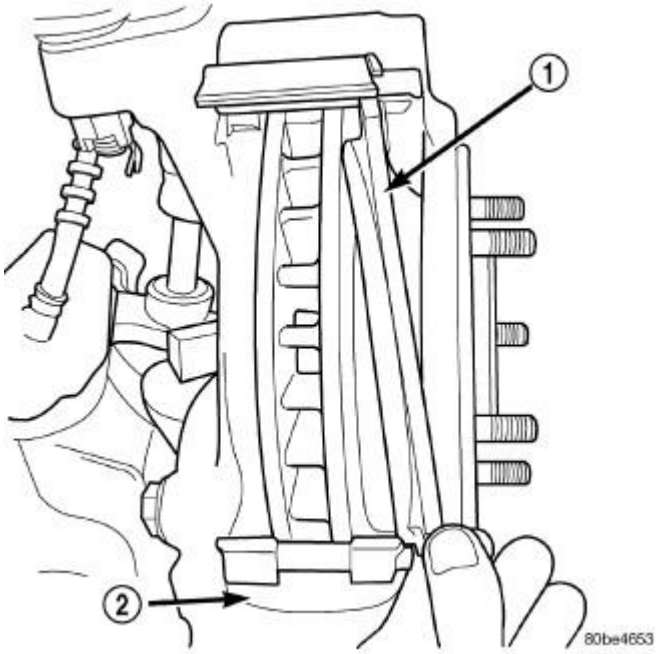

Fig. 84: Outboard Brake Shoe
Courtesy of CHRYSLER GROUP, LLC

1 - OUTBOARD SHOE
2 - CALIPER ADAPTER

7. Remove outboard brake shoe (1) from caliper adapter (2).

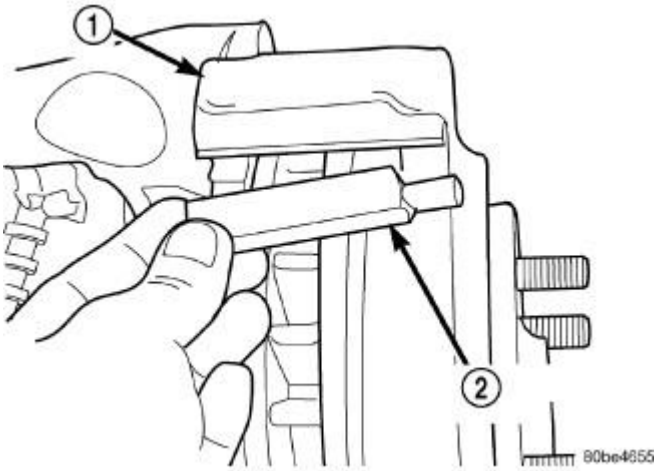

Fig. 85: Top Anti-Rattle Spring
Courtesy of CHRYSLER GROUP, LLC

1 - CALIPER ADAPTER
2 - ANTI-RATTLE SPRING

NOTE: Anti-rattle springs are not interchangeable.

8. Remove the top anti-rattle spring (2) from the caliper adapter (1).

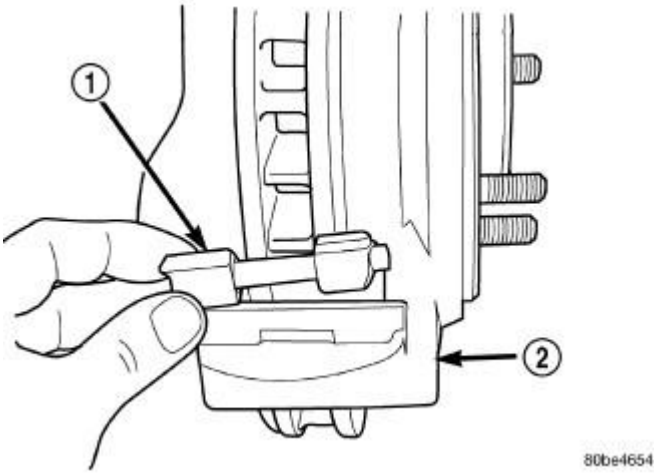

Fig. 86: Bottom Anti-Rattle Spring

Courtesy of CHRYSLER GROUP, LLC

1 - ANTI-RATTLE SPRING
2 - CALIPER ADAPTER

9. Remove the bottom anti-rattle spring (1) from the caliper adapter (2).

INSPECTION

INSPECTION

Visually inspect brake pads for uneven lining wear. Also inspect for excessive lining deterioration. Check the clearance between the tips of the wear indicators (if equipped) on the pads and the brake rotors.

If a visual inspection does not adequately determine the condition of the lining, a physical check will be necessary. To check the amount of lining wear, remove the disc brake pads from the vehicle.

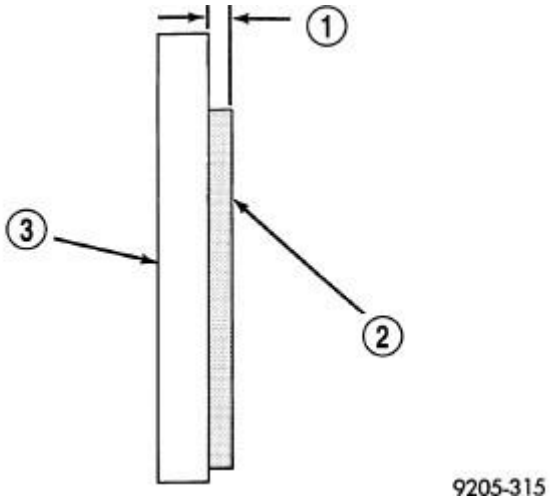

Fig. 87: Brake Pad Friction Material Thickness Measurement
Courtesy of CHRYSLER GROUP, LLC

1 - BRAKE SHOE ASSEMBLY FRICTION MATERIAL THICKNESS IS TO BE MEASURED AT THE THINNEST POINT.
2 - BRAKE SHOE ASSEMBLY FRICTION MATERIAL
3 - BRAKE SHOE ASSEMBLY BACKING PLATE

Measure brake pad minimum thickness (1). Brake pads must be replaced when usable material on a brake pad lining (2) measured at its **thinnest point** measures one millimeter (0.04 inches) or less.

If a brake pad fails inspection, replace **both** disc brake pads (inboard and outboard) at each caliper. It is also necessary to replace the pads on the opposite side of the vehicle as well as the pads failing inspection to maintain proper braking characteristics.

If the brake pad assemblies do not require replacement, be sure to reinstall the brake pads in the original

position they were removed from.

NOTE: **It is important to inspect both front and rear brake pads during the same inspection.**

INSTALLATION

FRONT - LIGHT DUTY

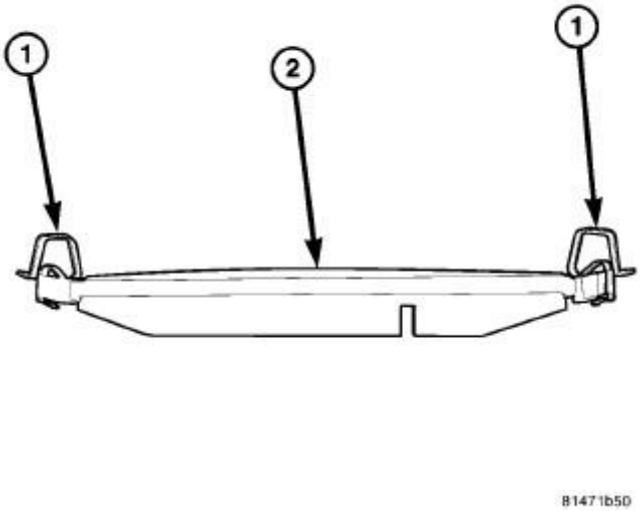

Fig. 88: Identifying Brake Pad Anti-Rattle Clips
Courtesy of CHRYSLER GROUP, LLC

1. Bottom pistons in caliper bore with C-clamp. Place an old brake shoe between a C-clamp and caliper piston.
2. Clean caliper mounting adapter.
3. Install **new** anti-rattle clips (1) to the brake pads (2).

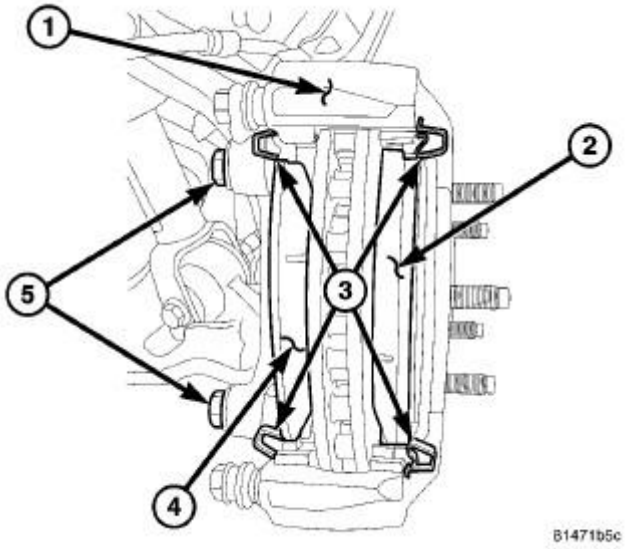

Fig. 89: Brake Pads, Caliper & Bolts
Courtesy of CHRYSLER GROUP, LLC

4. Install inboard brake pad (4) in adapter (1).
5. Install outboard brake pad (2) in adapter (1).

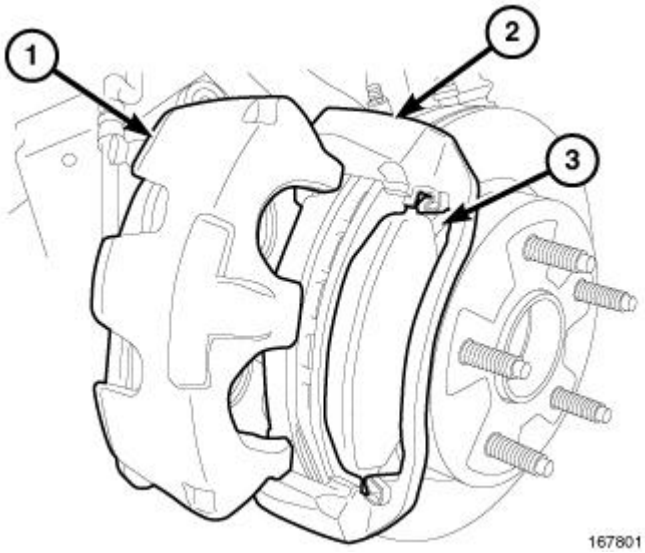

Fig. 90: Brake Caliper & Adapter
Courtesy of CHRYSLER GROUP, LLC

6. Install the caliper (1) over rotor, Then push the caliper onto the adapter (2).

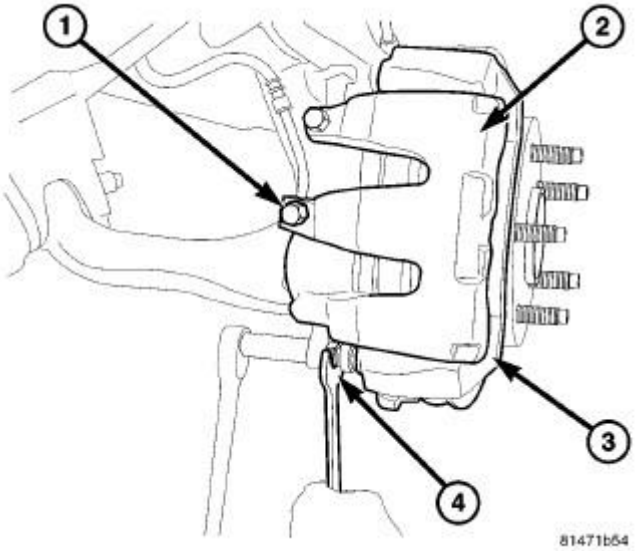

Fig. 91: Caliper Slide Pin Bolts
Courtesy of CHRYSLER GROUP, LLC

7. Install caliper slide pin bolts (4). Refer to **CALIPER, DISC BRAKE, INSTALLATION**.
8. Install wheel and tire assemblies and lower vehicle. Refer to **WHEELS, STANDARD PROCEDURE** .
9. Apply brakes several times to seat caliper pistons and brake shoes and obtain firm pedal.
10. Top off master cylinder fluid level.

FRONT - HEAVY DUTY

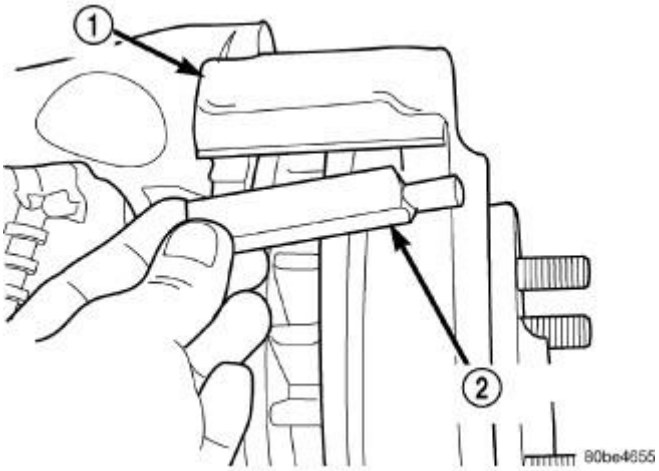

Fig. 92: Top Anti-Rattle Spring
Courtesy of CHRYSLER GROUP, LLC

1 - CALIPER ADAPTER
2 - ANTI-RATTLE SPRING

1. Bottom pistons in caliper bore with C-clamp. Place an old brake shoe between a C-clamp and caliper piston.
2. Clean caliper mounting adapter (1) and anti-rattle springs (2).
3. Lubricate anti-rattle springs with Mopar brake grease.

NOTE: Anti-rattle springs are not interchangeable.

4. Install **new** top anti-rattle springs (2).

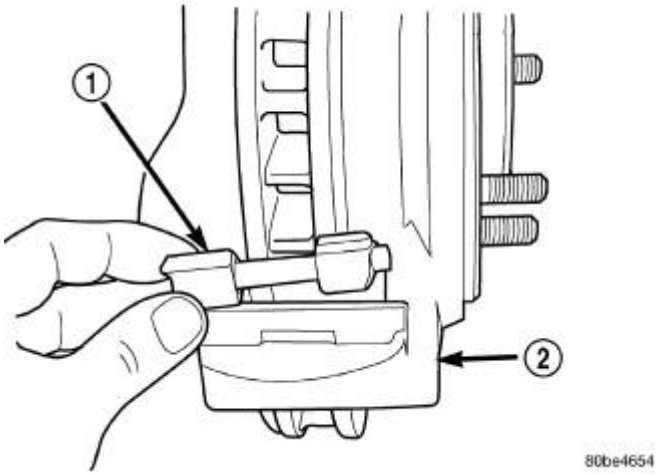

Fig. 93: Bottom Anti-Rattle Spring
Courtesy of CHRYSLER GROUP, LLC

1 - ANTI-RATTLE SPRING
2 - CALIPER ADAPTER

5. Install **new** bottom anti-rattle springs (1).

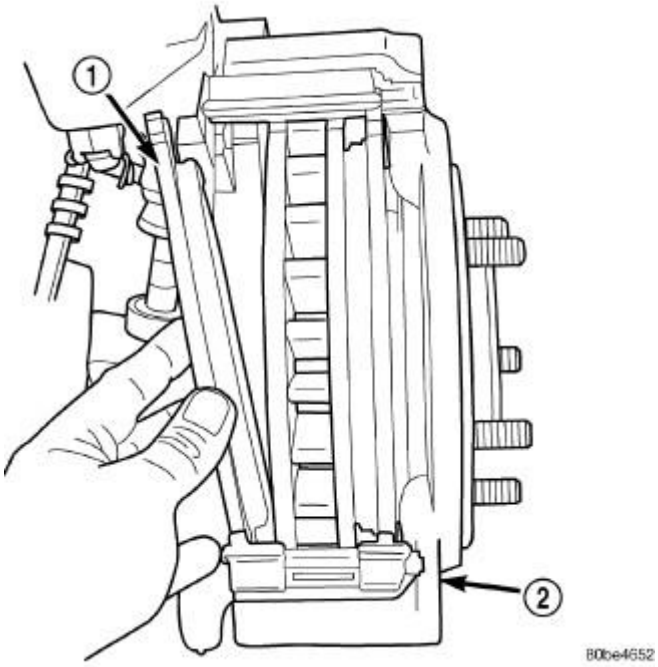

Fig. 94: Inboard Brake Shoe
Courtesy of CHRYSLER GROUP, LLC

1 - INBOARD SHOE
2 - CALIPER ADAPTER

6. Install inboard brake shoe (1) in adapter (2).

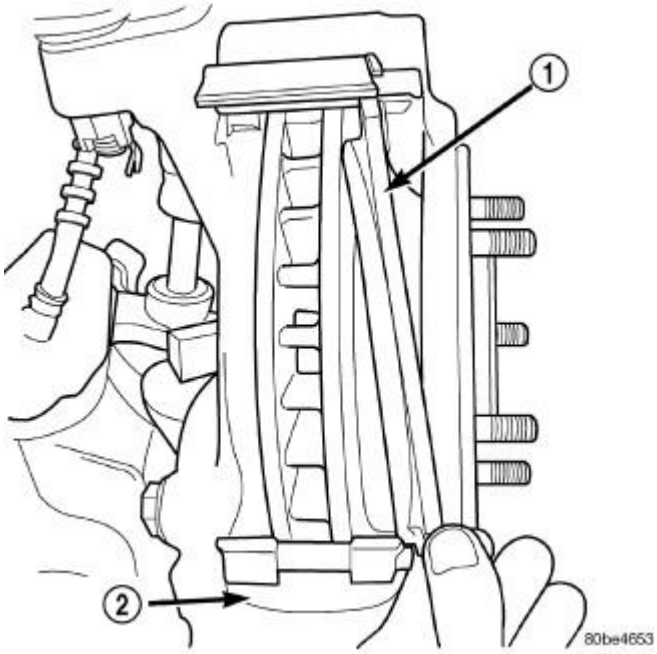

Fig. 95: Outboard Brake Shoe
Courtesy of CHRYSLER GROUP, LLC

1 - OUTBOARD SHOE
2 - CALIPER ADAPTER

7. Install outboard brake shoe (1) in adapter (2).
8. Tilt the top of the caliper over rotor and under adapter. Then push the bottom of the caliper down onto the adapter.
9. Install caliper. Refer to **CALIPER, DISC BRAKE, INSTALLATION**.
10. Install wheel and tire assemblies and lower vehicle. Refer to **WHEELS, STANDARD PROCEDURE** .
11. Apply brakes several times to seat caliper pistons and brake shoes and obtain firm pedal.
12. Top off master cylinder fluid level.

REAR

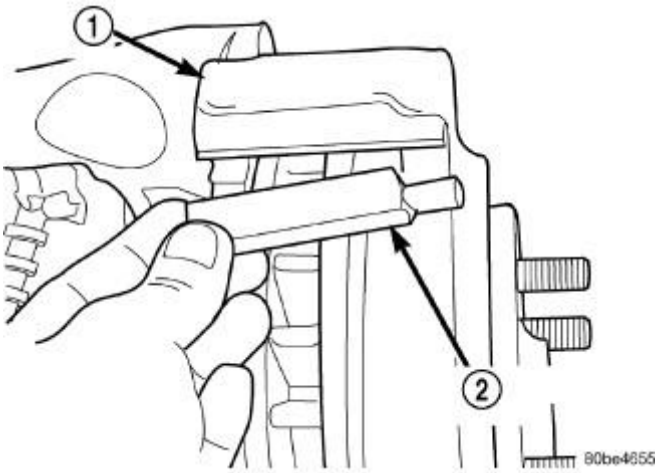

Fig. 96: Top Anti-Rattle Spring
Courtesy of CHRYSLER GROUP, LLC

1 - CALIPER ADAPTER
2 - ANTI-RATTLE SPRING

1. Clean caliper mounting adapter (1) and anti-rattle springs (2).
2. Lubricate anti-rattle springs with Mopar brake grease.

NOTE: Anti-rattle springs are not interchangeable.

3. Install **new** top anti-rattle spring (2).

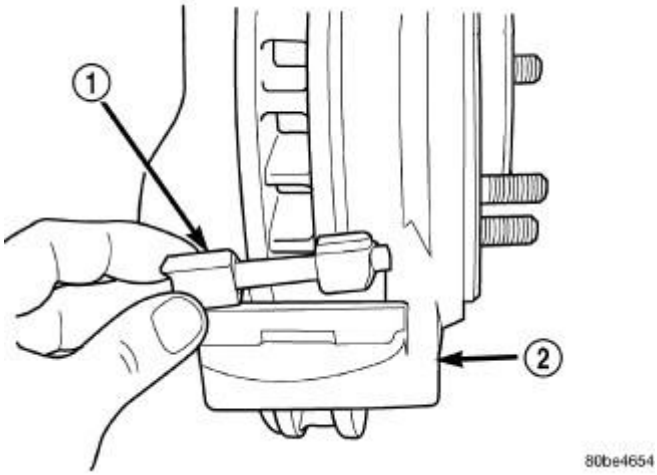

Fig. 97: Bottom Anti-Rattle Spring
Courtesy of CHRYSLER GROUP, LLC

1 - ANTI-RATTLE SPRING
2 - CALIPER ADAPTER

4. Install **new** bottom anti-rattle spring (1).

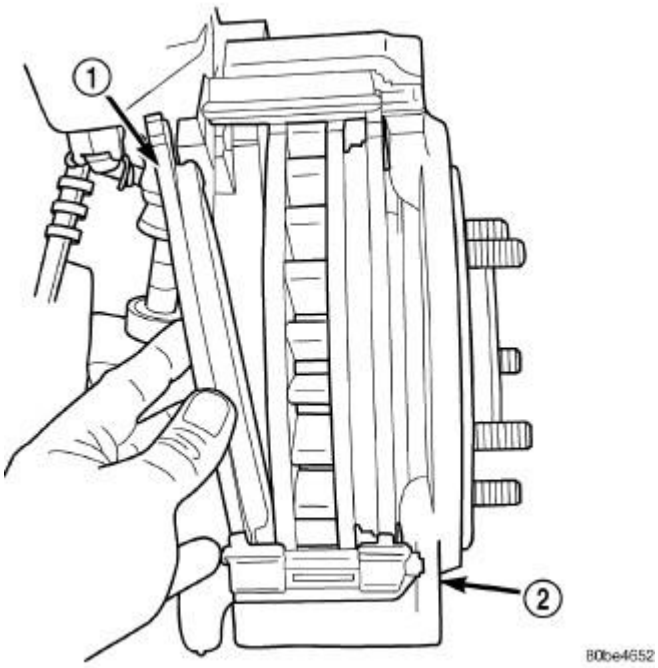

Fig. 98: Inboard Brake Shoe
Courtesy of CHRYSLER GROUP, LLC

1 - INBOARD SHOE
2 - CALIPER ADAPTER

5. Install inboard brake shoe (1) in adapter (2).

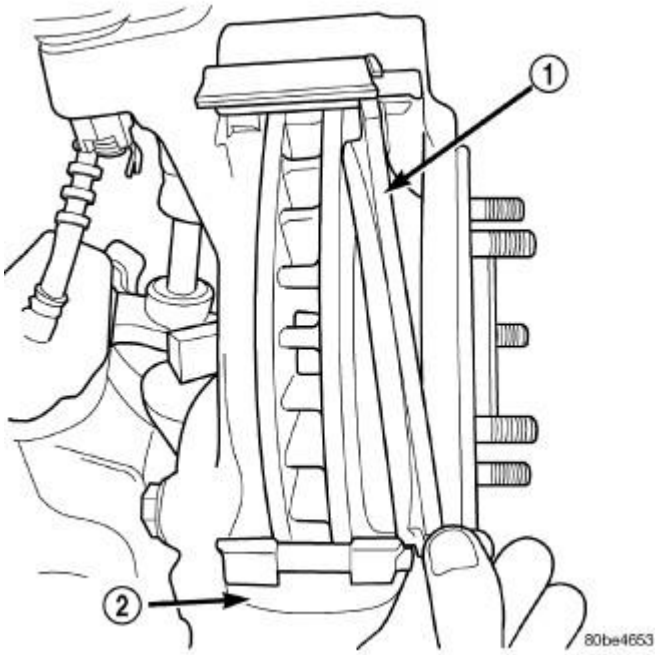

Fig. 99: Outboard Brake Shoe
Courtesy of CHRYSLER GROUP, LLC

1 - OUTBOARD SHOE
2 - CALIPER ADAPTER

6. Install outboard brake shoe (1) in adapter (2).

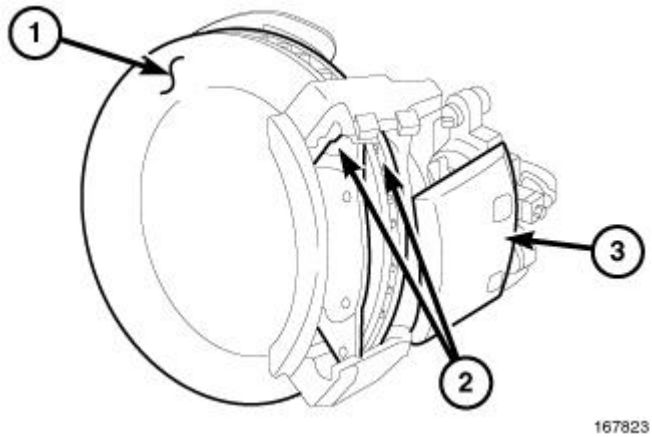

Fig. 100: Rotor / Pads/ Caliper Dual Rear Wheels
Courtesy of CHRYSLER GROUP, LLC

7. Tilt the bottom of the caliper (3) over rotor (1) and under adapter. Then push the top of the caliper down onto the adapter.

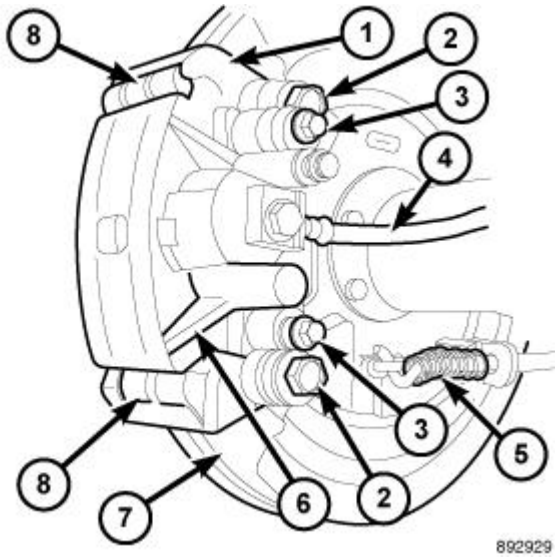

Fig. 101: Brake Caliper, Bolts, Hose & Cable
Courtesy of CHRYSLER GROUP, LLC

8. Install caliper (6). Refer to **CALIPER, DISC BRAKE, INSTALLATION**.
9. Install wheel and tire assemblies. Refer to **WHEELS, STANDARD PROCEDURE** .
10. Remove the supports and lower the vehicle.
11. Apply brakes several times to seat caliper pistons and brake shoes and obtain firm pedal.
12. Top off master cylinder fluid level.

PEDAL(S), BRAKE AND/OR ACCELERATOR

DESCRIPTION

DESCRIPTION

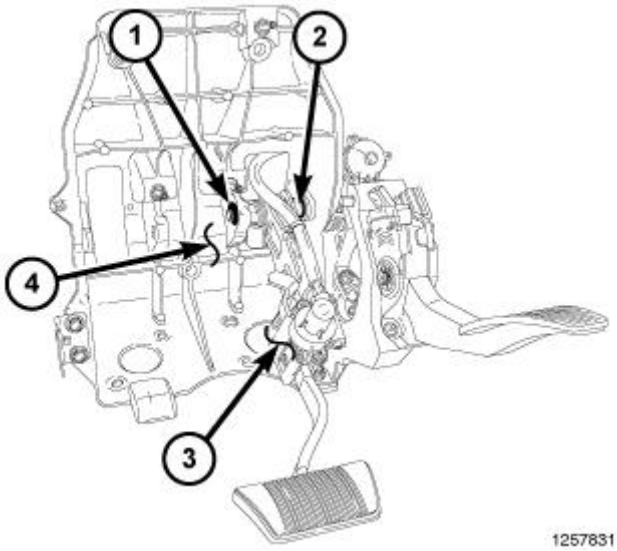

Fig. 102: Identifying Pedal Components

Courtesy of CHRYSLER GROUP, LLC

A suspended-type brake pedal is used. The pedal is attached to the pedal support bracket (4) with a pivot shaft pin, bushings and 2 e-clips (1, 2). If the bushings become dry a spray lubricant can be used to eliminate noises. The booster push rod is attached to the pedal with e-clips. The pedal (3), bushings/pivot pin (1, 2) and support bracket (4) are serviceable separate from the assembly and the accelerator pedal. If equipped with adjustable pedals the brake pedal is serviced with the adjustable (drive) cable (from the adjustable pedal motor). For brake pedal replacement with or without adjustable pedals, the assembly must be removed from the vehicle. Adjustable pedal components can be serviced as follows:

- Adjustable pedal assembly (including bracket and all subcomponents)
- Brake pedal assembly (including adjustment cable)
- Accelerator pedal (Electronic Throttle Control [ETC])
- Accelerator subassembly (including adjustable pedal motor, ETC, ETC mounting plate and bracket).

OPERATION

OPERATION

The brake pedal is attached to the booster push rod. When the pedal is depressed, the primary booster push rod is depressed which moves the booster secondary rod. The booster secondary rod depress the master cylinder piston.

REMOVAL

BRAKE PEDAL

NOTE: The views in this procedure are with adjustable pedals. Without adjustable pedals are similar.

NOTE: If equipped with adjustable pedals: When replacing the components both pedal assemblies must be in the fully down position toward the floor for proper adjustment. Pedals can be moved manually by rotating the cable on the component not being replaced. New components come in the correct position until activated.

1. Remove the pedal assembly. Refer to **PEDAL(S), BRAKE AND/OR ACCELERATOR, REMOVAL**.

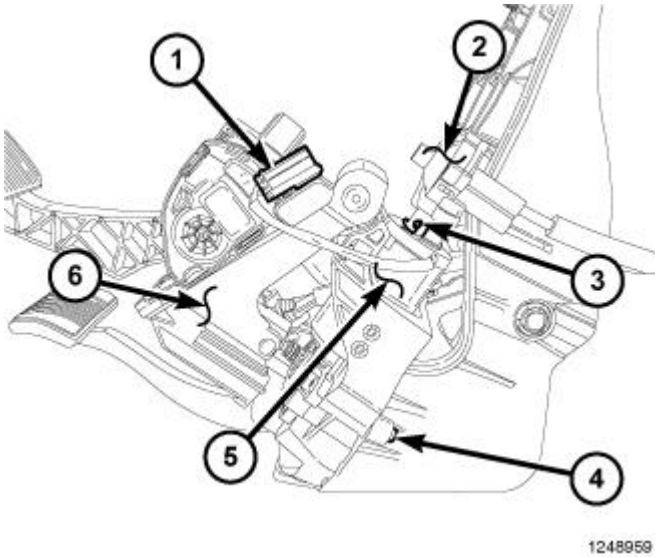

Fig. 103: Adjustable Pedals System Components
Courtesy of CHRYSLER GROUP, LLC

NOTE: **The adjustable pedal motor has three locking tabs (3) that prevent easy twisting when removing drive cable from housing.**

2. If equipped with adjustable pedals, disconnect the drive cable (2) from the adjustable pedal motor (5) by twisting clockwise and lifting from motor.

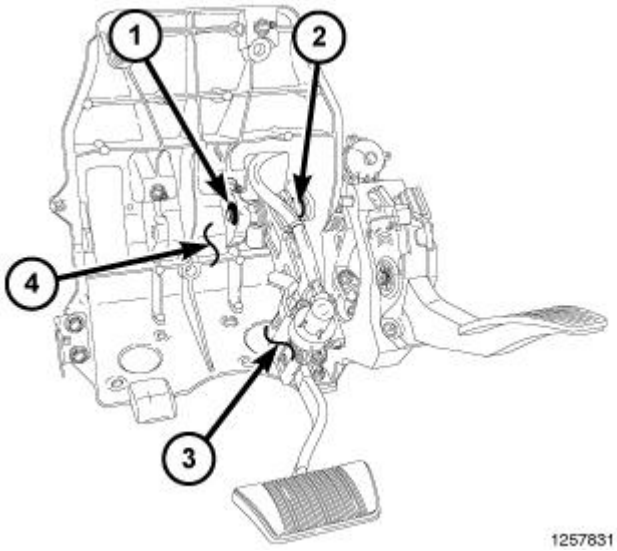

Fig. 104: Identifying Pedal Components
Courtesy of CHRYSLER GROUP, LLC

NOTE: **If equipped with adjustable pedals, note the spring and bushing positions during removal for proper installation.**

3. Remove the e-clip (1) from the brake pedal pivot shaft and slide shaft (2) from the pedal assembly (4).

4. Remove the brake pedal (3) from the pedal assembly (4).

PEDAL ASSEMBLY

NOTE: The brake pedal is serviced as a complete assembly including accelerator pedal and the bracket.

NOTE: The views in this procedure are with adjustable pedals. Without adjustable pedals are similar.

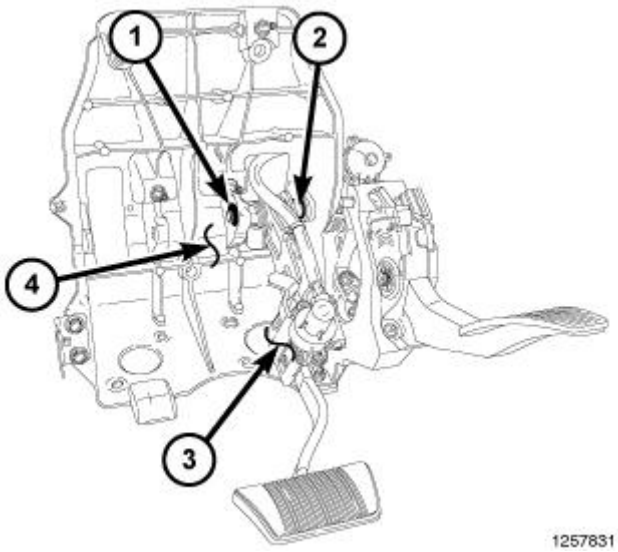

Fig. 105: Identifying Pedal Components
Courtesy of CHRYSLER GROUP, LLC

1. Disconnect the negative battery cable.
2. Remove the brake lamp switch. Refer to **SWITCH, STOP LAMP, REMOVAL** .
3. Remove the steering column. Refer to **COLUMN, REMOVAL** .
4. Disconnect the electrical connectors.
5. Remove the brake booster rod to brake pedal retainer clip and discard the clip.
6. Remove the four brake booster nuts.
7. If equipped with a manual transmission, remove the clutch master cylinder to clutch pedal clip and pin.

NOTE: If equipped with an automatic transmission a clutch master cylinder block out plate is used in place of the master cylinder and the retaining nuts will still be used.

8. Remove the two clutch master cylinder nuts.
9. Remove the three pedal assembly mounting bolts (to instrument panel) and remove the pedal assembly (4) from the vehicle.

INSTALLATION

BRAKE PEDAL

NOTE: **The views in this procedure are with adjustable pedals. Without adjustable pedals are similar.**

NOTE: **If equipped with adjustable pedals: When replacing the components both pedal assemblies must be in the fully down position toward the floor for proper adjustment. Pedals can be moved manually by rotating the cable on the component not being replaced. New components come in the correct position until activated.**

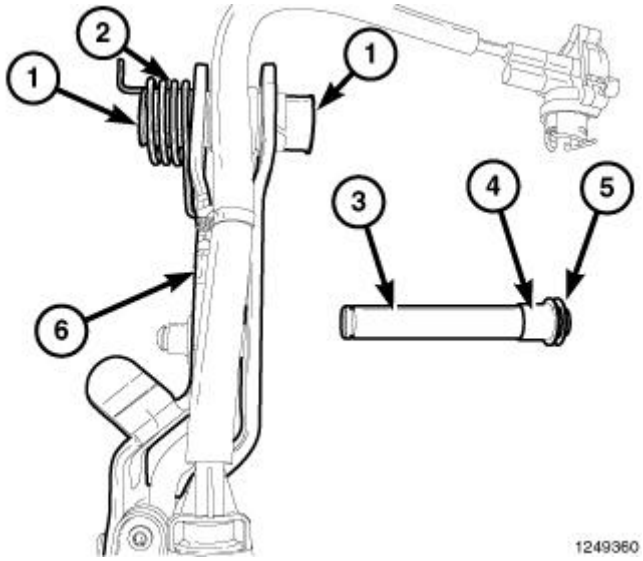

Fig. 106: Brake Pedal, Spring, Bushings, Shaft & Clip
Courtesy of CHRYSLER GROUP, LLC

NOTE: **The spring is only used if equipped with adjustable pedals.**

1. Verify the bushings (1) and spring (2) are installed on the brake pedal (6).
2. Install a bushing (4) and e-clip (5) on the brake pedal pivot shaft (3).

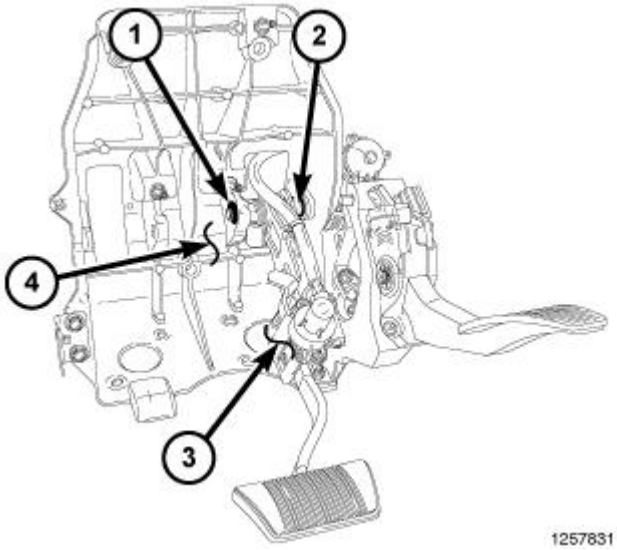

Fig. 107: Identifying Pedal Components
Courtesy of CHRYSLER GROUP, LLC

3. Position the brake pedal (3) and slide the pivot shaft (2) through the bracket and brake pedal.

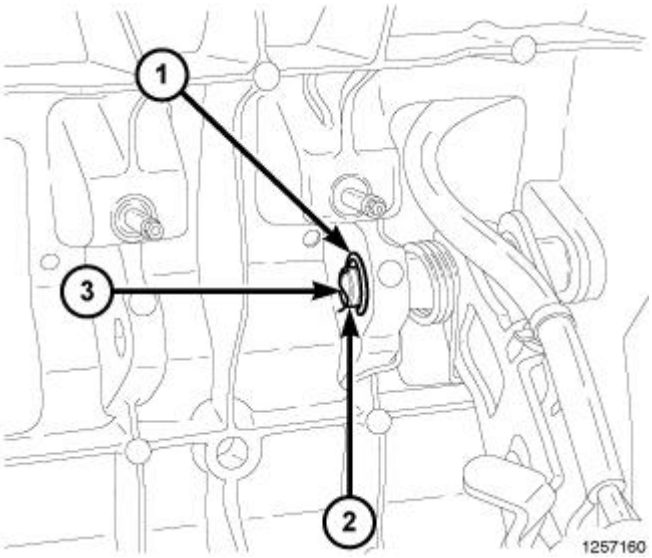

Fig. 108: Brake Pedal Bushing & E-Clip
Courtesy of CHRYSLER GROUP, LLC

NOTE: If equipped with adjustable pedals, verify the spring is properly positioned.

4. Install the bushing (2) and e-clip (1) to secure the pivot shaft (3).

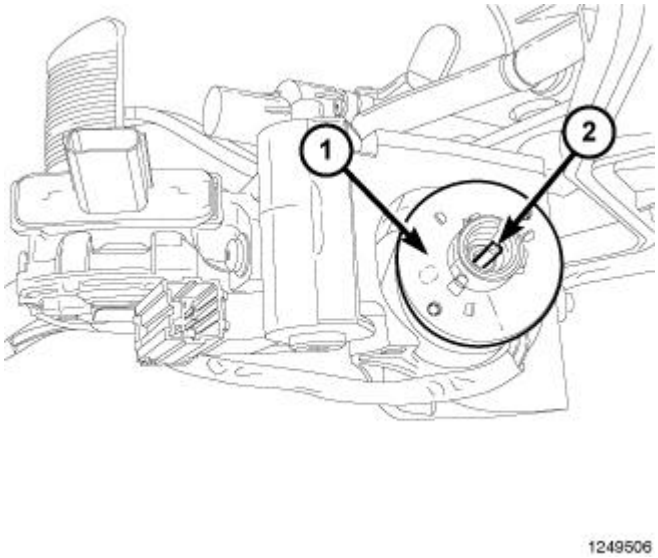

Fig. 109: Drive Cable To Motor Housing Adapter
Courtesy of CHRYSLER GROUP, LLC

NOTE: **Drive cable to motor housing adapter (2) can be turned manually within the motor housing (1) to allow proper alignment for drive cable attachment to motor.**

5. If equipped with adjustable pedals, verify the drive cable to motor housing adapter (2) is properly inserted in motor housing (1) before attaching drive cable.

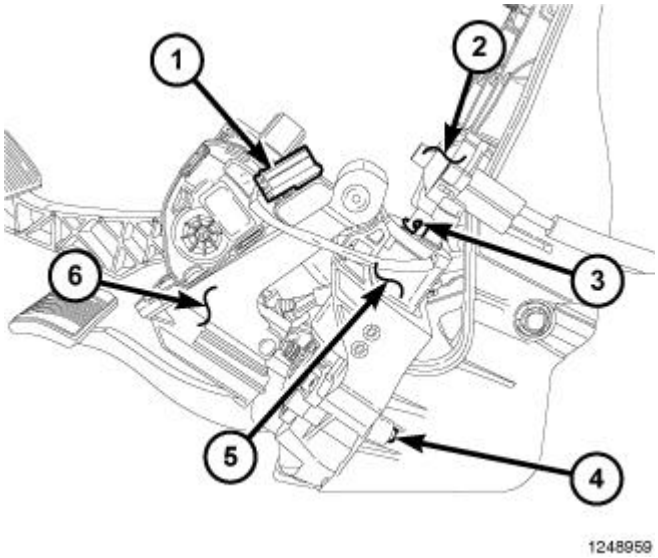

Fig. 110: Adjustable Pedals System Components
Courtesy of CHRYSLER GROUP, LLC

NOTE: **A snap sound should be heard when drive cable locks into position.**

6. If equipped with adjustable pedals, align drive cable housing to motor tabs/slots (3), and using light hand

pressure push drive cable (2) into position on the drive motor (5). Turn counter clockwise to lock into position.

7. Install the pedal assembly. Refer to **PEDAL(S), BRAKE AND/OR ACCELERATOR, INSTALLATION**.

PEDAL ASSEMBLY

NOTE: The views in this procedure are with adjustable pedals. Without adjustable pedals are similar.

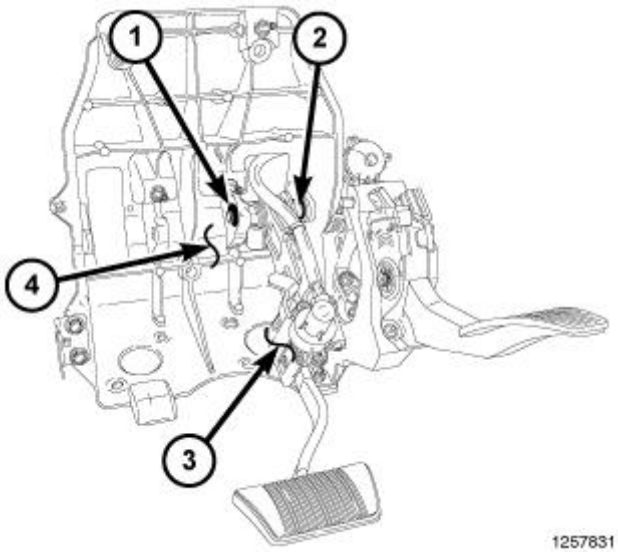

Fig. 111: Identifying Pedal Components
Courtesy of CHRYSLER GROUP, LLC

NOTE: Ensure that the cables and wiring harness is not pinched.

1. Position the pedal assembly (4) and install the three mounting bolts (to instrument panel). Do not tighten at this time.
2. Install the four brake booster mounting nuts and tighten to 28 N.m (20.5 ft. lbs.).
3. Tighten the pedal assembly mounting bolts (to instrument panel) to 31 N.m (23 ft. lbs.).
4. Install the brake booster rod to the brake pedal and install a new retainer clip.
5. If equipped with a manual transmission, install the clutch master cylinder to clutch pedal clip and pin.

NOTE: If equipped with an automatic transmission a clutch master cylinder block out plate is used in place of the master cylinder and the retaining nuts will still be used.

6. Install the two clutch master cylinder nuts and tighten to 28 N.m (20.5 ft. lbs.).
7. Connect the electrical connectors.
8. Install the steering column. Refer to **COLUMN, INSTALLATION** .

9. Install the brake lamp switch. Refer to **SWITCH, STOP LAMP, INSTALLATION** .
10. Install the steering column opening cover. Refer to **COVER, STEERING COLUMN OPENING, INSTALLATION** .
11. Reconnect the negative battery cable.

PLATE, BRAKE BACKING

REMOVAL

REMOVAL

1. Raise and support the vehicle. Refer to **HOISTING, STANDARD PROCEDURE** .
2. Remove wheel and tire assembly.
3. Remove the disc brake caliper. Refer to **CALIPER, DISC BRAKE, REMOVAL**.
4. Remove the caliper adapter. Refer to **ADAPTER, DISC BRAKE CALIPER, REMOVAL**.
5. Remove the rotor. Refer to **ROTOR, BRAKE, REMOVAL**.
6. Remove the axle shaft. Refer to **REMOVAL** .
7. Remove the park brake shoes. Refer to **SHOES, PARKING BRAKE, REMOVAL**.
8. Remove the parking brake cable from the brake lever.

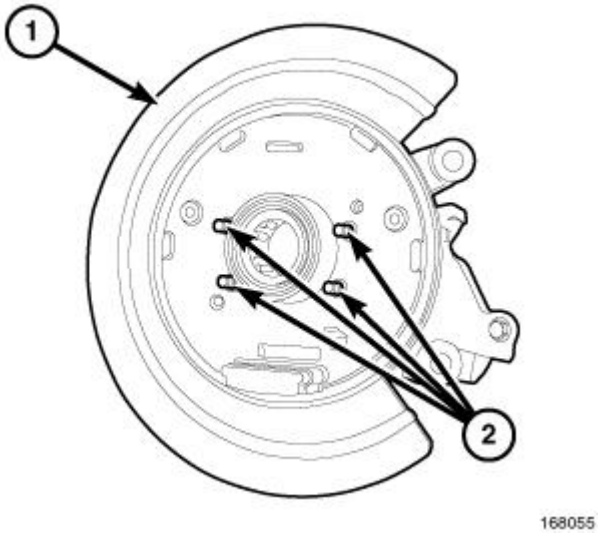

Fig. 112: Support Plate & Mounting Studs
Courtesy of CHRYSLER GROUP, LLC

1 - SUPPORT PLATE
2 - MOUNTING STUDS

9. Remove the bolts (2) attaching the support plate (1) to the axle and remove the support plate.

INSTALLATION

LIGHT DUTY

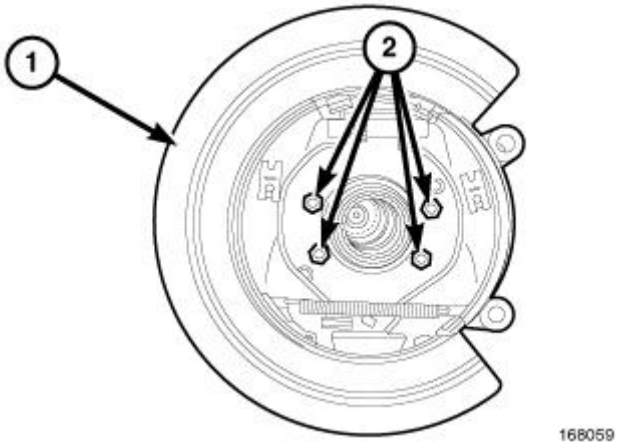

Fig. 113: Support Plate & Nuts
Courtesy of CHRYSLER GROUP, LLC

1 - SUPPORT PLATE
2 - MOUNTING NUTS

1. Install support plate (1) on axle flange. Tighten attaching bolts (2) to 68 N.m (50 ft. lbs.).
2. Install parking brake cable in the brake lever.
3. Install the park brake shoes. Refer to **SHOES, PARKING BRAKE, INSTALLATION**.
4. Install axle shaft. Refer to **INSTALLATION** .
5. Adjust brake shoes to drum with brake gauge. Refer to **SHOES, PARKING BRAKE, ADJUSTMENTS**.
6. Install the rotor. Refer to **ROTOR, BRAKE, INSTALLATION**.
7. Install the caliper adapter. Refer to **ADAPTER, DISC BRAKE CALIPER, INSTALLATION**.
8. Install the caliper. Refer to **CALIPER, DISC BRAKE, INSTALLATION**.
9. Install the wheel and tire assembly. Refer to **WHEELS, STANDARD PROCEDURE** .

HEAVY DUTY

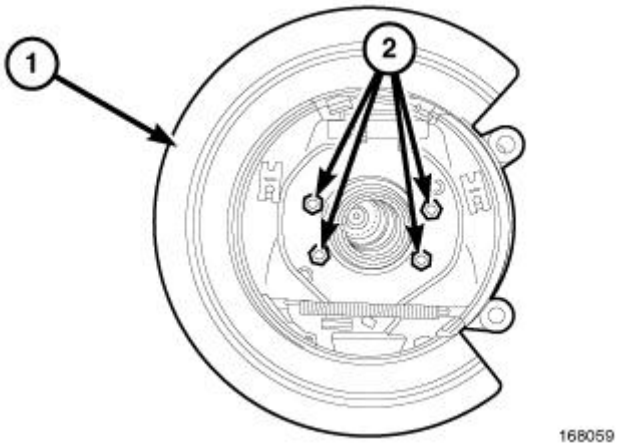

Fig. 114: Support Plate & Nuts
Courtesy of CHRYSLER GROUP, LLC

1 - SUPPORT PLATE
2 - MOUNTING NUTS

1. Install support plate (1) on axle flange and tighten bolts (2) to 203 N.m (150 ft. lbs).
2. Install parking brake cable in the brake lever.
3. Install the park brake shoes. Refer to **SHOES, PARKING BRAKE, INSTALLATION**.
4. Install axle shaft. Refer to **INSTALLATION** or **INSTALLATION** .
5. Adjust brake shoes to drum with brake gauge. Refer to **SHOES, PARKING BRAKE, ADJUSTMENTS**.
6. Install the rotor. Refer to **ROTOR, BRAKE, INSTALLATION**.
7. Install the caliper adapter. Refer to **ADAPTER, DISC BRAKE CALIPER, INSTALLATION**.
8. Install the caliper. Refer to **CALIPER, DISC BRAKE, INSTALLATION**.
9. Install the wheel and tire assembly. Refer to **WHEELS, STANDARD PROCEDURE** .

RESERVOIR, BRAKE MASTER CYLINDER

REMOVAL

REMOVAL

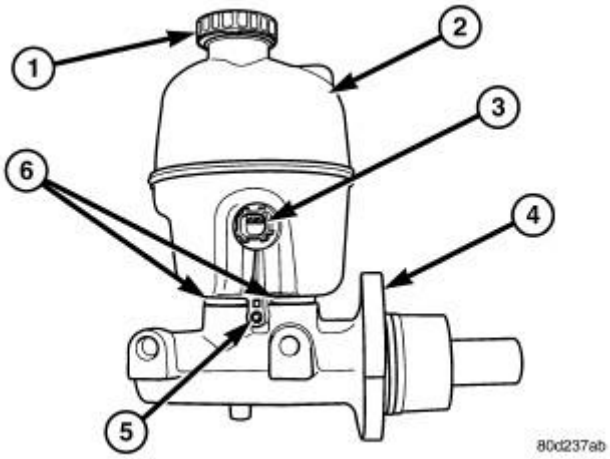

Fig. 115: Master Cylinder Fluid Reservoir & Components
Courtesy of CHRYSLER GROUP, LLC

1 - MASTER CYLINDER CAP
2 - FLUID RESERVOIR
3 - FLUID LEVEL SWITCH
4 - MASTER CYLINDER
5 - MOUNTING BOLT
6 - GROMMETS

1. Install the prop rod on the brake pedal to keep pressure on the brake system.
2. Remove the reservoir cap (1) and siphon fluid into a drain container. Refer to **Fig. 115**.
3. Remove the electrical connector from the fluid level switch (3) in the reservoir (2). Refer to **Fig. 115**.
4. Remove the reservoir mounting bolt (5). Refer to **Fig. 115**.
5. Remove the reservoir (2) from the master cylinder (4) by pulling upwards.
6. Remove old grommets from cylinder body. Refer to **Fig. 115**.

INSTALLATION

INSTALLATION

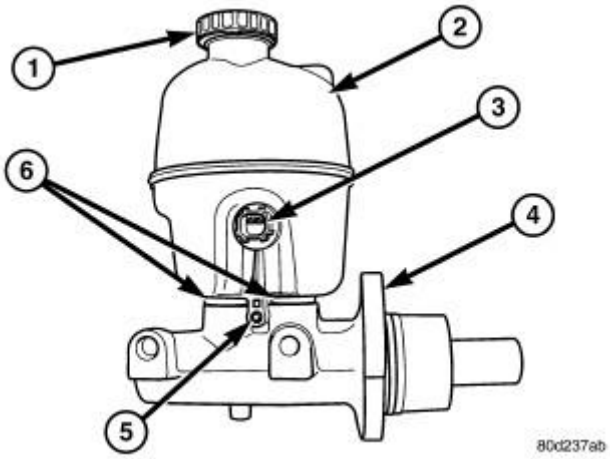

Fig. 116: Master Cylinder Fluid Reservoir & Components
Courtesy of CHRYSLER GROUP, LLC

1 - MASTER CYLINDER CAP
2 - FLUID RESERVOIR
3 - FLUID LEVEL SWITCH
4 - MASTER CYLINDER
5 - MOUNTING BOLT
6 - GROMMETS

CAUTION: Do not use any type of tool to install the grommets. Tools may cut, or tear the grommets creating a leak problem after installation. Install the grommets using finger pressure only.

1. Lubricate the new grommets (6) with clean brake fluid and Install new grommets in cylinder body. Use finger pressure to install and seat grommets (6).
2. Start the reservoir (2) in grommets (6). Then rock the reservoir back and forth while pressing downward to seat it into the grommets.
3. Install the mounting bolt (5) for the reservoir (2) to the master cylinder (4).
4. Reconnect the electrical connector to the fluid reservoir level switch (3).
5. Remove the prop rod from the vehicle.
6. Fill and bleed base brake system. Refer to **STANDARD PROCEDURE**. .

ROTOR, BRAKE

DIAGNOSIS AND TESTING

DIAGNOSIS AND TESTING - DISC BRAKE ROTOR

The rotor braking surfaces should not be refinished unless necessary.

Light surface rust and scale can be removed with a lathe equipped with dual sanding discs. The rotor surfaces can be restored by machining with a disc brake lathe if surface scoring and wear are light.

Replace the rotor for the following conditions:

- Severely Scored
- Tapered
- Hard Spots
- Cracked
- Below Minimum Thickness

ROTOR MINIMUM THICKNESS

Measure rotor thickness at the center of the brake shoe contact surface. Replace the rotor if below minimum thickness, or if machining would reduce thickness below the allowable minimum.

Rotor minimum thickness is usually specified on the rotor hub. The specification is either stamped or cast into the hub surface.

ROTOR RUNOUT

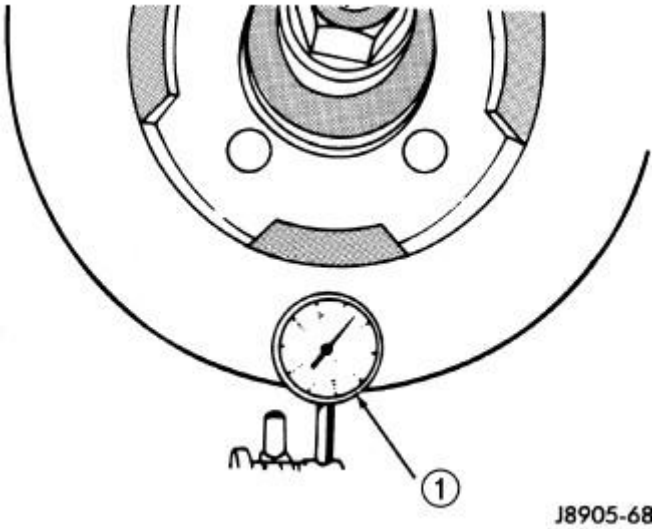

Fig. 117: Checking Rotor Lateral Runout
Courtesy of CHRYSLER GROUP, LLC

1 - DIAL INDICATOR

Check rotor lateral runout with Dial Indicator Set (special tool #C-3339A, Set, Dial Indicator) (1). Excessive lateral runout will cause brake pedal pulsation and rapid, uneven wear of the brake shoes. Position the dial indicator plunger approximately 25.4 mm (1 in.) inward from the rotor edge.

NOTE: **Be sure wheel bearing has zero end play before checking rotor runout.**

Maximum allowable rotor runout is 0.050 mm (0.002 in.).

ROTOR THICKNESS VARIATION

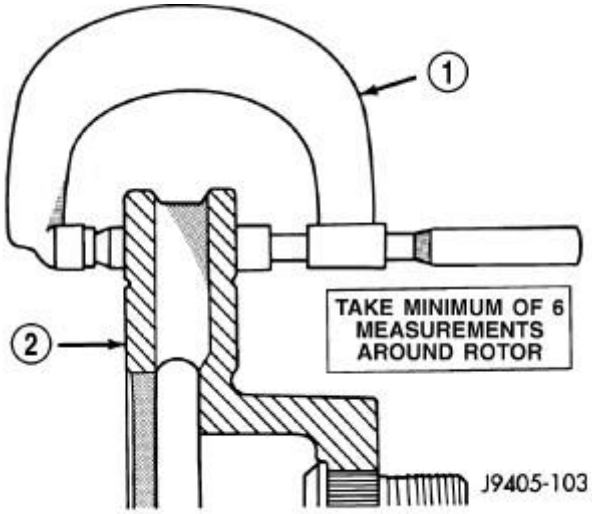

Fig. 118: Measuring Rotor Thickness
Courtesy of CHRYSLER GROUP, LLC

1 - MICROMETER
2 - ROTOR

Variations in rotor thickness will cause pedal pulsation, noise and shudder.

Measure rotor thickness at 6 to 12 points around the rotor face.

Position the micrometer (1) approximately 25.4 mm (1 in.) from the rotor (2) outer circumference for each measurement.

Thickness should not **vary** by more than 0.015 mm (0.0059 in.) from point-to-point on the rotor. Machine or replace the rotor if necessary.

STANDARD PROCEDURE

STANDARD PROCEDURE - DISC BRAKE ROTOR MACHINING

NOTE: **A hub mounted on-vehicle lathe is highly recommended. This type of lathe trues the rotor to the vehicles hub/bearing.**

The disc brake rotor can be machined if scored or worn. The on-vehicle lathe must machine both sides of the rotor simultaneously with dual cutter heads. The rotor mounting surface must be clean before placing on the on-

vehicle lathe. Equipment capable of machining only one side at a time may produce a tapered rotor **This type of rotor machining is not recommended** .

NOTE: Proper wheel torque is also critical to help prevent any warping of the disc brake rotor.

CAUTION: Brake rotors that do not meet minimum thickness specifications before or after machining must be replaced.

REMOVAL

FRONT - LIGHT DUTY

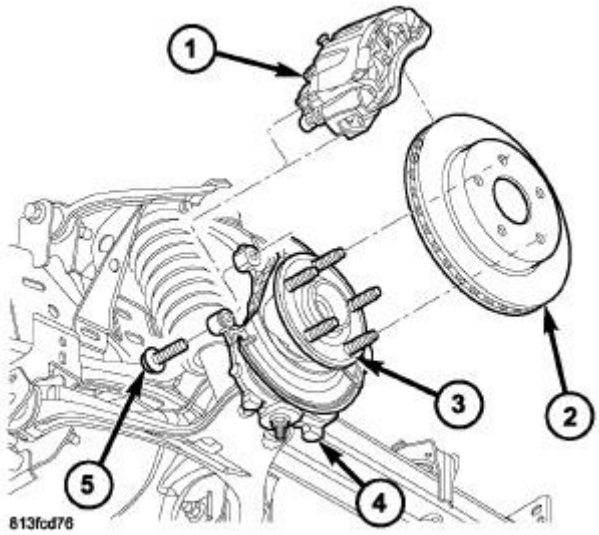

Fig. 119: Rotor, Caliper, Hub/Bearing, Knuckle & Bolt
Courtesy of CHRYSLER GROUP, LLC

1 - CALIPER
2 - ROTOR
3 - HUB/BEARING
4 - KNUCKLE
5 - CALIPER ADAPTER BOLT

1. Raise and support the vehicle. Refer to **HOISTING, STANDARD PROCEDURE** .
2. Remove the wheel and tire assembly.

NOTE: Do not allow brake hose to support caliper adapter assembly (1).

3. Remove the two caliper adaptor bolts (5) from the steering knuckle (4), remove caliper adapter assembly

(1), and hang aside.

4. Remove the rotor (2) from the hub/bearing (3).

FRONT - HEAVY DUTY

1. Raise and support the vehicle. Refer to **HOISTING, STANDARD PROCEDURE** .
2. Remove the wheel and tire assembly.

NOTE: Do not allow brake hose to support caliper adapter assembly.

3. Remove the caliper from the steering knuckle, and remove caliper adapter assembly. Refer to **CALIPER, DISC BRAKE, REMOVAL**.
4. With Dual Rear Wheels (DRW) only, remove the extension to the rotor nuts and remove the extension.
5. Remove the rotor from the hub/bearing wheel studs.

REAR

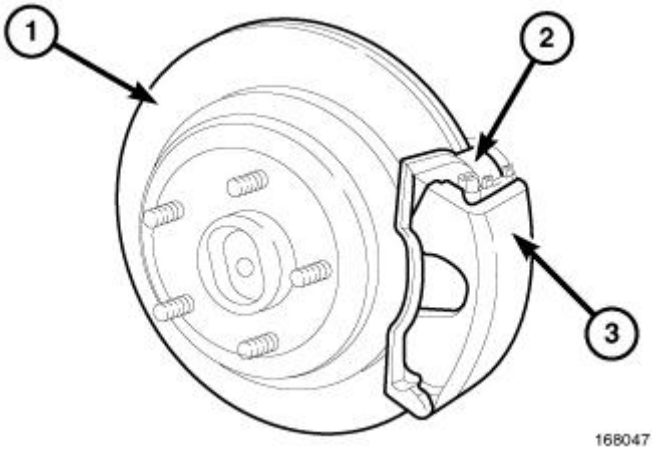

Fig. 120: Rear Rotor & Caliper
Courtesy of CHRYSLER GROUP, LLC

1. Raise and support the vehicle
2. Remove the tire and wheel assembly.
3. Remove the disc brake caliper (3). Refer to **CALIPER, DISC BRAKE, REMOVAL**.
4. Remove the caliper adapter (2) bolts. Refer to **ADAPTER, DISC BRAKE CALIPER, REMOVAL**.
5. Remove the retaining clips and rotor assembly (1).

REAR DUAL WHEELS

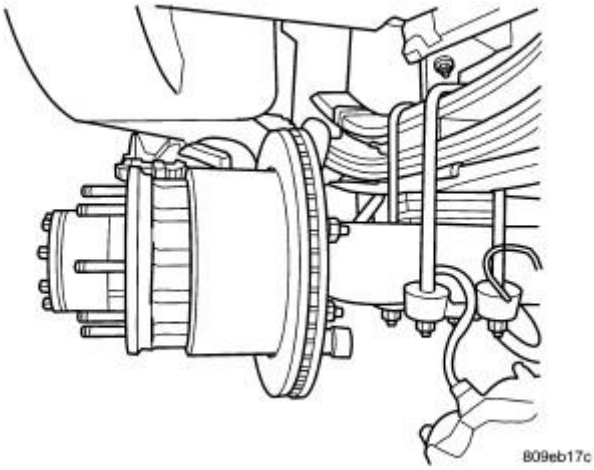

Fig. 121: Rear Rotor & Hub (Dual Wheel)
Courtesy of CHRYSLER GROUP, LLC

1. Raise and support the vehicle
2. Remove the tire and wheel assembly.
3. Remove the disc brake caliper. Refer to **CALIPER, DISC BRAKE, REMOVAL**.
4. Remove the caliper adapter bolts.
5. Remove the rear axle shaft from the housing on dual rear wheels. Refer to **SHAFT, AXLE, REMOVAL** .

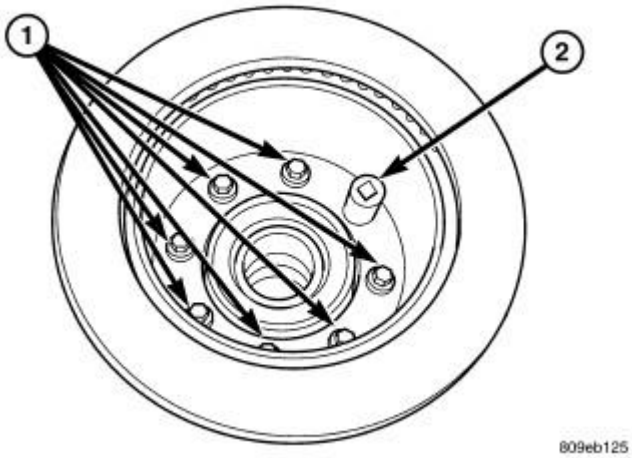

Fig. 122: Hub & Bolts
Courtesy of CHRYSLER GROUP, LLC

1 - Hub Bolts
2 - Socket

6. Remove the hub and rotor assembly.

7. Disassemble the hub from the rotor if needed by removing the bolts (1).

INSTALLATION

FRONT - LIGHT DUTY

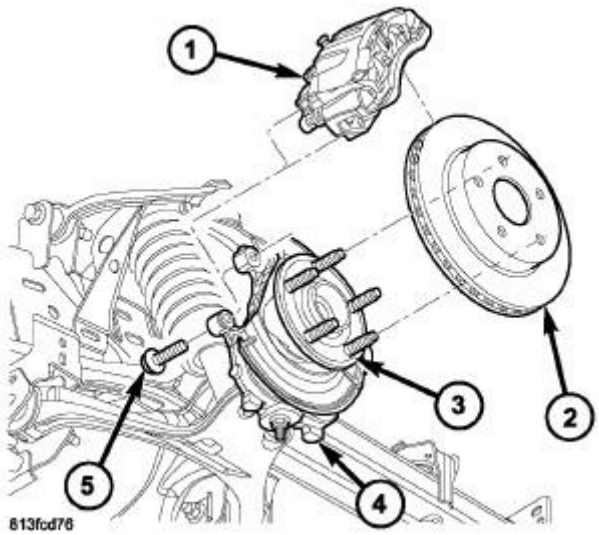

Fig. 123: Rotor, Caliper, Hub/Bearing, Knuckle & Bolt
Courtesy of CHRYSLER GROUP, LLC

1 - CALIPER
2 - ROTOR
3 - HUB/BEARING
4 - KNUCKLE
5 - CALIPER ADAPTER BOLT

1. Install the rotor (2) onto the hub/bearing (3).
2. Install the caliper adapter assembly (1). Refer to **CALIPER, DISC BRAKE, INSTALLATION**.
3. Install the wheel and tire assembly. Refer to **WHEELS, STANDARD PROCEDURE** .
4. Remove the supports and lower the vehicle.
5. Apply the brakes several times to seat the brake pads. Be sure to obtain a firm pedal before moving the vehicle.

FRONT - HEAVY DUTY

1. Position the rotor on the hub.
2. With Dual Rear Wheels (DRW) only, install the hub extension and nuts to the front rotor. Tighten nuts to 173.5 N.m (128 ft.lbs). **HD DRW ONLY.**
3. Install the rotor onto the hub/bearing wheel studs.

4. Install the caliper adapter assembly. Refer to **CALIPER, DISC BRAKE, INSTALLATION**.
5. Install the wheel and tire assembly, and lower the vehicle. Refer to **WHEELS, STANDARD PROCEDURE** .
6. Apply the brakes several times to seat brake pads. Be sure to obtain firm pedal before moving vehicle.

REAR - LIGHT DUTY

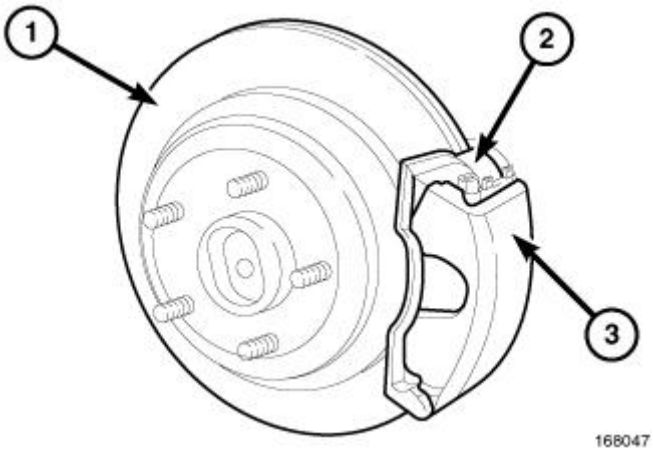

Fig. 124: Rear Rotor & Caliper
Courtesy of CHRYSLER GROUP, LLC

1 - ROTOR
2 - CALIPER ADAPTER
3 - CALIPER

1. Install the rotor (1) to the axleshaft.
2. Install the caliper adapter (2). Refer to **ADAPTER, DISC BRAKE CALIPER, INSTALLATION**.
3. Install the caliper adapter bolts and tighten the mounting bolts to 163 N.m (120 ft.lbs).
4. Install the disc brake caliper (3). Refer to **CALIPER, DISC BRAKE, INSTALLATION**.
5. Install the tire and wheel assembly. Refer to **WHEELS, STANDARD PROCEDURE** .
6. Remove the support and lower the vehicle.

REAR - HEAVY DUTY

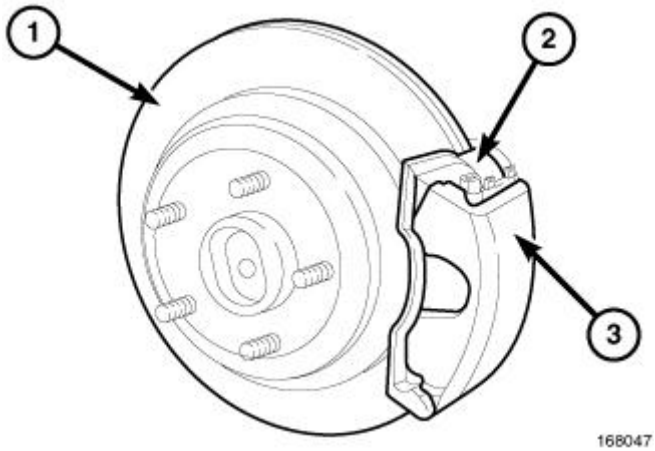

Fig. 125: Rear Rotor & Caliper
Courtesy of CHRYSLER GROUP, LLC

1 - ROTOR
2 - CALIPER ADAPTER
3 - CALIPER

1. Install the rotor (1) to the axle shaft.
2. Install the caliper adapter (2). Refer to **ADAPTER, DISC BRAKE CALIPER, INSTALLATION**.
3. Install the caliper adapter bolts and tighten to 328 N.m (242 ft.lbs).
4. Install the disc brake caliper (3). Refer to **CALIPER, DISC BRAKE, INSTALLATION**.
5. Install the tire and wheel assembly. Refer to **WHEELS, STANDARD PROCEDURE** .
6. Remove the supports and lower the vehicle.

REAR - DUAL WHEELS

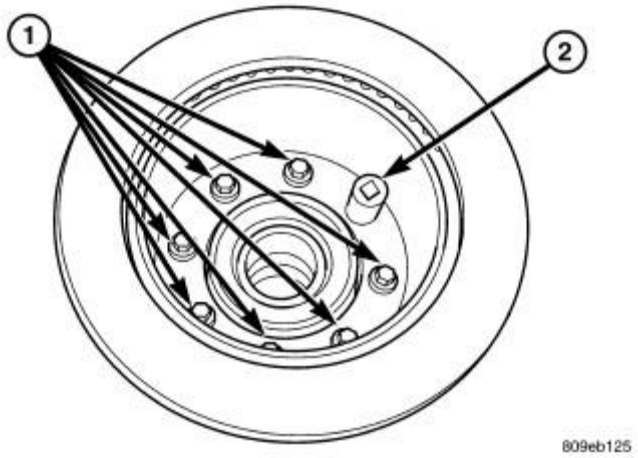

Fig. 126: Hub & Bolts
Courtesy of CHRYSLER GROUP, LLC

1 - Hub Bolts	
2 - Socket	

1. Install the hub to the rotor. Tighten the bolts (1) to 154.5 N.m (114 ft. lbs.).

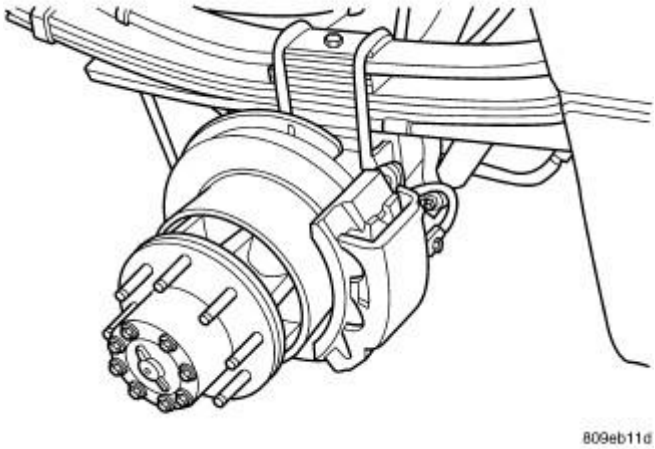

Fig. 127: Identifying Hub & Rotor Assembly
Courtesy of CHRYSLER GROUP, LLC

2. Install the hub and rotor assembly.
3. Install the rear axle shaft to the housing with dual wheels. Refer to **INSTALLATION** .
4. Install the caliper adapter bolts 328 N.m (242 ft.lbs).
5. Install the disc brake caliper. Refer to **CALIPER, DISC BRAKE, INSTALLATION**.
6. Install the tire and wheel assembly. Refer to **WHEELS, STANDARD PROCEDURE** .
7. Remove the supports and lower the vehicle.

TUBES AND HOSES, BRAKE

STANDARD PROCEDURE

DOUBLE INVERTED FLARING

A preformed metal brake tube is recommended and preferred for all repairs. However, double-wall steel tube can be used for emergency repair when factory replacement parts are not readily available.

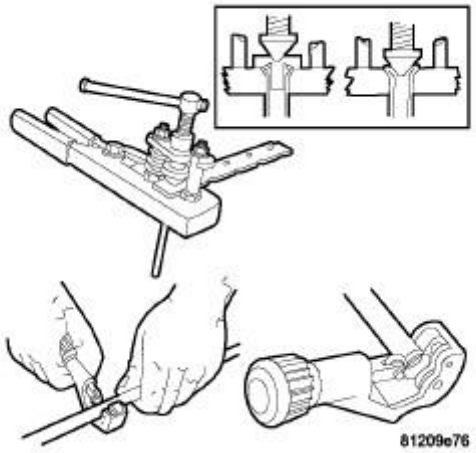

Fig. 128: Flaring Brake Line (Double Inverted) & Cutting Line
Courtesy of CHRYSLER GROUP, LLC

1. Cut off damaged tube with Tubing Cutter.
2. Ream cut edges of tubing to ensure proper flare.
3. Install replacement tube nut on the tube.
4. Insert tube in flaring tool.
5. Place gauge form over the end of the tube.
6. Push tubing through flaring tool jaws until tube contacts recessed notch in gauge that matches tube diameter.
7. Tighten the tool bar on the tube
8. Insert plug on gauge in the tube. Then swing compression disc over gauge and center tapered flaring screw in recess of compression disc.
9. Tighten tool handle until plug gauge is squarely seated on jaws of flaring tool. This will start the inverted flare.
10. Remove the plug gauge and complete the inverted flare.

ISO FLARING

A preformed metal brake tube is recommended and preferred for all repairs. However, double-wall steel tube can be used for emergency repair when factory replacement parts are not readily available.

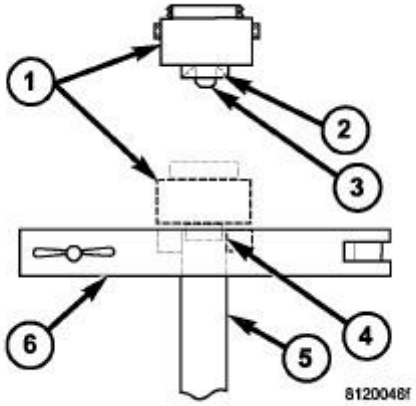

Fig. 129: ISO Flaring Using Tool Kit
Courtesy of CHRYSLER GROUP, LLC

To make a ISO flare use an ISO flaring tool kit.

1. Cut off damaged tube with Tubing Cutter.
2. Remove any burrs from the inside of the tube.
3. Install tube nut on the tube.
4. Position the tube in the flaring tool flush with the top of the tool bar (6). Then tighten the tool bar on the tube.
5. Install the correct size adaptor (1) on the flaring tool yoke screw.
6. Lubricate the adaptor (2).
7. Align the adaptor and yoke screw over the tube.
8. Turn the yoke screw in until the adaptor is squarely seated on the tool bar.

REMOVAL

FRONT BRAKE HOSE

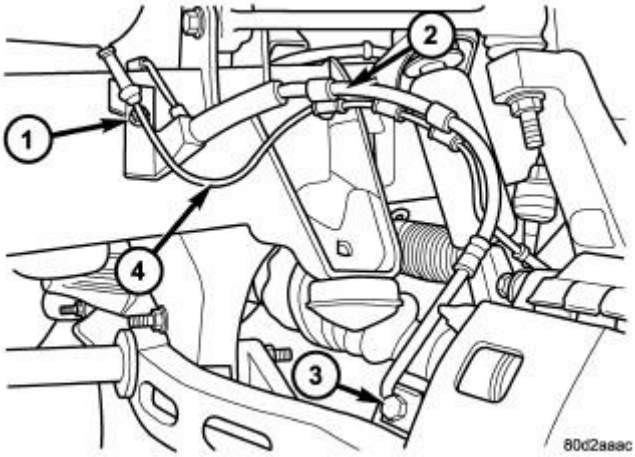

Fig. 130: Front Brake Hose, Banjo Bolt, Speed Sensor Wire & Bolt
Courtesy of CHRYSLER GROUP, LLC

1 - MOUNTING BOLT
2 - BRAKE HOSE
3 - BANJO BOLT
4 - WHEEL SPEED SENSOR WIRE

1. Install prop rod on the brake pedal to keep pressure on the brake system, Holding pedal in this position will isolate master cylinder from hydraulic brake system and will not allow brake fluid to drain out of brake fluid reservoir while brake lines are open. This will allow you to bleed out the area of repair instead of the entire system.
2. Raise and support vehicle.
3. Remove the tire and wheel assembly.
4. Remove the brake hose (2) from the brake line located at the frame. Refer to **Fig. 130**.
5. Remove the brake hose banjo bolt (3) at the caliper. Refer to **Fig. 130**.
6. Remove the mounting bolt securing the brake hose (2) to the frame and remove the wheel speed sensor wire (4) from the brake hose (2). Refer to **Fig. 130**.
7. Remove the hose.

REAR BRAKE HOSE - 1500 SERIES

Left and right side procedures are similar.

1. Install prop rod on the brake pedal to keep pressure on the brake system. Holding pedal in this position will isolate the master cylinder from the hydraulic brake system and will not allow brake fluid to drain out of the brake fluid reservoir while the brake lines are open. This will allow you to bleed out the area of repair instead of the entire system.

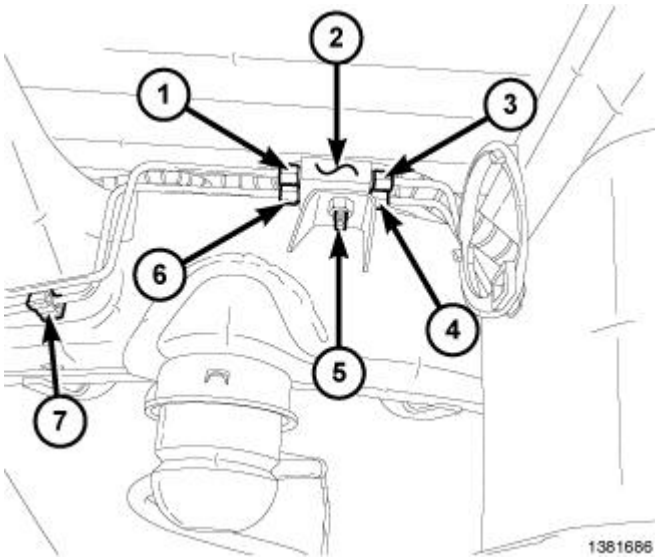

Fig. 131: Junction Block, Brake Lines, Clips & Bolts
Courtesy of CHRYSLER GROUP, LLC

2. Raise and support the vehicle. Refer to **HOISTING, STANDARD PROCEDURE** .
3. Remove the appropriate line connector (1 or 6) from the junction block (2) located on the frame.

NOTE: **The right brake line has three push type retainers, and the left brake line has only one push type retainer.**

4. Remove the brake line retainer clip(s) (7, left side shown in illustration).

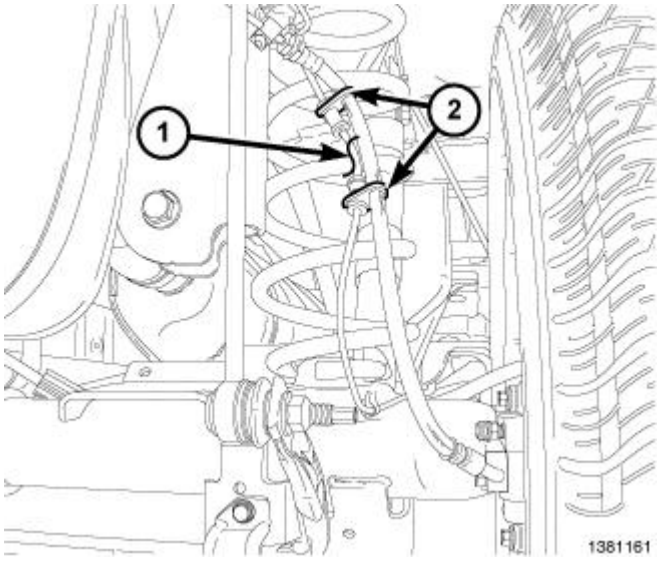

Fig. 132: Antilock Sensor Harness & Routing Clips
Courtesy of CHRYSLER GROUP, LLC

5. Remove the antilock sensor harness (1) from the routing clips (2) on the brake hose.

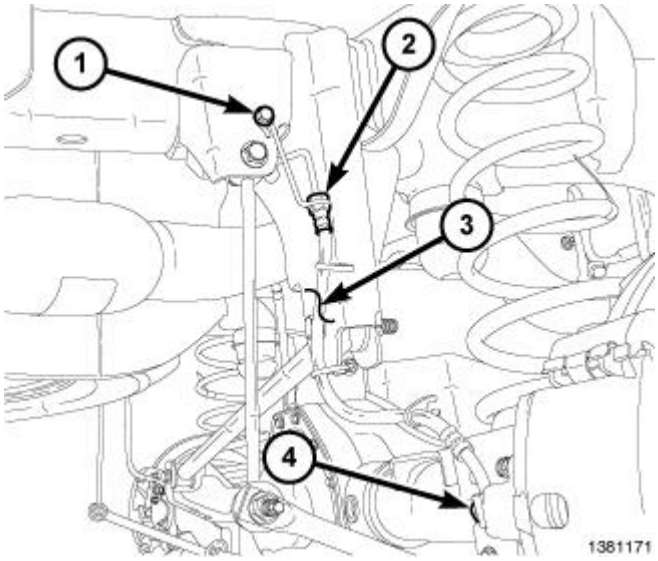

Fig. 133: Banjo Bolt & Brake Hose Retainer Clip Bolt
Courtesy of CHRYSLER GROUP, LLC

6. Remove the banjo bolt (4) at the caliper.
7. Remove the brake hose retainer clip bolt (1) located at the frame.
8. Remove the brake line.

REAR TUBE / HOSE ASSEMBLY - HEAVY DUTY

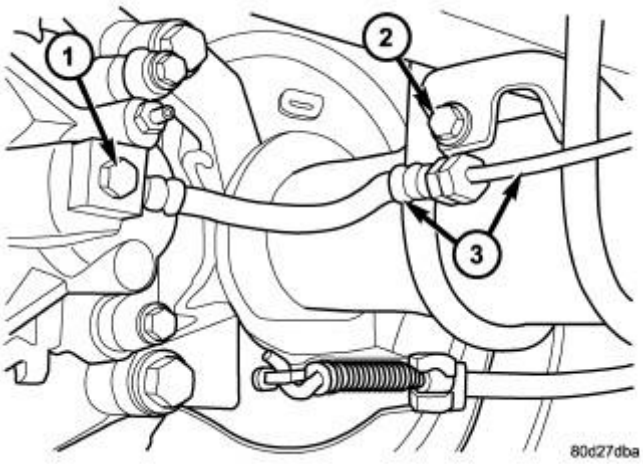

Fig. 134: Rear Tube/Hose Assembly & Bolts
Courtesy of CHRYSLER GROUP, LLC

1 - BANJO BOLT
2 - MOUNTING BOLT
3 - REAR TUBE / HOSE ASSEMBLY

1. Install prop rod on the brake pedal to keep pressure on the brake system, Holding pedal in this position

will isolate master cylinder from hydraulic brake system and will not allow brake fluid to drain out of brake fluid reservoir while brake lines are open. This will allow you to bleed out the area of repair instead of the entire system.

2. Raise and support the vehicle. Refer to **HOISTING, STANDARD PROCEDURE** .
3. Remove the brake line located at the axle.
4. Remove the mounting bolt (2) for the brake hose (3) at the axle.
5. Remove the banjo bolt (1) at the caliper.
6. Remove the hose.

REAR BRAKE HOSE - HEAVY DUTY (HD)

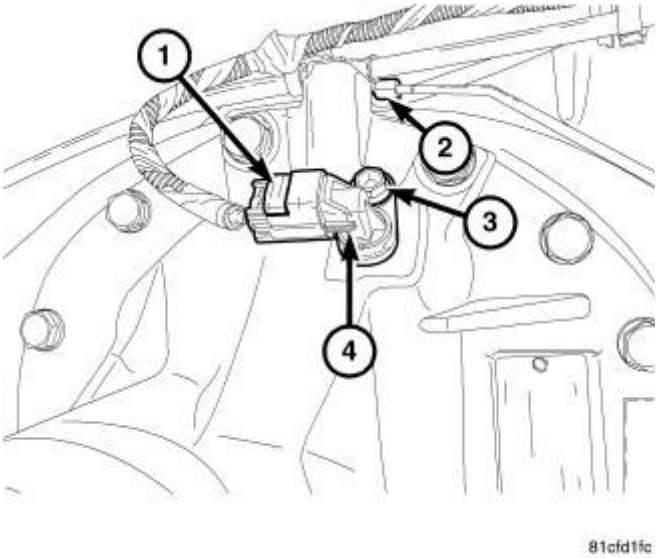

Fig. 135: Rear Speed Sensor, Mounting Bolt & Sensor Wire Harness
Courtesy of CHRYSLER GROUP, LLC

1. Install prop rod on the brake pedal to keep pressure on the brake system, Holding pedal in this position will isolate master cylinder from hydraulic brake system and will not allow brake fluid to drain out of brake fluid reservoir while brake lines are open. This will allow you to bleed out the area of repair instead of the entire system.
2. Raise and support the vehicle.
3. Remove the brake line (2) located at the axle.

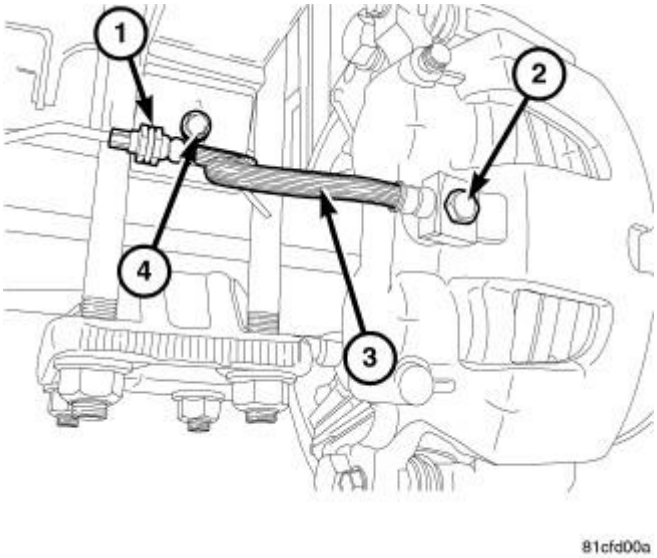

Fig. 136: Mounting Bolt, Banjo Bolt & Brake Hose
Courtesy of CHRYSLER GROUP, LLC

4. Remove the mounting bolt (4) for the brake hose (3) at the axle.
5. Remove the banjo bolt (2) at the caliper.
6. Remove the hose (3).

INSTALLATION

FRONT BRAKE HOSE

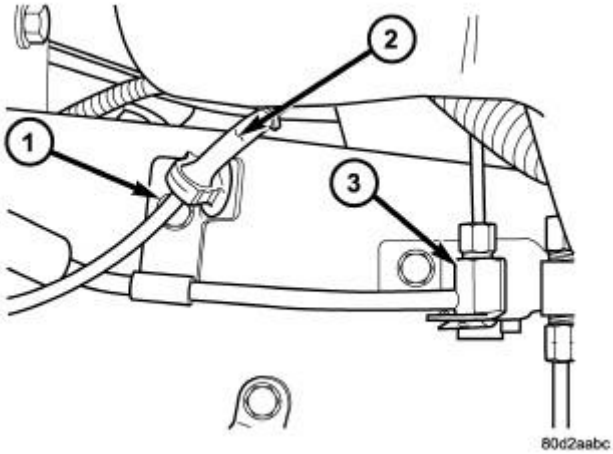

Fig. 137: Front Brake Hose & Mounting Bolt
Courtesy of CHRYSLER GROUP, LLC

1 - MOUNTING BOLT
2 - WHEEL SPEED SENSOR WIRE
3 - BRAKE HOSE

1. Install the hose (3).
2. Install the mounting bolt (1) for the brake hose (3) at the frame. Refer to **Fig. 137**.
3. Install the brake hose banjo bolt at the caliper .
4. Reinstall the wheel speed sensor wire (2) to the brake hose .
5. Remove the support and lower the vehicle.
6. Remove the prop rod from the brake pedal.
7. Bleed the area of repair for the brake system, **If a proper pedal is not felt during bleeding an area of repair then a base bleed system must be performed.** . Refer to **STANDARD PROCEDURE**. .

REAR BRAKE HOSE - 1500 SERIES

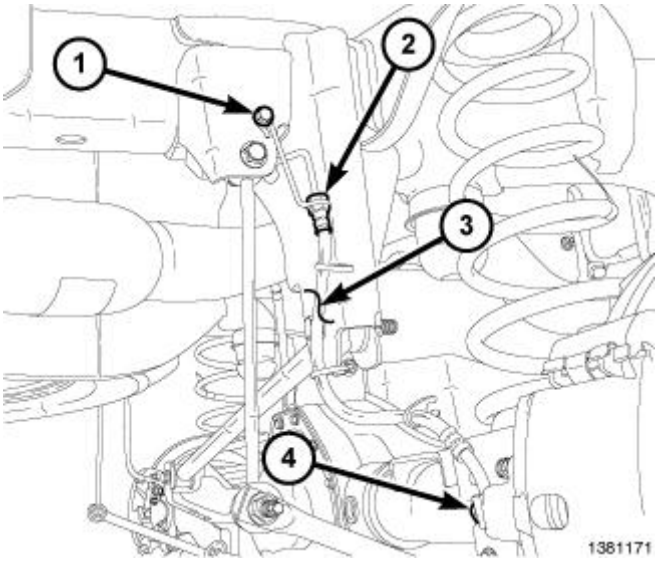

Fig. 138: Banjo Bolt & Brake Hose Retainer Clip Bolt
Courtesy of CHRYSLER GROUP, LLC

1. Position the brake line. Install the brake hose retainer clip bolt (1) located at the frame and tighten to 20 N.m (15 ft. lbs.).
2. Install the banjo bolt (4) at the caliper using two new washers and tighten to 28 N.m (21 ft. lbs.).

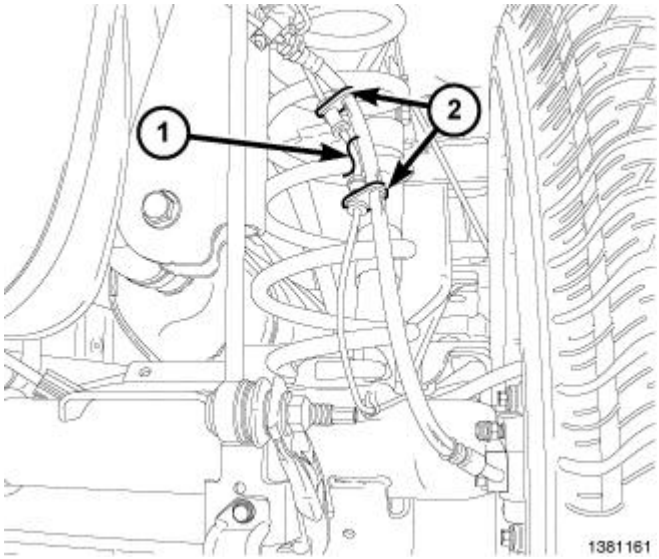

Fig. 139: Antilock Sensor Harness & Routing Clips
Courtesy of CHRYSLER GROUP, LLC

3. Connect the antilock sensor harness (1) to the routing clips (2).

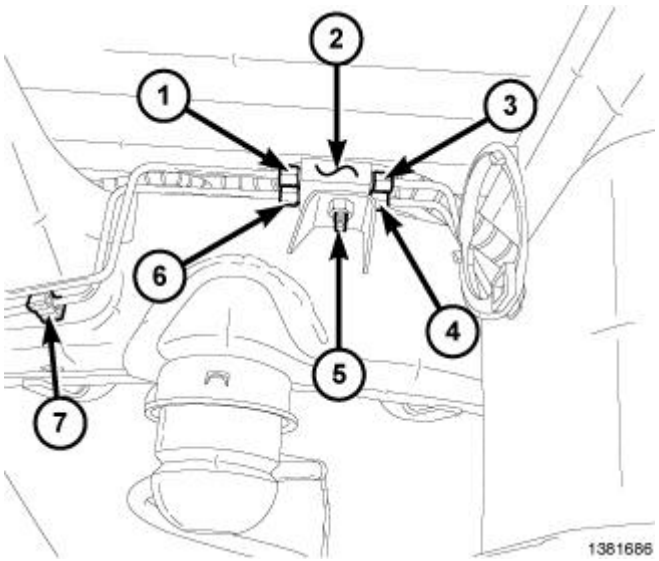

Fig. 140: Junction Block, Brake Lines, Clips & Bolts
Courtesy of CHRYSLER GROUP, LLC

NOTE: The right brake line has three push type retainers, and the left brake line has only one push type retainer.

4. Install the brake line retainer clip(s) (7, left side shown in illustration).
5. Install the appropriate line connector (1 or 6) to the junction block (2) located on the frame and tighten to 19 N.m (169 in. lbs.).
6. Remove the supports and lower the vehicle.

7. Remove the prop rod from the brake pedal.
8. Bleed the area of repair for the brake system.**If a proper pedal is not felt during bleeding an area of repair then a base bleed system must be performed.** . Refer to **STANDARD PROCEDURE**. .

REAR TUBE / HOSE ASSEMBLY - HEAVY DUTY

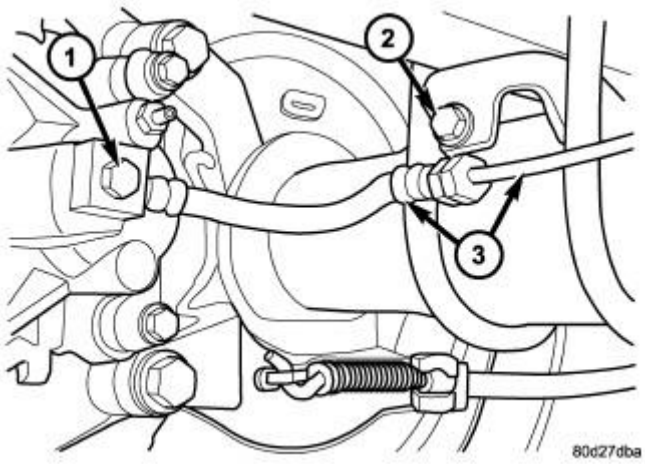

Fig. 141: Rear Tube/Hose Assembly & Bolts
Courtesy of CHRYSLER GROUP, LLC

1 - BANJO BOLT
2 - MOUNTING BOLT
3 - REAR TUBE / HOSE ASSEMBLY

1. Install the hose (3).
2. Install the banjo bolt (1) at the caliper and tighten fitting bolt to 27 N.m (245 in. lbs.).
3. Install the mounting bolt (2) for the brake hose (3) at the axle.
4. Install the brake line located at the axle.
5. Lower the vehicle and remove the support.
6. Remove the prop rod from the brake pedal.
7. Bleed the area of repair for the brake system, **If a proper pedal is not felt during bleeding an area of repair then a base bleed system must be performed.** . Refer to **STANDARD PROCEDURE**. .

REAR BRAKE HOSE - HEAVY DUTY (HD)

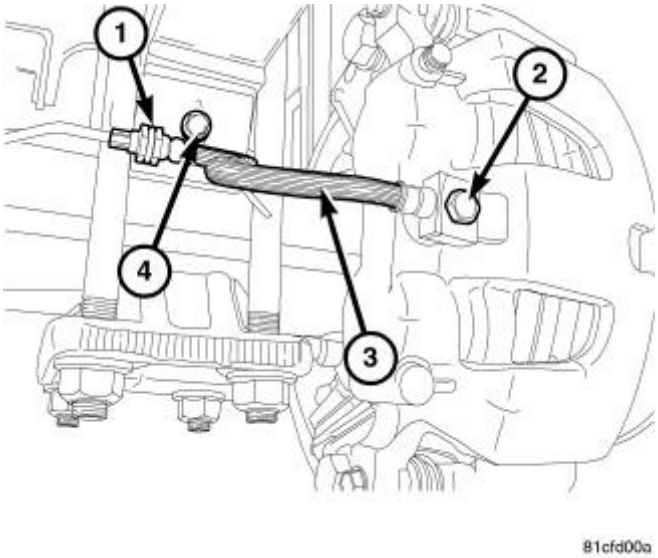

Fig. 142: Mounting Bolt, Banjo Bolt & Brake Hose
Courtesy of CHRYSLER GROUP, LLC

1. Install the hose (3).
2. Install the banjo bolt (2) at the caliper and tighten fitting bolt to 27 N.m (245 in. lbs.).
3. Install the mounting bolt (4) for the brake hose (3) at the axle.

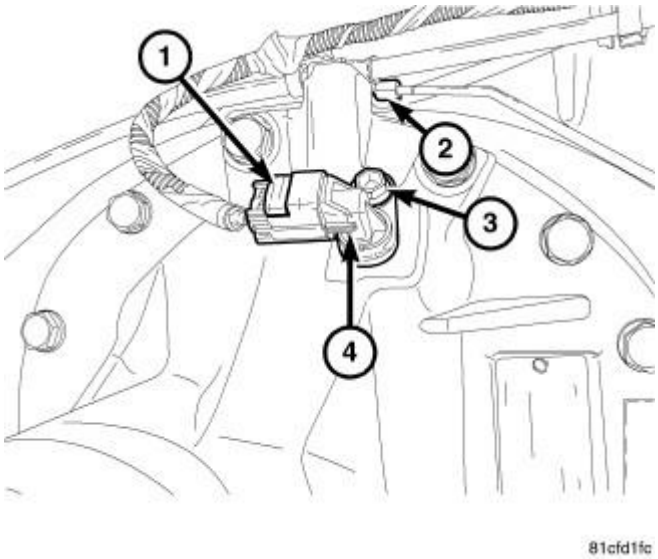

Fig. 143: Rear Speed Sensor, Mounting Bolt & Sensor Wire Harness
Courtesy of CHRYSLER GROUP, LLC

4. Install the brake line (2) located at the axle.
5. Lower the vehicle and remove the support.
6. Remove the prop rod from the brake pedal.
7. Bleed the area of repair for the brake system, **If a proper pedal is not felt during bleeding an area of repair then a base bleed system must be performed.** . Refer to **STANDARD PROCEDURE**. .

PARKING BRAKE

DESCRIPTION

DESCRIPTION

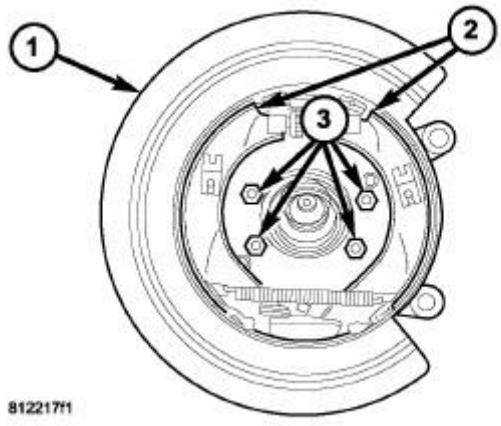

Fig. 144: Support Plate, Bolts & Parking Brake Shoes
Courtesy of CHRYSLER GROUP, LLC

The parking brakes are secured to a support plate (1) and operated by a system of cables and levers attached to a primary and secondary shoe (2) positioned within the drum section of the rotor.

The drum-in-hat design utilizes an independent set of shoes (2) to park the vehicle.

OPERATION

OPERATION

To apply the parking brake the pedal is depressed. This creates tension in the cable which pulls forward on the park brake lever. The lever pushes the park brake shoes outward and into contact with the drum section of the rotor. The contact of shoe to rotor parks the vehicle.

A torsion locking mechanism is used to hold the pedal in an applied position. Parking brake release is accomplished by the hand release.

A parking brake switch is mounted on the parking brake lever and is actuated by movement of the lever. The switch, which is in circuit with the red warning light in the dash, will illuminate the warning light whenever the parking brake is applied.

Parking brake adjustment is controlled by a cable tensioner mechanism. The cable tensioner, once adjusted at the factory, should not need further adjustment under normal circumstances. Adjustment may be required if a new tensioner, or cables are installed, or disconnected.

CABLE, PARKING BRAKE

REMOVAL

FRONT PARKING BRAKE CABLE

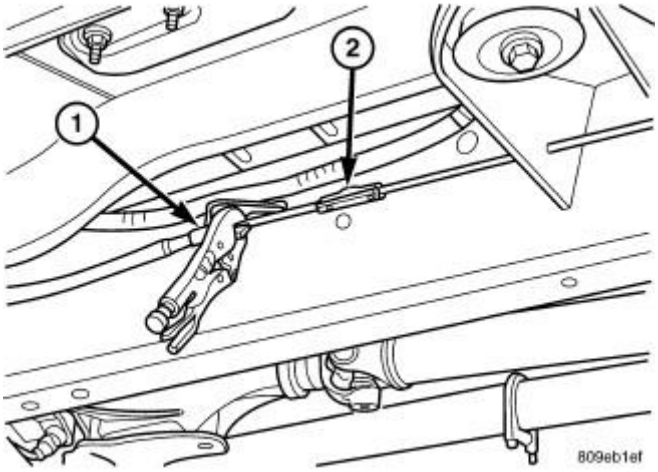

Fig. 145: Locking Out Parking Brake Cable
Courtesy of CHRYSLER GROUP, LLC

1 - LOCKING PLIERS
2 - PARKING BRAKE CABLE

1. Raise and support vehicle.
2. Lockout the parking brake cable (2). Refer to **Fig. 145**.
3. Loosen adjusting nut to create slack in front cable.
4. Remove the front cable from the cable connector.
5. Compress cable end fitting at underbody bracket and remove the cable from the bracket.
6. Lower vehicle.
7. Push ball end of cable out of pedal clevis with small screwdriver.

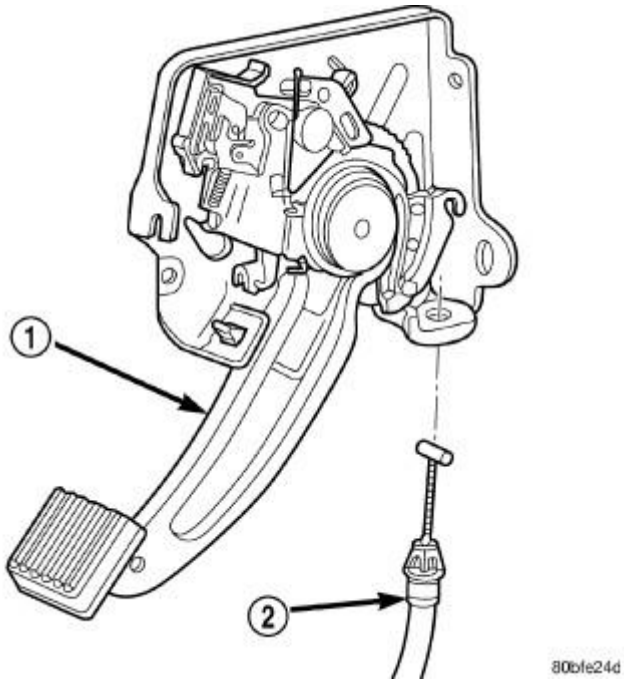

Fig. 146: Parking Brake Pedal & Cable
Courtesy of CHRYSLER GROUP, LLC

1 - PARK BRAKE PEDAL
2 - FRONT CABLE

8. Compress cable end fitting at the pedal bracket (1) and remove the cable (2). Refer to **Fig. 146**.
9. Remove the left cowl trim and sill plate.
10. Pull up the carpet and remove the cable from the body clip.
11. Pull up on the cable and remove the cable with the body grommet.

REAR PARK BRAKE CABLE

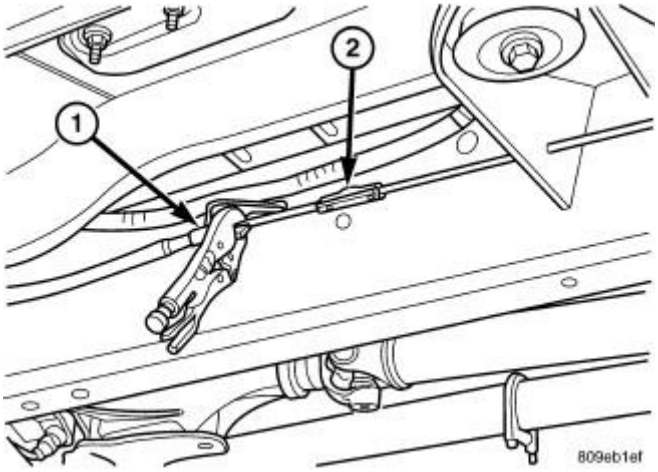

Fig. 147: Locking Out Parking Brake Cable
Courtesy of CHRYSLER GROUP, LLC

1 - LOCKING PLIERS
2 - PARKING BRAKE CABLE

1. Raise and support the vehicle.
2. Lockout the parking brake cable (2). Refer to **Fig. 147**.

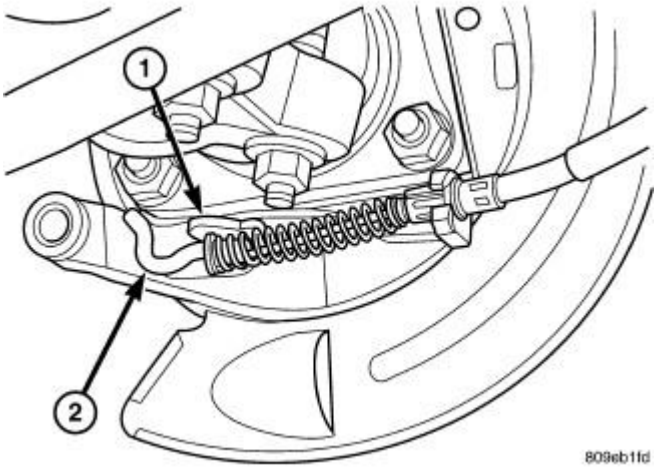

Fig. 148: Lever & Cable End
Courtesy of CHRYSLER GROUP, LLC

1 - LEVER
2 - CABLE END

3. Loosen cable adjuster nut.
4. Remove the rear park brake cable from the intermediate park brake cable.
5. Compress tabs on cable end fitting on the rear park brake cable to the frame mount bracket. Then pull the

cable through the bracket.

6. Disengage the park brake cable (2) from behind the rotor assembly. Refer to **Fig. 148**.
7. Compress cable tabs on each cable end fitting at the brake cable support plate.
8. Remove the cables from the brake cable support plates.

RIGHT REAR CABLE

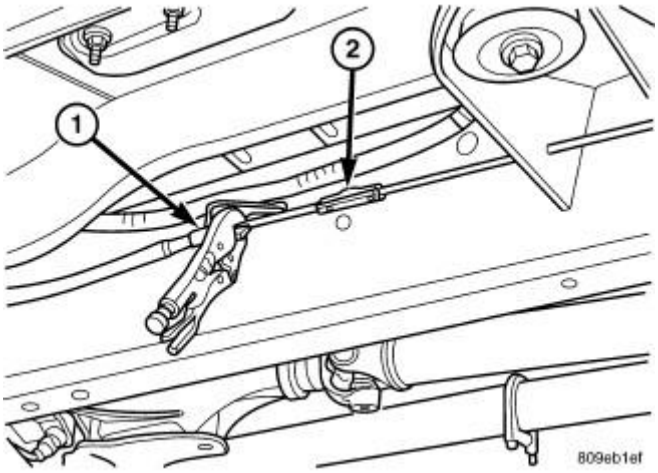

Fig. 149: Locking Out Parking Brake Cable
Courtesy of CHRYSLER GROUP, LLC

1 - LOCKING PLIERS
2 - PARKING BRAKE CABLE

1. Raise and support the vehicle.
2. Lockout the parking brake cable (2) .
3. Loosen the brake cable at the equalizer and adjuster nut.

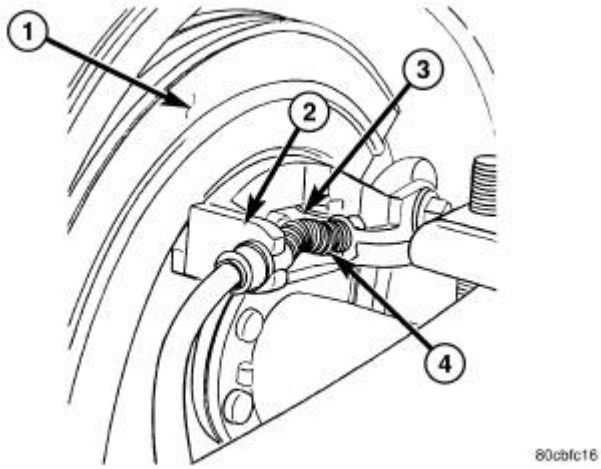

Fig. 150: Parking Brake Cable Mount & Lever

Courtesy of CHRYSLER GROUP, LLC

1 - SUPPORT PLAT
2 - CABLE MOUNT
3 - PARK BRAKE LEVER
4 - CABLE

4. Remove the right cable from the front cable.
5. Remove the right cable from the equalizer.
6. Remove the cable from the frame bracket.
7. Remove the cable from the axle bracket.
8. Remove the cable bracket from the shock bracket.
9. Remove the brake cable (4) from the brake lever (3). Refer to **Fig. 150**.

LEFT REAR CABLE

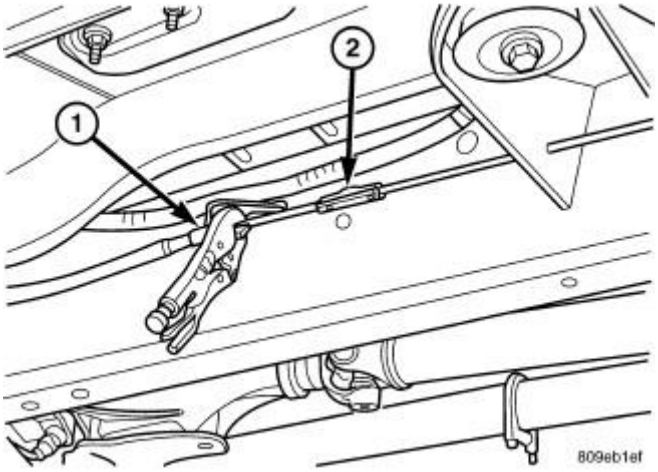

Fig. 151: Locking Out Parking Brake Cable
Courtesy of CHRYSLER GROUP, LLC

1 - LOCKING PLIERS
2 - PARKING BRAKE CABLE

1. Raise and support the vehicle.
2. Lockout the parking brake cable (2) .
3. Loosen the brake cable at the equalizer and adjuster nut.

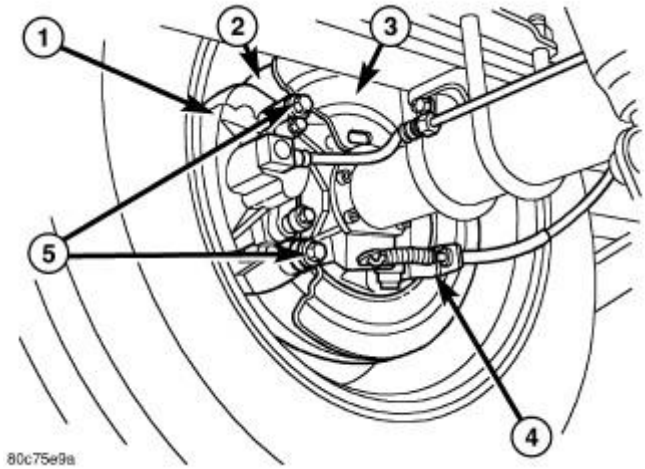

Fig. 152: Parking Brake Cable, Caliper & Dust Shield
Courtesy of CHRYSLER GROUP, LLC

1 - DISC BRAKE CALIPER
2 - DISC BRAKE ROTOR
3 - DUST SHIELD
4 - REAR PARKING BRAKE CABLE
5 - DISC BRAKE CALIPER MOUNTING BOLTS

4. Remove the left brake cable from the equalizer.
5. Remove the brake cable (4) from the frame bracket.
6. Remove the brake cable (4) from the brake lever. Refer to **Fig. 152**.

INSTALLATION

FRONT PARKING BRAKE CABLE

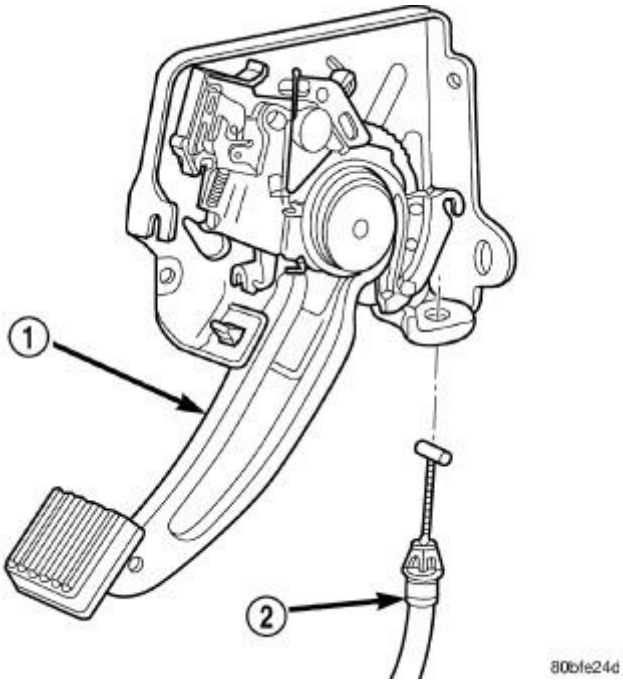

Fig. 153: Parking Brake Pedal
Courtesy of CHRYSLER GROUP, LLC

1 - PARK BRAKE PEDAL
2 - FRONT CABLE

1. From inside the vehicle, insert the cable end fitting (2) into the hole in the pedal assembly (1).
2. Seat the cable retainer in the pedal assembly (1).
3. Engage the cable ball end in clevis on the pedal assembly.
4. Route the cable through the floorpan and install the body grommet.
5. Place the carpet down and install the left cowl trim and sill plate.
6. Raise and support the vehicle.
7. Route the cable through the underbody bracket and seat the cable end fitting in the bracket.
8. Connect the cable to the cable connector.
9. Perform the park brake adjustment procedure. Refer to **TENSIONER, PARKING BRAKE CABLE, ADJUSTMENTS**.
10. Lower the vehicle.

REAR PARK BRAKE CABLE

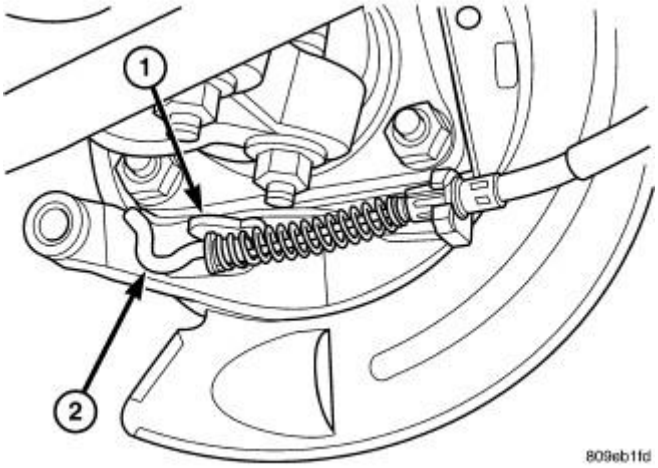

Fig. 154: Lever & Cable End
Courtesy of CHRYSLER GROUP, LLC

1 - LEVER
2 - CABLE END

1. Push each cable end (2) through the brake cable support plate hole until the cable end fitting tabs lock into place.

   NOTE: Pull on the cable to ensure it is locked into place.

2. Push the cable through the frame bracket.
3. Lock the left cable end fitting tabs into the frame bracket hole.
4. Install the rear cables into the tensioner rod behind the rear of the brake assembly.
5. Install the cable to the intermediate cable connector.
6. Release and remove the lock out device.
7. Perform the park brake adjustment procedure. Refer to **TENSIONER, PARKING BRAKE CABLE, ADJUSTMENTS**.
8. Remove the supports and lower the vehicle.

RIGHT REAR CABLE

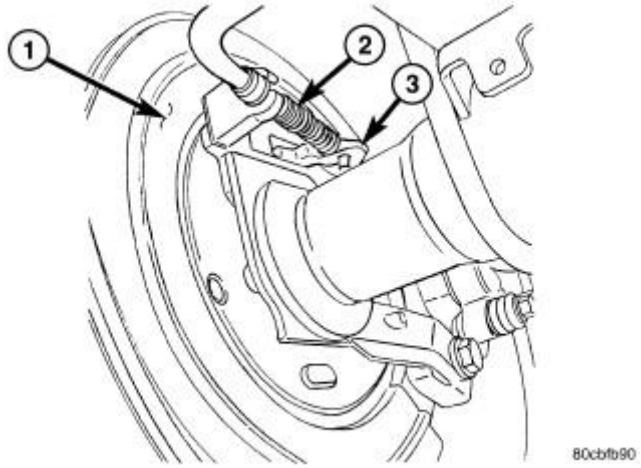

Fig. 155: Support Plate, Cable & Lever
Courtesy of CHRYSLER GROUP, LLC

1 - SUPPORT PLATE
2 - CABLE
3 - LEVER

1. Install the brake cable (2) to the brake lever (3). Refer to **Fig. 155**.
2. Install the cable bracket to the shock bracket.
3. Install the cable to the axle bracket.
4. Install the cable to the frame bracket.
5. Install the right cable to the equalizer.
6. Install the right cable to the front cable.
7. Adjust the brake cable at the equalizer and using the adjuster nut.

LEFT REAR CABLE

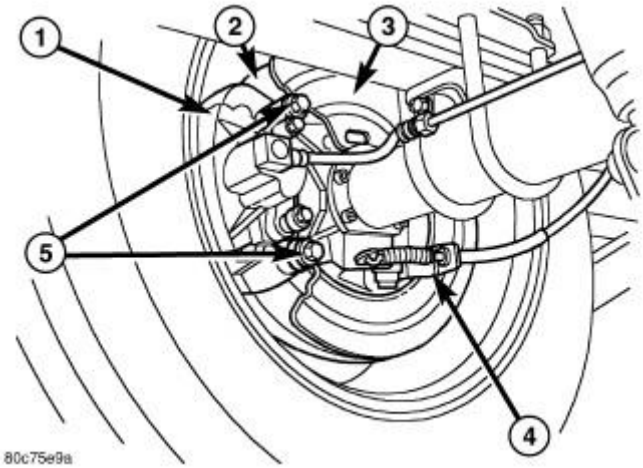

Fig. 156: Parking Brake Cable, Caliper & Dust Shield
Courtesy of CHRYSLER GROUP, LLC

1 - DISC BRAKE CALIPER
2 - DISC BRAKE ROTOR
3 - DUST SHIELD
4 - REAR PARKING BRAKE CABLE
5 - DISC BRAKE CALIPER MOUNTING BOLTS

1. Install the brake cable (4) to the brake lever .
2. Install the brake cable to the frame bracket.
3. Install the left brake cable to the equalizer.
4. Adjust the brake cable at the equalizer and adjuster nut.

HANDLE, PARKING BRAKE RELEASE

REMOVAL

REMOVAL

1. Disconnect and isolate the battery negative cable.
2. Reach under the driver side outboard end of the instrument panel to access and unsnap the plastic retainer clip that secures the park brake release linkage rod to the park brake mechanism on the left cowl side inner panel.
3. Disengage the park brake release linkage rod end from the park brake mechanism.
4. Lift the park brake release handle to access and unsnap the plastic retainer clip that secures the park brake release linkage rod to the lever on the back of the park brake release handle.
5. Lower the park brake release handle and reach under the driver side outboard end of the instrument panel to disengage the park brake release linkage rod end from the lever on the back of the park brake release handle.
6. Lift the park brake release handle to access the handle mounting bracket.

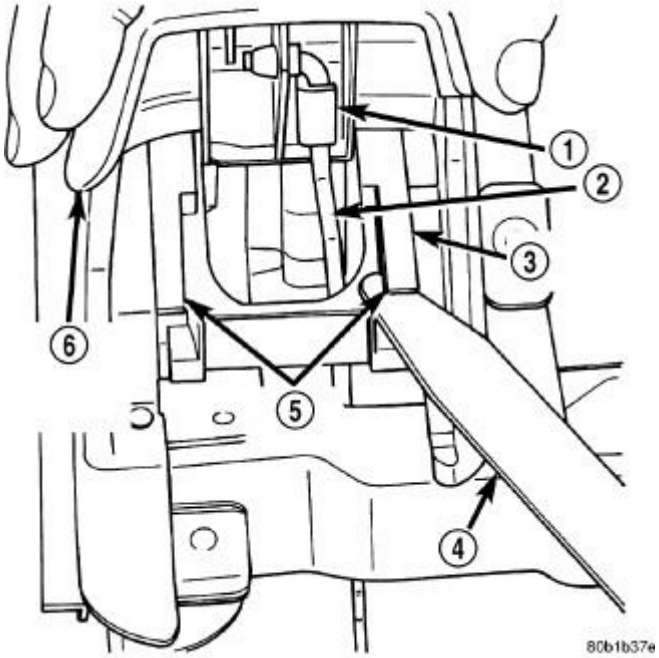

Fig. 157: Park Brake Release Handle Components
Courtesy of CHRYSLER GROUP, LLC

1 - CLIP
2 - ROD
3 - MOUNTING BRACKET
4 - TRIM STICK
5 - LATCH TABS
6 - PARK BRAKE RELEASE HANDLE

7. Using a trim stick (4) or another suitable wide flat-bladed tool, gently pry each of the park brake release handle (6) mounting bracket latch tabs (5) away from the retaining notches in the instrument panel receptacle. Refer to **Fig. 157**.
8. With both of the park brake release handle mounting bracket latches released, slide the handle and bracket assembly down and out of the instrument panel receptacle.

INSTALLATION

INSTALLATION

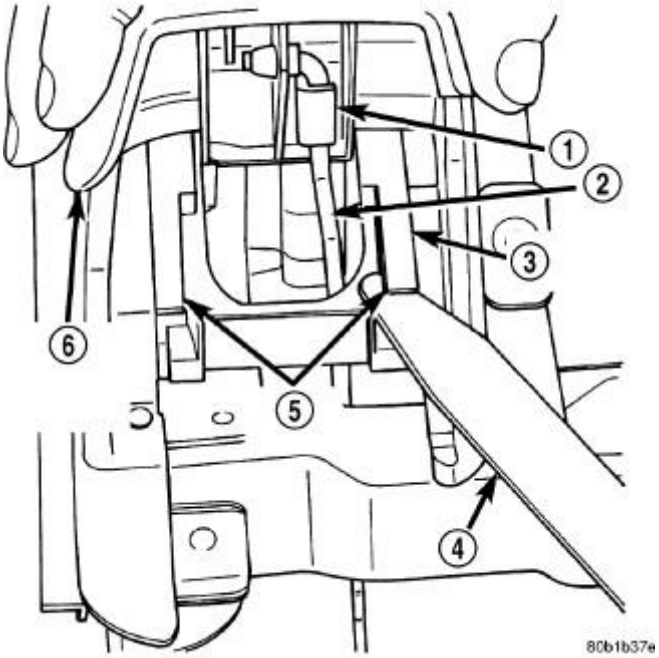

Fig. 158: Park Brake Release Handle Components
Courtesy of CHRYSLER GROUP, LLC

1 - CLIP
2 - ROD
3 - MOUNTING BRACKET
4 - TRIM STICK
5 - LATCH TABS
6 - PARK BRAKE RELEASE HANDLE

1. Position the park brake release handle to the instrument panel.
2. Slide the handle and bracket assembly up into the instrument panel receptacle until both of the park brake release handle (6) mounting bracket latches are engaged with the notches in the instrument panel receptacle.
3. Lower the park brake release handle and reach under the driver side outboard end of the instrument panel to engage the park brake release linkage rod end with the lever on the back of the park brake release handle (6).
4. Lift the park brake release handle to access and snap the plastic retainer clip that secures the park brake release linkage rod to the lever on the back of the park brake release handle over the linkage rod.
5. Reach under the driver side outboard end of the instrument panel to access and engage the park brake release linkage rod end to the park brake mechanism.
6. Snap the plastic retainer clip that secures the park brake release linkage rod to the park brake mechanism on the left cowl side inner panel over the linkage rod.
7. Reconnect the battery negative cable.

PEDAL, PARKING BRAKE

REMOVAL

REMOVAL

1. Release the parking brake.
2. Raise the vehicle.
3. Loosen the cable tensioner nut at the equalizer to create slack in the front cable.
4. Lower the vehicle.
5. Remove the knee bolster. Refer to **COVER, STEERING COLUMN OPENING, REMOVAL** .

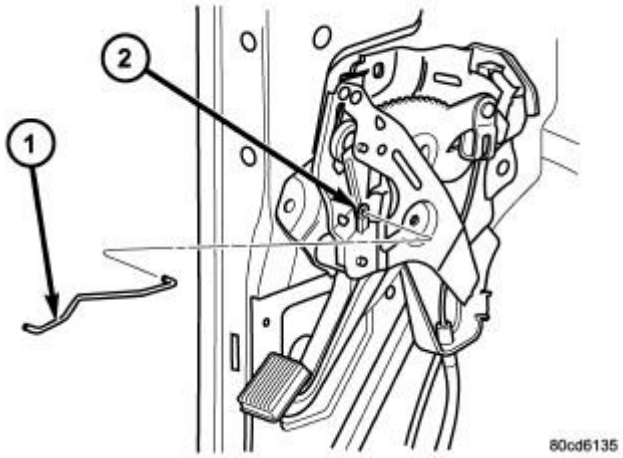

Fig. 159: Parking Brake Pedal & Release Rod
Courtesy of CHRYSLER GROUP, LLC

1 - RELEASE ROD
2 - PEDAL ASSEMBLY

6. Disconnect the brake lamp wire from the switch on the pedal assembly (2).
7. Roll the carpet back, loosen the front cable grommet from the floorpan and the cable retainer.
8. Disengage the release rod (1) from the arm on the pedal assembly (2). Refer to **Fig. 159**.
9. Remove the bolts/nuts from the pedal assembly (2) and remove the assembly.

INSTALLATION

INSTALLATION

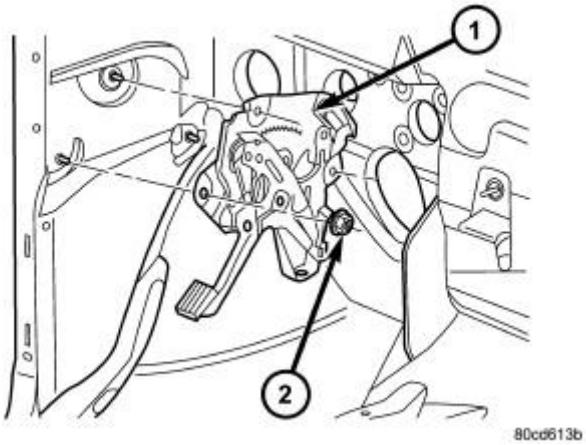

Fig. 160: Installing Pedal Assembly
Courtesy of CHRYSLER GROUP, LLC

1 - PEDAL ASSEMBLY
2 - MOUNTING NUT

1. Position the replacement pedal assembly (1) on the dash and cowl.
2. Install the bolts/nuts (2). For **1500 series** , tighten to 25 N.m (18 ft. lbs.). For **2500/3500 series** , tighten to 28 N.m (21 ft. lbs.).
3. Install the park brake release rod.
4. Connect the front cable to the arm on the pedal assembly (1).
5. Install the front cable grommet into the floorpan and the cable retainer, roll the carpet back.
6. Connect the wires to the brake lamp switch.
7. Install the knee bolster. Refer to **COVER, STEERING COLUMN OPENING, INSTALLATION** .
8. Raise the vehicle.
9. Adjust the parking brake cable tensioner. Refer to **TENSIONER, PARKING BRAKE CABLE, ADJUSTMENTS**.

SHOES, PARKING BRAKE

ADJUSTMENTS

PARKING BRAKE SHOES

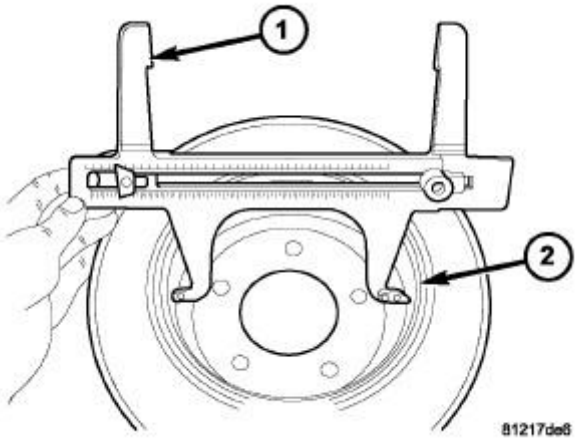

Fig. 161: Using Brake Shoe Gauge To Measure Rotor Inside Diameter
Courtesy of CHRYSLER GROUP, LLC

CAUTION: Before adjusting the park brake shoes be sure that the park brake pedal is in the fully released position. If park brake pedal is not in the fully released position, the park brake shoes can not be accurately adjusted.

1. Raise and support the vehicle. Refer to **HOISTING, STANDARD PROCEDURE** .
2. Remove tire and wheel.
3. Remove disc brake caliper from caliper adapter. Refer to **CALIPER, DISC BRAKE, REMOVAL**.
4. Remove rotor from the axle shaft. Refer to **ROTOR, BRAKE, REMOVAL**.

NOTE: When measuring the brake drum diameter, the diameter should be measured in the center of the area in which the park brake shoes contact the surface of the brake drum.

5. Using Brake Shoes Gauge (special tool #C-3919, Gauge, Brake Shoes) (1), or equivalent, **accurately** measure the inside diameter of the park brake drum portion (2) of the rotor.

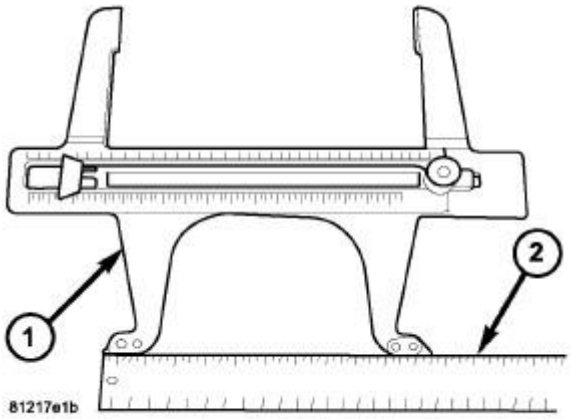

Fig. 162: Using Ruler To Read Special Tool Measurement Of Inside Diameter Of Brake Drum
Courtesy of CHRYSLER GROUP, LLC

6. Using a ruler (2) that reads in 64th of an inch, accurately read the measurement of the inside diameter of the park brake drum from the special tool (2).

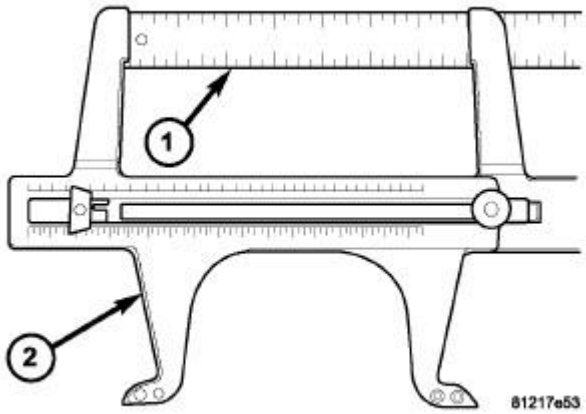

Fig. 163: Identifying Special Tool
Courtesy of CHRYSLER GROUP, LLC

7. Reduce the inside diameter measurement of the brake drum that was taken using Brake Shoes Gauge (special tool #C-3919, Gauge, Brake Shoes) (2) by 1/64 of an inch. Reset Brake Shoes Gauge (special tool #C-3919, Gauge, Brake Shoes) (2) or the equivalent used, so that the outside measurement jaws are set to the reduced measurement.
8. Place Brake Shoes Gauge (special tool #C-3919, Gauge, Brake Shoes), or equivalent over the park brake shoes. Brake Shoes Gauge (special tool #C-3919, Gauge, Brake Shoes) must be located diagonally across at the top of one shoe and bottom of opposite shoe (widest point) of the park brake shoes.
9. Using the star wheel adjuster, adjust the park brake shoes until the lining on the park brake shoes just touches the jaws on Brake Shoes Gauge (special tool #C-3919, Gauge, Brake Shoes).
10. Repeat step 8 above and measure shoes in both directions.

11. Install brake rotor on the axle shaft. Refer to **ROTOR, BRAKE, INSTALLATION**.
12. Rotate rotor to verify that the park brake shoes are not dragging on the brake drum. If park brake shoes are dragging, remove rotor and back off star wheel adjuster one notch and recheck for brake shoe drag against drum. Continue with the previous step until brake shoes are not dragging on brake drum.
13. Install disc brake caliper on caliper adapter. Refer to **CALIPER, DISC BRAKE, INSTALLATION**.
14. Install wheel and tire. Refer to **WHEELS, STANDARD PROCEDURE** .
15. Remove the support and lower the vehicle.
16. Apply and release the park brake pedal one time. This will seat and correctly adjust the park brake cables.

CAUTION: Before moving vehicle, pump brake pedal several times to ensure the vehicle has a firm enough pedal to stop the vehicle.

17. Road test the vehicle to ensure proper function of the vehicle's brake system.

WITH ADJUSTING TOOL

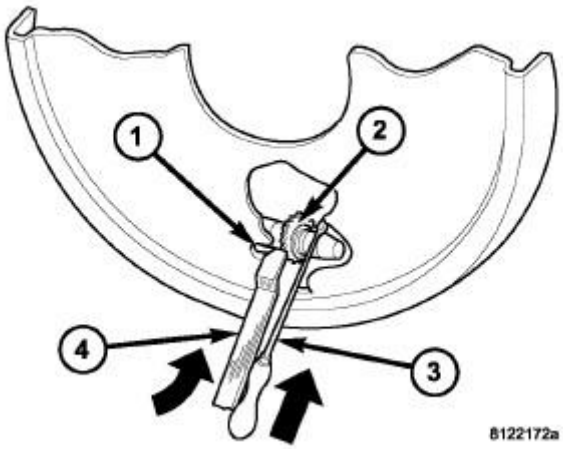

Fig. 164: Inserting Adjusting Tool Through Access Hole
Courtesy of CHRYSLER GROUP, LLC

Adjustment can be made with a standard brake gauge or with adjusting tool. Adjustment is performed with the complete brake assembly installed on the backing plate.

1. Be sure parking brake lever is fully released.
2. Raise vehicle so rear wheels can be rotated freely.
3. Remove plug from each access hole in brake support plates.
4. Loosen parking brake cable adjustment nut until there is slack in front cable.
5. Insert adjusting tool (4) through support plate access hole (1) and engage tool in teeth of adjusting screw star wheel (2).
6. Rotate adjuster screw star wheel (move tool handle upward) until slight drag can be felt when wheel is rotated.

7. Push and hold adjuster lever away from star wheel with thin screwdriver (3).
8. Back off adjuster screw star wheel until brake drag is eliminated.
9. Repeat adjustment at opposite wheel. Be sure adjustment is equal at both wheels.
10. Install support plate access hole plugs.
11. Adjust parking brake cable and lower vehicle.
12. Depress park brake pedal and make sure park brakes hold the vehicle stationary.
13. Release park brake pedal.

REMOVAL

REMOVAL

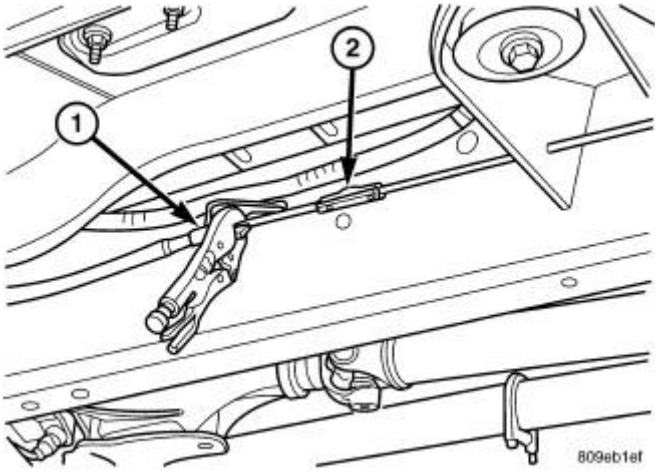

Fig. 165: Locking Out Parking Brake Cable
Courtesy of CHRYSLER GROUP, LLC

1 - LOCKING PLIERS
2 - PARKING BRAKE CABLE

1. Raise and support the vehicle. Refer to **HOISTING, STANDARD PROCEDURE** .
2. Remove the tire and wheel assembly.
3. Remove the disc brake caliper. Refer to **CALIPER, DISC BRAKE, REMOVAL**.
4. Remove the disc brake rotor. Refer to **ROTOR, BRAKE, REMOVAL**.
5. Lockout the parking brake cable (2).

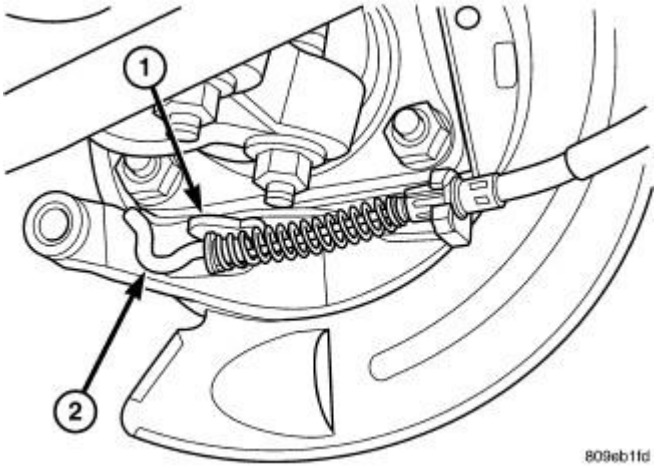

Fig. 166: Park Brake Cable & Lever
Courtesy of CHRYSLER GROUP, LLC

1 - LEVER
2 - CABLE END

6. Disengage the park brake cable (2) from behind the rotor assembly to allow easier disassembly of the park brake shoes.

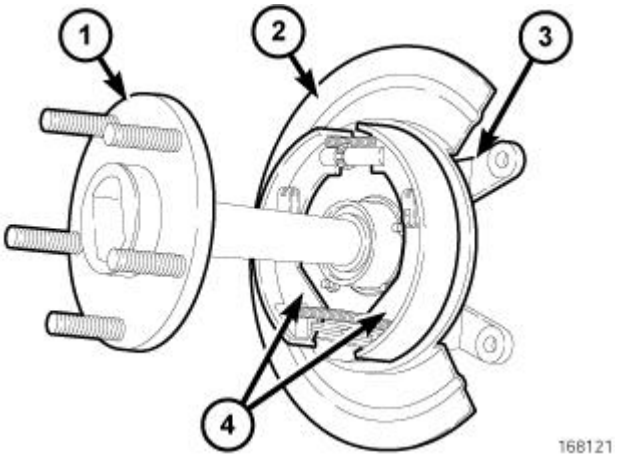

Fig. 167: Axle Shaft
Courtesy of CHRYSLER GROUP, LLC

7. Remove the axleshaft (1). Refer to **REMOVAL** .
8. Disassemble the rear park brake shoes (4).

CLEANING

CLEANING

Clean the individual brake components, including the support plate exterior, with a water dampened cloth or

with brake cleaner. Do not use any other cleaning agents. Remove light rust and scale from the brake shoe contact pads on the support plate with fine sandpaper.

INSPECTION

INSPECTION

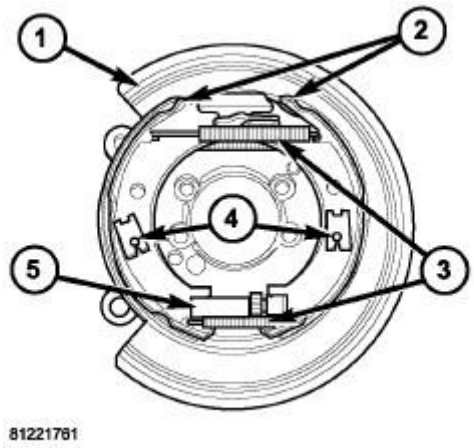

Fig. 168: Locating Support Plate & Rear Brake Components
Courtesy of CHRYSLER GROUP, LLC

As a general rule, riveted brake shoes (2) should be replaced when worn to within 0.78 mm (1/32 in.) of the rivet heads. Bonded lining should be replaced when worn to a thickness of 1.6 mm (1/16 in.).

Examine the lining contact pattern to determine if the shoes are bent or the drum is tapered. The lining should exhibit contact across its entire width. Shoes (2) exhibiting contact only on one side should be replaced and the drum checked for runout or taper.

Inspect the adjuster screw assembly (5). Replace the assembly if the star wheel or threads are damaged, or the components are severely rusted or corroded.

Discard the brake springs (3) and retainer components (4) if worn, distorted or collapsed. Also replace the springs if a brake drag condition had occurred. Overheating will distort and weaken the springs.

Inspect the brake shoe contact pads on the support plate (1), replace the support plate if any of the pads are worn or rusted through. Also replace the plate (1) if it is bent or distorted.

INSTALLATION

INSTALLATION

NOTE: **On a new vehicle or after parking brake lining replacement, it is recommended that the parking brake system be conditioned prior to use. This is done by making one stop from 25 mph on dry pavement or concrete using light to moderate force on the parking brake foot pedal.**

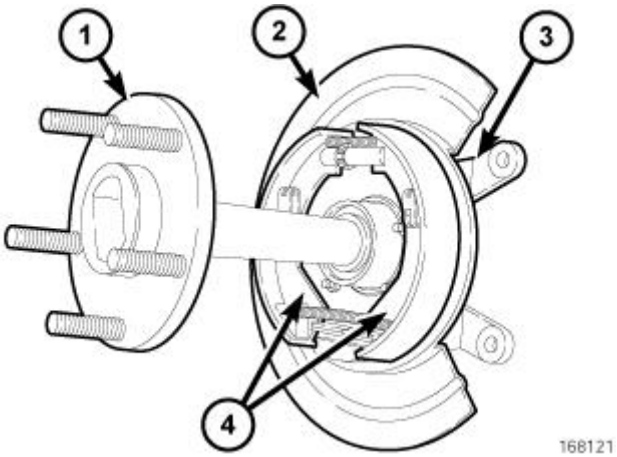

Fig. 169: Axle Shaft
Courtesy of CHRYSLER GROUP, LLC

1 - AXLE SHAFT
2 - SUPPORT PLATE
3 - CALIPER
4 - PARK BRAKE SHOE ASSEMBLY

1. Reassemble the rear park brake shoes (4).
2. Install the axle shaft (1). Refer to **INSTALLATION** .
3. Install the park brake cable to the lever behind the support plate.
4. Unlock the park brake cable.
5. Install the disc brake rotor. Refer to **ROTOR, BRAKE, INSTALLATION**.
6. Install the disc brake caliper. Refer to **CALIPER, DISC BRAKE, INSTALLATION**.
7. Adjust the rear brake shoes. Refer to **SHOES, PARKING BRAKE, ADJUSTMENTS**.
8. Install the tire and wheel assembly. Refer to **WHEELS, STANDARD PROCEDURE** .
9. Remove the support and lower the vehicle.

TENSIONER, PARKING BRAKE CABLE

ADJUSTMENTS

ADJUSTMENTS

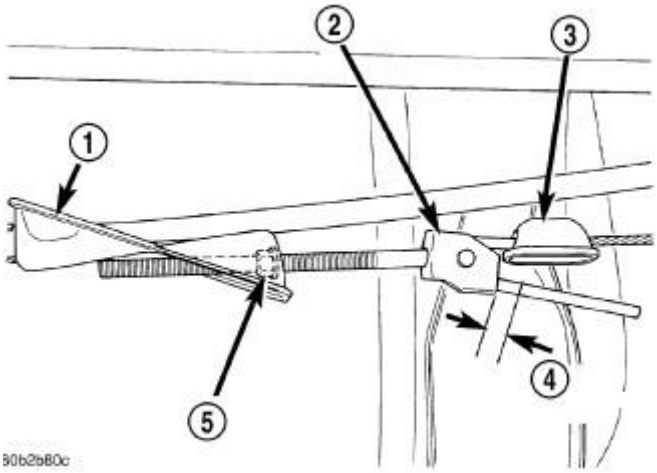

Fig. 170: Parking Brake Cable Tensioner
Courtesy of CHRYSLER GROUP, LLC

1 - TENSIONER CABLE BRACKET
2 - TENSIONER
3 - CABLE CONNECTOR
4 - 6.35mm (1/4 IN.)
5 - ADJUSTER NUT

NOTE: **Tensioner adjustment is only necessary when the tensioner, or a cable has been replaced or disconnected for service. When adjustment is necessary, perform adjustment only as described in the following procedure. This is necessary to avoid faulty park brake operation.**

1. Raise the vehicle.
2. Back off the cable tensioner adjusting nut (5) to create slack in the cables.
3. Remove the rear wheel/tire assemblies. Then remove the brake rotors. Refer to **ROTOR, BRAKE, REMOVAL**.
4. Verify the brakes are in good condition and operating properly.
5. Verify the park brake cables operate freely and are not binding, or seized.
6. Check the rear brake shoe adjustment with standard brake gauge. Refer to **SHOES, PARKING BRAKE, ADJUSTMENTS**.
7. Install the rotors and verify that the rotors rotate freely without drag. Refer to **ROTOR, BRAKE, INSTALLATION**.
8. Install the wheel/tire assemblies. Refer to **WHEELS, STANDARD PROCEDURE** .
9. Lower the vehicle enough for access to the park brake foot pedal. Then fully apply the park brakes.

NOTE: **Leave park brakes applied until adjustment is complete.**

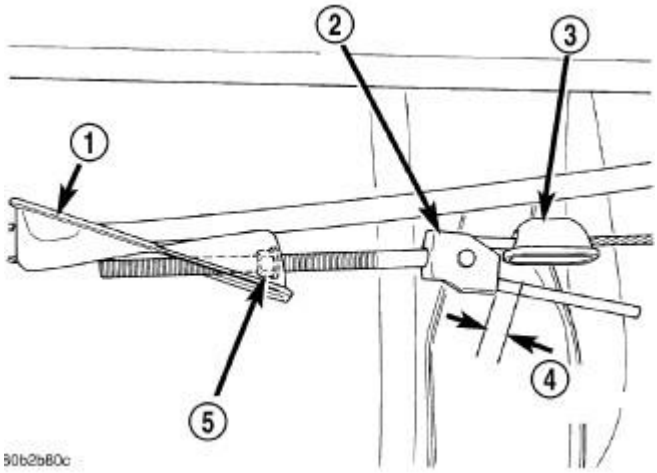

Fig. 171: Parking Brake Cable Tensioner
Courtesy of CHRYSLER GROUP, LLC

1 - TENSIONER CABLE BRACKET
2 - TENSIONER
3 - CABLE CONNECTOR
4 - 6.35mm (1/4 IN.)
5 - ADJUSTER NUT

10. Raise the vehicle again.
11. Mark the tensioner rod 6.35 mm (1/4 in.) from edge of the tensioner (2).
12. Tighten the adjusting nut (5) on the tensioner rod until the mark is no longer visible.

CAUTION: Do not loosen, or tighten the tensioner adjusting nut for any reason after completing adjustment.

13. Lower the vehicle until the rear wheels are 15-20 cm (6-8 in.) off the shop floor.
14. Release the park brake foot pedal and verify that rear wheels rotate freely without drag. Then lower the vehicle.

Brakes - Non-DTC Based Diagnostics - Ram Pickup

DIAGNOSIS AND TESTING

ABS WARNING INDICATOR

POSSIBLE CAUSES

Possible Causes
ANTI-LOCK BRAKE SYSTEM DTC PRESENT INSTRUMENT CLUSTER

DIAGNOSTIC TEST

1. **INSTRUMENT CLUSTER ABS INDICATOR**
    1. Turn the ignition off.
    2. Observe the ABS indicator lamp.
    3. Turn the ignition on.

    Select the appropriate condition for the ABS indicator lamp:

    Illuminates for several seconds and turns off

    - Go To 2.

    Illuminates continuously

    - With the scan tool, read DTCs. Perform the appropriate diagnostic procedure.
    - Perform ABS VERIFICATION TEST. Refer to **1500, 2500 & 3500 - ABS VERIFICATION TEST** or **3500 CAB & CHASSIS, 4500 & 5500 - ABS VERIFICATION TEST** .

    Does not illuminate

    - Replace the Instrument Cluster in accordance with the Service Information.
    - Perform ABS VERIFICATION TEST. Refer to **1500, 2500 & 3500 - ABS VERIFICATION TEST** or **3500 CAB & CHASSIS, 4500 & 5500 - ABS VERIFICATION TEST** .
2. **ANTI-LOCK BRAKE SYSTEM DTC PRESENT**
    1. Turn the ignition on.
    2. With the scan tool, select View DTCs in the Anti-lock Brake Module.

    Are there any DTCs present?

Yes

- Refer to the appropriate diagnostic procedure.
- Perform ABS VERIFICATION TEST. Refer to **1500, 2500 & 3500 - ABS VERIFICATION TEST** or **3500 CAB & CHASSIS, 4500 & 5500 - ABS VERIFICATION TEST** .

No

- Inspect the related wiring harness and connector terminals. Monitor the scan tool parameters while wiggle testing the related harness and connectors. Refer to any Technical Service Bulletins (TSB) that may apply. If no problems are found, test is complete.
- Perform ABS VERIFICATION TEST. Refer to **1500, 2500 & 3500 - ABS VERIFICATION TEST** or **3500 CAB & CHASSIS, 4500 & 5500 - ABS VERIFICATION TEST** .

REPLACING THE ANTILOCK BRAKE MODULE

POSSIBLE CAUSES

Possible Causes
REPLACING THE ANTI-LOCK BRAKE MODULE

DIAGNOSTIC TEST

1. **REPLACING THE ANTILOCK BRAKE MODULE**

NOTE: It may be necessary to call STAR to order a new ABS module.

NOTE: Failure to properly program the ABS module will result in an illuminated or blinking ABS indicator.

1. Turn the ignition off.
2. Replace the Anti-lock Brake Module in accordance with the Service Information.
3. With the scan tool, perform the module configuration procedures as necessary in accordance with the Service Information.
4. Road test the vehicle above 40 m.p.h. for at least two minutes.
5. With the scan tool, select View DTCs in the Anti-Lock Brake Module.

Are there any DTCs present?

Yes

- Perform the appropriate diagnostic procedure(s).

No

- Test Complete
- Perform ABS VERIFICATION TEST. Refer to **1500, 2500 & 3500 - ABS VERIFICATION TEST** or **3500 CAB & CHASSIS, 4500 & 5500 - ABS VERIFICATION TEST** .

VEHICLE SPEED SIGNAL OUTPUT

POSSIBLE CAUSES

Possible Causes
INTERMITTENT VEHICLE SPEED SIGNAL
VEHICLE SPEED SIGNAL DTC SET IN POWERTRAIN CONTROL MODULE
ANTI-LOCK BRAKE MODULE DTCS PRESENT

DIAGNOSTIC TEST

1. **VEHICLE SPEED SIGNAL DTC SET IN PCM**
   1. Turn the ignition on.
   2. With the scan tool, select view DTCs in the Powertrain Control Module (PCM).

      Is the status Active for P0500?

      Yes

      - Refer to **3.7L/4.7L/5.7L - DIAGNOSTIC CODE INDEX - NGC - 1500 & 2500** or **6.7L - DIAGNOSTIC CODE INDEX - 2500 & 3500** or **5.7L - DIAGNOSTIC CODE INDEX - 3500 CAB & CHASSIS** or **6.7L - DIAGNOSTIC CODE INDEX - 3500 CAB & CHASSIS, 4500 & 5500** and perform the appropriate diagnostic test procedure.

      No

      - Go To 2.
2. **ANTI-LOCK BRAKE MODULE DTCS PRESENT**
   1. With the scan tool, select view DTCs in the Anti-Lock Brake Module.

      Are there any DTCs present in the Anti-lock Brake Module?

      Yes

      - Refer to **1500, 2500 & 3500 - DIAGNOSIS AND TESTING** or **3500 CAB & CHASSIS, 4500 & 5500 - DIAGNOSIS AND TESTING** and perform the appropriate diagnostic procedure.

No

- Go To 3.

3. **INTERMITTENT VEHICLE SPEED SIGNAL**
    1. At this time, no DTCs are present.
    2. Inspect the related wiring harness. Look for any chafed, pierced, pinched, or partially broken wires.
    3. Inspect the related wire harness connectors. Look for broken, bent, pushed out, or corroded terminals.
    4. Using the schematics as a guide, wiggle test the related circuit(s) while monitoring the scan tool data relative to the vehicle speed sensor circuit(s). Look for the data to change or for a DTC to set.
    5. Perform any technical service bulletins that may apply.

    Were any problems found?

    Yes

    - Repair as necessary.
    - Perform the ABS VERIFICATION TEST. Refer to **1500, 2500 & 3500 - ABS VERIFICATION TEST** or **3500 CAB & CHASSIS, 4500 & 5500 - ABS VERIFICATION TEST** .

    No

    - Test Complete.

ELECTRONIC TRAILER BRAKE CONTROL OUTPUT-SHORT TO GROUND

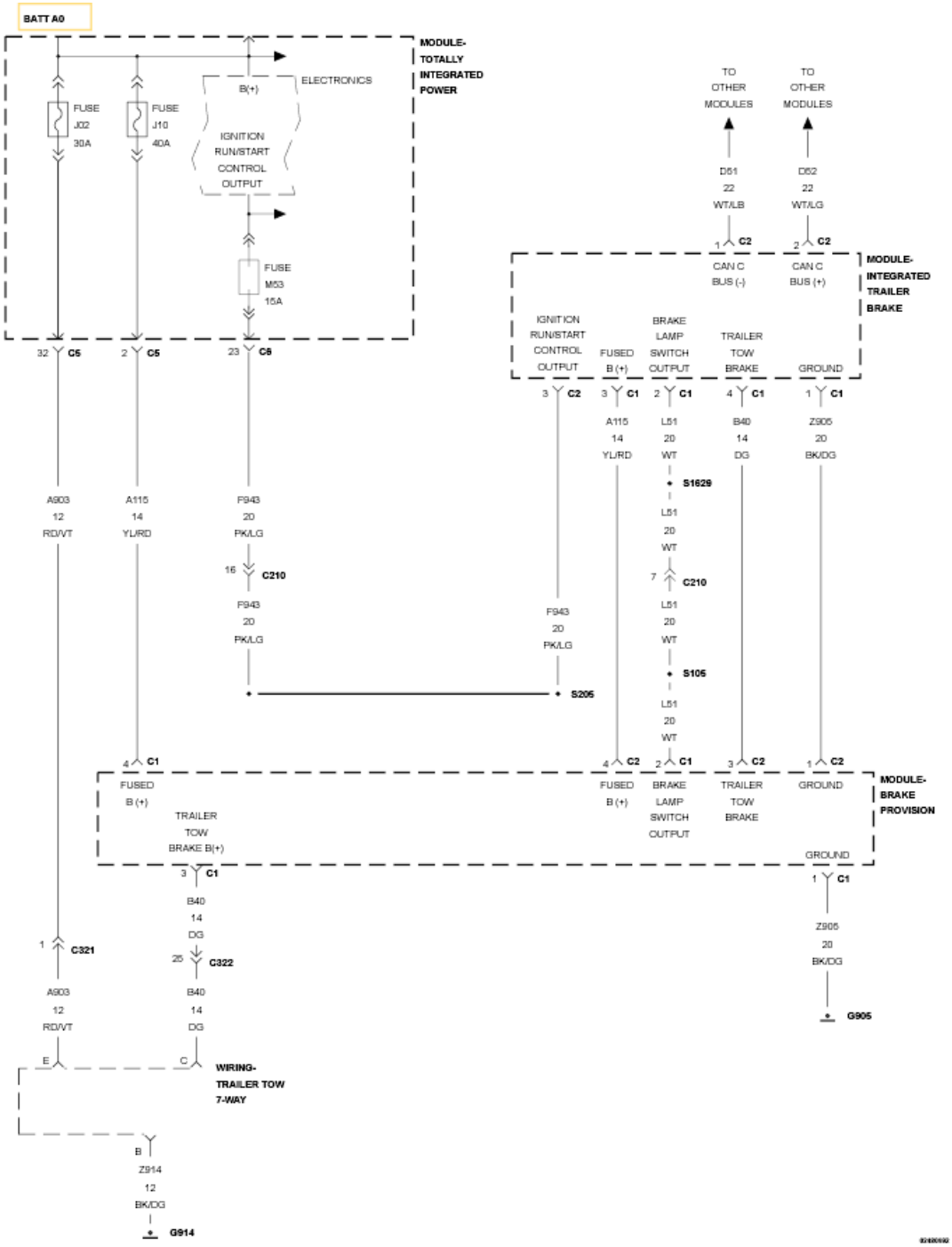

Fig. 1: Integrated Trailer Brake Module (ITBM) Wiring Diagram
Courtesy of CHRYSLER GROUP, LLC

For a complete wiring diagram, **refer to appropriate SYSTEM WIRING DIAGRAMS article** .

THEORY OF OPERATION

The Integrated Trailer Brake Module (ITBM) communicates with the vehicle through the high speed CAN C

bus. The ITBM monitors the Brake Pedal Status, Vehicle Speed and ESP status via CAN message. It also outputs the Trailer Status, Gain Setting, and Trailer Brake Output Power to the vehicle. The ITBM connects to the electric trailer brakes through the 7-Way connector and controls the brake force through a Pulse Width Modulating (PWM) duty cycle.

NOTE: If there is no trailer connected there will be NO Pulse Width Modulating (PWM) signal.

The PWM is proportional to the rate of deceleration measured by the accelerometer inside the ITBM. The ITBM controls the PWM output to the trailer brakes in four ways. The first occurs while the brake pedal becomes active and vehicle speed is greater than 0 km/h (0 mph). The second is the manual lever on the ITBM that can be controlled by the driver. If both the manual lever and the brake pedal are active simultaneously, the greater of the two, in terms of PWM output, will prevail. The third is after the vehicle has stopped moving, after approximately three seconds of the brake pedal applied the trailer brakes will be applied too. This is to minimize hitch to trailer noise and vehicle roll back when taking off from a stop and on an incline. The fourth is that it will become active during an ESP trailer sway event.

WHEN MONITORED:

Continuous.

SET CONDITION:

If the Integrated Trailer Brake Module (ITBM) is configured incorrect or the (B40) Trailer Tow Brake (B+) circuit is shorted to ground, this code will set. Automatic braking and manual lever braking (squeeze switch) are disabled.

POSSIBLE CAUSES

Possible Causes
TRAILER WIRING/BRAKES SHORTED TO GROUND
(B40) TRAILER TOW BRAKE (B+) CIRCUIT SHORTED TO GROUND
INTEGRATED TRAILER BRAKE MODULE (ITBM)

DIAGNOSTIC TEST

NOTE: The appropriate trailer or trailer simulator must be present for the results of this test to be valid.

NOTE: This DTC must be active for the results of this test to be valid.

1. **DTC IS ACTIVE**
    1. Connect the trailer or trailer simulator to the vehicle.
    2. Ignition on, engine not running.
    3. With the scan tool, record and erase DTCs.

4. Cycle the ignition switch from off to on.
5. With the scan tool, read DTCs.

   Is the status Active for this DTC?

   Yes

   - Go To 2.

   No

   - Go To 5.

2. **TRAILER WIRING/BRAKES**
   1. Turn ignition off to the lock position.
   2. Disconnect the trailer or trailer simulator from the vehicle.
   3. Ignition on, engine not running.
   4. With the scan tool, record and erase DTCs.
   5. Cycle the ignition switch from off to on.

      Does the ITBM display "SC"?

      Yes

      - Go To 3.

      No

      - Trailer wiring/brakes are shorted to ground, refer the customer to an authorized trailer dealer.

3. **(B40) TRAILER TOW BRAKE (B+) CIRCUIT SHORTED TO GROUND**

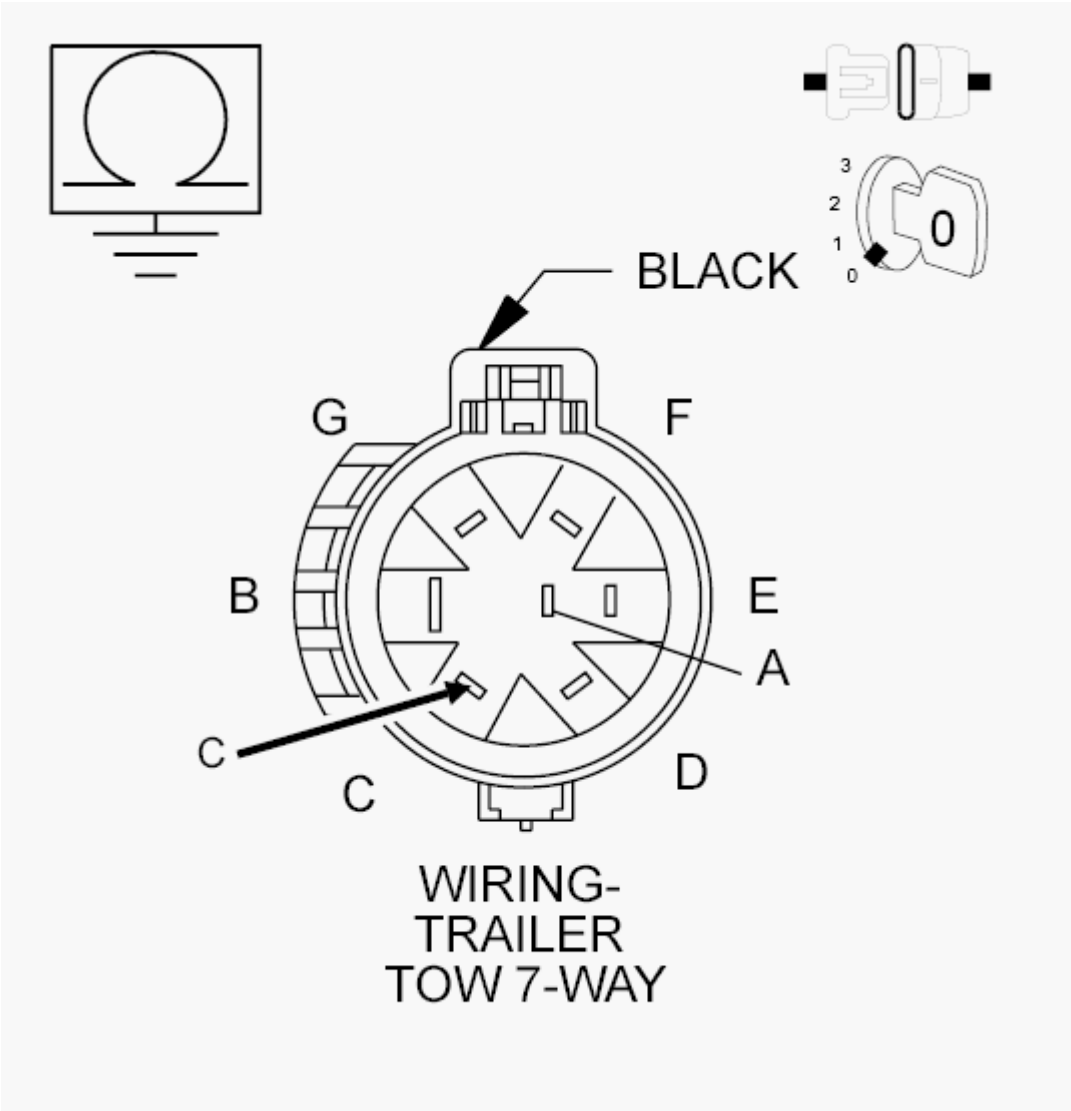

Fig. 2: Checking Trailer Tow Brake (B+) Circuit For A Short To Ground
Courtesy of CHRYSLER GROUP, LLC

1. Turn ignition off to the lock position.
2. Disconnect the ITBM C1 harness connector.
3. Check connectors - Clean/repair as necessary.
4. Measure the resistance between ground and the (B40) Trailer Tow Brake (B+) circuit.

   Is the resistance below 10k Ohms?

   Yes

   - Repair the (B40) Trailer Tow Brake (B+) circuit for a short to ground.
   - Perform the ITBM VERIFICATION TEST. Refer to **1500, 2500 & 3500 - STANDARD PROCEDURE - ITBM VERIFICATION TEST** or **3500 CAB & CHASSIS, 4500 &**

5500 - STANDARD PROCEDURE - ITBM VERIFICATION TEST .

No

- Go To 4.

4. **INTEGRATED TRAILER BRAKE MODULE (ITBM)**
    1. Using the wiring diagrams as a guide, check all related splices and connectors for signs of water intrusion, corrosion, pushed out or bent terminals, and correct pin tension. Pay particular attention to all Power and Ground circuits.

       Were there any problems found?

       Yes

       - Repair as necessary.
       - Perform the ITBM VERIFICATION TEST. Refer to **1500, 2500 & 3500 - STANDARD PROCEDURE - ITBM VERIFICATION TEST** or **3500 CAB & CHASSIS, 4500 & 5500 - STANDARD PROCEDURE - ITBM VERIFICATION TEST** .

       No

       - Replace the Integrated Trailer Brake Module (ITBM) in accordance with Service Information. Refer to **MODULE, INTEGRATED TRAILER BRAKE (ITBM), REMOVAL** .

5. **INTERMITTENT WIRING AND CONNECTORS**
    1. The conditions necessary to set this DTC are not present at this time.
    2. Using the wiring diagrams as a guide, check all related splices and connectors for signs of water intrusion, corrosion, pushed out or bent terminals, and correct pin tension.
    3. Wiggle test the wiring harness and connectors while monitoring the scan tool data relative to this circuit.
    4. Look for the data to change or for the DTC to reset during the wiggle test.
    5. While monitoring the scan tool data relative to this circuit.
    6. Connect the trailer to the vehicle.
    7. Look for the data to change other than as expected or for the DTC to reset.

       Were any problems found?

       Yes

       - Repair as necessary. Possible trailer wiring problem, refer the customer to an authorized trailer dealer.
       - Perform the ITBM VERIFICATION TEST. Refer to **1500, 2500 & 3500 - STANDARD PROCEDURE - ITBM VERIFICATION TEST** or **3500 CAB & CHASSIS, 4500 & 5500 - STANDARD PROCEDURE - ITBM VERIFICATION TEST** .

No

- Test complete, the condition or conditions that originally set this DTC are not present at this time.

ELECTRONIC TRAILER BRAKE CONTROL OUTPUT-SHORT TO BATTERY

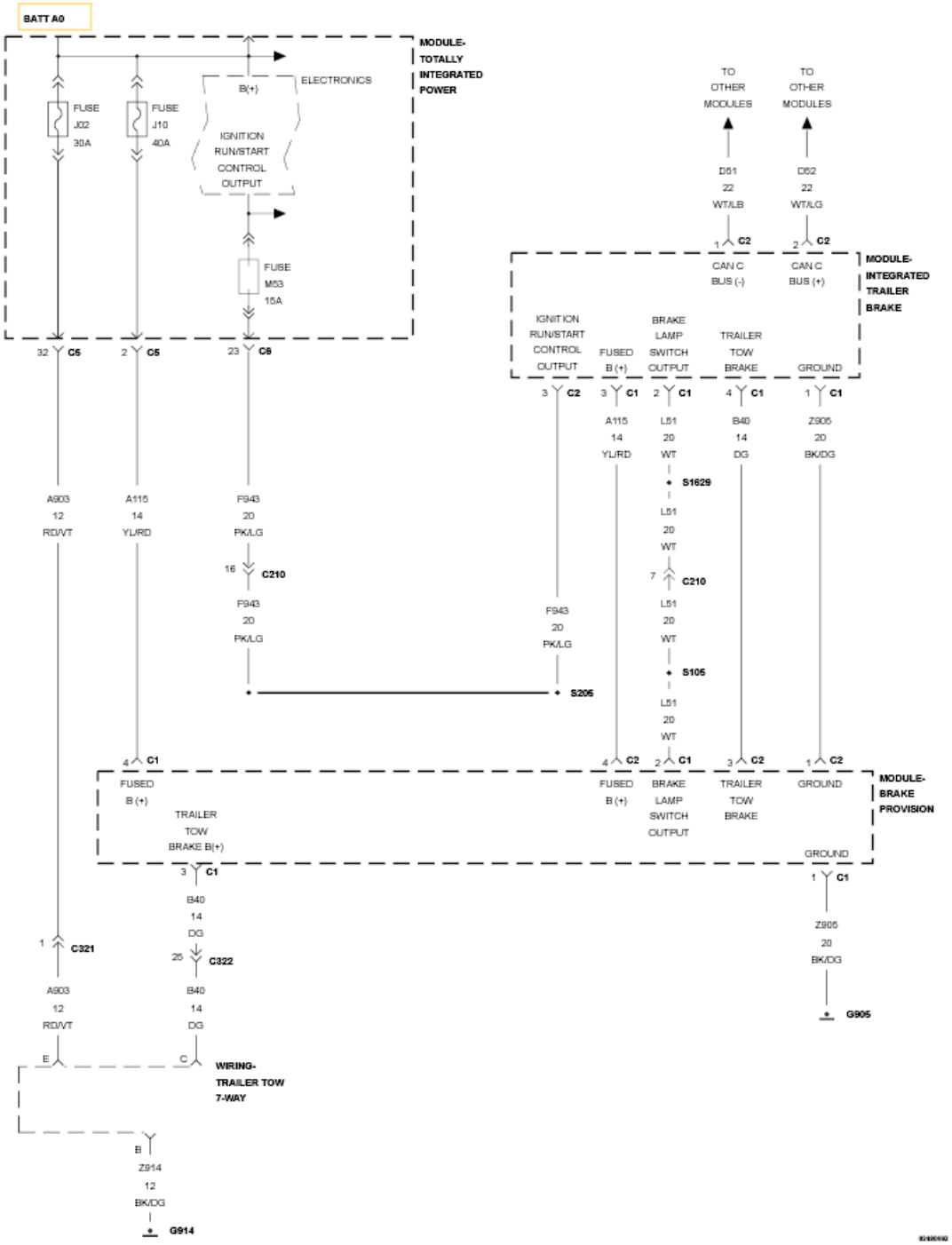

Fig. 3: Integrated Trailer Brake Module (ITBM) Wiring Diagram

Courtesy of CHRYSLER GROUP, LLC

For a complete wiring diagram, **refer to appropriate SYSTEM WIRING DIAGRAMS article** .

THEORY OF OPERATION

The Integrated Trailer Brake Module (ITBM) communicates with the vehicle through the high speed CAN C bus. The ITBM monitors the Brake Pedal Status, Vehicle Speed and ESP status via CAN message. It also outputs the Trailer Status, Gain Setting, and Trailer Brake Output Power to the vehicle. The ITBM connects to the electric trailer brakes through the 7-Way connector and controls the brake force through a Pulse Width Modulating (PWM) duty cycle.

NOTE: If there is no trailer connected there will be NO Pulse Width Modulating (PWM) signal.

The PWM is proportional to the rate of deceleration measured by the accelerometer inside the ITBM. The ITBM controls the PWM output to the trailer brakes in four ways. The first occurs while the brake pedal becomes active and vehicle speed is greater than 0 km/h (0 mph). The second is the manual lever on the ITBM that can be controlled by the driver. If both the manual lever and the brake pedal are active simultaneously, the greater of the two, in terms of PWM output, will prevail. The third is after the vehicle has stopped moving, after approximately three seconds of the brake pedal applied the trailer brakes will be applied too. This is to minimize hitch to trailer noise and vehicle roll back when taking off from a stop and on an incline. The fourth is that it will become active during an ESP trailer sway event.

WHEN MONITORED:

Continuous.

SET CONDITION:

If the Integrated Trailer Brake Module (ITBM) is configured incorrect or the (B40) Trailer Tow Brake (B+) circuit is shorted to voltage, this code will set. Automatic braking and manual lever braking (squeeze switch) are disabled.

POSSIBLE CAUSES

Possible Causes
TRAILER WIRING/BRAKES SHORTED TO VOLTAGE
(B40) TRAILER TOW BRAKE (B+) CIRCUIT SHORTED TO VOLTAGE
INTEGRATED TRAILER BRAKE MODULE (ITBM)

DIAGNOSTIC TEST

NOTE: The appropriate trailer or trailer simulator must be present for the results of this test to be valid.

NOTE: This DTC must be active for the results of this test to be valid.

1. **DTC IS ACTIVE**
    1. Connect the trailer or trailer simulator to the vehicle.
    2. Ignition on, engine not running.
    3. With the scan tool, record and erase DTCs.
    4. Cycle the ignition switch from off to on.
    5. With the scan tool, read DTCs.

    Is the status Active for this DTC?

    Yes

    - Go To 2.

    No

    - Go To 5.
2. **TRAILER WIRING/BRAKES**
    1. Turn ignition off to the lock position.
    2. Disconnect the trailer or trailer simulator from the vehicle.
    3. Ignition on, engine not running.
    4. With the scan tool, record and erase DTCs.
    5. Cycle the ignition switch from off to on.

    Does the ITBM display "SB"?

    Yes

    - Go To 3.

    No

    - Trailer wiring/brakes are shorted to voltage, refer the customer to an authorized trailer dealer.
3. **(B40) TRAILER TOW BRAKE (B+) CIRCUIT SHORTED TO VOLTAGE**

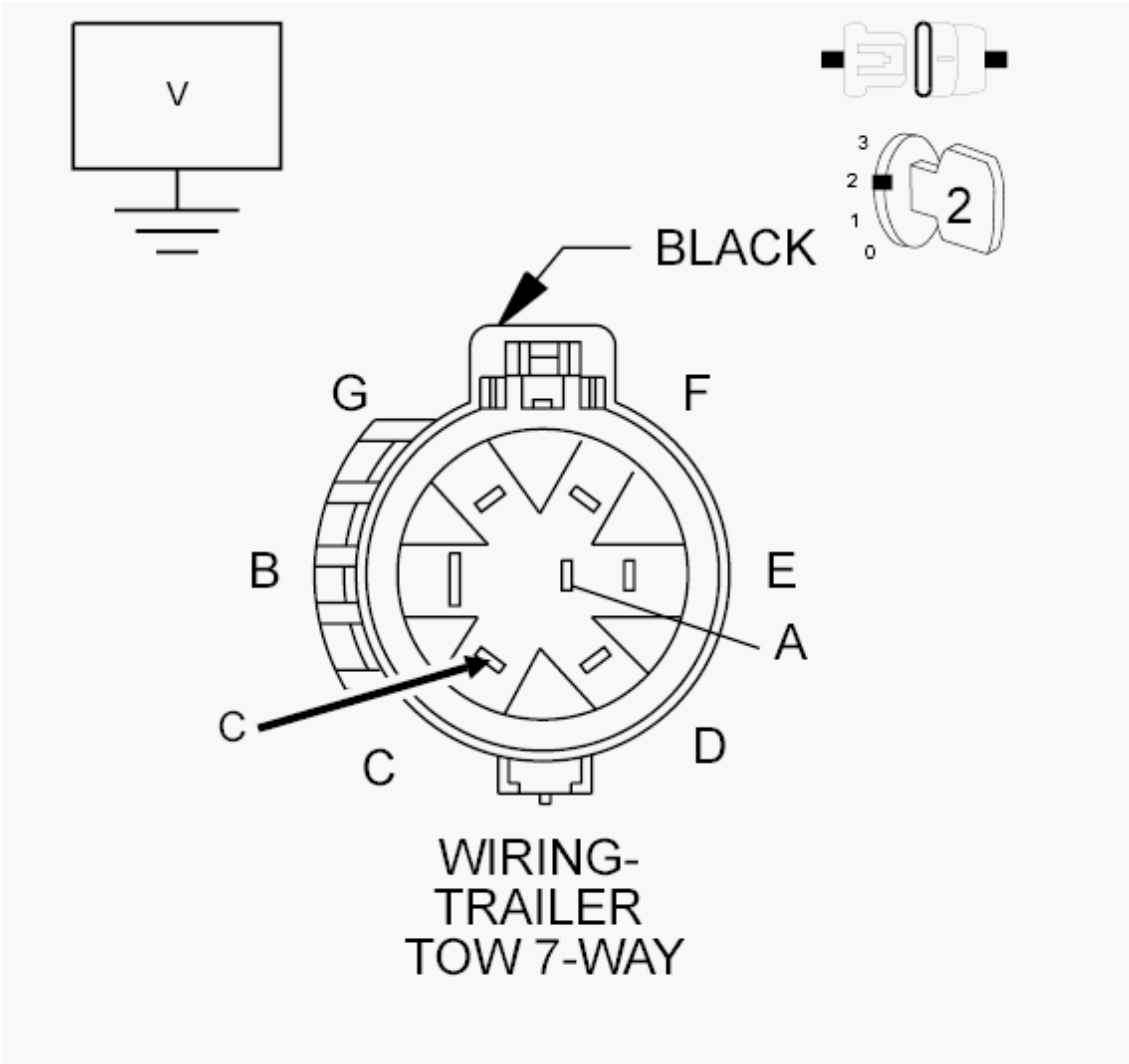

Fig. 4: Checking Trailer Tow Brake (B+) Circuit For A Short To Voltage
Courtesy of CHRYSLER GROUP, LLC

1. Turn ignition off to the lock position.
2. Disconnect the ITBM C1 harness connector.
3. Check connectors - Clean/repair as necessary.
4. Ignition on, engine not running.
5. Measure the voltage between the (B40) Trailer Tow Brake (B+) circuit and ground.

   Is there any voltage present?

   Yes

   - Repair the (B40) Trailer Tow Brake (B+) circuit for a short to voltage.
   - Perform the ITBM VERIFICATION TEST. Refer to **1500, 2500 & 3500 - STANDARD PROCEDURE - ITBM VERIFICATION TEST** or **3500 CAB & CHASSIS, 4500 &**

5500 - STANDARD PROCEDURE - ITBM VERIFICATION TEST .

No

- Go To 4.

4. **INTEGRATED TRAILER BRAKE MODULE (ITBM)**
    1. Using the wiring diagrams as a guide, check all related splices and connectors for signs of water intrusion, corrosion, pushed out or bent terminals, and correct pin tension. Pay particular attention to all Power and Ground circuits.

       Were there any problems found?

       Yes

       - Repair as necessary.
       - Perform the ITBM VERIFICATION TEST. Refer to **1500, 2500 & 3500 - STANDARD PROCEDURE - ITBM VERIFICATION TEST** or **3500 CAB & CHASSIS, 4500 & 5500 - STANDARD PROCEDURE - ITBM VERIFICATION TEST** .

       No

       - Replace the Integrated Trailer Brake Module (ITBM) in accordance with Service Information. Refer to **MODULE, INTEGRATED TRAILER BRAKE (ITBM), REMOVAL** .

5. **INTERMITTENT WIRING AND CONNECTORS**
    1. The conditions necessary to set this DTC are not present at this time.
    2. Using the wiring diagrams as a guide, check all related splices and connectors for signs of water intrusion, corrosion, pushed out or bent terminals, and correct pin tension.
    3. Wiggle test the wiring harness and connectors while monitoring the scan tool data relative to this circuit.
    4. Look for the data to change or for the DTC to reset during the wiggle test.
    5. While monitoring the scan tool data relative to this circuit.
    6. Connect the trailer to the vehicle.
    7. Look for the data to change other than as expected or for the DTC to reset.

       Were any problems found?

       Yes

       - Repair as necessary. Possible trailer wiring problem, refer the customer to an authorized trailer dealer.
       - Perform the ITBM VERIFICATION TEST. Refer to **1500, 2500 & 3500 - STANDARD PROCEDURE - ITBM VERIFICATION TEST** or **3500 CAB & CHASSIS, 4500 & 5500 - STANDARD PROCEDURE - ITBM VERIFICATION TEST** .

No

- Test complete, the condition or conditions that originally set this DTC are not present at this time.

ELECTRONIC TRAILER BRAKE MANUAL LEVER FAILSAFE CIRCUIT-PERFORMANCE OR INCORRECT OPERATION

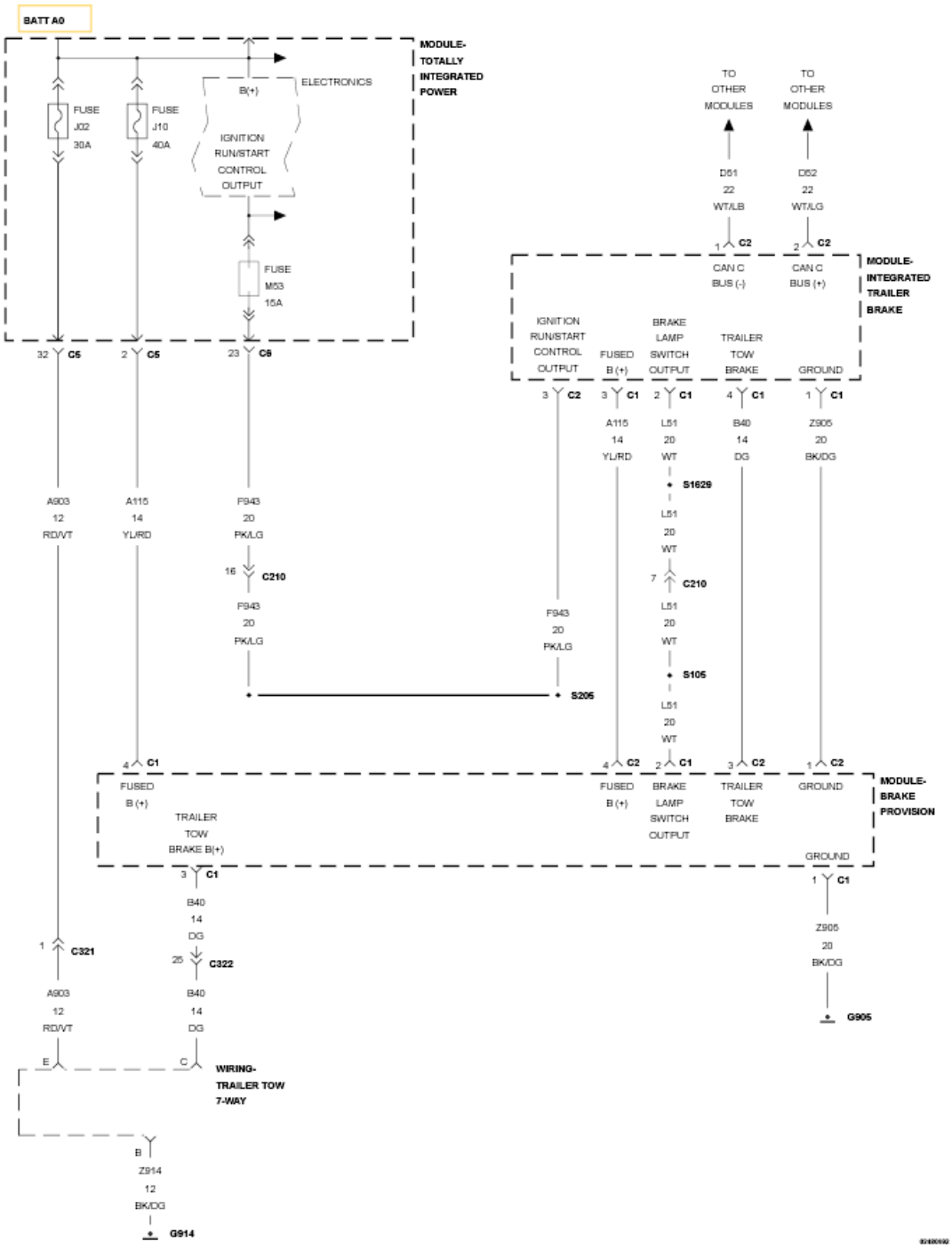

Fig. 5: Integrated Trailer Brake Module (ITBM) Wiring Diagram
Courtesy of CHRYSLER GROUP, LLC

For a complete wiring diagram, **refer to appropriate SYSTEM WIRING DIAGRAMS article** .

THEORY OF OPERATION

The Integrated Trailer Brake Module (ITBM) communicates with the vehicle through the high speed CAN C bus. The ITBM monitors the Brake Pedal Status, Vehicle Speed and ESP status via CAN message. It also outputs the Trailer Status, Gain Setting, and Trailer Brake Output Power to the vehicle. The ITBM connects to the electric trailer brakes through the 7-Way connector and controls the brake force through a Pulse Width Modulating (PWM) duty cycle.

NOTE: If there is no trailer connected there will be NO Pulse Width Modulating (PWM) signal.

The PWM is proportional to the rate of deceleration measured by the accelerometer inside the ITBM. The ITBM controls the PWM output to the trailer brakes in four ways. The first occurs while the brake pedal becomes active and vehicle speed is greater than 0 km/h (0 mph). The second is the manual lever on the ITBM that can be controlled by the driver. If both the manual lever and the brake pedal are active simultaneously, the greater of the two, in terms of PWM output, will prevail. The third is after the vehicle has stopped moving, after approximately three seconds of the brake pedal applied the trailer brakes will be applied too. This is to minimize hitch to trailer noise and vehicle roll back when taking off from a stop and on an incline. The fourth is that it will become active during an ESP trailer sway event.

WHEN MONITORED:

When manual lever (squeeze switch) is operated.

SET CONDITION:

If the Integrated Trailer Brake Module (ITBM) is configured incorrect or the manual lever braking (squeeze switch) circuit internally is out of range. Automatic braking and manual lever braking (squeeze switch) will operate normally.

POSSIBLE CAUSES

Possible Causes
TRAILER WIRING/BRAKES
INTEGRATED TRAILER BRAKE MODULE (ITBM)

DIAGNOSTIC TEST

NOTE: The appropriate trailer or trailer simulator must be present for the results of this test to be valid.

NOTE: This DTC must be active for the results of this test to be valid.

1. **DTC IS ACTIVE**
    1. Connect the trailer or trailer simulator to the vehicle.
    2. Ignition on, engine not running.
    3. With the scan tool, record and erase DTCs.
    4. Cycle the ignition switch from off to on.
    5. With the scan tool, read DTCs.

    Is the status Active for this DTC?

    Yes

    - Go To 2.

    No

    - Go To 4.
2. **TRAILER WIRING/BRAKES**
    1. Turn ignition off to the lock position.
    2. Disconnect the trailer or trailer simulator from the vehicle.
    3. Ignition on, engine not running.
    4. With the scan tool, record and erase DTCs.
    5. Cycle the ignition switch from off to on.

    Does the ITBM display "CF"?

    Yes

    - Go To 3.

    No

    - Trailer wiring/brakes are shorted to ground, refer the customer to an authorized trailer dealer.
3. **INTEGRATED TRAILER BRAKE MODULE (ITBM)**
    1. Turn ignition off to the lock position.
    2. Disconnect the trailer.
    3. Using the wiring diagrams as a guide, check all related splices and connectors for signs of water intrusion, corrosion, pushed out or bent terminals, and correct pin tension. Pay particular attention to all Power and Ground circuits.

    Were there any problems found?

Yes

- Repair as necessary.
- Perform the ITBM VERIFICATION TEST. Refer to **1500, 2500 & 3500 - STANDARD PROCEDURE - ITBM VERIFICATION TEST** or **3500 CAB & CHASSIS, 4500 & 5500 - STANDARD PROCEDURE - ITBM VERIFICATION TEST** .

No

- Replace the Integrated Trailer Brake Module (ITBM) in accordance with Service Information. Refer to **MODULE, INTEGRATED TRAILER BRAKE (ITBM), REMOVAL** .

4. **INTERMITTENT WIRING AND CONNECTORS**
   1. The conditions necessary to set this DTC are not present at this time.
   2. Using the wiring diagrams as a guide, check all related splices and connectors for signs of water intrusion, corrosion, pushed out or bent terminals, and correct pin tension.
   3. Wiggle test the wiring harness and connectors while monitoring the scan tool data relative to this circuit.
   4. Look for the data to change or for the DTC to reset during the wiggle test.
   5. While monitoring the scan tool data relative to this circuit.
   6. Connect the trailer to the vehicle.
   7. Look for the data to change other than as expected or for the DTC to reset.

   Were any problems found?

   Yes

   - Repair as necessary. Possible trailer wiring problem, refer the customer to an authorized trailer dealer.
   - Perform the ITBM VERIFICATION TEST. Refer to **1500, 2500 & 3500 - STANDARD PROCEDURE - ITBM VERIFICATION TEST** or **3500 CAB & CHASSIS, 4500 & 5500 - STANDARD PROCEDURE - ITBM VERIFICATION TEST** .

   No

   - Test complete, the condition or conditions that originally set this DTC are not present at this time.

Integrated Trailer Brake Module (ITBM) - Electrical Diagnostics - 3500 Cab & Chassis, 4500 & 5500

DIAGNOSTIC CODE INDEX

DIAGNOSTIC CODE INDEX

DTC	Description
C10C5	92 ELECTRONIC TRAILER BRAKE ACCELEROMETER-PERFORMANCE OR INCORRECT OPERATION
C10C6	92 ELECTRONIC TRAILER BRAKE MANUAL LEVER-PERFORMANCE OR INCORRECT OPERATION
C10C7	00 ELECTRONIC TRAILER BRAKE CONTROL OUTPUT
C10C7	11 ELECTRONIC TRAILER BRAKE CONTROL OUTPUT-CIRCUIT SHORT TO GROUND
C10C7	12 ELECTRONIC TRAILER BRAKE CONTROL OUTPUT-CIRCUIT SHORT TO BATTERY
C10C7	19 ELECTRONIC TRAILER BRAKE CONTROL OUTPUT-OVERCURRENT
C10C9	00 ELECTRONIC TRAILER BRAKE MANUAL LEVER FAILSAFE CIRCUIT
C10CA	2A ITBM ADJUSTMENT SWITCH STUCK
C2129	16 BATTERY VOLTAGE - CIRCUIT VOLTAGE BELOW THRESHOLD
C2129	17 BATTERY VOLTAGE - CIRCUIT VOLTAGE ABOVE THRESHOLD
C2213	00 TRAILER BRAKE MODULE INTERNAL
C2213-42	TRAILER BRAKE MODULE INTERNAL-GENERAL MEMORY FAILURE
C2214-00	ITBM NOT CALIBRATED
U0001-00	CAN C BUS
U0100-00	LOST COMMUNICATION WITH ECM/PCM
U0121-00	LOST COMMUNICATION WITH ANTILOCK BRAKE SYSTEM (ABS) CONTROL MODULE
U0141-00	LOST COMMUNICATION WITH IPM (FCM/TIPM)
U0401	00 IMPLAUSIBLE DATA RECEIVED FROM ECM/PCM
U0415	00 IMPLAUSIBLE DATA RECEIVED FROM ABS
U0431	00 IMPLAUSIBLE DATA RECEIVED FROM IPM (FCM/TIPM)
U1601-00	ECU APPLICATION SOFTWARE CODE 1 MISSING OR CORRUPTED

DIAGNOSIS AND TESTING

C10C5-92 ELECTRONIC TRAILER BRAKE ACCELEROMETER-PERFORMANCE OR INCORRECT OPERATION

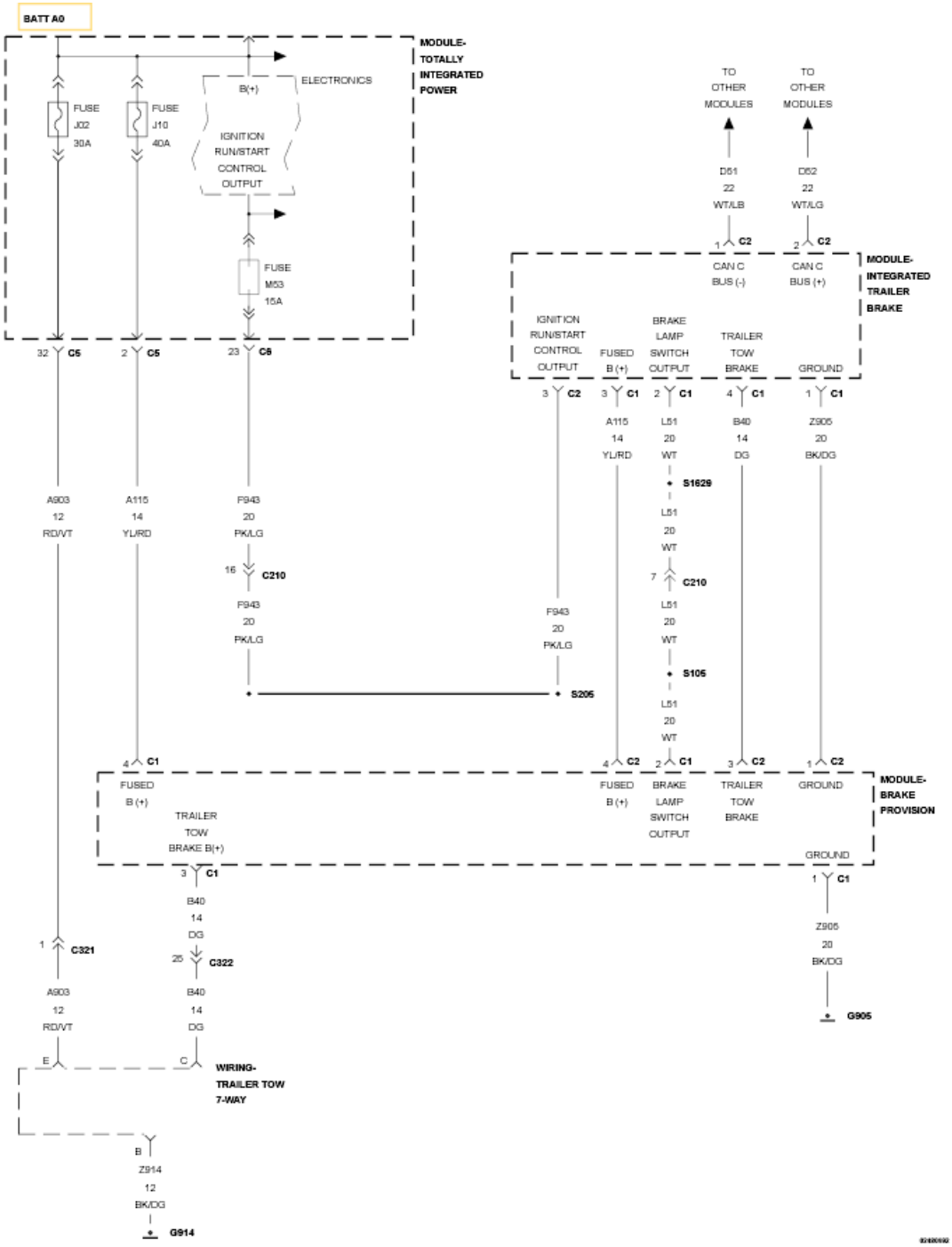

Fig. 1: Integrated Trailer Brake Module (ITBM) Wiring Diagram
Courtesy of CHRYSLER GROUP, LLC

For a complete wiring diagram, **refer to appropriate SYSTEM WIRING DIAGRAMS article** .

THEORY OF OPERATION

The Integrated Trailer Brake Module (ITBM) communicates with the vehicle through the high speed CAN C

bus. The ITBM monitors the Brake Pedal Status, Vehicle Speed and ESP status via CAN message. It also outputs the Trailer Status, Gain Setting, and Trailer Brake Output Power to the vehicle. The ITBM connects to the electric trailer brakes through the 7-Way connector and controls the brake force through a Pulse Width Modulating (PWM) duty cycle.

NOTE: If there is no trailer connected there will be NO Pulse Width Modulating (PWM) signal.

The PWM is proportional to the rate of deceleration measured by the accelerometer inside the ITBM. The ITBM controls the PWM output to the trailer brakes in four ways. The first occurs while the brake pedal becomes active and vehicle speed is greater than 0 km/h (0 mph). The second is the manual lever on the ITBM that can be controlled by the driver. If both the manual lever and the brake pedal are active simultaneously, the greater of the two, in terms of PWM output, will prevail. The third is after the vehicle has stopped moving, after approximately three seconds of the brake pedal applied the trailer brakes will be applied too. This is to minimize hitch to trailer noise and vehicle roll back when taking off from a stop and on an incline. The fourth is that it will become active during an ESP trailer sway event.

WHEN MONITORED:

Continuous.

SET CONDITION:

If the Integrated Trailer Brake Module (ITBM) has an internal accelerometer that has a duty cycle of less than 5% or greater than 95% or if the accelerometer fails the internal self test which is executed every time the ignition is turned on, this code will set. Automatic braking is disabled, manual lever is still functional.

POSSIBLE CAUSES

Possible Causes
INTEGRATED TRAILER BRAKE MODULE (ITBM)

DIAGNOSTIC TEST

NOTE: The appropriate trailer or trailer simulator must be present for the results of this test to be valid.

NOTE: This DTC must be active for the results of this test to be valid.

1. **DTC IS ACTIVE**
    1. Connect the appropriate trailer or trailer simulator to the vehicle.
    2. Ignition on, engine not running.
    3. With the scan tool, record and erase DTCs.
    4. Cycle the ignition from on to off and back to on several times, waiting 5 seconds between each ignition state.

5. With the scan tool, read DTCs.

   Is the status Active for this DTC?

   Yes

   - Go To 2.

   No

   - Go To 4.

2. **INTEGRATED TRAILER BRAKE MODULE (ITBM) ACCELEROMETER**
   1. Apply the trailer brakes by pressing the manual lever on the ITBM.

      Are the trailer brakes operating correctly?

      Yes

      - Go To 3.

      No

      - Trailer wiring/brakes are in operative, refer the customer to an authorized trailer dealer.

3. **INTEGRATED TRAILER BRAKE MODULE (ITBM)**
   1. Turn ignition off to the lock position.
   2. Disconnect the trailer.
   3. Using the wiring diagrams as a guide, check all related splices and connectors for signs of water intrusion, corrosion, pushed out or bent terminals, and correct pin tension. Pay particular attention to all Power and Ground circuits.

      Were there any problems found?

      Yes

      - Repair as necessary.
      - Perform the ITBM VERIFICATION TEST. Refer to **STANDARD PROCEDURE - ITBM VERIFICATION TEST**.

      No

      - Replace the Integrated Trailer Brake Module (ITBM) in accordance with Service Information. Refer to **MODULE, INTEGRATED TRAILER BRAKE (ITBM), REMOVAL** .

4. **INTERMITTENT WIRING AND CONNECTORS**
   1. The conditions necessary to set this DTC are not present at this time.

2. Using the wiring diagrams as a guide, check all related splices and connectors for signs of water intrusion, corrosion, pushed out or bent terminals, and correct pin tension.
3. Wiggle test the wiring harness and connectors while monitoring the scan tool data relative to this circuit.
4. Look for the data to change or for the DTC to reset during the wiggle test.
5. While monitoring the scan tool data relative to this circuit.
6. Look for the data to change other than as expected or for the DTC to reset.

Were any problems found?

Yes

- Repair as necessary.
- Perform the ITBM VERIFICATION TEST. Refer to **STANDARD PROCEDURE - ITBM VERIFICATION TEST**.

No

- Test complete, the condition or conditions that originally set this DTC are not present at this time.

C10C6-92 ELECTRONIC TRAILER BRAKE MANUAL LEVER-PERFORMANCE OR INCORRECT OPERATION

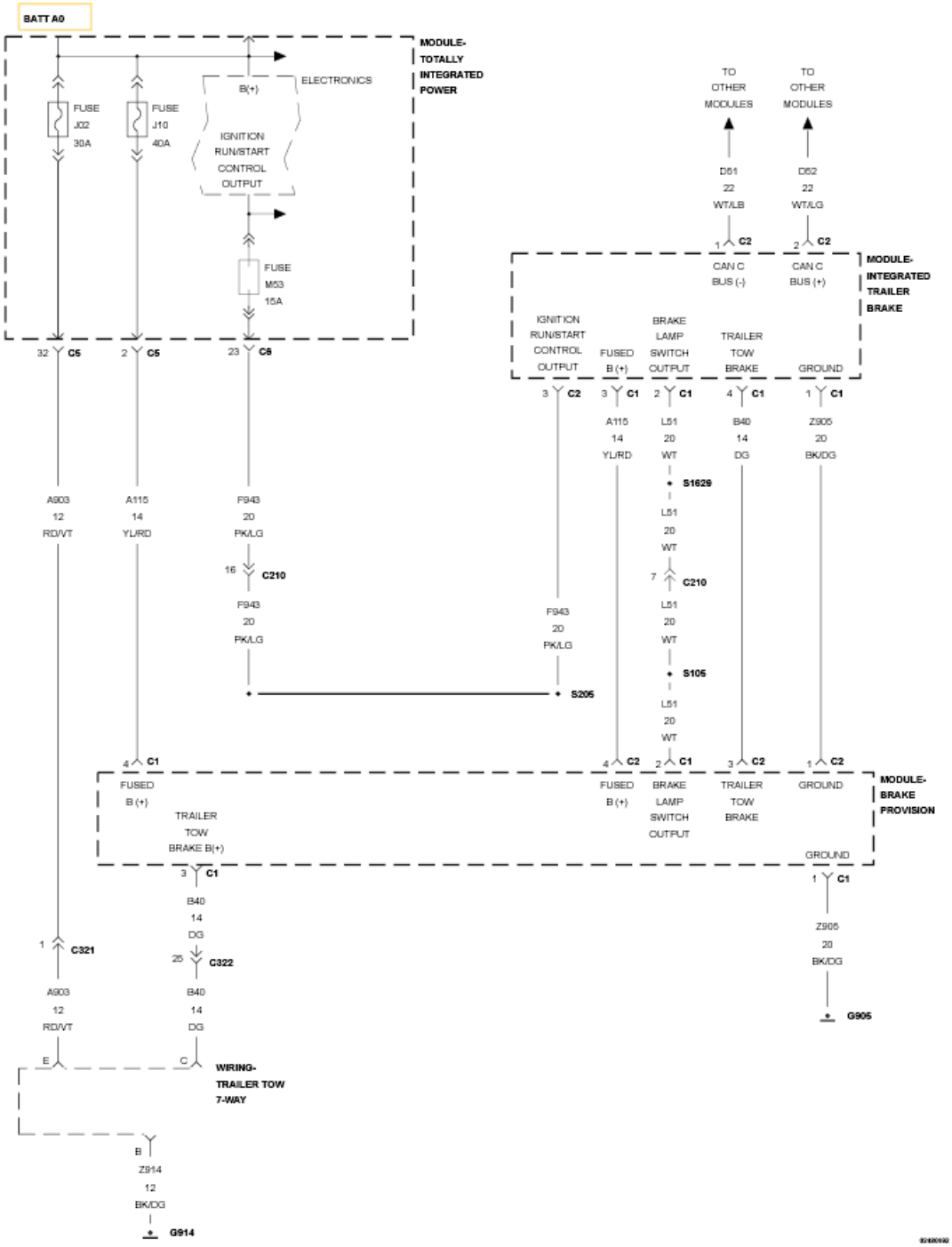

Fig. 2: Integrated Trailer Brake Module (ITBM) Wiring Diagram
Courtesy of CHRYSLER GROUP, LLC

For a complete wiring diagram, **refer to appropriate SYSTEM WIRING DIAGRAMS article** .

THEORY OF OPERATION

The Integrated Trailer Brake Module (ITBM) communicates with the vehicle through the high speed CAN C

bus. The ITBM monitors the Brake Pedal Status, Vehicle Speed and ESP status via CAN message. It also outputs the Trailer Status, Gain Setting, and Trailer Brake Output Power to the vehicle. The ITBM connects to the electric trailer brakes through the 7-Way connector and controls the brake force through a Pulse Width Modulating (PWM) duty cycle.

NOTE: If there is no trailer connected there will be NO Pulse Width Modulating (PWM) signal.

The PWM is proportional to the rate of deceleration measured by the accelerometer inside the ITBM. The ITBM controls the PWM output to the trailer brakes in four ways. The first occurs while the brake pedal becomes active and vehicle speed is greater than 0 km/h (0 mph). The second is the manual lever on the ITBM that can be controlled by the driver. If both the manual lever and the brake pedal are active simultaneously, the greater of the two, in terms of PWM output, will prevail. The third is after the vehicle has stopped moving, after approximately three seconds of the brake pedal applied the trailer brakes will be applied too. This is to minimize hitch to trailer noise and vehicle roll back when taking off from a stop and on an incline. The fourth is that it will become active during an ESP trailer sway event.

WHEN MONITORED:

Continuous.

SET CONDITION:

If the Integrated Trailer Brake Module (ITBM) is configured incorrect or the manual lever (squeeze switch) is less than 0.4 of a volt or greater than 1.0 volt at initialization, this code will set. Automatic braking and manual lever braking are disabled.

POSSIBLE CAUSES

Possible Causes
TRAILER WIRING/BRAKES
INTEGRATED TRAILER BRAKE MODULE (ITBM)

DIAGNOSTIC TEST

NOTE: The appropriate trailer or trailer simulator must be present for the results of this test to be valid.

NOTE: This DTC must be active for the results of this test to be valid.

1. **DTC IS ACTIVE**
    1. Connect the appropriate trailer or trailer simulator to the vehicle.
    2. Ignition on, engine not running.
    3. With the scan tool, record and erase DTCs.
    4. Cycle the ignition from on to off and back to on several times, waiting 5 seconds between each

ignition state.

5. With the scan tool, read DTCs.

   Is the status Active for this DTC?

   Yes

   - Go To 2.

   No

   - Go To 4.

2. **MANUAL LEVER**
   1. Turn ignition off to the lock position.
   2. Verify the squeeze switch is not pressed or sticking.
   3. Ignition on, engine not running.
   4. With the scan tool, erase DTCs.
   5. Cycle the ignition switch from off to on.

      Does the ITBM display "CF"?

      Yes

      - Go To 3.

      No

      - Trailer wiring/brakes are in operative, refer the customer to an authorized trailer dealer.

3. **INTEGRATED TRAILER BRAKE MODULE (ITBM)**
   1. Turn ignition off to the lock position.
   2. Disconnect the trailer.
   3. Using the wiring diagrams as a guide, check all related splices and connectors for signs of water intrusion, corrosion, pushed out or bent terminals, and correct pin tension. Pay particular attention to all Power and Ground circuits.

      Were there any problems found?

      Yes

      - Repair as necessary.
      - Perform the ITBM VERIFICATION TEST. Refer to **STANDARD PROCEDURE - ITBM VERIFICATION TEST**.

      No

- Replace the Integrated Trailer Brake Module (ITBM) in accordance with Service Information. Refer to **MODULE, INTEGRATED TRAILER BRAKE (ITBM), REMOVAL** .

4. **INTERMITTENT WIRING AND CONNECTORS**
    1. The conditions necessary to set this DTC are not present at this time.
    2. Using the wiring diagrams as a guide, check all related splices and connectors for signs of water intrusion, corrosion, pushed out or bent terminals, and correct pin tension.
    3. Wiggle test the wiring harness and connectors while monitoring the scan tool data relative to this circuit.
    4. Look for the data to change or for the DTC to reset during the wiggle test.
    5. While monitoring the scan tool data relative to this circuit.
    6. Look for the data to change other than as expected or for the DTC to reset.

    Were any problems found?

    Yes

    - Repair as necessary.
    - Perform the ITBM VERIFICATION TEST. Refer to **STANDARD PROCEDURE - ITBM VERIFICATION TEST**.

    No

    - Test complete, the condition or conditions that originally set this DTC are not present at this time.

C10C7-00 ELECTRONIC TRAILER BRAKE CONTROL OUTPUT

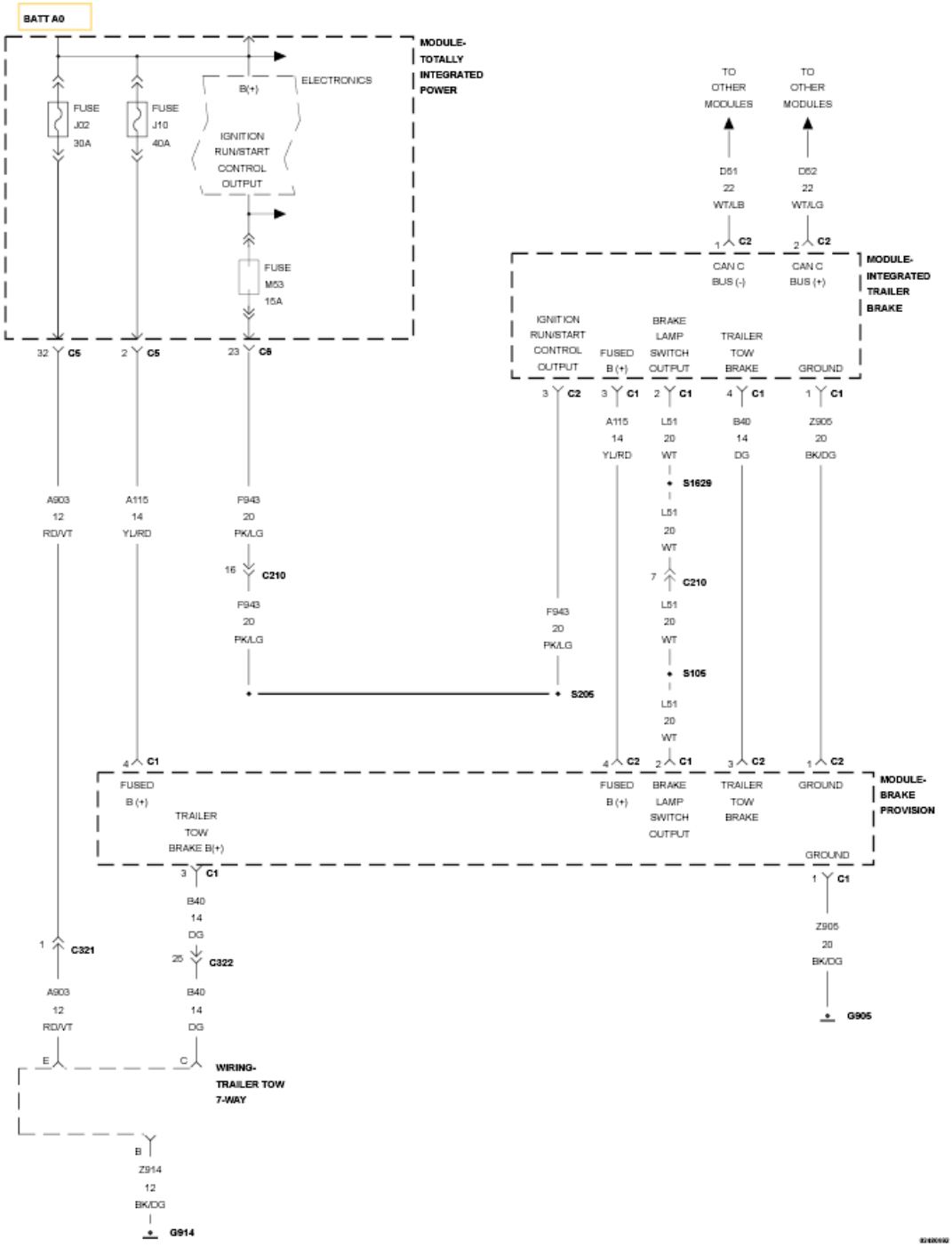

Fig. 3: Integrated Trailer Brake Module (ITBM) Wiring Diagram
Courtesy of CHRYSLER GROUP, LLC

For a complete wiring diagram, **refer to appropriate SYSTEM WIRING DIAGRAMS article** .

THEORY OF OPERATION

The Integrated Trailer Brake Module (ITBM) communicates with the vehicle through the high speed CAN C

bus. The ITBM monitors the Brake Pedal Status, Vehicle Speed and ESP status via CAN message. It also outputs the Trailer Status, Gain Setting, and Trailer Brake Output Power to the vehicle. The ITBM connects to the electric trailer brakes through the 7-Way connector and controls the brake force through a Pulse Width Modulating (PWM) duty cycle.

NOTE: If there is no trailer connected there will be NO Pulse Width Modulating (PWM) signal.

The PWM is proportional to the rate of deceleration measured by the accelerometer inside the ITBM. The ITBM controls the PWM output to the trailer brakes in four ways. The first occurs while the brake pedal becomes active and vehicle speed is greater than 0 km/h (0 mph). The second is the manual lever on the ITBM that can be controlled by the driver. If both the manual lever and the brake pedal are active simultaneously, the greater of the two, in terms of PWM output, will prevail. The third is after the vehicle has stopped moving, after approximately three seconds of the brake pedal applied the trailer brakes will be applied too. This is to minimize hitch to trailer noise and vehicle roll back when taking off from a stop and on an incline. The fourth is that it will become active during an ESP trailer sway event.

WHEN MONITORED:

Continuous.

SET CONDITION:

If the Integrated Trailer Brake Module (ITBM) is configured incorrect or the ignition voltage is below 9v or greater than 16v, this code will set. Automatic braking and manual lever braking (squeeze switch) are disabled.

POSSIBLE CAUSES

Possible Causes
TRAILER WIRING/BRAKES
(F943) IGNITION RUN/START CONTROL OUTPUT CIRCUIT OPEN OR HIGH RESISTANCE
(A115) FUSED (B+) CIRCUIT OPEN OR HIGH RESISTANCE
(Z905) GROUND CIRCUIT(S) OPEN OR HIGH RESISTANCE
INTEGRATED TRAILER BRAKE MODULE (ITBM)

DIAGNOSTIC TEST

NOTE: The appropriate trailer or trailer simulator must be present for the results of this test to be valid.

NOTE: This DTC must be active for the results of this test to be valid.

1. **DTC IS ACTIVE**
    1. Connect the trailer or trailer simulator to the vehicle.
    2. Ignition on, engine not running.

3. With the scan tool, record and erase DTCs.
4. Cycle the ignition switch from off to on.
5. With the scan tool, read DTCs.

   Is the status Active for this DTC?

   Yes

   - Go To 2.

   No

   - Go To 7.

2. **TRAILER WIRING/BRAKES**
   1. Turn ignition off to the lock position.
   2. Disconnect the trailer or trailer simulator from the vehicle.
   3. Ignition on, engine not running.
   4. With the scan tool, record and erase DTCs.
   5. Cycle the ignition switch from off to on.

      Does the ITBM display "CF"?

      Yes

      - Go To 3.

      No

      - Trailer wiring/brakes are in operative, refer the customer to an authorized trailer dealer.

3. **(F943) IGNITION RUN/START CONTROL OUTPUT CIRCUIT OPEN OR HIGH RESISTANCE**

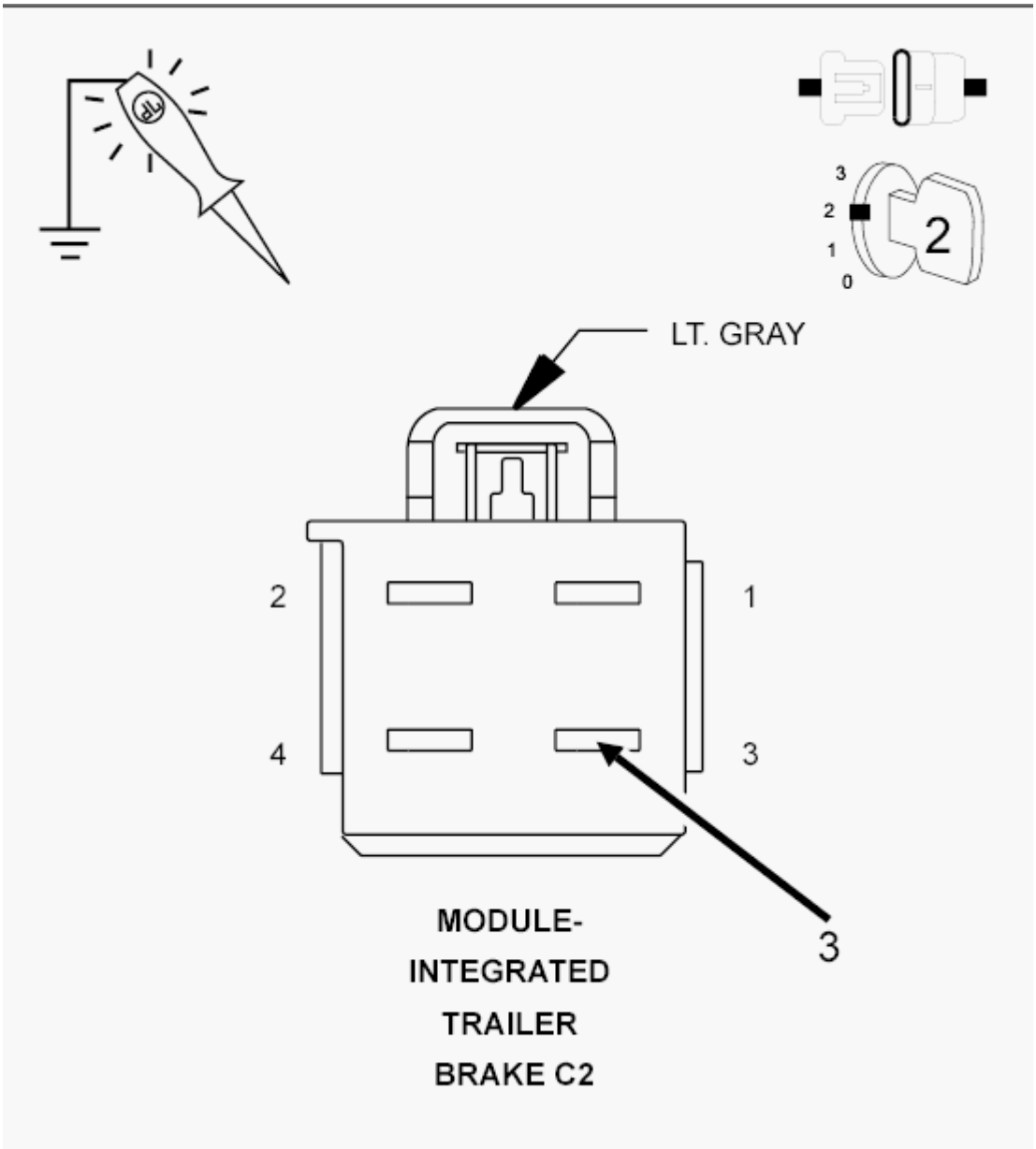

Fig. 4: Checking Ignition Run/Start Control Output Circuit For An Open Or High Resistance
Courtesy of CHRYSLER GROUP, LLC

1. Turn ignition off to the lock position.
2. Disconnect the ITBM C2 harness connector.
3. Check connectors - Clean/repair as necessary.
4. Ignition on, engine not running.
5. Using a 12-volt test light connected to ground, check the (F943) Ignition Run/Start Control Output circuit.

NOTE: Compare the brightness to that of a direct connection to the battery.

Does the test light illuminate brightly?

Yes

- Go To 4.

No

- Repair the (F943) Ignition Run/Start Control Output circuit for a short to ground, an open circuit, or high resistance.
- Perform the ITBM VERIFICATION TEST. Refer to **STANDARD PROCEDURE - ITBM VERIFICATION TEST**.

4. **(A115) FUSED (B+) CIRCUIT OPEN OR HIGH RESISTANCE**

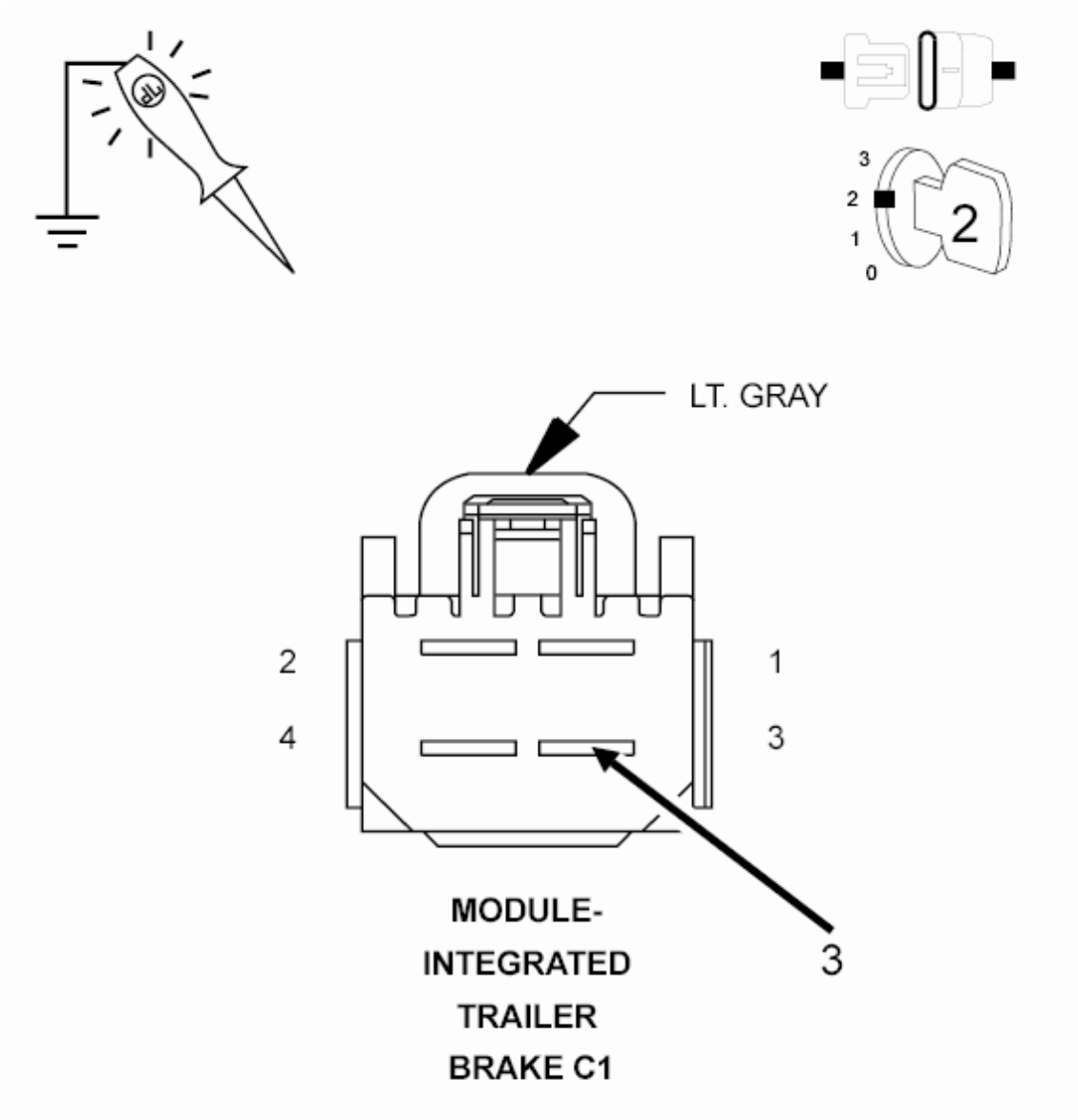

Fig. 5: Checking Fused (B+) Circuit For An Open Or High Resistance
Courtesy of CHRYSLER GROUP, LLC

1. Turn ignition off to the lock position.
2. Disconnect the ITBM C1 harness connector.
3. Check connectors - Clean/repair as necessary.
4. Ignition on, engine not running.
5. Using a 12-volt test light connected to ground, check the (A115) Fused (B+) circuit.

NOTE: Compare the brightness to that of a direct connection to the battery.

Does the test light illuminate brightly?

Yes

- Go To 5.

No

- Repair the (A115) Fused (B+) circuit for a short to ground, an open circuit, or high resistance.
- Perform the ITBM VERIFICATION TEST. Refer to **STANDARD PROCEDURE - ITBM VERIFICATION TEST**.

5. **(Z905) GROUND CIRCUIT OPEN OR HIGH RESISTANCE**

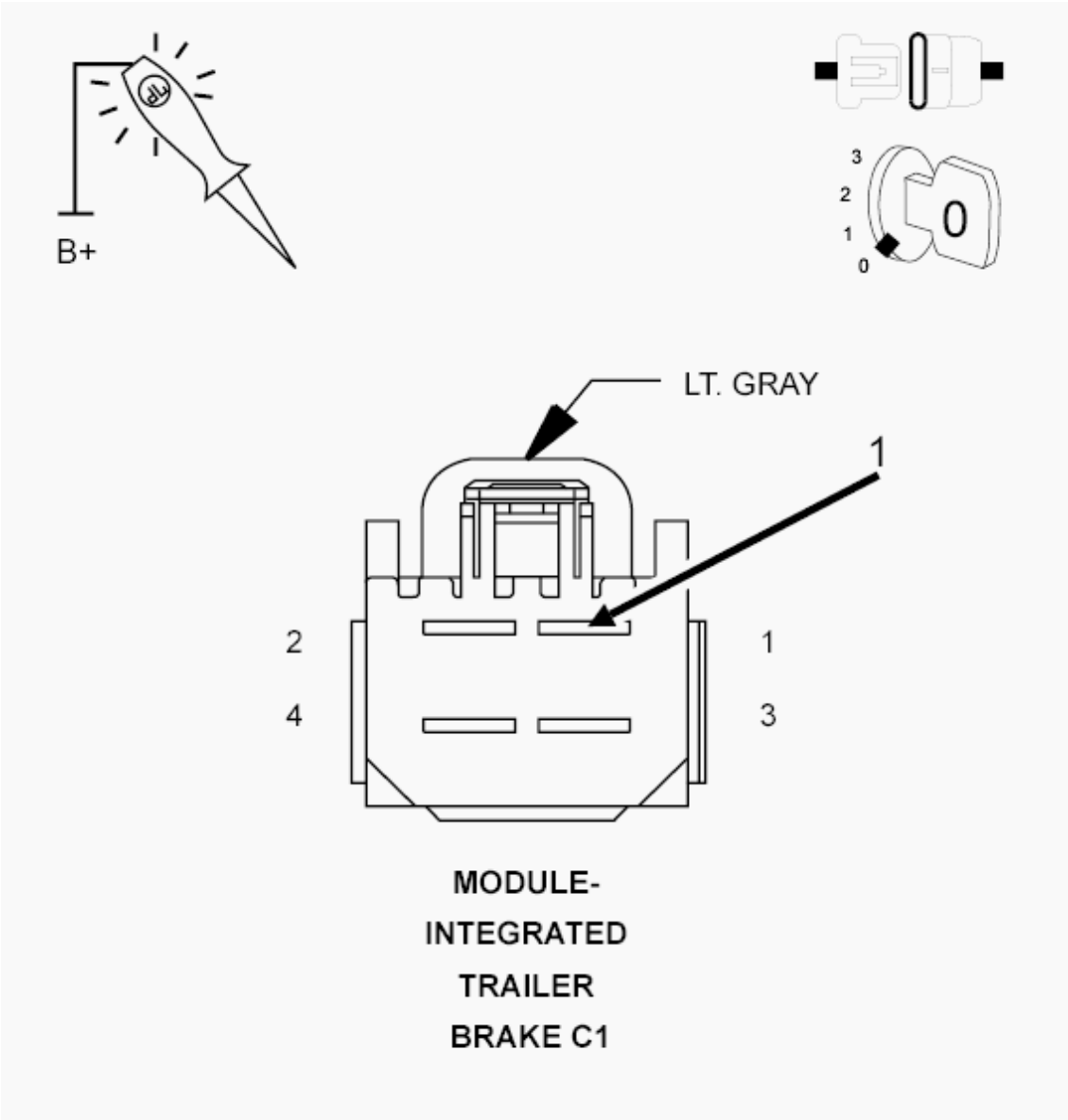

Fig. 6: Checking Ground Circuit For An Open Or High Resistance
Courtesy of CHRYSLER GROUP, LLC

1. Turn ignition off to the lock position.
2. Using a 12-volt test light connected to B+, check the (Z905) Ground circuit.

NOTE: Compare the brightness to that of a direct connection to the battery.

Does the test light illuminate brightly?

Yes

- Go To 6.

No

- Repair the (Z905) Ground circuit(s) for an open circuit or high resistance.
- Perform the ITBM VERIFICATION TEST. Refer to **STANDARD PROCEDURE - ITBM VERIFICATION TEST**.

6. **INTEGRATED TRAILER BRAKE MODULE (ITBM)**
   1. Turn ignition off to the lock position.
   2. Disconnect the trailer.
   3. Using the wiring diagrams as a guide, check all related splices and connectors for signs of water intrusion, corrosion, pushed out or bent terminals, and correct pin tension. Pay particular attention to all Power and Ground circuits.

      Were there any problems found?

      Yes

      - Repair as necessary.
      - Perform the ITBM VERIFICATION TEST. Refer to **STANDARD PROCEDURE - ITBM VERIFICATION TEST**.

      No

      - Replace the Integrated Trailer Brake Module (ITBM) in accordance with Service Information. Refer to **MODULE, INTEGRATED TRAILER BRAKE (ITBM), REMOVAL** .

7. **INTERMITTENT WIRING AND CONNECTORS**
   1. The conditions necessary to set this DTC are not present at this time.
   2. Using the wiring diagrams as a guide, check all related splices and connectors for signs of water intrusion, corrosion, pushed out or bent terminals, and correct pin tension.
   3. Wiggle test the wiring harness and connectors while monitoring the scan tool data relative to this circuit.
   4. Look for the data to change or for the DTC to reset during the wiggle test.
   5. While monitoring the scan tool data relative to this circuit.
   6. Connect the trailer to the vehicle.
   7. Look for the data to change other than as expected or for the DTC to reset.

      Were any problems found?

      Yes

      - Repair as necessary. Possible trailer wiring problem, refer the customer to an authorized trailer dealer.
      - Perform the ITBM VERIFICATION TEST. Refer to **STANDARD PROCEDURE - ITBM VERIFICATION TEST**.

No

- Test complete, the condition or conditions that originally set this DTC are not present at this time.

C10C7-11 ELECTRONIC TRAILER BRAKE CONTROL OUTPUT-CIRCUIT SHORT TO GROUND

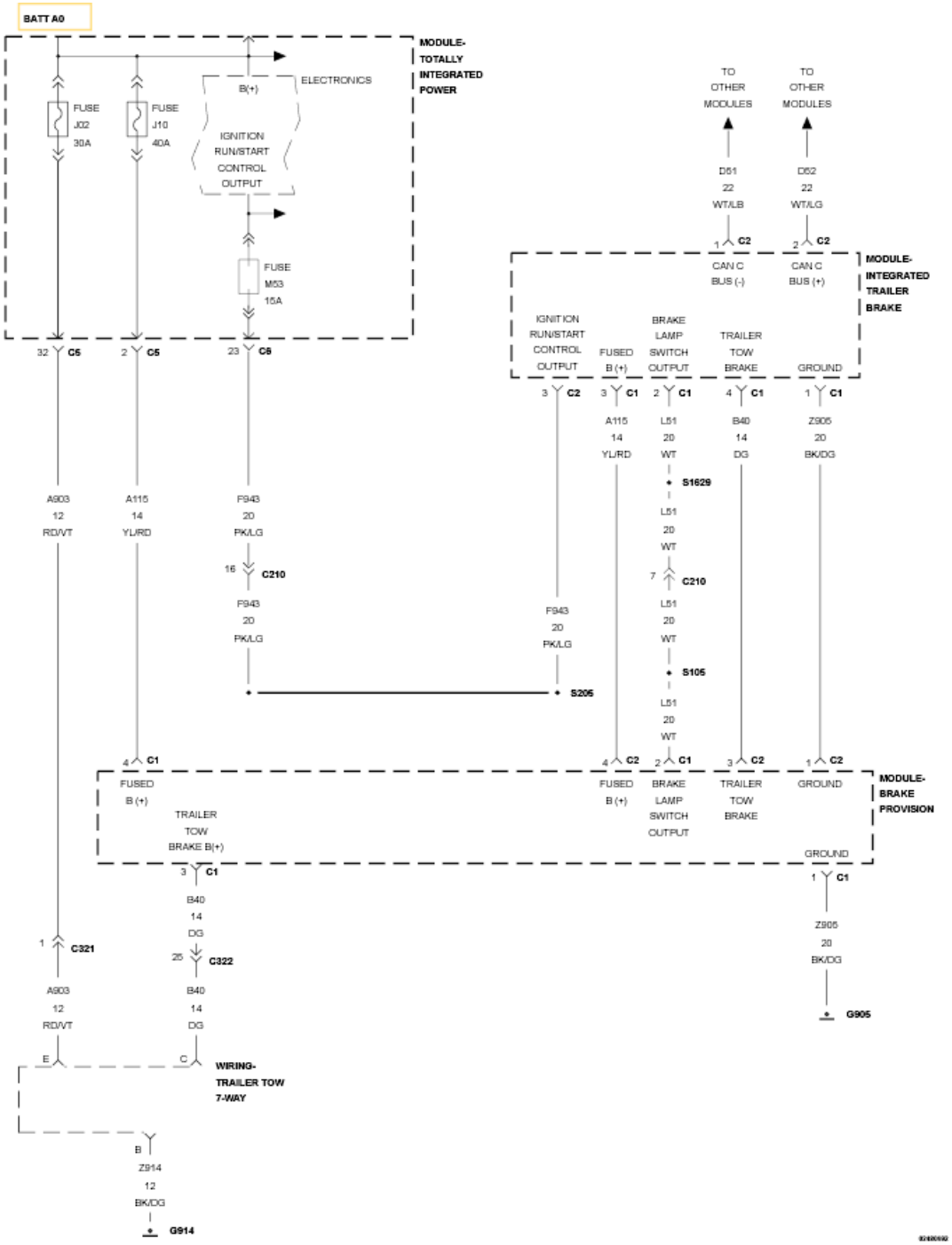

Fig. 7: Integrated Trailer Brake Module (ITBM) Wiring Diagram

Courtesy of CHRYSLER GROUP, LLC

For a complete wiring diagram, **refer to appropriate SYSTEM WIRING DIAGRAMS article** .

THEORY OF OPERATION

The Integrated Trailer Brake Module (ITBM) communicates with the vehicle through the high speed CAN C bus. The ITBM monitors the Brake Pedal Status, Vehicle Speed and ESP status via CAN message. It also outputs the Trailer Status, Gain Setting, and Trailer Brake Output Power to the vehicle. The ITBM connects to the electric trailer brakes through the 7-Way connector and controls the brake force through a Pulse Width Modulating (PWM) duty cycle.

NOTE: If there is no trailer connected there will be NO Pulse Width Modulating (PWM) signal.

The PWM is proportional to the rate of deceleration measured by the accelerometer inside the ITBM. The ITBM controls the PWM output to the trailer brakes in four ways. The first occurs while the brake pedal becomes active and vehicle speed is greater than 0 km/h (0 mph). The second is the manual lever on the ITBM that can be controlled by the driver. If both the manual lever and the brake pedal are active simultaneously, the greater of the two, in terms of PWM output, will prevail. The third is after the vehicle has stopped moving, after approximately three seconds of the brake pedal applied the trailer brakes will be applied too. This is to minimize hitch to trailer noise and vehicle roll back when taking off from a stop and on an incline. The fourth is that it will become active during an ESP trailer sway event.

WHEN MONITORED:

Continuous.

SET CONDITION:

If the Integrated Trailer Brake Module (ITBM) is configured incorrect or the (B40) Trailer Tow Brake (B+) circuit is shorted to ground, this code will set. Automatic braking and manual lever braking (squeeze switch) are disabled.

POSSIBLE CAUSES

Possible Causes
TRAILER WIRING/BRAKES SHORTED TO GROUND
(B40) TRAILER TOW BRAKE (B+) CIRCUIT SHORTED TO GROUND
INTEGRATED TRAILER BRAKE MODULE (ITBM)

DIAGNOSTIC TEST

NOTE: The appropriate trailer or trailer simulator must be present for the results of this test to be valid.

NOTE: This DTC must be active for the results of this test to be valid.

1. **DTC IS ACTIVE**
    1. Connect the trailer or trailer simulator to the vehicle.
    2. Ignition on, engine not running.
    3. With the scan tool, record and erase DTCs.
    4. Cycle the ignition switch from off to on.
    5. With the scan tool, read DTCs.

    Is the status Active for this DTC?

    Yes

    - Go To 2.

    No

    - Go To 5.
2. **TRAILER WIRING/BRAKES**
    1. Turn ignition off to the lock position.
    2. Disconnect the trailer or trailer simulator from the vehicle.
    3. Ignition on, engine not running.
    4. With the scan tool, record and erase DTCs.
    5. Cycle the ignition switch from off to on.

    Does the ITBM display "SC"?

    Yes

    - Go To 3.

    No

    - Trailer wiring/brakes are shorted to ground, refer the customer to an authorized trailer dealer.
3. **(B40) TRAILER TOW BRAKE (B+) CIRCUIT SHORTED TO GROUND**

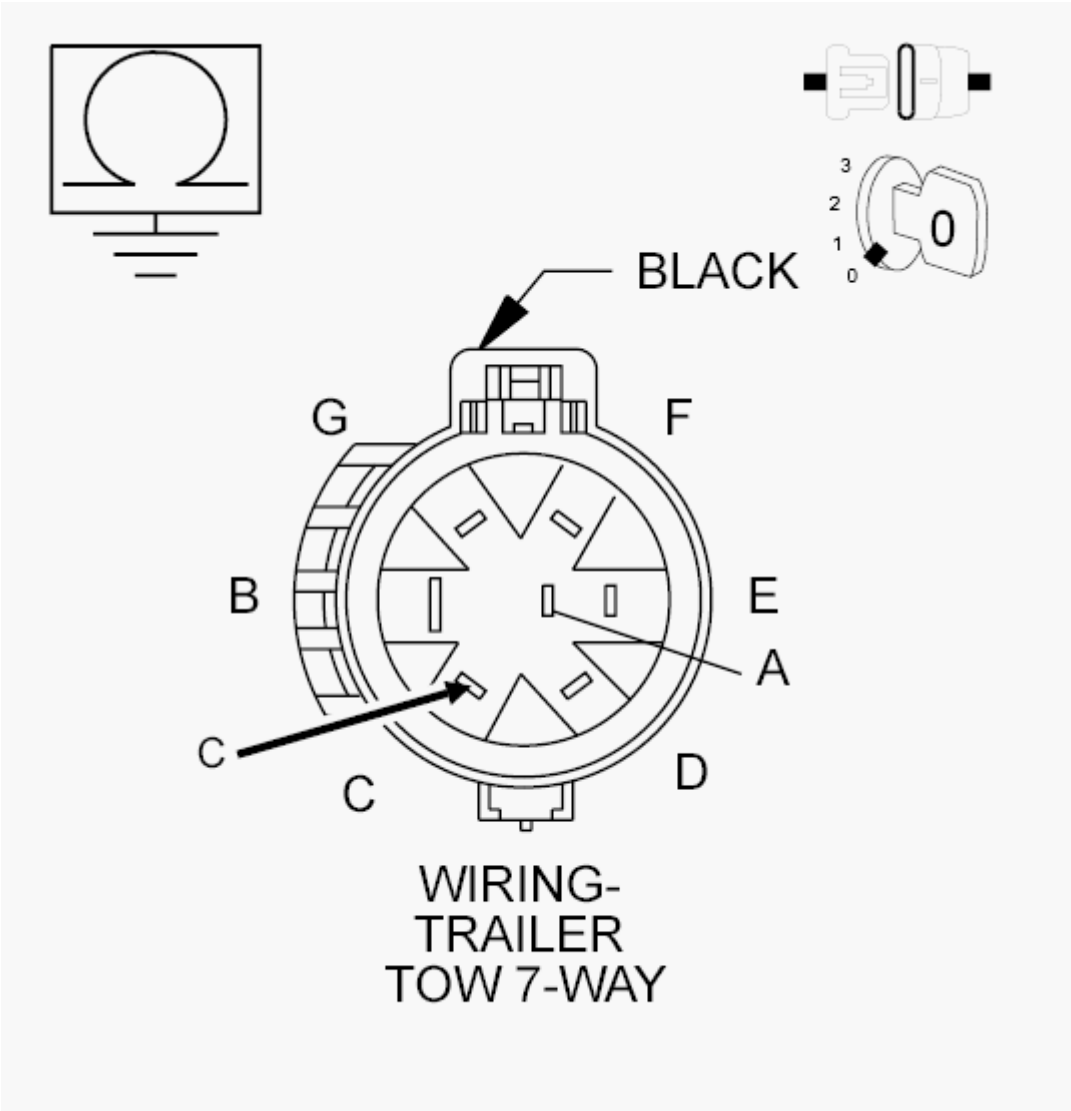

Fig. 8: Checking Trailer Tow Brake (B+) Circuit For A Short To Ground
Courtesy of CHRYSLER GROUP, LLC

1. Turn ignition off to the lock position.
2. Disconnect the ITBM C1 harness connector.
3. Check connectors - Clean/repair as necessary.
4. Measure the resistance between ground and the (B40) Trailer Tow Brake (B+) circuit.

   Is the resistance below 10k Ohms?

   Yes

   - Repair the (B40) Trailer Tow Brake (B+) circuit for a short to ground.
   - Perform the ITBM VERIFICATION TEST. Refer to **STANDARD PROCEDURE - ITBM VERIFICATION TEST**.

No

- Go To 4.

4. **INTEGRATED TRAILER BRAKE MODULE (ITBM)**
   1. Using the wiring diagrams as a guide, check all related splices and connectors for signs of water intrusion, corrosion, pushed out or bent terminals, and correct pin tension. Pay particular attention to all Power and Ground circuits.

      Were there any problems found?

      Yes

      - Repair as necessary.
      - Perform the ITBM VERIFICATION TEST. Refer to **STANDARD PROCEDURE - ITBM VERIFICATION TEST**.

      No

      - Replace the Integrated Trailer Brake Module (ITBM) in accordance with Service Information. Refer to **MODULE, INTEGRATED TRAILER BRAKE (ITBM), REMOVAL** .

5. **INTERMITTENT WIRING AND CONNECTORS**
   1. The conditions necessary to set this DTC are not present at this time.
   2. Using the wiring diagrams as a guide, check all related splices and connectors for signs of water intrusion, corrosion, pushed out or bent terminals, and correct pin tension.
   3. Wiggle test the wiring harness and connectors while monitoring the scan tool data relative to this circuit.
   4. Look for the data to change or for the DTC to reset during the wiggle test.
   5. While monitoring the scan tool data relative to this circuit.
   6. Connect the trailer to the vehicle.
   7. Look for the data to change other than as expected or for the DTC to reset.

      Were any problems found?

      Yes

      - Repair as necessary. Possible trailer wiring problem, refer the customer to an authorized trailer dealer.
      - Perform the ITBM VERIFICATION TEST. Refer to **STANDARD PROCEDURE - ITBM VERIFICATION TEST**.

      No

      - Test complete, the condition or conditions that originally set this DTC are not present at this

time.

C10C7-12 ELECTRONIC TRAILER BRAKE CONTROL OUTPUT-CIRCUIT SHORT TO BATTERY

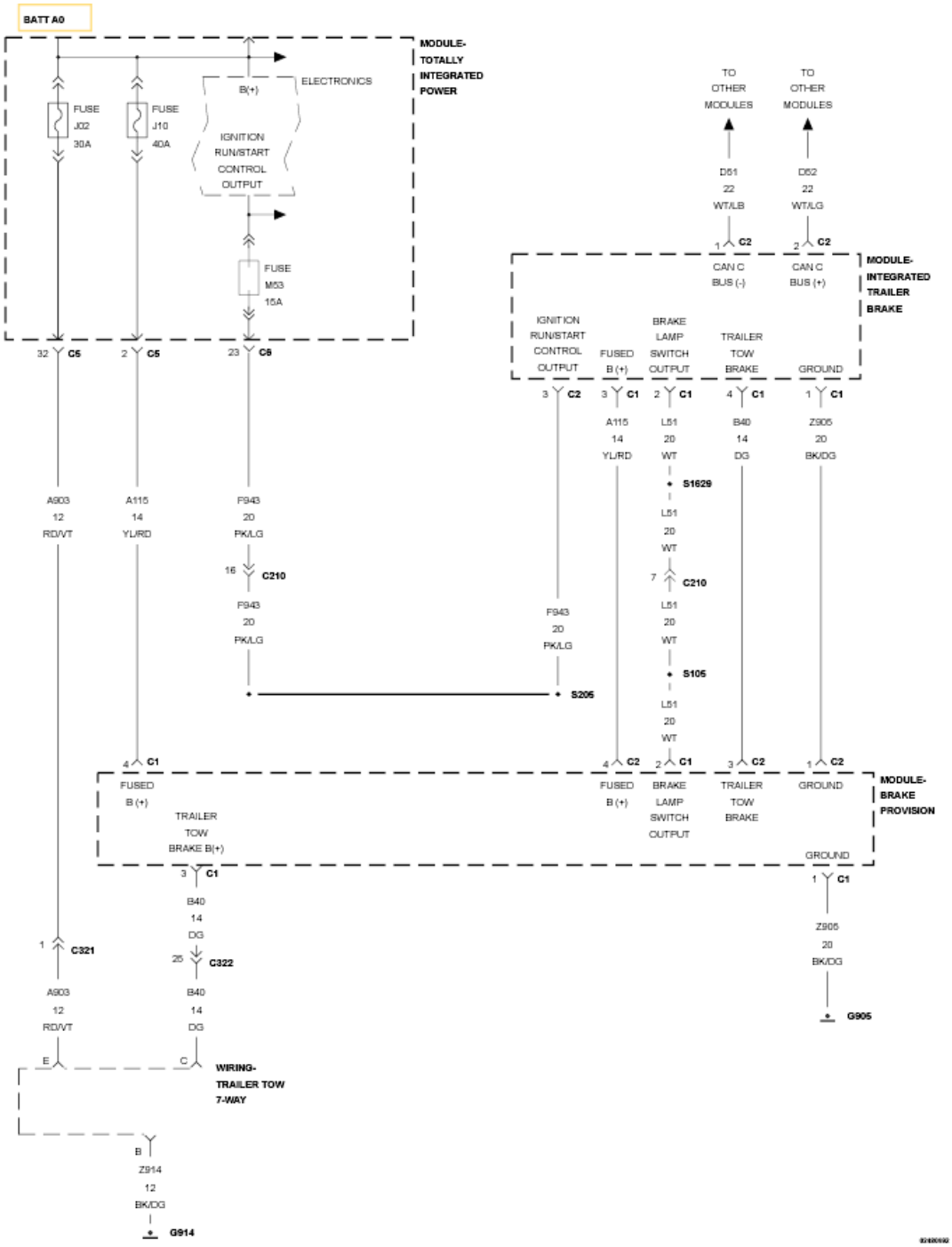

Fig. 9: Integrated Trailer Brake Module (ITBM) Wiring Diagram
Courtesy of CHRYSLER GROUP, LLC

For a complete wiring diagram, **refer to appropriate SYSTEM WIRING DIAGRAMS article** .

THEORY OF OPERATION

The Integrated Trailer Brake Module (ITBM) communicates with the vehicle through the high speed CAN C bus. The ITBM monitors the Brake Pedal Status, Vehicle Speed and ESP status via CAN message. It also outputs the Trailer Status, Gain Setting, and Trailer Brake Output Power to the vehicle. The ITBM connects to the electric trailer brakes through the 7-Way connector and controls the brake force through a Pulse Width Modulating (PWM) duty cycle.

NOTE: If there is no trailer connected there will be NO Pulse Width Modulating (PWM) signal.

The PWM is proportional to the rate of deceleration measured by the accelerometer inside the ITBM. The ITBM controls the PWM output to the trailer brakes in four ways. The first occurs while the brake pedal becomes active and vehicle speed is greater than 0 km/h (0 mph). The second is the manual lever on the ITBM that can be controlled by the driver. If both the manual lever and the brake pedal are active simultaneously, the greater of the two, in terms of PWM output, will prevail. The third is after the vehicle has stopped moving, after approximately three seconds of the brake pedal applied the trailer brakes will be applied too. This is to minimize hitch to trailer noise and vehicle roll back when taking off from a stop and on an incline. The fourth is that it will become active during an ESP trailer sway event.

WHEN MONITORED:

Continuous.

SET CONDITION:

If the Integrated Trailer Brake Module (ITBM) is configured incorrect or the (B40) Trailer Tow Brake (B+) circuit is shorted to voltage, this code will set. Automatic braking and manual lever braking (squeeze switch) are disabled.

POSSIBLE CAUSES

Possible Causes
TRAILER WIRING/BRAKES SHORTED TO VOLTAGE
(B40) TRAILER TOW BRAKE (B+) CIRCUIT SHORTED TO VOLTAGE
INTEGRATED TRAILER BRAKE MODULE (ITBM)

DIAGNOSTIC TEST

NOTE: The appropriate trailer or trailer simulator must be present for the results of this test to be valid.

NOTE: This DTC must be active for the results of this test to be valid.

1. **DTC IS ACTIVE**
    1. Connect the trailer or trailer simulator to the vehicle.

2. Ignition on, engine not running.
3. With the scan tool, record and erase DTCs.
4. Cycle the ignition switch from off to on.
5. With the scan tool, read DTCs.

   Is the status Active for this DTC?

   Yes

   - Go To 2.

   No

   - Go To 5.

2. **TRAILER WIRING/BRAKES**
   1. Turn ignition off to the lock position.
   2. Disconnect the trailer or trailer simulator from the vehicle.
   3. Ignition on, engine not running.
   4. With the scan tool, record and erase DTCs.
   5. Cycle the ignition switch from off to on.

      Does the ITBM display "SB"?

      Yes

      - Go To 3.

      No

      - Trailer wiring/brakes are shorted to voltage, refer the customer to an authorized trailer dealer.

3. **(B40) TRAILER TOW BRAKE (B+) CIRCUIT SHORTED TO VOLTAGE**

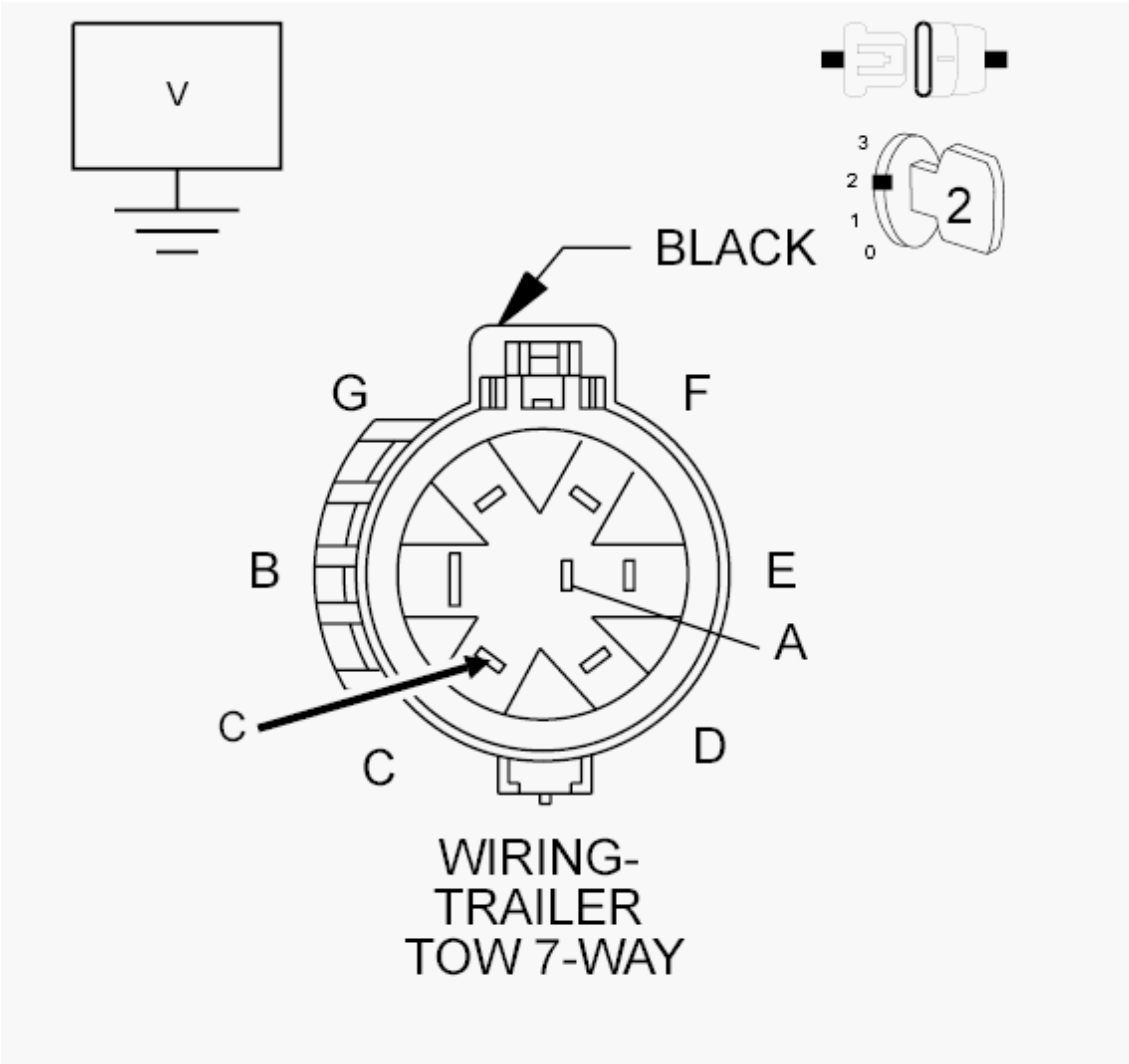

Fig. 10: Checking Trailer Tow Brake (B+) Circuit For An Shorted To Voltage
Courtesy of CHRYSLER GROUP, LLC

1. Turn ignition off to the lock position.
2. Disconnect the ITBM C1 harness connector.
3. Check connectors - Clean/repair as necessary.
4. Ignition on, engine not running.
5. Measure the voltage between the (B40) Trailer Tow Brake (B+) circuit and ground.

   Is there any voltage present?

   Yes

   - Repair the (B40) Trailer Tow Brake (B+) circuit for a short to voltage.
   - Perform the ITBM VERIFICATION TEST. Refer to **STANDARD PROCEDURE - ITBM VERIFICATION TEST**.

No

- Go To 4.

4. **INTEGRATED TRAILER BRAKE MODULE (ITBM)**
   1. Using the wiring diagrams as a guide, check all related splices and connectors for signs of water intrusion, corrosion, pushed out or bent terminals, and correct pin tension. Pay particular attention to all Power and Ground circuits.

      Were there any problems found?

      Yes

      - Repair as necessary.
      - Perform the ITBM VERIFICATION TEST. Refer to **STANDARD PROCEDURE - ITBM VERIFICATION TEST**.

      No

      - Replace the Integrated Trailer Brake Module (ITBM) in accordance with Service Information. Refer to **MODULE, INTEGRATED TRAILER BRAKE (ITBM), REMOVAL** .

5. **INTERMITTENT WIRING AND CONNECTORS**
   1. The conditions necessary to set this DTC are not present at this time.
   2. Using the wiring diagrams as a guide, check all related splices and connectors for signs of water intrusion, corrosion, pushed out or bent terminals, and correct pin tension.
   3. Wiggle test the wiring harness and connectors while monitoring the scan tool data relative to this circuit.
   4. Look for the data to change or for the DTC to reset during the wiggle test.
   5. While monitoring the scan tool data relative to this circuit.
   6. Connect the trailer to the vehicle.
   7. Look for the data to change other than as expected or for the DTC to reset.

      Were any problems found?

      Yes

      - Repair as necessary. Possible trailer wiring problem, refer the customer to an authorized trailer dealer.
      - Perform the ITBM VERIFICATION TEST. Refer to **STANDARD PROCEDURE - ITBM VERIFICATION TEST**.

      No

      - Test complete, the condition or conditions that originally set this DTC are not present at this

time.

C10C7-19 ELECTRONIC TRAILER BRAKE CONTROL OUTPUT-OVERCURRENT

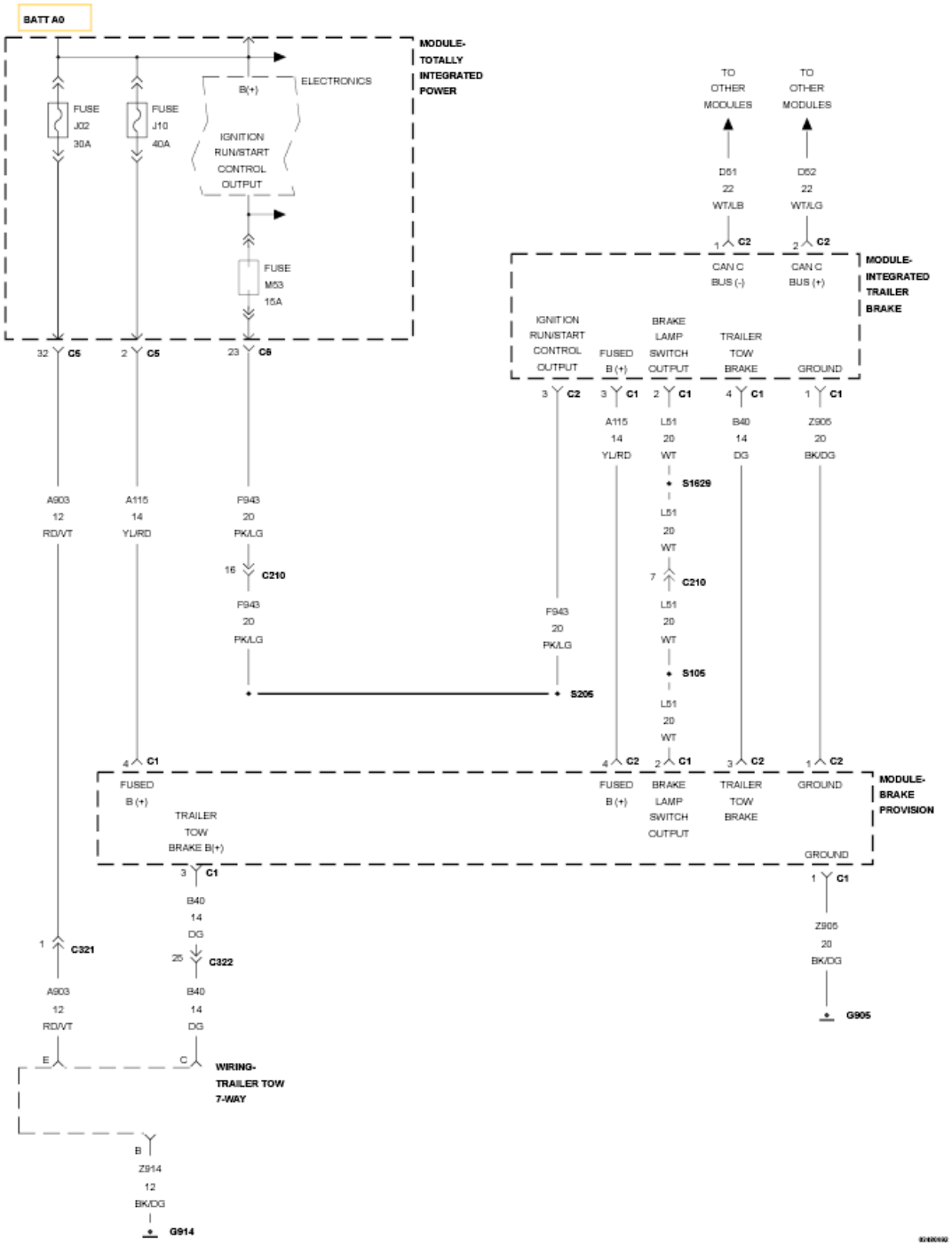

Fig. 11: Integrated Trailer Brake Module (ITBM) Wiring Diagram
Courtesy of CHRYSLER GROUP, LLC

For a complete wiring diagram, **refer to appropriate SYSTEM WIRING DIAGRAMS article** .

THEORY OF OPERATION

The Integrated Trailer Brake Module (ITBM) communicates with the vehicle through the high speed CAN C bus. The ITBM monitors the Brake Pedal Status, Vehicle Speed and ESP status via CAN message. It also outputs the Trailer Status, Gain Setting, and Trailer Brake Output Power to the vehicle. The ITBM connects to the electric trailer brakes through the 7-Way connector and controls the brake force through a Pulse Width Modulating (PWM) duty cycle.

NOTE: If there is no trailer connected there will be NO Pulse Width Modulating (PWM) signal.

The PWM is proportional to the rate of deceleration measured by the accelerometer inside the ITBM. The ITBM controls the PWM output to the trailer brakes in four ways. The first occurs while the brake pedal becomes active and vehicle speed is greater than 0 km/h (0 mph). The second is the manual lever on the ITBM that can be controlled by the driver. If both the manual lever and the brake pedal are active simultaneously, the greater of the two, in terms of PWM output, will prevail. The third is after the vehicle has stopped moving, after approximately three seconds of the brake pedal applied the trailer brakes will be applied too. This is to minimize hitch to trailer noise and vehicle roll back when taking off from a stop and on an incline. The fourth is that it will become active during an ESP trailer sway event.

WHEN MONITORED:

Continuous.

SET CONDITION:

If the Integrated Trailer Brake Module (ITBM) is configured incorrect or an output over current to the trailer brakes is present, this code will set. Automatic braking and manual lever braking (squeeze switch) are disabled.

POSSIBLE CAUSES

Possible Causes
TRAILER WIRING/BRAKES
INTEGRATED TRAILER BRAKE MODULE (ITBM)

DIAGNOSTIC TEST

NOTE: The appropriate trailer or trailer simulator must be present for the results of this test to be valid.

NOTE: This DTC must be active for the results of this test to be valid.

1. **DTC IS ACTIVE**
    1. Connect the trailer or trailer simulator to the vehicle.
    2. Ignition on, engine not running.
    3. With the scan tool, record and erase DTCs.

4. Cycle the ignition switch from off to on.
5. With the scan tool, read DTCs.

   Is the status Active for this DTC?

   Yes

   - Go To 2.

   No

   - Go To 4.

2. **TRAILER WIRING/BRAKES**
   1. Turn ignition off to the lock position.
   2. Disconnect the trailer or trailer simulator from the vehicle.
   3. Ignition on, engine not running.
   4. With the scan tool, record and erase DTCs.
   5. Cycle the ignition switch from off to on.

      Does the ITBM display "CF"?

      Yes

      - Go To 3.

      No

      - Trailer wiring or trailer brakes are in operative, refer the customer to an authorized trailer dealer.

3. **INTEGRATED TRAILER BRAKE MODULE (ITBM)**
   1. Turn ignition off to the lock position.
   2. Disconnect the trailer.
   3. Using the wiring diagrams as a guide, check all related splices and connectors for signs of water intrusion, corrosion, pushed out or bent terminals, and correct pin tension. Pay particular attention to all Power and Ground circuits.

      Were there any problems found?

      Yes

      - Repair as necessary.
      - Perform the ITBM VERIFICATION TEST. Refer to **STANDARD PROCEDURE - ITBM VERIFICATION TEST**.

No

- Replace the Integrated Trailer Brake Module (ITBM) in accordance with Service Information. Refer to **MODULE, INTEGRATED TRAILER BRAKE (ITBM), REMOVAL** .

4. **INTERMITTENT WIRING AND CONNECTORS**
    1. The conditions necessary to set this DTC are not present at this time.
    2. Using the wiring diagrams as a guide, check all related splices and connectors for signs of water intrusion, corrosion, pushed out or bent terminals, and correct pin tension.
    3. Wiggle test the wiring harness and connectors while monitoring the scan tool data relative to this circuit.
    4. Look for the data to change or for the DTC to reset during the wiggle test.
    5. While monitoring the scan tool data relative to this circuit.
    6. Connect the trailer to the vehicle.
    7. Look for the data to change other than as expected or for the DTC to reset.

    Were any problems found?

    Yes

    - Repair as necessary. Possible trailer wiring problem, refer the customer to an authorized trailer dealer.
    - Perform the ITBM VERIFICATION TEST. Refer to **STANDARD PROCEDURE - ITBM VERIFICATION TEST**.

    No

    - Test complete, the condition or conditions that originally set this DTC are not present at this time.

C10C9-00 ELECTRONIC TRAILER BRAKE MANUAL LEVER FAILSAFE CIRCUIT

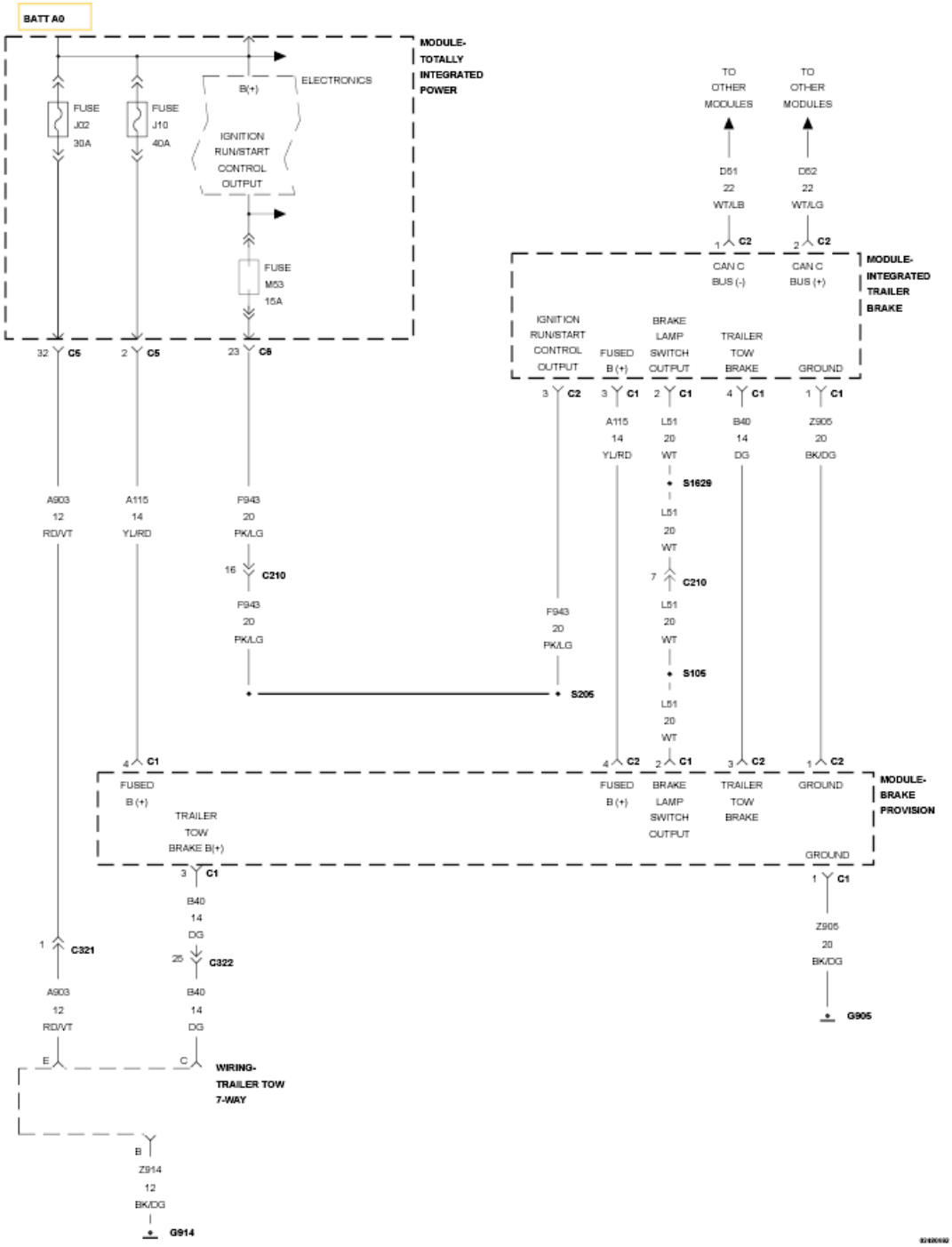

Fig. 12: Integrated Trailer Brake Module (ITBM) Wiring Diagram
Courtesy of CHRYSLER GROUP, LLC

For a complete wiring diagram, **refer to appropriate SYSTEM WIRING DIAGRAMS article** .

THEORY OF OPERATION

The Integrated Trailer Brake Module (ITBM) communicates with the vehicle through the high speed CAN C

bus. The ITBM monitors the Brake Pedal Status, Vehicle Speed and ESP status via CAN message. It also outputs the Trailer Status, Gain Setting, and Trailer Brake Output Power to the vehicle. The ITBM connects to the electric trailer brakes through the 7-Way connector and controls the brake force through a Pulse Width Modulating (PWM) duty cycle.

NOTE: If there is no trailer connected there will be NO Pulse Width Modulating (PWM) signal.

The PWM is proportional to the rate of deceleration measured by the accelerometer inside the ITBM. The ITBM controls the PWM output to the trailer brakes in four ways. The first occurs while the brake pedal becomes active and vehicle speed is greater than 0 km/h (0 mph). The second is the manual lever on the ITBM that can be controlled by the driver. If both the manual lever and the brake pedal are active simultaneously, the greater of the two, in terms of PWM output, will prevail. The third is after the vehicle has stopped moving, after approximately three seconds of the brake pedal applied the trailer brakes will be applied too. This is to minimize hitch to trailer noise and vehicle roll back when taking off from a stop and on an incline. The fourth is that it will become active during an ESP trailer sway event.

WHEN MONITORED:

When manual lever (squeeze switch) is operated.

SET CONDITION:

If the Integrated Trailer Brake Module (ITBM) is configured incorrect or the manual lever braking (squeeze switch) circuit internally is out of range. Automatic braking and manual lever braking (squeeze switch) will operate normally.

POSSIBLE CAUSES

Possible Causes
TRAILER WIRING/BRAKES
INTEGRATED TRAILER BRAKE MODULE (ITBM)

DIAGNOSTIC TEST

NOTE: The appropriate trailer or trailer simulator must be present for the results of this test to be valid.

NOTE: This DTC must be active for the results of this test to be valid.

1. **DTC IS ACTIVE**
    1. Connect the trailer or trailer simulator to the vehicle.
    2. Ignition on, engine not running.
    3. With the scan tool, record and erase DTCs.
    4. Cycle the ignition switch from off to on.

5. With the scan tool, read DTCs.

   Is the status Active for this DTC?

   Yes

   - Go To 2.

   No

   - Go To 4.

2. **TRAILER WIRING/BRAKES**
   1. Turn ignition off to the lock position.
   2. Disconnect the trailer or trailer simulator from the vehicle.
   3. Ignition on, engine not running.
   4. With the scan tool, record and erase DTCs.
   5. Cycle the ignition switch from off to on.

      Does the ITBM display "CF"?

      Yes

      - Go To 3.

      No

      - Trailer wiring/brakes are shorted to ground, refer the customer to an authorized trailer dealer.

3. **INTEGRATED TRAILER BRAKE MODULE (ITBM)**
   1. Turn ignition off to the lock position.
   2. Disconnect the trailer.
   3. Using the wiring diagrams as a guide, check all related splices and connectors for signs of water intrusion, corrosion, pushed out or bent terminals, and correct pin tension. Pay particular attention to all Power and Ground circuits.

      Were there any problems found?

      Yes

      - Repair as necessary.
      - Perform the ITBM VERIFICATION TEST. Refer to **STANDARD PROCEDURE - ITBM VERIFICATION TEST**.

      No

- Replace the Integrated Trailer Brake Module (ITBM) in accordance with Service Information. Refer to **MODULE, INTEGRATED TRAILER BRAKE (ITBM), REMOVAL** .

4. **INTERMITTENT WIRING AND CONNECTORS**
    1. The conditions necessary to set this DTC are not present at this time.
    2. Using the wiring diagrams as a guide, check all related splices and connectors for signs of water intrusion, corrosion, pushed out or bent terminals, and correct pin tension.
    3. Wiggle test the wiring harness and connectors while monitoring the scan tool data relative to this circuit.
    4. Look for the data to change or for the DTC to reset during the wiggle test.
    5. While monitoring the scan tool data relative to this circuit.
    6. Connect the trailer to the vehicle.
    7. Look for the data to change other than as expected or for the DTC to reset.

    Were any problems found?

    Yes

    - Repair as necessary. Possible trailer wiring problem, refer the customer to an authorized trailer dealer.
    - Perform the ITBM VERIFICATION TEST. Refer to **STANDARD PROCEDURE - ITBM VERIFICATION TEST**.

    No

    - Test complete, the condition or conditions that originally set this DTC are not present at this time.

C10CA-2A ITBM ADJUSTMENT SWITCH STUCK

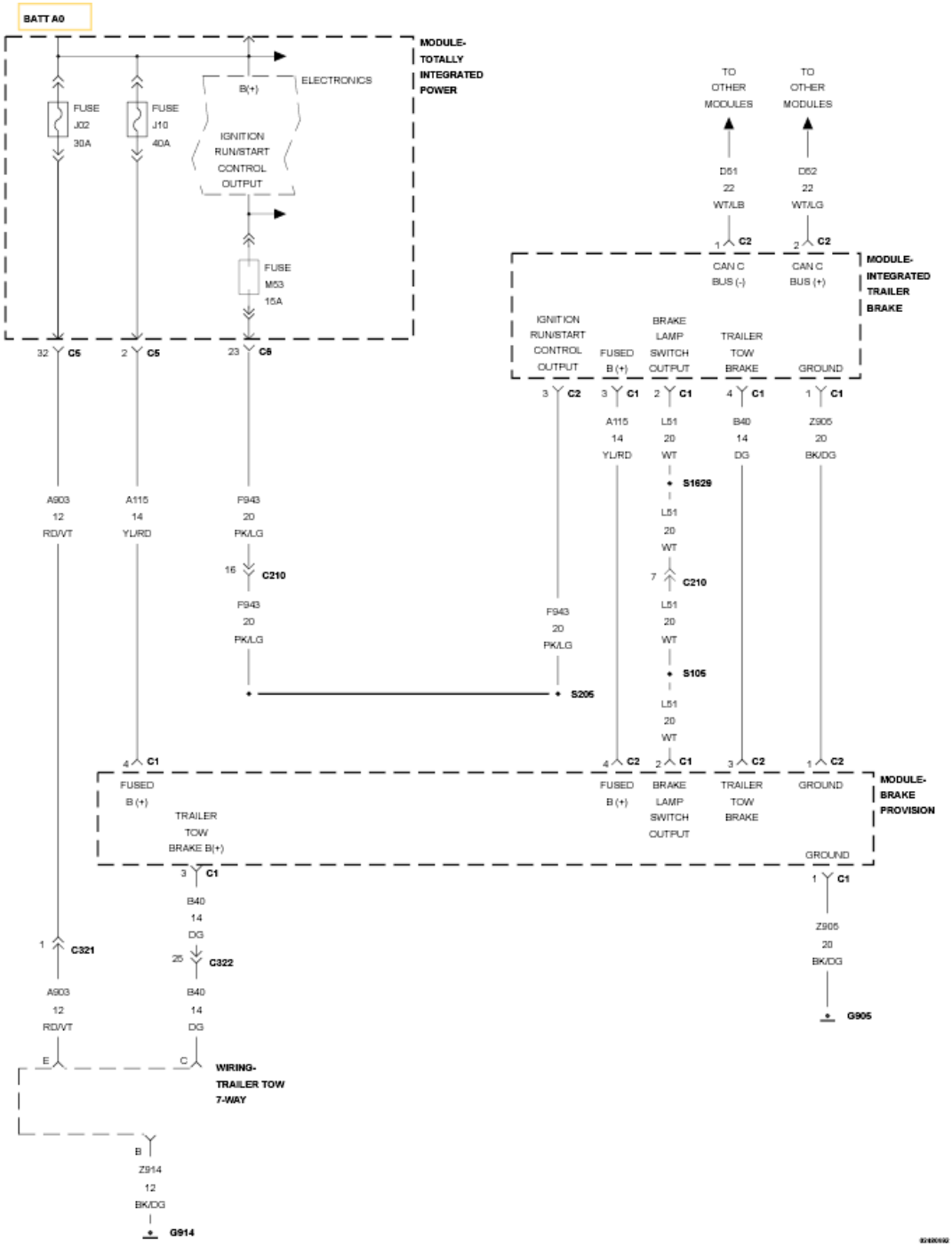

Fig. 13: Integrated Trailer Brake Module (ITBM) Wiring Diagram
Courtesy of CHRYSLER GROUP, LLC

For a complete wiring diagram, **refer to appropriate SYSTEM WIRING DIAGRAMS article** .

THEORY OF OPERATION

The Integrated Trailer Brake Module (ITBM) communicates with the vehicle through the high speed CAN C

bus. The ITBM monitors the Brake Pedal Status, Vehicle Speed and ESP status via CAN message. It also outputs the Trailer Status, Gain Setting, and Trailer Brake Output Power to the vehicle. The ITBM connects to the electric trailer brakes through the 7-Way connector and controls the brake force through a Pulse Width Modulating (PWM) duty cycle.

NOTE: If there is no trailer connected there will be NO Pulse Width Modulating (PWM) signal.

The PWM is proportional to the rate of deceleration measured by the accelerometer inside the ITBM. The ITBM controls the PWM output to the trailer brakes in four ways. The first occurs while the brake pedal becomes active and vehicle speed is greater than 0 km/h (0 mph). The second is the manual lever on the ITBM that can be controlled by the driver. If both the manual lever and the brake pedal are active simultaneously, the greater of the two, in terms of PWM output, will prevail. The third is after the vehicle has stopped moving, after approximately three seconds of the brake pedal applied the trailer brakes will be applied too. This is to minimize hitch to trailer noise and vehicle roll back when taking off from a stop and on an incline. The fourth is that it will become active during an ESP trailer sway event.

WHEN MONITORED:

Continuous.

SET CONDITION:

If the Integrated Trailer Brake Module (ITBM) is configured incorrect or the manual lever (squeeze switch) is stuck, this code will set. Automatic braking and manual lever braking are disabled.

POSSIBLE CAUSES

Possible Causes
TRAILER WIRING/BRAKES
INTEGRATED TRAILER BRAKE MODULE (ITBM)

DIAGNOSTIC TEST

NOTE: The appropriate trailer or trailer simulator must be present for the results of this test to be valid.

NOTE: This DTC must be active for the results of this test to be valid.

1. **DTC IS ACTIVE**
    1. Connect the appropriate trailer or trailer simulator to the vehicle.
    2. Ignition on, engine not running.
    3. With the scan tool, record and erase DTCs.
    4. Cycle the ignition from on to off and back to on several times, waiting five seconds between each ignition state.

5. With the scan tool, read DTCs.

   Is the status Active for this DTC?

   Yes

   - Go To 2.

   No

   - Go To 4.

2. **MANUAL LEVER**
   1. Turn ignition off to the lock position.
   2. Verify the squeeze switch is not pressed or sticking.
   3. Ignition on, engine not running.
   4. With the scan tool, erase DTCs.
   5. Cycle the ignition switch from off to on.

      Does the ITBM display "CF"?

      Yes

      - Go To 3.

      No

      - Trailer wiring/brakes are in operative, refer the customer to an authorized trailer dealer.

3. **INTEGRATED TRAILER BRAKE MODULE (ITBM)**
   1. Turn ignition off to the lock position.
   2. Disconnect the trailer.
   3. Using the wiring diagrams as a guide, check all related splices and connectors for signs of water intrusion, corrosion, pushed out or bent terminals, and correct pin tension. Pay particular attention to all Power and Ground circuits.

      Were there any problems found?

      Yes

      - Repair as necessary.
      - Perform the ITBM VERIFICATION TEST. Refer to **STANDARD PROCEDURE - ITBM VERIFICATION TEST**.

      No

- Replace the Integrated Trailer Brake Module (ITBM) in accordance with Service Information. Refer to **MODULE, INTEGRATED TRAILER BRAKE (ITBM), REMOVAL** .

4. **INTERMITTENT WIRING AND CONNECTORS**
    1. The conditions necessary to set this DTC are not present at this time.
    2. Using the wiring diagrams as a guide, check all related splices and connectors for signs of water intrusion, corrosion, pushed out or bent terminals, and correct pin tension.
    3. Wiggle test the wiring harness and connectors while monitoring the scan tool data relative to this circuit.
    4. Look for the data to change or for the DTC to reset during the wiggle test.
    5. While monitoring the scan tool data relative to this circuit.
    6. Look for the data to change other than as expected or for the DTC to reset.

    Were any problems found?

    Yes

    - Repair as necessary.
    - Perform the ITBM VERIFICATION TEST. Refer to **STANDARD PROCEDURE - ITBM VERIFICATION TEST**.

    No

    - Test complete, the condition or conditions that originally set this DTC are not present at this time.

C2129-16 BATTERY VOLTAGE - CIRCUIT VOLTAGE BELOW THRESHOLD

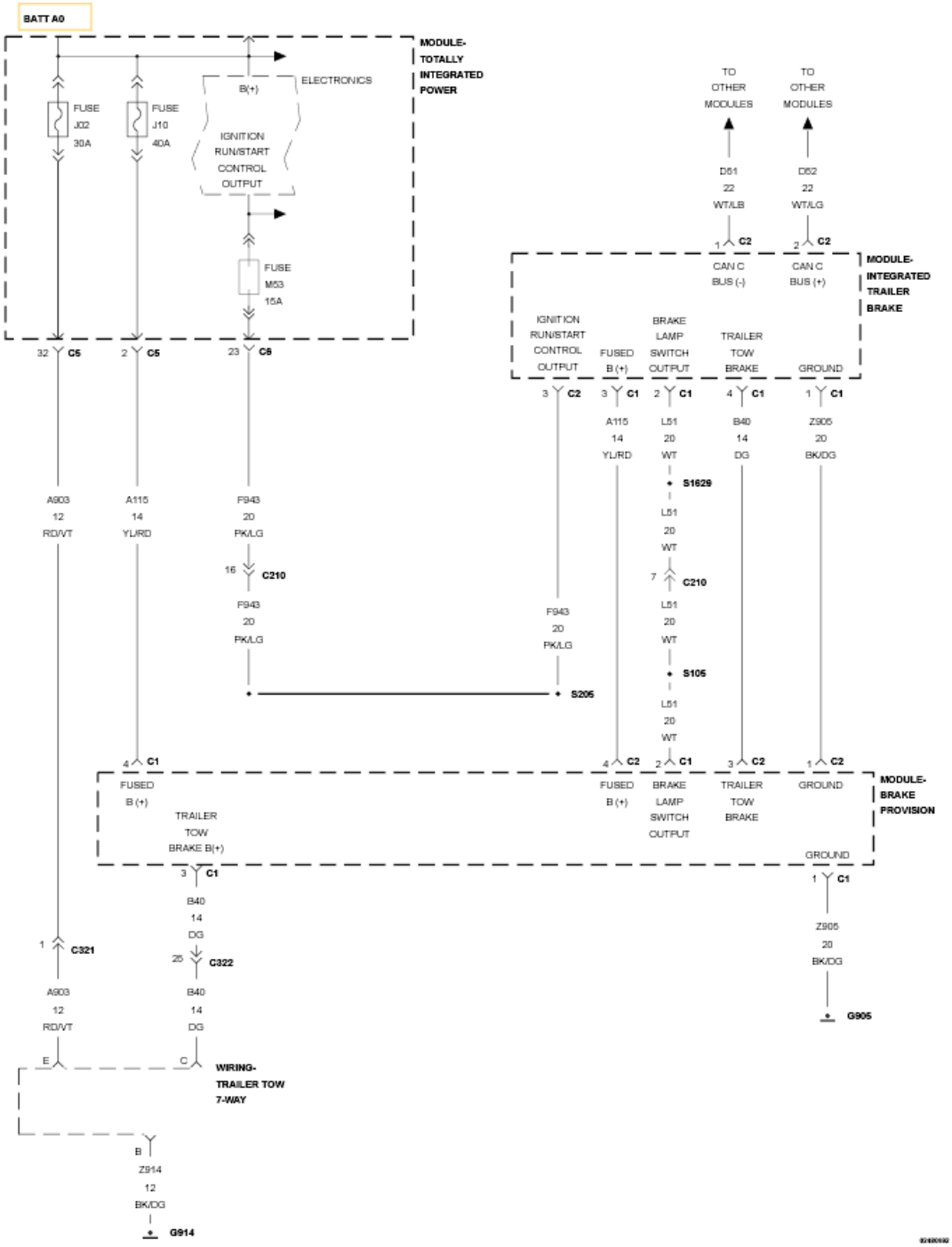

Fig. 14: Integrated Trailer Brake Module (ITBM) Wiring Diagram
Courtesy of CHRYSLER GROUP, LLC

For a complete wiring diagram, **refer to appropriate SYSTEM WIRING DIAGRAMS article** .

THEORY OF OPERATION

The Integrated Trailer Brake Module (ITBM) communicates with the vehicle through the high speed CAN B

bus. The ITBM monitors the Brake Pedal Status and Vehicle Speed. It also outputs the Trailer Status, Gain Setting, and Brake Output Power to the vehicle. The ITBM connects to the electric trailer brakes through the 7-Way connector and controls the brake force through a Pulse Width Modulating (PWM) duty cycle.

NOTE: If there is no trailer connected there will be NO Pulse Width Modulating (PWM) signal.

The ITBM controls the PWM output to the trailer brakes in two ways. The first occurs while the brake pedal becomes active, the PWM is proportional to the rate of deceleration measured by the accelerometer inside the ITBM. The second is the manual lever on the ITBM that can be controlled by the driver. If both are active, the greater of the two, in terms of PWM output, will prevail.

WHEN MONITORED:

Ignition on.

SET CONDITION:

If the sensed ignition voltage drops below 9.5 volts for 100 msec.

POSSIBLE CAUSES

Possible Causes
(F943) IGNITION RUN/START CONTROL OUTPUT CIRCUIT OPEN OR HIGH RESISTANCE
(A115) FUSED (B+) CIRCUIT OPEN OR HIGH RESISTANCE
(Z905) GROUND CIRCUIT(S) OPEN OR HIGH RESISTANCE
INTEGRATED TRAILER BRAKE MODULE (ITBM)

DIAGNOSTIC TEST

1. **DTC IS ACTIVE**

NOTE: Diagnose and repair any powertrain Charging system DTCs before continuing with this procedure.

NOTE: Make sure the battery is fully charged.

1. Ignition on, engine not running.
2. With the scan tool, record and erase DTCs.
3. Turn ignition off to the lock position.
4. Start the engine.
5. With the scan tool, read DTCs.

Is the status Active for this DTC?

Yes

- Go To 2.

No

- Go To 6.

2. **(F943) IGNITION RUN/START CONTROL OUTPUT CIRCUIT OPEN OR HIGH RESISTANCE**

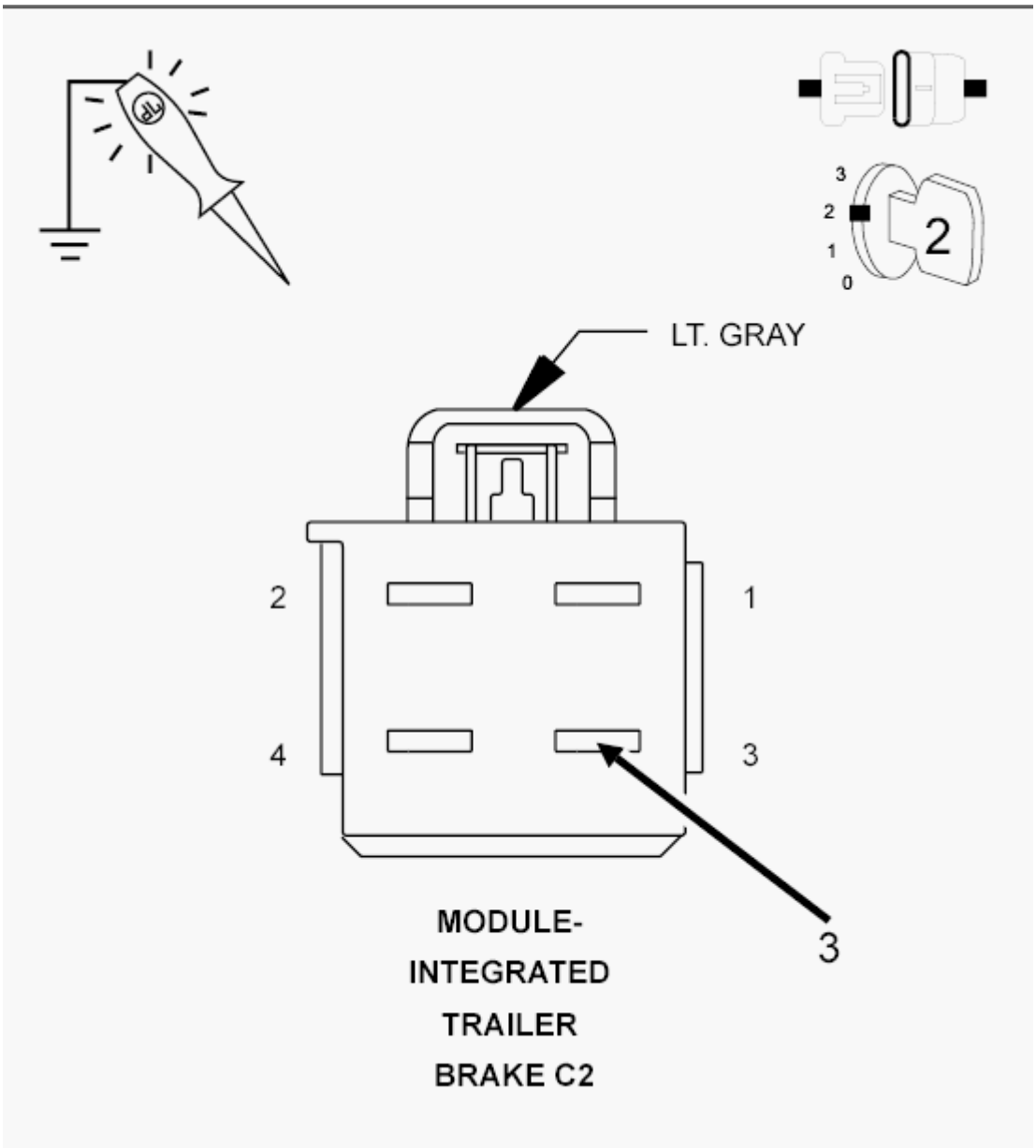

Fig. 15: Checking Ignition Run/Start Control Output Circuit For An Open Or High Resistance
Courtesy of CHRYSLER GROUP, LLC

1. Turn ignition off to the lock position.
2. Disconnect the ITBM C2 harness connector.
3. Check connectors - Clean/repair as necessary.
4. Ignition on, engine not running.
5. Using a 12-volt test light connected to ground, check the (F943) Ignition Run/Start Control Output circuit.

NOTE: Compare the brightness to that of a direct connection to the battery.

Does the test light illuminate brightly?

Yes

- Go To 3.

No

- Repair the (F943) Ignition Run/Start Control Output circuit for a short to ground, an open circuit, or high resistance.
- Perform the ITBM VERIFICATION TEST. Refer to **STANDARD PROCEDURE - ITBM VERIFICATION TEST**.

3. **(A115) FUSED (B+) CIRCUIT OPEN OR HIGH RESISTANCE**

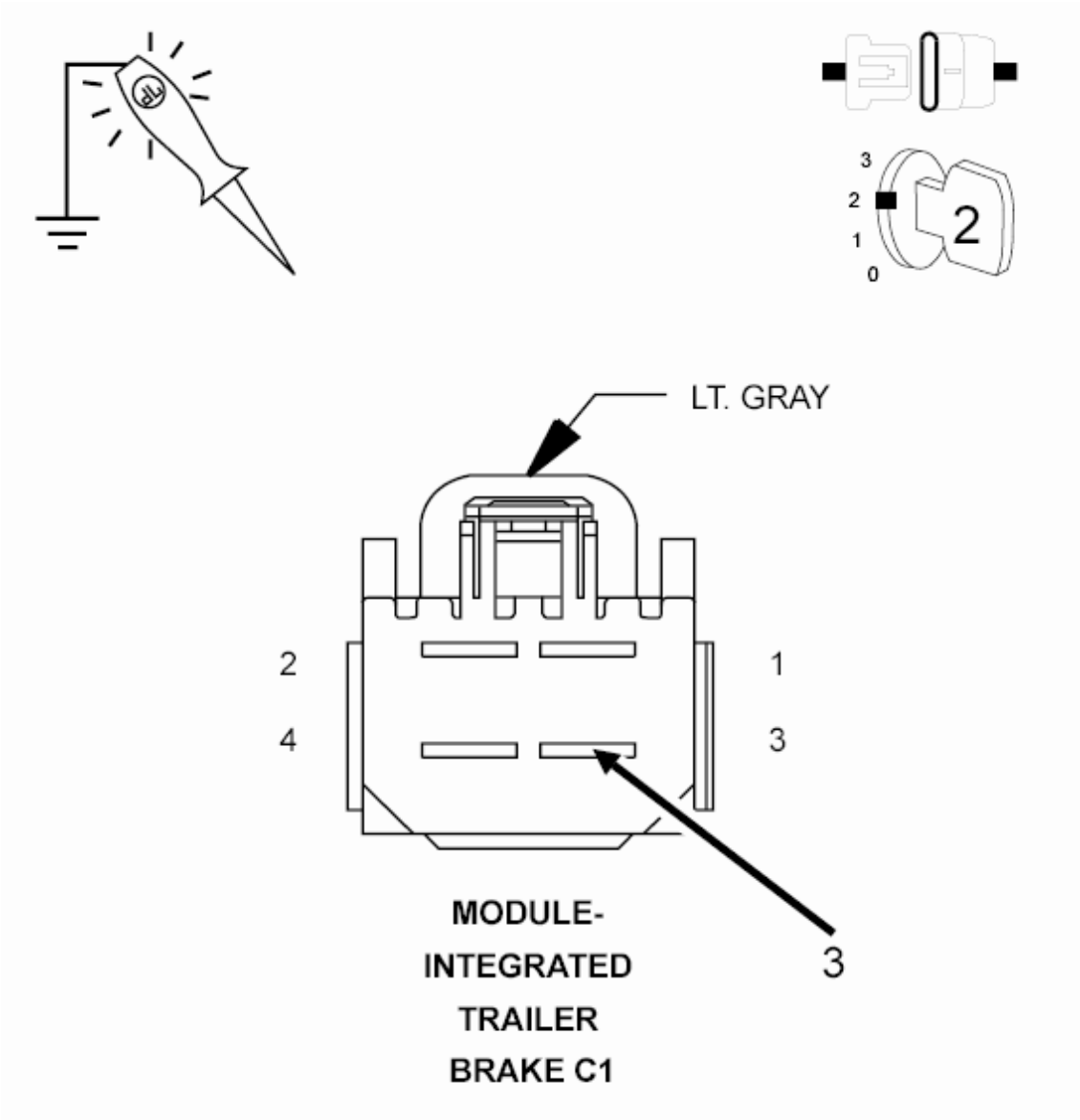

Fig. 16: Checking Fused (B+) Circuit For An Open Or High Resistance
Courtesy of CHRYSLER GROUP, LLC

1. Turn ignition off to the lock position.
2. Disconnect the ITBM C1 harness connector.
3. Check connectors - Clean/repair as necessary.
4. Using a 12-volt test light connected to ground, check the (A115) Fused (B+) circuit.

NOTE: **Compare the brightness to that of a direct connection to the battery.**

Does the test light illuminate brightly?

Yes

- Go To 4.

No

- Repair the (A115) Fused (B+) circuit for a short to ground, an open circuit, or high resistance.
- Perform the ITBM VERIFICATION TEST. Refer to **STANDARD PROCEDURE - ITBM VERIFICATION TEST**.

4. **(Z905) GROUND CIRCUIT OPEN OR HIGH RESISTANCE**

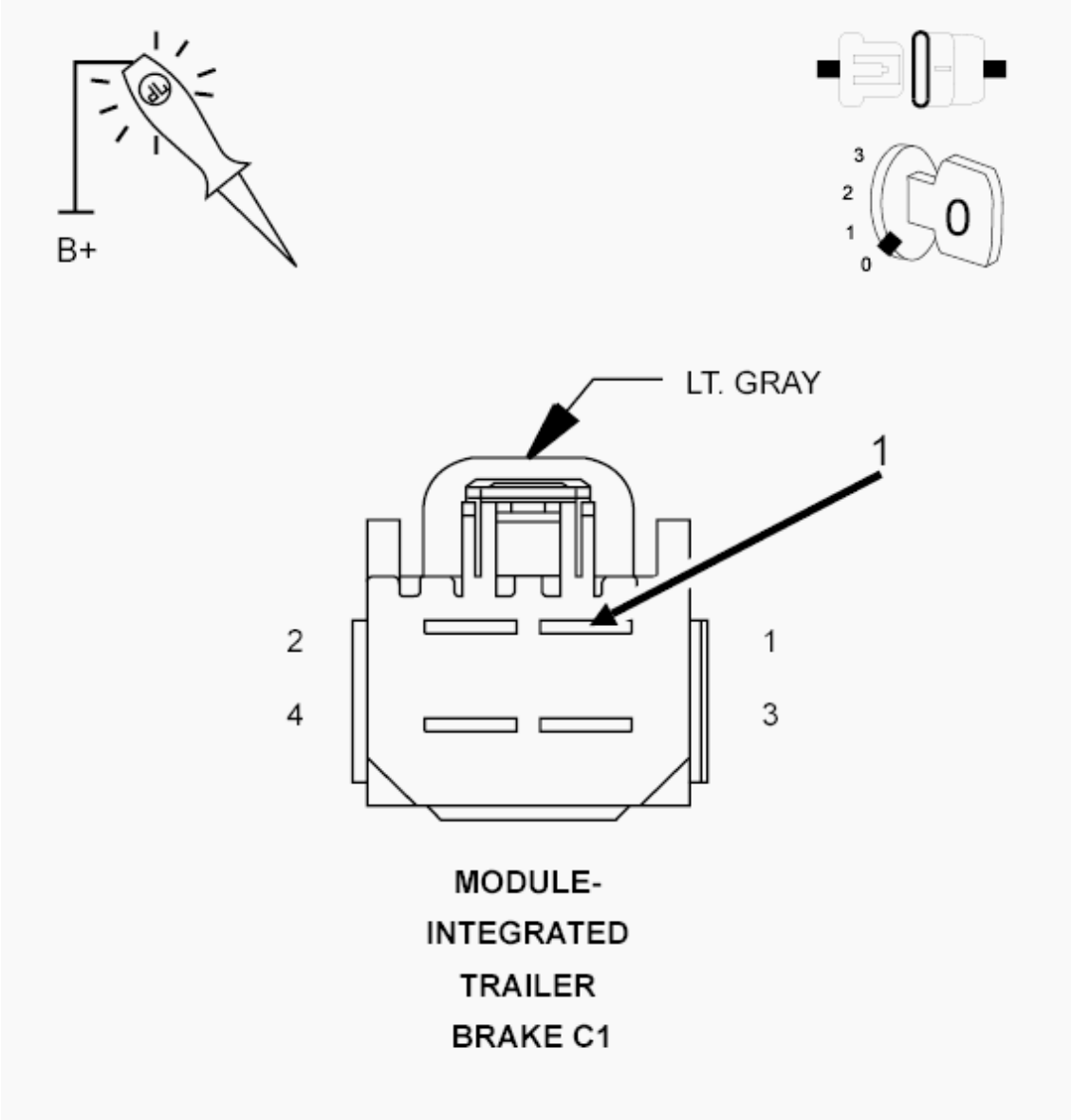

Fig. 17: Checking Ground Circuit For An Open Or High Resistance
Courtesy of CHRYSLER GROUP, LLC

1. Turn ignition off to the lock position.

2. Using a 12-volt test light connected to B+, check the (Z905) Ground circuit.

   NOTE: Compare the brightness to that of a direct connection to the battery.

   Does the test light illuminate brightly?

   Yes

   - Go To 5.

   No

   - Repair the (Z905) Ground circuit(s) for an open circuit or high resistance.
   - Perform the ITBM VERIFICATION TEST. Refer to **STANDARD PROCEDURE - ITBM VERIFICATION TEST**.

5. **INTEGRATED TRAILER BRAKE MODULE (ITBM)**
   1. Turn ignition off to the lock position.
   2. Using the wiring diagrams as a guide, check all related splices and connectors for signs of water intrusion, corrosion, pushed out or bent terminals, and correct pin tension. Pay particular attention to all Power and Ground circuits.

      Were there any problems found?

      Yes

      - Repair as necessary.
      - Perform the ITBM VERIFICATION TEST. Refer to **STANDARD PROCEDURE - ITBM VERIFICATION TEST**.

      No

      - Replace the Integrated Trailer Brake Module (ITBM) in accordance with Service Information. Refer to **MODULE, INTEGRATED TRAILER BRAKE (ITBM), REMOVAL** .

6. **INTERMITTENT WIRING AND CONNECTORS**
   1. The conditions necessary to set this DTC are not present at this time.
   2. Using the wiring diagrams as a guide, check all related splices and connectors for signs of water intrusion, corrosion, pushed out or bent terminals, and correct pin tension.
   3. Wiggle test the wiring harness and connectors while monitoring the scan tool data relative to this circuit.
   4. Look for the data to change or for the DTC to reset during the wiggle test.
   5. While monitoring the scan tool data relative to this circuit.
   6. Look for the data to change other than as expected or for the DTC to reset.

Were any problems found?

Yes

- Repair as necessary.
- Perform the ITBM VERIFICATION TEST. Refer to **STANDARD PROCEDURE - ITBM VERIFICATION TEST**.

No

- Test complete, the condition or conditions that originally set this DTC are not present at this time.
- Perform the ITBM VERIFICATION TEST. Refer to **STANDARD PROCEDURE - ITBM VERIFICATION TEST**.

C2129-17 BATTERY VOLTAGE - CIRCUIT VOLTAGE ABOVE THRESHOLD

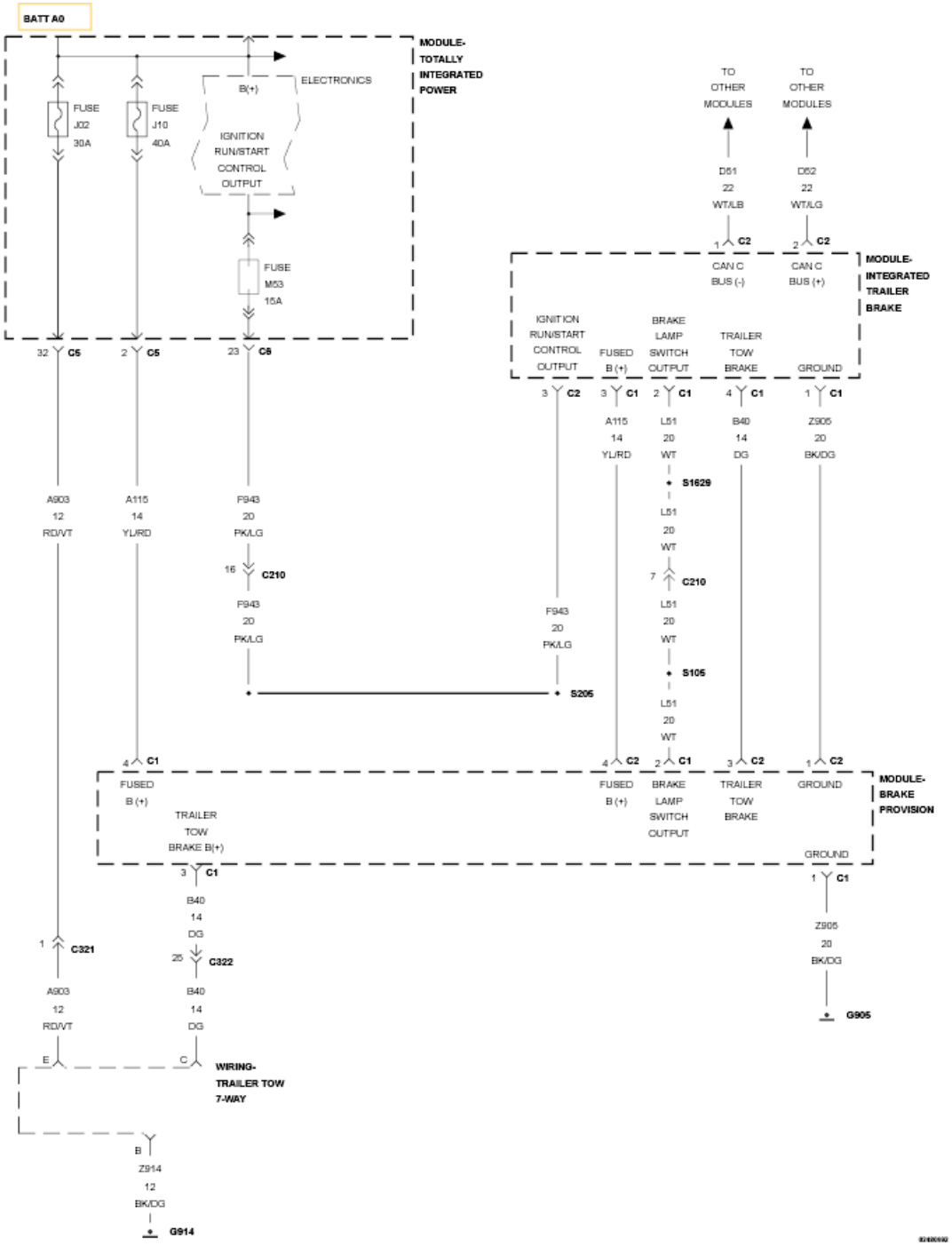

Fig. 18: Integrated Trailer Brake Module (ITBM) Wiring Diagram
Courtesy of CHRYSLER GROUP, LLC

For a complete wiring diagram, **refer to appropriate SYSTEM WIRING DIAGRAMS article** .

THEORY OF OPERATION

The Integrated Trailer Brake Module (ITBM) communicates with the vehicle through the high speed CAN B

bus. The ITBM monitors the Brake Pedal Status and Vehicle Speed. It also outputs the Trailer Status, Gain Setting, and Brake Output Power to the vehicle. The ITBM connects to the electric trailer brakes through the 7-Way connector and controls the brake force through a Pulse Width Modulating (PWM) duty cycle.

NOTE: If there is no trailer connected there will be NO Pulse Width Modulating (PWM) signal.

The ITBM controls the PWM output to the trailer brakes in two ways. The first occurs while the brake pedal becomes active, the PWM is proportional to the rate of deceleration measured by the accelerometer inside the ITBM. The second is the manual lever (squeeze switch) on the ITBM that can be controlled by the driver. If both are active, the greater of the two, in terms of PWM output, will prevail.

WHEN MONITORED:

Ignition on and no system undervoltage DTC active.

SET CONDITION:

If the sensed ignition voltage is greater than 16.5 volts for 100 msec.

POSSIBLE CAUSES

Possible Causes
POWERTRAIN CONTROL MODULE (PCM) CHARGING SYSTEM DTCS PRESENT
INTEGRATED TRAILER BRAKE MODULE (ITBM)

DIAGNOSTIC TEST

1. **CHARGING SYSTEM DTCS PRESENT**
    1. Ignition on, engine not running.
    2. With the scan tool, read DTCs in the PCM.

    Are there any Charging System or related voltage DTCs present?

    Yes

    - Perform the appropriate Charging System DTC diagnostic procedures before continuing with this test. Refer to **CHARGING SYSTEM - DIAGNOSIS AND TESTING** .

    No

    - Go To 2.
2. **DTC IS ACTIVE**
    1. Ignition on, engine not running.
    2. With the scan tool, record and erase DTCs.

3. Turn ignition off to the lock position.
4. Start the engine.
5. With the scan tool, read DTCs.

   Is the status Active for this DTC?

   Yes

   - Replace the Integrated Trailer Brake Module (ITBM) in accordance with Service Information. Refer to **MODULE, INTEGRATED TRAILER BRAKE (ITBM), REMOVAL** .

   No

   - Test complete, the condition or conditions that originally set this DTC are not present at this time. Using the wiring diagrams as a guide, check all related splices and connectors for signs of water intrusion, corrosion, pushed out or bent terminals, and correct pin tension.
   - Perform the ITBM VERIFICATION TEST. Refer to **STANDARD PROCEDURE - ITBM VERIFICATION TEST**.

C2213-00 TRAILER BRAKE MODULE INTERNAL

For a complete wiring diagram, **refer to appropriate SYSTEM WIRING DIAGRAMS article**

WHEN MONITORED:

Ignition on.

SET CONDITION:

The Integrated Trailer Brake Module (ITBM) has detected an error after a system self-test.

POSSIBLE CAUSES

Possible Causes
INTEGRATED TRAILER BRAKE MODULE (ITBM)

DIAGNOSTIC TEST

1. **INTEGRATED TRAILER BRAKE MODULE (ITBM) INTERNAL CONDITION**
   1. The ITBM is reporting internal errors.

      NOTE: Before continuing, check the ITBM harness connector terminals for corrosion, damage, or terminal push out. Repair as necessary.

   2. Using the schematics as a guide, inspect the wire harness and connectors. Pay particular attention to

all power and ground circuits.

3. Perform any Technical Service Bulletins (TSB) that may apply.

   Were there any problems found?

   Yes

   - Repair as necessary.
   - Perform the ITBM VERIFICATION TEST. Refer to **STANDARD PROCEDURE - ITBM VERIFICATION TEST**.

   No

   - Replace the Integrated Trailer Brake Module (ITBM) in accordance with the Service Information.
   - Perform the ITBM VERIFICATION TEST. Refer to **STANDARD PROCEDURE - ITBM VERIFICATION TEST**.

C2213-42-TRAILER BRAKE MODULE INTERNAL-GENERAL MEMORY FAILURE

For a complete wiring diagram, **refer to appropriate SYSTEM WIRING DIAGRAMS article**

WHEN MONITORED:

Ignition on.

SET CONDITION:

The Integrated Trailer Brake Module (ITBM) has detected an error after a system self-test.

POSSIBLE CAUSES

Possible Causes
INTEGRATED TRAILER BRAKE MODULE (ITBM)

DIAGNOSTIC TEST

1. **INTEGRATED TRAILER BRAKE MODULE (ITBM) INTERNAL - GENERAL MEMORY FAILURE CONDITION**
   1. The ITBM is reporting internal errors.

      NOTE: Before continuing, check the ITBM harness connector terminals for corrosion, damage, or terminal push out. Repair as necessary.

   2. Using the schematics as a guide, inspect the wire harness and connectors. Pay particular attention to all power and ground circuits.

3. Perform any Technical Service Bulletins (TSB)s that may apply.

   Were there any problems found?

   Yes

   - Repair as necessary.
   - Perform the ITBM VERIFICATION TEST. Refer to **STANDARD PROCEDURE - ITBM VERIFICATION TEST**.

   No

   - Replace the Integrated Trailer Brake Module (ITBM) in accordance with the Service Information.
   - Perform the ITBM VERIFICATION TEST. Refer to **STANDARD PROCEDURE - ITBM VERIFICATION TEST**.

C2214-00-ITBM NOT CALIBRATED

For a complete wiring diagram, **refer to appropriate SYSTEM WIRING DIAGRAMS article**

WHEN MONITORED:

Ignition on.

SET CONDITION:

The Integrated Trailer Brake Module (ITBM) configured/calibrated incorrectly from the factory after a system self-test was performed.

POSSIBLE CAUSES

Possible Causes
INTEGRATED TRAILER BRAKE MODULE (ITBM)

DIAGNOSTIC TEST

1. **INTEGRATED TRAILER BRAKE MODULE (ITBM) NOT CALIBRATED**
   1. The ITBM is reporting internal errors.

      NOTE: Before continuing, check the ITBM harness connector terminals for corrosion, damage, or terminal push out. Repair as necessary.

   2. Using the schematics as a guide, inspect the wire harness and connectors. Pay particular attention to all power and ground circuits.
   3. Perform any Technical Service Bulletins (TSB)s that may apply.

Were there any problems found?

Yes

- Repair as necessary.
- Perform the ITBM VERIFICATION TEST. Refer to **STANDARD PROCEDURE - ITBM VERIFICATION TEST**.

No

- Replace the Integrated Trailer Brake Module (ITBM) in accordance with the Service Information.
- Perform the ITBM VERIFICATION TEST. Refer to **STANDARD PROCEDURE - ITBM VERIFICATION TEST**.

U0001-00-CAN C BUS

For a complete wiring diagram, **refer to appropriate SYSTEM WIRING DIAGRAMS article** .

WHEN MONITORED:

With the ignition on.

Battery voltage between 9 and 16 volts

Engine run time greater than three seconds.

SET CONDITION:

The Integrated Trailer Brake Module (ITBM) does not receive any CAN C bus messages for a specific amount of time. One trip fault.

POSSIBLE CAUSES

Possible Causes
CAN C BUS OPEN OR SHORTED CONDITION INTEGRATED TRAILER BRAKE MODULE (ITBM)

DIAGNOSTIC TEST

1. **ACTIVE DTC**

NOTE: **For vehicle communication problems, use the scan tool to refer to the Network Review Screen. The screen depicts a high level view of the vehicle network. Fault and problem areas appear in red. Selecting any of the network components allows access to the source of the problem.**

1. Turn the ignition on.
2. With a scan tool, read DTCs.

   Is the status Active for this DTC?

   Yes

   - **Refer to TIPM - DIAGNOSIS AND TESTING** and perform the U0001-CAN C Bus circuit diagnostic procedure.

   No

   - **Refer to COMMUNICATION - DIAGNOSIS AND TESTING** and perform the Stored Lost Communication DTCs diagnostic procedure.

U0100-00-LOST COMMUNICATION WITH ECM/PCM

For a complete wiring diagram, **refer to appropriate SYSTEM WIRING DIAGRAMS article** .

WHEN MONITORED:

Ignition run time is greater than one second. Battery voltage between 9 and 16 volts. Engine run time greater than three seconds.

SET CONDITION:

Bus messages not received from the Powertrain Control Module (ECM/PCM) for approximately two to five seconds.

POSSIBLE CAUSES

Possible Causes
CAN BUS CIRCUITS OPEN OR SHORTED
DTCS RELATED TO BATTERY VOLTAGE, IGNITION, OR VIN MESSAGES
POWERTRAIN CONTROL MODULE POWER AND GROUND
TIPM NOT CONFIGURED CORRECTLY
POWERTRAIN CONTROL MODULE (ECM/PCM)
MODULE THAT SET THIS DTC

NOTE: If present, diagnose and repair DTC U0002-88-CAN C BUS OFF PERFORMANCE- BUS OFF before diagnosing this DTC.

DIAGNOSTIC TEST

1. **VERIFY DTC IS ACTIVE**

NOTE: **Make sure the IOD fuse is installed and the battery is fully charged before proceeding.**

1. Turn the ignition on.
2. With the scan tool, read the active DTCs.

   Is this DTC active?

   Yes

   - **Refer to TIPM - DIAGNOSIS AND TESTING** and perform the U0100-Lost Communication with ECM/PCM diagnostic procedure.

   No

   - **Refer to COMMUNICATION - DIAGNOSIS AND TESTING** and perform the Stored Lost Communication DTCs diagnostic procedure.

U0121-00-LOST COMMUNICATION WITH ANTILOCK BRAKE SYSTEM (ABS) CONTROL MODULE

For a complete wiring diagram, **refer to appropriate SYSTEM WIRING DIAGRAMS article** .

WHEN MONITORED:

Continuously when the ignition is on.

The battery voltage between 10 and 16 volts.

Ignition Off Draw (IOD) fuse installed.

Totally Integrated Power Module (TIPM) is configured correctly.

SET CONDITION:

Bus messages not received from the Antilock Brake System (ABS) Module for approximately two to five seconds.

POSSIBLE CAUSES

Possible Causes
CAN BUS CIRCUITS OPEN OR SHORTED
DTCS RELATED TO BATTERY VOLTAGE, IGNITION, OR VIN MESSAGES
TOTALLY INTEGRATED POWER MODULE POWER AND GROUND
TIPM NOT CONFIGURED CORRECTLY
TOTALLY INTEGRATED POWER MODULE (TIPM)

MODULE THAT SET THIS DTC

DIAGNOSTIC TEST

1. **VERIFY THE DTC IS ACTIVE**

   NOTE: Make sure the IOD fuse is installed and the battery is fully charged before proceeding.

   1. Turn the ignition on.
   2. With the scan tool, read active DTCs.

      Is the DTC active at this time?

      Yes

      - **Refer to TIPM - DIAGNOSIS AND TESTING** and perform the U0121-00-Lost Communication with Antilock Brake System (ABS) Control Module diagnostic procedure.

      No

      - **Refer to COMMUNICATION - DIAGNOSIS AND TESTING** and perform the Stored Lost Communication DTCs diagnostic procedure.

U0141-00-LOST COMMUNICATION WITH IPM (FCM/TIPM)

For a complete wiring diagram, **refer to appropriate SYSTEM WIRING DIAGRAMS article** .

WHEN MONITORED:

Continuously when the ignition is on.

The battery voltage between 10 and 16 volts.

Ignition Off Draw (IOD) fuse installed.

Totally Integrated Power Module (TIPM) is configured correctly.

SET CONDITION:

Bus messages not received from the Totally Integrated Power Module (TIPM) for approximately two to five seconds.

POSSIBLE CAUSES

Possible Causes

CAN BUS CIRCUITS OPEN OR SHORTED
DTCS RELATED TO BATTERY VOLTAGE, IGNITION, OR VIN MESSAGES
TOTALLY INTEGRATED POWER MODULE POWER AND GROUND
TIPM NOT CONFIGURED CORRECTLY
TOTALLY INTEGRATED POWER MODULE (TIPM)
MODULE THAT SET THIS DTC

DIAGNOSTIC TEST

1. **VERIFY DTC IS ACTIVE**

   NOTE: Make sure the IOD fuse is installed and the battery is fully charged before proceeding.

   1. Turn the ignition on.
   2. With the scan tool, read active DTCs.

      Is this DTC active?

      Yes

      - **Refer to TIPM - DIAGNOSIS AND TESTING** and perform the U0141-Lost Communication with IPM (FCM/TIPM) diagnostic procedure.

      No

      - **Refer to COMMUNICATION - DIAGNOSIS AND TESTING** and perform the Stored Lost Communication DTCs diagnostic procedure.

U0401-00 IMPLAUSIBLE DATA RECEIVED FROM ECM/PCM

For a complete wiring diagram, **refer to appropriate SYSTEM WIRING DIAGRAMS article** .

WHEN MONITORED:

With the ignition on for five seconds.

No CAN bus circuit error conditions present.

No lost communication with PCM conditions present.

No system undervoltage or overvoltage conditions present.

SET CONDITION:

The Integrated Trailer Brake Module (ITBM) is receiving implausible data for engine RPM, torque, or engine

coolant temperature from the PCM.

POSSIBLE CAUSES

Possible Causes
TOTALLY INTEGRATED POWER MODULE (TIPM) DTCS
POWERTRAIN CONTROL MODULE (PCM) DTCS
INTEGRATED TRAILER BRAKE MODULE (ITBM) DTCS
INTEGRATED TRAILER BRAKE MODULE (ITBM)

DIAGNOSTIC TEST

1. **CHECK FOR DTC U0401-IMPLAUSIBLE DATA RECEIVED FROM ECM/PCM**

   NOTE: This DTC must be active for the results of this test to be valid.

   1. Turn the ignition on.
   2. With the scan tool, record and erase DTCs.
   3. Cycle the ignition switch from off to on.
   4. With the scan tool, read DTCs.

   Does the scan tool display: U0401-00 IMPLAUSIBLE DATA RECEIVED FROM ECM/PCM?

   Yes

   - Go To 2.

   No

   - Go To 4.
2. **CHECK IF TIPM CAN BUS DTCS ARE PRESENT**
   1. With the scan tool, read TIPM DTCs.

   Are there any TIPM CAN BUS DTCs present?

   Yes

   - Refer to **TIPM - DIAGNOSIS AND TESTING** and perform the appropriate diagnostic procedure.

   No

   - Go To 3.
3. **POWERTRAIN DTCS PRESENT**

1. With the scan tool, read PCM DTCs.

   Are there any active DTCs present?

   Yes

   - Refer to **3.7L/4.7L/5.7L - DIAGNOSTIC CODE INDEX - NGC - 1500 & 2500** or **6.7L - DIAGNOSTIC CODE INDEX - 2500 & 3500** or **5.7L - DIAGNOSTIC CODE INDEX - 3500 CAB & CHASSIS** or **6.7L - DIAGNOSTIC CODE INDEX - 3500 CAB & CHASSIS, 4500 & 5500** and perform the appropriate diagnostic test procedure.

   No

   - Replace the Integrated Trailer Brake Module (ITBM) in accordance with the Service Information.
   - Perform the ITBM VERIFICATION TEST. Refer to **STANDARD PROCEDURE - ITBM VERIFICATION TEST**.

4. **INTERMITTENT WIRING AND CONNECTORS**
   1. The conditions necessary to set this DTC are not present at this time.
   2. Using the wiring diagrams as a guide, check all related splices and connectors for signs of water intrusion, corrosion, pushed out or bent terminals, and correct pin tension.
   3. Wiggle test the wiring harness and connectors while checking for shorted and open circuits.
   4. Using the scan tool, monitor the data related to this circuit while performing the wiggle test. Look for the data to change or for the DTC to reset.

      Were there any problems found?

      Yes

      - Repair as necessary.
      - Perform the ITBM VERIFICATION TEST. Refer to **STANDARD PROCEDURE - ITBM VERIFICATION TEST**.

      No

      - Test complete, the condition or conditions that originally set this DTC are not present at this time.

U0415-00 IMPLAUSIBLE DATA RECEIVED FROM ABS

For a complete wiring diagram, **refer to appropriate SYSTEM WIRING DIAGRAMS article** .

WHEN MONITORED:

With the ignition on for five seconds.

No CAN bus circuit error conditions present.

No lost communication with ABS conditions present.

No system undervoltage or overvoltage conditions present.

SET CONDITION:

The Integrated Trailer Brake Module (ITBM) is receiving implausible data for vehicle speed, wheel speed, brake switch status, longitudinal acceleration, yaw rate, or lateral acceleration from the ABS module.

POSSIBLE CAUSES

Possible Causes
TOTALLY INTEGRATED POWER MODULE (TIPM) DTCS PRESENT ANTILOCK BRAKE SYSTEM (ABS) MODULE DTCS PRESENT INTEGRATED TRAILER BRAKE MODULE (ITBM) DTCS PRESENT INTEGRATED TRAILER BRAKE MODULE (ITBM)

DIAGNOSTIC TEST

1. **CHECK FOR DTC U0401-00 IMPLAUSIBLE DATA RECEIVED FROM ABS**

   NOTE: This DTC must be active for the results of this test to be valid.

   1. Turn the ignition on.
   2. With the scan tool, record and erase DTCs.
   3. Cycle the ignition switch from off to on.
   4. With the scan tool, read DTCs.

      Does the scan tool display: U0401-00 IMPLAUSIBLE DATA RECEIVED FROM ABS?

      Yes

      - Go To 2.

      No

      - Go To 4.
2. **CHECK IF TIPM CAN BUS DTCS ARE PRESENT**
   1. With the scan tool, read TIPM DTCs.

      Are there any TIPM CAN BUS DTCs present?

      Yes

- Refer to **TIPM - DIAGNOSIS AND TESTING** and perform the appropriate diagnostic procedure.

No

- Go To 3.

3. **ABS DTCS PRESENT**
   1. Ignition on, engine not running.
   2. With the scan tool, read DTCs in the ABS module.

      Are there any DTCs present?

      Yes

      - Refer to **ABS - DIAGNOSTIC CODE INDEX** and perform the appropriate diagnostic procedure.

      No

      - Replace the Integrated Trailer Brake Module (ITBM) in accordance with the Service Information.
      - Perform the ITBM VERIFICATION TEST. Refer to **STANDARD PROCEDURE - ITBM VERIFICATION TEST**.
4. **INTERMITTENT WIRING HARNESS AND CONNECTORS**
   1. The conditions necessary to set this DTC are not present at this time.
   2. Using the wiring diagrams as a guide, check all related splices and connectors for signs of water intrusion, corrosion, pushed out or bent terminals, and correct pin tension.
   3. Wiggle test the wiring harness and connectors while monitoring the scan tool data relative to this circuit.
   4. Look for the data to change or for the DTC to reset during the wiggle test.
   5. While monitoring the scan tool data relative to this circuit, move the selector switch to each position several times (if equipped).

      Were there any problems found?

      Yes

      - Repair as necessary.
      - Perform the ITBM VERIFICATION TEST. Refer to **STANDARD PROCEDURE - ITBM VERIFICATION TEST**.

      No

      - Test complete, the condition or conditions that originally set this DTC are not present at this

time.

U0431-00 IMPLAUSIBLE DATA RECEIVED FROM IPM (FCM/TIPM)

For a complete wiring diagram, **refer to appropriate SYSTEM WIRING DIAGRAMS article** .

WHEN MONITORED:

With the ignition on for five seconds,, and

No CAN bus circuit error conditions present.

No lost communication with Totally Integrated Power Module (TIPM) conditions present.

No system undervoltage or overvoltage condition present.

SET CONDITION:

The Integrated Trailer Brake Module (ITBM) is receiving implausible data from the TIPM.

POSSIBLE CAUSES

Possible Causes
CAN BUS OPEN OR SHORTED CONDITION TOTALLY INTEGRATED POWER MODULE (TIPM) DTCS PRESENT INTEGRATED TRAILER BRAKE MODULE (ITBM)

DIAGNOSTIC TEST

1. **DTC IS ACTIVE**

NOTE: Diagnose all CAN C and CAN Interior bus communication DTCs before continuing.

NOTE: This DTC must be active for the results of this test to be valid.

1. Ignition on, engine not running.
2. With the scan tool, record and erase DTCs.
3. Cycle the ignition switch from off to on.
4. With the scan tool, read DTCs.

Is the status Active for this DTC?

Yes

- Go To 2.

No

- Go To 3.

2. **CHECK FOR TOTALLY INTEGRATED POWER MODULE (TIPM) DTCS**
   1. With the scan tool, read DTCs in the TIPM.

      Are there any TIPM DTCs present?

      Yes

      - Refer to **TIPM - DIAGNOSIS AND TESTING** and perform the appropriate diagnostic procedure.

      No

      - Replace the Integrated Trailer Brake Module (ITBM) in accordance with the Service Information.
      - Perform the ITBM VERIFICATION TEST. Refer to **STANDARD PROCEDURE - ITBM VERIFICATION TEST**.
3. **INTERMITTENT WIRING HARNESS AND CONNECTORS**
   1. The conditions necessary to set this DTC are not present at this time.
   2. Using the wiring diagrams as a guide, check all related splices and connectors for signs of water intrusion, corrosion, pushed out or bent terminals, and correct pin tension.
   3. Wiggle test the wiring harness and connectors while monitoring the scan tool data relative to this circuit.
   4. Look for the data to change or for the DTC to reset during the wiggle test.

      Were any problems found?

      Yes

      - Repair as necessary.
      - Perform the ITBM VERIFICATION TEST. Refer to **STANDARD PROCEDURE - ITBM VERIFICATION TEST**.

      No

      - Test complete, the condition or conditions that originally set this DTC are not present at this time.

U1601-00-ECU APPLICATION SOFTWARE CODE 1 MISSING OR CORRUPTED

For a complete wiring diagram, **refer to appropriate SYSTEM WIRING DIAGRAMS article** .

THEORY OF OPERATION

The Integrated Trailer Brake Module (ITBM) requires communication over the CAN C bus to function properly.

WHEN MONITORED:

Continuously, with the ignition on.

SET CONDITION:

When the Integrated Trailer Brake Module (ITBM) detects that its software has been corrupted or is missing.

POSSIBLE CAUSES

Possible Causes
INTEGRATED TRAILER BRAKE MODULE (ITBM)

DIAGNOSTIC TEST

1. **CHECK FOR DTC U1601-00-ECU APPLICATION SOFTWARE CODE 1 MISSING OR CORRUPTED**

   NOTE: This DTC must be active for the results of this test to be valid. Check for a loose scan tool connection. Verify battery charger is installed and charge rate provides approximately 13.5 volts.

   1. Ignition on, engine off.
   2. With the scan tool, read the DTCs.
   3. With the scan tool, follow the reprogramming procedure and reflash the Integrated Trailer Brake Module (ITBM) while maintaining voltage as noted above.
   4. With the scan tool, read the DTCs.

   Does the scan tool display: U1601-ECU APPLICATION SOFTWARE CODE 1 MISSING OR CORRUPTED?

   Yes

   - Replace the Integrated Trailer Brake Module (ITBM) in accordance with the Service Information.
   - Perform the ITBM VERIFICATION TEST. Refer to **STANDARD PROCEDURE - ITBM VERIFICATION TEST**.

   No

   - The condition or conditions that originally set this DTC are not present at this time. Using the

wiring diagrams as a guide, check all related splices and connectors for signs of water intrusion, corrosion, pushed out or bent terminals, and correct pin tension.

- Perform the ITBM VERIFICATION TEST. Refer to **STANDARD PROCEDURE - ITBM VERIFICATION TEST**.

STANDARD PROCEDURE

STANDARD PROCEDURE - ITBM VERIFICATION TEST

DIAGNOSTIC TEST

1. **PERFORM ITBM VERIFICATION TEST**

NOTE: If the Powertrain Control Module (PCM) or Totally Integrated Power Module (TIPM) was replaced, refer to the Service Information for proper programming procedures.

1. Disconnect all jumper wires and reconnect all previously disconnected components and connectors.
2. Make sure all accessories are turned off.
3. Make sure the battery is fully charged.
4. With the scan tool, record and erase all DTC(s) from the ITBM.
5. Start the engine and allow it to idle for two minutes while operating all functions of the system that caused the original concern.
6. Turn the ignition off, wait five seconds, then turn the ignition on. Using the scan tool, read DTC(s) from the ITBM.

   Are any ITBM DTC(s) present or is the original condition still present?

   Yes

   - The repair is not complete. Perform the appropriate diagnostic procedure for the DTC or symptom that is still present.

   No

   - The repair is complete.

DIAGNOSTIC CODE INDEX

DIAGNOSTIC CODE INDEX

DTC	Description
C1417	FRONT DIFFERENTIAL CONTROL CIRCUIT LOW
C1418	FRONT DIFFERENTIAL CONTROL CIRCUIT HIGH
C1419	FRONT DIFFERENTIAL CONTROL CIRCUIT FOR AN OPEN
C141D	REAR DIFFERENTIAL CONTROL CIRCUIT LOW
C141E	REAR DIFFERENTIAL CONTROL CIRCUIT HIGH
C141F	REAR DIFFERENTIAL CONTROL CIRCUIT FOR AN OPEN
C143A	C143A - DIFFERENTIAL/LOCKER SELECT SWITCH PERFORMANCE
C143B	DIFFERENTIAL/LOCKER SELECT SWITCH CIRCUIT LOW
C143C	DIFFERENTIAL/LOCKER SELECT SWITCH CIRCUIT HIGH
C143D	STABILIZER SELECT SWITCH PERFORMANCE
C143E	STABILIZER BAR SWITCH CIRCUIT LOW
C143F	STABILIZER SELECT SWITCH CIRCUIT HIGH
C1446	FRONT DIFFERENTIAL RETURN CIRCUIT LOW
C1447	FRONT DIFFERENTIAL RETURN CIRCUIT HIGH
C144A	REAR DIFFERENTIAL RETURN CIRCUIT LOW
C144B	REAR DIFFERENTIAL RETURN CIRCUIT HIGH
C144E	FRONT DIFFERENTIAL POSITION SENSOR PERFORMANCE
C144F	FRONT DIFFERENTIAL POSITION SENSOR LOW
C1450	FRONT DIFFERENTIAL POSITION SENSOR CIRCUIT HIGH
C1452	REAR DIFFERENTIAL POSITION SENSOR PERFORMANCE
C1453	REAR DIFFERENTIAL POSITION SENSOR LOW
C1454	REAR DIFFERENTIAL POSITION SENSOR CIRCUIT HIGH
C2100	BATTERY VOLTAGE LOW
C2101	BATTERY VOLTAGE HIGH
C2111	SENSOR SUPPLY 1 VOLTAGE CIRCUIT LOW
C2112	SENSOR SUPPLY 1 VOLTAGE CIRCUIT HIGH
C2124	STABILIZER BAR INDICATOR CONTROL CIRCUIT
C2126	SENSOR SUPPLY 2 VOLTAGE CIRCUIT LOW
C2127	SENSOR SUPPLY 2 VOLTAGE CIRCUIT HIGH
C2201	FDCM/DTCM INTERNAL
C230F	LOCKER/DIFFERENTIAL INDICATOR SUPPLY CIRCUIT PERFORMANCE
C2310	STABILIZER/DIFFERENTIAL INDICATOR SUPPLY CIRCUIT LOW
C2311	STABILIZER/DIFFERENTIAL INDICATOR SUPPLY CIRCUIT HIGH
C2324	STABILIZER BAR INDICATOR CONTROL CIRCUIT

U0100	LOST COMMUNICATION WITH ECM/PCM
U0155	NO CLUSTER BUS MESSAGE
U0401	IMPLAUSIBLE DATA RECEIVED FROM PCM
U0431	IMPLAUSIBLE DATA RECEIVED FROM FCM (TIPM)

DIAGNOSIS AND TESTING

C1417-FRONT DIFFERENTIAL CONTROL CIRCUIT LOW

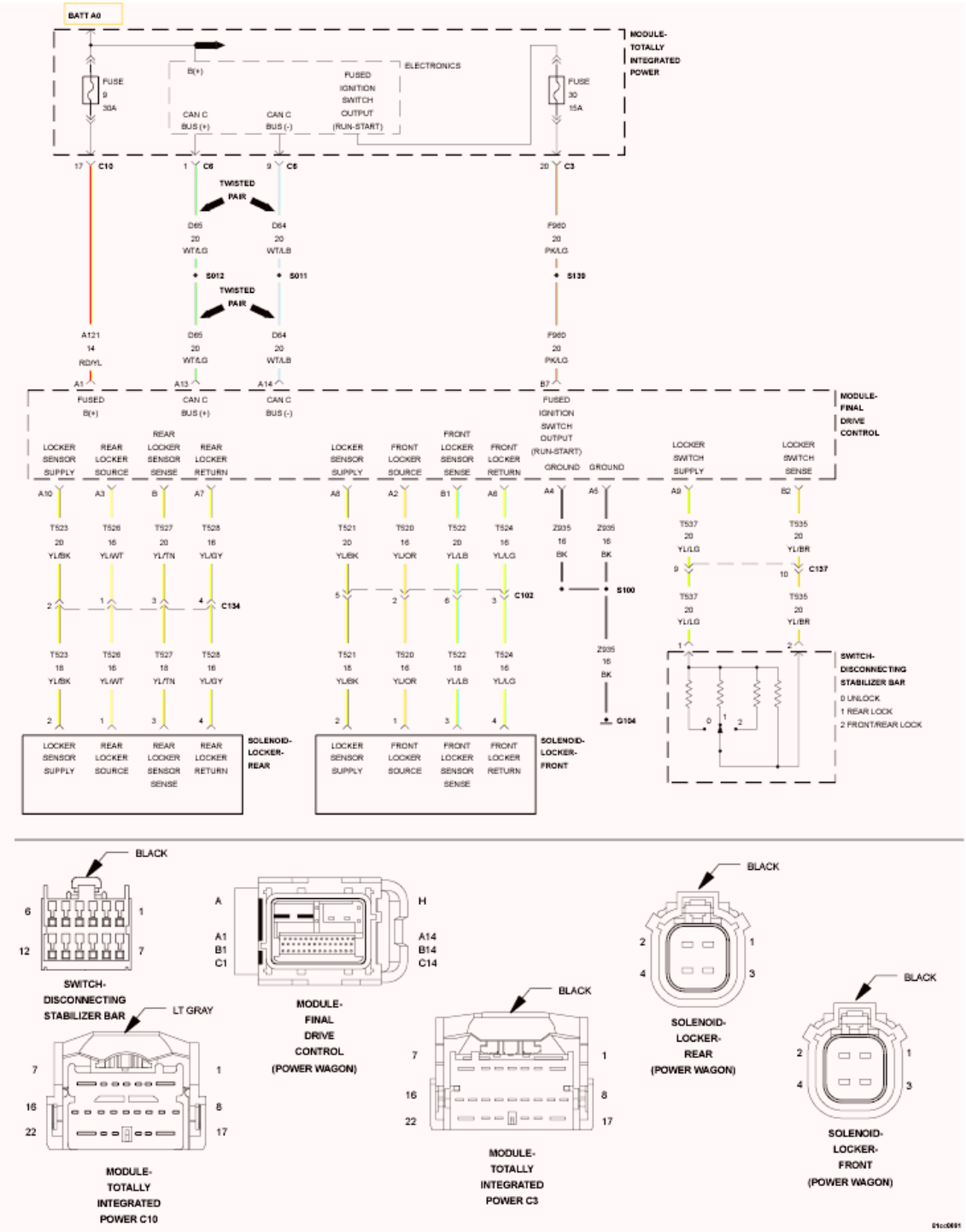

Fig. 1: Final Drive Control Module Wiring Diagram
Courtesy of CHRYSLER GROUP, LLC

For a complete wiring diagram **refer to appropriate SYSTEM WIRING DIAGRAMS article** .

WHEN MONITORED:

Ignition on. Disconnecting Stabilizer Bar Switch in the FR/RR position.

SET CONDITION:

The FDCM detects the Front Locker Source circuit is shorted low.

POSSIBLE CAUSES

Possible Causes
FRONT LOCKER SOLENOID
(T520) FRONT LOCKER SOURCE CIRCUIT FOR A SHORT TO GROUND
(T520) FRONT LOCKER SOURCE CIRCUIT FOR A SHORT TO FRONT LOCKER RETURN CIRCUIT
FDCM

DIAGNOSTIC TEST

1. **ACTIVE DTC**

   CAUTION: Before removing the FDCM harness connector, clean the connector and locking cam area of dirt and debris. Failure to do so can result in the connector being jammed or damage to the locking cams on the harness connector or module. Do not force the assist arm when releasing or installing the harness connector.

   1. Ignition on, engine not running.
   2. With the scan tool, read DTC's.

      Is the DTC active at this time?

      Yes

      - Go To 2.

      No

      - Go To 6.
2. **FRONT LOCKER SOLENOID OPERATION**

   NOTE: Before continuing with the below diagnostic test, ensure the FDCM harness connector seal is installed correctly. Inspect the terminals on both harness connector and the module for damage. Failure to do so can result in misdiagnoses of the system.

   1. Turn the ignition off.

2. Disconnect the Front Locker Solenoid harness connector.
3. Ignition on, engine not running.
4. Using a 12-volt test light, jump across from the (T520) Front Locker Source circuit and the (T524) Front Locker Return circuit in the Front Locker harness connector.
5. With the scan tool, actuate the Front Locker Solenoid.

   Does the test light illuminate and flash on and off?

   Yes

   - Inspect the Front Locker Solenoid terminals and connectors for corrosion and/or dirt that may compromise the connection. If OK, replace the Front Locker Solenoid.
   - Perform FDCM VERIFICATION TEST. Refer to **FDCM VERIFICATION TEST**.

   No

   - Go To 3.

3. **(T520) FRONT LOCKER SOURCE CIRCUIT FOR A SHORT TO GROUND**

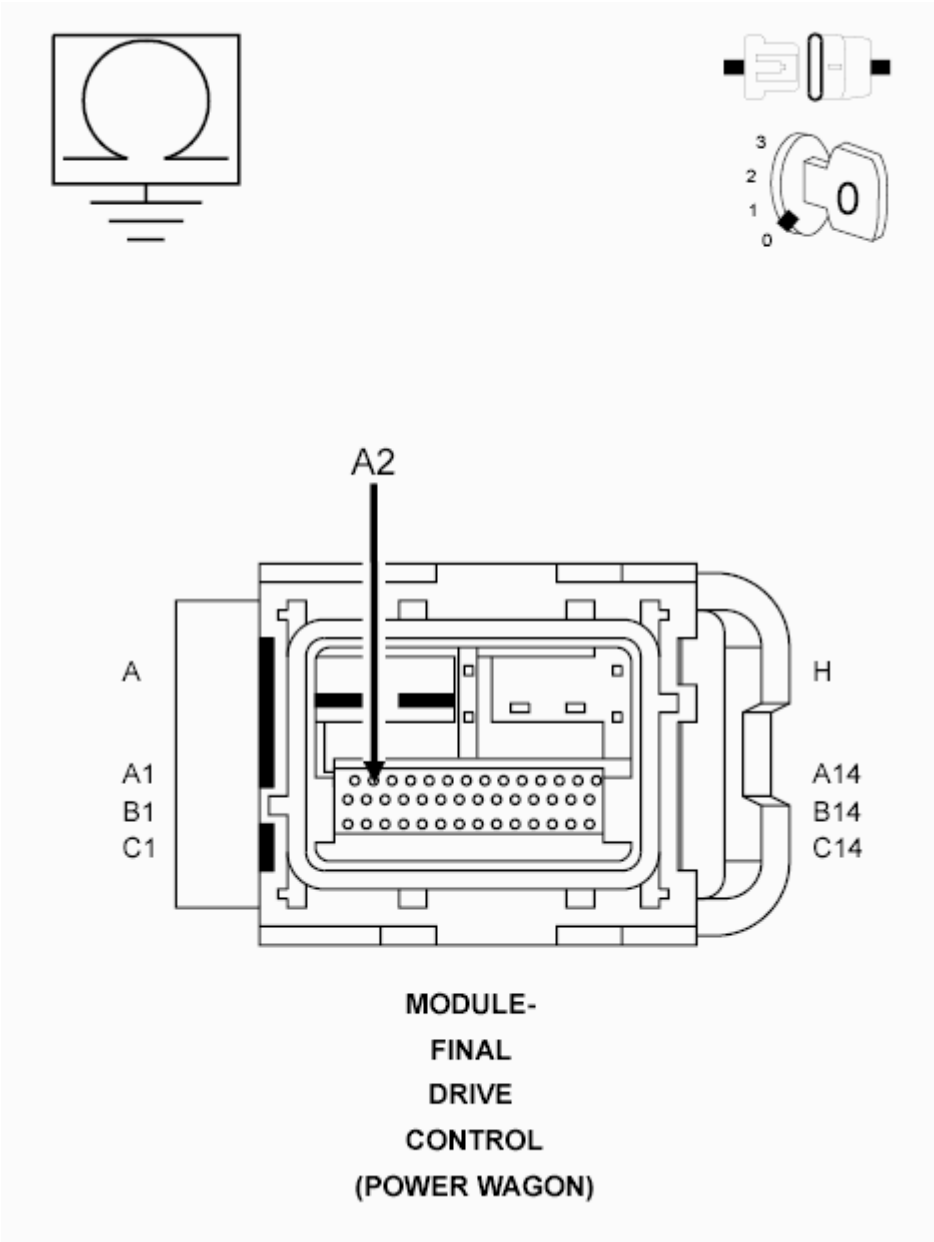

Fig. 2: Checking Front Locker Source Circuit For A Short To Ground
Courtesy of CHRYSLER GROUP, LLC

1. Turn the ignition off.
2. Disconnect the FDCM harness connector.
3. Measure the resistance of the (T520) Front Locker Source circuit at the FDCM harness connector to ground.

   Is the resistance below 100 ohms?

   Yes

- Repair the short to ground in the (T520) Front Locker Source circuit.
- Perform FDCM VERIFICATION TEST. Refer to **FDCM VERIFICATION TEST**.

No

- Go To 4.

4. **(T520) CHECK FRONT LOCKER SOURCE CIRCUIT FOR A SHORT TO (T524) FRONT LOCKER RETURN CIRCUIT**

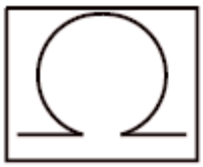

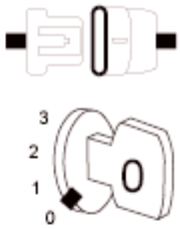

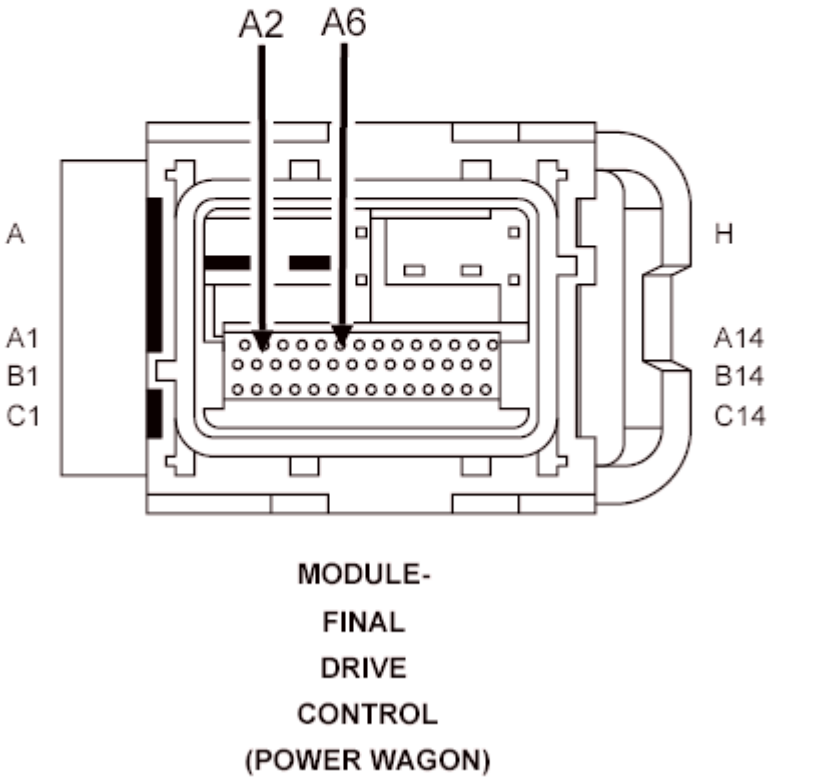

Fig. 3: Checking Front Locker Source Circuit For A Short To Front Locker Return Circuit

Courtesy of CHRYSLER GROUP, LLC

1. Measure the resistance between the (T520) Front Locker Source circuit and the (T524) Front Locker Return circuit in the FDCM harness connector.

   Is the resistance below 100 ohms?

   Yes

   - Repair the short between (T520) Front Locker Source circuit and the (T524) Front Locker Return circuit.
   - Perform FDCM VERIFICATION TEST. Refer to **FDCM VERIFICATION TEST**.

   No

   - Go To 5.

5. **FDCM**

   NOTE: Before continuing, check the FDCM harness connector terminals for corrosion, damage, or terminal push out. Repair as necessary.

   1. Using the schematics as a guide, inspect the wire harness and connectors. Pay particular attention to all Power and Ground circuits.

      Were there any problems found?

      Yes

      - Repair as necessary.
      - Perform FDCM VERIFICATION TEST. Refer to **FDCM VERIFICATION TEST**.

      No

      - Replace and program the Final Drive Control Module in accordance with Service Information.
      - Perform FDCM VERIFICATION TEST. Refer to **FDCM VERIFICATION TEST**.

6. **INTERMITTENT WIRING AND CONNECTORS**
   1. The conditions necessary to set this DTC are not present at this time.
   2. Using the schematics as a guide, inspect the wiring and connectors specific to this circuit.
   3. Wiggle test the wiring harness and connectors while checking for shorted and open circuits.
   4. Using the scan tool, monitor the data related to this circuit while performing the wiggle test. Look for the data to change or for the DTC to reset.

      Were there any problems found?

Yes

- Repair as necessary.
- Perform FDCM VERIFICATION TEST. Refer to **FDCM VERIFICATION TEST**.

No

- Test Complete.

C1418-FRONT DIFFERENTIAL CONTROL CIRCUIT HIGH

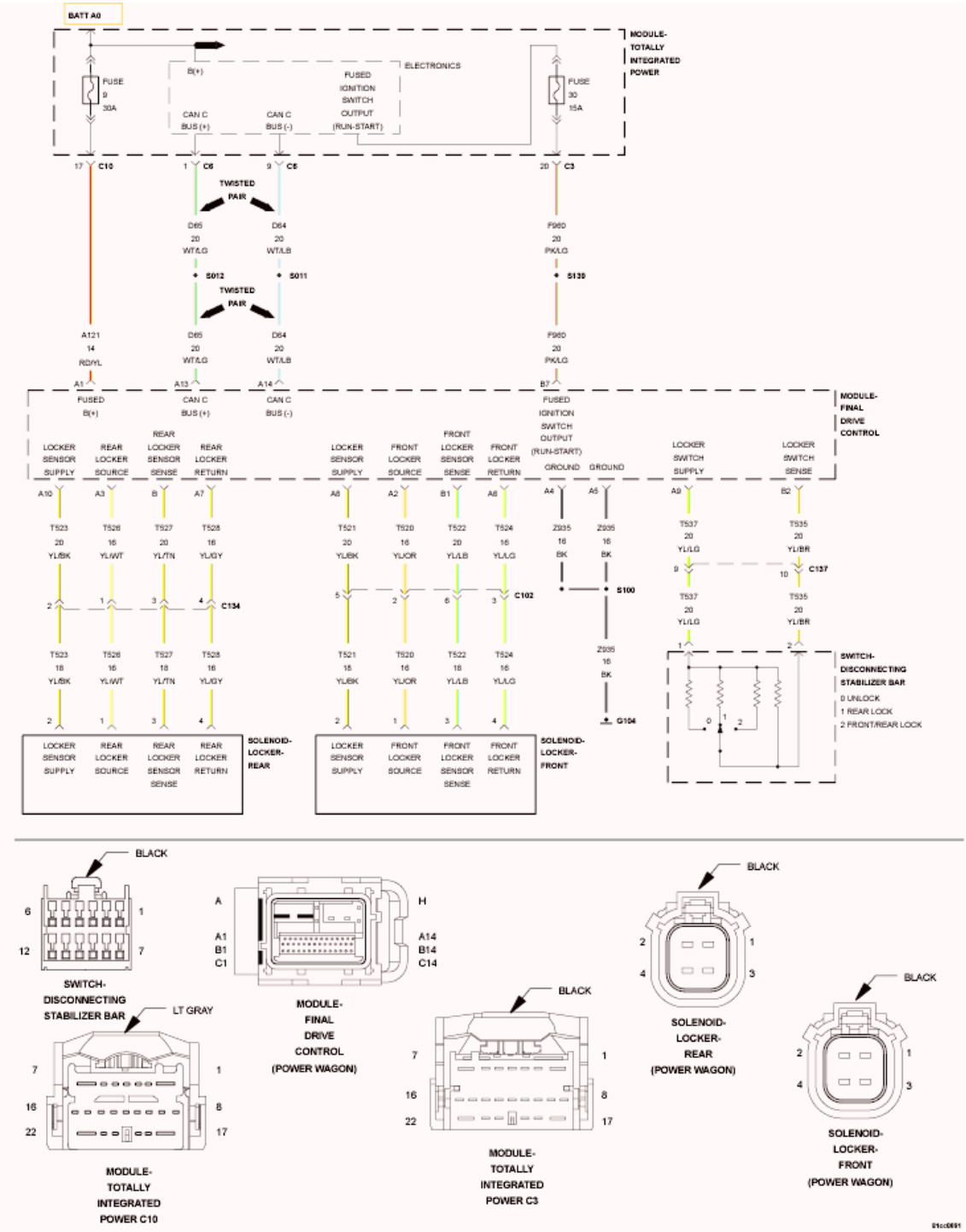

Fig. 4: Final Drive Control Module Wiring Diagram
Courtesy of CHRYSLER GROUP, LLC

For a complete wiring diagram **refer to appropriate SYSTEM WIRING DIAGRAMS article** .

WHEN MONITORED:

Ignition on. Disconnecting Stabilizer Bar Switch the FR/RR position.

SET CONDITION:

The FDCM detects the Front Locker Source circuit is shorted high.

POSSIBLE CAUSES

Possible Causes
FRONT LOCKER SOLENOID
(T520) FRONT LOCKER SOURCE CIRCUIT FOR A SHORT TO BATTERY VOLTAGE
(T524) FRONT LOCKER RETURN CIRCUIT FOR AN OPEN
FDCM

DIAGNOSTIC TEST

1. **ACTIVE DTC**

   CAUTION: Before removing the FDCM harness connector, clean the connector and locking cam area of dirt and debris. Failure to do so can result in the connector being jammed or damage to the locking cams on the harness connector or module. Do not force the assist arm when releasing or installing the harness connector.

   1. Ignition on, engine not running.
   2. With the scan tool, read DTC's.

      Is the DTC active at this time?

      Yes

      - Go To 2.

      No

      - Go To 6.
2. **FRONT LOCKER SOLENOID OPERATION**

   NOTE: Before continuing with the below diagnostic test, ensure the FDCM harness connector seal is installed correctly. Inspect the terminals on both harness connector and the module for damage. Failure to do so can result in misdiagnoses of the system.

   1. Turn the ignition off.
   2. Disconnect the Front Locker Solenoid harness connector.

3. Ignition on, engine not running.
4. Using a 12-volt test light, jump across from the (T520) Front Locker Source circuit and the (T524) Front Locker Return circuit in the Front Locker harness connector.
5. With a scan tool, actuate the Front Locker Solenoid.

   Does the test light flash on and off?

   Yes

   - Inspect the Front Locker Solenoid terminals and connectors for corrosion and/or dirt that may compromise the connection. If OK, replace the Front Locker Solenoid.
   - Perform FDCM VERIFICATION TEST. Refer to **FDCM VERIFICATION TEST**.

   No

   - Go To 3.

3. **(T520) FRONT LOCKER SOURCE CIRCUIT FOR A SHORT TO BATTERY VOLTAGE**

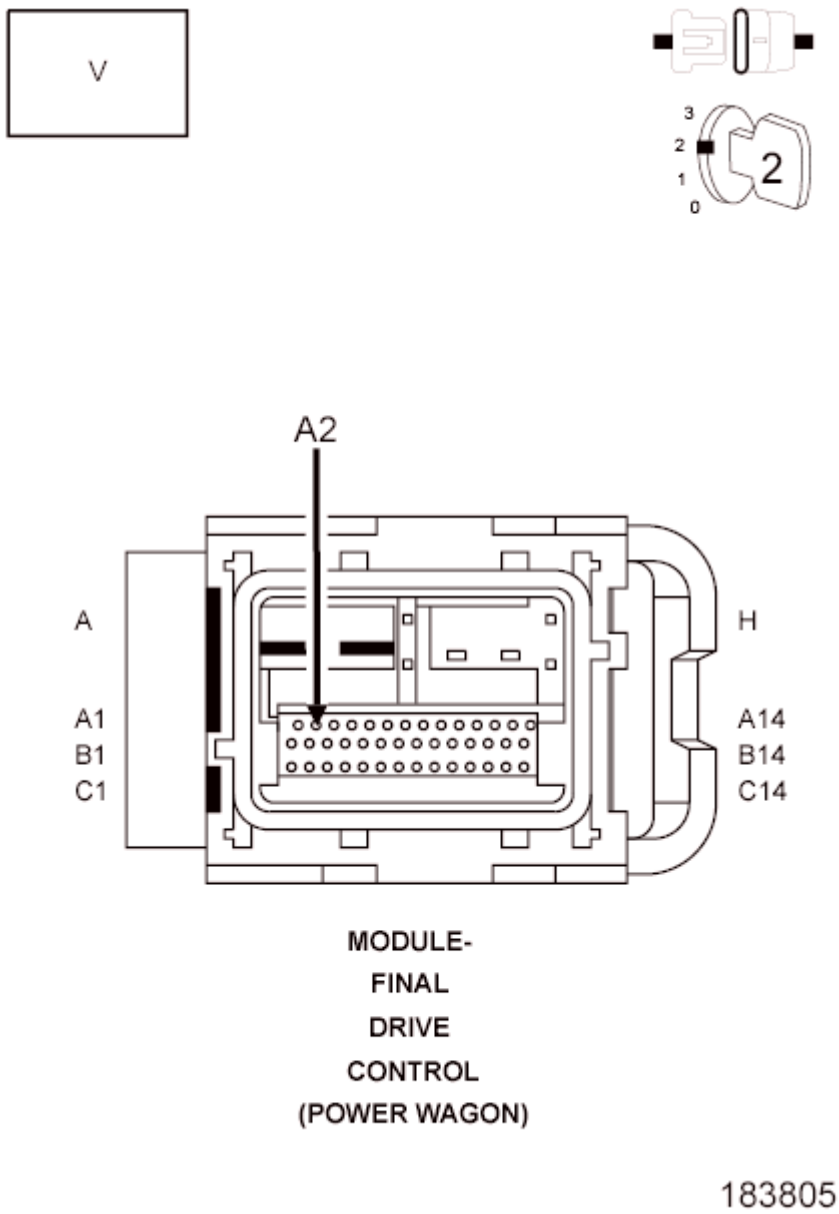

Fig. 5: Checking Front Locker Source Circuit For A Short To Battery Voltage
Courtesy of CHRYSLER GROUP, LLC

1. Turn the ignition off.
2. Disconnect the FDCM harness connector.
3. Turn the ignition on.
4. Measure the voltage on the (T520) Front Locker Source circuit at the FDCM harness connector.

   Does the voltmeter indicate voltage present?

   Yes

- Repair the short to voltage in the (T520) Front Locker Source circuit.
- Perform FDCM VERIFICATION TEST. Refer to **FDCM VERIFICATION TEST**.

No

- Go To 4.

4. **(T524) CHECK FRONT LOCKER RETURN CIRCUIT FOR AN OPEN**

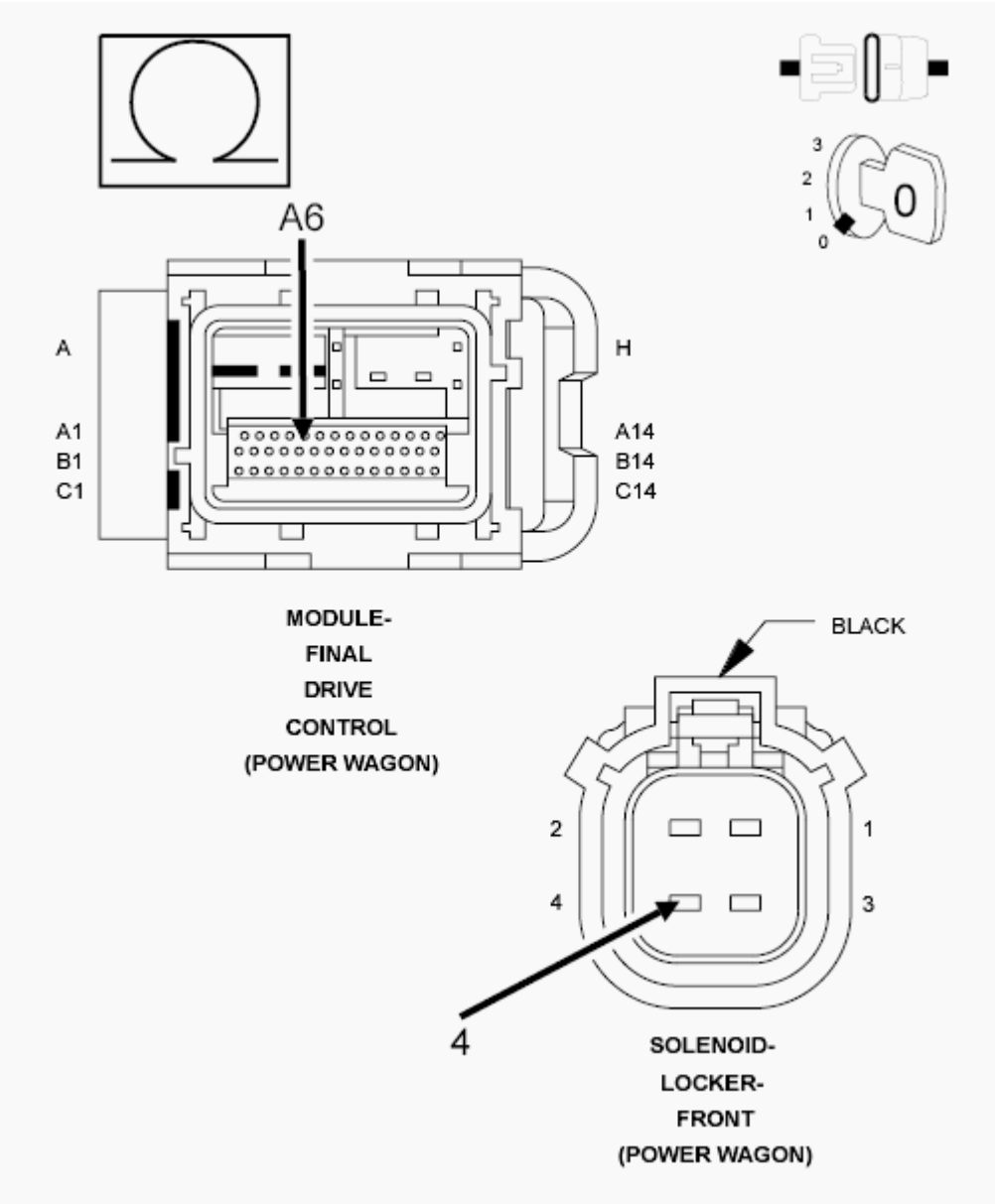

Fig. 6: Checking Front Locker Return Circuit For An Open
Courtesy of CHRYSLER GROUP, LLC

1. Measure the resistance of the (T524) Front Locker Return circuit from the Front Locker Solenoid harness connector and the FDCM harness connector.

Is the resistance below 5.0 ohms?

Yes

- Go To 5.

No

- Repair the open in the (T524) Front Locker Return circuit.
- Perform FDCM VERIFICATION TEST. Refer to **FDCM VERIFICATION TEST**.

5. **FDCM**

NOTE: Before continuing, check the FDCM harness connector terminals for corrosion, damage, or terminal push out. Repair as necessary.

1. Using the schematics as a guide, inspect the wire harness and connectors. Pay particular attention to all Power and Ground circuits.

   Were there any problems found?

   Yes

   - Repair as necessary.
   - Perform FDCM VERIFICATION TEST. Refer to **FDCM VERIFICATION TEST**.

   No

   - Replace and program the Final Drive Control Module in accordance with Service Information.
   - Perform FDCM VERIFICATION TEST. Refer to **FDCM VERIFICATION TEST**.

6. **INTERMITTENT WIRING AND CONNECTORS**
   1. The conditions necessary to set this DTC are not present at this time.
   2. Using the schematics as a guide, inspect the wiring and connectors specific to this circuit.
   3. Wiggle test the wiring harness and connectors while checking for shorted and open circuits.
   4. Using the scan tool, monitor the data related to this circuit while performing the wiggle test. Look for the data to change or for the DTC to reset.

   Were there any problems found?

   Yes

   - Repair as necessary.
   - Perform FDCM VERIFICATION TEST. Refer to **FDCM VERIFICATION TEST**.

No

- Test Complete.

C1419-FRONT DIFFERENTIAL CONTROL CIRCUIT FOR AN OPEN

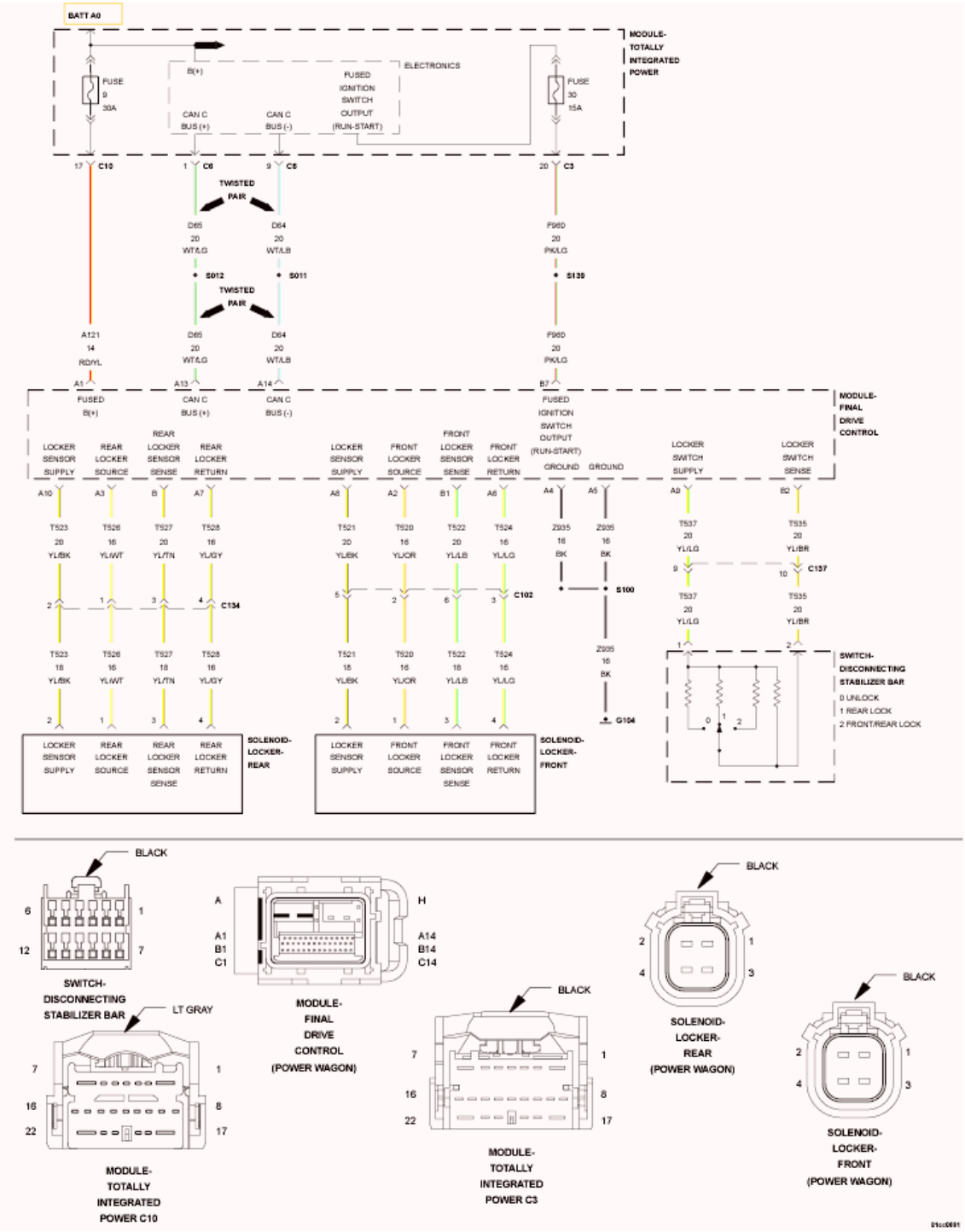

Fig. 7: Final Drive Control Module Wiring Diagram

Courtesy of CHRYSLER GROUP, LLC

For a complete wiring diagram **refer to appropriate SYSTEM WIRING DIAGRAMS article** .

WHEN MONITORED:

Ignition on. Disconnecting Stabilizer Bar Switch in the FR/RR position.

SET CONDITION:

The FDCM detects the Front Locker Source circuit is open.

POSSIBLE CAUSES

Possible Causes
FRONT LOCKER SOLENOID
(T520) FRONT LOCKER SOURCE CIRCUIT FOR AN OPEN
FDCM

DIAGNOSTIC TEST

1. **ACTIVE DTC**

CAUTION: Before removing the FDCM harness connector, clean the connector and locking cam area of dirt and debris. Failure to do so can result in the connector being jammed or damage to the locking cams on the harness connector or module. Do not force the assist arm when releasing or installing the harness connector.

1. Ignition on, engine not running.
2. With the scan tool, read DTC's.

Is the DTC active at this time?

Yes

- Go To 2.

No

- Go To 5.

2. **FRONT LOCKER SOLENOID OPERATION**

NOTE: Before continuing with the below diagnostic test, ensure the FDCM harness connector seal is installed correctly. Inspect the terminals on both harness connector and the module for damage. Failure to do so can result

in misdiagnoses of the system.

1. Turn the ignition off.
2. Disconnect the Front Locker Solenoid harness connector.
3. Ignition on, engine not running.
4. Using a 12-volt test light, jump across from the (T520) Front Locker Source circuit and the (T524) Front Locker Return circuit in the Front Locker harness connector.
5. With a scan tool, actuate the Front Locker Solenoid.

   Does the test light flash on and off?

   Yes

   - Inspect the Front Locker Solenoid terminals and connectors for corrosion and/or dirt that may compromise the connection. If OK, replace the Front Locker Solenoid.
   - Perform FDCM VERIFICATION TEST. Refer to **FDCM VERIFICATION TEST**.

   No

   - Go To 3.

3. **(T520) CHECK FRONT LOCKER SOURCE CIRCUIT FOR AN OPEN**

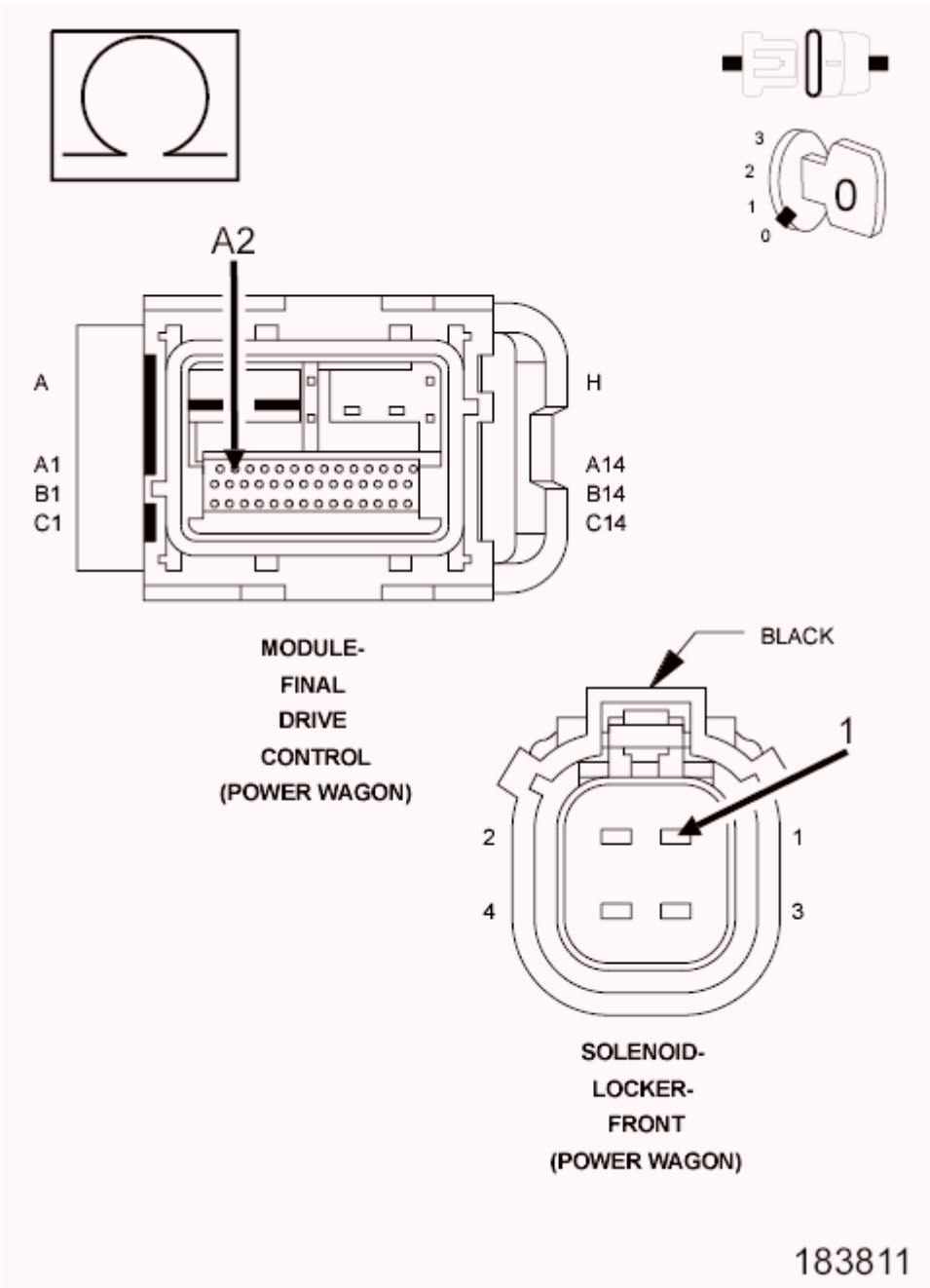

Fig. 8: Checking Front Locker Source Circuit For An Open
Courtesy of CHRYSLER GROUP, LLC

1. Turn the ignition off.
2. Disconnect the FDCM harness connector.
3. Turn the ignition on.
4. Measure the resistance of the (T520) Front Locker Source circuit from the FDCM harness connector and the Front Locker Solenoid harness connector.

   Is the resistances below 5.0 ohms?

Yes

- Go To 4.

No

- Repair the open in the (T520) Front Locker Source circuit.
- Perform FDCM VERIFICATION TEST. Refer to **FDCM VERIFICATION TEST**.

4. **FDCM**

NOTE: Before continuing, check the FDCM harness connector terminals for corrosion, damage, or terminal push out. Repair as necessary.

1. Using the schematics as a guide, inspect the wire harness and connectors. Pay particular attention to all Power and Ground circuits.

   Were there any problems found?

   Yes

   - Repair as necessary.
   - Perform FDCM VERIFICATION TEST. Refer to **FDCM VERIFICATION TEST**.

   No

   - Replace and program the Final Drive Control Module in accordance with Service Information.
   - Perform FDCM VERIFICATION TEST. Refer to **FDCM VERIFICATION TEST**.

5. **INTERMITTENT WIRING AND CONNECTORS**
   1. The conditions necessary to set this DTC are not present at this time.
   2. Using the schematics as a guide, inspect the wiring and connectors specific to this circuit.
   3. Wiggle test the wiring harness and connectors while checking for shorted and open circuits.
   4. Using the scan tool, monitor the data related to this circuit while performing the wiggle test. Look for the data to change or for the DTC to reset.

   Were there any problems found?

   Yes

   - Repair as necessary.
   - Perform FDCM VERIFICATION TEST. Refer to **FDCM VERIFICATION TEST**.

   No

- Test Complete.

C141D-REAR DIFFERENTIAL CONTROL CIRCUIT LOW

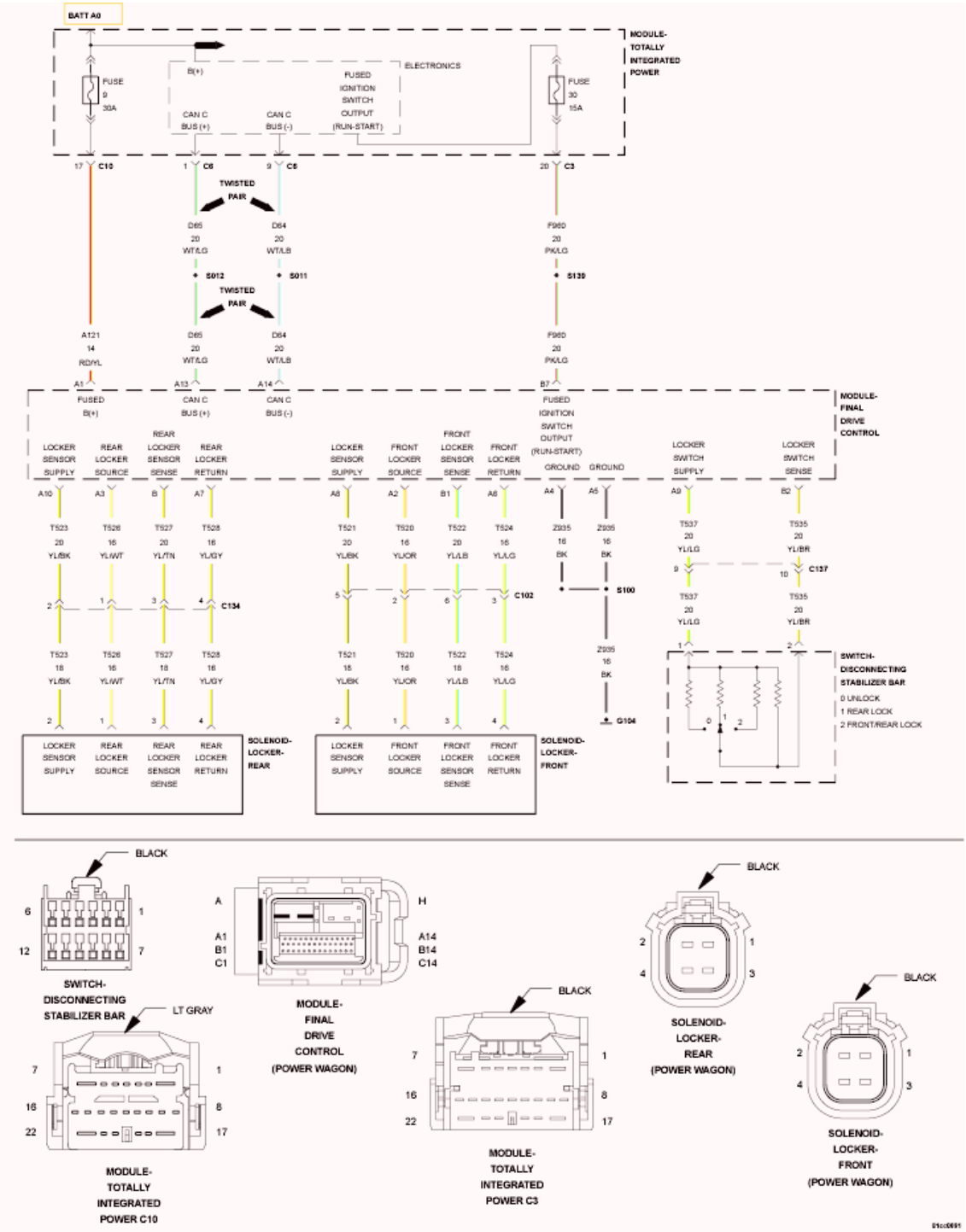

Fig. 9: Final Drive Control Module Wiring Diagram
Courtesy of CHRYSLER GROUP, LLC

For a complete wiring diagram **refer to appropriate SYSTEM WIRING DIAGRAMS article** .

WHEN MONITORED:

Ignition on. Disconnecting Stabilizer Bar Switch in the RR or FR/RR position.

SET CONDITION:

The FDCM detects the Rear Locker Source circuit is shorted low.

POSSIBLE CAUSES

Possible Causes
REAR LOCKER SOLENOID
(T526) REAR LOCKER SOURCE CIRCUIT FOR A SHORT TO GROUND
(T526) REAR LOCKER SOURCE CIRCUIT FOR A SHORT TO (T528) REAR LOCKER RETURN CIRCUIT
FDCM

DIAGNOSTIC TEST

1. **ACTIVE DTC**

   CAUTION: Before removing the FDCM harness connector, clean the connector and locking cam area of dirt and debris. Failure to do so can result in the connector being jammed or damage to the locking cams on the harness connector or module. Do not force the assist arm when releasing or installing the harness connector.

   1. Ignition on, engine not running.
   2. With the scan tool, read DTC's.

      Is the DTC active at this time?

      Yes

      - Go To 2.

      No

      - Go To 6.
2. **REAR LOCKER SOLENOID OPERATION**

   NOTE: Before continuing with the below diagnostic test, ensure the FDCM harness connector seal is installed correctly. Inspect the terminals on both harness connector and the module for damage. Failure to do so can result

in misdiagnoses of the system.

1. Turn the ignition off.
2. Disconnect the Rear Locker Solenoid harness connector.
3. Ignition on, engine not running.
4. Using a 12-volt test light, jump across from the (T526) Rear Locker Source circuit and the (T528) Rear Locker Return circuit in the Rear Locker harness connector.
5. With a scan tool, actuate the Rear Locker Solenoid.

   Does the test light flash on and off?

   Yes

   - Inspect the Rear Locker Solenoid terminals and connectors for corrosion and/or dirt that may compromise the connection. If OK, replace the Rear Locker Solenoid.
   - Perform FDCM VERIFICATION TEST. Refer to **FDCM VERIFICATION TEST**.

   No

   - Go To 3.

3. **(T526) REAR LOCKER SOURCE CIRCUIT FOR A SHORT TO GROUND**

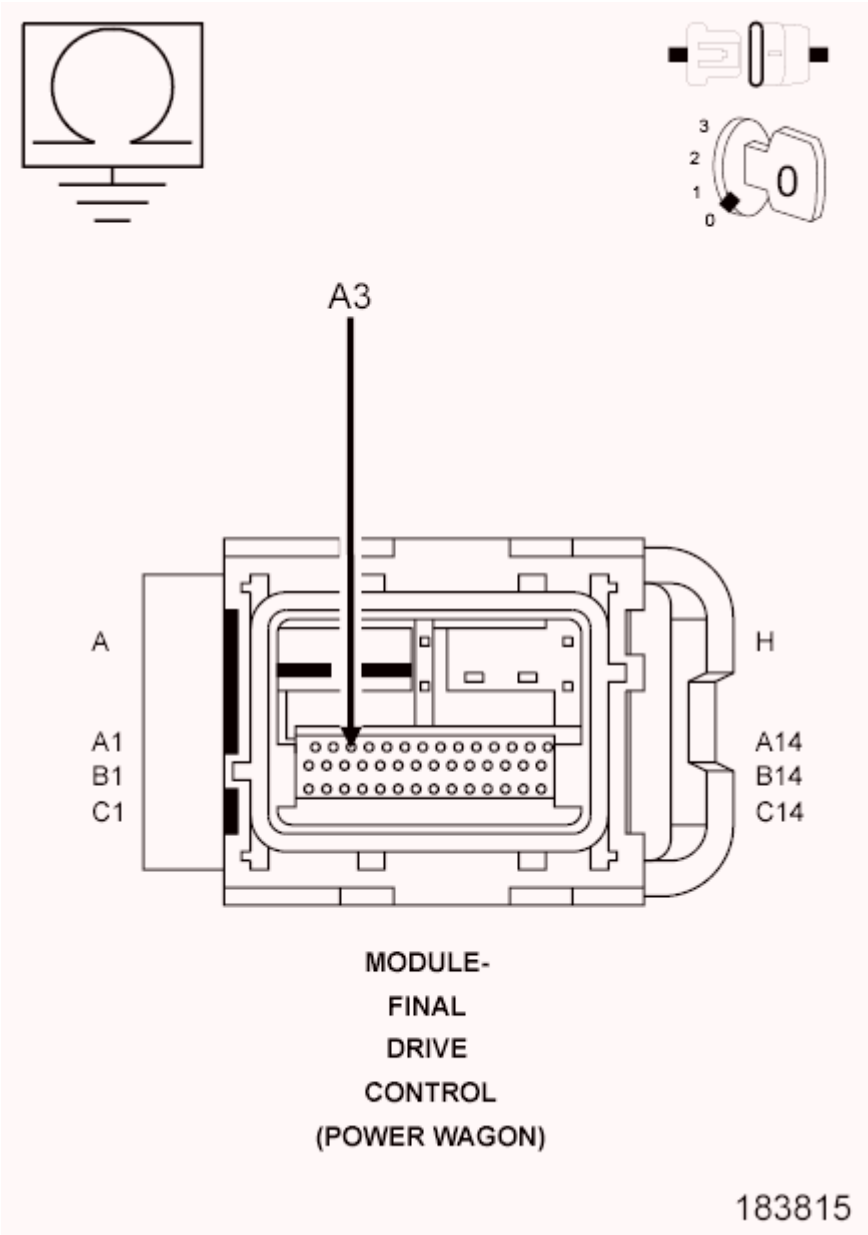

Fig. 10: Checking Rear Locker Source Circuit For A Short To Ground
Courtesy of CHRYSLER GROUP, LLC

1. Turn the ignition off.
2. Disconnect the FDCM harness connector.
3. Measure the resistance of the (T526) Rear Locker Source circuit at the FDCM harness connector to ground.

   Is the resistance below 100 ohms?

   Yes

- Repair the short to ground in the (T526) Rear Locker Source circuit.
- Perform FDCM VERIFICATION TEST. Refer to **FDCM VERIFICATION TEST**.

No

- Go To 4.

4. **(T526) REAR LOCKER SOURCE CIRCUIT FOR A SHORT TO (T528) REAR LOCKER RETURN CIRCUIT**

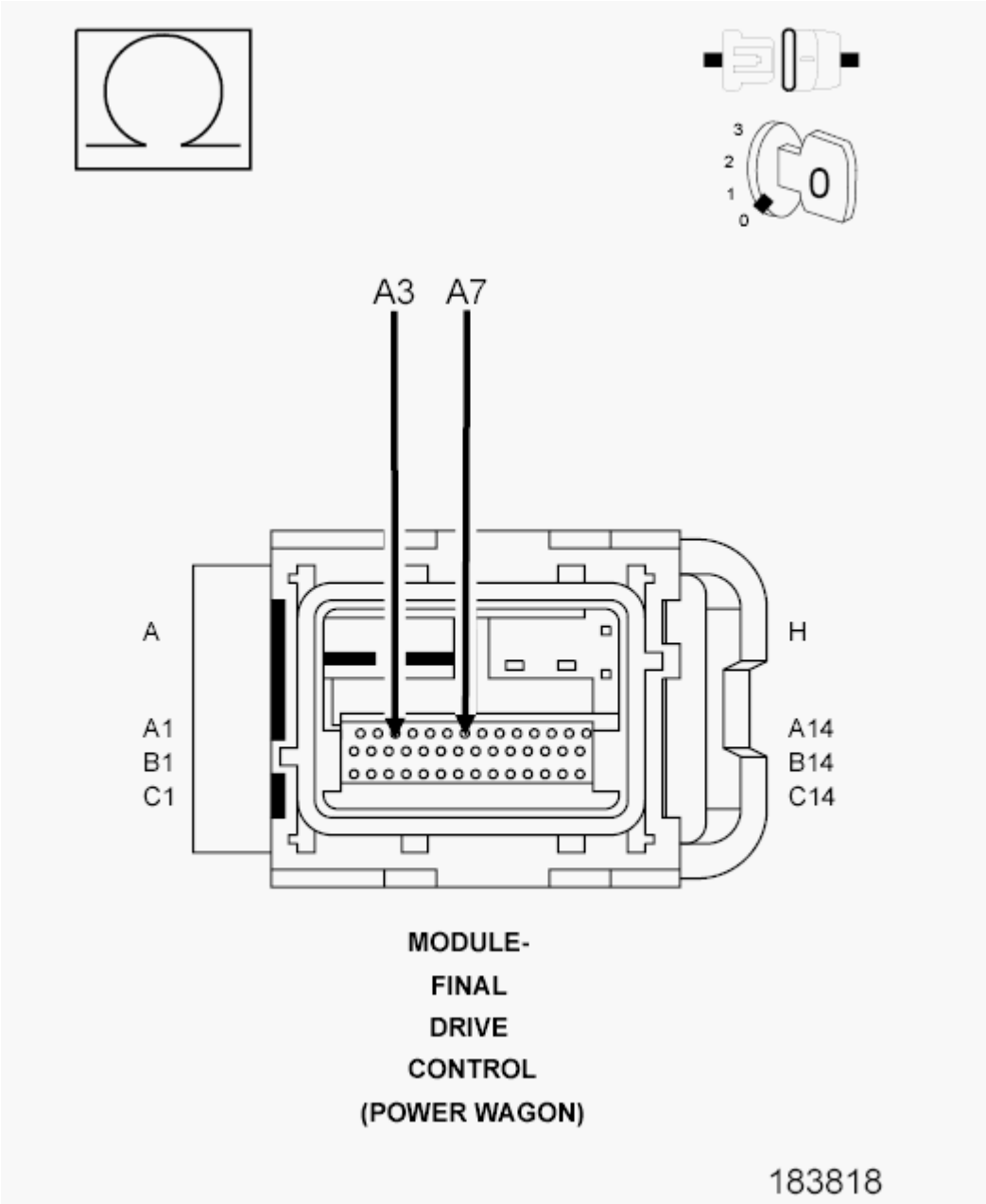

Fig. 11: Checking Rear Locker Source Circuit For A Short To Rear Locker Return Circuit
Courtesy of CHRYSLER GROUP, LLC

1. Measure the resistance between the (T526) Rear Locker Source circuit and the (T528) Rear Locker Return circuit in the FDCM harness connector.

   Is the resistance below 100 ohms?

   Yes

   - Repair the short between (T526) Rear Locker Source circuit and the (T528) Rear Locker Return circuit.
   - Perform FDCM VERIFICATION TEST. Refer to **FDCM VERIFICATION TEST**.

   No

   - Go To 5.

5. **FDCM**

   NOTE: Before continuing, check the FDCM harness connector terminals for corrosion, damage, or terminal push out. Repair as necessary.

   1. Using the schematics as a guide, inspect the wire harness and connectors. Pay particular attention to all Power and Ground circuits.

      Were there any problems found?

      Yes

      - Repair as necessary.
      - Perform FDCM VERIFICATION TEST. Refer to **FDCM VERIFICATION TEST**.

      No

      - Replace and program the Final Drive Control Module in accordance with Service Information.
      - Perform FDCM VERIFICATION TEST. Refer to **FDCM VERIFICATION TEST**.

6. **INTERMITTENT WIRING AND CONNECTORS**
   1. The conditions necessary to set this DTC are not present at this time.
   2. Using the schematics as a guide, inspect the wiring and connectors specific to this circuit.
   3. Wiggle test the wiring harness and connectors while checking for shorted and open circuits.
   4. Using the scan tool, monitor the data related to this circuit while performing the wiggle test. Look for the data to change or for the DTC to reset.

      Were there any problems found?

      Yes

- Repair as necessary.
- Perform FDCM VERIFICATION TEST. Refer to **FDCM VERIFICATION TEST**.

No

- Test Complete.

C141E-REAR DIFFERENTIAL CONTROL CIRCUIT HIGH

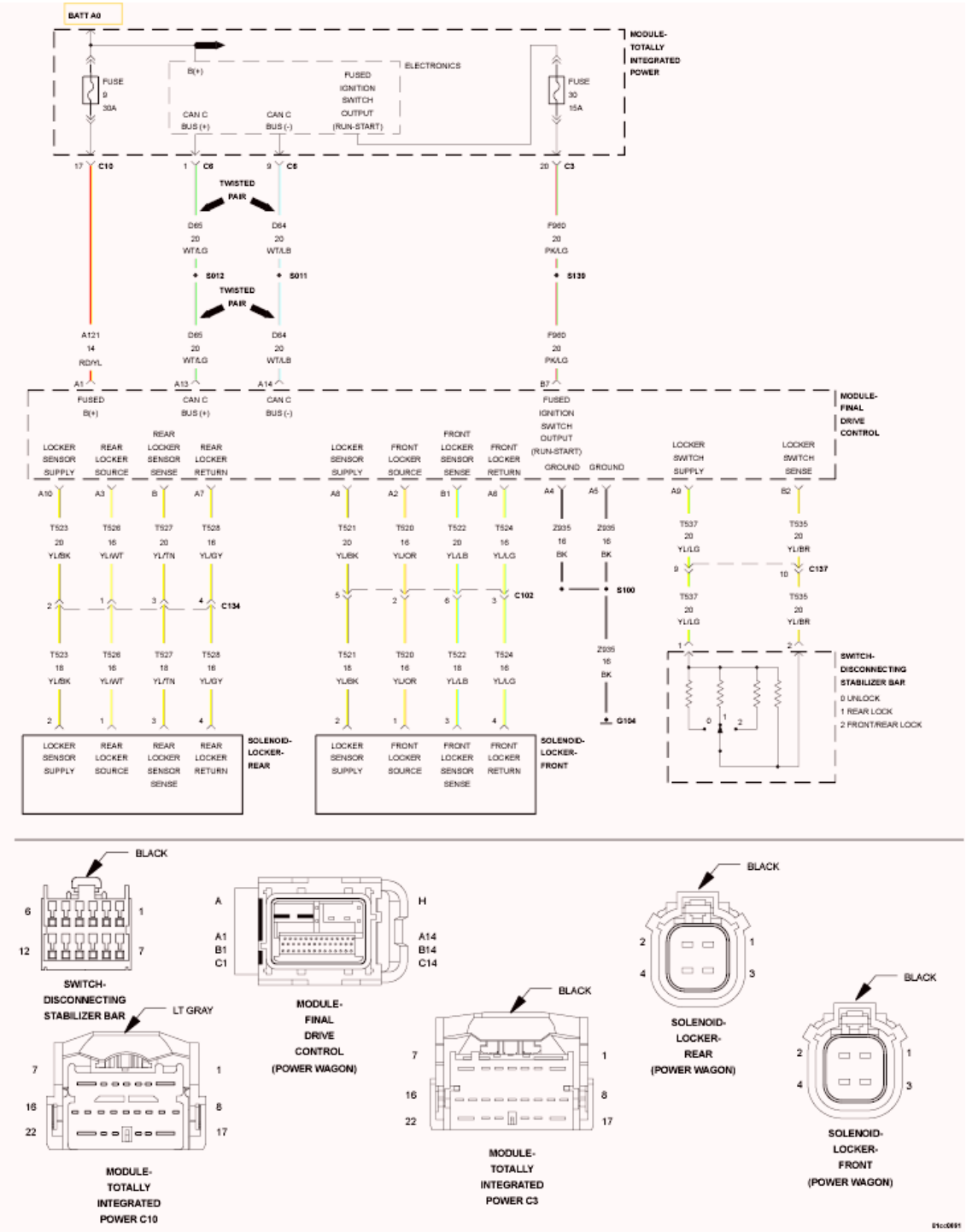

Fig. 12: Final Drive Control Module Wiring Diagram
Courtesy of CHRYSLER GROUP, LLC

For a complete wiring diagram **refer to appropriate SYSTEM WIRING DIAGRAMS article** .

WHEN MONITORED:

Ignition on. Disconnecting Stabilizer Bar Switch in the FR/RR position.

SET CONDITION:

The FDCM detects the Rear Locker Source circuit is shorted high.

POSSIBLE CAUSES

Possible Causes
REAR LOCKER SOLENOID
(T526) REAR LOCKER SOURCE CIRCUIT FOR A SHORT TO BATTERY VOLTAGE
(T528) REAR LOCKER RETURN CIRCUIT FOR AN OPEN
FDCM

DIAGNOSTIC TEST

1. **ACTIVE DTC**

   CAUTION: Before removing the FDCM harness connector, clean the connector and locking cam area of dirt and debris. Failure to do so can result in the connector being jammed or damage to the locking cams on the harness connector or module. Do not force the assist arm when releasing or installing the harness connector.

   1. Ignition on, engine not running.
   2. With the scan tool, read DTC's.

      Is the DTC active at this time?

      Yes

      - Go To 2.

      No

      - Go To 6.
2. **REAR LOCKER SOLENOID OPERATION**

   NOTE: Before continuing with the below diagnostic test, ensure the FDCM harness connector seal is installed correctly. Inspect the terminals on both harness connector and the module for damage. Failure to do so can result in misdiagnoses of the system.

   1. Turn the ignition off.
   2. Disconnect the Rear Locker Solenoid harness connector.

3. Ignition on, engine not running.
4. Using a 12-volt test light, jump across from the (T526) Rear Locker Source circuit and the (T528) Rear Locker Return circuit in the Rear Locker harness connector.
5. With a scan tool, actuate the Rear Locker Solenoid.

   Does the test light flash on and off?

   Yes

   - Inspect the Rear Locker Solenoid terminals and connectors for corrosion and/or dirt that may compromise the connection. If OK, replace the Rear Locker Solenoid.
   - Perform FDCM VERIFICATION TEST. Refer to **FDCM VERIFICATION TEST**.

   No

   - Go To 3.

3. **(T526) REAR LOCKER SOURCE CIRCUIT FOR A SHORT TO BATTERY VOLTAGE**

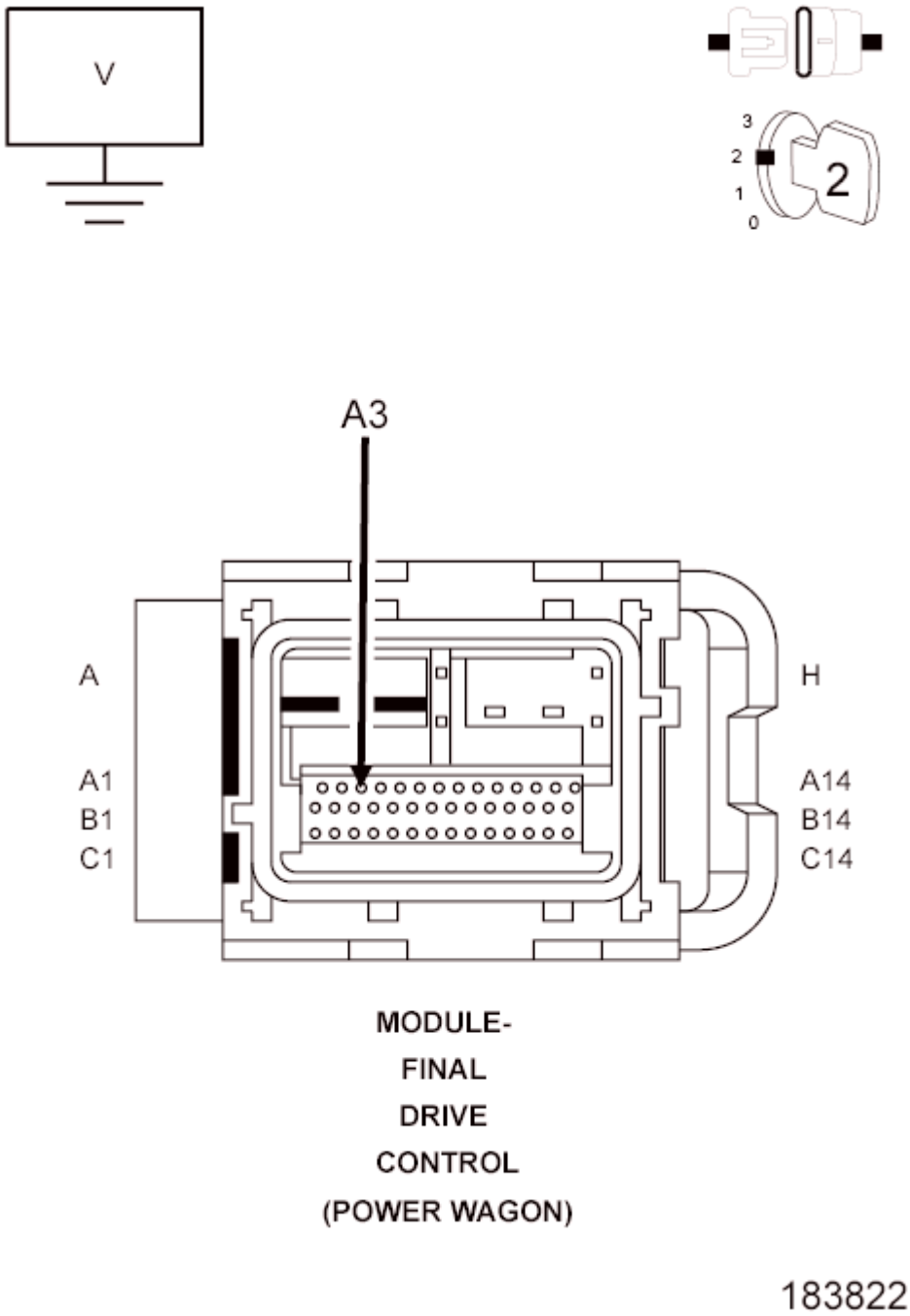

Fig. 13: Checking Rear Locker Source Circuit For A Short To Battery Voltage
Courtesy of CHRYSLER GROUP, LLC

1. Turn the ignition off.
2. Disconnect the FDCM harness connector.
3. Turn the ignition on.
4. Measure the voltage on the (T526) Rear Locker Source circuit at the FDCM harness connector.

Does the voltmeter indicate voltage present?

Yes

- Repair the short to voltage in the (T526) Rear Locker Source circuit.
- Perform FDCM VERIFICATION TEST. Refer to **FDCM VERIFICATION TEST**.

No

- Go To 4.

4. **(T528) REAR LOCKER RETURN CIRCUIT FOR AN OPEN**

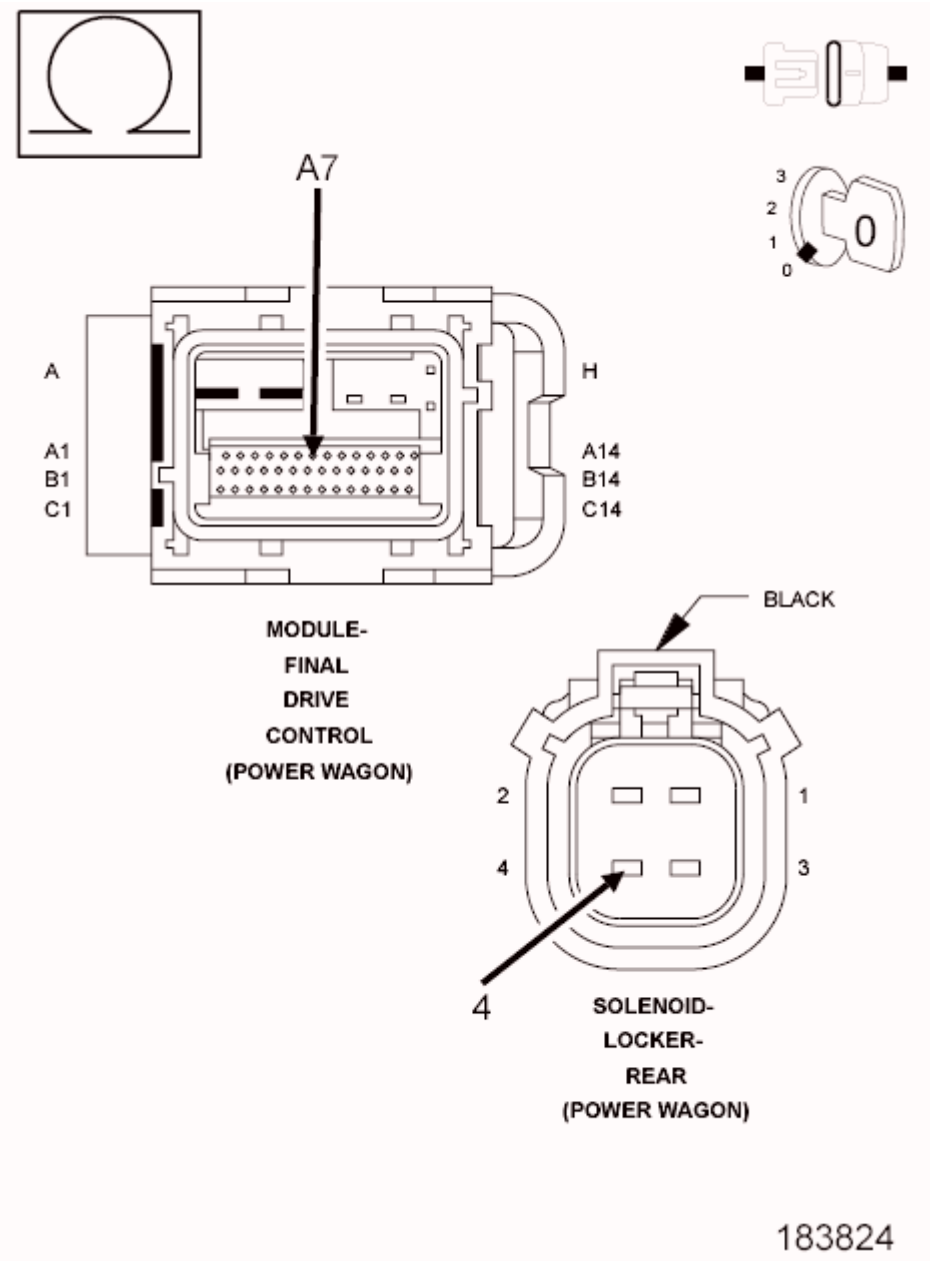

Fig. 14: Checking Rear Locker Return Circuit For An Open
Courtesy of CHRYSLER GROUP, LLC

1. Measure the resistance of the (T528) Rear Locker Return circuit from the Rear Locker Solenoid harness connector and the FDCM harness connector.

   Is the resistance below 5.0 ohms?

   Yes

   - Go To 5.

   No

   - Repair the open in the (T528) Rear Locker Return circuit.
   - Perform FDCM VERIFICATION TEST. Refer to **FDCM VERIFICATION TEST**.

5. **FDCM**

   NOTE: Before continuing, check the FDCM harness connector terminals for corrosion, damage, or terminal push out. Repair as necessary.

   1. Using the schematics as a guide, inspect the wire harness and connectors. Pay particular attention to all Power and Ground circuits.

      Were there any problems found?

      Yes

      - Repair as necessary.
      - Perform FDCM VERIFICATION TEST. Refer to **FDCM VERIFICATION TEST**.

      No

      - Replace and program the Final Drive Control Module in accordance with Service Information.
      - Perform FDCM VERIFICATION TEST. Refer to **FDCM VERIFICATION TEST**.

6. **INTERMITTENT WIRING AND CONNECTORS**
   1. The conditions necessary to set this DTC are not present at this time.
   2. Using the schematics as a guide, inspect the wiring and connectors specific to this circuit.
   3. Wiggle test the wiring harness and connectors while checking for shorted and open circuits.
   4. Using the scan tool, monitor the data related to this circuit while performing the wiggle test. Look for the data to change or for the DTC to reset.

      Were there any problems found?

Yes

- Repair as necessary.
- Perform FDCM VERIFICATION TEST. Refer to **FDCM VERIFICATION TEST**.

No

- Test Complete.

C141F-REAR DIFFERENTIAL CONTROL CIRCUIT FOR AN OPEN

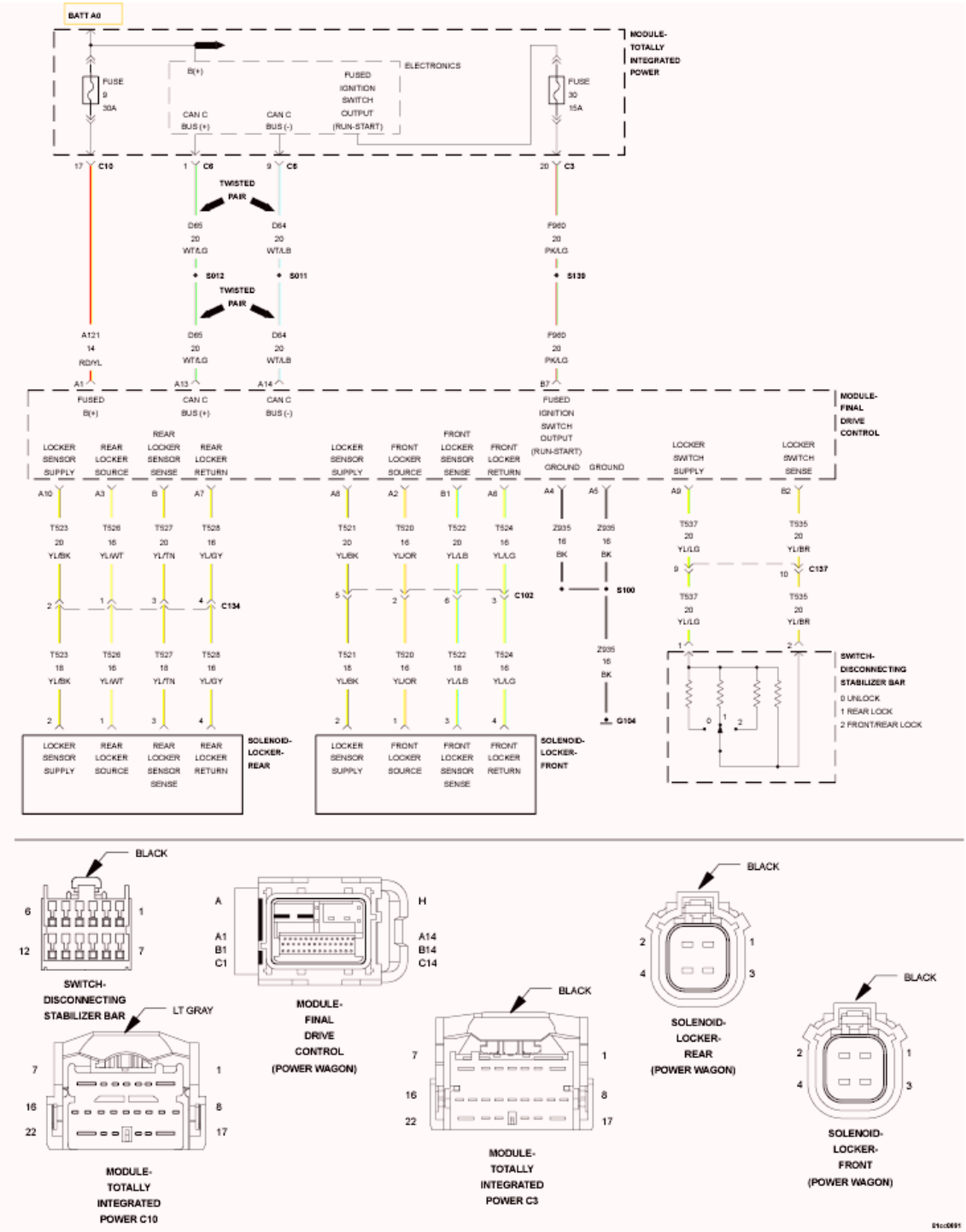

Fig. 15: Final Drive Control Module Wiring Diagram
Courtesy of CHRYSLER GROUP, LLC

For a complete wiring diagram **refer to appropriate SYSTEM WIRING DIAGRAMS article** .

WHEN MONITORED:

Ignition on. Disconnecting Stabilizer Bar Switch in the FR/RR position.

SET CONDITION:

The FDCM detects the Rear Locker Source circuit is open.

POSSIBLE CAUSES

Possible Causes
REAR LOCKER SOLENOID
(T526) REAR LOCKER SOURCE CIRCUIT FOR AN OPEN
FDCM

DIAGNOSTIC TEST

1. **ACTIVE DTC**

   CAUTION: Before removing the FDCM harness connector, clean the connector and locking cam area of dirt and debris. Failure to do so can result in the connector being jammed or damage to the locking cams on the harness connector or module. Do not force the assist arm when releasing or installing the harness connector.

   1. Ignition on, engine not running.
   2. With the scan tool, read DTC's.

      Is the DTC active at this time?

      Yes

      - Go To 2.

      No

      - Go To 5.
2. **REAR LOCKER SOLENOID OPERATION**

   NOTE: Before continuing with the below diagnostic test, ensure the FDCM harness connector seal is installed correctly. Inspect the terminals on both harness connector and the module for damage. Failure to do so can result in misdiagnoses of the system.

   1. Turn the ignition off.
   2. Disconnect the Rear Locker Solenoid harness connector.
   3. Ignition on, engine not running.

4. Using a 12-volt test light, jump across from the (T526) Rear Locker Source circuit and the (T528) Rear Locker Return circuit in the Rear Locker harness connector.
5. With a scan tool, actuate the Rear Locker Solenoid.

   Does the test light flash on and off?

   Yes

   - Inspect the Rear Locker Solenoid terminals and connectors for corrosion and/or dirt that may compromise the connection. If OK, replace the Rear Locker Solenoid.
   - Perform FDCM VERIFICATION TEST. Refer to **FDCM VERIFICATION TEST**.

   No

   - Go To 3.

3. **(T526) REAR LOCKER SOURCE CIRCUIT FOR AN OPEN**

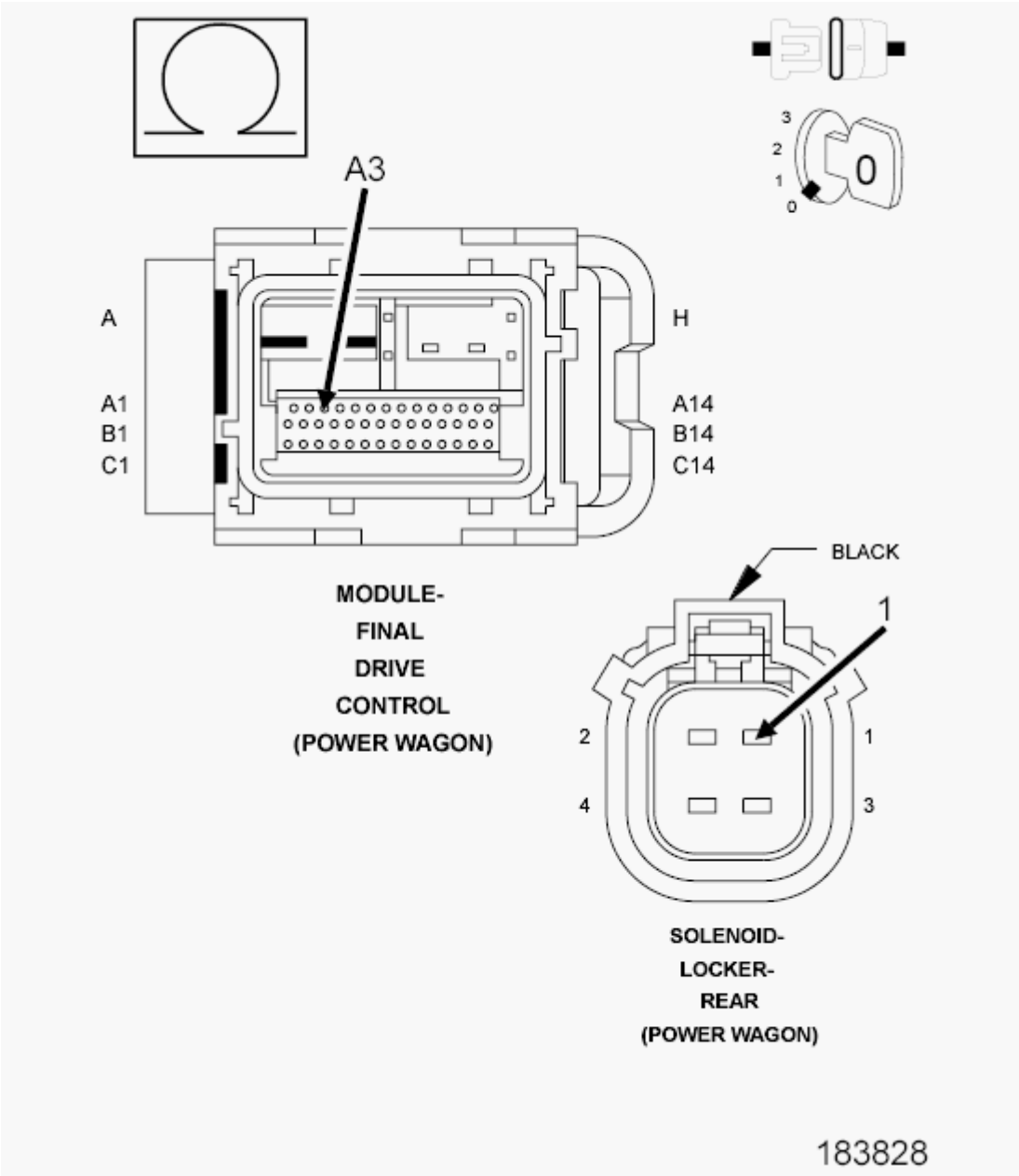

Fig. 16: Checking Rear Locker Source Circuit For An Open
Courtesy of CHRYSLER GROUP, LLC

1. Turn the ignition off.
2. Disconnect the FDCM harness connector.
3. Turn the ignition on.
4. Measure the resistance of the (T526) Rear Locker Source circuit from the FDCM harness connector and the Rear Locker Solenoid harness connector.

   Is the resistance below 5.0 ohms?

Yes

- Go To 4.

No

- Repair the open in the (T526) Rear Locker Source circuit.
- Perform FDCM VERIFICATION TEST. Refer to **FDCM VERIFICATION TEST**.

4. **FDCM**

NOTE: Before continuing, check the FDCM harness connector terminals for corrosion, damage, or terminal push out. Repair as necessary.

1. Using the schematics as a guide, inspect the wire harness and connectors. Pay particular attention to all Power and Ground circuits.

   Were there any problems found?

   Yes

   - Repair as necessary.
   - Perform FDCM VERIFICATION TEST. Refer to **FDCM VERIFICATION TEST**.

   No

   - Replace and program the Final Drive Control Module in accordance with Service Information.
   - Perform FDCM VERIFICATION TEST. Refer to **FDCM VERIFICATION TEST**.

5. **INTERMITTENT WIRING AND CONNECTORS**
   1. The conditions necessary to set this DTC are not present at this time.
   2. Using the schematics as a guide, inspect the wiring and connectors specific to this circuit.
   3. Wiggle test the wiring harness and connectors while checking for shorted and open circuits.
   4. Using the scan tool, monitor the data related to this circuit while performing the wiggle test. Look for the data to change or for the DTC to reset.

   Were there any problems found?

   Yes

   - Repair as necessary.
   - Perform FDCM VERIFICATION TEST. Refer to **FDCM VERIFICATION TEST**.

   No

- Test Complete.

C143A - DIFFERENTIAL/LOCKER SELECT SWITCH PERFORMANCE

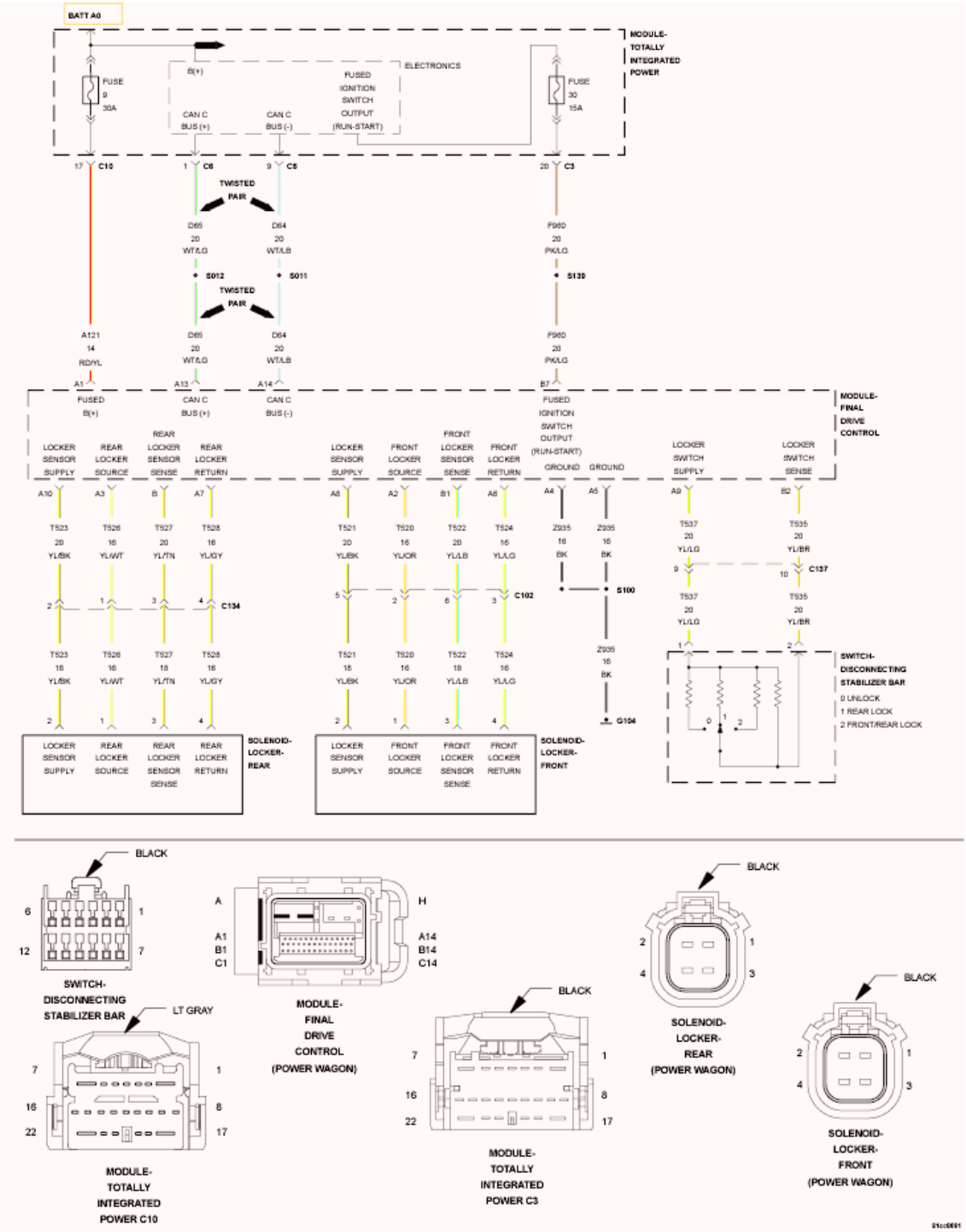

Fig. 17: Final Drive Control Module Wiring Diagram
Courtesy of CHRYSLER GROUP, LLC

For a complete wiring diagram **refer to appropriate SYSTEM WIRING DIAGRAMS article**

WHEN MONITORED:

Ignition on.

SET CONDITION:

During switch operation, the FDCM senses the Disconnecting Stabilizer Bar Switch resistance is out of specification.

POSSIBLE CAUSES

Possible Causes
SWITCH INTERMITTENT
DISCONNECTING STABILIZER BAR SWITCH
(T537) LOCKER SWITCH SUPPLY CIRCUIT
(T535) LOCKER SWITCH SENSE CIRCUIT FOR AN OPEN/HIGH RESISTANCE
FDCM

DIAGNOSTIC TEST

1. **DTC ACTIVE**

   CAUTION: Before removing the FDCM harness connector, clean the connector and locking cam area of dirt and debris. Failure to do so can result in the connector being jammed or damage to the locking cams on the harness connector or module. Do not force the assist arm when releasing or installing the harness connector.

   1. Turn the ignition on, engine not running
   2. With the scan tool, read FDCM DTC(s).

      Is the DTC active at this time?

      Yes

      - Go To 2.

      No

      - Go To 5.
2. **DISCONNECTING STABILIZER BAR SWITCH OPERATION**

   NOTE: Before continuing with the below diagnostic test, ensure the FDCM

harness connector seal is installed correctly. Inspect the terminals on both harness connector and the module for damage. Failure to do so can result in misdiagnoses of the system.

1. Turn the ignition off.
2. Disconnect the Disconnecting Stabilizer Bar Switch harness connector.
3. Remove the Disconnecting Stabilizer Bar Switch.
4. Measure the resistance on the Disconnecting Stabilizer Bar Switch between the Locker Switch Supply terminal and the Locker Switch Sense terminal.
5. The resistance must read as follows for each position of the switch.
   - **UNLOCK: 5454 ohms +/- 5%**
   - **RR: 1940 ohms +/- 5%**
   - **FR/RR: 1075 ohms +/- 5%**

   Does the ohmmeter read correctly for each position of the Disconnecting Stabilizer Bar Switch

   Yes

   - Go To 3.

   No

   - Replace the Disconnecting Stabilizer Bar Switch.
   - Perform FDCM VERIFICATION TEST. Refer to **FDCM VERIFICATION TEST**.

3. **(T535) LOCKER SWITCH SENSE CIRCUIT FOR AN OPEN**

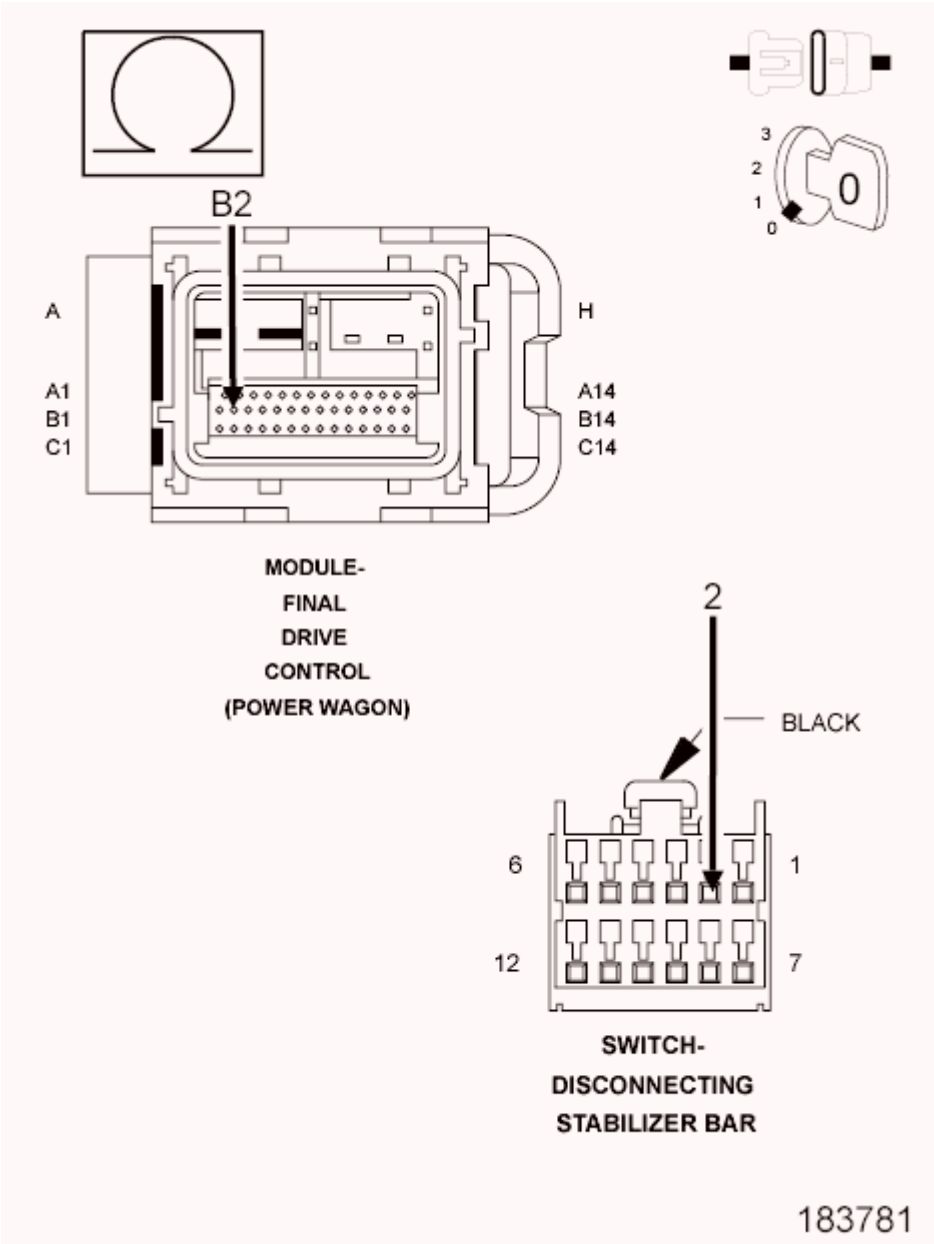

Fig. 18: Checking Locker Switch Sense Circuit For An Open
Courtesy of CHRYSLER GROUP, LLC

1. Disconnect the FDCM harness connector.
2. Measure the resistance of the (T535) Locker Switch Sense circuit between the Disconnecting Stabilizer Bar Switch and the FDCM harness connector.

   Is the resistance below 5.0 ohms?

   Yes

   - Go To 4.

No

- Repair the open or high resistance in the (T535) Locker Switch Sense circuit.
- Perform FDCM VERIFICATION TEST. Refer to **FDCM VERIFICATION TEST**.

4. **(T537) LOCKER SWITCH SUPPLY CIRCUIT FOR AN OPEN**

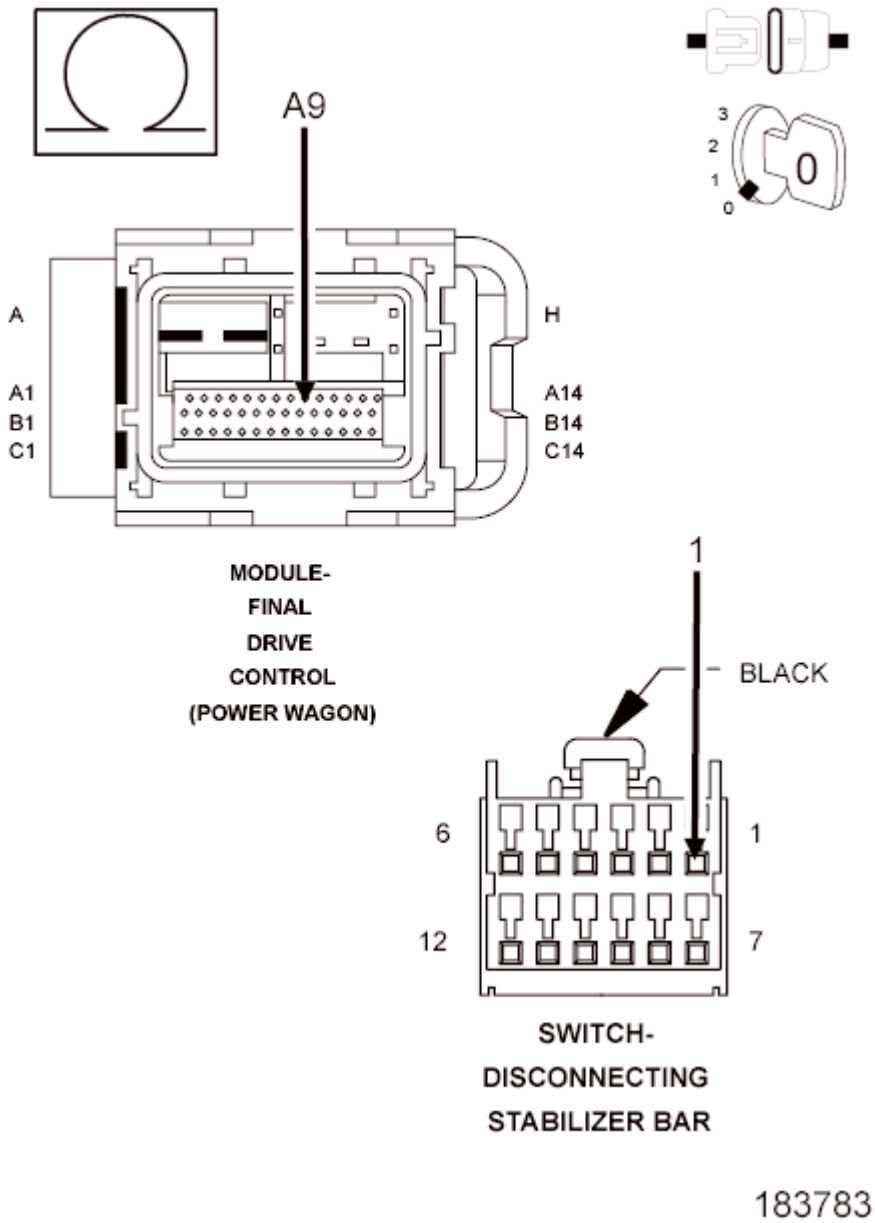

Fig. 19: Checking Locker Switch Supply Circuit For An Open
Courtesy of CHRYSLER GROUP, LLC

1. Measure the resistance of the (T537) Locker Switch Supply circuit between the Disconnecting Stabilizer Bar Switch and the FDCM harness connector.

Is the resistance below 5.0 ohms?

Yes

- Replace the FDCM in accordance with the Service Information
- Perform FDCM VERIFICATION TEST. Refer to **FDCM VERIFICATION TEST**.

No

- Repair the open or high resistance in the (T537) Locker Switch Supply circuit.
- Perform FDCM VERIFICATION TEST. Refer to **FDCM VERIFICATION TEST**.

5. **INTERMITTENT WIRING AND CONNECTORS**
    1. The conditions necessary to set this DTC are not present at this time.
    2. Using the schematics as a guide, inspect the wiring and connectors specific to this circuit.
    3. Wiggle test the wiring harness and connectors while checking for shorted and open circuits.
    4. Using the scan tool, monitor the data related to this circuit while performing the wiggle test. Look for the data to change or for the DTC to reset.
    5. While monitoring the TRAC State on the scan tool, move the switch to each position. The scan tool display must match the position on the actual switch.

    Were there any problems found?

    Yes

    - Repair as necessary.
    - Perform FDCM VERIFICATION TEST. Refer to **FDCM VERIFICATION TEST**.

    No

    - Test Complete.

C143B-DIFFERENTIAL/LOCKER SELECT SWITCH CIRCUIT LOW

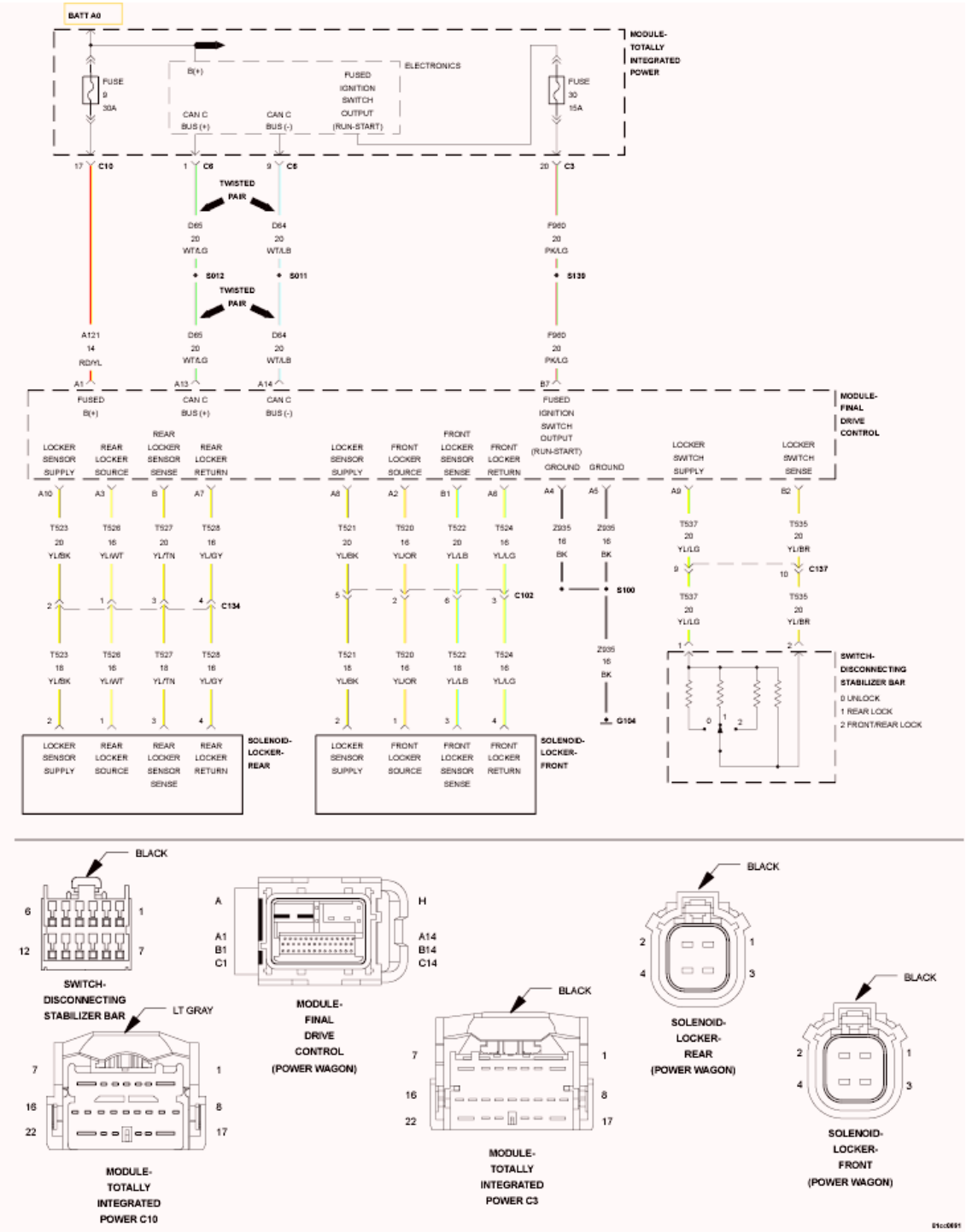

Fig. 20: Final Drive Control Module Wiring Diagram
Courtesy of CHRYSLER GROUP, LLC

For a complete wiring diagram **refer to appropriate SYSTEM WIRING DIAGRAMS article** .

WHEN MONITORED:

Ignition on.

SET CONDITION:

During switch operation, the FDCM senses the Disconnecting Stabilizer Bar Switch sense is below 0.25 volt.

POSSIBLE CAUSES

Possible Causes
SWITCH INTERMITTENT
DISCONNECTING STABILIZER BAR SWITCH
(T537) LOCKER SWITCH SUPPLY CIRCUIT FOR A SHORT TO GROUND
(T535) LOCKER SWITCH SENSE CIRCUIT SHORT TO GROUND
FDCM

DIAGNOSTIC TEST

1. **DTC ACTIVE**

   CAUTION: Before removing the FDCM harness connector, clean the connector and locking cam area of dirt and debris. Failure to do so can result in the connector being jammed or damage to the locking cams on the harness connector or module. Do not force the assist arm when releasing or installing the harness connector.

   1. Turn the ignition on, engine not running
   2. With the scan tool, read FDCM DTC(s).

      Is the DTC active at this time?

      Yes

      - Go To 2.

      No

      - Go To 5.

2. **DISCONNECTING STABILIZER BAR SWITCH OPERATION**

   NOTE: Before continuing with the below diagnostic test, ensure the FDCM harness connector seal is installed correctly. Inspect the terminals on both harness connector and the module for damage. Failure to do so can result in misdiagnoses of the system.

   1. Turn the ignition off.

2. Disconnect the Disconnecting Stabilizer Bar Switch harness connector.
3. Remove the Disconnecting Stabilizer Bar Switch.
4. Measure the resistance on the Disconnecting Stabilizer Bar Switch between the Locker Switch Supply terminal and the Locker Switch Sense terminal.
5. The resistance must read as follows for each position of the switch.
   - **UNLOCK: 5454 ohms +/- 5%**
   - **RR: 1940 ohms +/- 5%**
   - **FR/RR: 1075 ohms +/- 5%**

   Does the ohmmeter read correctly for each position of the Disconnecting Stabilizer Bar Switch

   Yes

   - Go To 3.

   No

   - Replace the Disconnecting Stabilizer Bar Switch.
   - Perform FDCM VERIFICATION TEST. Refer to **FDCM VERIFICATION TEST**.

3. **(T535) LOCKER SWITCH SENSE CIRCUIT FOR A SHORT TO GROUND**

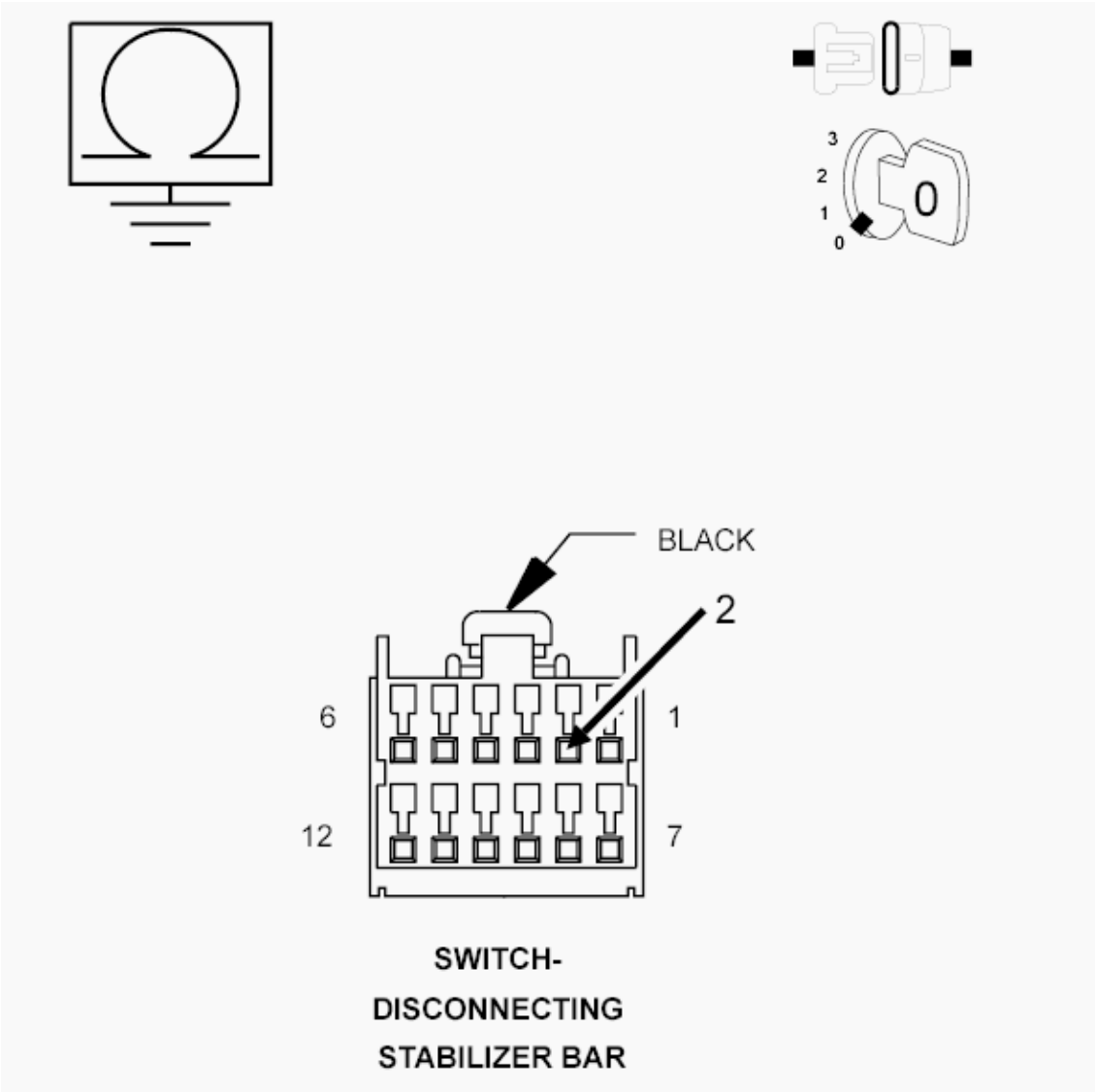

Fig. 21: Checking Locker Switch Sense Circuit For A Short To Ground
Courtesy of CHRYSLER GROUP, LLC

1. Disconnect the FDCM harness connector.
2. Measure the resistance of the (T535) Locker Switch Sense circuit in the Disconnecting Stabilizer Bar Switch harness connector to ground.

   Is the resistance below 100 ohms?

   Yes

   - Repair the short to ground in the (T535) Locker Switch Sense circuit.
   - Perform FDCM VERIFICATION TEST. Refer to **FDCM VERIFICATION TEST**.

   No

- Go To 4.

4. **(T537) LOCKER SWITCH SUPPLY CIRCUIT SHORT TO GROUND**

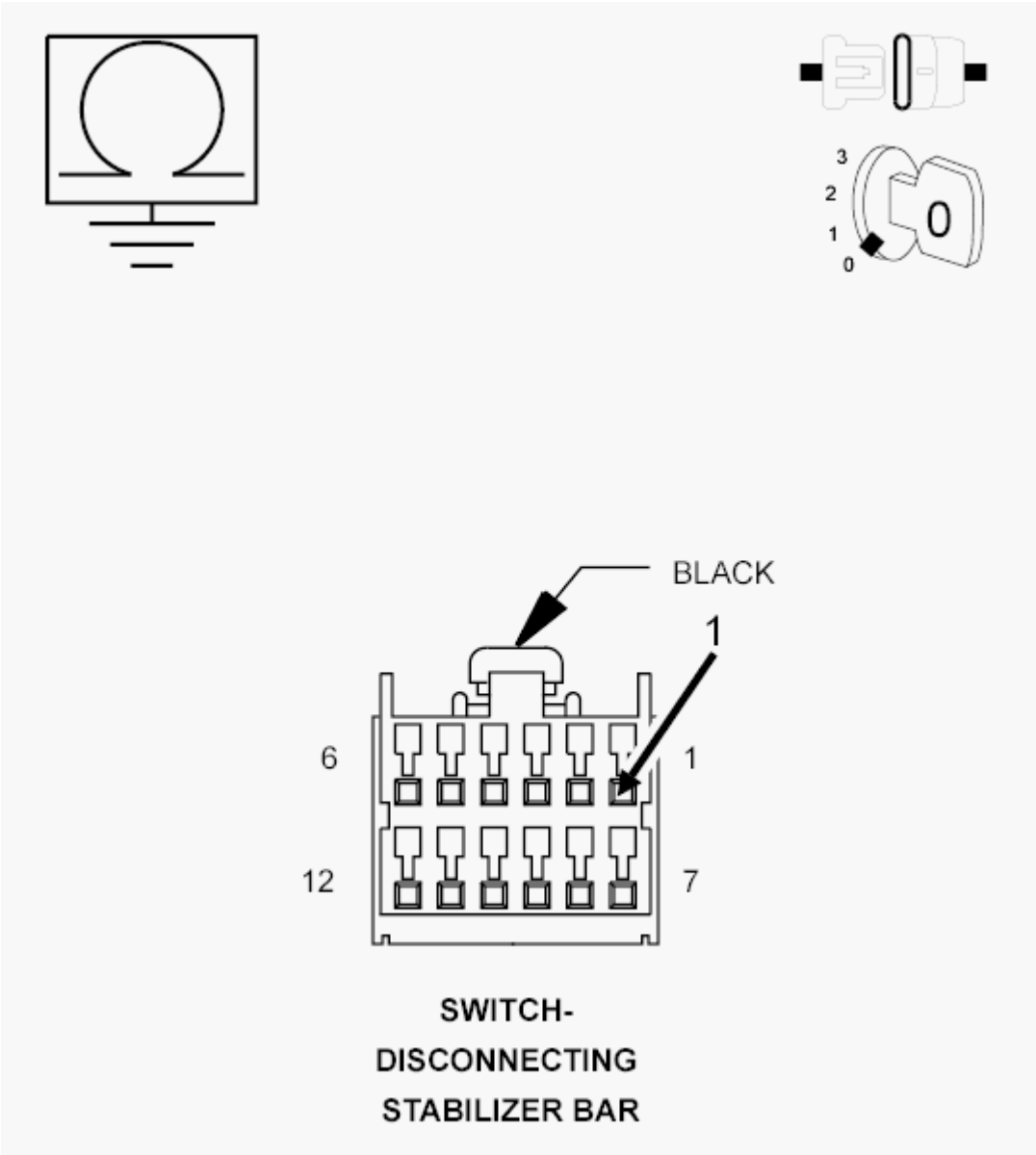

Fig. 22: Checking Locker Switch Supply Circuit Short To Ground
Courtesy of CHRYSLER GROUP, LLC

1. Measure the resistance of the (T537) Locker Switch Supply circuit in the Disconnecting Stabilizer Bar Switch harness connector to ground.

   Is the resistance below 100 ohms?

   Yes

- Repair the short to ground in the (T537) Locker Switch Supply circuit.
- Perform FDCM VERIFICATION TEST. Refer to **FDCM VERIFICATION TEST**.

No

- Replace the FDCM in accordance with the Service Information
- Perform FDCM VERIFICATION TEST. Refer to **FDCM VERIFICATION TEST**.

5. **INTERMITTENT WIRING AND CONNECTORS**
    1. The conditions necessary to set this DTC are not present at this time.
    2. Using the schematics as a guide, inspect the wiring and connectors specific to this circuit.
    3. Wiggle test the wiring harness and connectors while checking for shorted and open circuits.
    4. Using the scan tool, monitor the data related to this circuit while performing the wiggle test. Look for the data to change or for the DTC to reset.
    5. While monitoring the TRAC State on the scan tool, move the switch to each position. The scan tool display must match the position on the actual switch.

    Were there any problems found?

    Yes

    - Repair as necessary.
    - Perform FDCM VERIFICATION TEST. Refer to **FDCM VERIFICATION TEST**.

    No

    - Test Complete.

C143C-DIFFERENTIAL/LOCKER SELECT SWITCH CIRCUIT HIGH

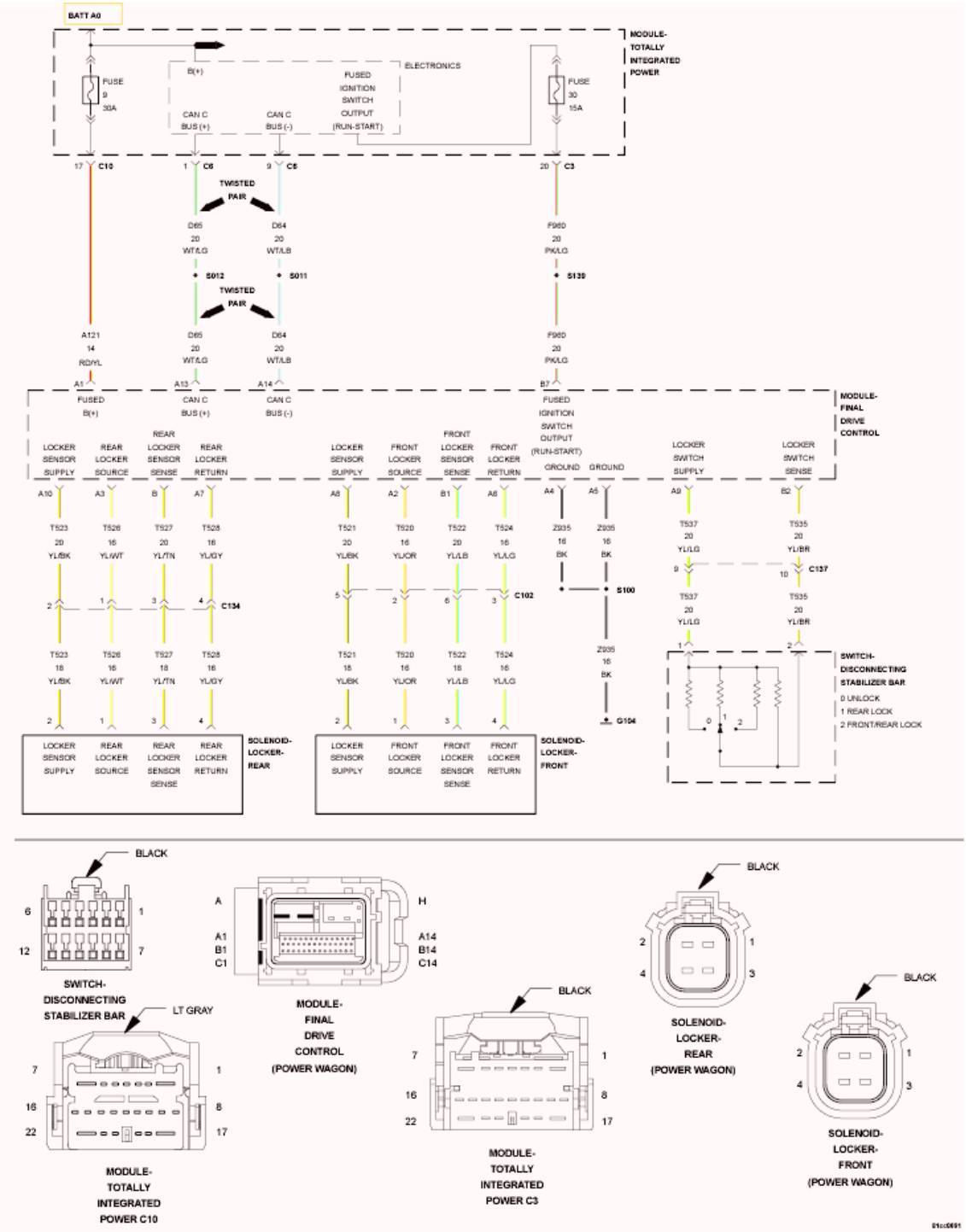

Fig. 23: Final Drive Control Module Wiring Diagram
Courtesy of CHRYSLER GROUP, LLC

For a complete wiring diagram **refer to appropriate SYSTEM WIRING DIAGRAMS article** .

WHEN MONITORED:

Ignition on.

SET CONDITION:

During switch operation, the FDCM senses the Disconnecting Stabilizer Bar Switch Sense circuit is above 4.5 volts.

POSSIBLE CAUSES

Possible Causes
SWITCH INTERMITTENT
DISCONNECTING STABILIZER SWITCH
(T535) LOCKER SWITCH SENSE CIRCUIT SHORT TO VOLTAGE
(T537) LOCKER SWITCH SUPPLY CIRCUIT FOR A SHORT TO (T535) LOCKER SWITCH SENSE CIRCUIT
(T535) LOCKER SWITCH SENSE CIRCUIT FOR AN OPEN
FDCM

DIAGNOSTIC TEST

1. **DTC ACTIVE**

CAUTION: Before removing the FDCM harness connector, clean the connector and locking cam area of dirt and debris. Failure to do so can result in the connector being jammed or damage to the locking cams on the harness connector or module. Do not force the assist arm when releasing or installing the harness connector.

1. Turn the ignition on, engine not running
2. With the scan tool, read FDCM DTC(s).

   Is the DTC active at this time?

   Yes

   - Go To 2.

   No

   - Go To 6.

2. **DISCONNECTING STABILIZER SWITCH OPERATION**

NOTE: Before continuing with the below diagnostic test, ensure the FDCM harness connector seal is installed correctly. Inspect the terminals on both harness connector and the module for damage. Failure to do so can result

in misdiagnoses of the system.

1. Turn the ignition off.
2. Disconnect the Disconnecting Stabilizer Bar Switch harness connector.
3. Remove the Disconnecting Stabilizer Bar Switch.
4. Measure the resistance on the Disconnecting Stabilizer Bar Switch between the Locker Switch Supply terminal and the Locker Switch Sense terminal.
5. The resistance must read as follows for each position of the switch.
   - **UNLOCK: 5454 ohms +/- 5%**
   - **RR: 1940 ohms +/- 5%**
   - **FR/RR: 1075 ohms +/- 5%**

   Does the ohmmeter read correctly for each position of the Disconnecting Stabilizer Bar Switch

   Yes

   - Go To 3.

   No

   - Replace the Disconnecting Stabilizer Bar Switch.
   - Perform FDCM VERIFICATION TEST. Refer to **FDCM VERIFICATION TEST**.

3. **(T535) LOCKER SWITCH SENSE CIRCUIT FOR A SHORT TO VOLTAGE**

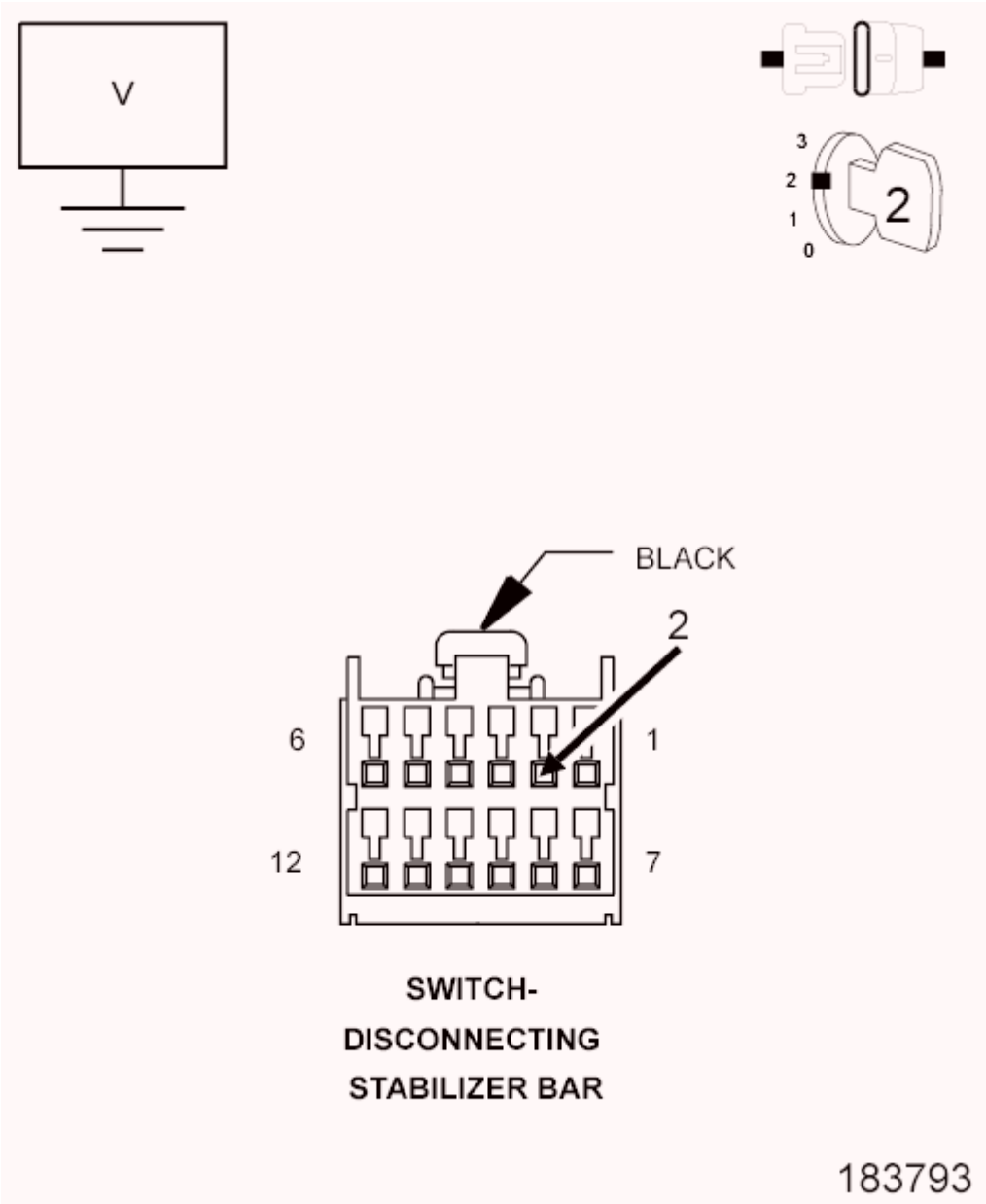

Fig. 24: Checking Locker Switch Sense Circuit For A Short To Voltage
Courtesy of CHRYSLER GROUP, LLC

1. Disconnect the FDCM harness connector.
2. Turn the ignition on.
3. Measure the voltage of the (T535) Locker Switch Sense circuit in the Disconnecting Stabilizer Bar Switch harness connector.

   Does the voltmeter indicate voltage present?

   Yes

- Repair the short to voltage in the (T535) Locker Switch Sense circuit.
- Perform FDCM VERIFICATION TEST. Refer to **FDCM VERIFICATION TEST**.

No

- Go To 4.

4. **(T537) LOCKER SWITCH SUPPLY CIRCUIT FOR A SHORT TO (T535) LOCKER SWITCH SENSE CIRCUIT**

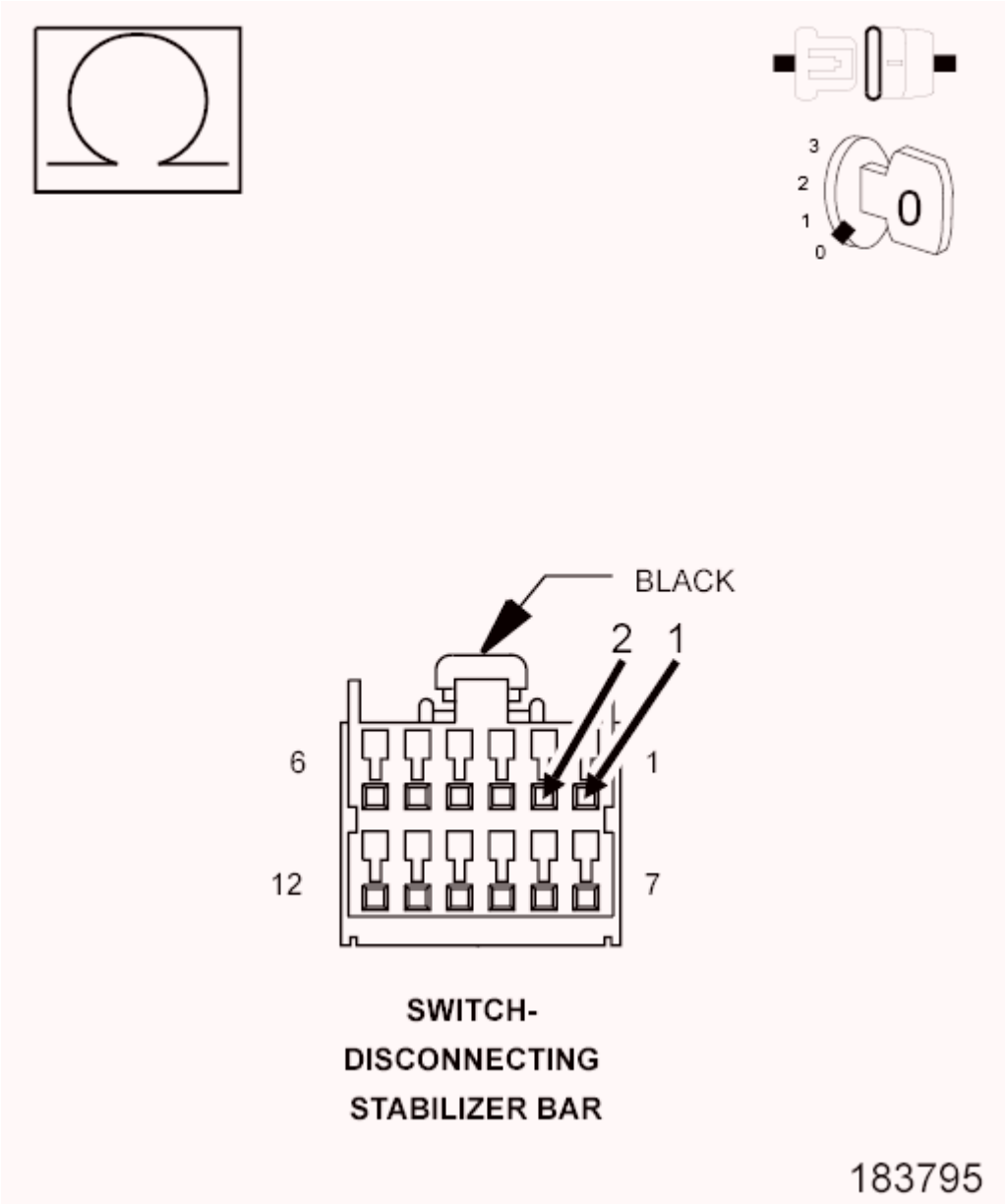

Fig. 25: Checking Locker Switch Supply Circuit For A Short To Locker Switch Sense Circuit
Courtesy of CHRYSLER GROUP, LLC

1. Measure the resistance between (T537) Locker Switch Supply circuit and the (T535) Locker Switch Sense circuit in the Disconnecting Stabilizer Bar Switch harness connector.

   Is the resistance below 5.0 ohms?

   Yes

   - Repair the short between (T537) Locker Switch Supply circuit and the (T535) Locker Switch Sense circuit.
   - Perform FDCM VERIFICATION TEST. Refer to **FDCM VERIFICATION TEST**.

   No

   - Go To 5.

5. **(T535) LOCKER SWITCH SENSE CIRCUIT FOR AN OPEN**

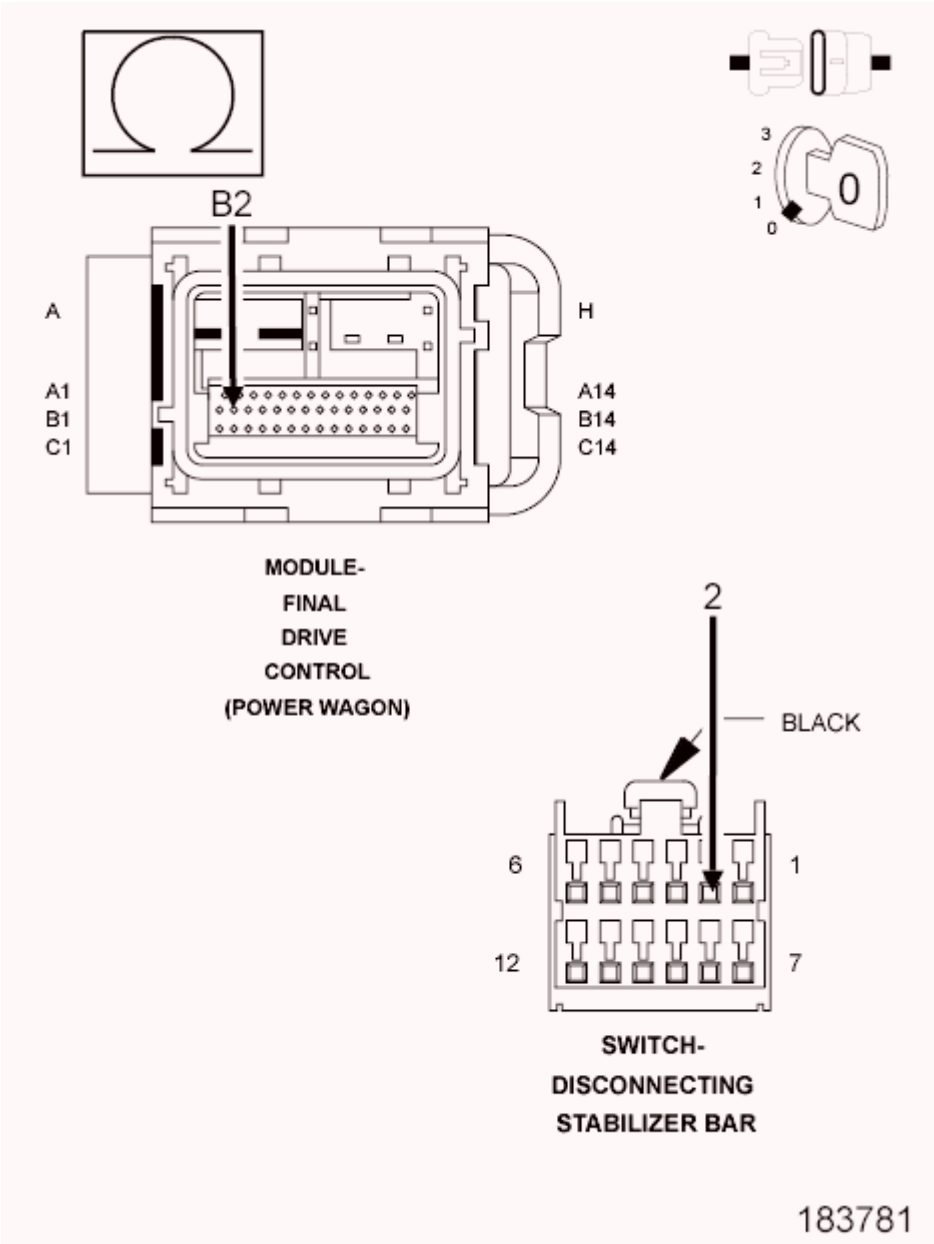

Fig. 26: Checking Locker Switch Sense Circuit For An Open
Courtesy of CHRYSLER GROUP, LLC

1. Measure the resistance of the (T535) Locker Switch Sense circuit between the Disconnecting Stabilizer Bar Switch and the FDCM harness connector.

   Is the resistance below 5.0 ohms?

   Yes

   - Replace the FDCM in accordance with the Service Information.
   - Perform FDCM VERIFICATION TEST. Refer to **FDCM VERIFICATION TEST**.

No

- Repair the open in the (T535) Locker Switch Sense circuit.
- Perform FDCM VERIFICATION TEST. Refer to **FDCM VERIFICATION TEST**.

6. **INTERMITTENT WIRING AND CONNECTORS**
   1. The conditions necessary to set this DTC are not present at this time.
   2. Using the schematics as a guide, inspect the wiring and connectors specific to this circuit.
   3. Wiggle test the wiring harness and connectors while checking for shorted and open circuits.
   4. Using the scan tool, monitor the data related to this circuit while performing the wiggle test. Look for the data to change or for the DTC to reset.
   5. While monitoring the TRAC State on the scan tool, move the switch to each position. The scan tool display must match the position on the actual switch.

      Were there any problems found?

      Yes

      - Repair as necessary.
      - Perform FDCM VERIFICATION TEST. Refer to **FDCM VERIFICATION TEST**.

      No

      - Test Complete.

C143D-STABILIZER SELECT SWITCH PERFORMANCE

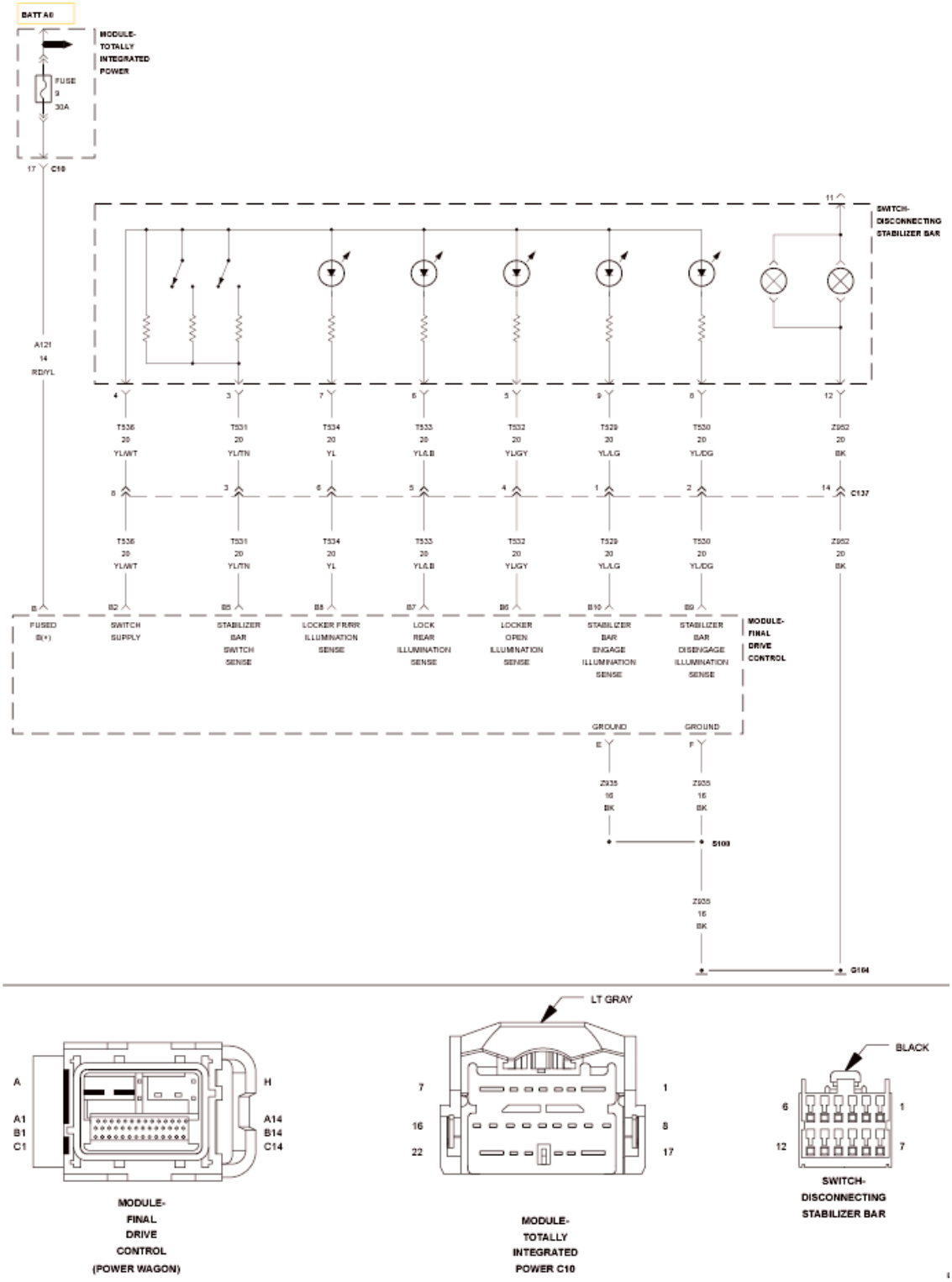

Fig. 27: Stabilizer Select Switch Wiring Diagram
Courtesy of CHRYSLER GROUP, LLC

For a complete wiring diagram **refer to appropriate SYSTEM WIRING DIAGRAMS article** .

WHEN MONITORED:

Ignition on.

SET CONDITION:

During switch operation, the FDCM senses the Disconnecting Stabilizer Switch resistance is out of specification.

POSSIBLE CAUSES

Possible Causes
DISCONNECTING STABILIZER SWITCH
(T531) STABILIZER BAR SWITCH SENSE CIRCUIT FOR AN OPEN/HIGH RESISTANCE
(T536) SWITCH SUPPLY CIRCUIT
FDCM

DIAGNOSTIC TEST

1. **DTC ACTIVE**

   CAUTION: Before removing the FDCM harness connector, clean the connector and locking cam area of dirt and debris. Failure to do so can result in the connector being jammed or damage to the locking cams on the harness connector or module. Do not force the assist arm when releasing or installing the harness connector.

   1. Turn the ignition on, engine not running
   2. With the scan tool, read FDCM DTC(s).

   Is the DTC active at this time?

   Yes

   - Go To 2.

   No

   - Go To 5.

2. **DISCONNECTING STABILIZER SWITCH OPERATION**

   NOTE: Before continuing with the below diagnostic test, ensure the FDCM harness connector seal is installed correctly. Inspect the terminals on both harness connector and the module for damage. Failure to do so can result in misdiagnoses of the system.

1. Turn the ignition off.
2. Disconnect the Disconnecting Stabilizer Switch harness connector.
3. Remove the Disconnecting Stabilizer Switch.
4. Measure the resistance on the Disconnecting Stabilizer Switch between the Switch Supply terminal and the Stabilizer Bar Switch Sense terminal.
5. The resistance must read as follows for each position of the switch.
   - **Off Road: 33 ohms +/- 5%**
   - **On Road: 510 ohms +/- 5%**
   - **Switch Not Applied: 2.2k ohms +/- 5%**

   Does the ohmmeter read correctly for each position of the Disconnecting Stabilizer Switch ?

   Yes

   - Go To 3.

   No

   - Replace the Disconnecting Stabilizer Switch in accordance with service information.
   - Perform FDCM VERIFICATION TEST. Refer to **FDCM VERIFICATION TEST**.

3. **(T531) STABILIZER BAR SWITCH SENSE CIRCUIT FOR AN OPEN**

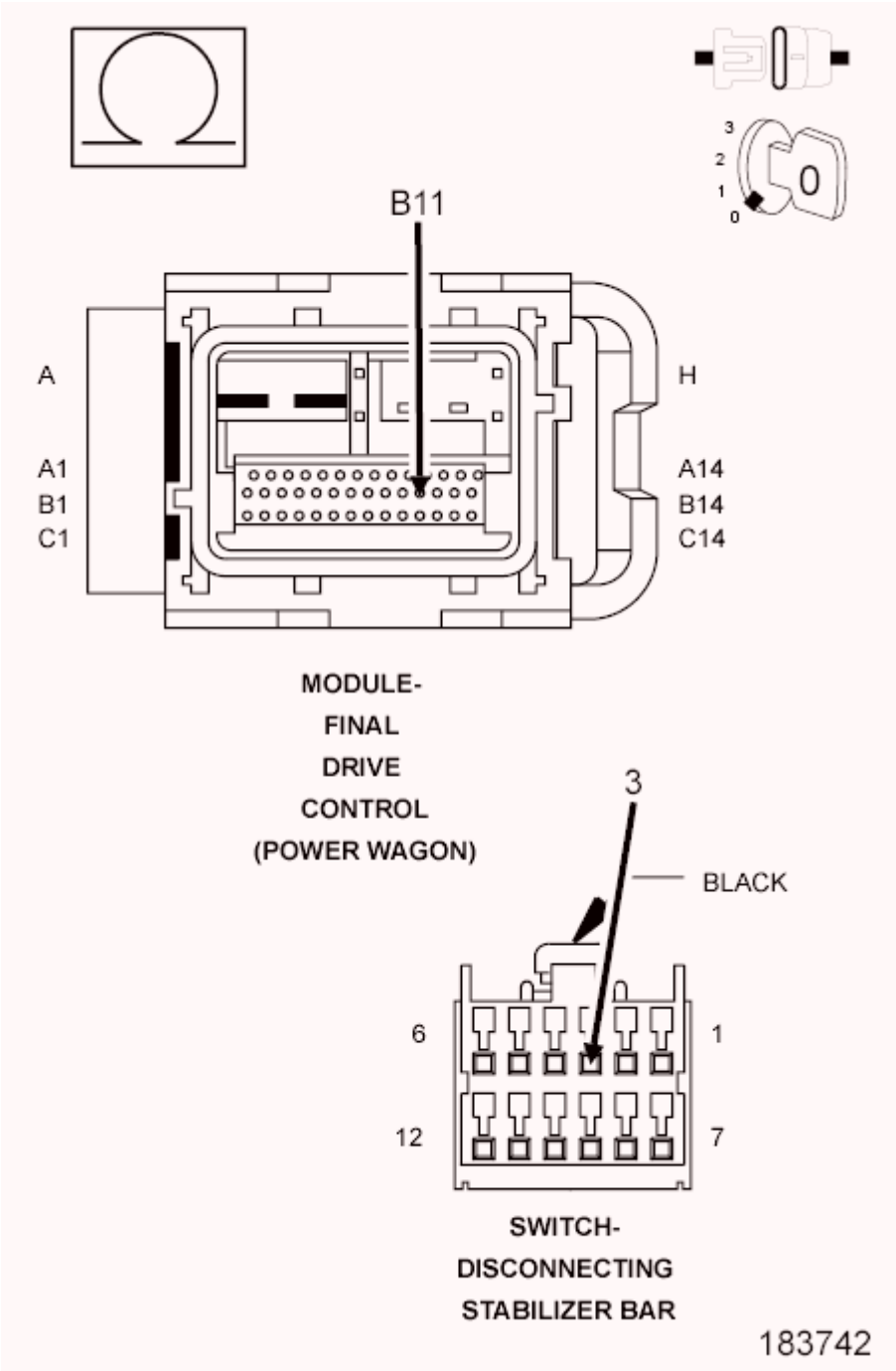

Fig. 28: Checking Stabilizer Bar Switch Sense Circuit For An Open
Courtesy of CHRYSLER GROUP, LLC

1. Disconnect the FDCM harness connector.
2. Measure the resistance of the (T531) Stabilizer Bar Switch Sense circuit between the Disconnecting Stabilizer Switch and the FDCM harness connectors.

   Is the resistance below 5.0 ohms?

Yes

- Go To 4.

No

- Repair the open or high resistance in the (T531) Stabilizer Bar Switch Sense circuit.
- Perform FDCM VERIFICATION TEST. Refer to **FDCM VERIFICATION TEST**.

4. **(T536) SWITCH SUPPLY CIRCUIT FOR AN OPEN**

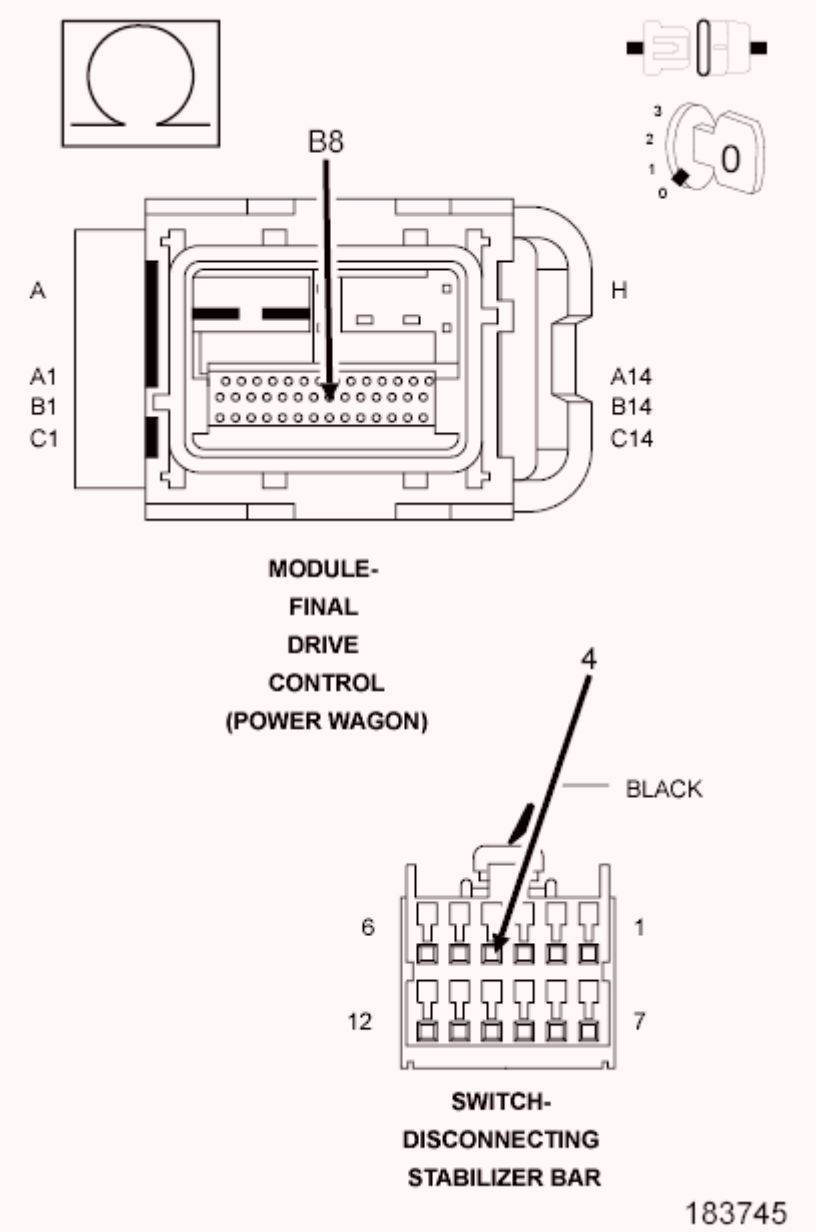

Fig. 29: Checking Switch Supply Circuit For An Open
Courtesy of CHRYSLER GROUP, LLC

1. Measure the resistance of the (T536) Switch Supply circuit between the Disconnecting Stabilizer Switch and the FDCM harness connectors.

   Is the resistance below 5.0 ohms?

   Yes

   - Replace the FDCM in accordance with the Service Information
   - Perform FDCM VERIFICATION TEST. Refer to **FDCM VERIFICATION TEST**.

   No

   - Repair the open or high resistance in the (T536) Switch Supply circuit.
   - Perform FDCM VERIFICATION TEST. Refer to **FDCM VERIFICATION TEST**.

5. **INTERMITTENT WIRING AND CONNECTORS**
   1. The conditions necessary to set this DTC are not present at this time.
   2. Using the schematics as a guide, inspect the wiring and connectors specific to this circuit.
   3. Wiggle test the wiring harness and connectors while checking for shorted and open circuits.
   4. Using the scan tool, monitor the data related to this circuit while performing the wiggle test. Look for the data to change or for the DTC to reset.
   5. While monitoring the Stabilizer Bar State on the scan tool, move the switch to each position. The scan tool display must match the position on the actual switch.

      Were there any problems found?

      Yes

      - Repair as necessary.
      - Perform FDCM VERIFICATION TEST. Refer to **FDCM VERIFICATION TEST**.

      No

      - Test Complete.

C143E-STABILIZER BAR SWITCH CIRCUIT LOW

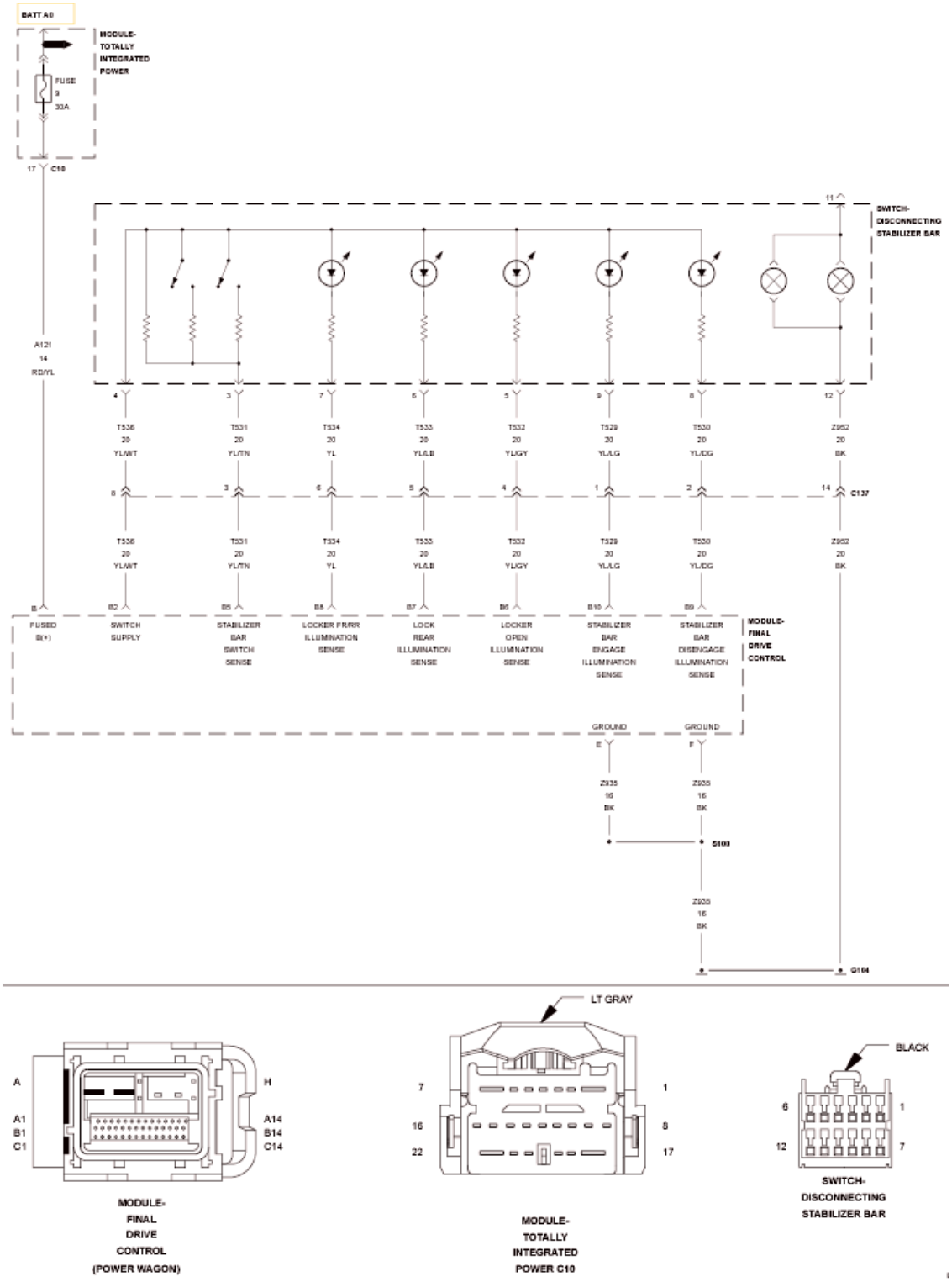

Fig. 30: Stabilizer Select Switch Wiring Diagram
Courtesy of CHRYSLER GROUP, LLC

For a complete wiring diagram, **refer to appropriate SYSTEM WIRING DIAGRAMS article** .

WHEN MONITORED:

Ignition on.

SET CONDITION:

During switch operation, the FDCM senses the Disconnecting Stabilizer Bar Switch sense is below 0.25 volt.

POSSIBLE CAUSES

Possible Causes
SWITCH INTERMITTENT
DISCONNECTING STABILIZER BAR SWITCH
(T536) SWITCH SUPPLY CIRCUIT FOR A SHORT TO GROUND
(T531) STABILIZER BAR SWITCH SENSE CIRCUIT SHORT TO GROUND
FDCM

DIAGNOSTIC TEST

1. **DTC ACTIVE**

   CAUTION: Before removing the FDCM harness connector, clean the connector and locking cam area of dirt and debris. Failure to do so can result in the connector being jammed or damage to the locking cams on the harness connector or module. Do not force the assist arm when releasing or installing the harness connector.

   1. Turn the ignition on, engine not running
   2. With the scan tool, read FDCM DTC(s).

      Is the DTC active at this time?

      Yes

      - Go To 2.

      No

      - Go To 5.
2. **DISCONNECTING STABILIZER BAR SWITCH OPERATION**
   1. Turn the ignition off.
   2. Disconnect the Disconnecting Stabilizer Switch harness connector.
   3. Remove the Disconnecting Stabilizer Switch.
   4. Measure the resistance on the Disconnecting Stabilizer Switch between the Switch Supply terminal and the Stabilizer Switch Sense terminal.

5. The resistance must read as follows for each position of the switch.
    - **Off Road: 33 Ohms +/- 5%**
    - **On Road: 510 Ohms +/- 5%**
    - **Switch Not Applied: 2.2k Ohms +/- 5%**

    Does the Ohmmeter read correctly for each position of the Stabilizer Bar Switch

    Yes

    - Go To 3.

    No

    - Replace the Disconnecting Stabilizer Switch.
    - Perform FDCM VERIFICATION TEST. Refer to **FDCM VERIFICATION TEST**.

3. **(T531) STABILIZER BAR SWITCH SENSE CIRCUIT FOR A SHORT TO GROUND**

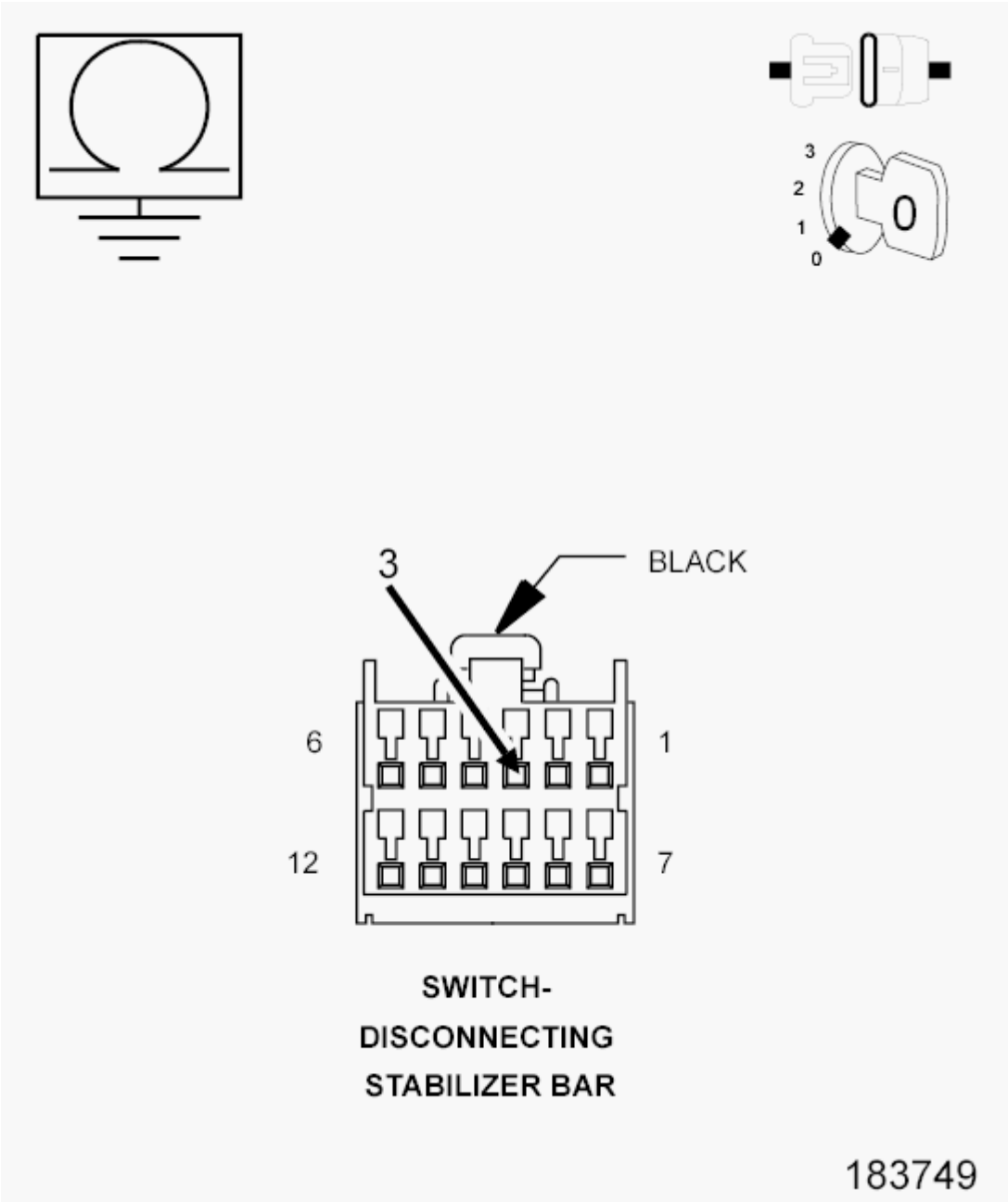

Fig. 31: Checking Stabilizer Bar Switch Sense Circuit For A Short To Ground
Courtesy of CHRYSLER GROUP, LLC

1. Disconnect the FDCM harness connector.
2. Measure the resistance of the (T531) Stabilizer Bar Switch Sense circuit in the Disconnecting Stabilizer Switch harness connector to ground.

   Is the resistance below 5.0 Ohms?

   Yes

- Repair the short to ground in the (T531) Disconnecting Stabilizer Switch Sense circuit.
- Perform FDCM VERIFICATION TEST. Refer to **FDCM VERIFICATION TEST**.

No

- Go To 4.

4. **(T536) SWITCH SUPPLY CIRCUIT SHORT TO GROUND**

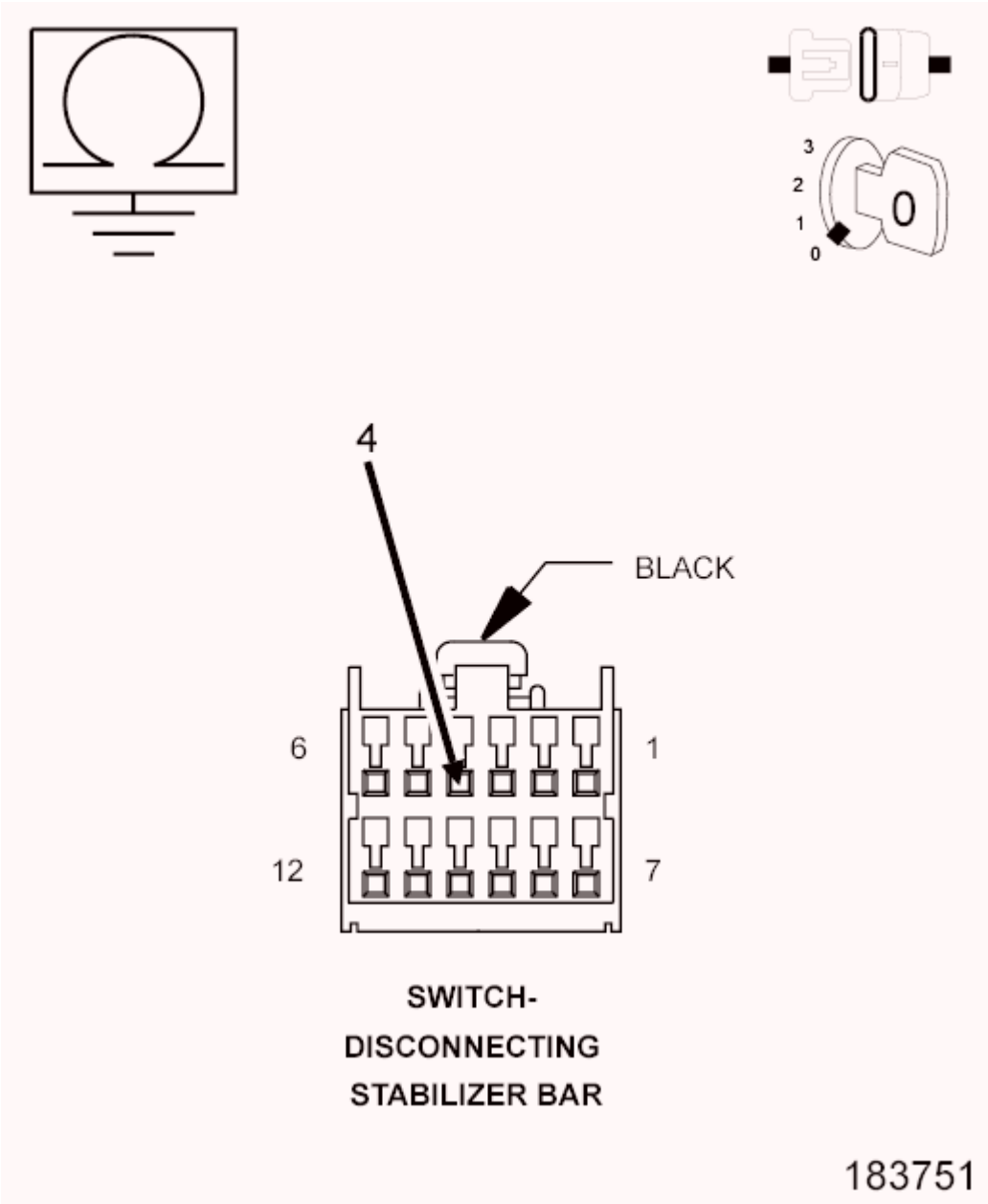

Fig. 32: Checking Switch Supply Circuit Short To Ground
Courtesy of CHRYSLER GROUP, LLC

1. Measure the resistance of the (T536) Switch Supply circuit in the Disconnecting Stabilizer Switch harness connector to ground.

   Is the resistance below 5.0 Ohms?

   Yes

   - Repair the short to ground in the (T536) Switch Supply circuit.
   - Perform FDCM VERIFICATION TEST. Refer to **FDCM VERIFICATION TEST**.

   No

   - Replace the FDCM in accordance with the Service Information
   - Perform FDCM VERIFICATION TEST. Refer to **FDCM VERIFICATION TEST**.

5. **INTERMITTENT WIRING AND CONNECTORS**
   1. The conditions necessary to set this DTC are not present at this time.
   2. Using the schematics as a guide, inspect the wiring and connectors specific to this circuit.
   3. Wiggle test the wiring harness and connectors while checking for shorted and open circuits.
   4. Using the scan tool, monitor the data related to this circuit while performing the wiggle test. Look for the data to change or for the DTC to reset.
   5. While monitoring the Stabilizer Bar State on the scan tool, move the switch to each position. The scan tool display must match the position on the actual switch.

      Were there any problems found?

      Yes

      - Repair as necessary.
      - Perform FDCM VERIFICATION TEST. Refer to **FDCM VERIFICATION TEST**.

      No

      - Test Complete.

C143F-STABILIZER SELECT SWITCH CIRCUIT HIGH

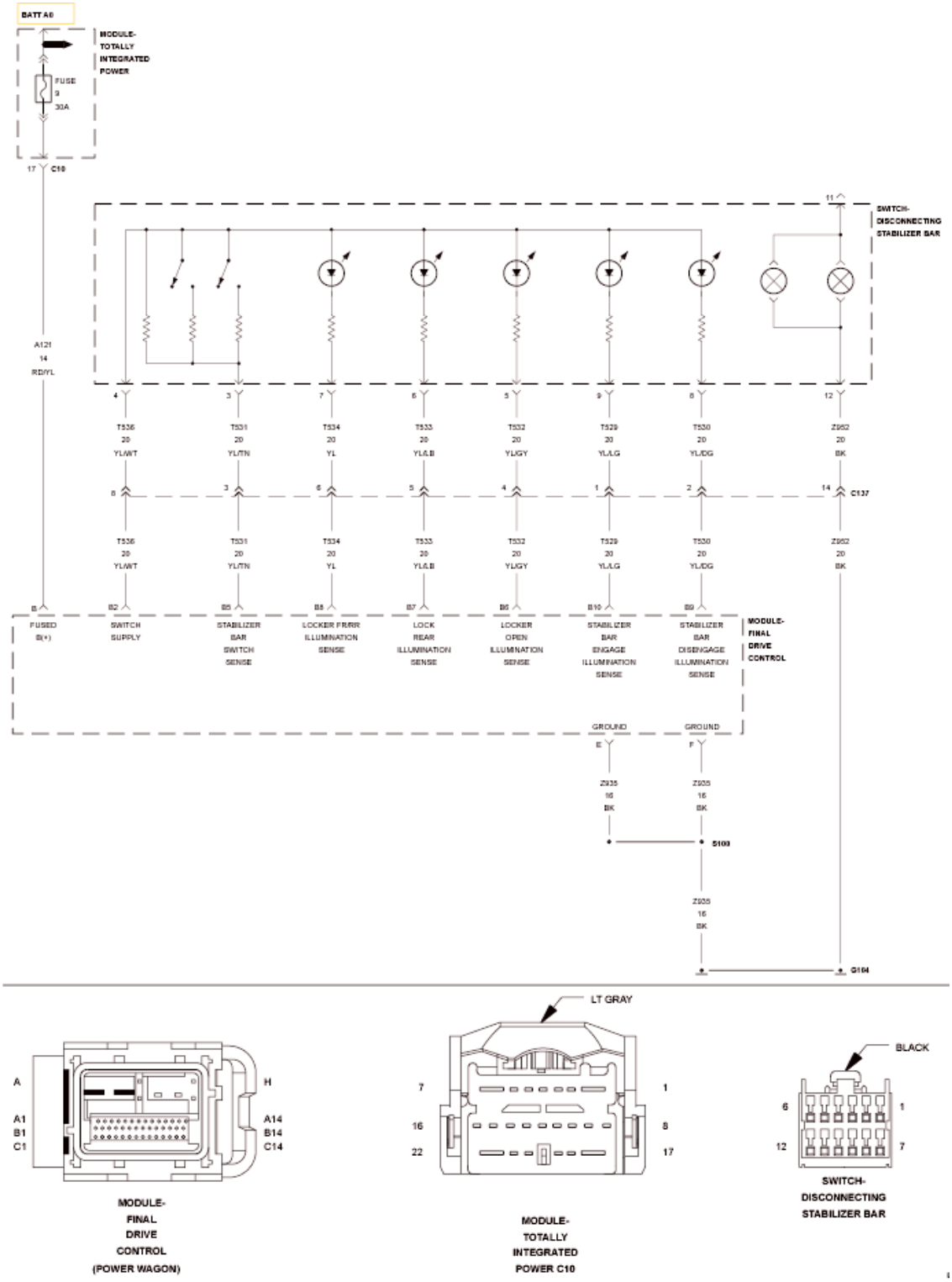

Fig. 33: Stabilizer Select Switch Wiring Diagram
Courtesy of CHRYSLER GROUP, LLC

For a complete wiring diagram **refer to appropriate SYSTEM WIRING DIAGRAMS article** .

WHEN MONITORED:

Ignition on.

SET CONDITION:

During switch operation, the FDCM senses the Stabilizer Bar Switch Sense circuit is above 4.0 volts.

POSSIBLE CAUSES

Possible Causes
SWITCH INTERMITTENT
STABILIZER BAR SWITCH
(T531) STABILIZER BAR SWITCH SENSE CIRCUIT SHORT TO VOLTAGE
(T536) SWITCH SUPPLY CIRCUIT FOR A SHORT TO (T531) STABILIZER BAR SWITCH SENSE CIRCUIT
(T536) STABILIZER BAR SWITCH SENSE CIRCUIT FOR AN OPEN
FDCM

DIAGNOSTIC TEST

1. **DTC ACTIVE**

   CAUTION: Before removing the FDCM harness connector, clean the connector and locking cam area of dirt and debris. Failure to do so can result in the connector being jammed or damage to the locking cams on the harness connector or module. Do not force the assist arm when releasing or installing the harness connector.

   1. Turn the ignition on, engine not running
   2. With the scan tool, read FDCM DTC(s).

      Is the DTC active at this time?

      Yes

      - Go To 2.

      No

      - Go To 6.
2. **DISCONNECTING STABILIZER BAR SWITCH OPERATION**
   1. Turn the ignition off.
   2. Disconnect the Disconnecting Stabilizer Bar Switch harness connector.
   3. Remove the Disconnecting Stabilizer Bar Switch.

4. Measure the resistance on the Disconnecting Stabilizer Bar Switch between the Switch Supply terminal and the Stabilizer Bar Switch Sense terminal.
5. The resistance must read as follows for each position of the switch.
   - **Off Road: 33 ohms +/- 5%**
   - **On Road: 510 ohms +/- 5%**
   - **Switch Not Applied: 2.2k ohms +/- 5%**

   Does the ohmmeter read correctly for each position of the Disconnecting Stabilizer Bar Switch

   Yes

   - Go To 5.

   No

   - Replace the Disconnecting Stabilizer Bar Switch.
   - Perform FDCM VERIFICATION TEST. Refer to **FDCM VERIFICATION TEST**.

3. **(T531) STABILIZER BAR SWITCH SENSE CIRCUIT FOR A SHORT TO VOLTAGE**

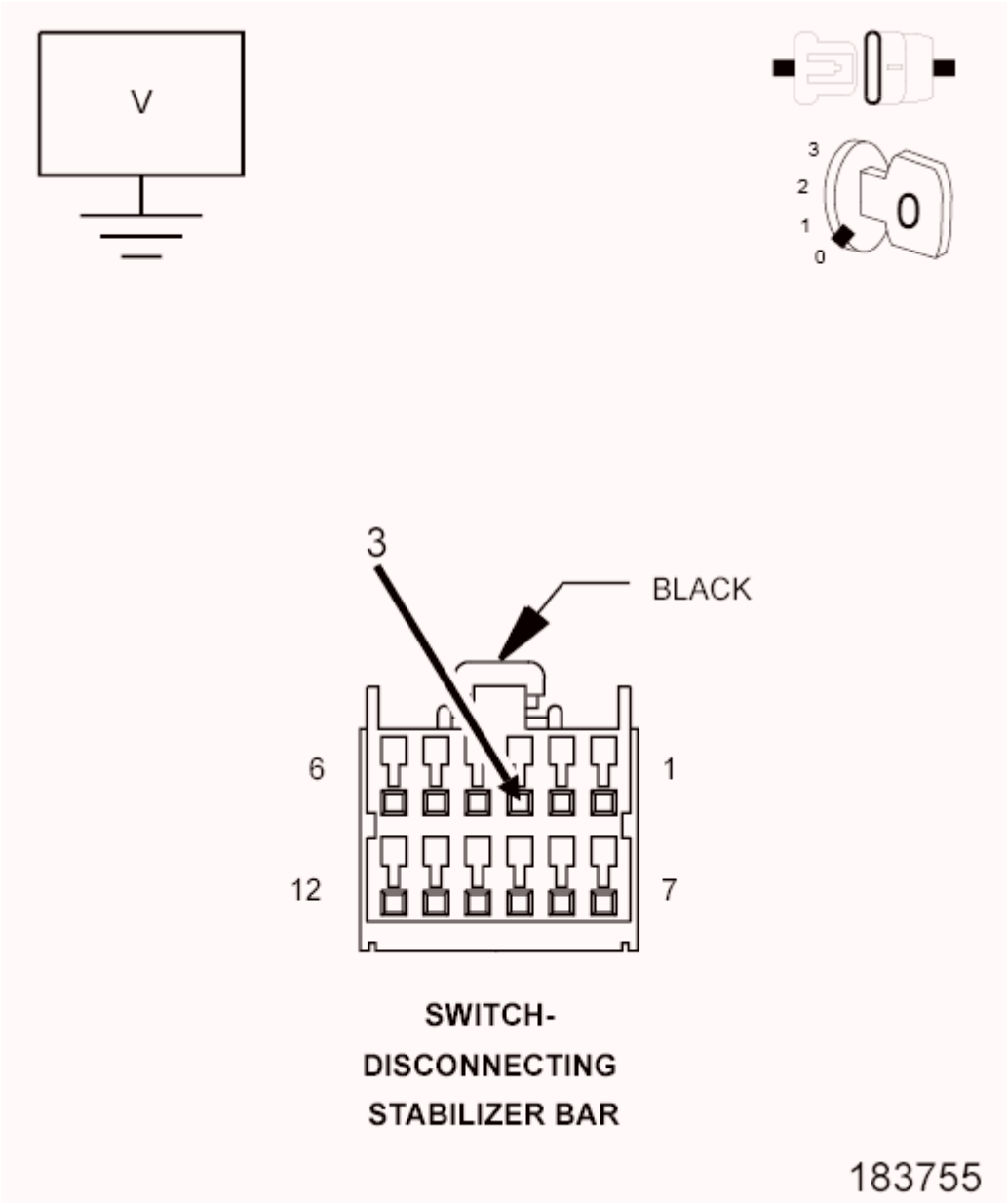

Fig. 34: Checking Stabilizer Bar Switch Sense Circuit For A Short To Voltage
Courtesy of CHRYSLER GROUP, LLC

1. Disconnect the FDCM harness connector.
2. Turn the ignition on.
3. Measure the voltage of the (T531) Stabilizer Bar Switch Sense circuit in the Disconnecting Stabilizer Bar Switch harness connector.

   Does the voltmeter indicate voltage present?

   Yes

   - Repair the short to voltage in the (T531) Stabilizer Bar Switch Sense circuit.

- Perform FDCM VERIFICATION TEST. Refer to **FDCM VERIFICATION TEST**.

No

- Go To 4.

4. **(T536) SWITCH SUPPLY CIRCUIT FOR A SHORT TO (T531) STABILIZER BAR SWITCH SENSE CIRCUIT**

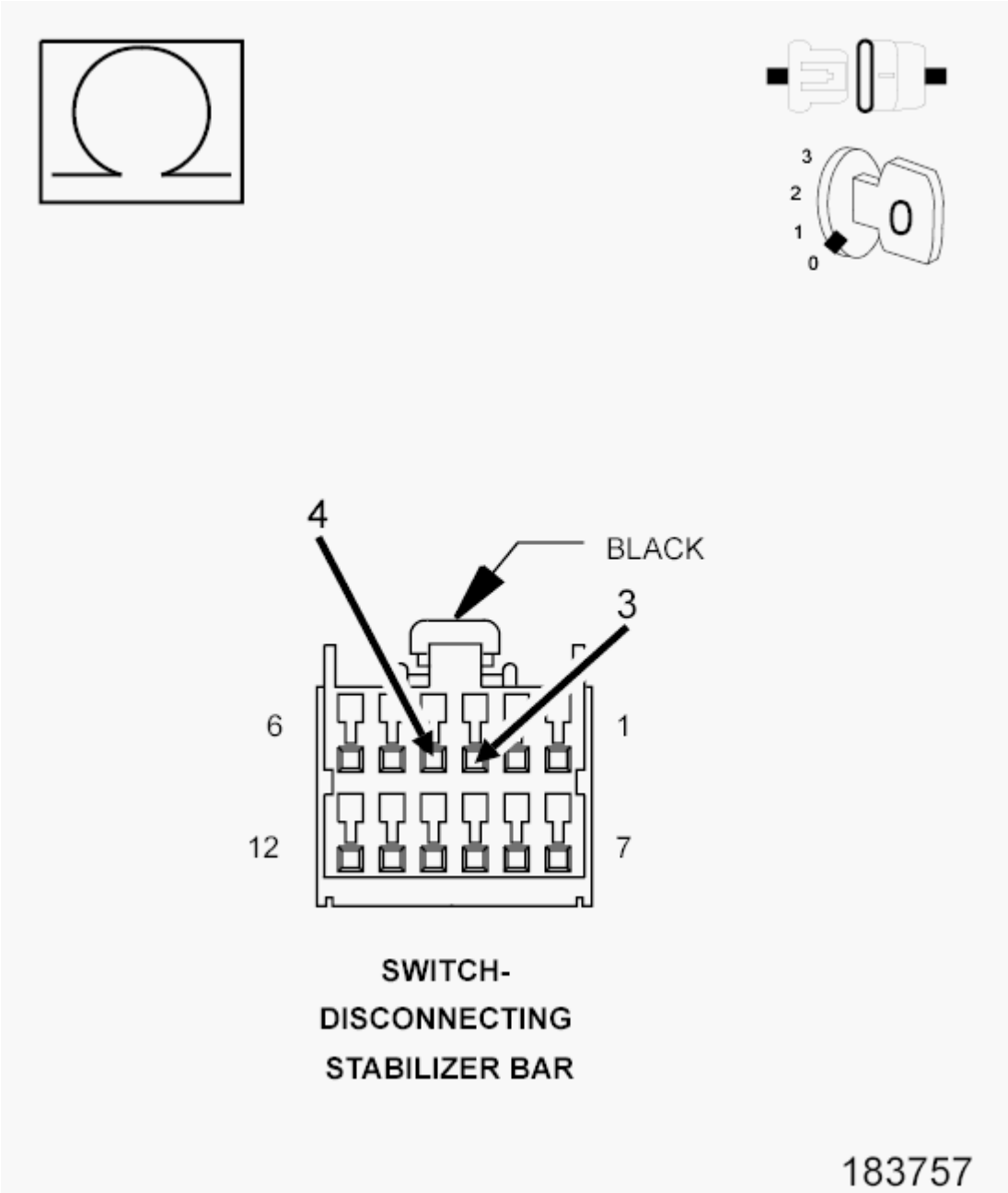

Fig. 35: Checking Switch Supply Circuit For A Short To Stabilizer Bar Switch Sense Circuit
Courtesy of CHRYSLER GROUP, LLC

1. Measure the resistance between (T536) Switch Supply circuit and the (T531) Stabilizer Bar Switch Sense circuit in the Disconnecting Stabilizer Bar Switch harness connector.

   Is the resistance below 5.0 ohms?

   Yes

   - Repair the short between (T536) Switch Supply circuit and the (T531) Stabilizer Bar Switch Sense circuit.
   - Perform FDCM VERIFICATION TEST. Refer to **FDCM VERIFICATION TEST**.

   No

   - Go To 5.

5. **(T531) STABILIZER BAR SWITCH SENSE CIRCUIT FOR AN OPEN**

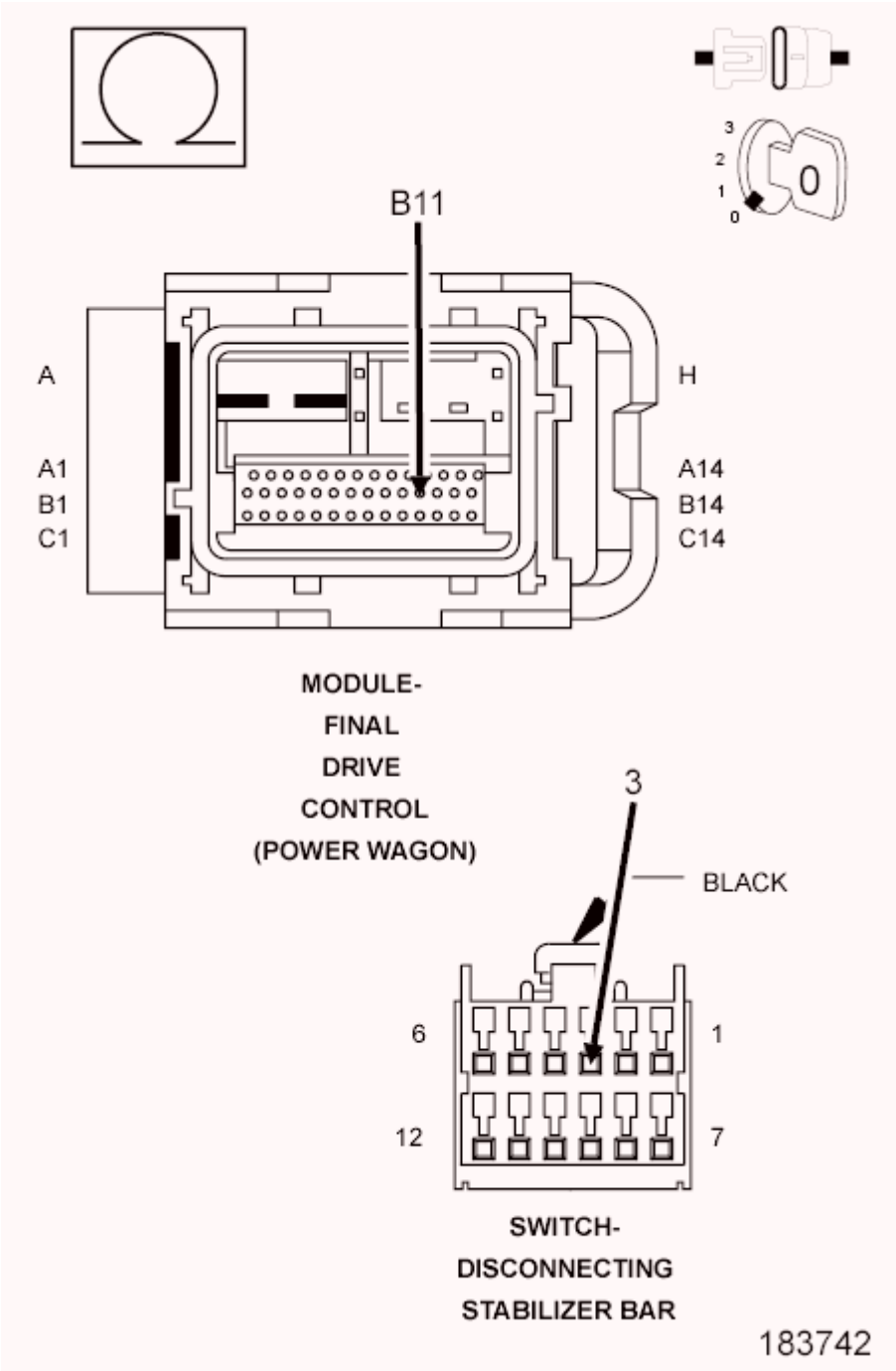

Fig. 36: Checking Stabilizer Bar Switch Sense Circuit For An Open
Courtesy of CHRYSLER GROUP, LLC

1. Measure the resistance of the (T531) Stabilizer Bar Switch Sense circuit between the Disconnecting Stabilizer Bar Switch and the FDCM harness connectors.

   Is the resistance below 5.0 ohms?

   Yes

- Replace the FDCM in accordance with the Service Information.
- Perform FDCM VERIFICATION TEST. Refer to **FDCM VERIFICATION TEST**.

No

- Repair the open in the (T531) Stabilizer Bar Switch Sense circuit.
- Perform FDCM VERIFICATION TEST. Refer to **FDCM VERIFICATION TEST**.

6. **INTERMITTENT WIRING AND CONNECTORS**
    1. The conditions necessary to set this DTC are not present at this time.
    2. Using the schematics as a guide, inspect the wiring and connectors specific to this circuit.
    3. Wiggle test the wiring harness and connectors while checking for shorted and open circuits.
    4. Using the scan tool, monitor the data related to this circuit while performing the wiggle test. Look for the data to change or for the DTC to reset.
    5. While monitoring the Stabilizer Bar State on the scan tool, move the switch to each position. The scan tool display must match the position on the actual switch.

    Were there any problems found?

    Yes

    - Repair as necessary.
    - Perform FDCM VERIFICATION TEST. Refer to **FDCM VERIFICATION TEST**.

    No

    - Test Complete.

C1446-FRONT DIFFERENTIAL RETURN CIRCUIT LOW

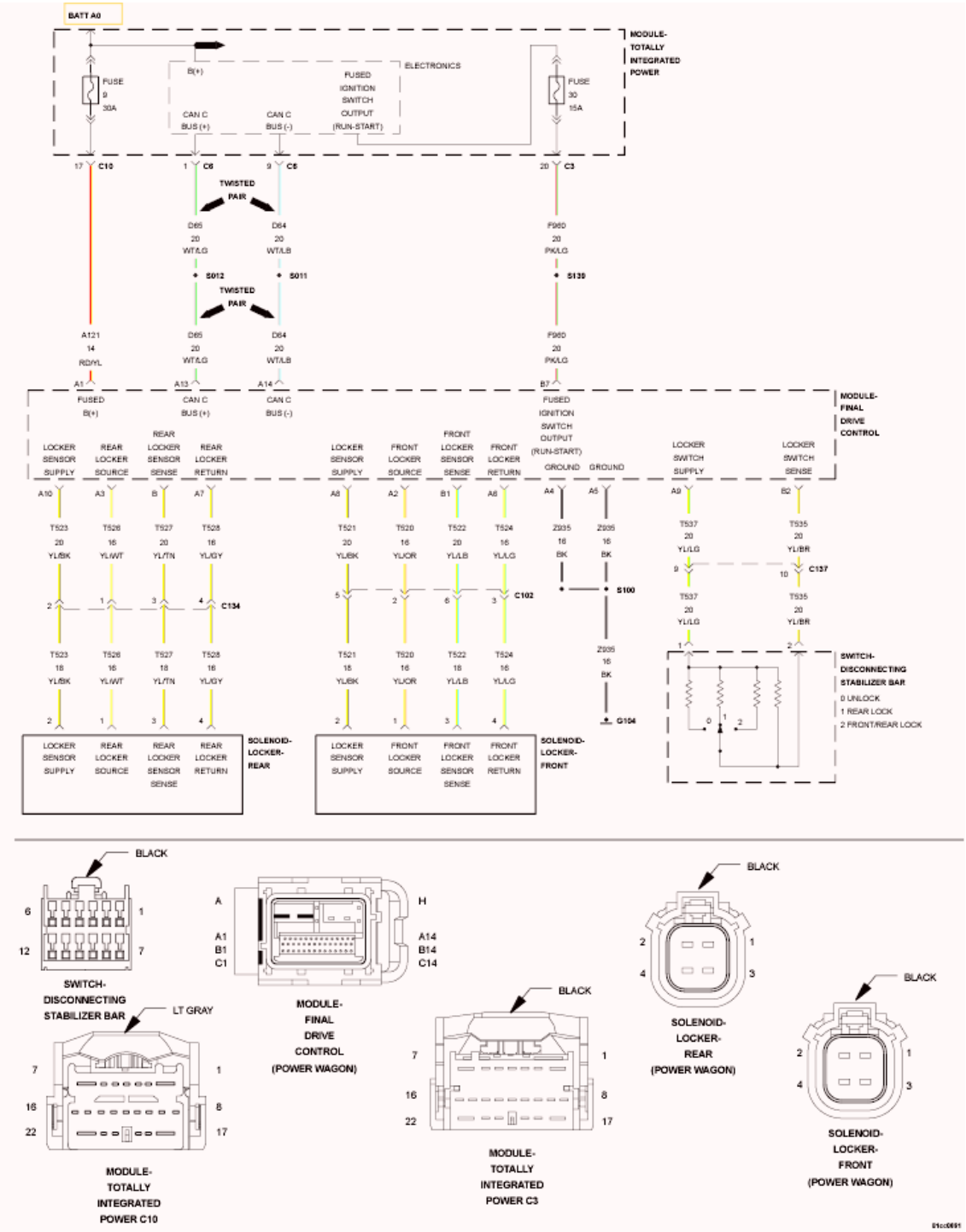

Fig. 37: Final Drive Control Module Wiring Diagram
Courtesy of CHRYSLER GROUP, LLC

For a complete wiring diagram **refer to appropriate SYSTEM WIRING DIAGRAMS article** .

WHEN MONITORED:

Ignition on. Disconnecting Stabilizer Bar Switch in the FR/RR position.

SET CONDITION:

The FDCM detects the Front Locker Source circuit is shorted low.

POSSIBLE CAUSES

Possible Causes
FRONT LOCKER SOLENOID
(T524) FRONT LOCKER RETURN CIRCUIT FOR A SHORT TO GROUND
FDCM

DIAGNOSTIC TEST

1. **ACTIVE DTC**

CAUTION: Before removing the FDCM harness connector, clean the connector and locking cam area of dirt and debris. Failure to do so can result in the connector being jammed or damage to the locking cams on the harness connector or module. Do not force the assist arm when releasing or installing the harness connector.

1. Ignition on, engine not running.
2. With the scan tool, read DTC's.

   Is the DTC active at this time?

   Yes

   - Go To 2.

   No

   - Go To 5.

2. **FRONT LOCKER SOLENOID OPERATION**

NOTE: Before continuing with the below diagnostic test, ensure the FDCM harness connector seal is installed correctly. Inspect the terminals on both harness connector and the module for damage. Failure to do so can result in misdiagnoses of the system.

1. Turn the ignition off.
2. Disconnect the Front Locker Solenoid harness connector.
3. Ignition on, engine not running.

4. Using a 12-volt test light, jump across from the (T520) Front Locker Source circuit and the (T524) Front Locker Return circuit in the Front Locker harness connector.
5. With a scan tool, actuate the Front Locker Solenoid.

   Does the test light flash on and off?

   Yes

   - Inspect the Front Locker Solenoid terminals and connectors for corrosion and/or dirt that may compromise the connection. If OK, replace the Front Locker Solenoid.
   - Perform FDCM VERIFICATION TEST. Refer to **FDCM VERIFICATION TEST**.

   No

   - Go To 3.

3. **(T524) FRONT LOCKER RETURN CIRCUIT FOR A SHORT TO GROUND**

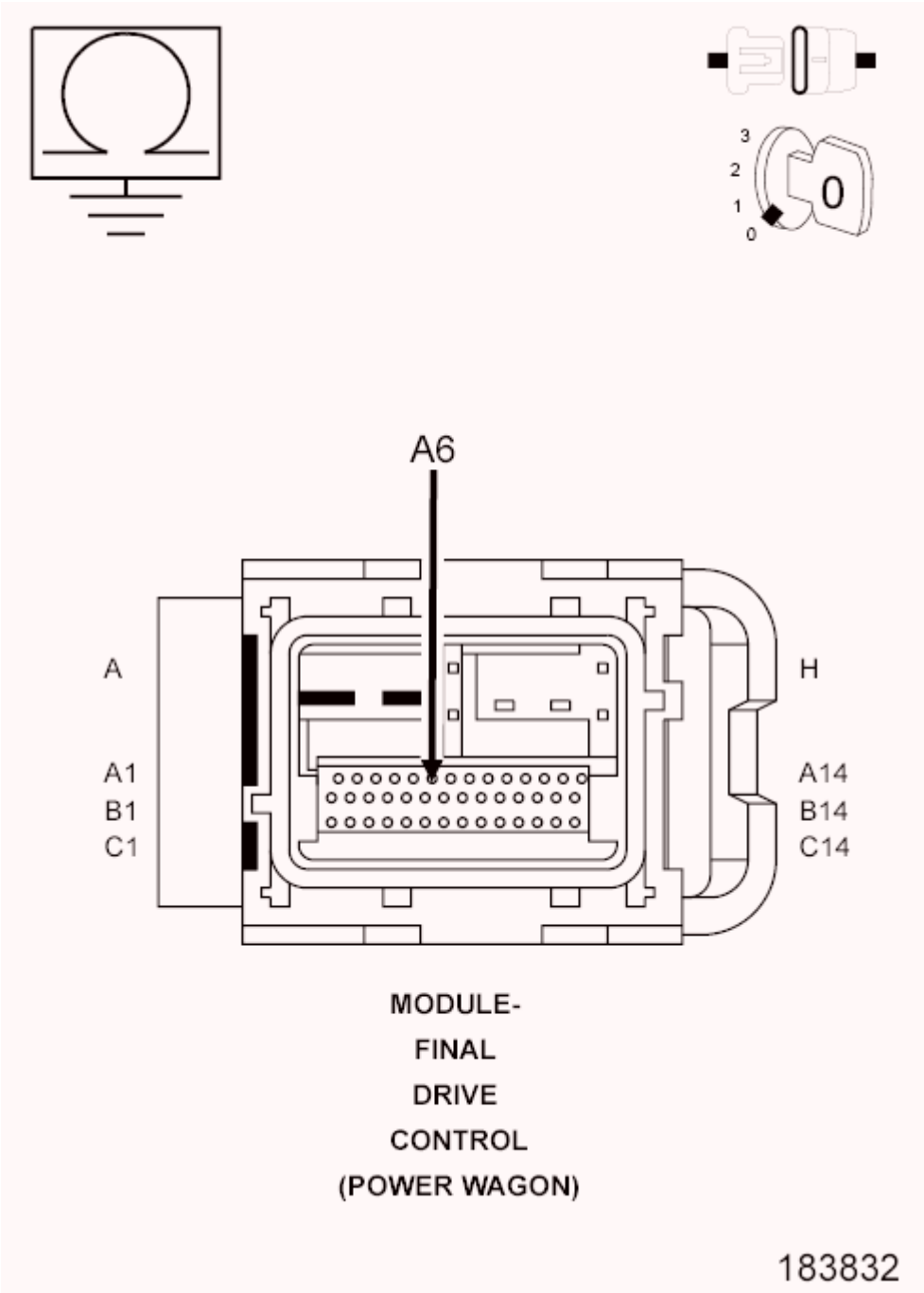

Fig. 38: Checking Front Locker Return Circuit For A Short To Ground
Courtesy of CHRYSLER GROUP, LLC

1. Turn the ignition off.
2. Disconnect the FDCM harness connector.
3. Measure the resistance of the (T524) Front Locker Return circuit in the FDCM harness connector to ground.

   Is the resistance below 100 ohms?

Yes

- Repair the short to ground in (T524) Front Locker Return circuit.
- Perform FDCM VERIFICATION TEST. Refer to **FDCM VERIFICATION TEST**.

No

- Go To 4.

4. **FDCM**

NOTE: Before continuing, check the FDCM harness connector terminals for corrosion, damage, or terminal push out. Repair as necessary.

1. Using the schematics as a guide, inspect the wire harness and connectors. Pay particular attention to all Power and Ground circuits.

   Were there any problems found?

   Yes

   - Repair as necessary.
   - Perform FDCM VERIFICATION TEST. Refer to **FDCM VERIFICATION TEST**.

   No

   - Replace and program the Final Drive Control Module in accordance with Service Information.
   - Perform FDCM VERIFICATION TEST. Refer to **FDCM VERIFICATION TEST**.

5. **INTERMITTENT WIRING AND CONNECTORS**

1. The conditions necessary to set this DTC are not present at this time.
2. Using the schematics as a guide, inspect the wiring and connectors specific to this circuit.
3. Wiggle test the wiring harness and connectors while checking for shorted and open circuits.
4. Using the scan tool, monitor the data related to this circuit while performing the wiggle test. Look for the data to change or for the DTC to reset.

   Were there any problems found?

   Yes

   - Repair as necessary.
   - Perform FDCM VERIFICATION TEST. Refer to **FDCM VERIFICATION TEST**.

   No

- Test Complete.

C1447-FRONT DIFFERENTIAL RETURN CIRCUIT HIGH

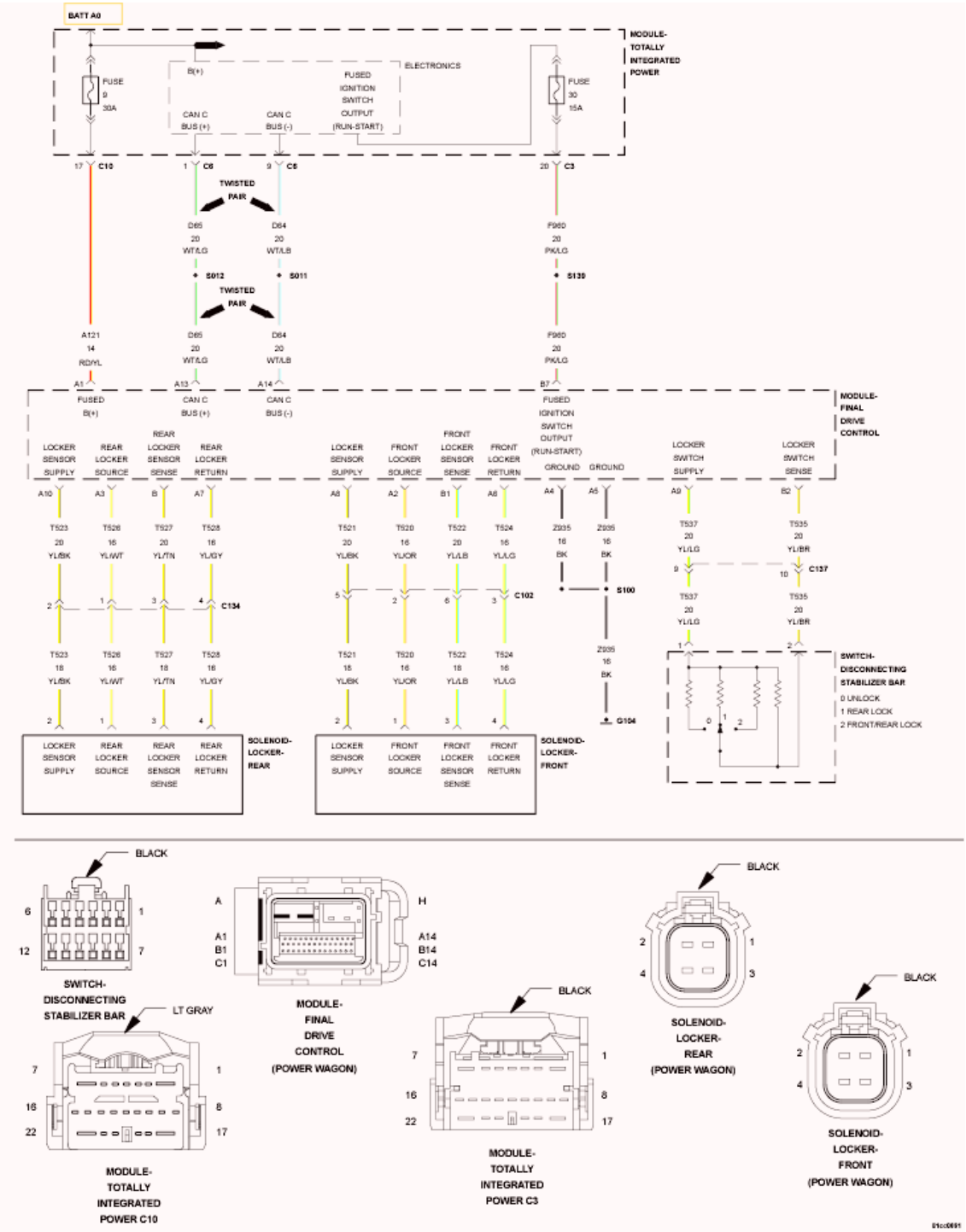

Fig. 39: Final Drive Control Module Wiring Diagram
Courtesy of CHRYSLER GROUP, LLC

For a complete wiring diagram **refer to appropriate SYSTEM WIRING DIAGRAMS article** .

WHEN MONITORED:

Ignition on. Disconnection Stabilizer Bar Switch in the FR/RR position.

SET CONDITION:

The FDCM detects the Front Locker Source circuit is shorted low.

POSSIBLE CAUSES

Possible Causes
FRONT LOCKER SOLENOID
(T520) FRONT LOCKER SOURCE CIRCUIT FOR A SHORT TO GROUND
(T524) FRONT LOCKER RETURN CIRCUIT FOR A SHORT TO (T520) FRONT LOCKER SOURCE CIRCUIT
FDCM

DIAGNOSTIC TEST

1. **ACTIVE DTC**

CAUTION: Before removing the FDCM harness connector, clean the connector and locking cam area of dirt and debris. Failure to do so can result in the connector being jammed or damage to the locking cams on the harness connector or module. Do not force the assist arm when releasing or installing the harness connector.

1. Ignition on, engine not running.
2. With the scan tool, read DTC's.

Is the DTC active at this time?

Yes

- Go To 2.

No

- Go To 6.

2. **FRONT LOCKER SOLENOID OPERATION**

NOTE: Before continuing with the below diagnostic test, ensure the FDCM harness connector seal is installed correctly. Inspect the terminals on both harness connector and the module for damage. Failure to do so can result

in misdiagnoses of the system.

1. Turn the ignition off.
2. Disconnect the Front Locker Solenoid harness connector.
3. Ignition on, engine not running.
4. Using a 12-volt test light, jump across from the (T520) Front Locker Source circuit and the (T524) Front Locker Return circuit in the Front Locker harness connector.
5. With a scan tool, actuate the Front Locker Solenoid.

   Does the test light flash on and off?

   Yes

   - Inspect the Front Locker Solenoid terminals and connectors for corrosion and/or dirt that may compromise the connection. If OK, replace the Front Locker Solenoid.
   - Perform FDCM VERIFICATION TEST. Refer to **FDCM VERIFICATION TEST**.

   No

   - Go To 3.

3. **(T524) FRONT LOCKER RETURN CIRCUIT FOR A SHORT TO BATTERY VOLTAGE**

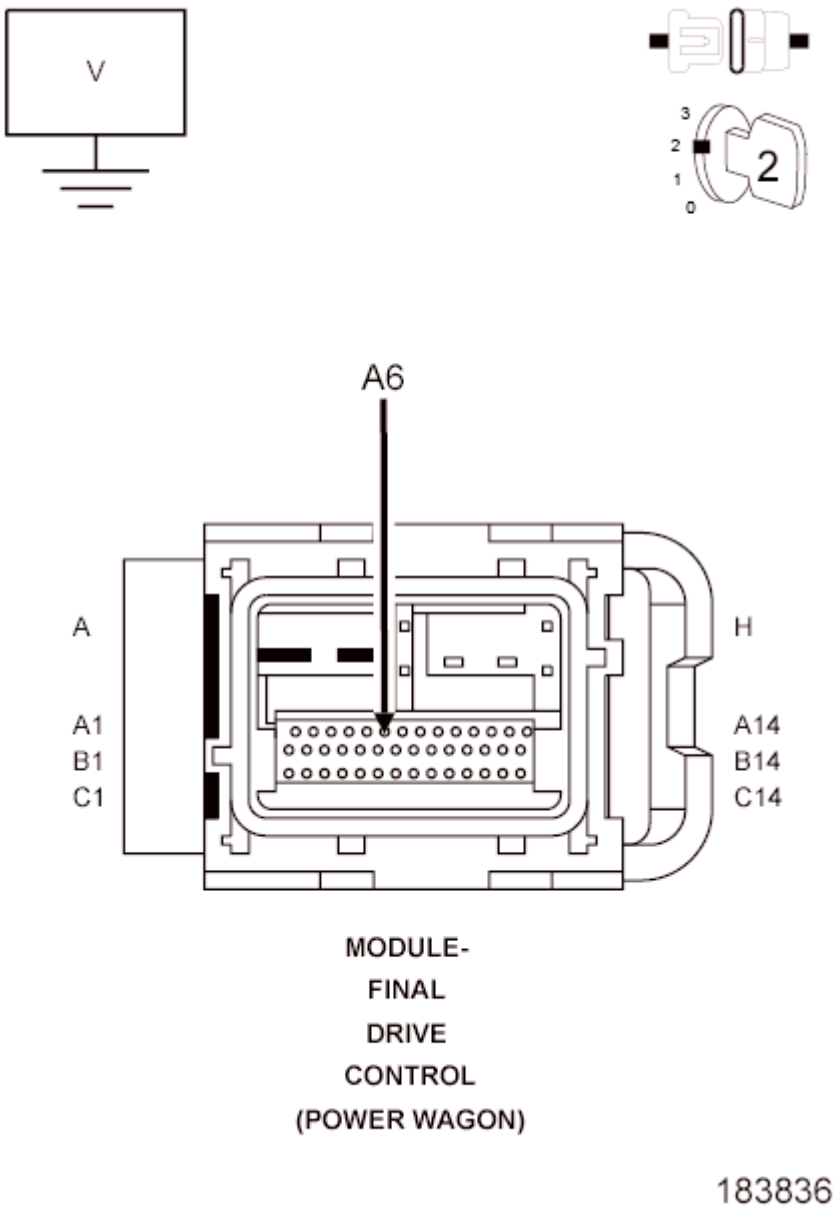

Fig. 40: Checking Front Locker Return Circuit For A Short To Battery Voltage
Courtesy of CHRYSLER GROUP, LLC

1. Turn the ignition off.
2. Disconnect the FDCM harness connector.
3. Turn the ignition on.
4. Measure the voltage of the (T524) Front Locker Return circuit at the FDCM harness connector.

   Does the voltmeter indicate voltage present?

   Yes

- Repair the short to voltage in the (T524) Front Locker Return circuit.
- Perform FDCM VERIFICATION TEST. Refer to **FDCM VERIFICATION TEST**.

No

- Go To 4.

4. **(T524) FRONT LOCKER RETURN CIRCUIT FOR A SHORT TO (T520) FRONT LOCKER SOURCE CIRCUIT**

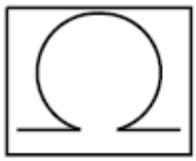

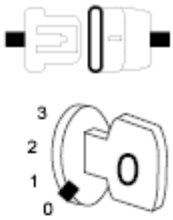

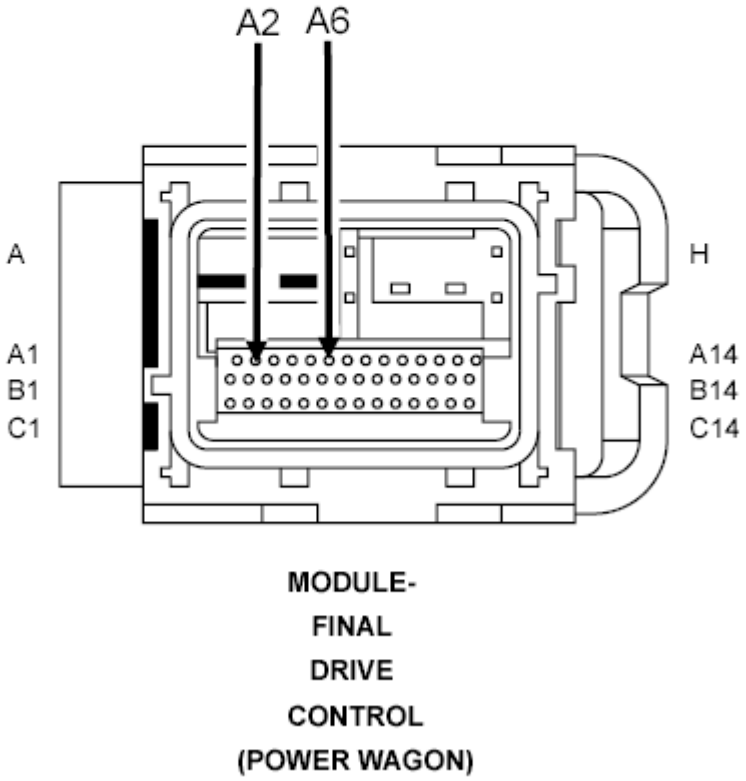

Fig. 41: Checking Front Locker Return Circuit For A Short To Front Locker Source Circuit
Courtesy of CHRYSLER GROUP, LLC

1. Turn the ignition off.
2. Measure the resistance between the (T520) Front Locker Source circuit and the (T524) Front Locker Return circuit in the FDCM harness connector.

   Is the resistance below 100 ohms?

   Yes

   - Repair the short between (T520) Front Locker Source circuit and the (T524) Front Locker Return circuit.
   - Perform FDCM VERIFICATION TEST. Refer to **FDCM VERIFICATION TEST**.

   No

   - Go To 5.

5. **FDCM**

   NOTE: Before continuing, check the FDCM harness connector terminals for corrosion, damage, or terminal push out. Repair as necessary.

   1. Using the schematics as a guide, inspect the wire harness and connectors. Pay particular attention to all Power and Ground circuits.

      Were there any problems found?

      Yes

      - Repair as necessary.
      - Perform FDCM VERIFICATION TEST. Refer to **FDCM VERIFICATION TEST**.

      No

      - Replace and program the Final Drive Control Module in accordance with Service Information.
      - Perform FDCM VERIFICATION TEST. Refer to **FDCM VERIFICATION TEST**.

6. **INTERMITTENT WIRING AND CONNECTORS**
   1. The conditions necessary to set this DTC are not present at this time.
   2. Using the schematics as a guide, inspect the wiring and connectors specific to this circuit.
   3. Wiggle test the wiring harness and connectors while checking for shorted and open circuits.
   4. Using the scan tool, monitor the data related to this circuit while performing the wiggle test. Look for the data to change or for the DTC to reset.

      Were there any problems found?

Yes

- Repair as necessary.
- Perform FDCM VERIFICATION TEST. Refer to **FDCM VERIFICATION TEST**.

No

- Test Complete.

C144A-REAR DIFFERENTIAL RETURN CIRCUIT LOW

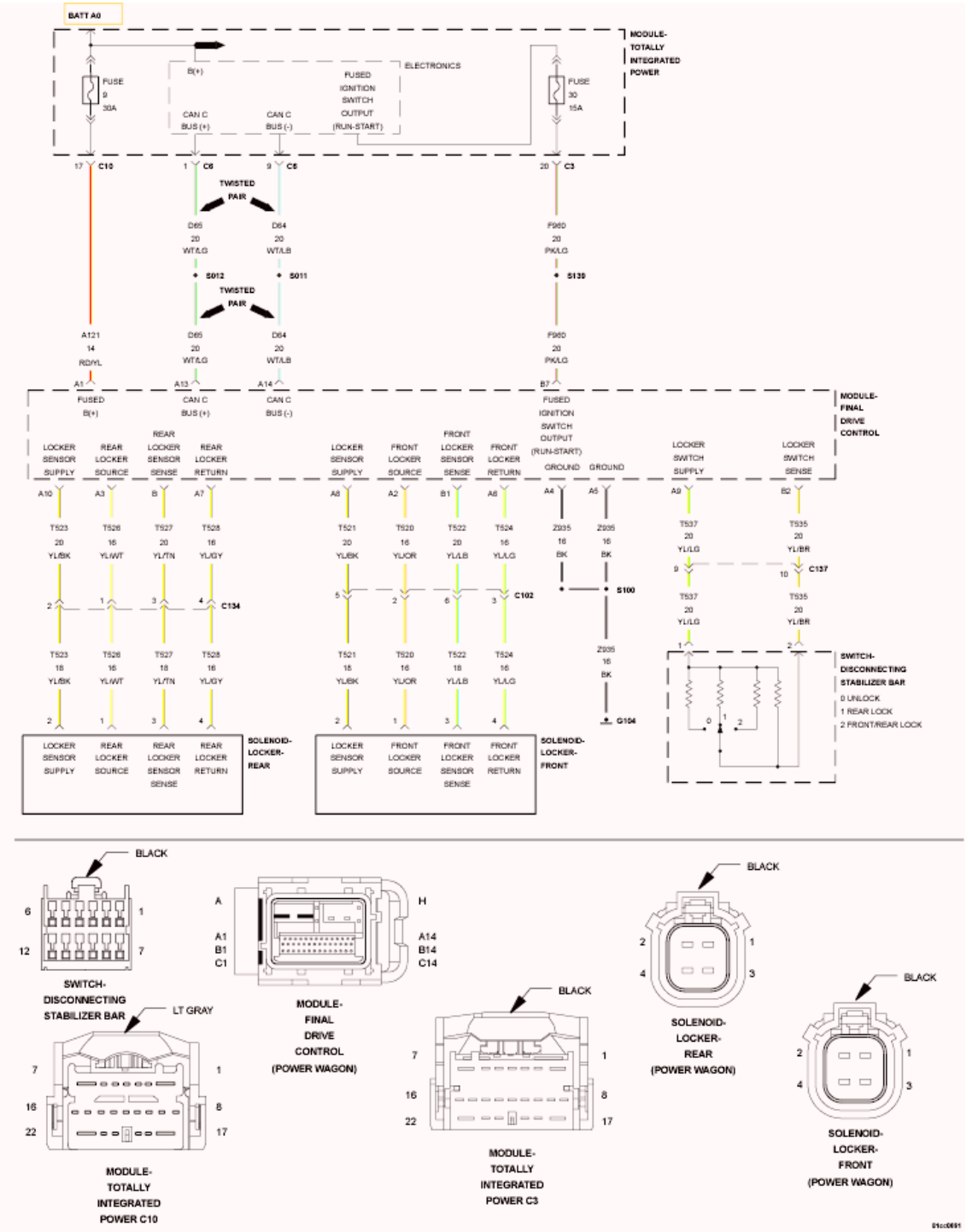

Fig. 42: Final Drive Control Module Wiring Diagram
Courtesy of CHRYSLER GROUP, LLC

For a complete wiring diagram **refer to appropriate SYSTEM WIRING DIAGRAMS article** .

WHEN MONITORED:

Ignition on. Disconnecting Stabilizer Bar Switch in the RR or FR/RR position.

SET CONDITION:

The FDCM detects the Rear Locker Source circuit is shorted low.

POSSIBLE CAUSES

Possible Causes
REAR LOCKER SOLENOID
(T528) REAR LOCKER RETURN CIRCUIT FOR A SHORT TO GROUND
FDCM

DIAGNOSTIC TEST

1. **ACTIVE DTC**

   CAUTION: Before removing the FDCM harness connector, clean the connector and locking cam area of dirt and debris. Failure to do so can result in the connector being jammed or damage to the locking cams on the harness connector or module. Do not force the assist arm when releasing or installing the harness connector.

   1. Ignition on, engine not running.
   2. With the scan tool, read DTC's.

      Is the DTC active at this time?

      Yes

      - Go To 2.

      No

      - Go To 5.
2. **REAR LOCKER SOLENOID OPERATION**

   NOTE: Before continuing with the below diagnostic test, ensure the FDCM harness connector seal is installed correctly. Inspect the terminals on both harness connector and the module for damage. Failure to do so can result in misdiagnoses of the system.

   1. Turn the ignition off.
   2. Disconnect the Rear Locker Solenoid harness connector.
   3. Ignition on, engine not running.

4. Using a 12-volt test light, jump across from the (T526) Rear Locker Source circuit and the (T528) Rear Locker Return circuit in the Rear Locker harness connector.
5. With a scan tool, actuate the Rear Locker Solenoid.

   Does the test light flash on and off?

   Yes

   - Inspect the Rear Locker Solenoid terminals and connectors for corrosion and/or dirt that may compromise the connection. If OK, replace the Rear Locker Solenoid.
   - Perform FDCM VERIFICATION TEST. Refer to **FDCM VERIFICATION TEST**.

   No

   - Go To 3.

3. **(T528) REAR LOCKER RETURN CIRCUIT FOR A SHORT TO GROUND**

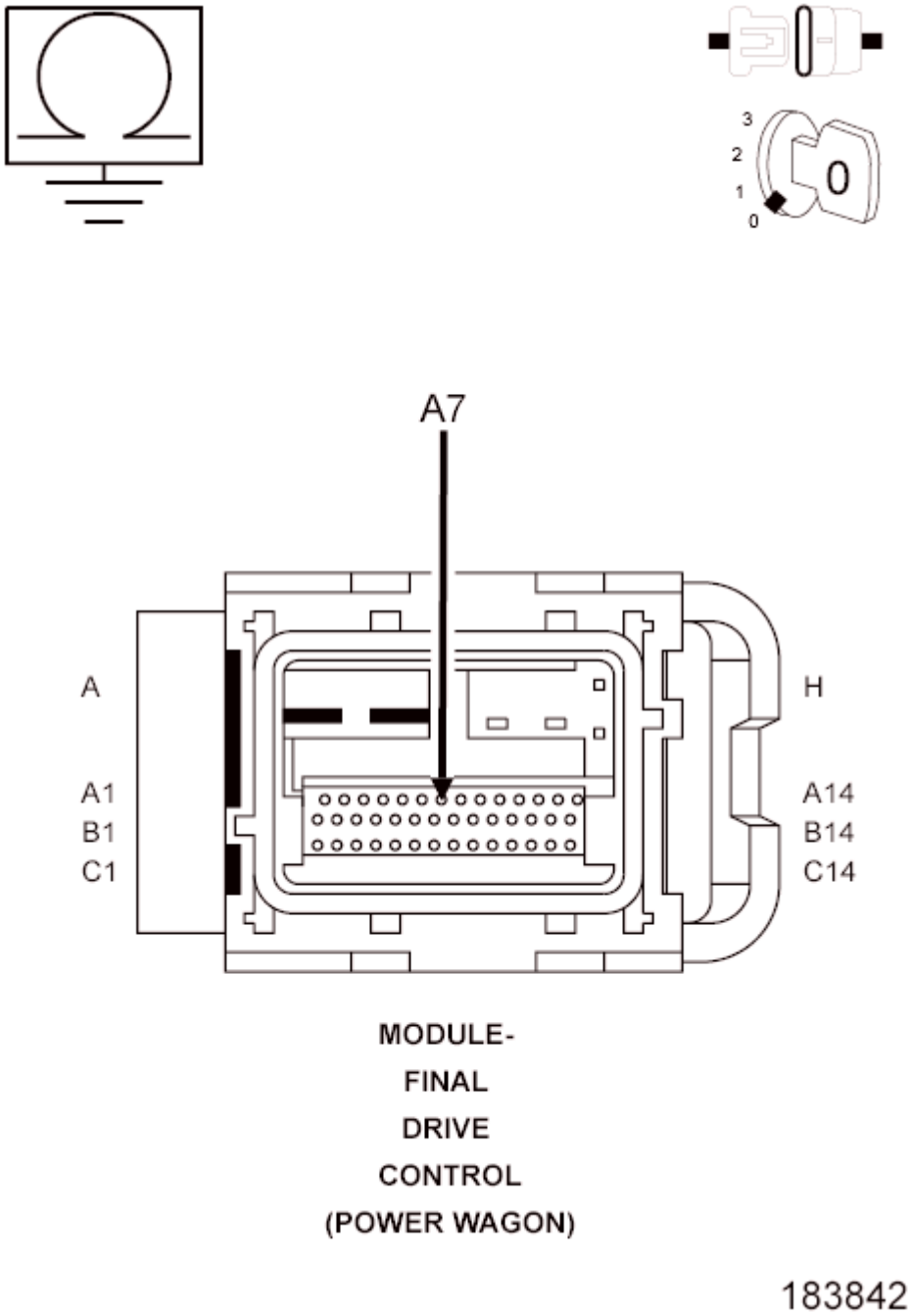

Fig. 43: Checking Rear Locker Return Circuit For A Short To Ground
Courtesy of CHRYSLER GROUP, LLC

1. Turn the ignition off.
2. Disconnect the FDCM harness connector.
3. Measure the resistance of the (T528) Rear Locker Return circuit in the FDCM harness connector to ground.

   Is the resistance below 100 ohms?

Yes

- Repair the short to ground in (T528) Rear Locker Return circuit.
- Perform FDCM VERIFICATION TEST. Refer to **FDCM VERIFICATION TEST**.

No

- Go To 4.

4. **FDCM**

NOTE: Before continuing, check the FDCM harness connector terminals for corrosion, damage, or terminal push out. Repair as necessary.

1. Using the schematics as a guide, inspect the wire harness and connectors. Pay particular attention to all Power and Ground circuits.

   Were there any problems found?

   Yes

   - Repair as necessary.
   - Perform FDCM VERIFICATION TEST. Refer to **FDCM VERIFICATION TEST**.

   No

   - Replace and program the Final Drive Control Module in accordance with Service Information.
   - Perform FDCM VERIFICATION TEST. Refer to **FDCM VERIFICATION TEST**.

5. **INTERMITTENT WIRING AND CONNECTORS**

1. The conditions necessary to set this DTC are not present at this time.
2. Using the schematics as a guide, inspect the wiring and connectors specific to this circuit.
3. Wiggle test the wiring harness and connectors while checking for shorted and open circuits.
4. Using the scan tool, monitor the data related to this circuit while performing the wiggle test. Look for the data to change or for the DTC to reset.

   Were there any problems found?

   Yes

   - Repair as necessary.
   - Perform FDCM VERIFICATION TEST. Refer to **FDCM VERIFICATION TEST**.

   No

- Test Complete.

C144B-REAR DIFFERENTIAL RETURN CIRCUIT HIGH

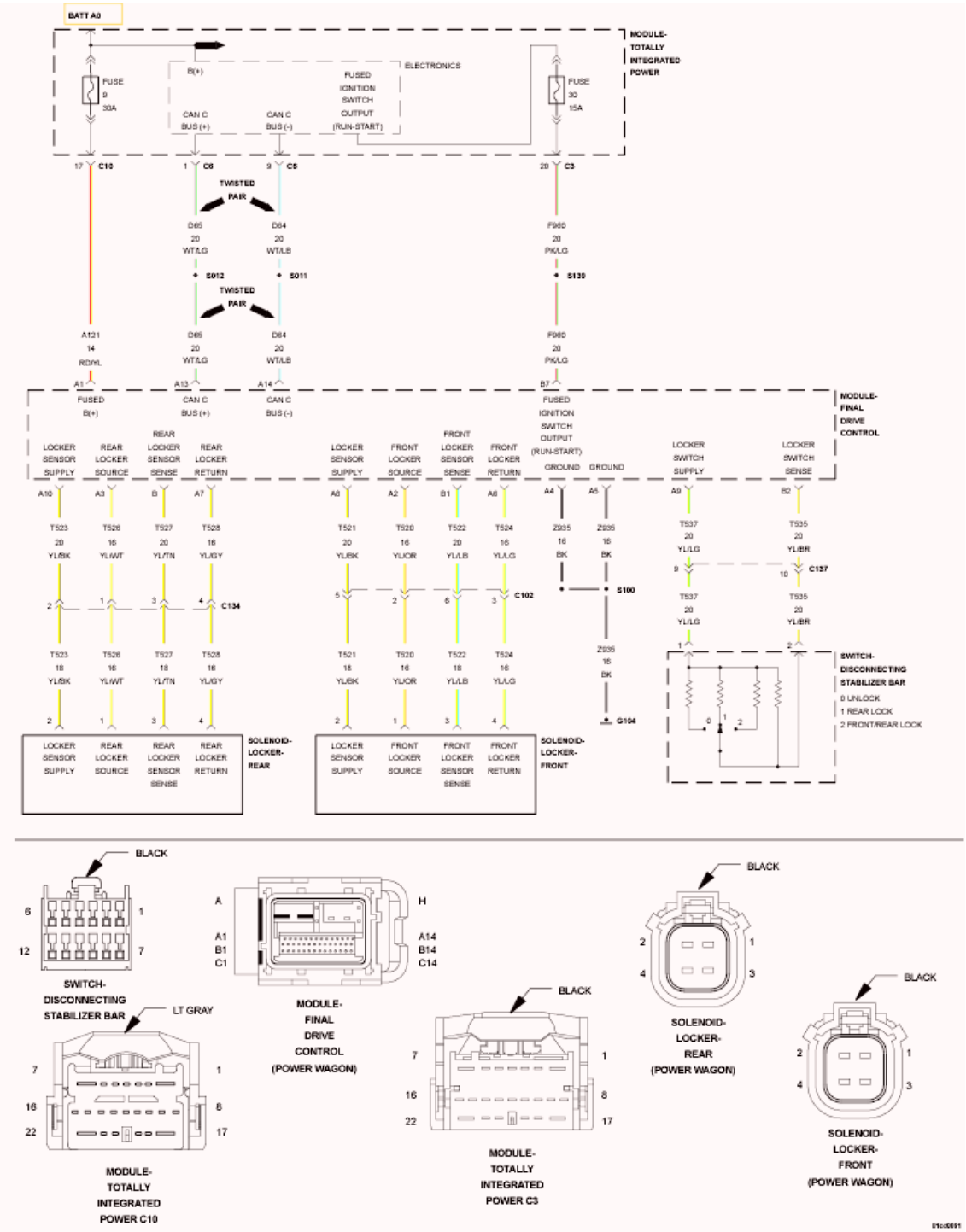

Fig. 44: Final Drive Control Module Wiring Diagram
Courtesy of CHRYSLER GROUP, LLC

For a complete wiring diagram **refer to appropriate SYSTEM WIRING DIAGRAMS article** .

WHEN MONITORED:

Ignition on. Disconnecting Stabilizer Bar Switch in the RR or FR/RR position.

SET CONDITION:

The FDCM detects the Rear Locker Source circuit is shorted low.

POSSIBLE CAUSES

Possible Causes
REAR LOCKER SOLENOID
(T526) REAR LOCKER SOURCE CIRCUIT FOR A SHORT TO GROUND
(T528) REAR LOCKER RETURN CIRCUIT FOR A SHORT TO (T526) REAR LOCKER SOURCE CIRCUIT
FDCM

DIAGNOSTIC TEST

1. **ACTIVE DTC**

CAUTION: Before removing the FDCM harness connector, clean the connector and locking cam area of dirt and debris. Failure to do so can result in the connector being jammed or damage to the locking cams on the harness connector or module. Do not force the assist arm when releasing or installing the harness connector.

1. Ignition on, engine not running.
2. With the scan tool, read DTC's.

   Is the DTC active at this time?

   Yes

   - Go To 2.

   No

   - Go To 6.

2. **REAR LOCKER SOLENOID OPERATION**

NOTE: Before continuing with the below diagnostic test, ensure the FDCM harness connector seal is installed correctly. Inspect the terminals on both harness connector and the module for damage. Failure to do so can result

in misdiagnoses of the system.

1. Turn the ignition off.
2. Disconnect the Rear Locker Solenoid harness connector.
3. Ignition on, engine not running.
4. Using a 12-volt test light, jump across from the (T526) Rear Locker Source circuit and the (T528) Rear Locker Return circuit in the Rear Locker harness connector.
5. With a scan tool, actuate the Rear Locker Solenoid.

   Does the test light flash on and off?

   Yes

   - Inspect the Rear Locker Solenoid terminals and connectors for corrosion and/or dirt that may compromise the connection. If OK, replace the Rear Locker Solenoid.
   - Perform FDCM VERIFICATION TEST. Refer to **FDCM VERIFICATION TEST**.

   No

   - Go To 3.

3. **(T528) REAR LOCKER RETURN CIRCUIT FOR A SHORT TO BATTERY VOLTAGE**

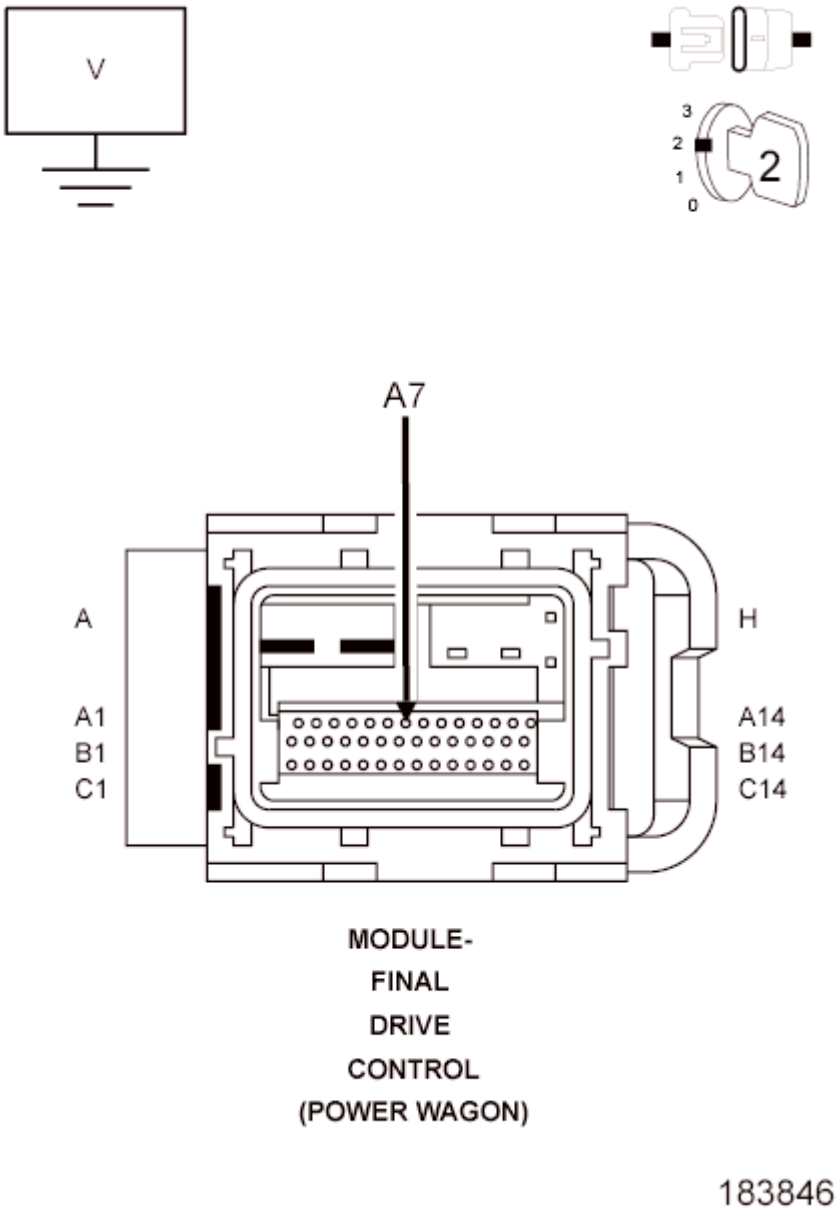

Fig. 45: Checking Rear Locker Return Circuit For A Short To Battery Voltage
Courtesy of CHRYSLER GROUP, LLC

1. Turn the ignition off.
2. Disconnect the FDCM harness connector.
3. Turn the ignition on.
4. Measure the voltage of the (T528) Rear Locker Return circuit at the FDCM harness connector.

   Does the voltmeter indicate voltage present?

   Yes

- Repair the short to voltage in the (T528) Rear Locker Return circuit.
- Perform FDCM VERIFICATION TEST. Refer to **FDCM VERIFICATION TEST**.

No

- Go To 4.

4. **(T528) REAR LOCKER RETURN CIRCUIT FOR A SHORT TO (T526) REAR LOCKER SOURCE CIRCUIT**

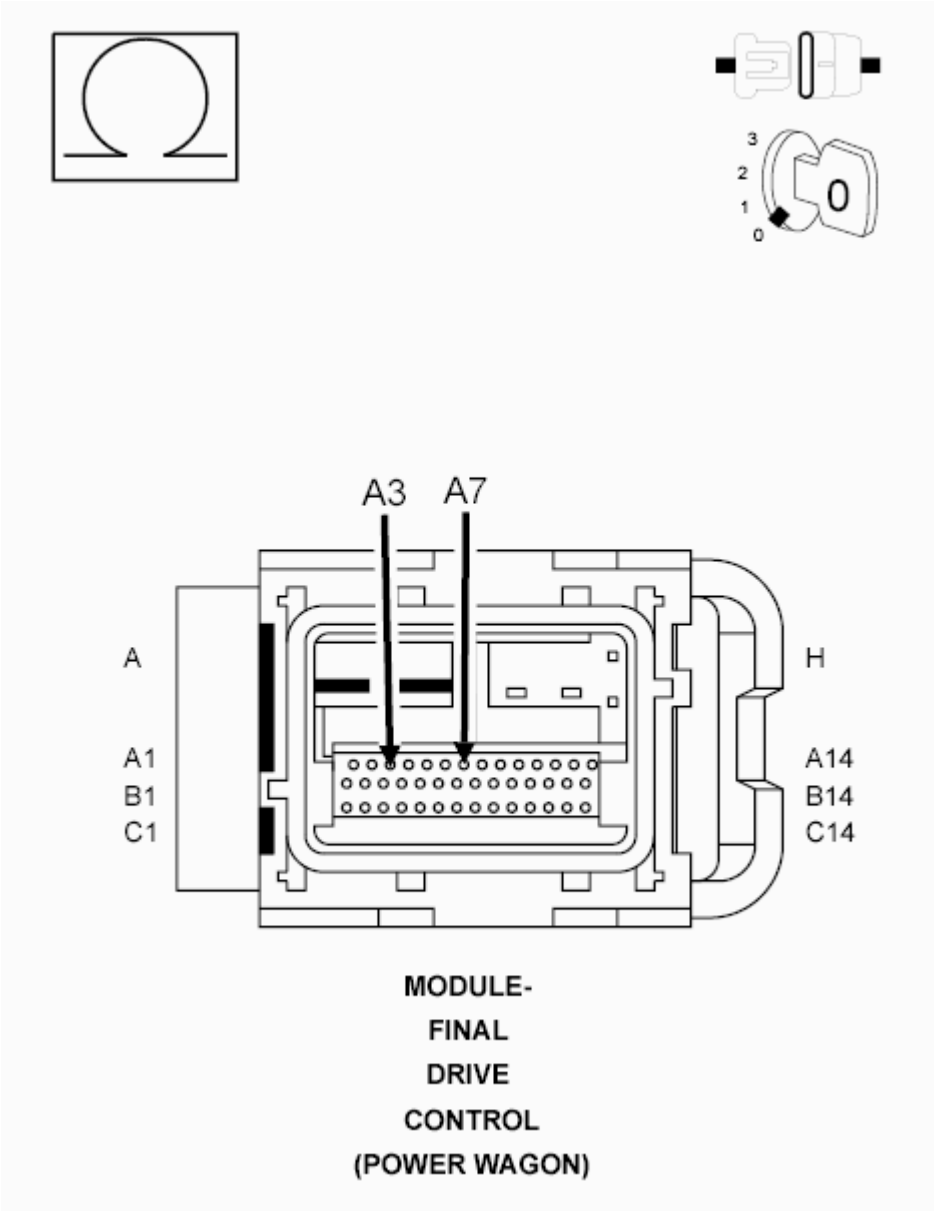

Fig. 46: Checking Rear Locker Return Circuit For A Short To Rear Locker Source Circuit
Courtesy of CHRYSLER GROUP, LLC

1. Turn the ignition off.

2. Measure the resistance between the (T526) Rear Locker Source circuit and the (T528) Rear Locker Return circuit in the FDCM harness connector.

   Is the resistance below 100 ohms?

   Yes

   - Repair the short between (T526) Rear Locker Source circuit and the (T528) Rear Locker Return circuit.
   - Perform FDCM VERIFICATION TEST. Refer to **FDCM VERIFICATION TEST**.

   No

   - Go To 5.

5. **FDCM**

   NOTE: Before continuing, check the FDCM harness connector terminals for corrosion, damage, or terminal push out. Repair as necessary.

   1. Using the schematics as a guide, inspect the wire harness and connectors. Pay particular attention to all Power and Ground circuits.

      Were there any problems found?

      Yes

      - Repair as necessary.
      - Perform FDCM VERIFICATION TEST. Refer to **FDCM VERIFICATION TEST**.

      No

      - Replace and program the Final Drive Control Module in accordance with Service Information.
      - Perform FDCM VERIFICATION TEST. Refer to **FDCM VERIFICATION TEST**.

6. **INTERMITTENT WIRING AND CONNECTORS**
   1. The conditions necessary to set this DTC are not present at this time.
   2. Using the schematics as a guide, inspect the wiring and connectors specific to this circuit.
   3. Wiggle test the wiring harness and connectors while checking for shorted and open circuits.
   4. Using the scan tool, monitor the data related to this circuit while performing the wiggle test. Look for the data to change or for the DTC to reset.

      Were there any problems found?

      Yes

- Repair as necessary.
- Perform FDCM VERIFICATION TEST. Refer to **FDCM VERIFICATION TEST**.

No

- Test Complete.

C144E-FRONT DIFFERENTIAL POSITION SENSOR PERFORMANCE

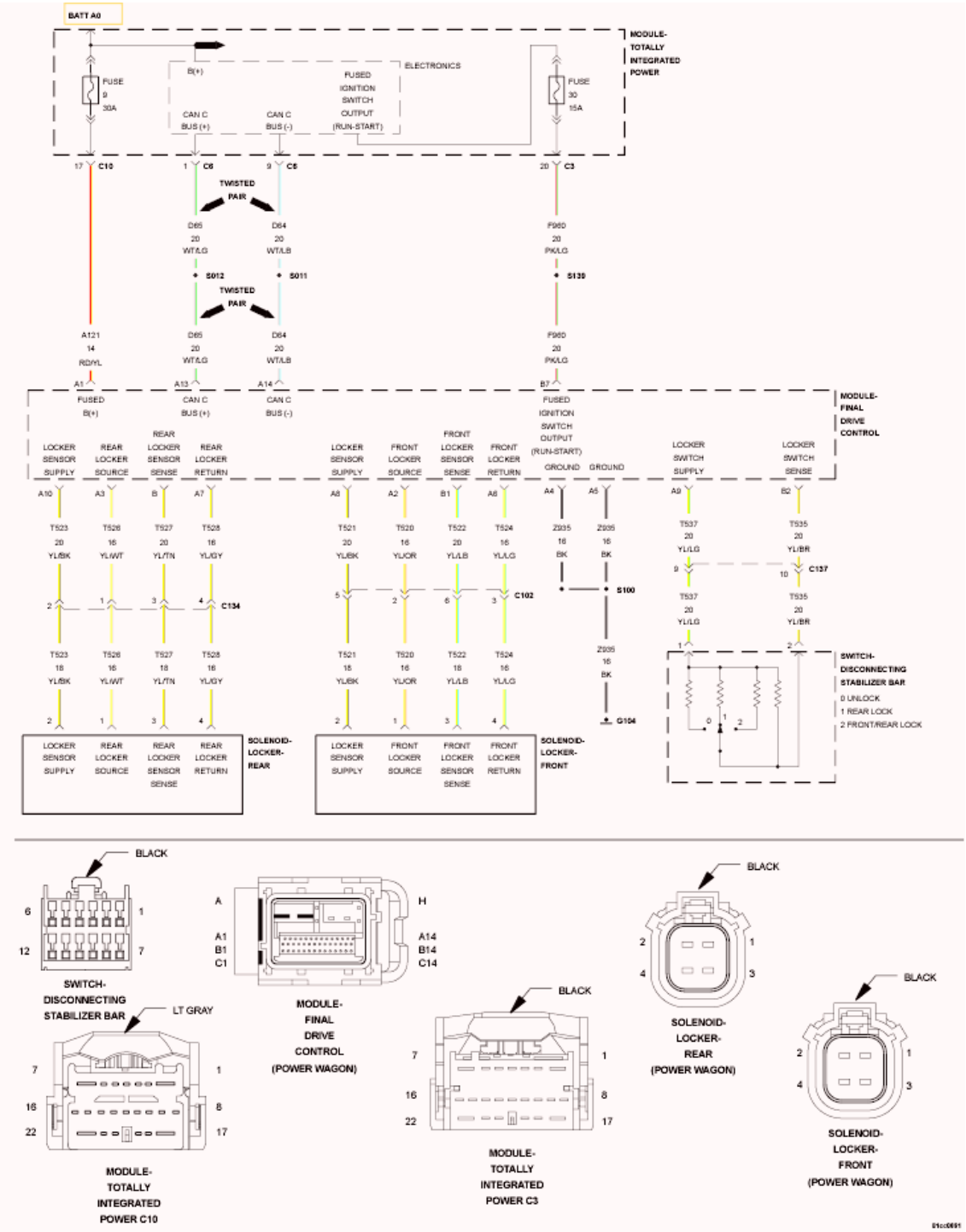

Fig. 47: Final Drive Control Module Wiring Diagram
Courtesy of CHRYSLER GROUP, LLC

For a complete wiring diagram **refer to appropriate SYSTEM WIRING DIAGRAMS article** .

WHEN MONITORED:

The ignition on. Disconnecting Stabilizer Bar Switch in the FR/RR position.

SET CONDITION:

The FDCM detects that the Front Differential Position Sensor is in an unexpected state.

POSSIBLE CAUSES

Possible Causes
FRONT DIFFERENTIAL POSITION SENSOR (WIRING, CONNECTOR AND/OR TERMINAL CONDITION)
FRONT DIFFERENTIAL POSITION SENSOR
(T522) FRONT LOCKER SENSOR SENSE OPEN
FDCM

DIAGNOSTIC TEST

1. **ACTIVE DTC**

   CAUTION: Before removing the FDCM harness connector, clean the connector and locking cam area of dirt and debris. Failure to do so can result in the connector being jammed or damage to the locking cams on the harness connector or module. Do not force the assist arm when releasing or installing the harness connector.

   1. Ignition on, engine not running.
   2. With the scan tool, read DTC's.

      Is the DTC active at this time?

      Yes

      - Go To 2.

      No

      - Go To 6.
2. **FRONT DIFFERENTIAL POSITION SENSOR WIRING**

   NOTE: Before continuing with the below diagnostic test, ensure the FDCM harness connector seal is installed correctly. Inspect the terminals on both harness connector and the module for damage. Failure to do so can result in misdiagnoses of the system.

   1. Using the scan tool, actuate the Front Locker Solenoid.

2. Monitor the Front Differential Position Sensor State.
3. Wiggle the related wiring harness from the FDCM to the Front Locker Solenoid connector at the axle.
4. With a scan tool, actuate the Front Locker Solenoid.

   Does the state on the scan tool change while wiggling the wiring harness?

   Yes

   - Using the schematics as a guide, inspect the wiring and connectors specific to this circuit. Check the Locker Solenoid terminals and connectors for corrosion and/or dirt that may compromise the connection. Repair as necessary.
   - Perform FDCM VERIFICATION TEST. Refer to **FDCM VERIFICATION TEST**.

   No

   - Go To 3.

3. **FRONT DIFFERENTIAL POSITION SENSOR OPERATION**
   1. Turn the ignition off.
   2. Disconnect the Front Locker Solenoid harness connector.
   3. Ignition on, engine not running.
   4. Using a jumper wire, jumper across from the (T522) Front Locker Sensor Sense circuit and the (T521) Locker Sensor Supply circuit in the Front Locker Solenoid harness connector.
   5. While monitoring the sensor state on the scan tool, tap the jumper wire on and off the (T522) Front Locker Sensor Sense circuit terminal. Hold the jumper wire on and off the terminal for a minimum of 3 seconds.

      Does the state change on the scan tool while tapping the terminal?

      Yes

      - Replace the Front Locker Solenoid.
      - Perform FDCM VERIFICATION TEST. Refer to **FDCM VERIFICATION TEST**.

      No

      - Go To 4.

4. **(T522) FRONT LOCKER SENSOR SENSE CIRCUIT FOR AN OPEN**

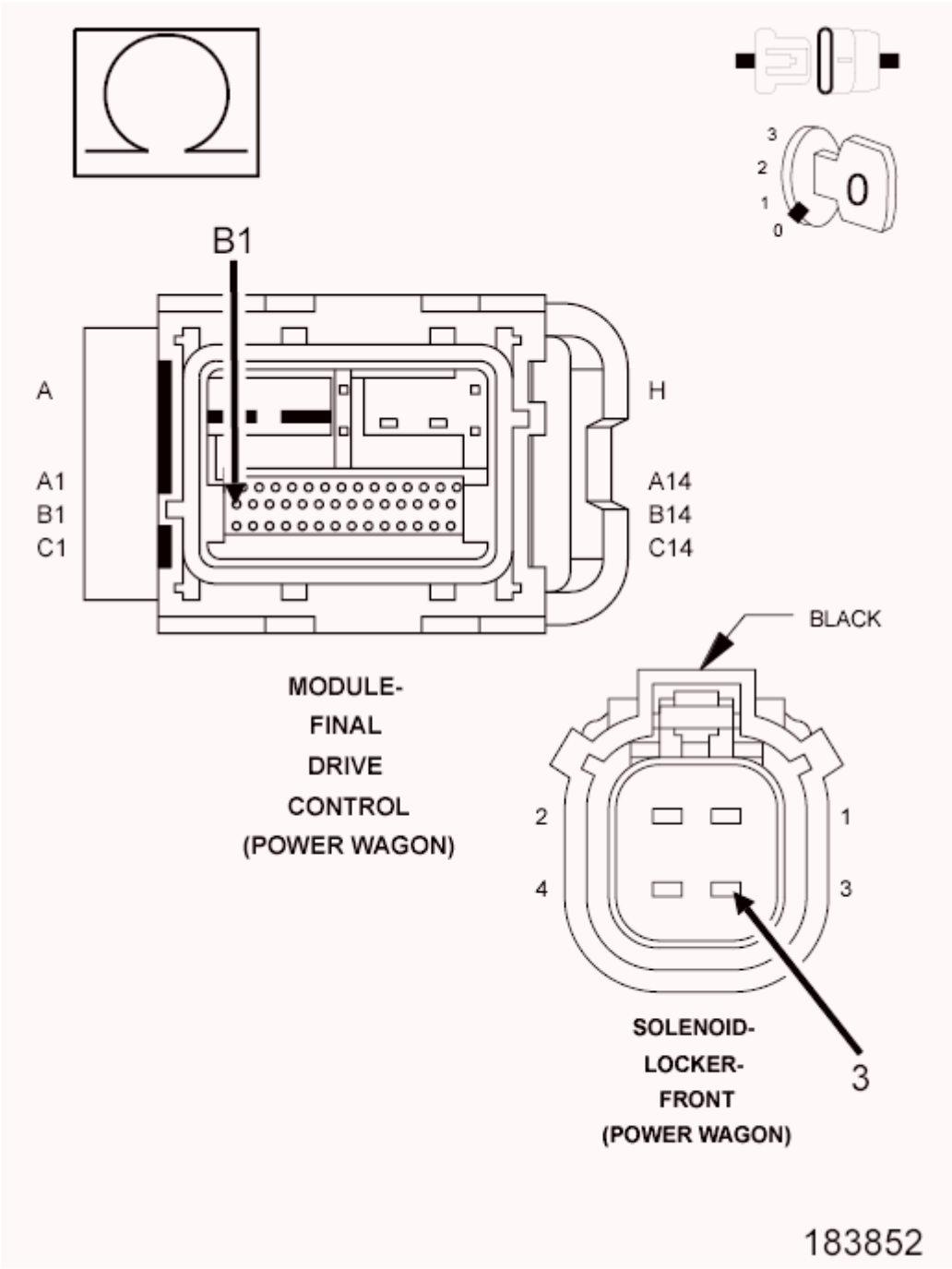

Fig. 48: Checking Front Locker Sensor Sense Circuit For An Open
Courtesy of CHRYSLER GROUP, LLC

1. Turn the ignition off.
2. Disconnect the FDCM harness connector.
3. Measure the resistance of the (T522) Front Locker Sensor Sense circuit between the Front Locker Solenoid harness connector and the FDCM harness connector.

   Is the resistance below 5.0 ohms?

Yes

- Go To 5.

No

- Repair the open in the (T522) Front Locker Sensor Sense circuit.
- Perform FDCM VERIFICATION TEST. Refer to **FDCM VERIFICATION TEST**.

5. **FDCM**

NOTE: Before continuing, check the FDCM harness connector terminals for corrosion, damage, or terminal push out. Repair as necessary.

1. Using the schematics as a guide, inspect the wire harness and connectors. Pay particular attention to all Power and Ground circuits.

   Were there any problems found?

   Yes

   - Repair as necessary.
   - Perform FDCM VERIFICATION TEST. Refer to **FDCM VERIFICATION TEST**.

   No

   - Replace and program the Final Drive Control Module in accordance with Service Information.
   - Perform FDCM VERIFICATION TEST. Refer to **FDCM VERIFICATION TEST**.

6. **INTERMITTENT WIRING AND CONNECTORS**
   1. The conditions necessary to set this DTC are not present at this time.
   2. Using the schematics as a guide, inspect the wiring and connectors specific to this circuit.
   3. Wiggle test the wiring harness and connectors while checking for shorted and open circuits.
   4. Using the scan tool, monitor the data related to this circuit while performing the wiggle test. Look for the data to change or for the DTC to reset.

   Were there any problems found?

   Yes

   - Repair as necessary.
   - Perform FDCM VERIFICATION TEST. Refer to **FDCM VERIFICATION TEST**.

   No

- Test Complete.

C144F-FRONT DIFFERENTIAL POSITION SENSOR LOW

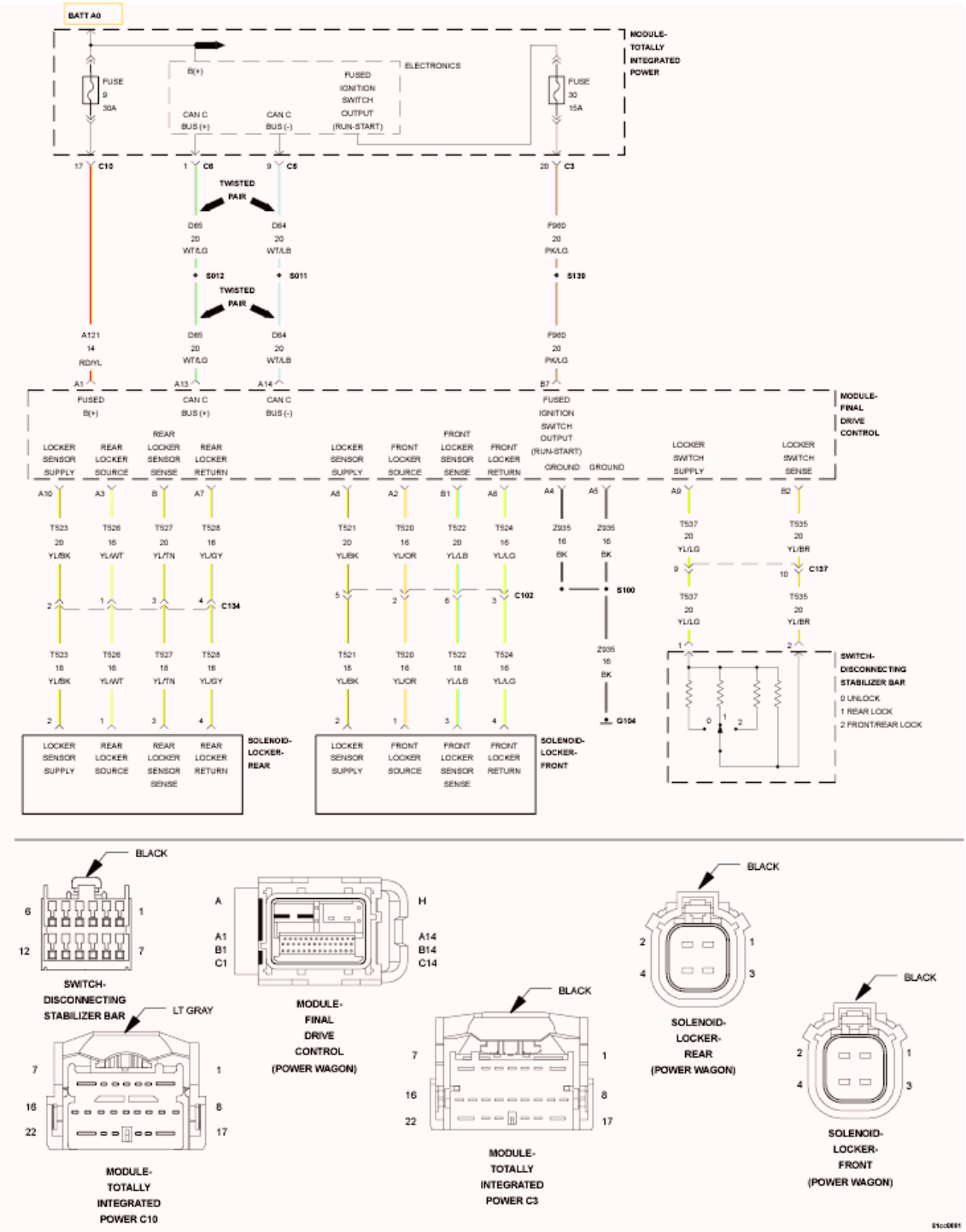

Fig. 49: Final Drive Control Module Wiring Diagram
Courtesy of CHRYSLER GROUP, LLC

For a complete wiring diagram **refer to appropriate SYSTEM WIRING DIAGRAMS article** .

WHEN MONITORED:

Ignition on. Disconnecting Stabilizer Bar Switch in the FR/RR position.

SET CONDITION:

The FDCM detects that the Front Differential Position Sensor is short low.

POSSIBLE CAUSES

Possible Causes
FRONT DIFFERENTIAL POSITION SENSOR
(T522) FRONT LOCKER SENSOR SENSE SHORTED TO GROUND
FDCM

DIAGNOSTIC TEST

1. **ACTIVE DTC**

   CAUTION: Before removing the FDCM harness connector, clean the connector and locking cam area of dirt and debris. Failure to do so can result in the connector being jammed or damage to the locking cams on the harness connector or module. Do not force the assist arm when releasing or installing the harness connector.

   1. Ignition on, engine not running.
   2. With the scan tool, read DTC's.

      Is the DTC active at this time?

      Yes

      - Go To 2.

      No

      - Go To 5.
2. **FRONT DIFFERENTIAL POSITION SENSOR OPERATION**

   NOTE: Before continuing with the below diagnostic test, ensure the FDCM harness connector seal is installed correctly. Inspect the terminals on both harness connector and the module for damage. Failure to do so can result in misdiagnoses of the system.

1. Using the scan tool, ignition on, monitor the Front Locker Sensor state.
2. Disconnect the Front Locker Solenoid harness connector.

   Does the state change on the scan tool from Locked to Unlocked?

   Yes

   - Replace the Front Locker Solenoid.
   - Perform FDCM VERIFICATION TEST. Refer to **FDCM VERIFICATION TEST**.

   No

   - Go To 3.

3. **(T522) FRONT LOCKER SENSOR SENSE CIRCUIT FOR A SHORT TO GROUND**

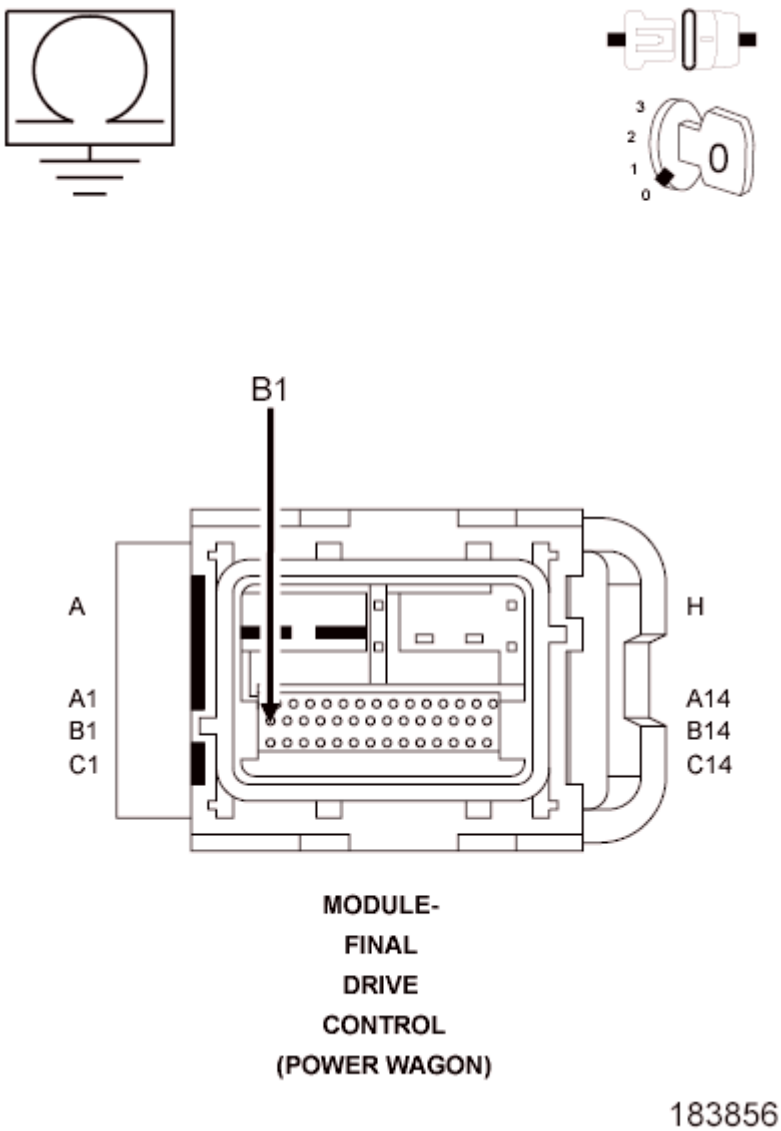

Fig. 50: Checking Front Locker Sensor Sense Circuit For A Short To Ground
Courtesy of CHRYSLER GROUP, LLC

1. Turn the ignition off.
2. Disconnect the FDCM harness connector.
3. Measure the resistance of the (T522) Front Locker Sensor Sense circuit in the FDCM harness connector.

   Is the resistance below 5.0 ohms?

   Yes

   - Repair the short to ground in the (T522) Front Locker Sensor Sense circuit.
   - Perform FDCM VERIFICATION TEST. Refer to **FDCM VERIFICATION TEST**.

No

- Go To 4.

4. **FDCM**

NOTE: Before continuing, check the FDCM harness connector terminals for corrosion, damage, or terminal push out. Repair as necessary.

1. Using the schematics as a guide, inspect the wire harness and connectors. Pay particular attention to all Power and Ground circuits.

   Were there any problems found?

   Yes

   - Repair as necessary.
   - Perform FDCM VERIFICATION TEST. Refer to **FDCM VERIFICATION TEST**.

   No

   - Replace and program the Final Drive Control Module in accordance with Service Information.
   - Perform FDCM VERIFICATION TEST. Refer to **FDCM VERIFICATION TEST**.

5. **INTERMITTENT WIRING AND CONNECTORS**
   1. The conditions necessary to set this DTC are not present at this time.
   2. Using the schematics as a guide, inspect the wiring and connectors specific to this circuit.
   3. Wiggle test the wiring harness and connectors while checking for shorted and open circuits.
   4. Using the scan tool, monitor the data related to this circuit while performing the wiggle test. Look for the data to change or for the DTC to reset.

   Were there any problems found?

   Yes

   - Repair as necessary.
   - Perform FDCM VERIFICATION TEST. Refer to **FDCM VERIFICATION TEST**.

   No

   - Perform FDCM VERIFICATION TEST. Refer to **FDCM VERIFICATION TEST**.

C1450-FRONT DIFFERENTIAL POSITION SENSOR CIRCUIT HIGH

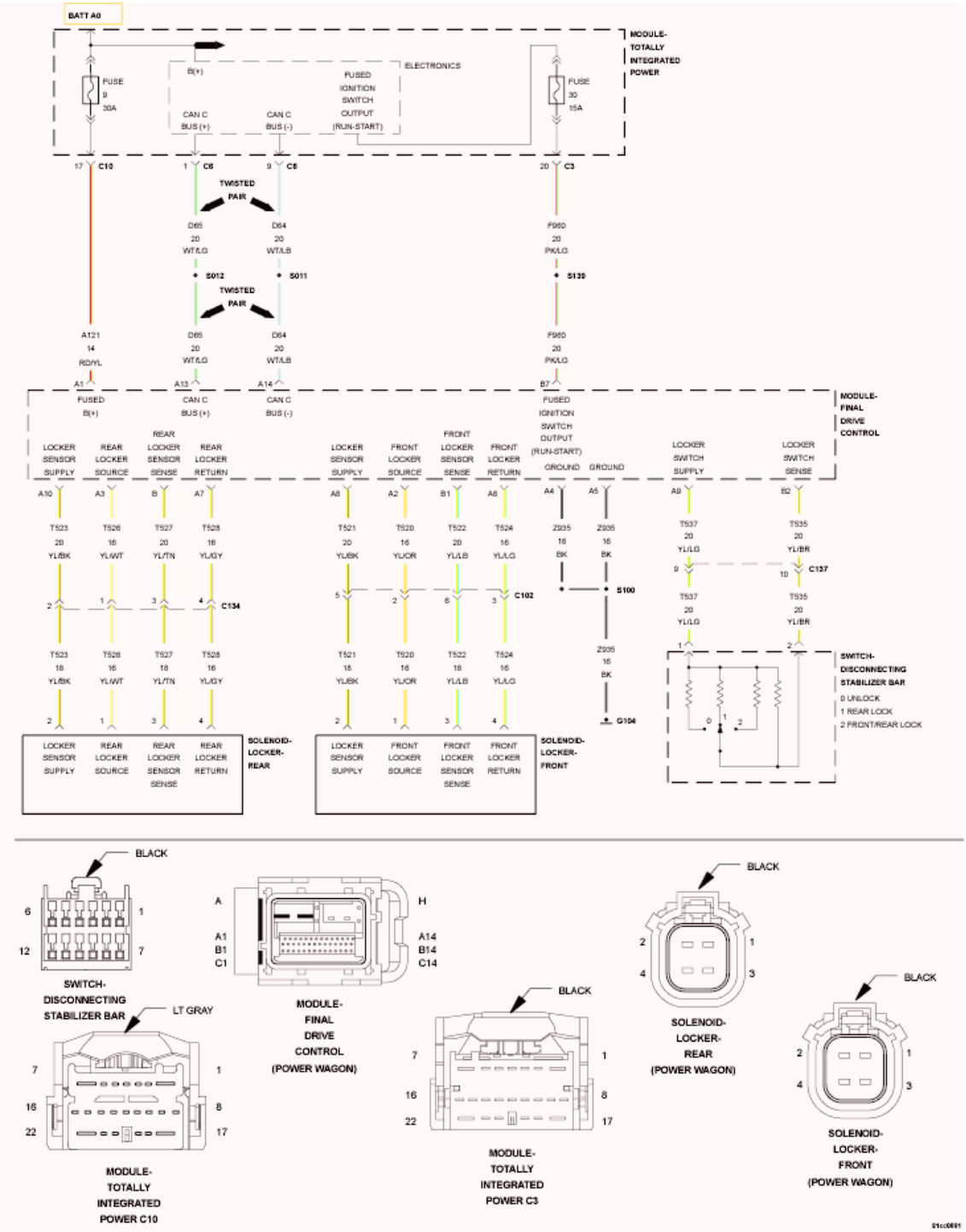

Fig. 51: Final Drive Control Module Wiring Diagram
Courtesy of CHRYSLER GROUP, LLC

For a complete wiring diagram **refer to appropriate SYSTEM WIRING DIAGRAMS article** .

WHEN MONITORED:

Ignition on. Disconnecting Stabilizer Bar Switch in the FR/RR position.

SET CONDITION:

The FDCM detects that the Front Differential Position Sensor is shorted to voltage.

POSSIBLE CAUSES

Possible Causes
(T522) FRONT LOCKER SENSOR SENSE SHORTED TO BATTERY VOLTAGE
FRONT DIFFERENTIAL POSITION SENSOR
(T522) FRONT LOCKER SENSOR SENSE OPEN
(T522) FRONT LOCKER SENSOR SENSE SHORTED TO (T521) LOCKER SENSOR SUPPLY
FDCM

DIAGNOSTIC TEST

1. **ACTIVE DTC**

   CAUTION: Before removing the FDCM harness connector, clean the connector and locking cam area of dirt and debris. Failure to do so can result in the connector being jammed or damage to the locking cams on the harness connector or module. Do not force the assist arm when releasing or installing the harness connector.

   1. Ignition on, engine not running.
   2. With the scan tool, read DTC's.

      Is the DTC active at this time?

      Yes

      - Go To 2.

      No

      - Go To 7.
2. **(T522) FRONT LOCKER SENSOR SENSE SHORTED TO BATTERY VOLTAGE**

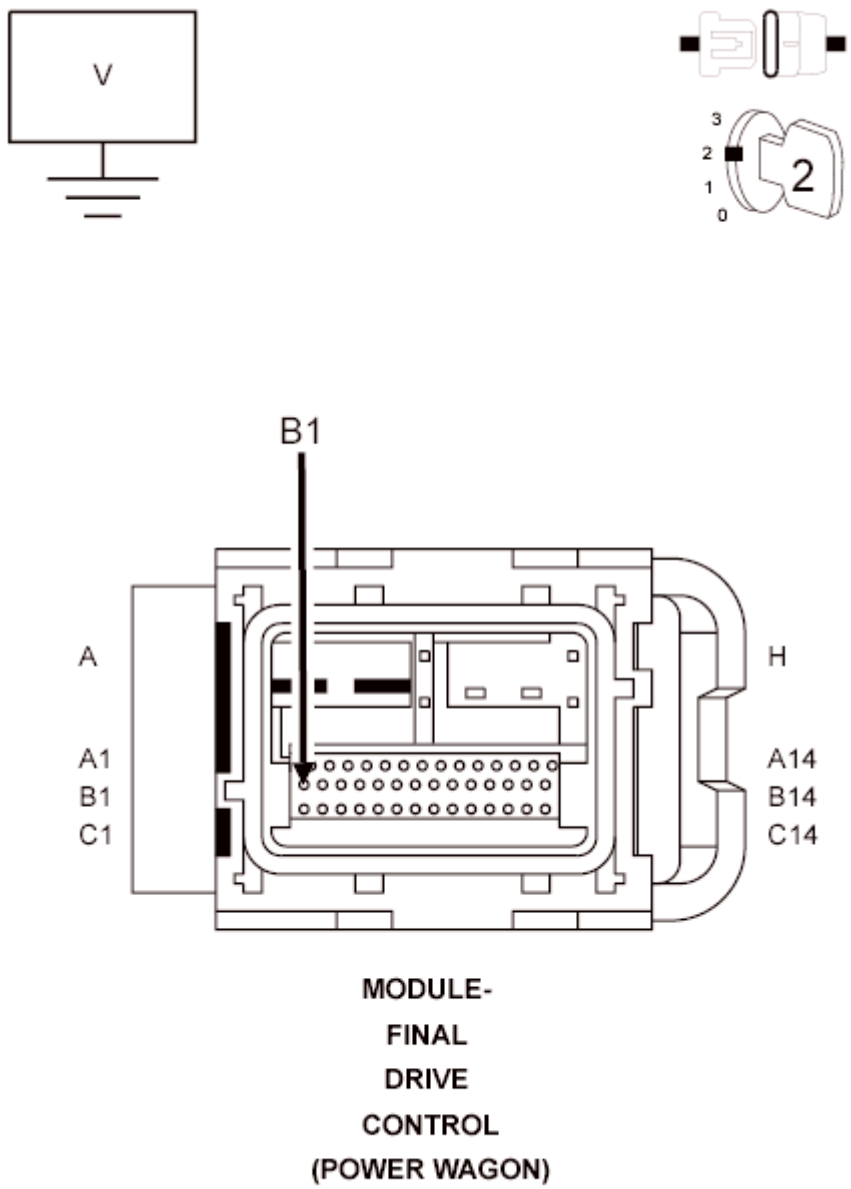

Fig. 52: Checking Front Locker Sensor Sense Shorted To Battery Voltage
Courtesy of CHRYSLER GROUP, LLC

NOTE: **Before continuing with the below diagnostic test, ensure the FDCM harness connector seal is installed correctly. Inspect the terminals on both harness connector and the module for damage. Failure to do so can result in misdiagnoses of the system.**

1. Turn the ignition off.
2. Disconnect the Front Locker Solenoid harness connector.
3. Disconnect the FDCM harness connector.

4. Turn the ignition on.
5. Measure the voltage on the (T522) Front Locker Sensor Sense circuit in the FDCM harness connector.

   Does the voltmeter indicate voltage present?

   Yes

   - Repair the short to voltage in the (T522) Front Locker Sensor Sense circuit.
   - Perform FDCM VERIFICATION TEST. Refer to **FDCM VERIFICATION TEST**.

   No

   - Go To 3.

3. **FRONT DIFFERENTIAL POSITION SENSOR OPERATION**
   1. Turn the ignition off.
   2. Connect the FDCM harness connector.
   3. Ignition on, engine not running.
   4. Using a jumper wire, jumper across from the (T522) Front Locker Sensor Sense circuit and the (T521) Locker Sensor Supply circuit in the Front Locker Solenoid harness connector.
   5. While monitoring the sensor state on the scan tool, tap the jumper wire on and off the (T522) Front Locker Sensor Sense circuit terminal. Hold the jumper wire on and off the terminal for a minimum of 3 seconds.

      Does the state change on the scan tool while tapping the terminal?

      Yes

      - Replace the Front Locker Solenoid.
      - Perform FDCM VERIFICATION TEST. Refer to **FDCM VERIFICATION TEST**.

      No

      - Go To 4.

4. **(T522) FRONT LOCKER SENSOR SENSE CIRCUIT FOR AN OPEN**

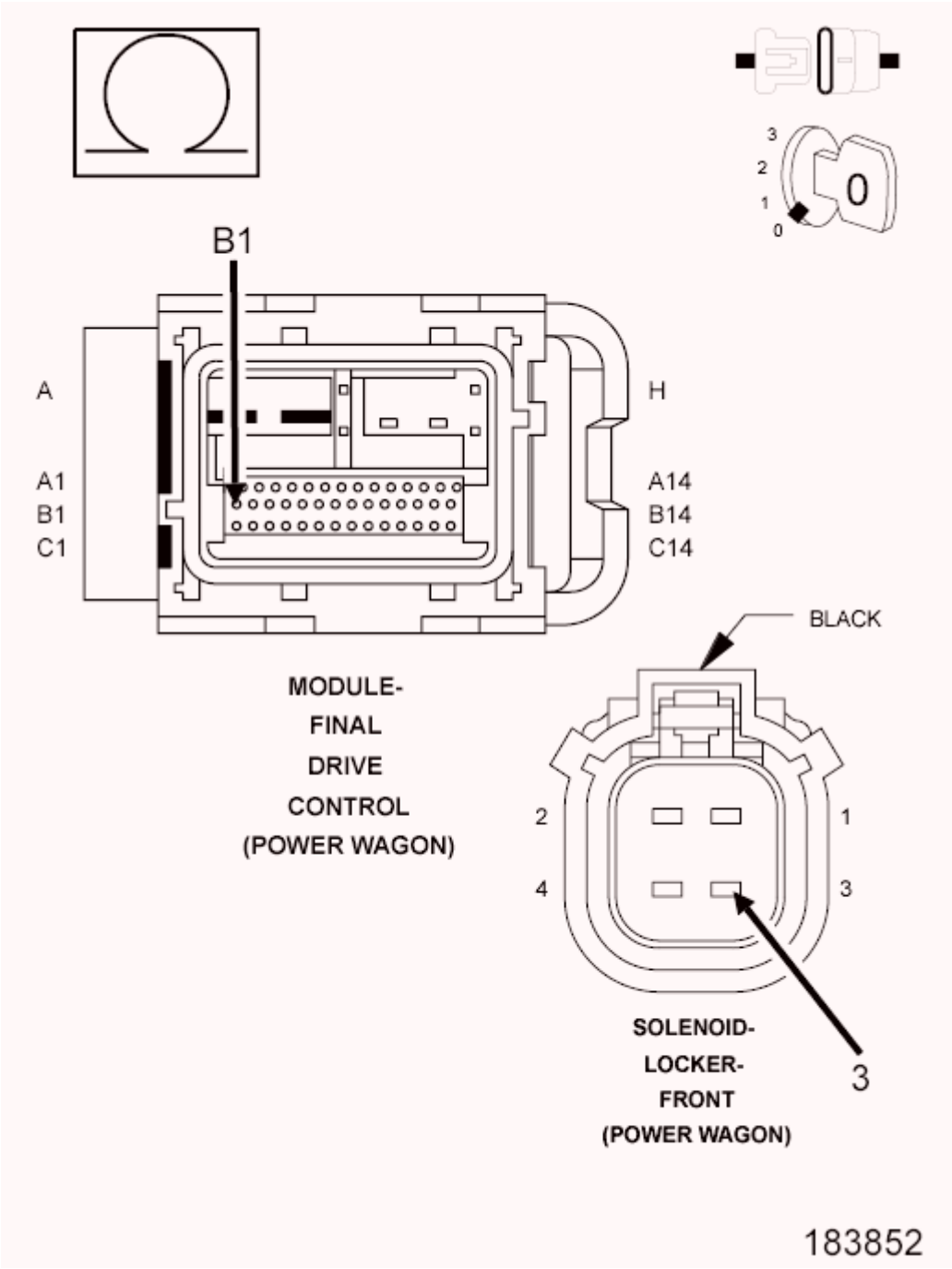

Fig. 53: Checking Front Locker Sensor Sense Circuit For An Open
Courtesy of CHRYSLER GROUP, LLC

1. Turn the ignition off.
2. Disconnect the FDCM harness connector.
3. Measure the resistance of the (T522) Front Locker Sensor Sense circuit between the Front Locker Solenoid harness connector and the FDCM harness connector.

   Is the resistance below 5.0 ohms?

Yes

- Go To 5.

No

- Repair the open in the (T522) Front Locker Sensor Sense circuit.
- Perform FDCM VERIFICATION TEST. Refer to **FDCM VERIFICATION TEST**.

5. **(T522) FRONT LOCKER SENSOR SENSE CIRCUIT FOR A SHORT TO (T521) LOCKER SENSOR 1 SUPPLY**

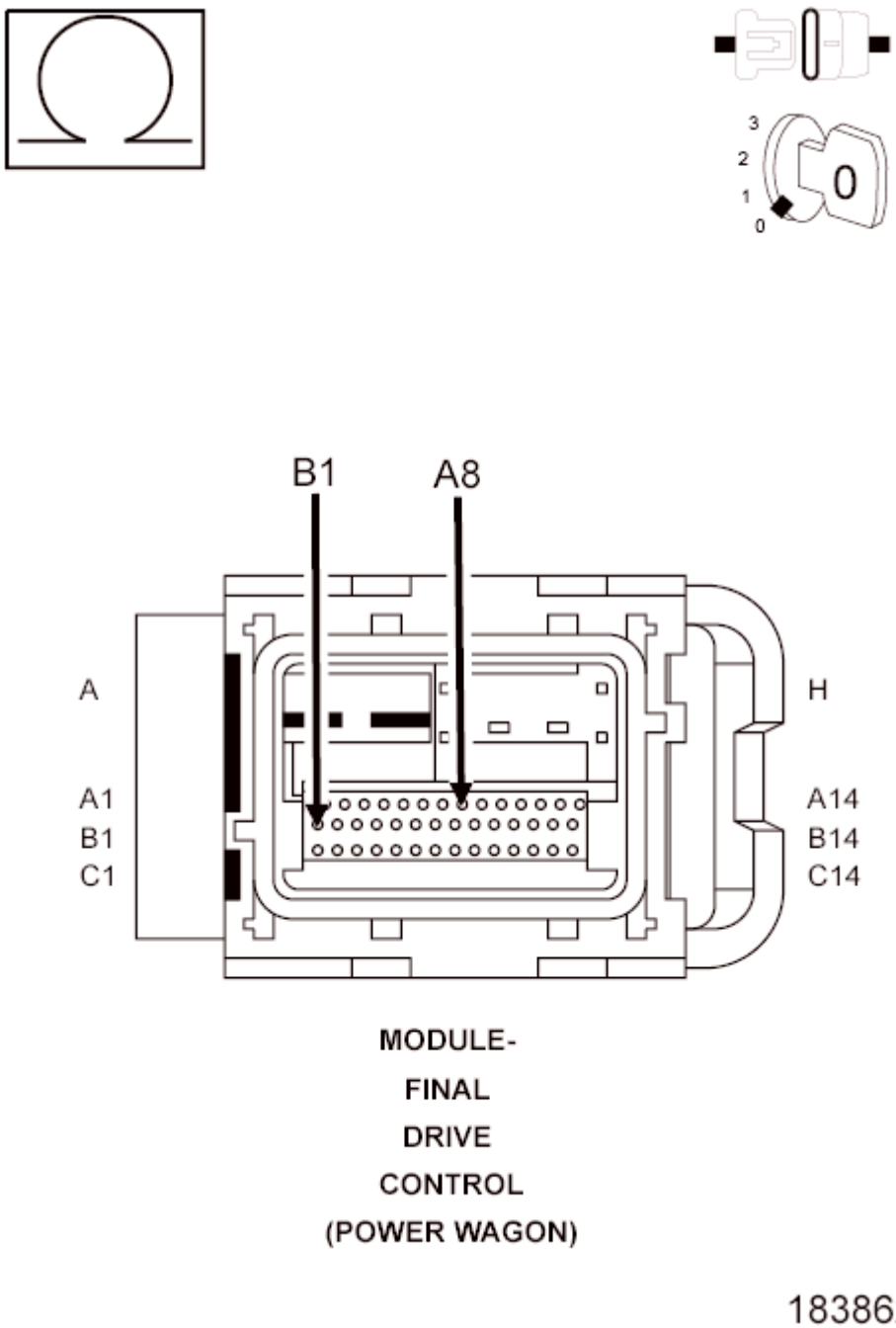

Fig. 54: Checking Front Locker Sensor Sense Circuit For A Short To Locker Sensor 1 Supply
Courtesy of CHRYSLER GROUP, LLC

1. Measure the resistance between the (T522) Front Locker Sensor Sense circuit and the (T521) Locker Sensor 1 Supply circuit in the FDCM harness connector.

   Is the resistance below 5.0 ohms?

   Yes

- Repair the short between the (T522) Front Locker Sensor Sense circuit and the (T521) Locker Sensor 1 Supply circuit.
- Perform FDCM VERIFICATION TEST. Refer to **FDCM VERIFICATION TEST**.

No

- Go To 6.

6. **FDCM**

NOTE: Before continuing, check the FDCM harness connector terminals for corrosion, damage, or terminal push out. Repair as necessary.

1. Using the schematics as a guide, inspect the wire harness and connectors. Pay particular attention to all Power and Ground circuits.

   Were there any problems found?

   Yes

   - Repair as necessary.
   - Perform FDCM VERIFICATION TEST. Refer to **FDCM VERIFICATION TEST**.

   No

   - Replace and program the Final Drive Control Module in accordance with Service Information.
   - Perform FDCM VERIFICATION TEST. Refer to **FDCM VERIFICATION TEST**.

7. **INTERMITTENT WIRING AND CONNECTORS**
   1. The conditions necessary to set this DTC are not present at this time.
   2. Using the schematics as a guide, inspect the wiring and connectors specific to this circuit.
   3. Wiggle test the wiring harness and connectors while checking for shorted and open circuits.
   4. Using the scan tool, monitor the data related to this circuit while performing the wiggle test. Look for the data to change or for the DTC to reset.

   Were there any problems found?

   Yes

   - Repair as necessary.
   - Perform FDCM VERIFICATION TEST. Refer to **FDCM VERIFICATION TEST**.

   No

   - Test Complete.

C1452-REAR DIFFERENTIAL POSITION SENSOR PERFORMANCE

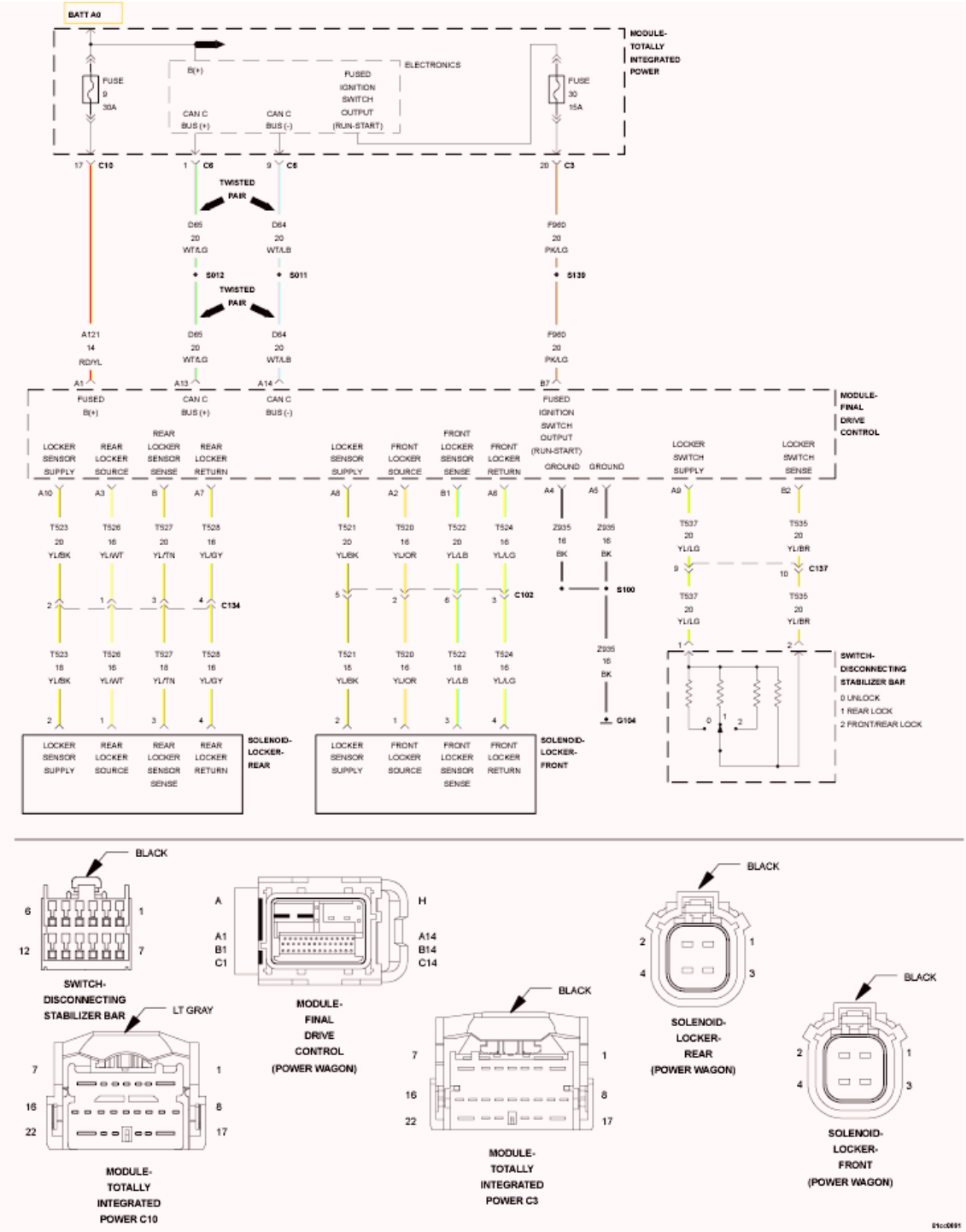

Fig. 55: Final Drive Control Module Wiring Diagram
Courtesy of CHRYSLER GROUP, LLC

For a complete wiring diagram **refer to appropriate SYSTEM WIRING DIAGRAMS article** .

WHEN MONITORED:

The ignition on. Disconnecting Stabilizer Bar Switch in the RR or FR/RR position.

SET CONDITION:

The FDCM detects that the Rear Differential Position Sensor is in an unexpected state.

POSSIBLE CAUSES

Possible Causes
REAR DIFFERENTIAL POSITION SENSOR (WIRING, CONNECTOR AND/OR TERMINAL CONDITION)
REAR DIFFERENTIAL POSITION SENSOR
(T527) REAR LOCKER SENSOR SENSE CIRCUIT FOR AN OPEN
FDCM

DIAGNOSTIC TEST

1. **ACTIVE DTC**

CAUTION: Before removing the FDCM harness connector, clean the connector and locking cam area of dirt and debris. Failure to do so can result in the connector being jammed or damage to the locking cams on the harness connector or module. Do not force the assist arm when releasing or installing the harness connector.

1. Ignition on, engine not running.
2. With the scan tool, read DTC's.

Is the DTC active at this time?

Yes

- Go To 2.

No

- Go To 6.

2. **REAR DIFFERENTIAL POSITION SENSOR WIRING**

NOTE: Before continuing with the below diagnostic test, ensure the FDCM harness connector seal is installed correctly. Inspect the terminals on both harness connector and the module for damage. Failure to do so can result in misdiagnoses of the system.

1. Using the scan tool, actuate the Rear Locker Solenoid.
2. Monitor the Rear Differential Position Sensor State.
3. Wiggle the related wiring harness from the FDCM to the Rear Locker Solenoid connector at the axle.
4. With a scan tool, actuate the Rear Locker Solenoid.

   Does the state on the scan tool change while wiggling the wiring harness?

   Yes

   - Using the schematics as a guide, inspect the wiring and connectors specific to this circuit. Check the Locker Solenoid terminals and connectors for corrosion and/or dirt that may compromise the connection. Repair as necessary.
   - Perform FDCM VERIFICATION TEST. Refer to **FDCM VERIFICATION TEST**.

   No

   - Go To 3.

3. **REAR DIFFERENTIAL POSITION SENSOR OPERATION**
   1. Turn the ignition off.
   2. Disconnect the Rear Locker Solenoid harness connector.
   3. Ignition on, engine not running.
   4. Using a jumper wire, jumper across from the (T527) Rear Locker Sensor Sense circuit and the (T521) Locker Sensor Supply circuit in the Rear Locker Solenoid harness connector.
   5. While monitoring the sensor state on the scan tool, tap the jumper wire on and off the (T527) Rear Locker Sensor Sense circuit terminal. Hold the jumper wire on and off the terminal for a minimum of 3 seconds.

      Does the state change on the scan tool while tapping the terminal?

      Yes

      - Replace the Rear Locker Solenoid.
      - Perform FDCM VERIFICATION TEST. Refer to **FDCM VERIFICATION TEST**.

      No

      - Go To 4.

4. **(T527) REAR LOCKER SENSOR SENSE CIRCUIT FOR AN OPEN**

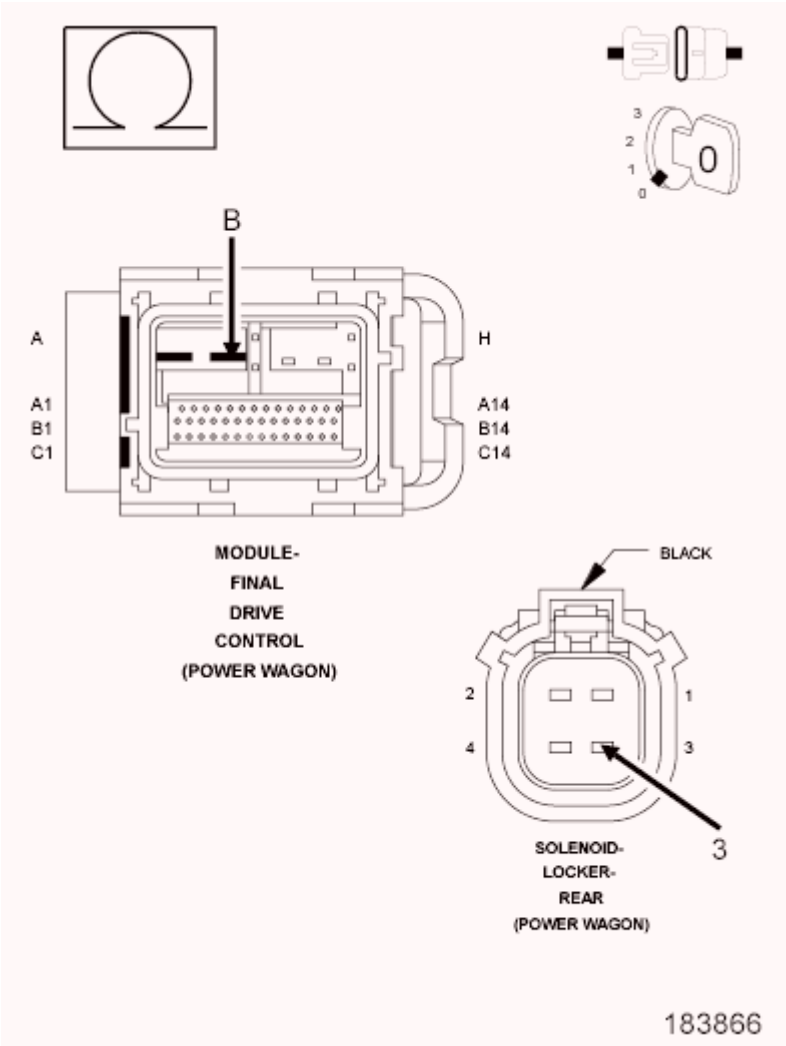

Fig. 56: Checking Rear Locker Sensor Sense Circuit For An Open
Courtesy of CHRYSLER GROUP, LLC

1. Turn the ignition off.
2. Disconnect the FDCM harness connector.
3. Measure the resistance of the (T527) Rear Locker Sensor Sense circuit between the Rear Locker Solenoid harness connector and the FDCM harness connector.

   Is the resistance below 5.0 ohms?

   Yes

   - Go To 5.

   No

   - Repair the open in the (T527) Rear Locker Sensor Sense circuit.

- Perform FDCM VERIFICATION TEST. Refer to **FDCM VERIFICATION TEST**.

5. **FDCM**

NOTE: Before continuing, check the FDCM harness connector terminals for corrosion, damage, or terminal push out. Repair as necessary.

1. Using the schematics as a guide, inspect the wire harness and connectors. Pay particular attention to all Power and Ground circuits.

   Were there any problems found?

   Yes

   - Repair as necessary.
   - Perform FDCM VERIFICATION TEST. Refer to **FDCM VERIFICATION TEST**.

   No

   - Replace and program the Final Drive Control Module in accordance with Service Information.
   - Perform FDCM VERIFICATION TEST. Refer to **FDCM VERIFICATION TEST**.

6. **INTERMITTENT WIRING AND CONNECTORS**
   1. The conditions necessary to set this DTC are not present at this time.
   2. Using the schematics as a guide, inspect the wiring and connectors specific to this circuit.
   3. Wiggle test the wiring harness and connectors while checking for shorted and open circuits.
   4. Using the scan tool, monitor the data related to this circuit while performing the wiggle test. Look for the data to change or for the DTC to reset.

   Were there any problems found?

   Yes

   - Repair as necessary.
   - Perform FDCM VERIFICATION TEST. Refer to **FDCM VERIFICATION TEST**.

   No

   - Test Complete.

C1453-REAR DIFFERENTIAL POSITION SENSOR LOW

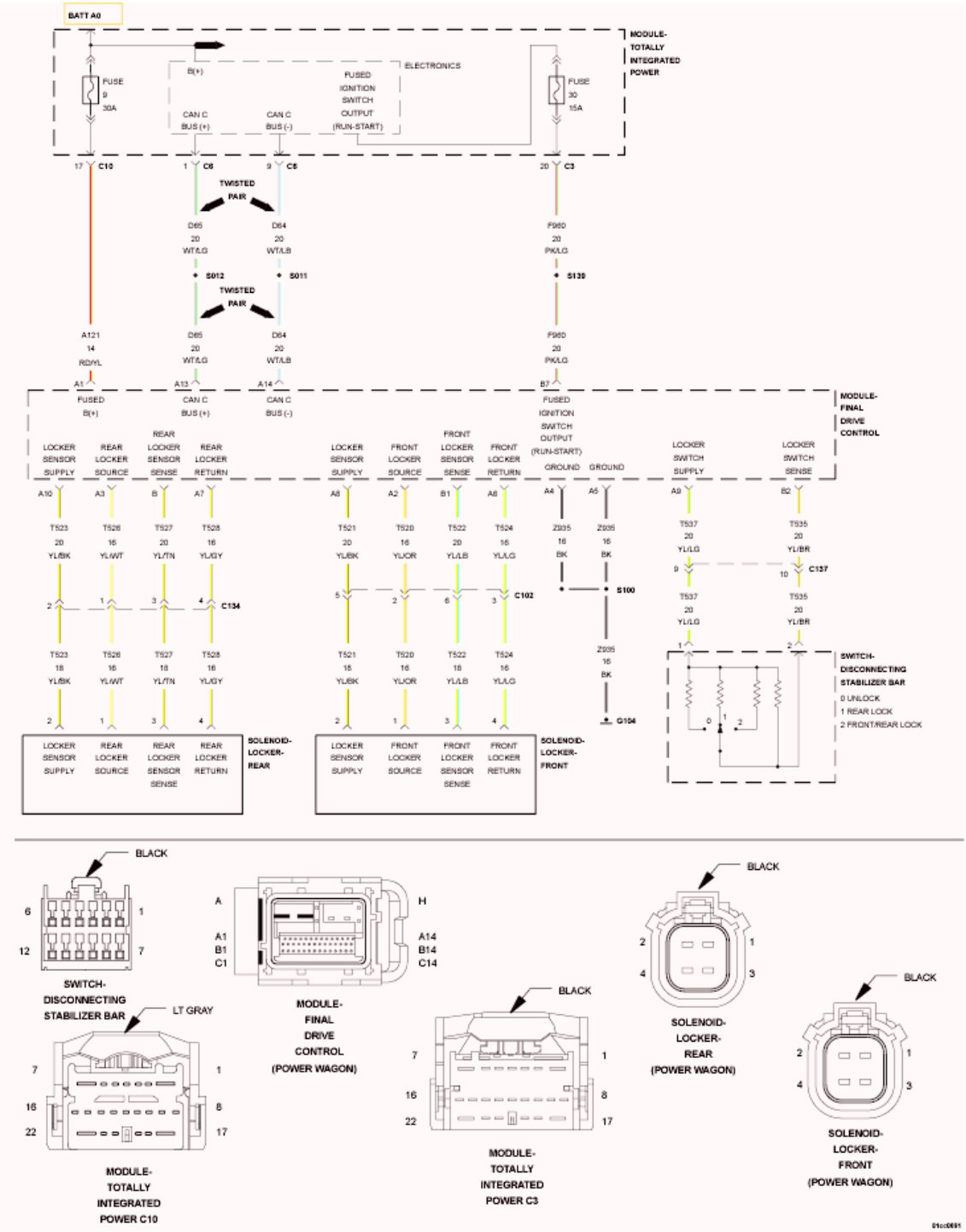

Fig. 57: Final Drive Control Module Wiring Diagram
Courtesy of CHRYSLER GROUP, LLC

For a complete wiring diagram **refer to appropriate SYSTEM WIRING DIAGRAMS article** .

WHEN MONITORED:

The ignition on. Disconnecting Stabilizer Bar Switch in the FR/RR position.

SET CONDITION:

The FDCM detects that the Rear Differential Position Sensor is short low.

POSSIBLE CAUSES

Possible Causes
REAR DIFFERENTIAL POSITION SENSOR
(T527) REAR LOCKER SENSOR SENSE SHORTED TO GROUND
FDCM

DIAGNOSTIC TEST

1. **ACTIVE DTC**

   CAUTION: Before removing the FDCM harness connector, clean the connector and locking cam area of dirt and debris. Failure to do so can result in the connector being jammed or damage to the locking cams on the harness connector or module. Do not force the assist arm when releasing or installing the harness connector.

   1. Ignition on, engine not running.
   2. With the scan tool, read DTC's.

      Is the DTC active at this time?

      Yes

      - Go To 2.

      No

      - Go To 5.
2. **REAR DIFFERENTIAL POSITION SENSOR OPERATION**

   NOTE: Before continuing with the below diagnostic test, ensure the FDCM harness connector seal is installed correctly. Inspect the terminals on both harness connector and the module for damage. Failure to do so can result in misdiagnoses of the system.

   1. Using the scan tool, ignition on, monitor the Rear Locker Sensor state.
   2. Disconnect the Rear Locker Solenoid harness connector.

Does the state change on the scan tool from Locked to Unlocked?

Yes

- Replace the Rear Locker Solenoid.
- Perform FDCM VERIFICATION TEST. Refer to **FDCM VERIFICATION TEST**.

No

- Go To 3.

3. **(T527) REAR LOCKER SENSOR SENSE CIRCUIT FOR A SHORT TO GROUND**

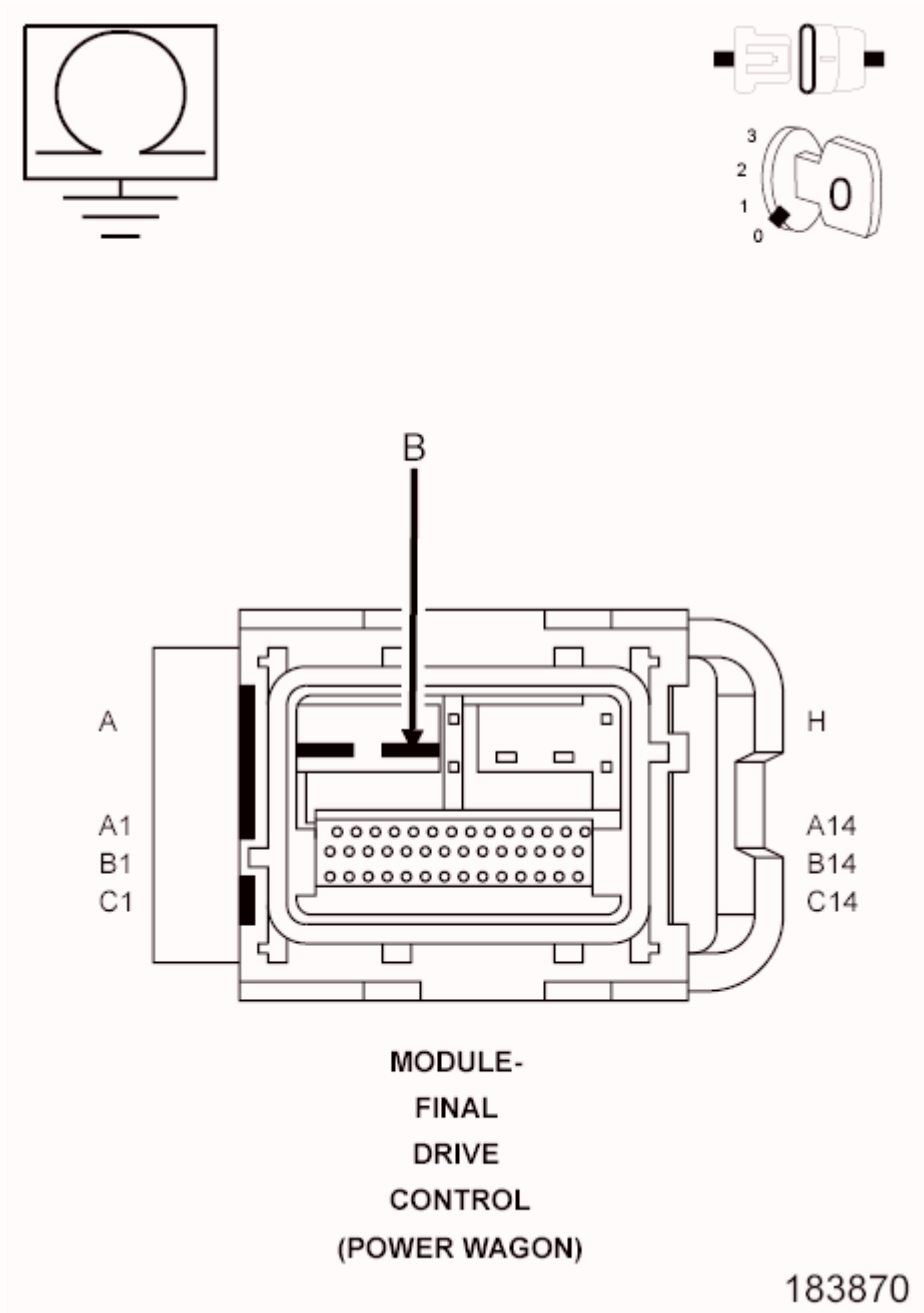

Fig. 58: Checking Rear Locker Sensor Sense Circuit For A Short To Ground
Courtesy of CHRYSLER GROUP, LLC

1. Turn the ignition off.
2. Disconnect the FDCM harness connector.
3. Measure the resistance of the (T527) Rear Locker Sensor Sense circuit in the FDCM harness connector.

   Is the resistance below 5.0 ohms?

Yes

- Repair the short to ground in the (T527) Rear Locker Sensor Sense circuit.
- Perform FDCM VERIFICATION TEST. Refer to **FDCM VERIFICATION TEST**.

No

- Go To 4.

4. **FDCM**

NOTE: Before continuing, check the FDCM harness connector terminals for corrosion, damage, or terminal push out. Repair as necessary.

1. Using the schematics as a guide, inspect the wire harness and connectors. Pay particular attention to all Power and Ground circuits.

   Were there any problems found?

   Yes

   - Repair as necessary.
   - Perform FDCM VERIFICATION TEST. Refer to **FDCM VERIFICATION TEST**.

   No

   - Replace and program the Final Drive Control Module in accordance with Service Information.
   - Perform FDCM VERIFICATION TEST. Refer to **FDCM VERIFICATION TEST**.

5. **INTERMITTENT WIRING AND CONNECTORS**

1. The conditions necessary to set this DTC are not present at this time.
2. Using the schematics as a guide, inspect the wiring and connectors specific to this circuit.
3. Wiggle test the wiring harness and connectors while checking for shorted and open circuits.
4. Using the scan tool, monitor the data related to this circuit while performing the wiggle test. Look for the data to change or for the DTC to reset.

   Were there any problems found?

   Yes

   - Repair as necessary.
   - Perform FDCM VERIFICATION TEST. Refer to **FDCM VERIFICATION TEST**.

   No

- Test Complete.

C1454-REAR DIFFERENTIAL POSITION SENSOR CIRCUIT HIGH

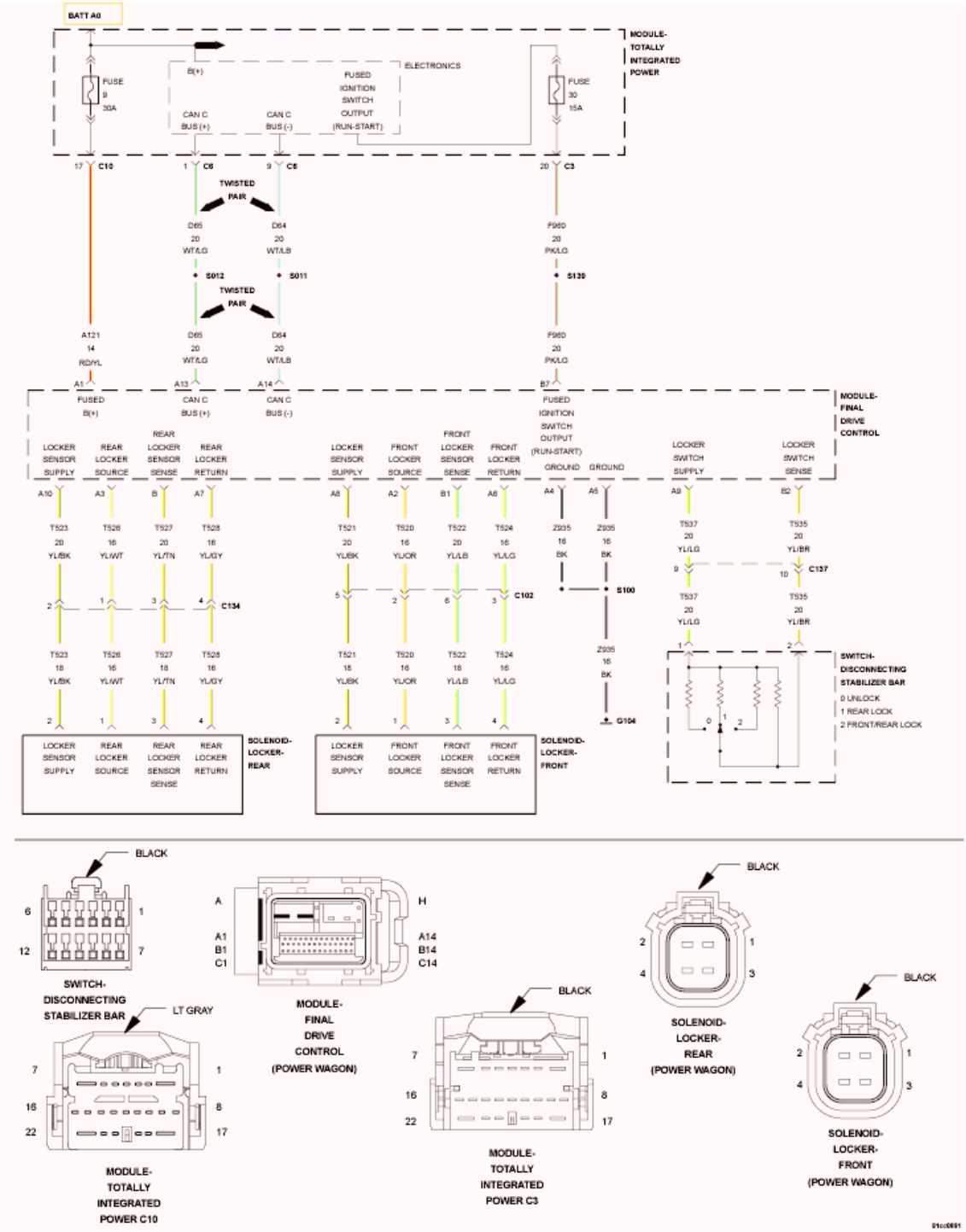

Fig. 59: Final Drive Control Module Wiring Diagram
Courtesy of CHRYSLER GROUP, LLC

For a complete wiring diagram **refer to appropriate SYSTEM WIRING DIAGRAMS article** .

WHEN MONITORED:

The ignition on. Disconnecting Stabilizer Bar Switch in the RR or FR/RR position.

SET CONDITION:

The FDCM detects that the Rear Differential Position Sensor is shorted to voltage.

POSSIBLE CAUSES

Possible Causes
(T527) REAR LOCKER SENSOR SENSE SHORTED TO BATTERY VOLTAGE
REAR DIFFERENTIAL POSITION SENSOR
(T527) REAR LOCKER SENSOR SENSE OPEN
(T527) REAR LOCKER SENSOR SENSE SHORTED TO (T521) LOCKER SENSOR SUPPLY
FDCM

DIAGNOSTIC TEST

1. **ACTIVE DTC**

   CAUTION: Before removing the FDCM harness connector, clean the connector and locking cam area of dirt and debris. Failure to do so can result in the connector being jammed or damage to the locking cams on the harness connector or module. Do not force the assist arm when releasing or installing the harness connector.

   1. Ignition on, engine not running.
   2. With the scan tool, read DTC's.

      Is the DTC active at this time?

      Yes

      - Go To 2.

      No

      - Go To 7.
2. **(T527) REAR LOCKER SENSOR SENSE CIRCUIT SHORTED TO BATTERY VOLTAGE**

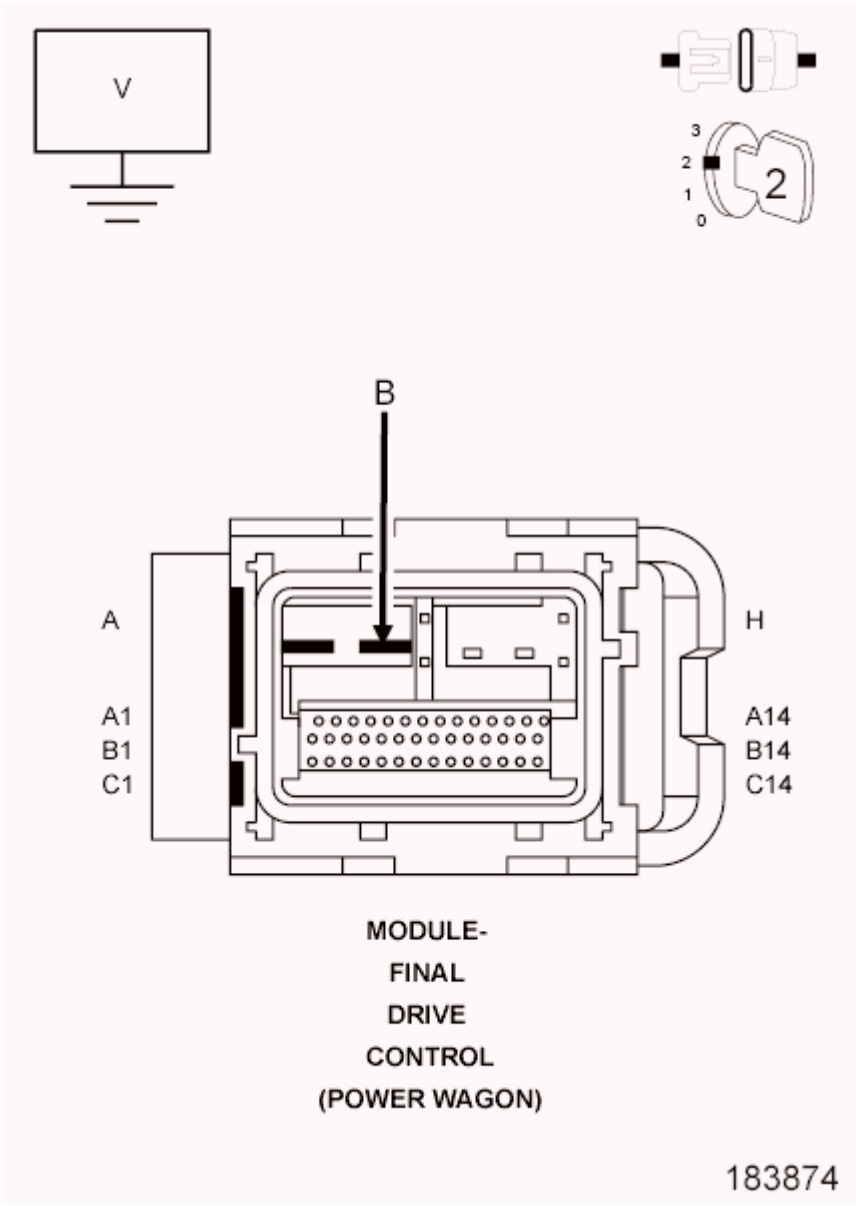

Fig. 60: Checking Rear Locker Sensor Sense Circuit For A Short To Battery Voltage
Courtesy of CHRYSLER GROUP, LLC

NOTE: **Before continuing with the below diagnostic test, ensure the FDCM harness connector seal is installed correctly. Inspect the terminals on both harness connector and the module for damage. Failure to do so can result in misdiagnoses of the system.**

1. Turn the ignition off.
2. Disconnect the Rear Locker Solenoid harness connector.
3. Disconnect the FDCM harness connector.
4. Turn the ignition on.
5. Measure the voltage on the (T527) Rear Locker Sensor Sense circuit in the FDCM harness

connector.

Does the voltmeter indicate voltage present?

Yes

- Repair the short to voltage in the (T527) Rear Locker Sensor Sense circuit.
- Perform FDCM VERIFICATION TEST. Refer to **FDCM VERIFICATION TEST**.

No

- Go To 3.

3. **REAR DIFFERENTIAL POSITION SENSOR OPERATION**
    1. Turn the ignition off.
    2. Connect the FDCM harness connector.
    3. Ignition on, engine not running.
    4. Using a jumper wire, jumper across from the (T527) Rear Locker Sensor Sense circuit and the (T521) Locker Sensor Supply circuit in the Rear Locker Solenoid harness connector.
    5. While monitoring the sensor state on the scan tool, tap the jumper wire on and off the (T527) Rear Locker Sensor Sense circuit terminal. Hold the jumper wire on and off the terminal for a minimum of 3 seconds.

    Does the state change on the scan tool while tapping the terminal?

    Yes

    - Replace the Rear Locker Solenoid.
    - Perform FDCM VERIFICATION TEST. Refer to **FDCM VERIFICATION TEST**.

    No

    - Go To 4.

4. **(T527) REAR LOCKER SENSOR SENSE CIRCUIT FOR AN OPEN**

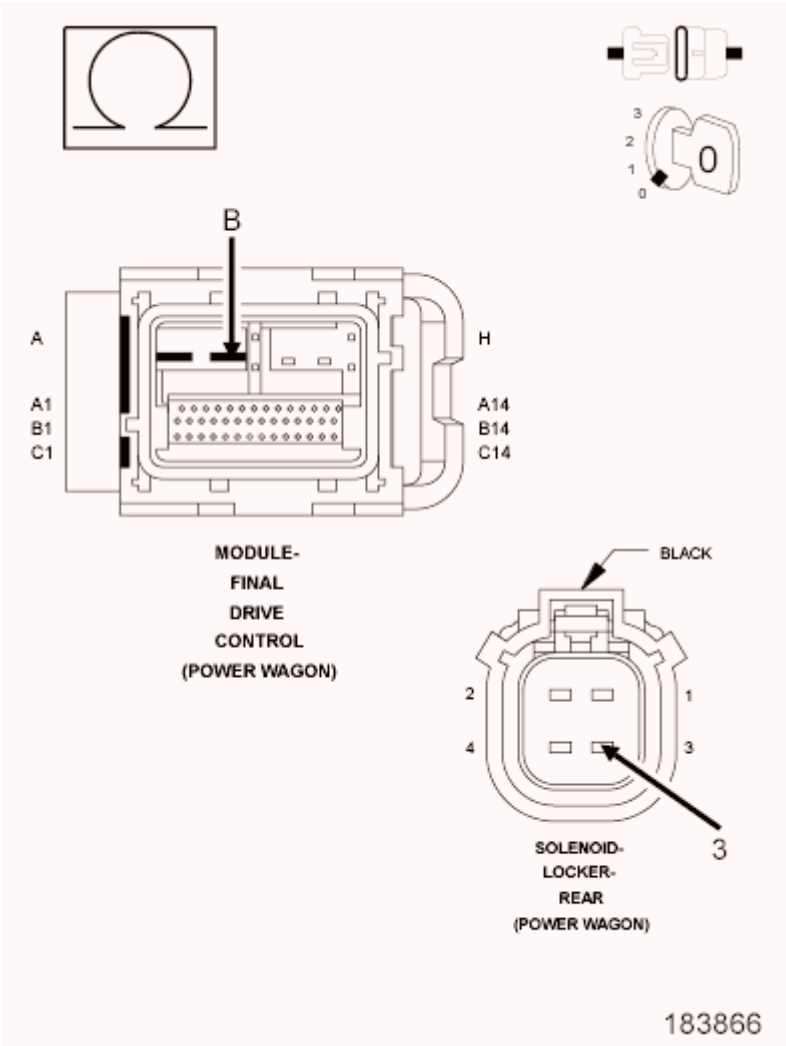

Fig. 61: Checking Rear Locker Sensor Sense Circuit For An Open
Courtesy of CHRYSLER GROUP, LLC

1. Turn the ignition off.
2. Disconnect the FDCM harness connector.
3. Measure the resistance of the (T527) Rear Locker Sensor Sense circuit between the Rear Locker Solenoid harness connector and the FDCM harness connector.

   Is the resistance below 5.0 ohms?

   Yes

   - Go To 5.

   No

   - Repair the open in the (T527) Rear Locker Sensor Sense circuit.

- Perform FDCM VERIFICATION TEST. Refer to **FDCM VERIFICATION TEST**.

5. **(T527) REAR LOCKER SENSOR SENSE CIRCUIT FOR A SHORT TO (T523) LOCKER SENSOR 2 SUPPLY**

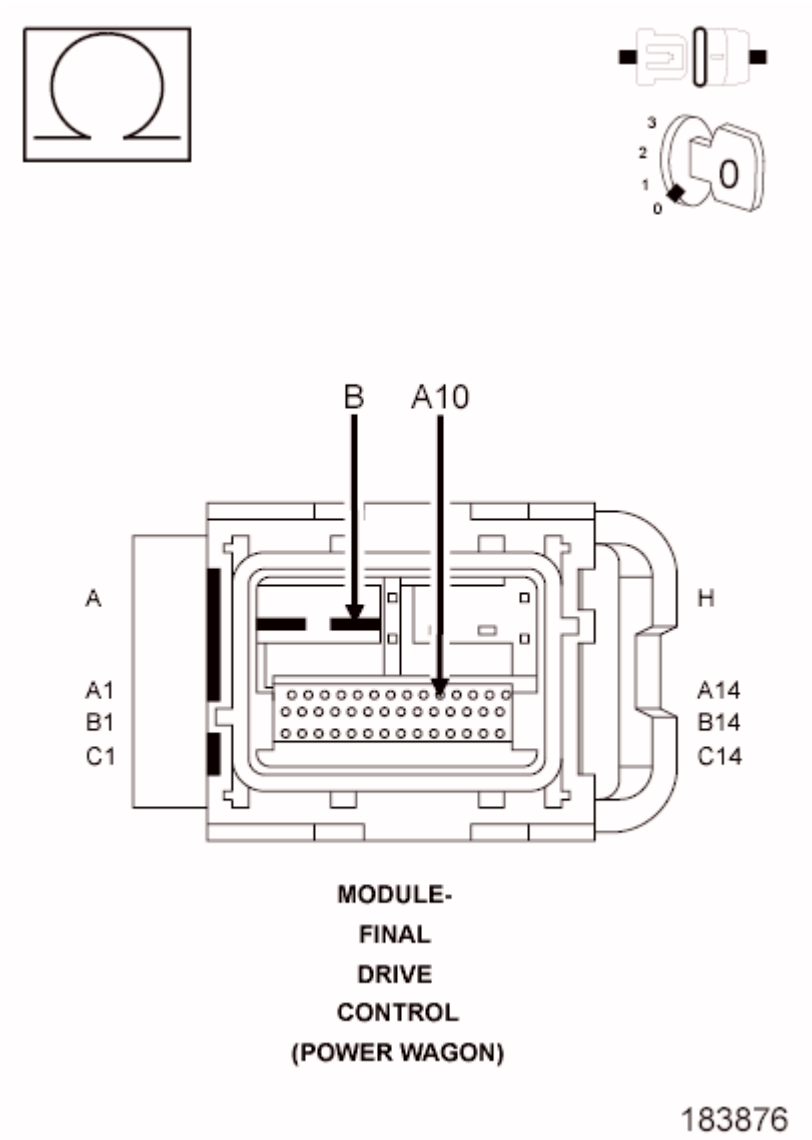

Fig. 62: Checking Rear Locker Sensor Sense Circuit For A Short To Locker Sensor 2 Supply
Courtesy of CHRYSLER GROUP, LLC

1. Measure the resistance between the (T527) Rear Locker Sensor Sense circuit and the (T523) Locker Sensor 2 Supply circuit in the FDCM harness connector.

   Is the resistance below 5.0 ohms?

   Yes

   - Repair the short between the (T527) Rear Locker Sensor Sense circuit and the (T523) Locker

Sensor 2 Supply circuit.

- Perform FDCM VERIFICATION TEST. Refer to **FDCM VERIFICATION TEST**.

No

- Go To 6.

6. **FDCM**

NOTE: Before continuing, check the FDCM harness connector terminals for corrosion, damage, or terminal push out. Repair as necessary.

1. Using the schematics as a guide, inspect the wire harness and connectors. Pay particular attention to all Power and Ground circuits.

   Were there any problems found?

   Yes

   - Repair as necessary.
   - Perform FDCM VERIFICATION TEST. Refer to **FDCM VERIFICATION TEST**.

   No

   - Replace and program the Final Drive Control Module in accordance with Service Information.
   - Perform FDCM VERIFICATION TEST. Refer to **FDCM VERIFICATION TEST**.

7. **INTERMITTENT WIRING AND CONNECTORS**

1. The conditions necessary to set this DTC are not present at this time.
2. Using the schematics as a guide, inspect the wiring and connectors specific to this circuit.
3. Wiggle test the wiring harness and connectors while checking for shorted and open circuits.
4. Using the scan tool, monitor the data related to this circuit while performing the wiggle test. Look for the data to change or for the DTC to reset.

   Were there any problems found?

   Yes

   - Repair as necessary.
   - Perform FDCM VERIFICATION TEST. Refer to **FDCM VERIFICATION TEST**.

   No

   - Test Complete.

C2100-BATTERY VOLTAGE LOW

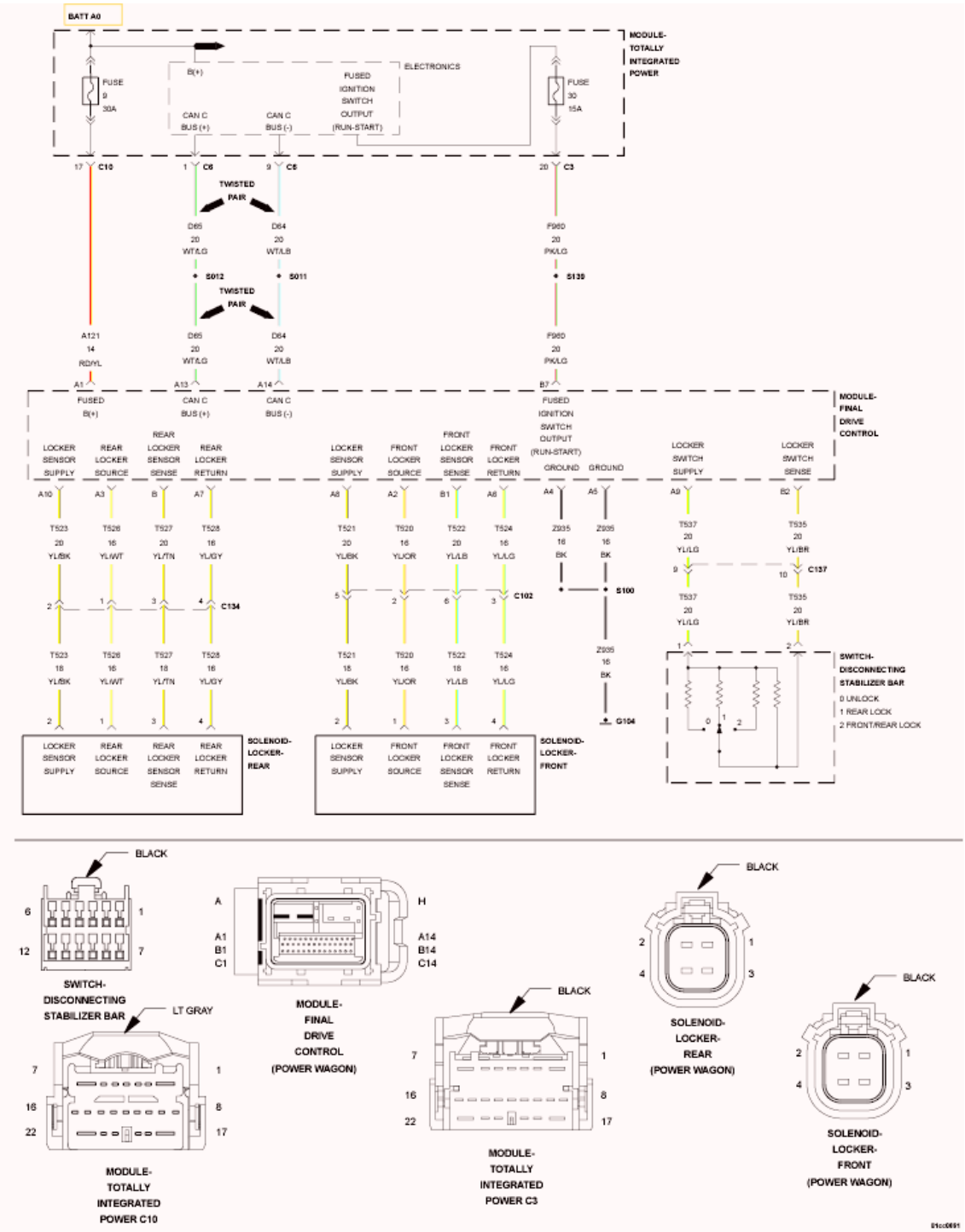

Fig. 63: Final Drive Control Module Wiring Diagram
Courtesy of CHRYSLER GROUP, LLC

For a complete wiring diagram, **refer to appropriate SYSTEM WIRING DIAGRAMS article** .

WHEN MONITORED:

Continuously.

SET CONDITION:

The Final Drive Control Module detects that system voltage is below 9.0 volts for 60 seconds.

POSSIBLE CAUSES

Possible Causes
INTERMITTENT BATTERY VOLTAGE LOW
CHARGING SYSTEM DTC's PRESENT
FINAL DRIVE CONTROL MODULE POWER CIRCUITS OPEN OR HIGH RESISTANCE
FINAL DRIVE CONTROL MODULE (FDCM)

DIAGNOSTIC TEST

1. **CHARGING SYSTEM DTC's PRESENT**
    1. Ignition on, engine not running.
    2. With the scan tool, read DTC's.

    Are there any Charging System or related voltage DTC's present?

    Yes

    - Perform the appropriate Charging System DTC diagnostic procedures before continuing with this test. Refer to **CHARGING SYSTEM - DIAGNOSIS AND TESTING** .

    No

    - Go To 2.
2. **DTC IS ACTIVE**
    1. With the scan tool, read DTC's.

    Is the status Active for this DTC?

    Yes

    - Go To 3.

    No

    - Go To 5.
3. **(A34) FUSED B+ CIRCUIT FOR AN OPEN OR HIGH RESISTANCE**

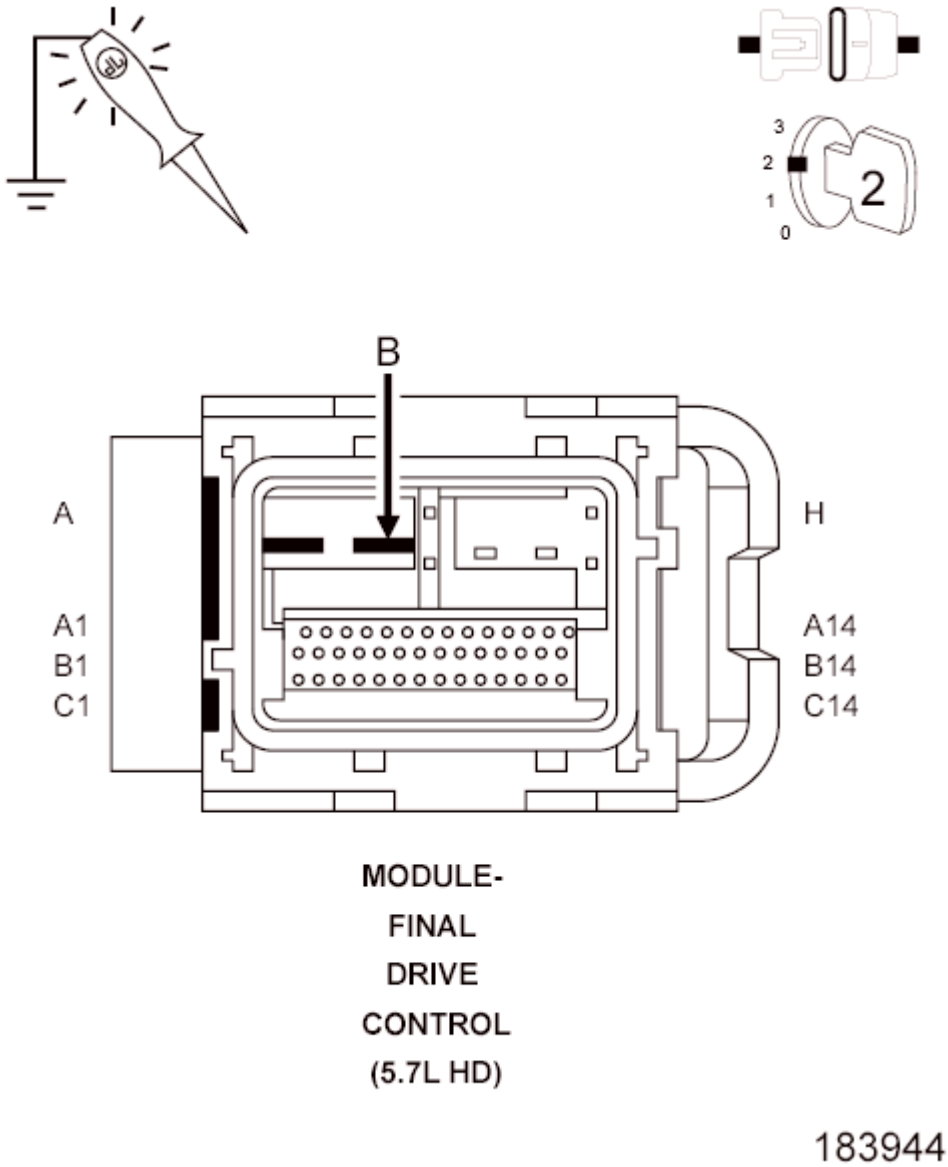

Fig. 64: Checking Fused B+ Circuit For An Open Or High Resistance
Courtesy of CHRYSLER GROUP, LLC

1. Turn the ignition off.
2. Disconnect the FDCM harness connector.
3. Ignition on, engine not running.
4. With a 12-volt test light connected to ground, check the (A34) Fused B+ circuit in the FDCM harness connector.

NOTE: **The test light must illuminate brightly. Compare the brightness to that of a direct connection to the battery.**

Does the test light illuminate brightly?

Yes

- Go To 4.

No

- Repair the (A34) Fused B+ circuit for an open circuit or high resistance.
- Perform FDCM VERIFICATION TEST. Refer to **FDCM VERIFICATION TEST**.

4. **FINAL DRIVE CONTROL MODULE (FDCM)**

   View repair.

   Repair

   - Replace the Final Drive Control Module (FDCM) in accordance with the service information.
   - Perform FDCM VERIFICATION TEST. Refer to **FDCM VERIFICATION TEST**.

5. **INTERMITTENT WIRING AND CONNECTORS**
   1. The conditions necessary to set this DTC are not present at this time.
   2. Using the wiring diagram/schematic as a guide, inspect the wiring and connectors.
   3. While monitoring the scan tool data relative to this circuit, wiggle test the wiring and connectors.
   4. Look for the data to change or for the DTC to reset during the wiggle test.

   Were any problems found?

   Yes

   - Repair as necessary.
   - Perform FDCM VERIFICATION TEST. Refer to **FDCM VERIFICATION TEST**.

   No

   - Test complete.

C2101-BATTERY VOLTAGE HIGH

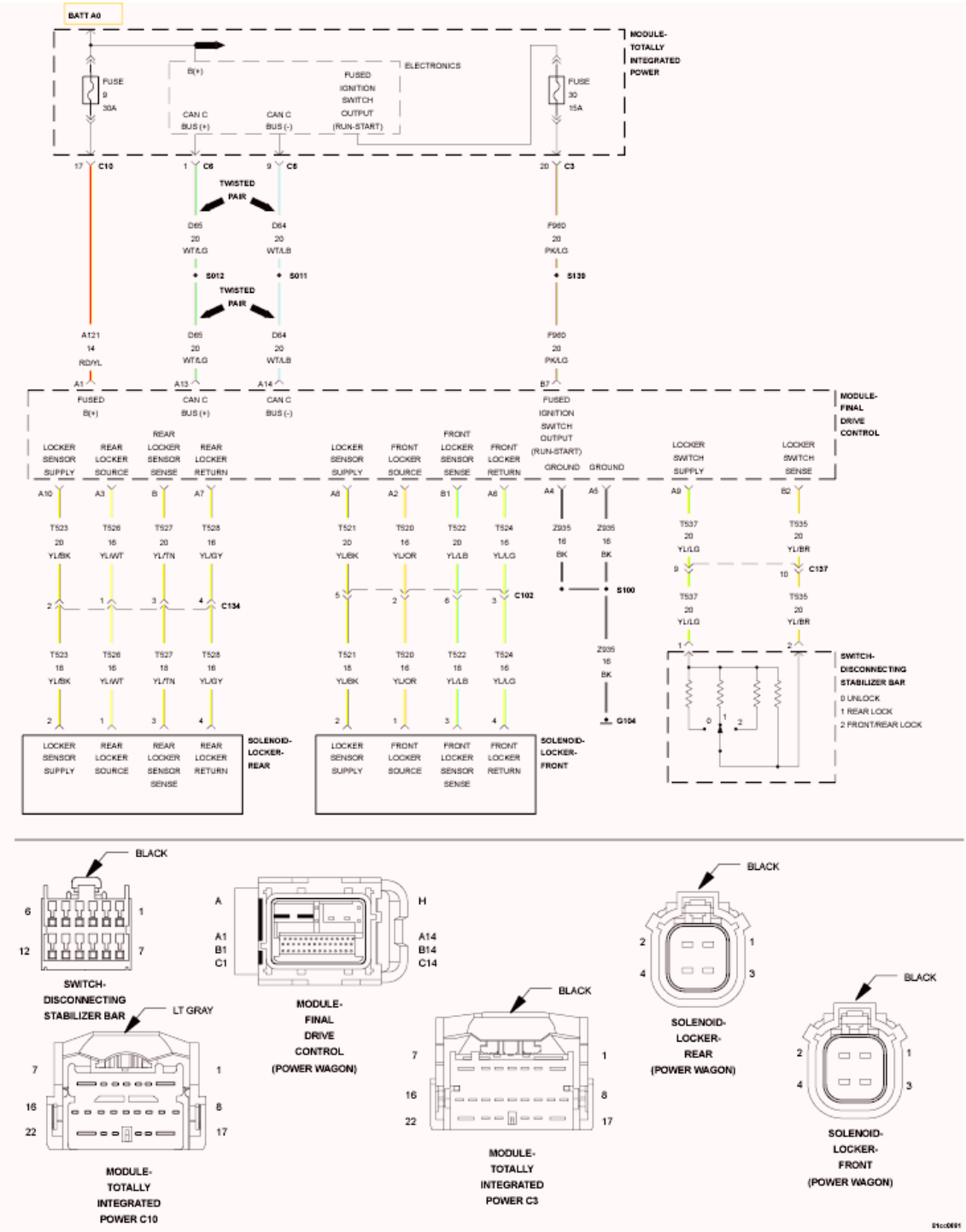

Fig. 65: Final Drive Control Module Wiring Diagram
Courtesy of CHRYSLER GROUP, LLC

For a complete wiring diagram, **refer to appropriate SYSTEM WIRING DIAGRAMS article** .

WHEN MONITORED:

Continuously.

SET CONDITION:

The Final Drive Control Module (FDCM) detects that system voltage is above 16.0 volts for 10 seconds with engine RPM greater than 350.

POSSIBLE CAUSES

Possible Causes
INTERMITTENT BATTERY VOLTAGE HIGH
CHARGING SYSTEM DTC's PRESENT
FINAL DRIVE CONTROL MODULE GROUND CIRCUITS OPEN OR HIGH RESISTANCE
FINAL DRIVE CONTROL MODULE (FDCM)

DIAGNOSTIC TEST

1. **CHARGING SYSTEM DTC's PRESENT**
    1. Ignition on, engine not running.
    2. With the scan tool, read DTC's.

    Are there any Charging System or related voltage DTC's present?

    Yes

    - Perform the appropriate Charging System DTC diagnostic procedures before continuing with this test. Refer to **CHARGING SYSTEM - DIAGNOSIS AND TESTING** .

    No

    - Go To 2.
2. **DTC IS ACTIVE**
    1. With the scan tool, read DTC's.

    Is the status Active for this DTC?

    Yes

    - Go To 3.

    No

    - Go To 5.
3. **FINAL DRIVE CONTROL MODULE (FDCM) GROUND CIRCUITS OPEN OR HIGH RESISTANCE**

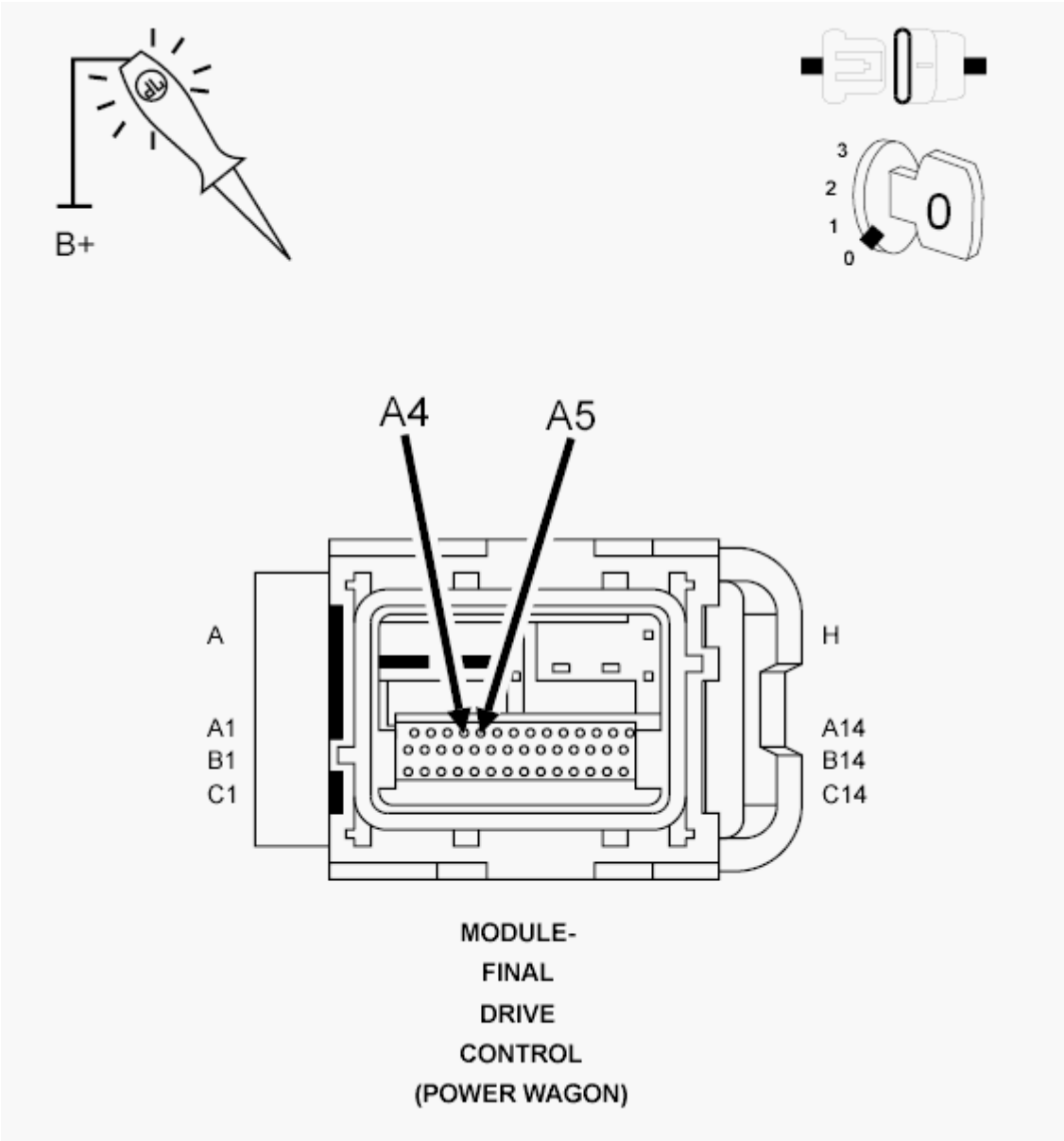

Fig. 66: Checking Final Drive Control Module (FDCM) Ground Circuits For Open Or High Resistance
Courtesy of CHRYSLER GROUP, LLC

1. Turn the ignition off.
2. Disconnect the FDCM harness connector.
3. Ignition on, engine not running.
4. With a 12-volt test light connected to B+, check the (Z935) Ground circuits in the FDCM harness connector.

NOTE: **The test light must illuminate brightly. Compare the brightness to that of a direct connection to the battery.**

Does the test light illuminate brightly for each of the Ground circuits?

Yes

- Go To 4.

No

- Repair the (Z935) Ground circuit(s) for an open circuit or high resistance.
- Perform FDCM VERIFICATION TEST. Refer to **FDCM VERIFICATION TEST**.

4. **FINAL DRIVE CONTROL MODULE (FDCM)**

   View the repair.

   Repair

   - Replace the Final Drive Control Module (FDCM) in accordance with the service information.
   - Perform FDCM VERIFICATION TEST. Refer to **FDCM VERIFICATION TEST**.

5. **INTERMITTENT WIRING AND CONNECTORS**
   1. The conditions necessary to set this DTC are not present at this time.
   2. Using the wiring diagram/schematic as a guide, inspect the wiring and connectors.
   3. While monitoring the scan tool data relative to this circuit, wiggle test the wiring and connectors.
   4. Look for the data to change or for the DTC to reset during the wiggle test.

      Were any problems found?

      Yes

      - Repair as necessary.
      - Perform FDCM VERIFICATION TEST. Refer to **FDCM VERIFICATION TEST**.

      No

      - Test complete.

C2111-SENSOR SUPPLY 1 VOLTAGE CIRCUIT LOW

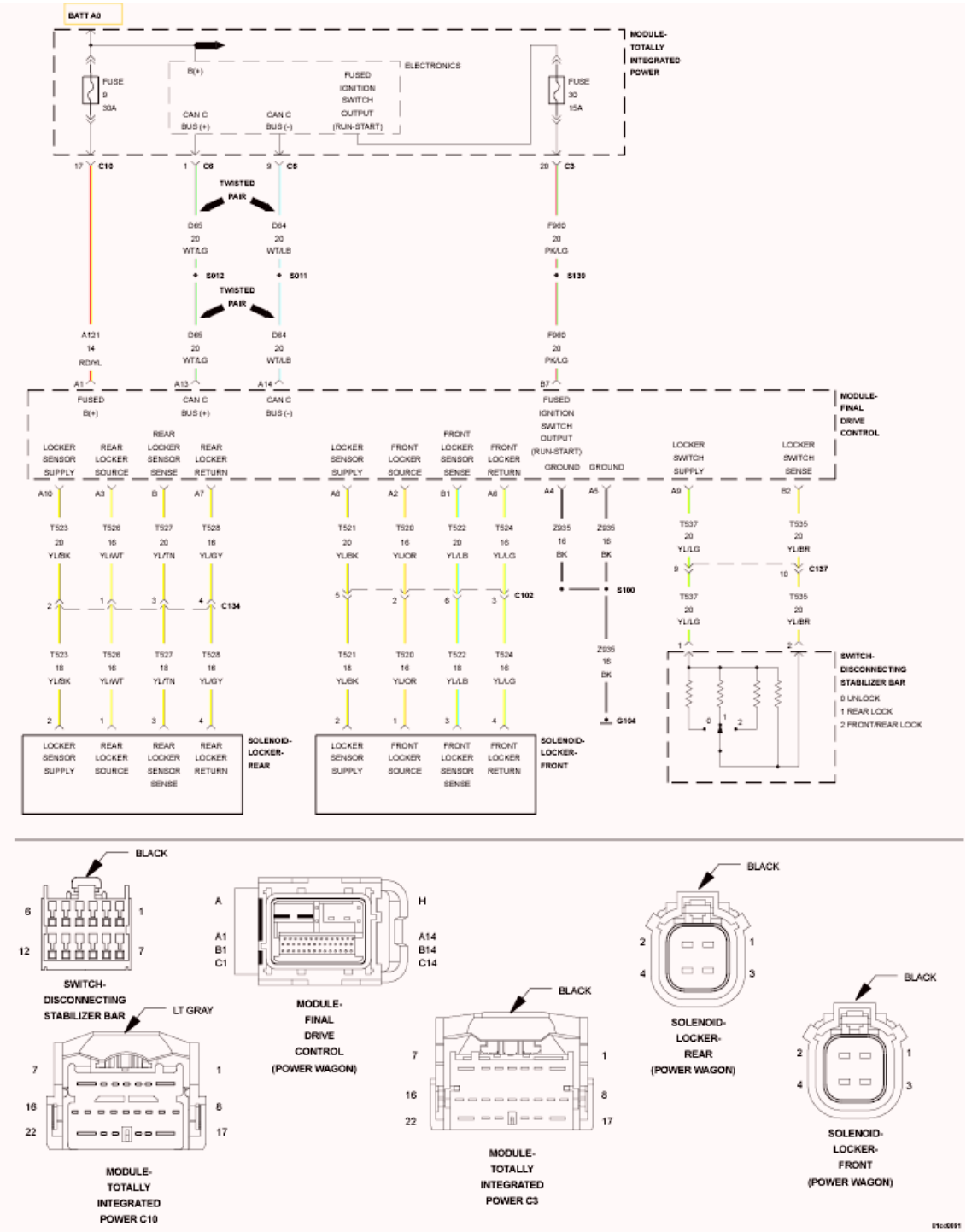

Fig. 67: Final Drive Control Module Wiring Diagram
Courtesy of CHRYSLER GROUP, LLC

For a complete wiring diagram **refer to appropriate SYSTEM WIRING DIAGRAMS article** .

WHEN MONITORED:

Ignition on.

SET CONDITION:

The FDCM recognizes the Locker Sensor Supply circuit voltage is too low.

POSSIBLE CAUSES

Possible Causes
FRONT DIFFERENTIAL POSITION SENSOR
REAR DIFFERENTIAL POSITION SENSOR
(T521) LOCKER SENSOR SUPPLY 1 CIRCUIT FOR A SHORT TO GROUND
FDCM

DIAGNOSTIC TEST

1. **ACTIVE DTC**

   CAUTION: Before removing the FDCM harness connector, clean the connector and locking cam area of dirt and debris. Failure to do so can result in the connector being jammed or damage to the locking cams on the harness connector or module. Do not force the assist arm when releasing or installing the harness connector.

   1. Ignition on, engine not running.
   2. With a scan tool, read DTC's.

      Is the DTC active at this time?

      Yes

      - Go To 2.

      No

      - Go To 5.
2. **FRONT DIFFERENTIAL POSITION SENSOR**

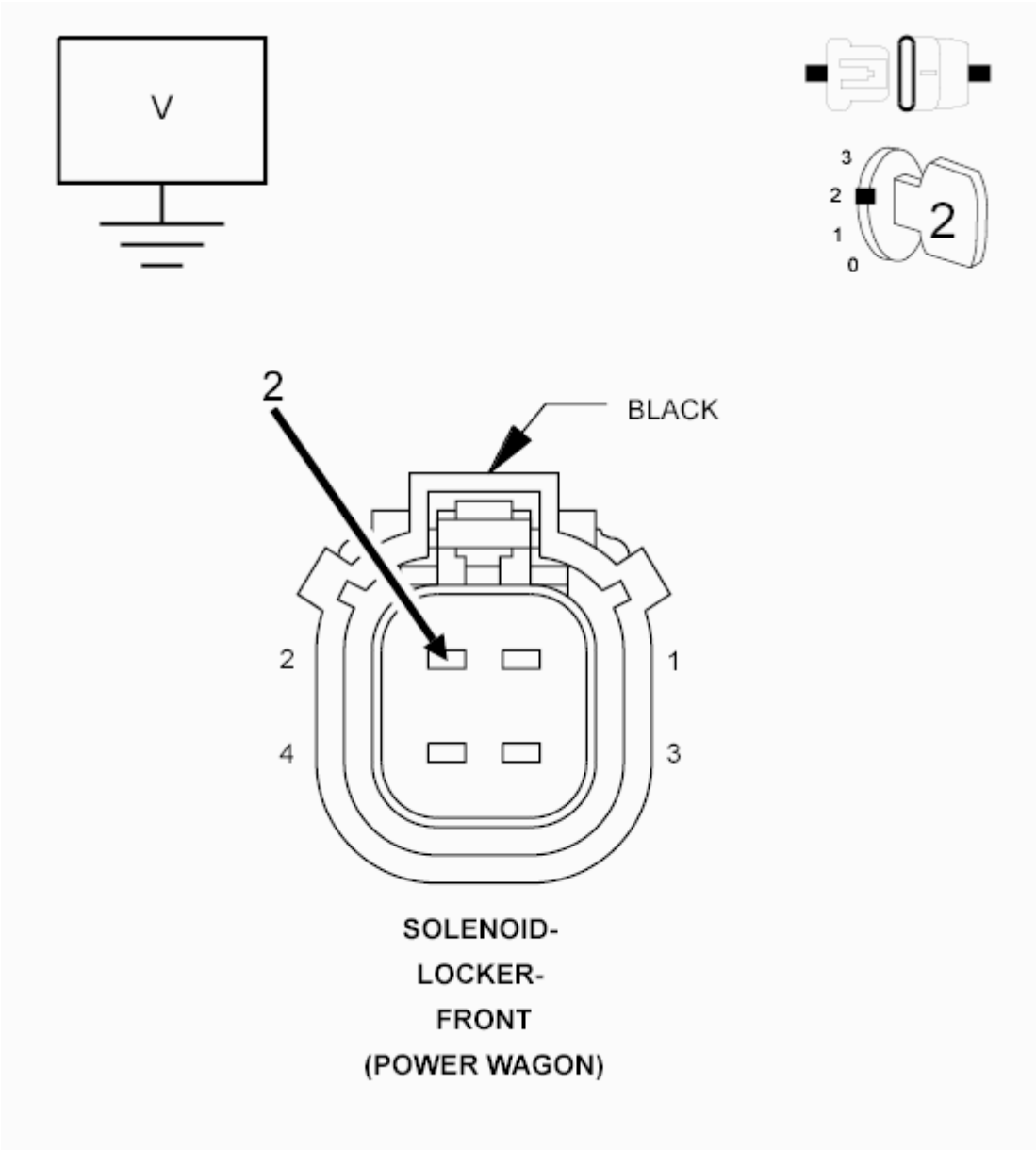

Fig. 68: Measuring Front Differential Position Sensor Voltage
Courtesy of CHRYSLER GROUP, LLC

NOTE: **Before continuing with the below diagnostic test, ensure the FDCM harness connector seal is installed correctly. Inspect the terminals on both harness connector and the module for damage. Failure to do so can result in misdiagnoses of the system.**

1. Turn the ignition off.
2. Disconnect the Front Locker Solenoid harness connector.
3. Turn the ignition on.
4. Measure the voltage of the (T521) Locker Sensor 1 Supply circuit in the Front Locker Solenoid

harness connector.

Is the voltage between 4.5 and 5.0 volts?

Yes

- Replace the Front Locker Solenoid.
- Perform FDCM VERIFICATION TEST. Refer to **FDCM VERIFICATION TEST**.

No

- Go To 3.

3. **(T521) LOCKER SENSOR SUPPLY 1 CIRCUIT FOR A SHORT TO GROUND**

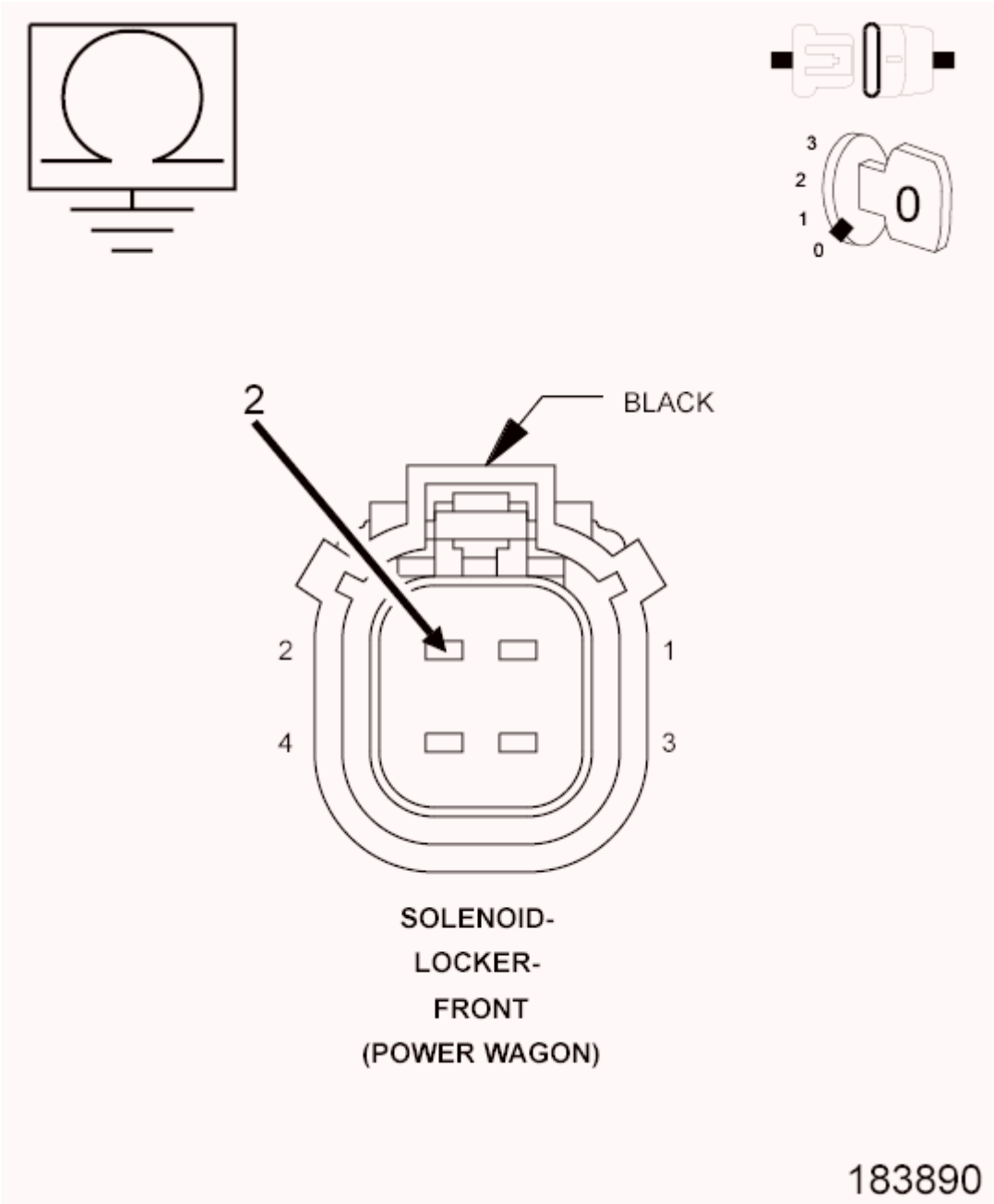

Fig. 69: Checking Locker Sensor Supply 1 Circuit For A Short To Ground
Courtesy of CHRYSLER GROUP, LLC

1. Turn the ignition off.
2. Disconnect the FDCM harness connector.
3. Measure the resistance of the (T521) Locker Sensor 1 Supply circuit at the FDCM harness connector.

   Is the resistance below 100 ohms?

   Yes

- Repair the short to ground in the (T521) Locker Sensor 1 Supply circuit.
- Perform FDCM VERIFICATION TEST. Refer to **FDCM VERIFICATION TEST**.

No

- Go To 4.

4. **FDCM**

NOTE: Before continuing, check the FDCM harness connector terminals for corrosion, damage, or terminal push out. Repair as necessary.

1. Using the schematics as a guide, inspect the wire harness and connectors. Pay particular attention to all Power and Ground circuits.

   Were there any problems found?

   Yes

   - Repair as necessary.
   - Perform FDCM VERIFICATION TEST. Refer to **FDCM VERIFICATION TEST**.

   No

   - Replace and program the Final Drive Control Module in accordance with Service Information.
   - Perform FDCM VERIFICATION TEST. Refer to **FDCM VERIFICATION TEST**.

5. **INTERMITTENT WIRING AND CONNECTORS**

1. The conditions necessary to set this DTC are not present at this time.
2. Using the schematics as a guide, inspect the wiring and connectors specific to this circuit.
3. Wiggle test the wiring harness and connectors while checking for shorted and open circuits.
4. Using the scan tool, monitor the data related to this circuit while performing the wiggle test. Look for the data to change or for the DTC to reset.

   Were there any problems found?

   Yes

   - Repair as necessary.
   - Perform FDCM VERIFICATION TEST. Refer to **FDCM VERIFICATION TEST**.

   No

   - Test Complete.

C2112-SENSOR SUPPLY 1 VOLTAGE CIRCUIT HIGH

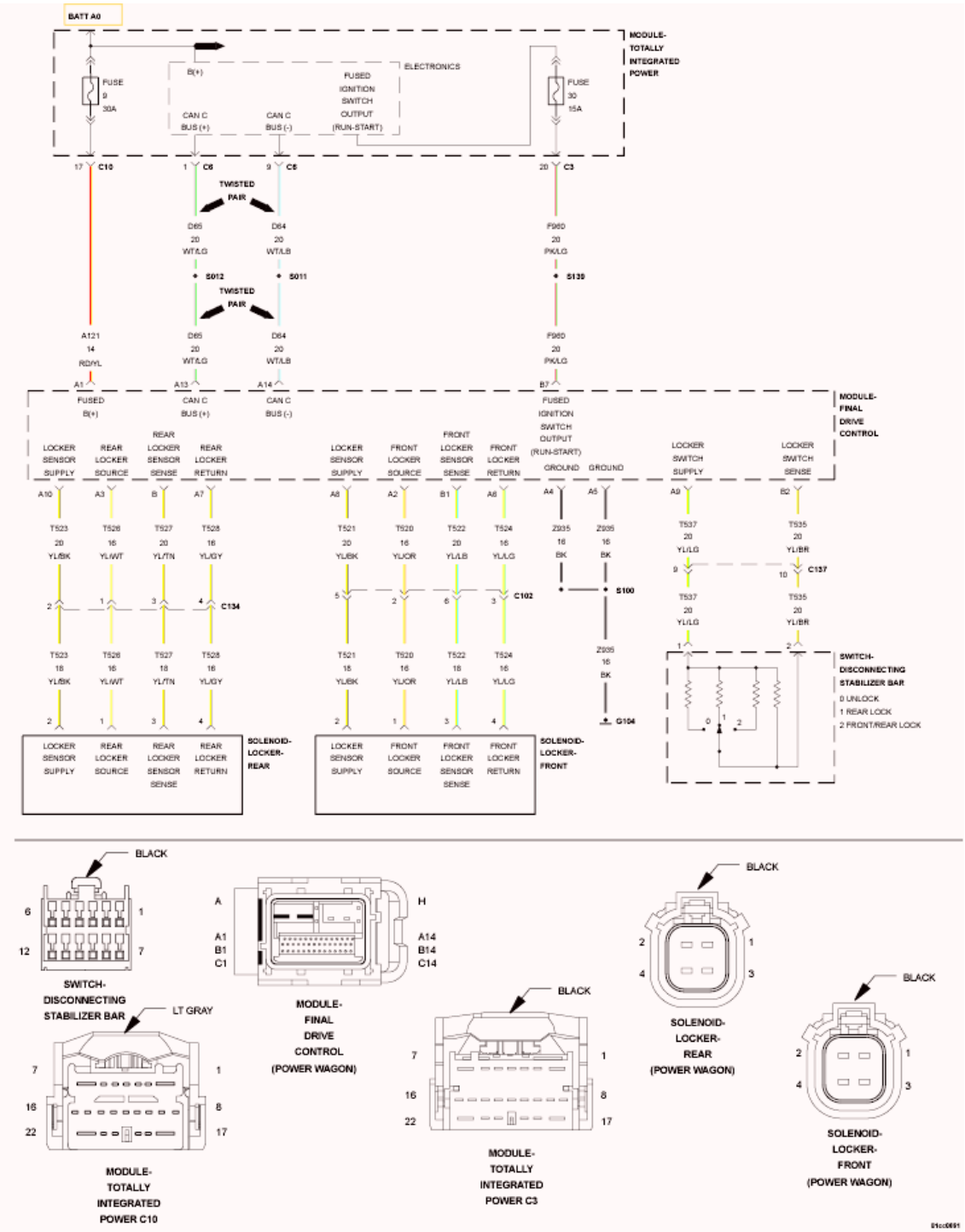

Fig. 70: Final Drive Control Module Wiring Diagram
Courtesy of CHRYSLER GROUP, LLC

For a complete wiring diagram **refer to appropriate SYSTEM WIRING DIAGRAMS article** .

WHEN MONITORED:

Ignition on.

SET CONDITION:

The FDCM recognizes the Locker Sensor Supply circuit voltage is too high.

POSSIBLE CAUSES

Possible Causes
FRONT DIFFERENTIAL POSITION SENSOR
REAR DIFFERENTIAL POSITION SENSOR
(T521) LOCKER SENSOR 1 SUPPLY CIRCUIT FOR A SHORT TO VOLTAGE
FDCM

DIAGNOSTIC TEST

1. **ACTIVE DTC**

   NOTE: Before continuing with the below diagnostic test, ensure the FDCM harness connector seal is installed correctly. Inspect the terminals on both harness connector and the module for damage. Failure to do so can result in misdiagnoses of the system.

   1. Ignition on, engine not running.
   2. With a scan tool, read DTC's.

      Is the DTC active at this time?

      Yes

      - Go To 2.

      No

      - Go To 5.
2. **FRONT DIFFERENTIAL POSITION SENSOR**

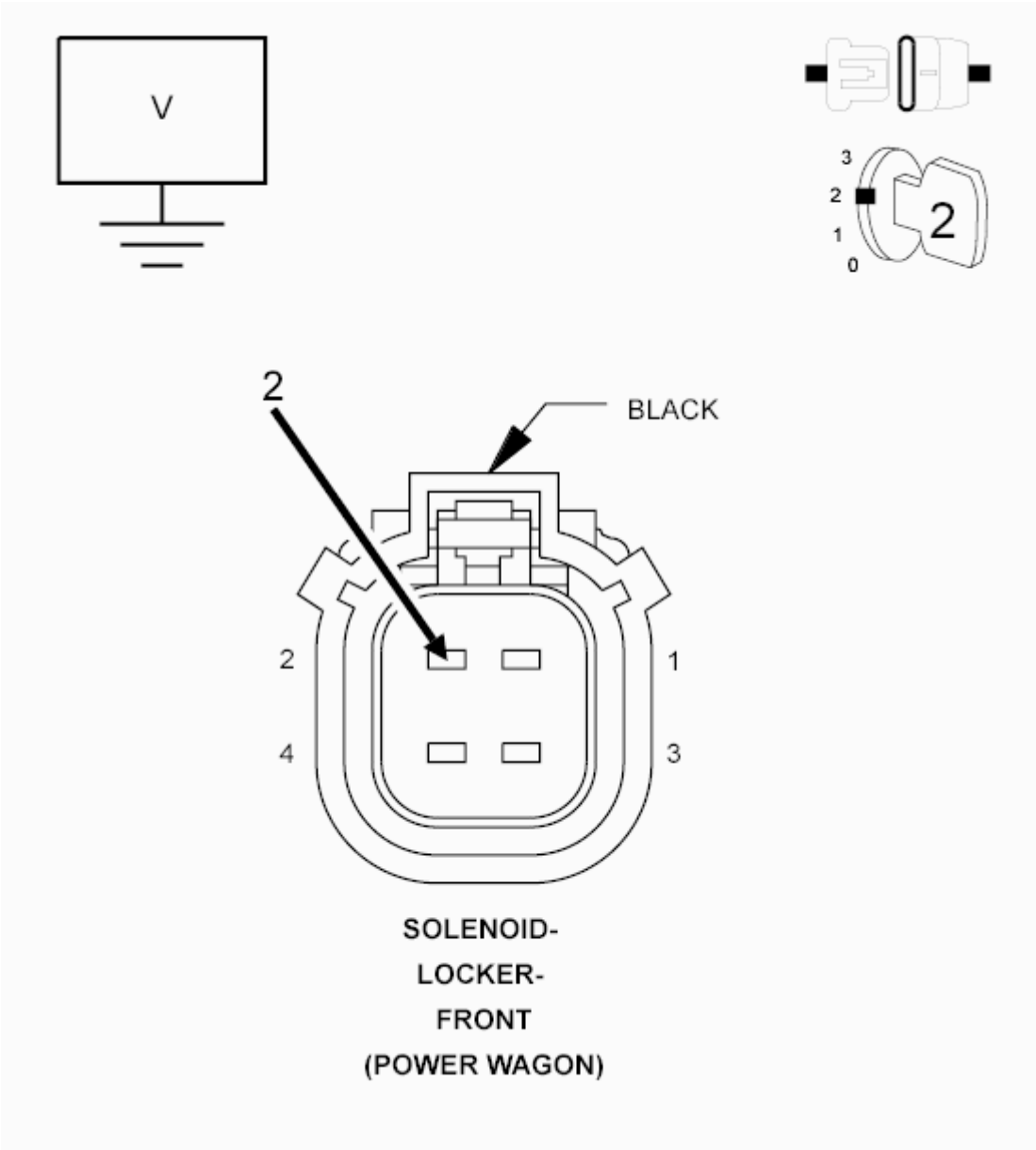

Fig. 71: Measuring Front Differential Position Sensor Voltage
Courtesy of CHRYSLER GROUP, LLC

CAUTION: Before removing the FDCM harness connector, clean the connector and locking cam area of dirt and debris. Failure to do so can result in the connector being jammed or damage to the locking cams on the harness connector or module. Do not force the assist arm when releasing or installing the harness connector.

1. Turn the ignition off.
2. Disconnect the Front Locker Solenoid harness connector.
3. Turn the ignition on.

4. Measure the voltage of the (T521) Locker Sensor 1 Supply circuit in the Front Locker Solenoid harness connector.

   Is the voltage above 4.5 volts?

   Yes

   - Replace the Front Locker Solenoid.
   - Perform FDCM VERIFICATION TEST. Refer to **FDCM VERIFICATION TEST**.

   No

   - Go To 3.

3. **(T521) LOCKER SENSOR 1 SUPPLY CIRCUIT FOR A SHORT TO VOLTAGE**

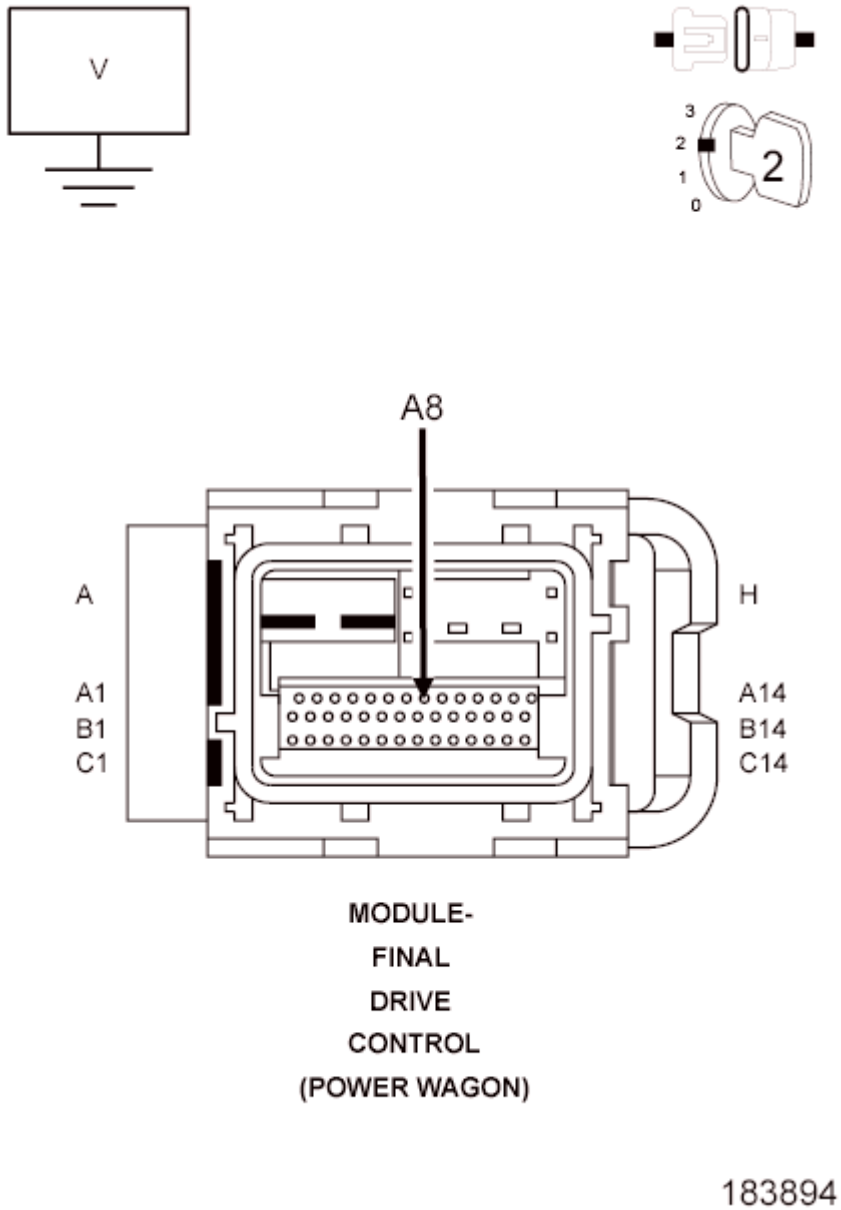

Fig. 72: Checking Locker Sensor 1 Supply Circuit For A Short To Voltage
Courtesy of CHRYSLER GROUP, LLC

1. Turn the ignition off.
2. Disconnect the FDCM harness connector.
3. Turn the ignition on.
4. Measure the voltage of the (T521) Locker Sensor 1 Supply circuit at the FDCM harness connector.

   Does the voltmeter indicate voltage present?

   Yes

- Repair the short to voltage in the (T521) Locker Sensor 1 Supply circuit.
- Perform FDCM VERIFICATION TEST. Refer to **FDCM VERIFICATION TEST**.

No

- Go To 4.

4. **FDCM**

NOTE: Before continuing, check the FDCM harness connector terminals for corrosion, damage, or terminal push out. Repair as necessary.

1. Using the schematics as a guide, inspect the wire harness and connectors. Pay particular attention to all Power and Ground circuits.

   Were there any problems found?

   Yes

   - Repair as necessary.
   - Perform FDCM VERIFICATION TEST. Refer to **FDCM VERIFICATION TEST**.

   No

   - Replace and program the Final Drive Control Module in accordance with Service Information.
   - Perform FDCM VERIFICATION TEST. Refer to **FDCM VERIFICATION TEST**.

5. **INTERMITTENT WIRING AND CONNECTORS**

1. The conditions necessary to set this DTC are not present at this time.
2. Using the schematics as a guide, inspect the wiring and connectors specific to this circuit.
3. Wiggle test the wiring harness and connectors while checking for shorted and open circuits.
4. Using the scan tool, monitor the data related to this circuit while performing the wiggle test. Look for the data to change or for the DTC to reset.

   Were there any problems found?

   Yes

   - Repair as necessary.
   - Perform FDCM VERIFICATION TEST. Refer to **FDCM VERIFICATION TEST**.

   No

   - Test Complete.

C2124-STABILIZER BAR INDICATOR CONTROL CIRCUIT

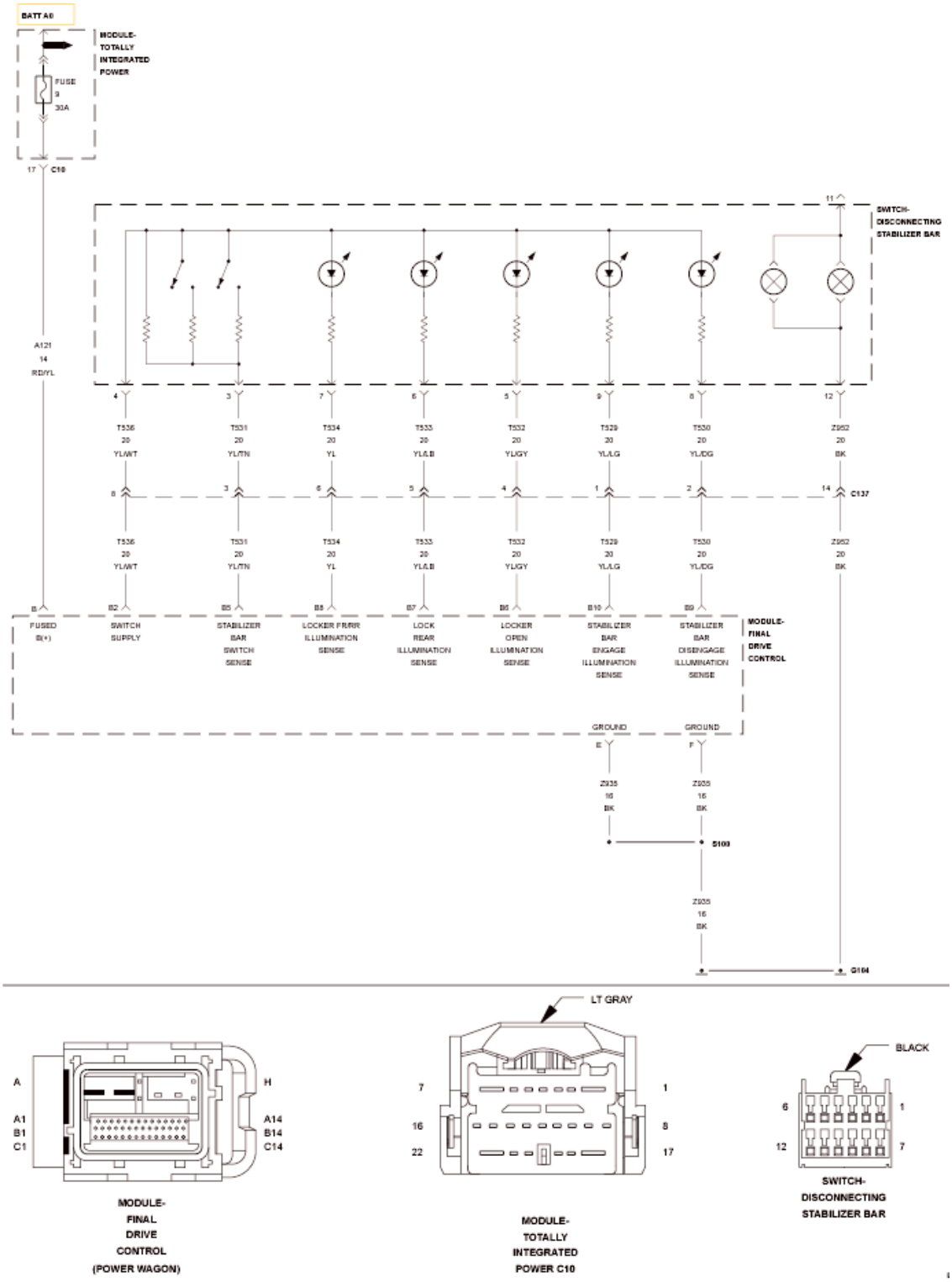

Fig. 73: Stabilizer Select Switch Wiring Diagram
Courtesy of CHRYSLER GROUP, LLC

For a complete wiring diagram **refer to appropriate SYSTEM WIRING DIAGRAMS article** .

WHEN MONITORED:

Ignition on.

SET CONDITION:

The FDCM has detected a short to voltage, ground or an open in the Stabilizer Bar Disengage or Engage Illumination Sense circuits.

POSSIBLE CAUSES

Possible Causes
DISCONNECTING STABILIZER SWITCH
(T530) STABILIZER BAR DISENGAGE ILLUMINATION SENSE SHORT TO VOLTAGE
(T530) STABILIZER BAR DISENGAGE ILLUMINATION SENSE SHORT TO GROUND
(T530) STABILIZER BAR DISENGAGE ILLUMINATION SENSE OPEN
(T529) STABILIZER BAR ENGAGE ILLUMINATION SENSE SHORT VOLTAGE
(T529) STABILIZER BAR ENGAGE ILLUMINATION SENSE SHORT GROUND
(T529) STABILIZER BAR ENGAGE ILLUMINATION SENSE OPEN
FDCM

DIAGNOSTIC TEST

1. **DTC ACTIVE**

CAUTION: Before removing the FDCM harness connector, clean the connector and locking cam area of dirt and debris. Failure to do so can result in the connector being jammed or damage to the locking cams on the harness connector or module. Do not force the assist arm when releasing or installing the harness connector.

NOTE: If set along with this DTC, diagnostic any Locker/Differential Indicator Control Circuit DTC(s) first before continuing.

1. Turn the ignition on, engine not running
2. With the scan tool, read FDCM DTC(s).

   Is the DTC active at this time?

   Yes

   - Go To 2.

No

- Go To 11.

2. **(T530) STABILIZER BAR DISENGAGE ILLUMINATION SENSE OPERATION**

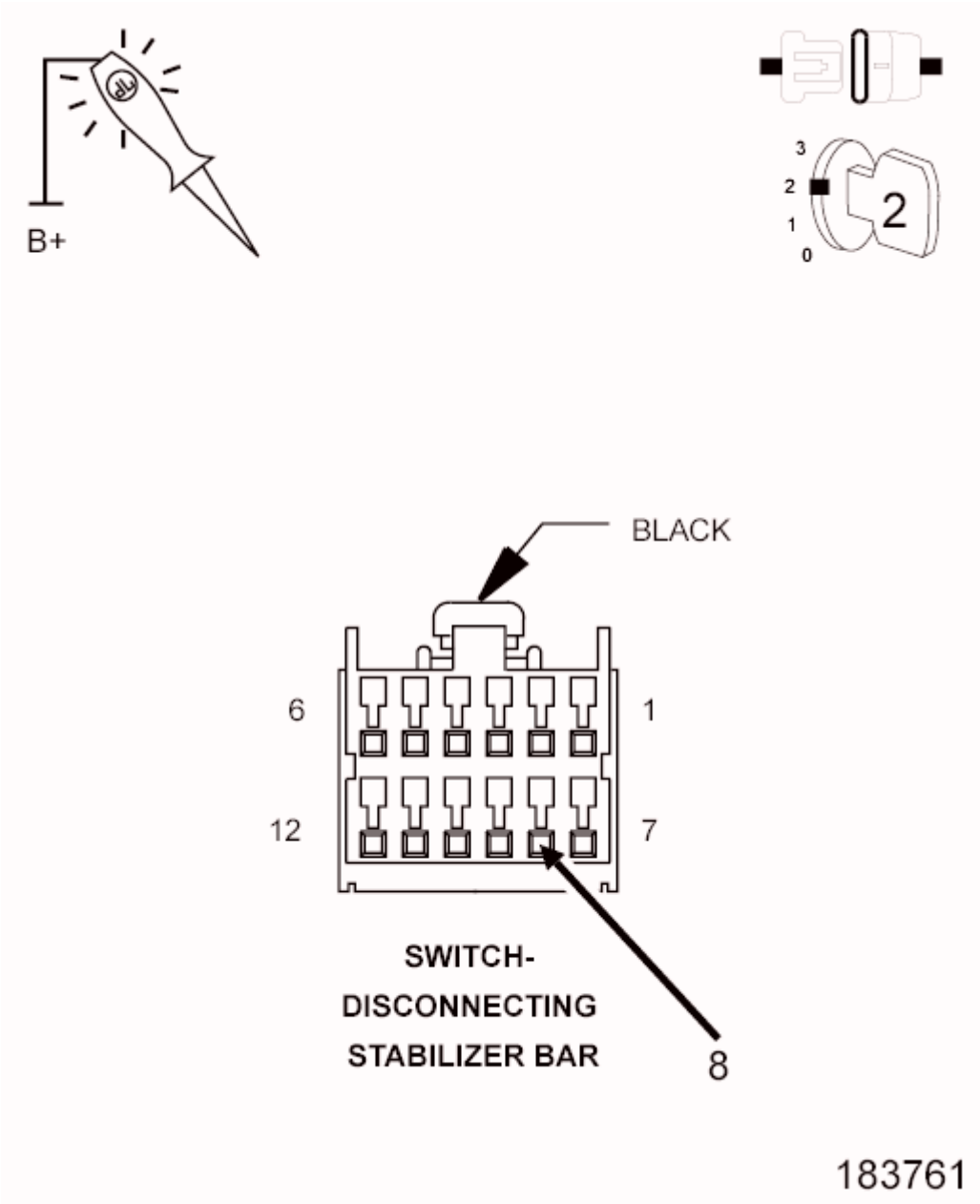

Fig. 74: Checking Stabilizer Bar Disengage Illumination Sense Operation
Courtesy of CHRYSLER GROUP, LLC

NOTE: **Before continuing with the below diagnostic test, ensure the FDCM harness connector seal is installed correctly. Inspect the terminals on both harness connector and the module for damage. Failure to do so can result in misdiagnoses of the system.**

1. Turn the ignition off.
2. Disconnect the Disconnecting Stabilizer Bar Switch harness connector.
3. Using a 12-volt test light connected to battery voltage, probe the (T530) Stabilizer Bar Disengage Illumination Sense circuit.
4. Turn the ignition on.
5. With the scan tool, actuate the Stabilizer Bar Disengage Illumination Sense circuit.

   Does the test light illuminate and flash on and off?

   Yes

   - Go to 3.

   No

   - Go To 4.

3. **(T529) STABILIZER BAR ENGAGE ILLUMINATION SENSE OPERATION**

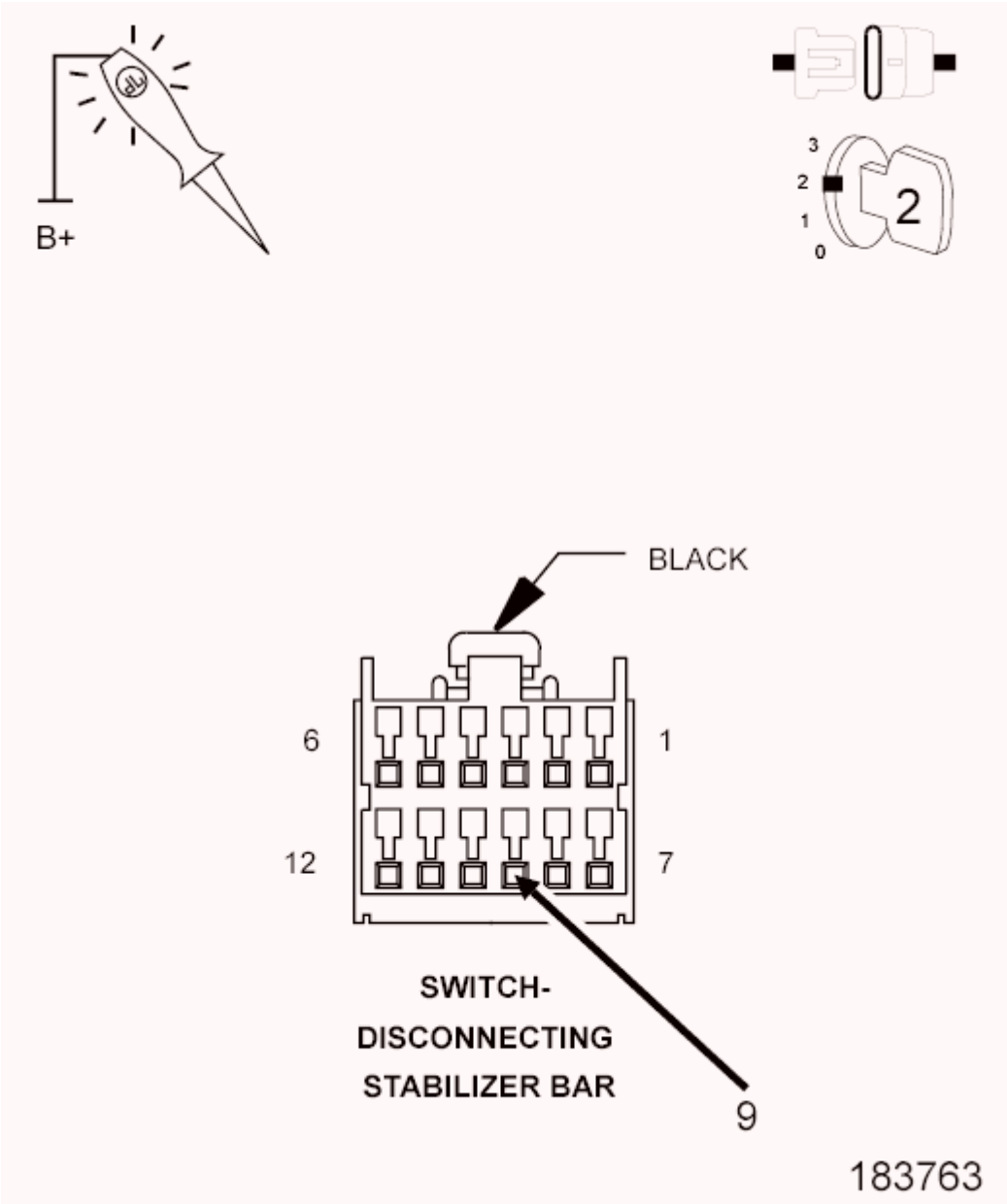

Fig. 75: Checking Stabilizer Bar Engage Illumination Sense Operation
Courtesy of CHRYSLER GROUP, LLC

1. Probe the Stabilizer Bar Disengage Illumination Sense circuit with the test light.
2. With the scan tool, actuate the (T529) Stabilizer Bar Engage Illumination Sense circuit.

   Does the test light illuminate and flash on and off?

   Yes

   - Replace the Disconnecting Stabilizer Bar Switch.
   - Perform FDCM VERIFICATION TEST. Refer to **FDCM VERIFICATION TEST**.

No

- Go to 7.

4. **(T530) STABILIZER BAR DISENGAGE ILLUMINATION SENSE CIRCUIT FOR A SHORT TO VOLTAGE**

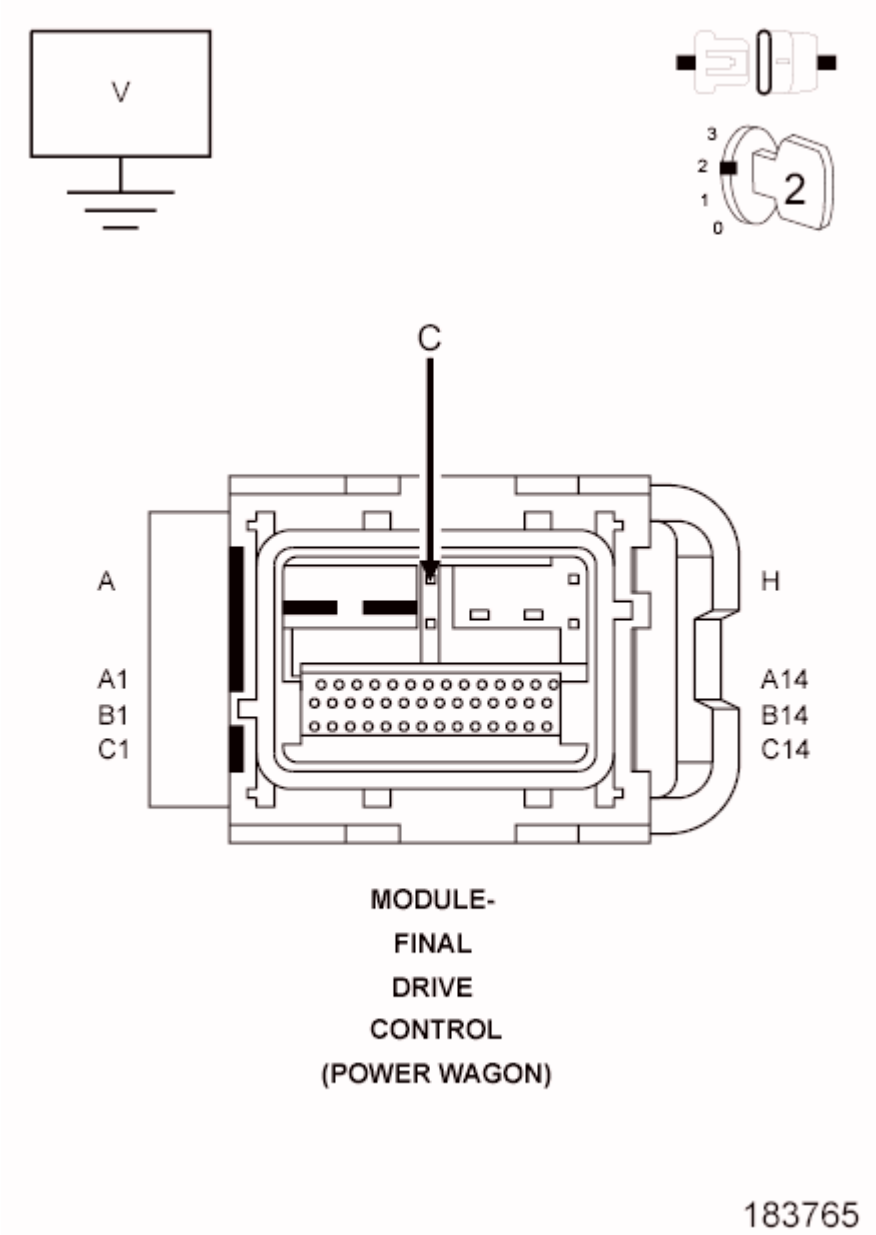

Fig. 76: Checking Stabilizer Bar Disengage Illumination Sense Circuit For A Short To Voltage
Courtesy of CHRYSLER GROUP, LLC

1. Turn the ignition off.
2. Disconnect the FDCM harness connector.
3. Turn the ignition on.

4. Measure the voltage on the (T530) Stabilizer Bar Disengage Illumination Sense circuit in the FDCM harness connector.

   Does the voltmeter indicate voltage present?

   Yes

   - Repair the short to voltage in the (T530) Stabilizer Bar Disengage Illumination Sense circuit.
   - Perform FDCM VERIFICATION TEST. Refer to **FDCM VERIFICATION TEST**.

   No

   - Go To 5.

5. **(T530) STABILIZER BAR DISENGAGE ILLUMINATION SENSE CIRCUIT FOR A SHORT TO GROUND**

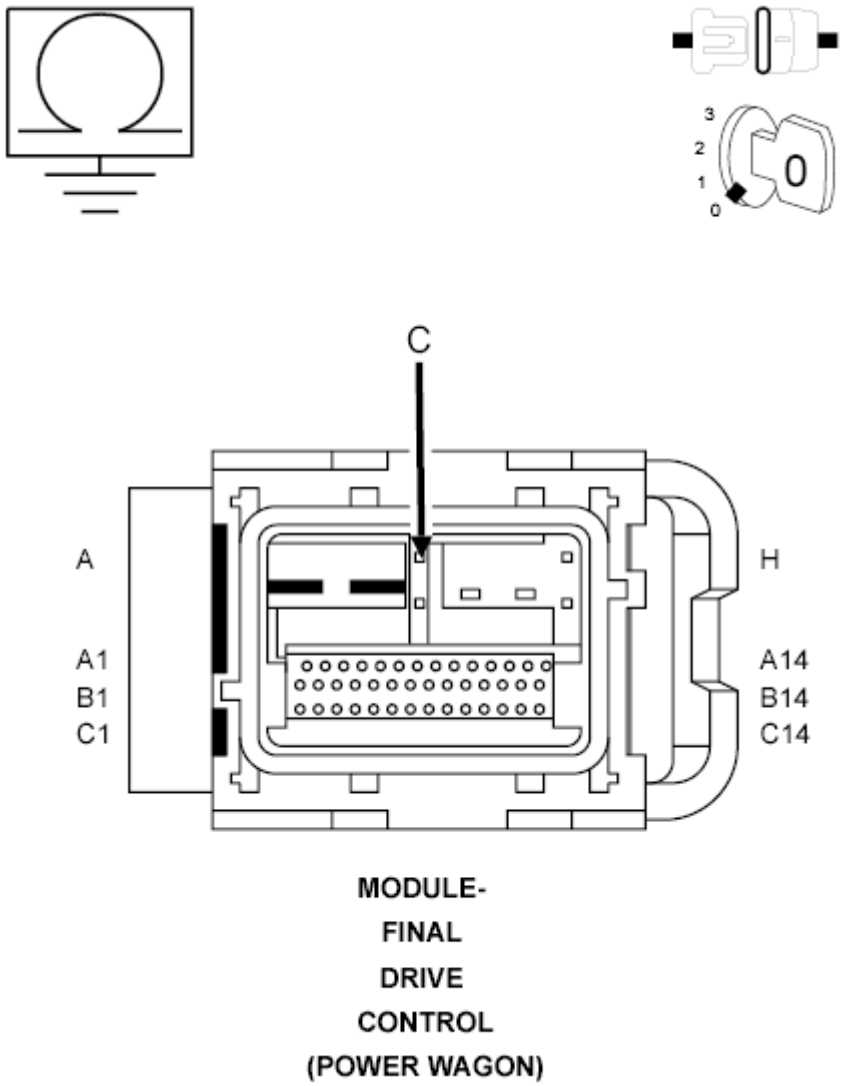

Fig. 77: Checking Stabilizer Bar Disengage Illumination Sense Circuit For A Short To Ground
Courtesy of CHRYSLER GROUP, LLC

1. Turn the ignition off.
2. Measure the resistance of the (T530) Stabilizer Bar Disengage Illumination Sense circuit between ground and the FDCM harness connector.

   Is the resistance below 100 ohms?

   Yes

   - Repair the short to ground in the (T530) Stabilizer Bar Disengage Illumination Sense circuit.
   - Perform FDCM VERIFICATION TEST. Refer to **FDCM VERIFICATION TEST**.

   No

- Go To 6.

6. **(T530) STABILIZER BAR DISENGAGE ILLUMINATION SENSE CIRCUIT FOR AN OPEN**

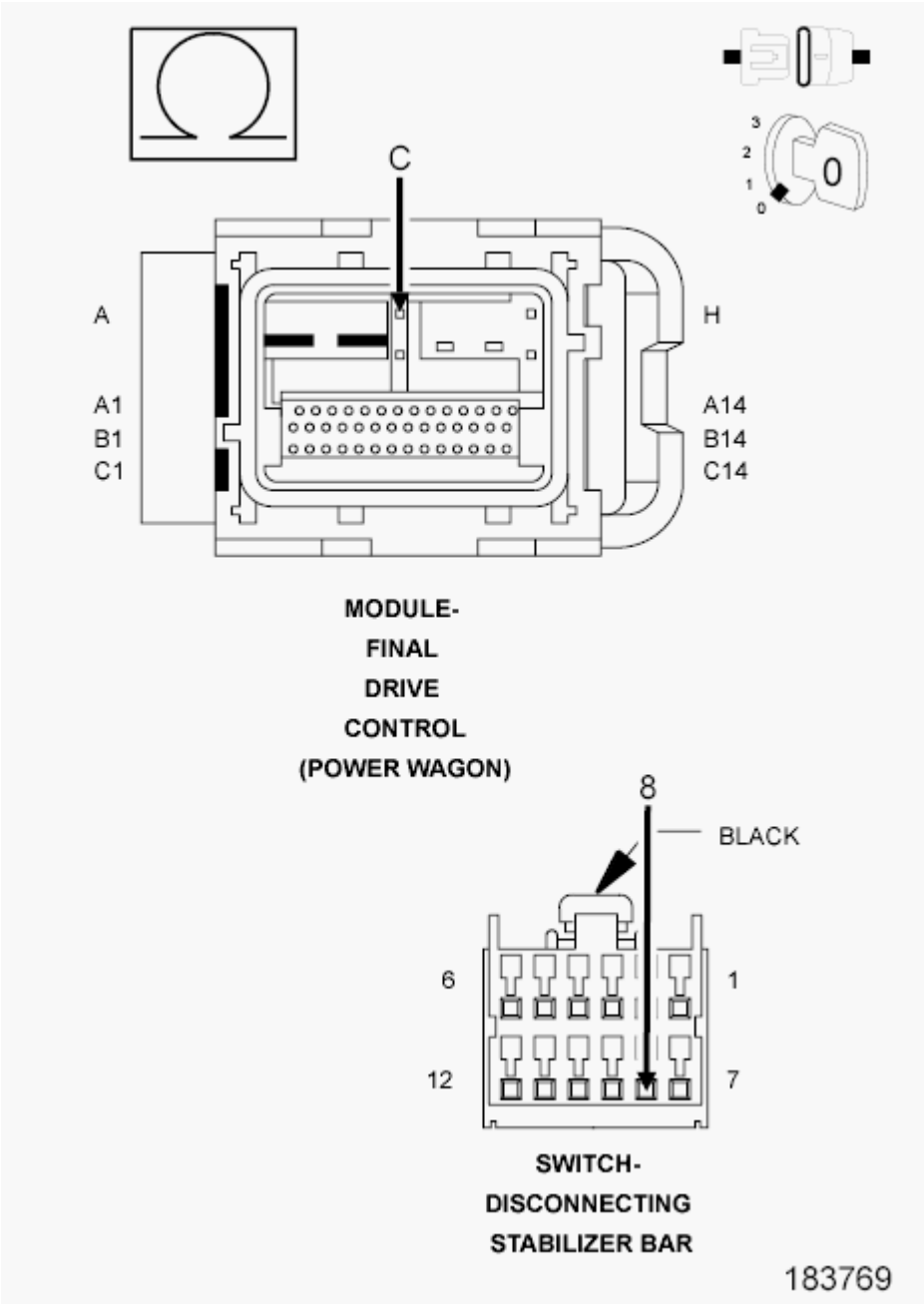

Fig. 78: Checking Stabilizer Bar Disengage Illumination Sense Circuit For An Open
Courtesy of CHRYSLER GROUP, LLC

1. Measure the resistance of the (T530) Stabilizer Bar Disengage Illumination Sense circuit between the Disconnecting Stabilizer Bar Switch harness connector and the FDCM harness connector.

   Is the resistance below 5.0 ohms?

Yes

- Go To 10.

No

- Repair the open in the (T530) Stabilizer Bar Disengage Illumination Sense circuit.
- Perform FDCM VERIFICATION TEST. Refer to **FDCM VERIFICATION TEST**.

7. **(T529) STABILIZER BAR ENGAGE ILLUMINATION SENSE CIRCUIT FOR A SHORT TO VOLTAGE**

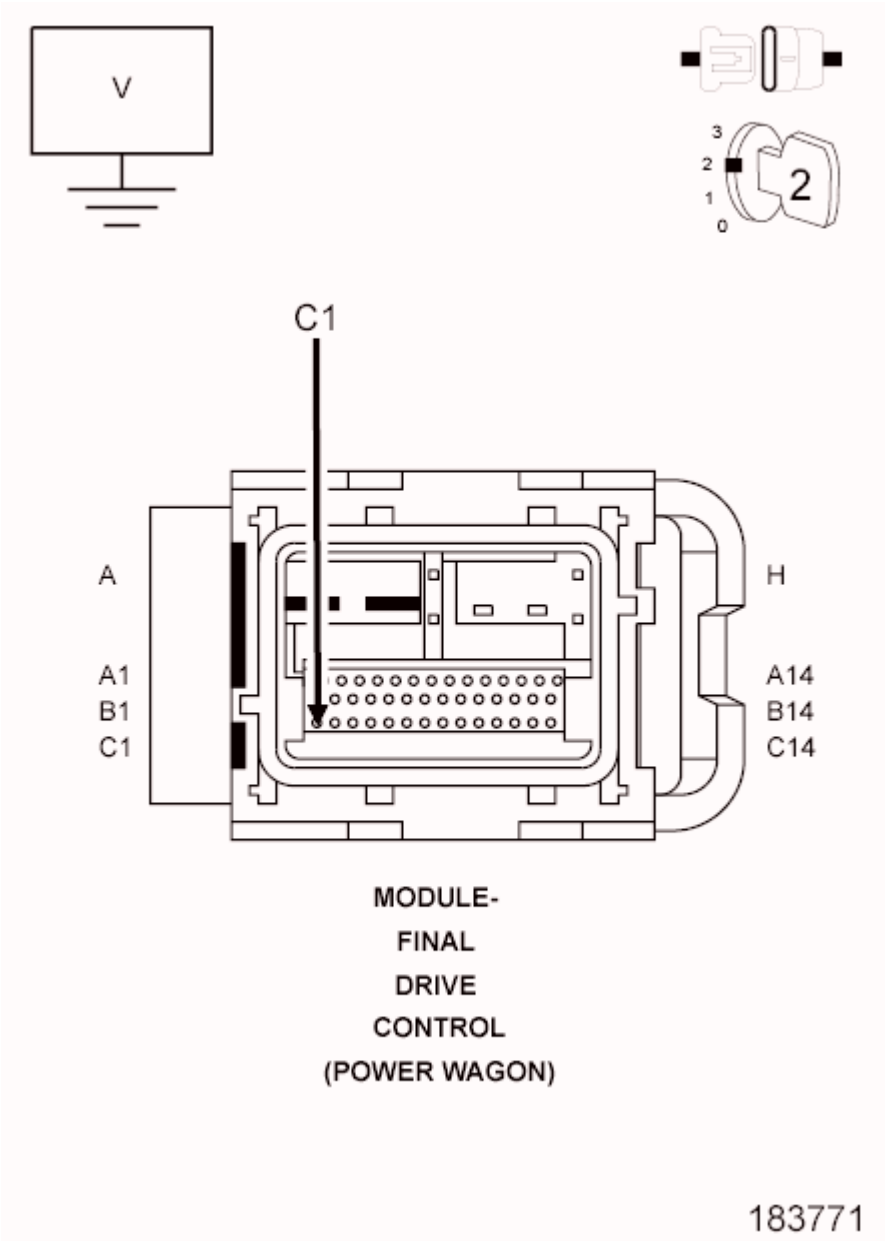

Fig. 79: Checking Stabilizer Bar Engage Illumination Sense Circuit For A Short To Voltage

Courtesy of CHRYSLER GROUP, LLC

1. Turn the ignition off.
2. Disconnect the FDCM harness connector.
3. Turn the ignition on.
4. Measure the voltage on the (T529) Stabilizer Bar Engage Illumination Sense circuit in the FDCM harness connector.

   Does the voltmeter indicate voltage present?

   Yes

   - Repair the short to voltage in the (T529) Stabilizer Bar Engage Illumination Sense circuit.
   - Perform FDCM VERIFICATION TEST. Refer to **FDCM VERIFICATION TEST**.

   No

   - Go To 8.

8. **(T529) STABILIZER BAR ENGAGE ILLUMINATION SENSE CIRCUIT FOR A SHORT TO GROUND**

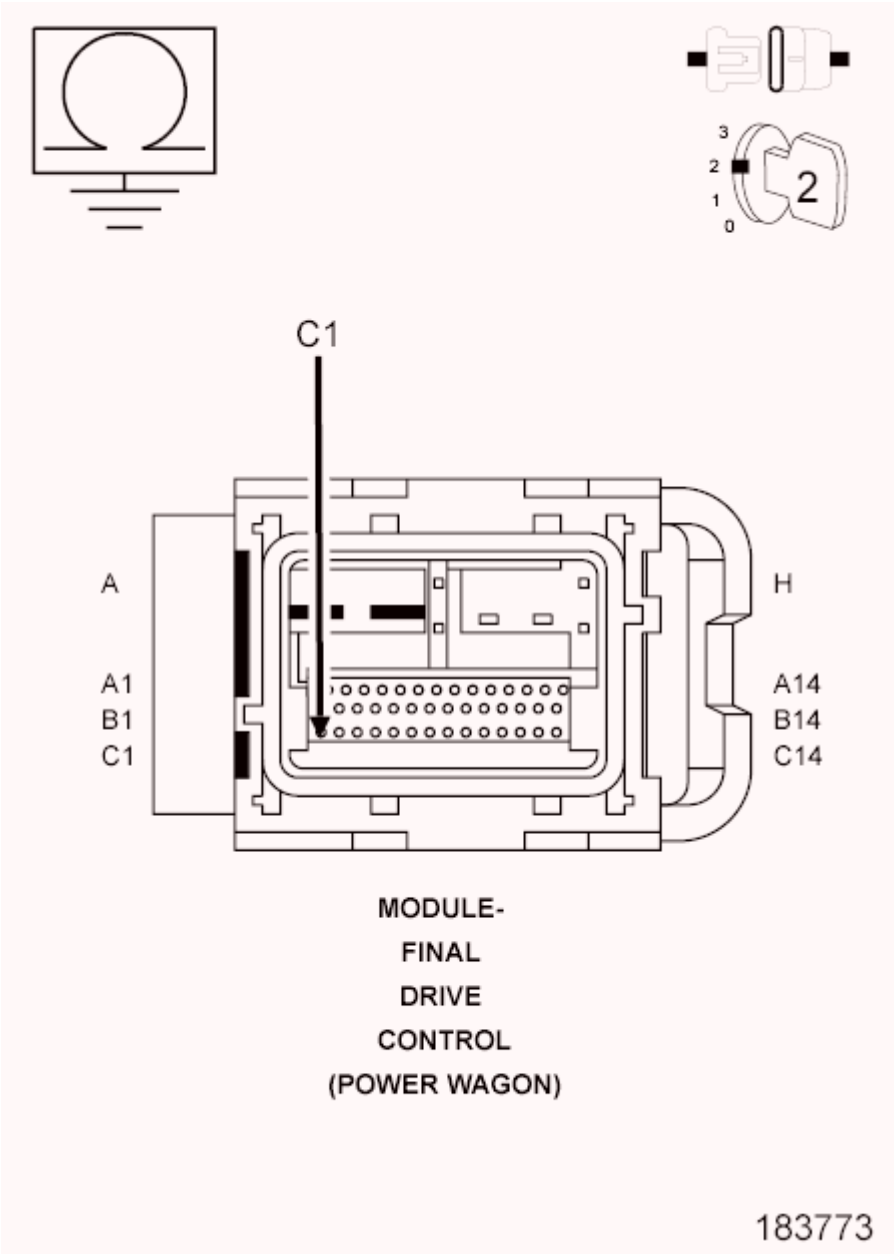

Fig. 80: Checking Stabilizer Bar Engage Illumination Sense Circuit For A Short To Ground
Courtesy of CHRYSLER GROUP, LLC

1. Turn the ignition off.
2. Measure the resistance of the (T529) Stabilizer Bar Engage Illumination Sense circuit between ground and the FDCM harness connector.

   Is the resistance below 100 ohms?

   Yes

   - Repair the short to ground in the (T529) Stabilizer Bar Engage Illumination Sense circuit.

- Perform FDCM VERIFICATION TEST. Refer to **FDCM VERIFICATION TEST**.

No

- Go To 9.

9. **(T529) STABILIZER BAR ENGAGE ILLUMINATION SENSE CIRCUIT FOR AN OPEN**

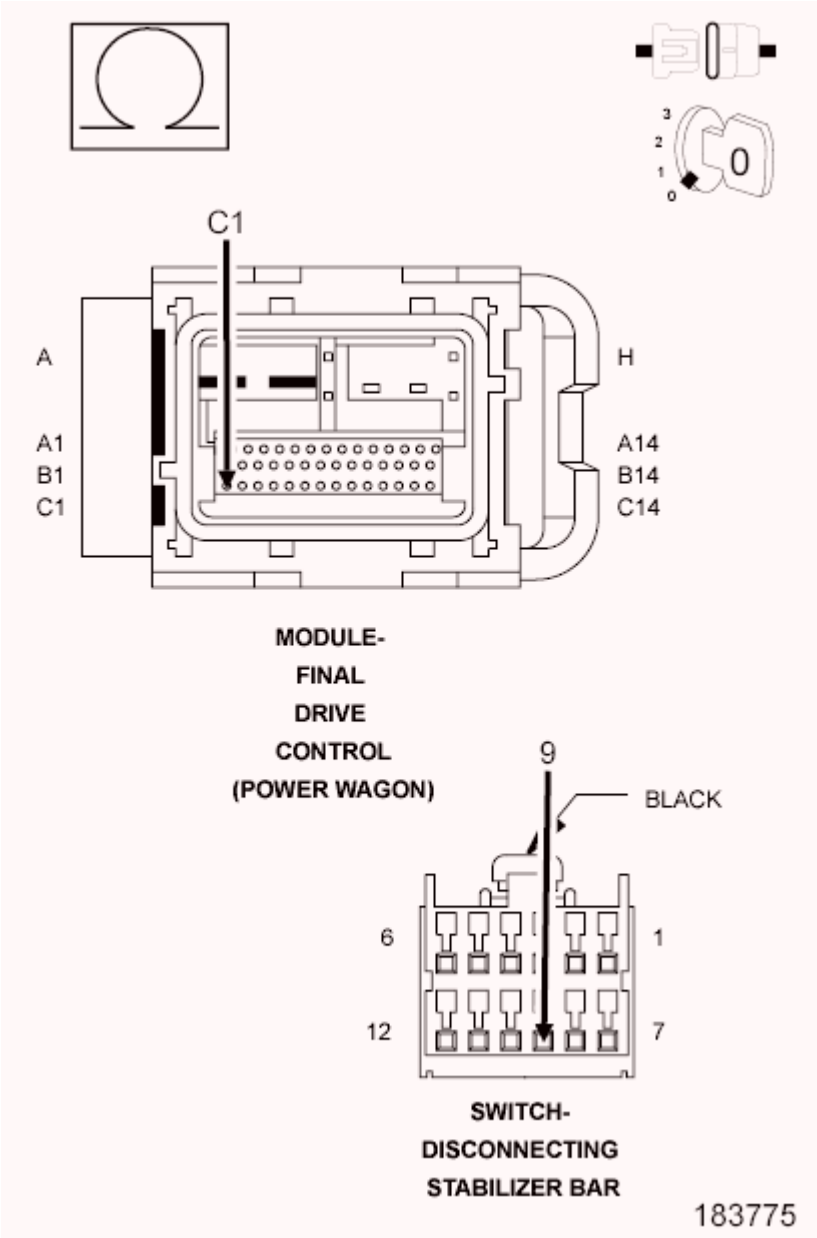

Fig. 81: Checking Stabilizer Bar Engage Illumination Sense Circuit For An Open
Courtesy of CHRYSLER GROUP, LLC

1. Measure the resistance of the (T529) Stabilizer Bar Engage Illumination Sense circuit between the Disconnecting Stabilizer Bar Switch harness connector and the FDCM harness connector.

Is the resistance below 5.0 ohms?

Yes

- Go To 10.

No

- Repair the open in the (T529) Stabilizer Bar Engage Illumination Sense circuit.
- Perform FDCM VERIFICATION TEST. Refer to **FDCM VERIFICATION TEST**.

10. **FDCM**

NOTE: Before continuing, check the FDCM harness connector terminals for corrosion, damage, or terminal push out. Repair as necessary.

1. Using the schematics as a guide, inspect the wire harness and connectors. Pay particular attention to all Power and Ground circuits.

   Were there any problems found?

   Yes

   - Repair as necessary.
   - Perform FDCM VERIFICATION TEST. Refer to **FDCM VERIFICATION TEST**.

   No

   - Replace and program the Final Drive Control Module in accordance with Service Information.
   - Perform FDCM VERIFICATION TEST. Refer to **FDCM VERIFICATION TEST**.

11. **INTERMITTENT WIRING AND CONNECTORS**

1. The conditions necessary to set this DTC are not present at this time.
2. Using the schematics as a guide, inspect the wiring and connectors specific to this circuit.
3. Wiggle test the wiring harness and connectors while checking for shorted and open circuits.
4. Using the scan tool, monitor the data related to this circuit while performing the wiggle test. Look for the data to change or for the DTC to reset.

   Were there any problems found?

   Yes

   - Repair as necessary.
   - Perform FDCM VERIFICATION TEST. Refer to **FDCM VERIFICATION TEST**.

No

- Test Complete.

C2126-SENSOR SUPPLY 2 VOLTAGE CIRCUIT LOW

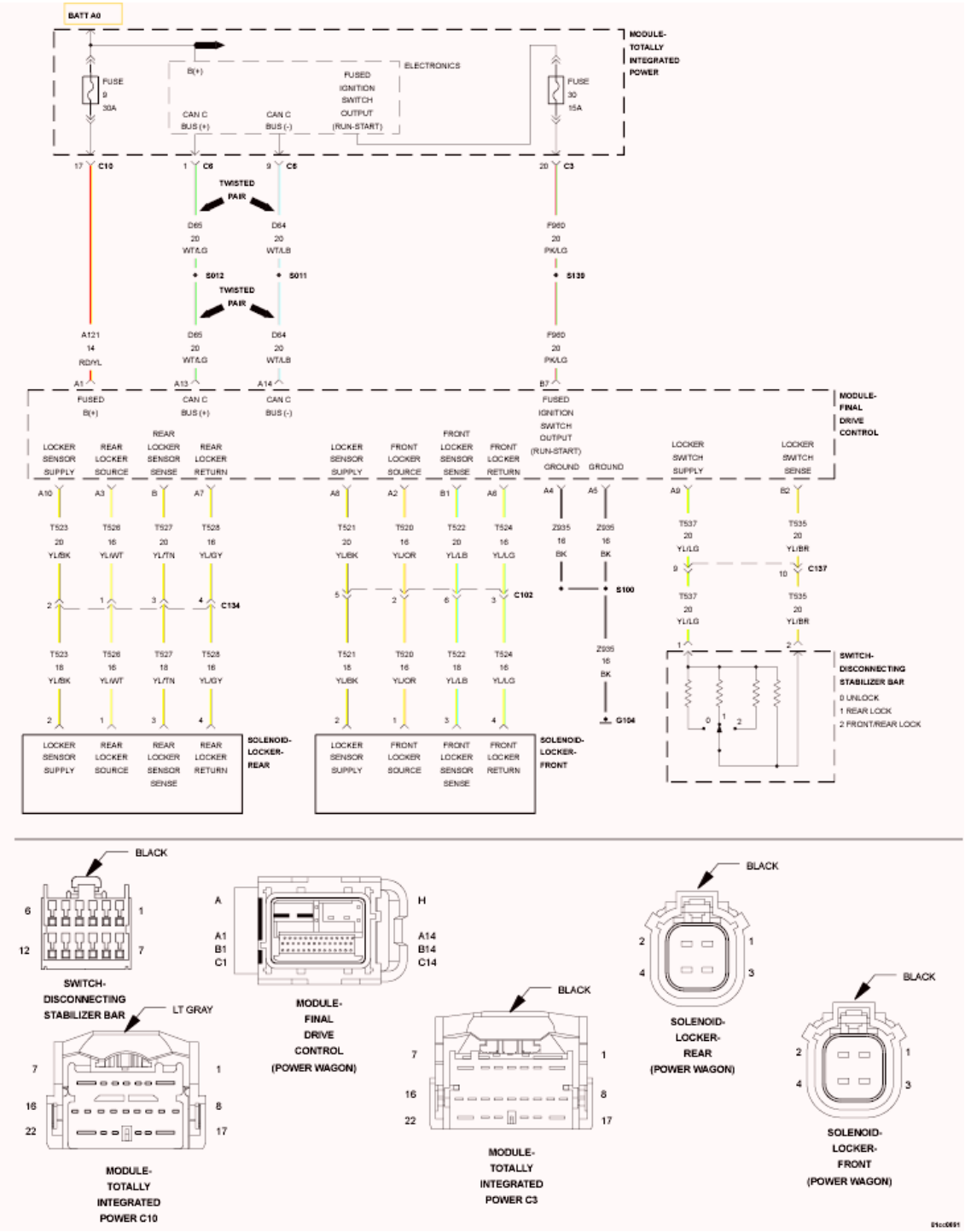

Fig. 82: Final Drive Control Module Wiring Diagram

Courtesy of CHRYSLER GROUP, LLC

For a complete wiring diagram **refer to appropriate SYSTEM WIRING DIAGRAMS article** .

WHEN MONITORED:

Ignition on.

SET CONDITION:

The FDCM recognizes the Locker Sensor Supply circuit voltage is too low.

POSSIBLE CAUSES

Possible Causes
FRONT DIFFERENTIAL POSITION SENSOR
REAR DIFFERENTIAL POSITION SENSOR
(T523) LOCKER SENSOR SUPPLY 2 CIRCUIT FOR A SHORT TO GROUND
FDCM

DIAGNOSTIC TEST

1. **ACTIVE DTC**

   CAUTION: Before removing the FDCM harness connector, clean the connector and locking cam area of dirt and debris. Failure to do so can result in the connector being jammed or damage to the locking cams on the harness connector or module. Do not force the assist arm when releasing or installing the harness connector.

   1. Ignition on, engine not running.
   2. With a scan tool, read DTC's.

      Is the DTC active at this time?

      Yes

      - Go To 2.

      No

      - Go To 5.
2. **REAR DIFFERENTIAL POSITION SENSOR**

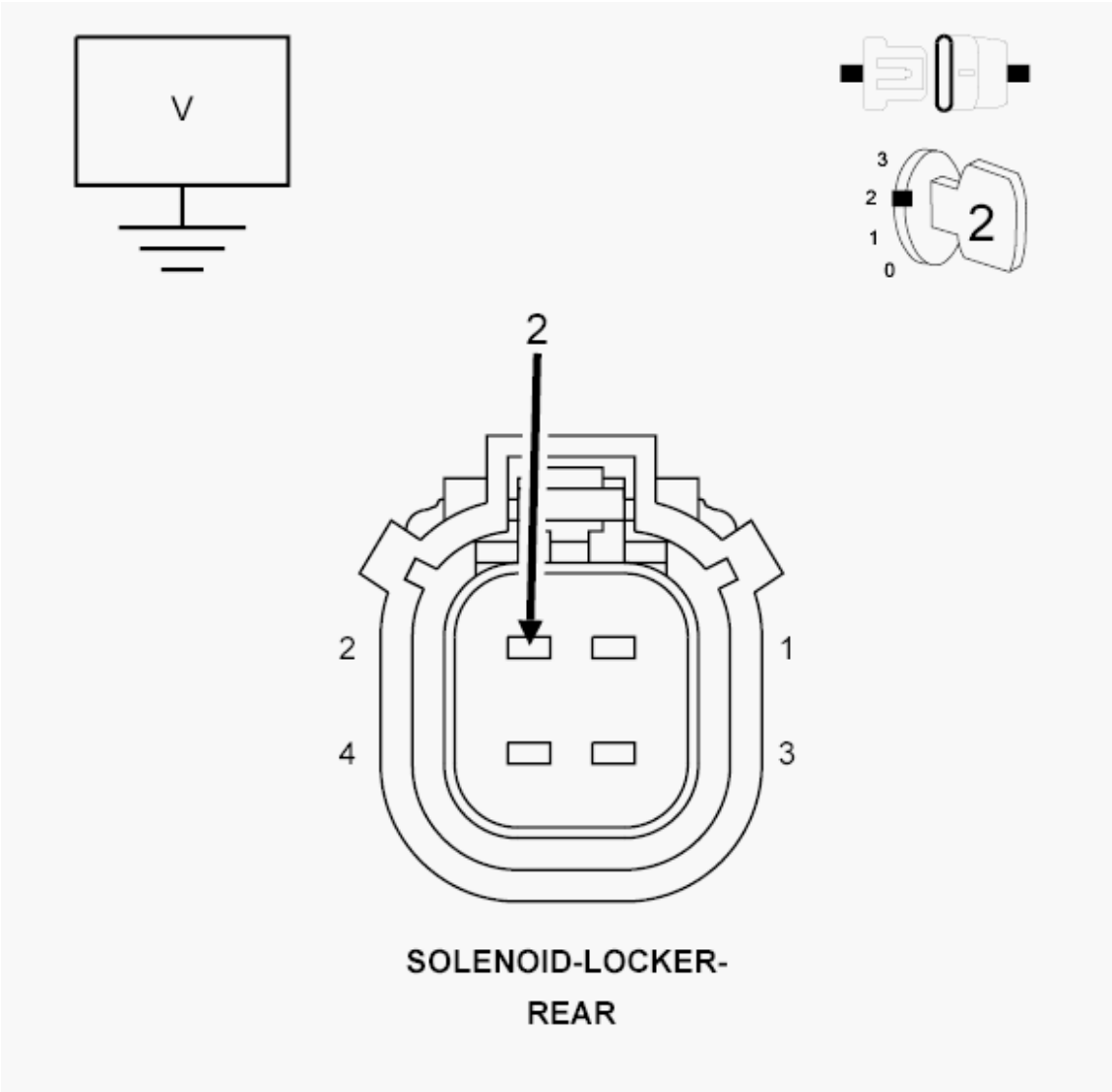

Fig. 83: Measuring Rear Differential Position Sensor Voltage
Courtesy of CHRYSLER GROUP, LLC

1. With the voltmeter still connected to the (T523) Locker Sensor Supply 2 Circuit in the Front Locker Solenoid harness connector.
2. While monitoring the voltmeter, disconnect the Rear Locker Solenoid harness connector.

   Is the voltage between 4.5 and 5.0 volts?

   Yes

   - Replace the Rear Locker Solenoid.
   - Perform FDCM VERIFICATION TEST. Refer to **FDCM VERIFICATION TEST**.

   No

- Go To 3.

3. **(T523) LOCKER SENSOR SUPPLY 2 CIRCUIT FOR A SHORT TO GROUND**

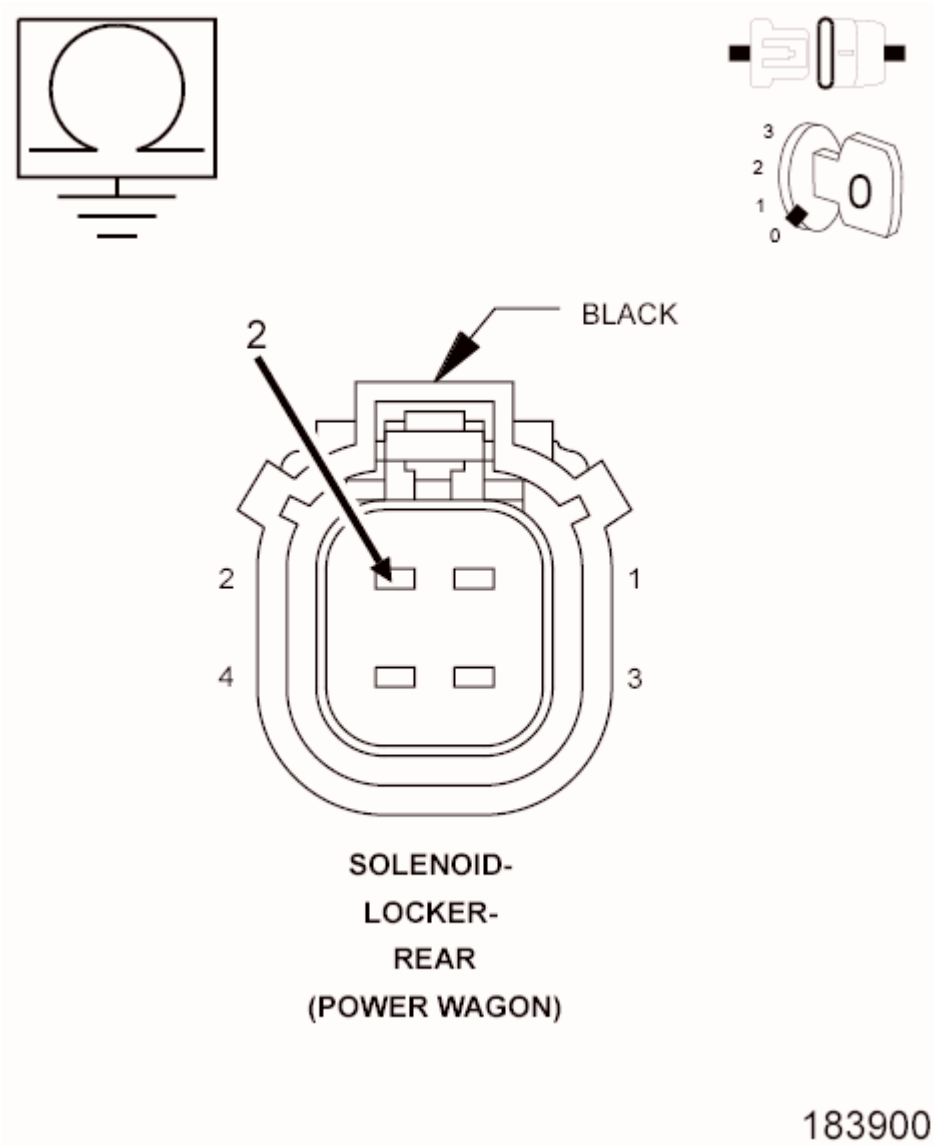

Fig. 84: Checking Locker Sensor Supply 2 Circuit For A Short To Ground
Courtesy of CHRYSLER GROUP, LLC

1. Turn the ignition off.
2. Disconnect the FDCM harness connector.
3. Measure the resistance of the (T523) Locker Sensor Supply 2 Circuit at the FDCM harness connector.

   Is the resistance below 100 ohms?

   Yes

- Repair the short to ground in the (T523) Locker Sensor Supply 2 Circuit.
- Perform FDCM VERIFICATION TEST. Refer to **FDCM VERIFICATION TEST**.

No

- Go To 4.

4. **FDCM**

NOTE: Before continuing, check the FDCM harness connector terminals for corrosion, damage, or terminal push out. Repair as necessary.

1. Using the schematics as a guide, inspect the wire harness and connectors. Pay particular attention to all Power and Ground circuits.

   Were there any problems found?

   Yes

   - Repair as necessary.
   - Perform FDCM VERIFICATION TEST. Refer to **FDCM VERIFICATION TEST**.

   No

   - Replace and program the Final Drive Control Module in accordance with Service Information.
   - Perform FDCM VERIFICATION TEST. Refer to **FDCM VERIFICATION TEST**.

5. **INTERMITTENT WIRING AND CONNECTORS**

1. The conditions necessary to set this DTC are not present at this time.
2. Using the schematics as a guide, inspect the wiring and connectors specific to this circuit.
3. Wiggle test the wiring harness and connectors while checking for shorted and open circuits.
4. Using the scan tool, monitor the data related to this circuit while performing the wiggle test. Look for the data to change or for the DTC to reset.

   Were there any problems found?

   Yes

   - Repair as necessary.
   - Perform FDCM VERIFICATION TEST. Refer to **FDCM VERIFICATION TEST**.

   No

   - Test Complete.

C2127-SENSOR SUPPLY 2 VOLTAGE CIRCUIT HIGH

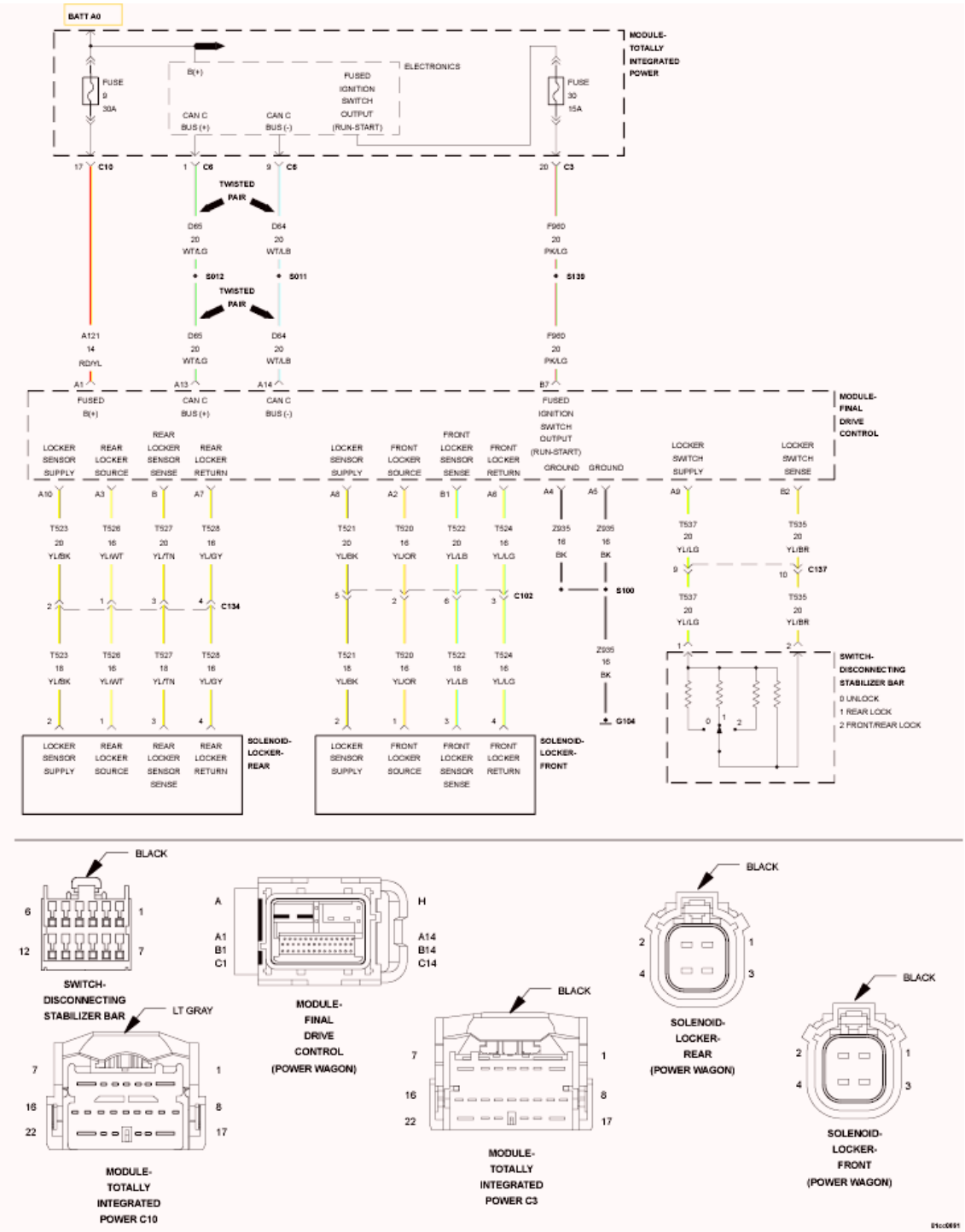

Fig. 85: Final Drive Control Module Wiring Diagram
Courtesy of CHRYSLER GROUP, LLC

For a complete wiring diagram **refer to appropriate SYSTEM WIRING DIAGRAMS article** .

WHEN MONITORED:

Ignition on.

SET CONDITION:

The FDCM recognizes the Locker Sensor Supply circuit voltage is too high.

POSSIBLE CAUSES

Possible Causes
FRONT DIFFERENTIAL POSITION SENSOR
REAR DIFFERENTIAL POSITION SENSOR
(T523) LOCKER SENSOR SUPPLY 2 CIRCUIT FOR A SHORT TO VOLTAGE
FDCM

DIAGNOSTIC TEST

1. **ACTIVE DTC**

   NOTE: Before continuing with the below diagnostic test, ensure the FDCM harness connector seal is installed correctly. Inspect the terminals on both harness connector and the module for damage. Failure to do so can result in misdiagnoses of the system.

   1. Ignition on, engine not running.
   2. With a scan tool, read DTC's.

      Is the DTC active at this time?

      Yes

      - Go To 2.

      No

      - Go To 5.
2. **REAR DIFFERENTIAL POSITION SENSOR**

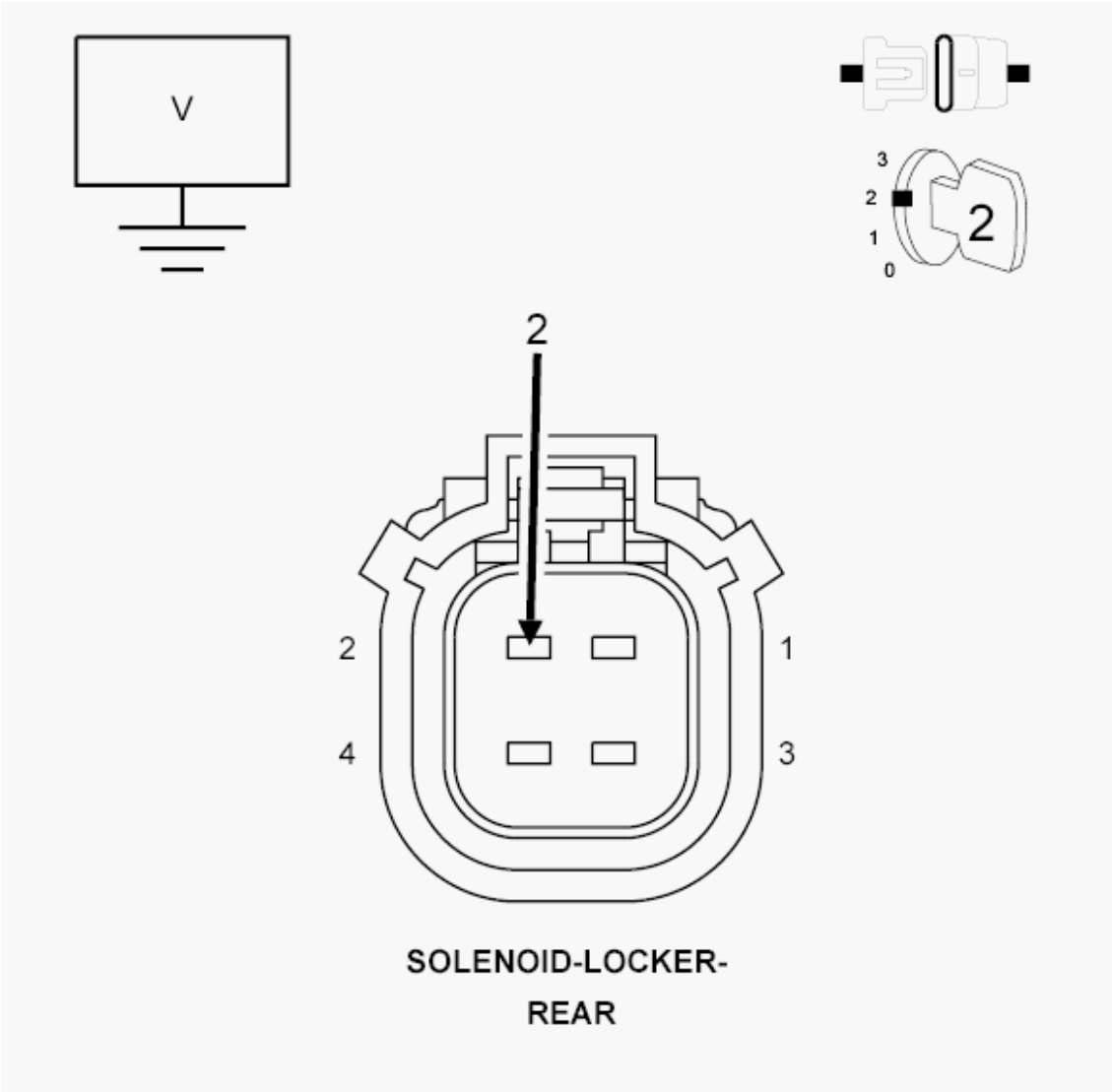

Fig. 86: Measuring Rear Differential Position Sensor Voltage
Courtesy of CHRYSLER GROUP, LLC

1. With the voltmeter still connected to the (T523) Locker Sensor Supply 2 circuit in the Front Locker Solenoid harness connector.
2. While monitoring the voltmeter, disconnect the Rear Locker Solenoid harness connector.

   Is the voltage above 4.5 volts?

   Yes

   - Replace the Rear Locker Solenoid.
   - Perform FDCM VERIFICATION TEST. Refer to **FDCM VERIFICATION TEST**.

   No

- Go To 3.

3. **(T523) LOCKER SENSOR SUPPLY 2 CIRCUIT FOR A SHORT TO VOLTAGE**

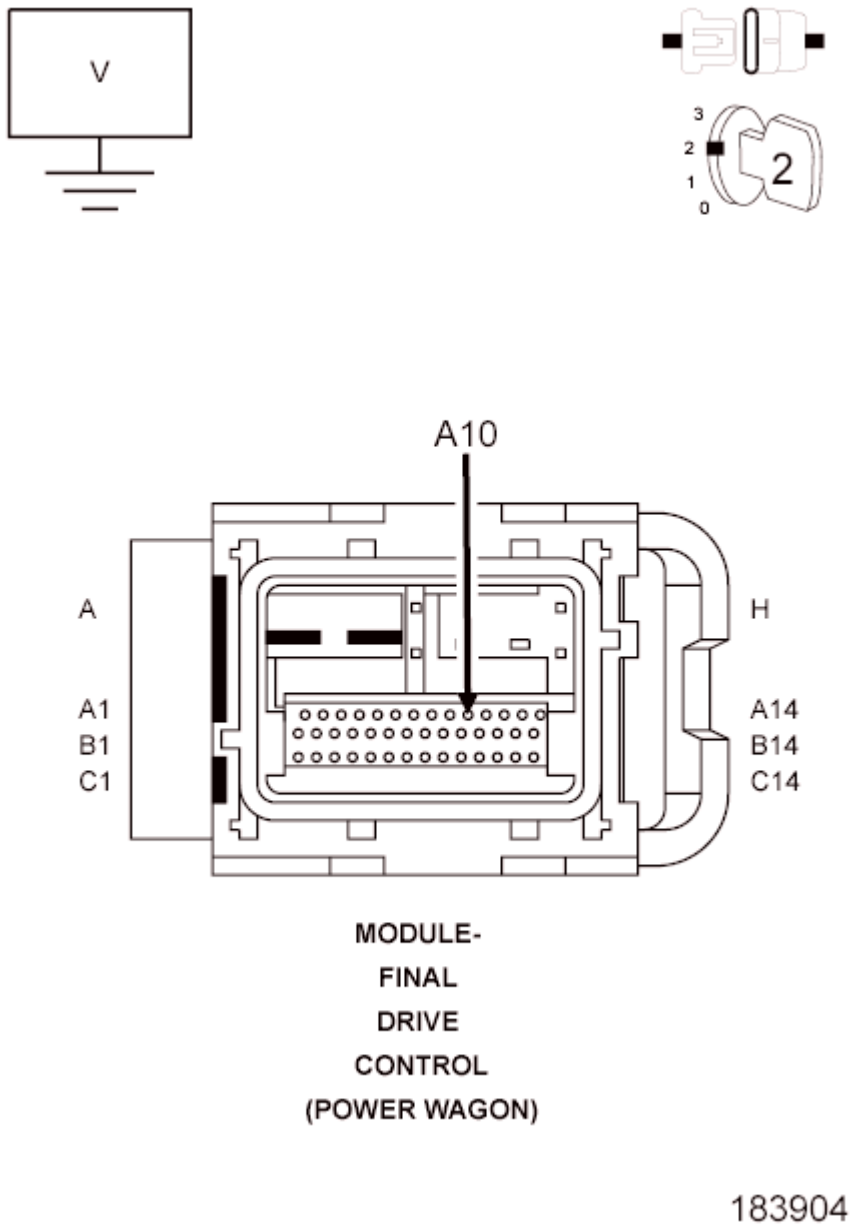

Fig. 87: Checking Locker Sensor Supply 2 Circuit For A Short To Voltage
Courtesy of CHRYSLER GROUP, LLC

1. Turn the ignition off.
2. Disconnect the FDCM harness connector.
3. Turn the ignition on.
4. Measure the voltage of the (T523) Locker Sensor Supply 2 circuit at the FDCM harness connector.

Does the voltmeter indicate voltage present?

Yes

- Repair the short to voltage in the (T523) Locker Sensor Supply 2 circuit.
- Perform FDCM VERIFICATION TEST. Refer to **FDCM VERIFICATION TEST**.

No

- Go To 4.

4. **FDCM**

NOTE: Before continuing, check the FDCM harness connector terminals for corrosion, damage, or terminal push out. Repair as necessary.

1. Using the schematics as a guide, inspect the wire harness and connectors. Pay particular attention to all Power and Ground circuits.

   Were there any problems found?

   Yes

   - Repair as necessary.
   - Perform FDCM VERIFICATION TEST. Refer to **FDCM VERIFICATION TEST**.

   No

   - Replace and program the Final Drive Control Module in accordance with Service Information.
   - Perform FDCM VERIFICATION TEST. Refer to **FDCM VERIFICATION TEST**.

5. **INTERMITTENT WIRING AND CONNECTORS**

1. The conditions necessary to set this DTC are not present at this time.
2. Using the schematics as a guide, inspect the wiring and connectors specific to this circuit.
3. Wiggle test the wiring harness and connectors while checking for shorted and open circuits.
4. Using the scan tool, monitor the data related to this circuit while performing the wiggle test. Look for the data to change or for the DTC to reset.

   Were there any problems found?

   Yes

   - Repair as necessary.
   - Perform FDCM VERIFICATION TEST. Refer to **FDCM VERIFICATION TEST**.

No

- Test Complete.

C2201-FDCM/DTCM INTERNAL

For a complete wiring diagram, **refer to appropriate SYSTEM WIRING DIAGRAMS article** .

WHEN MONITORED:

With the ignition on.

SET CONDITION:

The Final Drive Control Module (FDCM) has detected a failure internal to the controller.

POSSIBLE CAUSES

Possible Causes
FINAL DRIVE CONTROL MODULE (FDCM)

DIAGNOSTIC TEST

1. **FINAL DRIVE CONTROL MODULE**
    1. The Final Drive Control Module has detected an internal failure.

       View repair

       Repair

       - Replace the Final Drive Control Module (FDCM) in accordance with the Service Information.
       - Perform FDCM VERIFICATION TEST. Refer to **FDCM VERIFICATION TEST**.

C230F-LOCKER/DIFFERENTIAL INDICATOR SUPPLY CIRCUIT PERFORMANCE

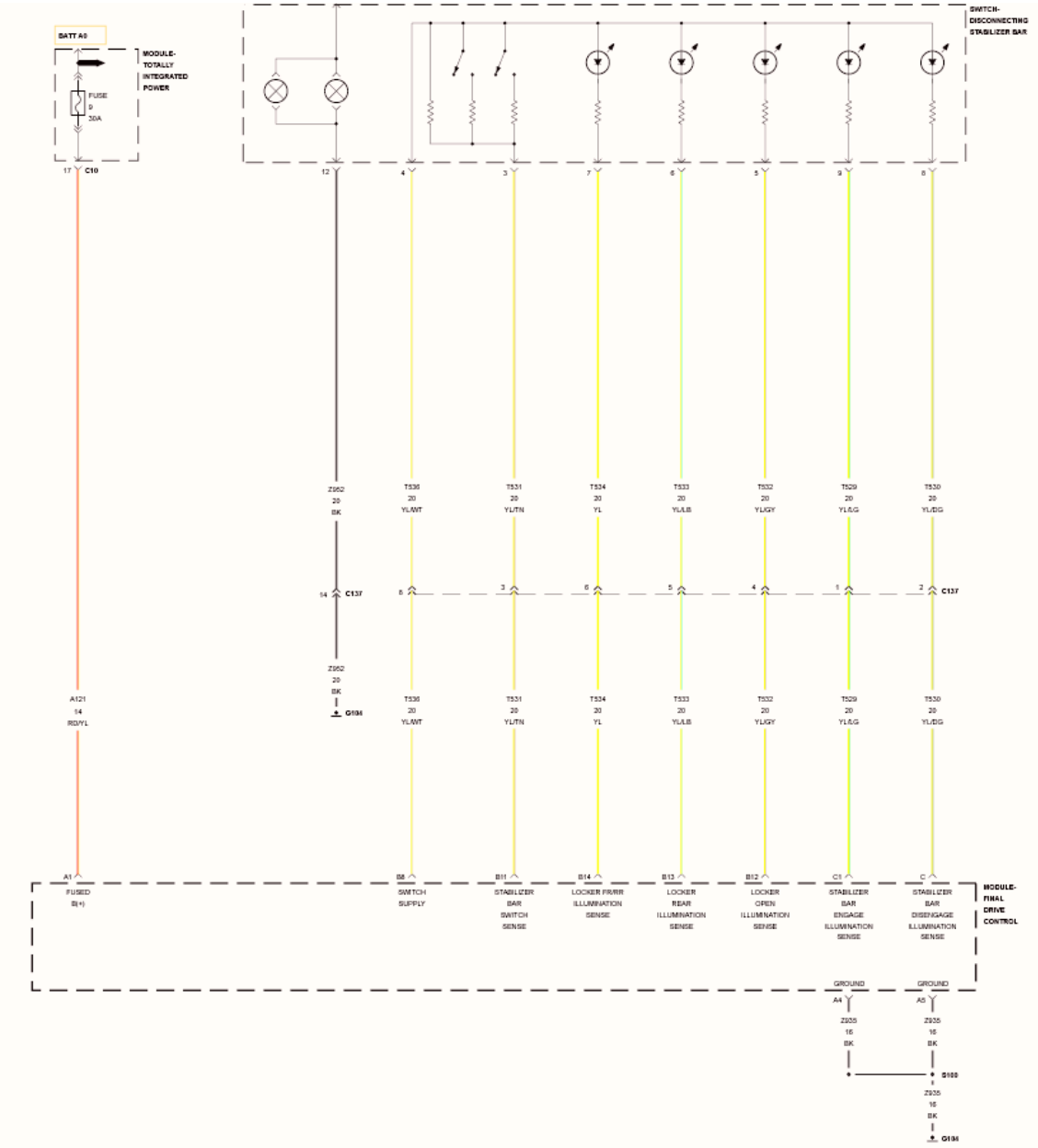

Fig. 88: Locker/Differential Indicator Power Supply Wiring Diagram
Courtesy of CHRYSLER GROUP, LLC

For a complete wiring diagram **refer to appropriate SYSTEM WIRING DIAGRAMS article** .

WHEN MONITORED:

Ignition on.

SET CONDITION:

The FDCM sense an incorrect voltage on the Switch Supply circuit other than 12 volts.

POSSIBLE CAUSES

Possible Causes
DISCONNECTING STABILIZER SWITCH
(T536) SWITCH SUPPLY CIRCUIT FOR AN OPEN/HIGH RESISTANCE
(T532, T533 or T534) LOCKER ILLUMINATION SENSE CIRCUIT FOR AN OPEN/HIGH RESISTANCE
FDCM

DIAGNOSTIC TEST

1. **DTC ACTIVE**

CAUTION: Before removing the FDCM harness connector, clean the connector and locking cam area of dirt and debris. Failure to do so can result in the connector being jammed or damage to the locking cams on the harness connector or module. Do not force the assist arm when releasing or installing the harness connector.

1. Turn the ignition on, engine not running
2. With the scan tool, read FDCM DTC(s).

   Is the DTC active at this time?

   Yes

   - Go To 2.

   No

   - Go To 5.

2. **DISCONNECTING STABILIZER SWITCH OPERATION**

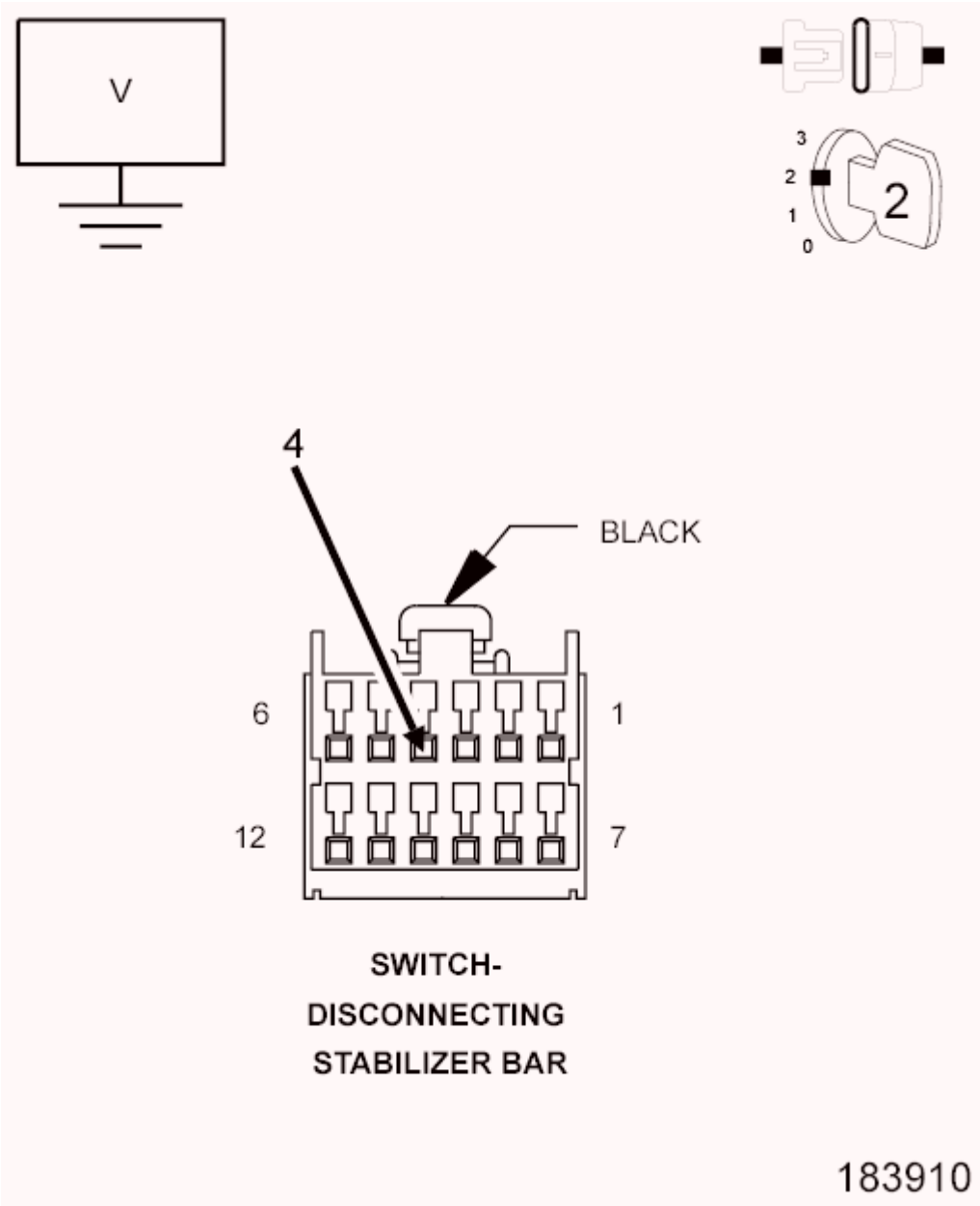

Fig. 89: Checking Disconnecting Stabilizer Switch Operation
Courtesy of CHRYSLER GROUP, LLC

NOTE: **Before continuing with the below diagnostic test, ensure the FDCM harness connector seal is installed correctly. Inspect the terminals on both harness connector and the module for damage. Failure to do so can result in misdiagnoses of the system.**

NOTE: **If set along with this DTC, diagnose any Stabilizer Select Switch DTC(s) first before continuing.**

1. Turn the ignition off.

2. Disconnect the Disconnecting Stabilizer Switch harness connector.
3. Turn the ignition on.
4. Measure the voltage on the (T536) Switch Supply circuit in the Disconnecting Stabilizer Switch harness connector.

   Is the voltage 12 volts?

   Yes

   - Go To 3.

   No

   - Check the (T536) Switch Supply circuit for an open or short to ground condition. If OK, replace the FDCM in accordance with the Service Information.
   - Perform FDCM VERIFICATION TEST. Refer to **FDCM VERIFICATION TEST**.

3. **DISCONNECTING STABILIZER SWITCH**

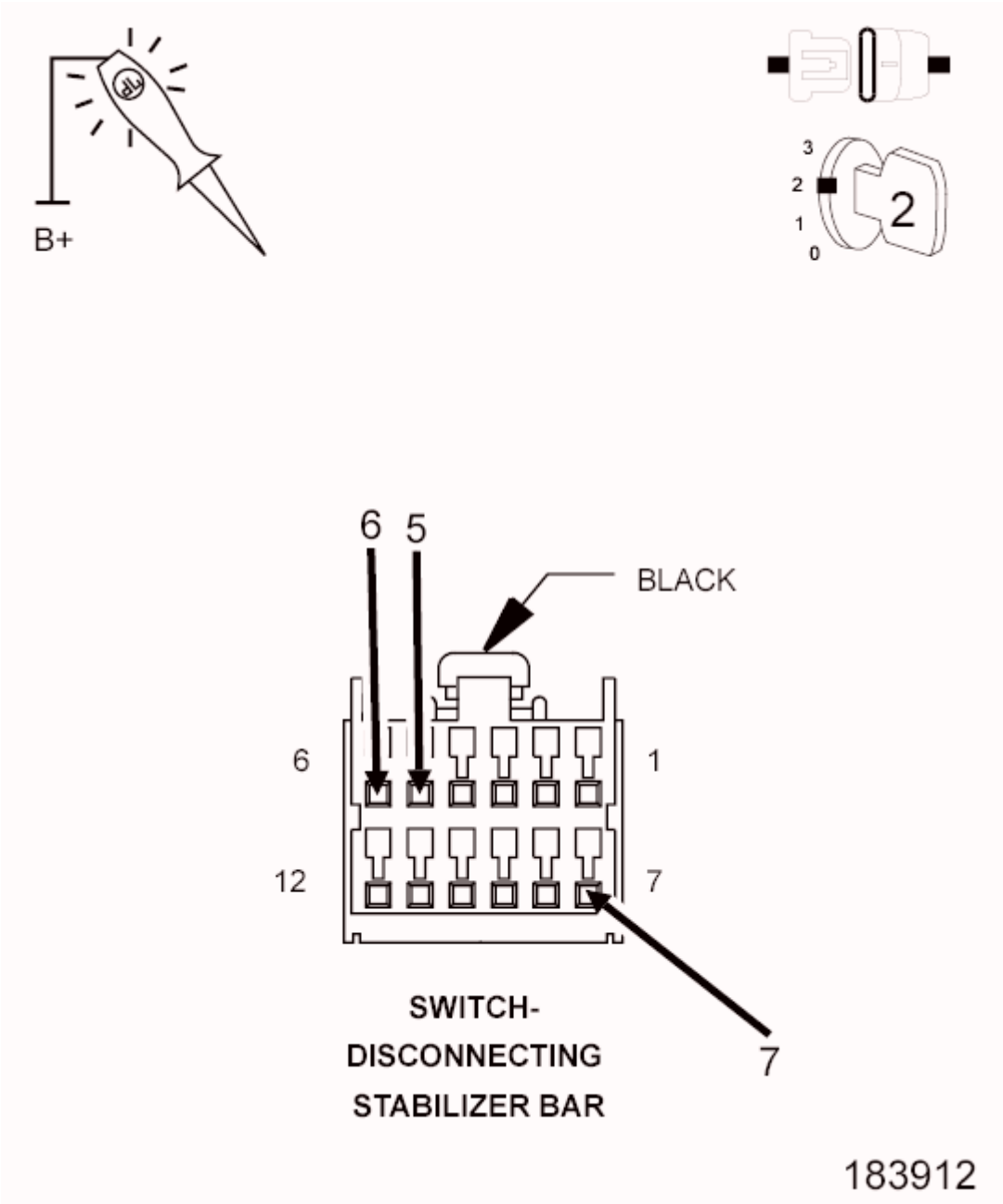

Fig. 90: Checking Disconnecting Stabilizer Switch
Courtesy of CHRYSLER GROUP, LLC

1. Using a test light connected to battery voltage, probe the (T532) Locker Open Illumination Sense circuit in the Disconnecting Stabilizer Switch harness connector.
2. With the scan tool, select System Test and actuate the Locker Open Illumination LED. Select the blinking option.

NOTE: **Repeat the above test for the (T533) Locker Rear Illumination Sense circuit terminal and (T534) Locker FR/RR Illumination Sense circuit one at a time.**

Does the test light illuminate and flash on and off at each circuit?

Yes

- Replace the Disconnecting Stabilizer Switch.
- Perform FDCM VERIFICATION TEST. Refer to **FDCM VERIFICATION TEST**.

No

- Go to 4.

4. **(T532, T533 or T534) LOCKER ILLUMINATION SENSE CIRCUIT FOR AN OPEN/HIGH RESISTANCE**

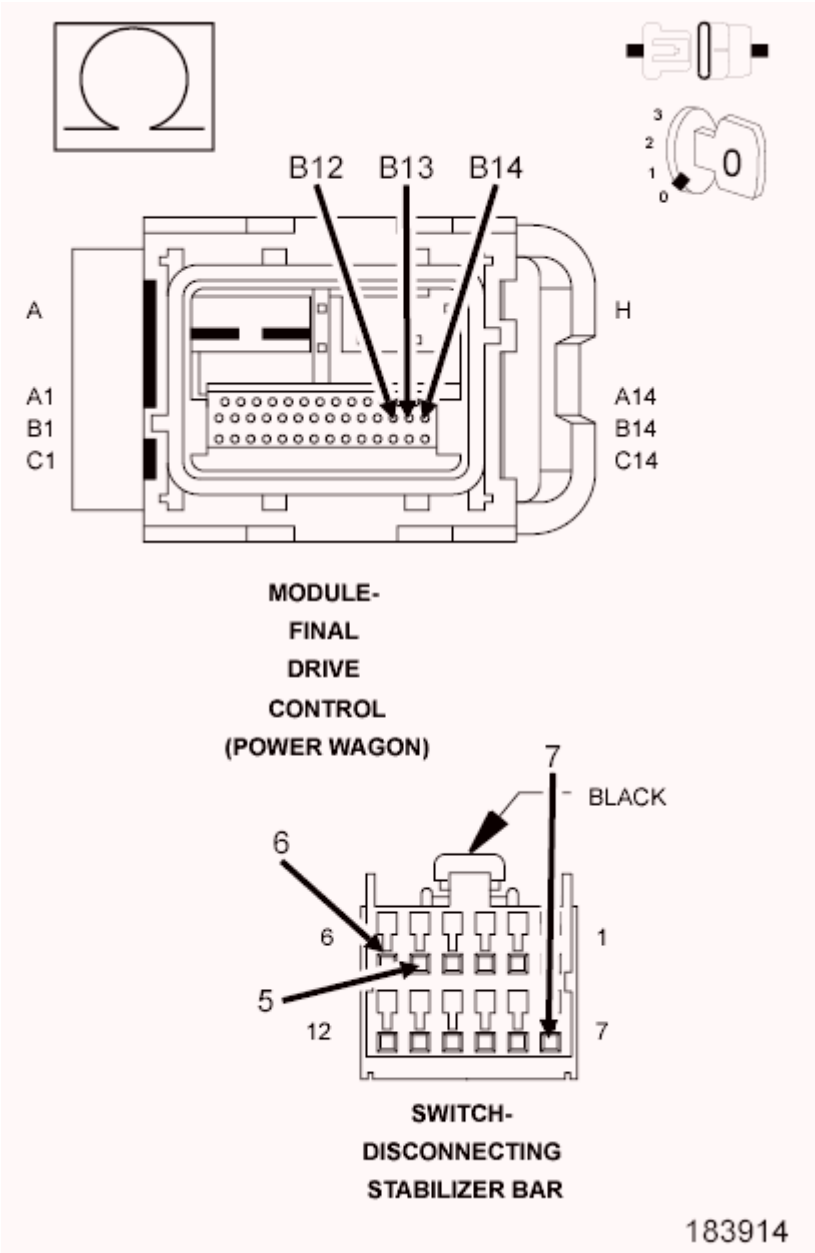

Fig. 91: Checking Locker Illumination Sense Circuit For Open Or High Resistance
Courtesy of CHRYSLER GROUP, LLC

1. Measure the resistance of each of the following circuits between the FDCM harness connector and the Disconnecting Stabilizer Switch harness connector.
   - (T532) Locker Open Illumination Sense circuit
   - (T533) Locker Rear Illumination Sense circuit
   - (T534) Locker FR/RR Illumination Sense circuit

   Does the ohmmeter indicate each measurement below 5.0 ohms?

   Yes

- Replace the FDCM in accordance with the Service Information.
- Perform FDCM VERIFICATION TEST. Refer to **FDCM VERIFICATION TEST**.

No

- Repair the open or high resistance in the Illumination Sense circuit that indicated the incorrect resistance reading.
- Perform FDCM VERIFICATION TEST. Refer to **FDCM VERIFICATION TEST**.

5. **INTERMITTENT WIRING AND CONNECTORS**
   1. The conditions necessary to set this DTC are not present at this time.
   2. Using the schematics as a guide, inspect the wiring and connectors specific to this circuit.
   3. Wiggle test the wiring harness and connectors while checking for shorted and open circuits.
   4. Using the scan tool, monitor the data related to this circuit while performing the wiggle test. Look for the data to change or for the DTC to reset.

   Were there any problems found?

   Yes

   - Repair as necessary.
   - Perform FDCM VERIFICATION TEST. Refer to **FDCM VERIFICATION TEST**.

   No

   - Test Complete.

C2310-STABILIZER/DIFFERENTIAL INDICATOR SUPPLY CIRCUIT LOW

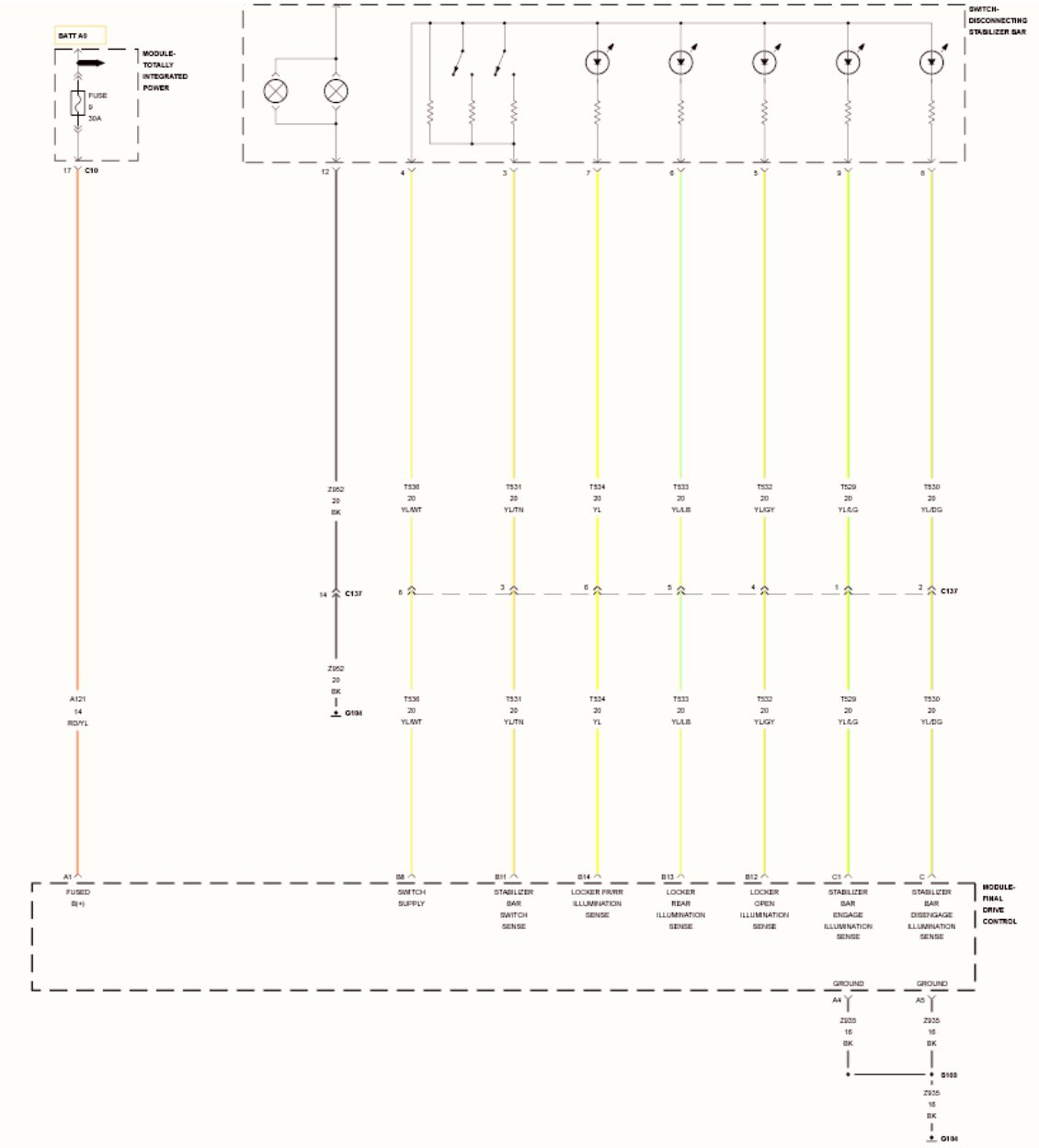

Fig. 92: Locker/Differential Indicator Power Supply Wiring Diagram
Courtesy of CHRYSLER GROUP, LLC

For a complete wiring diagram, **refer to appropriate SYSTEM WIRING DIAGRAMS article** .

WHEN MONITORED:

Ignition on.

SET CONDITION:

The Final Drive Control Module (FDCM) senses the voltage on the Switch Supply circuit is low.

POSSIBLE CAUSES

Possible Causes
DISCONNECTING STABILIZER SWITCH
(T536) SWITCH SUPPLY CIRCUIT FOR A SHORT TO GROUND
(T532, T533 or T534) LOCKER ILLUMINATION SENSE CIRCUIT FOR A SHORT TO GROUND
FINAL DRIVE CONTROL MODULE (FDCM)

DIAGNOSTIC TEST

1. **DTC ACTIVE**

   CAUTION: Before removing the FDCM harness connector, clean the connector and locking cam area of dirt and debris. Failure to do so can result in the connector being jammed or damage to the locking cams on the harness connector or module. Do not force the assist arm when releasing or installing the harness connector.

   1. Ignition on, engine not running
   2. With the scan tool, read DTC's.

      Is the DTC active at this time?

      Yes

      - Go To 2.

      No

      - Go To 5.
2. **DISCONNECTING STABILIZER SWITCH OPERATION**

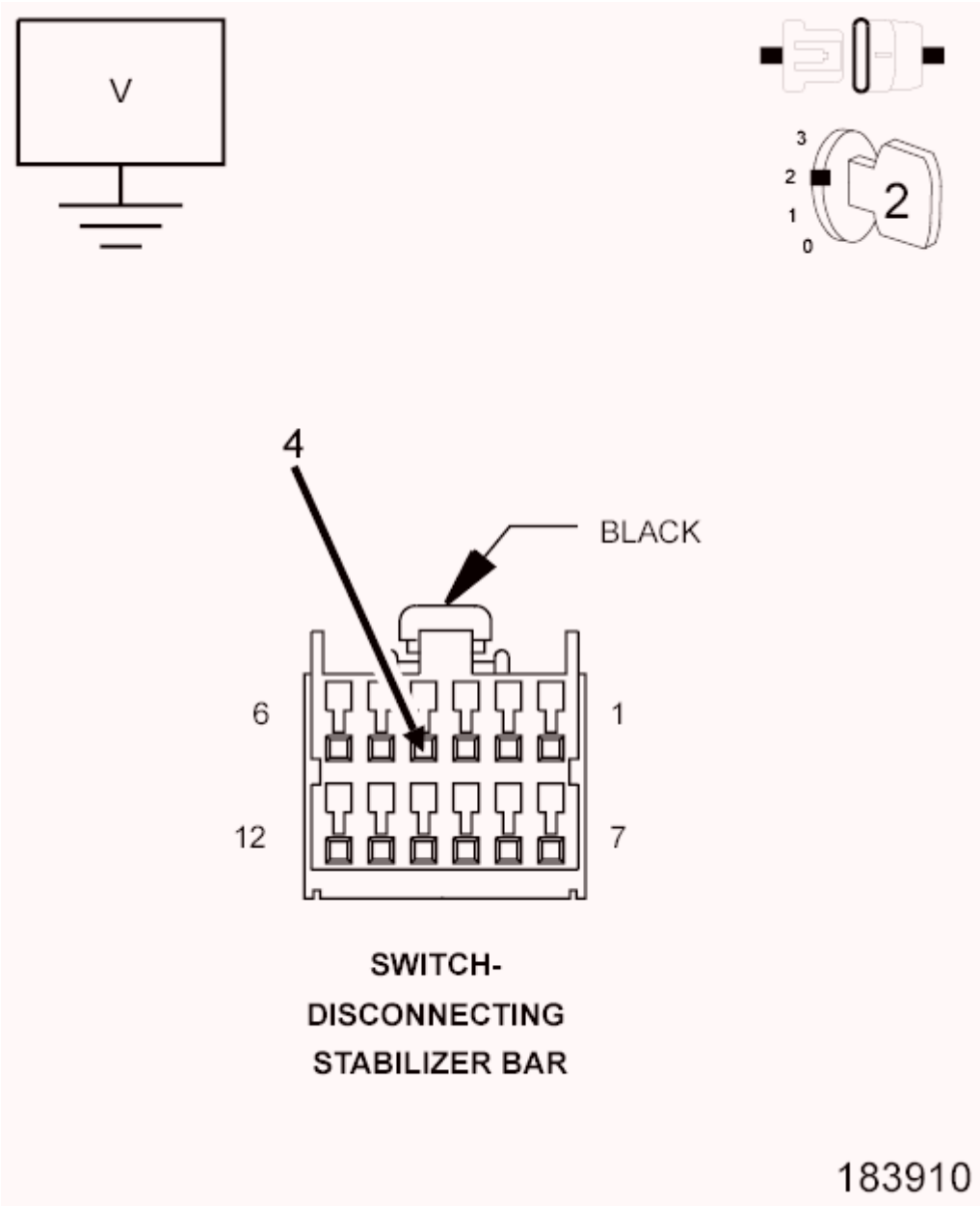

Fig. 93: Checking Disconnecting Stabilizer Switch Operation
Courtesy of CHRYSLER GROUP, LLC

NOTE: **Before continuing with the below diagnostic test, ensure the FDCM harness connector seal is installed correctly. Inspect the terminals on both harness connector and the module for damage. Failure to do so can result in misdiagnoses of the system.**

NOTE: **If set along with this DTC, diagnose any Stabilizer Select Switch DTC(s) first before continuing.**

1. Turn the ignition off.

2. Disconnect the Disconnecting Stabilizer Switch harness connector.
3. Ignition on, engine not running
4. Measure the voltage on the (T536) Switch Supply circuit in the Axle Locker Switch harness connector.

   Is the voltage 12 volts?

   Yes

   - Go To 3.

   No

   - Check the (T536) Switch Supply circuit for an open or short to ground condition. If OK, replace the FDCM in accordance with the Service Information.
   - Perform FDCM VERIFICATION TEST. Refer to **FDCM VERIFICATION TEST**.

3. **DISCONNECTING STABILIZER SWITCH**

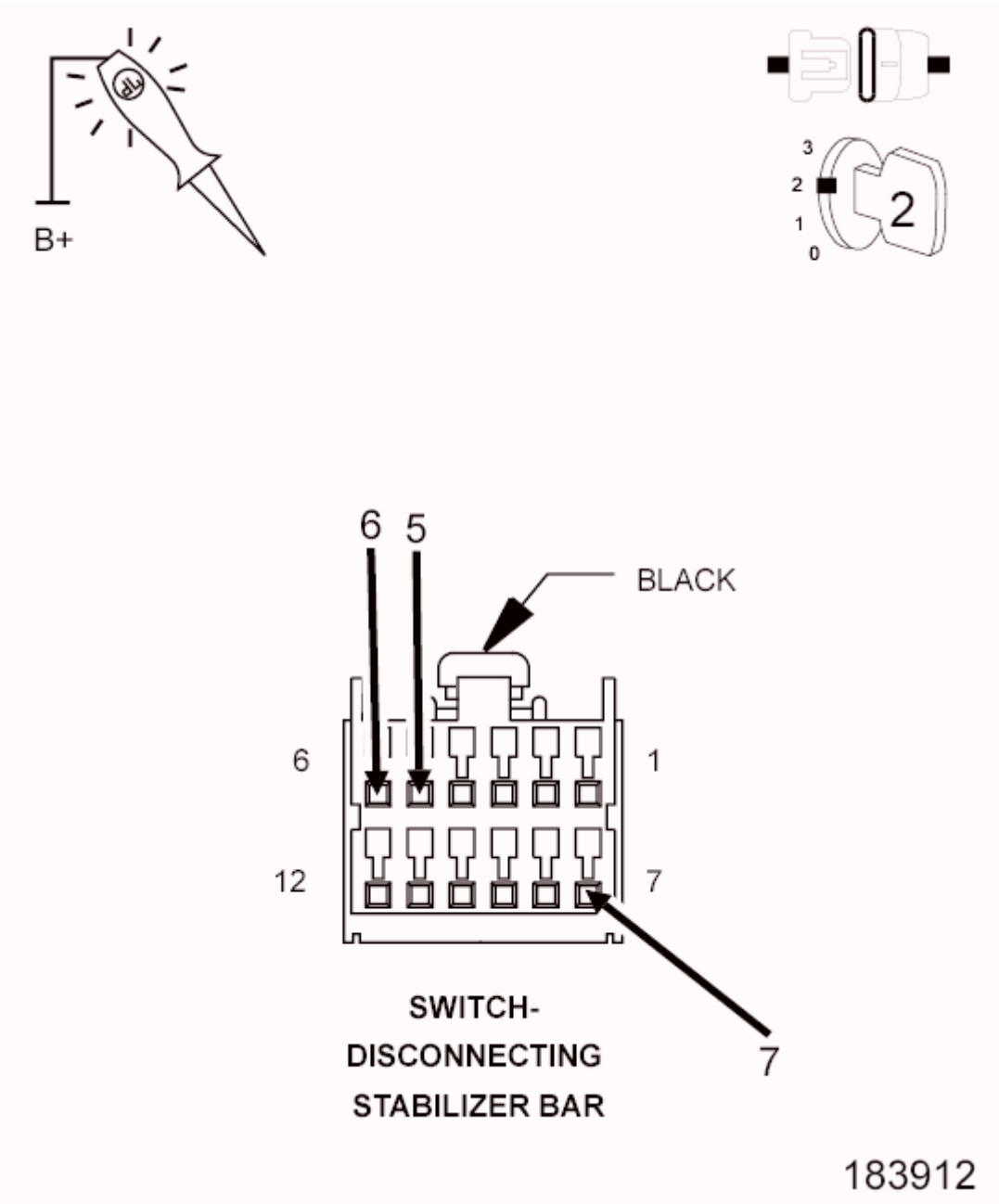

Fig. 94: Checking Disconnecting Stabilizer Switch
Courtesy of CHRYSLER GROUP, LLC

1. Using a test light connected to battery voltage, check the (T532) Locker Open Illumination Sense circuit at the Disconnecting Stabilizer Switch harness connector.
2. With the scan tool, select System Test and actuate the Locker Open Illumination LED. Select the blinking option.

NOTE: **Repeat the above test for the (T533) Locker Rear Illumination Sense circuit terminal and (T534) Locker FR/RR Illumination Sense circuit one at a time.**

Does the test light illuminate and flash on and off at each circuit?

Yes

- Replace the Disconnecting Stabilizer Switch in accordance with the service information.
- Perform FDCM VERIFICATION TEST. Refer to **FDCM VERIFICATION TEST**.

No

- Go to 4.

4. **(T532, T533 or T534) LOCKER ILLUMINATION SENSE CIRCUIT FOR A SHORT TO GROUND**

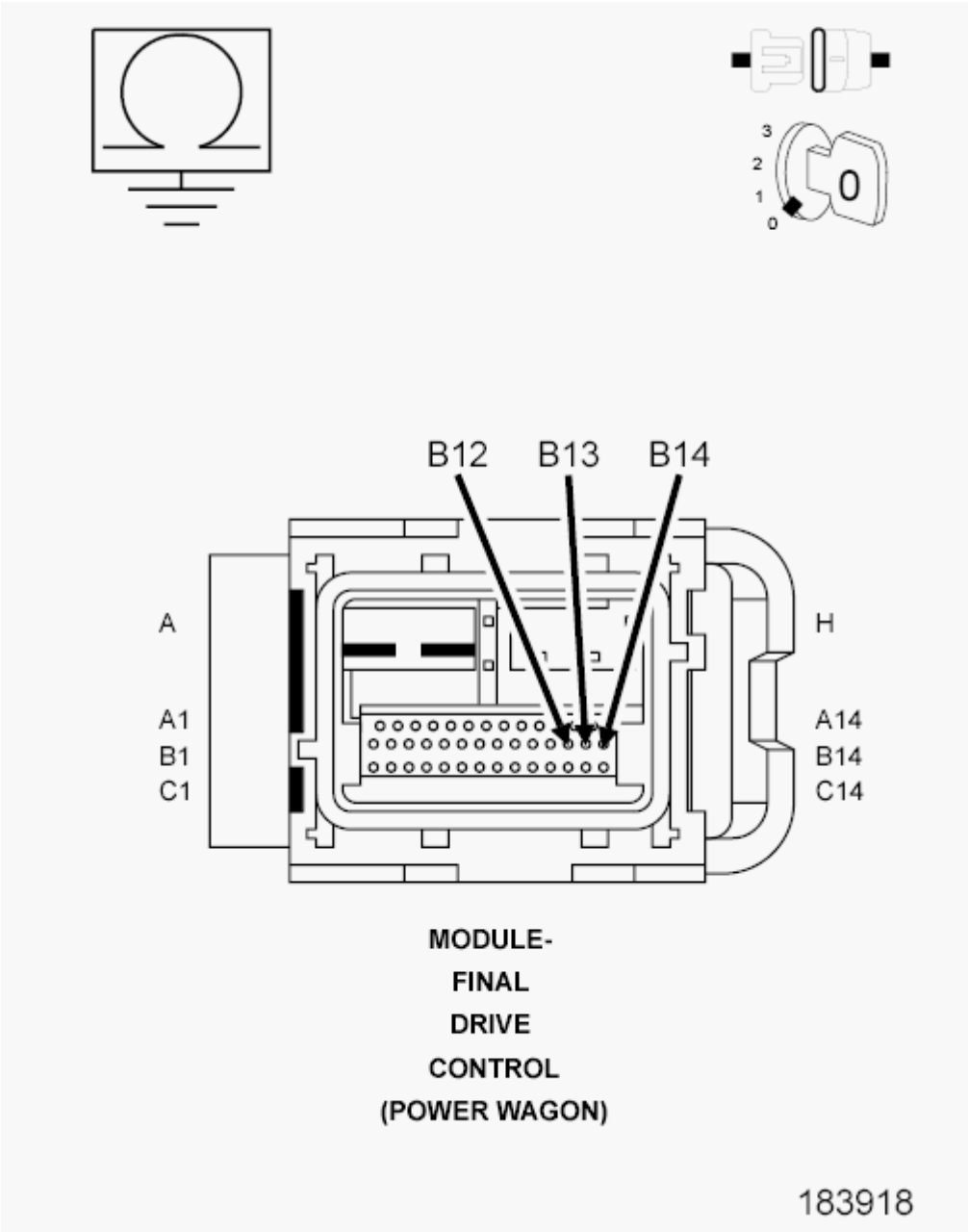

Fig. 95: Checking Locker Illumination Sense Circuit For A Short To Ground
Courtesy of CHRYSLER GROUP, LLC

1. Disconnect the Disconnecting Stabilizer Switch harness connector.
2. Measure the resistance between the FDCM harness connector and ground for each of the following circuits:
   - (T532) Locker Open Illumination Sense circuit.
   - (T533) Locker Rear Illumination Sense circuit.
   - (T533) Locker Rear Illumination Sense circuit.

   Does the ohmmeter read below 100 ohms for any of the above circuit checks?

Yes

- Repair the short to ground in the Illumination Sense circuit that indicated the resistance reading below 100 ohms.
- Perform FDCM VERIFICATION TEST. Refer to **FDCM VERIFICATION TEST**.

No

- Replace the Final Drive Control Module (FDCM) in accordance with the Service Information.
- Perform FDCM VERIFICATION TEST. Refer to **FDCM VERIFICATION TEST**.

5. **INTERMITTENT WIRING AND CONNECTORS**
   1. The conditions necessary to set this DTC are not present at this time.
   2. Using the schematics as a guide, inspect the wiring and connectors specific to this circuit.
   3. Wiggle test the wiring harness and connectors while checking for shorted and open circuits.
   4. Using the scan tool, monitor the data related to this circuit while performing the wiggle test. Look for the data to change or for the DTC to reset.

   Were there any problems found?

   Yes

   - Repair as necessary.
   - Perform FDCM VERIFICATION TEST. Refer to **FDCM VERIFICATION TEST**.

   No

   - Test complete.

C2311-STABILIZER/DIFFERENTIAL INDICATOR SUPPLY CIRCUIT HIGH

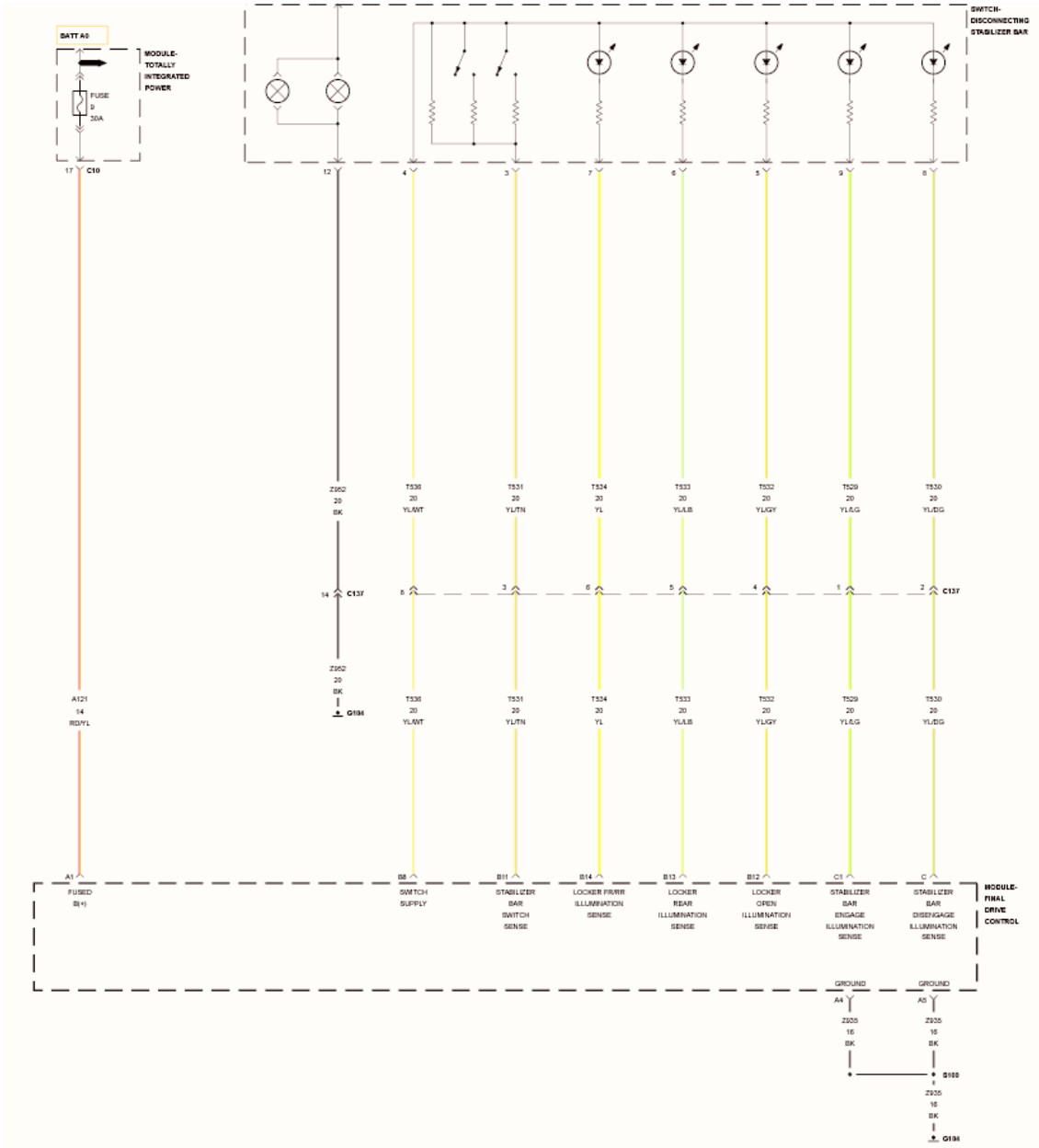

Fig. 96: Locker/Differential Indicator Power Supply Wiring Diagram
Courtesy of CHRYSLER GROUP, LLC

For a complete wiring diagram **refer to appropriate SYSTEM WIRING DIAGRAMS article** .

WHEN MONITORED:

Ignition on.

SET CONDITION:

The FDCM sense an the voltage on the Switch Supply circuit is high.

POSSIBLE CAUSES

Possible Causes
DISCONNECTING STABILIZER SWITCH
(T536) SWITCH SUPPLY CIRCUIT FOR A SHORT TO VOLTAGE
T536) SWITCH SUPPLY CIRCUIT FOR AN OPEN
(T532, T533 or T534) LOCKER ILLUMINATION SENSE CIRCUIT FOR A SHORT TO VOLTAGE
(T532, T533 or T534) LOCKER ILLUMINATION SENSE CIRCUIT FOR AN OPEN
FDCM

DIAGNOSTIC TEST

1. **DTC ACTIVE**

CAUTION: Before removing the FDCM harness connector, clean the connector and locking cam area of dirt and debris. Failure to do so can result in the connector being jammed or damage to the locking cams on the harness connector or module. Do not force the assist arm when releasing or installing the harness connector.

NOTE: If set along with this DTC, diagnose any Stabilizer Select Switch DTC(s) first before continuing.

1. Turn the ignition on, engine not running
2. With the scan tool read FDCM DTC(s).

   Is the DTC active at this time?

   Yes

   - Go To 2.

   No

   - Go To 7.

2. **DISCONNECTING STABILIZER BAR SWITCH**

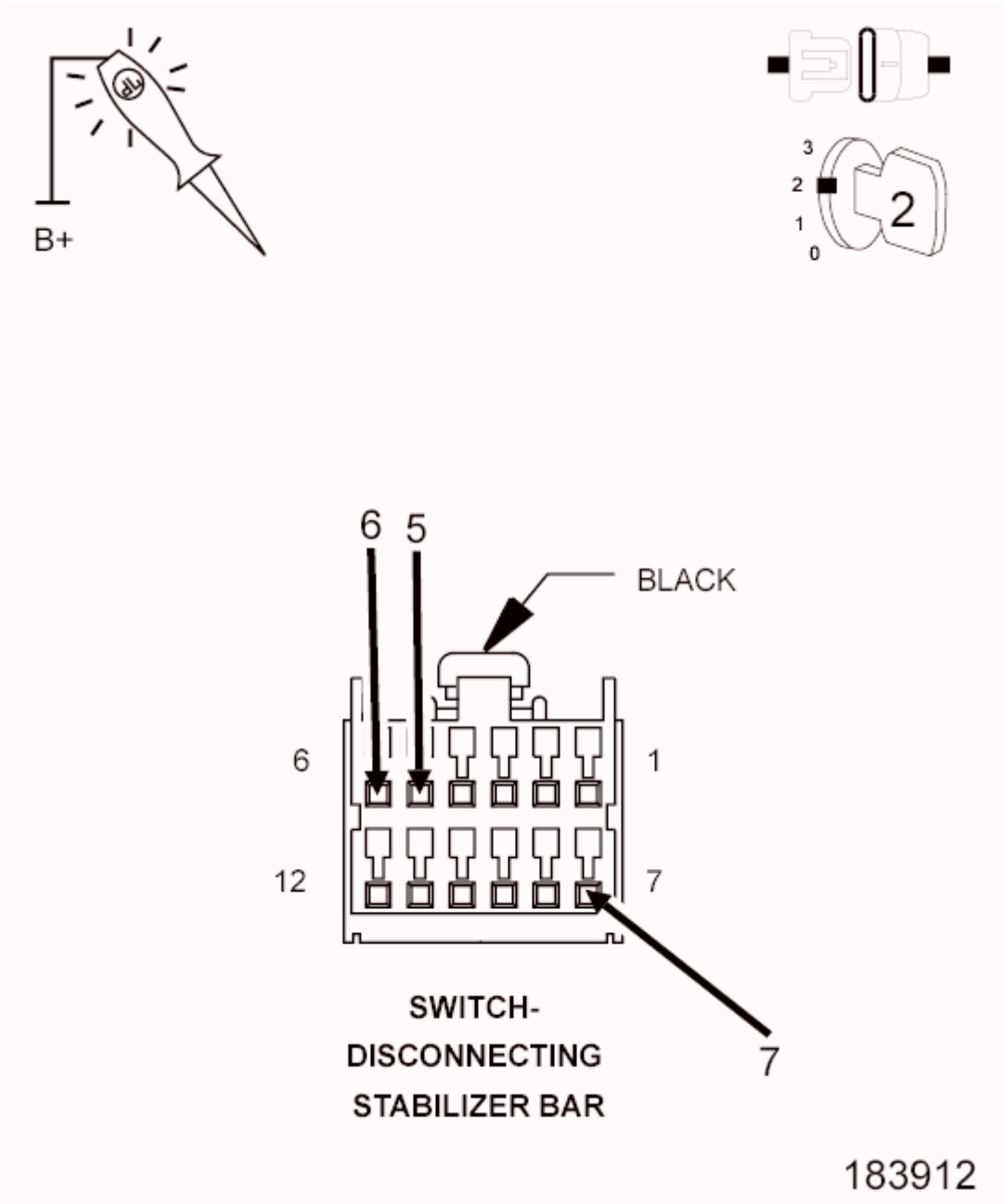

Fig. 97: Checking Disconnecting Stabilizer Switch
Courtesy of CHRYSLER GROUP, LLC

NOTE: **Before continuing with the below diagnostic test, ensure the FDCM harness connector seal is installed correctly. Inspect the terminals on both harness connector and the module for damage. Failure to do so can result in misdiagnoses of the system.**

1. Turn the ignition off.
2. Disconnect the Disconnecting Stabilizer Bar Switch harness connector.

3. Turn the ignition on.
4. Using a test light connected to battery voltage, probe the (T532) Locker Open Illumination Sense circuit in the Disconnecting Stabilizer Bar Switch harness connector.
5. With the scan tool select System Test and actuate the Locker Open Illumination LED. Select the blinking option.

NOTE: Repeat the above test for the (T533) Locker Rear Illumination Sense circuit and (T534) Locker FR/RR Illumination Sense circuit one at a time.

Does the test light illuminate and flash on and off at each circuit?

Yes

- Go To 3.

No

- Go to 5.

3. **(T536) SWITCH SUPPLY CIRCUIT FOR A SHORT TO VOLTAGE**

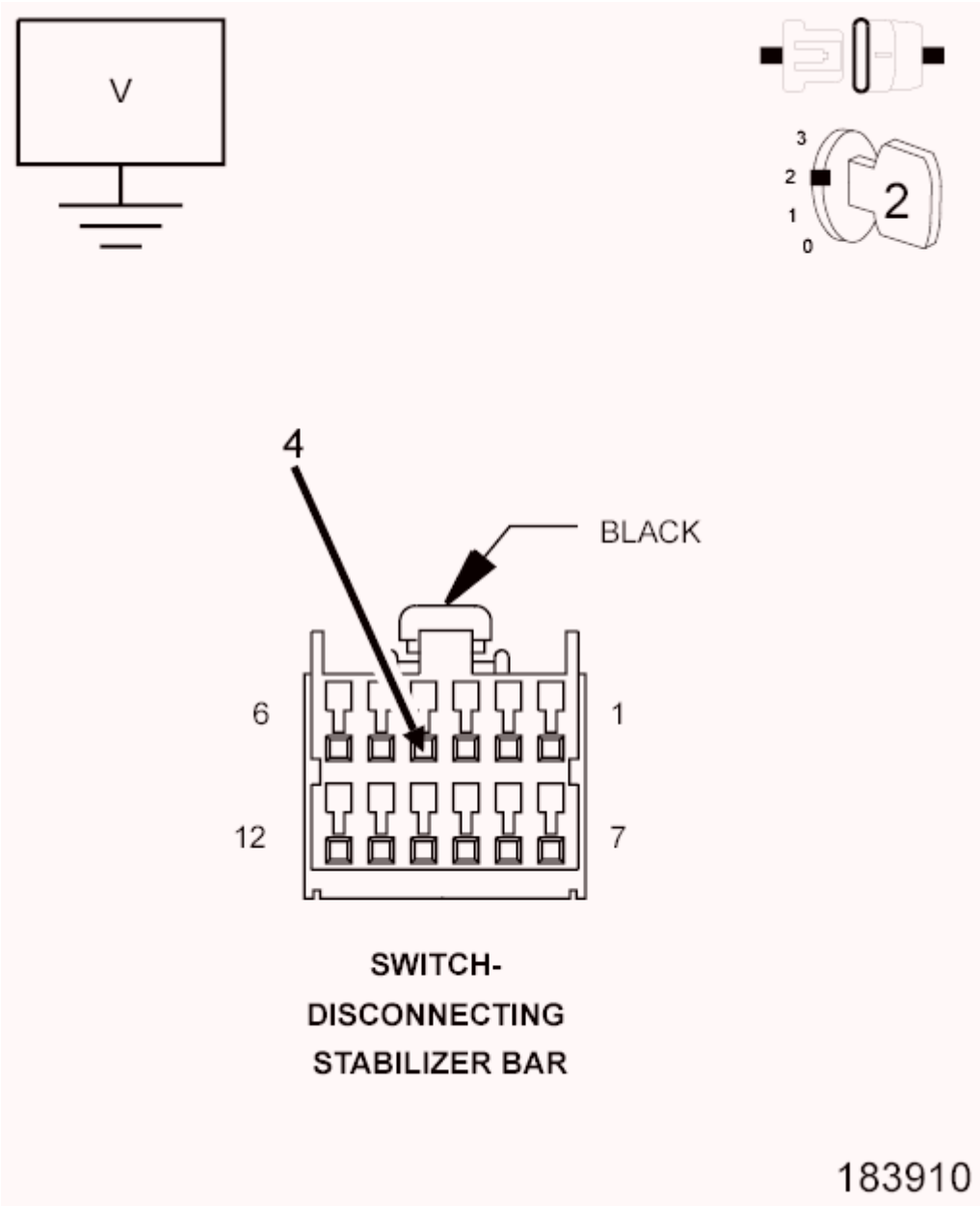

Fig. 98: Checking Disconnecting Stabilizer Switch Operation
Courtesy of CHRYSLER GROUP, LLC

1. Turn the ignition off.
2. Disconnect the Disconnecting Stabilizer Bar Switch harness connector
3. Disconnect the FDCM harness connector.
4. Turn the ignition on.
5. Measure the voltage on the (T536) Switch Supply circuit in the Disconnecting Stabilizer Switch harness connector.

   Does the voltmeter indicate voltage present?

Yes

- Replace the Disconnecting Stabilizer Bar Switch.
- Perform FDCM VERIFICATION TEST. Refer to **FDCM VERIFICATION TEST**.

No

- Go To 4.

4. **(T536) SWITCH SUPPLY CIRCUIT FOR AN OPEN**

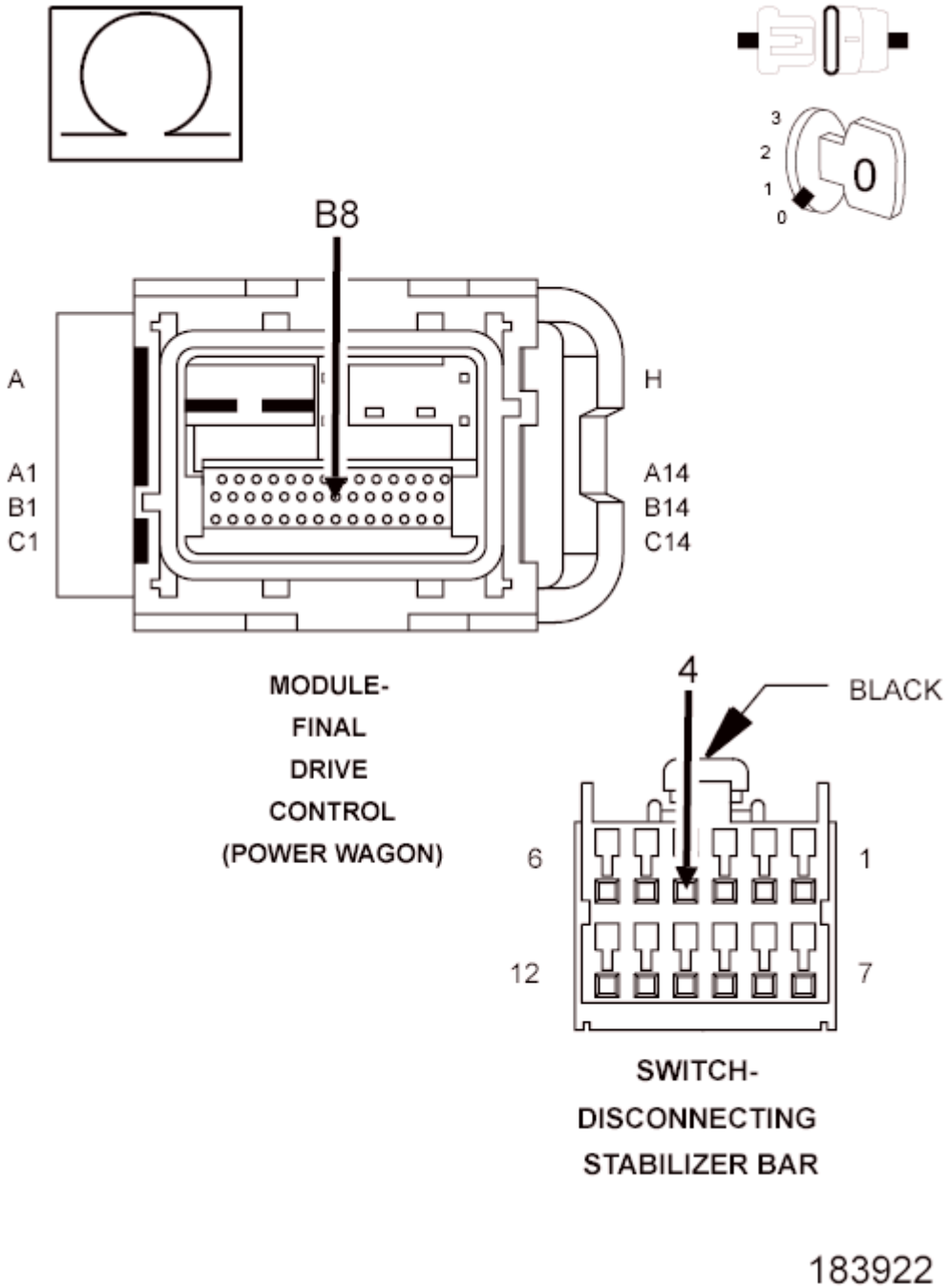

Fig. 99: Checking Switch Supply Circuit For An Open
Courtesy of CHRYSLER GROUP, LLC

1. Turn the ignition off.
2. Measure the resistance of the (T536) Switch Supply circuit between the Disconnecting Stabilizer Switch harness connector and the FDCM harness connector.

   Is the resistance below 5.0 ohms?

Yes

- Replace the FDCM in accordance with the Service Information.
- Perform FDCM VERIFICATION TEST. Refer to **FDCM VERIFICATION TEST**.

No

- Repair the open in the Switch Supply circuit.
- Perform FDCM VERIFICATION TEST. Refer to **FDCM VERIFICATION TEST**.

5. **(T532, T533 or T534) LOCKER ILLUMINATION SENSE CIRCUIT FOR A SHORT TO VOLTAGE**

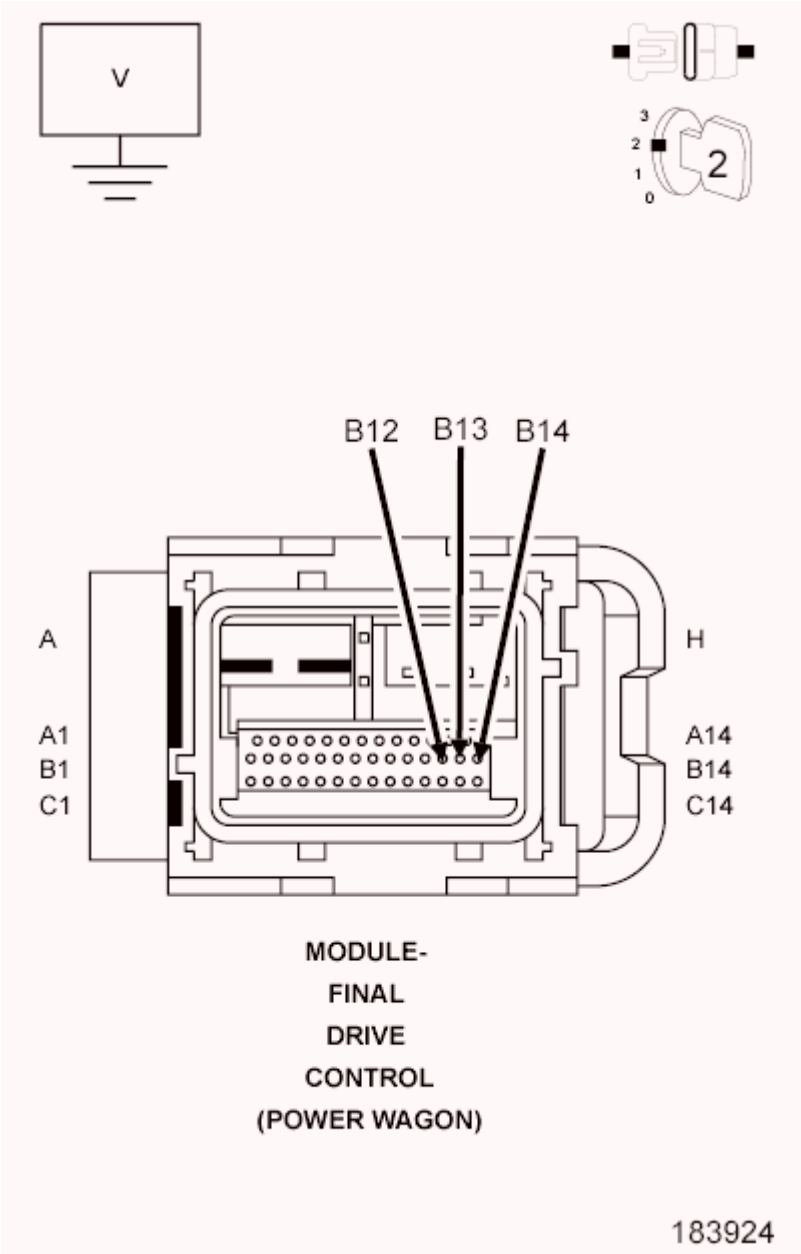

Fig. 100: Checking Locker Illumination Sense Circuit For Short To Voltage
Courtesy of CHRYSLER GROUP, LLC

1. Disconnect the Disconnecting Stabilizer Switch harness connector.
2. Measure the voltage at each of the following circuit at the FDCM harness connector.
   - (T532) Locker Open Illumination Sense circuit
   - (T533) Locker Rear Illumination Sense circuit
   - (T534) Locker FR/RR Illumination Sense circuit

   Does the voltmeter indicate voltage present for any of the above circuit?

   Yes

   - Repair the Locker Illumination Sense circuit that indicated a short to voltage.
   - Perform FDCM VERIFICATION TEST. Refer to **FDCM VERIFICATION TEST**.

   No

   - Go To 6.

6. **(T532, T533 or T534) LOCKER ILLUMINATION SENSE CIRCUIT FOR AN OPEN**

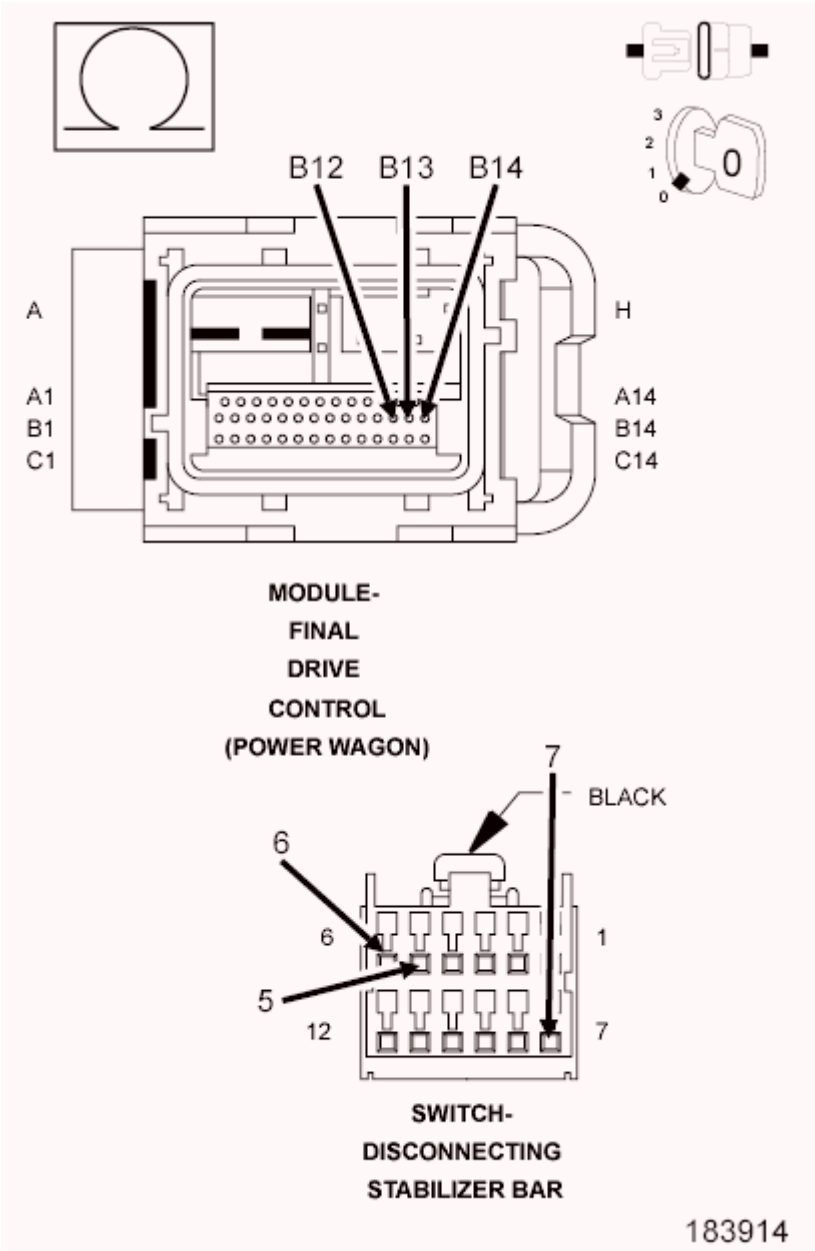

Fig. 101: Checking Locker Illumination Sense Circuit For Open Or High Resistance
Courtesy of CHRYSLER GROUP, LLC

1. Measure the resistance of each of the following circuits between the FDCM harness connector and the Disconnecting Stabilizer Switch harness connector.
   - (T532) Locker Open Illumination Sense circuit
   - (T533) Locker Rear Illumination Sense circuit
   - (T534) Locker FR/RR Illumination Sense circuit

   Does the ohmmeter indicate each measurement below 5.0 ohms?

   Yes

- Replace the FDCM in accordance with the Service Information.
- Perform FDCM VERIFICATION TEST. Refer to **FDCM VERIFICATION TEST**.

No

- Repair the Locker Illumination Sense circuit that indicated an open circuit.
- Perform FDCM VERIFICATION TEST. Refer to **FDCM VERIFICATION TEST**.

7. **INTERMITTENT WIRING AND CONNECTORS**
    1. The conditions necessary to set this DTC are not present at this time.
    2. Using the schematics as a guide, inspect the wiring and connectors specific to this circuit.
    3. Wiggle test the wiring harness and connectors while checking for shorted and open circuits.
    4. Using the scan tool monitor the data related to this circuit while performing the wiggle test. Look for the data to change or for the DTC to reset.

    Were there any problems found?

    Yes

    - Repair as necessary.
    - Perform FDCM VERIFICATION TEST. Refer to **FDCM VERIFICATION TEST**.

    No

    - Test Complete.

C2324-STABILIZER BAR INDICATOR CONTROL CIRCUIT

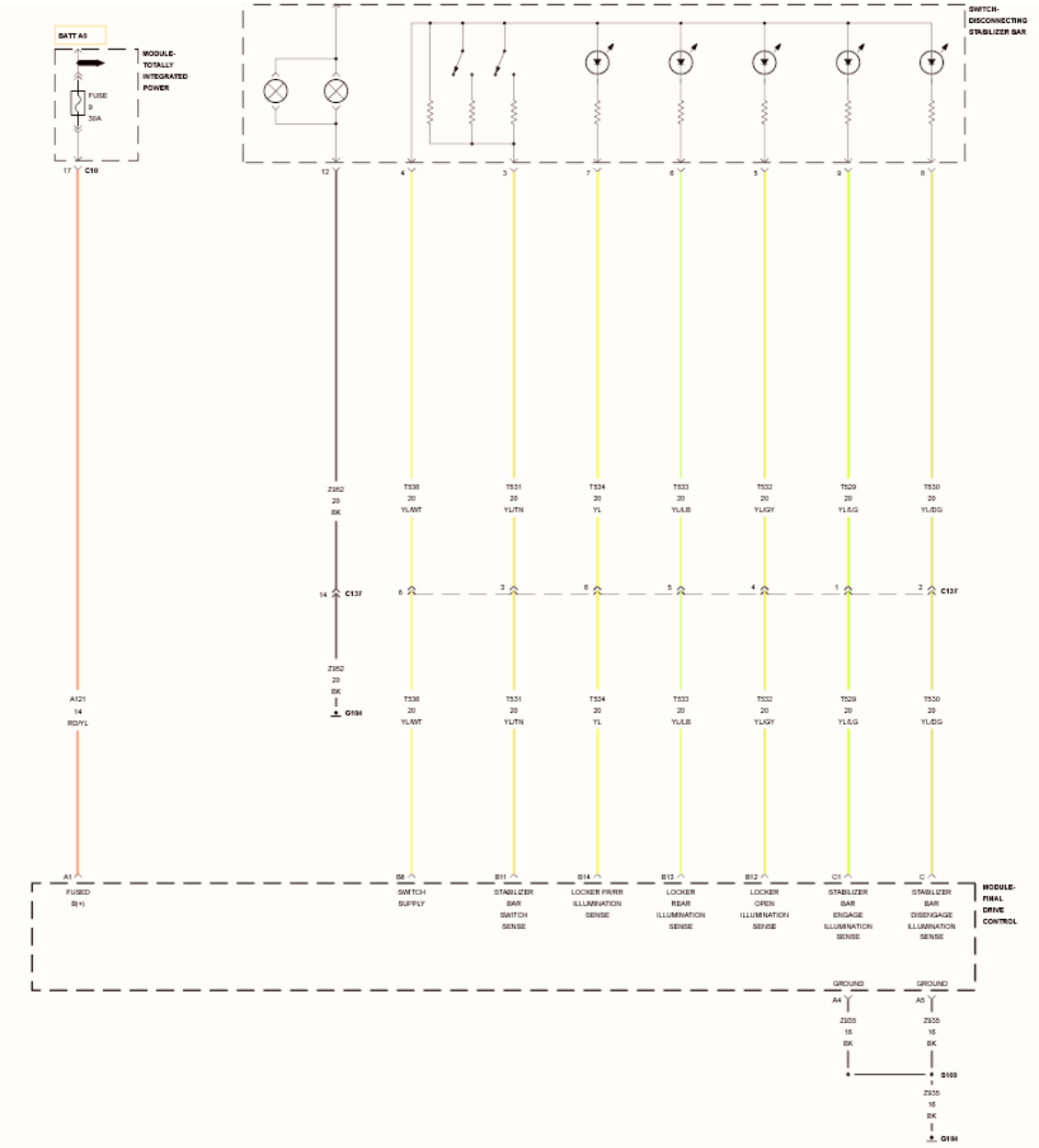

Fig. 102: Locker/Differential Indicator Power Supply Wiring Diagram
Courtesy of CHRYSLER GROUP, LLC

For a complete wiring diagram, **refer to appropriate SYSTEM WIRING DIAGRAMS article** .

WHEN MONITORED:

Ignition on.

SET CONDITION:

The FDCM sense an the voltage on the Switch Supply circuit is high.

POSSIBLE CAUSES

Possible Causes
DISCONNECTING STABILIZER SWITCH
(T536) SWITCH SUPPLY CIRCUIT FOR A SHORT TO VOLTAGE
(T536) SWITCH SUPPLY CIRCUIT FOR AN OPEN
(T529 or T530) STABILIZER BAR ILLUMINATION SENSE CIRCUIT(S) SHORTED TO VOLTAGE
(T529 or T530) STABILIZER BAR ILLUMINATION SENSE CIRCUIT(S) OPEN
(T529 or T530) STABILIZER BAR ILLUMINATION SENSE CIRCUIT(S) SHORTED TO GROUND
FDCM

DIAGNOSTIC TEST

1. **DTC ACTIVE**

CAUTION: Before removing the FDCM harness connector, clean the connector and locking cam area of dirt and debris. Failure to do so can result in the connector being jammed or damage to the locking cams on the harness connector or module. Do not force the assist arm when releasing or installing the harness connector.

NOTE: If set along with this DTC, diagnose any Stabilizer Select Switch DTC(s) first before continuing.

1. Turn the ignition on, engine not running
2. With the scan tool read FDCM DTC(s).

   Is the DTC active at this time?

   Yes

   - Go To 2.

   No

   - Go To 8.

2. **DISCONNECTING STABILIZER BAR SWITCH**

NOTE: Before continuing with the below diagnostic test, ensure the FDCM harness connector seal is installed correctly. Inspect the terminals on both harness connector and the module for damage. Failure to do so can result in misdiagnoses of the system.

1. Turn the ignition off.

2. Disconnect the Disconnecting Stabilizer Bar Switch harness connector.
3. Turn the ignition on.
4. Using a test light connected to battery voltage, probe the (T529) Stabilizer Bar Engage Illumination Sense circuit in the Disconnecting Stabilizer Bar Switch harness connector.
5. With the scan tool, select System Test and actuate the Stabilizer Bar Engage Illumination LED. Select the blinking option.

NOTE: Repeat the above test for the Stabilizer Bar Disengage Illumination Sense circuit.

Does the test light illuminate and flash on and off at each circuit?

Yes

Go To 3.

No

- Go To 5.

3. **(T536) SWITCH SUPPLY CIRCUIT FOR A SHORT TO VOLTAGE**

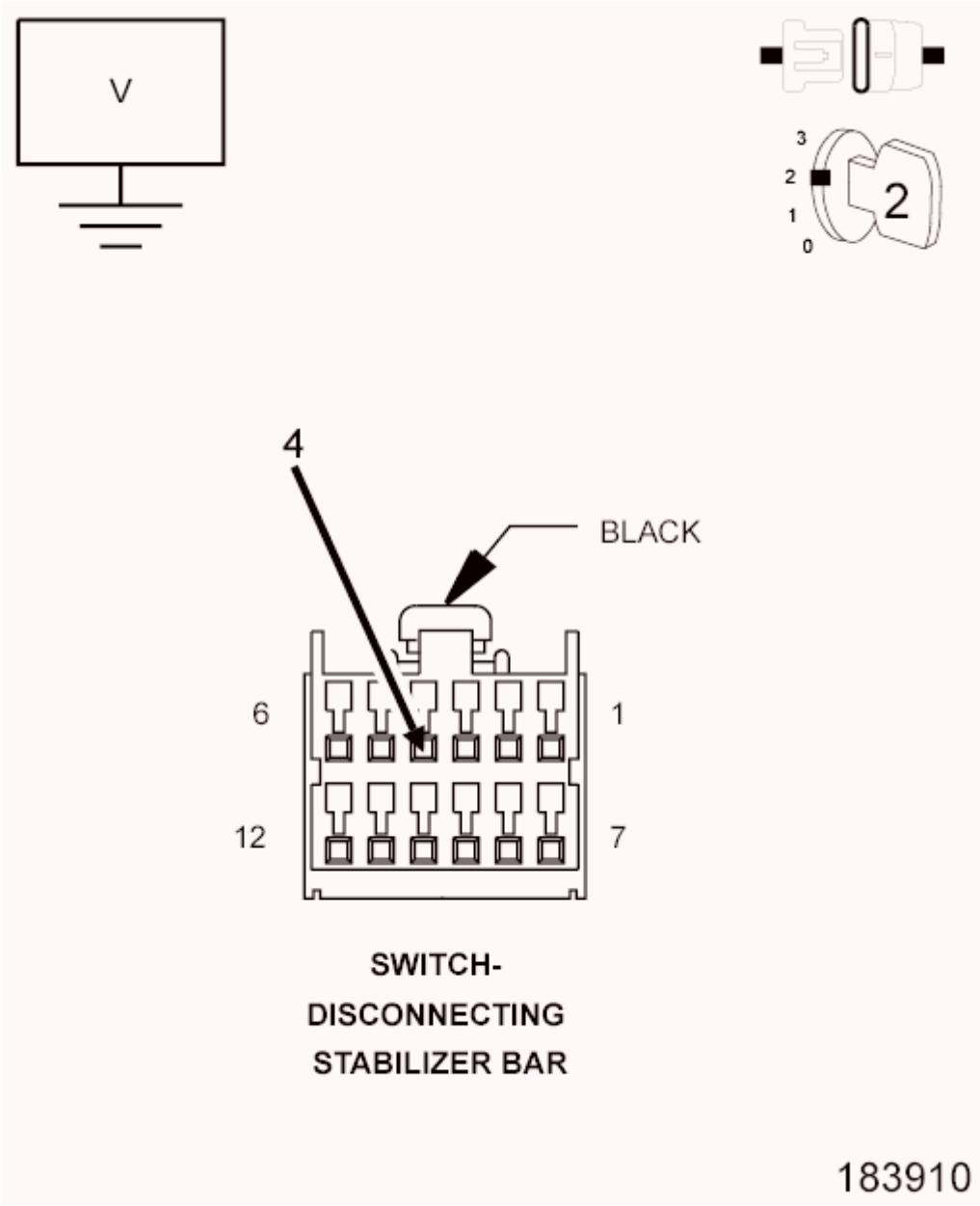

Fig. 103: Checking Disconnecting Stabilizer Switch Operation
Courtesy of CHRYSLER GROUP, LLC

1. Turn the ignition off.
2. Disconnect the Disconnecting Stabilizer Bar Switch harness connector
3. Disconnect the FDCM harness connector.
4. Turn the ignition on.
5. Measure the voltage on the (T536) Switch Supply circuit in the Disconnecting Stabilizer Switch harness connector.

   Does the voltmeter indicate voltage present?

Yes

- Replace the Disconnecting Stabilizer Bar Switch.
- Perform FDCM VERIFICATION TEST. Refer to **FDCM VERIFICATION TEST**.

No

- Go To 4.

4. **(T536) SWITCH SUPPLY CIRCUIT FOR AN OPEN**

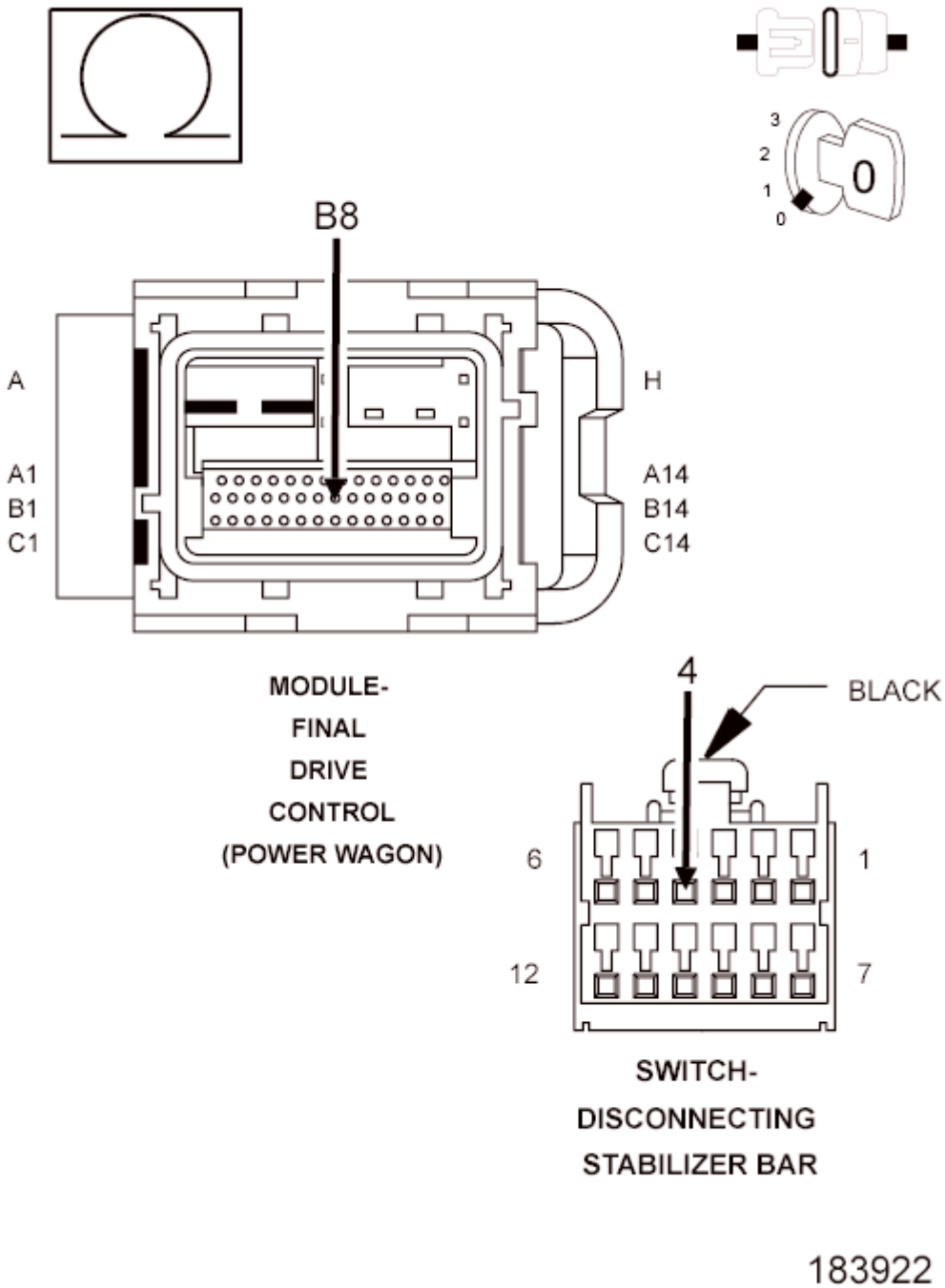

Fig. 104: Checking Switch Supply Circuit For An Open
Courtesy of CHRYSLER GROUP, LLC

1. Turn the ignition off.
2. Measure the resistance of the (T536) Switch Supply circuit between the Disconnecting Stabilizer Switch harness connector and the FDCM harness connector.

   Is the resistance below 5.0 Ohms?

Yes

- Replace the FDCM in accordance with the Service Information.
- Perform FDCM VERIFICATION TEST. Refer to **FDCM VERIFICATION TEST**.

No

- Repair the open in the (T536) Switch Supply circuit.
- Perform FDCM VERIFICATION TEST. Refer to **FDCM VERIFICATION TEST**.

5. **(T529 or T530) STABILIZER BAR ILLUMINATION SENSE CIRCUIT(S) SHORTED TO VOLTAGE**

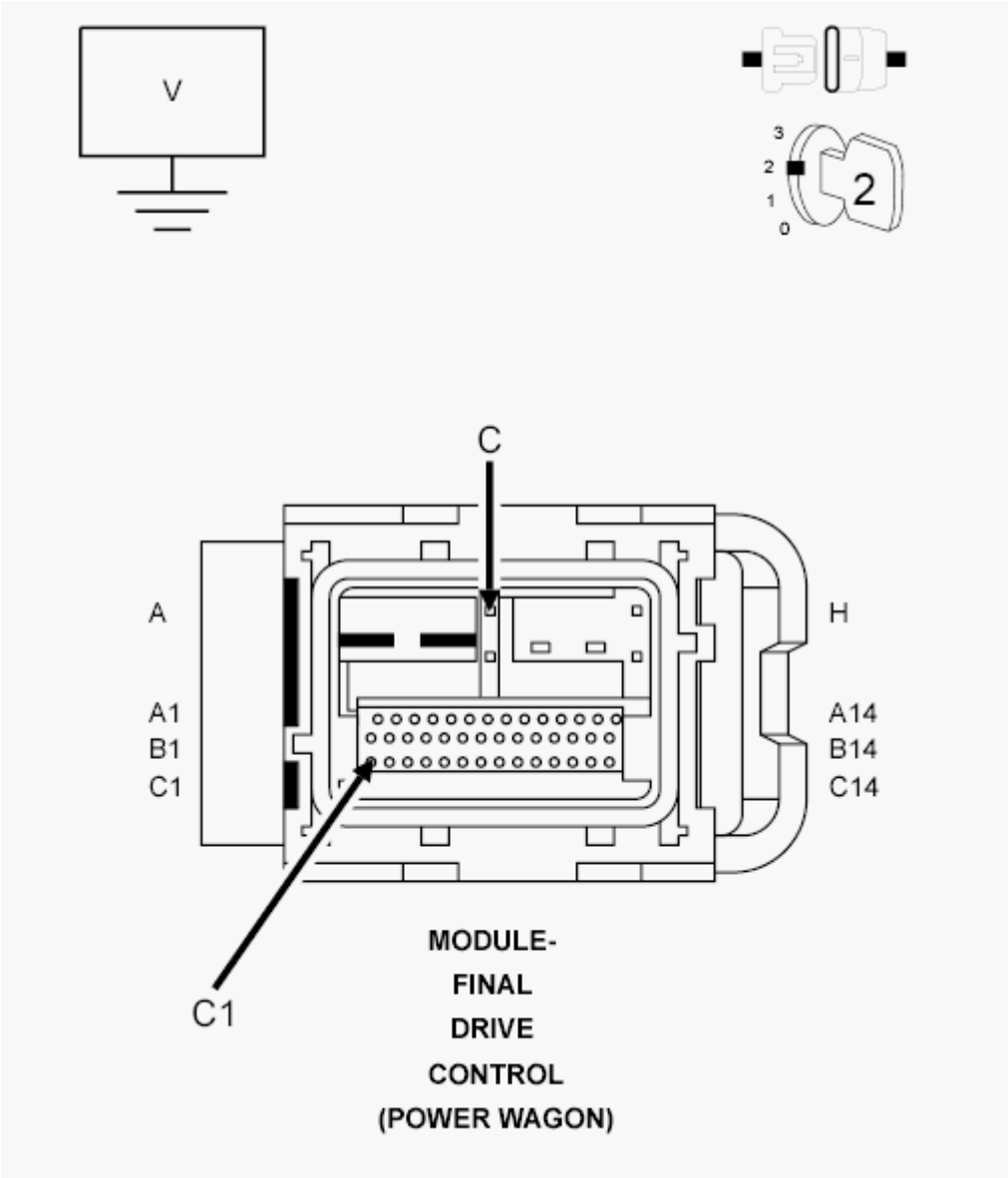

Fig. 105: Checking Stabilizer Bar Illumination Sense Circuit(s) For Short To Voltage
Courtesy of CHRYSLER GROUP, LLC

1. Disconnect the Disconnecting Stabilizer Switch harness connector.
2. Disconnect the FDCM harness connector.
3. Measure the voltage at each of the following circuit at the FDCM harness connector.
   - (T529) Stabilizer Bar Engage Illumination Sense circuit.
   - (T530) Stabilizer Bar Disengage Illumination Sense circuit.

   Does the voltmeter indicate voltage present for any of the above circuit?

   Yes

   - Repair the Stabilizer Bar Illumination Sense circuit(s) that indicated a short to voltage.
   - Perform FDCM VERIFICATION TEST. Refer to **FDCM VERIFICATION TEST**.

   No

   - Go To 6.

6. **(T529 or T530) STABILIZER BAR ILLUMINATION SENSE CIRCUIT(S) SHORTED TO GROUND**

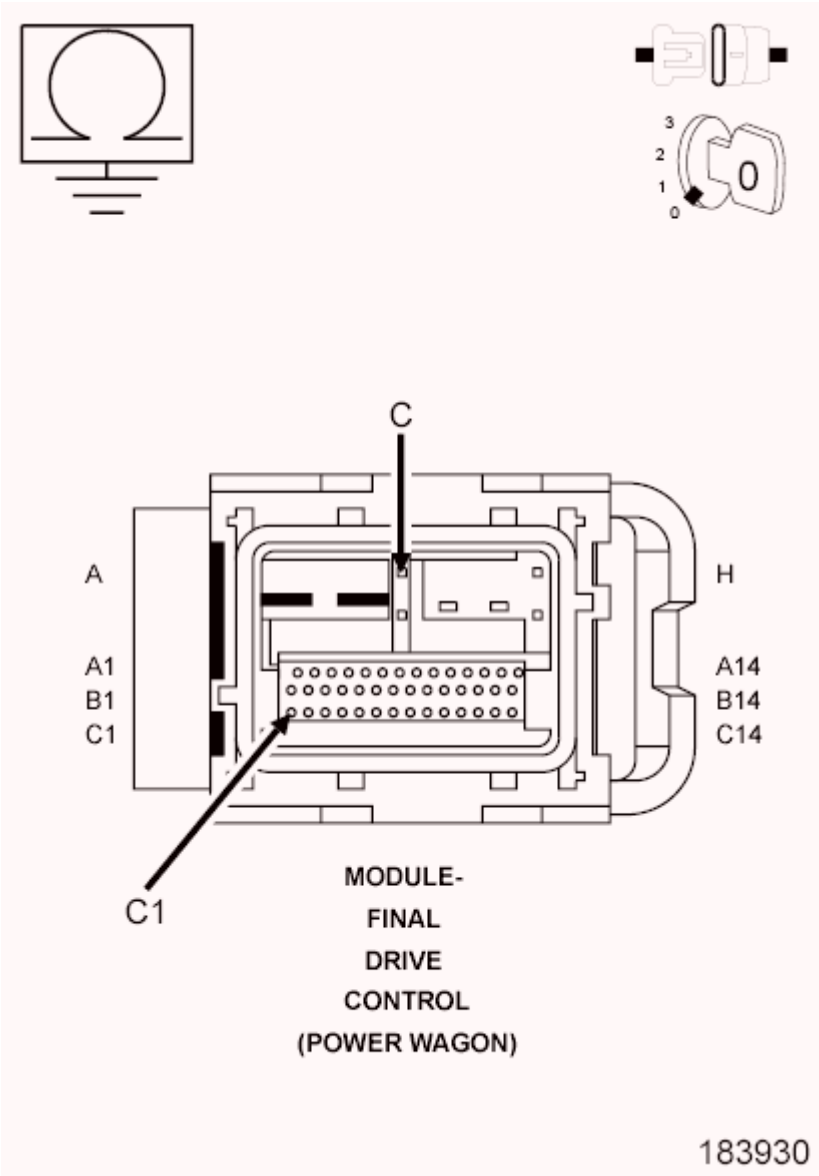

Fig. 106: Checking Stabilizer Bar Illumination Sense Circuit(s) For Short To Ground
Courtesy of CHRYSLER GROUP, LLC

1. Measure the resistance of each of the following circuit at the FDCM harness connector to ground.
   - (T529) Stabilizer Bar Engage Illumination Sense circuit.
   - (T530) Stabilizer Bar Disengage Illumination Sense circuit.

   Does the Ohmmeter read below 100 Ohms for any of the above circuit checks?

   Yes

   - Repair the short to ground in the Illumination Sense circuit that indicated the resistance reading below 100 Ohms.
   - Perform FDCM VERIFICATION TEST. Refer to **FDCM VERIFICATION TEST**.

No

- Go To 7.

7. **(T529 or T530) STABILIZER BAR ILLUMINATION SENSE CIRCUIT(S) OPEN**

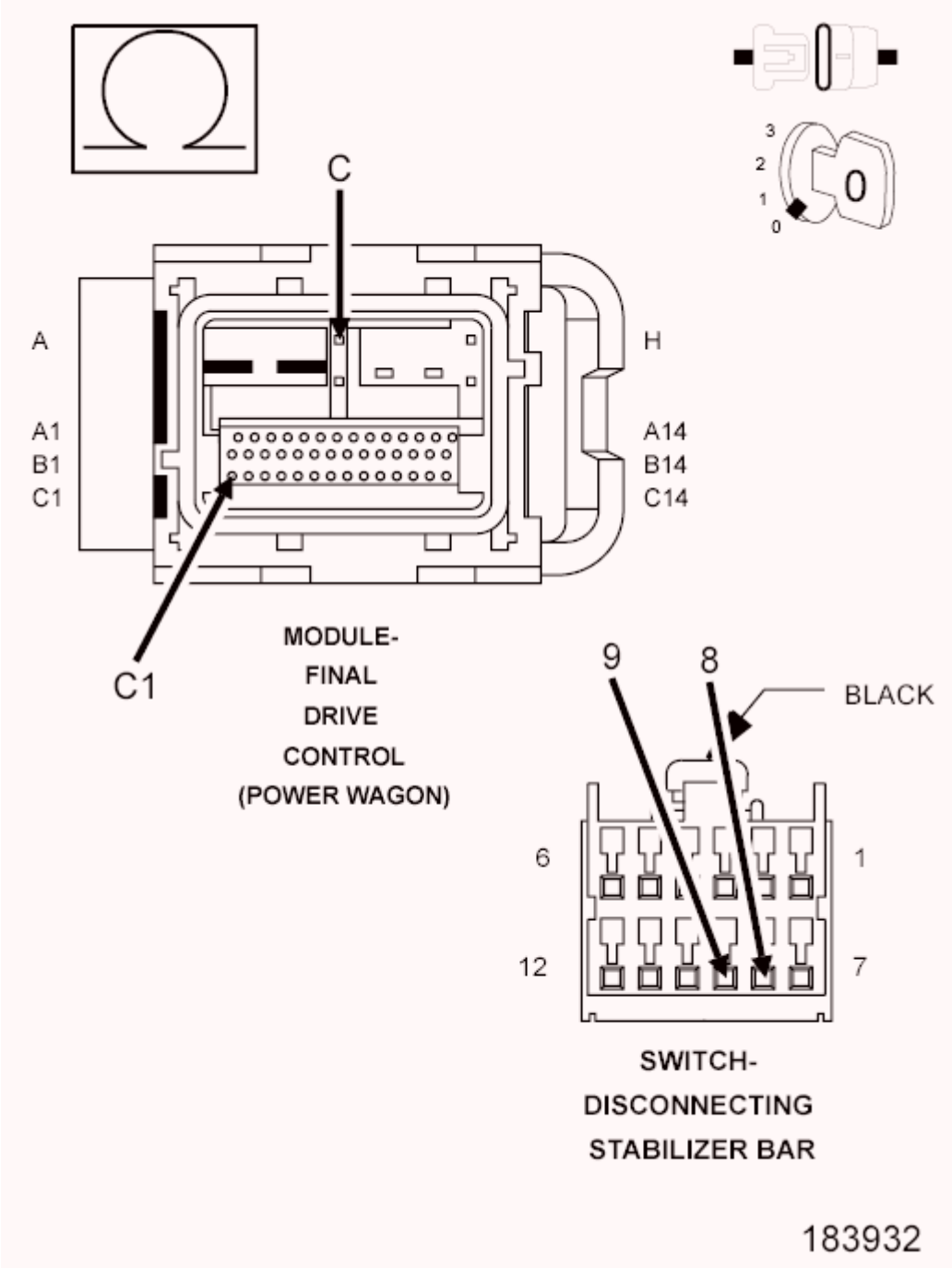

Fig. 107: Checking Stabilizer Bar Illumination Sense Circuit(s) For An Open
Courtesy of CHRYSLER GROUP, LLC

1. Measure the resistance of each of the following circuits between the FDCM harness connector and

the Disconnecting Stabilizer Switch harness connector.

- (T529) Stabilizer Bar Engage Illumination Sense circuit
- (T530) Stabilizer Bar Disengage Illumination Sense circuit

Does the Ohmmeter indicate each measurement below 5.0 Ohms?

Yes

- Replace the FDCM in accordance with the Service Information.
- Perform FDCM VERIFICATION TEST. Refer to **FDCM VERIFICATION TEST**.

No

- Repair the Stabilizer Bar Illumination Sense circuit(s) that indicated an open circuit.
- Perform FDCM VERIFICATION TEST. Refer to **FDCM VERIFICATION TEST**.

8. **INTERMITTENT WIRING AND CONNECTORS**
   1. The conditions necessary to set this DTC are not present at this time.
   2. Using the schematics as a guide, inspect the wiring and connectors specific to this circuit.
   3. Wiggle test the wiring harness and connectors while checking for shorted and open circuits.
   4. Using the scan tool monitor the data related to this circuit while performing the wiggle test. Look for the data to change or for the DTC to reset.

   Were there any problems found?

   Yes

   - Repair as necessary.
   - Perform FDCM VERIFICATION TEST. Refer to **FDCM VERIFICATION TEST**.

   No

   - Test Complete.

U0100-LOST COMMUNICATION WITH ECM/PCM

For a complete wiring diagram, **refer to appropriate SYSTEM WIRING DIAGRAMS article** .

WHEN MONITORED:

With the ignition on

Battery voltage between 10 and 16 volts

IOD fuse installed

TIPM is configured correctly

SET CONDITION:

Bus messages not received from the ECM/PCM for approximately two to five seconds.

POSSIBLE CAUSES

Possible Causes
CAN B OR CAN C BUS CIRCUITS OPEN OR SHORTED
DTC's RELATED TO BATTERY VOLTAGE, IGNITION, OR VIN MESSAGES
TOTALLY INTEGRATED POWER MODULE (TIPM) NOT CONFIGURED CORRECTLY
ECM/PCM POWER AND GROUND
ECM/PCM
MODULE THAT SET THIS DTC

DIAGNOSTIC TEST

1. **VERIFY DTC IS ACTIVE**

   NOTE: Make sure the IOD fuse is installed and battery voltage is between 10 and 16 volts before proceeding.

   1. Ignition on, engine not running.
   2. With the scan tool, read DTC's.

      Is this DTC active?

      Yes

      - Go To 2.

      No

      - Go To 5.
2. **CHECK FOR ANY OF THE FOLLOWING ACTIVE DTC's**
   1. With the scan tool, read all active DTC's from all modules.
   2. Check for:
      - TIPM configuration.
      - CAN B or C hardware electrical.
      - VIN Missing/Mismatch.
      - Battery or ignition related DTC's.

      Does the scan tool display any active DTC's to the conditions listed above?

Yes

- Refer to **3.7L/4.7L/5.7L - DIAGNOSTIC CODE INDEX - NGC - 1500 & 2500** or **6.7L - DIAGNOSTIC CODE INDEX - 2500 & 3500** or **5.7L - DIAGNOSTIC CODE INDEX - 3500 CAB & CHASSIS** or **6.7L - DIAGNOSTIC CODE INDEX - 3500 CAB & CHASSIS, 4500 & 5500** and perform the appropriate diagnostic test procedure.

No

- Go To 3.

3. **VERIFY THAT THE ECM/PCM IS ACTIVE ON THE BUS**
   1. Ignition on, engine not running.
   2. With the scan tool, select Network Diagnostics.
   3. Verify that the PCM is active on the bus.

   Is the PCM active on the bus?

   Yes

   - Go To 4.

   No

   - Perform the appropriate diagnostic procedure. Refer to **TIPM - DIAGNOSIS AND TESTING** .

4. **CHECK FOR ADDITIONAL COMMUNICATION RELATED DTC's**
   1. With the scan tool, select Network Diagnostics.

   Is there more than one module with active DTC's "Logged Against" the PCM?

   Yes

   - Replace the Powertrain Control Module (PCM) in accordance with the service information.
   - Perform the POWERTRAIN VERIFICATION TEST. Refer to **1500 & 2500 - 3.7L, 4.7L & 5.7L - POWERTRAIN VERIFICATION TEST** or **2500 & 3500 - POWERTRAIN VERIFICATION TEST - 6.7L** or **3500 CAB & CHASSIS - POWERTRAIN VERIFICATION TEST** or **3500 CAB & CHASSIS, 4500 & 5500 - POWERTRAIN VERIFICATION TEST - 6.7L** .

   No

   - Replace the module that set this DTC in accordance with the service information.
   - Perform FDCM VERIFICATION TEST. Refer to **FDCM VERIFICATION TEST**.

5. **INTERMITTENT WIRING AND CONNECTORS**
   1. The conditions necessary to set this DTC are not present at this time.

2. Using the schematics as a guide, inspect the wiring and connectors specific to this circuit.
3. Wiggle test the wiring harness and connectors while checking for shorted and open circuits.
4. Using the scan tool, monitor the data related to this circuit while performing the wiggle test. Look for the data to change or for the DTC to reset.

   Were there any problems found?

   Yes

   - Repair as necessary.
   - Perform FDCM VERIFICATION TEST. Refer to **FDCM VERIFICATION TEST**.

   No

   - Test complete.

U0155-NO CLUSTER BUS MESSAGE

For a complete wiring diagram, **refer to appropriate SYSTEM WIRING DIAGRAMS article** .

WHEN MONITORED:

Ignition key on and battery voltage greater than 10.4 volts.

SET CONDITION:

No messages received from the MIC (Instrument Cluster) for more than 20 seconds. One Trip Fault. Three good trips to turn off the MIL.

POSSIBLE CAUSES

Possible Causes
BUS CIRCUIT FOR AN OPEN OR SHORTED
INSTRUMENT CLUSTER
POWERTRAIN CONTROL MODULE (PCM)

Perform the Pre-Diagnostic Troubleshooting procedure before proceeding. Refer to 3.7L, 4.7L & 5.7L - PRE-DIAGNOSTIC TROUBLESHOOTING PROCEDURE or 5.7L 3500 CAB & CHASSIS - PRE-DIAGNOSTIC TROUBLESHOOTING PROCEDURE or 2500 & 3500 - PRE-DIAGNOSTIC TROUBLESHOOTING PROCEDURE - 6.7L or 3500 CAB & CHASSIS, 4500 & 5500 - PRE-DIAGNOSTIC TROUBLESHOOTING PROCEDURE - 6.7L .

DIAGNOSTIC TEST

1. **ACTIVE DTC**
   1. Ignition on, engine not running.

2. With the scan tool, erase DTC's.
3. Cycle the ignition key on and off several times.
4. With the scan tool, read DTC's.

   Does the DTC reset?

   Yes

   - Go To 2.

   No

   - Go To 4.

2. **COMMUNICATE WITH CLUSTER**
   1. With the scan tool, attempt to communicate with the Instrument Cluster.

      Can communication be established with the Instrument Cluster?

      Yes

      - Go To 3.

      No

      - Refer to **TIPM - DIAGNOSIS AND TESTING** and perform the U0155-Lost Communication with Cluster/CCN diagnostic procedure.

3. **INSTRUMENT CLUSTER OPERATION**
   1. Start the engine
   2. Allow the engine to idle.

      Is the correct engine speed display in the instrument cluster (Tach)?

      Yes

      - Replace and program the Powertrain Control Module in accordance with the Service Information.
      - Perform the POWERTRAIN VERIFICATION TEST. Refer to **1500 & 2500 - 3.7L, 4.7L & 5.7L - POWERTRAIN VERIFICATION TEST** or **2500 & 3500 - POWERTRAIN VERIFICATION TEST - 6.7L** or **3500 CAB & CHASSIS - POWERTRAIN VERIFICATION TEST** or **3500 CAB & CHASSIS, 4500 & 5500 - POWERTRAIN VERIFICATION TEST - 6.7L** .

      No

      - Refer to **CCN - DIAGNOSIS AND TESTING** and perform the appropriate diagnostic

procedure.

4. **INTERMITTENT WIRING AND CONNECTORS**
    1. The conditions necessary to set this DTC are not present at this time.
    2. Using the schematics as a guide, inspect the wiring and connectors specific to this circuit.
    3. Wiggle test the wiring harness and connectors while checking for shorted and open circuits.
    4. Using the scan tool, monitor the data related to this circuit while performing the wiggle test. Look for the data to change or for the DTC to reset.

    Were there any problems found?

    Yes

    - Repair as necessary.
    - Perform FDCM VERIFICATION TEST. Refer to **FDCM VERIFICATION TEST**.

    No

    - Test complete.

U0401-IMPLAUSIBLE DATA RECEIVED FROM PCM

For a complete wiring diagram, **refer to appropriate SYSTEM WIRING DIAGRAMS article** .

WHEN MONITORED:

Continuously with the ignition on, one valid CAN message received at least once, and no U0002-CAN C Bus Off Performance DTC present.

SET CONDITION:

When the Final Drive Control Module detects an incorrect CAN message from the Power Control Module (PCM).

POSSIBLE CAUSES

Possible Causes
TOTALLY INTEGRATED POWER MODULE (TIPM) NOT CONFIGURED CORRECTLY
ACTIVE POWERTRAIN CONTROL MODULE DTC's
FINAL DRIVE CONTROL MODULE (FDCM)

DIAGNOSTIC TEST

1. **CHECK FOR DTC U0401-IMPLAUSIBLE DATA RECEIVED FROM PCM**

    NOTE: This DTC must be active for the results of this test to be valid.

1. Turn the ignition on.
2. With the scan tool, record and erase DTC's.
3. Cycle the ignition switch from off to on.
4. With the scan tool, read DTC's.

   Does the scan tool display: U0401-IMPLAUSIBLE DATA RECEIVED FROM PCM?

   Yes

   - Go To 2.

   No

   - Go To 4.

2. **CHECK IF TIPM CAN BUS DTC's ARE PRESENT**
   1. With the scan tool, read TIPM DTC's.

      Are there any TIPM CAN BUS DTC's present?

      Yes

      - Refer to **TIPM - DIAGNOSIS AND TESTING** and perform the appropriate CAN Bus diagnostic procedure.

      No

      - Go To 3.

3. **PCM DTC's ARE PRESENT**
   1. With the scan tool, read Powertrain Control Module DTC's.

      Are there any PCM DTC's present?

      Yes

      - Refer to **3.7L/4.7L/5.7L - DIAGNOSTIC CODE INDEX - NGC - 1500 & 2500** or **6.7L - DIAGNOSTIC CODE INDEX - 2500 & 3500** or **5.7L - DIAGNOSTIC CODE INDEX - 3500 CAB & CHASSIS** or **6.7L - DIAGNOSTIC CODE INDEX - 3500 CAB & CHASSIS, 4500 & 5500** and perform the appropriate diagnostic test procedure.

      No

      - Replace the Final Drive Control Module (FDCM) in accordance with the Service Information.
      - Perform FDCM VERIFICATION TEST. Refer to **FDCM VERIFICATION TEST**.

4. **INTERMITTENT WIRING AND CONNECTORS**

1. The conditions necessary to set this DTC are not present at this time.
2. Using the schematics as a guide, inspect the wiring and connectors specific to this circuit.
3. Wiggle test the wiring harness and connectors while checking for shorted and open circuits.
4. Using the scan tool, monitor the data related to this circuit while performing the wiggle test. Look for the data to change or for the DTC to reset.

   Were there any problems found?

   Yes

   - Repair as necessary.
   - Perform FDCM VERIFICATION TEST. Refer to **FDCM VERIFICATION TEST**.

   No

   - Test complete.

U0431-IMPLAUSIBLE DATA RECEIVED FROM FCM (TIPM)

For a complete wiring diagram, **refer to appropriate SYSTEM WIRING DIAGRAMS article** .

WHEN MONITORED:

With the ignition on for Four seconds, no CAN BUS circuit error condition present, no lost communication with Totally Integrated Power Module (TIPM) condition present, and no system undervoltage or overvoltage condition present.

SET CONDITION:

The Final Drive Control Module (FDCM) is receiving no message or implausible data for Ambient Temperature from the TIPM.

POSSIBLE CAUSES

Possible Causes
TOTALLY INTEGRATED POWER MODULE (TIPM) DTC's PRESENT FINAL DRIVE CONTROL MODULE (FDCM)

DIAGNOSTIC TEST

1. **TOTALLY INTEGRATED POWER MODULE (TIPM) DTC's PRESENT**
   1. Ignition on, engine not running.
   2. With the scan tool, read DTC's.

      Are there any DTC's present?

Yes

- Perform the appropriate diagnostic procedure. Refer to **TIPM - DIAGNOSIS AND TESTING** .

No

- Replace the Final Drive Control Module (FDCM) in accordance with the Service Information.
- Perform FDCM VERIFICATION TEST. Refer to **FDCM VERIFICATION TEST**.

STANDARD PROCEDURE

TRANSFER CASE VERIFICATION TEST

DIAGNOSTIC TEST

1.
    1. Disconnect all jumper wires and reconnect all previously disconnected components and connectors.
    2. With the scan tool, select clear Stored DTC's.
    3. Make sure that all accessories are turned off and that the battery is fully charged.
    4. Test drive the vehicle in each Transfer Case range and verify proper operation in each range.
        - To select or deselect 2WD, AWD or 4HI mode (if equipped), vehicle speed must be below 88 Kmh (55 mph) with all wheels at vehicle speed.
        - Shifts will not take place with a wheel speed difference of greater than 21 Kmh (13 mph) between the front and rear wheels.
        - To select or deselect 4LO (if equipped), vehicle speed must be below 5 Kmh (3 mph) with the ignition on, engine not running and the transmission in neutral (automatic transmission) or the clutch pedal pressed (manual transmission).
        - To select or deselect Transfer Case Neutral (if equipped), vehicle speed must be 0 Kmh (0 mph) with the ignition on, engine not running, the brake pedal applied, and the transmission in neutral (automatic transmission) or the clutch pedal pressed (manual transmission). Press the Neutral button (if equipped) on the Transfer Case Selector Switch until the Neutral Indicator is illuminated.

        WARNING: **Apply the parking brake. The vehicle may roll with the Transfer Case in neutral.**

        -
        - To verify that the Transfer Case is in Neutral, shift the automatic transmission into reverse and release the brake pedal for three seconds or shift the manual transmission into gear and slowly release the clutch pedal. There should be no vehicle movement if the Transfer Case is in Neutral.
    5. With the scan tool, read DTC's in the Totally Integrated Power Module (TIPM) and in the

Instrument Cluster (CCN).

Are there any DTC's present in the TIPM or in the CCN?

Yes

- Perform the appropriate diagnostic procedure. Refer to **TIPM - DIAGNOSIS AND TESTING** or, Refer to **CCN - DIAGNOSIS AND TESTING** .

No

- Test complete.

FDCM VERIFICATION TEST

DIAGNOSTIC TEST

1. **PERFORM FDCM VERIFICATION TEST**

CAUTION: Before removing the FDCM harness connector, clean the connector and locking cam area of dirt and debris. Failure to do so can result in the connector being jammed or damage to the locking cams on the harness connector or module. Do not force the assist arm when releasing or installing the harness connector.

NOTE: If the SKIM, PCM or FCM was replaced, refer to the service information for proper programming procedures.

1. Disconnect all jumper wires and reconnect all previously disconnected components and connectors.
2. Ensure that all accessories are turned off.
3. Ensure that the battery is fully charged.
4. With the scan tool, record and erase all DTC(s) from the FDCM
5. Start and run the engine for 2 minutes while operating all functions of the system that caused the original concern.

NOTE: When a Stabilizer System DTC diagnostic is complete and all repairs have been made, running the Stabilizer Motor System Test and/or LED System Test can also provide verification that the DTC has been repaired and the system is operating normally.

6.
7. Turn the ignition off, wait 5 seconds, then turn the ignition on. Using the scan tool, read DTC(s) from the FDCM.

Are any FDCM DTC(s) present or is the original condition still present?

Yes

- The repair is not complete. Refer to the appropriate Electrical Diagnostic Information for the DTC or symptom that is still present.

No

- The repair is complete.

DIAGNOSIS AND TESTING

DIAGNOSIS AND TESTING - NOISE

GEAR NOISE

Axle gear noise can be caused by insufficient lubricant, incorrect backlash, tooth contact, worn/damaged gears or the carrier housing not having the proper offset and squareness.

Gear noise usually happens at a specific speed range. The noise can also occur during a specific type of driving condition. These conditions are acceleration, deceleration, coast, or constant load.

When road testing, first warm-up the axle fluid by driving the vehicle at least 5 miles and then accelerate the vehicle to the speed range where the noise is the greatest. Shift out-of-gear and coast through the peak-noise range. If the noise stops or changes greatly check for:

- Insufficient lubricant.
- Incorrect ring gear backlash.
- Gear damage.

Differential side gears and pinions can be checked by turning the vehicle. The side gears are loaded during turns. They usually do not cause noise during straight-ahead driving when the gears are unloaded. A worn pinion mate shaft can also cause a snapping or a knocking noise.

BEARING NOISE

The axle shaft, differential and pinion bearings can all produce noise when worn or damaged. Bearing noise can be either a whining, or a growling sound.

Pinion bearings have a constant-pitch noise. This noise changes only with vehicle speed. Pinion bearing noise will be higher pitched because it rotates at a faster rate. Drive the vehicle and load the differential. If bearing noise occurs, the rear pinion bearing is the source of the noise. If the bearing noise is heard during a coast, the front pinion bearing is the source.

Differential bearings usually produce a low pitch noise. Differential bearing noise is similar to pinion bearing noise. The pitch of differential bearing noise is also constant and varies only with vehicle speed.

Axle shaft bearings produce noise and vibration when worn or damaged. The noise generally changes when the bearings are loaded. Road test the vehicle. Turn the vehicle sharply to the left and to the right. This will load the bearings and change the noise level. Where axle bearing damage is slight, the noise is usually not noticeable at speeds above 30 m.p.h.

LOW SPEED KNOCK

Low speed knock is generally caused by:

- Worn U-joint(s).
- Worn side-gear thrust washers.
- Worn pinion shaft bore.

VIBRATION

Vibration at the front/rear of the vehicle is usually caused by:

- Damaged drive shaft.
- Missing drive shaft balance weight(s).
- Worn or out of balance wheels.
- Loose wheel lug nuts.
- Worn U-joint(s).
- Loose/broken springs.
- Damaged axle shaft bearing(s).
- Loose pinion gear nut.
- Excessive pinion flange run out.
- Bent axle shaft(s).

Check for loose or damaged front end components or engine/transmission mounts. These components can contribute to what appears to be a vibration. Do not overlook engine accessories, brackets and drive belts.

DRIVELINE SNAP

A snap or clunk noise when the vehicle is shifted into gear (or the clutch engaged) can be caused by:

- High engine idle speed.
- Transmission shift operation.
- Loose engine/transmission/transfer case mounts.
- Worn U-joints.
- Loose spring mounts.
- Loose pinion gear nut and flange.
- Excessive ring gear backlash.
- Excessive side gear to case clearance.

The source of a snap or a clunk noise can be determined with the assistance of a helper. Raise the vehicle on a hoist with the wheels free to rotate. Instruct the helper to shift the transmission into gear and listen for the noise. A mechanics stethoscope is helpful in isolating the source of a noise.

DIAGNOSTIC CHART

Condition	Possible Causes	Correction

Wheel Noise	1. Wheel loose.	1. Tighten loose nuts.
	2. Worn wheel bearing.	2. Replace bearing.
Axle Shaft Noise	1. Misaligned axle tube.	1. Inspect axle tube alignment. Correct as necessary.
	2. Bent or sprung axle shaft.	2. Inspect and correct as necessary.
	3. End-play in pinion bearings.	3. Refer to pinion pre-load information and correct as necessary.
	4. Excessive gear backlash between the ring gear and pinion.	4. Check adjustment of the ring gear and pinion backlash. Correct as necessary.
	5. Improper adjustment of pinion gear bearings.	5. Adjust the pinion bearings pre-load.
	6. Loose pinion flange nut.	6. Tighten the pinion flange nut.
	7. Scuffed gear tooth contact surfaces.	7. Inspect and replace as necessary.
Axle Shaft Broke	1. Misaligned axle tube.	1. Replace the broken shaft after correcting tube mis-alignment.
	2 Vehicle overloaded.	2. Replace broken shaft and avoid excessive weight on vehicle.
	3. Erratic clutch operation.	3. Replace broken shaft and avoid or correct erratic clutch operation.
	4. Grabbing clutch.	4. Replace broken shaft and inspect and repair clutch as necessary.
Differential Cracked	1. Improper adjustment of the differential bearings.	1. Replace case and inspect gears and bearings for further damage. Set differential bearing pre-load properly.
	2. Excessive ring gear backlash.	2. Replace case and inspect gears and bearings for further damage. Set ring gear backlash properly.
	3. Vehicle overloaded.	3. Replace case and inspect gears and bearings for further damage. Avoid excessive vehicle weight.
	4. Erratic clutch operation.	4. Replace case and inspect gears and bearings for further damage. Avoid erratic use of clutch.
Differential Gears Scored	1. Insufficient lubrication.	1. Replace scored gears. Fill differential with the correct fluid type and quantity.
	2. Improper grade of lubricant.	2. Replace scored gears. Fill differential with the correct fluid type and quantity.

	3. Excessive spinning of one wheel/tire.	3. Replace scored gears. Inspect all gears, pinion bores, and shaft for damage. Service as necessary.
Loss Of Lubricant	1. Lubricant level too high.	1. Drain lubricant to the correct level.
	2. Worn axle shaft seals.	2. Replace seals.
	3. Cracked differential housing.	3. Repair as necessary.
	4. Worn pinion seal.	4. Replace seal.
	5. Worn/scored flange.	5. Replace flange and seal.
	6. Axle cover not properly sealed.	6. Remove, clean and seal cover.
Axle Overheating	1. Lubricant level low.	1. Fill differential to correct level.
	2. Improper grade of lubricant.	2. Fill differential with the correct fluid type and quantity.
	3. Bearing pre-loads too high.	3. Adjust bearing pre-loads.
	4. Insufficient ring gear backlash.	4. Adjust ring gear backlash.
Gear Teeth Broke	1. Overloading.	1. Replace gears. Examine other gears and bearings for possible damage.
	2. Erratic clutch operation.	2. Replace gears and examine the remaining parts for damage. Avoid erratic clutch operation.
	3. Ice-spotted pavement.	3. Replace gears and examine remaining parts for damage.
	4. Improper adjustments.	4. Replace gears and examine remaining parts for damage. Ensure ring gear backlash is correct.
Axle Noise	1. Insufficient lubricant.	1. Fill differential with the correct fluid type and quantity.
	2. Improper ring gear and pinion adjustment.	2. Check ring gear and pinion contact pattern.
	3. Unmatched ring gear and pinion.	3. Replace gears with a matched ring gear and pinion.
	4. Worn teeth on ring gear and pinion.	4. Replace ring gear and pinion.
	5. Loose pinion bearings.	5. Adjust pinion bearing pre-load.
	6. Loose differential bearings.	6. Adjust differential bearing pre-load.
	7. Ring gear run-out.	7. Measure ring gear run-out. Replace components as necessary.
	8. Loose differential bearing cap bolts.	8. Inspect differential components and replace as necessary. Ensure that the bearing caps are torqued to the proper specification.

	9. Housing not machined properly.	9. Replace housing.

ADJUSTMENTS

ADJUSTMENTS

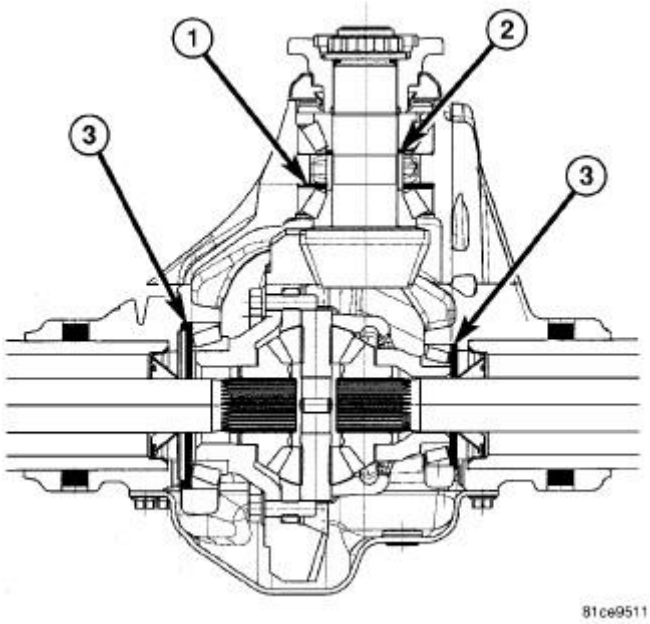

Fig. 1: Identifying Shim Locations
Courtesy of CHRYSLER GROUP, LLC

Ring gear and pinion are supplied as a matched sets. Identifying numbers marked on the ring and pinion gears for production date, part number and matching number. A plus (+) number, minus (-) number or zero (0) will be marked on the pinion gear for depth variance. This first number is the amount (in thousandths of an inch) the depth varies from the standard depth setting of a pinion marked with a (0).

Pinion depth is adjusted with a select shim (1) located under the rear pinion bearing cup. Pinion bearing preload/torque to rotate is adjusted with a select shim (2) on the pinion shaft. Differential bearing preload and backlash is adjusted with select shims (3) located between the differential bearing cups and the housing.

PINION GEAR DEPTH

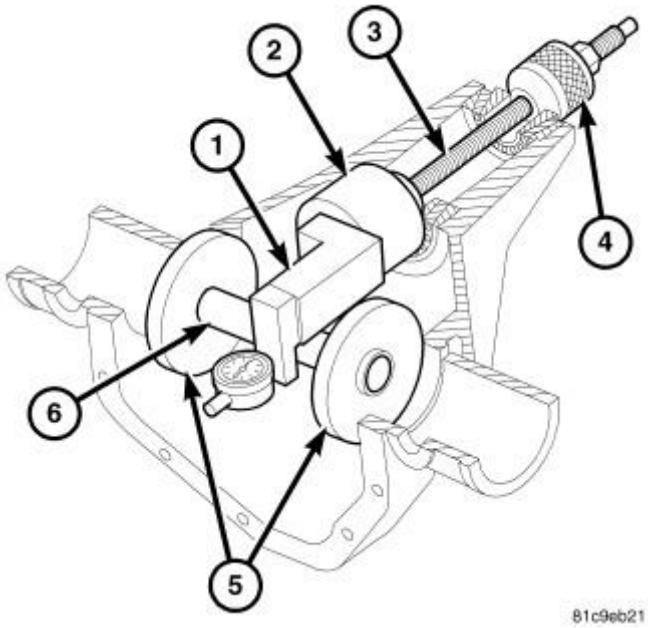

Fig. 2: Identifying Pinion Depth Tools
Courtesy of CHRYSLER GROUP, LLC

Measurement is taken with Height Block (special tool #6739, Block, Height) (1), Pinion Block (special tool #10091, Block, Gauge) (2), Screw (special tool #6741, Screw) (3), Nut (special tool #10121, Cone) (4), Arbor Discs (special tool #10094, Set, Arbor Disc) (5) and Arbor (special tool #D-115-3, Arbor) (6). With pinion bearing cups and pinion bearings installed in the housing, take measurements with Dial Indicator (special tool #C-3339A, Set, Dial Indicator) and Scooter Block (special tool #D-115-2A, Block, Scooter).

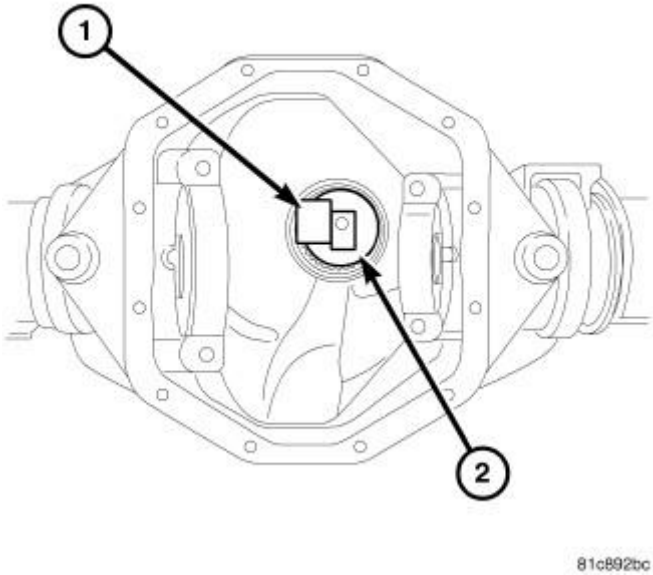

Fig. 3: Identifying Pinion Block
Courtesy of CHRYSLER GROUP, LLC

1. Assemble Pinion Height Block (special tool #6739, Block, Height) (1), Pinion Block (special tool #10091, Block, Gauge) (2) and rear pinion bearing onto Screw (special tool #6741, Screw).
2. Insert assembled pinion height block, pinion block, rear bearing and screw into the housing through pinion bearing cups.

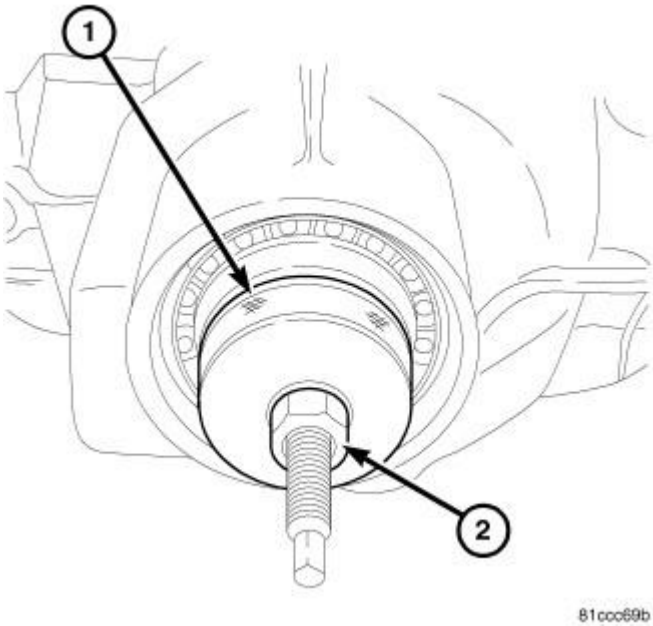

Fig. 4: Cone-Nut 10121
Courtesy of CHRYSLER GROUP, LLC

3. Install front pinion bearing and Cone-Nut (special tool #10121, Cone) (1) onto Screw (special tool #6741, Screw) (2).

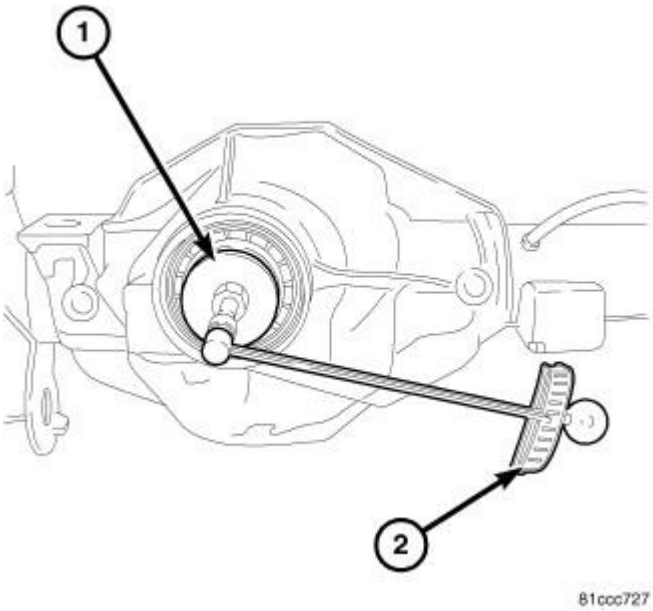

Fig. 5: Tightening Cone-Nut
Courtesy of CHRYSLER GROUP, LLC

4. Tighten cone-nut (1) until Torque To Rotate (2) the screw is 1.7 - 2.26 N.m (15 - 20 in. lbs.).

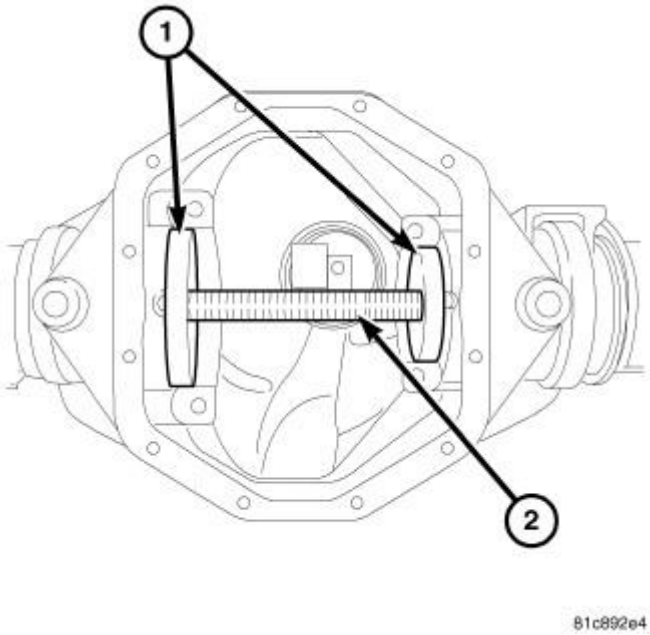

Fig. 6: Arbor Discs
Courtesy of CHRYSLER GROUP, LLC

5. Place Arbor Disc (special tool #10094, Set, Arbor Disc) (1) on Arbor (special tool #D-115-3, Arbor) (2), then position disc (1) in differential bearing cradles.

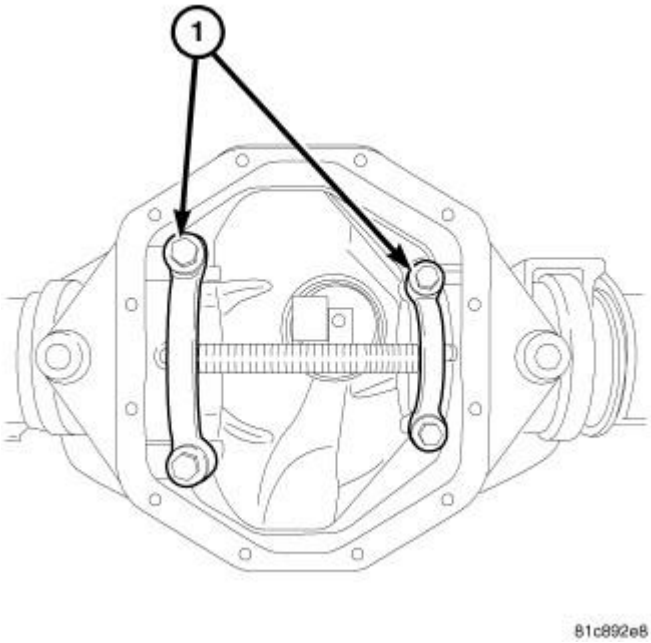

Fig. 7: Bearing Caps
Courtesy of CHRYSLER GROUP, LLC

6. Install differential bearing caps (1) on arbor discs. Tighten larger bearing cap to 160 N.m (118 ft. lbs.) and small bearing to 100 N.m (74 ft. lbs.).

NOTE: Arbor should rotate freely in the arbor disc.

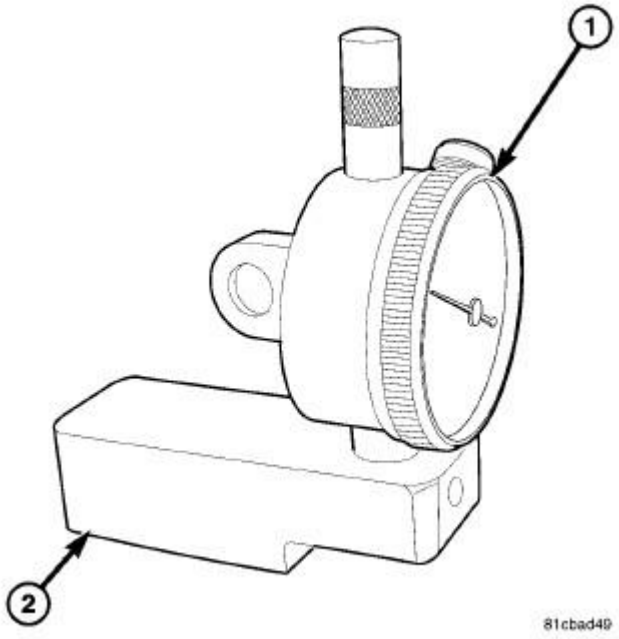

Fig. 8: Dial Indicator & Scooter Block
Courtesy of CHRYSLER GROUP, LLC

7. Assemble Dial Indicator (special tool #C-3339A, Set, Dial Indicator) (1) into Scooter Block (special tool #D-115-2A, Block, Scooter) (2) and secure set screw.
8. Position Scooter Block (1) flush on the pinion height block. Hold scooter block and zero the dial indicator (2).
9. Slowly slide the scooter block (1) across the pinion height block over to the arbor (3). Move scooter block till dial indicator (2) crests the arbor (3), then record the highest reading.

NOTE: If depth variance is -2, add 0.002 in. to the dial indicator reading. If the depth variance is +2, subtract 0.002 in. from the dial indicator reading.

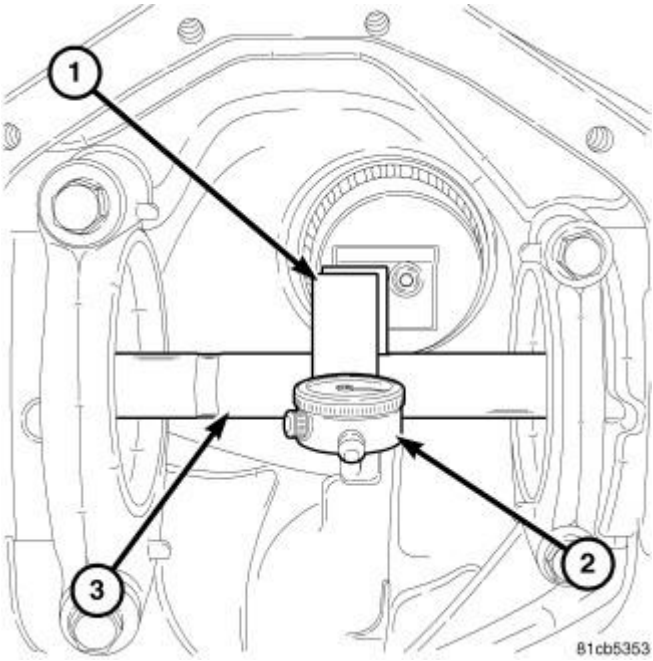

Fig. 9: Depth Measurement
Courtesy of CHRYSLER GROUP, LLC

10. Select a pinion depth shim equal to the dial indicator reading plus or minus the pinion depth variance number on the pinion gear.

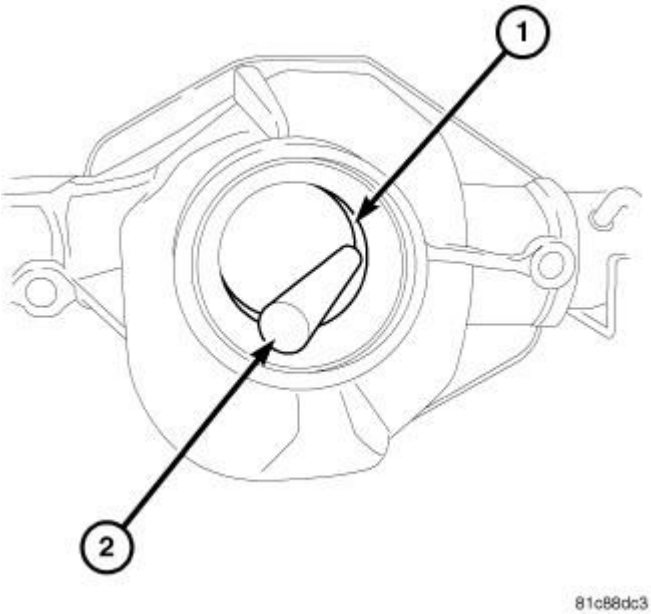

Fig. 10: Removing Rear Pinion Bearing Cup
Courtesy of CHRYSLER GROUP, LLC

11. Remove rear pinion bearing cup (1) with a hammer and brass drift (2).

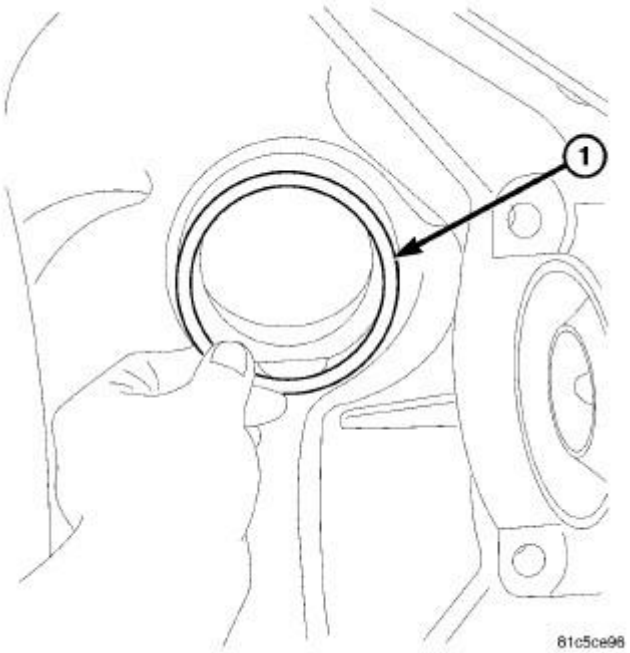

Fig. 11: Pinion Depth Shim
Courtesy of CHRYSLER GROUP, LLC

12. Install pinion depth shim (1) in rear pinion bearing cup bore.

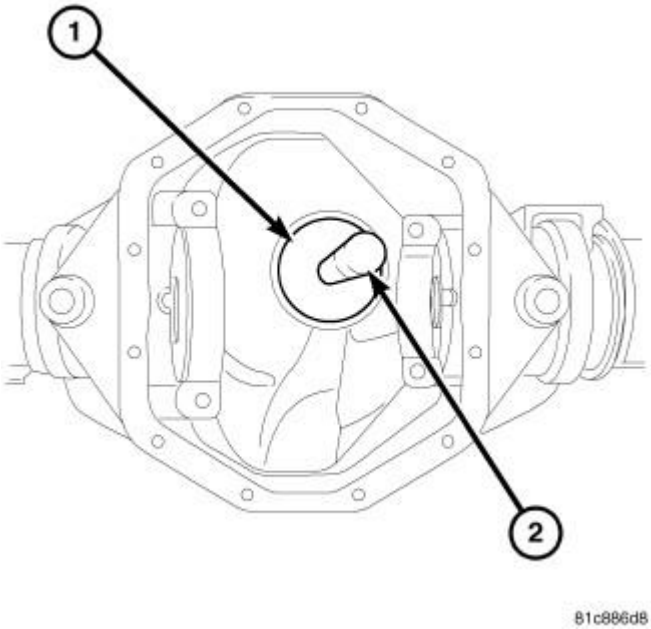

Fig. 12: Installing Rear Pinion Bearing Cup
Courtesy of CHRYSLER GROUP, LLC

13. Install rear pinion bearing cup with Installer (special tool #10093, Installer, Bearing Cup) (1) and handle (special tool #C-4171, Driver Handle, Universal) (2).

PINION TORQUE TO ROTATE

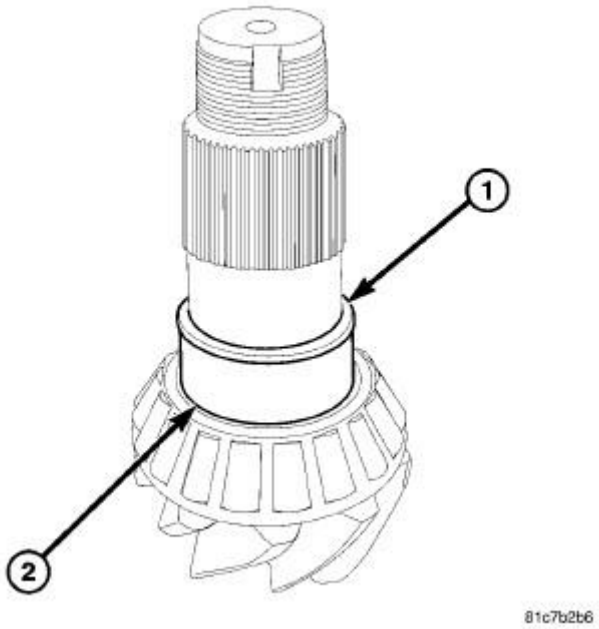

Fig. 13: Select Shim & Spacer
Courtesy of CHRYSLER GROUP, LLC

Pinion torque to rotate/pinion bearing preload is achieved using a select shim (1). The shim is located on the pinion shaft on top of the spacer (2). Pinion preload shims thickness will change with pinion depth shim change.

NOTE: Pinion torque to rotate (PTTR) is measured without the pinion seal.

1. Install pinion into the housing with the original shims plus/minus the pinion depth shim change. If pinion depth shim thickness was increased by 0.002 in. from the original shim thickness, increase preload shim thickness by 0.002 in. If pinion depth shim thickness was decreased by 0.002 in. from the original shim thickness, decrease preload shim thickness by 0.002 in.
2. Install pinion front bearing.
3. Install pinion flange and tighten the nut to 500 N.m (369 ft. lbs.)

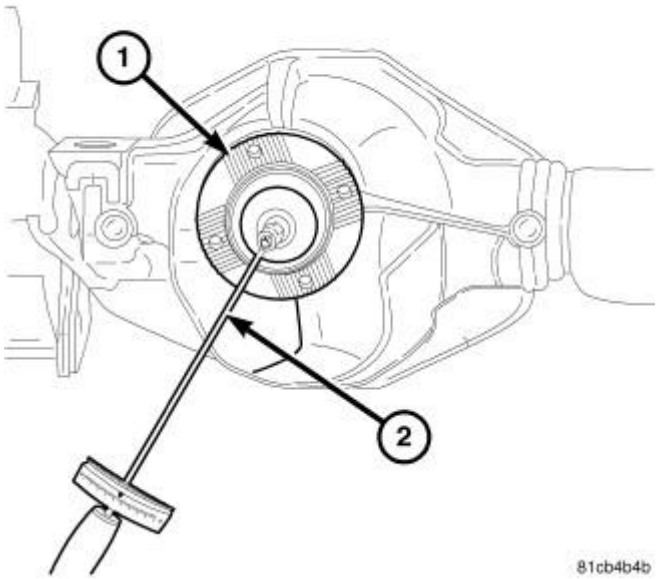

Fig. 14: Measuring Pinion Torque To Rotate
Courtesy of CHRYSLER GROUP, LLC

4. Measure pinion torque to rotate (1) with and inch pound torque wrench (2). Pinion torque to rotate is: 5 - 8 N.m (44 - 70 in. lbs.).

NOTE: **To increase PTTR install a thinner shim. To decreases PTTR install thicker shim. A shim thickness change of 0.025 mm (0.001 in.) will change PTTR approximately 0.9 N.m (8 in. lbs.).**

DIFFERENTIAL BEARING PRELOAD AND GEAR BACKLASH

Before measuring differential bearing preload and gear backlash, pinion gear depth must be established and the pinion gear ready for installation. Pinion gear depth is essential to establishing gear backlash and tooth contact patterns.

Differential bearing preload and gear backlash is achieved with selective shims located between the differential bearing cups and differential housing. Shim thickness is determined using Dummy Bearings (special tool #10120, Bearings, Dummy) in place of the differential side bearings and preload shims.

NOTE: **The large dummy bearings has 7 mm (0.275 in.) added to the thickness. This was done to eliminate the use of a dummy shim and differential spacer. The small dummy bearing has 3 mm (0.118) added to the thickness. This was done to eliminate the use of a dummy shim.**

DIFFERENTIAL BEARING PRELOAD SHIM SELECTION

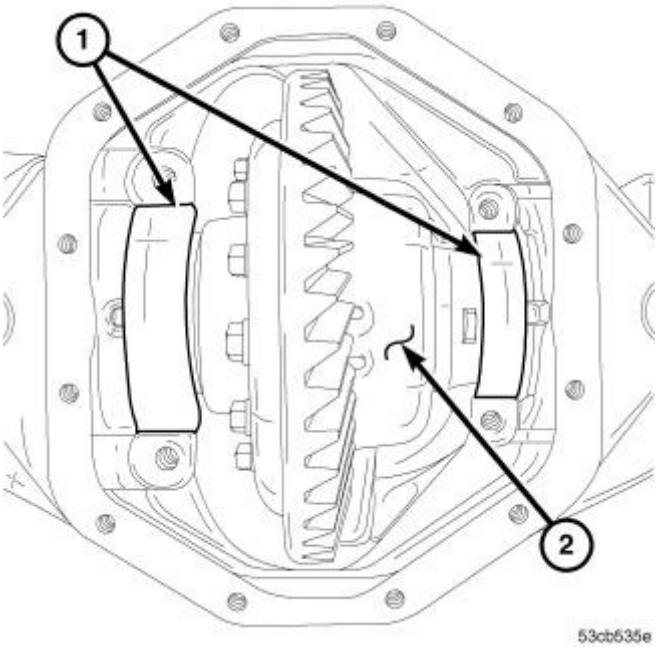

Fig. 15: Dummy Bearings
Courtesy of CHRYSLER GROUP, LLC

1. Remove bearings from differential case.
2. Install Dummy Bearings (special tool #10120, Bearings, Dummy) (1) on differential case (2).
3. Install differential case in the housing.

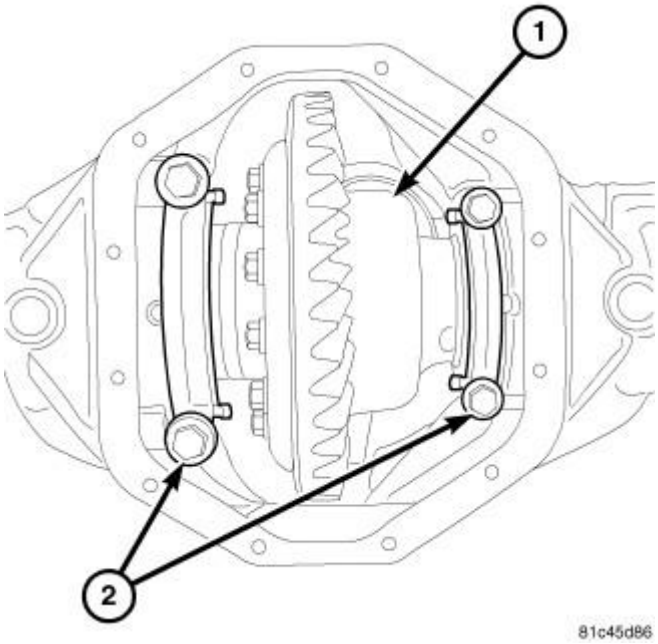

Fig. 16: Bearing Caps
Courtesy of CHRYSLER GROUP, LLC

4. Install differential (1) bearing caps and tighten bearing cap bolts (2) finger tight.

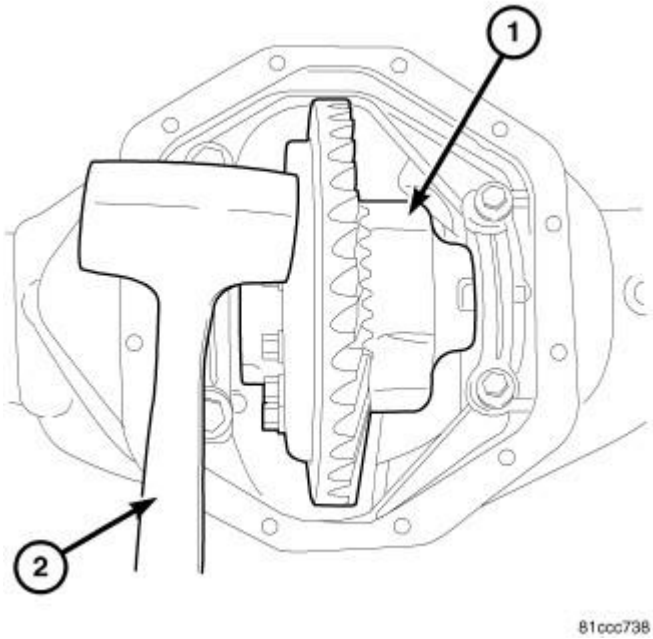

Fig. 17: Seat Pinion Gear Side
Courtesy of CHRYSLER GROUP, LLC

5. Seat pinion gear side (1) dummy bearing with a dead-blow hammer (2).

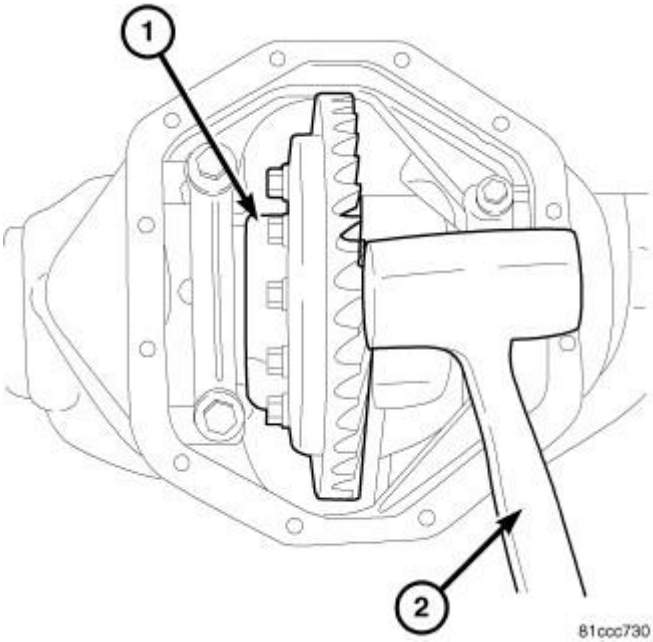

Fig. 18: Seat Ring Gear Side
Courtesy of CHRYSLER GROUP, LLC

6. Seat ring gear side (1) dummy bearing with a dead-blow hammer (2).

7. Tighten larger bearing cap to 160 N.m (118 ft. lbs.) and small bearing to 100 N.m (74 ft. lbs.).

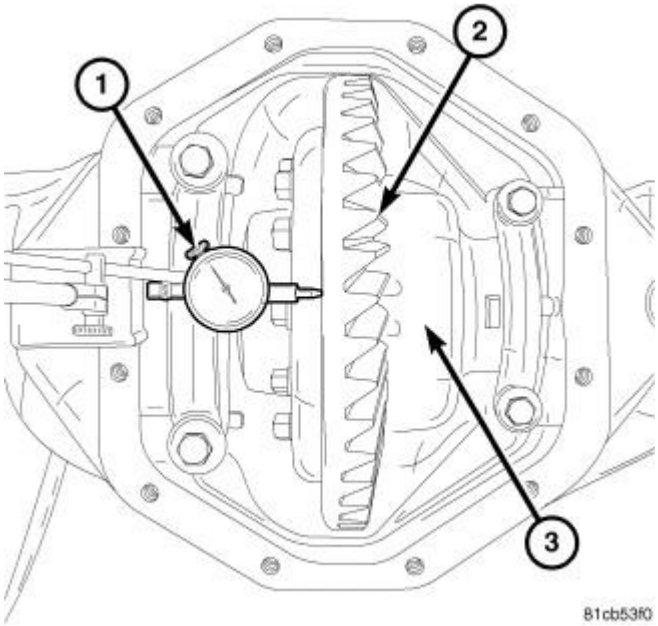

Fig. 19: Checking End Play
Courtesy of CHRYSLER GROUP, LLC

8. Attach Dial Indicator (special tool #C-3339A, Set, Dial Indicator) (1) to the housing and position dial indicator plunger on a flat surface on the ring gear (2).
9. Push and hold differential case (3) to pinion gear side of the housing and zero dial indicator.
10. Push and hold differential case (3) to the ring gear (2) side and record differential dial indicator (1) reading. Add 6 mm (0.236 in.) to the dial indicator reading for dummy bearings thickness. Then add 0.2 mm (0.008 in) for bearing preload. This is the total shim thickness needed to preload the differential bearings.

    Example: Differential Dial Indicator Reading + Dummy Bearings 6 mm (0.236 in.) + Differential Bearing Preload 0.2 mm (0.008 in) = Total Differential Shim

11. Rotate dial indicator out of the way.
12. Remove differential case with dummy bearings from the housing.

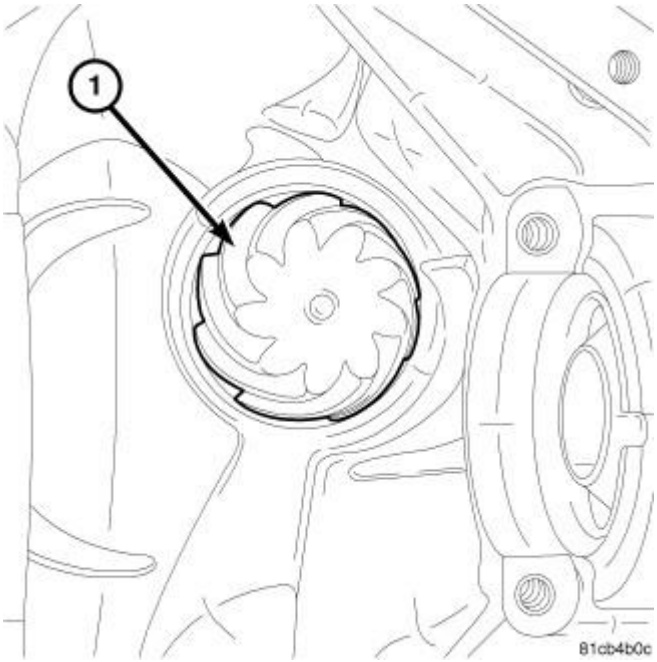

Fig. 20: Pinion Gear
Courtesy of CHRYSLER GROUP, LLC

13. Install pinion gear (1) into the housing.

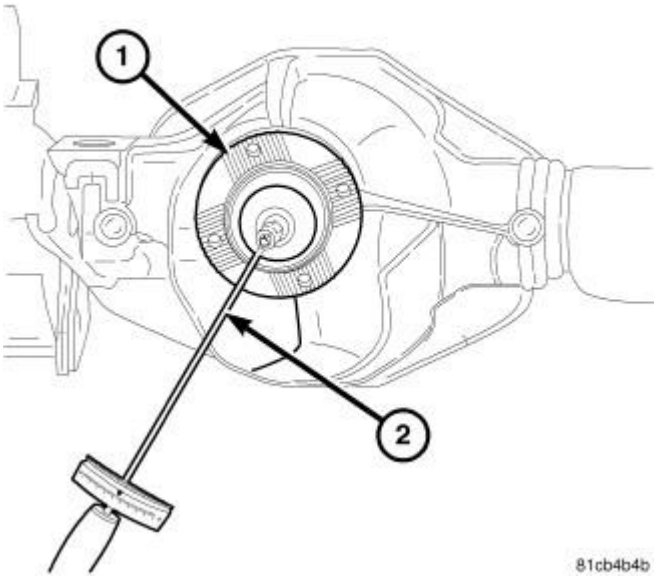

Fig. 21: Measuring Pinion Torque To Rotate
Courtesy of CHRYSLER GROUP, LLC

14. Establish pinion (1) torque to rotating with torque wrench (2).

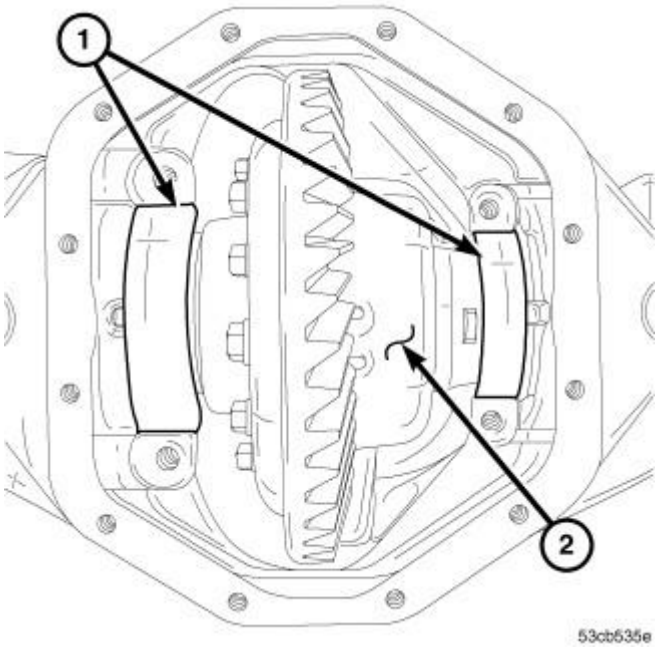

Fig. 22: Dummy Bearings
Courtesy of CHRYSLER GROUP, LLC

15. Install differential (2) with Dummy Bearings (special tool #10120, Bearings, Dummy) (1) into the housing.

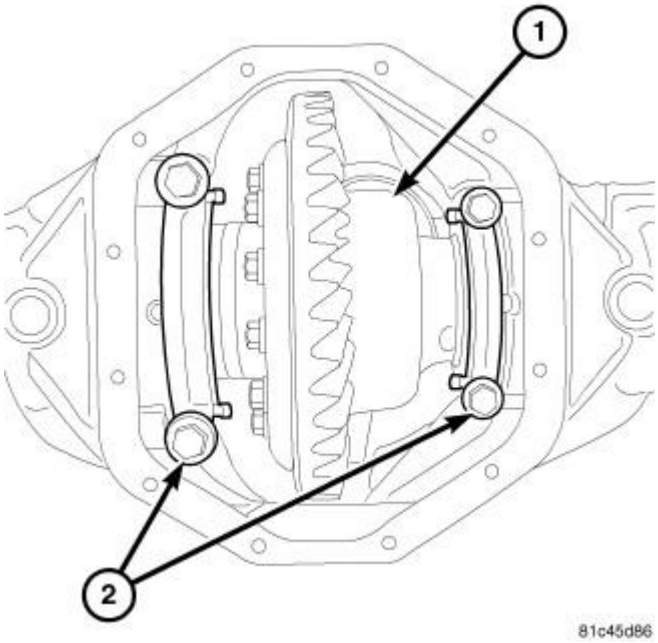

Fig. 23: Bearing Caps
Courtesy of CHRYSLER GROUP, LLC

16. Install differential (1) bearing caps and bearing cap bolts (2).

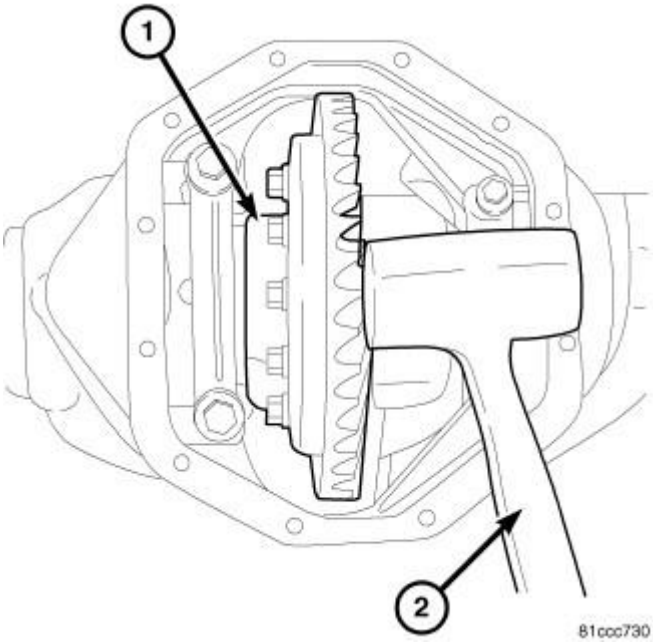

Fig. 24: Seat Ring Gear Side
Courtesy of CHRYSLER GROUP, LLC

17. Seat differential dummy bearing to the ring gear side (1) of the housing with a dead-blow hammer (2).
18. Tighten larger bearing cap to 160 N.m (118 ft. lbs.) and small bearing to 100 N.m (74 ft. lbs.).

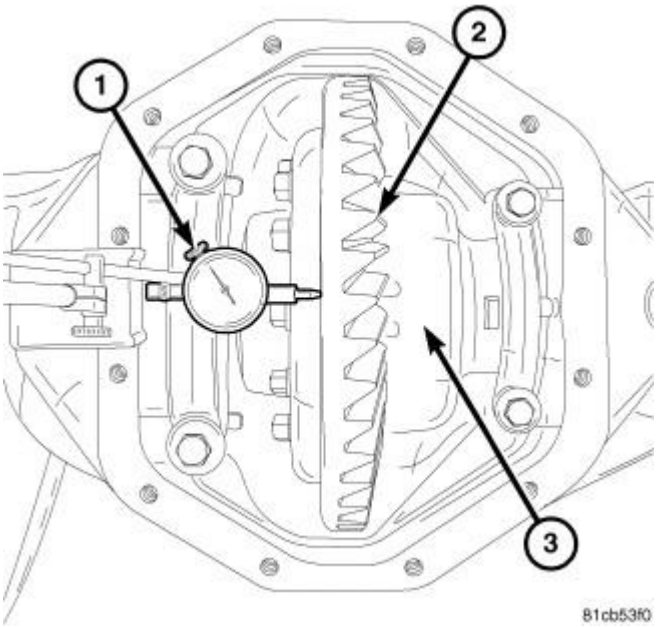

Fig. 25: Checking End Play
Courtesy of CHRYSLER GROUP, LLC

19. Attach Dial Indicator (special tool #C-3339A, Set, Dial Indicator) (1) to the housing and position dial indicator plunger on a flat surface on the ring gear (2).

20. Push and hold differential case (3) to pinion gear side of the housing and zero dial indicator.
21. Push and hold differential case (3) to the ring gear (2) side and record ring gear side dial indicator (1) reading. Add 3 mm (0.118 in.) to the record dial indicator reading to compensate for dummy bearing thickness. Then subtract 0.15 mm (0.006 in.) to compensate for ring gear backlash. The remainder is the total shim thickness needed on the ring gear side of the differential.

    Example: Ring Gear Side Dial Indicator Reading + One Dummy Bearing 3 mm (0.118 in.) - Ring Gear Backlash 0.15 mm (0.006 in.) = Ring Gear Side Shim

22. Subtract ring gear side shim from total differential shim, the remainder is the shim thickness needed on the pinion side of the housing.

    Example: Total Differential Shim - Ring Gear Side Shim = Pinion Gear Side Shim

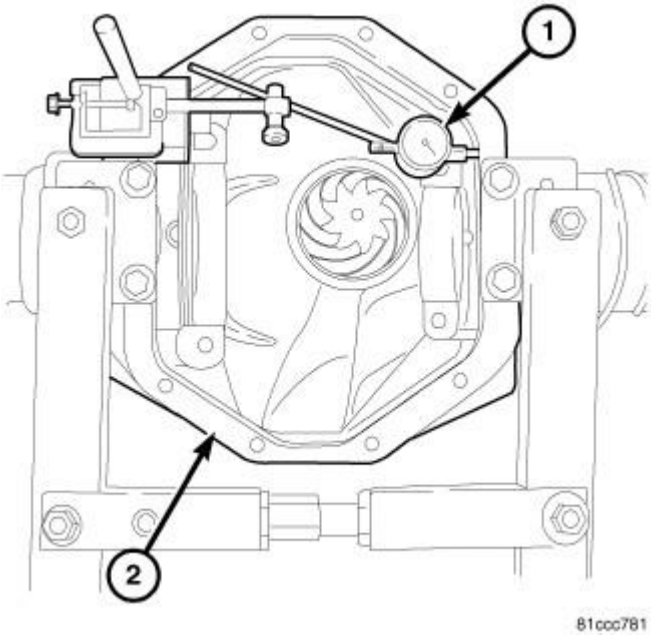

Fig. 26: Spreading Housing
Courtesy of CHRYSLER GROUP, LLC

23. Remove differential case with dummy bearings from the housing.
24. Install new side bearing cones and cups on differential case.
25. Mount Dial Indicator (special tool #C-3339A, Set, Dial Indicator) (1) to the housing (2) with indicator plunger against the opposite side of the housing. Zero the indicator.
26. Spread housing, while measuring the distance with the dial indicator.

CAUTION: Never spread housing over 0.38 mm (0.015 in.). Failure to follow these instruction will damage the housing.

27. Remove dial indicator.

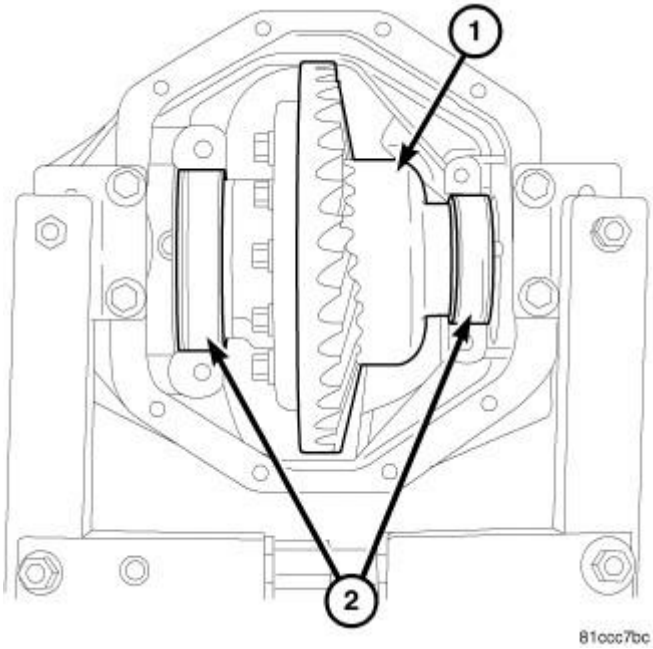

Fig. 27: Differential Case & Shims
Courtesy of CHRYSLER GROUP, LLC

28. Install differential case (1) with bearing cups and shims (2) into the housing.
29. Rotate the differential case several times to seat the side bearings.

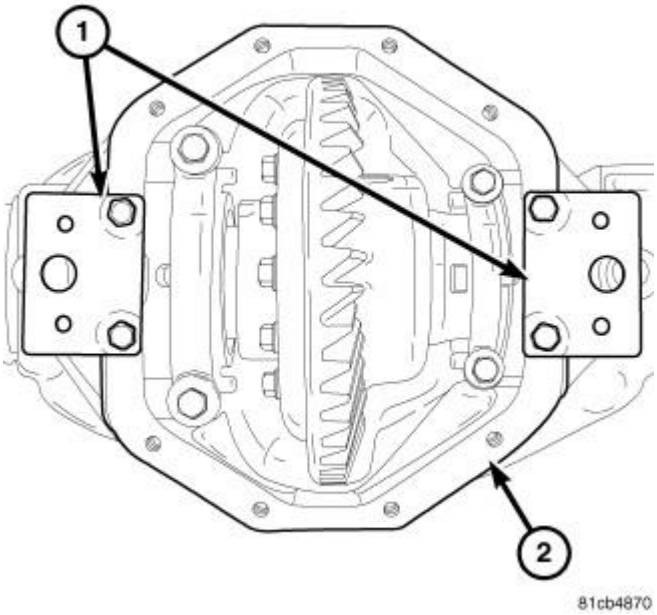

Fig. 28: Adapters 10068
Courtesy of CHRYSLER GROUP, LLC

30. Remove Spreader (special tool #W-129-B, Spreader, Differential) and Adapter Plates (special tool #10068, Adapters, Spreader) (1) from housing (2).

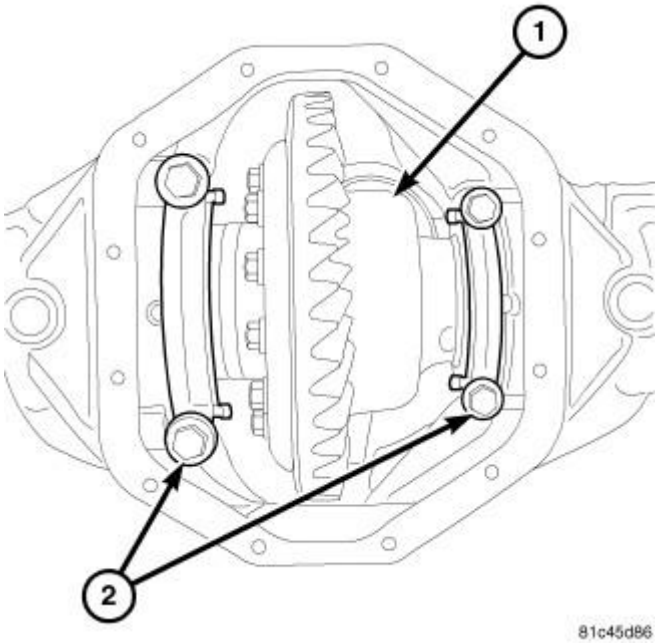

Fig. 29: Bearing Caps
Courtesy of CHRYSLER GROUP, LLC

31. Install differential (1) bearing caps and bolts (2).
32. Tighten larger bearing cap to 160 N.m (118 ft. lbs.) and small bearing to 100 N.m (74 ft. lbs.).

GEAR BACKLASH

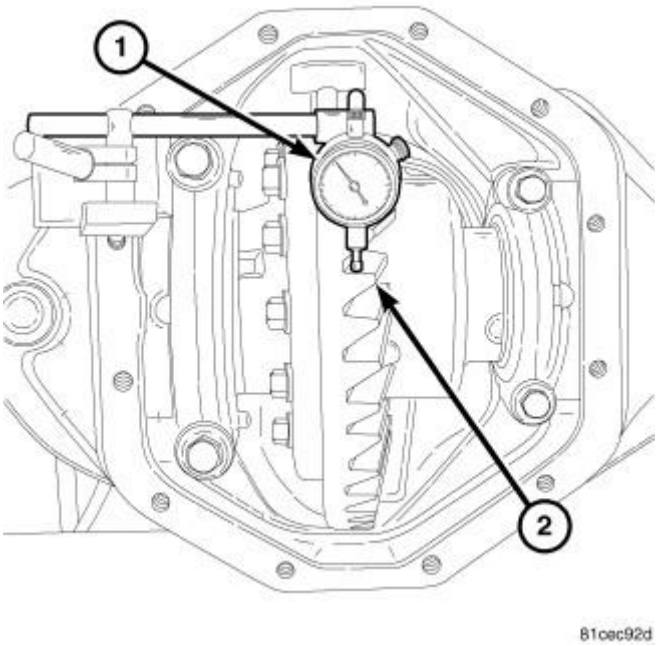

Fig. 30: Backlash Measurement
Courtesy of CHRYSLER GROUP, LLC

1. Position the dial indicator (1) plunger against a ring gear tooth (2).
2. Push and hold ring gear upward while not allowing the pinion gear to rotate.
3. Zero dial indicator face to pointer.
4. Push and hold ring gear downward while not allowing the pinion gear to rotate. Dial indicator reading should be between 0.1 - 0.15 mm (0.004 - 0.006 in.). If backlash is not within specifications transfer the necessary amount of shim thickness from one side of the differential housing to the other.
5. Verify differential case and ring gear runout by measuring ring to pinion gear backlash at eight locations around the ring gear. Readings should not vary more than 0.05 mm (0.002 in.). If readings vary more than specified, the ring gear or the differential case is defective.

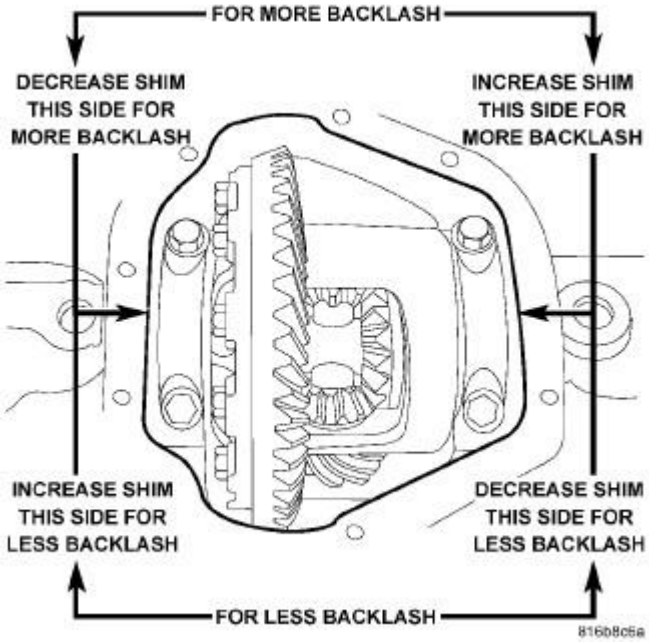

Fig. 31: Adjusting Backlash Shims
Courtesy of CHRYSLER GROUP, LLC

6. If backlash is not within specifications adjust shims equally on both sides to obtain backlash specification.

After the proper backlash is achieved, perform the Gear Contact Pattern procedure.

GEAR TOOTH CONTACT PATTERN

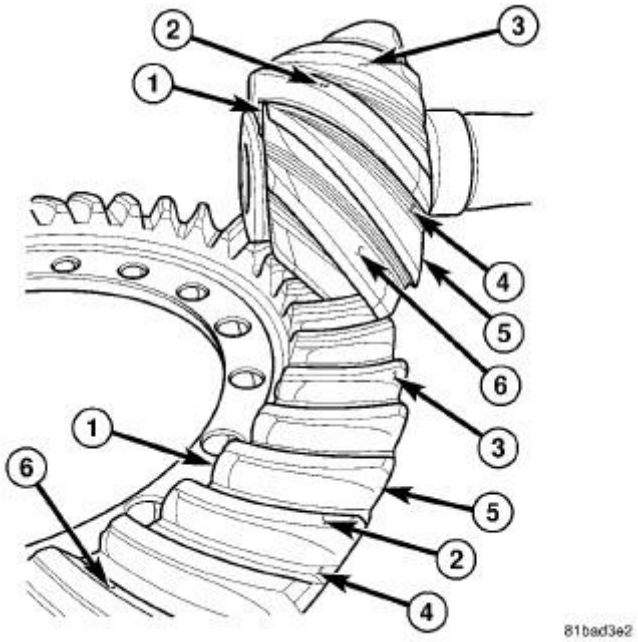

Fig. 32: Gear Tooth Contact Pattern
Courtesy of CHRYSLER GROUP, LLC

The gear and pinion gear tooth contact patterns will show if the ring gear backlash has been adjusted correctly.

Ring and pinion gear tooth description:

- Toe - (1)
- Land - (2)
- Drive Side - (3)
- Root - (4)
- Heel - (5)
- Coast Side - (6)

Paint six ring gear teeth 180 degrees apart with marking compound. Rotate the pinion 4 full revolutions in each directions to obtain a contact pattern.

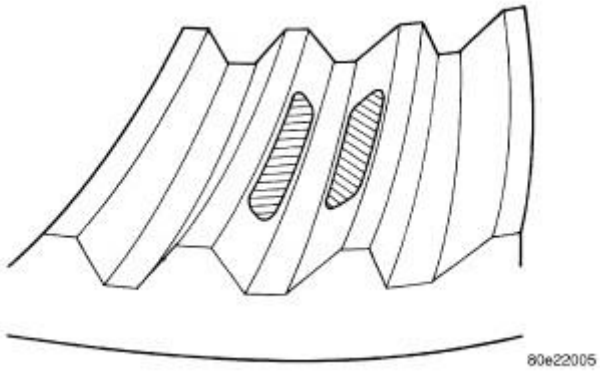

Fig. 33: Identifying Correct Gear Tooth Pattern
Courtesy of CHRYSLER GROUP, LLC

Gear contact pattern correct. Backlash and pinion depth is correct.

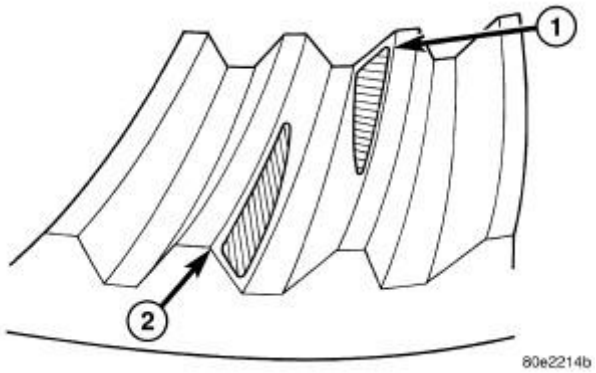

Fig. 34: Identifying Incorrect Backlash (1 Of 4)
Courtesy of CHRYSLER GROUP, LLC

Ring gear too far away from pinion gear, coast side toe (1) and drive side heel (2). Decrease backlash, by moving the ring closer to the pinion gear.

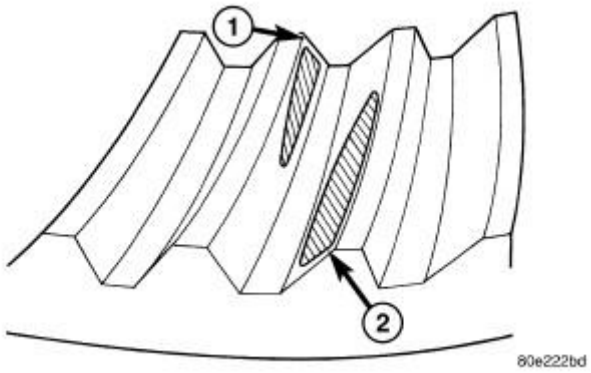

Fig. 35: Identifying Incorrect Backlash (2 Of 4)
Courtesy of CHRYSLER GROUP, LLC

Ring gear too close to pinion gear, drive side toe (1) and coast side heel (2). Increase backlash, by moving the ring away from the pinion gear.

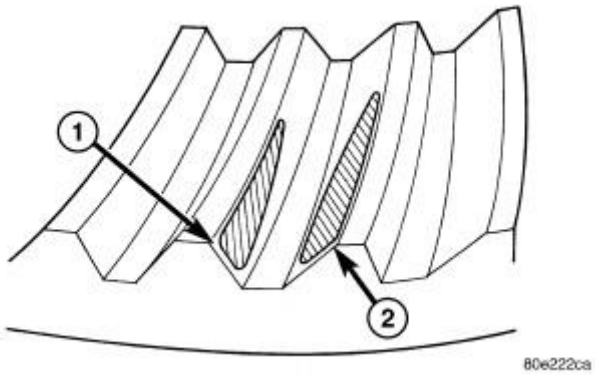

Fig. 36: Identifying Incorrect Backlash (3 Of 4)
Courtesy of CHRYSLER GROUP, LLC

Ring gear too far away from pinion gear, drive side heel (1) and coast side heel (2). Decrease backlash, by moving the ring closer to the pinion gear.

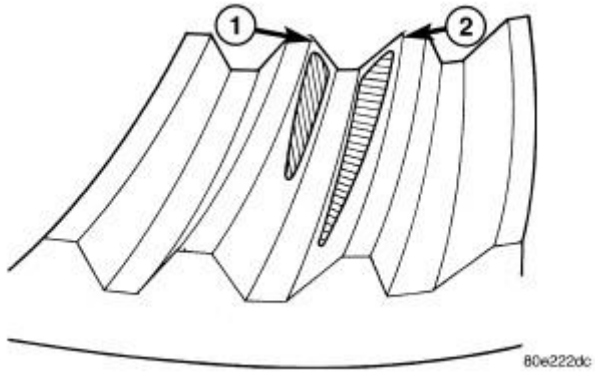

Fig. 37: Identifying Incorrect Backlash (4 Of 4)
Courtesy of CHRYSLER GROUP, LLC

Ring gear too close to pinion gear, drive side toe (1) and coast side toe (2). Increase backlash, by moving the ring away from the pinion gear.

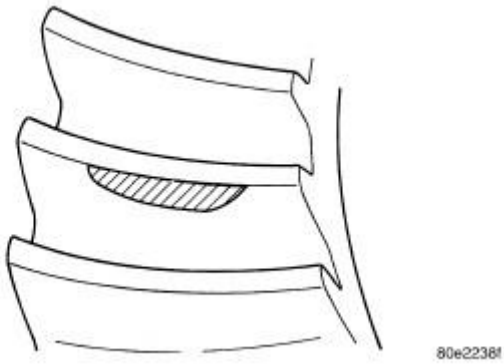

Fig. 38: Low Pinion Height
Courtesy of CHRYSLER GROUP, LLC

Pinion gear is set too low. Increase pinion gear height, by increasing the pinion depth shim thickness.

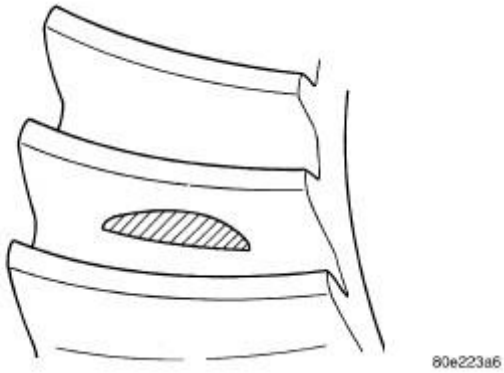

Fig. 39: High Pinion Height
Courtesy of CHRYSLER GROUP, LLC

Pinion gear is set too high. Decrease pinion depth, by decreasing the pinion depth shim thickness.

DIFFERENTIAL BEARING PRELOAD CHECK

The final check on the differential assembly before installing the axles is torque to rotate pinion and differential combined. This will verify the correct differential bearing preload.

Total Torque To Rotate (TTTR) the differential is: Pinion Torque To Rotate plus 1.5 N.m ± 0.5 N.m (13 in. lbs. ± 4.4 in. lbs.).

NOTE: **If TTTR is too high, decrease shim thickness equally from both sides of the differential and check TTTR again. If TTTR is too low, increase shim thickness equally to both sides of the differential and check TTTR again.**

SPECIFICATIONS

SPECIFICATIONS

AXLE

DESCRIPTION	SPECIFICATION
Gear Ratio	4.10, 4.44, 4.88
Rear Gear Runout	0.12 mm (0.005 in.)
Rear Gear Backlash	0.1 - 0.15 mm (0.004 - 0.006 in.)
Pinion Torque To Rotate (PTTR)	5 - 8 N.m (44 - 70 in. lbs.)
Total Torque To Rotate (TTTR) is: PTTR plus	1.5 N.m ± 0.5 N.m (13 in. lbs. ± 4.4 in. lbs.)

TORQUE SPECIFICATIONS

DESCRIPTION	N-m	Ft. Lbs.	In. Lbs.
Drain Plug	60	44	-
Differential Cover	46	34	-
Bearing Cap (Larger)	160	118	-
Bearing Cap (Small)	100	74	-
Rear Gear Bolts	175	139	-
Pinion Nut	500	369	-
Axle Nut	330	243	-
Hub Bearing Bolts	200	147	-

REMOVAL

REMOVAL

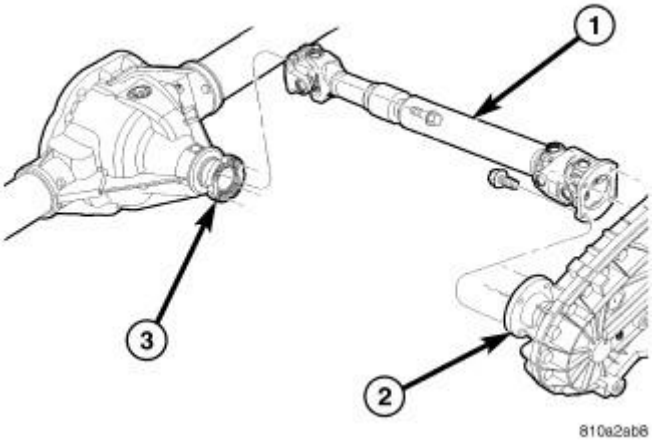

Fig. 40: Identifying HD Front Propeller Shaft
Courtesy of CHRYSLER GROUP, LLC

1. With vehicle in neutral, position vehicle on hoist.
2. Position a lift under axle and secure lift to the axle.

3. Mark propeller shaft and companion flange for installation alignment reference.
4. Remove propeller shaft (1) from pinion flange (3).

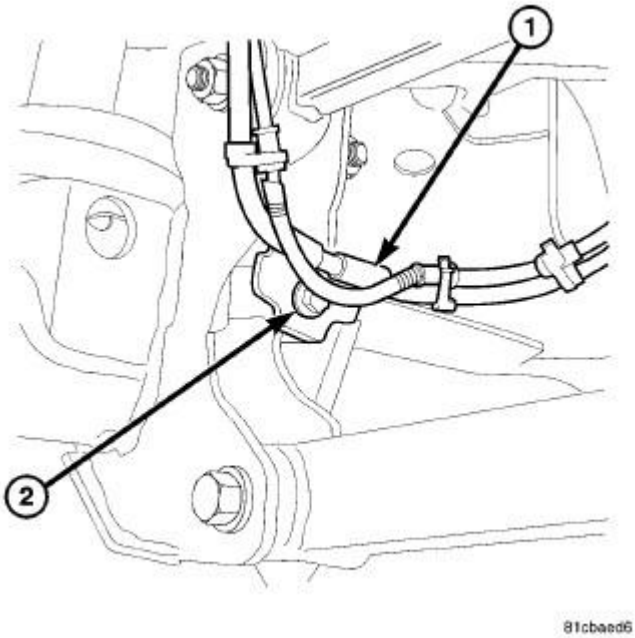

Fig. 41: Brake Line Retainer
Courtesy of CHRYSLER GROUP, LLC

5. Remove brake calipers, rotors, ABS wheel speed sensors.
6. Remove brake hose retainer (1) bolts (2) from axle.
7. Disconnect axle vent hose.

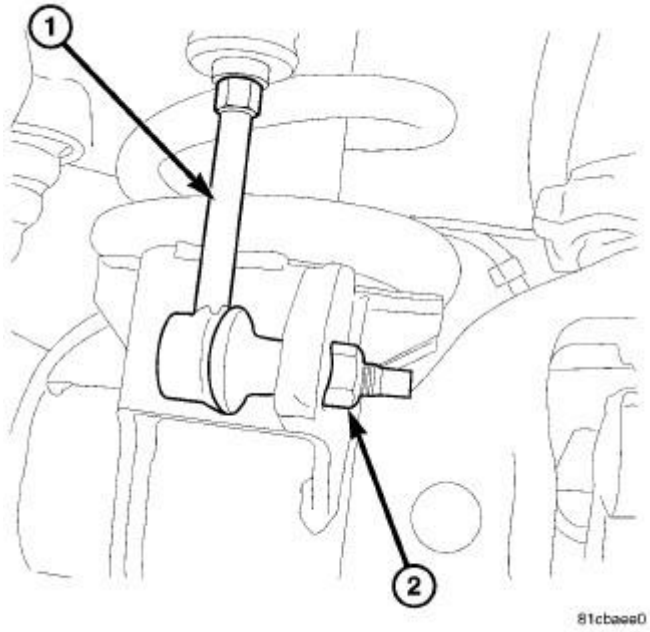

Fig. 42: Stabilizer Bar Link & Nuts
Courtesy of CHRYSLER GROUP, LLC

8. Remove stabilizer bar link (1) nuts (2).
9. Remove stabilizer bar links (1) from axle with Puller (special tool #C-3894-A, Puller, Tie Rod).

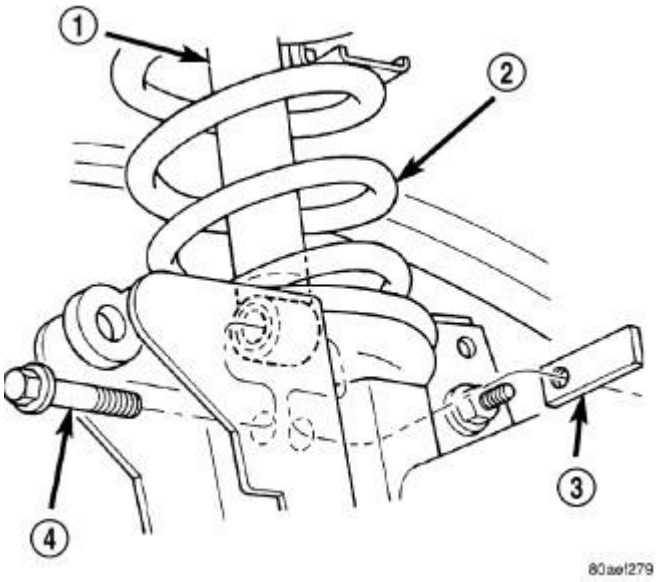

Fig. 43: Shock Absorber & Bolts
Courtesy of CHRYSLER GROUP, LLC

10. Remove shock absorbers (1) bolts (4) from axle brackets.

11. Remove track bar bolt from the axle bracket.
12. Remove damper from axle bracket.
13. Remove tie rod and drag link from the steering knuckles with Puller (special tool #C-3894-A, Puller, Tie Rod).

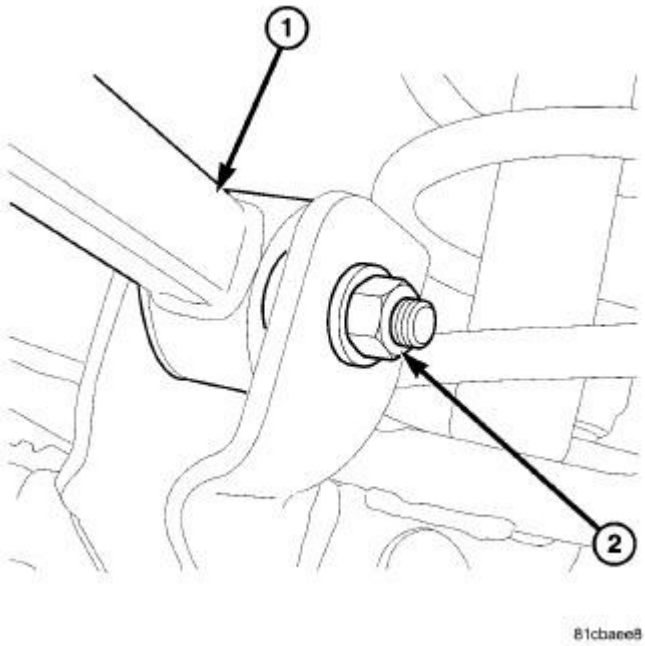

Fig. 44: Upper Control Arm & Nut
Courtesy of CHRYSLER GROUP, LLC

14. Remove upper control arm (1) nuts (2) and bolts from axle brackets.

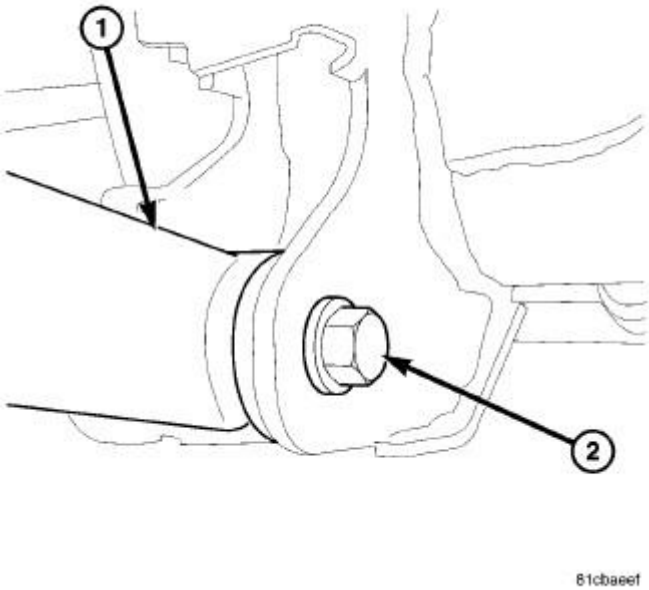

Fig. 45: Lower Control Arm & Bolt
Courtesy of CHRYSLER GROUP, LLC

15. Remove lower control arm (1) nuts and bolts (2) from the axle brackets.
16. Lower the axle. The coil springs will drop with the axle.
17. Remove coil springs from the axle bracket.

INSTALLATION

INSTALLATION

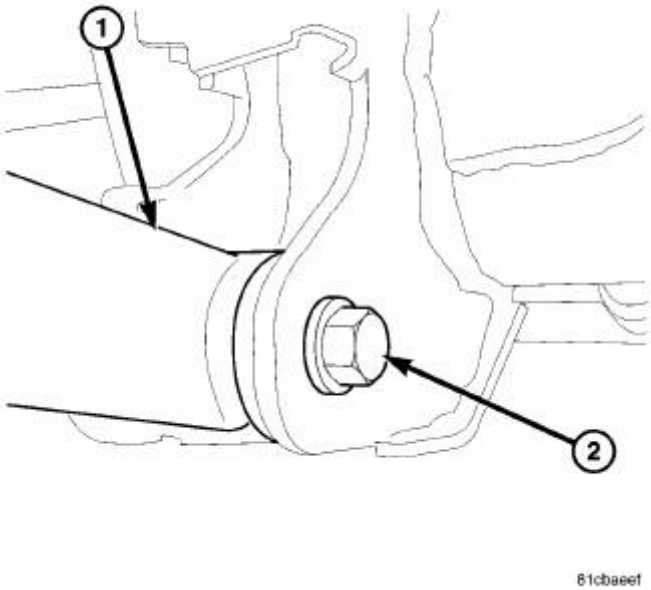

Fig. 46: Lower Control Arm & Bolt
Courtesy of CHRYSLER GROUP, LLC

CAUTION: Suspension components with rubber bushings should be tightened with the weight of the vehicle on the suspension. Failure to follow these instructions will result in damage to the bushings.

1. Secure axle to lifting device.
2. Align axle under the vehicle.
3. Install springs, retainer clip and bolts.
4. Raise axle and align it with the spring pads.
5. Install lower control arms (1) in the axle brackets. Install bolts (2) and nuts and hand tighten nuts.

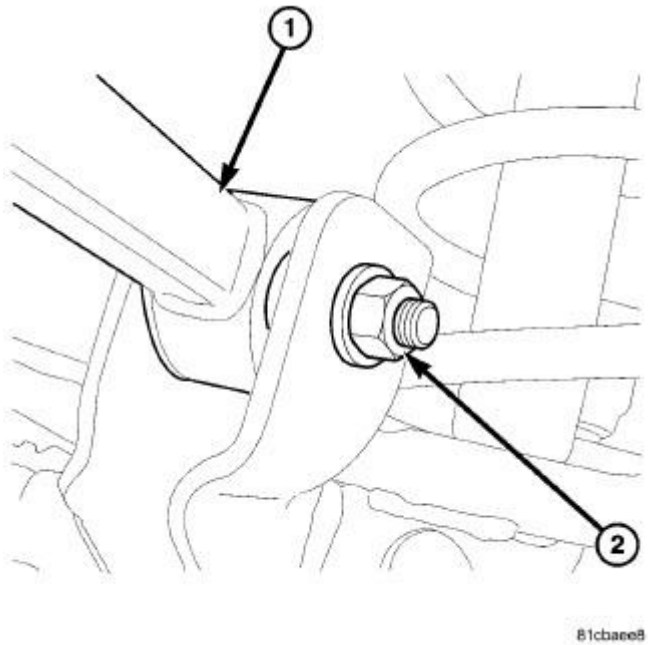

Fig. 47: Upper Control Arm & Nut
Courtesy of CHRYSLER GROUP, LLC

6. Install upper control arms (1) in the axle brackets. Install bolts and nuts (2) and hand tighten nuts.

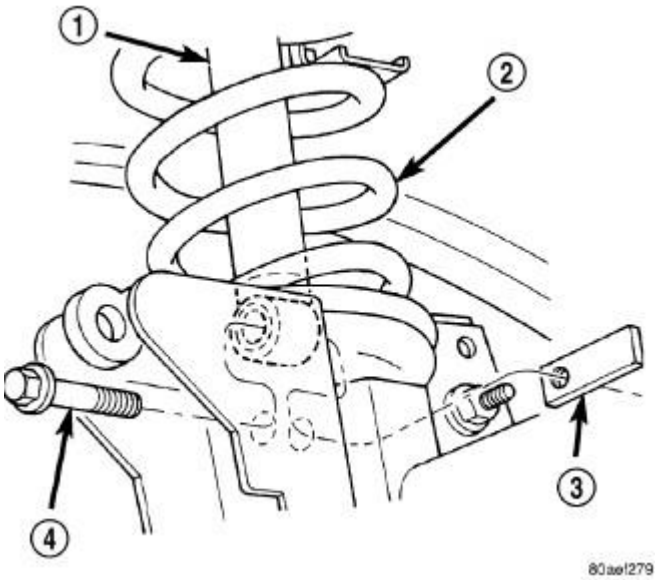

Fig. 48: Shock Absorber & Bolts
Courtesy of CHRYSLER GROUP, LLC

7. Install track bar in axle bracket and install bolt and nut hand tighten.
8. Install shock absorbers (1) and install nuts (3) and bolts (4) hand tighten.

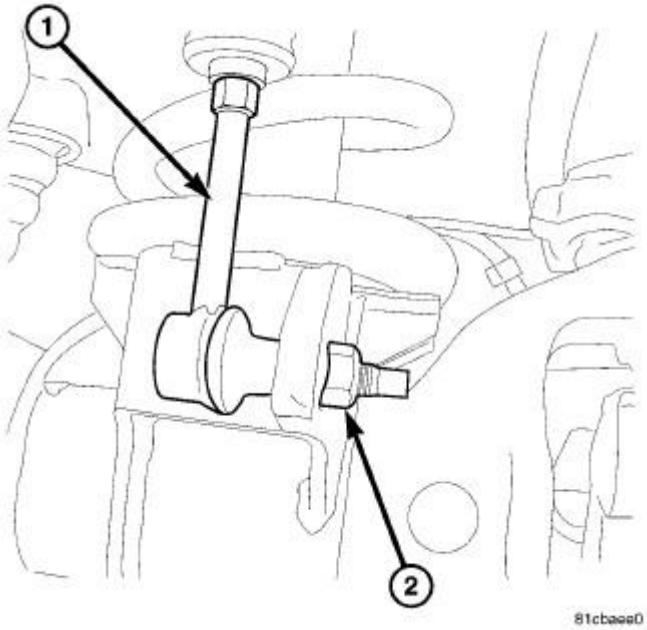

Fig. 49: Stabilizer Bar Link & Nuts
Courtesy of CHRYSLER GROUP, LLC

9. Install stabilizer bar link (1) in axle bracket and tighten nut (2) to 150 N.m (111 ft. lbs.).
10. Install track bar and tighten bolt to 54 N.m (40 ft. lbs.)
11. Install drag link and tie rod to the steering knuckles.
12. Install steering damper in axle bracket and tighten to 75 N.m (55 ft. lbs.).

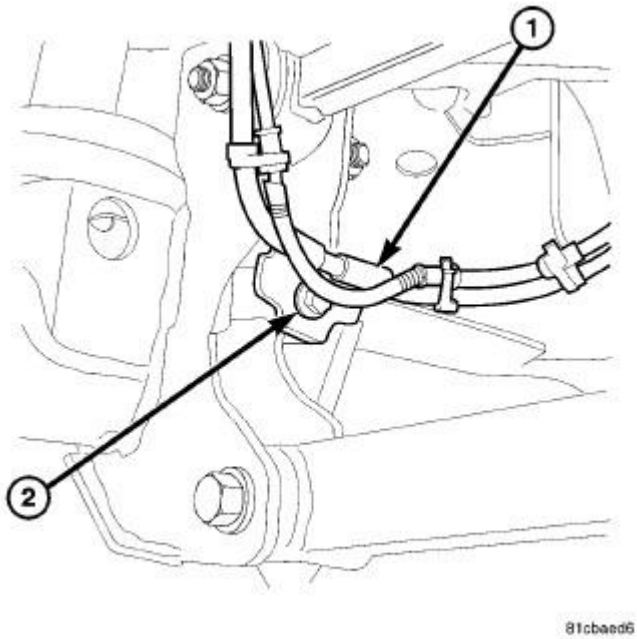

Fig. 50: Brake Line Retainer
Courtesy of CHRYSLER GROUP, LLC

13. Install rotors, brake calipers, and ABS wheel speed sensors.
14. Install brake hose retainers (1) and bolts (2).

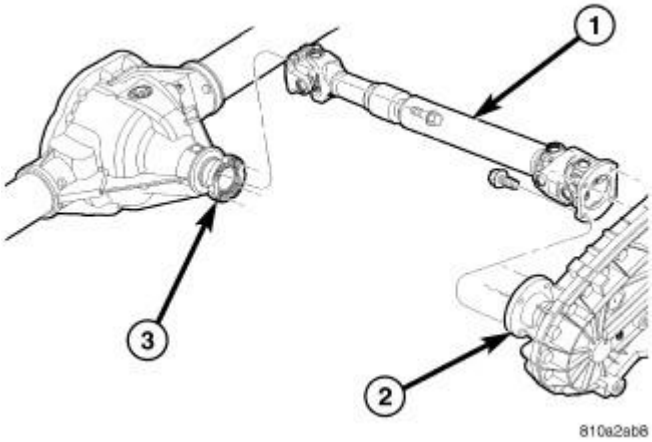

Fig. 51: Identifying HD Front Propeller Shaft
Courtesy of CHRYSLER GROUP, LLC

15. Install axle vent hose.
16. Install propeller shaft (1) with all reference marks aligned.
17. Install transfer case companion flange (2) bolts and tighten to 88 N.m (65 ft. lbs.).
18. Install **new** axle companion flange (3) bolts and tighten to 28 N.m (21 ft. lbs.).

NOTE: **Companion flange bolts incorporate a Loctite® patch, new bolts should be used. If bolts are not available, clean bolts and apply Loctite® 242 to the threads.**

19. Lower vehicle on the ground and tighten the following components at the axle:
    - Upper control arm nuts - 250 N.m (184 ft. lbs.)
    - Lower control arm nuts - 375 N.m (400 ft. lbs.)
    - Shock absorber nuts - 136 N.m (100 ft. lbs.)
    - Track bar bolt - 370 N.m (273 ft. lbs.)
20. Check front wheel alignment.

SPECIAL TOOLS

SPECIAL TOOLS

	10011 - Installer, Seal

(Originally Shipped In Kit Number(s) 10045.)
10068 - Adapters, Spreader
(Originally Shipped In Kit Number(s) 10045.)
10069 - Installer, Seal
(Originally Shipped In Kit Number(s) 10045.)
10091 - Block, Gauge
(Originally Shipped In Kit Number(s) 10045.)
10092 - Plug, Differential End
(Originally Shipped In Kit Number(s) 10045.)
10093 - Installer, Bearing Cup
(Originally Shipped In Kit Number(s) 10045.)
10094 - Set, Arbor Disc
(Originally Shipped In Kit Number(s) 10045, 9566-SUP2.)
10120 - Bearings, Dummy
(Originally Shipped In Kit Number(s) 10045.)
10121 - Cone
(Originally Shipped In Kit Number(s) 10045.)
1130 - Splitter, Bearing/Gear
(Originally Shipped In Kit Number(s) 6745, 6947, 6949, 9202, 9202A-CAN, 9202CC, 9299.)
6739 - Block, Height
(Originally Shipped In Kit Number(s) 6730, 9516A-CAN, 9540, 9541.)
6741 - Screw
(Originally Shipped In Kit Number(s) 6730, 6731, 9516A-CAN, 9540, 9541.)
8148 - Cup
(Originally Shipped In Kit Number(s) 8104, 9975.)
8151 - Installer, Bearing Cup
(Originally Shipped In Kit Number(s) 8104.)
8992 - Remover, Pinion Flange
(Originally Shipped In Kit Number(s) 8999, 8999CC, 9299, 9299CC, 9299CC, 9300A-CAN.)
938 - Bridge
(Originally Shipped In Kit Number(s) 6745, 6947, 6949, 9202, 9202A-CAN, 9202CC, 9299.)
C-3281 - Holder, Flange
(Originally Shipped In Kit Number(s) 9202, 9202A-CAN, 9202CC, 9299, 9299CC, 9299CC, 9300A-CAN.)
C-3339A - Set, Dial Indicator
(Originally Shipped In Kit Number(s) 9202.)
C-3894-A - Puller, Tie Rod
(Originally Shipped In Kit Number(s) 9202, 9202A-CAN, 9202CC, 9299, 9299CC, 9299CC, 9300A-CAN.)
C-4171 - Driver Handle, Universal
(Originally Shipped In Kit Number(s) 9202, 9202A-CAN, 9202CC, 9299, 9299CC, 9299CC, 9300A-CAN.)
D-115-2A - Block, Scooter
(Originally Shipped In Kit Number(s) 9329-SUP, 9515-SUP, 9516-SUP, 9517-SUP, 9518, 9519, 9540-SUP, 9541-SUP, 9694, 9926.)
D-115-3 - Arbor

	(Originally Shipped In Kit Number(s) 8667, 9516A-CAN.) W-129-B - Spreader, Differential (Originally Shipped In Kit Number(s) 9975.)

BEARING, DIFFERENTIAL SIDE

REMOVAL

REMOVAL

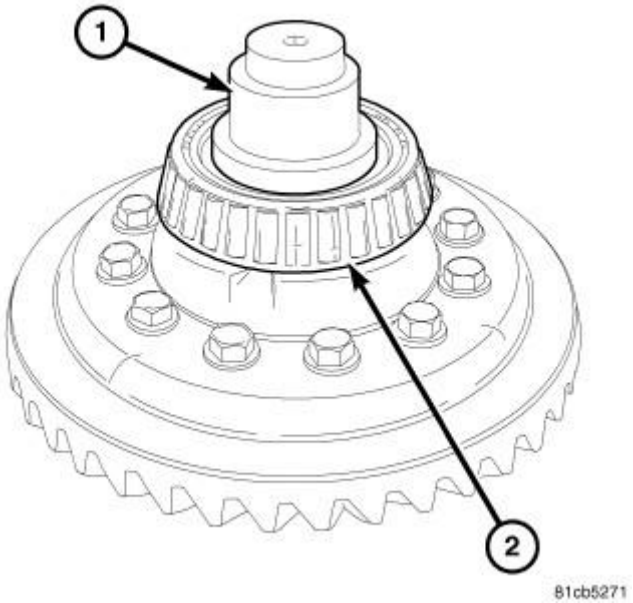

Fig. 52: Identifying Plug & Bearing
Courtesy of CHRYSLER GROUP, LLC

1. Install Plug (special tool #10092, Plug, Differential End) (1) into differential case this way to remove the large bearing (2).

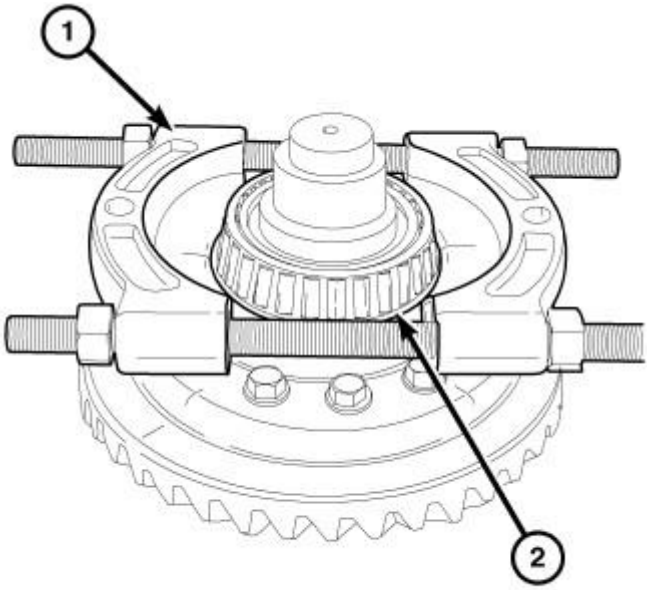

81cb5284

Fig. 53: Installing Splitter Under Larger Differential Bearing
Courtesy of CHRYSLER GROUP, LLC

2. Install Splitter (special tool #1130, Splitter, Bearing/Gear) (1) under larger differential bearing (2).

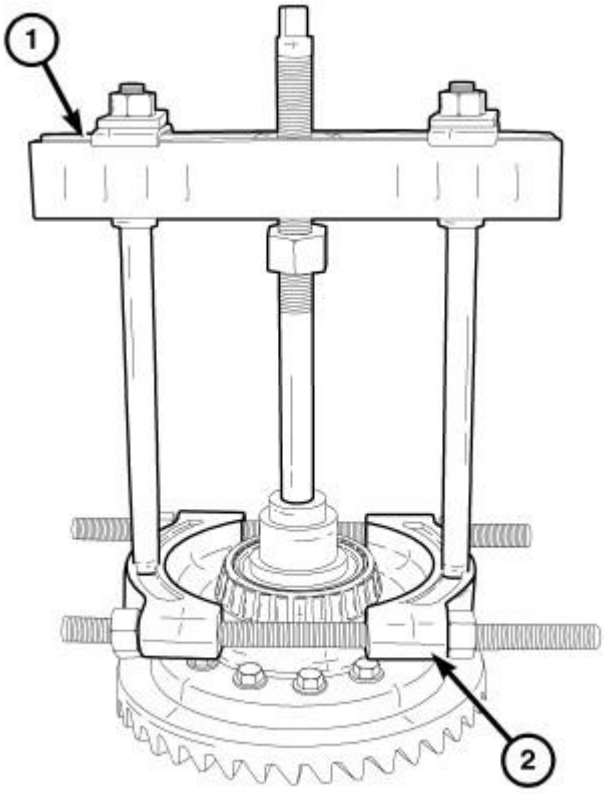

81cb5288

Fig. 54: Installing Bridge On Bearing Splitter & Removing Larger Differential Case Bearing
Courtesy of CHRYSLER GROUP, LLC

3. Install Bridge (special tool #938, Bridge) (1) on Bearing Splitter (special tool #1130, Splitter, Bearing/Gear) (2) and remove larger differential case bearing.

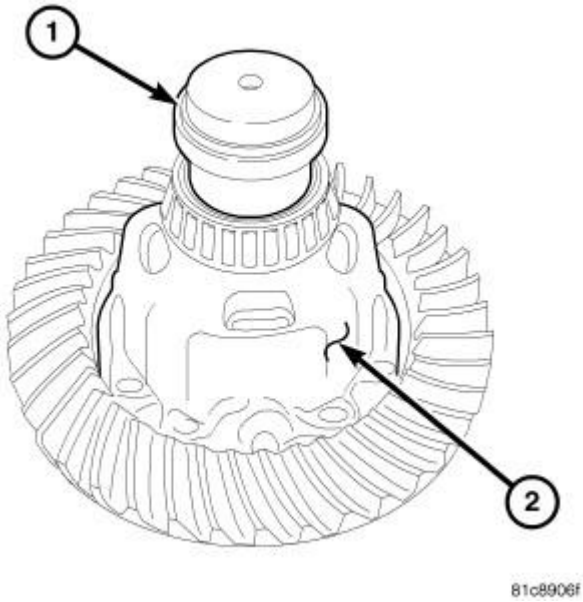

Fig. 55: Case Bearing Plug
Courtesy of CHRYSLER GROUP, LLC

4. Turn Plug (special tool #10092, Plug, Differential End) (1) over, in other side of the differential case (2) to remove the small differential case bearing.

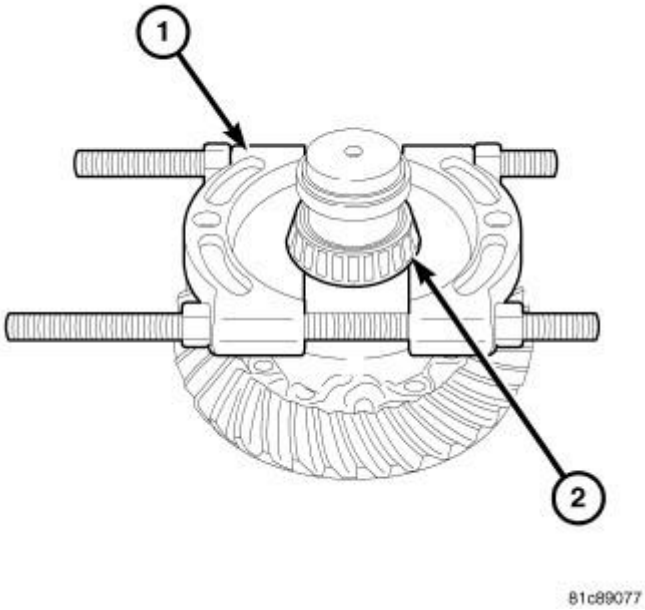

Fig. 56: Case Bearing Splitter
Courtesy of CHRYSLER GROUP, LLC

5. Install Splitter (special tool #1130, Splitter, Bearing/Gear) (1) under small differential bearing (2).
6. Install Bridge (special tool #938, Bridge) on Bearing Splitter (special tool #1130, Splitter, Bearing/Gear) (1) and remove small differential case bearing.

INSTALLATION

INSTALLATION

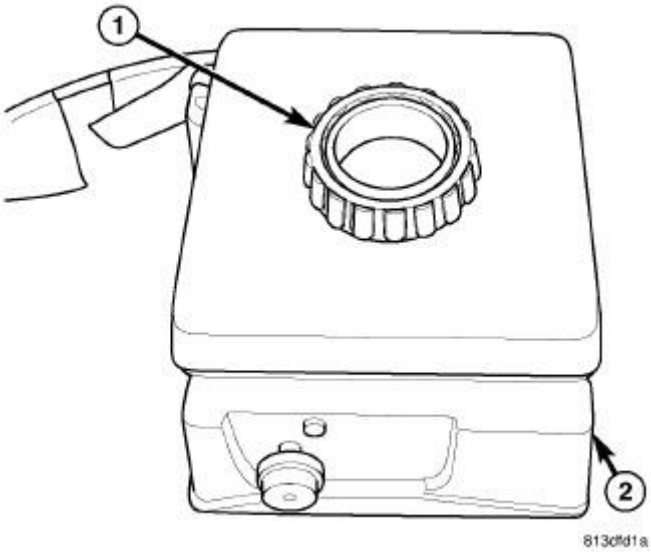

Fig. 57: Heating Bearing

Courtesy of CHRYSLER GROUP, LLC

WARNING: Use tongs or welding gloves when handling heated components. Failure to follow these instructions will result in personal injury.

CAUTION: Bearings (1) are installed using a Bearing Heater (2). Use only a bearing heater/hot plate and follow manufacture's instructions. Heat components to 100 - 149 Celsius (212° Min. - 300° Max Fahrenheit). Never use an open flame to heat components. Never leave components on heater for an extended amount of time. If component is discolored after heating, the component has been overheated and must not be used. Failure to follow these instructions will result in component damage.

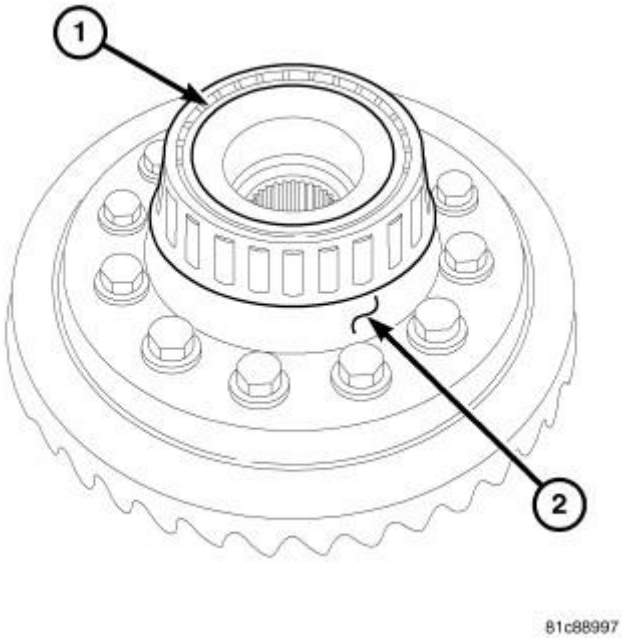

Fig. 58: Ring Gear Side Differential Bearing
Courtesy of CHRYSLER GROUP, LLC

1. Heat ring gear side differential bearing to 100 - 149 Celsius (212° Min. - 300° Max Fahrenheit). Install bearing (1) on differential (2) with tongs or welding gloves.

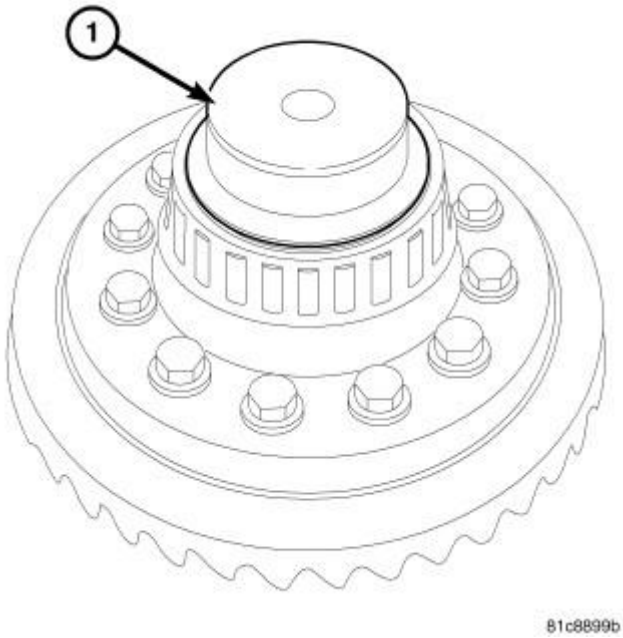

Fig. 59: Bearing Installer 8151
Courtesy of CHRYSLER GROUP, LLC

NOTE: **Ring gear side differential bearing can also be install with Installer (special tool #8151, Installer, Bearing Cup) (1) and a press.**

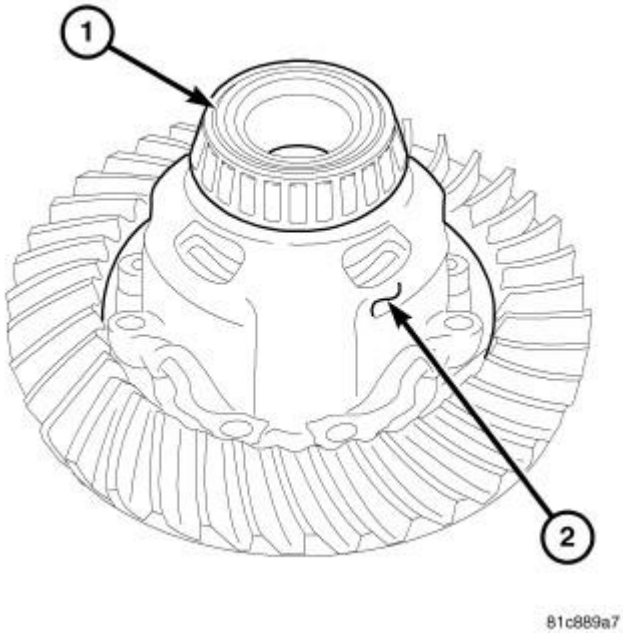

Fig. 60: Pinion Gear Side Differential Bearing
Courtesy of CHRYSLER GROUP, LLC

2. Heat pinion gear side differential bearing to 100 - 149 Celsius (212° Min. - 300° Max Fahrenheit). Install

bearing (1) on differential (2) with tongs or welding gloves.

CASE ASSEMBLY, DIFFERENTIAL

REMOVAL

REMOVAL

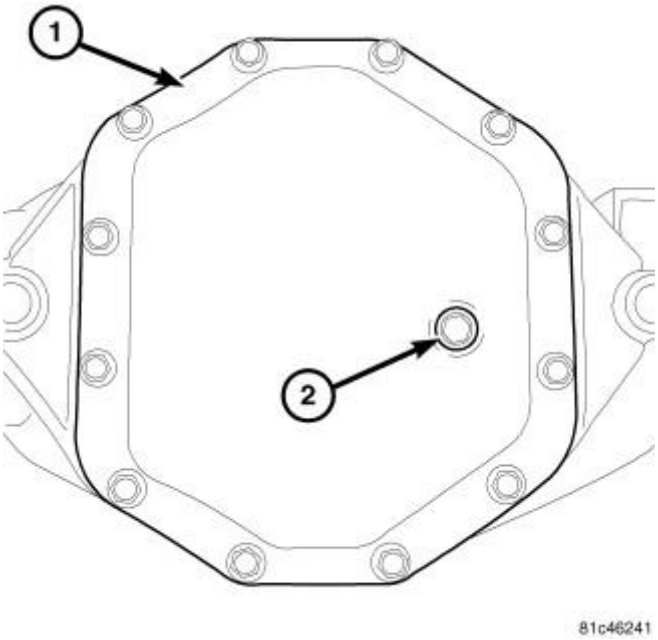

Fig. 61: Fill Plug
Courtesy of CHRYSLER GROUP, LLC

1. With vehicle in neutral, position vehicle on hoist.
2. Remove differential cover (1) fill plug (2).

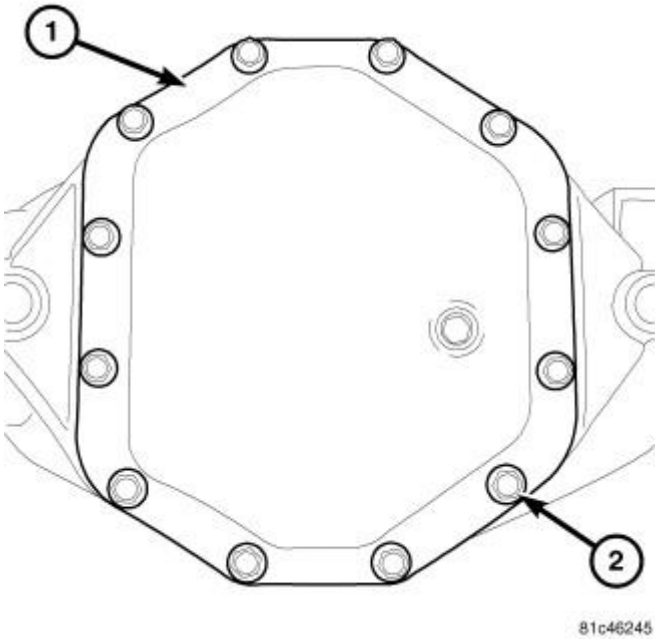

Fig. 62: Differential Cover Bolts
Courtesy of CHRYSLER GROUP, LLC

3. Remove differential cover (1) bolts (2).
4. Remove cover and drain lubricant.
5. Remove axle shafts.

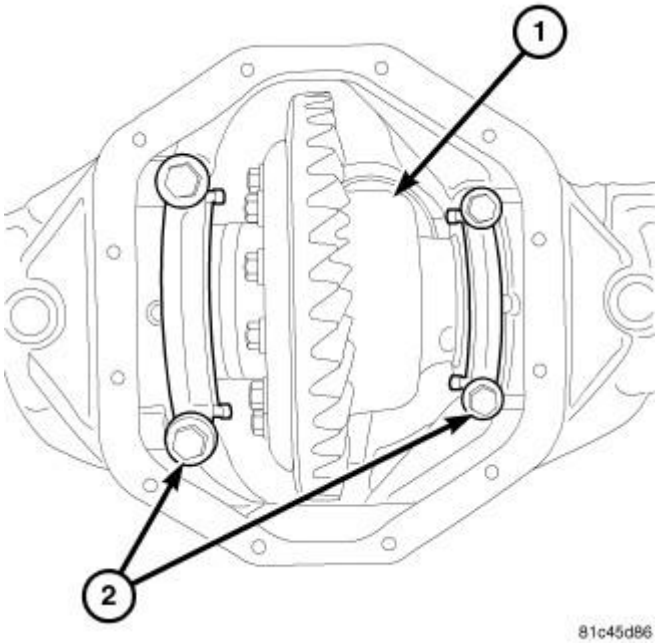

Fig. 63: Bearing Caps
Courtesy of CHRYSLER GROUP, LLC

6. Loosen differential (1) bearing cap bolts (2).

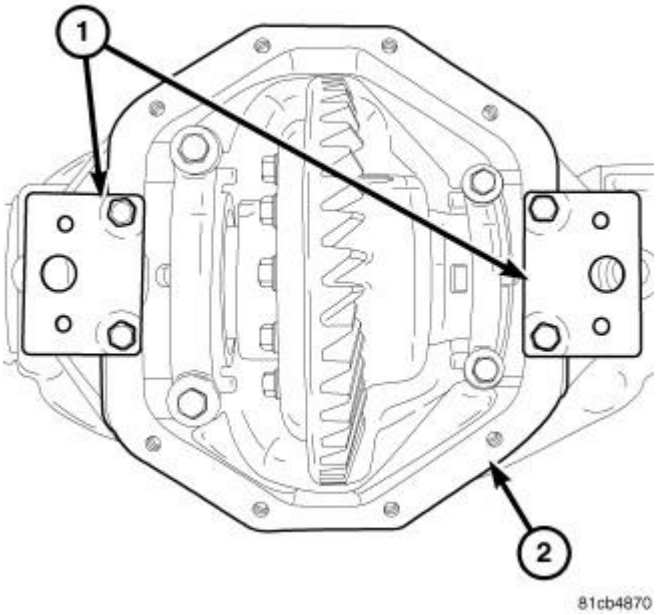

Fig. 64: Adapters 10068
Courtesy of CHRYSLER GROUP, LLC

7. Install Adapters (special tool #10068, Adapters, Spreader) (1) onto the housing (2).
8. Loosen bearing cap bolts.

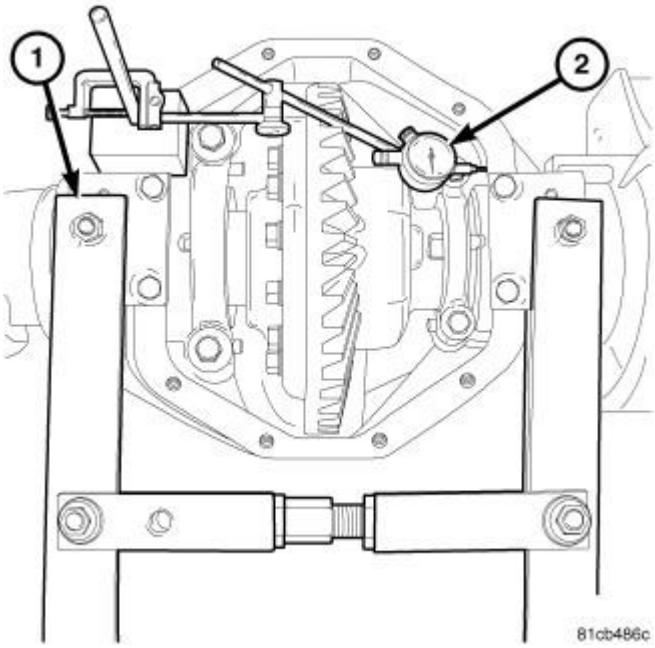

Fig. 65: Identifying Spreader & Dial Indicator
Courtesy of CHRYSLER GROUP, LLC

9. Install Spreader (special tool #W-129-B, Spreader, Differential) (1) onto the adapters and tighten the turnbuckle finger-tight.
10. Mount attach Dial Indicator (special tool #C-3339A, Set, Dial Indicator) (2) to housing and load indicator plunger against the opposite side of the housing. Zero the indicator.
11. Spread the housing, while measuring the distance with the dial indicator (2).

CAUTION: Never spread housing over 0.38 mm (0.015 in.). Failure to follow these instruction will damage the housing.

12. Remove dial indicator.
13. Remove bearing caps, differential with bearing cups and preload shims.
14. Remove the spreader.

DISASSEMBLY

DISASSEMBLY

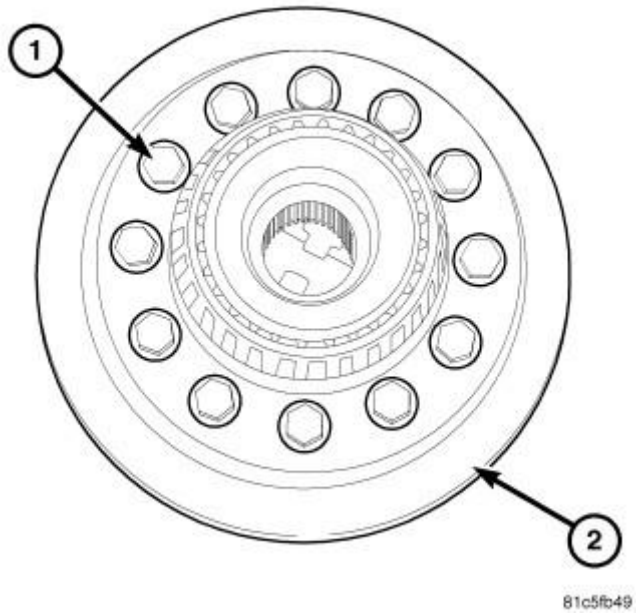

Fig. 66: Ring Gear & Bolts
Courtesy of CHRYSLER GROUP, LLC

NOTE: Tag all components with location.

1. Remove ring gear bolts (1) from ring gear (2).
2. Separate ring gear from differential case.

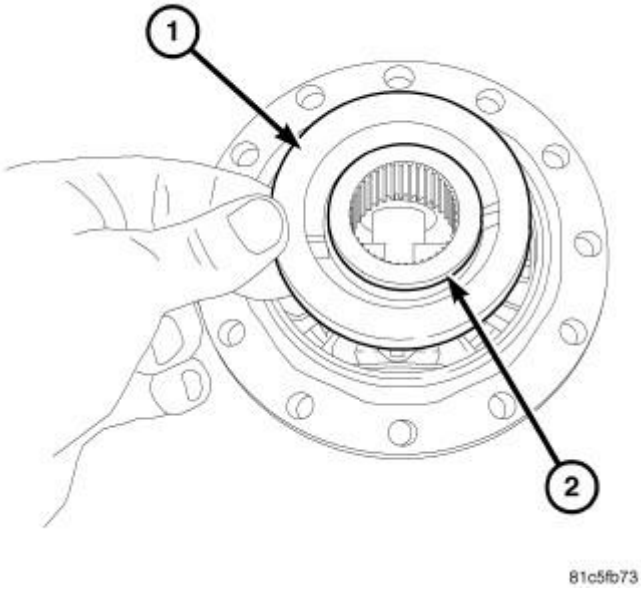

Fig. 67: Thrust Washer & Side Gear
Courtesy of CHRYSLER GROUP, LLC

3. Remove thrust washer (1) from side gear (2).

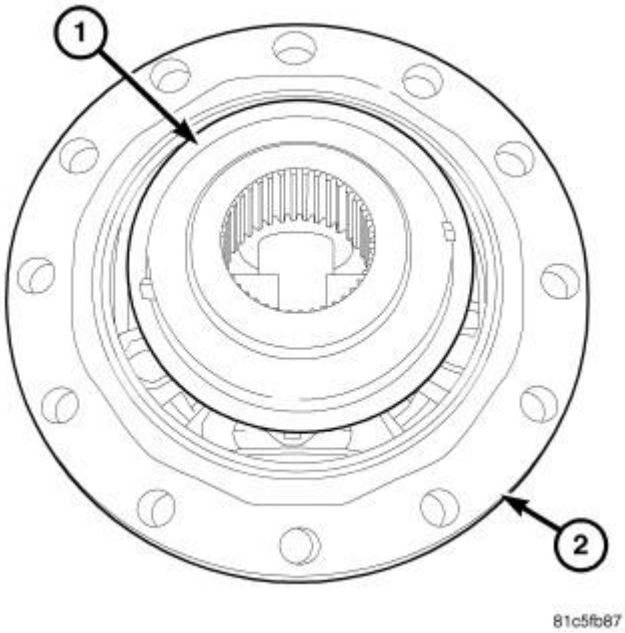

Fig. 68: Side Gear & Differential Case
Courtesy of CHRYSLER GROUP, LLC

4. Remove side gear (1) from differential case (2).

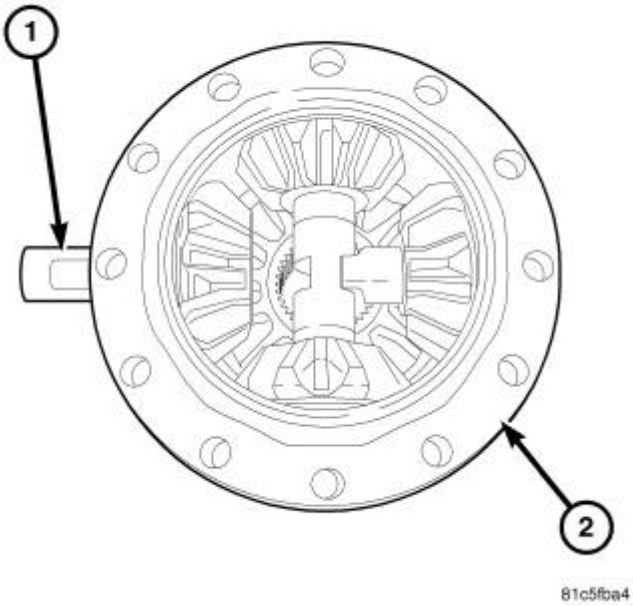

Fig. 69: First Pinion Mate Shaft & Differential Case
Courtesy of CHRYSLER GROUP, LLC

5. Remove first pinion mate shaft (1) from differential case (2).

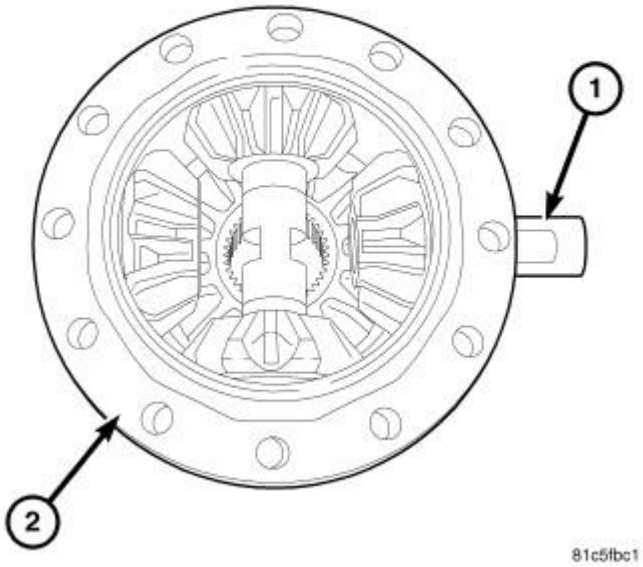

Fig. 70: Second Pinion Mate Shaft & Differential Case
Courtesy of CHRYSLER GROUP, LLC

6. Remove second pinion mate shaft (1) from differential case (2).

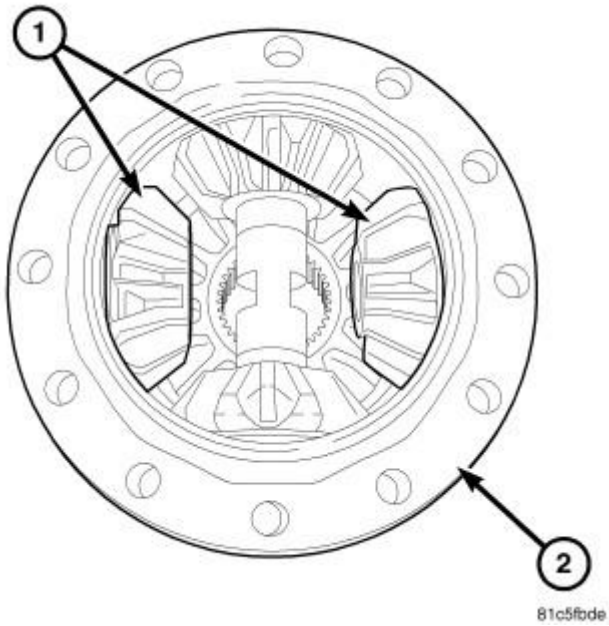

Fig. 71: 1st Set Pinion Gears
Courtesy of CHRYSLER GROUP, LLC

7. Remove first set of pinion gears (1) with thrust washer from differential case (2).

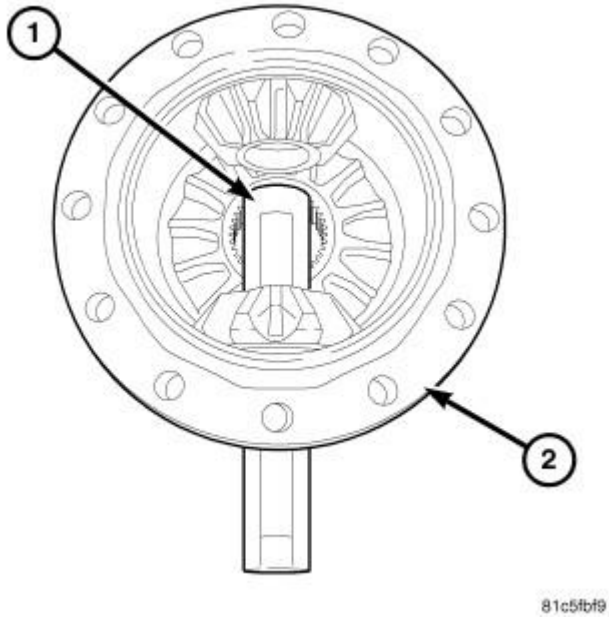

Fig. 72: Third Pinion Mate Shaft & Differential Case
Courtesy of CHRYSLER GROUP, LLC

8. Remove third pinion mate shaft (1) from differential case (2).

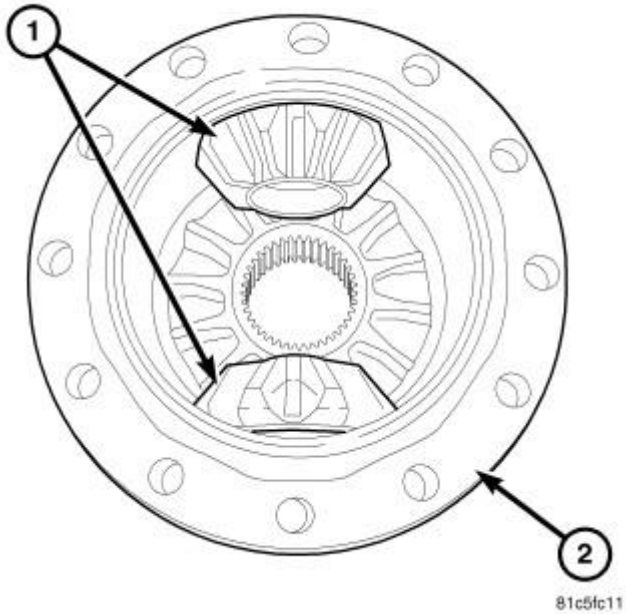

Fig. 73: 2nd Set Pinion Gears
Courtesy of CHRYSLER GROUP, LLC

9. Remove second set of pinion gears (1) with thrust washer from differential case (2).

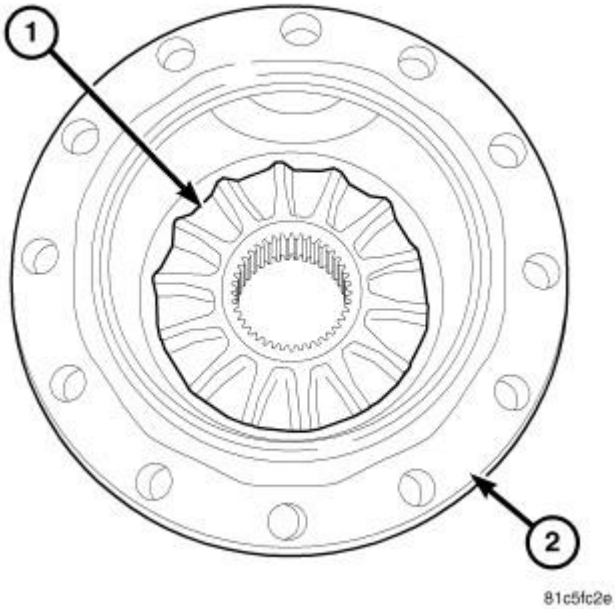

Fig. 74: Bottom Side Gear
Courtesy of CHRYSLER GROUP, LLC

10. Remove remaining side gear (1) from differential case (2).

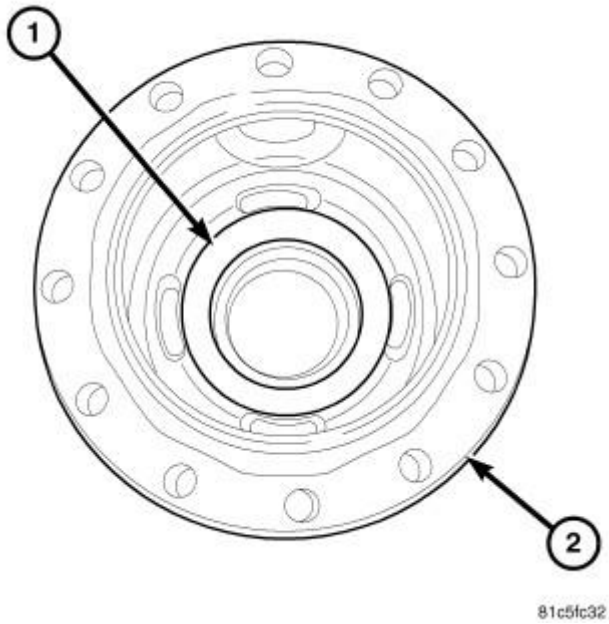

Fig. 75: Bottom Thrust Washer
Courtesy of CHRYSLER GROUP, LLC

11. Remove side gear thrust washer (1) from differential case (2).

ASSEMBLY

ASSEMBLY

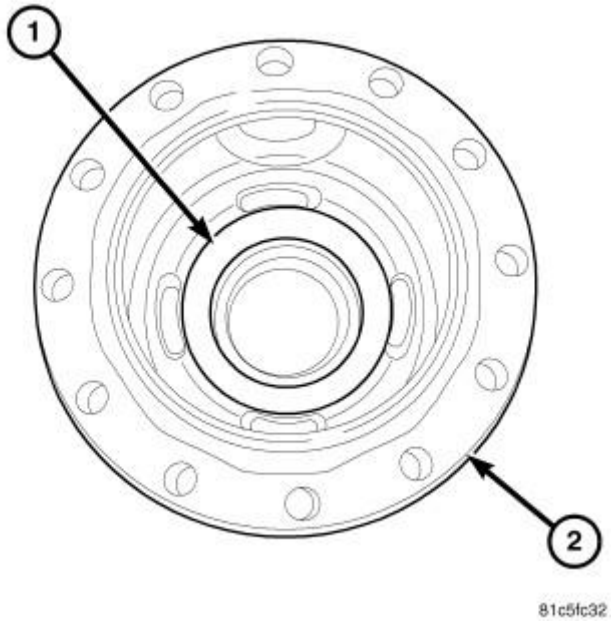

Fig. 76: Bottom Thrust Washer
Courtesy of CHRYSLER GROUP, LLC

NOTE: **Install components in original location.**

1. Install side gear thrust washer (1) into differential case (2).

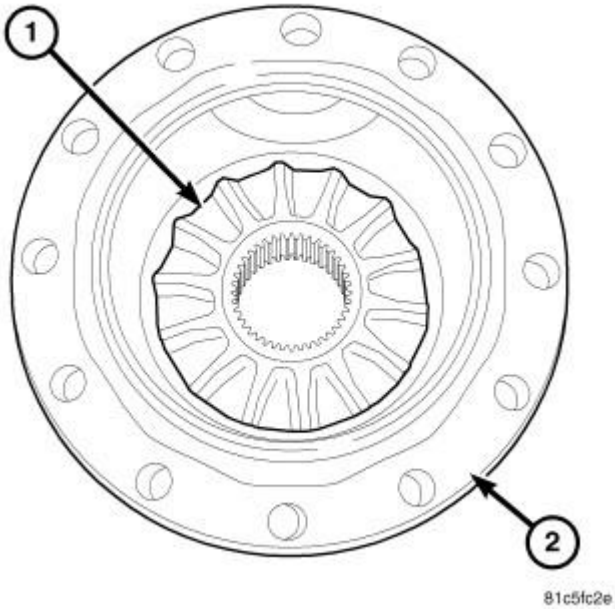

Fig. 77: Bottom Side Gear
Courtesy of CHRYSLER GROUP, LLC

2. Install side gear (1) into differential case (2).

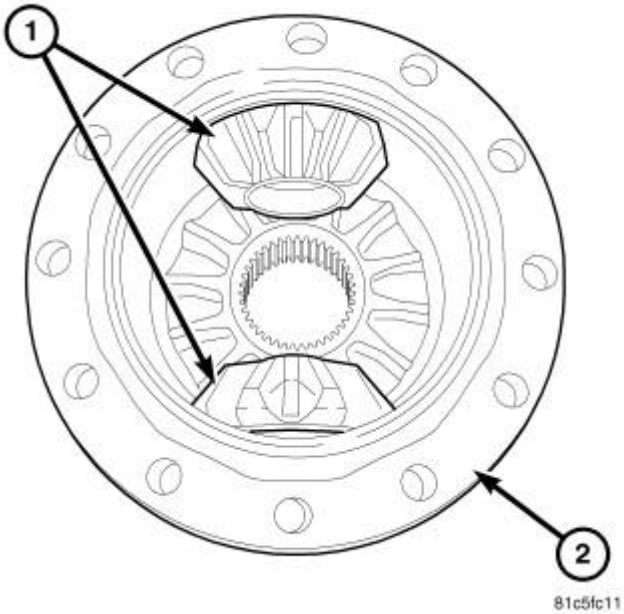

Fig. 78: 2nd Set Pinion Gears

Courtesy of CHRYSLER GROUP, LLC

3. Install a set of pinion gears (1) with thrust washer into differential case (2).

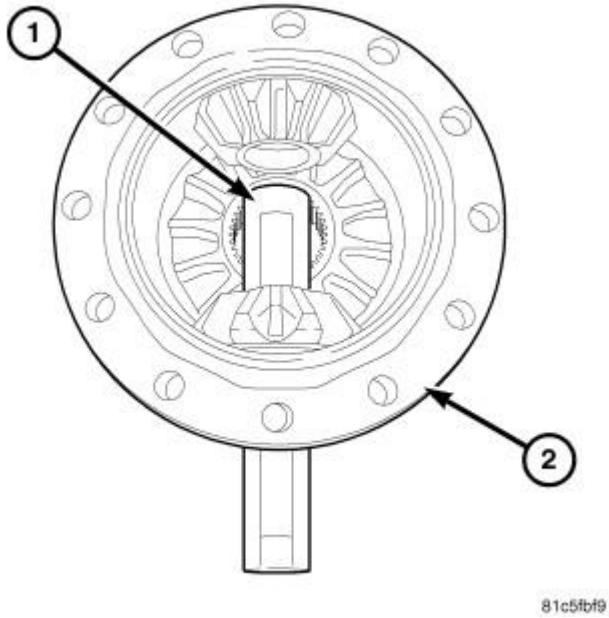

Fig. 79: Identifying Third Pinion Mate Shaft And Differential Case
Courtesy of CHRYSLER GROUP, LLC

4. Install pinion mate shaft (1) into differential case (2).

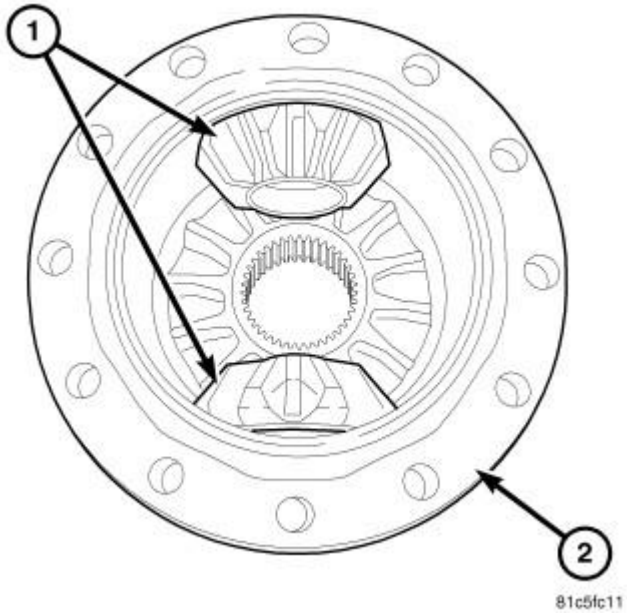

Fig. 80: 2nd Set Pinion Gears
Courtesy of CHRYSLER GROUP, LLC

5. Install next set of pinion gears (1) with thrust washer into differential case (2).

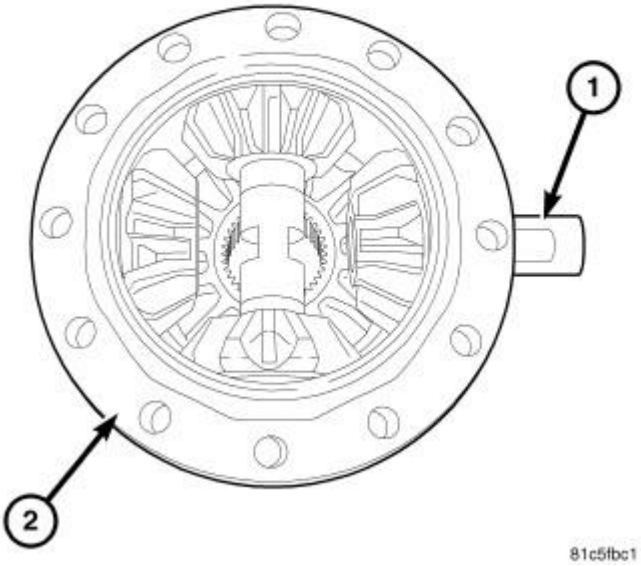

Fig. 81: Second Pinion Mate Shaft & Differential Case
Courtesy of CHRYSLER GROUP, LLC

6. Install a pinion mate shaft (1) into differential case (2).

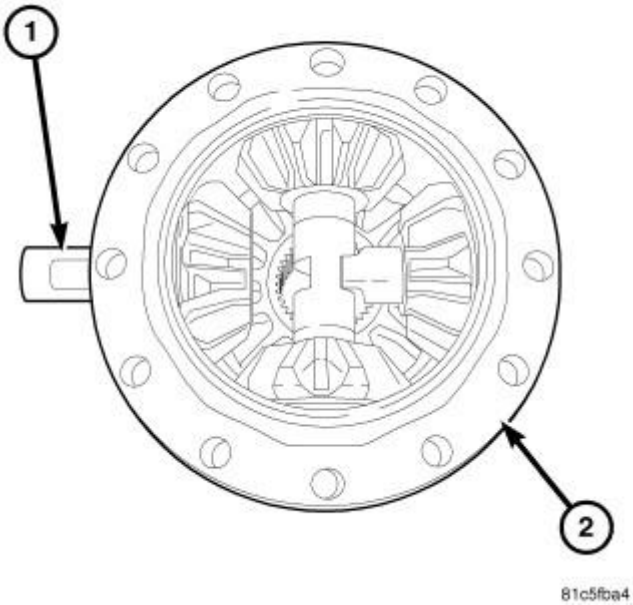

Fig. 82: First Pinion Mate Shaft & Differential Case
Courtesy of CHRYSLER GROUP, LLC

7. Install remaining pinion mate shaft (1) into differential case (2).

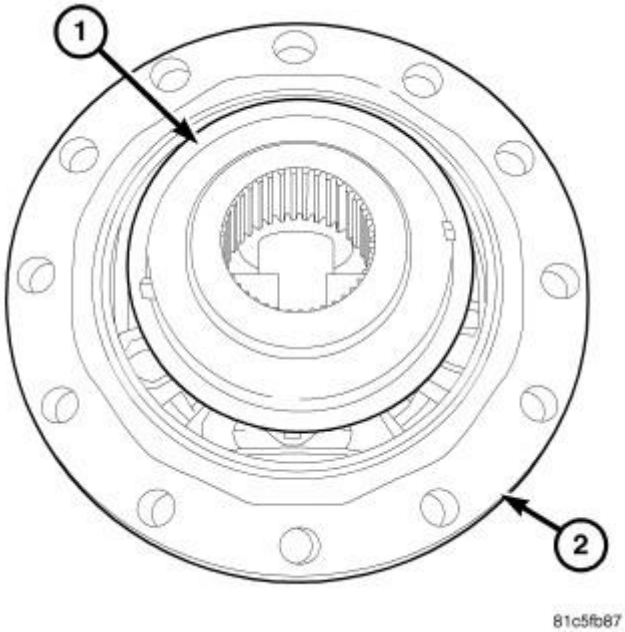

Fig. 83: Side Gear & Differential Case
Courtesy of CHRYSLER GROUP, LLC

8. Install side gear (1) into differential case (2).

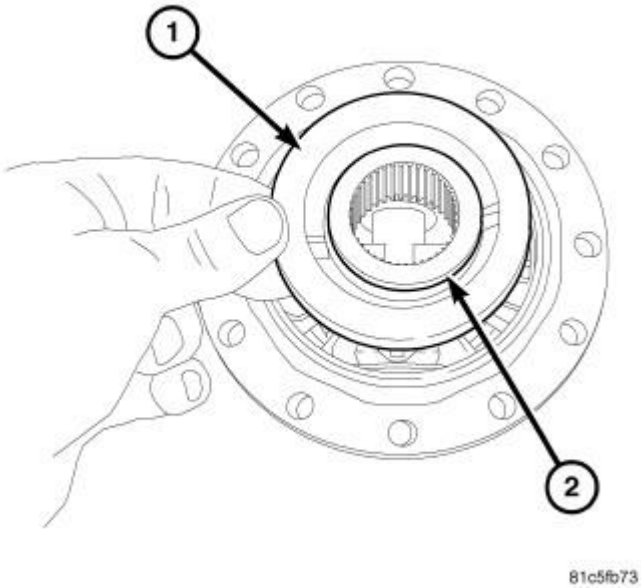

Fig. 84: Thrust Washer & Side Gear
Courtesy of CHRYSLER GROUP, LLC

9. Install thrust washer (1) on side gear (2).

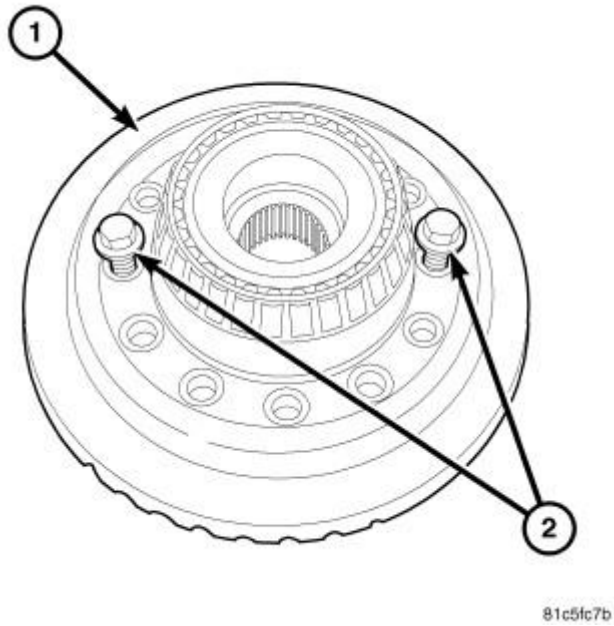

Fig. 85: Align Ring Gear
Courtesy of CHRYSLER GROUP, LLC

10. Align ring gear (1) to differential case with two ring gear bolts (2).

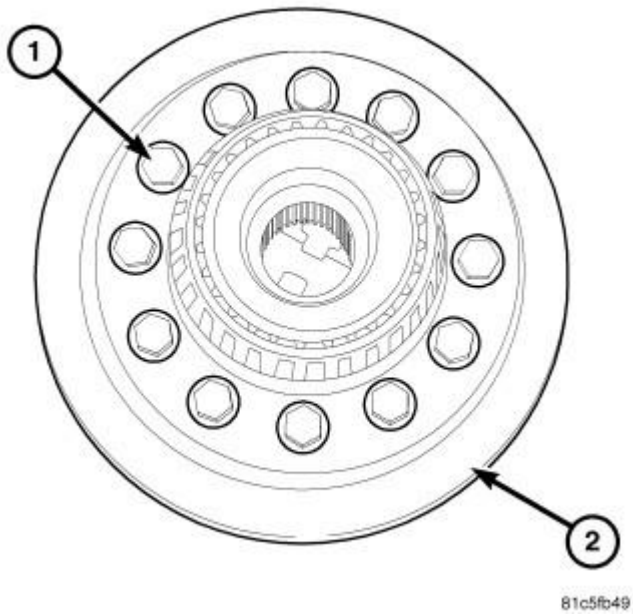

Fig. 86: Ring Gear & Bolts
Courtesy of CHRYSLER GROUP, LLC

11. Install remaining ring gear bolts and tighten to 175 N.m (139 ft. lbs.).

INSTALLATION

INSTALLATION

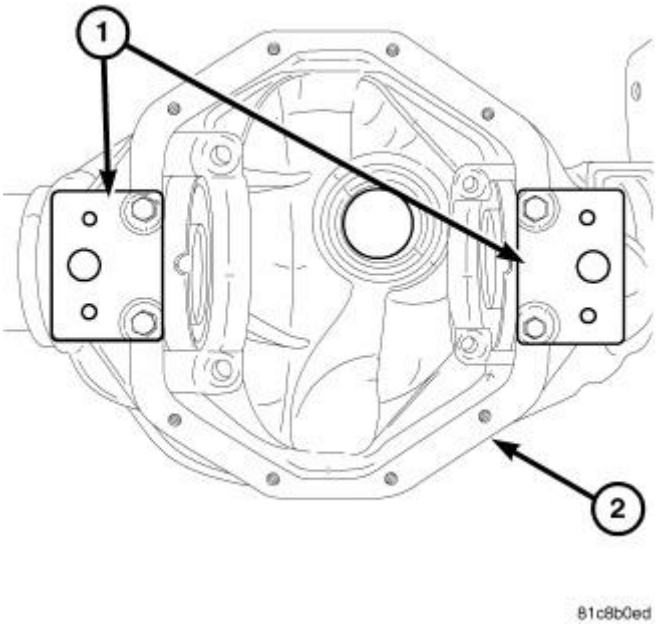

Fig. 87: Spreader Adapters 10068
Courtesy of CHRYSLER GROUP, LLC

NOTE: **If differential bearings or differential case are replaced, refer to DIFFERENTIAL BEARING PRELOAD AND GEAR BACKLASH for adjustment procedures.**

1. Install Adapters (special tool #10068, Adapters, Spreader) (1) on the differential housing (2).

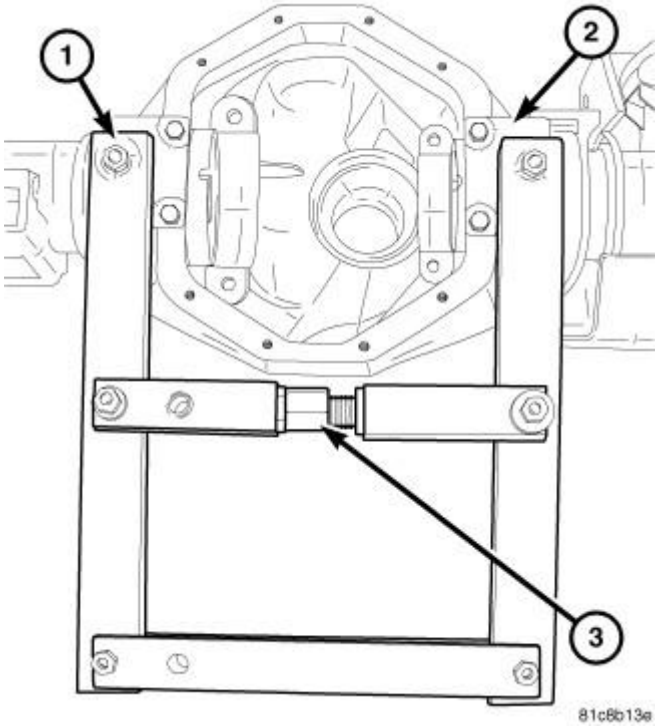

Fig. 88: Identifying Spreader, Adapters, & Spreader Turnbuckle
Courtesy of CHRYSLER GROUP, LLC

2. Install Spreader (special tool #W-129-B, Spreader, Differential) (1) on Adapters (special tool #10068, Adapters, Spreader) (2) and tighten spreader turnbuckle (3) finger-tight.

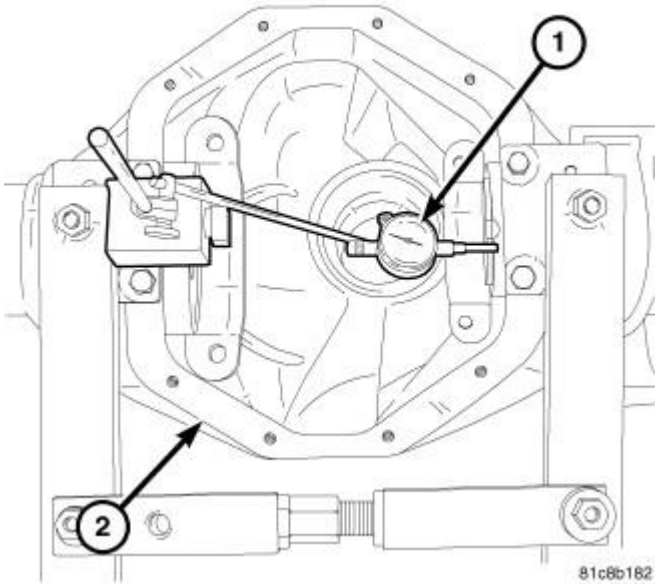

Fig. 89: Spreading Housing
Courtesy of CHRYSLER GROUP, LLC

3. Mount Dial Indicator (special tool #C-3339A, Set, Dial Indicator) (1) to the housing (2) with indicator plunger against the opposite side of the housing. Zero the indicator.
4. Spread housing, while measuring the distance with the dial indicator.

CAUTION: Never spread housing over 0.38 mm (0.015 in.). Failure to follow these instruction will damage the housing.

5. Remove dial indicator.

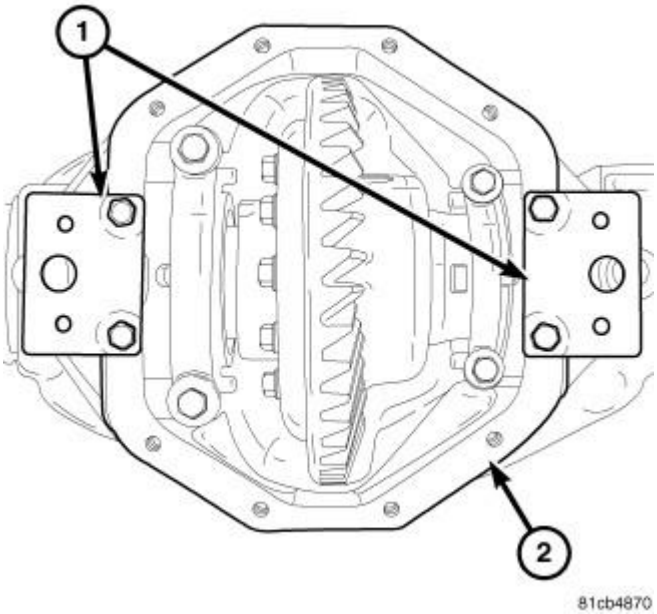

Fig. 90: Adapters 10068
Courtesy of CHRYSLER GROUP, LLC

6. Install differential case into the housing (2) with bearing cups and preload shims. Ensure differential bearing cups preload shims are seated in the housing. Tap differential case to ensure bearings cups are seated in the housing.
7. Install bearing caps and loosely install cap bolts.
8. Remove spreader and adapters (1) from housing.

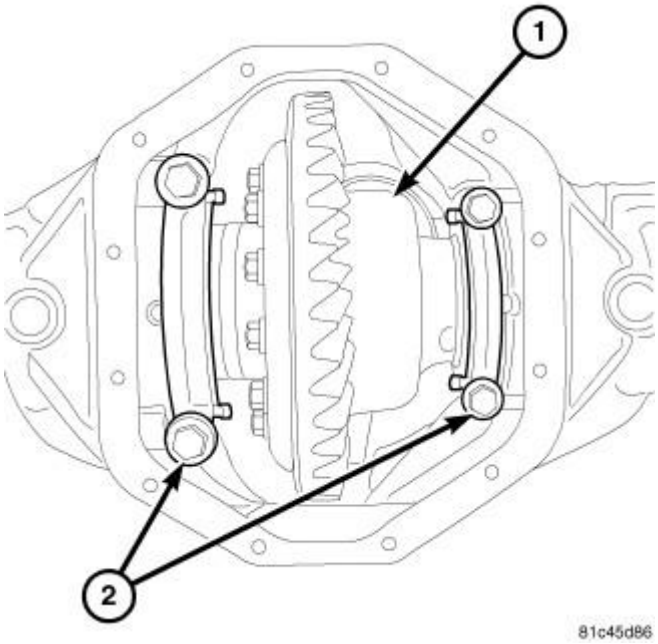

Fig. 91: Bearing Caps
Courtesy of CHRYSLER GROUP, LLC

9. Tighten large bearing cap bolts (2) to 160 N.m (118 ft. lbs.). Tighten small bearing cap bolts to 100 N.m (74 ft. lbs.).
10. Install axle shafts.

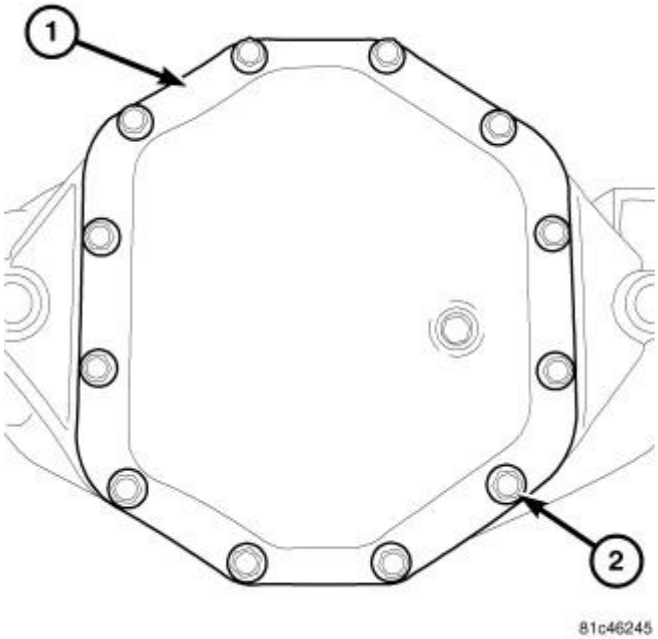

Fig. 92: Differential Cover Bolts
Courtesy of CHRYSLER GROUP, LLC

11. Apply a bead of orange Mopar Axle RTV sealant or equivalent to the housing cover.

CAUTION: If cover is not installed within 3 to 5 minutes, the cover must be cleaned and new RTV applied. Failure to follow these instruction will cause a leak.

12. Install cover (1) and tighten bolts (2) in a criss-cross pattern to 46 N.m (34 ft. lbs.).

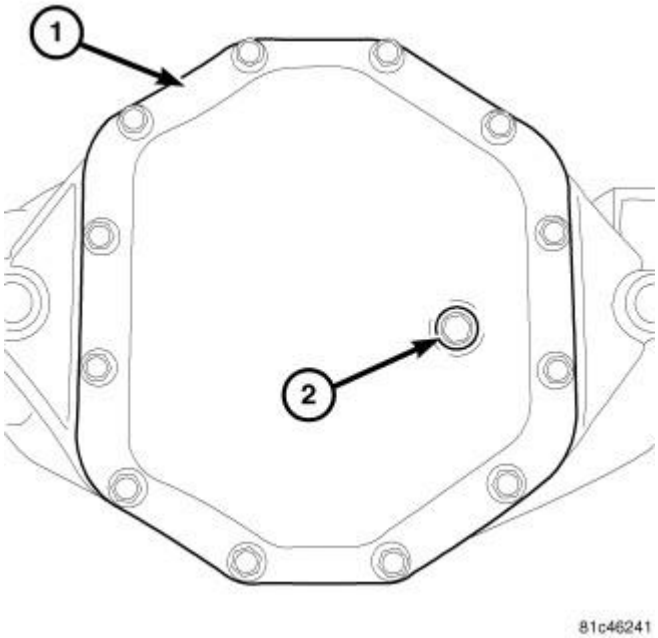

Fig. 93: Fill Plug
Courtesy of CHRYSLER GROUP, LLC

13. Fill differential to specifications.
14. Install cover (1) fill plug (2) and tighten to 60 N.m (44 ft. lbs.).

COVER, DIFFERENTIAL

REMOVAL

REMOVAL

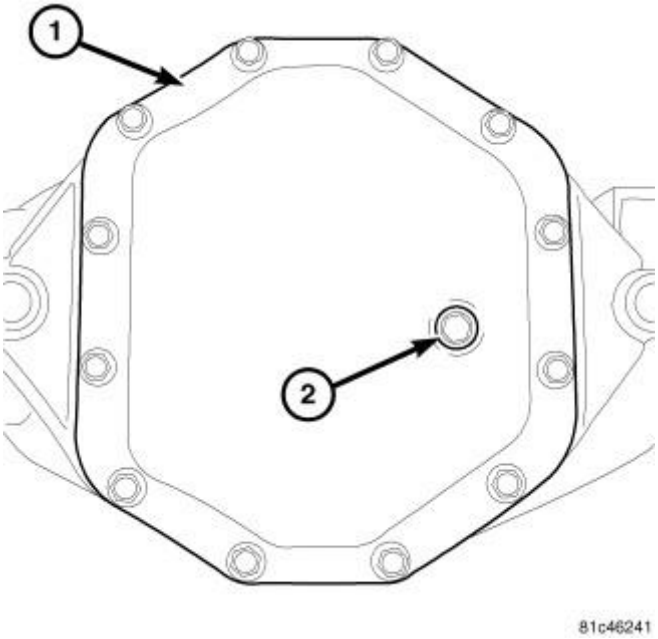

Fig. 94: Fill Plug
Courtesy of CHRYSLER GROUP, LLC

1. With vehicle in neutral, position vehicle on hoist.
2. Remove differential cover (1) fill plug (2).

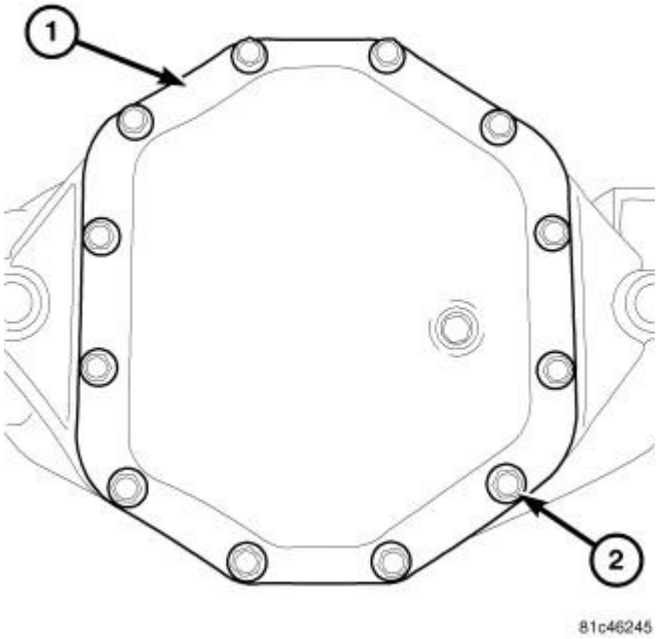

Fig. 95: Differential Cover Bolts
Courtesy of CHRYSLER GROUP, LLC

3. Remove differential cover (1) bolts (2).

4. Remove cover and drain lubricant.

INSTALLATION

INSTALLATION

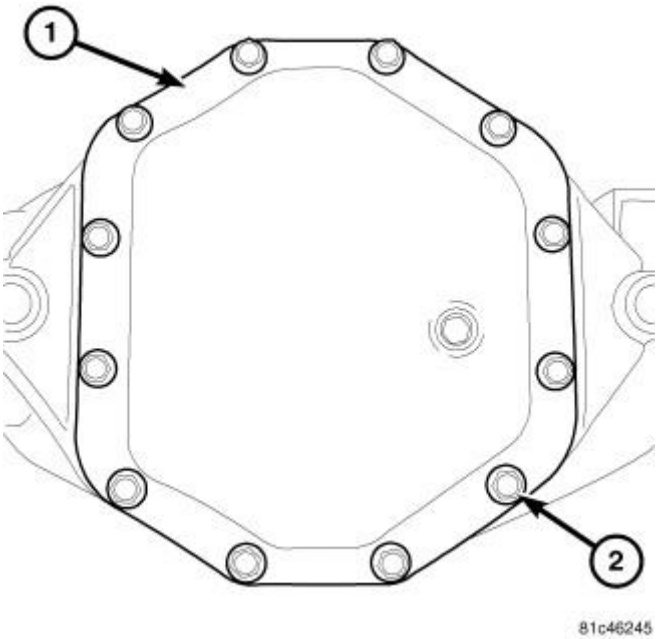

Fig. 96: Differential Cover Bolts
Courtesy of CHRYSLER GROUP, LLC

1. Clean sealing surface on cover and housing.
2. Apply a 4 mm (0.15 in.) bead of Mopar AXLE RTV (1) or equivalent to the housing.

CAUTION: If housing cover is not installed within 3 to 5 minutes, the cover must be cleaned and new RTV applied. Failure to follow these instructions will result in a leak.

3. Install cover (1) and tighten bolts (2) in a criss-cross pattern to 46 N.m (34 ft. lbs.).

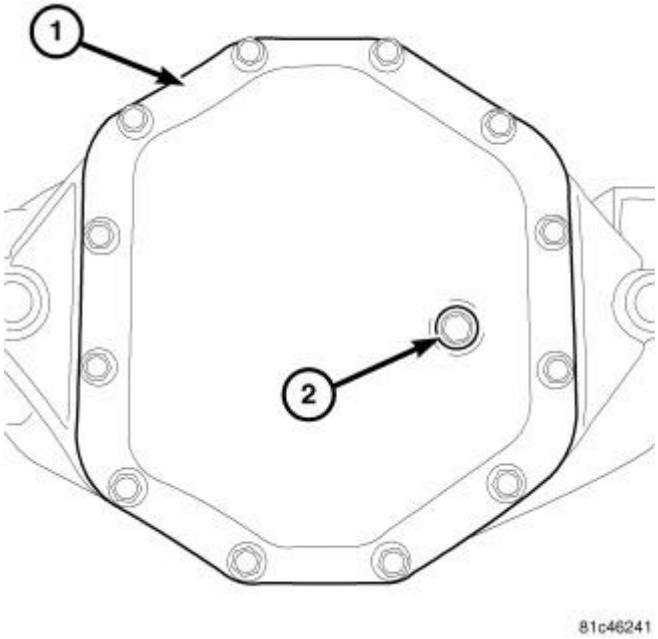

Fig. 97: Fill Plug
Courtesy of CHRYSLER GROUP, LLC

4. Fill differential to specifications.
5. Install cover (1) fill plug (2) and tighten to 60 N.m (44 ft. lbs.).

GEAR, RING AND PINION

REMOVAL

REMOVAL

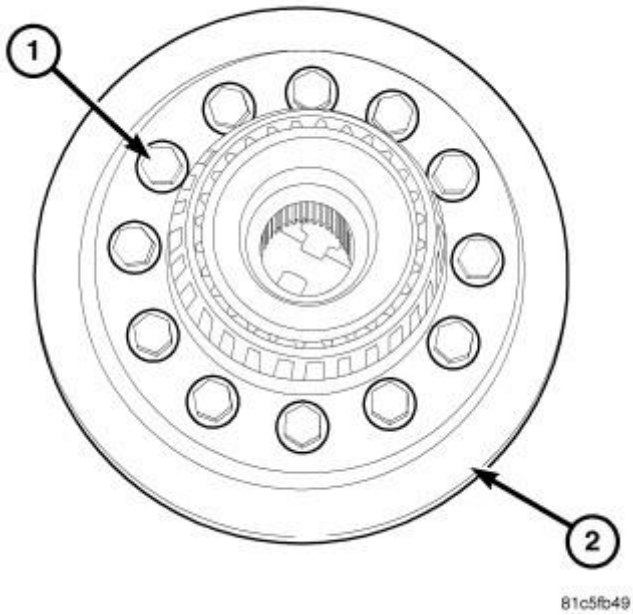

Fig. 98: Ring Gear & Bolts
Courtesy of CHRYSLER GROUP, LLC

NOTE: **The ring and pinion gears are service in a matched set. Never replace the ring gear/pinion gear without replacing the other matching gear.**

1. Remove differential case from the axle housing.
2. Remove ring gear bolts (1) from ring gear (2).
3. Separate ring gear from differential case.

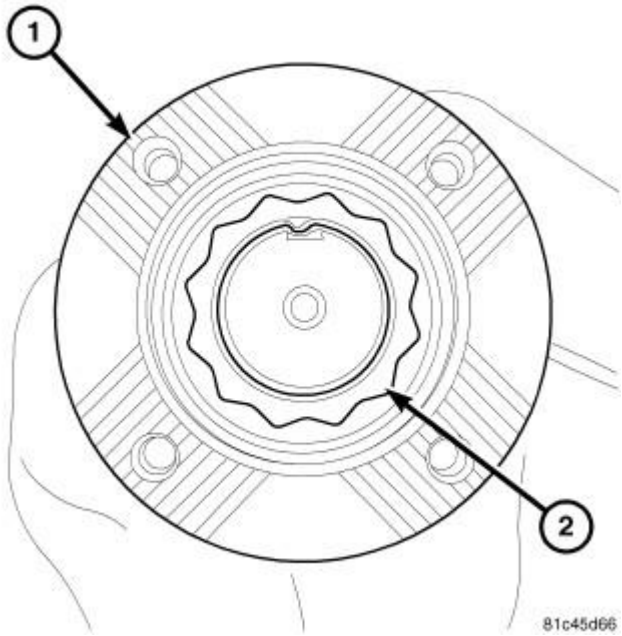

Fig. 99: Pinion Flange & Nut Collar
Courtesy of CHRYSLER GROUP, LLC

4. Bend pinion flange (1) nut (2) collar out pinion shaft keyway with a hammer and punch.

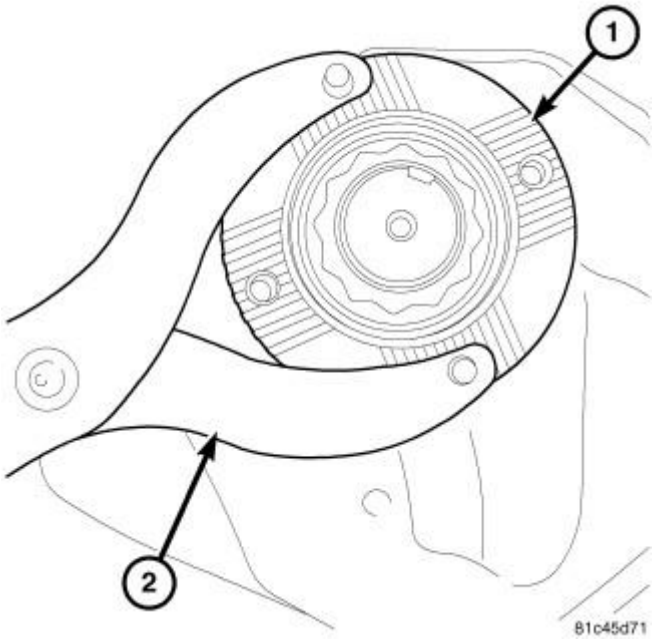

Fig. 100: Flange Holder & Pinion Flange
Courtesy of CHRYSLER GROUP, LLC

5. Hold pinion flange (1) with Holder (special tool #C-3281, Holder, Flange) (2) and remove 50 mm pinion nut.

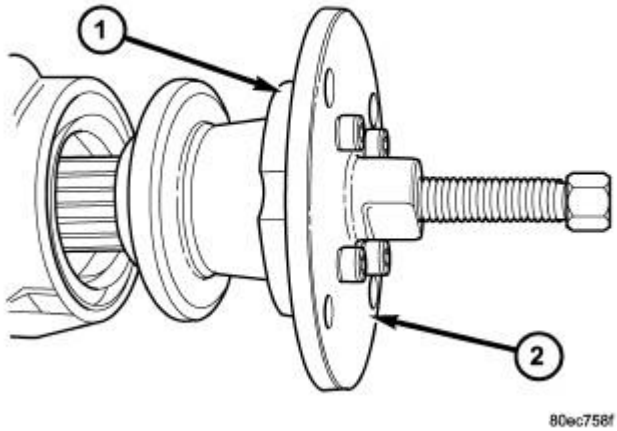

Fig. 101: Removing Pinion Flange
Courtesy of CHRYSLER GROUP, LLC

6. Remove pinion flange (1) with Puller (special tool #8992, Remover, Pinion Flange) (2).

7. Drive pinion out of the housing with a dead blow hammer.

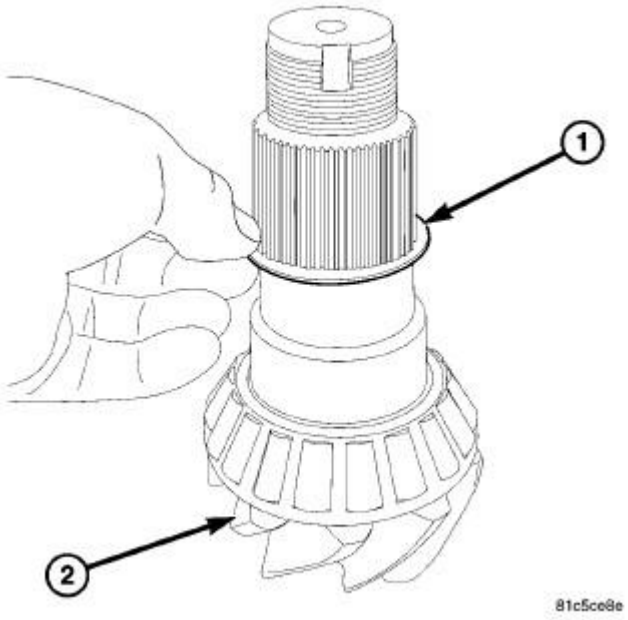

Fig. 102: Pinion Bearing Preload Shim
Courtesy of CHRYSLER GROUP, LLC

8. Remove pinion bearing preload shim (1) from pinion gear (2).

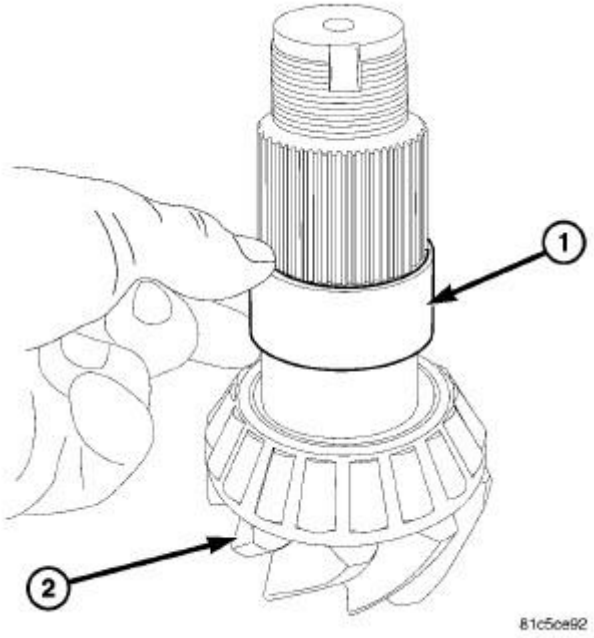

Fig. 103: Pinion Spacer

Courtesy of CHRYSLER GROUP, LLC

9. Remove pinion spacer (1) from pinion gear (2).

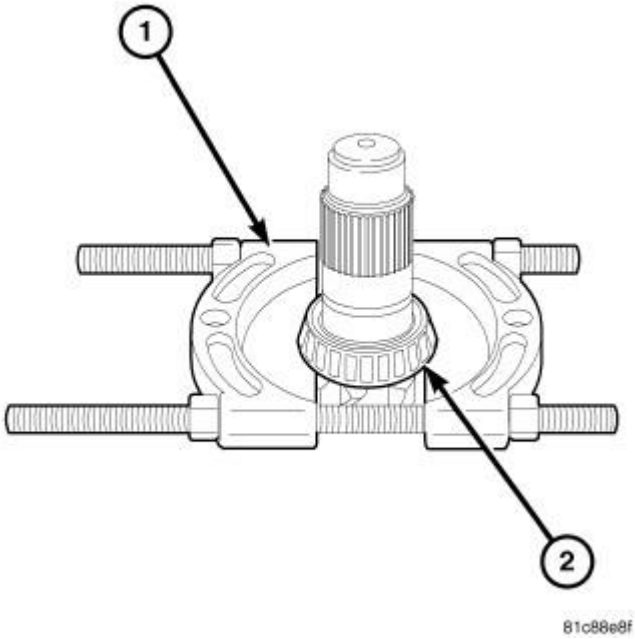

Fig. 104: Pinion Bearing Splitter
Courtesy of CHRYSLER GROUP, LLC

10. Position Splitter (special tool #1130, Splitter, Bearing/Gear) under the rear pinion bearing (2).

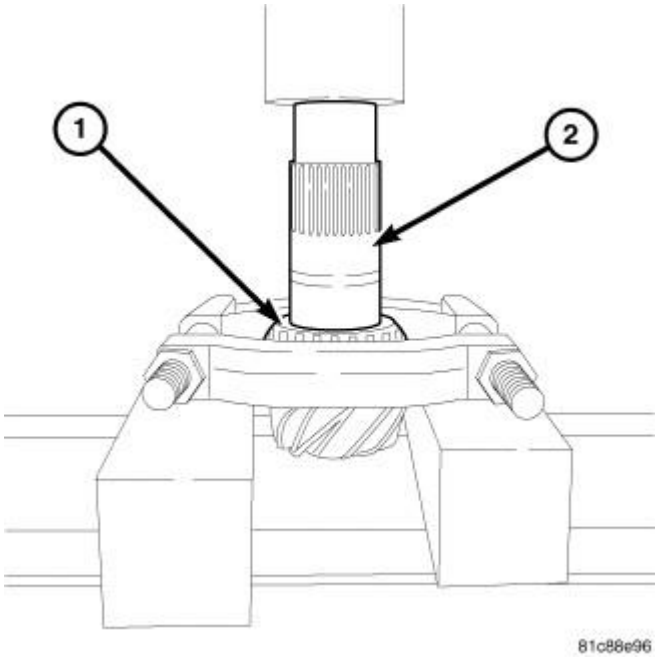

Fig. 105: Pressing Pinion Rear Bearing
Courtesy of CHRYSLER GROUP, LLC

11. Press pinion rear bearing (1) of the pinion shaft (2) with a press.

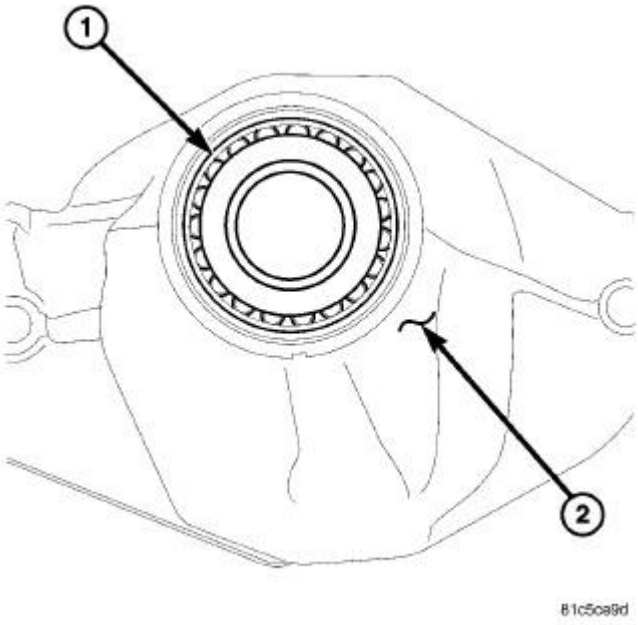

Fig. 106: Front Pinion Bearing
Courtesy of CHRYSLER GROUP, LLC

12. Remove pinion seal with a seal puller.
13. Remove front pinion bearing (1) from axle housing (2).

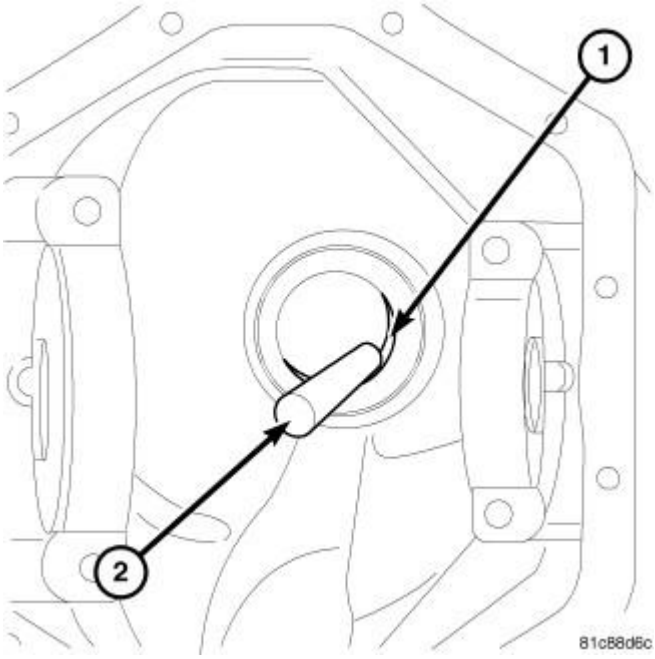

Fig. 107: Removing Front Pinion Bearing Cup

Courtesy of CHRYSLER GROUP, LLC

14. Remove front pinion bearing cup (1) with a hammer and brass drift (2).

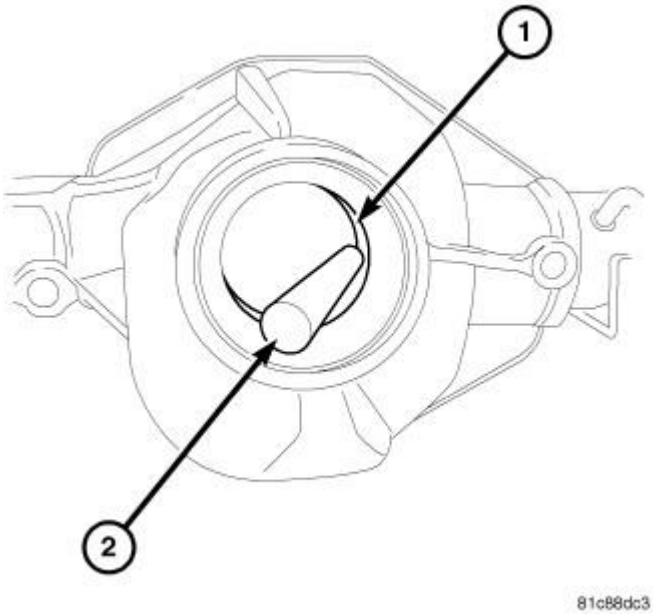

Fig. 108: Removing Rear Pinion Bearing Cup
Courtesy of CHRYSLER GROUP, LLC

15. Remove rear pinion bearing cup (1) with a hammer and brass drift (2).

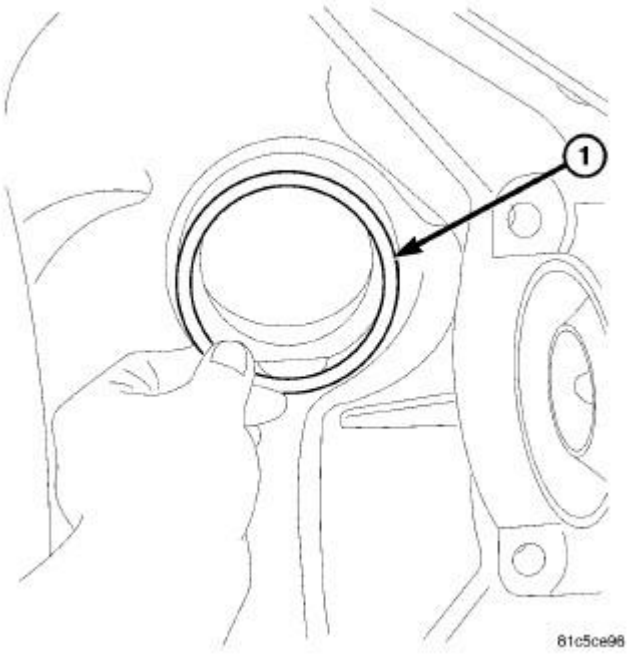

Fig. 109: Pinion Depth Shim

Courtesy of CHRYSLER GROUP, LLC

16. Remove pinion depth shim (1) from rear pinion bearing cup bore.

INSTALLATION

INSTALLATION

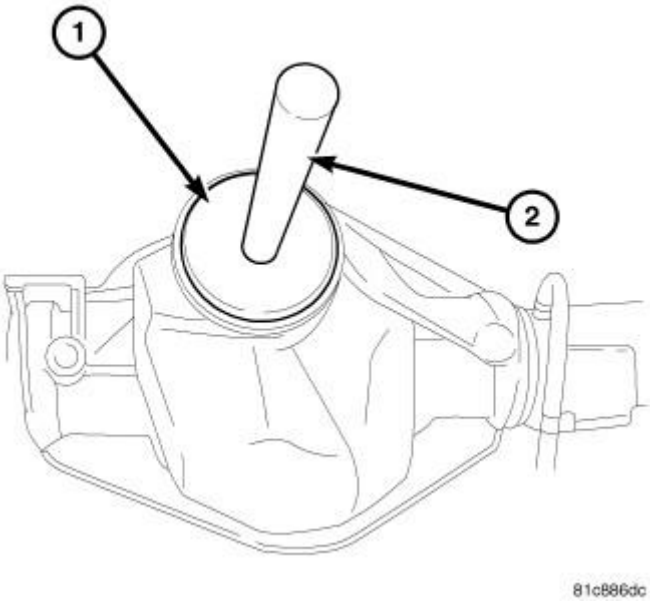

Fig. 110: Front Cup Installer 10093
Courtesy of CHRYSLER GROUP, LLC

1. Install front pinion bearing cup with Installer (special tool #10093, Installer, Bearing Cup) (1) and handle (special tool #C-4171, Driver Handle, Universal) (2).

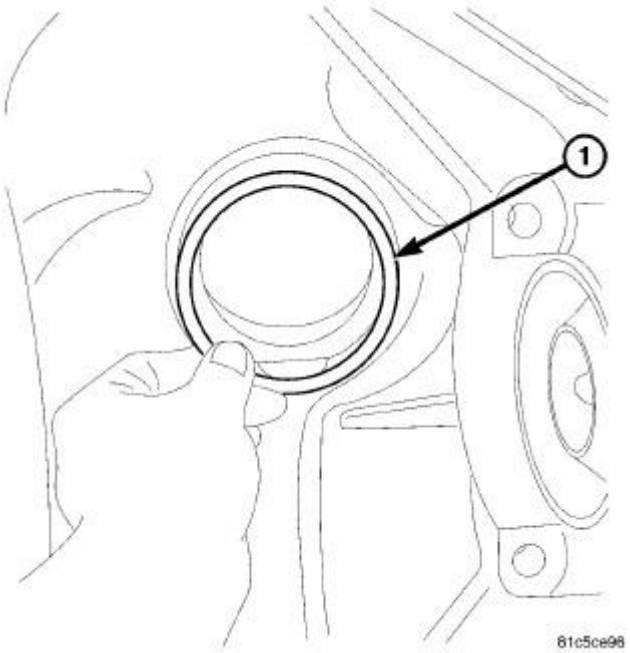

Fig. 111: Pinion Depth Shim
Courtesy of CHRYSLER GROUP, LLC

2. Install pinion depth shim (1) in rear pinion bearing cup bore.

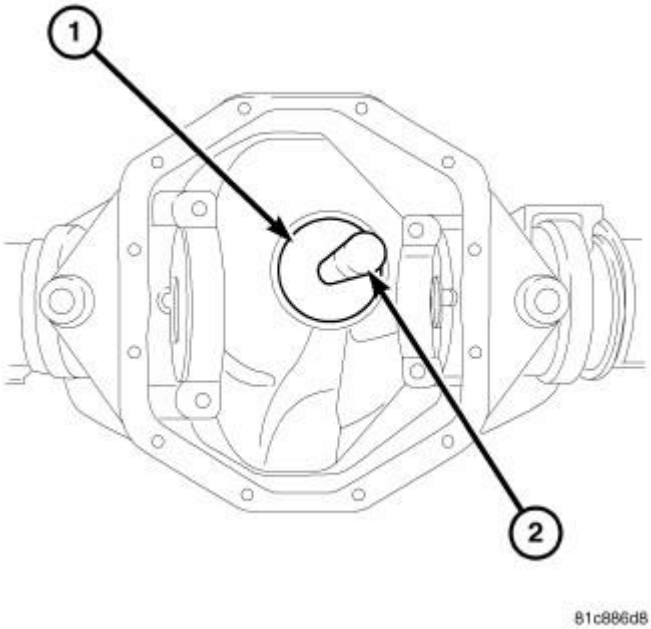

Fig. 112: Installing Rear Pinion Bearing Cup
Courtesy of CHRYSLER GROUP, LLC

3. Install rear pinion bearing cup with Installer (special tool #10093, Installer, Bearing Cup) (1) and handle (special tool #C-4171, Driver Handle, Universal) (2).

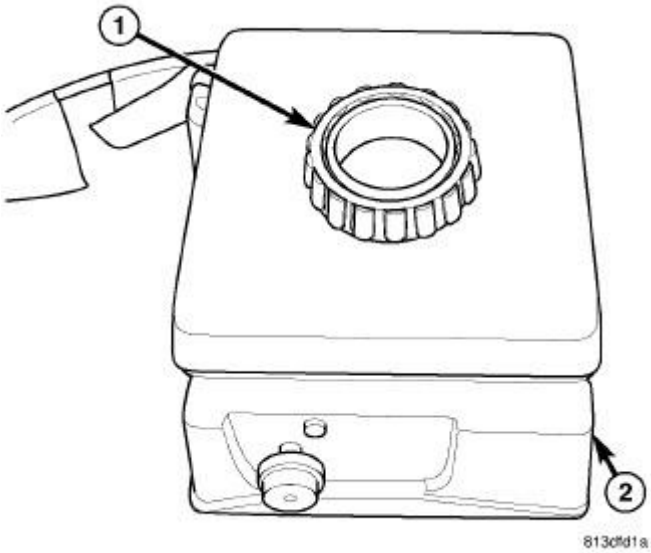

Fig. 113: Heating Bearing
Courtesy of CHRYSLER GROUP, LLC

WARNING: Use tongs or welding gloves when handling heated components. Failure to follow these instructions will result in personal injury.

CAUTION: Pinion bearings (1) are installed using a Bearing Heater (2). Use only a bearing heater/hot plate and follow manufacture's instructions. Heat components to 100 - 149 Celsius (212° Min. - 300° Max Fahrenheit). Never use an open flame to heat components. Never leave components on heater for an extended amount of time. If component is discolored after heating, the component has been overheated and must not be used. Failure to follow these instructions will result in component damage.

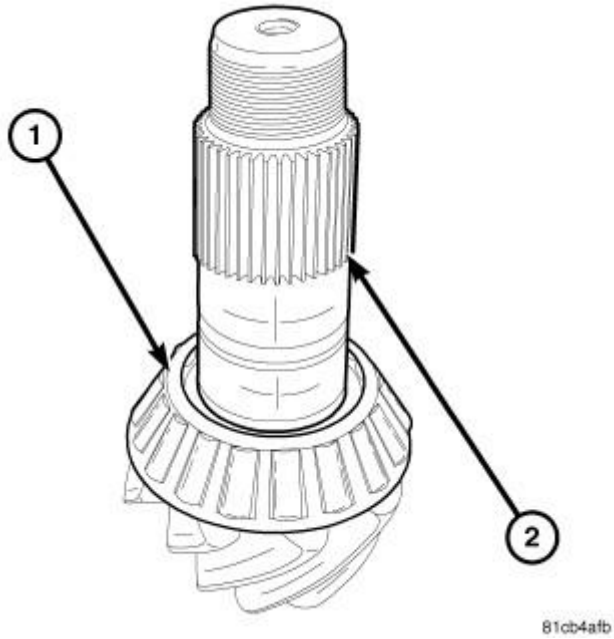

Fig. 114: Rear Pinion Bearing
Courtesy of CHRYSLER GROUP, LLC

4. Heat rear pinion bearing to 100 - 149 Celsius (212° Min. - 300° Max Fahrenheit) and install bearing (1) on pinion (2) with tongs or welding gloves.

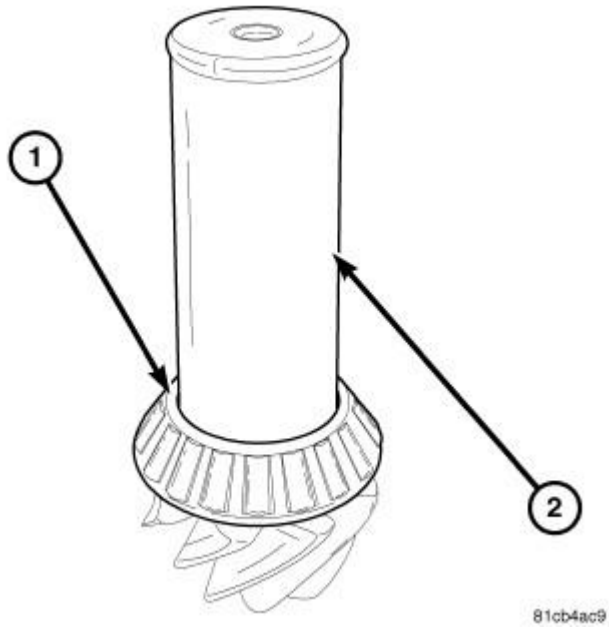

Fig. 115: Installing Rear Pinion Bearing
Courtesy of CHRYSLER GROUP, LLC

5. Rear pinion bearing (1) can also be installed with Installer (special tool #8148, Cup) (2) and a press.

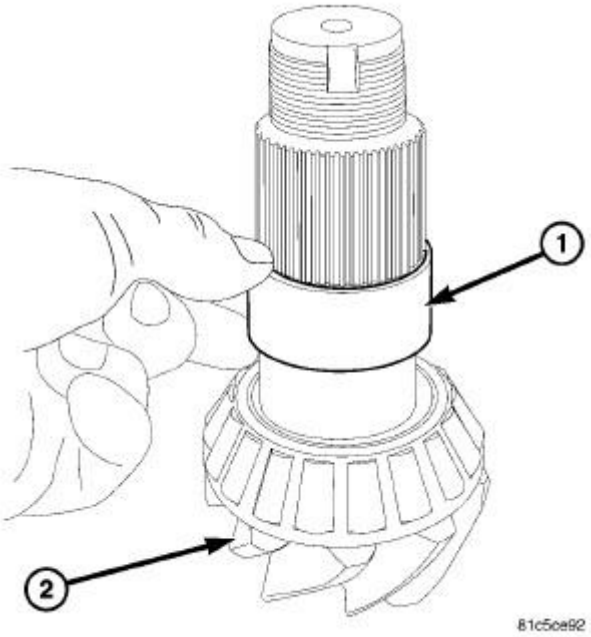

Fig. 116: Pinion Spacer
Courtesy of CHRYSLER GROUP, LLC

6. Install pinion spacer (1) on pinion gear (2).

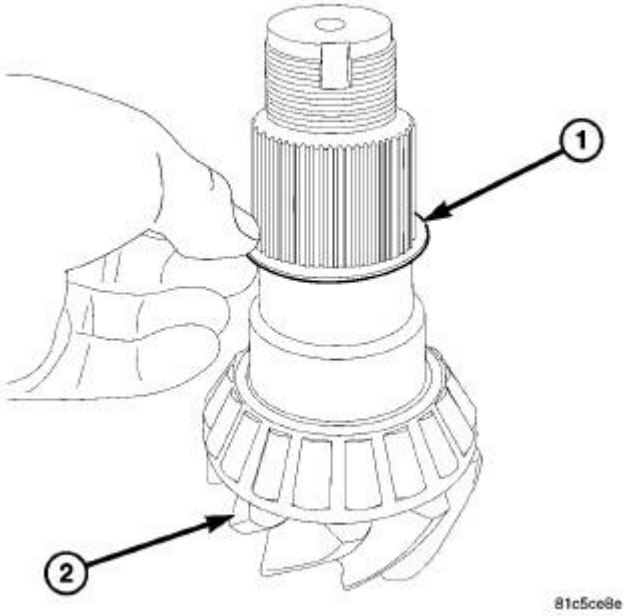

Fig. 117: Pinion Bearing Preload Shim
Courtesy of CHRYSLER GROUP, LLC

7. Install pinion bearing preload shim (1) on pinion gear (2).

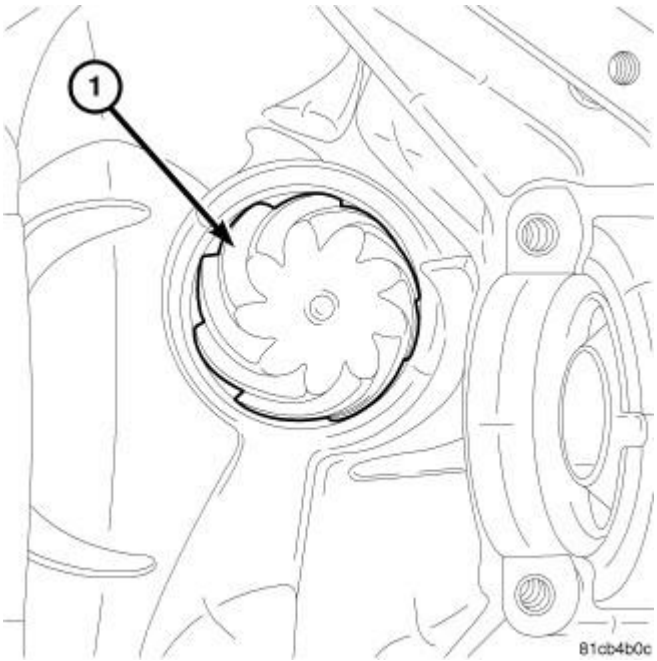

Fig. 118: Pinion Gear
Courtesy of CHRYSLER GROUP, LLC

8. Install pinion gear (1) into differential housing.

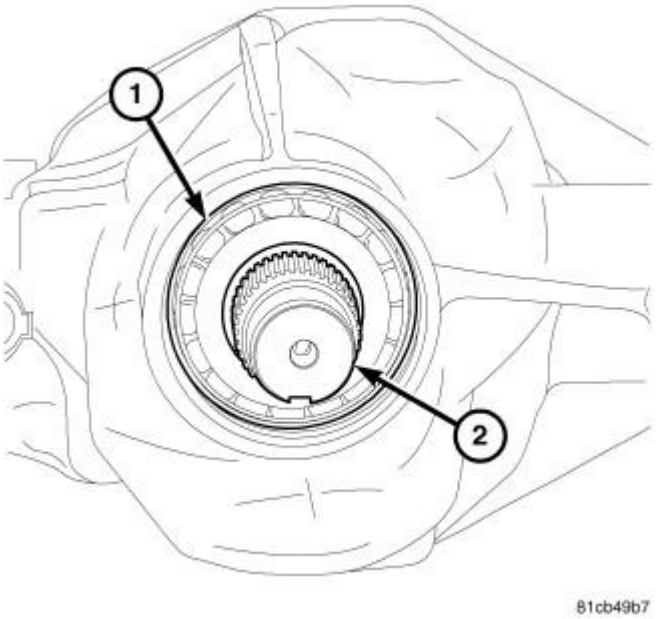

Fig. 119: Front Pinion Bearing
Courtesy of CHRYSLER GROUP, LLC

9. Heat front pinion bearing to 100 - 149 Celsius (212° Min. - 300° Max Fahrenheit) and install bearing (1) on pinion (2) with tongs or welding gloves.

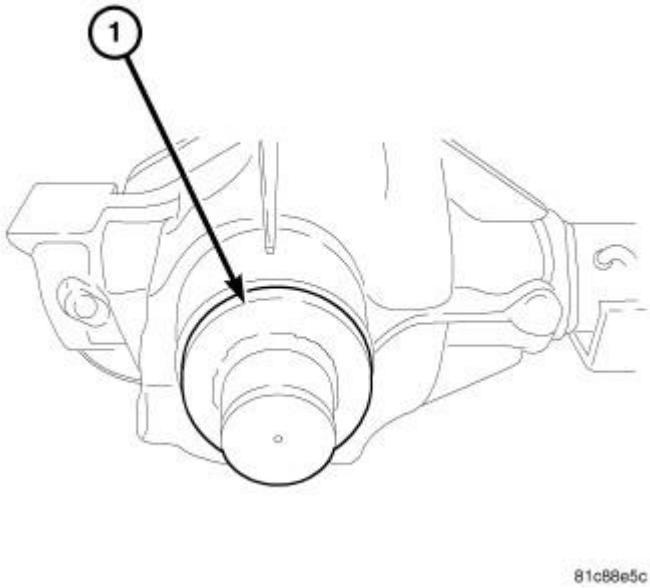

Fig. 120: Installing Pinion Seal
Courtesy of CHRYSLER GROUP, LLC

10. Install pinion seal with Installer (special tool #10069, Installer, Seal) (1).

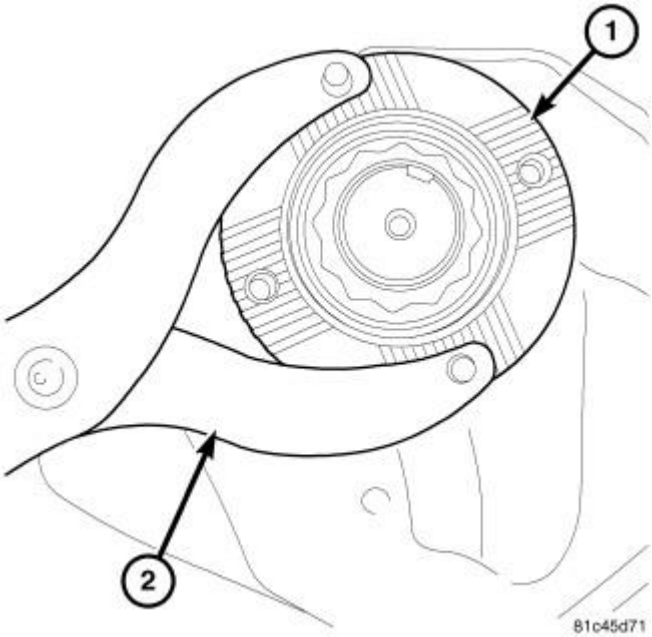

Fig. 121: Flange Holder & Pinion Flange
Courtesy of CHRYSLER GROUP, LLC

11. Install pinion flange on pinion shaft.
12. Hold pinion flange (1) with Holder (special tool #C-3281, Holder, Flange) (2) and tighten pinion flange nut to 500 N.m (369 ft. lbs.).

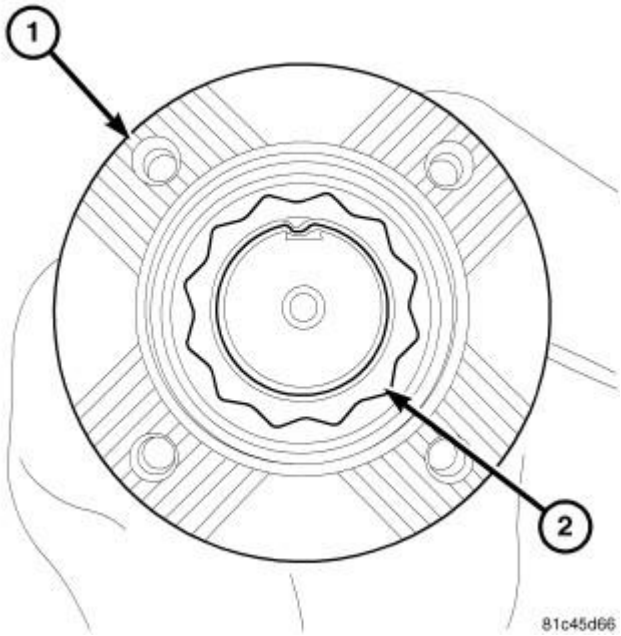

Fig. 122: Pinion Flange & Nut Collar
Courtesy of CHRYSLER GROUP, LLC

13. Bend pinion flange (1) nut (2) collar into pinion keyway with a hammer and punch.

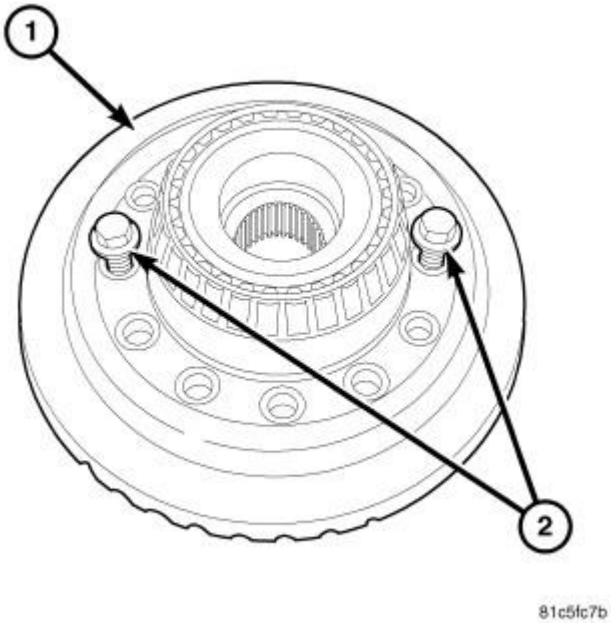

Fig. 123: Align Ring Gear

Courtesy of CHRYSLER GROUP, LLC

14. Align ring gear (1) to differential case with two **new** ring gear bolts (2).

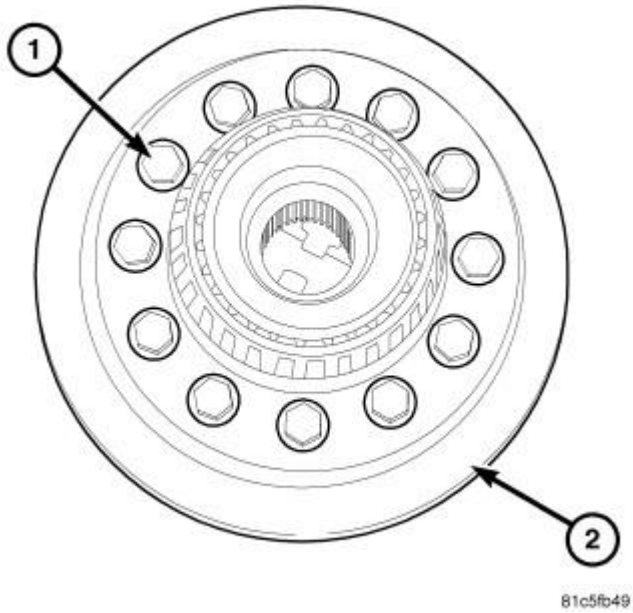

Fig. 124: Ring Gear & Bolts
Courtesy of CHRYSLER GROUP, LLC

15. Install remaining **new** ring gear bolts and tighten to 175 N.m (139 ft. lbs.).

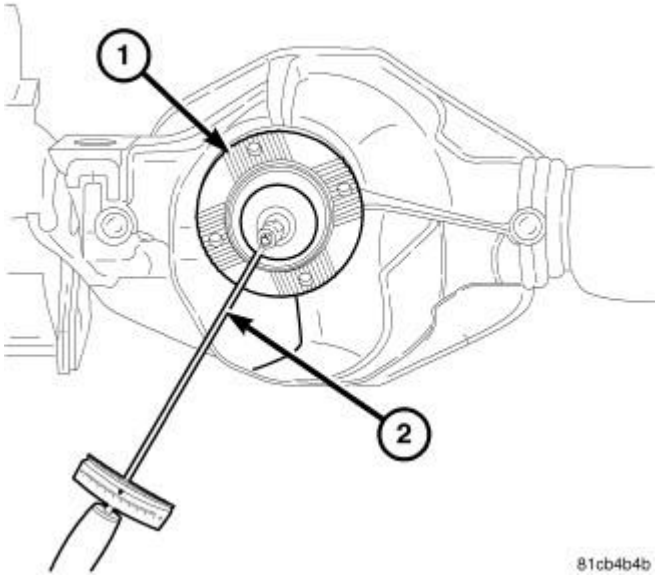

Fig. 125: Measuring Pinion Torque To Rotate
Courtesy of CHRYSLER GROUP, LLC

16. Install differential into housing.
17. Check Total Torque To Rotate. TTTR is: Pinion Torque To Rotate plus 1.5 N.m ± 0.5 N.m (13 in. lbs. ± 4.4 in. lbs.).

NOTE: **If TTTR is too high, decrease shim thickness equally from both sides of the differential and check TTTR again. If TTTR is too low, increase shim thickness equally to both sides of the differential and check TTTR again.**

18. Verify ring gear backlash and gear contact pattern.

SEAL, AXLE DRIVE SHAFT

REMOVAL

REMOVAL

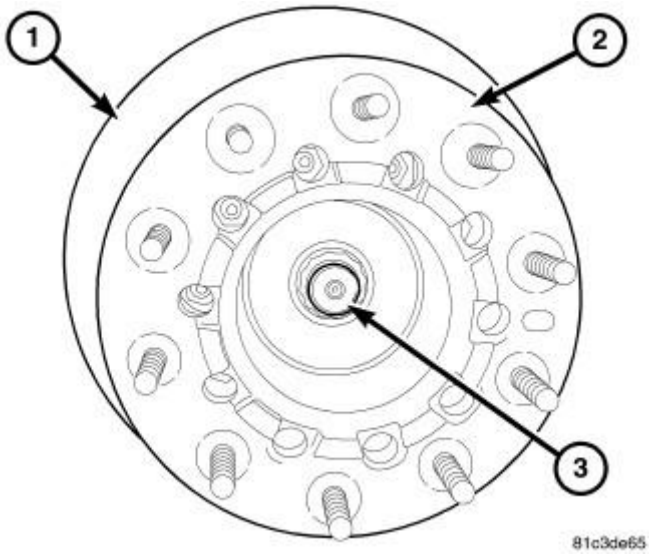

Fig. 126: Identifying Axle Shaft Nut, Hub Extension, & Disc Brake Rotor
Courtesy of CHRYSLER GROUP, LLC

1. With the vehicle in neutral, position vehicle on hoist.
2. Remove brake caliper, caliper adapter, hub extension, rotor and ABS sensor.
3. Bend axle shaft hub nut (1) collar out of the axle keyway.
4. Remove axle shaft hub nut (1).

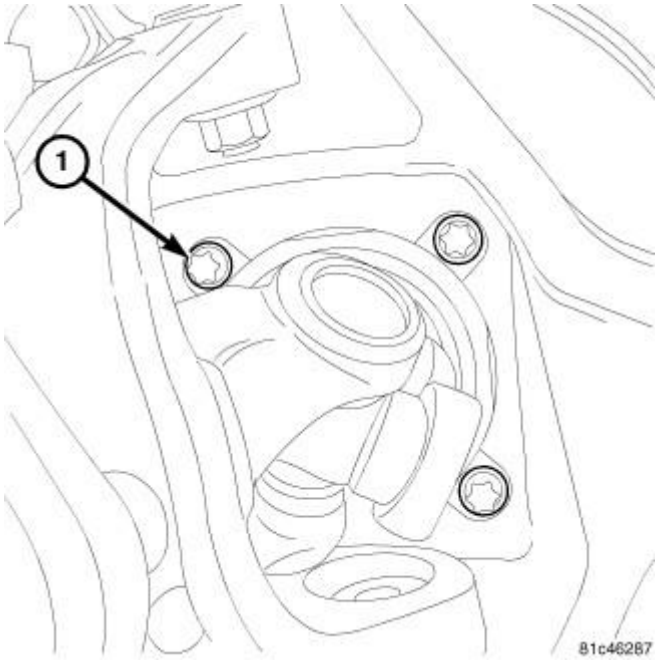

Fig. 127: Hub Bearing Bolts
Courtesy of CHRYSLER GROUP, LLC

5. Remove four hub bearing bolts (1) from the back of the steering knuckle.
6. Remove hub bearing from the steering knuckle.

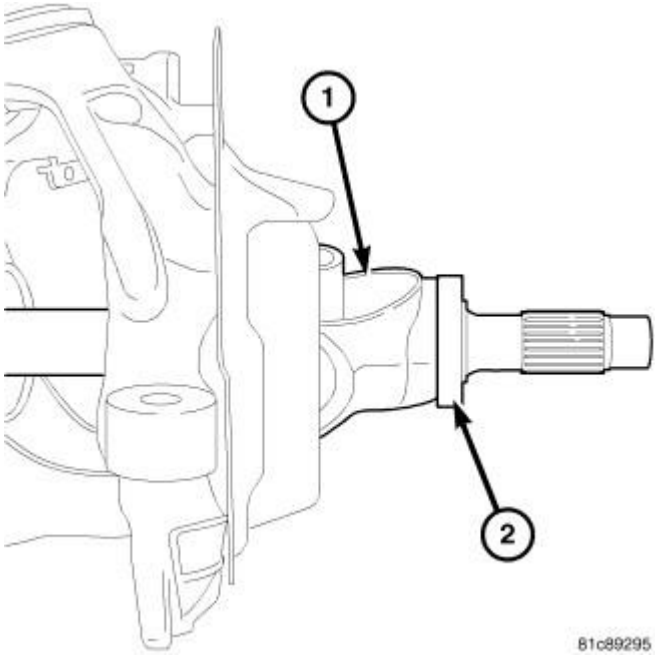

Fig. 128: Axle Shaft
Courtesy of CHRYSLER GROUP, LLC

7. Remove axle shaft (1) with hub bearing shim (2) from axle.

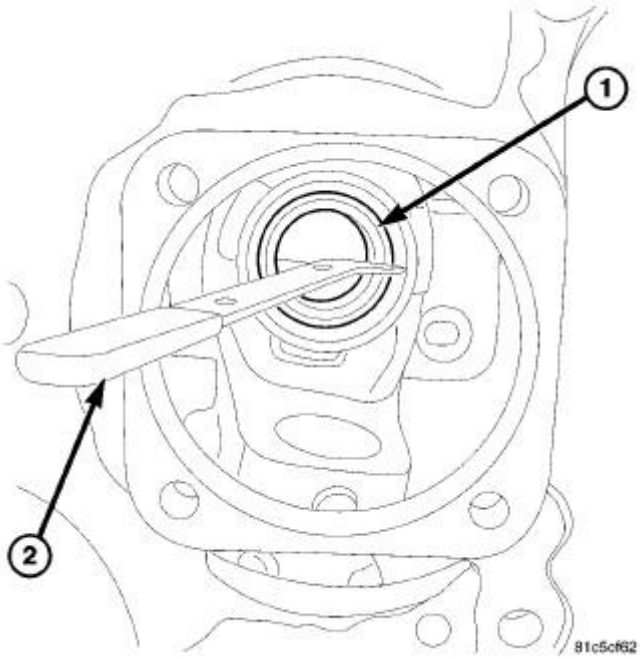

Fig. 129: Removing Axle Seal From Axle Yoke
Courtesy of CHRYSLER GROUP, LLC

8. Remove axle seal (1) from axle yoke with seal puller (2).

INSTALLATION

INSTALLATION

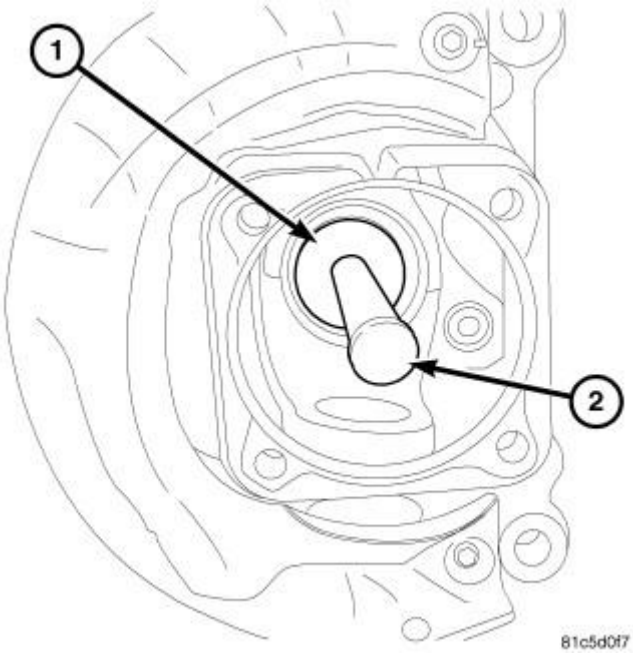

Fig. 130: Installing Axle Shaft Seal Into Axle Yoke

Courtesy of CHRYSLER GROUP, LLC

1. Install axle shaft seal into axle yoke with Installer (special tool #10011, Installer, Seal) (1) Handle (special tool #C-4171, Driver Handle, Universal) (2).

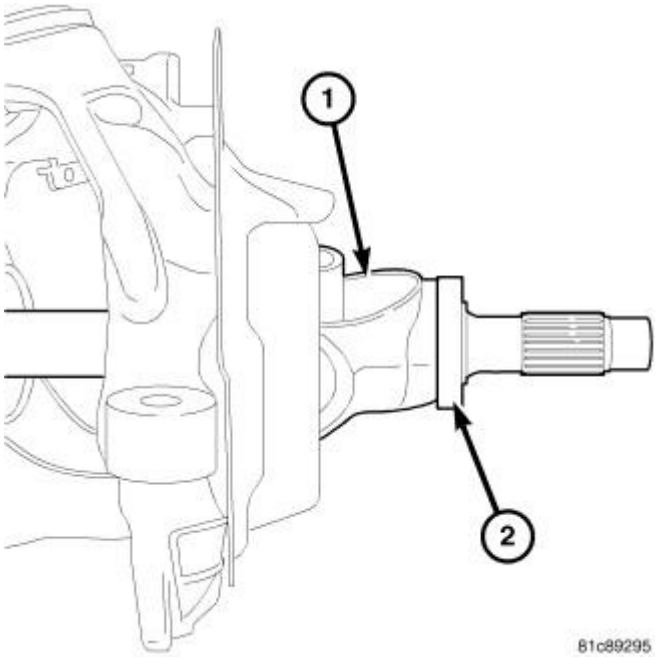

Fig. 131: Axle Shaft
Courtesy of CHRYSLER GROUP, LLC

2. Clean axle shaft and apply a thin film of grease to the shaft splines and hub bore.
3. Install axle shaft (1) with hub bearing shim (2) into the axle.

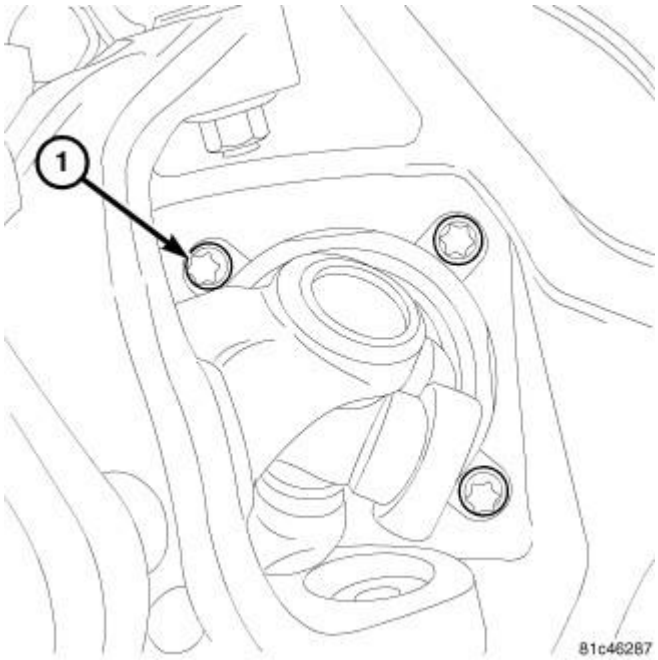

Fig. 132: Hub Bearing Bolts
Courtesy of CHRYSLER GROUP, LLC

4. Install hub bearing in the knuckle.
5. Install hub bearing bolts (1) and tighten to 200 N.m (147 ft. lbs.).

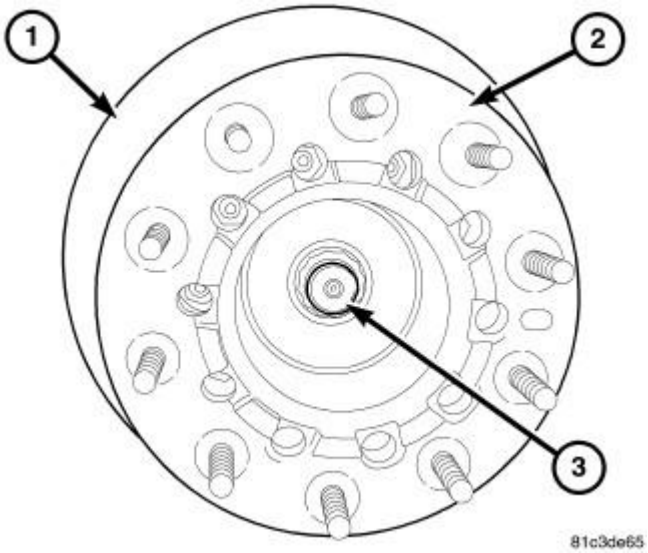

Fig. 133: Identifying Axle Shaft Nut, Hub Extension, & Disc Brake Rotor
Courtesy of CHRYSLER GROUP, LLC

6. Install ABS sensor, brake rotor (1), hub extension (2), caliper adapter and caliper.
7. Install axle hub nut (3) and tighten nut to 330 N.m (243 ft. lbs.).
8. Bend axle shaft hub nut (3) collar into axle keyway with a hammer and punch.

SEAL, DRIVE PINION

REMOVAL

REMOVAL

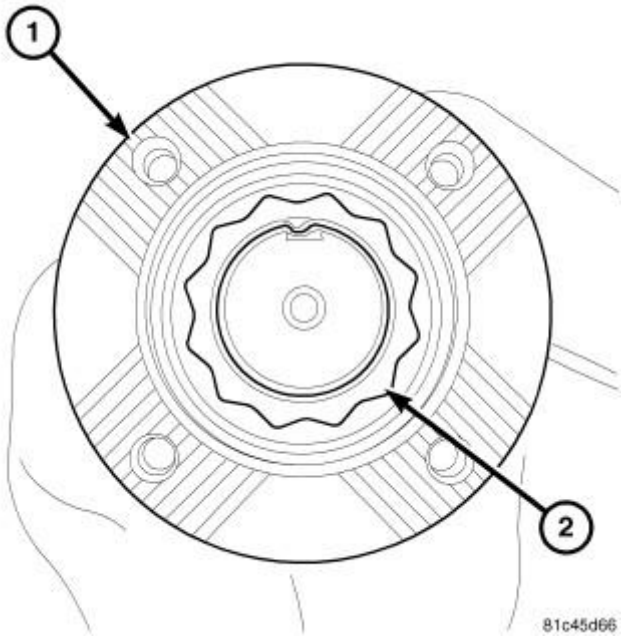

Fig. 134: Pinion Flange & Nut Collar
Courtesy of CHRYSLER GROUP, LLC

1. With the vehicle in neutral, position vehicle on hoist.
2. Remove propeller shaft.
3. Bend pinion flange (1) nut (2) collar lock out of the pinion shaft keyway.

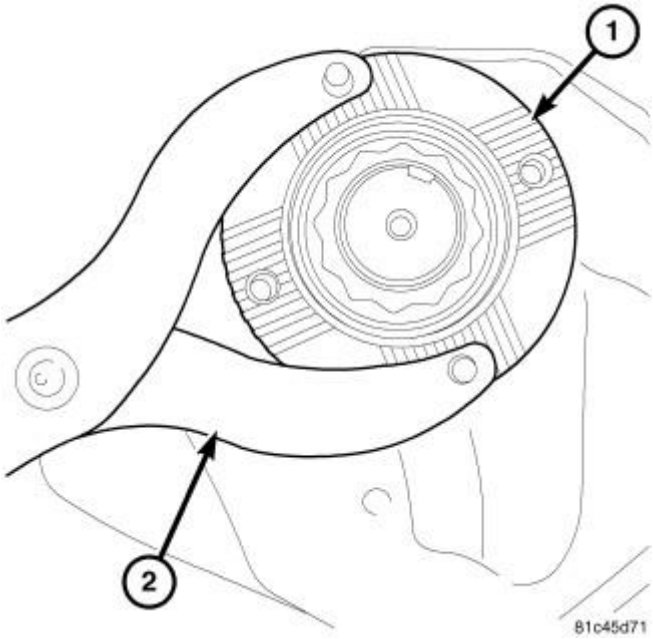

Fig. 135: Flange Holder & Pinion Flange
Courtesy of CHRYSLER GROUP, LLC

4. Hold pinion flange (1) with Holder (special tool #C-3281, Holder, Flange) (2) and remove pinion flange nut.

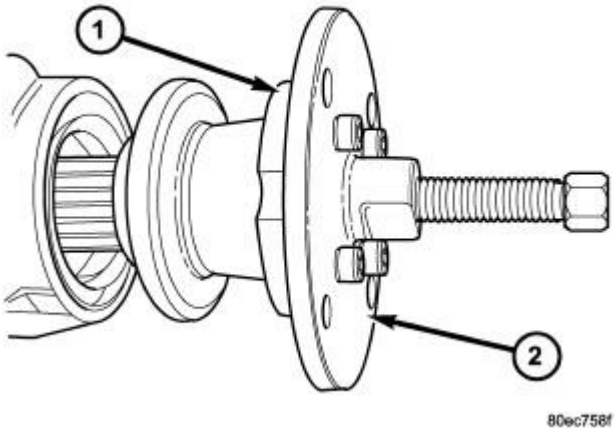

Fig. 136: Removing Pinion Flange
Courtesy of CHRYSLER GROUP, LLC

5. Mark a line across the pinion shaft and flange for installation reference.
6. Remove pinion flange (1) with Pinion Flange Puller (special tool #8992, Remover, Pinion Flange) (2).
7. Remove pinion seal with a seal puller.

INSTALLATION

INSTALLATION

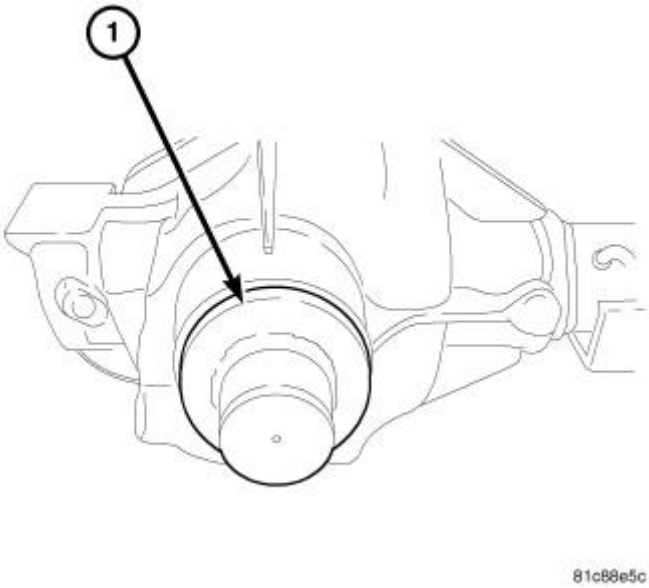

Fig. 137: Installing Pinion Seal
Courtesy of CHRYSLER GROUP, LLC

1. Install **new** pinion seal with Installer (special tool #10069, Installer, Seal) (1).
2. Apply a light coat of Teflon thread sealant, to pinion flange splines.

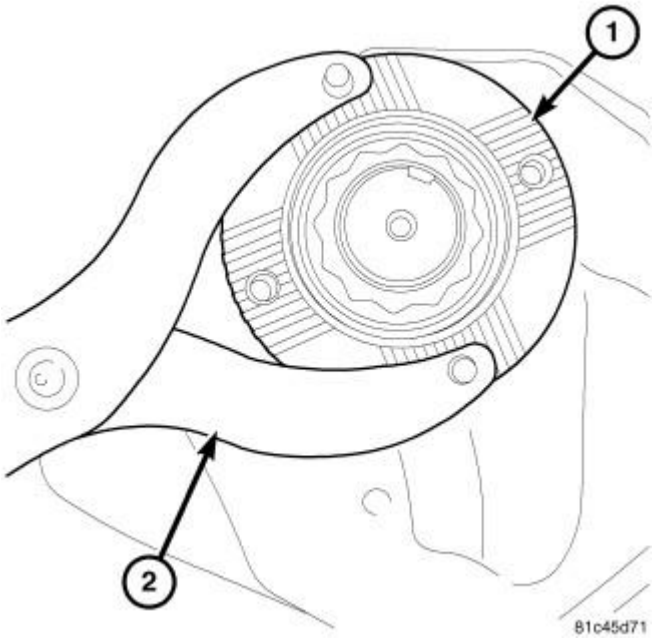

Fig. 138: Flange Holder & Pinion Flange
Courtesy of CHRYSLER GROUP, LLC

3. Position flange on pinion shaft with reference marks aligned.
4. Install pinion flange (1) **new** pinion nut.
5. Hold flange with Holder (special tool #C-3281, Holder, Flange) (2) and tighten pinion nut to 500 N.m (369 ft. lbs.).

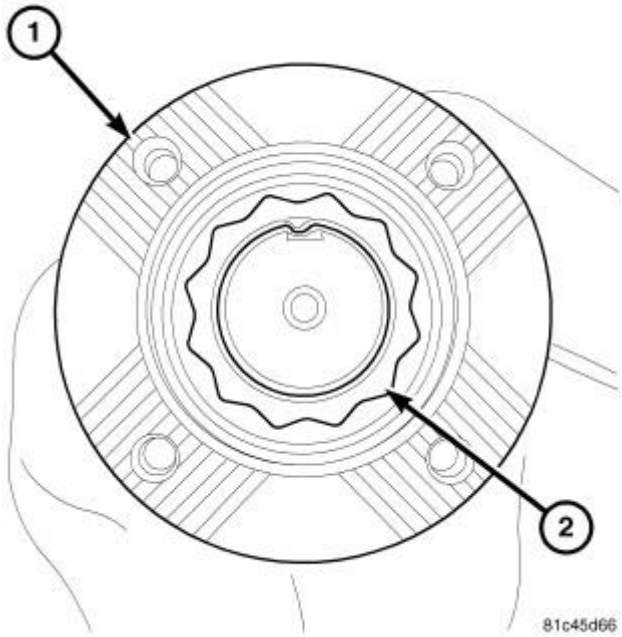

Fig. 139: Pinion Flange & Nut Collar
Courtesy of CHRYSLER GROUP, LLC

6. Bend pinion flange (1) nut (2) collar into pinion keyway with a hammer and punch.
7. Install propeller shaft with reference marks aligned.

SHAFT, AXLE

REMOVAL

REMOVAL

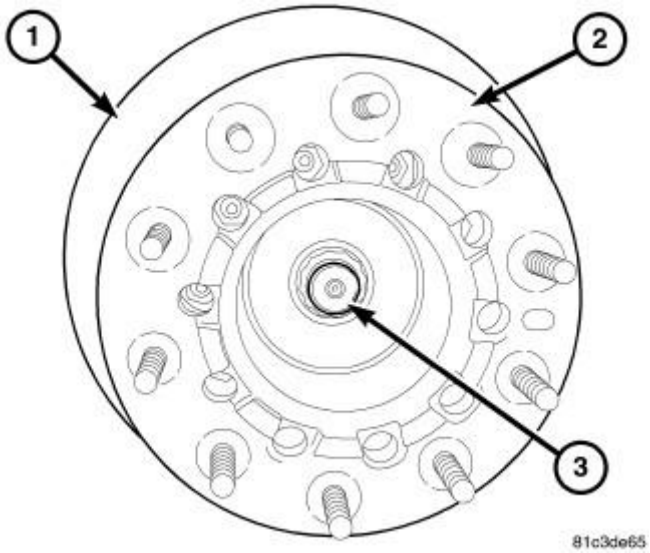

Fig. 140: Identifying Axle Shaft Nut, Hub Extension, & Disc Brake Rotor

Courtesy of CHRYSLER GROUP, LLC

1. With the vehicle in neutral, position vehicle on hoist.
2. Remove brake caliper, caliper adapter, hub extension, rotor and ABS sensor.
3. Bend axle shaft hub nut (1) collar out of the axle keyway.
4. Remove axle shaft hub nut (1).

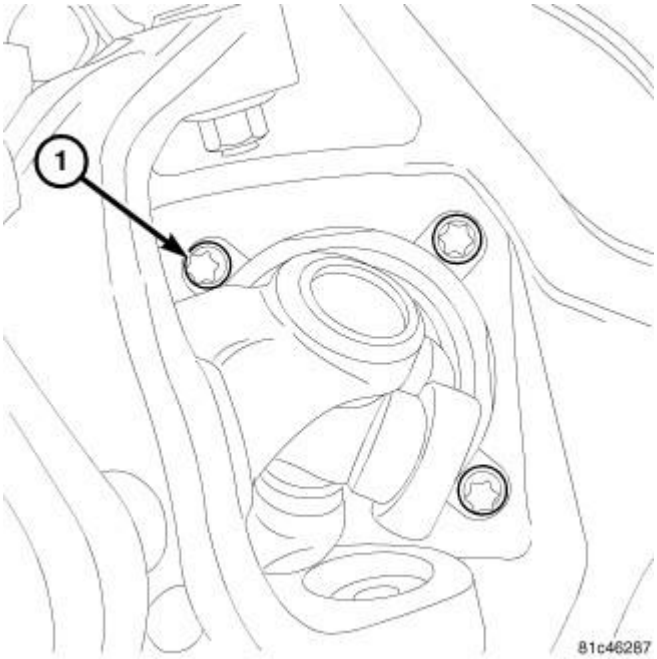

Fig. 141: Hub Bearing Bolts
Courtesy of CHRYSLER GROUP, LLC

5. Remove four hub bearing bolts (1) from the back of the steering knuckle.
6. Remove hub bearing from the steering knuckle.

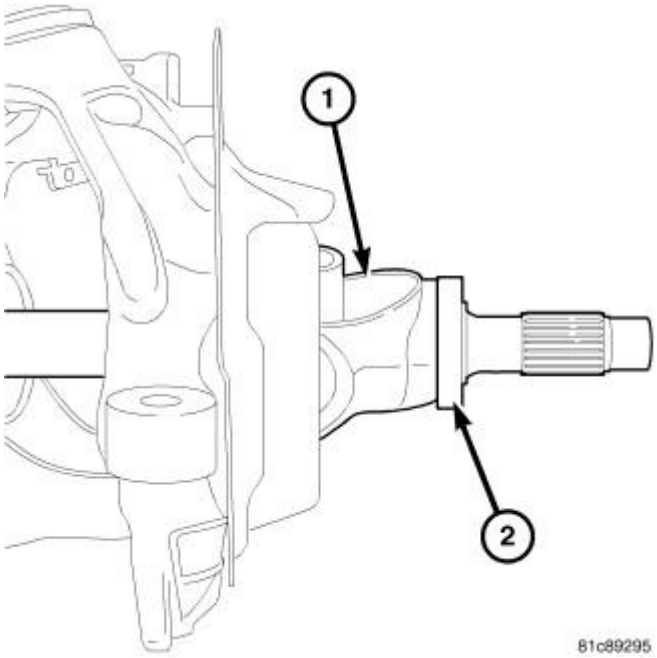

Fig. 142: Axle Shaft
Courtesy of CHRYSLER GROUP, LLC

7. Remove axle shaft (1) with hub bearing shim (2) from axle.

INSTALLATION

INSTALLATION

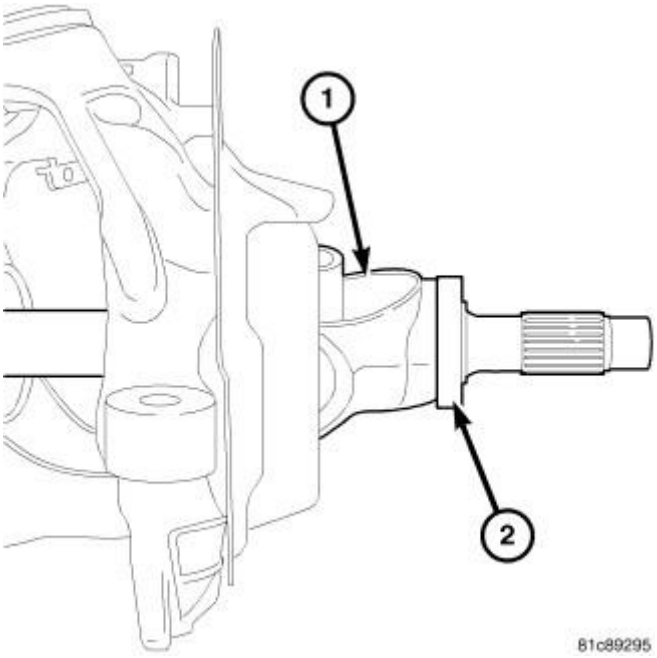

Fig. 143: Axle Shaft
Courtesy of CHRYSLER GROUP, LLC

1. Clean axle shaft and apply a thin film of grease to the shaft splines and hub bore.
2. Install axle shaft (1) with hub bearing shim (2) into the axle.

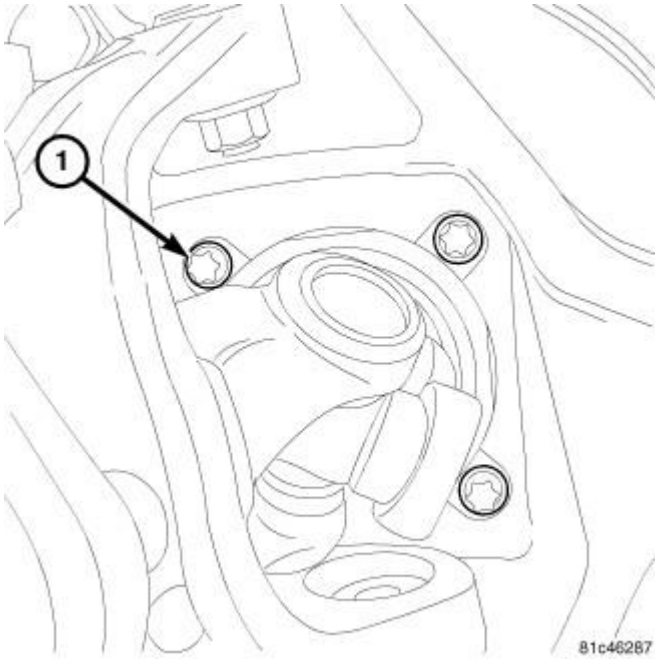

Fig. 144: Hub Bearing Bolts
Courtesy of CHRYSLER GROUP, LLC

3. Install hub bearing in the knuckle.
4. Install hub bearing bolts (1) and tighten to 200 N.m (147 ft. lbs.).

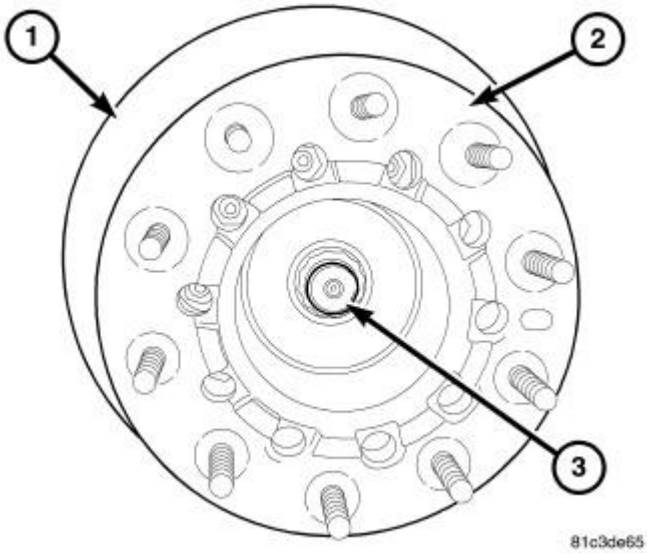

Fig. 145: Identifying Axle Shaft Nut, Hub Extension, & Disc Brake Rotor
Courtesy of CHRYSLER GROUP, LLC

5. Install ABS sensor, brake rotor (1), hub extension (2), caliper adapter and caliper.

6. Install axle hub nut (3) and tighten nut to 330 N.m (243 ft. lbs.).
7. Bend axle shaft hub nut (3) collar into axle keyway with a hammer and punch.

U-JOINT, SINGLE CARDAN

REMOVAL

REMOVAL

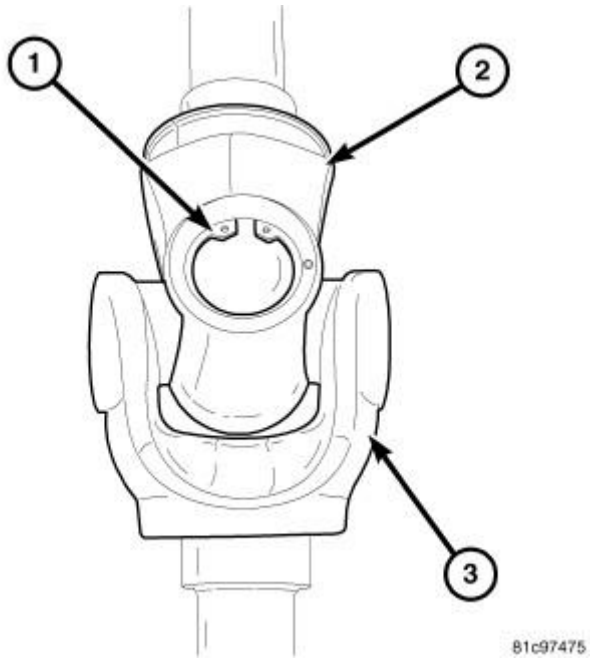

Fig. 146: Identifying Bearing Cap Snap Rings, Axle Yoke, & Stub Shaft Yoke
Courtesy of CHRYSLER GROUP, LLC

1. Remove bearing cap snap rings (1) from the axle yoke (2) and stub shaft yoke (3).

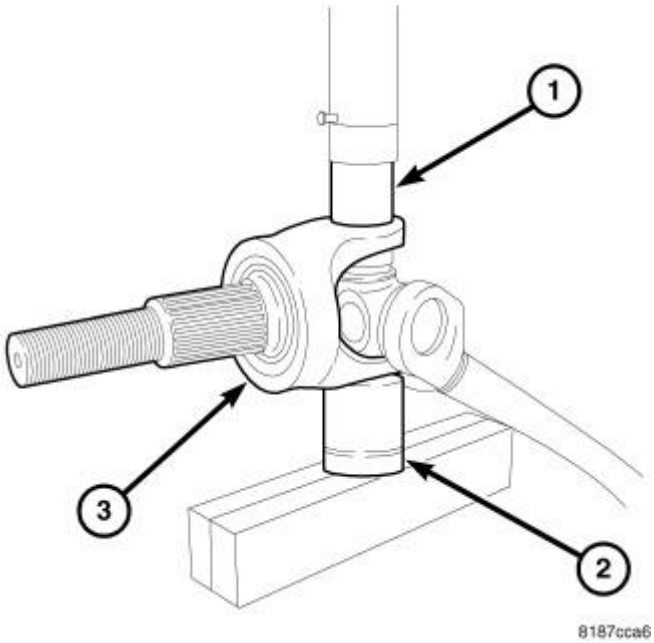

Fig. 147: Pressing Bearing Cup Into Receiver/Socket
Courtesy of CHRYSLER GROUP, LLC

NOTE: Saturate bearing caps with penetrating oil prior to removal.

2. Position receiver/socket (2) and driver/socket (1) on stub shaft yoke (3) in press. Press bearing cup into receiver/socket (2).

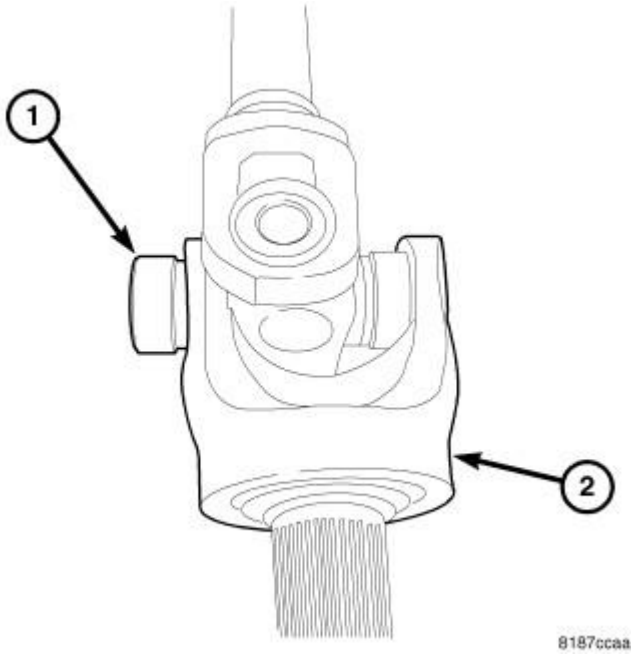

Fig. 148: Bearing Cap & Stub Shaft Yoke
Courtesy of CHRYSLER GROUP, LLC

3. Remove bearing cap (1) from stub shaft yoke (2).

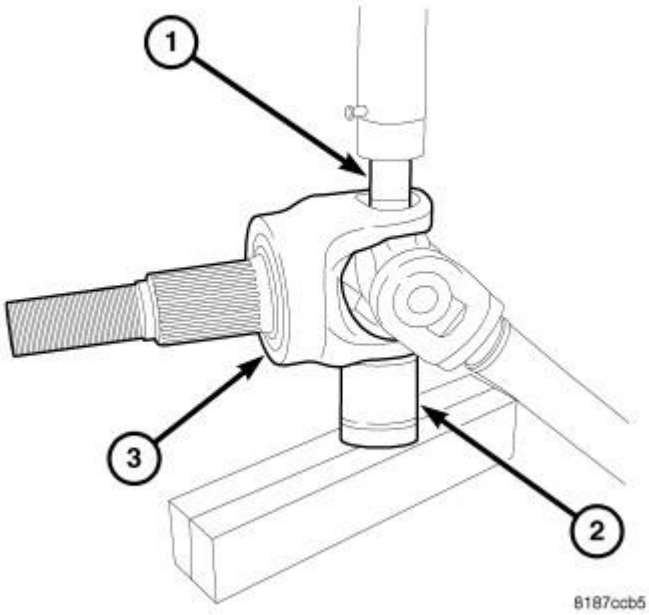

Fig. 149: Pressing Bearing Cup Into Receiver/Socket
Courtesy of CHRYSLER GROUP, LLC

4. Position receiver/socket (2) under stub shaft yoke (3) remaining bearing cup and driver/socket (1) on U-joint cross in press. Press bearing cup into receiver/socket (2)

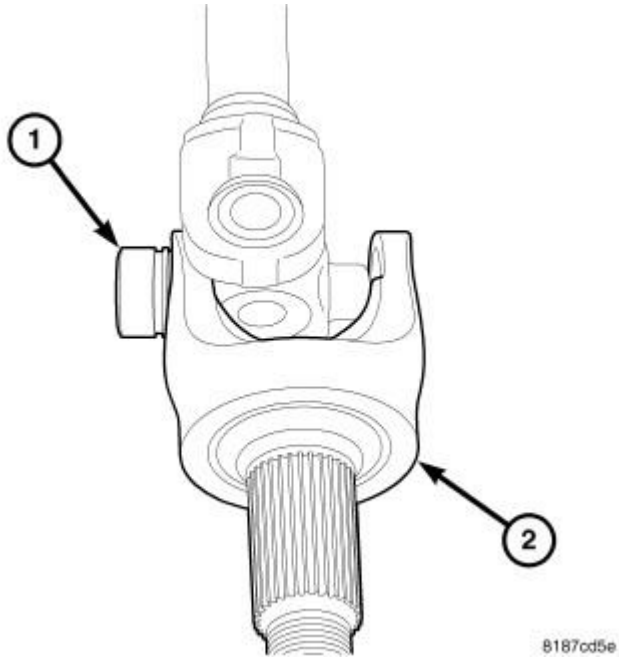

Fig. 150: Bearing Cap & Stub Shaft Yoke
Courtesy of CHRYSLER GROUP, LLC

5. Remove bearing cap (1) from stub shaft yoke (2). Then remove stub shaft from U-joint cross.

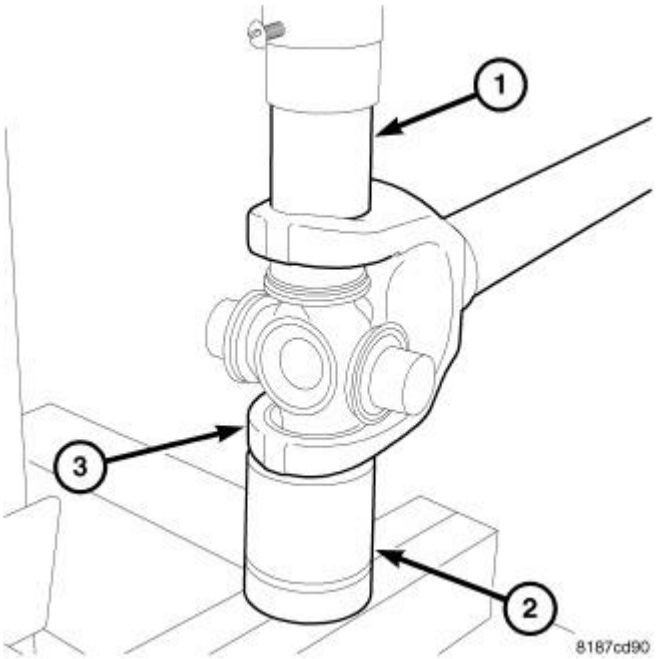

Fig. 151: Pressing Bearing Cup Into Receiver/Socket
Courtesy of CHRYSLER GROUP, LLC

6. Position receiver/socket (2) and driver/socket (1) on shaft yoke (3) in press. Press bearing cup into receiver/socket (2).

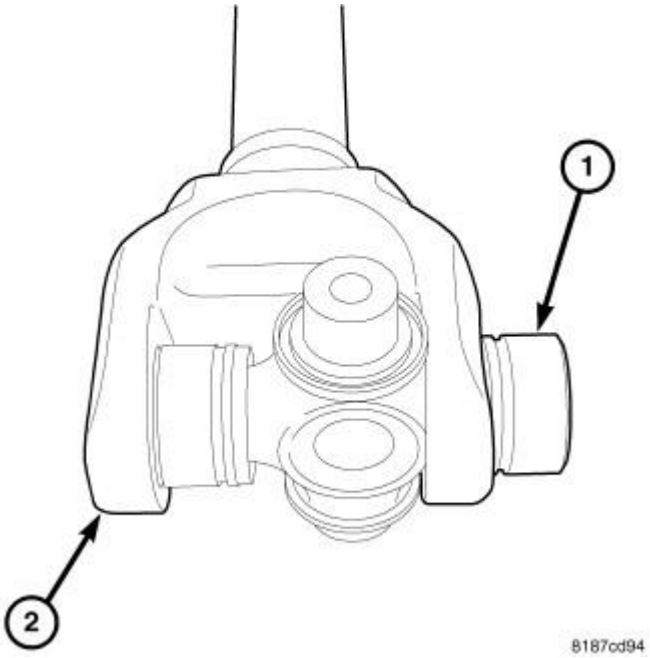

Fig. 152: Bearing Cap & Shaft Yoke
Courtesy of CHRYSLER GROUP, LLC

7. Remove bearing cap (1) from shaft yoke (2).

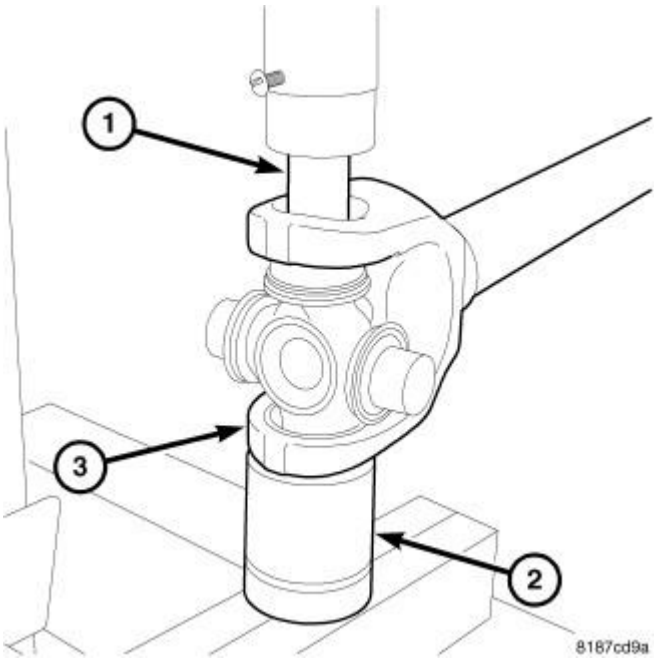

Fig. 153: Pressing Bearing Cup Into Receiver/Socket
Courtesy of CHRYSLER GROUP, LLC

8. Position receiver/socket (2) under shaft yoke (3) remaining bearing cup and driver/socket (1) on U-joint cross in press. Press bearing cup into receiver/socket (2)

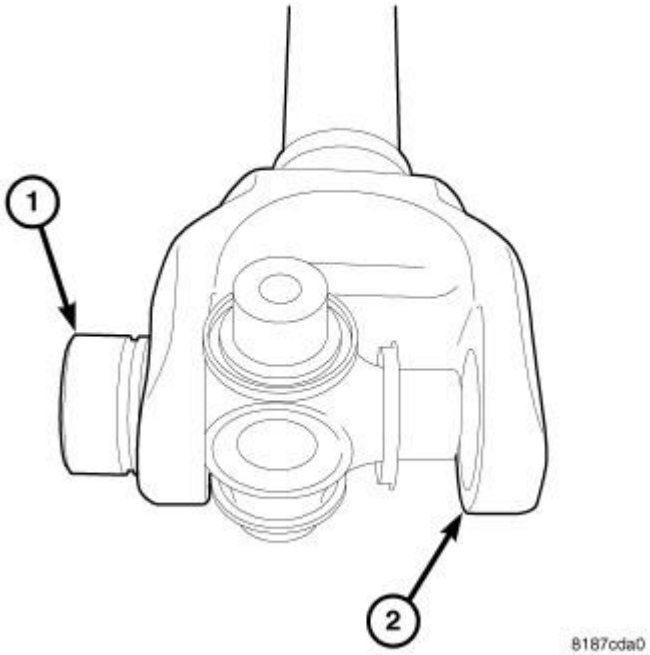

Fig. 154: Bearing Cap & Shaft Yoke
Courtesy of CHRYSLER GROUP, LLC

9. Remove bearing cap (1) from shaft yoke (2). Then remove U-joint cross from shaft yoke.

INSTALLATION

INSTALLATION

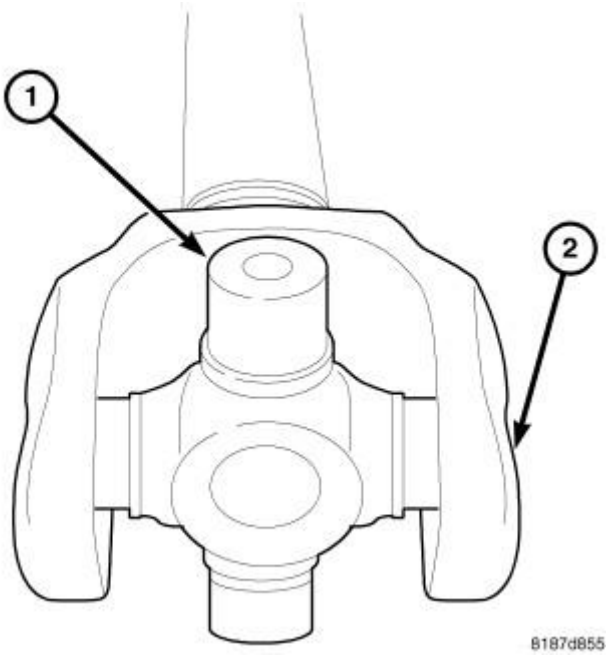

Fig. 155: U-Joint Cross
Courtesy of CHRYSLER GROUP, LLC

CAUTION: Keep cross and bearing cap straight during installation. Failure to follow these instruction will result in damage.

1. Pack bearing caps 1/3 full of wheel bearing lubricant. Apply extreme pressure (EP), lithium-base lubricant to aid in installation.
2. Position cross (1) in the shaft yoke (2).

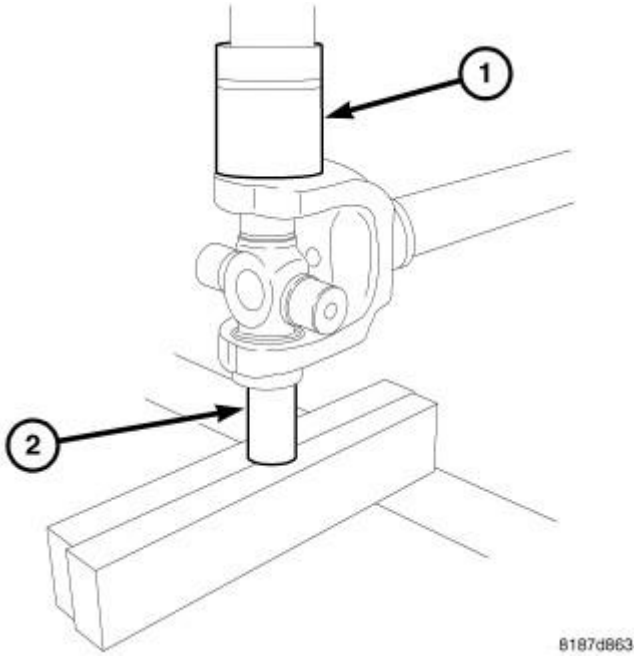

Fig. 156: Pressing Bearing Cap Into Shaft Yoke
Courtesy of CHRYSLER GROUP, LLC

3. Tap bearing cap into the yoke bores far enough to position cross.
4. Position receiver/socket (1) on shaft yoke and driver/socket (2) on bearing cap in press.
5. Press bearing cap into shaft yoke until bearing cap snap ring groove is visible and install snap ring.

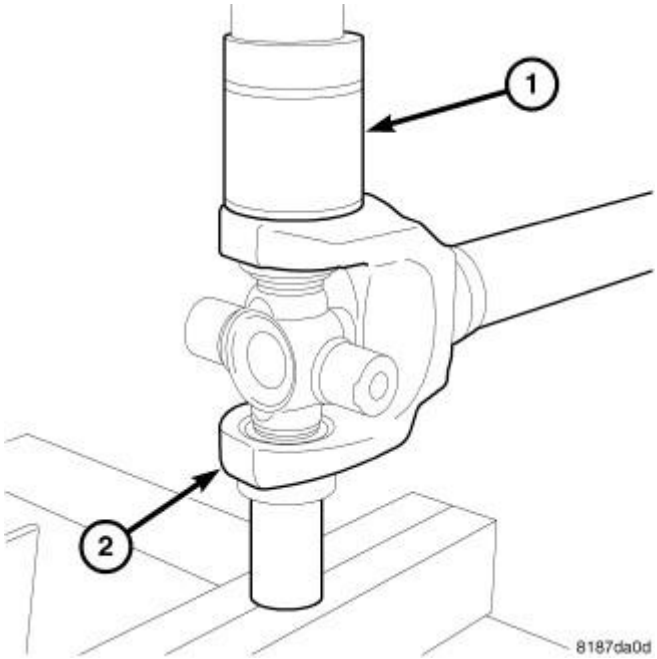

Fig. 157: Pressing Bearing Cap Into Shaft Yoke
Courtesy of CHRYSLER GROUP, LLC

6. Position receiver/socket (1) on shaft yoke (2) and driver/socket on bearing cap in press.
7. Press bearing cap into shaft yoke until bearing cap snap ring groove is visible and install snap ring.

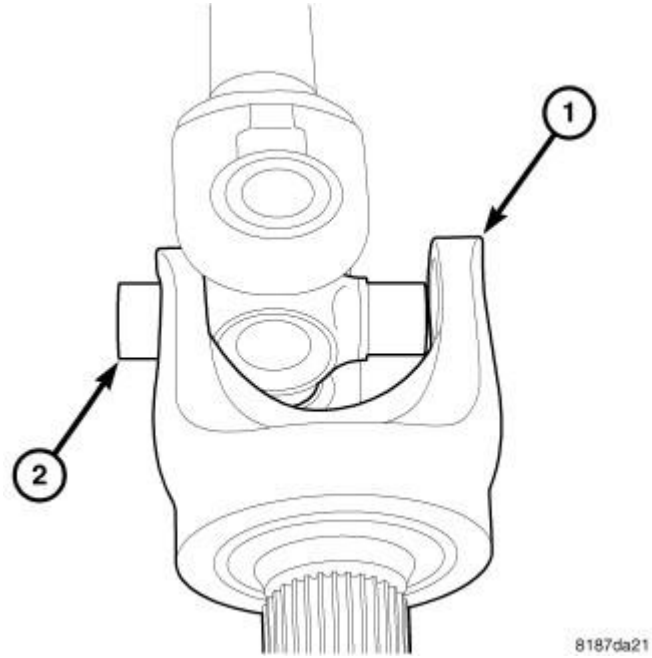

Fig. 158: Stub Shaft Yoke & U-Joint Cross
Courtesy of CHRYSLER GROUP, LLC

8. Install stub shaft yoke (1) on U-joint cross (2).

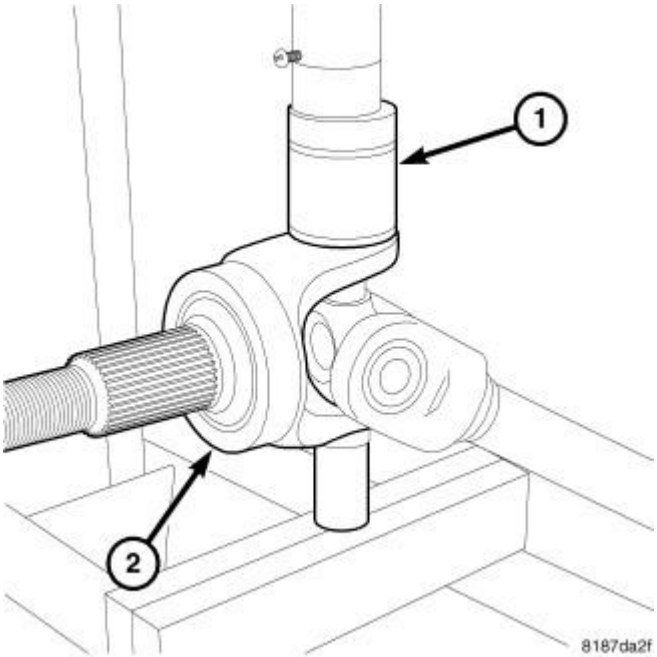

Fig. 159: Pressing Bearing Cap Into Stub Shaft Yoke
Courtesy of CHRYSLER GROUP, LLC

9. Tap fist bearing cap into the stub shaft yoke bore far enough to position cross.
10. Position receiver/socket (1) on shaft yoke (2) and driver/socket on bearing cap in press.
11. Press bearing cap into stub shaft yoke until bearing cap snap ring groove is visible and install snap ring.

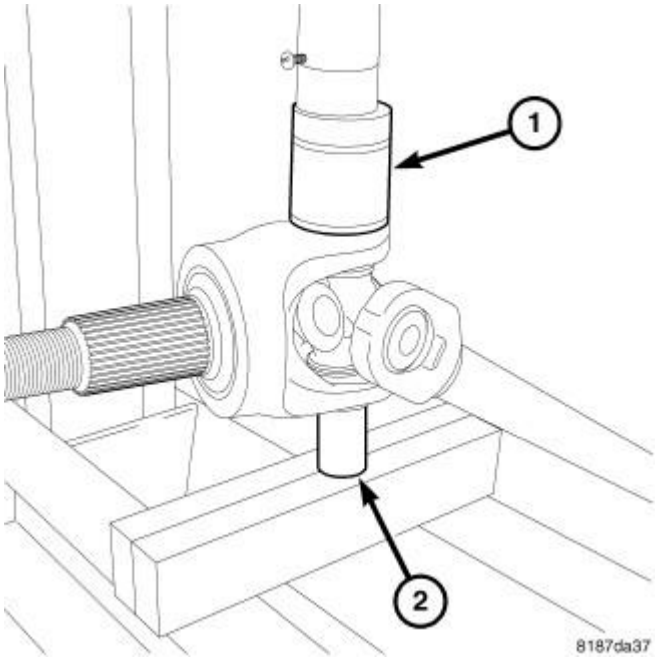

Fig. 160: Pressing Bearing Cap Into Stub Shaft Yoke
Courtesy of CHRYSLER GROUP, LLC

12. Position receiver/socket (1) on stub shaft yoke and driver/socket (2) on bearing cap in press.
13. Press bearing cap into stub shaft yoke until bearing cap snap ring groove is visible and install snap ring.

DIAGNOSIS AND TESTING

DIAGNOSIS AND TESTING - NOISE

FLUID CHECK

Filling an axle to the bottom of the fill hole may result in an over fill condition. This can cause fluid foaming which will result in inadequate lubrication to the axle components. To check axle fluid, park vehicle on a level surface. Take a piece of wire and make a 90 degree bend two inches from the end of the wire. Insert the wire into the fill plug hole and use it like a dipstick. Remove the wire and measure from the 90 degree bend to the oil level. For the correct measurement, refer to **SPECIFICATIONS**.

GEAR NOISE

Axle gear noise can be caused by insufficient lubricant, incorrect backlash, tooth contact, worn/damaged gears or the carrier housing not having the proper offset and squareness.

Gear noise usually happens at a specific speed range. The noise can also occur during a specific type of driving condition. These conditions are acceleration, deceleration, coast, or constant load.

When road testing, first warm-up the axle fluid by driving the vehicle at least 5 miles and then accelerate the vehicle to the speed range where the noise is the greatest. Shift out-of-gear and coast through the peak-noise range. If the noise stops or changes greatly check for:

- Insufficient lubricant.
- Incorrect ring gear backlash.
- Gear damage.

Differential side gears and pinions can be checked by turning the vehicle. The side gears are loaded during turns. They usually do not cause noise during straight-ahead driving when the gears are unloaded. A worn pinion mate shaft can also cause a snapping or a knocking noise.

BEARING NOISE

The axle shaft, differential and pinion bearings can all produce noise when worn or damaged. Bearing noise can be either a whining, or a growling sound.

Pinion bearings have a constant-pitch noise. This noise changes only with vehicle speed. Pinion bearing noise will be higher pitched because it rotates at a faster rate. Drive the vehicle and load the differential. If bearing noise occurs, the rear pinion bearing is the source of the noise. If the bearing noise is heard during a coast, the front pinion bearing is the source.

Differential bearings usually produce a low pitch noise. Differential bearing noise is similar to pinion bearing

noise. The pitch of differential bearing noise is also constant and varies only with vehicle speed.

Axle shaft bearings produce noise and vibration when worn or damaged. The noise generally changes when the bearings are loaded. Road test the vehicle. Turn the vehicle sharply to the left and to the right. This will load the bearings and change the noise level. Where axle bearing damage is slight, the noise is usually not noticeable at speeds above 30 m.p.h.

LOW SPEED KNOCK

Low speed knock is generally caused by:

- Worn U-joint(s).
- Worn side-gear thrust washers.
- Worn pinion shaft bore.

VIBRATION

Vibration at the front/rear of the vehicle is usually caused by:

- Damaged drive shaft.
- Missing drive shaft balance weight(s).
- Worn or out of balance wheels.
- Loose wheel lug nuts.
- Worn U-joint(s).
- Loose/broken springs.
- Damaged axle shaft bearing(s).
- Loose pinion gear nut.
- Excessive pinion yoke run out.
- Bent axle shaft(s).

Check for loose or damaged front end components or engine/transmission mounts. These components can contribute to what appears to be a vibration. Do not overlook engine accessories, brackets and drive belts.

DRIVELINE SNAP

A snap or clunk noise when the vehicle is shifted into gear (or the clutch engaged) can be caused by:

- High engine idle speed.
- Transmission shift operation.
- Loose engine/transmission/transfer case mounts.
- Worn U-joints.
- Loose spring mounts.
- Loose pinion gear nut and yoke.

- Excessive ring gear backlash.
- Excessive side gear to case clearance.

The source of a snap or a clunk noise can be determined with the assistance of a helper. Raise the vehicle on a hoist with the wheels free to rotate. Instruct the helper to shift the transmission into gear and listen for the noise. A mechanics stethoscope is helpful in isolating the source of a noise.

DIAGNOSTIC CHART

Condition	Possible Causes	Correction
Wheel Noise	1. Wheel loose.	1. Tighten loose nuts.
	2. Worn wheel bearing.	2. Replace bearing.
Axle Shaft Noise	1. Misaligned axle tube.	1. Inspect axle tube alignment. Correct as necessary.
	2. Bent or sprung axle shaft.	2. Inspect and correct as necessary.
	3. End-play in pinion bearings.	3. Refer to **ADJUSTMENTS** and correct as necessary.
	4. Excessive gear backlash between the ring gear and pinion.	4. Check adjustment of the ring gear and pinion backlash. Correct as necessary.
	5. Improper adjustment of pinion gear bearings.	5. Adjust the pinion bearings pre-load.
	6. Loose pinion yoke nut.	6. Tighten the pinion yoke nut.
	7. Scuffed gear tooth contact surfaces.	7. Inspect and replace as necessary.
Axle Shaft Broke	1. Misaligned axle tube.	1. Replace the broken shaft after correcting tube mis-alignment.
	2 Vehicle overloaded.	2. Replace broken shaft and avoid excessive weight on vehicle.
	3. Erratic clutch operation.	3. Replace broken shaft and avoid or correct erratic clutch operation.
	4. Grabbing clutch.	4. Replace broken shaft and inspect and repair clutch as necessary.
Differential Cracked	1. Improper adjustment of the differential bearings.	1. Replace case and inspect gears and bearings for further damage. Set differential bearing pre-load properly.
	2. Excessive ring gear backlash.	2. Replace case and inspect gears and bearings for further damage. Set ring gear backlash properly.
	3. Vehicle overloaded.	3. Replace case and inspect gears and bearings for further damage. Avoid excessive vehicle weight.

	4. Erratic clutch operation.	4. Replace case and inspect gears and bearings for further damage. Avoid erratic use of clutch.
Differential Gears Scored	1. Insufficient lubrication.	1. Replace scored gears. Fill differential with the correct fluid type and quantity.
	2. Improper grade of lubricant.	2. Replace scored gears. Fill differential with the correct fluid type and quantity.
	3. Excessive spinning of one wheel/tire.	3. Replace scored gears. Inspect all gears, pinion bores, and shaft for damage. Service as necessary.
Loss Of Lubricant	1. Lubricant level too high.	1. Drain lubricant to the correct level.
	2. Worn axle shaft seals.	2. Replace seals.
	3. Cracked differential housing.	3. Repair as necessary.
	4. Worn pinion seal.	4. Replace seal.
	5. Worn/scored yoke.	5. Replace yoke and seal.
	6. Axle cover not properly sealed.	6. Remove, clean and seal cover.
Axle Overheating	1. Lubricant level low.	1. Fill differential to correct level.
	2. Improper grade of lubricant.	2. Fill differential with the correct fluid type and quantity.
	3. Bearing pre-loads too high.	3. Adjust bearing pre-loads.
	4. Insufficient ring gear backlash.	4. Adjust ring gear backlash.
Gear Teeth Broke	1. Overloading.	1. Replace gears. Examine other gears and bearings for possible damage.
	2. Erratic clutch operation.	2. Replace gears and examine the remaining parts for damage. Avoid erratic clutch operation.
	3. Ice-spotted pavement.	3. Replace gears and examine remaining parts for damage.
	4. Improper adjustments.	4. Replace gears and examine remaining parts for damage. Ensure ring gear backlash is correct.
Axle Noise	1. Insufficient lubricant.	1. Fill differential with the correct fluid type and quantity.
	2. Improper ring gear and pinion adjustment.	2. Check ring gear and pinion contact pattern.
	3. Unmatched ring gear and pinion.	3. Replace gears with a matched ring gear and pinion.
	4. Worn teeth on ring gear and pinion.	4. Replace ring gear and pinion.

	5. Loose pinion bearings.	5. Adjust pinion bearing pre-load.
	6. Loose differential bearings.	6. Adjust differential bearing pre-load.
	7. Ring gear run-out.	7. Measure ring gear run-out. Replace components as necessary.
	8. Loose differential bearing cap bolts.	8. Inspect differential components and replace as necessary. Ensure that the bearing caps are torqued to the proper specification.
	9. Housing not machined properly.	9. Replace housing.

ADJUSTMENTS

ADJUSTMENTS

PINION DEPTH MEASUREMENT

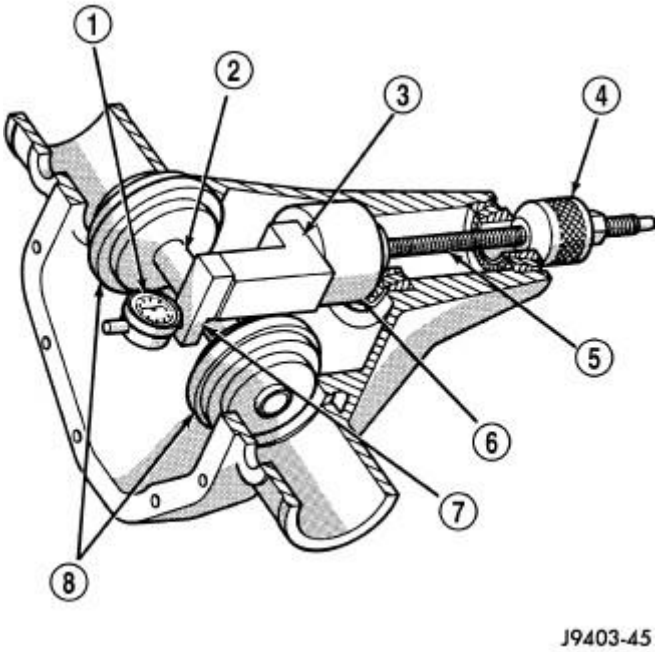

Fig. 1: Pinion Gear Depth Gauge Tools
Courtesy of CHRYSLER GROUP, LLC

Ring and pinion gears are supplied as matched sets. Compensation for pinion depth variance is achieved with a select shim. located between the rear pinion bearing and pinion gear head.

Measurements are taken with pinion bearing cups and pinion bearings installed in the housing. Take measurements with Pinion Gauge Set and Dial Indicator (special tool #C-3339A, Set, Dial Indicator).

1. Assemble Pinion Height Block (special tool #6739, Block, Height) (3), Pinion Block (special tool #8878,

Gauge, Pinion Height) (6) and rear pinion bearing onto Screw (special tool #6741, Screw) (5).

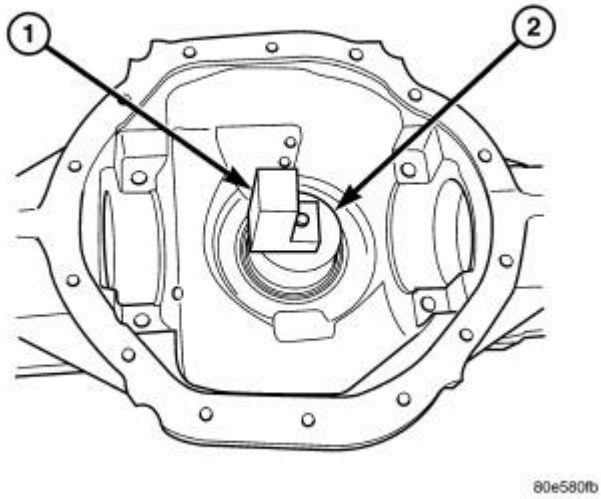

Fig. 2: Identifying Pinion Height Block
Courtesy of CHRYSLER GROUP, LLC

2. Insert assembled pinion height block (1), pinion block (2), rear bearing and screw into the housing through pinion bearing cups.
3. Install front pinion bearing and Cone-Nut (special tool #6740, Cone) onto the screw. Tighten cone-nut until Torque To Rotate the screw is 1.7 - 2.26 N.m (15 - 20 in. lbs.).

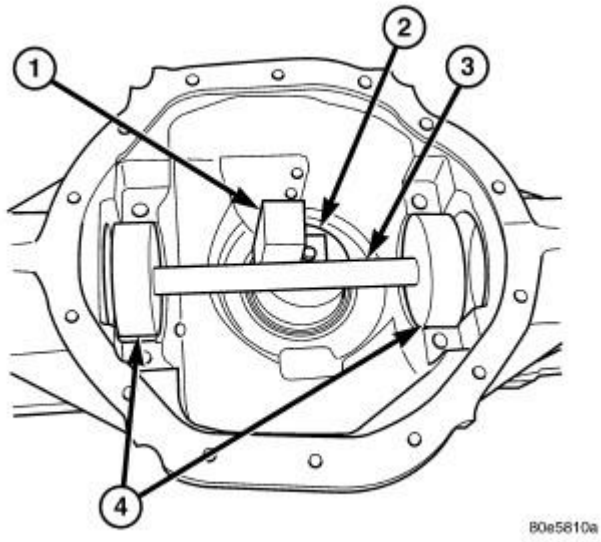

Fig. 3: Gauge Tools In Housing
Courtesy of CHRYSLER GROUP, LLC

4. Place Arbor Disc (special tool #8289, Set, Arbor Disc) (4) on Arbor (special tool #D-115-3, Arbor) (3) in position in the housing side bearing cradles.
5. Install differential bearing caps on arbor discs and snug the bearing cap bolts. Then cross tighten cap bolts to 85 N.m (63 ft. lbs.).

NOTE: Arbor (3) should rotate freely in the arbor disc (4).

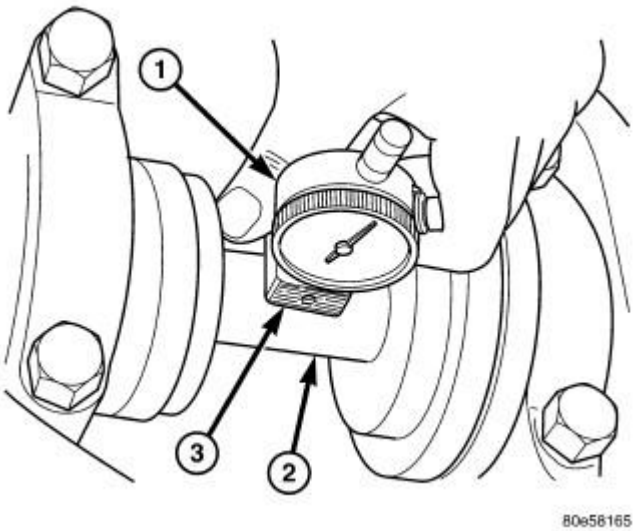

Fig. 4: Pinion Depth Measurement
Courtesy of CHRYSLER GROUP, LLC

6. Assemble Dial Indicator (special tool #C-3339A, Set, Dial Indicator) (1) into Scooter Block (special tool #D-115-2A, Block, Scooter) (3) and secure set screw.
7. Position Scooter Block/Dial Indicator flush on the pinion height block. Hold scooter block and zero the dial indicator (1).
8. Slowly slide the scooter block across the pinion height block over to the arbor. Move scooter block till dial indicator crests the arbor (2), then record the highest reading.
9. Select a shim equal to the dial indicator reading.

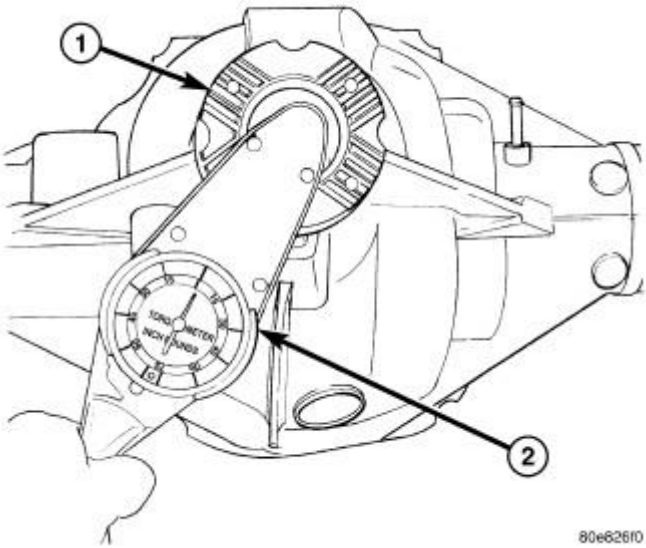

Fig. 5: Measuring Pinion Torque To Rotate
Courtesy of CHRYSLER GROUP, LLC

10. Install select shim between rear pinion bearing and the pinion gear head.
11. Install pinion gear and establish Pinion Torque To Rotate (PTTR) with and inch pound torque wrench (2).

DIFFERENTIAL BEARING PRELOAD AND GEAR BACKLASH

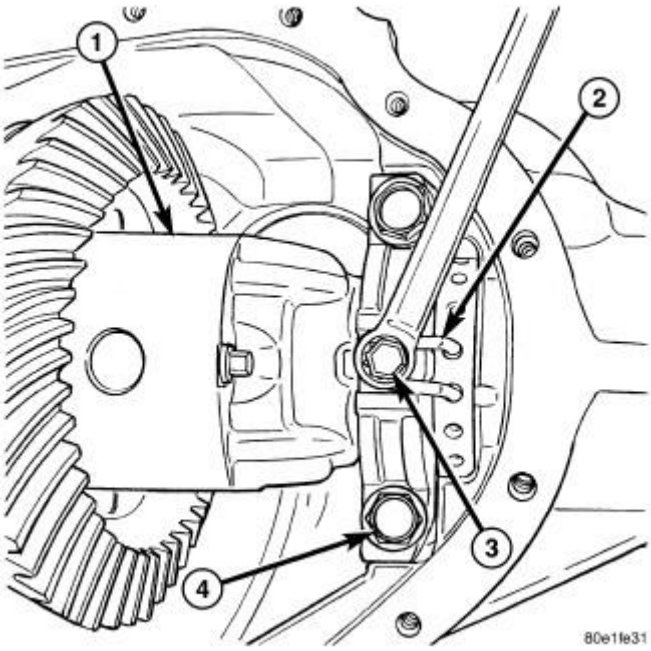

Fig. 6: Adjuster Locks & Bolts
Courtesy of CHRYSLER GROUP, LLC

Backlash is adjusted by moving the adjusters in and out or both. By moving the adjusters the case/ring gear will move closer or further away from the pinion. In most cases this adjustment can be used to achieve the correct gear tooth pattern and set the case bearing preload.

1. Remove adjuster lock bolts (3) and adjuster locks (2).
2. **Loosen** the differential bearing caps.
3. Slide differential case (1) toward the pinion gear until the gears make contact/zero backlash. If zero backlash cannot be obtained, turn the pinion side adjuster until zero backlash is obtained.
4. Holding the differential case toward the pinion gear, turn bearing adjusters with Wrench (special tool #8883A, Wrench, Differential Adjusting) until they make contact with the differential bearings/cups.
5. Back off the ring gear side adjuster 4 holes, to obtain initial ring gear backlash.
6. Install ring gear side adjuster lock and bolt. **Do not tighten** adjuster lock bolt at this time.
7. Tighten pinion gear side adjuster firmly against the differential case bearing cup.
8. Rotate the pinion several times to seat the differential bearings.
9. Loosen pinion gear side adjuster until it is no longer in contact with the bearing cup, then tighten it until it makes contact.
10. Tighten pinion gear side adjuster an additional:
    - **New Bearings:** 6 Adjuster Holes
    - **Original Bearings:** 4 Adjuster Holes
11. Install pinion gear side adjuster lock and bolt.
12. Tighten bearing cap bolts to 85 N.m (63 ft. lbs.).
13. Tighten adjuster lock bolts to 25 N.m (18 ft. lbs.).

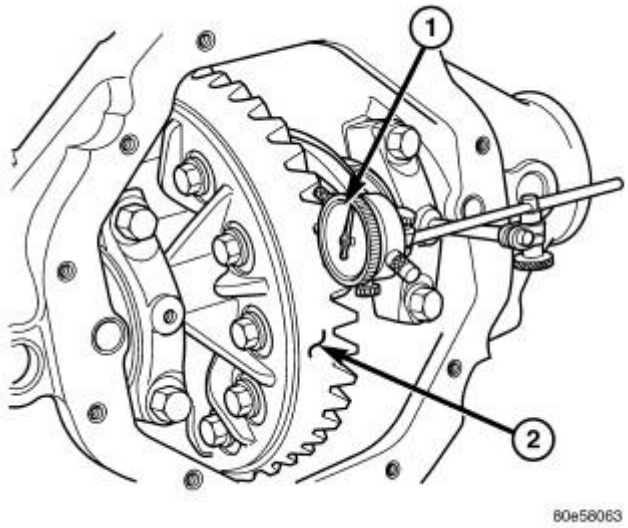

Fig. 7: Measuring Ring Gear Backlash
Courtesy of CHRYSLER GROUP, LLC

14. Measure ring gear backlash with a Dial Indicator (special tool #C-3339A, Set, Dial Indicator) (1) and Dial

Indicator Stud (special tool #L-4438, Dial Indicator Post) at eight points around the drive side of the ring gear (2). The backlash should be 0.08 - 0.25 mm (0.003 - 0.010 in) with a preferred backlash of 0.13 - 0.18 mm (0.005 - 0.007 in).

NOTE: **Backlash measurement should not vary more than 0.05 mm (0.002 in) between measuring points. If measurement does vary inspect the gears for burrs, the differential case flange and ring gear mounting.**

GEAR TOOTH CONTACT PATTERN

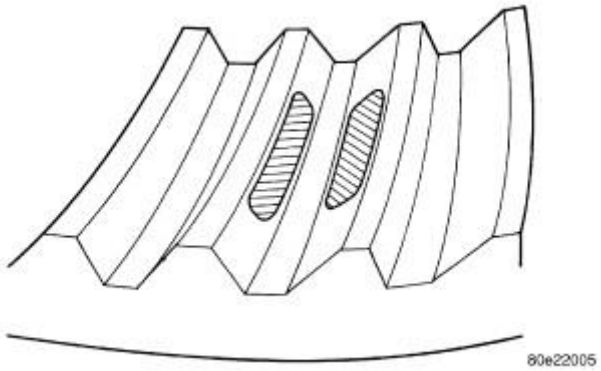

Fig. 8: Correct Contact Pattern
Courtesy of CHRYSLER GROUP, LLC

1. Wipe clean each tooth of the ring gear.
2. Apply gear marking compound to all of the ring gear teeth.
3. Verify bearing cap bolts are torque to specification.
4. Apply the brakes lightly to create a 14 N.m (10 ft. lbs.) pinion rotating torque.
5. Rotate the pinion/pinion yoke 4 full revolutions in each directions.
6. Read gear tooth contact pattern.

Gear contact pattern is correct. Backlash and pinion depth is correct.

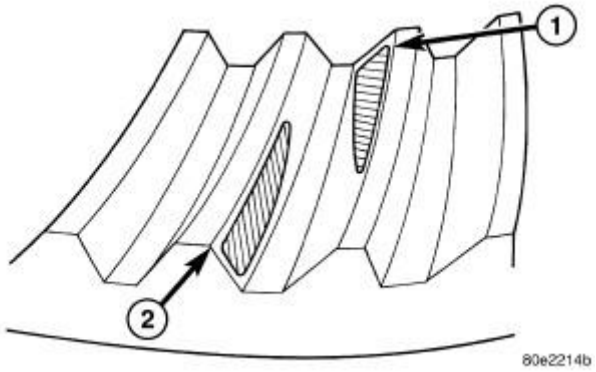

Fig. 9: Incorrect Backlash (1 Of 4)

Courtesy of CHRYSLER GROUP, LLC

Ring gear too far away from pinion gear, coast side toe (1) and drive side heel (2). Decrease backlash, by moving the ring closer to the pinion gear using the adjusters.

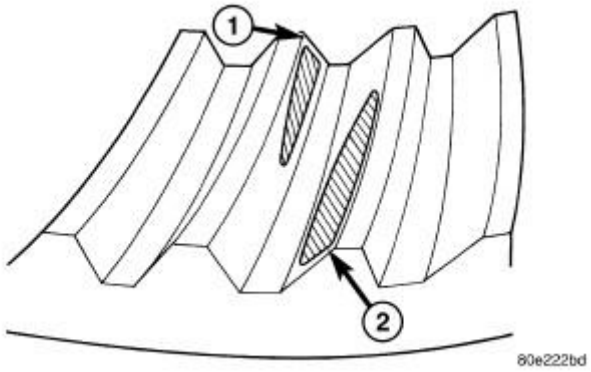

Fig. 10: Incorrect Backlash (2 Of 4)
Courtesy of CHRYSLER GROUP, LLC

Ring gear too close to pinion gear, drive side toe (1) and coast side heel (2). Increase backlash, by moving the ring away from the pinion gear using the adjusters.

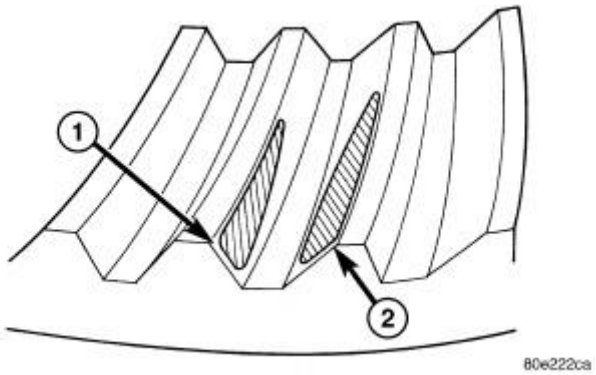

Fig. 11: Incorrect Backlash (3 Of 4)
Courtesy of CHRYSLER GROUP, LLC

Ring gear too far away from pinion gear, drive side heel (1) and coast side heel (2). Decrease backlash, by moving the ring closer to the pinion gear using the adjusters.

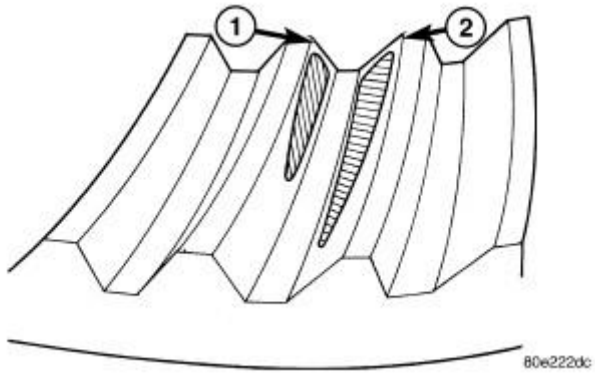

Fig. 12: Incorrect Backlash (4 Of 4)
Courtesy of CHRYSLER GROUP, LLC

Ring gear too close to pinion gear, drive side toe (1) and coast side toe (2). Increase backlash, by moving the ring away from the pinion gear using the adjusters.

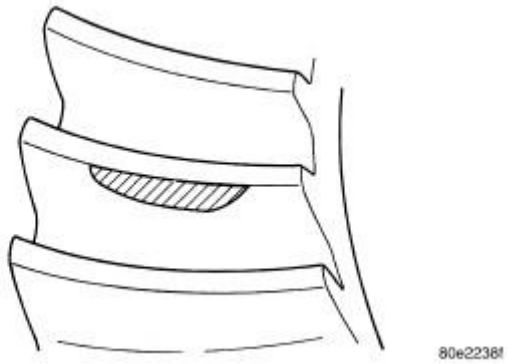

Fig. 13: Low Pinion Height
Courtesy of CHRYSLER GROUP, LLC

Pinion gear set too low. Increase pinion gear height, by increasing the pinion depth shim thickness.

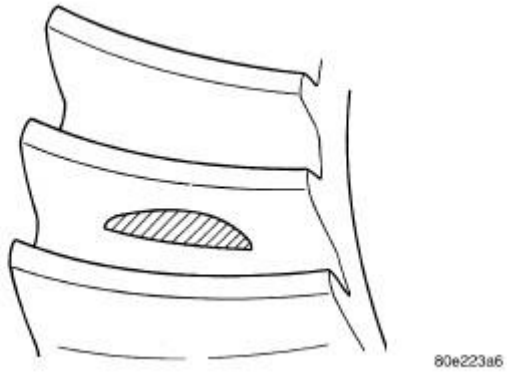

Fig. 14: High Pinion Height
Courtesy of CHRYSLER GROUP, LLC

Pinion gear set too high. Decrease pinion depth, by decreasing the pinion depth shim thickness.

SPECIFICATIONS

SPECIFICATIONS

AXLE

DESCRIPTION	SPECIFICATION
Axle Ratio	3.73, 4.10, 4.56
Ring Gear Diameter	235 mm (9.25 in.)
Ring Gear Backlash	0.13 - 0.18 mm (0.005 - 0.007 in.)
Pinion Torque To Rotate - New Bearing	1.7 - 2.8 N.m (15 - 25 in. lbs.)
Pinion Torque To Rotate - Original Bearing	1.1 - 2.2 N.m (10 - 20 in. lbs.)
Total Torque To Rotate - New Bearing	3.4 - 5.6 N.m (30 - 50 in. lbs.)
Total Torque To Rotate - Original Bearing	2.8 - 5.1 N.m (25 - 45 in. lbs.)
Fill Level - From Bottom of Fill Hole	6 mm (1/4 in.) ± 6 mm (1/4 in.)

TORQUE SPECIFICATIONS

DESCRIPTION	N.m	Ft. Lbs.	In. Lbs.
Fill Hole Plug	32	24	-
Differential Cover Bolts	40	30	-
Bearing Cap Bolts	85	63	-
Ring Gear Bolts	140	103	-
Axle Nut	356	263	-
Pinion Shaft Lock Bolt	52	38	-
Adjuster Lock Bolt	25	18	-

REMOVAL

REMOVAL

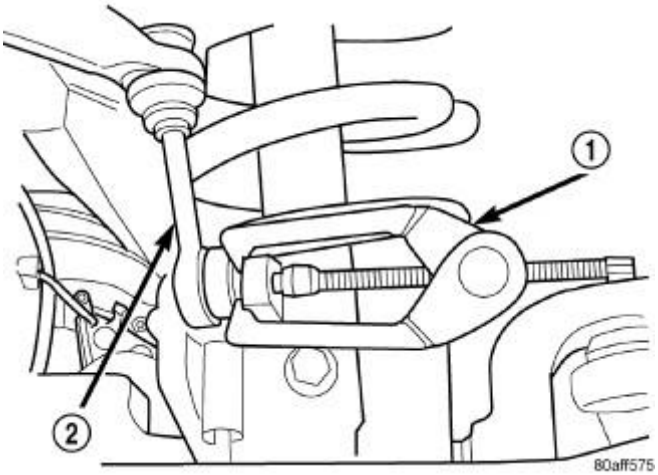

Fig. 15: Removing Stabilizer Bar Links
Courtesy of CHRYSLER GROUP, LLC

1. With vehicle in neutral, position vehicle on hoist.
2. Remove brake calipers and rotors.
3. Disconnect ABS wheel speed sensors.
4. Disconnect axle vent hose.
5. Remove front propeller shaft.
6. Remove stabilizer bar links (2) at the axle brackets with Puller (special tool #C-3894-A, Puller, Tie Rod) (1).

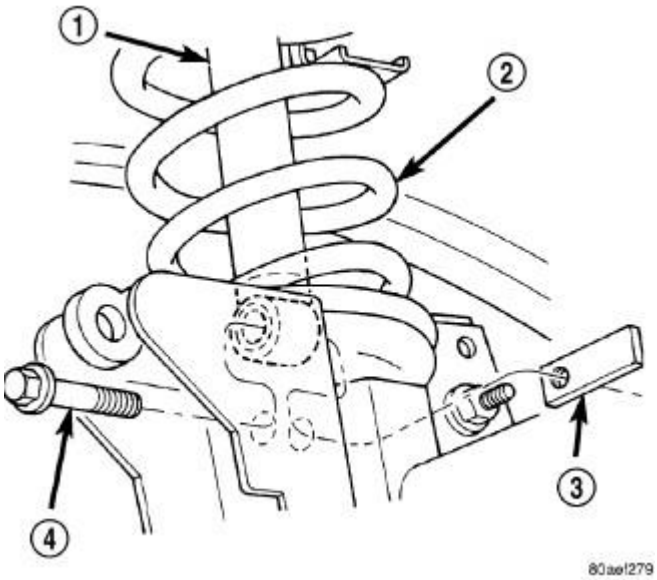

Fig. 16: Shock Absorber Bolts
Courtesy of CHRYSLER GROUP, LLC

7. Remove shock absorbers (1) bolts (4) from axle brackets.

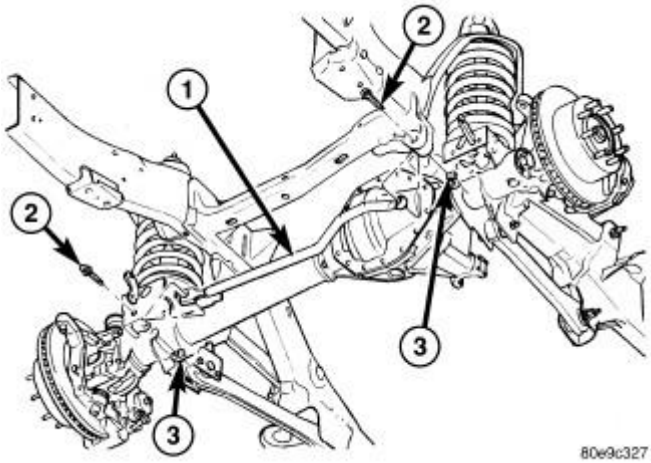

Fig. 17: Track Bar & Bolts
Courtesy of CHRYSLER GROUP, LLC

8. Remove track bar (1) bolt (2) from the axle bracket.

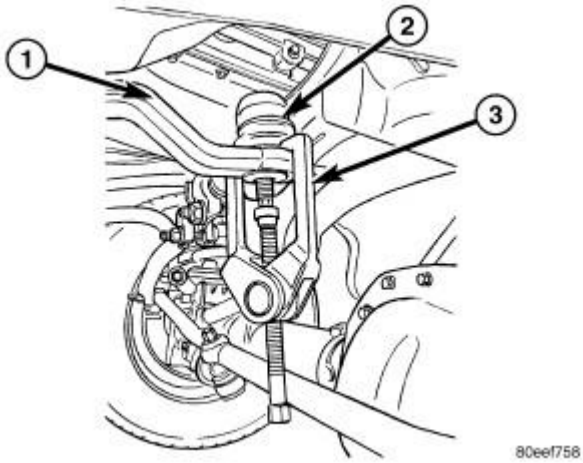

Fig. 18: Removing Tie Rod & Drag Link
Courtesy of CHRYSLER GROUP, LLC

9. Remove tie rod and drag link (2) with Puller (special tool #C-3894-A, Puller, Tie Rod) (3) from the steering knuckles.

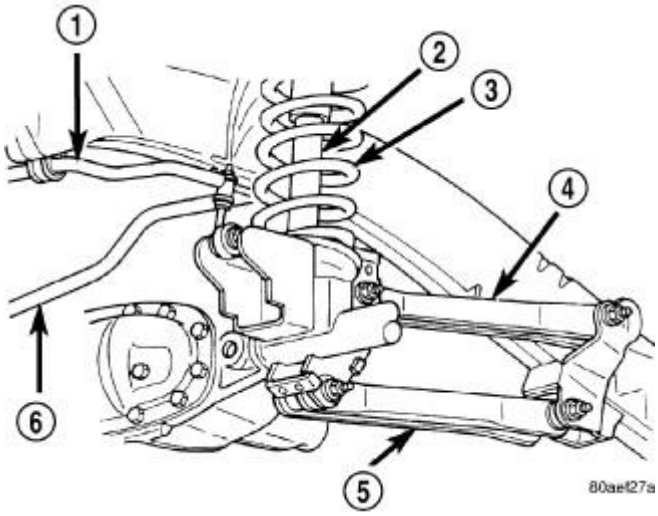

Fig. 19: Upper & Lower Control Arms
Courtesy of CHRYSLER GROUP, LLC

10. Position lift under the axle assembly and secure axle to lift.
11. Mark suspension alignment cams for installation reference.
12. Remove upper control arms (4) and lower control arms (5) from the axle bracket.
13. Lower the axle. The coil springs will drop with the axle.
14. Remove coil springs from the axle bracket.

INSTALLATION

INSTALLATION

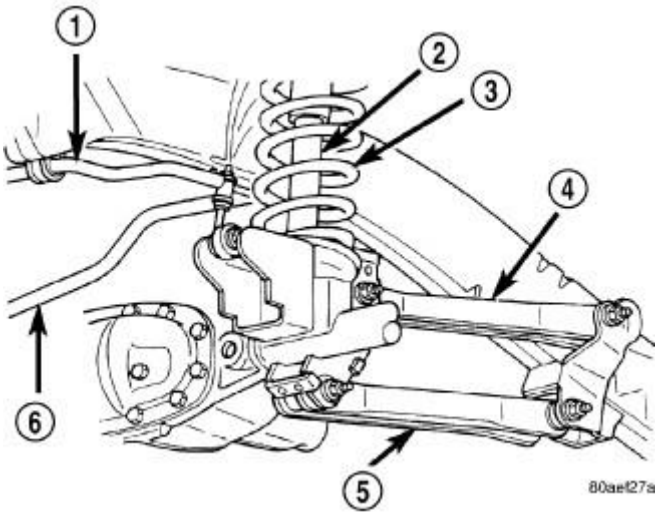

Fig. 20: Upper & Lower Control Arms
Courtesy of CHRYSLER GROUP, LLC

CAUTION: Suspension components with rubber bushings should be tightened with the weight of the vehicle on the suspension. Failure to follow these instructions will result in damage.

1. Support the axle on a suitable lifting device.
2. Secure axle to lifting device.
3. Position the axle under the vehicle.
4. Install springs (3), retainer clip and bolts.
5. Raise axle and align it with the spring pads.
6. Position upper (4) and lower control arms (5) in the axle brackets. Install bolts, nuts and align the suspension alignment cams to the reference marks. Do not tighten at this time.
7. Connect track bar (6) to the axle bracket and install the bolt. Do not tighten at this time.
8. Install shock absorber (2) and stabilizer bar (1)
9. Install drag link and tie rod to the steering knuckles.
10. Install ABS wheel speed sensors.
11. Install rotors and brake calipers.
12. Connect the axle vent hose.
13. Install front propeller shaft.
14. With vehicle on the ground, tighten upper control arm nuts at axle to 149 N.m (110 ft. lbs.). Tighten upper control arm nuts at frame to 149 N.m (110 ft. lbs.).
15. With vehicle on the ground, tighten lower control arm nuts at axle to 190 N.m (140 ft. lbs.). Tighten the lower control arm nuts at frame to 190 N.m (140 ft. lbs.).
16. Tighten track bar bolt at the axle bracket to 176 N.m (130 ft. lbs.).
17. Check front wheel alignment.

SPECIAL TOOLS

SPECIAL TOOLS

	1130 - Splitter, Bearing/Gear (Originally Shipped In Kit Number(s) 6745, 6947, 6949, 9202, 9202A-CAN, 9202CC, 9299.) 6310 - Remover, Bearing/Seal (Originally Shipped In Kit Number(s) 8207, 8418, XJ594, XJ595.) 6310-2 - Disc (Originally Shipped In Kit Number(s) 8207, 8418, XJ594, XJ595.) 6310-7 - Nut (Originally Shipped In Kit Number(s) 8207, 8418, XJ594, XJ595.) 6310-9 - Head (Originally Shipped In Kit Number(s) 8207, 8418, XJ594, XJ595.) 6739 - Block, Height (Originally Shipped In Kit Number(s) 6730, 9516A-CAN, 9540, 9541.) 6740 - Cone

(Originally Shipped In Kit Number(s) 6730, 6731, 9516A-CAN, 9540, 9541.)
6741 - Screw
(Originally Shipped In Kit Number(s) 6730, 6731, 9516A-CAN, 9540, 9541.)
8289 - Set, Arbor Disc
(Originally Shipped In Kit Number(s) 8887, 8887CC.)
8498 - Receiver, Axle Shaft Seal
(Originally Shipped In Kit Number(s) 8887, 8887CC, 9972.)
8878 - Gauge, Pinion Height
(Originally Shipped In Kit Number(s) 8887, 8887CC.)
8879 - Adapters, Puller
(Originally Shipped In Kit Number(s) 8887, 8887CC.)
8881 - Installer, Bearing
(Originally Shipped In Kit Number(s) 8887, 8887CC.)
8882 - Installer, Pinion Seal
(Originally Shipped In Kit Number(s) 8887, 8887CC.)
8883A - Wrench, Differential Adjusting
(Originally Shipped In Kit Number(s) 8887.)
8885-1 - Installer Seal Plate
(Originally Shipped In Kit Number(s) 8887, 8887CC.)
8885-2 - Assembly, Screw
(Originally Shipped In Kit Number(s) 8887, 8887CC.)
8886 - Installer, Bearing Cup
(Originally Shipped In Kit Number(s) 8887, 8887CC.)
8888 - Plug, Differential Bearing
(Originally Shipped In Kit Number(s) 8887, 8887CC.)
8976 - Pinion Driver
(Originally Shipped In Kit Number(s) 8887, 8887CC, 9925, 9926.)
8979 - Wrench, Pinion Flange
(Originally Shipped In Kit Number(s) 8999.)
8982 - Installer, Pinion
(Originally Shipped In Kit Number(s) 8887, 8887CC.)
8992 - Remover, Pinion Flange
(Originally Shipped In Kit Number(s) 8999, 8999CC, 9299, 9299CC, 9299CC, 9300A-CAN.)
938 - Bridge
(Originally Shipped In Kit Number(s) 6745, 6947, 6949, 9202, 9202A-CAN, 9202CC, 9299.)
9611 - Plug, Differential End
(Originally Shipped In Kit Number(s) 9690.)
9612 - Installer, Bearing
(Originally Shipped In Kit Number(s) 9690.)
9613 - Adapters, Puller
(Originally Shipped In Kit Number(s) 9690, 9720-SUP.)
C-293-PA - Puller, Press
(Originally Shipped In Kit Number(s) 8418, 8837, C-293-M.)
C-3095-A - Installer, Bearing

C-3339A - Set, Dial Indicator

	(Originally Shipped In Kit Number(s) 9202.) C-3894-A - Puller, Tie Rod (Originally Shipped In Kit Number(s) 9202, 9202A-CAN, 9202CC, 9299, 9299CC, 9299CC, 9300A-CAN.) C-4171 - Driver Handle, Universal (Originally Shipped In Kit Number(s) 9202, 9202A-CAN, 9202CC, 9299, 9299CC, 9299CC, 9300A-CAN.) D-115-2A - Block, Scooter (Originally Shipped In Kit Number(s) 9329-SUP, 9515-SUP, 9516-SUP, 9517-SUP, 9518, 9519, 9540-SUP, 9541-SUP, 9694, 9926.) D-115-3 - Arbor (Originally Shipped In Kit Number(s) 8667, 9516A-CAN.) D-146 - Installer, Bearing Cup (Originally Shipped In Kit Number(s) 8667.) L-4438 - Dial Indicator Post

BEARING, DIFFERENTIAL SIDE

REMOVAL

REMOVAL

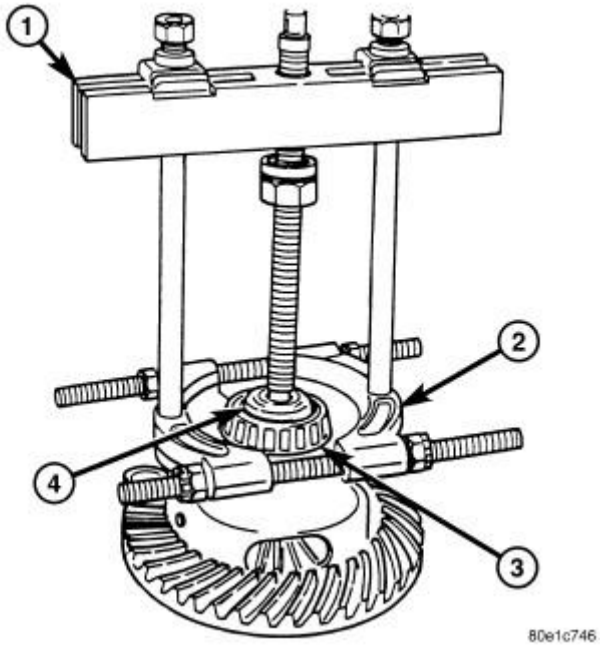

Fig. 21: Removing Differential Case Bearing
Courtesy of CHRYSLER GROUP, LLC

1. Remove the differential case from the housing.

2. Install Plug (special tool #8888, Plug, Differential Bearing) (4) into the end of the case.
3. Remove differential case bearings (3) with Bearing Splitter (special tool #1130, Splitter, Bearing/Gear) (2) and Bridge (special tool #938, Bridge) (1).

INSTALLATION

INSTALLATION

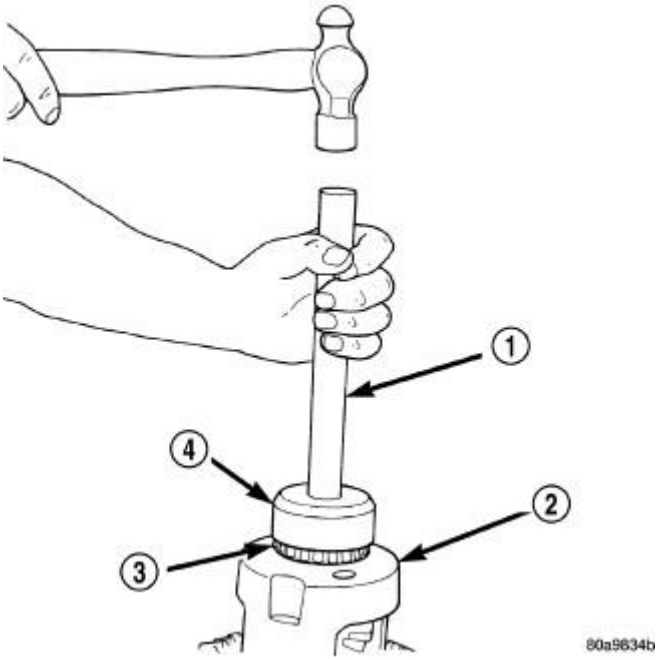

Fig. 22: Installing Differential Case Bearings
Courtesy of CHRYSLER GROUP, LLC

1. Set differential case (2) on Plug (special tool #8888, Plug, Differential Bearing).
2. Install differential case bearings (3) with Installer (special tool #8881, Installer, Bearing) (4) and Handle (special tool #C-4171, Driver Handle, Universal) (1).
3. Install differential case into housing.

BEARING, DIFFERENTIAL SIDE, ELECTRIC LOCKER

REMOVAL

REMOVAL

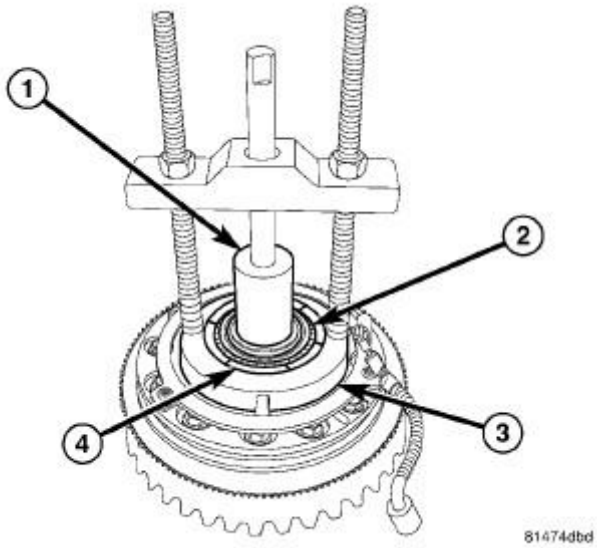

Fig. 23: Removing Differential Case Bearings
Courtesy of CHRYSLER GROUP, LLC

1. Remove the differential case from the housing.
2. Bend anti-rotation tabs outwards.
3. Install Plug (special tool #9611, Plug, Differential End) (1) into the end of the case.
4. Remove differential case bearings (2) with Puller (special tool #C-293-PA, Puller, Press) (3) and Adapters (special tool #9613, Adapters, Puller) (4).

INSTALLATION

INSTALLATION

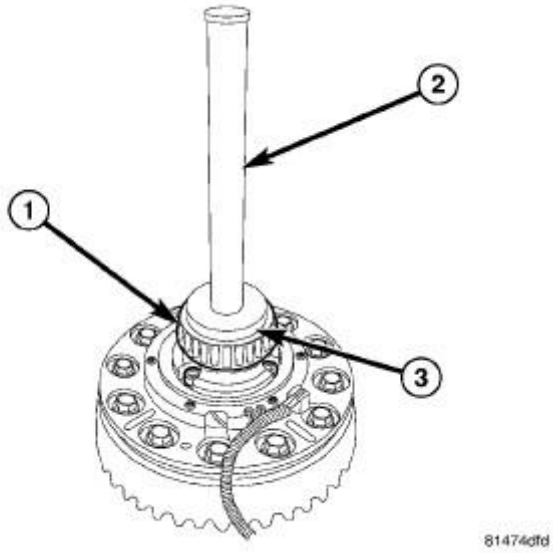

Fig. 24: Installing Differential Case Bearings
Courtesy of CHRYSLER GROUP, LLC

1. Install differential case bearings (1) with Handle (special tool #C-4171, Driver Handle, Universal) (2) and Installer (special tool #9612, Installer, Bearing) (3).
2. Bend anti-rotation tabs back to original location.

CASE ASSEMBLY, DIFFERENTIAL

REMOVAL

REMOVAL

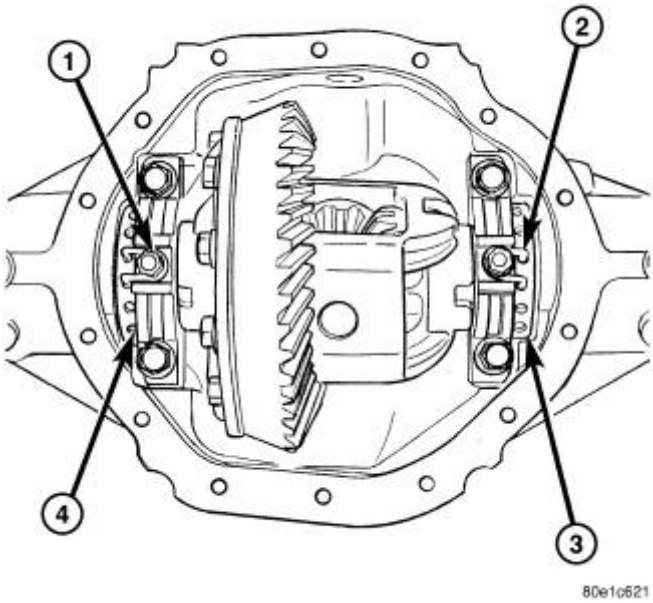

Fig. 25: Adjuster Locks, Bolts & Bearing Caps
Courtesy of CHRYSLER GROUP, LLC

1. Remove differential housing cover and drain lubricant from the housing.
2. Remove hub bearings and axle shafts.
3. Remove adjuster lock bolts (1) and adjuster locks (2).
4. Mark bearing caps (4) left and right for installation reference.
5. Remove bearing cap bolts and remove bearing caps.

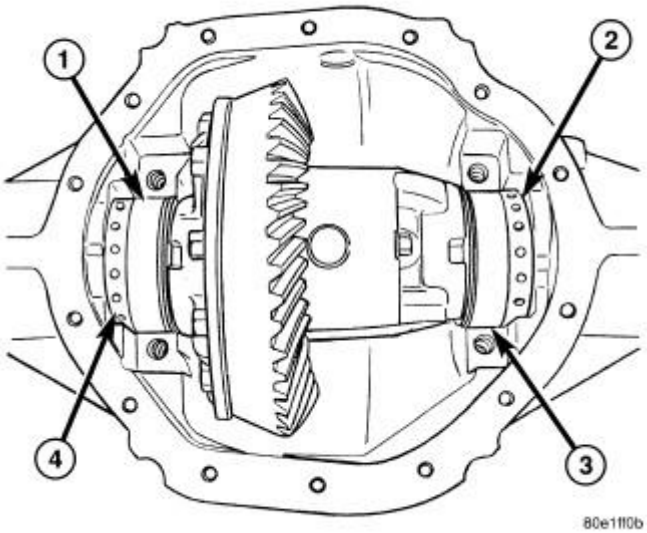

Fig. 26: Bearing Cups & Adjusters
Courtesy of CHRYSLER GROUP, LLC

6. Loosen differential bearing adjusters (2, 4) with a hammer and punch.
7. Remove differential case from the housing.
8. Remove bearing cups (1, 3) and tag them left and right for installation reference.

DISASSEMBLY

DISASSEMBLY

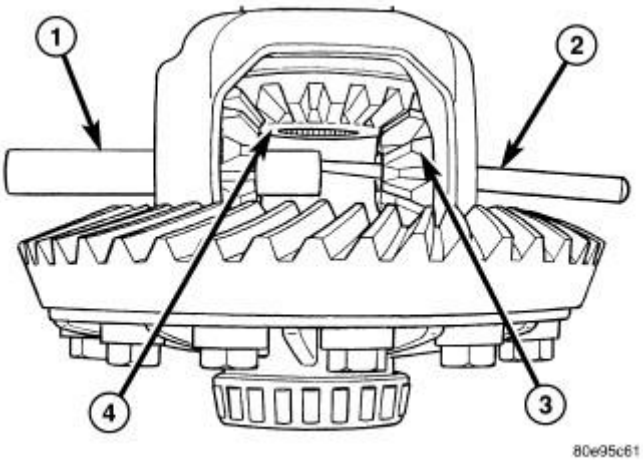

Fig. 27: Pinion Shaft, Pinion Gears & Punch
Courtesy of CHRYSLER GROUP, LLC

1. Remove pinion shaft lock bolt.

2. Remove pinion shaft (1) from pinion gears (3) with a punch (2).

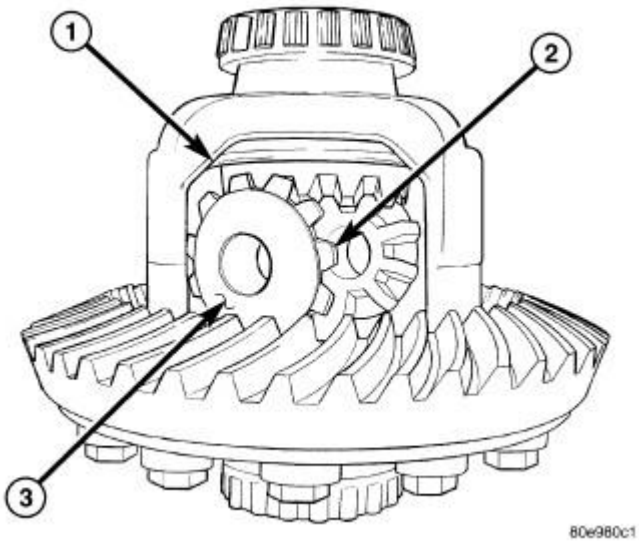

Fig. 28: Pinion Gears & Thrust Washers
Courtesy of CHRYSLER GROUP, LLC

3. Rotate differential pinion gears (2) to differential window (1) and remove pinion gears and thrust washers (3).

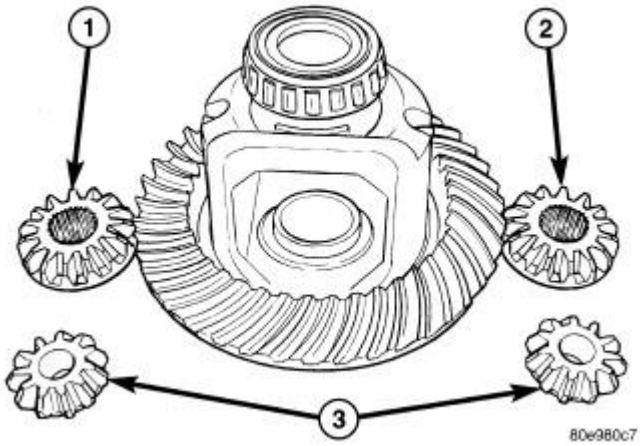

Fig. 29: Differential Side Gears & Thrust Washers
Courtesy of CHRYSLER GROUP, LLC

4. Remove differential side gears (1) (2) and thrust washers.

ASSEMBLY

ASSEMBLY

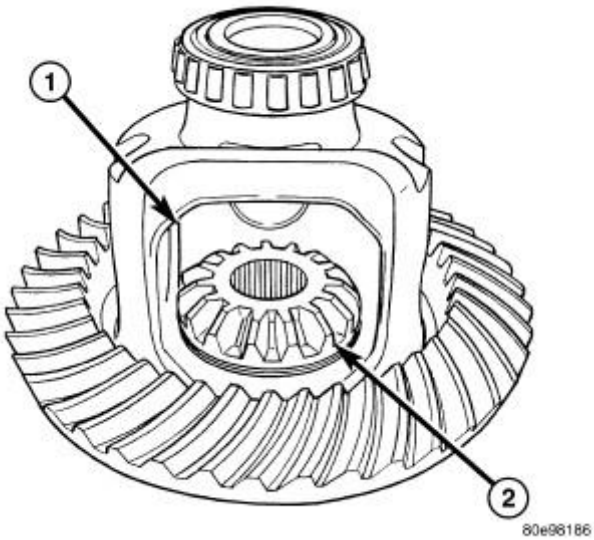

Fig. 30: Identifying Differential Side Gears
Courtesy of CHRYSLER GROUP, LLC

NOTE: **If same gears and thrust washers are being used, install them into original locations.**

1. Lubricate all differential components with axle lubricant.
2. Install differential side gears (2) and thrust washers.

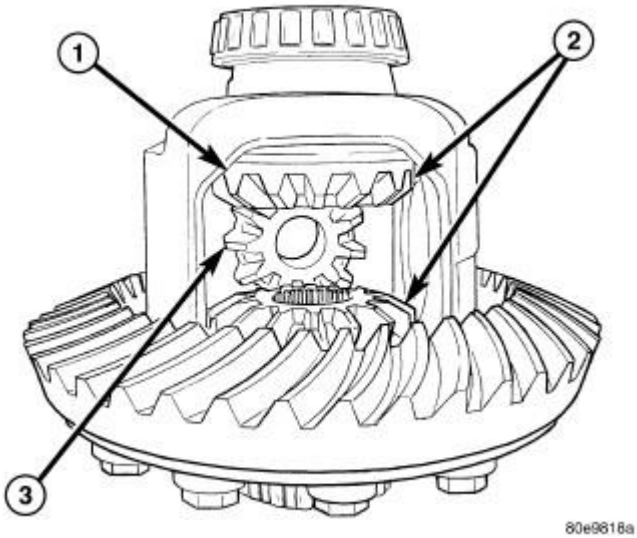

Fig. 31: Pinion Gear
Courtesy of CHRYSLER GROUP, LLC

3. Rotate one pinion gear (3) with thrust washer into the differential case. Then rotate the other pinion gear

with thrust washer into the differential case.

4. Align hole in the pinion gears with hole in the differential case.
5. Install pinion shaft.
6. Install **new** pinion shaft lock bolt and tighten to 52 N.m (38 ft. lbs.).

INSTALLATION

INSTALLATION

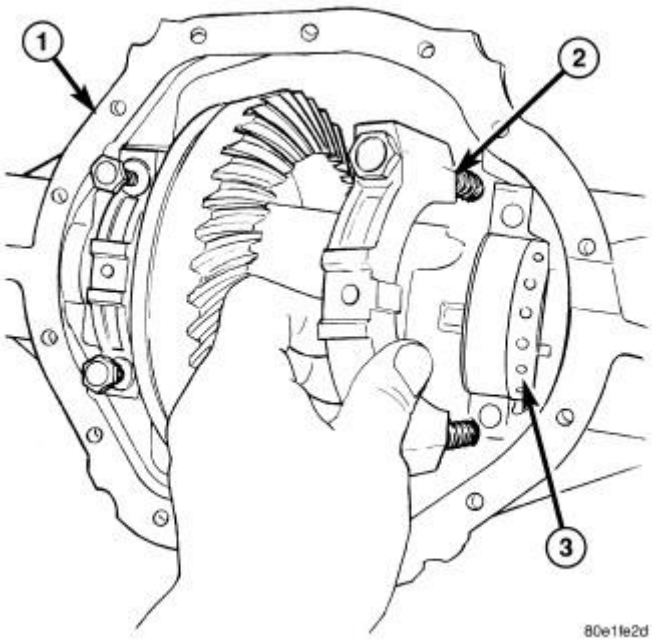

Fig. 32: Case Bearing Cap
Courtesy of CHRYSLER GROUP, LLC

1. Clean the housing cavity with a flushing oil, light engine oil or lint free cloth.
2. Lubricate differential case bearing.
3. Install differential case with bearings cups into the housing (1).
4. Install bearing caps (2) and bolts. Tighten the bearing cap bolts finger-tight.

NOTE: Do not torque bearing cap and bolts at this time.

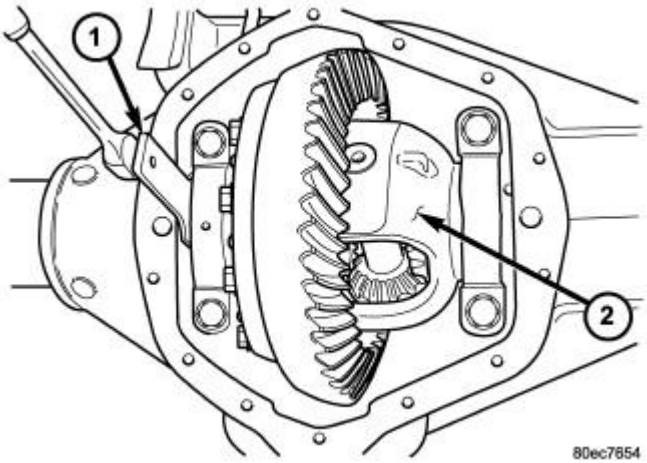

Fig. 33: Turning Bearing Adjusters
Courtesy of CHRYSLER GROUP, LLC

5. Slide differential case toward the pinion gear until the gears make contact/zero backlash. If zero backlash cannot be obtained, turn the pinion side adjuster until zero backlash is obtained.
6. Holding the differential case (2) toward the pinion gear, turn bearing adjusters with Wrench (special tool #8883A, Wrench, Differential Adjusting) (1) until they make contact with the differential bearings/cups.
7. Back off the ring gear side adjuster 4 holes, to obtain initial ring gear backlash.
8. Install ring gear side adjuster lock and bolt. Do not tighten adjuster lock bolt at this time.
9. Tighten pinion gear side adjuster firmly against the differential case bearing cup.
10. Rotate the pinion several times to seat the differential bearings.
11. Loosen pinion gear side adjuster until it is no longer in contact with the bearing cup.
12. Tighten pinion gear side adjuster until it just makes contact with the bearing cup.
13. Tighten pinion gear side adjuster an additional:
    - **New Bearings:** 6 Adjuster Holes
    - **Original Bearings:** 4 Adjuster Holes
14. Install pinion gear side adjuster lock and bolt. Do not tighten adjuster lock bolt at this time.

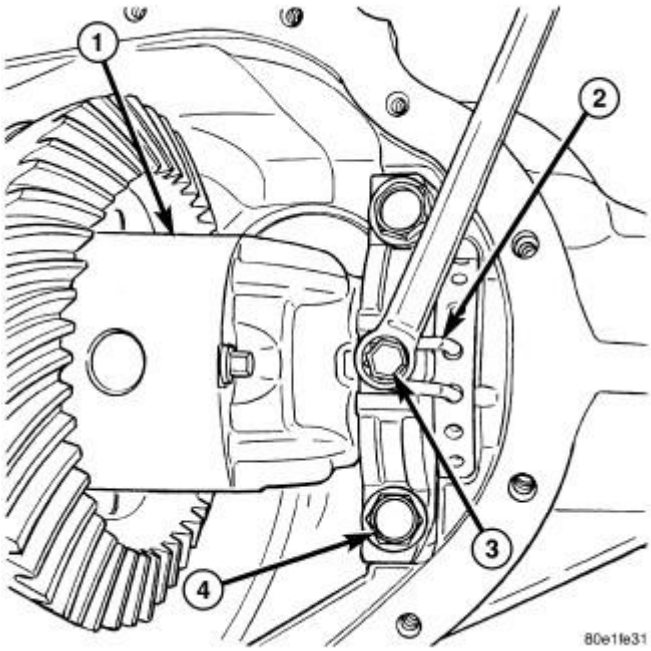

Fig. 34: Adjuster Locks & Bolts
Courtesy of CHRYSLER GROUP, LLC

15. Tighten bearing cap bolts (4) to 85 N.m (63 ft. lbs.).
16. Tighten adjuster lock bolts (3) to 25 N.m (18 ft. lbs.).
17. Measure ring gear backlash and check gear tooth contact pattern. For procedure, refer to **ADJUSTMENTS**.
18. Install axle shafts and hub bearings.
19. Install differential housing gasket and cover. Tighten cover bolts to 40 N.m (30 ft. lbs.).
20. Fill differential with lubricant to specifications.
21. Install fill plug and tighten to 32 N.m (24 ft. lbs.).

CASE ASSEMBLY, DIFFERENTIAL, ELECTRIC LOCKER

DESCRIPTION

DESCRIPTION

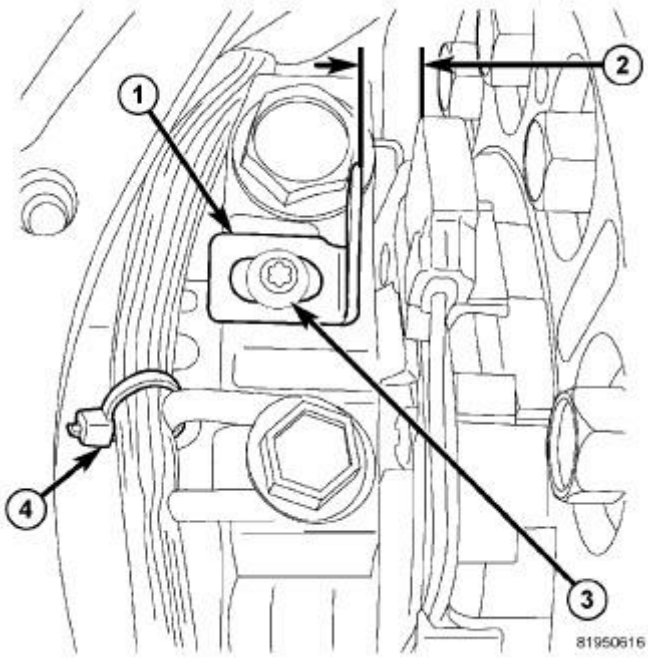

Fig. 35: Magnetic Target Sensor & Wire Tie Strap
Courtesy of CHRYSLER GROUP, LLC

The electric locker differential has an 12 volt electromagnetic coil on the ring gear side of the differential. When the coil is energized a dog clutch is engaged in the differential case which locks both axles. A 5 volt magnetic target sensor (1) mounted on the bearing cap is used to indicate the system has been activated.

NOTE: System will time out within 2 minutes, when the key is in the on position and the engine is not running.

DIAGNOSIS AND TESTING

DIAGNOSIS AND TESTING - DIFFERENTIAL-ELECTRIC LOCKER

1. Position vehicle on host with wheels of the ground.
2. Turn key to the on position.

NOTE: System will time out within 2 minutes, when the key is in the on position and the engine is not running.

3. Place vehicle in drive/first gear and transfer case in LOW LOCK.
4. Activate locker switch and lock rear axle.
5. Activate locker switch for front axle.
6. Hold one wheel and rotate the other wheel which should lock once the dog clutch is aligned.
7. Turn off locker switch.
8. Hold one wheel and rotate the other wheel which should turn.

NOTE: **Only the locker actuator with sensor is serviced. Internal differential components are serviced as a differential case assembly.**

REMOVAL

REMOVAL

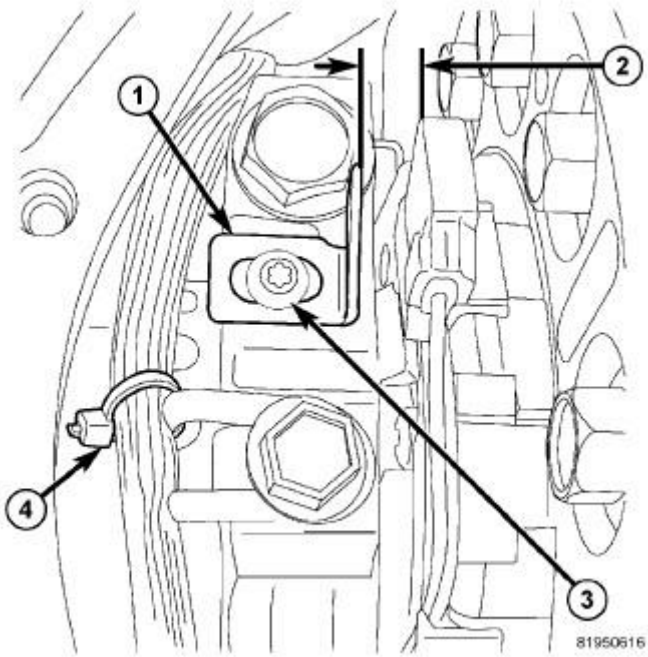

Fig. 36: Magnetic Target Sensor & Wire Tie Strap
Courtesy of CHRYSLER GROUP, LLC

1. Remove differential housing cover and drain lubricant from the housing.
2. Remove hub bearings and axle shafts.
3. Cut sensor wire tie strap (4) from adjuster lock.
4. Remove sensor target magnet (1) from bearing cap.

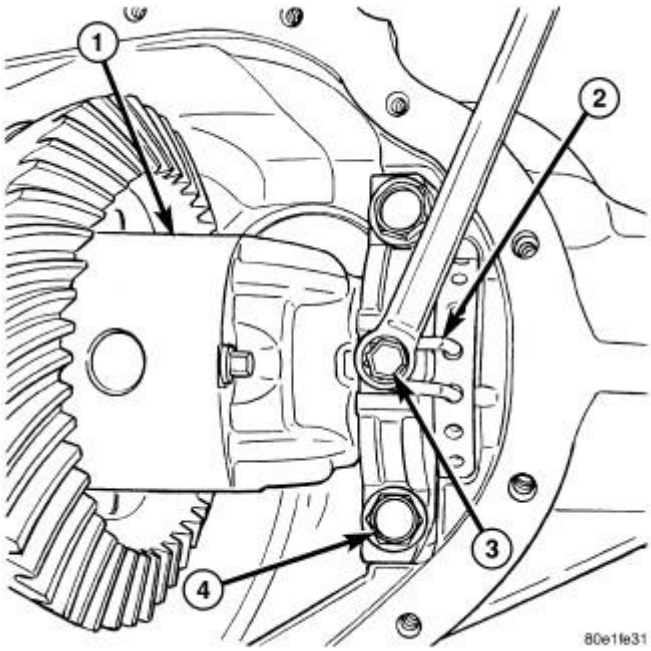

Fig. 37: Adjuster Locks & Bolts
Courtesy of CHRYSLER GROUP, LLC

5. Remove adjuster lock bolts (3) and adjuster locks (2).

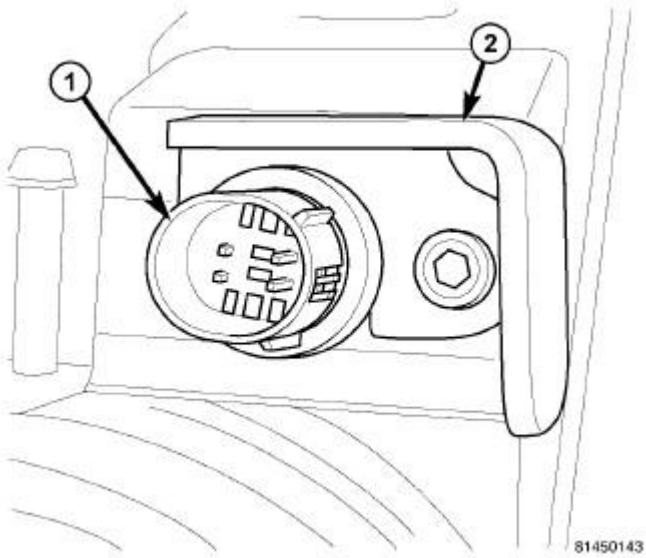

Fig. 38: Electric Locker Connector & Retainer
Courtesy of CHRYSLER GROUP, LLC

6. Remove electric locker connector (1) retainer (2) bolt from differential housing.

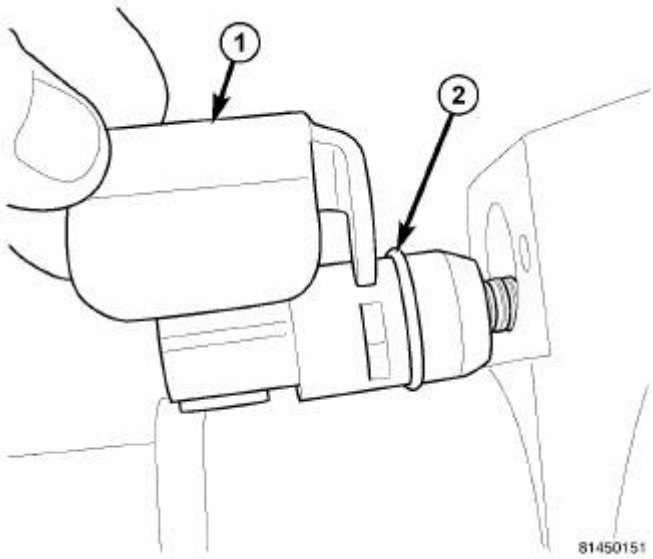

Fig. 39: Electric Locker Connector Retainer & O-Ring
Courtesy of CHRYSLER GROUP, LLC

7. Remove retainer (1) and connector (2) from differential housing.
8. Remove retainer (1) from connector (2) and remove O-ring (3) from connector.
9. Mark bearing caps left and right for installation reference.
10. Loosen bearing cap bolts and loosen adjusters with a hammer and punch.
11. Remove bearing cap bolts and bearing caps.
12. Slid electric locker connector through differential housing.
13. Remove differential case and bearing cups from the housing.
14. Tag bearing cups left and right for installation reference.

DISASSEMBLY

DISASSEMBLY

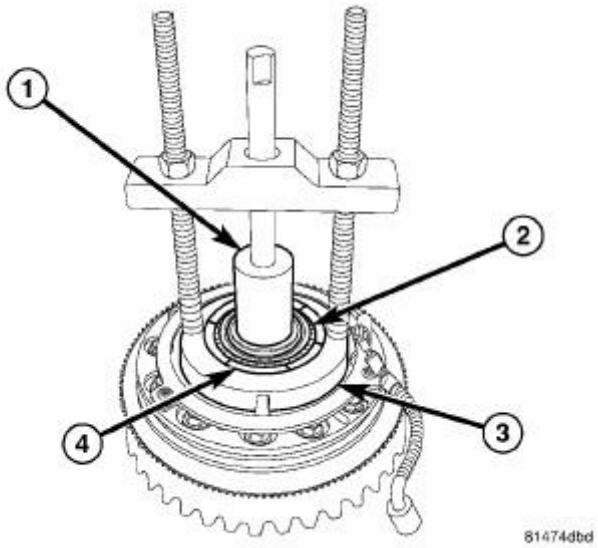

Fig. 40: Removing Differential Case Bearings
Courtesy of CHRYSLER GROUP, LLC

NOTE: Internal differential components are serviced with the case.

1. Bend anti-rotation tabs outward.
2. Install Plug (special tool #9611, Plug, Differential End) (1) into coil side of the case.
3. Remove differential case bearing (2) with Puller (special tool #C-293-PA, Puller, Press) (3) and Adapters (special tool #9613, Adapters, Puller) (4).

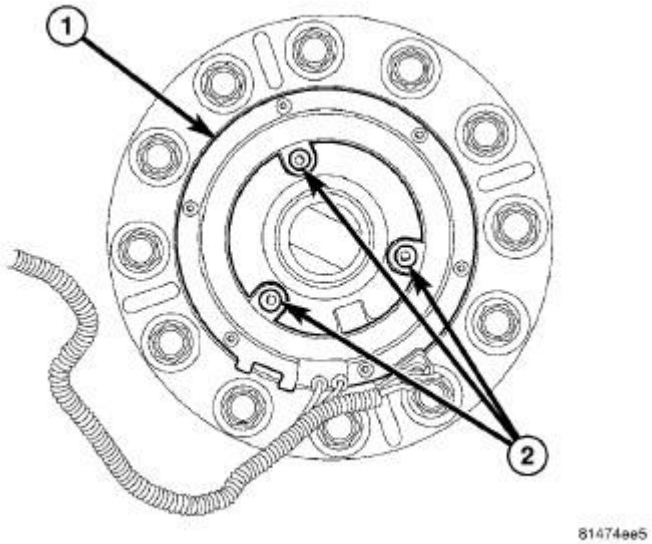

Fig. 41: Coil & Mounting Bolts
Courtesy of CHRYSLER GROUP, LLC

4. Remove coil (1) mounting bolts (2).
5. Remove coil (1) with harness.

ASSEMBLY

ASSEMBLY

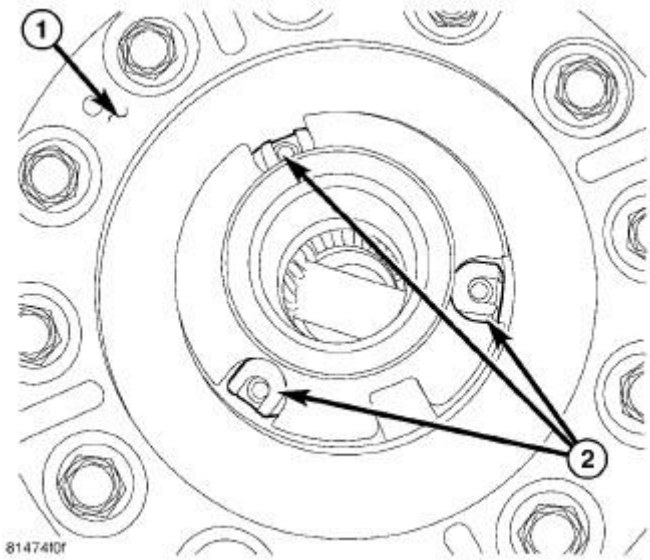

Fig. 42: Mounting Location
Courtesy of CHRYSLER GROUP, LLC

NOTE: Internal differential components are serviced with the case.

1. Position locker coil on differential case (1) mounting location (2).

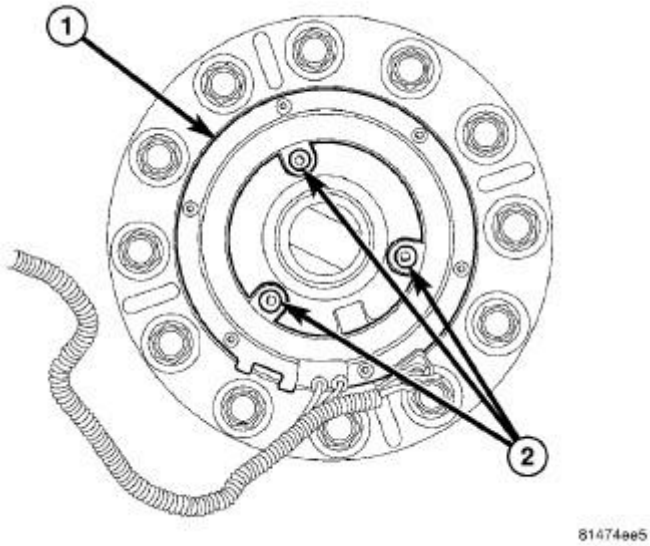

Fig. 43: Coil & Mounting Bolts
Courtesy of CHRYSLER GROUP, LLC

2. Clean coil bolts and apply Mopar® Lock AND Seal adhesive to the threads.
3. Install coil (1) and bolts (2).

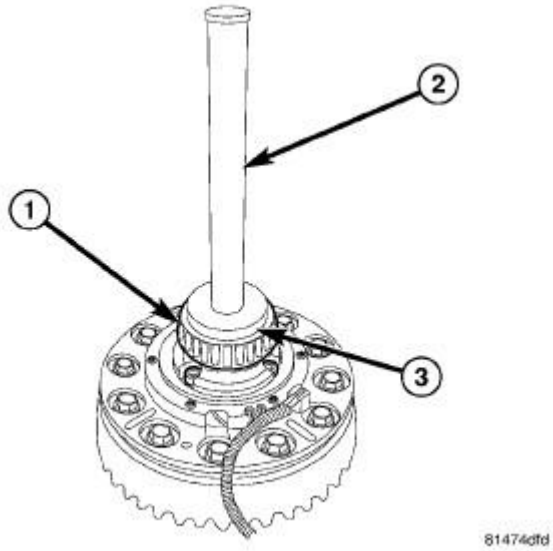

Fig. 44: Installing Differential Case Bearings
Courtesy of CHRYSLER GROUP, LLC

4. Install differential case bearing (1) with Handle (special tool #C-4171, Driver Handle, Universal) (2) and Installer (special tool #9612, Installer, Bearing) (3).

INSTALLATION

INSTALLATION

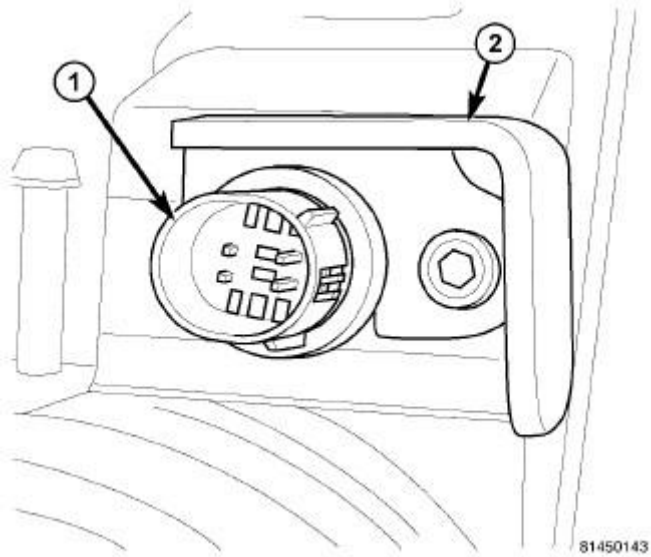

Fig. 45: Electric Locker Connector & Retainer
Courtesy of CHRYSLER GROUP, LLC

1. Clean the housing cavity with a flushing oil, light engine oil or lint free cloth.
2. Lubricate differential case bearing.
3. Install differential case with bearings cups into the housing.
4. Slide electric locker connector through differential housing.
5. Install O-ring on electric locker connector.
6. Install electric locker connector (1) with retainer (2) in differential housing.
7. Install connector retainer and bolt.

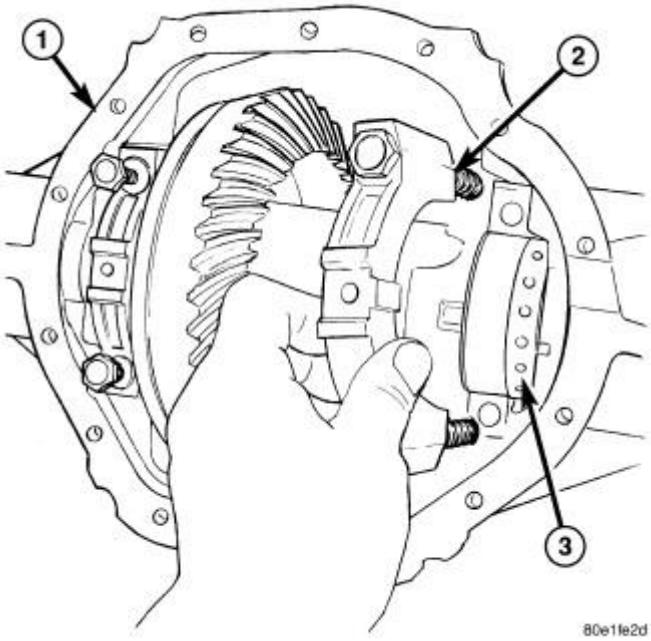

Fig. 46: Case Bearing Cap
Courtesy of CHRYSLER GROUP, LLC

NOTE: Do not torque bearing cap and bolts at this time.

8. Install bearing caps (2) and tighten bearing cap bolts finger-tight.
9. Slide differential case toward the pinion gear until the gears make contact/zero backlash. If zero backlash cannot be obtained, turn the pinion side adjuster until zero backlash is obtained.
10. Holding the differential case toward the pinion gear, turn bearing adjusters with Wrench (special tool #8883A, Wrench, Differential Adjusting) until they make contact with the differential bearings/cups.
11. Back off the ring gear side adjuster 4 holes, to obtain initial ring gear backlash.
12. Install ring gear side adjuster lock and bolt. Do not tighten adjuster lock bolt at this time.
13. Tighten pinion gear side adjuster firmly against the differential case bearing cup.
14. Rotate the pinion several times to seat the differential bearings.
15. Loosen pinion gear side adjuster until it is no longer in contact with the bearing cup.
16. Tighten pinion gear side adjuster until it just makes contact with the bearing cup.
17. Tighten pinion gear side adjuster an additional:
    - **New Bearings:** 6 Adjuster Holes
    - **Original Bearings:** 4 Adjuster Holes

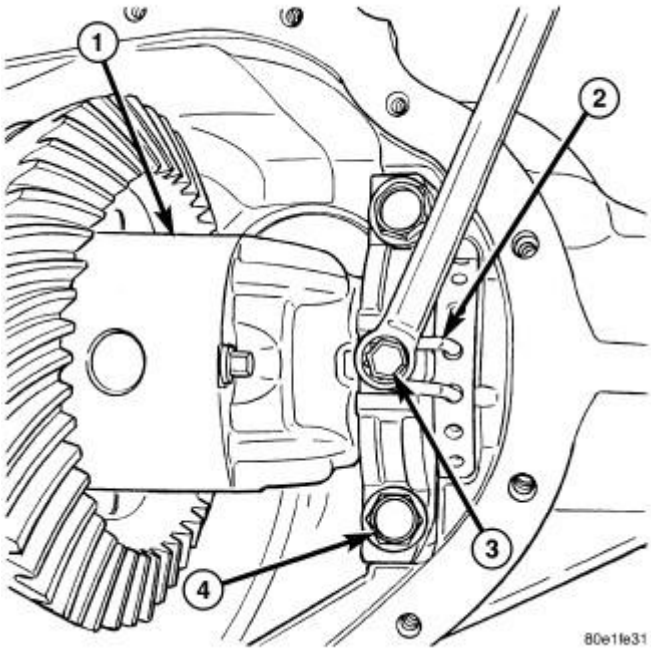

Fig. 47: Adjuster Locks & Bolts
Courtesy of CHRYSLER GROUP, LLC

18. Tighten bearing cap bolts (4) to 85 N.m (63 ft. lbs.).
19. Install adjuster locks (2) and tighten bolts (3) to 25 N.m (18 ft. lbs.).

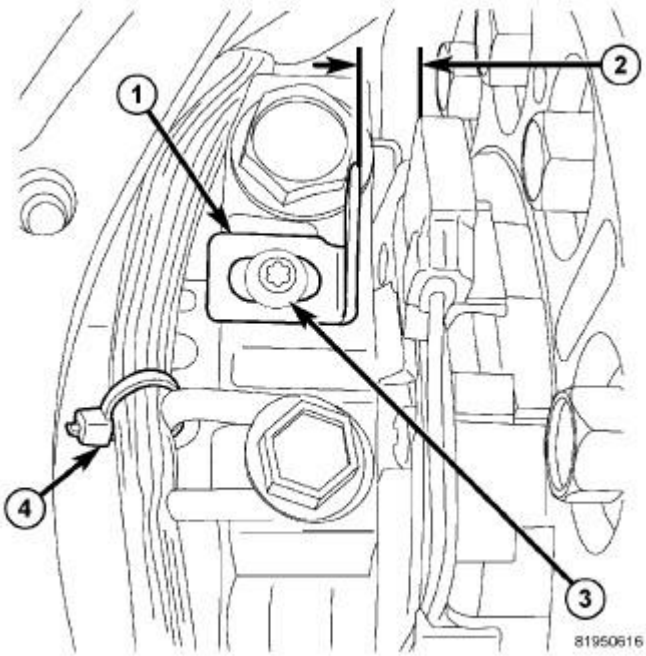

Fig. 48: Magnetic Target Sensor & Wire Tie Strap
Courtesy of CHRYSLER GROUP, LLC

20. Install axle shafts and hub bearings.
21. Install sensor target magnet (1) on bearing cap.
22. Energize locker and rotate axle shaft. Verify dog clutch is engaged by rotating one axle while holding the other. If engaged axle will not rotate.
23. De-energize locker and rotate left axle 15 to 40 degrees so dog clutch gears will not engage.

NOTE: System will time out within 2 minutes when the key is in the on position and the engine is not running.

NOTE: If the axle is locking and the indicator light continues to flash, the sensor gap is too small. If the axle is disengaged and the indicator light stays on, the sensor gap is to large. Gap adjustment must be within spec.

24. Energize locker and set sensor air gap (2) to 5.05 mm ± 0.25 mm (0.20 in. ± 0.01 in.).
25. Tighten sensor target magnet bolt (3) to 7 N.m (62 in. lbs.).

NOTE: The next step will verify the sensor air gap was adjusted with the dog clutch gears ear to ear.

26. Hold right axle and rotate left axle until dog clutch engages with an audible click nose.
27. Install sensor wire tie strap (4) in the original location or at white dot on wiring harness to the top leg of adjuster lock and de-energize coil.
28. Measure ring gear backlash and check gear tooth contact pattern. For procedure, refer to **ADJUSTMENTS**.
29. Install differential housing gasket and cover. Tighten cover bolts to 40 N.m (30 ft. lbs.).
30. Fill differential with lubricant.
31. Install fill plug and tighten to 32 N.m (24 ft. lbs.).

GEAR, RING AND PINION

REMOVAL

REMOVAL

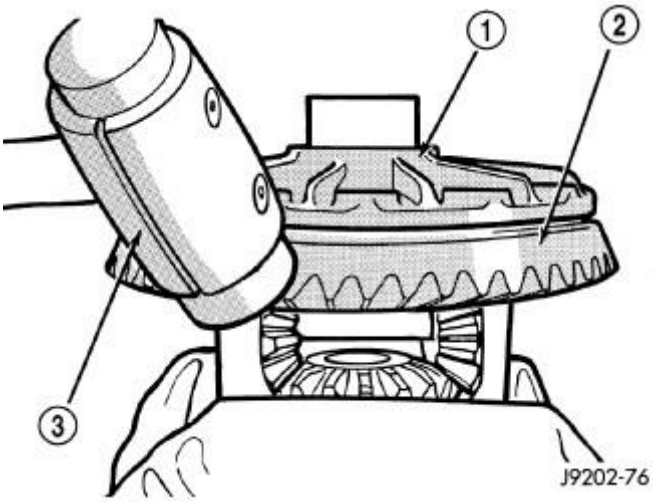

Fig. 49: Ring Gear
Courtesy of CHRYSLER GROUP, LLC

NOTE: **The ring and pinion gears are service in a matched set. Never replace the ring gear/pinion gear without replacing the other matching gear.**

1. Mark pinion flange and propeller shaft for installation alignment.
2. Disconnect propeller shaft from pinion flange and remove propeller shaft.
3. Remove axle shafts.
4. Remove differential from housing.
5. Place differential case in a vise with soft metal jaw protectors
6. Remove bolts holding ring gear to differential case.
7. Drive ring gear (2) from differential case (1) with a soft hammer (3).

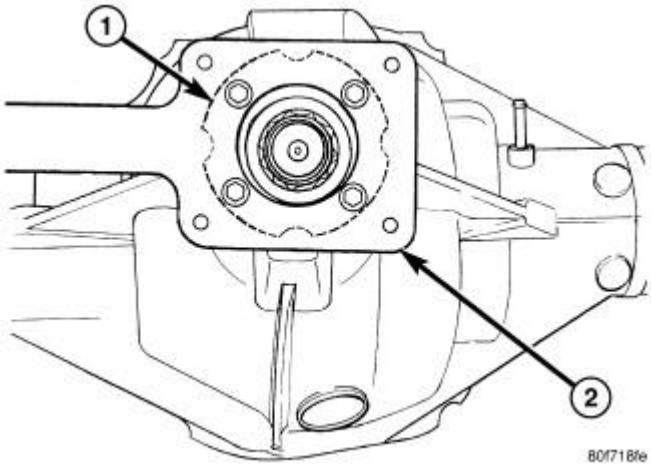

Fig. 50: Flange Wrench
Courtesy of CHRYSLER GROUP, LLC

8. Hold pinion flange (1) with Flange Wrench (special tool #8979, Wrench, Pinion Flange) (2) and remove pinion flange nut and washer.

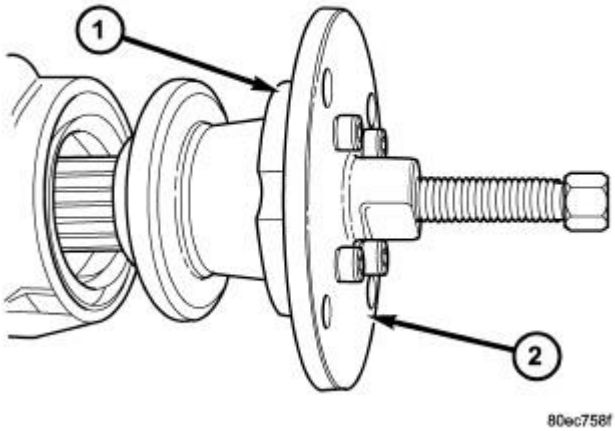

Fig. 51: Pinion Flange Puller
Courtesy of CHRYSLER GROUP, LLC

9. Remove pinion flange (1) from pinion with Pinion Flange Puller (special tool #8992, Remover, Pinion Flange) (2).

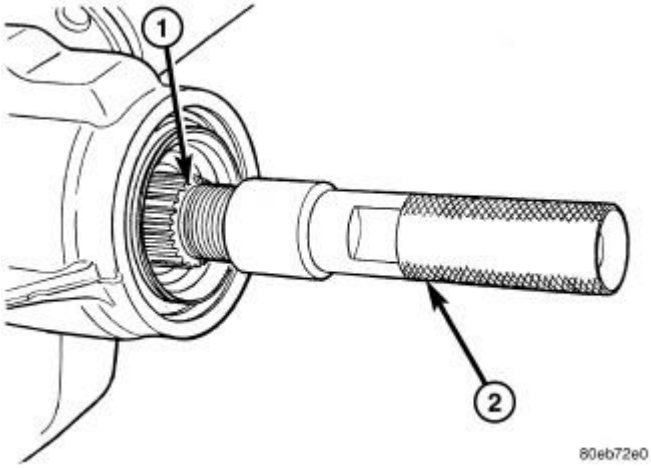

Fig. 52: Removing Pinion Gear From Housing
Courtesy of CHRYSLER GROUP, LLC

10. Remove pinion gear (1) from housing with Pinion Driver (special tool #8976, Pinion Driver) (2) and a hammer.

NOTE: Thread drive on shaft until it bottoms out.

11. Remove pinion seal with a slide hammer or pry bar.

12. Remove and discard front pinion bearing.
13. Remove collapsible spacer from the pinion shaft.

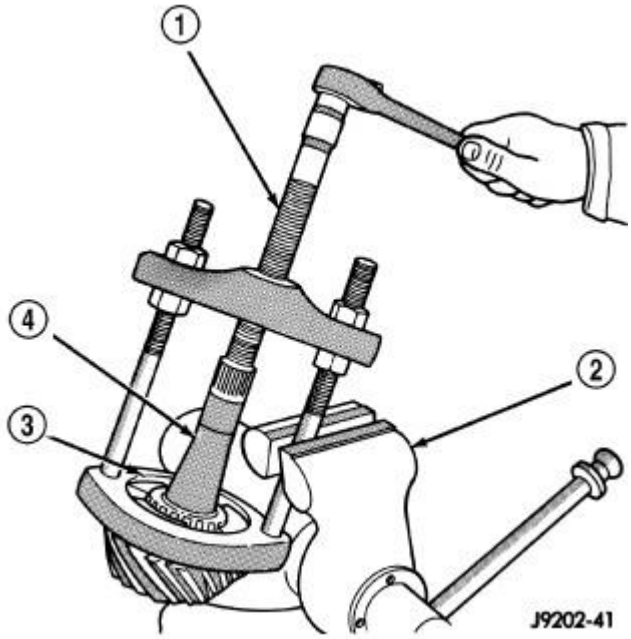

Fig. 53: Removing Rear Pinion Bearing
Courtesy of CHRYSLER GROUP, LLC

14. Remove rear pinion bearing with Puller (special tool #C-293-PA, Puller, Press) (1) and Adapters (special tool #8879, Adapters, Puller) (4).
15. Remove pinion depth shim from the pinion gear shaft and record thickness of the shims.
16. Remove front pinion bearing cup from the housing with a punch and hammer and discard cup.
17. Remove rear pinion bearing cup from the housing with a punch and hammer, if bearing is replaced.

INSTALLATION

INSTALLATION

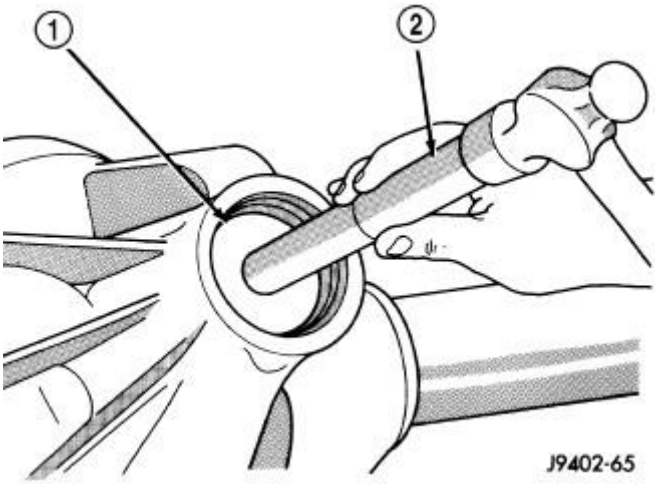

Fig. 54: Installing Front Pinion Bearing Cup
Courtesy of CHRYSLER GROUP, LLC

1. Install front pinion bearing cup with Installer (special tool #D-146, Installer, Bearing Cup) (1) and Handle (special tool #C-4171, Driver Handle, Universal) (2).

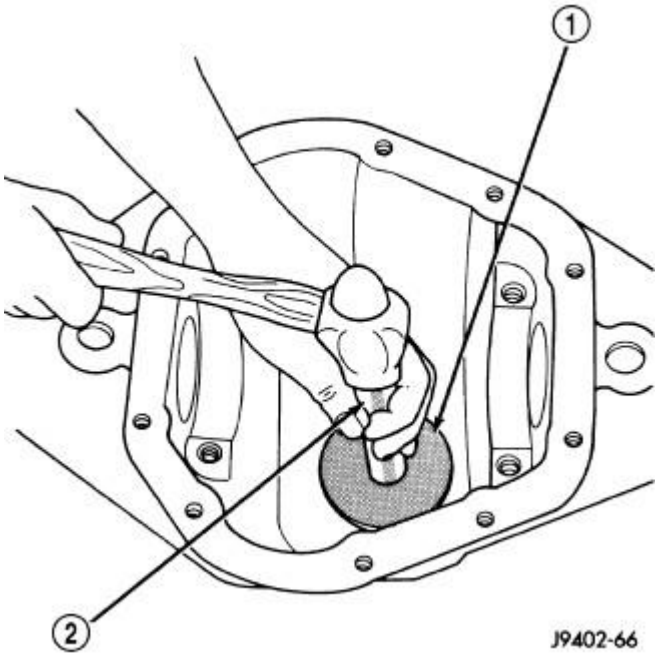

Fig. 55: Installing Rear Pinion Bearing Cup
Courtesy of CHRYSLER GROUP, LLC

2. Install rear pinion bearing cup with Installer (special tool #8886, Installer, Bearing Cup) (1) and Handle (special tool #C-4171, Driver Handle, Universal) (2), if bearing is replaced.

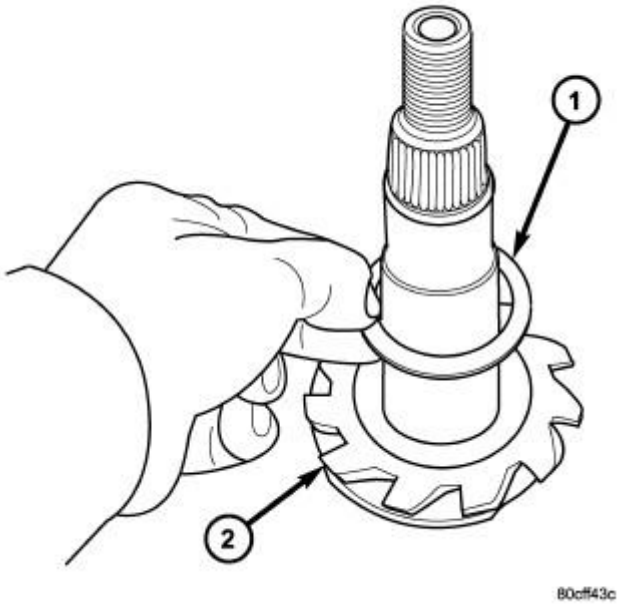

Fig. 56: Pinion Depth Shim
Courtesy of CHRYSLER GROUP, LLC

3. Install pinion depth shim (1) on the pinion gear (2) shaft.

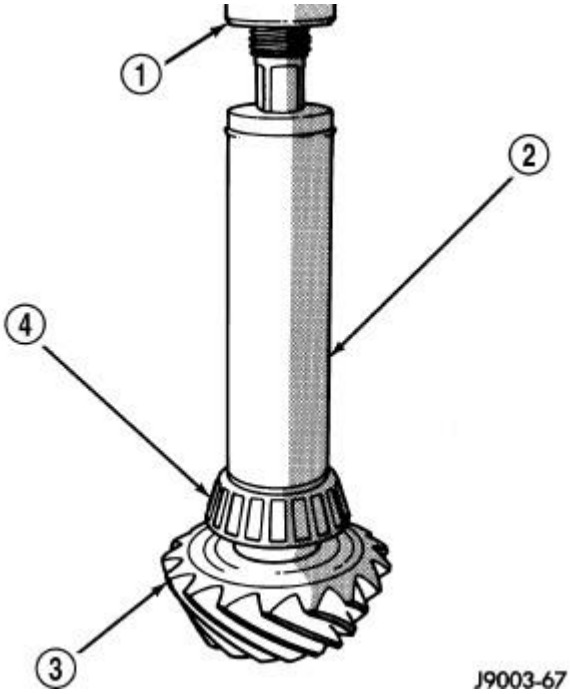

Fig. 57: Installing Rear Pinion Bearing
Courtesy of CHRYSLER GROUP, LLC

4. Install rear pinion bearing (4) with Installer (special tool #C-3095-A, Installer, Bearing) (2) and a press

(1).

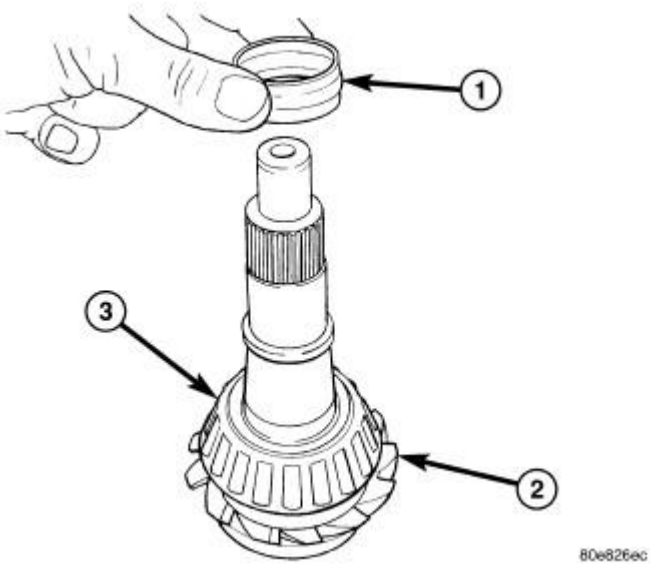

Fig. 58: Collapsible Spacer
Courtesy of CHRYSLER GROUP, LLC

5. Install **new** collapsible spacer (1) on pinion gear (2).
6. Lubricate pinion and bearings (3).

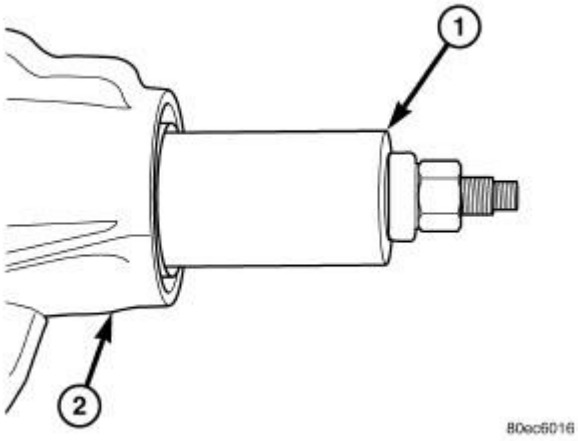

Fig. 59: Installing Pinion Into Housing
Courtesy of CHRYSLER GROUP, LLC

7. Install pinion in housing (2) and place front pinion bearing on pinion shaft. Draw pinion shaft into the front bearing with Installer (special tool #8982, Installer, Pinion) (1).

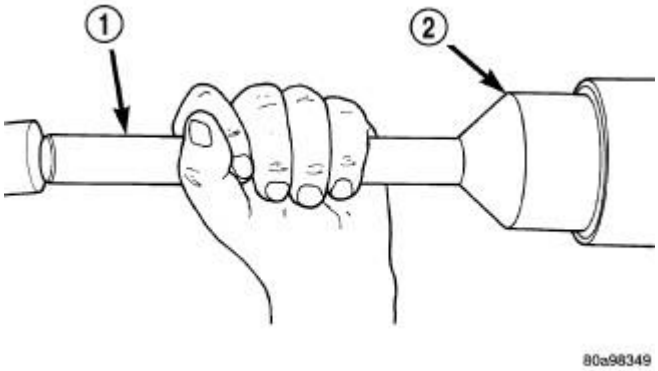

Fig. 60: Installing Pinion Seal
Courtesy of CHRYSLER GROUP, LLC

8. Install **new** pinion seal with Installer (special tool #8882, Installer, Pinion Seal) (2) and Handle (special tool #C-4171, Driver Handle, Universal) (1).
9. Apply a light coat of teflon sealant to the pinion flange splines.
10. Hold pinion and lightly tap the pinion flange onto the pinion shaft, until a few threads are showing.
11. Install pinion flange washer and **new** pinion nut.
12. Hold pinion flange with Flange Wrench (special tool #8979, Wrench, Pinion Flange) and tighten pinion nut until end play is eliminated.

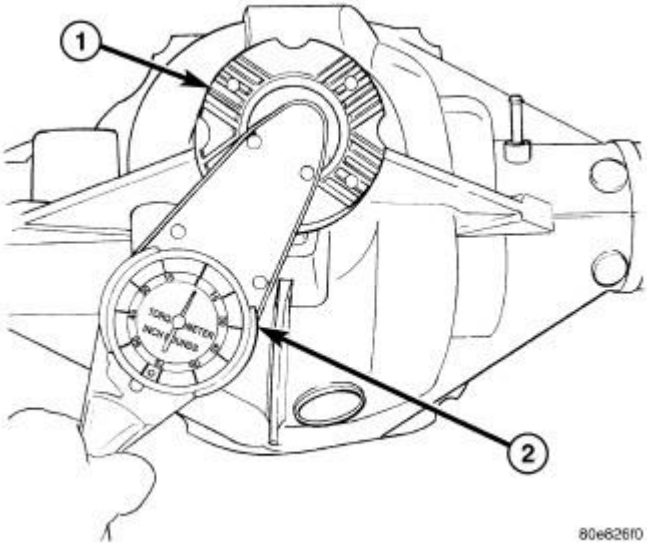

Fig. 61: Measuring Pinion Torque To Rotate
Courtesy of CHRYSLER GROUP, LLC

13. Rotate pinion several times to seat pinion bearings.
14. Measure Pinion Torque To Rotate (1) with an inch pound torque wrench (2). Tighten pinion nut in 6.8 N.m (5 ft. lbs.) increments until pinion torque to rotate is reached.

Pinion Torque To Rotate is:

- **New Pinion Bearings:** 1.7 - 2.8 N.m (15 - 25 in. lbs.)
- **Original Pinion Bearings:** 1.1 - 2.2 N.m (10 - 20 in. lbs.)

15. Rotate pinion several times then verify pinion torque to rotate again.
16. Position ring gear on differential case and start two **new** ring gear bolts.
17. Install remaining **new** ring gear bolts and tighten them alternately to seat the ring gear. Torque ring gear bolts to 140 N.m (103 ft. lbs.).
18. Install differential in housing.
19. Measure Total Torque to Rotate (TTTR) with an inch pound torque wrench.

    Total Torque to Rotate is:

    - **New Bearings:** 3.4 - 5.6 N.m (30 - 50 in. lbs.)
    - **Original Bearings:** 2.8 - 5.1 N.m (25 - 45 in. lbs.)

    NOTE: **If TTTR is to high, back off adjusters evenly on both sides slightly and check TTTR again. If TTTR is to low, tighten adjusters evenly on both sides slightly and check TTTR again.**

20. Verify ring gear backlash and gear contact pattern.

SEAL, AXLE DRIVE SHAFT

REMOVAL

REMOVAL

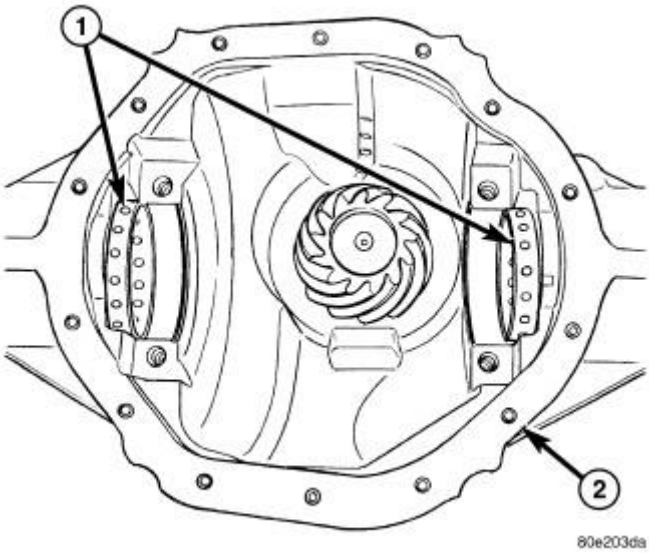

Fig. 62: Differential Bearing Adjusters
Courtesy of CHRYSLER GROUP, LLC

1. Remove hub bearings and axle shafts.
2. Remove differential from differential housing (2).
3. Remove differential bearing adjusters (1).

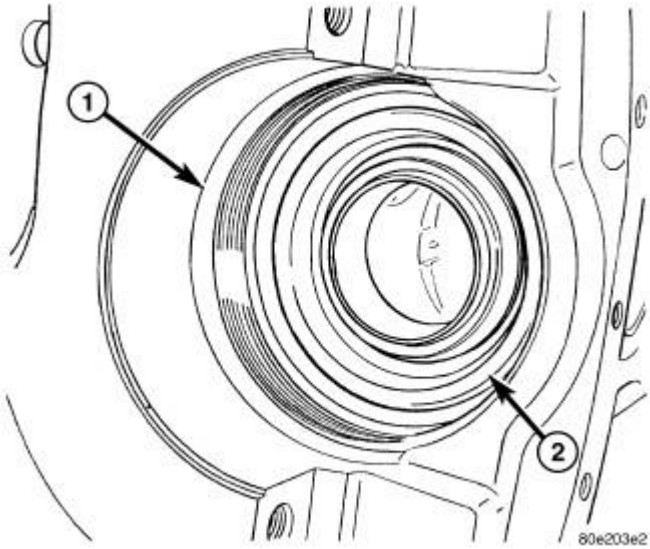

Fig. 63: Axle Shaft Seal
Courtesy of CHRYSLER GROUP, LLC

4. Remove axle seals (2) located behind adjusters with Receiver (special tool #8498, Receiver, Axle Shaft Seal) and Extractor (special tool #6310, Remover, Bearing/Seal).

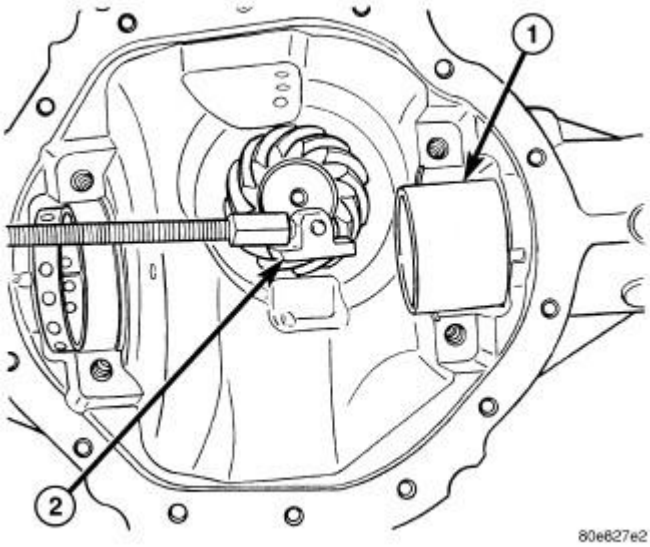

Fig. 64: Seal Receiver
Courtesy of CHRYSLER GROUP, LLC

5. Install Receiver (special tool #8498, Receiver, Axle Shaft Seal) (1) into the adjuster bore.
6. Install Extractor Rod (special tool #6310, Remover, Bearing/Seal) with Extractor Foot (special tool #6310-9, Head) (2) through the receiver and axle seal.

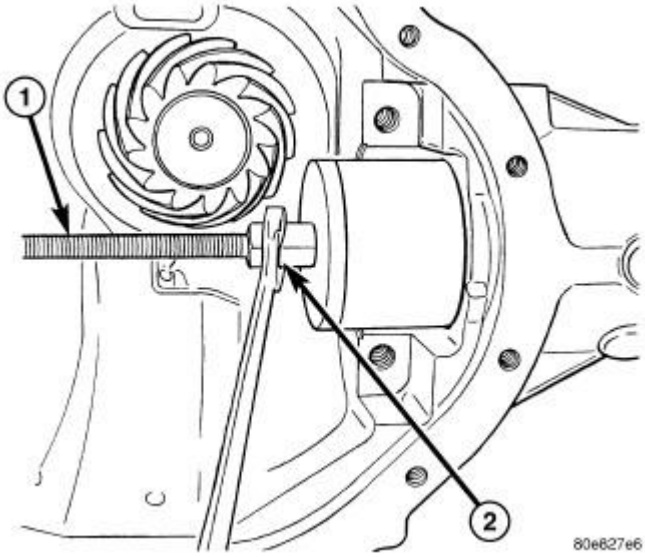

Fig. 65: Pulling Seal Into Receiver
Courtesy of CHRYSLER GROUP, LLC

7. Install Extractor Plate (special tool #6310-2, Disc) and Nut (special tool #6310-7, Nut) (2) on the extractor rod (1).
8. Tighten nut (2) on extractor rod (1) to pull seal into the receiver.

INSTALLATION

INSTALLATION

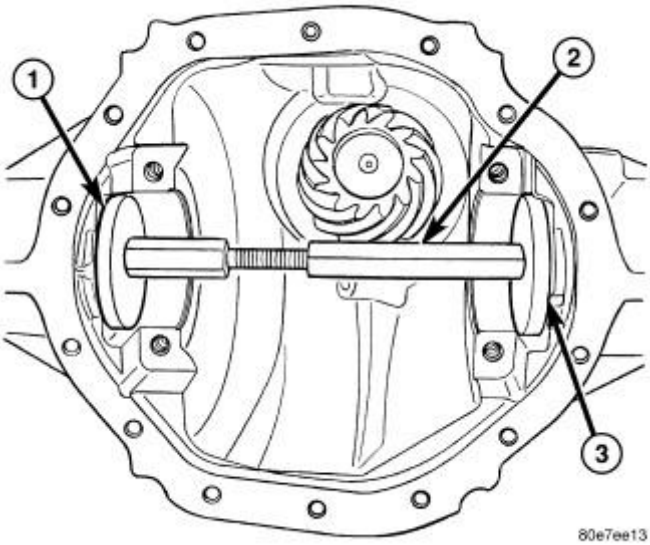

Fig. 66: Installing Axle Seal
Courtesy of CHRYSLER GROUP, LLC

1. Install axle seal on Installer Cups (special tool #8885-2, Assembly, Screw) (1) (3) and position cups with seals into the housing.

   NOTE: Seals are installed with the axle guide facing outward.

2. Install Turnbuckle (special tool #8885-1, Installer Seal Plate) (2) into installer cups and expand the turnbuckle until the seals bottom out in the housing.

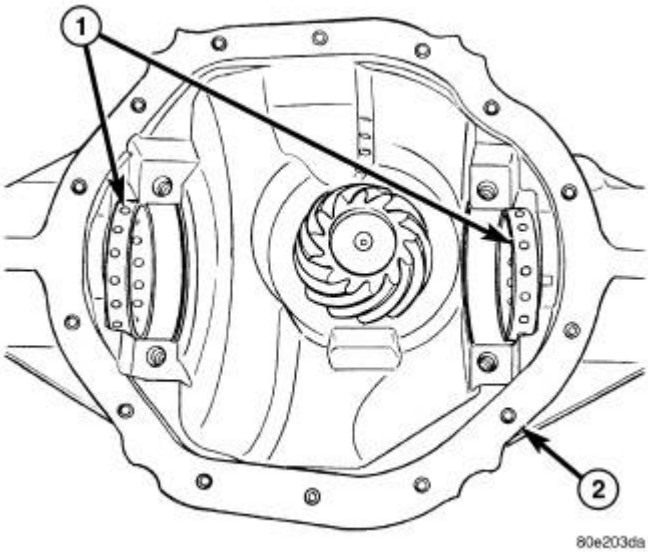

Fig. 67: Differential Bearing Adjusters
Courtesy of CHRYSLER GROUP, LLC

3. Install adjuster (1) into the differential housing (2).
4. Install differential in housing.
5. Install axle shaft and hub bearings.

SEAL, DRIVE PINION

REMOVAL

REMOVAL

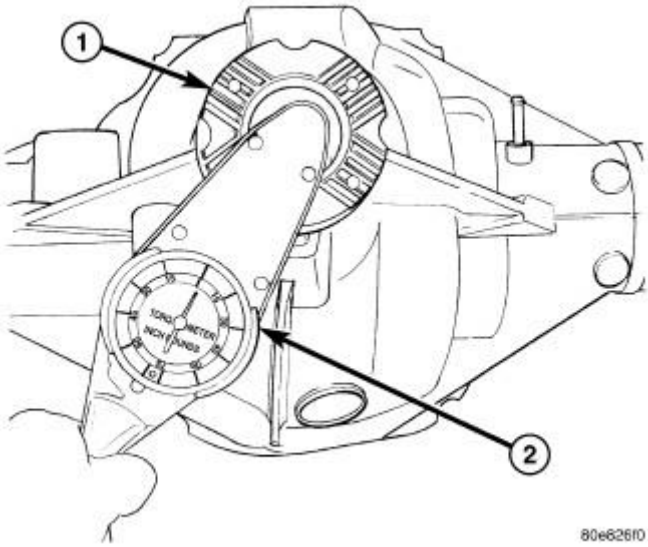

Fig. 68: Measuring Pinion Torque To Rotate
Courtesy of CHRYSLER GROUP, LLC

1. Mark propeller shaft and pinion flange (1) for installation reference.
2. Remove propeller shaft.
3. Remove hub bearings and axle shafts.
4. Rotate pinion gear three or four times.
5. Record pinion torque to rotate (1) with an inch pound torque wrench (2) for installation reference.

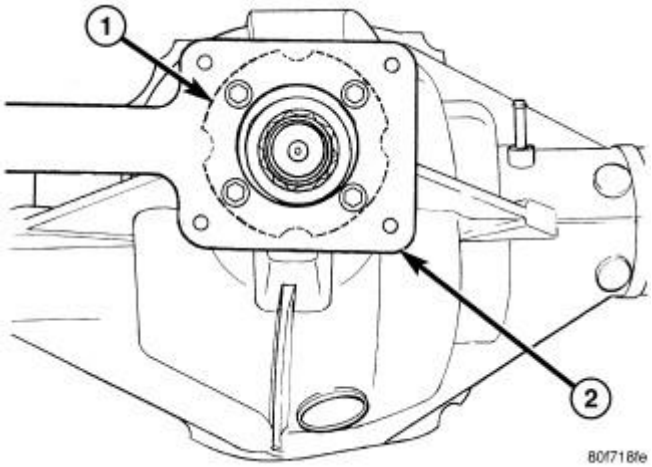

Fig. 69: Flange Wrench
Courtesy of CHRYSLER GROUP, LLC

6. Hold pinion flange (1) with Flange Wrench (special tool #8979, Wrench, Pinion Flange) (2) and remove pinion flange nut and washer.

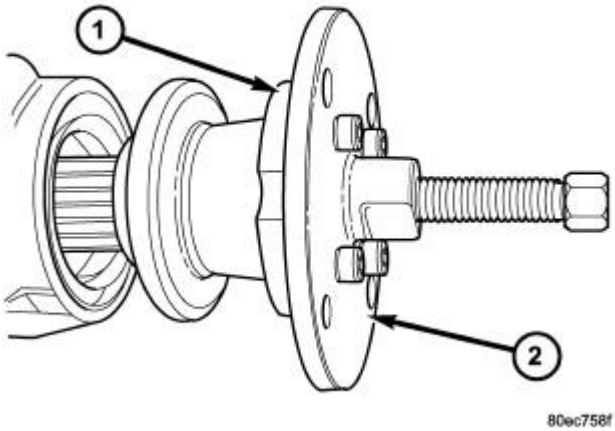

Fig. 70: Pinion Flange Puller
Courtesy of CHRYSLER GROUP, LLC

7. Mark a line across the pinion shaft and flange for installation reference.
8. Remove pinion flange (1) with Pinion Flange Puller (special tool #8992, Remover, Pinion Flange) (2).
9. Remove pinion seal with a seal puller.

INSTALLATION

INSTALLATION

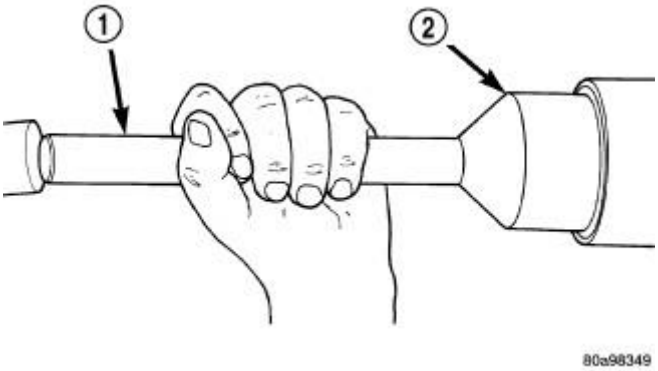

Fig. 71: Installing Pinion Seal
Courtesy of CHRYSLER GROUP, LLC

1. Install **new** pinion seal with Installer (special tool #8882, Installer, Pinion Seal) (2) and Handle (special tool #C-4171, Driver Handle, Universal) (1).
2. Apply a light coat of teflon thread sealant, to pinion flange splines.

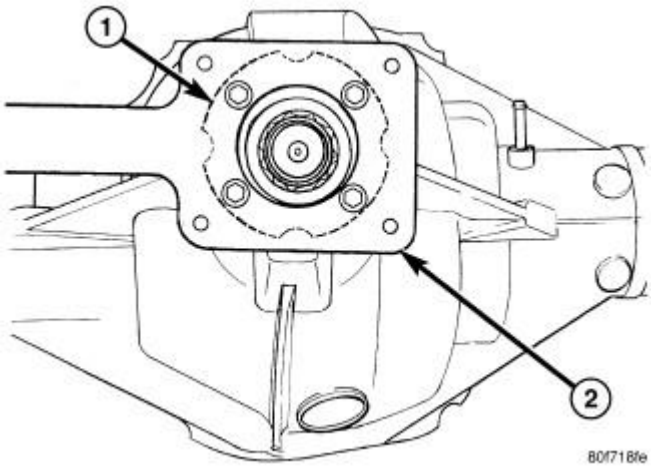

Fig. 72: Flange Wrench
Courtesy of CHRYSLER GROUP, LLC

3. Install flange on the pinion shaft with the reference marks aligned.
4. Lightly tap pinion flange onto the pinion, until a few threads are showing.
5. Install flange washer and **new** pinion nut.
6. Hold flange (1) with Flange Wrench (special tool #8979, Wrench, Pinion Flange) (2) and tighten pinion nut until pinion end play is taken up.

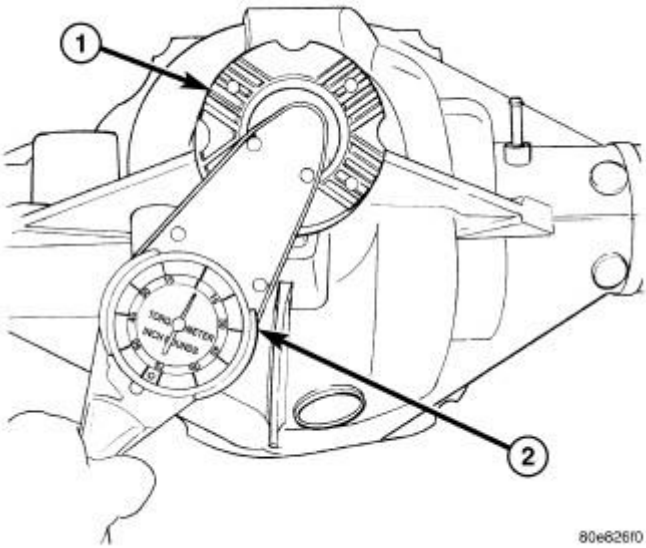

Fig. 73: Measuring Pinion Torque To Rotate
Courtesy of CHRYSLER GROUP, LLC

7. Rotate pinion flange (1) several times to seat bearings.
8. Measure pinion torque to rotate (1) with an inch pound torque wrench (2). Pinion torque to rotate should be equal to recorded reading plus an additional 0.40-0.57 N.m (3-5 in. lbs.).
9. If torque to rotating is low, tighten the pinion nut in 6.8 N.m (5 ft. lbs.) increments until pinion torque to rotate is achieved.
10. Rotate pinion several times then verify pinion torque to rotate again.
11. Install axle shafts and hub bearings.
12. Install propeller shaft with reference marks aligned.

SHAFT, AXLE

REMOVAL

REMOVAL

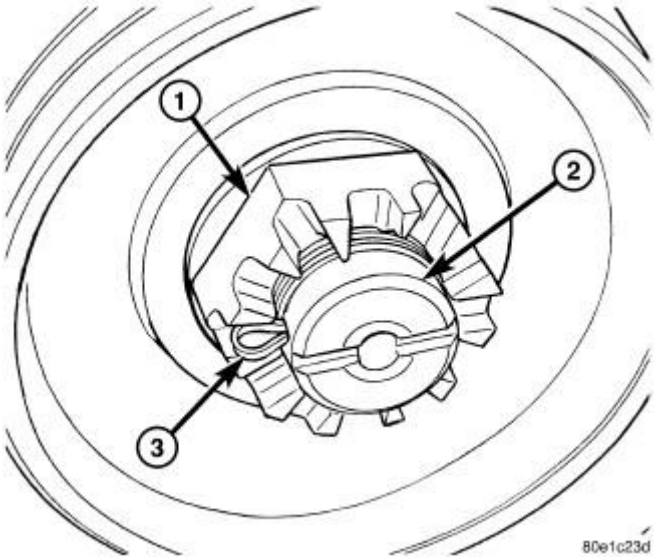

Fig. 74: Axle Shaft, Cotter Pin, Hub Nut & Washer
Courtesy of CHRYSLER GROUP, LLC

1. With the vehicle in neutral, position vehicle on hoist.
2. Remove brake caliper, rotor and ABS wheel speed sensor if equipped.
3. Remove axle shaft (2) cotter pin (3), hub nut (1) and washer.

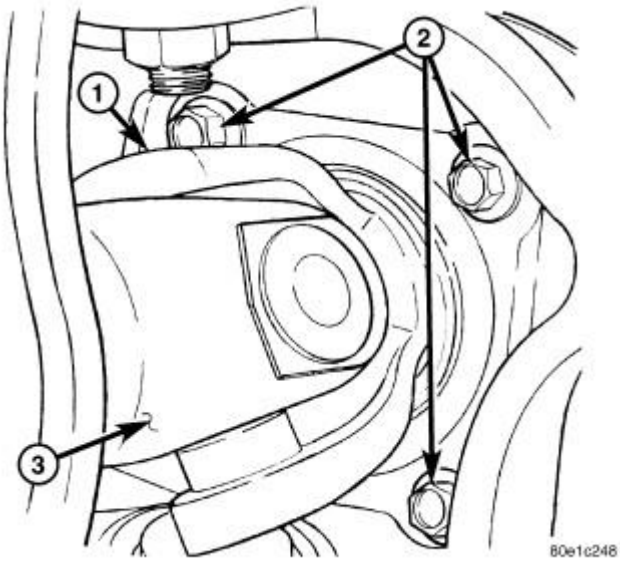

Fig. 75: Hub Bearing Bolts
Courtesy of CHRYSLER GROUP, LLC

4. Remove four hub bearing bolts (2) from the back of the steering knuckle.
5. Remove hub bearing from the steering knuckle.

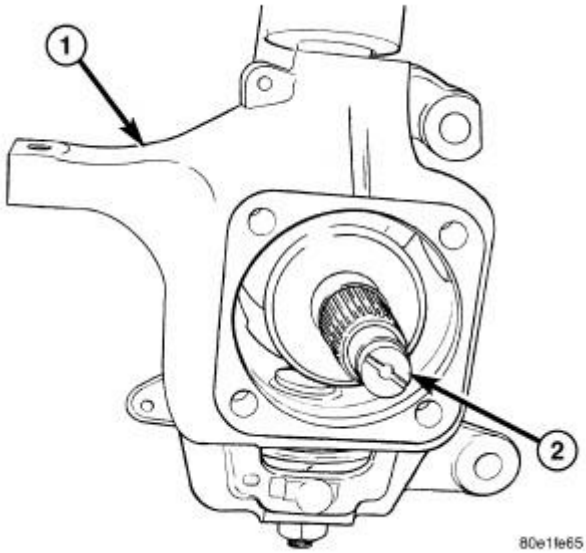

Fig. 76: Axle Shaft & Steering Knuckle
Courtesy of CHRYSLER GROUP, LLC

6. Remove axle shaft (2) from steering knuckle (1) and axle housing.

INSTALLATION

INSTALLATION

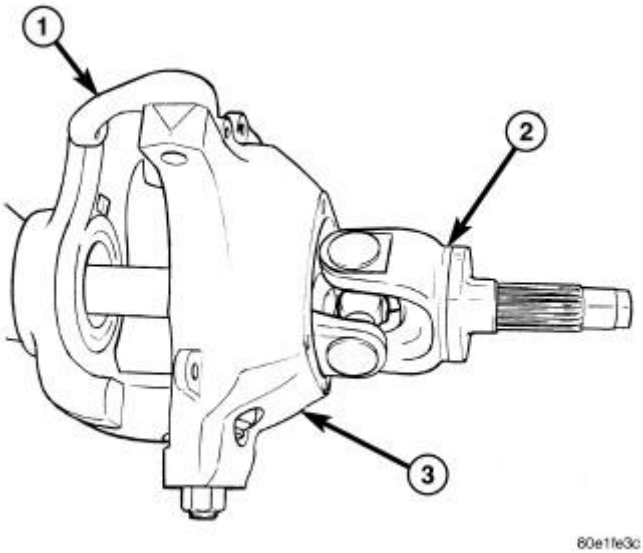

Fig. 77: Axle Shaft
Courtesy of CHRYSLER GROUP, LLC

1. Clean axle shaft and apply a thin film of grease to the shaft splines and hub bore.

2. Install axle shaft (2) through the steering knuckle (3) and into the differential side gears.

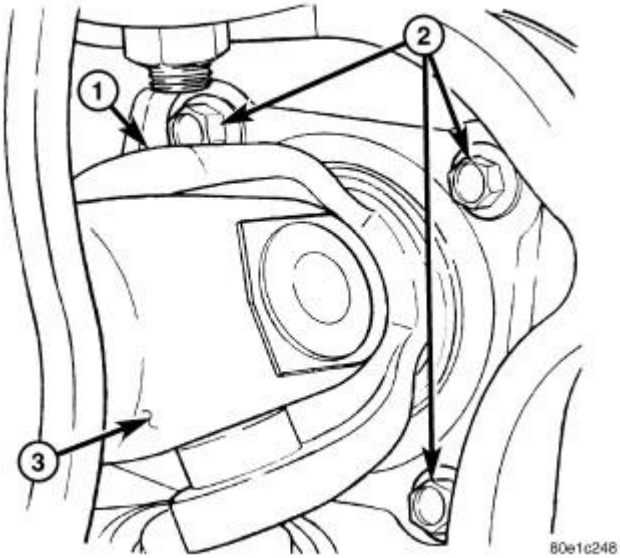

Fig. 78: Hub Bearing Bolts
Courtesy of CHRYSLER GROUP, LLC

3. Install hub bearing in the knuckle.
4. Install hub bearing bolts (2) and tighten to 202 N.m (149 ft. lbs.).

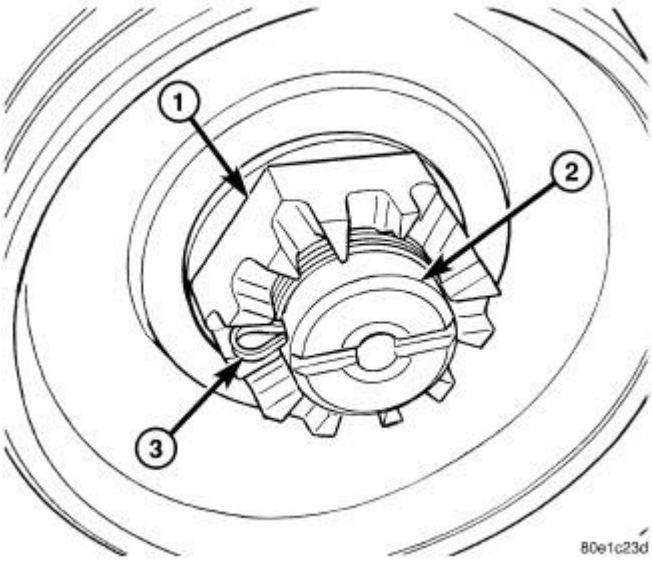

Fig. 79: Axle Shaft, Cotter Pin, Hub Nut & Washer
Courtesy of CHRYSLER GROUP, LLC

5. Install ABS wheel speed sensor, brake rotor and caliper.
6. Install axle (2) washer and nut (1). Tighten axle nut to 179 N.m (132 ft. lbs.).

7. Rotate axle several 5 to 10 times to seat the wheel bearing.
8. Tighten axle nut (1) to final torque of 356 N.m (263 ft. lbs.).
9. Align nut to next cotter pin hole and install new cotter pin (3).

U-JOINT, SINGLE CARDAN

REMOVAL

REMOVAL

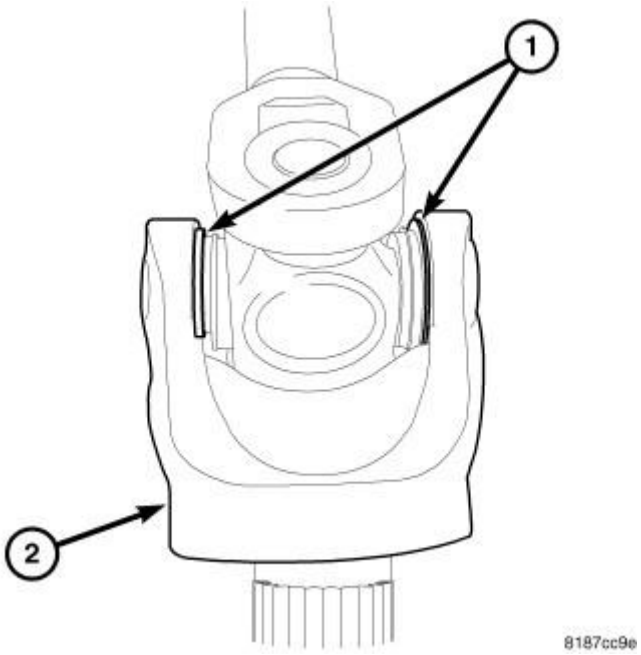

Fig. 80: Stub Shaft Snap Rings
Courtesy of CHRYSLER GROUP, LLC

NOTE: Saturate bearing caps with penetrating oil prior to removal.

1. Remove axle shaft.
2. Remove bearing cap snap rings (1) from stub shaft yoke (2) bearing caps.

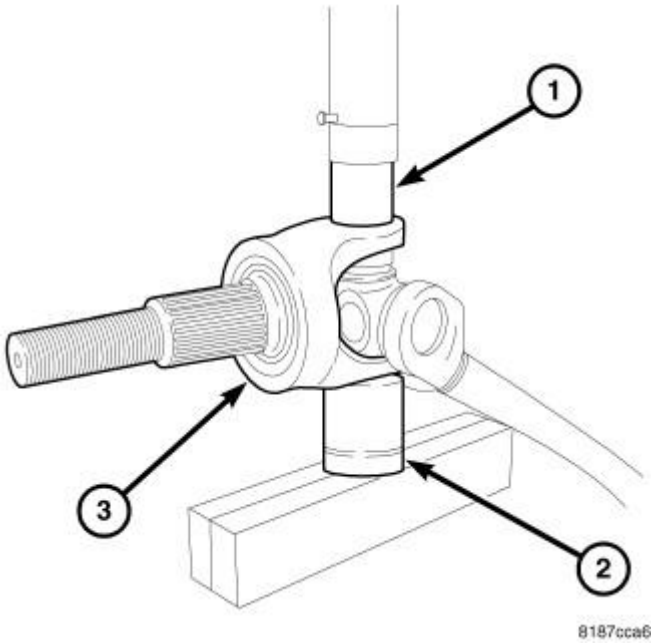

Fig. 81: Press Stub Shaft 1st Cup
Courtesy of CHRYSLER GROUP, LLC

3. Position receiver/socket (2) and driver/socket (1) on stub shaft yoke (3) in press. Press bearing cup into receiver/socket (2).

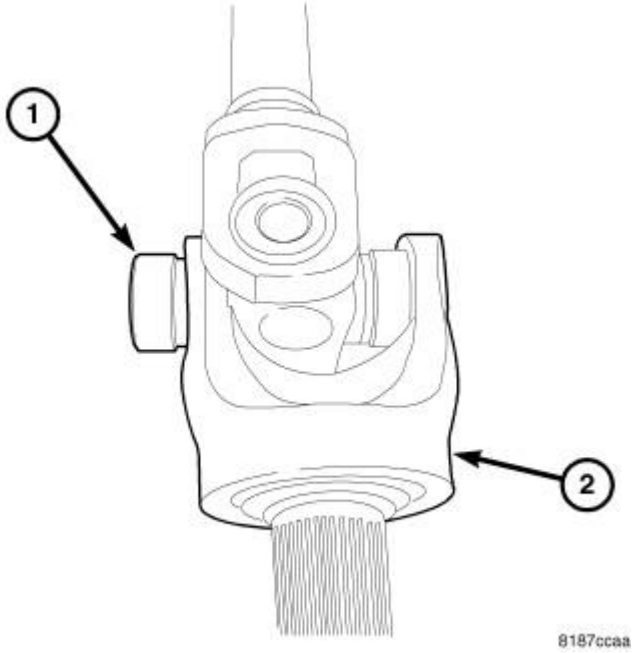

Fig. 82: Stub Shaft 1st Cup
Courtesy of CHRYSLER GROUP, LLC

4. Remove bearing cap (1) from stub shaft yoke (2).

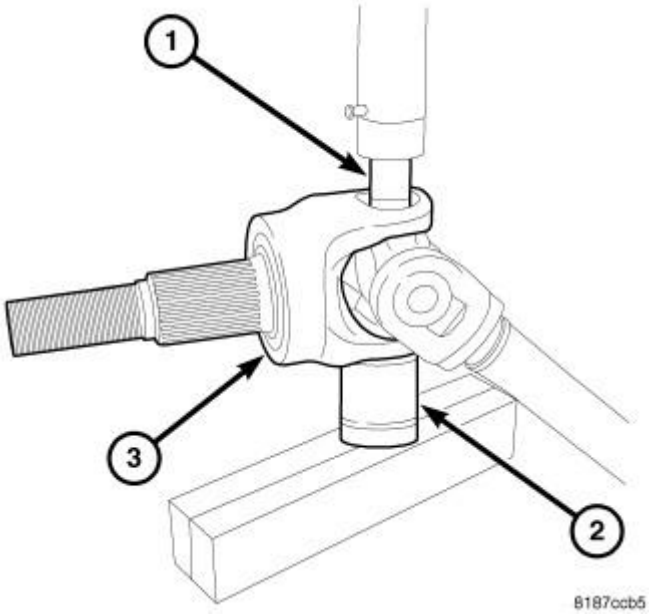

Fig. 83: Press Stub Shaft 2nd Cup
Courtesy of CHRYSLER GROUP, LLC

5. Position receiver/socket (2) under stub shaft yoke (3) remaining bearing cup and driver/socket (1) on U-joint cross in press. Press bearing cup into receiver/socket (2)

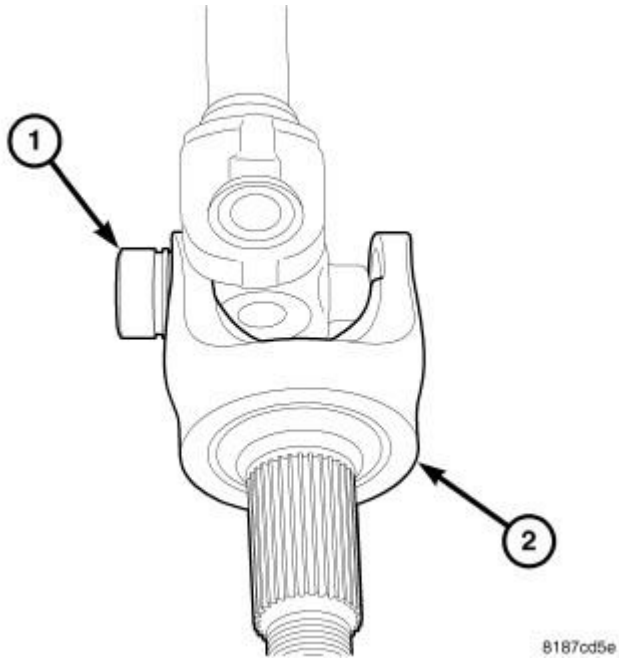

Fig. 84: Stub Shaft 2nd Cup
Courtesy of CHRYSLER GROUP, LLC

6. Remove bearing cap (1) from stub shaft yoke (2). Then remove stub shaft from U-joint cross.

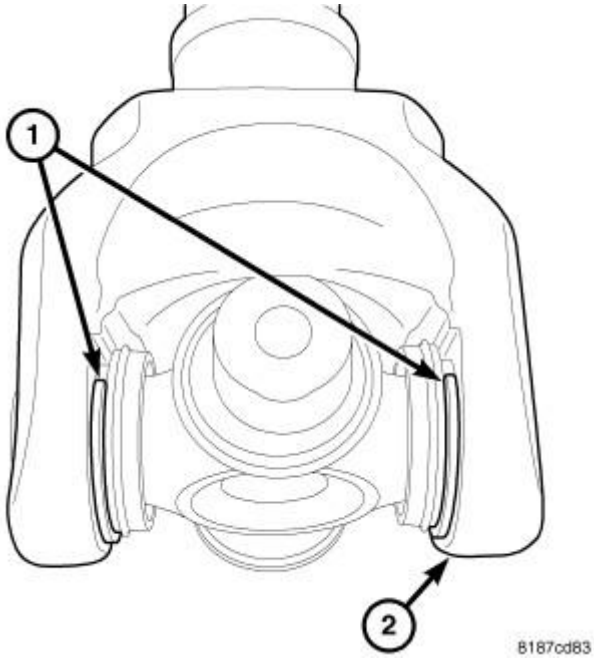

Fig. 85: Shaft Snap Rings
Courtesy of CHRYSLER GROUP, LLC

7. Remove snap rings (1) from shaft yoke (2) bearing caps.

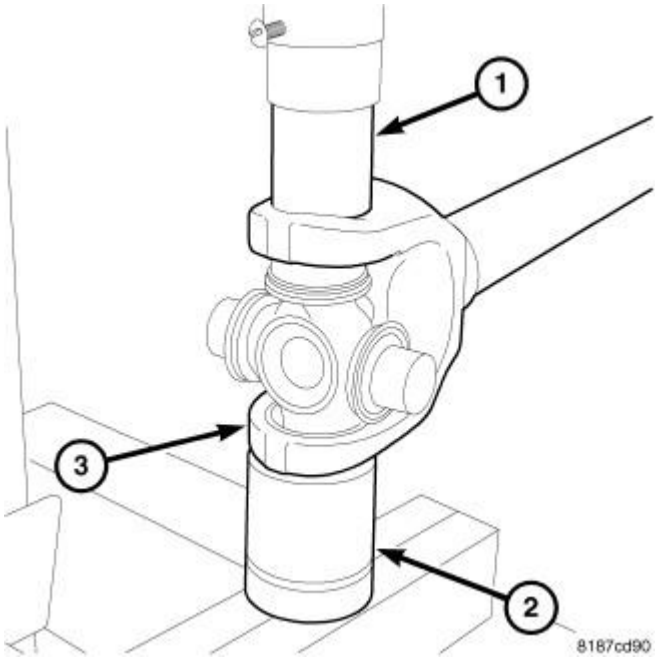

Fig. 86: Press Shaft 1st Cup
Courtesy of CHRYSLER GROUP, LLC

8. Position receiver/socket (2) and driver/socket (1) on shaft yoke (3) in press. Press bearing cup into receiver/socket (2).

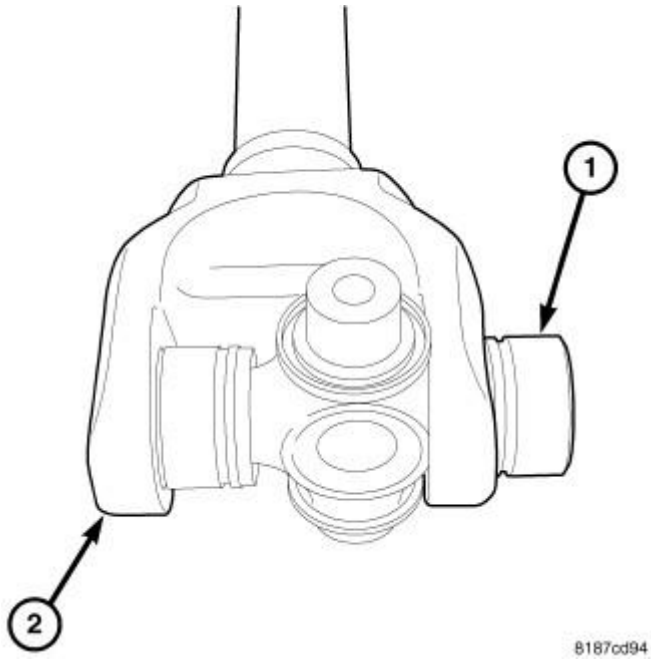

Fig. 87: Shaft 1st Cup
Courtesy of CHRYSLER GROUP, LLC

9. Remove bearing cap (1) from shaft yoke (2).

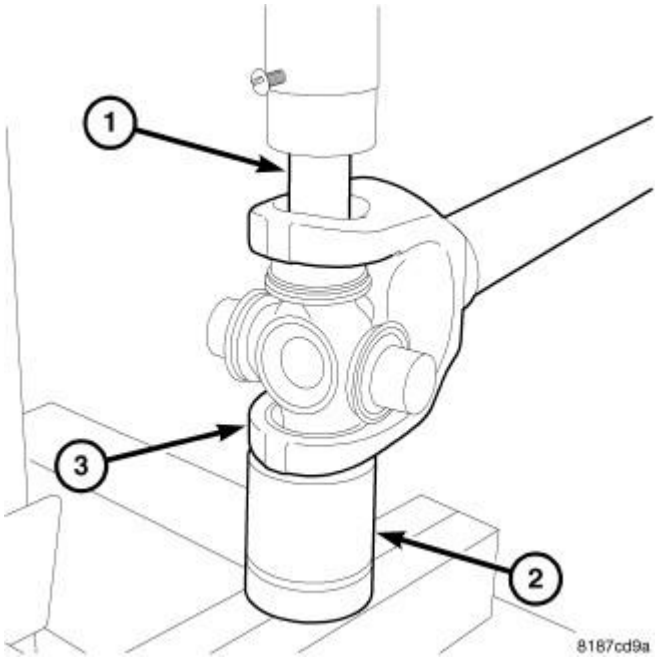

Fig. 88: Press Shaft 2nd Cup
Courtesy of CHRYSLER GROUP, LLC

10. Position receiver/socket (2) under shaft yoke (3) remaining bearing cup and driver/socket (1) on U-joint cross in press. Press bearing cup into receiver/socket (2)

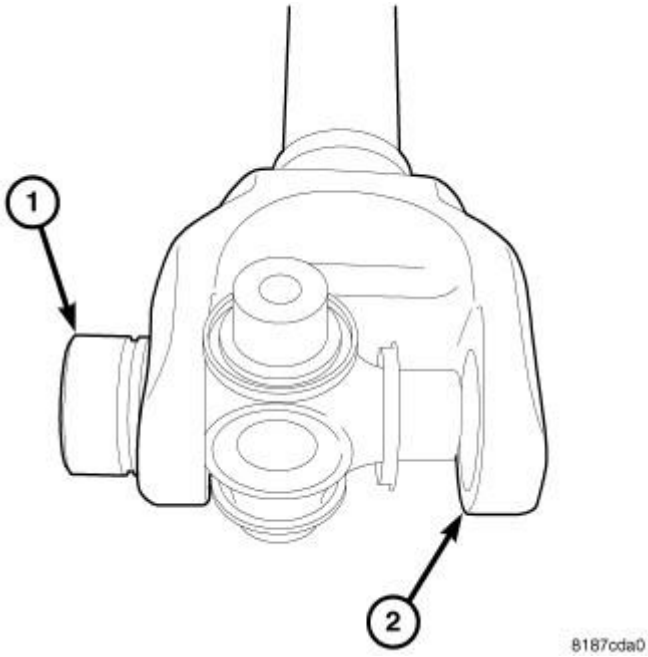

Fig. 89: Shaft 2nd Cup
Courtesy of CHRYSLER GROUP, LLC

11. Remove bearing cap (1) from shaft yoke (2). Then remove U-joint cross from shaft yoke.

INSTALLATION

INSTALLATION

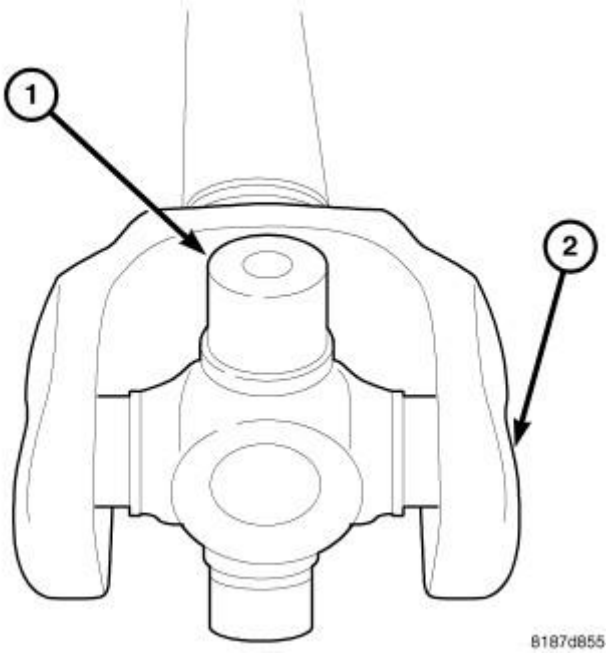

Fig. 90: U-Joint Cross
Courtesy of CHRYSLER GROUP, LLC

CAUTION: Keep cross and bearing cap straight during installation. Failure to follow these instruction will result in damage.

1. Pack bearing caps 1/3 full of wheel bearing lubricant. Apply extreme pressure (EP), lithium-base lubricant to aid in installation.
2. Position cross (1) in the shaft yoke (2).

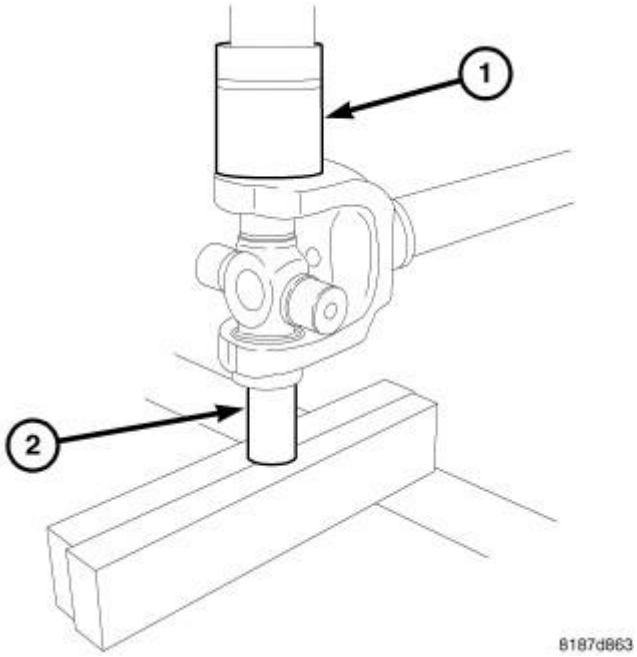

Fig. 91: Press Shaft 1st Cup
Courtesy of CHRYSLER GROUP, LLC

3. Tap bearing cap into the yoke bores far enough to position cross.
4. Position receiver/socket (1) on shaft yoke and driver/socket (2) on bearing cap in press.

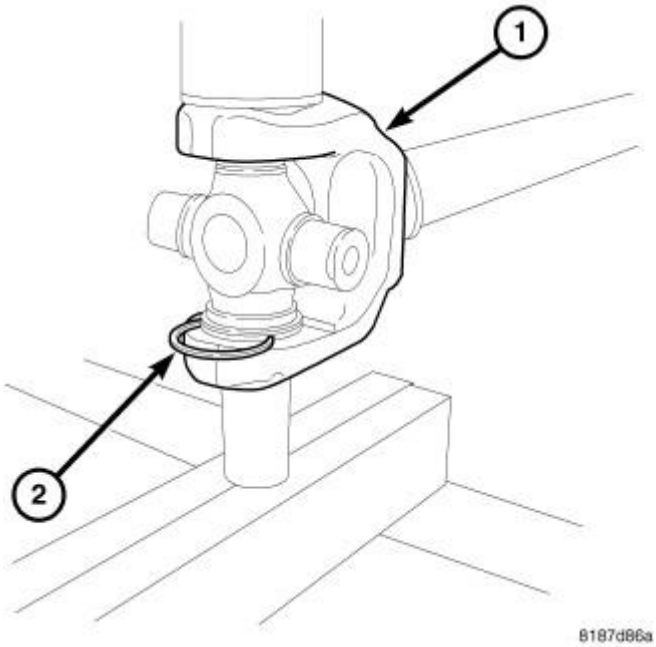

Fig. 92: Shaft 1st Snap Ring
Courtesy of CHRYSLER GROUP, LLC

5. Press bearing cap into shaft yoke (1) until bearing cap snap ring groove is visible and install snap ring (2).

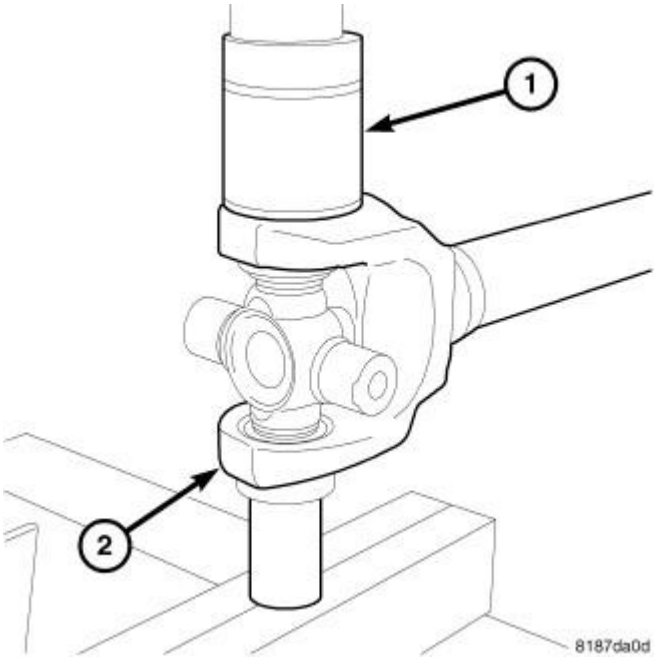

Fig. 93: Press Shaft 2nd Cup
Courtesy of CHRYSLER GROUP, LLC

6. Position receiver/socket (1) on shaft yoke and driver/socket (2) on bearing cap in press.

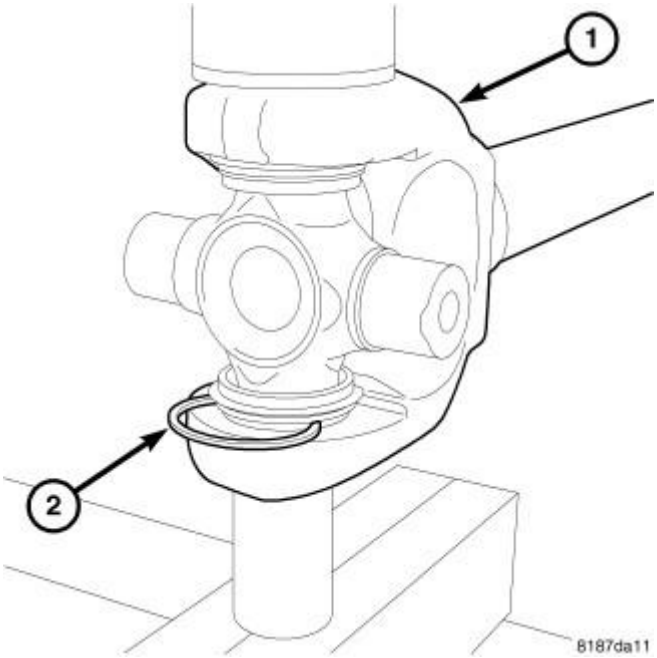

Fig. 94: Shaft 2nd Snap Ring
Courtesy of CHRYSLER GROUP, LLC

7. Press bearing cap into shaft yoke (1) until bearing cap snap ring groove is visible and install snap ring (2).

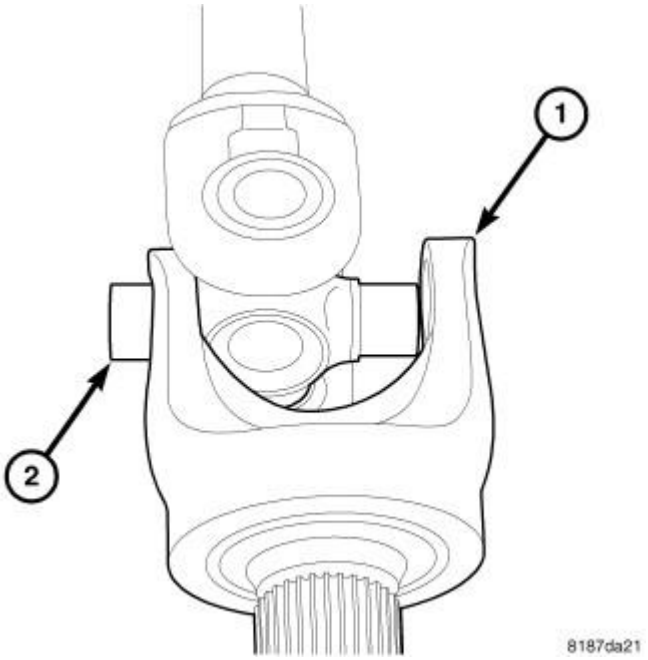

Fig. 95: Stub Shaft On Cross
Courtesy of CHRYSLER GROUP, LLC

8. Install stub shaft yoke (1) on U-joint cross (2).

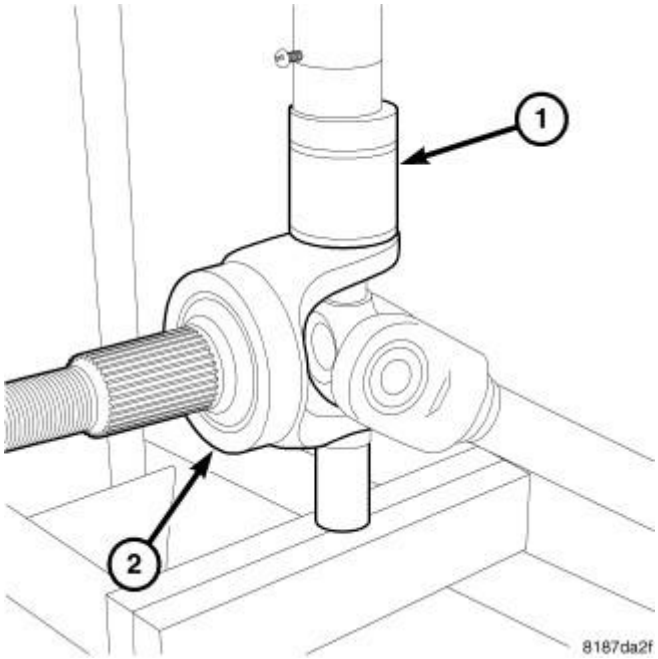

Fig. 96: Press Stub Shaft 1st Cup
Courtesy of CHRYSLER GROUP, LLC

9. Tap fist bearing cap into the stub shaft yoke bore far enough to position cross.
10. Position receiver/socket (1) on shaft yoke and driver/socket (2) on bearing cap in press.

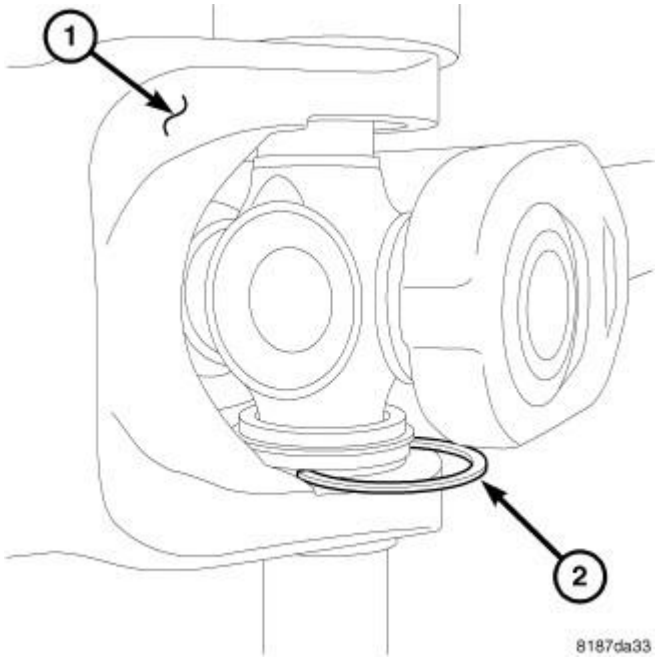

Fig. 97: Stub Shaft 1st Snap Ring
Courtesy of CHRYSLER GROUP, LLC

11. Press bearing cap into stub shaft yoke (1) until bearing cap snap ring groove is visible and install snap ring (2).

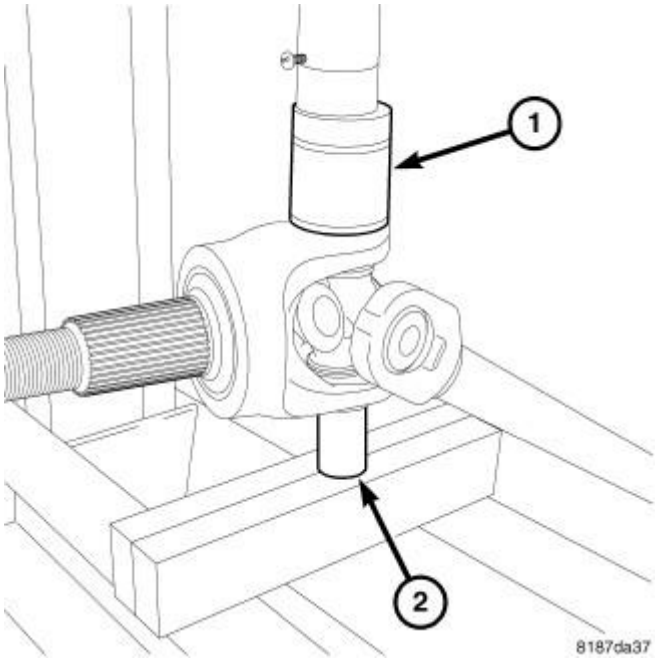

Fig. 98: Stub Shaft 2nd Cup
Courtesy of CHRYSLER GROUP, LLC

12. Position receiver/socket (1) on stub shaft yoke and driver/socket (2) on bearing cap in press.

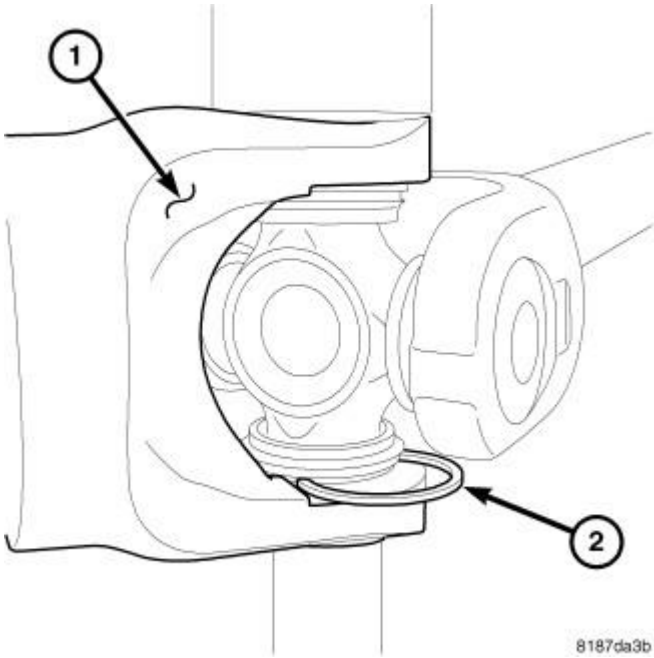

Fig. 99: Stub Shaft 2nd Snap Ring
Courtesy of CHRYSLER GROUP, LLC

13. Press bearing cap into stub shaft yoke (1) until bearing cap snap ring groove is visible and install snap ring (2).
14. Install axle shaft.

DIAGNOSIS AND TESTING

DIAGNOSIS AND TESTING - PROPELLER SHAFT

PROPELLER SHAFT VIBRATION

Out-of-round tires or wheels that are out of balance, will cause a low frequency vibration.

Driveline vibration can also be caused by loose or damaged engine mounts.

Propeller shaft vibration increases with vehicle speed. A vibration that occurs at a specific speed range, is not usually caused by an out of balance propeller shaft. Defective universal joints or an incorrect propeller shaft angle are usually the cause of such a vibration.

DRIVELINE VIBRATION

CONDITION	POSSIBLE CAUSE	CORRECTION
Propeller Shaft Noise	1) Undercoating or other foreign material on shaft.	1) Clean exterior of shaft and wash with solvent.
	2) Loose companion flange bolts.	2) Install new bolts and tighten to proper torque.
	3) Loose or bent U-joint yoke or excessive runout.	3) Install new yoke.
	4) Incorrect driveline angularity.	4) Measure and correct driveline angles.
	5) Rear spring center bolt not in seat.	5) Loosen spring U-bolts and seat center bolt.
	6) Worn U-joint bearings.	6) Install new U-joint.
	7) Propeller shaft damaged or out of balance.	7) Install new propeller shaft.
	8) Broken rear spring.	8) Install new rear spring.
	9) Excessive runout or unbalanced condition.	9) Re-index propeller shaft, test, and evaluate.
	10) Excessive drive pinion gear shaft runout.	10) Re-index propeller shaft and evaluate.
	11) Excessive axle yoke deflection.	11) Inspect and replace yoke if necessary.
	12) Excessive transfer case runout.	12) Inspect and repair as necessary.
Universal Joint Noise	1) Loose companion flange bolts.	1) Install new bolts and tighten to proper torque.
	2) Lack of lubrication.	2) Replace U-joints as necessary.

PROPELLER SHAFT BALANCE

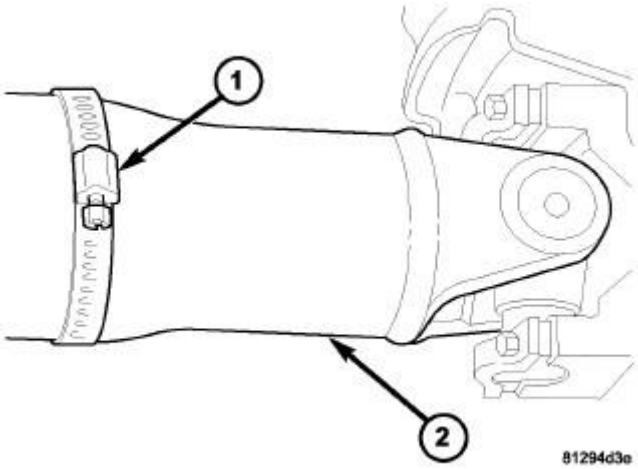

Fig. 1: Screw Clamp & Propeller Shaft
Courtesy of CHRYSLER GROUP, LLC

If propeller shaft is suspected of being out of balance, use the following procedure.

NOTE: Indexing propeller shaft 180 degrees relative to the yoke may eliminate some vibrations.

1. Raise and support vehicle.
2. Clean all foreign material from the propeller shaft and universal joints.
3. Inspect propeller shaft for missing balance weights, broken welds and bent areas. **If propeller shaft is bent, it must be replaced.**
4. Inspect universal joints for wear and properly installed.
5. Check propeller shaft bolt torques.
6. Remove wheels and install lug nuts to retain brake rotors.
7. Mark and number the shaft six inches from the pinion yoke end at four positions 90 degrees apart.
8. Run and accelerate vehicle until vibration occurs. Note the intensity and speed the vibration occurred. Stop the engine.
9. Install a screw clamp at position (1).

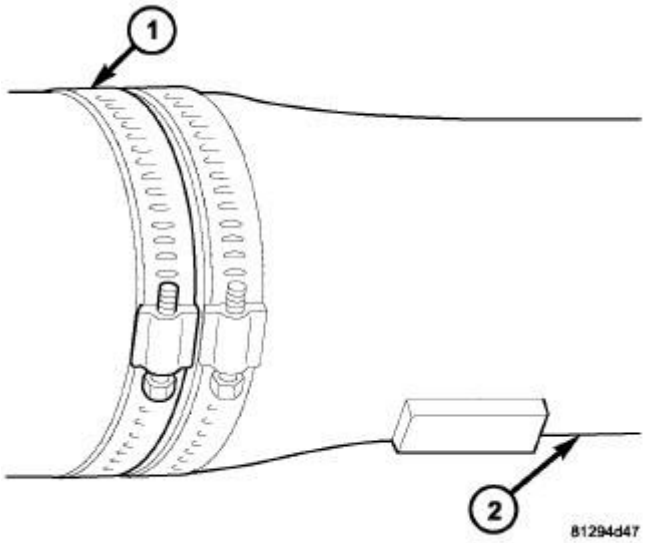

Fig. 2: Separating Clamps
Courtesy of CHRYSLER GROUP, LLC

10. Start engine and check vibration. If there is little or no change move the clamp to the next positions. Repeat the vibration test.

NOTE: **If there is no difference in vibration at this positions, the vibration may not be the propeller shaft.**

11. If vibration decreased, install a second clamp (1) and repeat the test.

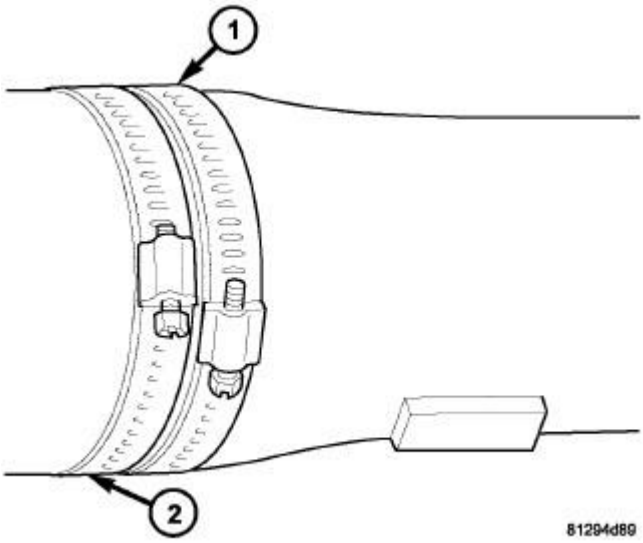

Fig. 3: Stagger Clamps
Courtesy of CHRYSLER GROUP, LLC

12. If additional clamp causes an additional vibration, separate the clamps 1/2 inch (1) above and below the mark. Repeat the vibration test.
13. Increase distance between the clamp screws (1) (2) and repeat test, until the least amount of vibration is noticed. Bend the slack end of the clamps so screws will not loosen.
14. If vibration remains unacceptable, repeat the procedure to the front end of the propeller shaft.
15. Install wheels and lower vehicle.

STANDARD PROCEDURE

PROPELLER SHAFT ANGLE

ONE PIECE PROPELLER SHAFT

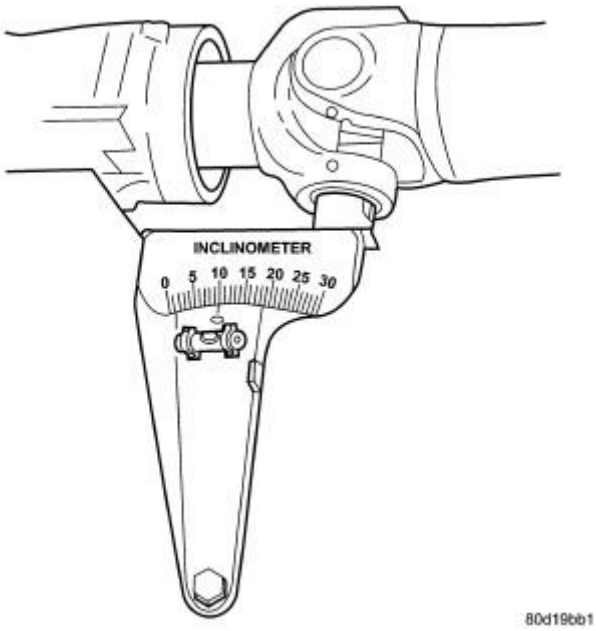

Fig. 4: Identifying Output Angle (A)
Courtesy of CHRYSLER GROUP, LLC

This procedure applies to front and rear propeller shafts.

NOTE: To obtain output angle (A) on the front propeller shaft equipped with a C/V joint, place inclinometer on machined surface of the C/V joint.

1. Raise vehicle and support the axles as level as possible, allowing the wheels and propeller shaft to turn.
2. Remove universal joint snap rings if equipped, so inclinometer base sits flat.
3. Rotate shaft until transmission/transfer case output yoke bearing is facing downward.

NOTE: **Always take measurements from front to rear and on the same side of the vehicle.**

4. Place Inclinometer (special tool #7663, Inclinometer) on yoke bearing cap or pinion flange ring parallel to the shaft. Center bubble in sight glass and record measurement (A).

   This measurement will give you the transmission yoke Output Angle (A).

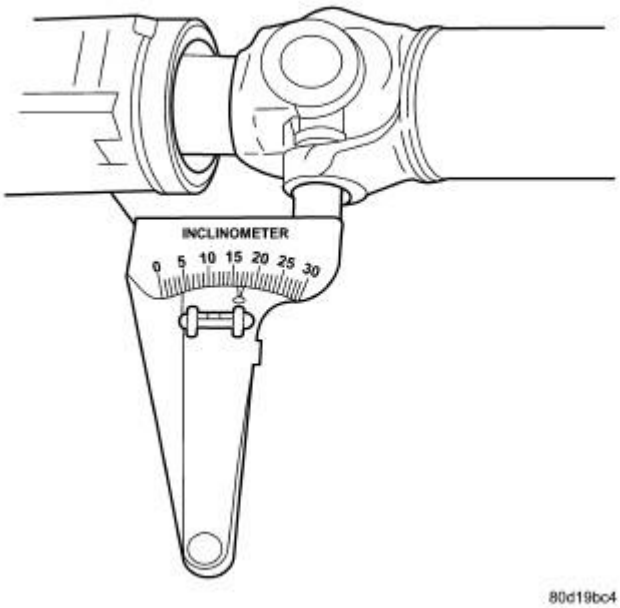

Fig. 5: Propeller Shaft Angle (C)
Courtesy of CHRYSLER GROUP, LLC

5. Rotate propeller shaft 90 degrees and place Inclinometer on yoke bearing parallel to the shaft. Center bubble in sight glass and record measurement. This measurement can also be taken at the rear end of the shaft.

   This measurement will give you the Propeller Shaft Angle (C).

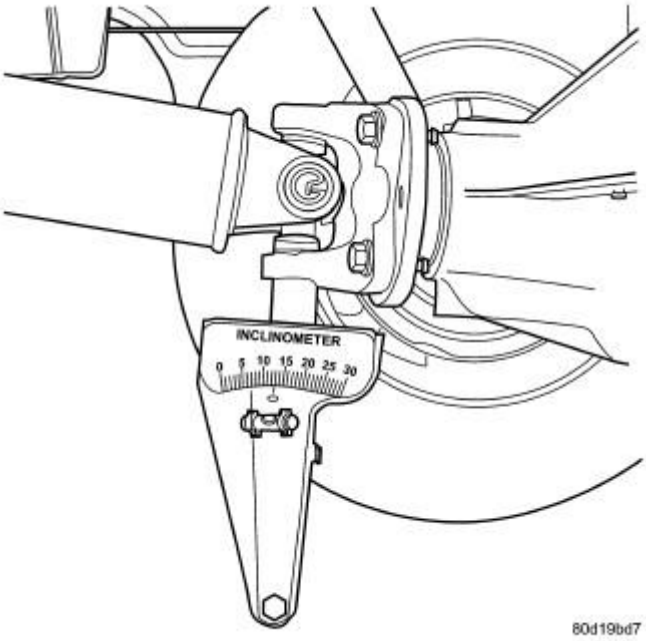

Fig. 6: Companion Flange Input Angle (B)
Courtesy of CHRYSLER GROUP, LLC

6. Rotate propeller shaft 90 degrees and place inclinometer on companion flange yoke bearing parallel to the shaft. Center bubble in sight glass and record measurement.

   This measurement will give you the pinion Companion Flange Input Angle (B).

7. Subtract smaller figure from larger (C minus A) to obtain Transmission/Transfer Case **Output Operating Angle** .
8. Subtract smaller figure from larger (C minus B) to obtain axle **Input Operating Angle** .

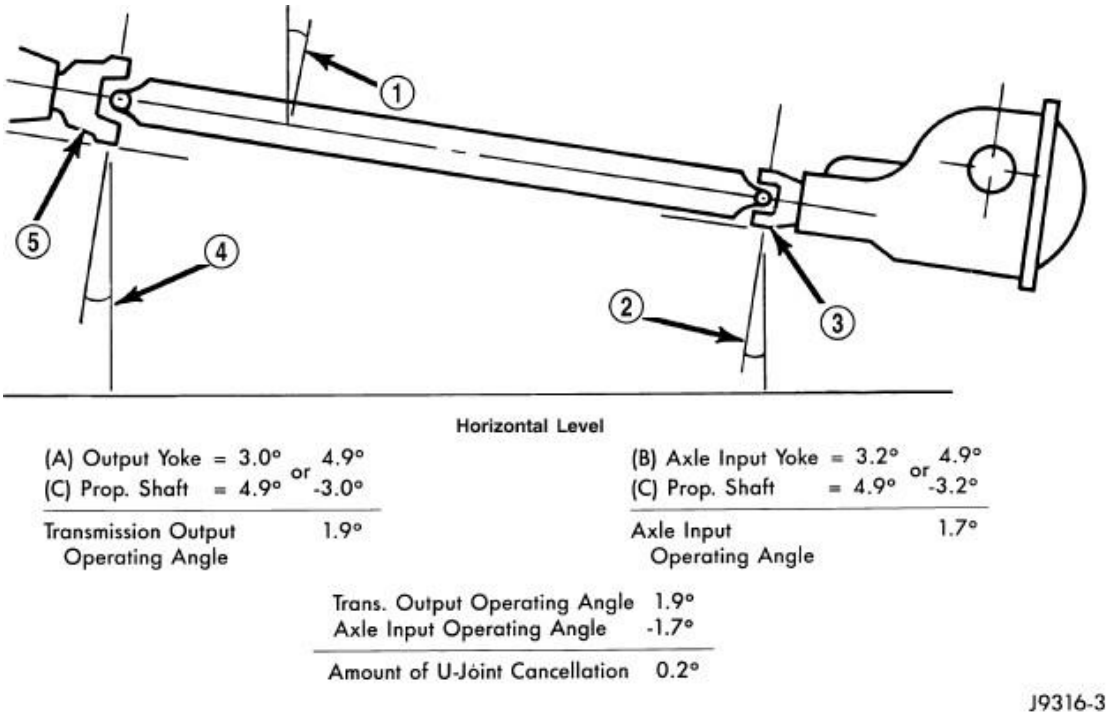

Fig. 7: Universal Joint Angle Example
Courtesy of CHRYSLER GROUP, LLC

Refer to rules below for additional information (example shown in illustration).

RULES

- Good cancellation of U-joint operating angles should be within 1 degree.
- Operating angles should be less than 3 degrees.
- Operating angles less than 10 degrees for double cardan U-joint.
- At least 1/2 of one degree continuous operating propeller shaft angle.

TWO PIECE PROPELLER SHAFT

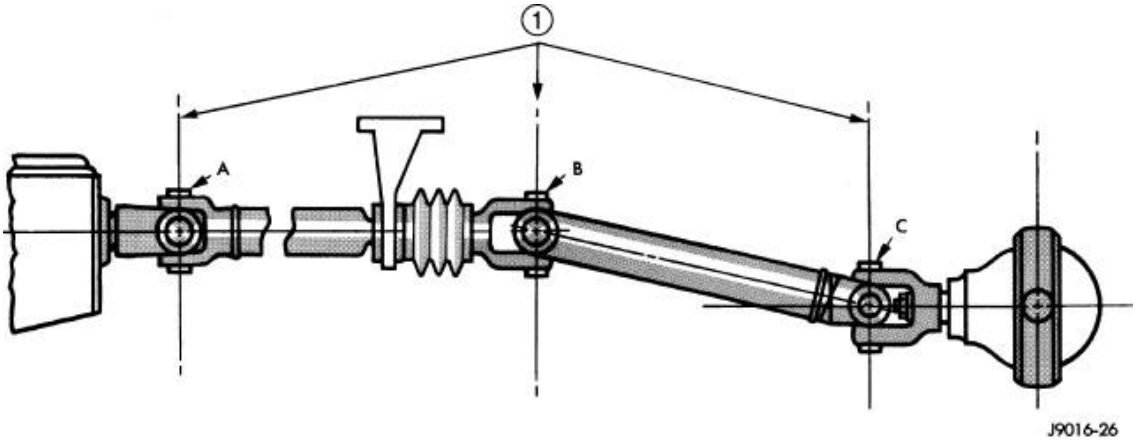

Fig. 8: Two Piece Propeller Shaft Universal Joint Angle

Courtesy of CHRYSLER GROUP, LLC

Two piece propeller shaft angles measurement is the same as a one-piece propeller shaft.

LUBRICATION

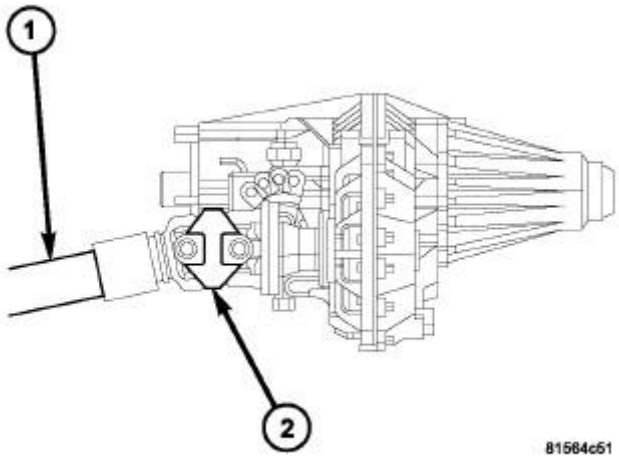

Fig. 9: Front Propeller Shaft & Grease Fitting
Courtesy of CHRYSLER GROUP, LLC

Vehicles with double cardan universal joint front propeller shaft (1) are equipped with a grease fitting (2). Grease the double cardan universal joint at each oil change.

SPECIFICATIONS

SPECIFICATIONS

DESCRIPTION	N.m	Ft. Lbs.	In. Lbs.
Center Bearing Bolts	54	40	-
Center Bearing Yoke Nut	678	500	-
Transfer Case Flange Bolts	88	65	-
Front Pinion Flange Bolts (Light Duty)	115	85	-
Front Pinion Flange Bolts (DP Heavy Duty)	75	55	-
Front Pinion Flange Bolts (DJ/D2/DD Heavy Duty)	28	21	-
Rear Pinion Flange Bolts (Light Duty)	115	85	-

Rear Pinion Flange Bolts (DP Heavy Duty)	75	55	-
Rear Pinion Flange Bolts (DJ/D2/DD Heavy Duty)	115	85	-

SPECIAL TOOLS

SPECIAL TOOLS

	1130 - Splitter, Bearing/Gear (Originally Shipped In Kit Number(s) 6745, 6947, 6949, 9202, 9202A-CAN, 9202CC, 9299.) 6052 - Installer, Bearing/Seal (Originally Shipped In Kit Number(s) 6303, 6672, 8853.) 6448A - Installer, Bearing/Gear (Originally Shipped In Kit Number(s) 6947, 8667, 8837, 8867.) 7663 - Inclinometer (Originally Shipped In Kit Number(s) 7663-MC, XJ594.) 938 - Bridge (Originally Shipped In Kit Number(s) 6745, 6947, 6949, 9202, 9202A-CAN, 9202CC, 9299.)

BEARING, DRIVE SHAFT CENTER, LIGHT DUTY

ADJUSTMENTS

ADJUSTMENTS

Launch shudder is a vibration that occurs at first acceleration from a stop. Shudder vibration usually peaks at the engines highest torque output. Shudder is a symptom associated with vehicles using a two-piece propeller shaft. To decrease shudder, lower the center bearing in 3.0 mm (0.125 in.) increments. Use shim stock or fabricated plates. **Do not use washers.** Replace the original bolts with the appropriate increased length bolts.

REMOVAL

REMOVAL

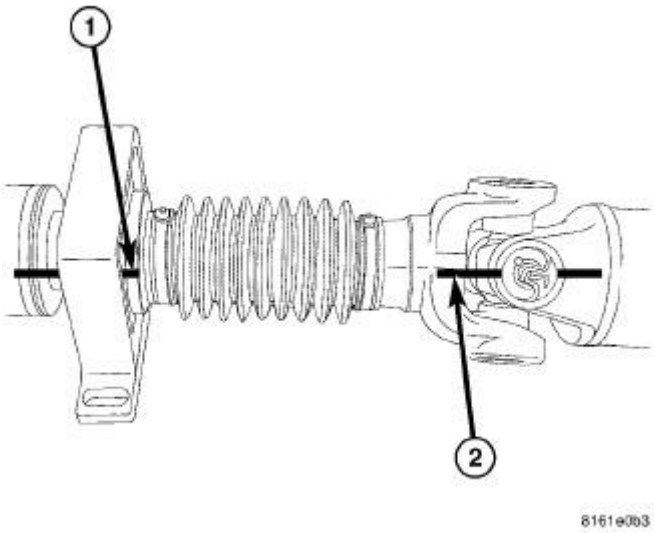

Fig. 10: Identifying Reference Marks On Shaft & Slip Yoke
Courtesy of CHRYSLER GROUP, LLC

1. Remove rear propeller shaft.
2. Make installation reference marks on the shaft (1) and slip yoke (2).

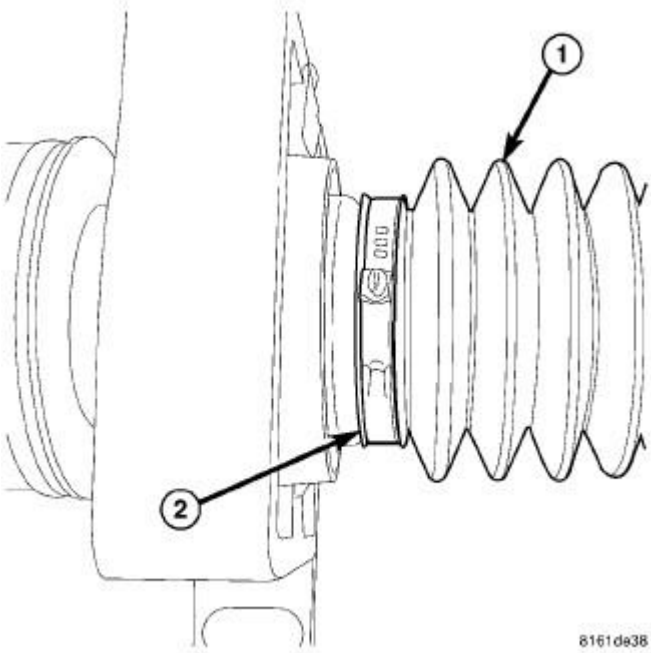

Fig. 11: Slip Joint Boot & Clamp
Courtesy of CHRYSLER GROUP, LLC

3. Remove slip joint boot (1) clamp (2).

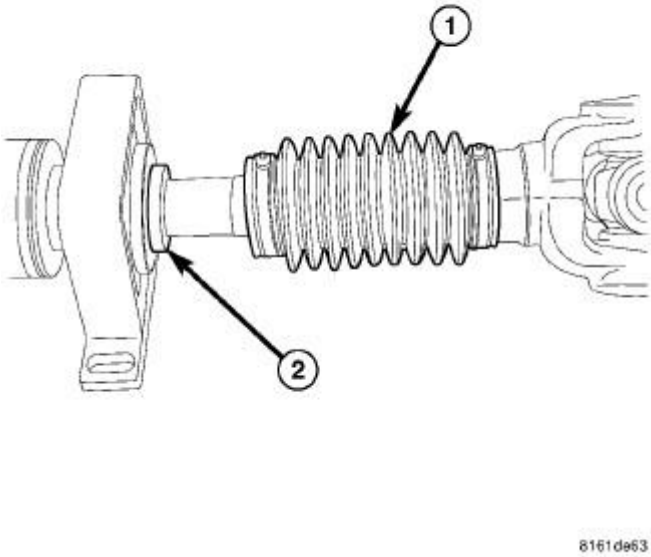

Fig. 12: Boot & Collar
Courtesy of CHRYSLER GROUP, LLC

4. Slide boot (1) off boot collar (2) and separate the two shafts.

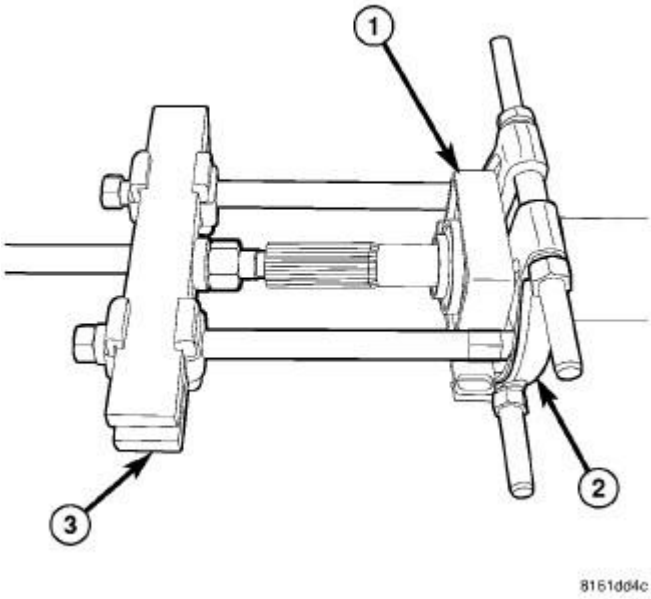

Fig. 13: Removing Center Bearing
Courtesy of CHRYSLER GROUP, LLC

5. Position Bearing Splitter Tool (special tool #1130, Splitter, Bearing/Gear) (2) between slinger and center bearing (1).
6. Install Bridge (special tool #938, Bridge) (3) on the splitter (2) and remove center bearing (1).

INSTALLATION

INSTALLATION

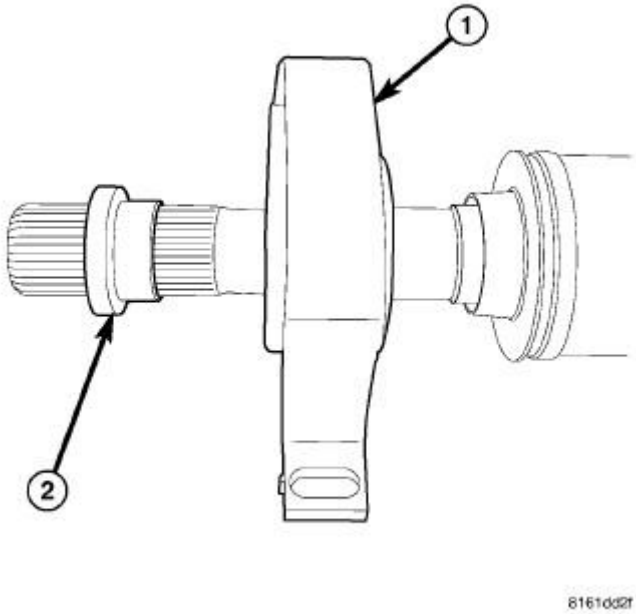

Fig. 14: Center Bearing & Collar
Courtesy of CHRYSLER GROUP, LLC

1. Install new slinger on shaft if removed and drive into position with appropriate installer tool.
2. Install new center bearing (1) and boot collar (2) on shaft.

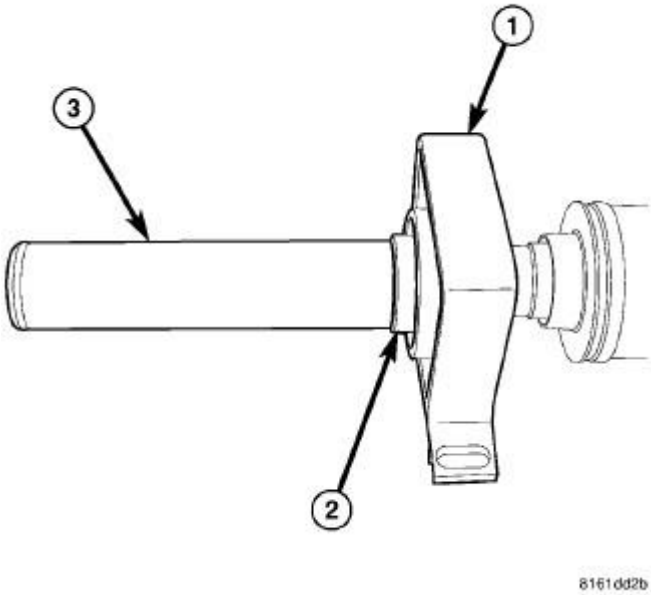

Fig. 15: Installing Bearing & Collar
Courtesy of CHRYSLER GROUP, LLC

3. Install bearing (1) and boot collar (2) on shaft with Installer (special tool #6052, Installer, Bearing/Seal) (3).

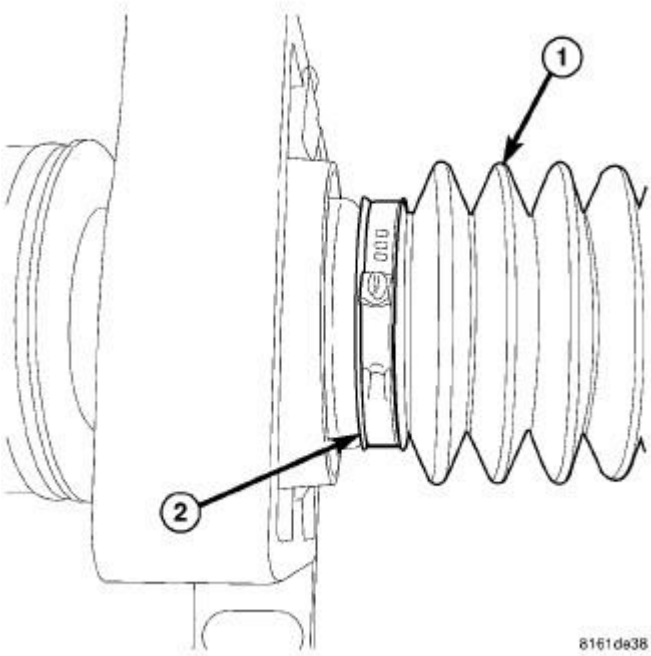

Fig. 16: Slip Joint Boot & Clamp
Courtesy of CHRYSLER GROUP, LLC

4. Clean shaft splines and apply a coat of multi-purpose grease.
5. Align master splines and slide front and rear half-shafts together.
6. Position slip yoke boot (1) on boot collar and install clamp (2).
7. Install propeller shaft in vehicle.

BEARING, DRIVE SHAFT CENTER, HEAVY DUTY

ADJUSTMENTS

ADJUSTMENTS

Launch shudder is a vibration that occurs at first acceleration from a stop. Shudder vibration usually peaks at the engines highest torque output. Shudder is a symptom associated with vehicles using a two-piece propeller shaft. To decrease shudder, lower the center bearing in 3.0 mm (0.125 in.) increments. Use shim stock or fabricated plates. **Do not use washers.** Replace the original bolts with the appropriate increased length bolts.

REMOVAL

REMOVAL

2500 AND 3500

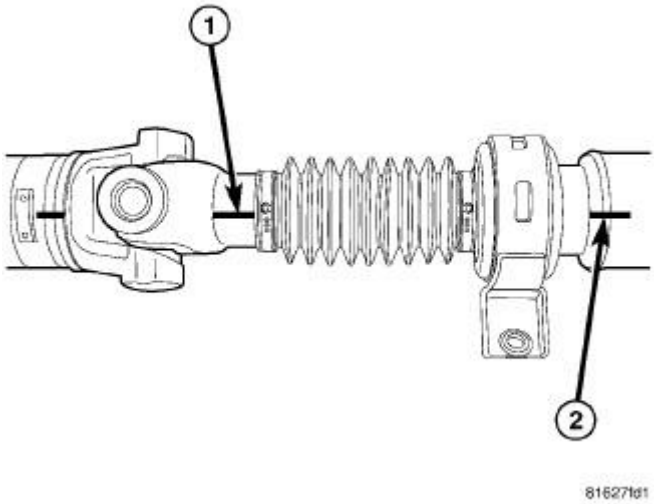

Fig. 17: Making Installation Reference Marks
Courtesy of CHRYSLER GROUP, LLC

1. Remove rear propeller shaft.
2. Make installation reference marks on rear shaft (1) and front shaft (2).

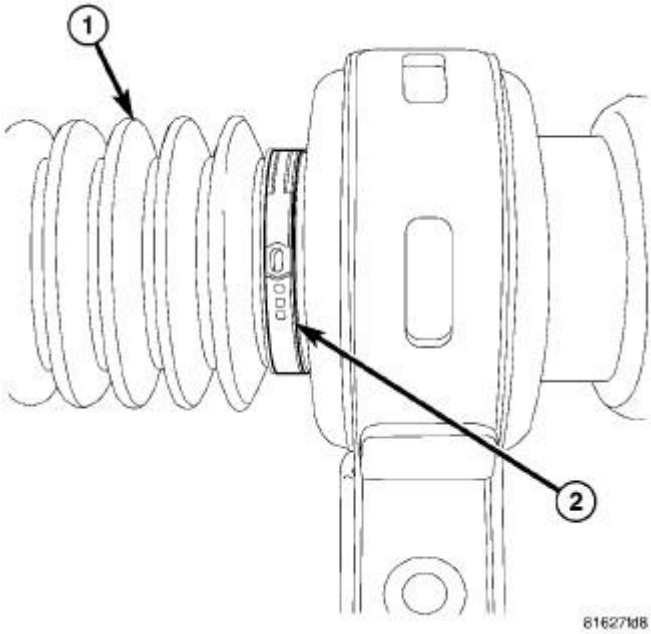

Fig. 18: Boot Clamp HD
Courtesy of CHRYSLER GROUP, LLC

3. Remove slip joint boot (1) clamp (2).

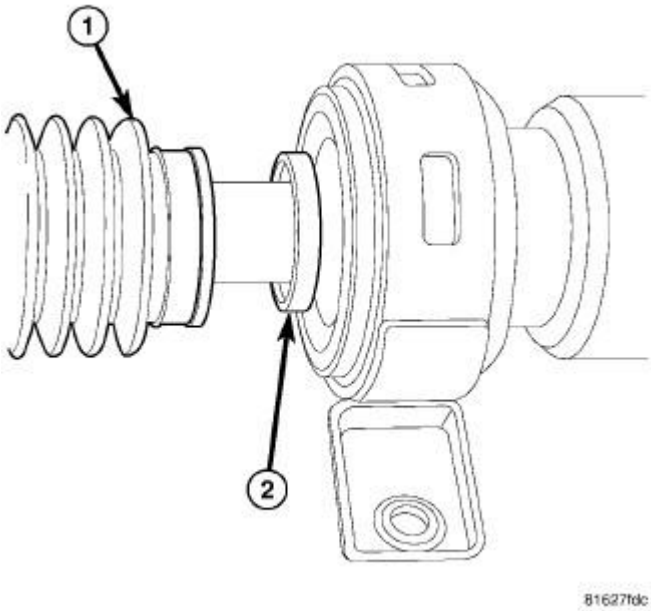

Fig. 19: Boot Collar HD
Courtesy of CHRYSLER GROUP, LLC

4. Slide boot (1) off boot collar (2) and separate the two shafts.

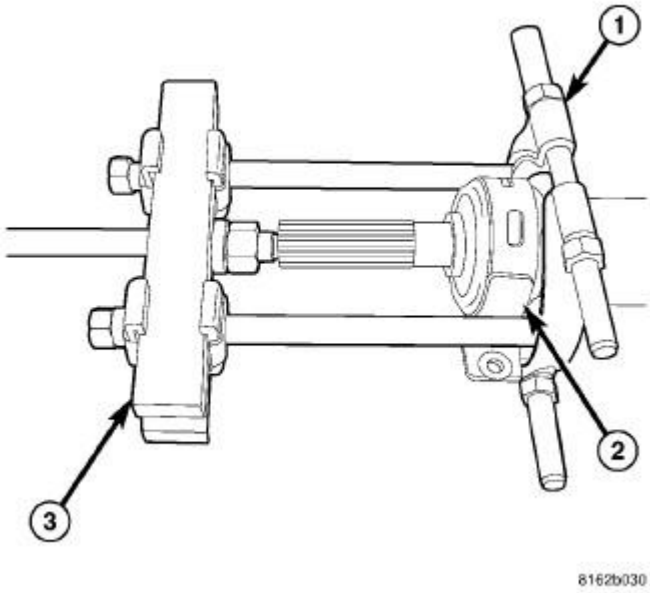

Fig. 20: Removing Center Bearing
Courtesy of CHRYSLER GROUP, LLC

5. Position Bearing Splitter Tool (special tool #1130, Splitter, Bearing/Gear) (1) between propeller shaft and center bearing (2).
6. Install Bridge (special tool #938, Bridge) (3) on the splitter (1) and remove center bearing.

4500 AND 5500

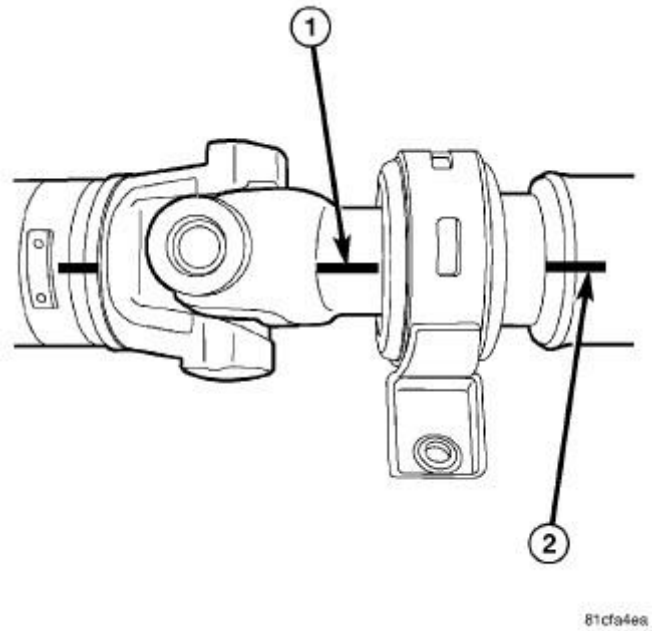

Fig. 21: Reference Marks On Rear Shaft, Center Bearing Yoke, & Front Shaft
Courtesy of CHRYSLER GROUP, LLC

1. Remove rear propeller shaft.
2. Make installation reference marks on rear shaft, center bearing yoke (1) and front shaft (2).

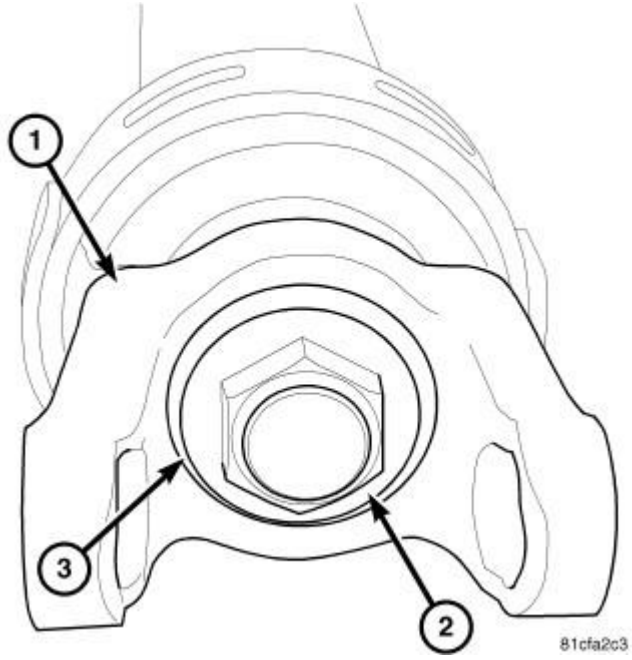

Fig. 22: Center Bearing Yoke, Nut & Washer
Courtesy of CHRYSLER GROUP, LLC

3. Remove joint from center bearing yoke.
4. Remove center bearing yoke (1) nut (2) and washer (3). Discard yoke nut.
5. Remove center bearing yoke (1) from shaft with two jaw puller.

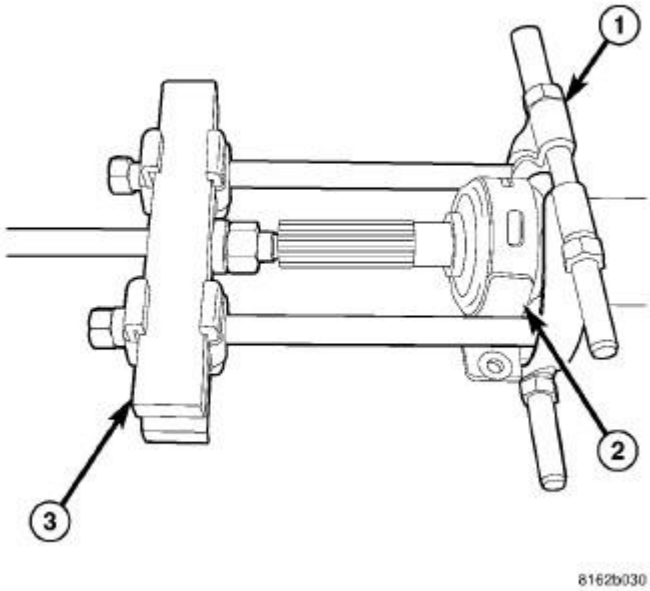

Fig. 23: Removing Center Bearing
Courtesy of CHRYSLER GROUP, LLC

6. Position Bearing Splitter Tool (special tool #1130, Splitter, Bearing/Gear) (1) between propeller shaft and center bearing (2).
7. Install Bridge (special tool #938, Bridge) (3) on the splitter (1) and remove center bearing.

INSTALLATION

INSTALLATION

2500 AND 3500

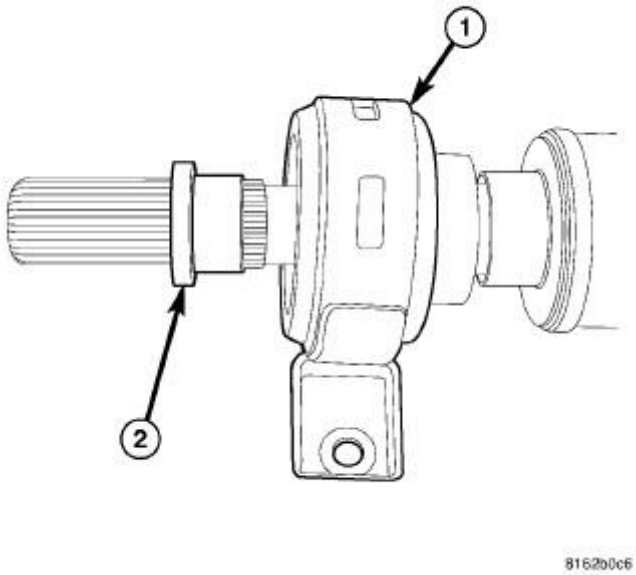

Fig. 24: Collar & Bearing HD
Courtesy of CHRYSLER GROUP, LLC

1. Slide center bearing (1) and boot collar (2) on shaft.

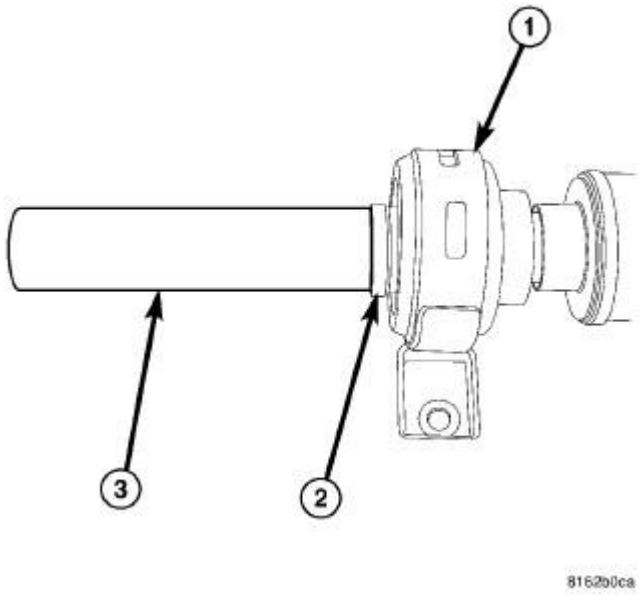

Fig. 25: Installing Boot Collar & Center Bearing
Courtesy of CHRYSLER GROUP, LLC

2. Install boot collar (2) and center bearing (1) with Installer (special tool #6448A, Installer, Bearing/Gear).
3. Clean shaft splines and apply a coat of multi-purpose grease.
4. Align master splines and slide front and rear half-shafts together.

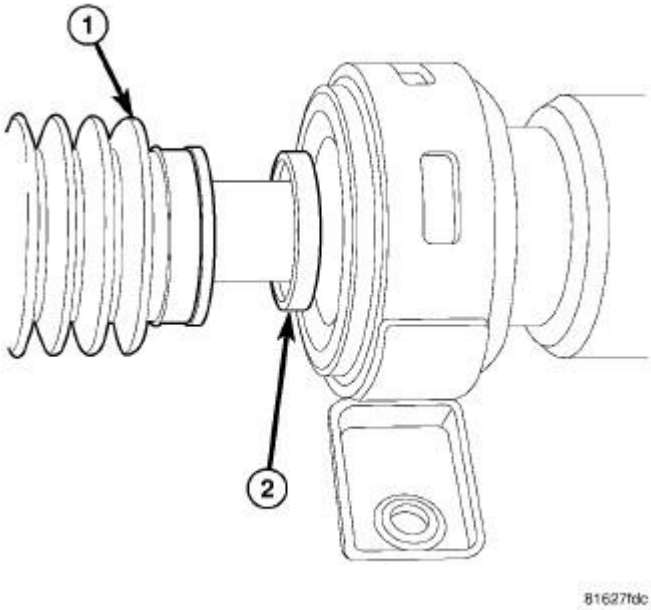

Fig. 26: Boot Collar HD
Courtesy of CHRYSLER GROUP, LLC

5. Slide slip yoke boot (1) on boot collar (2).

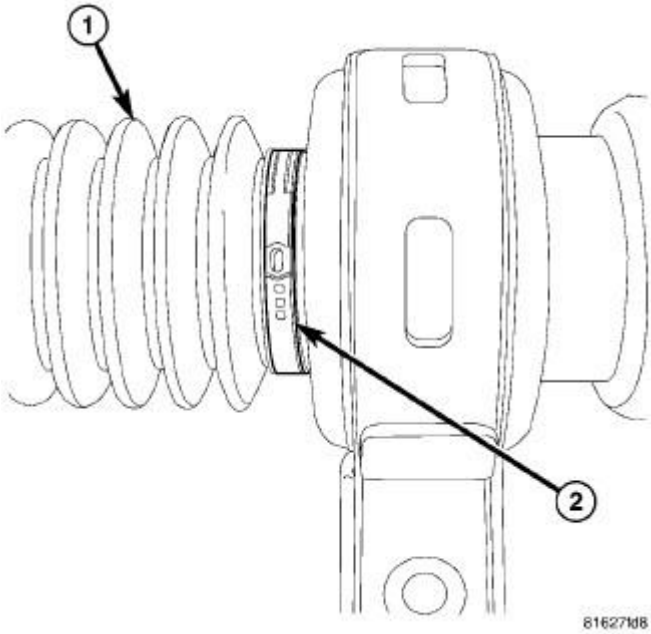

Fig. 27: Boot Clamp HD
Courtesy of CHRYSLER GROUP, LLC

6. Install slip yoke boot (1) clamp (2).
7. Install propeller shaft in vehicle.

4500 AND 5500

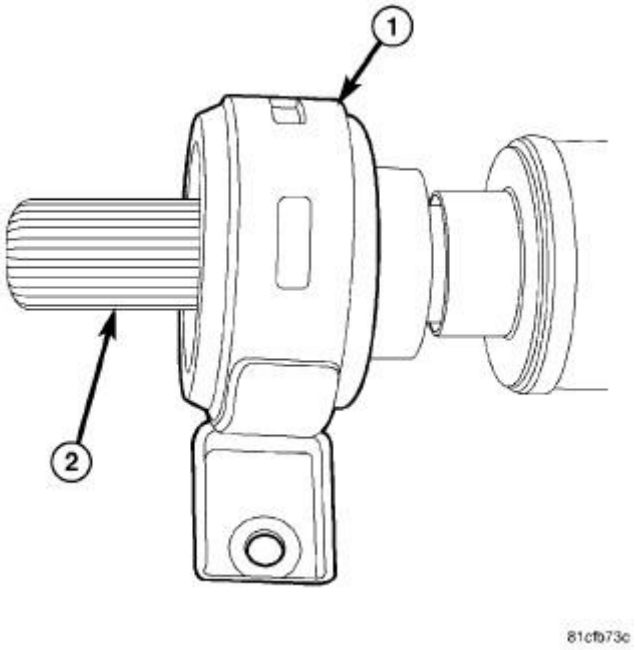

Fig. 28: Center Bearing
Courtesy of CHRYSLER GROUP, LLC

1. Slide center bearing (1) on shaft (2).

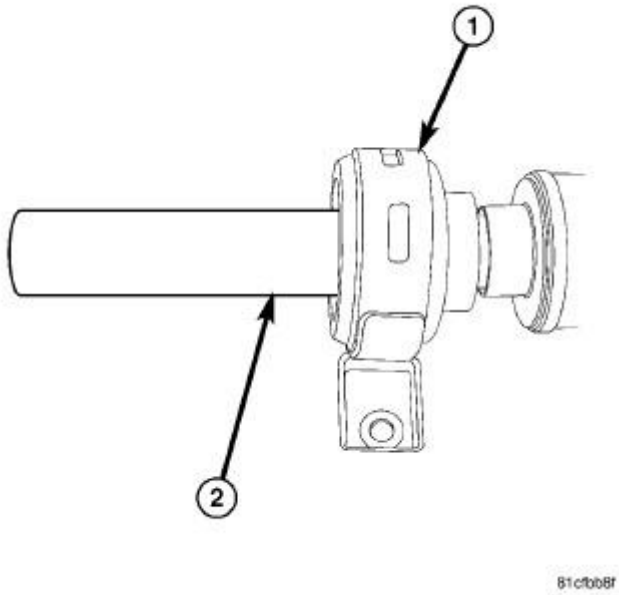

Fig. 29: Installing Center Bearing
Courtesy of CHRYSLER GROUP, LLC

2. Install center bearing (1) with Installer MD 998805 (2).
3. Clean shaft splines and apply a coat of multi-purpose grease.

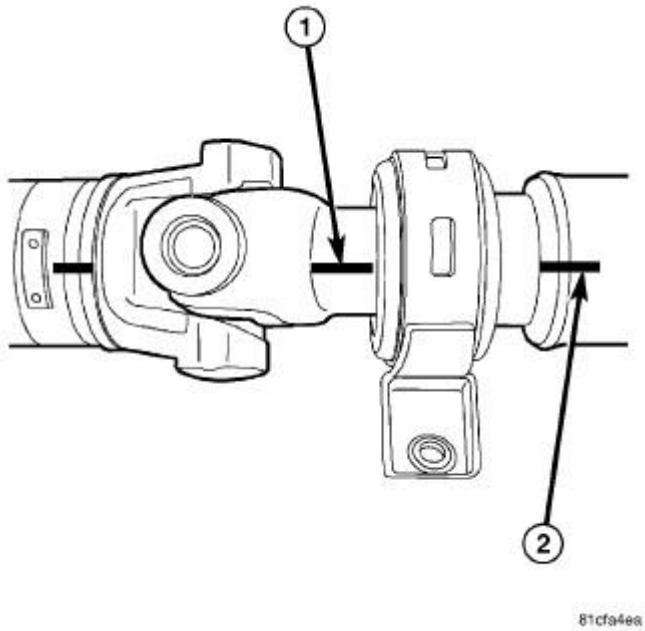

Fig. 30: Reference Marks On Rear Shaft, Center Bearing Yoke, & Front Shaft
Courtesy of CHRYSLER GROUP, LLC

4. Install center bearing yoke (1) and front shaft (2) with reference marks aligned.

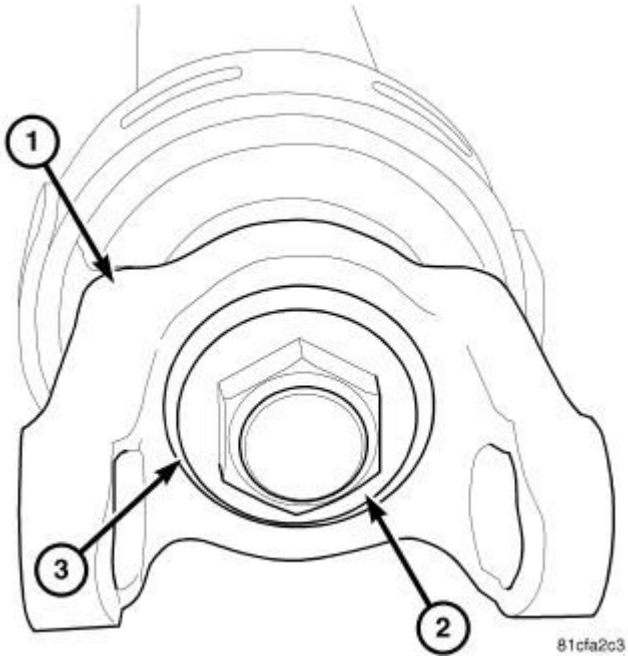

Fig. 31: Center Bearing Yoke, Nut & Washer
Courtesy of CHRYSLER GROUP, LLC

5. Install center bearing yoke (1) **new** nut (2) and washer (3).

6. Tighten nut to 678 N.m (500 ft. lbs.).
7. Install joint in center bearing yoke (1).

SHAFT, DRIVE, FRONT LIGHT DUTY

REMOVAL

REMOVAL

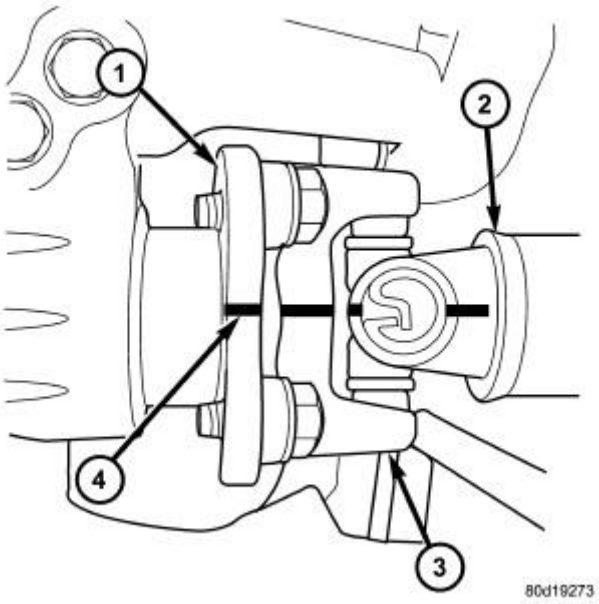

Fig. 32: Propeller Shaft & Pinion Flange Reference Mark
Courtesy of CHRYSLER GROUP, LLC

1. With vehicle in neutral, position vehicle on hoist.
2. Remove exhaust crossover pipe.
3. Mark a line across the axle companion flange (1), propeller shaft (2), flange yoke (3) and transfer case for installation reference.

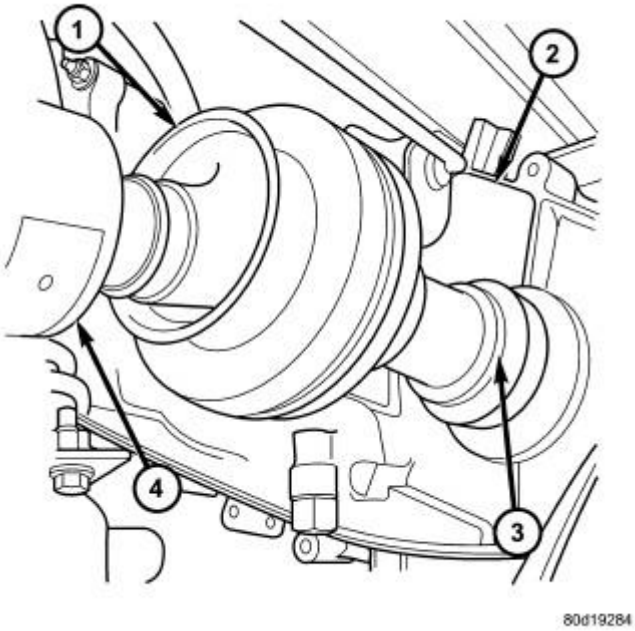

Fig. 33: C/V Joint Dust Boot Clamp
Courtesy of CHRYSLER GROUP, LLC

4. Remove axle/transfer case companion flange bolts. Remove dust boot clamp (3) from the C/V joint (1) end of the shaft if equipped.
5. Remove propeller shaft.

INSTALLATION

INSTALLATION

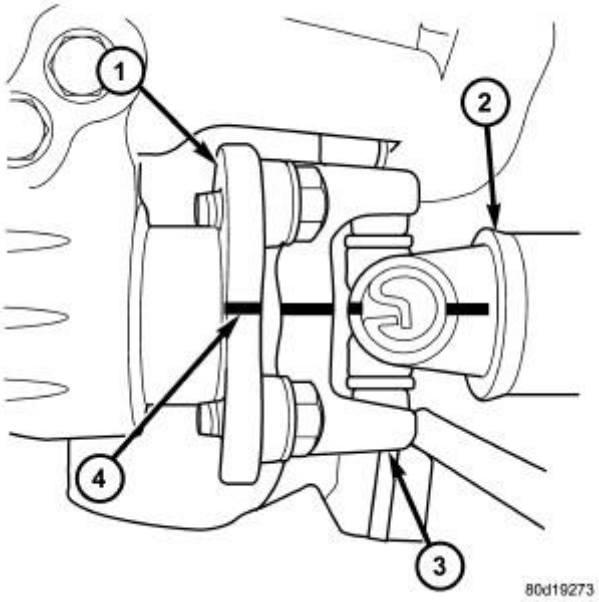

Fig. 34: Propeller Shaft & Pinion Flange Reference Mark
Courtesy of CHRYSLER GROUP, LLC

1. Install propeller shaft with all reference marks (4) aligned.
2. Install with dust boot clamp at transfer case end.
3. Install **new** axle companion flange bolts and tighten to 115 N.m (85 ft. lbs.).

NOTE: **Companion flange bolts incorporate a Loctite® patch, new bolts should be used. If bolts are not available, clean bolts and apply Loctite® 242 to the threads.**

4. Install skid plate, if equipped.

SHAFT, DRIVE, FRONT HEAVY DUTY

REMOVAL

REMOVAL

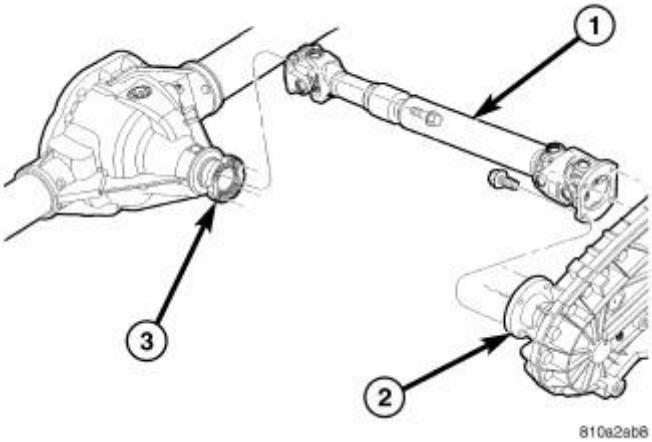

Fig. 35: Identifying HD Front Propeller Shaft
Courtesy of CHRYSLER GROUP, LLC

1. With vehicle in neutral, position vehicle on hoist.
2. Remove exhaust crossover pipe.
3. Mark a line across axle (3) transfer case (2) companion flange and propeller shaft flange yokes for installation reference.
4. Remove axle/transfer case companion flange bolts.
5. Remove propeller shaft.

INSTALLATION

INSTALLATION

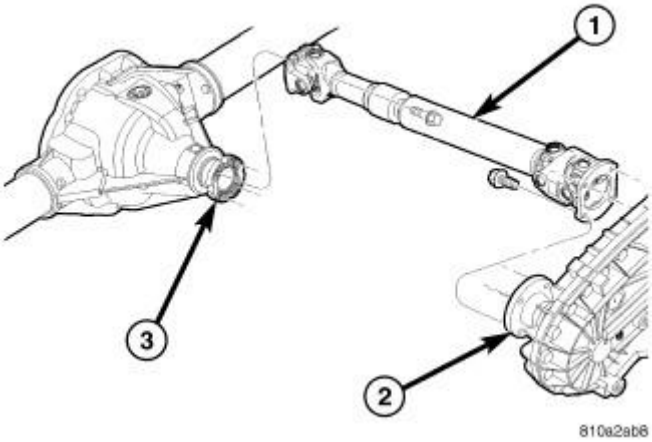

Fig. 36: Identifying HD Front Propeller Shaft
Courtesy of CHRYSLER GROUP, LLC

1. Install propeller shaft (1) with all reference marks aligned.

2. Install transfer case companion flange (2) bolts and tighten to 88 N.m (65 ft. lbs.).
3. Install **new** axle companion flange (3) bolts and tighten to 28 N.m (21 ft. lbs.).

NOTE: Companion flange bolts incorporate a Loctite® patch, new bolts should be used. If bolts are not available, clean bolts and apply Loctite® 242 to the threads.

4. Install skid plate, if equipped.

SHAFT, DRIVE, REAR LIGHT DUTY

REMOVAL

REMOVAL

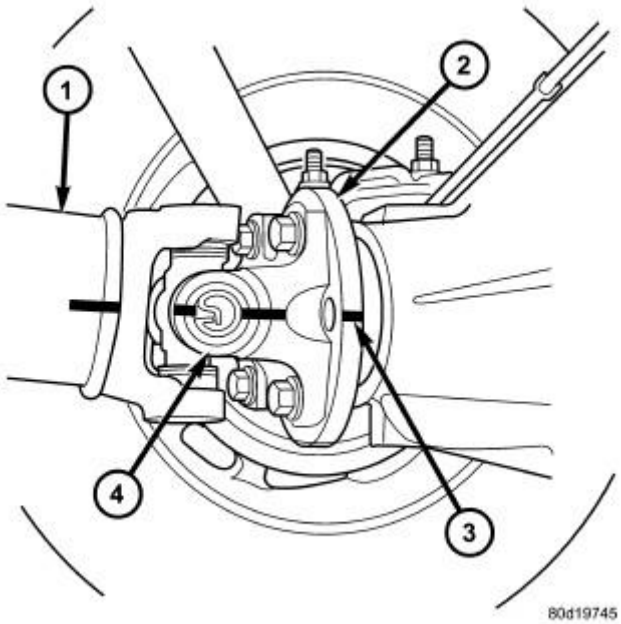

Fig. 37: Aligning Reference Marks
Courtesy of CHRYSLER GROUP, LLC

1. With vehicle in neutral, position vehicle on hoist.
2. Mark propeller shaft (1) pinion flange (2) and propeller shaft flange (4) with installation reference marks (3).

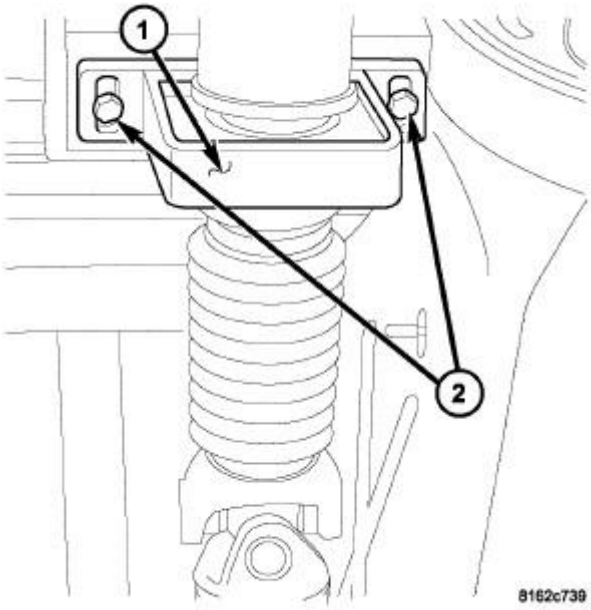

Fig. 38: Center Bearing & Bolts
Courtesy of CHRYSLER GROUP, LLC

3. If equipped with a center bearing (1) mark an outline of the center bearing (1) on the center bearing bracket for installation reference. Then support propeller shaft and remove mounting bolts (2).

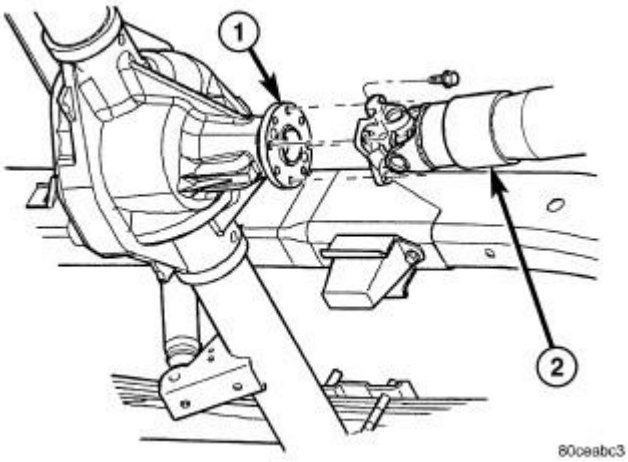

Fig. 39: Pinion Flange & Rear Propeller Shaft
Courtesy of CHRYSLER GROUP, LLC

4. Remove pinion flange (1) bolts from propeller shaft (2).

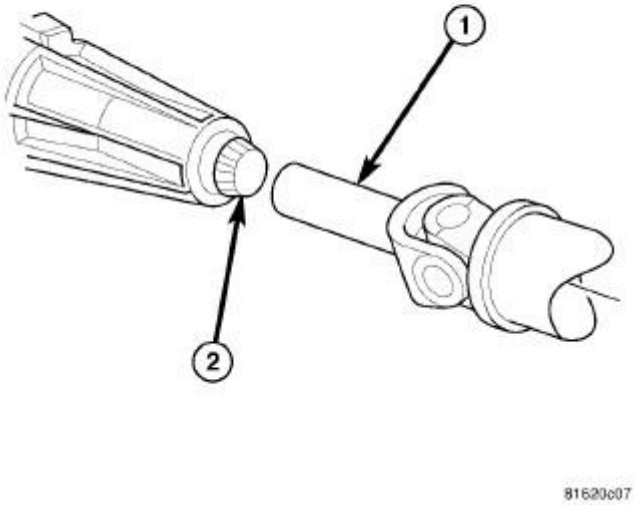

Fig. 40: Propeller Shaft & Output Shaft
Courtesy of CHRYSLER GROUP, LLC

5. Slide propeller shaft back off automatic transmission/transfer case output shaft, then mark propeller shaft (1) and transmission/transfer case output shaft (2) for installation reference.

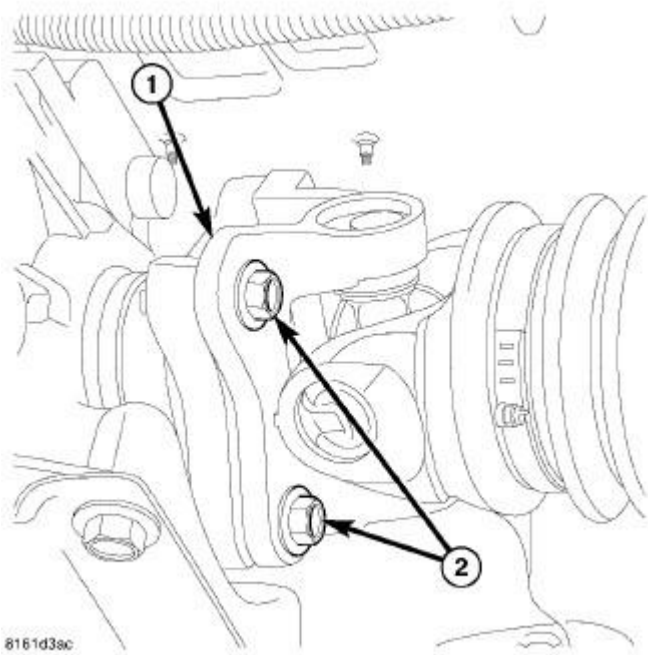

Fig. 41: Flange & Bolts
Courtesy of CHRYSLER GROUP, LLC

6. Remove propeller shaft from vehicle.

CAUTION: Failure to follow these instructions may result in a driveline vibration.

INSTALLATION

INSTALLATION

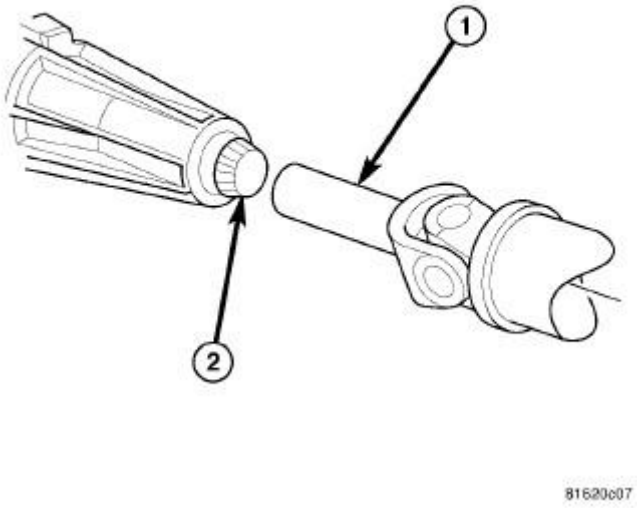

Fig. 42: Propeller Shaft & Output Shaft
Courtesy of CHRYSLER GROUP, LLC

1. Slide slip yoke (1) onto automatic transmission/transfer case output shaft (2) with reference marks aligned.

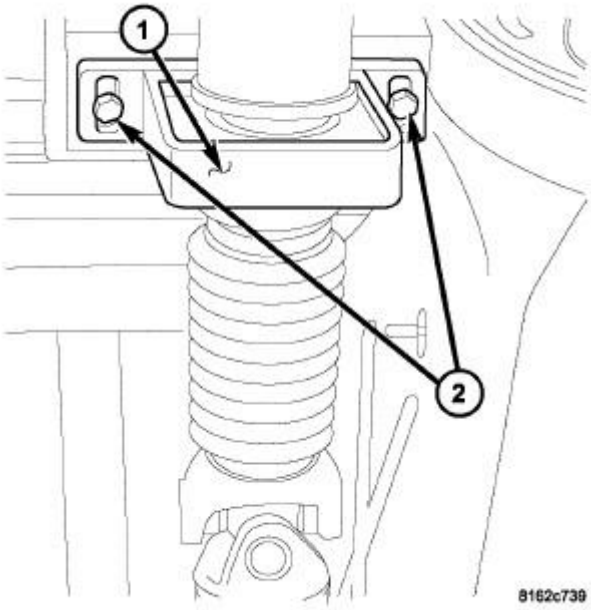

Fig. 43: Center Bearing & Bolts
Courtesy of CHRYSLER GROUP, LLC

2. If two piece propeller shaft, align center bearing (1) with reference marks on center bearing bracket and tighten bolts (2) to 54 N.m (40 ft. lbs.).

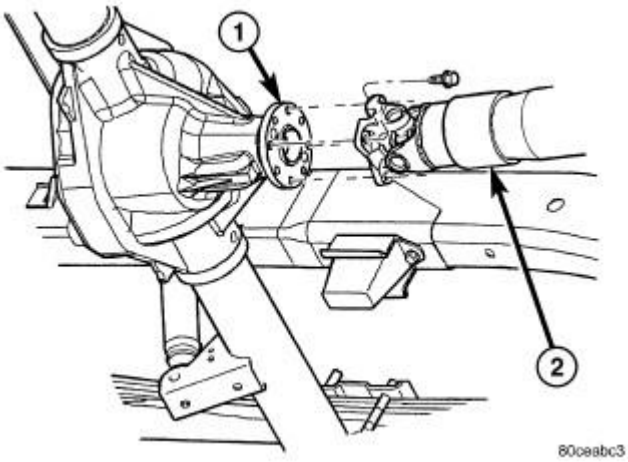

Fig. 44: Pinion Flange & Rear Propeller Shaft
Courtesy of CHRYSLER GROUP, LLC

3. Align reference marks on propeller shaft and pinion flange. Install **new** companion flange (1) bolts and tighten to 115 N.m (85 ft. lbs.)

CAUTION: Failure to follow these instruction may result in a driveline vibration.

SHAFT, DRIVE, REAR HEAVY DUTY

REMOVAL

REMOVAL

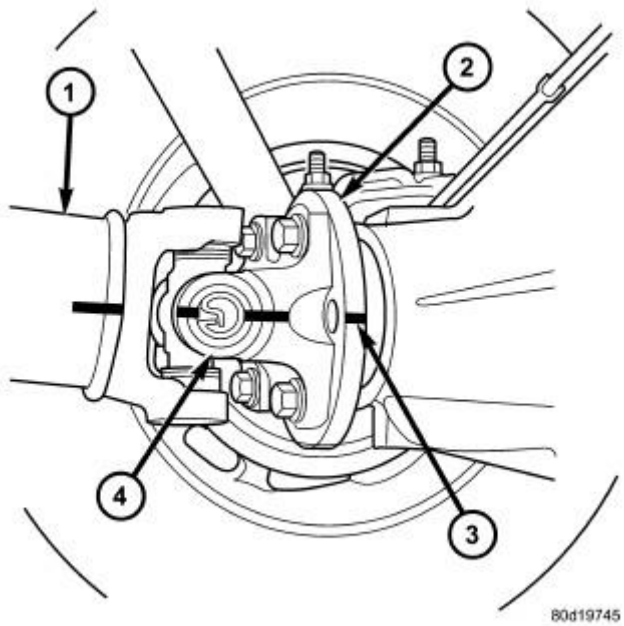

Fig. 45: Aligning Reference Marks
Courtesy of CHRYSLER GROUP, LLC

1. With vehicle in neutral, position vehicle on hoist.
2. Mark propeller shaft (1) pinion flange (2) and propeller shaft flange (4) with installation reference marks (3).

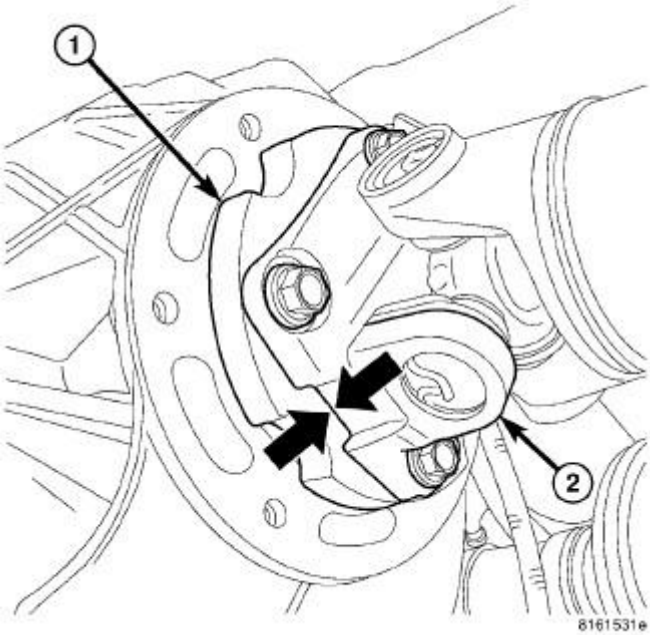

Fig. 46: Marking Transmission Flange
Courtesy of CHRYSLER GROUP, LLC

3. Mark transmission flange (1) if equipped and propeller shaft flange (2) for installation reference.

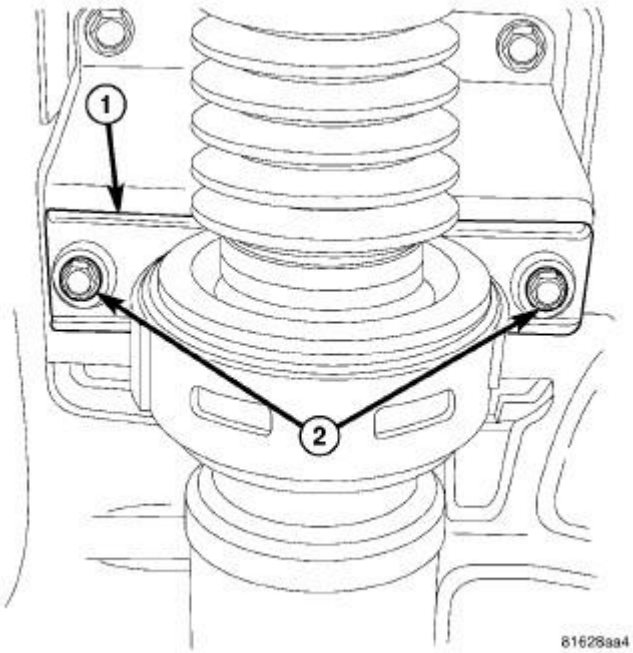

Fig. 47: Center Bearing HD
Courtesy of CHRYSLER GROUP, LLC

4. If equipped with a center bearing (1) mark an outline of the center bearing on the center bearing bracket for installation reference. Then support propeller shaft and remove center bearing bolts (2).

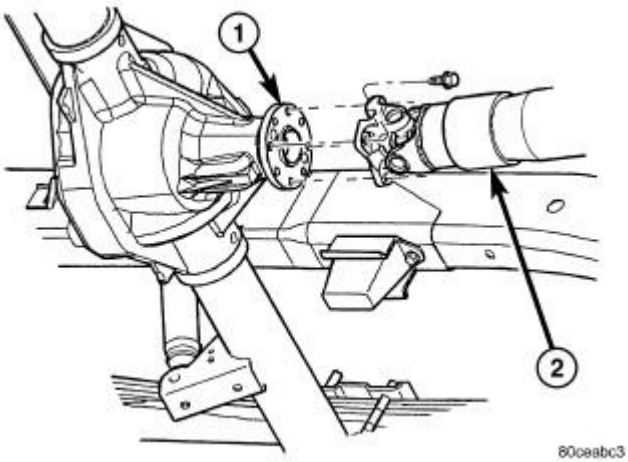

Fig. 48: Pinion Flange & Rear Propeller Shaft
Courtesy of CHRYSLER GROUP, LLC

5. Remove pinion flange (1) bolts from propeller shaft (2).

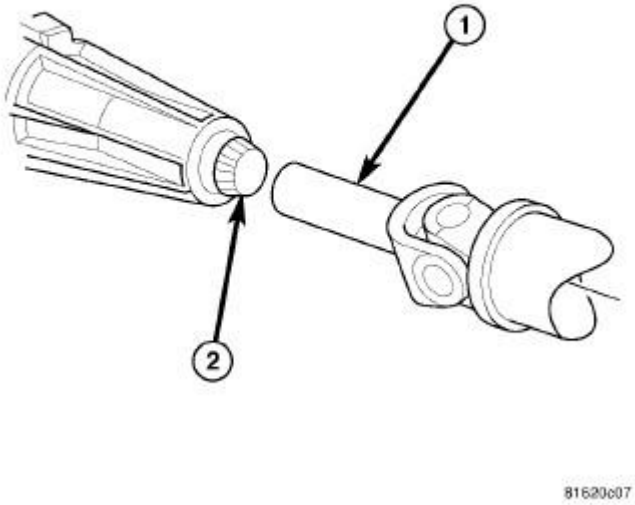

Fig. 49: Propeller Shaft & Output Shaft
Courtesy of CHRYSLER GROUP, LLC

6. Slide propeller shaft back off automatic transmission/transfer case output shaft, then mark propeller shaft (1) and transmission/transfer case output shaft (2) for installation reference.

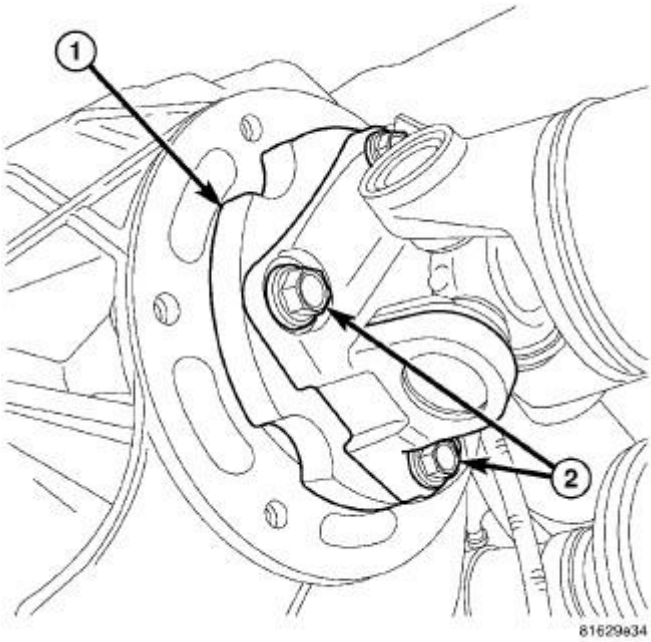

Fig. 50: Identifying Transmission Flange & Bolts
Courtesy of CHRYSLER GROUP, LLC

7. If equipped with transmission flange (1) remove bolts (2).
8. Remove propeller shaft from vehicle.

CAUTION: Failure to follow these instructions may result in a driveline vibration.

INSTALLATION

INSTALLATION

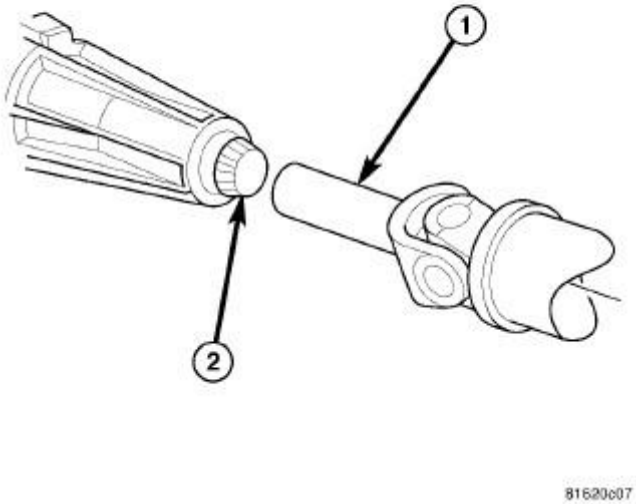

Fig. 51: Propeller Shaft & Output Shaft
Courtesy of CHRYSLER GROUP, LLC

1. Slide slip yoke (1) onto automatic transmission/transfer case output shaft (2) with reference marks aligned.

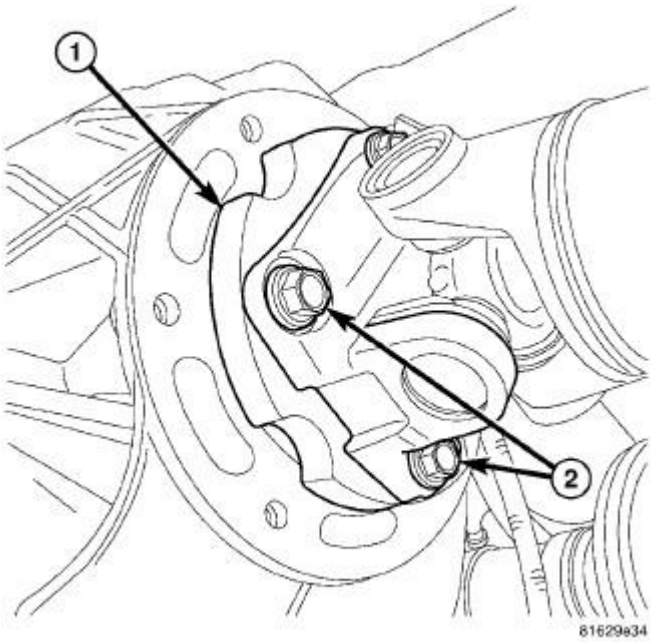

Fig. 52: Identifying Transmission Flange & Bolts
Courtesy of CHRYSLER GROUP, LLC

2. If equipped with manual transmission, align transmission flange (1) and propeller shaft reference marks. Install **new** flange bolts (2) and tighten to 115 N.m (85 ft. lbs.).

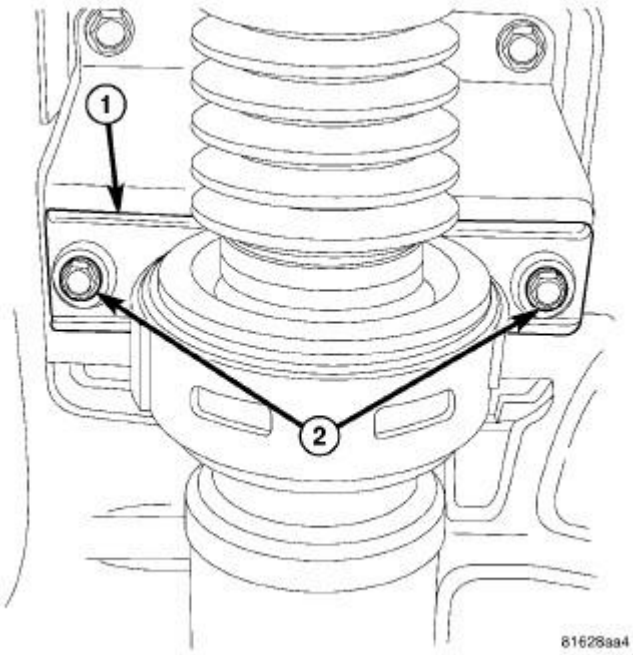

Fig. 53: Center Bearing HD
Courtesy of CHRYSLER GROUP, LLC

3. If two piece propeller shaft, align center bearing (1) with reference marks on center bearing bracket and tighten bolts (2) to 54 N.m (40 ft. lbs.).

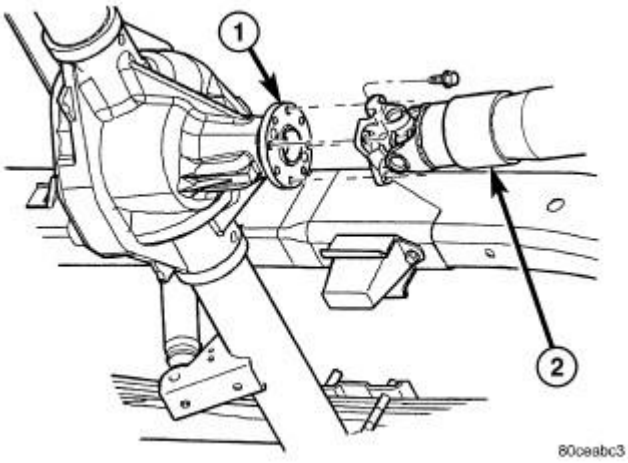

Fig. 54: Pinion Flange & Rear Propeller Shaft
Courtesy of CHRYSLER GROUP, LLC

4. Align reference marks on propeller shaft and pinion flange. Install **new** companion flange (1) bolts and

tighten to 115 N.m (85 ft. lbs.)

CAUTION: Failure to follow these instruction may result in a driveline vibration.

U-JOINT, DOUBLE CARDAN

DISASSEMBLY

DISASSEMBLY

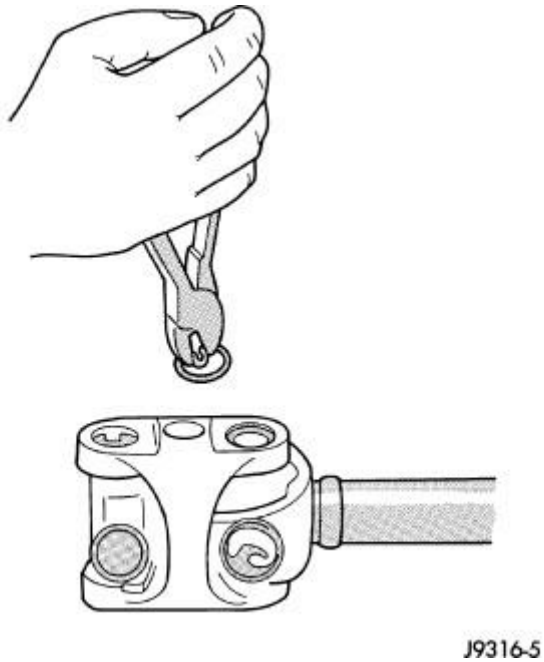

Fig. 55: Snap Ring
Courtesy of CHRYSLER GROUP, LLC

1. Remove propeller shaft.
2. Mark propeller shaft, link yoke and flange yoke for assembly reference.
3. Tap outside of the bearing cap assembly with drift to loosen snap rings.
4. Remove all bearing cap snap rings.
5. Remove grease fittings if equipped.
6. Position a socket on the press with an inside diameter large enough to receive the bearing cap under the link yoke.
7. Place another socket with an outside diameter smaller than the bearing cap on the upper bearing cap.

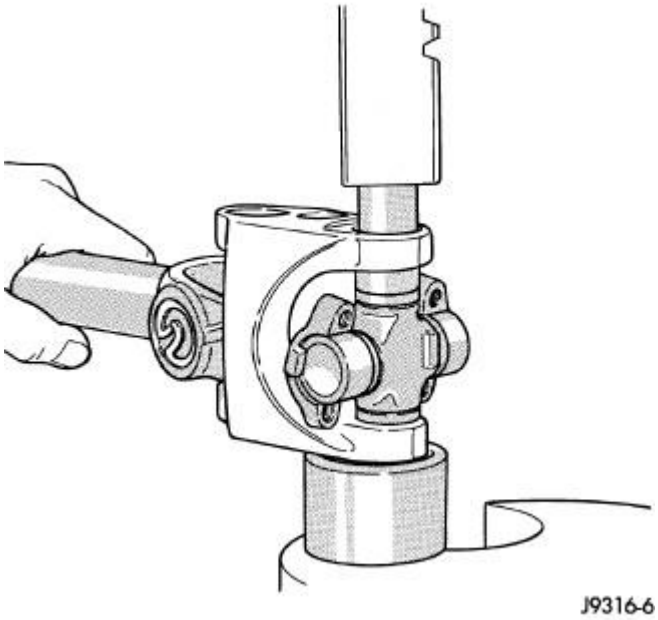

Fig. 56: Pressing Out Bearing Cap
Courtesy of CHRYSLER GROUP, LLC

8. Press one bearing cap from outboard side of the link yoke, enough to grasp the cap with vise jaws.

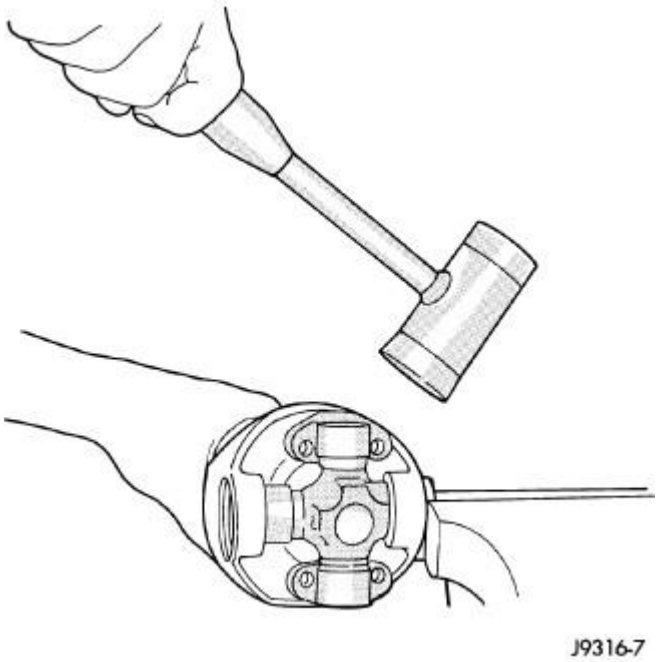

Fig. 57: Removing Bearing Cap
Courtesy of CHRYSLER GROUP, LLC

9. Grasp protruding bearing cap with vise jaws and tap link yoke with a mallet to remove bearing cap.
10. To remove the opposite bearing cap, flip assembly and repeat. Refer to 6 and 7 and 8 and 9.

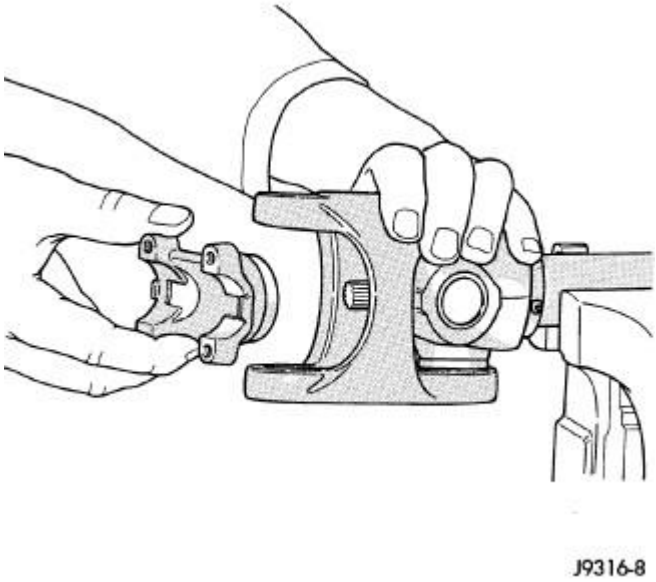

Fig. 58: Cross Centering Kit Assembly
Courtesy of CHRYSLER GROUP, LLC

11. Remove cross centering kit assembly and spring.
12. Press remaining bearing caps out the other end of the link yoke.

ASSEMBLY

ASSEMBLY

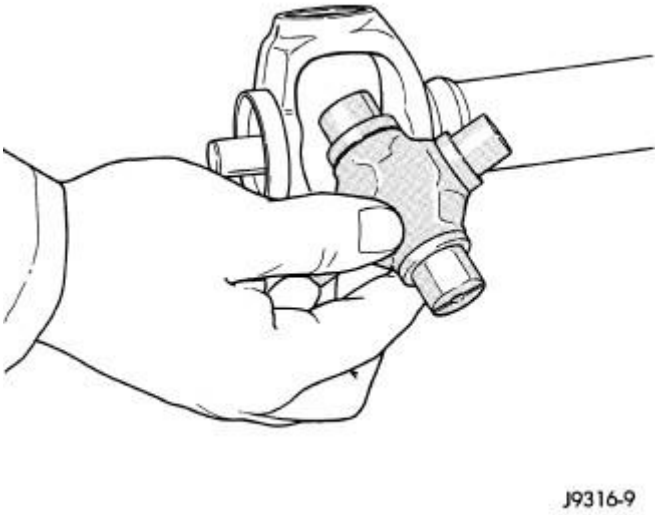

Fig. 59: Cross
Courtesy of CHRYSLER GROUP, LLC

CAUTION: All alignment marks on the link yoke and propeller shaft yoke must be aligned during assembled.

1. Apply (EP) N.L.G.I. Grade 1 or 2 grease to inside of yoke bores.
2. Fit cross into the propeller shaft yoke.

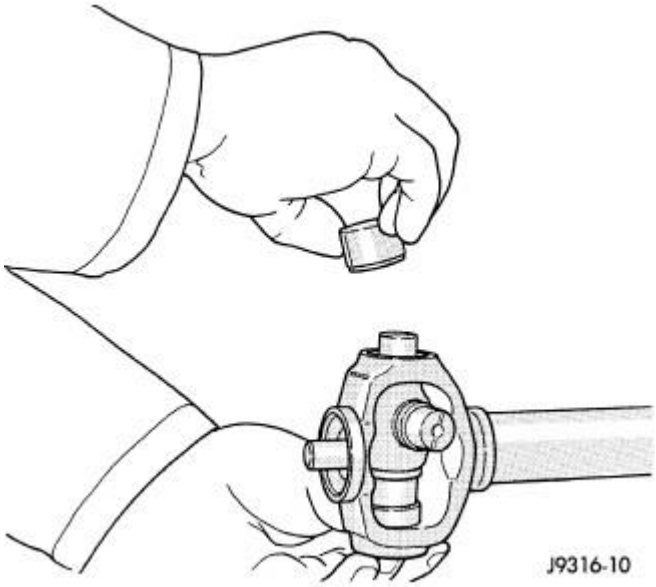

Fig. 60: Install Bearing Cap
Courtesy of CHRYSLER GROUP, LLC

3. Place bearing cap over the trunnion and align cap with the yoke bore. Keep needle bearings upright in the bearing cap.

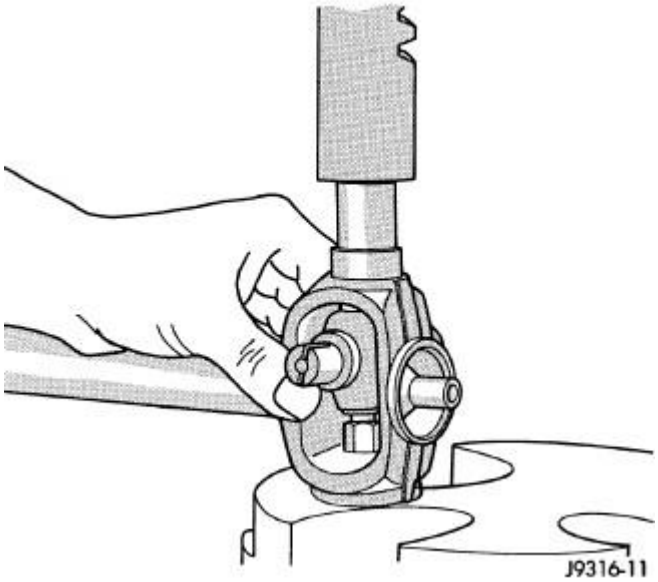

Fig. 61: Pressing Bearing Cap Into Yoke
Courtesy of CHRYSLER GROUP, LLC

4. Press bearing cap into yoke bore enough to clear snap ring groove and install snap-ring.

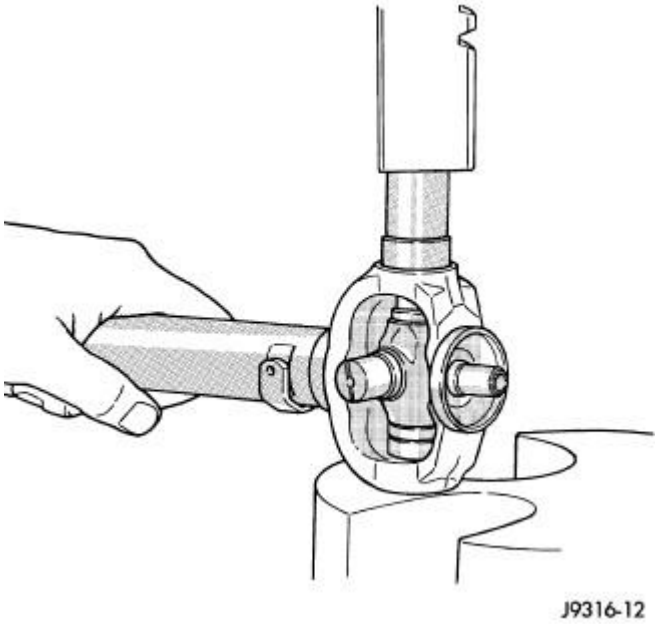

Fig. 62: Installing Other Bearing Cap Onto Opposite Trunnion
Courtesy of CHRYSLER GROUP, LLC

5. Flip propeller shaft yoke and install other bearing cap onto the opposite trunnion and install a snap ring.

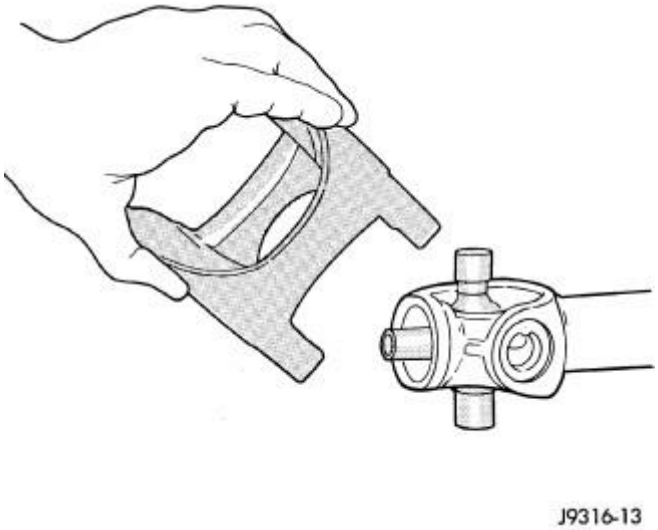

Fig. 63: Link Yoke
Courtesy of CHRYSLER GROUP, LLC

6. Fit link yoke onto remaining trunnions and press both bearing caps into place and install snap rings.

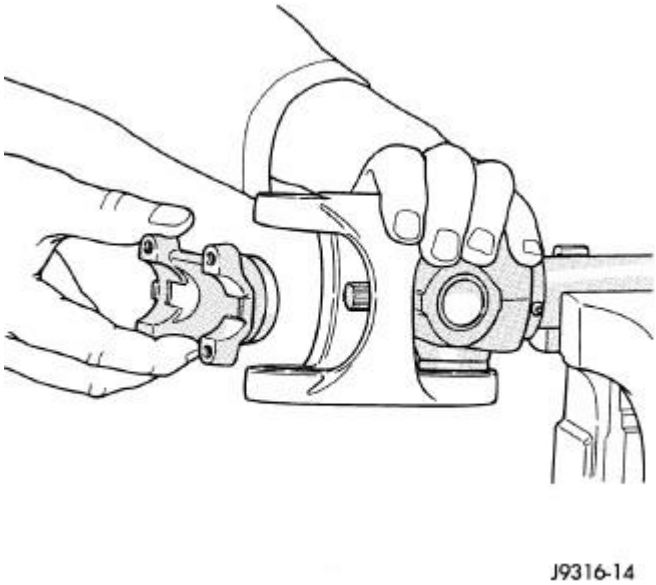

Fig. 64: Cross Centering Kit Assembly
Courtesy of CHRYSLER GROUP, LLC

7. Install centering kit assembly inside the link yoke.

NOTE: Verify spring is properly positioned.

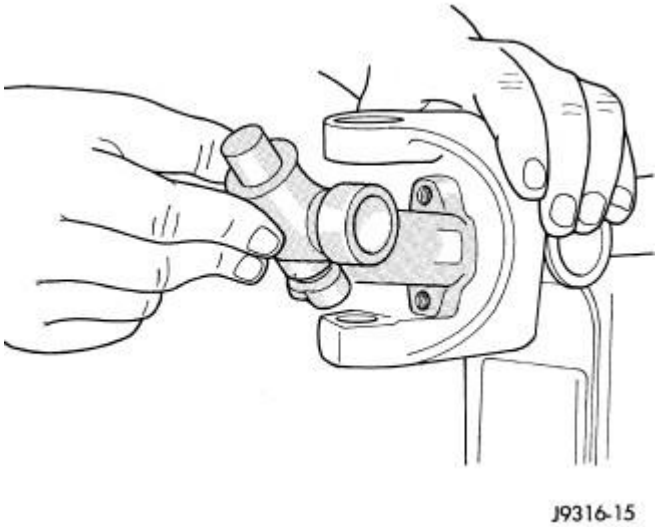

Fig. 65: Cross
Courtesy of CHRYSLER GROUP, LLC

8. Place two bearing caps on opposite trunnions of the remaining cross. Fit open trunnions into the link yoke bores and bearing caps into the centering kit.

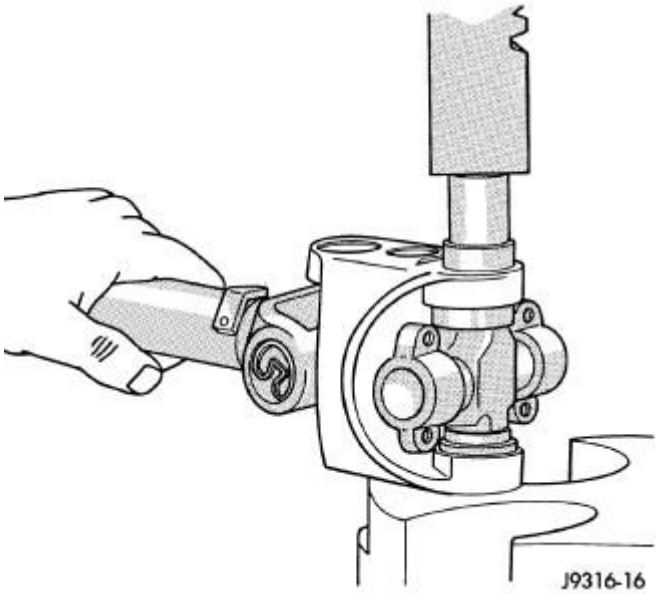

Fig. 66: Pressing Bearing Caps
Courtesy of CHRYSLER GROUP, LLC

9. Press remaining two bearing caps into place and install snap rings.

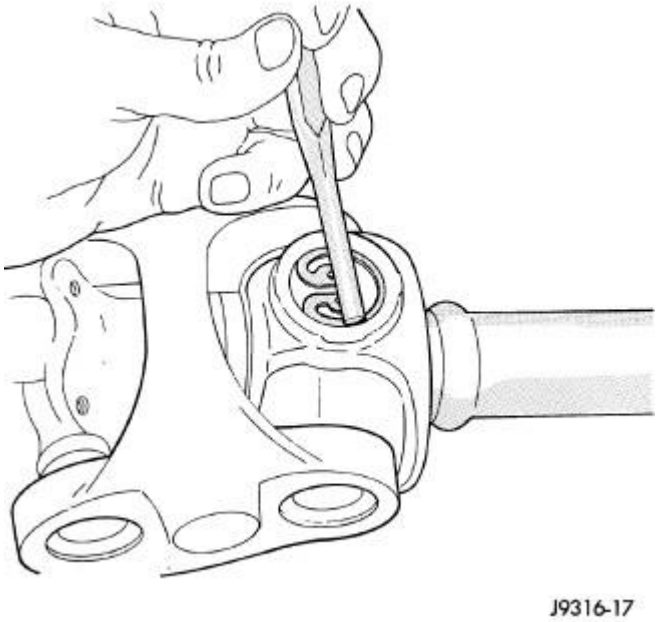

Fig. 67: Seating Snap Ring Into Groove
Courtesy of CHRYSLER GROUP, LLC

10. Tap snap rings to seat them into the grooves.

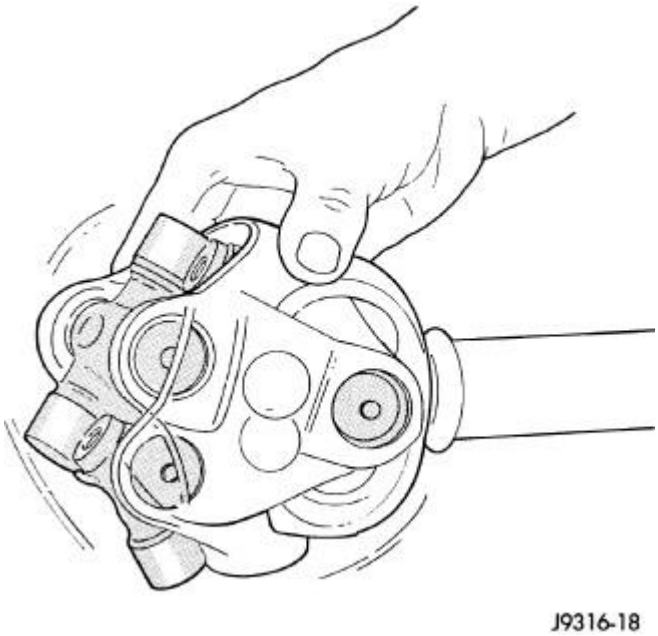

Fig. 68: Flexing Joint
Courtesy of CHRYSLER GROUP, LLC

11. Flexing the joint beyond center, the joint should snap over-center in both directions if correctly assembled.
12. Install propeller shaft.

U-JOINT, SINGLE CARDAN

DISASSEMBLY

WITH INJECTED RING

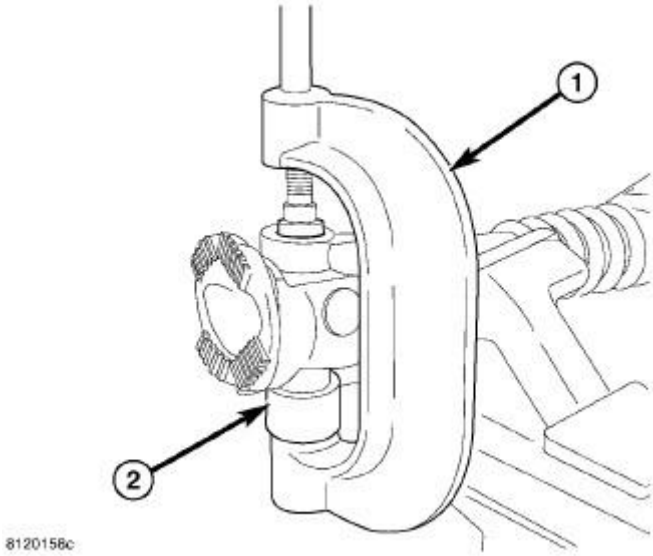

Fig. 69: Positioning U-Joint Press With Receiver On Propeller Shaft Yoke
Courtesy of CHRYSLER GROUP, LLC

1. Place shaft yoke in vise.
2. Position U-joint press (1) with receiver (2) on propeller shaft yoke.

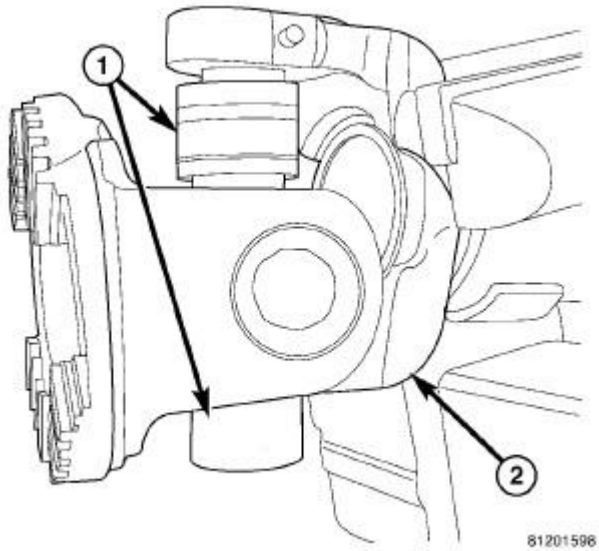

Fig. 70: Pressing U-Joint Bearing Caps Out Of Shaft Yoke
Courtesy of CHRYSLER GROUP, LLC

3. Pressed U-joint bearing caps (1) out of shaft yoke (2).
4. Remove lower bearing cap from shaft yoke.

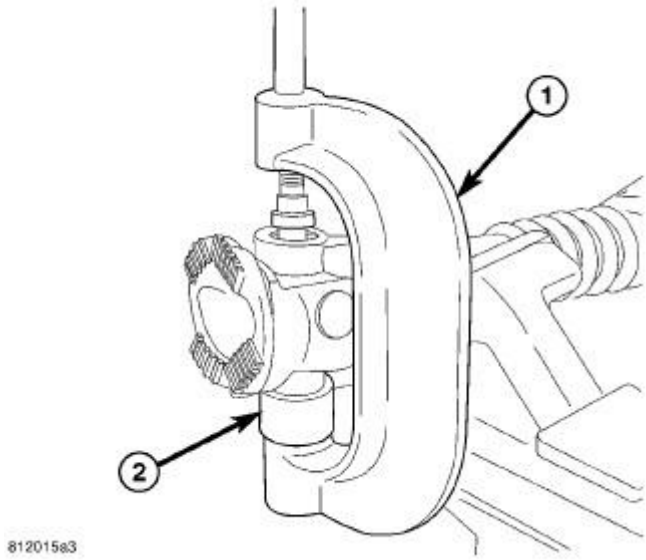

Fig. 71: Pressing U-Joint Bearing Cap

Courtesy of CHRYSLER GROUP, LLC

5. Turn shaft over and position press (1) with receiver (2) on shaft yoke.
6. Press remaining U-joint bearing cap out of shaft yoke.

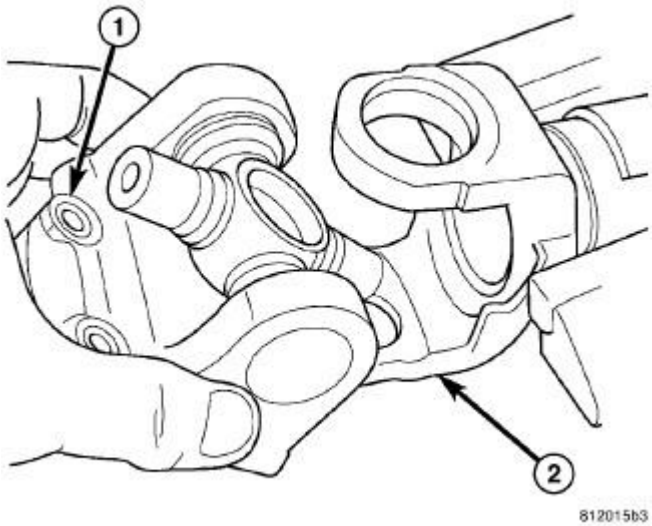

Fig. 72: Removing Flange
Courtesy of CHRYSLER GROUP, LLC

7. Remove flange (1) with U-joint out of shaft yoke (2).

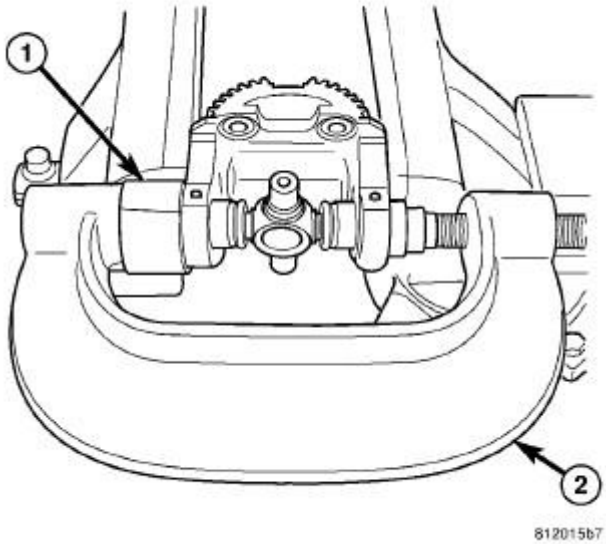

Fig. 73: U-Joint Press With Receiver
Courtesy of CHRYSLER GROUP, LLC

8. Position U-joint press (2) with receiver (1) on flange.

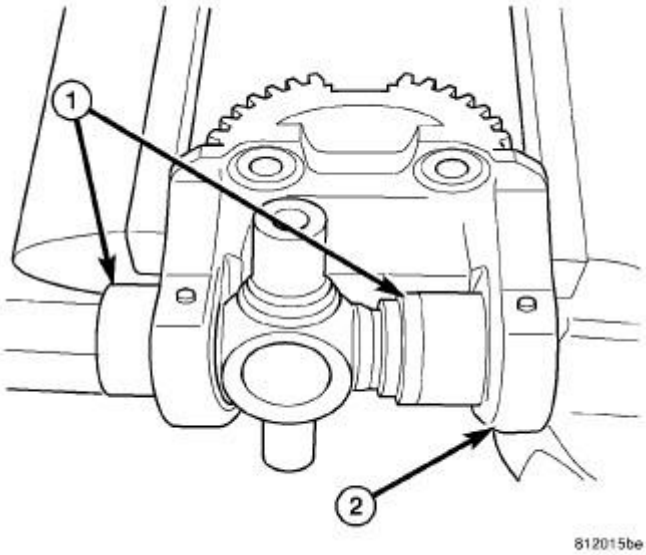

Fig. 74: Pressing U-Joint Bearing Caps Out Of Flange
Courtesy of CHRYSLER GROUP, LLC

9. Press U-joint bearing caps (1) out of flange (2).
10. Remove bearing cap on the outside of the flange.

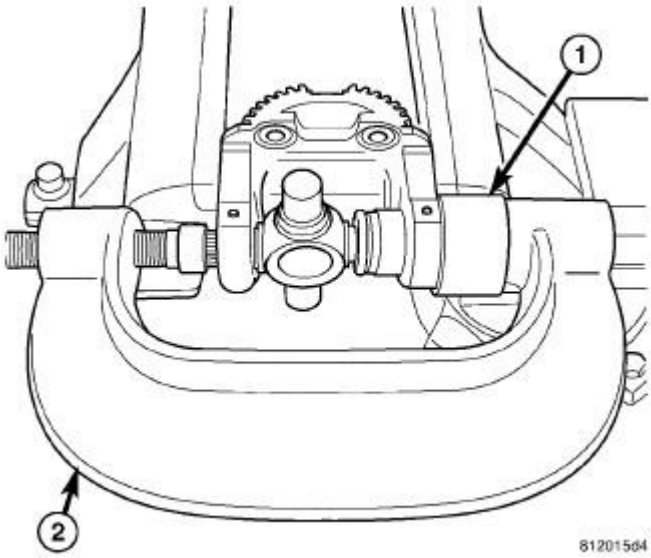

Fig. 75: Pressing Remaining U-Joint Bearing Cap Out Of Flange
Courtesy of CHRYSLER GROUP, LLC

11. Position U-joint press (2) with receiver (1) on flange.
12. Press remaining U-joint bearing cap out of flange.
13. Remove U-joint from flange.

WITH SNAP RINGS

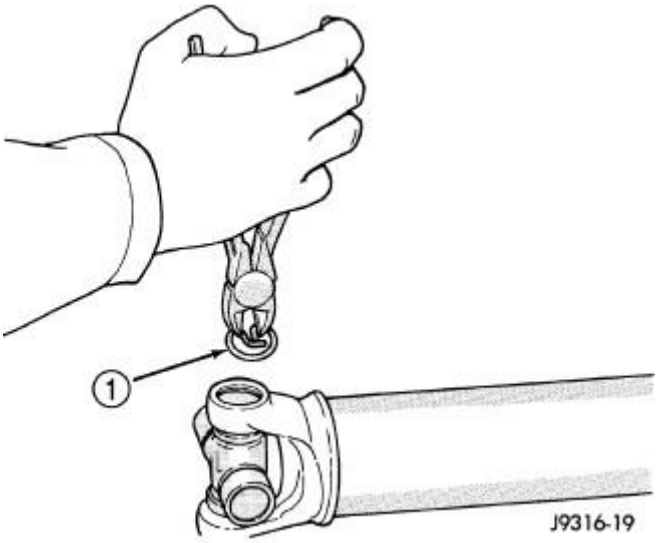

Fig. 76: Remove Snap Ring
Courtesy of CHRYSLER GROUP, LLC

1. Tap outside of bearing cap with a drift to loosen snap ring.
2. Remove snap rings (1) from both sides of yoke.

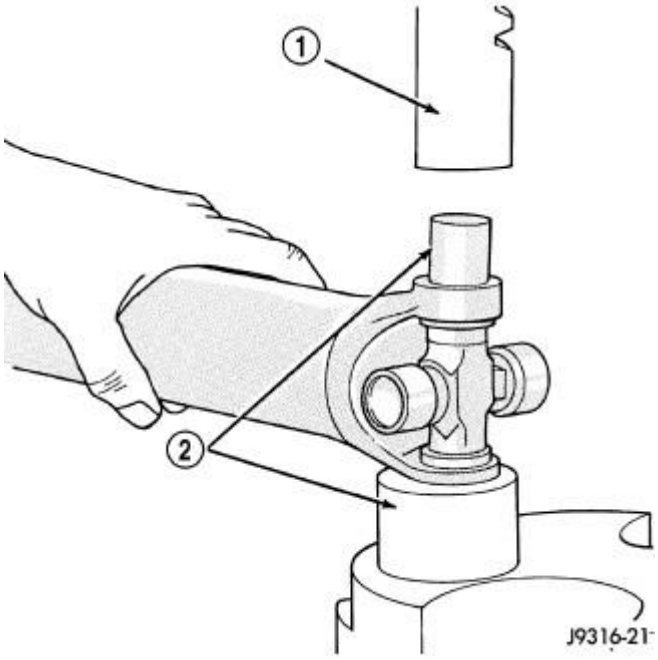

Fig. 77: Press Out Bearing
Courtesy of CHRYSLER GROUP, LLC

3. Position yoke with the grease fitting if equipped, pointing up.

4. Position a socket (2) with a inside diameter large enough to receive the bearing cap, beneath the yoke on a press.
5. Place another socket with an outside diameter smaller than bearing cap on the upper bearing cap and press (1) the lower cap through the yoke.

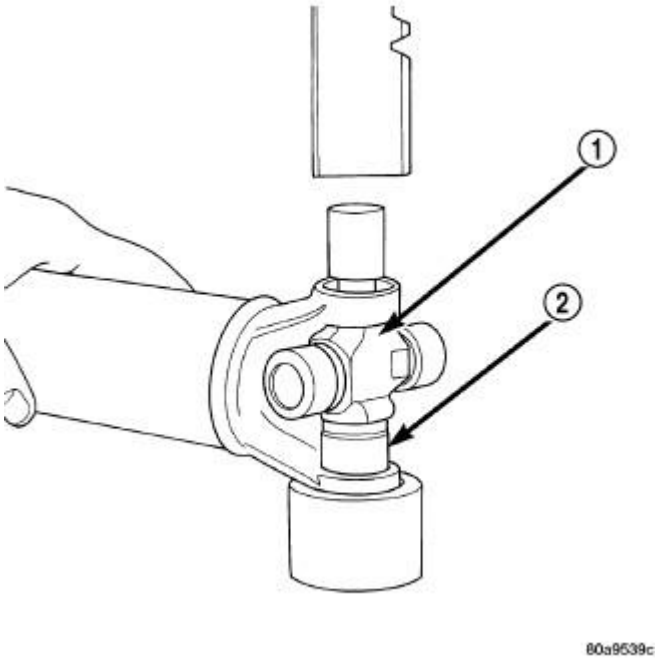

Fig. 78: Pressing Cross To Remove Bearing Cap
Courtesy of CHRYSLER GROUP, LLC

NOTE: If bearing cap will not pull out of the yoke after pressing, tap yoke ear near bearing cap to dislodge the cap.

6. Pull bearing cap of the yoke.
7. Turn yoke over in the press and straighten the cross (1). Press the cross until the remaining bearing cap (2) can be removed.

CAUTION: If cross or bearing cap are not straight during removal, the bearing cap will score the walls of the yoke bore and damage can occur.

ASSEMBLY

WITH INJECTED RING

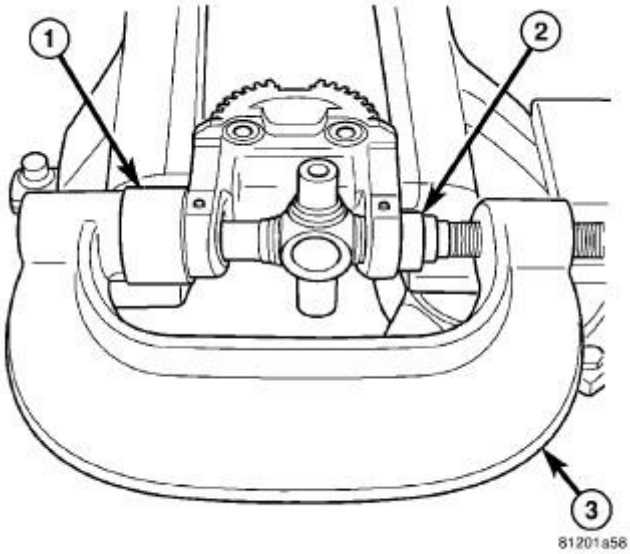

Fig. 79: U-Joint Press With Receiver
Courtesy of CHRYSLER GROUP, LLC

NOTE: Replacement joint has internal snap rings.

1. Place joint in flange with one bearing cap.
2. Position press (3) with receiver (1) on flange and bearing cap (2).

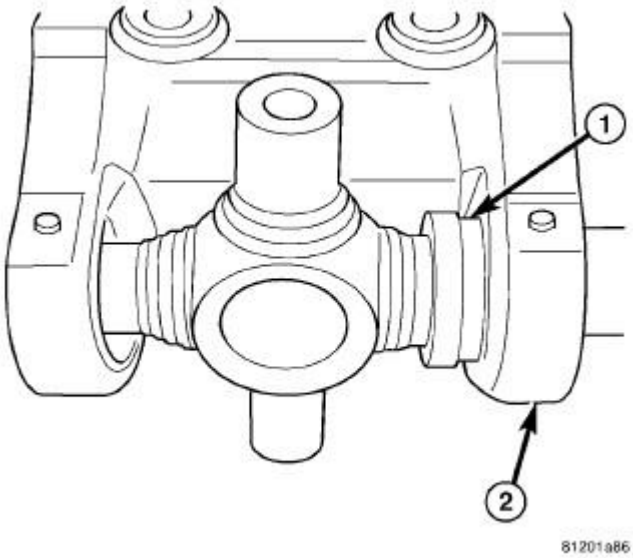

Fig. 80: Identifying Snap Ring Groove & Flange
Courtesy of CHRYSLER GROUP, LLC

3. Press bearing cap until snap ring groove (1) is through the flange (2).

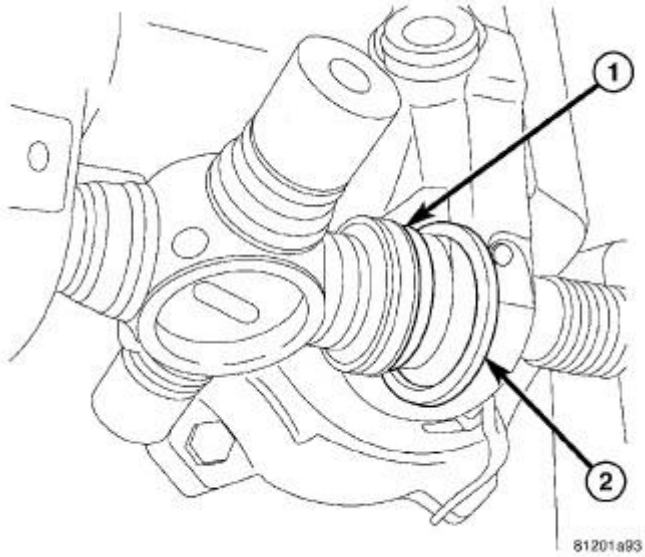

Fig. 81: Identifying Snap Ring & Bearing
Courtesy of CHRYSLER GROUP, LLC

4. Install snap ring (2) on bearing (1).

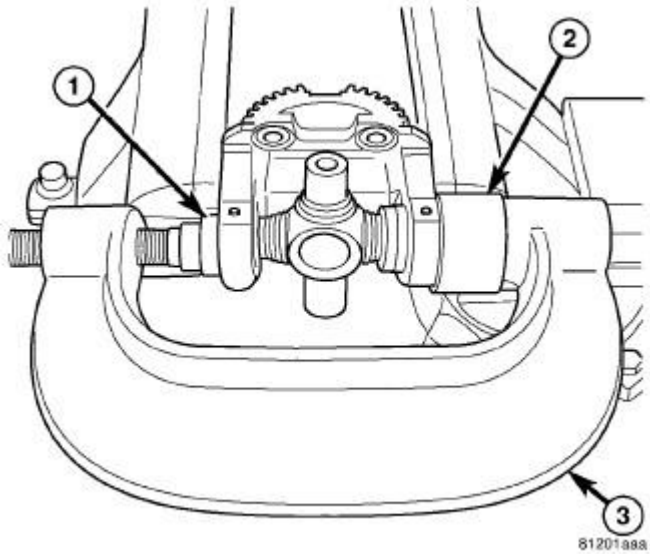

Fig. 82: U-Joint Press With Receiver
Courtesy of CHRYSLER GROUP, LLC

5. Position press (3) with receiver (2) on remaining bearing cap (1) and flange.
6. Press bearing cap until snap ring groove is through the flange.

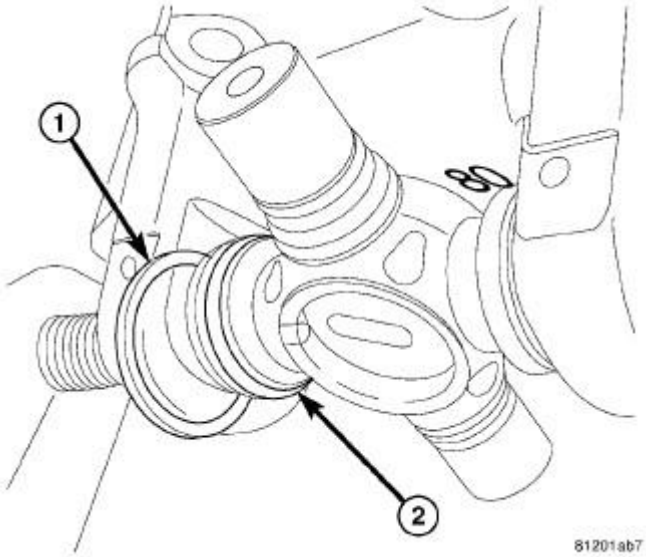

Fig. 83: Identifying Snap Ring On Bearing Cap
Courtesy of CHRYSLER GROUP, LLC

7. Install snap ring (1) on bearing cap (2).

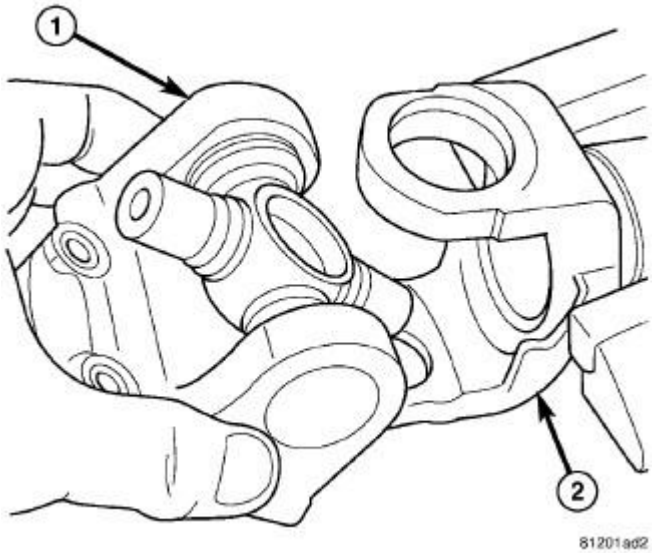

Fig. 84: Identifying Flange With U-Joint In Yoke
Courtesy of CHRYSLER GROUP, LLC

8. Install flange (1) with U-joint in yoke (2).

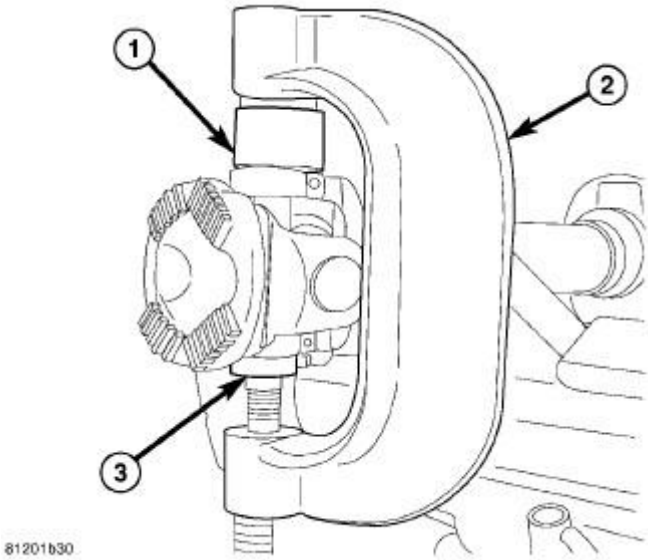

Fig. 85: U-Joint Press With Receiver
Courtesy of CHRYSLER GROUP, LLC

9. Position press (2) with receiver (1) and lower bearing cap (3) on yoke.
10. Press bearing cap until snap ring groove is through the yoke.

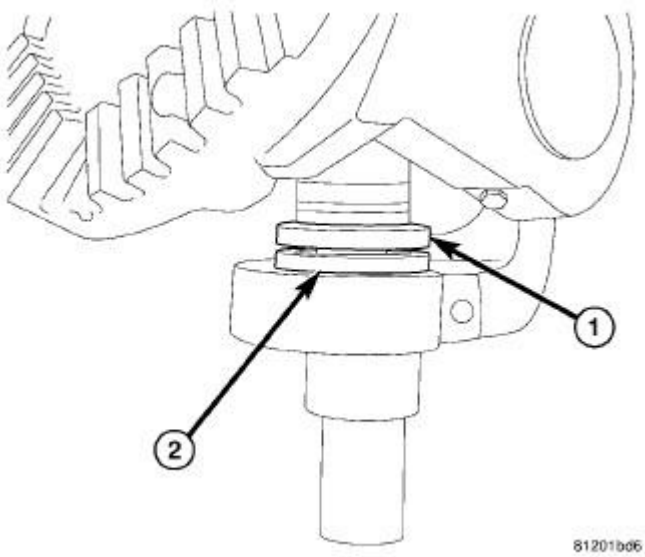

Fig. 86: Installing Snap Ring On Bearing Cap
Courtesy of CHRYSLER GROUP, LLC

11. Install snap ring (2) on bearing cap (1).

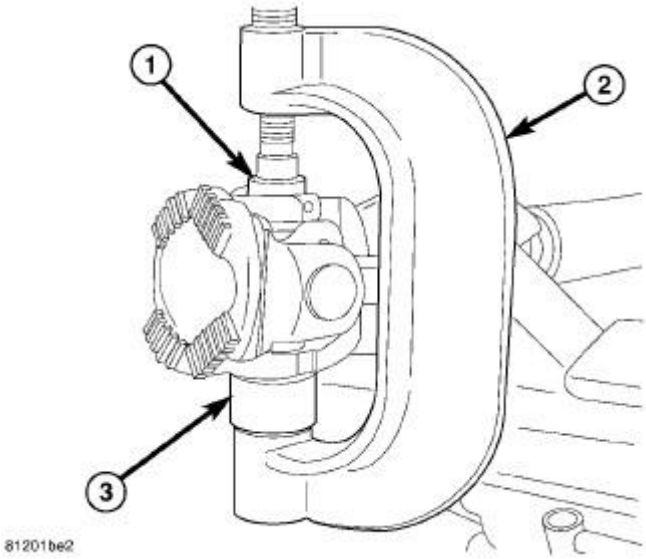

Fig. 87: Positioning U-Joint Press With Receiver
Courtesy of CHRYSLER GROUP, LLC

12. Position press (2) with receiver (3) on remaining bearing cap (1) and yoke.
13. Press remaining bearing cap until snap ring groove is through the yoke.

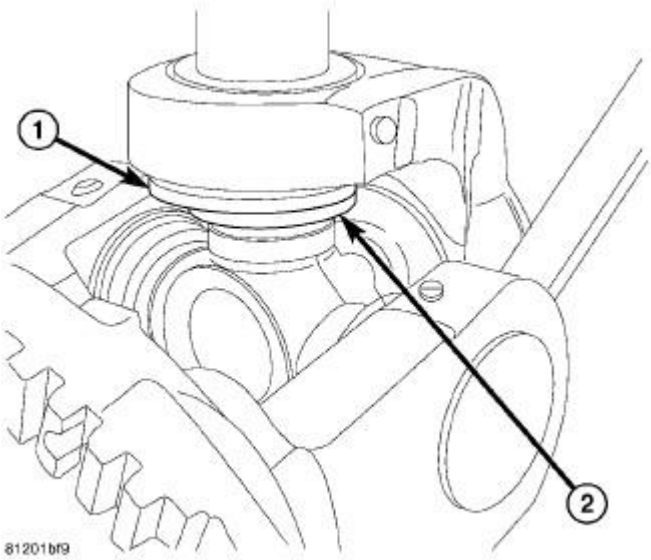

Fig. 88: Installing Snap Ring On Bearing Cap
Courtesy of CHRYSLER GROUP, LLC

14. Install snap ring (2) on bearing cap (1).

WITH SNAP RINGS

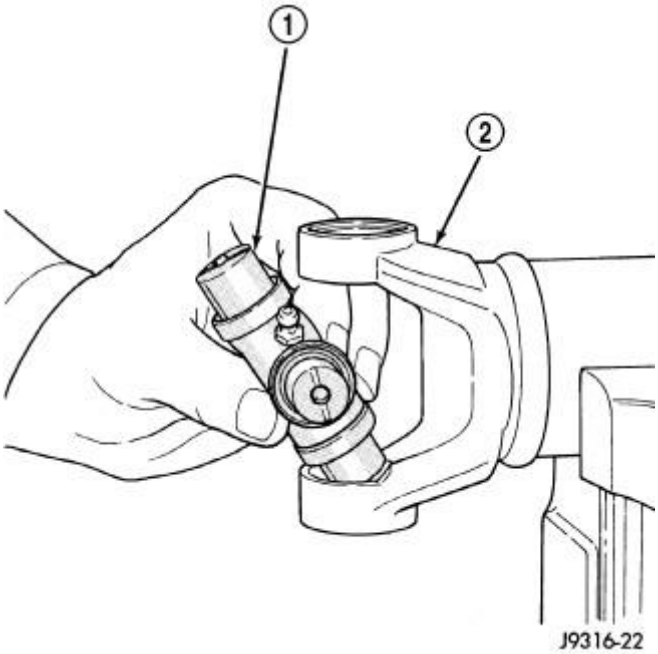

Fig. 89: Install Cross In Yoke
Courtesy of CHRYSLER GROUP, LLC

1. Apply (EP) N.L.G.I. Grade 1 or 2 grease to inside of yoke bores.
2. Position cross (1) in yoke (2) with lube fitting pointing up, if equipped.

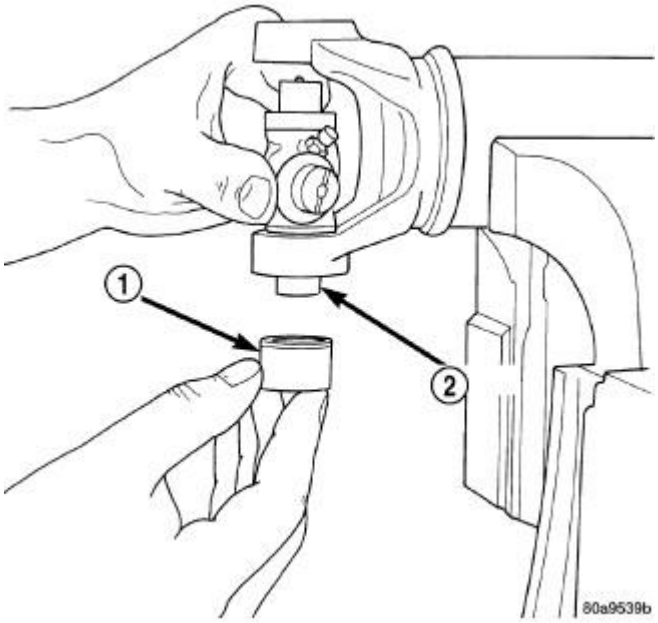

Fig. 90: Placing Bearing Cap Over Cross
Courtesy of CHRYSLER GROUP, LLC

3. Place a bearing cap (1) over the cross end (2) and align cap with yoke bore.
4. Press bearing cap into the yoke bore enough to clear snap ring groove.
5. Repeat to install the opposite bearing cap. Refer to 3 and 4.

NOTE: If joint is stiff or binding, strike the yoke with a soft hammer to seat the needle bearings.

6. Add grease to lube fitting, if equipped.
7. Install propeller shaft.

DIAGNOSIS AND TESTING

DIAGNOSIS AND TESTING - REAR AXLE - 10 1/2 AA

FLUID CHECK

Filling an axle to the bottom of the fill hole may result in an over fill condition. This can cause fluid foaming which will result in inadequate lubrication to the axle components. To check axle fluid, park vehicle on a level surface. Take a piece of wire and make a 90 degree bend two inches from the end of the wire. Insert the wire into the fill plug hole and use it like a dipstick. Remove the wire and measure from the 90 degree bend to the oil level. Refer to **SPECIFICATIONS**.

GEAR NOISE

Axle gear noise can be caused by insufficient lubricant, incorrect backlash, incorrect pinion depth, tooth contact, worn/damaged gears, or the carrier housing not having the proper offset and squareness.

Gear noise usually happens at a specific speed range. The noise can also occur during a specific type of driving condition. These conditions are acceleration, deceleration, coast, or constant load.

When road testing, first warm-up the axle fluid by driving the vehicle at least 5 miles and then accelerate the vehicle to the speed range where the noise is the greatest. Shift out-of-gear and coast through the peak-noise range. If the noise stops or changes greatly check for:

- Insufficient lubricant.
- Incorrect ring gear backlash.
- Gear damage.

Differential side gears and pinions can be checked by turning the vehicle. The side gears are loaded during turns. They usually do not cause noise during straight-ahead driving when the gears are unloaded. A worn pinion shaft can also cause a snapping or a knocking noise.

BEARING NOISE

The axle shaft, differential and pinion bearings can all produce noise when worn or damaged. Bearing noise can be either a whining, or a growling sound.

Pinion bearings have a constant-pitch noise. This noise changes only with vehicle speed. Pinion bearing noise will be higher pitched because it rotates at a faster rate. Drive the vehicle and load the differential. If bearing noise occurs, the rear pinion bearing is the source of the noise. If the bearing noise is heard during a coast, the front pinion bearing is the source.

Differential bearings usually produce a low pitch noise. Differential bearing noise is similar to pinion bearing

noise. The pitch of differential bearing noise is also constant and varies only with vehicle speed.

Axle shaft bearings produce noise and vibration when worn or damaged. The noise generally changes when the bearings are loaded. Road test the vehicle. Turn the vehicle sharply to the left and to the right. This will load the bearings and change the noise level. Where axle bearing damage is slight, the noise is usually not noticeable at speeds above 30 m.p.h.

LOW SPEED KNOCK

Low speed knock is generally caused by:

- Worn U-joint(s).
- Worn side-gear thrust washers.
- Worn pinion shaft bore.

VIBRATION

Vibration at the rear of the vehicle is usually caused by:

- Damaged drive shaft.
- Missing drive shaft balance weight(s).
- Worn or out-of-balance wheels.
- Loose wheel lug nuts.
- Worn U-joint(s).
- Loose/broken springs.
- Damaged axle shaft bearing(s).
- Loose pinion gear nut.
- Excessive pinion yoke run out.
- Bent axle shaft(s).

Check for loose or damaged front-end components or engine/transmission mounts. These components can contribute to what appears to be a rear end vibration. Do not overlook engine accessories, brackets and drive belts.

NOTE: All driveline components should be examined before starting any repair.

DRIVELINE SNAP

A snap or clunk noise when the vehicle is shifted into gear (or the clutch engaged), can be caused by:

- High engine idle speed.
- Transmission shift operation.
- Loose engine/transmission/transfer case mounts.
- Worn U-joints.

- Loose spring mounts.
- Loose pinion gear nut and yoke.
- Excessive ring gear backlash.
- Excessive side gear to case clearance.

The source of a snap or a clunk noise can be determined with the assistance of a helper. Raise the vehicle on a hoist with the wheels free to rotate. Instruct the helper to shift the transmission into gear and listen for the noise. A mechanics stethoscope is helpful in isolating the source of a noise.

DIAGNOSTIC CHART

Condition	Possible Causes	Correction
Wheel Noise	1. Wheel loose.	1. Tighten loose nuts.
	2. Worn wheel bearing.	2. Replace bearing.
Axle Shaft Noise	1. Misaligned axle tube.	1. Inspect axle tube alignment. Correct as necessary.
	2. Bent or sprung axle shaft.	2. Inspect and correct as necessary.
Axle Shaft Broke	1. Misaligned axle tube.	1. Replace the broken shaft after correcting tube mis-alignment.
	2 Vehicle overloaded.	2. Replace broken shaft and avoid excessive weight on vehicle.
	3. Erratic clutch operation.	3. Replace broken shaft and avoid or correct erratic clutch operation.
	4. Grabbing clutch.	4. Replace broken shaft and inspect and repair clutch as necessary.
Differential Cracked	1. Improper adjustment of the differential bearings.	1. Replace case and inspect gears and bearings for further damage. Set differential bearing pre-load properly.
	2. Excessive ring gear backlash.	2. Replace case and inspect gears and bearings for further damage. Set ring gear backlash properly.
	3. Vehicle overloaded.	3. Replace case and inspect gears and bearings for further damage. Avoid excessive vehicle weight.
	4. Erratic clutch operation.	4. Replace case and inspect gears and bearings for further damage. Avoid erratic use of clutch.
Differential Gears Scored	1. Insufficient lubrication.	1. Replace scored gears. Fill differential with the correct fluid type and quantity.
	2. Improper grade of lubricant.	2. Replace scored gears. Fill differential with the correct fluid

		type and quantity.
	3. Excessive spinning of one wheel/tire.	3. Replace scored gears. Inspect all gears, pinion bores, and shaft for damage. Service as necessary.
Loss Of Lubricant	1. Lubricant level too high.	1. Drain lubricant to the correct level.
	2. Worn axle shaft seals.	2. Replace seals.
	3. Cracked differential housing.	3. Repair as necessary.
	4. Worn pinion seal.	4. Replace seal.
	5. Worn/scored yoke.	5. Replace yoke and seal.
	6. Axle cover not properly sealed.	6. Remove, clean and seal cover.
Axle Overheating	1. Lubricant level low.	1. Fill differential to correct level.
	2. Improper grade of lubricant.	2. Fill differential with the correct fluid type and quantity.
	3. Bearing pre-loads too high.	3. Adjust bearing pre-loads.
	4. Insufficient ring gear backlash.	4. Adjust ring gear backlash.
Gear Teeth Broke	1. Overloading.	1. Replace gears. Examine other gears and bearings for possible damage.
	2. Erratic clutch operation.	2. Replace gears and examine the remaining parts for damage. Avoid erratic clutch operation.
	3. Ice-spotted pavement.	3. Replace gears and examine remaining parts for damage.
	4. Improper adjustments.	4. Replace gears and examine remaining parts for damage. Ensure ring gear backlash is correct.
Axle Noise	1. Insufficient lubricant.	1. Fill differential with the correct fluid type and quantity.
	2. Improper ring gear and pinion adjustment.	2. Check ring gear and pinion contact pattern. Adjust backlash or pinion depth.
	3. Unmatched ring gear and pinion.	3. Replace gears with a matched ring gear and pinion.
	4. Worn teeth on ring gear and pinion.	4. Replace ring gear and pinion.
	5. Loose pinion bearings.	5. Adjust pinion bearing pre-load.
	6. Loose differential bearings.	6. Adjust differential bearing pre-load.
	7. Ring gear run-out.	7. Measure ring gear run-out. Replace components as necessary.
	8. Loose differential bearing cap bolts.	8. Inspect differential components and replace as necessary. Ensure

		that the bearing caps are torqued tot he proper specification.
	9. Housing not machined properly.	9. Replace housing.

ADJUSTMENTS

ADJUSTMENTS

PINION DEPTH MEASUREMENT

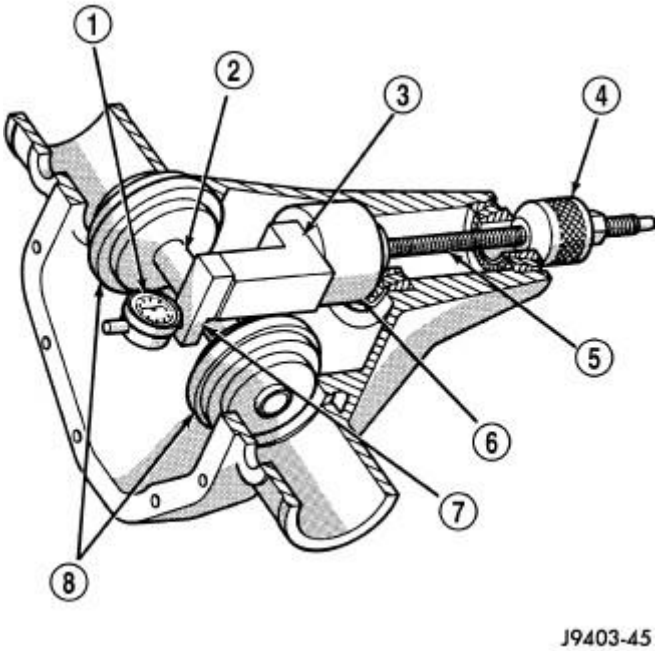

Fig. 1: Pinion Gear Depth Gauge Tools
Courtesy of CHRYSLER GROUP, LLC

Ring and pinion gears are supplied as matched sets. Compensation for pinion depth variance is achieved with a select shim. The shim is located between the rear pinion bearing and the pinion gear head.

Measurements are taken with pinion bearing cups and pinion bearings installed in the housing. Take measurements with Pinion Gauge Set and Dial Indicator (special tool #C-3339A, Set, Dial Indicator).

1. Assemble Pinion Height Block (special tool #6739, Block, Height) (3), Pinion Block (special tool #8899, Gauge, Pinion Height) (6) and rear pinion bearing onto Screw (special tool #6741, Screw) (5).

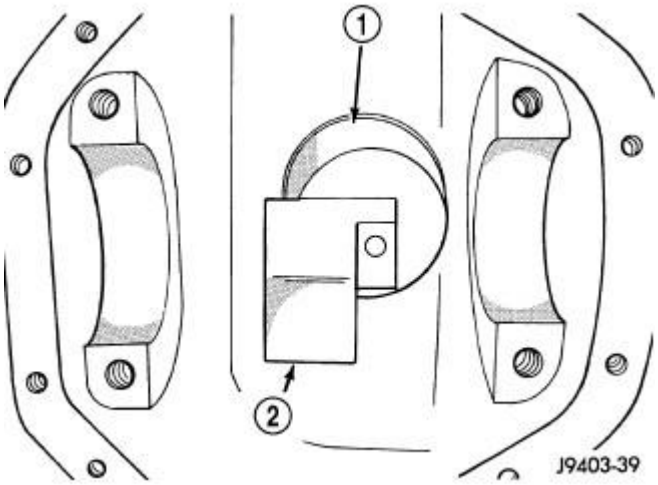

Fig. 2: Pinion Height Block
Courtesy of CHRYSLER GROUP, LLC

2. Insert pinion block (1), pinion height block (2), rear bearing and screw into the housing through pinion bearing cups.
3. Install front pinion bearing and Cone-nut (special tool #6740, Cone) onto the screw. Tighten cone-nut until Torque To Rotate the screw is 1.7-2.26 N.m (15-20 in. lbs.).

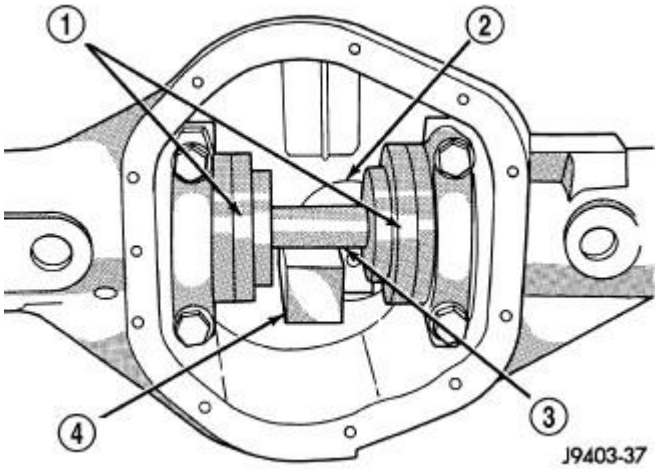

Fig. 3: Gauge Tools In Housing
Courtesy of CHRYSLER GROUP, LLC

4. Place Arbor Discs (special tool #6732, Set, Arbor Disc) (1) on Arbor (special tool #D-115-3, Arbor) (3) in position in the housing side bearing cradles.
5. Install differential bearing caps on arbor discs (1) and snug the bearing cap bolts. Then cross tighten cap bolts to 165 N.m (122 ft. lbs.).

NOTE: Arbor should rotate freely in the arbor discs.

6. Assemble Dial Indicator (special tool #C-3339A, Set, Dial Indicator) into Scooter Block (special tool #D-115-2A, Block, Scooter) and secure set screw.

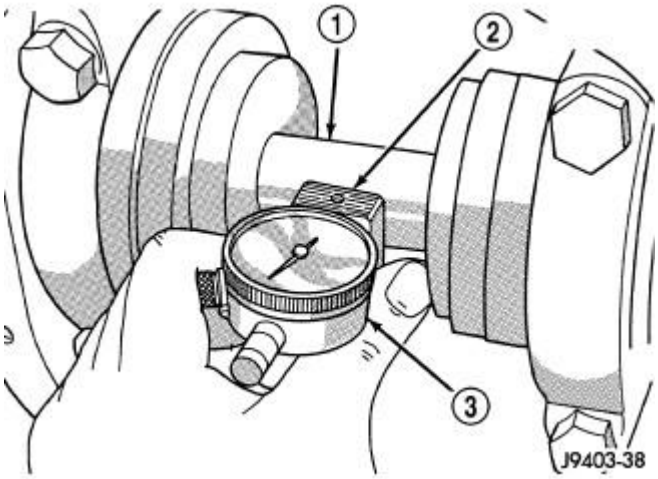

Fig. 4: Measuring Pinion Gear Depth
Courtesy of CHRYSLER GROUP, LLC

7. Position scooter block (2) with dial indicator (3) flush on the pinion height block. Hold scooter block and zero the dial indicator.
8. Slowly slide the scooter block (2) across the pinion height block over to the arbor (1). Move the scooter block till dial indicator crests the arbor, then record the highest reading.
9. Select a shim equal to the dial indicator reading.

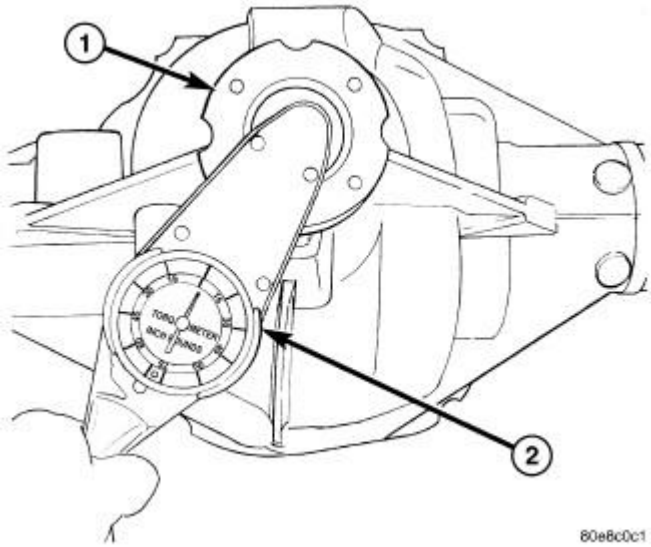

Fig. 5: Measuring Pinion Rotating Torque
Courtesy of CHRYSLER GROUP, LLC

10. Install select shim between rear pinion bearing and the pinion gear head.
11. Install pinion gear and establish Pinion Torque To Rotate (PTTR) with an inch pound torque wrench (2).

DIFFERENTIAL CASE BEARING PRELOAD AND GEAR BACKLASH

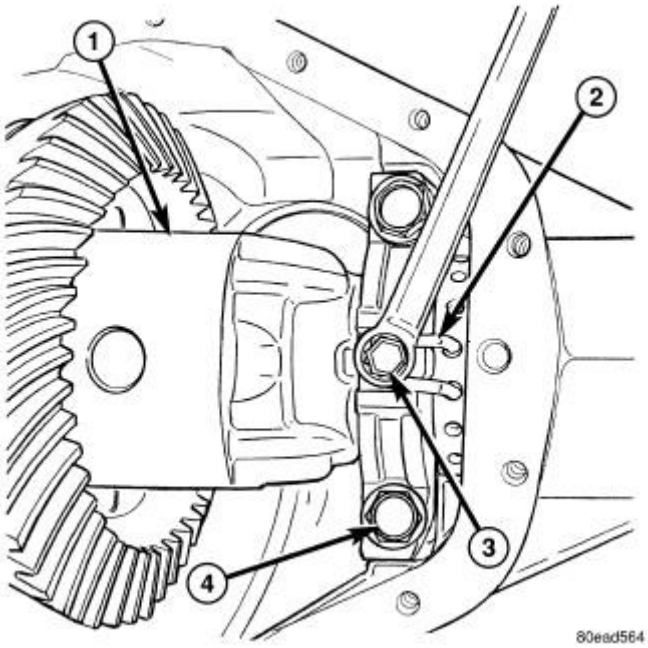

Fig. 6: Adjuster Locks & Bolts
Courtesy of CHRYSLER GROUP, LLC

Backlash is adjusted by moving the adjusters in and out or both. By moving the adjusters the case/ring gear will move closer or further away from the pinion. In most cases this adjustment can be used to achieve the correct gear tooth pattern and set the case bearing preload.

1. Remove adjuster lock bolts (3) and adjuster locks (2).
2. **Loosen** the differential bearing cap bolts (4).
3. Slide differential case (1) toward the pinion gear until the gears make contact/zero backlash. If zero backlash cannot be obtained, turn the pinion side adjuster until zero backlash is obtained.

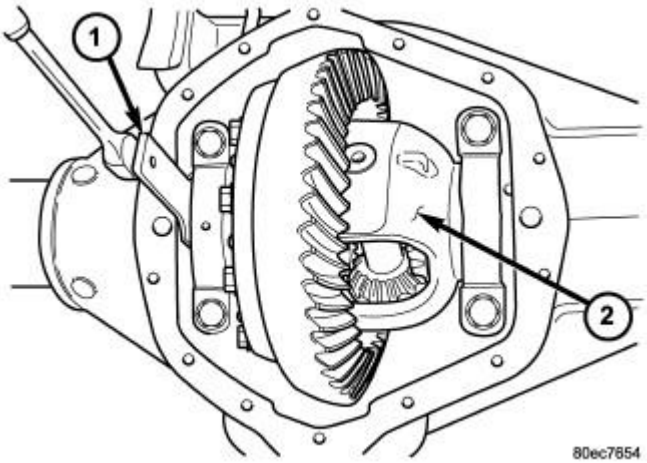

Fig. 7: Turning Bearing Adjusters
Courtesy of CHRYSLER GROUP, LLC

4. Holding the differential case (2) toward the pinion gear, turn bearing adjusters with Adjuster Wrench (special tool #8883A, Wrench, Differential Adjusting) (1) until they make contact with the differential bearings/cups.
5. Back off the ring gear side adjuster 4 holes, to obtain initial ring gear backlash.
6. Install ring gear side adjuster lock and bolt. **Do not tighten** adjuster lock bolt at this time.
7. Tighten pinion gear side adjuster firmly against the differential case bearing cup.
8. Rotate the pinion several times to seat the deferential bearings.
9. Loosen pinion gear side adjuster until it is no longer in contact with the bearing cup, then tighten it until it makes contact.
10. Tighten pinion gear side adjuster an additional:
    - **New Bearings:** 6 Adjuster Holes
    - **Original Bearings:** 4 Adjuster Holes
11. Install pinion gear side adjuster lock and bolt.
12. Tighten bearing cap bolts to 165 N.m (122 ft. lbs.).
13. Tighten adjuster lock bolts to 25 N.m (18 ft. lbs.).

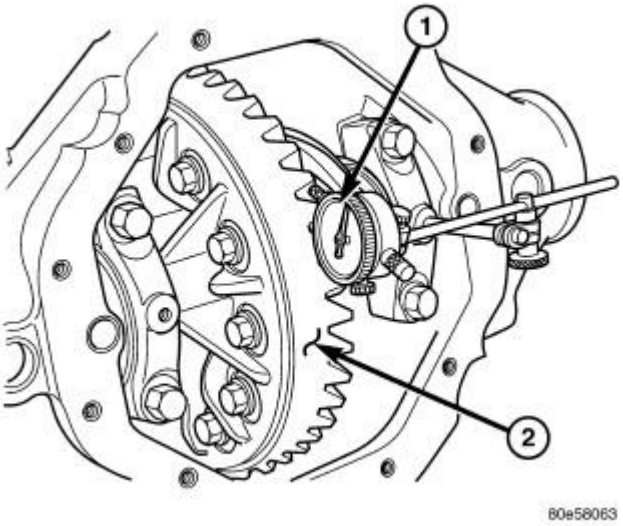

Fig. 8: Measuring Ring Gear Backlash
Courtesy of CHRYSLER GROUP, LLC

14. Measure ring gear (2) backlash with a Dial Indicator (special tool #C-3339A, Set, Dial Indicator) (1) and Pilot Stud (special tool #L-4438, Dial Indicator Post) at eight points around the drive side of the ring gear. The backlash should be 0.08-0.25 mm (0.003-0.010 in) with a preferred backlash of 0.13-0.18 mm (0.005-0.007 in).

NOTE: **Backlash measurement should not vary more than 0.05 mm (0.002 in) between measuring points. If measurement does vary inspect the gears for burrs, the differential case flange and ring gear mounting.**

GEAR TOOTH CONTACT PATTERN

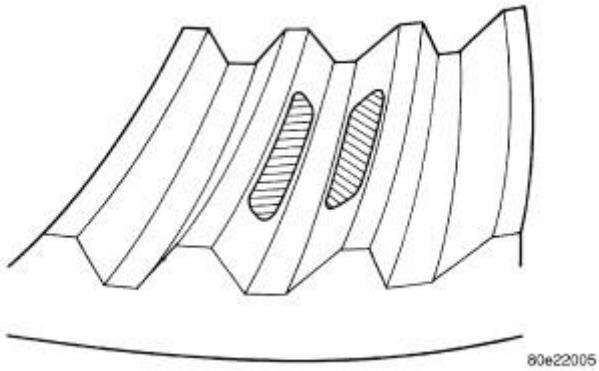

Fig. 9: Correct Contact Pattern
Courtesy of CHRYSLER GROUP, LLC

1. Wipe clean each tooth of the ring gear.
2. Apply gear marking compound to all of the ring gear teeth.

3. Verify bearing cap bolts are torqued to specification.
4. Apply parking brakes lightly to create at 14 N.m (10 ft. lbs.) pinion rotating torque.
5. Rotate the pinion/pinion yoke 4 full revolutions in each directions.
6. Read gear tooth contact pattern.

Gear contact pattern correct. Backlash and pinion depth is correct.

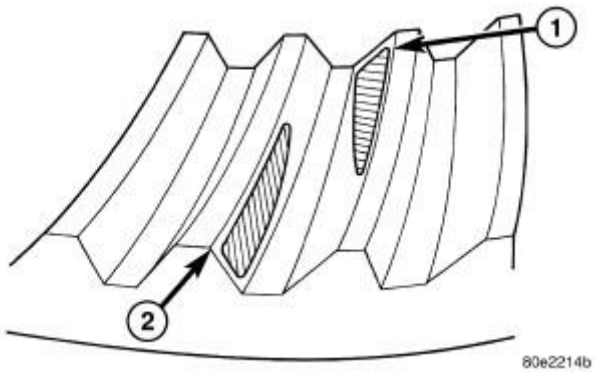

Fig. 10: Incorrect Backlash (1 Of 4)
Courtesy of CHRYSLER GROUP, LLC

Ring gear too far away from pinion gear, coast side toe (1) and drive side heel (2). Decrease the backlash, by moving the ring closer to the pinion gear using the adjusters.

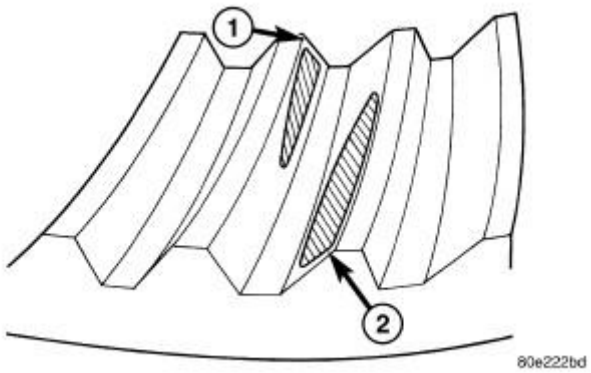

Fig. 11: Incorrect Backlash (2 Of 4)
Courtesy of CHRYSLER GROUP, LLC

Ring gear too close to pinion gear, drive side toe (1) and coast side heel (2). Increase the backlash, by moving the ring away from the pinion gear using the adjusters.

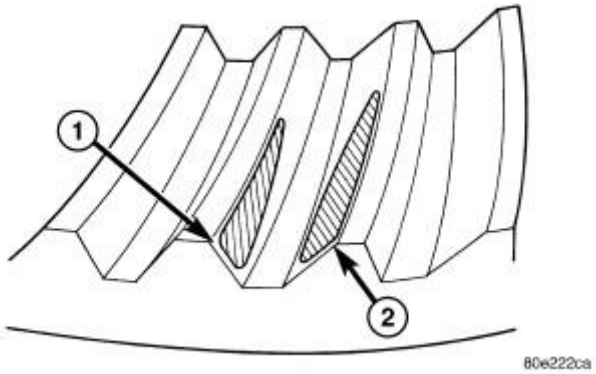

Fig. 12: Incorrect Backlash (3 Of 4)
Courtesy of CHRYSLER GROUP, LLC

Ring gear too far away from pinion gear, drive side heel (1) and coast side heel (2). Decrease the backlash, by moving the ring closer to the pinion gear using the adjusters.

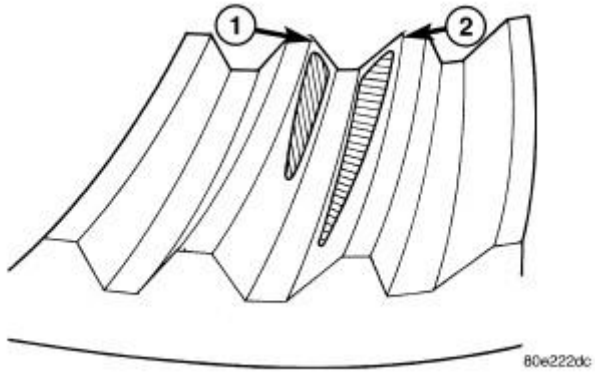

Fig. 13: Incorrect Backlash (4 Of 4)
Courtesy of CHRYSLER GROUP, LLC

Ring gear too close to pinion gear, drive side toe (1) and coast side toe (2). Increase the backlash, by moving the ring away from the pinion gear using the adjusters.

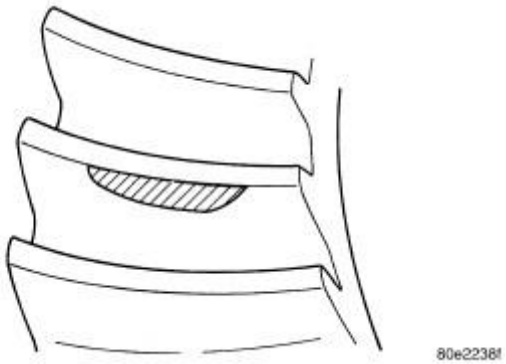

Fig. 14: Low Pinion Height

Courtesy of CHRYSLER GROUP, LLC

Pinion gear is set too low. Increase the pinion gear height, by increasing the pinion depth shim thickness.

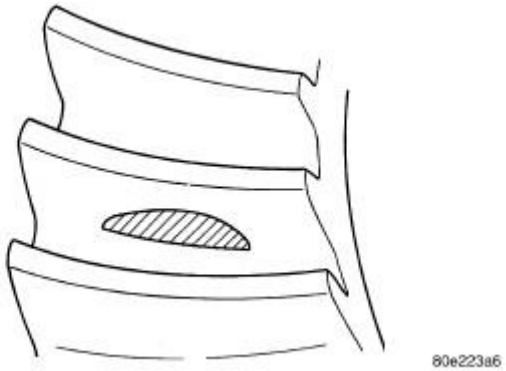

Fig. 15: High Pinion Height
Courtesy of CHRYSLER GROUP, LLC

Pinion gear is set too high. Decrease the pinion depth, by decreasing the pinion depth shim thickness.

SPECIFICATIONS

SPECIFICATIONS

AXLE

DESCRIPTION	SPECIFICATION
Axle Ratio	3.73, 4.10, 4.56
Ring Gear Diameter	266 mm (10.5 in.)
Ring Gear Backlash	0.13 - 0.18 mm (0.005 - 0.007 in.)
Pinion Torque To Rotate - New Bearings	1.69 - 2.82 N.m (15 - 25 in. lbs.)
Pinion Torque To Rotate - Original Bearings	1 - 2 N.m (10 - 20 in. lbs.)
Total Torque To Rotate - New Bearings	3.4 - 5.6 N.m (30 - 50 in. lbs.)
Total Torque To Rotate - Original Bearings	2.8 - 5.1 N.m (25 - 45 in. lbs.)
Fill Level - From Bottom of Fill Hole	25 mm (1 in.) ± 6 mm (1/4 in.)

TORQUE SPECIFICATIONS

DESCRIPTION	N.m	Ft. Lbs.	In. Lbs.
Fill Hole Plug	32	24	-
Differential Cover Bolts	40	30	-
Bearing Cap Bolts	165	122	-
Ring Gear Bolts	237	175	-
Axle Flange Bolts	129	95	-
Adjuster Lock Bolt	25	18	-
Sensor Target Magnet			

Bolt	7	-	62

REMOVAL

REMOVAL

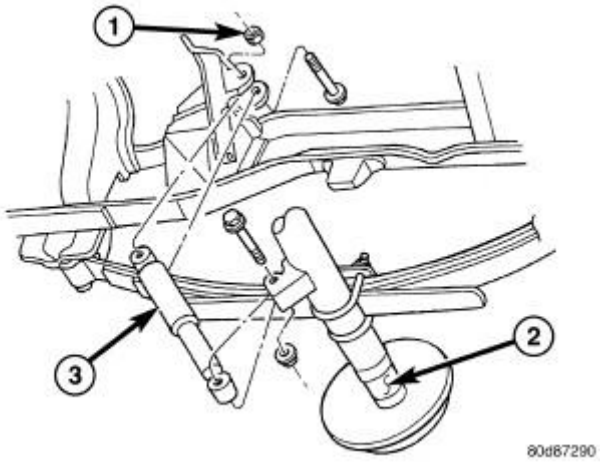

Fig. 16: Shock Absorber
Courtesy of CHRYSLER GROUP, LLC

1. With vehicle in neutral, position vehicle on hoist.
2. Position a lift under axle and secure lift to the axle.
3. Remove all brake components.
4. Remove axle vent hose.
5. Mark propeller shaft and companion flange for installation alignment reference.
6. Remove propeller shaft.
7. Remove shock absorbers (3) from axle (2).

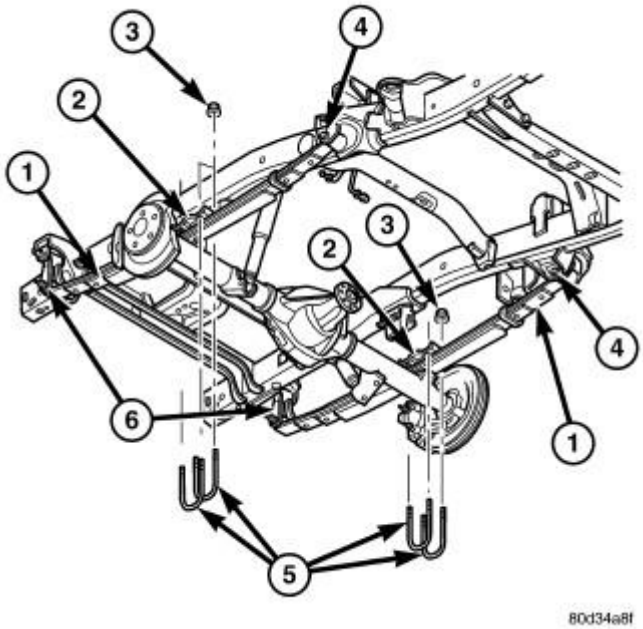

Fig. 17: Rear Axle & U-Bolts
Courtesy of CHRYSLER GROUP, LLC

8. Remove U-bolts (5) from axle.
9. Remove axle from the vehicle.

INSTALLATION

INSTALLATION

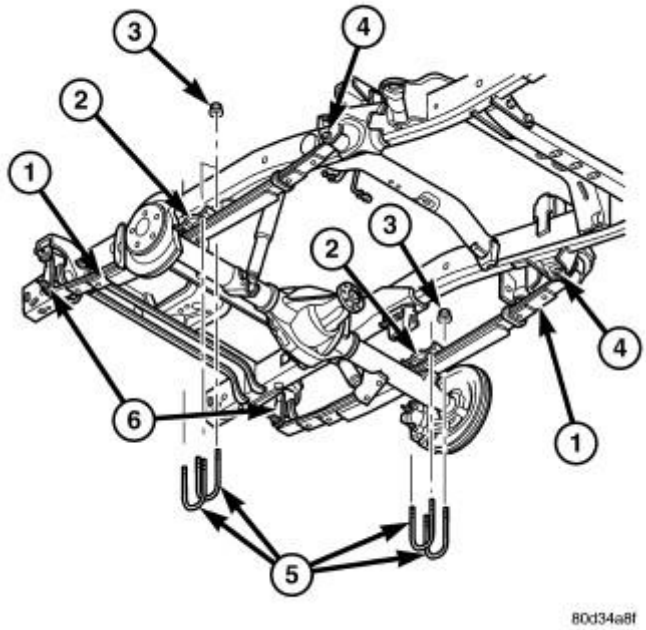

Fig. 18: Rear Axle & U-Bolts
Courtesy of CHRYSLER GROUP, LLC

1. Raise axle with lift and align to the leaf spring centering bolts.
2. Install axle U-bolts (5) and tighten to 149 N.m (110 ft. lbs.).
3. Install shock absorbers to axle and tighten to specification.
4. Install all brake components.
5. Install axle vent hose.
6. Install propeller shaft with reference marks aligned and tighten to specification.
7. Fill differential to specifications.

SPECIAL TOOLS

SPECIAL TOOLS

	1130 - Splitter, Bearing/Gear (Originally Shipped In Kit Number(s) 6745, 6947, 6949, 9202, 9202A-CAN, 9202CC, 9299.) 6444 - Puller, Bearing/Gear (Originally Shipped In Kit Number(s) 6440, 8847, 8854CC.) 6732 - Set, Arbor Disc (Originally Shipped In Kit Number(s) 6730.) 6739 - Block, Height (Originally Shipped In Kit Number(s) 6730, 9516A-CAN, 9540, 9541.) 6740 - Cone (Originally Shipped In Kit Number(s) 6730, 6731, 9516A-CAN, 9540, 9541.)

6741 - Screw
(Originally Shipped In Kit Number(s) 6730, 6731, 9516A-CAN, 9540, 9541.)
8879 - Adapters, Puller
(Originally Shipped In Kit Number(s) 8887, 8887CC.)
8883A - Wrench, Differential Adjusting
(Originally Shipped In Kit Number(s) 8887.)
8888 - Plug, Differential Bearing
(Originally Shipped In Kit Number(s) 8887, 8887CC.)
8896 - Installer, Seal
(Originally Shipped In Kit Number(s) 8887, 8887CC.)
8899 - Gauge, Pinion Height
(Originally Shipped In Kit Number(s) 8887, 8887CC.)
8954 - Hub Nut Socket
(Originally Shipped In Kit Number(s) 8887, 8887CC.)
8956 - Installer, Differential Bearing
(Originally Shipped In Kit Number(s) 8887, 8887CC.)
8959 - Installer, Bearing Cup
(Originally Shipped In Kit Number(s) 8887, 8887CC.)
8960 - Installer, Bearing Cup
(Originally Shipped In Kit Number(s) 8887, 8887CC.)
8961 - Installer, Bearing Cup
(Originally Shipped In Kit Number(s) 8887, 8887CC.)
8962 - Installer, Bearing Cup
(Originally Shipped In Kit Number(s) 8887, 8887CC.)
8963 - Installer, Hub Seal
(Originally Shipped In Kit Number(s) 8887, 8887CC.)
8977 - Pinion Driver
(Originally Shipped In Kit Number(s) 8887, 8887CC.)
8979 - Wrench, Pinion Flange
(Originally Shipped In Kit Number(s) 8999.)
8981 - Installer, Bearing Cup
(Originally Shipped In Kit Number(s) 8887, 8887CC.)
8992 - Remover, Pinion Flange
(Originally Shipped In Kit Number(s) 8999, 8999CC, 9299, 9299CC, 9299CC, 9300A-CAN.)
938 - Bridge
(Originally Shipped In Kit Number(s) 6745, 6947, 6949, 9202, 9202A-CAN, 9202CC, 9299.)
9614 - Adapters, Puller
(Originally Shipped In Kit Number(s) 9690.)
9915 - Remover, El Diff. Bearing
(Originally Shipped In Kit Number(s) 9940.)
C-293-PA - Puller, Press
(Originally Shipped In Kit Number(s) 8418, 8837, C-293-M.)
C-3339A - Set, Dial Indicator
(Originally Shipped In Kit Number(s) 9202.)
C-4171 - Driver Handle, Universal
(Originally Shipped In Kit Number(s) 9202, 9202A-CAN, 9202CC, 9299, 9299CC, 9299CC,

	9300A-CAN.) D-115-2A - Block, Scooter (Originally Shipped In Kit Number(s) 9329-SUP, 9515-SUP, 9516-SUP, 9517-SUP, 9518, 9519, 9540-SUP, 9541-SUP, 9694, 9926.) D-115-3 - Arbor (Originally Shipped In Kit Number(s) 8667, 9516A-CAN.) L-4438 - Dial Indicator Post

BEARING, AXLE SHAFT

REMOVAL

REMOVAL

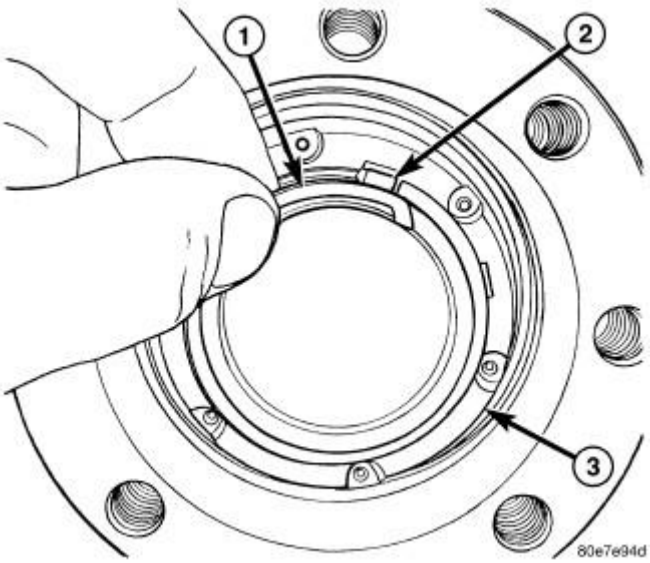

Fig. 19: Retainer Ring
Courtesy of CHRYSLER GROUP, LLC

1. Remove axle shaft flange bolts and remove axle shaft.
2. Remove retainer ring (1) from axle shaft tube.

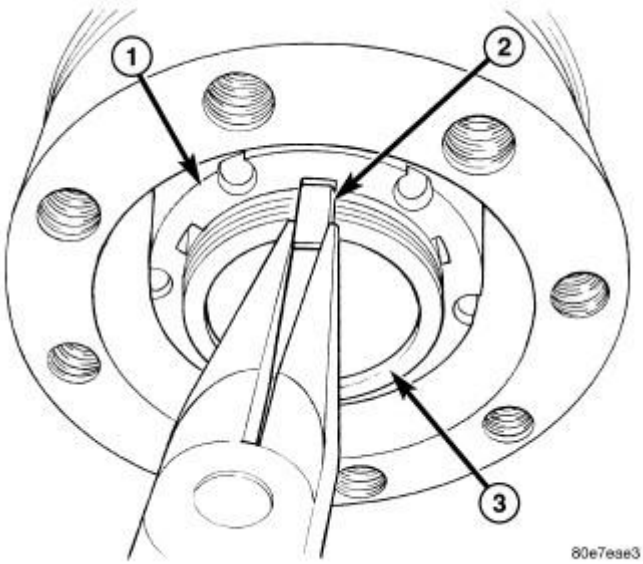

Fig. 20: Locking Key
Courtesy of CHRYSLER GROUP, LLC

3. Remove hub bearing nut (1) locking key (2) from axle tube (3).
4. Remove hub bearing nut with Socket (special tool #8954, Hub Nut Socket).
5. Remove hub and bearings from the axle.

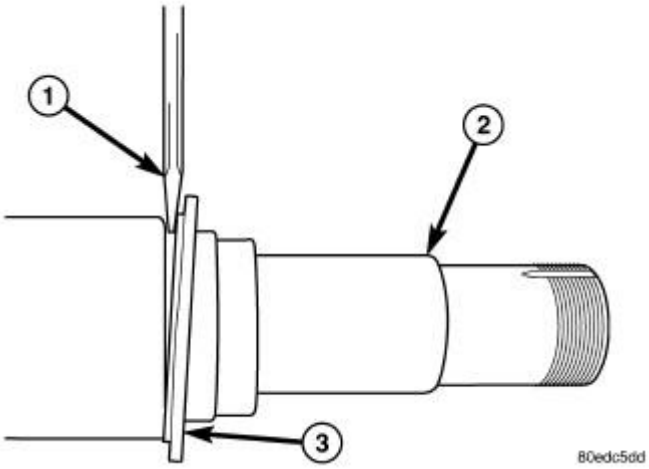

Fig. 21: Prying Out Hub Bearing Seal
Courtesy of CHRYSLER GROUP, LLC

6. Pry out hub bearing seal from the back of the hub.

NOTE: **The inner part of the seal (3) may stay on the axle tube (2). This part must also be removed with pry bar (1).**

7. Remove rear bearing.
8. Remove hub bearing cups with a hammer and drift.

INSTALLATION

INSTALLATION

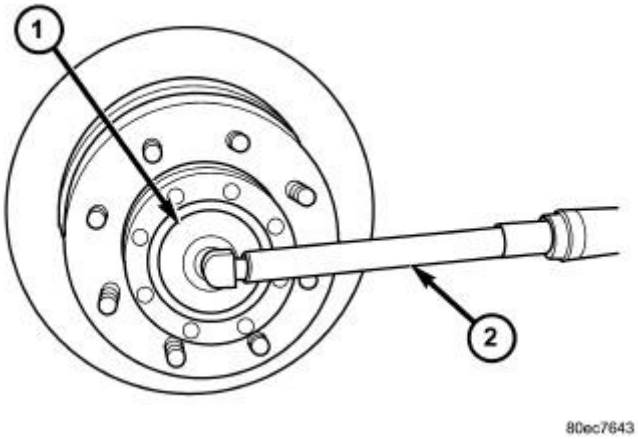

Fig. 22: Hub Nut Socket
Courtesy of CHRYSLER GROUP, LLC

1. Install outer hub bearing cup with Installer (special tool #8961, Installer, Bearing Cup) and Handle (special tool #C-4171, Driver Handle, Universal).
2. Install inner hub bearing cup with Installer (special tool #8962, Installer, Bearing Cup) and Handle (special tool #C-4171, Driver Handle, Universal).
3. Pack bearings with the appropriate grease.
4. Install rear bearing and install **new** grease seal with Installer (special tool #8963, Installer, Hub Seal) and Handle (special tool #C-4171, Driver Handle, Universal).
5. Slide hub on the axle tube and install front bearing into the hub.
6. Install hub bearing nut with Socket (special tool #8954, Hub Nut Socket) (1) and torque wrench (2) to 30 N.m (22 ft. lbs.) while rotating the hub.
7. Back off nut about 30° and align next hub nut key slot with axle tube key slot and install locking key. End play should be 0.025-0.25 mm (0.001-0.010 in.).

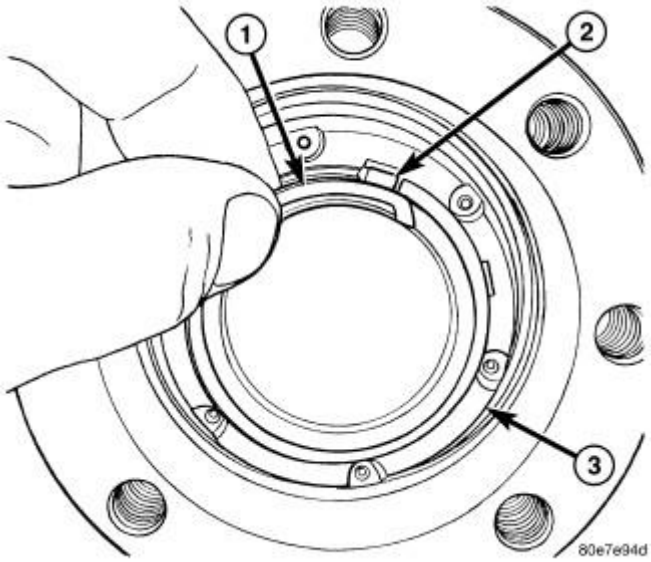

Fig. 23: Retainer Ring
Courtesy of CHRYSLER GROUP, LLC

8. Install retainer ring (1) with ring end in the key slot (2).
9. Install new axle shaft gasket and install axle shaft.

BEARING, DIFFERENTIAL SIDE

REMOVAL

REMOVAL

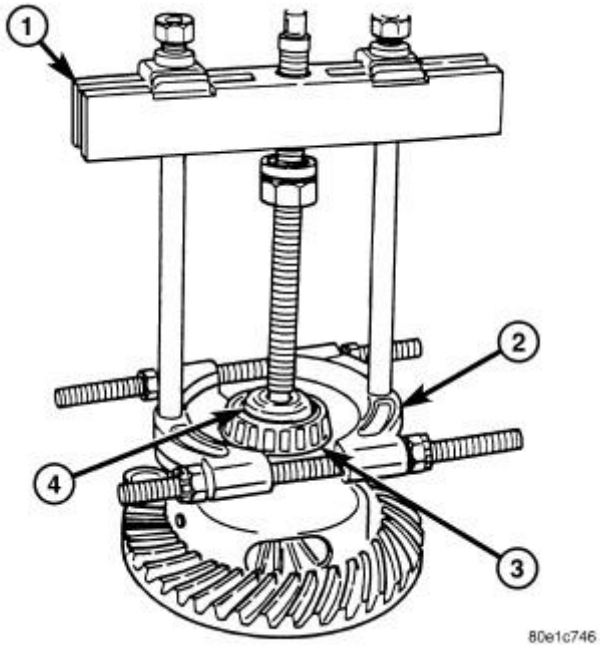

Fig. 24: Removing Differential Case Bearings
Courtesy of CHRYSLER GROUP, LLC

1. Remove differential case from the housing.
2. Install Plug (special tool #8888, Plug, Differential Bearing) (4) into the end of the case.
3. Remove differential case bearings (3) with Bearing Splitter (special tool #1130, Splitter, Bearing/Gear) (2) and Bridge (special tool #938, Bridge) (1).

INSTALLATION

INSTALLATION

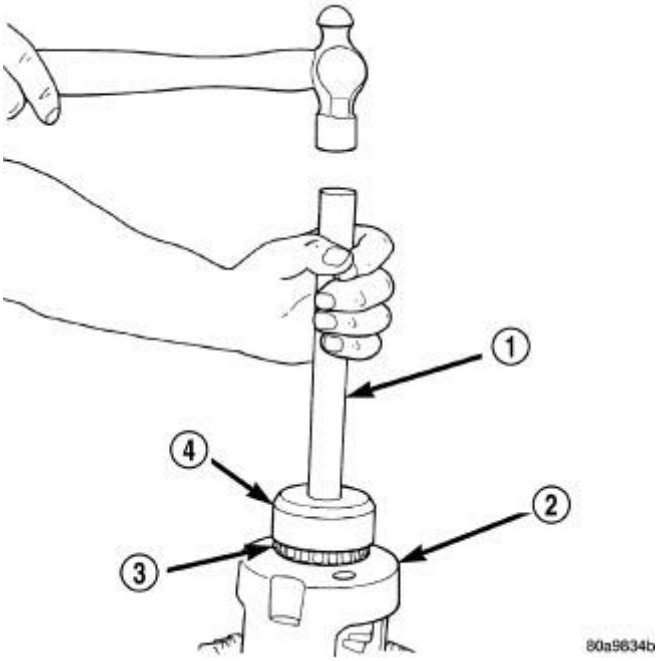

Fig. 25: Installing Differential Case Bearings
Courtesy of CHRYSLER GROUP, LLC

1. Install open and Trac-Rite differential case (2) bearings (3) with Installer (special tool #8956, Installer, Differential Bearing) (4) and Handle (special tool #C-4171, Driver Handle, Universal) (1).
2. Install differential case into housing.

BEARING, DIFFERENTIAL SIDE, ELECTRIC LOCKER

REMOVAL

REMOVAL

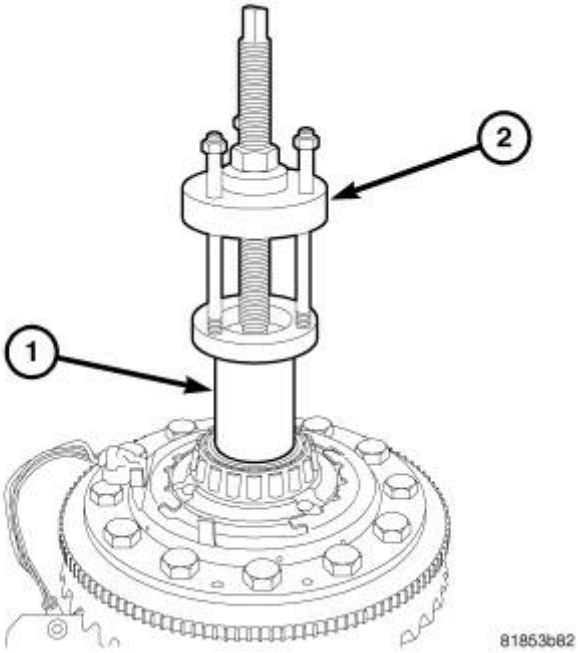

Fig. 26: Identifying Puller & Plug
Courtesy of CHRYSLER GROUP, LLC

1. Remove the differential case from the housing.
2. Install Plug (special tool #8888, Plug, Differential Bearing) (1) into the end of the differential case on the coil side.
3. Install Puller (special tool #6444, Puller, Bearing/Gear) (2) onto the end of the plug (1).

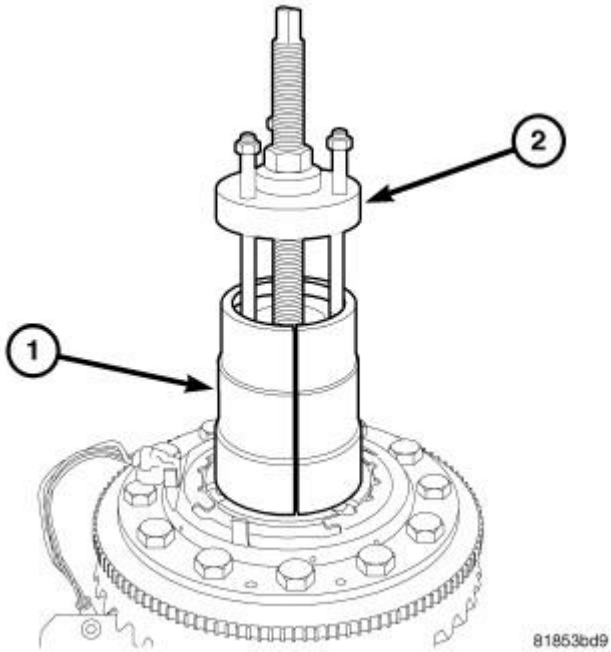

Fig. 27: Identifying Puller & Jaws
Courtesy of CHRYSLER GROUP, LLC

4. Install puller Jaws (special tool #9915, Remover, El Diff. Bearing) (1) onto puller (2) and around the bearing.

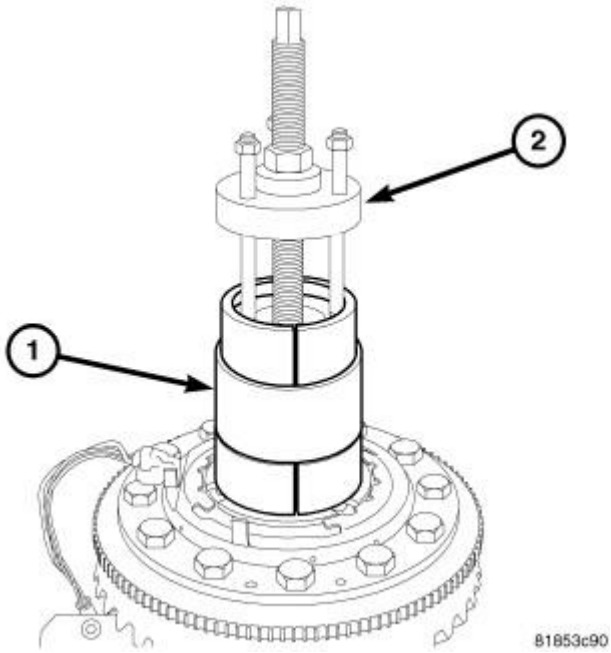

Fig. 28: Removing Differential Bearing
Courtesy of CHRYSLER GROUP, LLC

5. Install puller collar (1) onto puller jaws (2). Tighten puller bolt and remove bearing.

NOTE: **Bearing on the other side of the case can be removed with Puller (special tool #C-293-PA, Puller, Press) and Adapters (special tool #9614, Adapters, Puller).**

INSTALLATION

INSTALLATION

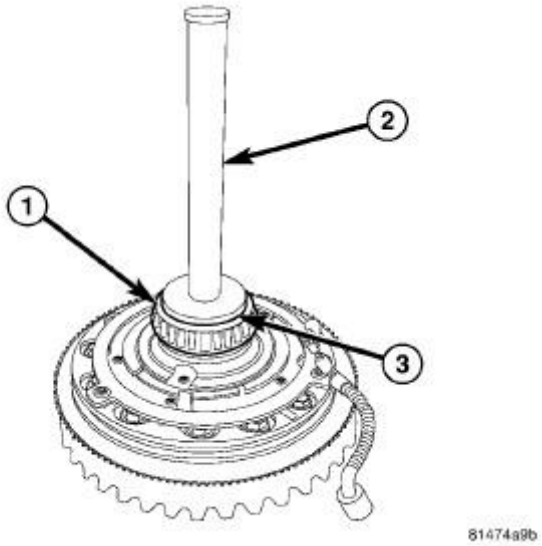

Fig. 29: Installing Differential Bearing
Courtesy of CHRYSLER GROUP, LLC

1. Install differential bearings (1) with Handle (special tool #C-4171, Driver Handle, Universal) (2) and Installer (special tool #8956, Installer, Differential Bearing) (3).

CASE ASSEMBLY, DIFFERENTIAL

REMOVAL

REMOVAL

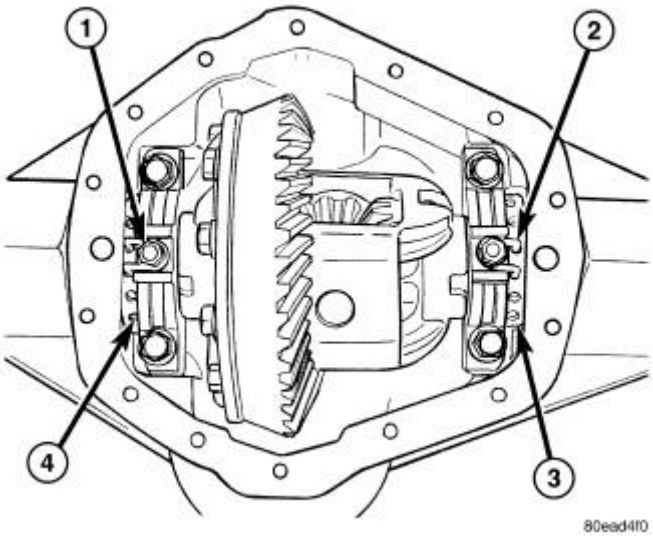

Fig. 30: Adjuster Locks

Courtesy of CHRYSLER GROUP, LLC

1. Remove lubricant fill hole plug from the differential housing cover.
2. Remove differential housing cover and drain the lubricant from housing.
3. Remove axle shafts.
4. Remove adjuster lock bolts (1) and adjuster locks (2).
5. Mark bearing caps (4) left and right for installation reference.
6. Remove bearing cap bolts and remove bearing caps.

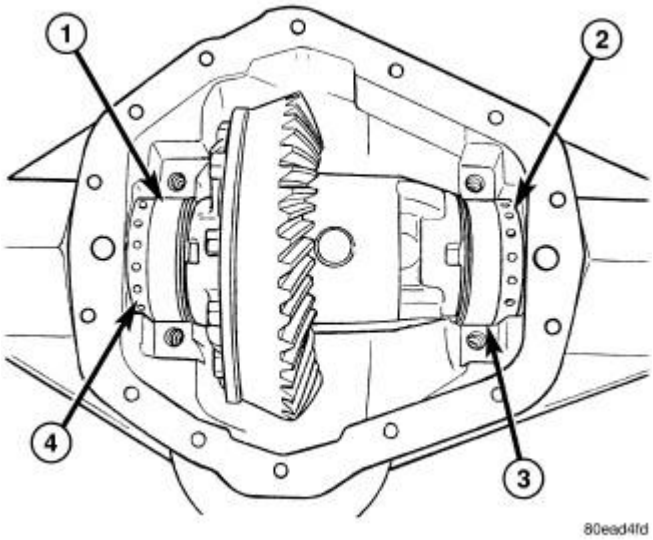

Fig. 31: Bearing Adjusters
Courtesy of CHRYSLER GROUP, LLC

7. Loosen differential bearing (1, 3) adjusters (2, 4) with a hammer and punch.
8. Remove differential case from the housing.
9. Remove bearing cups (1, 3) and tag them left and right for installation reference.

DISASSEMBLY

DISASSEMBLY

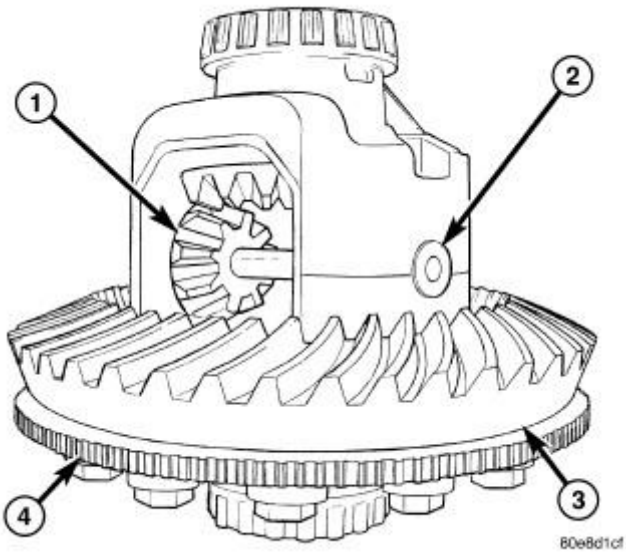

Fig. 32: Pinion Shaft
Courtesy of CHRYSLER GROUP, LLC

1. Remove pinion shaft (2) with a hammer and punch from the side with the hole in the pinion shaft.

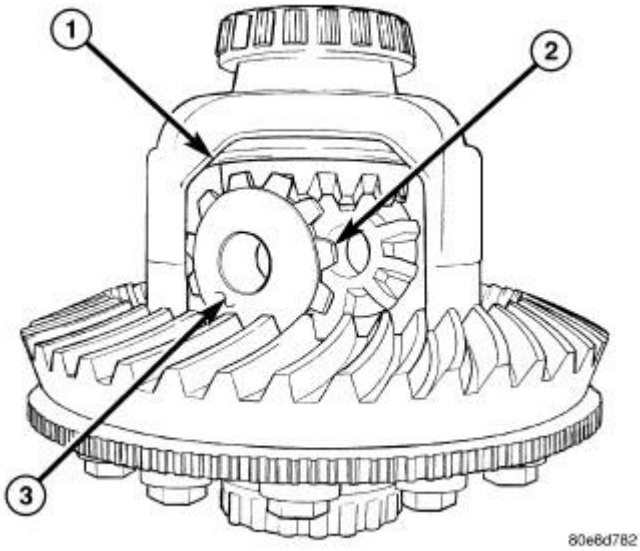

Fig. 33: First Pinion Gear
Courtesy of CHRYSLER GROUP, LLC

2. Rotate one pinion gear (2) with thrust washer (3) to the differential window (1) and remove the gear.

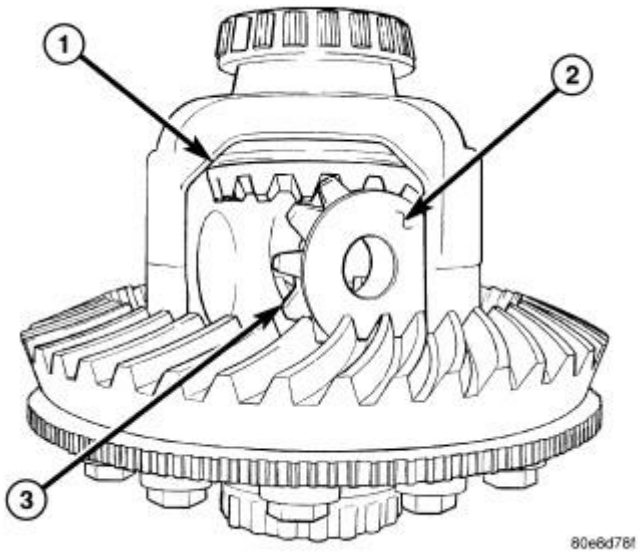

Fig. 34: Second Pinion Gear
Courtesy of CHRYSLER GROUP, LLC

3. Rotate other pinion gear (3) with thrust washer (2) to the differential window (1) and remove the gear.

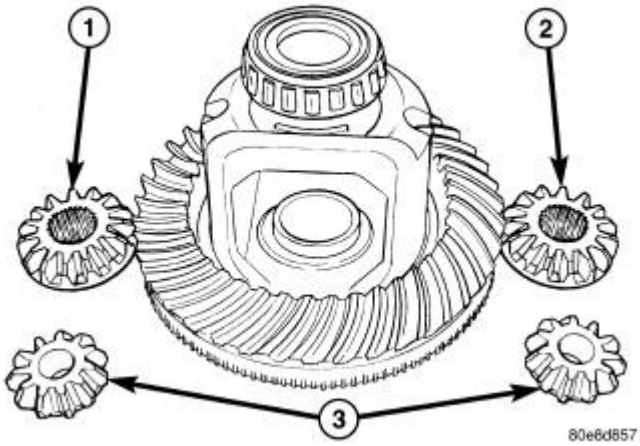

Fig. 35: Side Gears
Courtesy of CHRYSLER GROUP, LLC

4. Remove differential side gears (1) (2) and thrust washers.

ASSEMBLY

ASSEMBLY

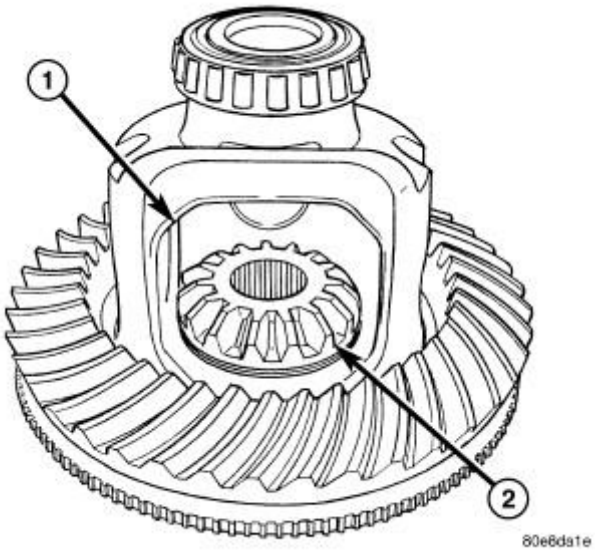

Fig. 36: Installing Side Gear
Courtesy of CHRYSLER GROUP, LLC

NOTE: **If the same gears and thrust washers are being used, install them into their original locations.**

1. Lubricate all differential components with axle lubricant.
2. Install differential side gears (2) with thrust washers through differential window (1).

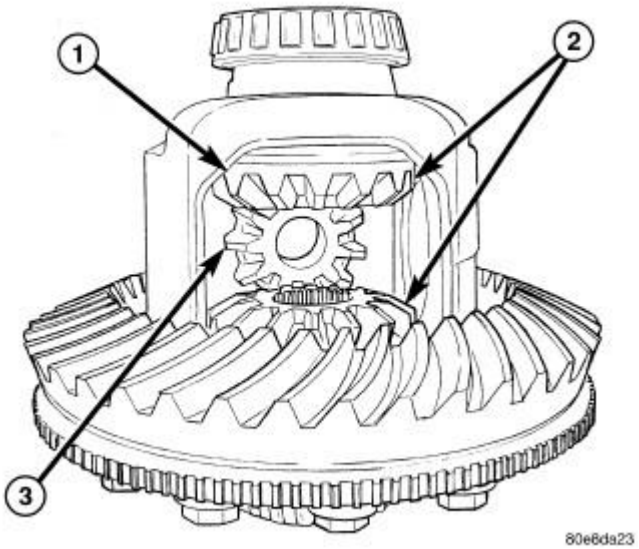

Fig. 37: Installing First Pinion Gear
Courtesy of CHRYSLER GROUP, LLC

3. Install first pinion gear (3) into the differential window (1) and side gears (2). Rotate the pinion gear to

the back of the case.

4. Install other pinion gear and thrust washer. Rotate the gears to align hole in the pinion gears with hole in the differential case.

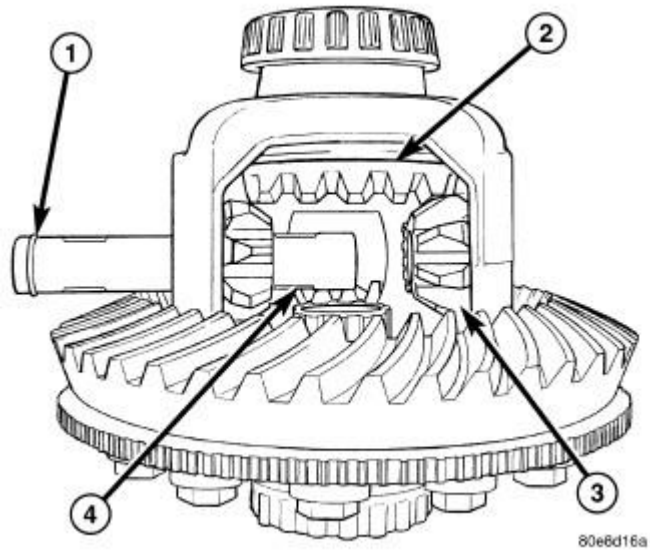

Fig. 38: Pinion Shaft, Gears & Snap-Ring
Courtesy of CHRYSLER GROUP, LLC

5. Slide pinion shaft (4) into the case and through the pinion gears (3). Tap the shaft to seat the pinion shaft snap-ring (1) into the case.

INSTALLATION

INSTALLATION

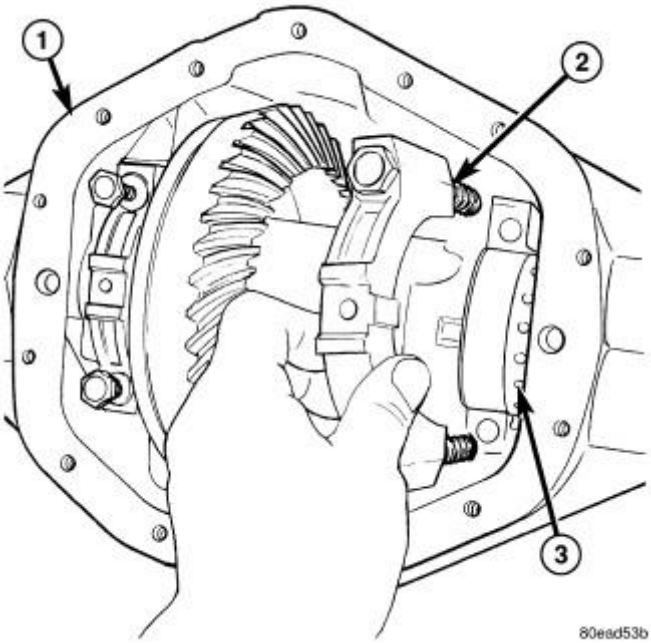

Fig. 39: Bearing Caps & Bolts
Courtesy of CHRYSLER GROUP, LLC

1. Clean housing (1) cavity with a flushing oil, light engine oil or lint free cloth.

CAUTION: Do not use water, steam, kerosene or gasoline for cleaning.

2. Lubricate differential case bearing.
3. Install differential case with bearings cups into the housing.

NOTE: A light coat of grease on the cups will hold them in place during installation.

4. Install bearing caps (2) and bolts. Tighten bearing cap bolts finger-tight.

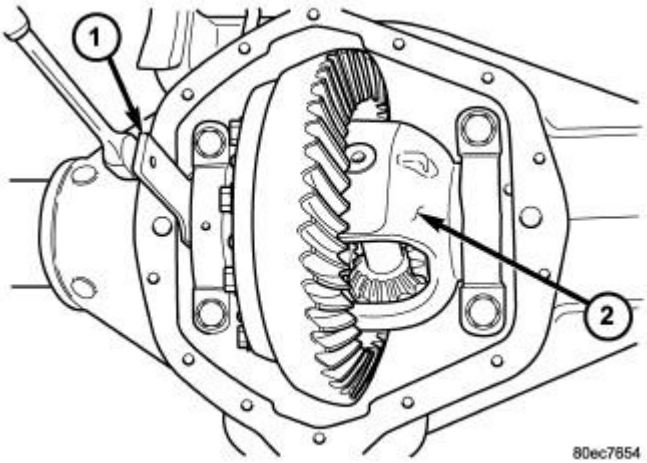

Fig. 40: Turning Bearing Adjusters
Courtesy of CHRYSLER GROUP, LLC

5. Slide differential case (2) toward the pinion gear until the gears make contact/zero backlash. If zero backlash cannot be obtained, turn the pinion side adjuster until zero backlash is obtained.
6. Holding the differential case toward the pinion gear, turn bearing adjusters with Adjuster Wrench (special tool #8883A, Wrench, Differential Adjusting) (1) until they make contact with the differential bearings/cups.
7. Back off the ring gear side adjuster 4 holes, to obtain initial ring gear backlash.
8. Install ring gear side adjuster lock and bolt. Do not tighten adjuster lock bolt at this time.
9. Tighten pinion gear side adjuster firmly against the differential case bearing cup.
10. Rotate the pinion several times to seat the differential bearings.
11. Loosen pinion gear side adjuster until it is no longer in contact with the bearing cup.
12. Tighten pinion gear side adjuster until it just makes contact with the bearing cup.
13. Tighten pinion gear side adjuster an additional:
    - **New Bearings** 6 Adjuster Holes
    - **Original Bearings** 4 Adjuster Holes
14. Install pinion gear side adjuster lock and bolt. Do not tighten adjuster lock bolt at this time.

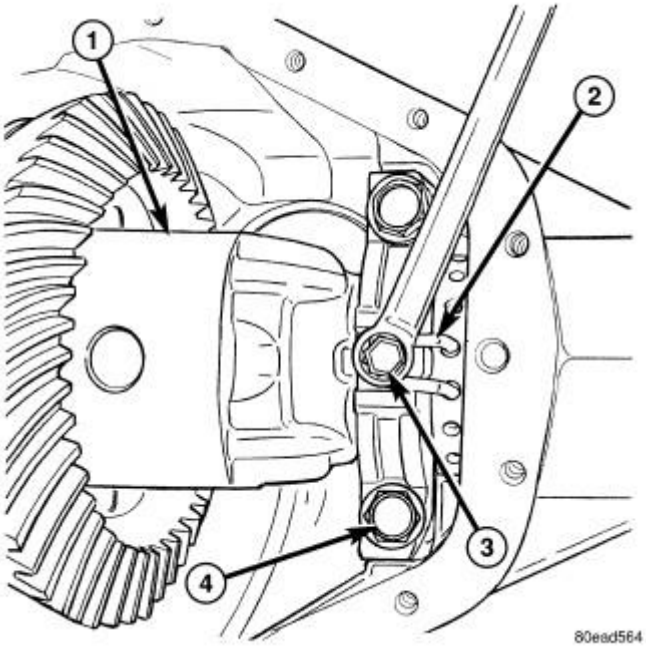

Fig. 41: Adjuster Locks & Bolts
Courtesy of CHRYSLER GROUP, LLC

15. Tighten bearing cap bolts to 165 N.m (122 ft. lbs.).
16. Tighten adjuster (2) lock bolts (3) to 25 N.m (18 ft. lbs.).
17. Measure ring gear backlash and check gear tooth contact pattern. Refer to **ADJUSTMENTS**.
18. Install axle shafts.
19. Install differential housing gasket and cover. Tighten cover bolts to 40 N.m (30 ft. lbs.).
20. Fill differential with lubricant to specifications.
21. Install fill plug and tighten to 32 N.m (24 ft. lbs.).

CASE ASSEMBLY, DIFFERENTIAL, ELECTRIC LOCKER

DESCRIPTION

DESCRIPTION

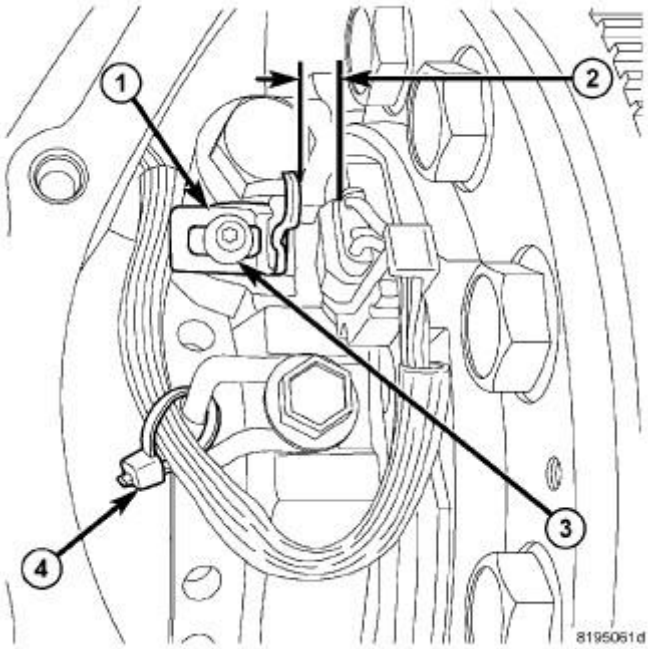

Fig. 42: Sensor Target Magnet & Tie Strap
Courtesy of CHRYSLER GROUP, LLC

The electric locker differential has a 12 volt electromagnet coil on the ring gear side of the differential. When the coil is energized a dog clutch is engaged in the differential case which locks both axles. A 5 volt magnetic target sensor (1) mounted on the bearing cap is used to indicate the system has been activated.

NOTE: System will time out within 2 minutes, when the key is in the on position and the engine is not running.

DIAGNOSIS AND TESTING

DIAGNOSIS AND TESTING - ELECTRIC LOCKER DIFFERENTIAL

1. Position vehicle on host with wheels of the ground.
2. Turn key to the on position.

NOTE: System will time out within 2 minutes, when the key is in the on position and the engine is not running.

3. Place vehicle in drive/first gear and transfer case in LOW LOCK.
4. Activate locker switch.
5. Hold one wheel and rotate the other wheel which should lock once the dog clutch is aligned.
6. Turn off locker switch.
7. Hold one wheel and rotate the other wheel which should turn.

NOTE: **Only the locker actuator with sensor are serviced. Internal differential components are serviced as a differential case assembly.**

REMOVAL

REMOVAL

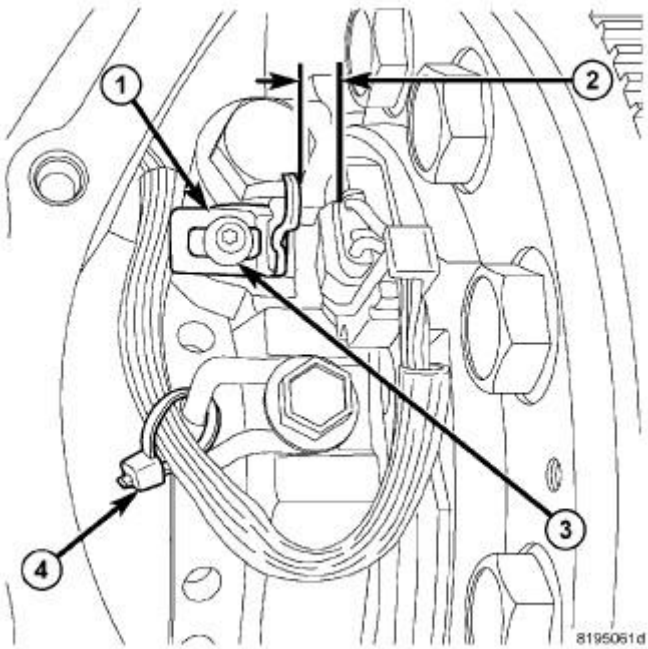

Fig. 43: Sensor Target Magnet & Tie Strap
Courtesy of CHRYSLER GROUP, LLC

1. Remove lubricant fill hole plug from the differential housing cover.
2. Remove differential housing cover and drain the lubricant from housing.
3. Remove axle shafts.
4. Cut sensor wire tie strap (4) from adjuster lock.
5. Remove sensor target magnet (1) from bearing cap.

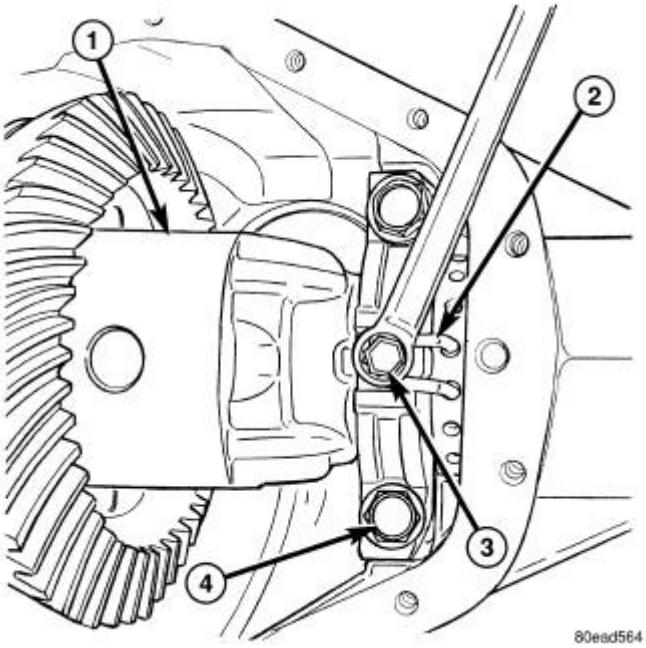

Fig. 44: Adjuster Locks & Bolts
Courtesy of CHRYSLER GROUP, LLC

6. Remove adjuster lock bolts (3) and adjuster locks (2).

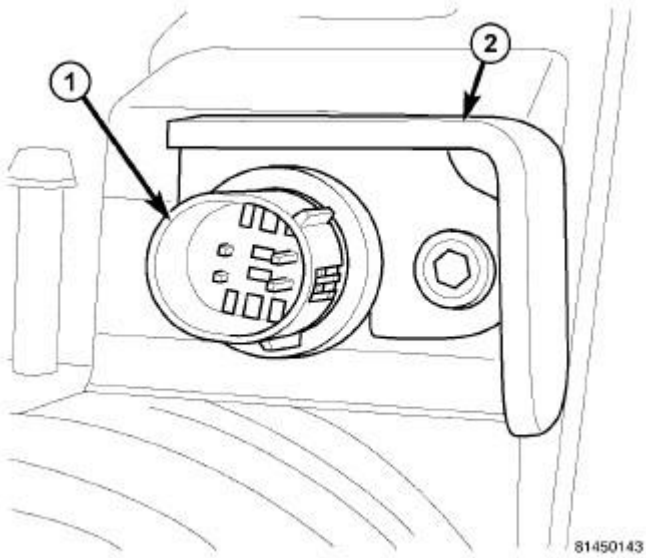

Fig. 45: Electric Locker Connector & Retainer
Courtesy of CHRYSLER GROUP, LLC

7. Remove electric locker connector (1) retainer (2) bolt from differential housing.
8. Remove connector (1) and retainer (2) from differential housing.

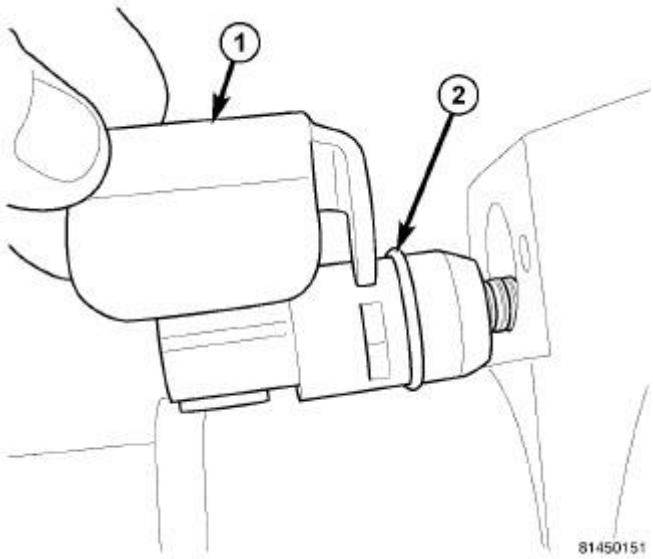

Fig. 46: Electric Locker Connector Retainer & O-Ring
Courtesy of CHRYSLER GROUP, LLC

9. Remove retainer (1) from connector and remove o-ring (2) from connector.

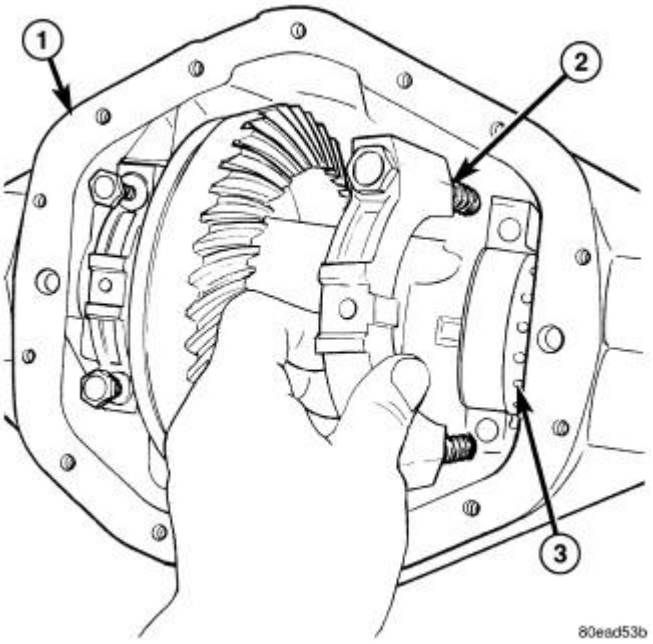

Fig. 47: Bearing Caps & Bolts
Courtesy of CHRYSLER GROUP, LLC

10. Mark bearing caps (2) left and right for installation reference.
11. Remove bearing cap bolts and remove bearing caps (2).

12. Loosen differential bearing adjusters (3) with a hammer and punch.
13. Slid electric locker connector through differential housing.
14. Remove differential case with bearing cups from the housing.
15. Tag bearing cups left and right for installation reference.

DISASSEMBLY

DISASSEMBLY

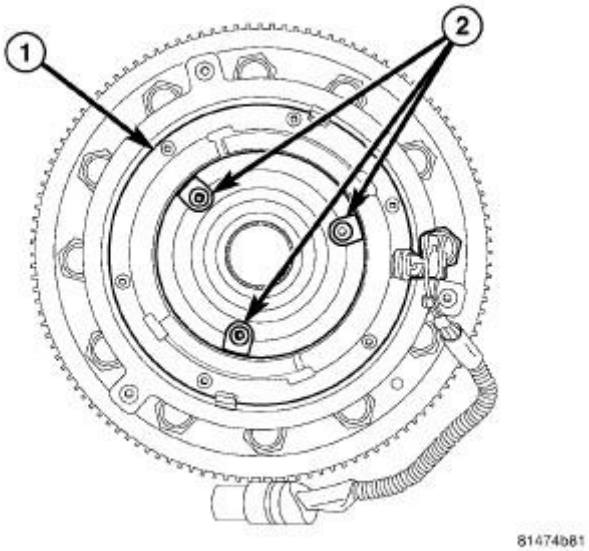

Fig. 48: Coil & Mounting Bolts
Courtesy of CHRYSLER GROUP, LLC

NOTE: Internal differential components are serviced with the case.

1. Remove differential case bearing.
2. Remove coil (1) mounting bolts (2).

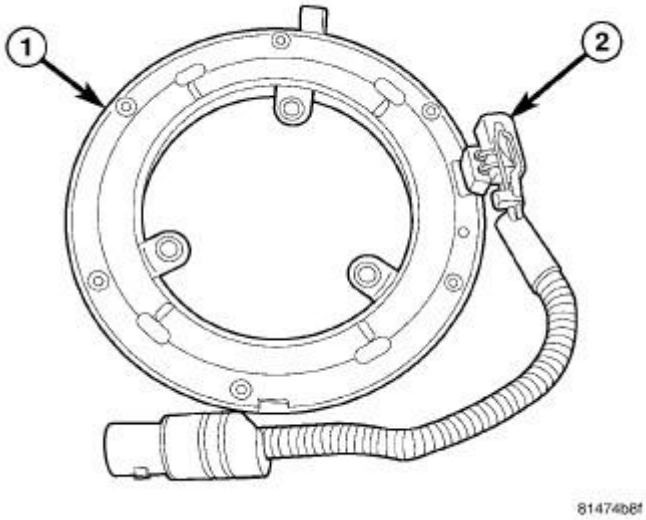

Fig. 49: Coil With Sensor & Harness
Courtesy of CHRYSLER GROUP, LLC

3. Remove coil (1) with sensor (2) and harness.

ASSEMBLY

ASSEMBLY

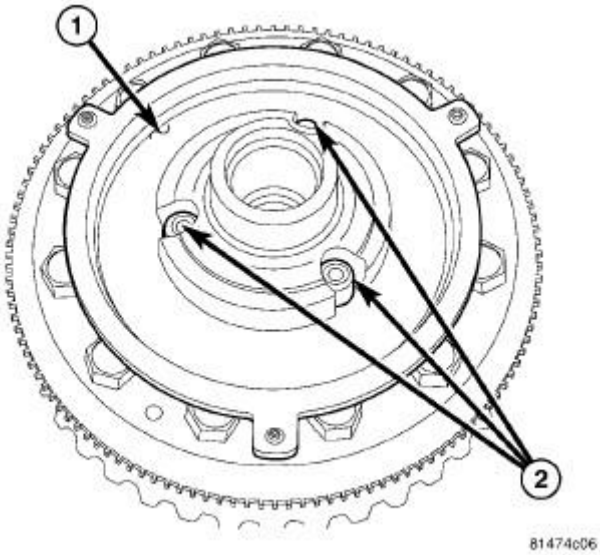

Fig. 50: Differential Case & Mounting Location
Courtesy of CHRYSLER GROUP, LLC

NOTE: Internal differential components are serviced with the case.

1. Position coil on differential case (1) mounting location (2).

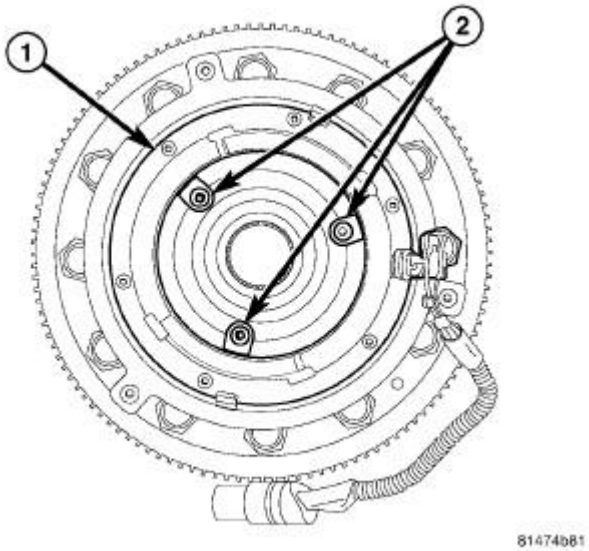

Fig. 51: Coil & Mounting Bolts
Courtesy of CHRYSLER GROUP, LLC

2. Clean coil bolts then apply Mopar® Lock AND Seal adhesive to the threads
3. Install coil (1) and bolts (2).

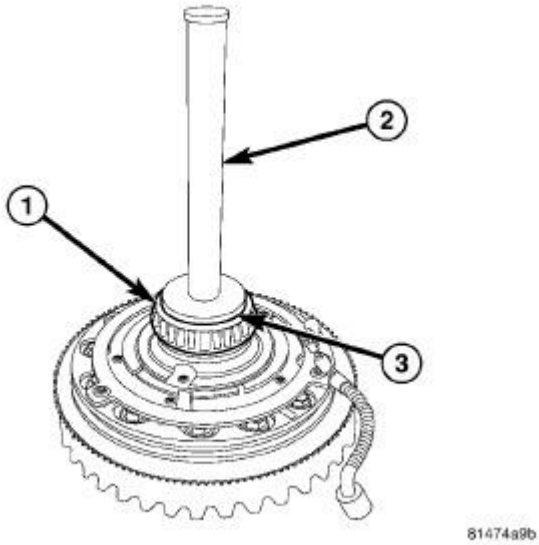

Fig. 52: Installing Differential Bearing
Courtesy of CHRYSLER GROUP, LLC

4. Install differential bearing (1) with Handle (special tool #C-4171, Driver Handle, Universal) (2) and Installer (special tool #8956, Installer, Differential Bearing) (3).

INSTALLATION

INSTALLATION

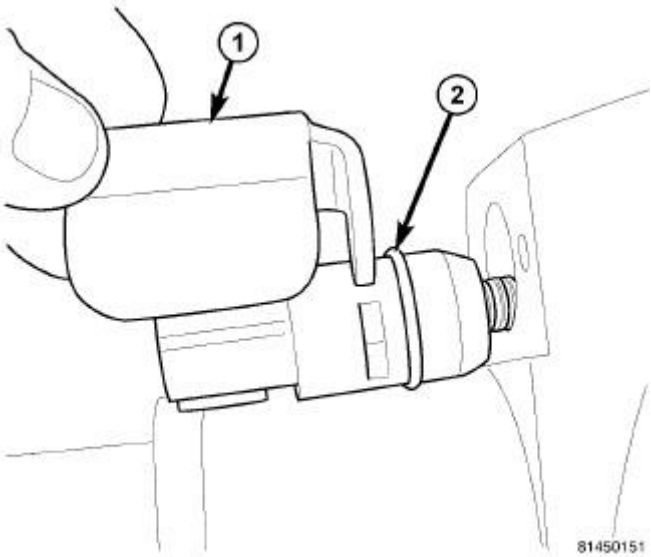

Fig. 53: Electric Locker Connector Retainer & O-Ring
Courtesy of CHRYSLER GROUP, LLC

1. Clean the housing cavity with a flushing oil, light engine oil or lint free cloth.
2. Lubricate differential case bearing.
3. Install differential case with bearings cups into the housing.
4. Slide electric locker connector through differential housing.
5. Install o-ring (2) on electric locker connector.
6. Install electric locker connector retainer (1) and install connector with retainer in differential housing.
7. Install connector retainer bolt.

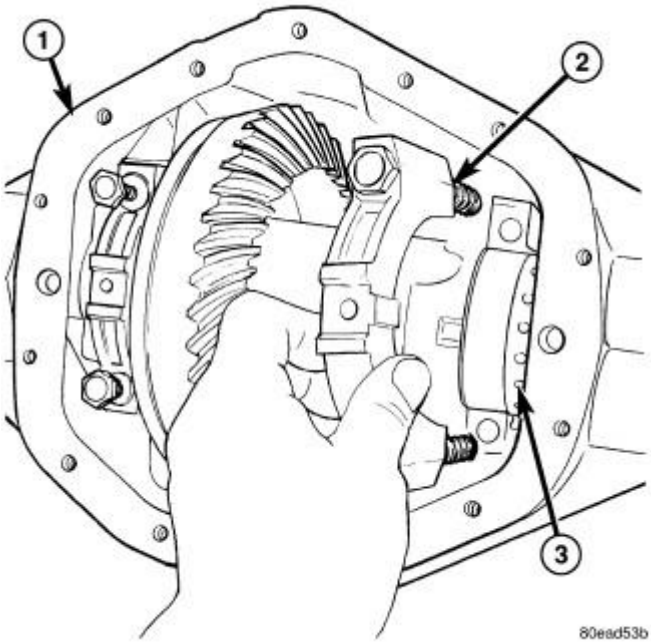

Fig. 54: Bearing Caps & Bolts
Courtesy of CHRYSLER GROUP, LLC

NOTE: Do not torque bearing cap and bolts at this time.

8. Install bearing caps (2) and tighten bearing cap bolts finger-tight.
9. Slide differential case toward the pinion gear until the gears make contact/zero backlash. If zero backlash cannot be obtained, turn the pinion side adjuster until zero backlash is obtained.
10. Holding the differential case toward the pinion gear, turn bearing adjusters with Adjuster Wrench (special tool #8883A, Wrench, Differential Adjusting) until they make contact with the differential bearings/cups.
11. Back off the ring gear side adjuster 4 holes, to obtain initial ring gear backlash.
12. Install ring gear side adjuster lock and bolt. Do not tighten adjuster lock bolt at this time.
13. Tighten pinion gear side adjuster firmly against the differential case bearing cup.
14. Rotate the pinion several times to seat the differential bearings.
15. Loosen pinion gear side adjuster until it is no longer in contact with the bearing cup.
16. Tighten pinion gear side adjuster until it just makes contact with the bearing cup.
17. Tighten pinion gear side adjuster an additional:
    - **New Bearings:** 6 Adjuster Holes
    - **Original Bearings:** 4 Adjuster Holes
18. Install pinion gear side adjuster lock and bolt. Do not tighten adjuster lock bolt at this time.

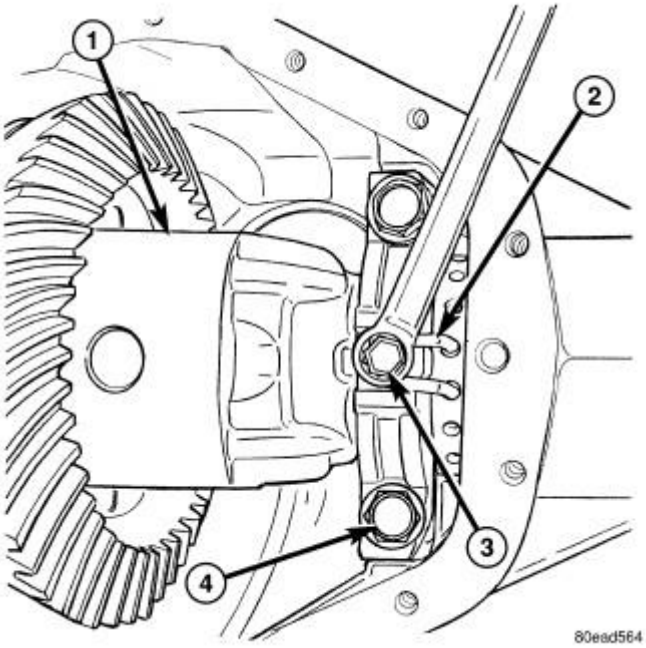

Fig. 55: Adjuster Locks & Bolts
Courtesy of CHRYSLER GROUP, LLC

19. Tighten bearing cap bolts (4) to 165 N.m (122 ft. lbs.).
20. Tighten adjuster (2) lock bolts (3) to 25 N.m (18 ft. lbs.).

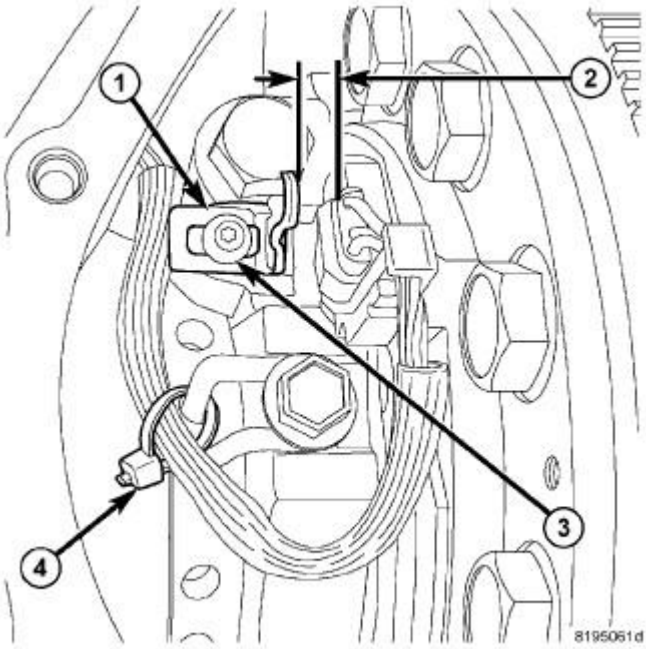

Fig. 56: Sensor Target Magnet & Tie Strap
Courtesy of CHRYSLER GROUP, LLC

21. Measure ring gear backlash and check gear tooth contact pattern. Refer to **ADJUSTMENTS**.
22. Install axle shafts.
23. Install sensor target magnet (1) on bearing cap.
24. Energize locker and rotate axle shaft. Verify dog clutch is engaged by rotating one axle while holding the other. If engaged axle will not rotate.
25. De-energize locker and rotate left axle 15 to 40 degrees so dog clutch gears will not engage.

NOTE: System will time out within 2 minutes when the key is in the on position and the engine is not running.

NOTE: If the axle is locking and the indicator light continues to flash, the sensor gap is too small. If the axle is disengaged and the indicator light stays on, the sensor gap is to large. Gap adjustment must be within spec.

26. Energize locker and set sensor air gap (2) to 5.5 mm ± 0.25 mm (0.21 in. ± 0.01 in.).
27. Tighten sensor target magnet bolt (3) to 7 N.m (62 in. lbs.).

NOTE: The next step will verify the sensor air gap was adjusted with the dog clutch gears ear to ear.

28. Hold right axle and rotate left axle until dog clutch engages with an audible click nose.
29. Install sensor wire tie strap (4) in the original location or at white dot on wiring harness to the top leg of adjuster lock and de-energize coil.
30. Install differential housing gasket and cover. Tighten cover bolts to 40 N.m (30 ft. lbs.).
31. Fill differential with lubricant to specifications.
32. Install fill plug and tighten to 32 N.m (24 ft. lbs.).

CASE ASSEMBLY, DIFFERENTIAL, TRAC-RITE

DESCRIPTION

DESCRIPTION

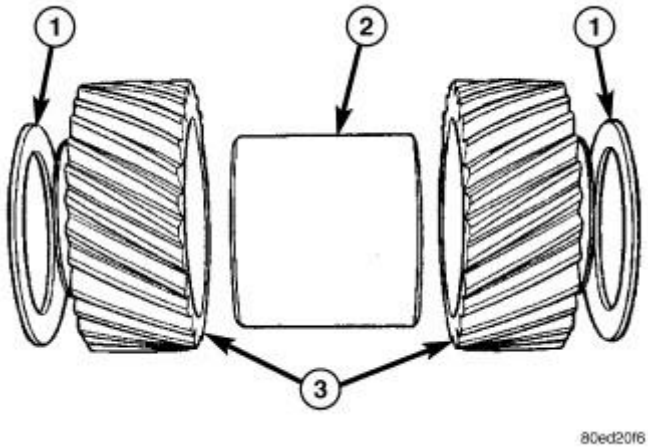

Fig. 57: Side Gears, Thrust Washers & Spacer
Courtesy of CHRYSLER GROUP, LLC

CAUTION: The differential is serviced as an assembly only do not attempt to disassemble. Failure to follow these instructions will result in damage to the differential.

The Trac-Rite™ differential is a helical gear differential. The differential has two side gears (3), two thrust washers (1) and one spacer (2).

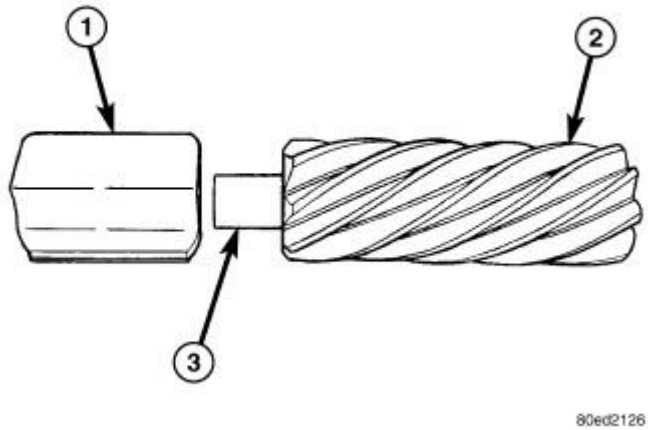

Fig. 58: Pinion Gear, Shaft & Brake Shoe
Courtesy of CHRYSLER GROUP, LLC

It also has six pinion brake shoes (1) which pivot on the six pinion gear (2) shafts (3).

OPERATION

OPERATION

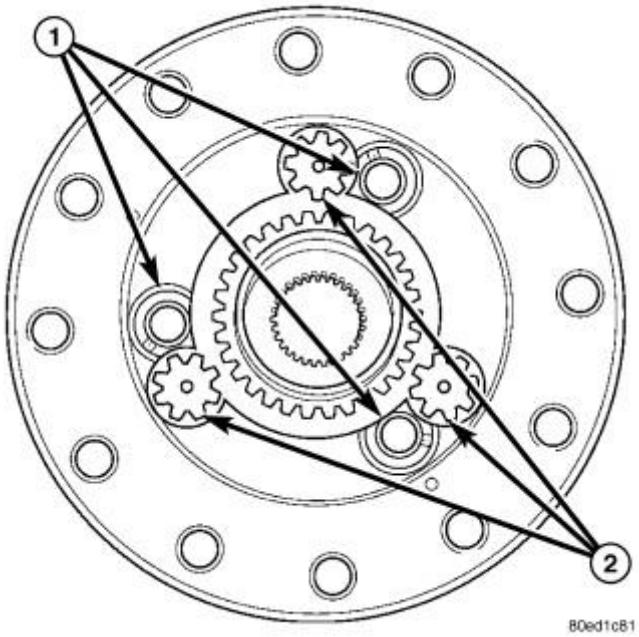

Fig. 59: Pinion Gears & Brake Shoes
Courtesy of CHRYSLER GROUP, LLC

> **CAUTION: The differential is serviced as an assembly only do not attempt to disassemble. Failure to follow these instructions will result in damage to the differential.**

When one wheel begins to spin the pinion gears (2) on that side, are forced toward the pinion brake shoes (1). The pinion brake shoes then cause frictional drag on the opposite pinion gears and the side gear. These friction forces transfer the power to the opposite wheel. Once the frictional forces are overcome, differentiation will occur. The torque will be continually biased by the frictional forces to the high traction wheel.

CLEANING

CLEANING

> **CAUTION: The differential is serviced as an assembly only do not attempt to disassemble. Failure to follow these instructions will result in damage to the differential.**

Flush the differential case and gears through openings in the case with light oil.

GEAR, RING AND PINION

REMOVAL

REMOVAL

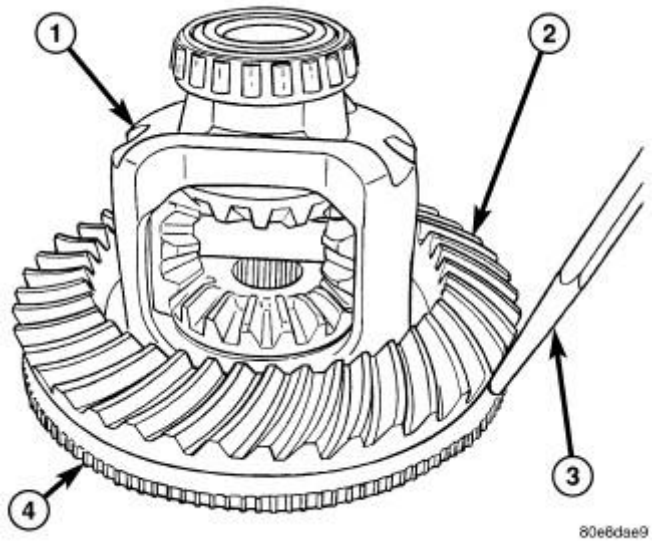

Fig. 60: Exciter Ring
Courtesy of CHRYSLER GROUP, LLC

NOTE: The ring and pinion gears are service in a matched set. Never replace the ring gear/pinion gear without replacing the other matching gear.

1. Mark pinion flange and propeller shaft for installation alignment.
2. Disconnect propeller shaft from pinion flange and remove propeller shaft.
3. Remove differential from axle housing.
4. Place differential on Plug (special tool #8888, Plug, Differential Bearing) and drive exciter ring (4) off the differential case (1) with a hammer and punch (3).

NOTE: Do not remove the exciter ring if it is not being replaced.

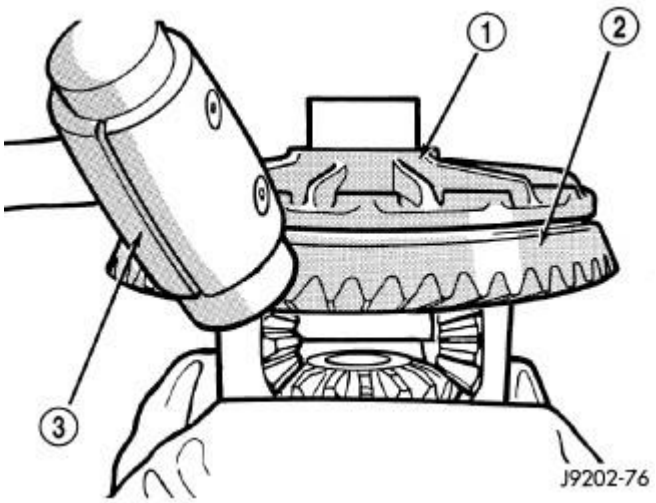

Fig. 61: Ring Gear
Courtesy of CHRYSLER GROUP, LLC

5. Place differential case in a vise with soft metal jaw protectors.
6. Remove bolts holding ring gear to differential case.
7. Drive ring gear (2) from differential case (1) with a soft hammer (3).

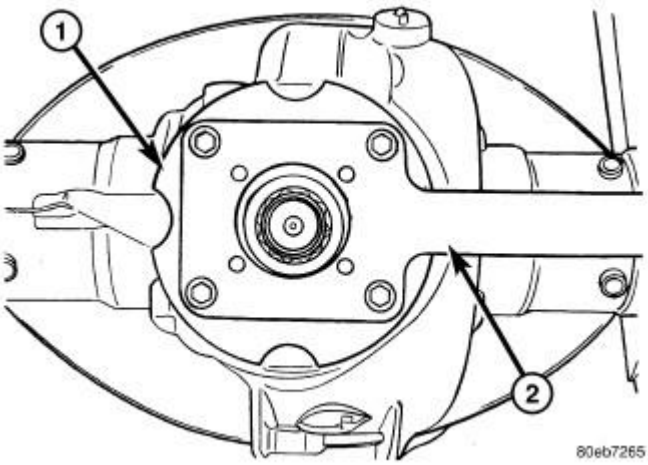

Fig. 62: Flange Wrench
Courtesy of CHRYSLER GROUP, LLC

8. Hold pinion flange (1) with Flange Wrench (special tool #8979, Wrench, Pinion Flange) (2) and remove pinion flange nut and washer.

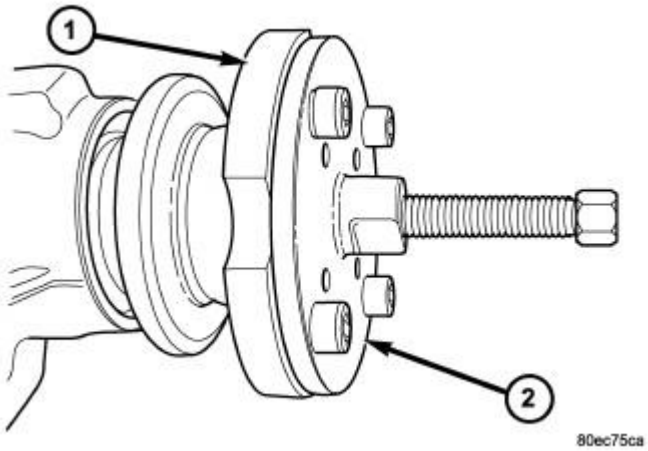

Fig. 63: Pinion Flange Puller
Courtesy of CHRYSLER GROUP, LLC

9. Remove pinion flange (1) from the pinion with Flange Puller (special tool #8992, Remover, Pinion Flange) (2).

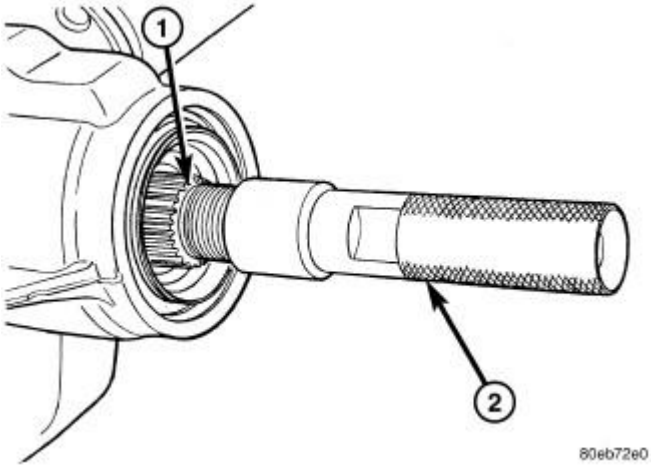

Fig. 64: Removing Pinion Gear From Housing
Courtesy of CHRYSLER GROUP, LLC

10. Remove pinion gear (1) from housing, with Pinion Driver (special tool #8977, Pinion Driver) (2) and a hammer.

NOTE: Thread the driver on the pinion shaft till it bottoms out.

11. Remove pinion seal with a slide hammer or pry bar.
12. Remove and discard front pinion bearing.

CAUTION: Do not reuse front pinion bearing/cup.

13. Remove collapsible spacer from the pinion shaft.

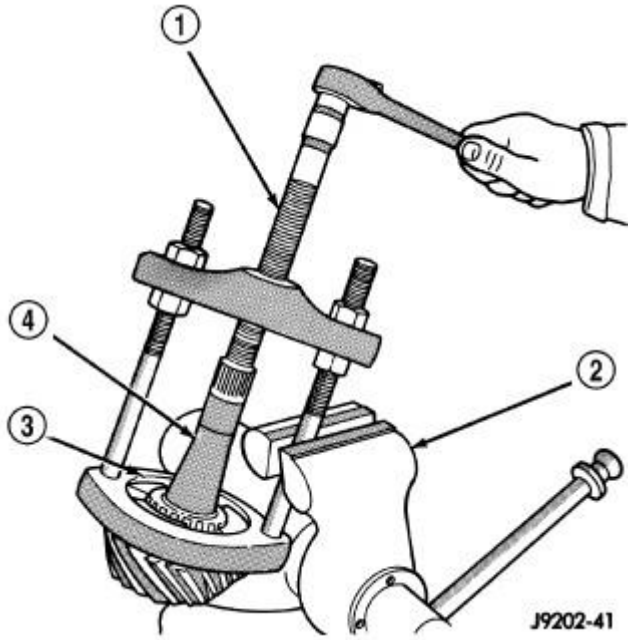

Fig. 65: Removing Rear Pinion Bearing
Courtesy of CHRYSLER GROUP, LLC

14. Remove rear pinion bearing with Puller (special tool #C-293-PA, Puller, Press) (1) and Adapter Blocks (special tool #8879, Adapters, Puller) (4).
15. Remove pinion depth shim from pinion gear shaft and record shim thickness.
16. Remove front pinion bearing cup from the housing with a punch and hammer and discard cup.

CAUTION: Do not reuse front pinion bearing/cup.

17. Remove rear pinion bearing cup from the housing with a punch and hammer, if bearing is going to be replaced.

INSTALLATION

INSTALLATION

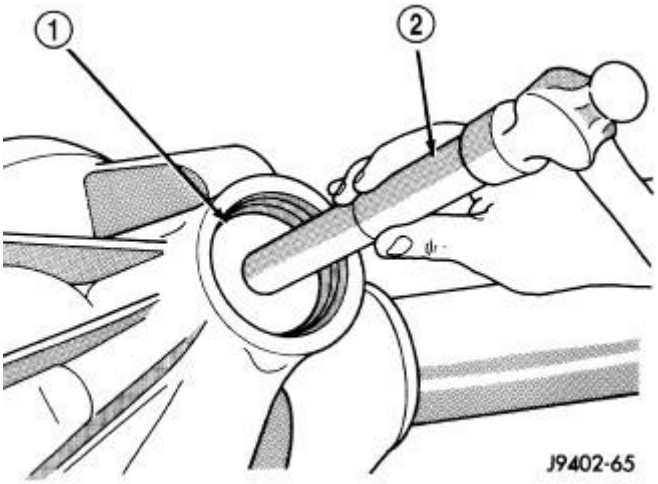

Fig. 66: Installing Front Pinion Bearing Cup
Courtesy of CHRYSLER GROUP, LLC

1. Install new front pinion bearing cup with Installer (special tool #8960, Installer, Bearing Cup) (1) and Handle (special tool #C-4171, Driver Handle, Universal) (2).

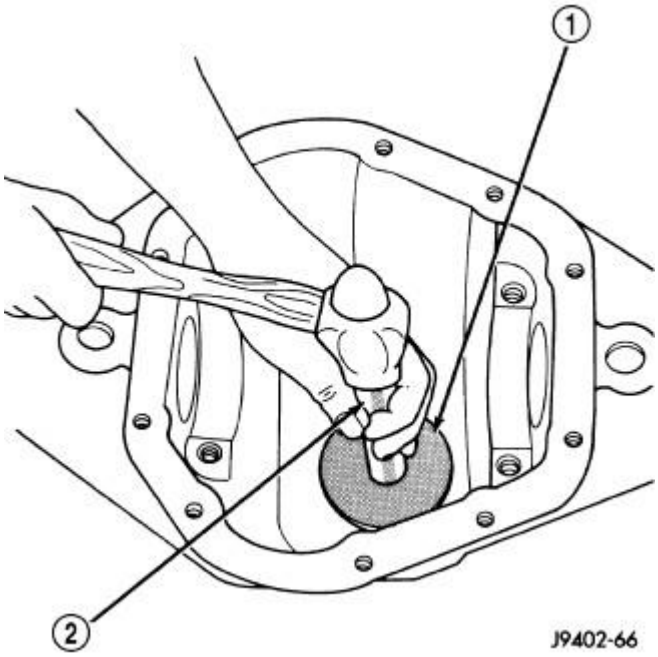

Fig. 67: Installing Rear Pinion Bearing Cup
Courtesy of CHRYSLER GROUP, LLC

2. Install new rear pinion bearing cup with Installer (special tool #8959, Installer, Bearing Cup) (1) and Handle (special tool #C-4171, Driver Handle, Universal) (2).

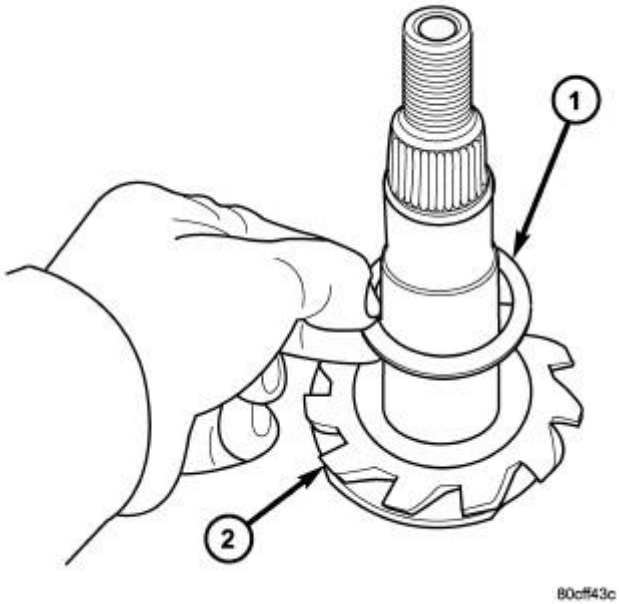

Fig. 68: Pinion Depth Shim
Courtesy of CHRYSLER GROUP, LLC

3. Install pinion depth shim (1) on the pinion gear shaft (2).

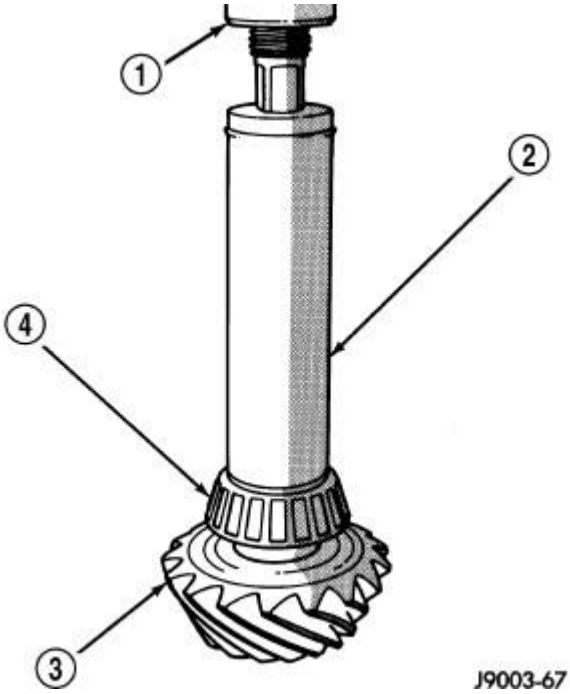

Fig. 69: Installing Rear Pinion Bearing
Courtesy of CHRYSLER GROUP, LLC

4. Install rear pinion bearing (4) on pinion (3) with Installer MD998805 (2) and a press (1).

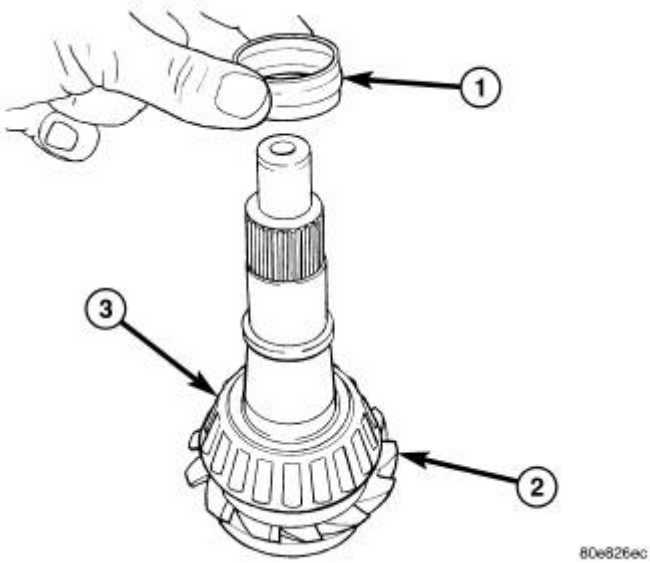

Fig. 70: Collapsible Spacer
Courtesy of CHRYSLER GROUP, LLC

5. Install **new** collapsible spacer (1) on pinion gear (2).

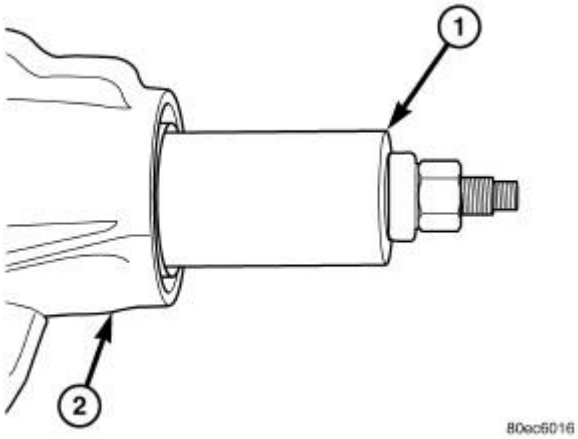

Fig. 71: Installing Pinion Into Housing
Courtesy of CHRYSLER GROUP, LLC

6. Lubricate pinion and bearings.
7. Install pinion into housing (2) and place front pinion bearing onto the pinion shaft. Draw pinion shaft into the front bearing with Installer (special tool #8981, Installer, Bearing Cup) (1).

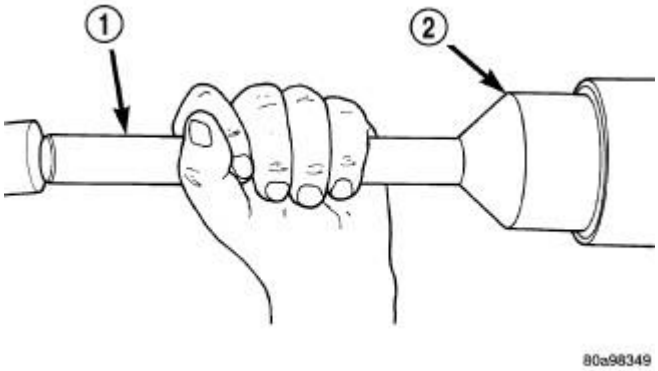

Fig. 72: Installing Pinion Seal
Courtesy of CHRYSLER GROUP, LLC

8. Install **new** pinion seal with Installer (special tool #8896, Installer, Seal) (2) and Handle (special tool #C-4171, Driver Handle, Universal) (1).

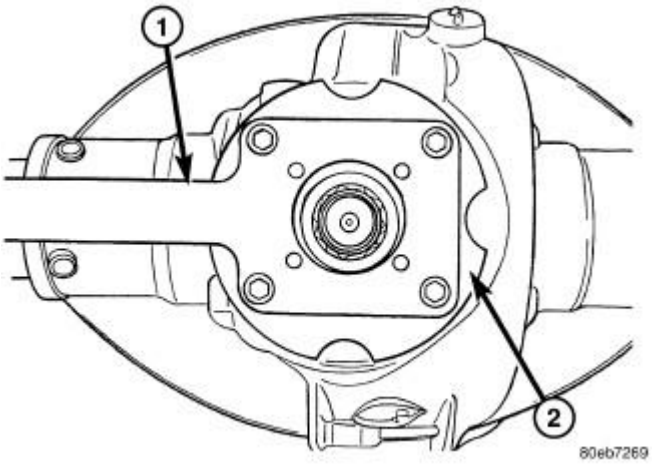

Fig. 73: Flange Wrench
Courtesy of CHRYSLER GROUP, LLC

9. Apply a light coat of teflon sealant to the pinion flange splines.
10. Hold the pinion and lightly tap the pinion flange onto the pinion, until a few threads are showing.
11. Install pinion flange washer and **new** pinion nut.
12. Hold pinion flange (2) with Flange Wrench (special tool #8979, Wrench, Pinion Flange) (1) and tighten pinion nut until pinion end play is taken up.

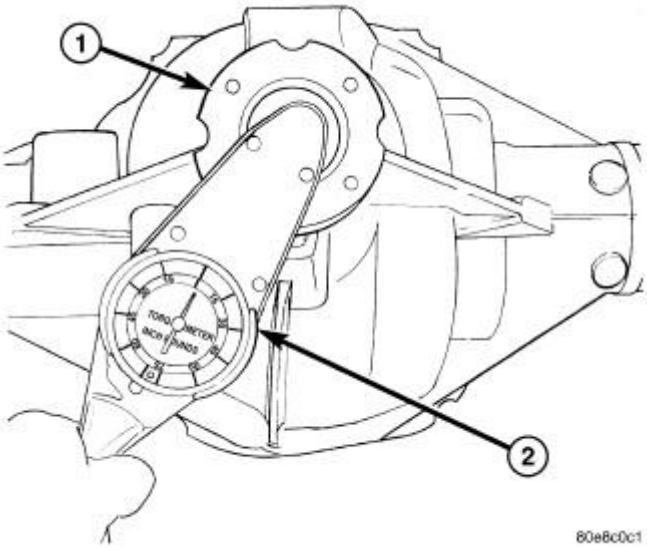

Fig. 74: Measuring Pinion Rotating Torque
Courtesy of CHRYSLER GROUP, LLC

13. Rotate pinion several times to seat pinion bearings.
14. Measure Pinion Torque To Rotate (1) with an inch pound torque wrench (2). Tighten pinion nut in 6.8 N.m (5 ft. lbs.) increments until pinion torque to rotate is achieved.

    Pinion Torque To Rotate is:

    - **New Pinion Bearings:** 1.7 - 2.8 N.m (15 - 25 in. lbs.)
    - **Original Pinion Bearings:** 1.1 - 2.2 N.m (10 - 20 in. lbs.)
15. Rotate pinion several times then verify pinion torque to rotate again.

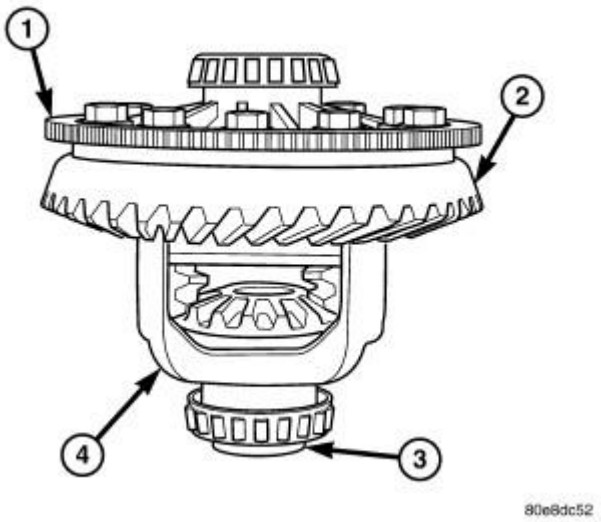

Fig. 75: Ring Gear, Differential Case & Bolts
Courtesy of CHRYSLER GROUP, LLC

16. Position ring gear (2) on differential case (4) and start two **new** ring gear bolts.
17. Install the rest of the **new** ring gear bolts and tighten them alternately to seat the ring gear.
18. Torque ring gear bolts to 237 N.m (175 ft. lbs.).

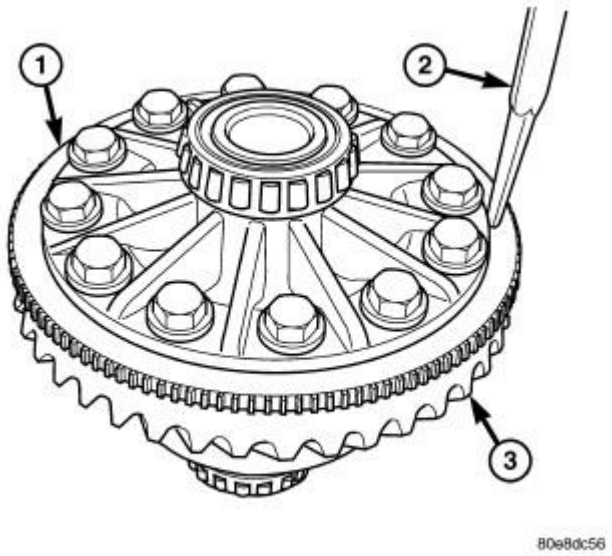

Fig. 76: Installing Exciter Ring
Courtesy of CHRYSLER GROUP, LLC

19. If exciter ring was removed, position differential assembly on differential Plug (special tool #8888, Plug, Differential Bearing) and place exciter ring on the differential case.
20. Install exciter ring (1) on the differential case evenly with a hammer and brass punch (2). Drive the ring down until it is seated against the ring gear (3).

CAUTION: Do not damage exciter ring teeth during installation.

21. Install differential into the housing.
22. Measure Total Torque to Rotate (TTTR) with an inch pound torque wrench.

Total Torque To Rotate is:

- **New Bearings:** 3.4 - 5.6 N.m (30 - 50 in. lbs.)
- **Original Bearings:** 2.8 - 5.1 N.m (25 - 45 in. lbs.)

NOTE: **If TTTR is to high back off adjusters evenly on both sides slightly and check TTTR again. If TTTR is to low tighten adjusters evenly on both**

sides slightly and check TTTR again.

23. Verify ring gear backlash and gear contact pattern.

SEAL, DRIVE PINION

REMOVAL

REMOVAL

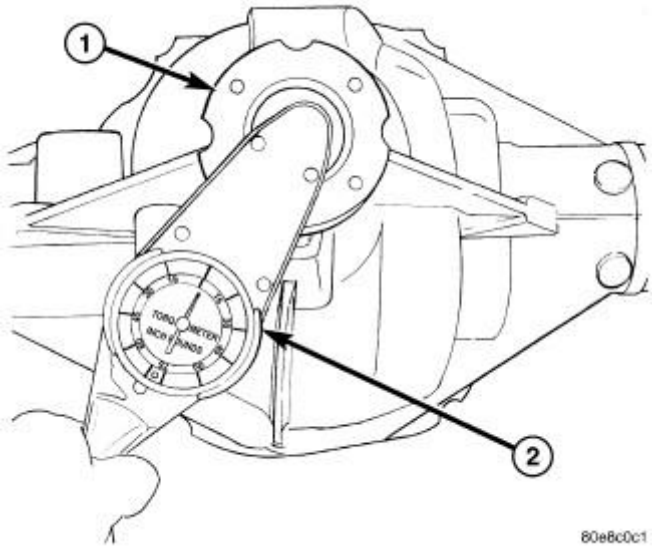

Fig. 77: Measuring Pinion Rotating Torque
Courtesy of CHRYSLER GROUP, LLC

1. Remove axle shafts.
2. Mark propeller shaft and pinion flange for installation reference and remove shaft.
3. Rotate pinion gear three or four times.
4. Record pinion torque to rotate (1) with an inch pound torque wrench (2).

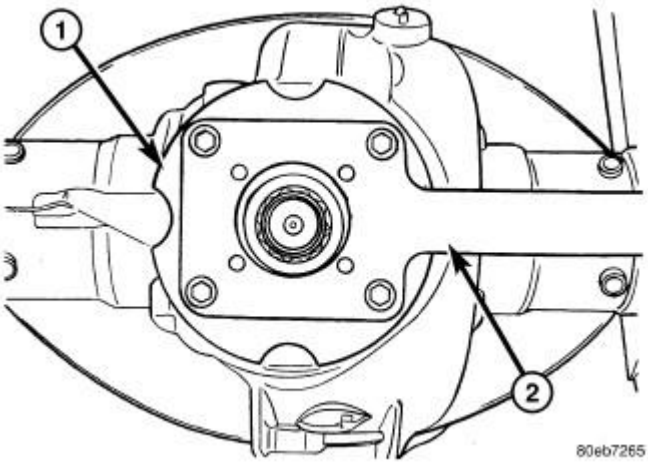

Fig. 78: Flange Wrench
Courtesy of CHRYSLER GROUP, LLC

5. Hold pinion flange (1) with Wrench (special tool #8979, Wrench, Pinion Flange) (2) and remove pinion flange nut and washer.

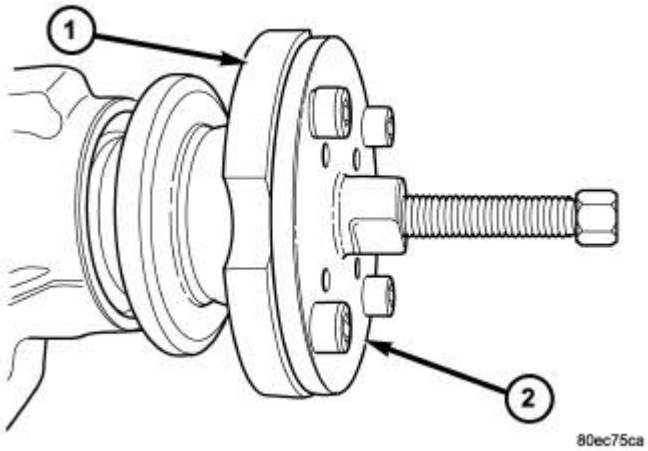

Fig. 79: Pinion Flange Puller
Courtesy of CHRYSLER GROUP, LLC

6. Mark a line across the pinion shaft and flange for installation reference.
7. Remove pinion flange (1) with Puller (special tool #8992, Remover, Pinion Flange) (2).
8. Remove pinion shaft seal with a pry tool or slide hammer mounted screw.

INSTALLATION

INSTALLATION

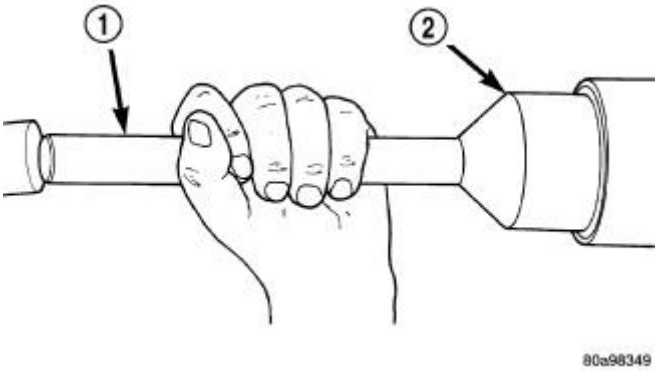

Fig. 80: Installing Pinion Seal
Courtesy of CHRYSLER GROUP, LLC

1. Install **new** pinion seal with Installer (special tool #8896, Installer, Seal) (2) and Handle (special tool #C-4171, Driver Handle, Universal) (1).

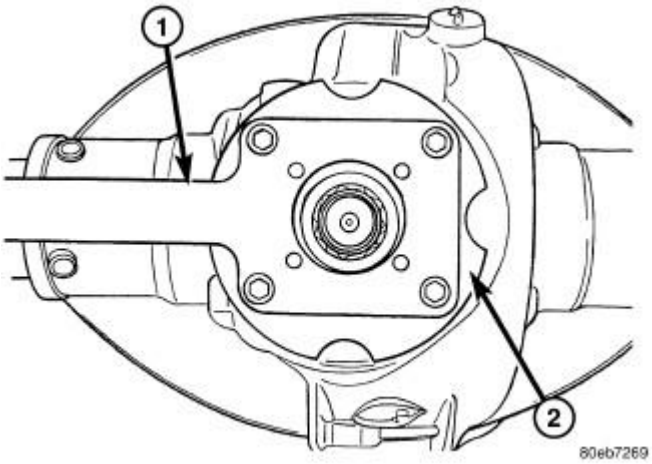

Fig. 81: Flange Wrench
Courtesy of CHRYSLER GROUP, LLC

2. Apply a light coat of teflon sealant to the pinion flange splines.
3. Install flange on the pinion shaft with the reference marks aligned.
4. Lightly tap the pinion flange onto the pinion until a few threads are showing.
5. Install flange washer and **new** pinion nut.
6. Hold flange (2) with Flange Wrench (special tool #8979, Wrench, Pinion Flange) (1) and tighten pinion nut until pinion end play is taken up.

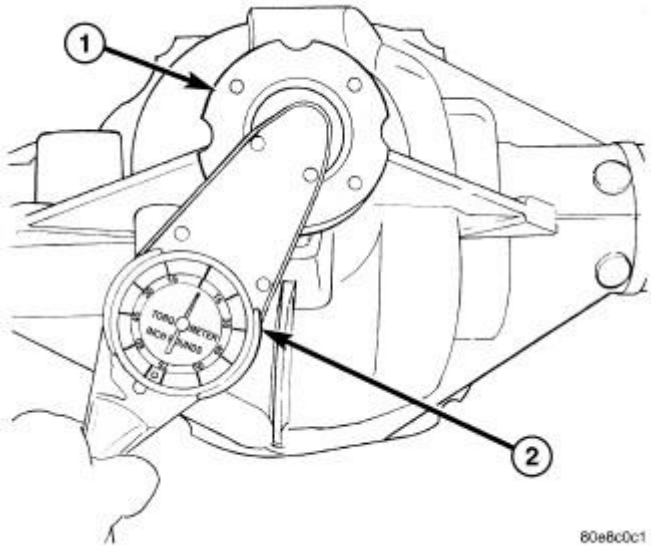

Fig. 82: Measuring Pinion Rotating Torque
Courtesy of CHRYSLER GROUP, LLC

7. Rotate pinion several times to seat bearings.
8. Measure pinion torque to rotate (1) with an inch pound torque wrench (2). Pinion torque to rotate should be equal to recorded reading plus an additional 0.40-0.57 N.m (3-5 in. lbs.).
9. If torque to rotating is low, tighten the pinion nut in 6.8 N.m (5 ft. lbs.) increments until pinion torque to rotate is achieved.
10. Rotate pinion several times then verify pinion torque to rotate again.
11. Install axle shafts.
12. Install propeller shaft with reference marks aligned.
13. Check and fill differential if necessary.

SENSOR, ELECTRIC LOCKER DIFFERENTIAL

ADJUSTMENTS

ADJUSTMENTS

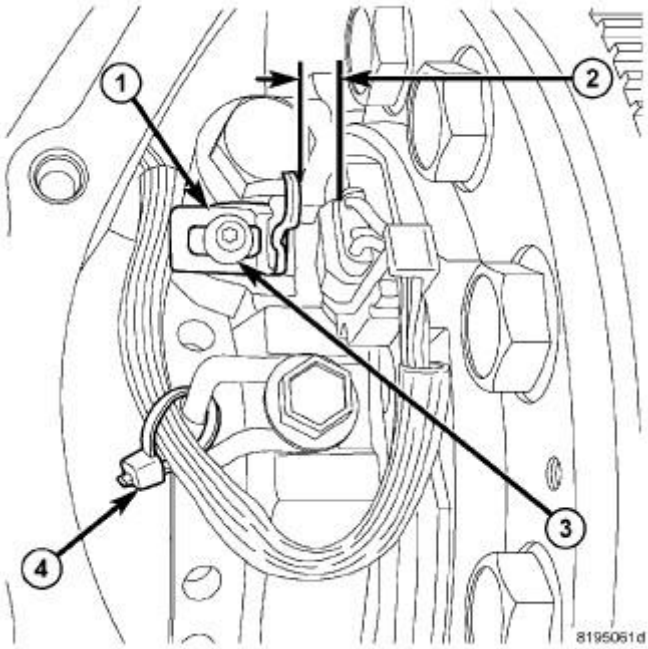

Fig. 83: Sensor Target Magnet & Tie Strap
Courtesy of CHRYSLER GROUP, LLC

1. Install sensor target magnet (1) on bearing cap.
2. Energize locker and rotate axle shaft. Verify dog clutch is engaged by rotating one axle while holding the other. If engaged axle will not rotate.
3. De-energize locker and rotate left axle 15 to 40 degrees so dog clutch gears will not engage.
4. Energize locker and set sensor air gap (2) to 5.5 mm ± 0.25 mm (0.21 in. ± 0.01 in.).

NOTE: System will time out within 2 minutes, when the key is in the on position and the engine is not running.

5. Tighten sensor target magnet bolt (3) to 7 N.m (62 in. lbs.).
6. Hold right axle and rotate left axle until dog clutch engages with an audible click nose.

NOTE: This will verify the sensor air gap was adjusted with the dog clutch gears ear to ear.

7. Install sensor wire tie strap (4) in the original location or at white dot on wiring harness to the top leg of adjuster lock and de-energize coil.

SHAFT, AXLE

REMOVAL

REMOVAL

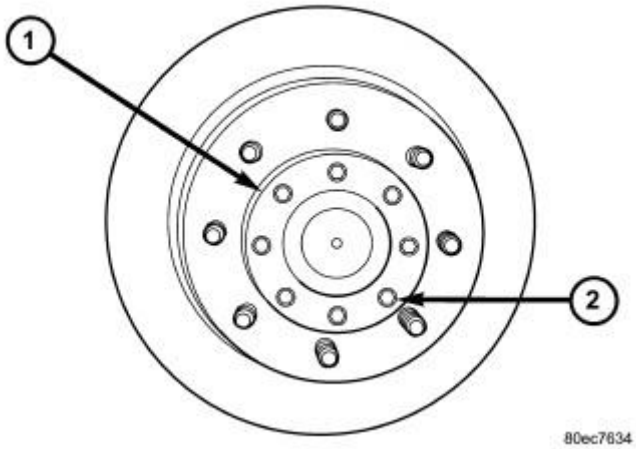

Fig. 84: Axle Shaft Flange & Bolts
Courtesy of CHRYSLER GROUP, LLC

1. Remove axle shaft flange (1) bolts (2).
2. Slide axle shaft out of the axle tube.
3. Remove axle shaft gasket.

INSTALLATION

INSTALLATION

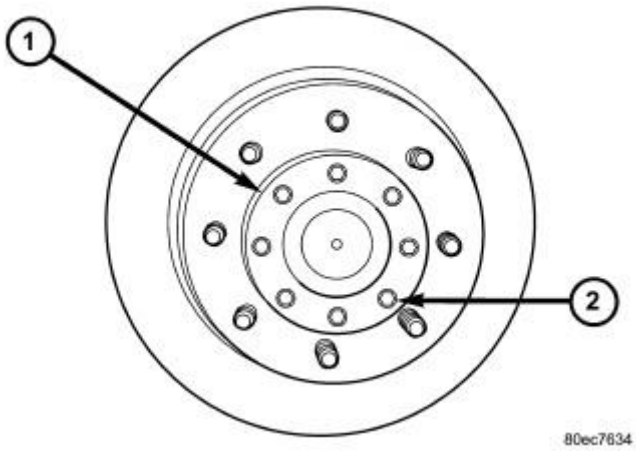

Fig. 85: Axle Shaft Flange & Bolts
Courtesy of CHRYSLER GROUP, LLC

NOTE: Axle flange bolts must be replaced or cleaned existing bolts apply Mopar™ Lock N' Seal or Loctite® 242 on the threads.

1. Clean axle flange and hub.

2. Install new axle shaft gasket.
3. Slide axle shaft into the axle tube.
4. Install axle shaft flange (1) bolts (2) and tighten to 129 N.m (95 ft. lbs.).

DIAGNOSIS AND TESTING

DIAGNOSIS AND TESTING - REAR AXLE - 11 1/2 AA

FLUID CHECK

Filling an axle to the bottom of the fill hole may result in an over fill condition. This can cause fluid foaming which will result in inadequate lubrication to the axle components. To check axle fluid, park vehicle on a level surface. Take a piece of wire and make a 90 degree bend two inches from the end of the wire. Insert the wire into the fill plug hole and use it like a dipstick. Remove the wire and measure from the 90 degree bend to the oil level. For the correct measurement, refer to **SPECIFICATIONS**.

GEAR NOISE

Axle gear noise can be caused by insufficient lubricant, incorrect backlash, incorrect pinion depth, tooth contact, worn/damaged gears, or the carrier housing not having the proper offset and squareness.

Gear noise usually happens at a specific speed range. The noise can also occur during a specific type of driving condition. These conditions are acceleration, deceleration, coast, or constant load.

When road testing, first warm-up the axle fluid by driving the vehicle at least 5 miles and then accelerate the vehicle to the speed range where the noise is the greatest. Shift out-of-gear and coast through the peak-noise range. If the noise stops or changes greatly check for:

- Insufficient lubricant.
- Incorrect ring gear backlash.
- Gear damage.

Differential side gears and pinions can be checked by turning the vehicle. The side gears are loaded during turns. They usually do not cause noise during straight-ahead driving when the gears are unloaded. A worn pinion shaft can also cause a snapping or a knocking noise.

BEARING NOISE

The axle shaft, differential and pinion bearings can all produce noise when worn or damaged. Bearing noise can be either a whining, or a growling sound.

Pinion bearings have a constant-pitch noise. This noise changes only with vehicle speed. Pinion bearing noise will be higher pitched because it rotates at a faster rate. Drive the vehicle and load the differential. If bearing noise occurs, the rear pinion bearing is the source of the noise. If the bearing noise is heard during a coast, the front pinion bearing is the source.

Differential bearings usually produce a low pitch noise. Differential bearing noise is similar to pinion bearing

noise. The pitch of differential bearing noise is also constant and varies only with vehicle speed.

Axle shaft bearings produce noise and vibration when worn or damaged. The noise generally changes when the bearings are loaded. Road test the vehicle. Turn the vehicle sharply to the left and to the right. This will load the bearings and change the noise level. Where axle bearing damage is slight, the noise is usually not noticeable at speeds above 30 mph.

LOW SPEED KNOCK

Low speed knock is generally caused by:

- Worn U-joint(s).
- Worn side gear thrust washers.
- Worn pinion shaft bore.

VIBRATION

Vibration at the rear of the vehicle is usually caused by:

- Damaged drive shaft.
- Missing drive shaft balance weight(s).
- Worn or out-of-balance wheels.
- Loose wheel lug nuts.
- Worn U-joint(s).
- Loose/broken springs.
- Damaged axle shaft bearing(s).
- Loose pinion gear nut.
- Excessive pinion yoke run out.
- Bent axle shaft(s).

Check for loose or damaged front-end components or engine/transmission mounts. These components can contribute to what appears to be a rear end vibration. Do not overlook engine accessories, brackets and drive belts.

NOTE: All driveline components should be examined before starting any repair.

DRIVELINE SNAP

A snap or clunk noise when the vehicle is shifted into gear (or the clutch engaged), can be caused by:

- High engine idle speed.
- Transmission shift operation.
- Loose engine/transmission/transfer case mounts.
- Worn U-joints.

- Loose spring mounts.
- Loose pinion gear nut and yoke.
- Excessive ring gear backlash.
- Excessive side gear to case clearance.

The source of a snap or a clunk noise can be determined with the assistance of a helper. Raise the vehicle on a hoist with the wheels free to rotate. Instruct the helper to shift the transmission into gear and listen for the noise. A mechanics stethoscope is helpful in isolating the source of a noise.

DIAGNOSTIC CHART

Condition	Possible Causes	Correction
Wheel Noise	1. Wheel loose.	1. Tighten loose nuts.
	2. Worn wheel bearing.	2. Replace bearing.
Axle Shaft Noise	1. Misaligned axle tube.	1. Inspect axle tube alignment. Correct as necessary.
	2. Bent or sprung axle shaft.	2. Inspect and correct as necessary.
Axle Shaft Broke	1. Misaligned axle tube.	1. Replace the broken shaft after correcting tube mis-alignment.
	2 Vehicle overloaded.	2. Replace broken shaft and avoid excessive weight on vehicle.
	3. Erratic clutch operation.	3. Replace broken shaft and avoid or correct erratic clutch operation.
	4. Grabbing clutch.	4. Replace broken shaft and inspect and repair clutch as necessary.
Differential Cracked	1. Improper adjustment of the differential bearings.	1. Replace case and inspect gears and bearings for further damage. Set differential bearing pre-load properly.
	2. Excessive ring gear backlash.	2. Replace case and inspect gears and bearings for further damage. Set ring gear backlash properly.
	3. Vehicle overloaded.	3. Replace case and inspect gears and bearings for further damage. Avoid excessive vehicle weight.
	4. Erratic clutch operation.	4. Replace case and inspect gears and bearings for further damage. Avoid erratic use of clutch.
Differential Gears Scored	1. Insufficient lubrication.	1. Replace scored gears. Fill differential with the correct fluid type and quantity.
	2. Improper grade of lubricant.	2. Replace scored gears. Fill differential with the correct fluid

		type and quantity.
	3. Excessive spinning of one wheel/tire.	3. Replace scored gears. Inspect all gears, pinion bores, and shaft for damage. Service as necessary.
Loss Of Lubricant	1. Lubricant level too high.	1. Drain lubricant to the correct level.
	2. Worn axle shaft seals.	2. Replace seals.
	3. Cracked differential housing.	3. Repair as necessary.
	4. Worn pinion seal.	4. Replace seal.
	5. Worn/scored yoke.	5. Replace yoke and seal.
	6. Axle cover not properly sealed.	6. Remove, clean and seal cover.
Axle Overheating	1. Lubricant level low.	1. Fill differential to correct level.
	2. Improper grade of lubricant.	2. Fill differential with the correct fluid type and quantity.
	3. Bearing pre-loads too high.	3. Adjust bearing pre-loads.
	4. Insufficient ring gear backlash.	4. Adjust ring gear backlash.
Gear Teeth Broke	1. Overloading.	1. Replace gears. Examine other gears and bearings for possible damage.
	2. Erratic clutch operation.	2. Replace gears and examine the remaining parts for damage. Avoid erratic clutch operation.
	3. Ice-spotted pavement.	3. Replace gears and examine remaining parts for damage.
	4. Improper adjustments.	4. Replace gears and examine remaining parts for damage. Ensure ring gear backlash is correct.
Axle Noise	1. Insufficient lubricant.	1. Fill differential with the correct fluid type and quantity.
	2. Improper ring gear and pinion adjustment.	2. Check ring gear and pinion contact pattern. Adjust backlash or pinion depth.
	3. Unmatched ring gear and pinion.	3. Replace gears with a matched ring gear and pinion.
	4. Worn teeth on ring gear and pinion.	4. Replace ring gear and pinion.
	5. Loose pinion bearings.	5. Adjust pinion bearing pre-load.
	6. Loose differential bearings.	6. Adjust differential bearing pre-load.
	7. Ring gear run out.	7. Measure ring gear run-out. Replace components as necessary.
	8. Loose differential bearing cap bolts.	8. Inspect differential components and replace as necessary. Ensure

		that the bearing caps are torqued to the proper specification.
	9. Housing not machined properly.	9. Replace housing.

ADJUSTMENTS

ADJUSTMENTS

PINION DEPTH MEASUREMENT

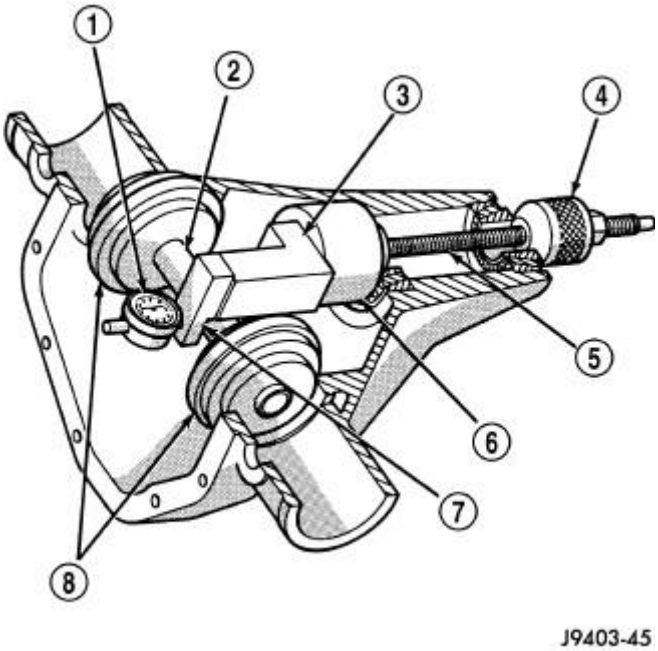

Fig. 1: Pinion Gear Depth Gauge Tools
Courtesy of CHRYSLER GROUP, LLC

Ring and pinion gears are supplied as matched sets. Compensation for pinion depth variance is achieved with a select shim, located between the rear pinion bearing and pinion gear head.

Measurements are taken with pinion bearing cups and pinion bearings installed in the housing. Take measurements with Pinion Gauge Set and Dial Indicator (special tool #C-3339A, Set, Dial Indicator) (1).

1. Assemble Pinion Height Block (special tool #6739, Block, Height) (3), Pinion Block (special tool #8897, Gauge, Pinion Height) (6) and rear pinion bearing onto Screw (special tool #6741, Screw) (5).

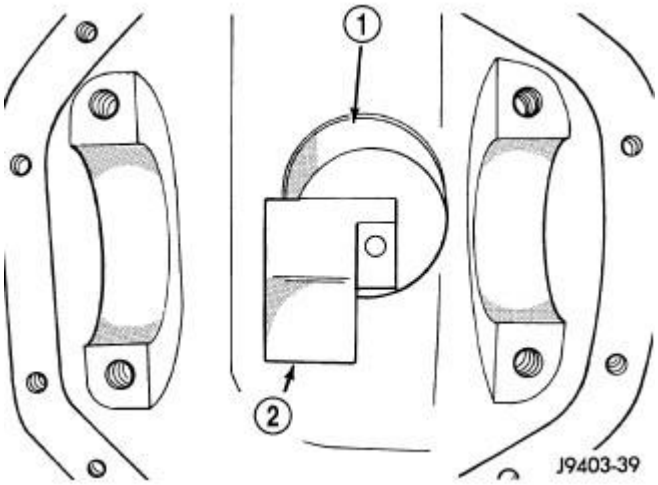

Fig. 2: Pinion Height Block
Courtesy of CHRYSLER GROUP, LLC

2. Insert assembled pinion block (1), pinion height block (2), rear bearing and screw into the housing through pinion bearing cups.
3. Install front pinion bearing and Cone-nut (special tool #6740, Cone) onto the screw. Tighten cone-nut until Torque To Rotate the screw is 1.7-2.26 N.m (15-20 in. lbs.).

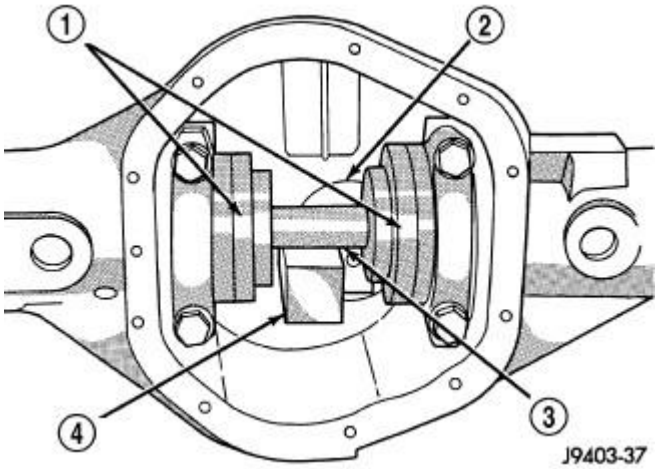

Fig. 3: Gauge Tools In Housing
Courtesy of CHRYSLER GROUP, LLC

4. Place Arbor Discs (special tool #8289, Set, Arbor Disc) (1) on Arbor (special tool #D-115-3, Arbor) (3) in position in the housing side bearing cradles.
5. Install differential bearing caps on arbor discs and snug the bearing cap bolts. Then cross tighten cap bolts to 281 N.m (207 ft. lbs.).

NOTE: Arbor should rotate freely in the arbor discs.

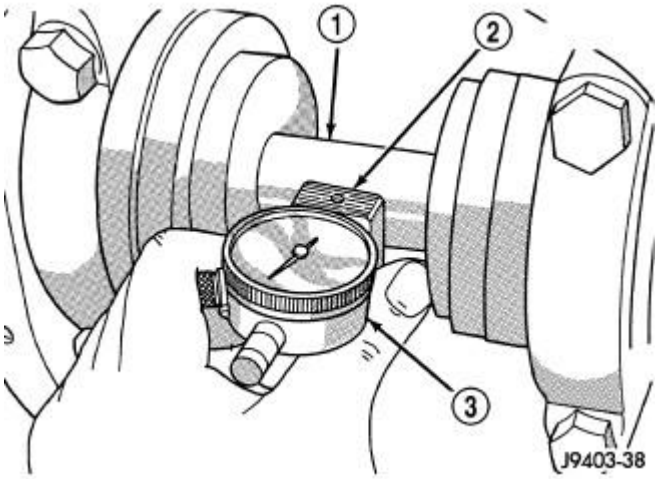

Fig. 4: Pinion Gear Depth Measurement
Courtesy of CHRYSLER GROUP, LLC

6. Assemble Dial Indicator (special tool #C-3339A, Set, Dial Indicator) (3) into Scooter Block (special tool #D-115-2A, Block, Scooter) (2) and secure set screw.
7. Position Scooter Block/Dial Indicator flush on the pinion height block. Hold scooter block and zero the dial indicator.
8. Slowly slide the scooter block across the pinion height block over to the arbor. Move the scooter block till dial indicator crests the arbor (1), then record the highest reading.
9. Select a shim equal to the dial indicator reading.

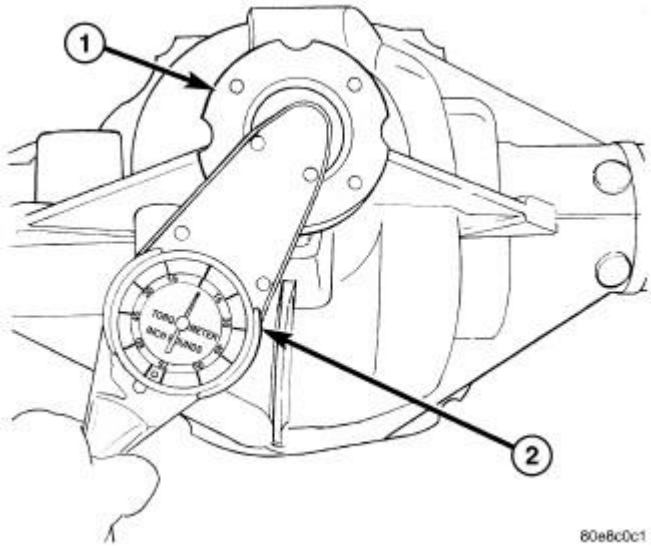

Fig. 5: Measuring Pinion Rotating Torque
Courtesy of CHRYSLER GROUP, LLC

10. Install select shim between rear pinion bearing and the pinion gear head.

11. Install pinion gear and establish Pinion Torque To Rotate (PTTR) with an inch pound torque wrench (2).

DIFFERENTIAL CASE BEARING PRELOAD AND GEAR BACKLASH

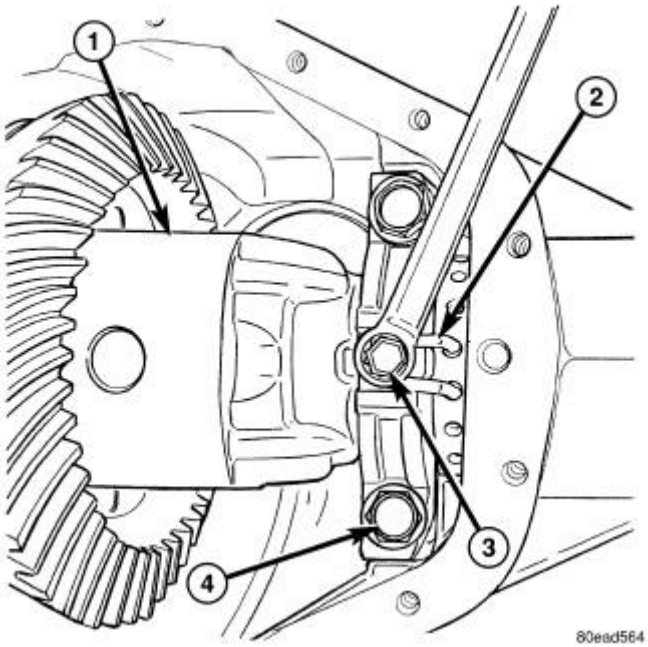

Fig. 6: Adjuster Locks & Bolts
Courtesy of CHRYSLER GROUP, LLC

Backlash is adjusted by moving the adjusters in and out or both. By moving the adjusters the case/ring gear will move closer or further away from the pinion. In most cases this adjustment can be used to achieve the correct gear tooth pattern and set the case bearing preload.

1. Remove adjuster lock bolts (3) and adjuster locks (2).
2. **Loosen** the differential bearing caps (4).
3. Slide differential case toward the pinion gear until the gears make contact/zero backlash. If zero backlash cannot be obtained, turn the pinion side adjuster until zero backlash is obtained.

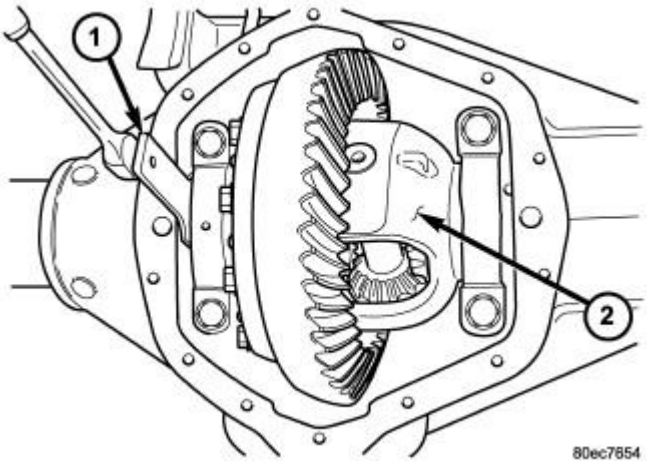

Fig. 7: Turning Bearing Adjusters
Courtesy of CHRYSLER GROUP, LLC

4. Holding the differential case (2) toward the pinion gear, turn bearing adjusters with Adjuster Wrench (special tool #8883A, Wrench, Differential Adjusting) (1) until adjuster makes contact with the differential bearings/cups.
5. Back off the ring gear side adjuster 4 holes, to obtain initial ring gear backlash.
6. Install ring gear side adjuster lock and bolt. **Do not tighten** adjuster lock bolt at this time.
7. Tighten pinion gear side adjuster firmly against the differential case bearing cup.
8. Rotate the pinion several times to seat the deferential bearings.
9. Loosen pinion gear side adjuster until it is no longer in contact with the bearing cup, then tighten it until it makes contact.
10. Tighten pinion gear side adjuster an additional:
    - **New Bearings:** 6 Adjuster Holes
    - **Original Bearings:** 4 Adjuster Holes
11. Install pinion gear side adjuster lock and bolt.
12. Tighten bearing cap bolts to 281 N.m (207 ft. lbs.).
13. Tighten adjuster lock bolts to 25 N.m (18 ft. lbs.).

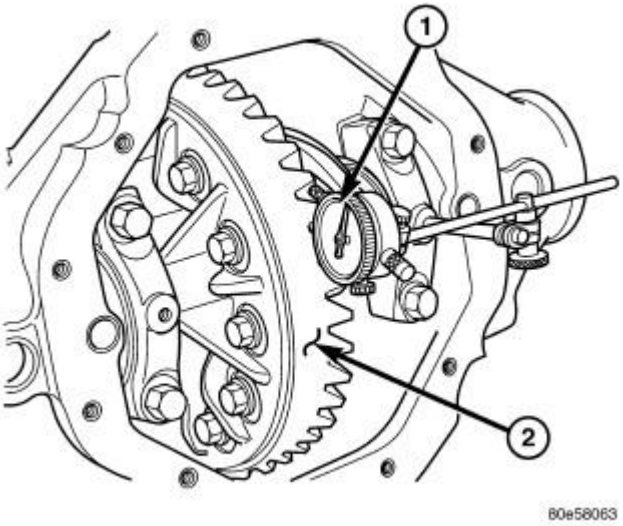

Fig. 8: Measuring Ring Gear Backlash
Courtesy of CHRYSLER GROUP, LLC

14. Measure ring gear backlash with a Dial Indicator (special tool #C-3339A, Set, Dial Indicator) (1) and Pilot Stud (special tool #L-4438, Dial Indicator Post) at eight points around the drive side of the ring gear (2). The backlash should be 0.08-0.25 mm (0.003-0.010 in) with a preferred backlash of 0.13-0.18 mm (0.005-0.007 in).

NOTE: **Backlash measurement should not vary more than 0.05 mm (0.002 in) between measuring points. If measurement does vary inspect the gears for burrs, the differential case flange and ring gear mounting.**

GEAR TOOTH CONTACT PATTERN

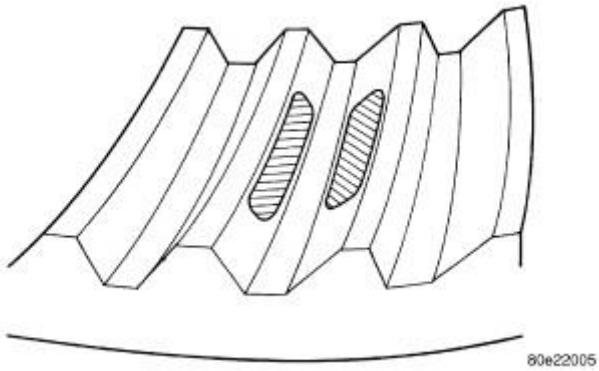

Fig. 9: Correct Contact Pattern
Courtesy of CHRYSLER GROUP, LLC

1. Wipe clean each tooth of the ring gear.
2. Apply gear marking compound to all of the ring gear teeth.

3. Verify bearing cap bolts are torque specification.
4. Apply parking brakes lightly to create at 14 N.m (10 ft. lbs.) pinion rotating torque.
5. Rotate the pinion/pinion yoke 4 full revolutions in each directions.
6. Read gear tooth contact pattern.

Gear contact pattern correct. Backlash and pinion depth is correct.

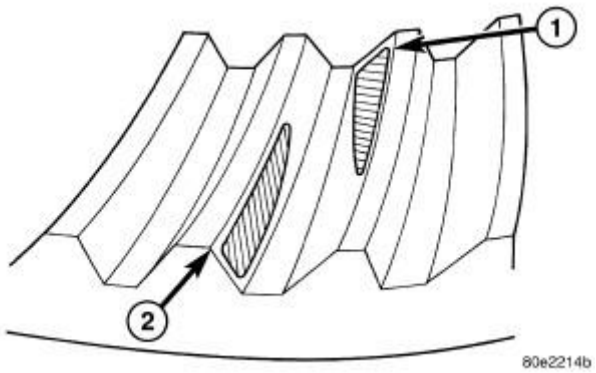

Fig. 10: Incorrect Backlash (1 Of 4)
Courtesy of CHRYSLER GROUP, LLC

Ring gear too far away from pinion gear, coast side toe (1) and drive side heel (2). Decrease backlash, by moving the ring closer to the pinion gear using the adjusters.

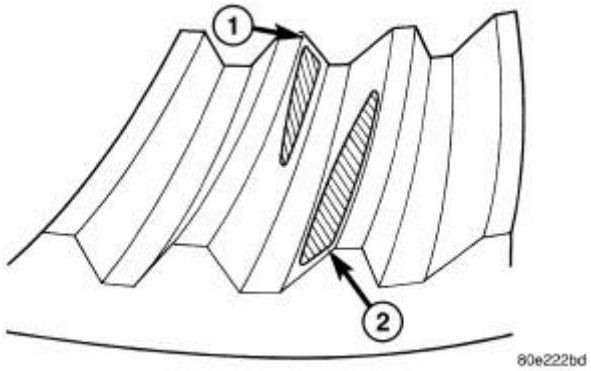

Fig. 11: Incorrect Backlash (2 Of 4)
Courtesy of CHRYSLER GROUP, LLC

Ring gear too close to pinion gear, drive side toe (1) and coast side heel (2). Increase backlash, by moving the ring away from the pinion gear using the adjusters.

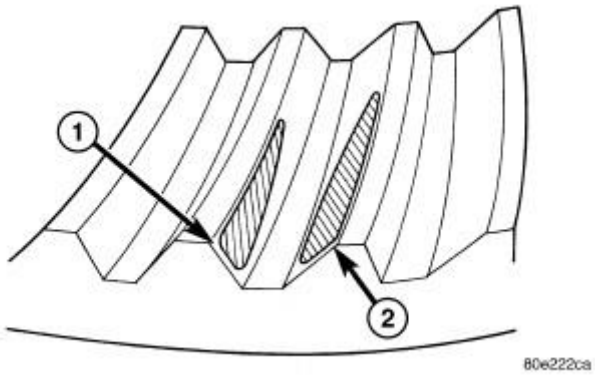

Fig. 12: Incorrect Backlash (3 Of 4)
Courtesy of CHRYSLER GROUP, LLC

Ring gear too far away from pinion gear, drive side heel (1) and coast side heel (2). Decrease backlash, by moving the ring closer to the pinion gear using the adjusters.

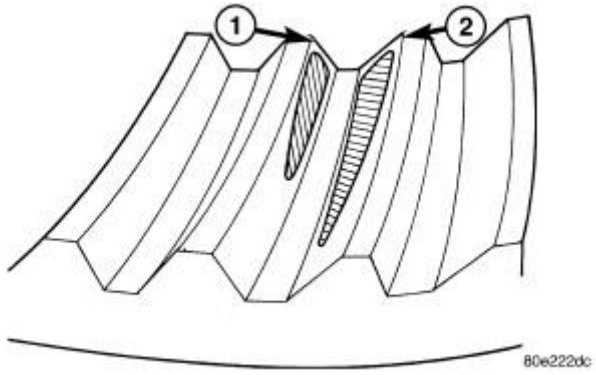

Fig. 13: Incorrect Backlash (4 Of 4)
Courtesy of CHRYSLER GROUP, LLC

Ring gear too close to pinion gear, drive side toe (1) coast side toe (2). Increase backlash, by moving the ring away from the pinion gear using the adjusters.

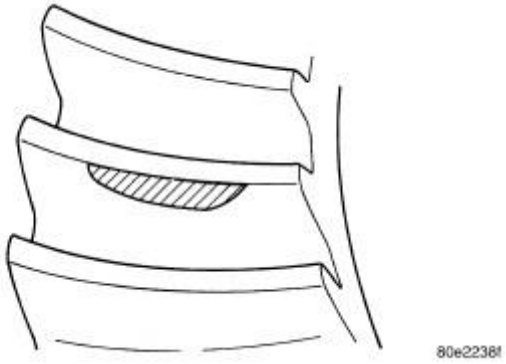

Fig. 14: Low Pinion Height

Courtesy of CHRYSLER GROUP, LLC

Pinion gear is set too low. Increase pinion gear height, by increasing the pinion depth shim thickness.

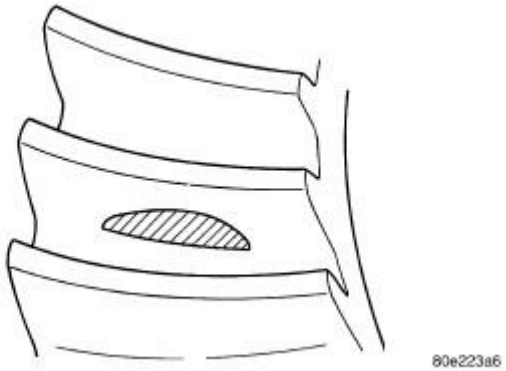

Fig. 15: High Pinion Height
Courtesy of CHRYSLER GROUP, LLC

Pinion gear is set too high. Decrease pinion depth, by decreasing the pinion depth shim thickness.

SPECIFICATIONS

SPECIFICATIONS

AXLE

DESCRIPTION	SPECIFICATION
Axle Ratio	3.73, 4.10
Ring Gear Diameter	292 mm (11.5 in.)
Ring Gear Backlash	0.13 - 0.18 mm (0.005 - 0.007 in.)
Pinion Torque To Rotate - New Bearings	1.69 - 2.82 N.m (15 - 25 in. lbs.)
Pinion Torque To Rotate - Original Bearings	1 - 2 N.m (10 - 20 in. lbs.)
Total Torque to Rotate - New Bearing	3.4 - 5.6 N.m (30 - 50 in. lbs.)
Total Torque to Rotate - Original Bearing	2.8 - 5.1 N.m (25 - 45 in. lbs.)
Fill Level - From Bottom of Fill Hole	6 mm (1/4 in.) ± 6 mm (1/4 in.)

TORQUE SPECIFICATIONS

DESCRIPTION	N.m	Ft. Lbs.	In. Lbs.
Fill Hole Plug	32	24	-
Differential Cover Bolts	40	30	-
Bearing Cap Bolts	281	207	-
Ring Gear Bolts	237	175	-
Axle Flange Bolts	129	95	-
Adjuster Lock Bolt	25	18	-

REMOVAL

REMOVAL

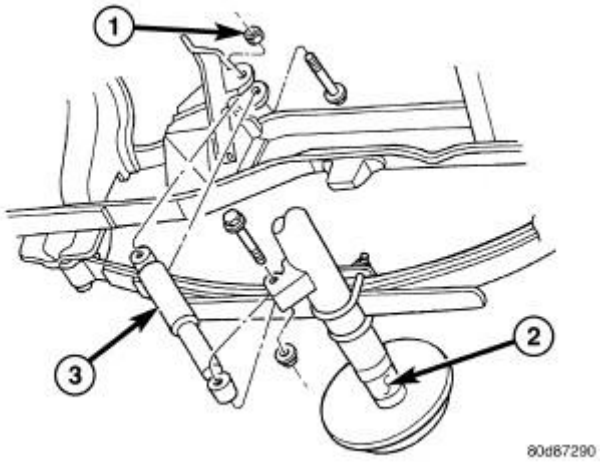

Fig. 16: Shock Absorber
Courtesy of CHRYSLER GROUP, LLC

1. With vehicle in neutral, position vehicle on hoist.
2. Position a lift under axle and secure lift to the axle.
3. Remove all brake components.
4. Mark propeller shaft and companion flange for installation alignment reference.
5. Remove propeller shaft.
6. Remove axle vent hose.
7. Remove shock absorbers (3) from axle (2).

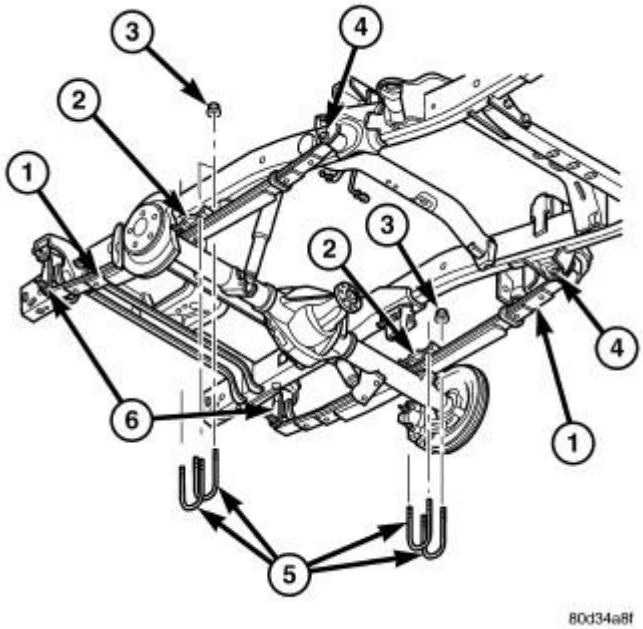

Fig. 17: Identifying Rear Spring Components
Courtesy of CHRYSLER GROUP, LLC

8. Remove U-bolts (4) from axle.
9. Remove axle from the vehicle.

INSTALLATION

INSTALLATION

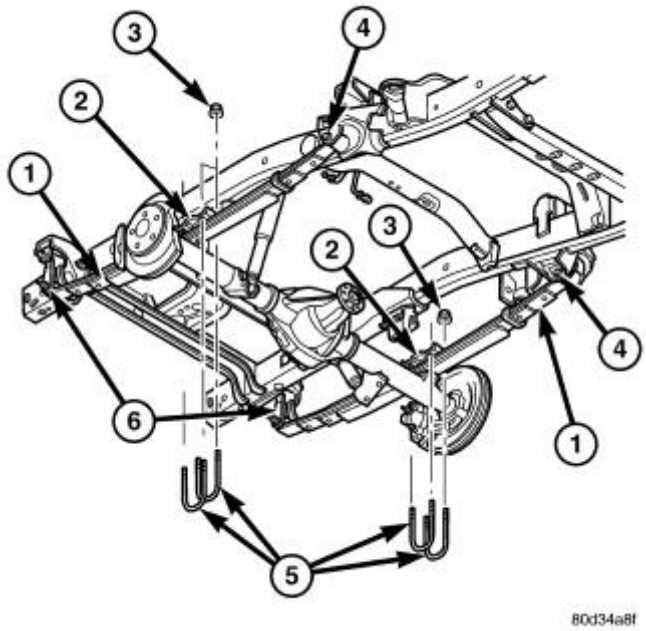

Fig. 18: Identifying Rear Spring Components
Courtesy of CHRYSLER GROUP, LLC

1. Raise axle with lift and align to the leaf spring (1) centering bolts.
2. Install axle U-bolts (5) and tighten to 149 N.m (110 ft. lbs.).
3. Install shock absorbers to axle and tighten to specification.
4. Install all brake components.
5. Install propeller shaft with reference marks aligned and tighten to specification.
6. Install axle vent hose.
7. Fill differential to specifications.
8. Remove lift from axle and lower the vehicle.

SPECIAL TOOLS

SPECIAL TOOLS

	1130 - Splitter, Bearing/Gear (Originally Shipped In Kit Number(s) 6745, 6947, 6949, 9202, 9202A-CAN, 9202CC, 9299.) 6739 - Block, Height (Originally Shipped In Kit Number(s) 6730, 9516A-CAN, 9540, 9541.) 6740 - Cone (Originally Shipped In Kit Number(s) 6730, 6731, 9516A-CAN, 9540, 9541.) 6741 - Screw (Originally Shipped In Kit Number(s) 6730, 6731, 9516A-CAN, 9540, 9541.) 8153 - Installer, Bearing Cup

(Originally Shipped In Kit Number(s) 8104.)
8289 - Set, Arbor Disc
(Originally Shipped In Kit Number(s) 8887, 8887CC.)
8883A - Wrench, Differential Adjusting
(Originally Shipped In Kit Number(s) 8887.)
8896 - Installer, Seal
(Originally Shipped In Kit Number(s) 8887, 8887CC.)
8897 - Gauge, Pinion Height
(Originally Shipped In Kit Number(s) 8887, 8887CC.)
8954 - Hub Nut Socket
(Originally Shipped In Kit Number(s) 8887, 8887CC.)
8960 - Installer, Bearing Cup
(Originally Shipped In Kit Number(s) 8887, 8887CC.)
8961 - Installer, Bearing Cup
(Originally Shipped In Kit Number(s) 8887, 8887CC.)
8963 - Installer, Hub Seal
(Originally Shipped In Kit Number(s) 8887, 8887CC.)
8964 - Plug, Differential Bearing
(Originally Shipped In Kit Number(s) 8887, 8887CC.)
8965 - Installer, Differential Bearing
(Originally Shipped In Kit Number(s) 8887, 8887CC.)
8968 - Installer, Bearing Cup
(Originally Shipped In Kit Number(s) 8887, 8887CC.)
8977 - Pinion Driver
(Originally Shipped In Kit Number(s) 8887, 8887CC.)
8979 - Wrench, Pinion Flange
(Originally Shipped In Kit Number(s) 8999.)
8981 - Installer, Bearing Cup
(Originally Shipped In Kit Number(s) 8887, 8887CC.)
8992 - Remover, Pinion Flange
(Originally Shipped In Kit Number(s) 8999, 8999CC, 9299, 9299CC, 9299CC, 9300A-CAN.)
938 - Bridge
(Originally Shipped In Kit Number(s) 6745, 6947, 6949, 9202, 9202A-CAN, 9202CC, 9299.)
C-3339A - Set, Dial Indicator
(Originally Shipped In Kit Number(s) 9202.)
C-4171 - Driver Handle, Universal
(Originally Shipped In Kit Number(s) 9202, 9202A-CAN, 9202CC, 9299, 9299CC, 9299CC, 9300A-CAN.)
D-115-2A - Block, Scooter
(Originally Shipped In Kit Number(s) 9329-SUP, 9515-SUP, 9516-SUP, 9517-SUP, 9518, 9519, 9540-SUP, 9541-SUP, 9694, 9926.)
D-115-3 - Arbor
(Originally Shipped In Kit Number(s) 8667, 9516A-CAN.)
D-389 - Installer, Bearing
(Originally Shipped In Kit Number(s) 6745.)

L-4438 - Dial Indicator Post

BEARING, AXLE SHAFT

REMOVAL

REMOVAL

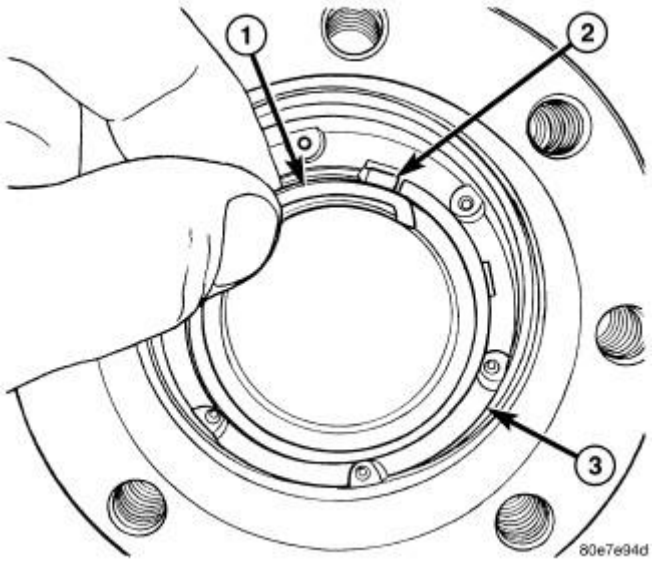

Fig. 19: Identifying Retainer Ring
Courtesy of CHRYSLER GROUP, LLC

1. Remove axle shaft flange bolts and remove shaft.
2. Remove retainer ring (1) from the axle shaft tube.

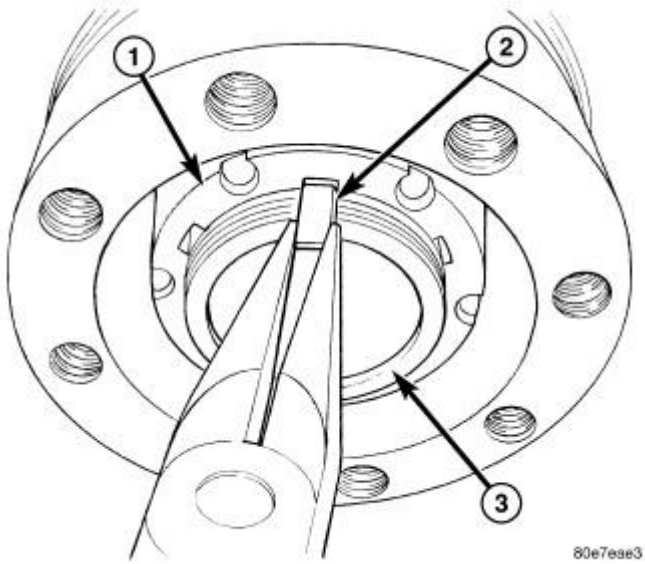

Fig. 20: Locking Key
Courtesy of CHRYSLER GROUP, LLC

3. Remove hub bearing nut (1) locking key (2) form axle tube (3).
4. Remove hub bearing nut with Socket (special tool #8954, Hub Nut Socket).
5. Remove hub and bearings from the axle.

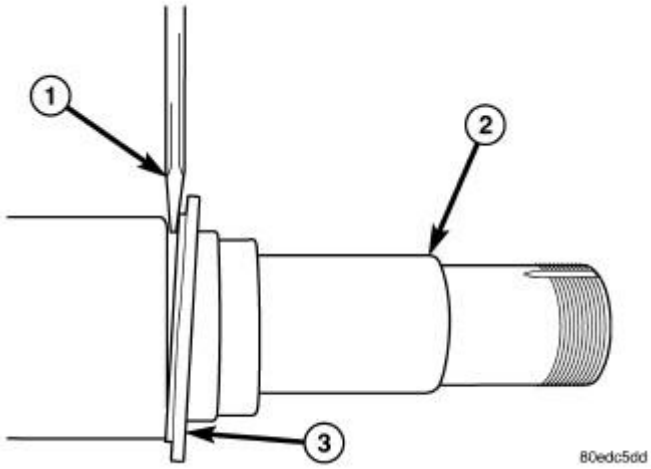

Fig. 21: Prying Out Hub Bearing Seal
Courtesy of CHRYSLER GROUP, LLC

6. Pry out hub bearing seal from the back of the hub.

NOTE: **The inner part of the seal (3) may stay on the axle tube (2). This part must also be removed with a pry bar (1).**

7. Remove rear bearing.
8. Remove hub bearing cups with a hammer and drift.

INSTALLATION

INSTALLATION

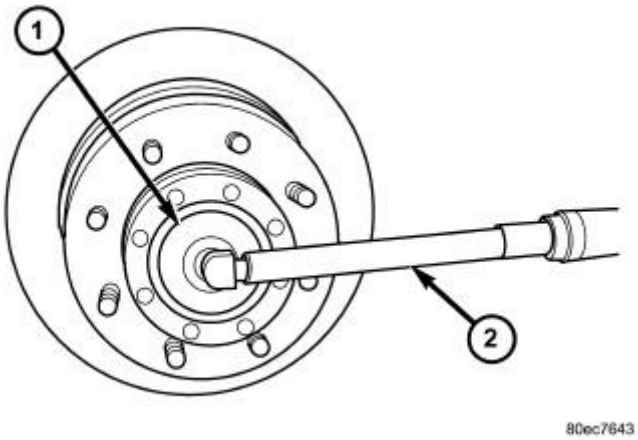

Fig. 22: Installing Hub Bearing Nut
Courtesy of CHRYSLER GROUP, LLC

1. Install outer hub bearing cup with Installer (special tool #8961, Installer, Bearing Cup) and Handle (special tool #C-4171, Driver Handle, Universal).
2. Install inner hub bearing cup with Installer (special tool #8153, Installer, Bearing Cup) and Handle (special tool #C-4171, Driver Handle, Universal).
3. Pack bearings with the appropriate wheel bearing grease.
4. Install rear bearing and install **new** grease seal with Installer (special tool #8963, Installer, Hub Seal) and Handle (special tool #C-4171, Driver Handle, Universal).
5. Slide hub on the axle tube and install front bearing into the hub.
6. Install hub bearing nut with Socket (special tool #8954, Hub Nut Socket) (1) and tighten with torque wrench (2) to 30 N.m (22 ft. lbs.) while rotating the hub.
7. Back off nut about 30° and align next hub nut key slot with axle tube key slot and install locking key.

NOTE: End play should be 0.025-0.25 mm (0.01-0.001 in.)

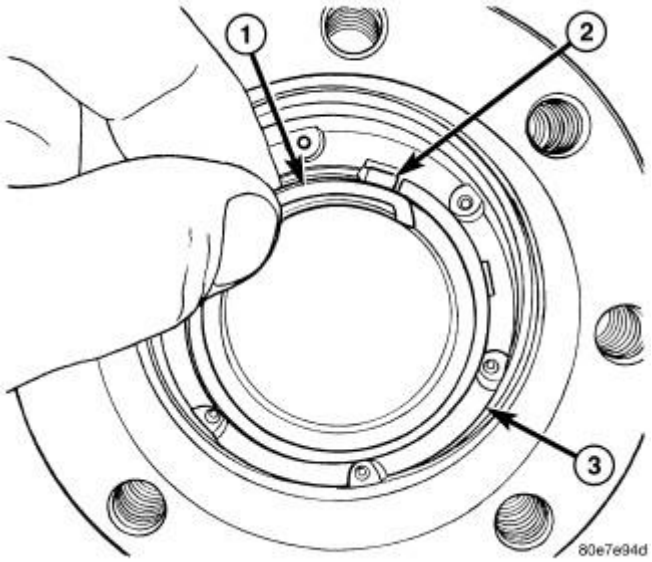

Fig. 23: Identifying Retainer Ring
Courtesy of CHRYSLER GROUP, LLC

8. Install retainer ring (1) with ring end in the key slot (2).
9. Install new axle shaft gasket and install the axle shaft.

BEARING, DIFFERENTIAL SIDE

REMOVAL

REMOVAL

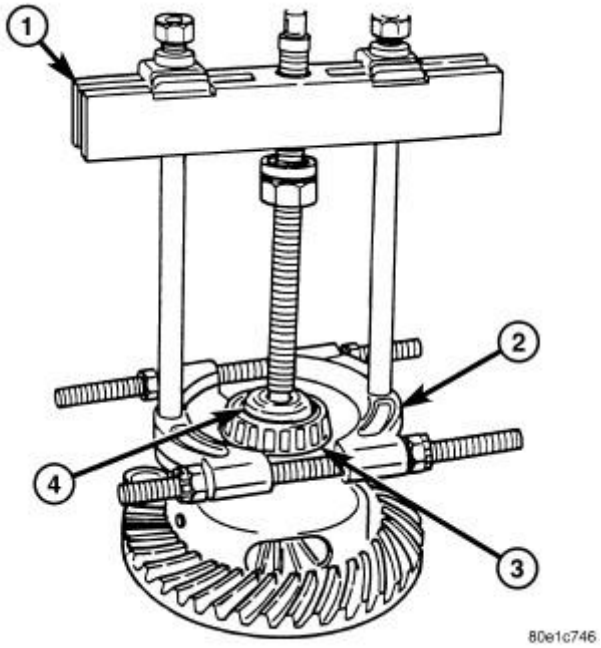

Fig. 24: Removing Differential Case Bearings
Courtesy of CHRYSLER GROUP, LLC

1. Remove differential case from the housing.
2. Install Plug (special tool #8964, Plug, Differential Bearing) (4) into the end of the case.
3. Remove differential case bearings (3) with Bearing Splitter (special tool #1130, Splitter, Bearing/Gear) (2) and Bridge (special tool #938, Bridge) (1).

INSTALLATION

INSTALLATION

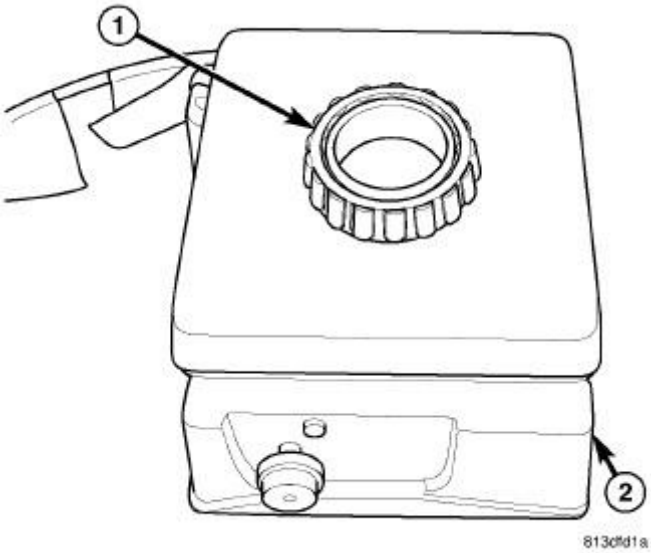

Fig. 25: Heating Bearing
Courtesy of CHRYSLER GROUP, LLC

WARNING: Use welding gloves when handling heated components. Failure to follow these instructions will result in personal injury.

CAUTION: A bearing heater (2) is used to install Trac-Rite™ differential case bearings (1). Use only a bearing heater/hot plate and follow manufacture's instructions. Heat components to 100 - 177 Celsius (212° - 350° Max Fahrenheit). Never use an open flame to heat components. Never leave components on heater for and extended amount of time. If component is discolored after heating the component has been overheated and must not be used. Failure to follow these instructions will result in component damage.

1. Heat Trac-Rite™ differential case bearings (1) with bearing heater (2).
2. With welding gloves or tongs install bearings on differential case.

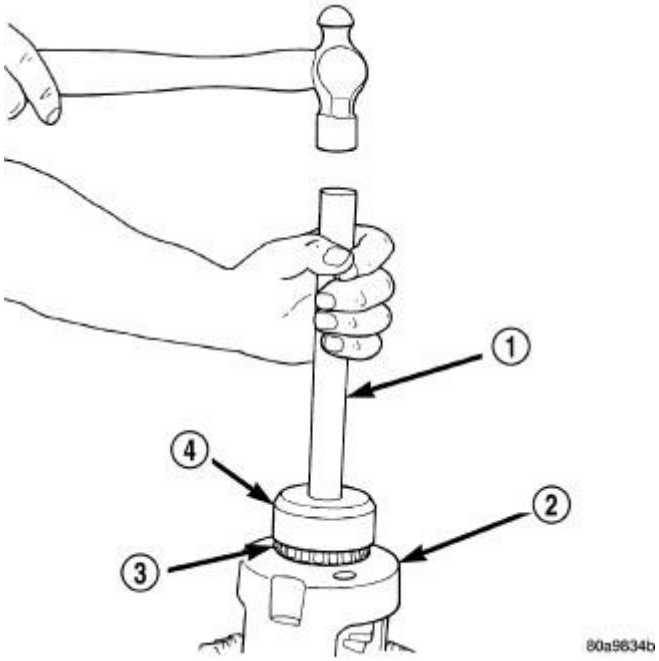

Fig. 26: Installing Open Differential Case Bearings
Courtesy of CHRYSLER GROUP, LLC

3. Install open differential case (2) bearings (3) with Installer (special tool #8965, Installer, Differential Bearing) (4) and Handle (special tool #C-4171, Driver Handle, Universal) (1).
4. Install differential case into housing.

CASE ASSEMBLY, DIFFERENTIAL

REMOVAL

REMOVAL

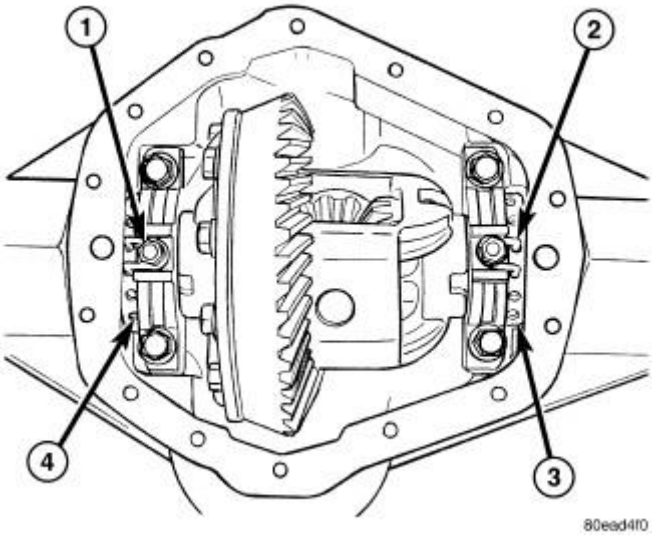

Fig. 27: Adjuster Locks & Bolts
Courtesy of CHRYSLER GROUP, LLC

1. Remove fill hole plug from the differential housing cover.
2. Remove differential housing cover and drain the lubricant.
3. Remove axle shafts.
4. Remove adjuster (3) lock bolts (1) and adjuster locks (2).

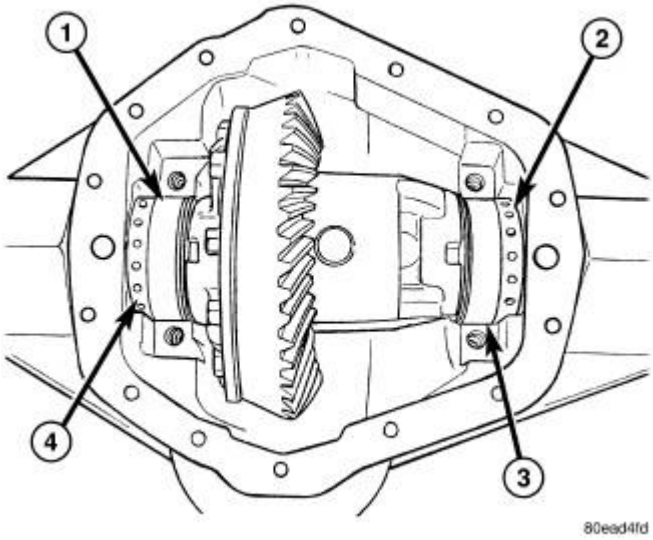

Fig. 28: Bearing Adjusters
Courtesy of CHRYSLER GROUP, LLC

5. Mark bearing caps left and right for installation reference.

6. Remove bearing cap bolts and remove bearing caps.
7. Loosen differential bearing (1, 3) adjusters (2, 4) with a hammer and punch.
8. Remove differential case from the housing.
9. Remove bearing cups (1, 3) and tag them left and right for installation reference.

DISASSEMBLY

DISASSEMBLY

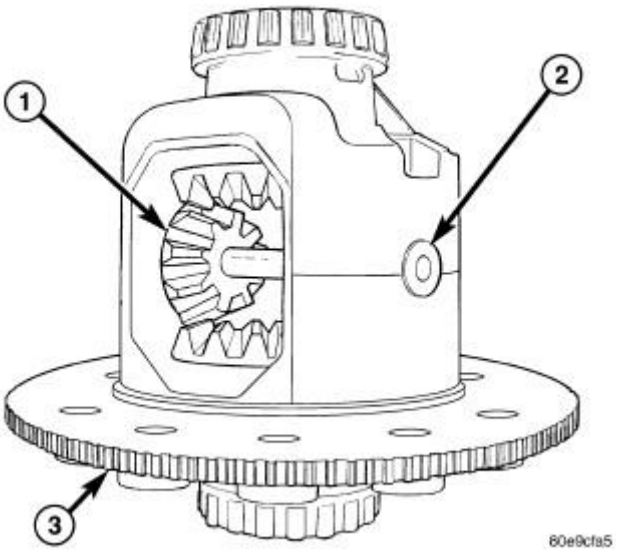

Fig. 29: Pinion Shaft
Courtesy of CHRYSLER GROUP, LLC

1. Remove ring gear.
2. Remove pinion shaft (2) with a hammer and punch from the side with the hole in the pinion shaft.

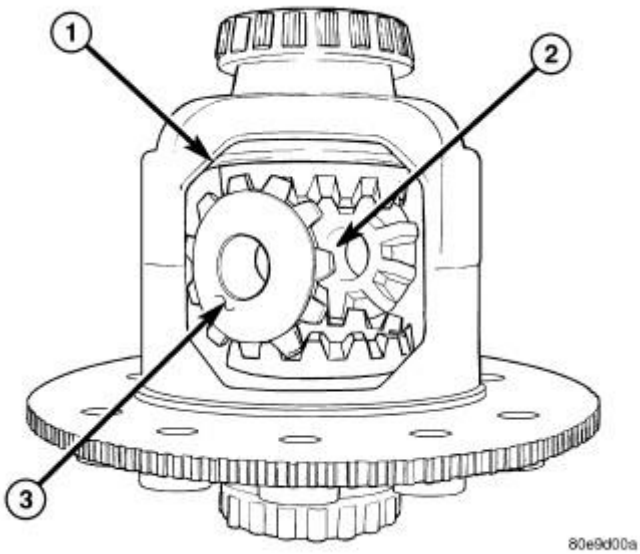

Fig. 30: First Pinion Gear
Courtesy of CHRYSLER GROUP, LLC

3. Rotate one pinion gear (2) with thrust washer (3) to the differential window (1) and remove the gear.

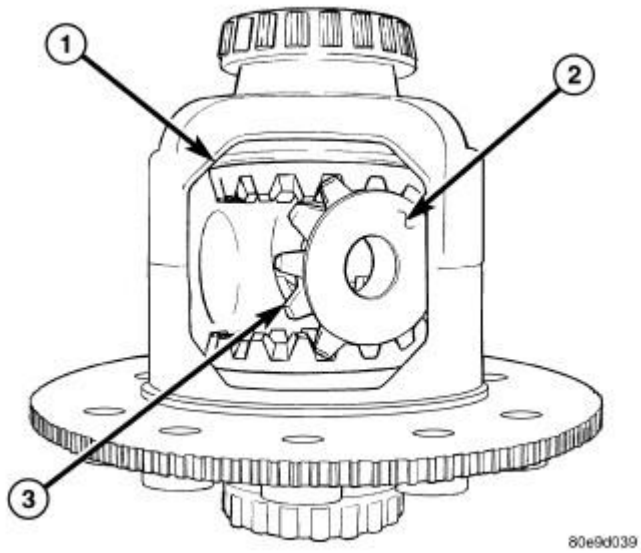

Fig. 31: Identifying Pinion Gear, Thrust Washer & Differential Window
Courtesy of CHRYSLER GROUP, LLC

4. Rotate the other pinion gear (3) with thrust washer (2) to the differential window (1) and remove the gear.

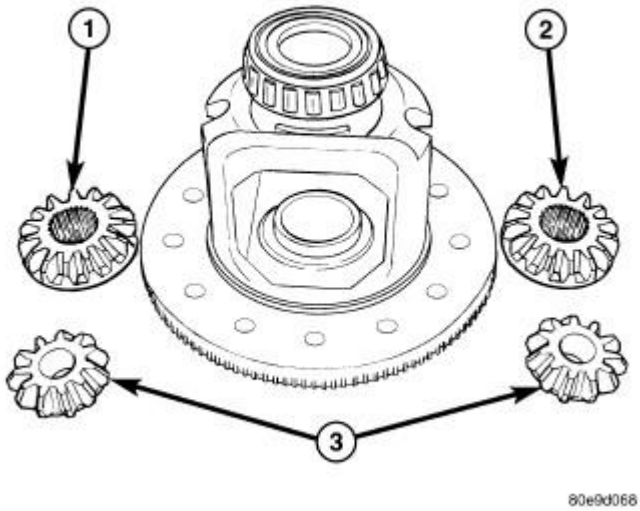

Fig. 32: Identifying Differential Side Gears
Courtesy of CHRYSLER GROUP, LLC

5. Remove differential side gears (1) (2) and thrust washers.

ASSEMBLY

ASSEMBLY

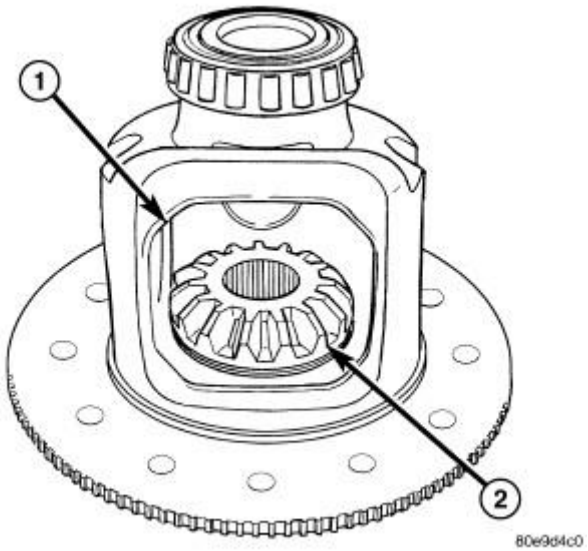

Fig. 33: Differential Side Gears & Window
Courtesy of CHRYSLER GROUP, LLC

NOTE: If the same gears and thrust washers are being used, install them into their

original locations.

1. Lubricate all differential components with axle lubricant.
2. Install differential side gears (2) and thrust washers through the differential window (1).

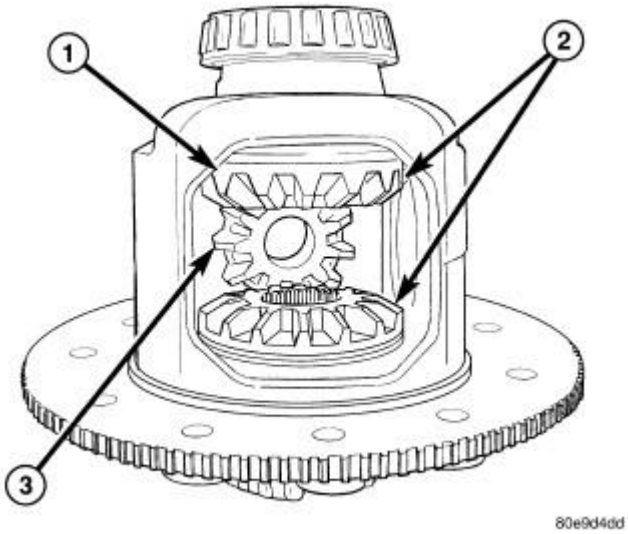

Fig. 34: Identifying Pinion Gear, Differential Window & Side Gears
Courtesy of CHRYSLER GROUP, LLC

3. Install first pinion gear (3) into the differential window (1) and side gears (2). Rotate the pinion gear to the back of the case.
4. Install the other pinion gear and thrust washer. Rotate the gears to align hole in the pinion gears with hole in the differential case.

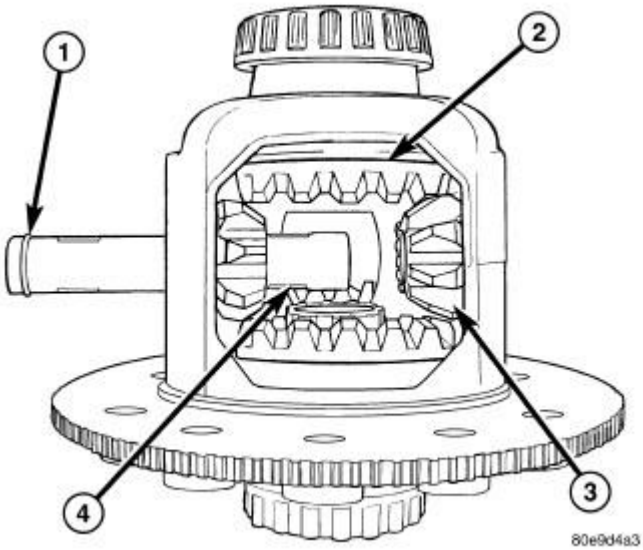

Fig. 35: Identifying Pinion Shaft, Pinion Gears & Snap Ring
Courtesy of CHRYSLER GROUP, LLC

5. Slide pinion shaft (4) into the case and through the pinion gears (3). Tap the shaft to seat the pinion shaft snap-ring (1) into the case.
6. Install ring gear.

INSTALLATION

INSTALLATION

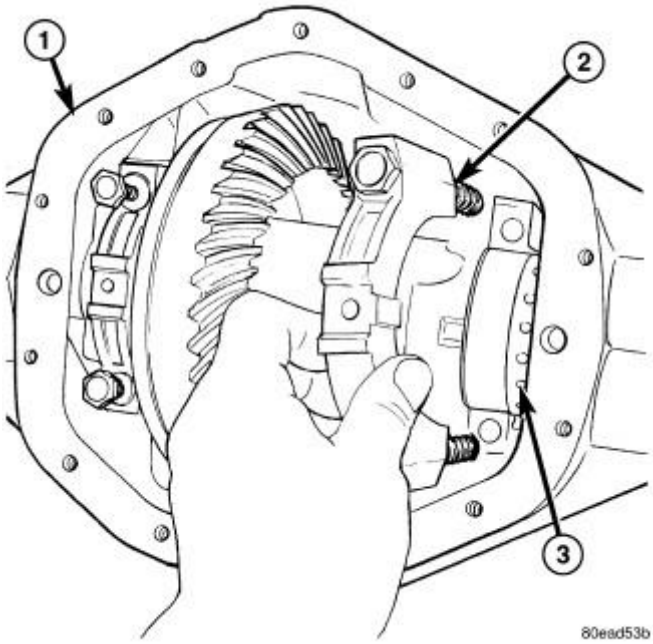

Fig. 36: Bearing Caps & Bolts
Courtesy of CHRYSLER GROUP, LLC

1. Clean the housing cavity with a flushing oil, light engine oil or lint free cloth.

   NOTE: Do not use water, steam, kerosene or gasoline for cleaning.

2. Lubricate differential case bearing.
3. Install differential case with bearings cups into the housing.

   NOTE: A light coat of grease on the cups will hold them in place during installation.

4. Install bearing caps (2) and bolts. Tighten the bearing cap (2) bolts finger-tight.

NOTE: **Do not torque bearing cap and bolts at this time.**

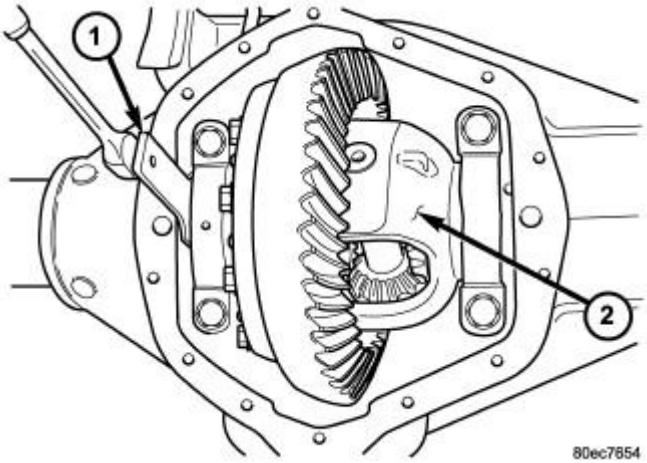

Fig. 37: Turning Bearing Adjusters
Courtesy of CHRYSLER GROUP, LLC

5. Slide differential case toward the pinion gear until the gears make contact/zero backlash. If zero backlash cannot be obtained, turn the pinion side adjuster until zero backlash is obtained.
6. Holding the differential case (2) toward the pinion gear, turn bearing adjusters with Adjuster Wrench (special tool #8883A, Wrench, Differential Adjusting) (1) until they make contact with the differential bearings/cups.
7. Back off the ring gear side adjuster 4 holes, to obtain initial ring gear backlash.
8. Install ring gear side adjuster lock and bolt. Do not tighten adjuster lock bolt at this time.
9. Tighten pinion gear side adjuster firmly against the differential case bearing cup.
10. Rotate the pinion several times to seat the differential bearings.
11. Loosen pinion gear side adjuster until it is no longer in contact with the bearing cup.
12. Tighten pinion gear side adjuster until it just makes contact with the bearing cup.
13. Tighten pinion gear side adjuster an additional:
    - **New Bearings** 6 Adjuster Holes
    - **Original Bearings** 4 Adjuster Holes
14. Install pinion gear side adjuster lock and bolt. Do not tighten adjuster lock bolt at this time.

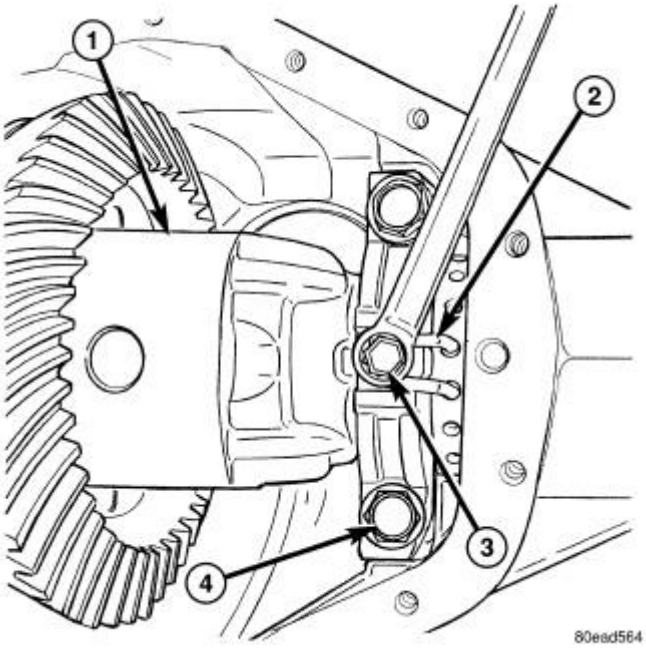

Fig. 38: Adjuster Locks & Bolts
Courtesy of CHRYSLER GROUP, LLC

15. Tighten bearing cap bolts (4) to 281 N.m (207 ft. lbs.).
16. Tighten adjuster lock bolts (3) to 25 N.m (18 ft. lbs.).
17. Measure ring gear backlash and check gear tooth contact pattern. For procedure, refer to **ADJUSTMENTS**.
18. Install axle shaft gasket and install axle shafts.
19. Install differential housing gasket and cover. Tighten cover bolts to 40 N.m (30 ft. lbs.).
20. Fill differential with lubricant to specifications.
21. Install fill plug and tighten to 32 N.m (24 ft. lbs.).

CASE ASSEMBLY, DIFFERENTIAL, TRAC-RITE

DESCRIPTION

DESCRIPTION

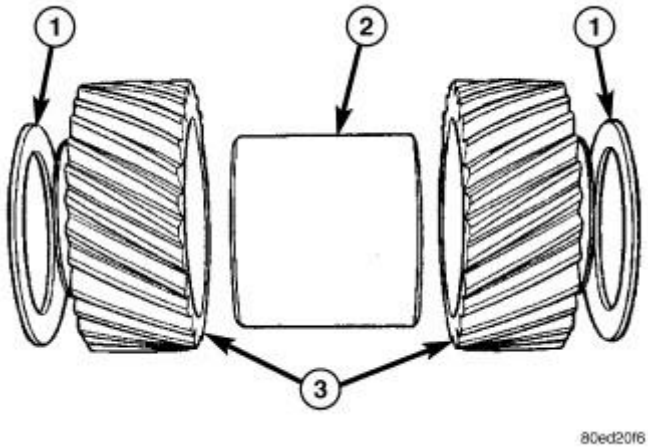

Fig. 39: Identifying Side Gears, Thrust Washers & Spacer
Courtesy of CHRYSLER GROUP, LLC

CAUTION: The differential is serviced as an assembly only do not attempt to disassemble. Failure to follow these instructions will result in damage to the differential.

The Trac-Rite™ differential is a helical gear differential. The differential has two side gears (3), two thrust washers (1) and one spacer (2).

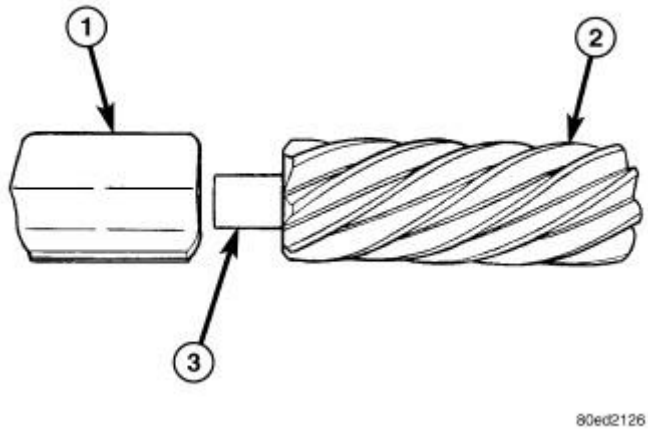

Fig. 40: Identifying Pinion Gear, Shaft & Brake Shoe
Courtesy of CHRYSLER GROUP, LLC

It also has six pinion brake shoes (1) which pivot on the six pinion gear (2) shafts (3).

OPERATION

OPERATION

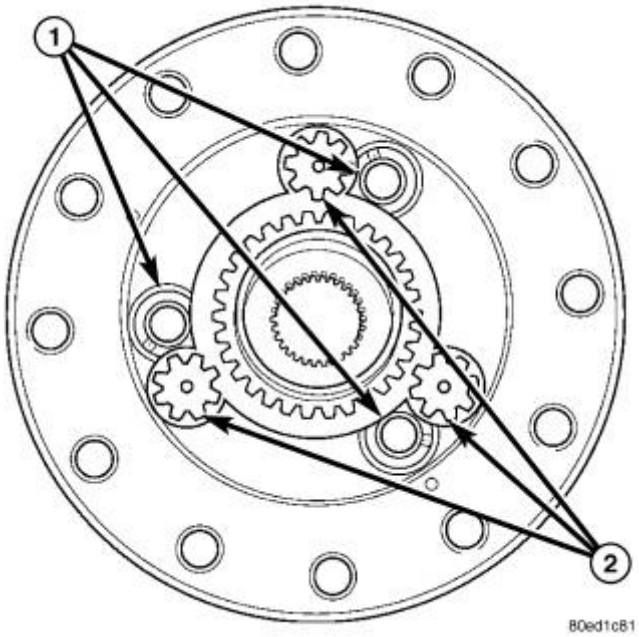

Fig. 41: Pinion Gears & Brake Shoes
Courtesy of CHRYSLER GROUP, LLC

CAUTION: The differential is serviced as an assembly only do not attempt to disassemble. Failure to follow these instructions will result in damage to the differential.

When one wheel begins to spin the pinion gears (2) on that side, are forced toward the pinion brake shoes (1). The pinion brake shoes then cause frictional drag on the opposite pinion gears and the side gear. These friction forces transfer the power to the opposite wheel. Once the frictional forces are overcome, differentiation will occur. The torque will be continually biased by the frictional forces to the high traction wheel.

CLEANING

CLEANING

CAUTION: The differential is serviced as an assembly only do not attempt to disassemble. Failure to follow these instructions will result in damage to the differential.

Flush the differential case and gears through openings in the case with light oil.

GEAR, RING AND PINION

REMOVAL

REMOVAL

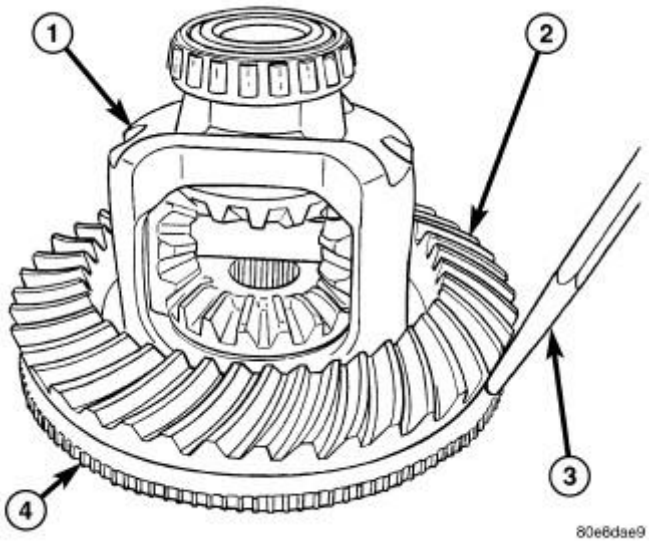

Fig. 42: Exciter Ring
Courtesy of CHRYSLER GROUP, LLC

NOTE: The ring and pinion gears are service in a matched set. Never replace the ring gear/pinion gear without replacing the other matching gear.

1. Mark pinion flange and propeller shaft for installation alignment.
2. Remove propeller shaft.
3. Remove differential from the housing.
4. Place differential case (1) on Plug (special tool #8964, Plug, Differential Bearing). Drive exciter ring (4) off the differential case with a hammer and punch (3).

NOTE: Do not remove the exciter ring if it is not being replaced.

5. Place differential case in a vise with soft metal jaw protectors.

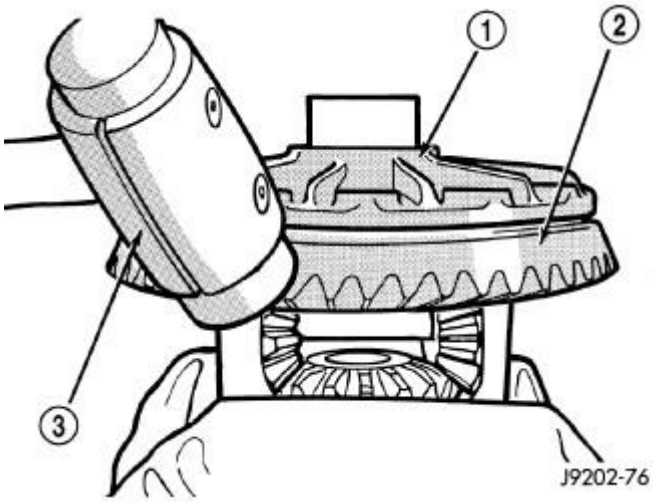

Fig. 43: Ring Gear
Courtesy of CHRYSLER GROUP, LLC

6. Remove bolts holding ring gear to differential case.
7. Drive ring gear (2) from differential case (1) with a soft hammer (3).

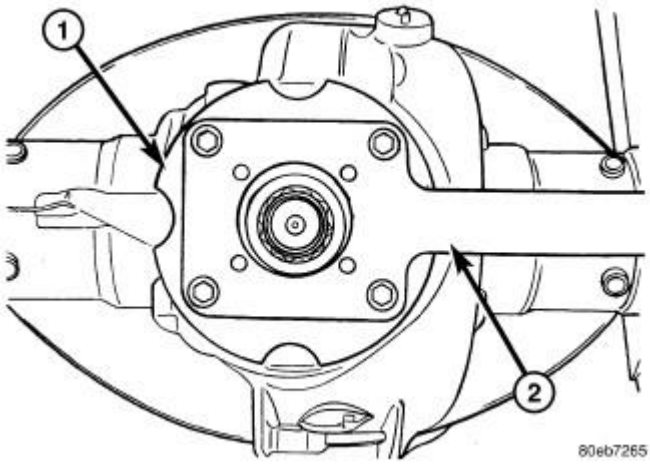

Fig. 44: Flange Wrench
Courtesy of CHRYSLER GROUP, LLC

8. Hold pinion flange (1) with Flange Wrench (special tool #8979, Wrench, Pinion Flange) (2) and remove pinion flange nut.

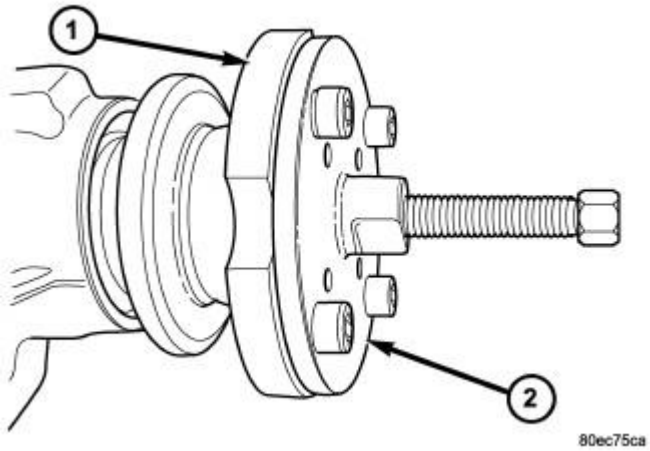

Fig. 45: Pinion Flange Puller
Courtesy of CHRYSLER GROUP, LLC

9. Remove pinion flange (1) from pinion with pinion Puller (special tool #8992, Remover, Pinion Flange) (2).

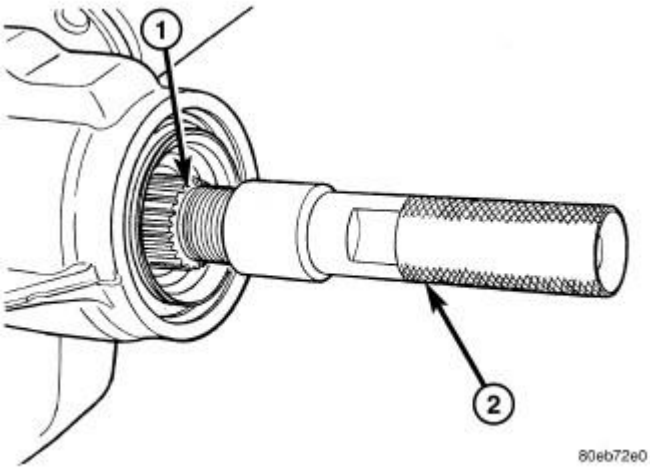

Fig. 46: Removing Pinion Gear From Housing
Courtesy of CHRYSLER GROUP, LLC

10. Remove pinion gear (1) from housing with pinion Driver (special tool #8977, Pinion Driver) (2) and a hammer.

NOTE: Thread the driver on the pinion shaft till it bottoms out.

11. Remove pinion seal with a slide hammer or pry bar.

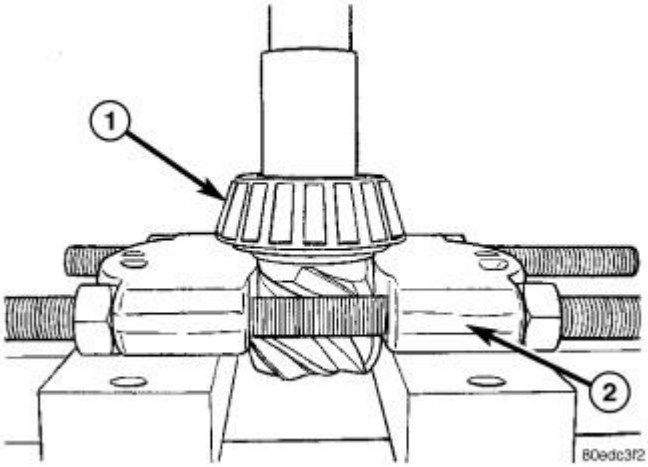

Fig. 47: Removing Rear Pinion Bearing
Courtesy of CHRYSLER GROUP, LLC

12. Remove front pinion bearing and discard bearing.

NOTE: Do not reuse front pinion bearing/cup.

13. Remove collapsible spacer from the pinion shaft.
14. Remove rear pinion bearing (1) with Bearing Splitter (special tool #1130, Splitter, Bearing/Gear) (2) and a press.
15. Remove pinion depth shim from the pinion gear shaft and record thickness of the shims.
16. Remove front pinion bearing cup from the housing with a punch and hammer, and discard cup.

NOTE: Do not reuse front pinion bearing/cup.

17. Remove rear pinion bearing cup from the housing with a punch and hammer, if bearing is going to be replaced.

INSTALLATION

INSTALLATION

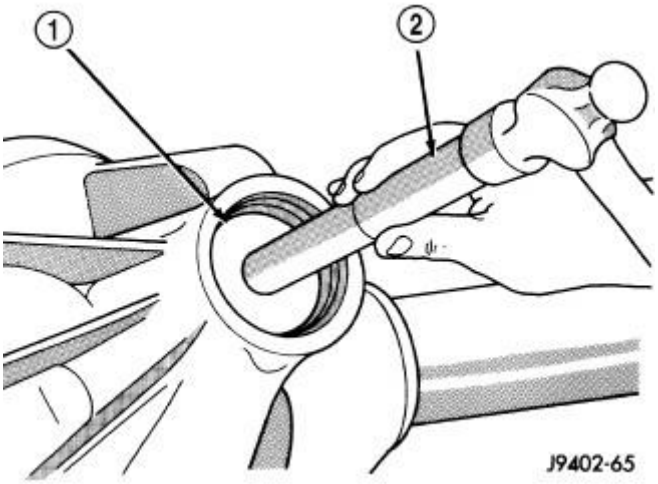

Fig. 48: Installing Front Pinion Bearing Cup
Courtesy of CHRYSLER GROUP, LLC

1. Install new front pinion bearing cup with Installer (special tool #8960, Installer, Bearing Cup) (1) and Handle (special tool #C-4171, Driver Handle, Universal) (2).

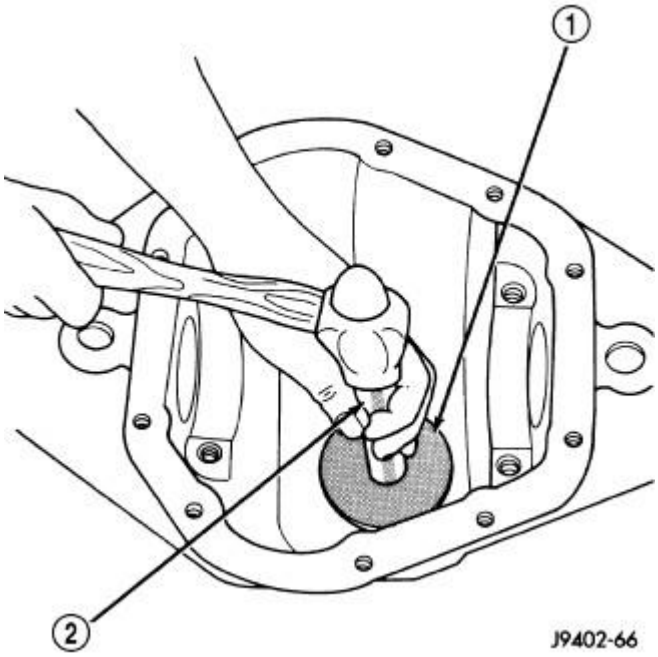

Fig. 49: Installing Rear Pinion Bearing Cup
Courtesy of CHRYSLER GROUP, LLC

2. Install new rear pinion bearing cup with Installer (special tool #8968, Installer, Bearing Cup) (1) and Handle (special tool #C-4171, Driver Handle, Universal) (2).

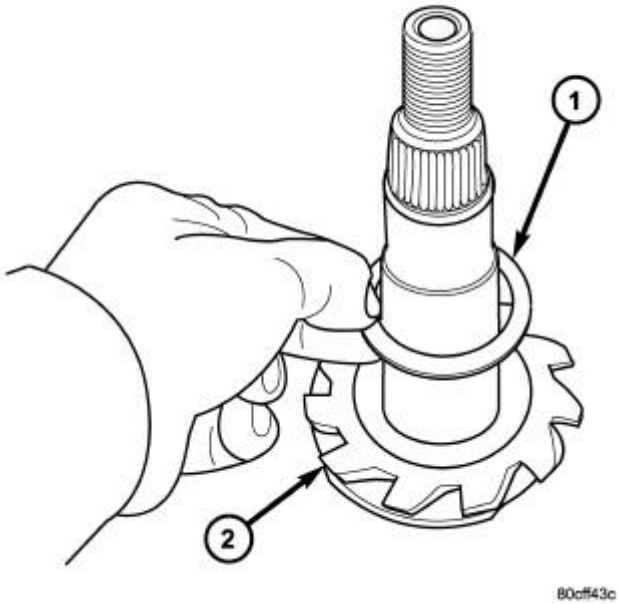

Fig. 50: Installing Pinion Depth Shim
Courtesy of CHRYSLER GROUP, LLC

3. Install pinion depth shim (1) on the pinion gear shaft (2).

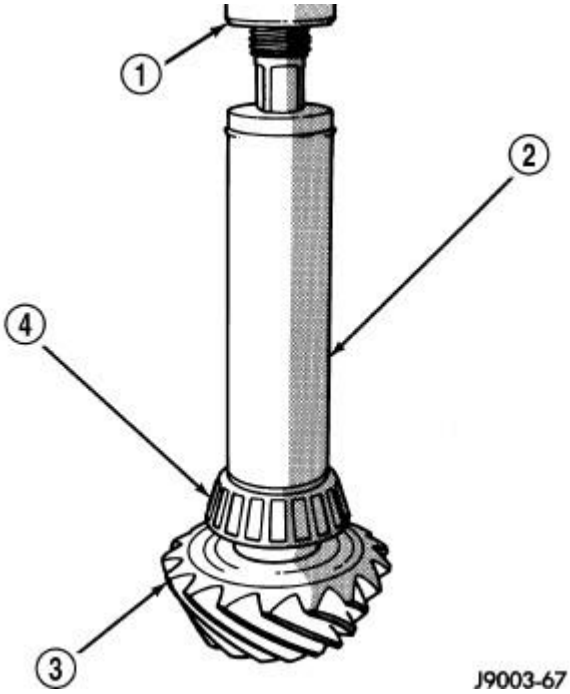

Fig. 51: Installing Rear Pinion Bearing
Courtesy of CHRYSLER GROUP, LLC

4. Install rear pinion bearing (4) with Installer (special tool #D-389, Installer, Bearing) (1) and a press (1).

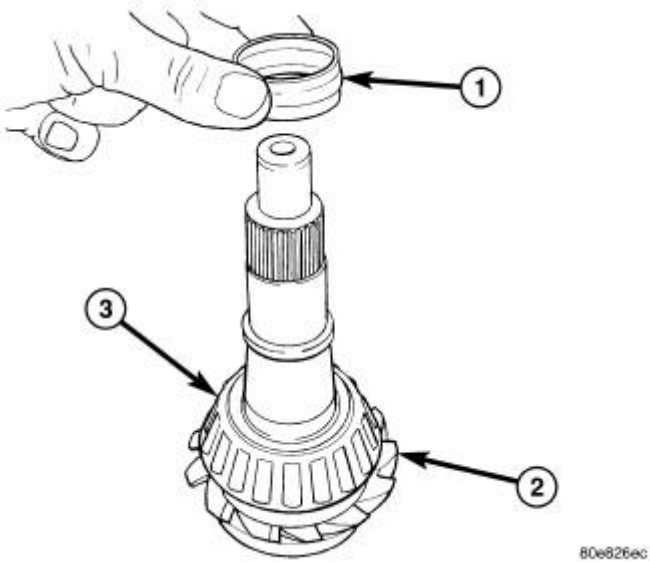

Fig. 52: Installing Collapsible Spacer
Courtesy of CHRYSLER GROUP, LLC

5. Install **new** collapsible spacer (1) on the pinion (2).
6. Lubricate pinion and bearings.

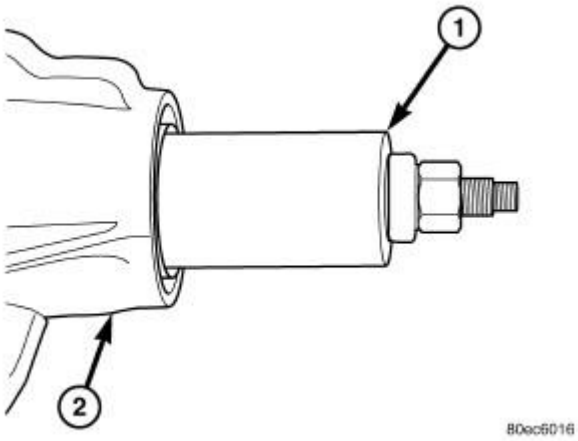

Fig. 53: Pinion Gear Installer
Courtesy of CHRYSLER GROUP, LLC

7. Install pinion into the housing (2) and place front pinion bearing onto the pinion shaft. Draw the pinion shaft into the front bearing with Installer (special tool #8981, Installer, Bearing Cup) (1).

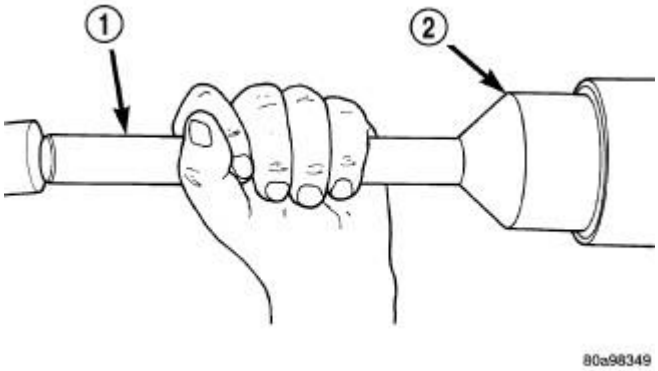

Fig. 54: Pinion Seal Installer
Courtesy of CHRYSLER GROUP, LLC

8. Install **new** pinion seal with Installer (special tool #8896, Installer, Seal) (2) and Handle (special tool #C-4171, Driver Handle, Universal) (1).

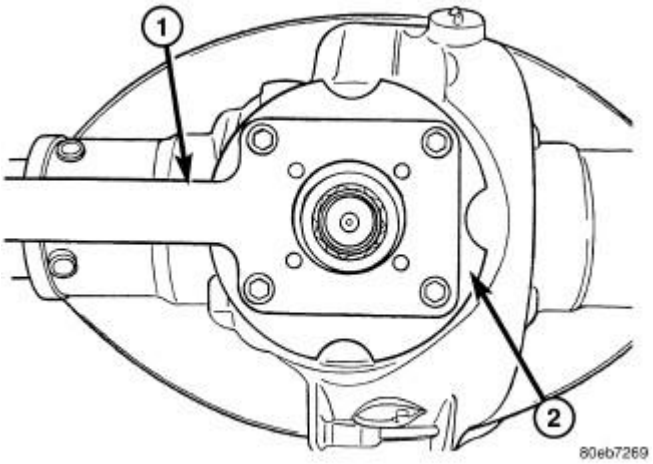

Fig. 55: Flange Wrench
Courtesy of CHRYSLER GROUP, LLC

9. Apply a light coat of teflon sealant to the pinion flange splines.
10. Hold pinion and lightly tap the pinion flange (2) onto the pinion, until a few threads are showing.
11. Install pinion flange washer and **new** pinion nut.
12. Hold pinion flange (2) with Flange Wrench (special tool #8979, Wrench, Pinion Flange) (1) and tighten pinion nut until pinion end play is eliminated.

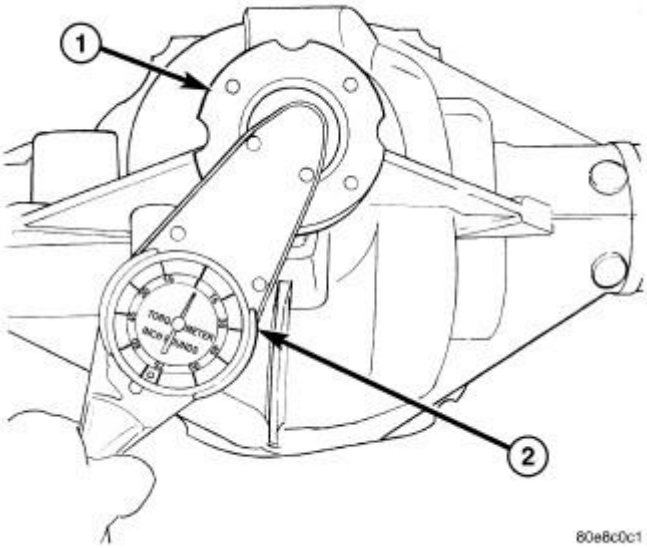

Fig. 56: Measuring Pinion Rotating Torque
Courtesy of CHRYSLER GROUP, LLC

13. Rotate pinion several times to seat pinion bearings.
14. Measure Pinion Torque To Rotate (1) with an inch pound torque wrench (2). Tighten pinion nut in 6.8 N.m (5 ft. lbs.) increments until pinion torque to rotate is achieved.

    Pinion Torque To Rotate is:

    - **New Pinion Bearings:** 1.7 - 2.8 N.m (15 - 25 in. lbs.)
    - **Original Pinion Bearings:** 1.1 - 2.2 N.m (10 - 20 in. lbs.)
15. Rotate pinion several times then verify pinion rotating torque again.

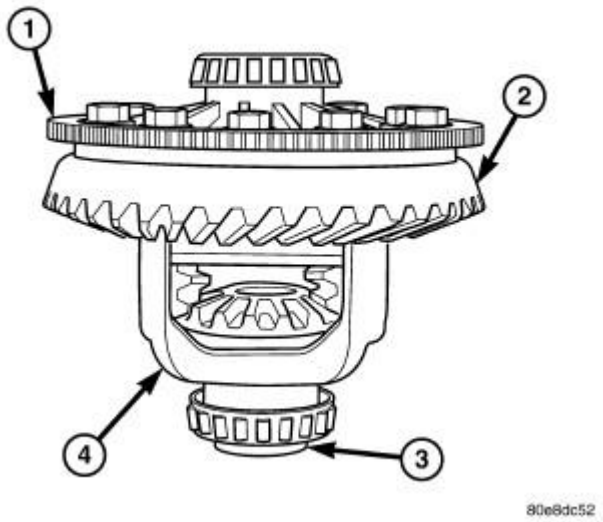

Fig. 57: Ring Gear, Differential Case & Bolts
Courtesy of CHRYSLER GROUP, LLC

16. Position the ring gear (2) on differential case (4) and start two **new** ring gear bolts.
17. Install the rest of the **new** ring gear bolts and tighten them alternately to seat the ring gear.
18. Torque ring gear bolts to 237 N.m (175 ft. lbs.).

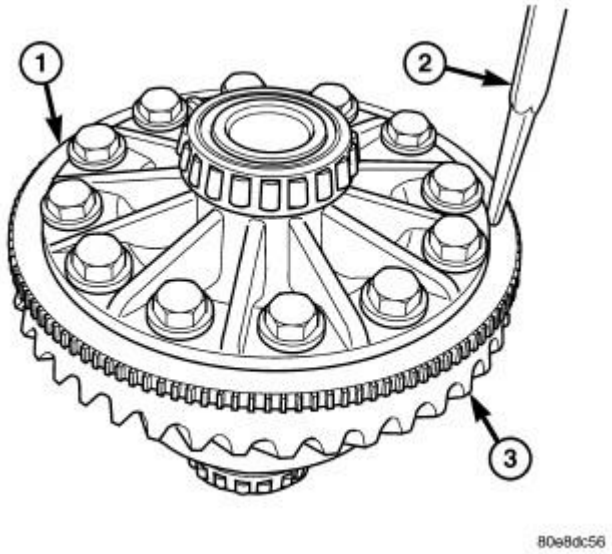

Fig. 58: Installing Exciter Ring
Courtesy of CHRYSLER GROUP, LLC

19. If exciter ring was removed, position differential assembly on differential Plug (special tool #8965, Installer, Differential Bearing) and place exciter ring (1) on the differential case.
20. Install the exciter ring on the differential case evenly with a hammer and brass punch (2). Drive the ring down until it is seated against the ring gear (2).
21. Install differential in housing.
22. Measure Total Torque To Rotate (TTTR) with an inch pound torque wrench.

    Total Torque To Rotate is:

    - **New Bearings:** 3.4 - 5.6 N.m (30 - 50 in. lbs.)
    - **Original Bearings:** 2.8 - 5.1 N.m (25 - 45 in. lbs.)

    NOTE: **If TTTR is to high, back off adjusters evenly on both sides slightly and check TTTR again. If TTTR is to low, tighten adjusters evenly on both sides slightly and check TTTR again.**

23. Verify ring gear backlash and gear contact pattern.

SEAL, DRIVE PINION

REMOVAL

REMOVAL

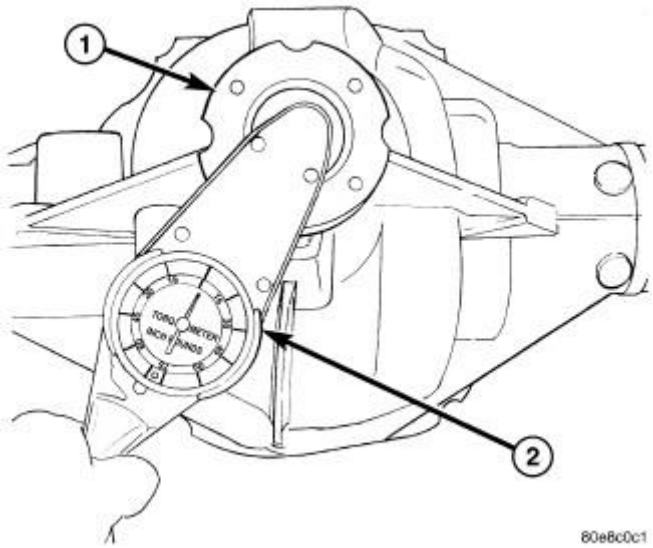

Fig. 59: Measuring Pinion Rotating Torque
Courtesy of CHRYSLER GROUP, LLC

1. Remove axle shafts.
2. Mark the propeller shaft and pinion flange for installation reference.
3. Remove propeller shaft.
4. Rotate pinion gear (1) three or four times.
5. Measure and record the amount of torque necessary to rotate the pinion gear with an inch pound torque wrench (2).

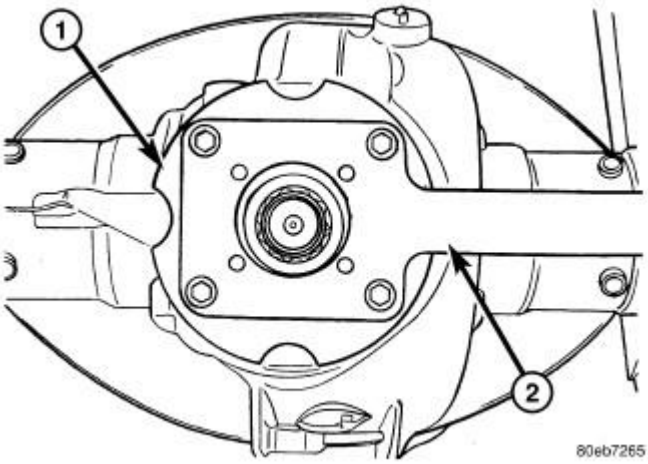

Fig. 60: Flange Wrench
Courtesy of CHRYSLER GROUP, LLC

6. Hold pinion flange (1) with Flange Wrench (special tool #8979, Wrench, Pinion Flange) (2) and remove pinion flange nut.

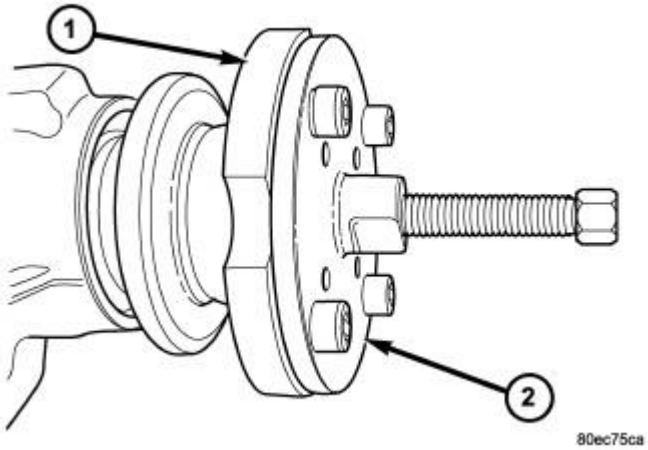

Fig. 61: Pinion Flange Puller
Courtesy of CHRYSLER GROUP, LLC

7. Remove pinion flange (1) with Pinion Flange Puller (special tool #8992, Remover, Pinion Flange) (2).
8. Remove pinion shaft seal with a seal puller or slide hammer mounted screw.

INSTALLATION

INSTALLATION

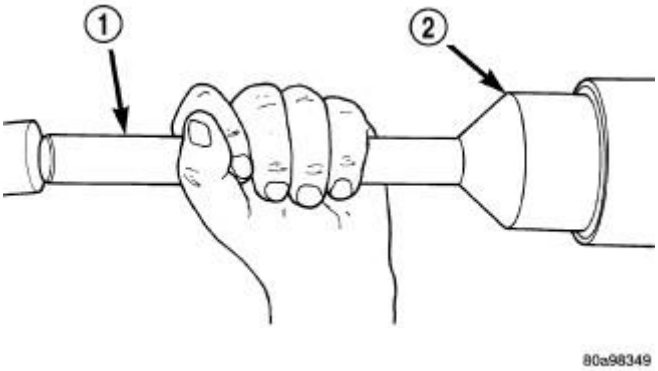

Fig. 62: Pinion Seal Installer
Courtesy of CHRYSLER GROUP, LLC

1. Install **new** pinion seal with Handle (special tool #C-4171, Driver Handle, Universal) (1) and Installer (special tool #8896, Installer, Seal) (2).
2. Apply a light coat of teflon sealant to the pinion flange splines.
3. Lightly tap the pinion flange onto the pinion until a few threads are showing.
4. Install flange washer and **new** pinion nut.

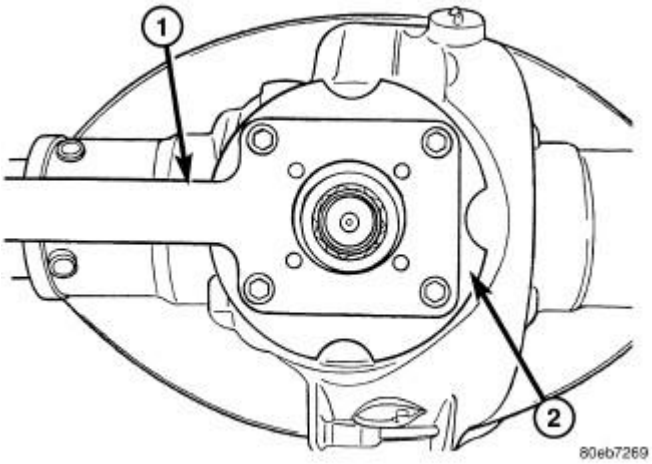

Fig. 63: Flange Wrench
Courtesy of CHRYSLER GROUP, LLC

5. Hold pinion flange (2) with Flange Wrench (special tool #8979, Wrench, Pinion Flange) (1) and tighten pinion nut until pinion end play is taken up.

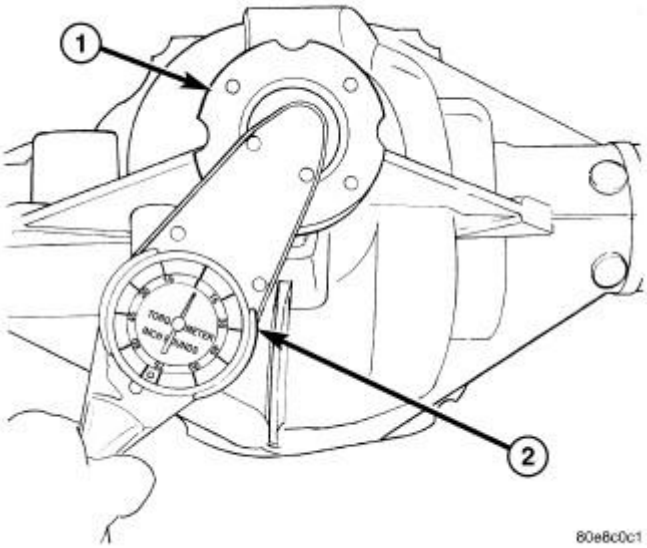

Fig. 64: Measuring Pinion Rotating Torque
Courtesy of CHRYSLER GROUP, LLC

6. Rotate pinion several times to seat bearings.
7. Measure pinion (1) Torque To Rotate with an inch pound torque wrench (2) and compare it to recorded measurement. Tighten pinion nut in small increments, until pinion Torque To Rotate is 0.40-0.57 N.m (3-5 in. lbs.) greater than recorded measurement.
8. Rotate pinion several times then verify pinion Torque To Rotate again.
9. Install axle shafts.
10. Install propeller shaft with reference marks aligned.
11. Check differential fluid level.

SHAFT, AXLE

REMOVAL

REMOVAL

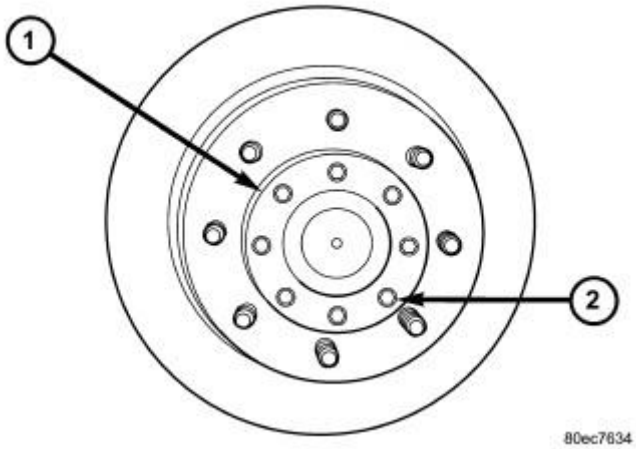

Fig. 65: Axle Shaft Flange & Bolts
Courtesy of CHRYSLER GROUP, LLC

1. Remove axle shaft flange (1) bolts (2).
2. Slide axle shaft out of the axle tube.
3. Remove axle shaft gasket.

INSTALLATION

INSTALLATION

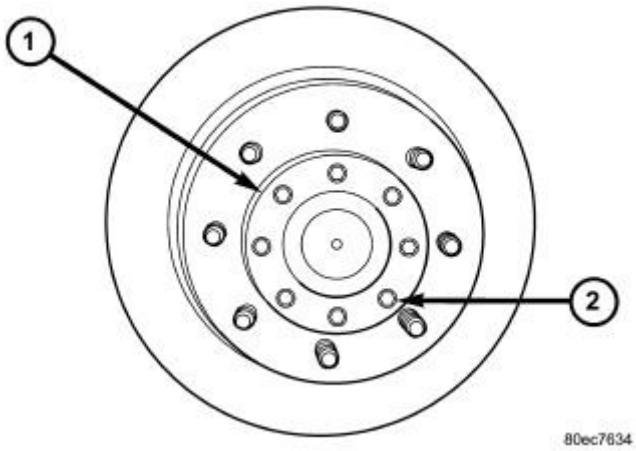

Fig. 66: Axle Shaft Flange & Bolts
Courtesy of CHRYSLER GROUP, LLC

NOTE: Axle flange bolts must be replaced or use Mopar™ Lock N' Seal or Loctite® 242 on cleaned existing bolts.

1. Clean axle flange and hub.

2. Install new axle shaft gasket.
3. Slide axle shaft into the axle tube.
4. Install axle shaft flange (1) bolts (2) and tighten to 129 N.m (95 ft. lbs.).

DIAGNOSIS AND TESTING

DIAGNOSIS AND TESTING - NOISE

GEAR NOISE

Axle gear noise can be caused by insufficient lubricant, incorrect backlash, incorrect pinion depth, tooth contact, worn/damaged gears, or the carrier housing not having the proper offset and squareness.

Gear noise usually happens at a specific speed range. The noise can also occur during a specific type of driving condition. These conditions are acceleration, deceleration, coast, or constant load.

When road testing, first warm-up the axle fluid by driving the vehicle at least 5 miles and then accelerate the vehicle to the speed range where the noise is the greatest. Shift out-of-gear and coast through the peak-noise range. If the noise stops or changes greatly:

- Check for insufficient lubricant.
- Incorrect ring gear backlash.
- Gear damage.

Differential side gears and pinions can be checked by turning the vehicle. They usually do not cause noise during straight-ahead driving when the gears are unloaded. The side gears are loaded during vehicle turns. A worn pinion shaft can also cause a snapping or a knocking noise.

BEARING NOISE

The axle shaft, differential and pinion bearings can all produce noise when worn or damaged. Bearing noise can be either a whining, or growling sound.

Pinion bearings have a constant-pitch noise. This noise changes with vehicle speed. Pinion bearing noise will be high pitched because it rotates at a faster rate. Drive the vehicle and load the differential. If bearing noise occurs, the rear pinion bearing is the source of the noise. If bearing noise is heard during a coast, the front pinion bearing is the source.

Differential bearings usually produce a low pitch noise. Differential bearing noise is similar to pinion bearing noise. The pitch of differential bearing noise is also constant and varies only with vehicle speed.

Axle shaft bearings produce noise and vibration when worn or damaged. The noise generally changes when the bearings are loaded. Road test the vehicle turning the vehicle sharply to the left and to the right. This will load the bearings and change the noise level. Where axle bearing damage is slight, the noise is usually not noticeable at speeds above 30 mph.

LOW SPEED KNOCK

Low speed knock is generally caused by a worn U-joint or by worn side-gear thrust washers. A worn pinion shaft bore will also cause low speed knock.

VIBRATION

Vibration at the rear of the vehicle is usually caused by a:

- Damaged drive shaft.
- Missing drive shaft balance weight(s).
- Worn or out-of-balance wheels.
- Loose wheel lug nuts.
- Worn U-joint(s).
- Loose/broken springs.
- Damaged axle shaft bearing(s).
- Loose pinion gear nut.
- Excessive pinion yoke run out.
- Bent axle shaft(s).

Check for loose or damaged front-end components or engine/transmission mounts. These components can contribute to what appears to be a rear end vibration. Do not overlook engine accessories, brackets and drive belts.

NOTE: All driveline components should be examined before starting any repair.

DRIVELINE SNAP

A snap or clunk noise when the vehicle is shifted into gear (or the clutch engaged), can be caused by:

- High engine idle speed.
- Transmission shift operation.
- Loose engine/transmission/transfer case mounts.
- Worn U-joints.
- Loose spring mounts.
- Loose pinion gear nut and yoke.
- Excessive ring gear backlash.
- Excessive side gear to case clearance.

The source of a snap or a clunk noise can be determined with the assistance of a helper. Raise the vehicle on a hoist with the wheels free to rotate. Instruct the helper to shift the transmission into gear. Listen for the noise, a mechanics stethoscope is helpful in isolating the source of a noise.

DIAGNOSTIC CHART

Condition	Possible Causes	Correction

Wheel Noise	1. Wheel loose.	1. Tighten loose nuts.
	2. Worn wheel bearing.	2. Replace bearing.
Axle Shaft Noise	1. Misaligned axle tube.	1. Inspect axle tube alignment. Correct as necessary.
	2. Bent or sprung axle shaft.	2. Inspect and correct as necessary.
Axle Shaft Broke	1. Misaligned axle tube.	1. Replace the broken shaft after correcting tube mis-alignment.
	2 Vehicle overloaded.	2. Replace broken shaft and avoid excessive weight on vehicle.
	3. Erratic clutch operation.	3. Replace broken shaft and avoid or correct erratic clutch operation.
	4. Grabbing clutch.	4. Replace broken shaft and inspect and repair clutch as necessary.
Differential Cracked	1. Improper adjustment of the differential bearings.	1. Replace case and inspect gears and bearings for further damage. Set differential bearing pre-load properly.
	2. Excessive ring gear backlash.	2. Replace case and inspect gears and bearings for further damage. Set ring gear backlash properly.
	3. Vehicle overloaded.	3. Replace case and inspect gears and bearings for further damage. Avoid excessive vehicle weight.
	4. Erratic clutch operation.	4. Replace case and inspect gears and bearings for further damage. Avoid erratic use of clutch.
Differential Gears Scored	1. Insufficient lubrication.	1. Replace scored gears. Fill differential with the correct fluid type and quantity.
	2. Improper grade of lubricant.	2. Replace scored gears. Fill differential with the correct fluid type and quantity.
	3. Excessive spinning of one wheel/tire.	3. Replace scored gears. Inspect all gears, pinion bores, and shaft for damage. Service as necessary.
Loss Of Lubricant	1. Lubricant level too high.	1. Drain lubricant to the correct level.
	2. Worn axle shaft seals.	2. Replace seals.
	3. Cracked differential housing.	3. Repair as necessary.
	4. Worn pinion seal.	4. Replace seal.
	5. Worn/scored yoke.	5. Replace yoke and seal.
	6. Axle cover not properly sealed.	6. Remove, clean and seal cover.

Axle Overheating	1. Lubricant level low.	1. Fill differential to correct level.
	2. Improper grade of lubricant.	2. Fill differential with the correct fluid type and quantity.
	3. Bearing pre-loads too high.	3. Adjust bearing pre-loads.
	4. Insufficient ring gear backlash.	4. Adjust ring gear backlash.
Gear Teeth Broke	1. Overloading.	1. Replace gears. Examine other gears and bearings for possible damage.
	2. Erratic clutch operation.	2. Replace gears and examine the remaining parts for damage. Avoid erratic clutch operation.
	3. Ice-spotted pavement.	3. Replace gears and examine remaining parts for damage.
	4. Improper adjustments.	4. Replace gears and examine remaining parts for damage. Ensure ring gear backlash is correct.
Axle Noise	1. Insufficient lubricant.	1. Fill differential with the correct fluid type and quantity.
	2. Improper ring gear and pinion adjustment.	2. Check ring gear and pinion contact pattern. Adjust backlash or pinion depth.
	3. Unmatched ring gear and pinion.	3. Replace gears with a matched ring gear and pinion.
	4. Worn teeth on ring gear and pinion.	4. Replace ring gear and pinion.
	5. Loose pinion bearings.	5. Adjust pinion bearing pre-load.
	6. Loose differential bearings.	6. Adjust differential bearing pre-load.
	7. Ring gear runt-out.	7. Measure ring gear run-out. Replace components as necessary.
	8. Loose differential bearing cap bolts.	8. Inspect differential components and replace as necessary. Ensure that the bearing caps are torqued to the proper specification.
	9. Housing not machined properly.	9. Replace housing.

STANDARD PROCEDURE

STANDARD PROCEDURE - DRAIN AND FILL

DRAIN

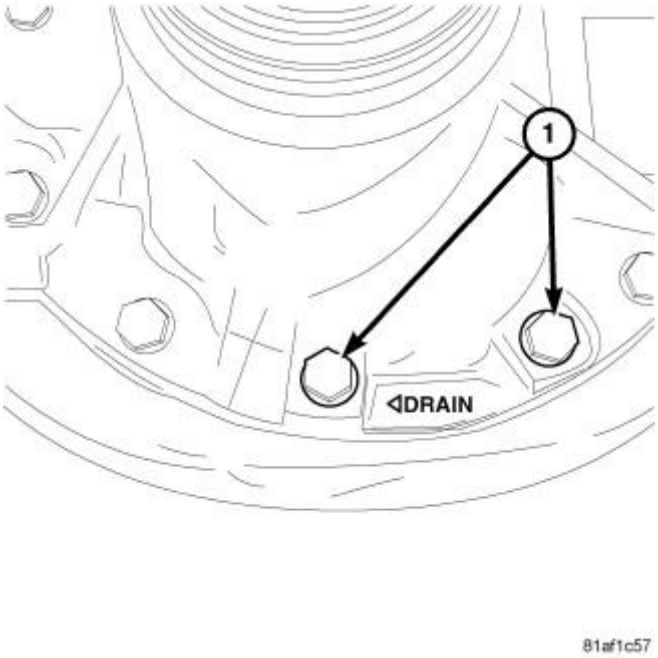

Fig. 1: Drain Plug
Courtesy of CHRYSLER GROUP, LLC

NOTE: Drain when fluid is at normal operating temperature.

1. Remove the bottom two carrier bolts (1) and drain fluid.
2. Inspect breather and clean if necessary.
3. Install bottom two carrier bolts (1) and tighten to 203 N.m (150 ft. lbs.).

FILL

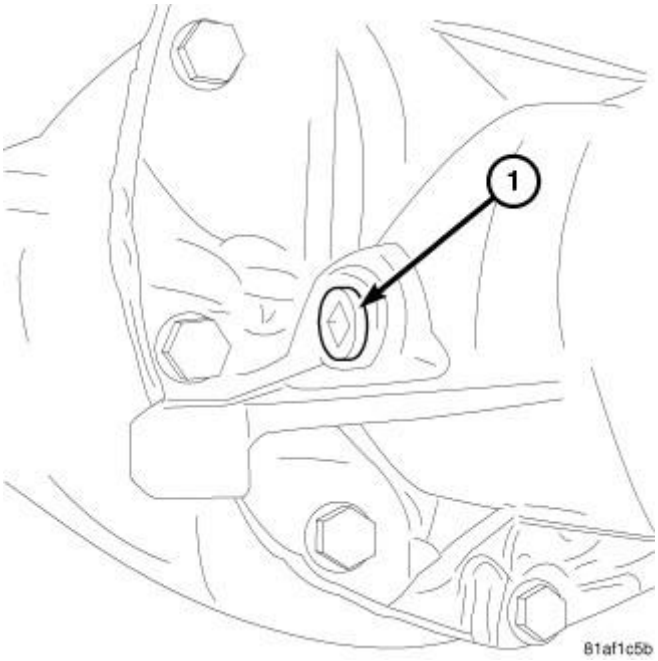

Fig. 2: Fill Plug
Courtesy of CHRYSLER GROUP, LLC

1. Remove fill plug (1) from the right side of the carrier.
2. With axle level, fill carrier with lubricant to the bottom of the fill plug hole.
3. Install fill plug (1) and tighten to 68 N.m (50 ft. lbs.).

SPECIFICATIONS

SPECIFICATIONS

AXLE

DESCRIPTION	SPECIFICATION
Gear Ratio	4.10, 4.44, 4.88
Ring Gear Run Out	0.25 mm (0.10 in.)
Backlash	0.15 - 0.46 mm (0.006 - 0.018 in.)
Pinion Torque To Rotate	2.3 - 4.5 N.m (20 - 40 in. lbs.)

TORQUE SPECIFICATIONS

DESCRIPTION	N-m	Ft. Lbs.	In. Lbs.
Fill Plug	68	50	-
Axle Flange Bolts	133	98	-
Carrier Bolts	203	150	-
Ring Gear Bolts	286	210	-
Bearing Cap Bolts	193	142	-
Pinion Nut	937	689	-

REMOVAL

REMOVAL

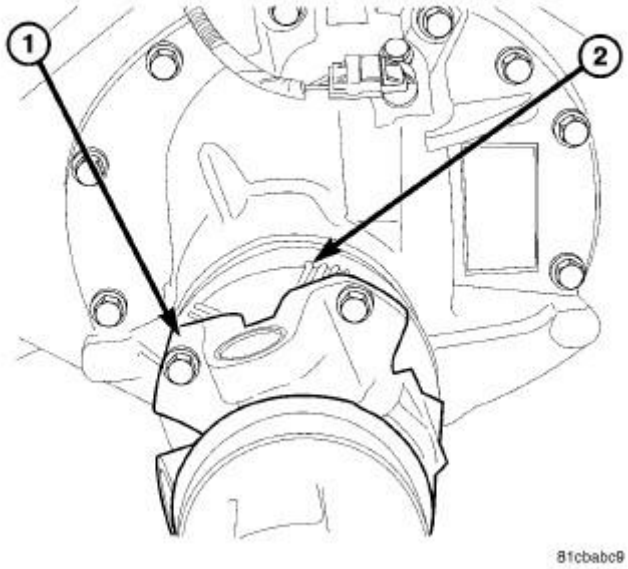

Fig. 3: Propeller Shaft & Pinion Flange
Courtesy of CHRYSLER GROUP, LLC

1. With vehicle in neutral, position vehicle on hoist.
2. Position a lift under axle and secure lift to the axle.
3. Mark propeller shaft and companion flange for installation alignment reference.
4. Remove propeller shaft (1) from pinion flange (2).

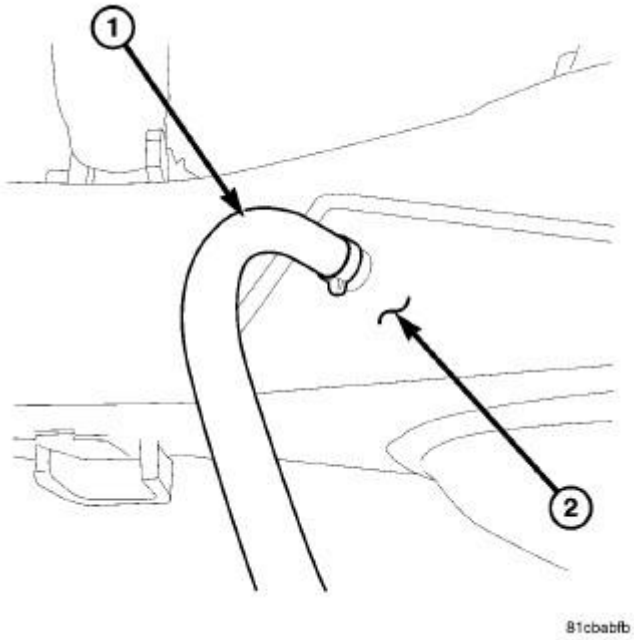

Fig. 4: Axle Vent Hose
Courtesy of CHRYSLER GROUP, LLC

5. Remove axle vent hose (1) axle housing (2).

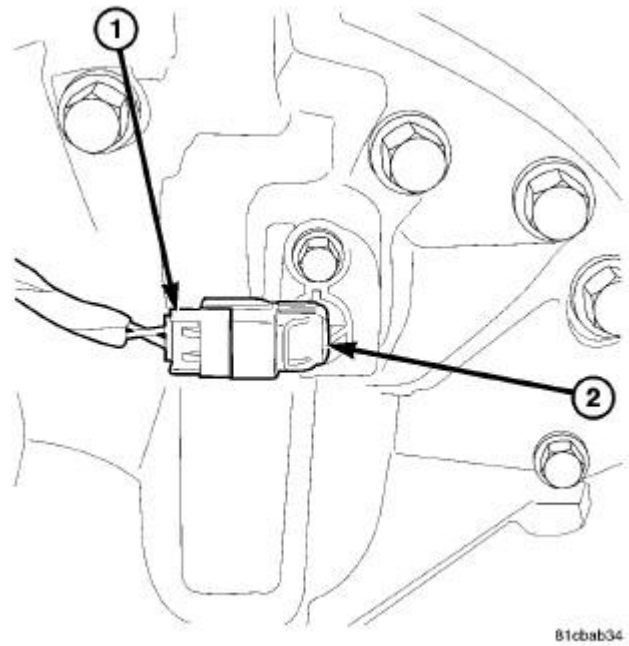

Fig. 5: Brake Sensor & Wiring Harness
Courtesy of CHRYSLER GROUP, LLC

6. Remove wiring harness (1) from brake sensor (2).

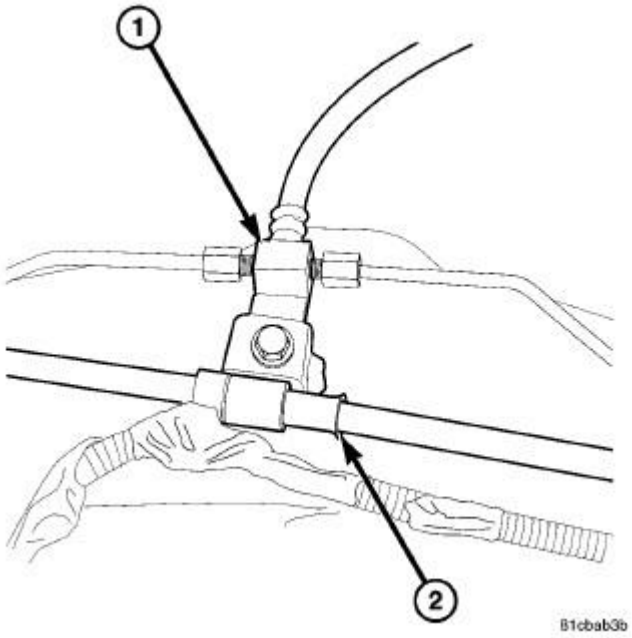

Fig. 6: Brake Lines & Park Cables
Courtesy of CHRYSLER GROUP, LLC

7. Remove brake calipers, rotors, brake lines (1) and park cables (2) from axle housing.

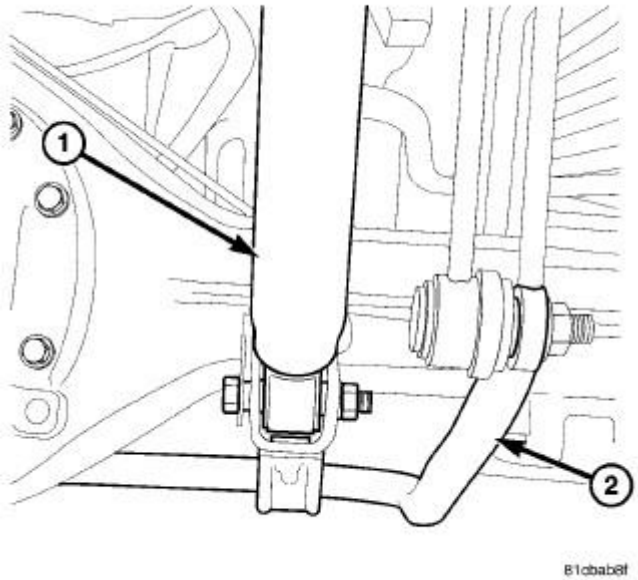

Fig. 7: Shock Absorber & Stabilizer Bar

Courtesy of CHRYSLER GROUP, LLC

8. Remove shock absorbers (1) and stabilizer bar (2) from the axle.

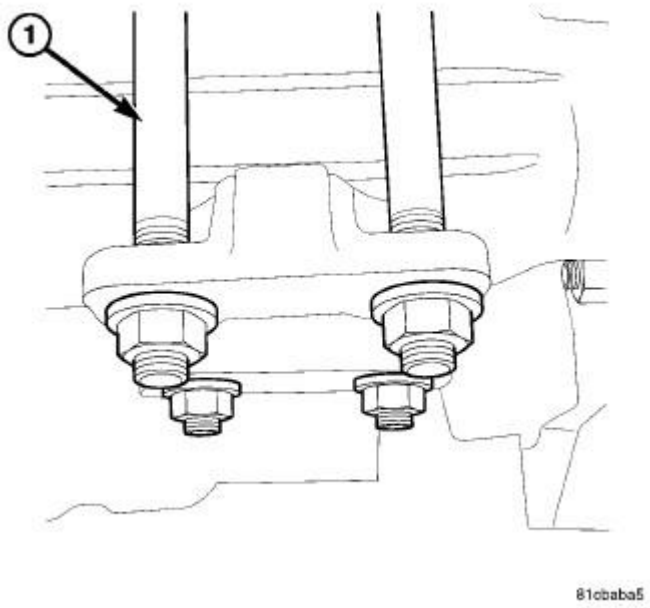

Fig. 8: U-Bolts
Courtesy of CHRYSLER GROUP, LLC

9. Remove U-bolts (1) nuts (2) from the axle.
10. Remove U-bolts and lower the axle from the vehicle.

INSTALLATION

INSTALLATION

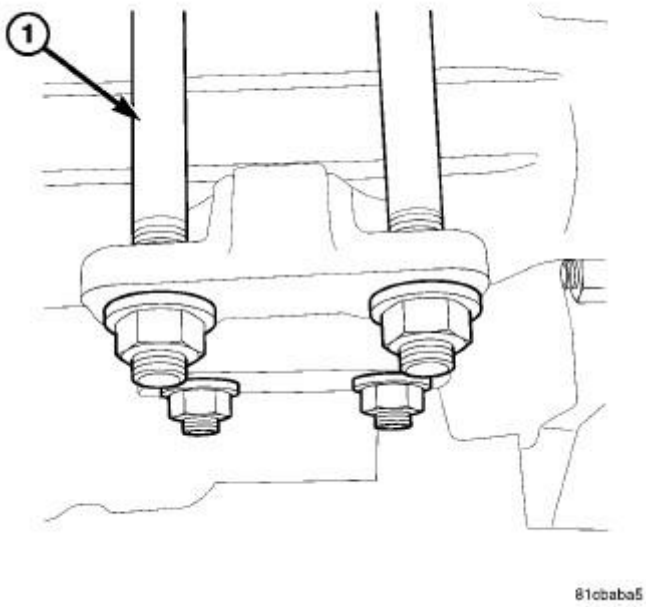

Fig. 9: U-Bolts
Courtesy of CHRYSLER GROUP, LLC

1. Raise axle with lift and align to the leaf spring centering bolts.
2. Install axle U-bolts (1) and tighten nuts (2) to 455 N.m (336 ft. lbs.).

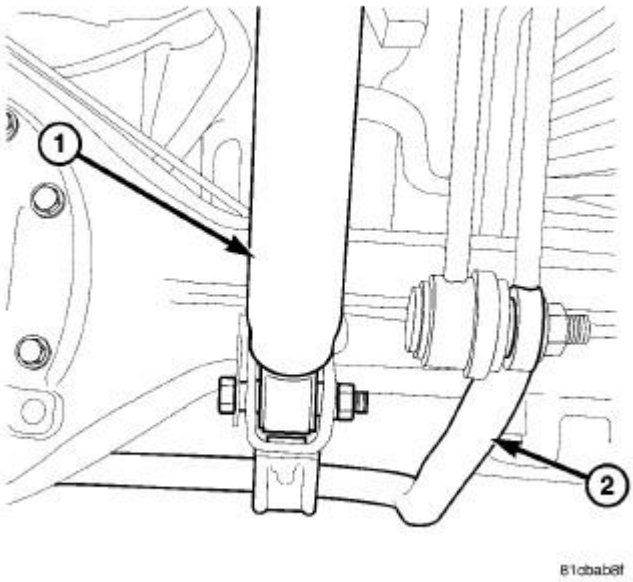

Fig. 10: Shock Absorber & Stabilizer Bar
Courtesy of CHRYSLER GROUP, LLC

3. Install shock absorbers (1) to axle and tighten nuts to 160 N.m (118 ft. lbs.).
4. Install stabilizer bar (2) to axle and tighten nuts to 65 N.m (48 ft. lbs.).

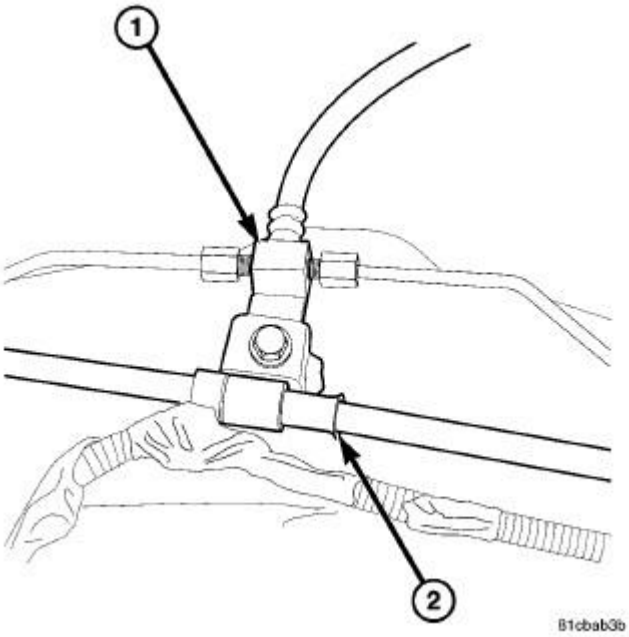

Fig. 11: Brake Lines & Park Cables
Courtesy of CHRYSLER GROUP, LLC

5. Install rotors, brake calipers, brake lines (1) and park cables (2) to axle housing.

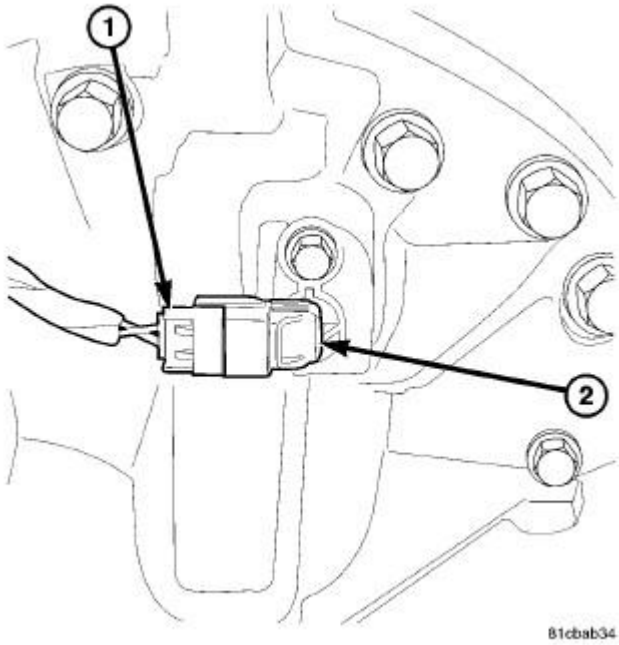

Fig. 12: Brake Sensor & Wiring Harness
Courtesy of CHRYSLER GROUP, LLC

6. Install wiring harness (1) to brake sensor (2).

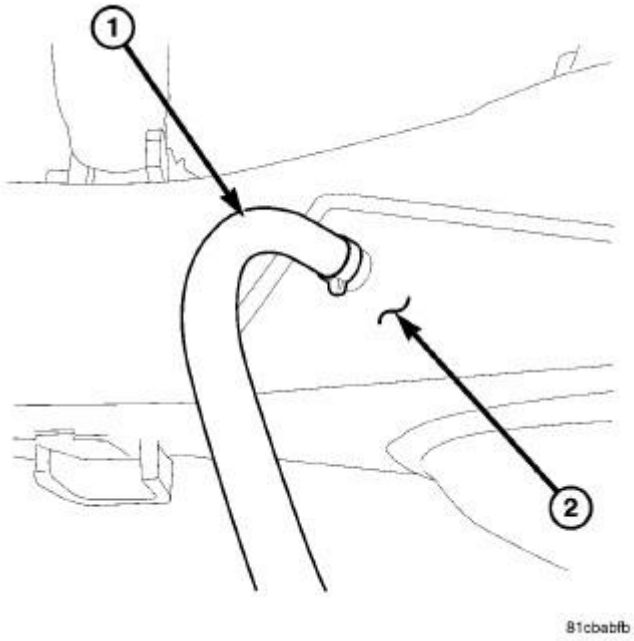

Fig. 13: Axle Vent Hose
Courtesy of CHRYSLER GROUP, LLC

7. Install axle vent hose (1) to axle housing (2).

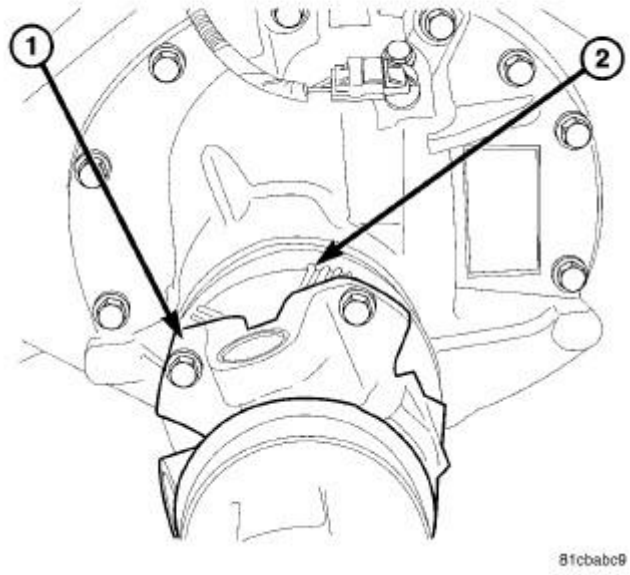

Fig. 14: Propeller Shaft & Pinion Flange
Courtesy of CHRYSLER GROUP, LLC

8. Install propeller shaft (1) to pinion flange (2) with reference marks aligned and tighten to specification.
9. Fill differential to specifications.
10. Remove lift from axle and lower the vehicle.

SPECIAL TOOLS

SPECIAL TOOLS

	10047 - Guide Pins (Originally Shipped In Kit Number(s) 10045.) 10048 - Fixture, Differential Carrier (Originally Shipped In Kit Number(s) 10045.) 10049 - Installer, Bearing Cup (Originally Shipped In Kit Number(s) 10045.) 10051 - Socket, Hub Nut (Originally Shipped In Kit Number(s) 10045.) 10052 - Installer, Bearing Cup (Originally Shipped In Kit Number(s) 10045.) 10053 - Installer, Seal (Originally Shipped In Kit Number(s) 10045.) 10054 - Holder, Pinion Flange (Originally Shipped In Kit Number(s) 10045.) 10055 - Installer, Seal

	(Originally Shipped In Kit Number(s) 10045.) 10062 - Installer, Bearing Cup (Originally Shipped In Kit Number(s) 10045.) 10063 - Installer, Bearing Cup (Originally Shipped In Kit Number(s) 10045.) 10064 - Guide, Hub (Originally Shipped In Kit Number(s) 10045.) 10066 - Bearing Adjuster (Originally Shipped In Kit Number(s) 10045.) 10067 - Plug, Differential Bearing (Originally Shipped In Kit Number(s) 10045.) 1130 - Splitter, Bearing/Gear (Originally Shipped In Kit Number(s) 6745, 6947, 6949, 9202, 9202A-CAN, 9202CC, 9299.) 6719A - Holder, Yoke (Originally Shipped In Kit Number(s) 6745, 6947, 6949, 9975.) 8992 - Remover, Pinion Flange (Originally Shipped In Kit Number(s) 8999, 8999CC, 9299, 9299CC, 9299CC, 9300A-CAN.) 938 - Bridge (Originally Shipped In Kit Number(s) 6745, 6947, 6949, 9202, 9202A-CAN, 9202CC, 9299.) 9385 - Holding Fixture, Bench Mount (Originally Shipped In Kit Number(s) 10017, 10017A.) C-3339A - Set, Dial Indicator (Originally Shipped In Kit Number(s) 9202.) C-4171 - Driver Handle, Universal (Originally Shipped In Kit Number(s) 9202, 9202A-CAN, 9202CC, 9299, 9299CC, 9299CC, 9300A-CAN.) D-389 - Installer, Bearing (Originally Shipped In Kit Number(s) 6745.)

BEARING, AXLE SHAFT

REMOVAL

REMOVAL

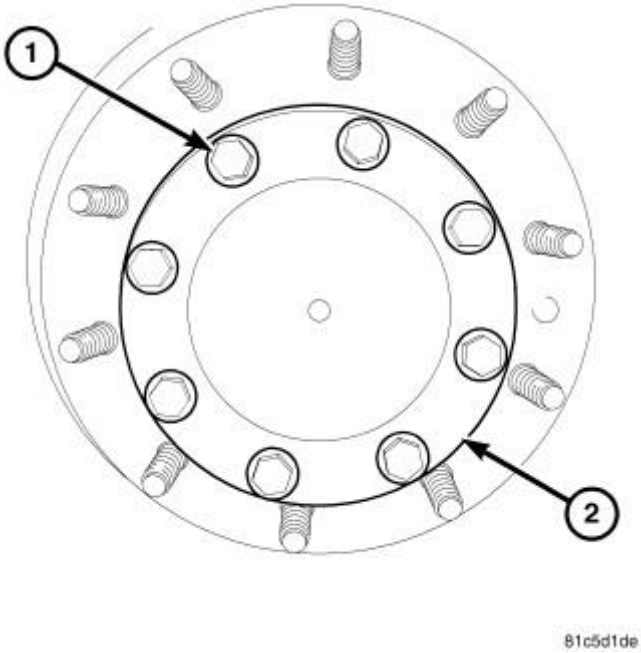

Fig. 15: Axle Bolts & Axle Flange
Courtesy of CHRYSLER GROUP, LLC

1. Remove axle bolts (1) from axle flange (2).

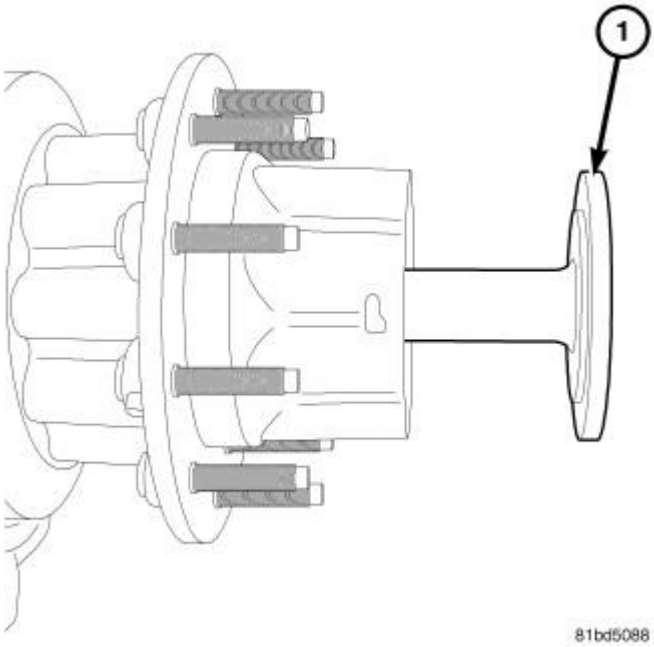

Fig. 16: Axle Shaft
Courtesy of CHRYSLER GROUP, LLC

2. Remove axle shaft (1) from axle.

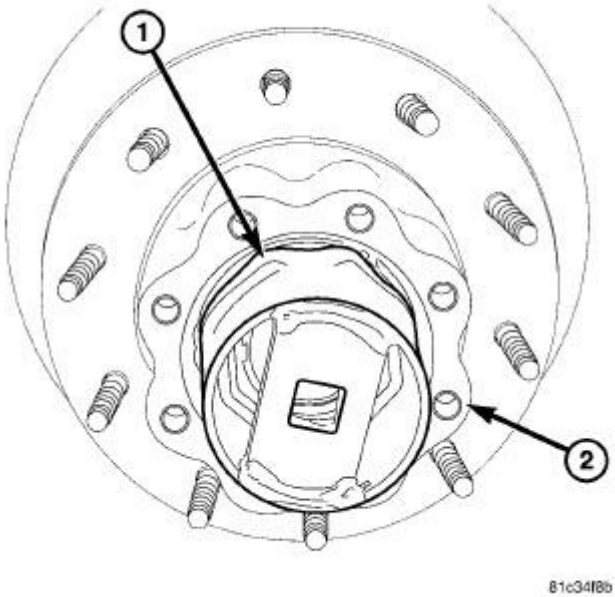

Fig. 17: Hub Socket
Courtesy of CHRYSLER GROUP, LLC

3. With Socket (special tool #10051, Socket, Hub Nut) (1) remove hub nut with integrated lock washer from hub (2) spindle.

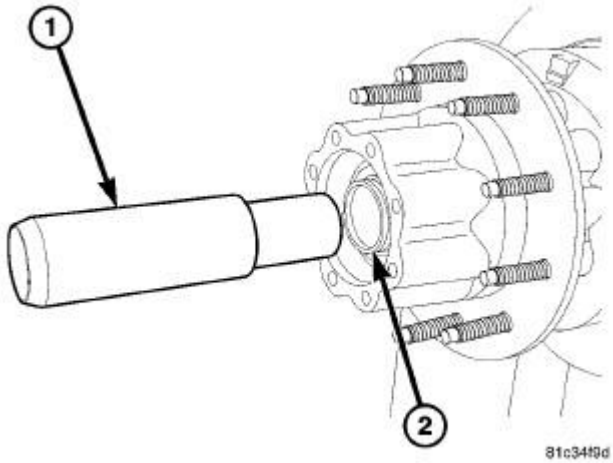

Fig. 18: Hub/Rotor Guide
Courtesy of CHRYSLER GROUP, LLC

4. Install hub/rotor Guide (special tool #10064, Guide, Hub) (1) into hub spindle (2).

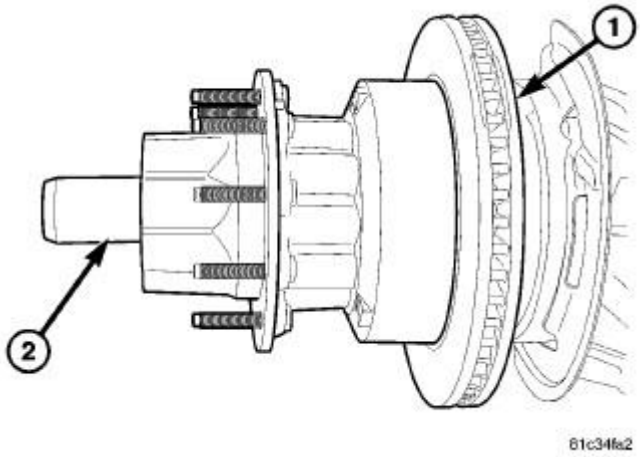

Fig. 19: Hub/Rotor
Courtesy of CHRYSLER GROUP, LLC

5. Slide hub/rotor (1) with bearings off hub spindle and hub/rotor Guide (special tool #10064, Guide, Hub) (2).

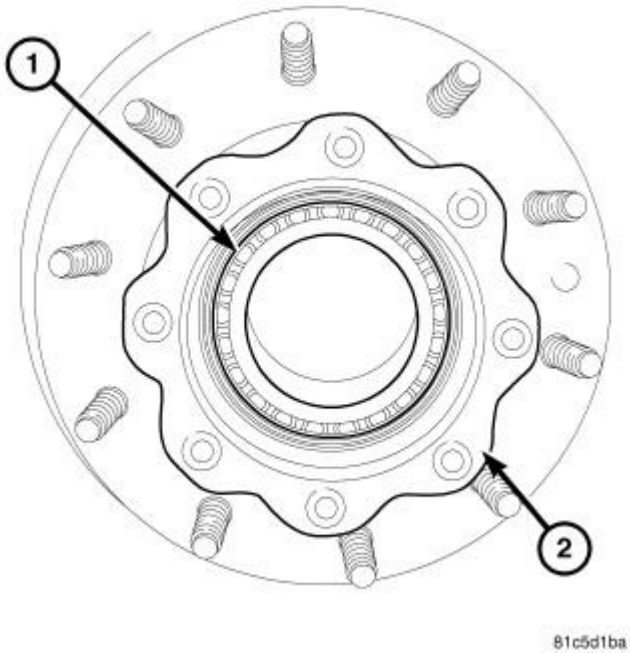

Fig. 20: Outer Bearing & Hub
Courtesy of CHRYSLER GROUP, LLC

6. Remove outer bearing (1) from hub (2).

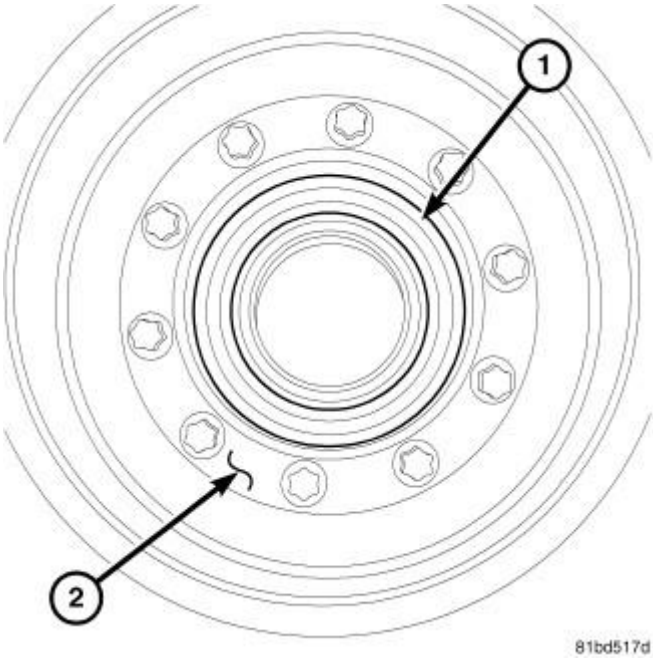

Fig. 21: Hub Seal
Courtesy of CHRYSLER GROUP, LLC

7. Remove hub seal (1) from the back of the hub (2) with seal puller.

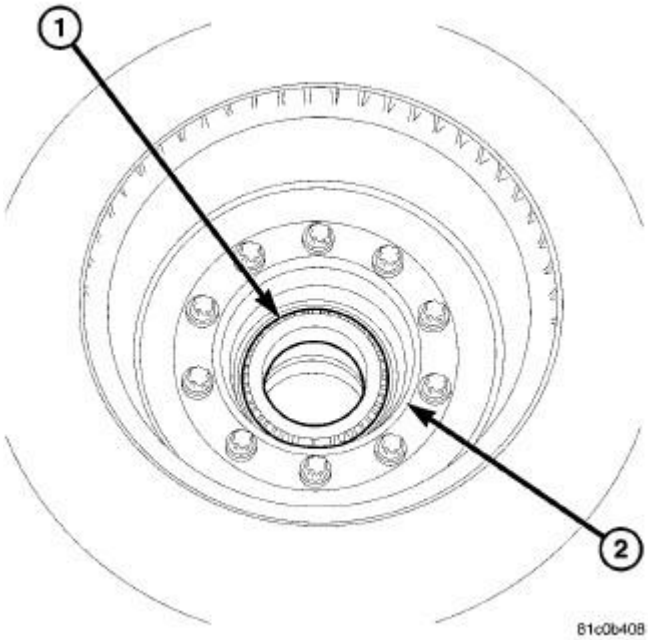

Fig. 22: Inner Bearing & Hub
Courtesy of CHRYSLER GROUP, LLC

8. Remove inner bearing (1) from hub (2).

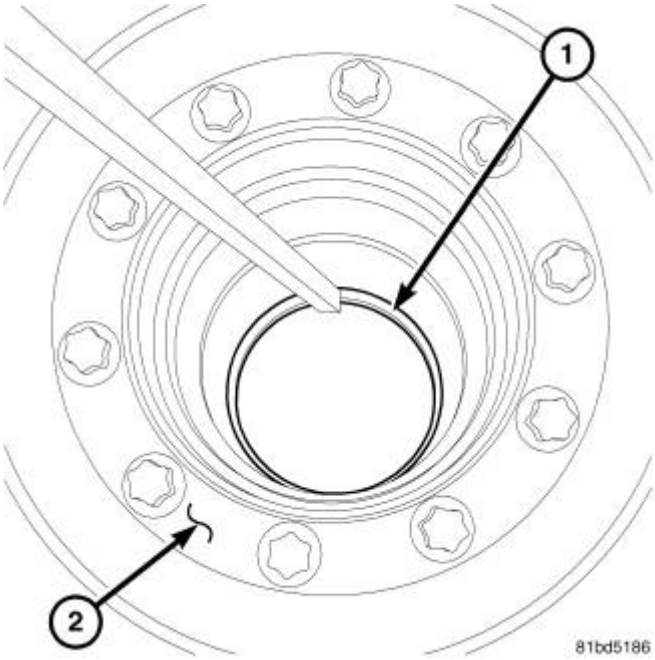

Fig. 23: Outer Bearing Cup & Hub
Courtesy of CHRYSLER GROUP, LLC

9. Remove outer bearing cup (1) from hub (2) with a hammer and brass drift.

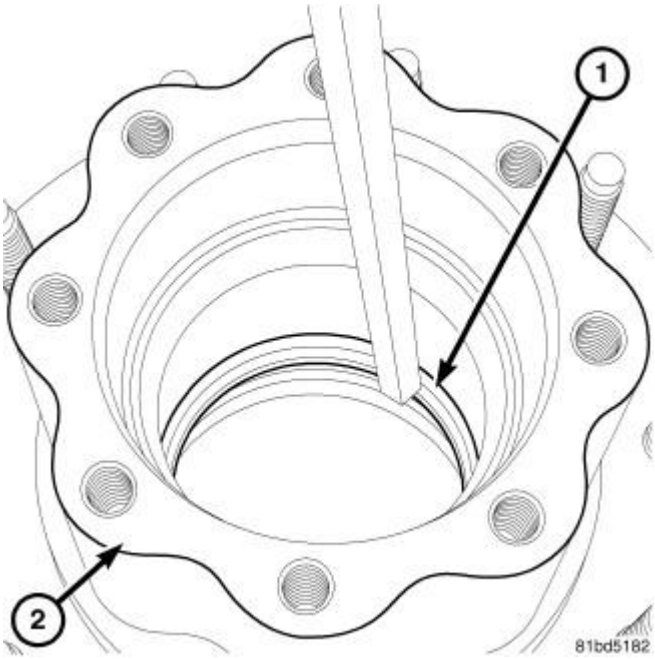

Fig. 24: Inner Bearing Cup & Hub
Courtesy of CHRYSLER GROUP, LLC

10. Remove inner bearing cup (1) from hub (2) with hammer and brass drift.

INSTALLATION

INSTALLATION

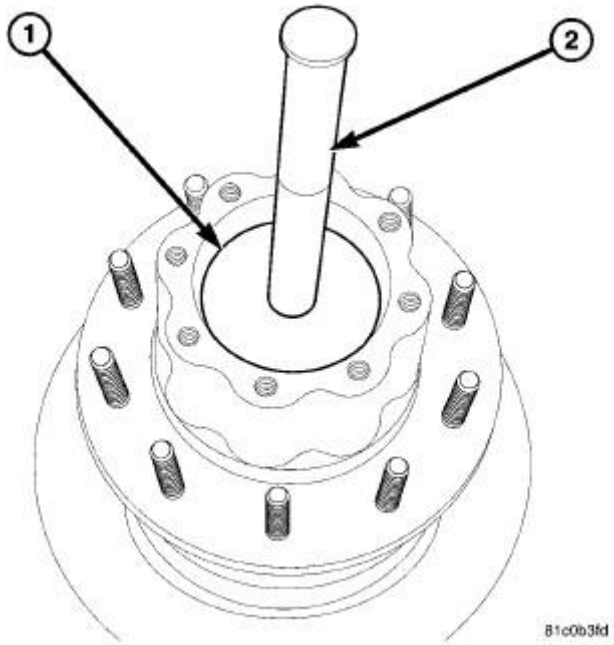

Fig. 25: Installing Outer Hub Bearing Cup
Courtesy of CHRYSLER GROUP, LLC

1. Install outer hub bearing cup with Installer (special tool #10052, Installer, Bearing Cup) (1) and Handle (special tool #C-4171, Driver Handle, Universal) (2).

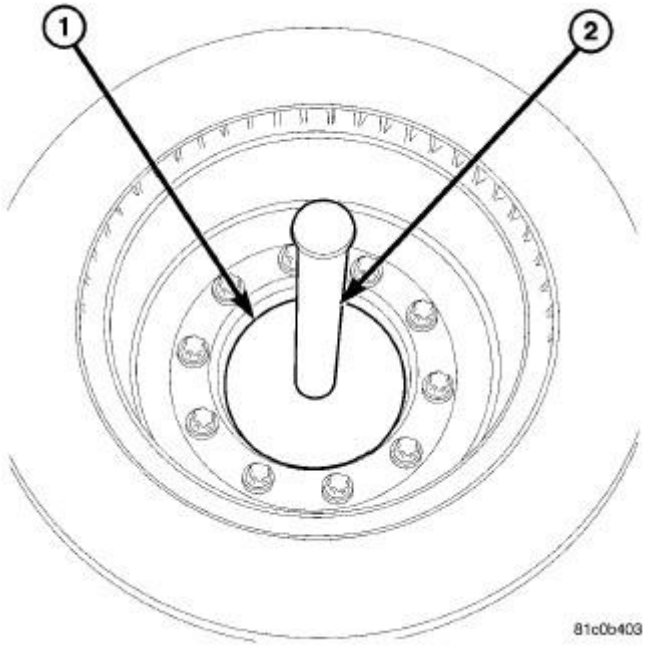

Fig. 26: Installing Inner Hub Bearing Cup
Courtesy of CHRYSLER GROUP, LLC

2. Install inner hub bearing cup with Installer (special tool #10049, Installer, Bearing Cup) (1) and Handle (special tool #C-4171, Driver Handle, Universal) (2).

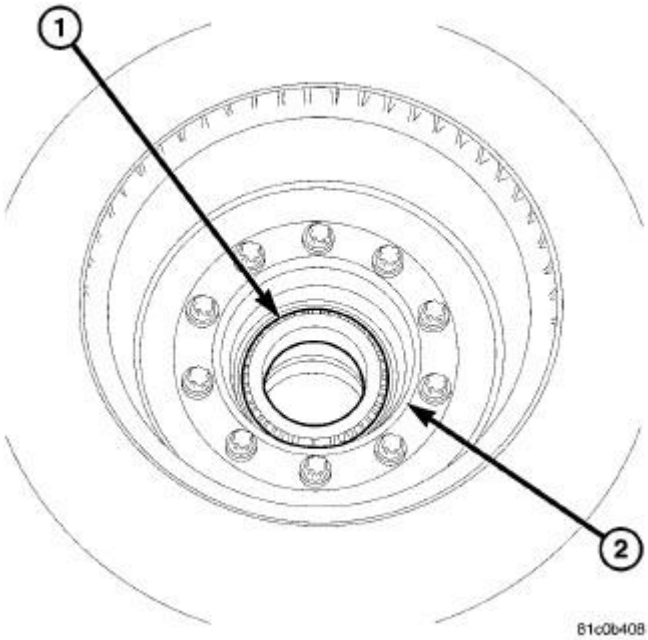

Fig. 27: Inner Bearing & Hub
Courtesy of CHRYSLER GROUP, LLC

3. Lubricate and install inner hub bearing (1) into hub (2).

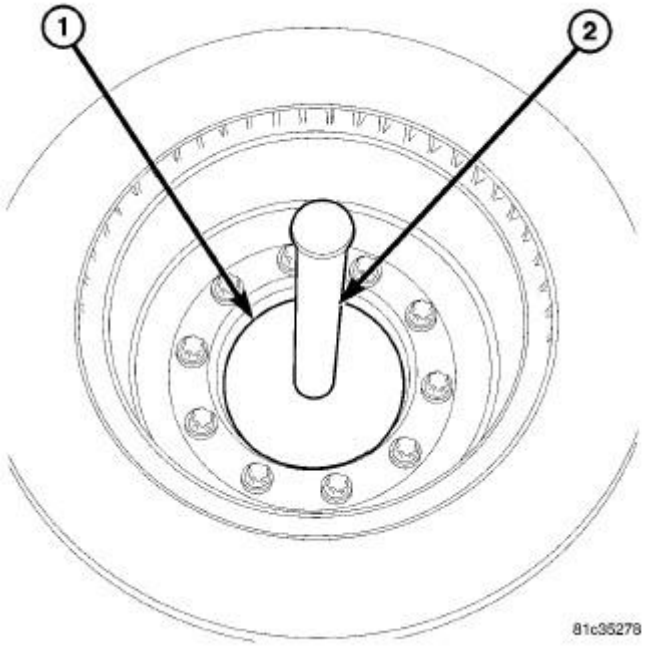

Fig. 28: Installing Hub Seal
Courtesy of CHRYSLER GROUP, LLC

4. Install hub seal with Installer (special tool #10053, Installer, Seal) (1) and Handle (special tool #C-4171, Driver Handle, Universal) (2).

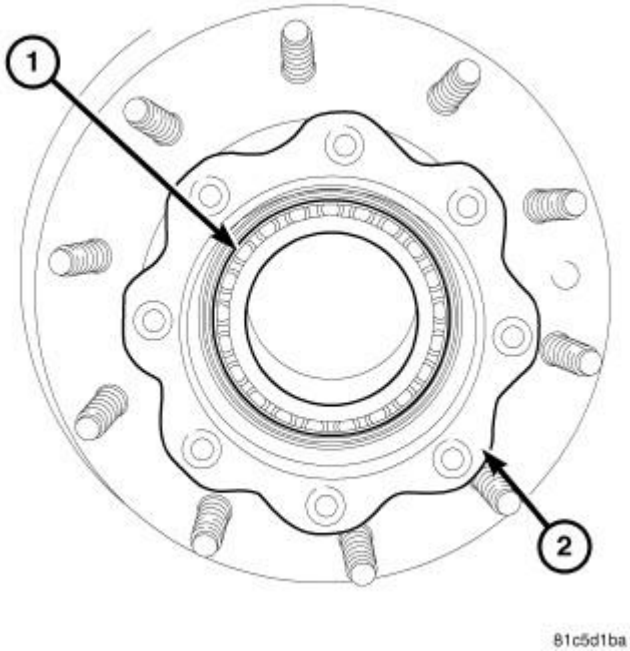

Fig. 29: Outer Bearing & Hub
Courtesy of CHRYSLER GROUP, LLC

5. Lubricate and install outer hub bearing (1) into hub (2).

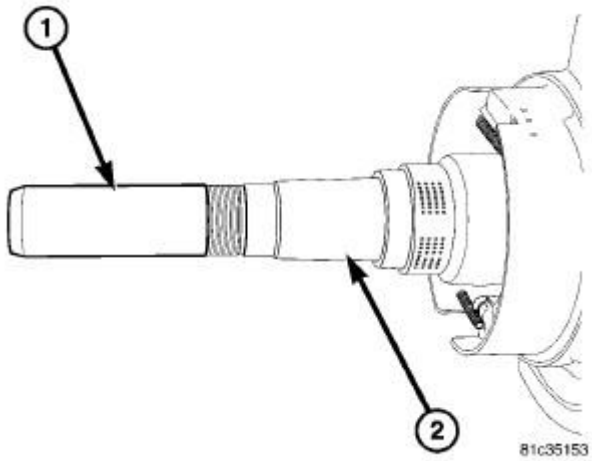

Fig. 30: Guide & Spindle
Courtesy of CHRYSLER GROUP, LLC

6. Install hub/rotor Guide (special tool #10064, Guide, Hub) (1) into the axle spindle (2).

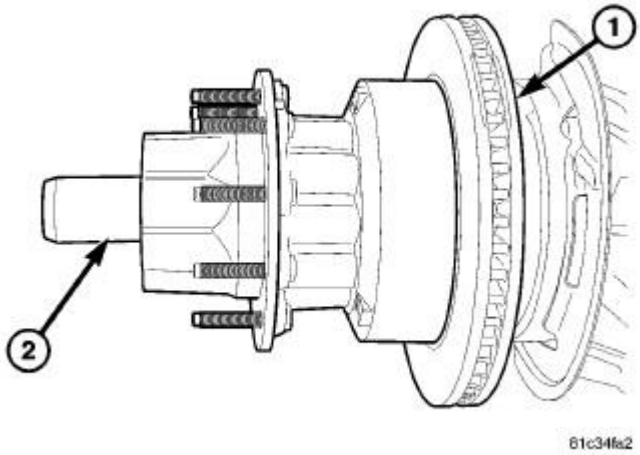

Fig. 31: Hub/Rotor
Courtesy of CHRYSLER GROUP, LLC

7. Install hub/rotor (1) over Guide (special tool #10064, Guide, Hub) (2) onto the axle spindle.

CAUTION: Never support hub with just the inner bearing and seal. Failure to follow these instruction will result in damaging the hub seal.

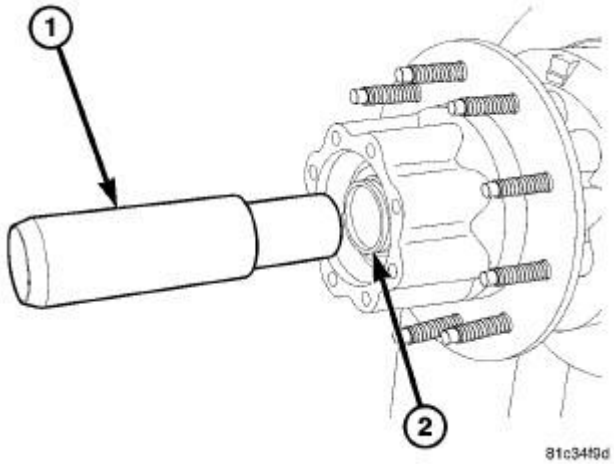

Fig. 32: Hub/Rotor Guide
Courtesy of CHRYSLER GROUP, LLC

8. Remove Guide (special tool #10064, Guide, Hub) (1) from axle spindle (2).

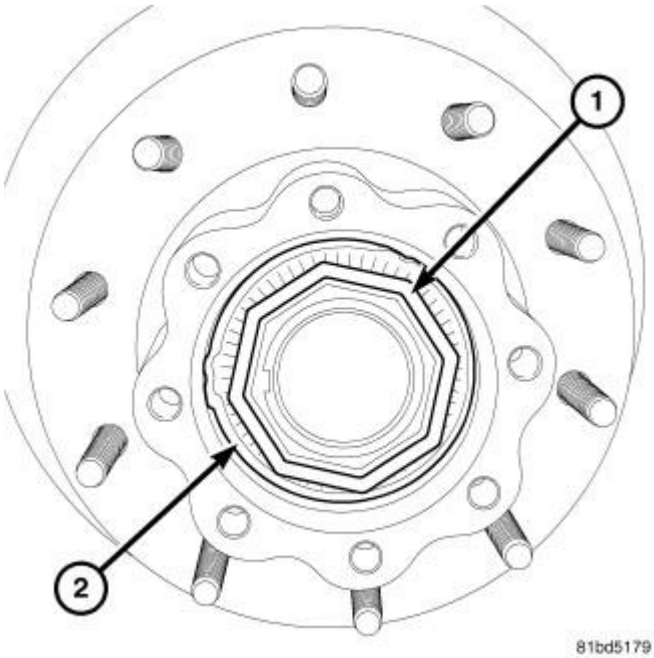

Fig. 33: Hub Bearing Nut & Lock Washer
Courtesy of CHRYSLER GROUP, LLC

9. Install hub bearing nut (1) with integrated lock washer (2).

NOTE: Integrated lock washer tab must be aligned with the spindle keyway.

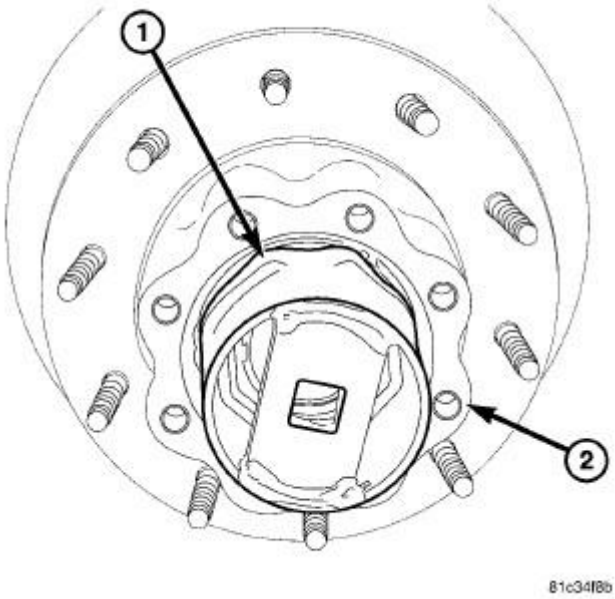

Fig. 34: Hub Socket
Courtesy of CHRYSLER GROUP, LLC

10. Tighten hub (1) nut with Socket (special tool #10051, Socket, Hub Nut) (2) to 95 N.m (70 ft. lbs.) while rotating the hub. Then back off nut 90 degrees and retighten nut to 41 N.m (30 ft. lbs.).

NOTE: This will set hub to zero end-play.

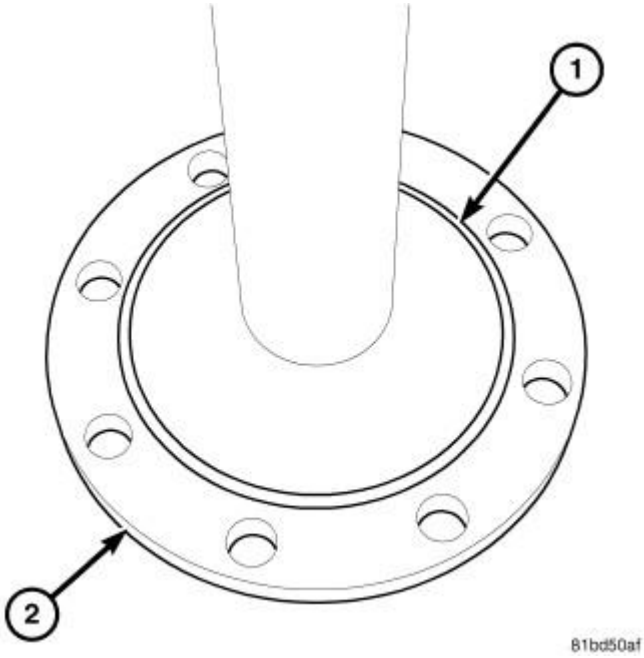

Fig. 35: O-Ring & Axle Flange

Courtesy of CHRYSLER GROUP, LLC

11. Install new O-ring (1) on axle flange (2).

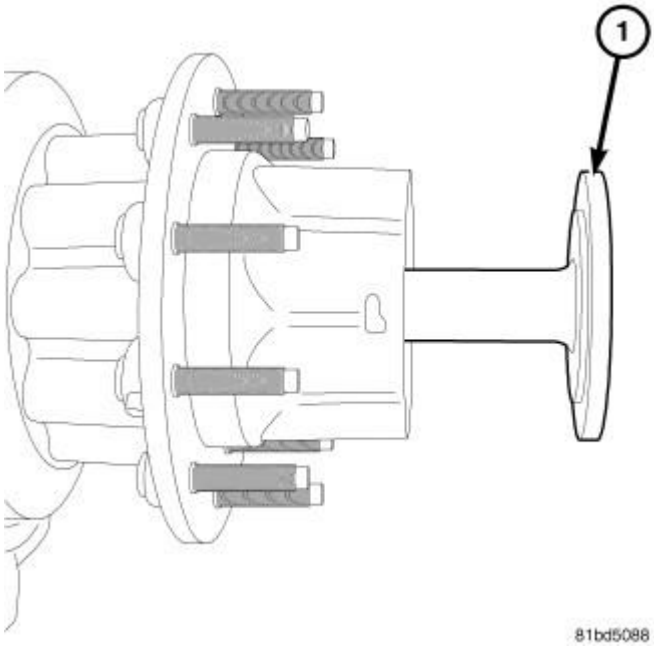

Fig. 36: Axle Shaft
Courtesy of CHRYSLER GROUP, LLC

12. Install axle shaft (1) into the hub (2) and axle.

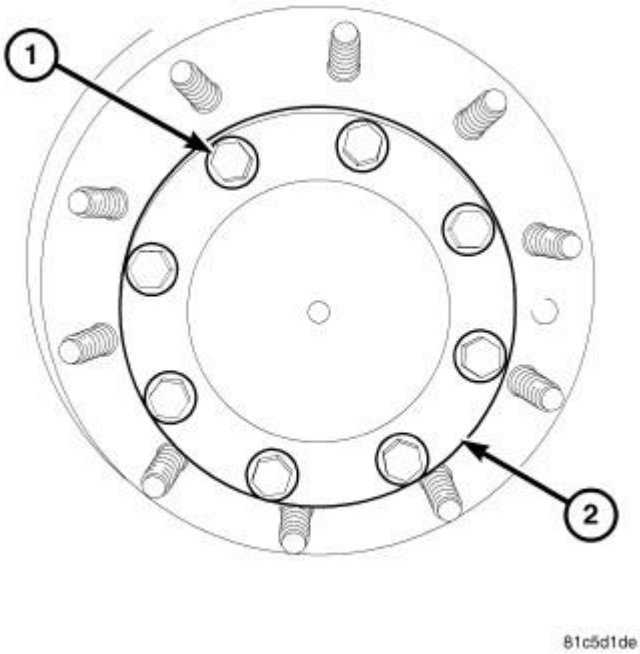

Fig. 37: Axle Bolts & Axle Flange
Courtesy of CHRYSLER GROUP, LLC

13. Install axle bolts (1) through axle flange (2) and tighten to 133 N.m (98 ft. lbs.).

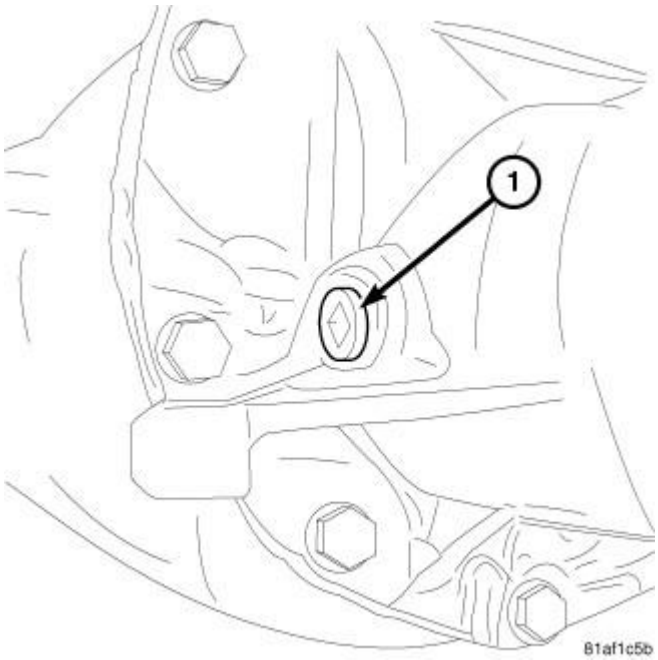

Fig. 38: Fill Plug
Courtesy of CHRYSLER GROUP, LLC

14. Remove fill plug (1), from right side of carrier.
15. With axle level, fill carrier with lubricant to the bottom of the fill plug hole.
16. Install fill plug (1) and tighten to 68 N.m (50 ft. lbs.).

WHEEL HUB OIL FILL

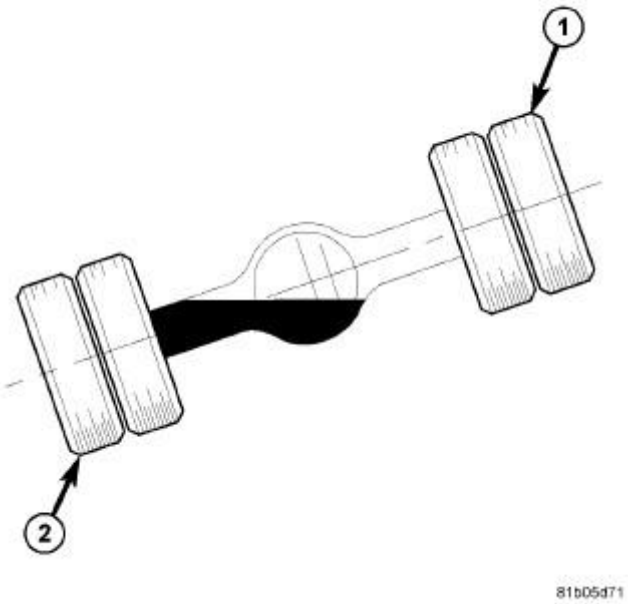

Fig. 39: Raise Right Side
Courtesy of CHRYSLER GROUP, LLC

CAUTION: Wheel hub cavities must be filled with lubricate before using axle. Failure to follow these instruction will result in hub bearing damage.

1. Raise right end (1) of axle six inches. Hold in this position for one minute to fill left hub (2) with lubricate.
2. Lower the axle.

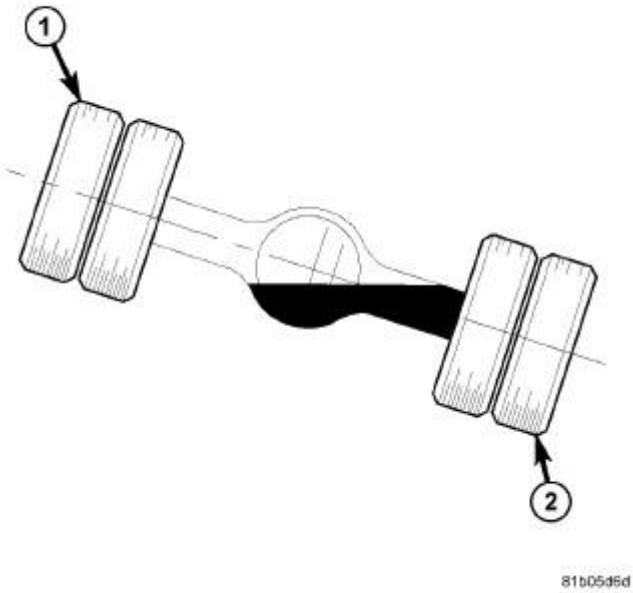

Fig. 40: Raise Left Side
Courtesy of CHRYSLER GROUP, LLC

3. Raise left end (1) of axle six inches. Hold in this position for one minute to fill right hub (2) with lubricate.
4. Lower the axle.

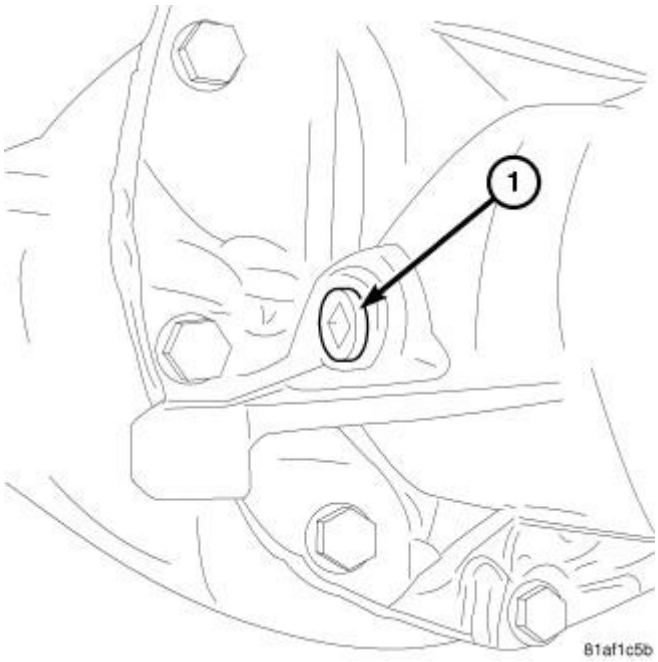

Fig. 41: Fill Plug
Courtesy of CHRYSLER GROUP, LLC

5. Remove fill plug (1), from right side of carrier.
6. With axle level, fill carrier with lubricant to the bottom of the fill plug hole.

NOTE: Axle will require approximately 1.18 L (40 oz.) of additional lubricant.

7. Install fill plug (1) and tighten to 68 N.m (50 ft. lbs.).

BEARING, DIFFERENTIAL SIDE

REMOVAL

REMOVAL

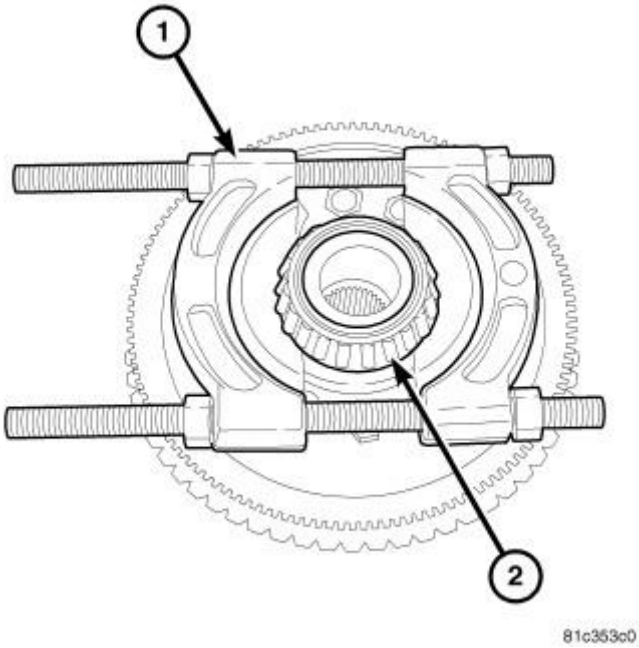

Fig. 42: Identifying Differential Bearing & Bearing Splitter
Courtesy of CHRYSLER GROUP, LLC

1. Install Bearing Splitter (special tool #1130, Splitter, Bearing/Gear) (1) under differential bearing (2).

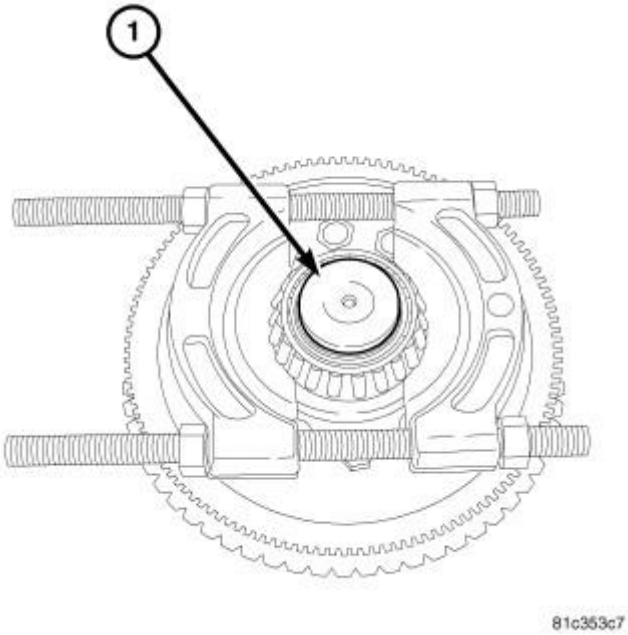

Fig. 43: Differential Plug 10067
Courtesy of CHRYSLER GROUP, LLC

2. Install Plug (special tool #10067, Plug, Differential Bearing) (1) into the differential case.

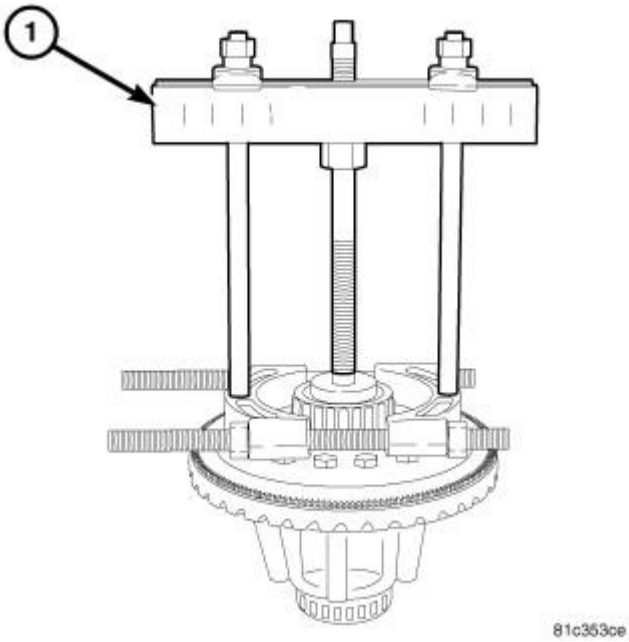

Fig. 44: Removing Differential Case Bearing
Courtesy of CHRYSLER GROUP, LLC

3. Install Bridge (special tool #938, Bridge) (1) on Bearing Splitter (special tool #1130, Splitter, Bearing/Gear) (2) and remove differential case bearings.

INSTALLATION

INSTALLATION

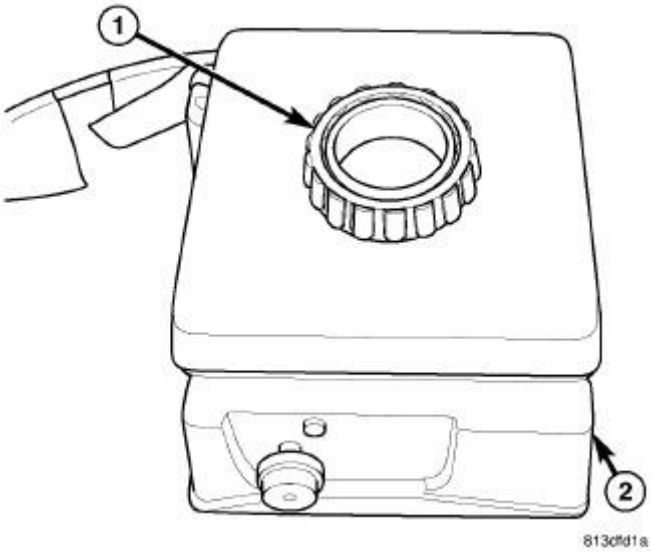

Fig. 45: Heating Bearing
Courtesy of CHRYSLER GROUP, LLC

WARNING: Use tongs or welding gloves when handling heated components. Failure to follow these instructions will result in personal injury.

CAUTION: Bearings (1) are installed using a Bearing Heater (2). Use only a bearing heater/hot plate and follow manufacturer's instructions. Heat components to 100 - 149 Celsius (212° Min. - 300° Max Fahrenheit). Never use an open flame to heat components. Never leave components on heater for an extended amount of time. If component is discolored after heating, the component has been overheated and must not be used. Failure to follow these instructions will result in component damage.

1. Heat differential case bearings to 100 - 149 Celsius (212° Min. - 300° Max Fahrenheit) and install on differential with tongs or welding gloves.

CASE ASSEMBLY, DIFFERENTIAL, CARRIER

REMOVAL

REMOVAL

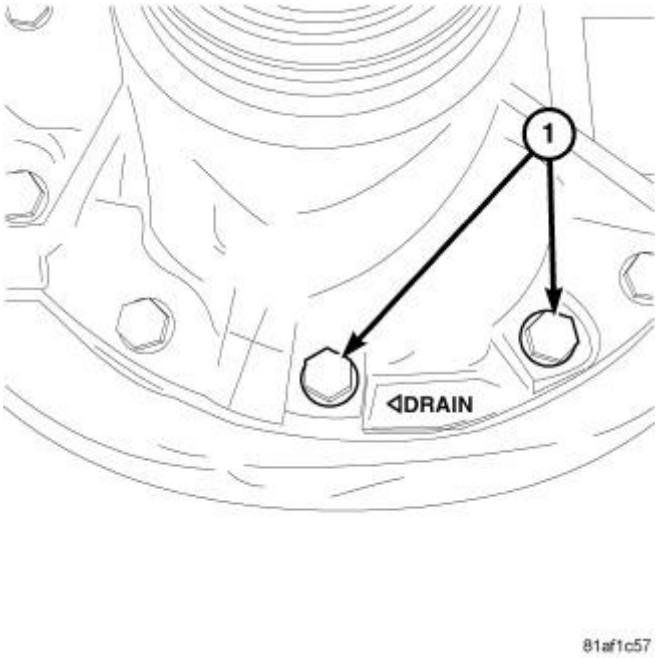

Fig. 46: Drain Plug
Courtesy of CHRYSLER GROUP, LLC

1. Remove propeller shaft.
2. Remove bottom two carrier bolts (1) and drain fluid.

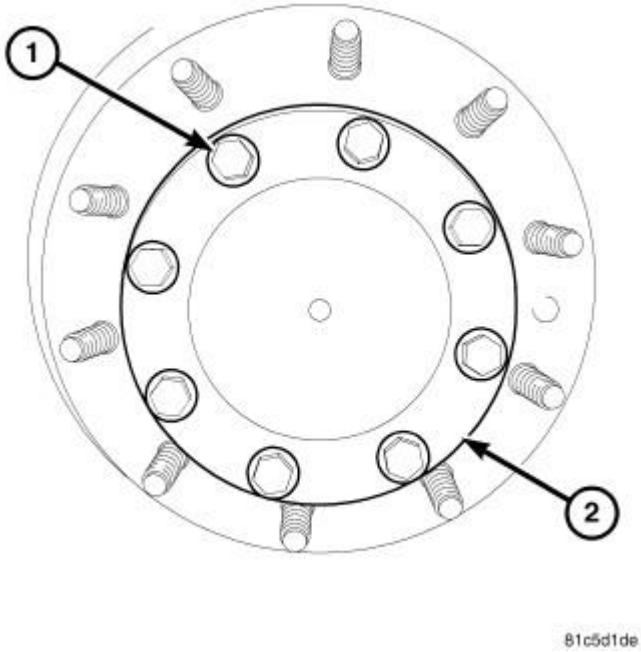

Fig. 47: Axle Bolts & Axle Flange
Courtesy of CHRYSLER GROUP, LLC

3. Remove axle shaft bolts (1) from axle flange (2).

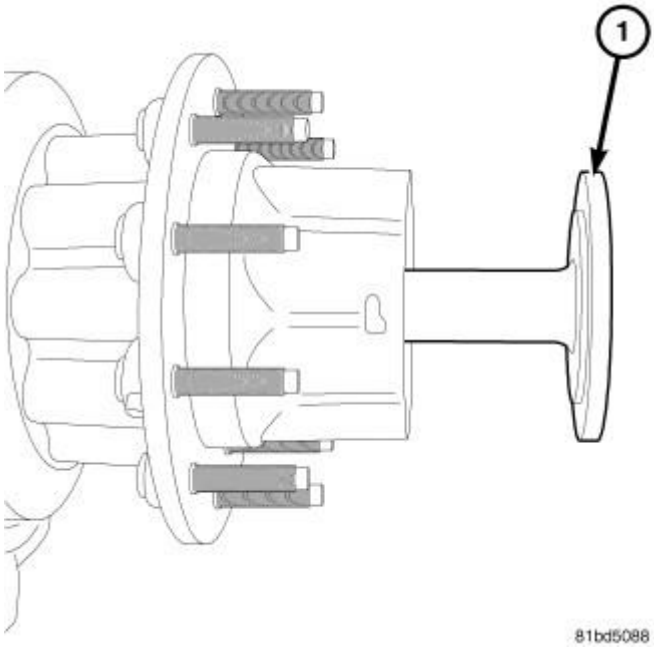

Fig. 48: Axle Shaft
Courtesy of CHRYSLER GROUP, LLC

4. Remove axle shaft from axle shaft (1).

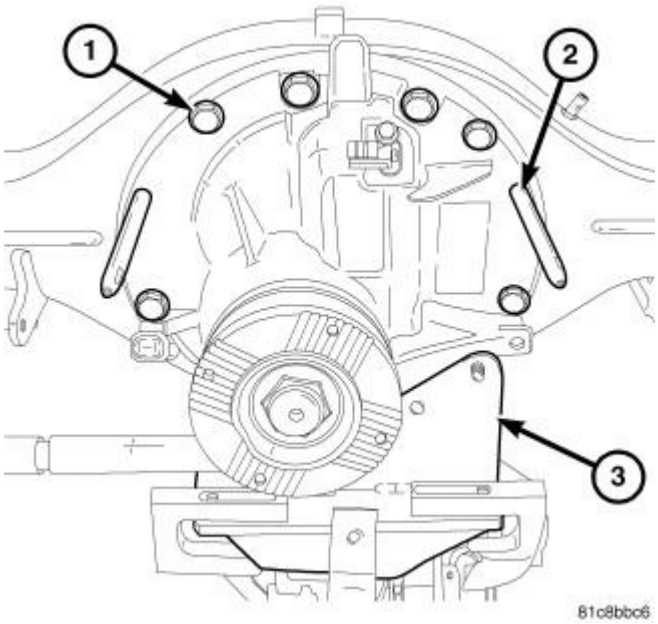

Fig. 49: Guide Pins & Fixtures
Courtesy of CHRYSLER GROUP, LLC

5. Remove a bolt from each side of the carrier and two more bottom bolts.
6. Install a Guide Pins (special tool #10047, Guide Pins) (2) into each side of the housing.

7. Attach Fixture (special tool #10048, Fixture, Differential Carrier) (3) to transmission jack with fixture clamps.
8. Guide Fixture (special tool #10048, Fixture, Differential Carrier) (3) onto the carrier and Guide Pins (special tool #10047, Guide Pins) (2).

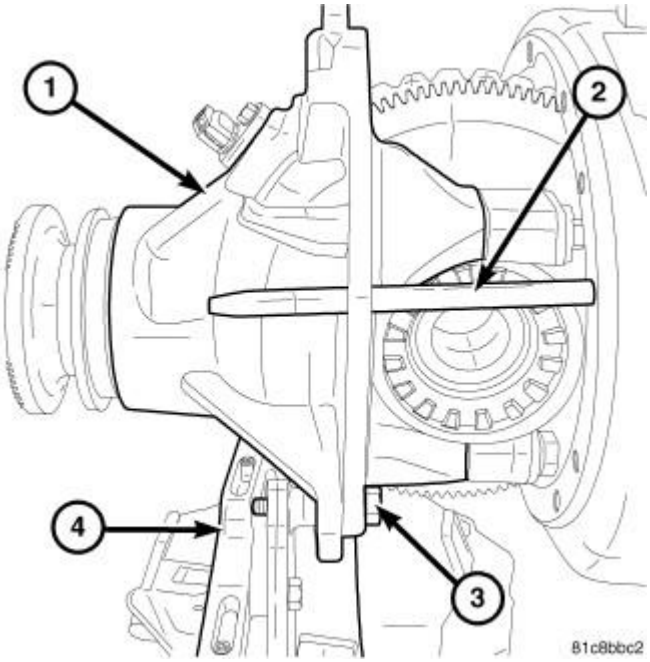

Fig. 50: Fixture, Carrier & Bolts
Courtesy of CHRYSLER GROUP, LLC

9. Remove remaining carrier bolts.
10. Slide fixture (4) with carrier (1) out of the axle housing about three inches onto the Guide Pins (special tool #10047, Guide Pins) (2).
11. Bolt both sides of the Fixture (special tool #10048, Fixture, Differential Carrier) (4) to carrier (1) with two carrier bolts (3).

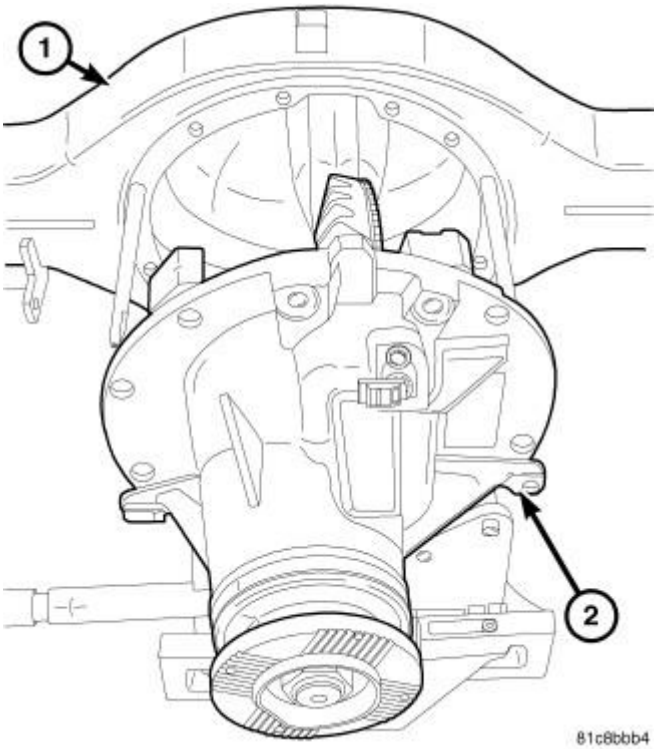

Fig. 51: Carrier & Housing
Courtesy of CHRYSLER GROUP, LLC

12. Slide the carrier (2) off Guide Pins (special tool #10047, Guide Pins) and out of the housing (1) with transmission jack and fixture.

INSTALLATION

INSTALLATION

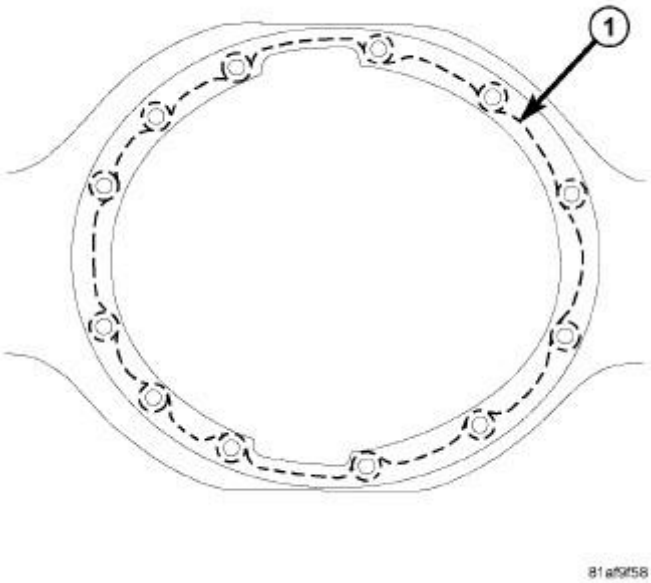

Fig. 52: RTV Sealant
Courtesy of CHRYSLER GROUP, LLC

1. Apply Mopar Silicone Rubber RTV or equivalent (1) to the axle housing sealing surface.

CAUTION: If carrier is not installed within 3 to 5 minutes, the housing must be cleaned and new RTV applied. Failure to follow these instructions will result in a leak.

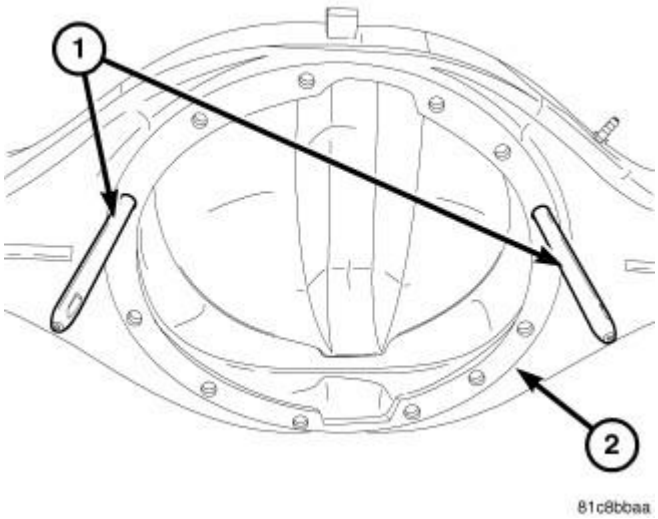

Fig. 53: Guide Pins 10047
Courtesy of CHRYSLER GROUP, LLC

2. Install carrier Guide Pins (special tool #10047, Guide Pins) (1) into opposite sides of the housing (2).

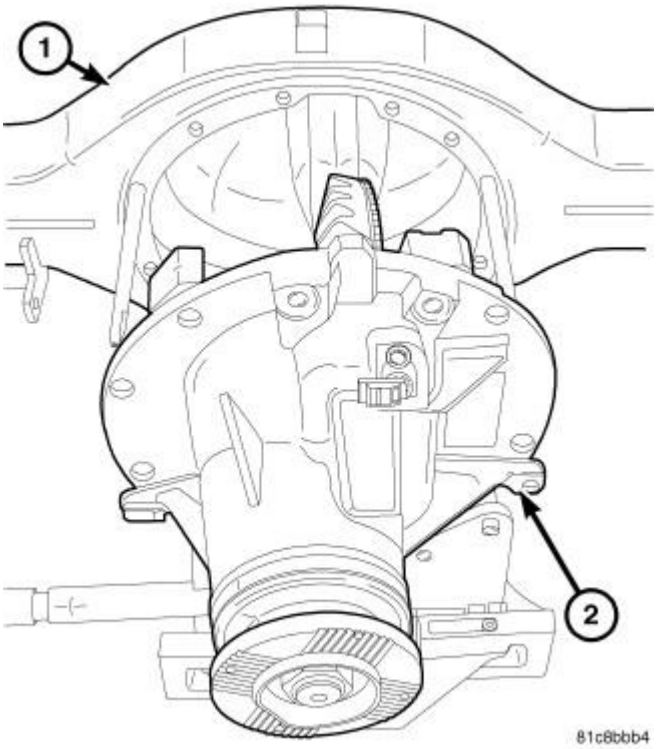

Fig. 54: Carrier & Housing
Courtesy of CHRYSLER GROUP, LLC

3. Align transmission jack with carrier up (2) with axle housing (1).

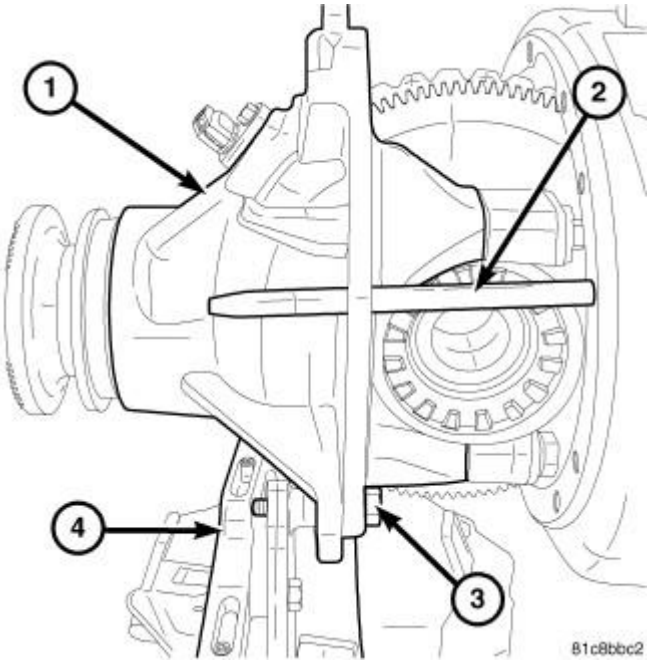

Fig. 55: Fixture, Carrier & Bolts

Courtesy of CHRYSLER GROUP, LLC

4. Slide carrier (1) onto Guide Pins (special tool #10047, Guide Pins) (2), until carrier is within three inches of the axle housing.
5. Remove both bolts (3) from carrier Fixture (special tool #10048, Fixture, Differential Carrier) (4).

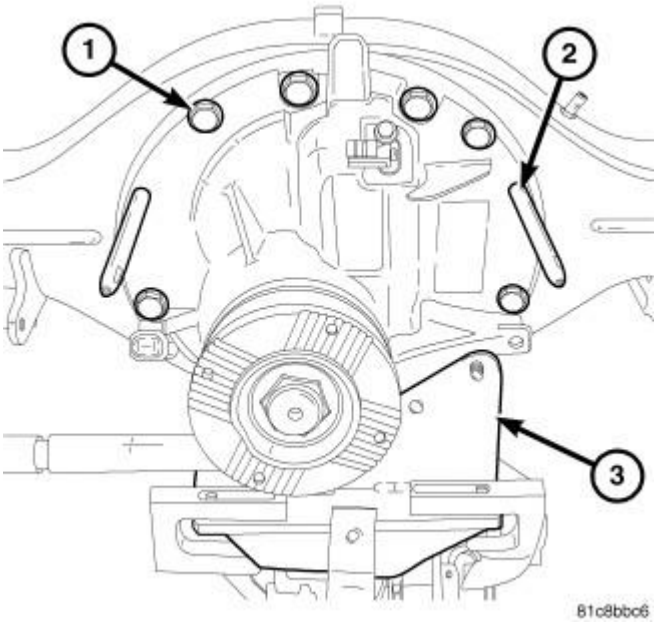

Fig. 56: Guide Pins & Fixtures
Courtesy of CHRYSLER GROUP, LLC

6. Slide carrier with the fixture into the axle housing.
7. Install some carrier bolts (1) then remove Guide Pins (special tool #10047, Guide Pins) (2) and carrier Fixture (special tool #10048, Fixture, Differential Carrier) (3). Install remaining carrier bolts and tighten bolts to 203 N.m (150 ft. lbs.).

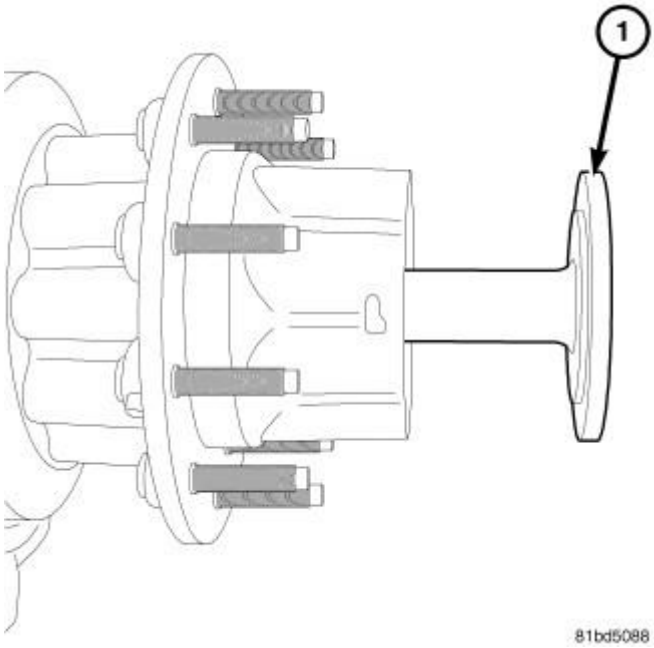

Fig. 57: Axle Shaft
Courtesy of CHRYSLER GROUP, LLC

8. Slide axle shafts (1) into the axle.

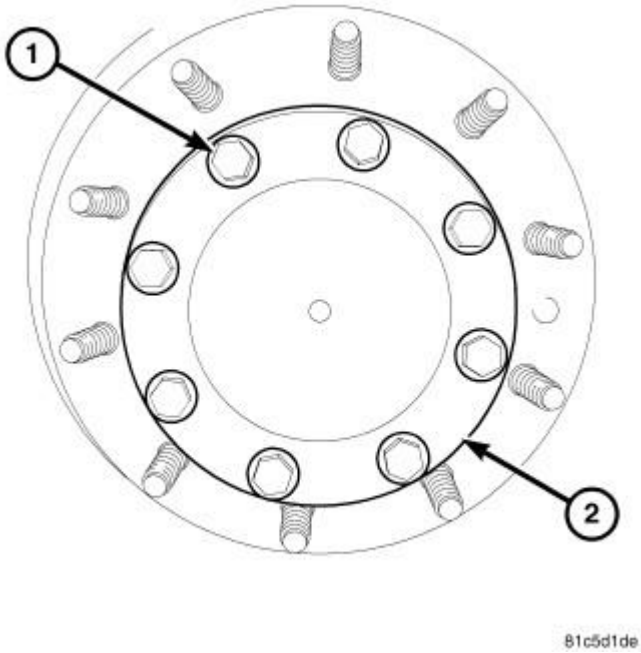

Fig. 58: Axle Bolts & Axle Flange
Courtesy of CHRYSLER GROUP, LLC

9. Install axle flange (1) bolts (2) and tighten to 133 N.m (98 ft. lbs.).

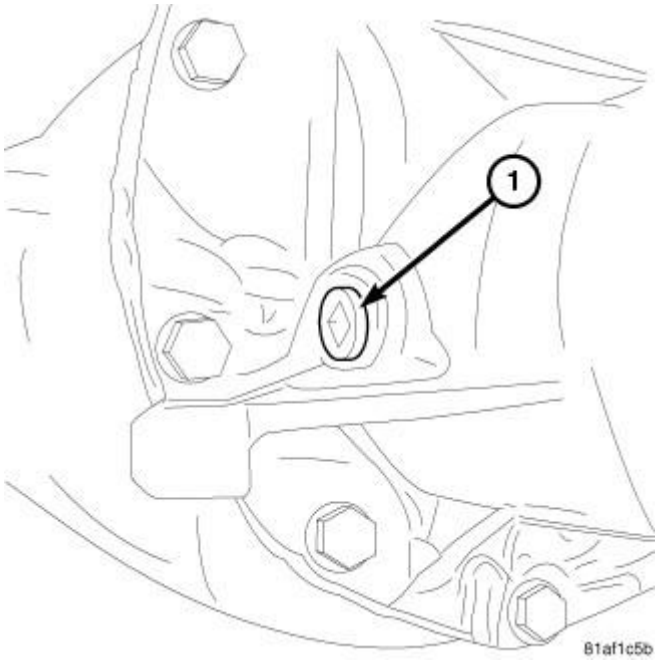

Fig. 59: Fill Plug
Courtesy of CHRYSLER GROUP, LLC

10. Fill axle with lubricant to the bottom of the fill plug hole.
11. Install fill plug (1) and tighten to 68 N.m (50 ft. lbs.).

CASE ASSEMBLY, DIFFERENTIAL

DESCRIPTION

DESCRIPTION

DIFFERENTIAL-OPEN

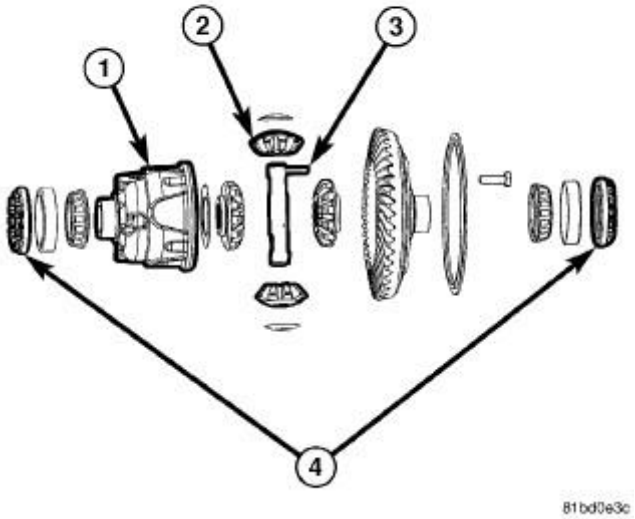

Fig. 60: Exploded View Of Differential Case
Courtesy of CHRYSLER GROUP, LLC

The differential case (1) is a two-piece design with two pinion gears (2). The differential pinion mate shaft is retained with a pin (3). Differential bearing preload and ring gear backlash are set using threaded adjusters (4).

DIFFERENTIAL-TRUETRAC®

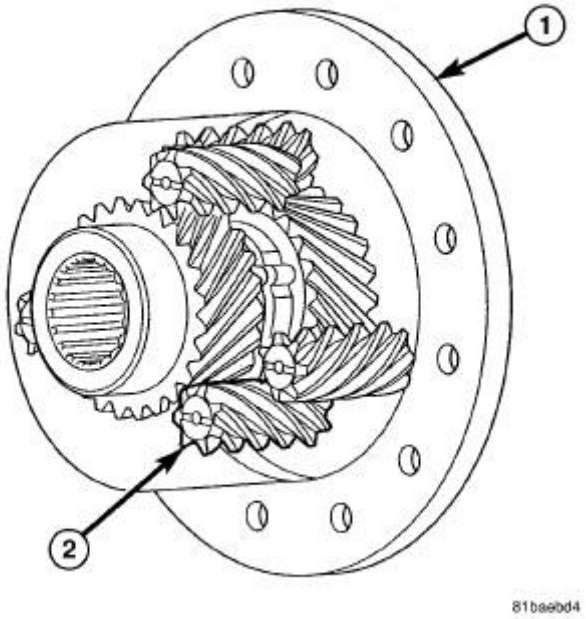

Fig. 61: Differential & Pinion Gears

Courtesy of CHRYSLER GROUP, LLC

The Truetrac® limited slip differential (1) performs like a conventional open differential under normal conditions. When traction control is needed, gear forces from the planetary pinion gears (2) automatically apply resistance to the wheel with less traction and torque to the opposite wheel.

OPERATION

OPERATION

DIFFERENTIAL-OPEN

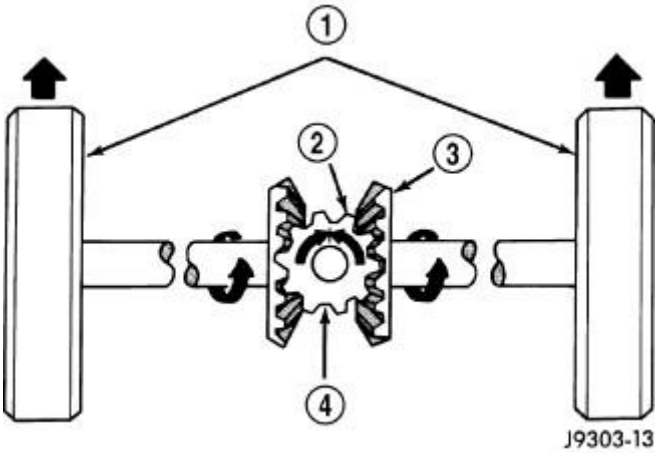

Fig. 62: Differential-Straight Ahead Driving
Courtesy of CHRYSLER GROUP, LLC

During straight-ahead driving (1), the differential pinion gears (2) do not rotate on the pinion mate shaft. This occurs because input torque applied to the gears is divided and distributed equally between the two side gears (3). As a result, the pinion gears revolve with the pinion mate shaft but do not rotate around it.

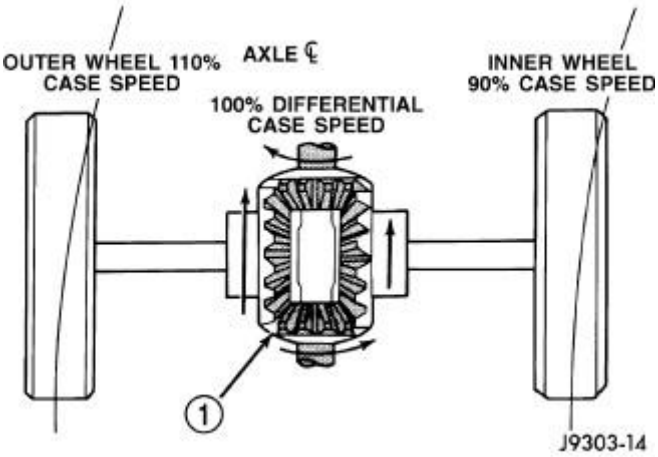

Fig. 63: Differential-On Turns
Courtesy of CHRYSLER GROUP, LLC

When turning corners, the outside wheel must travel a greater distance than the inside wheel to complete a turn. To accomplish this, the differential allows the axle shafts to turn at unequal speeds. In this instance, the input torque applied to the pinion gears is not divided equally. The pinion gears (1) now rotate around the pinion mate shaft in opposite directions. This allows the side gear and axle shaft attached to the outside wheel to rotate at a faster speed.

DIFFERENTIAL-TRUETRAC®

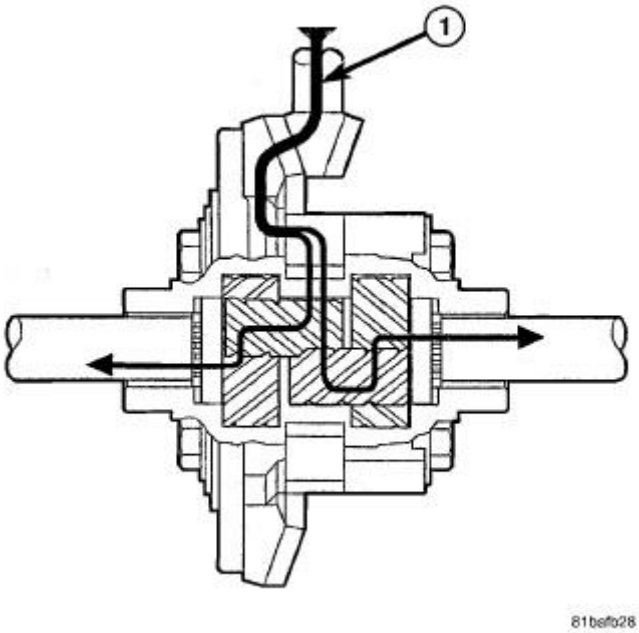

Fig. 64: Normal Torque Flow
Courtesy of CHRYSLER GROUP, LLC

When the vehicle is on a surface with equal traction to both wheels, the Truetrac® differential will supply torque flow (1) evenly to both axle.

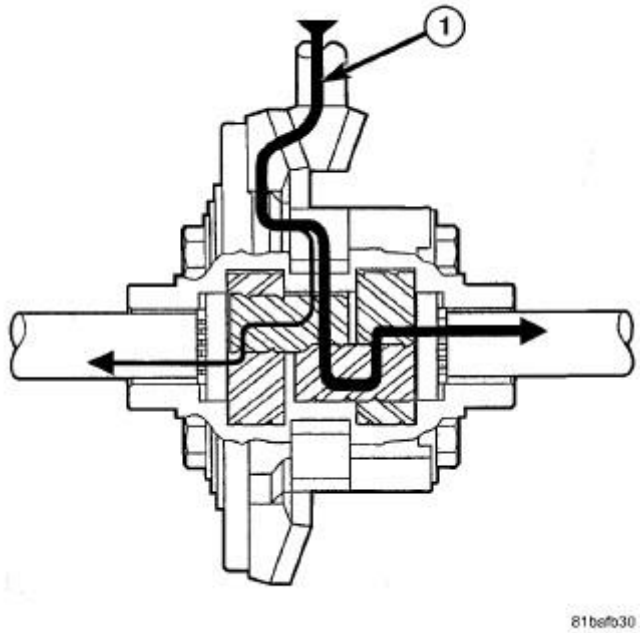

Fig. 65: Identifying Limited Slip Torque Flow
Courtesy of CHRYSLER GROUP, LLC

When the vehicle experiences a loss of traction to either axle, the Truetrac® differential mating pinions push off each other and wedge themselves into the differential case pockets. This provides a friction force, which is applied to the axle with the loss of traction to prevent it from spinning. The majority of torque flow (1) is then transferred to the axle with traction.

ADJUSTMENTS

ADJUSTMENTS

GEAR IDENTIFICATION

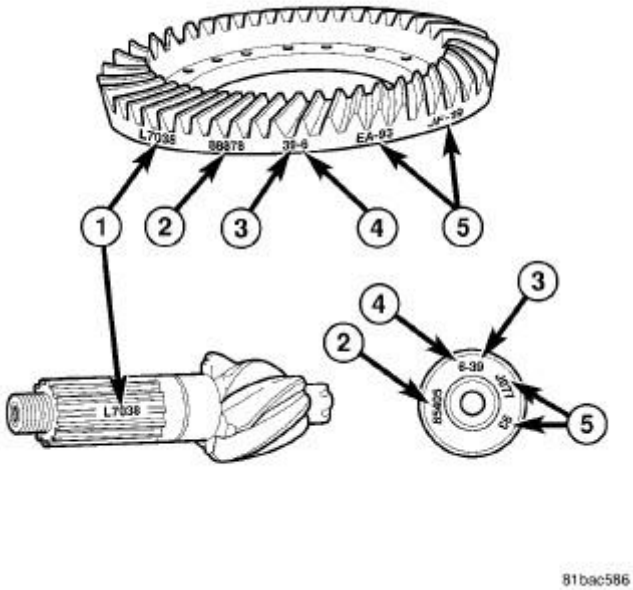

Fig. 66: Gear Identification
Courtesy of CHRYSLER GROUP, LLC

Ring and pinion gears are matched parts and must be replaced as a set. Gear identification numbers are stamped on to both gears.

- Matched Gear Set Number - (1)
- Part Number - (2)
- Ring Gear Teeth - (3)
- Pinion Teeth - (4)
- Manufacturing Number - (5)

PINION BEARING PRELOAD

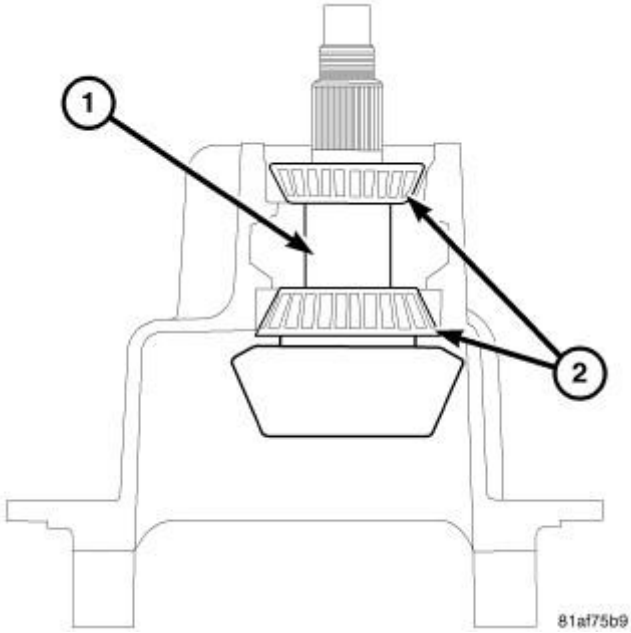

Fig. 67: Preload Spacer & Pinion Bearings
Courtesy of CHRYSLER GROUP, LLC

Pinon bearing preload is set using a select preload spacer (1) located between the pinion bearings (2).

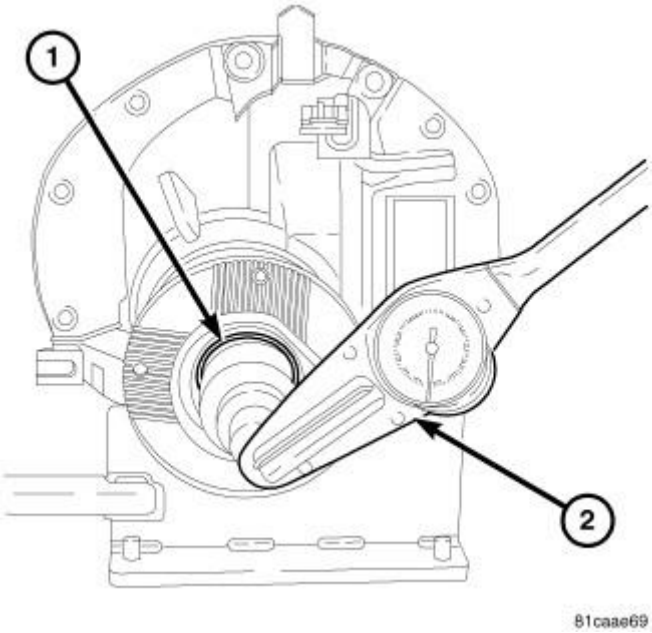

Fig. 68: Measuring Pinion Torque To Rotate
Courtesy of CHRYSLER GROUP, LLC

Measure Pinion Torque To Rotate (1) (PTTR) with an inch pound torque wrench (2). Pinion torque to rotate is 2.3 - 4.5 N.m (20 - 40 in. lbs.). Pinion torque to rotate (PTTR) is measured without the pinion seal.

Spacers are available in sizes from 27.23 - 28.1 mm (1.07 - 1.10 in.). A 0.025 mm (0.001 in.) change in spacer thickness will change pinion torque to rotate approximately 3.38 mm (30 in. lbs.).

NOTE: To increase PTTR install a thinner spacer. To decreases PTTR install thicker spacer.

DIFFERENTIAL BEARING PRELOAD AND GEAR BACKLASH

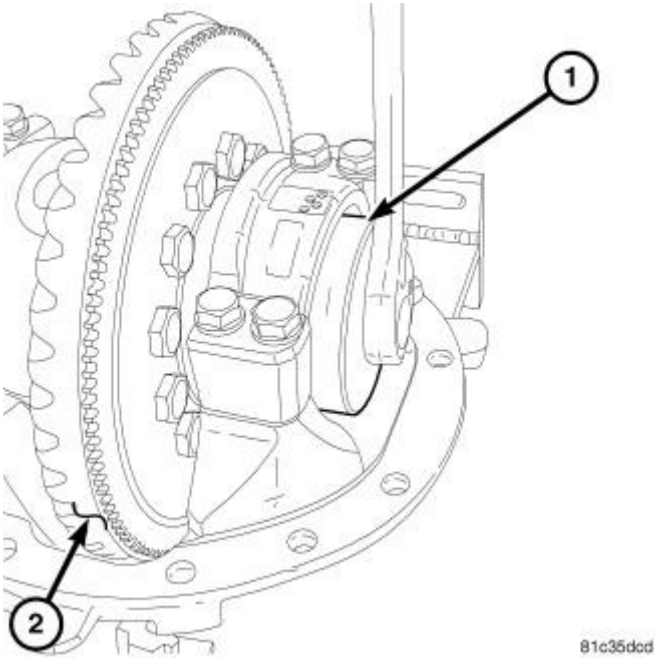

Fig. 69: Ring Gear & Adjuster
Courtesy of CHRYSLER GROUP, LLC

1. Install pinion and establish PTTR.
2. Install ring gear side (2) bearing cap finger tight with **new** bolts.
3. Turn ring gear side adjuster clockwise with Adjuster (special tool #10066, Bearing Adjuster) (1) until ring gear (2) contacts the pinion gear to achieve zero lash.

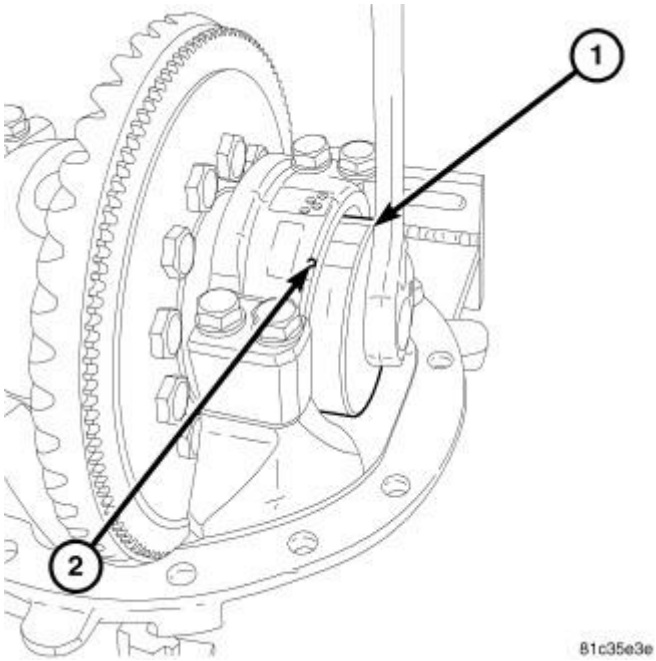

Fig. 70: Adjust Ring Side
Courtesy of CHRYSLER GROUP, LLC

4. Install Adjuster (special tool #10066, Bearing Adjuster) (1) into ring gear side differential bearing adjuster with indicator marks showing.
5. Mark first indicator mark on the bearing cap (2). Rotate adjuster counter clockwise until the third indicator mark is aligned with the bearing cap mark (2).

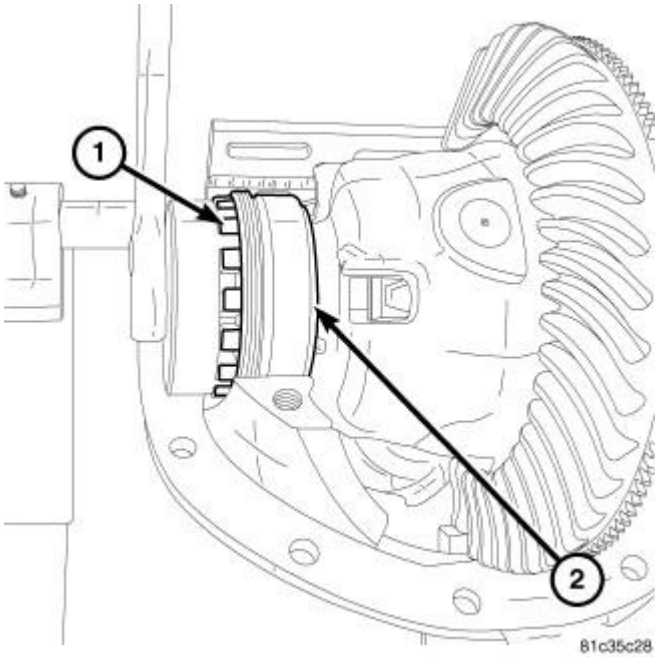

Fig. 71: Adjuster & Bearing Cup
Courtesy of CHRYSLER GROUP, LLC

6. Turn pinion gear side adjuster (1) with Adjuster (special tool #10066, Bearing Adjuster) in until bearing cup (2) just starts to turn to achieve zero lash.

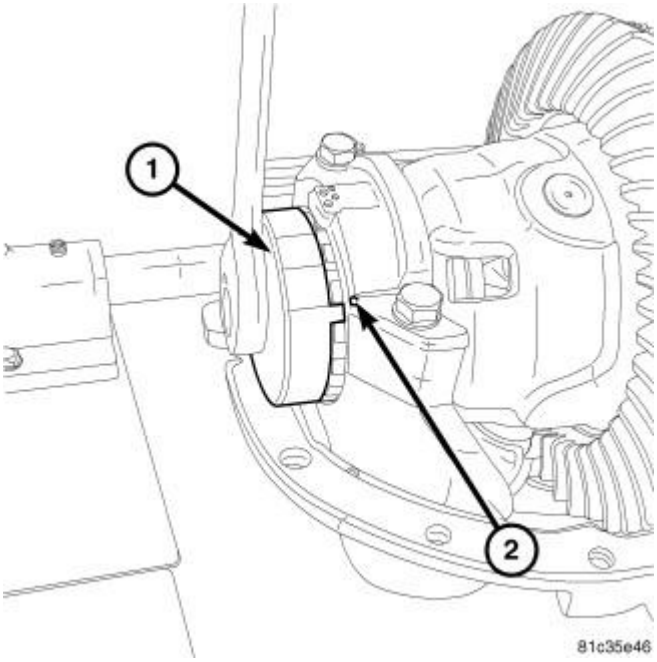

Fig. 72: Adjust Pinion Side
Courtesy of CHRYSLER GROUP, LLC

7. Install pinion gear side bearing cap finger tight with **new** bolts.
8. Install Adjuster (special tool #10066, Bearing Adjuster) (1) into pinion gear side differential bearing adjuster with indicator marks showing.
9. Mark first indicator mark on the bearing cap (2). Rotate adjuster clockwise until the third indicator mark is aligned with the bearing cap mark (2).

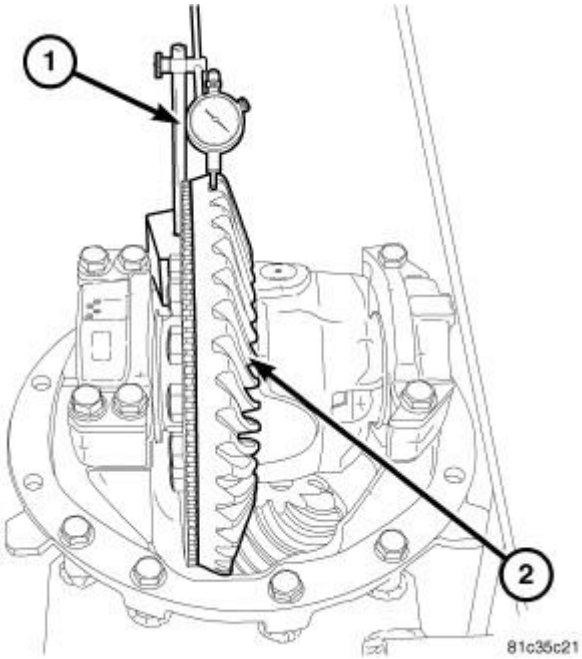

Fig. 73: Measuring Ring Gear Backlash
Courtesy of CHRYSLER GROUP, LLC

10. With Dial Indicator (special tool #C-3339A, Set, Dial Indicator) (1) measure ring gear (2) backlash. Backlash is 0.15 - 0.46 mm (0.006 - 0.018 in.). If backlash is not within specification move adjusters equally one indicator mark and check backlash again.

NOTE: **One indicator mark on Adjuster (special tool #10066, Bearing Adjuster) equals about 0.08 mm (0.003 in.) of backlash.**

11. Tighten bearing cap bolts to 190 N.m (140 ft. lbs.).
12. Recheck ring gear backlash.
13. Measure ring gear runout.

RING GEAR RUNOUT

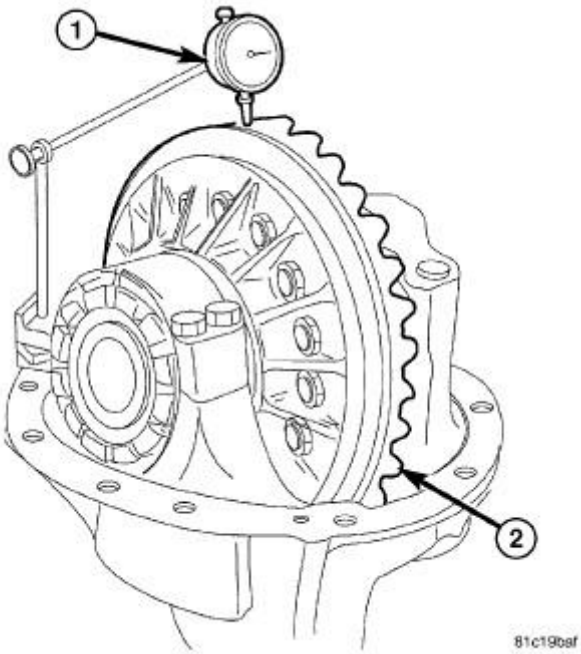

Fig. 74: Measuring Radial Runout
Courtesy of CHRYSLER GROUP, LLC

1. Measure radial runout with dial indicator (1) plunger on top of the ring gear (2). Rotate ring gear and record the highest reading. Radial runout should not exceed 0.25 mm (0.01 in.).

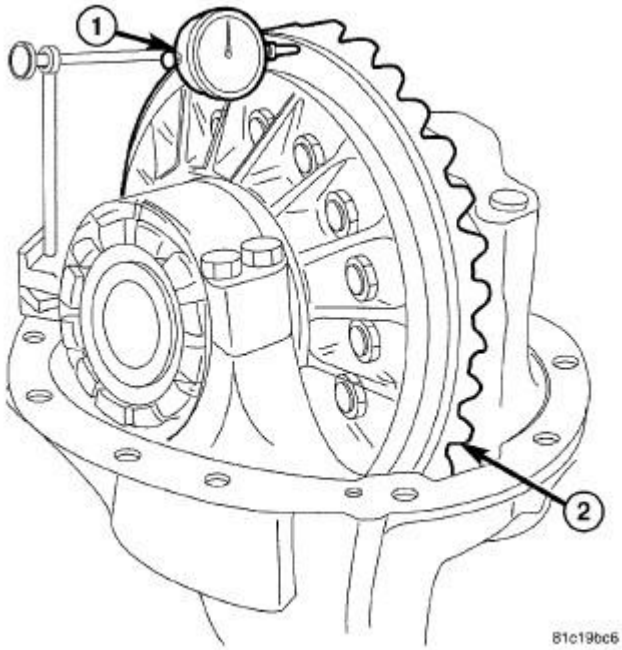

Fig. 75: Measuring Lateral Runout
Courtesy of CHRYSLER GROUP, LLC

2. Measure lateral runout with dial indicator (1) plunger on the side of the ring gear (2). Rotate ring gear and record the highest reading. Lateral runout should not exceed 0.25 mm (0.01 in.).
3. Check gear contact pattern.

GEAR TOOTH CONTACT PATTERN

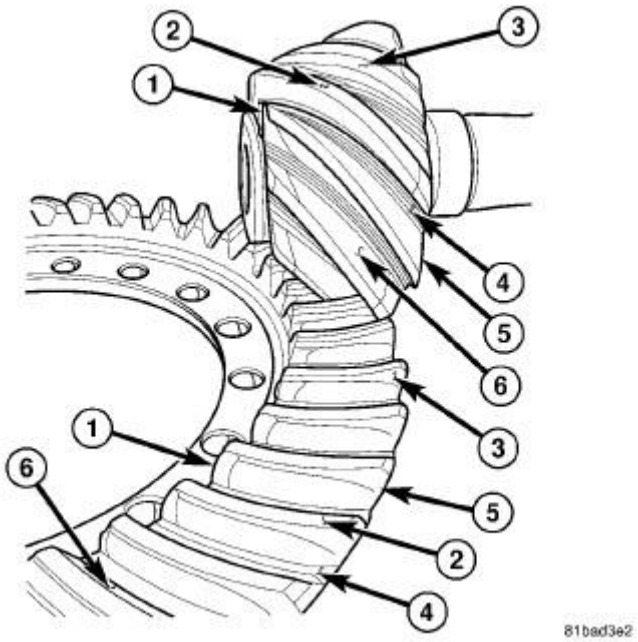

Fig. 76: Gear Tooth Contact Pattern
Courtesy of CHRYSLER GROUP, LLC

The gear and pinion gear tooth contact patterns will show if the ring gear backlash has been adjusted correctly. The backlash can be adjusted within specifications to achieve desired tooth contact patterns.

Ring and pinion gear tooth description:

- Toe - (1)
- Land - (2)
- Drive Side - (3)
- Root - (4)
- Heel - (5)
- Coast Side - (6)

Paint six ring gear teeth 180 degrees apart with marking compound. Turn the gear to obtain a contact pattern.

NEW GEAR PATTERN

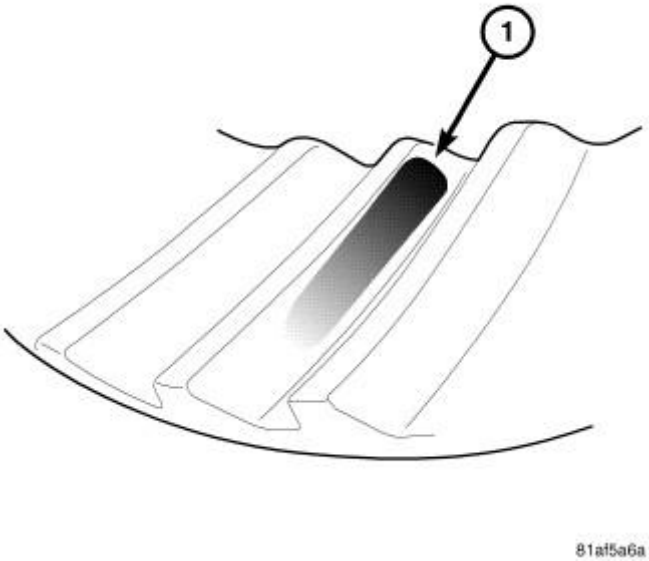

Fig. 77: Identifying New Gear Pattern
Courtesy of CHRYSLER GROUP, LLC

A new gear pattern should be slightly below center on the ring gear tooth with lengthwise contact up off the toe (1). Length of the pattern in an unloaded condition is approximately one-half to two-thirds of the ring gear tooth. Pattern can very in length but should cover one-half or more of the tooth face. Pattern should be evenly centered between the tooth land.

USED GEAR PATTERN

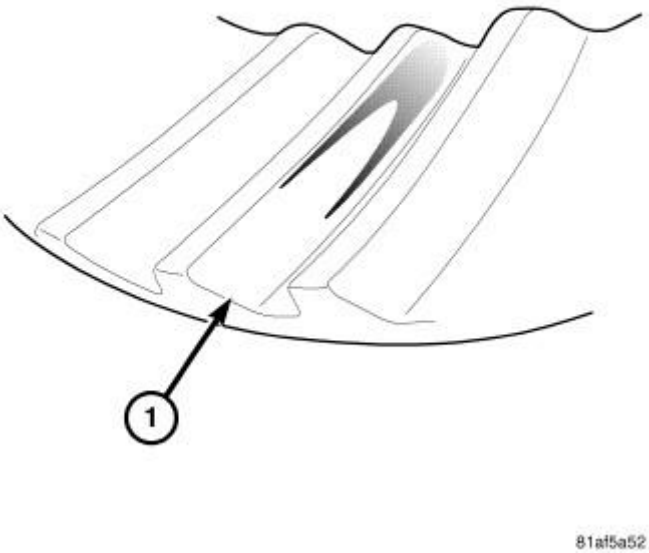

Fig. 78: Identifying Old Gear Pattern

Courtesy of CHRYSLER GROUP, LLC

A used gear pattern will normally have a pocket at the heal (1) end of ring gear. The more the gear is used the more dominate this pattern. The pattern should be evenly centered between the tooth land and root off the toe. Length and shape of the pattern are highly variable but considered acceptable as long as it does not run off the tooth. Adjust used gear sets to this same pattern or to pattern observed before disassembly.

RING GEAR ADJUSTMENT

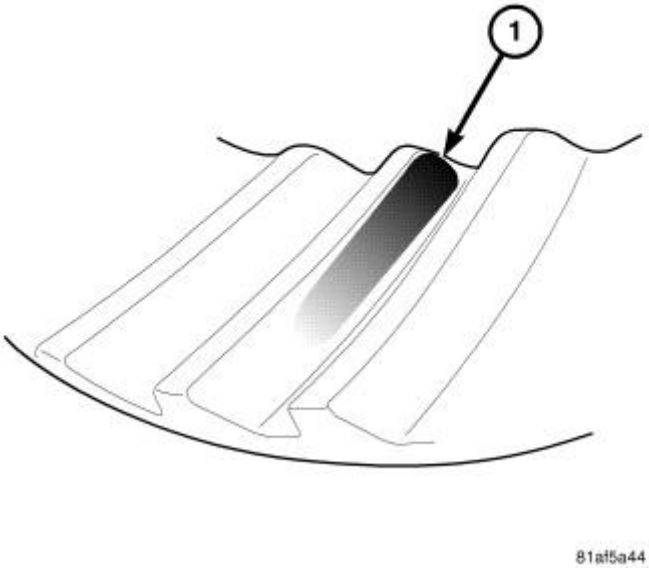

Fig. 79: Contact Pattern Too Close To Ring Gear Toe
Courtesy of CHRYSLER GROUP, LLC

Contact pattern is too close to ring gear toe (1). Move ring gear away from pinion gear to increase backlash.

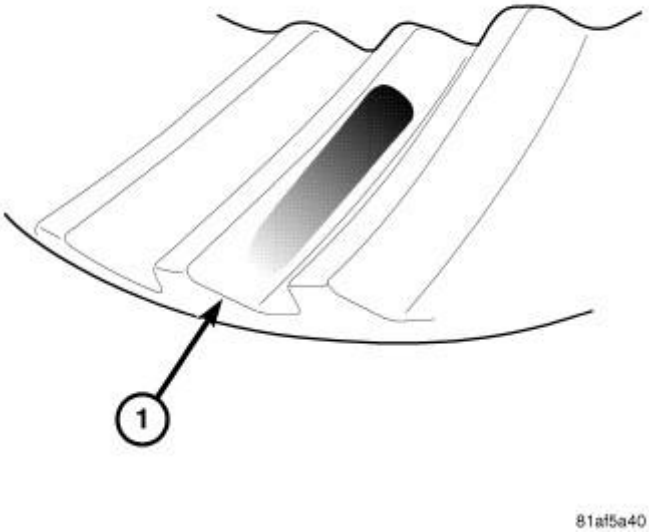

Fig. 80: Contact Pattern Too Close To Ring Gear Heel
Courtesy of CHRYSLER GROUP, LLC

Contact pattern is too close to ring gear heel (1). Move ring gear towards pinion gear to decrease backlash.

REMOVAL

REMOVAL

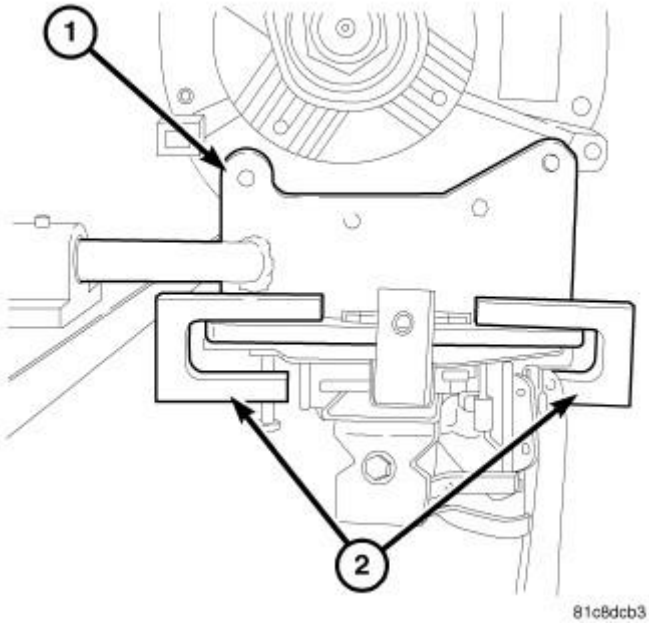

Fig. 81: Fixture 10048 & Clamps
Courtesy of CHRYSLER GROUP, LLC

1. Mount carrier with Fixture (special tool #10048, Fixture, Differential Carrier) (1) into bench Fixture (special tool #9385, Holding Fixture, Bench Mount).
2. Remove Fixture (special tool #10048, Fixture, Differential Carrier) (1) clamps (2) from transmission jack and remove transmission jack.
3. Rotate carrier in bench fixture so bearing caps are facing up.

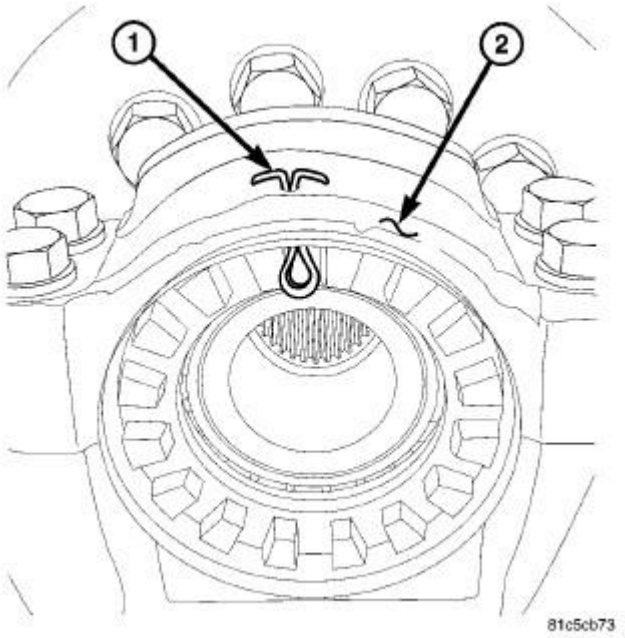

Fig. 82: Cotter Pin
Courtesy of CHRYSLER GROUP, LLC

4. Remove differential bearing preload adjuster cotter pins (1) bearing caps (2).

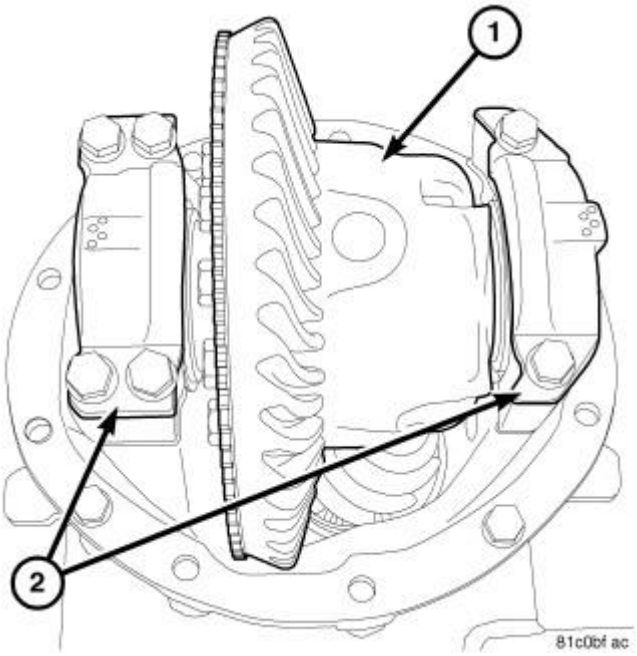

Fig. 83: Bearing Cap Bolts
Courtesy of CHRYSLER GROUP, LLC

5. Remove differential bearing cap (1) bolts from the differential (2).

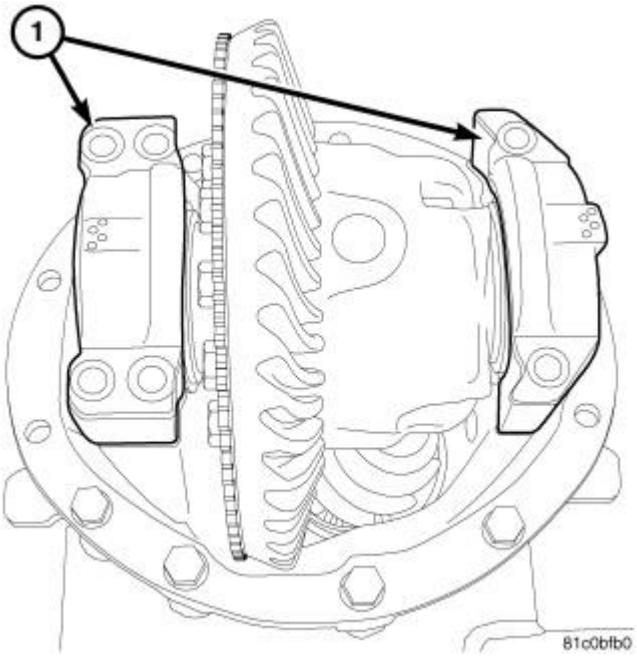

Fig. 84: Bearing Caps
Courtesy of CHRYSLER GROUP, LLC

6. Remove differential bearing caps (1) from carrier.

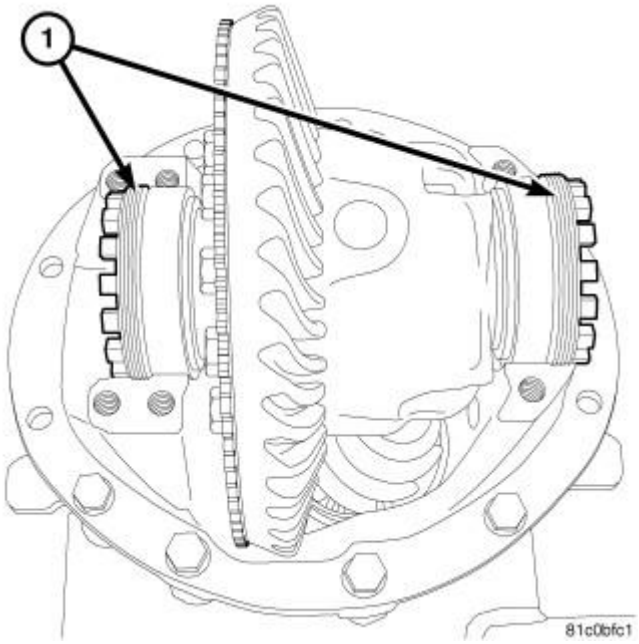

Fig. 85: Differential Bearing Adjusters
Courtesy of CHRYSLER GROUP, LLC

7. Loosen differential bearing adjusters (1).
8. Remove differential with adjusters and bearing cups. Tag adjusters and bearing cups for installation reference.

DISASSEMBLY

DISASSEMBLY

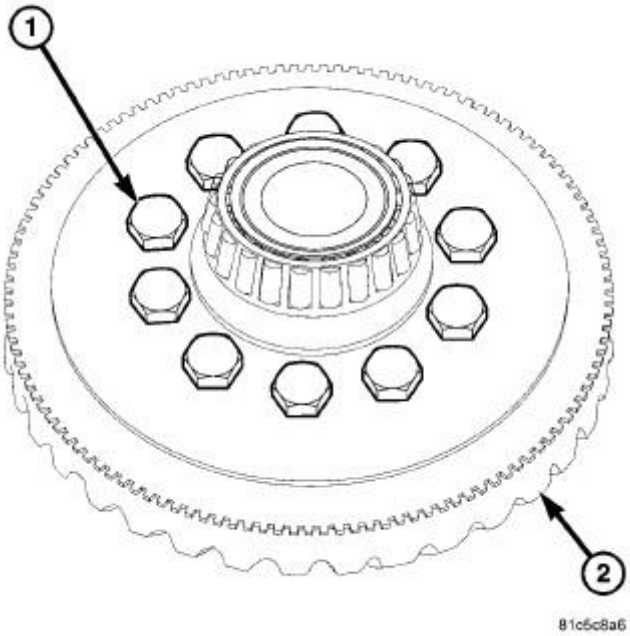

Fig. 86: Ring Gear & Bolts
Courtesy of CHRYSLER GROUP, LLC

1. Remove ring gear bolts (1) from ring gear (2).
2. Separate ring gear from differential case and remove case dowel pins.

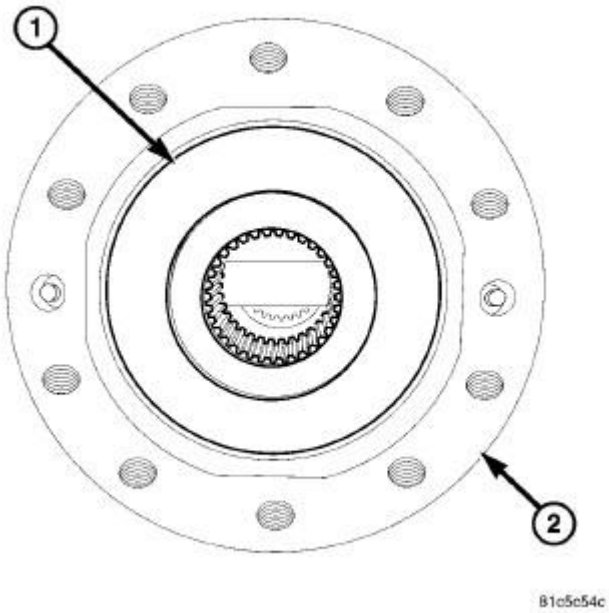

Fig. 87: Side Gear & Differential Case
Courtesy of CHRYSLER GROUP, LLC

3. Remove side gear (1) from differential case (2).

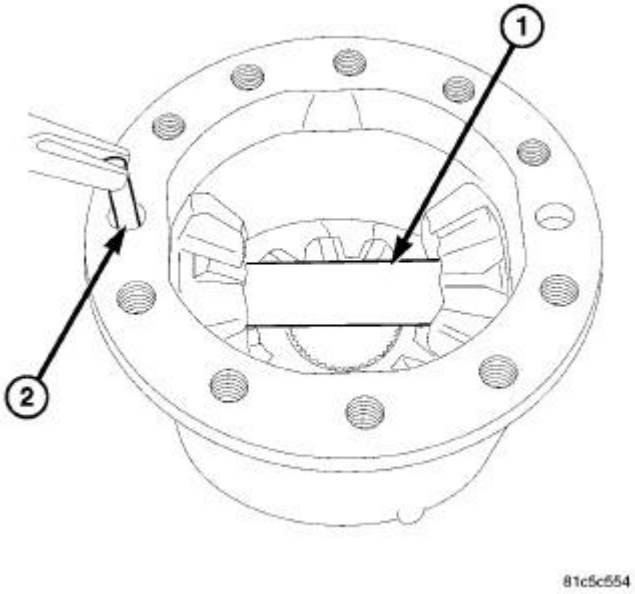

Fig. 88: Pinion Mate Shaft & Pins
Courtesy of CHRYSLER GROUP, LLC

4. Remove pinion mate shaft (1) pins (2) from differential case.

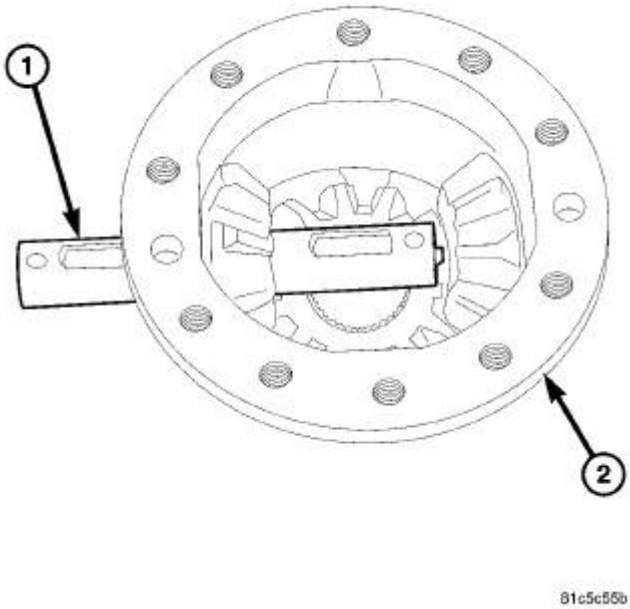

Fig. 89: Pinion Mate Shaft & Differential Case

Courtesy of CHRYSLER GROUP, LLC

5. Remove pinion mate shaft (1) from differential case (2).

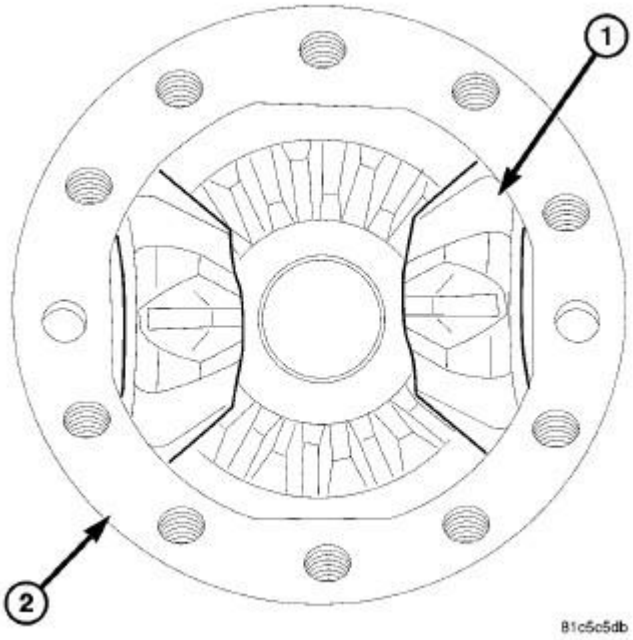

Fig. 90: 1st Pinion Gear
Courtesy of CHRYSLER GROUP, LLC

6. Remove first pinion gear (1) with thrust washer from differential case (2).

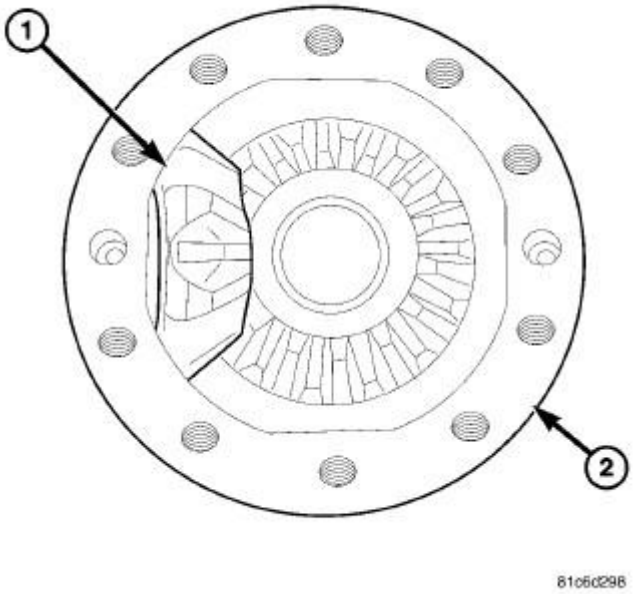

Fig. 91: 2nd Pinion Gear
Courtesy of CHRYSLER GROUP, LLC

7. Remove second pinion gear (1) with thrust washer from differential case (2).

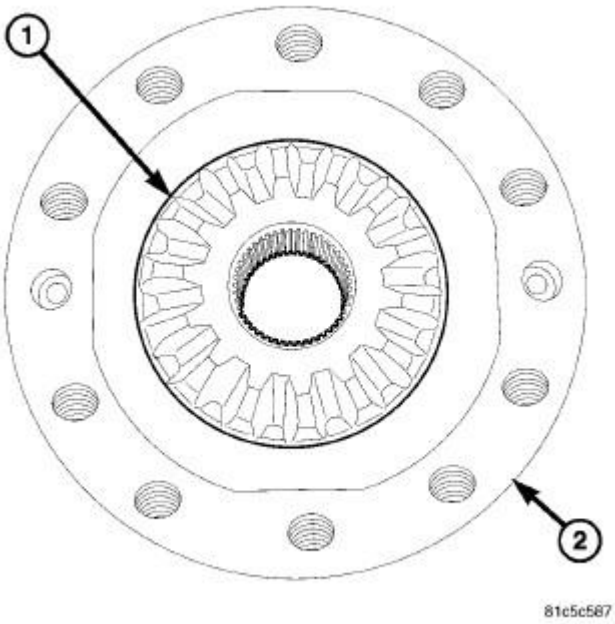

Fig. 92: Bottom Side Gear
Courtesy of CHRYSLER GROUP, LLC

8. Remove remaining side gear (1) from differential case (2).

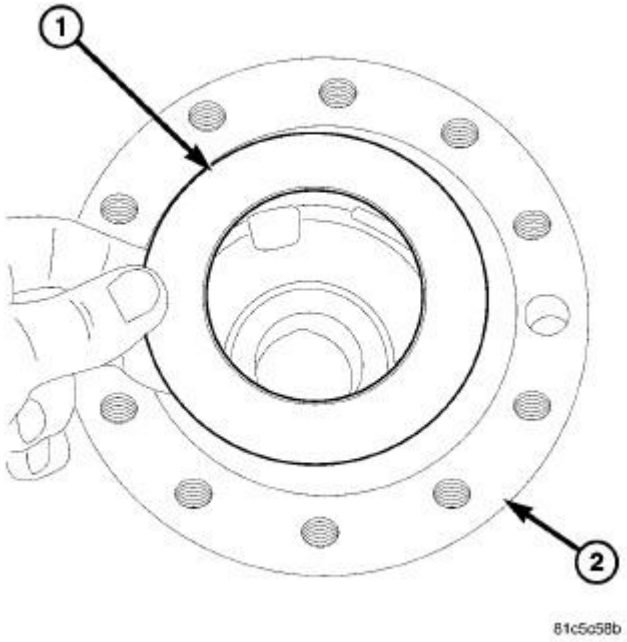

Fig. 93: Side Gear Thrust Washer & Differential Case
Courtesy of CHRYSLER GROUP, LLC

9. Remove side gear thrust washer (1) from differential case (2).

ASSEMBLY

ASSEMBLY

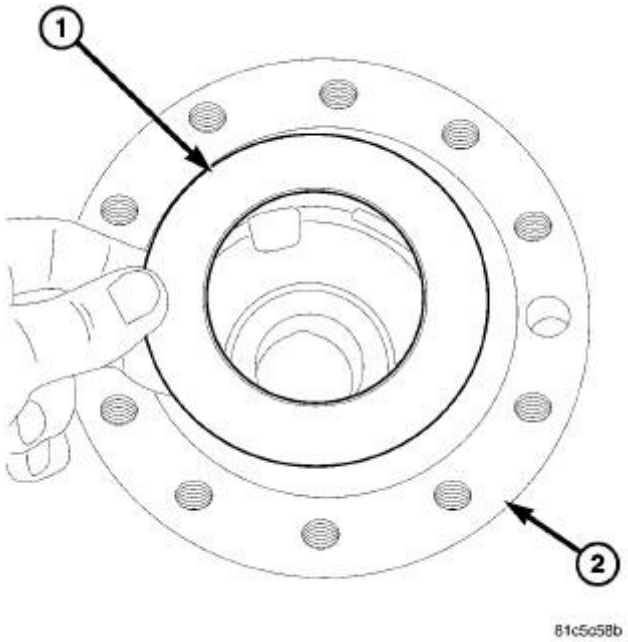

Fig. 94: Side Gear Thrust Washer & Differential Case
Courtesy of CHRYSLER GROUP, LLC

1. Install side gear thrust washer (1) into differential case (2).

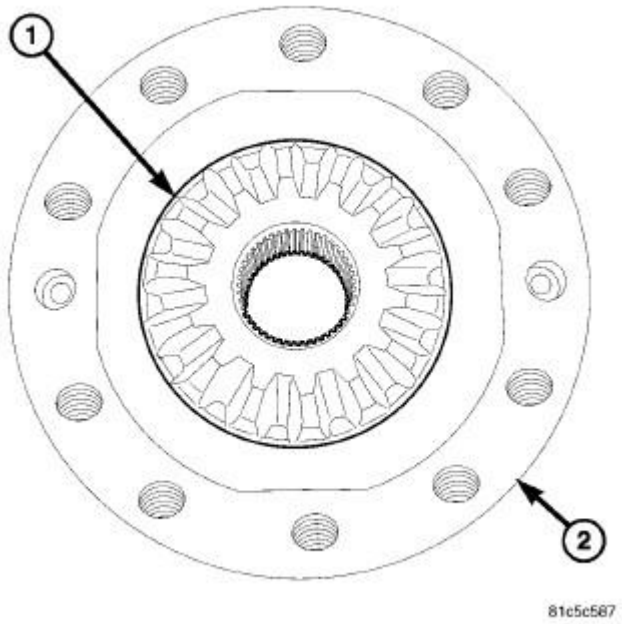

Fig. 95: Bottom Side Gear
Courtesy of CHRYSLER GROUP, LLC

2. Install remaining side gear (1) into differential case (2).

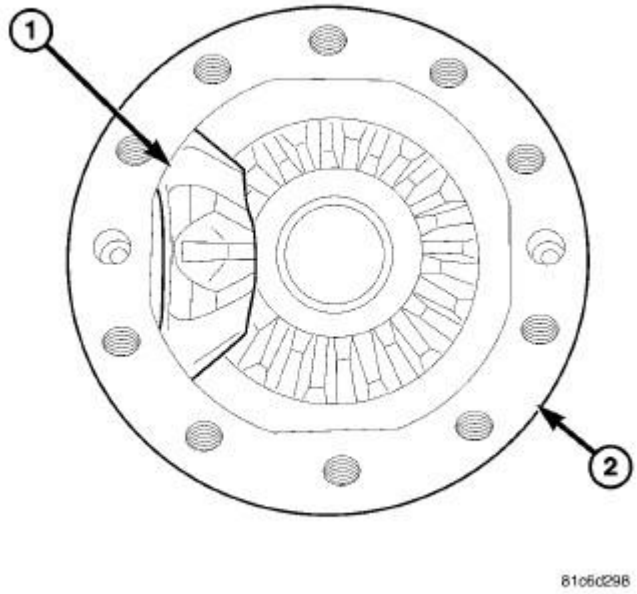

Fig. 96: 2nd Pinion Gear
Courtesy of CHRYSLER GROUP, LLC

3. Install pinion gear (1) with thrust washer into differential case (2).

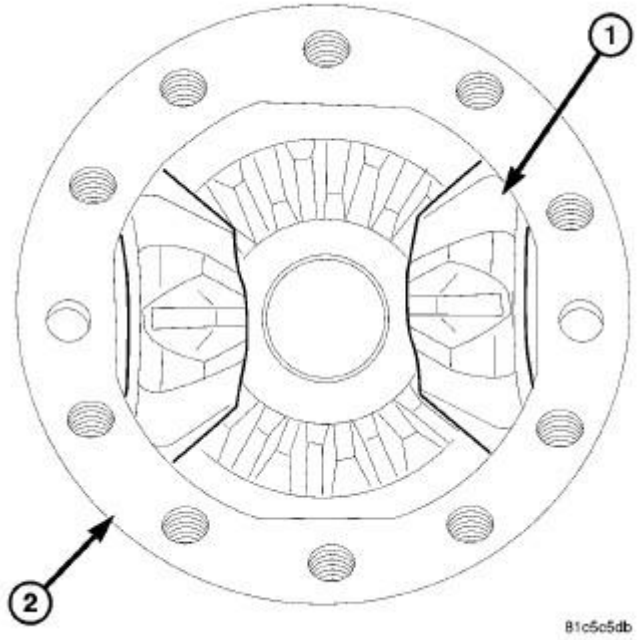

Fig. 97: 1st Pinion Gear

Courtesy of CHRYSLER GROUP, LLC

4. Install remaining pinion gear (1) with thrust washer into differential case (2).

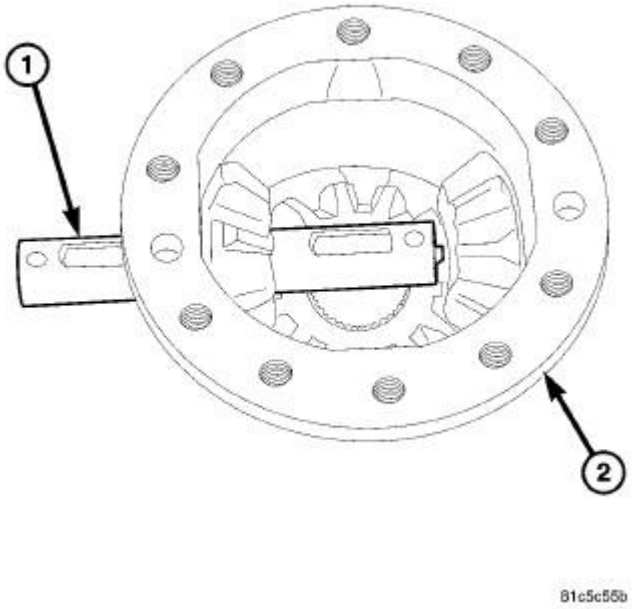

Fig. 98: Pinion Mate Shaft & Differential Case
Courtesy of CHRYSLER GROUP, LLC

5. Install pinion mate shaft (1) into differential case (2).

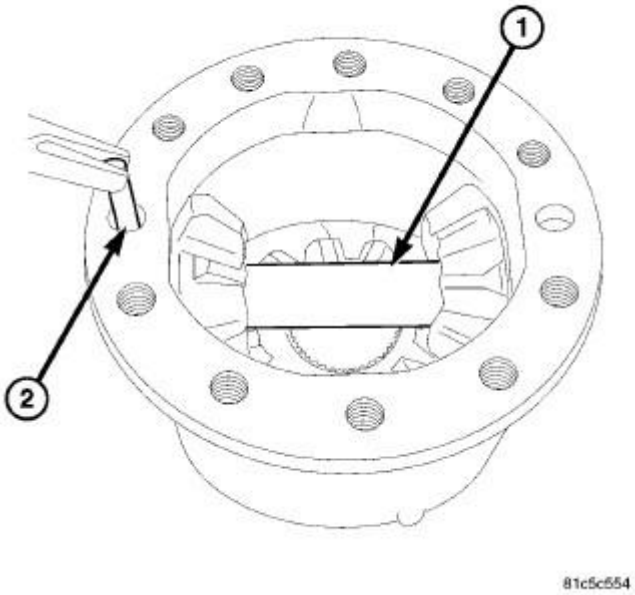

Fig. 99: Pinion Mate Shaft & Pins
Courtesy of CHRYSLER GROUP, LLC

6. Install pinion mate shaft (1) pins (2) into differential case and tap dowel pins in case.

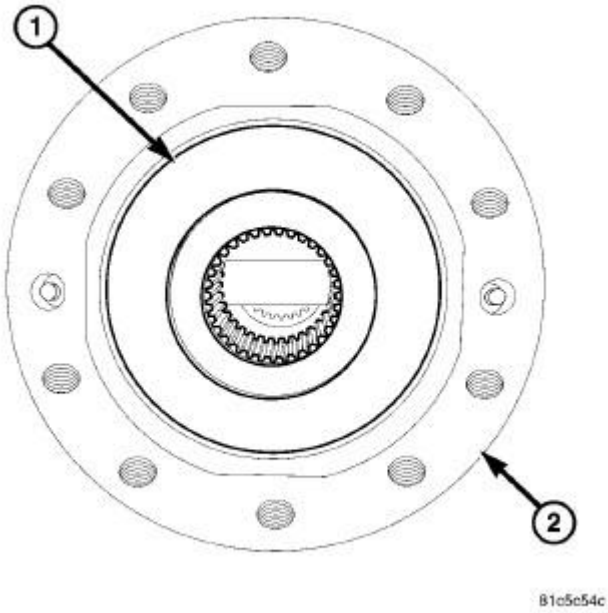

Fig. 100: Side Gear & Differential Case
Courtesy of CHRYSLER GROUP, LLC

7. Install side gear (1) into differential case (2).

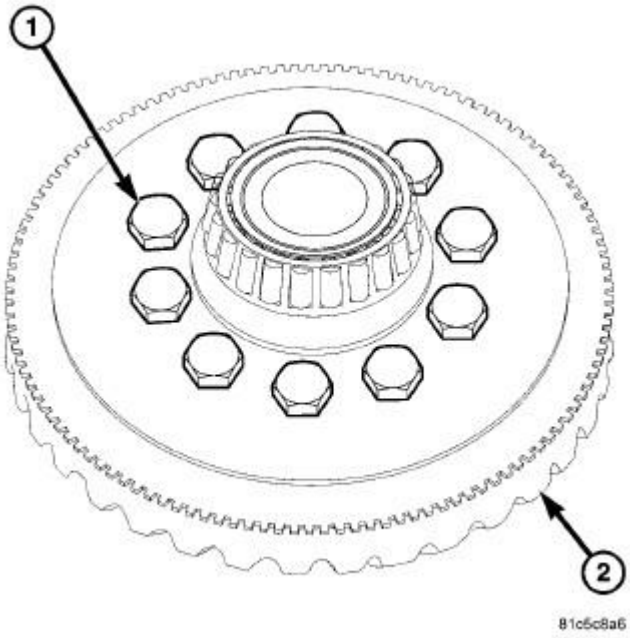

Fig. 101: Ring Gear & Bolts
Courtesy of CHRYSLER GROUP, LLC

8. Install ring gear onto case and tighten ring gear (2) bolts (1) to 286 N.m (210 ft. lbs.).

INSTALLATION

INSTALLATION

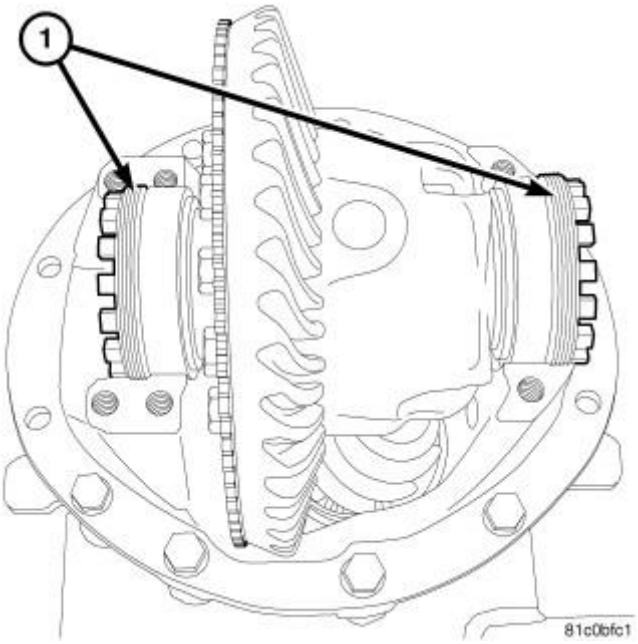

Fig. 102: Differential Bearing Adjusters
Courtesy of CHRYSLER GROUP, LLC

1. Install differential into carrier.
2. Install differential bearing cups and adjusters (1) into carrier.

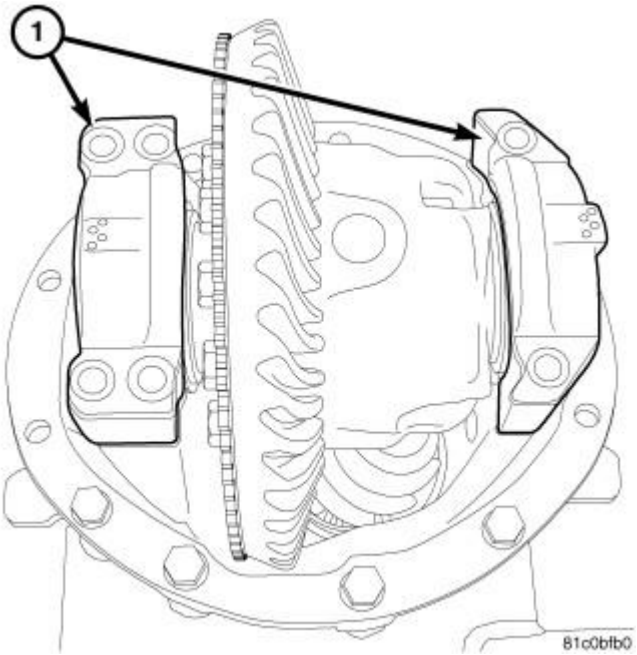

Fig. 103: Bearing Caps
Courtesy of CHRYSLER GROUP, LLC

3. Install differential bearing caps (1).

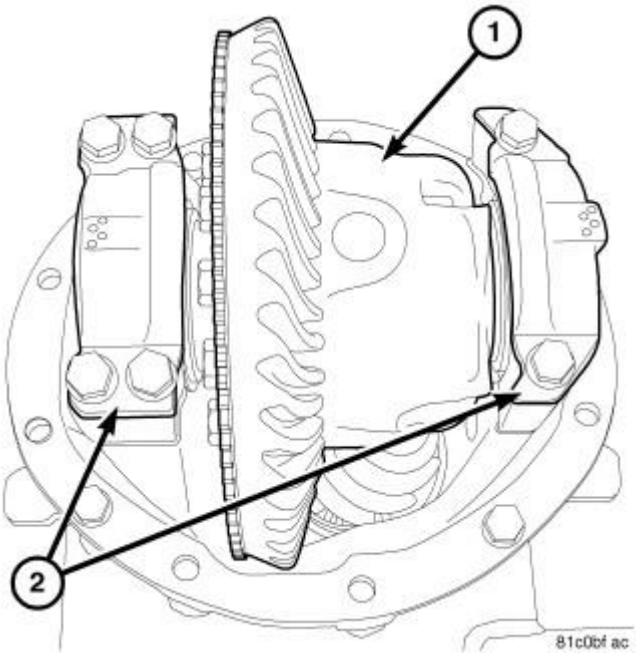

Fig. 104: Bearing Cap Bolts
Courtesy of CHRYSLER GROUP, LLC

NOTE: **Before tightening bearing caps, perform differential bearing preload and backlash adjustments. Refer to ADJUSTMENTS.**

4. Install **new** bearing cap (2) bolts and tighten to 190 N.m (140 ft. lbs.).

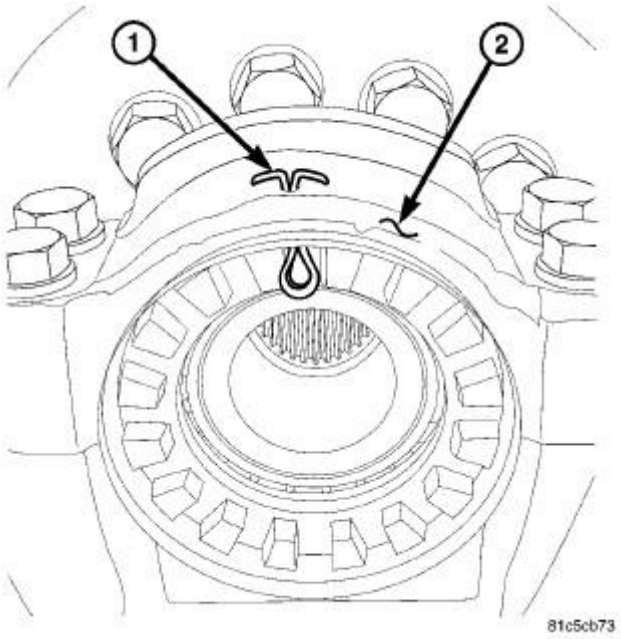

Fig. 105: Cotter Pin

Courtesy of CHRYSLER GROUP, LLC

5. Install differential adjuster cotter pins (1) in bearing caps (2).

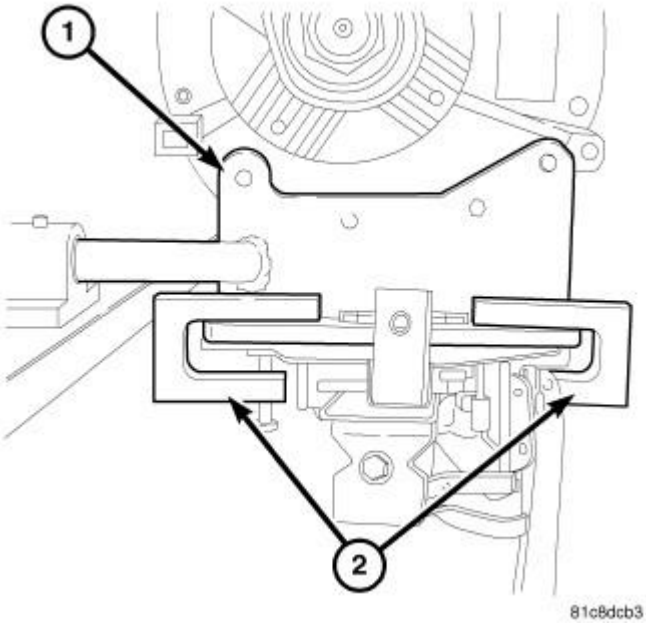

Fig. 106: Fixture 10048 & Clamps
Courtesy of CHRYSLER GROUP, LLC

6. Rotate carrier in bench Fixture (special tool #9385, Holding Fixture, Bench Mount) and attach carrier Fixture (special tool #10048, Fixture, Differential Carrier) (1) to transmission jack with fixture clamps (2).
7. Remove carrier with Fixture (special tool #10048, Fixture, Differential Carrier) and transmission jack from bench Fixture (special tool #9385, Holding Fixture, Bench Mount).

GEAR, RING AND PINION

REMOVAL

REMOVAL

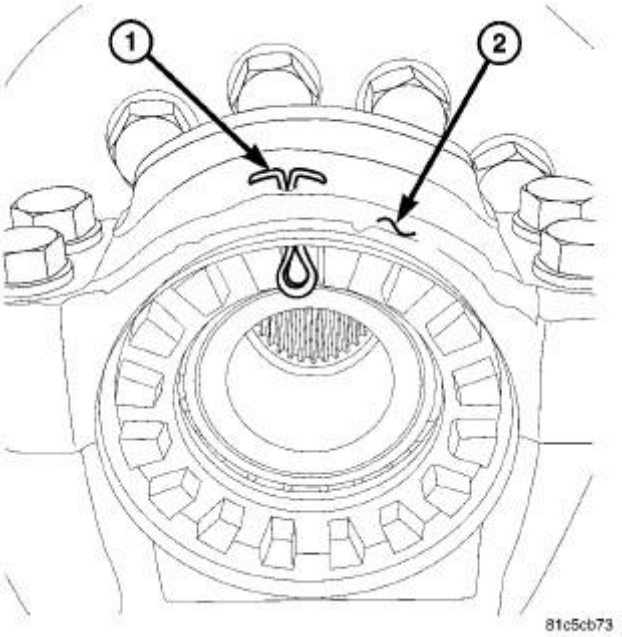

Fig. 107: Cotter Pin
Courtesy of CHRYSLER GROUP, LLC

1. Remove differential bearing preload adjuster cotter pins (1) bearing caps (2).

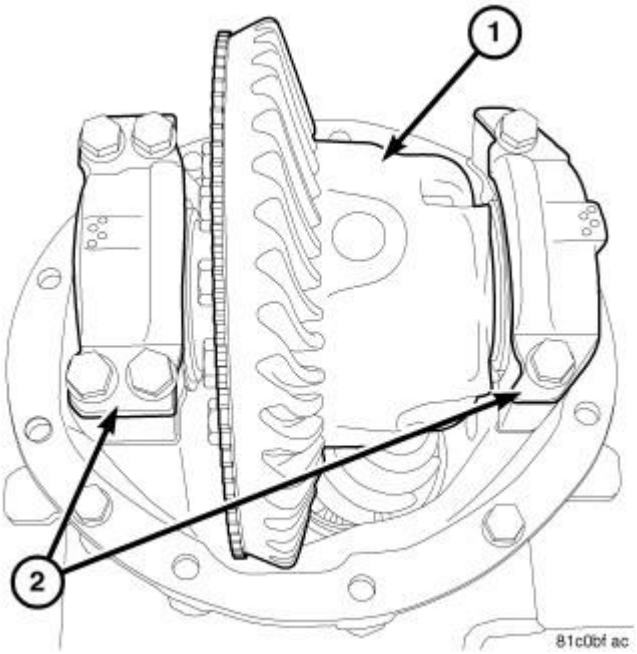

Fig. 108: Bearing Cap Bolts
Courtesy of CHRYSLER GROUP, LLC

2. Remove differential bearing cap (1) bolts from the differential (2).

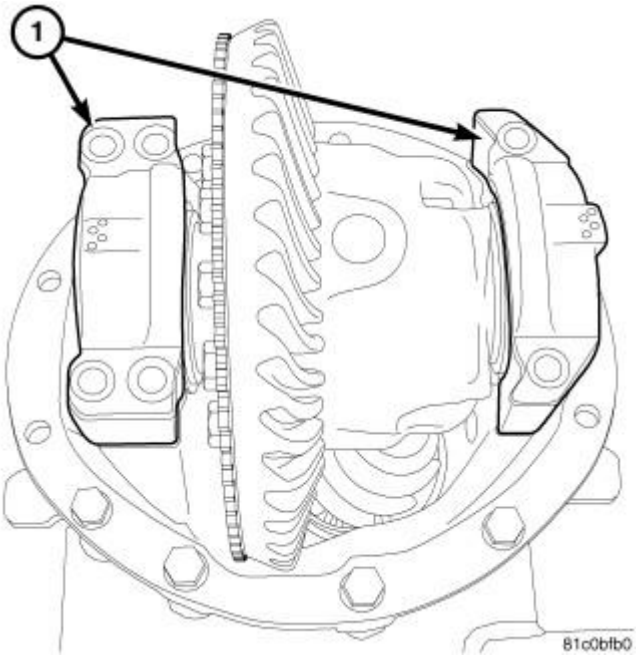

Fig. 109: Bearing Caps
Courtesy of CHRYSLER GROUP, LLC

3. Remove differential bearing caps (1) from carrier.

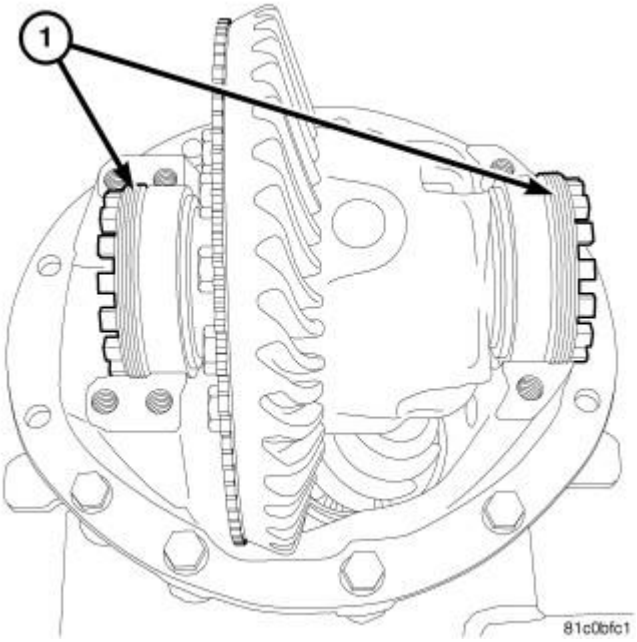

Fig. 110: Differential Bearing Adjusters
Courtesy of CHRYSLER GROUP, LLC

4. Loosen and remove adjusters (1) from carrier.
5. Remove differential with bearing cups from carrier.

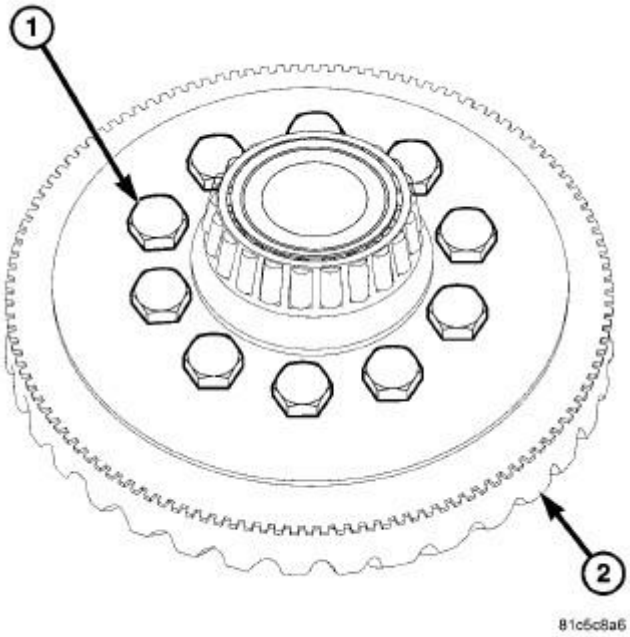

Fig. 111: Ring Gear & Bolts
Courtesy of CHRYSLER GROUP, LLC

6. Remove and discard old ring gear (1) bolts (2).
7. Separate ring gear from the differential case.

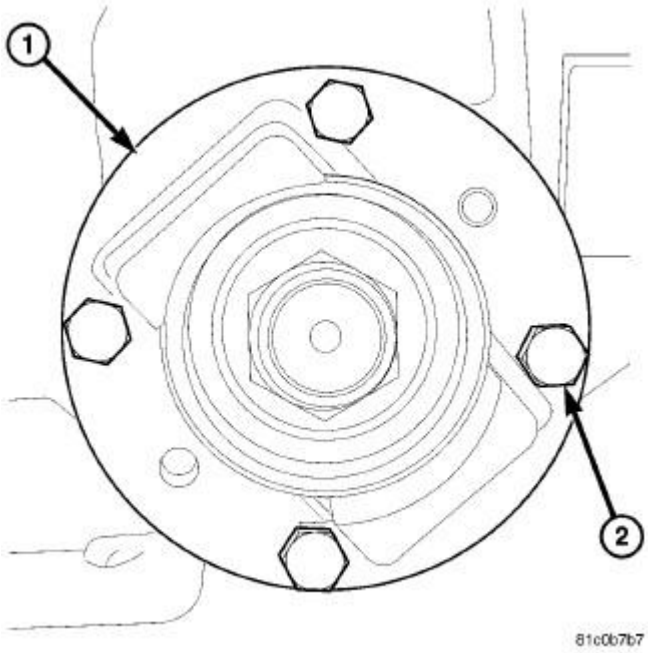

Fig. 112: Pinion Flange Adapter
Courtesy of CHRYSLER GROUP, LLC

8. Install Adapter (special tool #10054, Holder, Pinion Flange) (1) on pinion flange and bolt (2) in place.

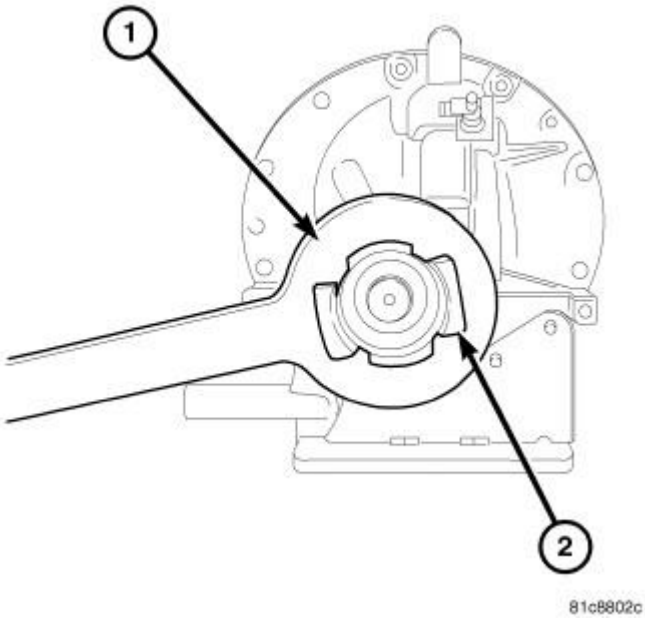

Fig. 113: Holder 6719A
Courtesy of CHRYSLER GROUP, LLC

9. Install Holder (special tool #6719A, Holder, Yoke) (1) on Adapter (special tool #10054, Holder, Pinion Flange) (2).

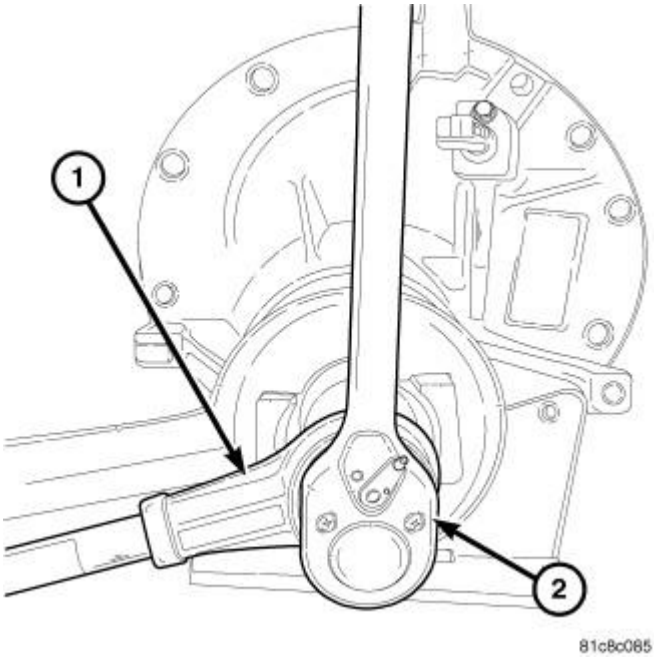

Fig. 114: Torque Multiplier & Ratchet
Courtesy of CHRYSLER GROUP, LLC

10. Remove pinion nut with Torque Multiplier (special tool #10054, Holder, Pinion Flange) (1) and ratchet (2).

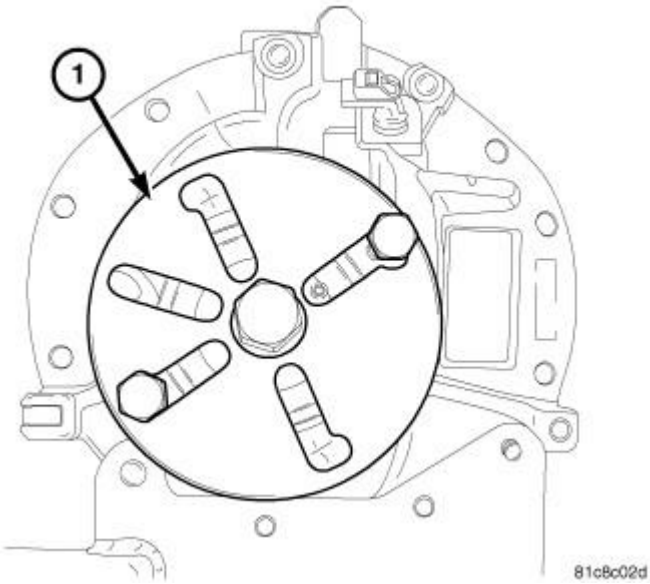

Fig. 115: Flange Puller 8992
Courtesy of CHRYSLER GROUP, LLC

11. Remove pinion flange with a Puller (special tool #8992, Remover, Pinion Flange) (1).

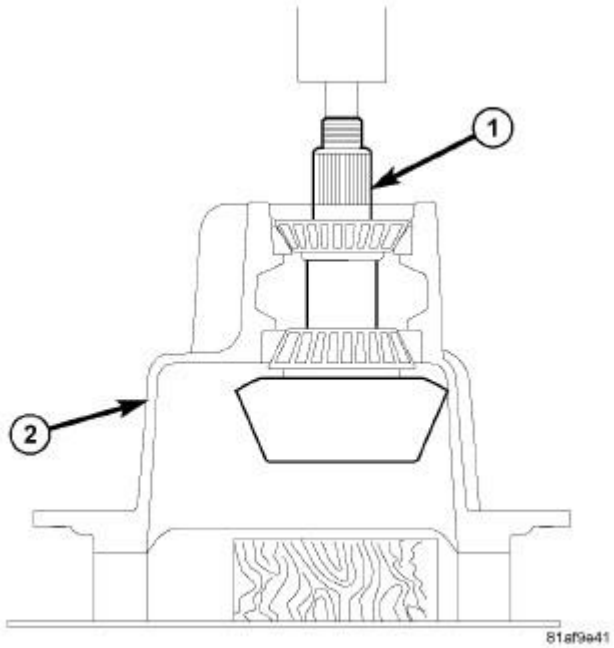

Fig. 116: Removing Pinion Gear

Courtesy of CHRYSLER GROUP, LLC

12. Remove pinion gear (1) from the carrier (2) with a press. Press pinion gear through the front bearing and case.

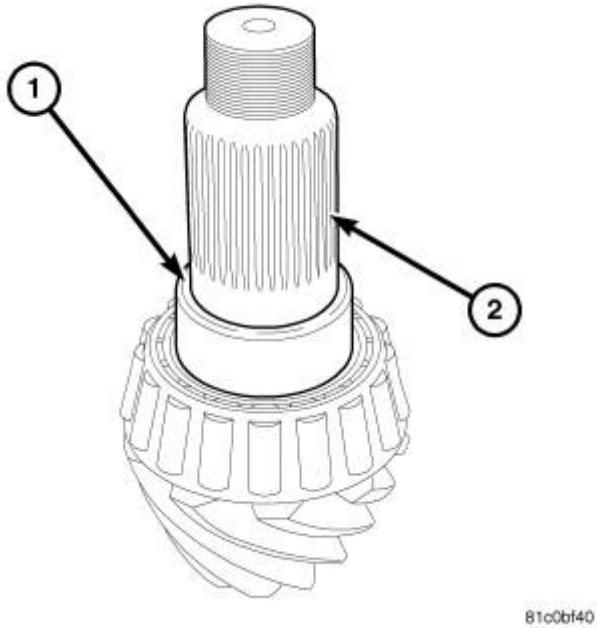

Fig. 117: Pinion Bearing Preload Spacer & Shaft
Courtesy of CHRYSLER GROUP, LLC

13. Remove pinion bearing preload spacer (1) from the pinion shaft (2).

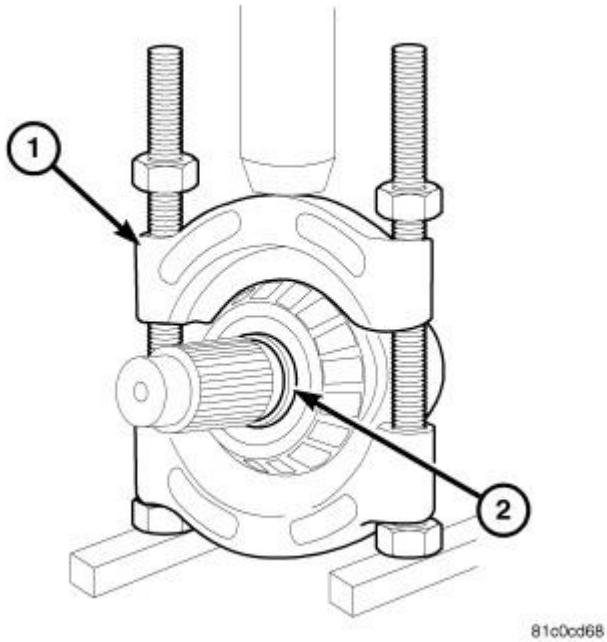

Fig. 118: Separating Bearing From Pinion Gear Head

Courtesy of CHRYSLER GROUP, LLC

14. Position Splitter (special tool #1130, Splitter, Bearing/Gear) (1) vertically with pinion gear (2) in a press and apply pressure until bearing separates from pinion gear head.

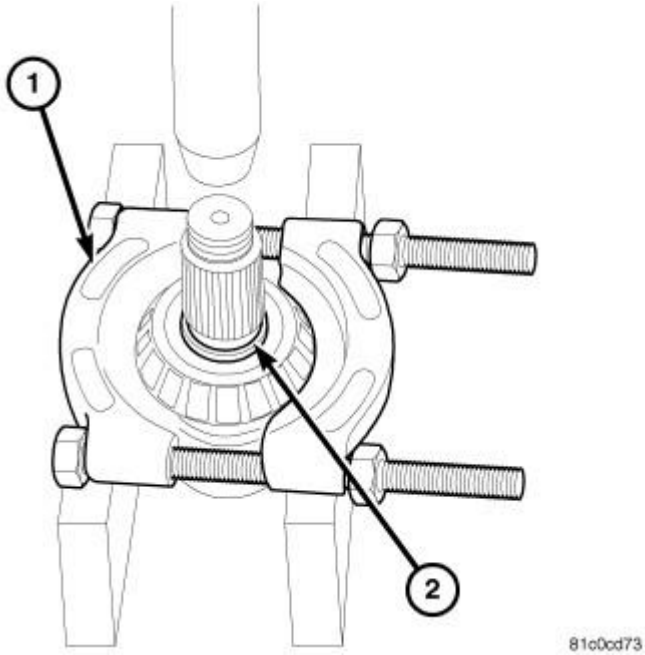

Fig. 119: Pressing Pinion Gear Out Of Rear Bearing
Courtesy of CHRYSLER GROUP, LLC

15. Position Splitter (special tool #1130, Splitter, Bearing/Gear) (1) horizontally with pinion gear (2) in a press and press pinion gear out of the rear bearing.

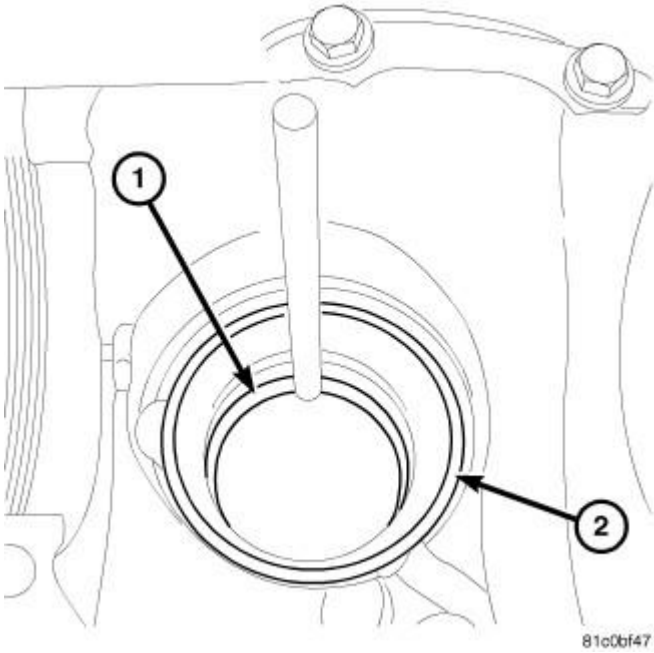

Fig. 120: Removing Front Pinion Bearing Cup
Courtesy of CHRYSLER GROUP, LLC

16. Remove front pinion bearing cup (1) from carrier (2) with a hammer and brass drift.

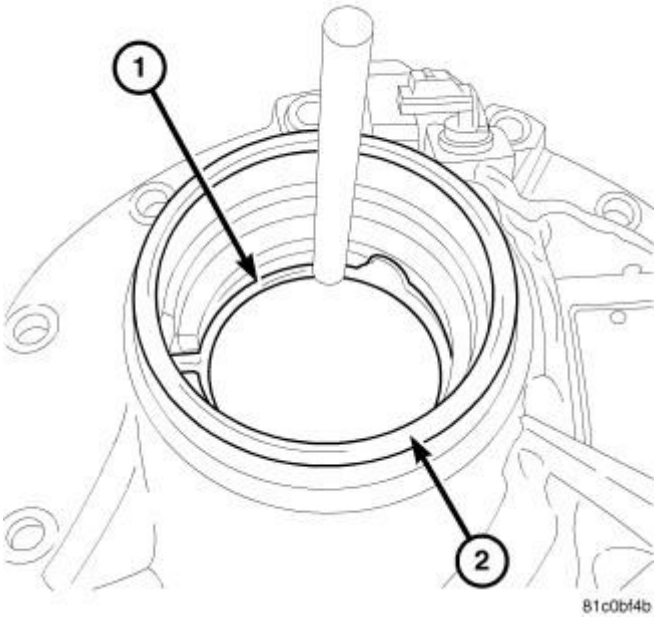

Fig. 121: Removing Rear Pinion Bearing Cup
Courtesy of CHRYSLER GROUP, LLC

17. Remove rear pinion bearing cup (1) from carrier (2) with a hammer and brass drift.

INSTALLATION

INSTALLATION

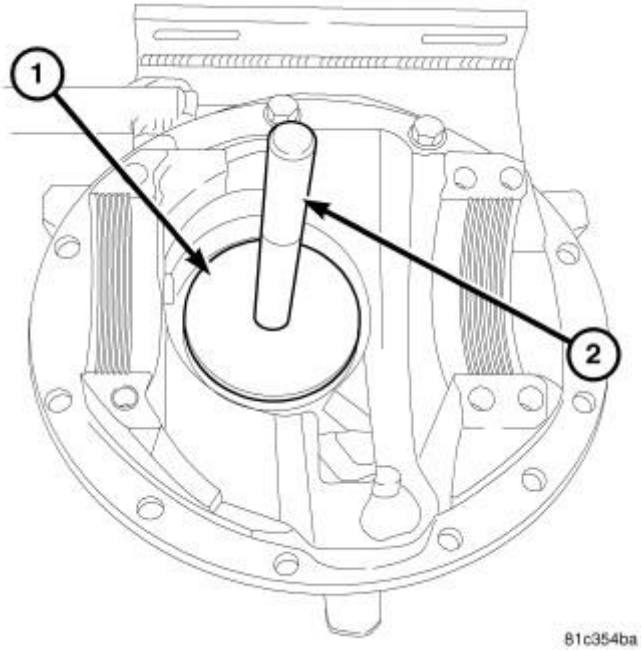

Fig. 122: Installing Rear Pinion Bearing Cup
Courtesy of CHRYSLER GROUP, LLC

1. Install rear pinion bearing cup in the carrier, with Installer (special tool #10063, Installer, Bearing Cup) (1) and Handle (special tool #C-4171, Driver Handle, Universal) (2).

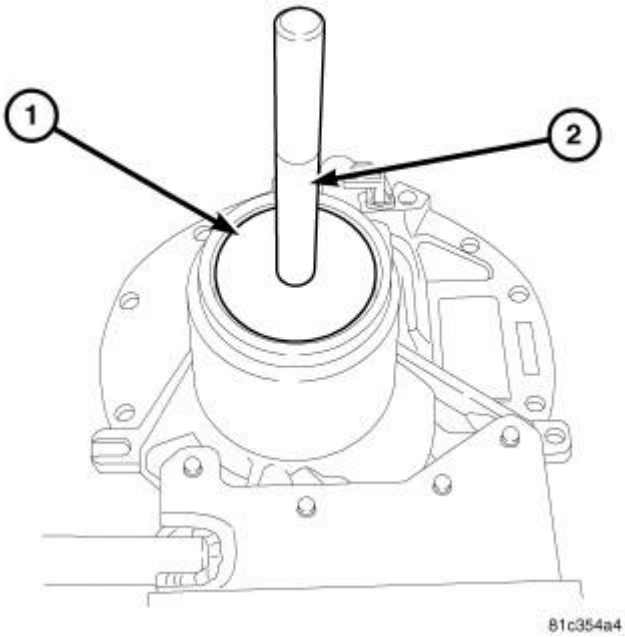

Fig. 123: Installing Front Pinion Bearing Cup
Courtesy of CHRYSLER GROUP, LLC

2. Install front pinion bearing cup in the carrier, with Installer (special tool #10062, Installer, Bearing Cup) (1) and Handle (special tool #C-4171, Driver Handle, Universal) (2).

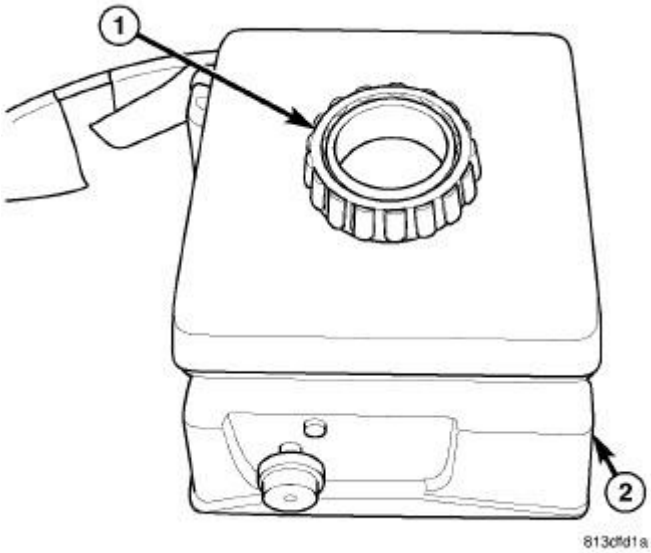

Fig. 124: Heating Bearing
Courtesy of CHRYSLER GROUP, LLC

WARNING: Use tongs or welding gloves when handling heated components. Failure to follow these instructions will result in personal injury.

CAUTION: Pinion bearings (1) are installed using a Bearing Heater (2). Use only a bearing heater/hot plate and follow manufacture's instructions. Heat components to 100 - 149 Celsius (212° Min. - 300° Max Fahrenheit). Never use an open flame to heat components. Never leave components on heater for an extended amount of time. If component is discolored after heating, the component has been overheated and must not be used. Failure to follow these instructions will result in component damage.

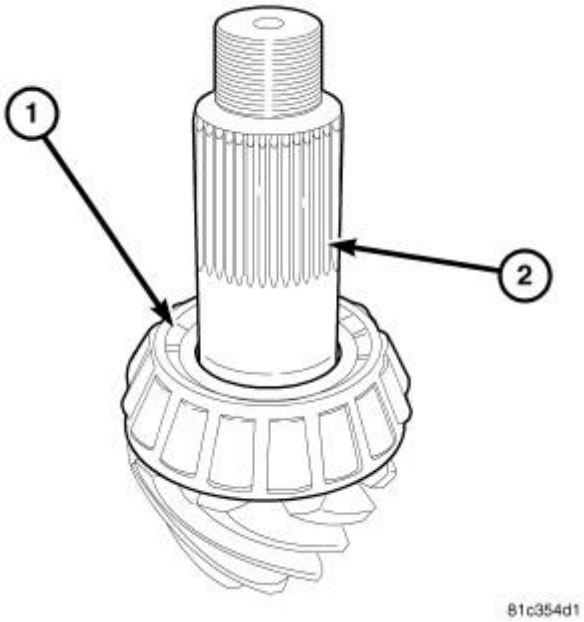

Fig. 125: Rear Pinion Bearing & Pinion
Courtesy of CHRYSLER GROUP, LLC

3. Heat rear pinion bearing to 100 - 149 Celsius (212° Min. - 300° Max Fahrenheit) and install bearing (1) on pinion (2) with tongs or welding gloves.

NOTE: **Rear pinion bearing (1) can also be installed with Installer (special tool #D-389, Installer, Bearing) and a press.**

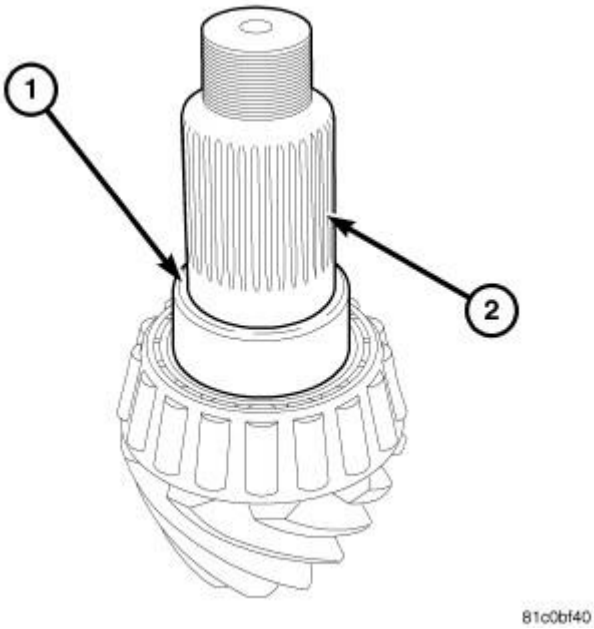

Fig. 126: Pinion Bearing Preload Spacer & Shaft

Courtesy of CHRYSLER GROUP, LLC

4. Install select pinion bearing preload spacer (1) on pinion shaft (2).

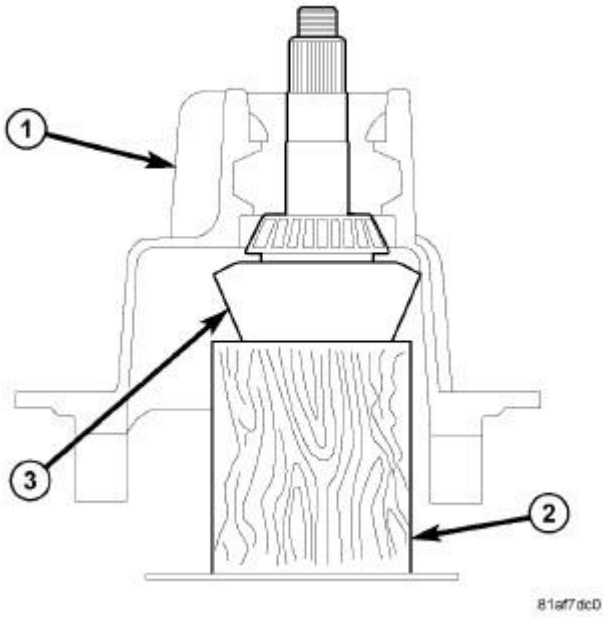

Fig. 127: Installing Pinion Gear In Carrier With Preload Spacer
Courtesy of CHRYSLER GROUP, LLC

5. Install pinion gear in carrier with preload spacer. Support pinion (3) in the carrier (1) or hold in place.

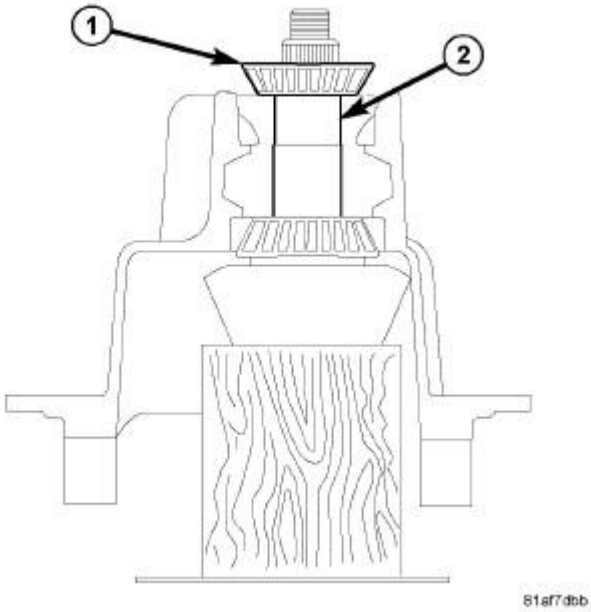

Fig. 128: Installing Front Bearing On Pinion Shaft
Courtesy of CHRYSLER GROUP, LLC

6. Heat front pinion bearing to 100 - 149 Celsius (212° Min. - 300° Max Fahrenheit).
7. Install front bearing (1) on the pinion shaft (2) with tongs or welding gloves.

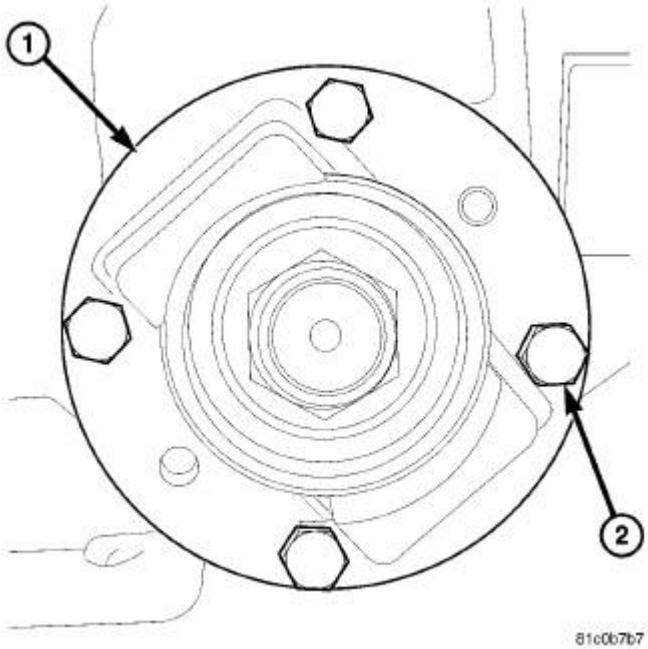

Fig. 129: Pinion Flange Adapter
Courtesy of CHRYSLER GROUP, LLC

8. Install pinion flange and original pinion nut.
9. Install Adapter (special tool #10054, Holder, Pinion Flange) (1) on pinion flange and bolt (2) in place.

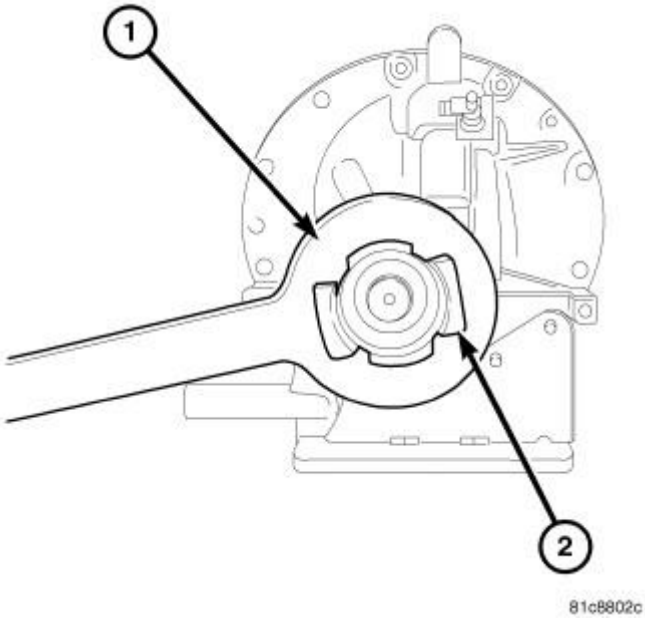

Fig. 130: Holder 6719A
Courtesy of CHRYSLER GROUP, LLC

10. Hold pinion flange with Holder (special tool #6719A, Holder, Yoke) (1) and Adapter (special tool #10054, Holder, Pinion Flange) (2).

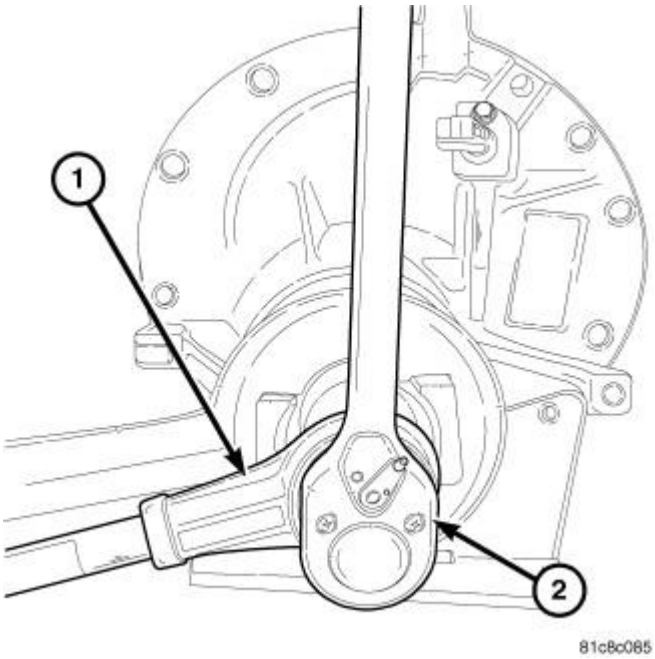

Fig. 131: Torque Multiplier & Ratchet
Courtesy of CHRYSLER GROUP, LLC

11. Tighten **original** pinion nut to 937 N.m (689 ft. lbs.) with torque multiplier (1) and a torque wrench (2).

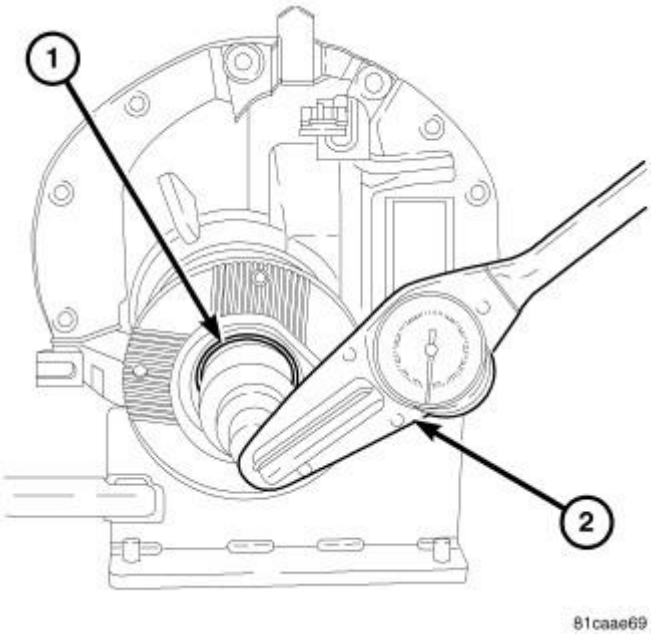

Fig. 132: Measuring Pinion Torque To Rotate
Courtesy of CHRYSLER GROUP, LLC

12. Measure pinion (1) torque to rotate (PTTR) with an inch pound torque wrench (2). Pinion torque to rotate is 2.3 - 4.5 N.m (20 - 40 in. lbs.).

NOTE: **To increase PTTR install a thinner spacer. To decreases PTTR install thicker spacer.**

Spacers are available in sizes from 27.23 - 28.1 mm (1.072 - 1.1063 in.). A 0.0254 mm (0.001 in.) change in spacer thickness will change pinion torque to rotate approximately 3.3894 mm (30 in. lbs.).

NOTE: **Pinion torque to rotate is measured without the pinion seal.**

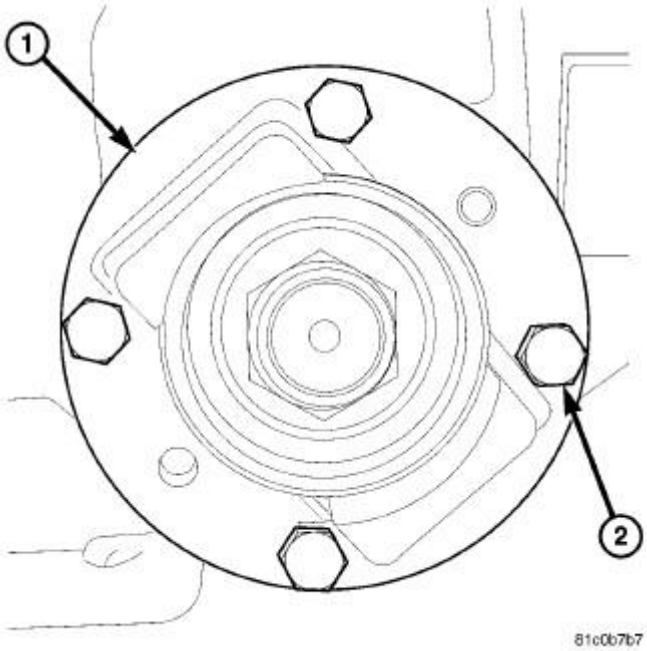

Fig. 133: Pinion Flange Adapter
Courtesy of CHRYSLER GROUP, LLC

13. Install Adapter (special tool #10054, Holder, Pinion Flange) (1) on pinion flange and bolt (2) in place.

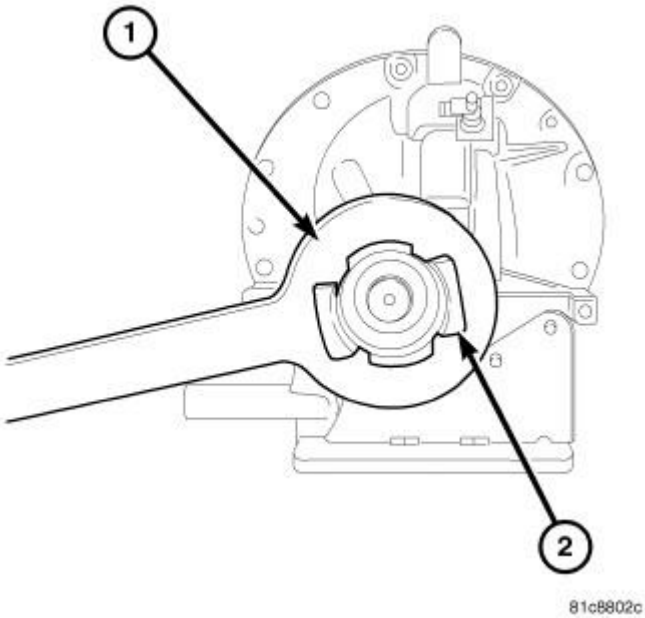

Fig. 134: Holder 6719A
Courtesy of CHRYSLER GROUP, LLC

14. Hold pinion flange with Holder (special tool #6719A, Holder, Yoke) (1) and Adapter (special tool #10054, Holder, Pinion Flange) (2). Remove pinion nut with torque multiplier and a ratchet.

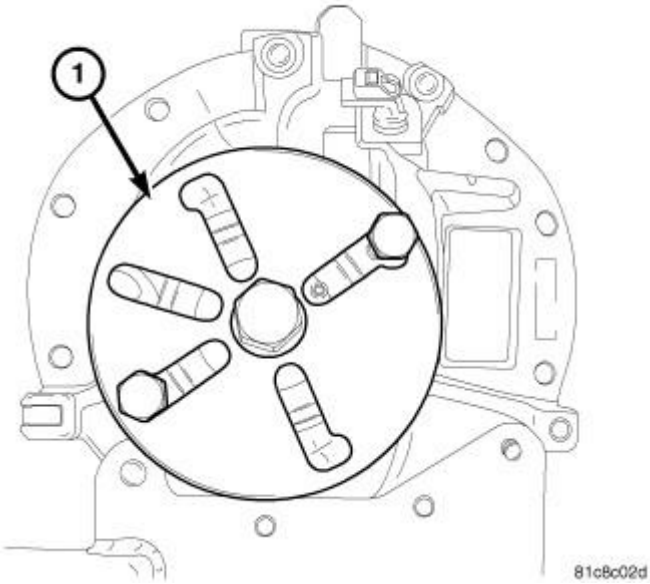

Fig. 135: Flange Puller 8992
Courtesy of CHRYSLER GROUP, LLC

15. Bolt Puller (special tool #8992, Remover, Pinion Flange) (1) to Adapter (special tool #10054, Holder, Pinion Flange) and remove pinion flange.

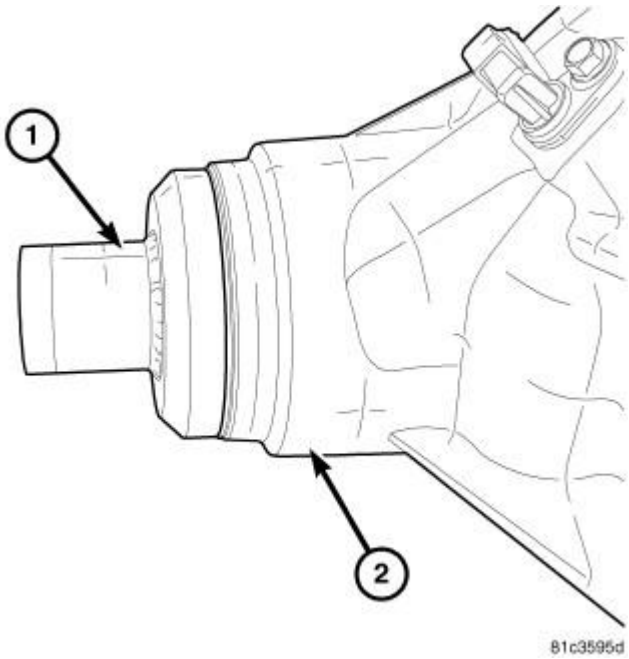

Fig. 136: Installing Pinion Seal
Courtesy of CHRYSLER GROUP, LLC

16. Install **new** pinion seal with Installer (special tool #10055, Installer, Seal) (1) into housing (2).

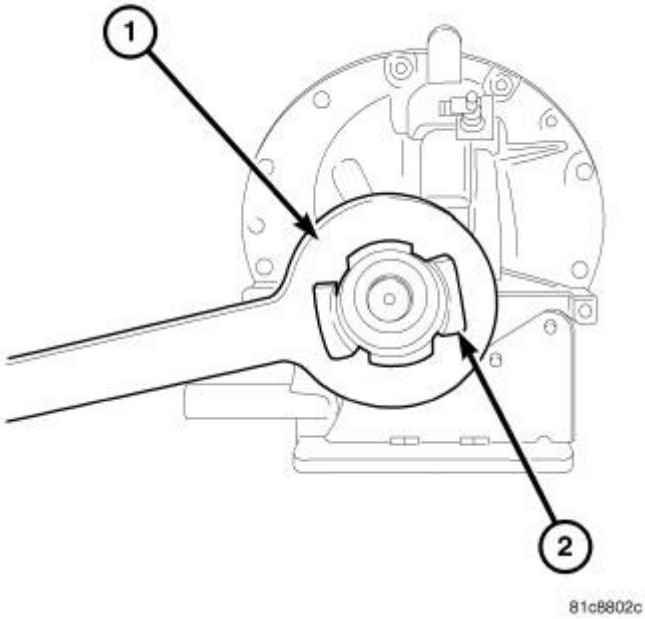

Fig. 137: Holder 6719A
Courtesy of CHRYSLER GROUP, LLC

17. Install pinion flange and **new** pinion nut.
18. Hold pinion flange with Holder (special tool #6719A, Holder, Yoke) (1) and Adapter (special tool #10054, Holder, Pinion Flange) (2).

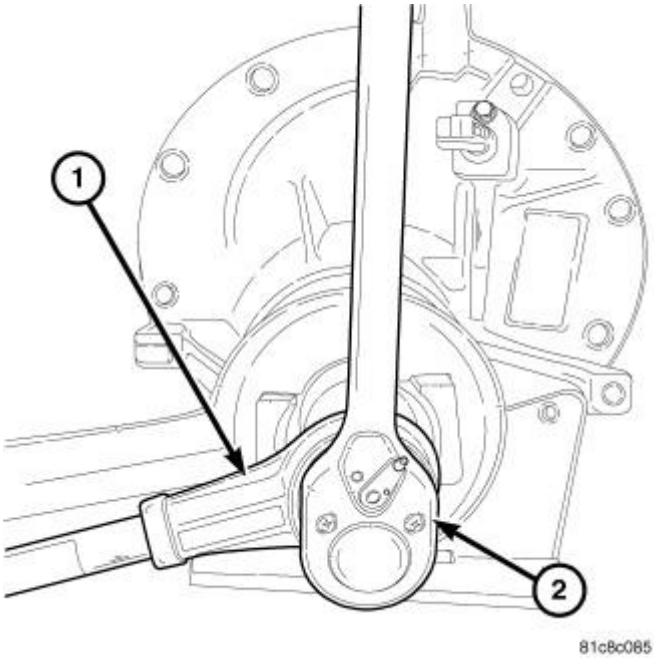

Fig. 138: Torque Multiplier & Ratchet
Courtesy of CHRYSLER GROUP, LLC

19. Tighten pinion nut to 937 N.m (689 ft. lbs.) a with torque multiplier (1) and torque wrench (2).

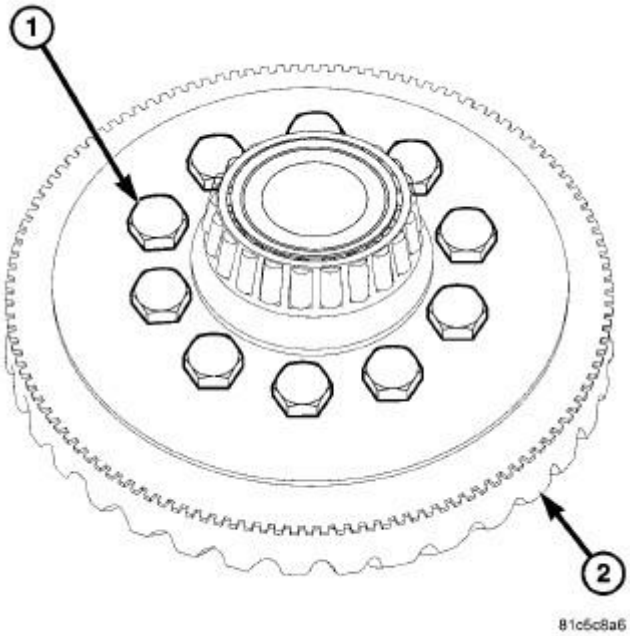

Fig. 139: Ring Gear & Bolts
Courtesy of CHRYSLER GROUP, LLC

20. Verify dowel pins are in case.
21. Lower ring gear onto the case dowel pins.
22. Install **new** ring gear (2) bolts (1).
23. Set case in a press with ring gear facing up. Press ring gear onto the case with an appropriate installer.

NOTE: Verify ring gear is square and flush to the case before pressing ring gear.

24. Tighten **new** ring gear bolts (1) to 286 N.m (210 ft. lbs.).

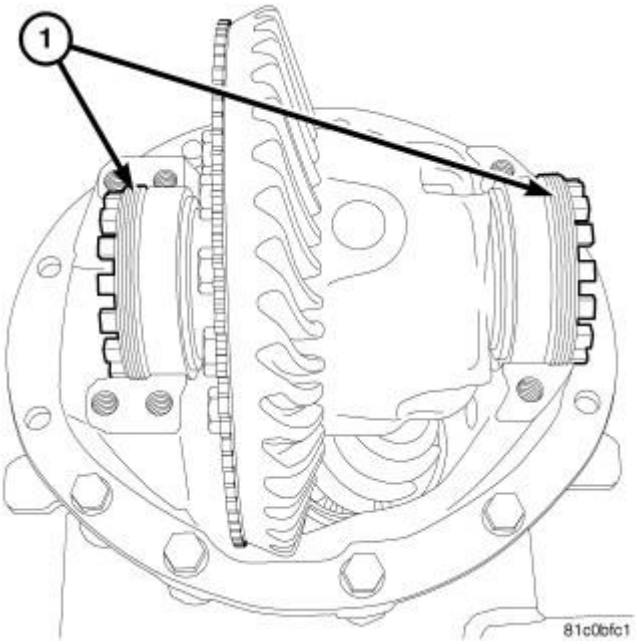

Fig. 140: Differential Bearing Adjusters
Courtesy of CHRYSLER GROUP, LLC

25. Install differential into carrier.
26. Install differential bearing cups and adjusters (1) into carrier.

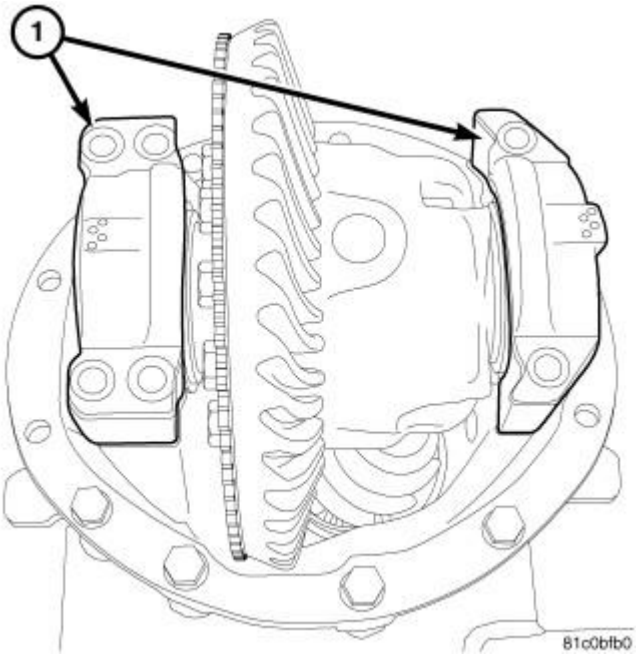

Fig. 141: Bearing Caps
Courtesy of CHRYSLER GROUP, LLC

27. Install differential bearing caps (1).

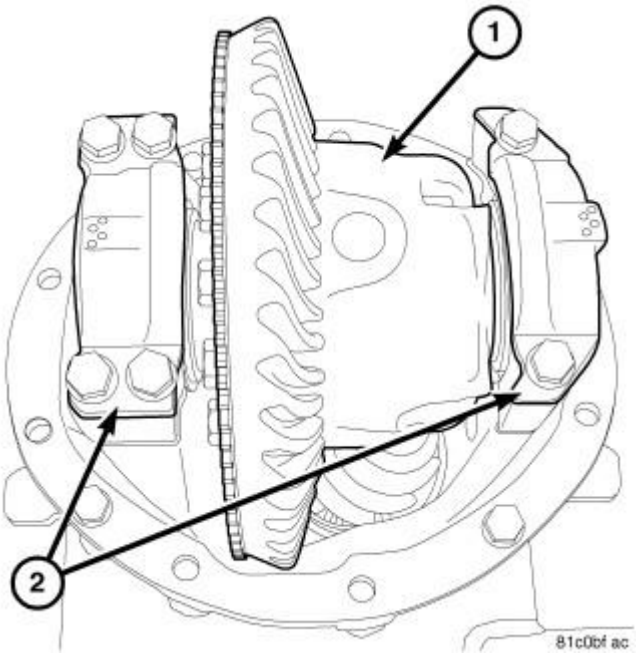

Fig. 142: Bearing Cap Bolts
Courtesy of CHRYSLER GROUP, LLC

NOTE: **Before tightening bearing caps, perform differential bearing preload and backlash adjustments. Refer to ADJUSTMENTS.**

28. Install **new** bearing cap (2) bolts and tighten to 190 N.m (140 ft. lbs.).

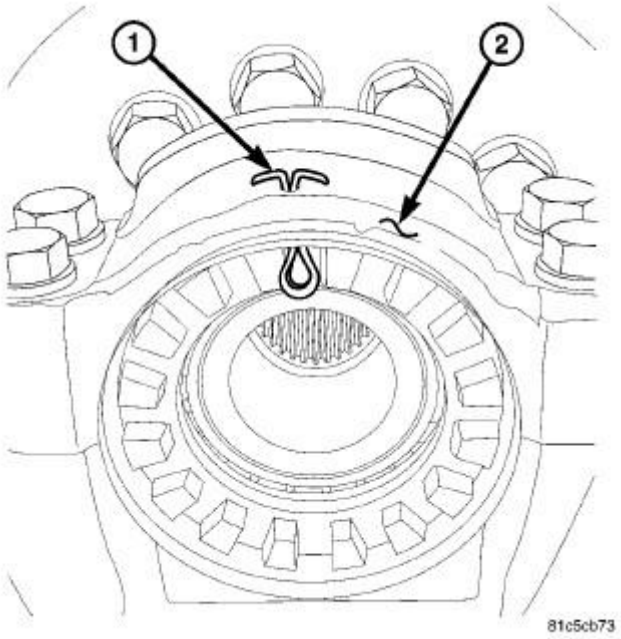

Fig. 143: Cotter Pin

Courtesy of CHRYSLER GROUP, LLC

29. Install differential adjuster cotter pins (1) in bearing caps (2).

SEAL, DRIVE PINION

REMOVAL

REMOVAL

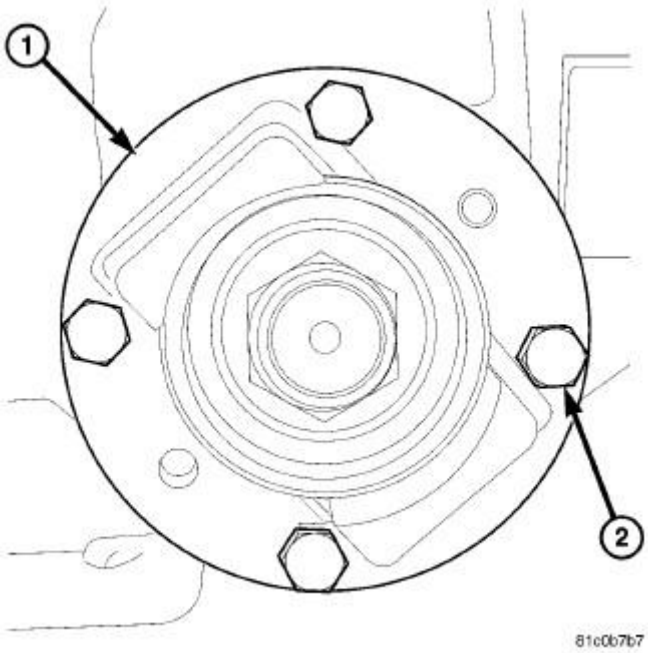

Fig. 144: Pinion Flange Adapter
Courtesy of CHRYSLER GROUP, LLC

1. Remove propeller shaft.
2. Install Adapter (special tool #10054, Holder, Pinion Flange) (1) on pinion flange and bolt (2) in place.

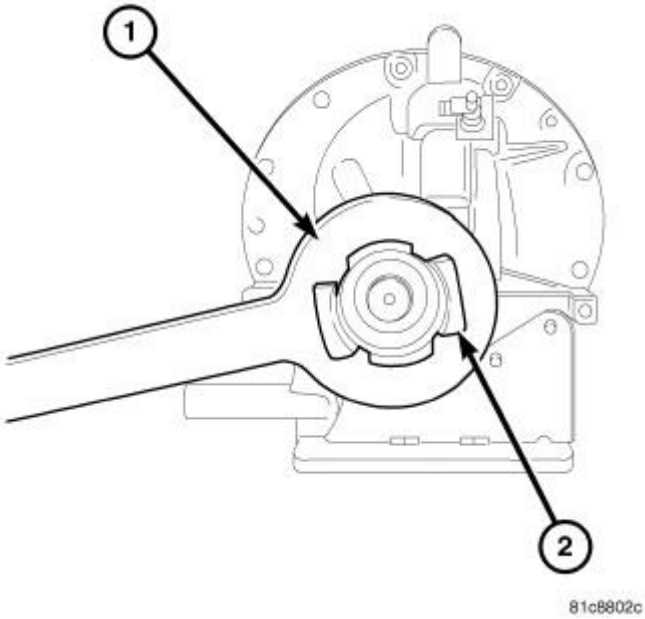

Fig. 145: Holder 6719A
Courtesy of CHRYSLER GROUP, LLC

3. Hold pinion flange with Holder (special tool #6719A, Holder, Yoke) (1) and Adapter (special tool #10054, Holder, Pinion Flange) (2).

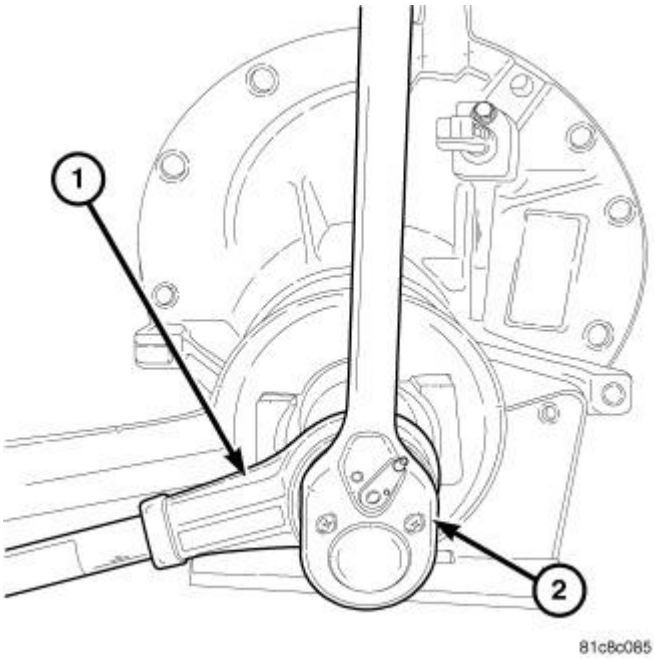

Fig. 146: Torque Multiplier & Ratchet
Courtesy of CHRYSLER GROUP, LLC

4. Remove pinion nut with a torque multiplier (1) and ratchet (2).

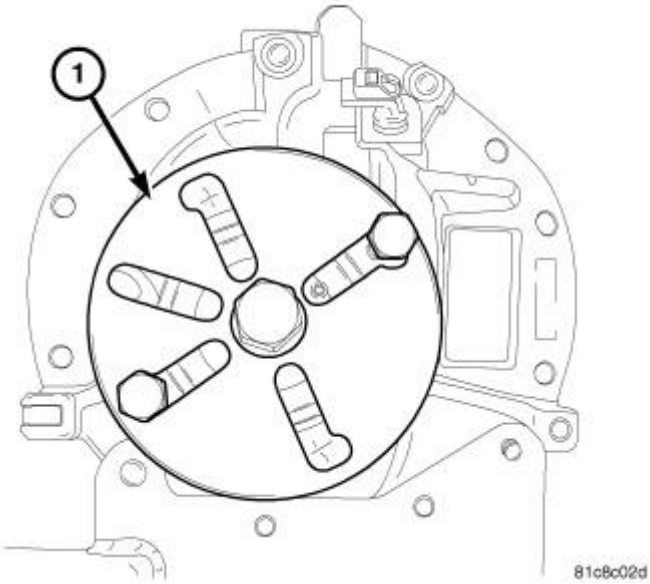

Fig. 147: Flange Puller 8992
Courtesy of CHRYSLER GROUP, LLC

5. Bolt Puller (special tool #8992, Remover, Pinion Flange) (1) to Adapter (special tool #10054, Holder, Pinion Flange) and remove pinion flange.
6. Remove pinion seal with seal puller.

INSTALLATION

INSTALLATION

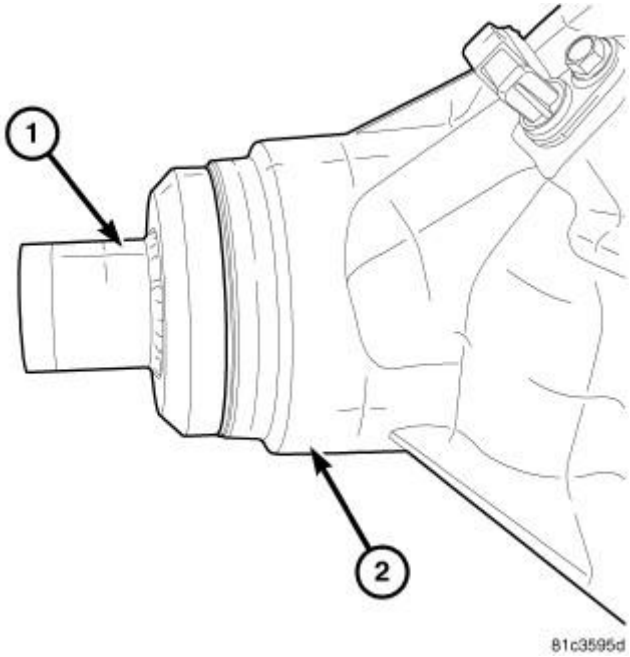

Fig. 148: Installing Pinion Seal
Courtesy of CHRYSLER GROUP, LLC

1. Install pinion seal in housing (2) with Installer (special tool #10055, Installer, Seal) (1).

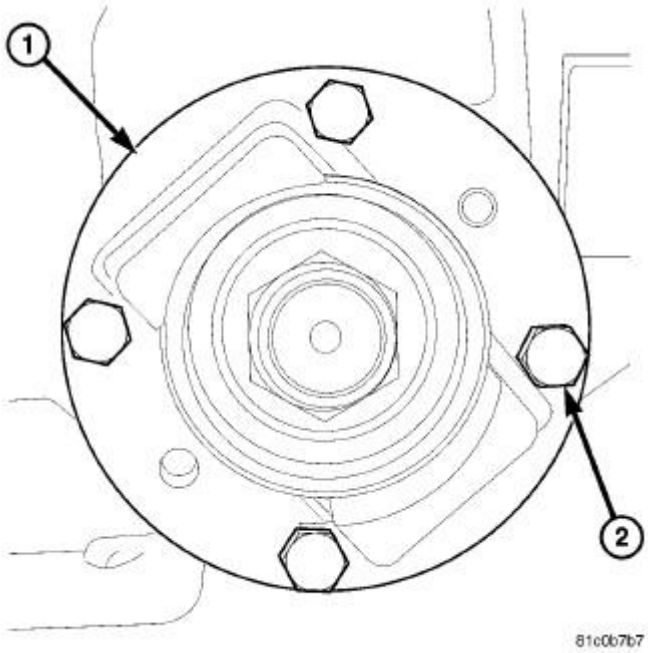

Fig. 149: Pinion Flange Adapter
Courtesy of CHRYSLER GROUP, LLC

2. Install pinion flange on pinion.
3. Install **new** pinion nut.
4. Install Adapter (special tool #10054, Holder, Pinion Flange) (1) on pinion flange and bolt (2) in place.

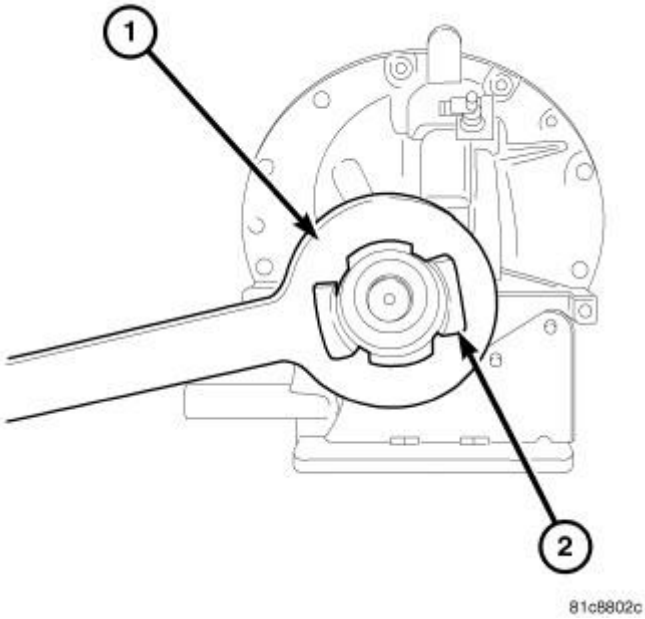

Fig. 150: Holder 6719A
Courtesy of CHRYSLER GROUP, LLC

5. Hold pinion flange with Holder (special tool #6719A, Holder, Yoke) (1) and Adapter (special tool #10054, Holder, Pinion Flange) (2).

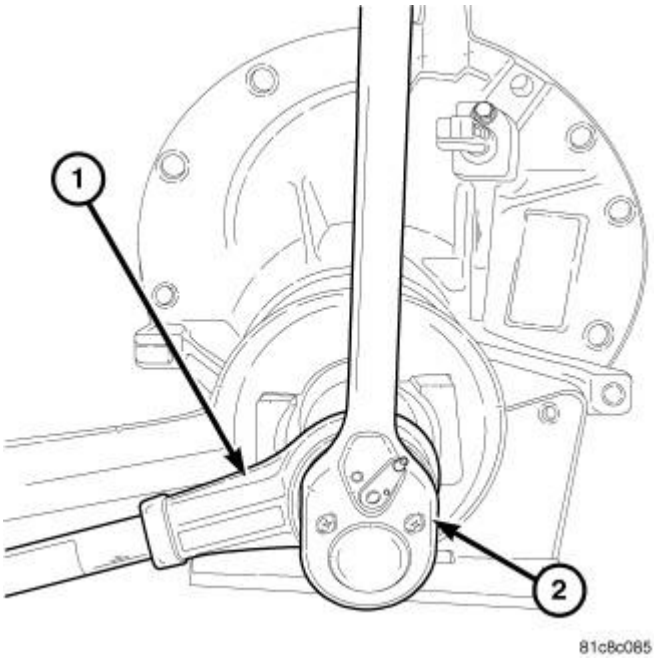

Fig. 151: Torque Multiplier & Ratchet
Courtesy of CHRYSLER GROUP, LLC

6. Tighten pinion nut to 937 N.m (689 ft. lbs.) with a torque multiplier (1) and torque wrench (2).

SHAFT, AXLE

REMOVAL

REMOVAL

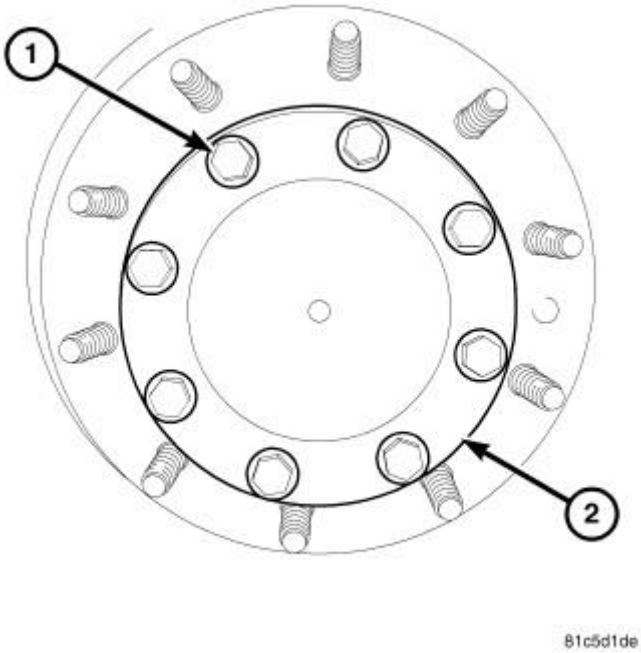

Fig. 152: Axle Bolts & Axle Flange
Courtesy of CHRYSLER GROUP, LLC

1. Remove axle shaft bolts (1) from axle flange (2).

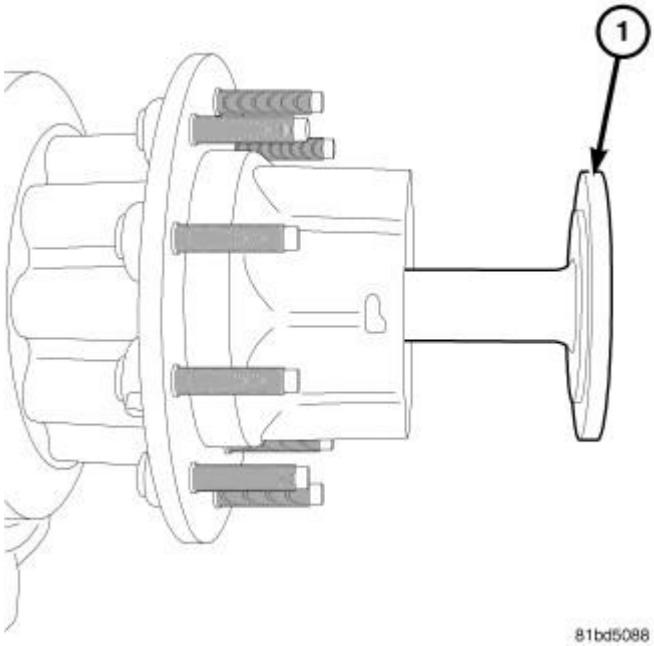

Fig. 153: Axle Shaft
Courtesy of CHRYSLER GROUP, LLC

2. Slide axle shaft (1) out of the axle.

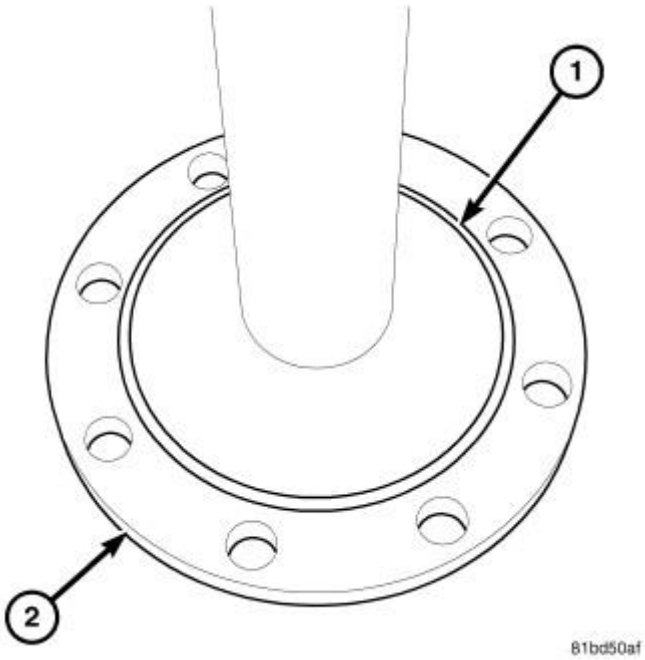

Fig. 154: O-Ring & Axle Flange
Courtesy of CHRYSLER GROUP, LLC

3. Remove axle shaft O-ring (1) from axle flange (2).

INSTALLATION

INSTALLATION

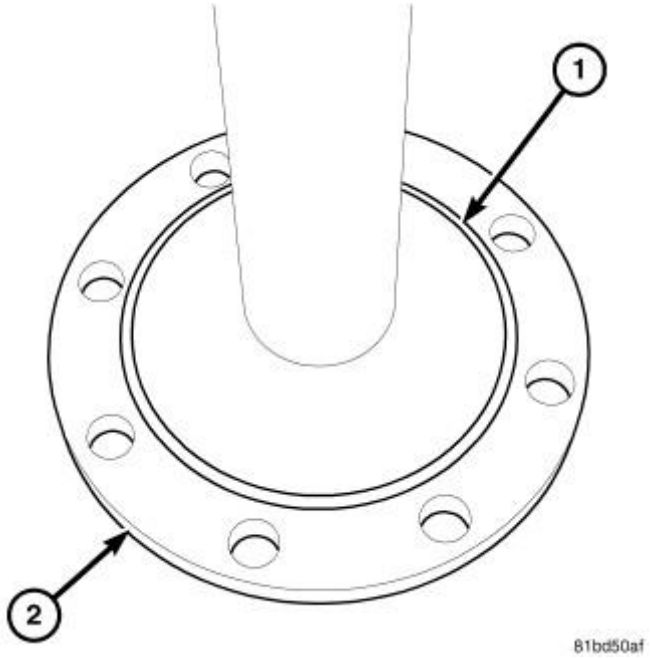

Fig. 155: O-Ring & Axle Flange
Courtesy of CHRYSLER GROUP, LLC

1. Install new O-ring (1) on axle flange (2).

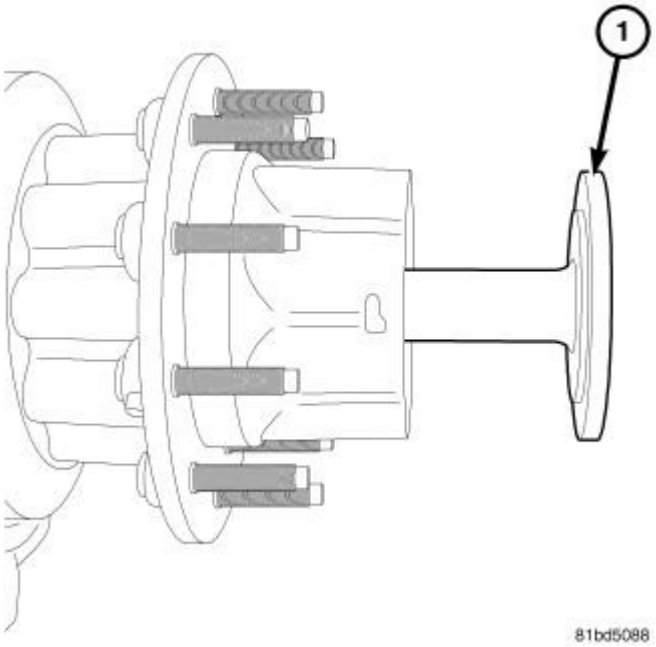

Fig. 156: Axle Shaft
Courtesy of CHRYSLER GROUP, LLC

2. Slide axle shaft (1) into the axle.

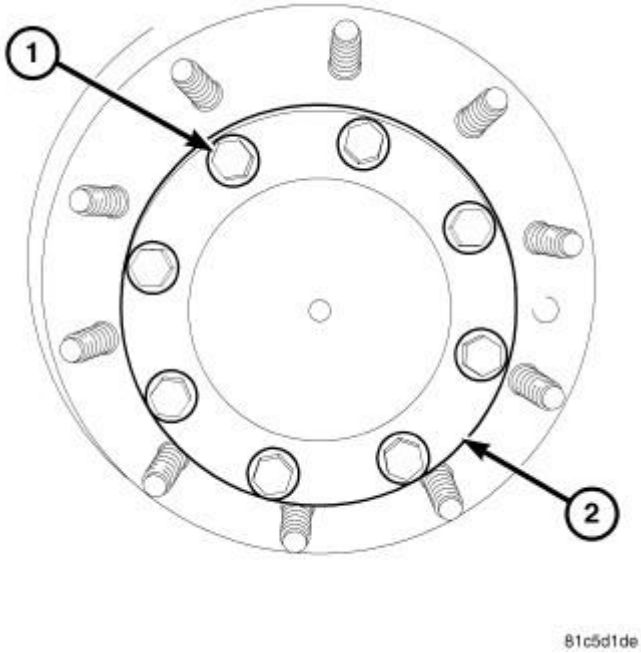

Fig. 157: Axle Bolts & Axle Flange
Courtesy of CHRYSLER GROUP, LLC

3. Install bolts (1) in axle flange (2) and tighten to 133 N.m (98 ft. lbs.).

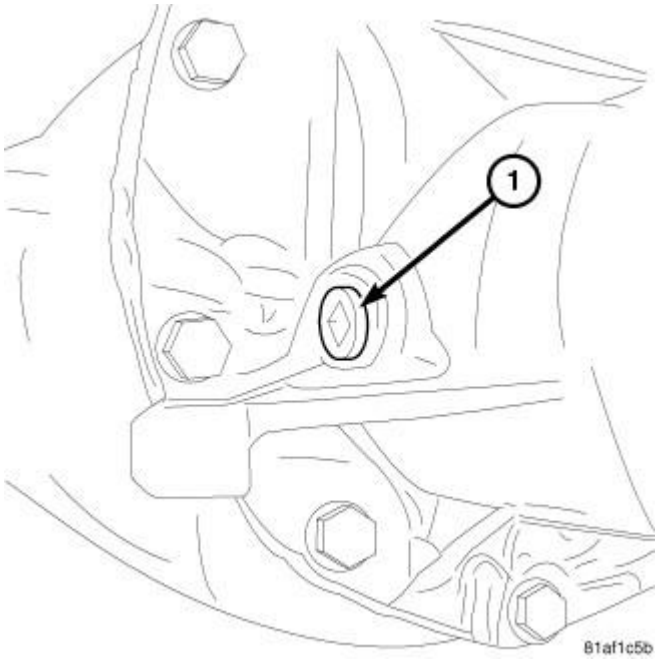

Fig. 158: Fill Plug
Courtesy of CHRYSLER GROUP, LLC

4. Remove fill plug (1), from right side of carrier.
5. With axle level, fill carrier with lubricant to the bottom of the fill plug hole.

6. Install fill plug (1) and tighten to 68 N.m (50 ft. lbs.).

DIAGNOSIS AND TESTING

DIAGNOSIS AND TESTING - BATTERY SYSTEM

The battery, starting, and charging systems in the vehicle operate with one another and must be tested as a complete system. In order for the engine to start and the battery to maintain its charge properly, all of the components that are used in these systems must perform within specifications. It is important that the battery, starting, and charging systems be thoroughly tested and inspected any time a battery needs to be charged or replaced. The cause of abnormal battery discharge, overcharging or early battery failure must be diagnosed and corrected before a battery is replaced and before a vehicle is returned to service. The service information for these systems has been separated within this service information to make it easier to locate the specific information you are seeking. However, when attempting to diagnose any of these systems, it is important that you keep their interdependency in mind.

The diagnostic procedures used for the battery, starting, and charging systems include the most basic conventional diagnostic methods, to the more sophisticated On-Board Diagnostics (OBD) built into the Powertrain Control Module (PCM). Use of an induction-type milliampere ammeter, a volt/ohmmeter, a battery charger, a carbon pile rheostat (load tester) and a 12-volt test lamp may be required. All OBD-sensed systems are monitored by the PCM. Each monitored circuit is assigned a Diagnostic Trouble Code (DTC). The PCM will store a DTC in electronic memory for any inoperative system it detects. For the proper charging system on-board diagnostic test procedures, refer to **DIAGNOSIS AND TESTING** .

MICRO 420 BATTERY TESTER

The Micro 420 automotive battery system tester is designed to help diagnose the cause of a defective battery. For directions on using the Micro 420 battery tester. Refer to **BATTERY, STANDARD PROCEDURE**.

BATTERY SYSTEM DIAGNOSIS		
CONDITION	**POSSIBLE CAUSES**	**CORRECTION**
THE BATTERY SEEMS WEAK OR DEAD WHEN ATTEMPTING TO START THE ENGINE.	1. The electrical system ignition-off draw is excessive.	1. For the proper test procedures, refer to **IGNITION-OFF DRAW TEST**. Repair the excessive ignition-off draw, as required.
	2. The charging system is inoperative.	2. Determine if the charging system is performing to specifications. Repair the inoperative charging system, as required.
	3. The battery is discharged.	3. Determine the battery state-of-charge using the Micro 420 battery tester. Refer to **BATTERY, STANDARD PROCEDURE**. Charge the inoperative battery as required.
	4. The battery terminal connections are loose or corroded.	4. Refer to **CLEANING**. Clean and tighten the battery terminal connections, as required.

	5. The battery has an incorrect size or rating for this vehicle.	5. For the proper size and rating, refer to **SPECIFICATIONS**. Replace an incorrect battery, as required.
	6. The battery is inoperative.	6. Determine the battery cranking capacity using the Micro 420 battery tester. Refer to **BATTERY, STANDARD PROCEDURE**. Replace the inoperative battery, as required.
	7. The starting system is inoperative.	7. Determine if the starting system is performing to specifications. Repair the inoperative starting system, as required.
	8. The battery is physically damaged.	8. Inspect the battery for loose terminal posts or a cracked and leaking case. Replace the damaged battery, as required.
THE BATTERY STATE OF CHARGE CANNOT BE MAINTAINED.	1. The battery has an incorrect size or rating for this vehicle.	1. For the proper size and rating, refer to **SPECIFICATIONS**. Replace an incorrect battery, as required.
	2. The battery terminal connections are loose or corroded.	2. Refer to **CLEANING**. Clean and tighten the battery terminal connections, as required.
	3. The electrical system ignition-off draw is excessive.	3. For the proper test procedures, refer to **IGNITION-OFF DRAW TEST**. Repair the inoperative electrical system, as required.
	4. The battery is inoperative.	4. Test the battery using the Micro 420 battery tester. Refer to **BATTERY, STANDARD PROCEDURE**. Replace the inoperative battery, as required.
	5. The starting system is inoperative.	5. Determine if the starting system is performing to specifications. Repair the inoperative starting system, as required.
	6. The charging system is inoperative.	6. Determine if the charging system is performing to specifications. Repair the inoperative charging system, as required.
	7. Electrical loads exceed the output of the charging system.	7. Inspect the vehicle for aftermarket electrical equipment which might cause excessive electrical loads.
	8. Slow driving or prolonged idling with high-amperage draw systems in use.	8. Advise the vehicle operator, as required.
THE BATTERY WILL NOT ACCEPT A CHARGE.	1. The battery is inoperative.	1. Test the battery using the Micro 420 battery tester. Refer to **BATTERY, STANDARD PROCEDURE**. Replace the inoperative battery, as required.

SPECIFICATIONS

SPECIFICATIONS

The battery Group Size number, the Cold Cranking Amperage (CCA) rating, and the Reserve Capacity (RC) rating or Ampere-Hours (AH) rating can be found on the original equipment battery label. Be certain that a replacement battery has the correct Group Size number, as well as CCA, and RC or AH ratings that equal or exceed the original equipment specification for the vehicle being serviced. Battery sizes and ratings are discussed in more detail below.

- **Group Size** - The outside dimensions and terminal placement of the battery conform to standards established by the Battery Council International (BCI). Each battery is assigned a BCI Group Size number to help identify a correctly-sized replacement.
- **Cold Cranking Amperage** - The Cold Cranking Amperage (CCA) rating specifies how much current (in amperes) the battery can deliver for thirty seconds at -18° C (0° F). Terminal voltage must not fall below 7.2 volts during or after the thirty second discharge period. The CCA required is generally higher as engine displacement increases, depending also upon the starter current draw requirements.
- **Reserve Capacity** - The Reserve Capacity (RC) rating specifies the time (in minutes) it takes for battery terminal voltage to fall below 10.5 volts, at a discharge rate of 25 amperes. RC is determined with the battery fully-charged at 26.7° C (80° F). This rating estimates how long the battery might last after a charging system failure, under minimum electrical load.
- **Ampere-Hours** - The Ampere-Hours (AH) rating specifies the current (in amperes) that a battery can deliver steadily for twenty hours, with the voltage in the battery not falling below 10.5 volts. This rating is also sometimes identified as the twenty-hour discharge rating.
- **Load Test Amperage** - The Load Test Amperage rating specifies the current (in amperes) that a battery should be tested at with the battery load test equipment. This value should always be 50 percent of the CCA. For example: if the CCA for this battery is 600 amps, the Load Test Amperage is 50 percent of that or 300 amps.

BATTERY CLASSIFICATIONS AND RATINGS				
BCI Group Size Classification	**Cold Cranking Amperage**	**Reserve Capacity**	**Ampere - Hours**	**Load Test Amperage**
H7	730	140 Minutes	80	365

CLEANING

CLEANING

The following information details the recommended cleaning procedures for the battery and related components. In addition to the maintenance schedules, it is recommended that these procedures be performed any time the battery or related components must be removed for vehicle service. Refer to **MAINTENANCE SCHEDULES, DESCRIPTION** .

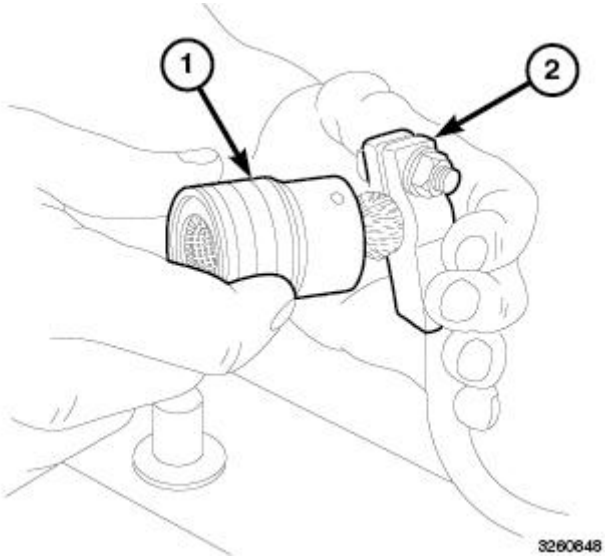

Fig. 1: Cleaning Battery Cable Terminal Clamps
Courtesy of CHRYSLER GROUP, LLC

1. Clean the battery cable terminal clamps (2) of all corrosion. Remove any corrosion using a wire brush or a post and terminal cleaning tool (1), and a sodium bicarbonate (baking soda) and warm water cleaning solution.
2. Clean the battery tray and battery hold-down hardware of all corrosion. Remove any corrosion using a wire brush and a sodium bicarbonate (baking soda) and warm water cleaning solution. Paint any exposed bare metal.

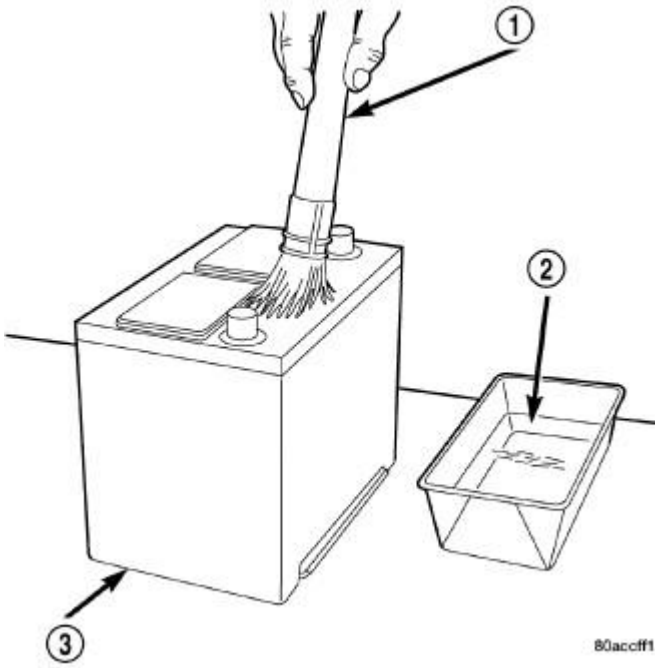

Fig. 2: Cleaning Outside Of Battery Case
Courtesy of CHRYSLER GROUP, LLC

3. If the removed battery is to be reinstalled, clean the outside of the battery case (3) and the top cover with a sodium bicarbonate (baking soda) and warm water cleaning solution (2) using a stiff bristle parts cleaning brush (1) to remove any acid film. Rinse the battery with clean water. Ensure that the cleaning solution does not enter the battery cells through the vent holes. If the battery is being replaced, for the factory-installed battery specifications, refer to **SPECIFICATIONS**. Confirm that the replacement battery is the correct size and has the correct ratings for the vehicle.
4. Clean the battery thermal guard with a sodium bicarbonate (baking soda) and warm water cleaning solution using a stiff bristle parts cleaning brush to remove any acid film.

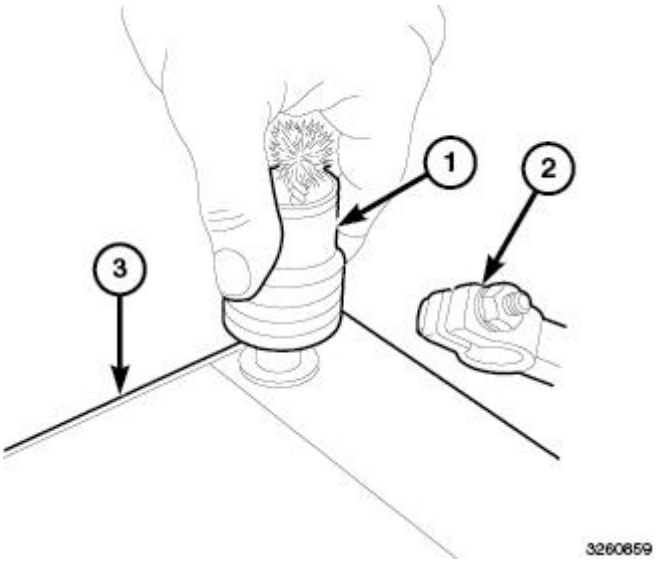

Fig. 3: Cleaning Battery Terminal Posts
Courtesy of CHRYSLER GROUP, LLC

5. Clean any corrosion from the battery terminal posts with a wire brush or a post and terminal cleaner (1), and a sodium bicarbonate (baking soda) and warm water cleaning solution.

INSPECTION

INSPECTION

The following information details the recommended inspection procedures for the battery and related components. In addition to the maintenance schedules. Refer to **MAINTENANCE SCHEDULES, DESCRIPTION** . It is recommended that these procedures be performed any time the battery or related components must be removed for vehicle service.

1. Inspect the battery cable terminal clamps for damage. Replace any battery cable that has a damaged or deformed terminal clamp.
2. Inspect the battery tray and battery hold down hardware for damage. Replace any damaged parts.
3. Slide the thermal guard off of the battery case (if equipped). Inspect the battery case for cracks or other damage that could result in electrolyte leaks. Also, check the battery terminal posts for looseness. Batteries with damaged cases or loose terminal posts must be replaced.

4. Inspect the battery thermal guard (if equipped) for tears, cracks, deformation or other damage. Replace any battery thermal guard that has been damaged.
5. If the battery is discharged, charge as required. For the proper battery charging procedures, refer to **BATTERY, STANDARD PROCEDURE**.

BATTERY

DIAGNOSIS AND TESTING

DIAGNOSIS AND TESTING - BATTERY

MIDTRONICS GR8 BATTERY TESTER

The Midtronics GR8 battery tester is designed to help diagnose the cause of an inoperative battery. For instructions on the use of the Midtronics GR8 battery tester, refer to **BATTERY, STANDARD PROCEDURE**.

WARNING: IF THE BATTERY SHOWS SIGNS OF FREEZING, LEAKING OR LOOSE POSTS, DO NOT TEST, ASSIST-BOOST, OR CHARGE. THE BATTERY MAY ARC INTERNALLY AND EXPLODE. PERSONAL INJURY AND/OR VEHICLE DAMAGE MAY RESULT.

WARNING: EXPLOSIVE HYDROGEN GAS FORMS IN AND AROUND THE BATTERY. DO NOT SMOKE, USE FLAME, OR CREATE SPARKS NEAR THE BATTERY. PERSONAL INJURY AND/OR VEHICLE DAMAGE MAY RESULT.

WARNING: THE BATTERY CONTAINS SULFURIC ACID, WHICH IS POISONOUS AND CAUSTIC. AVOID CONTACT WITH THE SKIN, EYES, OR CLOTHING. IN THE EVENT OF CONTACT, FLUSH WITH WATER AND CALL A PHYSICIAN IMMEDIATELY. KEEP OUT OF THE REACH OF CHILDREN.

A battery that will not accept a charge is inoperative, and must be replaced. Further testing is not required. A fully-charged battery must be load tested to determine its cranking capacity. A battery that is fully-charged, but does not pass the load test, is inoperative and must be replaced.

NOTE: Completely discharged batteries may take several hours to accept a charge. For the proper battery charging procedures, refer to STANDARD PROCEDURE.

STANDARD PROCEDURE

BATTERY CHARGING

Battery charging is the means by which the battery can be restored to its full voltage potential. A battery is fully-charged when:

- Midtronics (special tool #GR8-1220KIT-CHRY, AGM Battery Tester/Charger Station) tester indicates battery is OK.
- All of the battery cells are gassing freely during battery charging.
- Open-circuit voltage of the battery is 12.65 volts or above.

WARNING: Never exceed twenty amperes when charging a cold (-1° C [30° F] or lower) battery. The battery may arc internally and explode. Personal injury and/or vehicle damage may result.

WARNING: If the battery shows signs of freezing, leaking, loose posts, do not test, assist-boost, or charge. The battery may arc internally and explode. Personal injury and/or vehicle damage may result.

WARNING: Explosive hydrogen gas forms in and around the battery. Do not smoke, use flame, or create sparks near the battery. Personal injury and/or vehicle damage may result.

WARNING: The battery contains sulfuric acid, which is poisonous and caustic. Avoid contact with the skin, eyes, or clothing. In the event of contact, flush with water and call a physician immediately. Keep out of the reach of children.

WARNING: If the battery is equipped with removable cell caps, be certain that each of the cell caps is in place and tight before the battery is returned to service. Personal injury and possible vehicle damage may result from loose or missing cell caps.

CAUTION: Always disconnect and isolate the battery negative cable before charging a battery. Do not exceed sixteen volts while charging a battery. Damage to the vehicle electrical system components may result.

CAUTION: Battery electrolyte will bubble inside the battery case during normal battery charging. Electrolyte boiling or being discharged from the battery vents indicates a battery overcharging condition. Immediately reduce the charging rate or turn off the charger to evaluate the battery condition. Damage to the battery may result from overcharging.

CAUTION: The battery should not be hot to the touch. If the battery feels hot to the touch, turn off the charger and let the battery cool before continuing the charging operation. Damage to the battery may result.

After the battery has been charged to 12.65 volts or greater, perform a load test to determine the battery cranking capacity. For the proper battery load test procedures, refer to **BATTERY, STANDARD PROCEDURE**. If the battery will endure a load test, return the battery to service. If the battery will not endure a load test, it is inoperative and must be replaced.

Clean and inspect the battery hold-down, tray, terminals, posts, and top before completing battery service. For the proper battery system cleaning and inspection procedures, refer to **CLEANING** and **INSPECTION**.

CHARGING A COMPLETELY DISCHARGED BATTERY

The following procedure should be used to recharge a completely discharged battery. Unless this procedure is properly followed, a good battery may be needlessly replaced.

1. Measure the voltage at the battery posts with a voltmeter, accurate to 1/10 (0.10) volt. If the reading is below ten volts, the battery charging current will be low. It could take some time before the battery accepts a current greater than a few milliamperes. Such low current may not be detectable on the ammeters built into many battery chargers.
2. Disconnect and isolate the battery negative cable. Connect the Midtronics (special tool #GR8-1220KIT-CHRY, AGM Battery Tester/Charger Station).

NOTE: **Some battery chargers are equipped with polarity-sensing circuitry. This circuitry protects the battery charger and the battery from being damaged if they are improperly connected. If the battery state-of-charge is too low for the polarity-sensing circuitry to detect, the battery charger will not operate. This makes it appear that the battery will not accept charging current. See the instructions provided by the manufacturer of the battery charger for details on how to bypass the polarity-sensing circuitry.**

3. Battery chargers vary in the amount of voltage and current they provide. The amount of time required for a battery to accept measurable charging current at various voltages is shown in the Charge Rate Table. If the charging current is still not measurable at the end of the charging time, the battery is inoperative and must be replaced. If the charging current is measurable during the charging time, the battery may be good and the charging should be completed in the normal manner.

CHARGE RATE TABLE	
Voltage	**Hours**
16.0 volts maximum	up to 4 hours
14.0 to 15.9 volts	up to 8 hours
13.9 volts or less	up to 16 hours

CHARGING TIME REQUIRED

The time required to charge a battery will vary, depending upon the following factors:

- **Battery Capacity** - A completely discharged heavy-duty battery requires twice the charging time of a small capacity battery.
- **Temperature** - A longer time will be needed to charge a battery at -18° C (0° F) than at 27° C (80° F). When a fast battery charger is connected to a cold battery, the current accepted by the battery will be very low at first. As the battery warms, it will accept a higher charging current rate (amperage).
- **Charger Capacity** - A battery charger that supplies only five amperes will require a longer charging time. A battery charger that supplies twenty amperes or more will require a shorter charging time.

- **State-Of-Charge** - A completely discharged battery requires more charging time than a partially discharged battery. Electrolyte is nearly pure water in a completely discharged battery. At first, the charging current (amperage) will be low. As the battery charges, the specific gravity of the electrolyte will gradually rise.

The Battery Charging Time Table gives an indication of the time required to charge a typical battery at room temperature based upon the battery state-of-charge and the charger capacity.

BATTERY CHARGING TIME TABLE			
Charging Amperage	**5 Amps**	**10 Amps**	**20 Amps**
Open Circuit Voltage	**Hours Charging @ 21° C (70° F)**		
12.25 to 12.49	6 hours	3 hours	1.5 hours
12.00 to 12.24	10 hours	5 hours	2.5 hours
10.00 to 11.99	14 hours	7 hours	3.5 hours
Below 10.00	18 hours	9 hours	4.5 hours

GR8 BATTERY TESTER / CHARGER

Always use the Midtronics GR8 Instruction Manual that was supplied with the tester as a reference. If the Instruction Manual is not available the following procedure can be used:

WARNING: **Always wear appropriate eye protection and use extreme caution when working with batteries.**

BATTERY TESTING

1. If testing the battery OUT-OF-VEHICLE, clean the battery terminals with a wire brush before testing. Refer to **CLEANING**. If the battery is equipped with side post terminals, install and tighten the supplied lead terminal stud adapters. Do not use steel bolts. Failure to properly install the stud adapters, or using stud adapters that are dirty or worn-out may result in false test readings.
2. If testing the battery IN-THE-VEHICLE, make certain all of the vehicle accessory loads are OFF, including the ignition. Connect the Midtronics GR8 directly to the battery posts.

NOTE: **Multiple batteries connected in parallel must have the ground cable disconnected to perform a battery test. Failure to disconnect may result in false battery test readings.**

3. Using the ARROW key select **in** or **out** of vehicle testing and press ENTER to make a selection.

4. If not selected, choose the Cold Cranking Amp (CCA) battery rating. Or select the appropriate battery rating for your area (see menu). The tester will then run its self programmed test of the battery and display the results. Refer to the test result table noted below.
5. While viewing the battery test result, press the CODE button and the tester will prompt you for the last 4 digits of the VIN. Use the UP/DOWN arrow buttons to scroll to the correct character; then press ENTER to select and move to the next digit. Then press the ENTER button to view the SERVICE CODE. Pressing the CODE button a second time will return you to the test results.

NOTE: The SERVICE CODE is required on every warranty claim submitted for battery replacement.

QUICK REFERENCE GUIDE

Inspect the battery for damages and check the electrolyte level. Always use the necessary safety precautions when working with batteries to prevent severe injury or death. Follow all manufacturers' instructions and BCI (Battery Council International) safety recommendations, which include the following precautions:

MAIN MENU

The Main Menu is the starting point for all tools and utilities, which are depicted as icons. Some icons lead directly to the function they represent, while others are menu icons that lead to two or more options.

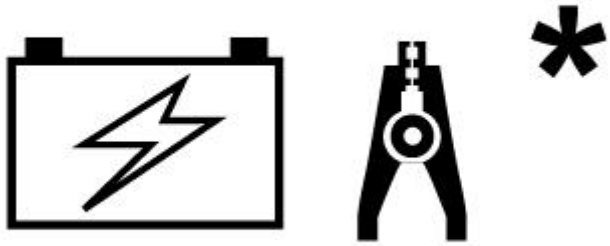

2906815

Fig. 4: Battery Tester Main Menu Icon 1
Courtesy of CHRYSLER GROUP, LLC

Automatically tests, charges, and provides battery decision using the information you select in a series of screens. Start here to generate warranty codes.

2907015

Fig. 5: Battery Tester Main Menu Icon 2
Courtesy of CHRYSLER GROUP, LLC

Tests the starting and charging systems.

2906976

Fig. 6: Battery Tester Main Menu Icon 3
Courtesy of CHRYSLER GROUP, LLC

Maintains battery voltage at 13.5 volts to provide uninterrupted reprogramming of ECUs and retain vehicle system settings.

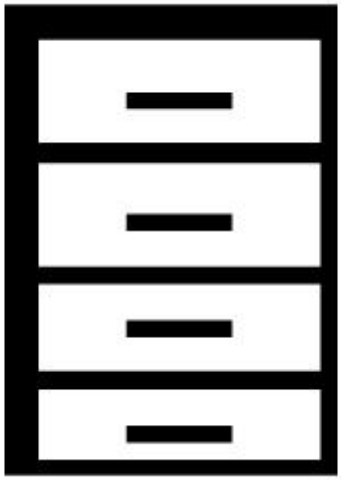

2906894

Fig. 7: Battery Tester Main Menu Icon 4
Courtesy of CHRYSLER GROUP, LLC

Includes a utility to view and print a test counter, a data transfer utility, the software version and date, the Midtronics GR8 serial number for the control module, and current wireless channel.

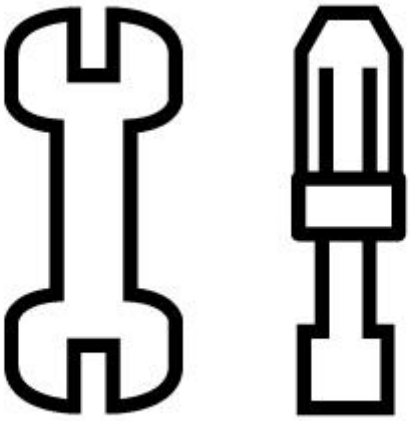

2907001

Fig. 8: Battery Tester Main Menu Icon 5
Courtesy of CHRYSLER GROUP, LLC

The Setup Menu lets you customize options in the Midtronics GR8 to suit your needs.

2906883

Fig. 9: Battery Tester Main Menu Icon 6
Courtesy of CHRYSLER GROUP, LLC

Provides a list of topics and definitions. Also includes Midtronics Customer Service phone numbers.

CHARGE/TEST MENU

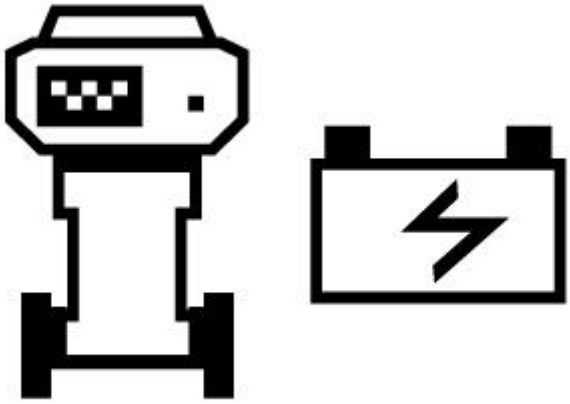

2906844

Fig. 10: Charge/Test Menu Icon 1
Courtesy of CHRYSLER GROUP, LLC

Automatically tests and charges battery, starting, and charging system. Generates a warranty code for Replace and Bad Cell decisions.

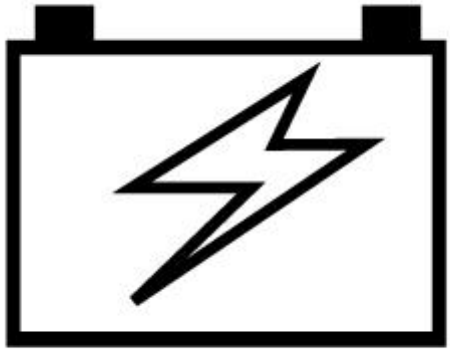

2906961

Fig. 11: Charge/Test Menu Icon 2
Courtesy of CHRYSLER GROUP, LLC

Pre Delivery Inspection (PDI): For testing delivered vehicles and lot maintenance. Uses the same inputs as a diagnostic charge.

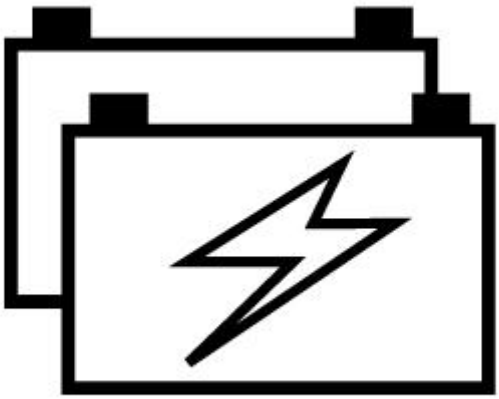

2906860

Fig. 12: Charge/Test Menu Icon 3
Courtesy of CHRYSLER GROUP, LLC

Dual Battery Charge mode allows the charger to be used with dual battery systems.

2906906

Fig. 13: Charge/Test Menu Icon 4
Courtesy of CHRYSLER GROUP, LLC

Makes high output current available to boost charge an in-vehicle battery and assist in starting the engine.

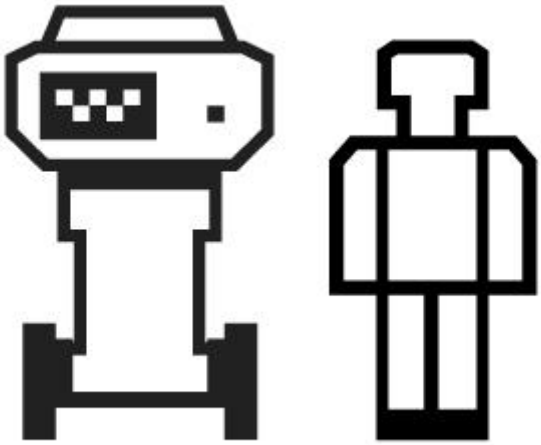

2906933

Fig. 14: Charge/Test Menu Icon 5
Courtesy of CHRYSLER GROUP, LLC

Provides a timed charge that ranges from 5 to 120 minutes or a continuous charge that ends when you press the STOP key.

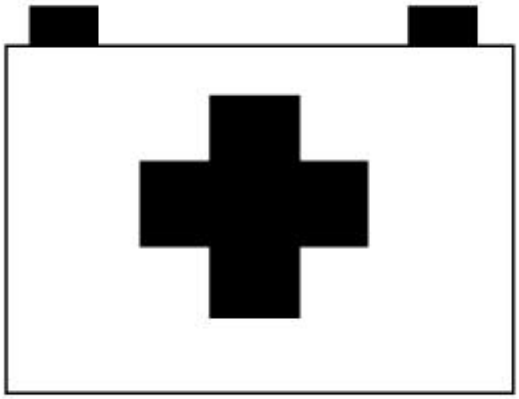

2906991

Fig. 15: Charge/Test Menu Icon 6
Courtesy of CHRYSLER GROUP, LLC

In this mode the charger can provide a trickle charge for long term, low amp battery charging.

2906871

Fig. 16: Charge/Test Menu Icon 7
Courtesy of CHRYSLER GROUP, LLC

Generates 15-digit warranty codes for physically defective batteries or customer good will.

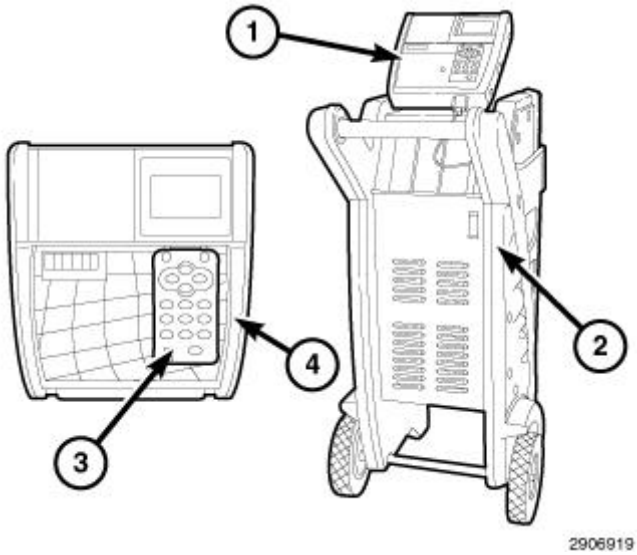

Fig. 17: GR8 Battery Tester
Courtesy of CHRYSLER GROUP, LLC

1. **Control module:** Backlit graphical display and keypad for data entry.
2. **ON/OFF switch:** ON/OFF switch Turns power on and off to the GR8.
3. **STATUS light:** Lights in conjunction with beeping alarm to indicate transitions and warnings.
4. **Data card slot:** For future upgrades via a data card. The slot contains a plastic filler card for protection.

REPLACE BATTERY DECISIONS

BATTERY DECISIONS

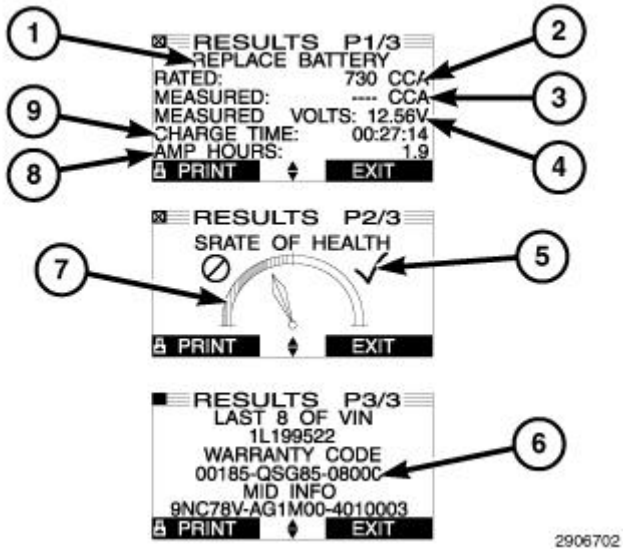

Fig. 18: Battery Test Screen - Example
Courtesy of CHRYSLER GROUP, LLC

1. Battery Decisions

2. Select Rating
3. Measured capacity
4. Measured voltage
5. Good Range

NOTE: **The warranty code screen will only be displayed for REPLACE BATTERY and BAD CELL-REPLACE decisions.**

6. Enter this number into wiTech
7. Replace range
8. Replaced AMP Hours
9. Charging Time

TEST RESULTS-CHARGING SYSTEM

A REPLACE BATTERY or BAD CELL-REPLACE decision gives you the option of generating a warranty code. For Chrysler vehicles model year 2011 or later, enter that warranty code into your wiTECH in the Midtronics warranty code validation routine.

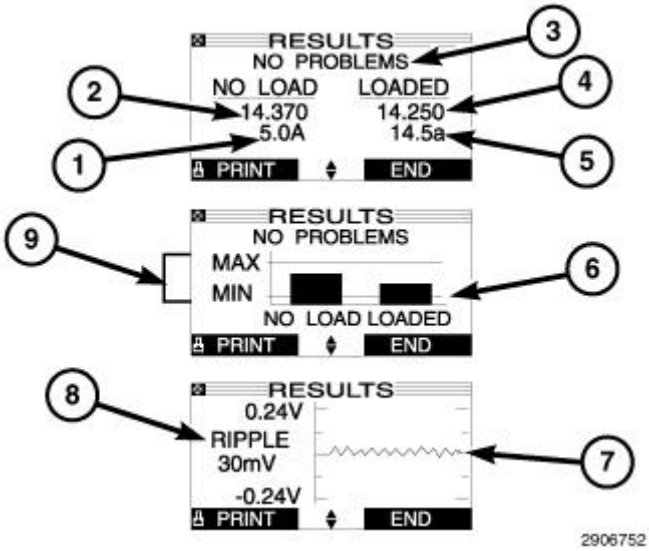

Fig. 19: Battery Tester Test Results Screen - Example
Courtesy of CHRYSLER GROUP, LLC

1. Loads-off current at rev if amp clamp is used
2. Loads-off DC voltage at rev
3. Decision
4. Loads-on DC voltage at rev
5. Loads-on current at rev if amp clamp is used
6. Bar graph of DC voltage within normal range (loads on and off)

7. Graph of diode waveform
8. Peak-to-peak AC voltage
9. Normal DC voltage range

TEST RESULTS-STARTER SYSTEM

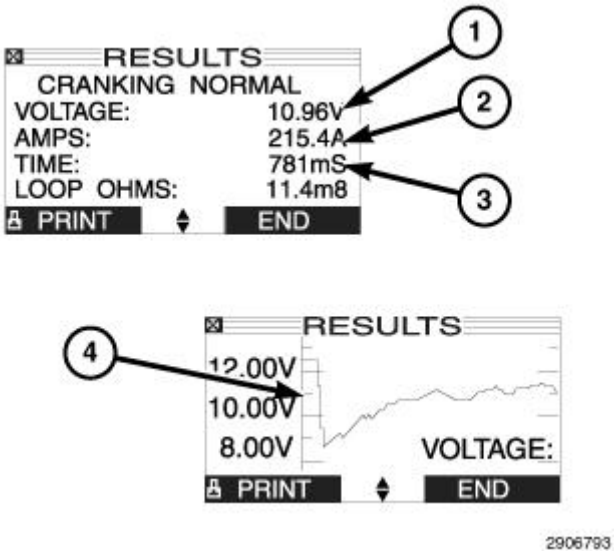

Fig. 20: Test Results-Starter System Example
Courtesy of CHRYSLER GROUP, LLC

1. Average cranking voltage
2. Average cranking current if amp clamp is used
3. Cranking time in seconds
4. Y axis = System performance: cranking voltage

OPEN-CIRCUIT VOLTAGE TEST

A battery open-circuit voltage (no load) test will show the approximate state-of-charge of a battery. This test can be used in place of the hydrometer test when a hydrometer is not available, or for maintenance-free batteries with non-removable cell caps.

Before proceeding with this test, completely charge the battery. Refer to **BATTERY, STANDARD PROCEDURE**.

1. Before measuring the open-circuit voltage, the surface charge must be removed from the battery. Turn on the headlamps for fifteen seconds, then allow up to five minutes for the battery voltage to stabilize.
2. Disconnect and isolate both battery cables, negative cable first.
3. Using a voltmeter connected to the battery posts measure the open-circuit voltage.

Refer to the Open-Circuit Voltage Table below. This voltage reading will indicate the battery state-of-charge, but will not reveal its cranking capacity. If a battery has an open-circuit voltage reading of 12.4 volts or greater,

it may be load tested to reveal its cranking capacity. Refer to **BATTERY, STANDARD PROCEDURE**.

OPEN CIRCUIT VOLTAGE TABLE	
Open Circuit Voltage	**Charge Percentage**
11.7 volts or less	0%
12.0 volts	25%
12.2 volts	50%
12.4 volts	75%
12.6 volts or more	100%

IGNITION-OFF DRAW TEST

The term Ignition-Off Draw (IOD) identifies a normal condition where power is being drained from the battery with the ignition switch in the Off position. A normal vehicle electrical system will draw from five to thirty-five milliamperes (0.005 to 0.035 ampere) with the ignition switch in the Off position, and all non-ignition controlled circuits in proper working order. Up to thirty-five milliamperes are needed to enable the memory functions for the Powertrain Control Module (PCM), digital clock, electronically tuned radio, and other modules which may vary with the vehicle equipment.

A vehicle that has not been operated for approximately twenty days, may discharge the battery to an inadequate level. When a vehicle will not be used for twenty days or more (stored), remove the IOD fuse from the Totally Integrated Power Module (TIPM). This will reduce battery discharging.

Excessive IOD can be caused by:

- Electrical items left on.
- Inoperative or improperly adjusted switches.
- Inoperative or shorted electronic modules and components.
- An internally shorted generator.
- Intermittent shorts in the wiring.

If the IOD is over thirty-five milliamperes, the problem must be found and corrected before replacing a battery. In most cases, the battery can be charged and returned to service after the excessive IOD condition has been corrected.

1. Verify that all electrical accessories are off. Turn off all lamps, remove the ignition key, and close all doors. If the vehicle is equipped with an illuminated entry system or an electronically tuned radio, allow the electronic timer function of these systems to automatically shut off (time out). This may take up to ten minutes. Refer to the Electronic Module Ignition-Off Draw Table for more information.

ELECTRONIC MODULE IGNITION-OFF DRAW (IOD) TABLE			
	Time Out? (If Yes,		**IOD**

Module	Interval And Wake-Up Input)	IOD	After Time Out
Radio	No	1 to 3 milliamperes	N/A
Audio Power Amplifier	No	up to 1 milliampere	N/A
Powertrain Control Module (PCM)	No	0.95 milliampere	N/A
Cab Compartment Node (CCN)	No	0.44 milliampere	N/A

2. Determine that the underhood lamp is operating properly, then disconnect the lamp wire harness connector or remove the lamp bulb.
3. Turn off all electrical accessories.
4. Disconnect the battery negative cable.

WARNING: Do not open any doors, or turn on any electrical accessories. Failure to do so can result in possible serious or fatal injury.

CAUTION: Do not open any doors, or turn on any electrical accessories with the lowest milliampere scale selected, or the multi-meter may be damaged.

5. Connect a 10 amp fused jumper wire between the negative battery cable and the negative battery post.
6. Turn the ignition key ON and then OFF and wait 10 minutes for all systems to enter sleep mode.

NOTE: Do not break the connection between the 10 amp fused jumper wire and the battery. If the connection between the battery negative terminal post and the negative cable terminal clamp is lost during any part of the IOD test, the electronic timer function will be activated and all of the tests will have to be repeated.

7. Set an electronic digital multi-meter to its highest amperage scale. Connect the multi-meter to the battery negative cable terminal clamp and the battery negative terminal post, but not on the jumper connection.
8. Remove the 10 amp jumper wire without breaking the digital multi-meter connection.
9. The multi-meter leads must be securely clamped to the battery negative cable terminal clamp and the battery negative terminal post, but not the 10 amp jumper wire.
10. The high-amperage IOD reading on the multi-meter should be very low or nonexistent, depending upon

the electrical equipment in the vehicle. If the amperage reading remains high, remove and replace each fuse or circuit breaker in the TIPM, one at a time until the amperage reading becomes very low, or nonexistent. Refer to the appropriate wiring information for complete TIPM, circuit breaker, and circuit identification. This will isolate each circuit and identify the circuit that is the source of the high-amperage IOD. If the amperage reading remains high after removing and replacing each fuse, disconnect the wire harness from the generator. If the amperage reading now becomes very low or nonexistent, diagnose and repair the Charging System as necessary. After the high-amperage IOD has been corrected, switch the multi-meter to progressively lower amperage scales and, if necessary, repeat the fuse and circuit breaker remove-and-replace process to identify and correct all sources of excessive IOD. It is now safe to select the lowest milliampere scale of the multi-meter to check the low-amperage IOD.

11. Observe the multi-meter reading. The low-amperage IOD should not exceed thirty-five milliamperes (0.035 ampere). If the current draw exceeds thirty-five milliamperes, isolate each circuit using the fuse and circuit breaker remove-and-replace process in. Refer to 10. The multi-meter reading will drop to within the acceptable limit when the source of the excessive current draw is disconnected. Repair this circuit as required; whether a wiring short, incorrect switch adjustment, or an inoperative component is the cause.

REMOVAL

REMOVAL

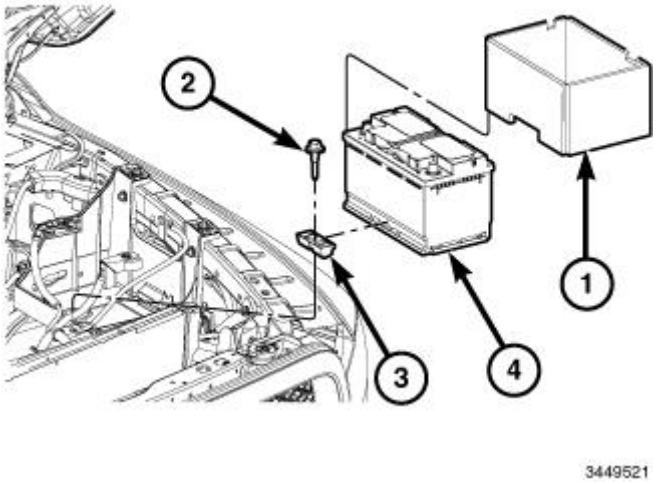

Fig. 21: Remove/Install Battery
Courtesy of CHRYSLER GROUP, LLC

WARNING: Wear a suitable pair of rubber gloves (not the household type) when removing a battery by hand. Safety glasses should also be worn. If the battery is cracked or leaking, the electrolyte can burn the skin and eyes.

1. Turn the ignition switch to the Off position. Be certain that all electrical accessories are turned off.
2. Disconnect the battery negative cable from the battery.
3. Disconnect the battery positive cable from the battery.

4. Remove the battery thermal cover (1).
5. Remove the battery hold down retaining bolt (2) and battery hold down (3).
6. Remove the battery (4) from the battery tray.

INSTALLATION

INSTALLATION

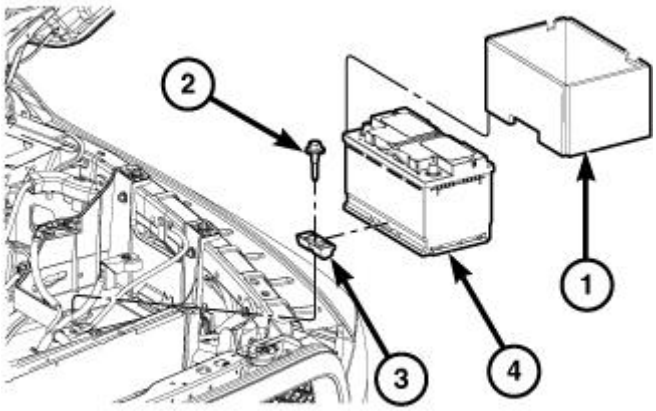

3449521

Fig. 22: Remove/Install Battery
Courtesy of CHRYSLER GROUP, LLC

1. Clean and inspect the battery (2). For the proper procedures, refer to **CLEANING** and **INSPECTION**.

CAUTION: Be certain that the battery cable terminal clamps are connected to the correct battery terminal posts. Reversed battery polarity may damage electrical components of the vehicle.

2. Position the battery into the battery tray. Ensure that the battery positive and negative terminal posts are correctly positioned. The battery cable terminal clamps must reach the correct battery terminal post without stretching the cables.
3. Position the battery hold down (3) and install the retaining bolt (2).
4. Clean the battery cable terminal clamps and the battery terminal posts. For the proper procedures, refer to **CLEANING**.
5. Connect the battery positive cable to the battery. Tighten to 4 N.m (35 in. lbs.).
6. Connect the battery negative cable to the battery. Tighten to 4 N.m (35 in. lbs.).
7. Apply a thin coating of petroleum jelly or chassis grease to the exposed surfaces of the battery cable terminal clamps and the battery terminal posts.
8. Obtain an appropriate scan tool and check the PCM for any stored battery disconnect trouble codes. Clear codes if required.

CABLES, BATTERY

DIAGNOSIS AND TESTING

DIAGNOSIS AND TESTING - BATTERY CABLES

A voltage drop test will determine if there is excessive resistance in the battery cable terminal connections or the battery cables. If excessive resistance is found in the battery cable connections, the connection point should be disassembled, cleaned of all corrosion or foreign material, then reassembled. Following reassembly, check the voltage drop for the battery cable connection and the battery cable again to confirm repair.

When performing the voltage drop test, it is important to remember that the voltage drop is giving an indication of the resistance between the two points at which the voltmeter probes are attached. **EXAMPLE:** When testing the resistance of the battery positive cable, touch the voltmeter leads to the battery positive cable terminal clamp and to the battery positive cable eyelet terminal at the starter solenoid B(+) terminal stud. If you probe the battery positive terminal post and the battery positive cable eyelet terminal at the starter solenoid B(+) terminal stud, you are reading the combined voltage drop in the battery positive cable terminal clamp-to-terminal post connection and the battery positive cable.

TESTING

VOLTAGE DROP TEST

The following operation will require a voltmeter accurate to 1/10 (0.10) volt. Before performing this test, be certain that the following procedures are accomplished:

- The battery is fully-charged and tested. Refer to **BATTERY, STANDARD PROCEDURE**.
- Fully engage the parking brake.
- If the vehicle is equipped with an automatic transmission, place the gearshift selector lever in the Park position. If the vehicle is equipped with a manual transmission, place the gearshift selector lever in the Neutral position and block the clutch pedal in the fully depressed position.
- Verify that all lamps and accessories are turned off.

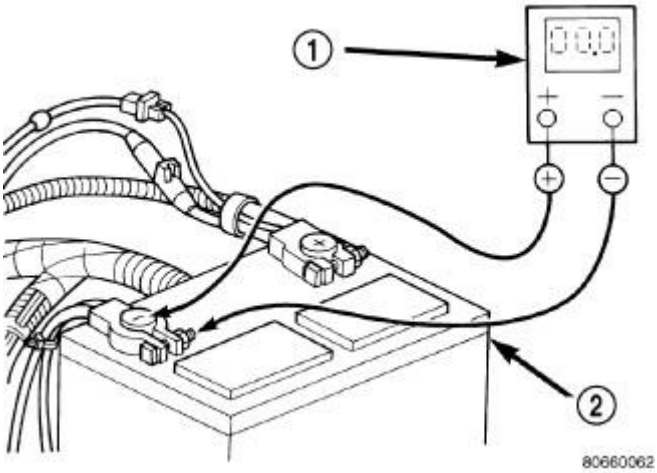

Fig. 23: Testing Negative Battery Cable Connection
Courtesy of CHRYSLER GROUP, LLC

1. Connect the positive lead of the voltmeter (1) to the battery negative terminal post. Connect the negative lead of the voltmeter to the battery negative cable terminal clamp. Rotate and hold the ignition switch in the Start position. Observe the voltmeter. If voltage is detected, correct the poor connection between the battery negative cable terminal clamp and the battery negative terminal post.

NOTE: **If the vehicle is equipped with two 12v batteries, step #1 must be performed twice, once for each battery.**

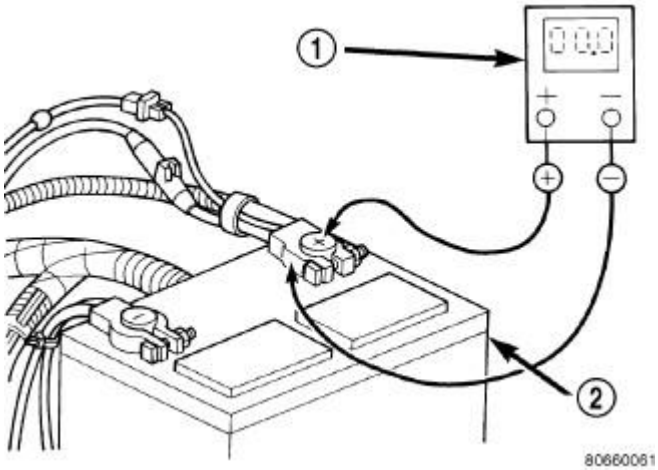

Fig. 24: Testing Positive Battery Cable Connection
Courtesy of CHRYSLER GROUP, LLC

2. Connect the positive lead of the voltmeter (1) to the battery positive terminal post. Connect the negative lead of the voltmeter to the battery positive cable terminal clamp. Rotate and hold the ignition switch in the Start position. Observe the voltmeter. If voltage is detected, correct the poor connection between the battery positive cable terminal clamp and the battery positive terminal post.

NOTE: **If the vehicle is equipped with two 12v batteries, step #2 must be performed twice, once for each battery.**

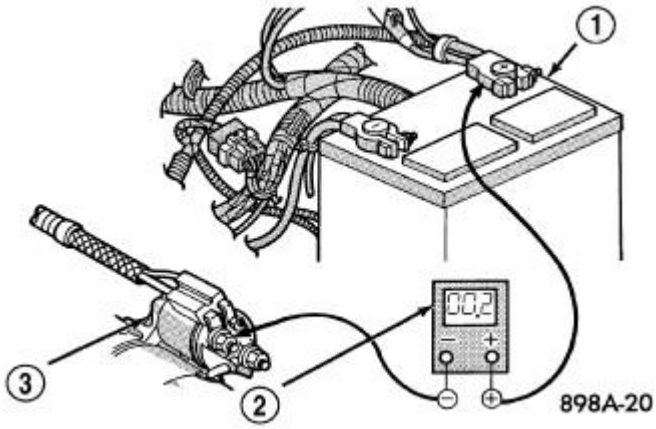

Fig. 25: Checking Voltage Between Battery & Starter
Courtesy of CHRYSLER GROUP, LLC

3. Connect the voltmeter (2) to measure between the battery positive cable terminal clamp (1) and the starter solenoid (3) B(+) terminal stud. Rotate and hold the ignition switch in the Start position. Observe the voltmeter. If the reading is above 0.2 volt, clean and tighten the battery positive cable eyelet terminal connection at the starter solenoid B(+) terminal stud. Repeat the test. If the reading is still above 0.2 volt, replace the faulty battery positive cable.

NOTE: **If the vehicle is equipped with two 12v batteries, step #3 must be performed twice, once for each battery.**

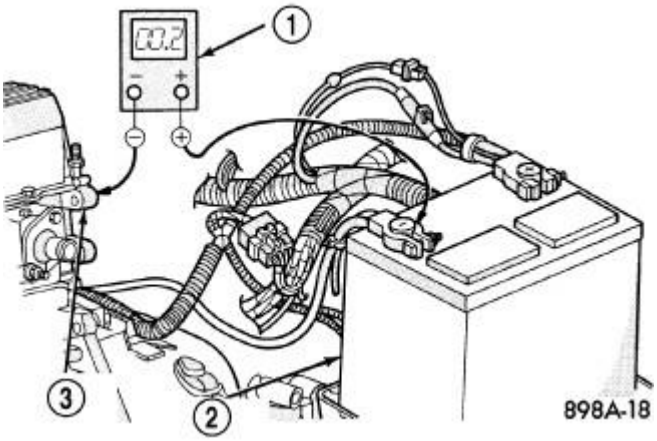

Fig. 26: Checking Voltage Between Battery & Ground
Courtesy of CHRYSLER GROUP, LLC

4. Connect the voltmeter (1) to measure between the battery (2) negative cable terminal clamp and a good clean ground on the engine block (3). Rotate and hold the ignition switch in the Start position. Observe the voltmeter. If the reading is above 0.2 volt, clean and tighten the battery negative cable eyelet terminal connection to the engine block. Repeat the test. If the reading is still above 0.2 volt, replace the faulty battery negative cable.

NOTE: **If the vehicle is equipped with two 12v batteries, step #4 must be performed twice, once for each battery.**

REMOVAL

REMOVAL

NEGATIVE

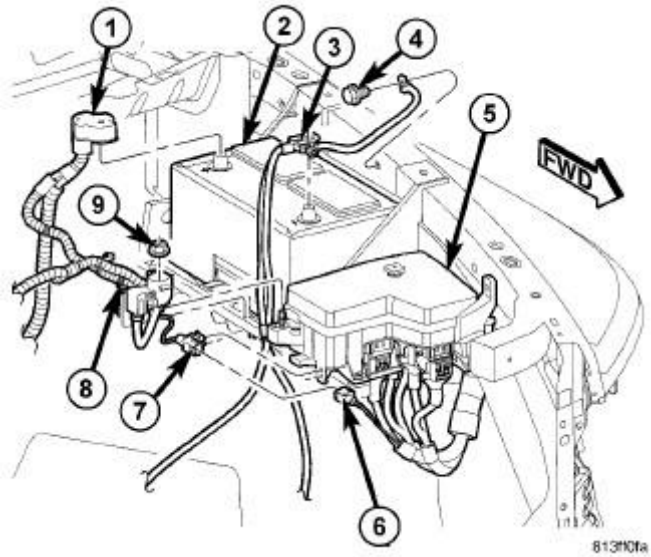

Fig. 27: Identifying Battery Cables & Components
Courtesy of CHRYSLER GROUP, LLC

1. Turn the ignition switch to the Off position. Be certain that all electrical accessories are turned off.
2. Disconnect and isolate the battery negative cable terminal clamp (3).
3. Remove the bolt (4) securing the negative cable to the left front fender.

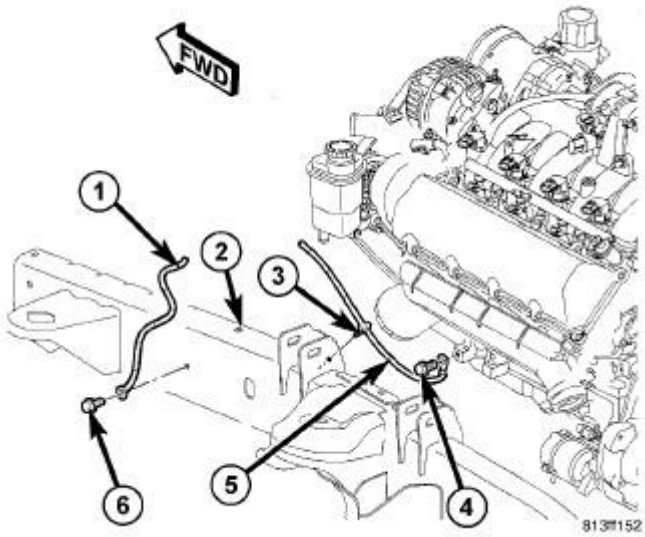

Fig. 28: Removing/Installing Negative Battery Cable
Courtesy of CHRYSLER GROUP, LLC

4. One at a time, trace the battery cable retaining pushpins (3), fasteners and routing clips until the cable is free from the vehicle.
5. Remove the bolt (4) securing the negative cable to the engine.
6. Remove the bolt (6) securing the negative cable to the left frame rail.
7. Remove the battery negative cable from the vehicle.

POSITIVE

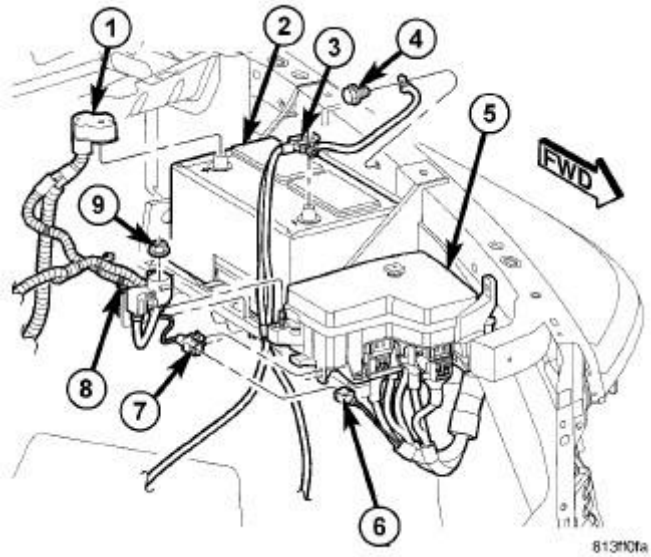

Fig. 29: Identifying Battery Cables & Components
Courtesy of CHRYSLER GROUP, LLC

1. Turn the ignition switch to the Off position. Be certain that all electrical accessories are turned off.
2. Disconnect and isolate the battery negative cable terminal clamp (3).
3. Disconnect the battery positive cable terminal clamp (1).
4. Remove the nut (9) securing the cable to the Totally Integrated Power Module (TIPM) (5).
5. Disconnect the wire harness connector (6) at the TIPM.
6. Disconnect the wire harness connector (7) pushpin from the TIPM housing.
7. Disconnect the battery cable retaining pushpin (8) securing the cable to the battery tray.

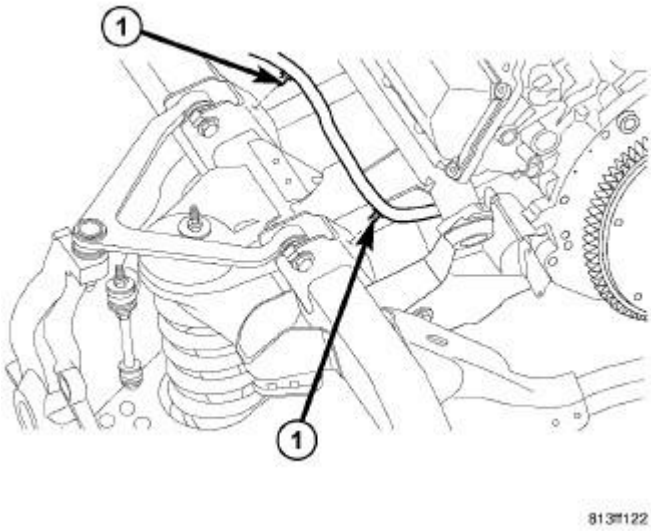

Fig. 30: Battery Cable Retaining Pushpins
Courtesy of CHRYSLER GROUP, LLC

8. Raise the vehicle on a hoist. Refer to **HOISTING, STANDARD PROCEDURE** .
9. Disconnect the battery cable retaining pushpins (1) securing the cable to the left frame rail.

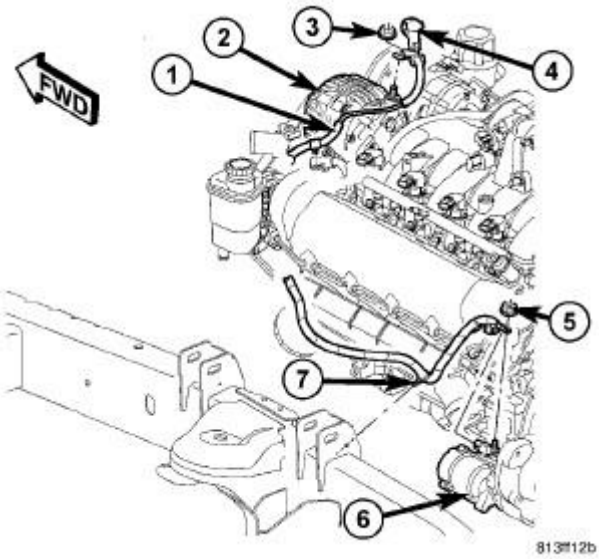

Fig. 31: Removing/Installing Positive Battery Cable
Courtesy of CHRYSLER GROUP, LLC

10. Remove the nut (5) securing the cable to the starter solenoid (6).
11. Lower the vehicle.
12. Lift the terminal cap (4) and remove the nut (3) securing the cable (1) to the alternator (2).
13. Disconnect any remaining pushpins securing the cable to the vehicle.
14. Remove the battery positive cable from the vehicle.

INSTALLATION

INSTALLATION

NEGATIVE

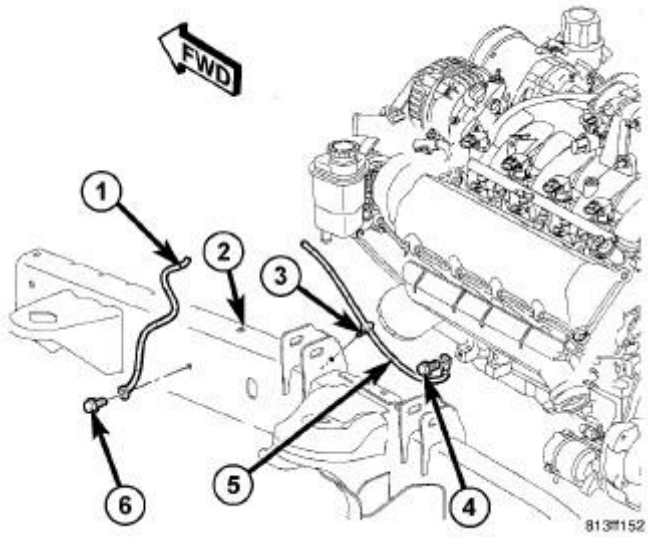

Fig. 32: Removing/Installing Negative Battery Cable
Courtesy of CHRYSLER GROUP, LLC

1. Position the battery negative cable (5) in the vehicle.
2. One at a time, install the battery cable retaining pushpins (3), fasteners and routing clips until the cable is secure in the vehicle.
3. Install the bolt (6) securing the negative cable (1) to the left frame rail.
4. Install the bolt (4) securing the negative cable (5) to the engine.

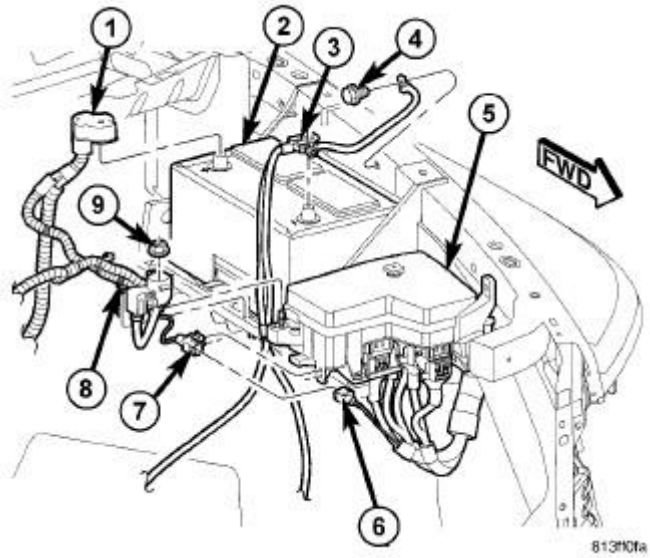

Fig. 33: Identifying Battery Cables & Components
Courtesy of CHRYSLER GROUP, LLC

5. Install the bolt (4) securing the negative cable (3) to the left front fender.

6. Connect the battery negative cable terminal clamp (3).
7. Check the vehicle for normal operation.

POSITIVE

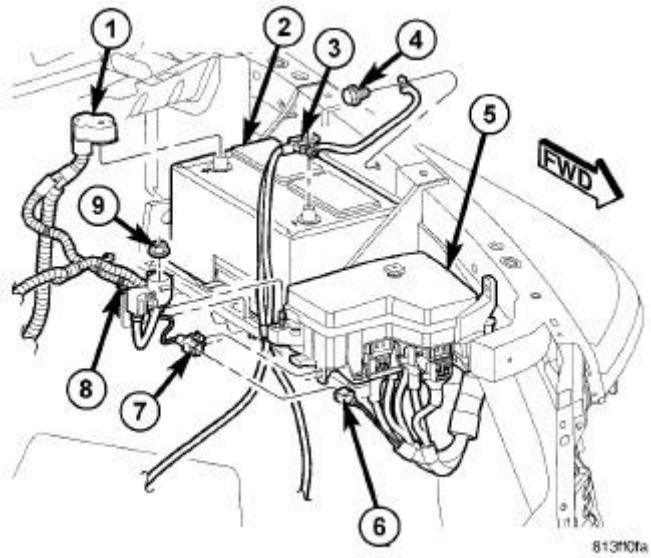

Fig. 34: Identifying Battery Cables & Components
Courtesy of CHRYSLER GROUP, LLC

1. Position the battery positive cable (1) in the vehicle.

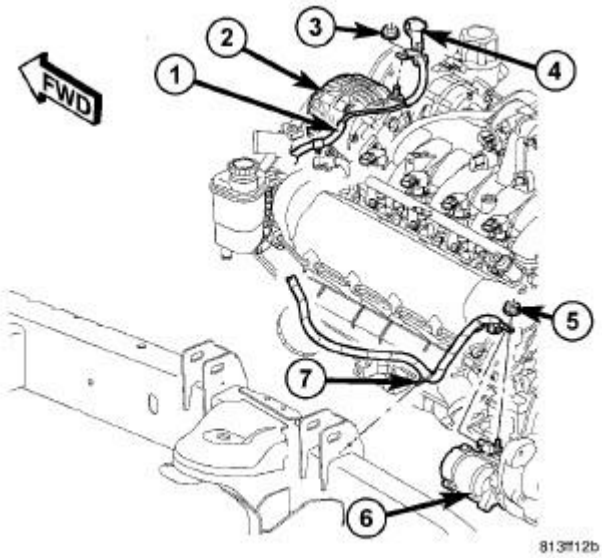

Fig. 35: Removing/Installing Positive Battery Cable
Courtesy of CHRYSLER GROUP, LLC

2. Install the nut (3) securing the cable (1) to the alternator (2).
3. Secure the terminal cap (4) to the alternator stud.
4. Install the cable (1) pushpin into the bracket to the left of the alternator.
5. Raise the vehicle on a hoist. Refer to **HOISTING, STANDARD PROCEDURE** .
6. Install the nut (5) securing the cable to the starter solenoid (6).

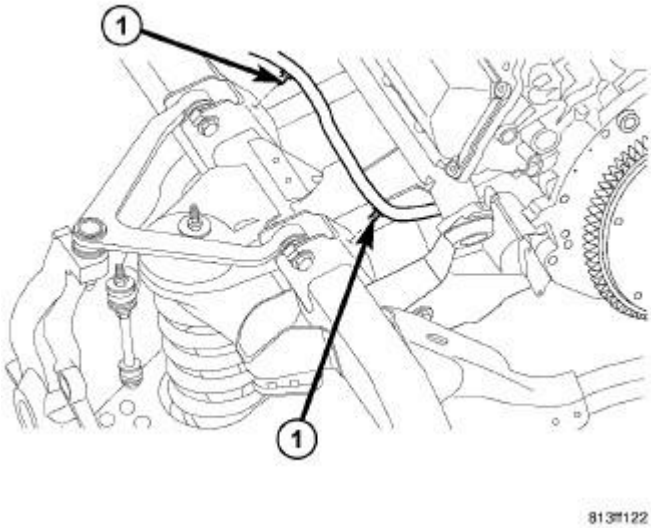

Fig. 36: Battery Cable Retaining Pushpins
Courtesy of CHRYSLER GROUP, LLC

7. Connect the battery cable retaining pushpins (1) securing the cable to the left frame rail.
8. Lower the vehicle.

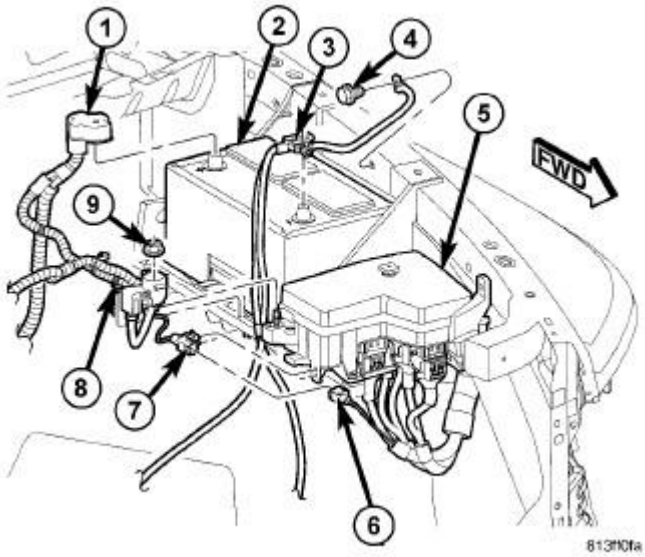

Fig. 37: Identifying Battery Cables & Components
Courtesy of CHRYSLER GROUP, LLC

9. Install the battery cable retaining pushpin (8) securing the cable to the battery tray.
10. Install the wire harness connector (7) pushpin into the Totally Integrated Power Module (TIPM) (5) housing.
11. Connect the wire harness connector (6) at the TIPM.
12. Install the nut (9) securing the cable to the TIPM.
13. Connect the battery positive cable terminal clamp (1).
14. Connect the battery negative cable terminal clamp (3).
15. Check the vehicle for normal operation.

RETAINER, BATTERY

REMOVAL

REMOVAL

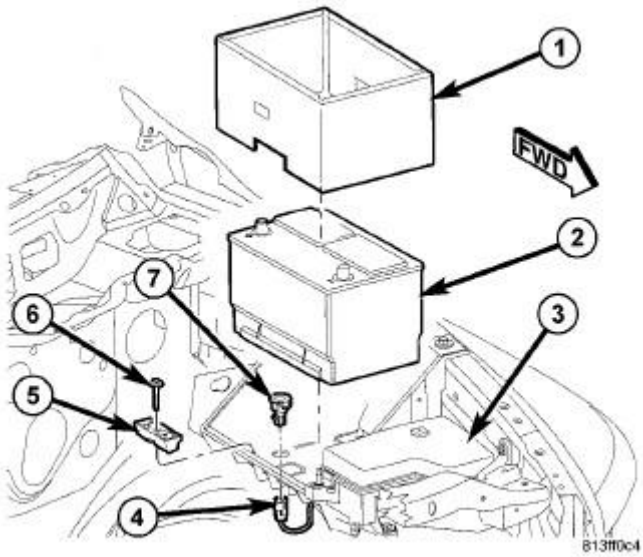

Fig. 38: Removing/Installing Battery & Components
Courtesy of CHRYSLER GROUP, LLC

CAUTION: Never operate a vehicle without a battery hold down device properly installed. Damage to the vehicle, components and battery could result.

1. Verify that the ignition switch and all accessories are OFF.
2. Disconnect and isolate the battery negative cable.
3. Remove the bolt (6) from the battery hold down bracket (5) and remove the bracket from the vehicle.

INSTALLATION

INSTALLATION

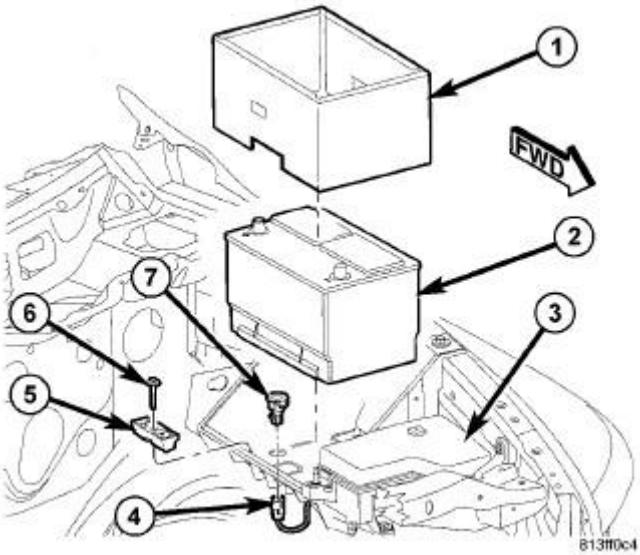

Fig. 39: Removing/Installing Battery & Components
Courtesy of CHRYSLER GROUP, LLC

1. Clean and inspect the battery hold down bracket (5) and bolt (6). Refer to **CLEANING**.
2. Position the battery hold down bracket in the battery tray.

CAUTION: Be certain that the hold down bracket is properly positioned in the battery tray before tightening the hold down bolt or damage to the battery and tray may result.

3. Install and tighten the battery hold down retaining bolt.

TRAY, BATTERY

REMOVAL

REMOVAL

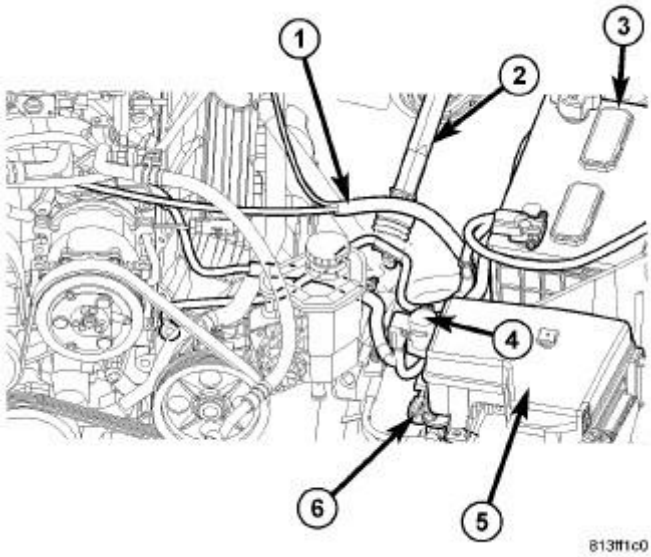

Fig. 40: Removing/Installing Battery Tray (Left Side) 1 Of 2
Courtesy of CHRYSLER GROUP, LLC

1. Remove the battery (3) from the battery tray. Refer to **BATTERY, REMOVAL**.
2. Remove the Totally Integrated Power Module (TIPM) (5). Refer to **MODULE, TOTALLY INTEGRATED POWER (TIPM), REMOVAL** .
3. Disconnect the wire harness retainers from the battery tray assembly.
4. Disconnect the purge solenoid (6) from its mounting bracket.
5. Remove the anti-lock brake controller (if equipped) retaining bolts and support the brake controller with mechanics wire. It is not necessary to completely remove the anti-lock brake control unit.
6. Remove the left front wheelhouse splash shield. Refer to **SHIELD, SPLASH, FRONT WHEELHOUSE, REMOVAL** .

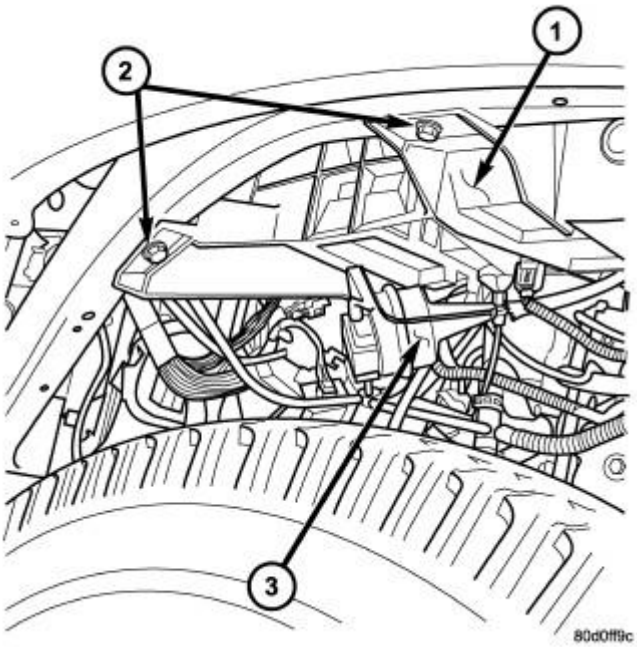

Fig. 41: Removing/Installing Battery Tray (Left Side) 2 Of 2
Courtesy of CHRYSLER GROUP, LLC

7. Mark the location of the cruise servo (3) (if equipped) and remove the retaining screws. Position the servo out of the way.
8. Disconnect the left front fender ground wire.
9. Remove the remaining battery tray retaining bolts (2).
10. Remove the battery tray from the vehicle.

INSTALLATION

INSTALLATION

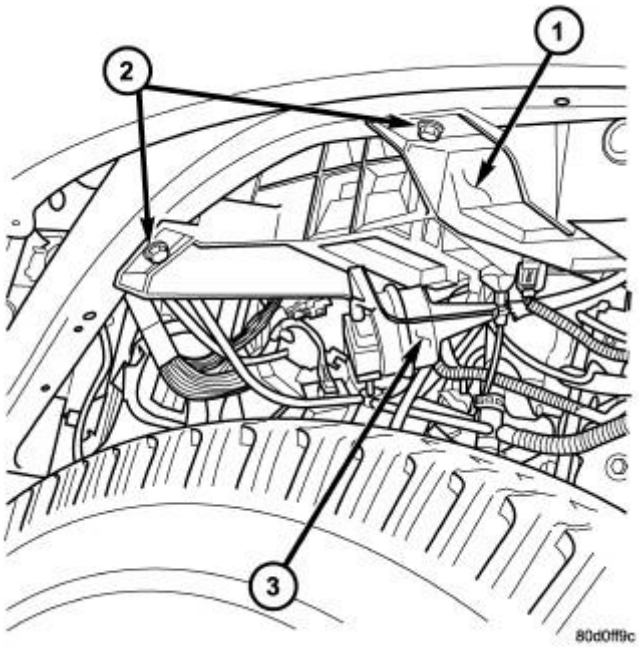

Fig. 42: Removing/Installing Battery Tray (Left Side) 2 Of 2
Courtesy of CHRYSLER GROUP, LLC

1. Position the battery tray assembly (1) and install the retaining bolts (2).
2. Connect the left front fender ground wire.
3. Install the cruise servo (3) (if equipped) and retaining screws.
4. Install the left front wheelhouse splash shield. Refer to **SHIELD, SPLASH, FRONT WHEELHOUSE, INSTALLATION** .

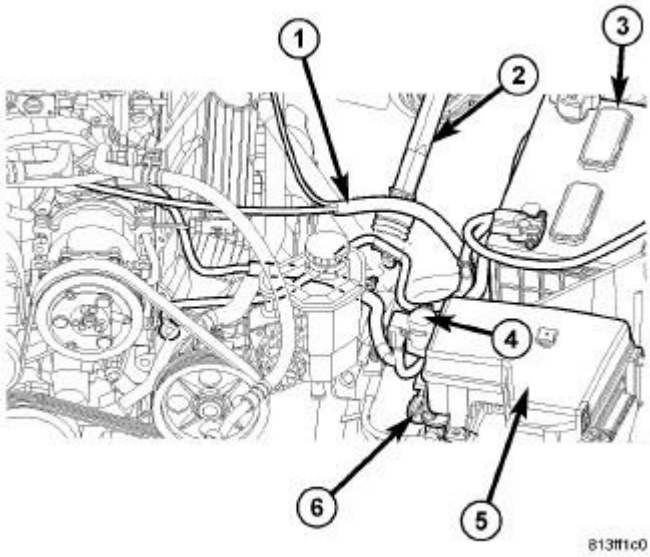

Fig. 43: Removing/Installing Battery Tray (Left Side) 1 Of 2

Courtesy of CHRYSLER GROUP, LLC

5. Install the anti-lock brake controller (if equipped).
6. Install the purge solenoid (6) on its mounting bracket.
7. Connect the wire harness retainers on the battery tray assembly.
8. Install the Totally Integrated Power Module (TIPM) (5). Refer to **MODULE, TOTALLY INTEGRATED POWER (TIPM), INSTALLATION** .
9. Install the battery (3). Refer to **BATTERY, INSTALLATION**.

DESCRIPTION

DESCRIPTION

The charging system consists of:

- Generator
- Electronic Voltage Regulator (EVR) circuitry within the Powertrain Control Module (PCM).
- Ignition switch
- Battery. For information, refer to **BATTERY** .
- Battery temperature sensor
- Check Gauges Lamp (if equipped)
- Voltmeter. For information, refer to appropriate Electrical Diagnostic article.
- Wiring harness and connections. For information, refer to appropriate wiring information.

OPERATION

OPERATION

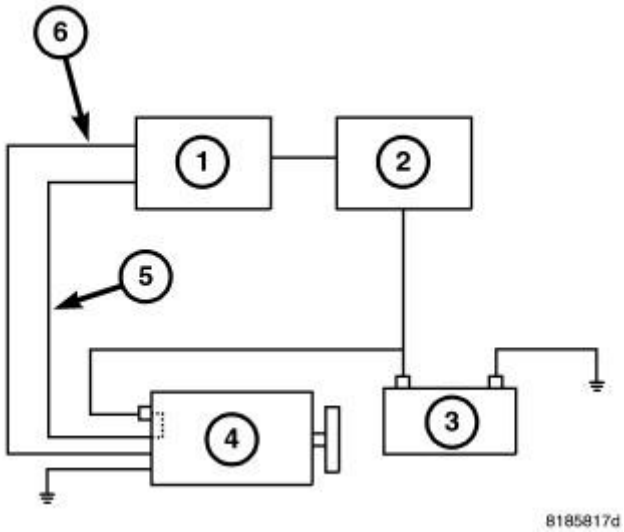

Fig. 1: Identifying Charging System Components
Courtesy of CHRYSLER GROUP, LLC

1 - PCM
2 - TIPM
3 - Battery

4 - Generator
5 - Feed Back Circuit B+
6 - Control Circuit
7 - Battery Sense

The charging system is turned on and off with the Powertrain Control Module (PCM) and ignition switch with engine running. The field circuit will not be energized until engine is running and ignition switch on. This voltage is connected through the PCM and supplied to one of the generator field terminals (Gen. Source B+) at the back of the generator. The generator is internally grounded. The generator regulates the field using pin-1 of the field connector (high side driver).

The generator is driven by the engine through a serpentine belt and pulley, or a decoupler pulley arrangement.

The PCM receives a voltage input from the generator (5) and also a battery voltage input (7) from the Totally Integrated Power Module (TIPM), it then compares the voltages to the desired voltage programed in the Electronic Voltage Regulator (EVR) software, and, if there is a difference it sends a signal to the generator EVR circuit to increase or decrease output. It uses a Pulse Width Modulation (PWM) to send signals to the generator circuitry to control the amount of output from the generator. The amount of DC current produced by the generator is controlled by the EVR circuitry contained within the generator.

All vehicles are equipped with On-Board Diagnostics (OBD). All OBD-sensed systems, including EVR circuitry, are monitored by the PCM. Each monitored circuit is assigned a Diagnostic Trouble Code (DTC). The PCM will store a DTC in electronic memory for certain failures it detects.

The Check Gauges Lamp (if equipped) monitors: **charging system voltage,** engine coolant temperature and engine oil pressure. If an extreme condition is indicated, the lamp will be illuminated. This is done as reminder to check the three gauges. The lamp is located on the instrument panel.

Voltage is monitored at the B+ terminal stud to insure it is connected. If the B+ cable is loose, the PCM will shut down generator field. Because of this new feature, pin-2 of the field connector is internally connected to the B+ terminal.

DIAGNOSIS AND TESTING

DIAGNOSIS AND TESTING - CHARGING SYSTEM

The following procedures may be used to diagnose the charging system if:

- the check gauges lamp (if equipped) is illuminated with the engine running
- the voltmeter (if equipped) does not register properly
- an undercharged or overcharged battery condition occurs.

Remember that an undercharged battery is often caused by:

- accessories being left on with the engine not running
- a faulty or improperly adjusted switch that allows a lamp to stay on for Ignition-Off Draw Test. Refer to

IGNITION-OFF DRAW TEST .

INSPECTION

The PCM (Powertrain Control Module) monitors the critical input and output circuits of the charging system, making sure they are operational. A Diagnostic Trouble Code (DTC) is assigned to each input and output circuit monitored by the On-Board Diagnostic (OBD) system. Some charging system circuits are checked continuously, and some are checked only under certain conditions.

For Diagnostic Trouble Codes, refer to appropriate diagnostic information.

To perform a complete test of the charging system, use a diagnostic scan tool. Perform the following inspections before attaching the scan tool.

1. Inspect the battery condition. Refer to **INSPECTION** .
2. Inspect the condition of battery cable terminals, battery posts, connections at engine block, starter solenoid and relays. They should be clean and tight. Repair as required.
3. Inspect all the fuses in the Totally Integrated Power Module (TIPM) for tightness in there receptacles. They should be properly installed and tight. Repair or replace as required.
4. Inspect the generator mounting bolts for tightness. Replace or tighten the bolts if required. For torque specifications, refer to **SPECIFICATIONS**.
5. Inspect the generator drive belt condition and tension. Tighten or replace the belt as required. Refer to **BELT, SERPENTINE** .
6. Inspect the automatic belt tensioner (when equipped).
7. Inspect the generator electrical connections at generator field, battery output, and ground terminal (if equipped). Also check the generator ground wire connection at the engine (if equipped). They should all be clean and tight. Repair as required.

SPECIFICATIONS

GENERATOR RATINGS

TYPE	RATED SAE AMPS	ENGINES
DENSO	160	3.7L / 4.7L / 5.7L

TORQUE SPECIFICATIONS - GENERATOR / CHARGING SYSTEM

DESCRIPTION	N.m	Ft. Lbs.	In. Lbs.
Generator Mounting Bolts - 5.7L	41	30	-
Generator Support Bracket Bolt/Nuts - 5.7L	41	30	-
Generator Vertical Mounting Bolt - 3.7L / 4.7L Engines	55	40	-

Generator (long) Horizontal Mounting Bolt - 3.7L / 4.7L Engines	55	40	-
Generator (short) Horizontal Mounting Bolt - 3.7L / 4.7L Engines	74	55	-
Generator B+ Output Cable Terminal Nut	14	10	125

GENERATOR

DESCRIPTION

DESCRIPTION

The generator is belt-driven by the engine using a serpentine type drive belt. It is serviced only as a complete assembly. If the generator fails for any reason, the entire assembly must be replaced.

OPERATION

OPERATION

As the energized rotor begins to rotate within the generator, the spinning magnetic field induces a current into the windings of the stator coil. Once the generator begins producing sufficient current, it also provides the current needed to energize the rotor.

The stator winding connections deliver the induced alternating current to 3 or 6 positive and 3 or 6 negative diodes for rectification. From the diodes, rectified direct current is delivered to the vehicle electrical system through the generator battery terminal.

Although the generators appear the same externally, different generators with different output ratings are used on this vehicle. Be certain that the replacement generator has the same output rating and part number as the original unit. For amperage ratings, refer to **GENERATOR RATINGS**.

Noise emitting from the generator may be caused by: worn, loose or defective bearings; a loose or defective drive pulley; incorrect, worn, damaged or misadjusted fan drive belt; loose mounting bolts; a misaligned drive pulley or a defective stator or diode.

REMOVAL

3.7L / 4.7L

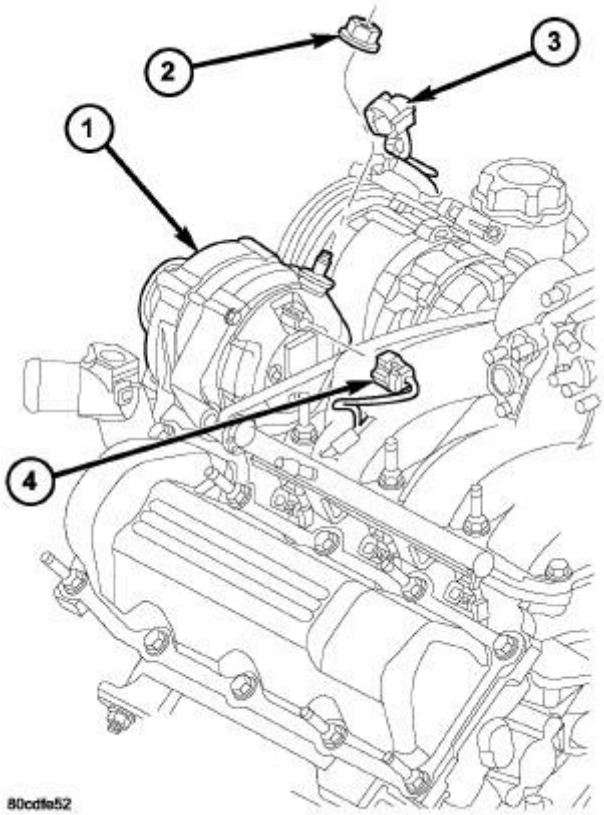

Fig. 2: Generator, Nut, Cap & Connectors
Courtesy of CHRYSLER GROUP, LLC

1 - GENERATOR
2 - B+ NUT
3 - PLASTIC INSULATOR CAP
4 - FIELD WIRE CONNECTOR

WARNING: **Disconnect the negative cable from the battery before removing the battery output wire (B+ wire) from the generator. Failure to do so can result in injury or damage to the electrical system.**

1. Disconnect the negative battery cable.
2. Remove the generator drive belt. Refer to **BELT, SERPENTINE, REMOVAL** .
3. Unsnap the plastic insulator cap from the B+ output terminal (3). Refer to **Fig. 2**.
4. Remove the B+ terminal mounting nut at the rear of generator (2). Refer to **Fig. 2**. Disconnect the terminal from the generator.
5. Disconnect the field wire connector at the rear of the generator (4) by pushing on the connector tab. Refer to **Fig. 2**.

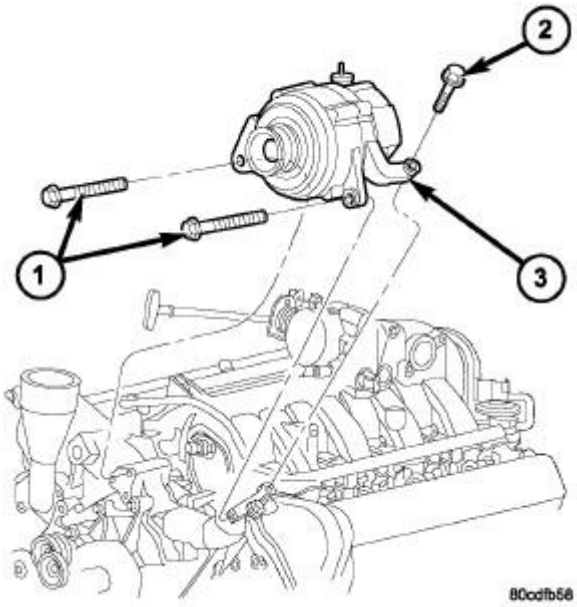

Fig. 3: Generator & Bolts
Courtesy of CHRYSLER GROUP, LLC

1 - LOWER BOLTS
2 - REAR BOLT
3 - GENERATOR

6. Remove the one rear vertical generator mounting bolt (2). Refer to **Fig. 3**.
7. Remove the two front horizontal generator mounting bolts (1). Refer to **Fig. 3**.
8. Remove the generator from vehicle.

5.7L

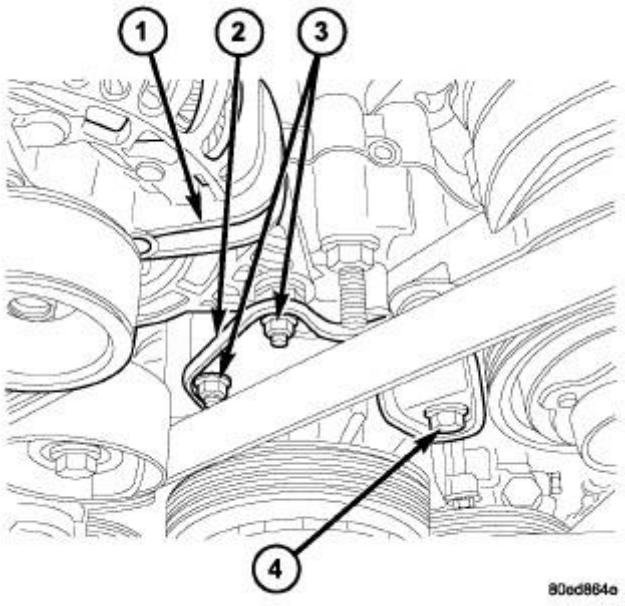

Fig. 4: Generator Support Bracket, Nuts & Bolt
Courtesy of CHRYSLER GROUP, LLC

1 - GENERATOR
2 - SUPPORT BRACKET
3 - BRACKET NUTS
4 - BRACKET BOLT

WARNING: **Disconnect the negative cable from the battery before removing the battery output wire (B+ wire) from the generator. Failure to do so can result in injury or damage to the electrical system.**

1. Disconnect the negative battery cable.
2. Remove the generator drive belt. Refer to **BELT, SERPENTINE, REMOVAL** .
3. Unsnap the plastic insulator cap from the B+ output terminal.
4. Remove the B+ terminal mounting nut at the rear of the generator. Disconnect the terminal from the generator.
5. Disconnect the field wire connector at the rear of generator by pushing on the connector tab.
6. Remove the generator support bracket nuts (3) and bolt (4) and remove the support bracket. Refer to **Fig. 4**.

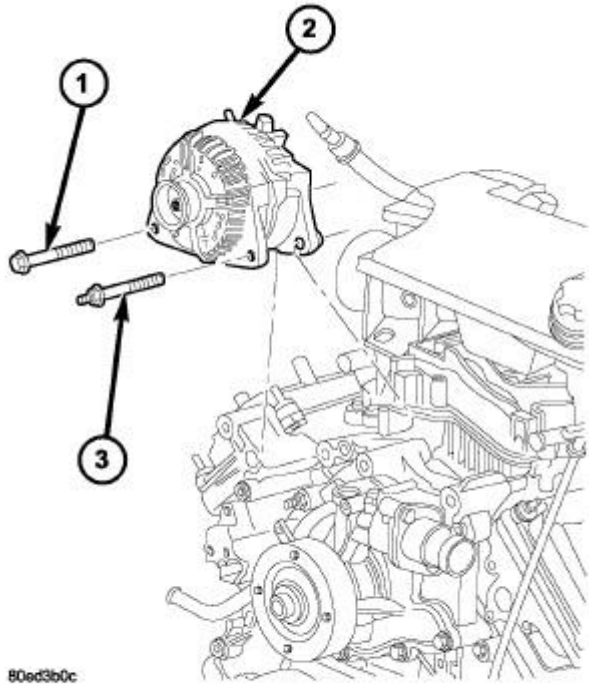

Fig. 5: Generator, Mounting Stud & Bolt
Courtesy of CHRYSLER GROUP, LLC

1 - MOUNTING BOLT
2 - GENERATOR
3 - MOUNTING STUD / BOLT

7. Remove the two generator mounting bolts (1) and (3). Refer to **Fig. 5**.
8. Remove the generator from the vehicle.

DIESEL

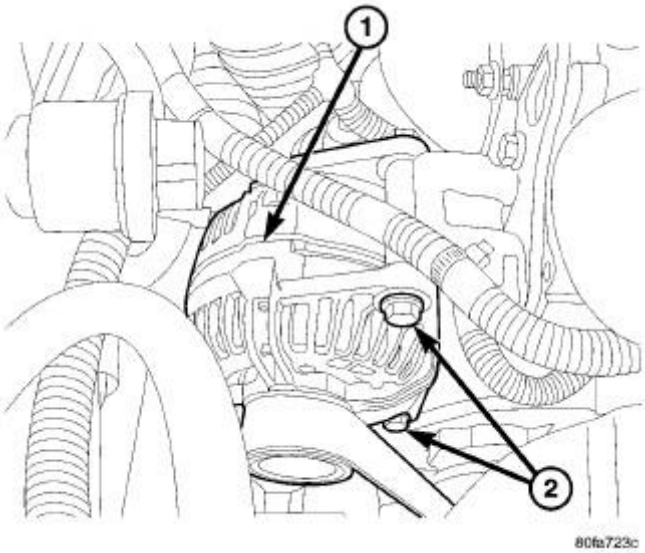

Fig. 6: Diesel Generator & Mounting Bolts
Courtesy of CHRYSLER GROUP, LLC

1 - GENERATOR
2 - MOUNTING BOLTS

WARNING: **Disconnect both negative cables from both batteries before removing battery output wire (B+ wire) from generator. Failure to do so can result in injury or damage to electrical system.**

1. Disconnect both negative battery cables at both batteries.
2. Remove generator drive belt. Refer to **BELT, SERPENTINE, REMOVAL** .
3. Remove upper mounting bracket bolt (2). Refer to **Fig. 6**.
4. Remove lower mounting bracket bolt and nut (2). Refer to **Fig. 6**.
5. Remove generator from engine.

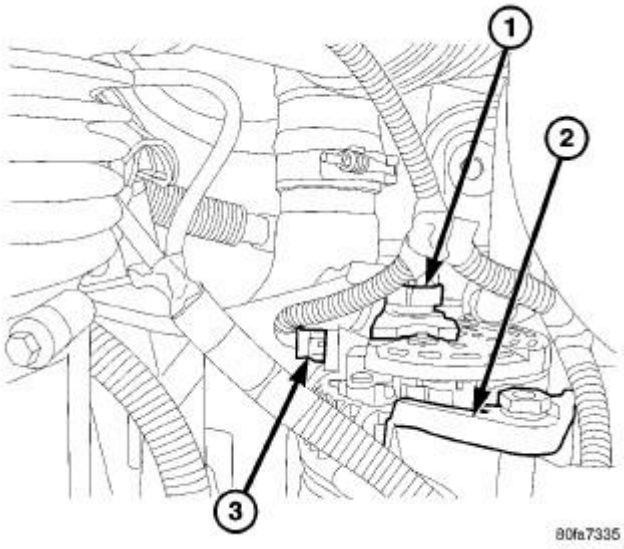

Fig. 7: Diesel Generator Connectors
Courtesy of CHRYSLER GROUP, LLC

1 - B+ CONNECTOR
2 - GENERATOR
3 - FIELD WIRE CONNECTOR

6. Unsnap plastic insulator cap (1) from B+ output terminal.
7. Remove B+ terminal mounting nut at rear of generator. Disconnect terminal from generator.
8. Disconnect field wire connector (3) at rear of generator by pushing on connector tab.

INSTALLATION

3.7L / 4.7L

1. Position the generator to the engine and install the two horizontal bolts and the one vertical bolt. Tighten all three bolts to 55 N.m (40 ft. lbs.).
2. Snap the field wire connector into the rear of the generator.
3. Install the B+ terminal eyelet to the generator output stud. Tighten to 12 N.m (8.8 ft. lbs.).

CAUTION: Never force a belt over a pulley rim using a screwdriver. The synthetic fiber of the belt can be damaged.

CAUTION: When installing a serpentine accessory drive belt, the belt must be routed correctly. The water pump may be rotating in the wrong direction if the belt is installed incorrectly, causing the engine to overheat. Refer to belt routing label in engine compartment, or refer to INSTALLATION .

4. Install the accessory drive belt. Refer to **BELT, SERPENTINE, INSTALLATION** .
5. Connect the negative battery cable.

5.7L

1. Position the generator to the engine and install the two mounting bolts. Tighten to 41 N.m (30 ft. lbs.).
2. Position the support bracket to the front of the generator and install the bolt and nuts. Tighten to 41 N.m (30 ft. lbs.).
3. Snap the field wire connector into the rear of the generator.
4. Install the B+ terminal eyelet to the generator output stud. Tighten mounting nut to 12 N.m (8.8 ft. lbs.).

CAUTION: Never force a belt over a pulley rim using a screwdriver. The synthetic fiber of the belt can be damaged.

CAUTION: When installing a serpentine accessory drive belt, the belt must be routed correctly. The water pump may be rotating in the wrong direction if the belt is installed incorrectly, causing the engine to overheat. Refer to belt routing label in engine compartment, or refer to BELT, SERPENTINE, INSTALLATION .

5. Install the generator drive belt. Refer to **BELT, SERPENTINE, INSTALLATION** .
6. Connect the negative battery cable.

DIESEL

1. Position generator to upper and lower mounting brackets and install upper bolt and lower bolt / nut.
2. Tighten all bolts/nut to 30 ft. lbs. (41 N.m).
3. Snap field wire connector into rear of generator.
4. Install B+ terminal eyelet to generator output stud. Tighten mounting nut. Refer to **TORQUE SPECIFICATIONS - GENERATOR / CHARGING SYSTEM**.

CAUTION: Never force a belt over a pulley rim using a screwdriver. The synthetic fiber of the belt can be damaged.

CAUTION: When installing a serpentine accessory drive belt, the belt must be routed correctly. The water pump may be rotating in the wrong direction if the belt is installed incorrectly, causing the engine to overheat. Refer to belt routing label in engine compartment, or refer to BELT, SERPENTINE, INSTALLATION .

5. Install generator drive belt. Refer to **BELT, SERPENTINE, INSTALLATION** .
6. Install both negative battery cables to both batteries.

REGULATOR, VOLTAGE

DESCRIPTION

DESCRIPTION

The Electronic Voltage Regulator (EVR) is not a separate component. It is actually a voltage regulating circuit located within the PCM (Powertrain Control Module). The EVR is not serviced separately. If replacement is necessary, the PCM must be replaced.

OPERATION

OPERATION

The amount of direct current produced by the generator is controlled by EVR circuitry contained within the PCM. This circuitry is connected in series with the generators second rotor field terminal and its ground.

Voltage is regulated by cycling the battery positive path to control the strength of the rotor magnetic field. The EVR circuitry monitors system line voltage (B+) and battery temperature (refer to appropriate Electrical Diagnostic article). It then determines a target charging voltage. If sensed battery voltage is 0.5 volts or lower than the target voltage, the PCM grounds the field winding until sensed battery voltage is 0.5 volts above target voltage. A circuit in the PCM cycles the battery positive (high side) of the generator field up to 400 times per second (400Hz), but has the capability to ground the field control wire 100% of the time (full field) to achieve the target voltage. If the charging rate cannot be monitored (limp-in), a duty cycle of 25% is used by the PCM in order to have some generator output. For additional information, refer to **OPERATION**.

DESCRIPTION

DESCRIPTION

The power distribution system for this vehicle consists of the following components:

- Totally Integrated Power Module (TIPM)
- Cigar Lighter Outlets

The power distribution system also incorporates various types of circuit control and protection devices, including:

- Automatic resetting circuit breakers
- Blade-type fuses
- Cartridge fuses
- Relays

For complete circuit diagrams, refer to the appropriate wiring information. The wiring information includes wiring diagrams, proper wire and connector repair procedures, details of wire harness routing and retention, connector pin-out information and location views for the various wire harness connectors, splices and grounds.

For specific fuse location and types, refer to **FUSE LOCATIONS AND TYPES, SPECIFICATIONS** .

FUSE, IOD

DESCRIPTION

DESCRIPTION

All vehicles are equipped with an Ignition-Off Draw (IOD) fuse that is disconnected within the Totally Integrated Power Module (TIPM) when the vehicle is shipped from the factory. Dealer personnel are to reconnect the IOD fuse in the TIPM as part of the new vehicle preparation procedures and then disconnect it again until new vehicle delivery to the customer.

A laser printed fuse layout map is integral to the TIPM cover to ensure proper fuse identification. The IOD fuse is a 60 amp cartridge fuses - FMX series fuse. The fuse is secured within a white molded plastic fuse holder and puller unit that serves both as a tool for disconnecting and reconnecting the fuse in the TIPM cavity, and as a fuse holder that conveniently stores the fuse in the same cavity after it has been disconnected.

CIRCUITS INCLUDED WITH IOD FUSE

- A/C and Heater Control
- Amplifier
- Cluster (CCN)
- Compass
- Hands Free Module (HFM)
- Multifunction Switch
- Radio
- Satellite Video Module
- Underhood Lamp
- Video Screen Module

OPERATION

OPERATION

The term Ignition-Off Draw (IOD) identifies a normal condition where power is being drained from the battery with the ignition switch in the Off position. The IOD fuse feeds the memory and sleep mode functions for some of the electronic modules in the vehicle as well as various other accessories that require battery current when the ignition switch is in the Off position. The only reason the IOD fuse is disconnected is to reduce the normal IOD of the vehicle electrical system during new vehicle transportation and pre-delivery storage to reduce battery depletion, while still allowing vehicle operation so that the vehicle can be loaded, unloaded and moved as needed by both vehicle transportation company and dealer personnel.

The IOD fuse is disconnected from Totally Integrated Power Module (TIPM) fuse cavity # J15 when the vehicle is shipped from the assembly plant. Dealer personnel must reconnect the IOD fuse when the vehicle is being prepared for delivery in order to restore full electrical system operation. Once the vehicle is prepared for delivery, the IOD function of this fuse becomes transparent and the fuse that has been assigned the IOD designation becomes only another Fused B(+) circuit fuse.

The IOD fuse can be used by the vehicle owner as a convenient means of reducing battery depletion when a vehicle is to be stored for periods not to exceed about thirty days. However, it must be remembered that disconnecting the IOD fuse will not eliminate IOD, but only reduce this normal condition. If a vehicle will be stored for more than about thirty days, the battery negative cable should be disconnected to eliminate normal IOD; and, the battery should be tested and recharged at regular intervals during the vehicle storage period to prevent the battery from becoming discharged or damaged.

MODULE, POWER INVERTER

DESCRIPTION

DESCRIPTION

The inverter module is located under the front passenger seat it provides a total of 400 watts of power. The A/C outlet is mounted in the right hand side of the instrument panel center and in the back of the center floor console. The inverter module provides A/C power for user accessories. The inverter converts the 12 Volt DC

from the battery system to a 115 Volt AC output.

OPERATION

OPERATION

The AC power outlet receives 12 volts from the Totally Integrated Power Module (TIPM) and passes it as an enable signal to the inverter module. The inverter module also receives 12 volts via the TIPM and inverts this to a 115 volt AC output. The enable signal received from the power outlet enables the inverter to convert the received voltage and pass it to the power outlet to power external devices.

DIAGNOSIS AND TESTING

DIAGNOSIS AND TESTING - INVERTER MODULE

For complete circuit diagrams, refer to the appropriate wiring information.

WARNING: Disable the airbag system before attempting any steering wheel, steering column, seat belt tensioner, side airbag or instrument panel component diagnosis or service. Refer to WARNING . Disconnect and isolate the negative battery (ground) cable. Wait two minutes for the airbag system capacitor to discharge before performing further diagnosis or service. This is the only sure way to disable the airbag system. Failure to follow these instructions may result in accidental airbag deployment and possible serious or fatal injury.

115 VOLT POWER OUTLET DIAGNOSIS

CONDITION	POSSIBLE CAUSES	CORRECTION
NO POWER AT THE 115 VOLT POWER OUTLET	1. Fuse inoperative.	1. Check Totally Integrated Power Module (TIPM) fuse number 29. Replace fuse, if required.
	2. Power outlet connector damaged.	2. Check for loose or corroded power outlet connector. Repair, if required.
	3. Inverter module connector damaged.	3. Check for loose or corroded inverter module connector. Repair, if required.
	4. Wiring damaged.	4. Check for shorted or open wires. Repair wiring, if required.
	5. Inverter module ground damaged.	5. Check for continuity between the inverter module and a known good ground. There should be continuity. Repair ground, if required.
	6. Power outlet inoperative.	6. Replace the power outlet.
	7. Inverter module inoperative.	7. Replace the inverter module.
	8. Power outlet switch inoperative.	6. Replace the accessory switch bank.

REMOVAL

REMOVAL

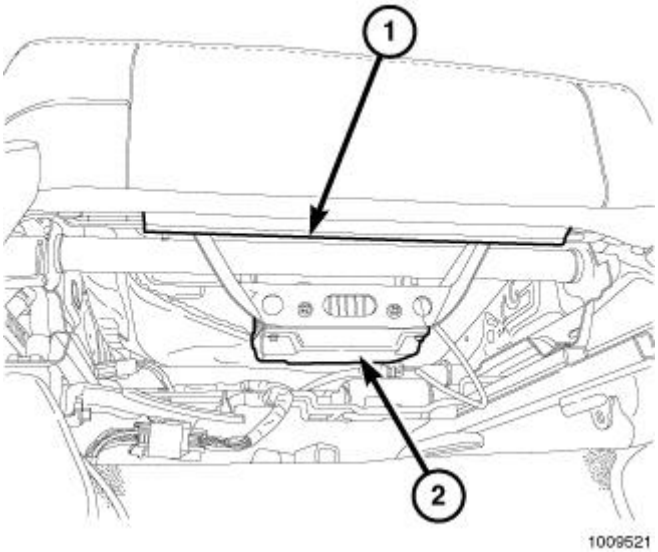

Fig. 1: Identifying Seat Cushion J-Channel & Power Inverter Module
Courtesy of CHRYSLER GROUP, LLC

1. Disconnect and isolate the negative battery cable.
2. Release the seat cushion j-channel (1) from the seat frame to gain access to the power inverter module (2).

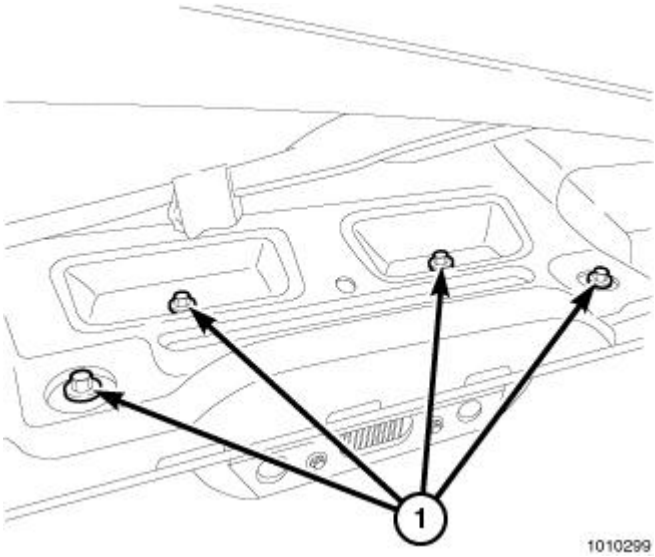

Fig. 2: Identifying Power Inverter Mounting Bracket Retainers
Courtesy of CHRYSLER GROUP, LLC

3. Lift up on the seat cushion and remove the four power inverter mounting bracket retainers.
4. Disconnect the power inverter electrical connector and remove the power inverter assembly from the vehicle.

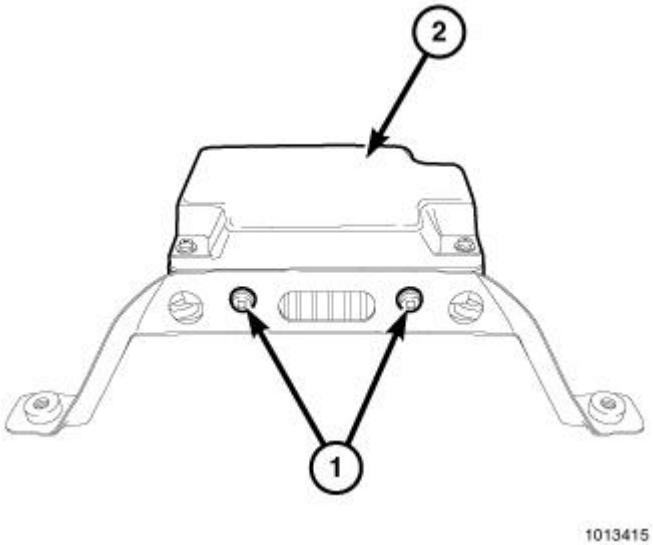

Fig. 3: Power Inverter Assembly & Screws
Courtesy of CHRYSLER GROUP, LLC

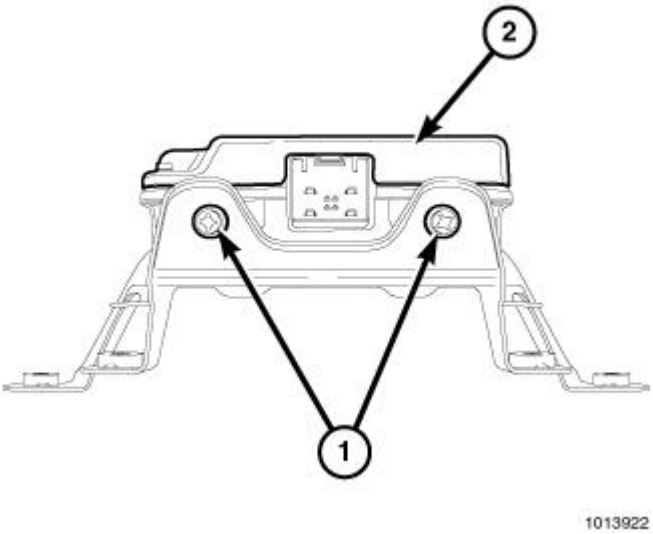

Fig. 4: Power Inverter, Mounting Bracket & Screws
Courtesy of CHRYSLER GROUP, LLC

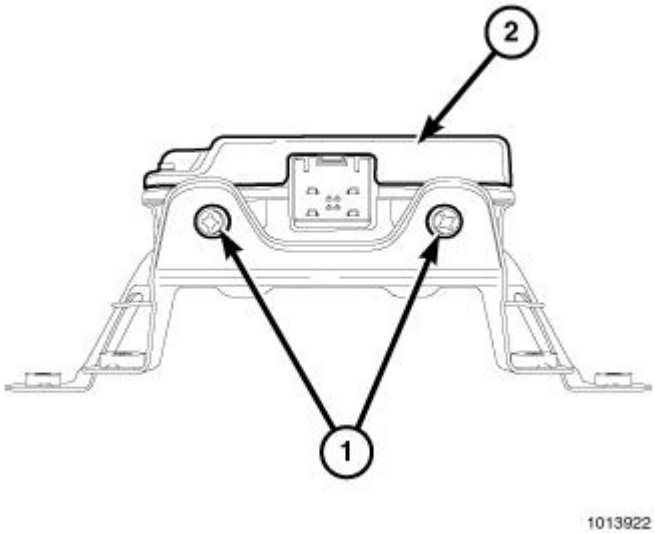

Fig. 5: Power Inverter, Mounting Bracket & Screws
Courtesy of CHRYSLER GROUP, LLC

5. Remove the four screws holding the power inverter to the mounting bracket.
6. Remove the power inverter.

INSTALLATION

INSTALLATION

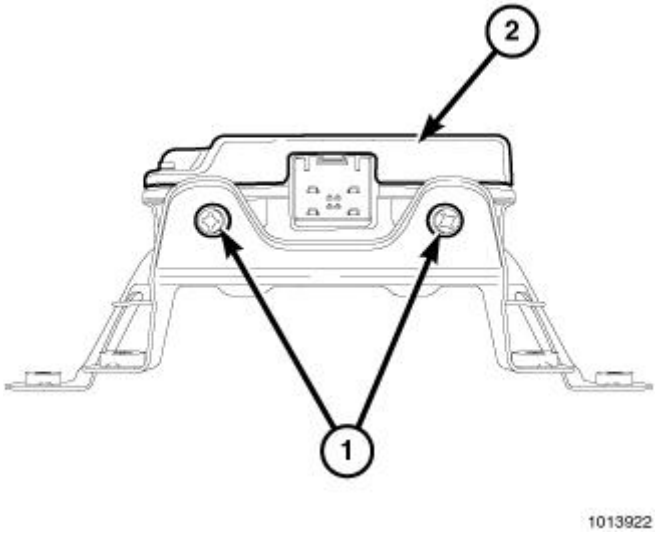

Fig. 6: Power Inverter, Mounting Bracket & Screws
Courtesy of CHRYSLER GROUP, LLC

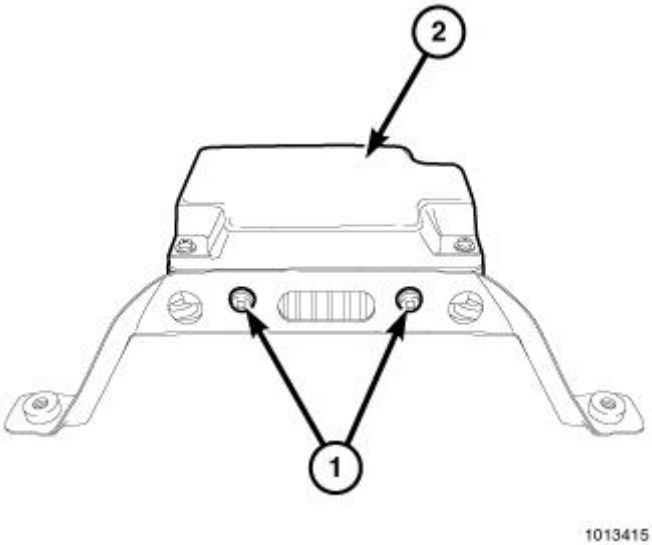

Fig. 7: Power Inverter Assembly & Screws
Courtesy of CHRYSLER GROUP, LLC

1. Install the power inverter into the mounting bracket.
2. Install the four screws holding the power inverter to the mounting bracket.

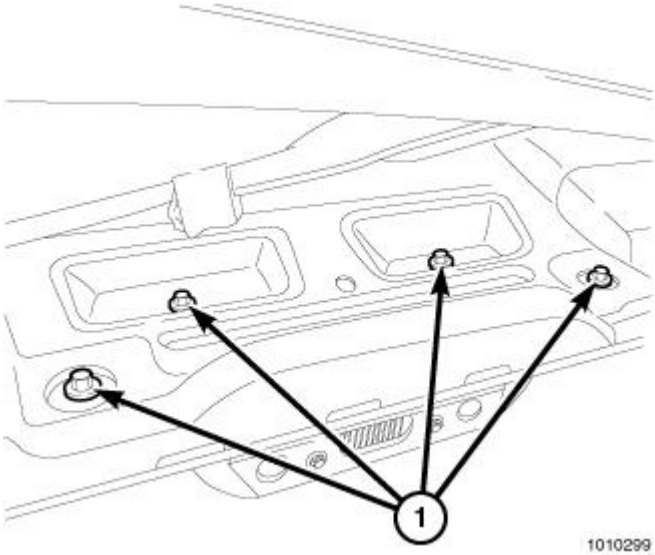

Fig. 8: Identifying Power Inverter Mounting Bracket Retainers
Courtesy of CHRYSLER GROUP, LLC

3. Install the power inverter assembly, lift up the front seat cushion to gain access to the retainer holes (1).

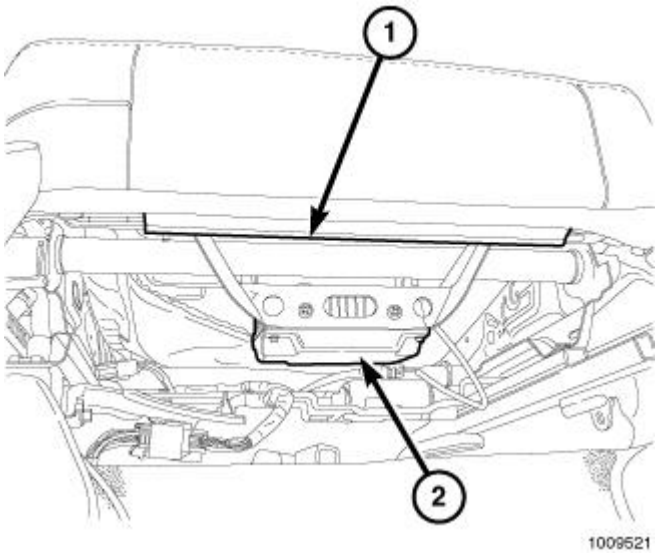

Fig. 9: Identifying Seat Cushion J-Channel & Power Inverter Module
Courtesy of CHRYSLER GROUP, LLC

4. Install the seat cushion j-channel to the seat frame.
5. Connect the negative battery cable.

MODULE, TOTALLY INTEGRATED POWER (TIPM)

DESCRIPTION

DESCRIPTION

The Totally Integrated Power Module (TIPM) is a combination unit that performs the functions of the Power Distribution Center (PDC) and the Front Control Module. The TIPM is a printed circuit board based module that contains fuses, internal relays and a microprocessor that performs the functions previously executed by the FCM. The TIPM is located in the engine compartment, next to the battery and connects directly to the B+ cable via a stud located on top of the unit. The ground connection is via electrical connectors. The TIPM provides the primary means of voltage distribution and protection for the entire vehicle.

The molded plastic TIPM housing includes a base and cover. The TIPM cover is easily opened or removed for service and has a fuse and relay layout map integral to the inside surface of the cover. The TIPM housing base and cover are secured in place via mounting tabs. The mounting tabs secure the TIPM to the TIPM mounting bracket.

OPERATION

OPERATION

All of the current from the battery and the generator output enters the Totally Integrated Power Module (TIPM) via a stud on the top of the module. The TIPM cover is removed to access the fuses or relays. Internal connections of all of the power distribution center circuits are accomplished by a combination of bus bars and a printed circuit board.

For complete circuit diagrams, refer to the appropriate wiring information. The wiring information includes wiring diagrams, proper wire and connector repair procedures, details of wire harness routing and retention, connector pin-out information and location views for the various wire harness connectors, splices, and grounds.

REMOVAL

REMOVAL

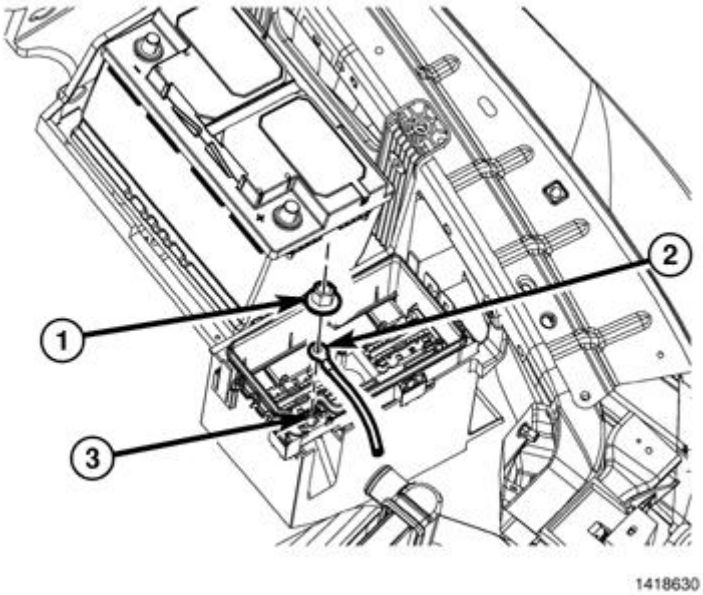

Fig. 10: B+ Terminal Cable & Nut
Courtesy of CHRYSLER GROUP, LLC

1. Disconnect and isolate the battery negative cable.
2. Remove the B+ terminal nut (1) from the Totally Integrated Power Module (3) (TIPM) B+ terminal. Remove the B+ cable (2) from the TIPM.
3. Using a suitable flat blade tool, disengage the TIPM upper retaining tabs from the battery tray bracket (3).

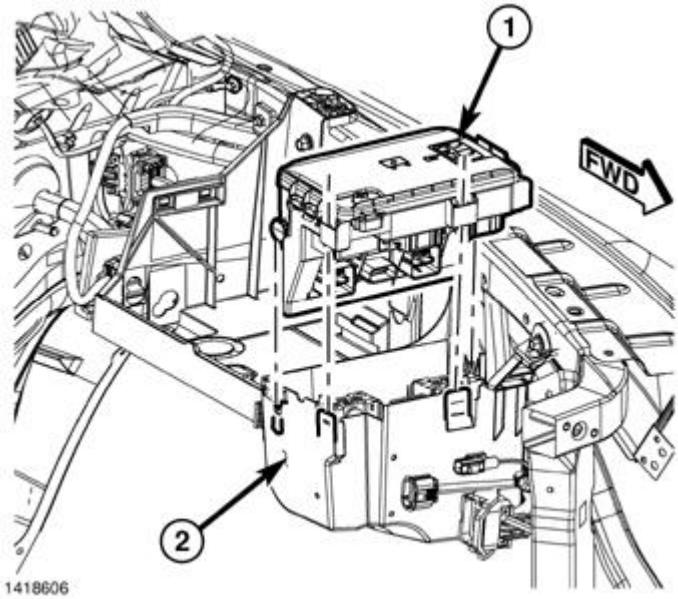

Fig. 11: Totally Integrated Power Module (TIPM)
Courtesy of CHRYSLER GROUP, LLC

4. Grasp the TIPM (1) and rotate the assembly up to free it from its mounting bracket (3). Position the assembly upside down to access the electrical connectors located on the bottom of the unit.

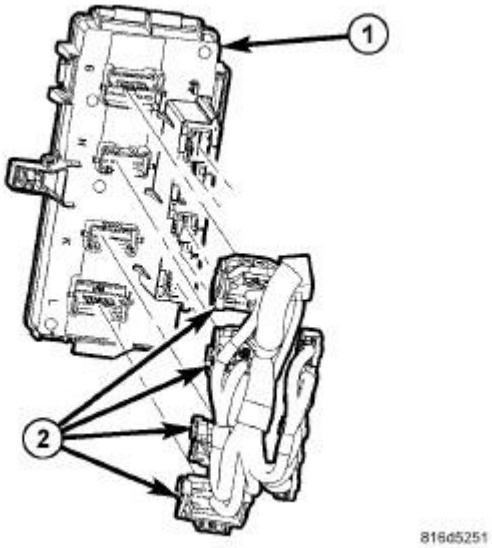

Fig. 12: Identifying Electrical Connectors & TIPM
Courtesy of CHRYSLER GROUP, LLC

5. Disconnect the electrical connectors (2) by depressing the locking tab and rotating the connector arm outboard, until the connector is free from the TIPM assembly (1). Be certain to pull the connectors straight off.
6. Remove the TIPM (1) from the vehicle.

INSTALLATION

INSTALLATION

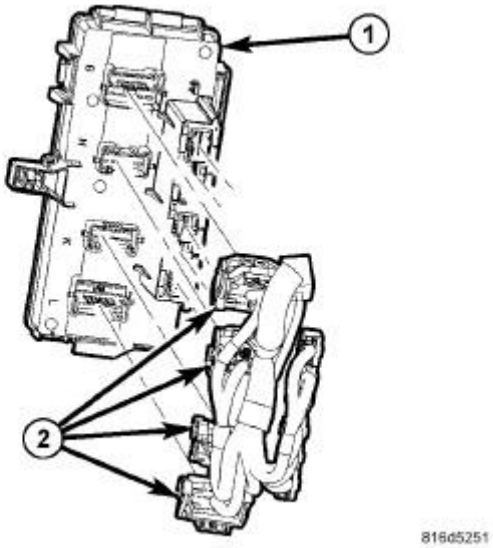

Fig. 13: Identifying Electrical Connectors & TIPM
Courtesy of CHRYSLER GROUP, LLC

1. Position the Totally Integrated Power Module (1) (TIPM) into the vehicle.

   NOTE: Totally Integrated power module electrical connectors are color coded to ease location reference.

2. Connect the electrical connectors (2) by pushing straight on and rotating the connector arm inboard, until the connector is firmly locked in place on the TIPM assembly (1).

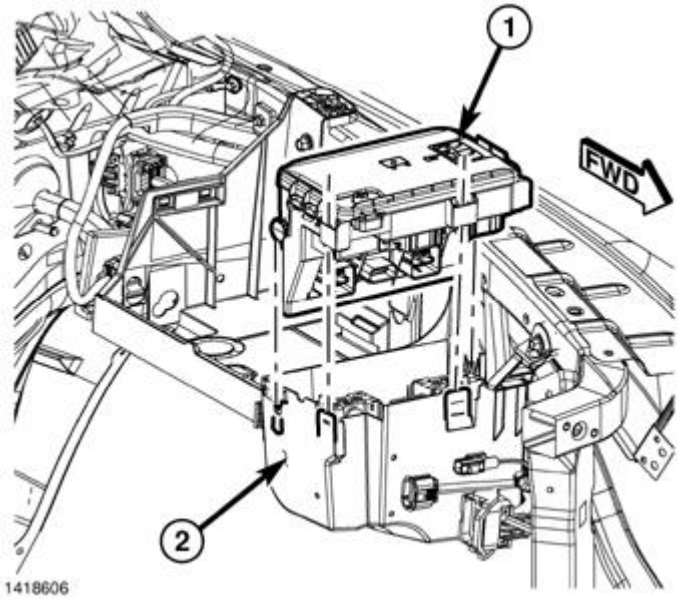

Fig. 14: Totally Integrated Power Module (TIPM)
Courtesy of CHRYSLER GROUP, LLC

3. Turn the TIPM so that the connector side is facing down. Install the assembly onto the TIPM battery tray bracket making sure to line up the lower retaining tab with the retaining slot in the tray.
4. Push the TIPM (1) downward to lock the upper retaining clips into the bracket (3).

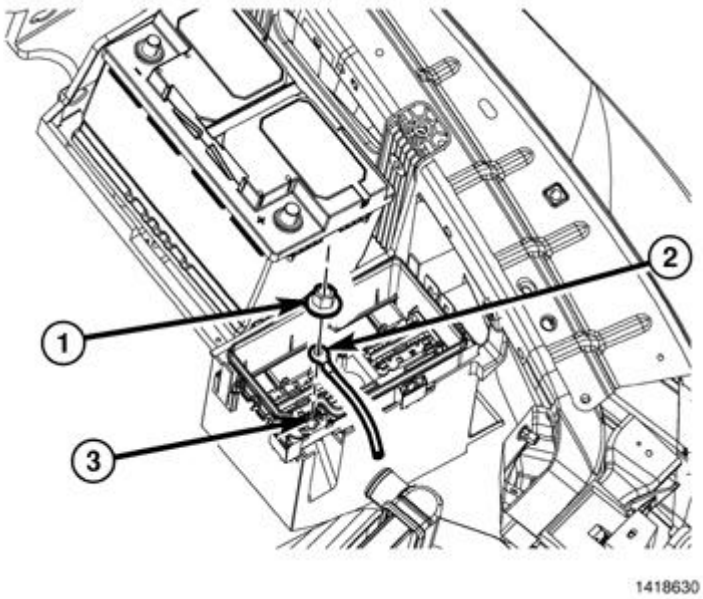

Fig. 15: B+ Terminal Cable & Nut
Courtesy of CHRYSLER GROUP, LLC

5. Install the B+ terminal cable (2) and nut (1) on the B+ terminal of the TIPM (3).
6. Connect the battery negative cable.

OUTLET, POWER, 12 V

DESCRIPTION

DESCRIPTION

A cigar lighter outlet is installed to the left of the center stack area in the lower instrument panel. The cigar lighter outlet is secured by a snap fit within the bezel.

The cigar lighter outlet, plastic cap and the knob and heating element unit are available for service replacement. These components cannot be repaired and, if inoperative or damaged, they must be replaced.

OPERATION

OPERATION

The cigar lighter consists of two major components: a knob and heating element unit, and the cigar lighter base or outlet shell. The receptacle shell is connected to ground, and an insulated contact in the bottom of the shell is connected to battery current. The cigar lighter receives battery voltage from a fuse in the Integrated Power Module (IPM) when the ignition switch is in the Accessory or Run positions.

The cigar lighter knob and heating element are encased within a spring-loaded housing, which also features a sliding protective heat shield. When the knob and heating element are inserted in the outlet shell, the heating element resistor coil is grounded through its housing to the outlet shell. If the cigar lighter knob is pushed inward, the heat shield slides up toward the knob exposing the heating element, and the heating element extends from the housing toward the insulated contact in the bottom of the outlet shell.

Two small spring-clip retainers are located on either side of the insulated contact inside the bottom of the outlet shell. These clips engage and hold the heating element against the insulated contact long enough for the resistor coil to heat up. When the heating element is engaged with the contact, battery current can flow through the resistor coil to ground, causing the resistor coil to heat.

When the resistor coil becomes sufficiently heated, excess heat radiates from the heating element causing the spring-clips to expand. Once the spring-clips expand far enough to release the heating element, the spring-loaded housing forces the knob and heating element to pop back outward to their relaxed position. When the cigar lighter knob and element are pulled out of the outlet shell, the protective heat shield slides downward on the housing so that the heating element is recessed and shielded around its circumference for safety.

DIAGNOSIS AND TESTING

DIAGNOSIS AND TESTING - CIGAR LIGHTER OUTLET

For complete circuit diagrams, refer to the appropriate wiring information. The wiring information includes wiring diagrams, proper wire and connector repair procedures, details of wire harness routing and retention, connector pin-out information and location views for the various wire harness connectors, splices and grounds.

1. Check the fused B(+) fuse in the Integrated Power Module (IPM). If OK, go to 2. If not OK, repair the

shorted circuit or component as required and replace the inoperative fuse.

2. Turn the ignition switch to the Run position. Check for battery voltage at the fused B(+) fuse in the IPM. If OK, go to 3. If not OK, repair the open or short as required.
3. Remove the cigar lighter knob and element from the cigar lighter outlet shell. Check for continuity between the inside circumference of the cigar lighter outlet shell and a good ground. there should be continuity. If OK, go to 4. If not OK, go to 5.
4. Turn the ignition switch to the Run position. Check for battery voltage at the insulated contact located at the back of the cigar lighter outlet shell. If OK, replace the inoperative cigar lighter knob and element. If not OK, go to 5.
5. Turn the ignition switch to the Off position. Disconnect and isolate the battery negative cable. Check for continuity between the ground circuit cavity of the cigar lighter wire harness connector and a good ground. There should be continuity. If OK, go to 6. If not OK, repair the open ground circuit to ground as required.
6. Connect the battery negative cable. Turn the ignition switch to the Accessory or Run positions. Check for battery voltage at the fused B(+) circuit cavity of the cigar lighter wire harness connector. If OK, replace the inoperative cigar lighter outlet. If not OK, repair the open fused B(+) circuit to the IPM fuse as required.

REMOVAL

REMOVAL

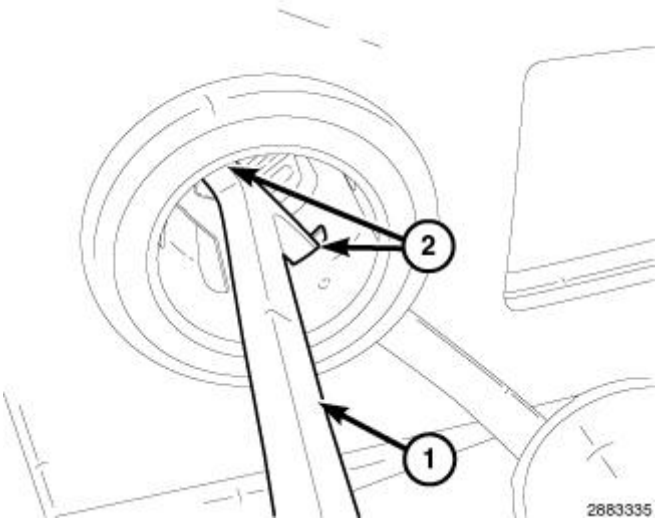

Fig. 16: Inserting Power Outlet Remover
Courtesy of CHRYSLER GROUP, LLC

1. Disconnect and isolate the battery negative cable.
2. Look inside and note position of the retaining bosses (2).
3. Insert the (special tool #10246, Remover, Power Outlet) (1) into the retaining bosses (2) of the power outlet.
4. Pull out the base through the mounting ring by gently rocking the tool.

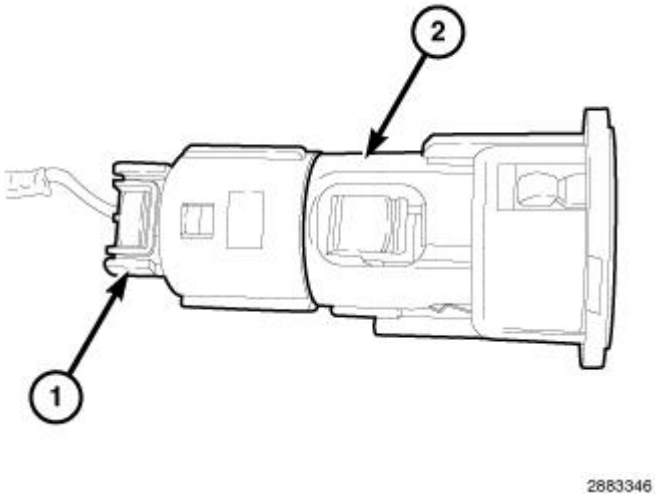

Fig. 17: Power Outlet & Connector
Courtesy of CHRYSLER GROUP, LLC

5. Disconnect the harness (1) from the power outlet (2).
6. Set the base aside and remove the base mount ring.

INSTALLATION

INSTALLATION

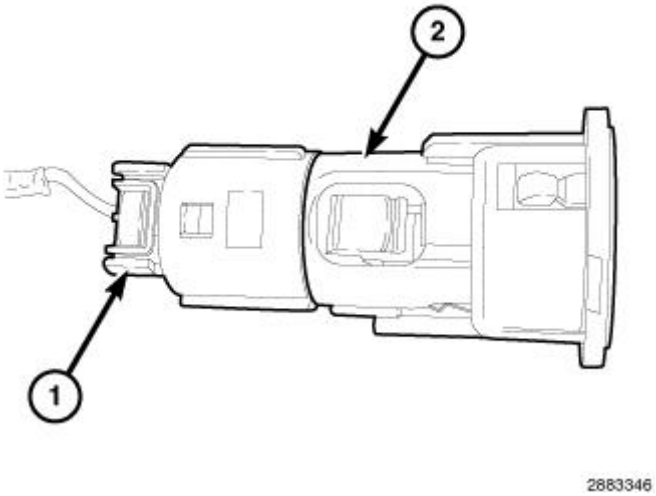

Fig. 18: Power Outlet & Connector
Courtesy of CHRYSLER GROUP, LLC

1. Connect the wire connector (1) to the power outlet receptacle (2).
2. Install the power outlet mount into the panel.
3. Align the splines on the outside of the power outlet receptacle base connector receptacle with the grooves

on the inside of the mount.

4. Press firmly on the power outlet receptacle base until the retaining bosses of the mount are fully engaged in their receptacles.
5. Connect the battery negative cable.

OUTLET, POWER, 115 V

DESCRIPTION

DESCRIPTION

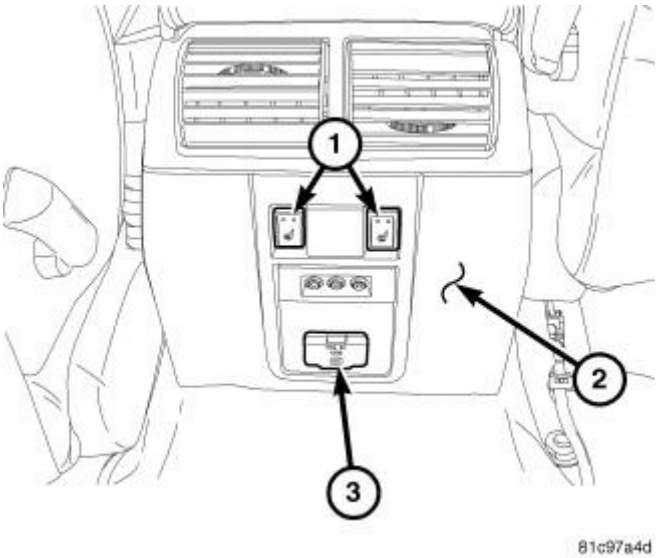

Fig. 19: View Of Center Floor Console Rear Trim Panel
Courtesy of CHRYSLER GROUP, LLC

The 115 Volt AC outlet (3) is mounted in the rear of the center floor console (2). The vehicle is able to supply 115 Volt AC power through the use of a inverter module. The inverter module is located under the right rear seat cushion. The inverter converts the 12 Volt DC from the vehicle battery system to a 115 Volt AC output.

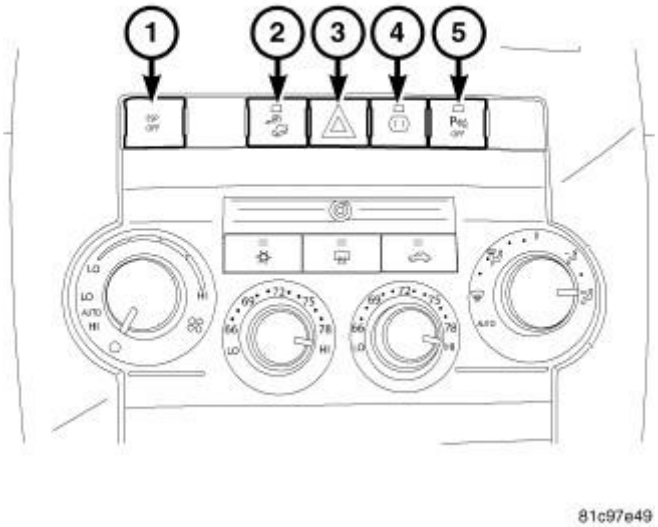

Fig. 20: Instrument Panel Switch Pods
Courtesy of CHRYSLER GROUP, LLC

The inverter module provides A/C power for user accessories when the 115 Volt AC outlet switch (4) in the instrument panel center stack is in the "ON" position. The outlet switch is part of the instrument panel upper switch pod assembly and is not available for service as an individual part. If the switch is damaged or inoperative the complete upper switch pod assembly must be replaced. For the appropriate procedure, refer to **POD, SWITCH, REMOVAL** .

OPERATION

OPERATION

The 115 volt AC power outlet switch receives 12 volts from the Totally Integrated Power Module (TIPM) and passes it as an enable signal to the inverter module. The inverter module also receives 12 volts via the TIPM and inverts this to a 115 volt AC output. The enable signal received from the power outlet switch enables the inverter to convert the received voltage and pass it to the power outlet to power external devices.

DIAGNOSIS AND TESTING

DIAGNOSIS AND TESTING - 115 V POWER OUTLET

WARNING: **Be sure to utilize the proper safety gloves rated at least at a 00 rating when working on any high voltage system. Failure to do so may result in serious or fatal injury.**

Proper use and care of rubber insulating gloves and sleeves are essential to user safety. Do not wear rings, watches, jewelry and sharp objects on your hands or arms, they will cause damage to the rubber gloves and sleeves.

NOTE: **Before attempting any repair on a inverter circuits, check for Diagnostic Trouble Codes with the scan tool.**

NOTE: **B (+) range must be with 11.5 V DC to 16 V DC for inverter operation.**

For complete circuit diagrams, refer to the appropriate wiring information. The wiring information includes wiring diagrams, proper wire and connector repair procedures, details of wire harness routing and retention, connector pin-out information and location views for the various wire harness connectors, splices and grounds.

1. Check the fused B (+) fuse in the Integrated Power Module (TIPM). If OK, go to 2. If not OK, repair the shorted circuit or component as required and replace the inoperative fuse.
2. Remove the instrument panel center bezel, disconnect the connector from the back of the 115 V power outlet. Refer to **BEZEL, INSTRUMENT PANEL, CENTER, REMOVAL** . Turn the ignition switch to the RUN position and press the inverter ON switch. Switch the multi-meter from D/C to A/C and check for 115 V at pin 1 and pin 4 in the harness connector. If OK, go to 3. If not OK, repair the open or short as required.
3. Replace the 115 V power outlet. Refer to **OUTLET, POWER, 115 V, REMOVAL**.

REMOVAL

REMOVAL

1. Disconnect and isolate the negative battery cable.
2. Remove the instrument panel center bezel. Refer to **BEZEL, INSTRUMENT PANEL, CENTER, REMOVAL** .
3. Using a trim stick (special tool #C-4755, Trim Stick) or equivalent, release the 115 V power outlet from the retaining clips and remove from the instrument panel center bezel.

INSTALLATION

INSTALLATION

1. Install the 115 V power outlet into the instrument panel center bezel.
2. Install the instrument panel center bezel. Refer to **BEZEL, INSTRUMENT PANEL, CENTER, INSTALLATION** .
3. Connect the battery negative cable.

OUTLET, POWER, CONSOLE

DESCRIPTION

DESCRIPTION

Two power outlets are utilized on this model. One in the instrument panel center lower bezel and the other in

the center console. The power outlet bases are secured by a snap fit within the instrument panel or trim panel. A plastic protective cap snaps into the power outlet base when the power outlet is not being used, and hangs from the power outlet base mount by an integral bail strap while the power outlet is in use.

The power outlet receptacle unit and the accessory power outlet protective cap are available for service. The power outlet receptacle cannot be repaired and, if faulty or damaged, it must be replaced.

OPERATION

OPERATION

The power outlet base or receptacle shell is connected to ground, and an insulated contact in the bottom of the shell is connected to battery current. The power outlet receives battery voltage from a fuse in the integrated power module at all times.

While the power outlet is very similar to a cigar lighter base unit, it does not include the two small spring-clip retainers inside the bottom of the receptacle shell that are used to secure the cigar lighter heating element to the insulated contact.

DIAGNOSIS AND TESTING

DIAGNOSIS AND TESTING - POWER OUTLET

For complete circuit diagrams, refer to the appropriate wiring information. The wiring information includes wiring diagrams, proper wire and connector repair procedures, details of wire harness routing and retention, connector pin-out information and location views for the various wire harness connectors, splices and grounds.

1. Check the fused B(+) fuse in the Integrated Power Module (IPM). If OK, go to 2. If not OK, repair the shorted circuit or component as required and replace the inoperative fuse.
2. Turn the ignition switch to the Run position. Check for battery voltage at the fused B(+) fuse in the IPM. If OK, go to 3. If not OK, repair the open or short as required.
3. Remove the cigar lighter knob and element from the cigar lighter outlet shell. Check for continuity between the inside circumference of the cigar lighter outlet shell and a good ground. there should be continuity. If OK, go to 4. If not OK, go to 5.
4. Turn the ignition switch to the Run position. Check for battery voltage at the insulated contact located at the back of the cigar lighter outlet shell. If OK, replace the inoperative cigar lighter knob and element. If not OK, go to 5.
5. Turn the ignition switch to the Off position. Disconnect and isolate the battery negative cable. Check for continuity between the ground circuit cavity of the cigar lighter wire harness connector and a good ground. There should be continuity. If OK, go to 6. If not OK, repair the open ground circuit to ground as required.
6. Connect the battery negative cable. Turn the ignition switch to the Accessory or Run positions. Check for battery voltage at the fused B(+) circuit cavity of the cigar lighter wire harness connector. If OK, replace the inoperative cigar lighter outlet. If not OK, repair the open fused B(+) circuit to the IPM fuse as required.

REMOVAL

REMOVAL

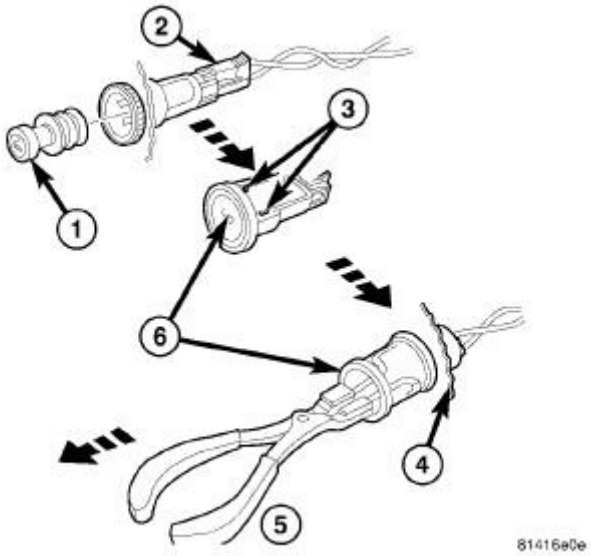

Fig. 21: Identifying Power Outlet Components
Courtesy of CHRYSLER GROUP, LLC

1. Disconnect and isolate the battery negative cable.
2. Pull the cigar lighter knob and element (1) out of the cigar lighter receptacle base (6), or unsnap the protective cap from the power outlet receptacle base (6).
3. Look inside the cigar lighter or power outlet receptacle base and note the position of the rectangular retaining bosses (3) of the mount that secures the receptacle base to the panel (4).
4. Insert a pair of external snap ring pliers (5) into the cigar lighter or power outlet receptacle base and engage the tips of the pliers with the retaining bosses of the mount.
5. Squeeze the pliers to disengage the mount retaining bosses from the receptacle base and, using a gentle rocking motion, pull the pliers and the receptacle base out of the mount.
6. Pull the receptacle base away from the instrument panel far enough to access the instrument panel wire harness connector (2).
7. Disconnect the instrument panel wire harness connector (2) from the cigar lighter or power outlet receptacle base (6).
8. Remove the cigar lighter or power outlet mount from the instrument panel.

INSTALLATION

INSTALLATION

1. Connect the instrument panel wire harness connector to the cigar lighter or power outlet receptacle base connector receptacle.
2. Install the cigar lighter or power outlet mount into the instrument panel.

3. Align the splines on the outside of the cigar lighter or power outlet receptacle base connector receptacle with the grooves on the inside of the mount.
4. Press firmly on the cigar lighter or power outlet receptacle base until the retaining bosses of the mount are fully engaged in their receptacles.
5. Install the cigar lighter knob and element into the cigar lighter receptacle base, or the protective cap into the power outlet receptacle base.
6. Connect the battery negative cable.

SPECIAL TOOLS

	10246 - Remover, Power Outlet (Originally Shipped In Kit Number(s) 10246.)
	6029 - De Gauser
	9001 - Rf Detector (Originally Shipped In Kit Number(s) 9001.)
	C-4755 - Trim Stick (Originally Shipped In Kit Number(s) 9299, 9299CC, 9299CC, 9300A-CAN.)
	C-4816 - Socket, Antenna (Originally Shipped In Kit Number(s) 8674, 8676.)
	GR8-1220KIT-CHRY - AGM Battery Tester/Charger Station (Originally Shipped In Kit Number(s) GR8-1220KIT-CHRY.)

DESCRIPTION

DESCRIPTION

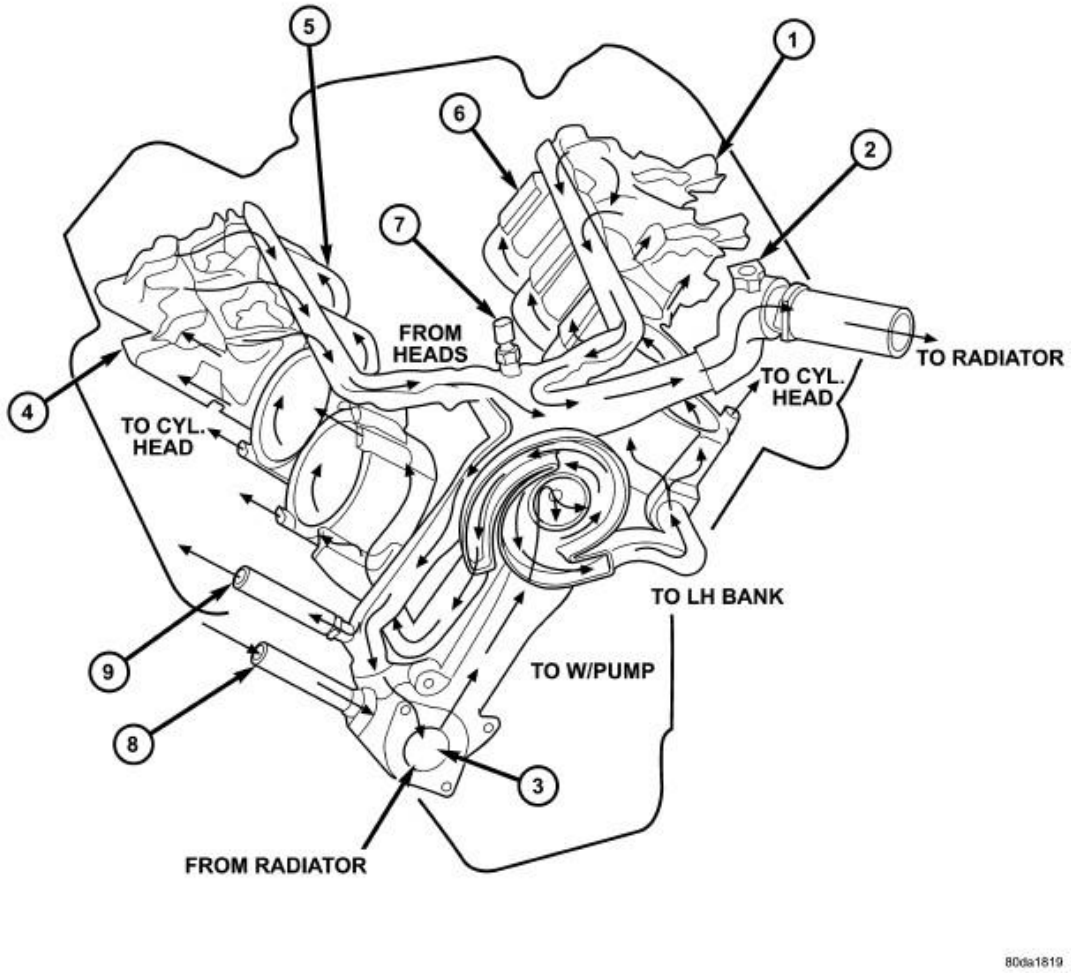

Fig. 1: Engine Cooling System Flow - 3.7L/4.7L
Courtesy of CHRYSLER GROUP, LLC

1 - LH CYL. HEAD	6 - LH BANK CYL. BLOCK
2 - BLEED	7 - COOLANT TEMP. SENSOR
3 - THERMOSTAT LOCATION	8 - FROM HEATER CORE
4 - RH CYL. HEAD	9 - TO HEATER CORE
5 - RH BANK CYL. BLOCK	

The 3.7L/4.7L engine cooling system consists of :

- LH Cylinder Head (1)
- Bleed (2)
- Thermostat location (3)
- RH Cylinder Head (4)
- RH Bank Cyl. Block (5)
- LH Bank Cyl. Block (6)
- Coolant Temp Sensor (7)
- From Heater Core (8)
- To Heater Core (9)

The cooling system regulates engine operating temperature. It allows the engine to reach normal operating temperature as quickly as possible. It also maintains normal operating temperature and prevents overheating.

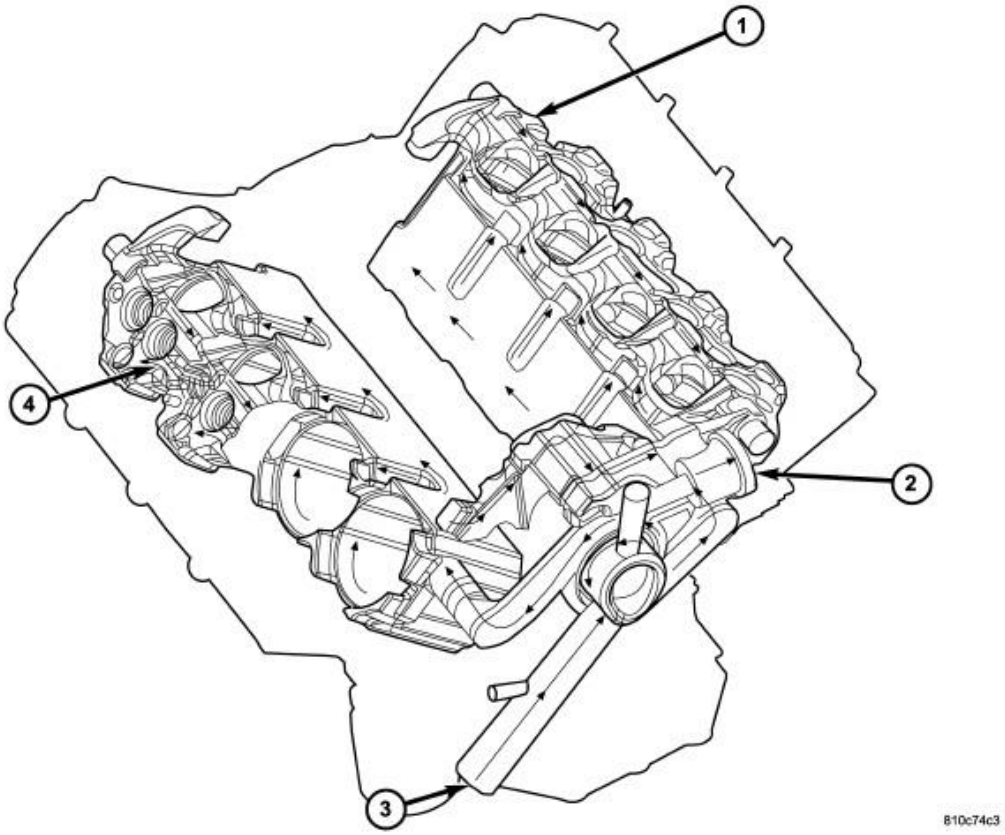

Fig. 2: 5.7L Engine Coolant System Flow
Courtesy of CHRYSLER GROUP, LLC

1 - LH CYLINDER HEAD	3 - FROM RADIATOR
2 - TO RADIATOR	4 - TO RH CYLINDER HEAD

The 5.7L engine cooling system consists of :

- LH Cylinder Head (1)
- To Radiator (2)
- From Radiator (3)
- To RH Cylinder Head (4)

The cooling system provides a means of heating the passenger compartment and cooling the automatic transmission fluid (if equipped). The cooling system is pressurized and uses a centrifugal water pump to circulate coolant through the system. The coolant recovery/reserve system utilizes an ambient overflow bottle.

DIESEL ENGINE

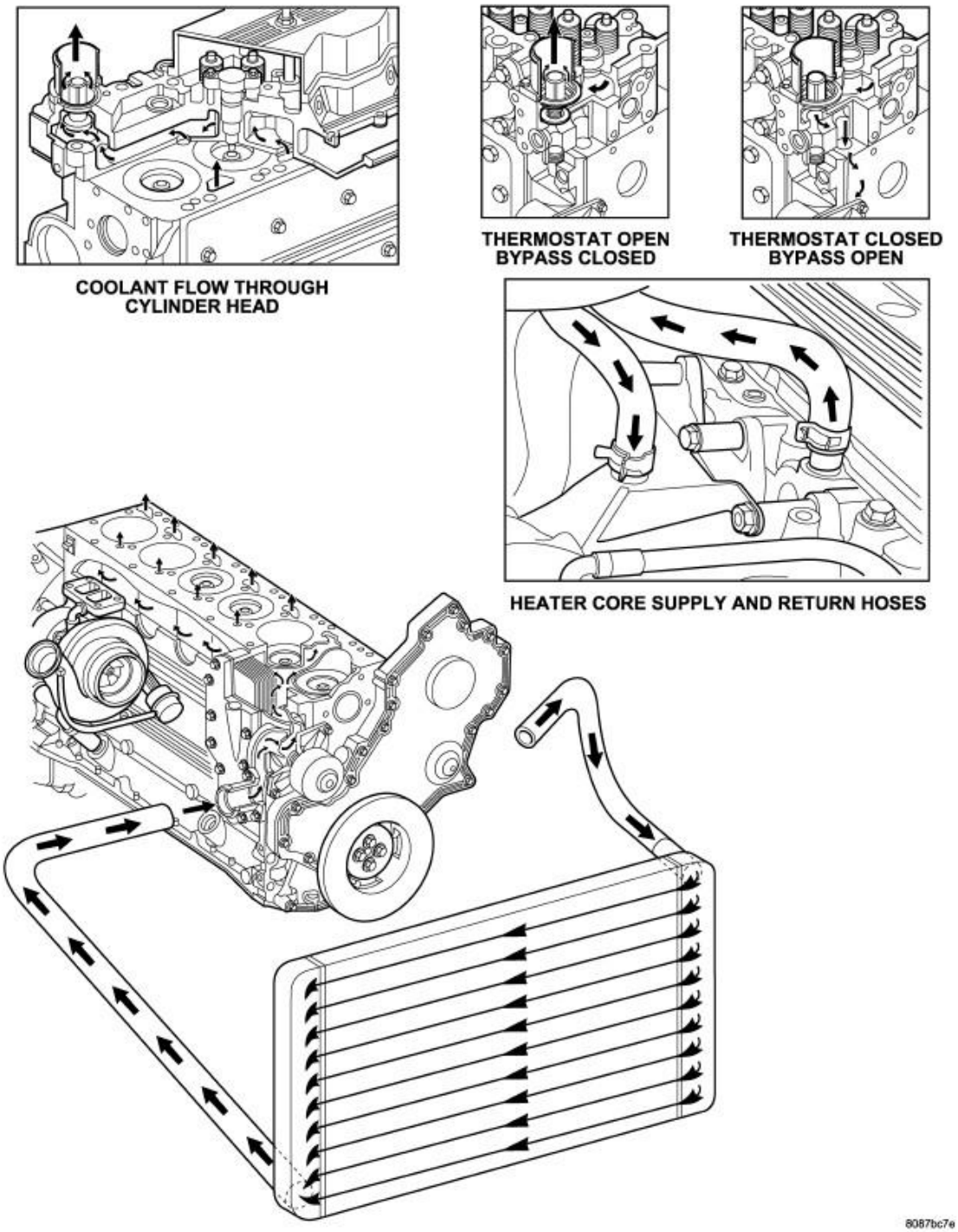

Fig. 3: Cooling System Circulation - Diesel Engine
Courtesy of CHRYSLER GROUP, LLC

The diesel engine cooling system consists of :

- Cross-flow radiator
- Belt driven water pump

- Belt driven Electronically Controlled Viscous fan drive (Diesel Engine)
- Engine mounted fan shroud
- Radiator pressure cap
- Vertically mounted thermostat
- Coolant reserve/recovery system
- Transmission Oil Cooler (Automatic Transmission Only)
- Engine mounted Transmission oil cooler
- Radiator mounted fan shroud
- EGR Cooler
- Turbocharger Actuator

OPERATION

OPERATION

The cooling system regulates engine operating temperature. It allows the engine to reach normal operating temperature as quickly as possible. It also maintains normal operating temperature and prevents overheating.

The cooling system also provides a source of hot coolant for heating the passenger compartment and cooling the automatic transmission fluid (if equipped). The cooling system is pressurized and uses a centrifugal water pump to circulate coolant throughout the system.

- When engine is cold the thermostat is closed. The cooling system has no flow through the radiator. The coolant flows through the engine, water pump, and heater.
- When engine is warm the thermostat is full open. One the gas engine coolant flows through the engine, radiator, heater, and water pump.

All engines utilize an ambient overflow bottle for coolant recovery/reserve.

An optional factory installed maximum duty cooling package is available on most models. This package will provide additional cooling capacity for vehicles used under extreme conditions such as trailer towing in high ambient temperatures.

DIAGNOSIS AND TESTING

PRELIMINARY CHECKS

ENGINE COOLING SYSTEM OVERHEATING

Establish what driving conditions caused the complaint. Abnormal loads on the cooling system such as the following may be the cause:

- Prolonged idle
- Very high ambient temperature

- Overloaded Truck
- Slow traffic
- Traffic jams
- High speed or steep grades
- Snow Plow restricting airflow through cooling module
- Debris on front of the grill or the cooling module that is restricting airflow

Driving techniques that avoid overheating are:

- Idle with A/C off when temperature gauge is at end of normal range.
- Increasing engine speed up to 2000 rpm with transmission in park or neutral for more airflow is recommended.
- If equipped with a snow plow. Activate the **snow plow** mode.

TRAILER TOWING:

Consult Trailer Towing section of the owners manual. Do not exceed the limits.

RECENT SERVICE OR ACCIDENT REPAIR:

Determine if any recent service has been performed on vehicle that may affect the cooling system. This may be:

- Engine adjustments (incorrect timing)
- Slipping engine accessory drive belt(s)
- Brakes (possibly dragging)
- Changed parts. Incorrect water pump or pump rotating in wrong direction due to belt not correctly routed
- Reconditioned radiator or cooling system refilling (possibly under filled or air trapped in system).
- Service to electrically controlled viscous fan clutch

NOTE: **If investigation reveals none of the previous items as a cause for an engine overheating complaint, refer to COOLING SYSTEM DIAGNOSIS CHART.**

These charts are to be used as a quick-reference only.

COOLING SYSTEM DIAGNOSIS CHART

CONDITION	POSSIBLE CAUSES	CORRECTION
TEMPERATURE GAUGE READS LOW **NOTE:** **Information on dash cluster is displayed based on broadcast data from PCM. DTC will be set for engine sensor circuit issues.**	1. Vehicle is equipped with a heavy duty cooling system.	1. None. System operating normally.

	2. Thermostat stuck open	2. Inspect and test thermostat. Refer to **THERMOSTAT, DIAGNOSIS AND TESTING**.
	3. Coolant level low.	3. Fill cooling system. Refer to **STANDARD PROCEDURE**.
	4. Temperature gauge not functioning correctly.	4. Check cluster. Refer to **DIAGNOSIS AND TESTING** .
	5. Engine sensor stuck in range	5. Monitor sensor with scan tool to verify sensor reading changes with increasing temperature.
	6. Engine sensor failed out of range.	6. A DTC will be set.
	7. Electronically Controlled Viscous Fan Drive/mechanical viscous fan not operating properly.	7. Check Electronically Controlled Viscous Fan Drive.
TEMPERATURE GAUGE READS HIGH. COOLANT MAY OR MAY NOT BE LEAKING FROM SYSTEM **NOTE:** **Temperature information displayed on dash cluster and EVIC are based on broadcast data from PCM. If engine temperatures exceed thresholds, power is reduced and a message of 'Oil Temp High - Speed May be Reduced' is displayed on the EVIC.** **NOTE:** **Beginning in MY2010, a 200 F thermostat is used in the Ram 2500 / 3500 pickup with the Cummins Turbo Diesel. It is normal for the coolant temperature gauge to read higher than in previous model years.**	1. Vehicle overloaded, high ambient (outside) temperatures with A/C turned on, stop and go driving or prolonged operation at idle speeds.	1. Temporary condition, repair not required. Notify customer of vehicle operation instructions located in Owners Manual.
	2. Electronically-controlled viscous fan clutch not functioning correctly.	2. Troubleshoot and if necessary repair the electronic viscous fan clutch.
	3. Temperature gauge not functioning correctly.	3. Check cluster. Refer to **DIAGNOSIS AND TESTING** .
	4. Air trapped in cooling system	4. Drain and refill cooling system. Refer to **STANDARD**

		PROCEDURE.
	5. Radiator cap faulty.	5. Replace radiator cap.
	6. Plugged A/C or radiator cooling fins.	6. Clean all debris away from A/C and radiator cooling fins.
	7. Coolant mixture incorrect.	7. Drain cooling system and refill with correct mixture. Refer to **STANDARD PROCEDURE**.
	8. Thermostat stuck shut.	8. Inspect and test thermostat. Refer to **THERMOSTAT, DIAGNOSIS AND TESTING**.
	9. Bug screen or winter front being used.	9. Remove bug screen or winter front.
	10. Electronically controlled viscous fan drive not operating properly.	10. Check viscous fan.
	11. Cylinder head gasket leaking.	11. Check for leaking head gaskets. Refer to **LEAK TESTING**.
	12. Heater core leaking.	12. Replace heater core. Refer to **CORE, HEATER, REMOVAL** .
	13. Cooling system hoses leaking.	13. Tighten clamps or Replace hoses.
	14. Brakes dragging.	14. Check brakes. Refer to **DIAGNOSIS AND TESTING** .
	15. Accessory drive belt.	15. Inspect and replace as necessary. Refer to **BELT, SERPENTINE, DIAGNOSIS AND TESTING**.
	16. Water Pump.	16. Inspect and replace as necessary.
	17. Engine sensor stuck in range.	17. Monitor sensor with scan tool to verify sensor reading changes increase in temperature.
	18. Temperature sensor failed - Too High	18. Clear the existing overheat fault. Drive the vehicle until thermostat opens. Verify that fault code does not return and coolant does not reach threshold of 230 degrees F.
TEMPERATURE GAUGE READING INCONSISTENT (ERRATIC, CYCLES OR FLUCTUATES) **NOTE:**	1. Heavy duty cooling system, extreme cold ambient (outside) temperature or heater blower motor in high position.	1. None. System operating normally.

Information on dash cluster is displayed based on broadcast data from PCM. DTC will be set for engine sensor circuit issues.		
	2. Temperature gauge or sensor defective.	2. Check cluster or engine coolant temp sensor. Refer to **DIAGNOSIS AND TESTING** .
	3. Temporary heavy usage or load.	3. None. Normal condition.
	4. Air trapped in cooling system.	4. Fill cooling system. Refer to **STANDARD PROCEDURE**.
	5. Water pump.	5. Replace water pump.
	6. Air leak on suction side of water pump.	6. Check for leak. Refer to **LEAK TESTING**.
RADIATOR CAP LEAKING STEAM AND OR COOLANT INTO RESERVOIR BOTTLE. (TEMPERATURE GAUGE MAY READ HIGH)	1. Radiator cap defective.	1. Replace radiator cap.
	2. Radiator neck surface damaged.	2. Replace radiator. Refer to **REMOVAL**.
HOSE OR HOSES COLLAPSE WHEN ENGINE IS COOLING.	1. Vacuum created in cooling system on engine cool-down is not being relieved through coolant reservoir/overflow system.	1. Replace radiator cap, check vent hose between radiator and reservoir bottle for blockage also check reservoir bottle vent for blockage.
NOISY FAN	1. Fan blade(s) loose, damaged.	1. Replace fan blade assembly.
	2. Electronically controlled viscous fan drive/mechanical viscous fan.	2. None. Normal condition.
	3. Fan blades striking surrounding objects.	3. Locate contact point and repair as necessary.
	4. Electronically controlled viscous fan drive/mechanical viscous fan bearing concern.	4. Check viscous fan drive.
	5. Electronically controlled viscous fan/mechanical viscous fan stuck on.	5. Check viscous fan drive.
	6. Obstructed air flow through radiator.	6. Remove obstruction.
INADEQUATE AIR CONDITIONER PERFORMANCE (COOLING SYSTEM SUSPECTED)	1. Radiator and/or A/C condenser air flow obstructed.	1. Remove obstruction and/or clean.
	2. Electronically controlled viscous fan drive/ /mechanical viscous fan not working.	2. Check viscous fan drive.
	3. Air seals around radiator damaged or missing.	3. Inspect air seals, repair or replace as necessary.
INADEQUATE HEATER	1. Heavy duty cooling system, and	1. None. Normal condition.

PERFORMANCE. GAUGE MAY OR MAY NOT READ LOW.	cooler ambient temperatures.	
	2. Obstruction in heater hoses.	2. Remove hoses, remove obstruction.
	3. Electronically controlled viscous fan/ /mechanical viscous fan stuck on.	Check viscous fan drive.
	4. Water pump damaged.	4. Replace water pump.
HEAT ODOR	1. Damaged or missing exhaust system heat shields.	1. Repair or replace damaged or missing exhaust system heat shields. Refer to **SHIELD, HEAT, DESCRIPTION** .
	2. Electronically controlled viscous fan drive//mechanical viscous fan damaged.	2. Check viscous fan drive.

LEAK TESTING

ULTRAVIOLET LIGHT METHOD

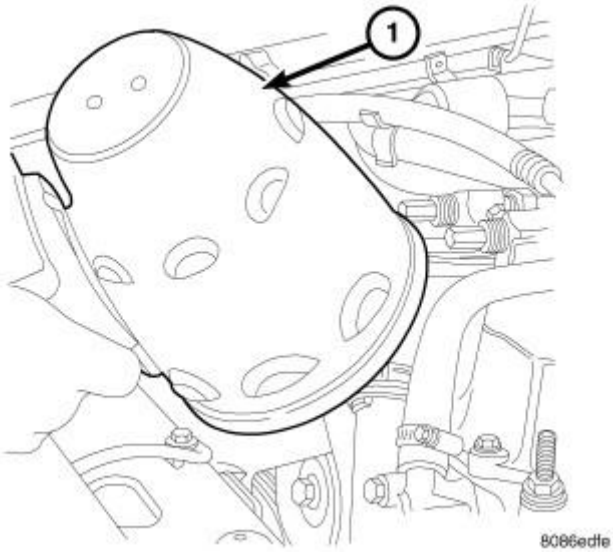

Fig. 4: Identifying Ultraviolet Light Method
Courtesy of CHRYSLER GROUP, LLC

1 - TYPICAL BLACK LIGHT TOOL

A leak detection additive is available through the parts department that can be added to cooling system. The additive is highly visible under ultraviolet light (black light) (1). Pour one ounce of additive into cooling system. Place heater control unit in HEAT position. Start and operate the engine until the radiator upper hose is warm to the touch. Aim the commercially available black light tool at the components to be checked. If leaks are present, the black light will cause the additive to glow a bright green color.

The black light can be used in conjunction with a pressure tester to determine if any external leaks exist.

PRESSURE TESTER METHOD

The engine should be at normal operating temperature. Recheck the system cold if the cause of coolant loss is not located during the warm engine examination.

> WARNING: **Hot, pressurized coolant can cause injury by scalding.**

Carefully remove the radiator pressure cap from the filler neck and check the coolant level. Push down on the cap to disengage it from the stop tabs. Wipe the inside of the filler neck and examine the lower inside sealing seat for nicks, cracks, paint, dirt and solder residue. Inspect the radiator-to- reserve/overflow tank hose for internal obstructions. Insert a wire through the hose to be sure it is not obstructed.

Inspect the cams on the outside of the filler neck. If the cams are damaged, seating of the pressure cap valve and tester seal will be affected.

Attach pressure tester ((special tool #7700, Tester, Cooling System) or an equivalent) to radiator filler neck.

Operate the tester pump to apply 103.4 kPa (15 psi) pressure to the system. If the hoses enlarge excessively or bulges while testing, replace as necessary. Observe the gauge pointer and determine the condition of the cooling system according to following criteria:

Holds Steady: If the pointer remains steady for two minutes, serious coolant leaks are not present in system. However, there could be an internal leak that does not appear with normal system test pressure. If it is certain that coolant is being lost and leaks cannot be detected, inspect for interior leakage or perform Internal Leakage Test. Refer to **INTERNAL LEAKAGE INSPECTION**.

Drops Slowly: Indicates a small leak or seepage is occurring. Examine all of the connections for seepage or slight leakage with a flashlight. Inspect the radiator, hoses, gasket edges and heater. Seal the small leak holes with a Sealer Lubricant (or equivalent). Repair the leak holes and inspect the system again with pressure applied.

Drops Quickly: Indicates that serious leakage is occurring. Examine the system for external leakage. Block side panels are embossed to highlight core plugs. Remove embossed noise panels to inspect and or repair core plugs. If leaks are not visible, inspect for internal leakage.

INTERNAL LEAKAGE INSPECTION

Remove the engine oil pan drain plug and drain a small amount of engine oil. If coolant is present in the pan, it will drain first because it is heavier than oil. An alternative method is to operate engine for a short period to churn the oil. After this is done, remove the engine dipstick and inspect for water globules. Also inspect the transmission dipstick for water globules and transmission fluid cooler for leakage.

> WARNING: **With radiator pressure tester tool installed on radiator, do not allow pressure to exceed 145 kpa (21 psi). Pressure will build up quickly if a combustion leak is present. To release pressure, rock tester from side to side. When removing tester, do not turn tester more than 1/2 turn if**

system is under pressure.

Operate the engine without the pressure cap on the radiator until the thermostat opens. Attach a Pressure Tester to the filler neck. If pressure builds up quickly it indicates a combustion leak exists. This is usually the result of a cylinder head gasket leak or crack in engine. Repair as necessary.

If there is not an immediate pressure increase, pump the Pressure Tester. Do this until indicated pressure is within system range of 110 kPa (16 psi). Fluctuation of the gauge pointer indicates compression or combustion leakage into cooling system.

Because the vehicle is equipped with a catalytic converter, **do not** short out cylinders to isolate compression leak.

If the needle on dial of the pressure tester does not fluctuate, race engine a few times to check for an abnormal amount of coolant or steam. This would be emitting from exhaust pipe. Coolant or steam from exhaust pipe may indicate a faulty cylinder head gasket, cracked engine cylinder block or cylinder head.

COMBUSTION LEAKAGE TEST - WITHOUT PRESSURE TESTER

DO NOT WASTE reusable coolant. If the solution is clean, drain the coolant into a clean container for reuse.

WARNING: **Do not remove cylinder block drain plugs or loosen radiator draincock with system hot and under pressure. Serious burns from coolant can occur.**

Drain sufficient coolant to allow thermostat removal. Refer to **THERMOSTAT, REMOVAL**. Remove accessory drive belt. Refer to **BELT, SERPENTINE, REMOVAL**.

Add coolant to radiator to bring level to within 6.3 mm (1/4 in) of the top of the thermostat housing.

CAUTION: **Avoid overheating. Do not operate engine for an excessive period of time. Open draincock immediately after test to eliminate boil over.**

Start engine and accelerate rapidly three times, to approximately 3000 rpm while observing coolant. If internal engine combustion gases are leaking into cooling system, bubbles will appear in coolant. If bubbles do not appear, internal combustion gas leakage is not present.

STANDARD PROCEDURE

CLEANING/REVERSE FLUSHING

CLEANING

Drain the cooling system and refill with water. Run the engine with the radiator cap installed until the upper radiator hose is hot. Stop the engine and drain the water from system. If the water is dirty, fill the system with water, run the engine and drain the system. Repeat this procedure until the water drains clean.

REVERSE FLUSHING

Reverse flushing of the cooling system is the forcing of water through the cooling system. This is done using air pressure in the opposite direction of normal coolant flow. It is usually only necessary with very dirty systems with evidence of partial plugging.

REVERSE FLUSHING RADIATOR

Disconnect the radiator hoses from the radiator inlet and outlet. Attach a section of the radiator hose to the radiator bottom outlet fitting and insert the flushing gun. Connect a water supply hose and air supply hose to the flushing gun.

CAUTION: Internal radiator pressure must not exceed 138 kPa (20 psi) as damage to radiator may result.

Allow the radiator to fill with water. When the radiator is filled, apply air in short blasts. Allow the radiator to refill between blasts. Continue this reverse flushing until clean water flows out through the rear of the radiator cooling tube passages.

REVERSE FLUSHING ENGINE

Drain the cooling system. Remove the thermostat housing and thermostat. Install the thermostat housing. Disconnect the radiator upper hose from the radiator and attach the flushing gun to the hose. Disconnect the radiator lower hose from the water pump and attach a lead-away hose to the water pump inlet fitting.

CAUTION: On vehicles equipped with a heater water control valve, be sure the heater control valve is closed (heat off). This will prevent coolant flow with scale and other deposits from entering the heater core.

Connect the water supply hose and air supply hose to flushing gun. Allow the engine to fill with water. When the engine is filled, apply air in short blasts, allowing the system to fill between air blasts. Continue until clean water flows through the lead away hose.

Remove the lead away hose, flushing gun, water supply hose and air supply hose. Remove the thermostat housing and install the thermostat. Install the thermostat housing with a replacement gasket. Refer to **INSTALLATION**. Connect the radiator hoses. Refill the cooling system with the correct antifreeze/water mixture. Refer to **CAPACITIES AND RECOMMENDED FLUIDS, DESCRIPTION** .

CHEMICAL CLEANING

In some instances, use a radiator cleaner (Mopar® Radiator Kleen or equivalent) before flushing. This will soften scale and other deposits and aid flushing operation.

CAUTION: Follow manufacturers instructions when using these products.

DRAINING

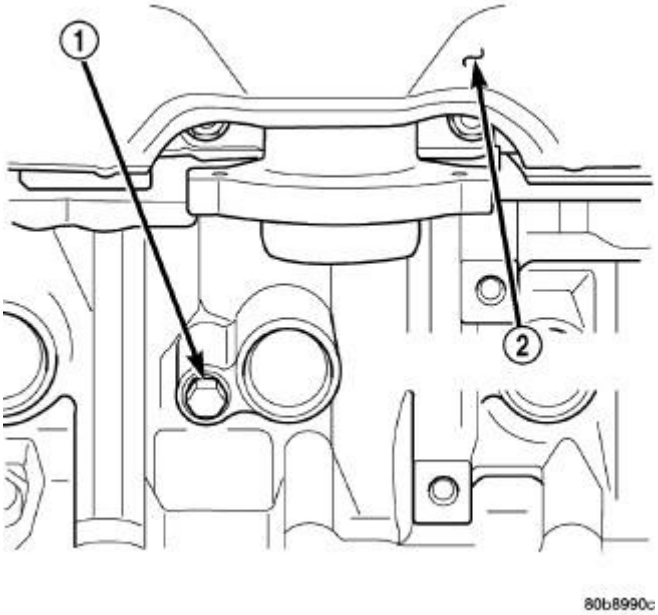

Fig. 5: Identifying Cylinder Block Drain Plugs
Courtesy of CHRYSLER GROUP, LLC

1 - CYLINDER BLOCK DRAIN PLUG
2 - EXHAUST MANIFOLD AND HEAT SHIELD

WARNING: **Do not remove cylinder block drain plugs or loosen radiator draincock with system hot and under pressure. Serious burns from coolant can occur.**

DO NOT WASTE reusable coolant. If solution is clean, drain coolant into a clean container for reuse.

1. Attach one end of a hose to the draincock. Put the other end into a clean container.
2. **DO NOT REMOVE THE RADIATOR CAP** when draining the coolant from the reservoir/overflow tank. Open radiator draincock and when the tank is empty, remove the radiator cap and continue draining the cooling system.
3. If draining the entire engine, remove the cylinder block drain plugs (1).

STANDARD PROCEDURE - COOLANT AIR EVACUATION

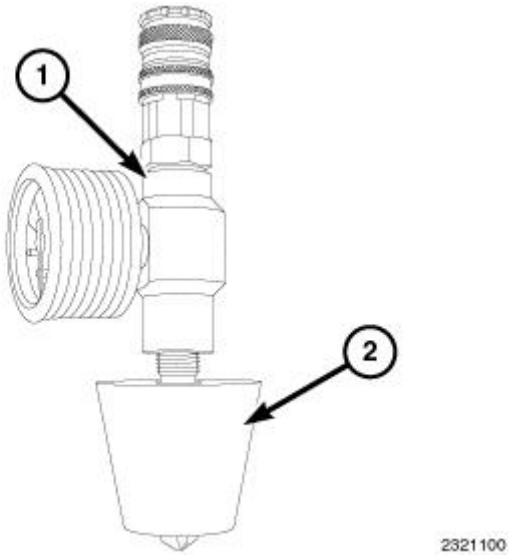

Fig. 6: Pressurized Air Operated Vacuum Generator
Courtesy of CHRYSLER GROUP, LLC

Evacuating or purging air from the cooling system involves the use of a pressurized air operated vacuum generator. The vacuum created allows for a quick and complete coolant refilling while removing any airlocks present in the system components.

NOTE: **To avoid damage to the cooling system, ensure that no component would be susceptible to damage when a vacuum is drawn on the system.**

WARNING: **ANTIFREEZE IS AN ETHYLENE GLYCOL BASE COOLANT AND IS HARMFUL IF SWALLOWED OR INHALED. IF SWALLOWED, DRINK TWO GLASSES OF WATER AND INDUCE VOMITING. IF INHALED, MOVE TO FRESH AIR AREA. SEEK MEDICAL ATTENTION IMMEDIATELY. DO NOT STORE IN OPEN OR UNMARKED CONTAINERS. WASH SKIN AND CLOTHING THOROUGHLY AFTER COMING IN CONTACT WITH ETHYLENE GLYCOL. KEEP OUT OF REACH OF CHILDREN. DISPOSE OF GLYCOL BASED COOLANT PROPERLY. CONTACT YOUR DEALER OR GOVERNMENT AGENCY FOR LOCATION OF COLLECTION CENTER IN YOUR AREA. DO NOT OPEN A COOLING SYSTEM WHEN THE ENGINE IS AT OPERATING TEMPERATURE OR HOT UNDER PRESSURE; PERSONAL INJURY CAN RESULT. AVOID RADIATOR COOLING FAN WHEN ENGINE COMPARTMENT RELATED SERVICE IS PERFORMED; PERSONAL INJURY CAN RESULT.**

WARNING: **WEAR APPROPRIATE EYE AND HAND PROTECTION WHEN PERFORMING THIS PROCEDURE.**

NOTE: **The service area where this procedure is performed should have a minimum shop air requirement of 80 PSI (5.5 bar) and should be equipped with an air**

dryer system.

NOTE: **For best results, the radiator should be empty. The vehicle's heater control should be set to the heat position (ignition may need to be turned to the on position but do not start the motor).**

1. Refer to the Chrysler Pentastar Service Equipment (Chrysler PSE) Coolant Refiller #85-15-0650 or equivalent tool's operating manual for specific assembly steps.
2. Choose an appropriate adapter cone that will fit the vehicle's radiator filler neck or reservoir tank.
3. Attach the adapter cone (2) to the vacuum gauge (1).

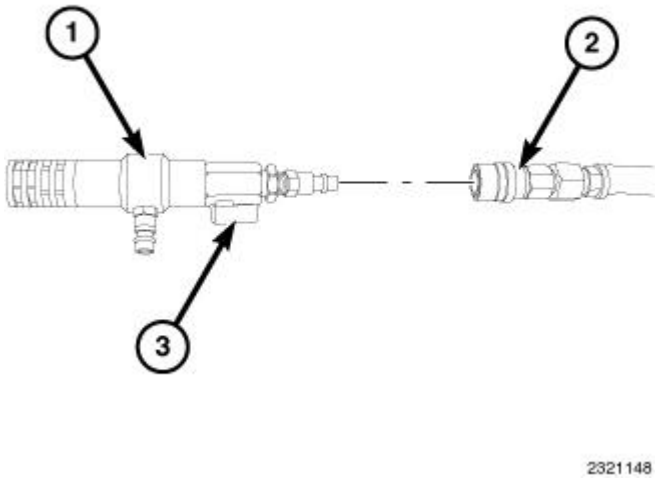

Fig. 7: Vacuum Generator/Venturi Ball Valve
Courtesy of CHRYSLER GROUP, LLC

4. Make sure the vacuum generator/venturi ball valve (3) is closed and attach an airline hose (2) (minimum shop air requirement of 80 PSI/5.5 bar) to the vacuum generator/venturi (1).
5. Position the adaptor cone/vacuum gauge assembly into the radiator filler neck or reservoir tank. Ensure that the adapter cone is sealed properly.

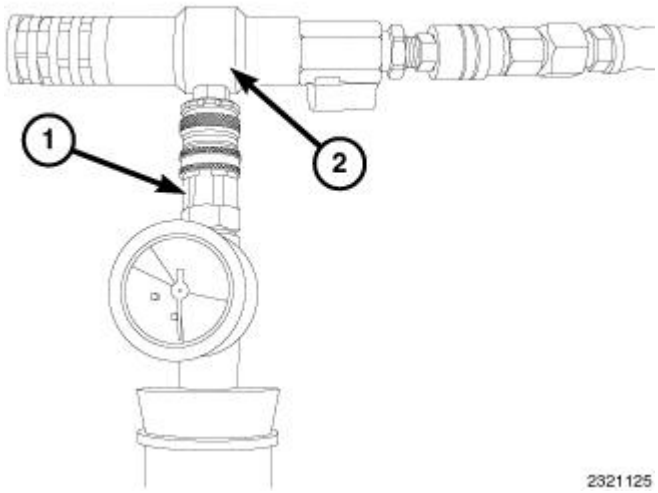

Fig. 8: Vacuum Generator/Venturi
Courtesy of CHRYSLER GROUP, LLC

6. Connect the vacuum generator/venturi (2) to the positioned adaptor cone/vacuum gauge assembly (1).
7. Open the vacuum generator/venturi ball valve.

NOTE: **Do not bump or move the assembly as it may result in loss of vacuum. Some radiator overflow hoses may need to be clamped off to obtain vacuum.**

8. Let the system run until the vacuum gauge shows a good vacuum through the cooling system. Refer to the tool's operating manual for appropriate pressure readings.

NOTE: **If a strong vacuum is being created in the system, it is normal to see the radiator hoses to collapse.**

9. Close the vacuum generator/venturi ball valve.

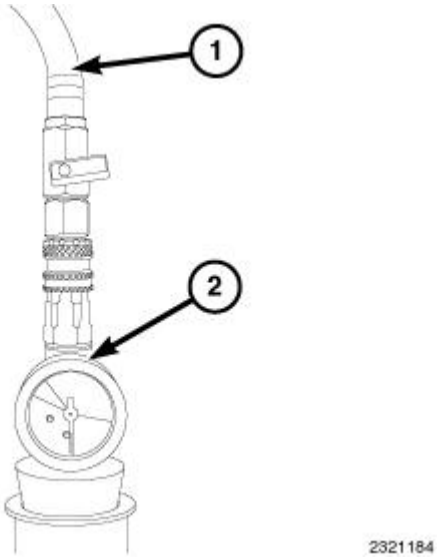

Fig. 9: Vacuum Generator/Venturi & Air Line
Courtesy of CHRYSLER GROUP, LLC

10. Disconnect the vacuum generator/venturi and airline from the adaptor cone/vacuum gauge assembly.
11. Wait approximately 20 seconds, if the pressure readings do not move, the system has no leaks. If the pressure readings move, a leak could be present in the system and the cooling system should be checked for leaks and the procedure should be repeated.
12. Place the tool's suction hose into the coolant's container.

NOTE: **Ensure there is a sufficient amount of coolant, mixed to the required strength/protection level available for use. For best results and to assist the refilling procedure, place the coolant container at the same height as the radiator filler neck. Always draw more coolant than required. If the coolant level is too low, it will pull air into the cooling system which could result in airlocks in the system.**

13. Connect the tool's suction hose (1) to the adaptor cone/vacuum gauge assembly (2).

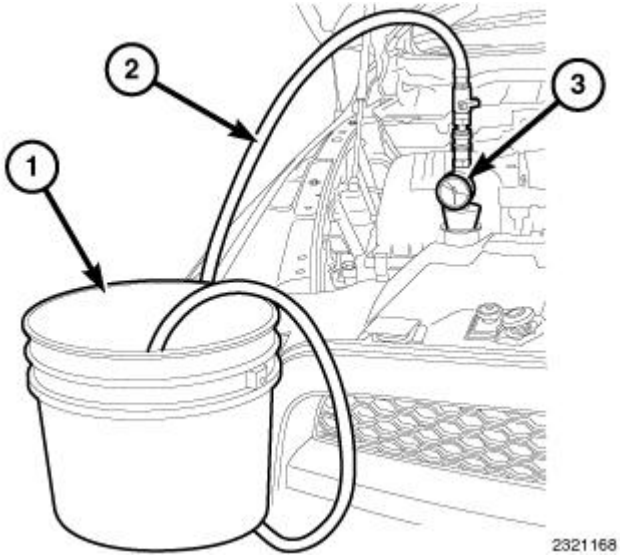

Fig. 10: Refilling Cooling System
Courtesy of CHRYSLER GROUP, LLC

14. Open the suction hose's ball valve to begin refilling the cooling system.
15. When the vacuum gauge reads zero, the system is filled.

NOTE: On some remote pressurized tanks, it is recommended to stop filling when the proper level is reached.

16. Close the suction hose's ball valve and remove the suction hose from the adaptor cone/vacuum gauge assembly.
17. Remove the adaptor cone/vacuum gauge assembly from the radiator filler neck or reservoir tank.
18. With heater control unit in the HEAT position, operate engine with container cap in place.
19. After engine has reached normal operating temperature, shut engine off and allow it to cool. When engine is cooling down, coolant will be drawn into the radiator from the pressure container.
20. Add coolant to the recovery bottle/container as necessary. **Only add coolant to the container when the engine is cold. Coolant level in a warm engine will be higher due to thermal expansion.** Add necessary coolant to raise container level to the COLD MINIMUM mark after each cool down period.
21. Once the appropriate coolant level is achieved, attach the radiator cap or reservoir tank cap.

DRAINING - DIESEL ENGINE

WARNING: Do not remove the cylinder block drain plugs or loosen the radiator drain plug with system hot and under pressure. Serious burns from coolant can occur.

DO NOT WASTE reusable coolant. If the solution is clean, drain the coolant into a clean container for reuse.

1. Start the engine and place the heater control temperature selector in the Full-On position.

2. Turn the ignition off.
3. Do not remove radiator cap when draining coolant from coolant recovery container. Open radiator drain plug and when coolant recovery container is empty, remove radiator cap. If the coolant recovery container does not drain. Refer to **DIAGNOSIS AND TESTING**.
4. Remove radiator pressure cap.

STANDARD PROCEDURE - FILLING

WARNING: ANTIFREEZE COOLANT IS HARMFUL IF SWALLOWED OR INHALED. IF SWALLOWED, DRINK TWO GLASSES OF WATER AND INDUCE VOMITING. IF INHALED, MOVE TO FRESH AIR AREA. SEEK MEDICAL ATTENTION IMMEDIATELY. DO NOT STORE IN OPEN OR UNMARKED CONTAINERS. WASH SKIN AND CLOTHING THOROUGHLY AFTER COMING IN CONTACT WITH ETHYLENE GLYCOL. KEEP OUT OF REACH OF CHILDREN. DISPOSE OF GLYCOL BASED COOLANT PROPERLY. CONTACT YOUR DEALER OR GOVERNMENT AGENCY FOR LOCATION OF COLLECTION CENTER IN YOUR AREA. DO NOT OPEN A COOLING SYSTEM WHEN THE ENGINE IS AT OPERATING TEMPERATURE OR HOT UNDER PRESSURE; PERSONAL INJURY CAN RESULT. AVOID RADIATOR COOLING FAN AND OTHER MOVING COMPONENTS WHEN ENGINE COMPARTMENT RELATED SERVICE IS PERFORMED; PERSONAL INJURY CAN RESULT.

WARNING: WEAR APPROPRIATE EYE AND HAND PROTECTION WHEN PERFORMING THIS PROCEDURE.

CAUTION: Do not use well water or suspect water supply in cooling system. A 50/50 mixture of the recommended antifreeze coolant and distilled water is recommended.

NOTE: Cooling system fill procedure is critical to overall cooling system performance.

NOTE: Make sure all hoses are connected and radiator draincock is closed. Draincock should be hand tightened only.

6.7L

CAUTION: All air must be purged from the 6.7L engine when refilling the cooling system. Failure to do so can cause EGR Cooler cracking which can lead to catastrophic engine and exhaust system damage.

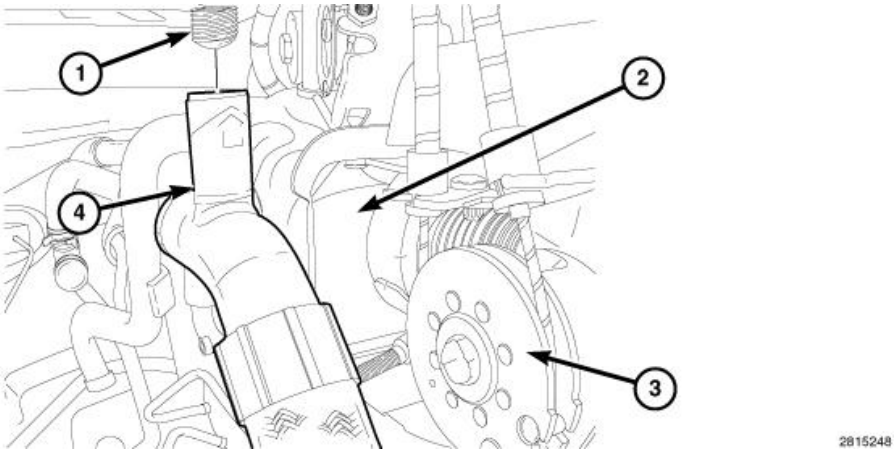

Fig. 11: Vent Fitting
Courtesy of CHRYSLER GROUP, LLC

1. Close radiator drain plug.
2. Remove the vent fitting (1) located near the EGR cooler (2).
3. If using funnel 8195:
    1. Remove cooling system pressure cap. Attach Filling Aid Funnel (special tool #8195, Funnel), to coolant pressure container filler neck.
    2. Use the supplied clip to pinch overflow hose.
    3. Pour coolant into the larger section of Filling Aid Funnel (the smaller section of funnel is to allow air to escape).
    4. Continue filling until a steady stream of coolant flows from the vent hole.
    5. Install vent fitting when coolant is free of bubbles.
    6. Tighten the bleed plug to 6 N.m (55 in. lbs.).
    7. Remove clip from overflow hose.
    8. Allow coolant in Filling Aid Funnel to drain into overflow chamber of pressure container.
    9. Remove Filling Aid Funnel. (special tool #8195, Funnel)
    10. Install the pressure cap.

NOTE: **The diesel engine is equipped with two one-way check valves (jiggle pins). The check valves are used as a servicing feature and will vent air when the system is being filled. Water pressure (or flow) will hold the valves closed.**

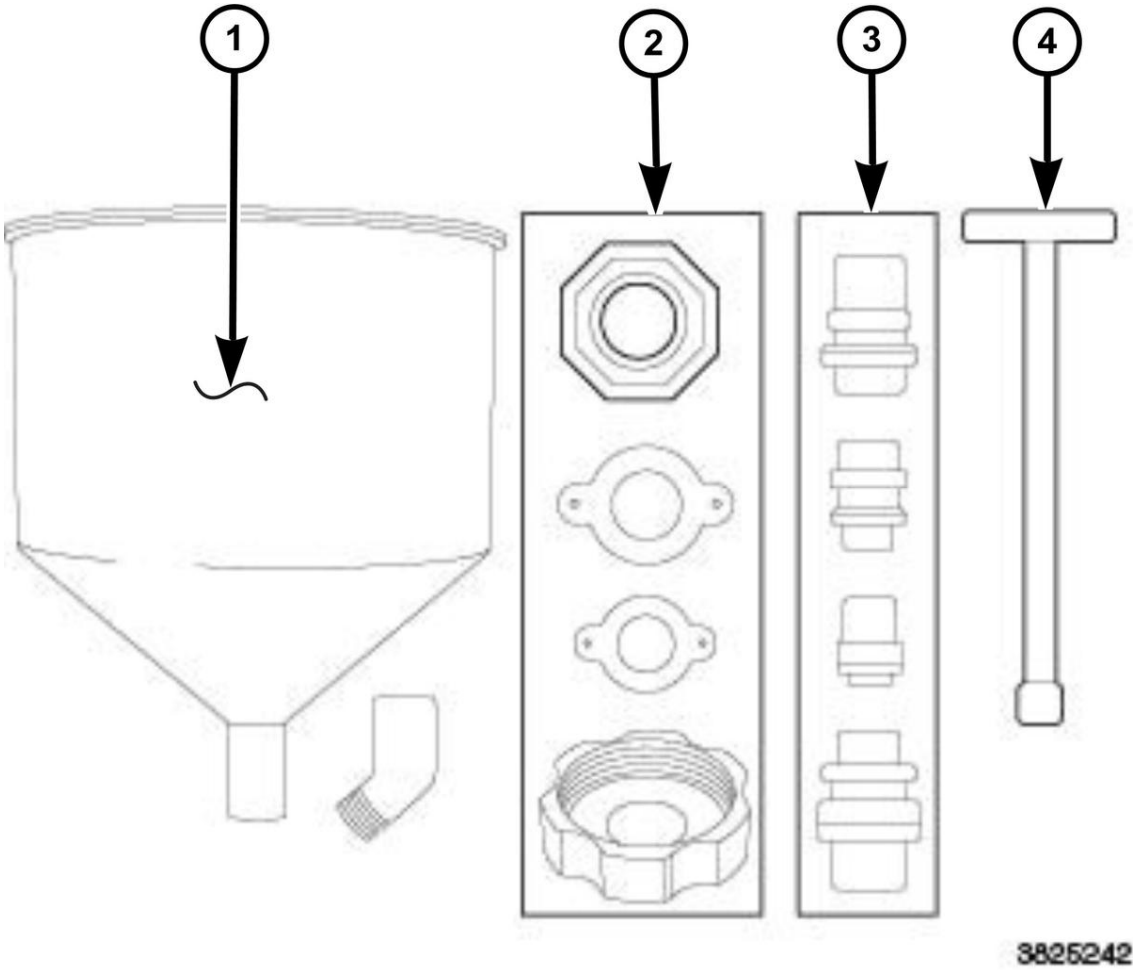

Fig. 12: Locating Funnel, Locking Ring, Fitting Extension & Stopper
Courtesy of CHRYSLER GROUP, LLC

NOTE: **The 8195A does not require pinching off the overflow hose. The adapter seal prevents liquid from entering the overflow during coolant fill.**

4. If using Special Tool 8195A:
    1. Select the appropriate fitting extension (3) and locking ring (2) and attach to the fill neck of the cooling system.
    2. Make sure the adapter seal fits firmly against the inside of the fill neck base to ensure a good seal. After the extension and locking ring are installed, make sure the extension can not be moved. This will confirm a good seal.
    3. Attach the funnel (1) to the extension (1) and fill with coolant.
    4. Add coolant to the funnel. Continue to add coolant until a steady stream of coolant flows from the vent hole.
    5. Install the vent fitting when coolant is free of bubbles.
    6. Tighten the vent fitting to 6 N.m (55 in. lbs.).
    7. Install the stopper (4) into the funnel base. The stopper will prevent the fluid that is left in the

funnel from spilling out when separated from the extension.

8. Remove the funnel, extension and locking ring and install the cap.

5. Start and operated the engine. Take the vehicle on a test drive till operating temperature is reached. Shut the engine down and wait till engine is cool.
6. Slowly loosen vent fitting (1) to purge any trapped air. If air is still present. Repeat step 3 - 5.
7. Check coolant level in coolant recovery container. Fill to FULL line.
8. The volume of coolant added to the engine must be within 1.5 quarts of the volume drained. If this requirement has not been met, repeat steps 2 - 9.
9. Remove Tool. Install radiator cap.

5.9L

NOTE: **The diesel engine is equipped with two one-way check valves (jiggle pins). The check valves are used as a servicing feature and will vent air when the system is being filled. Water pressure (or flow) will hold the valves closed.**

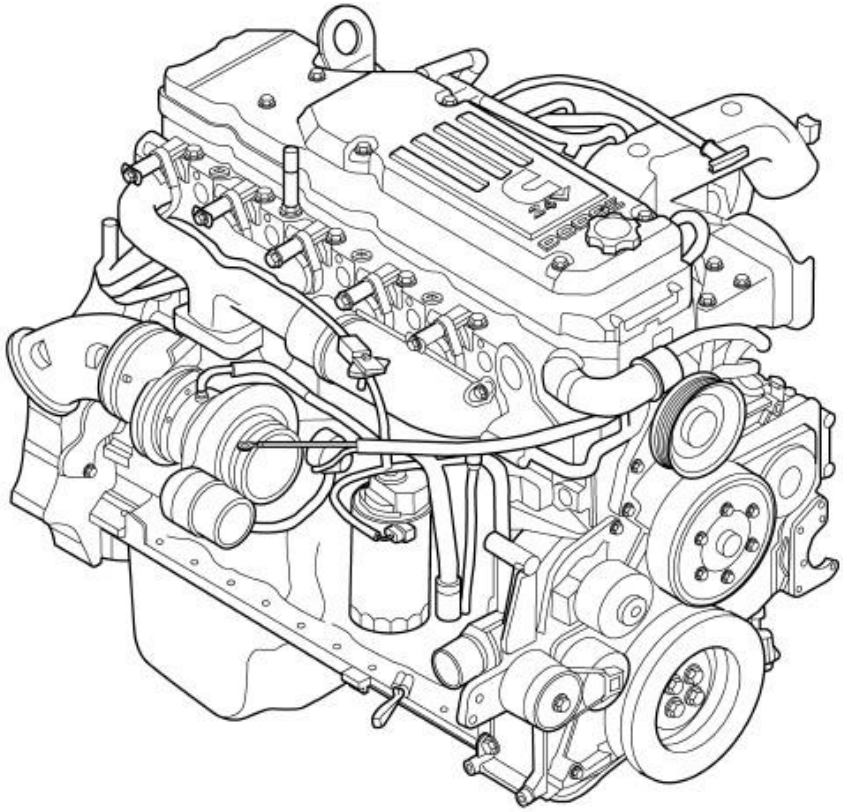

81025fe5

Fig. 13: Cummins(R) 24-Valve Turbo-Diesel Engine
Courtesy of CHRYSLER GROUP, LLC

Clean cooling system prior to refilling. Refer to **STANDARD PROCEDURE**.

1. Close radiator drain plug.

2. If using funnel 8195:
    1. Remove cooling system pressure cap. Attach Filling Aid Funnel (special tool #8195, Funnel), to coolant pressure container filler neck.
    2. Use the supplied clip to pinch overflow hose.
    3. Pour coolant into the larger section of Filling Aid Funnel (the smaller section of funnel is to allow air to escape).
    4. Add coolant until some coolant remains in the funnel and no more air bubbles appear in the fluid.
    5. Remove clip from overflow hose.
    6. Allow coolant in Filling Aid Funnel to drain into overflow chamber of pressure container.
    7. Remove Filling Aid Funnel. (special tool #8195, Funnel)
    8. Install the pressure cap.

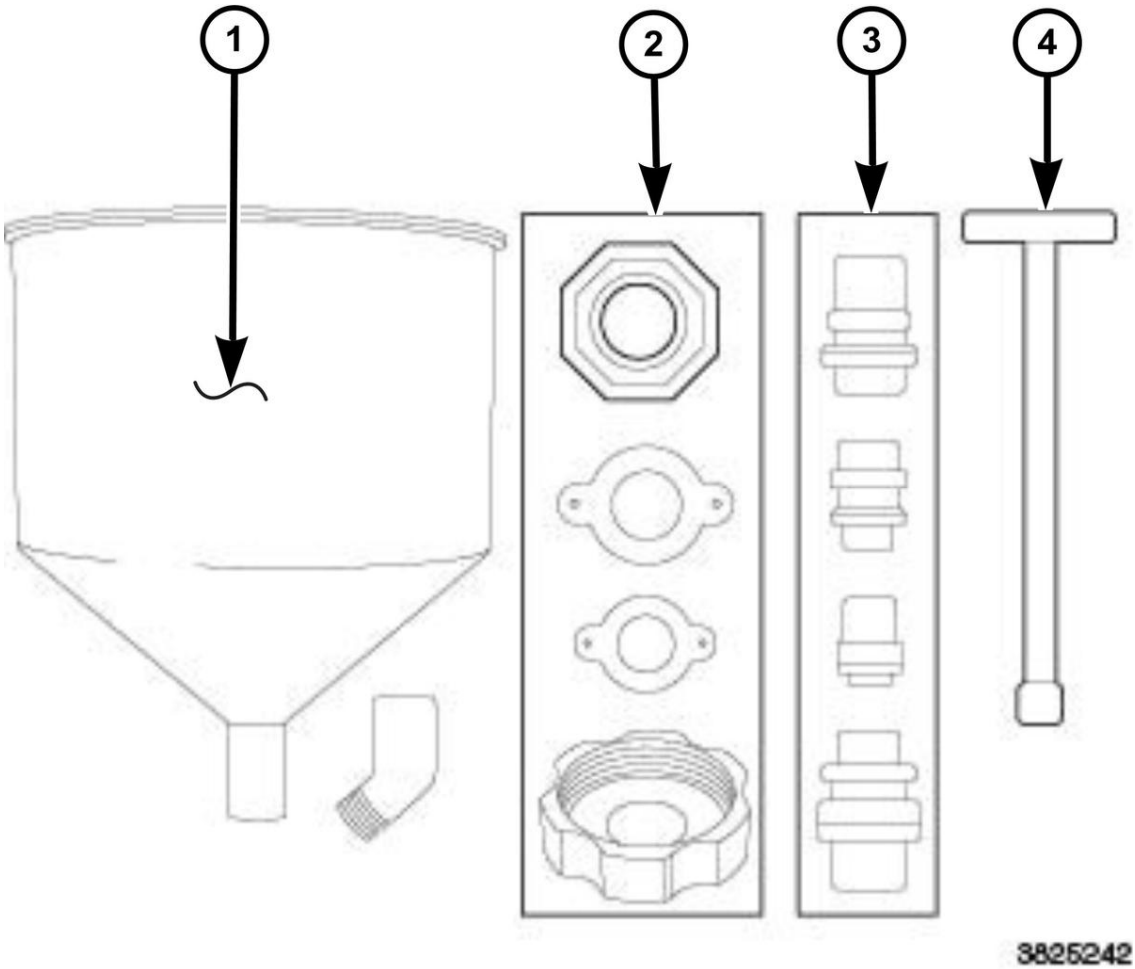

Fig. 14: Locating Funnel, Locking Ring, Fitting Extension & Stopper
Courtesy of CHRYSLER GROUP, LLC

NOTE: **The 8195A does not require pinching off the overflow hose. The adapter seal prevents liquid from entering the overflow during coolant fill.**

3. If using Special Tool 8195A:
    1. Select the appropriate fitting extension (3) and locking ring (2) and attach to the fill neck of the cooling system.
    2. Make sure the adapter seal fits firmly against the inside of the fill neck base to ensure a good seal. After the extension and locking ring are installed, make sure the extension can not be moved. This will confirm a good seal.
    3. Attach the funnel (1) to the extension (3) and fill with coolant.
    4. Add coolant to the funnel.

       Continue to add coolant until it is free of bubbles.

    5. Install the stopper (4) into the funnel base. The stopper will prevent the fluid that is left in the funnel from spilling out when separated from the extension.
    6. Remove the funnel, extension and locking ring and install the cap.
4. Fill coolant recovery container to the FULL mark.
5. Start and operate engine until thermostat opens. Upper radiator hose should be warm to touch.
6. Accelerate engine from idle to 2500 RPM five times.
7. Shut off engine. Allowing cooling system to settle. Fill coolant recovery container to FULL line.
8. Start and operate engine. Take vehicle for a test drive till operating temperature is reached.
9. Shut off engine. Allow engine to cool. Fill coolant recovery container to FULL line.
10. The volume of coolant added to the engine must be within 1.5 quarts of the volume drained. If this requirement has not been met, repeat steps 1 - 13.
11. Install radiator cap.

SPECIFICATIONS

TORQUE SPECIFICATIONS

DESCRIPTION	N.m	Ft. Lbs.	In. Lbs.
Bolt - Automatic Belt Tensioner to Block	41	30	-
Bolt - Automatic Belt Tensioner Pulley	61	45	-
Engine Mounted Fan Shroud Brackets (Upper and Lower)	24	18	-
Fan Shroud Ring to Fan Shroud Brackets	12	9	106
Bolt - Block Heater	2	-	18
Bolts - Generator Mounting Bracket			
Front horizontal mounting bolts	54	40	-
Rear vertical mounting bolt	40	30	-
Bolts - Fan Shroud to Radiator Mounting	10	7	89
Bolts - Radiator to Support	8	-	71
Bolts - Fan Blade to Viscous Fan Drive	24	18	-
Fan Drive	50	37	-

Bolts - Thermostat Housing	13	10	115
Bolts - Power Steering Oil Cooler	8	-	71
Bolts - Transmission Auxiliary Oil Cooler	6	-	53
Nuts - Transmission Oil Cooler Tube	31	23	-
Bolts - Coolant Recovery Container	10	7	89
Tube Nut - Fan Motor - Pressure Line	47	35	-
Tube Nut - Fan Motor - Return Line	29	21	-
Plug - Bleed	6	-	53
Tube Nuts - Transmission Oil Cooler to Transmission	20	15	-
Bolts - Water Pump - 5.7L	24	18	-
Bolts - Water Pump - 3.7L/4.7L	58	43	-

TORQUE SPECIFICATIONS - DIESEL ENGINE

DESCRIPTION	N.m	Ft. Lbs.	In. Lbs.
Bolt - Automatic Belt Tensioner to Block	41	30	-
Bolt - Automatic Belt Tensioner Pulley - Diesel	43	32	-
Engine Mounted Fan Shroud Brackets (Upper and Lower)	24	18	-
Fan Shroud Ring to Fan Shroud Brackets	12	-	108
Bolt - Block Heater	2	-	17
Bolts - Generator/Compressor Mounting Bracket			
# 1 and 2	54	40	-
# 3	40	30	-
Bolts - Generator/Compressor Mounting Bracket - Diesel (4 mounting holes)	24	18	-
Bolts - Fan Shroud to Radiator Mounting	12	-	105
Bolts - Radiator to Support	8	-	75
Bolts - Fan Blade to Viscous Fan Drive	24	18	-
Fan Drive -Diesel	115	85	-
Bolt - Idler Pulley - Diesel	43	32	-
Bolts - Thermostat Housing - Diesel	10	-	89
Bolts - Power Steering Oil Cooler	8	-	75
Bolts - Transmission Auxiliary Oil Cooler	6	-	55
Nuts - Transmission Oil Cooler Tube	31	24	-
Bolts - Coolant Recovery Container	10	-	89
Tube Nut - Fan Motor - Pressure Line	47	35	-
Tube Nut - Fan Motor - Return Line	29	21	-
Plug - Bleed	6	-	55
Tube Nuts - Transmission Oil Cooler to Transmission			
6.7L/46RE	31	24	-
Bolts - Water Pump - Diesel	24	18	-

Turbocharger Coolant Supply Line - Diesel	24	18	-
Block Heater - Diesel	75	55	-

FILL VOLUMES

DESCRIPTION	SPECIFICATION	
	Metric	**US**
3.7L Engine	13 L	13.7qts
4.7L Engine	13 L	13.7qts.
5.7L Engine	15.3 L	16 qts.
6.7L Diesel Engine	21.4 L	22.6 qts.

SPECIAL TOOLS

SPECIAL TOOLS

	7700 - Tester, Cooling System (Originally Shipped In Kit Number(s) 7700-A.) 8195 - Funnel (Originally Shipped In Kit Number(s) 8273, 8273CC.) 8286 - Refractometer 8875A - Disconnect, Transmission Cooler Line (Originally Shipped In Kit Number(s) 9202, 9328, 9328-CAN, 9329, 9516, 9575.) 9546 - Disconnect Tool (Originally Shipped In Kit Number(s) 9590.)

ACCESSORY DRIVE

BELT, SERPENTINE

DESCRIPTION

DESCRIPTION

The accessory drive belt is a serpentine type belt. Satisfactory performance of these belts depends on belt condition and proper belt tension.

DIAGNOSIS AND TESTING

DIAGNOSIS AND TESTING - SERPENTINE BELT

VISUAL DIAGNOSIS

When diagnosing serpentine accessory drive belts, small cracks that run across the ribbed surface of the belt from rib to rib, are considered normal. These are not a reason to replace the belt. However, cracks running along

a rib (not across) are **not** normal. Any belt with cracks running along a rib must be replaced. Also replace the belt if it has excessive wear, frayed cords or severe glazing.

for further belt diagnosis. Refer to **ACCESSORY DRIVE BELT DIAGNOSIS CHART**.

NOISE DIAGNOSIS

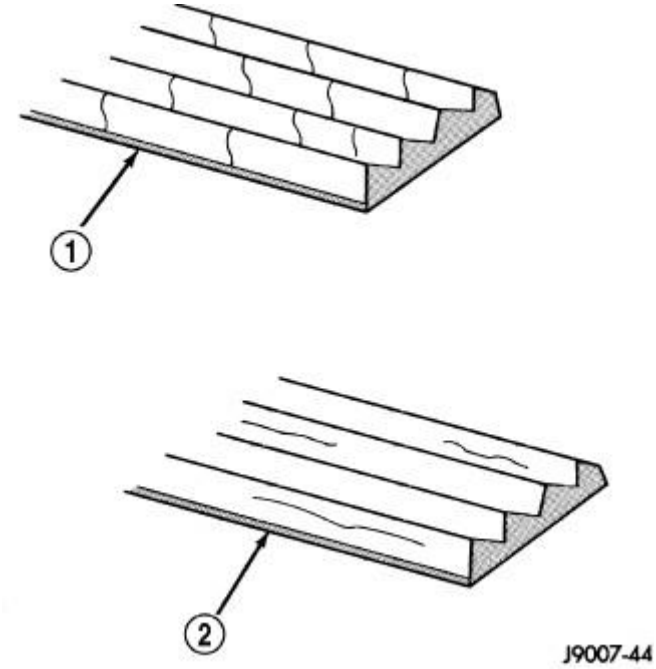

Fig. 15: Belt Wear Patterns
Courtesy of CHRYSLER GROUP, LLC

1 - NORMAL CRACKS BELT OK
2 - NOT NORMAL CRACKS REPLACE BELT

Noises generated by the accessory drive belt are most noticeable at idle. Before replacing a belt to resolve a noise condition, inspect all of the accessory drive pulleys for alignment, glazing, or excessive end play.

ACCESSORY DRIVE BELT DIAGNOSIS CHART

CONDITION	POSSIBLE CAUSES	CORRECTION
RIB CHUNKING (One or more ribs has separated from belt body)	1. Foreign objects imbedded in pulley grooves.	1. Remove foreign objects from pulley grooves. Replace belt.
	2. Installation damage.	2. Replace belt.
RIB OR BELT WEAR	1. Pulley misaligned.	1. Align pulley(s).
	2. Abrasive environment.	2. Clean pulley(s). Replace belt if necessary.
	3. Rusted pulley(s).	3. Clean rust from pulley(s).
	4. Sharp or jagged pulley groove tips.	4. Replace pulley. Inspect belt.

	5. Belt rubber deteriorated.	5. Replace belt.
BELT SLIPS	1. Belt slipping because of insufficient tension.	1. Inspect/Replace tensioner if necessary.
	2. Belt or pulley exposed to substance that has reduced friction (belt dressing, oil, ethylene glycol).	2. Replace belt and clean pulleys.
	3. Driven component bearing failure (seizure).	3. Replace faulty component or bearing.
	4. Belt glazed or hardened from heat and excessive slippage.	4. Replace belt.
LONGITUDAL BELT CRACKING	1. Belt has mistracked from pulley groove.	1. Replace belt.
	2. Pulley groove tip has worn away rubber to tensile member.	2. Replace belt.
"GROOVE JUMPING" (Belt does not maintain correct position on pulley)	1. Incorrect belt tension.	1. Inspect/Replace tensioner if necessary.
	2. Pulley(s) not within design tolerance.	2. Replace pulley(s).
	3. Foreign object(s) in grooves.	3. Remove foreign objects from grooves.
	4. Pulley misalignment.	4. Align component.
	5. Belt cordline is broken.	5. Replace belt.
BELT BROKEN (Note: Identify and correct problem before new belt is installed)	1. Incorrect belt tension.	1. Replace Inspect/Replace tensioner if necessary.
	2. Tensile member damaged during belt installation.	2. Replace belt.
	3. Severe misalignment.	3. Align pulley(s).
	4. Bracket, pulley, or bearing failure.	4. Replace defective component and belt.
NOISE (Objectionable squeal, squeak, or rumble is heard or felt while drive belt is in operation)	1. Incorrect belt tension.	1. Inspect/Replace tensioner if necessary.
	2. Bearing noise.	2. Locate and repair.
	3. Belt misalignment.	3. Align belt/pulley(s).
	4. Belt to pulley mismatch.	4. Install correct belt.
	5. Driven component induced vibration.	5. Locate defective driven component and repair.
TENSION SHEETING FABRIC FAILURE (Woven fabric on outside, circumference of belt has cracked or separated from body of belt)	1. Tension sheeting contacting stationary object.	1. Correct rubbing condition.
	2. Excessive heat causing woven fabric to age.	2. Replace belt
	3. Tension sheeting splice has fractured.	3. Replace belt.
CORD EDGE FAILURE	1. Incorrect belt tension.	1. Inspect/Replace tensioner if

(Tensile member exposed at edges of belt or separated from belt body)		necessary.
	2. Belt contacting stationary object.	2. Replace belt.
	3. Pulley(s) out of tolerance.	3. Replace pulley.
	4. Insufficient adhesion between tensile member and rubber matrix.	4. Replace belt.

REMOVAL

3.7L/4.7L ENGINE

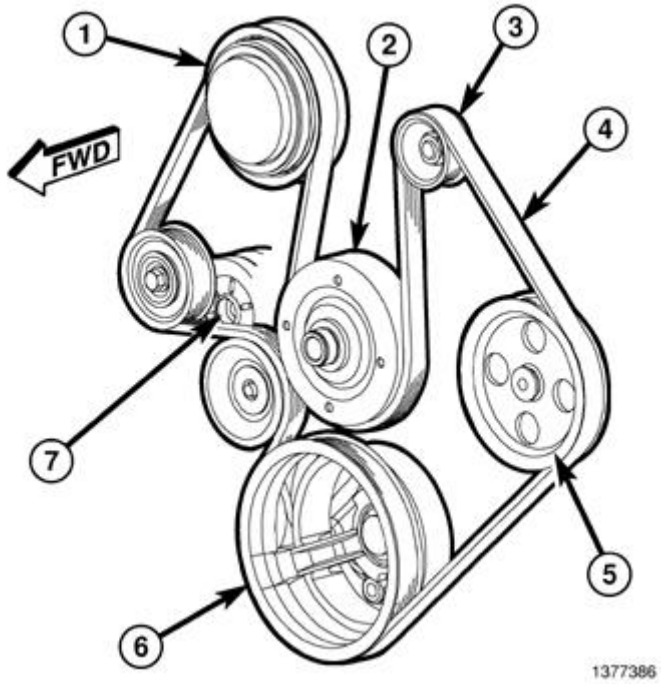

Fig. 16: Belt Routing (3.7L/4.7L Engine)
Courtesy of CHRYSLER GROUP, LLC

CAUTION: Do not let tensioner arm snap back to the freearm position, severe damage may occur to the tensioner.

1. Disconnect negative battery cable from battery.
2. Rotate belt tensioner until it contacts it's stop. Remove belt, then slowly rotate the tensioner (7) into the freearm position.

5.7L ENGINE

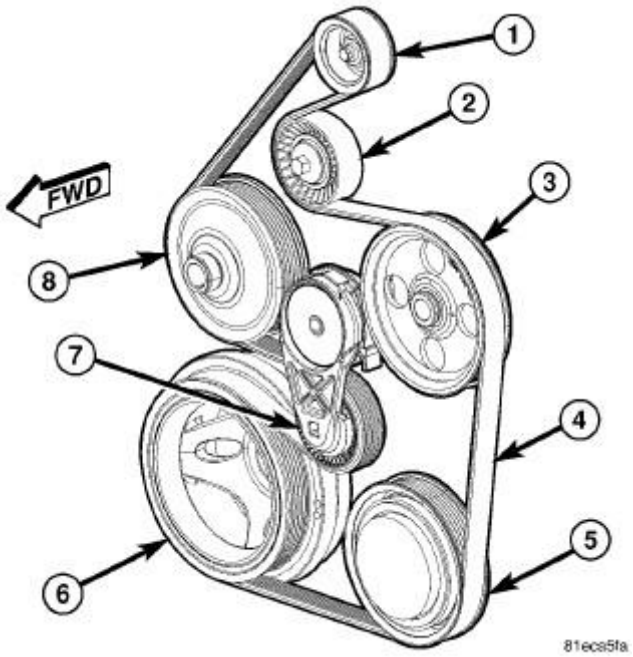

Fig. 17: Belt Routing (5.7L Engine)
Courtesy of CHRYSLER GROUP, LLC

1. Insert a suitable square drive ratchet into the square hole on belt tensioner arm (7).
2. Release the belt tension by rotating the tensioner (7)**clockwise** . Rotate the belt tensioner (7) until the accessory belt (4) can be removed from pulleys (1, 2, 3, 5, 6, 8).

CAUTION: Do not let the tensioner arm snap back to the freearm position, severe damage may occur to the tensioner.

3. Remove the accessory belt (4).
4. Gently release the tensioner (7).

6.7L DIESEL ENGINE

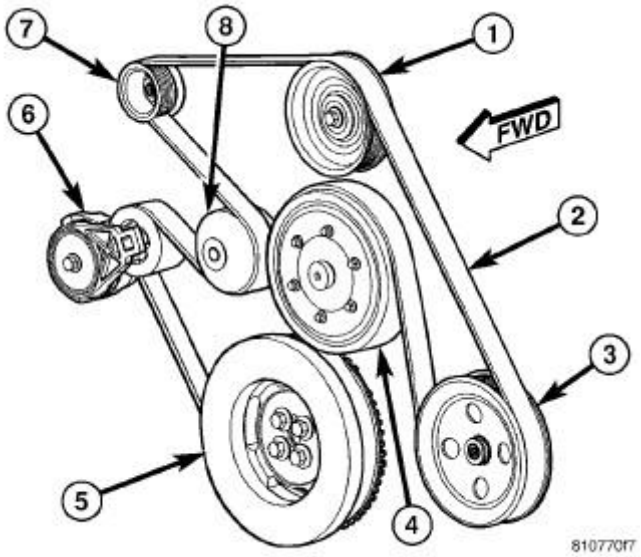

Fig. 18: Belt Routing-Diesel Engine Without A/C
Courtesy of CHRYSLER GROUP, LLC

1 - IDLER PULLEY
2 - ACCESSORY DRIVE BELT
3 - P/S PULLEY
4 - RADIATOR FAN PULLEY
5 - CRANKSHAFT PULLEY
6 - ACCESSORY DRIVE BELT TENSIONER
7 - GENERATOR
8 - WATER PUMP

1. A 1/2 inch square hole is provided in the automatic belt tensioner. Attach a suitable tool into this hole.

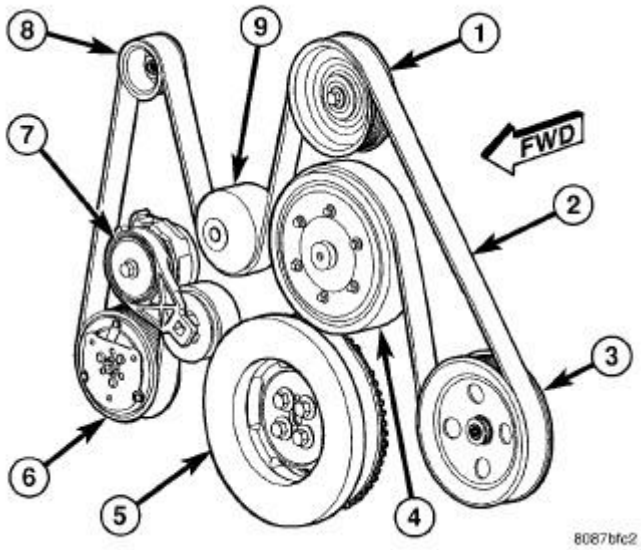

Fig. 19: Belt Routing-Diesel With A/C
Courtesy of CHRYSLER GROUP, LLC

1 - IDLER PULLEY
2 - ACCESSORY DRIVE BELT
3 - P/S PULLEY
4 - RADIATOR FAN PULLEY
5 - CRANKSHAFT PULLEY
6 - A/C COMPRESSOR PULLEY
7 - ACCESSORY DRIVE BELT TENSIONER
8 - GENERATOR
9 - WATER PUMP PULLEY

2. Rotate tensioner assembly clockwise (as viewed from front) until tension has been relieved from belt.
3. Remove belt from water pump pulley first.
4. Remove belt from vehicle.

INSTALLATION

3.7L/4.7L ENGINE

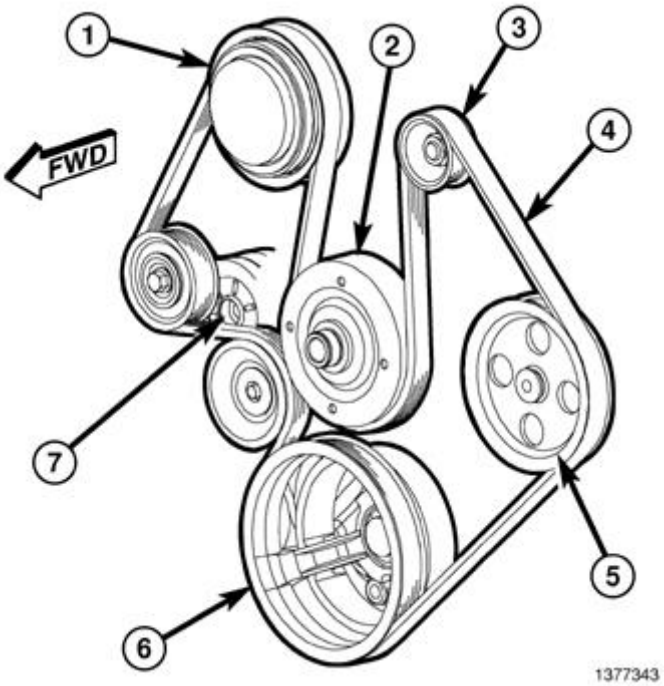

Fig. 20: Belt Routing (3.7L/4.7L Engine)
Courtesy of CHRYSLER GROUP, LLC

1. Check condition of all pulleys.

CAUTION: When installing the serpentine accessory drive belt, the belt MUST be routed correctly. If not, the engine may overheat due to the water pump rotating in the wrong direction.

NOTE: When installing accessory drive belt onto pulleys, make sure that belt is properly routed and all V-grooves make proper contact with pulleys.

2. Position accessory drive belt around all pulleys except the idler pulley.
3. Rotate the tensioner arm until it contacts it's stop position. Route the belt around the idler and slowly release tensioner rotate into accessory drive belt. Make sure the belt is seated onto all pulleys.

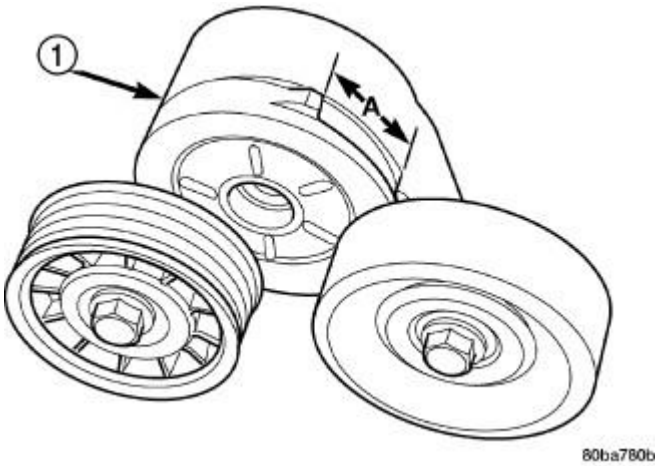

Fig. 21: Identifying Automatic Belt Tensioner
Courtesy of CHRYSLER GROUP, LLC

1 - AUTOMATIC TENSIONER ASSEMBLY

4. 4.7L Engines Only - With the drive belt installed, inspect the belt wear indicator. Gap between the tang and the housing stop (measurement A) must not exceed 24 mm (.94 inches). If the measurement exceeds this specification replace the accessory drive belt.

5.7L ENGINE

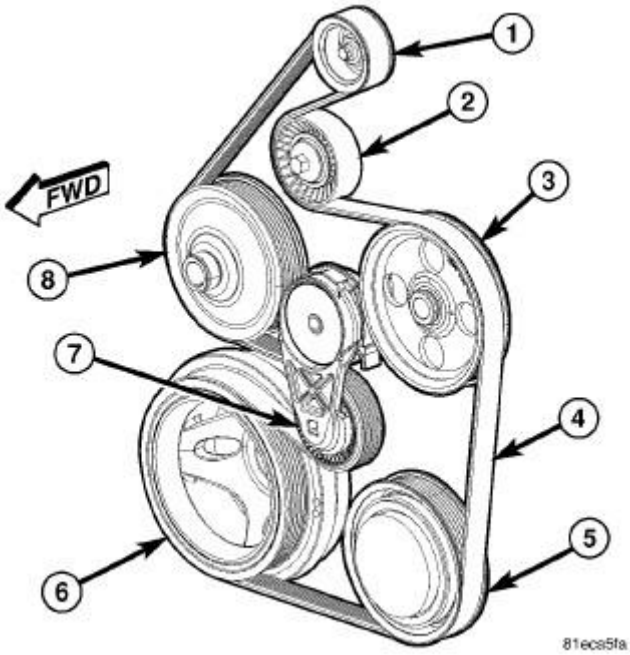

Fig. 22: Belt Routing (5.7L Engine)

Courtesy of CHRYSLER GROUP, LLC

NOTE: When installing accessory drive belt onto pulleys, make sure that belt is properly routed and all V-grooves make proper contact with pulleys.

1. Position the accessory drive belt (4) over all pulleys (1, 2, 3, 5, 6) except for the water pump pulley (8).
2. Rotate the tensioner (7)**clockwise** and slip the belt over the water pump pulley (8).
3. Gently release the tensioner (7).

CAUTION: Do not let the tensioner arm snap back to the freearm position, severe damage may occur to the tensioner.

6.7L DIESEL ENGINE

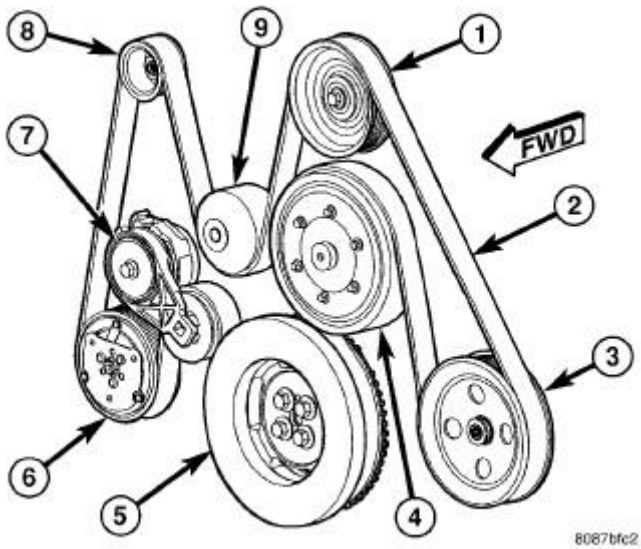

Fig. 23: Belt Routing-Diesel With A/C
Courtesy of CHRYSLER GROUP, LLC

1 - IDLER PULLEY
2 - ACCESSORY DRIVE BELT
3 - P/S PULLEY
4 - RADIATOR FAN PULLEY
5 - CRANKSHAFT PULLEY
6 - A/C COMPRESSOR PULLEY
7 - ACCESSORY DRIVE BELT TENSIONER
8 - GENERATOR
9 - WATER PUMP PULLEY

CAUTION: When installing the accessory drive belt, the belt must be routed correctly. If not, engine may overheat due to water pump rotating in wrong direction.

1. Position drive belt over all pulleys **except** water pump pulley.
2. Attach a suitable tool to the accessory drive belt tensioner.

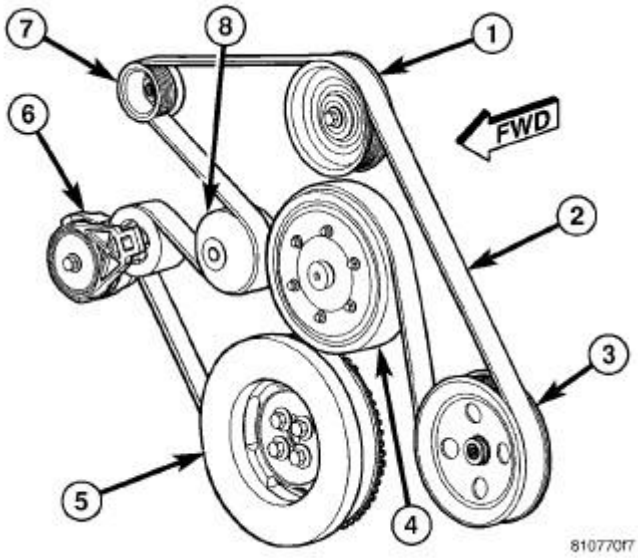

Fig. 24: Belt Routing-Diesel Engine Without A/C
Courtesy of CHRYSLER GROUP, LLC

1 - IDLER PULLEY
2 - ACCESSORY DRIVE BELT
3 - P/S PULLEY
4 - RADIATOR FAN PULLEY
5 - CRANKSHAFT PULLEY
6 - ACCESSORY DRIVE BELT TENSIONER
7 - GENERATOR
8 - WATER PUMP

3. Rotate accessory drive belt tensioner clockwise. Place belt over water pump pulley. Let tensioner rotate back into place. Remove tool. Be sure belt is properly seated on all pulleys.

PULLEY, IDLER

REMOVAL

5.7L ENGINE

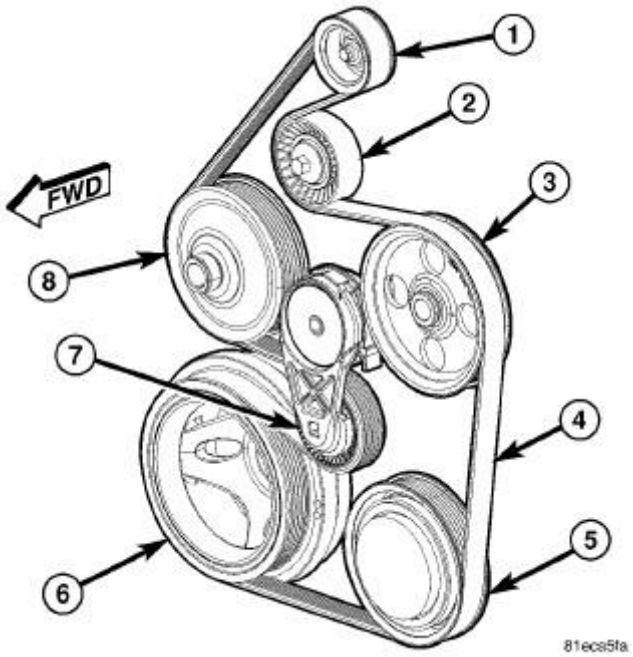

Fig. 25: Belt Routing (5.7L Engine)
Courtesy of CHRYSLER GROUP, LLC

1. Remove the accessory drive belt (4). Refer to **REMOVAL**.
2. Remove the bolt from the idler pulley (2).
3. Remove the idler pulley (2).

3.7L/4.7L ENGINE

1. The idler pulley is serviced as part of the belt tensioner assembly. For removal steps, refer to **TENSIONER, BELT, REMOVAL**.

INSTALLATION

5.7L ENGINE

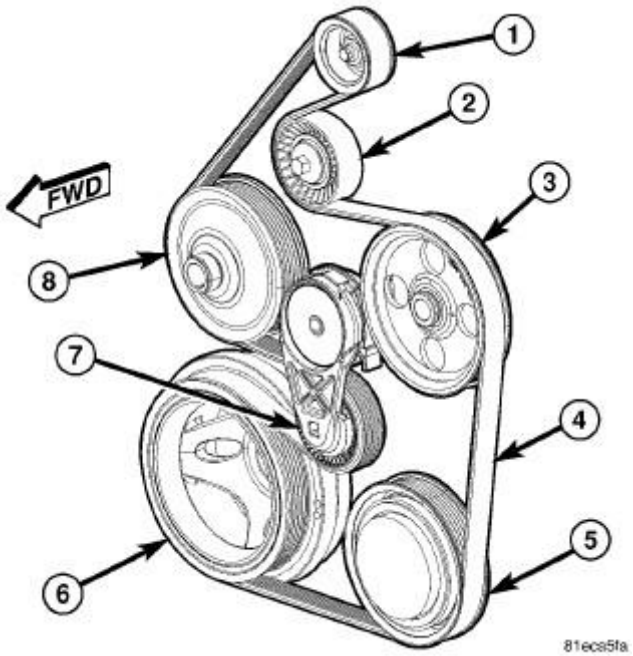

Fig. 26: Belt Routing (5.7L Engine)
Courtesy of CHRYSLER GROUP, LLC

1. Position the idler pulley (2).
2. Install the idler pulley (2) bolt. Tighten the bolt to 54 N.m (40 ft. lbs.).
3. Install the accessory drive belt (4). Refer to **BELT, SERPENTINE, INSTALLATION**.

3.7L/4.7L ENGINE

1. The idler pulley is serviced as part of the belt tensioner assembly. For installation steps, refer to **TENSIONER, BELT, INSTALLATION**.

TENSIONER, BELT

DESCRIPTION

DESCRIPTION

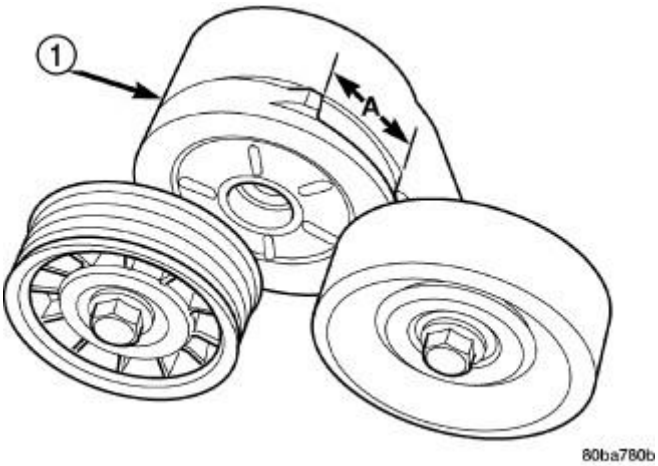

Fig. 27: Identifying Automatic Belt Tensioner
Courtesy of CHRYSLER GROUP, LLC

1 - AUTOMATIC TENSIONER ASSEMBLY

Correct drive belt tension is required to ensure optimum performance of the belt driven engine accessories. If specified tension is not maintained, belt slippage may cause; engine overheating, lack of power steering assist, loss of air conditioning capacity, reduced generator output rate, and greatly reduced belt life.

It is not necessary to adjust belt tension. All engines are equipped with an automatic belt tensioner. The tensioner maintains correct accessory drive belt tension at all times.

REMOVAL

3.7L/4.7L ENGINE

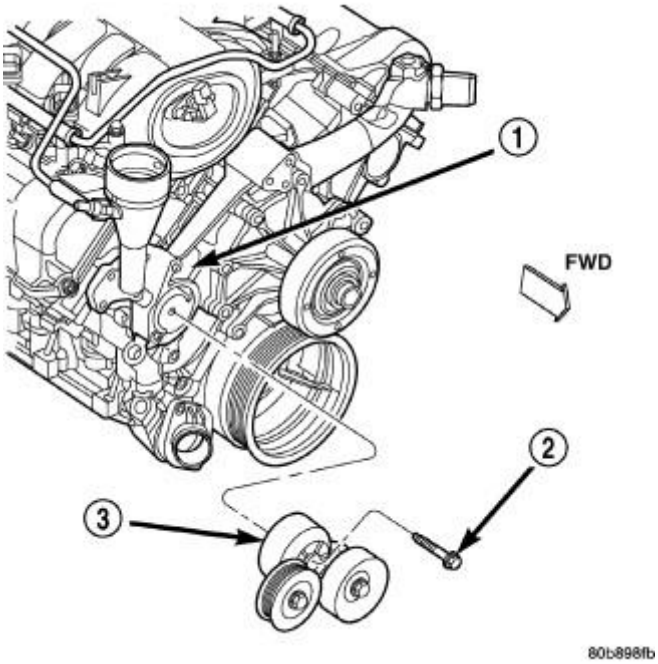

Fig. 28: Automatic Belt Tensioner & Bolt
Courtesy of CHRYSLER GROUP, LLC

1 - TIMING CHAIN COVER
2 - BOLT TORQUE TO 41 N.m (30 FT LBS)
3 - AUTOMATIC BELT TENSIONER

On 3.7L and 4.7L engines, the accessory drive belt tensioner is equipped with an indexing tang on back of tensioner and an indexing stop on tensioner housing. If a new accessory drive belt is being installed, tang must be within approximately 24 mm (.94 inches) of indexing stop. Belt is considered new if it has been used 15 minutes or less.

1. Remove accessory drive belt. Refer to **BELT, SERPENTINE, REMOVAL**.

WARNING: Because of high spring pressure, do not attempt to disassemble automatic tensioner. Unit is serviced as an assembly.

2. Remove tensioner (3) assembly from timing chain cover.

5.7L ENGINE

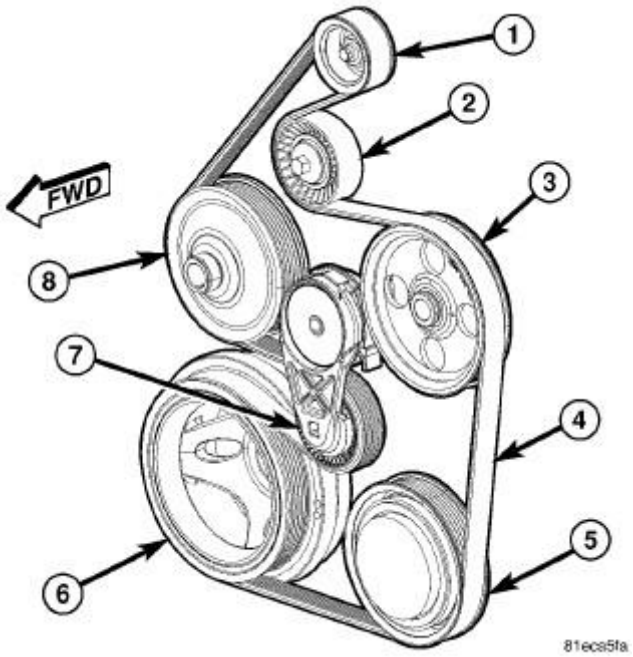

Fig. 29: Belt Routing (5.7L Engine)
Courtesy of CHRYSLER GROUP, LLC

1. Remove the accessory drive belt (4). Refer to **BELT, SERPENTINE, REMOVAL**.
2. Remove the bolt from the belt tensioner assembly (7).
3. Remove the belt tensioner assembly (7).

6.7L DIESEL ENGINE

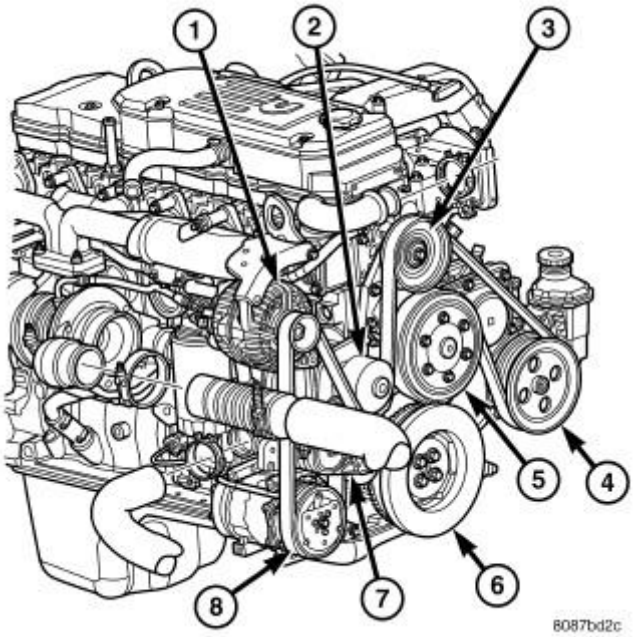

Fig. 30: Accessory Drive Belt
Courtesy of CHRYSLER GROUP, LLC

1 - GENERATOR
2 - WATER PUMP
3 - IDLER
4 - POWER STEERING PUMP
5 - RADIATOR FAN PULLEY
6 - CRANKSHAFT
7 - AUTOMATIC TENSIONER
8 - A/C COMPRESSOR

WARNING: Because of high spring pressure, do not attempt to disassemble automatic tensioner. Unit is serviced as an assembly.

1. Remove accessory drive belt. Refer to **BELT, SERPENTINE, REMOVAL**.
2. Remove tensioner mounting bolt and remove tensioner (7).

INSTALLATION

3.7L/4.7L ENGINE

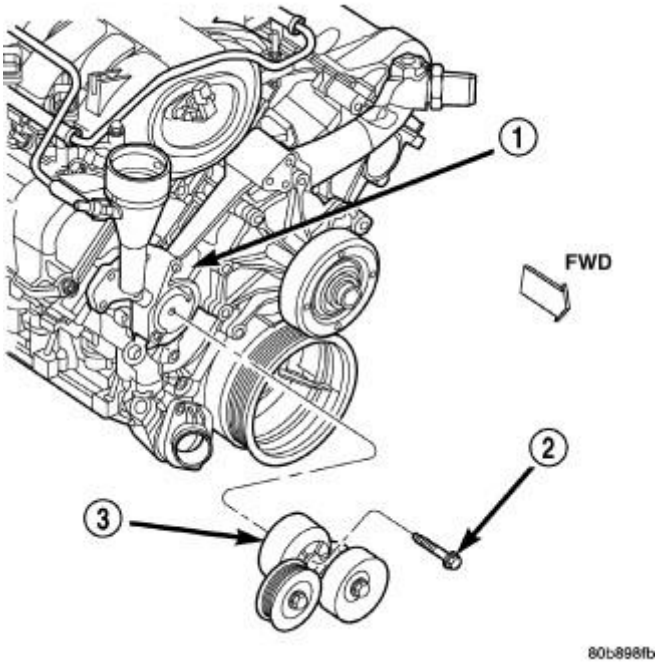

Fig. 31: Automatic Belt Tensioner & Bolt
Courtesy of CHRYSLER GROUP, LLC

1 - TIMING CHAIN COVER
2 - BOLT TORQUE TO 41 N.m (30 FT LBS)
3 - AUTOMATIC BELT TENSIONER

1. An indexing slot is located on back of tensioner (3). Align this slot to the head of the bolt on the front cover. Install the mounting bolt. Tighten bolt (2) to 41 N.m (30 ft. lbs.).
2. Install accessory drive belt. Refer to **BELT, SERPENTINE, INSTALLATION**.
3. Check tensioner indexing marks.

5.7L ENGINE

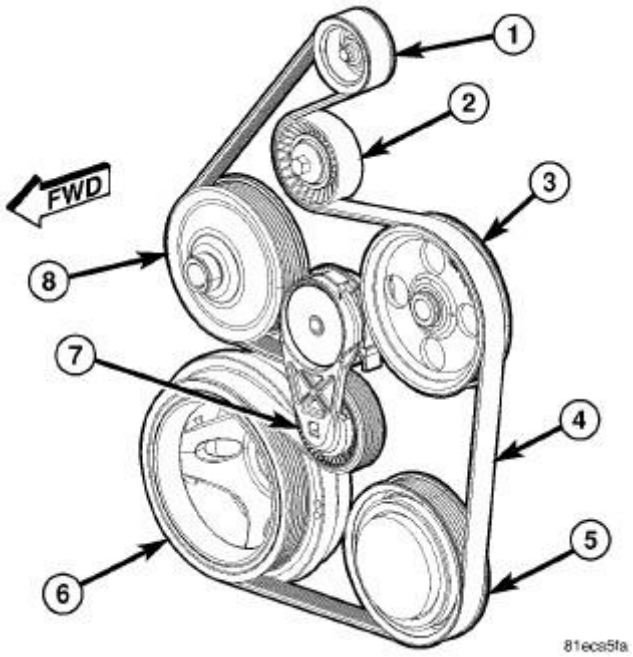

Fig. 32: Belt Routing (5.7L Engine)
Courtesy of CHRYSLER GROUP, LLC

NOTE: **When installing accessory drive belt onto pulleys, make sure that belt is properly routed and all V-grooves make proper contact with pulleys.**

1. Position the belt tensioner assembly (7) onto the front of the engine block. Tighten the bolt to 41 N.m (30 ft. lbs.).
2. Install the accessory drive belt (4). Refer to **BELT, SERPENTINE, INSTALLATION**.

6.7L DIESEL ENGINE

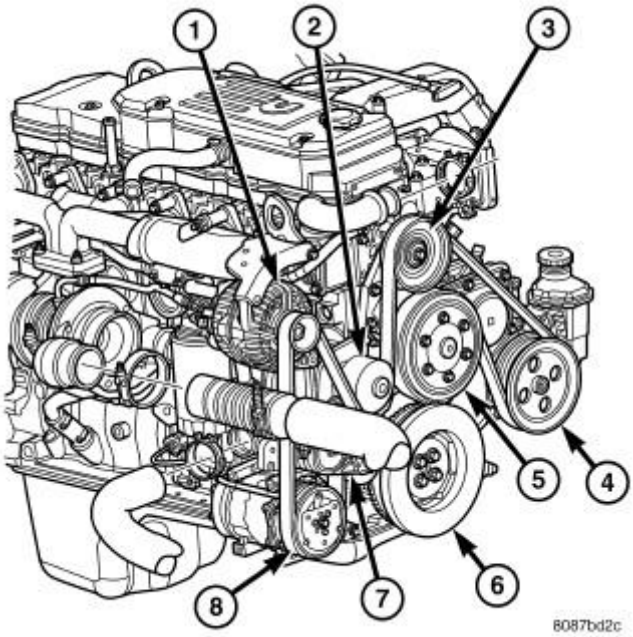

Fig. 33: Accessory Drive Belt
Courtesy of CHRYSLER GROUP, LLC

1 - GENERATOR
2 - WATER PUMP
3 - IDLER
4 - POWER STEERING PUMP
5 - RADIATOR FAN PULLEY
6 - CRANKSHAFT
7 - AUTOMATIC TENSIONER
8 - A/C COMPRESSOR

1. Install tensioner assembly (7) to water inlet bracket. A dowel is located on back of tensioner. Align this dowel to hole in tensioner mounting bracket. Tighten bolt to 43 N.m (32 ft. lbs.) torque.
2. Install drive belt. Refer to **BELT, SERPENTINE, INSTALLATION**.

ENGINE

BOTTLE, COOLANT RECOVERY

DESCRIPTION

DESCRIPTION

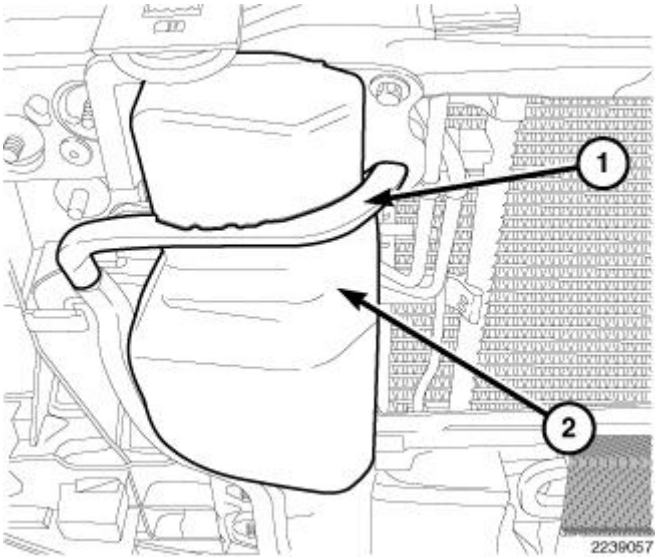

Fig. 34: Coolant Recovery/Overflow Bottle
Courtesy of CHRYSLER GROUP, LLC

The coolant recovery/overflow bottle (2) is mounted on the front of the radiator support and behind the grille. The coolant recovery/overflow bottle (2) is made of high temperature plastic.

OPERATION

OPERATION

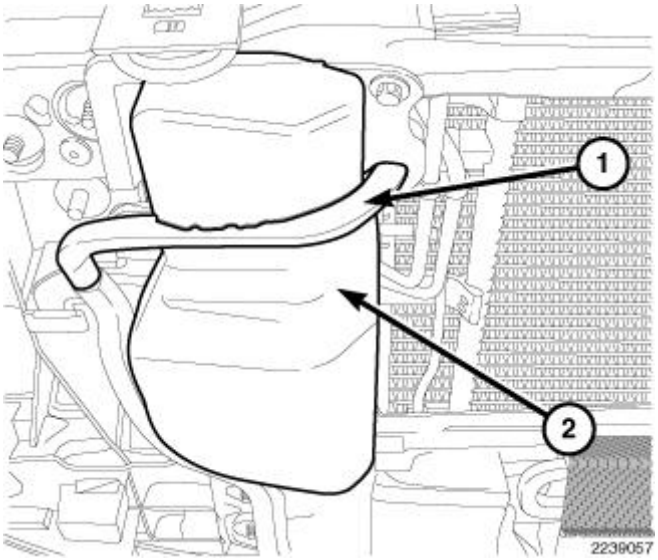

Fig. 35: Coolant Recovery/Overflow Bottle
Courtesy of CHRYSLER GROUP, LLC

The coolant recovery/overflow bottle (2) works in conjunction with the radiator pressure cap. It utilizes thermal expansion and contraction of coolant to keep coolant free of trapped air. It provides a volume for expansion and contraction of coolant. It also provides a convenient and safe method for checking coolant level and adjusting level at atmospheric pressure. This is done without removing the radiator pressure cap. The system also

provides some reserve coolant to the radiator to cover minor leaks and evaporation or boiling losses.

As the engine cools, a vacuum is formed in the cooling system of both the radiator and engine. Coolant will then be drawn from the coolant recovery/overflow bottle (2) and returned to a proper level in the radiator.

REMOVAL

3.7L/4.7L/5.7L ENGINE

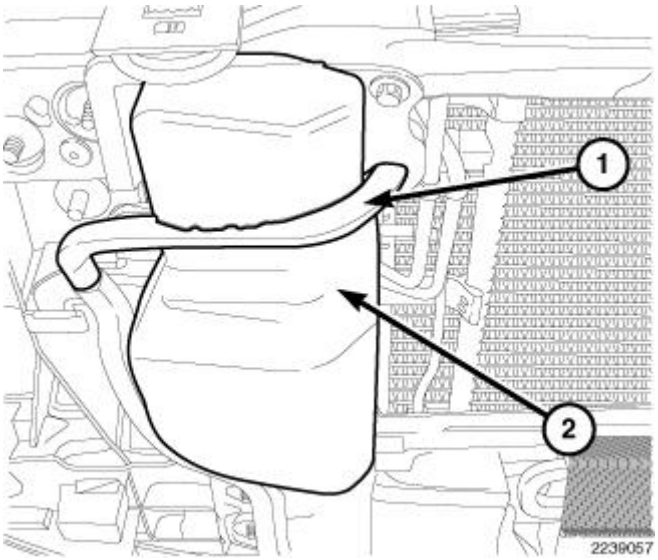

Fig. 36: Coolant Recovery/Overflow Bottle
Courtesy of CHRYSLER GROUP, LLC

1. Remove the exterior grille. Refer to **GRILLE, REMOVAL** .
2. Partially drain the cooling system using the draincock only. Refer to **STANDARD PROCEDURE**.

NOTE: DO NOT WASTE reusable coolant. If solution is clean, drain coolant into a clean container for reuse.

3. Drain system below the level of the coolant recovery pressure container.
4. Remove the recovery hose (1) from the radiator.
5. Remove the coolant recovery bottle (2) to radiator support mounting bolts.
6. Disengage the coolant recovery bottle (2) mounting pins located on the radiator support side by pulling the assembly straight up.
7. Remove the coolant recovery bottle (1).

6.7L DIESEL

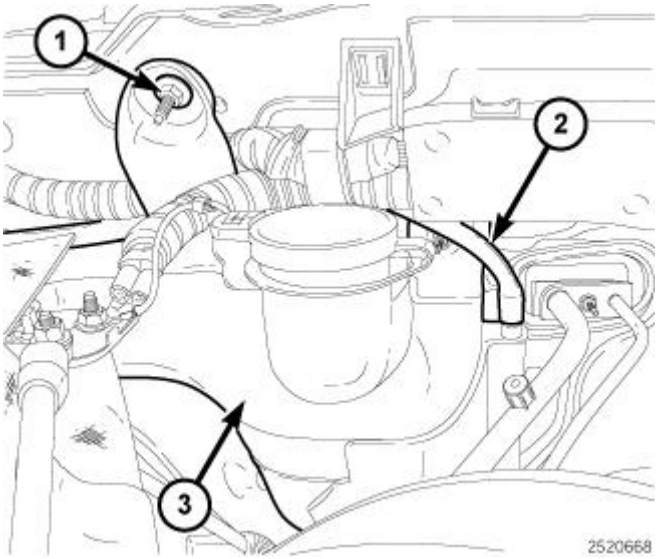

Fig. 37: Identifying Overflow Hose
Courtesy of CHRYSLER GROUP, LLC

1. Disconnect and isolate the negative battery cable.
2. If equipped, disconnect and isolate the negative battery cable from the auxiliary battery.
3. Partially drain coolant until the coolant recovery bottle (3) and overflow hose (2) are completely empty.
4. Remove the overflow hose (2) from the coolant recovery bottle (3).
5. Remove the mounting bolts (1).
6. Remove coolant recovery bottle (3) from the vehicle.

INSTALLATION

3.7L/4.7L/5.7L ENGINE

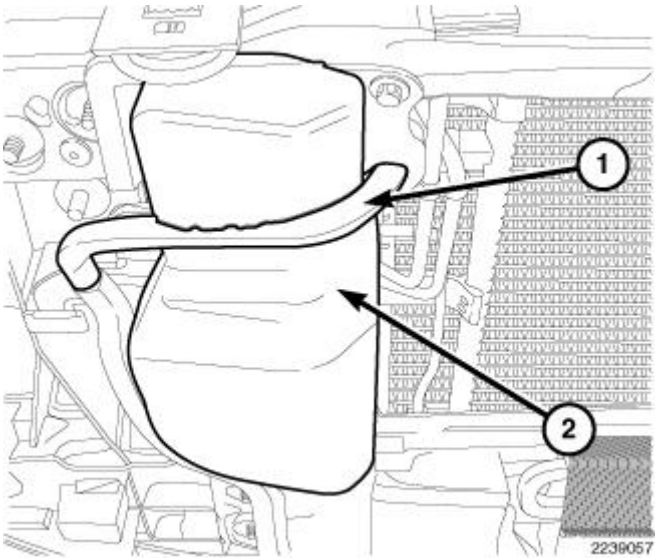

Fig. 38: Coolant Recovery/Overflow Bottle

Courtesy of CHRYSLER GROUP, LLC

1. Align the coolant recovery bottle (2) mounting pins into the slots located on the radiator support side and push the coolant recovery bottle (2) into place.

   NOTE: Ensure that the mounting pins are properly seated into the radiator support.

2. Install the coolant recovery bottle (2) to radiator support bolts. Tighten the bolts to 10 N.m (89 in. lbs).
3. Connect the recovery hose (1) to the radiator.
4. Install the front grille. Refer to **GRILLE, INSTALLATION** .
5. Fill the cooling system. Refer to **STANDARD PROCEDURE**.
6. Test the system for leaks. Refer to **LEAK TESTING**.

6.7L DIESEL

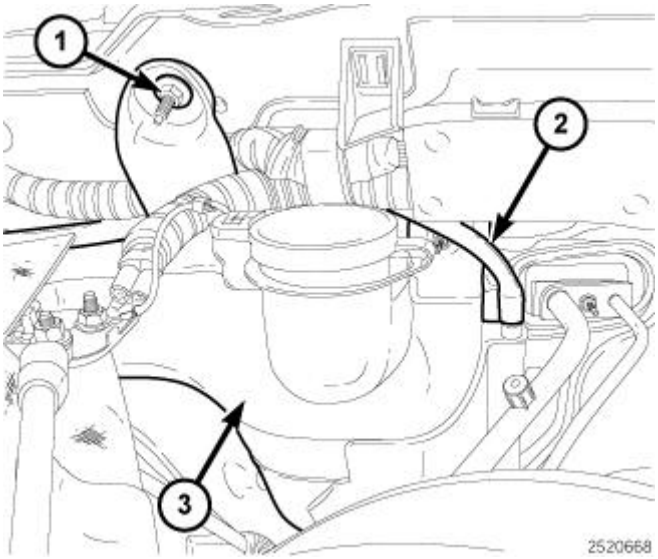

Fig. 39: Identifying Overflow Hose
Courtesy of CHRYSLER GROUP, LLC

1. Position the coolant recovery bottle (3) into the vehicle.
2. Install mounting bolts (1). Tighten to 8.5 N.m (75 in. lbs).
3. Install overflow hose (2) onto the coolant recovery bottle (3).
4. Fill the coolant recovery bottle (3) with coolant until the required level is met.
5. If equipped, connect the negative battery cable to the auxiliary battery.
6. Connect the negative battery cable.

CAP, RADIATOR

DESCRIPTION

DESCRIPTION

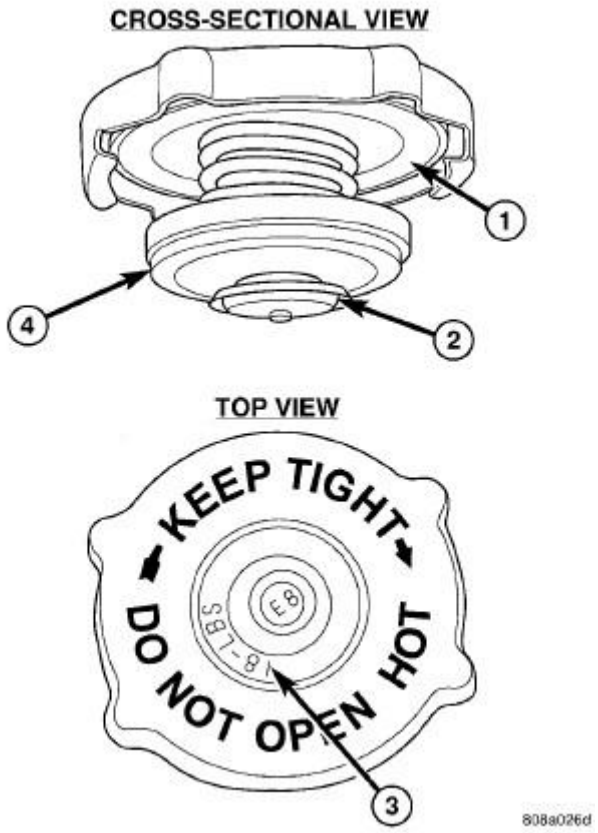

Fig. 40: Radiator Cap
Courtesy of CHRYSLER GROUP, LLC

1 - FILLER NECK SEAL
2 - VACUUM VENT VALVE
3 - PRESSURE RATING
4 - PRESSURE VALVE

All cooling systems are equipped with a pressure cap. For all engines, the pressure cap is located on top of the radiator outlet tank. The cap releases pressure at some point within a range of 97-to-124 kPa (14-to-18 psi). The pressure relief point (in pounds) is engraved on top of the cap

The cooling system will operate at pressures slightly above atmospheric pressure. This results in a higher coolant boiling point allowing increased radiator cooling capacity. The cap contains a spring-loaded pressure relief valve. This valve opens when system pressure reaches the release range of 97-to-124 kPa (14-to-18 psi).

A rubber gasket seals the radiator filler neck. This is done to maintain vacuum during coolant cool-down and to prevent leakage when system is under pressure.

DIAGNOSIS AND TESTING

RADIATOR CAP-TO-FILLER NECK SEAL

The pressure cap upper gasket (seal) pressure relief can be tested by removing overflow hose from the radiator filler neck tube. Attach the hose of the pressure tester tool (special tool #7700, Tester, Cooling System) (or equivalent) to the tube. It will be necessary to disconnect hose from its adapter for the filler neck. Pump air into radiator. The pressure cap upper gasket should relieve at 69 to 124kPa (10 to 18 psi) and hold pressure at a minimum of 55 kPa (8 psi).

> WARNING: **The warning words, "DO NOT OPEN HOT", on radiator pressure cap, are a safety precaution. When hot, pressure builds up in cooling system. To prevent scalding or injury, radiator cap should not be removed while system is hot and/or under pressure.**

Do not remove the radiator cap at any time **except** for the following purposes:

- Check and adjust antifreeze freeze point.
- Refill the system with new antifreeze.
- Conducting service procedures.
- Checking for vacuum leaks.

> WARNING: **If vehicle has been run recently, wait at least 15 minutes before removing radiator cap. With a rag, squeeze radiator upper hose to check if system is under pressure. Place a rag over cap and without pushing cap down, rotate it counter-clockwise to first stop. Allow fluid to escape through the coolant reserve/overflow hose into reserve/overflow tank. Squeeze radiator upper hose to determine when pressure has been released. When coolant and steam stop being pushed into tank and system pressure drops, remove radiator cap completely.**

RADIATOR CAP

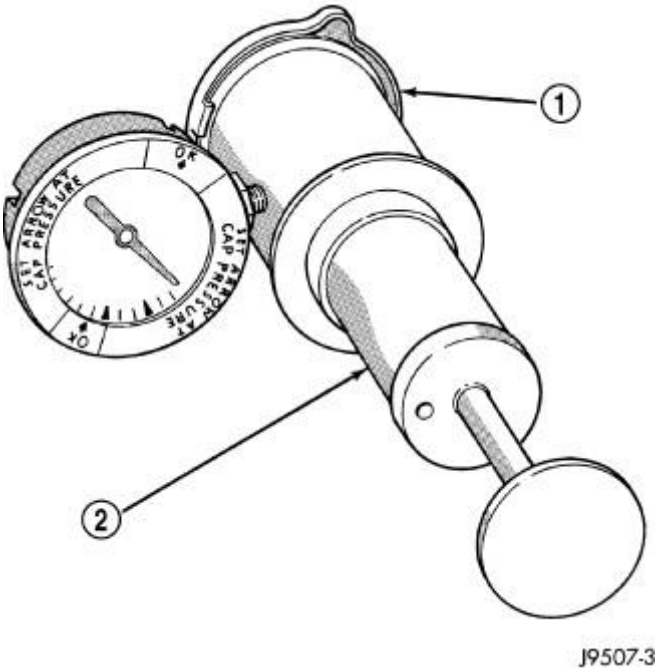

Fig. 41: Pressure Testing Radiator Cap
Courtesy of CHRYSLER GROUP, LLC

1 - PRESSURE CAP
2 - TYPICAL COOLING SYSTEM PRESSURE TESTER

Remove the cap from the radiator. Be sure that the sealing surfaces are clean. Moisten the rubber gasket with water and install the cap on the pressure tester (special tool #7700, Tester, Cooling System) or an equivalent. Refer to **Fig. 41**.

Operate the tester pump to bring the pressure to 104 kPa (15 psi) on the gauge. If the pressure cap fails to hold pressure of at least 97 kPa (14 psi) replace the cap. Refer to the following **CAUTION** .

The pressure cap may test properly while positioned on tool (special tool #7700, Tester, Cooling System) (or equivalent). It may not hold pressure or vacuum when installed on the radiator. If so, inspect the radiator filler neck and radiator cap's top gasket for damage. Also inspect for dirt or distortion that may prevent the cap from sealing properly.

CAUTION: Radiator pressure testing tools are very sensitive to small air leaks which will not cause cooling system problems. A pressure cap that does not have a history of coolant loss should not be replaced just because it leaks slowly when tested with this tool. Add water to tool. Turn tool upside down and recheck pressure cap to confirm that cap needs replacement.

INSPECTION

INSPECTION

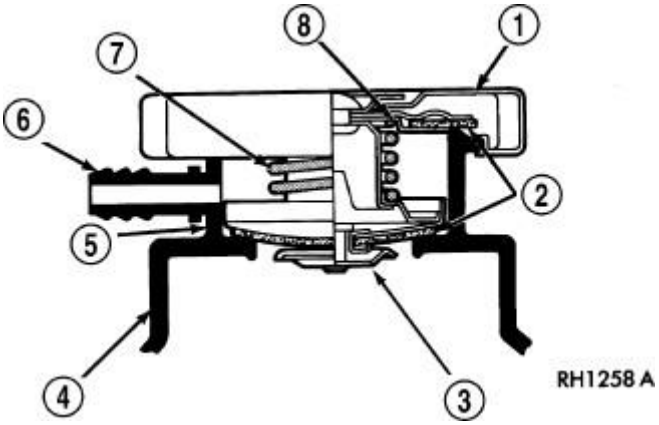

Fig. 42: Sectional View Of Radiator Pressure Cap
Courtesy of CHRYSLER GROUP, LLC

1 - STAINLESS-STEEL SWIVEL TOP
2 - RUBBER SEALS
3 - VENT VALVE
4 - RADIATOR TANK
5 - FILLER NECK
6 - OVERFLOW NIPPLE
7 - MAIN SPRING
8 - GASKET RETAINER

Hold cap at eye level, right side up. The vent valve at bottom of cap should closed. Refer to **Fig. 42**. A slight downward pull on the vent valve should open it. If the rubber gasket has swollen and prevents vent valve from opening, replace cap.

Hold cap at eye level, upside down. If any light can be seen between vent valve and rubber gasket, replace cap. A replacement cap must be the type designed for a coolant reserve/overflow system with a completely sealed diaphragm spring and a rubber gasket. This gasket is used to seal to radiator filler neck top surface. Use of proper cap will allow coolant return to radiator.

COOLANT

DESCRIPTION

DESCRIPTION

WARNING: **Antifreeze is an ethylene-glycol base coolant and is harmful if swallowed or inhaled. If swallowed, drink two glasses of water and induce vomiting. If inhaled, move to fresh air area. Seek medical attention immediately. Do not store in open or unmarked containers. Wash skin and clothing thoroughly after coming in contact with ethylene-glycol. Keep out of reach of children. Dispose of glycol based coolant properly, contact your dealer or government agency for location of collection center in your**

area. Do not open a cooling system when the engine is at operating temperature or hot under pressure, personal injury can result. Avoid radiator cooling fan when engine compartment related service is performed, personal injury can result.

CAUTION: Use of Propylene-Glycol based coolants is not recommended, as they provide less freeze protection and less corrosion protection.

The cooling system is designed around the coolant. The coolant must accept heat from engine metal, in the cylinder head area near the exhaust valves and engine block. Then coolant carries the heat to the radiator where the tube/fin radiator can transfer the heat to the air.

The use of aluminum cylinder blocks, cylinder heads, and water pumps require special corrosion protection. Mopar® Antifreeze/Coolant, 5 Year/100, 000 Mile Formula (MS-9769), or the equivalent ethylene-glycol base coolant with organic corrosion inhibitors (called HOAT, for Hybrid Organic Additive Technology) is recommended. This coolant offers the best engine cooling without corrosion when mixed with 50% ethylene-glycol and 50% distilled water to obtain a freeze point of -37°C (-35°F). If it loses color or becomes contaminated, drain, flush, and replace with fresh properly mixed coolant solution.

CAUTION: Mopar® Antifreeze/Coolant, 5 Year/100, 000 Mile Formula (MS-9769) may not be mixed with any other type of antifreeze. Mixing of coolants other than specified (non-HOAT or other HOAT) may result in engine damage that may not be covered under the new vehicle warranty, and decreased corrosion protection.

COOLANT PERFORMANCE

The required ethylene-glycol and water mixture depends upon climate and vehicle operating conditions. The coolant performance of various mixtures follows:

Pure Water- Water can absorb more heat than a mixture of water and ethylene-glycol. This is for purpose of heat transfer only. Water also freezes at a higher temperature and allows corrosion.

100 percent Ethylene-Glycol - The corrosion inhibiting additives in ethylene-glycol need the presence of water to dissolve. Without water, additives form deposits in system. These act as insulation causing temperature to rise to as high as 149°C (300°F). This temperature is hot enough to melt plastic. The increased temperature can result in severe engine damage. In addition, 100 percent ethylene-glycol freezes at -22°C (-8°F).

50/50 Ethylene-Glycol and Water - Is the recommended mixture, it provides protection against freezing to -37°C (-34°F). The antifreeze concentration **must always** be a minimum of 44 percent, year-round in all climates. If percentage is lower, engine parts may be eroded by cavitation. Maximum protection against freezing is provided with a 68 percent antifreeze concentration, which prevents freezing down to -67.7°C (-90° F). A higher percentage will freeze at a warmer temperature. Also, a higher percentage of antifreeze can cause the engine to overheat because specific heat of antifreeze is lower than that of water.

CAUTION: Richer antifreeze mixtures cannot be measured with normal field

equipment and can cause problems associated with 100 percent ethylene-glycol.

DIAGNOSIS AND TESTING

DIAGNOSIS AND TESTING - COOLANT CONCENTRATION TESTING

Check coolant concentration when any additional coolant is added to the system, or after a coolant drain, flush and refill. Use of a hydrometer or Refractometer Tool (special tool #8286, Refractometer), refractometer can be used to test coolant concentration.

A hydrometer tests the amount of glycol in a mixture by measuring the specific gravity of the mixture. The higher the concentration of ethylene glycol, the larger the number of balls that will float, and the higher the freeze protection (up to a maximum of 60% by volume glycol).

A Refractometer Tool (special tool #8286, Refractometer) tests the amount of glycol in a coolant mixture by measuring the amount a beam of light bends as it passes through the fluid.

Some coolant manufacturers use other types of glycols into their coolant formulations. Propylene glycol is the most common new coolant. However, propylene glycol based coolants do not provide the same freezing protection and corrosion protection and are not recommended.

CAUTION: Do not mix types of coolant - corrosion protection will be severely reduced.

COOLER, EGR

DESCRIPTION

DESCRIPTION

The Exhaust Gas Recirculation cooler is located above the exhaust manifold on the right side of the engine. Using engine coolant, the EGR cooler reduces the temperature of the exhaust gas that is recirculated to the air intake.

OPERATION

OPERATION

Exhaust gas enter the rear portion of the EGR Cooler from the exhaust manifold. The gas is cooled as it passes through the EGR Cooler and then enters the EGR crossover tube and is routed to the EGR valve.

Coolant enters the rear of the EGR Cooler and flow the same direction as the exhaust gases.

REMOVAL

PICKUP - REMOVAL

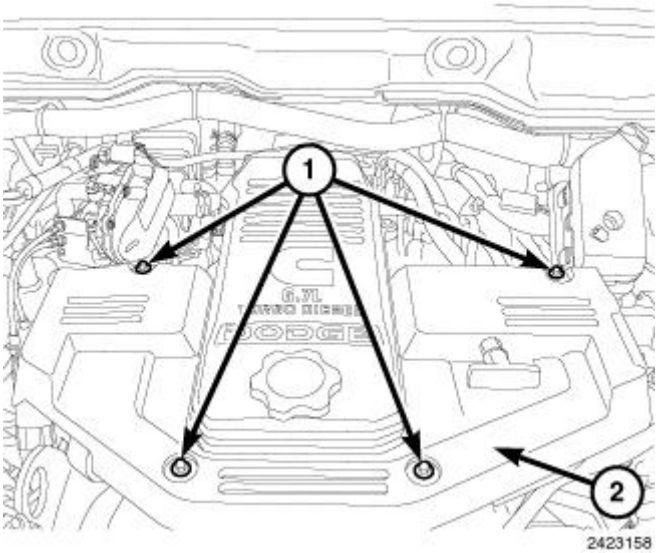

Fig. 43: EGR Crossover Tube Cover
Courtesy of CHRYSLER GROUP, LLC

1. Disconnect both negative battery cables.
2. Remove the bolts (1) and the engine cover.
3. Drain cooling system below level of EGR cooler. Refer to **STANDARD PROCEDURE**.

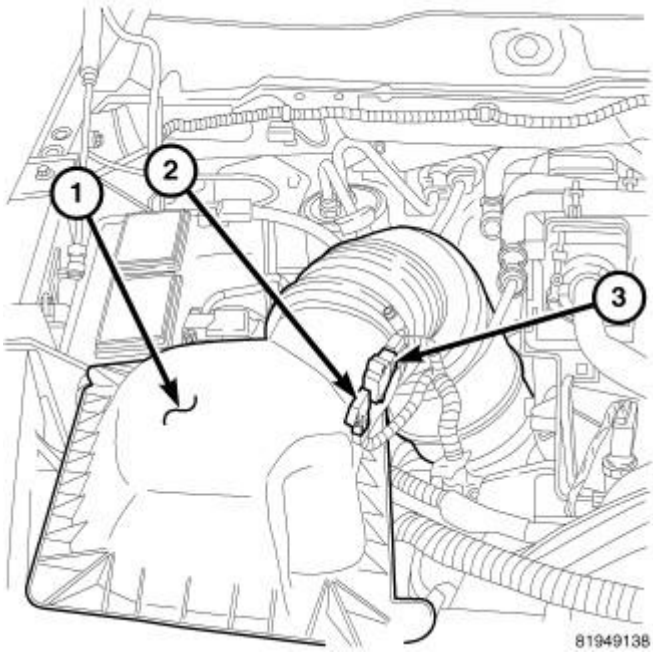

Fig. 44: Air Cleaner Housing
Courtesy of CHRYSLER GROUP, LLC

4. Remove the air cleaner assembly. Refer to **BODY, AIR CLEANER, REMOVAL, 6.7L** .

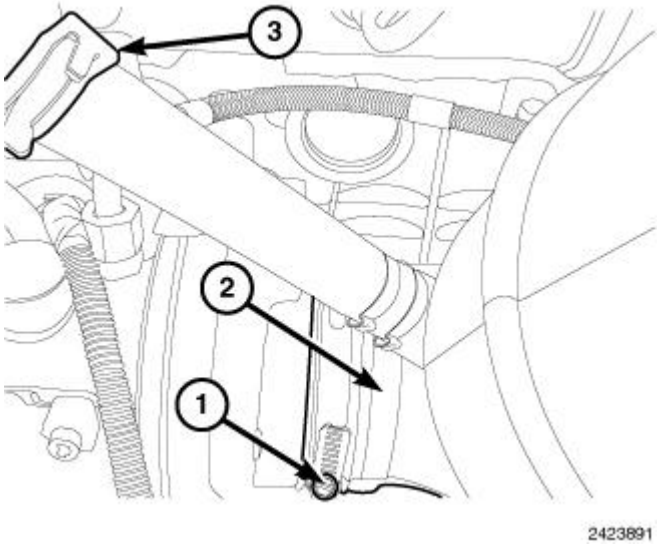

Fig. 45: Clamp, Outlet Tube & Breather Hose
Courtesy of CHRYSLER GROUP, LLC

5. Disconnect the breather hose (3).
6. Loosen the clamp (1) and remove the outlet tube (2) from the turbocharger.

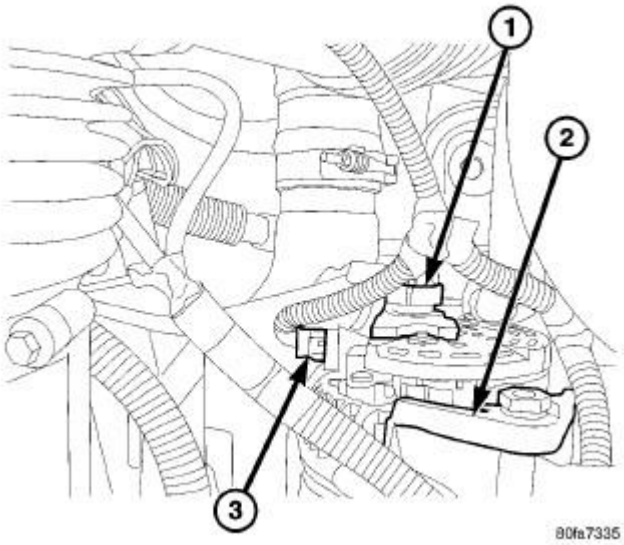

Fig. 46: Diesel Generator Connectors
Courtesy of CHRYSLER GROUP, LLC

1 - B+ CONNECTOR
2 - GENERATOR
3 - FIELD WIRE CONNECTOR

7. Remove the generator. Refer to **GENERATOR, REMOVAL** .

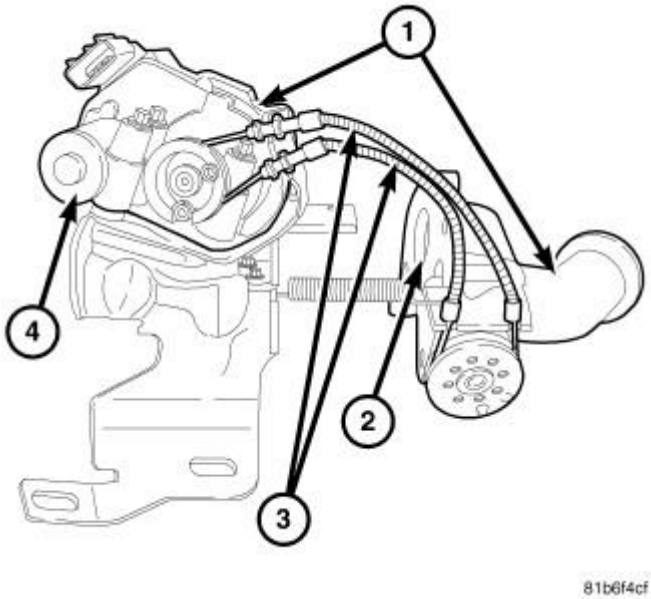

Fig. 47: EGR Cooler Bypass Valve Assembly
Courtesy of CHRYSLER GROUP, LLC

8. Remove the EGR cooler bypass valve. Refer to **VALVE, EXHAUST GAS RECIRCULATION (EGR) COOLER BYPASS, REMOVAL** .

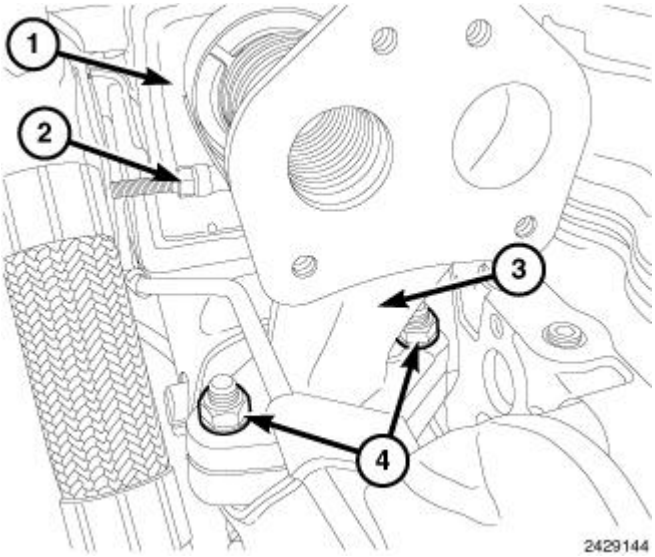

Fig. 48: EGR Cooler, Clamp, Exhaust Transfer Manifold & Nuts
Courtesy of CHRYSLER GROUP, LLC

9. Remove the clamp (2) securing the EGR cooler (1) to exhaust transfer manifold (3).
10. Remove the nuts (4) and the exhaust transfer manifold (3).

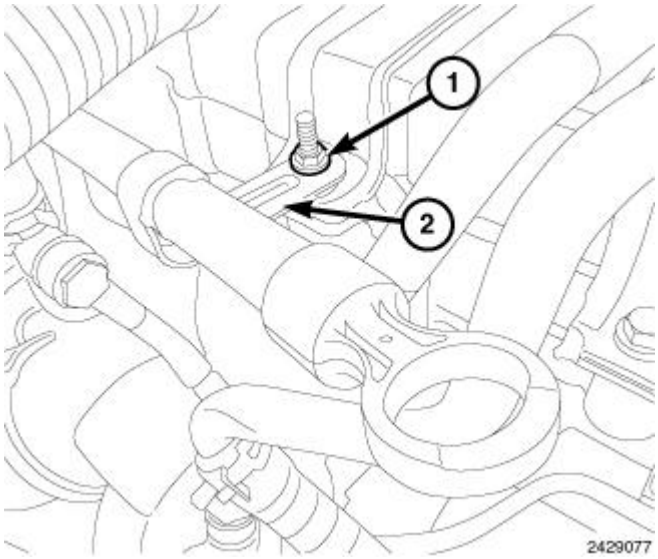

Fig. 49: Transmission Fill Tube Retaining Nut
Courtesy of CHRYSLER GROUP, LLC

11. If equipped, remove the retaining nut and position aside the transmission fill tube from the EGR cooler.

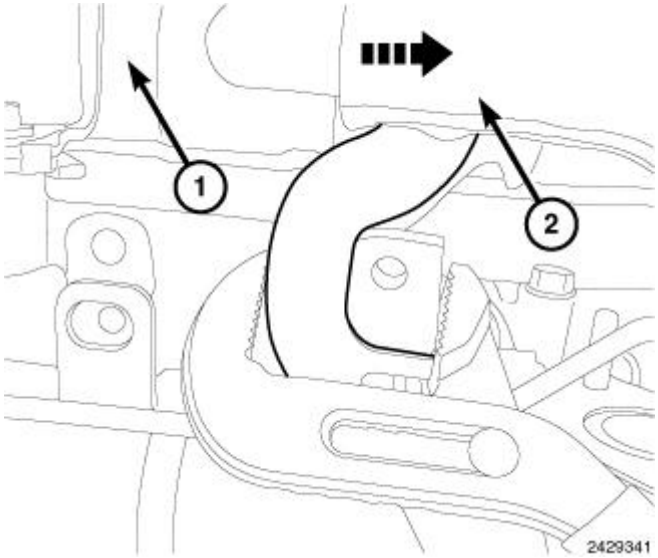

Fig. 50: Forward Coolant Tube & EGR Cooler
Courtesy of CHRYSLER GROUP, LLC

12. As illustrated, using a suitable pair of channel lock pliers, remove forward coolant tube (2) from EGR cooler (1).

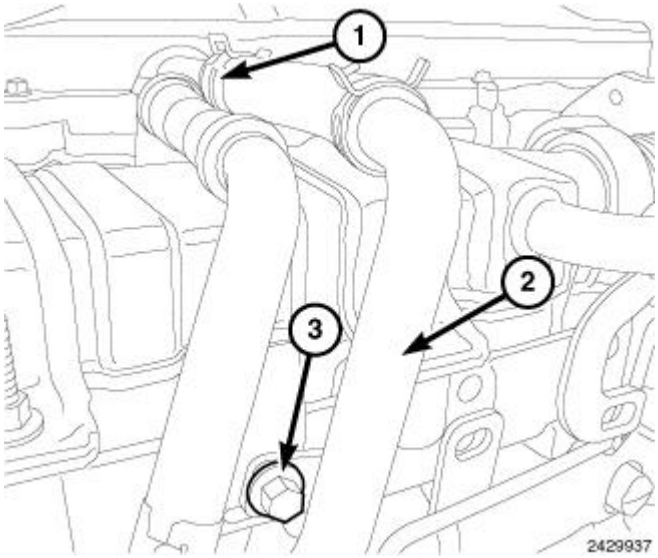

Fig. 51: Breather Hose, Breather Tube & Bolt
Courtesy of CHRYSLER GROUP, LLC

13. Disconnect breather hose (1), remove the bolt (3) and remove the breather tube (2).

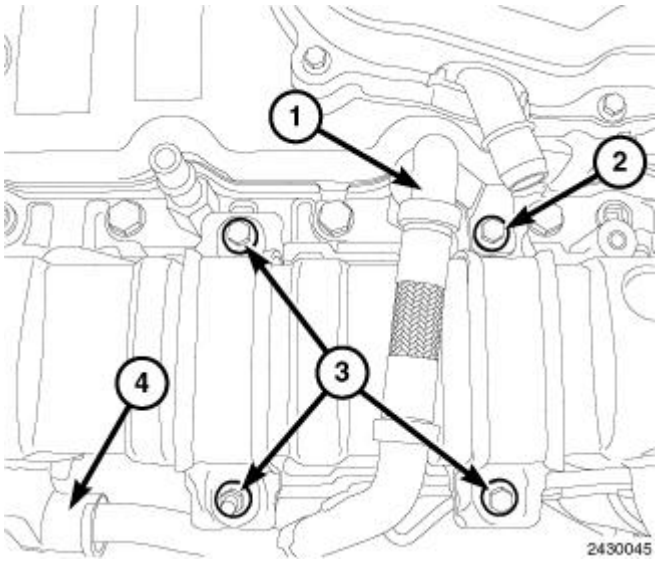

Fig. 52: Rear Coolant Tube & EGR Cooler Mounting Bolts
Courtesy of CHRYSLER GROUP, LLC

14. Remove the bolt (2), and remove rear coolant tube from connection (1) and (4).
15. Remove EGR cooler mount bolts (3).

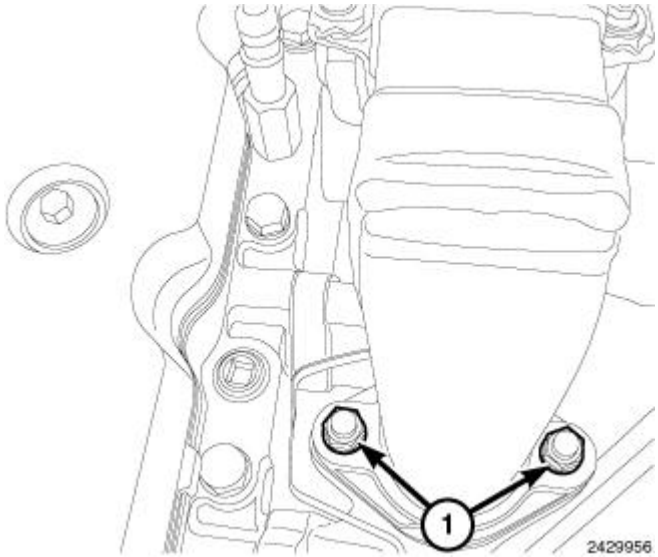

Fig. 53: EGR Cooler Inlet Flange Nuts
Courtesy of CHRYSLER GROUP, LLC

16. Remove EGR cooler flange nuts (1).
17. Remove EGR cooler and discard the flange gasket.
18. If damaged, remove EGR cooler mounting support.

CLEANING

CLEANING

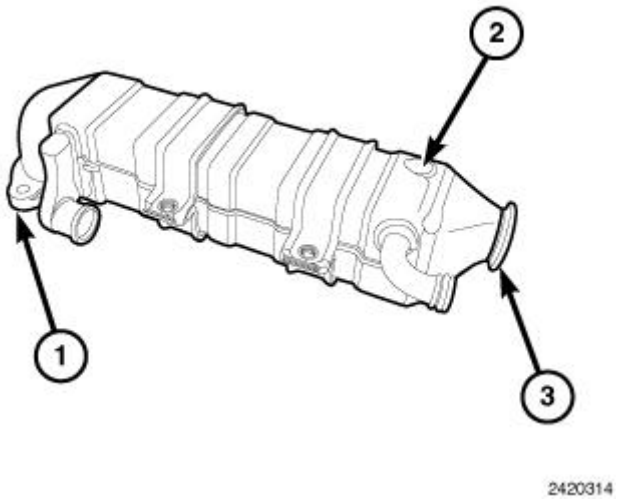

Fig. 54: EGR Cooler
Courtesy of CHRYSLER GROUP, LLC

1. Remove EGR Cooler. Refer to **COOLER, EGR, REMOVAL**.
2. Spray the internal cavity of EGR Cooler (2) with hot tap water for 10 minutes.

3. Plug the EGR Cooler inlet (1) with a locally obtained rubber expansion plug to make a watertight seal.
4. Following instruction on the container, mix MOPAR® EGR System Cleaner and hot tap water with a ratio of one part EGR Cleaner, four parts water.
5. Position the EGR Cooler with the outlet (3) facing up. Fill EGR Cooler with hot tap water and MOPAR® EGR System Cleaner until cooler is completely full. Soak for one hour.
6. Remove the plug from EGR Cooler inlet (1). Drain cleaning solution from cooler. Discard according to local governmental regulations.
7. Rinse the EGR Cooler (2) using hot tap water until all cleaning solution has been rinsed clean. Dry completely.
8. Install EGR Cooler. Refer to **COOLER, EGR, INSTALLATION**.

INSTALLATION

P/U

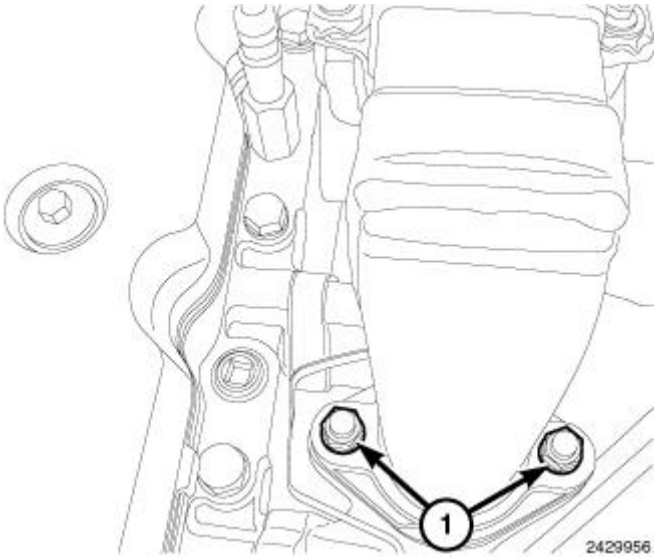

Fig. 55: EGR Cooler Inlet Flange Nuts
Courtesy of CHRYSLER GROUP, LLC

1. Install EGR cooler support bracket, if removed and tighten mounting bolts finger tight. If the EGR cooler support bracket was already installed, loosen the bolts to finger tight.
2. Using a new gasket, position EGR cooler (2) on exhaust manifold flange. Tighten flange nuts (1) to finger tight.

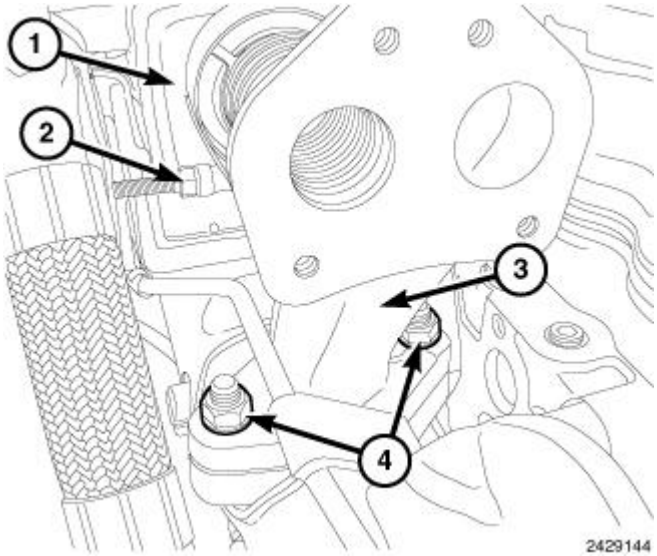

Fig. 56: EGR Cooler, Clamp, Exhaust Transfer Manifold & Nuts
Courtesy of CHRYSLER GROUP, LLC

3. Using a new gasket, install the exhaust transfer manifold (3) Tighten nuts (4) to finger tight.
4. Using a new gasket, install the clamp (2) securing the EGR cooler (1) to exhaust transfer manifold (3), make sure that the bellows pilot is centered in the EGR cooler outlet. Tighten clamp finger tight.

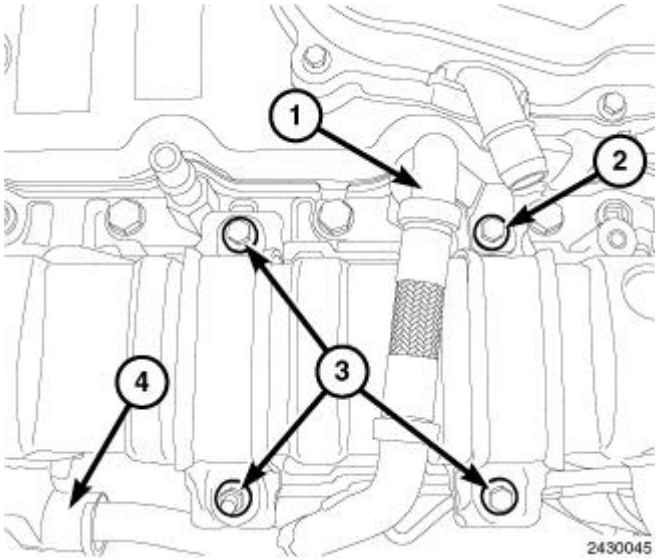

Fig. 57: Rear Coolant Tube & EGR Cooler Mounting Bolts
Courtesy of CHRYSLER GROUP, LLC

NOTE: Lubricate the new O-rings with a soapy water solution.

5. Install EGR Cooler mounting bolts (3) finger tight.
6. Using new O-rings, install the rear coolant tube to connection (4) then (1) and install the bolt (2) finger tight.

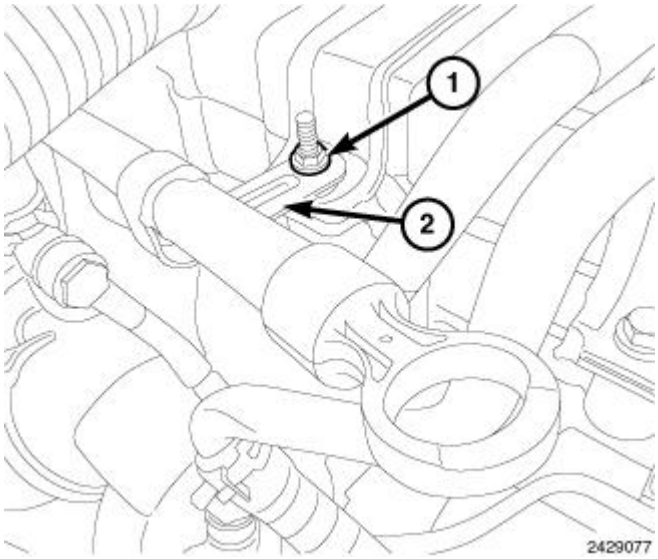

Fig. 58: Transmission Fill Tube Retaining Nut
Courtesy of CHRYSLER GROUP, LLC

7. If equipped, position back the transmission fill tube (2) to the EGR cooler (1) finger tight.

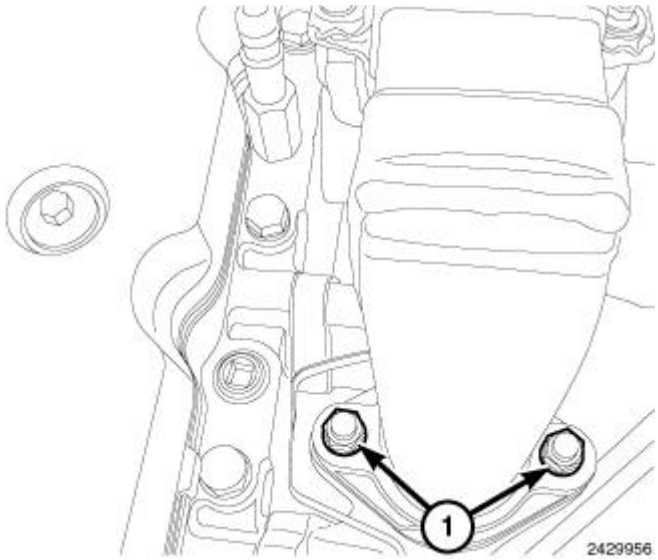

Fig. 59: EGR Cooler Inlet Flange Nuts
Courtesy of CHRYSLER GROUP, LLC

8. Tighten nuts (1) on the EGR cooler inlet flange to the exhaust manifold to 60 N.m (44 ft. lbs.).

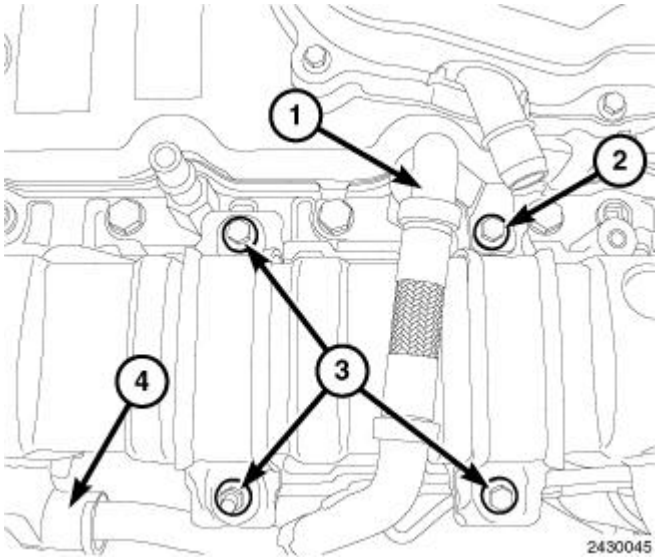

Fig. 60: Rear Coolant Tube & EGR Cooler Mounting Bolts
Courtesy of CHRYSLER GROUP, LLC

9. Using a crisscross pattern, tighten bolt (2) and (3) to 24 N.m 18 ft. lbs.) to secure the EGR cooler onto the EGR cooler mounting bracket.

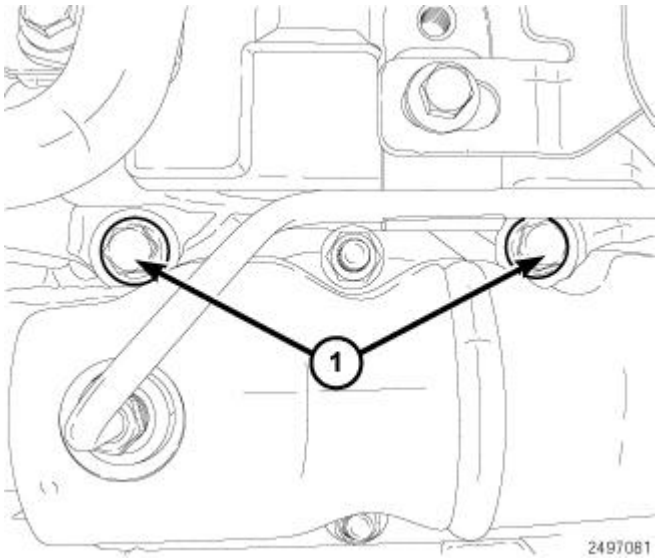

Fig. 61: EGR Cooler Mounting Bracket-To-Cylinder Head Bolts
Courtesy of CHRYSLER GROUP, LLC

10. Tighten the EGR cooler mounting bracket to cylinder head bolts to 36 N.m (27 ft. lbs.).

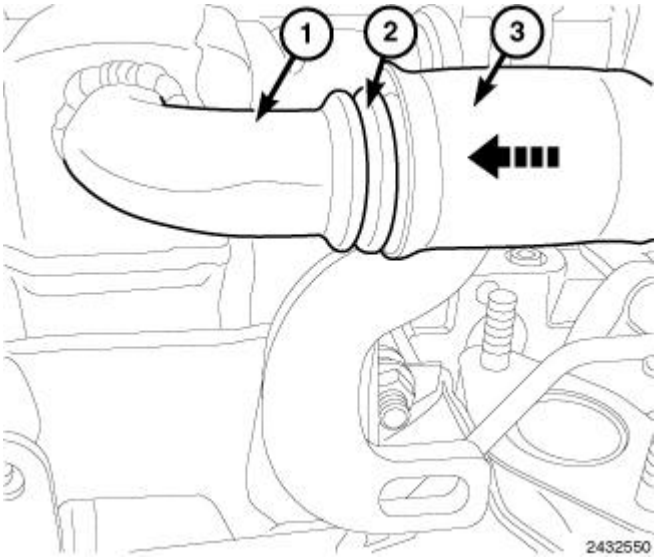

Fig. 62: Installing EGR Cooler, O-Ring & Forward Coolant Tube
Courtesy of CHRYSLER GROUP, LLC

NOTE: Lubricate the new O-rings with a soapy water solution.

11. Using a new O-ring (2), install the forward coolant tube (3) onto EGR cooler (1).

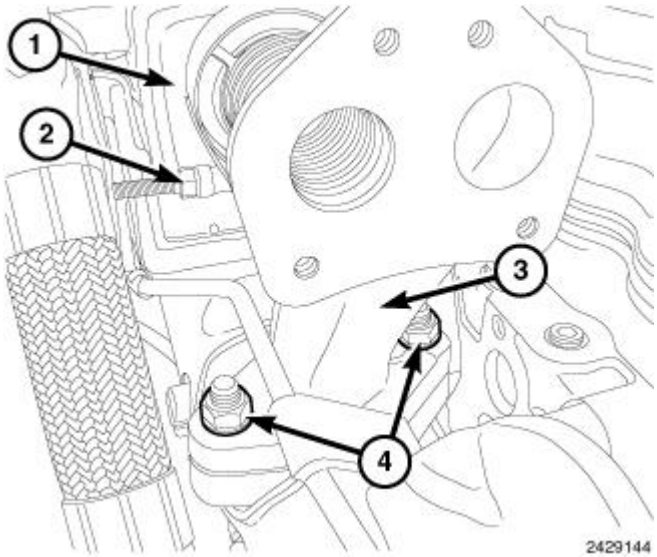

Fig. 63: EGR Cooler, Clamp, Exhaust Transfer Manifold & Nuts
Courtesy of CHRYSLER GROUP, LLC

12. Tighten nuts (4) on the exhaust transfer manifold (3) to 43 N.m (18 ft. lbs.).
13. Tighten clamp (2) to 10 N.m (89 in. lbs.).

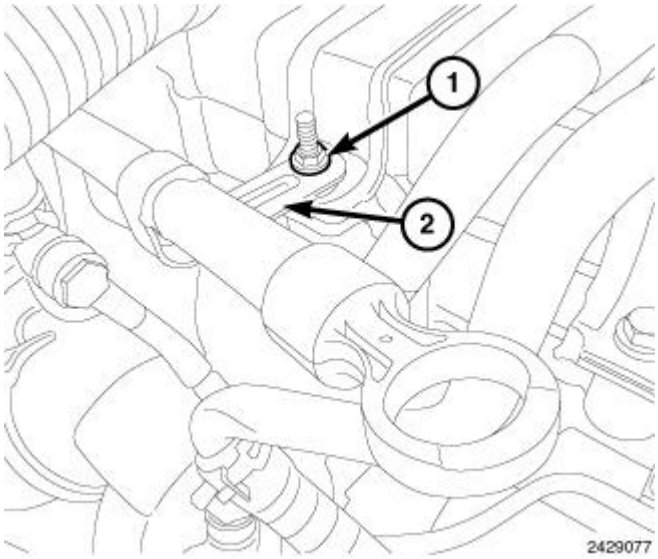

Fig. 64: Transmission Fill Tube Retaining Nut
Courtesy of CHRYSLER GROUP, LLC

14. If equipped, tighten the nut (1) on the transmission fill tube (2) 10 N.m (89 in. lbs.).

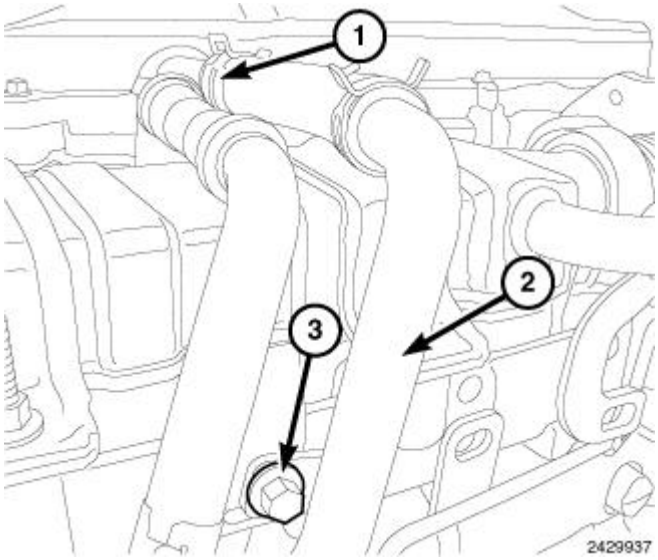

Fig. 65: Breather Hose, Breather Tube & Bolt
Courtesy of CHRYSLER GROUP, LLC

15. Install the breather tube (2) and connect breather hose (1), Tighten the bolt (3) 24 N.m (18 ft. lbs.).

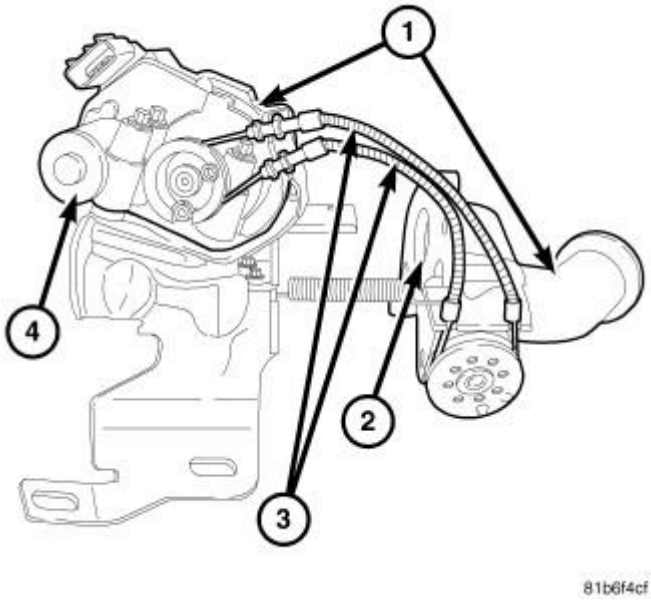

Fig. 66: EGR Cooler Bypass Valve Assembly
Courtesy of CHRYSLER GROUP, LLC

16. Install the EGR cooler bypass valve. Refer to **VALVE, EXHAUST GAS RECIRCULATION (EGR) COOLER BYPASS, INSTALLATION** .

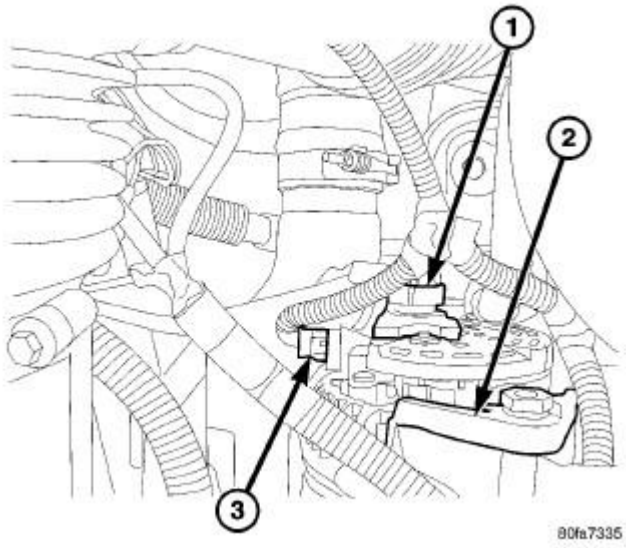

Fig. 67: Diesel Generator Connectors
Courtesy of CHRYSLER GROUP, LLC

1 - B+ CONNECTOR
2 - GENERATOR
3 - FIELD WIRE CONNECTOR

17. Install the generator. Refer to **GENERATOR, INSTALLATION** .

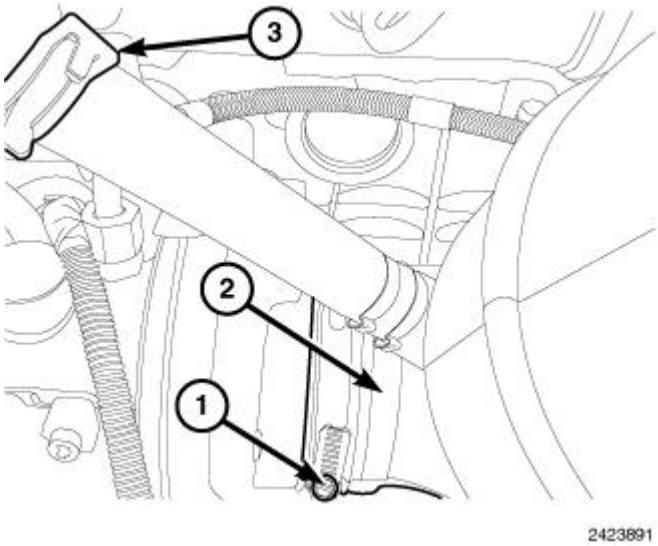

Fig. 68: Clamp, Outlet Tube & Breather Hose
Courtesy of CHRYSLER GROUP, LLC

18. Install the outlet tube (2) to the turbocharger and tighten the clamp (1) 11 N.m (95 in. lbs.).
19. Connect the breather hose (3).

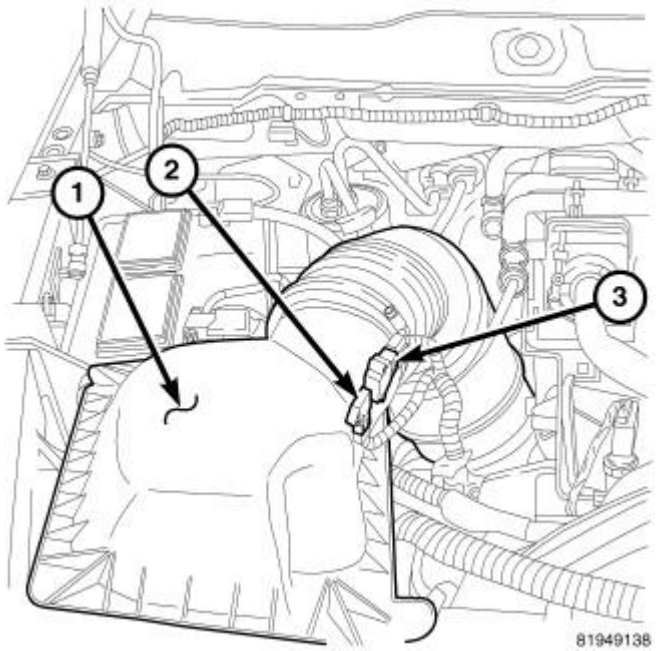

Fig. 69: Air Cleaner Housing
Courtesy of CHRYSLER GROUP, LLC

20. Install the air cleaner assembly. Refer to **BODY, AIR CLEANER, INSTALLATION, 6.7L** .

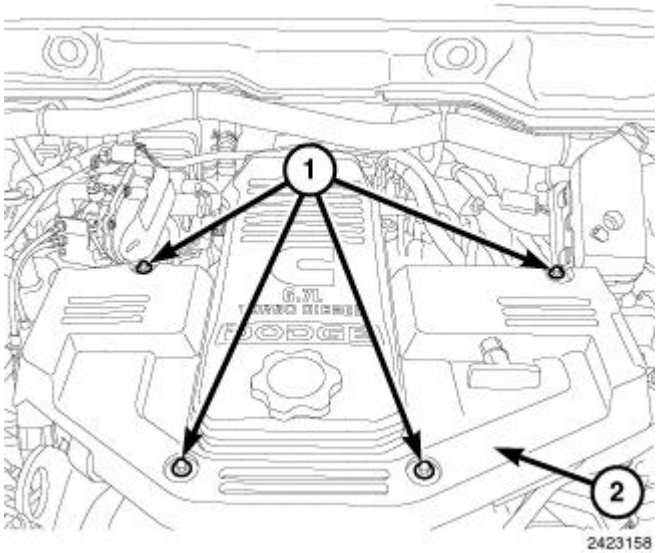

Fig. 70: EGR Crossover Tube Cover
Courtesy of CHRYSLER GROUP, LLC

21. Install engine cover and tighten bolts (1) to 10 N.m (89 in. lbs.).
22. Connect negative battery cable(s).
23. Fill coolant system. Refer to **STANDARD PROCEDURE**.
24. Start engine and check for coolant or exhaust leaks.

FAN, COOLING, ELECTRIC

REMOVAL

REMOVAL

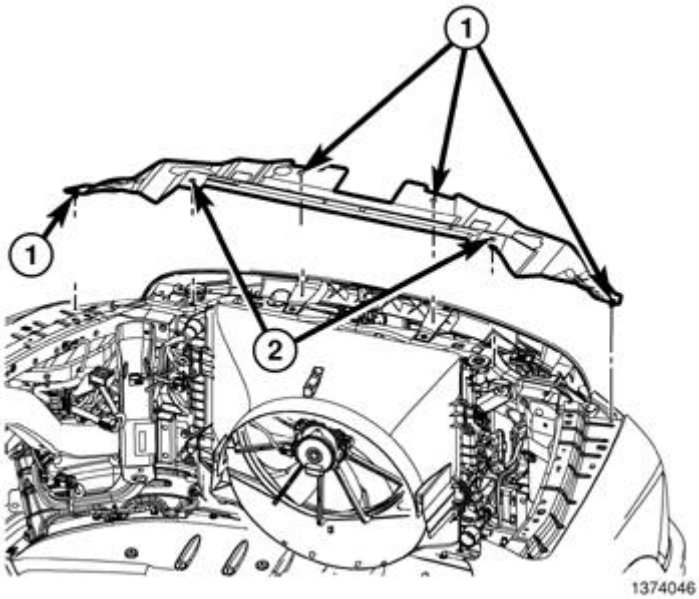

Fig. 71: Upper Radiator Seal

Courtesy of CHRYSLER GROUP, LLC

1. Disconnect and isolate the negative battery cable.
2. Remove the upper radiator seal push pins (1).
3. Remove the upper radiator seal plastic rivets (2).
4. Remove the upper radiator seal.
5. If equipped, remove the viscous fan assembly from the water pump hub shaft. Refer to **FAN, COOLING, VISCOUS, REMOVAL**.

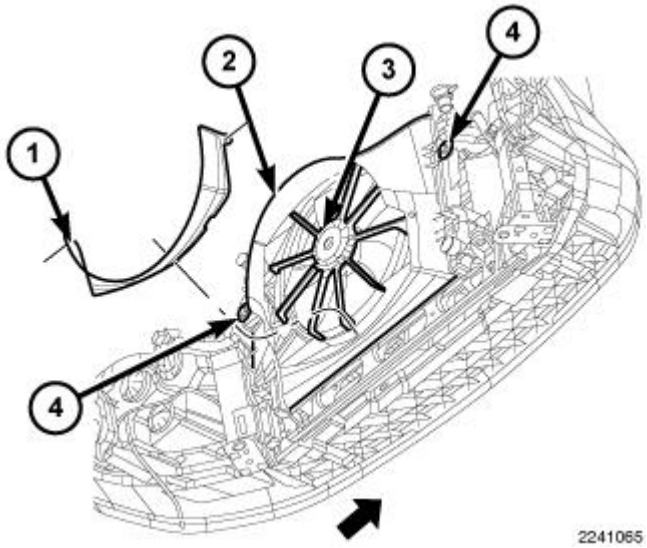

Fig. 72: Radiator Fan, Shroud & Bolts
Courtesy of CHRYSLER GROUP, LLC

6. Disconnect the radiator fan (3) electrical connector.
7. Remove the fan shroud (1, 2) to radiator mounting bolts (4).
8. Disengage the fan shroud's (1, 2) lower retaining clips and position the fan shroud (1, 2) towards the rear of vehicle.
9. Disengage the electric cooling fan (3) to radiator upper retaining clips.
10. Disengage the electric fan (3) to radiator lower retaining clips.
11. Pulling upward remove the viscous fan, radiator fan shroud (1, 2) and the electric cooling fan (3) as an assembly.
12. The lower fan shroud (1) can be removed from the upper fan shroud (2) if needed.
13. If damaged, remove radiator fan resistor from shroud (1, 2).

INSTALLATION

INSTALLATION

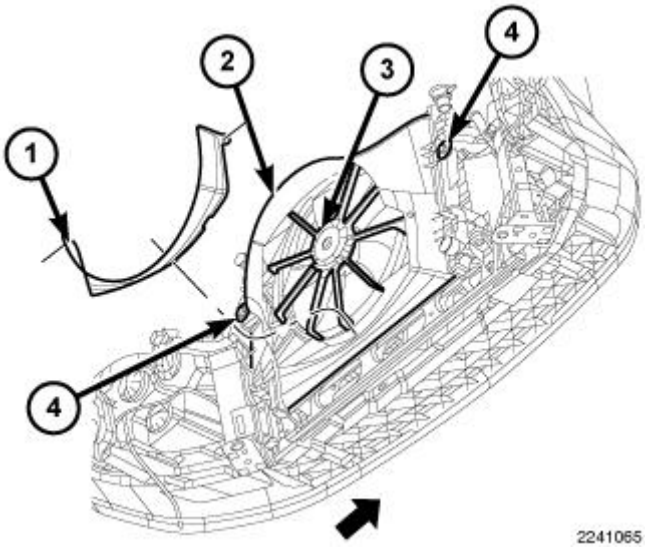

Fig. 73: Radiator Fan, Shroud & Bolts
Courtesy of CHRYSLER GROUP, LLC

1. If removed, install the electric cooling fan resistor. Tighten the mounting screw securely.
2. If removed, install the lower fan shroud (1) to the upper fan shroud (2).
3. Position the viscous fan (if equipped), radiator fan shroud (1, 2) and electric cooling fan (3) into the vehicle as an assembly.
4. Install the electric cooling fan (3) by engaging the electric cooling fan's (3) upper and lower retaining clips to the radiator.
5. Install the fan shroud (1, 2) by engaging the fan shroud's (1, 2) lower retaining clips to the radiator/electric cooling fan (3).

NOTE: Make sure all retaining clips lock into place.

6. Install the fan shroud (1, 2) mounting bolts (4). Tighten to 10 N.m (89 in. lbs.).
7. Connect the electric cooling fan (3) electrical connector.

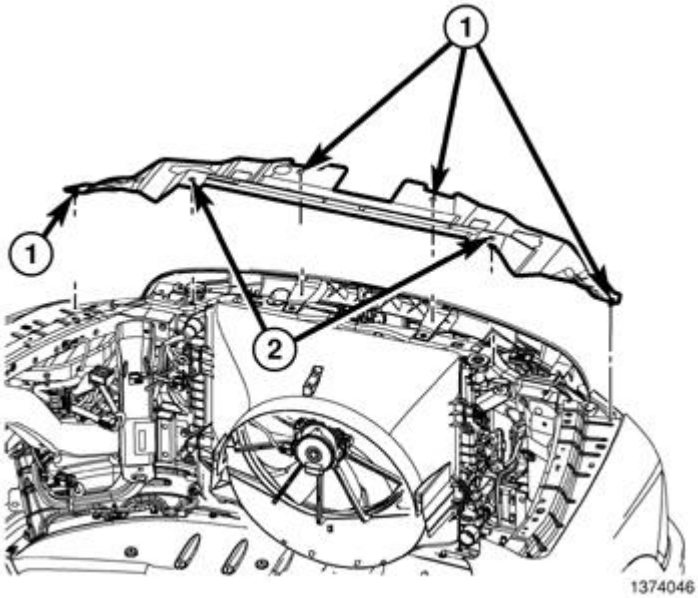

Fig. 74: Upper Radiator Seal
Courtesy of CHRYSLER GROUP, LLC

8. If equipped, install the viscous fan assembly. Refer to **FAN, COOLING, VISCOUS, INSTALLATION**.
9. Position the upper radiator seal.
10. Install the upper radiator seal plastic rivets (2).
11. Install the upper radiator push pins (1).
12. Connect the negative battery cable.

FAN, COOLING, VISCOUS

DESCRIPTION

DESCRIPTION

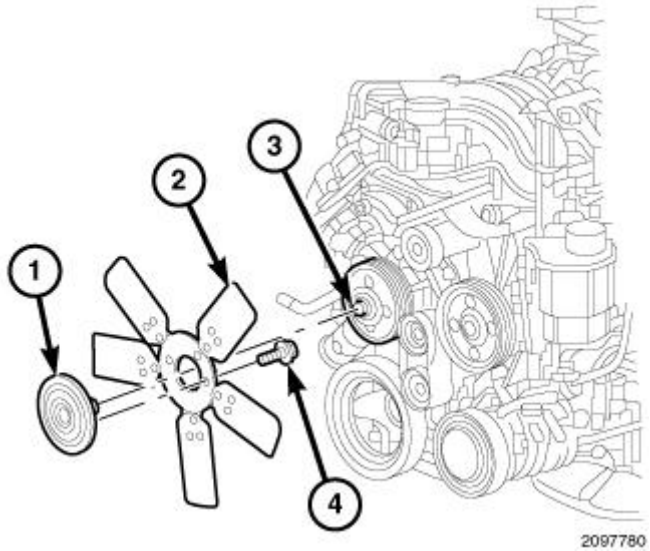

Fig. 75: Viscous Fan Drive & Blade
Courtesy of CHRYSLER GROUP, LLC

1 -VISCOUS FAN DRIVE
2 - FAN BLADE ASSEMBLY
3 - WATER PUMP AND PULLEY
4 - BOLT (4)

A thermostatic bi-metallic spring coil is located on the front face of the viscous fan drive unit. This spring coil reacts to the temperature of the radiator discharge air. It engages the viscous fan drive for higher fan speed if the air temperature from the radiator rises above a certain point. Until additional engine cooling is necessary, the fan will remain at a reduced rpm regardless of engine speed.

Only when sufficient heat is present, will the viscous fan drive engage. This is when the air flowing through the radiator core causes a reaction to the bi-metallic coil. It then increases fan speed to provide the necessary additional engine cooling.

Once the engine has cooled, the radiator discharge temperature will drop. The bi-metallic coil again reacts and the fan speed is reduced to the previous disengaged speed.

DIAGNOSIS AND TESTING

DIAGNOSIS AND TESTING - RADIATOR VISCOUS FAN

NOISE

NOTE: It is normal for fan noise to be louder (roaring) when:

- The underhood temperature is above the engagement point for the viscous drive coupling. This may occur when ambient (outside air temperature) is very high.
- Engine loads and temperatures are high such as when towing a trailer.

- Cool silicone fluid within the fan drive unit is being redistributed back to its normal disengaged (warm) position. This can occur during the first 15 seconds to one minute after engine start-up on a cold engine.

LEAKS

Viscous fan drive operation is not affected by small oil stains near the drive bearing. If leakage appears excessive, replace the fan drive unit.

VISCOUS DRIVE

For the following test, the cooling system must be in good condition. It also will ensure against excessively high coolant temperature.

WARNING: Be sure that there is adequate fan blade clearance before drilling.

1. Drill a 3.18-mm (1/8-in) diameter hole in the top center of the fan shroud.
2. Obtain a dial thermometer with an 8 inch stem (or equivalent). It should have a range of -18°-to-105°C (0°-to-220° F). Insert thermometer through the hole in the shroud. Be sure that there is adequate clearance from the fan blades.
3. Connect a tachometer and an engine ignition timing light. The timing light is to be used as a strobe light.
4. Block the air flow through the radiator. Secure a sheet of plastic in front of the radiator. Use tape at the top to secure the plastic and be sure that the air flow is blocked.
5. Be sure that the air conditioner (if equipped) and blower fan is turned off.

WARNING: Use extreme caution when the engine is operating. Do not stand in a direct line with the fan. Do not put your hands near the pulleys, belts or fan. Do not wear loose clothing.

6. Start the engine and operate at 2400 rpm. Within ten minutes the air temperature (indicated on the dial thermometer) should be up to 88° C (190° F). Fan drive **engagement** should start to occur at/between:
   - 3.7L Automatic - 93° C - 99°C (200° F - 210° F)
   - 3.7L Manual/4.7L Automatic - 85° - 91° C (185° - 195° F)
   - 4.7L Manual - 74° - 79° C (165° - 175° F)
   - 5.7L Automatic Standard Cool - 94° C - 99°C (201° F - 211° F)
   - 5.7L Manual - 93° C - 100°C (199° F - 212° F)
   - 5.7L Heavy Duty Snowplow - 76° C - 83°C (169° F - 181° F)
   - Engagement is distinguishable by a definite **increase** in fan flow noise (roaring). The timing light also will indicate an increase in the speed of the fan.
7. When viscous drive engagement is verified, remove the plastic sheet. Fan drive **disengagement** should start to occur at or between:
   - 3.7L Automatic - 76°C - 81°C (168° F - 178° F)
   - 3.7L Manual/4.7L Auto - 67°C - 73°C (153° F - 163° F)

- 4.7L Manual - 56°C - 62°C (133° F - 143° F)
- 5.7L Automatic Standard Cool - 69° C - 74°C (156° F - 166° F)
- 5.7L Manual - 71° C - 76°C (160° F - 170° F)
- 5.7L Heavy Duty Snowplow - 55° C - 60°C (168° F - 178° F)

A definite **decrease** of fan flow noise (roaring) should be noticed. If not, replace the defective viscous fan drive unit.

CAUTION: Some engines equipped with serpentine drive belts have reverse rotating fans and viscous fan drives. Installation of the wrong fan or viscous fan drive can result in engine overheating.

CAUTION: If the viscous fan drive is replaced because of mechanical damage, the cooling fan blades should also be inspected. Inspect for fatigue cracks, loose blades, or loose rivets that could have resulted from excessive vibration. Replace fan blade assembly if any of these conditions are found. Also inspect water pump bearing and shaft assembly for any related damage due to a viscous fan drive malfunction.

DIESEL

NOISE

NOTE: It is normal for fan noise to be louder (roaring) when:

- Fan duty cycle high. This may occur when ambient (outside air temperature) is very high.
- Engine loads and temperatures are high such as when towing a trailer.
- Operating conditions where transmission temperatures may be high
- Cool silicone fluid within the fan drive unit is being redistributed back to its normal disengaged (warm) position. This can occur during the first 15 seconds to one minute after engine start-up on a cold engine.

LEAKS

Viscous fan drive operation is not affected by small oil stains near the drive bearing. If leakage appears excessive, replace the fan drive unit.

ELECTRONICALLY CONTROLLED VISCOUS DRIVE - DIESEL

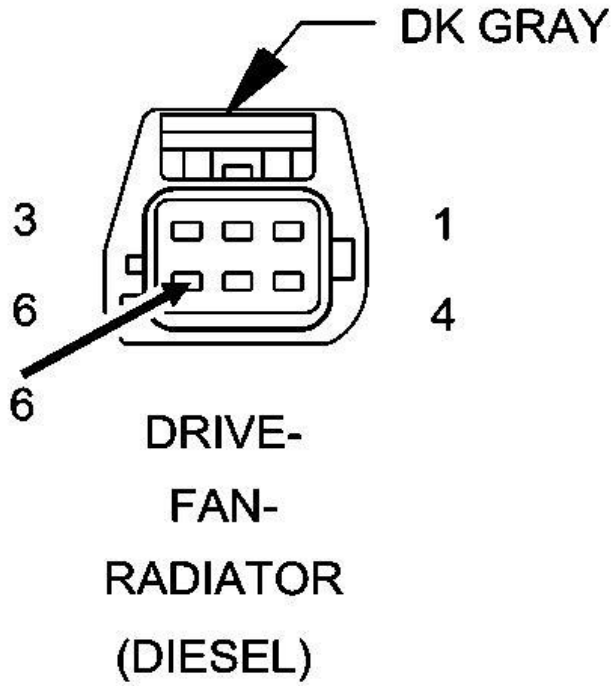

2578509

Fig. 76: Electronically Controlled Viscous Fan Drive Connector Pin ID
Courtesy of CHRYSLER GROUP, LLC

If the fan assembly does not free-wheel and a metallic grinding sound exists, replace the electronically controlled fan drive. Refer to **FAN, COOLING, VISCOUS, REMOVAL**.

NOTE: The following test may take up to 15 minutes to perform.

The engine should be at normal operating temperature.

1. Set the parking brake and verify the transmission is in park or neutral.
2. Set air conditioner (if equipped) and blower fan to OFF.
3. Start and allow engine to reach normal operating temperatures.
4. Stop engine, connect the scan tool and select appropriate model year and engine option.
5. Check for and correct existing DTC's
6. Locate the electronically controlled viscous fan drive connector on the fan shroud.

WARNING: A spark may occur when the connection to battery is made. Be sure there are no combustible materials near the area where this procedure is being performed.

7. Using a jumper wire, backprobe pin 6 of the viscous fan drive connector to battery positive.

NOTE: The fan drive control coil is energized to 12 volts at this time.

8. Using the scan tool, confirm that DTC 0480 is set to verify a good connection at the cooling fan harness connector.
9. Start the engine.
10. Actuate engine speed to 2000 RPM.
11. Go to the SENSOR screen and observe the fan speed.
12. Run the engine at 2000 RPM until the fan speed increases to 1850 RPM or more for 30 seconds.

NOTE: Fan RPM may ramp up slowly.

NOTE: It may take 15 minutes before fan speed increases.

13. The fan speed should be in accordance to the table below.
14. If fan speed does not increase, make sure that the jumper wire has a good connection. If so replace the electronically control viscous fan drive.
15. If the fan speed does increase and there is still a concern, refer to the appropriate Electrical Diagnostic article to diagnosis the electronically controlled viscous fan drive control circuit.

ELECTRONICALLY CONTROLLED VISCOUS FAN DRIVE SPEEDS	
ENGINE RPM	**FAN RPM** (Min)
1000	950

1500	1420
2000	1850
2500	2230

REMOVAL

5.7L

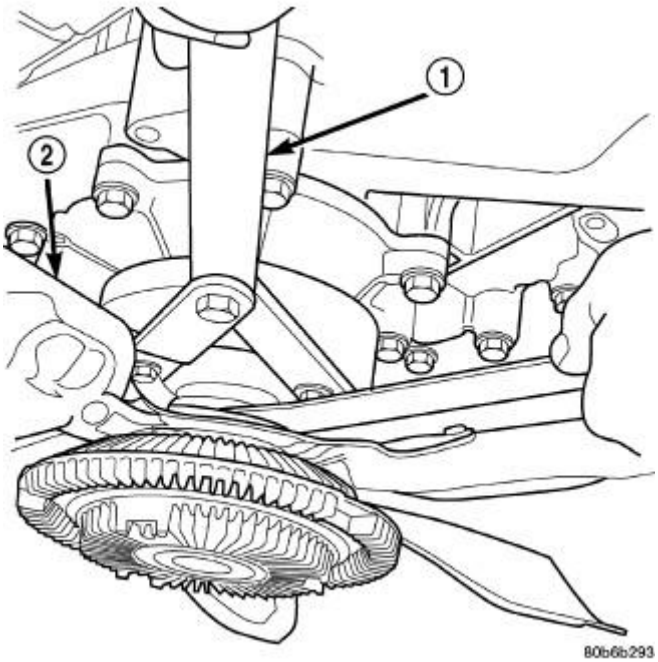

Fig. 77: Fan & Spanner Wrench
Courtesy of CHRYSLER GROUP, LLC

1 - SPECIAL TOOL 6958 SPANNER WRENCH WITH ADAPTER PINS 8346
2 - FAN

1. **Do Not** attempt to remove the fan/viscous fan drive assembly (2) from the vehicle at this time.

CAUTION: If the viscous fan drive is replaced because of mechanical damage, the cooling fan blades should also be inspected. Inspect for fatigue cracks, loose blades, or loose rivets that could have resulted from excessive vibration. Replace fan blade assembly if any of these conditions are found. Also inspect water pump bearing and shaft assembly for any related damage due to a viscous fan drive malfunction.

2. Disconnect negative battery cable from battery.
3. The thermal viscous fan drive/fan blade assembly (2) is attached (threaded) to the water pump hub shaft.

Remove the fan blade/viscous fan drive assembly from the water pump by turning the mounting nut clockwise as viewed from the front. Threads on the viscous fan drive are **LEFT-HAND.** A 36 MM Fan Wrench (1) should be used to prevent pulley from rotating.

4. **Do Not** unbolt the fan blade assembly from viscous fan drive at this time.
5. Remove the fan shroud-to-radiator mounting bolts.
6. Pull the lower shroud mounts out of the radiator tank clips.
7. Remove the fan shroud, electric cooling fan, and fan blade/viscous fan drive assembly (2) as a complete unit from vehicle. Refer to **FAN, COOLING, ELECTRIC, REMOVAL** and **FAN, COOLING, VISCOUS, REMOVAL**.
8. After removing the fan blade/viscous fan drive assembly (2), **do not** place the viscous fan drive in a horizontal position. If stored horizontally, silicone fluid in the viscous fan drive could drain into its bearing assembly and contaminate lubricant.

CAUTION: Do not remove water pump pulley-to-water pump bolts. This pulley is under spring tension.

9. Remove four bolts securing fan blade assembly to viscous fan drive.

CAUTION: Some engines equipped with serpentine drive belts have reverse rotating fans and viscous fan drives. They are marked with the word REVERSE to designate their usage. Installation of the wrong fan or viscous fan drive can result in engine overheating.

6.7L DIESEL

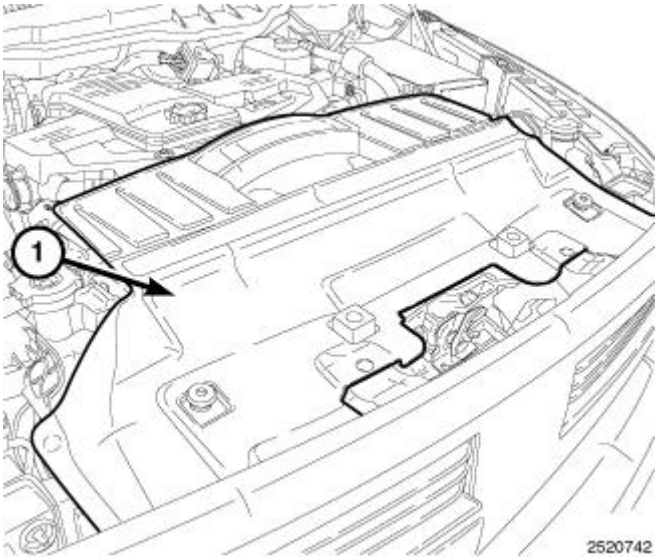

Fig. 78: Upper Radiator Shroud
Courtesy of CHRYSLER GROUP, LLC

CAUTION: If the electronically controlled viscous fan drive is replaced because of

mechanical damage, the cooling fan blades should also be inspected. Inspect for fatigue cracks, or chipped blades that could have resulted from excessive vibration. Replace fan blade assembly if any of these conditions are found. Also inspect wiring harness and connectors for damage.

1. Remove the upper radiator shroud (1).
2. Disconnect and isolate the battery negative cable.
3. If equipped, disconnect and isolate the negative battery cable from the auxiliary battery.

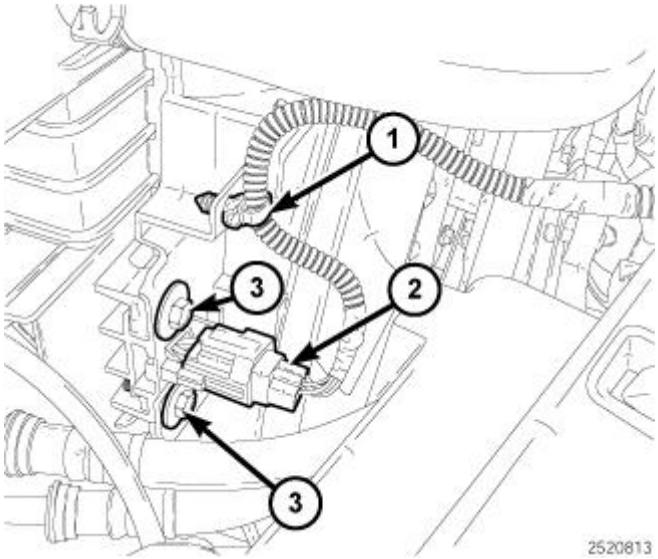

Fig. 79: Viscous Fan Electrical Connector
Courtesy of CHRYSLER GROUP, LLC

4. Disconnect the electronically controlled viscous fan electrical connector (2) at the fan shroud.
5. Remove and re-position the fan drive wire harness support (1) from the fan shroud.
6. Remove the two fan shroud-to-radiator shroud mounting bolts (3) located on the driver side of the vehicle.

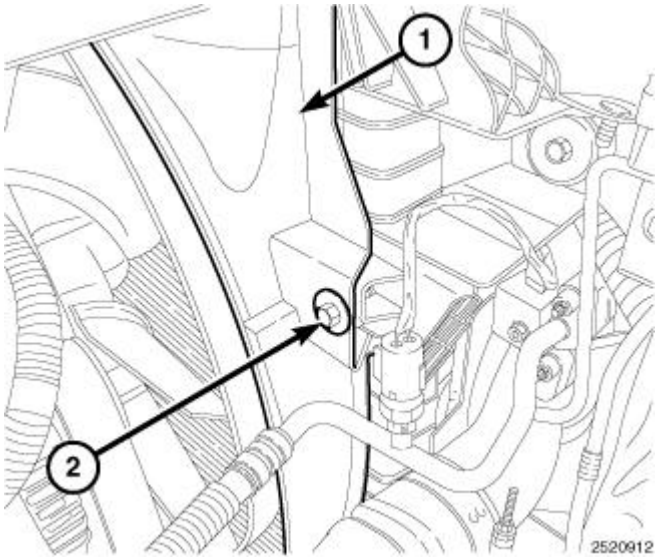

Fig. 80: Fan Shroud-To-Radiator Shroud Mounting Bolt
Courtesy of CHRYSLER GROUP, LLC

7. Remove the fan shroud-to-radiator shroud mounting bolt (2) located on the passenger side of the vehicle.
8. Remove the fan shroud-to-lower radiator shroud push pins.

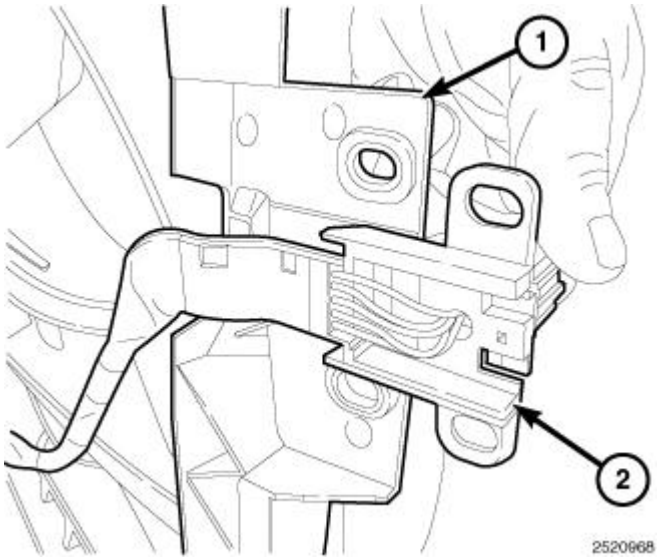

Fig. 81: Electrical Connector Bracket
Courtesy of CHRYSLER GROUP, LLC

CAUTION: Do not remove the fan pulley bolts. This pulley is under spring tension.

9. The electronically controlled viscous fan drive/fan blade assembly is attached (threaded) to the fan pulley shaft. Remove the fan blade/fan drive assembly from fan pulley by turning the mounting nut counterclockwise (as viewed from front). Threads on the viscous fan drive are **RIGHT-HAND.** A 36

MM Fan Wrench can be used. Place a bar or screwdriver between the fan pulley bolts to prevent pulley from rotating.

10. Disengage the fan shroud lower retaining clips.
11. Collapse fan shroud toward front of vehicle and remove fan drive/fan blade and fan shroud as an assembly.
12. Remove the electrical connector bracket (2) by disengaging the retainer clip and sliding the connector bracket (2) out of the fan shroud (1).

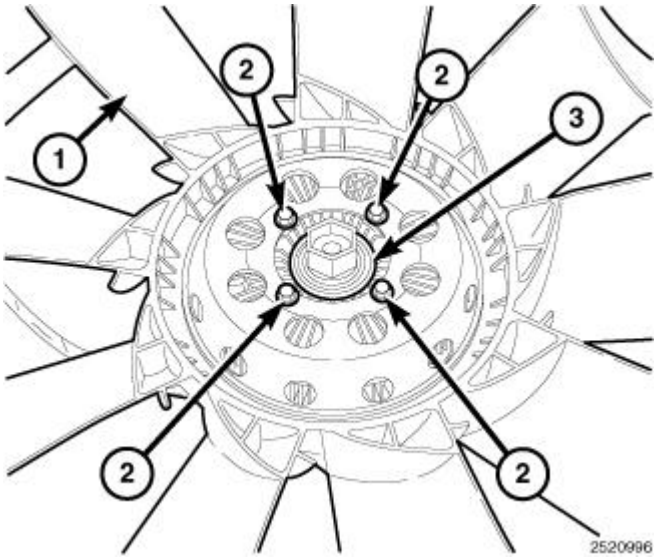

Fig. 82: Fan Blade Mounting Bolts
Courtesy of CHRYSLER GROUP, LLC

CAUTION: The electronically controlled viscous fan drive is vibration and impact sensitive, especially at the electrical connectors. Do not drop the unit.

13. Remove the four fan blade mounting bolts (2) from the viscous fan drive (3).
14. Inspect the fan for cracked, chipped or damaged fan blades (1).

CLEANING

CLEANING

Clean the fan blades using a mild soap and water. Do not use an abrasive to clean the blades.

INSPECTION

INSPECTION

WARNING: Do not attempt to bend or straighten fan blades if fan is not within specifications.

CAUTION: If fan blade assembly is replaced because of mechanical damage, water pump and viscous fan drive should also be inspected. These components could have been damaged due to excessive vibration.

INSTALLATION

3.7L/4.7L/5.7L

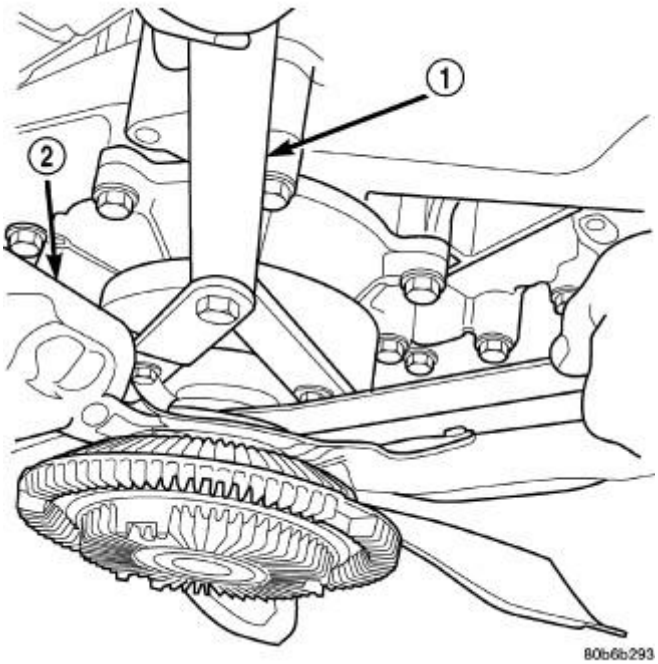

Fig. 83: Fan & Spanner Wrench
Courtesy of CHRYSLER GROUP, LLC

1 - SPECIAL TOOL 6958 SPANNER WRENCH WITH ADAPTER PINS 8346
2 - FAN

CAUTION: If the viscous fan drive is replaced because of mechanical damage, the cooling fan blades should also be inspected. Inspect for fatigue cracks, loose blades, or loose rivets that could have resulted from excessive vibration. Replace fan blade assembly if any of these conditions are found. Also inspect water pump bearing and shaft assembly for any related damage due to a viscous fan drive malfunction.

NOTE: Viscous Fan Drive Fluid Pump Out Requirement: After installing a new viscous fan drive, bring the engine speed up to approximately 2000 rpm and hold for approximately two minutes. This will ensure proper fluid distribution within the drive.

1. Install fan blade assembly (2) to the viscous fan drive. Tighten the bolts to 24 N.m (18 ft. lbs.) torque.

2. Position the fan shroud, electric cooling fan and the fan blade/viscous fan drive assembly (2) to the vehicle as a complete unit. Refer to **FAN, COOLING, ELECTRIC, INSTALLATION** and **FAN, COOLING, VISCOUS, INSTALLATION**.
3. Install the fan shroud.
4. The thermal viscous fan drive/fan blade assembly is attached (threaded) to the water pump hub shaft. Install the fan blade/viscous fan drive assembly to the water pump by turning the mounting nut counterclockwise as viewed from the front. Threads on the viscous fan drive are **LEFT-HAND.** A 36 MM Fan Wrench (1) should be used to prevent pulley from rotating. Tighten mounting nut to 50 N.m (37 ft. lbs.).
5. Connect the negative battery cable.

6.7L DIESEL

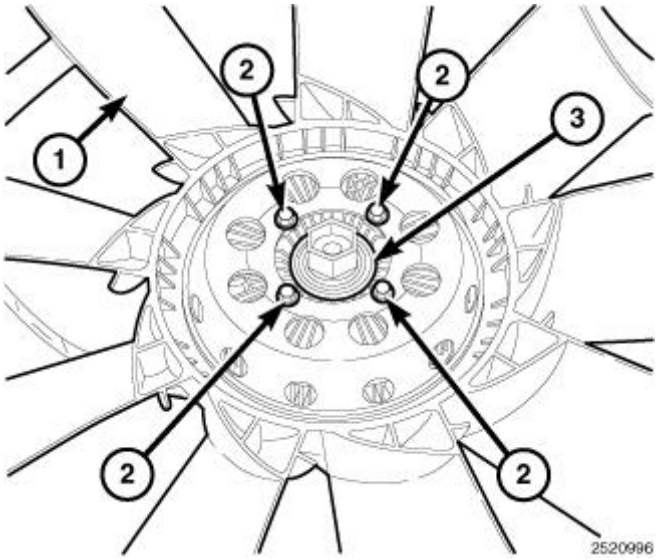

Fig. 84: Fan Blade Mounting Bolts
Courtesy of CHRYSLER GROUP, LLC

CAUTION: The electronically controlled viscous fan drive is vibration and impact sensitive, especially at the electrical connectors. Do not drop the unit.

1. Install the fan blade assembly (1) to the electrically controlled viscous fan drive (3). Tighten the mounting bolts (2) to 24 N.m (18 ft. lbs.) torque.

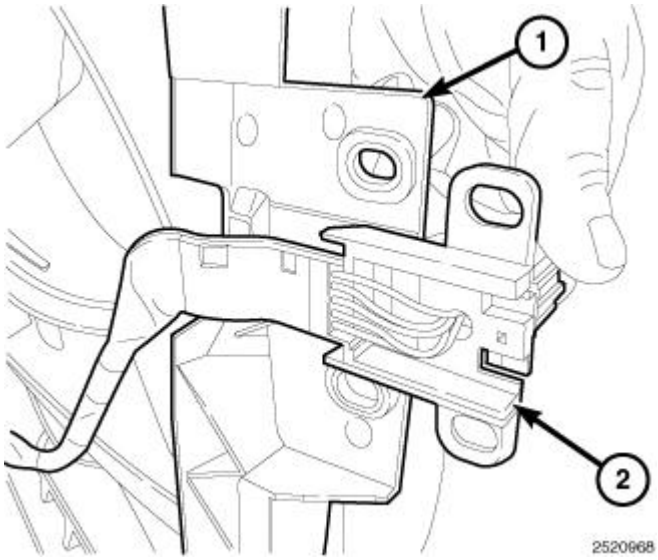

Fig. 85: Electrical Connector Bracket
Courtesy of CHRYSLER GROUP, LLC

2. Position the fan/fan drive assembly inside fan shroud (1).
3. Install the electrical connector bracket (2) by sliding the connector bracket (2) into the fan shroud (1) and engaging the retainer clip.
4. Tilt the fan shroud/fan blade toward front of vehicle and position the fan shroud/fan blade as an assembly into the engine compartment.
5. Engage the fan shroud lower retaining clips.
6. Install the fan blade/fan drive assembly to the fan pulley by turning the mounting nut clockwise (as viewed from front). The threads on the viscous fan drive are **RIGHT-HAND.** A 36 MM Fan Wrench can be used. Place a bar or screwdriver between the fan pulley bolts to prevent pulley from rotating. Tighten the mounting nut to 115 N.m (85 ft. lbs.) torque.

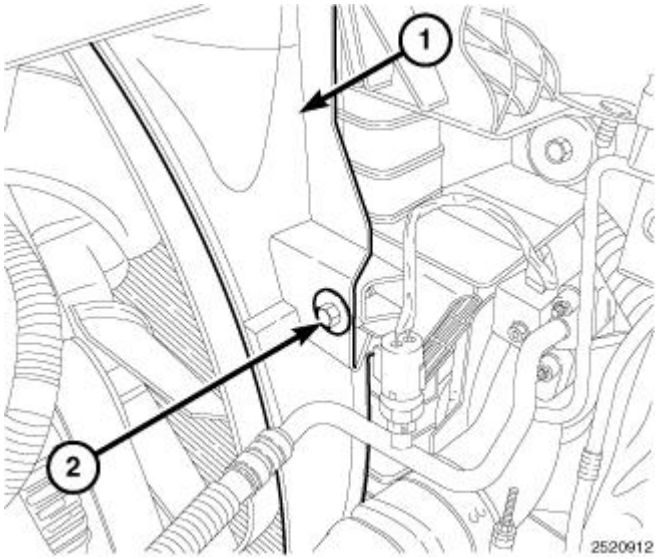

Fig. 86: Fan Shroud-To-Radiator Shroud Mounting Bolt

Courtesy of CHRYSLER GROUP, LLC

7. Install the fan shroud-to-lower radiator shroud push pins.
8. Install the fan shroud-to-radiator shroud mounting bolt (2) located on the passenger side of the vehicle. Tighten the bolt (2) to 24 N.m (18 ft. lbs.).

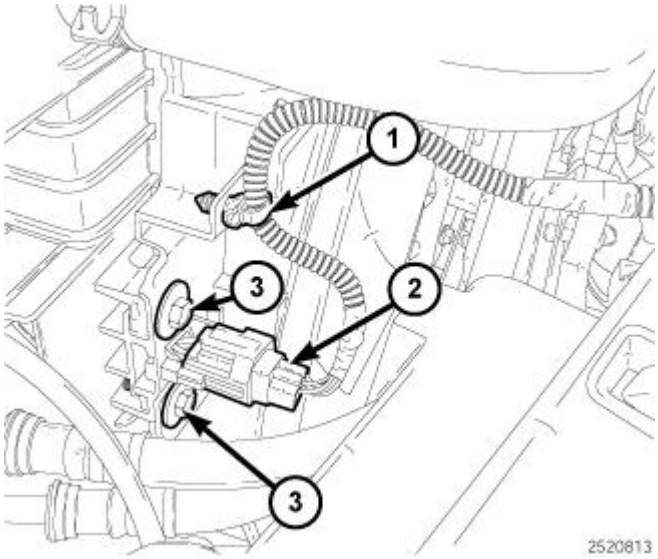

Fig. 87: Viscous Fan Electrical Connector
Courtesy of CHRYSLER GROUP, LLC

9. Install the two fan shroud-to-radiator shroud mounting bolts (3) located on the driver side of the vehicle. Tighten the bolts (3) to 24 N.m (18 ft. lbs.).
10. Position and connect the fan drive wire harness support (1) to the fan shroud.
11. Connect the electronically controlled viscous fan electrical connector (2) at the fan shroud.

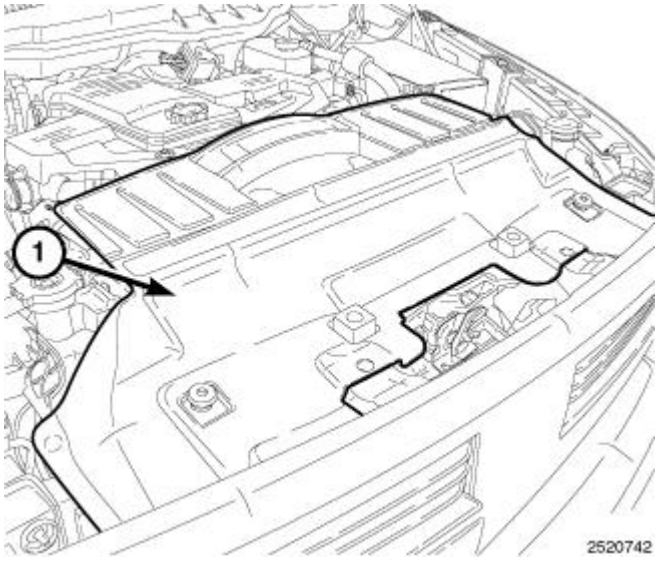

Fig. 88: Upper Radiator Shroud
Courtesy of CHRYSLER GROUP, LLC

12. If equipped, connect the negative battery cable to the auxiliary battery.
13. Connect the negative battery cable.
14. Install the upper radiator shroud (1).

NOTE: **Viscous Fan Drive Fluid Pump Out Requirement: After installing a new viscous fan drive, bring the engine speed up to approximately 2000 rpm and hold for approximately two minutes. This will ensure proper fluid distribution within the drive.**

15. Start the vehicle and check for proper clearance between the fan blade assembly and the fan shroud.

HEATER, ENGINE BLOCK

DESCRIPTION

DESCRIPTION

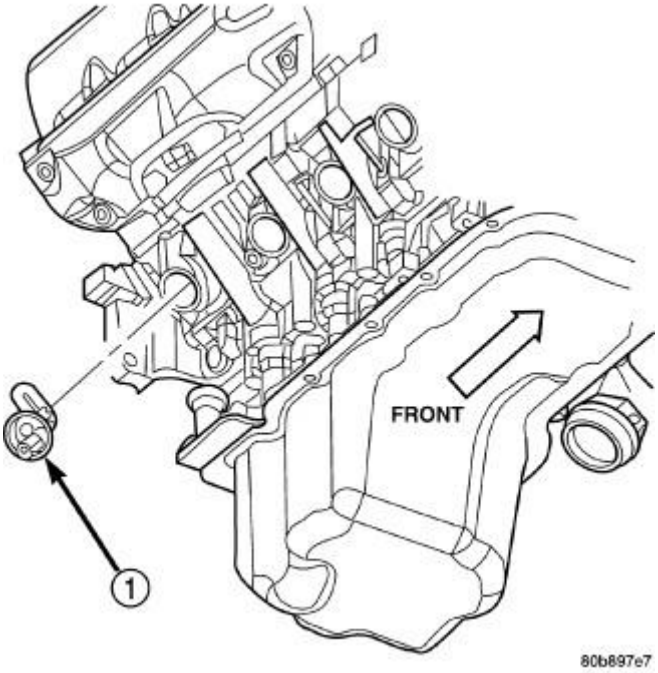

Fig. 89: Engine Block Heater - 3.7L/4.7L
Courtesy of CHRYSLER GROUP, LLC

1 - ENGINE BLOCK HEATER

WARNING: **Do not operate engine unless block heater cord has been disconnected from power source and secured in place. The power cord must be secured in its retaining clips and routed away from exhaust manifolds and moving parts.**

An optional engine block heater is available with all models. The heater is equipped with a power cord. The cord is attached to an engine compartment component with tie-straps. The heater warms the engine providing easier engine starting and faster warm-up in low temperatures. The heater is mounted in a core hole of the engine cylinder block in place of a freeze plug with the heating element immersed in engine coolant. The 3.7L/4.7L gas powered engines have the block heater located to the rear on the right side of the engine.

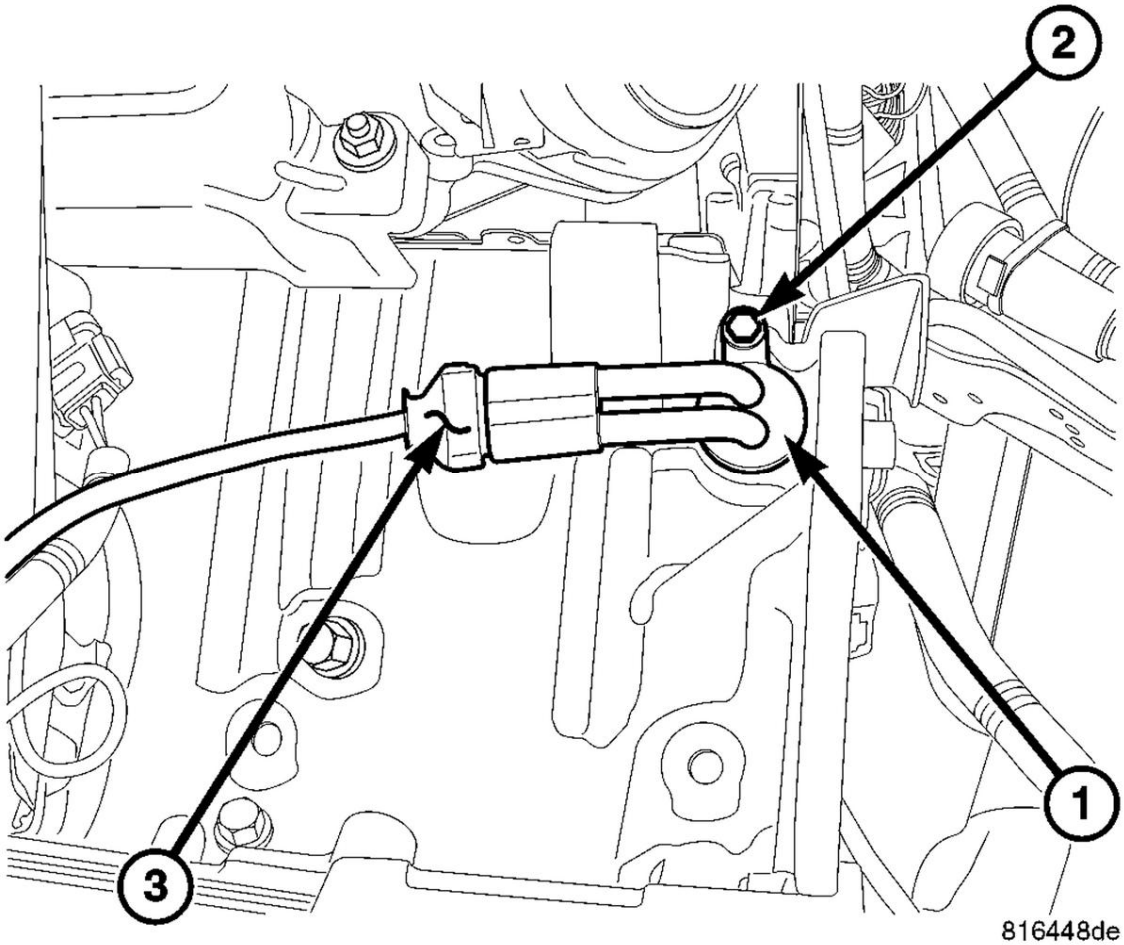

Fig. 90: 5.7L Engine Block Heater
Courtesy of CHRYSLER GROUP, LLC

1 - BLOCK HEATER

The 5.7L engine has the block heater (1) located on the left side of the engine below the exhaust manifold in the rear of the engine and is not immersed in engine coolant but makes direct contact with the block.

DIAGNOSIS AND TESTING

DIAGNOSIS AND TESTING - ENGINE BLOCK HEATER

If the unit does not operate, possible causes can be either the power cord or the heater element. Test the power cord for continuity with a 110-volt voltmeter or 110-volt test light. Test heater element continuity with an ohmmeter or a 12-volt test light.

CAUTION: To prevent damage, the power cord must be secured in its retainer clips and away from any components that may cause abrasion or damage, such as linkages, exhaust components, etc.

REMOVAL

3.7L/4.7L ENGINE

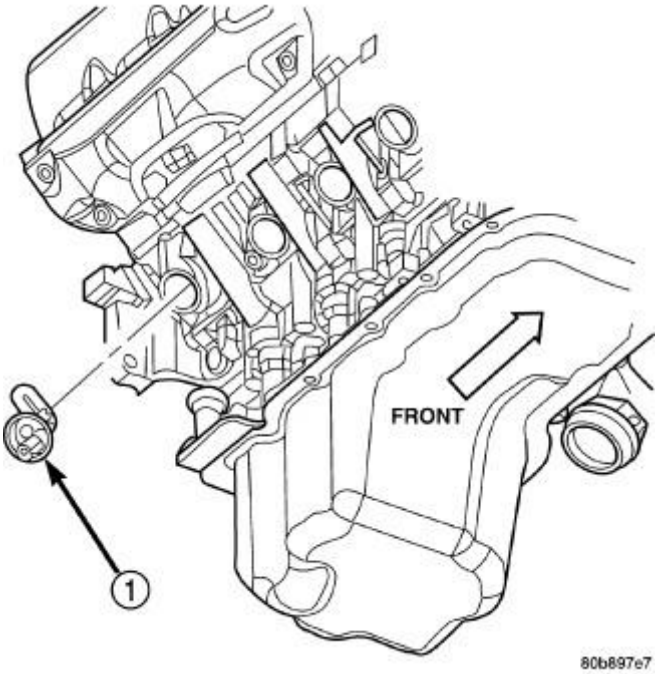

Fig. 91: Engine Block Heater - 3.7L/4.7L
Courtesy of CHRYSLER GROUP, LLC

1. Disconnect the battery negative cable.
2. Drain the coolant. Refer to **STANDARD PROCEDURE**.
3. Remove the power cord from the heater by unplugging.
4. Loosen (but do not completely remove) the screw at center of block heater.
5. Remove the block heater (1) by carefully prying from side-to-side. Note the direction of the heating element coil (up or down). The element coil must be installed correctly to prevent damage.

5.7L ENGINE

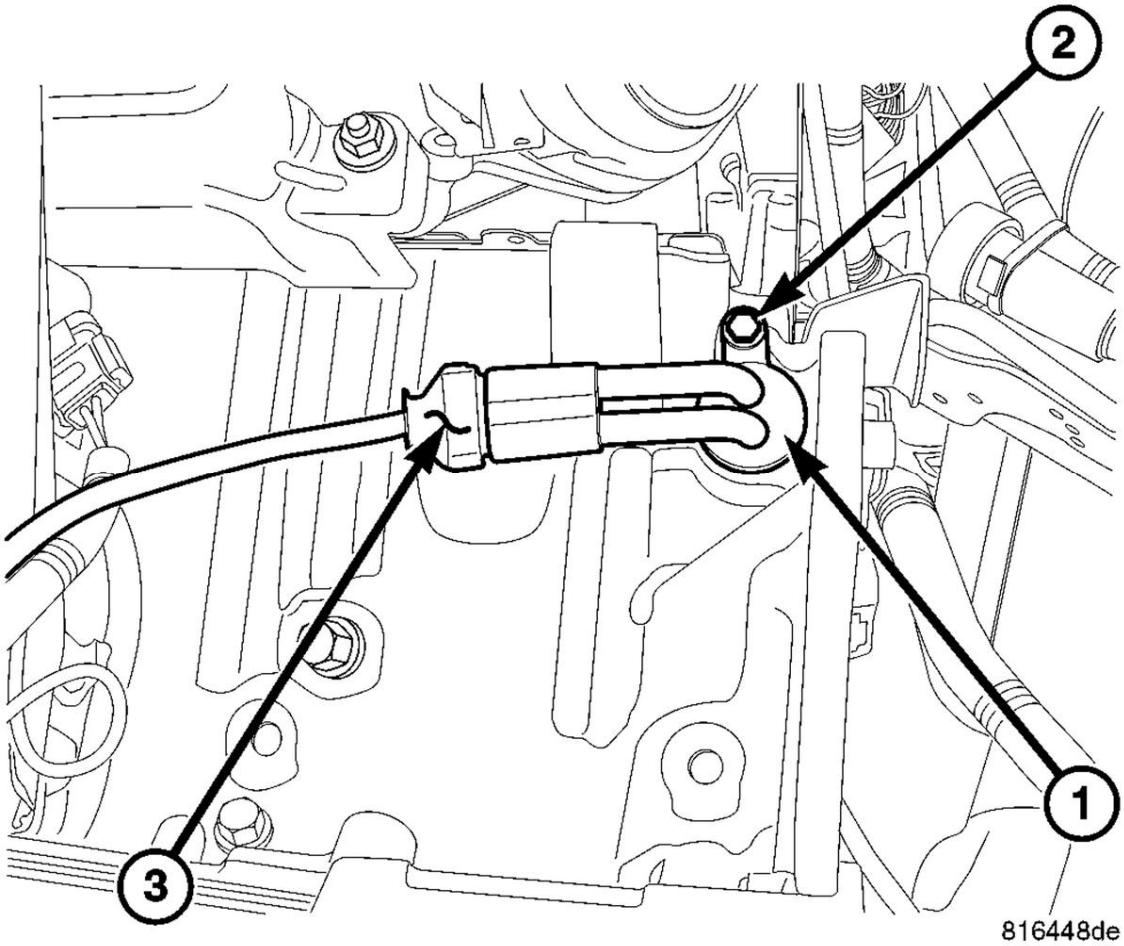

Fig. 92: 5.7L Engine Block Heater
Courtesy of CHRYSLER GROUP, LLC

1 - BLOCK HEATER

1. Raise vehicle.
2. Remove power cord from block heater (1).
3. Remove bolt (2) on block heater (1). Remove heater assembly (1).

6.7L DIESEL ENGINE

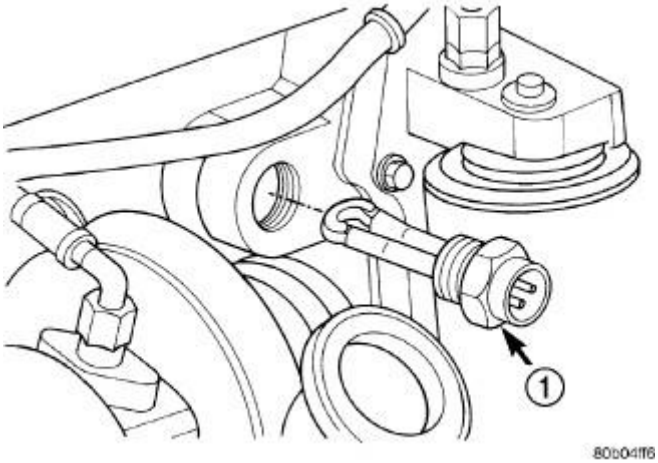

Fig. 93: Block Heater - Diesel Engine
Courtesy of CHRYSLER GROUP, LLC

1 - BLOCK HEATER

1. Disconnect the battery negative cables.
2. Drain coolant from radiator and cylinder block. Refer to **STANDARD PROCEDURE**.
3. Unscrew the power cord retaining cap and disconnect cord from heater element.
4. Using a suitable size socket, loosen and remove the block heater element. Refer to **Fig. 93**.

INSTALLATION

3.7L/4.7L ENGINE

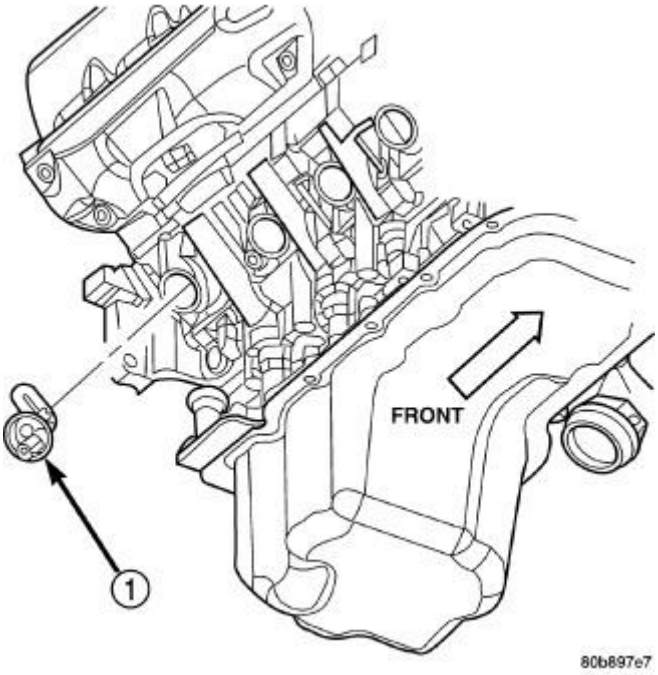

Fig. 94: Engine Block Heater - 3.7L/4.7L
Courtesy of CHRYSLER GROUP, LLC

1. Clean and inspect the block heater hole.
2. Install the new O-ring seal(s) to heater.
3. Insert the block heater (1) into cylinder block and position the element properly.
4. With the heater fully seated, tighten center screw to 2 N.m (17 in. lbs.).
5. Fill the cooling system with the recommended coolant. Refer to **CAPACITIES AND RECOMMENDED FLUIDS** .
6. Start and warm the engine.
7. Check the block heater for leaks.

5.7L ENGINE

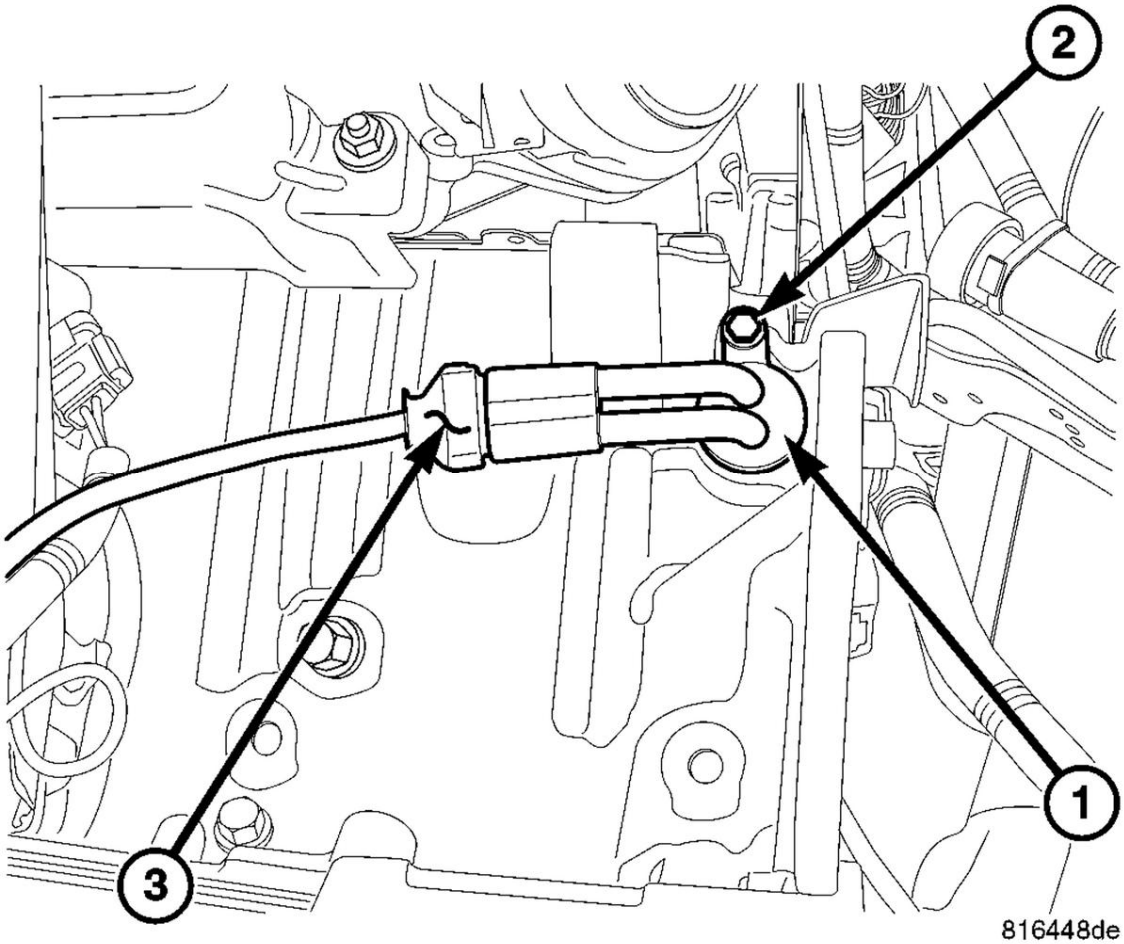

Fig. 95: 5.7L Engine Block Heater
Courtesy of CHRYSLER GROUP, LLC

1 - BLOCK HEATER

1. Thoroughly clean cylinder block core hole and block heater seat.
2. Insert block heater assembly (1) into the block.
3. With block heater fully seated, tighten bolt (1) to 2 N.m (17 in. lbs.) torque.

6.7L DIESEL ENGINE

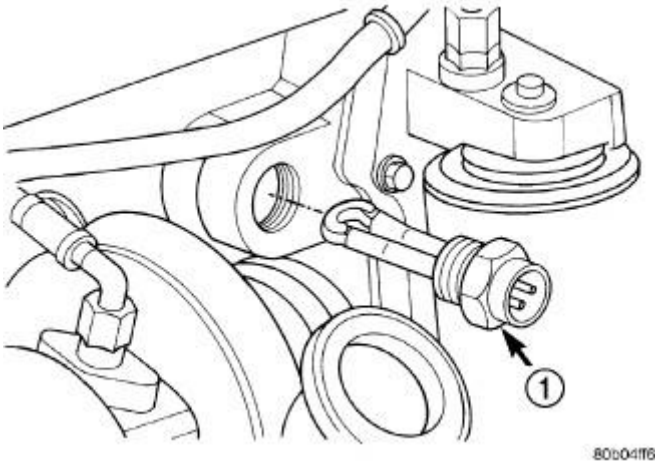

Fig. 96: Block Heater - Diesel Engine
Courtesy of CHRYSLER GROUP, LLC

1 - BLOCK HEATER

1. Clean and inspect the threads in the cylinder block and heater element.
2. Coat heater element threads with Mopar® Thread Sealer with Teflon.
3. Screw block heater (1) into cylinder block and tighten to 75 N.m (55 ft. lbs.).
4. Connect block heater cord and tighten retaining cap.
5. Fill cooling system with recommended coolant. Refer to **CAPACITIES AND RECOMMENDED FLUIDS** .
6. Start and warm the engine.
7. Check block heater for leaks.

PUMP, WATER

DESCRIPTION

WATER PUMP

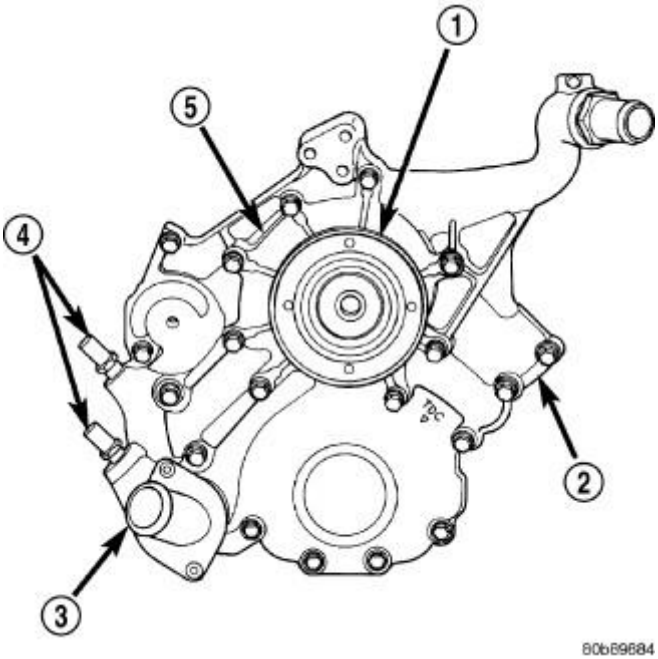

Fig. 97: Water Pump & Timing Chain Cover
Courtesy of CHRYSLER GROUP, LLC

1 - INTEGRAL WATER PUMP PULLEY
2 - TIMING CHAIN COVER
3 - THERMOSTAT HOUSING
4 - HEATER HOSE FITTINGS
5 - WATER PUMP

A centrifugal water pump circulates coolant through the water jackets, passages, intake manifold, radiator core, cooling system hoses and heater core. The pump is driven from the engine crankshaft by a single serpentine drive belt.

The water pump impeller is pressed onto the rear of a shaft that rotates in bearings pressed into the housing. The housing has two small holes to allow seepage to escape. The water pump seals are lubricated by the antifreeze in the coolant mixture. No additional lubrication is necessary.

WATER PUMP BYPASS

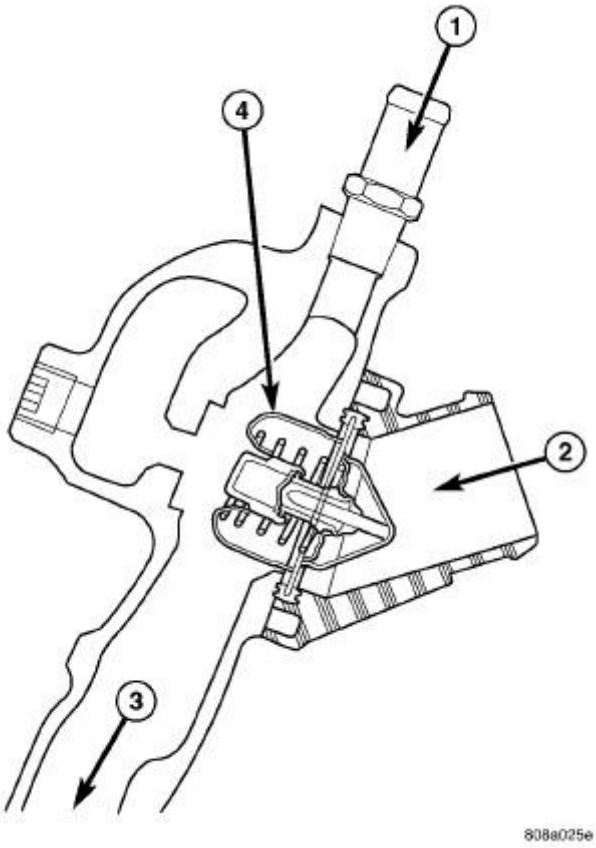

Fig. 98: Cutaway View Of Thermostat & Bypass
Courtesy of CHRYSLER GROUP, LLC

1 - FROM HEATER AND DEGAS CONTAINER
2 - FROM RADIATOR
3 - TO WATER PUMP
4- THERMOSTAT

The 3.7L and 4.7L engine uses an internal water/coolant bypass system. The design uses galleries in the timing chain cover to circulate coolant during engine warm-up preventing the coolant from flowing through the radiator. Refer to **Fig. 98**.

OPERATION

WATER PUMP

A centrifugal water pump circulates coolant through the water jackets, passages, intake manifold, radiator core, cooling system hoses and heater core, this coolant absorbs the heat generated when the engine is running. The pump is driven by the engine crankshaft via a drive belt.

WATER PUMP BYPASS - 3.7L/4.7L

When the thermostat is in the closed position the bypass gallery is not obstructed allowing 100% flow. When the thermostat is in the open position the pill partially covers the bypass hole, reducing the amount of bypass flow. This design allows the coolant to reach operating temperature quickly when cold, while adding extra cooling during normal temperature operation.

DIAGNOSIS AND TESTING

DIAGNOSIS AND TESTING - WATER PUMP

A quick test to determine if pump is working is to check if heater warms properly. A defective water pump will not be able to circulate heated coolant through the long heater hose to the heater core.

STANDARD PROCEDURE

STANDARD PROCEDURE - COOLANT AIR EVACUATION

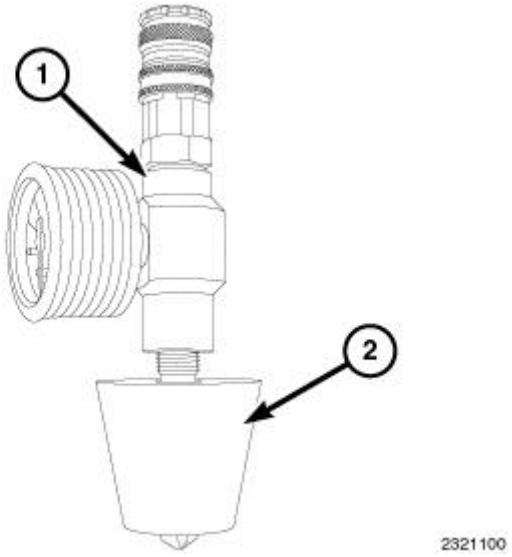

Fig. 99: Pressurized Air Operated Vacuum Generator
Courtesy of CHRYSLER GROUP, LLC

Evacuating or purging air from the cooling system involves the use of a pressurized air operated vacuum generator. The vacuum created allows for a quick and complete coolant refilling while removing any airlocks present in the system components.

NOTE: **To avoid damage to the cooling system, ensure that no component would be susceptible to damage when a vacuum is drawn on the system.**

WARNING: **ANTIFREEZE IS AN ETHYLENE GLYCOL BASE COOLANT AND IS HARMFUL IF SWALLOWED OR INHALED. IF SWALLOWED, DRINK TWO GLASSES OF WATER AND INDUCE VOMITING. IF INHALED, MOVE TO FRESH AIR AREA. SEEK MEDICAL ATTENTION IMMEDIATELY. DO NOT STORE IN OPEN OR UNMARKED CONTAINERS. WASH SKIN AND CLOTHING THOROUGHLY AFTER COMING IN CONTACT WITH**

ETHYLENE GLYCOL. KEEP OUT OF REACH OF CHILDREN. DISPOSE OF GLYCOL BASED COOLANT PROPERLY. CONTACT YOUR DEALER OR GOVERNMENT AGENCY FOR LOCATION OF COLLECTION CENTER IN YOUR AREA. DO NOT OPEN A COOLING SYSTEM WHEN THE ENGINE IS AT OPERATING TEMPERATURE OR HOT UNDER PRESSURE; PERSONAL INJURY CAN RESULT. AVOID RADIATOR COOLING FAN WHEN ENGINE COMPARTMENT RELATED SERVICE IS PERFORMED; PERSONAL INJURY CAN RESULT.

WARNING: **WEAR APPROPRIATE EYE AND HAND PROTECTION WHEN PERFORMING THIS PROCEDURE.**

NOTE: **The service area where this procedure is performed should have a minimum shop air requirement of 80 PSI (5.5 bar) and should be equipped with an air dryer system.**

NOTE: **For best results, the radiator should be empty. The vehicle's heater control should be set to the heat position (ignition may need to be turned to the on position but do not start the motor).**

1. Refer to the Chrysler Pentastar Service Equipment (Chrysler PSE) Coolant Refiller #85-15-0650 or equivalent tool's operating manual for specific assembly steps.
2. Choose an appropriate adapter cone that will fit the vehicle's radiator filler neck or reservoir tank.
3. Attach the adapter cone (2) to the vacuum gauge (1).

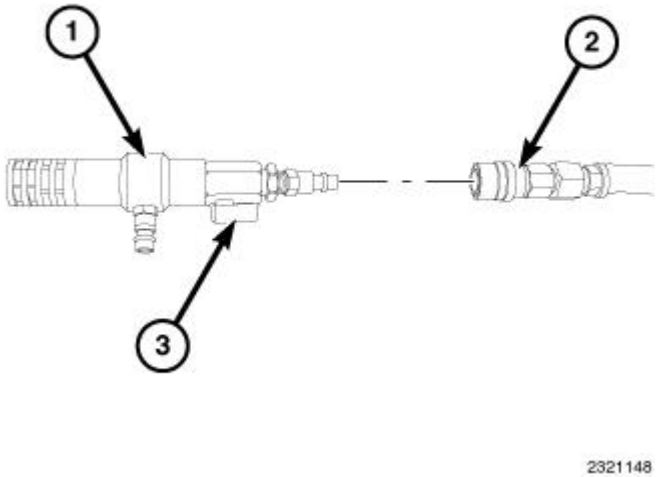

Fig. 100: Vacuum Generator/Venturi Ball Valve
Courtesy of CHRYSLER GROUP, LLC

4. Make sure the vacuum generator/venturi ball valve (3) is closed and attach an airline hose (2) (minimum shop air requirement of 80 PSI/5.5 bar) to the vacuum generator/venturi (1).

5. Position the adaptor cone/vacuum gauge assembly into the radiator filler neck or reservoir tank. Ensure that the adapter cone is sealed properly.

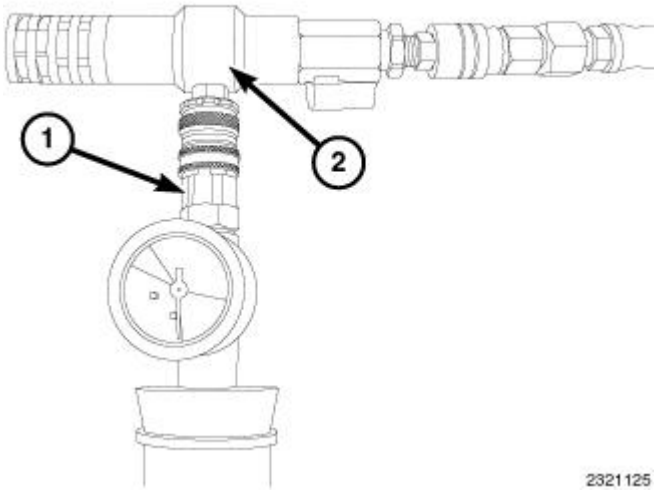

Fig. 101: Vacuum Generator/Venturi
Courtesy of CHRYSLER GROUP, LLC

6. Connect the vacuum generator/venturi (2) to the positioned adaptor cone/vacuum gauge assembly (1).
7. Open the vacuum generator/venturi ball valve.

NOTE: **Do not bump or move the assembly as it may result in loss of vacuum. Some radiator overflow hoses may need to be clamped off to obtain vacuum.**

8. Let the system run until the vacuum gauge shows a good vacuum through the cooling system. Refer to the tool's operating manual for appropriate pressure readings.

NOTE: **If a strong vacuum is being created in the system, it is normal to see the radiator hoses to collapse.**

9. Close the vacuum generator/venturi ball valve.

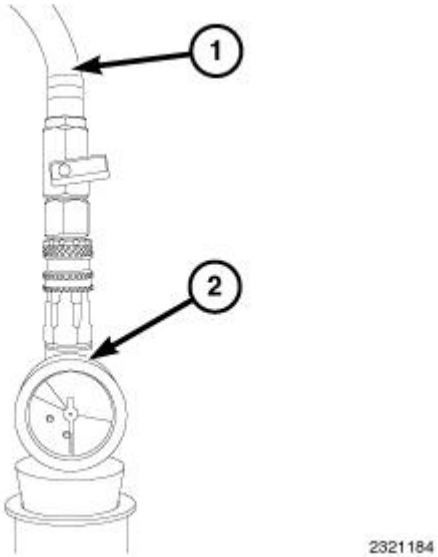

Fig. 102: Vacuum Generator/Venturi & Air Line
Courtesy of CHRYSLER GROUP, LLC

10. Disconnect the vacuum generator/venturi and airline from the adaptor cone/vacuum gauge assembly.
11. Wait approximately 20 seconds, if the pressure readings do not move, the system has no leaks. If the pressure readings move, a leak could be present in the system and the cooling system should be checked for leaks and the procedure should be repeated.
12. Place the tool's suction hose into the coolant's container.

NOTE: **Ensure there is a sufficient amount of coolant, mixed to the required strength/protection level available for use. For best results and to assist the refilling procedure, place the coolant container at the same height as the radiator filler neck. Always draw more coolant than required. If the coolant level is too low, it will pull air into the cooling system which could result in airlocks in the system.**

13. Connect the tool's suction hose (1) to the adaptor cone/vacuum gauge assembly (2).

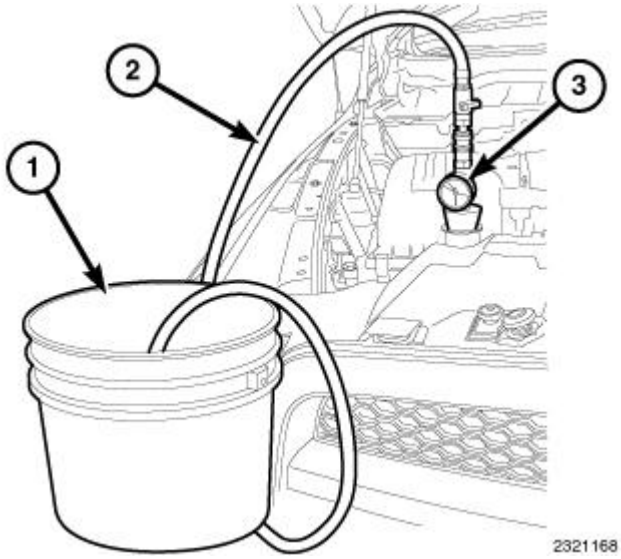

Fig. 103: Refilling Cooling System
Courtesy of CHRYSLER GROUP, LLC

14. Open the suction hose's ball valve to begin refilling the cooling system.
15. When the vacuum gauge reads zero, the system is filled.

NOTE: **On some remote pressurized tanks, it is recommended to stop filling when the proper level is reached.**

16. Close the suction hose's ball valve and remove the suction hose from the adaptor cone/vacuum gauge assembly.
17. Remove the adaptor cone/vacuum gauge assembly from the radiator filler neck or reservoir tank.
18. With heater control unit in the HEAT position, operate engine with container cap in place.
19. After engine has reached normal operating temperature, shut engine off and allow it to cool. When engine is cooling down, coolant will be drawn into the radiator from the pressure container.
20. Add coolant to the recovery bottle/container as necessary. **Only add coolant to the container when the engine is cold. Coolant level in a warm engine will be higher due to thermal expansion.** Add necessary coolant to raise container level to the COLD MINIMUM mark after each cool down period.
21. Once the appropriate coolant level is achieved, attach the radiator cap or reservoir tank cap.

REMOVAL

3.7L/4.7L

The water pump on 3.7L/4.7L engines is bolted directly to the engine timing chain case cover.

1. Disconnect the negative battery cable.
2. Drain cooling system. Refer to **STANDARD PROCEDURE**.
3. Remove fan/viscous fan drive assembly from water pump. Refer to **FAN, COOLING, VISCOUS, REMOVAL**. Do not attempt to remove fan/viscous fan drive assembly from vehicle at this time.

4. If the water pump is being replaced, do not unbolt the fan blade assembly from the thermal viscous fan drive.

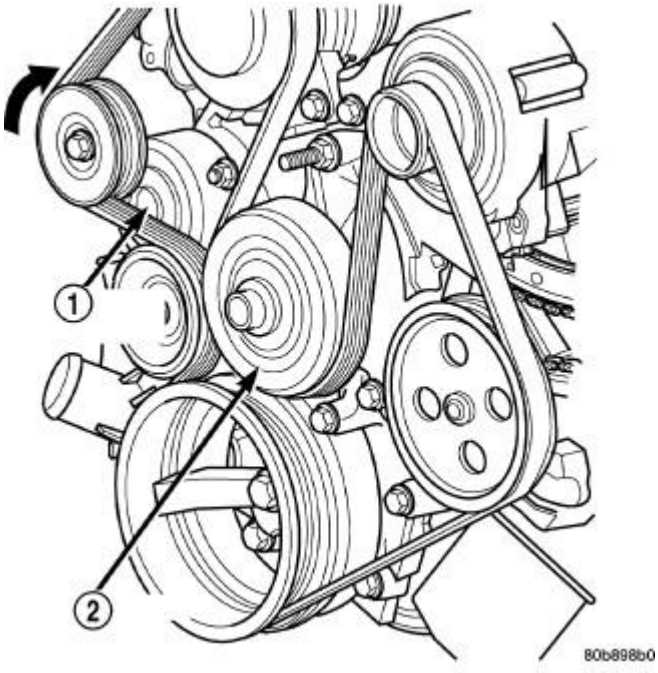

Fig. 104: Identifying Water Pump Pulley
Courtesy of CHRYSLER GROUP, LLC

1 - AUTOMATIC TENSIONER
2 - WATER PUMP PULLEY

5. Remove the radiator fan. Refer to **FAN, COOLING, VISCOUS, REMOVAL**.
6. Remove accessory drive belt. Refer to **BELT, SERPENTINE, REMOVAL**.
7. Remove the lower radiator hose clamp and remove the lower hose at the water pump.
8. Remove the water pump mounting bolts.

CAUTION: Do not pry on the water pump at the timing chain case/cover. The machined surfaces may be damaged resulting in leaks.

9. Remove the water pump and gasket. Discard gasket.

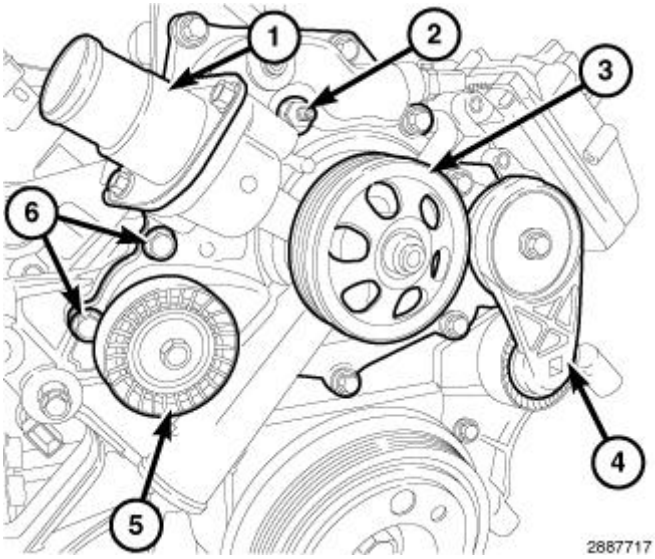

Fig. 105: Thermostat Housing, Water Pump, Belt Tensioner, & Idler Pulley
Courtesy of CHRYSLER GROUP, LLC

1. Disconnect negative battery cable.
2. Remove the air intake assembly. Refer to **BODY, AIR CLEANER, REMOVAL, 5.7L** .
3. Remove the resonator mounting bracket.
4. Remove cooling fan assembly. Refer to **FAN, COOLING, VISCOUS, REMOVAL**.
5. Drain coolant into a clean container. Refer to **STANDARD PROCEDURE**.
6. Remove the upper radiator hose from the thermostat housing (1) and position aside.
7. Remove serpentine belt. Refer to **BELT, SERPENTINE, REMOVAL**.
8. Remove idler pulley (5).
9. Remove belt tensioner assembly (4). Refer to **TENSIONER, BELT, REMOVAL**.
10. Remove lower radiator hose from the water pump and position aside.
11. Remove the upper metal heater tube from the cylinder head.
12. Remove water pump mounting bolts (6) and remove pump (3).

6.7L DIESEL ENGINE

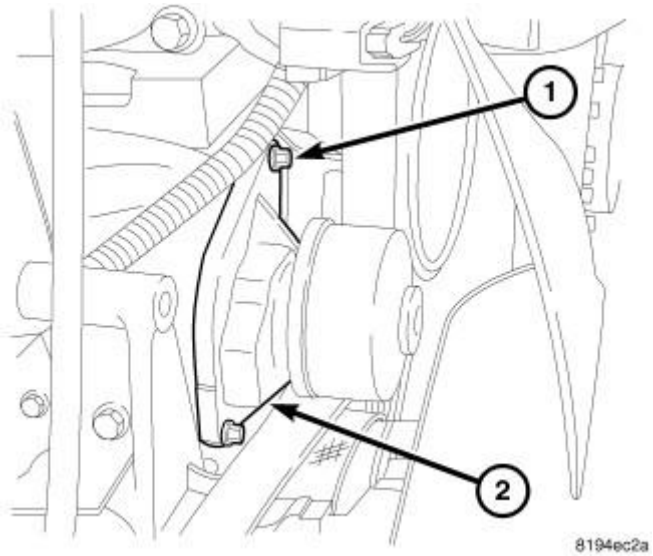

Fig. 106: Diesel Water Pump
Courtesy of CHRYSLER GROUP, LLC

1 - BOLT
2 - WATER PUMP

1. Disconnect battery negative cables.
2. Drain cooling system. Refer to **STANDARD PROCEDURE**.
3. Disconnect ambient air temp sensor electrical connector and mass airflow sensor electrical connector (if equipped).
4. Remove turbocharger inlet tube and air filter housing. Refer to **BODY, AIR CLEANER, REMOVAL, 6.7L** .
5. Remove generator assembly. Refer to **GENERATOR, REMOVAL** .
6. Remove the accessory drive belt. Refer to **BELT, SERPENTINE, REMOVAL**.
7. Remove water pump mounting bolts (1).
8. Remove O-ring from water pump (2).
9. Remove water pump (2). Clean water pump sealing surface on cylinder block.

CLEANING

CLEANING

Clean the gasket mating surface. Use caution not to damage the gasket sealing surface.

To ensure proper gasket sealing, surface preparation must be performed, especially with the use of aluminum engine components.

Never use the following to clean gasket surfaces:

- Metal scraper.

- Abrasive pad or paper to clean cylinder block and head.
- High speed power tool with an abrasive pad or a wire brush).
- High speed power tool with 3M Roloc™ Bristle Disc (white or yellow).

Only use the following for cleaning gasket surfaces:

- Solvent or a commercially available gasket remover
- Plastic or wood scraper.

INSPECTION

INSPECTION

Inspect the water pump assembly for cracks in the housing, water leaks from the shaft seal, worn bearing or the impeller rubbing either the pump body or the timing chain case/cover.

INSTALLATION

3.7L/4.7L ENGINE

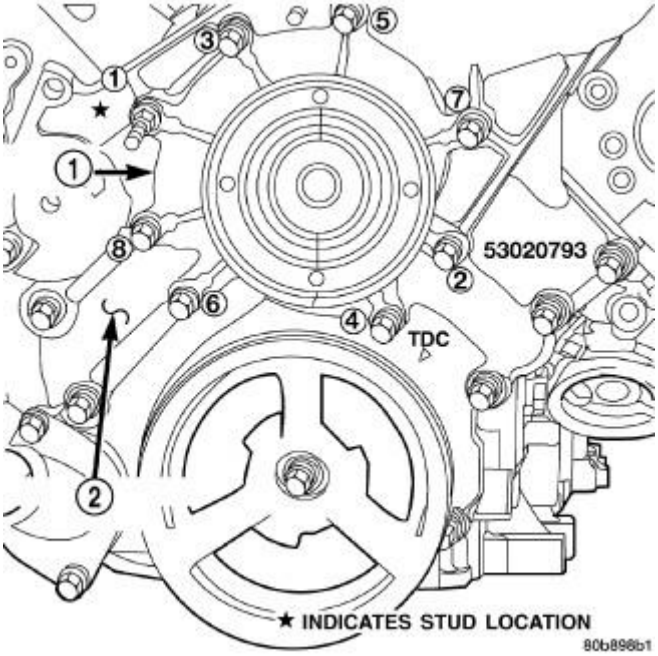

Fig. 107: Water Pump Bolt Tightening Sequence
Courtesy of CHRYSLER GROUP, LLC

1 - WATER PUMP
2 - TIMING CHAIN COVER

1. Clean the gasket mating surfaces.

2. Using a new gasket, position water pump and install the mounting bolts. Tighten the water pump mounting bolts to 58 N.m (43 ft. lbs.).
3. Spin the water pump to be sure that the pump impeller does not rub against the timing chain case/cover.
4. Connect the radiator lower hose to the water pump.
5. Install accessory drive belt tensioner. Refer to **TENSIONER, BELT, INSTALLATION**.
6. Install the drive belt. Refer to **BELT, SERPENTINE, INSTALLATION**.
7. Install the radiator fan. Refer to **FAN, COOLING, VISCOUS, INSTALLATION**.
8. Evacuate air and refill the cooling system. Refer to **PUMP, WATER, STANDARD PROCEDURE**.
9. Connect the negative battery cable.
10. Check cooling system for leaks. Refer to **LEAK TESTING**.

5.7L ENGINE

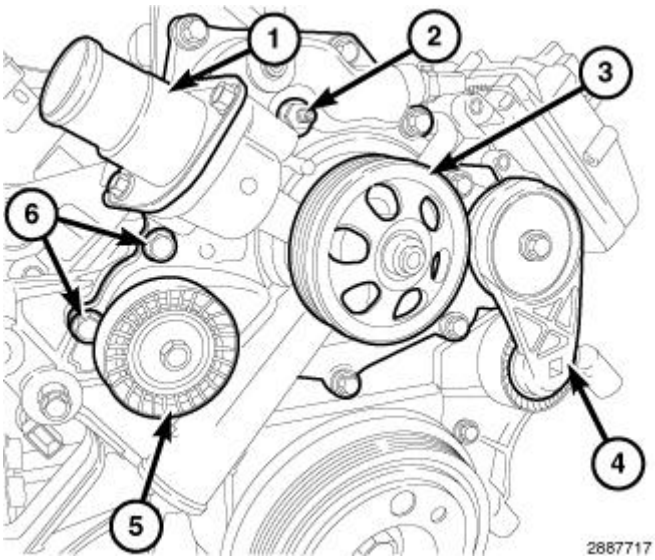

Fig. 108: Thermostat Housing, Water Pump, Belt Tensioner, & Idler Pulley
Courtesy of CHRYSLER GROUP, LLC

1. Clean mating surfaces and install water pump (3). Tighten mounting bolts to 24 N.m (18 ft. lbs.).
2. Install upper metal heater tube.
3. Install belt tensioner assembly (4). Refer to **TENSIONER, BELT, INSTALLATION**.
4. Install idler pulley (5).
5. Install the lower radiator hose.
6. Install serpentine belt. Refer to **BELT, SERPENTINE, INSTALLATION**.
7. Install the resonator mounting bracket.
8. Install cooling fan assembly. Refer to **FAN, COOLING, VISCOUS, INSTALLATION**.
9. Install the upper radiator hose to the thermostat housing (1).
10. Install the air intake assembly. Refer to **BODY, AIR CLEANER, INSTALLATION, 5.7L** .
11. Connect negative battery cable.

12. Evacuate air and refill cooling system. Refer to **STANDARD PROCEDURE**.
13. Check cooling system for leaks. Refer to **LEAK TESTING**.

6.7L DIESEL ENGINE

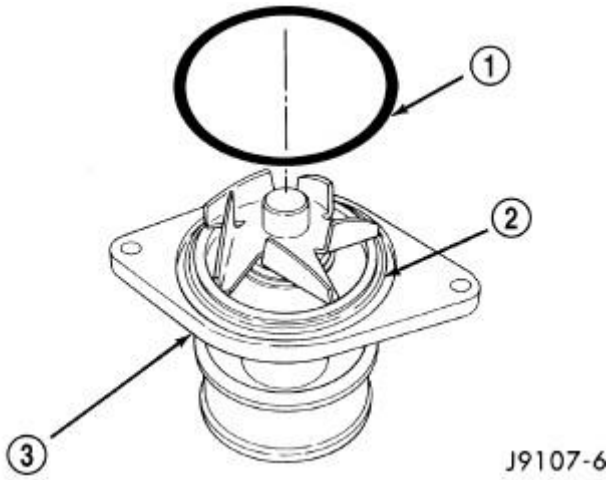

Fig. 109: Pump O-Ring Seal
Courtesy of CHRYSLER GROUP, LLC

1 - O-RING SEAL
2 - GROOVE
3 - WATER PUMP

1. Install new O-ring seal (1) in groove (2) on water pump (3).

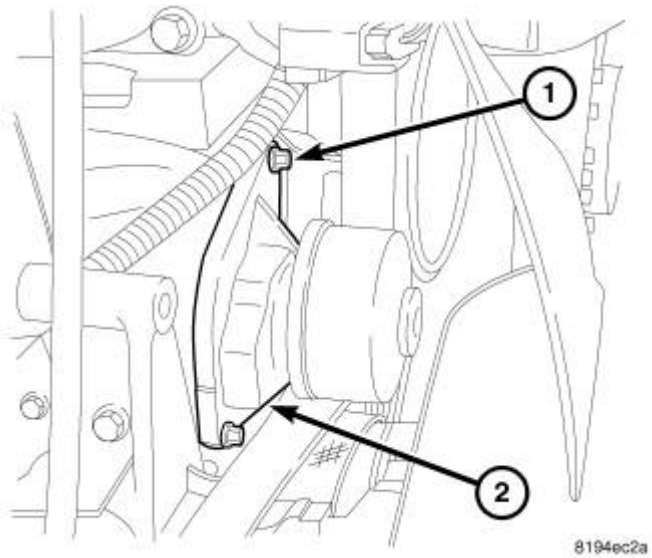

Fig. 110: Diesel Water Pump
Courtesy of CHRYSLER GROUP, LLC

1 - BOLT
2 - WATER PUMP

2. Install water pump (2) with the weep hole facing downward. Tighten mounting bolts (1) to 24 N.m (18 ft. lbs.) torque.
3. Install generator assembly. Refer to **GENERATOR, INSTALLATION** .
4. Install accessory drive belt. Refer to **BELT, SERPENTINE, INSTALLATION**.
5. Install air box and tube assembly. Refer to **BODY, AIR CLEANER, INSTALLATION, 6.7L** .
6. Install air filter housing. Refer to **BODY, AIR CLEANER, INSTALLATION, 6.7L** .
7. Evacuate air and refill cooling system. Refer to **PUMP, WATER, STANDARD PROCEDURE**.
8. Connect both battery cables.
9. Start and warm the engine. Check for leaks. Refer to **LEAK TESTING**.

RADIATOR, ENGINE COOLING

DESCRIPTION

DESCRIPTION

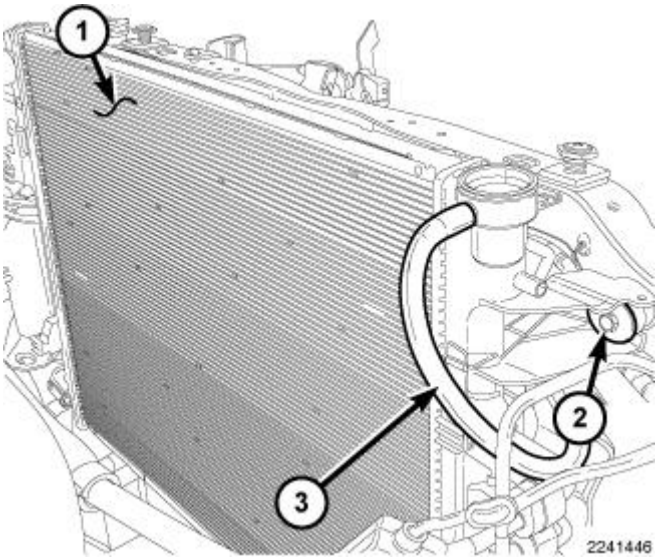

Fig. 111: Radiator
Courtesy of CHRYSLER GROUP, LLC

The radiator (1) is a aluminum cross-flow design with horizontal tubes through the radiator core and vertical plastic side tanks.

This radiator (1) does not contain an internal transmission oil cooler.

OPERATION

OPERATION

The radiator supplies sufficient heat transfer using the cooling fins interlaced between the horizontal tubes in the radiator core to cool the engine.

DIAGNOSIS AND TESTING

DIAGNOSIS AND TESTING - RADIATOR COOLANT FLOW

Use the following procedure to determine if coolant is flowing through the cooling system.

1. Idle engine until operating temperature is reached. If the upper radiator hose is warm to the touch, the thermostat is opening and coolant is flowing to the radiator.

   WARNING: Hot, pressurized coolant can cause injury by scalding. Using a rag to cover the radiator pressure cap, open radiator cap slowly to the first stop. This will allow any built-up pressure to vent to the reserve/overflow tank. After pressure build-up has been released, remove cap from filler neck.

2. Drain a small amount of coolant from the radiator until the ends of the radiator tubes are visible through the filler neck. Idle the engine at normal operating temperature. If coolant is flowing past the exposed tubes, the coolant is circulating.

REMOVAL

REMOVAL

1. Disconnect and isolate the negative battery cable.
2. Raise and secure the vehicle.

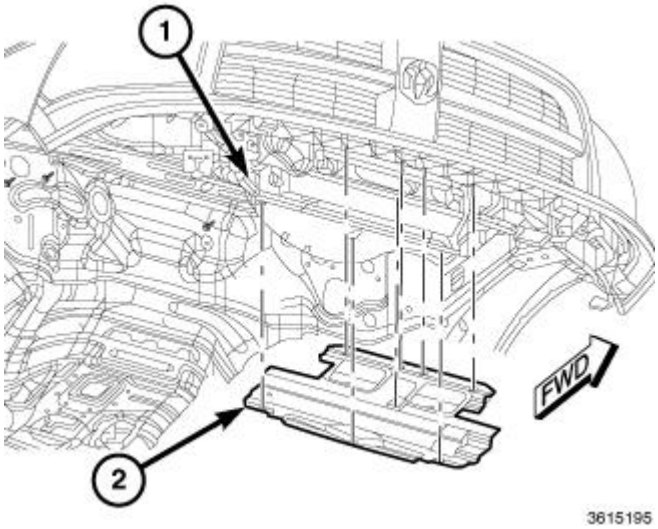

Fig. 112: Lower Radiator Cover
Courtesy of CHRYSLER GROUP, LLC

3. Remove the lower radiator cover (2).

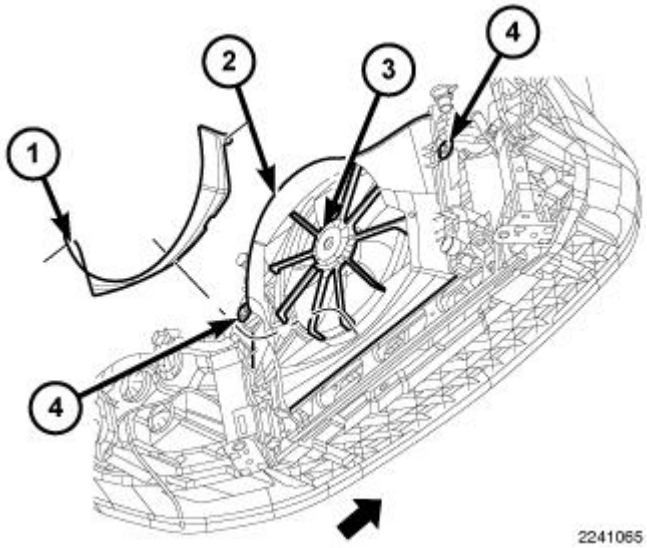

Fig. 113: Radiator Fan, Shroud & Bolts
Courtesy of CHRYSLER GROUP, LLC

4. Drain the cooling system. Refer to **STANDARD PROCEDURE**.

> WARNING: **Do not remove the cylinder block drain plugs or loosen the radiator draincock with the system hot and under pressure. Serious burns from the coolant can occur.**

5. Remove the lower radiator hose.
6. Remove the lower fan shroud cover (1).
7. Remove the lower electric cooling fan retainer clip.
8. Lower the vehicle.

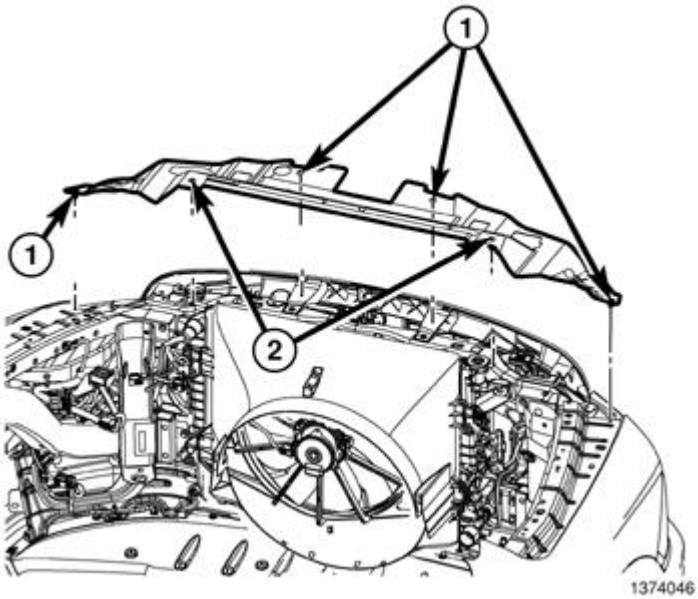

Fig. 114: Upper Radiator Seal
Courtesy of CHRYSLER GROUP, LLC

9. Remove the upper radiator clamp and hose.
10. Remove the upper radiator seal push pins (1).
11. Remove the upper radiator seal plastic rivets (2).
12. Remove the upper radiator seal.

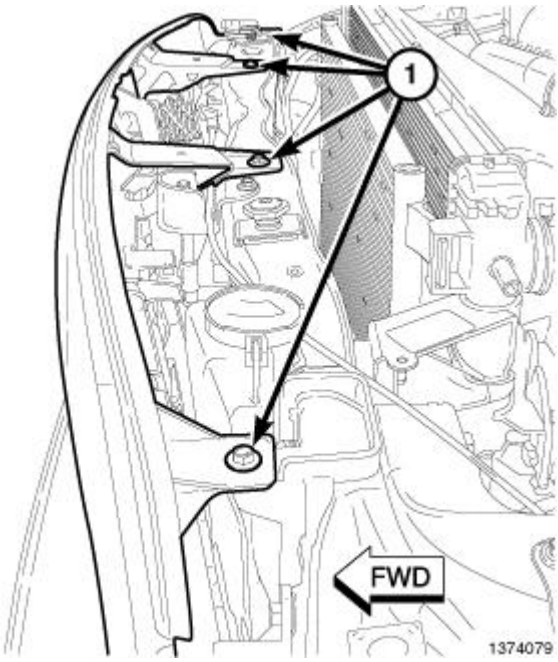

Fig. 115: Upper Grille Support Bolts
Courtesy of CHRYSLER GROUP, LLC

13. Remove the grille. Refer to **GRILLE, REMOVAL** .

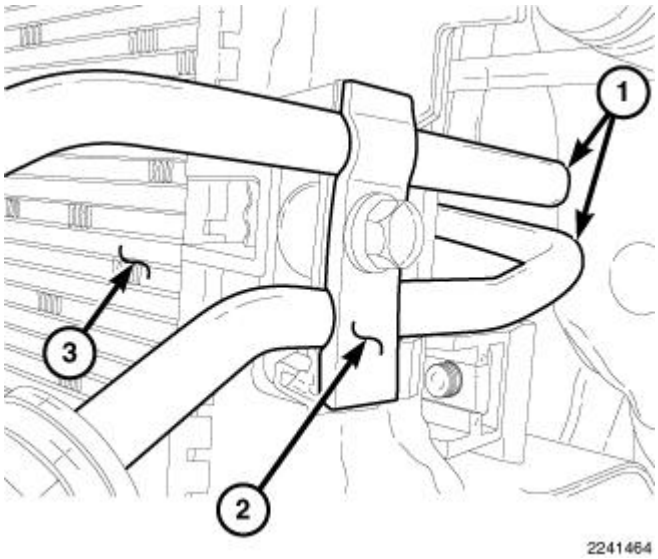

Fig. 116: Transmission Cooler Line & Bracket
Courtesy of CHRYSLER GROUP, LLC

14. Remove the bolt from the transmission cooler line (1) to radiator (3) bracket (2).

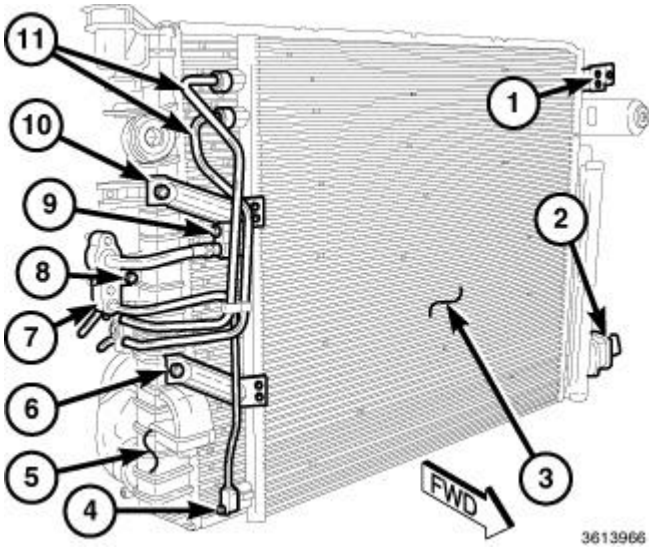

Fig. 117: A/C Compressor/Transmission Combination Cooler, Lines, Bolts & Brackets
Courtesy of CHRYSLER GROUP, LLC

NOTE: **It is not necessary to remove the transmission cooler lines or the A/C lines from the cooler.**

15. Remove the bolt (8) that secures the condenser jumper line tapping block (7) to the right side of the radiator (5).
16. Remove the three brackets (10) from the A/C compressor/transmission combination cooler (3).

17. Using care, disengage the A/C condenser/transmission combination cooler mounting bracket (2) from the left side of the radiator, **do not disconnect the A/C lines.**

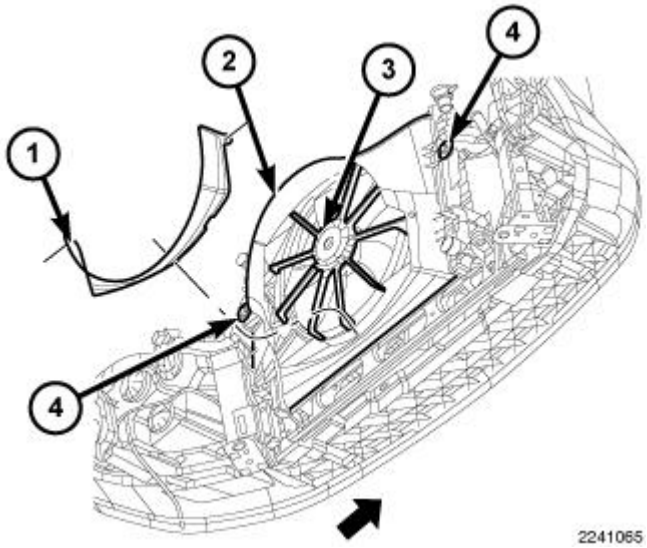

Fig. 118: Radiator Fan, Shroud & Bolts
Courtesy of CHRYSLER GROUP, LLC

18. Disconnect the electrical connector to the cooling fan.
19. Remove the electric cooling fan (3) to radiator upper retaining clips.
20. Remove the fan shroud mounting bolts (4) and pull up and out of the radiator tank clips. Position the shroud (2) rearward over the fan blades towards engine.
21. Remove the fan shroud (2) and electric cooling fan (3) as an assembly.

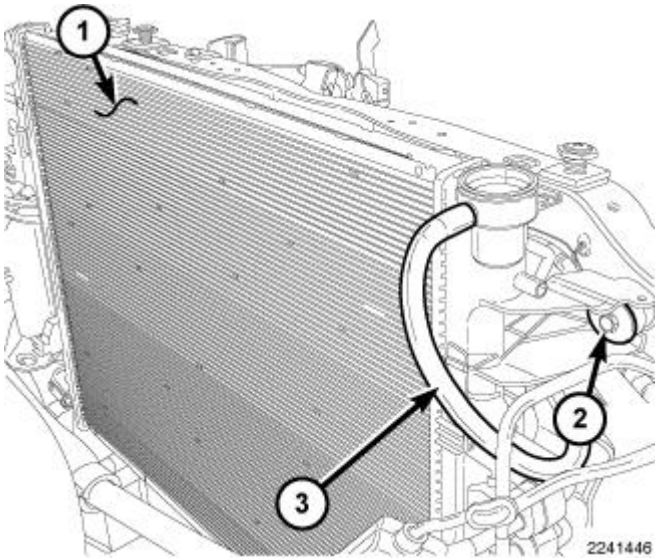

Fig. 119: Radiator
Courtesy of CHRYSLER GROUP, LLC

22. Remove the overflow hose (3) from the radiator filler neck.
23. Remove the two radiator upper mounting bolts (2).
24. Lift the radiator (1) straight up and out of the engine compartment. Take care not to damage cooling fins when removing.

6.7L DIESEL

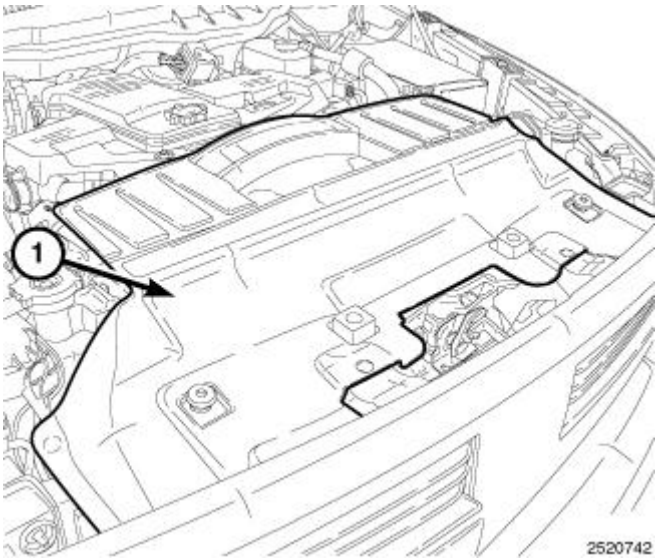

Fig. 120: Upper Radiator Shroud
Courtesy of CHRYSLER GROUP, LLC

1. Remove the upper radiator shroud (1).
2. Disconnect and isolate the battery negative cable.
3. If equipped, disconnect and isolate the negative battery cable from the auxiliary battery.

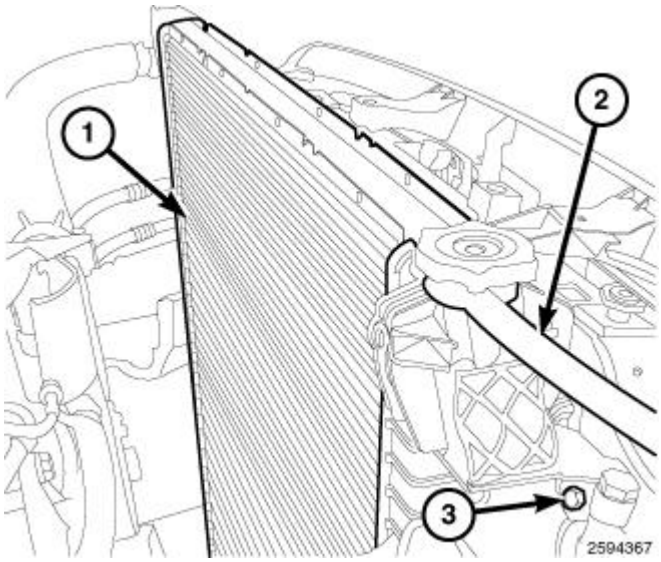

Fig. 121: Radiator - Diesel

WARNING: **Do not remove the cylinder block drain plugs or loosen the radiator draincock with the system hot and under pressure. Serious burns from coolant can occur.**

4. Drain the cooling system. Refer to **STANDARD PROCEDURE**.
5. Disconnect the ambient air temperature sensor electrical connector and mass airflow sensor electrical connector (If equipped).
6. Remove air box and turbocharger inlet tube. Refer to **BODY, AIR CLEANER, REMOVAL, 6.7L** .
7. Remove coolant tank hose from the fastening clips located on top of the radiator.
8. Remove the viscous fan and fan shroud. Refer to **FAN, COOLING, VISCOUS, REMOVAL**.
9. Remove the hose clamps and hoses from radiator.
10. Disconnect the transmission cooler lines at the transmission cooler. The transmission cooler will remain on the radiator and can be removed as an assembly. Refer to **TUBES AND HOSES, TRANSMISSION OIL COOLER, STANDARD PROCEDURE**.
11. Remove the two radiator upper mounting bolts.
12. Lift and support the vehicle.
13. Remove the power steering cooler mounting bolts and position the power steering cooler out of the way.
14. Lower the vehicle.
15. Tilt the radiator towards the rear of the vehicle and lift it out of the engine compartment. The bottom of the radiator is equipped with two alignment dowels that fit into holes in the lower radiator support panel. Rubber biscuits (insulators) are installed to these dowels. Take care not to damage cooling fins or tubes on the radiator and air conditioning condenser or the electronic viscous fan connector when removing.

INSPECTION

INSPECTION

Inspect the radiator side tanks for cracks, and broken or missing fittings. Inspect the joint where the tanks seam up to the radiator core for signs of leakage and/or deteriorating seals.

Inspect radiator core for corroded, bent or missing cooling fins. Inspect the core for bent or damaged cooling tubes.

INSTALLATION

INSTALLATION

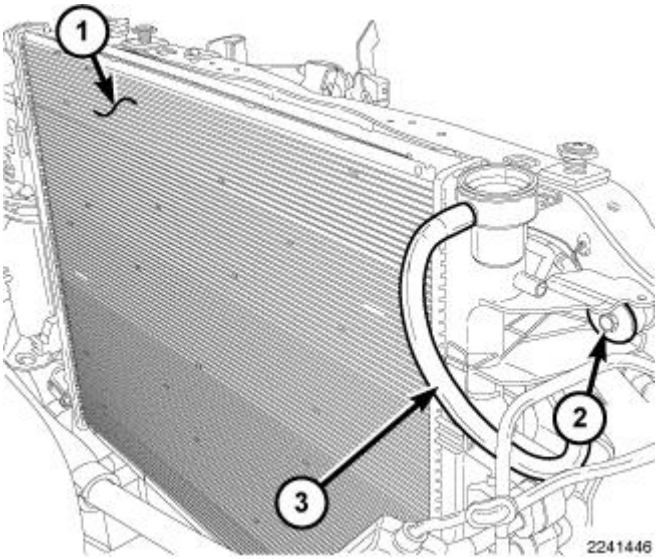

Fig. 122: Radiator
Courtesy of CHRYSLER GROUP, LLC

1. Install the rubber insulators to the lower radiator mounting features (alignment dowel and support bracket at the lower part of the radiator).
2. Position the radiator (1) into the engine compartment. Take care not to damage cooling fins when installing.
3. Install the two radiator upper mounting bolts (2). Tighten the bolts to 8 N-m (71 in. lbs.).
4. Install the coolant overflow hose (3).

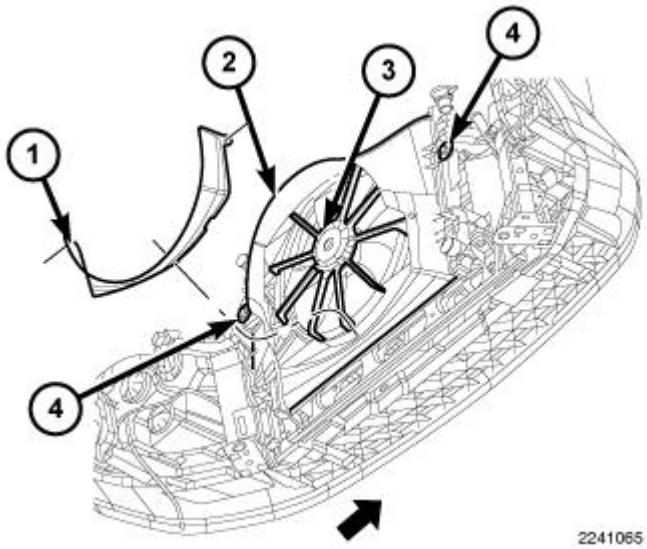

Fig. 123: Radiator Fan, Shroud & Bolts
Courtesy of CHRYSLER GROUP, LLC

NOTE: Make sure all retaining clips lock into place.

5. Position the electric cooling fan (3) to the mounts located on the radiator.
6. Install the upper cooling fan retainer clip.
7. Install the fan shroud (2) to the radiator/electric cooling fan (3) mount.
8. Install the fan shroud mounting bolts (4). Tighten to 10 N.m (89 in. lbs.).
9. Connect the electric cooling fan (3) electrical connector.

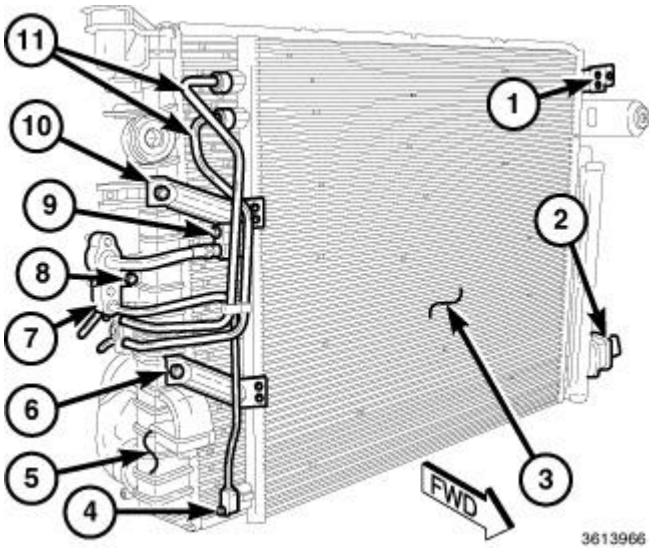

Fig. 124: A/C Compressor/Transmission Combination Cooler, Lines, Bolts & Brackets
Courtesy of CHRYSLER GROUP, LLC

10. Using care, guide the lower left side A/C condenser/transmission combination cooler mounting bracket (2) into the lower mount located on the left lower side of the radiator.
11. Install the three A/C condenser/transmission combination cooler mounting brackets (10) to the radiator (3). Tighten the bolts to 2.2 N.m (20 in. lbs.).
12. Install the bolt (8) that secures the condenser jumper line tapping block (7) to the radiator. Tighten the bolt securely.

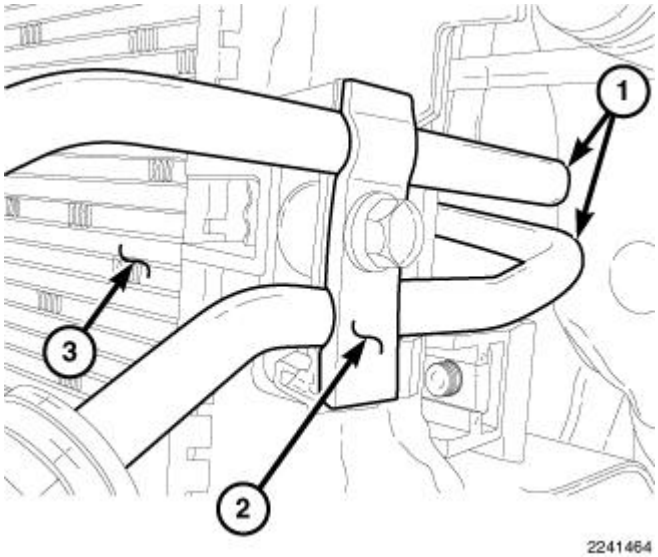

Fig. 125: Transmission Cooler Line & Bracket
Courtesy of CHRYSLER GROUP, LLC

13. Install the bolt securing the transmission cooler line (1) to radiator (3) bracket (2). Tighten the bolt securely.

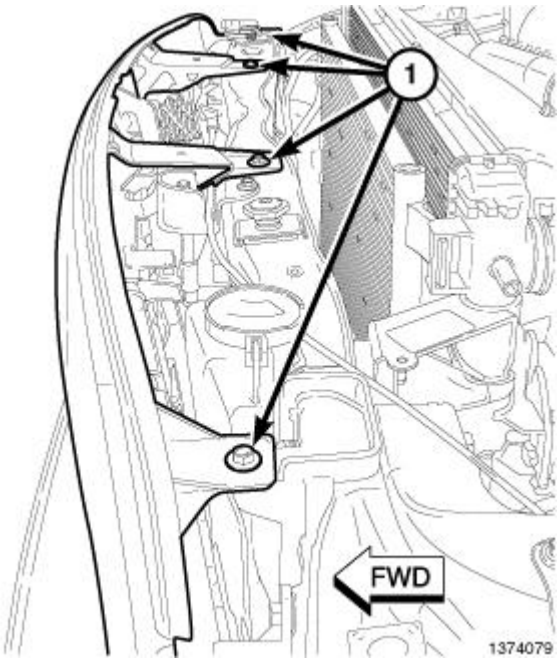

Fig. 126: Upper Grille Support Bolts
Courtesy of CHRYSLER GROUP, LLC

14. Install the front grille. Refer to **GRILLE, INSTALLATION** .
15. Connect the upper radiator hose and install the clamp in it's proper position.

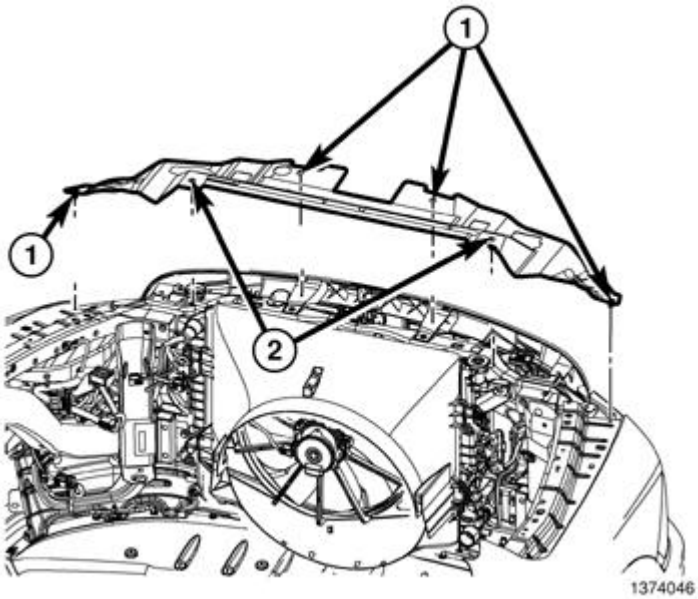

Fig. 127: Upper Radiator Seal
Courtesy of CHRYSLER GROUP, LLC

16. Install the upper radiator seal plastic rivets (2).
17. Install the upper radiator seal push pins (1).
18. Raise and secure the vehicle.

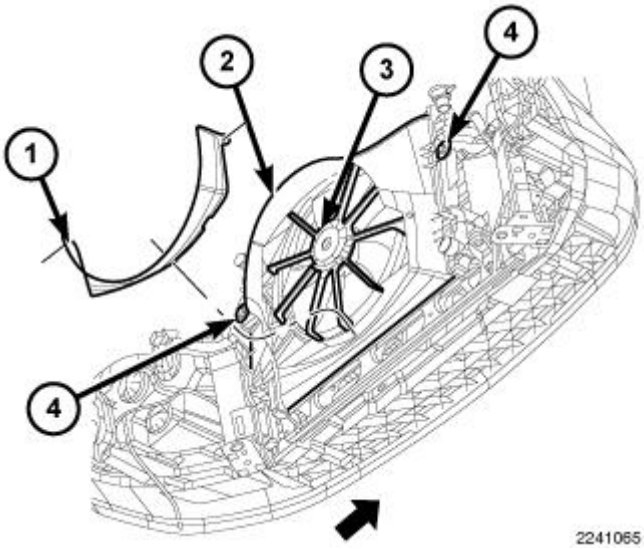

Fig. 128: Radiator Fan, Shroud & Bolts
Courtesy of CHRYSLER GROUP, LLC

19. Install the lower center cooling fan retaining clip.
20. Install the lower radiator clamp and hose.

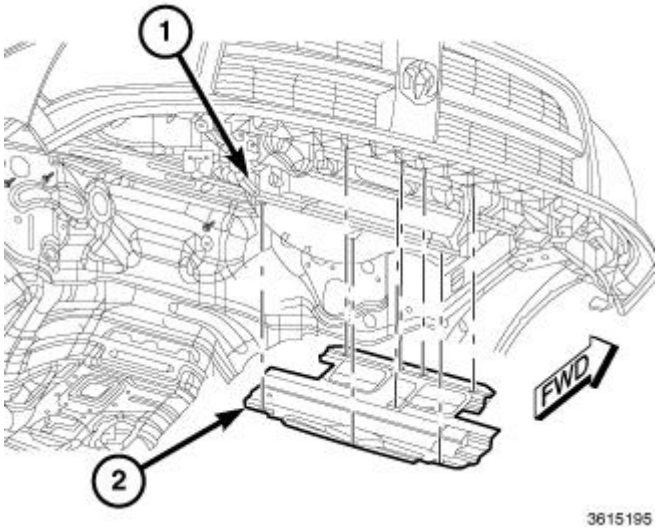

Fig. 129: Lower Radiator Cover
Courtesy of CHRYSLER GROUP, LLC

21. Install the lower radiator cover (2).
22. Lower the vehicle.
23. Install negative battery cable.
24. Fill cooling system with coolant. Refer to **STANDARD PROCEDURE**.
25. Check the system for any leaks. Refer to **LEAK TESTING**.
26. Operate the engine until it reaches normal operating temperature. Check cooling system fluid levels.

6.7L DIESEL

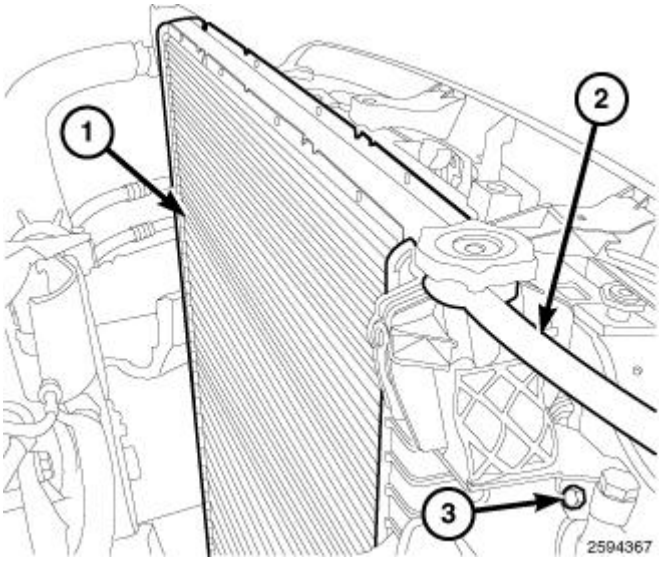

Fig. 130: Radiator - Diesel
Courtesy of CHRYSLER GROUP, LLC

1. Install the rubber insulators to the alignment dowels at the lower part of radiator.
2. Lower the radiator into position while guiding the two alignment dowels into the lower radiator support.
3. Raise the vehicle.
4. Position the power steering cooler on the radiator and tighten the nuts to 10 N.m (90 in. lbs.)
5. Lower the vehicle.
6. Install the two upper radiator mounting bolts. Tighten the bolts to 12 N.m (105 in. lbs.) torque.
7. If equipped, connect the transmission cooler lines to the transmission cooler. Inspect quick connect fittings for debris and install until an audible "click" is heard. Tug on lines to verify connection. Refer to **TUBES AND HOSES, TRANSMISSION OIL COOLER, STANDARD PROCEDURE**.
8. Connect both radiator hoses and install hose clamps.
9. Install the cooling fan. Refer to **FAN, COOLING, VISCOUS, INSTALLATION**.
10. Position the coolant recovery tank hose into the clips located on the top of the radiator.
11. Install the air box and the turbocharger inlet hose. Refer to **BODY, AIR CLEANER, INSTALLATION, 6.7L** . Tighten clamps to 4 N.m (35 in. lbs.).
12. Connect the mass airflow sensor electrical connector and ambient air temp sensor electrical connector (if equipped).

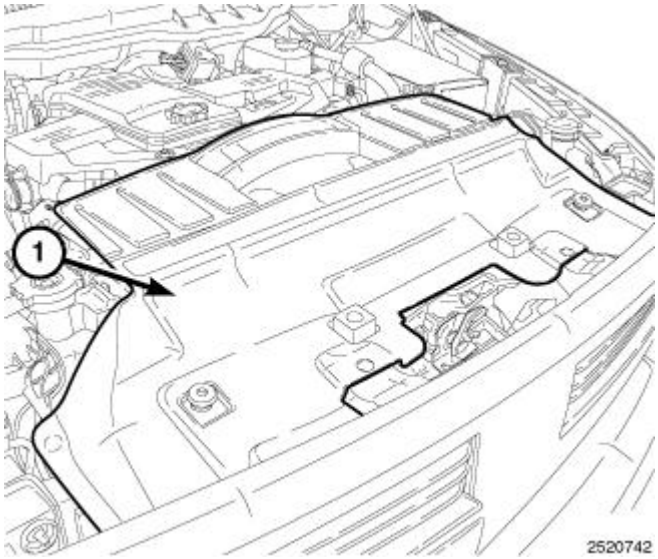

Fig. 131: Upper Radiator Shroud
Courtesy of CHRYSLER GROUP, LLC

13. Install the upper radiator shroud (1).
14. If equipped, connect the negative battery cable to the auxiliary battery.
15. Connect the battery negative cable.
16. Position heater controls to **full heat** position.
17. Fill cooling system with coolant. Refer to **STANDARD PROCEDURE**.
18. Operate the engine until it reaches normal operating temperature. Check the cooling system and automatic transmission (if equipped) for leaks.

SENSOR, COOLANT TEMPERATURE

DESCRIPTION

DESCRIPTION

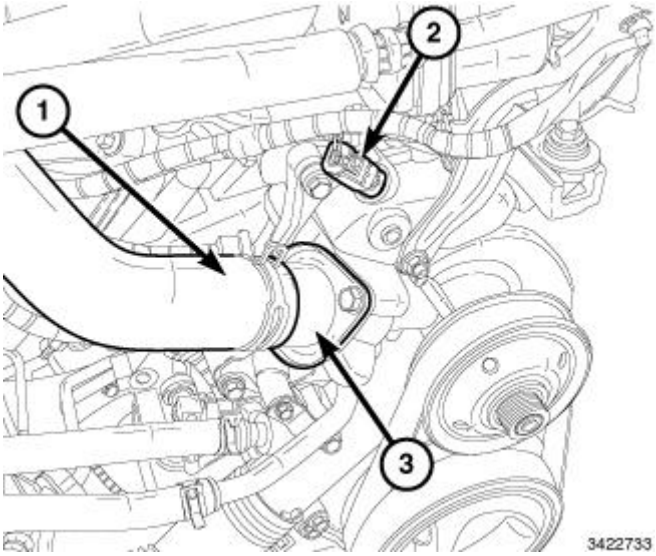

Fig. 132: Upper Radiator Hose, Thermostat Housing & Engine Coolant Temperature (ECT) Sensor
Courtesy of CHRYSLER GROUP, LLC

The Engine Coolant Temperature (ECT) sensor (2) is used to sense engine coolant temperature. The ECT sensor protrudes into an engine water jacket.

The ECT sensor is a two-wire Negative Thermal Coefficient (NTC) sensor. Meaning, as engine coolant temperature increases, resistance (voltage) in the sensor decreases. As temperature decreases, resistance (voltage) in the sensor increases.

OPERATION

OPERATION

At key-on, the Powertrain Control Module (PCM) sends out a regulated 5 volt signal to the ECT sensor. The PCM then monitors the signal as it passes through the ECT sensor to the sensor ground (sensor return).

When the engine is cold, the PCM will operate in Open Loop cycle. It will demand slightly richer air-fuel mixtures and higher idle speeds. This is done until normal operating temperatures are reached.

The PCM uses inputs from the ECT sensor for the following calculations:

- for engine coolant temperature gauge operation through CAN Bus communications
- Injector pulse-width
- Spark-advance curves
- ASD relay shut-down times

- Idle Air Control (IAC) motor key-on steps
- Pulse-width prime-shot during cranking
- O2 sensor closed loop times
- Purge solenoid on/off times
- Cooling fan control
- Temperature gauge operation
- A/C cutoff at high coolant temperatures
- EGR solenoid on/off times (if equipped)
- Evaporation System Integrity Monitor (ESIM) operation (if equipped)
- Radiator fan relay on/off times (if equipped)
- Target idle speed

REMOVAL

3.7L ENGINE

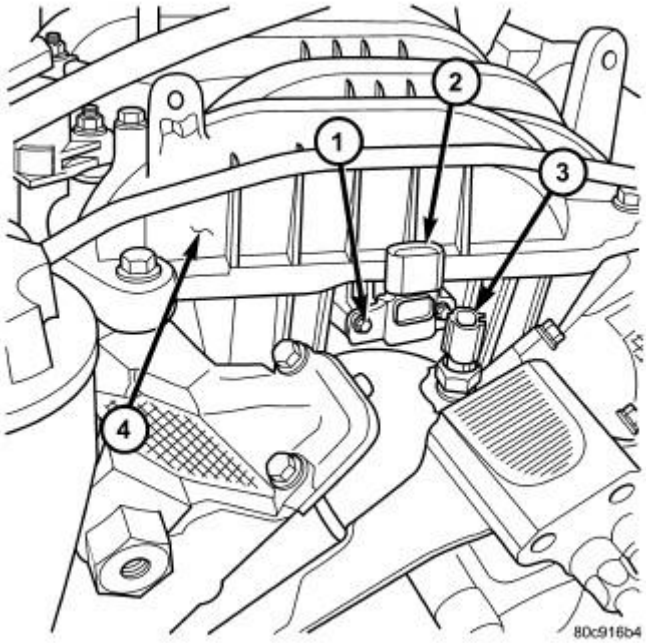

Fig. 133: MAP Sensor & ECT Sensor
Courtesy of CHRYSLER GROUP, LLC

1 - MOUNTING SCREWS
2 - MAP SENSOR
3 - ECT SENSOR
4 - FRONT OF INTAKE MANIFOLD

WARNING: Hot, pressurized coolant can cause injury by scalding. Cooling system must be partially drained before removing the coolant temperature sensor.

1. Partially drain the cooling system.
2. Disconnect the electrical connector from the ECT sensor (3).
3. Remove the sensor from the intake manifold (4).

4.7L ENGINE

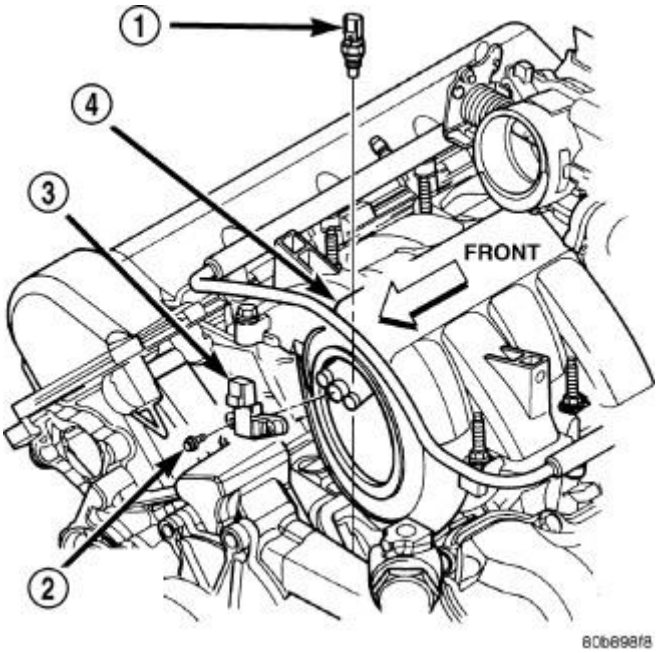

Fig. 134: Identifying Engine Coolant Temperature Sensor & MAP Sensor (4.7L)
Courtesy of CHRYSLER GROUP, LLC

1 - ECT SENSOR
2 - MOUNTING BOLTS (2)
3 - MAP SENSOR
4 - INTAKE MANIFOLD

WARNING: Hot, pressurized coolant can cause injury by scalding. Cooling system must be partially drained before removing the engine coolant temperature (ECT) sensor.

1. Partially drain the cooling system. Refer to **STANDARD PROCEDURE**.
2. Disconnect the electrical connector from the ECT sensor (1).
3. Remove the sensor from the intake manifold (4).

5.7L ENGINE

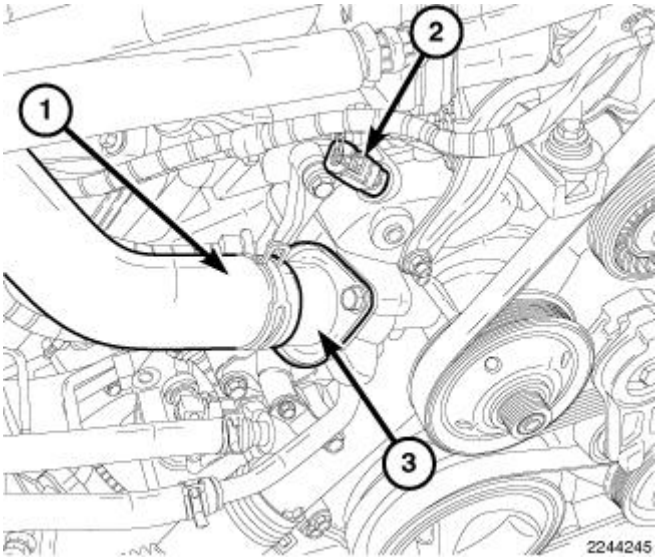

Fig. 135: Engine Coolant Temperature (ECT) Sensor & Thermostat
Courtesy of CHRYSLER GROUP, LLC

NOTE: Viscous fan, fan shroud and electric cooling fan removed for clarity.

1. Partially drain the cooling system. Refer to **STANDARD PROCEDURE**.

WARNING: Hot, pressurized coolant can cause injury by scalding. Cooling system must be partially drained before removing the engine coolant temperature (ECT) sensor.

2. Disconnect the electrical connector from the engine coolant temperature (ECT) sensor (2).
3. Remove the engine coolant temperature (ECT) sensor (2) from the water pump assembly.

6.7L DIESEL

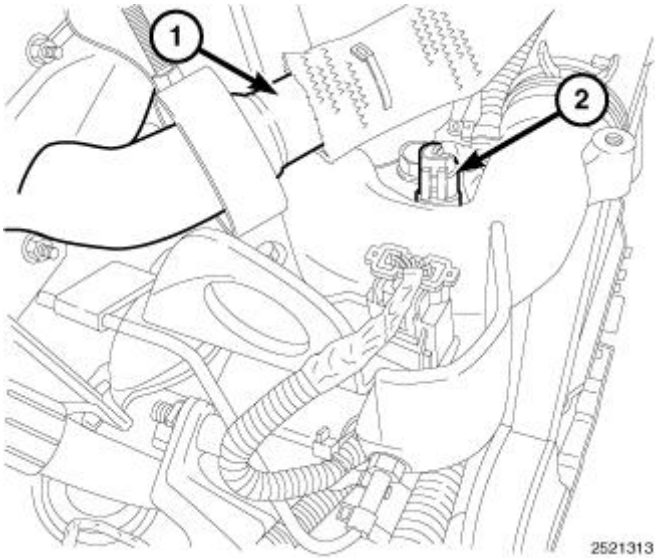

Fig. 136: ETC Sensor Connector
Courtesy of CHRYSLER GROUP, LLC

WARNING: Hot, pressurized coolant can cause injury by scalding. Cooling system must be partially drained before removing the coolant temperature sensor.

1. Partially drain the cooling system. Refer to **STANDARD PROCEDURE**.
2. Remove the engine trim cover.
3. Remove the upper EGR tube (2). Refer to **TUBE, EXHAUST GAS RECIRCULATION (EGR), CROSSOVER, REMOVAL** .
4. Remove heat shield.
5. Disconnect the electrical connector (2) from the ETC sensor (3).
6. Remove the ETC sensor from the cylinder head.

INSTALLATION

3.7L ENGINE

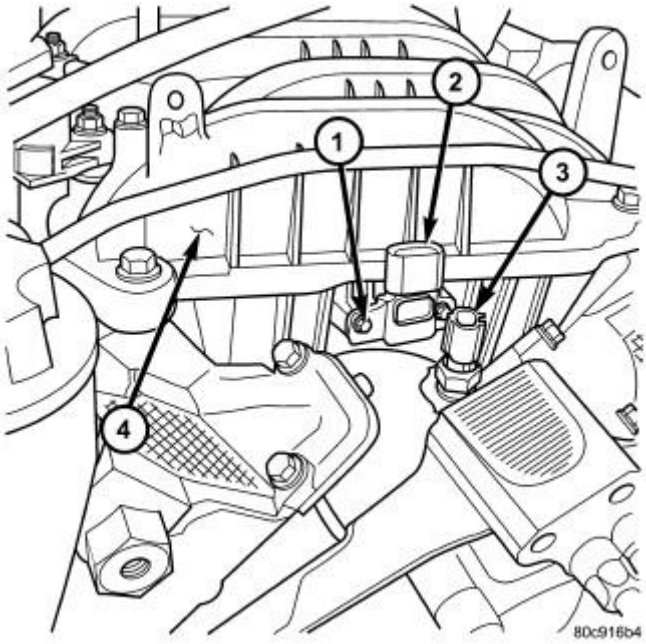

Fig. 137: MAP Sensor & ECT Sensor
Courtesy of CHRYSLER GROUP, LLC

1 - MOUNTING SCREWS
2 - MAP SENSOR
3 - ECT SENSOR
4 - FRONT OF INTAKE MANIFOLD

1. Apply thread sealant to ECT sensor threads.
2. Install ECT sensor (3) to engine.
3. Tighten sensor to 11 N.m (8 ft. lbs.) torque.
4. Connect electrical connector to ECT sensor (3).
5. Replace any lost engine coolant. Refer to **STANDARD PROCEDURE**.

4.7L ENGINE

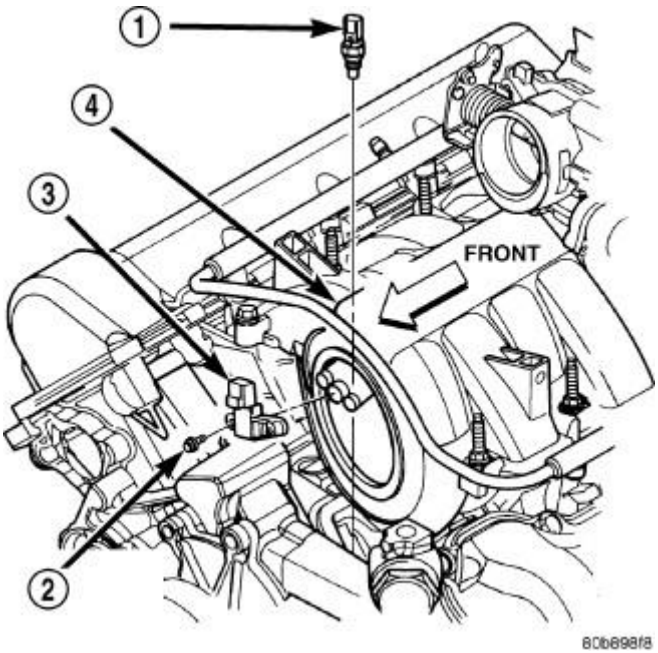

Fig. 138: Identifying Engine Coolant Temperature Sensor & MAP Sensor (4.7L)
Courtesy of CHRYSLER GROUP, LLC

1 - ECT SENSOR
2 - MOUNTING BOLTS (2)
3 - MAP SENSOR
4 - INTAKE MANIFOLD

1. Apply thread sealant to ECT sensor threads.
2. Install ECT sensor (1) to engine.
3. Tighten ECT sensor to 11 N.m (8 ft. lbs.) torque.
4. Connect electrical connector to ECT sensor (1).
5. Replace any lost engine coolant. Refer to **STANDARD PROCEDURE**.

5.7L ENGINE

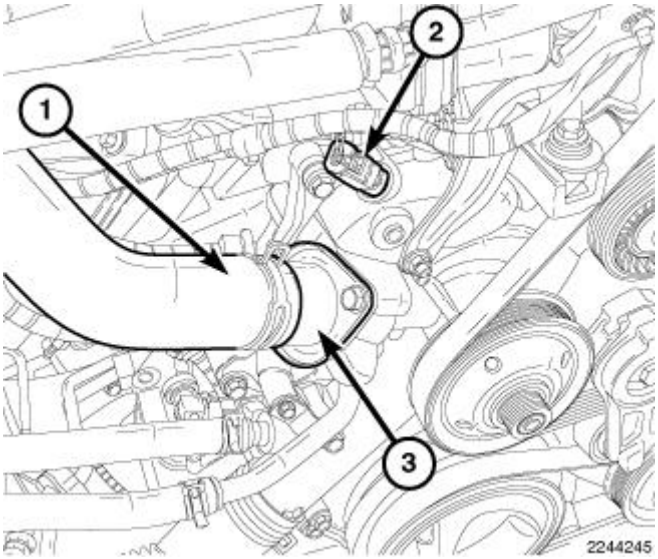

Fig. 139: Engine Coolant Temperature (ECT) Sensor & Thermostat
Courtesy of CHRYSLER GROUP, LLC

NOTE: Viscous fan, fan shroud and electric cooling fan removed for clarity.

1. Apply thread sealant to the engine coolant temperature (ECT) sensor (2) threads.
2. Install the ECT sensor (2) into engine.
3. Tighten the ECT sensor (2) to 11 N.m (8 ft. lbs.) torque.
4. Connect the electrical connector to the ECT sensor (2).
5. Fill the cooling system the proper level. Refer to **STANDARD PROCEDURE**.

6.7L DIESEL

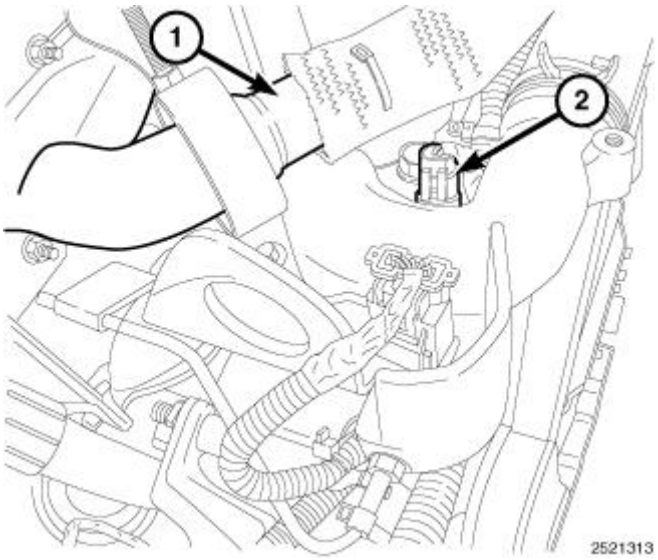

Fig. 140: ETC Sensor Connector
Courtesy of CHRYSLER GROUP, LLC

1. Install ETC sensor (2) to engine.
2. Tighten sensor (2) to 18 N.m (13 ft. lbs.) torque.
3. Connect the electrical connector to the ETC sensor (2).
4. Install heat shield.
5. Install the upper EGR tube. Refer to **TUBE, EXHAUST GAS RECIRCULATION (EGR), CROSSOVER, INSTALLATION** .
6. Install the engine trim cover.
7. Replace any lost engine coolant. Refer to **STANDARD PROCEDURE**.

THERMOSTAT

DESCRIPTION

DESCRIPTION

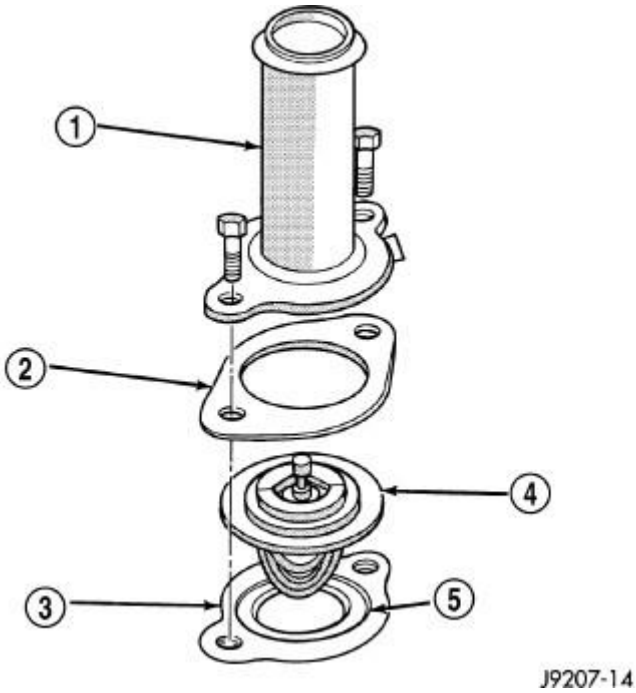

Fig. 141: Thermostat - Gas Powered Engines
Courtesy of CHRYSLER GROUP, LLC

1 - THERMOSTAT HOUSING
2 - GASKET
3 - INTAKE MANIFOLD
4 - THERMOSTAT
5 - MACHINED GROOVE

CAUTION: Do not operate the engine without a thermostat, except for servicing or

testing.

The 3.7L/4.7L/5.7L engines use a pellet-type thermostat that controls the operating temperature of the engine by controlling the amount of coolant flow to the radiator. On all engines the thermostat is closed below 195°F (90° C). Above this temperature, coolant is allowed to flow to the radiator. This provides quick engine warm up and overall temperature control.

Coolant leakage into the pellet container will cause the thermostat to fail in the open position. Thermostats very rarely stick. Do not attempt to free a thermostat with a prying device.

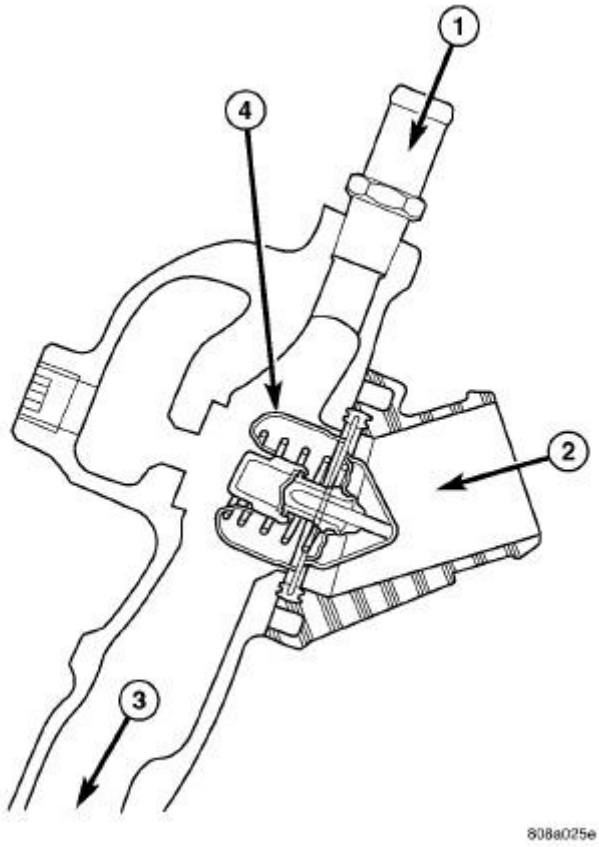

Fig. 142: Cutaway View Of Thermostat & Bypass
Courtesy of CHRYSLER GROUP, LLC

1 - FROM HEATER AND DEGAS CONTAINER
2 - FROM RADIATOR
3 - TO WATER PUMP
4- THERMOSTAT

On the 3.7L/4.7L engine the thermostat is designed to block the flow of the coolant bypass journal by 50% instead of completely blocking the flow. This design controls coolant temperature more accurately. Refer to **Fig. 142**.

The same thermostat is used for winter and summer seasons. An engine should not be operated without a thermostat, except for servicing or testing. Operating without a thermostat causes other problems. These are: longer engine warm-up time, unreliable warm-up performance, increased exhaust emissions and crankcase condensation. This condensation can result in sludge formation.

OPERATION

OPERATION

The wax pellet is located in a sealed container at the spring end of the thermostat. When heated, the pellet expands, overcoming closing spring tension and water pump pressure to force the valve to open.

DIAGNOSIS AND TESTING

DIAGNOSIS AND TESTING - ON-BOARD DIAGNOSTICS

All models are equipped with On-Board Diagnostics for certain cooling system components. Refer to appropriate Electrical Diagnostic article. If the powertrain control module (PCM) detects low engine coolant temperature, it will record a Diagnostic Trouble Code (DTC) in the PCM memory. Do not change a thermostat for lack of heat as indicated by the instrument panel gauge or by poor heater performance unless a DTC is present. For other probable causes, refer to the appropriate diagnostic information.

REMOVAL

3.7L/4.7L ENGINE

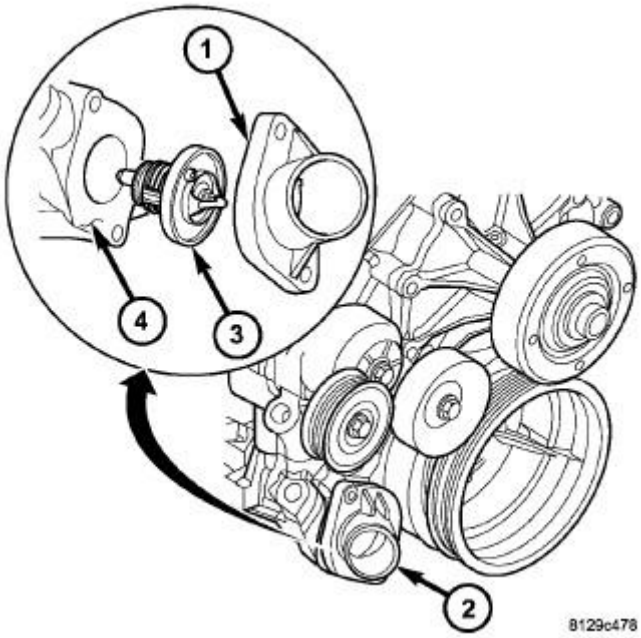

Fig. 143: Thermostat & Thermostat Housing 3.7L/4.7L
Courtesy of CHRYSLER GROUP, LLC

1 - THERMOSTAT HOUSING
2 - THERMOSTAT LOCATION
3 - THERMOSTAT AND GASKET
4 - TIMING CHAIN COVER

WARNING: Do not loosen the radiator draincock with the cooling system hot and pressurized. Serious burns from the coolant can occur.

1. Disconnect the negative battery cable.
2. Drain the cooling system. Refer to **STANDARD PROCEDURE**.
3. Raise and support the vehicle.
4. Remove the splash shield.
5. Remove the lower radiator hose clamp and the lower radiator hose at the thermostat housing (1).
6. Remove the thermostat housing mounting bolts, thermostat housing (1) and thermostat (3). Refer to **Fig. 143**.

5.7L ENGINE

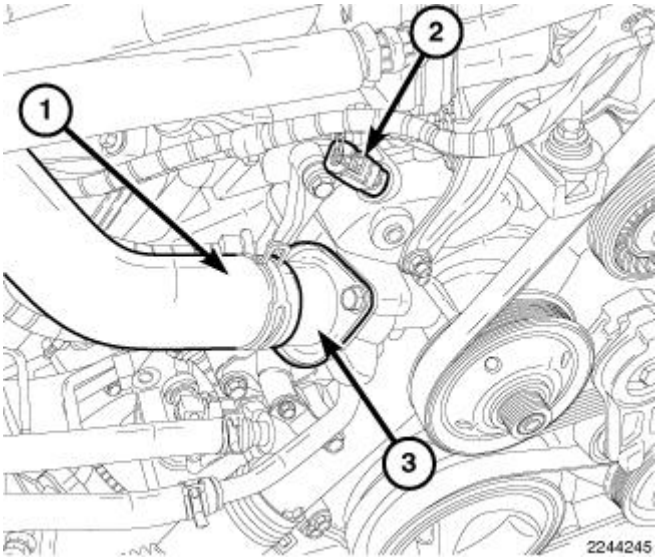

Fig. 144: Engine Coolant Temperature (ECT) Sensor & Thermostat
Courtesy of CHRYSLER GROUP, LLC

WARNING: Do not loosen the radiator draincock with the cooling system hot and pressurized. Serious burns from the coolant can occur.

1. Disconnect the negative battery cable.
2. Drain the cooling system. Refer to **STANDARD PROCEDURE**.
3. Remove the radiator hose clamp and radiator hose (1) at the thermostat housing (3).
4. Remove the thermostat housing mounting bolts, thermostat housing (3) and thermostat.

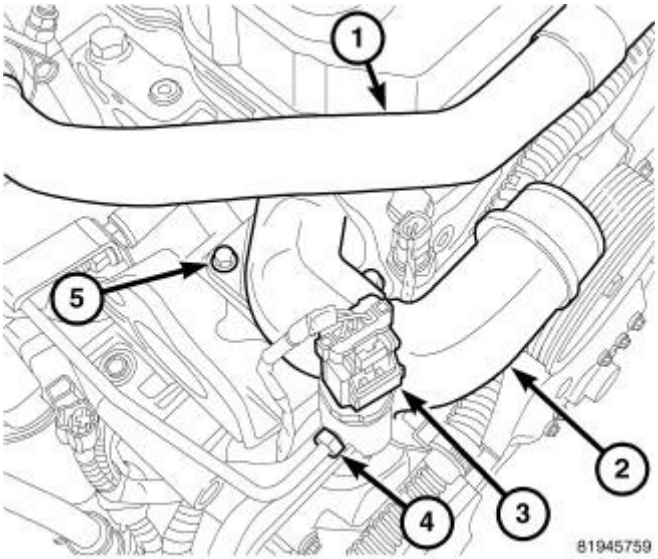

Fig. 145: Thermostat Housing - 6.7L Diesel
Courtesy of CHRYSLER GROUP, LLC

1 - EGR CROSSOVER TUBE
2 - THERMOSTAT HOUSING
3 - EXHAUST GAS PRESSURE SENSOR CONNECTOR
4 - EXHAUST GAS PRESSURE TUBE
5 - MOUNTING BOLT

NOTE: **Thermostats for the Cummins diesel, while physically interchangeable, should not be mixed and matched. For model year 2010 and forward, the 6.7L diesel engine uses a 200° Fahrenheit thermostat. Confirm the temperature stamp on the thermostat rim prior to removal or installation.**

WARNING: **Do not loosen the radiator draincock with the system hot and pressurized. Serious burns from the coolant can occur.**

1. Disconnect the battery negative cables.
2. Remove the vent plug near EGR cooler.
3. Drain the cooling system until the coolant level is below the thermostat. Refer to **STANDARD PROCEDURE**.
4. Disconnect the exhaust gas pressure sensor electrical connector (3).
5. Remove the exhaust pressure tube (4) from the thermostat housing.
6. Remove the EGR cooler cross over tube (1).
7. Remove the radiator hose clamp and hose from the thermostat housing (1).
8. Remove the heat shield.

9. Remove the three water outlet-to-cylinder head bolts (5) and remove the water outlet connector.
10. Clean the mating surfaces of the thermostat housing (1) and clean the thermostat seat groove at the top of the thermostat housing (1).

INSTALLATION

3.7L/4.7L ENGINE

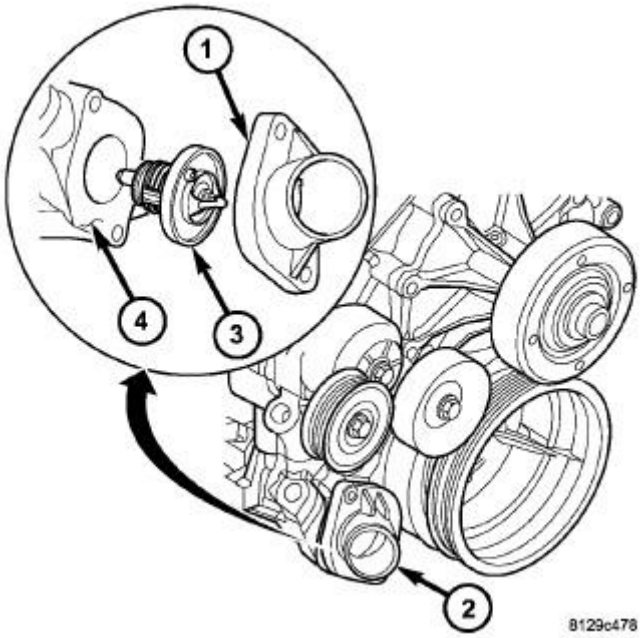

Fig. 146: Thermostat & Thermostat Housing 3.7L/4.7L
Courtesy of CHRYSLER GROUP, LLC

1 - THERMOSTAT HOUSING
2 - THERMOSTAT LOCATION
3 - THERMOSTAT AND GASKET
4 - TIMING CHAIN COVER

1. Clean the mating areas of the timing chain cover (4) and the thermostat housing (1).
2. Install the thermostat (3) (spring side down) into the recessed machined groove on the timing chain cover (4).

CAUTION: The housing must be tightened evenly and the thermostat must be centered into the recessed groove in the timing chain cover. If not, it may result in a cracked housing, damaged timing chain cover threads or coolant leaks.

3. Position the thermostat housing (1) on the timing chain cover (4).

4. Install the housing-to-timing chain cover bolts. Tighten the bolts to 13 N.m (112 in. lbs.).
5. Install the lower radiator hose on the thermostat housing (1).
6. Install the splash shield.
7. Lower the vehicle.
8. Fill the cooling system. Refer to **STANDARD PROCEDURE**.
9. Connect negative battery cable.
10. Start and warm the engine. Check for leaks.

5.7L ENGINE

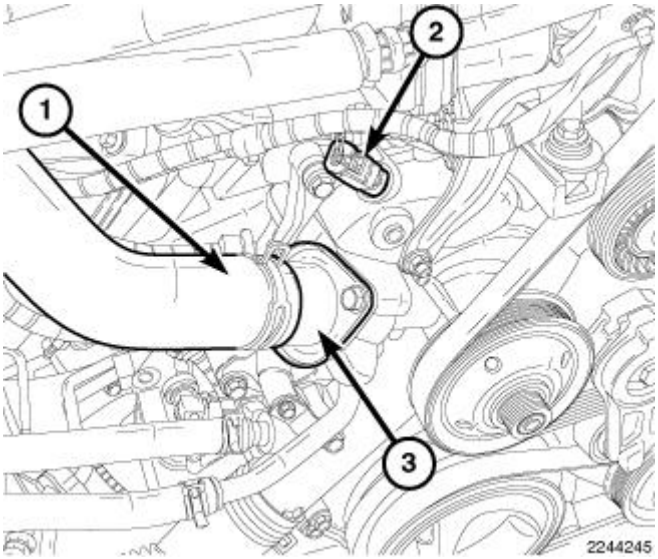

Fig. 147: Engine Coolant Temperature (ECT) Sensor & Thermostat
Courtesy of CHRYSLER GROUP, LLC

1. Position the thermostat and thermostat housing (3) onto the water pump.
2. Install the thermostat housing (3) bolts. Tighten the bolts to 13 N.m (10 ft. lbs.).
3. Install the radiator hose (1) onto the thermostat housing (3).
4. Fill the cooling system. Refer to **STANDARD PROCEDURE**.
5. Connect the negative battery cable.
6. Start and warm the engine. Check for leaks. Refer to **LEAK TESTING**.

6.7L DIESEL

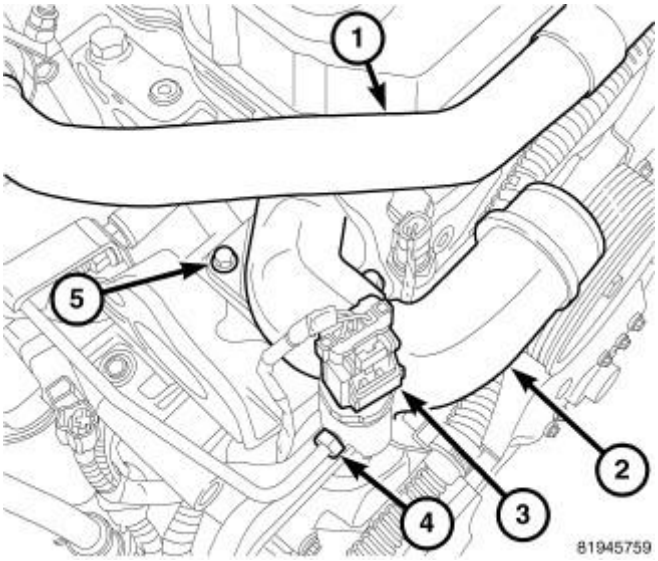

Fig. 148: Thermostat Housing - 6.7L Diesel
Courtesy of CHRYSLER GROUP, LLC

1 - EGR CROSSOVER TUBE
2 - THERMOSTAT HOUSING
3 - EXHAUST GAS PRESSURE SENSOR CONNECTOR
4 - EXHAUST GAS PRESSURE TUBE
5 - MOUNTING BOLT

NOTE: **Thermostats for the Cummins diesel, while physically interchangeable, should not be mixed and matched. For model year 2010 and forward, the 6.7L diesel engine uses a 200° Fahrenheit thermostat. Confirm the temperature stamp on the thermostat rim prior to removal or installation.**

1. Inspect the thermostat seal for cuts or nicks. Replace if damaged.
2. Install the thermostat into the groove in the top of the cylinder head.
3. Install the thermostat housing and bolts (5). Tighten the bolts to 10 N.m (89 in. lbs.).
4. Install the heat shield. Tighten the bolts to 9 N.m (79 in. lbs.).
5. Install the exhaust pressure tube (4). Tighten to 10 N.m (89 in. lbs.).
6. Connect exhaust pressure sensor electrical connector (2).
7. Install the EGR cross over tube (1).
8. Install the P-clip and bolt. Tighten to 8 N.m (71 in. lbs.).
9. Install the radiator upper hose and clamp.
10. Fill the cooling system with coolant. Refer to **STANDARD PROCEDURE**.
11. Connect the battery negative cables.
12. Start the engine and check for any coolant leaks. Run engine to check for proper thermostat operation.

TRANSMISSION

COOLER, TRANSMISSION OIL

DESCRIPTION

GAS ENGINES

EXTERNAL TRANS COOLER

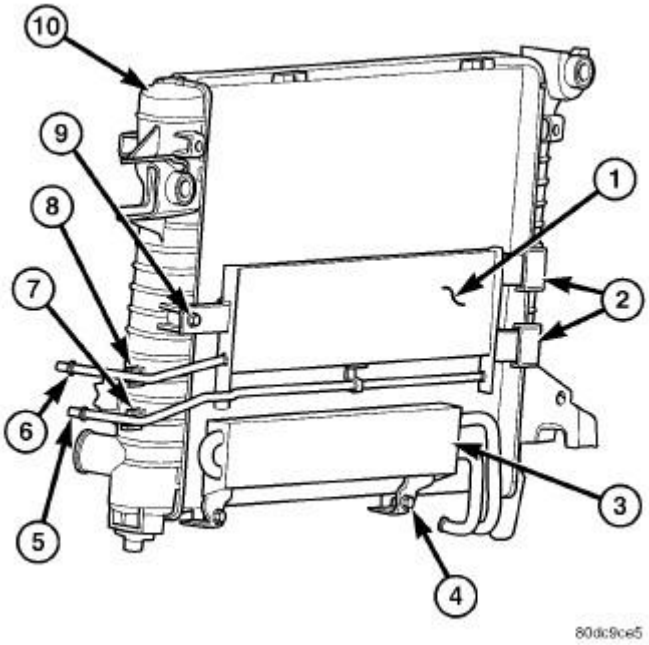

Fig. 149: Transmission Oil Cooler
Courtesy of CHRYSLER GROUP, LLC

An air-to-oil transmission oil cooler is standard on all engine packages. The transmission oil cooler is mounted to the front of the radiator above the power steering cooler.

A/C CONDENSER/TRANSMISSION COOLER COMBINATION

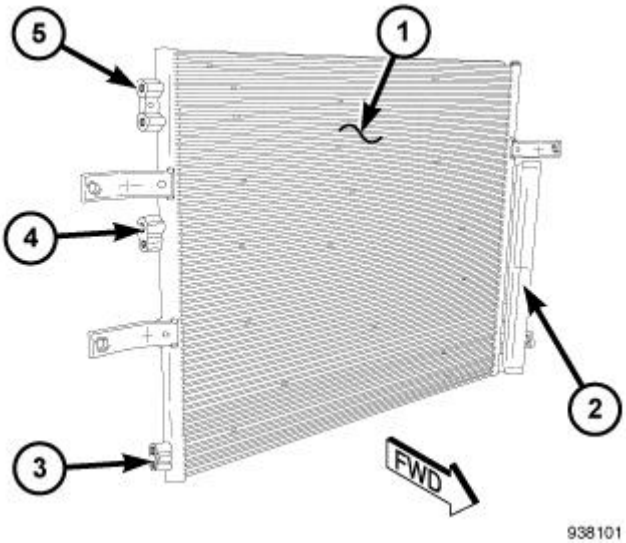

Fig. 150: A/C Condenser/Transmission Cooler
Courtesy of CHRYSLER GROUP, LLC

The automatic transmission cooler assembly is integrated in with the A/C condenser and behind the grille. The transmission cooler is a heat exchanger that allows heat in the transmission fluid to be transferred to the air passing over the cooler fins. The transmission oil cooler assembly is equipped with quick connect fitting for the transmission oil. The transmission oil cooler is serviced as an assembly with the A/C condenser.

To service the A/C condenser/Transmission cooler, refer to **CONDENSER, A/C, REMOVAL** and **CONDENSER, A/C, INSTALLATION** .

DIESEL ENGINES

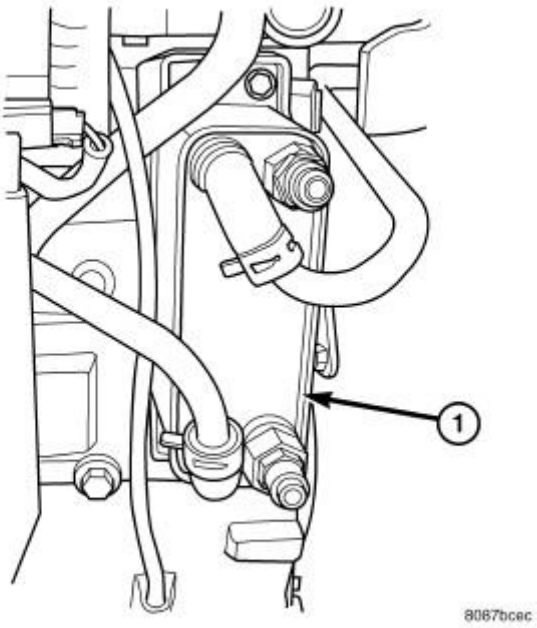

Fig. 151: Transmission Water - To - Oil Cooler
Courtesy of CHRYSLER GROUP, LLC

1 - TRANSMISSION WATER-TO-OIL COOLER

All diesel models equipped with an automatic transmission are equipped with both a main water-to-oil cooler and a separate air-to-oil cooler. Both coolers are supplied as standard equipment on diesel engine powered models when equipped with an automatic transmission.

The main water-to-oil transmission oil cooler is mounted to a bracket on the intake side of the engine. Refer to **Fig. 151**.

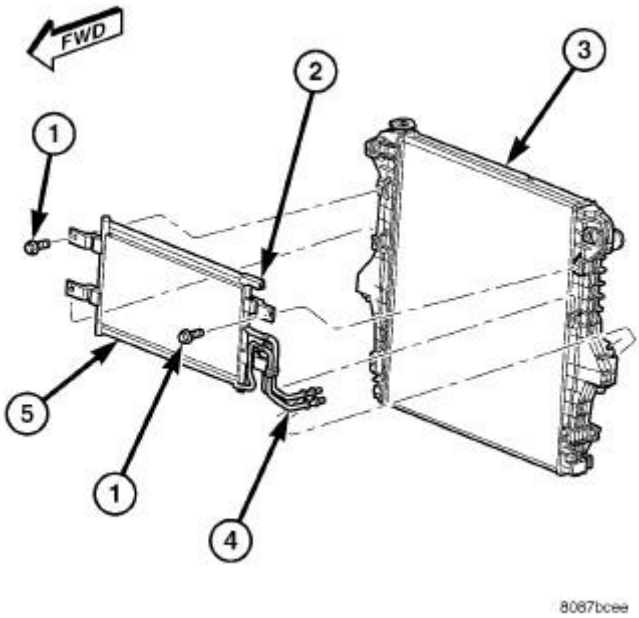

Fig. 152: Transmission Oil Cooler - Diesel Engine
Courtesy of CHRYSLER GROUP, LLC

1 - MOUNTING BOLTS
2 - THERMOSTATIC BYPASS VALVE
3 - RADIATOR
4 - QUICK-CONNECT FITTINGS
5 - TRANSMISSION OIL COOLER

The air-to-oil cooler is located in front of the radiator. Refer to **Fig. 152**.

OPERATION

OPERATION

On all models equipped with an automatic transmission, the transmission oil is routed through the air-to-oil transmission oil cooler where heat is removed from the transmission oil before returning to the transmission. The air-to-oil cooler has an internal thermostat that controls oil flow through the cooler. When the transmission oil is cold (less then operating temperature), the oil is routed through the cooler bypass. When the transmission oil reaches operating temperatures and above, the thermostat closes off the bypass allowing the oil to flow through the cooler. The thermostat is serviceable.

On heavy duty diesel engine models, the transmission oil is routed through an oil-to water transmission oil cooler first, then to the air-to-oil transmission oil cooler.

REMOVAL

REMOVAL

EXTERNAL TRANSMISSION COOLER

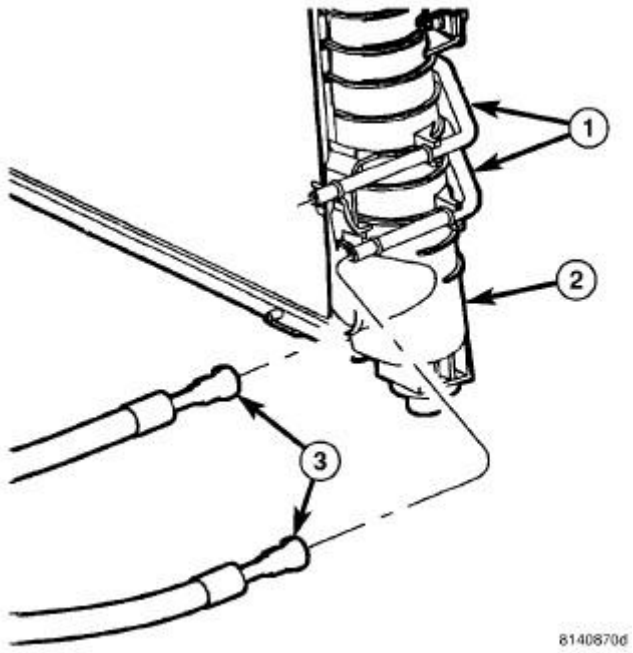

Fig. 153: Transmission Oil Cooler Lines
Courtesy of CHRYSLER GROUP, LLC

1. Place a drain pan under the oil cooler lines.
2. Disconnect the transmission oil cooler line quick-connect fitting at the cooler outlet. Refer to **TUBES AND HOSES, TRANSMISSION OIL COOLER, STANDARD PROCEDURE**. Plug the cooler lines to prevent oil leakage.
3. Unsnap the transmission cooler tubes from the radiator tank clips.
4. Remove the bolt attaching the transmission cooler to the radiator.
5. Remove oil cooler from the vehicle. Take care not to damage the radiator core or transmission cooler tubes.

A/C CONDENSER/TRANSMISSION COOLER

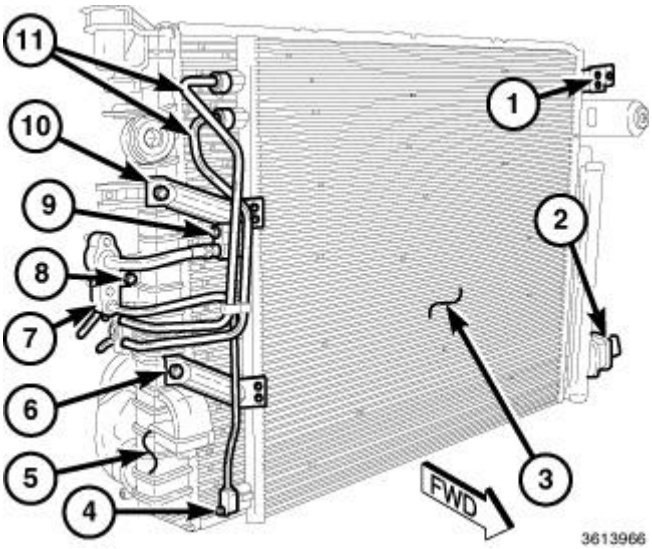

Fig. 154: A/C Compressor/Transmission Combination Cooler, Lines, Bolts & Brackets
Courtesy of CHRYSLER GROUP, LLC

NOTE: The transmission cooler has been integrated with the A/C condenser.

1. The A/C condenser/transmission cooler is removed as an unit. Refer to **CONDENSER, A/C, REMOVAL** .

AIR TO OIL COOLER - DIESEL

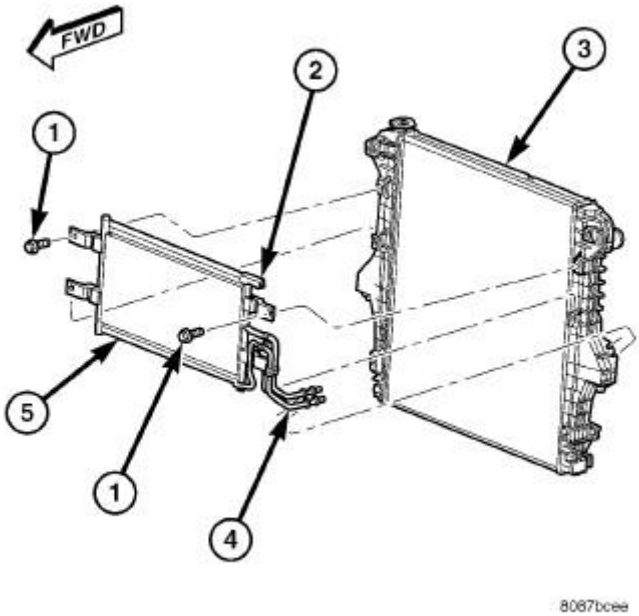

Fig. 155: Transmission Oil Cooler - Diesel Engine

Courtesy of CHRYSLER GROUP, LLC

1 - MOUNTING BOLTS
2 - THERMOSTATIC BYPASS VALVE
3 - RADIATOR
4 - QUICK-CONNECT FITTINGS
5 - TRANSMISSION OIL COOLER

1. Remove Charge Air Cooler. Refer to **COOLER AND HOSES, CHARGE AIR, REMOVAL, 6.7L** .
2. Place a drain pan under the oil cooler.
3. Raise the vehicle.
4. Disconnect the oil cooler quick-connect fittings from the transmission lines. Refer to **TUBES AND HOSES, TRANSMISSION OIL COOLER, STANDARD PROCEDURE**.
5. Remove the charge air cooler-to-oil cooler bolt. Refer to **Fig. 155**.
6. Remove two mounting nuts.
7. Remove the oil cooler and line assembly towards the front of vehicle. Cooler must be rotated and tilted into position while removing.

WATER TO OIL COOLER

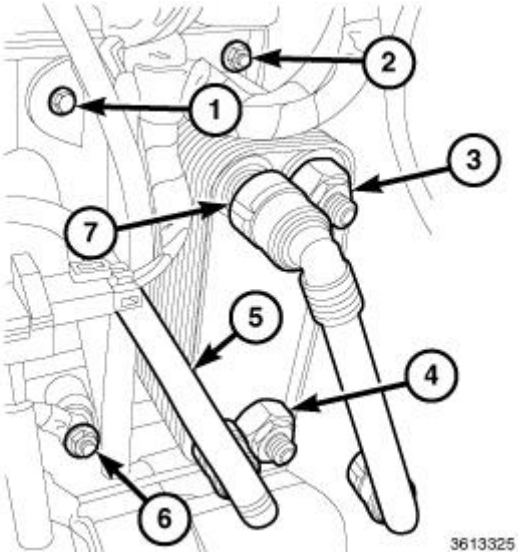

Fig. 156: Water To Oil Cooler, Lines, Bolts & Nuts
Courtesy of CHRYSLER GROUP, LLC

CAUTION: If a leak should occur in the water-to-oil cooler mounted to the side of the engine block, engine coolant may become mixed with transmission fluid. Transmission fluid may also enter engine cooling system. Both cooling system and transmission should be drained and inspected in case of oil cooler leakage.

1. Disconnect both battery negative cables.
2. Remove starter. Refer to **STARTER, REMOVAL** .
3. Drain cooling system. Refer to **STANDARD PROCEDURE**.
4. Disconnect coolant lines from cooler.

NOTE: **Use a back-up wrench on the transmission cooler fittings to prevent damage to the cooler.**

5. Disconnect transmission oil lines from cooler. Plug cooler lines to prevent oil leakage.
6. Remove cooler bracket to transmission adapter bolt.
7. Remove the nut (6) secures the ground cable to the mounting stud then remove the nut.
8. Remove the upper nut (2).
9. Remove cooler bracket to block bolts (1).
10. Remove cooler assembly from vehicle.

DISASSEMBLY

DISASSEMBLY

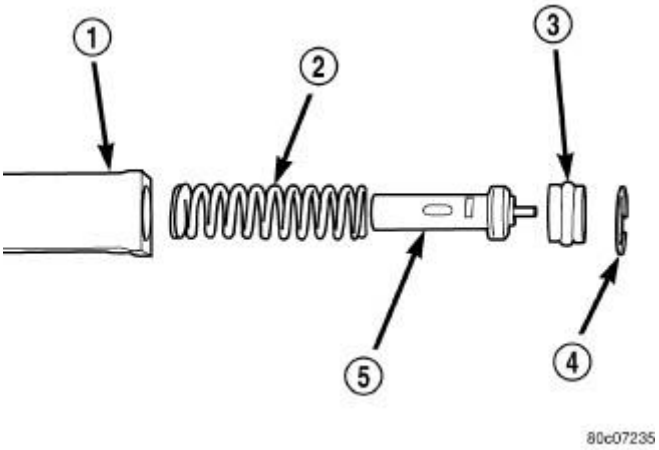

Fig. 157: Exploded View Of Transmission Oil Cooler Thermostat
Courtesy of CHRYSLER GROUP, LLC

1 - THERMOSTAT HOUSING
2 - SPRING
3 - END PLUG
4 - SNAP RING
5 - THERMOSTAT

NOTE: **The transmission oil cooler uses an internal thermostat to control transmission oil flow through the cooler. This thermostat is serviceable.**

1. Remove the transmission oil cooler. Refer to **COOLER, TRANSMISSION OIL, REMOVAL**.
2. Remove the snap ring (4) retaining the thermostat end plug (3). Refer to **Fig. 157**.
3. Remove the end plug (3), thermostat (5) and spring (2) from transmission oil cooler. Refer to **Fig. 157**.

ASSEMBLY

ASSEMBLY

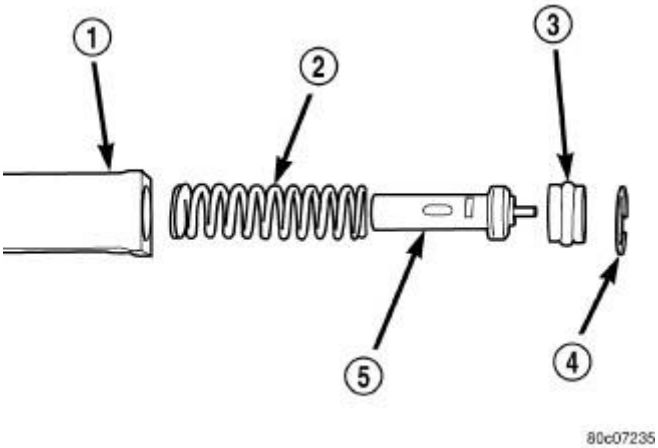

Fig. 158: Exploded View Of Transmission Oil Cooler Thermostat
Courtesy of CHRYSLER GROUP, LLC

1 - THERMOSTAT HOUSING
2 - SPRING
3 - END PLUG
4 - SNAP RING
5 - THERMOSTAT

1. Thoroughly clean the thermostat bore on the transmission oil cooler.
2. Install the new spring (2), thermostat (5), end plug (3) and snap ring (4).
3. Install the transmission oil cooler. Refer to **COOLER, TRANSMISSION OIL, INSTALLATION**.

INSTALLATION

INSTALLATION

EXTERNAL TRANSMISSION COOLER

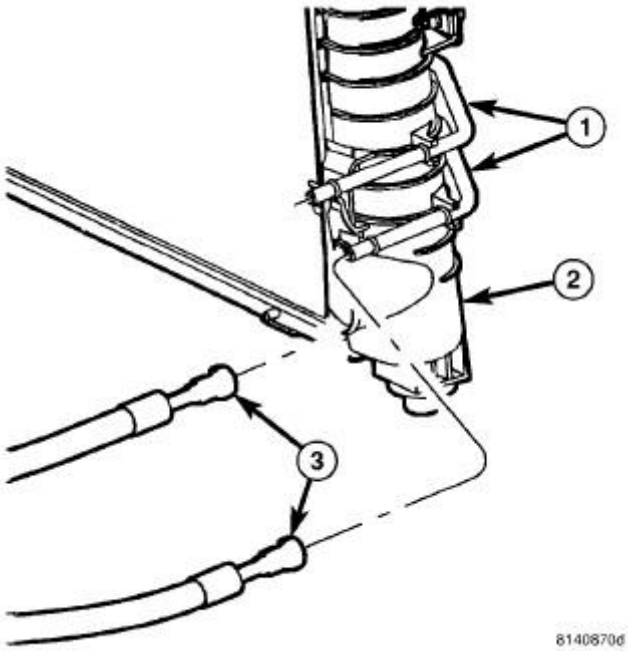

Fig. 159: Transmission Oil Cooler Lines
Courtesy of CHRYSLER GROUP, LLC

1. Position the transmission cooler tubes to the front of the radiator by sliding brackets into slots on radiator inlet tank.
2. Snap the transmission cooler tubes into the clips on the side of the radiator tank.
3. Install the transmission cooler attaching bolt. Tighten the bolt to 16 N.m (140 in. lbs.).
4. Inspect the quick connect fittings for debris and install the quick connect fitting on the cooler tube until an audible "click" is heard. Pull on the connection to verify proper installation and install the secondary latches. Refer to **TUBES AND HOSES, TRANSMISSION OIL COOLER, STANDARD PROCEDURE**.
5. Start the engine and check all fittings for leaks.
6. Check the fluid level in the automatic transmission.

A/C CONDENSER/TRANSMISSION COOLER

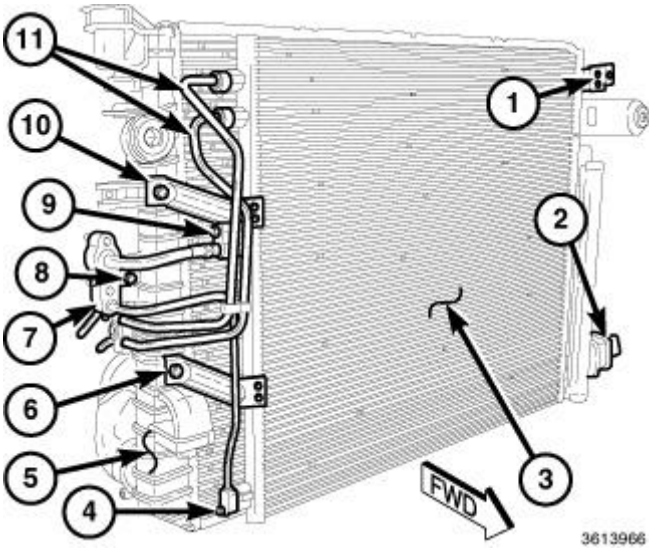

Fig. 160: A/C Compressor/Transmission Combination Cooler, Lines, Bolts & Brackets
Courtesy of CHRYSLER GROUP, LLC

NOTE: The transmission cooler is integrated in with the A/C condenser.

1. The A/C condenser/transmission cooler is installed as an unit. Refer to **CONDENSER, A/C, INSTALLATION** .
2. Top off the transmission oil to the required level.
3. Take vehicle for test to ensure all the air has escaped from the cooler.
4. Recheck the transmission oil.

AIR TO OIL COOLER - DIESEL

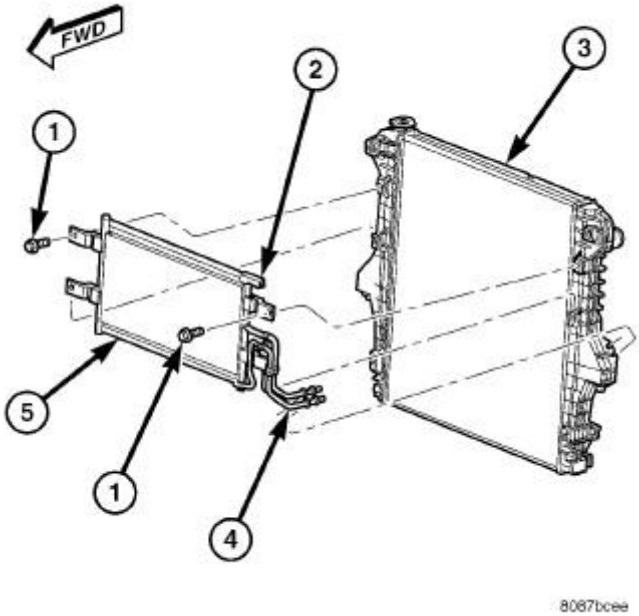

Fig. 161: Transmission Oil Cooler - Diesel Engine
Courtesy of CHRYSLER GROUP, LLC

1 - MOUNTING BOLTS
2 - THERMOSTATIC BYPASS VALVE
3 - RADIATOR
4 - QUICK-CONNECT FITTINGS
5 - TRANSMISSION OIL COOLER

1. Carefully position the oil cooler assembly to the vehicle.
2. Install two nuts and one bolt. Tighten to 11 N.m (95 in. lbs.) torque.
3. Connect the quick-connect fittings to the transmission cooler lines. Refer to **TUBES AND HOSES, TRANSMISSION OIL COOLER, STANDARD PROCEDURE**.
4. Install Charge Air Cooler. Refer to **COOLER AND HOSES, CHARGE AIR, INSTALLATION, 6.7L** .
5. Start the engine and check all fittings for leaks.
6. Check the fluid level in the automatic transmission.

WATER-TO-OIL COOLER

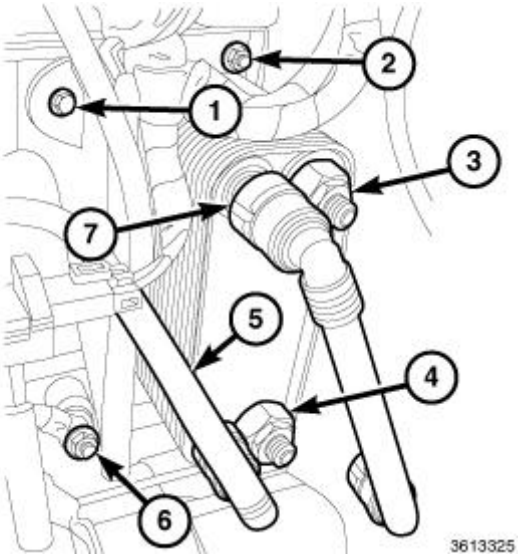

Fig. 162: Water To Oil Cooler, Lines, Bolts & Nuts
Courtesy of CHRYSLER GROUP, LLC

1. Guide the oil cooler onto the studs located on the cylinder block.
2. Install the upper (2) and lower nuts to cylinder block finger tight.
3. Install and tighten mounting bolt (1) to cooler at cylinder block to 24 N.m (18 ft. lbs).
4. Torque the nuts to 24 N.m (18 ft. lbs.)
5. Install the ground cable. Install the retaining nut (6).
6. Tighten lower mounting bolt to cooler at the cylinder block. Tighten to 77 N.m (57 ft. lbs.).

NOTE: Use a back-up wrench on the transmission cooler fittings to prevent damage to the cooler.

7. Tighten upper mounting bolt to cooler at cylinder block to 24 N.m (18 ft. lbs).
8. Install wire harness push in clip at bottom of cooler bracket.
9. Install starter motor. Refer to **STARTER, INSTALLATION** .
10. Connect battery negative cables.
11. Fill cooling system. Refer to **STANDARD PROCEDURE**.
12. Check transmission oil level and fill as necessary.

TUBES AND HOSES, TRANSMISSION OIL COOLER

STANDARD PROCEDURE

STANDARD PROCEDURE - TRANSMISSION COOLER LINE QUICK CONNECT FITTING DISASSEMBLY/ASSEMBLY

DISCONNECT

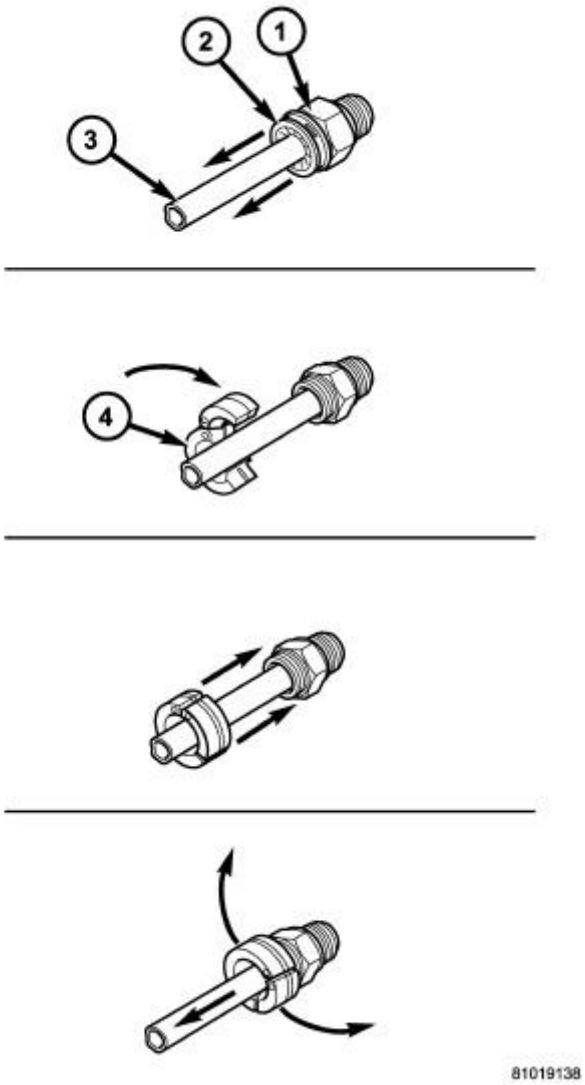

Fig. 163: Oil Cooler Line Quick Connect Fitting - Disassembly
Courtesy of CHRYSLER GROUP, LLC

1 - QUICK CONNECT FITTING
2 - DUST CAP
3 - OIL COOLER LINE
4 - SPECIAL TOOL 8875A

1. Remove dust cap by pulling it straight back off of quick connect fitting
2. Place disconnect Special Tool (special tool #8875A, Disconnect, Transmission Cooler Line) onto a ? inch transmission cooler lines or Special Tool (special tool #9546, Disconnect Tool) onto a 1/2 inch transmission cooler lines with the fingers of the tool facing the quick connect fitting.
3. Slide disconnect tool down the transmission line and engage the fingers of the tool into the retaining clip.

When properly engaged in the clip, the tool will fit flush against the quick connect fitting.

4. Rotate the disconnect tool 60° to expand the retaining clip.
5. While holding the disconnect tool against the quick connect fitting, pull back on the transmission cooler line to remove.

CONNECT

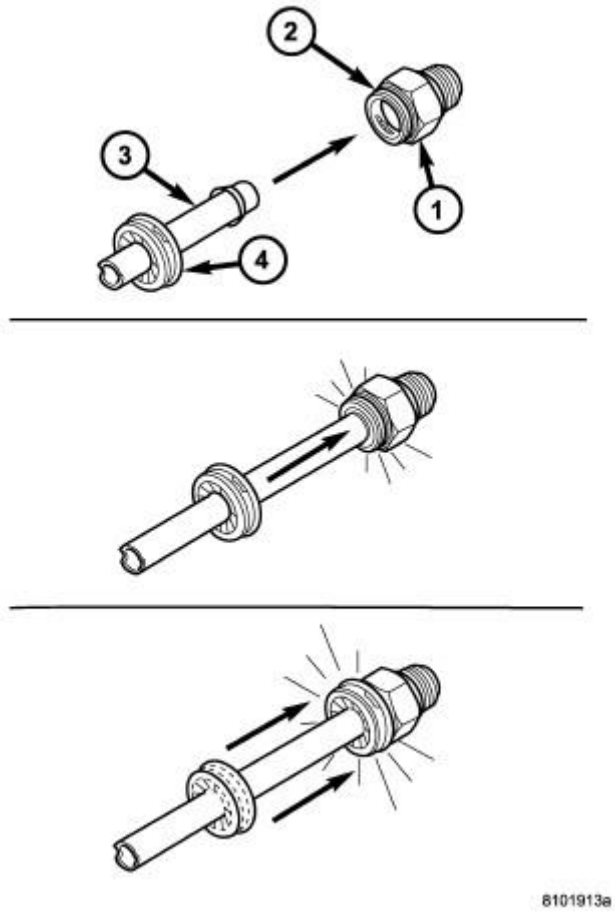

Fig. 164: Oil Cooler Line Quick Connect Fitting - Assembly
Courtesy of CHRYSLER GROUP, LLC

1 - QUICK CONNECT FITTING
2 - CLIP
3 - OIL COOLER LINE
4 - DUST CAP

1. Align transmission cooler line with quick connect fitting while pushing straight into the fitting.
2. Push in on transmission cooler line until a "click" is heard or felt.
3. Slide dust cap down the transmission cooler line and snap it over the quick connect fitting until it is fully

seated and rotates freely. Dust cap will only snap over quick connect fitting when the transmission cooler line is properly installed.

NOTE: If dust cap will not snap into place, repeat assembly step 2.

DESCRIPTION

DESCRIPTION

The 5.7L engine (348 CID) eight-cylinder engine is a 90° V-Type lightweight, deep skirt cast iron block, aluminum heads, single cam, overhead valve engine with hydraulic roller tappets. The heads incorporate splayed valves with a hemispherical style combustion chamber and dual spark plugs. The cylinders are numbered from front to rear; 1, 3, 5, 7 on the left bank and 2, 4, 6, 8 on the right bank. The firing order is 1-8-4-3-6-5-7-2.

DIAGNOSIS AND TESTING

INTRODUCTION

Engine diagnosis is helpful in determining the causes of malfunctions not detected and remedied by routine maintenance.

These malfunctions may be classified as either performance (e.g., engine idles rough and stalls) or mechanical (e.g., a strange noise).

Refer to **PERFORMANCE** and **MECHANICAL** for possible causes and corrections of malfunctions.

Additional tests and diagnostic procedures may be necessary for specific engine malfunctions that can not be isolated with the Service Diagnosis charts. Information concerning additional tests and diagnosis is provided within the following diagnosis:

- Cylinder Compression Pressure Test. Refer to **CYLINDER COMPRESSION PRESSURE LEAKAGE**.
- Cylinder Combustion Pressure Leakage Test. Refer to **CYLINDER COMBUSTION PRESSURE LEAKAGE**.
- Engine Cylinder Head Gasket Failure Diagnosis. Refer to **DIAGNOSIS AND TESTING - CYLINDER HEAD GASKET FAILURE**.
- Intake Manifold Leakage Diagnosis. Refer to **DIAGNOSIS AND TESTING - INTAKE MANIFOLD LEAKAGE**.

PERFORMANCE

CONDITION	POSSIBLE CAUSE	CORRECTION
ENGINE WILL NOT START	1. Weak battery.	1. Charge or replace as necessary.
	2. Corroded or	2. Clean and tighten

	loose battery connections.	battery connections. Apply a coat of light mineral grease to the terminals.	
	3. Faulty starter.	3. Refer to **DIAGNOSIS AND TESTING** .	
	4. Incorrect spark plug gap.	4. Refer to **SPECIFICATIONS** .	
	5. Dirt or water in fuel system.	5. Clean system and replace fuel filter.	
	6. Faulty fuel pump, relay or wiring.	6. Refer to **FUEL SYSTEM** article.	
ENGINE STALLS OR ROUGH IDLE	1. Idle speed set to low.	1. Refer to **CYLINDER COMPRESSION PRESSURE LEAKAGE**.	
	2. Vacuum leak.	2. Inspect intake manifold and vacuum hoses, repair or replace as necessary.	
ENGINE LOSS OF POWER	1. Dirty or incorrectly gapped spark plugs.	1. Replace spark plugs.	
	2. Dirt or water in fuel system.	2. Clean system and replace fuel filter.	
	3. Blown cylinder head gasket.	3. Replace cylinder head gasket.	
	4. Low compression.	4. Refer to **CYLINDER COMPRESSION PRESSURE LEAKAGE**.	
	5. Burned, warped or pitted valves.	5. Replace as necessary.	
	6. Plugged or restricted exhaust system.	6. Inspect and replace as necessary.	

CYLINDER COMPRESSION PRESSURE LEAKAGE

NOTE: **The results of a cylinder compression pressure test can be utilized to diagnose several engine malfunctions.**

NOTE: **Ensure the battery is completely charged and the engine starter motor is in good operating condition. Otherwise the indicated compression pressures may not be valid for diagnosis purposes.**

1. Clean the spark plug recesses with compressed air.
2. Remove the spark plugs and record the cylinder number of each spark plug for future reference.
3. Inspect the spark plug electrodes for abnormal firing indicators such as fouled, hot, oily, etc.
4. Disable the fuel system and perform the fuel system pressure release procedure. Refer to **FUEL SYSTEM PRESSURE RELEASE** .
5. Insert a compression pressure gauge and rotate the engine with the engine starter motor for three revolutions.
6. Record the compression pressure on the 3rd revolution. Continue the test for the remaining cylinders.

NOTE: **The recommended compression pressures are to be used only as a guide to diagnosing engine problems. An engine should not be disassembled to determine the cause of low compression unless some malfunction is present.**

7. Compression should not be less than 689 kPa (100 psi) and not vary more than 25 percent from cylinder to cylinder.
8. If one or more cylinders have abnormally low compression pressures, repeat the compression test.

NOTE: **If the same cylinder or cylinders repeat an abnormally low reading on the second compression test, it could indicate the existence of a problem in the cylinder in question.**

9. If one or more cylinders continue to have abnormally low compression pressures, perform the cylinder combustion pressure leakage test. Refer to **CYLINDER COMBUSTION PRESSURE LEAKAGE**.

CYLINDER COMBUSTION PRESSURE LEAKAGE

The combustion pressure leakage test provides an accurate means for determining engine condition.

Combustion pressure leakage testing will detect:

- Exhaust and intake valve leaks (improper seating).
- Leaks between adjacent cylinders or into water jacket.
- Any causes for combustion/compression pressure loss.

1. Check the coolant level and fill as required. DO NOT install the radiator cap.
2. Start and operate the engine until it attains normal operating temperature, then turn the engine OFF.
3. Remove the spark plugs.
4. Remove the oil filler cap.

5. Remove the air cleaner hose.
6. Calibrate the tester according to the manufacturer's instructions. The shop air source for testing should maintain 483 kPa (70 psi) minimum, 1, 379 kPa (200 psi) maximum and 552 kPa (80 psi) recommended.
7. Perform the test procedures on each cylinder according to the tester manufacturer's instructions. Set piston of cylinder to be tested at TDC compression, While testing, listen for pressurized air escaping through the throttle body, tailpipe and oil filler cap opening. Check for bubbles in the radiator coolant.

All gauge pressure indications should be equal, with no more than 25% leakage.

FOR EXAMPLE: At 552 kPa (80 psi) input pressure, a minimum of 414 kPa (60 psi) should be maintained in the cylinder.

Refer to **CYLINDER COMBUSTION PRESSURE LEAKAGE DIAGNOSIS CHART**.

CYLINDER COMBUSTION PRESSURE LEAKAGE DIAGNOSIS CHART

CONDITION	POSSIBLE CAUSE	CORRECTION
AIR ESCAPES THROUGH THROTTLE BODY	Intake valve bent, burnt, or not seated properly	Inspect valve and valve seat. Reface or replace, as necessary. Inspect valve springs. Replace as necessary.
AIR ESCAPES THROUGH TAILPIPE	Exhaust valve bent, burnt, or not seated properly	Inspect valve and valve seat. Reface or replace, as necessary. Inspect valve springs. Replace as necessary.
AIR ESCAPES THROUGH RADIATOR	Head gasket leaking or cracked cylinder head or block	Remove cylinder head and inspect. Replace defective part.
MORE THAN 50% LEAKAGE FROM ADJACENT CYLINDERS	Head gasket leaking or crack in cylinder head or block between adjacent cylinders	Remove cylinder head and inspect. Replace gasket, head, or block as necessary.
MORE THAN 25% LEAKAGE AND AIR ESCAPES THROUGH OIL FILLER CAP OPENING ONLY	Stuck or broken piston rings; cracked piston; worn rings and/or cylinder wall	Inspect for broken rings or piston. Measure ring gap and cylinder diameter, taper and out-of-round. Replace defective part as necessary.

LUBRICATION

CONDITION	POSSIBLE CAUSES	CORRECTION
OIL LEAKS	1. Gaskets and O-Rings.	1. Replace as necessary.
	a. Misaligned or damaged.	a. Replace as necessary.
	b. Loose fasteners, broken or porous metal parts.	b. Tighten fasteners, Repair or replace metal parts.
	2. Crankshaft rear seal.	2. Replace as necessary.
	3. Crankshaft seal flange.	3. Polish or replace crankshaft.

	Scratched, nicked or grooved.	
	4. Oil pan flange cracked.	4. Replace oil pan.
	5. Front cover seal, damaged or misaligned.	5. Replace seal.
	6. Scratched or damaged vibration damper hub.	6. Polish or replace damper.
	7. Crankshaft Rear Flange Microporosity.	7. Replace Crankshaft.
OIL PRESSURE DROP	1. Low oil level.	1. Check and correct oil level.
	2. Faulty oil pressure sending unit.	2. Replace sending unit.
	3. Low oil pressure.	3. Check pump and bearing clearance.
	4. Clogged oil filter.	4. Replace oil filter.
	5. Worn oil pump.	5. Replace as necessary.
	6. Thin or diluted oil.	6. Change oil and filter.
	7. Excessive bearing clearance.	7. Replace as necessary.
	8. Oil pump relief valve stuck.	8. Replace oil pump.
	9. Oil pickup tube loose or damaged.	9. Replace as necessary.
OIL PUMPING AT RINGS; SPARK PLUGS FOULING	1. Worn or damaged rings.	1. Hone cylinder bores and replace rings.
	2. Carbon in oil ring slots.	2. Replace rings.
	3. Incorrect ring size installed.	3. Replace rings.
	4. Worn valve guides.	4. Ream guides and replace valves.
	5. Leaking intake gasket(s).	5. Replace intake gasket(s).
	6. Leaking valve guide seals.	6. Replace valve guide seals.

MECHANICAL

ENGINE MECHANICAL DIAGNOSIS CHART

CONDITION	POSSIBLE CAUSES	CORRECTION
NOISY VALVES/LIFTERS	1. High or low oil level in crankcase	1. Check for correct oil level. Adjust oil level by draining or adding as needed.
	2. Thin or diluted oil	2. Change oil. Refer to **Engine/Lubrication/OIL - Standard Procedure**.
	3. Low oil pressure	3. Check engine oil level. If ok, perform engine oil pressure test. Refer to **Engine/Lubrication - Diagnosis and Testing**.
	4. Dirt in tappets/lash adjusters	4. Clean/replace hydraulic tappets/lash adjusters.

	5. Bent push rod(s)	5. Install new push rods.
	6. Worn rocker arms	6. Inspect oil supply to rocker arms and replace worn arms as needed.
	7. Worn tappets/lash adjusters	7. Install new hydraulic tappets/lash adjusters.
	8. Worn valve guides	8. Inspect all valve guides and replace as necessary.
	9. Excessive runout of valve seats or valve faces	9. Grind valves and seats.
CONNECTING ROD NOISE	1. Insufficient oil supply	1. Check engine oil level.
	2. Low oil pressure	2. Check engine oil level. If ok, perform engine oil pressure test. Refer to **Engine/Lubrication - Diagnosis and Testing**.
	3. Thin or diluted oil	3. Change oil to correct viscosity. Refer to **Engine/Lubrication/OIL - Standard Procedure**.
	4. Excessive connecting rod bearing clearance	4. Measure bearings for correct clearance with plasti-gage. Repair as necessary.
	5. Connecting rod journal out of round	5. Replace crankshaft or grind journals.
	6. Misaligned connecting rods	6. Replace bent connecting rods.
MAIN BEARING NOISE	1. Insufficient oil supply	1. Check engine oil level.
	2. Low oil pressure	2. Check engine oil level. If ok, perform engine oil pressure test. Refer to **Engine/Lubrication - Diagnosis and Testing**.
	3. Thin or diluted oil	3. Change oil to correct viscosity.
	4. Excessive main bearing clearance	4. Measure bearings for correct clearance. Repair as necessary.
	5. Excessive end play	5. Check crankshaft thrust bearing for excessive wear on flanges.
	6. Crankshaft main journal out of round or worn	6. Grind journals or replace crankshaft.
	7. Loose flywheel or torque converter	7. Inspect crankshaft, flexplate/flywheel and bolts for damage. Tighten to correct torque.
LOW OIL PRESSURE	1. Low oil level	1. Check oil level and fill if necessary.
	2. Faulty oil pressure sending unit	2. Install new sending unit.
	3. Clogged oil filter	3. Install new oil filter.
	4. Worn oil pump	4. Replace oil pump assembly.
	5. Thin or diluted oil	5. Change oil to correct viscosity.

	6. Excessive bearing clearance	6. Measure bearings for correct clearance.
	7. Oil pump relief valve stuck	7. Remove valve to inspect, clean and reinstall.
	8. Oil pickup tube loose, broken, bent or clogged	8. Inspect oil pickup tube and pump, and clean or replace if necessary.
	9. Oil pump cover warped or cracked	9. Install new oil pump.
OIL LEAKS	1. Misaligned or deteriorated gaskets	1. Replace gasket
	2. Loose fastener, broken or porous metal part	2. Tighten, repair or replace the part.
	3. Front or rear crankshaft oil seal leaking	3. Replace seal.
	4. Leaking oil gallery plug or cup plug	4. Remove and reseal threaded plug. Replace cup style plug.
EXCESSIVE OIL CONSUMPTION OR SPARK PLUGS OIL FOULED	1. Defective valve stem seal(s)	1. Repair or replace seal(s).
	2. Worn or broken piston rings	2. Hone cylinder bores. Install new rings.
	3. Scuffed pistons/cylinder walls	3. Hone cylinder bores and replace pistons as required.
	4. Carbon in oil control ring groove	4. Remove rings and de-carbon piston.
	5. Worn valve guides	5. Inspect/replace valve guides as necessary.
	6. Piston rings fitted too tightly in grooves	6. Remove rings and check ring end gap and side clearance. Replace if necessary.

OIL CONSUMPTION TEST AND DIAGNOSIS

Diagnostic Procedure

The following diagnostic procedures are used to determine the source of excessive internal oil Consumption, these procedures and tests apply to vehicles with 50, 000 miles or less.

NOTE: Engine oil consumption may be greater than normal during engine break-in. Repairs should be delayed until vehicle has been driven at least 7, 500 miles.

Severe service (high ambient temperature, short trips, heavy loading, trailer towing, taxi, off-road, or law enforcement use) may result in greater oil consumption than normal.

Sustained high speed driving and high engine RPM operation may result in increased oil consumption.

Failure to comply with the recommended oil type and viscosity rating, as outlined in the owner's manual, may impact oil economy as well as fuel economy.

Oil consumption may increase with vehicle age and mileage due to normal engine wear.

NOTE: **Because a few drops of external oil leakage per mile can quickly account for the loss of one quart of oil in a few hundred miles, ensure no external engine oil leaks are present.**

- **Oil leakage is not the same as oil consumption and all external leakage must be eliminated before any action can be taken to verify and/or correct oil consumption complaints.**
- **Verify that the engine has the correct oil level dipstick and dipstick tube installed.**
- **Verify that the engine is not being run in an overfilled condition. Check the oil level 15 minutes after a hot shutdown with the vehicle parked on a level surface. In no case should the level be above MAX or the FULL mark on the dipstick.**

OIL CONSUMPTION TEST

1. Check the oil level at least 15 minutes after a hot shutdown.
2. If the oil level is low, top off with the proper viscosity and API service level engine oil. Add one bottle of MOPAR® 4-In-1 Leak Detection Dye into the engine oil.
3. Tamper proof the oil pan drain plug, oil filter, dipstick and oil fill cap.
4. Record the vehicle mileage.
5. Instruct the customer to drive the vehicle as usual.
6. Ask the customer to return to the servicing dealer after accumulating 500 miles, Check the oil level at least 15 minutes after a hot shutdown. If the oil level is half way between the "FULL" and "ADD" mark continue with the next step.
7. Using a black light, re-check for any external engine oil leaks, repair as necessary, if no external engine oil leaks are present, continue with oil consumption diagnosis.

OIL CONSUMPTION DIAGNOSIS

1. Check the Positive Crankcase Ventilation (PCV) system. Make sure the system is not restricted and the PCV valve has the correct part number and correct vacuum source (18-20 in. Hg at idle below 3000 ft. above sea level is considered normal).
2. Perform a **CYLINDER COMPRESSION PRESSURE LEAKAGE** test and **CYLINDER-TO-CYLINDER LEAKAGE TEST** using the standard leak down gauge following manufacturers suggested best practices.

   NOTE: **Verify the spark plugs are not oil saturated. If the spark plugs are oil saturated and compression is good it can be assumed the valve seals or valve guides are at fault.**

3. If one or more cylinders have more than 15% leak down further engine tear down and inspection will be required.

TOP 19 REASONS THAT MAY LEAD TO ENGINE OIL CONSUMPTION

1. **Tapered and Out-of-Round Cylinders**

   The increased piston clearances permit the pistons to rock in the worn cylinders. While tilted momentarily, an abnormally large volume of oil is permitted to enter on one side of the piston. The rings, also tilted in the cylinder, permit oil to enter on one side. Upon reversal of the piston on each stroke, some of this oil is passed into the combustion chamber.

2. **Distorted Cylinders**

   This may be caused by unequal heat distribution or unequal tightening of cylinder head bolts. This condition presents a surface which the rings may not be able to follow completely. In this case, there may be areas where the rings will not remove all of the excess oil. When combustion takes place, this oil will be burned and cause high oil consumption.

3. **Improper operation of "PCV "system**

   The main purpose of the Positive Crankcase Ventilation (PCV) valve is to recirculate blow-by gases back from the crankcase area through the engine to consume unburned hydrocarbons. The PCV system usually has a one way check valve and a make up air source. The system uses rubber hoses that route crankcase blow by gases to the intake manifold. Vacuum within the engine intake manifold pulls the blow by gases out of the crankcase into the combustion chamber along with the regular intake air and fuel mixture.

   The PCV system can become clogged with sludge and varnish deposits and trap blow by gases in the crankcase. This degrades the oil, promoting additional formation of deposit material. If left uncorrected, the result is plugged oil rings, oil consumption, rapid ring wear due to sludge buildup, ruptured gaskets and seals due to crankcase pressurization.

4. **Worn Piston Ring Grooves**

   For piston rings to form a good seal, the sides of the ring grooves must be true and flat - not flared or shouldered. Piston rings in tapered or irregular grooves will not seal properly and, consequently, oil will pass around behind the rings into the combustion chamber.

5. **Worn, Broken or Stuck Piston Rings**

   When piston rings are broken, worn or stuck to such an extent that the correct tension and clearances are not maintained, this will allow oil to be drawn into the combustion chamber on the intake stroke and hot gases of combustion to be blown down the cylinder past the piston on the power stroke. All of these conditions will result in burning and carbon build up of the oil on the cylinders, pistons and rings.

6. **Cracked or Broken Ring Lands**

   Cracked or broken ring lands prevent the rings from seating completely on their sides and cause oil pumping. This condition will lead to serious damage to the cylinders as well as complete destruction of the pistons and rings. Cracked or broken ring lands cannot be corrected by any means other than piston replacement.

7. **Worn Valve Stems and Guides**

   When wear has taken place on valve stems and valve guides, the vacuum in the intake manifold will draw oil and oil vapor between the intake valve stems and guides into the intake manifold and then into the cylinder where it will be burned.

8. **Bent or Misaligned Connecting Rods**

   Bent or misaligned connecting rods will not allow the pistons to ride straight in the cylinders. This will prevent the pistons and rings from forming a proper seal with the cylinder walls and promote oil consumption. In addition, it is possible that a bearing in a bent connect rod will not have uniform clearance on the connecting rod wrist pin. Under these conditions, the bearing will wear rapidly and throw off an excessive amount of oil into the cylinder.

9. **Fuel Dilution**

   If raw fuel is allowed to enter the lubrication system, the oil will become thinner and more volatile and will result in higher oil consumption. The following conditions will lead to higher oil consumption;

   - Excess fuel can enter and mix with the oil via a leaking fuel injector
   - Gasoline contaminated with diesel fuel
   - Restricted air intake
   - Excessive idling

10. **Contaminated Cooling Systems**

    Corrosion, rust, scale, sediment or other formations in the water jacket and radiator will prevent a cooling system from extracting heat efficiently. This is likely to cause cylinder distortion thus leading to higher oil consumption.

11. **Oil Viscosity**

    The use of oil with a viscosity that is too light may result in high oil consumption. Refer to the vehicle owner's manual for the proper oil viscosity to be used under specific driving conditions and/or ambient temperatures.

12. **Dirty Engine Oil**

    Failure to change the oil and filter at proper intervals may cause the oil to be so dirty that it will promote accumulation of sludge and varnish and restrict oil passages in the piston rings and pistons. This will increase oil consumption; dirty oil by nature is also consumed at a higher rate than clean oil.

13. **Crankcase Overfull**

    Due to an error in inserting the oil dip stick so that it does not come to a seat on its shoulder, a low reading may be obtained. Additional oil may be added to make the reading appear normal with the stick in this incorrect position which will actually make the oil level too high. If the oil level is so high that the

lower ends of the connecting rods touch the oil in the oil pan excessive quantities of oil will be thrown on the cylinder walls and some of it will work its way up into the combustion chamber.

14. **Excessively High Oil Pressure**

    A faulty oil pressure relief valve may cause the oil pressure to be too high. The result will be that the engine will be flooded with an abnormally large amount of oil in a manner similar to that which occurs with worn bearings. This condition may also cause the oil filter to burst.

15. **Aftermarket Performance Chips and Modification**

    Increasing performance through the use of performance/power enhancement products to a stock or factory engine will increase the chance of excessive oil consumption.

16. **Lugging Engine**

    Lugging is running the engine at a lower RPM in a condition where a higher RPM (more power/torque) should be implemented. Especially susceptible on vehicles equipped with a manual transmission. This driving habit causes more stress loading on the piston and can lead to increases in engine oil consumption.

17. **Turbocharged Engines**

    There is a possibility for PCV "push-over" due to higher crankcase pressure (as compared to naturally aspirated engines) which is normal for turbocharged engines. This condition causes varying amounts of engine oil to enter the intake manifold, charge air cooler and associated plumbing to and from the charge air cooler, also a leaking turbocharger seal will draw oil into the combustion chamber where it will burn (blue smoke from tail pipe may be present) and form carbon deposits which contribute to further oil consumption as they interfere with proper engine function.

18. **Restricted Air Intake**

    Excessive restriction in the air intake system will increase engine vacuum and can increase oil consumption, an extremely dirty air filter would be one example of this situation.

19. **Intake Manifold port seals**

    Engines that have a "V" configuration and a "wet valley" could draw oil into the intake ports due to improper sealing between the intake manifold ports and cylinder head. Causes may include improper torque of intake manifold bolts, corrosion (aluminum intake manifold) and or warped sealing surface.

STANDARD PROCEDURE

DUST COVERS AND CAPS

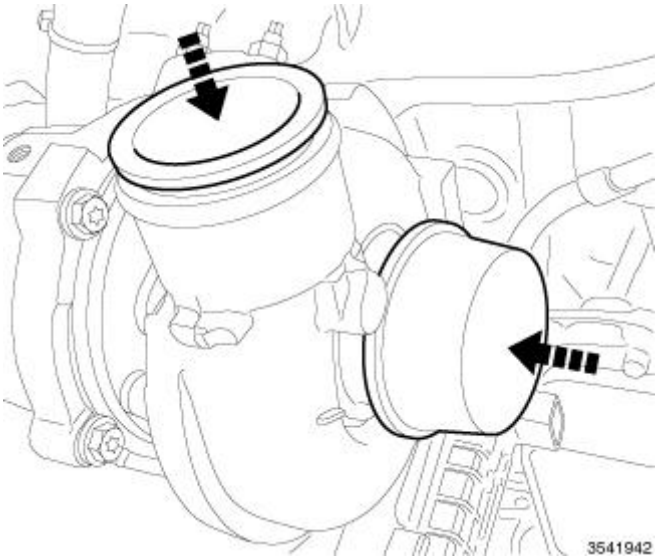

Fig. 1: Covers/Caps
Courtesy of CHRYSLER GROUP, LLC

Due to the high amounts of failures cased by dust, dirt, moisture and other foreign debris being introduced to the engine during service. Covers or caps are needed to reduce the possible damage that can be caused or created.

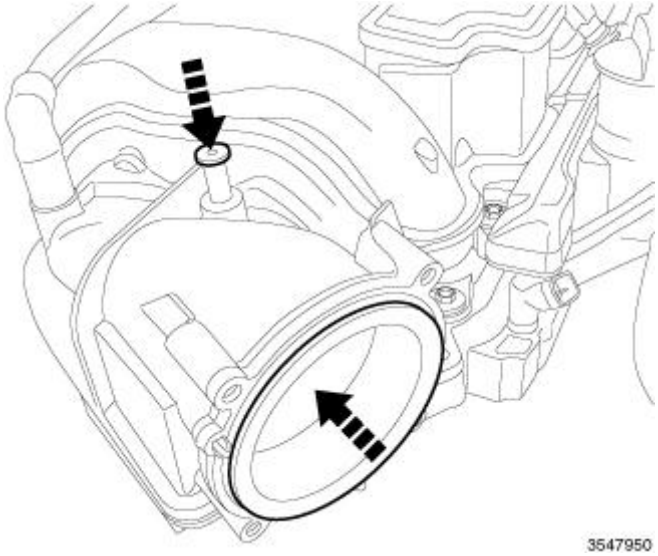

Fig. 2: Opening Cover
Courtesy of CHRYSLER GROUP, LLC

Covers over openings will reduce any possibilities for foreign materials to enter the engine systems. Using miller tool (special tool #10368, Set, Universal Protective Cap), Select the appropriated cover needed to the procedure.

REPAIR DAMAGED OR WORN THREADS

CAUTION: Be sure that the tapped holes maintain the original center line.

Damaged or worn threads can be repaired. Essentially, this repair consists of:

- Drilling out worn or damaged threads.
- Tapping the hole with a special Heli-Coil Tap.
- Installing an insert into the tapped hole to bring the hole back to its original thread size.

HYDROSTATIC LOCK

CAUTION: Do not attempt to run engine. Severe damage could occur.

When an engine is suspected of hydrostatic lock (regardless of what caused the problem), follow the steps below.

1. Perform the Fuel Pressure Release Procedure. Refer to **FUEL SYSTEM PRESSURE RELEASE** .
2. Disconnect the negative battery cable(s) from the battery.
3. Inspect air cleaner, induction system, and intake manifold to make sure the system is dry and clear of foreign material.
4. Place a shop towel around the spark plugs to catch any fluid that may possibly be under pressure in the cylinder head. Remove the spark plugs.
5. With all spark plugs removed, rotate the crankshaft using a breaker bar and socket.
6. Identify the fluid in the cylinders (coolant, fuel, oil).
7. Make sure all fluid has been removed from the cylinders.
8. Repair engine or components as necessary to prevent this problem from occurring again.
9. Squirt a small amount of engine oil into the cylinders to lubricate the walls. This prevents damage on restart.
10. Install new spark plugs. Tighten the spark plugs to 41 N.m (30 ft. lbs.).
11. Drain engine oil. Remove and discard the oil filter.
12. Install the drain plug. Tighten the plug to 34 N.m (25 ft. lbs.).
13. Install a new oil filter.
14. Fill the engine crankcase with the specified amount and grade of oil. Refer to **CAPACITIES AND RECOMMENDED FLUIDS, SPECIFICATIONS** .
15. Connect the negative battery cable(s).
16. Start the engine and check for any leaks.

FORM-IN-PLACE GASKETS AND SEALERS

NOTE: All sealants mentioned below are not used on every engine, they are listed as general reference guide. See service information for specific sealer usage.

There are numerous places where form-in-place gaskets are used on the engine. Care must be taken when applying form-in-place gaskets to assure obtaining the desired results.**Do not use form-in-place gasket material unless specified.** Bead size, continuity, and location are of great importance. Too thin of a bead can result in leakage while too much can result in spill-over which can break off and obstruct fluid feed lines. A continuous bead of the proper width is essential to obtain a leak-free gasket. All sealing surfaces that use form-in-place gaskets and sealers must be free of grease or oil. Clean surfaces with Mopar® brake parts cleaner prior to sealer application. After the sealer is applied, assemble the parts within 10 minutes.

Numerous types of form-in-place gasket materials are used in the engine area. Mopar® Sealant RTV Silicone Rubber Adhesive, MOPAR® Silicone Rubber RTV, Mopar® ATF-RTV and Mopar® Gasket Maker gasket materials, each have different properties and cannot be used in place of the other.

MOPAR® SEALANT RTV SILICONE RUBBER ADHESIVE is used to seal components exposed to engine oil. This material is a specially designed black silicone rubber RTV that retains adhesion and sealing properties when exposed to engine oil. Moisture in the air causes the material to cure. This material is available in three ounce tubes and has a shelf life of one year. After one year this material will not properly cure. Always inspect the package for the expiration date before use.

MOPAR® SILICONE RUBBER RTV is used to seal components exposed to engine oil, gear lubricant, and coolant. This material is a specially designed gray silicone rubber RTV that retains adhesion and sealing properties when exposed to engine oil, gear lubricant and coolant. Excellent adhesion even on oily surfaces, withstands temperatures to 330° C (626° F). Moisture in the air causes the material to cure. This material is available in three ounce tubes and has a shelf life of one year. After one year this material will not properly cure. Always inspect the package for the expiration date before use.

MOPAR® ATF-RTV is a specially designed black silicone rubber RTV that retains adhesion and sealing properties to seal components exposed to automatic transmission fluid, engine coolants, and moisture. This material is available in three ounce tubes and has a shelf life of one year. After one year this material will not properly cure. Always inspect the package for the expiration date before use.

MOPAR® GASKET MAKER is an anaerobic type gasket material. The material cures in the absence of air when squeezed between two metallic surfaces. It will not cure if left in the uncovered tube. The anaerobic material is for use between two machined surfaces. Do not use on flexible metal flanges.

MOPAR® GASKET SEALANT is a slow drying, permanently soft sealer. This material is recommended for sealing threaded fittings and gaskets against leakage of oil and coolant. It can be used on threaded and machined parts under all temperatures. This material also prevents corrosion. Mopar® Gasket Sealant is available in a 13 oz. aerosol can or in a 4 oz. or 6 oz. can with applicator.

SEALER APPLICATION

Apply 1 mm (0.040 in.) diameter or less of Mopar® Gasket Maker material to one gasket surface. Be certain the material surrounds each mounting hole. Excess material can easily be wiped off. Tighten the components in place within 15 minutes. Use a locating dowel during assembly to prevent smearing material off the location.

Apply Mopar® RTV or ATF-RTV gasket material in a continuous bead approximately 3 mm (0.120 in.) in diameter. For corner sealing and "T-Joint" locations and waffle pad area, a 0.635 mm (0.025 in.) drop is placed in the center of the gasket contact area. Remove uncured sealant with a shop towel. Tighten the components in

place while the sealant is still wet to the touch (within 10 minutes). Use a locating dowel during assembly to prevent smearing material off the location.

SPECIFICATIONS

SPECIFICATIONS

EAGLE ENGINE - 90° V-8 OHV

EAGLE ENGINE - 90° V-8 OHV

DESCRIPTION	SPECIFICATION	
	Metric	Standard
Displacement	5.7 Liters	348 CID
Bore	99.5 mm	3.92 in.
Stroke	90.9 mm	3.58 in.
Compression Ratio	10.5:1	
Max. Variation Between Cylinders	25%	
Firing Order	1-8-4-3-6-5-7-2	
Lubrication	Pressure Feed - Full Flow Filtration	
Cooling System	Liquid Cooled	
Cylinder Block	Cast Iron	
Cylinder Head	Aluminum	
Crankshaft	Nodular Iron	
Camshaft	Cast Iron	
Pistons	Aluminum Alloy	
Connecting Rods	Powdered Metal	

CYLINDER BLOCK

CYLINDER BLOCK

DESCRIPTION	SPECIFICATION	
	Metric	Standard
Cylinder Bore Diameter	99.50 mm	3.92 in.
Out of Round (MAX)	0.0076 mm	0.0003 in.
Taper (MAX)	0.0127 mm	0.0005 in.
Lifter Bore Diameter	21.45 - 21.425 mm	0.8444 - 0.8435 in.

PISTONS & PINS

PISTONS

DESCRIPTION	SPECIFICATION	
	Metric	Standard
Clearance		

Measured at 38.0 mm (1.5 in.) Below Deck	0.031 - 0.058 mm	0.012 - 0.023 in.
Ring Groove Diameter		
Top Groove	90.4 - 90.6 mm	3.56 - 3.57 in.
Second Groove	88.4 - 88.7 mm	3.48 - 3.49 in.
Weight	413 grams	14.56 oz
Piston Length	53.3 mm	2.10 in.
Ring Groove Width		
No. 1	1.23 - 1.26 mm	0.048 - 0.0496 in
No. 2	1.23 - 1.25 mm	0.048 - 0.0492 in.
No. 3	2.03 - 2.05 mm	0.079 - 0.080 in.

PISTON PINS

DESCRIPTION	SPECIFICATION	
	Metric	**Standard**
Clearance In Piston	0.005 - 0.014 mm	0.0001 - 0.0005 in.
Diameter	24.004 - 24.007 mm	0.945 - 0.9451 in.
Length	62.99 - 63.21 mm	2.47 - 2.48 in.

PISTON RINGS

PISTON RINGS

DESCRIPTION	SPECIFICATION	
	Metric	**Standard**
Ring Gap		
Top Compression Ring	0.40 - 0.55 mm	0.015 - 0.021 in.
Second Compression Ring	0.24 - 0.51 mm	0.009 - 0.020 in.
Oil Control Rails	0.15 - 0.66 mm	0.0059 - 0.0259 in.
Side Clearance		
Top Compression Ring	0.04 - 0.09 mm	0.001 - 0.0035 in.
Second Compression Ring	0.04 -.08 mm	0.001 - 0.0031 in.
Oil Control Rails	0.06 - 0.21 mm	0.002 - 0.008 in.
Ring Width		
Top Compression Ring	1.17 - 1.19 mm	0.0460 - 0.0468 in.
Second Compression Ring	1.17 - 1.19 mm	0.0460 - 0.0468 in.
Oil Control Rails	0.387 - 0.413 mm	0.015 - 0.016 in.

CONNECTING RODS

CONNECTING RODS

DESCRIPTION	SPECIFICATION	
	Metric	**Standard**

Piston Pin Bore Diameter	24.014 - 24.024 mm	0.9454 - 0.9458 in.
Side Clearance	0.10 - 0.35 mm	0.003 - 0.0137 in.

CRANKSHAFT

CRANKSHAFT

DESCRIPTION	SPECIFICATION	
	Metric	**Standard**
Main Bearing Journal Diameter	64.988 - 65.012 mm	2.5585 - 2.5595 in.
Bearing Clearance	0.023 - 0.051 mm	0.0009 - 0.002 in.
Out of Round (MAX)	0.005 mm	0.0002 in.
Taper (MAX)	0.003 mm	0.0001 in.
End Play	0.052 - 0.282 mm	0.002 - 0.011 in.
End Play (MAX)	0.282 mm	0.011 in.
Connecting Rod Journal Diameter	53.992 - 54.008 mm	2.126 in.
Bearing Clearance	0.020 - 0.060 mm	0.0007 - 0.0023 in.
Out of Round (MAX)	0.005 mm	0.0002 in.
Taper (MAX)	0.003 mm	0.0001 in.

CAMSHAFT

CAMSHAFT

DESCRIPTION	SPECIFICATION	
	Metric	**Standard**
Bearing Journal Diameter		
No. 1	58.2 mm	2.29 in.
No. 2	57.8 mm	2.28 in.
No. 3	57.4 mm	2.26 in.
No. 4	57.0 mm	2.24 in.
No. 5	43.633 mm	1.72 in.
Bearing To Journal Clearance Standard		
No. 1	0.040 - 0.080 mm	.0015 -.003 in.
No. 2	0.050 -0.090 mm	0.0019 -.0035 in.
No. 3	0.040 - 0.080 mm	.0015 -.003 in.
No. 4	0.050 - 0.090 mm	0.0019 -.0035 in.
No. 5	0.040 - 0.080 mm	.0015 -.003 in.
Camshaft End Play	.080 - 0.290 mm	0.0031 - 0.0114 in.

VALVE TIMING

VALVE TIMING

DESCRIPTION	SPECIFICATION

Intake	
Opens (BTDC)	28.2°
Closes (ATDC)	239.8°
Duration	268°
Exhaust	
Opens (BTDC)	274.2°
Closes (ATDC)	15.8°
Duration	290°
Valve Overlap	44°

CYLINDER HEAD

CYLINDER HEAD

DESCRIPTION	SPECIFICATION	
	Metric	**Standard**
Valve Seat Angle	44.5° - 45.0°	
Valve Seat Runout (MAX)	0.05 mm	0.0019 in.
Valve Seat Width (finish)		
Intake	1.18 - 1.62 mm	.0638 in.
Exhaust	1.48 - 1.92 mm	0.0583 - 0.0756 in.
Guide Bore Diameter (Std.)	7.975 - 8.00 mm	0.3134 - 0.315 in.

HYDRAULIC TAPPETS

HYDRAULIC TAPPETS

DESCRIPTION	SPECIFICATION	
	Metric	**Standard**
Body Diameter	21.387 - 21.405 mm	0.8420 - 0.8427 in.
Clearance (to bore)	0.020 - 0.063 mm	0.0008 - 0.0025 in.
Dry Lash	3.0 mm (at the valve)	0.1181 in. (at the valve)

VALVES

VALVES

DESCRIPTION	SPECIFICATION	
	Metric	**Standard**
Face Angle	45.0° - 45.5°	
Head Diameter		
Intake	50.67 - 50.93 mm	1.99 - 2.01 in.
Exhaust	39.27 - 39.53 mm	1.55 - 1.56 in.
Length (overall)		
Intake	123.38 - 123.76 mm	4.857 - 4.872 in.

Exhaust	120.475 - 120.855 mm	4.743 - 4.758 in.
Stem Diameter		
Intake	7.935 - 7.953 mm	0.312 - 0.313 in.
Exhaust	7.932 - 7.950 mm	0.312 - 0.313 in.
Stem - to - Guide Clearance		
Intake	0.022 - 0.065 mm	0.0008 - 0.0025 in.
Exhaust	0.025 - 0.065 mm	0.0009 - 0.0025 in.
Valve Lift (@ zero lash)		
Intake	12.0 mm	0.472 in.
Exhaust	11.70 mm	0.460 in.

VALVE SPRING

VALVE SPRING

DESCRIPTION	SPECIFICATION	
	Metric	**Standard**
Spring Force (valve closed)	435.0 N +/- 22.0 N @ 45 mm	97.8 lbs +/- 5.0 lbs. @ 1.771 in.
Spring Force (valve open)	1077.0 N +/- 48.0 N @ 32.6 mm.	242.0 lbs. +/- 11 lbs. @ 1.283 in.
Free Length (approx).	55.6 mm	2.189 in.
Number of Coils	7.95	
Wire Diameter	4.95 X 4.1 mm	0.194 - 0.161 in.
Installed Height (spring seat to bottom of retainer)	46.0 mm	1.81 in.

OIL PUMP

OIL PUMP

DESCRIPTION	SPECIFICATION	
	Metric	**Standard**
Clearance Over Rotors (MAX)	0.095 mm	0.0038 in.
Outer Rotor to Pump Body Clearance (MAX)	.235 mm	0.009 in.
Tip Clearance Between Rotors (MAX)	0.150 mm	0.006 in.

OIL PRESSURE

OIL PRESSURE

DESCRIPTION	SPECIFICATION	
	Metric	**Standard**
At Curb Idle Speed (MIN)*	25 kPa	4 psi
@ 3000 rpm	170 - 758 kPa	25 - 110 psi
*** CAUTION: If pressure is zero at curb idle, DO NOT run engine.**		

TORQUE SPECIFICATIONS

5.7L ENGINE

DESCRIPTION	N.m	Ft. Lbs.	In. Lbs.
Block Pipe Plugs (1/4 - 18 NPT) Oil Galley Plug	20	15	-
(1/4 - 18 NPT) Coolant Drain Plug	34	25	-
(3/8 NPT)	27	20	240
Camshaft Phaser Bolt	85	63	-
Timing Drive Tensioner Bolts	11	-	97
Timing Drive Guide Bolts	11	-	97
Camshaft Thrust Plate Bolts	12	-	106
Camshaft Sprocket Bolt	122	90	-
Coil to Cylinder Head Cover Bolts	7	-	62
Timing Chain Case Cover Bolts	28	21	-
Lifting Stud	55	41	-
Connecting Rod Cap Bolts	21 Plus 90° Turn	15 Plus 90° Turn	-
Main Bearing Cap Bolts	See **CRANKSHAFT, INSTALLATION, 5.7L** Procedure.		
Cylinder Head Bolts	See **CYLINDER HEAD, INSTALLATION, 5.7L** Procedure.		
Cylinder Head Cover Bolts	8	-	71
Exhaust Manifold to Cylinder Head	25	18	220
Flexplate to Crankshaft Bolts	95	70	-
Flywheel to Crankshaft Bolts	75	55	-
Front Engine Mount Through Bolt and Nut	130	96	-
Front Engine Mount Heat Shield Nut	55	41	-
Front Engine Mount to Support Bracket			
Through Bolts to Axle Pinion Housing (4WD)	120	89	-
Through Bolts to Axle Housing (4WD)	110	81	-

Engine Mount Brackets to Block Bolts	64	47	-
Front Engine Mount to Block Bolts (2WD)	64	47	-
Generator Mounting Bolt	55	41	-
Intake Manifold Bolts	Refer to **MANIFOLD, INTAKE, INSTALLATION, 5.7L** Procedure.		
Lifter Guide Holder	12	9	-
Oil Pan Bolts	12	9	-
Oil Dipstick Tube	12	9	-
Oil Pan Drain Plug	34	25	-
Oil Pump Bolts	28	21	-
Oil Pump Pickup Tube Bolt and Nut	28	21	-
Rear Seal Retainer Bolts	15	11	-
Rear Insulator to Support Bracket Nut	61	45	-
Rear Insulator to Crossmember Nut	61	45	-
Support Bracket Bolt	64	47	-
Rear Support Bracket to Crossmember Flange Nuts Crossmember Flange Nuts	41	30	-
Rear Support Plate to Transfer Case Bolts Case Bolts	41	30	-
Rocker Arm Bolts	22	16	-
Thermostat Housing Bolts	28	21	-
Throttle Body Bolts	12	9	-
Transfer Case to Insulator Bolts Mounting Plate Nuts	204	150	-
Transmission Support Bracket Bolts (2WD)	68	50	-
Vibration Damper Bolt	176	130	-
Water Pump to Timing Chain Case Cover Bolts	28	21	-

REMOVAL

REMOVAL

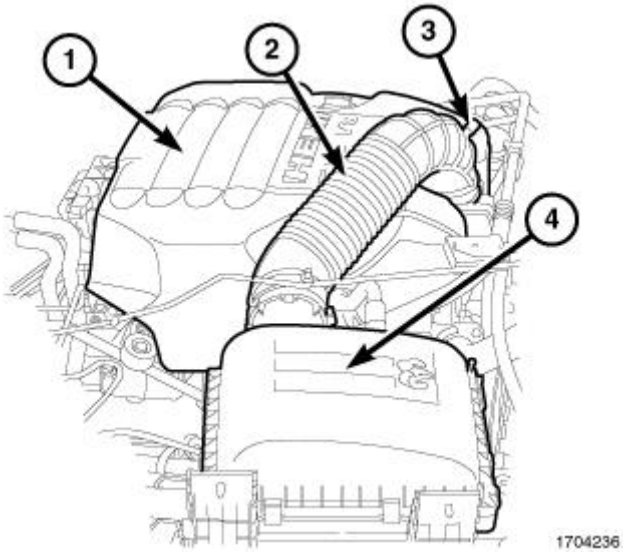

Fig. 3: Engine Cover, Clean Air Hose, Intake Air Temperature (IAT) Sensor Electrical Connector & Air Cleaner Housing
Courtesy of CHRYSLER GROUP, LLC

1. Remove the Hood. Refer to **HOOD, REMOVAL** .
2. Disconnect the intake air temperature (IAT) sensor electrical connector (3).
3. Remove the clean air hose (2).
4. Remove the engine cover (1). Refer to **COVER, ENGINE, REMOVAL, 5.7L**.
5. Remove the air cleaner housing (4)
6. Perform the Fuel System Pressure Release procedure. Refer to **FUEL SYSTEM PRESSURE RELEASE** .

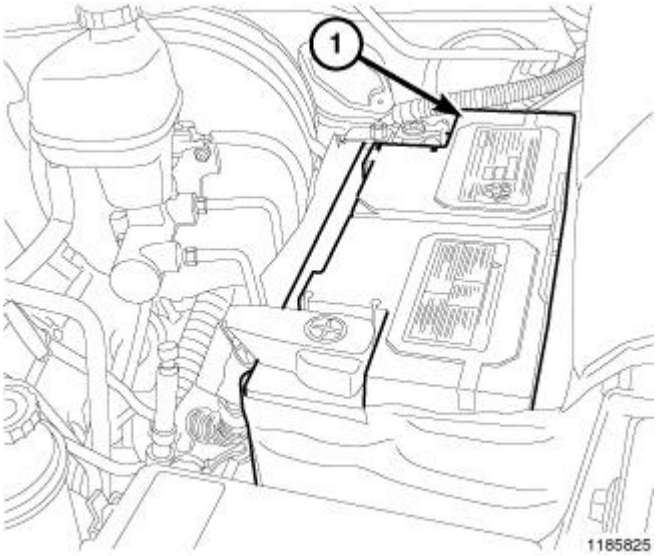

Fig. 4: Negative Battery Cable
Courtesy of CHRYSLER GROUP, LLC

7. Disconnect the negative battery cable (1).

WARNING: Do not remove or loosen the radiator draincock with system hot and under pressure. Serious burns from coolant can occur.

8. Drain the cooling system. Refer to **STANDARD PROCEDURE** .

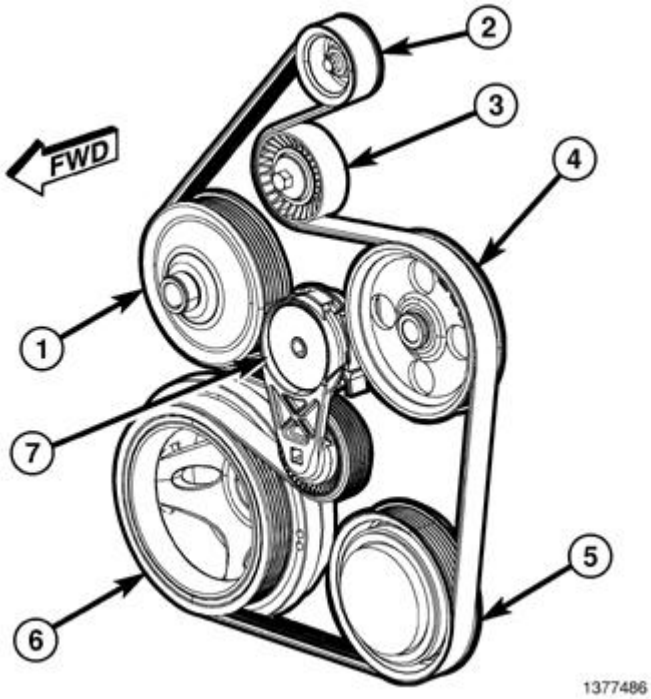

Fig. 5: Accessory Drive Belt Routing, Tensioner & Pulleys
Courtesy of CHRYSLER GROUP, LLC

CAUTION: Do not let the tensioner arm snap back to the free arm position, severe damage may occur to the tensioner.

9. Insert a suitable square drive ratchet into the square hole on the belt tensioner arm (7).
10. Release the belt tension by rotating the tensioner (7) clockwise until the accessory drive belt (4) can be removed from the generator pulley only.

CAUTION: Do not place the viscous fan drive in horizontal position. If stored horizontally, silicone fluid in the viscous fan drive could drain into its bearing assembly and contaminate lubricant.

11. Remove the viscous fan drive assembly. Refer to **FAN, COOLING, ELECTRIC, REMOVAL** or **FAN, COOLING, VISCOUS, REMOVAL** .
12. Recover the refrigerant system. Refer to **PLUMBING, STANDARD PROCEDURE** .

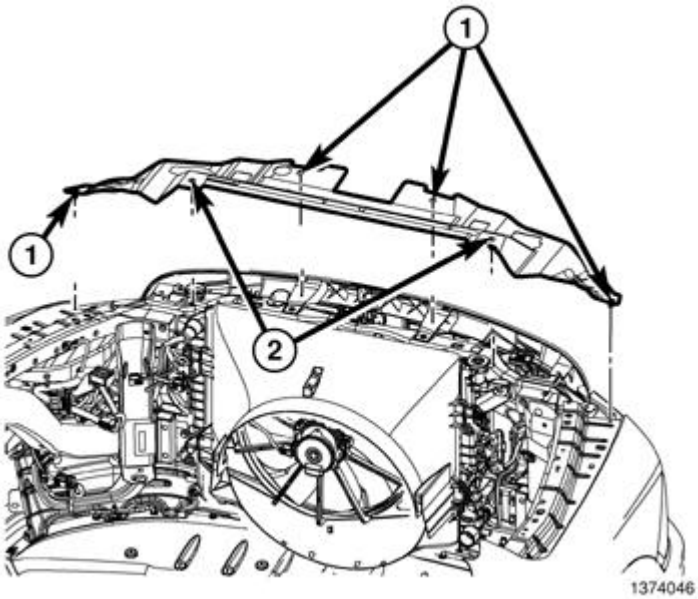

Fig. 6: Upper Radiator Seal & Plastic Rivets
Courtesy of CHRYSLER GROUP, LLC

13. Remove the upper radiator seal four push pins (1).
14. Remove the two plastic rivets (2) and remove the upper radiator seal.
15. Remove the fan shroud mounting bolts and pull the shroud up and out of the radiator tank clips.
16. Remove the radiator and A/C condenser as an assembly from the vehicle. Refer to **RADIATOR, ENGINE COOLING, REMOVAL** .

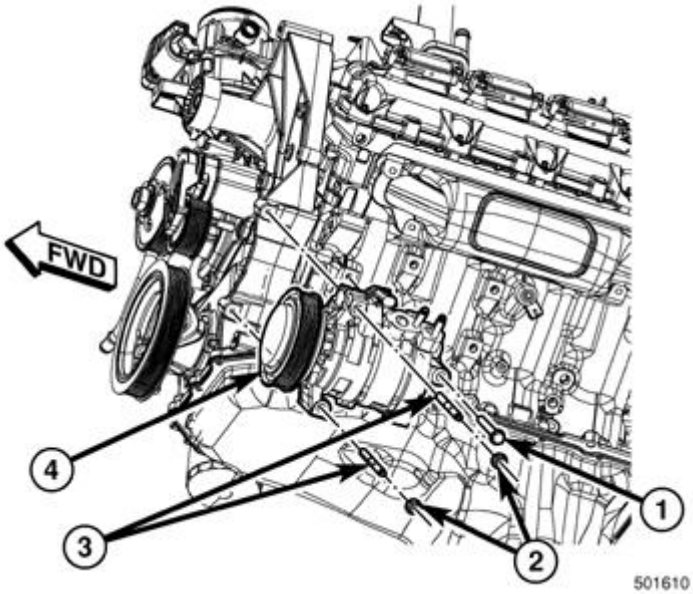

Fig. 7: A/C Compressor & Fasteners
Courtesy of CHRYSLER GROUP, LLC

17. Remove the A/C compressor (4). Refer to **COMPRESSOR, A/C, REMOVAL** .

18. Disconnect the generator electrical connectors and remove the generator assembly. Refer to **GENERATOR, REMOVAL** .

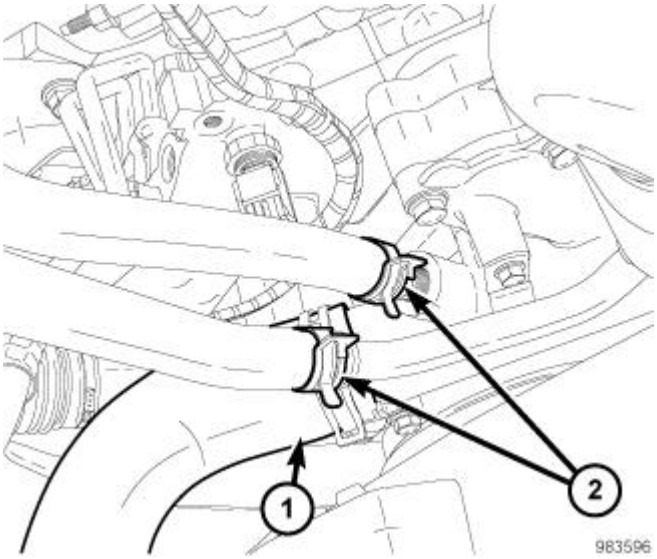

Fig. 8: Lower Radiator Hose & Heater Hoses
Courtesy of CHRYSLER GROUP, LLC

19. Disconnect the heater hoses (2) and lower radiator hose (1).

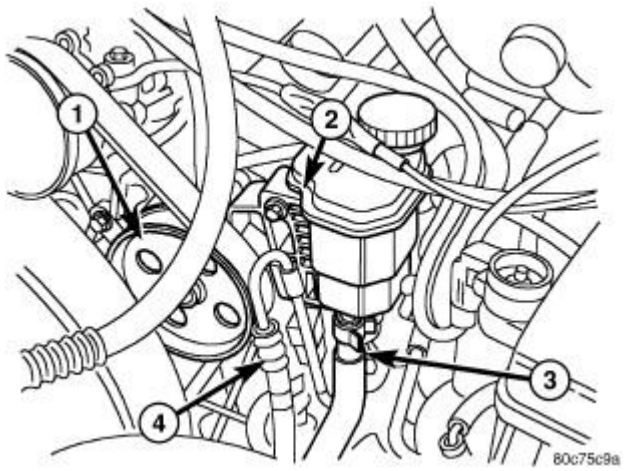

Fig. 9: Power Steering Pulley, Reservoir & Hoses
Courtesy of CHRYSLER GROUP, LLC

NOTE: **It is not necessary to disconnect the power steering hoses from the power steering pump, for power steering pump removal.**

20. Remove the three bolts securing the power steering pump through the holes in the pulley (1) and secure the power steering pump out of the way.
21. Disconnect the fuel supply line. Refer to **STANDARD PROCEDURE - QUICK-CONNECT**

FITTINGS .

22. Raise and support the vehicle on a hoist and drain the engine oil.

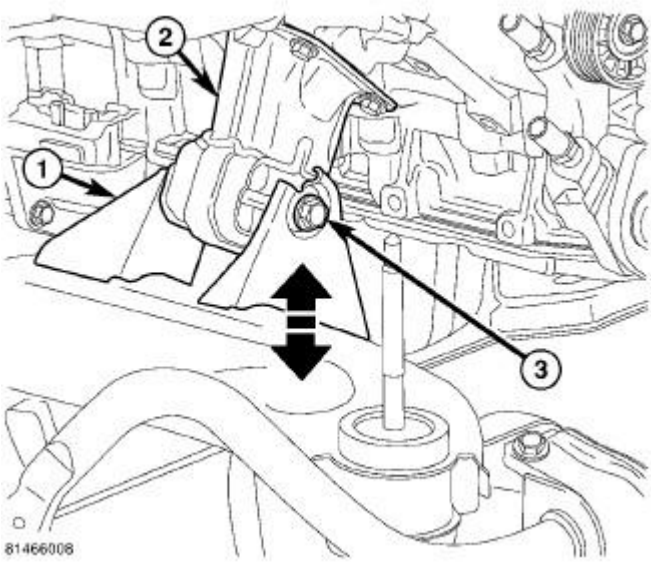

Fig. 10: Engine Mount & Bolt
Courtesy of CHRYSLER GROUP, LLC

23. Remove the front engine mount through bolts (3).
24. Disconnect the transmission oil cooler lines from their retainers at the oil pan bolts.

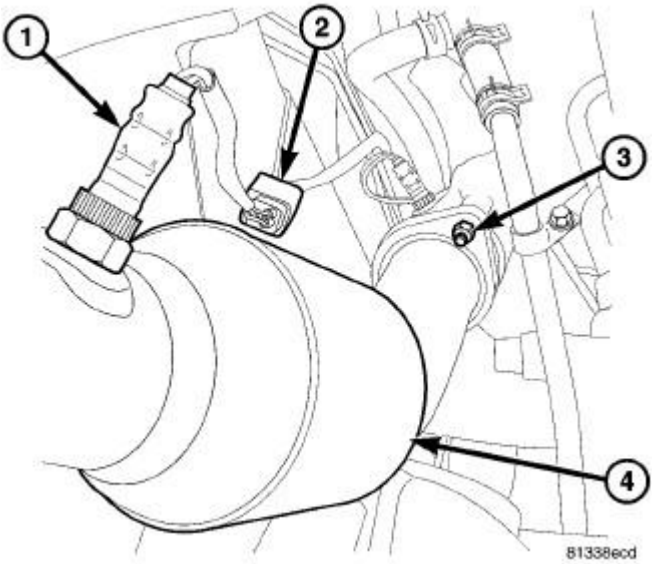

Fig. 11: Oxygen Sensor, Oxygen Sensor Connector, Ball Flange Nut & LH Catalytic Converter
Courtesy of CHRYSLER GROUP, LLC

CAUTION: When servicing or replacing exhaust system components,

disconnect the oxygen sensor connector(s). Allowing the exhaust to hang by the oxygen sensor wires will damage the harness and/or sensor.

25. Disconnect the oxygen sensor electrical connectors (2).
26. Saturate all exhaust bolts and nuts with Mopar® Rust Penetrant. Allow 5 minutes for penetration.
27. Remove the exhaust pipe to manifold bolts (3) (left side shown in illustration, right side similar) and disconnect the front exhaust pipe/catalytic converter assembly (4) at the exhaust manifolds.

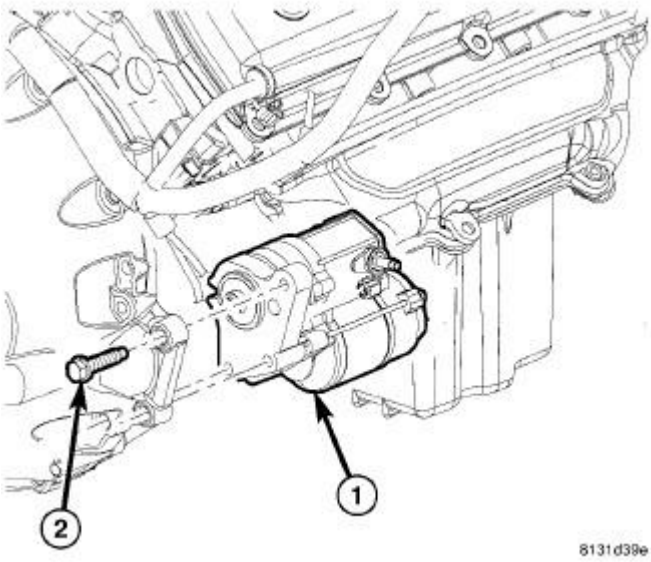

Fig. 12: Starter & Fasteners
Courtesy of CHRYSLER GROUP, LLC

28. Disconnect the starter wires and remove the starter (1). Refer to **STARTER, REMOVAL** .

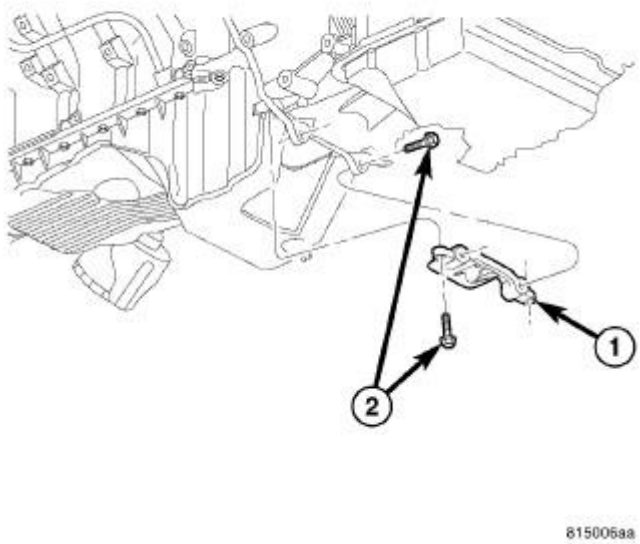

Fig. 13: Structural Dust Cover
Courtesy of CHRYSLER GROUP, LLC

29. Remove the transmission inspection and structural dust covers (2). Refer to **COVER, STRUCTURAL DUST, REMOVAL, 5.7L**.

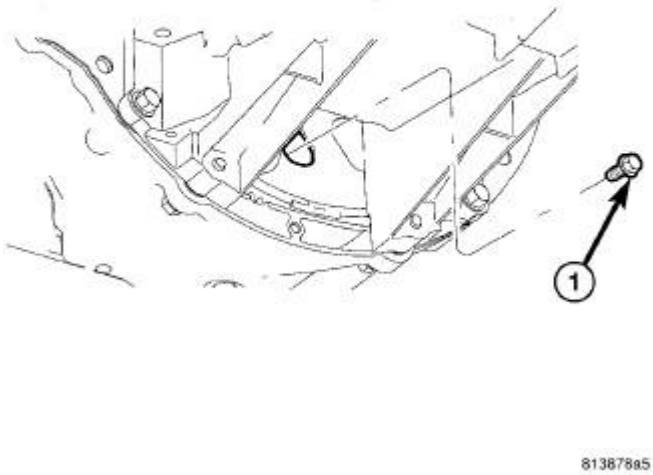

Fig. 14: Drive Plate Torque Converter Bolts
Courtesy of CHRYSLER GROUP, LLC

30. Remove the drive plate to converter bolts (Automatic transmission equipped vehicles).

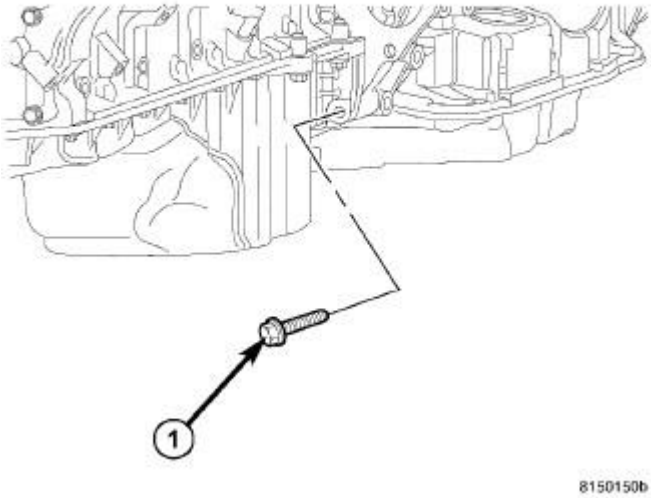

Fig. 15: Oil Pan To Transmission Bolts
Courtesy of CHRYSLER GROUP, LLC

31. Remove both the left and right side oil pan to transmission bolts (1).

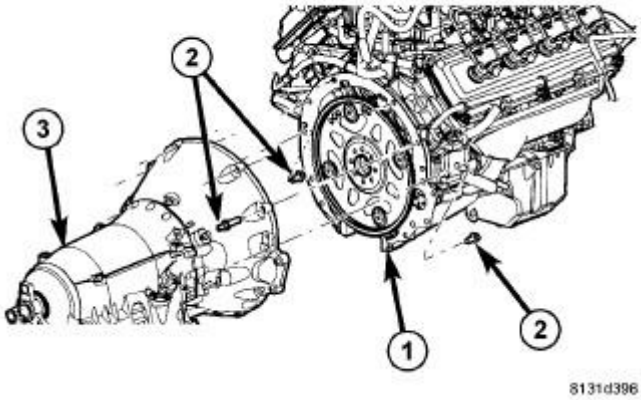

Fig. 16: Remove/Install Transmission To Engine Bolts
Courtesy of CHRYSLER GROUP, LLC

32. Remove the transmission bell housing to engine block bolts (2).
33. Lower the vehicle.
34. Remove the intake manifold. Refer to **MANIFOLD, INTAKE, REMOVAL, 5.7L**.

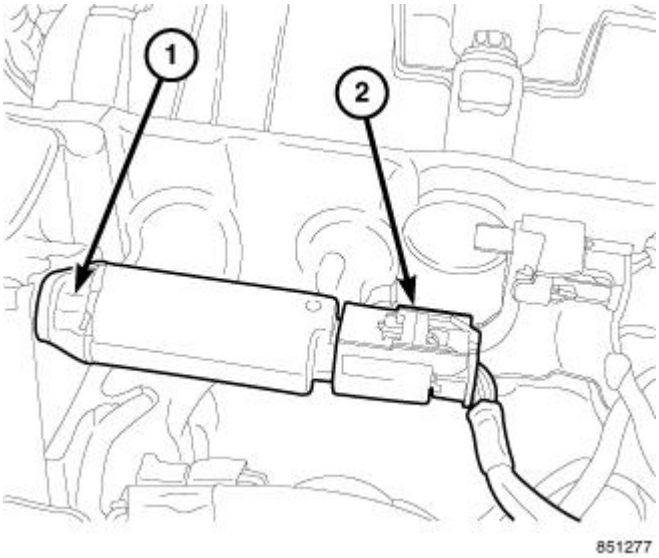

Fig. 17: Oil Control Valve
Courtesy of CHRYSLER GROUP, LLC

NOTE: To remove the oil control valve, the engine must be at room temperature.

35. Remove the oil control valve (OCV) electrical connector (2).
36. Remove the oil control valve (OCV) retaining bolt (1) and remove the OCV.

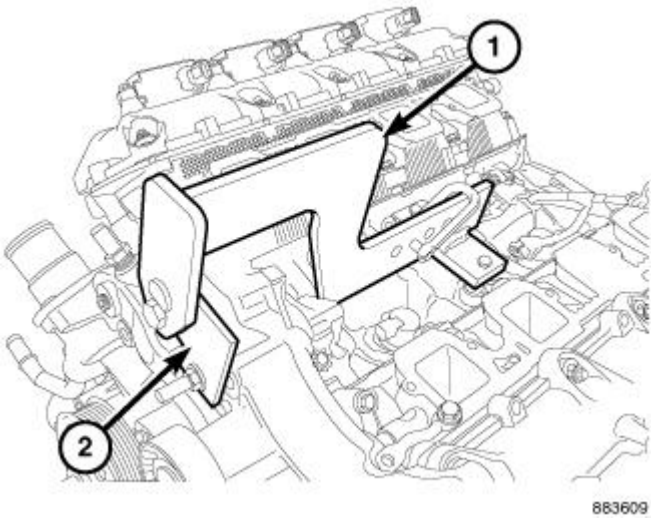

Fig. 18: Engine Lift Fixture & Adapter
Courtesy of CHRYSLER GROUP, LLC

NOTE: Do not use air tools to install (special tool #8984B, Fixture, Engine Lifting) Engine Lift Fixture (1) and Adapter (special tool #8984B, Fixture, Engine Lifting) Eagle (2).

37. Install the engine lift fixture (special tool #8984B, Fixture, Engine Lifting) (1) and adapter (special tool #8984B, Fixture, Engine Lifting) Eagle (2).
38. Separate the engine from the transmission and remove engine from the vehicle.

INSTALLATION

INSTALLATION

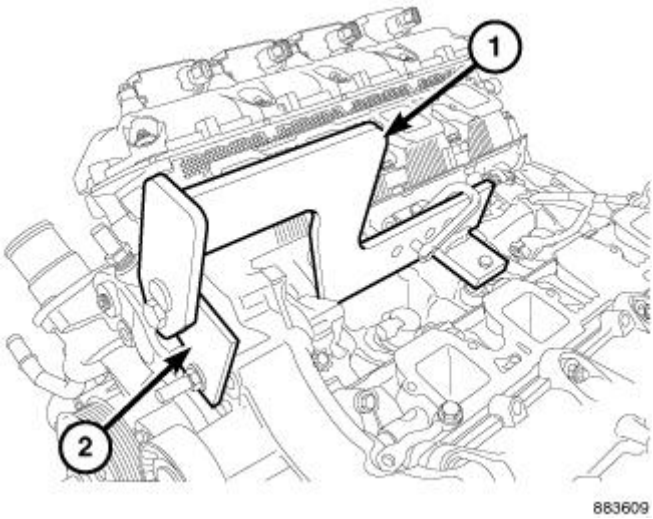

Fig. 19: Engine Lift Fixture & Adapter
Courtesy of CHRYSLER GROUP, LLC

NOTE: Do not use air tools to install (special tool #8984B, Fixture, Engine Lifting) Engine Lift Fixture (1) and Adapter (special tool #8984B, Fixture, Engine Lifting) Eagle (2).

1. Install the engine lift fixture (special tool #8984B, Fixture, Engine Lifting) (1) and adapter (special tool #8984B, Fixture, Engine Lifting) Eagle (2).
2. Position the engine in the engine compartment.

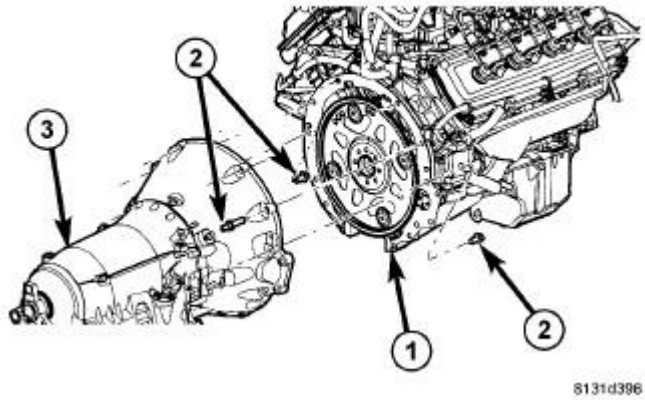

Fig. 20: Remove/Install Transmission To Engine Bolts
Courtesy of CHRYSLER GROUP, LLC

3. Lower and align the engine (1) with the transmission (3).
4. Install two transmission bell housing to engine block mounting bolts (2) finger tight.

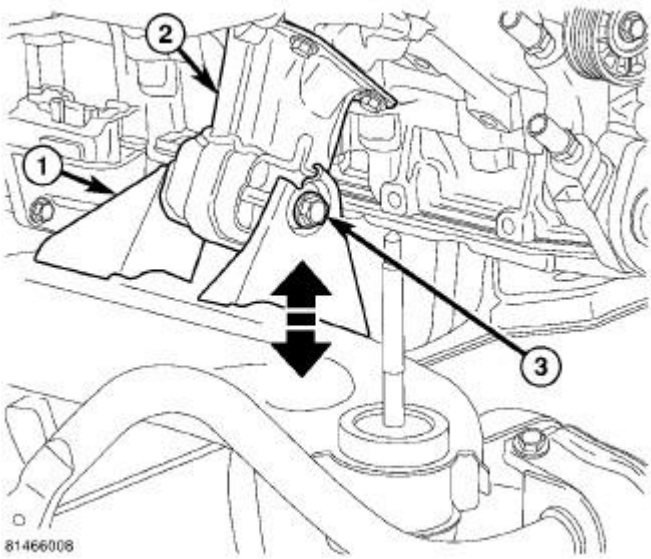

Fig. 21: Engine Mount & Bolt
Courtesy of CHRYSLER GROUP, LLC

5. Lower the engine assembly until the engine mount through bolts (3) line up in the frame brackets (1).
6. Raise and support the vehicle on a hoist.

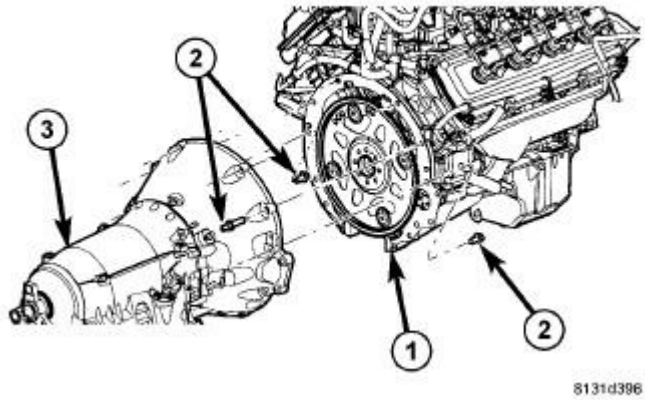

Fig. 22: Remove/Install Transmission To Engine Bolts
Courtesy of CHRYSLER GROUP, LLC

7. Install the remaining transmission bell housing to engine block mounting bolts (2) and tighten to 68 N.m (50 ft. lbs.)

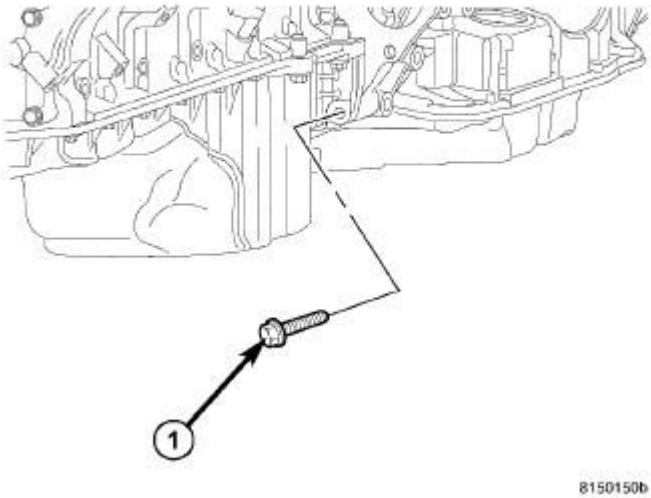

Fig. 23: Oil Pan To Transmission Bolts
Courtesy of CHRYSLER GROUP, LLC

8. Install both the left and right side oil pan to transmission bolts (1) and tighten bolts to 54 N.m (40 ft. lbs.).
9. Connect the transmission oil cooler lines at the oil pan and tighten bolts to 12 N.m (9 ft. lbs.).

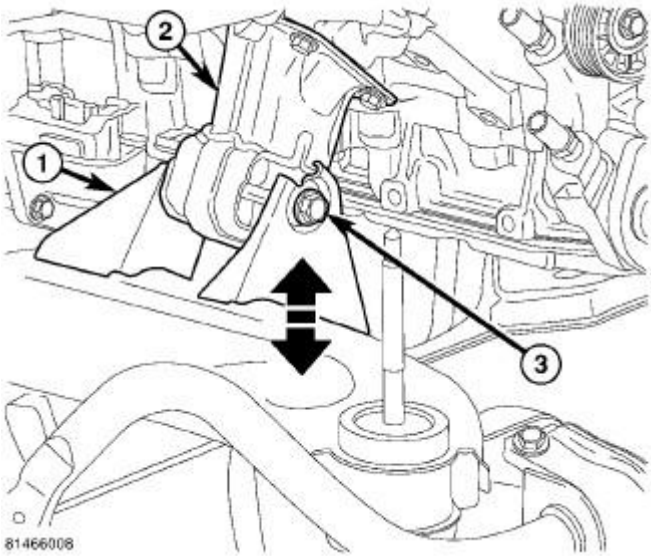

Fig. 24: Engine Mount & Bolt
Courtesy of CHRYSLER GROUP, LLC

10. Install the engine mount through bolts (3) and nuts and tighten to 95 N.m (70 ft. lbs.).

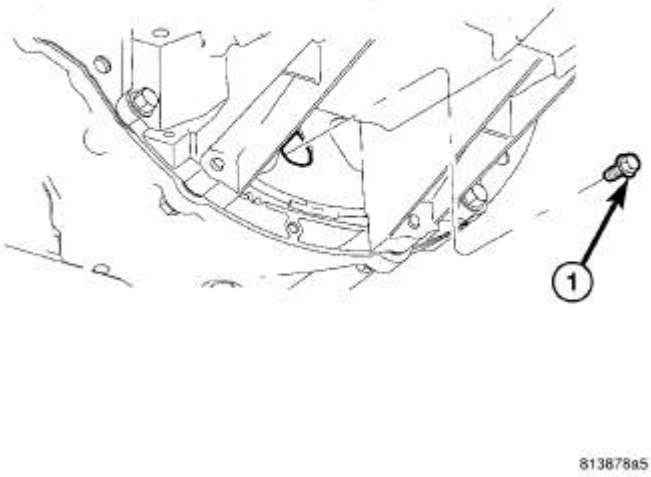

Fig. 25: Drive Plate Torque Converter Bolts
Courtesy of CHRYSLER GROUP, LLC

11. Install all torque converter-to-driveplate bolts (1) by hand, verify the torque converter is pulled flush to the driveplate and tighten bolts to 31 N.m (23 ft. lbs.).

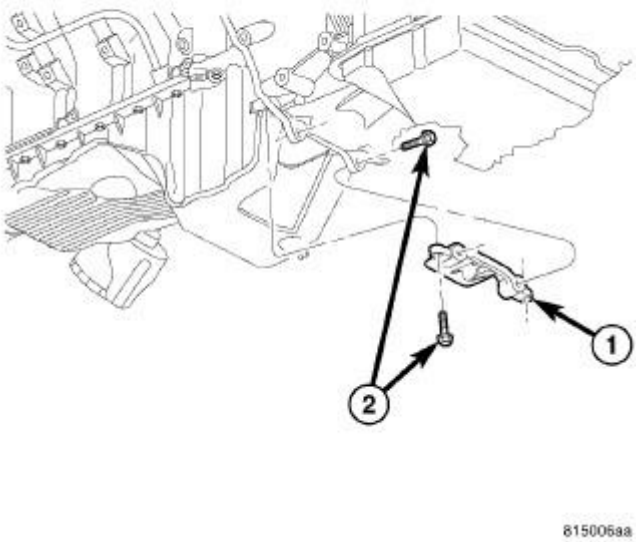

Fig. 26: Structural Dust Cover
Courtesy of CHRYSLER GROUP, LLC

CAUTION: The structural dust cover must be installed as described in the Structural Dust Cover installation procedure. Failure to do so will cause severe damage to the cover.

12. Install the structural dust cover (1). Refer to **COVER, STRUCTURAL DUST, INSTALLATION, 5.7L**.

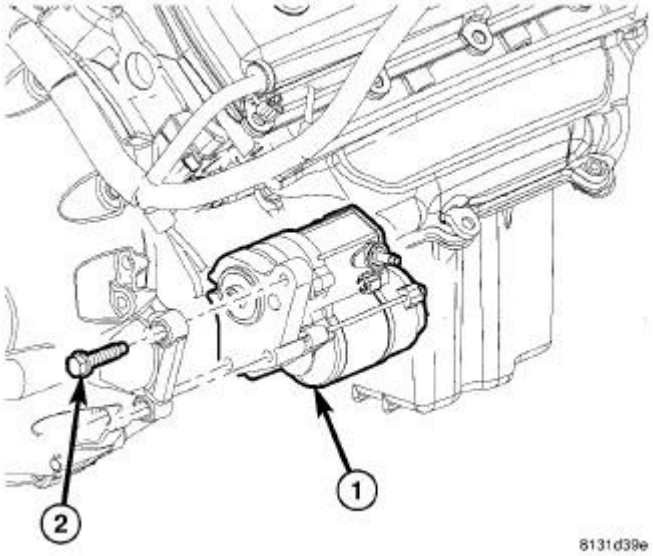

Fig. 27: Starter & Fasteners

Courtesy of CHRYSLER GROUP, LLC

13. Install the starter (1) and connect the starter wires. Refer to **STARTER, INSTALLATION** .

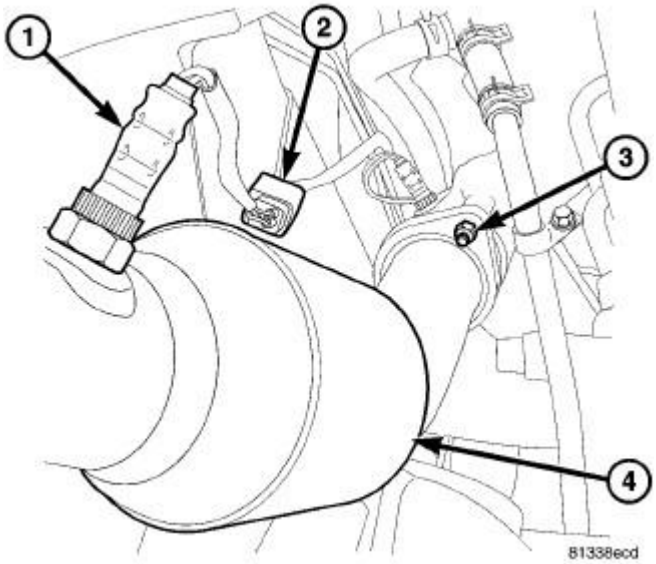

Fig. 28: Oxygen Sensor, Oxygen Sensor Connector, Ball Flange Nut & LH Catalytic Converter
Courtesy of CHRYSLER GROUP, LLC

14. Install the front exhaust pipe/catalytic converter assembly (4) to the exhaust manifold flange and tighten the bolts and nuts (3) to 26 N.m (19 ft. lbs.).
15. Lower the vehicle.

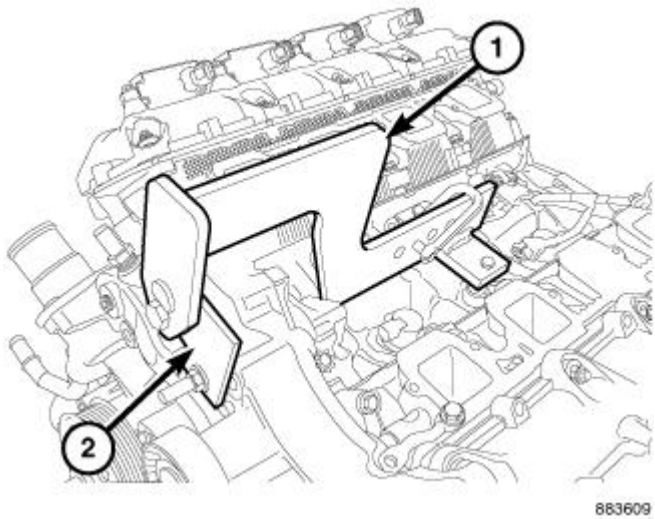

Fig. 29: Engine Lift Fixture & Adapter
Courtesy of CHRYSLER GROUP, LLC

16. Remove the engine lift fixture (special tool #8984B, Fixture, Engine Lifting) and adapter (special tool

#8984B, Fixture, Engine Lifting) Eagle (1, 2).

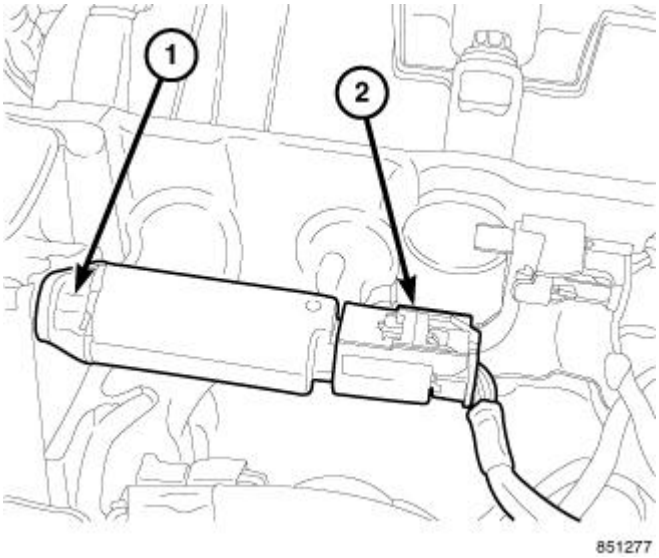

Fig. 30: Oil Control Valve
Courtesy of CHRYSLER GROUP, LLC

17. Install the oil control valve and securely tighten fastener (1).
18. Connect the oil control valve (OCV) electrical connector (2).
19. Install the intake manifold. Refer to **MANIFOLD, INTAKE, REMOVAL, 5.7L**.
20. Connect the fuel supply line. Refer to **STANDARD PROCEDURE - QUICK-CONNECT FITTINGS** .

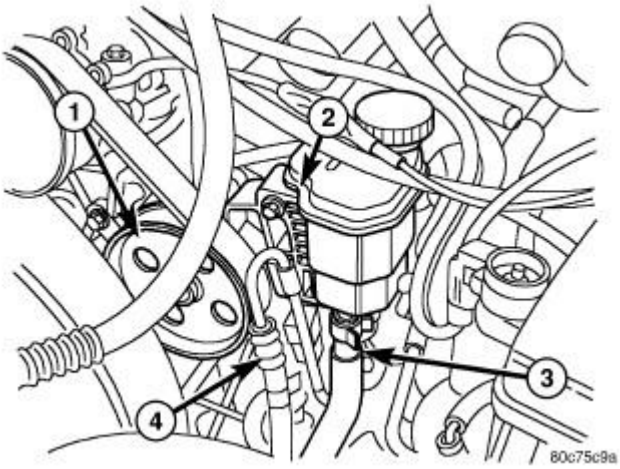

Fig. 31: Power Steering Pulley, Reservoir & Hoses
Courtesy of CHRYSLER GROUP, LLC

21. Install the three power steering pump mounting bolts through the access holes in the pulley (1) and tighten bolts to 28 N•m (21 ft. lbs.).

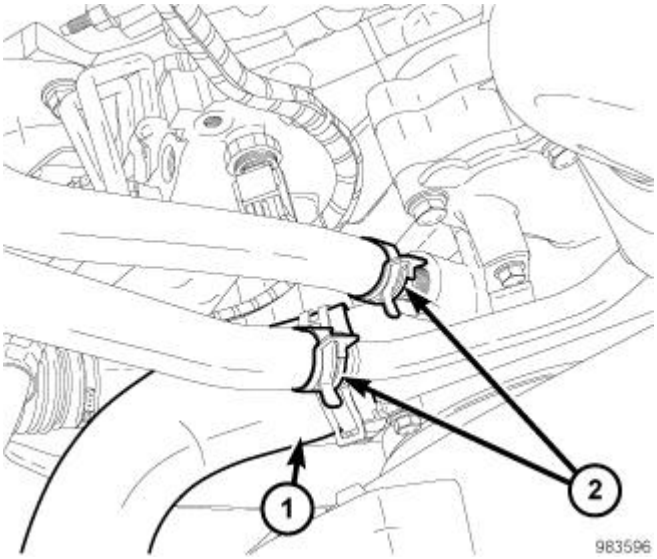

Fig. 32: Lower Radiator Hose & Heater Hoses
Courtesy of CHRYSLER GROUP, LLC

22. Connect the heater hoses (2) and the lower radiator hose (1).

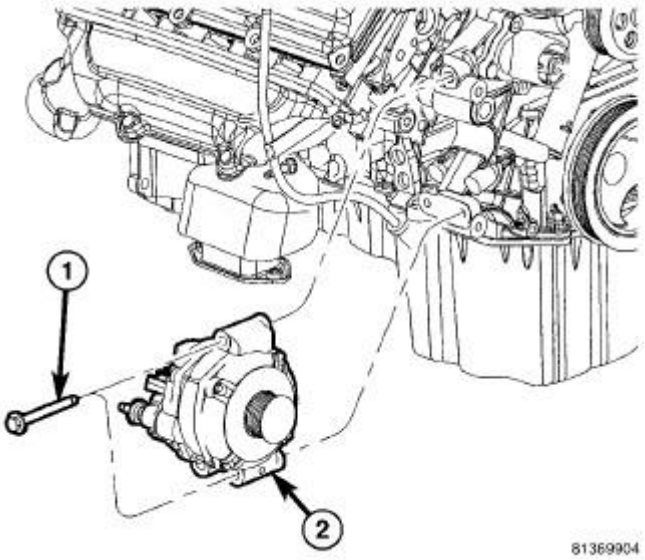

Fig. 33: Generator & Fasteners
Courtesy of CHRYSLER GROUP, LLC

23. Install the generator (2) and electrical connections. Refer to **GENERATOR, INSTALLATION** .

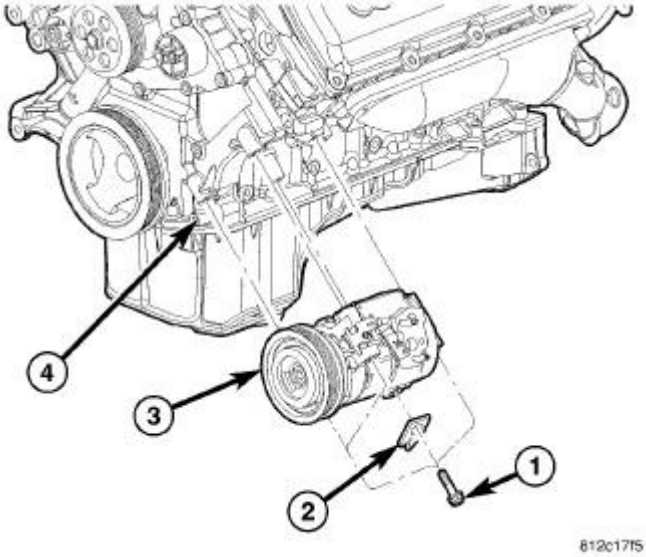

Fig. 34: A/C Compressor & Fasteners
Courtesy of CHRYSLER GROUP, LLC

24. Install the A/C compressor (3). Refer to **COMPRESSOR, A/C, INSTALLATION** .

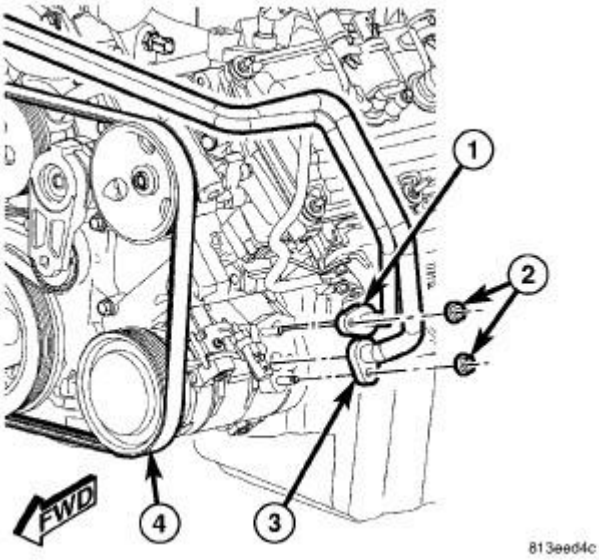

Fig. 35: Refrigerant Lines, A/C Compressor & Nuts
Courtesy of CHRYSLER GROUP, LLC

25. Connect the refrigerant lines (1, 3) to the A/C compressor (4) and tighten the nuts (2) to 20 N.m (15 ft. lbs.).
26. Install the viscous fan drive assembly. Refer to **FAN, COOLING, ELECTRIC, REMOVAL** or **FAN, COOLING, VISCOUS, REMOVAL** .

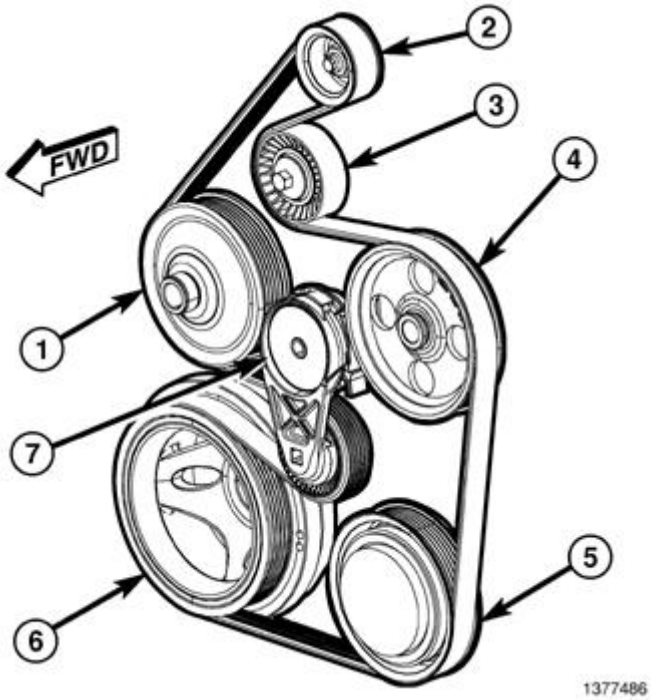

Fig. 36: Accessory Drive Belt Routing, Tensioner & Pulleys
Courtesy of CHRYSLER GROUP, LLC

CAUTION: Do not let the tensioner arm snap back to the free arm position, severe damage may occur to the tensioner.

27. Insert a suitable square drive ratchet into the square hole on the belt tensioner arm (7).
28. Rotate the tensioner (7) counter-clockwise and install the accessory drive belt (4).
29. Install the radiator and A/C condenser as an assembly. Refer to **RADIATOR, ENGINE COOLING, INSTALLATION** and **CONDENSER, A/C, INSTALLATION** .
30. Position the shroud in the radiator tank clips and Install the fan shroud mounting bolts.
31. Connect the radiator upper hose.

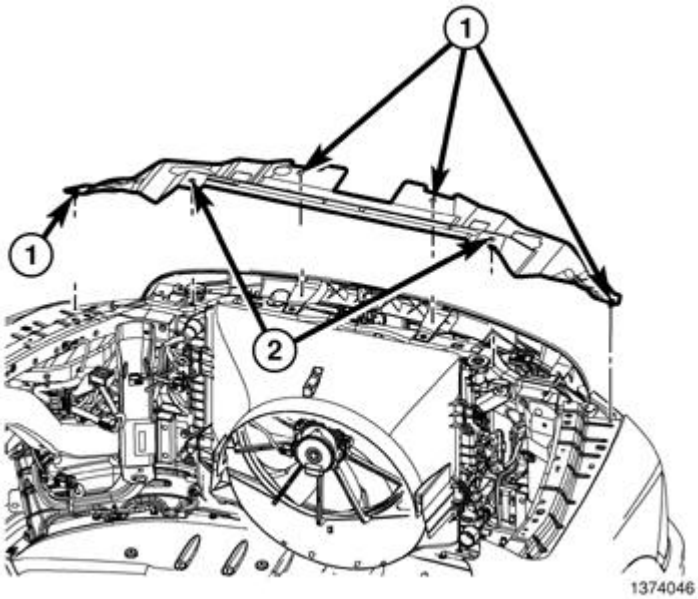

Fig. 37: Upper Radiator Seal & Plastic Rivets
Courtesy of CHRYSLER GROUP, LLC

32. Position the upper radiator seal and install the two plastic rivets (2).
33. Install the four push pins (1).
34. Install the washer bottle.

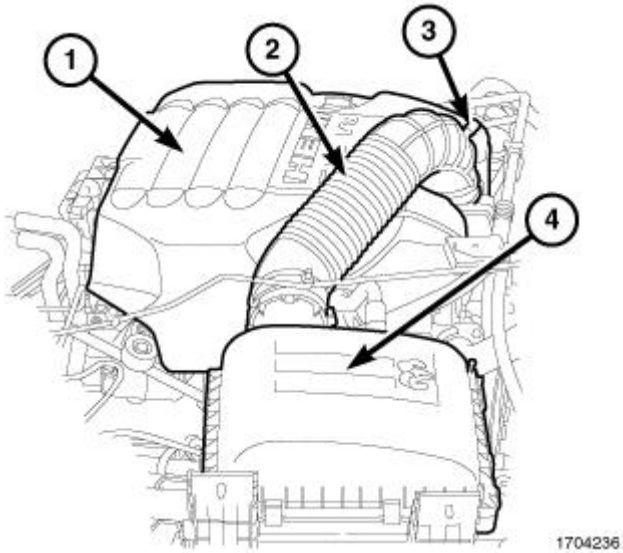

Fig. 38: Engine Cover, Clean Air Hose, Intake Air Temperature (IAT) Sensor Electrical Connector & Air Cleaner Housing
Courtesy of CHRYSLER GROUP, LLC

35. Install the engine cover (1). Refer to **COVER, ENGINE, INSTALLATION, 5.7L**.
36. Install the air cleaner housing (4).
37. Install the clean air hose (2).

38. Connect the intake air temperature (IAT) sensor electrical connector (3).

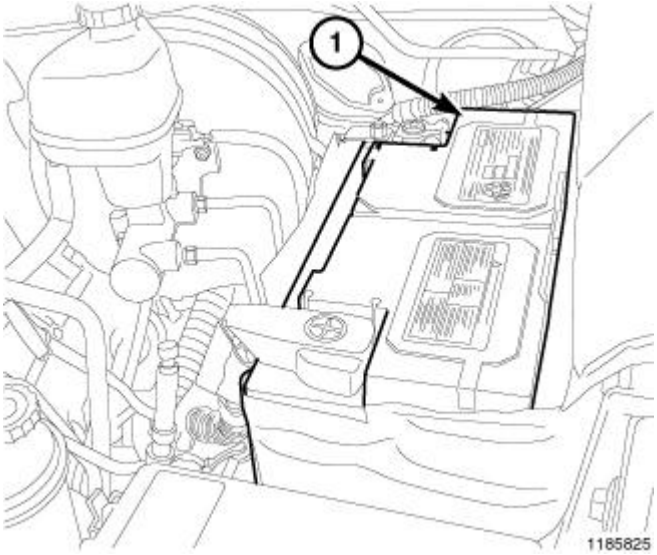

Fig. 39: Negative Battery Cable
Courtesy of CHRYSLER GROUP, LLC

39. Fill the engine with oil. Refer to **CAPACITIES AND RECOMMENDED FLUIDS, SPECIFICATIONS** .
40. Fill the cooling system. Refer to **STANDARD PROCEDURE** .
41. Connect the negative battery cable (1).
42. Start the engine and check for leaks.
43. Evacuate and Charge the refrigerant system. Refer to **PLUMBING, STANDARD PROCEDURE** .

SPECIAL TOOLS

SPECIAL TOOLS

	1023 - Puller (Originally Shipped In Kit Number(s) 8678.) 10368 - Set, Universal Protective Cap 10386 - Holder, Vibration Damper 6871 - Installer, A/C Hub (Originally Shipped In Kit Number(s) 6896.) 7700 - Tester, Cooling System (Originally Shipped In Kit Number(s) 7700-A.) 8464 - Adapter, Valve Spring (Originally Shipped In Kit Number(s) 8664, 8665, 8665CC, 8702, 9577.) 8507 - Guides, Connecting Rod (Originally Shipped In Kit Number(s) 8283, 8283CC, 8527, 8527CC, 8575, 8575CC.) 8512A - Installer, Damper

	(Originally Shipped In Kit Number(s) 8283, 8527, 8575, 8575CC, 8660, 8661.) 8513A - Insert, Crankshaft (Originally Shipped In Kit Number(s) 8283, 8527, 8575, 8999, 8999CC.) 8514 - Pins, Tensioner (Originally Shipped In Kit Number(s) 8283, 8283CC, 8527, 8527CC, 8575, 8575CC, 9975.) 8534B - Fixture, Driveline Support (Originally Shipped In Kit Number(s) 8534, 8534B, 8849, 9565.) 8984-UPD - Adapter, Engine Lift (Originally Shipped In Kit Number(s) 9516, 9516-CAN, 9517, 9517-CAN, 9518, 9519.) 8984B - Fixture, Engine Lifting (Originally Shipped In Kit Number(s) 8849CC, 9329, 9515, 9516, 9518, 9519, 9540, 9541, 9577.) 9065B - Compressor, Valve Spring 9070 - Retainer, Push Rod (Originally Shipped In Kit Number(s) 8999, 8999CC, 9329, 9515, 9540, 9541, 9577.) 9071 - Remover, Seal (Originally Shipped In Kit Number(s) 8999, 8999CC, 9329, 9515, 9540, 9541, 9577.) 9072 - Installer, Seal (Originally Shipped In Kit Number(s) 8999, 8999CC, 9329, 9515, 9540, 9541, 9577, 9975, 9976.) C-119 - Cylinder Indicator C-3292A - Gauge, Pressure C-3422-D - Compressor, Valve Spring C-3685-A - Bloc-Chek Kit

COVER, ENGINE

DESCRIPTION

DESCRIPTION

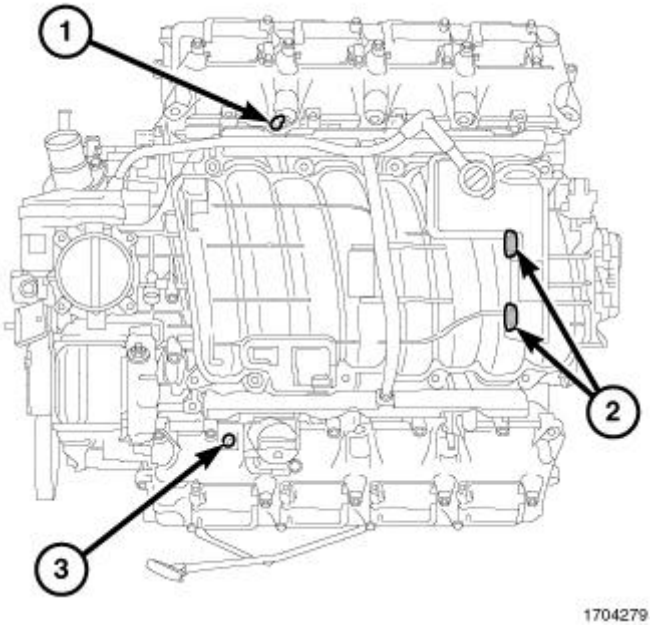

Fig. 40: Engine Cover Mounts
Courtesy of CHRYSLER GROUP, LLC

The engine cover mounts into grommets at the front and rear of the intake manifold.

The front grommets (1, 3) are a ball stud type mounts and the rear grommets (2) are a sliding peg design.

The engine cover rear pegs slide into the grommets (2) at the rear of the intake manifold and the engine cover front ball studs snap into the grommets (1, 3) at the front of the intake manifold.

REMOVAL

REMOVAL

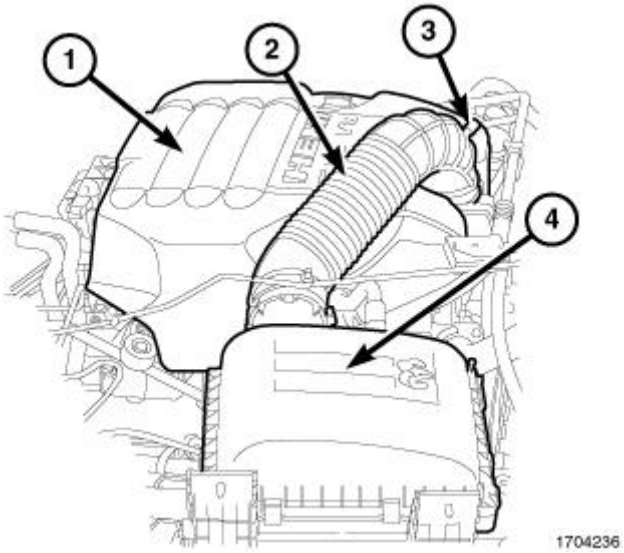

Fig. 41: Engine Cover, Clean Air Hose, Intake Air Temperature (IAT) Sensor Electrical Connector & Air Cleaner Housing
Courtesy of CHRYSLER GROUP, LLC

1. Disconnect the IAT sensor electrical connector (3).
2. Remove the clean air tube (2) from the air cleaner housing (4) and the throttle body.

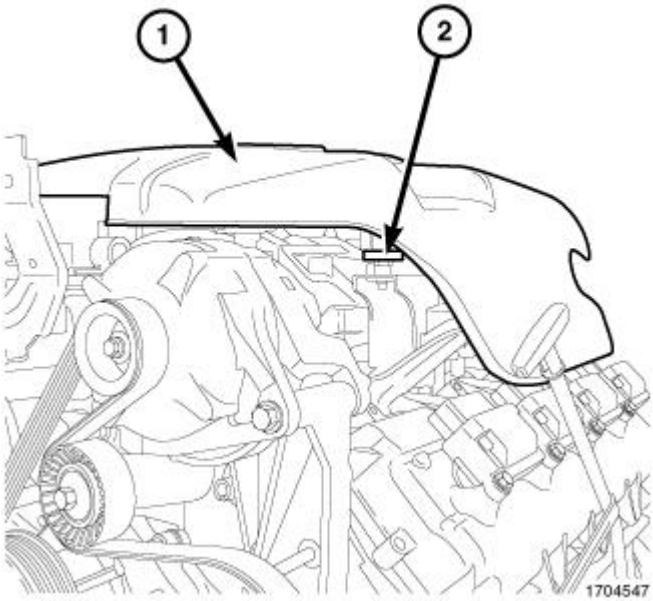

Fig. 42: Engine Cover & Grommets
Courtesy of CHRYSLER GROUP, LLC

3. Lift up the front of the engine cover (1) and separate the engine cover front grommets (2) from the ball studs on the intake manifold.

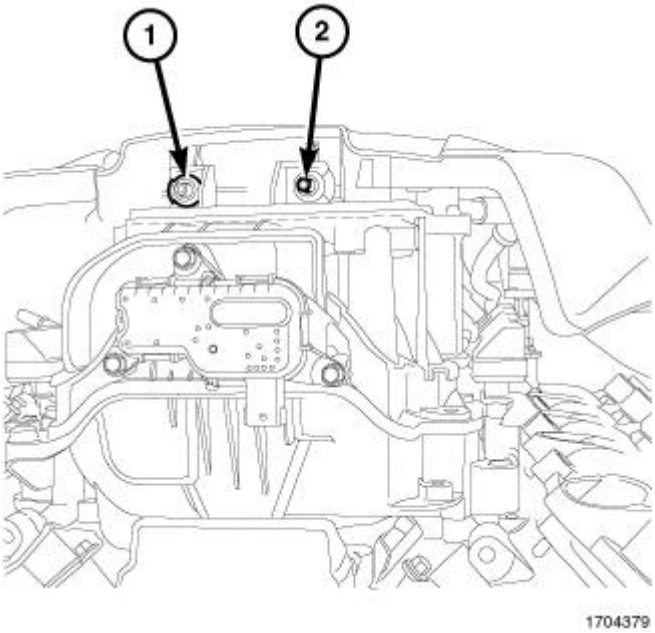

Fig. 43: Engine Cover Pegs & Grommets
Courtesy of CHRYSLER GROUP, LLC

4. Slightly raise the front of the engine cover and slide forward to remove the rear engine cover pegs (2) from the grommets (1) on the rear of the intake manifold.

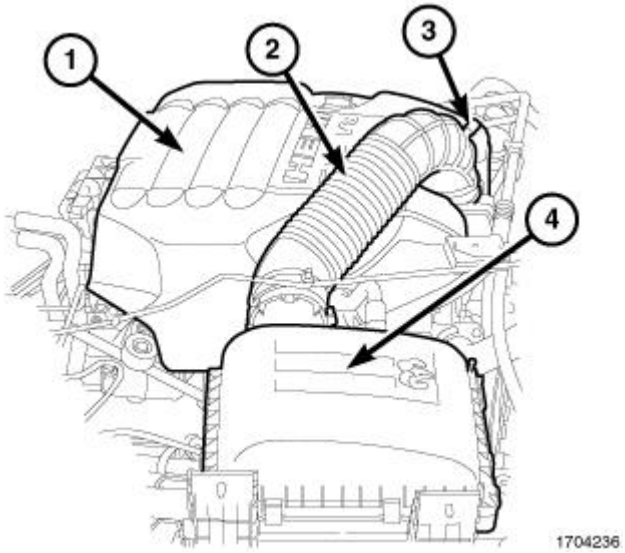

Fig. 44: Engine Cover, Clean Air Hose, Intake Air Temperature (IAT) Sensor Electrical Connector & Air Cleaner Housing
Courtesy of CHRYSLER GROUP, LLC

5. Remove the engine cover (1).

INSTALLATION

INSTALLATION

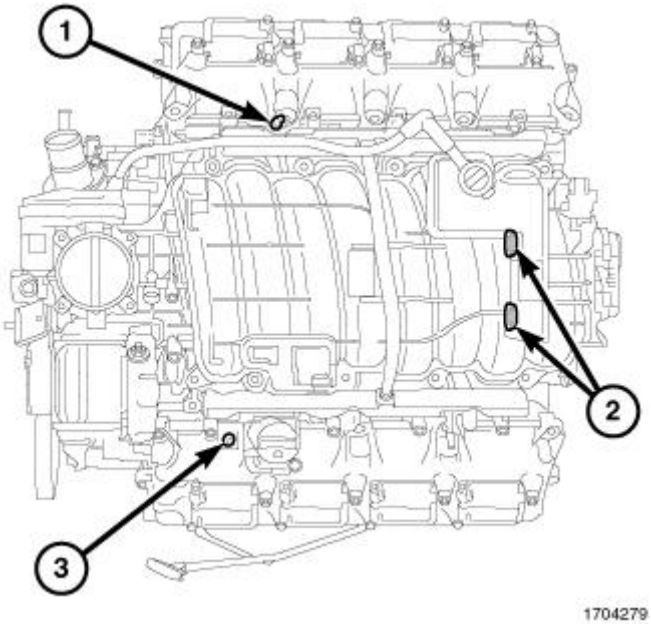

Fig. 45: Engine Cover Mounts
Courtesy of CHRYSLER GROUP, LLC

NOTE: **The front grommets (1, 3) are a ball stud type mount and the rear grommets (2) are a sliding peg design.**

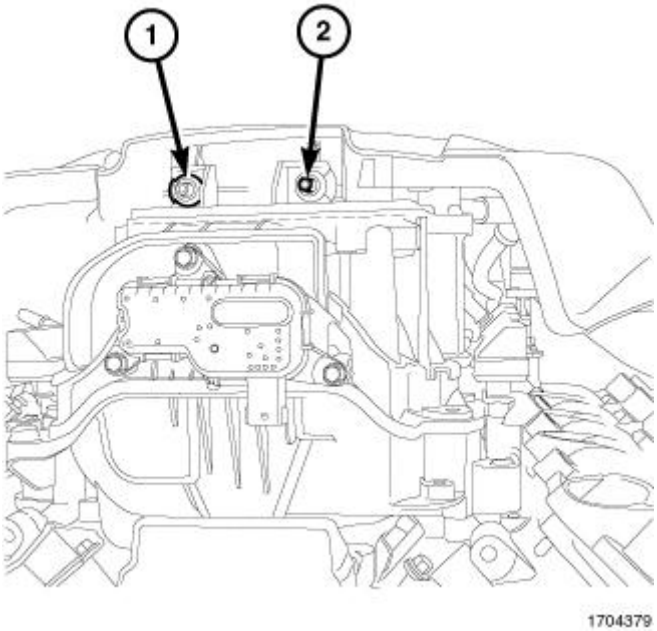

Fig. 46: Engine Cover Pegs & Grommets
Courtesy of CHRYSLER GROUP, LLC

1. Slightly tilt the rear of the engine cover and slide the rear engine cover pegs (2) into the grommets (1) on the rear of the intake manifold until the cover stops.

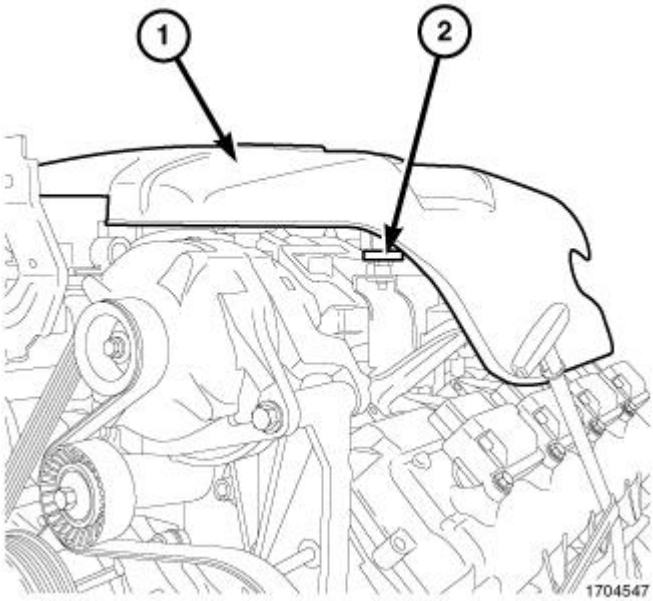

Fig. 47: Engine Cover & Grommets
Courtesy of CHRYSLER GROUP, LLC

NOTE: While installing the engine cover the front ball studs will make a popping or suction sound as the ball studs are inserted into the front grommets.

2. Lower the front of the engine cover (1) and line up the front ball studs with the grommets (2) on the front of the intake manifold and with a downward motion push the engine cover ball studs into the front grommets.
3. Lightly lift the front of the engine cover to insure the front ball studs are seated into the front grommets correctly.

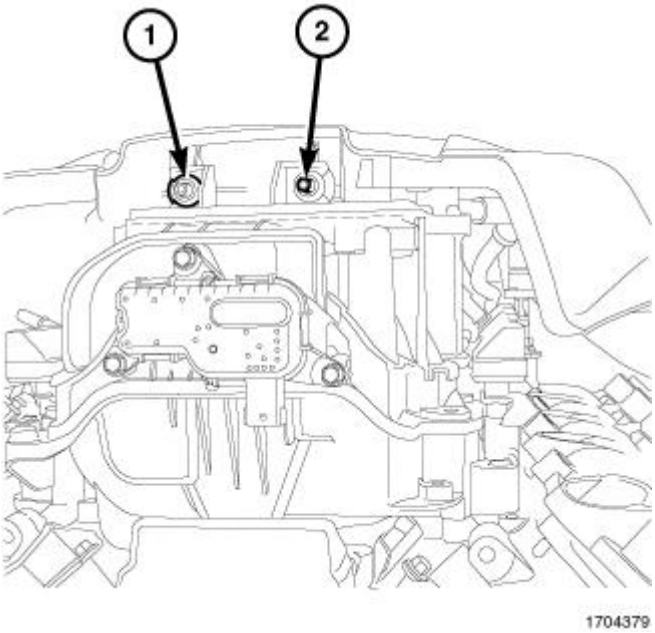

Fig. 48: Engine Cover Pegs & Grommets
Courtesy of CHRYSLER GROUP, LLC

4. Check to make sure the engine cover is installed properly by reaching behind the cover to verify that the pegs (2) are located in the grommets (1).

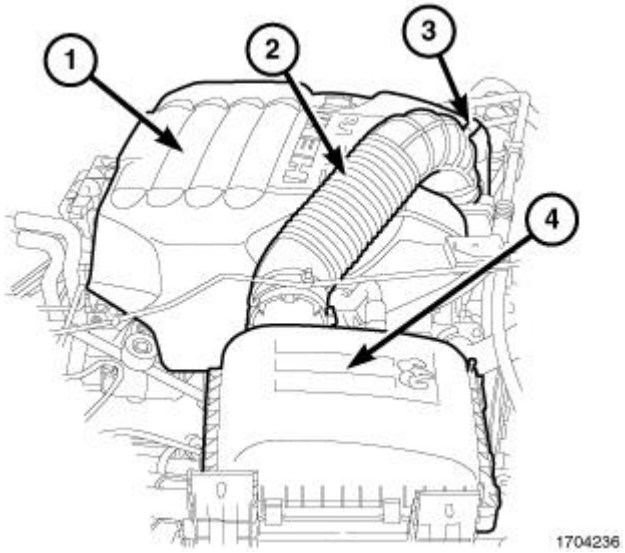

Fig. 49: Engine Cover, Clean Air Hose, Intake Air Temperature (IAT) Sensor Electrical Connector & Air Cleaner Housing
Courtesy of CHRYSLER GROUP, LLC

5. Install the clean air tube (2) onto the air cleaner housing (4) and the throttle body.
6. Connect the IAT sensor electrical connector (3).

MDS SYSTEM

DESCRIPTION

DESCRIPTION

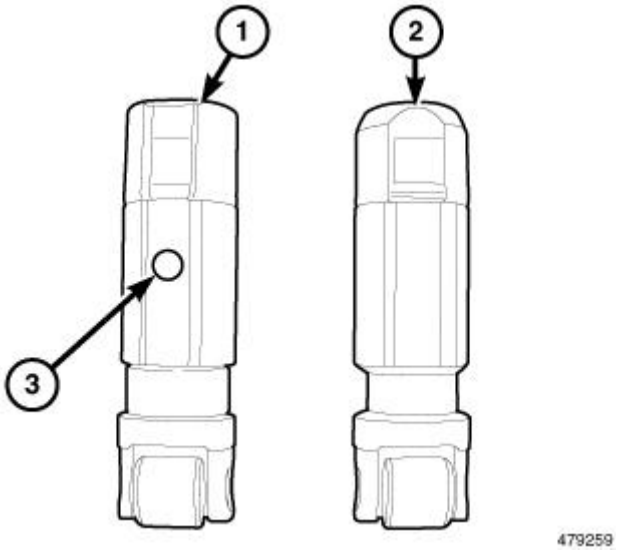

Fig. 50: MDS Lifter
Courtesy of CHRYSLER GROUP, LLC

The Multiple Displacement System (MDS) selectively deactivates cylinders 1, 4, 6 and 7 during steady speed, low acceleration and shallow grade climbing conditions to increase fuel economy.

The MDS can provide a 5 to 20% fuel economy benefit when operating in four-cylinder mode. Depending on driving habits and vehicle usage. For EPA rating purposes the fuel economy is 8 to 15% higher than if the engine was operating on eight-cylinders at all times.

The MDS deactivating lifter (1) can be distinguished from the non-MDS lifter (2) by the disconnecting pin (3) on the side of the MDS lifter.

MDS is integrated into the basic engine architecture requiring these additional components:

- Unique MDS camshaft
- 8 deactivating roller lifters
- 4 MDS control valve solenoids
- MDS control valve solenoid wiring harness
- Oil temperature sensor

OPERATION

OPERATION

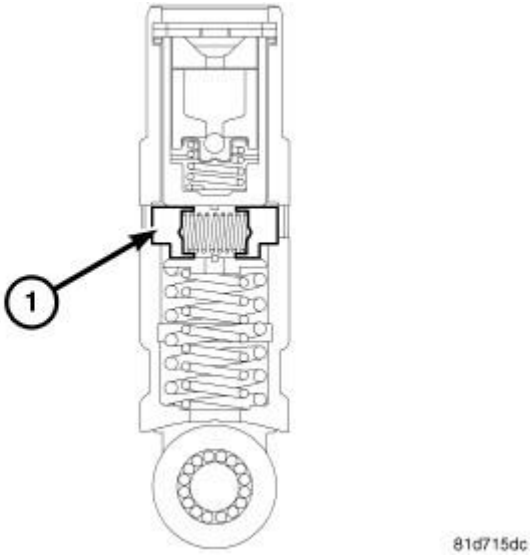

Fig. 51: MDS Lifter Cross Section
Courtesy of CHRYSLER GROUP, LLC

The Multiple Displacement System (MDS) provides cylinder deactivation during steady speed, low acceleration and shallow grade climbing conditions to increase fuel economy. Both four and eight cylinder configurations have even firing intervals to provide smooth operation. The MDS selectively deactivates cylinders 1, 4, 6, and 7, to improve fuel economy. All deactivated cylinders have unique hydraulic lifters that collapse when deactivated to prevent the valves from opening. Engine oil pressure is used to activate and deactivate the valves. Oil is delivered through special oil passages drilled into the cylinder block. The MDS solenoid valves control the flow. When activated, pressurized oil pushes a latching pin on each MDS lifter which becomes a lost motion link. The base of the MDS lifter follows the camshaft while the top remains stationary. The MDS lifter is held in place against the pushrod by light spring pressure but unable to move because of the much higher force of the valve spring.

NOTE: It is critical to use the recommended oil viscosity in engines that use MDS.

Deactivation occurs during the compression stroke of each cylinder, after air and fuel enter the cylinder. Ignition occurs, but the combustion products remain trapped in the cylinder under high pressure, because the valves no longer open. No fuel/air enters or leaves during subsequent piston strokes, this high pressure gas is repeatedly compressed and expanded like an air spring.

AIR INTAKE SYSTEM

AIR CLEANER

REMOVAL

REMOVAL

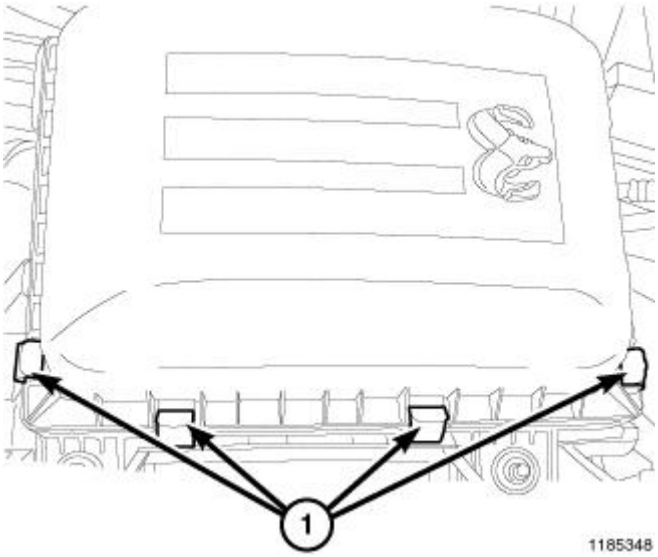

Fig. 52: Air Cleaner Body Cover Retaining Clamps
Courtesy of CHRYSLER GROUP, LLC

1. Disengage the retaining clamps (1) that secure the air cleaner body cover to air cleaner body.
2. Lift and push the air cleaner body cover toward the engine to disengage the cover locating tabs from the air cleaner body and position the cover out of the way.

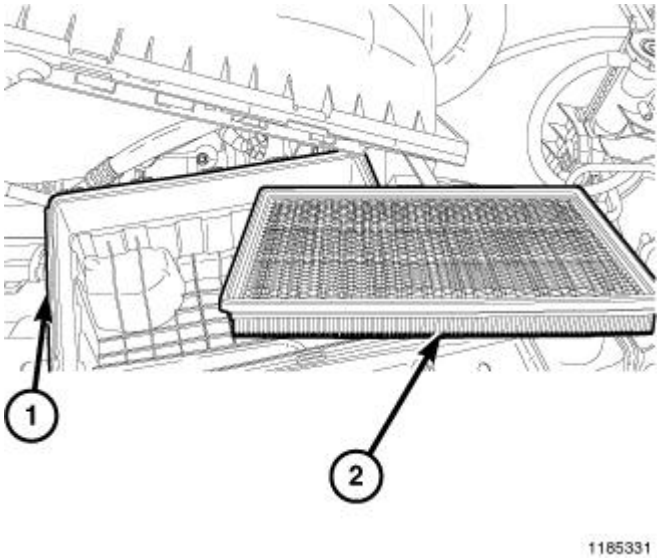

Fig. 53: Air Cleaner Body & Air Filter Element
Courtesy of CHRYSLER GROUP, LLC

3. Remove the air cleaner element (2) from the inside of the air cleaner body (1).
4. Clean out the inside of the air cleaner body (1).

INSTALLATION

INSTALLATION

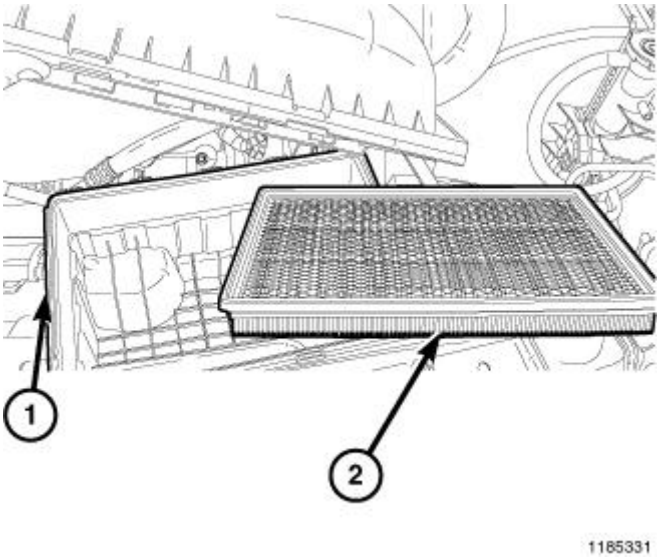

Fig. 54: Air Cleaner Body & Air Filter Element
Courtesy of CHRYSLER GROUP, LLC

1. Clean any dirt or foreign matter from the inside of the air cleaner housing (1).
2. Install the air filter element (2) into air cleaner housing. Make sure the element is properly seated in the housing.

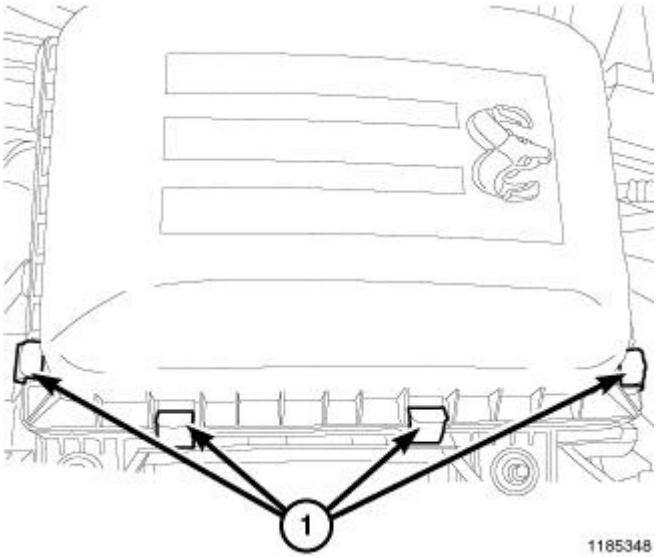

Fig. 55: Air Cleaner Body Cover Retaining Clamps
Courtesy of CHRYSLER GROUP, LLC

3. Position the air cleaner housing cover to the air cleaner housing and engage the cover locating tabs.
4. Fully install the air cleaner housing cover to the air cleaner housing and engage the four retaining clamps (1).

BODY, AIR CLEANER

REMOVAL

REMOVAL

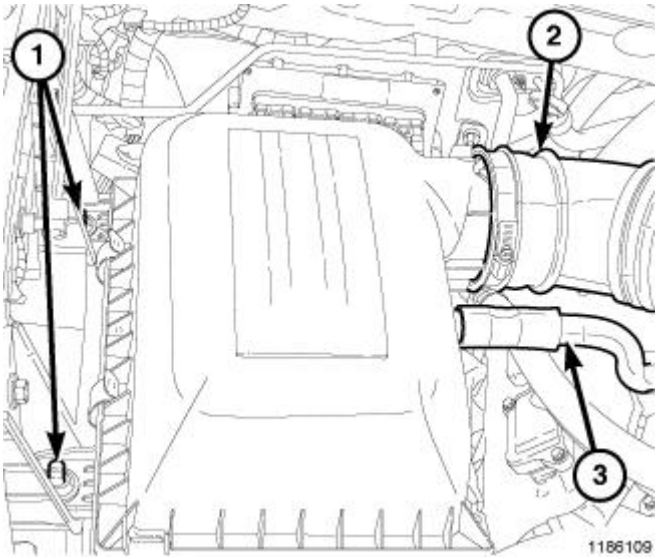

Fig. 56: Clean Air Tube To Air Cleaner Housing, Make Up Air Hose & Grommets
Courtesy of CHRYSLER GROUP, LLC

1. Disconnect the make up air hose (3).
2. Remove clean air tube from air cleaner housing (2).
3. Pull the air cleaner housing straight upward to disengage it from the grommets (1).

INSTALLATION

INSTALLATION

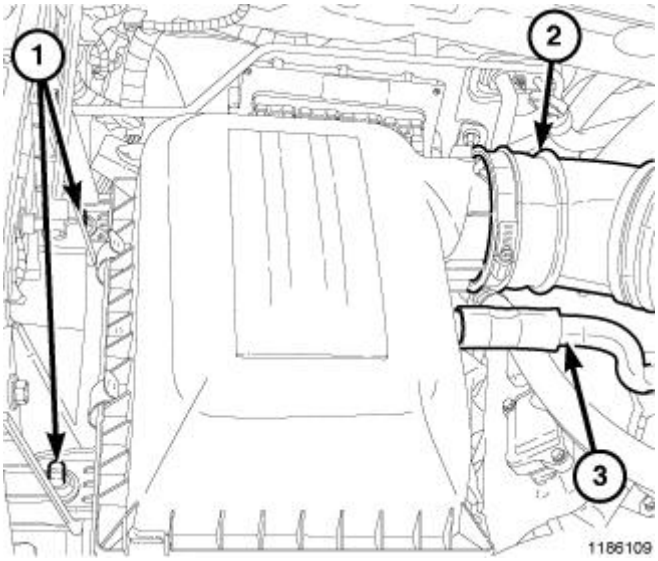

Fig. 57: Clean Air Tube To Air Cleaner Housing, Make Up Air Hose & Grommets

Courtesy of CHRYSLER GROUP, LLC

1. Position the air cleaner housing onto the grommets (1) and push downward.
2. Connect the clean air hose (2) to the air cleaner housing.
3. Connect make up air hose (3) to the air cleaner housing.

CYLINDER HEAD

OPERATION

OPERATION

The cylinder head closes the combustion chamber allowing the pistons to compress the air fuel mixture to the correct ratio for ignition. The valves located in the cylinder head open and close to either allow clean air into the combustion chamber or to allow the exhaust gases out, depending on the stroke of the engine.

DIAGNOSIS AND TESTING

DIAGNOSIS AND TESTING - CYLINDER HEAD GASKET FAILURE

A cylinder head gasket leak can be located between adjacent cylinders or between a cylinder and the adjacent water jacket.

- Possible indications of the cylinder head gasket leaking between adjacent cylinders are:
  - Loss of engine power
  - Engine misfiring
  - Poor fuel economy
- Possible indications of the cylinder head gasket leaking between a cylinder and an adjacent water jacket are:
  - Engine overheating
  - Loss of coolant
  - Excessive steam (white smoke) emitting from exhaust
  - Coolant foaming

CYLINDER-TO-CYLINDER LEAKAGE TEST

To determine if an engine cylinder head gasket is leaking between adjacent cylinders, follow the procedures in the **CYLINDER COMPRESSION PRESSURE LEAKAGE** Test in this information. An engine cylinder head gasket leaking between adjacent cylinders will results in approximately a 50 - 70% reduction in compression pressure.

CYLINDER-TO-WATER JACKET LEAKAGE TEST

WARNING: Use extreme care when the engine is operating with the coolant pressure cap removed. Failure to follow these instructions may result in possible

serious or fatal injury.

VISUAL TEST METHOD

With the engine cool, remove the coolant pressure cap. Start the engine and allow it to warm up until thermostat opens.

If a large combustion/compression pressure leak exists, bubbles will be visible in the coolant.

COOLING SYSTEM TESTER METHOD

CAUTION: With the cooling system tester in place, pressure builds up fast. Excessive pressure built up by continuous engine operation must be released to a safe pressure point. Never permit pressure to exceed 138 Kpa (20 psi).

Install the Cooling System Tester (special tool #7700, Tester, Cooling System) or equivalent to pressure cap neck. Start the engine and observe the tester's pressure gauge. If the gauge pulsates with every power stroke of a cylinder a combustion pressure leak is evident.

CHEMICAL TEST METHOD

Combustion leaks into the cooling system can also be checked by using the Bloc-Chek Kit (special tool #C-3685-A, Bloc-Chek Kit) or equivalent. Perform the test following the procedures supplied with the tool kit.

REMOVAL

REMOVAL

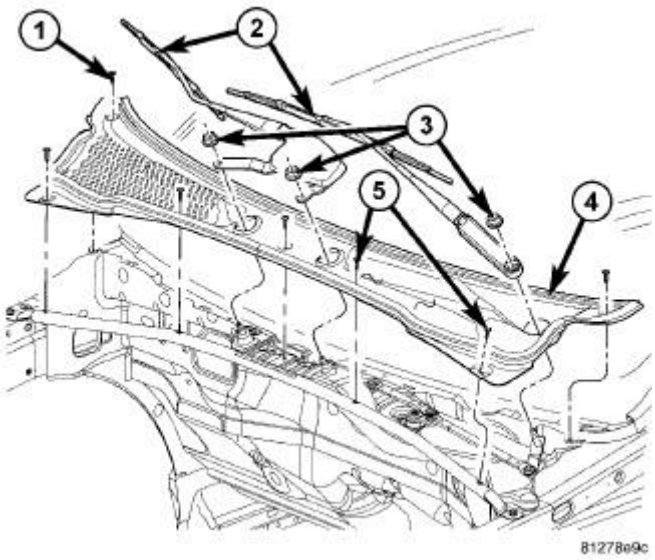

Fig. 58: Wipers, Cowl Grille, Push-Pins & Fasteners
Courtesy of CHRYSLER GROUP, LLC

1. Remove the cowl grille (4).

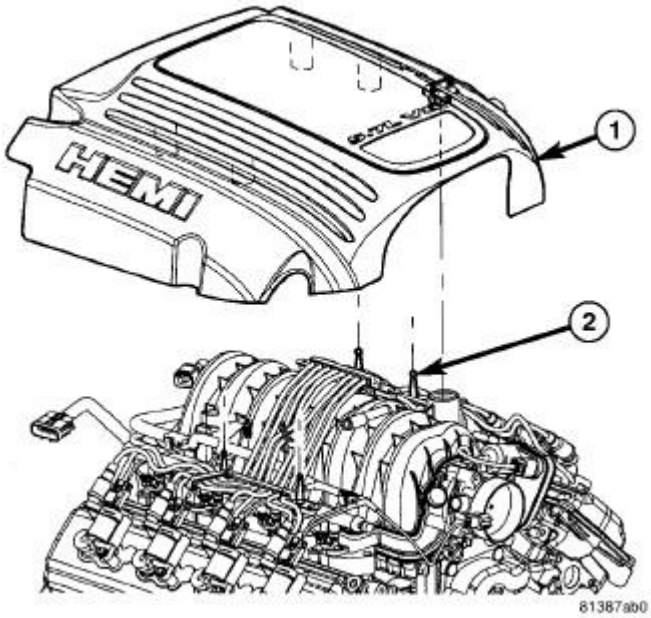

Fig. 59: Engine Cover
Courtesy of CHRYSLER GROUP, LLC

2. Remove the engine cover (1). Refer to **COVER, ENGINE, INSTALLATION, 5.7L**.
3. Perform the Fuel System Pressure Release procedure. Refer to **FUEL SYSTEM PRESSURE RELEASE** .
4. Disconnect the fuel supply line. Refer to **STANDARD PROCEDURE - QUICK-CONNECT FITTINGS** .

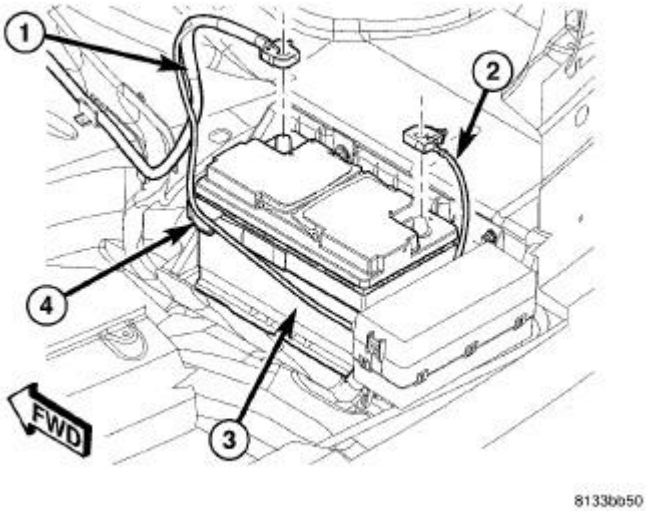

Fig. 60: Battery & Cables
Courtesy of CHRYSLER GROUP, LLC

5. Disconnect and isolate the negative battery cable (2).
6. Drain the cooling system. Refer to **STANDARD PROCEDURE** .
7. Remove the air cleaner assembly. Refer to **BODY, AIR CLEANER, REMOVAL, 5.7L**.
8. Remove closed crankcase ventilation system.

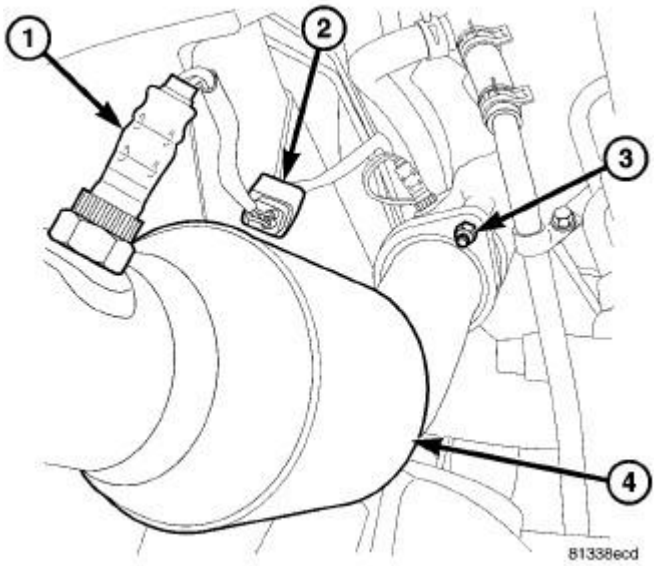

Fig. 61: Oxygen Sensor, Oxygen Sensor Connector, Ball Flange Nut & LH Catalytic Converter
Courtesy of CHRYSLER GROUP, LLC

CAUTION: When servicing or replacing exhaust system components, disconnect the oxygen sensor connector(s). Allowing the exhaust to hang by the oxygen sensor wires will damage the harness and/or sensor.

9. Disconnect the oxygen sensor connectors (2).
10. Saturate all exhaust bolts and nuts with Mopar® Rust Penetrant. Allow 5 minutes for penetration.

NOTE: If separating the exhaust pipe/catalytic converter at the exhaust manifold flange. New bolts will be required.

11. Remove the exhaust pipe to manifold bolts (3) (left side shown in illustration, right side similar) and disconnect the front exhaust pipe/catalytic converter assembly (4). Discard the nuts and bolts.
12. Disconnect the evaporation control system.

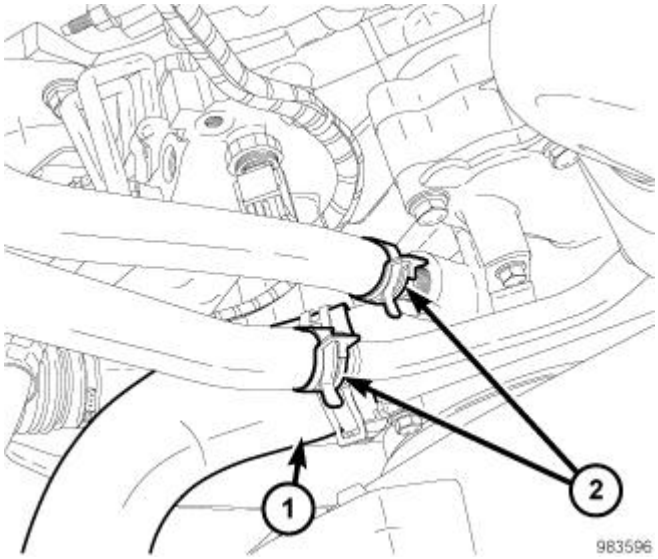

Fig. 62: Lower Radiator Hose & Heater Hoses
Courtesy of CHRYSLER GROUP, LLC

13. Disconnect the heater hoses (2).

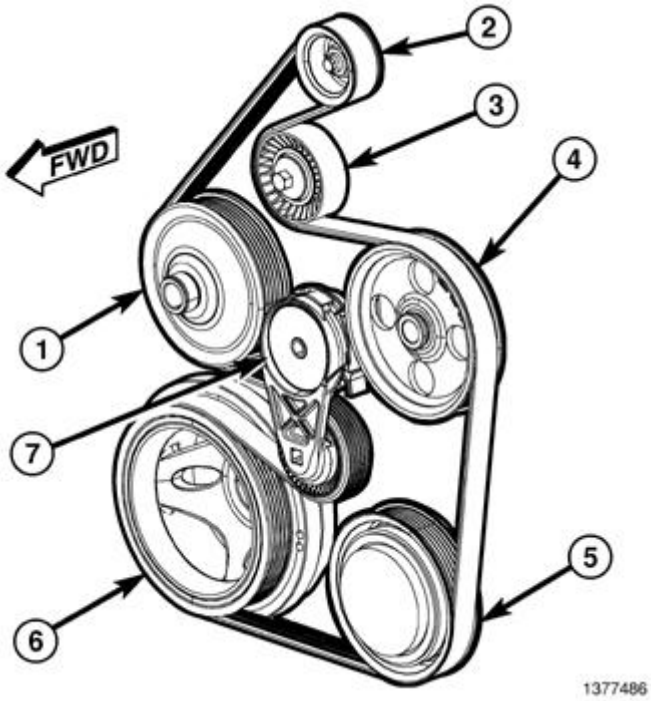

Fig. 63: Accessory Drive Belt Routing, Tensioner & Pulleys
Courtesy of CHRYSLER GROUP, LLC

CAUTION: Do not let the tensioner arm snap back to the free arm position, sever damage may occur to the tensioner.

14. Insert a suitable square drive ratchet into the square hole on belt tensioner arm (7).

15. Release the belt tension by rotating the tensioner arm (7)**clockwise** . Rotate the belt tensioner arm (7) until the belt can be removed from the pulleys.
16. Remove the accessory drive belt.
17. Gently release the tensioner arm (7).

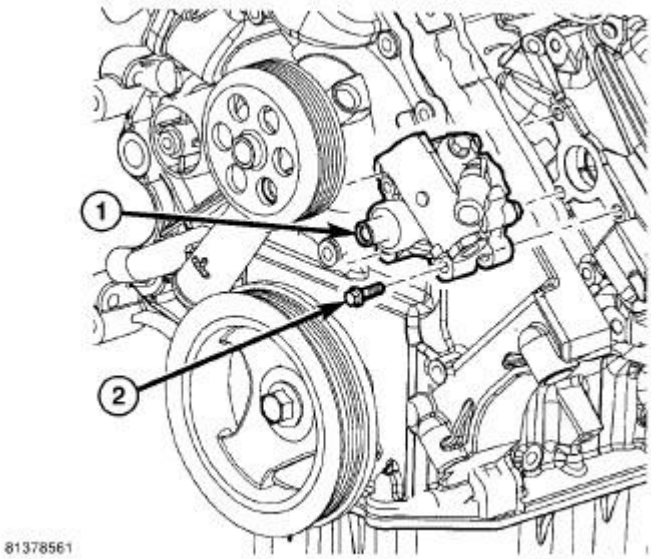

Fig. 64: Power Steering Pump & Bolts
Courtesy of CHRYSLER GROUP, LLC

NOTE: **It is not necessary to disconnect the hoses from the power steering pump, for power steering pump removal.**

18. Remove the three power steering pump (1) mounting bolts (2) through the access holes in the pulley and secure out of the way.

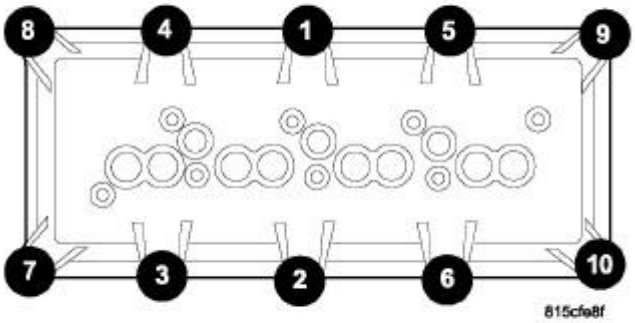

Fig. 65: Cylinder Head Cover Removal/Tightening Sequence
Courtesy of CHRYSLER GROUP, LLC

19. Remove the cylinder head covers and gaskets. Refer to **COVER(S), CYLINDER HEAD, REMOVAL, 5.7L**.

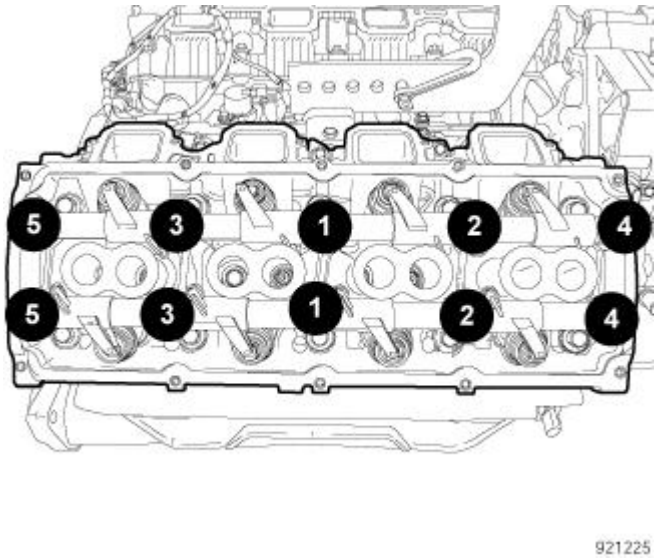

Fig. 66: Rocker Shafts Retaining Bolt Removal & Tightening Sequence
Courtesy of CHRYSLER GROUP, LLC

20. Remove the intake manifold and throttle body as an assembly. Refer to **MANIFOLD, INTAKE, REMOVAL, 5.7L**.

CAUTION: Rocker arm assemblies and pushrods must be installed in their original locations or engine damage could result.

21. Identify the original locations for assembly, remove rocker arm assemblies and pushrods. Refer to **ROCKER ARM, VALVE, REMOVAL, 5.7L**.

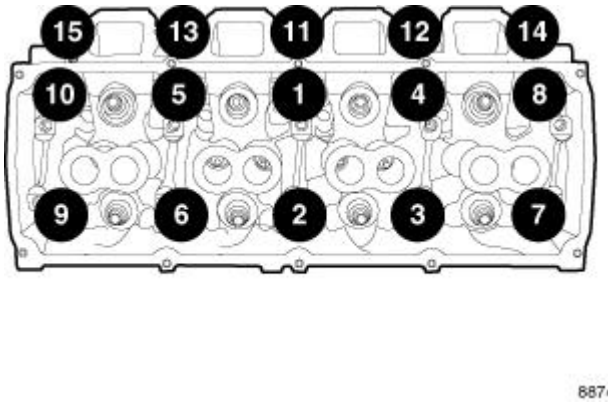

Fig. 67: Cylinder Head Bolt Removal & Tightening Sequence
Courtesy of CHRYSLER GROUP, LLC

22. Using the sequence shown in illustration, remove the head bolts from each cylinder head. Remove the cylinder head and discard the cylinder head gasket.

CLEANING

CLEANING

Clean all of the sealing surfaces of cylinder block and cylinder heads Mopar® Brake Parts Cleaner (or equivalent).

INSPECTION

INSPECTION

1. Inspect the cylinder head for out-of-flatness using a straightedge and a feeler gauge. If tolerances exceed 0.0508 mm (0.002 in.) replace the cylinder head.
2. Inspect the valve seats for damage. Service the valve seats as necessary.
3. Inspect the valve guides for wear, cracks or looseness. If either condition exist, replace the cylinder head.
4. Inspect the pushrods. Replace worn or bent pushrods.

INSTALLATION

INSTALLATION

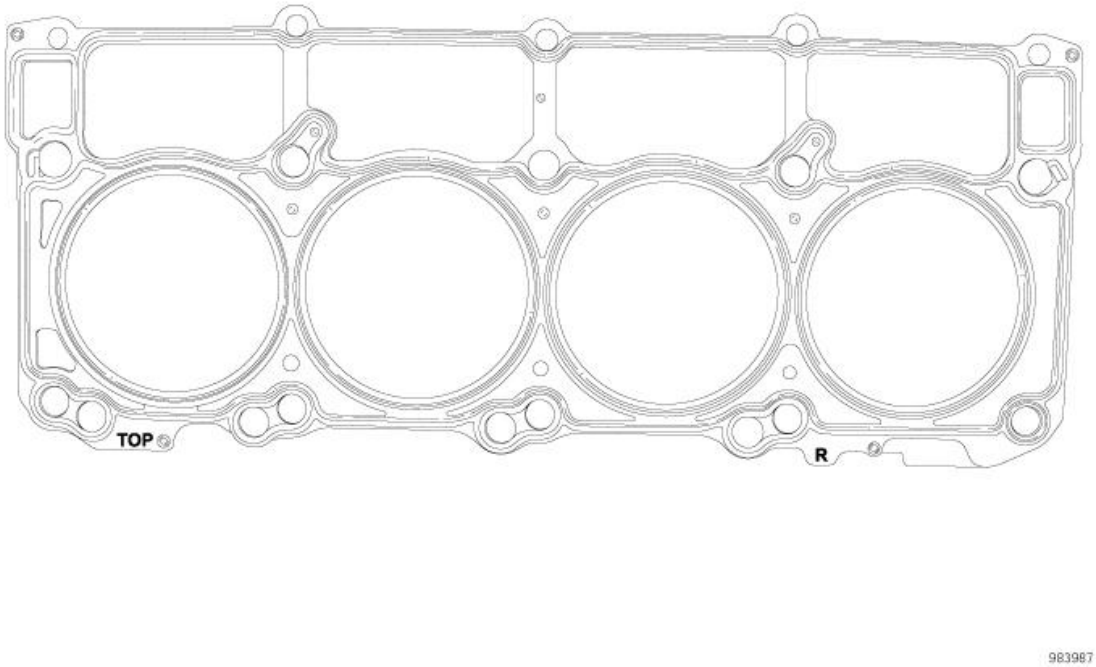

Fig. 68: Cylinder Head Gasket Markings
Courtesy of CHRYSLER GROUP, LLC

1. Clean all surfaces of cylinder block and cylinder heads.
2. Clean cylinder block front and rear gasket surfaces using a suitable solvent.

CAUTION: The cylinder head gaskets are not interchangeable between the left and right sides. They are marked with an "L" and "R" to indicate the left or right side and they are marked "TOP" to indicate which side goes up.

CAUTION: The head gaskets are marked "TOP" to indicate which side goes up.

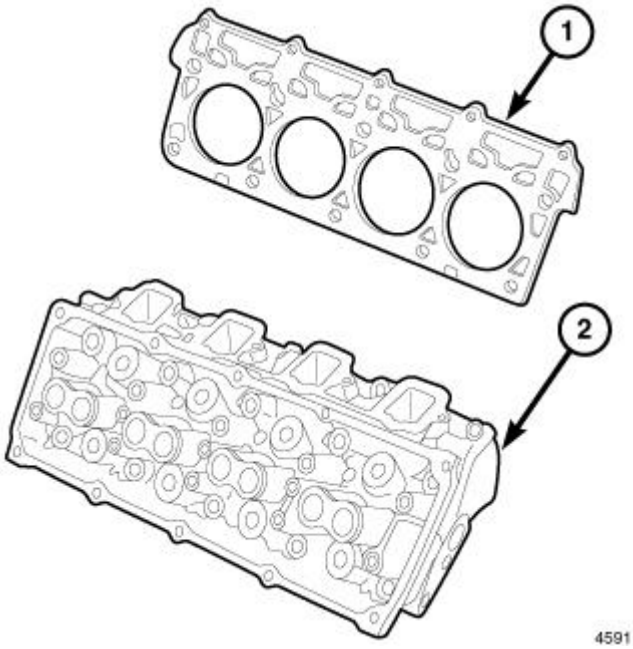

Fig. 69: Cylinder Head & Gasket
Courtesy of CHRYSLER GROUP, LLC

3. Position the new cylinder head gasket onto the cylinder block.
4. Position cylinder head onto head gasket and cylinder block.

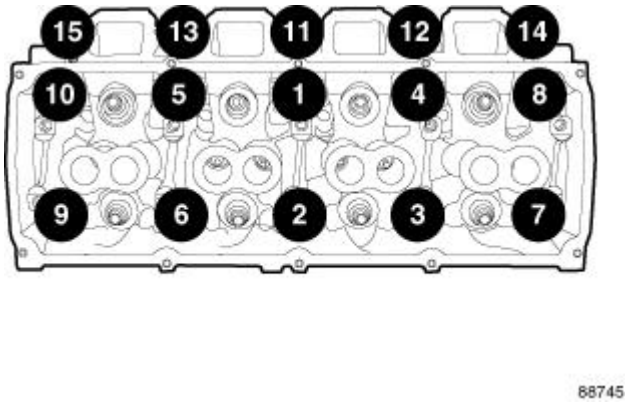

Fig. 70: Cylinder Head Bolt Removal & Tightening Sequence
Courtesy of CHRYSLER GROUP, LLC

5. Using the sequence shown in illustration, tighten the cylinder head bolts 1 through 10 to 34 N.m (25 ft. lbs.).
6. Using the sequence shown in illustration, tighten the cylinder head bolts 11 through 15 to 20 N.m (15 ft. lbs.).
7. Using the sequence shown in illustration, tighten the cylinder head bolts 1 through 10 to 54 N.m (40 ft. lbs.).
8. Using the sequence shown in illustration, tighten the cylinder head bolts 11 through 15 to 20 N.m (15 ft. lbs.).

9. Using the sequence shown in illustration, rotate the cylinder head bolts 1 through 10 90°.
10. Using the sequence shown in illustration, tighten the cylinder head bolts 11 through 15 to 34 N.m (25 ft. lbs.).

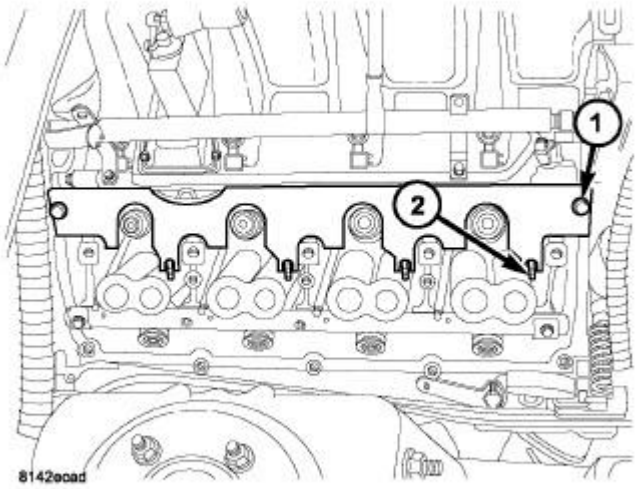

Fig. 71: Pushrod Retaining Plate
Courtesy of CHRYSLER GROUP, LLC

11. Install the push rods and rocker arm assemblies in their original position, using Pushrod Retainer (special tool #9070, Retainer, Push Rod) (1). Refer to **ROCKER ARM, VALVE, INSTALLATION, 5.7L**.
12. Install the intake manifold. Refer to **MANIFOLD, INTAKE, INSTALLATION, 5.7L**.
13. Install the spark plugs.

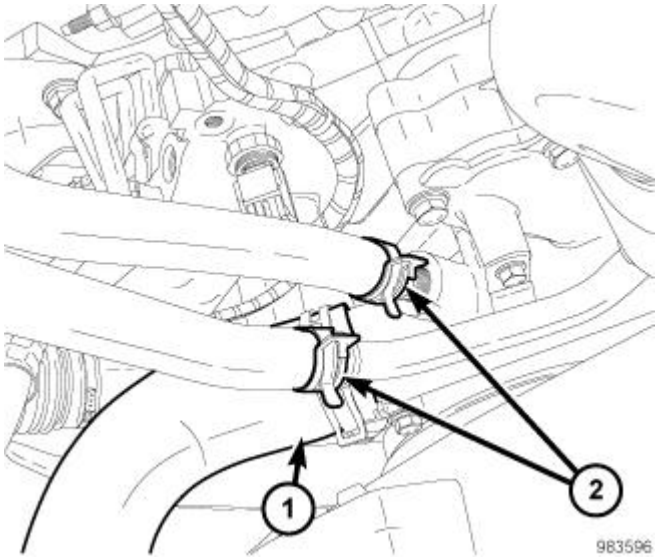

Fig. 72: Lower Radiator Hose & Heater Hoses
Courtesy of CHRYSLER GROUP, LLC

14. Connect the heater hoses (2).
15. Connect the fuel supply line.

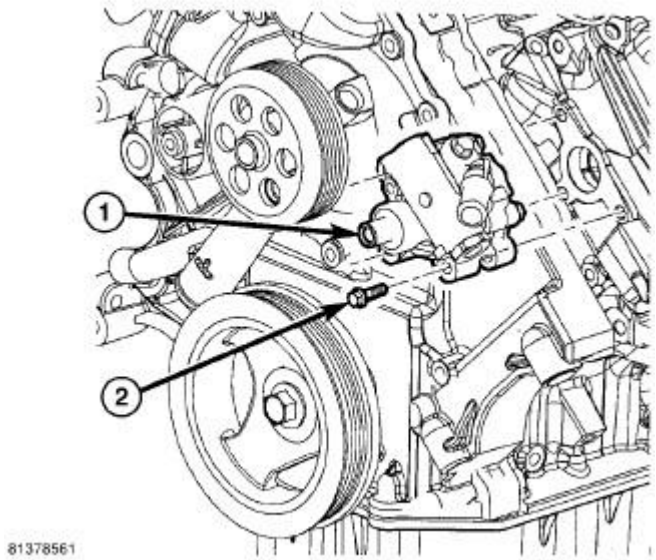

Fig. 73: Power Steering Pump & Bolts
Courtesy of CHRYSLER GROUP, LLC

16. Install the three power steering pump mounting bolts (2) through the access holes in the pulley and tighten bolts to 28 N•m (21 ft. lbs.).
17. Install the accessory drive belt. Refer to **BELT, SERPENTINE, INSTALLATION** .

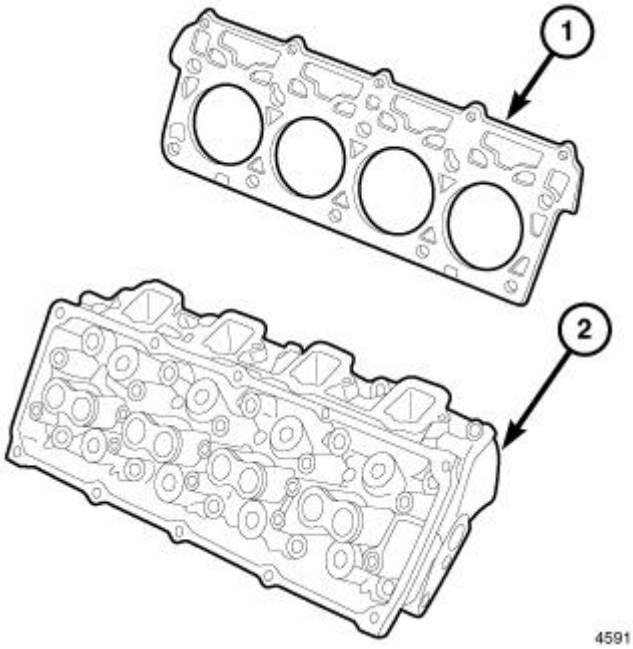

Fig. 74: Cylinder Head & Gasket
Courtesy of CHRYSLER GROUP, LLC

18. Install the cylinder head cover (1) and hand start all fasteners. Verify that all double ended studs (3) are in the correct location. Refer to **COVER(S), CYLINDER HEAD, INSTALLATION, 5.7L**.

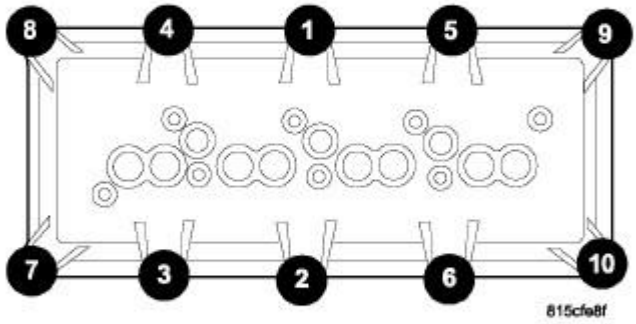

Fig. 75: Cylinder Head Cover Removal/Tightening Sequence
Courtesy of CHRYSLER GROUP, LLC

19. Using the sequence shown in illustration, tighten the cylinder head cover bolts and double ended studs to

8 N.m (70 in. lbs.).

20. Connect the evaporation control system.
21. Install the air cleaner.

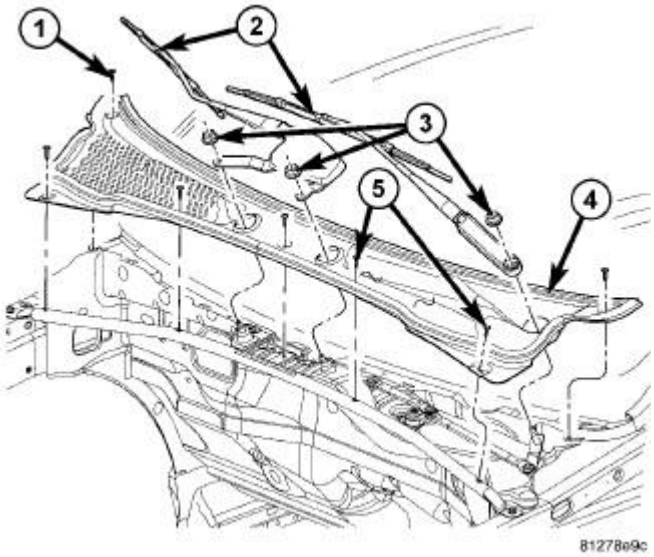

Fig. 76: Wipers, Cowl Grille, Push-Pins & Fasteners
Courtesy of CHRYSLER GROUP, LLC

22. Install cowl grille (4).

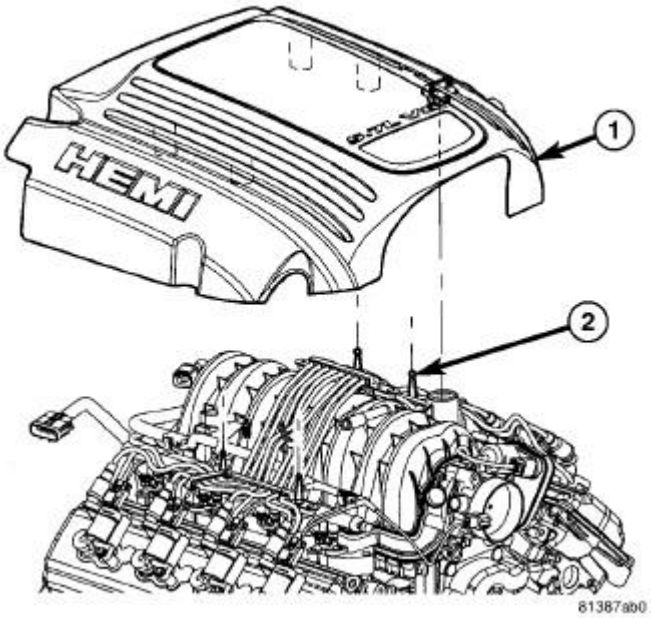

Fig. 77: Engine Cover
Courtesy of CHRYSLER GROUP, LLC

23. Install the engine cover (1). Refer to **COVER, ENGINE, INSTALLATION, 5.7L**.
24. Fill the cooling system. Refer to **STANDARD PROCEDURE** .
25. Drain and fill the engine with new oil.

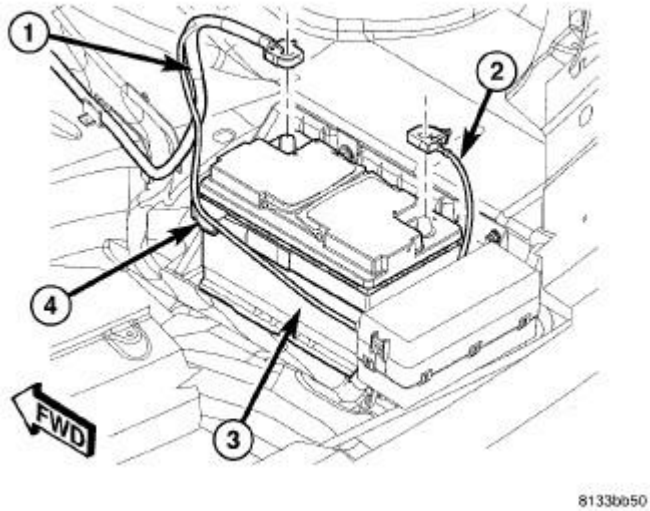

Fig. 78: Battery & Cables
Courtesy of CHRYSLER GROUP, LLC

26. Connect the negative battery cable (2).
27. Start the engine and check for leaks.

COVER(S), CYLINDER HEAD

REMOVAL

REMOVAL

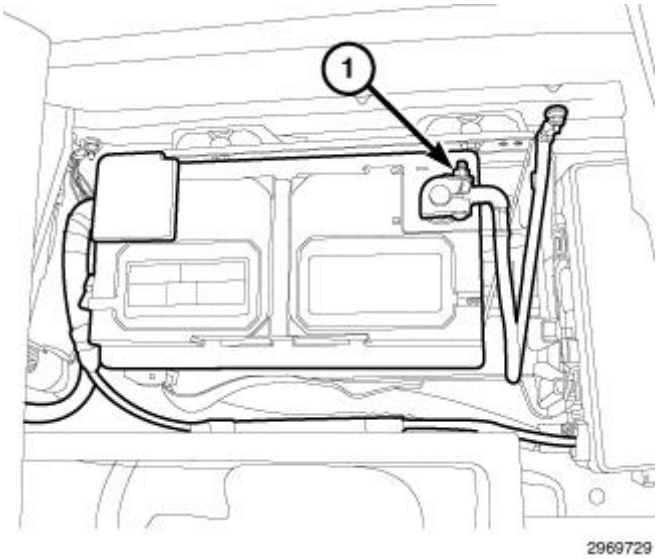

Fig. 79: Negative Battery Cable
Courtesy of CHRYSLER GROUP, LLC

1. Disconnect and isolate the negative battery cable (1).

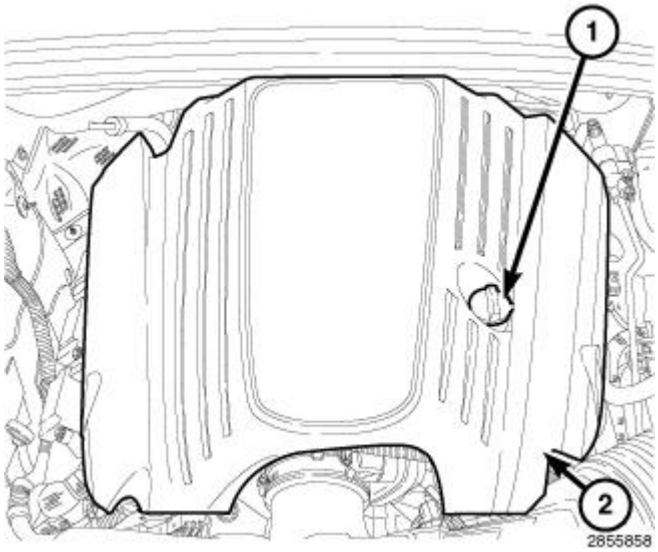

Fig. 80: Oil Fill Cap & Engine Cover
Courtesy of CHRYSLER GROUP, LLC

2. Remove the engine cover (2). Refer to **COVER, ENGINE, INSTALLATION, 5.7L**.

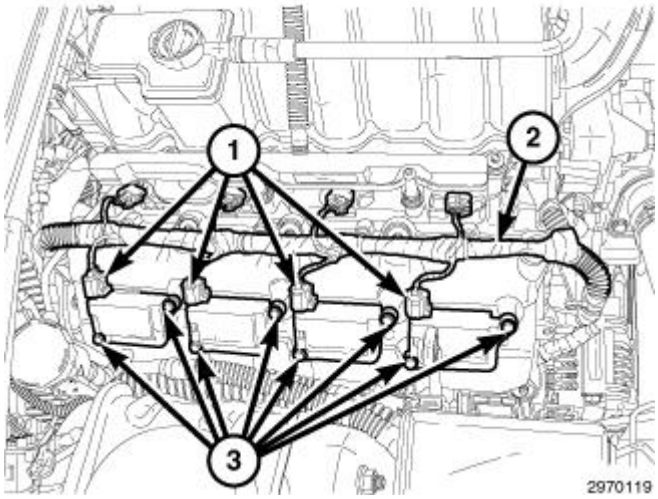

Fig. 81: Ignition Coil Electrical Connectors, Harness & Bolts
Courtesy of CHRYSLER GROUP, LLC

NOTE: Right side shown in illustration, left side similar.

3. Disconnect the ignition coil electrical connectors (1).
4. Position the electrical harness (2) aside.
5. Remove the ignition coil retaining bolts (3) and remove the ignition coils.

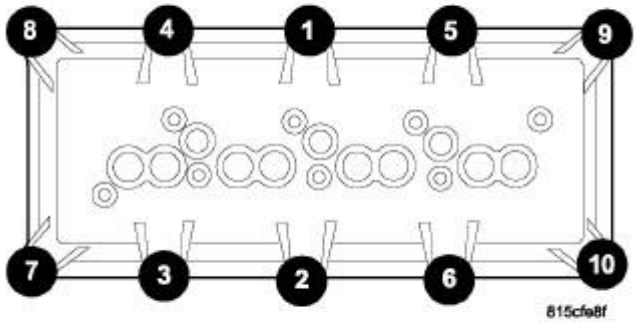

Fig. 82: Cylinder Head Cover Removal/Tightening Sequence
Courtesy of CHRYSLER GROUP, LLC

6. Using the sequence shown in illustration, remove the cylinder head cover retaining bolts.

CAUTION: Do not use harsh cleaners to clean the cylinder head covers. Severe damage to covers may occur.

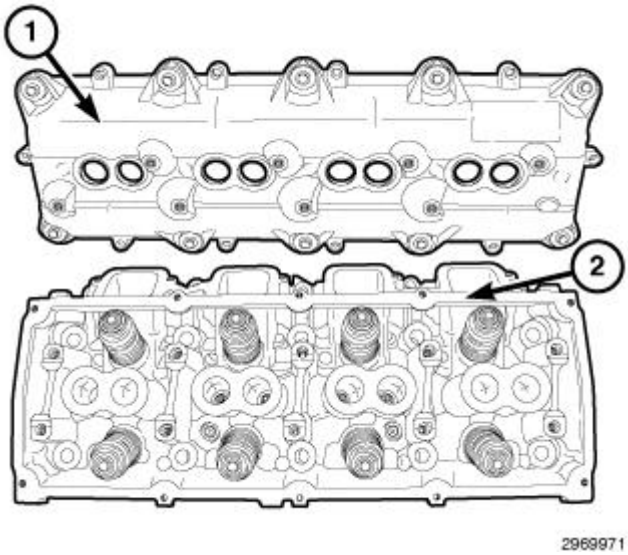

Fig. 83: Cylinder Head & Cover
Courtesy of CHRYSLER GROUP, LLC

7. Remove the cylinder head cover (1).
8. Clean the sealing surface of the cylinder head (2) and cover.

NOTE: The cylinder head cover gasket may be used again, provided no cuts, tears, or deformation have occurred.

INSTALLATION

INSTALLATION

CAUTION: Do not use harsh cleaners to clean the cylinder head covers. Severe damage to covers may occur.

CAUTION: Do not allow other components including the wire harness to rest on or against the engine cylinder head cover. Prolonged contact with other objects may wear a hole in the cylinder head cover.

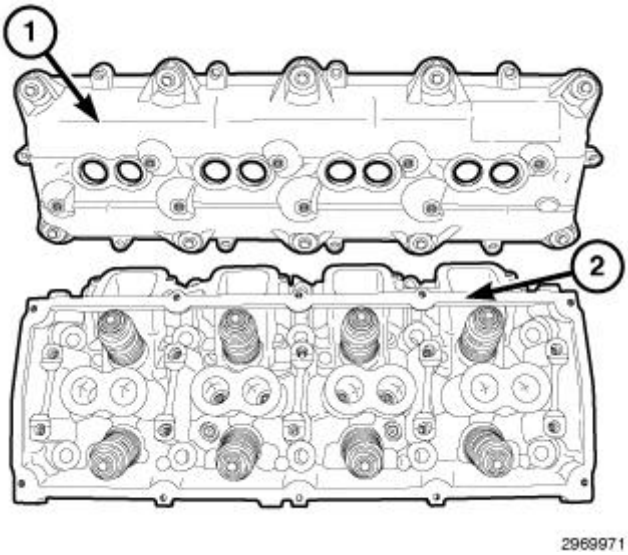

Fig. 84: Cylinder Head & Cover
Courtesy of CHRYSLER GROUP, LLC

NOTE: **The cylinder head cover gasket may be used again, provided no cuts, tears, or deformation have occurred.**

1. Clean the cylinder head cover (1) and the sealing surface of the cylinder head (2). Inspect and replace gasket if necessary.
2. Install the cylinder head cover and hand start all fasteners.

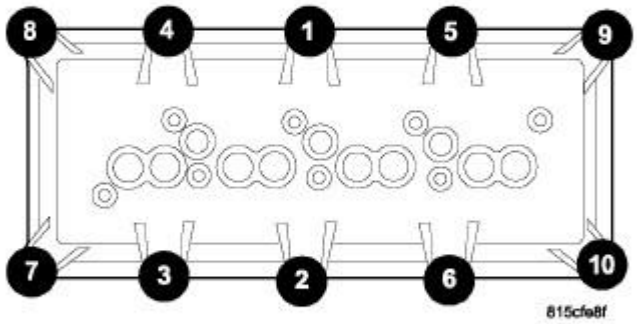

Fig. 85: Cylinder Head Cover Removal/Tightening Sequence
Courtesy of CHRYSLER GROUP, LLC

Using the sequence shown in illustration, tighten the cylinder head cover bolts to 8 N.m (70 lbs in.).

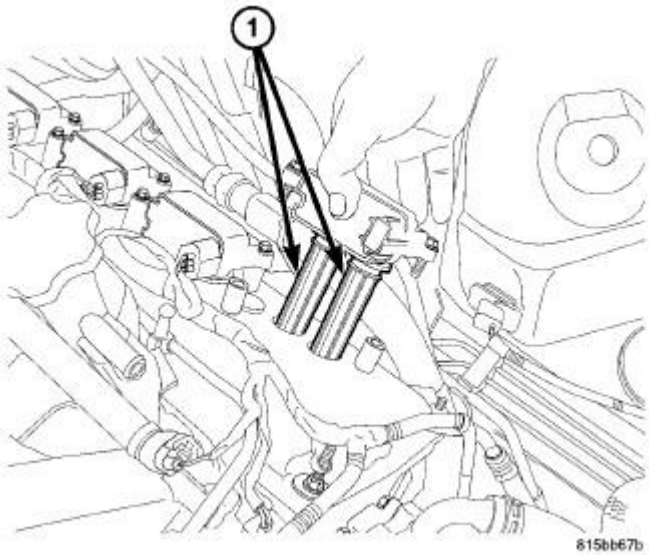

Fig. 86: Removing/Installing Ignition Coil
Courtesy of CHRYSLER GROUP, LLC

3. Before installing the ignition coils, apply dielectric grease to the inside of the spark plug boots (1).
4. Install the ignition coils.

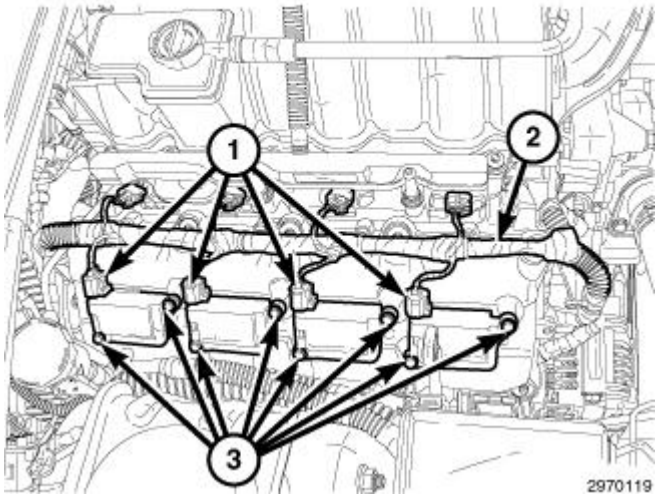

Fig. 87: Ignition Coil Electrical Connectors, Harness & Bolts
Courtesy of CHRYSLER GROUP, LLC

NOTE: Right side shown in illustration, left side similar.

5. Tighten the ignition coil retaining bolts (3) to 7 N.m (62 in. lbs.).

6. Position the electrical harness (2).
7. Connect the ignition coil electrical connectors (1).

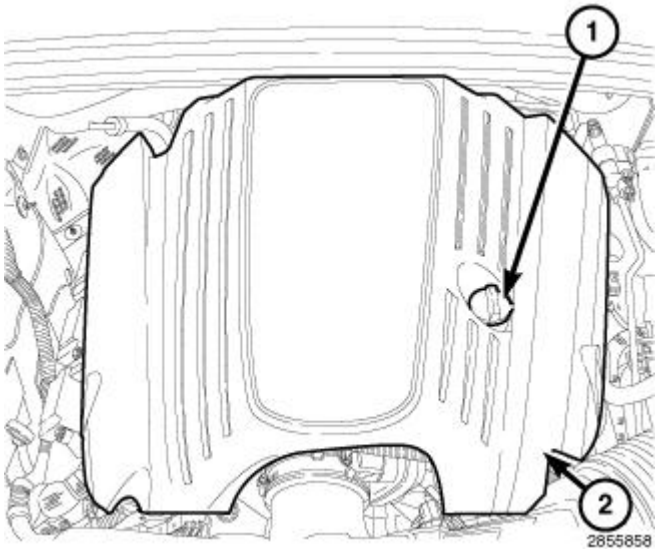

Fig. 88: Oil Fill Cap & Engine Cover
Courtesy of CHRYSLER GROUP, LLC

8. Install the engine cover (2).

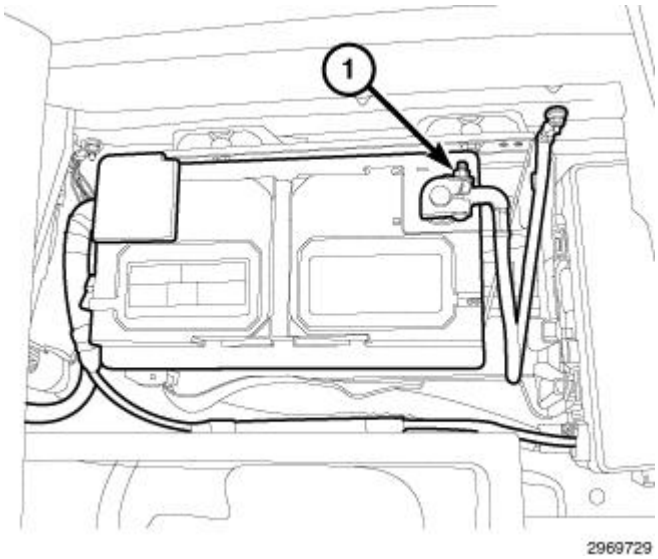

Fig. 89: Negative Battery Cable
Courtesy of CHRYSLER GROUP, LLC

9. Connect the negative battery cable (1).

ROCKER ARM, VALVE

REMOVAL

REMOVAL

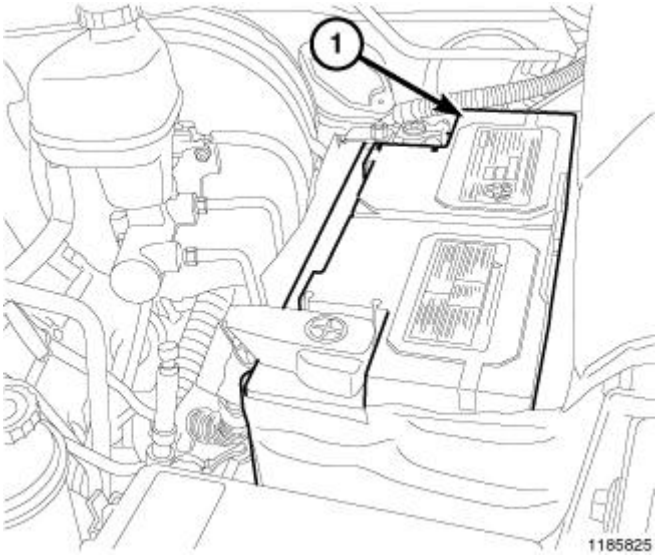

Fig. 90: Negative Battery Cable
Courtesy of CHRYSLER GROUP, LLC

1. Disconnect the negative battery cable (1).
2. Remove the engine cover.

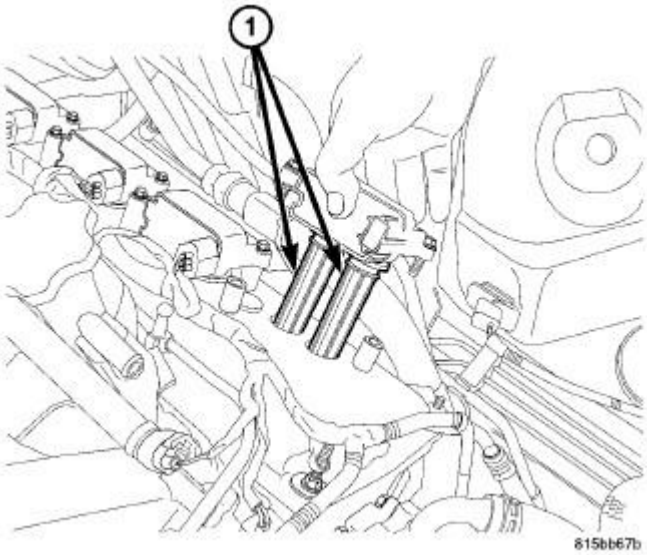

Fig. 91: Removing/Installing Ignition Coil
Courtesy of CHRYSLER GROUP, LLC

3. Remove the ignition coils (1). Refer to **COIL, IGNITION, REMOVAL** .

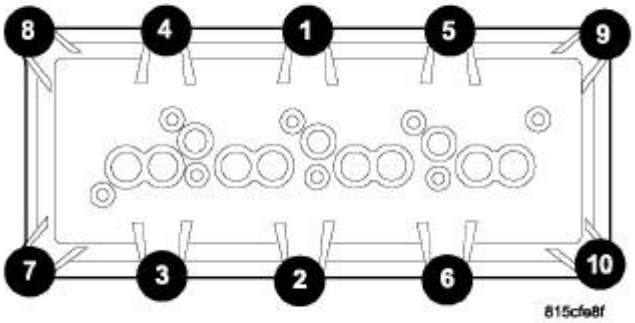

Fig. 92: Cylinder Head Cover Removal/Tightening Sequence
Courtesy of CHRYSLER GROUP, LLC

4. Using the sequence shown in illustration, remove the cylinder head cover. Refer to **COVER(S), CYLINDER HEAD, REMOVAL, 5.7L**.

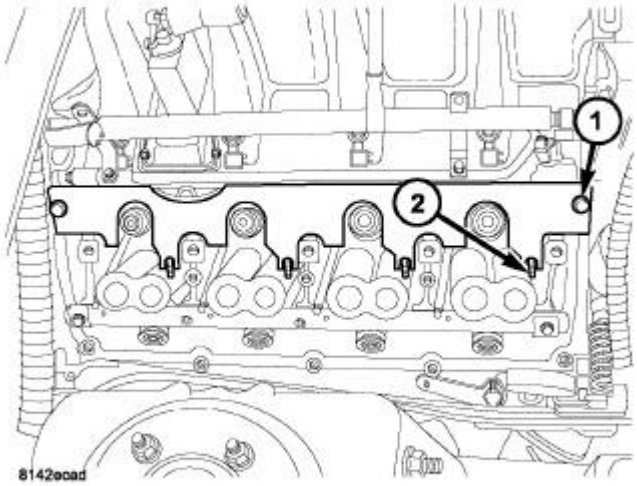

Fig. 93: Pushrod Retaining Plate
Courtesy of CHRYSLER GROUP, LLC

5. Install the pushrod retainer (special tool #9070, Retainer, Push Rod) (1).

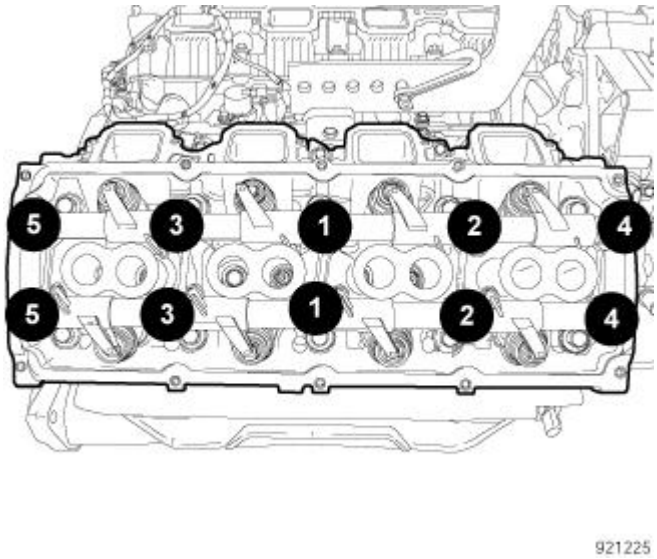

Fig. 94: Rocker Shafts Retaining Bolt Removal & Tightening Sequence
Courtesy of CHRYSLER GROUP, LLC

6. Using the sequence shown in illustration, loosen the rocker shafts retaining bolts.

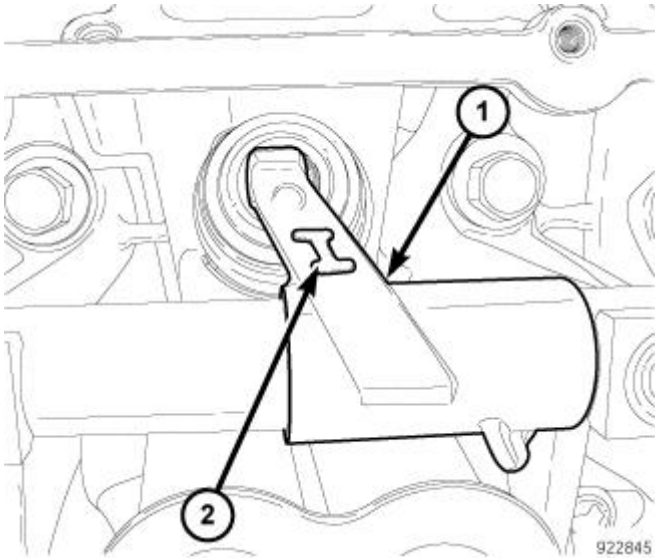

Fig. 95: Intake Rocker Arm Marking
Courtesy of CHRYSLER GROUP, LLC

CAUTION: The rocker shaft assemblies are not interchangeable between the intake and the exhaust, failure to install them in the correct location could result in engine damage. The intake rocker arms (1) are marked with the letter "I" (2).

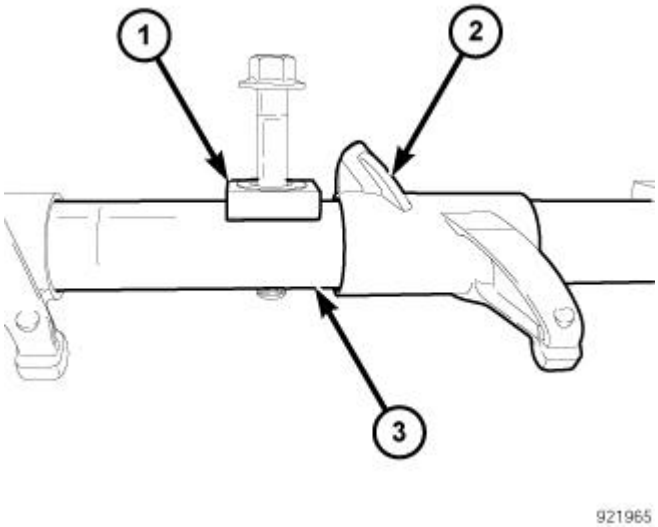

Fig. 96: Retainers, Rocker Arm & Rocker Shaft
Courtesy of CHRYSLER GROUP, LLC

CAUTION: Do not remove the retainers (1) from the rocker shaft (3).

7. Remove the rocker shaft (3). Note the rocker shaft location during removal.

CAUTION: The longer pushrods are for the exhaust side and the shorter pushrods are for the intake side.

8. Remove the pushrods. Note the pushrod location during removal.

INSTALLATION

INSTALLATION

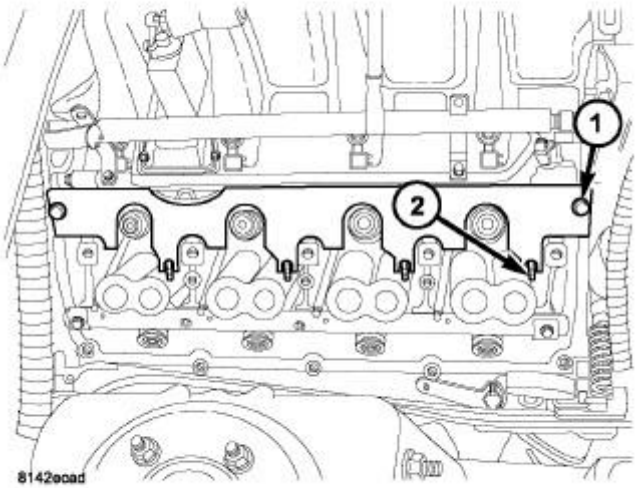

Fig. 97: Pushrod Retaining Plate
Courtesy of CHRYSLER GROUP, LLC

CAUTION: The longer pushrods are for the exhaust side and the shorter pushrods are for the intake side.

1. Install the pushrods in the same order as removed.
2. Install the pushrod retainer (special tool #9070, Retainer, Push Rod) (1).

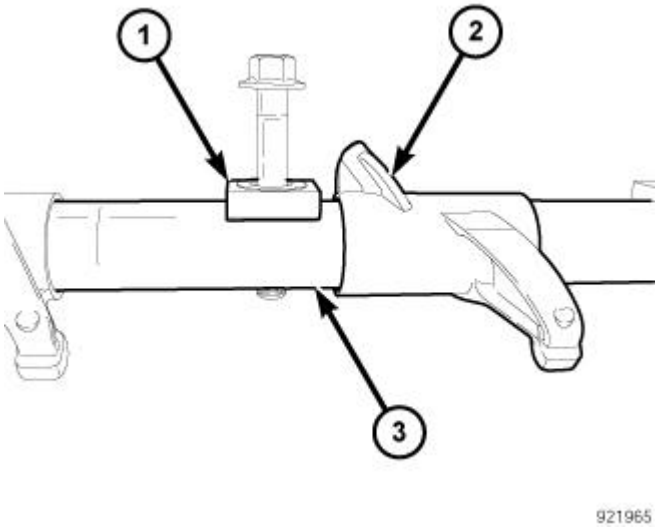

Fig. 98: Retainers, Rocker Arm & Rocker Shaft
Courtesy of CHRYSLER GROUP, LLC

CAUTION: Make sure that the retainers (1) and the rocker arms (2) are not overlapped when tightening bolts or engine damage could result.

CAUTION: Due to the changes in the pushrod clearance holes in the Eagle 5.7L cylinder heads, close attention must be given when installing the pushrod(s) into the tappet(s). Once the pushrod(s) have been installed, use a suitable light to look down through the pushrod hole (s). This will allow you to verify the pushrod(s) are centered properly in the tappet(s) and avoid engine damage. Recheck after the rocker shaft assembly has been installed and tightened to specification.

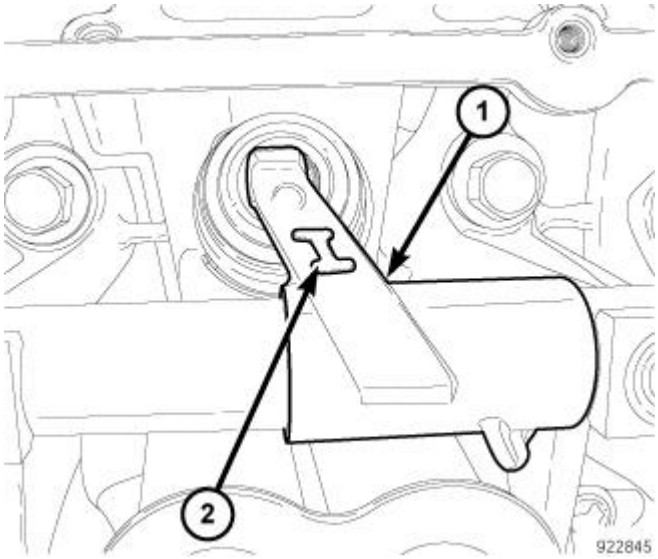

Fig. 99: Intake Rocker Arm Marking
Courtesy of CHRYSLER GROUP, LLC

CAUTION: The rocker shaft assemblies are not interchangeable between the intake and the exhaust, failure to install them in the correct location could result in engine damage. The intake rocker arms (1) are marked with the letter "I" (2).

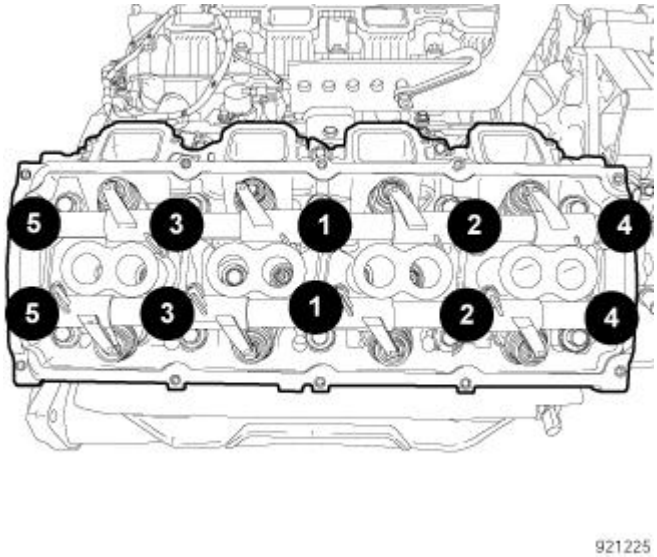

Fig. 100: Rocker Shafts Retaining Bolt Removal & Tightening Sequence
Courtesy of CHRYSLER GROUP, LLC

3. Install the rocker shaft assemblies in the same order as removed.
4. Using the sequence shown in illustration, tighten the rocker shaft bolts to 22 N.m (16 ft. lbs.).

CAUTION: Do Not rotate or crank the engine during or immediately after rocker arm installation. Allow the hydraulic roller tappets adequate time to bleed down (about five minutes).

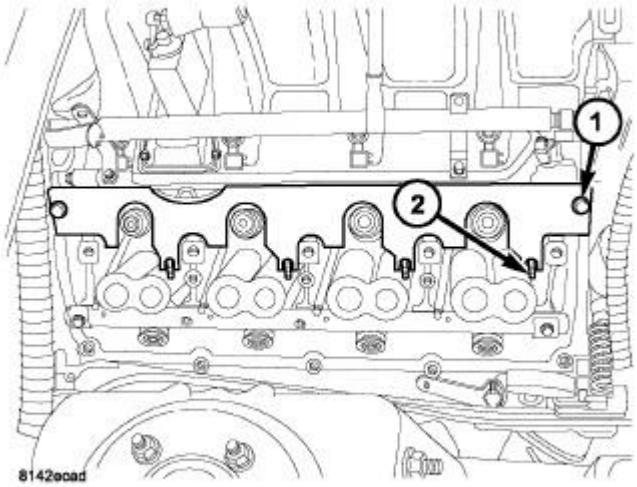

Fig. 101: Pushrod Retaining Plate
Courtesy of CHRYSLER GROUP, LLC

5. Remove pushrod retainer (special tool #9070, Retainer, Push Rod) (1).

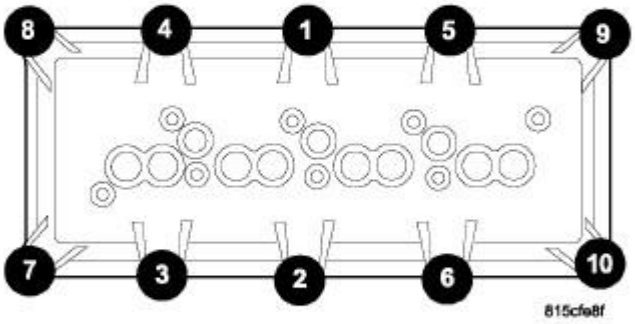

Fig. 102: Cylinder Head Cover Removal/Tightening Sequence
Courtesy of CHRYSLER GROUP, LLC

6. Using the sequence shown in illustration, install the cylinder head cover. Refer to **COVER(S), CYLINDER HEAD, INSTALLATION, 5.7L**.

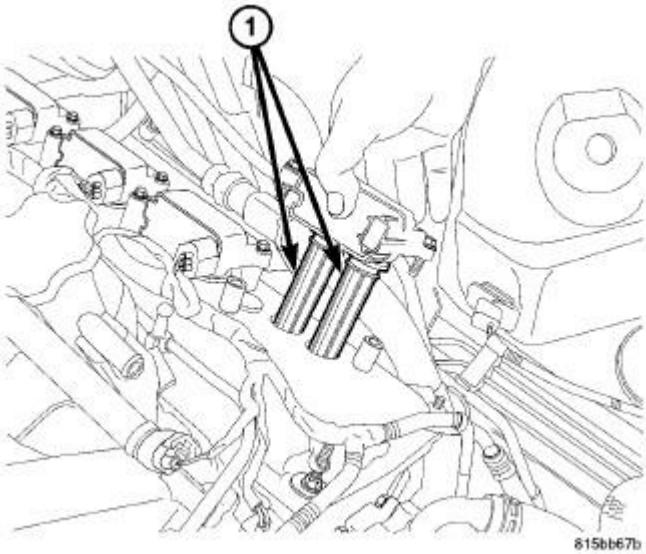

Fig. 103: Removing/Installing Ignition Coil
Courtesy of CHRYSLER GROUP, LLC

7. Install the ignition coils (1). Refer to **COIL, IGNITION, REMOVAL** .
8. Install the engine cover.

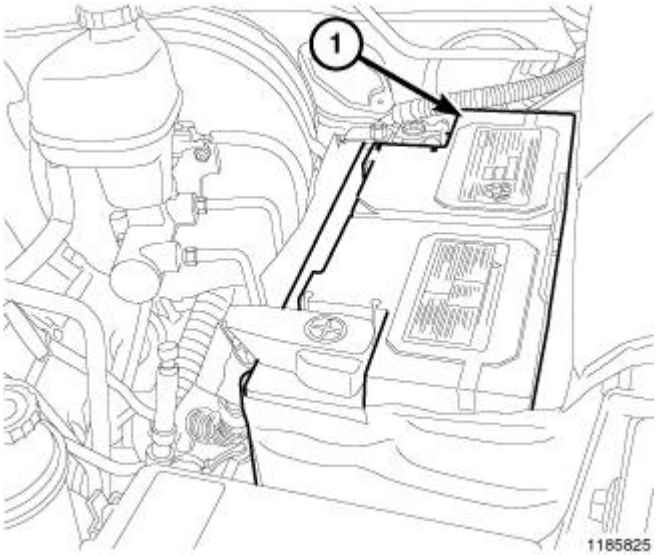

Fig. 104: Negative Battery Cable
Courtesy of CHRYSLER GROUP, LLC

9. Connect the negative battery cable (1).

SEAL(S), VALVE GUIDE

DESCRIPTION

DESCRIPTION

The valve guide seals are made of rubber and incorporate an integral steel valve spring seat. The integral garter spring maintains consistent lubrication control to the valve stems.

REMOVAL

REMOVAL

The valve stem seal is integral with the valve spring seat, for removal. Refer to **SPRING(S), VALVE, REMOVAL, 5.7L**.

INSTALLATION

INSTALLATION

The valve stem seal is integral with the valve spring seat, for installation. Refer to **SPRING(S), VALVE, INSTALLATION, 5.7L**.

SPRING(S), VALVE

REMOVAL

REMOVAL

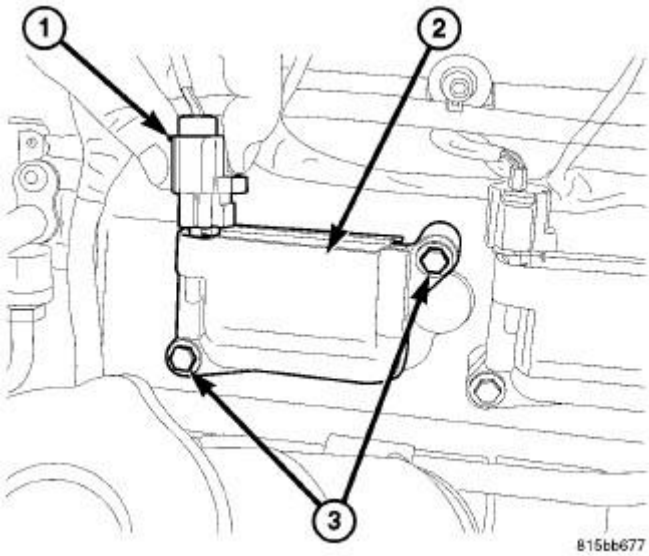

Fig. 105: Ignition Coil Connector, Ignition Coil & Mounting Bolts
Courtesy of CHRYSLER GROUP, LLC

1. Disconnect the negative battery cable.
2. Remove the air cleaner assembly and the air intake resonator, Refer to **BODY, AIR CLEANER, REMOVAL, 5.7L**.
3. Remove the ignition coil electrical connectors (1).
4. Remove the ignition coils (2).
5. Remove the spark plugs.

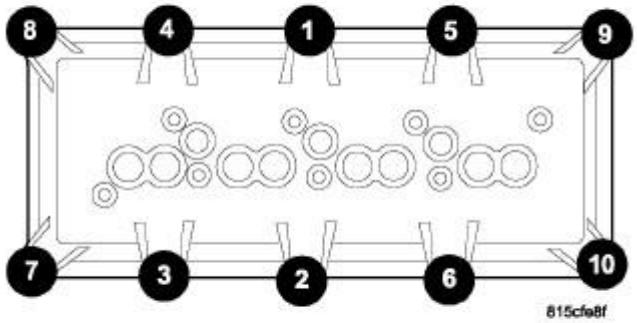

Fig. 106: Cylinder Head Cover Removal/Tightening Sequence
Courtesy of CHRYSLER GROUP, LLC

6. Using the sequence shown in illustration, remove the cylinder head cover retaining bolts and remove the cylinder head cover. Refer to **COVER(S), CYLINDER HEAD, REMOVAL, 5.7L**.

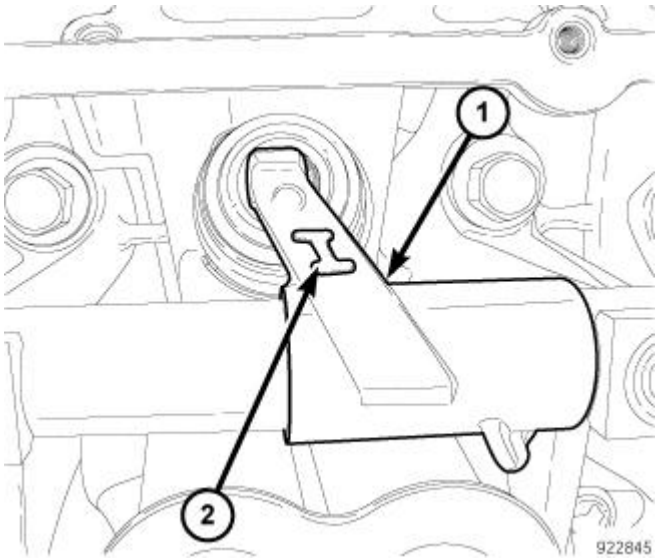

Fig. 107: Intake Rocker Arm Marking
Courtesy of CHRYSLER GROUP, LLC

CAUTION: The rocker shaft assemblies are not interchangeable between the intake and the exhaust, failure to install them in the correct location could result in engine damage. The intake rocker arms (1) are marked

with the letter "I" (2).

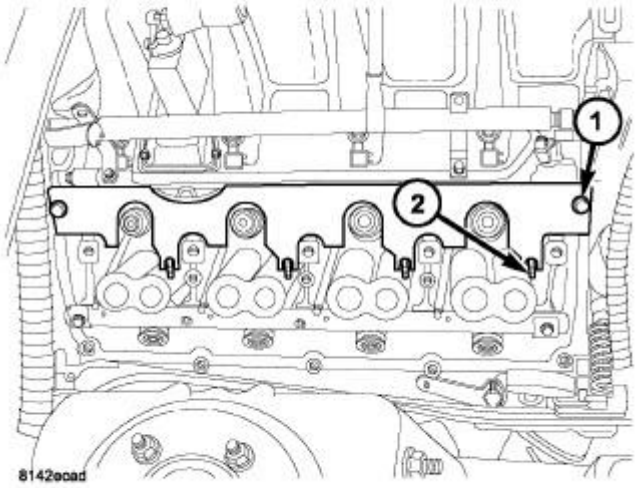

Fig. 108: Pushrod Retaining Plate
Courtesy of CHRYSLER GROUP, LLC

CAUTION: The piston must be at TDC and both valves closed on the cylinder to be serviced.

CAUTION: The longer pushrods are for the exhaust side and the shorter pushrods are for the intake side.

NOTE: Pushrods must be installed in the same order as removed.

NOTE: If removing the intake valve spring, install the pushrod retainer (special tool #9070, Retainer, Push Rod) (1).

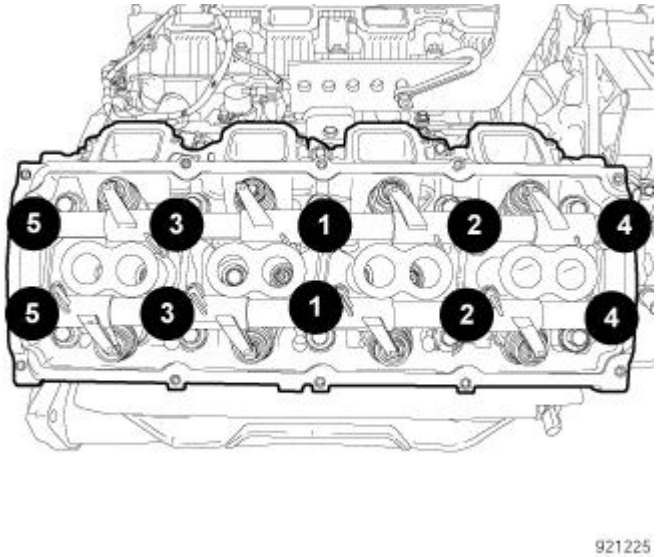

Fig. 109: Rocker Shafts Retaining Bolt Removal & Tightening Sequence
Courtesy of CHRYSLER GROUP, LLC

7. Using the sequence shown in illustration, remove the exhaust/intake rocker arm shaft retaining bolts.

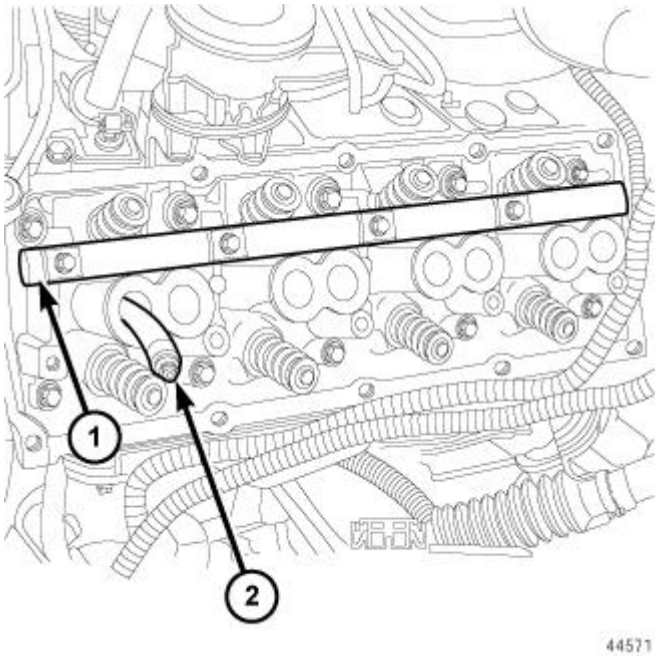

Fig. 110: Rocker Arm Valve Spring Compressor Shaft & Air Hose
Courtesy of CHRYSLER GROUP, LLC

NOTE: **Tap the top of the valve spring retainer to loosen the spring retainers locks.**

8. Install the rocker arm valve spring compressor shaft (special tool #9065B, Compressor, Valve Spring) (1).

9. Install the spring compressor adapter arm (special tool #9065B, Compressor, Valve Spring) if needed.
10. Insert an air hose (2) into the spark plug hole and charge the cylinder with air.

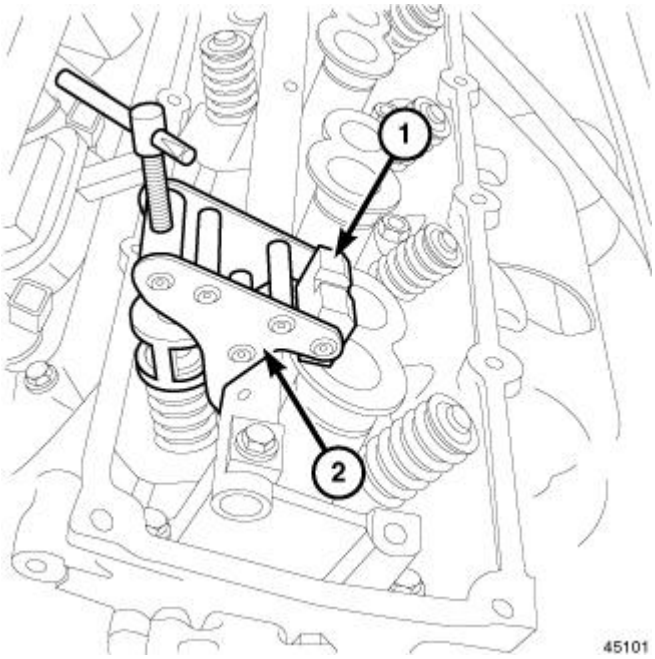

Fig. 111: Intake Valve Spring Removal/Installation
Courtesy of CHRYSLER GROUP, LLC

NOTE: **A fulcrum assembly (1) must be rotated to the appropriate setting as marked on the tool for proper valve spring alignment.**

NOTE: **Tap the top of the valve spring retainer to loosen the spring retainers locks.**

11. Compress the valve spring with valve spring compressor (1) and remove the valve retainer locks.
12. Release the spring compressor and remove valve spring.

NOTE: **All valve springs and seals are removed in the same manner and are interchangeable between intake and exhaust.**

13. Remove the valve seal.

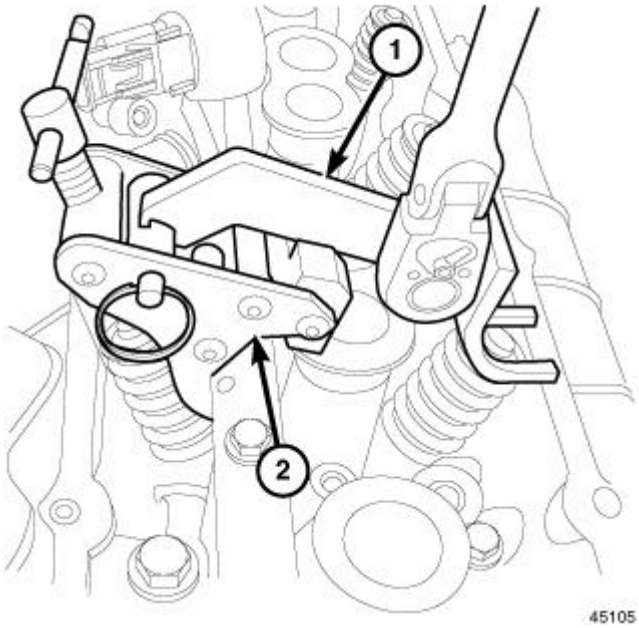

Fig. 112: Valve Spring Tool Adapter
Courtesy of CHRYSLER GROUP, LLC

NOTE: **When the exhaust spring, seal or valve needs servicing. The exhaust adapter arm (1) must be installed to the spring compressor clamp (3).**

14. Install tool (special tool #9065B, Compressor, Valve Spring), exhaust adapter arm (1) to the spring compressor (3) for servicing the exhaust side.

INSTALLATION

INSTALLATION

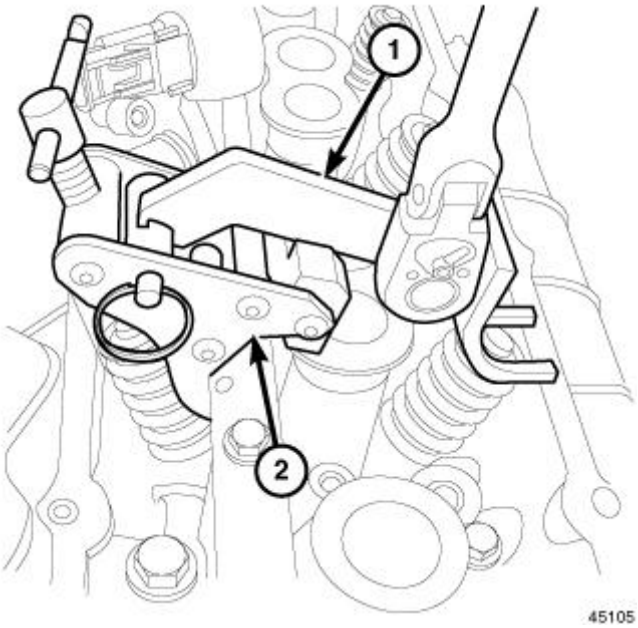

Fig. 113: Valve Spring Tool Adapter
Courtesy of CHRYSLER GROUP, LLC

1. Install the valve seal.
2. Install the valve spring.
3. Using the valve spring compressor (special tool #9065B, Compressor, Valve Spring) (1), compress the valve spring and install the valve spring retainer and locks.
4. Remove the exhaust extension arm (1).

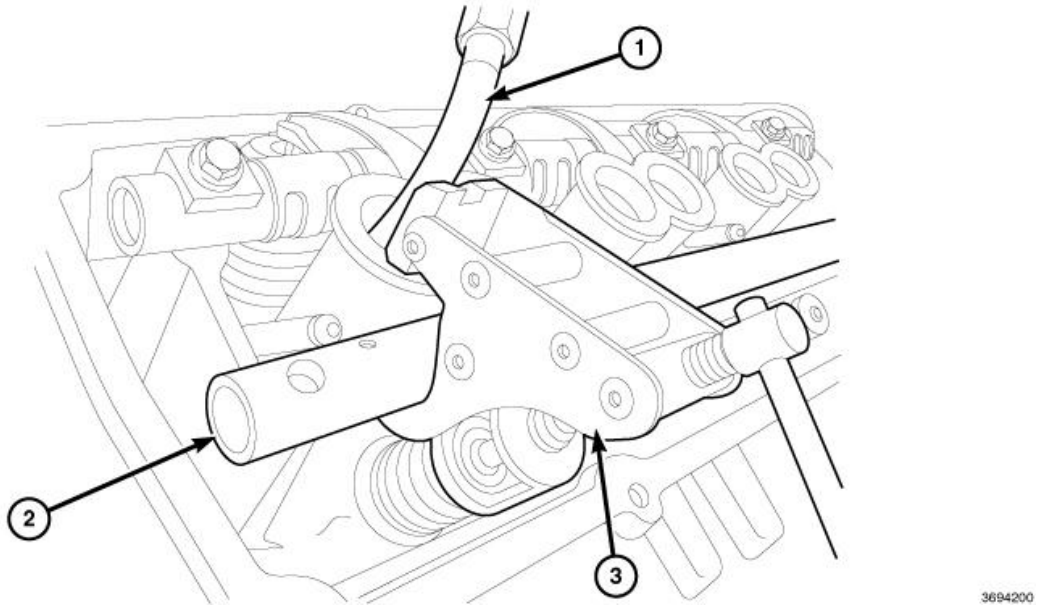

Fig. 114: Valve Spring Compressor
Courtesy of CHRYSLER GROUP, LLC

5. Remove the spring compressor (3).
6. Remove the air hose from the spark plug hole.

NOTE: All valve springs and seals are installed in the same manner.

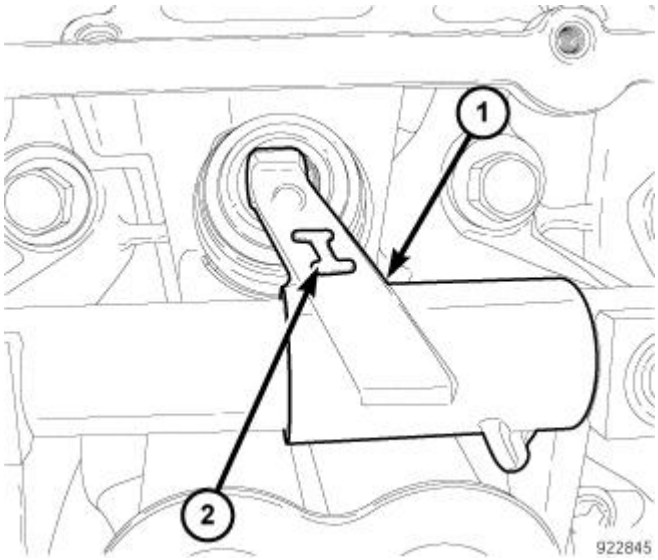

Fig. 115: Intake Rocker Arm Marking
Courtesy of CHRYSLER GROUP, LLC

CAUTION: The rocker shaft assemblies are not interchangeable between the intake and the exhaust, failure to install them in the correct location could result in engine damage. The intake rocker arms (1) are marked with the letter "I" (2).

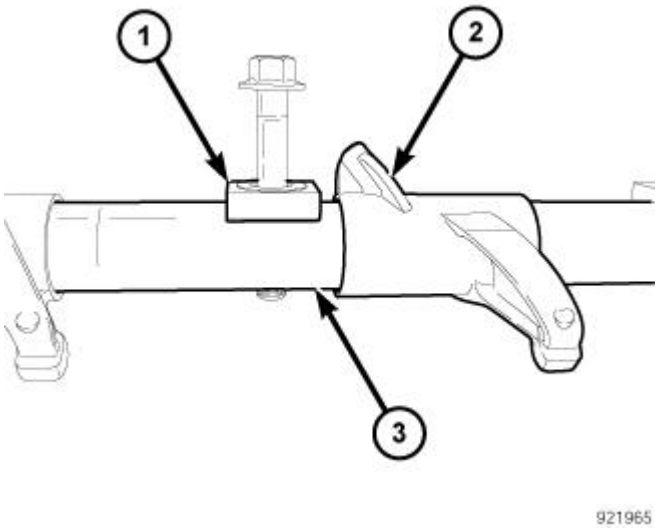

Fig. 116: Retainers, Rocker Arm & Rocker Shaft
Courtesy of CHRYSLER GROUP, LLC

CAUTION: Make sure that the retainers (1) and the rocker arms (2) are not overlapped when tightening bolts or engine damage could result.

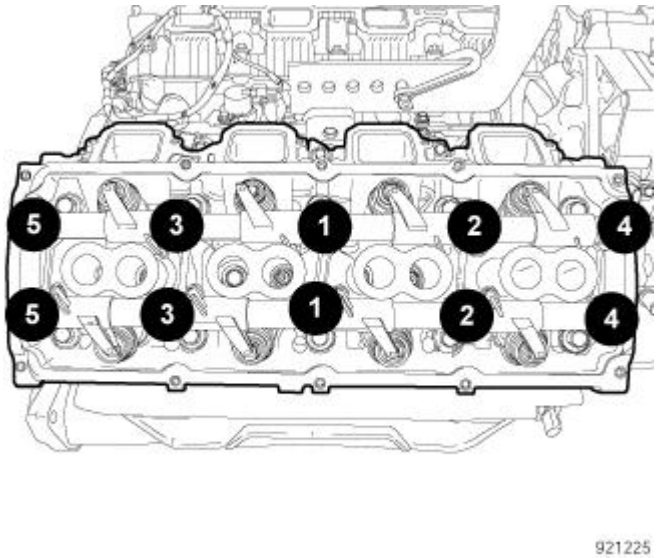

Fig. 117: Rocker Shafts Retaining Bolt Removal & Tightening Sequence
Courtesy of CHRYSLER GROUP, LLC

CAUTION: Due to the changes in the pushrod clearance holes in the Eagle 5.7L cylinder heads, close attention must be given when installing the pushrod(s) into the tappet(s). Once the pushrod(s) have been installed, use a suitable light to look down through the pushrod hole (s). This will allow you to verify the pushrod(s) are centered properly in the tappet(s) and avoid engine damage. Recheck after the rocker shaft assembly has been installed and tightened to specification.

CAUTION: The longer pushrods are for the exhaust side and the shorter pushrods are for the intake side.

NOTE: Pushrods must be installed in the same order as removed.

7. Install the rocker arm shaft and pushrods. Refer to **ROCKER ARM, VALVE, INSTALLATION, 5.7L**.
8. Using the sequence shown in illustration, tighten the rocker shaft bolts to 22 N.m (16 ft. lbs.).

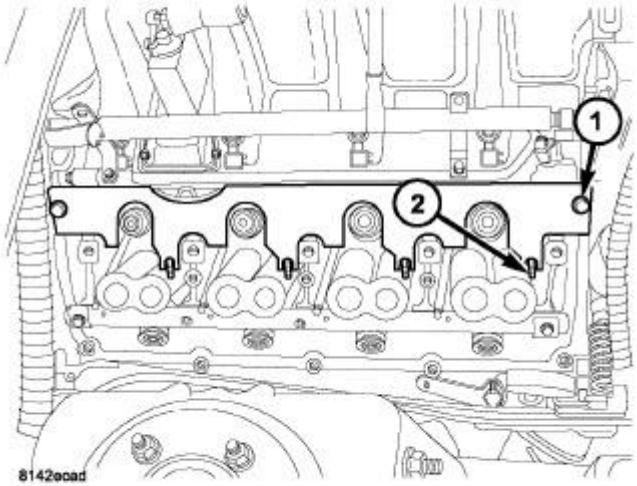

Fig. 118: Pushrod Retaining Plate
Courtesy of CHRYSLER GROUP, LLC

9. If used, remove the pushrod retainer (special tool #9070, Retainer, Push Rod) (1).

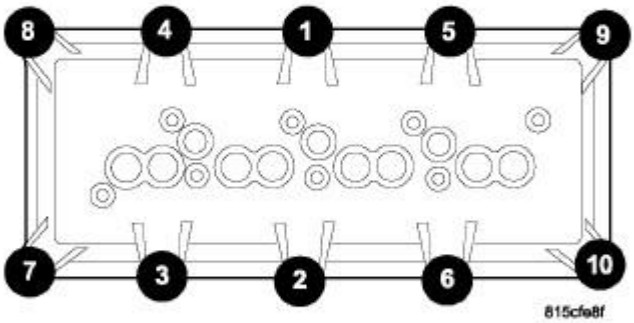

Fig. 119: Cylinder Head Cover Removal/Tightening Sequence
Courtesy of CHRYSLER GROUP, LLC

CAUTION: Do not use harsh cleaners to clean the cylinder head covers. Severe damage to covers may occur.

CAUTION: Do not allow other components including the wire harness to rest on or against the engine cylinder head cover. Prolonged contact with other objects may wear a hole in the cylinder head cover.

10. Clean the cylinder head cover and both sealing surfaces, inspect and replace the gasket as necessary.
11. Install the cylinder head cover and hand start all fasteners. Verify that all double ended studs are in the correct location.
12. Using the sequence shown in illustration, tighten the cylinder head cover retaining bolts to 8 N.m (71 in. lbs.).
13. Install the spark plugs.

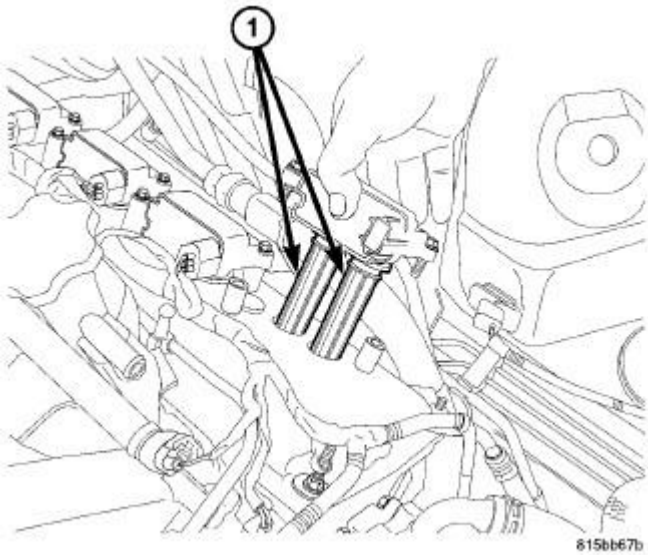

Fig. 120: Removing/Installing Ignition Coil
Courtesy of CHRYSLER GROUP, LLC

14. Before installing the ignition coils, apply dielectric grease to the inside of the spark plug boots.

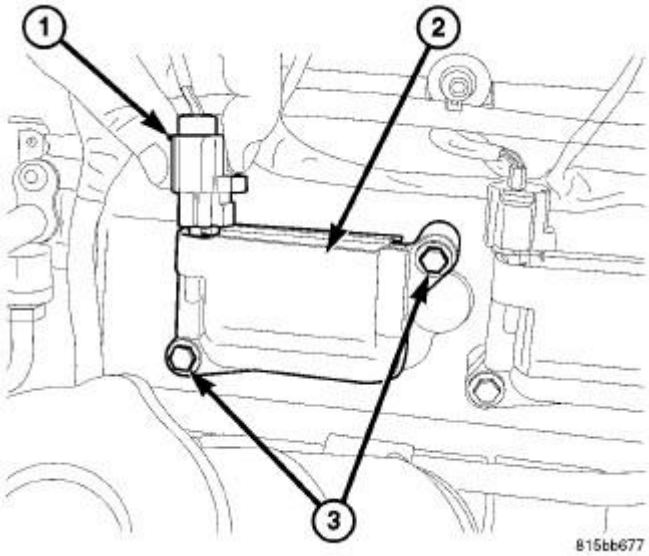

Fig. 121: Ignition Coil Connector, Ignition Coil & Mounting Bolts
Courtesy of CHRYSLER GROUP, LLC

15. Install the ignition coil (2) on the plugs and tighten the fasteners (3) to 7 N.m (62 in. lbs).
16. Connect the ignition coil electrical connectors (1).
17. Install the air intake resonator and the air cleaner assembly. Refer to **BODY, AIR CLEANER, INSTALLATION, 5.7L**.
18. Connect the negative battery cable.

VALVES, INTAKE AND EXHAUST

DESCRIPTION

VALVE GUIDES

The valve guides are made of powdered metal and pressed into the cylinder head. The guides are not replaceable or serviceable, and valve guide reaming is not recommended. If the guides are worn beyond acceptable limits, replace the cylinder heads.

VALVES

Both the intake and the exhaust valves are made of steel. The intake valve is 50.93 mm (2.00 inches) in diameter and the exhaust valve is 39.53 mm (1.55 inches) in diameter. All valves use three-bead lock keepers to retain the springs and promote valve rotation.

STANDARD PROCEDURE

STANDARD PROCEDURE - REFACING

VALVE FACE AND VALVE SEAT ANGLE CHART

DESCRIPTION	SPECIFICATION	
	Metric	Standard
Seat Width		
Intake	1.18 - 1.62 mm	0.0464 - 0.0637 in.
Exhaust	1.48 - 1.92 mm	0.058 - 0.075 in.
Face Angle	45° - 45 1/2 °	
Seat Angle	44 1/2 ° - 45°	

NOTE: **Valve seats that are worn or burned can be reworked, provided that correct angle and seat width are maintained. Otherwise the cylinder head must be replaced.**

NOTE: **When refacing valves and valve seats, it is important that the correct size valve guide pilot be used for reseating stones. A true and complete surface must be obtained.**

1. Using a suitable dial indicator, measure the center of the valve seat. Total run out must not exceed 0.051 mm (0.002 in).
2. Apply a small amount of Prussian Blue to the valve seat. Insert the valve into the cylinder head. Rotate valve while applying light pressure on the valve seat. Remove the valve and examine the valve face. If the blue is transferred below the top edge of the valve face, lower the valve seat using a 15 degree stone. If the blue is transferred to the bottom edge of the valve face, raise the valve seat using a 65 degree stone.
3. When the seat is properly positioned the width of the intake seat must be 1.18 - 1.62 mm (0.0464 - 0.0637 in.) and the exhaust seat must be 1.48 - 1.92 mm (0.058 - 0.075 in.).
4. Check the valve spring installed height after refacing the valve and seat. The installed height for both intake and exhaust valve springs must not exceed 46.0 mm (1.81 in.).
5. The valve seat must maintain a seat angle of 44 1/2 ° - 45°.
6. The valve face must maintain a face angle of 45° - 45 1/2 °.

REMOVAL

REMOVAL

1. Remove the cylinder head. Refer to **CYLINDER HEAD, REMOVAL, 5.7L**.
2. Compress valve springs using Valve Spring Compressor Tool (special tool #C-3422-D, Compressor, Valve Spring) and Adapter (special tool #8464, Adapter, Valve Spring).
3. Remove valve retaining locks, valve spring retainers, valve stem seals and valve springs.
4. Before removing valves, remove any burrs from valve stem lock grooves to prevent damage to the valve guides. Identify valves to ensure installation in original location.

INSTALLATION

INSTALLATION

1. Clean valves thoroughly. Discard burned, warped and cracked valves.
2. Remove the carbon and varnish deposits from the inside of the valve guides with a reliable guide cleaner.
3. Measure the valve stems for wear. If the wear exceeds 0.051 mm (0.002 inch), replace the valve.
4. Coat the valve stems with clean engine oil and insert them into the cylinder head.
5. If the valves or seats are ground, check the valve stem height. If the valve stem is too long, replace the cylinder head.
6. Install new seals on all valve guides. Install the valve springs and valve retainers.
7. Compress the valve springs with the Valve Spring Compressor (special tool #C-3422-D, Compressor, Valve Spring) and Valve Spring Adapter (special tool #8464, Adapter, Valve Spring). Install the locks and release the tool. If the valves and/or seats are ground, measure the installed height of the springs. Make sure the measurement is taken from the bottom of the spring seat in the cylinder head to the bottom surface of the spring retainer.
8. Install the cylinder head. Refer to **CYLINDER HEAD, INSTALLATION, 5.7L**.

ENGINE BLOCK

CLEANING

CLEANING

Thoroughly clean the oil pan and engine block gasket surfaces.

Use compressed air to clean:

- Gallery at the oil filter adaptor hole
- Front and rear oil gallery holes
- Multiple Displacement System (MDS) oil gallery holes in the valley
- Oil feed holes for the crankshaft main bearings

Drilled and tapped holes should be free of debris upon assembly.

Once the block has been completely cleaned, apply Loctite® PST pipe sealant with Teflon 592 to the threads of the front and rear oil gallery plugs and coolant drain plugs. Tighten the oil gallery 1/4 inch x 18 NPT plugs to 20 N.m (15 ft. lbs.). Tighten the coolant drain 1/4 inch x 18 NPT plugs to 34 N.m (25 ft. lbs.). Tighten the 3/8 inch x 18 NPT plugs to 27 N.m (20 ft. lbs.).

INSPECTION

INSPECTION

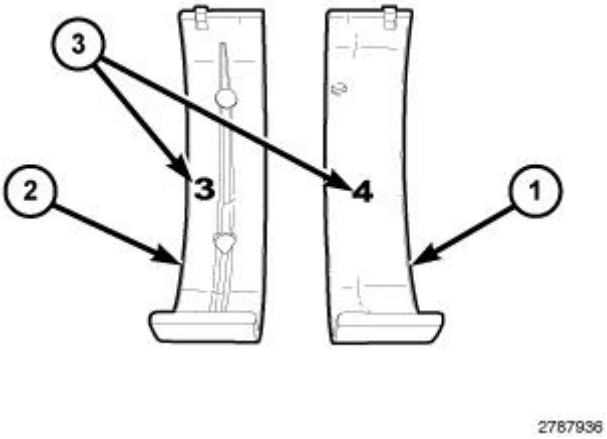

Fig. 122: Main Bearing Inserts
Courtesy of CHRYSLER GROUP, LLC

1. Wipe the main bearing inserts (1, 2) clean.
2. Inspect the inserts for abnormal wear patterns, scoring, grooving, fatigue, pitting and for metal or other foreign material imbedded in the lining.
3. Inspect the back of the inserts for fractures, scrapes or irregular wear patterns.
4. Inspect the insert locking tabs for damage.
5. Inspect the crankshaft thrust washers for scoring, scratches, wear or blueing.
6. Replace any bearing that shows abnormal wear.
7. Inspect the main bearing bores for signs of scoring, nicks and burrs.
8. If the cylinder block main bearing bores show damage, replace the engine block.

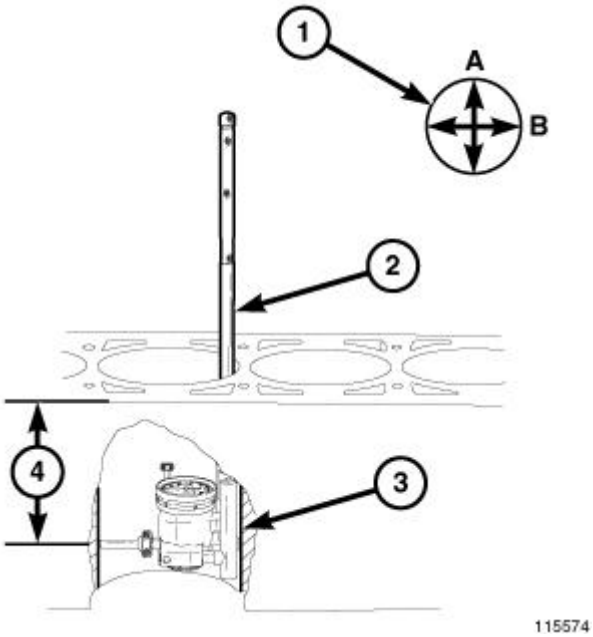

Fig. 123: Measuring Cylinder Bore Diameter
Courtesy of CHRYSLER GROUP, LLC

9. Use Cylinder Indicator (special tool #C-119, Cylinder Indicator) (2) to correctly measure the inside diameter of the cylinder bore (3). A cylinder bore gauge capable of reading in 0.003 mm (0.0001 in.) Increments is required. If a bore gauge is not available, do not use an inside micrometer.
10. Measure the inside diameter of the cylinder bore at three levels below the top of the bore (4). Start at the top of the bore, perpendicular (across or at 90°) to the axis of the crankshaft at point A (1).
11. Repeat the measurement near the middle of the bore then repeat the measurement near the bottom of the bore.
12. Determine the taper by subtracting the smaller diameter from the larger diameter.
13. Rotate the measuring device 90° to point B (1) and repeat the three measurements. Verify that the maximum taper is within specifications.
14. Determine out-of-roundness by comparing the difference between each measurement.
15. If the cylinder bore taper does not exceed 0.025 mm (0.001 inch) and out-of-roundness does not exceed 0.015 mm (0.0006 inch) then the cylinder bore can be honed. If the cylinder bore taper or out- of-round condition exceeds the maximum limits, replace the cylinder block.

NOTE: **A slight amount of taper always exists in the cylinder bore after the engine has been in use for a period of time.**

ASSEMBLY, VARIABLE VALVE TIMING, 5.7L

DESCRIPTION

DESCRIPTION

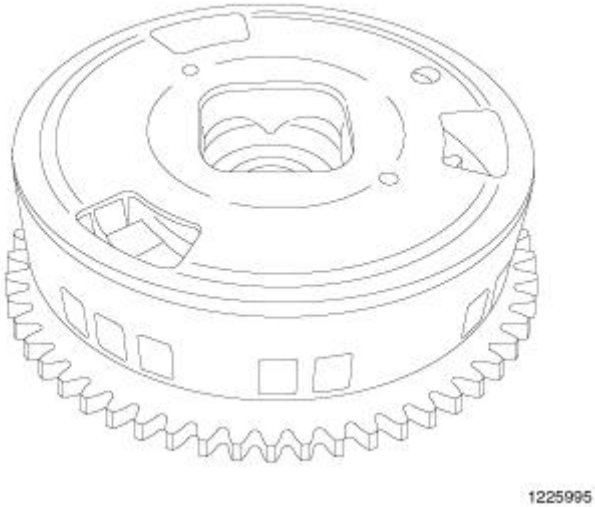

Fig. 124: Variable Cam Timing (VCT) Assembly
Courtesy of CHRYSLER GROUP, LLC

The 5.7L Eagle engine is equipped with Variable Cam Timing (VCT). This system advances and/or retards the camshaft timing to improve engine performance, mid-range torque, idle quality, fuel economy, and reduce emissions. The VCT assembly is sometimes referred to as a camshaft phaser.

CAUTION: Never attempt to disassemble the camshaft phaser, severe engine damage could result.

The VCT assembly consists of the camshaft sprocket and a timing phaser. The VCT phaser assembly bolts to the camshaft and is serviced as an assembly.

OPERATION

OPERATION

The Variable Cam Timing (VCT) assembly is actuated with engine oil pressure. The oil flow to the VCT assemblies are controlled by an Oil Control Valve (OCV). The OCV consist of a Pulse Width Modulated (PWM) solenoid and a spool valve. The PCM actuates the OCV to control oil flow through the spool valve into the VCT assemblies. The VCT assembly consists of a rotor, stator, and sprocket. The stator is connected to the timing chain through the sprocket. The rotor is connected to the camshaft. Oil flow in to the VCT assembly rotates the rotor with respect to the stator, thus rotating the exhaust camshaft with respect to the timing chain and intake camshaft. An infinitely variable cam timing position can be achieved within the limits of the hardware. The CMP monitors the position of the camshaft with respect to the crankshaft and provides feedback to the PCM.

CAUTION: Never attempt to disassemble the camshaft phaser, severe engine damage could result.

REMOVAL

REMOVAL

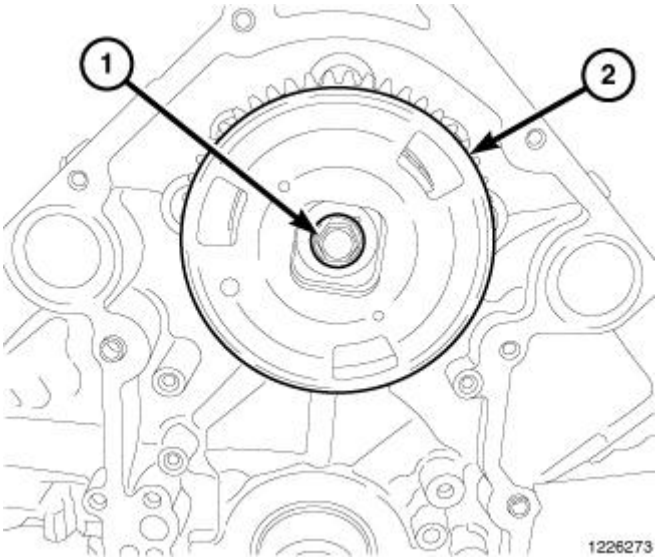

Fig. 125: Camshaft Phaser & Bolt
Courtesy of CHRYSLER GROUP, LLC

CAUTION: Never attempt to disassemble the camshaft phaser, severe engine damage could result.

1. Remove the timing chain and sprockets. Refer to **CHAIN AND SPROCKETS, TIMING, REMOVAL, 5.7L**.
2. Remove the camshaft phaser bolt (1).
3. Remove camshaft phaser (2).

INSTALLATION

INSTALLATION

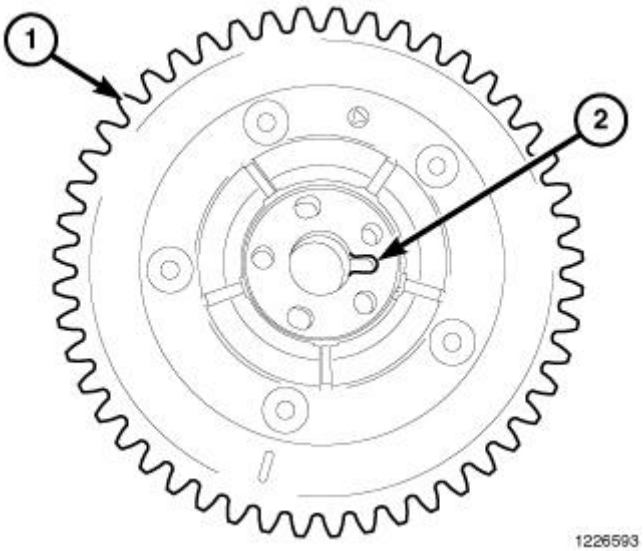

Fig. 126: Phaser Alignment Slot
Courtesy of CHRYSLER GROUP, LLC

1. Align the slot (2) in the phaser (1) with the dowel on the camshaft.

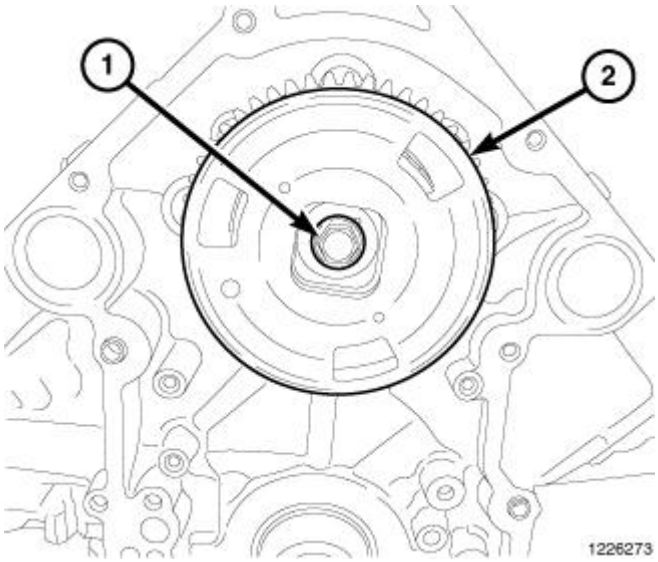

Fig. 127: Camshaft Phaser & Bolt
Courtesy of CHRYSLER GROUP, LLC

CAUTION: Never attempt to disassemble the camshaft phaser, severe engine damage could result.

2. Position the phaser (2) in place and install phaser retaining bolt (1) and tighten to 122 N.m (90 ft. lbs.).
3. Install the timing chain and sprockets. Refer to **CHAIN AND SPROCKETS, TIMING, INSTALLATION, 5.7L**.

BEARING(S), CRANKSHAFT, MAIN

STANDARD PROCEDURE

STANDARD PROCEDURE - CRANKSHAFT MAIN BEARING - FITTING

MAIN BEARING JOURNAL DIAMETER (CRANKSHAFT REMOVED)

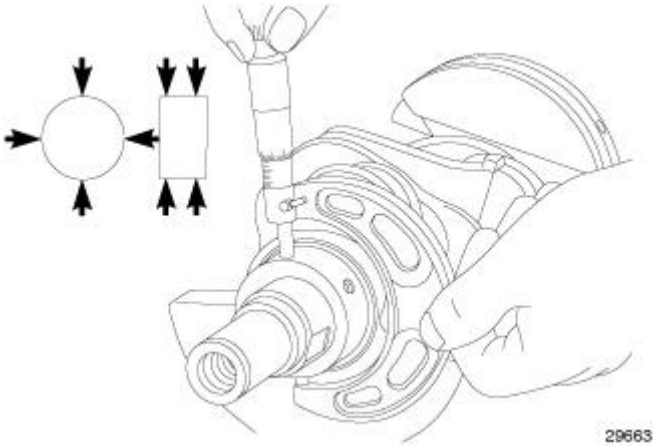

Fig. 128: Measuring Main Bearing Journal Diameter
Courtesy of CHRYSLER GROUP, LLC

With the crankshaft removed from the cylinder block.

Clean the oil off the main bearing journal.

Determine the maximum diameter of the journal with a micrometer. Measure at two locations 90° apart at each end of the journal.

The maximum allowable taper is 0.008 mm (0.0004 inch.) and maximum out of round is 0.005 mm (0.0002 inch). Compare the measured diameter with the journal diameter specification (Main Bearing Fitting Chart). Select the inserts required to obtain the specified bearing-to-journal clearance.

CRANKSHAFT MAIN BEARING SELECTION

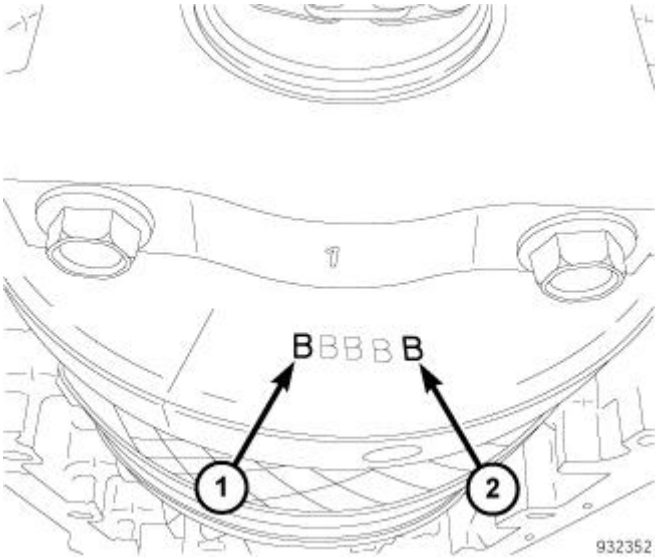

Fig. 129: Crankshaft Counterweight Stamped Grade Identification Marks
Courtesy of CHRYSLER GROUP, LLC

The main bearings are "select fit" to achieve proper oil clearances. For main bearing selection, the crankshaft counterweight has grade identification marks stamped into it. These marks are read from left to right. The left letter (1) refers to the number one main journal and the right letter (2) refers to the number 5 journal.

NOTE: **Service main bearings are coded. These codes identify what size or grade of the bearing.**

MAIN BEARING SELECTION CHART - 5.7L

GRADE MARKING	BEARING SIZE		FOR USE WITH JOURNAL SIZE	
	METRIC	STANDARD	METRIC	STANDARD
A	0.008 mm U/S	0.0004 in. U/S	64.988 - 64.995 mm	2.5585 - 2.5588 in.
B	NOMINAL		64.996 - 65.004 mm	2.5588 - 2.5592 in.
C	0.008 mm O/S	0.0004 in. O/S	65.005 - 65.012 mm	2.5592 - 2.5595 in.

INSPECTION

INSPECTION

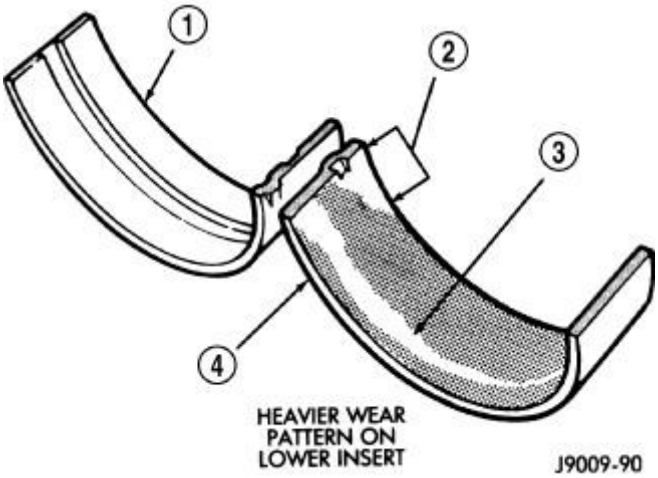

Fig. 130: Main Bearing Wear Patterns
Courtesy of CHRYSLER GROUP, LLC

Wipe the inserts clean and inspect for abnormal wear patterns and for metal or other foreign material imbedded in the lining. Normal main bearing insert wear patterns are illustrated.

NOTE: **If any crankshaft journals are scored, the crankshaft must be repaired or replaced.**

Inspect the back of the inserts for fractures, scrapings or irregular wear patterns.

Inspect the upper insert locking tabs for damage.

Replace all damaged or worn bearing inserts.

CAMSHAFT, ENGINE

REMOVAL

CAMSHAFT CORE HOLE PLUG

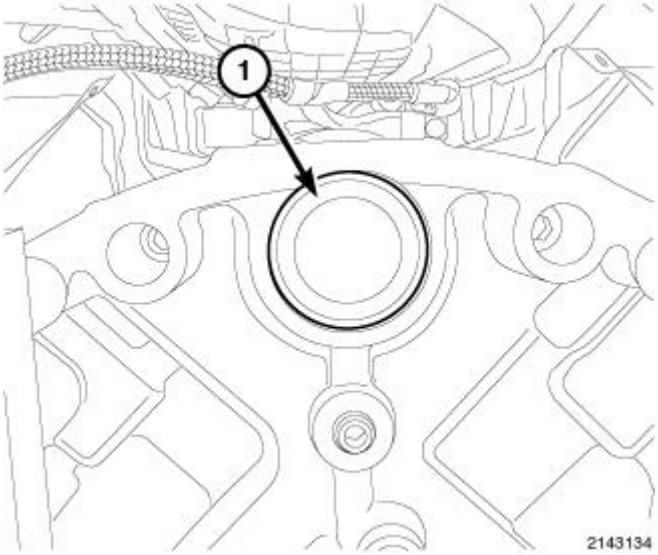

Fig. 131: Camshaft Core Hole Plug
Courtesy of CHRYSLER GROUP, LLC

1. Perform the fuel system pressure release procedure. Refer to **FUEL SYSTEM PRESSURE RELEASE** .
2. Remove the engine from the vehicle. Refer to **REMOVAL, 5.7L**.
3. Remove the flexplate. Refer to **FLEXPLATE, REMOVAL, 5.7L**.

CAUTION: Do not damage the rear surface of the camshaft or the core plug sealing surface, when removing the core plug.

4. Using a suitable sharp punch, punch a small hole in the camshaft core hole plug (1).
5. Insert a short sheet metal screw into the small hole in the camshaft core hole plug.
6. Using a suitable slide hammer puller, remove the rear camshaft core hole plug.

CAMSHAFT

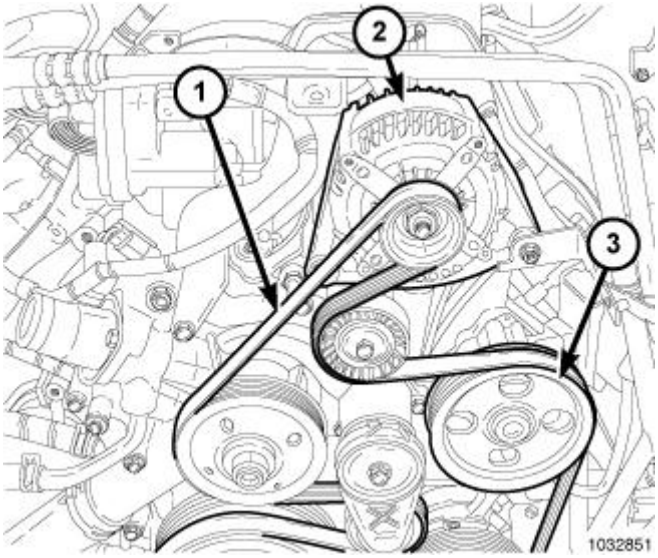

Fig. 132: Accessory Drive Belt Routing, Generator & Power Steering Pump
Courtesy of CHRYSLER GROUP, LLC

1. Remove the battery negative cable.
2. Remove the air cleaner assembly. Refer to **BODY, AIR CLEANER, REMOVAL, 5.7L**.
3. Drain coolant. Refer to **STANDARD PROCEDURE** .
4. Remove the accessory drive belt. Refer to **BELT, SERPENTINE, REMOVAL** .
5. Remove the left and right cylinder heads. Refer to **CYLINDER HEAD, REMOVAL, 5.7L**.
6. Remove the radiator. Refer to **RADIATOR, ENGINE COOLING, REMOVAL** .
7. Remove the oil pan. Refer to **PAN, OIL, REMOVAL, 5.7L**.
8. Remove timing case cover. Refer to **COVER(S), ENGINE TIMING, REMOVAL, 5.7L**.

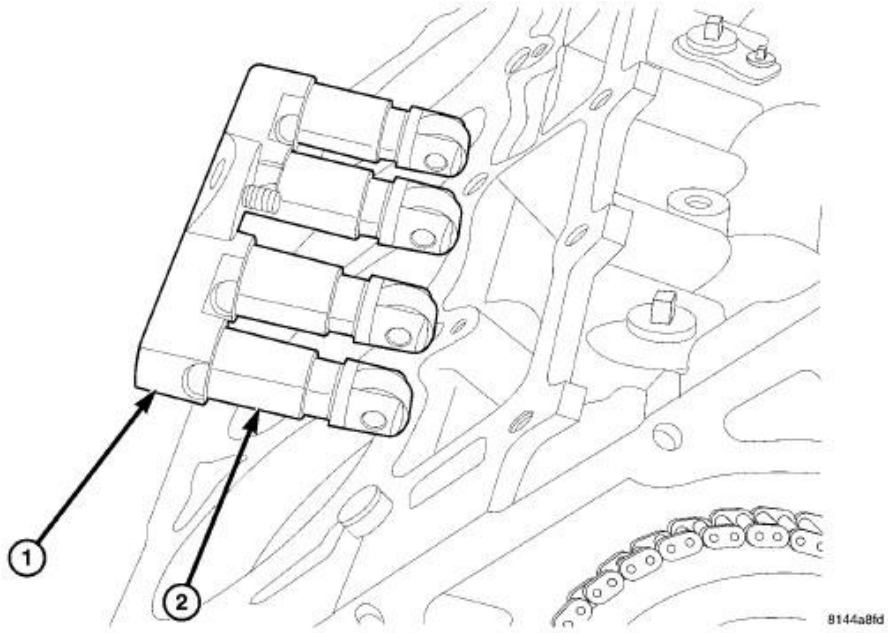

Fig. 133: Hydraulic Lifters/Tappets & Retainer/Guide Holder
Courtesy of CHRYSLER GROUP, LLC

NOTE: Identify lifters to ensure installation in original location.

9. Remove the tappets (2) and retainer (1) assembly.

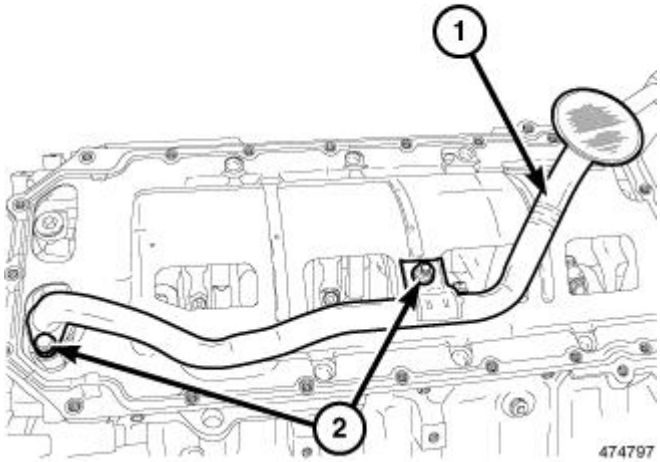

Fig. 134: Oil Pick Up Tube
Courtesy of CHRYSLER GROUP, LLC

10. Remove the oil pick up tube (1).

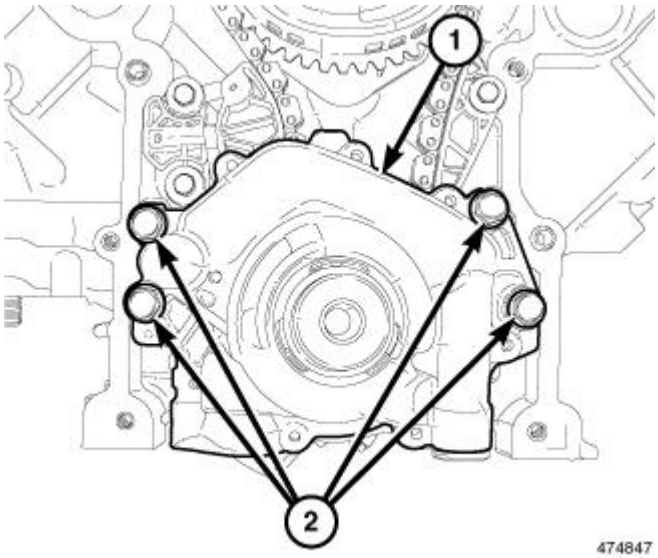

Fig. 135: Oil Pump & Retaining Bolts
Courtesy of CHRYSLER GROUP, LLC

11. Remove the oil pump retaining bolts (2) and remove the oil pump (1).

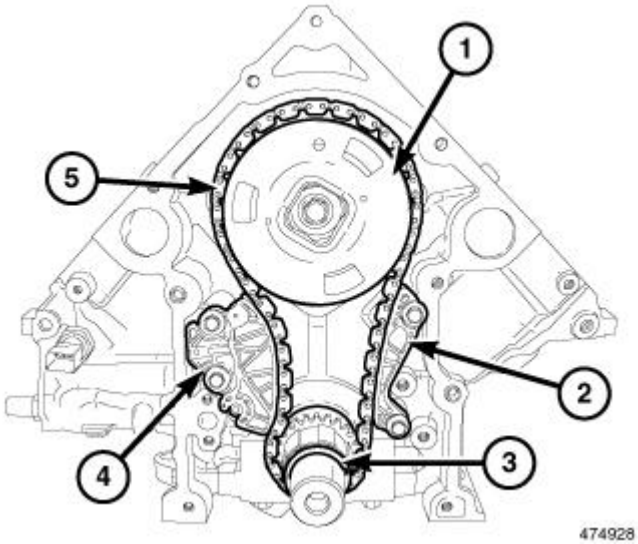

Fig. 136: Timing Chain, Sprockets, Timing Chain Tensioner & Guide
Courtesy of CHRYSLER GROUP, LLC

12. Remove timing chain (5). Refer to **CHAIN AND SPROCKETS, TIMING, REMOVAL, 5.7L**.

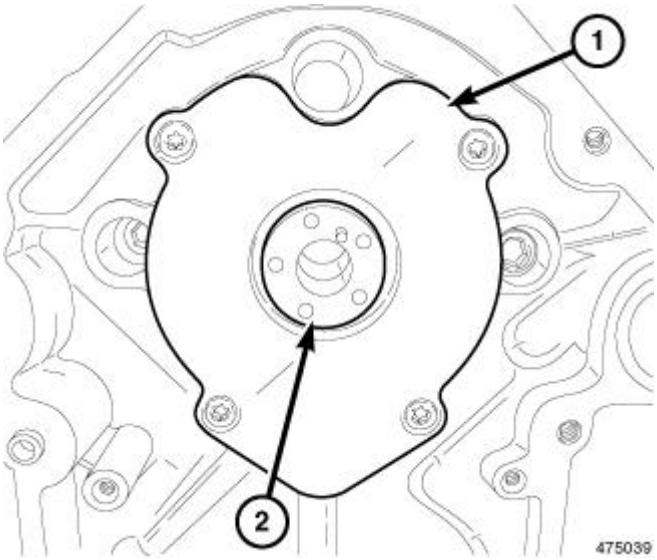

Fig. 137: Camshaft Thrust Plate
Courtesy of CHRYSLER GROUP, LLC

13. Remove camshaft thrust plate (1).

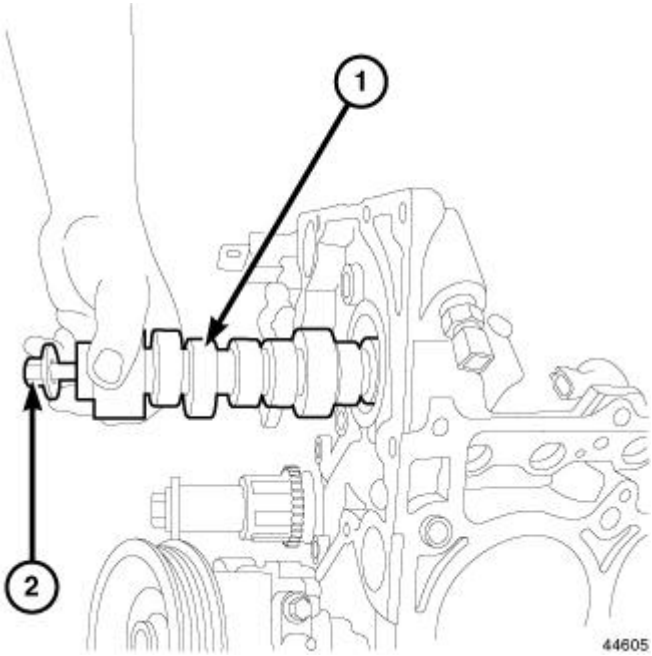

Fig. 138: Removing/Installing Camshaft
Courtesy of CHRYSLER GROUP, LLC

NOTE: Slowly rotate the camshaft while pulling camshaft out.

14. Install a long bolt (2) into front of camshaft (1) to aid in removal of the camshaft. Remove camshaft, being careful not to damage cam bearings with the cam lobes.

INSPECTION

INSPECTION

The cam bearings are not serviceable. Do not attempt to replace cam bearings for any reason. If the cam bearings are damaged, the cylinder block must be replaced.

INSTALLATION

CAMSHAFT CORE HOLE PLUG

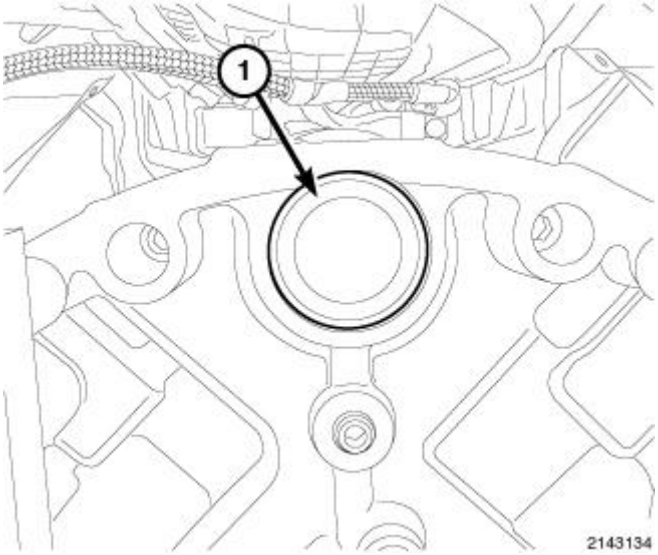

Fig. 139: Camshaft Core Hole Plug
Courtesy of CHRYSLER GROUP, LLC

1. Clean the core hole in the cylinder block.

NOTE: **Do not apply adhesive to the new camshaft core hole plug. A new plug has adhesive pre-applied.**

2. Install a new camshaft core hole plug (1) located at the rear of cylinder block, using a suitable flat faced tool. The plug must be fully seated on the cylinder block shoulder.
3. Install the flexplate. Refer to **FLEXPLATE, INSTALLATION, 5.7L**.
4. Install the engine. Refer to **INSTALLATION, 5.7L**.

CAMSHAFT

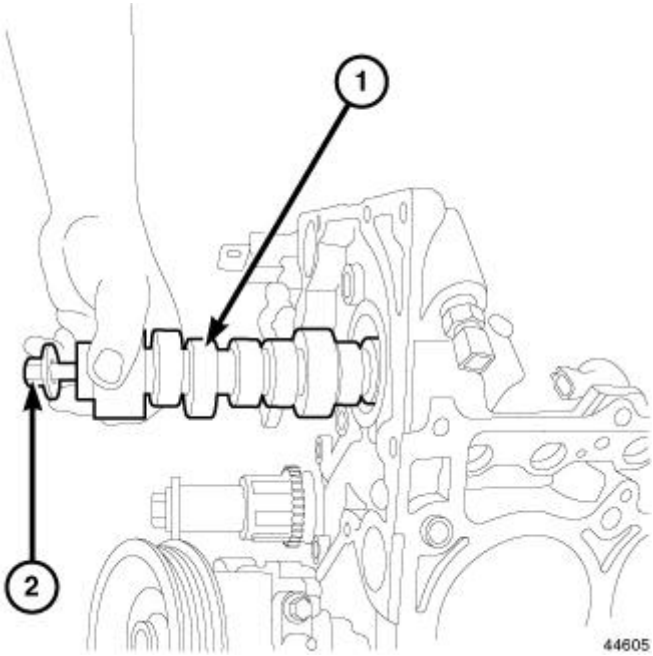

Fig. 140: Removing/Installing Camshaft
Courtesy of CHRYSLER GROUP, LLC

1. Lubricate the camshaft lobes and camshaft bearing journals and insert the camshaft (1).

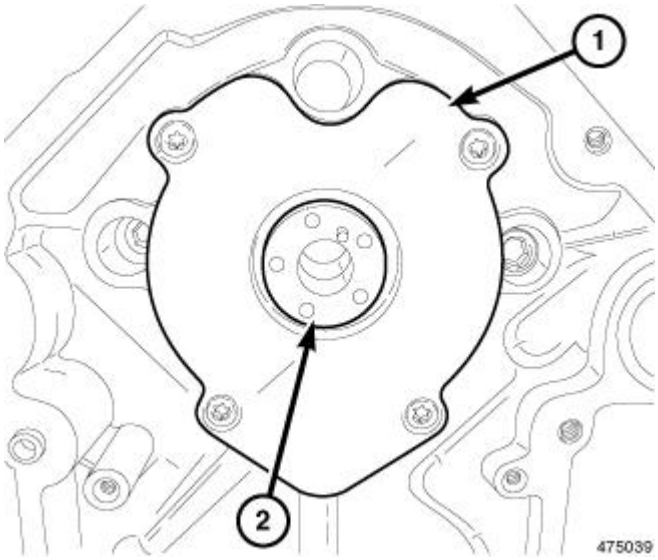

Fig. 141: Camshaft Thrust Plate
Courtesy of CHRYSLER GROUP, LLC

NOTE: **Ensure that the plate is installed on the correct side. The fasteners are flat head fasteners so the top of the head of the fastener should not stick above the front face of the plate after they are torqued. The plate has chamfered fastener holes and the chamfered side should be facing forward to ensure the fasteners are flush or below the front surface.**

2. Install the camshaft thrust plate (1).

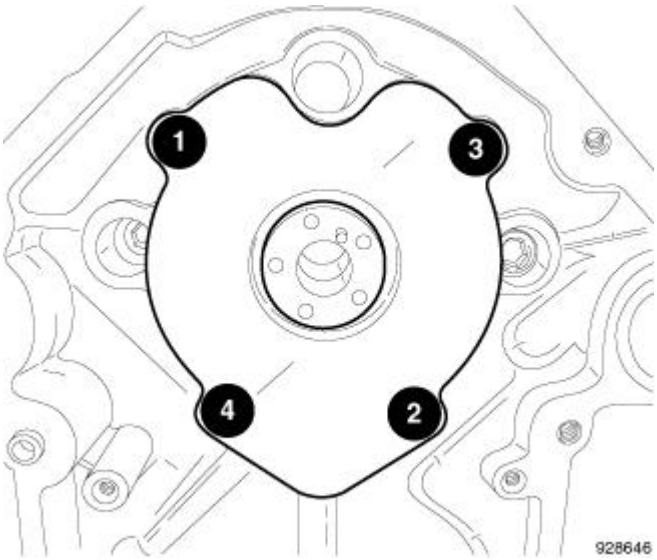

Fig. 142: Camshaft Thrust Plate Bolt Tightening Sequence
Courtesy of CHRYSLER GROUP, LLC

3. Using the sequence shown in illustration, tighten the bolts to 12 N.m (9 ft. lbs.).

NOTE: The camshaft phaser must be installed before the camshaft end play can be measured.

4. Measure camshaft end play. Refer to **Engine - Specifications**.
5. If not within limits, disassemble, clean, and inspect for burrs or debris. Reassemble and measure end play again. If the end play is still out, then install a new thrust plate.

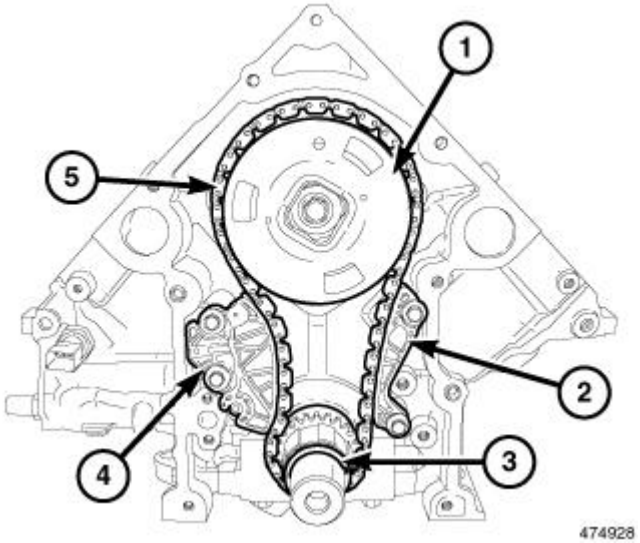

Fig. 143: Timing Chain, Sprockets, Timing Chain Tensioner & Guide

Courtesy of CHRYSLER GROUP, LLC

6. Install the timing chain (5) and sprockets (1, 3). Refer to **CHAIN AND SPROCKETS, TIMING, INSTALLATION, 5.7L**.
7. Install the timing chain tensioner arm (4) and guide (2).

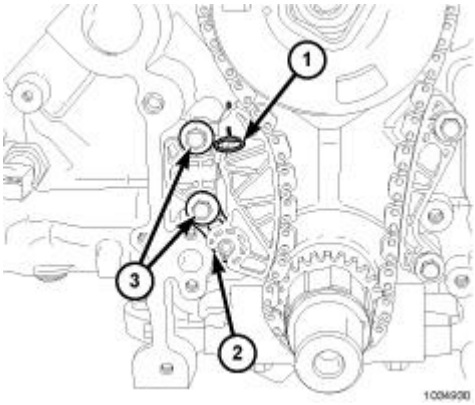

Fig. 144: Timing Chain Tensioner Pin & Bolts
Courtesy of CHRYSLER GROUP, LLC

8. Remove the tensioner pin (special tool #8514, Pins, Tensioner) (1).

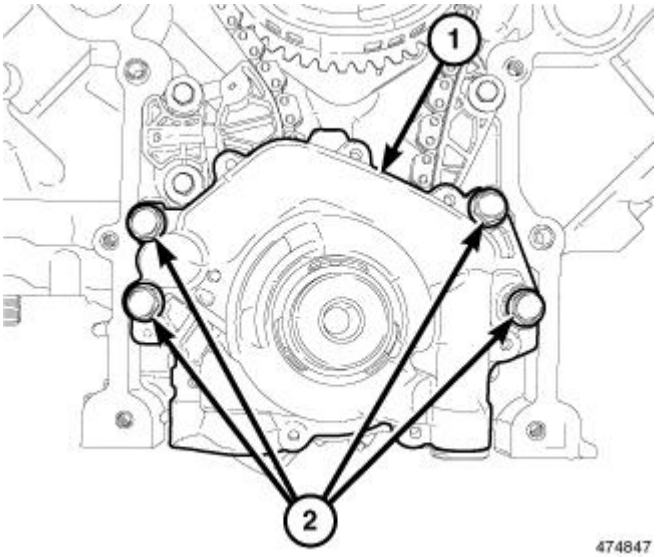

Fig. 145: Oil Pump & Retaining Bolts
Courtesy of CHRYSLER GROUP, LLC

9. Install the oil pump (1) and tighten bolts to 28 N.m (21 ft. lbs.). Refer to **PUMP, ENGINE OIL, INSTALLATION, 5.7L**.

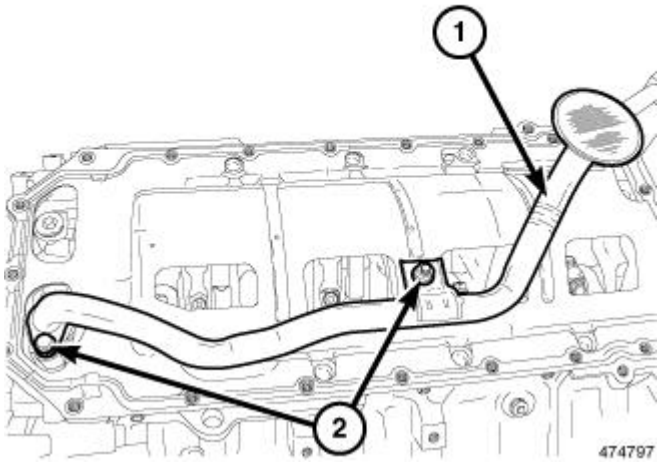

Fig. 146: Oil Pick Up Tube
Courtesy of CHRYSLER GROUP, LLC

10. Inspect the oil pick up tube O-rings and replace as necessary.
11. Install the oil pick up tube (1) and tighten fasteners (2) to 28 N.m (21 ft. lbs.).
12. Install the timing chain cover. Refer to **COVER(S), ENGINE TIMING, INSTALLATION, 5.7L**.
13. Install the oil pan. Refer to **PAN, OIL, INSTALLATION, 5.7L**.

CAUTION: Engines equipped with MDS use both standard roller lifters (2) and deactivating roller lifters (1). The deactivating roller lifters must be used in cylinders 1, 4, 6, 7. The deactivating lifters can be identified by the two holes in the side of the lifter body (3), for the latching pins.

NOTE: Each tappet reused must be installed in the same position from which it was removed. When camshaft is replaced, all of the tappets must be replaced.

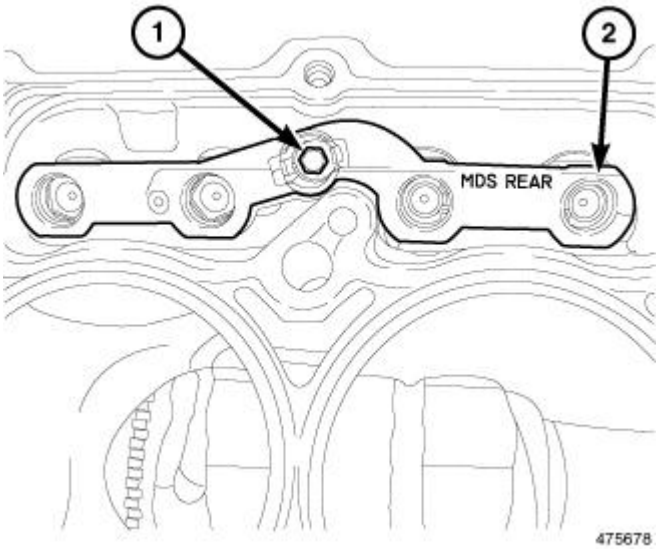

Fig. 147: Rear MDS Lifter Assembly
Courtesy of CHRYSLER GROUP, LLC

14. Install the rear MDS lifter assembly (2) and tighten bolt (1) to 12 N.m (106 in. lbs.)

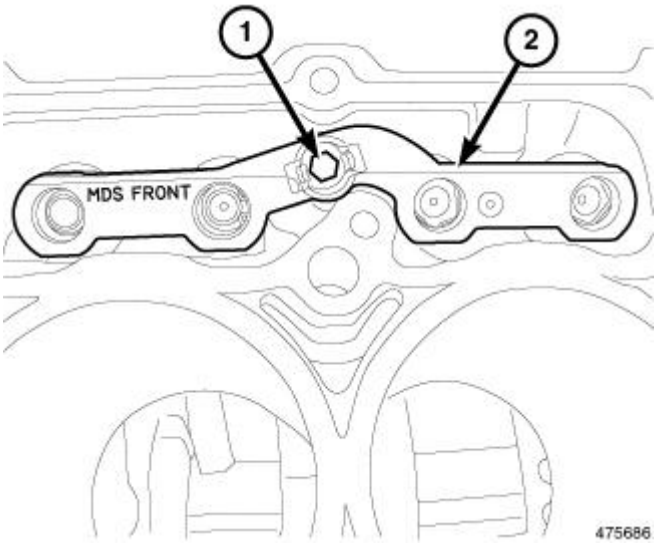

Fig. 148: Front MDS Lifter Assembly
Courtesy of CHRYSLER GROUP, LLC

15. Install the front MDS lifter assembly (2) and tighten bolt (1) to 12 N.m (106 in. lbs.).

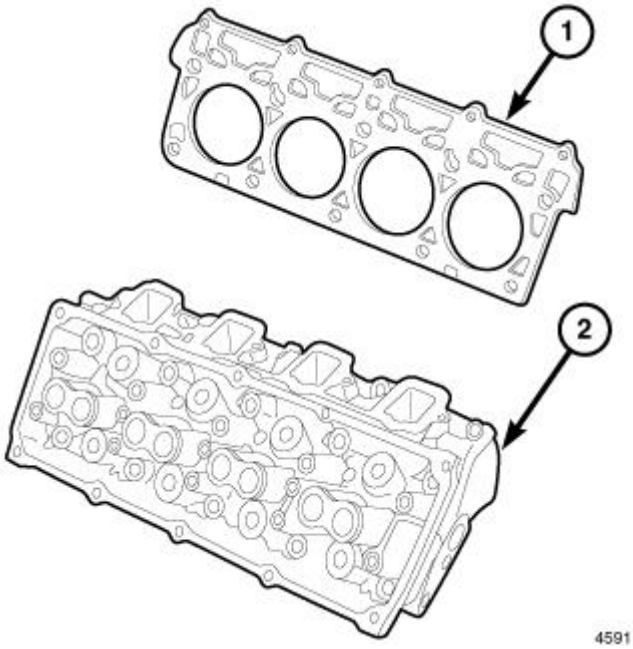

Fig. 149: Cylinder Head & Gasket
Courtesy of CHRYSLER GROUP, LLC

16. Install both the left and right cylinder heads (4). Refer to **CYLINDER HEAD, INSTALLATION, 5.7L**.
17. Install pushrods.
18. Install rocker arms. Refer to **ROCKER ARM, VALVE, INSTALLATION, 5.7L**.

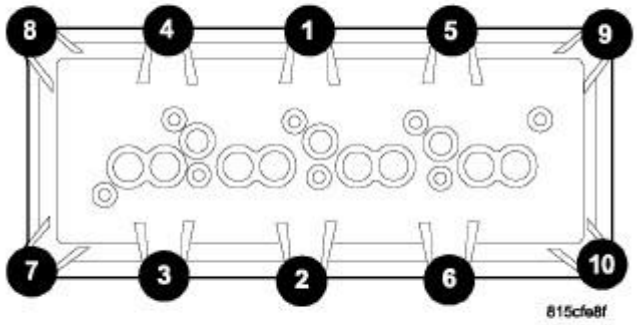

Fig. 150: Cylinder Head Cover Removal/Tightening Sequence
Courtesy of CHRYSLER GROUP, LLC

19. Install cylinder head covers. Refer to **COVER(S), CYLINDER HEAD, INSTALLATION, 5.7L**.

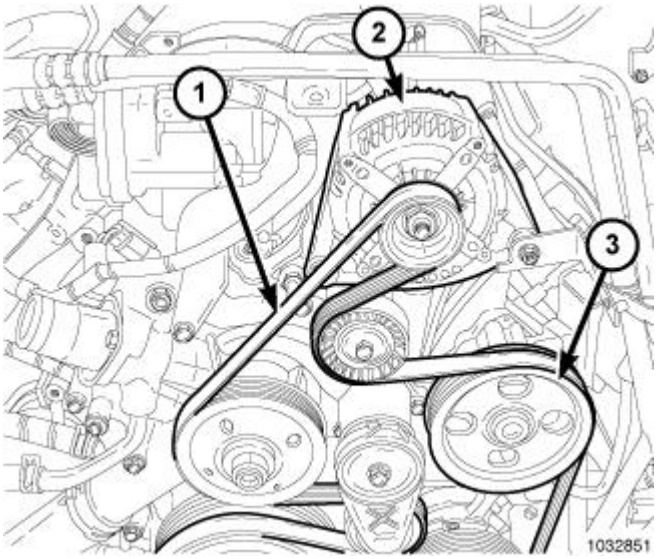

Fig. 151: Accessory Drive Belt Routing, Generator & Power Steering Pump
Courtesy of CHRYSLER GROUP, LLC

20. Install the intake manifold. Refer to **MANIFOLD, INTAKE, INSTALLATION, 5.7L**.
21. Install the generator (2).
22. Install the power steering pump (3).
23. Install the accessory drive belt (1). Refer to **BELT, SERPENTINE, INSTALLATION** .
24. Install the radiator. Refer to **RADIATOR, ENGINE COOLING, INSTALLATION** .
25. Install the air cleaner assembly. Refer to **BODY, AIR CLEANER, INSTALLATION, 5.7L**.
26. Install the negative battery cable.
27. Fill the radiator with coolant. Refer to **STANDARD PROCEDURE** .
28. Fill the engine with oil. Refer to **FILTER, ENGINE OIL, INSTALLATION, 5.7L**.
29. Start the engine and check for leaks.

COVER, STRUCTURAL DUST

REMOVAL

REMOVAL

1. Raise and support the vehicle.

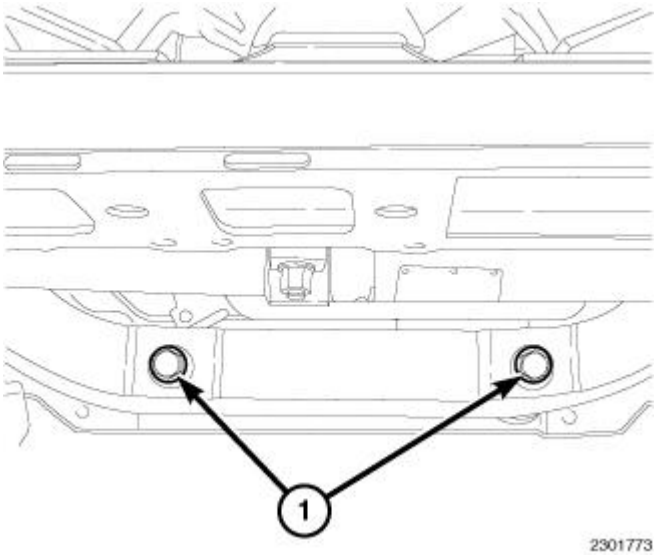

Fig. 152: Steering Rack To Frame Mounting Bolts
Courtesy of CHRYSLER GROUP, LLC

2. Remove the steering rack to frame mounting bolts (1) and lower the steering rack enough to gain clearance for the structural dust cover removal.

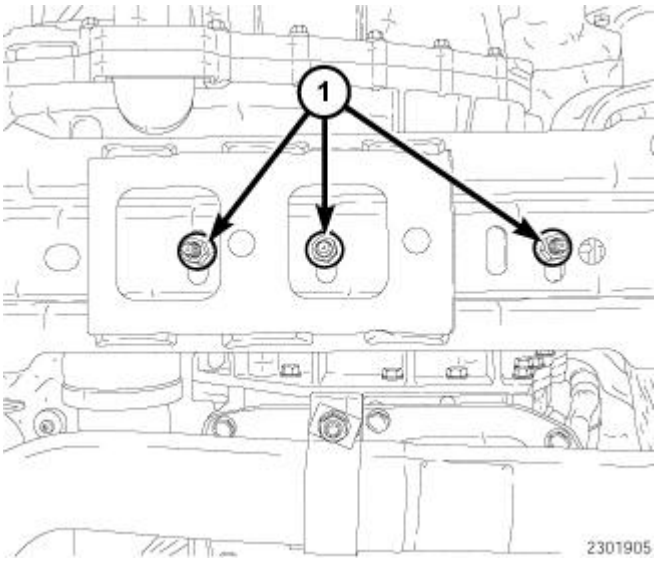

Fig. 153: Transmission Mount To Crossmember Retaining Nuts
Courtesy of CHRYSLER GROUP, LLC

3. Remove the transmission mount to crossmember retaining nuts (1).
4. Using a suitable jack, lift the transmission enough to gain clearance for the structural dust cover removal.

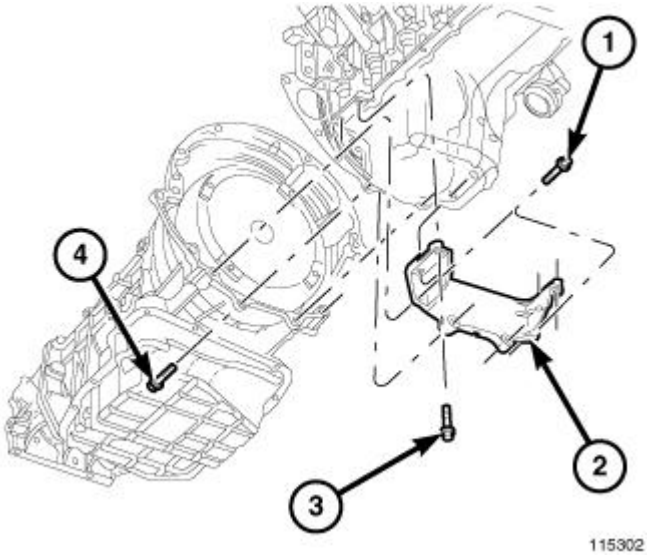

Fig. 154: Structural Cover
Courtesy of CHRYSLER GROUP, LLC

5. Remove the structural dust cover retaining bolts (1, 3 & 4).
6. Remove the structural dust cover (2).

INSTALLATION

INSTALLATION

CAUTION: The structural dust cover must be installed as described in the following steps. Failure to do so may cause severe damage to the cover.

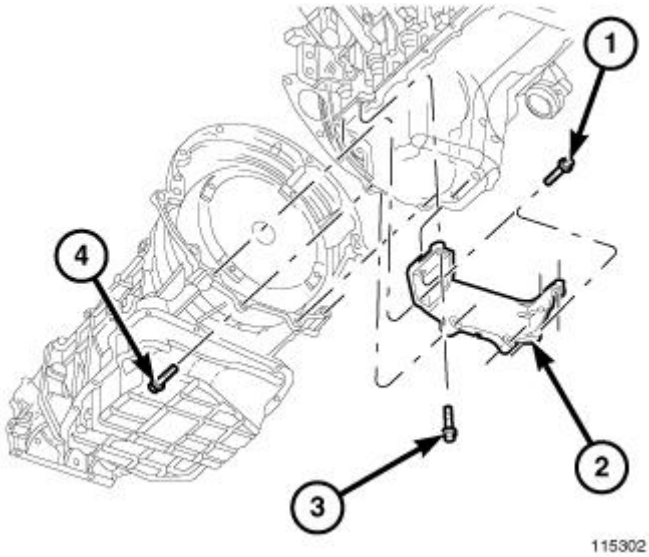

Fig. 155: Structural Cover
Courtesy of CHRYSLER GROUP, LLC

1. Position the structural dust cover in the vehicle
2. Install all four bolts retaining the structural dust cover to the engine (3) hand tight.
3. Install the four cover to transmission bolts (1, 2 & 4) hand tight.

CAUTION: The structural dust cover must be held tightly against both the engine and the transmission bell housing during the tightening sequence. Failure to do so may cause severe damage to the cover.

4. Tighten the structural dust cover-to-transmission bolts (1, 2 & 4) to 9 N.m (80 in. lbs.).
5. Tighten the structural dust cover-to-engine block bolts (3) to 9 N.m (80 in. lbs.).
6. Retighten the structural dust cover-to-transmission bolts to 54 N.m (40 ft. lbs.).
7. Retighten the structural dust cover-to-engine block bolts to 54 N.m (40 ft. lbs.).

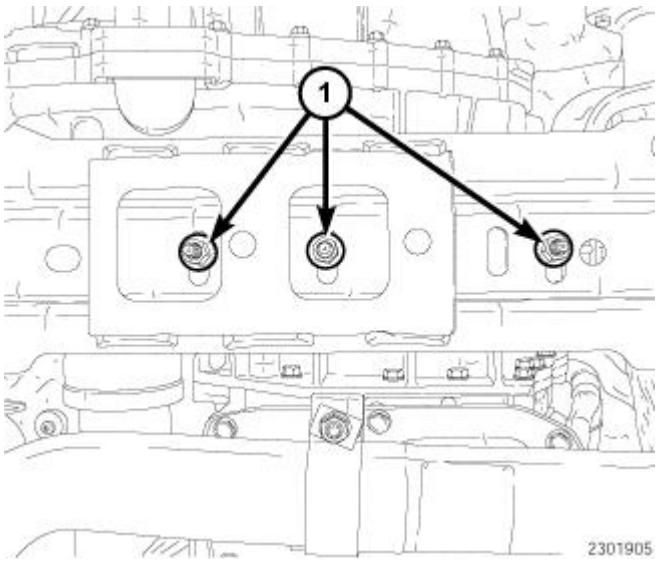

Fig. 156: Transmission Mount To Crossmember Retaining Nuts
Courtesy of CHRYSLER GROUP, LLC

8. Lower the transmission onto the crossmember and remove the jack.
9. Install the transmission mount to crossmember retaining nuts (1) and tighten to 54 N.m (40 ft. lbs.).

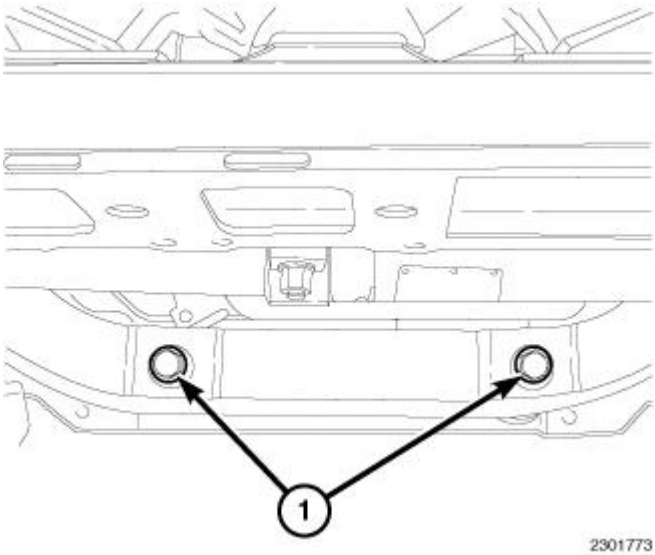

Fig. 157: Steering Rack To Frame Mounting Bolts
Courtesy of CHRYSLER GROUP, LLC

10. Position the steering rack to the frame, install the bolts (1) and tighten bolts/nuts to 258 N.m (190 ft. lbs.).
11. Lower the vehicle.

CRANKSHAFT

REMOVAL

REMOVAL

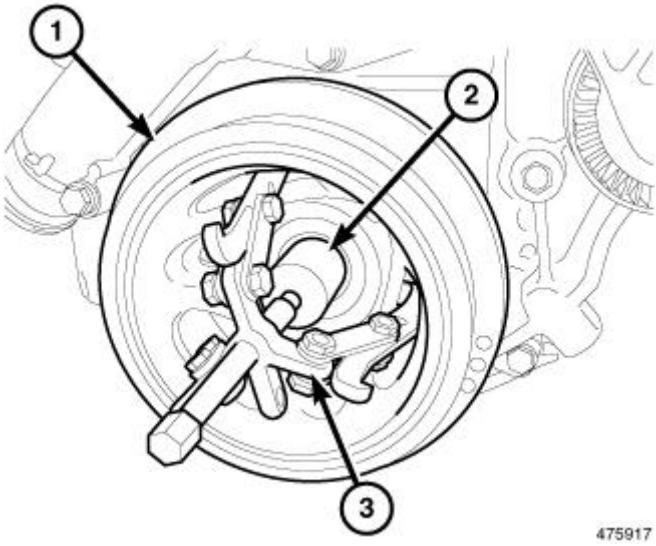

Fig. 158: Removing Vibration Damper
Courtesy of CHRYSLER GROUP, LLC

1. Remove engine. Refer to **REMOVAL, 5.7L**.

2. Remove the vibration damper (1) using Crankshaft Insert (special tool #8513A, Insert, Crankshaft) (2) and Puller (special tool #1023, Puller) (3). Refer to **DAMPER, VIBRATION, REMOVAL, 5.7L**.

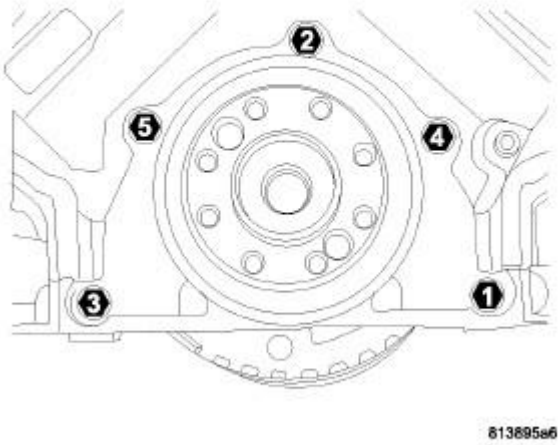

Fig. 159: Rear Seal Retainer Removal/Tightening Sequence
Courtesy of CHRYSLER GROUP, LLC

3. Remove the rear oil seal retainer. Refer to **RETAINER, CRANKSHAFT REAR OIL SEAL, REMOVAL, 5.7L**.
4. Remove the oil pan. Refer to **PAN, OIL, REMOVAL, 5.7L**.

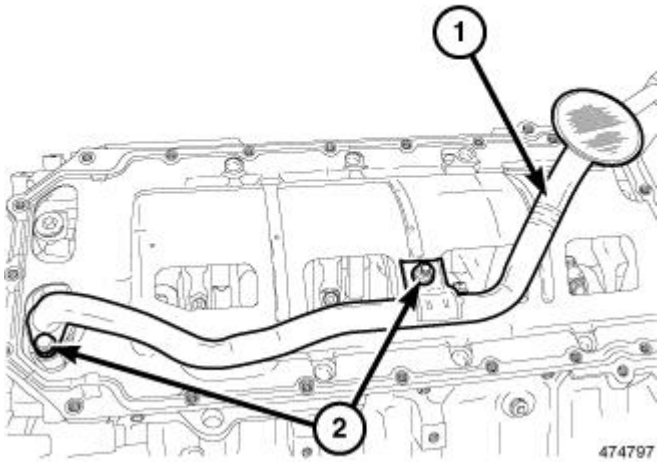

Fig. 160: Oil Pick Up Tube
Courtesy of CHRYSLER GROUP, LLC

5. Remove the oil pump pickup (1).
6. Remove the windage tray/oil pan gasket.
7. Remove the timing chain cover. Refer to **COVER(S), ENGINE TIMING, REMOVAL, 5.7L**.

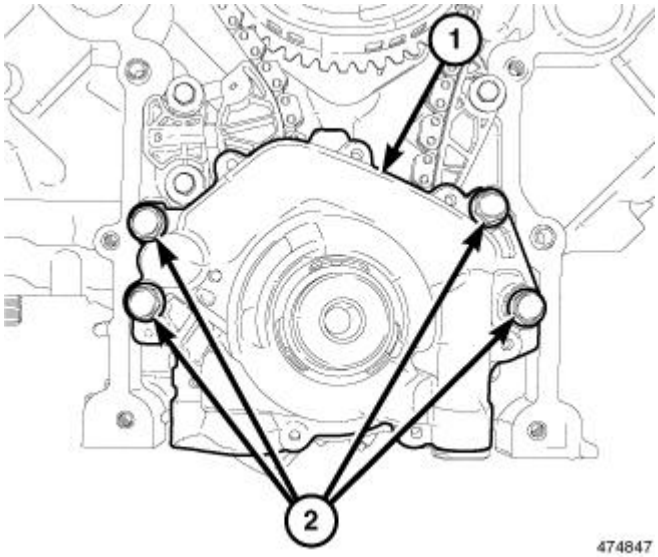

Fig. 161: Oil Pump & Retaining Bolts
Courtesy of CHRYSLER GROUP, LLC

8. Remove the oil pump (1). Refer to **PUMP, ENGINE OIL, REMOVAL, 5.7L**.

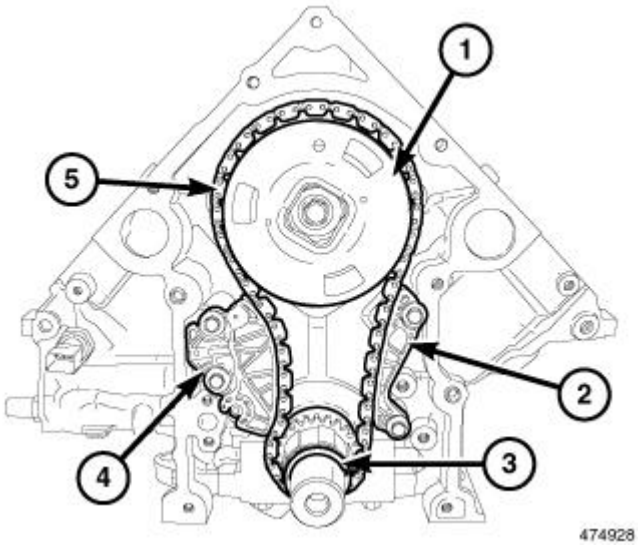

Fig. 162: Timing Chain, Sprockets, Timing Chain Tensioner & Guide
Courtesy of CHRYSLER GROUP, LLC

9. Remove the timing chain (5) and sprockets (1, 3). Refer to **CHAIN AND SPROCKETS, TIMING, REMOVAL, 5.7L**.

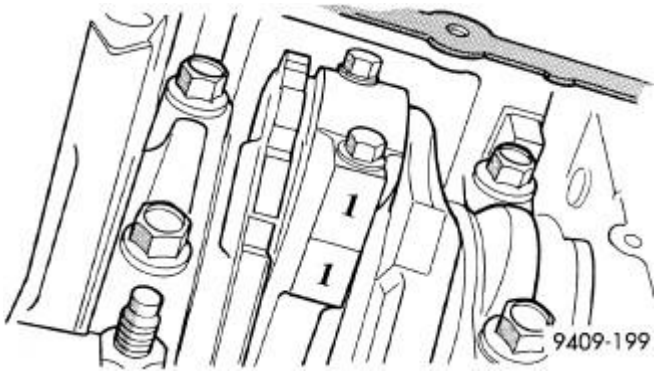

Fig. 163: Mark On Connecting Rod & Bearing Cap
Courtesy of CHRYSLER GROUP, LLC

10. Identify rod bearing caps before removal. Remove rod bearing caps with bearings.

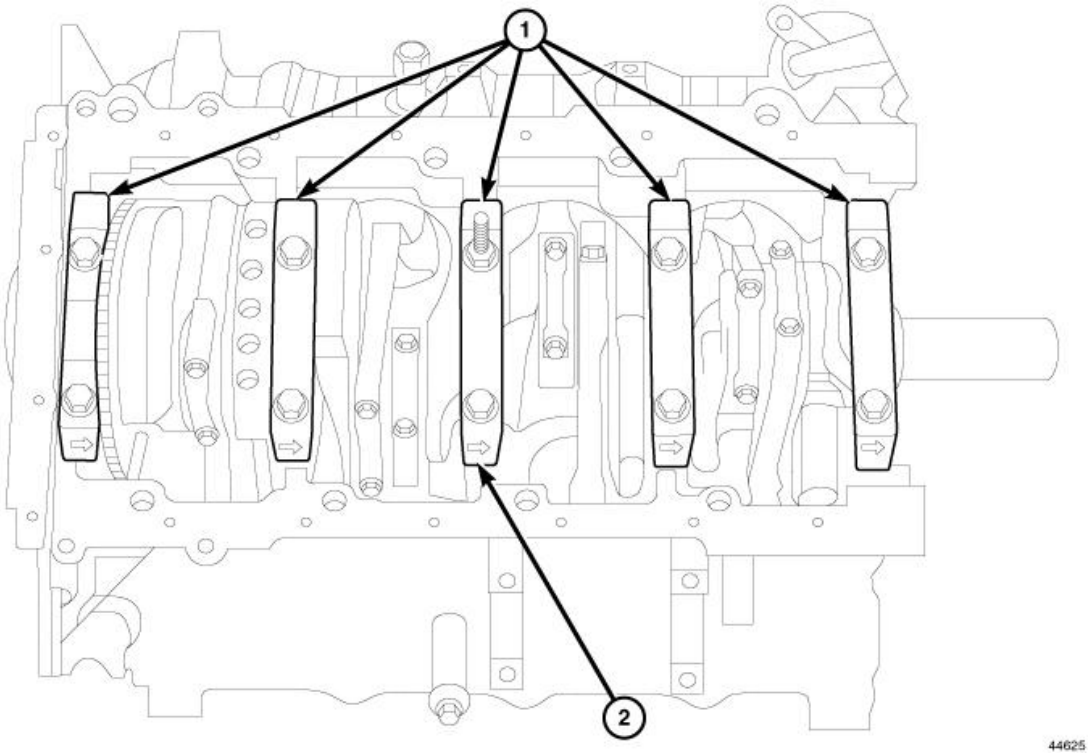

Fig. 164: Main Bearing Caps & Arrows
Courtesy of CHRYSLER GROUP, LLC

11. Identify main bearing caps (1) before removal.

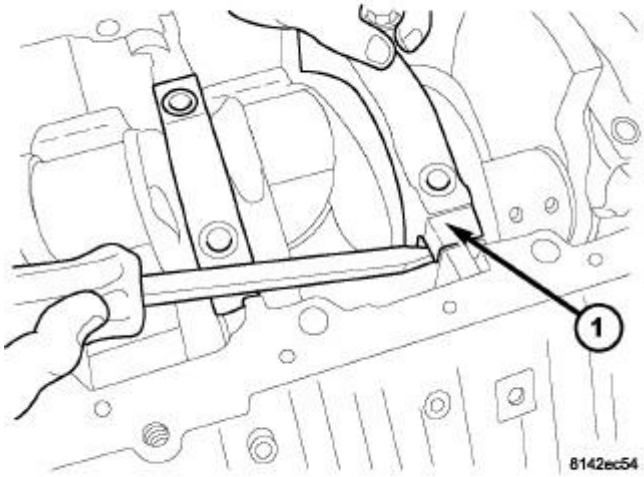

Fig. 165: Main Bearing Cap Removal
Courtesy of CHRYSLER GROUP, LLC

12. Remove main bearing cap bolts.
13. Remove main bearing caps (1) and bearings one at a time.

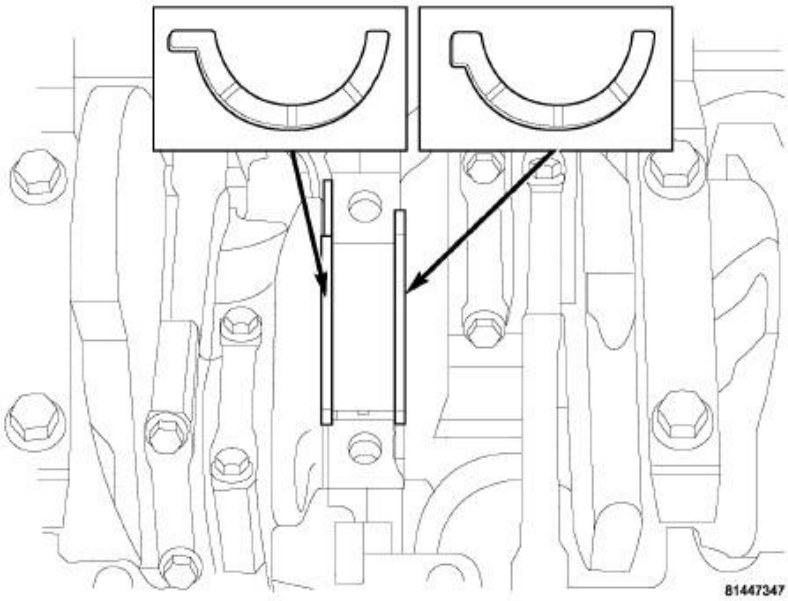

Fig. 166: Thrust Washer Locations
Courtesy of CHRYSLER GROUP, LLC

14. Remove the thrust washers.
15. Remove the crankshaft out of the block.

INSTALLATION

INSTALLATION

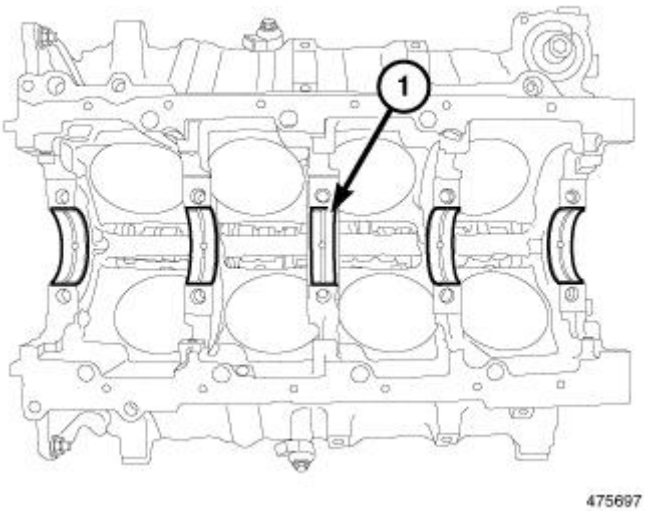

Fig. 167: Main Bearings
Courtesy of CHRYSLER GROUP, LLC

1. Select the proper main bearings. Refer to **Engine/Engine Block/BEARING(S), Crankshaft - Standard Procedure**.
2. Install main bearings in block (1).

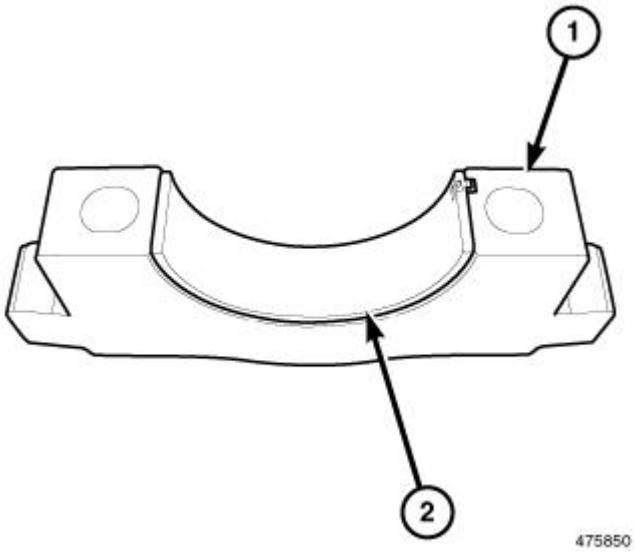

Fig. 168: Main Bearing Shells In The Bearing Caps
Courtesy of CHRYSLER GROUP, LLC

3. Install main bearing shells (2) in the bearing caps (1).

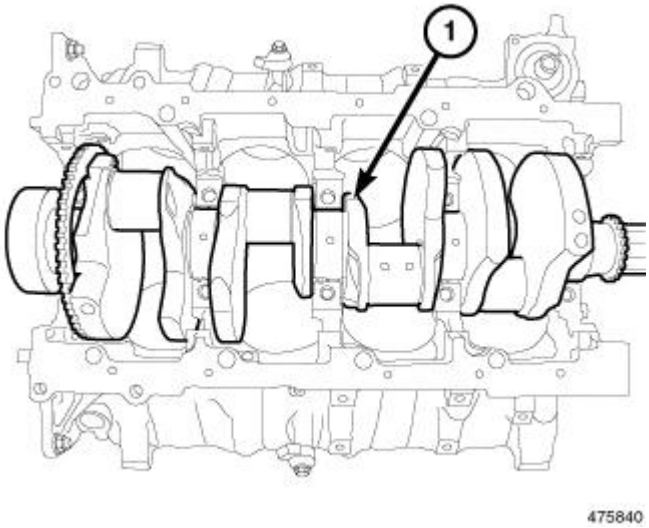

Fig. 169: Crankshaft
Courtesy of CHRYSLER GROUP, LLC

4. Lubricate the main bearing shells with clean engine oil.
5. Position the crankshaft (1) into the cylinder block.

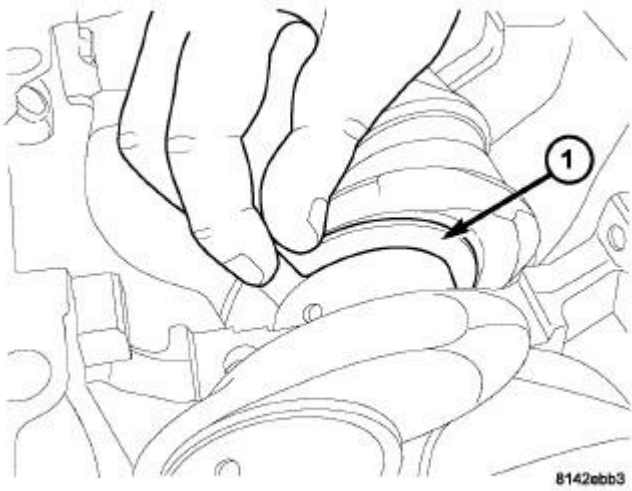

Fig. 170: Removing/Installing Thrust Washer
Courtesy of CHRYSLER GROUP, LLC

6. Lubricate and install the thrust bearings (1).

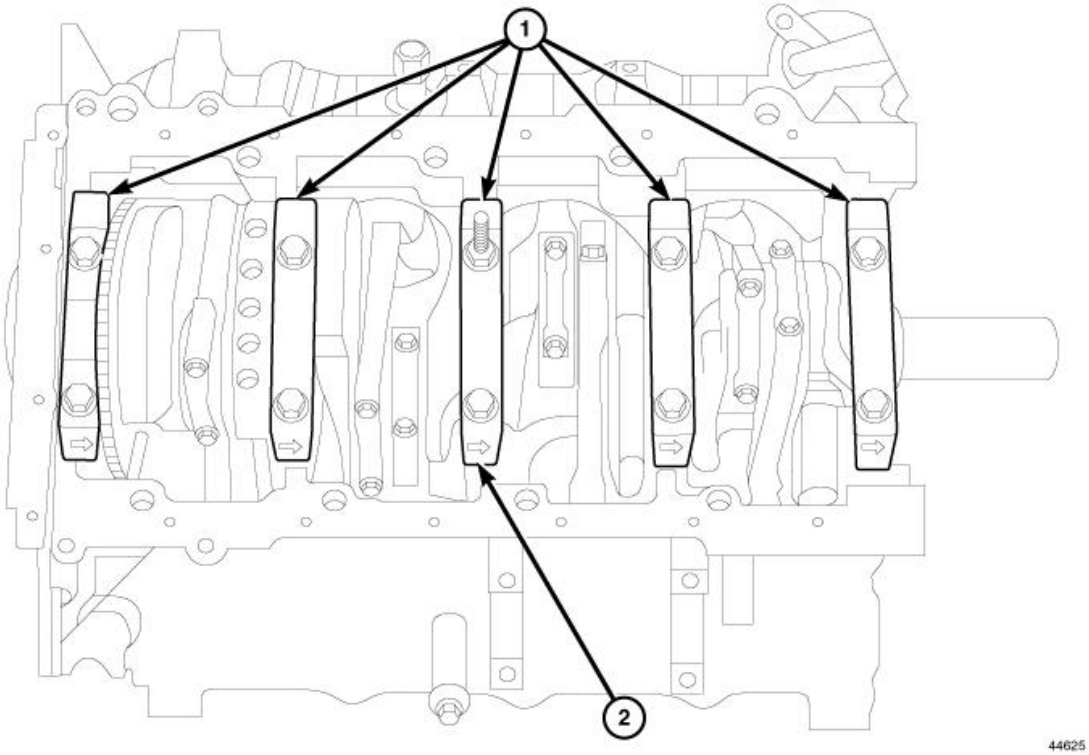

Fig. 171: Main Bearing Caps & Arrows
Courtesy of CHRYSLER GROUP, LLC

NOTE: **The main cap crossbolts are torqued after final torque of the main cap bolts. Always use a new washer/seal on crossbolts.**

7. Clean and oil all cap bolts. Install all main bearing caps (1) making sure the arrow (2) faces forward.

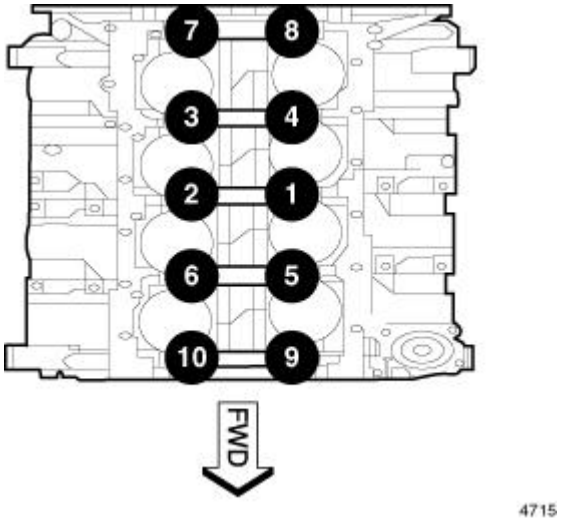

Fig. 172: Main Bearing Cap Bolt Tightening Sequence
Courtesy of CHRYSLER GROUP, LLC

8. Tighten main bearing cap bolts to 13 N.m (10 ft. lbs.) in the sequence shown in illustration.
9. Tighten main bearing cap bolts to 27 N.m (20 ft. lbs.) in the sequence shown in illustration.
10. Rotate main cap bolts an additional 90° in the sequence shown in illustration.

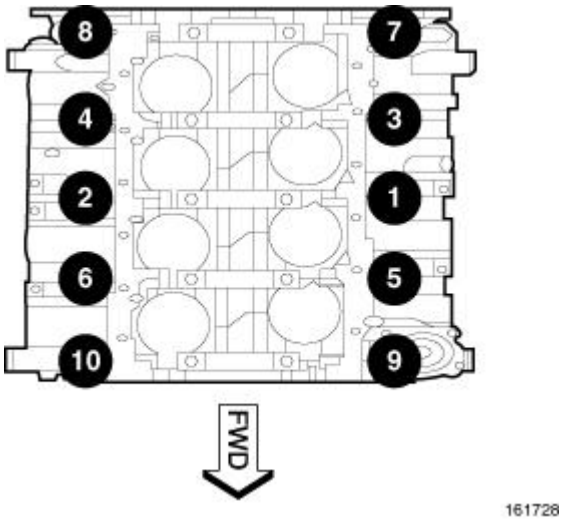

Fig. 173: Crossbolt Tightening Sequence
Courtesy of CHRYSLER GROUP, LLC

11. Install the crossbolts with new seal washer. Starting with crossbolt A,
12. Tighten crossbolt to 28 N.m (21 ft. lbs.).
13. Repeat crossbolt tightening procedure.
14. Measure crankshaft end play. Refer to **Engine/Engine Block/BEARING(S), Crankshaft - Standard Procedure**.
15. Position the connecting rods onto the crankshaft and install the rod bearing caps. Refer to **ROD, PISTON AND CONNECTING, INSTALLATION, 5.7L**.

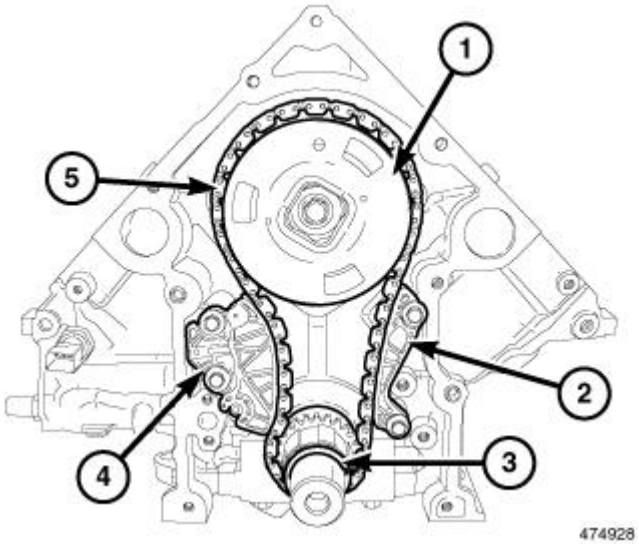

Fig. 174: Timing Chain, Sprockets, Timing Chain Tensioner & Guide

Courtesy of CHRYSLER GROUP, LLC

16. Install timing chain (5) and sprockets (1, 3). Refer to **CHAIN AND SPROCKETS, TIMING, INSTALLATION, 5.7L**.
17. Install the timing chain tensioner (4) and guide (2).

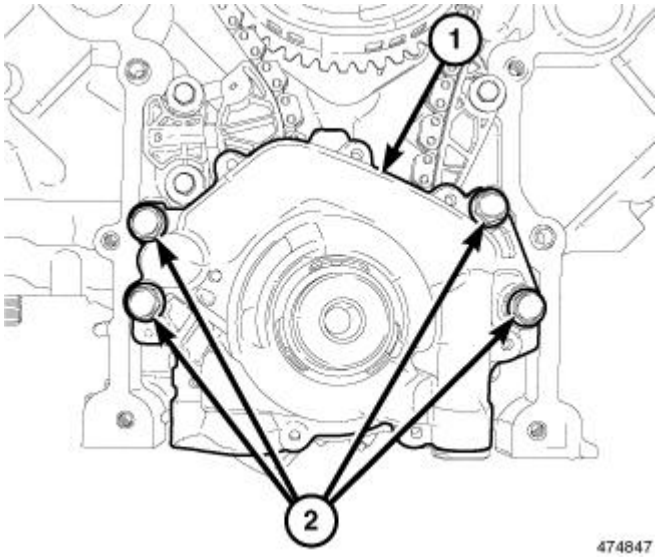

Fig. 175: Oil Pump & Retaining Bolts
Courtesy of CHRYSLER GROUP, LLC

18. Install the oil pump (1). Refer to **PUMP, ENGINE OIL, INSTALLATION, 5.7L**.
19. Install the timing chain case cover (1). Refer to **COVER(S), ENGINE TIMING, INSTALLATION, 5.7L**.

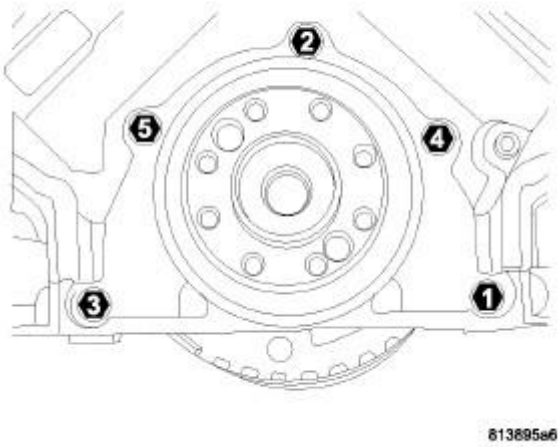

Fig. 176: Rear Seal Retainer Removal/Tightening Sequence
Courtesy of CHRYSLER GROUP, LLC

20. Install the rear main seal and retainer. Refer to **RETAINER, CRANKSHAFT REAR OIL SEAL, INSTALLATION, 5.7L**.

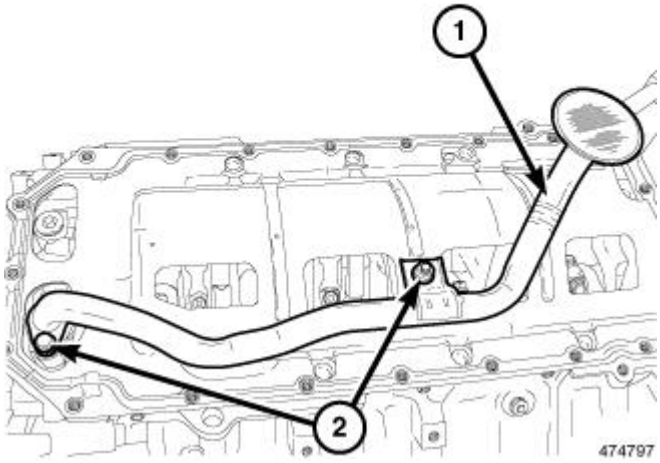

Fig. 177: Oil Pick Up Tube
Courtesy of CHRYSLER GROUP, LLC

21. Install the windage tray/oil pan gasket.
22. Inspect oil pick up tube O-rings, replace as necessary.
23. Install the oil pick up tube (1) and tighten fasteners (2) to 28 Nm (248 in. lbs.).

24. Install the oil pan. Refer to **PAN, OIL, INSTALLATION, 5.7L**.
25. Install the vibration damper. Refer to **DAMPER, VIBRATION, INSTALLATION, 5.7L**.
26. Install the engine. Refer to **INSTALLATION, 5.7L**.

DAMPER, VIBRATION

REMOVAL

REMOVAL

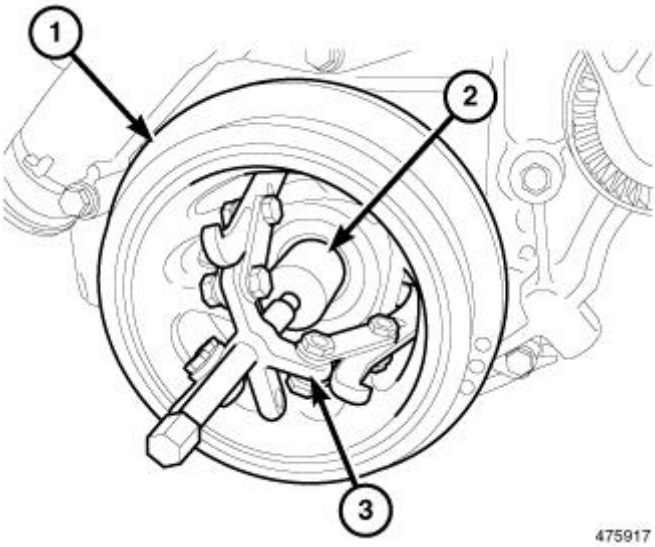

Fig. 178: Removing Vibration Damper
Courtesy of CHRYSLER GROUP, LLC

1. Disconnect negative cable from battery.
2. Remove accessory drive belt. Refer to **BELT, SERPENTINE, REMOVAL** .
3. Drain cooling system. Refer to **STANDARD PROCEDURE** .
4. Remove radiator upper hose.
5. Remove fan shroud. Refer to **FAN, COOLING, ELECTRIC, REMOVAL** or **FAN, COOLING, VISCOUS, REMOVAL** .
6. Remove crankshaft damper bolt.
7. Remove damper (1) using Crankshaft Insert (special tool #8513A, Insert, Crankshaft) (2) and Three Jaw Puller (special tool #1023, Puller) (3).

INSTALLATION

INSTALLATION

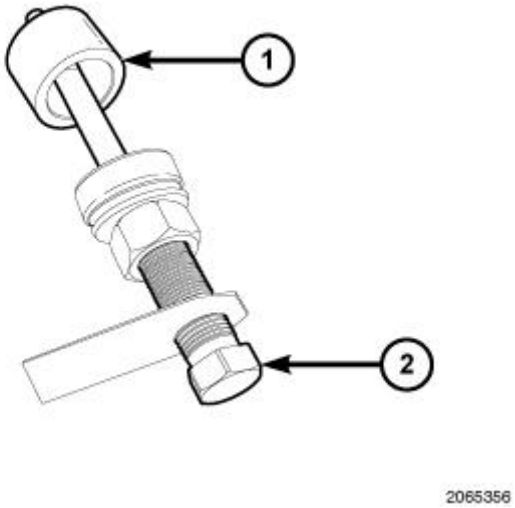

Fig. 179: Damper Installer & A/C Hub Installer Cup
Courtesy of CHRYSLER GROUP, LLC

CAUTION: To prevent severe damage to the crankshaft, damper, and damper installer (special tool #8512A, Installer, Damper), thoroughly clean the damper bore and the crankshaft nose before installing damper.

1. Position the damper onto crankshaft.
2. Assemble the damper installer (special tool #8512A, Installer, Damper) (2), and the pressing cup (1) from A/C hub installer (special tool #6871, Installer, A/C Hub).
3. Using the damper installer (special tool #8512A, Installer, Damper) (2), and the pressing cup (1) from the A/C hub installer (special tool #6871, Installer, A/C Hub), press the damper onto crankshaft.

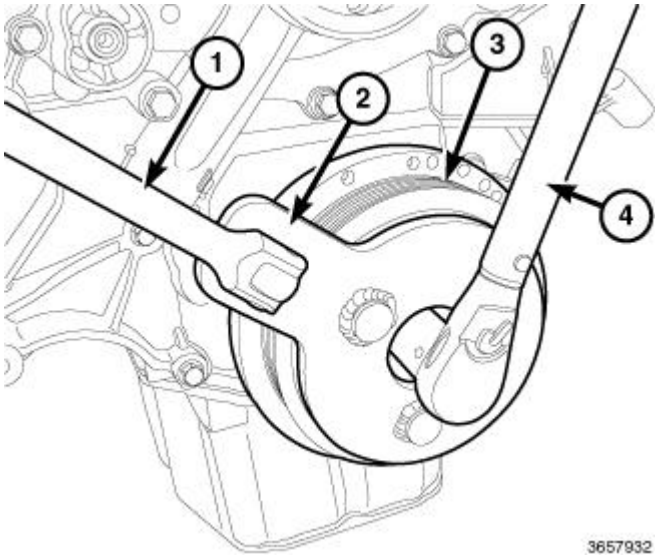

Fig. 180: Installing Vibration Damper
Courtesy of CHRYSLER GROUP, LLC

4. Install the crankshaft damper bolt.
5. Position the (special tool #10386, Holder, Vibration Damper) (2), onto the vibration damper (3).
6. Tighten the bolt to 176 N.m (130 ft. lbs.).
7. Install the cooling fan.

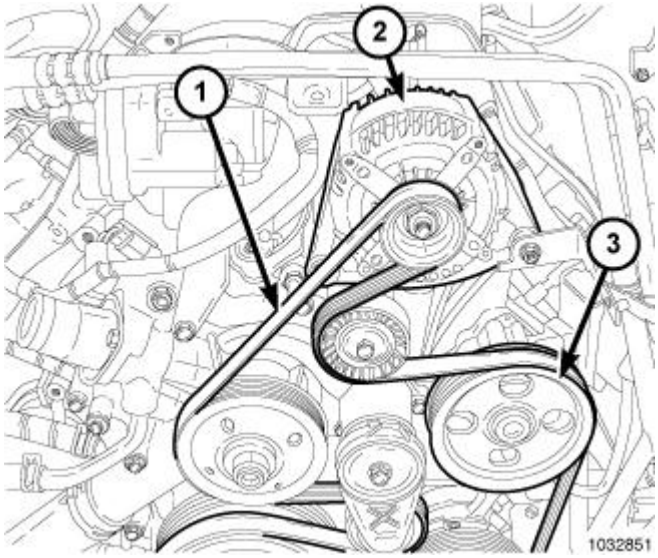

Fig. 181: Accessory Drive Belt Routing, Generator & Power Steering Pump
Courtesy of CHRYSLER GROUP, LLC

8. Install the radiator upper shroud and tighten the fasteners to 11 N.m (95 in. lbs.).
9. Install the radiator upper hose.
10. Install the accessory drive belt (1). Refer to **BELT, SERPENTINE, INSTALLATION** .
11. Refill the cooling system. Refer to **STANDARD PROCEDURE** .
12. Connect the negative cable to battery.

FLEXPLATE

REMOVAL

REMOVAL

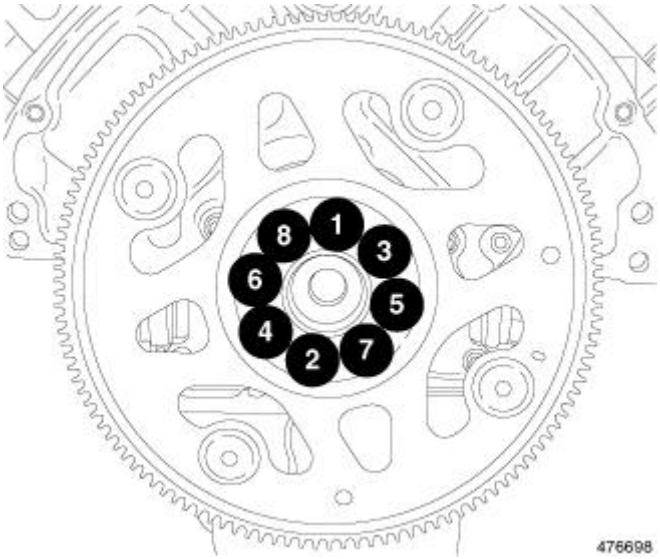

Fig. 182: Flexplate Retaining Bolt Removal & Tightening Sequence
Courtesy of CHRYSLER GROUP, LLC

1. Remove the transmission. Refer to appropriate Transmission and Transfer Case articles.
2. Using the sequence shown in illustration, remove the flexplate retaining bolts.
3. Remove the flexplate.

INSTALLATION

INSTALLATION

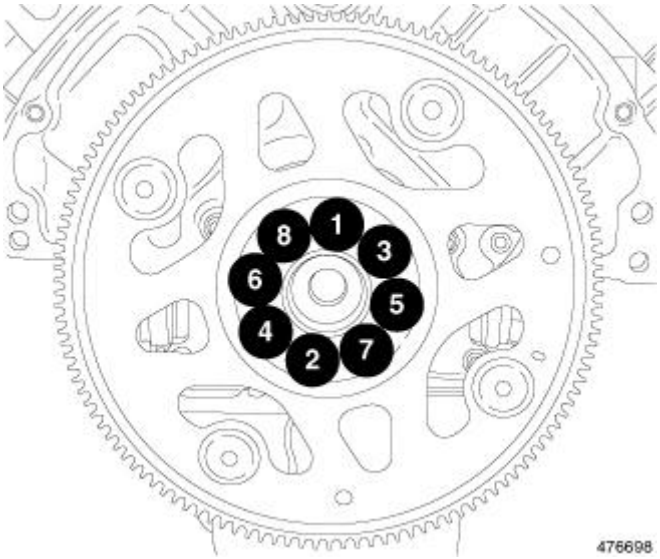

Fig. 183: Flexplate Retaining Bolt Removal & Tightening Sequence
Courtesy of CHRYSLER GROUP, LLC

1. Position the flexplate onto the crankshaft and install the retaining bolts hand tight.
2. Using the sequence shown in illustration, tighten the flexplate retaining bolts to 95 N.m (70 ft. lbs.).

3. Install the transmission. Refer to appropriate Transmission and Transfer Case articles.

LIFTER(S), HYDRAULIC, ROLLER

DESCRIPTION

DESCRIPTION

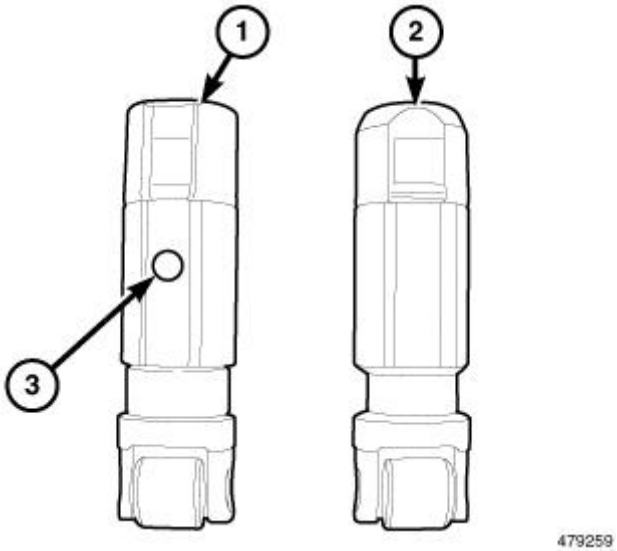

Fig. 184: MDS Lifter
Courtesy of CHRYSLER GROUP, LLC

The Multiple Displacement System (MDS) selectively deactivates cylinders 1, 4, 6 and 7 during steady speed, low acceleration and shallow grade climbing conditions to increase fuel economy.

The MDS can provide a 5 to 20% fuel economy benefit when operating in four-cylinder mode. Depending on driving habits and vehicle usage. For EPA rating purposes the fuel economy is 8 to 15% higher than if the engine was operating on eight-cylinders at all times.

The MDS deactivating lifter (1) can be distinguished from the non-MDS lifter (2) by the disconnecting pin (3) on the side of the MDS lifter.

MDS is integrated into the basic engine architecture requiring these additional components:

- Unique MDS camshaft
- 8 deactivating roller lifters
- 4 MDS control valve solenoids
- MDS control valve solenoid wiring harness
- Oil temperature sensor

OPERATION

OPERATION

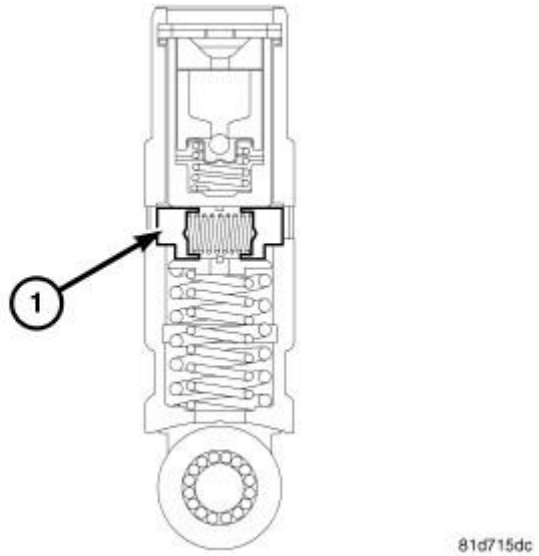

Fig. 185: MDS Lifter Cross Section
Courtesy of CHRYSLER GROUP, LLC

The Multiple Displacement System (MDS) provides cylinder deactivation during steady speed, low acceleration and shallow grade climbing conditions to increase fuel economy. Both four and eight cylinder configurations have even firing intervals to provide smooth operation. The MDS selectively deactivates cylinders 1, 4, 6, and 7, to improve fuel economy. All deactivated cylinders have unique hydraulic lifters that collapse when deactivated to prevent the valves from opening. Engine oil pressure is used to activate and deactivate the valves. Oil is delivered through special oil passages drilled into the cylinder block. The MDS solenoid valves control the flow. When activated, pressurized oil pushes a latching pin on each MDS lifter which becomes a lost motion link. The base of the MDS lifter follows the camshaft while the top remains stationary. The MDS lifter is held in place against the pushrod by light spring pressure but unable to move because of the much higher force of the valve spring.

NOTE: It is critical to use the recommended oil viscosity in engines that use MDS.

Deactivation occurs during the compression stroke of each cylinder, after air and fuel enter the cylinder. Ignition occurs, but the combustion products remain trapped in the cylinder under high pressure, because the valves no longer open. No fuel/air enters or leaves during subsequent piston strokes, this high pressure gas is repeatedly compressed and expanded like an air spring.

DIAGNOSIS AND TESTING

DIAGNOSIS AND TESTING - HYDRAULIC TAPPETS

Check the oil pressure before disassembling any part of the engine to correct tappet noise. If vehicle has no oil pressure gauge, install a reliable gauge at the pressure sending-unit. The pressure should be between 207-552 kPa (30-80 psi) at 3, 000 RPM.

Check the oil level after the engine reaches normal operating temperature. Allow five minutes for the oil level

to stabilize before checking the oil level. The oil level in the pan should never be above the FULL mark or below the ADD OIL mark on the dipstick. Either of these two conditions could be responsible for noisy tappets.

HIGH

If the oil level is above the FULL mark, it is possible for the connecting rods to dip into the oil. With the engine running, this condition could create foam in the oil pan. Foam in the oil pan would be fed to the hydraulic tappets by the oil pump causing them to lose length and allow the valves to seat noisily.

LOW

Low oil level may allow the oil pump to take in air. When air is fed to the tappets, they lose length, which allows valves to seat noisily. Any leaks on the intake side of the oil pump through which air can be drawn creates the same tappet action. Check the lubrication system from the intake strainer to the pump cover, including the relief valve retainer cap. When tappet noise is due to aeration, it may be intermittent or constant, and usually more than one tappet will be noisy. When the oil level and leaks have been corrected, operate the engine at fast idle. Run the engine for a sufficient amount of time to allow all of the air inside the tappets to be bleed out.

TAPPET NOISE DIAGNOSIS

1. To determine the source of tappet noise, crank the engine over with the cylinder head covers removed.
2. Feel each valve spring or rocker arm to detect the noisy tappet. The noisy tappet will cause the affected spring and/or rocker arm to vibrate or feel rough in operation.

NOTE: **Worn valve guides or cocked springs are sometimes mistaken for noisy tappets. If such is the case, noise may be dampened by applying side thrust on the valve spring. If noise is not appreciably reduced, it can be assumed the noise is in the tappet. Inspect the rocker arm pushrod sockets and pushrod ends for wear.**

3. Valve tappet noise ranges from light noise to a heavy click. A light noise is usually caused by excessive leak-down around the unit plunger, or by the plunger partially sticking in the tappet body cylinder. The tappet should be replaced. A heavy click is caused by a tappet check valve not seating, or by foreign particles wedged between the plunger and the tappet body. This will cause the plunger to stick in the down position. This heavy click will be accompanied by excessive clearance between the valve stem and rocker arm as valve closes. In either case, tappet assembly should be removed for inspection and cleaning.
4. The valve train generates a noise very much like a light tappet noise during normal operation. Care must be taken to ensure that tappets are making the noise. If more than one tappet seems to be noisy, it's probably not the tappets.

REMOVAL

REMOVAL

1. Disconnect and isolate the negative battery cable.
2. Remove the cylinder head. Refer to **CYLINDER HEAD, REMOVAL, 5.7L**.

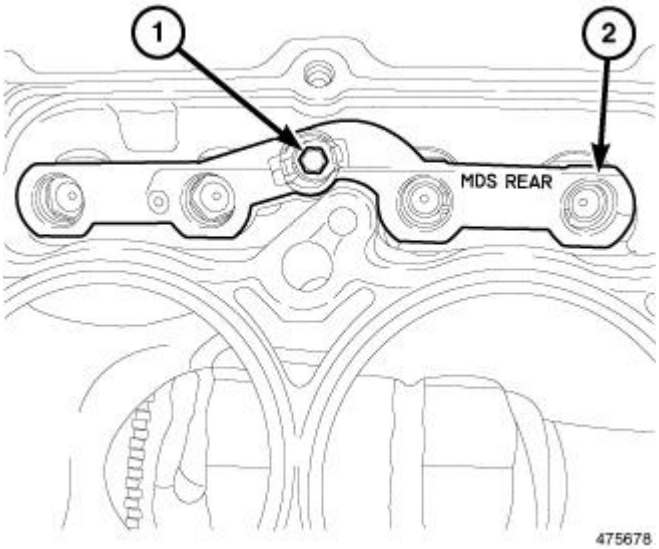

Fig. 186: Rear MDS Lifter Assembly
Courtesy of CHRYSLER GROUP, LLC

3. Remove the tappet guide holder retaining bolt (1) from the tappet guide holder assembly (2).

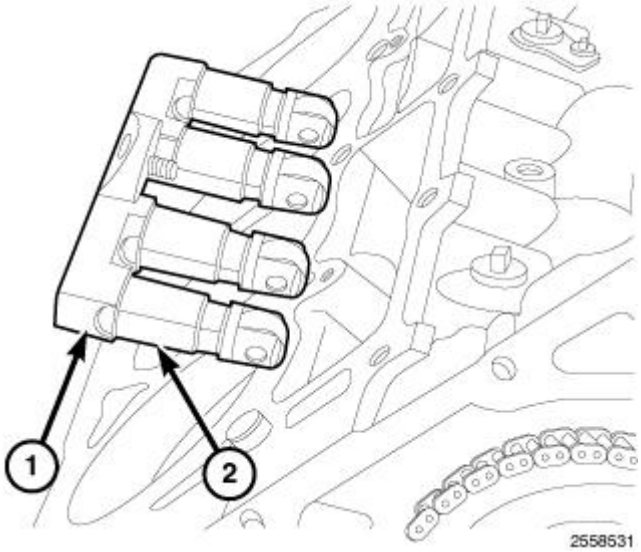

Fig. 187: Hydraulic Lifters/Tappets & Retainer/Guide Holder
Courtesy of CHRYSLER GROUP, LLC

CAUTION: The lifter and retainer assembly must be installed as a unit.

CAUTION: If the lifter and retainer assembly are to be reused, identify the lifters to ensure installation in their original location or engine damage could result.

4. Remove the tappet guide holder (1) and tappets (2) as an assembly.
5. Check the camshaft lobes for abnormal wear.

INSTALLATION

INSTALLATION

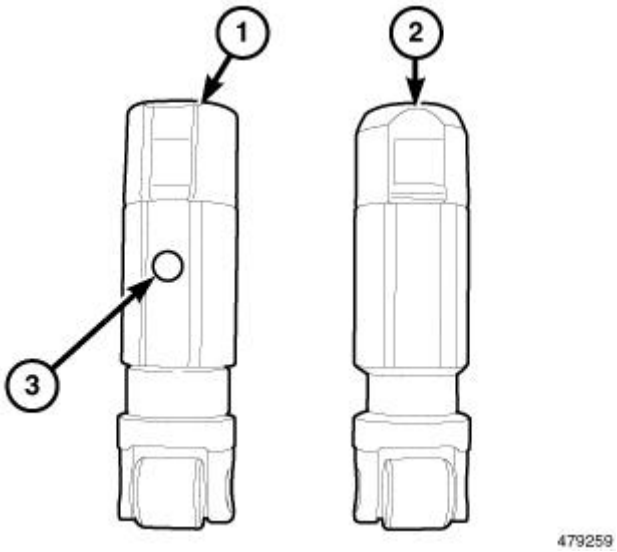

Fig. 188: MDS Lifter
Courtesy of CHRYSLER GROUP, LLC

The Multiple Displacement System (MDS) provides cylinder deactivation during steady speed, low acceleration and shallow grade climbing conditions to increase fuel economy.

CAUTION: Engines equipped with MDS use both standard roller lifters (2) and deactivating roller lifters (1). The deactivating roller lifters must be used in cylinders 1, 4, 6, 7. The deactivating lifters can be identified by the two holes in the side of the lifter body (3), for the latching pins.

CAUTION: The lifter and retainer assembly must be installed as a unit.

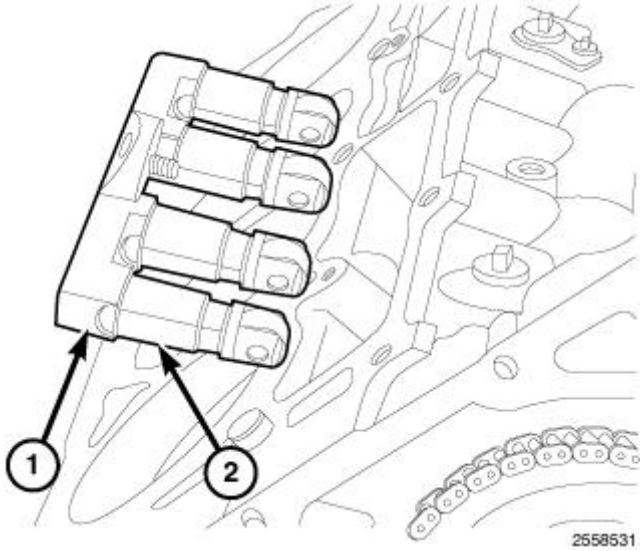

Fig. 189: Hydraulic Lifters/Tappets & Retainer/Guide Holder
Courtesy of CHRYSLER GROUP, LLC

1. Lubricate the tappet guide holder (1) and tappets (2).

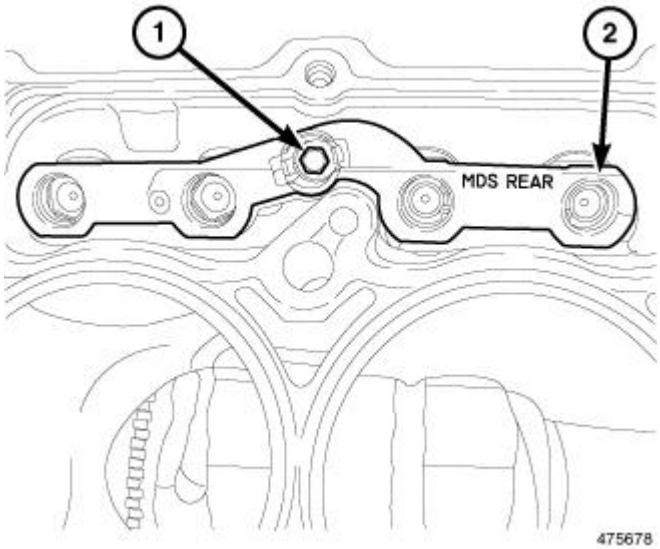

Fig. 190: Rear MDS Lifter Assembly
Courtesy of CHRYSLER GROUP, LLC

CAUTION: If the lifters and guide holder assembly are to be reused, they must me installed in their original location.

2. Install the tappet guide holder (2) and tappets.
3. Tighten the tappet retainer bolt (1) to 12 N.m (9 ft. lbs.).
4. Install the cylinder head. Refer to **CYLINDER HEAD, INSTALLATION, 5.7L**.
5. Connect the negative battery cable.

CAUTION: To prevent damage to valve assemblies, do not run the engine above fast idle until all hydraulic lifters have filled with oil and have become quiet.

6. Start the engine and check for leaks.
7. Road test the vehicle.

RETAINER, CRANKSHAFT REAR OIL SEAL

DIAGNOSIS AND TESTING

DIAGNOSIS AND TESTING - REAR SEAL AREA LEAKS

The crankshaft rear oil seal is integral to the crankshaft rear oil seal retainer and cannot be serviced separately.

Since it is sometimes difficult to determine the source of an oil leak in the rear seal area of the engine, a more involved inspection is necessary. The following steps should be followed to help pinpoint the source of the leak.

If the leakage occurs at the crankshaft rear oil seal area:

1. Raise and support the vehicle.
2. Remove the transmission inspection/torque converter access cover.
3. Inspect the rear of the cylinder block for evidence of oil leakage, note the following:
   - Circular spray pattern generally indicates seal leakage or crankshaft damage.
   - Where leakage tends to run straight down, possible causes are a porous block, camshaft bore cup plugs, oil galley pipe plugs, oil filter runoff, and main bearing cap to cylinder block mating surfaces. See appropriate Engine information, for proper repair procedures of these items.
4. If no leaks are detected, pressurize the crankcase as outlined in **OIL CONSUMPTION TEST AND DIAGNOSIS**.

   CAUTION: Do not exceed 20.6 kPa (3 psi).

5. If the leak is not detected, very slowly turn the crankshaft and watch for leakage. If a leak is detected between the crankshaft and seal while slowly turning the crankshaft, it is possible the crankshaft seal surface is damaged. The seal area on the crankshaft could have minor nicks or scratches that can be polished out using an emery cloth.

   CAUTION: Use extreme caution when crankshaft polishing is necessary to remove minor nicks or scratches. The crankshaft seal flange is specially machined to complement the function of the rear oil seal.

6. For bubbles that remain steady with shaft rotation, no further inspection can be done. Refer to **RETAINER, CRANKSHAFT REAR OIL SEAL, REMOVAL, 5.7L**.

REMOVAL

REMOVAL

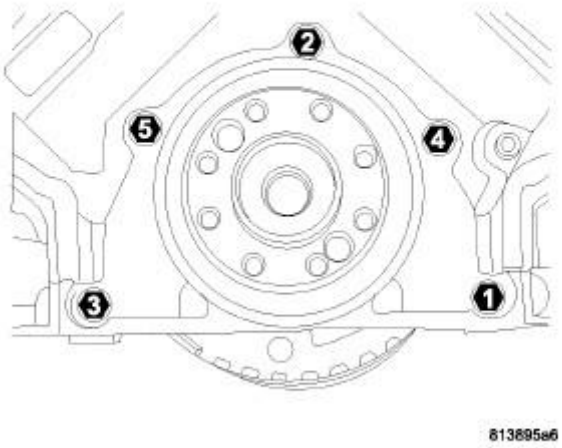

Fig. 191: Rear Seal Retainer Removal/Tightening Sequence
Courtesy of CHRYSLER GROUP, LLC

NOTE: **The crankshaft rear oil seal is integral to the crankshaft rear oil seal retainer and must be replaced as an assembly.**

NOTE: **The crankshaft rear oil seal retainer can not be reused after removal.**

NOTE: **This procedure can be performed in vehicle.**

1. Disconnect the negative battery cable.
2. Remove the transmission. Refer to appropriate Transmission and Transfer Case articles.
3. Remove the flexplate. Refer to **FLEXPLATE, REMOVAL, 5.7L**.
4. Remove the oil pan. Refer to **PAN, OIL, REMOVAL, 5.7L**.
5. Using the sequence shown in illustration, remove the rear oil seal retainer mounting bolts.
6. Carefully remove the retainer from the engine block.

INSTALLATION

INSTALLATION

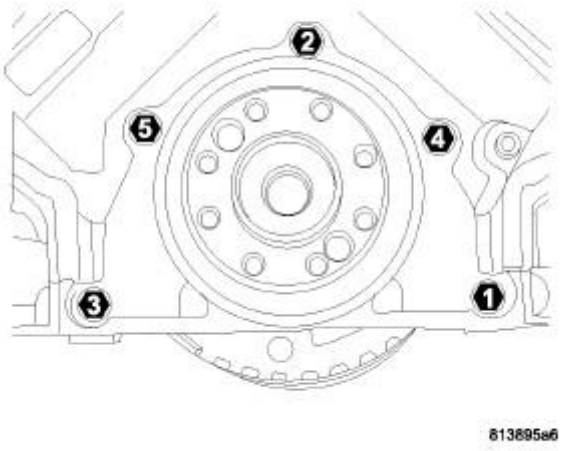

Fig. 192: Rear Seal Retainer Removal/Tightening Sequence
Courtesy of CHRYSLER GROUP, LLC

NOTE: The crankshaft rear oil seal is integral to the crankshaft rear oil seal retainer and must be replaced as an assembly.

NOTE: The crankshaft rear oil seal retainer can not be reused after removal.

1. Thoroughly clean all gasket residue from the engine block.
2. Position the gasket onto the new crankshaft rear oil seal retainer.
3. Position the crankshaft rear oil seal retainer onto the engine block.
4. Using the sequence shown in illustration, install the crankshaft rear oil seal retainer mounting bolts and tighten to 15 N.m (11 ft. lbs.).
5. Install the oil pan. Refer to **PAN, OIL, INSTALLATION, 5.7L**.
6. Install the flexplate. Refer to **FLEXPLATE, INSTALLATION, 5.7L**.
7. Install the transmission. Refer to appropriate Transmission and Transfer Case articles.
8. Fill the engine with oil.
9. Start the engine and check for leaks.

RING(S), PISTON

STANDARD PROCEDURE

STANDARD PROCEDURE - PISTON RING FITTING

PISTON RING END GAP

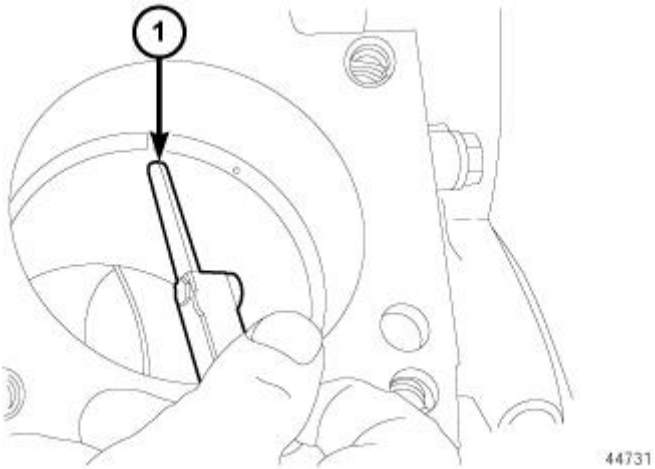

Fig. 193: Checking Piston Ring End Gap Using Feeler Gauge
Courtesy of CHRYSLER GROUP, LLC

NOTE: Before reinstalling used rings or installing new rings, the ring clearances must be checked.

1. Wipe the cylinder bore clean.
2. Insert the ring in the cylinder bore.

NOTE: The ring gap measurement must be made with the ring positioned at least 12 mm (0.50 inch.) from bottom of cylinder bore.

3. Using a piston, to ensure that the ring is squared in the cylinder bore, slide the ring downward into the cylinder.
4. Using a feeler gauge check the ring end gap. Replace any rings not within specification.

PISTON RING SIDE CLEARANCE

NOTE: Make sure the piston ring grooves are clean and free of nicks and burrs.

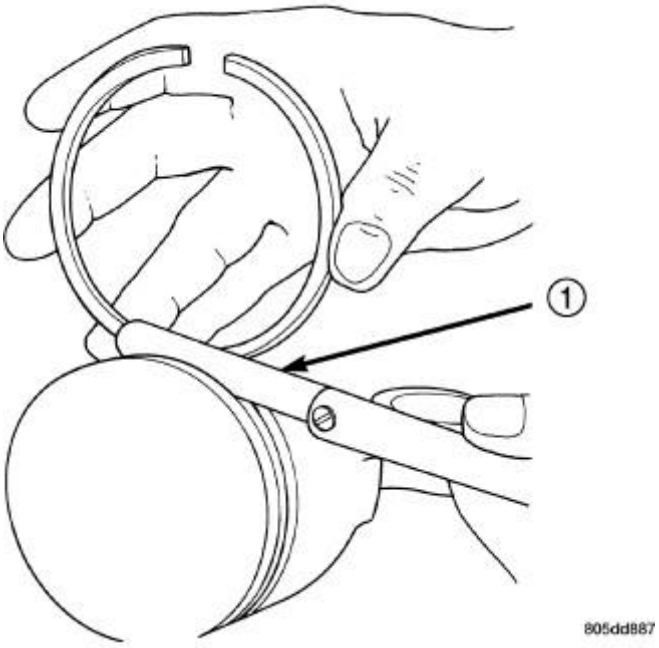

Fig. 194: Measuring Piston Ring Side Clearance
Courtesy of CHRYSLER GROUP, LLC

1. Measure the ring side clearance as shown in illustration make sure the feeler gauge (1) fits snugly between the ring land and the ring. Replace any ring not within specification.
2. Rotate the ring around the piston, the ring must rotate in the groove with out binding.

PISTON RING SPECIFICATION CHART

Piston Ring Position	Piston Ring Side Clearance	Maximum Clearance
Upper Ring		
Metric	0.04 - 0.09 mm	0.11 mm
Standard	0.0015 - 0.0035 in.	0.004 in.
Intermediate Ring		
Metric	0.04 - 0.08 mm	0.10 mm
Standard	0.0015 - 0.0031 in.	0.004 in.
Piston Ring Position	**Piston Ring End Gap**	**Wear Limit**
Upper Ring		
Metric	0.40 - 0.55 mm	0.43 mm
Standard	0.0157 - 0.0216 in.	0.017 in.
Intermediate Ring		
Metric	0.24 - 0.51 mm	0.74 mm
Standard	0.0094 - 0.0200 in.	0.029 in.
Oil Control Ring (Steel Rail)		
Metric	0.015 - 0.66 mm	0.76 mm
Standard	0.0059 - 0.0259 in.	0.030 in.

PISTON RING INSTALLATION

Fig. 195: Installing Piston Ring Side Rail
Courtesy of CHRYSLER GROUP, LLC

NOTE: **The No. 1 and No. 2 piston rings have a different cross section. Ensure No. 2 ring is installed with manufacturers I.D. mark (Dot) facing up, towards top of the piston.**

NOTE: **Piston rings are installed in the following order:**

- **Oil ring expander.**
- **Lower oil ring side rail.**
- **Upper oil ring side rail.**
- **No. 2 Intermediate piston ring.**
- **No. 1 Upper piston ring.**

1. Install the oil ring expander.
2. Install upper side rail by placing one end between the piston ring groove and the expander ring. Hold end firmly and press down the portion to be installed until side rail is in position. Repeat this step for the lower side rail.

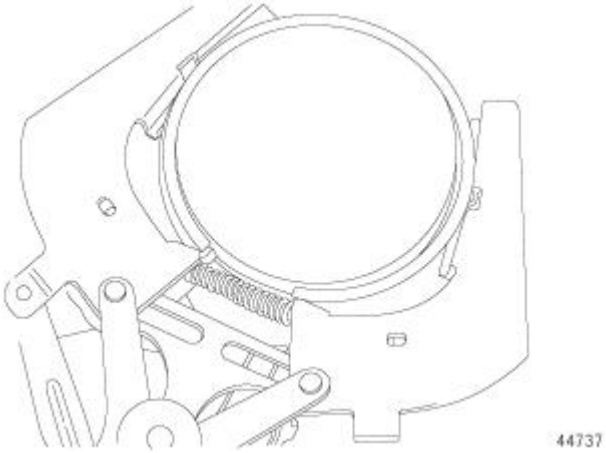

Fig. 196: Installing Upper & Intermediate Rings
Courtesy of CHRYSLER GROUP, LLC

3. Install No. 2 intermediate piston ring using a piston ring installer.
4. Install No. 1 upper piston ring using a piston ring installer.

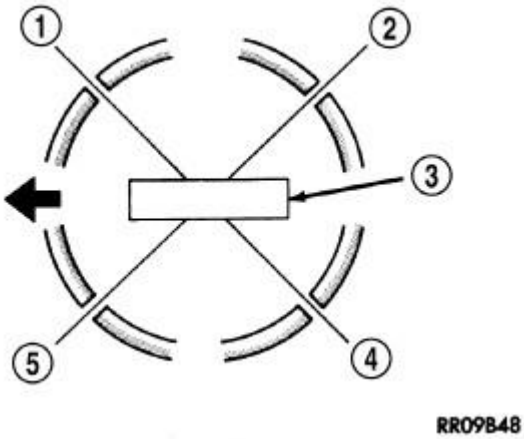

Fig. 197: Piston Ring End Gap Position
Courtesy of CHRYSLER GROUP, LLC

NOTE: **Install the piston rings so the gaps positioned as indicated with the piston viewed from the top.**

NOTE: **Staggering ring gap is important for oil control.**

5. Install the oil expander so the ring gap is located in the (1) position.
6. Install the oil ring rails so the ring gap is located in the (2, 4) position.
7. Install the second compression ring so the ring gap is located in the (3) position.
8. Install the top compression so the ring gap is located in the (1) position.

ROD, PISTON AND CONNECTING

DESCRIPTION

DESCRIPTION

CAUTION: Do not use a metal stamp to mark connecting rods as damage may result, instead use ink or a scratch awl.

The pistons are made of a high strength aluminum alloy. Piston skirts are coated with a solid lubricant (Molykote®) to reduce friction and provide scuff resistance. The piston top ring groove and land is anodized. The connecting rods are made of forged powdered metal, with a fractured cap design.

STANDARD PROCEDURE

STANDARD PROCEDURE - PISTON FITTING

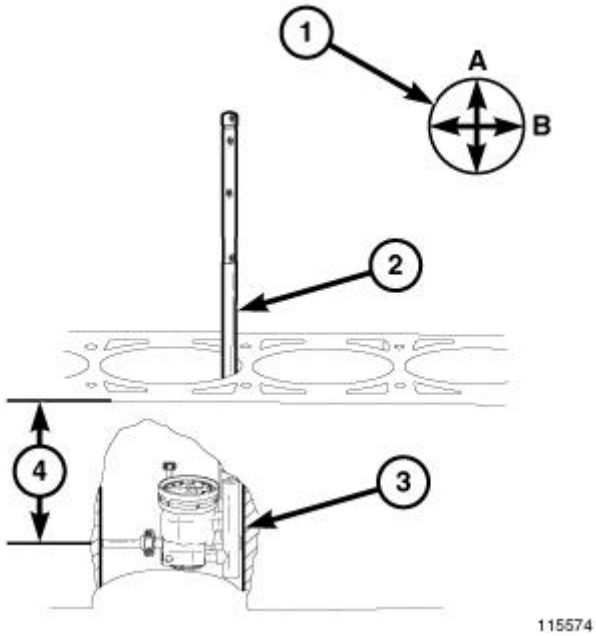

Fig. 198: Measuring Cylinder Bore Diameter
Courtesy of CHRYSLER GROUP, LLC

1. To correctly select the proper size piston, use Cylinder Indicator (special tool #C-119, Cylinder Indicator) (2) to measure the inside diameter of the cylinder bore (3). A cylinder bore gauge capable of reading in 0.003 mm (0.0001 in.) Increments is required. If a bore gauge is not available, do not use an inside micrometer.
2. Measure the inside diameter of the cylinder bore at a point 38.0 mm (1.5 inches) below the top of bore (4). Start perpendicular (across or at 90°) to the axis of the crankshaft at point A (1) and then take an additional bore reading 90° at point B (1).
3. The coated pistons will be serviced with the piston pin and connecting rod pre-assembled. The piston-rod assembly is specific for the left cylinder bank (odd numbered) and the right cylinder bank (even

numbered) and must not be interchanged.

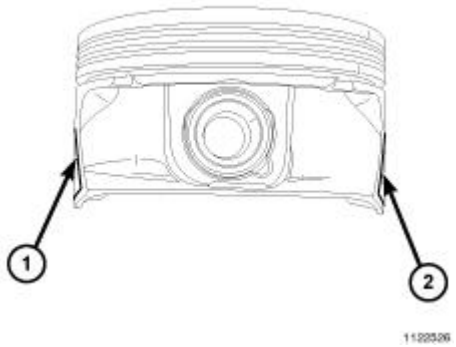

Fig. 199: Piston Diameter Measuring Points
Courtesy of CHRYSLER GROUP, LLC

4. Measure the piston diameter with a micrometer at points (1, 2).

REMOVAL

REMOVAL

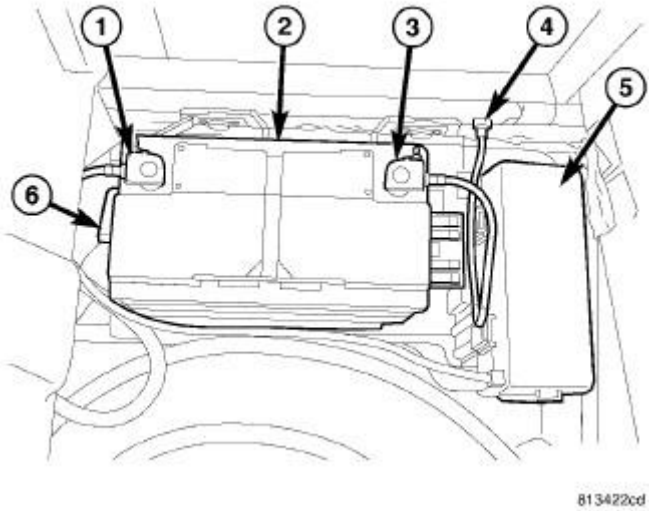

Fig. 200: Battery System Components & PDC Cover
Courtesy of CHRYSLER GROUP, LLC

1. Perform the fuel system pressure release procedure. Refer to **FUEL SYSTEM PRESSURE RELEASE** .
2. Disconnect and isolate the negative battery cable (3).

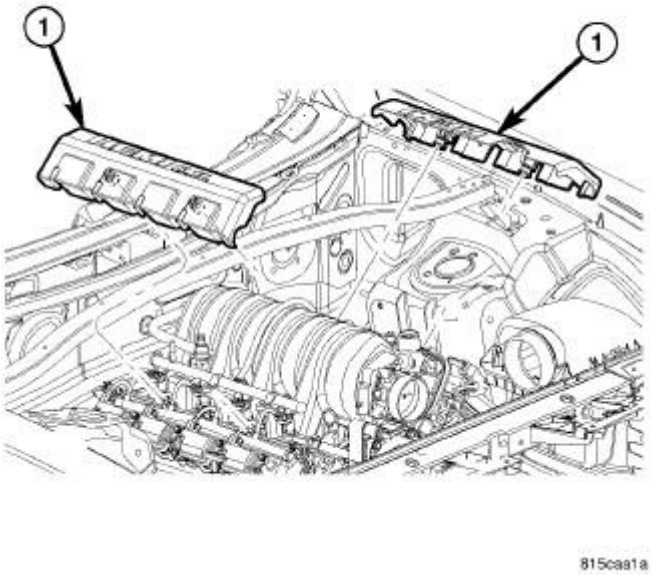

Fig. 201: Engine Covers
Courtesy of CHRYSLER GROUP, LLC

3. Remove the engine covers (1).

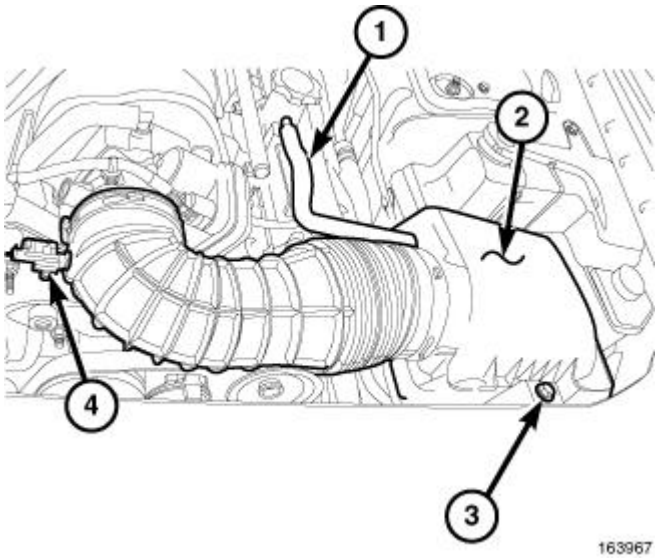

Fig. 202: Makeup Air Hose, Air Cleaner Housing, Retaining Bolt & Intake Air Temperature Sensor
Courtesy of CHRYSLER GROUP, LLC

4. Loosen clamp and disconnect the air duct at throttle body.
5. Disconnect the intake air temperature sensor (4) electrical connector.
6. Remove the makeup air hose (1).

7. Remove the air cleaner housing retaining bolt (3) and remove the air cleaner housing (2).
8. Remove the cylinder head(s). Refer to **CYLINDER HEAD, REMOVAL, 5.7L**.
9. Raise and support the vehicle.

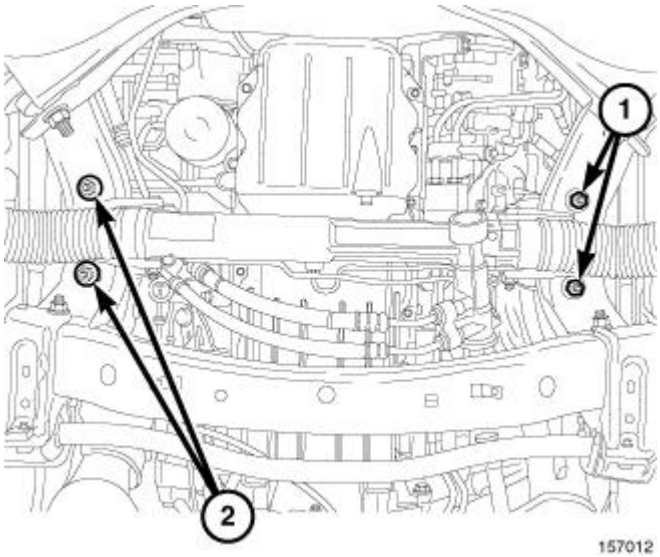

Fig. 203: Engine Mount Nuts
Courtesy of CHRYSLER GROUP, LLC

10. Remove the engine mount nuts (1, 2).

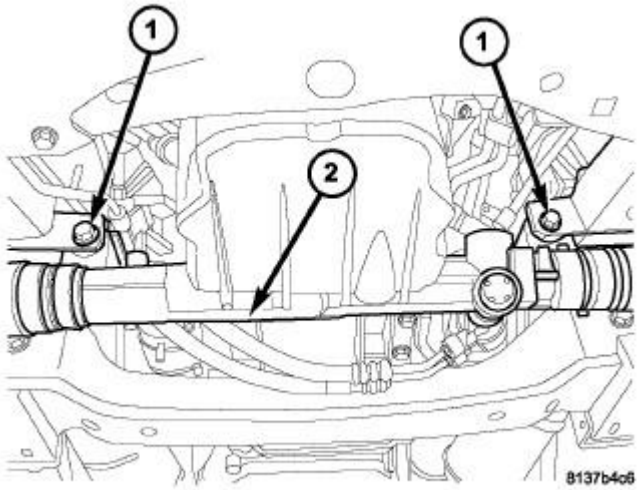

Fig. 204: Gear Mounting Bolts & Steering Gear
Courtesy of CHRYSLER GROUP, LLC

11. Remove the steering gear mounting bolts (1) and position the steering gear (2) aside.
12. Remove the engine oil dipstick and tube from the oil pan.

13. Lower the vehicle.

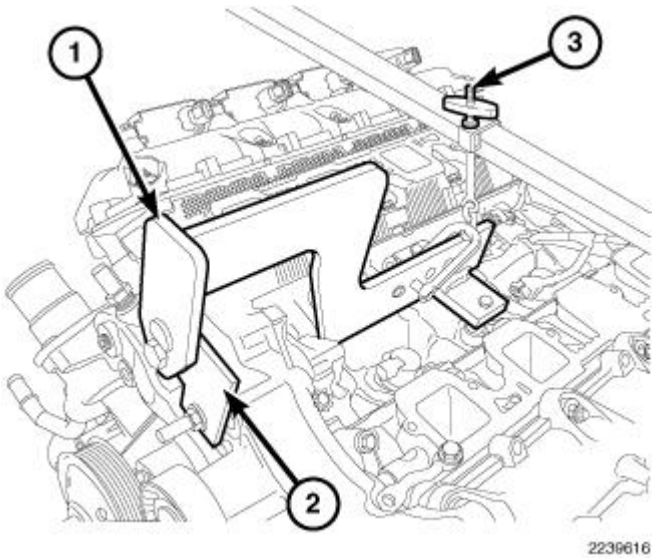

Fig. 205: Engine Lift Fixture & Adapter
Courtesy of CHRYSLER GROUP, LLC

NOTE: Do not use air tools to install engine lift fixture.

14. Install the Engine Lift Fixture (special tool #8984B, Fixture, Engine Lifting) (1), Engine Lift Adapter (special tool #8984-UPD, Adapter, Engine Lift) (2) and the Engine Support Fixture (special tool #8534B, Fixture, Driveline Support) (3).
15. Raise the engine to provide clearance to remove the oil pan.
16. Raise and support the vehicle.
17. Remove the oil pan. Refer to **PAN, OIL, REMOVAL, 5.7L**.
18. Lower the vehicle.
19. Remove the timing chain cover. Refer to **COVER(S), ENGINE TIMING, REMOVAL, 5.7L**.
20. If necessary, remove the ridge on top of the cylinder bores with a reliable ridge reamer before removing the pistons from the cylinder block. **Be sure to keep the tops of the pistons covered during this operation.**

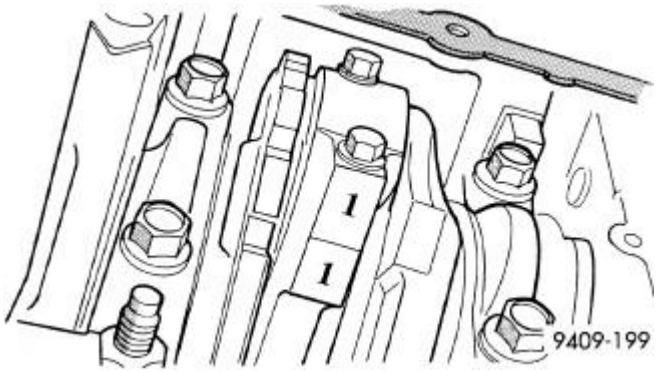

Fig. 206: Mark On Connecting Rod & Bearing Cap
Courtesy of CHRYSLER GROUP, LLC

CAUTION: Do not use a number stamp or a punch to mark connecting rods or caps, as damage to connecting rods could occur.

NOTE: Connecting rods and bearing caps are not interchangeable and should be marked before removal to ensure correct reassembly.

21. Raise and support the vehicle.
22. Mark the connecting rod and bearing cap positions using a permanent ink marker or scribe tool.

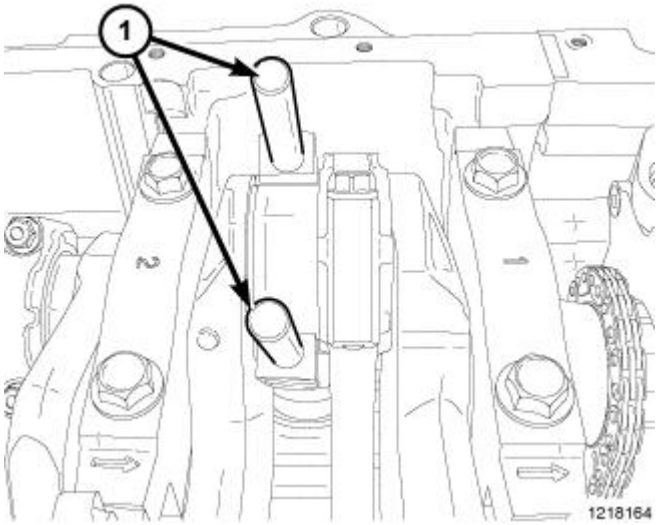

Fig. 207: Connecting Rod Guides
Courtesy of CHRYSLER GROUP, LLC

CAUTION: Care must be taken not to damage the fractured rod and cap joint face surfaces, as engine damage may occur.

CAUTION: Care must be taken not to nick crankshaft journals, as engine damage may occur.

NOTE: Pistons and connecting rods assemblies must be removed from the top of cylinder block. When removing the piston and connecting rod assemblies from the engine, rotate the crankshaft so each connecting rod is centered in the cylinder bore.

23. Remove the connecting rod cap, install the Connecting Rod Guides (special tool #8507, Guides, Connecting Rod) (1) and carefully remove the piston from the cylinder bore, repeat this procedure for each piston being removed.

24. Immediately after removing the piston and connecting rod, install the bearing cap on the mating connecting rod to prevent damage to the fractured cap and rod surfaces.
25. Carefully remove the piston rings from the piston(s), starting from the top ring down.

CLEANING

CLEANING

CAUTION: Do not use a wire wheel or other abrasive cleaning devise to clean the pistons or connecting rods. The pistons have a moly coating, this coating must not be damaged.

1. Using a suitable cleaning solvent, clean the pistons in warm water and towel dry.
2. Use a wood or plastic scraper to clean the ring land grooves.

CAUTION: Do not remove the piston pin from the piston and connecting rod assembly.

INSPECTION

INSPECTION

Check the connecting rod journal for excessive wear, taper and scoring. Refer to **Engine/Engine Block/ROD, Piston and Connecting - Standard Procedure**.

Check the connecting rod for signs of twist or bending.

Check the piston for taper and elliptical shape before it is fitted into the cylinder bore. Refer to **Engine/Engine Block/ROD, Piston and Connecting - Standard Procedure**.

Check the piston for scoring or scraping marks in the piston skirts. Check the ring lands for cracks and/or deterioration.

INSTALLATION

INSTALLATION

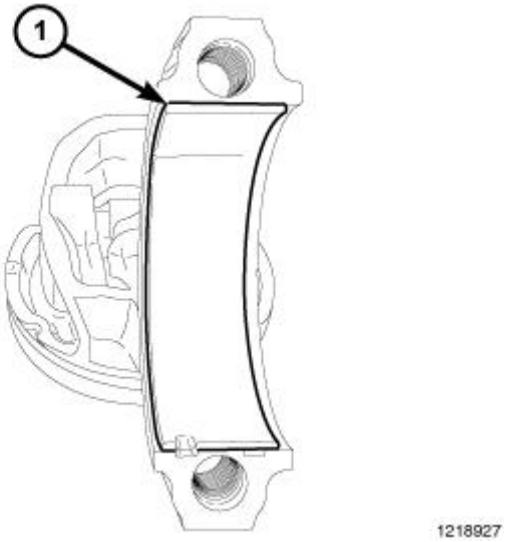

Fig. 208: Rod Bearing
Courtesy of CHRYSLER GROUP, LLC

NOTE: Before reinstalling used rings or installing new rings, the ring clearances must be checked.

NOTE: Make sure the piston ring grooves are clean and free of nicks and burrs.

1. Check piston ring clearance. Refer to **Engine/Engine Block/RING(S), Piston - Standard Procedure**.
2. Before installing piston and connecting rod assemblies into the bore, install the piston rings. Refer to **Engine/Engine Block/RING(S), Piston - Standard Procedure**.
3. Immerse the piston head and rings in clean engine oil and position a ring compressor over the piston and rings and tighten the ring compressor. **Ensure the position of rings do not change during this operation.**
4. Position the rod bearing (1) onto the connecting rod and lubricate bearing surface with clean engine oil.

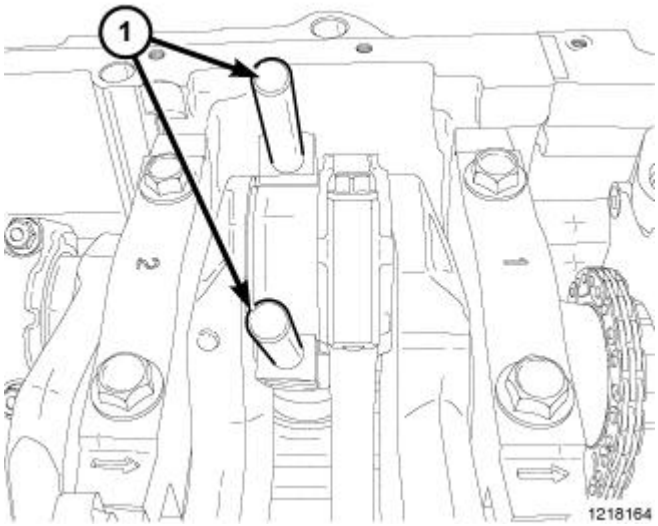

Fig. 209: Connecting Rod Guides
Courtesy of CHRYSLER GROUP, LLC

5. Install Connecting Rod Guides (special tool #8507, Guides, Connecting Rod) (1) into the connecting rod bolt threads.

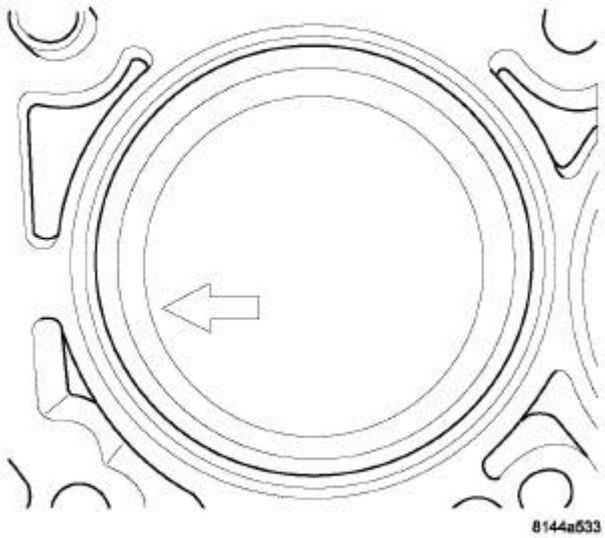

Fig. 210: Piston Direction Arrow
Courtesy of CHRYSLER GROUP, LLC

6. The pistons are marked on the piston pin bore surface with an raised "F" or arrow on top of piston indicating installation position. This mark must be pointing toward the front of engine on both cylinder banks.

7. Wipe cylinder bore clean and lubricate with clean engine oil.
8. Rotate the crankshaft until the connecting rod journal is centered with the cylinder bore.
9. Insert the piston and rod assembly into the cylinder bore and carefully position the connecting rod over the crankshaft journal.
10. Tap the piston down into the cylinder bore using a hammer handle while guiding the connecting rod into position on the rod journal.

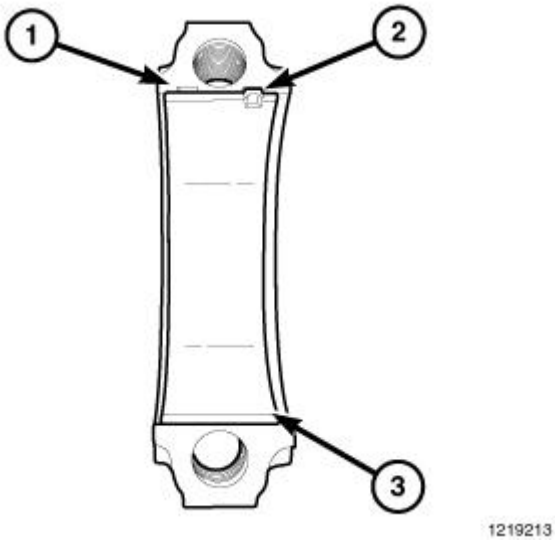

Fig. 211: Connecting Rod Cap & Bearing
Courtesy of CHRYSLER GROUP, LLC

11. Remove the Connecting Rod Guides (special tool #8507, Guides, Connecting Rod).
12. Wipe the connecting rod cap (1) clean and lubricate with clean engine oil and install the bearing (3).

NOTE: **The connecting rods and bearing caps are not interchangeable, line up the previously marked bearing caps and connecting rods to ensure assembly to their original location.**

13. Lubricate the bearing surfaces with clean engine oil and position the rod cap in place.

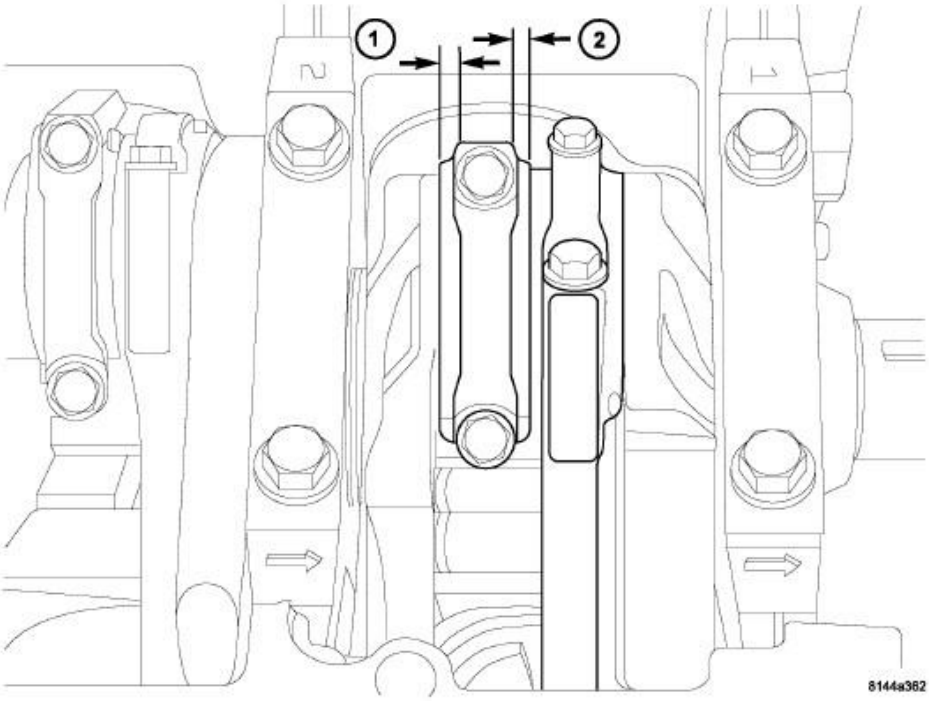

Fig. 212: Identifying Connecting Rod Proper Installation
Courtesy of CHRYSLER GROUP, LLC

CAUTION: When installing the connecting rods, make sure the wide side of the connecting rod faces the crankshaft and the narrow sides face each other.

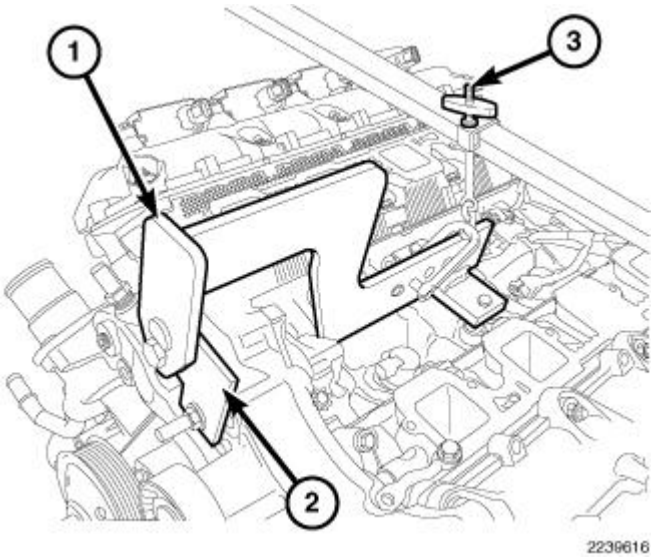

Fig. 213: Engine Lift Fixture & Adapter
Courtesy of CHRYSLER GROUP, LLC

CAUTION: Always replace the connecting rod bolts whenever they are loosened or removed.

14. Lubricate the new rod cap bolts with clean engine oil, install and tighten to 21 N.m (15 ft. lbs.) plus 90°.
15. Install the timing chain cover. Refer to **COVER(S), ENGINE TIMING, INSTALLATION, 5.7L**.
16. Install the new oil pan gasket/windage tray and oil pan. Refer to **PAN, OIL, INSTALLATION, 5.7L**.
17. Install the engine oil dipstick tube and dipstick.
18. Lower the vehicle.
19. Using the Engine Lift Fixture (special tool #8984B, Fixture, Engine Lifting) (1), Engine Lift Adapter (special tool #8984-UPD, Adapter, Engine Lift) (2) and the Engine Support Fixture (special tool #8534B, Fixture, Driveline Support) (3) lower the engine into position and remove.
20. Raise and support the vehicle.

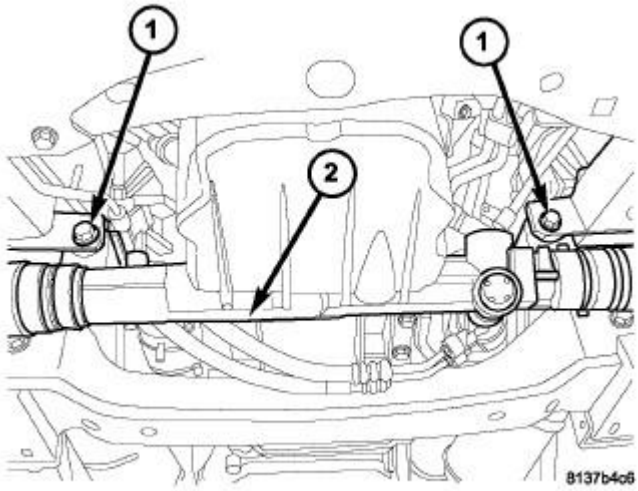

Fig. 214: Gear Mounting Bolts & Steering Gear
Courtesy of CHRYSLER GROUP, LLC

21. Position the steering gear (2), install mounting bolts (1) and tighten to 95 N.m (70 ft. lbs.).

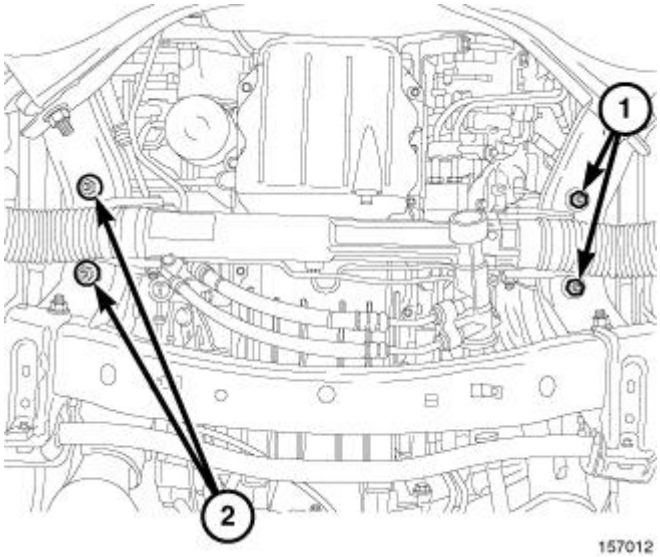

Fig. 215: Engine Mount Nuts
Courtesy of CHRYSLER GROUP, LLC

22. Install the engine mount nuts (1, 2) and tighten to 95 N.m (70 ft. lbs.).
23. Lower the vehicle.
24. Install the cylinder head(s). Refer to **CYLINDER HEAD, INSTALLATION, 5.7L**.

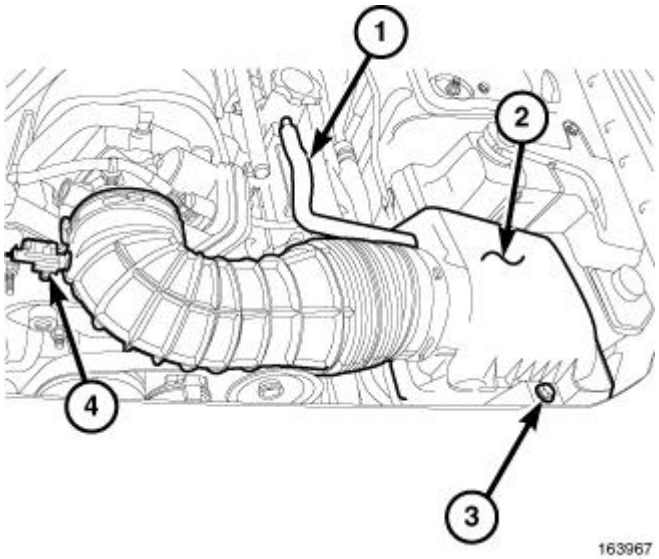

Fig. 216: Makeup Air Hose, Air Cleaner Housing, Retaining Bolt & Intake Air Temperature Sensor
Courtesy of CHRYSLER GROUP, LLC

25. Position the air cleaner housing (2), install the air cleaner housing retaining bolt (3) and securely tighten.
26. Connect the makeup air hose (1).
27. Connect the intake air temperature sensor (4) electrical connector.
28. Connect the air duct to the throttle body and tighten clamp to 3 N.m (30 in. lbs.).

29. Fill the engine with oil. Refer to **Engine/Lubrication/OIL - Standard Procedure**.

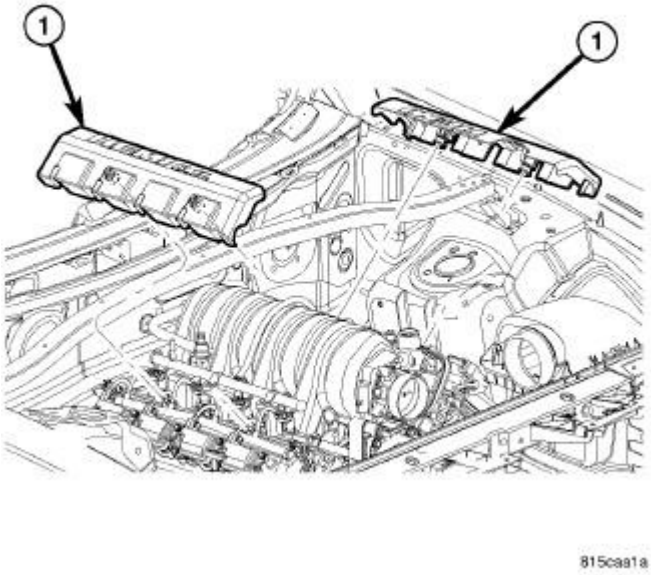

Fig. 217: Engine Covers
Courtesy of CHRYSLER GROUP, LLC

30. Install the engine covers (1).

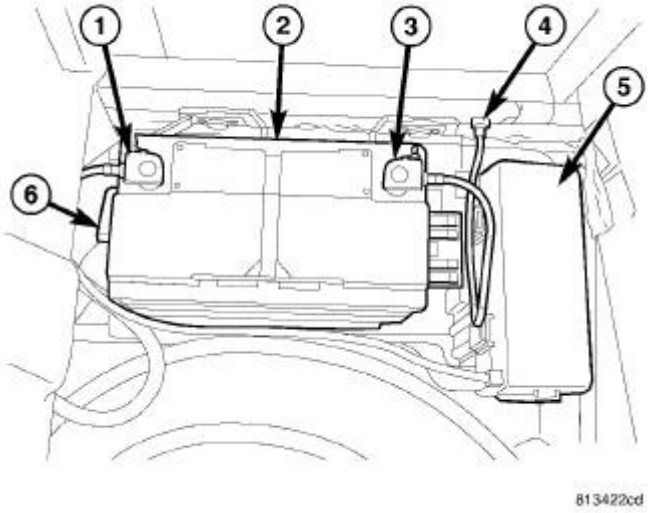

Fig. 218: Battery System Components & PDC Cover
Courtesy of CHRYSLER GROUP, LLC

31. Connect the negative battery cable (3).

SEAL, CRANKSHAFT OIL, FRONT

REMOVAL

REMOVAL

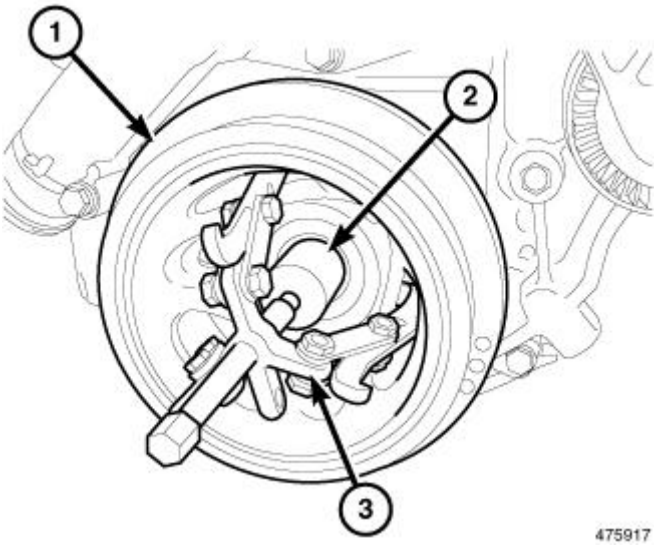

Fig. 219: Removing Vibration Damper
Courtesy of CHRYSLER GROUP, LLC

1. Disconnect negative cable from battery.
2. Remove accessory drive belt. Refer to **BELT, SERPENTINE, REMOVAL** .
3. Drain cooling system. Refer to **STANDARD PROCEDURE** .
4. Remove upper radiator hose.
5. Remove radiator shroud attaching fasteners.
6. Remove radiator cooling fan and shroud. Refer to **FAN, COOLING, ELECTRIC, REMOVAL** or **FAN, COOLING, VISCOUS, REMOVAL** .
7. Remove crankshaft damper bolt.
8. Remove damper using Crankshaft Insert (special tool #8513A, Insert, Crankshaft) (2) and Three Jaw Puller (special tool #1023, Puller) (1). Refer to **DAMPER, VIBRATION, REMOVAL, 5.7L**.

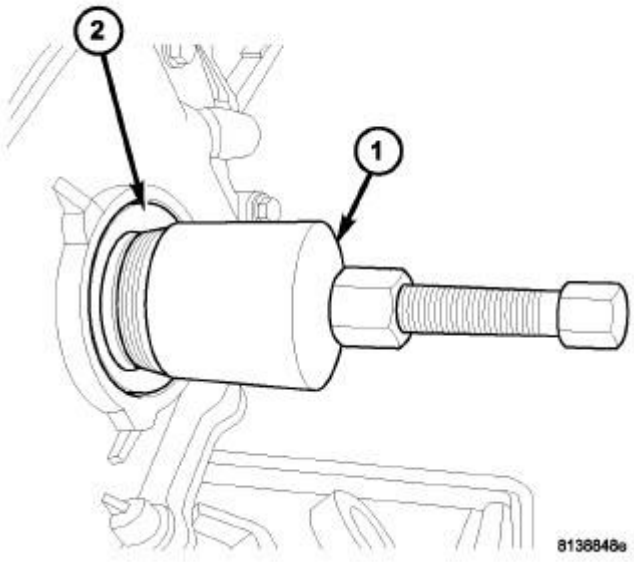

Fig. 220: Front Crankshaft Seal Removal
Courtesy of CHRYSLER GROUP, LLC

9. Using Seal Remover (special tool #9071, Remover, Seal) (1), remove crankshaft front seal (2).

INSTALLATION

INSTALLATION

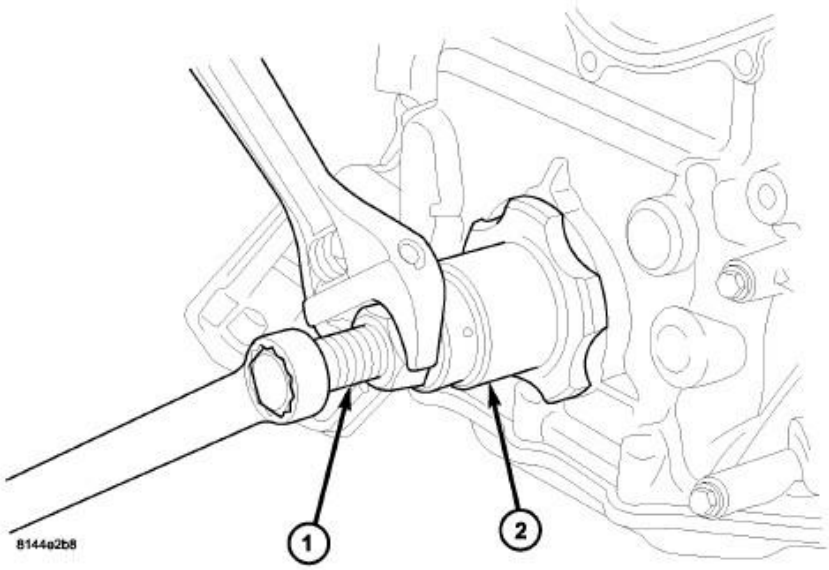

Fig. 221: Front Seal Installation

Courtesy of CHRYSLER GROUP, LLC

CAUTION: The front crankshaft seal must be installed dry. Do not apply lubricant to the sealing lip or the outer edge.

1. Using Crankshaft Front Oil Seal Installer (special tool #9072, Installer, Seal) (2) and Damper Installer (special tool #8512A, Installer, Damper) (1), install crankshaft front seal.

CAUTION: To prevent severe damage to the crankshaft or damper, thoroughly clean the damper bore and the crankshaft nose before installing damper.

2. Install vibration damper. Refer to **DAMPER, VIBRATION, INSTALLATION, 5.7L**.
3. Install radiator cooling fan and shroud. Refer to **FAN, COOLING, ELECTRIC, INSTALLATION** or **FAN, COOLING, VISCOUS, INSTALLATION** .
4. Install upper radiator hose.
5. Install accessory drive belt refer. Refer to **BELT, SERPENTINE, INSTALLATION** .
6. Refill cooling system. Refer to **STANDARD PROCEDURE** .
7. Connect negative cable to battery.

SEAL, CRANKSHAFT OIL, REAR

DESCRIPTION

DESCRIPTION

The crankshaft rear oil seal is integral to the crankshaft rear oil seal retainer, for more information. Refer to the following;

- **Diagnosis and Testing** . Refer to **RETAINER, CRANKSHAFT REAR OIL SEAL, DIAGNOSIS AND TESTING, 5.7L**.
- **Removal** . Refer to **RETAINER, CRANKSHAFT REAR OIL SEAL, REMOVAL, 5.7L**.
- **Installation** . Refer to **RETAINER, CRANKSHAFT REAR OIL SEAL, INSTALLATION, 5.7L**.

SOLENOID, MULTIPLE DISPLACEMENT

DESCRIPTION

DESCRIPTION

The Multi Displacement System selectively deactivates cylinders 1, 4, 6, and 7, to improve fuel economy. It has two modes of operation:

- 8 cylinders for acceleration and heavy loads.
- 4 cylinders for cruising and city traffic.

The main components of the Multi Displacement System are:

- Unique MDS camshaft.
- Deactivating roller tappets.
- 4 control valves/solenoids.
- control valve/solenoid wiring harness.
- oil temp sensor.

OPERATION

OPERATION

Cylinder Deactivation

- Trap an exhaust charge from a normal combustion event
- Normal combustion event
- Don't open the exhaust valve
- Don't open the intake valve
- Piston is an air spring
- Cylinders deactivated in firing sequence

Cylinder Reactivation

- Open the exhaust valve
- Empty the cylinder
- Open the intake valve
- Normal combustion event
- Cylinders reactivated in firing sequence

DIAGNOSIS AND TESTING

DIAGNOSIS AND TESTING - MDS SOLENOID

The Multi-Displacement System (MDS) has the following detectable issues:

- solenoid circuit
- fail to deactivate a cylinder(s)
- fail to reactivate a cylinder(s)
- low oil pressure

CONDITION	POSSIBLE CAUSES	CORRECTION
MDS does not activate	1. Low oil pressure.	1. Check for proper oil pressure.
	2. Bad oil temperature sensor.	2. Replace the oil temperature sensor.

	3. Malfunctioning MDS solenoid.	3. Replace the solenoid.
	4. Malfunctioning MDS tappet.	4. Replace tappet (s).
MDS does not deactivate	1. Low oil pressure.	1. Check or proper oil pressure.
	2. Bad oil temperature sensor.	2. Replace the oil temp sensor.
	3. Malfunctioning MDS solenoid.	3. Replace the solenoid.
	4. Malfunctioning MDS tappet.	4. Replace tappet(s).

REMOVAL

REMOVAL

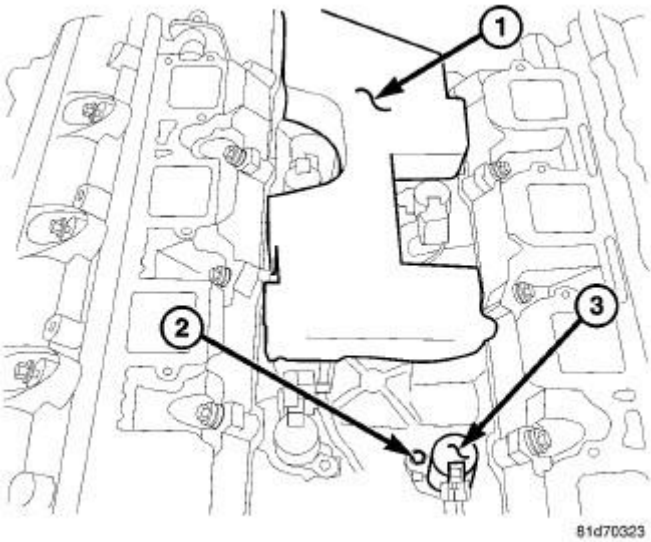

Fig. 222: Intake Manifold Foam Insulator Pad, MDS Solenoids & Bolts
Courtesy of CHRYSLER GROUP, LLC

1. Disconnect and isolate the negative battery cable.
2. Remove the intake manifold. Refer to **MANIFOLD, INTAKE, REMOVAL, 5.7L**.
3. Remove foam insulator pad (1).

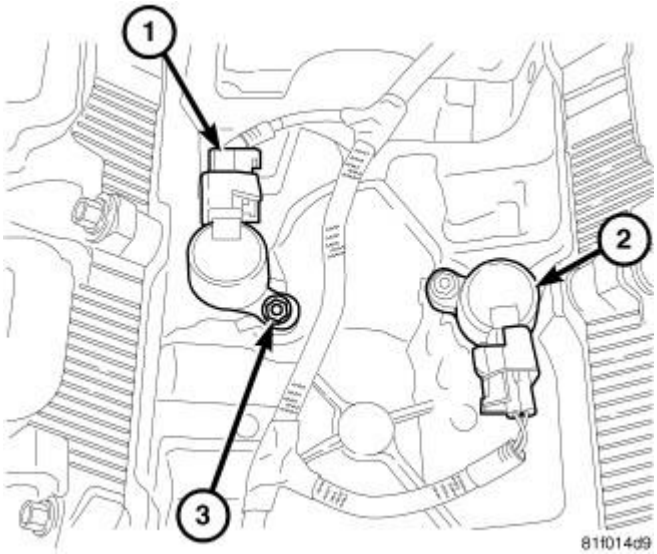

Fig. 223: MDS Solenoids, Electrical Connectors & Retaining Bolts
Courtesy of CHRYSLER GROUP, LLC

4. Remove the Multiple Displacement Solenoid (MDS) (2) electrical connector(s) (1).
5. Remove the MDS solenoid (2) retaining bolt(s) (3).

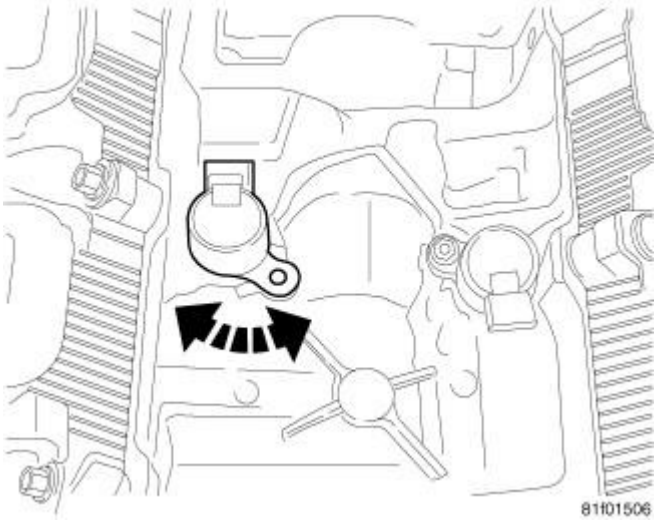

Fig. 224: MDS Solenoid Removal
Courtesy of CHRYSLER GROUP, LLC

CAUTION: Do not try to pry the solenoid out. This could lead to breakage and contamination of the lubrication system.

6. Lightly tap on the MDS solenoid(s) with a rubber mallet. Rotate the MDS solenoid(s) from side to side to break the seal.
7. Remove the MDS solenoid(s).

INSTALLATION

INSTALLATION

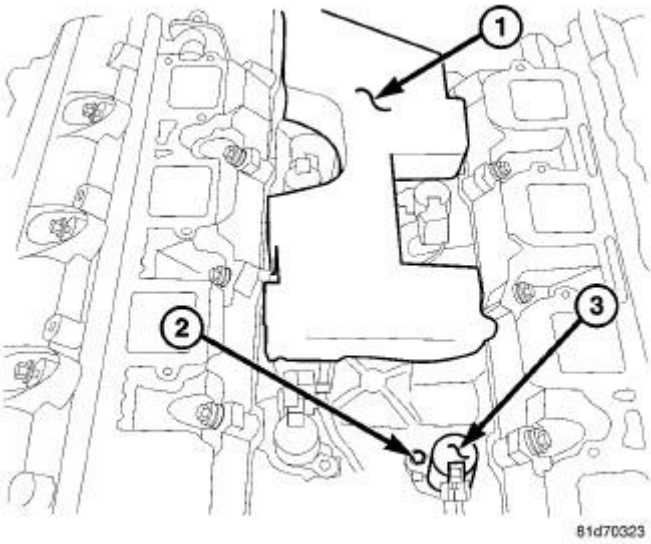

Fig. 225: Intake Manifold Foam Insulator Pad, MDS Solenoids & Bolts
Courtesy of CHRYSLER GROUP, LLC

1. Verify the MDS solenoid bores are free of debris before installing the MDS solenoid into the engine block.
2. Install the MDS solenoid(s) (3), ensure the seal is fully seated into the engine block.
3. Install the retaining bolt(s) (2) and tighten to 11 N.m (8 ft. lbs.).
4. Connect the MDS electrical connector to the solenoid(s) (3).
5. Install the foam insulator pad (1).
6. Install the intake manifold. Refer to **MANIFOLD, INTAKE, INSTALLATION, 5.7L**.

ENGINE MOUNTING

INSULATOR, ENGINE MOUNT, REAR (TRANSMISISON)

REMOVAL

REMOVAL

NOTE: 2WD shown in illustration. 4WD similar.

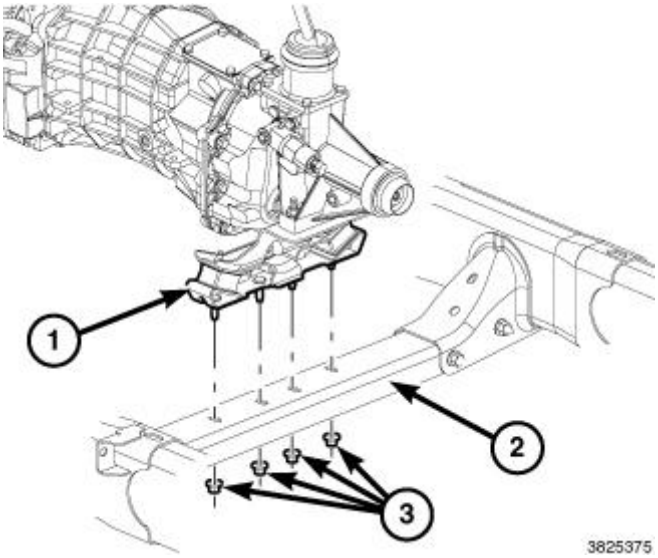

Fig. 226: Transmission Mount, Crossmember & Nuts
Courtesy of CHRYSLER GROUP, LLC

1. Raise the vehicle on a hoist.
2. Remove the nuts (3) from the transmission mount (1).
3. Using a suitable jack. Raise the transmission off the crossmember (2).

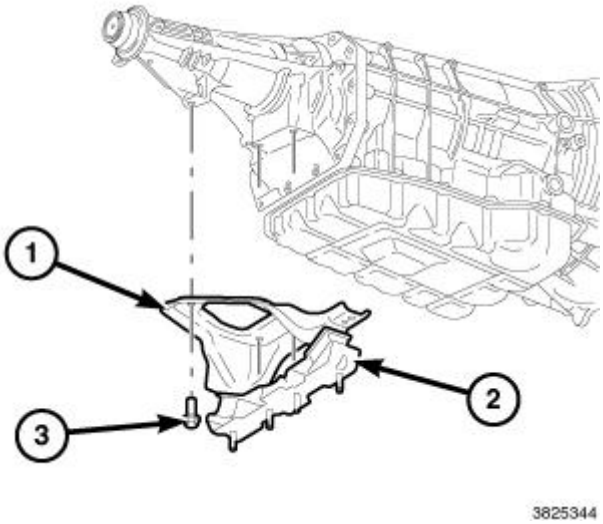

Fig. 227: Transmission Mounting Bracket, Insulator & Bolts
Courtesy of CHRYSLER GROUP, LLC

4. Remove the transmission bracket mounting bolts (3).
5. Remove the rear mount assembly.
6. If necessary, separate the insulator (2) from the transmission mounting bracket (1).

INSTALLATION

INSTALLATION

NOTE: 2WD shown in illustration. 4WD similar.

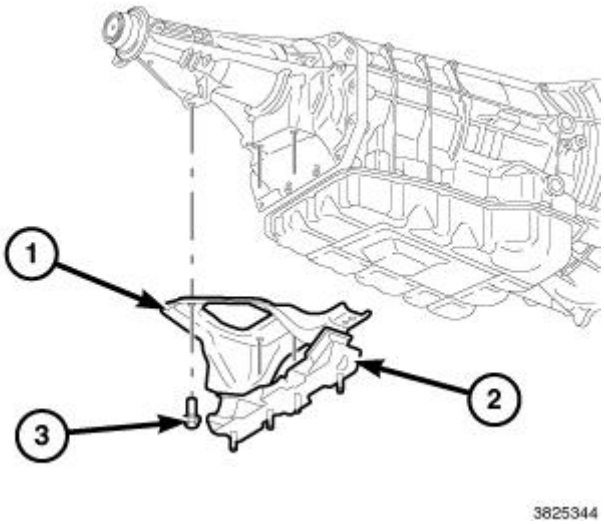

Fig. 228: Transmission Mounting Bracket, Insulator & Bolts
Courtesy of CHRYSLER GROUP, LLC

NOTE: Threadlocking compound must be applied to the bolts before installation.

1. If removed, install the insulator (2) to the transmission mounting bracket (1). Tighten the nuts to 61 N.M (45 ft. lbs.).
2. Install the bolts (3) that attach the transmission bracket (1) to the transmission.
3. Tighten the bolts to 64 N.M (47 ft.lbs.).

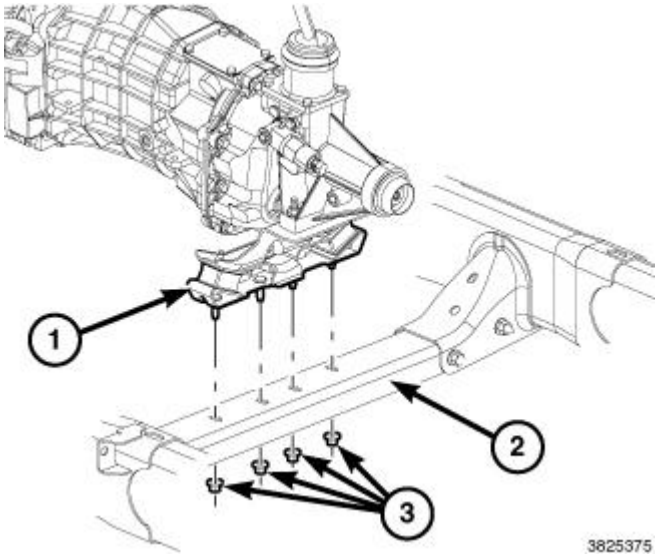

Fig. 229: Transmission Mount, Crossmember & Nuts

Courtesy of CHRYSLER GROUP, LLC

4. Lower the transmission so the transmission mount (1) rest on the crossmember (2) and the studs of the transmission mount are aligned in the slots in the crossmember.
5. Install the nuts (3) onto the transmission mount studs through the crossmember access slot.
6. Tighten the nuts to 61 N.M (45 ft. lbs.).

INSULATOR, ENGINE MOUNT, FRONT

REMOVAL

INSULATOR, LEFT

2WD

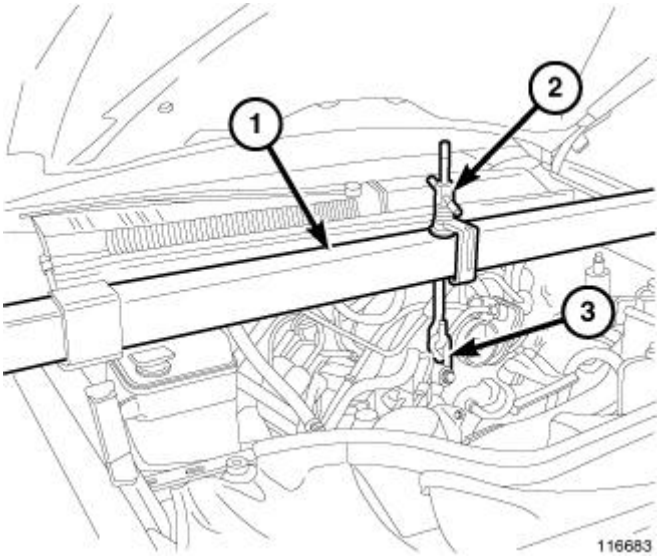

Fig. 230: Engine Support Tool
Courtesy of CHRYSLER GROUP, LLC

1. Disconnect negative battery cable.
2. Install the (special tool #8534B, Fixture, Driveline Support) (1).
3. Using the handle (2), tighten the lift rod (3) so that the engine will be supported.
4. Raise the vehicle.

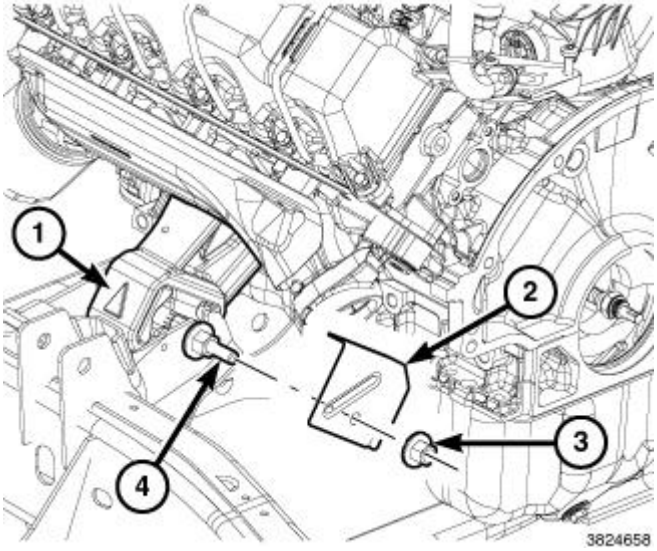

Fig. 231: Engine Mount, Heat Shield & Fasteners
Courtesy of CHRYSLER GROUP, LLC

NOTE: **Loosening of both front engine mount through bolts will be required for lifting of the engine.**

5. Remove the engine mount heat shield nuts (3).
6. Remove the heat shield (2) from the engine mount through bolts (4).
7. Loosen the nut from engine mount through bolts.
8. Lower the vehicle.
9. Tighten the handle for the engine lift so that the engine clears the engine mount to frame bracket.
10. Raise the vehicle.

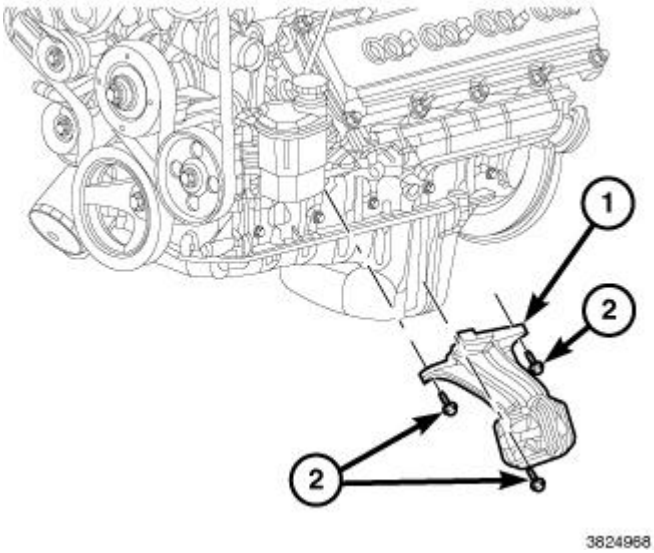

Fig. 232: Engine Mount & Bolts
Courtesy of CHRYSLER GROUP, LLC

11. Remove the bolts (2) that secure the engine mount (1) to the engine block.
12. Remove insulator from engine.

4WD WITH INDEPENDENT SUSPENSION

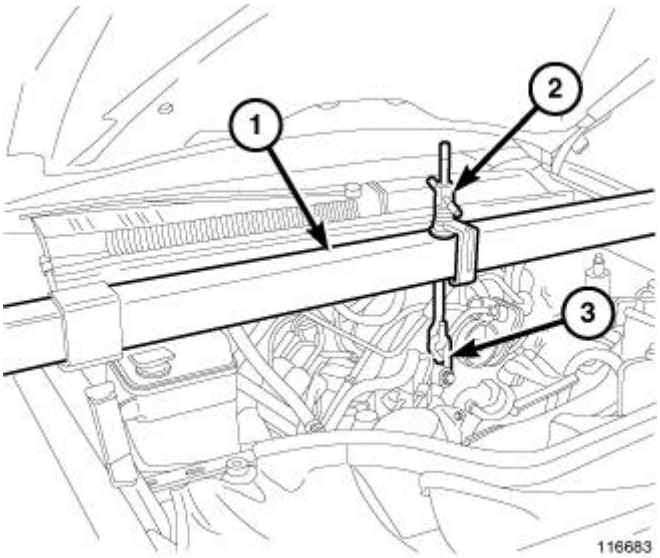

Fig. 233: Engine Support Tool
Courtesy of CHRYSLER GROUP, LLC

1. Disconnect the negative cable from the battery.
2. Install the (special tool #8534B, Fixture, Driveline Support) (1).
3. Using the handle (2), tighten the lift rod (3) so that the engine will be supported.
4. Raise the vehicle.

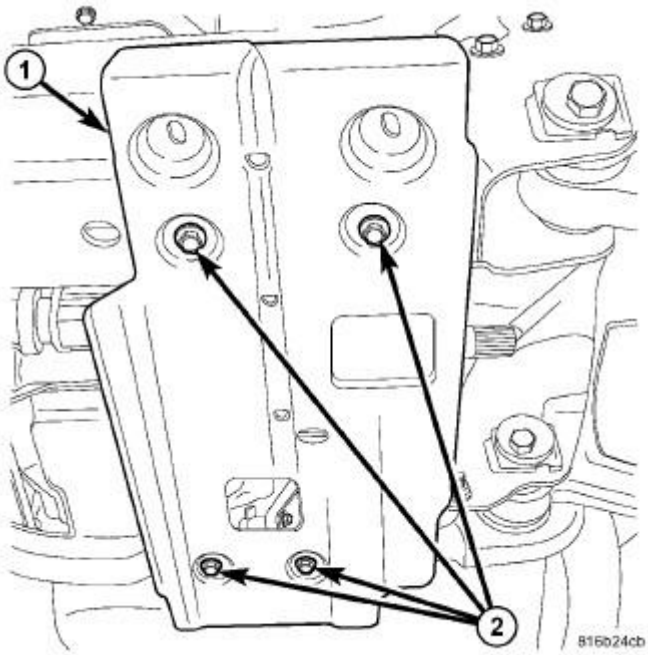

Fig. 234: Skid Plate & Bolts
Courtesy of CHRYSLER GROUP, LLC

5. Remove the skid plate.

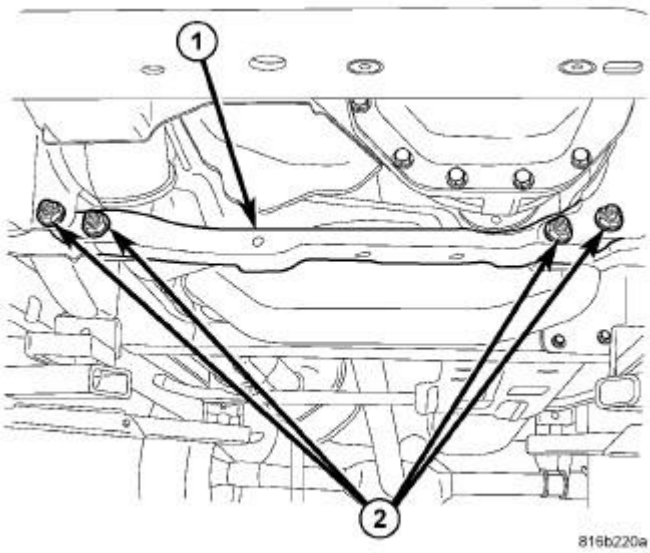

Fig. 235: Suspension Crossmember & Bolts
Courtesy of CHRYSLER GROUP, LLC

6. Remove the front crossmember.

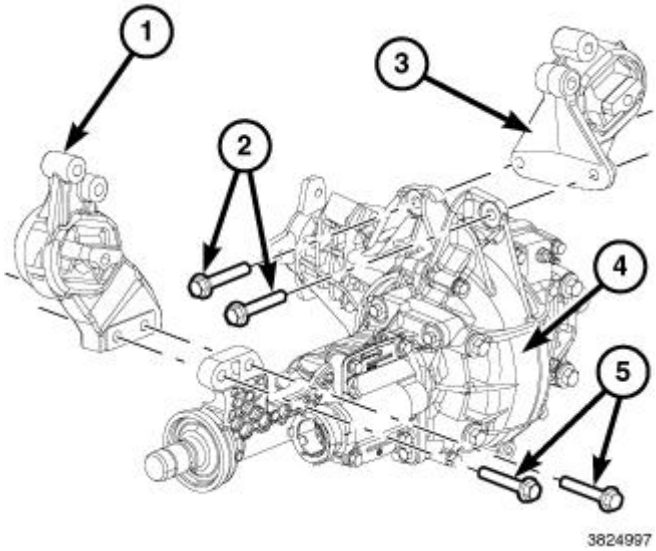

Fig. 236: Engine Mounts, Front Axle & Bolts
Courtesy of CHRYSLER GROUP, LLC

7. Support the front axle (4) with a suitable jack.
8. Remove the bolts (2 and 5) that attach the engine mounts (1 and 3) to the front axle.

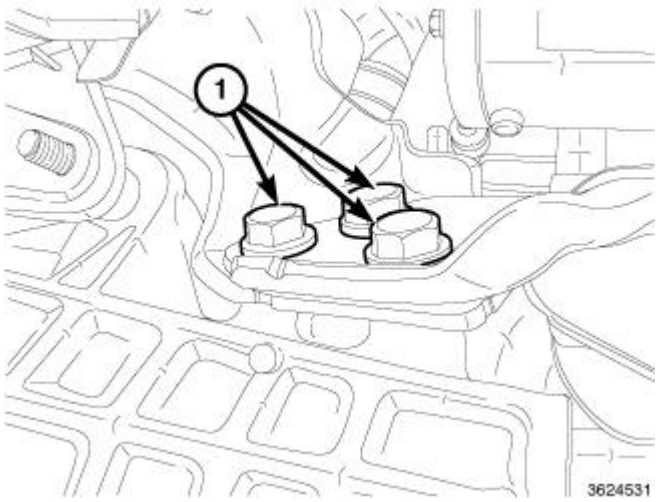

Fig. 237: Engine Bracket Bolts
Courtesy of CHRYSLER GROUP, LLC

9. Remove the bolts (1) that attach the front axle pinion housing to the left engine bracket.
10. Lower the front axle.

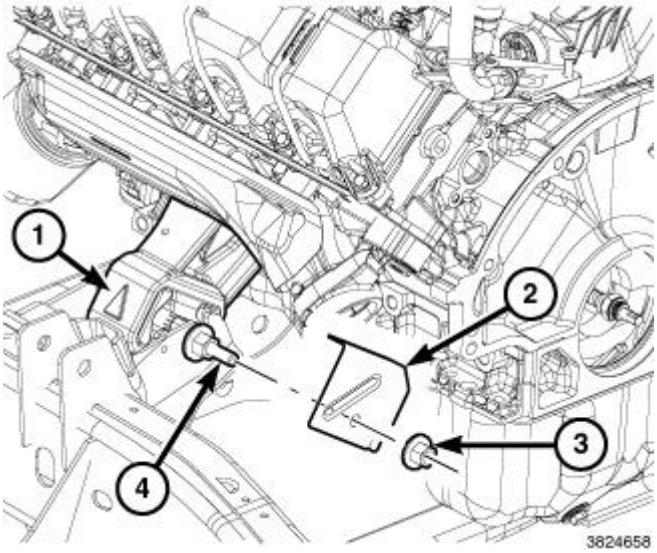

Fig. 238: Engine Mount, Heat Shield & Fasteners
Courtesy of CHRYSLER GROUP, LLC

11. Remove the engine mount heat shield nut (3).
12. Remove the heat shield (2) from the engine mount insulator bolts.
13. Remove the nut and through bolt (4) from engine mount insulator bolts.

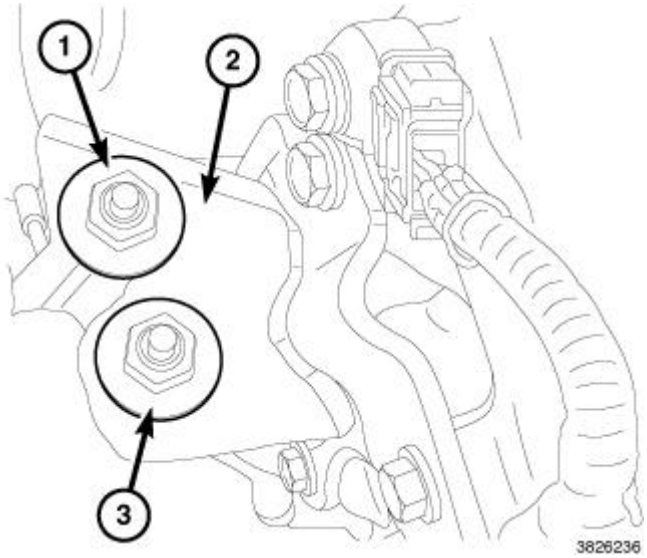

Fig. 239: Upper Engine Bracket, Mount & Bolts - Left
Courtesy of CHRYSLER GROUP, LLC

14. From the upper engine mount bracket (2). Remove the upper engine mount through bolt (3).
15. Remove the upper engine bracket to mount guide bolt (1).
16. Remove the engine mounts from below the vehicle.

INSULATOR, RIGHT

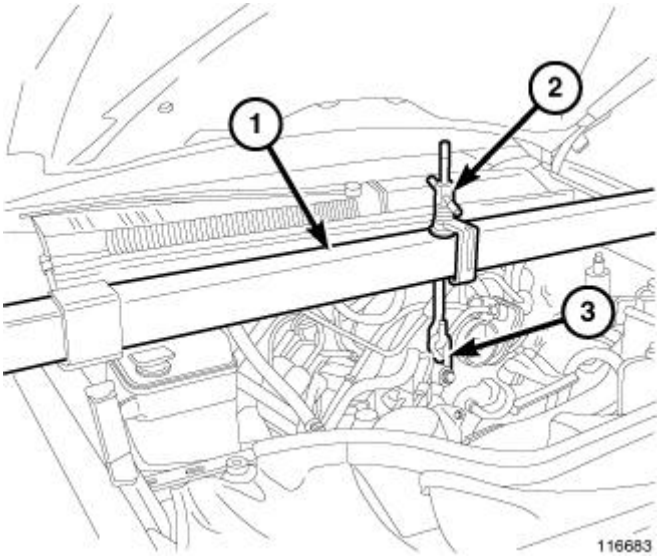

Fig. 240: Engine Support Tool
Courtesy of CHRYSLER GROUP, LLC

1. Disconnect negative battery cable.
2. Install the (special tool #8534B, Fixture, Driveline Support) (1).
3. Using the handle (2), tighten the lift rod (3) so that the engine will be supported.
4. Raise the vehicle.

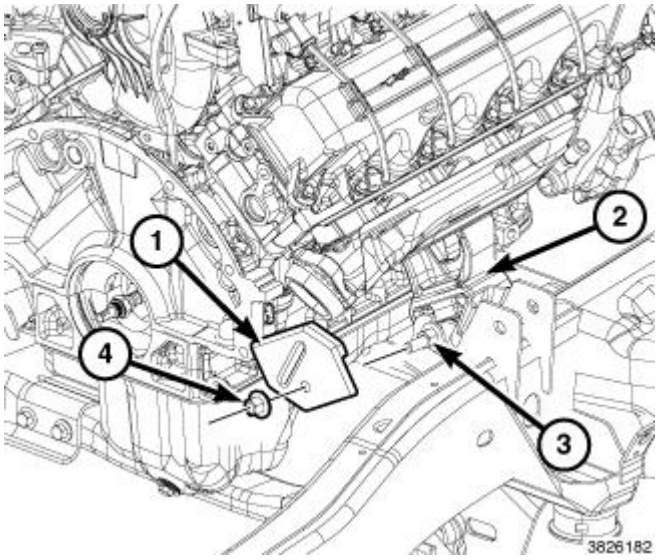

Fig. 241: Engine Mount, Heat Shield & Fasteners
Courtesy of CHRYSLER GROUP, LLC

NOTE: **Loosening of both front engine mount through bolts will be required for lifting of the engine.**

5. Remove the engine mount heat shield nuts (4).
6. Remove the heat shields (1) from the engine mounts through bolts.
7. Loosen the nut (3) from engine mount through bolts.
8. Lower the vehicle.
9. Tighten the handle for the engine lift so that the engine clears the engine mount to frame bracket.
10. Raise the vehicle.

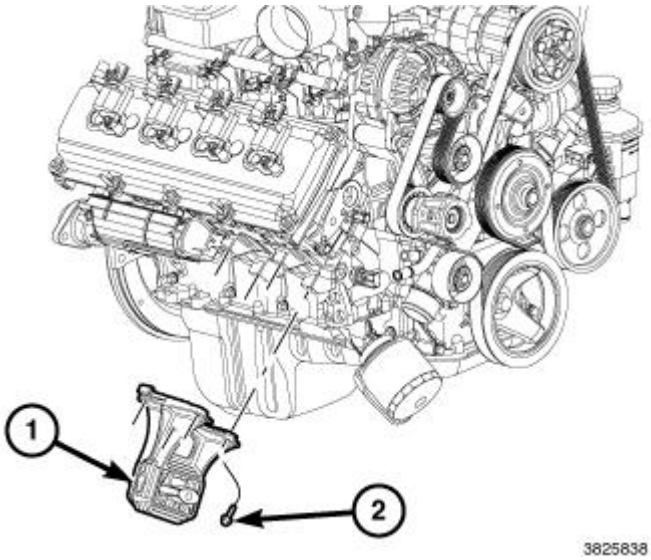

Fig. 242: Engine Mount & Bolts
Courtesy of CHRYSLER GROUP, LLC

11. Remove the bolts (2) that secure the engine mount (1) to the engine block.
12. Remove insulator from below the vehicle.

4WD WITH INDEPENDENT SUSPENSION

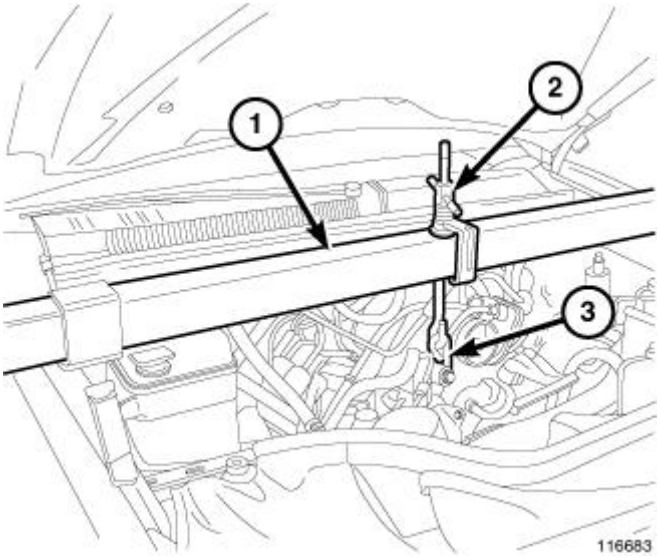

Fig. 243: Engine Support Tool
Courtesy of CHRYSLER GROUP, LLC

1. Disconnect the negative cable from the battery.
2. Install the (special tool #8534B, Fixture, Driveline Support) (1).
3. Using the handle (2), tighten the lift rod (3) so that the engine will be supported.
4. Raise the vehicle.

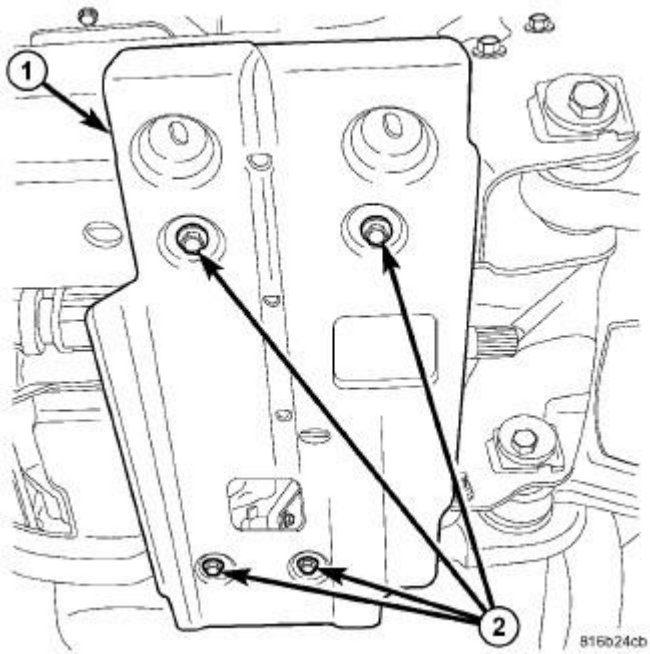

Fig. 244: Skid Plate & Bolts
Courtesy of CHRYSLER GROUP, LLC

5. Remove the skid plate.

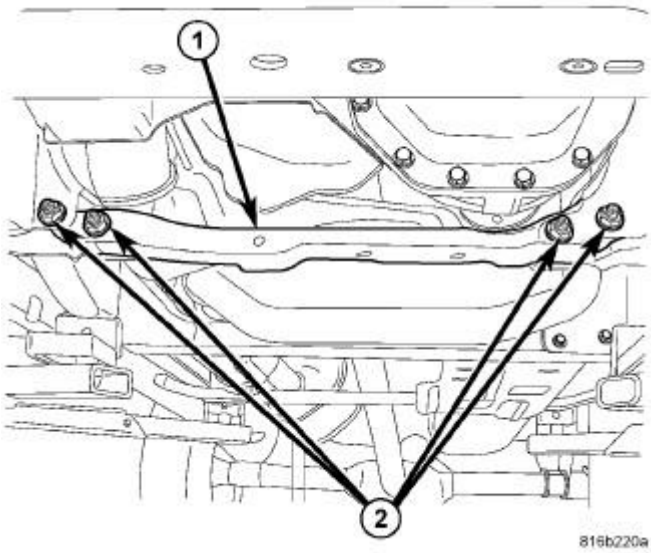

Fig. 245: Suspension Crossmember & Bolts
Courtesy of CHRYSLER GROUP, LLC

6. Remove the front crossmember.

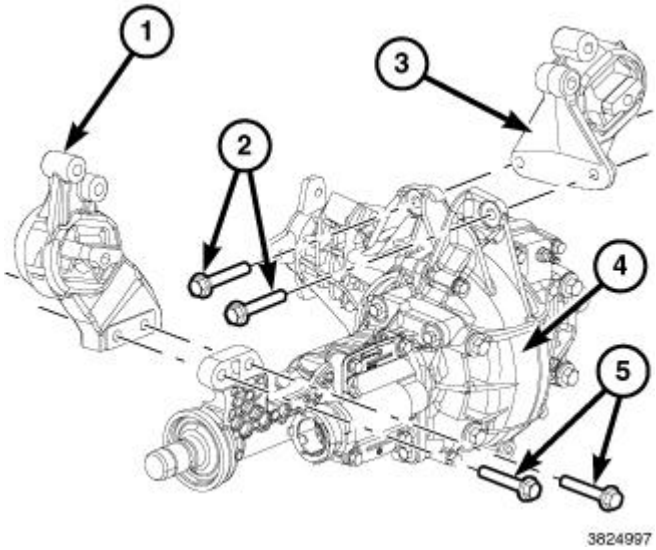

Fig. 246: Engine Mounts, Front Axle & Bolts
Courtesy of CHRYSLER GROUP, LLC

7. Support the front axle (4) with a suitable jack.
8. Remove the bolts (2 and 5) that attach the engine mounts (1 and 3) to the front axle.

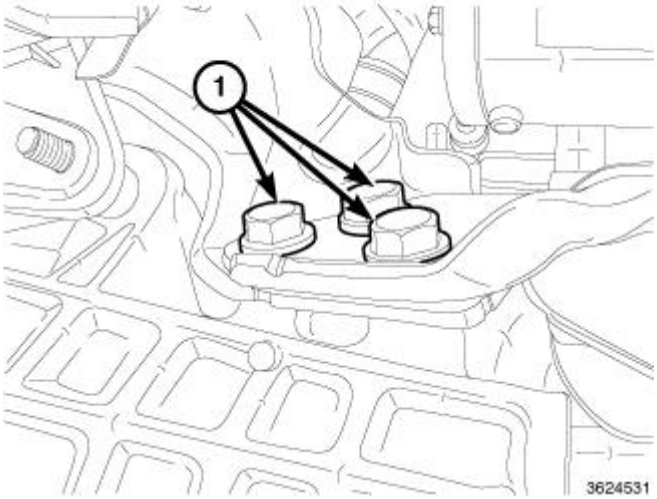

Fig. 247: Engine Bracket Bolts
Courtesy of CHRYSLER GROUP, LLC

9. Remove the bolts (1) that attach the front axle pinion housing to the left engine bracket.
10. Lower the front axle.

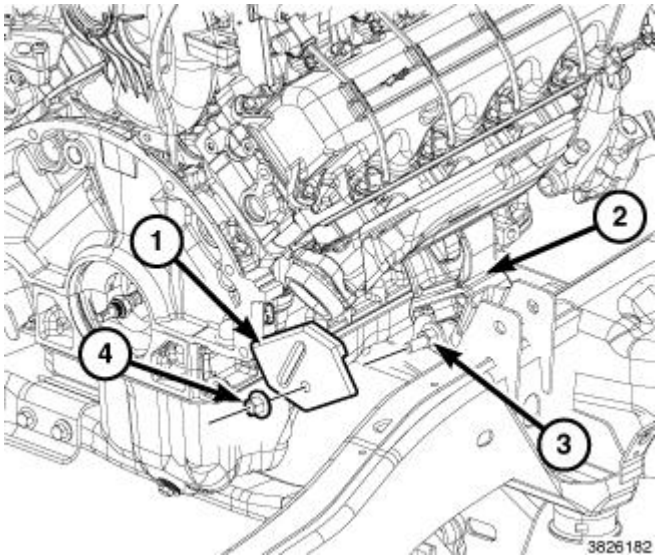

Fig. 248: Engine Mount, Heat Shield & Fasteners
Courtesy of CHRYSLER GROUP, LLC

11. Remove the engine mount heat shield nut (4).
12. Remove the heat shield (1).
13. Remove the nut (3) and through bolt from engine mount.

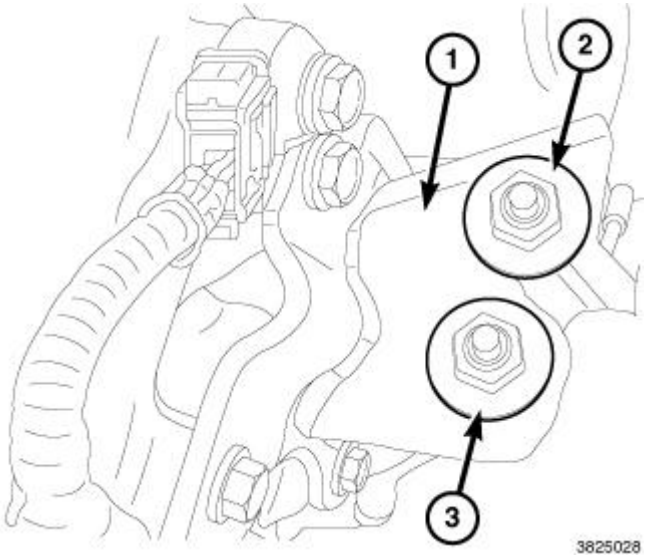

Fig. 249: Upper Engine Bracket, Mount & Bolts - Right
Courtesy of CHRYSLER GROUP, LLC

14. Remove the upper engine bracket (1) to mount through bolt (3).
15. Remove the upper engine bracket to mount guide bolt (2).
16. Remove the engine mount from below the vehicle.

INSTALLATION

INSULATOR, LEFT

2WD

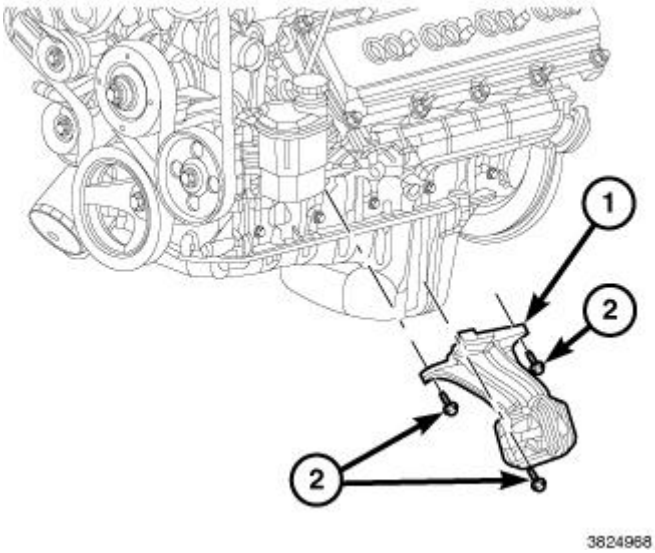

Fig. 250: Engine Mount & Bolts
Courtesy of CHRYSLER GROUP, LLC

1. With the vehicle raised. Position the engine mount (1) on the engine.
2. Install upper and lower mount mounting bolts (2). Tighten bolts to 64 N.M (47 ft. lbs.).
3. Center the engine mount through bolt.
4. Lower the vehicle.

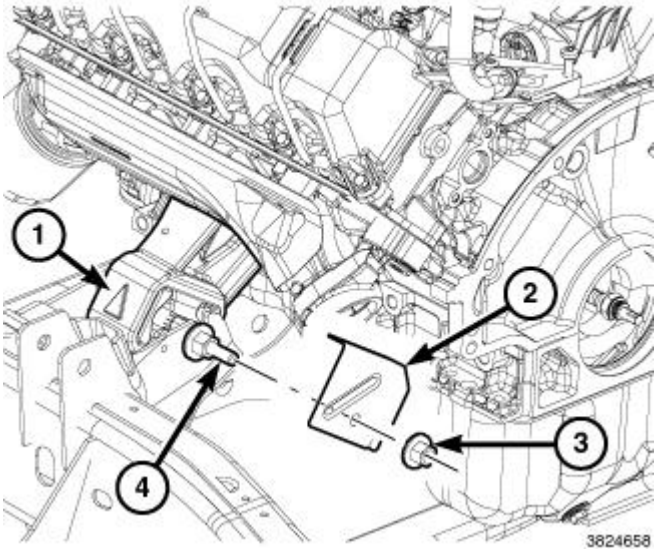

Fig. 251: Engine Mount, Heat Shield & Fasteners
Courtesy of CHRYSLER GROUP, LLC

5. Lower the engine into position onto the frame.
6. Raise vehicle.
7. Install the nut to the engine mount through bolt (4). Tighten the bolt to 130 N.M (96 ft. lbs.).
8. Install the engine mount heat shield (2). Tighten the nut (3) to 55 N.M (41 ft. lbs.).
9. Lower the vehicle.

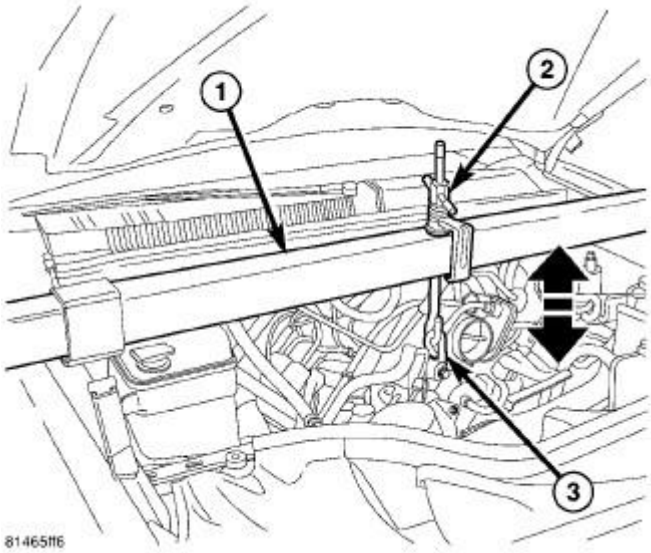

Fig. 252: Engine Support Tool
Courtesy of CHRYSLER GROUP, LLC

10. Remove the (special tool #8534B, Fixture, Driveline Support).
11. Connect negative battery cable.

4WD WITH INDEPENDENT SUSPENSION

NOTE: **For mount to engine block and left engine bracket to front axle bolts, apply Mopar® Lock and Seal Adhesive, Medium Strength Threadlocker.**

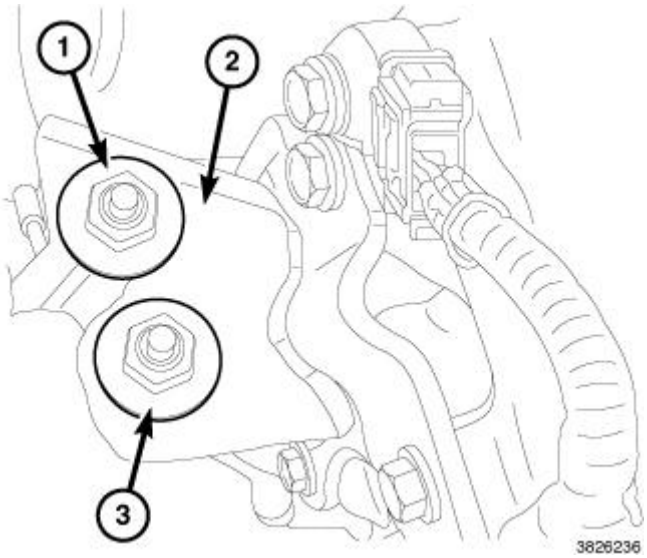

Fig. 253: Upper Engine Bracket, Mount & Bolts - Left
Courtesy of CHRYSLER GROUP, LLC

1. Position the engine mount to the engine bracket (2).

2. Install the upper engine mount to the engine bracket (3) through bolt.
3. Install the upper engine bracket to mount guide bolt (1).
4. Install the engine mount to frame through bolt.
5. Tighten the upper fasteners (1 and 3) to 108 N.m (80 ft. lbs.).

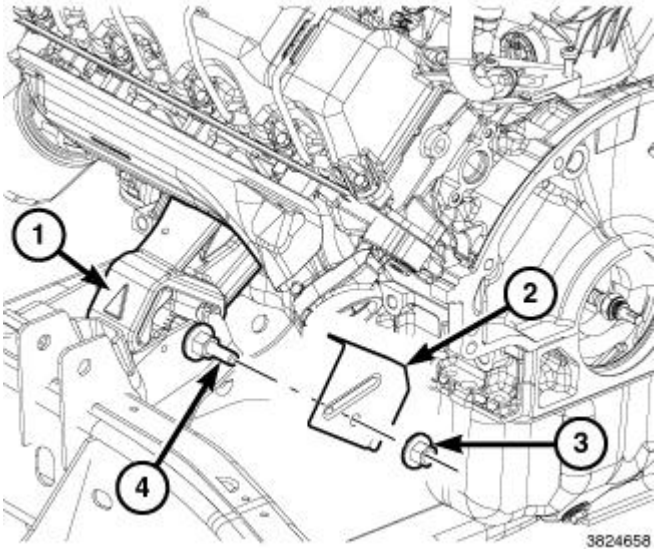

Fig. 254: Engine Mount, Heat Shield & Fasteners
Courtesy of CHRYSLER GROUP, LLC

6. Install the engine mount (1) through bolt nut. Tighten to 130 N.M (96 ft. lbs.).
7. Position the heat shield (2) onto the engine mount through bolt (4). Tighten the nut (3) to 55 N.M (41 ft. lbs.).

NOTE: **Removing the stabilizer bar mounts and positioning the stabilizer bar below the frame will provide adequate room for torquing the front upper axle bolt.**

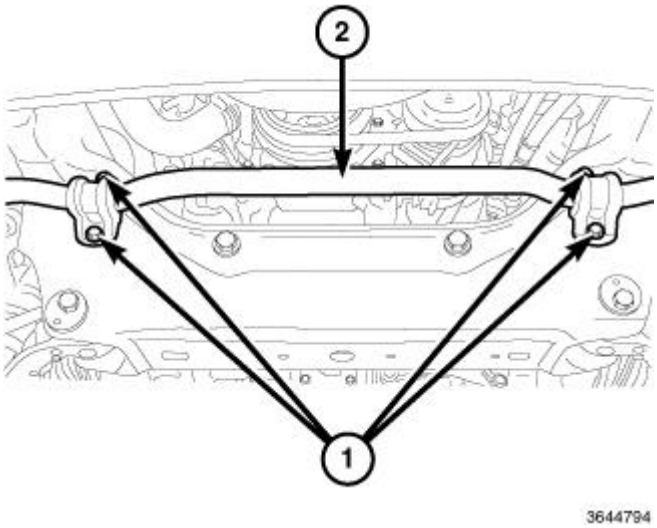

Fig. 255: Stabilizer Bar & Bolts
Courtesy of CHRYSLER GROUP, LLC

8. Remove stabilizer bar bolts (1) and position stabilizer bar (2) below crossmember.

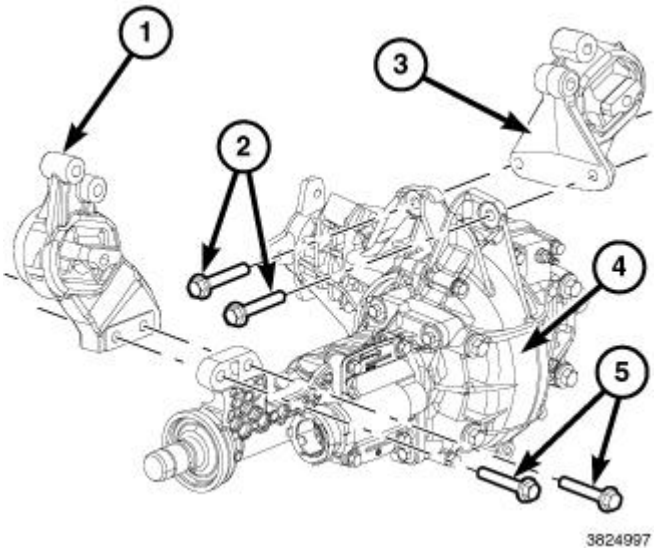

Fig. 256: Engine Mounts, Front Axle & Bolts
Courtesy of CHRYSLER GROUP, LLC

9. Align the axle assembly (4) to the engine mounts.
10. Install the bolts (2 and 5) that secure the axle to the engine mount (1 and 3). Tighten bolts to 110 N.M (81 ft. lbs.).
11. Position the stabilizer bar to the crossmember. Tighten the bolts to 59 N.M (44 ft. lbs.).

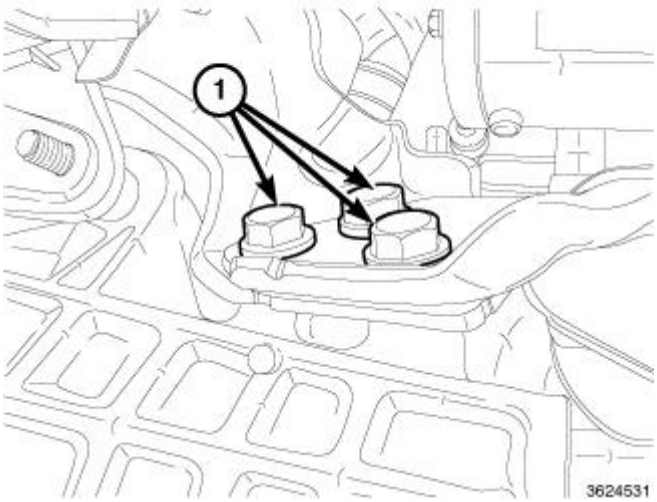

Fig. 257: Engine Bracket Bolts
Courtesy of CHRYSLER GROUP, LLC

12. Install the pinion housing to engine bracket bolts (1). Tighten bolts to 120 N.M (89 ft. lbs.).

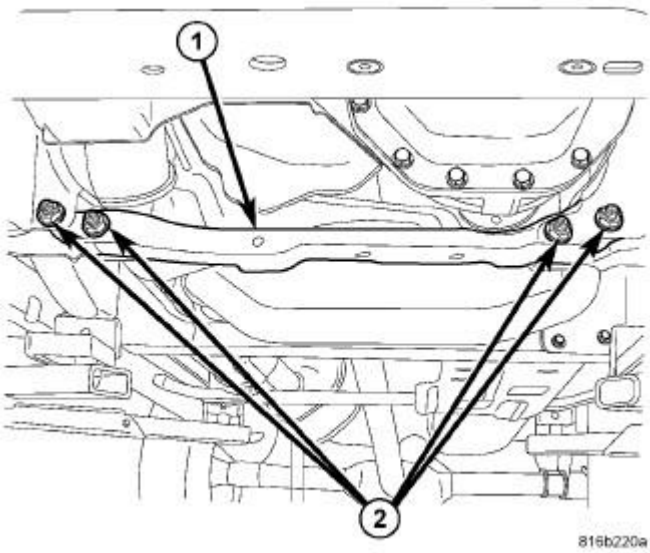

Fig. 258: Suspension Crossmember & Bolts
Courtesy of CHRYSLER GROUP, LLC

13. Install the crossmember. Refer to **CROSSMEMBER, LOWER CONTROL ARM, INSTALLATION** or **CROSSMEMBER, TRANSMISSION, INSTALLATION** .

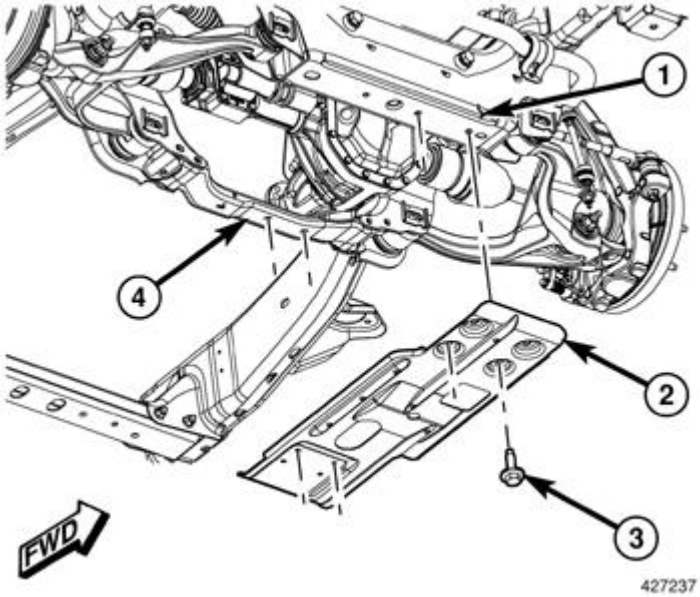

Fig. 259: Removing/Installing Front Skid Plate
Courtesy of CHRYSLER GROUP, LLC

14. Install the front skid plate. Install the bolts (3) and tighten to 18 N.m (13 ft. lbs.).
15. Lower the vehicle.

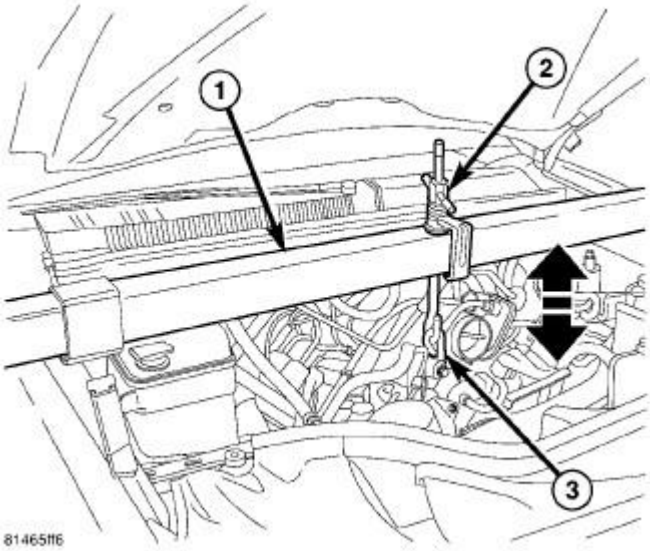

Fig. 260: Engine Support Tool
Courtesy of CHRYSLER GROUP, LLC

16. Remove the (special tool #8534B, Fixture, Driveline Support).
17. Connect the negative battery cable.

INSULATOR, RIGHT

2WD

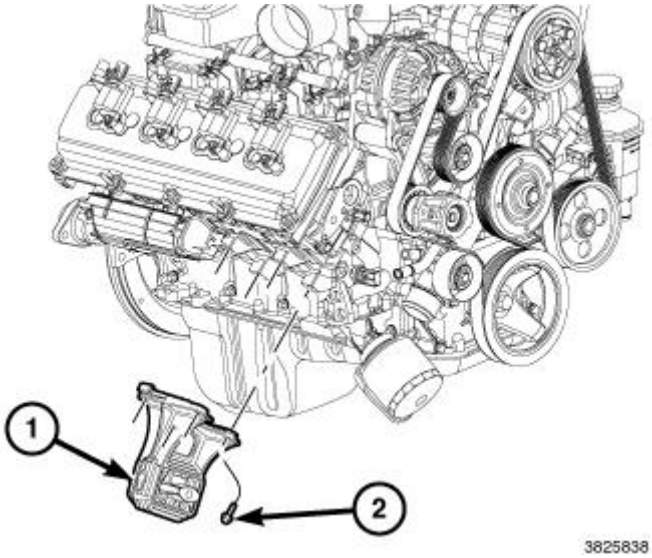

Fig. 261: Engine Mount & Bolts
Courtesy of CHRYSLER GROUP, LLC

1. With the vehicle raised. Position the engine mount (1) on the engine.
2. Install upper and lower mount mounting bolts (2). Tighten bolts to 64 N.M (47 ft. lbs.).
3. Center the engine mount through bolt.
4. Lower the vehicle.

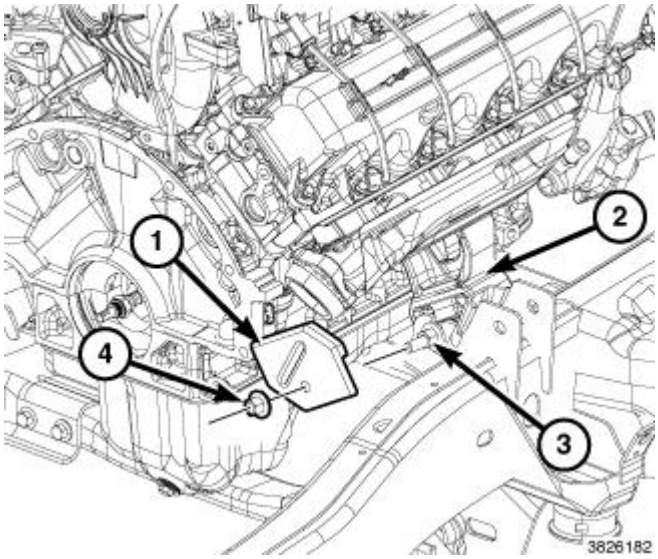

Fig. 262: Engine Mount, Heat Shield & Fasteners
Courtesy of CHRYSLER GROUP, LLC

5. Lower the engine into position onto the frame.
6. Raise vehicle.

7. Install the nut to the engine mount through bolt (3). Tighten the bolt to 130 N.M (96 ft. lbs.).
8. Install the engine mount heat shield (1). Tighten the nut (4) to 55 N.M (41 ft. lbs.).
9. Lower the vehicle.

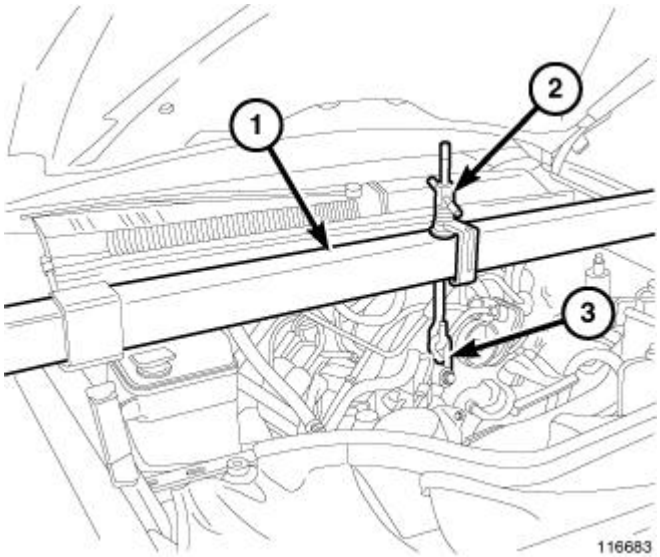

Fig. 263: Engine Support Tool
Courtesy of CHRYSLER GROUP, LLC

10. Remove the (special tool #8534B, Fixture, Driveline Support).
11. Connect negative battery cable.

4WD WITH INDEPENDENT SUSPENSION

NOTE: For mount to engine block and left engine bracket to front axle bolts, apply Mopar® Lock and Seal Adhesive, Medium Strength Threadlocker.

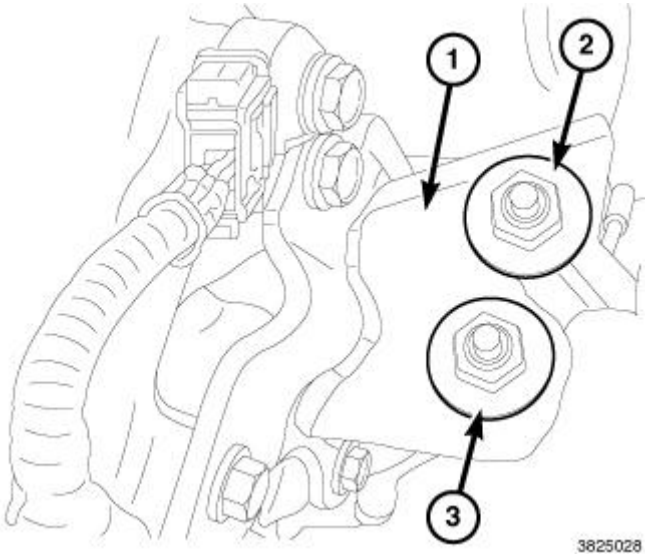

Fig. 264: Upper Engine Bracket, Mount & Bolts - Right
Courtesy of CHRYSLER GROUP, LLC

1. Position the engine mount to the engine bracket (1).
2. Install the upper engine mount to the engine bracket through bolt (3).
3. Install the upper engine bracket to mount guide bolt (2) through the engine mount.
4. Tighten the upper fasteners (2 and 3) to 108 N.m (80 ft. lbs.).

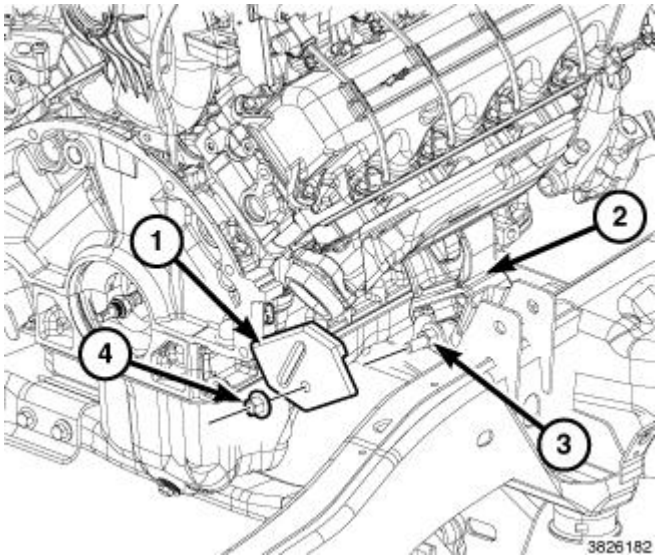

Fig. 265: Engine Mount, Heat Shield & Fasteners
Courtesy of CHRYSLER GROUP, LLC

5. Install the engine mount through bolt. Tighten the nut (3) for through bolt to 130 N.M (96 ft. lbs.).
6. Position the heat shield (1) onto the engine mount through bolt. Tighten the nut (4) to 55 N.M (41 ft. lbs.).

NOTE: **Removing the stabilizer bar mounts and positioning the stabilizer bar below the frame will provide adequate room for torquing the front upper axle bolt.**

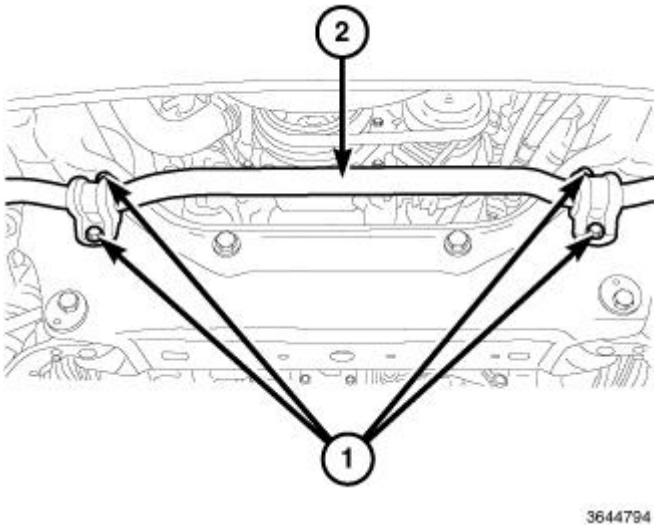

Fig. 266: Stabilizer Bar & Bolts
Courtesy of CHRYSLER GROUP, LLC

7. Remove stabilizer bar bolts (1) and position stabilizer bar (2) below crossmember.

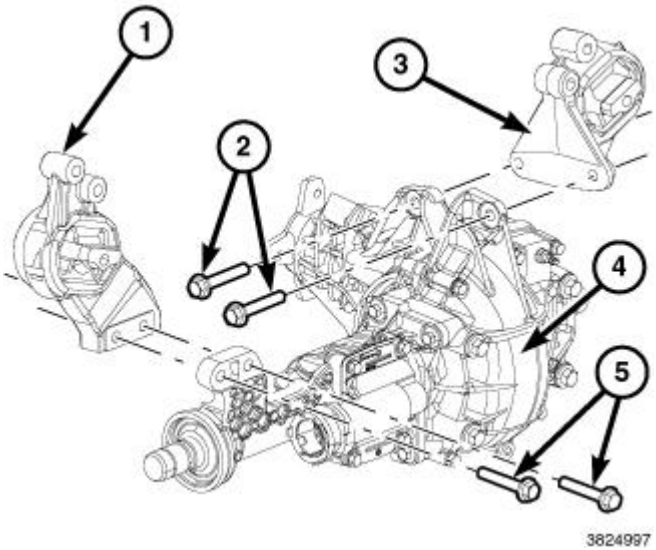

Fig. 267: Engine Mounts, Front Axle & Bolts
Courtesy of CHRYSLER GROUP, LLC

8. Align the axle assembly (4) to the engine mounts.
9. Install the bolts (2 and 5) that secure the axle to the engine mounts (1 and 3). Tighten bolts to 110 N.M (81 ft. lbs.).
10. Position the stabilizer bar to the crossmember. Tighten the bolts to 59 N.M (44 ft. lbs.).

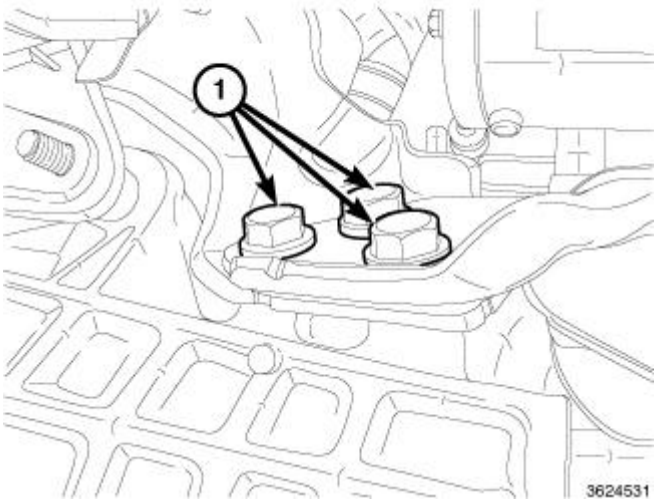

Fig. 268: Engine Bracket Bolts
Courtesy of CHRYSLER GROUP, LLC

11. Install the pinion housing to engine bracket bolts (1). Tighten bolts to 120 N.M (89 ft. lbs.).

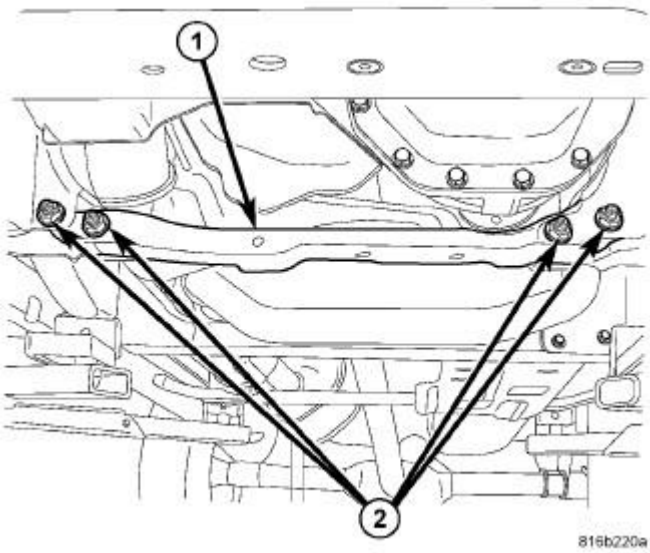

Fig. 269: Suspension Crossmember & Bolts
Courtesy of CHRYSLER GROUP, LLC

12. Install the crossmember. Refer to **CROSSMEMBER, LOWER CONTROL ARM, INSTALLATION** or **CROSSMEMBER, TRANSMISSION, INSTALLATION** .

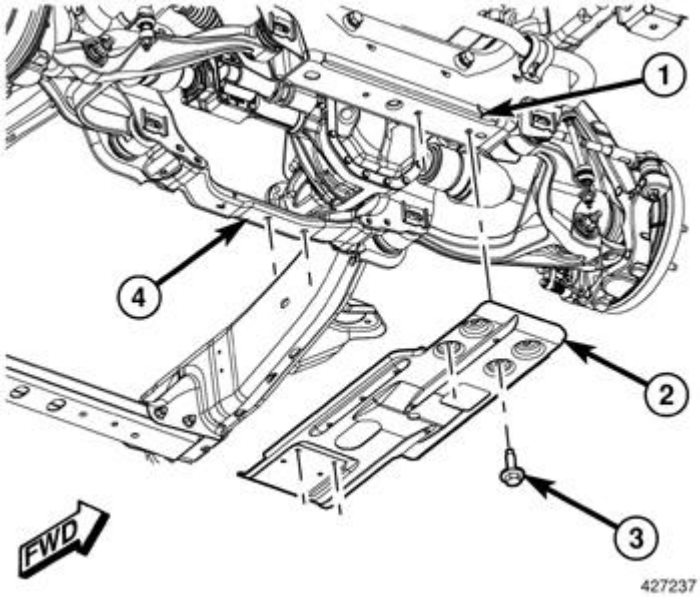

Fig. 270: Removing/Installing Front Skid Plate
Courtesy of CHRYSLER GROUP, LLC

13. Install the front skid plate. Install the bolts (3) and tighten to 18 N.m (13 ft. lbs.).
14. Lower the vehicle.

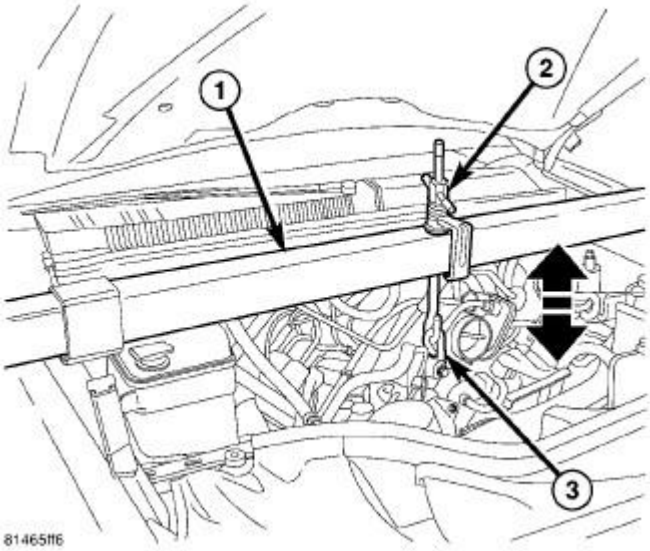

Fig. 271: Engine Support Tool
Courtesy of CHRYSLER GROUP, LLC

15. Remove the engine lift tool.
16. Reconnect the negative battery cable.

LUBRICATION

DESCRIPTION

DESCRIPTION

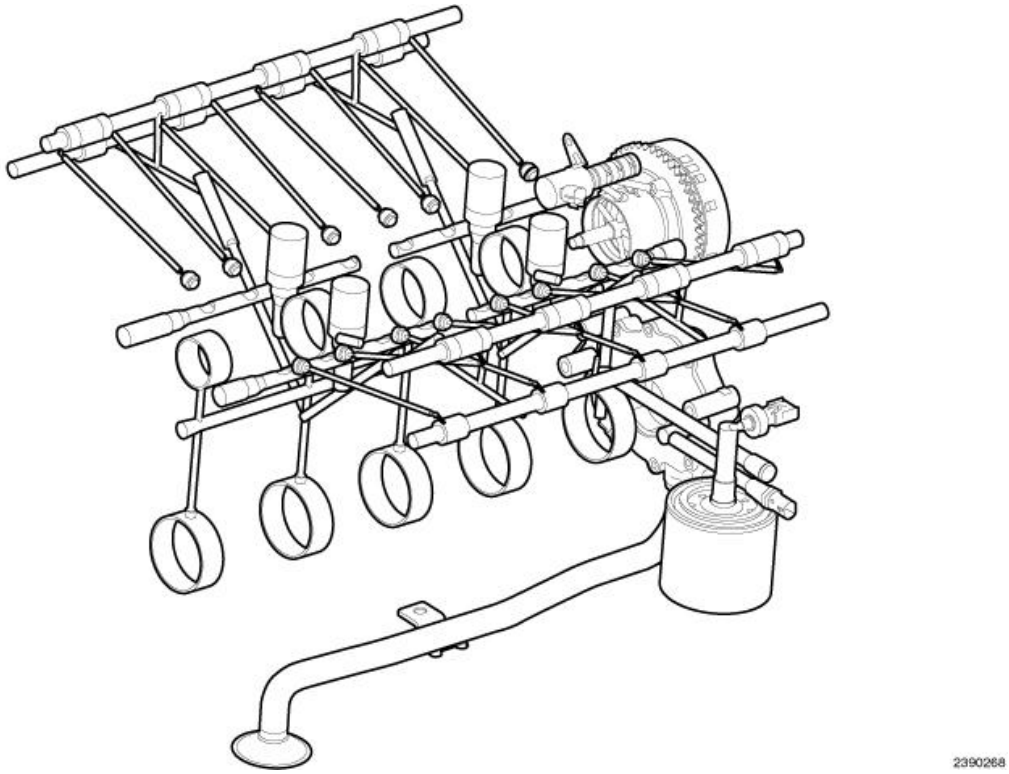

Fig. 272: 5.7L MDS Lubrication System
Courtesy of CHRYSLER GROUP, LLC

The 5.7L MDS lubrication system is a full flow filtration pressure feed type.

DIAGNOSIS AND TESTING

CHECKING ENGINE OIL PRESSURE

1. Remove the oil pressure sending unit and install gauge assembly (special tool #C-3292A, Gauge, Pressure).
2. Run the engine until thermostat opens.
3. Oil Pressure:
    - Curb Idle-25 kPa (4 psi) minimum
    - 3000 rpm-170 - 758 kPa (25 - 110 psi)
4. If oil pressure is 0 at idle, shut off engine. Check for a clogged oil pick-up screen or a pressure relief valve stuck open.

ENGINE OIL LEAK

Begin with a thorough visual inspection of the engine, particularly at the area of the suspected leak. If an oil

leak source is not readily identifiable, the following steps should be followed:

1. Do not clean or degrease the engine at this time because some solvents may cause rubber to swell, temporarily stopping the leak.
2. Add an oil soluble dye (use as recommended by manufacturer). Start the engine and let idle for approximately 15 minutes. Check the oil dipstick to make sure the dye is thoroughly mixed as indicated with a bright yellow color under a black light.
3. Using a black light, inspect the entire engine for fluorescent dye, particularly at the suspected area of the oil leak. If the oil leak is found and identified, repair per service information instructions.
4. If dye is not observed, drive the vehicle at various speeds for approximately 24 km (15 miles), and repeat inspection.

   If the oil leak source is not positively identified at this time , proceed with the AIR LEAK DETECTION TEST METHOD below.

AIR LEAK DETECTION TEST METHOD

1. Remove the PCV valve from the IAFM. Cap or plug the PCV valve grommet.
2. Attach an air hose with a pressure gauge and regulator to the dipstick tube.

CAUTION: Do not subject the engine assembly to more than 20.6 kPa (3 PSI) of test pressure.

3. Gradually apply air pressure from 1 psi to 2.5 psi maximum while applying soapy water at the suspected source. Adjust the regulator to the suitable test pressure that provide the best bubbles which will pinpoint the leak source. If the oil leak is detected and identified, repair per service information procedures.
4. If the leakage occurs at the rear oil seal area, refer to **INSPECTION FOR REAR SEAL AREA LEAKS**.
5. If no leaks are detected, turn off the air supply and remove the air hose and all plugs and caps. Install the PCV valve.
6. Clean the oil off the suspect oil leak area using a suitable solvent. Drive the vehicle at various speeds approximately 24 km (15 miles). Inspect the engine for signs of an oil leak by using a black light.

INSPECTION FOR REAR SEAL AREA LEAKS

Since it is sometimes difficult to determine the source of an oil leak in the rear seal area of the engine, a more involved inspection is necessary. The following steps should be followed to help pinpoint the source of the leak.

If the leakage occurs at the crankshaft rear oil seal area:

1. Disconnect the battery.
2. Raise the vehicle.
3. Remove torque converter or clutch housing cover and inspect rear of block for evidence of oil. Use a black light to check for the oil leak:
   1. Circular spray pattern generally indicates seal leakage or crankshaft damage.

2. Where leakage tends to run straight down, possible causes are a porous block, distributor seal, camshaft bore cup plugs oil gallery pipe plugs, oil filter runoff, and main bearing cap to cylinder block mating surfaces.

4. If no leaks are detected, pressurize the crankcase as outlined in the, Inspection (Engine oil Leaks in general)

CAUTION: Do not exceed 20.6 kPa (3 psi).

5. If the leak is not detected, very slowly turn the crankshaft and watch for leakage. If a leak is detected between the crankshaft and seal while slowly turning the crankshaft, it is possible the crankshaft seal surface is damaged. The seal area on the crankshaft could have minor nicks or scratches that can be polished out with emery cloth.

CAUTION: Use extreme caution when crankshaft polishing is necessary to remove minor nicks and scratches. The crankshaft seal flange is especially machined to complement the function of the rear oil seal.

6. For bubbles that remain steady with shaft rotation, no further inspection can be done until disassembled.

CONTROL VALVE, OIL INTAKE

DESCRIPTION

DESCRIPTION

The 5.7L engine is equipped with Variable Cam Timing (VCT). This system uses an oil control valve to direct oil pressure into the camshaft phaser assembly. The camshaft phaser assembly advances and/or retards camshaft timing to improve engine performance, mid-range torque, idle quality, fuel economy, and reduce emissions. The oil control valve is located under the intake manifold.

OPERATION

OPERATION

The Variable Cam Timing (VCT) assembly is actuated with engine oil pressure. The oil flow to the VCT assembly is controlled by an Oil Control Valve (OCV). The OCV consists of a Pulse Width Modulated (PWM) solenoid and a spool valve. The PCM actuates the OCV to control oil flow through the spool valve into the VCT assembly. The VCT assembly consists of a rotor and a stator/sprocket. The stator/sprocket is connected to the timing chain. The rotor is connected to the camshaft. Oil flow into the VCT assembly rotates the rotor with respect to the stator, thus rotating the camshaft with respect to the stator/sprocket. This will rotate both the intake and exhaust lobes on the camshaft by the same amount. The intake and exhaust lobes can not be individually controlled with this VCT system. An infinitely variable valve timing position can be achieved within the limits of the hardware. The camshaft position sensor monitors the position of the camshaft with respect to the crankshaft and provides feedback to the PCM.

REMOVAL

REMOVAL

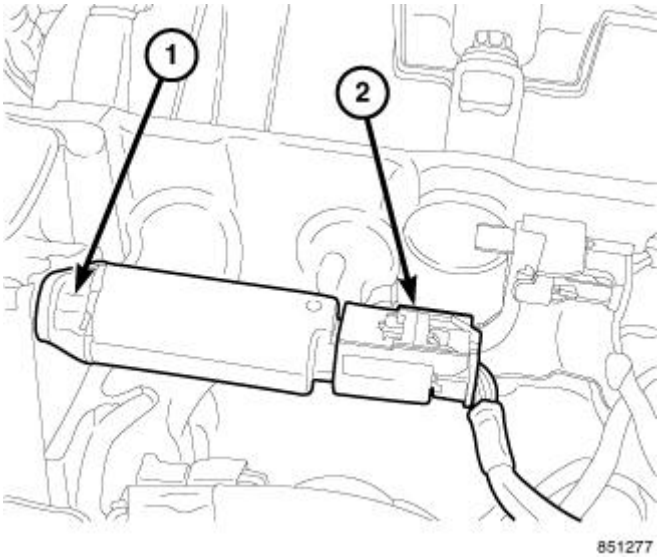

Fig. 273: Oil Control Valve
Courtesy of CHRYSLER GROUP, LLC

1. Remove intake manifold. Refer to **MANIFOLD, INTAKE, REMOVAL, 5.7L**.
2. Disconnect oil control valve electrical connector (2).
3. Remove oil control valve fastener (1).

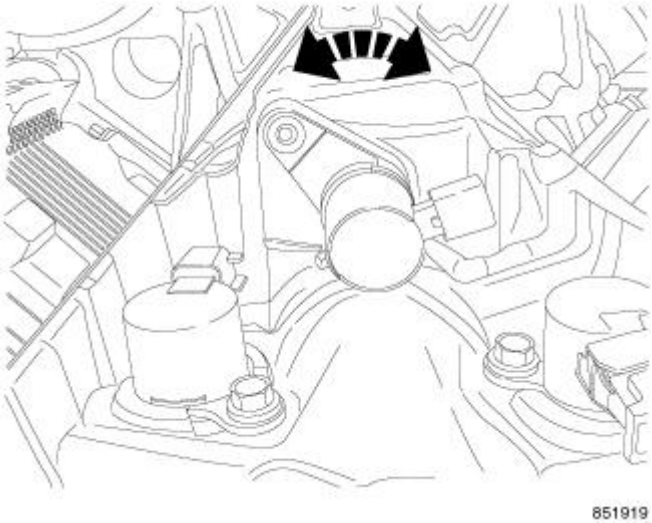

Fig. 274: Removing/Installing OCV
Courtesy of CHRYSLER GROUP, LLC

NOTE: To remove the oil control valve, the engine must be at room temperature.

4. Rotate the oil control valve to break the seal. Pull the oil control valve out.

INSTALLATION

INSTALLATION

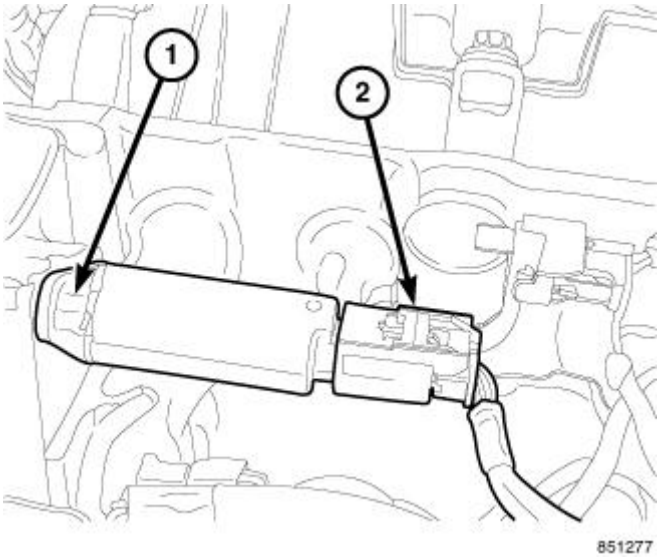

Fig. 275: Oil Control Valve
Courtesy of CHRYSLER GROUP, LLC

1. Install the oil control valve.
2. Ensure that the O-ring is fully seated into the cylinder block.
3. Securely tighten the oil control valve fastener (1).
4. Connect the oil control valve electrical connector (2).
5. Install the intake manifold. Refer to **MANIFOLD, INTAKE, REMOVAL, 5.7L**.

FILTER, ENGINE OIL

REMOVAL

REMOVAL

All engines are equipped with a high quality full-flow, disposable type oil filter. Chrysler Corporation recommends a Mopar® or equivalent oil filter be used.

1. Position a drain pan under the oil filter.
2. Using a suitable oil filter wrench loosen filter.
3. Rotate the oil filter counterclockwise to remove it from the cylinder block oil filter boss.
4. When filter separates from cylinder block oil filter boss, tip gasket end upward to minimize oil spill. Remove filter from vehicle.

NOTE: Make sure filter gasket was removed with filter.

5. With a wiping cloth, clean the gasket sealing surface of oil and grime.

INSTALLATION

INSTALLATION

1. Lightly lubricate the oil filter gasket (2) with engine oil.

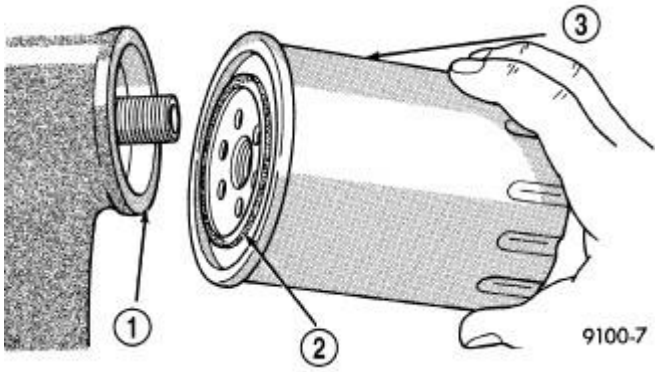

Fig. 276: Installing Engine Oil Filter
Courtesy of CHRYSLER GROUP, LLC

2. Thread the oil filter (3) onto adapter nipple and when the gasket makes contact with sealing surface (1), rotate the filter 360° or one full turn, do not over tighten.
3. Add oil, verify crankcase oil level and start engine. Inspect for oil leaks.

OIL

STANDARD PROCEDURE

STANDARD PROCEDURE - ENGINE OIL SERVICE

The engine oil level indicator is located at the left hand of the engine on the 5.7L engines.

CRANKCASE OIL LEVEL INSPECTION

CAUTION: Do not overfill crankcase with engine oil, pressure loss or oil foaming can result.

Inspect engine oil level approximately every 800 kilometers (500 miles). Unless the engine has exhibited loss of oil pressure, run the engine for about ten minutes before checking oil level. Checking engine oil level on a cold engine is not accurate.

To ensure proper lubrication of an engine, the engine oil must be maintained at an acceptable level. The acceptable levels are indicated between the ADD and SAFE marks on the engine oil dipstick.

1. Position vehicle on level surface.

2. With engine OFF, allow approximately five minutes for oil to settle to bottom of crankcase, remove engine oil dipstick.
3. Wipe dipstick clean.
4. Install dipstick and verify it is seated in the tube.
5. Remove dipstick, with handle held above the tip, take oil level reading.
6. Add oil only if level is below the ADD mark on dipstick.

ENGINE OIL CHANGE

Change engine oil at mileage and time intervals described in Maintenance Schedules. Refer to **MAINTENANCE SCHEDULES, DESCRIPTION** .

Run engine until achieving normal operating temperature.

1. Position the vehicle on a level surface and turn engine off.
2. Hoist and support vehicle on safety stands.
3. Remove oil fill cap.
4. Place a suitable drain pan under crankcase drain.
5. Remove drain plug from crankcase and allow oil to drain into pan. Inspect drain plug threads for stretching or other damage. Replace drain plug if damaged.
6. Install drain plug in crankcase. Torque to 34 N.m (25 ft. lbs.).
7. Lower vehicle and fill crankcase with specified type and amount of engine oil described in this information.
8. Install oil fill cap.
9. Start engine and inspect for leaks.
10. Stop engine and inspect oil level.

NOTE: **Care should be exercised when disposing used engine oil after it has been drained from a vehicle engine. Refer to the WARNING at beginning of this information.**

PAN, OIL

REMOVAL

REMOVAL

4X2

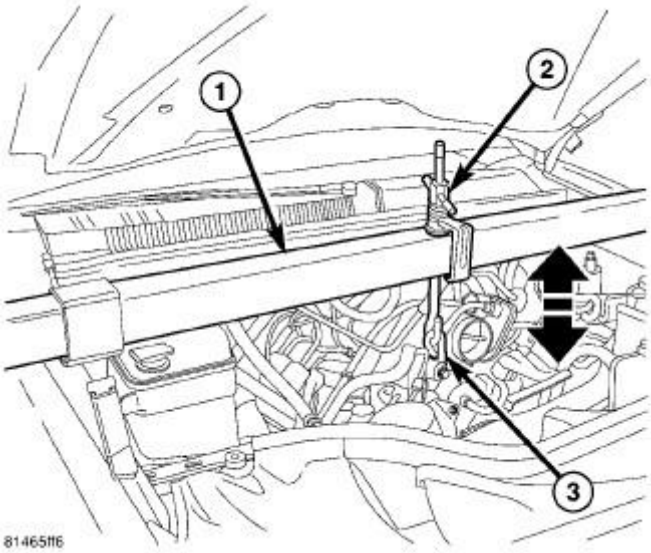

Fig. 277: Engine Support Tool
Courtesy of CHRYSLER GROUP, LLC

1. Disconnect the negative battery cable.
2. Loosen both the left and right side engine mount through bolts. Do not remove bolts.
3. Install Engine Support Fixture (special tool #8534B, Fixture, Driveline Support) (1). **Do not raise engine at this time.**

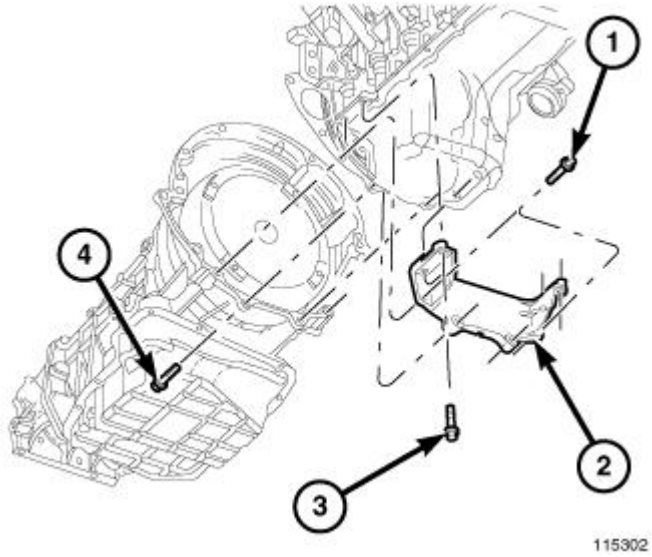

Fig. 278: Structural Cover
Courtesy of CHRYSLER GROUP, LLC

4. Remove the structural dust cover (2). Refer to **COVER, STRUCTURAL DUST, REMOVAL, 5.7L**.
5. Remove the fan and the fan shroud.
6. Drain engine oil.

7. Disconnect transmission fluid cooler lines at radiator, transmission fittings and clips.

NOTE: **When disconnecting the transmission oil cooler lines, it is necessary to replace the line clip that is located on the oil pan stud. The retention force of the clip is severely degraded upon removal.**

8. Remove the front crossmember. Refer to **CROSSMEMBER, LOWER CONTROL ARM, REMOVAL** and **CROSSMEMBER, TRANSMISSION, REMOVAL** .

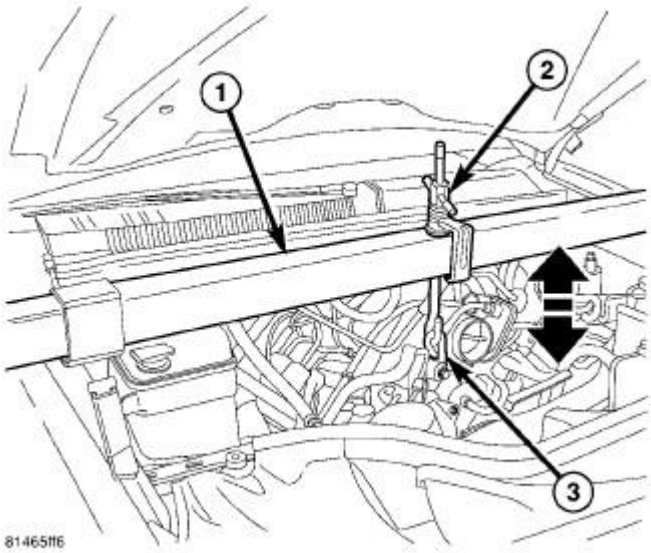

Fig. 279: Engine Support Tool
Courtesy of CHRYSLER GROUP, LLC

9. Raise engine using Engine Support Fixture (special tool #8534B, Fixture, Driveline Support) (1) to provide clearance to remove oil pan.

NOTE: **Do not pry on oil pan or oil pan gasket. The gasket is integral to engine windage tray and does not come out with oil pan.**

NOTE: **If more clearance is needed to remove oil pan the transmission mount can be removed, and the transmission can be raised to gain clearance.**

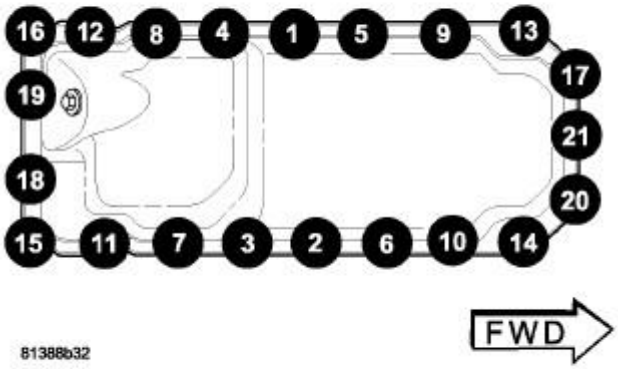

Fig. 280: Oil Pan Removal/Tightening Sequence
Courtesy of CHRYSLER GROUP, LLC

NOTE: **The double ended oil pan studs must be installed in the same location that they were removed from.**

10. Remove the oil pan mounting bolts using the sequence provided.
11. Unbolt oil pump pickup tube and remove tube.

NOTE: **When the oil pan is removed, a new integral windage tray and gasket assembly must be installed. The old gasket cannot be reused.**

12. Discard the integral windage tray and gasket and replace.

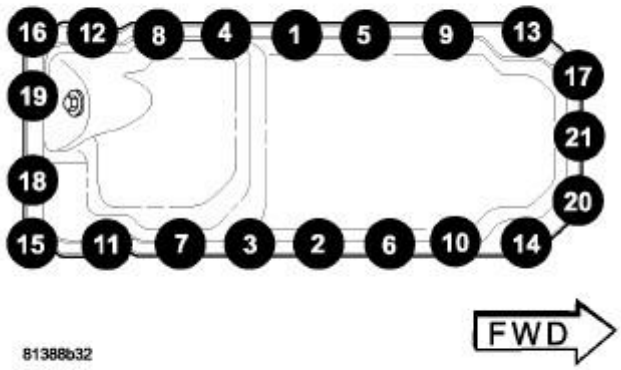

Fig. 281: Oil Pan Removal/Tightening Sequence
Courtesy of CHRYSLER GROUP, LLC

1. Follow all steps for 4X2 removal.
2. Unbolt and lower the steering rack, without disconnecting the lines.

NOTE: The front axle must be lowered to remove the oil pan on 4X4 vehicles.

3. Remove the front driveshaft at the axle. Mark for reassembly.
4. Support the front axle.
5. Remove the right and left axle to mount bolts.
6. Lower axle.
7. Remove the oil pan mounting bolts and oil pan.
8. Unbolt oil pump pickup tube and remove tube.

NOTE: When the oil pan is removed, a new integral windage tray and gasket assembly must be installed. The old gasket cannot be reused.

9. Discard the integral windage tray and gasket and replace.

INSTALLATION

INSTALLATION

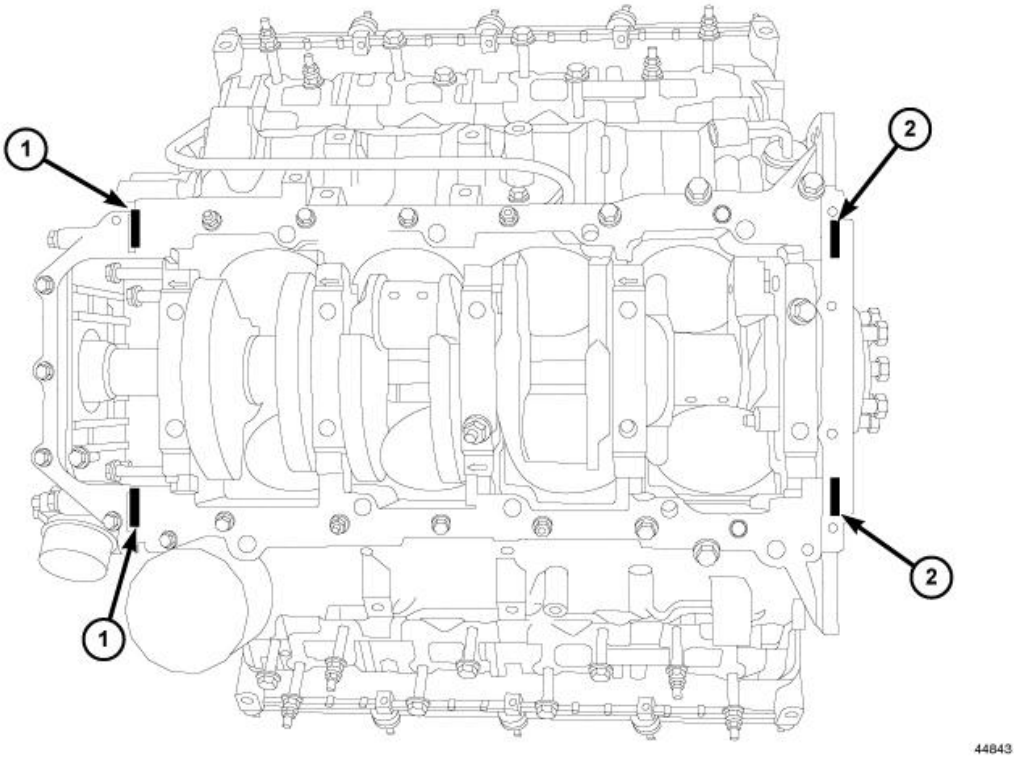

Fig. 282: T-Joint RTV Application
Courtesy of CHRYSLER GROUP, LLC

1. Clean the oil pan gasket mating surface of the block and oil pan.

NOTE: **Mopar® Engine RTV must be applied to the four T-joints (1, 2). The bead of RTV should cover the bottom of the gasket. This area is approximately 4.5 mm x 25 mm in each of the four T-joint locations.**

2. Apply Mopar® Engine RTV at the T- joints (1, 2).

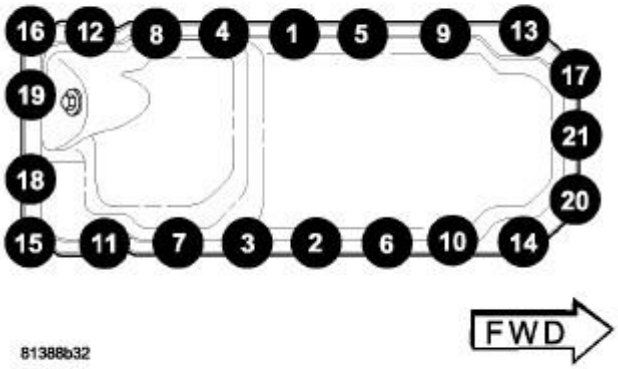

Fig. 283: Oil Pan Removal/Tightening Sequence
Courtesy of CHRYSLER GROUP, LLC

NOTE: **When the oil pan is removed, a new integral windage tray and gasket assembly must be installed. The old gasket cannot be reused.**

3. Install a new integral windage tray and gasket.
4. Reinstall the oil pump pickup tube with new O-rings. Tighten tube to pump fasteners to 28 N.m (21 ft.lbs.).

NOTE: **The double ended oil pan studs must be installed in the same location that they were removed from.**

5. Position the oil pan and install the mounting bolts and studs. Tighten the mounting bolts to 12 N.m (105 in.lbs.).

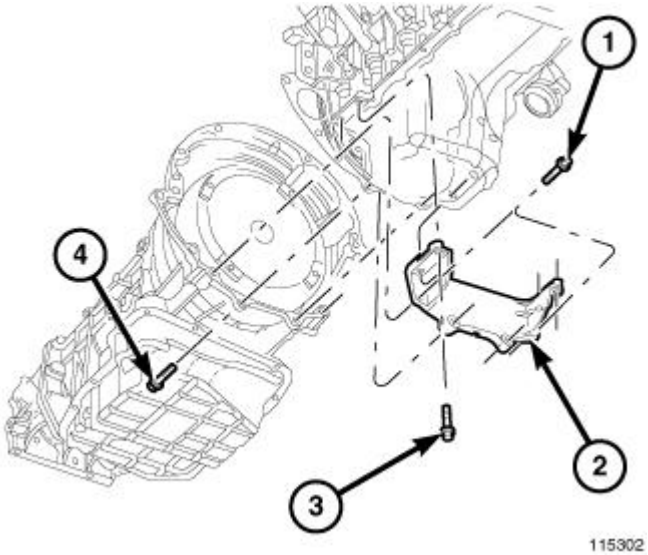

Fig. 284: Structural Cover
Courtesy of CHRYSLER GROUP, LLC

6. Connect cooler lines to radiator, transmission and clips.

NOTE: **When connecting the transmission oil cooler lines, it is necessary to replace the line clip that is located on the oil pan stud. The retention force of the clip is severely degraded upon removal.**

7. Install the structural cover (2). Refer to **COVER, STRUCTURAL DUST, INSTALLATION, 5.7L**.

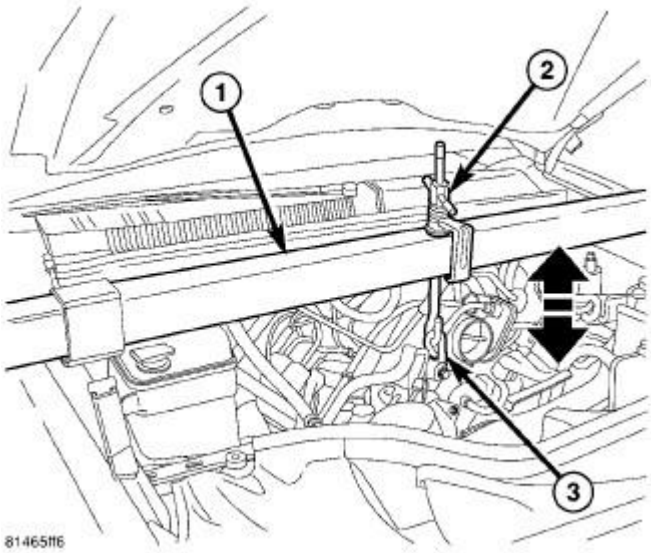

Fig. 285: Engine Support Tool
Courtesy of CHRYSLER GROUP, LLC

8. Lower the engine into mounts using Engine Support Fixture (special tool #8534B, Fixture, Driveline

Support) (1).

9. Install both the left and right side engine mount through bolts. Tighten the nuts to 68 N.m (50 ft. lbs.).
10. Reinstall the front axle, if removed.
11. Install the steering rack, if removed.
12. Install the rear transmission mount, if removed.
13. Remove Engine Support Fixture (special tool #8534B, Fixture, Driveline Support) (1).
14. Install the front crossmember. Refer to **CROSSMEMBER, LOWER CONTROL ARM, INSTALLATION** and **CROSSMEMBER, TRANSMISSION, INSTALLATION** .
15. Install the fan shroud and fan.
16. Fill engine oil.
17. Connect the negative battery cable.
18. Start engine and check for leaks.

PUMP, ENGINE OIL

REMOVAL

REMOVAL

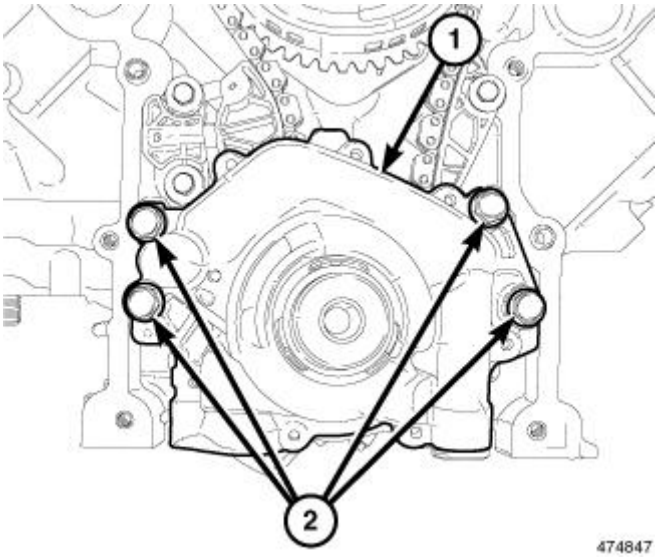

Fig. 286: Oil Pump & Retaining Bolts
Courtesy of CHRYSLER GROUP, LLC

1. Remove the oil pan. Refer to **PAN, OIL, REMOVAL, 5.7L**.
2. Remove the timing cover. Refer to **COVER(S), ENGINE TIMING, REMOVAL, 5.7L**.
3. Remove the four bolts (2) and the oil pump (1).

CLEANING

CLEANING

1. Wash all parts in a suitable solvent.

INSPECTION

INSPECTION

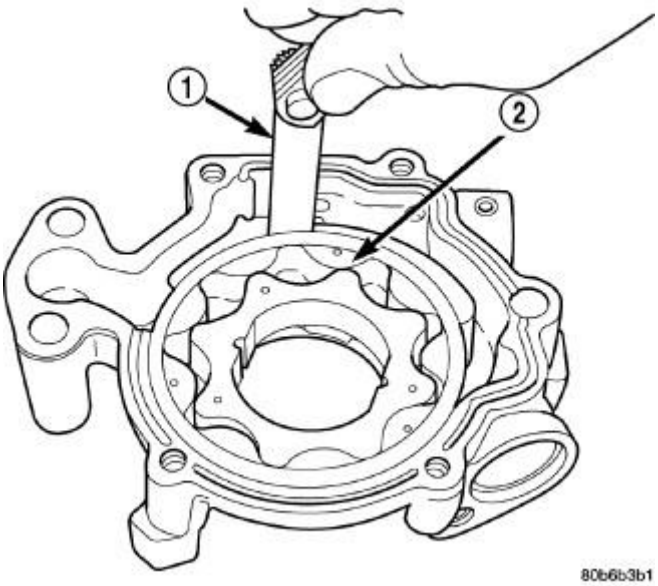

Fig. 287: Measuring Clearance Between Outer Rotor & Body Of Oil Pump
Courtesy of CHRYSLER GROUP, LLC

CAUTION: The oil pump pressure relief valve and spring should not be removed from the oil pump. If these components are disassembled and or removed from the pump the entire oil pump assembly must be replaced.

1. Remove the pump cover.
2. Clean all parts thoroughly. Mating surface of the oil pump housing should be smooth. If the pump cover is scratched or grooved the oil pump assembly should be replaced.
3. Slide outer rotor into the body of the oil pump. Press the outer rotor to one side of the oil pump body and measure clearance between the outer rotor (2) and the body. If the measurement is 0.235 mm (0.009 in.) or more the oil pump assembly must be replaced.

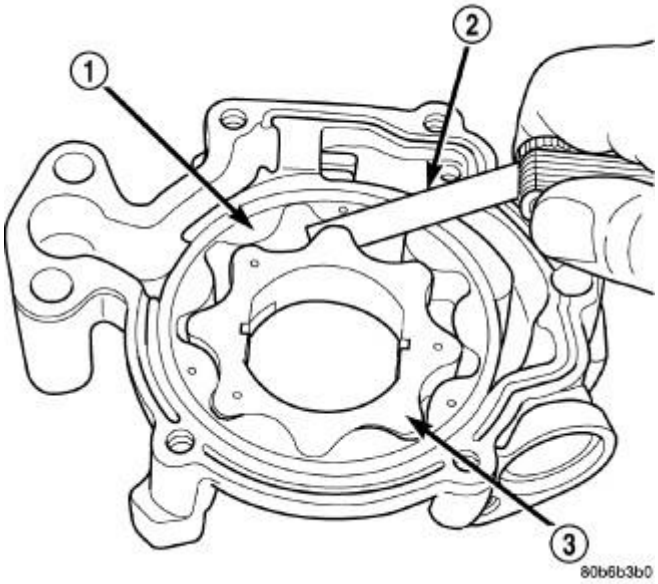

Fig. 288: Measuring Clearance Between Inner & Outer Rotors
Courtesy of CHRYSLER GROUP, LLC

4. Install the inner rotor into the oil pump body. Measure the clearance between the inner (3) and outer rotors (1). If the clearance between the rotors is 0.150 mm (0.006 in.) or more the oil pump assembly must be replaced.

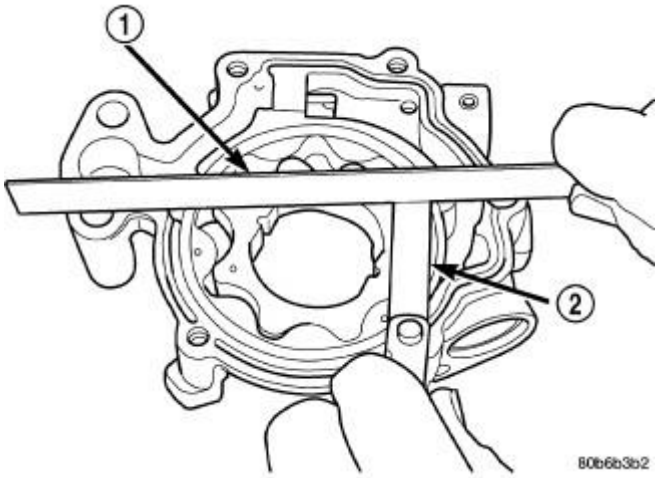

Fig. 289: Measuring Clearance Over Rotors
Courtesy of CHRYSLER GROUP, LLC

5. Place a straight edge (1) across the body of the oil pump (between the bolt holes), if a feeler gauge (2) of 0.095 mm (0.0038 in.) or greater can be inserted between the straightedge and the rotors, the pump must be replaced.
6. Reinstall the pump cover. Tighten fasteners to 15 N.m (132 in. lbs.).

NOTE: **The 5.7 Oil pump is serviced as an assembly. In the event the oil pump is not functioning or out of specification, it must be replaced as an assembly.**

INSTALLATION

INSTALLATION

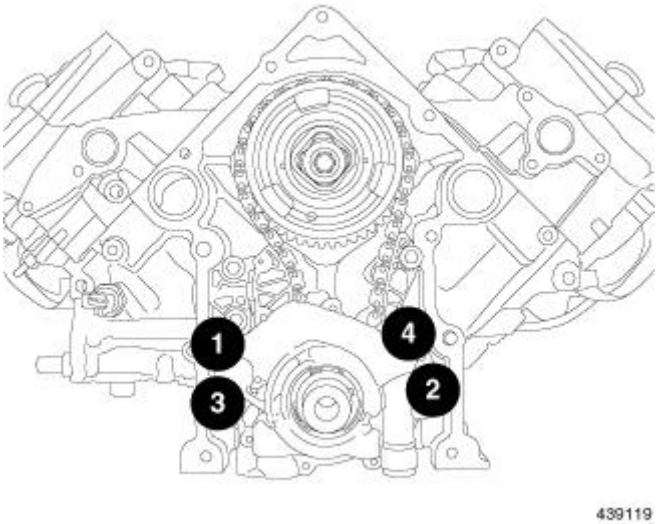

Fig. 290: Oil Pump Retaining Bolt Tightening Sequence
Courtesy of CHRYSLER GROUP, LLC

1. Position the oil pump on the crankshaft and install the oil pump retaining bolts finger tight.
2. Using the sequence shown in illustration, tighten the oil pump retaining bolts to 28 N.m (21 ft. lbs.).
3. Install the timing cover. Refer to **COVER(S), ENGINE TIMING, INSTALLATION, 5.7L**.
4. Install the oil pan. Refer to **PAN, OIL, INSTALLATION, 5.7L**.

SENSOR, OIL PRESSURE

DESCRIPTION

DESCRIPTION

The oil pressure sensor uses the following three circuits:

- Signal circuit to the PCM
- Sensor ground circuit from the PCM
- 5 volt reference circuit from the PCM

The oil pressure sensor returns a voltage signal back to the PCM with reference to oil pressure. Ground for the sensor is supplied by the PCM.

The oil pressure sensor is located on the right side of the engine block. The sensor screws into the engines main

oil gallery.

REMOVAL

REMOVAL

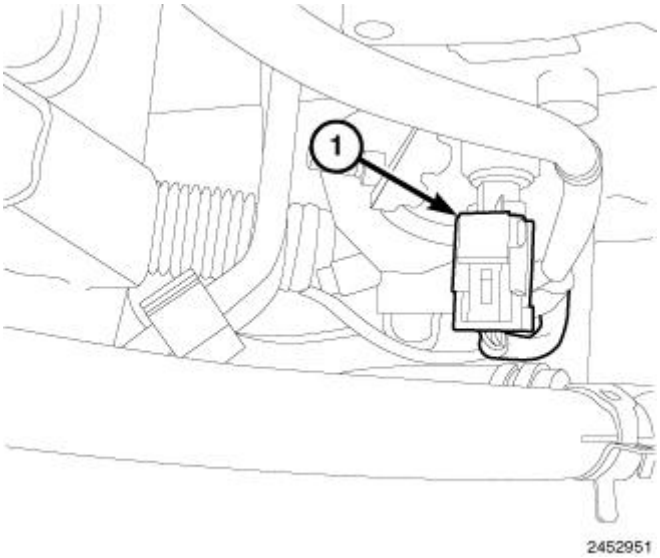

Fig. 291: Oil Pressure Sensor Electrical Connector
Courtesy of CHRYSLER GROUP, LLC

1. Disconnect and isolate the negative battery cable.
2. Disconnect the oil pressure sensor electrical connector (1).

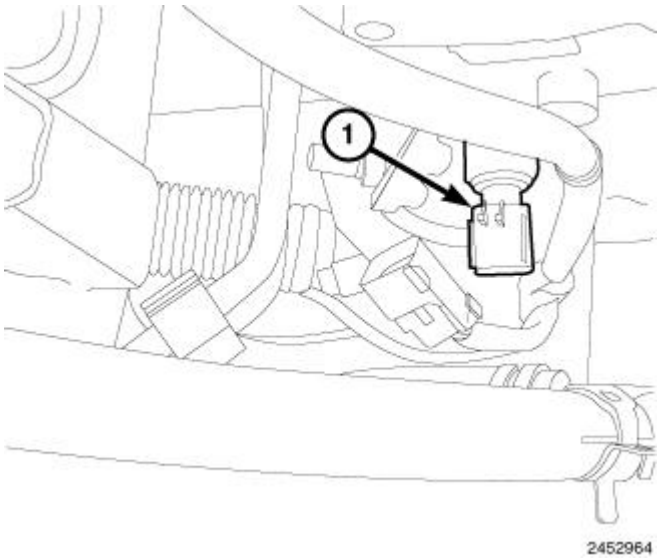

Fig. 292: Oil Pressure Sensor
Courtesy of CHRYSLER GROUP, LLC

3. Remove the oil pressure sensor (1).

INSTALLATION

INSTALLATION

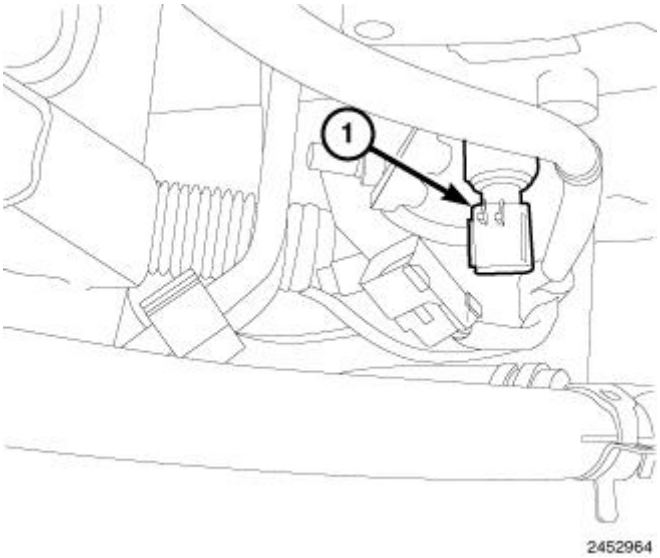

Fig. 293: Oil Pressure Sensor
Courtesy of CHRYSLER GROUP, LLC

NOTE: Apply Mopar® Thread Sealant with PTFE to the sensor threads with before installing into the engine block.

1. Install the oil pressure sensor (1).

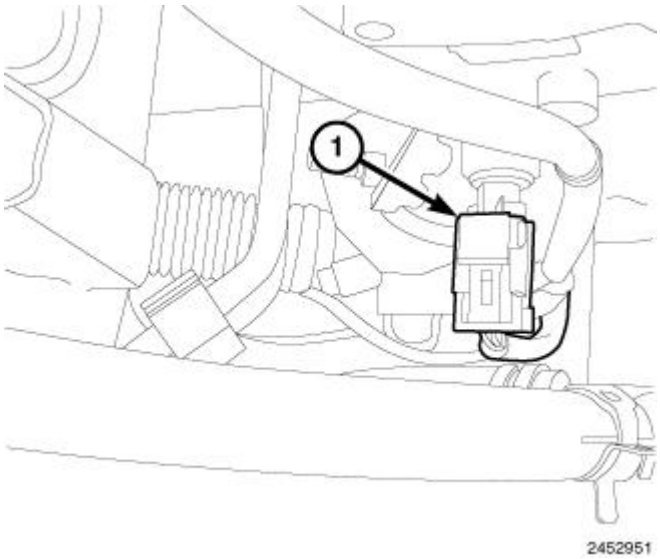

Fig. 294: Oil Pressure Sensor Electrical Connector
Courtesy of CHRYSLER GROUP, LLC

2. Connect the oil pressure sensor electrical connector (1).

3. Connect the negative battery cable.

SENSOR, OIL TEMPERATURE

DESCRIPTION

DESCRIPTION

The oil temperature sensor uses the following two circuits:

- Signal circuit to the PCM
- Ground circuit from the PCM

The oil temperature sensor is a Negative Thermal Coefficient sensor. The resistance of the sensor changes as oil temperature changes. This results in different output voltages back to the PCM.

The oil temperature sensor is located on the right side of the engine block.

REMOVAL

REMOVAL

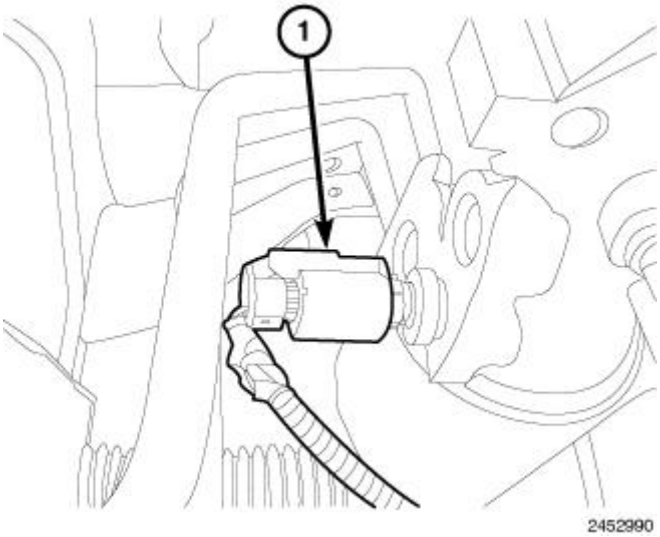

Fig. 295: Oil Temperature Sensor Electrical Connector
Courtesy of CHRYSLER GROUP, LLC

1. Disconnect and isolate the negative battery cable.
2. Disconnect the oil temperature sensor electrical connector (1).

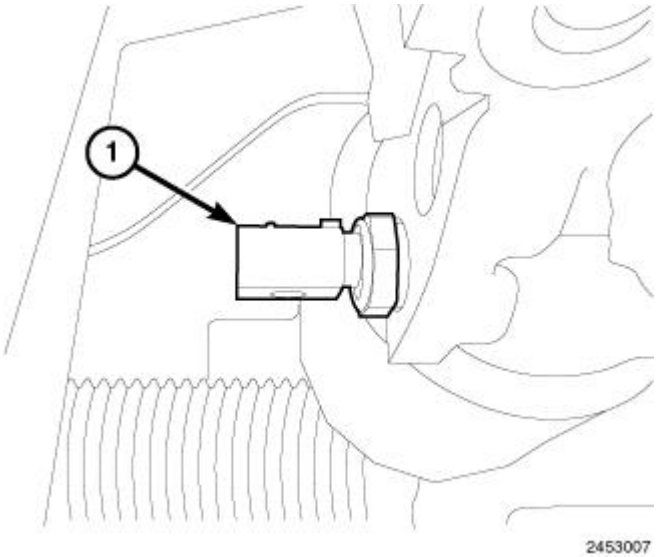

Fig. 296: Oil Temperature Sensor
Courtesy of CHRYSLER GROUP, LLC

3. Remove the oil temperature sensor (1).

INSTALLATION

INSTALLATION

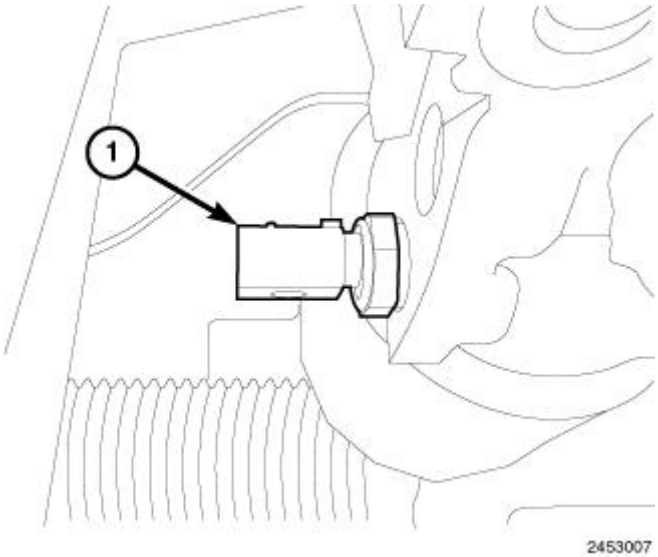

Fig. 297: Oil Temperature Sensor
Courtesy of CHRYSLER GROUP, LLC

NOTE: Apply Mopar® Thread Sealant with PTFE to the sensor threads before installing into the engine block.

1. Install the oil temperature sensor (1).

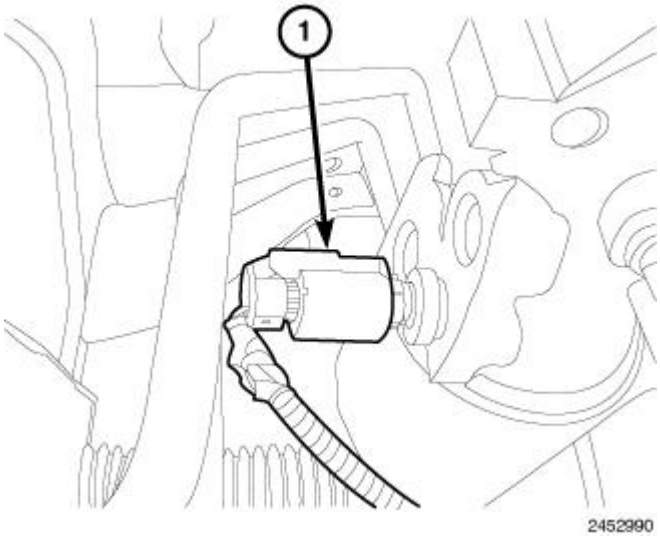

Fig. 298: Oil Temperature Sensor Electrical Connector
Courtesy of CHRYSLER GROUP, LLC

2. Connect the oil temperature sensor electrical connector (1).
3. Connect the negative battery cable.

MANIFOLDS

MANIFOLD, EXHAUST

REMOVAL

REMOVAL

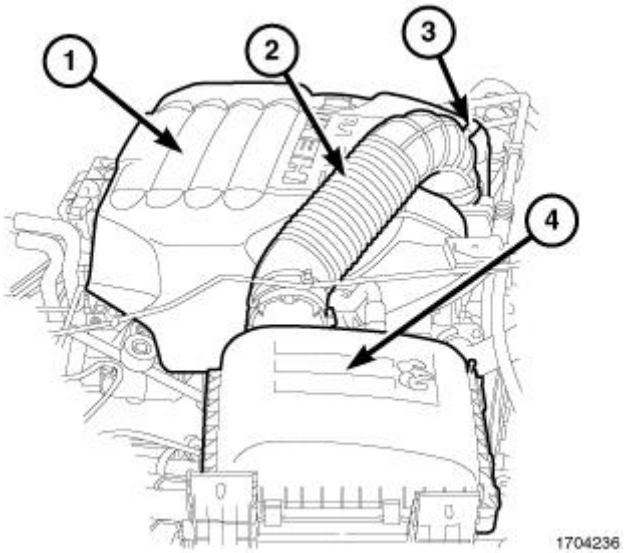

Fig. 299: Engine Cover, Clean Air Hose, Intake Air Temperature (IAT) Sensor Electrical Connector & Air Cleaner Housing

Courtesy of CHRYSLER GROUP, LLC

1. Disconnect the intake air temperature (IAT) sensor electrical connector (3).
2. Remove the clean air hose (2).
3. Remove the air cleaner housing (4).
4. Remove the engine cover (1).

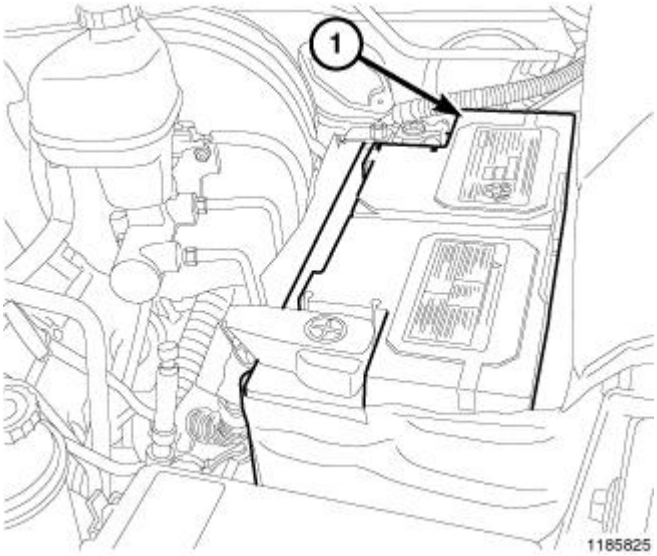

Fig. 300: Negative Battery Cable
Courtesy of CHRYSLER GROUP, LLC

5. Disconnect the negative battery cable (1).

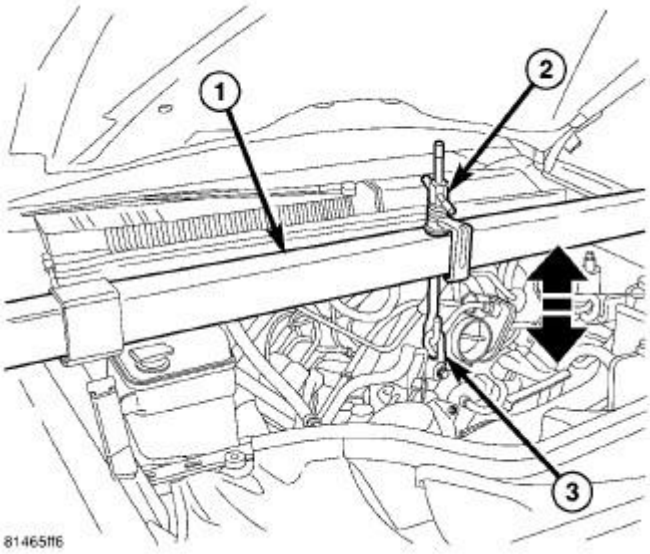

Fig. 301: Engine Support Tool
Courtesy of CHRYSLER GROUP, LLC

6. Install Engine Support Fixture (special tool #8534B, Fixture, Driveline Support) (1).
7. Raise and support the vehicle.

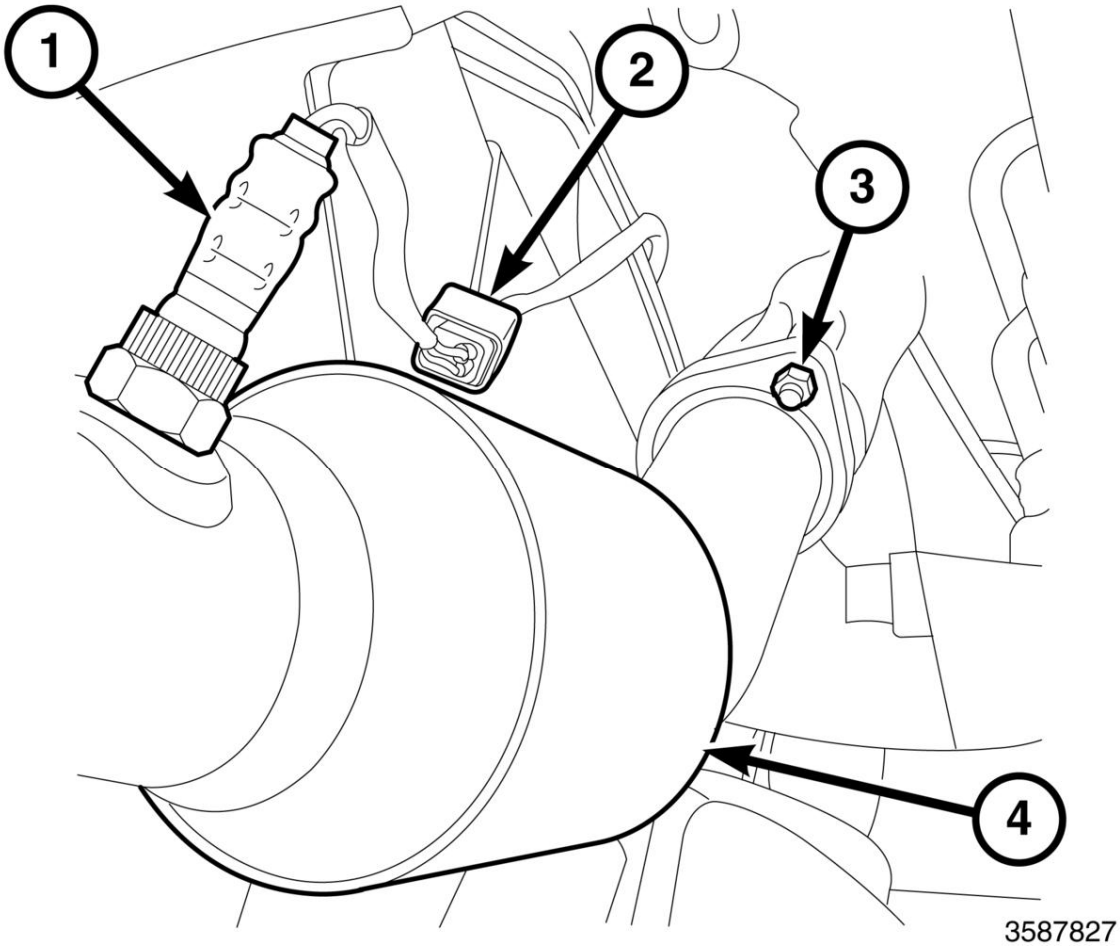

Fig. 302: Oxygen Sensor, Oxygen Sensor Connector, Ball Flange Nut & LH Catalytic Converter
Courtesy of CHRYSLER GROUP, LLC

CAUTION: When servicing or replacing exhaust system components, disconnect the oxygen sensor connector(s). Allowing the exhaust to hang by the oxygen sensor wires will damage the harness and/or sensor.

8. Disconnect the oxygen sensor electrical connectors (2).
9. Saturate the front exhaust pipe/catalytic converter retaining bolts and nuts with Mopar® Rust Penetrant or equivalent and allow 5 minutes for penetration.

NOTE: If separating the exhaust pipe/catalytic converter at the exhaust manifold flange. New bolts will be required.

10. Remove the right and left exhaust pipe/catalytic converter assembly at the exhaust manifold and discard

the bolts.

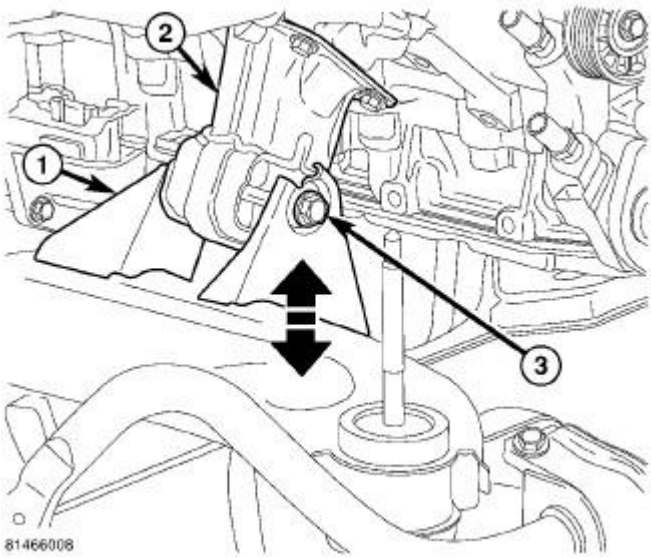

Fig. 303: Engine Mount & Bolt
Courtesy of CHRYSLER GROUP, LLC

Right side shown in illustration, left side similar.

11. Remove the right and left engine mount through bolts (3).
12. Lower the vehicle.

CAUTION: Do not damage engine harness while raising the engine.

13. Using the Engine Support Fixture (special tool #8534B, Fixture, Driveline Support), raise the engine enough to gain access to the exhaust manifold retaining bolts.
14. Remove the exhaust manifold heat shield.

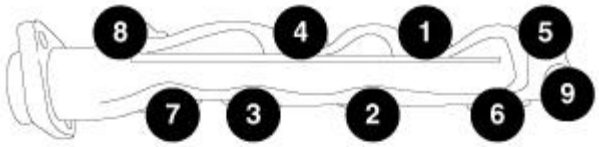

44921

Fig. 304: Exhaust Manifold Bolt Removal/Tightening Sequence - Right
Courtesy of CHRYSLER GROUP, LLC

NOTE: **The bolts used to secure the exhaust manifold are stainless steel at locations 7 and 8. All bolts removed must be installed in the same location were they were removed from.**

15. **Right Side:** Using the sequence shown in illustration, remove the exhaust manifold retaining bolts.

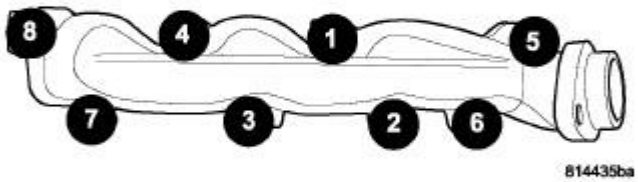

Fig. 305: Exhaust Manifold Bolt Removal/Tightening Sequence - Left
Courtesy of CHRYSLER GROUP, LLC

NOTE: **The bolts used to secure the exhaust manifold are stainless steel at locations 5 and 6. All bolts removed must be installed in the same location were they were removed from.**

16. **Left Side:** Using the sequence shown in illustration, remove the exhaust manifold retaining bolts.

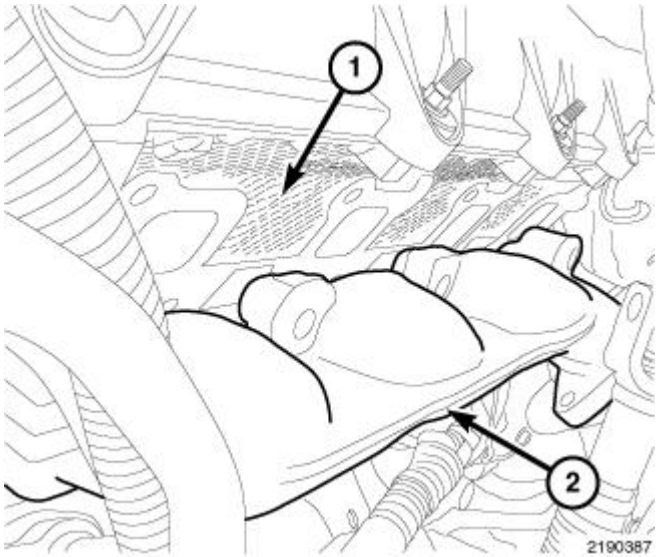

Fig. 306: Locating Exhaust Manifold & Gasket
Courtesy of CHRYSLER GROUP, LLC

Left side shown in illustration, right similar.

17. Remove the exhaust manifold (2) and gasket.
18. Inspect the exhaust manifold for any damage. Refer to **Engine/Manifolds/MANIFOLD, Exhaust - Inspection**.
19. Clean the mating surfaces.

CLEANING

CLEANING

Clean mating surfaces on cylinder head and manifold. Wash with solvent and blow dry with compressed air.

INSPECTION

INSPECTION

Inspect manifold for cracks.

Inspect mating surfaces of manifold for flatness with a straight edge. Gasket surfaces must be flat within 0.2

mm per 300 mm (0.008 inch per foot).

INSTALLATION

INSTALLATION

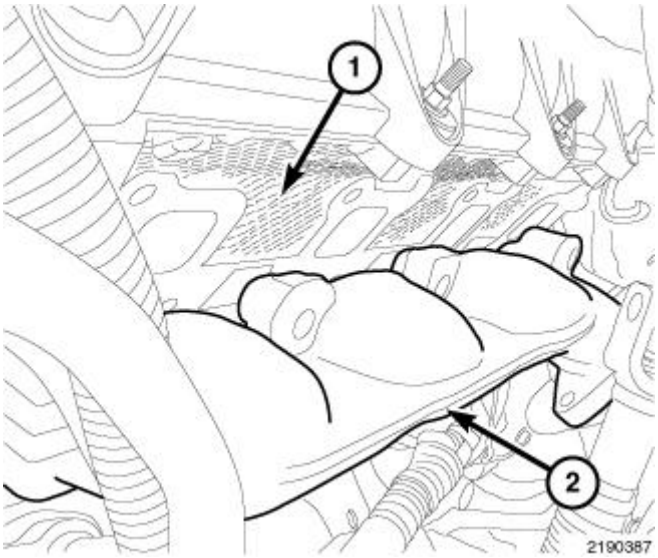

Fig. 307: Locating Exhaust Manifold & Gasket
Courtesy of CHRYSLER GROUP, LLC

Left side shown in illustration, right similar.

1. Prior to installation, make sure all gasket mating surfaces (1, 2) are clean and free of any debris.
2. Position the exhaust manifold gasket and manifold.

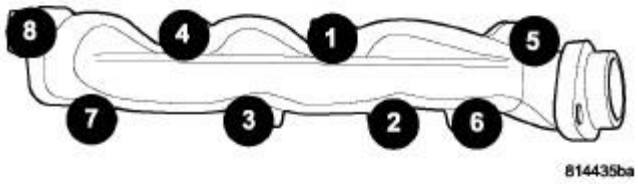

Fig. 308: Exhaust Manifold Bolt Removal/Tightening Sequence - Left
Courtesy of CHRYSLER GROUP, LLC

NOTE: **The bolts used to secure the exhaust manifold are stainless steel at locations 6 and 9. All bolts removed must be installed in the same location were they were removed from.**

3. **Left Side:** Using the sequence shown in illustration, Install the exhaust manifold retaining bolts and pre-tighten to 25 N.m (18 ft. lbs.) allowing the gasket to seat to the exhaust manifold and cylinder head.
4. Re-check the torque at 25 N.m (18 ft. lbs.) using the sequence shown in illustration.
5. Install the heat shield and tighten nuts to 8 N.m (70 in. lbs.).

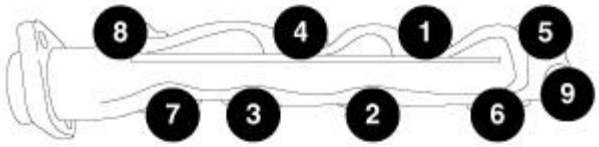

44921

Fig. 309: Exhaust Manifold Bolt Removal/Tightening Sequence - Right
Courtesy of CHRYSLER GROUP, LLC

NOTE: **The bolts used to secure the exhaust manifold are stainless steel at locations 7 and 8. All bolts removed must be installed in the same location were they were removed from.**

6. **Right Side:** Using the sequence shown in illustration, install the exhaust manifold retaining bolts and tighten to 25 N.m (18 ft. lbs.) allowing the gasket to seat to the exhaust manifold and cylinder head.
7. Re-check the torque at 25 N.m (18 ft. lbs.) using the sequence shown in illustration.
8. Install the heat shield and tighten nuts to 8 N.m (70 in. lbs.).

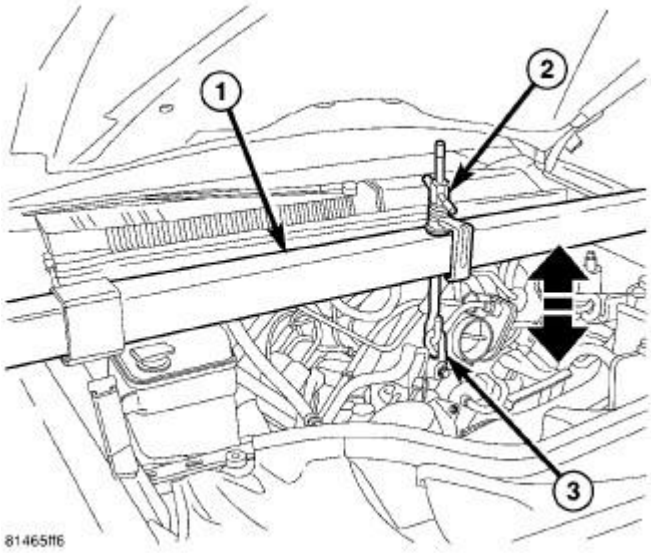

Fig. 310: Engine Support Tool
Courtesy of CHRYSLER GROUP, LLC

CAUTION: Do not damage engine harness while lowering the engine.

9. Using the Engine Support Fixture (special tool #8534B, Fixture, Driveline Support), lower the engine into position.
10. Raise and support the vehicle.

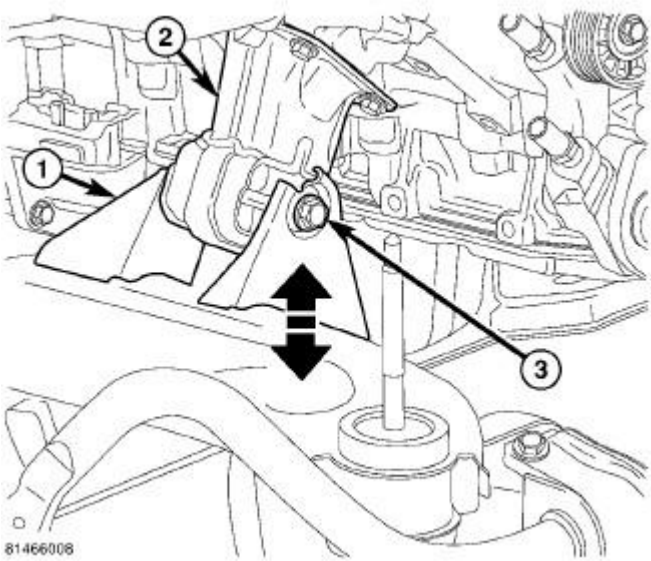

Fig. 311: Engine Mount & Bolt
Courtesy of CHRYSLER GROUP, LLC

Right side shown in illustration, left side similar.

11. Install the right and left engine mount through bolts (3) and tighten to 100 N.m (74 ft. lbs.).

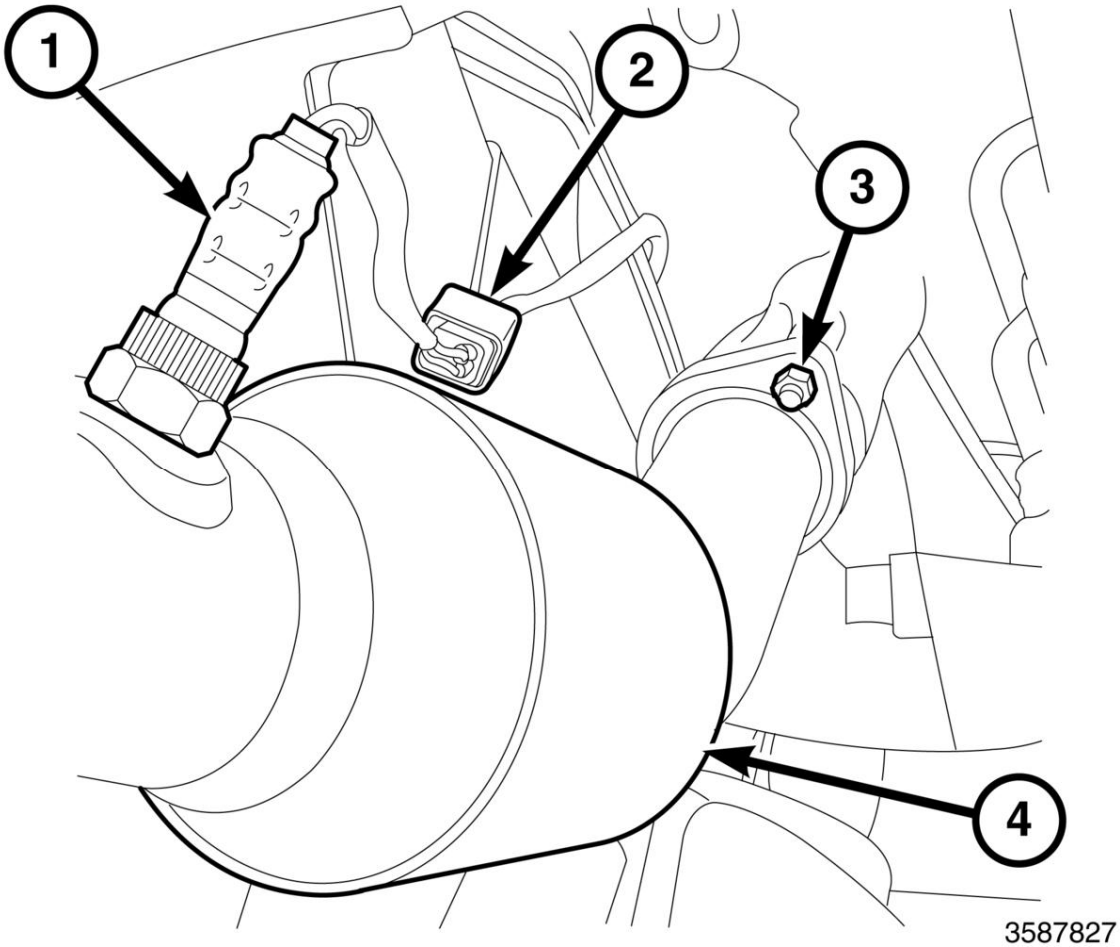

Fig. 312: Oxygen Sensor, Oxygen Sensor Connector, Ball Flange Nut & LH Catalytic Converter
Courtesy of CHRYSLER GROUP, LLC

NOTE: **If separating the exhaust pipe/catalytic converter at the exhaust manifold flange. New bolts will be required.**

12. Position the right and left exhaust pipe/catalytic converter assembly to the exhaust manifold flange. Install new bolts.
13. Connect the oxygen sensor electrical connectors (2).
14. Lower the vehicle.
15. Remove Engine Support Fixture (special tool #8534B, Fixture, Driveline Support).

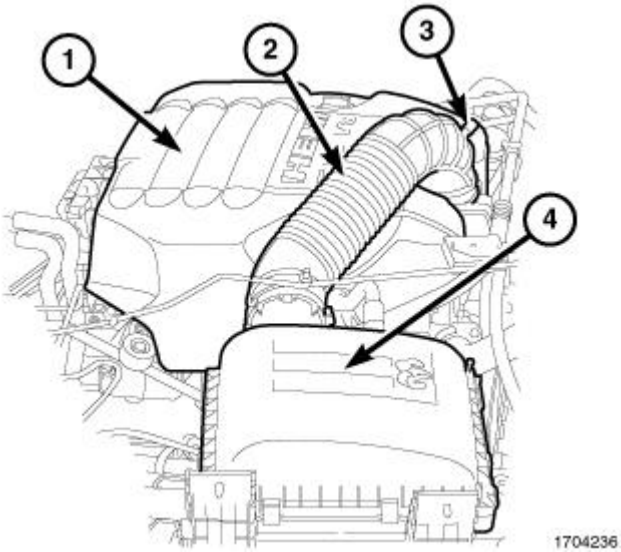

Fig. 313: Engine Cover, Clean Air Hose, Intake Air Temperature (IAT) Sensor Electrical Connector & Air Cleaner Housing
Courtesy of CHRYSLER GROUP, LLC

16. Install the air cleaner housing (4).
17. Install the clean air hose (2).
18. Connect the intake air temperature (IAT) sensor electrical connector (3).
19. Install the engine cover (1).

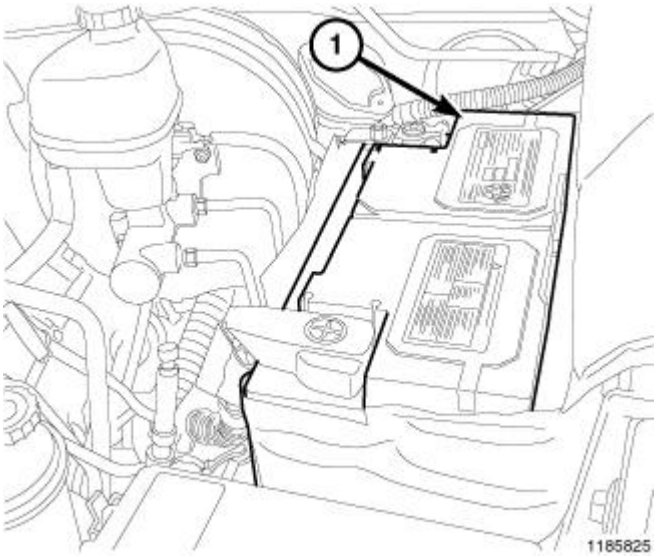

Fig. 314: Negative Battery Cable
Courtesy of CHRYSLER GROUP, LLC

20. Connect the negative battery cable (1).
21. Start the engine and check for leaks.

MANIFOLD, INTAKE

DESCRIPTION

DESCRIPTION

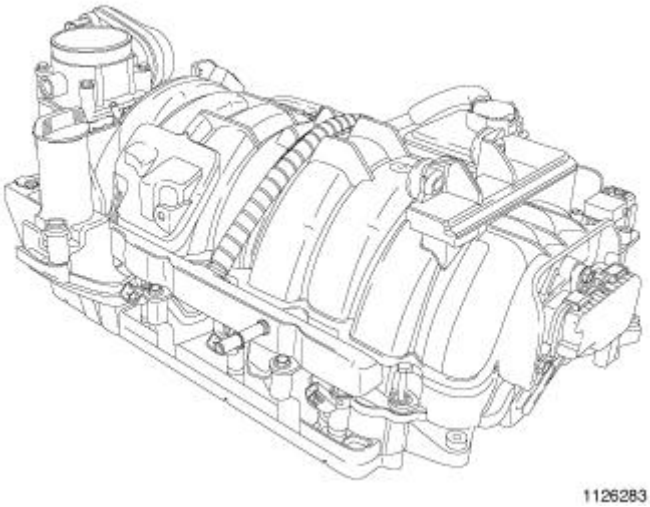

Fig. 315: Intake Manifold
Courtesy of CHRYSLER GROUP, LLC

The intake manifold is made of a composite material and features a dual shaft Short Runner Valve (SRV) system to maximize both low end torque and peak power. The SRV is bolted to the rear of the intake manifold and can be service separately from the manifold. The manifold uses a single plane sealing system with individual port seals and a separate PCV port seal to prevent leaks.

DIAGNOSIS AND TESTING

DIAGNOSIS AND TESTING - INTAKE MANIFOLD LEAKAGE

An intake manifold air leak is characterized by lower than normal manifold vacuum. Also, one or more cylinders may not be functioning.

> WARNING: **Use extreme caution when the engine is operating. Do not stand in a direct line with the fan. Do not put your hands near the pulleys, belts or the fan. Do not wear loose clothing. Failure to follow these instructions may result in possible serious or fatal injury.**

1. Start the engine.
2. Spray a small stream of water at the suspected leak area.
3. If a change in RPM is observed the area of the suspected leak has been found.
4. Repair as required.

REMOVAL

REMOVAL

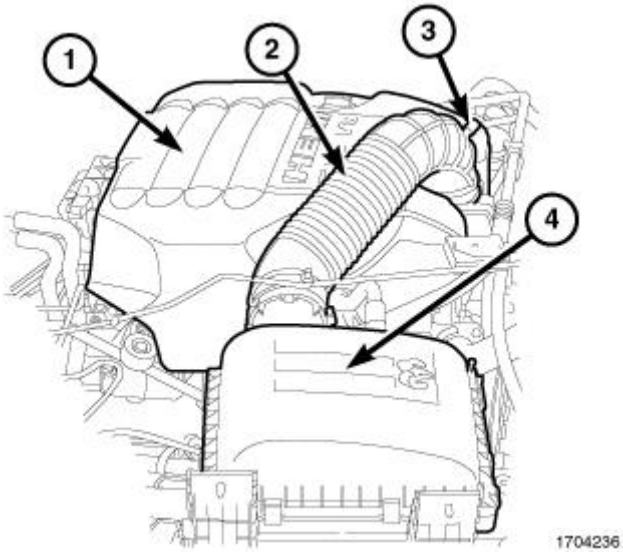

Fig. 316: Engine Cover, Clean Air Hose, Intake Air Temperature (IAT) Sensor Electrical Connector & Air Cleaner Housing
Courtesy of CHRYSLER GROUP, LLC

1. Disconnect the intake air temperature (IAT) sensor electrical connector (3).
2. Remove the clean air tube (2) from the air cleaner housing (4) and the throttle body.
3. Disconnect the makeup air hose.
4. Remove the air cleaner housing. Refer to **BODY, AIR CLEANER, REMOVAL, 5.7L**.

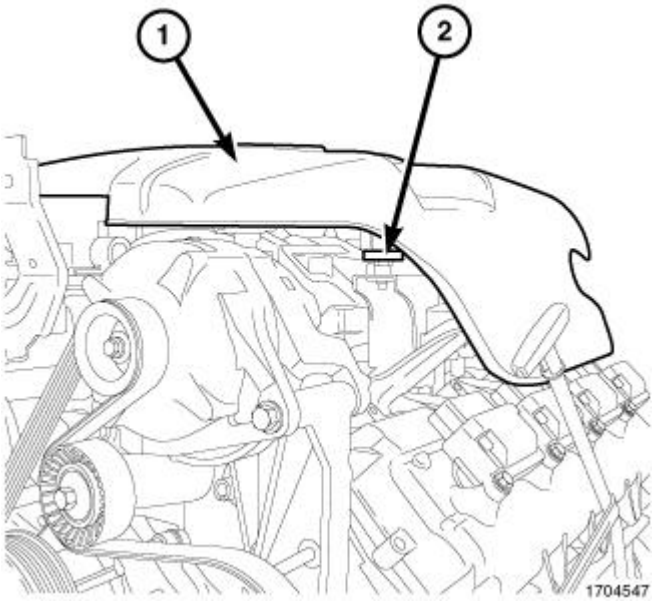

Fig. 317: Engine Cover & Grommets
Courtesy of CHRYSLER GROUP, LLC

5. Lift up the front of the engine cover (1) and separate the engine cover front grommets (2) from the ball studs on the intake manifold.

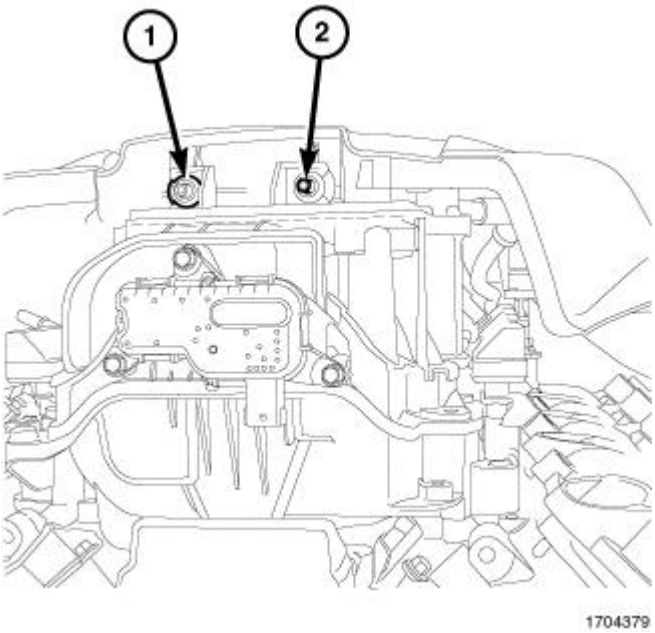

Fig. 318: Engine Cover Pegs & Grommets
Courtesy of CHRYSLER GROUP, LLC

6. Slightly raise the front of the engine cover and slide forward to remove the rear engine cover pegs (2) from the grommets (1) on the rear of the intake manifold.
7. Perform the fuel pressure release procedure. Refer to **FUEL SYSTEM PRESSURE RELEASE** .

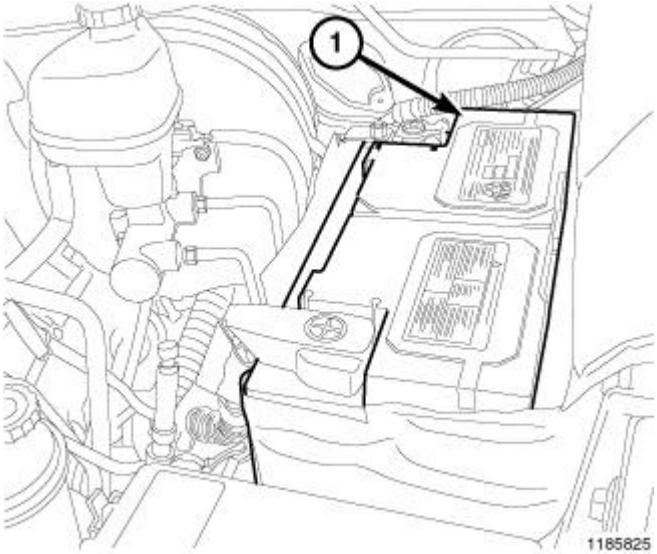

Fig. 319: Negative Battery Cable
Courtesy of CHRYSLER GROUP, LLC

8. Disconnect the negative battery cable (1).

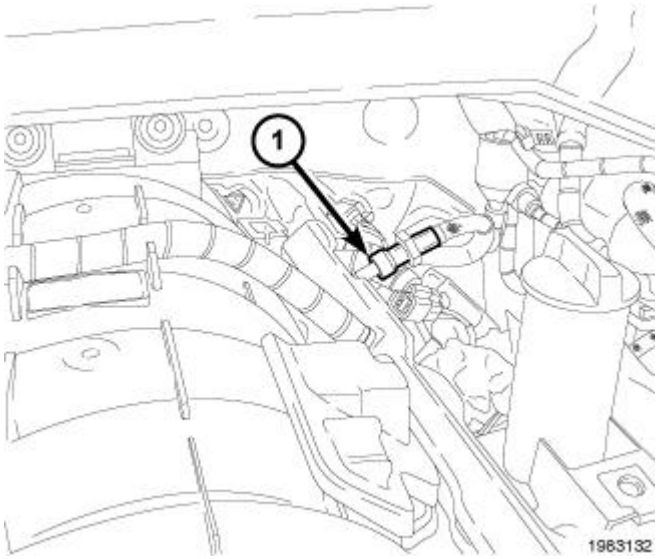

Fig. 320: Fuel Supply Line Quick Connect Fitting At Fuel Rail
Courtesy of CHRYSLER GROUP, LLC

NOTE: **Excessive fuel spillage onto the gaskets can cause gaskets to expand and dislodge from the gasket groove.**

9. Disconnect the fuel supply line quick connect fitting at the fuel rail (1) and plug the fuel supply line with a shipping cap to prevent spillage. Refer to **STANDARD PROCEDURE - QUICK-CONNECT FITTINGS** .

NOTE: **The factory fuel injection electrical harness is numerically tagged (INJ 1, INJ 2, etc.) for injector position identification. If the harness was not tagged, note the electrical connector's location during removal.**

10. Disconnect the electrical connectors to all fuel injectors and position the fuel injector electrical harness aside.
11. Remove the main engine electrical harness support strap at the rear of the intake manifold and position harness aside.

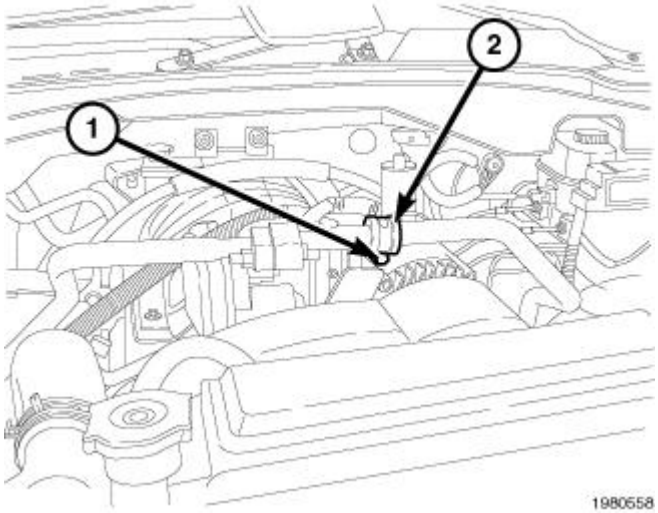

Fig. 321: A/C Line P-Clip & Retaining Bolt
Courtesy of CHRYSLER GROUP, LLC

12. Remove the A/C line P-Clip retaining bolt (1) from the throttle body bracket and remove the P-Clip (2).
13. Secure the A/C line out of the way.
14. Remove the generator. Refer to **GENERATOR, REMOVAL** .
15. Remove the throttle body bracket retaining bolt from the intake manifold and remove the bracket.
16. Disconnect the electrical connector at the throttle body and reposition the harness.
17. Disconnect the brake booster vacuum hose, and the vacuum lines.

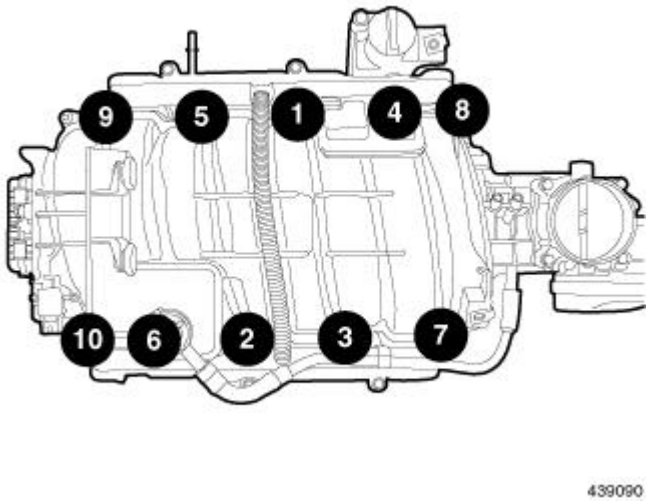

Fig. 322: Intake Manifold Retaining Bolt Removal & Tightening Sequence
Courtesy of CHRYSLER GROUP, LLC

18. Using the sequence shown in illustration, remove the intake manifold retaining bolts.

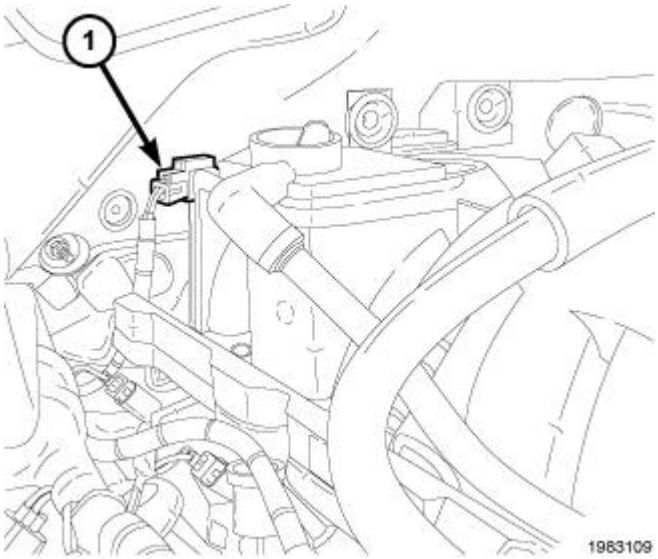

Fig. 323: MAP Sensor
Courtesy of CHRYSLER GROUP, LLC

19. Slide the intake manifold forward and disconnect both the manifold air pressure (MAP) sensor (1) and the short runner valve (SRV) connectors located at the rear of the intake manifold.
20. Remove the intake manifold and throttle body as an assembly.

CLEANING

CLEANING

NOTE: There is NO approved repair procedure for the intake manifold. If severe damage is found during inspection, the intake manifold must be replaced.

Before installing the intake manifold thoroughly clean the mating surfaces. Use a suitable cleaning solvent, then air dry.

INSPECTION

INSPECTION

1. Inspect the intake manifold sealing surface for cracks, nicks and distortion.
2. Inspect the intake manifold vacuum hose fittings for looseness or blockage.

INSTALLATION

INSTALLATION

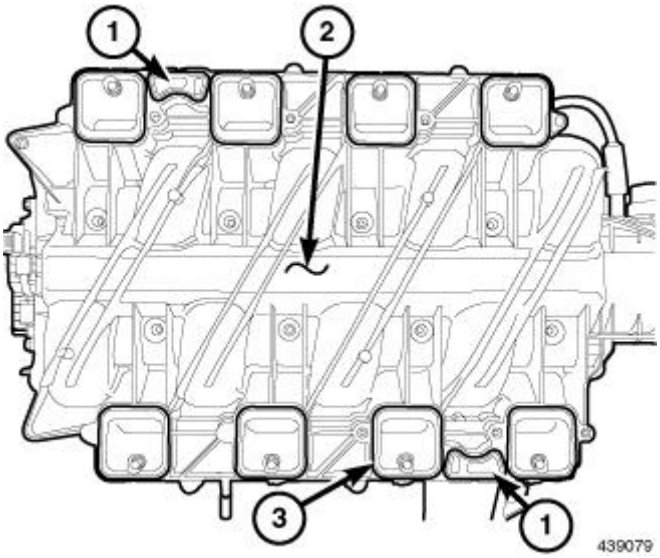

Fig. 324: Intake Manifold & PCV Seals
Courtesy of CHRYSLER GROUP, LLC

NOTE: **If reinstalling the original manifold apply Mopar® Lock & Seal Adhesive to the intake manifold bolts. Not required when installing a new manifold.**

1. Apply Mopar® Lock & Seal Adhesive to the intake manifold bolts.
2. Install the intake manifold seals (3) and positive crankcase ventilation (PCV) seals (1).

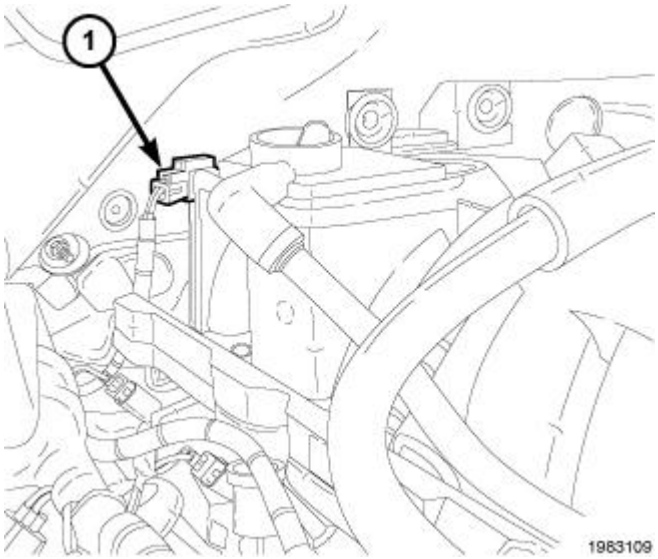

Fig. 325: MAP Sensor
Courtesy of CHRYSLER GROUP, LLC

3. Connect both the manifold air pressure (MAP) sensor (1) and the short runner valve (SRV) electrical connectors located at the rear of the intake manifold as you position the intake manifold in place.

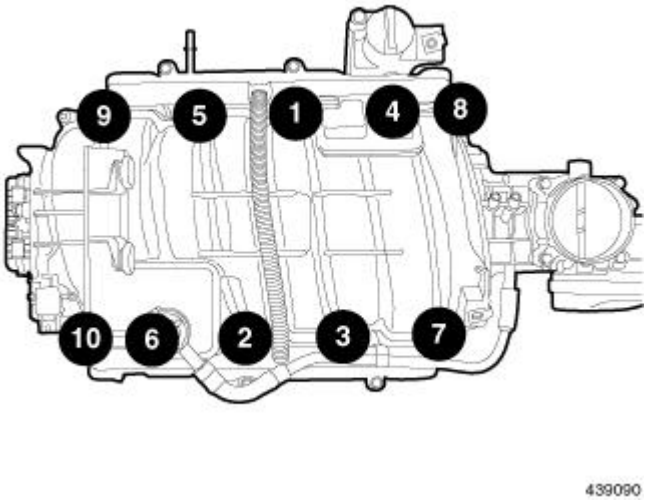

Fig. 326: Intake Manifold Retaining Bolt Removal & Tightening Sequence
Courtesy of CHRYSLER GROUP, LLC

4. Using the sequence shown in illustration, tighten the intake manifold bolts to 12 N.m (9 ft. lbs.).
5. Position the main engine electrical harness at the rear of the intake manifold and install the support strap.

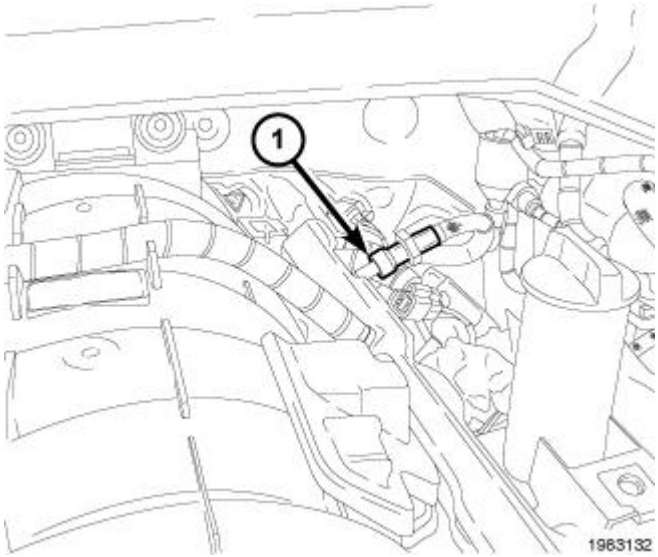

Fig. 327: Fuel Supply Line Quick Connect Fitting At Fuel Rail
Courtesy of CHRYSLER GROUP, LLC

6. Connect the fuel supply line quick connect fitting at the fuel rail (1).

NOTE: **The factory fuel injection electrical harness is numerically tagged (INJ 1, INJ 2, etc.) for injector position identification. If the harness was not tagged, use the noted the electrical connector's location during removal.**

7. Position the fuel injector electrical harness and connect the electrical connectors to all fuel injectors.

8. Connect the brake booster vacuum hose, and the vacuum lines.
9. Install the throttle body bracket and securely tighten the retaining bolt.
10. Install the generator. Refer to **GENERATOR, INSTALLATION** .

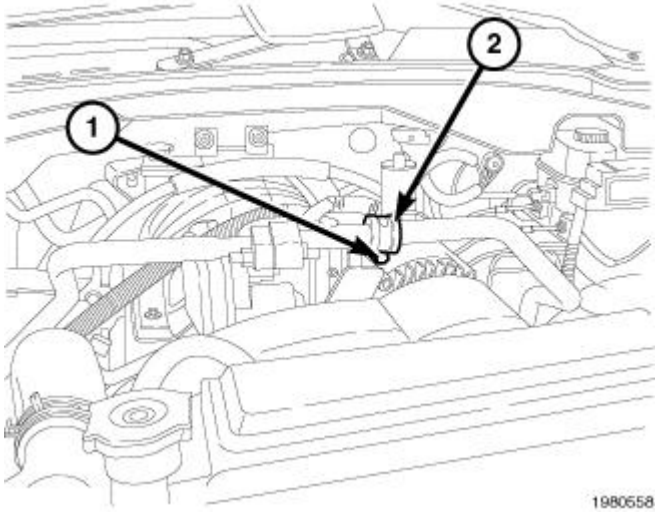

Fig. 328: A/C Line P-Clip & Retaining Bolt
Courtesy of CHRYSLER GROUP, LLC

11. Position the A/C lines, install the A/C line P-Clip (2) and tighten P-Clip retaining bolt (1) to 4 N.m (35 in. lbs.).
12. Position the wiring harness and connect the electrical connector at the throttle body.

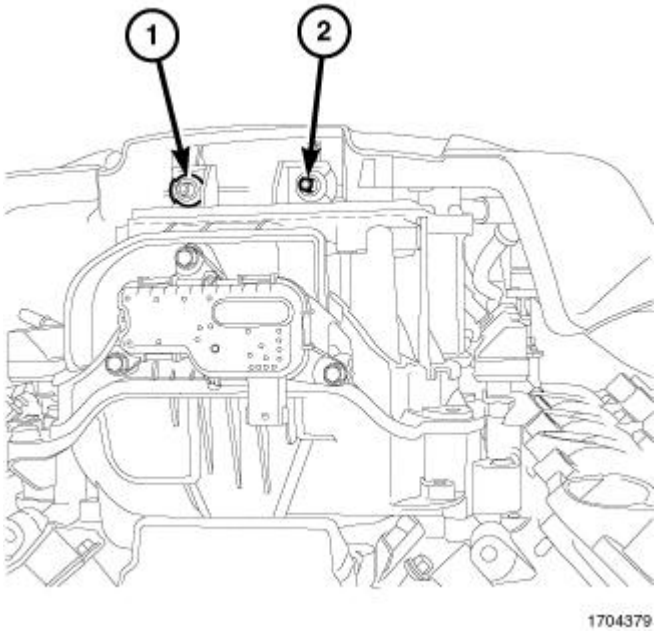

Fig. 329: Engine Cover Pegs & Grommets
Courtesy of CHRYSLER GROUP, LLC

13. Slightly tilt the rear of the engine cover and slide the rear engine cover pegs (2) into the grommets (1) on the rear of the intake manifold until the cover stops.

NOTE: Check to make sure the engine cover is installed properly by reaching behind the cover to verify that the pegs (2) are located in the rear grommets (1).

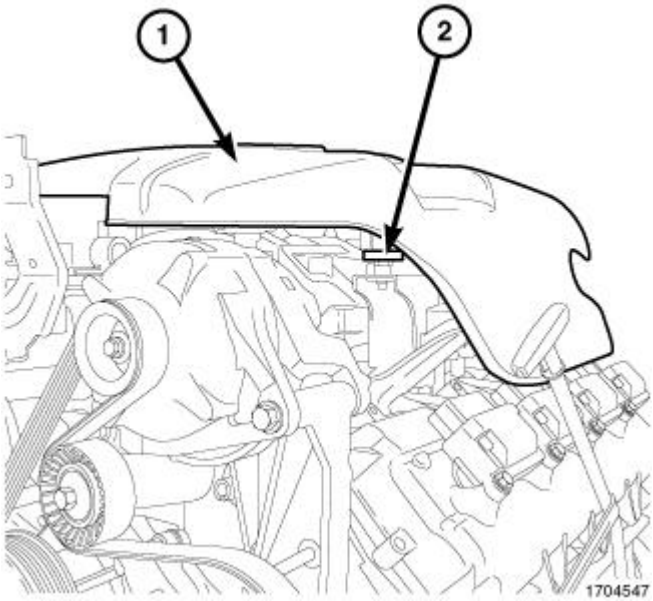

Fig. 330: Engine Cover & Grommets
Courtesy of CHRYSLER GROUP, LLC

NOTE: While installing the engine cover the front ball studs will make a popping or suction sound as the ball studs are inserted into the front grommets.

14. Lower the front of the engine cover (1) and line up the front grommets (2) with the ball studs on the front of the intake manifold and with a downward motion push the engine cover front grommets onto the ball studs.

NOTE: Lightly lift the front of the engine cover to insure the front ball studs are seated into the front grommets correctly.

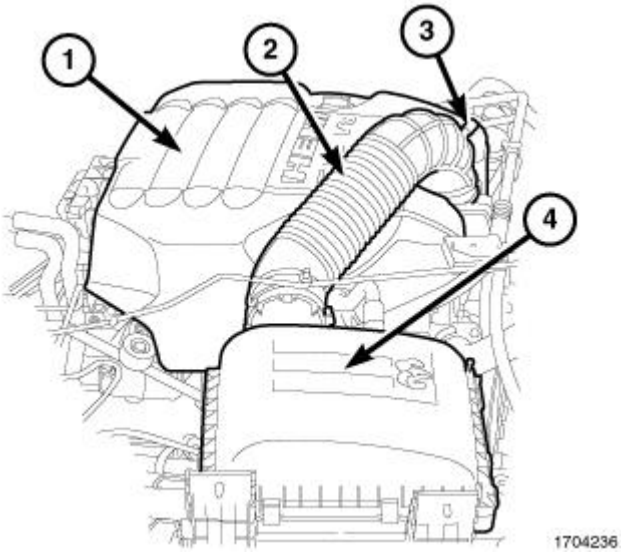

Fig. 331: Engine Cover, Clean Air Hose, Intake Air Temperature (IAT) Sensor Electrical Connector & Air Cleaner Housing
Courtesy of CHRYSLER GROUP, LLC

15. Install the air cleaner assembly (4)
16. Connect the clean air tube (2) to the air cleaner assembly (4) and the throttle body.
17. Connect the makeup air hose.
18. Connect the IAT sensor electrical connector (3).

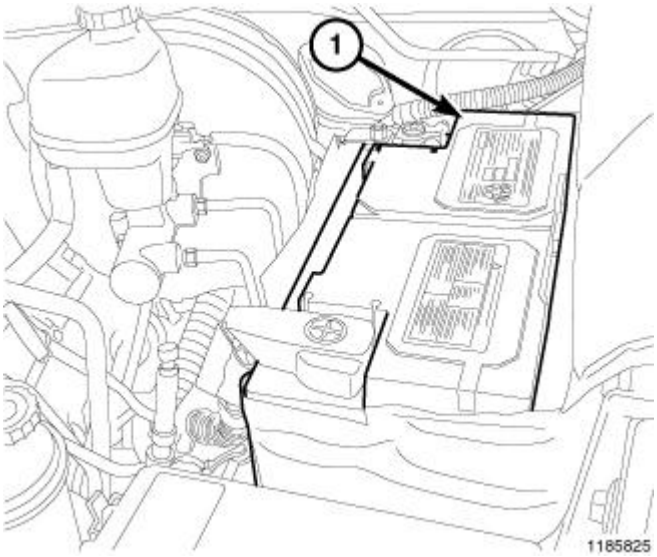

Fig. 332: Negative Battery Cable
Courtesy of CHRYSLER GROUP, LLC

19. Connect the negative battery cable (1).

VALVE TIMING

CHAIN AND SPROCKETS, TIMING

REMOVAL

REMOVAL

1. Disconnect the negative battery cable.
2. Drain the cooling system. Refer to **STANDARD PROCEDURE** .

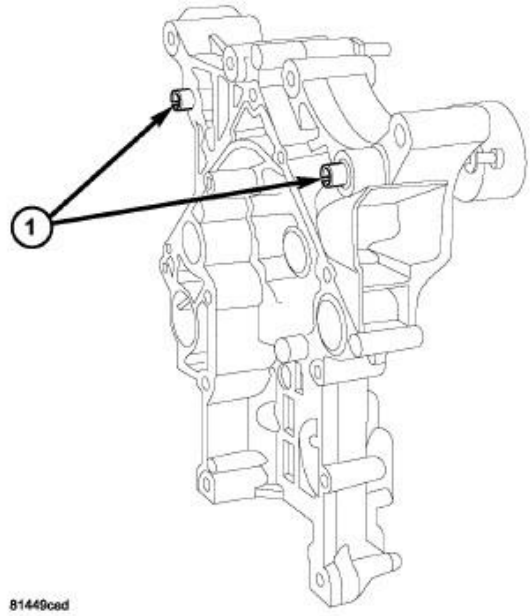

Fig. 333: Front Cover Slide Bushings
Courtesy of CHRYSLER GROUP, LLC

NOTE: It is not necessary to remove water pump for timing chain cover removal.

3. Remove the timing chain cover. Refer to **COVER(S), ENGINE TIMING, REMOVAL, 5.7L**.
4. Verify the slide bushings (1) remain installed in the timing chain cover during removal.

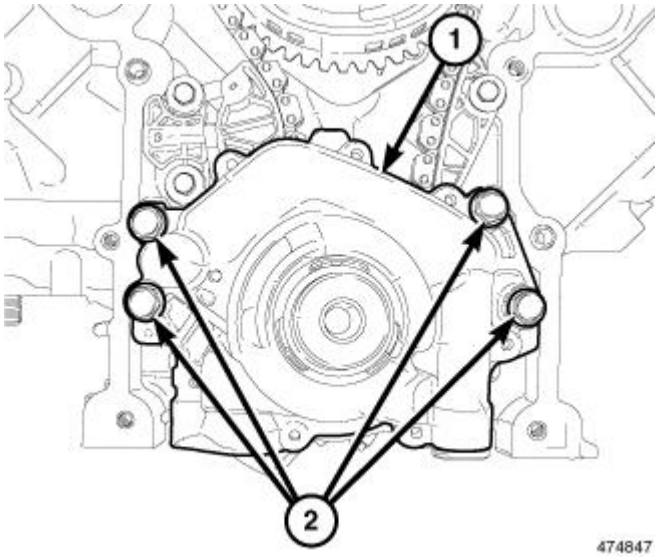

Fig. 334: Oil Pump & Retaining Bolts
Courtesy of CHRYSLER GROUP, LLC

5. Remove the oil pump retaining bolts (2) and remove the oil pump (1).

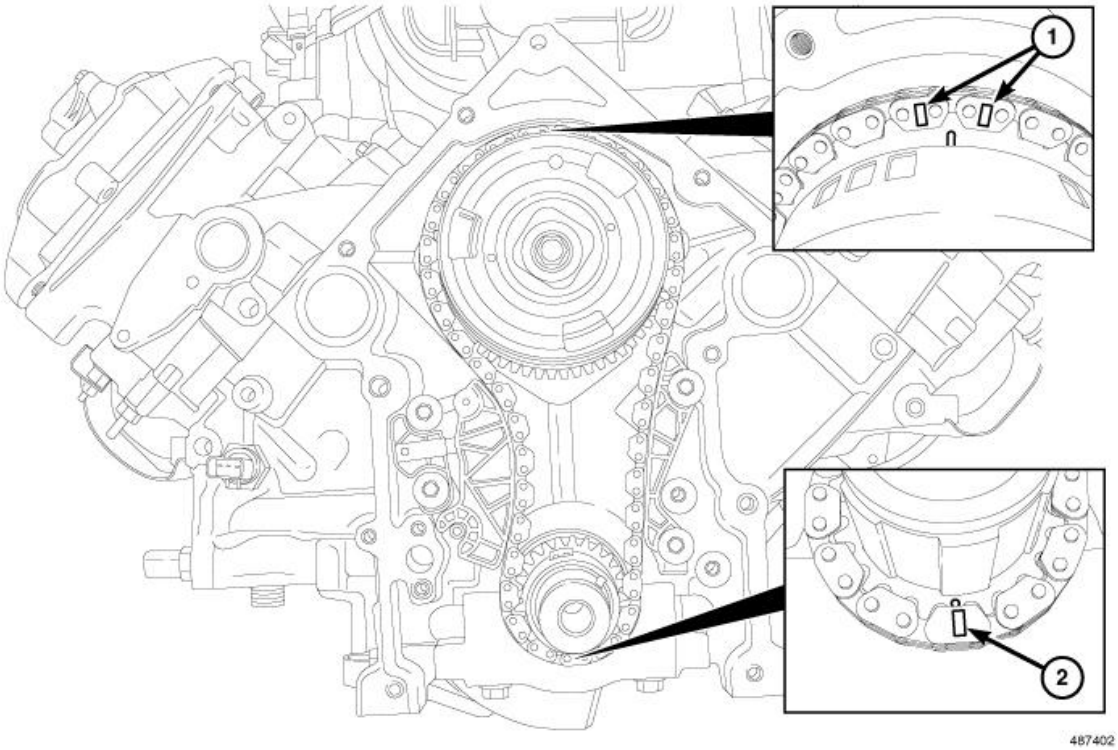

Fig. 335: Aligning Timing Marks With Timing Chain Sprockets
Courtesy of CHRYSLER GROUP, LLC

6. Install the vibration damper bolt finger tight. Using a suitable socket and breaker bar, rotate the crankshaft to align the timing marks with the timing chain sprockets (1, 2).

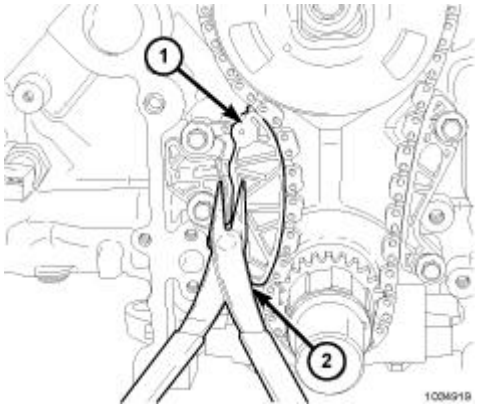

Fig. 336: Retracting Tensioner Shoe Using Pliers
Courtesy of CHRYSLER GROUP, LLC

7. Retract the chain tensioner arm (1) until the hole in the arm lines up with the hole in the bracket.

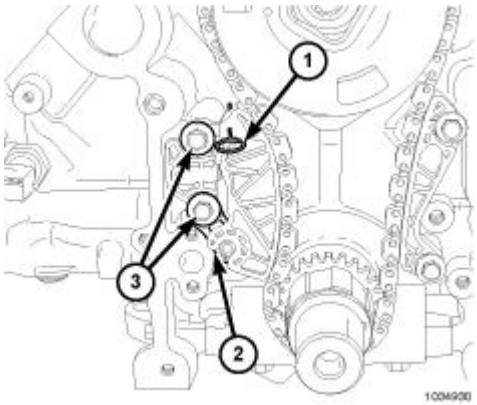

Fig. 337: Timing Chain Tensioner Pin & Bolts
Courtesy of CHRYSLER GROUP, LLC

8. Install the Tensioner Pin (special tool #8514, Pins, Tensioner) (1) into the chain tensioner holes.

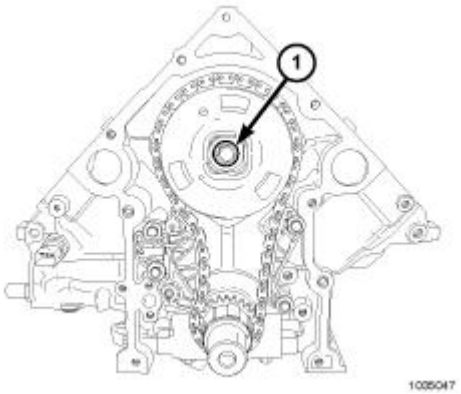

Fig. 338: Camshaft Phaser Retaining Bolt
Courtesy of CHRYSLER GROUP, LLC

CAUTION: Never attempt to disassemble the camshaft phaser, severe engine damage could result.

9. Remove the camshaft phaser retaining bolt (1) and remove the timing chain with the camshaft phaser and crankshaft sprocket.

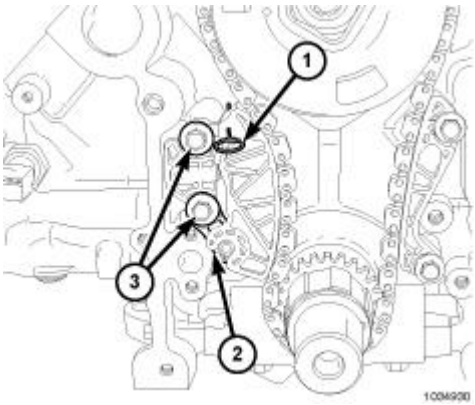

Fig. 339: Timing Chain Tensioner Pin & Bolts
Courtesy of CHRYSLER GROUP, LLC

NOTE: Inspect the timing chain tensioner and timing chain guide shoes for wear and replace as necessary.

10. If the timing chain tensioner is being replaced, remove the retaining bolts (3) and remove the timing chain tensioner (2).

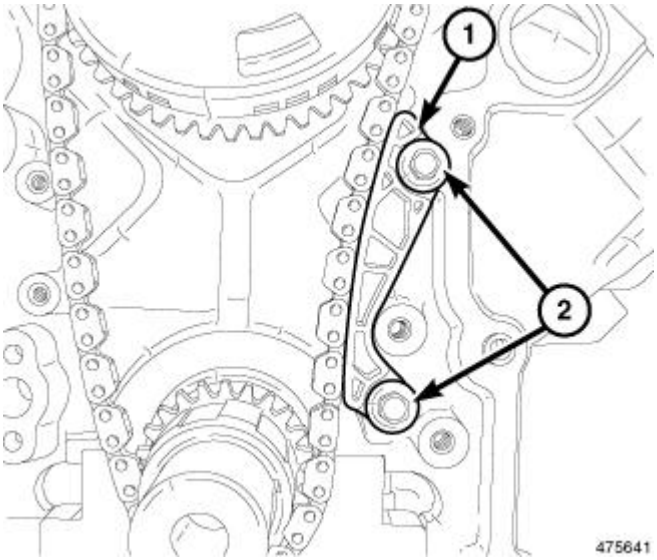

Fig. 340: Timing Chain Guide & Bolts
Courtesy of CHRYSLER GROUP, LLC

11. If the timing chain guide (1) is being replaced, remove the retaining bolts (2) and remove the timing chain guide.

INSTALLATION

INSTALLATION

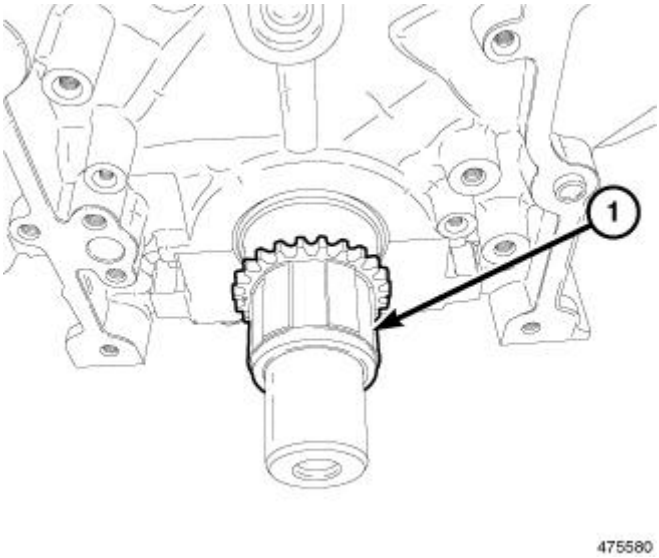

Fig. 341: Crankshaft Sprocket
Courtesy of CHRYSLER GROUP, LLC

1. Install the crankshaft sprocket (1) and position halfway onto the crankshaft.

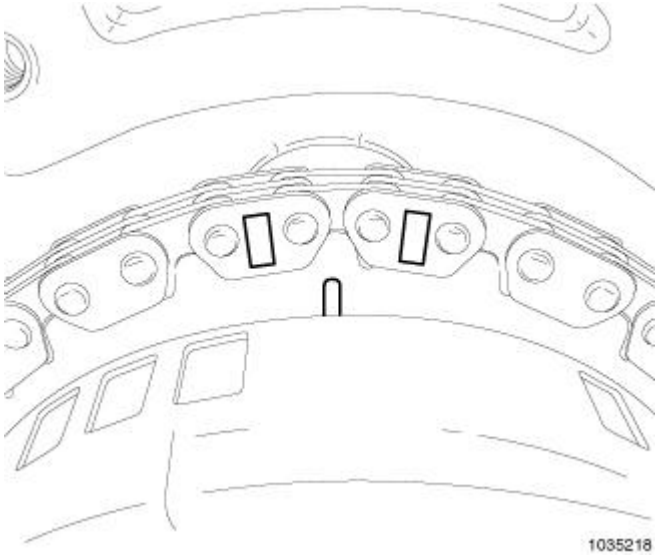

Fig. 342: Aligning Timing Chain & Camshaft Phaser Marks
Courtesy of CHRYSLER GROUP, LLC

2. While holding the camshaft phaser in hand, position the timing chain on the camshaft phaser and align the timing marks as shown in illustration.

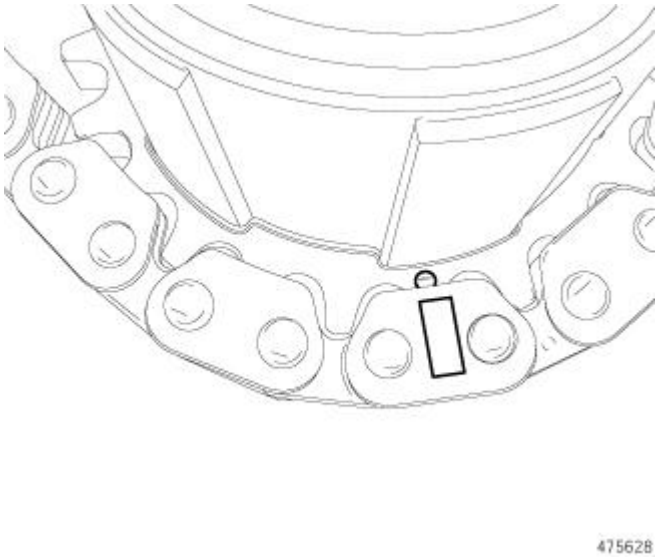

Fig. 343: Aligning Timing Chain & Crankshaft Sprocket Marks
Courtesy of CHRYSLER GROUP, LLC

3. While holding the camshaft phaser and timing chain in hand, position the timing chain on the crankshaft sprocket and align the timing mark as shown in illustration.

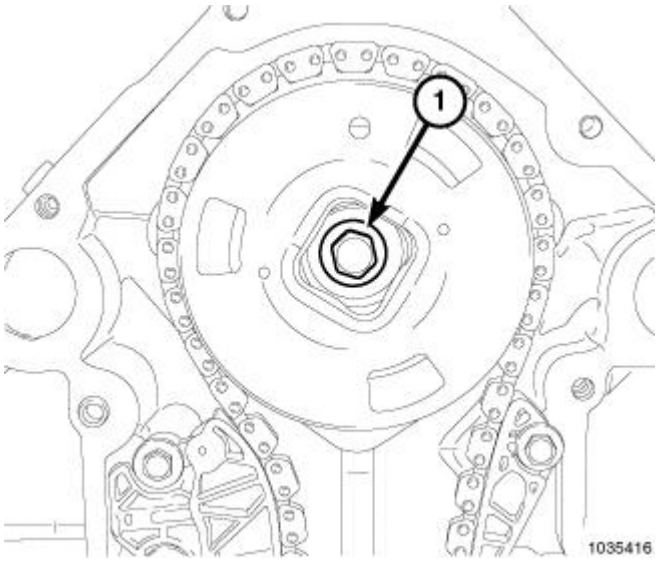

Fig. 344: Camshaft Phaser Retaining Bolt
Courtesy of CHRYSLER GROUP, LLC

4. Align the slot in the camshaft phaser with the dowel on the camshaft and position the camshaft phaser on the camshaft while sliding the crankshaft sprocket into position.
5. Install the camshaft phaser retaining bolt (1) finger tight.

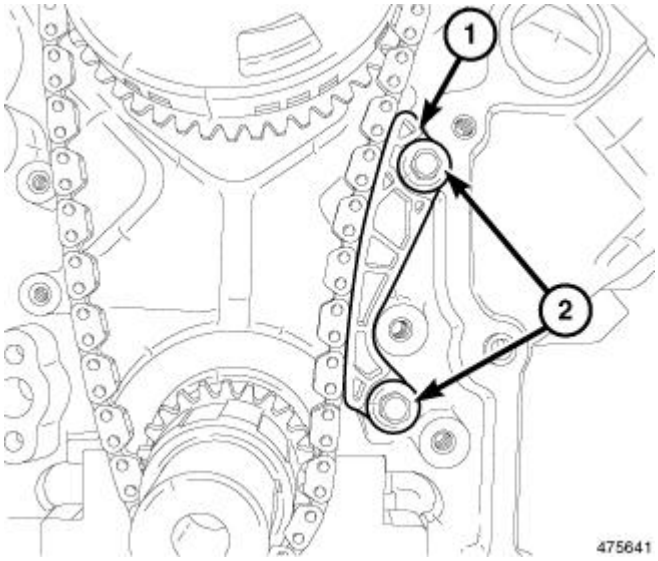

Fig. 345: Timing Chain Guide & Bolts
Courtesy of CHRYSLER GROUP, LLC

6. If removed, install the timing chain guide (1) and tighten the bolts (2) to 11 N.m (8 ft. lbs.).

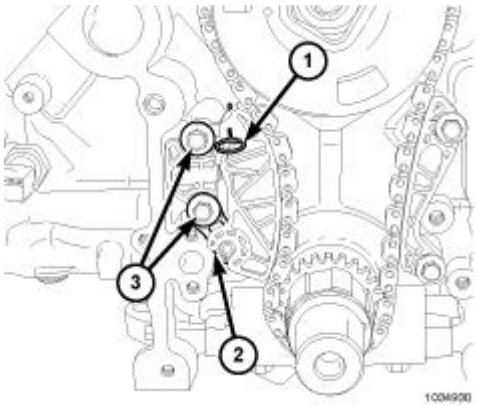

Fig. 346: Timing Chain Tensioner Pin & Bolts
Courtesy of CHRYSLER GROUP, LLC

7. If removed, install the timing chain tensioner (2) and tighten the bolts (3) to 11 N.m (8 ft. lbs.).
8. Remove the tensioner pin (special tool #8514, Pins, Tensioner) (1).

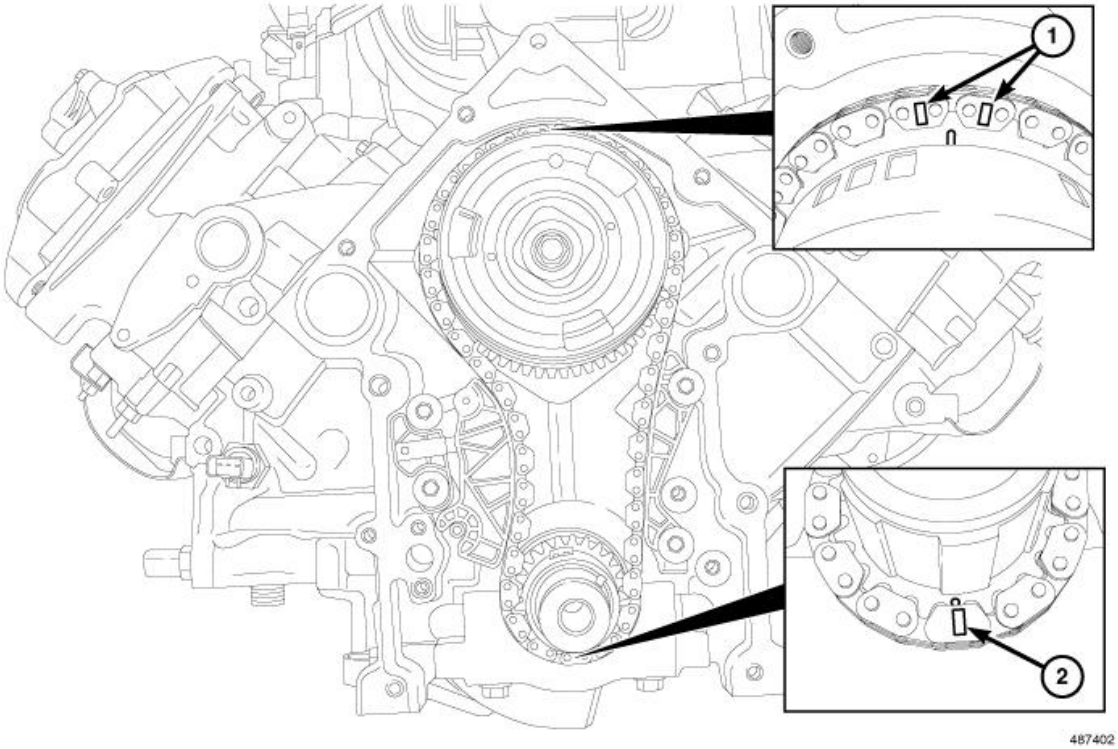

Fig. 347: Aligning Timing Marks With Timing Chain Sprockets
Courtesy of CHRYSLER GROUP, LLC

9. Rotate the crankshaft two revolutions and verify the alignment of the timing marks (1, 2). If the timing marks do not line up, remove the camshaft sprocket and realign.

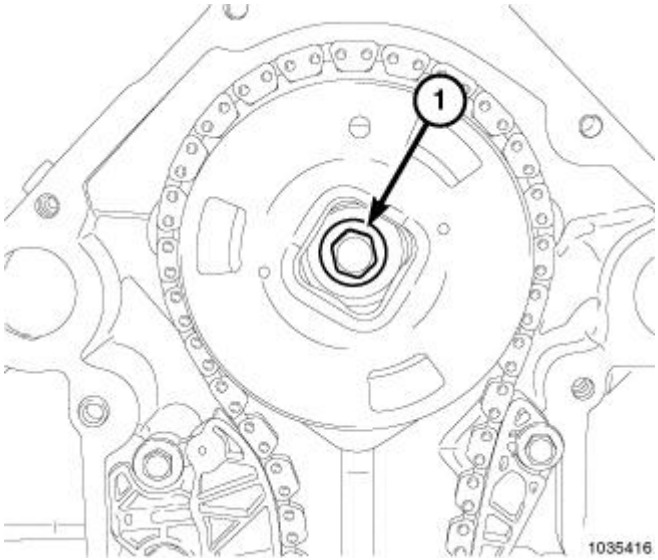

Fig. 348: Camshaft Phaser Retaining Bolt
Courtesy of CHRYSLER GROUP, LLC

10. Tighten the camshaft phaser bolt (1) to 85 N.m (63 ft. lbs.).

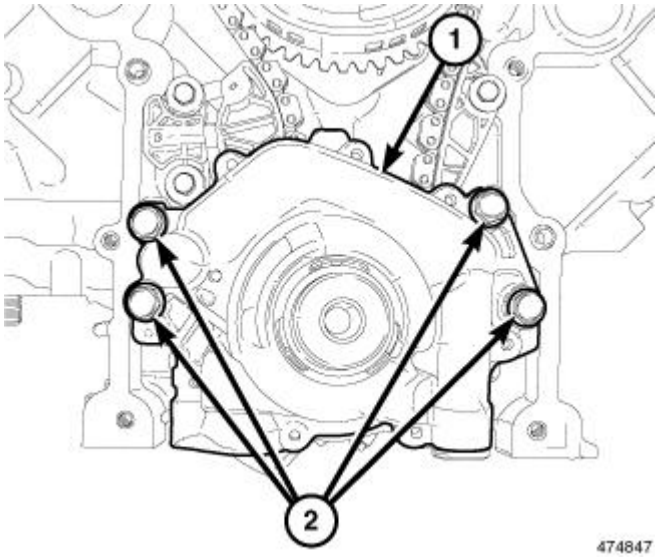

Fig. 349: Oil Pump & Retaining Bolts
Courtesy of CHRYSLER GROUP, LLC

11. Position the oil pump (1) onto the crankshaft and install the oil pump retaining bolts (2) finger tight.

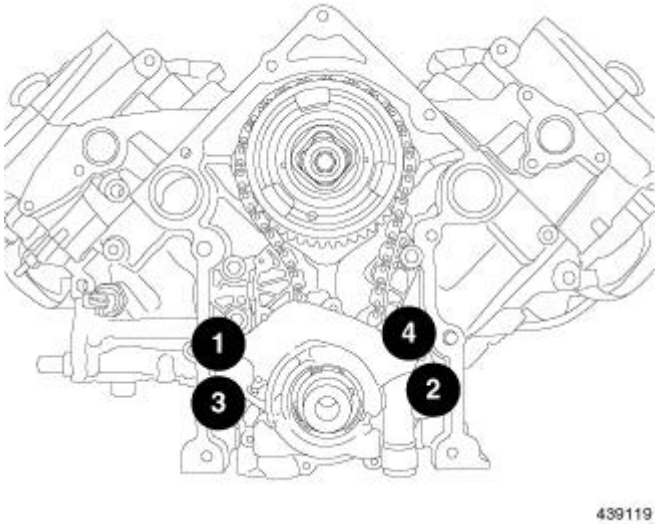

Fig. 350: Oil Pump Retaining Bolt Tightening Sequence
Courtesy of CHRYSLER GROUP, LLC

12. Using the sequence shown in illustration, tighten the oil pump retaining bolts to 28 N.m (21 ft. lbs.).

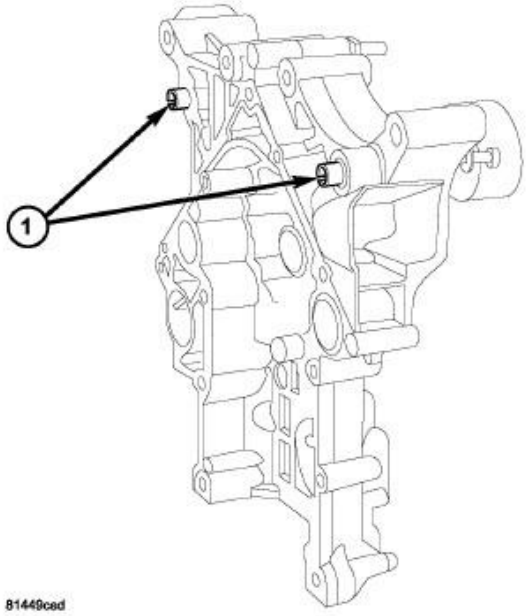

Fig. 351: Front Cover Slide Bushings
Courtesy of CHRYSLER GROUP, LLC

13. Verify the slide bushings (1) are installed in the timing chain cover.
14. Install the timing chain cover. Refer to **COVER(S), ENGINE TIMING, INSTALLATION, 5.7L**.
15. Fill the engine with oil.
16. Fill the cooling system. Refer to **STANDARD PROCEDURE** .
17. Connect the negative battery cable.
18. Start the engine and check for leaks.

COVER(S), ENGINE TIMING

REMOVAL

REMOVAL

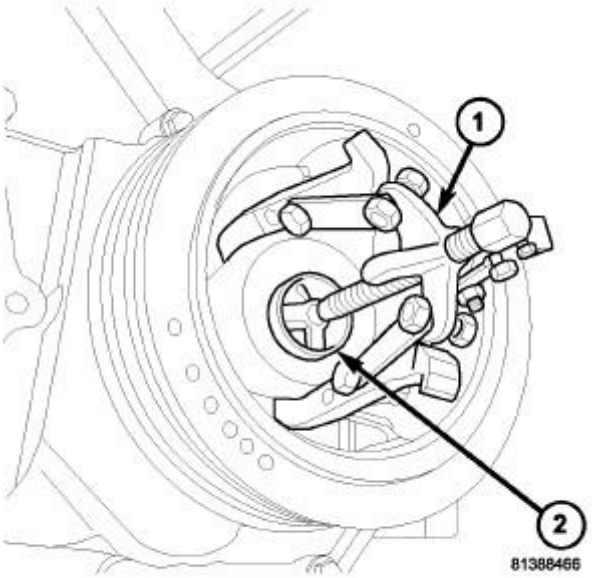

Fig. 352: Crankshaft Damper Removal
Courtesy of CHRYSLER GROUP, LLC

1 - 3 - Jaw Puller 1023
2 - Crankshaft Insert 8513A

1. Disconnect the battery negative cable.
2. Remove the engine cover.
3. Remove air cleaner assembly.
4. Drain cooling system.
5. Remove accessory drive belt.
6. Remove fan and fan drive assembly.
7. Remove coolant bottle and washer bottle.
8. Remove fan shroud.

NOTE: It is not necessary to disconnect A/C lines or discharge refrigerant.

9. Remove A/C compressor and set aside.
10. Remove the generator.
11. Remove upper radiator hose.
12. Disconnect both heater hoses at timing cover.
13. Disconnect lower radiator hose at engine.
14. Remove accessory drive belt tensioner and both idler pulleys.
15. Remove crankshaft damper (2). Refer to **DAMPER, VIBRATION, REMOVAL, 5.7L**.

NOTE: Do not remove the hoses from the power steering pump.

16. Remove power steering pump and set aside.

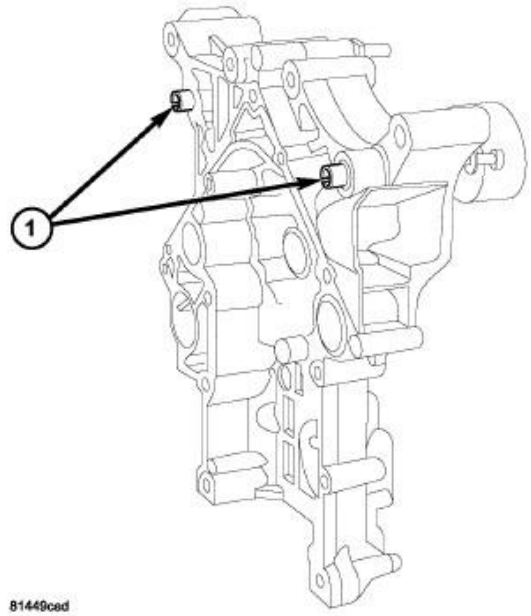

Fig. 353: Front Cover Slide Bushings
Courtesy of CHRYSLER GROUP, LLC

17. Remove the dipstick support bolt.
18. Drain the engine oil.
19. Remove the oil pan and pick up tube. Refer to **PAN, OIL, REMOVAL, 5.7L**.

NOTE: It is not necessary to remove water pump for timing cover removal.

20. Remove timing cover bolts and remove cover.
21. Verify that timing cover slide bushings (1) are located in timing cover.

INSTALLATION

INSTALLATION

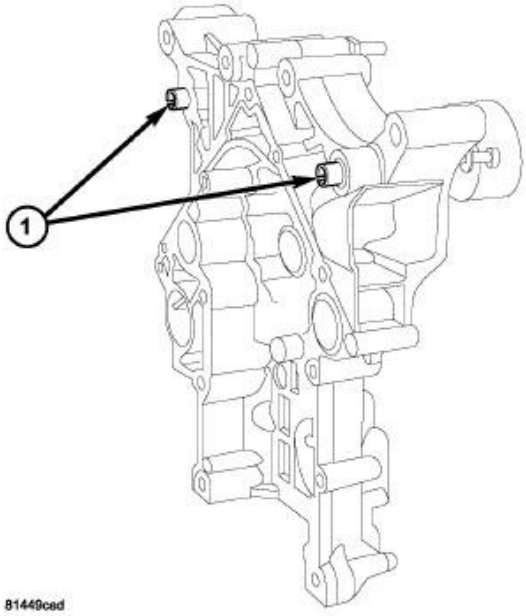

Fig. 354: Front Cover Slide Bushings
Courtesy of CHRYSLER GROUP, LLC

1. Clean timing chain cover and block surface.

NOTE: Always install a new gasket on timing cover.

2. Verify that the slide bushings (1) are installed in timing cover.
3. Install cover and new gasket. Tighten fasteners to 28 N.m (250 in. lbs.).

NOTE: The large lifting stud is tightened to 55 N.m (40 ft. lbs.).

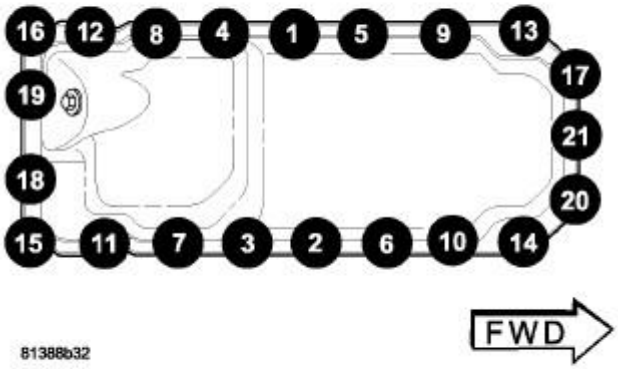

Fig. 355: Oil Pan Removal/Tightening Sequence
Courtesy of CHRYSLER GROUP, LLC

4. Install the oil pan and pick up tube. Refer to **PAN, OIL, INSTALLATION, 5.7L**.
5. Install the A/C compressor.
6. Install the generator.
7. Install power steering pump.
8. Install the dipstick support bolt.
9. Install the thermostat housing.
10. Install crankshaft damper. Refer to **DAMPER, VIBRATION, INSTALLATION, 5.7L**.
11. Install accessory drive belt tensioner assembly and both idler pulleys.
12. Install radiator lower hose.
13. Install both heater hoses.
14. Install the cooling module.
15. Install the accessory drive belt.
16. Install the coolant bottle and washer bottle.
17. Install the upper radiator hose.
18. Install the air cleaner assembly.
19. Fill cooling system.
20. Refill engine oil.
21. Connect the battery negative cable.

TENSIONER, ENGINE TIMING

STANDARD PROCEDURE

STANDARD PROCEDURE - RESETTING TIMING CHAIN TENSIONER

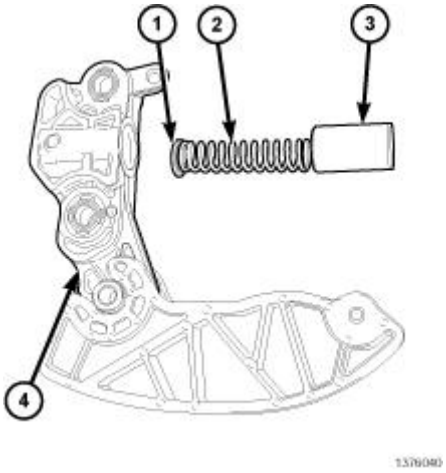

Fig. 356: Tensioner Body, Washer, Spring & Plunger
Courtesy of CHRYSLER GROUP, LLC

NOTE: Verify that the tensioner is assembled correctly.

1. Install the washer (1), spring (2), and plunger (3) inside the tensioner body (4).

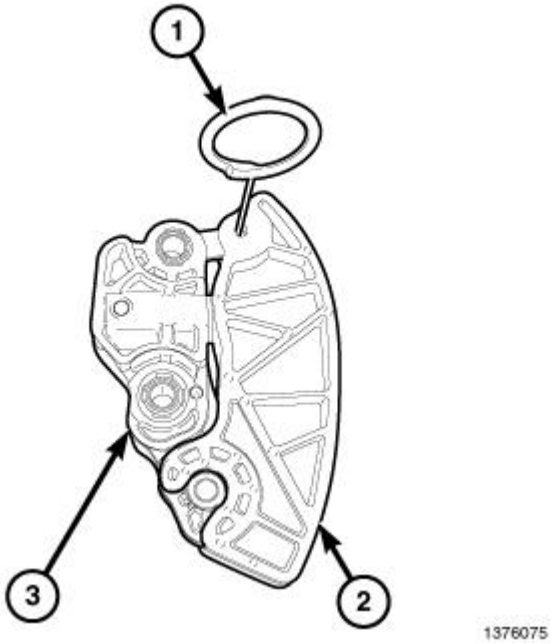

Fig. 357: Tensioner Pin, Guide Shoe & Tensioner Body
Courtesy of CHRYSLER GROUP, LLC

2. Squeeze the tensioner body (3) and movable guide shoe (2) together and install the Tensioner Pin (special tool #8514, Pins, Tensioner) (1).

DESCRIPTION

DESCRIPTION

The cylinder block is constructed of cast iron. The casting is a skirted design which incorporates longitudinal ribs for superior strength and noise reduction. The block incorporates metric straight thread O-ring fittings at lubrication oil access points. The engine is manufactured with the cylinders being a non-sleeved type cylinder.

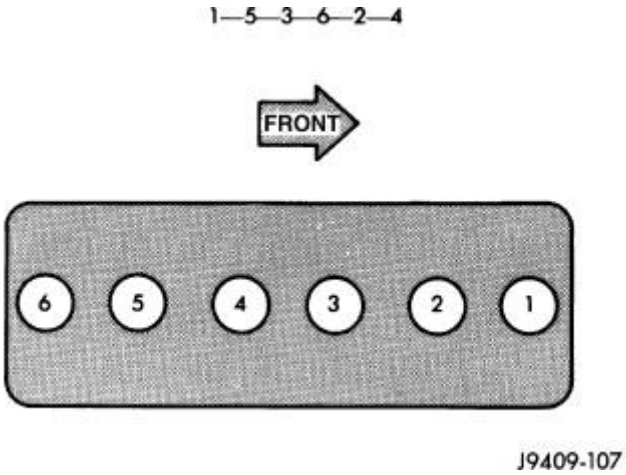

Fig. 1: Cylinder Numbering & Firing Order
Courtesy of CHRYSLER GROUP, LLC

The cylinders are numbered front to rear; 1 to 6. The firing order is 1-5-3-6-2-4.

DIAGNOSIS AND TESTING

ENGINE DIAGNOSIS - MECHANICAL

CONDITION	POSSIBLE CAUSES	CORRECTION
LUBRICATING OIL PRESSURE LOW	1. Low oil level.	1. (a) Check and fill with clean engine oil.
		(b) Check for a severe external oil leak that could reduce the pressure.
	2. Oil viscosity thin, diluted or wrong specification.	2. (a) Verify the correct engine oil is being used. Refer to **CAPACITIES AND RECOMMENDED FLUIDS, DESCRIPTION** .
		(b) Look for reduced viscosity from fuel dilution.
	3. Improperly operating	3. Verify the pressure switch is

	pressure switch/gauge.	functioning correctly. If not, replace switch/gauge.
	4. Relief valve stuck open.	4. Check/replace valve.
	6. If cooler was replaced, shipping plugs may have been left in cooler	6. Check/remove shipping plugs.
	7. Worn oil pump.	7. Check and replace oil pump.
	8. Suction tube damaged, loose or seal leaking.	8. Check and replace suction tube and/or seal.
	9. Loose main bearing cap.	9. Check and install new bearing. Tighten cap to proper torque.
	10. Worn bearings or wrong bearings installed.	10. Inspect and replace connecting rod or main bearings. Check and replace directed piston cooling nozzles.
	11. Directed piston cooling nozzles under piston, bad fit into main carrier.	11. Check directed piston cooling nozzles position.
	12. Loose oil rifle plug with saddle-jet style nozzles	12. Tighten oil rifle plug.
	13. Loose directed piston cooling nozzle.	13. Tighten directed piston cooling nozzle.
	14. Both J-jet and saddle jet style cooling nozzle installed.	14. Install correct style jet.
LUBRICATING OIL PRESSURE TOO HIGH	1. Pressure switch/gauge not operating properly.	1. Verify pressure switch is functioning correctly. If not, replace switch/gauge.
	2. Engine running too cold.	2. Refer to Coolant Temperature Below Normal. Refer to **DIAGNOSIS AND TESTING** .
	3. Oil viscosity too thick.	3. Make sure the correct oil is being used. Refer to **CAPACITIES AND RECOMMENDED FLUIDS, DESCRIPTION** .
	4. Oil pressure relief valve stuck closed or binding	4. Check and replace valve.
LUBRICATING OIL LOSS	1. External leaks.	1. Visually inspect for oil leaks. Repair as required.
	2. Crankcase being overfilled.	2. Verify that the correct dipstick is being used.
	3. Incorrect oil specification or viscosity.	3. (a) Make sure the correct oil is being used. Refer to **CAPACITIES AND RECOMMENDED FLUIDS, DESCRIPTION** .
		(b) Look for reduced viscosity from dilution with fuel.

		(c) Review/reduce oil change intervals.
	4. Oil cooler leak	4. Check and replace the oil cooler.
	5. High blow-by forcing oil out the breather.	5. Check the breather tube area for signs of oil loss. Perform the required repairs.
	6. Turbocharger leaking oil to the air intake.	6. Inspect the air ducts for evidence of oil transfer. Repair as required.
COMPRESSION KNOCKS	1. Air in the fuel system.	1. Identify location of air leak and repair. Do not bleed high pressure fuel system.
	2. Poor quality fuel or water/gasoline contaminated fuel.	2. Verify by operating from a temporary tank with good fuel. Clean and flush the fuel tank. Replace fuel/water separator filter.
	3. Engine overloaded.	3. Verify the engine load rating is not being exceeded.
	4. Improperly operating injectors.	4. Check and replace misfiring/inoperative injectors.
EXCESSIVE VIBRATION	1. Loose or broken engine mounts.	1. Replace engine mounts.
	2. Damaged fan or improperly operating accessories.	2. Check and replace the vibrating components.
	3. Improperly operating vibration damper	3. Inspect/replace vibration damper.
	4. Improperly operating electronically controlled viscous fan drive.	4. Inspect/replace fan drive.
	5. Worn or damaged generator bearing.	5. Check/replace generator.
	6. Flywheel housing misaligned.	6. Check/correct flywheel alignment.
	7. Loose or broken power component.	7. Inspect the crankshaft and rods for damage that causes an unbalance condition. Repair/replace as required.
	8. Worn or unbalanced driveline components.	8. Check/repair driveline components.
EXCESSIVE ENGINE NOISES	1. Drive belt squeal, insufficient tension or abnormally high loading.	1. Check the automatic tensioner and inspect the drive belt. Make sure water pump, tensioner pulley, fan hub, generator and power steering pump turn freely. Check for proper operation of over running alternator pulley.
	2. Intake air or exhaust leaks.	2. Refer to Excessive Exhaust Smoke. Refer to **SMOKE DIAGNOSIS CHARTS**.

	3. Excessive valve lash.	3. Adjust valves. Make sure the push rods are not bent and rocker arms, adjusting screws, crossheads, are not severely worn. Replace bent or severely worn components.
	4. Turbocharger noise.	4. Check turbocharger impeller and turbine wheel for housing contact. Repair/replace as required.
	5. Gear train noise.	5. Visually inspect and measure gear backlash. Replace gears as required.
	6. Power function knock.	6. Check/replace rod and main bearings.
	7. High Pitched Squeal.	7. Using soapy water solution check the EGR cooler to exhaust manifold joint. Check all clamps and hoses on the pressure side of the turbocharger

OFF-IDLE ENGINE SPEED LOW DURING COLD START

Dependent upon engine coolant temperature, the Engine Control Module (ECM) will temporarily delay (limit) the maximum engine speed when the vehicle is not moving. For automatic transmission equipped vehicles, the maximum engine speed is temporarily delayed when the vehicle speed is less than one mph, and when the transmission selector is in either the neutral or park position. For manual transmission equipped vehicles, the maximum engine speed is temporarily delayed when the vehicle speed is less than one mph. This ECM feature is used to protect the engine turbocharger. By temporarily limiting the engine speed, the shaft speed of the engine turbocharger is controlled to a low speed. This delay in maximum engine and turbocharger shaft speed allows for sufficient oil lubrication to the turbocharger shaft bearings. Satisfactory oil lubrication of the turbocharger shaft bearings is important for long term turbocharger durability. The 6.7L engine speed is temporarily limited to 1, 200 RPM's when the above conditions are met. The length of time that the maximum engine speed is temporarily limited is dependent upon engine coolant temperature. Refer to the table to determine the amount of Time Delay.

NOTE: The time delay values supplied in the table are an approximation and may vary per application.

ENGINE TEMPERATURE	TIME DELAY
- 35° F (-37°C)	45.2 secs.
- 20° F (-28°C)	34.6 secs.
- 10° F (-23°C)	28.8 secs.
- 0° F (-17°C)	24.2 secs.
+ 10° F (-12°C)	20.2 secs.
+ 20° F (-7°C)	17.0 secs.
+ 35° F (2°C)	13.0 secs.
+ 45° F (7°C)	10.8 secs.
+ 55° F (13°C)	9.0 secs.
+ 70° F (21°C)	7.0 secs.

SMOKE DIAGNOSIS CHARTS

The following charts include possible causes and corrections for **excess or abnormal** exhaust smoke. Small amounts of white smoke or water vapor (at certain times) are to be considered normal for a diesel powered engine.

NOTE: **Visible black smoke at the tail pipe is an indication of an after treatment (diesel particulate filter) failure. Follow inspection/replacement guidelines in the EXHAUST SYSTEM article of the service information to correct after treatment failure. The diesel particulate filter MAY have failed due to the possible causes listed below.**

EXCESSIVE BLACK SMOKE	
POSSIBLE CAUSE	**CORRECTION**
Aftermarket components installed.	Inspect for aftermarket components or evidence of modifications.
Air filter dirty or plugged.	Check Filter Minder® at air filter. Refer to **AIR CLEANER, REMOVAL, 6.7L**.
Air intake system restricted.	Check entire air intake system including all hoses and tubes for restrictions, collapsed parts or damage. Repair/replace as necessary.
Air Leak in Intake System.	Check entire air intake system, including all hoses and tubes for cracks, loose clamps and/or holes in rubber ducts. Refer to **COOLER AND HOSES, CHARGE AIR, DIAGNOSIS AND TESTING, 6.7L**. Also check intake manifold for loose mounting hardware.
Diagnostic Trouble Codes (DTC's) active or multiple, intermittent DTC's.	Refer to appropriate Electrical Diagnostics article.
Engine Control Module (ECM) not calibrated or ECM calibration out of date.	Refer to appropriate Electrical Diagnostics article. Check for Technical Service Bulletin (TSB) updates.
Exhaust system restriction is above specifications.	Check exhaust pipes for damage/restrictions. Repair as necessary.
Fuel grade is not correct or fuel quality is poor.	Temporarily change fuel brands and note condition. Change brand if necessary. Refer to Owners manual for proper fuel specifications.
Fuel injector malfunctioning.	A DTC may have been set (Refer to appropriate Electrical Diagnostics article). Perform "Cylinder Performance Test" or "Cylinder Cutout Test" using scan tool to isolate individual cylinders (Refer to **DRIVEABILITY - DIESEL - NON-DTC BASED DIAGNOSTICS, 6.7L DIESEL** article).
Fuel injection pump malfunctioning.	A DTC may have been set (Refer to appropriate Electrical Diagnostics article). Also refer to **FUEL SYSTEM** article.

Fuel return system restricted.	Check fuel return lines for restriction. Refer to **DIAGNOSIS AND TESTING**. Also refer to **DRIVEABILITY - DIESEL - NON-DTC BASED DIAGNOSTICS, 6.7L DIESEL** article.
Intake manifold restricted.	Remove restriction. Remove the intake air horn to inspect for grid heater fouling, inspect the EGR airflow control valve to ensure valve is in the open position
Raw fuel in intake manifold. Fuel injectors leaking on engine shutdown.	Fuel injectors leaking on engine shutdown. Do Fuel Injector Test. Refer to **DIAGNOSIS AND TESTING**. Also refer to **DRIVEABILITY - DIESEL - NON-DTC BASED DIAGNOSTICS, 6.7L DIESEL** article.
Turbocharger air intake restriction.	Remove restriction.
Turbocharger damaged or malfunctioning.	Turbocharger damaged or malfunctioning. Refer to **TURBOCHARGER, INSPECTION, 6.7L**.
Turbocharger has excess build up on compressor wheel and/or diffuser vanes.	Refer to **TURBOCHARGER SYSTEM, CLEANING, 6.7L**.
Turbocharger externally damaged.	Check for excessive oil in compressor and/or turbine housing and in turbocharger exhaust pipe. Refer to **TURBOCHARGER, INSPECTION, 6.7L**.
Turbocharger wheel clearance out of specification.	Refer to **TURBOCHARGER, INSPECTION, 6.7L**.

EXCESSIVE WHITE SMOKE	
POSSIBLE CAUSE	**CORRECTION**
Aftermarket components installed.	Inspect for aftermarket components or evidence of modifications.
Diagnostic Trouble Codes (DTC's) active or multiple, intermittent DTC's.	Refer to appropriate Electrical Diagnostics article. Check for Technical Service Bulletin (TSB) updates.
Intake manifold heater circuit not functioning correctly in cold weather.	A DTC should have been set (Refer to appropriate Electrical Diagnostics article). Also check heater elements for correct operation.
Coolant leaking into combustion chamber.	Do pressure test of cooling system. Refer to **DIAGNOSIS AND TESTING** .
In cold ambient temperatures, engine block heater is malfunctioning (if equipped).	Refer to **HEATER, ENGINE BLOCK, REMOVAL** .
Engine coolant temperature sensor malfunctioning.	A DTC should have been set (Refer to appropriate Electrical Diagnostics article). Also check thermostat operation. Refer to **THERMOSTAT, DIAGNOSIS AND TESTING** . Powertrain or Engine Control Module not calibrated or has incorrect calibration. A DTC should have

	been set (Refer to appropriate Electrical Diagnostics article).
Engine Control Module (ECM) not calibrated or has incorrect calibration.	A DTC should have been set (Refer to appropriate Electrical Diagnostics article). Perform fuel injection pump performance test. Refer to **FUEL SYSTEM** article.
Low supply flow to the injection pump.	Test the fuel delivery system (Refer to **FUEL SYSTEM** article).
Fuel grade not correct or fuel quality is poor.	Temporarily change fuel brands and note condition. Change brand if necessary. Refer to Owners Manual for correct fuel specification.
Fuel heater element or fuel heater temperature sensor malfunctioning. This will cause wax type build-up in fuel filter.	Refer to Fuel Heater Testing. Refer to **HEATER, FUEL, DIAGNOSIS AND TESTING** .
Fuel injector malfunctioning.	A DTC should have been set (Refer to appropriate Electrical Diagnostics article). Perform the cylinder cut-out test using a scan tool to isolate individual cylinders. If unable to isolate individual cylinder, perform Injector Return Flow Test to identify failed injector or fuel connector tube. In the event that return flow is normal, use Injector Blocking Tool 9864, to block the high pressure fuel line at the rail one at a time. This test may isolate and injector nozzle that is leaking fuel into the cylinder. Also, refer to **DRIVEABILITY - DIESEL - NON-DTC BASED DIAGNOSTICS, 6.7L DIESEL** article.
Fuel injector protrusion not correct.	Check washer (shim) at bottom of fuel injector for correct thickness. Refer to **INJECTOR(S), FUEL, INSTALLATION** .
Fuel injection pump malfunctioning.	A DTC should have been set (Refer to appropriate Electrical Diagnostics article). Perform fuel injection pump performance test. Refer to **FUEL SYSTEM** article.
Fuel transfer (lift) pump malfunctioning.	A DTC should have been set (Refer to appropriate Electrical Diagnostics article).
Intake/Exhaust valve adjustments not correct (too tight).	Refer to **Engine/Cylinder Head/VALVES, Intake and Exhaust - Standard Procedure**.
Intake manifold air temperature sensor malfunctioning.	A DTC should have been set (Refer to appropriate Electrical Diagnostics article).
Internal engine damage (scuffed cylinder).	Analyze engine oil and inspect oil filter to locate area of probable damage.

NOTE: **Visible blue smoke at the tail pipe is an indication of an after treatment (diesel particulate filter) failure. Follow inspection/replacement guidelines in the EXHAUST SYSTEM article of the service information to correct after treatment failure. The diesel particulate filter MAY have failed due to the possible causes**

listed below.

EXCESSIVE BLUE SMOKE	
POSSIBLE CAUSE	**CORRECTION**
Dirty air cleaner or restricted turbocharger intake duct.	Check Filter Minder® at air filter housing. Refer to **AIR CLEANER, REMOVAL, 6.7L**.
Obstruction in exhaust manifold.	Remove exhaust manifold and inspect for blockage. Refer to **MANIFOLD, EXHAUST, REMOVAL, 6.7L**.
Restricted turbocharger drain tube.	Remove turbocharger drain tube and remove obstruction.
Crankcase ventilation system plugged.	Inspect crankcase ventilation system for function.
Valve seals are worn, brittle, or improperly installed.	Replace valve stem oil seals. Refer to **VALVES, INTAKE AND EXHAUST, REMOVAL, 6.7L**.
Valve stems and/or guides are worn.	Remove valves and inspect valves and guides. Refer to **VALVES, INTAKE AND EXHAUST, REMOVAL, 6.7L**.
Broken or Improperly installed piston rings.	Tear down engine and inspect piston rings.
Excessive piston ring end gap.	Remove pistons and measure piston ring end gap. Refer to **Engine/Engine Block/RING(S), Piston - Standard Procedure**.
Excessive cylinder bore wear and taper.	Remove pistons and measure cylinder bore wear and taper. Refer to **Engine/Engine Block - Standard Procedure**.
Cylinder damage.	Remove pistons and inspect cylinder bore for cracks or porosity. Repair with cylinder liner if necessary. Refer to **Engine/Engine Block - Standard Procedure**.
Piston damage.	Remove pistons and inspect for cracks and/or holes. Measure piston for out-of-round and taper. Refer to **Engine/Engine Block/ROD, Piston and Connecting - Inspection**.
Turbocharger failure.	Refer to **TURBOCHARGER, DIAGNOSIS AND TESTING, 6.7L**.
Fuel injector protrusion not correct.	Check washer (shim) at bottom of fuel injector for correct thickness. Refer to **INJECTOR(S), FUEL, INSTALLATION** .

CYLINDER COMPRESSION/LEAKAGE TESTS

CYLINDER COMPRESSION PRESSURE

The results of a cylinder compression pressure test can be utilized to diagnose several engine malfunctions.

Ensure batteries are completely charged and the engine starter motor is in good operating condition. Otherwise,

the indicated compression pressures may not be valid for diagnostic purposes.

1. Disconnect the fuel inlet line to the fuel filter housing. Plug the fuel line from the fuel tank.

NOTE: Failure to plug fuel line will result in fuel leak.

2. Remove fuel transfer pump relay from PDC.
3. Start the engine and idle until the engine stalls (runs out of fuel).
4. Remove the cylinder head cover. Refer to **COVER(S), CYLINDER HEAD, REMOVAL, 6.7L**.
5. Remove the cylinder head cover carrier gasket. Refer to **COVER(S), CYLINDER HEAD, REMOVAL, 6.7L**.
6. Remove the high pressure fuel line between the cylinder head and fuel rail for the cylinder to be tested. Use Fuel Rail Cap (special tool #9864, Cap, Fuel Rail) to cap this fuel rail on the cylinder being tested.
7. Remove the fuel connector tube nut and fuel connector tube.
8. Remove the exhaust rocker lever.
9. Use Fuel Injector Remover\Installer (special tool #9010A, Remover/Installer, Fuel Injector) to remove the injector and copper sealing washer.
10. Install Compression Test Adapter (special tool #9007, Adapter, Compression Test) into the injector bore.
11. Install the exhaust rocker lever and tighten to 36 N.m (27 ft. lbs.).
12. Cover the remaining rocker levers with clean shop towels to prevent any oil splatter under the hood.
13. Place a rag over the compression test tool fitting. Crank the engine for 2-3 seconds to purge any fuel that may have drained into the cylinder when the injector was removed.
14. Connect the compression test gauge.
15. Crank the engine for 5 seconds and record the pressure reading. Repeat this step three times and calculate the average of the three readings.

NOTE: The minimum cylinder pressure is 350 psi. Cylinder pressure should be within 20% from cylinder to cylinder.

16. Combustion pressure leakage can be checked if cylinder pressure is below the specification. Perform the leakage test procedure on each cylinder according to the tester manufacturer instructions.
17. Upon completion of the test check and erase any engine related fault codes.

CYLINDER COMBUSTION PRESSURE LEAKAGE

The combustion pressure leakage test provides an accurate means for determining engine condition.

Combustion pressure leakage testing will detect:

- Exhaust and intake valve leaks (improper seating).
- Leaks between adjacent cylinders or into water jacket.
- Any causes for combustion/compression pressure loss

1. Start and operate the engine until it attains normal operating temperature.
2. Disconnect injector harness connectors.
3. Disconnect CCV tube and breather drain tube from valve cover.
4. Remove the cylinder head cover. Refer to **COVER(S), CYLINDER HEAD, REMOVAL, 6.7L**.
5. Disconnect harness from injectors.
6. Remove the cylinder head cover carrier gasket. Refer to **COVER(S), CYLINDER HEAD, REMOVAL, 6.7L**.
7. Bring the cylinder to be tested to TDC.
8. Remove the high pressure fuel line between the cylinder head and the fuel rail for the cylinder to be tested.
9. Install Fuel Rail Cap (special tool #9864, Cap, Fuel Rail) onto the rail.
10. Remove the high pressure connector nut and high pressure connector with High Pressure Connector Remover (special tool #9015, Remover, High Pressure Connector).
11. Remove the exhaust and intake rocker lever.
12. Use Fuel Injector Remover\Installer (special tool #9010A, Remover/Installer, Fuel Injector) to remove the injector and copper sealing washer.
13. Install Compression Test Adapter (special tool #9007, Adapter, Compression Test) into the injector bore.
14. Connect the leakage tester and perform the leakage test procedure on each cylinder according to the tester manufacturer's instructions.
15. Upon completion of the test check and erase any engine related fault codes.

STANDARD PROCEDURE

DUST COVERS AND CAPS

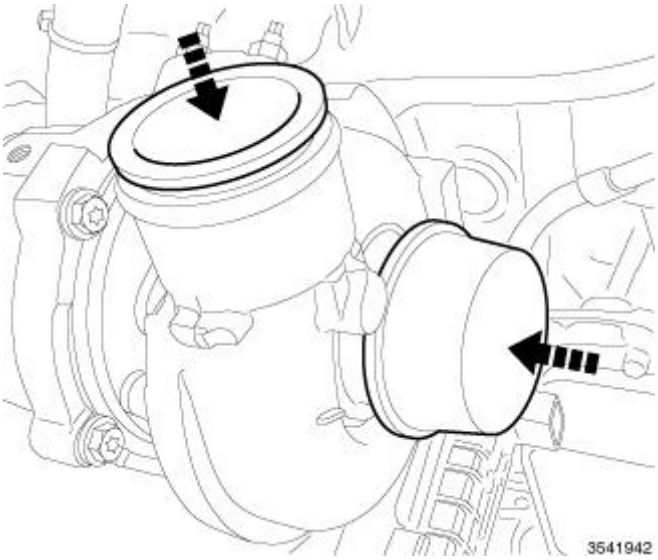

Fig. 2: Covers/Caps
Courtesy of CHRYSLER GROUP, LLC

Due to the high amounts of failures cased by dust, dirt, moisture and other foreign debris being introduced to the engine during service. Covers or caps are needed to reduce the possible damage that can be caused or created.

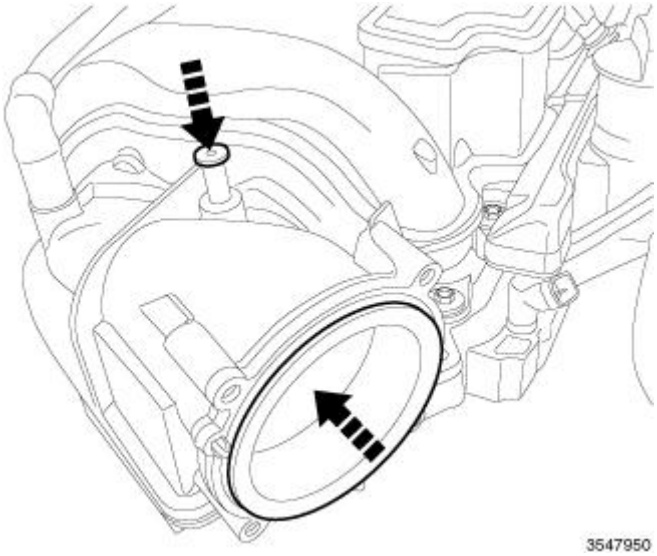

Fig. 3: Opening Cover
Courtesy of CHRYSLER GROUP, LLC

Covers over openings will reduce any possibilities for foreign materials to enter the engine systems. Using miller tool (special tool #10368, Set, Universal Protective Cap), Select the appropriated cover needed to the procedure.

ENGINE GASKET SURFACE PREPARATION

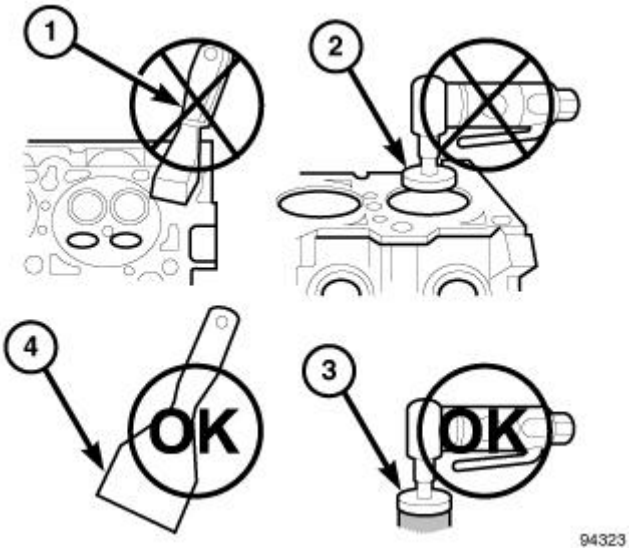

Fig. 4: Proper Tool Usage For Surface Preparation
Courtesy of CHRYSLER GROUP, LLC

To ensure engine gasket sealing, proper surface preparation must be performed, especially with the use of

aluminum engine components and multi-layer steel cylinder head gaskets.

Never use the following to clean gasket surfaces:

- Metal scraper (1).
- Abrasive pad or paper to clean cylinder block and head.
- High speed power tool with an abrasive pad or a wire brush (2).

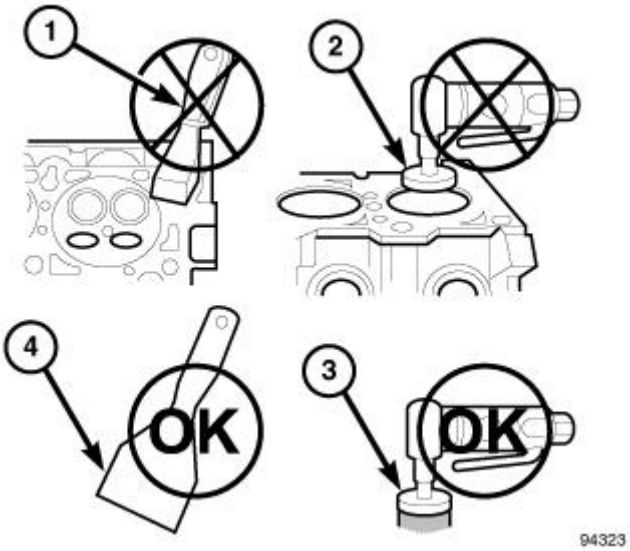

Fig. 5: Proper Tool Usage For Surface Preparation
Courtesy of CHRYSLER GROUP, LLC

NOTE: Multi-Layer Steel (MLS) head gaskets require a scratch free sealing surface.

Only use the following for cleaning gasket surfaces:

- Solvent or a commercially available gasket remover
- Plastic or wood scraper (4).
- High speed power tool with a plastic bristle brush style disc.

Sealing surfaces must be free of grease or oil residue. Clean surfaces with Mopar® brake parts cleaner (or equivalent).

FORM-IN-PLACE GASKETS AND SEALERS

There are numerous places where form-in-place gaskets are used on the engine. Care must be taken when applying form-in-place gaskets to assure obtaining the desired results.**Do not use form-in-place gasket material unless specified.** Bead size, continuity, and location are of great importance. Too thin a bead can result in leakage while too much can result in spill-over which can break off and obstruct fluid feed lines. A continuous bead of the proper width is essential to obtain a leak-free gasket.

There are numerous types of form-in-place gasket materials that are used in the engine area. Mopar® Engine

RTV GEN II, Mopar® ATF-RTV, and Mopar® Gasket Maker gasket materials, each have different properties and can not be used in place of the other.

MOPAR® ENGINE RTV GEN II

Mopar® Engine RTV GEN II is used to seal components exposed to engine oil. This material is a specially designed black silicone rubber RTV that retains adhesion and sealing properties when exposed to engine oil. Moisture in the air causes the material to cure. This material is available in three ounce tubes and has a shelf life of one year. After one year this material will not properly cure. Always inspect the package for the expiration date before use.

MOPAR® ATF RTV

Mopar® ATF RTV is a specifically designed black silicone rubber RTV that retains adhesion and sealing properties to seal components exposed to automatic transmission fluid, engine coolants, and moisture. This material is available in three ounce tubes and has a shelf life of one year. After one year this material will not properly cure. Always inspect the package for the expiration date before use.

MOPAR® GASKET MAKER

Mopar® Gasket Maker is an anaerobic type gasket material. The material cures in the absence of air when squeezed between two metallic surfaces. It will not cure if left in the uncovered tube. The anaerobic material is for use between two machined surfaces. Do not use on flexible metal flanges.

MOPAR® GASKET SEALANT

Mopar® Gasket Sealant is a slow drying, permanently soft sealer. This material is recommended for sealing threaded fittings and gaskets against leakage of oil and coolant. Can be used on threaded and machined parts under all temperatures. This material is used on engines with multi-layer steel (MLS) cylinder head gaskets. This material also will prevent corrosion. Mopar® Gasket Sealant is available in a 13 oz. aerosol can or 4 oz. / 16 oz. can w/applicator.

FORM-IN-PLACE GASKET AND SEALER APPLICATION

Assembling parts using a form-in-place gasket requires care but it's easier than using precut gaskets.

Mopar® Gasket Maker material should be applied sparingly 1 mm (0.040 in.) diameter or less of sealant to one gasket surface. Be certain the material surrounds each mounting hole. Excess material can easily be wiped off. Components should be torqued in place within 15 minutes. The use of a locating dowel is recommended during assembly to prevent smearing material off the location.

Mopar® Engine RTV GEN II or ATF RTV gasket material should be applied in a continuous bead approximately 3 mm (0.120 in.) in diameter. All mounting holes must be circled. For corner sealing, a 3.17 or 6.35 mm (1/8 or 1/4 in.) drop is placed in the center of the gasket contact area. Uncured sealant may be removed with a shop towel. Components should be torqued in place while the sealant is still wet to the touch (within 10 minutes). The usage of a locating dowel is recommended during assembly to prevent smearing material off the location.

Mopar® Gasket Sealant in an aerosol can should be applied using a thin, even coat sprayed completely over both surfaces to be joined, and both sides of a gasket. Then proceed with assembly. Material in a can w/applicator can be brushed on evenly over the sealing surfaces. Material in an aerosol can should be used on engines with multi-layer steel gaskets.

REPAIR DAMAGED OR WORN THREADS

CAUTION: Be sure that the tapped holes maintain the original center line.

Damaged or worn threads can be repaired. Essentially, this repair consists of:

- Drilling out worn or damaged threads.
- Tapping the hole with a special Heli-Coil Tap, or equivalent.
- Installing an insert into the tapped hole to bring the hole back to its original thread size.

HYDROSTATIC LOCK

CAUTION: DO NOT use the starter motor to rotate the crankshaft. Severe damage could occur.

When an engine is suspected of hydrostatic lock (regardless of what caused the problem), follow the steps below.

1. Disconnect the negative cable(s) from the battery.
2. Inspect air cleaner, induction system, and intake manifold to ensure system is dry and clear of foreign material.
3. Place a shop towel around the fuel injectors to catch any fluid that may possibly be under pressure in the cylinder head. Remove the fuel injectors. Refer to **INJECTOR(S), FUEL, REMOVAL** .
4. With all injectors removed, rotate the crankshaft using the crankshaft barring tool (PN 7471B).
5. Identify the fluid in the cylinders (coolant, fuel, oil, etc.).
6. Be sure all fluid has been removed from the cylinders.
7. Repair engine or components as necessary to prevent this problem from occurring again.
8. Squirt a small amount of engine oil into the cylinders to lubricate the walls. This will prevent damage on restart.
9. Install fuel injectors. Refer to **INJECTOR(S), FUEL, INSTALLATION** .
10. Drain engine oil. Remove and discard the oil filter. Refer to **FILTER, ENGINE OIL, REMOVAL, 6.7L**.
11. Install the drain plug. Tighten the plug to 50 N.m (37 ft. lbs.).
12. Install a new oil filter. Refer to **FILTER, ENGINE OIL, INSTALLATION, 6.7L**.
13. Fill engine crankcase with the specified amount and grade of oil. Refer to **CAPACITIES AND RECOMMENDED FLUIDS, SPECIFICATIONS** .

14. Connect the negative cable(s) to the battery.
15. Start the engine and check for any leaks.

SPECIFICATIONS

6.7L DIESEL

GENERAL DESCRIPTION

DESCRIPTION	SPECIFICATION
Engine Type	In-Line 6 Cyl. Turbo Diesel
Displacement	6.7 Liters 409 (Cubic Inches)
Bore	107.0 mm (4.21 in.)
Stroke	124.0 mm (4.88 in.)
Compression Ratio	17.2:1
Cylinder Pressure (Minimum)	350 psi.
Horsepower High Output 68 RE A/T and G 56 M/T (pickup)	350 HP @ 3013 RPM
Horsepower High Output 68 RE A/T and G 56 M/T (cab chassis)	305 HP @ 3013 RPM
Maximum Compression Pressure Variation Between Cylinders	20% from cylinder to cylinder
Torque Rating High Output 68RE A/T and G 56 M/T (pickup)	650 ft. lbs. @ 1500 RPM (auto) 610 ft. lbs. @ 1500 RPM (manual)
Torque Rating High Output 68RE A/T and G 56 M/T (cab chassis)	610 ft. lbs. @ 1600 RPM (manual)
Lubrication System	Pressure Feed-Full Flow With Bypass Valve
Firing Order	1-5-3-6-2-4
Cylinder Block	Cast Iron
Crankshaft	Induction Hardened Forged Steel
Cylinder Head	Cast Iron With Valve Seat Inserts
Combustion Chambers	High Swirl Bowl
Camshaft	Chilled Ductile Iron
Pistons	Cast Aluminum
Connecting Rods	Cross Rolled Micro Alloy

PISTONS

DESCRIPTION	SPECIFICATION	
	Metric	**Standard**
Skirt Diameter (Measure the skirt 21.4 mm (0.84 in) from the bottom of the piston)	106.828- 106.892 mm	4.2078 - 4.2083 in.
	The clearance for the top piston	The clearance for the top piston

Ring Groove Clearance	ring groove can not be measured accurately with a typical feeler gauge.	ring groove can not be measured accurately with a typical feeler gauge.
Intermediate (Min)	0.040 mm	0.0016 in
(Max)	0.110 mm	0.0043 in.
Oil Control (Min)	0.040 mm	0.0016 in.
(Max)	0.085 mm	0.0033 in.

PISTON PINS

DESCRIPTION	SPECIFICATION	
	Metric	**Standard**
Pin Diameter (Min) (Max)	39.997 mm 40.003 mm	1.5747 in. 1.5749 in.
Bore Diameter (Min) (Max)	40.006 mm 40.012 mm	1.5750 in. 1.5753 in.

PISTON RINGS

DESCRIPTION	SPECIFICATION	
	Metric	**Standard**
Ring Gap		
Ring Gap Wear Limit		
Top Ring	0.30 - 0.46 mm	0.012 - 0.018 in.
Intermediate	0.82 - 1.18 mm	0.032 - 0.047 in.
Oil Control	0.22 - 0.58 mm	0.010 - 0.023 in.
Top Ring	See Above	See Above
Intermediate	See Above	See Above
Oil Control	See Above	See Above

CONNECTING RODS

DESCRIPTION	SPECIFICATION	
	Metric	**Standard**
Bearing Clearance		
Desired	0.04 - 0.12 mm	0.002 - 0.005 in.
Wear Limit	See Above	See Above
Pin Bore Diameter (Min. w/ bushing installed)	40.019 mm	1.5764 in.
Pin Bore Diameter (Max. w/ bushing installed)	40.042 mm	1.5765 in.
Side Clearance (Min)	0.100 mm	0.004 in.
Side Clearance (Max)	0.330 mm	0.013 in.

CYLINDER HEAD

DESCRIPTION	SPECIFICATION	
	Metric	Standard
Overall Flatness End To End (max)	0.305 mm	0.012 in.
Overall Flatness Side To Side (Max)	0.076 mm	0.003 in.
Intake Valve Seat Angle	30°	30°
Exhaust Valve Seat Angle	45°	45°
Valve Stem Diameter		
(Min)	6.96 mm	0.2740 in.
(Max)	7.01 mm	0.2760 in.
Valve Margin (Min.)	0.79 mm	0.031 in.

INJECTOR PROTRUSION

DESCRIPTION	Metric	Standard
MIN	2.45 mm	0.96 in.
MAX	3.15 mm	0.124 in.
NOTE: **Do NOT use thicker or double stacked injector sealing washers to correct injector protrusion. This will cause misalignment of the high pressure fuel connector.**		

OIL PUMP

DESCRIPTION	SPECIFICATION	
	Metric	Standard
Tip Clearance Between Rotors (Max)	0.178 mm	0.007 in.

OIL PRESSURE

DESCRIPTION	SPECIFICATION	
	Metric	Standard
At Idle	69 kPa	10 psi
@ 2500 rpm	207 kPa	30 psi
Regulating Valve Opening Pressure	517 kPa	75 psi
Oil Filter Bypass Pressure Setting	344.75 kPa	50 psi

CYLINDER BLOCK

DESCRIPTION	SPECIFICATION	
	Metric	Standard
Cylinder Bore Diameter	New - 106.990 - 107.010 mm	New - 4.2122 - 4.2130 in.
	Used - 106.990 - 107.030 mm	Used - 4.2122 - 4.2138 in.

Out of Round (Max.)	0.038 mm	0.0015 in.
Taper (Max.)	0.076 mm	0.003 in.
Tappet Bore Diameter	16.000 - 16.055 mm	0.630 - 0.632 in.
Camshaft Bearing / Support Bore Diameter(s)	54.083 - 54.147 mm (Bushing Installed)	2.1293 - 2.1318 in. (Bushing Installed)

CRANKSHAFT

DESCRIPTION	SPECIFICATION	
	Metric	**Standard**
Connecting Rod Journal Diameter	68.962 - 69.013 mm	2.7150 - 2.7170 in.
Out-of-Round (Max.)	0.050 mm	0.002 in.
Taper (Max.)	0.013 mm	0.0005 in.
End Play Range	0.120 - 0.432 mm	0.004 - 0.017 in.
Desired End-Play	See Above	See Above
Wear Limit	See Above	See Above
Main Bearing Clearance 1-6	0.04 - 0.12 mm	0.002 - 0.005 in.
Wear Limit	See Above	See Above

MAIN BEARING JOURNALS

DESCRIPTION	SPECIFICATION	
	Metric	**Standard**
Diameter - High	83.013 mm	3.2682 in.
Diameter - Low	82.962 mm	3.2662 in.
Taper		
Out of Round (Max.)		

CAMSHAFT

DESCRIPTION	SPECIFICATION	
	Metric	**Standard**
Journal Diameter	53.095 - 54.045 mm	2.0904 - 2.1278 in
		See Cylinder Block

Bore Diameter	See Cylinder Block **CYLINDER BLOCK** table	**CYLINDER BLOCK** table
End Play	0.12 - 0.5 mm	0.005 - 0.02 in.

SOLID TAPPETS

DESCRIPTION	SPECIFICATION	
	Metric	**Standard**
Stem Diameter	15.936 - 15.977 mm	0.627 - 0.629 in.

VALVES

DESCRIPTION		SPECIFICATION	
		Metric	**Standard**
Valve Stem Diameter	(Min)	6.96 mm	0.2740 in.
	(Max.)	7.01 mm	0.2760 in.
Valve Margin - Intake		0.79 mm	0.031 in.
Valve - Exhaust		0.79 mm	0.031 in.

VALVE SPRINGS

DESCRIPTION	SPECIFICATION	
	Metric	**Standard**
Free Length - Spring	47.75 mm	1.88 in.

TORQUE SPECIFICATIONS

6.7L DIESEL ENGINE

DESCRIPTION	N.m	In. Lbs.	Ft. Lbs.
Connecting Rod-Bolts			
Step 1	30	-	22
Step 2	60	-	44
Step 3	Rotate 60 degrees		
CAUTION: **The 6.7L engine has different torque procedures for new and previously installed main bearing capscrews. Failure to use the correct torque procedure can result in engine damage.**			
Crankshaft Main Cap-Bolts (Previously Used)			
Step 1	60		44
Step 2	80		59

Step 3	Rotate 90°		
Crankshaft Main Cap-Bolts (New Main Bearing Capscrews)	**N.m**	**In. Lbs.**	**Ft. Lbs.**
Step 1	120	-	89
Step 2	Loosen completely	-	Loosen completely
Step 3	60	-	44
Step 4	85	-	63
Step 5	Rotate 120°		
Cylinder Head-Bolts			
Step 1	70	-	52
Step 2	Back off 360 degrees		
Step 3	105	-	77
Step 4 Verify	105	-	77
Step 5	Rotate All Bolts 1/4 Turn		
Cylinder Head Cover Bolts	24	-	18
Accessory Drive Belt Tensioner Bolt	43	-	32
Air Inlet to Intake Manifold Bolts	24	-	18
Air Cleaner Body Bolt	8	70	-
Air Cleaner Intake Air Tube Clamp	4	-	35
Bell Housing Access Cover Bolts	10	89	-
Block Stiffener Bolts	43	-	32
Breather Cover Bolts	10	89	-
Charge Air Cooler Bolt	2	18	-
Charge Air Tube Clamps	11	97	-
Coolant Outlet Tube Bracket Bolt	10	89	-
Coolant Outlet Tube Bracket Nut	24	-	18
Crankshaft Damper Bolts	40 + 60°	-	30 + 60°
Delta-P line Bracket Bolt	10	89	-
Delta-P line Bracket Nut	24	-	18
Delta-P Flare Nut	10	89	-
Dual Mass Flywheel Bolts	54	-	40
Engine Cover Bolts	10	89	-
Engine Mount Bolt	95	-	70
Engine Mount Through Bolt Nut	129	-	95
Engine Wire Harness P-clip Bolts	24	-	18
Exhaust Manifold Bolts	43	-	37
Exhaust Manifold Heat Shield Nuts	24	-	18
Fan Support Hub	32	-	24
Flexplate to Engine	137	-	100
Flywheel to Engine	137	-	100

Flywheel/Crankshaft Adapter	137	-	100
Flywheel Housing Bolts	77	-	57
Forward Coolant Tube Bracket Bolts	10	89	-
Forward Coolant Tube Bolts	10	89	-
Front Cover	24	-	18
Fuel Delivery Lines-Banjo	24	-	18
Fuel Drain Line-Banjo	24	-	18
Fuel Injector Harness Nuts	1.25	11	-
Fuel Injector Hold-down	5	44	-
Step 2	10	89	-
Fuel Injector Solenoid Nuts	1.25	11	-
Fuel Tube, No. 6 Bracket Shield Bolts	43	-	32
Fuel Tube-Rail to Cylinder Head	40	-	30
Fuel Tube-Pump to Fuel Rail	37	-	27
Fuel Rail Hold-down Bolt	24	-	18
Gear Housing Cover	24	-	18
HPC Nut	50	-	37
Intake Manifold Bolts	24	-	18
Intake Manifold Grid Heater Wire Harness Bolts	10	89	-
Oil Cooler Bolts	24	-	18
Oil Dip Stick Tube Bolt	24	-	18
Oil Dip Stick Tube Nut	9	80	-
Oil Pan-Bolts	28	-	21
Oil Pan-Drain Plug	50	-	37
Oil Pressure Regulator-Plug	80	-	59
Oil Pressure Switch to Block Fitting	18	-	13
Oil Pressure Switch to Block Fitting to Block	30	-	22
Oil Pump-Bolts	Refer to **PUMP, ENGINE OIL, INSTALLATION, 6.7L**.		
Oil Suction Tube (Flange)-Bolts	24	-	18
Oil Suction Tube (Brace)-Bolt	43	-	32
Oxygen Sensor	41	-	30
P-Clip Bolt	24	-	18
Rack and Pinion Steering Gear to Frame Bolts (4X2)	251	-	185
Rocker Arm Housing Bolts	24	-	18
Rocker Arm/Pedestal-Bolts	36	-	27
Rocker Housing Bolts	24	-	18
Starter Motor Bolts	40	-	30
Torque Converter Bolts	88	-	65
Transmission to Engine Bolts (automatic)	41	-	30
Transmission to Engine Bolts (manual)	45	-	33

Transmission Mount to Crossmember Nuts	47	-	35
G 56 Transmission Mount Bolts	50	-	37
68RFE Transmission Mount Bolts	50	-	37
AS68RC Transmission Mount Nuts	47	-	35
AS68RC Transmission Mount Support Bracket Bolts	54	-	40
AS68RC Transmission Side Support Bracket Bolt	55	-	41
AS68RC Transmission Upper Bracket Nut	30	-	22
Turbocharger Actuator Bolt	11	97	-
Turbocharger Air Inlet Tube Clamp	11	97	-
Turbocharger Cleaning Port Plug	10	89	-
Turbocharger Coolant Return Line Banjo Bolt	24	-	18
Turbocharger Coolant Supply Line Banjo Bolt	24	-	18
Turbocharger Nuts	43	-	32
Turbocharger Oil Drain Tube Bolt	36	-	27
Turbocharger Oil Supply Line Nut	36	-	27
Turbocharger Speed Sensor Bolt	10	89	-
Turbocharger V-Band Clamp Nut	10	89	-
Valve Lash Adjusting Nut	24	-	18

REMOVAL

REMOVAL

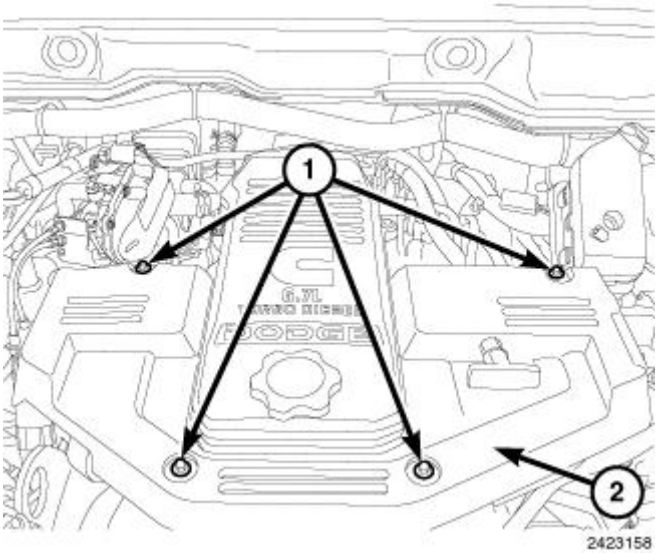

Fig. 6: Engine Cover & Bolts
Courtesy of CHRYSLER GROUP, LLC

1. Remove bolts (1) and the engine cover (2).

2. Disconnect the hood support struts and position hood out of the way.
3. Disconnect both negative and positive battery cables.
4. Drain cooling system. Refer to **STANDARD PROCEDURE** .
5. Remove the air cleaner body. Refer to **BODY, AIR CLEANER, REMOVAL, 6.7L**.
6. Recover A/C refrigerant. Refer to **PLUMBING, STANDARD PROCEDURE** .

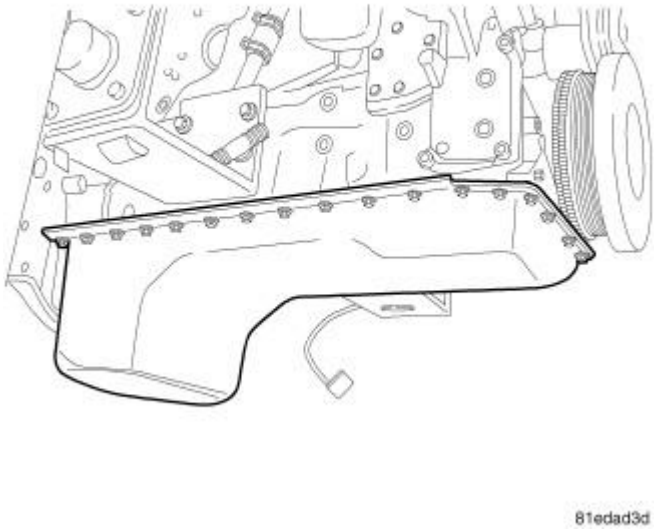

Fig. 7: Oil Pan
Courtesy of CHRYSLER GROUP, LLC

7. Drain engine oil.
8. Reinstall drain plug. Tighten to 50 N.m (37 ft. lbs.).

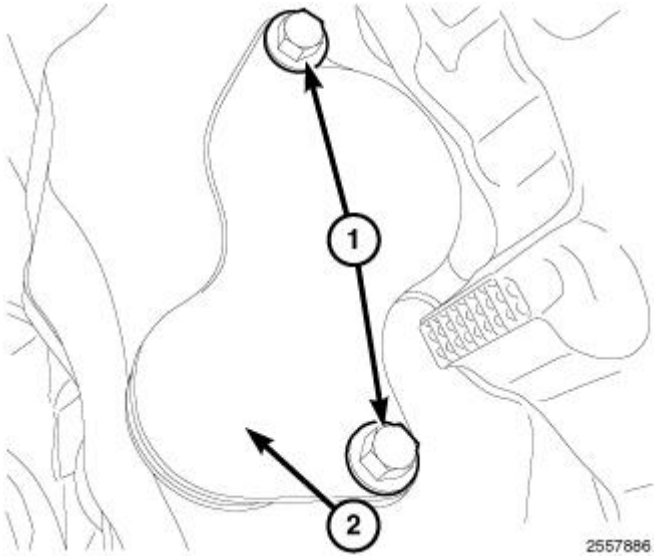

Fig. 8: Bolts & Bell Housing Access Cover
Courtesy of CHRYSLER GROUP, LLC

9. Remove bolts (1) and the bell housing access cover (2).

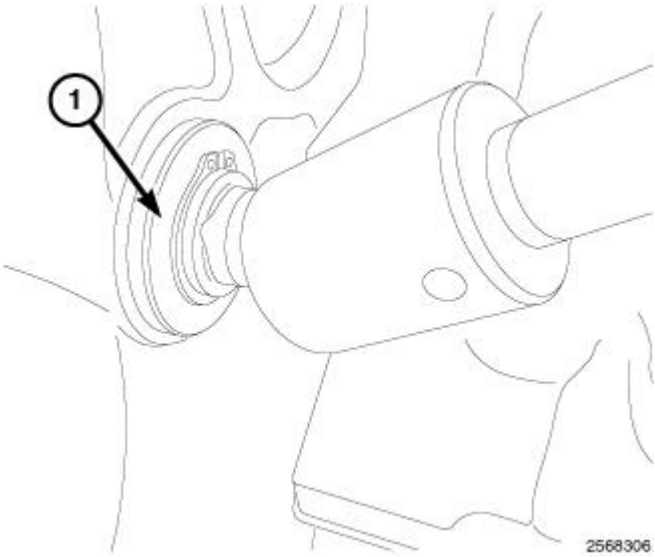

Fig. 9: Engine Barring Tool
Courtesy of CHRYSLER GROUP, LLC

10. Install the Barring Tool (special tool #7471B, Barring Tool) (1).
11. Using the Barring Tool (special tool #7471B, Barring Tool) (1), rotate the engine and remove the torque converter bolts.
    1. On manual transmission models, remove the dual mass flywheel bolts.
12. Remove the Barring Tool (special tool #7471B, Barring Tool) (1).
13. Remove the left ground strap.
14. Disconnect the transmission harness connector.
15. Remove the radiator closure panel. Refer to **PANEL, CLOSURE, RADIATOR, REMOVAL** .
16. Remove the fan and fan shroud. Refer to **FAN, COOLING, ELECTRIC, REMOVAL** and **FAN, COOLING, VISCOUS, REMOVAL** .
17. Disconnect the upper and lower radiator hoses and remove the radiator.
18. Remove the serpentine drive belt. Refer to **BELT, SERPENTINE, REMOVAL** .

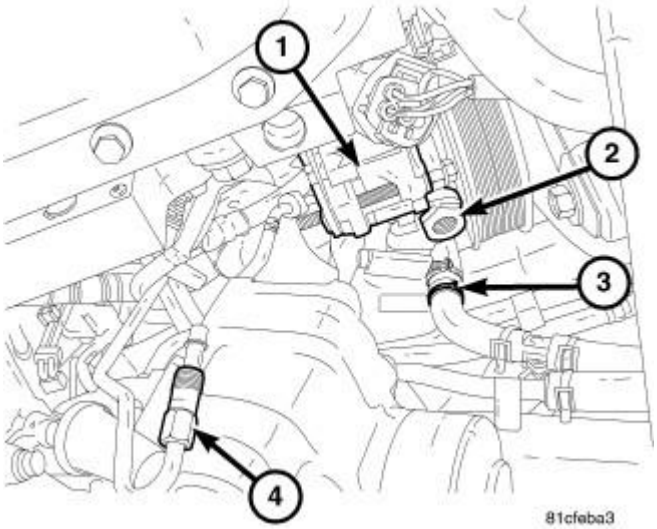

Fig. 10: Power Steering Pump Components
Courtesy of CHRYSLER GROUP, LLC

19. Remove the power steering reservoir. Refer to **RESERVOIR, POWER STEERING PUMP, REMOVAL** .
20. Remove the power steering pump. Refer to **PUMP, REMOVAL** .

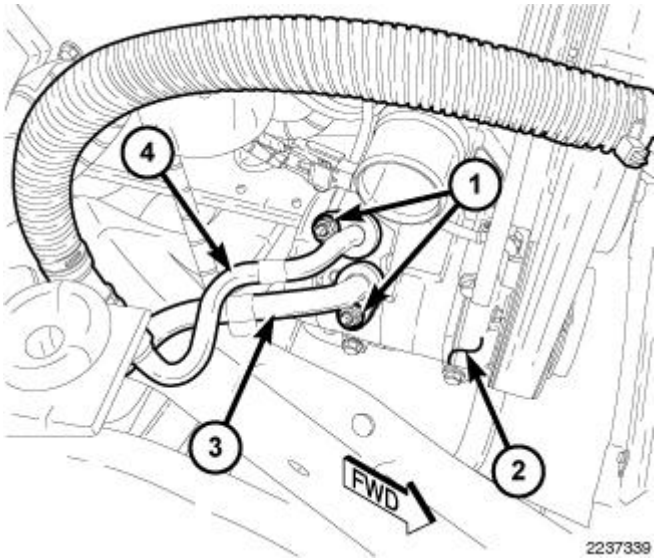

Fig. 11: Nuts, A/C Compressor, A/C Suction Line & A/C Discharge Line
Courtesy of CHRYSLER GROUP, LLC

NOTE: Illustration shown with lower radiator hose removed for clarity.

21. Remove the nuts (1) that secure the A/C suction line (3) and the A/C discharge line (4) to the A/C compressor (2).
22. Disconnect the A/C suction and discharge lines from the A/C compressor and remove and discard the O-ring seals and gaskets.

23. Install plugs in, or tape over the opened refrigerant line fittings and compressor ports.
24. Disconnect engine wiring harness connector from Totally Integrated Power Module (TIPM).
25. Remove the starter cable at the left battery and power distribution center.
26. Disconnect the intake heater connector.
27. Remove the battery negative cables to the engine block on the driver and passenger side.
28. Disconnect the generator harness wires.
29. Disconnect the block heater harness connector.
30. Disconnect the left side, engine block to frame, ground wire.

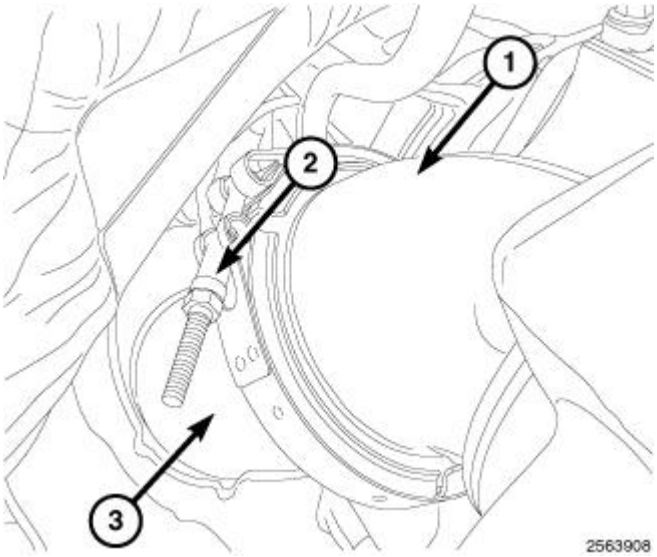

Fig. 12: V-Clamp & Elbow
Courtesy of CHRYSLER GROUP, LLC

NOTE: Do not remove the elbow (1) from the turbocharger.

31. Remove the V-clamp (2) from the exhaust pipe-to-tubrocharger outlet elbow connection.
32. Disconnect the heater core supply and return hoses.
33. Disconnect the fuel supply and return lines from the fuel filter housing.

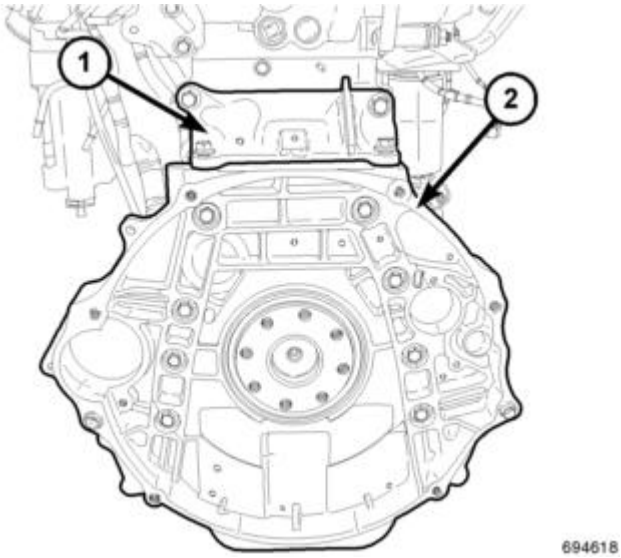

Fig. 13: Flywheel Housing & Collar
Courtesy of CHRYSLER GROUP, LLC

NOTE: Starter, transmission, and flex plate/flywheel removed for clarity.

34. Remove the transmission collar (1).
35. Remove the engine to transmission bolts.

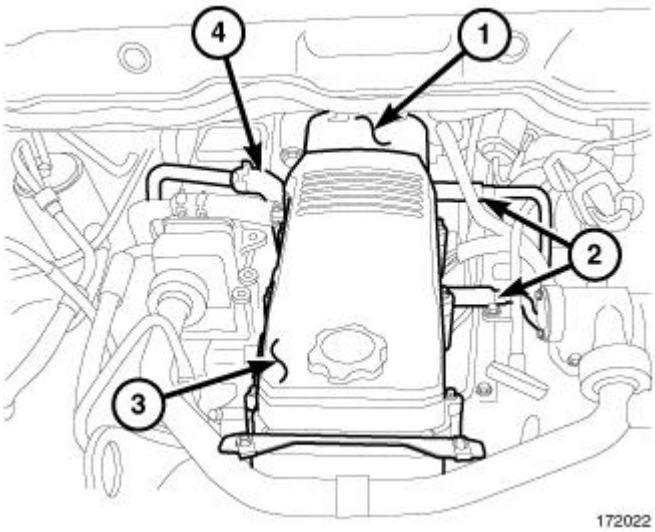

Fig. 14: Cylinder Head Cover Components
Courtesy of CHRYSLER GROUP, LLC

36. Remove the cylinder head cover. Refer to **COVER(S), CYLINDER HEAD, REMOVAL, 6.7L**.

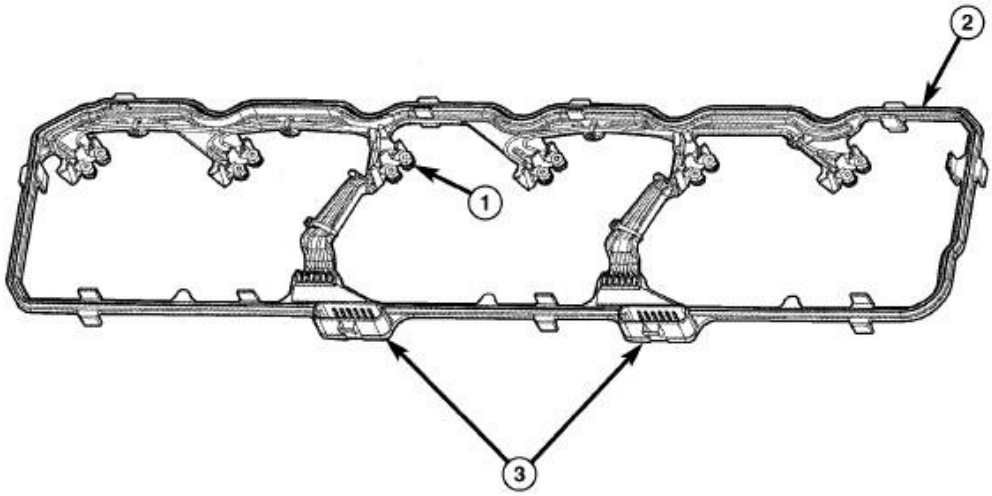

814b3452

Fig. 15: Injector Harness Nuts, Cylinder Head Cover/Injector Wiring Gasket & Injector Wiring Harness Connectors
Courtesy of CHRYSLER GROUP, LLC

37. Disconnect the injector wiring harness connectors to injector connections on cylinder head cover carrier gasket (3).
38. Remove the injector harness nuts to injectors (1).
39. Remove the cylinder head cover/injector wiring gasket (2).

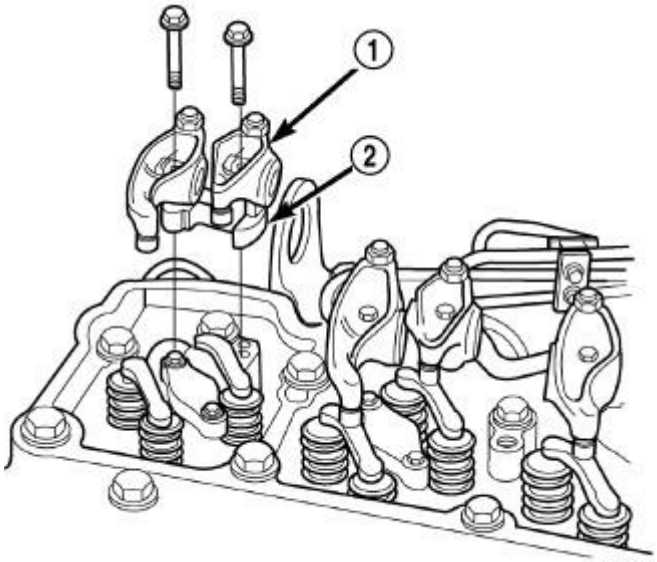

80b46d23

Fig. 16: Rocker Arms & Pedestals
Courtesy of CHRYSLER GROUP, LLC

40. Remove the EGR cooler. Refer to **COOLER, EGR, REMOVAL** .

NOTE: Mark the location of pushrods and crossheads for reinstallation.

41. Remove the rocker arms (1), pedestals (2), and pushrods for cylinders No. 4, No 5, and No. 6.

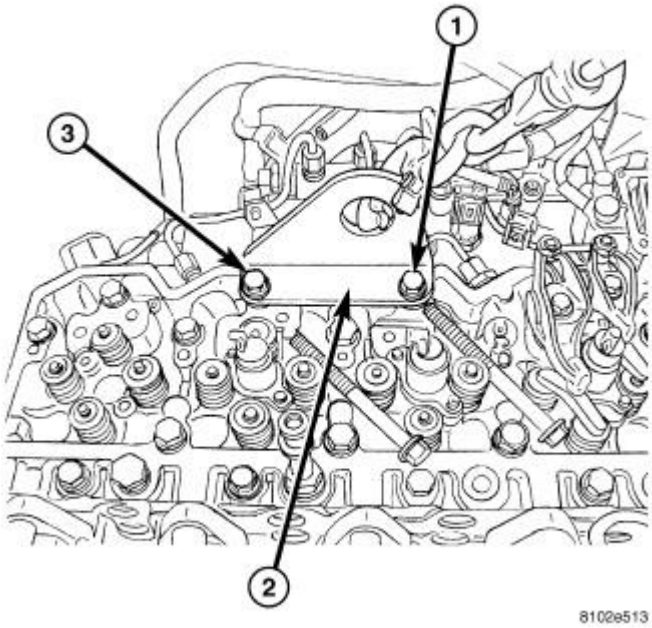

Fig. 17: Engine Lift Bracket
Courtesy of CHRYSLER GROUP, LLC

NOTE: Extreme care should be used to keep dirt/debris from entering the fuel lines. Plastic caps should be used on the ends of the fuel lines.

42. Remove the No. 6 high pressure fuel line shield.
43. Remove the No. 5 and No. 6 high pressure fuel line.
44. Remove the HPC connector tube and nut.
45. Remove the No. 5 and No. 6 fuel injector.
46. Remove the No. 4 and No. 5 head bolts.
47. Install the front and rear engine lift bracket. Tighten to 77 N.m (57 ft. lbs).
48. Remove the two cylinder head bolts (1 and 3) according to the diagram and install the Engine Lifting Bracket (special tool #9009, Bracket, Engine Lifting) (2). Tighten bolts to 105 N.m (77 ft. lbs.).
49. Attach a chain with two hooks to the engine lift brackets.
50. Remove the engine mount through bolts and nuts.

51. While keeping engine level, lift straight up out of the mounts.
52. Rotate the nose of engine upward and pull out of chassis.

INSTALLATION

INSTALLATION

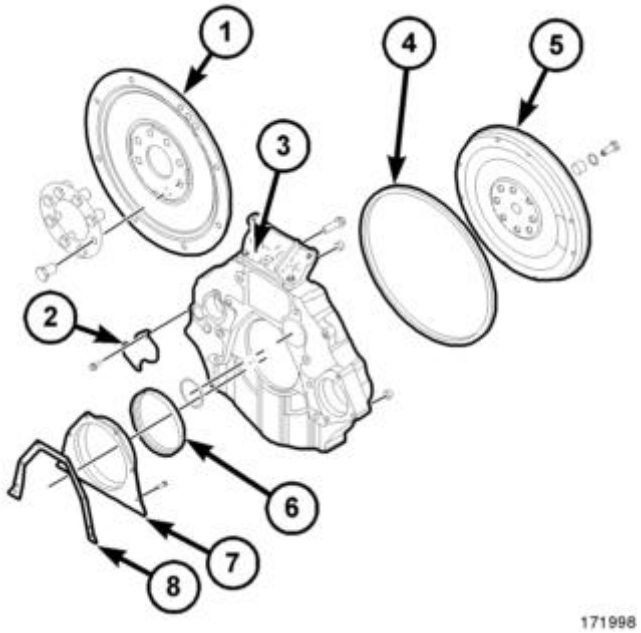

Fig. 18: Flywheel Housing, Adapter Plates & Rear Oil Seal
Courtesy of CHRYSLER GROUP, LLC

NOTE: **A new clamping ring must be used any time the flex plate or flywheel adapter is removed.**

1. If removed, install the flywheel and adapter or flexplate. Tighten bolts to 137 N.m (100 ft. lbs).

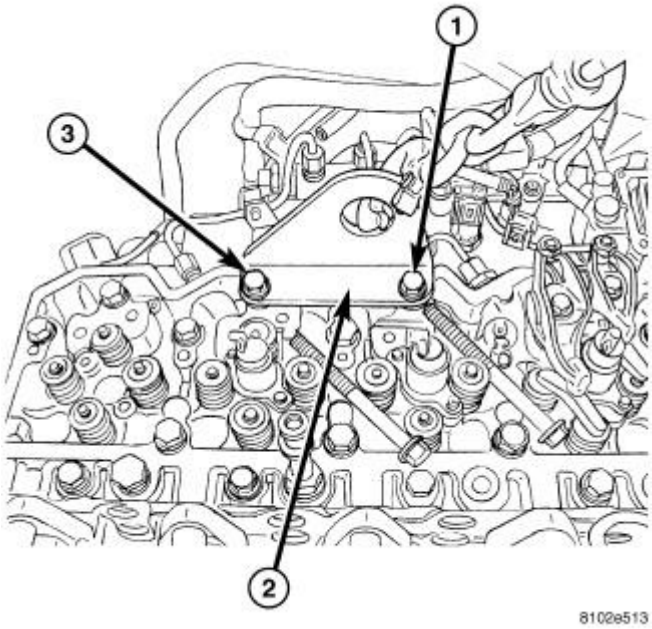

Fig. 19: Engine Lift Bracket
Courtesy of CHRYSLER GROUP, LLC

1 - Head bolt
2 - Engine Lift Bracket
3 - Head Bolt

2. Remove the cylinder head bolts (1 and 3) according to the diagram. Install special Tool (special tool #9009, Bracket, Engine Lifting) (2). Tighten bolts to 105 N.m (77 ft. lbs.).
3. Lower the engine into the engine compartment and install the engine mount through bolts and nuts.
4. Tighten the mount through bolts and nuts to 129 N.m (95 ft. lbs).
5. Remove the chain with 2 hooks and the Engine Lifting Bracket (special tool #9009, Bracket, Engine Lifting) (2).
6. Check the cylinder head bolt length and install into cylinder head.
7. Torque in 4 steps to:
    - Step 1-Tighten to 70 N.m (52 ft. lbs.).
    - Step 2-Back off 360°.
    - Step 3-Tighten to 105 N.m (77 ft. lbs.).
    - Step 4-Rotate 90°.
8. Replace injector O-ring and sealing washer on injectors No. 5, No. 6. Install injectors and tighten using the following steps:
    - Step 1-Install the injector hold-down capscrews and tighten to 5 N.m (44 in. lbs.).
    - Step 2-Loosen the injector hold-down capscrews.
    - Step 3-Install the HPC connector tube and nut. Tighten nut to 15 N.m (133 in. lbs.).

- Step 4-Tighten the injector hold-down capscrews to 10 N.m (89 in. lbs.).
- Step 5-Tighten the HPC connector tube nut to 50 N.m (37 ft. lbs.).

9. Remove the front and rear engine lift bracket.

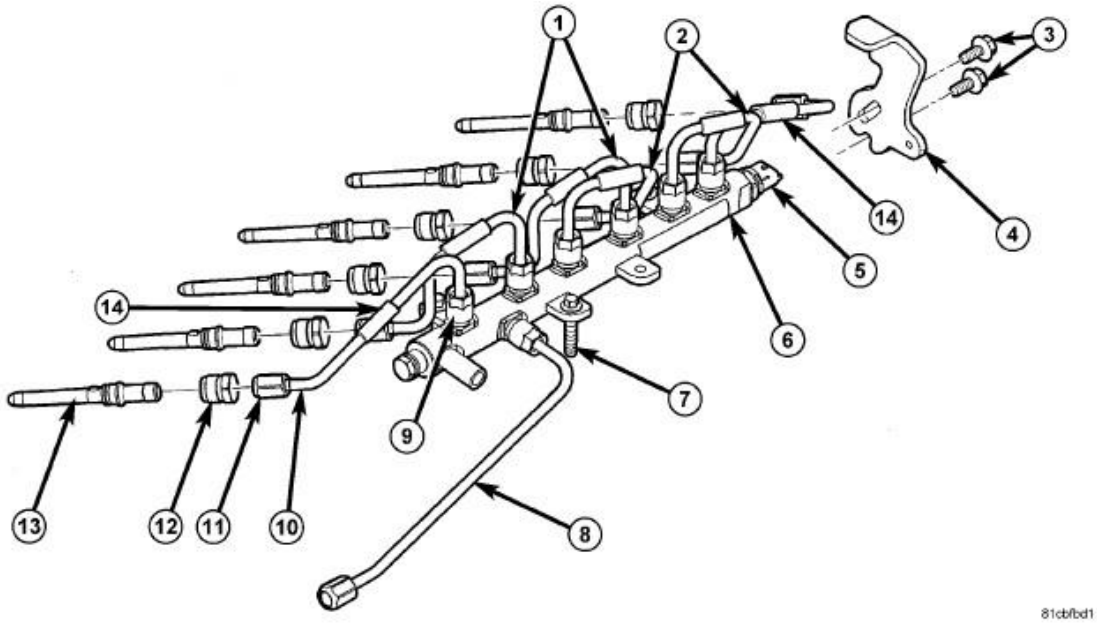

Fig. 20: Exploded View Of Fuel Lines, Fuel Rail & Injectors
Courtesy of CHRYSLER GROUP, LLC

10. If fuel tube at No. 6 cylinder has been removed, tilt metal bracket (4) upward to install the No. 6 fuel tube finger tight.
11. Install the No. 5 and No. 6 high pressure fuel lines. Tighten fuel line fittings to 40 N.m (35 ft. lbs.).
12. Position the metal bracket (4) at the rear of cylinder head back and tighten bolts (3) to 43 N.m (32 ft. lbs.).

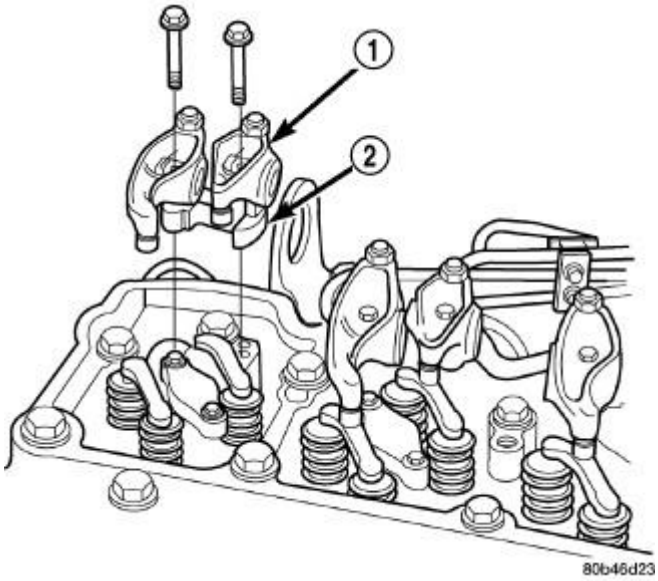

Fig. 21: Rocker Arms & Pedestals
Courtesy of CHRYSLER GROUP, LLC

13. Install the pushrods, rocker arms (1), and pedestals (2) for cylinders No. 4, No. 5, and No. 6. Tighten the mounting bolts to 36 N.m (27 ft. lbs).
14. Reset the valve lash on cylinders No. 4, No. 5, and No. 6. for the intake valve at 0.254 mm (0.010 in.) and exhaust valve at 0.66 mm (0.026 in.). Tighten adjusting nuts to 24 N.m (18 ft. lbs.).
15. Install the EGR cooler. Refer to **COOLER, EGR, INSTALLATION** .

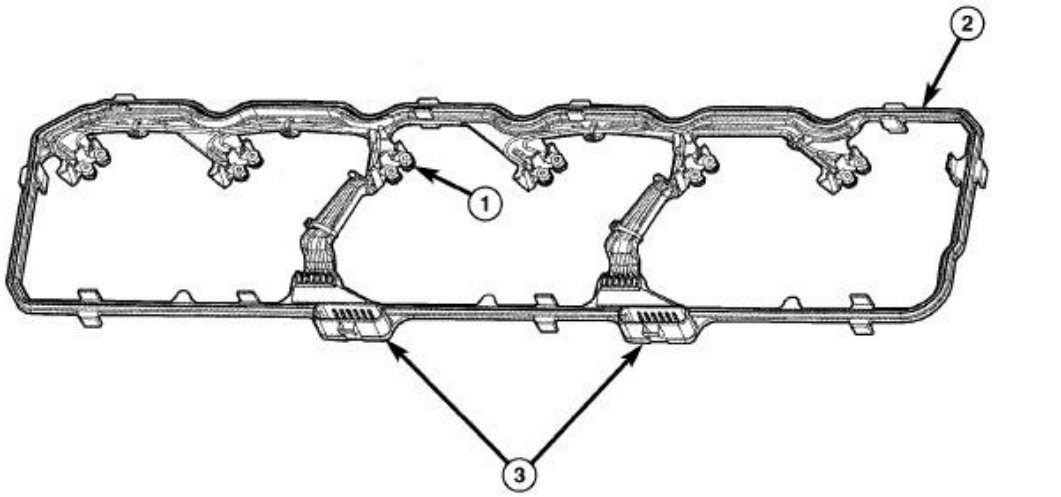

Fig. 22: Injector Harness Nuts, Cylinder Head Cover/Injector Wiring Gasket & Injector Wiring Harness Connectors
Courtesy of CHRYSLER GROUP, LLC

16. Install the cylinder head cover/injector wiring gasket (2).
17. Install the injector harness nuts to injectors (1). Tighten to 1.25 N.m (11 in. lbs.).
18. Connect the injector wiring harness connectors to injector connections on cylinder head cover carrier gasket (3).

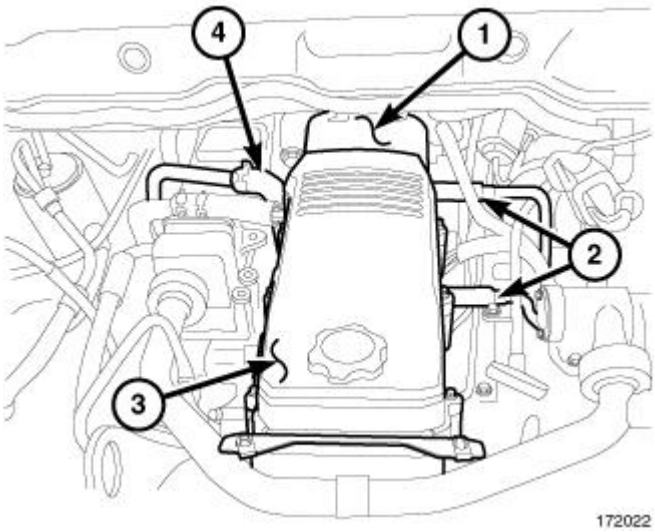

Fig. 23: Cylinder Head Cover Components
Courtesy of CHRYSLER GROUP, LLC

19. Install the cylinder head cover. Refer to **COVER(S), CYLINDER HEAD, INSTALLATION, 6.7L**.

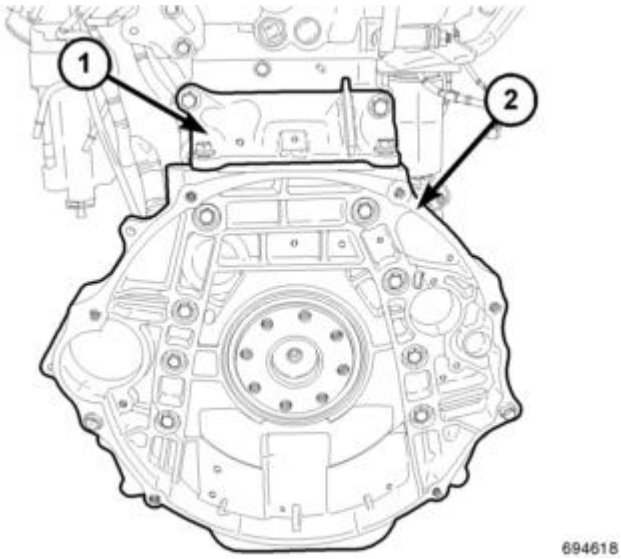

Fig. 24: Flywheel Housing & Collar
Courtesy of CHRYSLER GROUP, LLC

20. Install the transmission to engine bolts.
    - Automatic transmission, tighten bolts to 41 N.m (30 ft. lbs.).
    - Manual transmission, tighten bolts to 45 N.m (33 ft. lbs.).
21. Install the transmission collar (1). Tighten to 77 N.m (57 ft. lbs.).

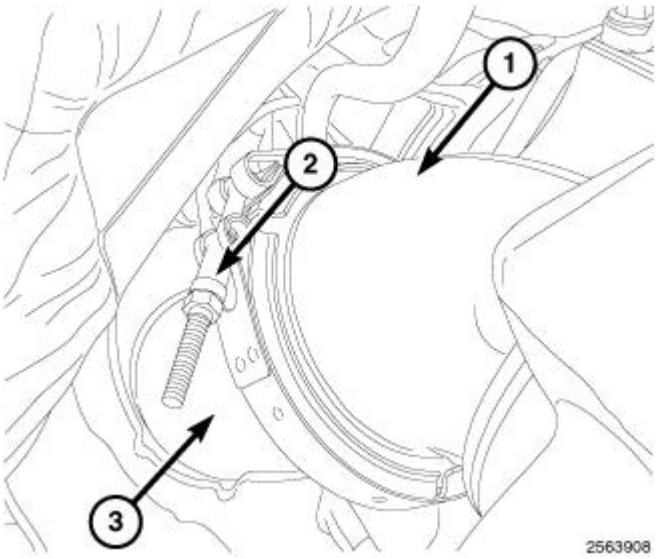

Fig. 25: V-Clamp & Elbow
Courtesy of CHRYSLER GROUP, LLC

22. Connect the fuel supply and return lines from the fuel filter housing.
23. Connect the heater core supply and return hoses.
24. Using a new V-clamp, install the exhaust pipe to the turbocharger elbow (1). Tighten V-clamp to 11 N.m (97 in. lbs.).
25. Connect left side, engine block to frame ground wire.
26. Connect the engine block heater harness connector.
27. Connect the generator harness wires.
28. Install the battery negative cables to the engine block on the driver and passenger side.
29. Connect the intake heater connector.
30. Install the starter cable to the left battery and power distribution center.
31. Connect engine wiring harness connector from Totally Integrated Power Module (TIPM).

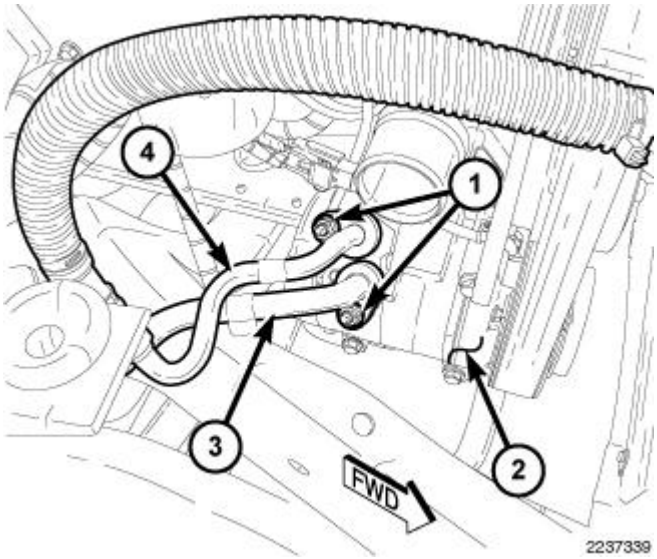

Fig. 26: Nuts, A/C Compressor, A/C Suction Line & A/C Discharge Line
Courtesy of CHRYSLER GROUP, LLC

NOTE: Illustration shown with lower radiator hose removed for clarity.

32. Remove the tape or plugs from the opened refrigerant line fittings and compressor ports.
33. Lubricate new O-ring seals with clean refrigerant oil and install them and a new gasket onto the refrigerant line fittings. Use only the specified O-ring seals as they are made of a special material for the R-134a system. Use only refrigerant oil of the type recommended for the A/C compressor in the vehicle.
34. Connect the A/C suction line (3) and A/C discharge line (4) to the A/C compressor (2).
35. Install the A/C suction and discharge line assembly to the compressor. Tighten the nuts to 23 N.m (17 ft. lbs.).

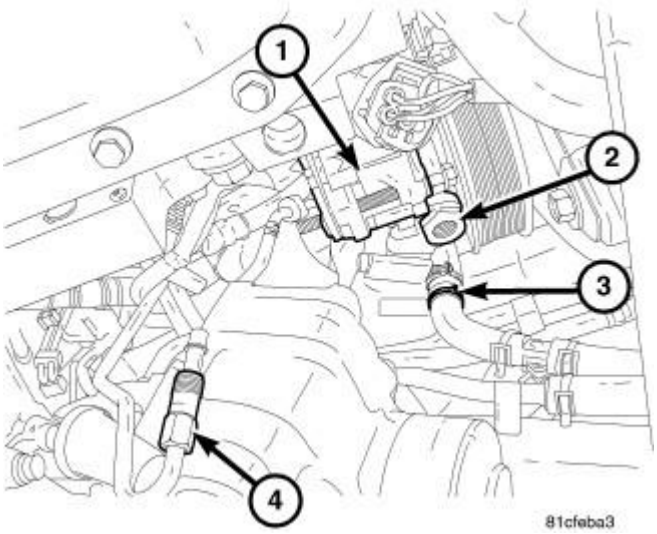

Fig. 27: Power Steering Pump Components
Courtesy of CHRYSLER GROUP, LLC

36. Install the power steering pump. Refer to **PUMP, INSTALLATION** .
37. Install the power steering reservoir. Refer to **RESERVOIR, POWER STEERING PUMP, INSTALLATION** .
38. Install the serpentine drive belt. Refer to **BELT, SERPENTINE, INSTALLATION** .
39. Install the fan and fan shroud. Refer to **FAN, COOLING, ELECTRIC, INSTALLATION** and **FAN, COOLING, VISCOUS, INSTALLATION** .
40. Install the radiator and connect the upper and lower radiator hoses.

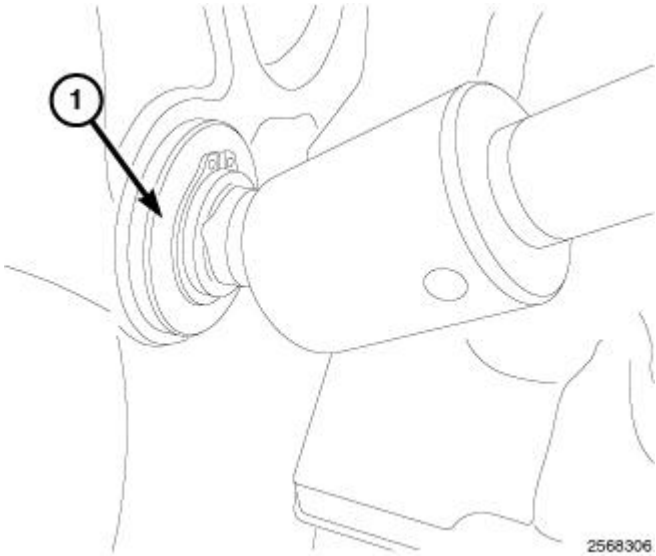

Fig. 28: Engine Barring Tool
Courtesy of CHRYSLER GROUP, LLC

41. Install the radiator closure panel. Refer to **PANEL, CLOSURE, RADIATOR, INSTALLATION** .
42. Connect the transmission harness connector.
43. Install the left ground strap.
44. Install the Barring Tool (special tool #7471B, Barring Tool) (1).
45. Using the Barring Tool (special tool #7471B, Barring Tool) (1), rotate the engine and install the torque converter bolts. Tighten bolts to 88 N.m (65 ft. lbs.).
    1. On manual transmission models, install the dual mass flywheel bolts. Tighten bolts to 88 N.m (65 ft. lbs.).
46. Remove the Barring Tool (special tool #7471B, Barring Tool) (1).

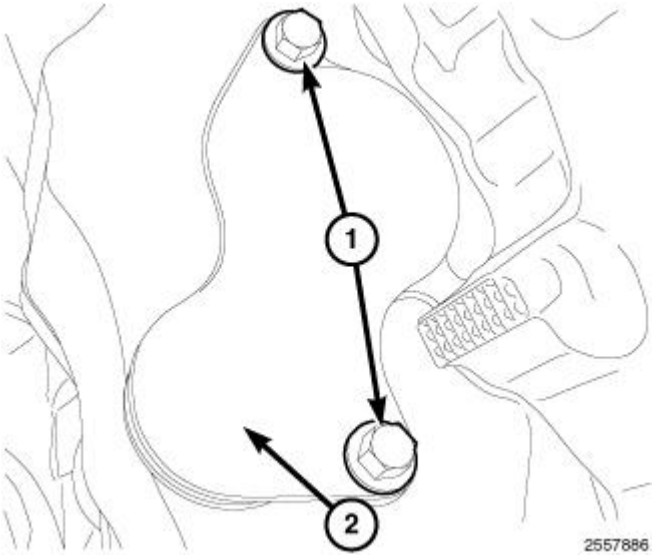

Fig. 29: Bolts & Bell Housing Access Cover
Courtesy of CHRYSLER GROUP, LLC

47. Install the bell housing access plate. Tighten bolts to 10 N.m (89 in. lbs.).

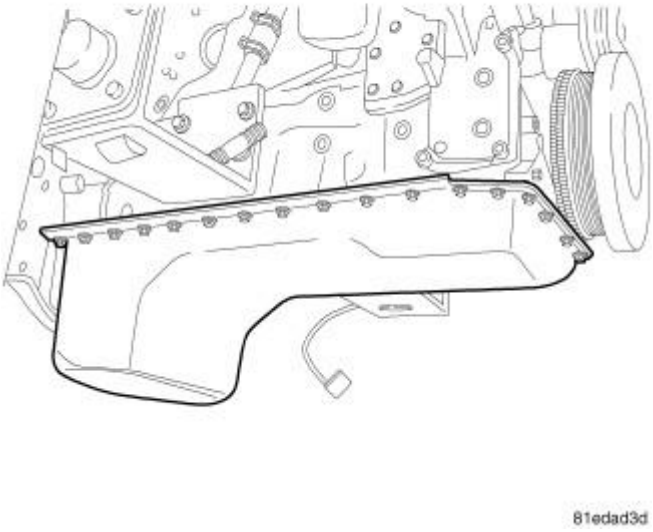

Fig. 30: Oil Pan
Courtesy of CHRYSLER GROUP, LLC

48. Change the oil filter and fill with recommended new engine oil.
49. Evacuate and recharge A/C system. Refer to **PLUMBING, STANDARD PROCEDURE** .
50. Fill the cooling system with coolant. Refer to **STANDARD PROCEDURE** .
51. Install the air cleaner body. Refer to **BODY, AIR CLEANER, INSTALLATION, 6.7L**.
52. Connect both negative and positive battery cables.

53. Start the engine and inspect for engine oil, coolant, and fuel leaks.

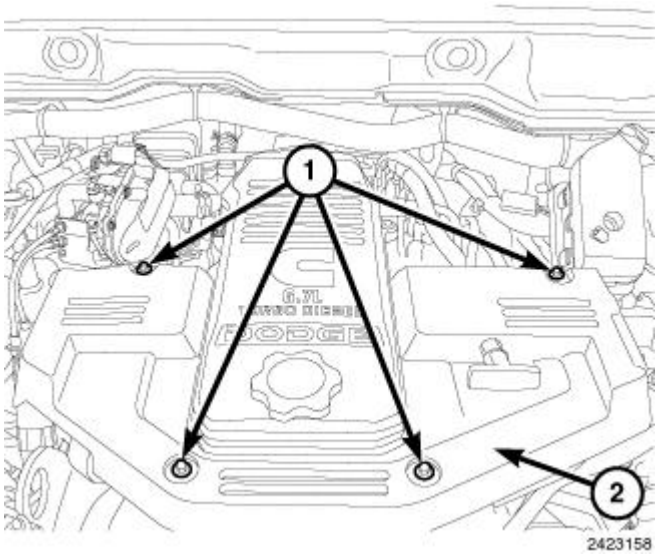

Fig. 31: Engine Cover & Bolts
Courtesy of CHRYSLER GROUP, LLC

54. Position the hood and connect hood support struts.
55. Install the engine cover. Tighten bolts (1) to 10 N.m (89 in. lbs.).

SPECIAL TOOLS

SPECIAL TOOLS

	10136 - Installer, Crankshaft Front Oil Seal (Originally Shipped In Kit Number(s) 10138.) 10137 - Adapter, Charge Air (Originally Shipped In Kit Number(s) 10138.) 10142 - Cummins Turbo Cleaning Kit (Originally Shipped In Kit Number(s) 10138-UPD.) 10143 - Cummins Turbo Drilling Kit (Originally Shipped In Kit Number(s) 10138-UPD.) 10143-4 - Drill Assembly (Originally Shipped In Kit Number(s) 10138-UPD.) 10143-5 - Tap & Collar Assembly (Originally Shipped In Kit Number(s) 10138-UPD.) 10368 - Set, Universal Protective Cap 7471B - Barring Tool (Originally Shipped In Kit Number(s) 6860.) 8281 - Installer, Seal (Originally Shipped In Kit Number(s) 8267, 8267CC, 9697, 9698.) 8319 - Compressor, Valve Spring

	(Originally Shipped In Kit Number(s) 8267, 8267CC.) 8502 - Remover/Installer 8534B - Fixture, Driveline Support (Originally Shipped In Kit Number(s) 8534, 8534B, 8849, 9565.) 9007 - Adapter, Compression Test (Originally Shipped In Kit Number(s) 8848, 8849, 8849CC.) 9009 - Bracket, Engine Lifting (Originally Shipped In Kit Number(s) 8848, 8849, 8849CC.) 9010A - Remover/Installer, Fuel Injector (Originally Shipped In Kit Number(s) 8848, 8849.) 9015 - Remover, High Pressure Connector (Originally Shipped In Kit Number(s) 8848, 8849, 8849CC.) 9864 - Cap, Fuel Rail (Originally Shipped In Kit Number(s) 9860.) 9866 - Wrench, Turbo Charger Bolt (Originally Shipped In Kit Number(s) 9860.) C-3292A - Gauge, Pressure C-4171 - Driver Handle, Universal (Originally Shipped In Kit Number(s) 9202, 9202A-CAN, 9202CC, 9299, 9299CC, 9299CC, 9300A-CAN.) C-647 - Spring Tester

PLATE, IDENTIFICATION

DESCRIPTION

DESCRIPTION

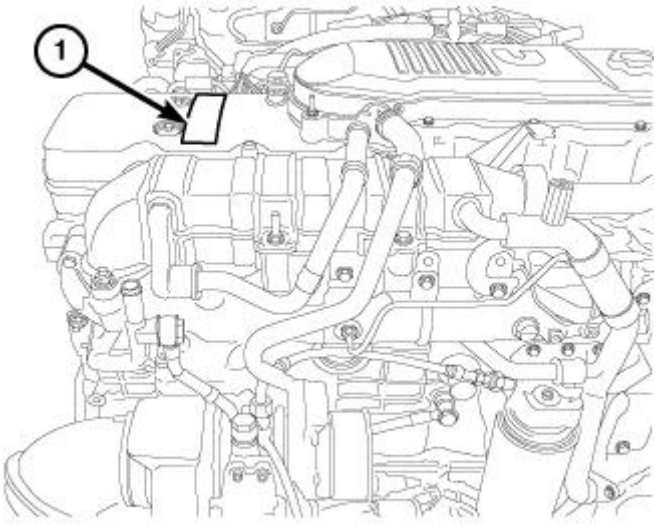

1304937

Fig. 32: Locating Engine Data Plate On Valve Cover
Courtesy of CHRYSLER GROUP, LLC

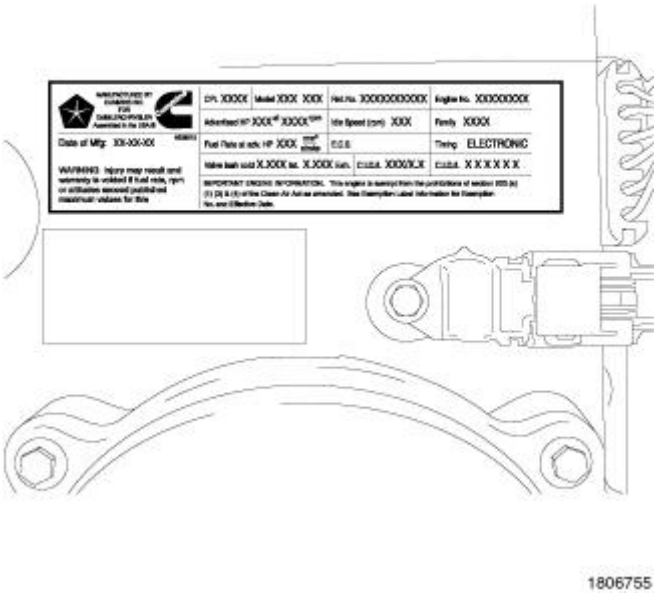

Fig. 33: Engine Data Plate Details
Courtesy of CHRYSLER GROUP, LLC

The engine data plate (1) contains specific information that is helpful to servicing and obtaining parts for the engine. The data plate is on the cylinder head cover. Information that can be found on the data plate includes:

- Engine Part Number
- Date of Engine Manufacture
- Engine Serial Number
- Control Parts List (CPL)
- Engine Rated Horsepower
- Engine Firing Order
- Engine Displacement
- Valve Lash Reset Specifications

If the engine data plate is missing or not legible, the engine serial number is used for engine identification. The engine serial number is stamped on the right side of the block, on top of the oil cooler cavity.

AIR INTAKE SYSTEM

AIR CLEANER

REMOVAL

REMOVAL

NOTE: **There is no filter minder on the air intake for the 6.7L. There will be an EVIC message which will display when the filter restriction reaches it's maximum. The customer will be required to replace it with-in 250 miles (402 KM).**

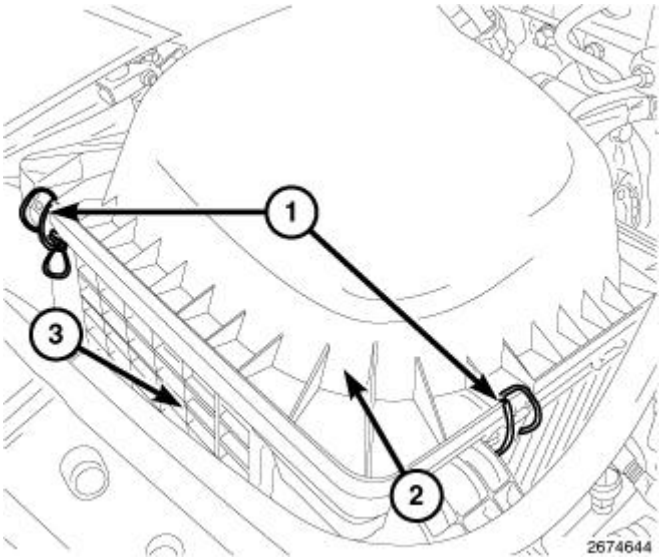

Fig. 34: Air Cleaner Housing & Clips
Courtesy of CHRYSLER GROUP, LLC

1. The housing cover is equipped with over center clips (1) and is hinged with plastic tabs. Unlatch clips (1) from top of air cleaner housing (2) and tilt housing cover up for removal.

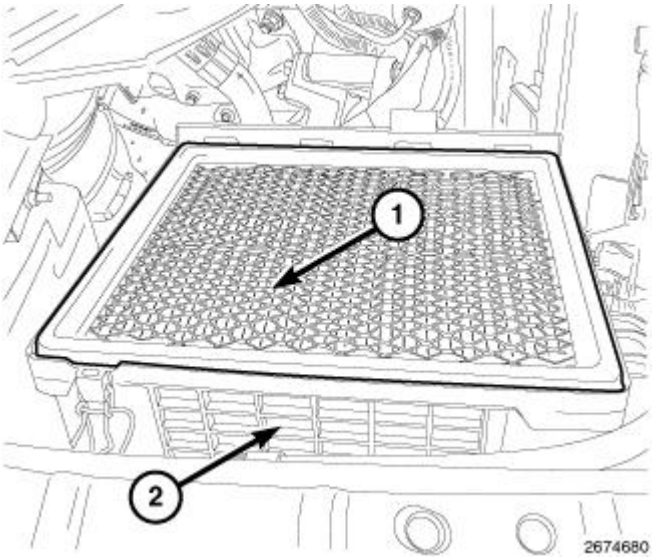

Fig. 35: Air Cleaner Housing & Filter
Courtesy of CHRYSLER GROUP, LLC

2. Remove air cleaner filter (1) from air cleaner housing (2).

INSTALLATION

INSTALLATION

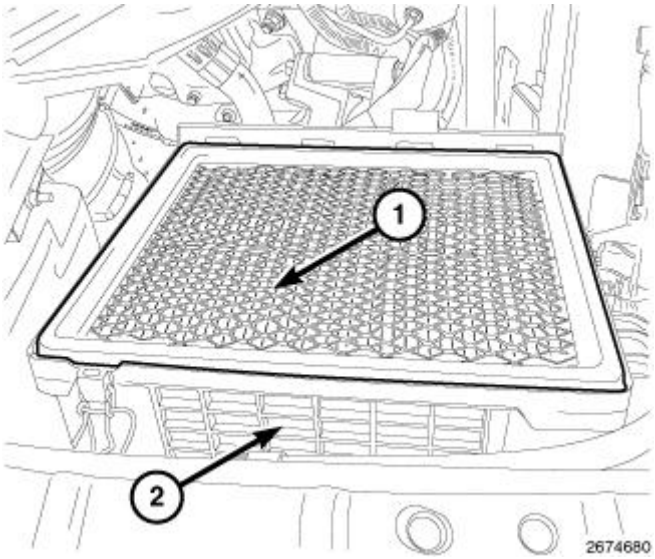

Fig. 36: Air Cleaner Housing & Filter
Courtesy of CHRYSLER GROUP, LLC

1. Clean out the inside of air cleaner housing (2).
2. Install the new air filter element. Make sure the air filter element is fully seated in housing.

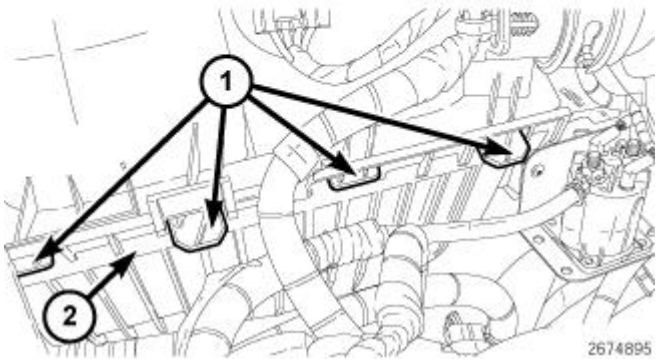

Fig. 37: Air Cleaner Cover Alignment Tabs & Housing Slots
Courtesy of CHRYSLER GROUP, LLC

3. Position air cleaner cover alignment tabs (1) into the housing slots (2) in all four locations and make sure the air cleaner cover is properly seated.

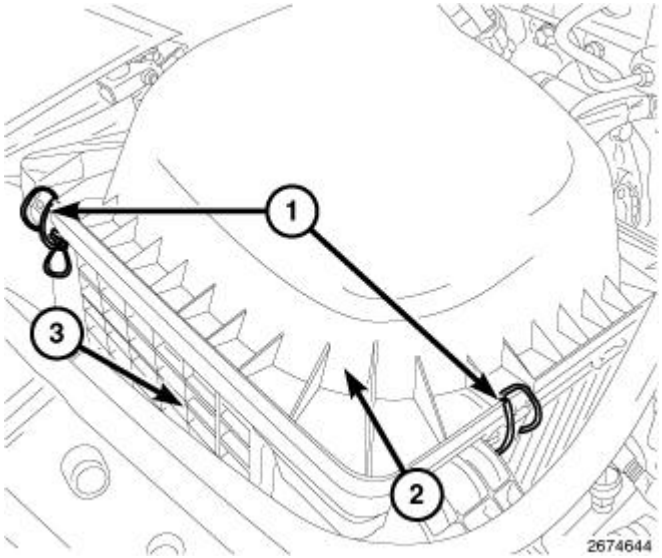

Fig. 38: Air Cleaner Housing & Clips
Courtesy of CHRYSLER GROUP, LLC

4. Latch the over center clips (1)) to clamp air cleaner cover (2).

BODY, AIR CLEANER

REMOVAL

REMOVAL

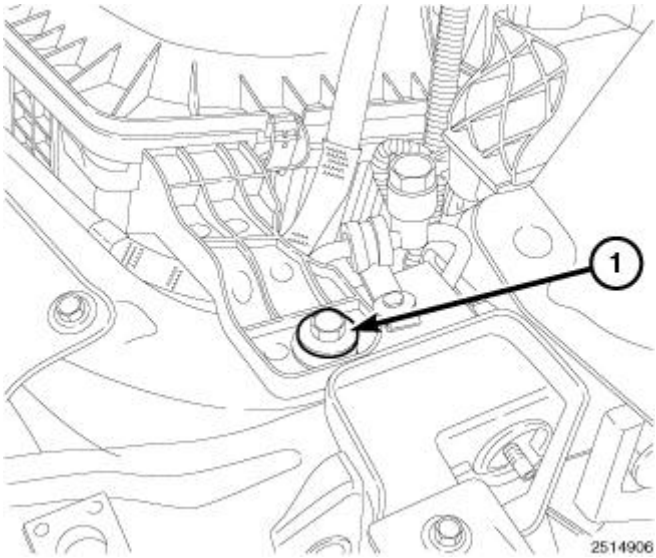

Fig. 39: Intake Air Housing Bolt
Courtesy of CHRYSLER GROUP, LLC

1. Disconnect both negative battery cable.
2. Remove the intake air housing bolt (1).

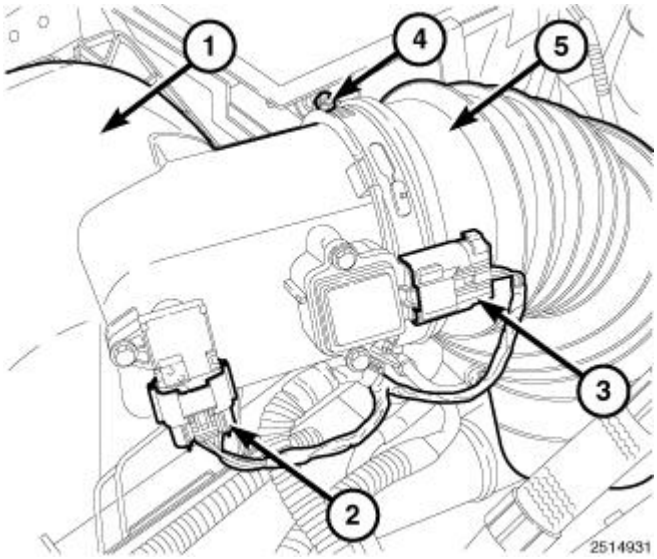

Fig. 40: Air Cleaner Body, TBAP Sensor, MAF Sensor, Clamp & Intake Air Tube
Courtesy of CHRYSLER GROUP, LLC

3. Disconnect the Mass Air Flow (MAF) (3) sensor.
4. Disconnect the TBAP (2) sensor.
5. Loosen clamp (4) and disconnect the intake air tube (5) from the air cleaner body (1).
6. Lift up and remove air cleaner body (1).

INTAKE AIR TUBE

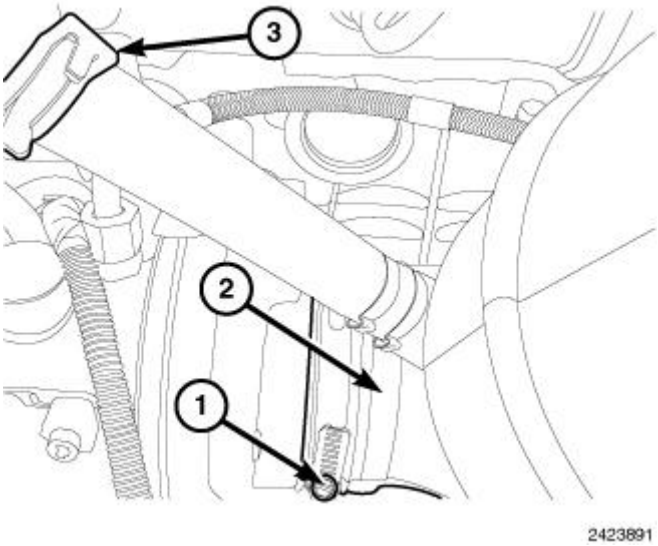

Fig. 41: Clamp, Outlet Tube & Breather Hose
Courtesy of CHRYSLER GROUP, LLC

1. Disconnect the breather hose (3).
2. Loosen the clamp (1) and remove the outlet tube (2) from the turbocharger.

INSTALLATION

INSTALLATION

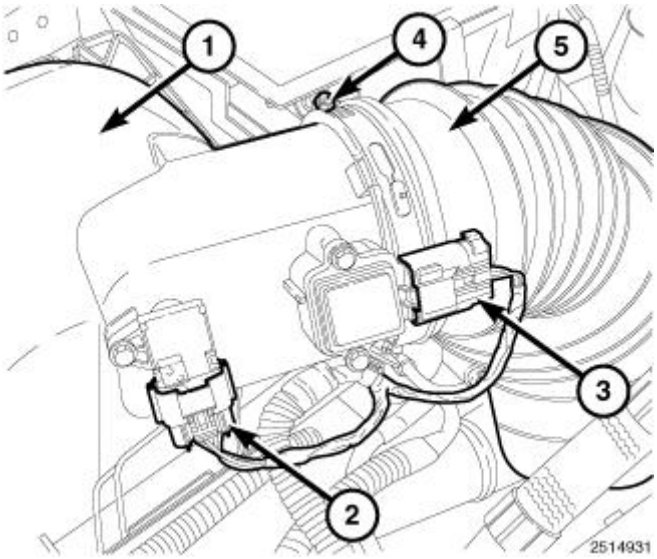

Fig. 42: Air Cleaner Body, TBAP Sensor, MAF Sensor, Clamp & Intake Air Tube
Courtesy of CHRYSLER GROUP, LLC

1. Position the air cleaner body (1) rear pegs to battery tray and push down to lock in place.
2. Install the intake air tube (5) to the air cleaner body (1). Tighten clamp (4) 4 N.m (35 in. lbs.).
3. Connect the TBAP (2) sensor.
4. Connect the Mass Air Flow (MAF) (3) sensor.

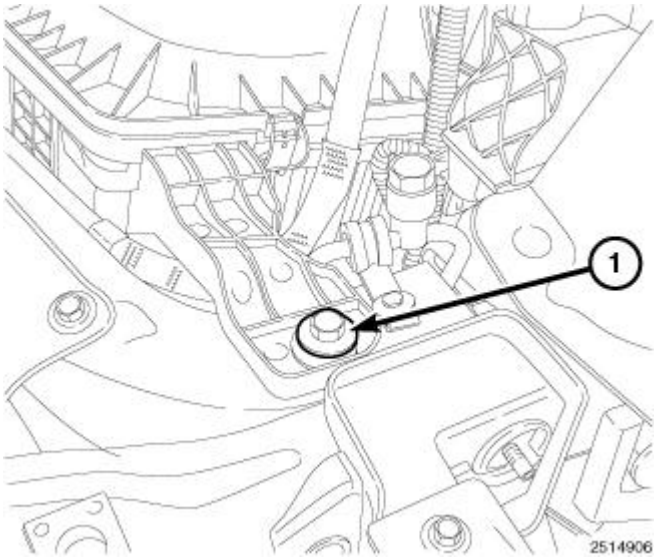

Fig. 43: Intake Air Housing Bolt
Courtesy of CHRYSLER GROUP, LLC

5. Install the housing bolt (1). Tighten bolt (1) 8 N.m (71 in. lbs).

6. Connect both negative battery cable.

INTAKE AIR TUBE

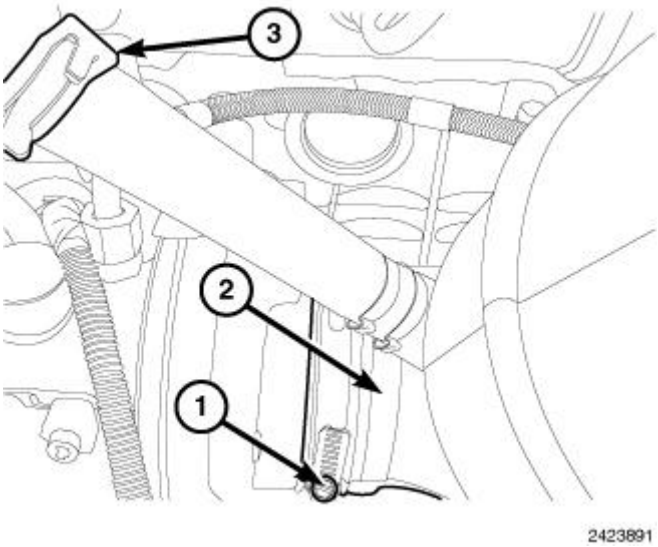

Fig. 44: Clamp, Outlet Tube & Breather Hose
Courtesy of CHRYSLER GROUP, LLC

1. Install the outlet tube (2) to the turbocharger. Tighten the clamp (1) 4 N.m (35 in. lbs.).
2. Connect the breather hose (3).

CYLINDER HEAD

DESCRIPTION

DESCRIPTION

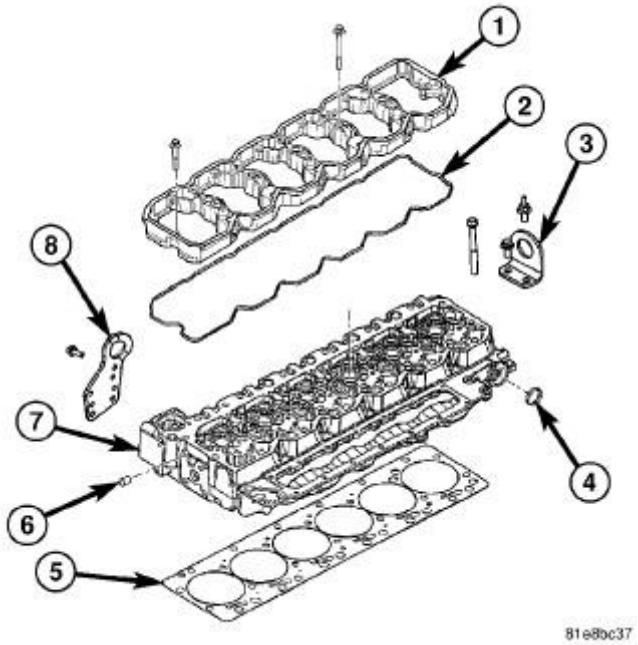

Fig. 45: Cylinder Head Assembly & Gasket
Courtesy of CHRYSLER GROUP, LLC

The cylinder head is constructed of cast iron and is a one piece cross flow design with four valves per cylinder. The arrangement of two intake and two exhaust valves per cylinder allows for a centrally located injector. The cylinder head also includes an integral intake manifold, an integral thermostat housing, and a longitudinal fuel return rifle, which exits at the rear of the head. The 24 valve design also includes integrally cast valve guides and hardened intake and exhaust valve seat inserts.

REMOVAL

REMOVAL

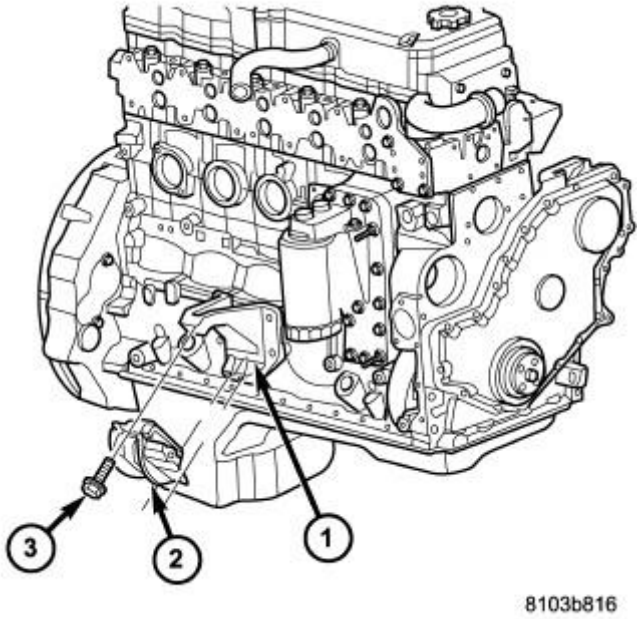

Fig. 46: Mount, Insulator & Bolt
Courtesy of CHRYSLER GROUP, LLC

1 - Mount
2 - Insulator
3 - Bolt

1. Disconnect both negative battery cables.
2. Drain engine coolant. Refer to **STANDARD PROCEDURE** .
3. Disconnect exhaust pipe from turbocharger elbow.
4. Remove the right engine mount. Refer to **INSULATOR, ENGINE MOUNT, FRONT, REMOVAL, 6.7L** and **INSULATOR, ENGINE MOUNT, REAR, REMOVAL, 6.7L**.
5. Remove turbocharger drain tube bolts at turbocharger. Cap off ports to prevent dirt or foreign material from entering.
6. Disconnect air inlet temperature/pressure sensor.
7. Remove air cleaner housing and snorkel from the vehicle. Cap off turbocharger air inlet to prevent intrusion of dirt or foreign material.
8. Disconnect cab heater core supply and return hoses from the cylinder head and heater pipe.
9. Disconnect turbocharger oil supply line at the turbocharger end. Cap off open ports to prevent intrusion of dirt or foreign material.
10. Remove the turbocharger coolant lines.
11. Remove EGR cooler and associated hardware. Refer to **COOLER, EGR, REMOVAL** .

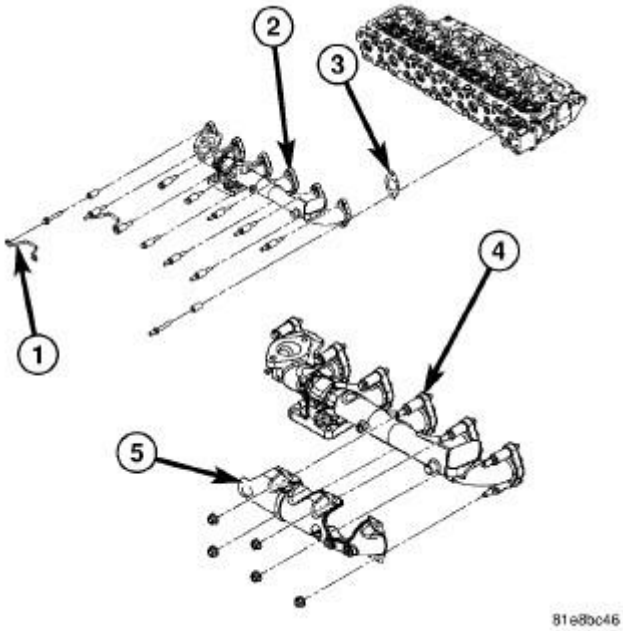

Fig. 47: Exhaust Manifold, Gasket, Heat Shield, Retainer & Bolts
Courtesy of CHRYSLER GROUP, LLC

1 - Retainer
2 - Exhaust Manifold
3 - Gasket
4 - Bolt
5 - Heat Shield

12. Remove exhaust manifold-to-cylinder head bolts, spacers, heat shield, retention straps, and cab heater plumbing. Remove exhaust manifold and turbocharger from the vehicle as an assembly.
13. Remove cooling fan/drive/shroud assembly. Refer to **FAN, COOLING, ELECTRIC, REMOVAL** and **FAN, COOLING, VISCOUS, REMOVAL** .
14. Remove accessory drive belt. Refer to **BELT, SERPENTINE, REMOVAL** .
15. Remove cooling fan support from cylinder block.

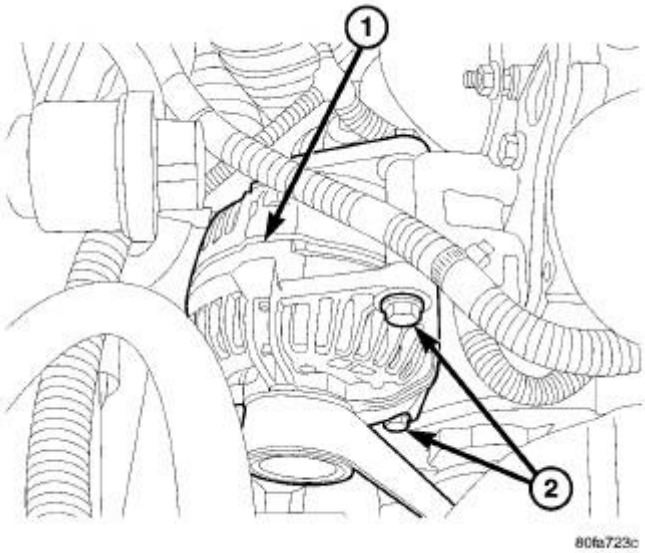

Fig. 48: Generator & Mounting Bolts
Courtesy of CHRYSLER GROUP, LLC

1 - GENERATOR
2 - MOUNTING BOLTS

16. Remove upper generator bolt, loosen lower generator bolt, and rotate generator away from cylinder head.
17. Disconnect radiator upper hose from the thermostat housing.
18. Disconnect the Intake Air Temperature/Manifold Air Pressure, and Coolant Temperature sensor connectors.
19. Remove the engine harness to cylinder head attaching bolts and P-clips at front of head.

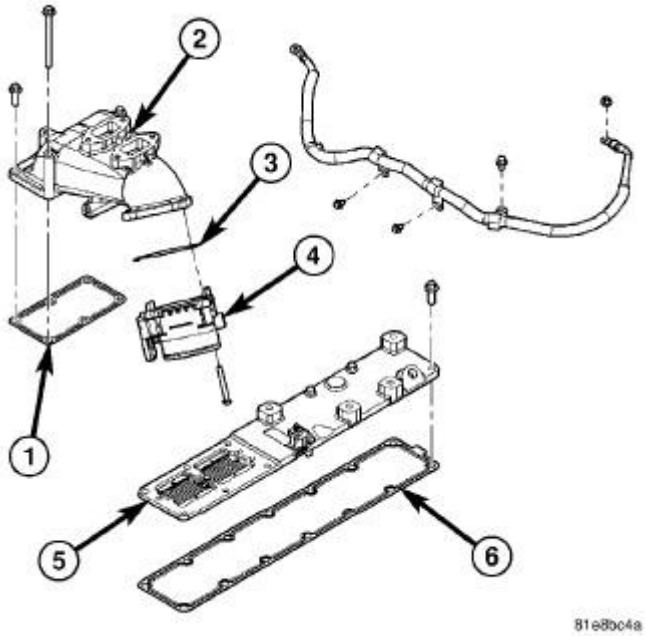

Fig. 49: Intake Air Heater Assembly
Courtesy of CHRYSLER GROUP, LLC

20. Remove the intake air grid heater wire from the grid heater.
21. Remove engine oil level indicator tube attaching bolt at fuel filter housing bracket and inlet air connection.
22. Remove the charge air cooler-to-air inlet housing pipe.
23. Remove the engine wire harness attaching bolt and wire harness push-in fastener from air inlet housing.
24. Remove the air inlet housing.
25. Remove the two grid heater harness-to-cylinder head attaching bolts at front of cylinder head.

NOTE: **Extreme care should be used to keep dirt/debris from entering the fuel lines. Plastic caps should be used on the ends of the fuel lines.**

26. **Remove the high pressure pump to fuel rail fuel line as follows:**
    1. Loosen fuel line nuts at fuel pump and at fuel rail.
    2. Use a back-up wrench on the fitting at the fuel pump to keep it from loosening.
27. Remove the fuel rail to cylinder head fuel lines as follows:
    1. Loosen No. 6 high pressure fuel line shield and position out of way.
    2. Loosen the fuel line nuts at the fuel rail and at the cylinder head. Use a back-up wrench on HPC nut.

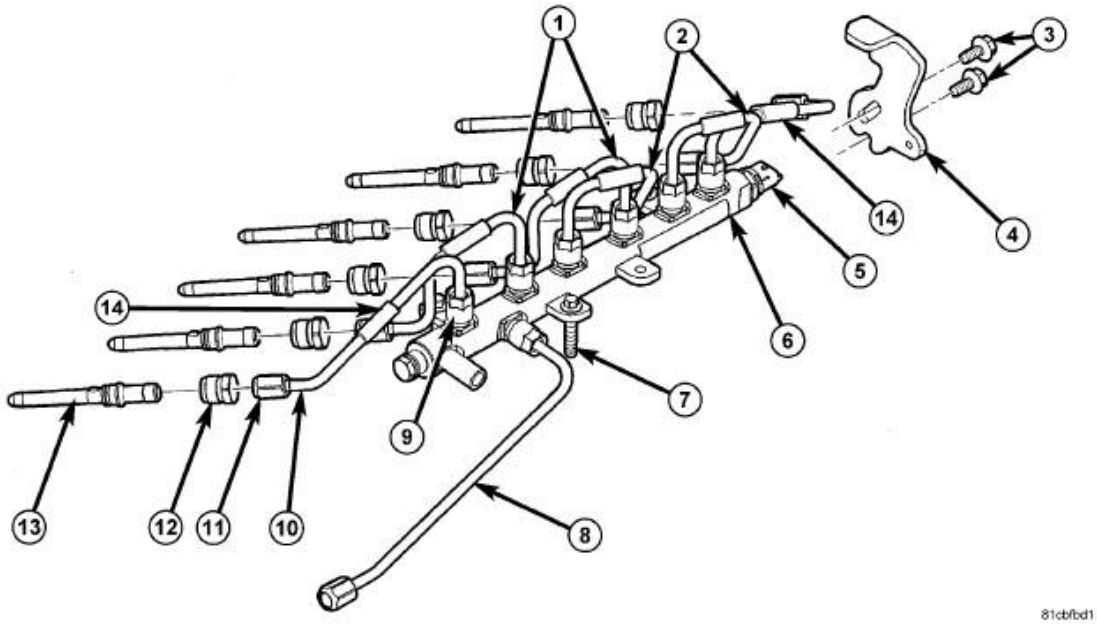

Fig. 50: Exploded View Of Fuel Lines, Fuel Rail & Injectors
Courtesy of CHRYSLER GROUP, LLC

28. Remove the engine lift bracket from the rear of the cylinder head.
29. Remove the fuel rail as follows:
    1. Remove fuel rail pressure sensor connector.
    2. Remove banjo fitting at pressure limiting valve.
    3. Remove the banjo fitting at fuel rail.
    4. Remove fuel rail bolts and fuel rail.
30. Remove P-clip from cylinder head.
31. Remove the breather cover and cylinder head cover. Refer to **COVER(S), CYLINDER HEAD, REMOVAL, 6.7L**.
32. Remove injector harness nuts from injectors.

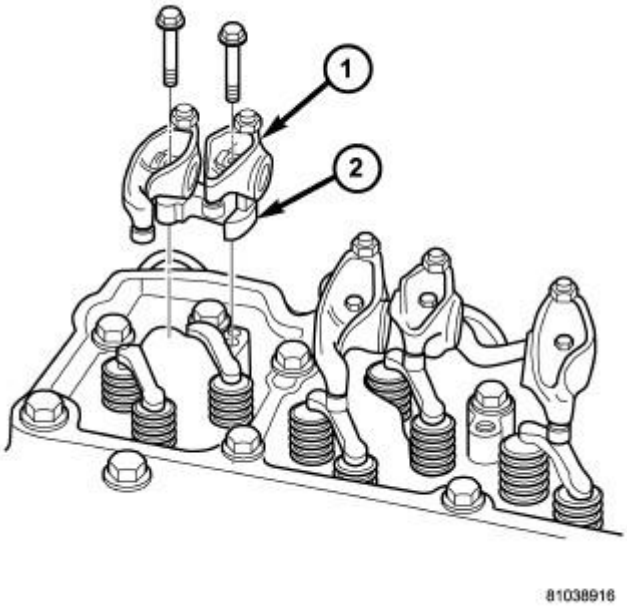

Fig. 51: Rocker Arms & Pedestals
Courtesy of CHRYSLER GROUP, LLC

1 - ROCKER ARM
2 - PEDESTAL

33. Remove the rocker levers (1), cross heads and push rods. Mark each component so they can be installed in their original positions.

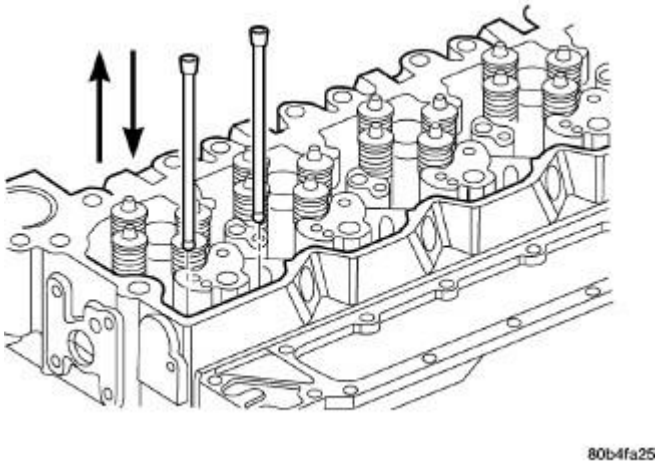

Fig. 52: Push Rod Removal/Installation
Courtesy of CHRYSLER GROUP, LLC

NOTE: **The No. 5 cylinder exhaust and the No. 6 cylinder intake and exhaust push rods are removed by lifting them up and through the provided cowl panel**

access holes. Remove the rubber plugs to expose these relief holes.

34. Remove the fuel return line and banjo bolt at the rear of the cylinder head. Be careful not to drop the two (2) sealing washers.
35. Remove the fuel injectors. Refer to **INJECTOR(S), FUEL, REMOVAL** .

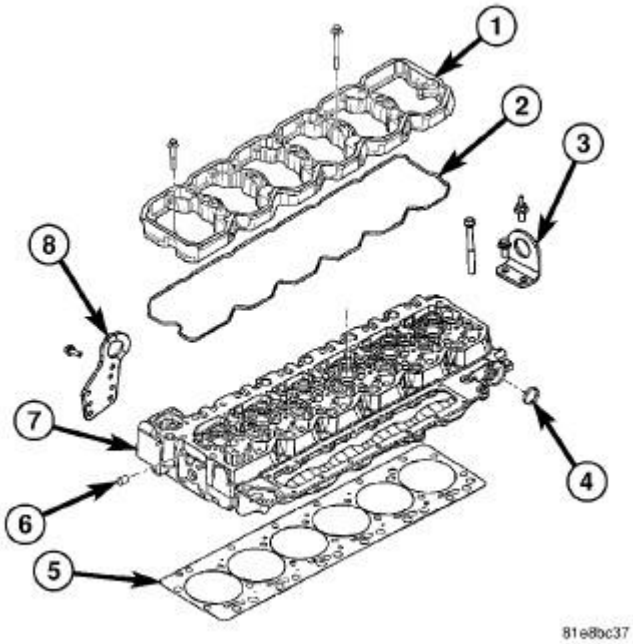

Fig. 53: Cylinder Head Assembly & Gasket
Courtesy of CHRYSLER GROUP, LLC

36. Remove rocker housing bolts and rocker housing and gasket.
37. Reinstall the engine lift bracket at the rear of cylinder head. Tighten to 77 N.m (57 ft. lbs.).
38. Starting on the outside and working towards the center, remove twenty six (26) cylinder head bolts.
39. Attach an engine lift crane to engine lift brackets and lift cylinder head off engine and out of vehicle.
40. Remove the head gasket and inspect.

CLEANING

CYLINDER HEAD

CAUTION: Do not wire brush head surface while fuel injectors are still installed. Fuel injector damage can result.

Remove fuel injectors before cleaning (if not already removed during cylinder head removal).

Clean the carbon from the injector nozzle seat with a nylon or brass brush.

Scrape the gasket residue from all gasket surfaces.

Wash the cylinder head in hot soapy water solution (88°C or 140°F).

After rinsing, use compressed air to dry the cylinder head.

Polish the gasket surface with 400 grit paper. Use a sanding block to maintain a flat surface.

CROSSHEADS

Clean all crossheads in a suitable solvent. If necessary, use a wire brush or wheel to remove stubborn deposits. Rinse in hot water and blow dry with compressed air.

PUSHRODS

Clean the pushrods in a suitable solvent. Rinse in hot water and blow dry with compressed air. If necessary, use a wire brush or wheel to remove stubborn deposits.

INSPECTION

CYLINDER HEAD

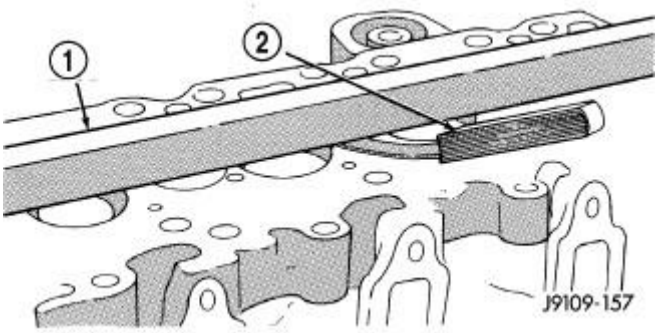

Fig. 54: Inspecting Cylinder Head Combustion Deck Face For Warpage
Courtesy of CHRYSLER GROUP, LLC

1 - STRAIGHT EDGE
2 - FEELER GAUGE

Inspect the cylinder head for cracks in the combustion surface. Pressure test any cylinder head that is visibly cracked. A cylinder head that is cracked between the injector bore and valve seat can be pressure tested and reused if OK; however, if the crack extends **into** the valve seat insert bore, the cylinder head **must** be replaced.

Visually inspect the cylinder block and head combustion surfaces for localized dips or imperfections. Check the cylinder head and block combustion surfaces for overall out-of-flatness. If either the visual or manual inspection exceeds the limits, then the head or block must be surfaced.

Check the top surface for damage caused by the cylinder head gasket leaking between cylinders.

Inspect the block and head surface for nicks, erosion, etc.

Check the head distortion. Maximum overall variation end to end is 0.305 mm (0.012 inch), and maximum overall variation side to side 0.076 mm (.003 in.).

DO NOT proceed with the in-chassis overhaul if the cylinder head or block surface is damaged or not flat (within specifications).

Check block surface for distortion. Maximum variation end-to-end is 0.076 mm (.003 in.), side-to-side 0.051 mm (.002).

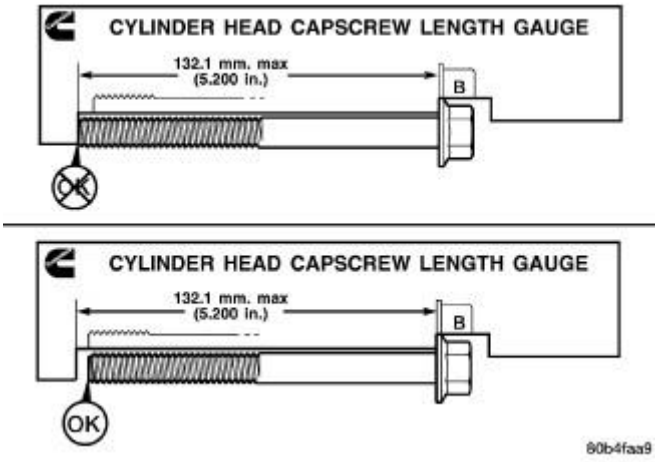

Fig. 55: Head Bolt Stretch Gauge
Courtesy of CHRYSLER GROUP, LLC

Visually inspect the cylinder head bolts for damaged threads, corroded/pitted surfaces, or a reduced diameter due to bolt stretching.

If the bolts are not damaged, their "free length" should be measured using the cap screw stretch gauge provided with the replacement head gasket. Place the head of the bolt against the base of the slot and align the bolt with the straight edge of gauge. If the end of the bolt touches the foot of the gauge, the bolt **must** be discarded. **The maximum bolt free length is 132.1 mm (5.200 in.).**

CROSSHEADS

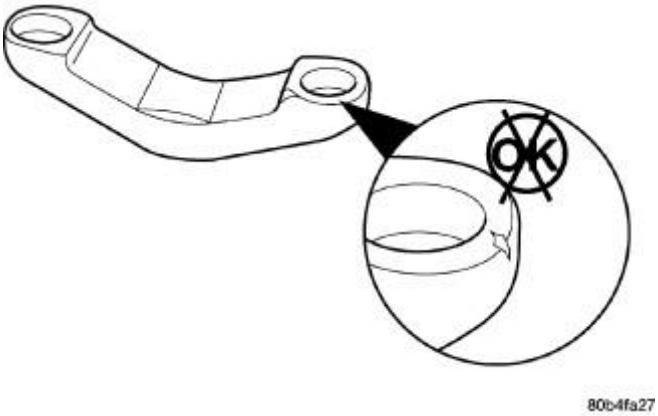

Fig. 56: Inspecting Crosshead For Cracks
Courtesy of CHRYSLER GROUP, LLC

Inspect the crossheads for cracks and/or excessive wear on rocker lever and valve tip mating surfaces. Replace any crossheads that exhibit abnormal wear or cracks.

PUSHRODS

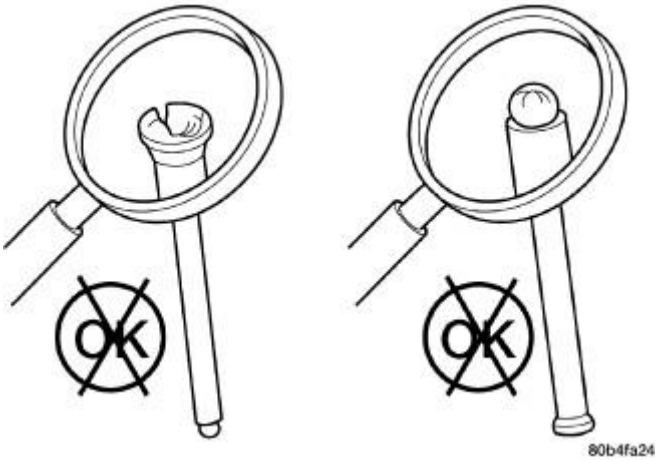

Fig. 57: Inspecting Push Rod For Cracks
Courtesy of CHRYSLER GROUP, LLC

Inspect the pushrod ball and socket for signs of scoring. Check for cracks where the ball and the socket are pressed into the tube.

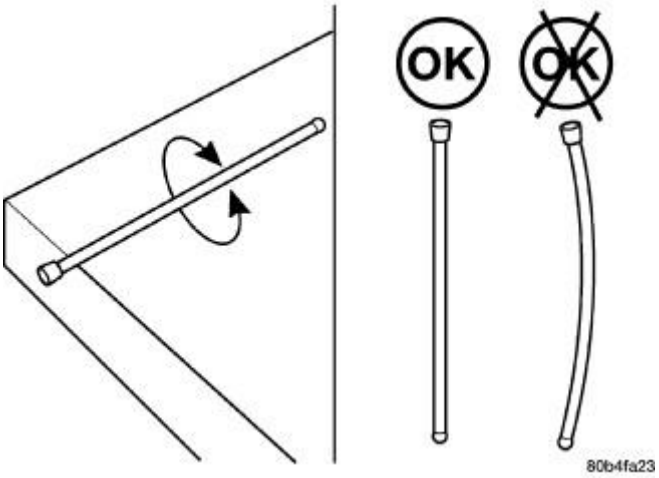

Fig. 58: Inspecting Push Rod For Flatness
Courtesy of CHRYSLER GROUP, LLC

Roll the pushrod on a flat work surface with the socket end hanging off the edge. Replace any pushrod that appears to be bent.

INSTALLATION

INSTALLATION

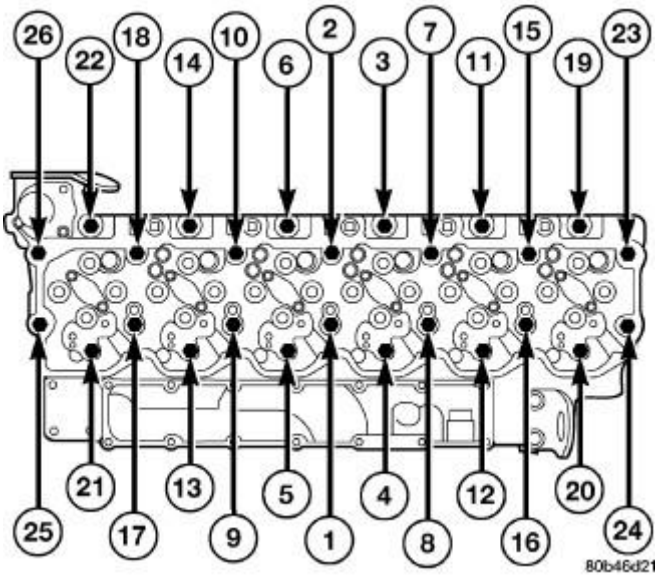

Fig. 59: Cylinder Head Bolt Torque Sequence
Courtesy of CHRYSLER GROUP, LLC

WARNING: **THE OUTSIDE EDGE OF THE HEAD GASKET IS VERY SHARP. WHEN HANDLING THE NEW HEAD GASKET, USE CARE NOT TO INJURE YOURSELF.**

1. Install a new gasket with the part number side up, and locate the gasket over the dowel sleeves.
2. Using an engine lifting crane, lower the cylinder head onto the engine.
3. Lightly lubricate head bolts under bolt head and on threads, with engine oil and install. Using the sequence shown in illustration, tighten bolts in the following steps:
    1. Tighten bolts to 70 N.m (52 ft. lbs.).
    2. Back off 360° in sequence.
    3. Tighten bolts to 105 N.m (77 ft. lbs.).
    4. Re-check all bolts to 105 N.m (77 ft. lbs.).
    5. Tighten all bolts an additional 1/4 turn (90°).

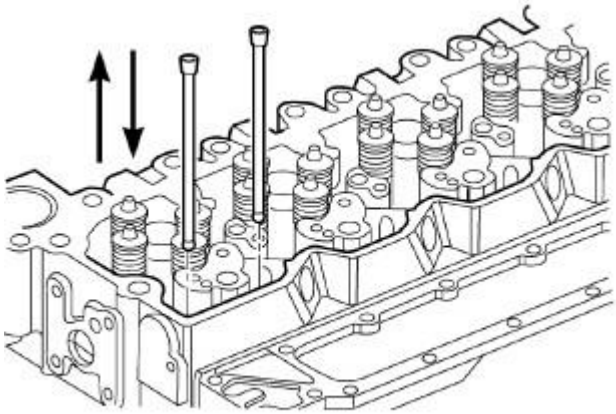

80b4fa25

Fig. 60: Push Rod Removal/Installation
Courtesy of CHRYSLER GROUP, LLC

4. Install push rods into their original locations. **Verify that they are seated in the tappets** .
5. Inspect rocker housing gasket for cuts and proper installation into groove. Replace if damaged.
6. Install rocker housing. Tighten bolts to 24 N.m (18 ft. lbs.).
7. Install fuel injector. Refer to **INJECTOR(S), FUEL, INSTALLATION** .

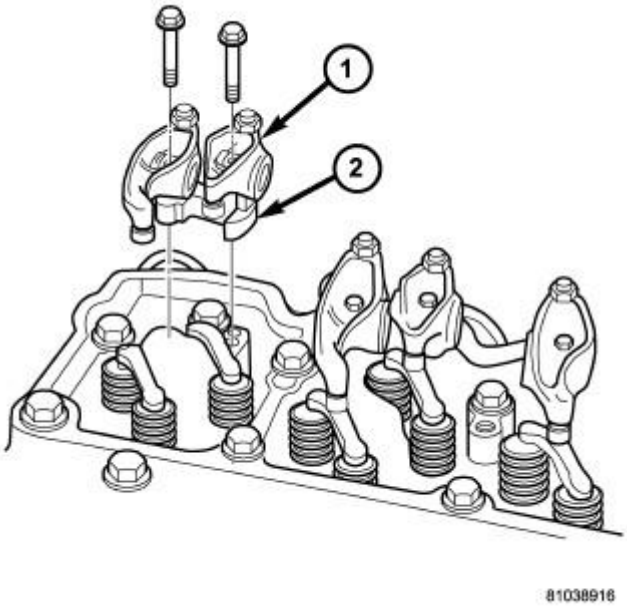

Fig. 61: Rocker Arms & Pedestals
Courtesy of CHRYSLER GROUP, LLC

1 - ROCKER ARM
2 - PEDESTAL

8. Lubricate valve stem tips and install the crossheads in their original locations.
9. Lubricate the rocker arms (1) and pedestals (2) and install them in their original locations. Install the bolts and tighten them to 36 N.m (27 ft. lbs.).
10. Verify that the valve lash settings are maintained at 0.254 mm (0.010 in) for the intake valve and 0.660 mm (0.026 in) for the exhaust valve. Refer to **Engine/Cylinder Head/VALVES, Intake and Exhaust - Standard Procedure**.

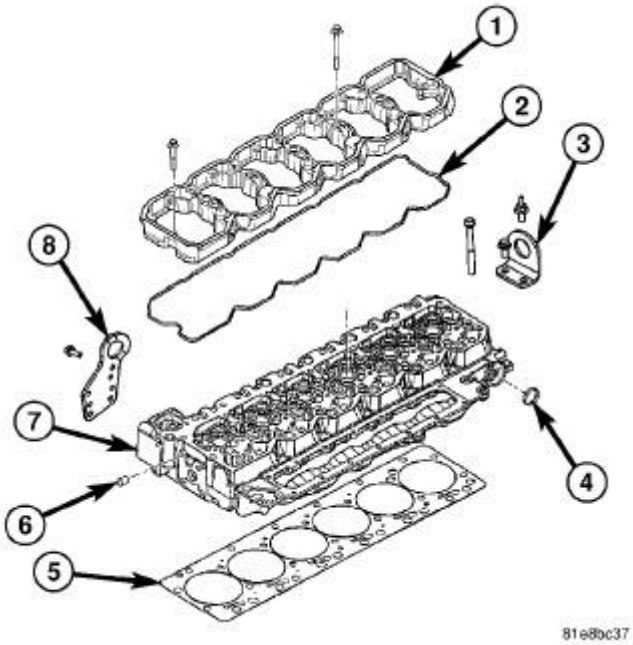

Fig. 62: Cylinder Head Assembly & Gasket
Courtesy of CHRYSLER GROUP, LLC

11. Install cylinder head cover gasket onto rocker housing.
12. Install injector harness nuts. Tighten to 1.25 N.m (11 in. lbs.).
13. Connect injector harness connectors at cylinder head cover gasket.
14. Install P-clip to cylinder head and tighten to 24 N.m (18 ft. lbs.).
15. Connect the IAT/MAP sensor connector.

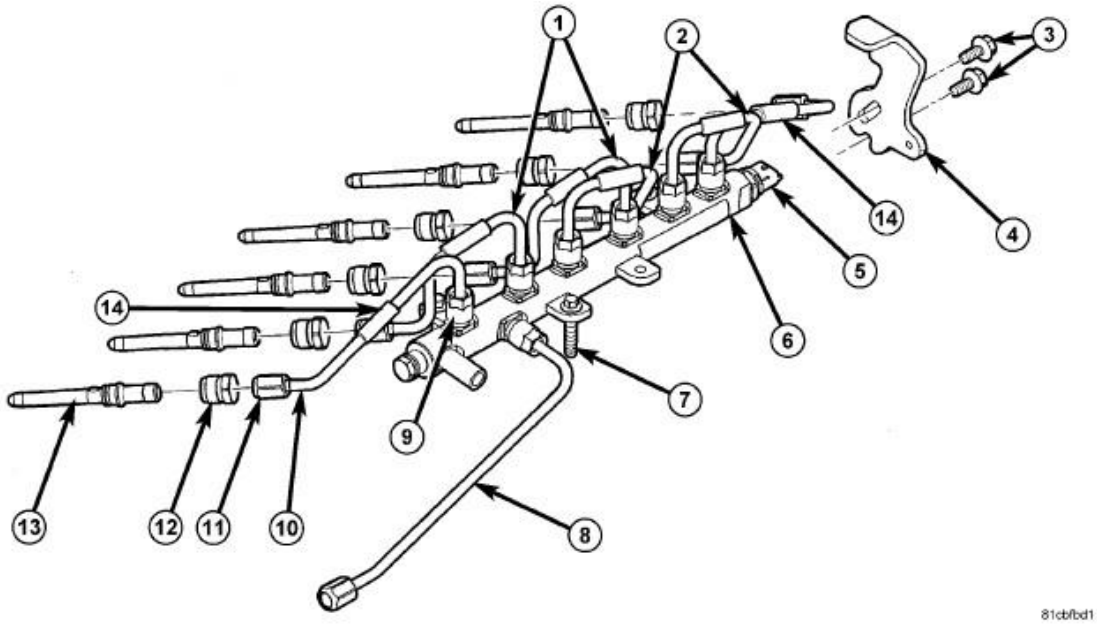

Fig. 63: Exploded View Of Fuel Lines, Fuel Rail & Injectors
Courtesy of CHRYSLER GROUP, LLC

CAUTION: Failure to follow procedure will result in fuel leaks and/or fuel system failure.

16. **Install the fuel rail and high pressure fuel lines as follows:**
    1. Hand tighten fuel rail bolts.
    2. Hand tighten fuel drain line to pressure limiting valve.
    3. Hand tighten fuel rail-to-cylinder head high pressure fuel lines.
    4. Hand tighten fuel pump to fuel rail line.
    5. Tighten fuel line nuts at cylinder head to 40 N.m (30 ft. lbs.).
    6. Tighten fuel line nuts at fuel rail to 40 N.m (30 ft. lbs.)
    7. Using a back up wrench, tighten fuel pump to fuel rail line to 40 N.m (30 ft. lbs.). At injection pump.
    8. Tighten fuel pump to fuel rail line to 40 N.m (30 ft. lbs.) at fuel rail.
    9. Tighten banjo bolt at pressure limiting valve and fuel rail to 24 N.m (18 ft. lbs.).
    10. Tighten rail bolts to 24 N.m (18 ft. lbs.).
    11. Connect fuel pressure sensor.
17. Reposition No. 6 fuel line shield and tighten to 43 N.m (32 ft. lbs.).
18. Install the fuel filter to injection pump low pressure line. Inspect and replace sealing washers if necessary.
19. Connect fuel return line at back of cylinder head hand tight.
20. Tighten banjo connections at cylinder head to 24 N.m (18 ft. lbs.).
21. Using new gaskets, install the air inlet housing. Tighten bolts to 24 N.m (18 ft. lbs.).
22. Install wire harness P-clip and push on clip to air inlet housing.
23. Connect engine oil level indicator tube at fuel filter housing and at air inlet housing.
24. Install the charge air cooler-to-air inlet housing duct assembly. Tighten all clamps to 11 N.m (97 in. lbs.).

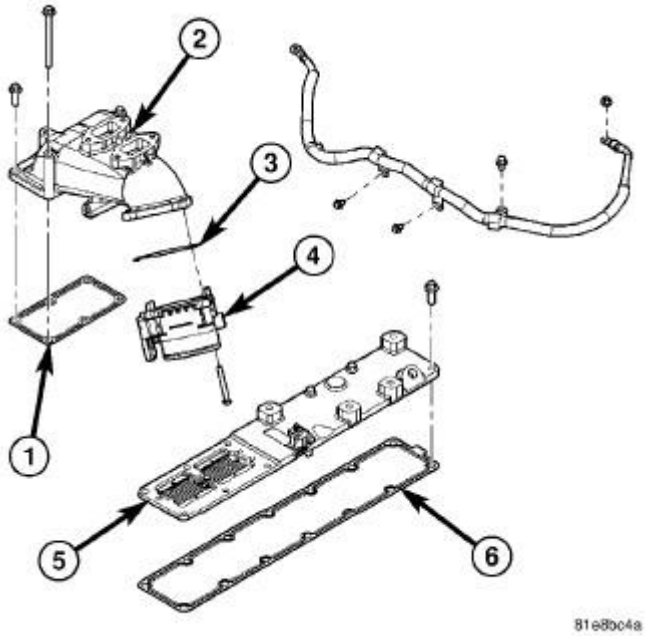

Fig. 64: Intake Air Heater Assembly
Courtesy of CHRYSLER GROUP, LLC

25. Connect intake grid heater wire.
26. Secure engine harness to front of cylinder head with bolt at four locations.
27. Connect engine coolant temperature sensor connector.
28. Connect radiator upper hose to thermostat housing.

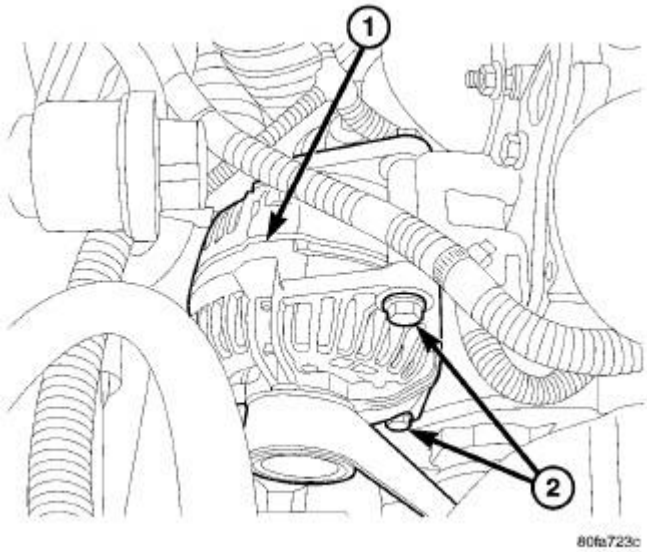

Fig. 65: Generator & Mounting Bolts
Courtesy of CHRYSLER GROUP, LLC

1 - GENERATOR
2 - MOUNTING BOLTS

29. Rotate generator into position. Install upper bolt and tighten upper and lower bolts.
30. Install wire harness push-on clip below bracket.
31. Install wire harness P-clip to top of bracket.
32. Install fan support and tighten to 32 N.m (24 ft. lbs.).
33. Install cooling fan/drive. Refer to **FAN, COOLING, ELECTRIC, INSTALLATION** and **FAN, COOLING, VISCOUS, INSTALLATION** .
34. Install accessory drive belt. Refer to **BELT, SERPENTINE, INSTALLATION** .

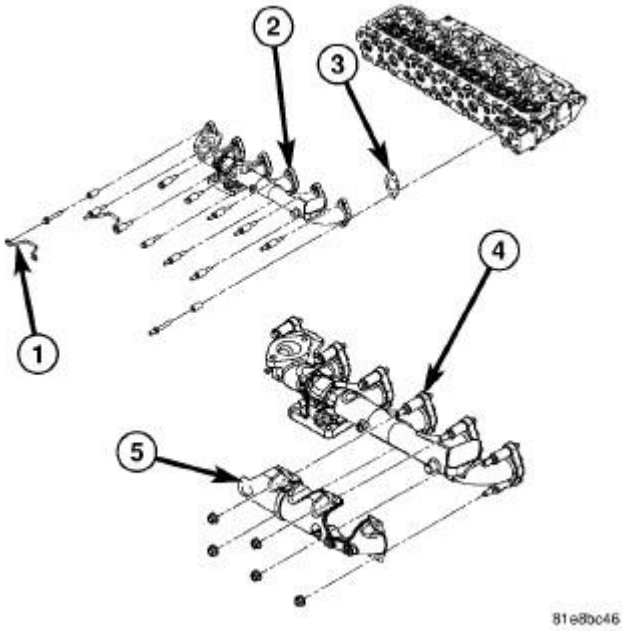

Fig. 66: Exhaust Manifold, Gasket, Heat Shield, Retainer & Bolts
Courtesy of CHRYSLER GROUP, LLC

1 - Retainer
2 - Exhaust Manifold
3 - Gasket
4 - Bolt
5 - Heat Shield

35. Install exhaust manifold/turbocharger assembly, using new gaskets. Start all bolts/spacers by hand. Starting from the center bolts out, Tighten bolts to 43 N.m (32 ft. lbs.), then retighten from the center out again.
36. Install exhaust manifold heat shield to exhaust manifold studs. Install retaining nuts. Tighten to 24 N.m (18 ft. lbs.).

37. Install exhaust bolt retention straps across cylinders No. 5 and No. 6.
38. Using a new gasket, connect the turbocharger oil drain tube. Tighten to 24 N.m (18 ft. lbs.).

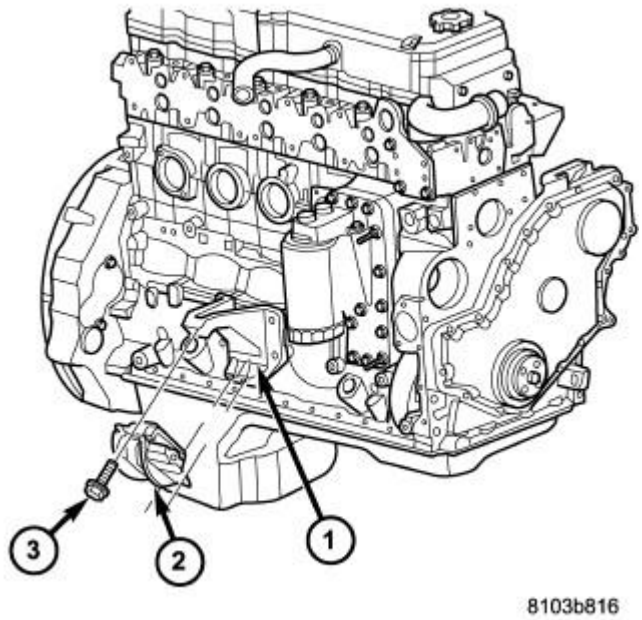

Fig. 67: Mount, Insulator & Bolt
Courtesy of CHRYSLER GROUP, LLC

1 - Mount
2 - Insulator
3 - Bolt

39. Install the right motor mount. Refer to **INSULATOR, ENGINE MOUNT, FRONT, INSTALLATION, 6.7L** and **INSULATOR, ENGINE MOUNT, REAR, INSTALLATION, 6.7L**.

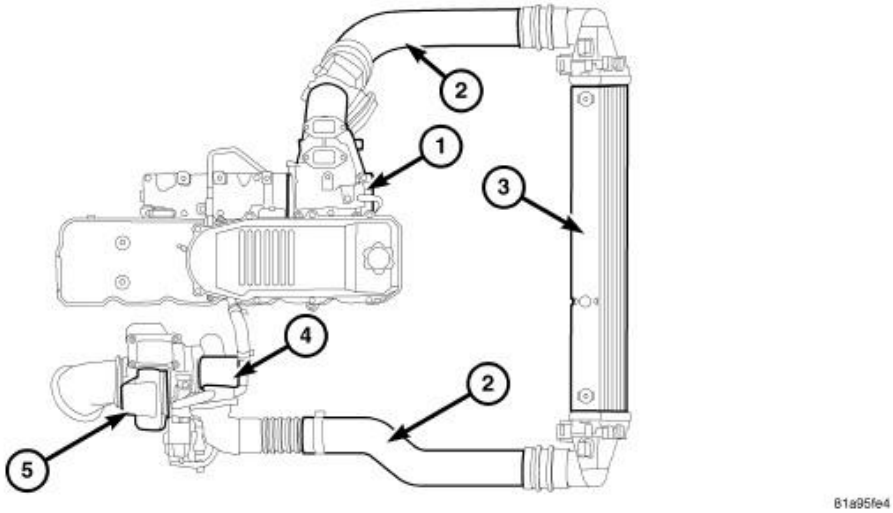

Fig. 68: Charge Air Cooler Assembly Components
Courtesy of CHRYSLER GROUP, LLC

1 - INTAKE MANIFOLD
2 - CHARGE AIR COOLER TUBE
3 - CHARGE AIR COOLER
4 - TURBOCHARGER FRESH AIR INTAKE
5 - TURBOCHARGER

40. Perform the turbocharger pre-lube procedure. Refer to **TURBOCHARGER, INSTALLATION, 6.7L**.
41. Connect the turbocharger oil supply line. Tighten to 24 N.m (18 ft. lbs.).
42. Connect the turbocharger coolant lines. Tighten the banjo bolts to 24 N.m (18 ft. lbs.)
43. Install the EGR cooler and associated hardware. Refer to **COOLER, EGR, INSTALLATION** .
44. Install air cleaner housing and duct.
45. Connect air inlet temperature/pressure sensor.
46. Raise vehicle on hoist.

NOTE: **Do not reuse the clamp for the exhaust pipe to turbocharger elbow connection.**

47. Install the exhaust pipe to turbocharger elbow using a new clamp. Tighten bolts to 10 N.m (89 in. lbs.).

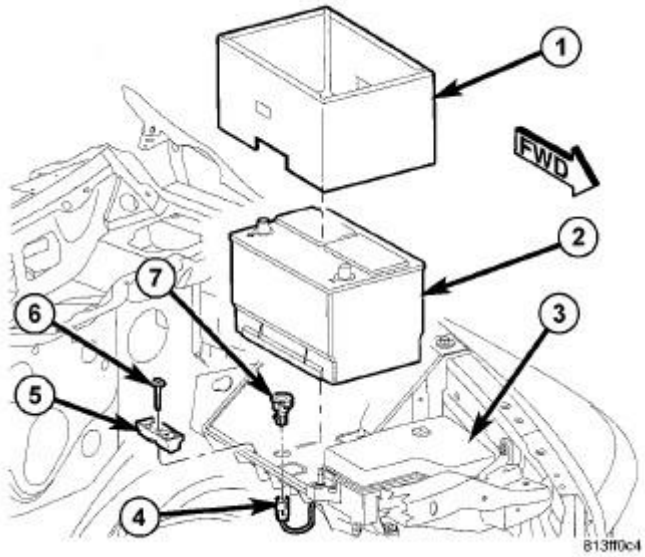

Fig. 69: Battery & Components
Courtesy of CHRYSLER GROUP, LLC

48. Lower vehicle.
49. Connect both negative battery cables.
50. Fill engine coolant. Refer to **STANDARD PROCEDURE** .
51. Start engine and check for leaks.

COVER(S), CYLINDER HEAD

REMOVAL

ROCKER HOUSING

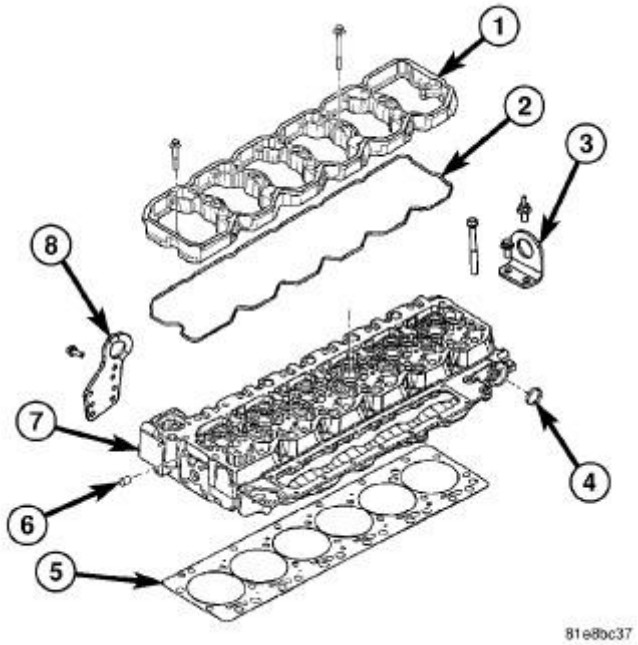

Fig. 70: Cylinder Head Assembly & Gasket
Courtesy of CHRYSLER GROUP, LLC

1. Remove the cylinder head cover. Refer to **COVER(S), CYLINDER HEAD, REMOVAL, 6.7L**.
2. Remove injector harness nuts from injectors.
3. Remove cylinder head cover gasket.
4. Remove rocker housing bolts.
5. Remove rocker housing and gasket.

CYLINDER HEAD COVER

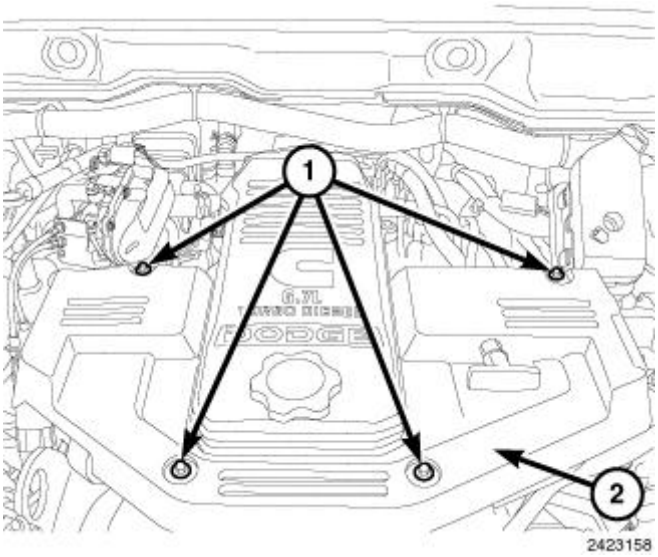

Fig. 71: Engine Cover & Bolts
Courtesy of CHRYSLER GROUP, LLC

1. Remove the bolts (1) and the engine cover.
2. Disconnect both negative battery cables.

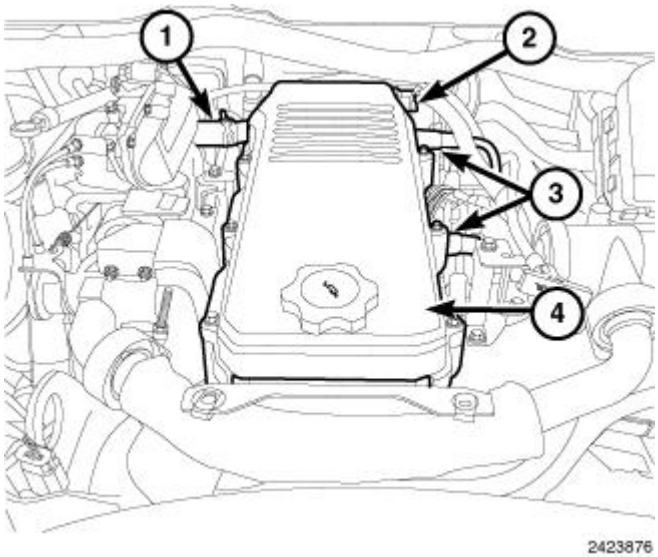

Fig. 72: Cylinder Head Cover Components
Courtesy of CHRYSLER GROUP, LLC

NOTE: Pneumatic tools should NOT be used to remove or install the cover.

3. Remove the oil fill cap.
4. Remove the breather cover capscrews.
5. Remove the Close Crankcase Ventilation (CCV) cover (4) and breather filter.
6. Disconnect the CCV Tube (1) at the Crankcase Depression Regular (CDR) valve.
7. Disconnect the crankcase pressure sensor connector (2).
8. Remove the CCV oil drains (3) from cylinder head cover (2 hoses).
9. Remove the cylinder head cover capscrews.
10. Remove the cylinder head cover.

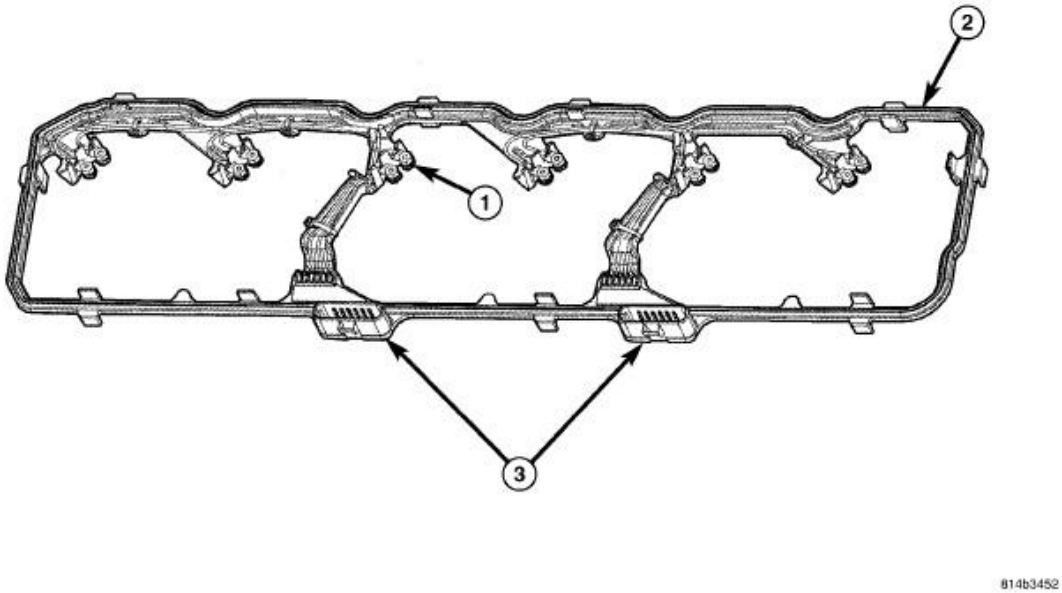

Fig. 73: Injector Harness Nuts, Cylinder Head Cover/Injector Wiring Gasket & Injector Wiring Harness Connectors
Courtesy of CHRYSLER GROUP, LLC

11. Disconnect both injector harness connectors.
12. Remove the injector wire nuts (1) from the valve cover gasket.
13. Remove the cylinder head cover gasket (2).

CYLINDER HEAD COVER GASKET

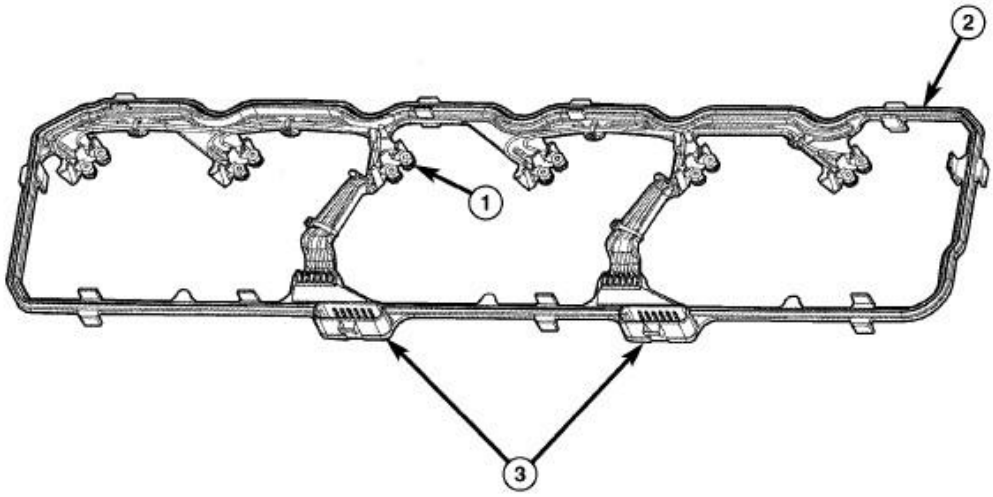

814b3452

Fig. 74: Injector Harness Nuts, Cylinder Head Cover/Injector Wiring Gasket & Injector Wiring Harness Connectors
Courtesy of CHRYSLER GROUP, LLC

1 - INJECTOR NUTS
2 - GASKET
3 - INJECTOR HARNESS CONNECTORS

1. Remove cylinder head cover.
2. Disconnect injector harness connectors (3) at cylinder head cover gasket.
3. Remove injector solenoid nuts (1) at injectors.
4. Remove cylinder head cover gasket (2).

CLEANING

CLEANING

Using a suitable solvent, Clean and dry gasket mating surfaces on cylinder head and rocker housing. Wipe gasket dry and inspect for re-use.

INSPECTION

INSPECTION

The cylinder head cover gasket and rocker housing gasket, are reusable. However, should cracks, nicks, or

tears be present in the rubber/silicone construction, the defective components should be replaced. Also replace gasket if it is no longer flexible. Inspect cylinder head cover rubber isolated capscrews for cracks, nicks, or tears.**Do not reuse gasket if it has been removed from the groove in the rocker housing or cylinder head cover.**

INSTALLATION

ROCKER HOUSING

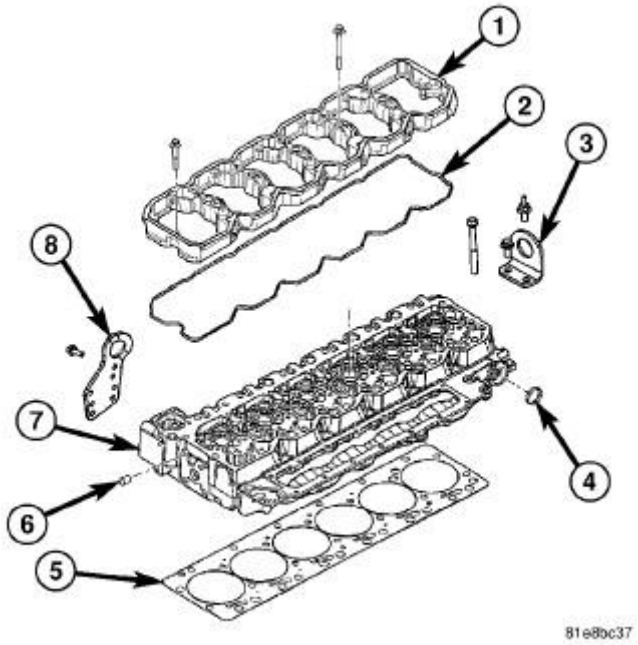

Fig. 75: Cylinder Head Assembly & Gasket
Courtesy of CHRYSLER GROUP, LLC

1. Inspect rocker housing gasket for cuts, nicks, or tears. Replace if damaged or if gasket has come out of groove.
2. Inspect rocker housing gasket for proper installation in groove. Gasket bead must be centered in groove. A gasket bead that is tilted to the side will cause an oil leak.

CAUTION: When installing rocker housing onto cylinder head, do not slide housing from side to side, The gasket could fall out or be damaged.

3. Install the rocker housing. Carefully guide the rocker housing evenly down onto the cylinder head.
4. Install rocker housing bolts and tighten finger tight.
5. Tighten bolts, working from center out, to 24 N.m (18 ft. lbs.).

CYLINDER HEAD COVER

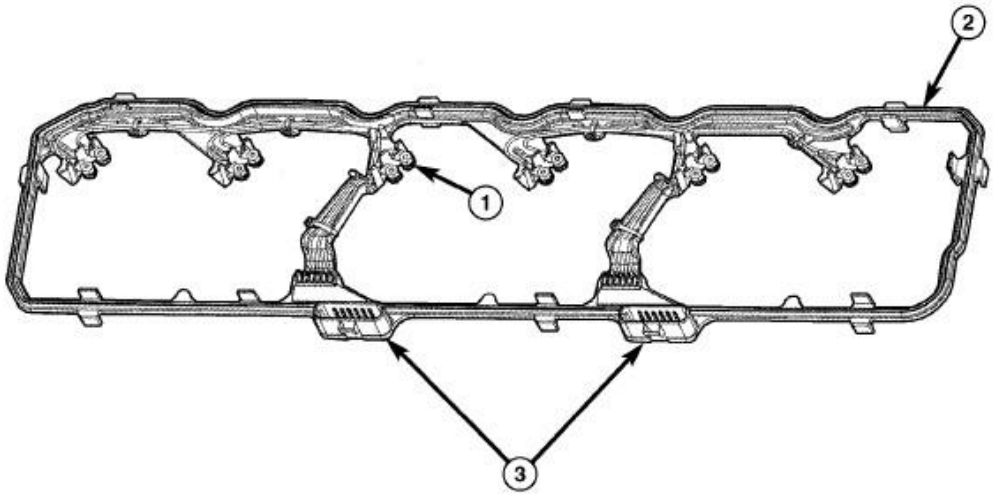

814b3452

Fig. 76: Injector Harness Nuts, Cylinder Head Cover/Injector Wiring Gasket & Injector Wiring Harness Connectors
Courtesy of CHRYSLER GROUP, LLC

NOTE: Gasket must be completely dry and free of oil before installation. Pneumatic tools should NOT be used to remove or install the cover.

1. Wipe oil from the cylinder head cover gasket (2), rocker box, and cylinder head cover.
2. Inspect cylinder head cover gasket (2) for tears, or splits. Replace if necessary.
3. Install the cylinder head cover gasket (2) on the rocker box.
4. Install the injector nuts to injector studs. Tighten nuts to 1.25 N.m (11 in. lbs.).
5. Connect both injector harness connectors.

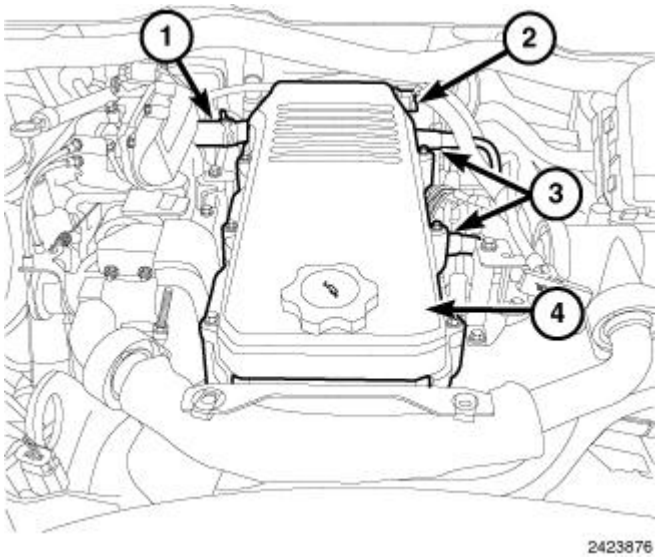

Fig. 77: Cylinder Head Cover Components
Courtesy of CHRYSLER GROUP, LLC

NOTE: Pneumatic tools should NOT be used to remove or install the cover.

6. Install cylinder head cover and cylinder head cover capscrews. Tighten from center out. Tighten to 24 N.m (18 ft. lbs.).
7. Install the Close Crankcase Ventilation (CCV) drain hoses (3) to the cylinder head cover.
8. Connect the crankcase pressure sensor connector (2).
9. Connect the CCV Tube (1) at the Crankcase Depression Regular (CDR) valve.
10. Remove any oil from the CCV seal area and install the CCV breather filter.
11. Install the CCV cover (4) and capscrews. Tighten to 10 N.m (89 in. lbs.).
12. Install the oil fill cap.

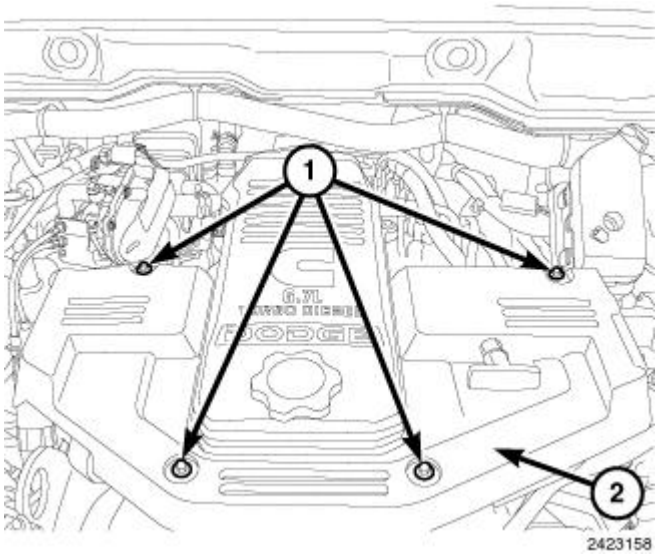

Fig. 78: Engine Cover & Bolts
Courtesy of CHRYSLER GROUP, LLC

13. Connect both negative battery cables.
14. Install the engine cover. Tighten the bolts (1) 10 N.m (89 in. lbs.).
15. Start the vehicle and check for leaks.

CYLINDER HEAD COVER GASKET

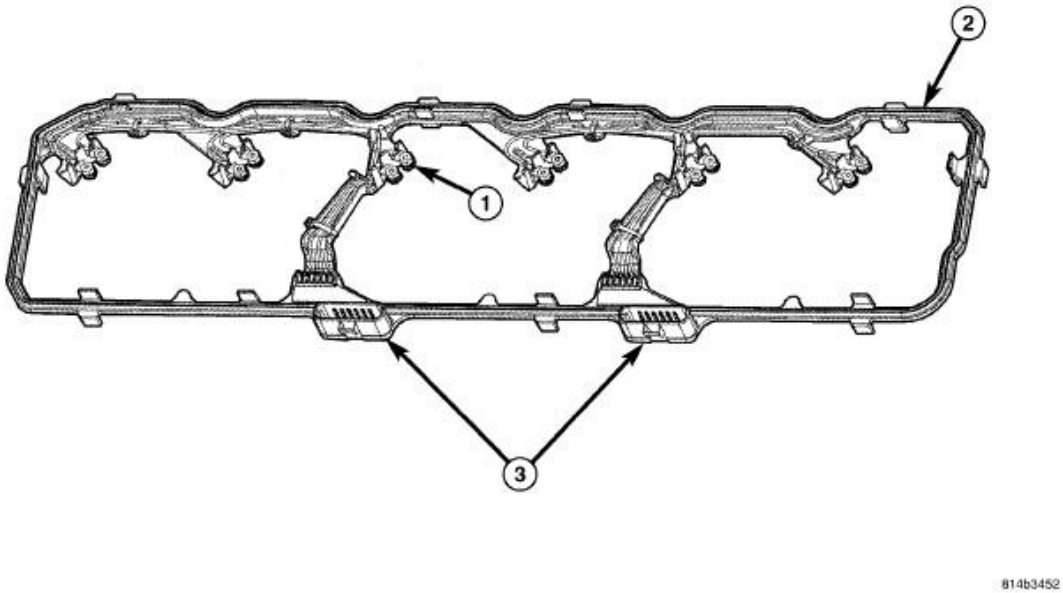

Fig. 79: Injector Harness Nuts, Cylinder Head Cover/Injector Wiring Gasket & Injector Wiring Harness Connectors
Courtesy of CHRYSLER GROUP, LLC

1 - INJECTOR NUTS
2 - GASKET
3 - INJECTOR HARNESS CONNECTORS

1. Clean off any oil from cylinder head cover gasket
2. Inspect cylinder head cover gasket for cuts or damage. Replace if damaged.
3. Install cylinder head cover gasket (2).
4. Install injector solenoid nuts (1) at injectors. Tighten to 1.25 Nm (11 in. lbs.).
5. Connect injector harness connectors (3) at cylinder head cover gasket.

ROCKER ARM, VALVE

DESCRIPTION

DESCRIPTION

The unique intake and exhaust rocker arms have their own rocker shafts and are lubricated by passages intersecting the cylinder block main oil rifle. Crossheads are used, which allow each rocker arm to operate two valves.

The solid push rods are hardened at the rocker arm and tappet contact areas for superior strength and durability.

REMOVAL

REMOVAL

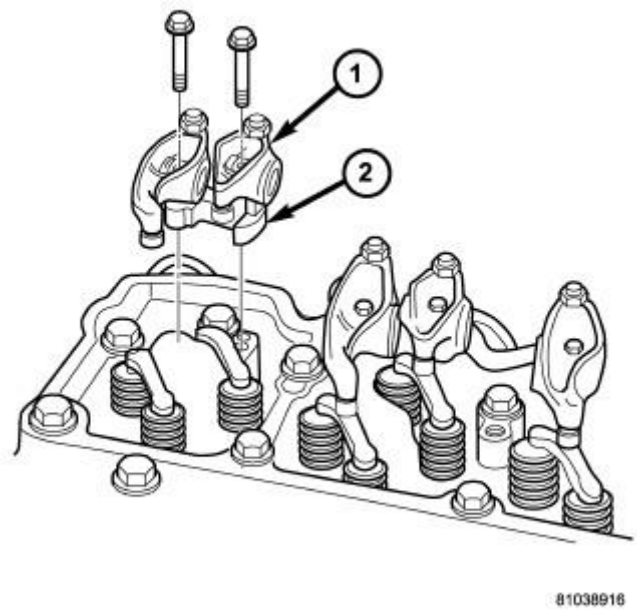

Fig. 80: Rocker Arms & Pedestals
Courtesy of CHRYSLER GROUP, LLC

1 - ROCKER ARM
2 - PEDESTAL

1. Disconnect both negative battery cables.
2. Remove cylinder head cover. Refer to **COVER(S), CYLINDER HEAD, REMOVAL, 6.7L**.
3. Remove the rocker arm/pedestal fasteners and remove rocker arm (1) and pedestal (2) from cylinder head. Mark the arms and pedestals so they can be installed in their original position.

CAUTION: When removing the rocker arms, the sockets may come loose and fall into the engine. Make sure they stay with the arm upon

removal/installation.

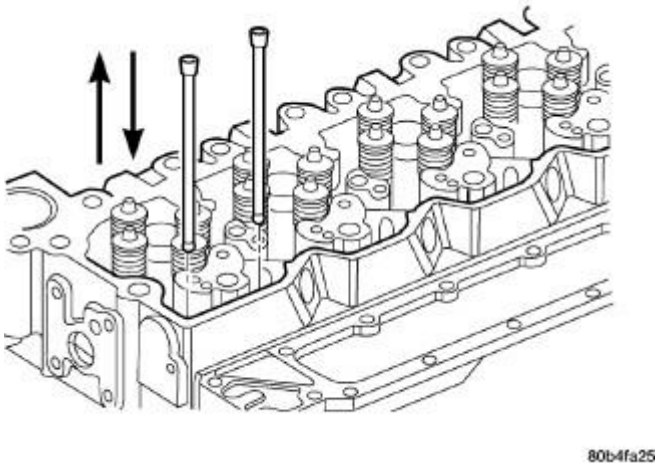

Fig. 81: Push Rod Removal/Installation
Courtesy of CHRYSLER GROUP, LLC

4. Lift the push rod(s) up and out of the engine. Mark them so they can be installed in their original position.

NOTE: **The No. 5 cylinder intake and exhaust, and No. 6 cylinder intake and exhaust push rods must be raised through the provided cowl panel access holes.**

5. Lift the crossheads off of the valve stems. Mark them so they can be installed in their original position.

CLEANING

CLEANING

Clean all components in a suitable solvent. If necessary, use a wire brush or wheel to remove stubborn deposits. Rinse in hot water and blow dry with compressed air. Inspect oil passages in rocker arms and pedestals. Apply compressed air to lubrication orifices to purge contaminants.

INSPECTION

INSPECTION

ROCKER ARMS

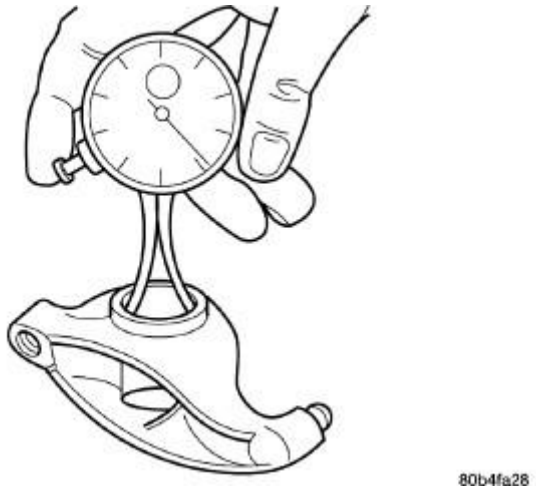

Fig. 82: Measuring Rocker Arm Bore
Courtesy of CHRYSLER GROUP, LLC

ROCKER ARM BORE (MAX.)
22.027 mm (.867 in.)

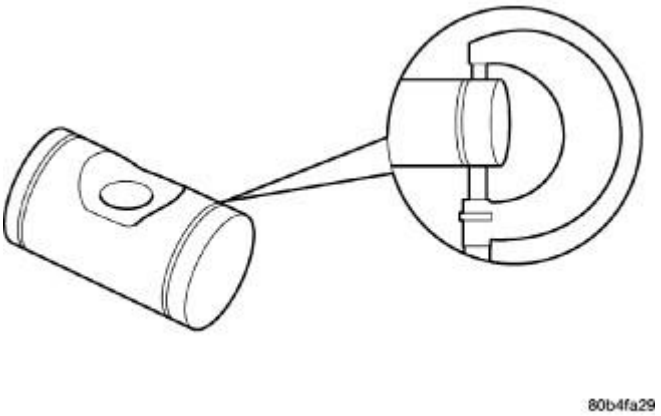

Fig. 83: Measuring Rocker Arm Shaft
Courtesy of CHRYSLER GROUP, LLC

ROCKER ARM SHAFT (MIN.)
21.965 mm (.865 in.)

1. Remove rocker shaft and inspect for cracks and excessive wear in the bore or shaft. Remove socket and inspect ball insert and socket for signs of wear. Replace retainer if necessary.

Measure the rocker arm bore and shaft.

PUSH RODS

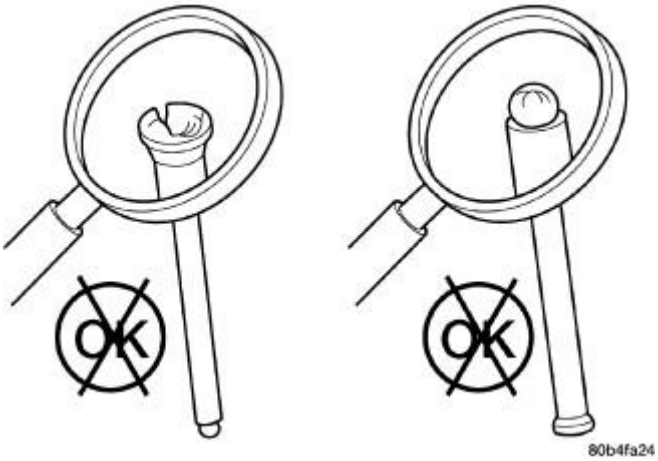

Fig. 84: Inspecting Push Rod For Cracks
Courtesy of CHRYSLER GROUP, LLC

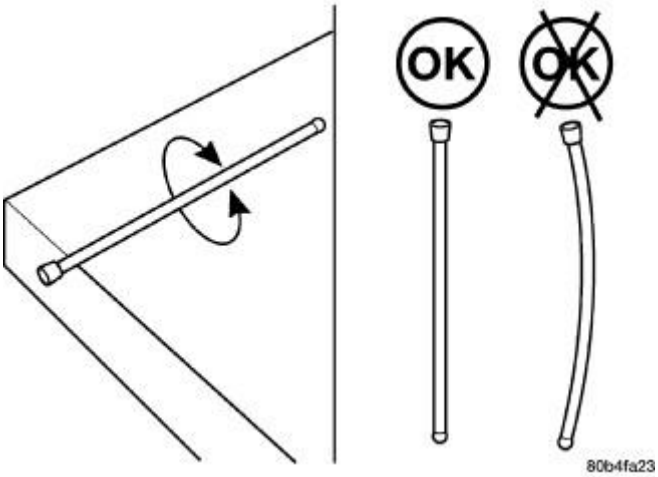

Fig. 85: Inspecting For Bent Push Rods
Courtesy of CHRYSLER GROUP, LLC

Inspect the push rod ball and socket for signs of scoring. Check for cracks where the ball and the socket are pressed into the tube.

Roll the push rod on a flat work surface with the socket end hanging off the edge. Replace any push rod that appears to be bent.

CROSSHEADS

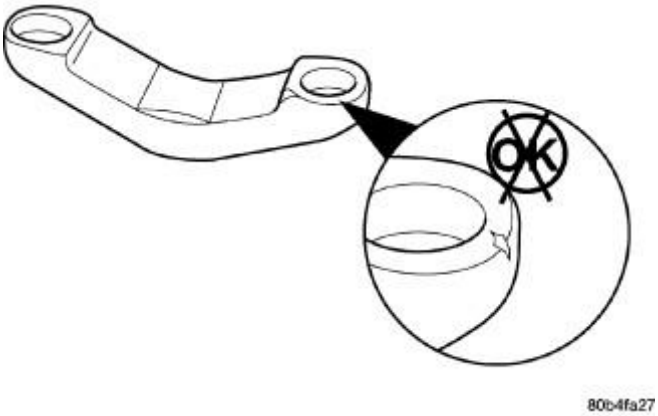

Fig. 86: Inspecting Crosshead For Cracks
Courtesy of CHRYSLER GROUP, LLC

Inspect the crossheads for cracks and/or excessive wear on rocker lever and valve tip mating surfaces.

INSTALLATION

INSTALLATION

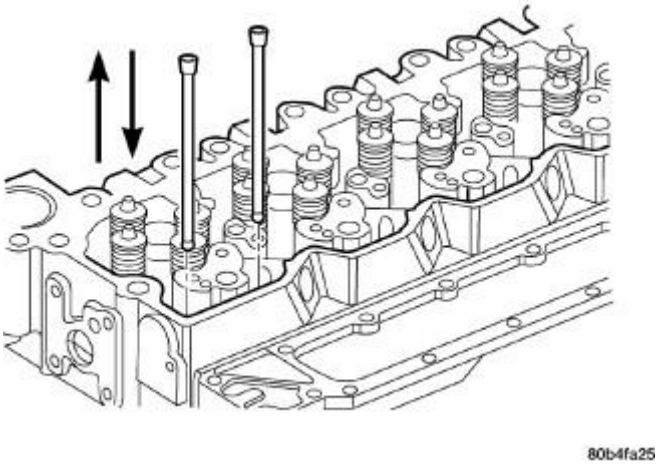

Fig. 87: Push Rod Removal/Installation
Courtesy of CHRYSLER GROUP, LLC

1. If previously removed, install the push rods in their original location. **Verify that they are seated in the tappets.**
2. Lubricate the valve tips and install the crossheads in their original locations.
3. Lubricate the crossheads and push rod sockets and install the rocker arms and pedestals in their original locations. Tighten bolts to 36 N.m (27 ft. lbs.).

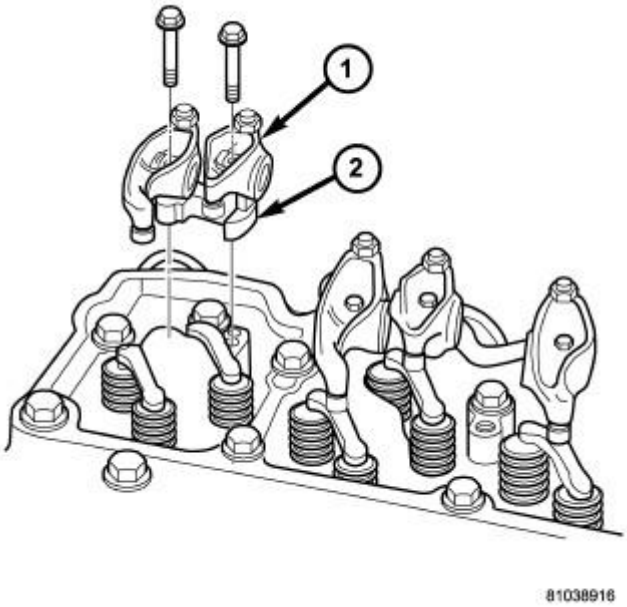

Fig. 88: Rocker Arms & Pedestals
Courtesy of CHRYSLER GROUP, LLC

1 - ROCKER ARM
2 - PEDESTAL

4. **Verify valve lash adjustment. Refer to Engine/Cylinder Head/VALVES, Intake and Exhaust - Standard Procedure.**
5. Install cylinder head cover. Refer to **COVER(S), CYLINDER HEAD, INSTALLATION, 6.7L**.
6. Connect both negative battery negative cables.

VALVES, INTAKE AND EXHAUST

DESCRIPTION

DESCRIPTION

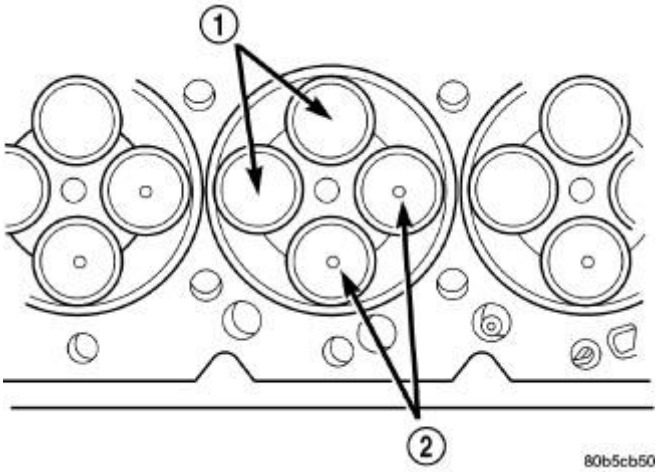

Fig. 89: Intake & Exhaust Valve Identification
Courtesy of CHRYSLER GROUP, LLC

1 - INTAKE VALVES
2 - EXHAUST VALVES

The intake valves (1) are made of heat resistant steel, and have chrome plated stems to prevent scuffing. The exhaust valves are made of iron alloys (2). The intake and exhaust valves are both similar in head diameter and overall length, but they have unique face angles which makes them non-interchangeable. The valves are distinguished by unique dimples on the exhaust valve head (2).

The exhaust valve springs are made from high strength, chrome silicon steel. The exhaust valve springs are also exhaust brake compatible.

STANDARD PROCEDURE

VALVES, GUIDES AND SPRINGS

REMOVAL

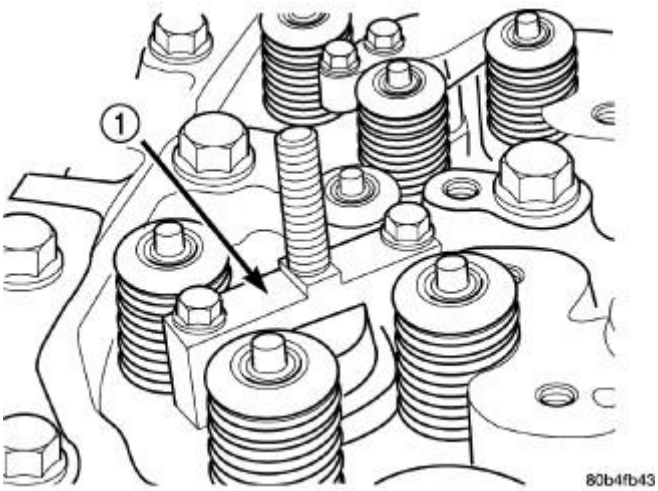

Fig. 90: Spring Compressor Mounting Base
Courtesy of CHRYSLER GROUP, LLC

1 - COMPRESSOR MOUNTING BASE

1. Remove cylinder head. Refer to **CYLINDER HEAD, REMOVAL, 6.7L**.
2. Support cylinder head on stands, or install head bolts upside down (through combustion surface side) to protect injector tips from damage from work bench.
3. Install the valve spring compressor base 8313A (1) as shown in illustration.

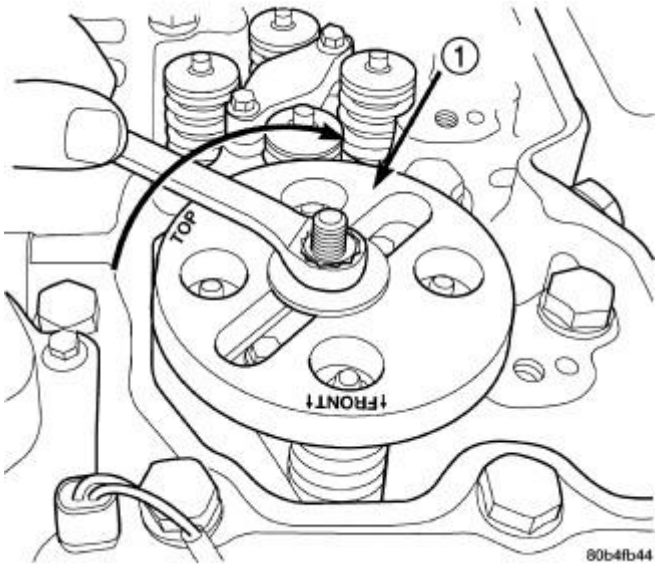

Fig. 91: Compressing Valve Springs With Tool 8319
Courtesy of CHRYSLER GROUP, LLC

1 - SPECIAL TOOL 8319

4. Install the valve spring compressor (special tool #8319, Compressor, Valve Spring) top plate, washer, and nut. Using a suitable wrench, tighten the nut (clockwise) to compress the valve springs and remove the locks.
5. Rotate the compressor nut counter-clockwise to relieve tension on the springs. Remove the spring compressor (1).

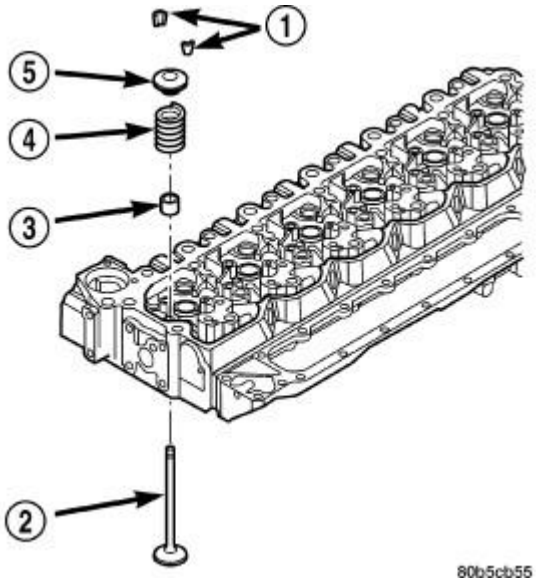

Fig. 92: Valve Assembly Configuration
Courtesy of CHRYSLER GROUP, LLC

1 - VALVE RETAINING LOCKS
2 - VALVE
3 - SEAL
4 - SPRING
5 - RETAINER

6. Remove the retainers (5), springs (4), valve seals (3) (if necessary), and valves (2). Arrange or number all components so they can be installed in their original locations.
7. Repeat the procedure on all cylinders to be serviced.

CLEANING

Clean the valve stems with crocus cloth or a Scotch-Brite™ pad. Remove carbon with a soft wire brush. Clean valves, springs, retainers, and valve retaining locks in a suitable solvent. Rinse in hot water and blow dry with compressed air.

INSPECTION

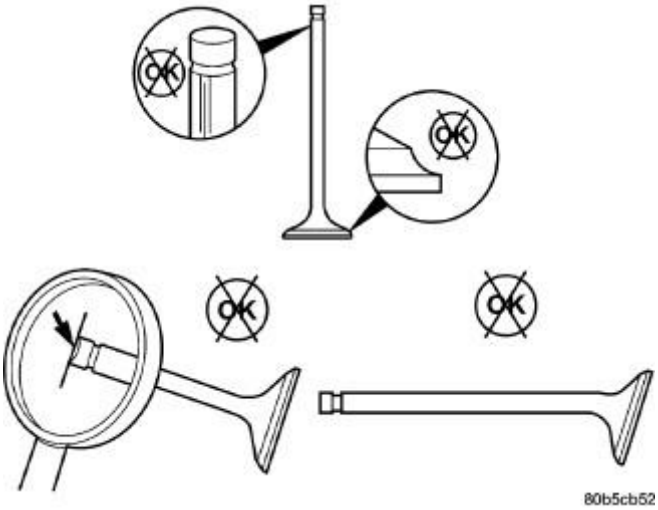

Fig. 93: Visually Inspect Valves For Abnormal Wear
Courtesy of CHRYSLER GROUP, LLC

Visually inspect the valves for abnormal wear on the heads, stems, and tips. Replace any valve that is worn out or bent.

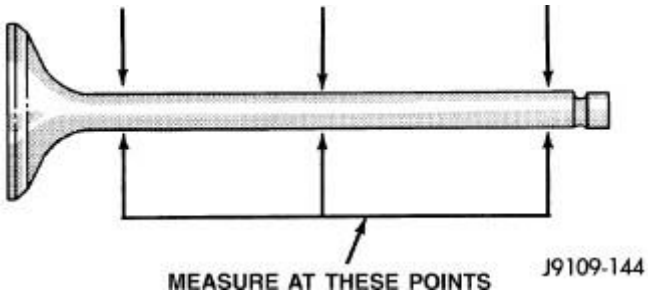

Fig. 94: Measuring Points Of Valve Stem
Courtesy of CHRYSLER GROUP, LLC

VALVE STEM DIAMETER
6.96 mm (0.2740 in.) MIN 7.010 mm (0.2760 in.) MAX

Measure the valve stem diameter in three places as shown in illustration.

VALVE GUIDE BORE SPECIFICATIONS

VALVE GUIDE BORE SPECIFICATIONS	
Valve guide bore diameter	
Min.	7.027 mm (0.2767 in.)
Max.	7.077 mm (0.2786 in.)
Installed valve guide depth	
Intake	
Min.	0.584 mm (0.023 in.)

Max.	1.092 mm (0.043 in.)
Exhaust	
Min.	0.965 mm (0.028 in.)
Max.	1.473 mm (0.058 in.)

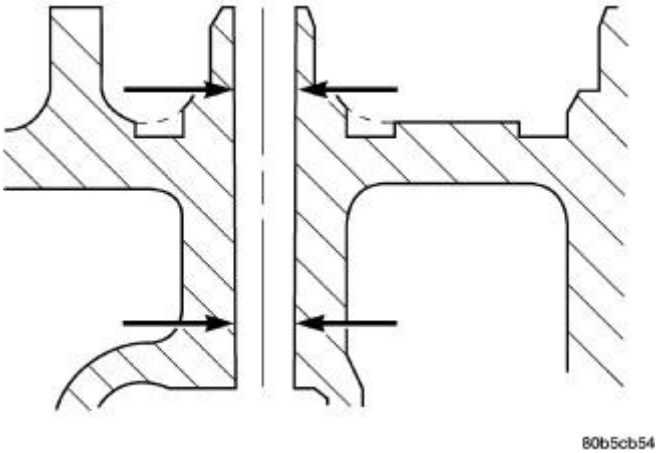

Fig. 95: Measuring Points Of Valve Guide Bore
Courtesy of CHRYSLER GROUP, LLC

Measure the cylinder head valve guide bore.

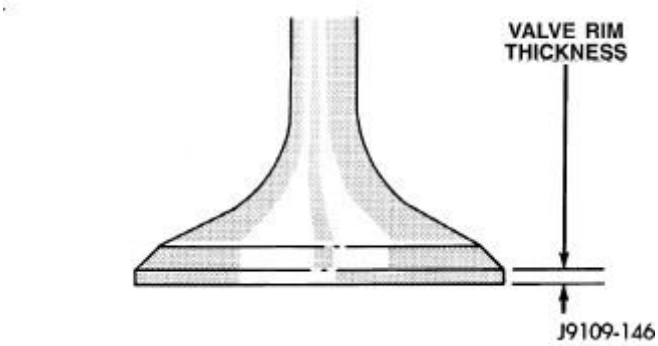

Fig. 96: Measuring Points Of Valve Margin (Rim Thickness)
Courtesy of CHRYSLER GROUP, LLC

VALVE MARGIN (RIM THICKNESS)
0.79 mm (0.031 in.) MIN.

Measure valve margin (rim thickness).

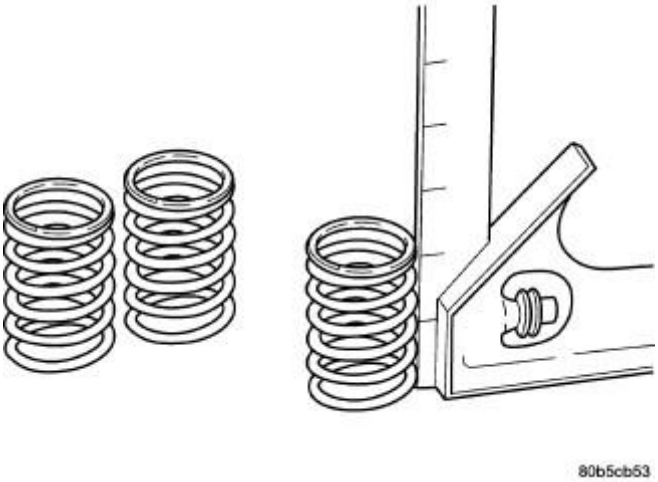

Fig. 97: Measure Valve Spring Free Length And Maximum Inclination
Courtesy of CHRYSLER GROUP, LLC

APPROXIMATE VALVE SPRING FREE LENGTH
47.75 mm (1.88 in.)
MAX INCLINATION
1.5 mm (.059 in.)

Measure the valve spring free length and maximum inclination.

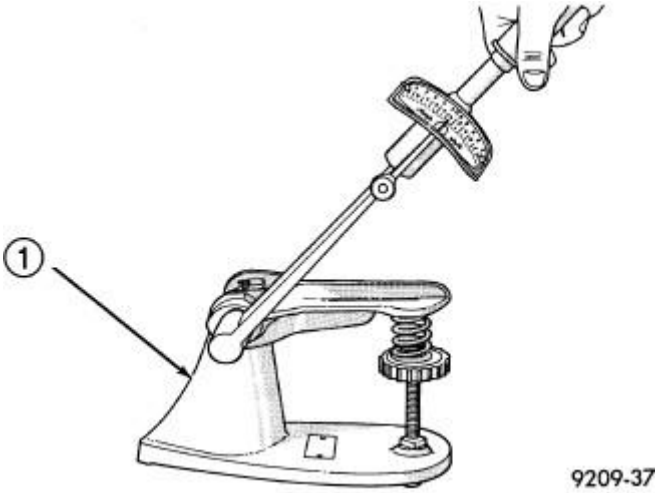

Fig. 98: Testing Valve Spring With Tool C-647
Courtesy of CHRYSLER GROUP, LLC

1 - SPECIAL TOOL C-647

Test valve spring force with tool (special tool #C-647, Spring Tester) (1). Specification 72.0 - 80.7 lbs. when compressed to 35.33 mm (1.39 in.).

INSTALLATION

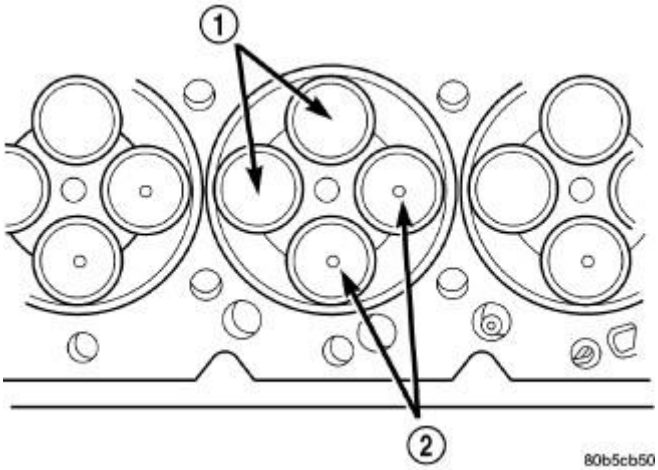

Fig. 99: Intake & Exhaust Valve Identification
Courtesy of CHRYSLER GROUP, LLC

1 - INTAKE VALVES
2 - EXHAUST VALVES

1. Install new valve seals. The yellow seals are for the intake valves and the green seals are for the exhaust valves.
2. Install the valves in their original position. The exhaust valves are identified by a dimple on the valve head.

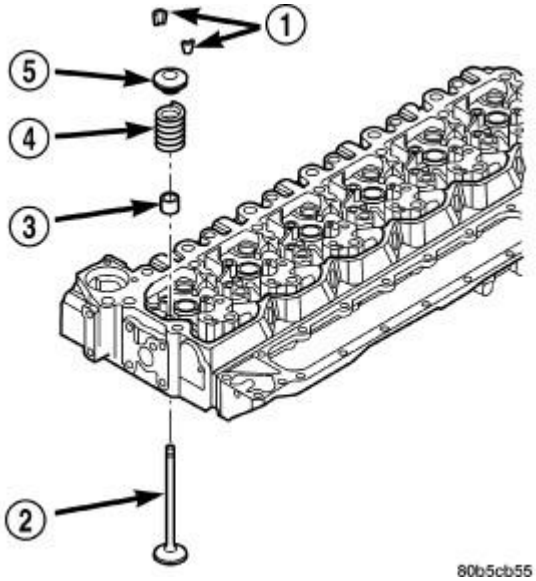

Fig. 100: Valve Assembly Configuration
Courtesy of CHRYSLER GROUP, LLC

1 - VALVE RETAINING LOCKS

2 - VALVE
3 - SEAL
4 - SPRING
5 - RETAINER

3. Install the valve (2), springs (4), and retainer (5).

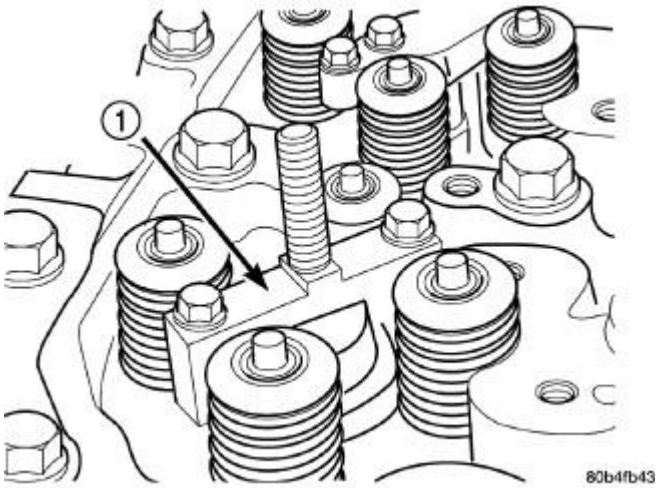

Fig. 101: Spring Compressor Mounting Base
Courtesy of CHRYSLER GROUP, LLC

1 - COMPRESSOR MOUNTING BASE

4. Install the valve spring compressor tool base (special tool #8319, Compressor, Valve Spring) (1) as shown in illustration.

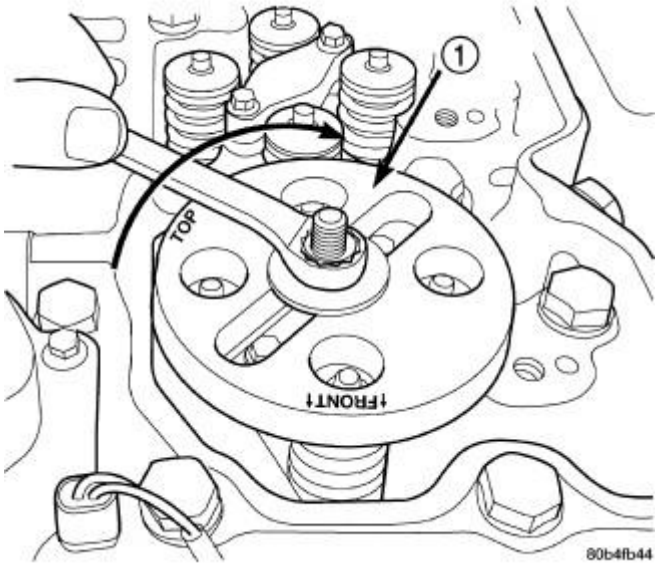

Fig. 102: Compressing Valve Springs With Tool 8319

Courtesy of CHRYSLER GROUP, LLC

1 - SPECIAL TOOL 8319

5. Install the valve spring compressor top plate, washer, and nut (special tool #8319, Compressor, Valve Spring).
6. Compress the valve springs and install the valve retaining locks.
7. Remove the valve spring compressor tool (special tool #8319, Compressor, Valve Spring) and repeat the procedure on the remaining cylinders.
8. Install new o-ring and sealing washer on injector.
9. Lubricate o-ring and injector bore.
10. Verify sealing washer (shim) was removed with old injector.
11. Install injector. Refer to **INJECTOR(S), FUEL, INSTALLATION** .
12. Install the cylinder head. Refer to **CYLINDER HEAD, INSTALLATION, 6.7L**.

VALVE LASH ADJUSTMENT AND VERIFICATION

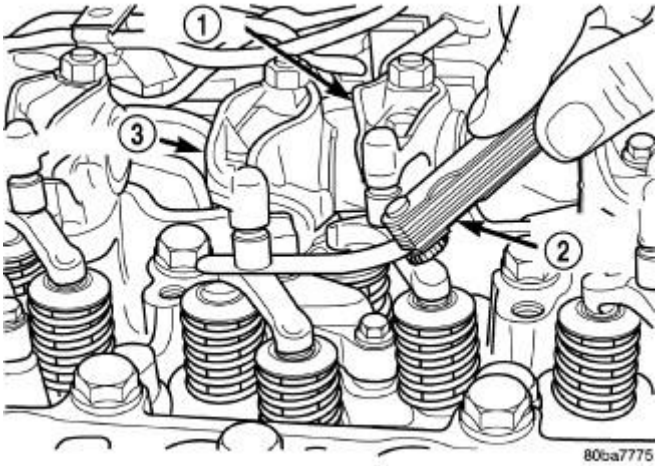

Fig. 103: Measuring Valve Lash
Courtesy of CHRYSLER GROUP, LLC

1 - INTAKE
2 - FEELER GAUGE
3 - EXHAUST

NOTE: **To obtain accurate readings, valve lash measurements and adjustments should only be performed when the engine coolant temperature is less than 60° C (140° F.).**

The 24-valve overhead system is a "low-maintenance" design. Routine adjustments are no longer necessary, however, measurement should still take place when troubleshooting performance problems, or upon completion of a repair that includes removal and installation of the valve train components or injectors.

1. Disconnect battery negative cables.
2. Remove cylinder head cover. Refer to **COVER(S), CYLINDER HEAD, REMOVAL, 6.7L**.
3. Using the barring tool (special tool #7471B, Barring Tool), rotate crankshaft to align damper TDC mark to 12:00 o'clock position.
    1. If both number one cylinder rocker levers are loose, continue to next step.
    2. If both number one cylinder rocker levers are not loose, rotate crankshaft 360°.
4. With the engine in this position, valve lash can be measured at the following rocker arms: **INTAKE 1-2-4 / EXHAUST 1-3-5.** Measure the valve lash by inserting a feeler gauge between the rocker arm socket and crosshead. Refer to chart for the correct specifications. If the measurement falls within the limits, adjustment/resetting is not necessary. If measurement finds the lash outside of the limits, adjustment/resetting is required.

VALVE LASH LIMIT CHART

INTAKE	EXHAUST
0.152 mm (0.006 in.) MIN.	0.533 mm (0.021 in.) MIN.
0.381 mm (0.015 in.) MAX.	0.863 mm (0.034 in.) MAX.
NOTE: **If measured valve lash falls within these specifications, no adjustment/reset is necessary. Engine operation within these ranges has no adverse affect on performance, emissions, fuel economy or level of engine noise.**	

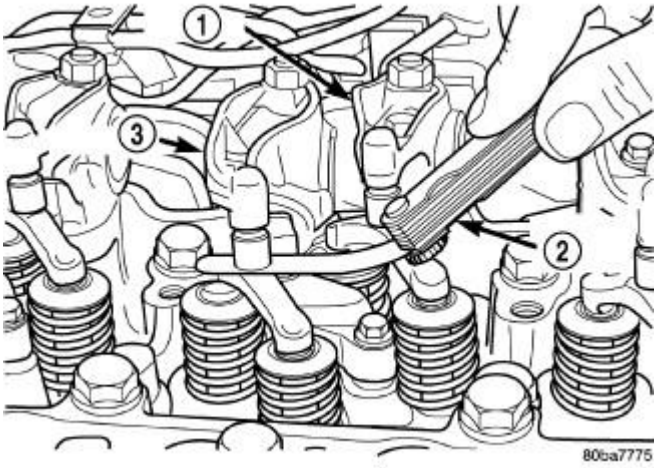

Fig. 104: Measuring Valve Lash
Courtesy of CHRYSLER GROUP, LLC

1 - INTAKE
2 - FEELER GAUGE
3 - EXHAUST

5. If adjustment/resetting is required, loosen the lock nut on rocker arms and turn the adjusting screw until the desired lash is obtained:
    - **INTAKE** 0.254 mm (0.010 in.)

- **EXHAUST** 0.660 mm (0.026 in.)

Tighten the lock nut to 24 N.m (18 ft. lbs.) and recheck the valve lash.

6. Using the crankshaft barring tool, rotate the crankshaft one revolution (360°) to align the damper TDC mark to the 12 o'clock position.
7. With the engine in this position, valve lash can be measured at the remaining rocker arms: **INTAKE 3-5-6 / EXHAUST 2-4-6** . Use the same method as above for determining whether adjustment is necessary, and adjust those that are found to be outside of the limits.
8. Install the cylinder head cover. Refer to **COVER(S), CYLINDER HEAD, INSTALLATION, 6.7L**.
9. Connect the battery negative cables.

REMOVAL

REMOVAL

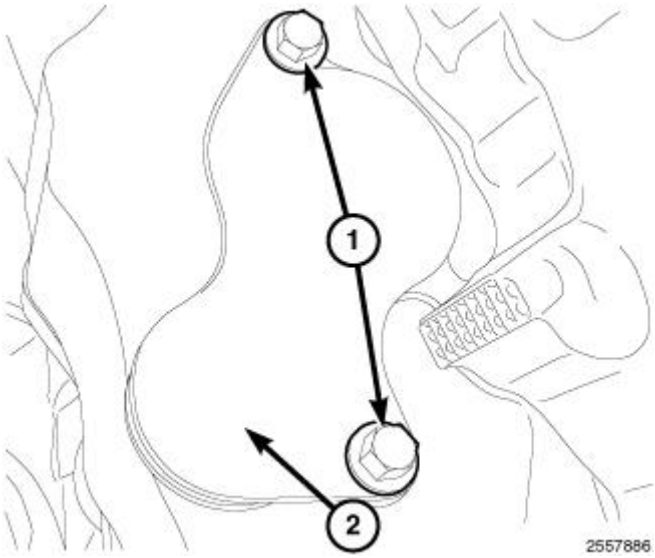

Fig. 105: Bolts & Bell Housing Access Cover
Courtesy of CHRYSLER GROUP, LLC

1. Disconnect both negative battery cables.
2. Remove the cylinder head cover. Refer to **COVER(S), CYLINDER HEAD, REMOVAL, 6.7L**.
3. Disconnect the injector harness connectors at cylinder head cover gasket. Remove all injector solenoid nuts. Remove cylinder head cover gasket.
4. Remove injector(s) for cylinder(s) to be serviced. Refer to **INJECTOR(S), FUEL, REMOVAL** .
5. Remove the rocker housing.
6. Remove the rocker arms and crossheads from the cylinder(s) to be serviced. Mark each component so they can be installed in their original position.
7. Remove bolts (1) and the bell housing access cover (2).

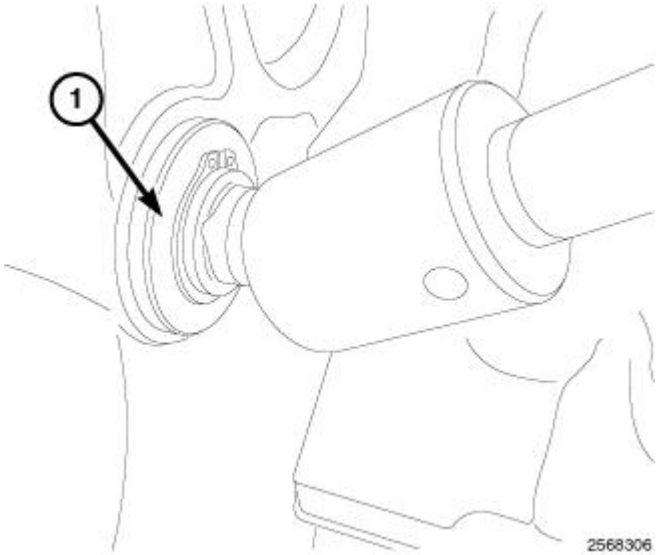

Fig. 106: Engine Barring Tool
Courtesy of CHRYSLER GROUP, LLC

NOTE: At this engine position, cylinders No. 1 and No. 6 can be serviced.

8. Using the barring tool (special tool #7471B, Barring Tool) (1), rotate the engine to position the damper mark in the 12 o'clock position.
9. Remove the accessory drive belt. Refer to **BELT, SERPENTINE, REMOVAL** .
10. With the damper TDC mark in the 12 o'clock position, add a paint mark anywhere on the gear housing cover next to the crankshaft damper. Place another mark on the vibration damper in alignment with the mark you just made on the cover.
11. Divide the crankshaft damper into three equally sized segments as follows:
    1. Using a tape measure, measure the circumference of the crankshaft damper and divide the measurement by three (3).
    2. Measure that distance in a counterclockwise direction from the first balancer mark and place another mark on the balancer.
    3. From the second damper mark, again measure in a counterclockwise direction and place a mark on the damper at the same distance you measured when placing the second damper mark. The damper should now be marked in three equally spaced locations and the damper TDC mark should be in the 12 o'clock position.
    4. Remove injectors, fuel lines, and high pressure connectors for every cylinder that requires repair.

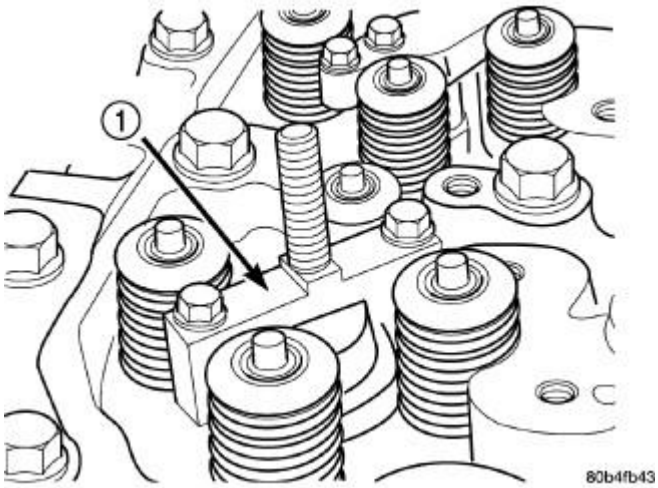

Fig. 107: Spring Compressor Mounting Base
Courtesy of CHRYSLER GROUP, LLC

1 - COMPRESSOR MOUNTING BASE

12. Compress the valve springs at cylinders. No. 1 and No. 6 as follows:
    1. Install the Valve Spring Compressor Tool (special tool #8319, Compressor, Valve Spring) base (1) as shown in illustration.

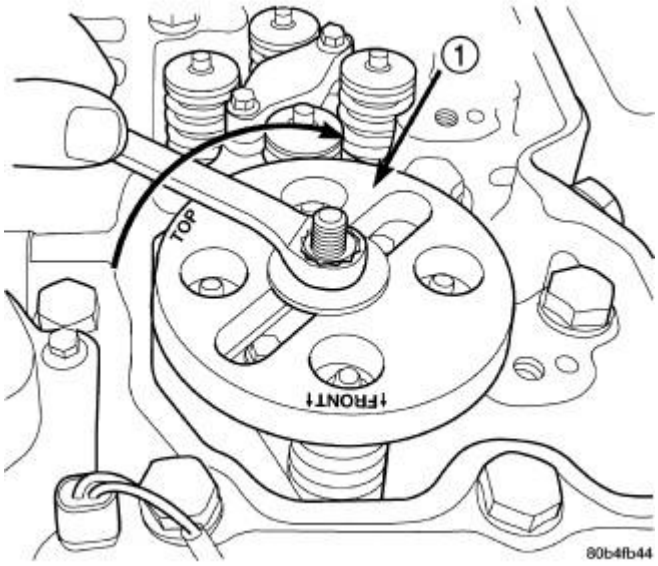

Fig. 108: Compressing Valve Springs With Tool 8319-A
Courtesy of CHRYSLER GROUP, LLC

1 - SPECIAL TOOL 8319

13. Install the Valve Spring Compressor Tool (special tool #8319, Compressor, Valve Spring) top plate, washer, and nut. Using a suitable wrench tighten the nut (clockwise) to compress the valve springs and

remove the collets.

1. Rotate the compressor nut counterclockwise to relieve tension on springs. Remove spring compressor.
2. Remove and replace retainers, springs, and seals as necessary.
3. **Do not rotate the engine until the springs and retainers are reinstalled.**
4. Install seals, springs and retainers. Install spring compressor, compress valve springs and install the collets.
5. Release the spring tension and remove the compressor. Verify that the collets are seated by tapping on the valve stem with a plastic hammer.

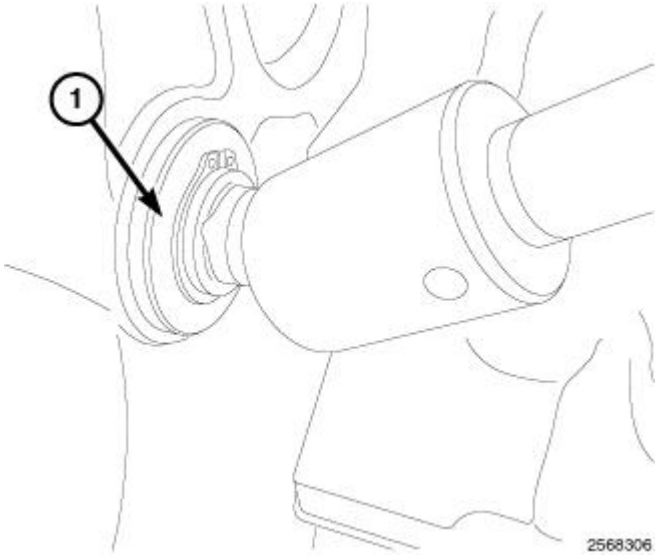

Fig. 109: Engine Barring Tool
Courtesy of CHRYSLER GROUP, LLC

NOTE: In this position, cylinders No. 2 and No. 5 can be serviced.

14. Using the barring tool (special tool #7471B, Barring Tool) (1), rotate the engine until the next crankshaft damper paint mark aligns with the mark you placed on the cover.
15. Repeat the valve spring compressing procedure previously performed and service the retainers, springs, and seals as necessary.

NOTE: In this position, cylinders No. 3 and No. 4 can be serviced.

16. Using the barring tool (special tool #7471B, Barring Tool), rotate the engine until the next crankshaft damper paint mark aligns with the mark you placed on the cover.
17. Repeat the spring compressing procedure previously performed and service the retainers, springs, and seals as necessary.

INSTALLATION

INSTALLATION

1. Install rocker housing. Refer to **COVER(S), CYLINDER HEAD, INSTALLATION, 6.7L**.
2. Install fuel injectors and high pressure fuel lines. Refer to **INJECTOR(S), FUEL, INSTALLATION** .
3. Lubricate the valve tips and install the crossheads in their original locations.
4. Lubricate the crossheads and push rod sockets and install the rocker arms and pedestals in their original locations. Tighten bolts to 36 N.m (27 ft. lbs.).
5. **Verify valve lash adjustment. Refer to Engine/Cylinder Head/VALVES, Intake and Exhaust - Standard Procedure.**
6. Install cylinder head cover gasket onto rocker housing. Refer to **COVER(S), CYLINDER HEAD, INSTALLATION, 6.7L**.
7. Install injector solenoid nuts.
8. Connect injector harness connectors.
9. Install cylinder head cover. Refer to **COVER(S), CYLINDER HEAD, INSTALLATION, 6.7L**.
10. Connect both negative battery cables.

ENGINE BLOCK

STANDARD PROCEDURE

CYLINDER BLOCK REFACING

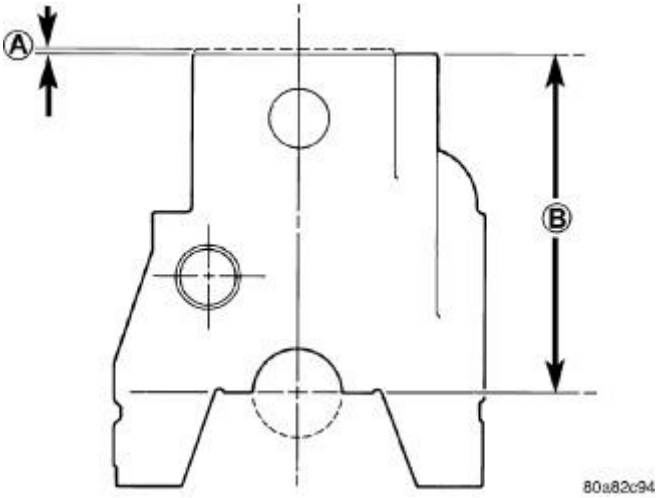

Fig. 110: Refacing Dimensions Of Cylinder Block
Courtesy of CHRYSLER GROUP, LLC

1. Prior to removing the piston and connecting rod assemblies, measure and record piston protrusion. Piston protrusion (A) must be with in 0.151 - 0485 mm (0.006 - 0.019 in.). Measuring piston protrusion prior to disassembly will aid in determining if the cylinder block, if required, can be resurfaced.
2. Measure the overall flatness of the engine block.
3. The engine block must be within 0.076 mm (0.003 in) end-to-end and 0.051 mm (.002 in.) side-to-side.
4. Inspect for any localized dips or imperfections. If present, the cylinder head deck MUST be resurfaced.

NOTE: **The combustion deck of the block can ONLY be resurfaced if after the resurface, the correct piston protrusion can be achieved.**

No specific head gasket with an increased thickness is available for combustion deck resurfacing. If the combustion deck can NOT be resurfaced such that the correct piston protrusion an be reached, the cylinder block MUST be replaced.

CYLINDER BORE - DE-GLAZE

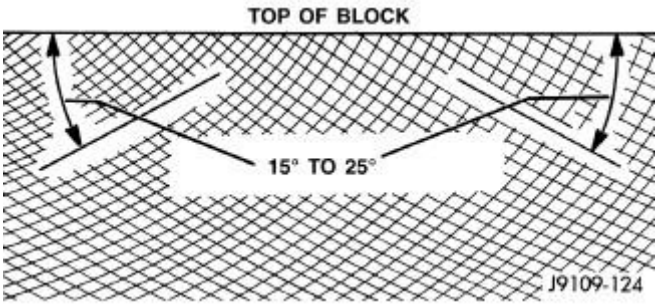

Fig. 111: Cylinder Bore Crosshatch Pattern
Courtesy of CHRYSLER GROUP, LLC

1. New piston rings may not seat in glazed cylinder bores.
2. De-glazing gives the bore the correct surface finish required to seat the rings. The size of the bore is not changed by proper de-glazing.
3. Cover the lube and tappet holes in the top of the block with waterproof tape.
4. If crankshaft is installed, wrap connecting rod journals with clean cloth. Cover cloth with waterproof tape.
5. A correctly honed surface will have a crosshatch appearance with the lines at 15° to 25° angles. For the rough hone, use 80 grit honing stones. To finish hone, use 280 grit honing stones.

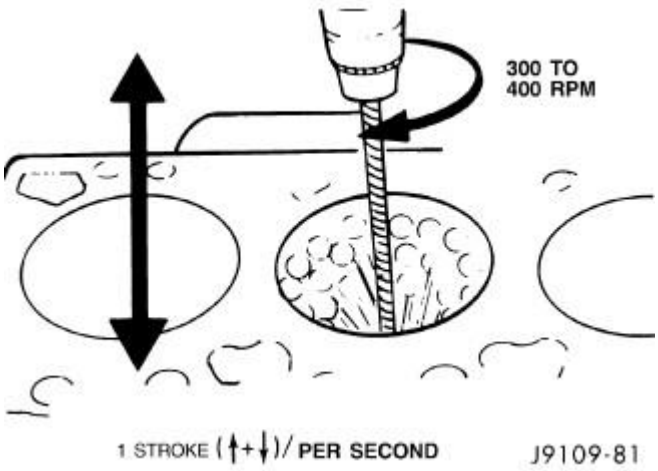

Fig. 112: De-Glazing Cylinder Bore
Courtesy of CHRYSLER GROUP, LLC

6. Use a drill, a fine grit Flex-hone and a mixture of equal parts of mineral spirits and SAE 30W engine oil

to de-glaze the bores.

7. The crosshatch angle is a function of drill speed and how fast the hone is moved vertically.
8. Vertical strokes MUST be smooth continuous passes along the full length of the bore.
9. Inspect the bore after 10 strokes.
10. Use a strong solution of hot water and laundry detergent to clean the bores. Clean the cylinder bores immediately after de-glazing.
11. Rinse the bores until the detergent is removed and blow the block dry with compressed air.
12. Check the bore cleanliness by wiping with a white, lint free, lightly oiled cloth. If grit residue is still present, repeat the cleaning process until all residue is removed. Wash the bores and the complete block assembly with solvent and dry with compressed air. Place a clean shop towel around the top main bearing saddle to deflect water and residue from piston cooling nozzles. Remove directed piston cooling nozzles if installed.
13. Be sure to remove the tape covering the lube holes, rod journals, and piston cooling nozzles after the cleaning process is complete.

OVERSIZE BORE

Oversize pistons and rings are available in one size - 0.50 mm (0.0197 inch).

Any combination of standard or 0.50 mm (0.0197 inch) overbore may be used in the same engine.

If more than 0.50 mm (0.0197 inch) overbore is needed the block must be replaced.

Cylinder block bores may be bored one time. The bore size is 0.50 mm (0.0197 inch) oversize.

After boring to size, use a honing stone to chamfer the edge of the bore.

CYLINDER BORE DIMENSION CHART

DESCRIPTION	MEASUREMENT
BORING DIAMETER DIMENSION	REBORE - 107.490 mm (4.2319 in.) Minimum
	REBORE - 107.510 mm (4.2327 in.) Maximum
HONING DIAMETER DIMENSIONS	STANDARD - 102.020 ± 0.020 mm (4.0165 ± 0.0008 in.)
	REBORE - 107.45 mm (4.2303 in) Nominal
CHAMFER DIMENSIONS	Approx. 1.25 mm (0.049 in.) by 30°

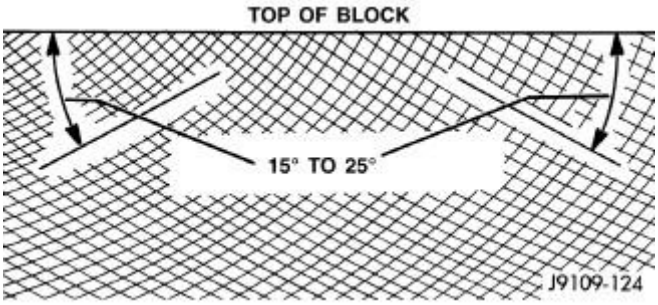

Fig. 113: Crosshatch Pattern Of Repaired Sleeve(s)

Courtesy of CHRYSLER GROUP, LLC

A correctly honed surface will have a crosshatch appearance with the lines at 15° to 25° angles with the top of the cylinder block. For the rough hone, use 80 grit honing stones. To finish hone, use 280 grit honing stones.

A maximum of 1.2 micrometer (48 microinch) surface finish must be obtained.

After finish honing is complete, immediately clean the cylinder bores with a strong solution of laundry detergent and hot water.

After rinsing, blow the block dry.

Check the bore cleanliness by wiping with a white, lint-free, lightly- oiled cloth. There should be no grit residue present.

If the block is not to be used right away, coat it with a rust- preventing compound.

CAM BORE REPAIR

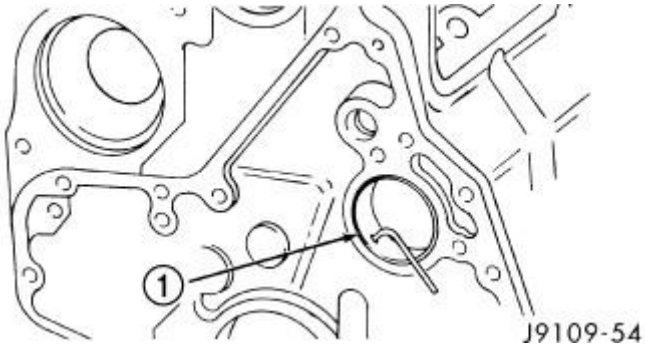

Fig. 114: Camshaft Bushing
Courtesy of CHRYSLER GROUP, LLC

1 - CAMSHAFT BUSHING

For standard bushings, not oversized, maximum front and rear cam bushing bore diameter is 59.248 mm. (2.3326 in.). DO NOT bore the intermediate cam bore to the front cam bore oversize dimensions. Maximum front and rear camshaft bushing installed diameter is 54.147 mm. (2.1318 in.). Minimum installed diameter is 54.083 mm. (2.1293 in.). Maximum intermediate camshaft bore diameter is 54.164 mm. (2.1324 in.).

A surface finish of 2.3 micrometers (92 microinch) must be maintained. Not more than 20% of an area of any one bore may be 3.2 micrometers (126 microinch).

Camshaft bores can be repaired individually. It is not necessary to repair undamaged cam bores in order to repair individually damaged cam bores. The standard front and rear bushing (1) cannot be used to repair intermediate bores.

Install all cam bushings flush or below the front and rear cam bore surface. The front camshaft bushing should be installed flush with front face of block. The oil hole must align to allow a 3.2 mm (0.125 inch) rod to pass

through freely.

INSPECTION

INSPECTION

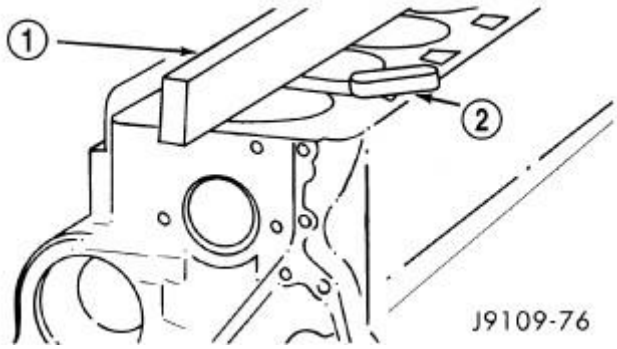

Fig. 115: Combustion Deck Face Measurement
Courtesy of CHRYSLER GROUP, LLC

1 - STRAIGHT EDGE
2 - FEELER GAUGE

Measure the combustion deck face using a straight edge (1) and a feeler gauge (2). Cylinder block flatness: End-to-end 0.076 mm (.003 in.). Maximum variation side-to-side 0.051 mm (.002 in.).

Inspect for any localized dips or imperfections.

If the surface exceeds the limit. Refer to **Engine/Engine Block - Standard Procedure**.

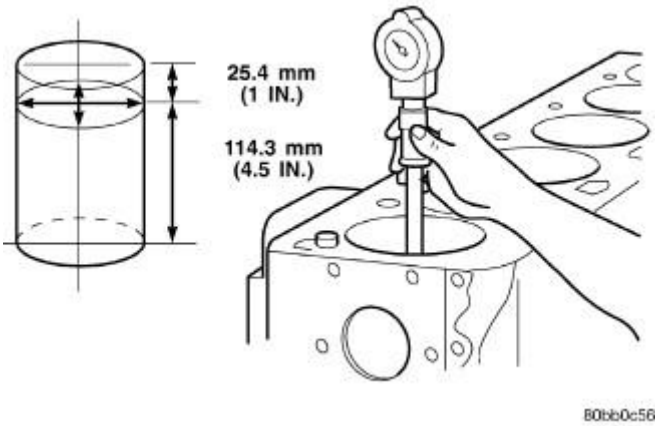

Fig. 116: Measuring Cylinder Bore Diameter
Courtesy of CHRYSLER GROUP, LLC

Inspect the cylinder bores for damage or excessive wear.

Measure the cylinder bores. If the cylinder bores exceed the limit. Refer to **Engine/Engine Block - Standard**

Procedure.

BORE SPECIFICATIONS

BORE SPECIFICATIONS	
BORE DIAMETER	
Min.	106.990 mm (4.2122 in.)
Max.	107.010 mm (4.2130 in.)
OUT OF ROUNDNESS	
Max.	0.038 mm (0.0015 in.)
TAPER	
Max.	0.076 mm (.003 in.)

Inspect the camshaft bores for scoring or excessive wear.

Measure the camshaft bores. Refer to **Engine - Specifications**.

If a bore exceeds the limit. Refer to **Engine/Engine Block - Standard Procedure**.

Inspect the tappet bores for scoring or excessive wear.

Measure tappet bore from bottom of block. Minimum tappet bore diameter 16.000 mm (0.630 in.). Maximum tappet bore 16.055 mm. (0.632 in.).

If out of limits, replace the cylinder block.

BEARING(S), CONNECTING ROD

STANDARD PROCEDURE

STANDARD PROCEDURE - CONNECTING ROD BEARING AND CRANKSHAFT JOURNAL CLEARANCE

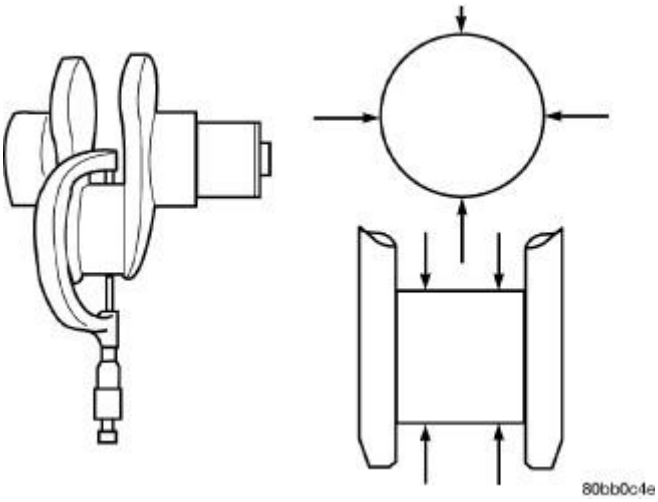

Fig. 117: Measuring Connecting Rod Journal Diameter

Courtesy of CHRYSLER GROUP, LLC

1. Measure the connecting rod bore with bearings **removed** and the bolts tightened to 100 Nm (73 ft. lbs.) torque.
2. Measure the connecting rod bore with the bearings **installed** and the bolts tightened to 100 Nm (73 ft. lbs.) torque.

Measure within 20° arc from each side of the parting line. Also measure 90° from parting line.

Record the smallest and largest diameter.

Measure the diameter of the rod journal at the location shown in illustration. Calculate the average diameter for each side of the journal.

Determine minimum bearing clearance by calculating the difference between the smallest connecting rod bore diameter with the bearing installed and the average diameter for each side of the crankshaft connecting rod journal. See charts below.

Determine the maximum bearing clearance by calculating the difference between the largest connecting rod bore diameter and the average diameter with the bearing installed for each side of the crankshaft connecting rod journal. See charts below.

If the crankshaft is within limits, replace the bearing. If the crankshaft is out of limits, grind the crankshaft to the next smaller size and use oversize rod bearings.

CONNECTING ROD BORE DIAMETER LIMITS

DESCRIPTION	MEASUREMENT
CONNECTING ROD BORE, BEARINGS REMOVED	MIN. 72.99 mm (2.874 in.) MAX. 73.01 mm (2.875 in.)
CONNECTING ROD BORE, BEARINGS INSTALLED	MIN. 69.05 mm (2.719 in.) MAX. 69.10 mm (2.720 in.)

CONNECTING ROD JOURNAL DIAMETER LIMITS

DESCRIPTION	MEASUREMENT
CRANKSHAFT ROD JOURNAL DIAMETER	Min. 68.96 mm (2.715 in.) Max. 69.01 mm (2.717 in.)
BEARING CLEARANCE	Min. 0.04 mm (.002 in.) Max. 0.12 mm (0.005 in.)

BEARING(S), CRANKSHAFT, MAIN

STANDARD PROCEDURE

STANDARD PROCEDURE - MAIN BEARING CLEARANCE

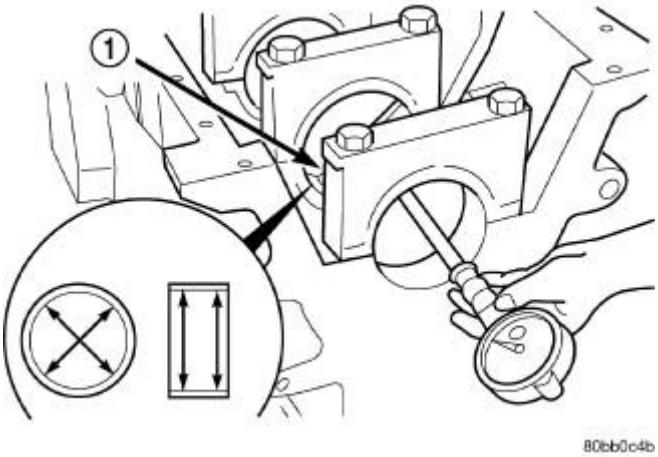

Fig. 118: Measuring Main Bearing Bore Diameter
Courtesy of CHRYSLER GROUP, LLC

1. Remove bearings and inspect the main bearing bores for damage or abnormal wear.
2. Measure main bearing bore diameter (1) after tightening main bearing cap bolts to 176 N.m (130 ft. lbs.). See Main Bearing Bore Diameter table for specifications.
3. Install the crankshaft main bearings and measure main bearing bore diameter with the main bolts tightened to 176 N.m (130 ft. lbs.). See Main Bearing Bore Diameter table for specifications.

MAIN BEARING BORE DIAMETER

ITEM	MAIN BEARING BORE DIAMETER (MAXIMUM)
BEARINGS INSTALLED	83.106 mm (3.2719 in.)
BEARINGS REMOVED	Min 87.983 mm (3.4639 in.) Max. 88.019 mm (3.4653 in.)

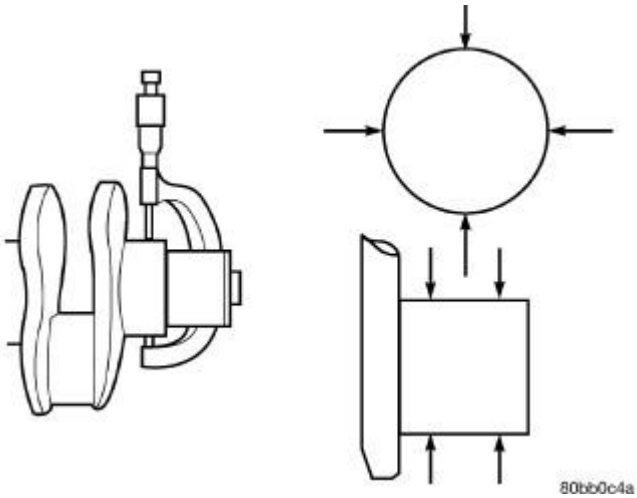

Fig. 119: Measuring Crankshaft Main Journal Diameter
Courtesy of CHRYSLER GROUP, LLC

4. Measure the diameter of the crankshaft main journal at the locations shown in illustration. Calculate the average diameter for each side of the journal.
5. Calculate the main bearing journal to bearing clearance. Maximum clearance is 0.119 mm (0.00475 inch). If the crankshaft journal is within limits, replace the main bearings. If not within limits, grind the crankshaft to next size and use oversize bearings. See Crankshaft Main Journal Diameter table for specifications.
6. Measure thrust distance at the No. 6 position.

CRANKSHAFT MAIN JOURNAL DIAMETER

ITEM	SPECIFICATION
Minimum diameter	82.962 mm (3.2662 in.)
Maximum diameter	83.013 mm (3.2682 in.)
Maximum out of roundness	0.050 mm (.002 in.)
Maximum taper	0.013 mm (.0005 in.)
Thrust distance (at No. 6 position)	Min. 0.065 mm (.003 in.) Max. 0.432 mm (.017 in.)

CAMSHAFT, ENGINE

REMOVAL

CAMSHAFT BEARINGS

NOTE: **Measure the diameter of each bore. If the camshaft bore for the cam bushing is worn beyond the limit, install a new service bushing. Inspect the rest of the camshaft bores for damage or excessive wear.**

If the bores without a bushing are worn beyond the limit, the engine must be removed for machining and installation of service bushings. If badly worn, replace the cylinder block.

1. Remove the camshaft. Refer to **CAMSHAFT, ENGINE, REMOVAL, 6.7L**.
2. Remove the bushing from the No. 1 bore.
3. Mark the cylinder block so you can align the oil hole in the cylinder block with the oil hole in the bushing.

CAMSHAFT - REMOVAL

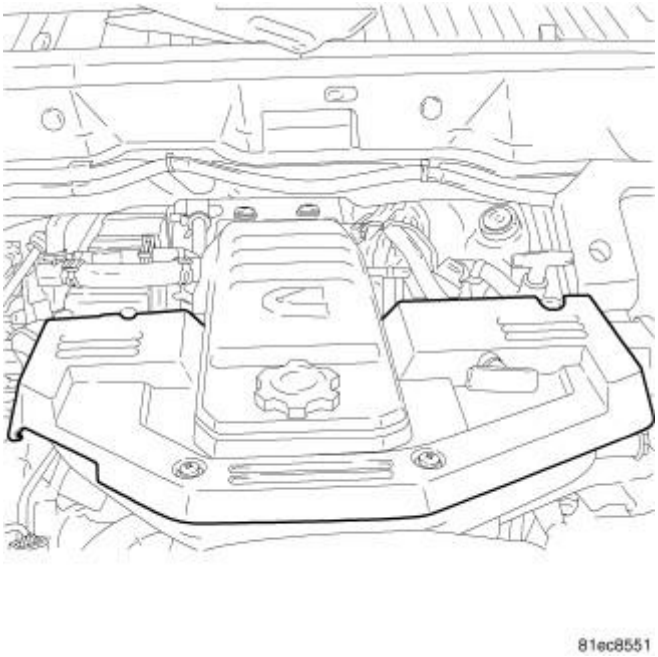

Fig. 120: Engine Cover
Courtesy of CHRYSLER GROUP, LLC

1. Disconnect both negative battery cables.
2. Remove the engine cover.
3. Recover A/C refrigerant (if A/C equipped). Refer to **PLUMBING, STANDARD PROCEDURE** .
4. Drain engine coolant. Refer to **STANDARD PROCEDURE** .
5. Remove radiator upper hose.
6. Remove viscous fan/drive/shroud assembly. Refer to **FAN, COOLING, ELECTRIC, REMOVAL** and **FAN, COOLING, VISCOUS, REMOVAL** .
7. Disconnect the coolant recovery bottle hose from the radiator filler neck.
8. Disconnect lower radiator hose from radiator outlet.
9. On automatic transmission equipped models, disconnect transmission oil cooler lines from radiator.
10. Remove radiator mounting screws and lift radiator out of engine compartment.
11. Remove upper radiator support panel.

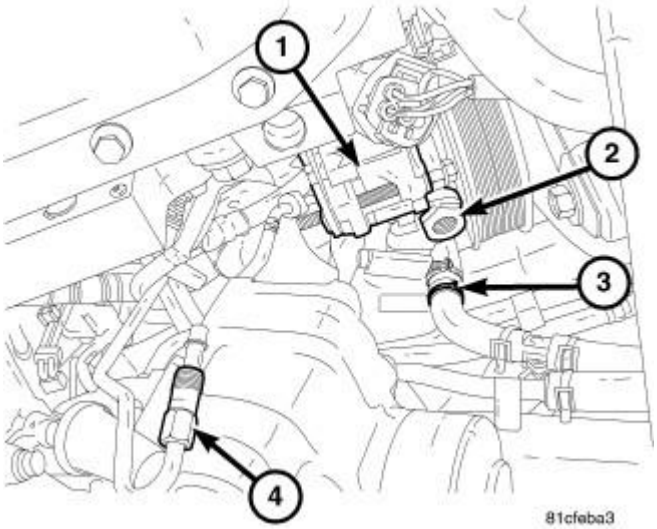

Fig. 121: Power Steering Pump Components
Courtesy of CHRYSLER GROUP, LLC

12. If A/C equipped, disconnect A/C condenser refrigerant lines.
13. Disconnect charge air cooler piping from the cooler inlet and outlet.
14. Remove the two charge air cooler mounting bolts.
15. Remove charge air cooler (and A/C condenser if equipped) from vehicle.
16. Remove the power steering pump and position aside.
17. Remove accessory drive belt. Refer to **BELT, SERPENTINE, REMOVAL** .

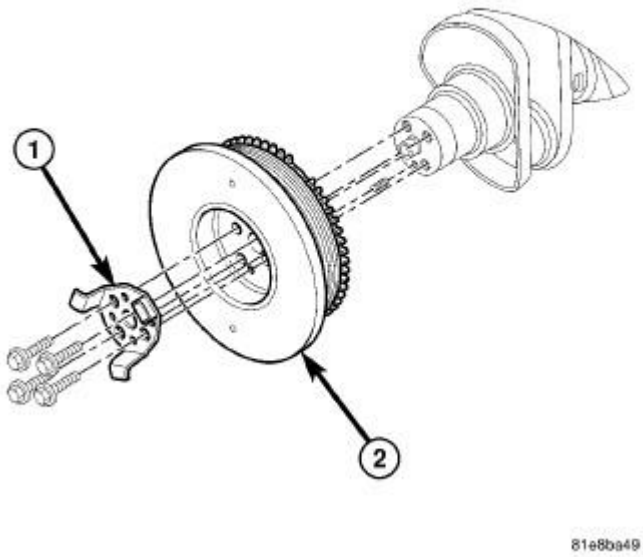

Fig. 122: Crankshaft Damper (Non-High Output Engine)

Courtesy of CHRYSLER GROUP, LLC

18. Remove accessory drive belt tensioner.
19. Remove the fan support/hub assembly.
20. Remove crankshaft damper. Refer to **DAMPER, VIBRATION, REMOVAL, 6.7L**.

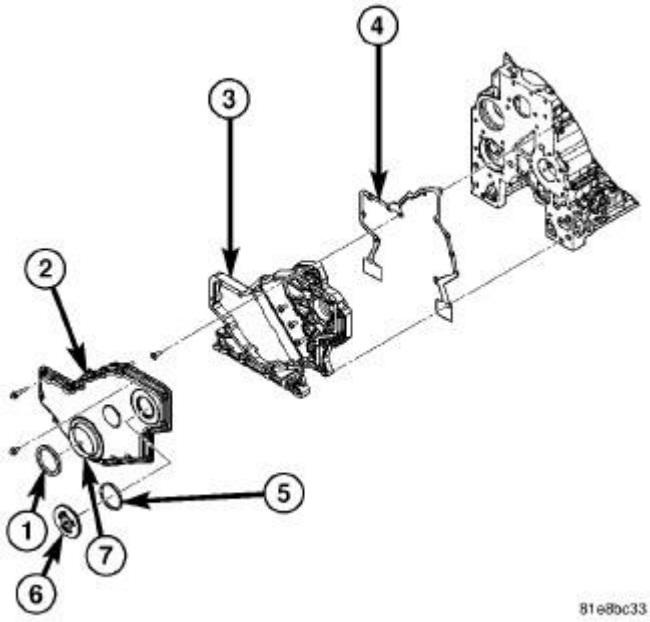

Fig. 123: Front Cover Assembly Components
Courtesy of CHRYSLER GROUP, LLC

21. Remove the gear cover-to-housing bolts and gently pry the cover away from the housing, taking care not to mar the sealing surfaces. Remove dust seal with cover.
22. Using Barring Tool (special tool #7471B, Barring Tool) or equivalent, rotate the crankshaft to align the timing marks on the crankshaft and the camshaft gears.
23. Remove the cylinder head cover. Refer to **COVER(S), CYLINDER HEAD, REMOVAL, 6.7L**.

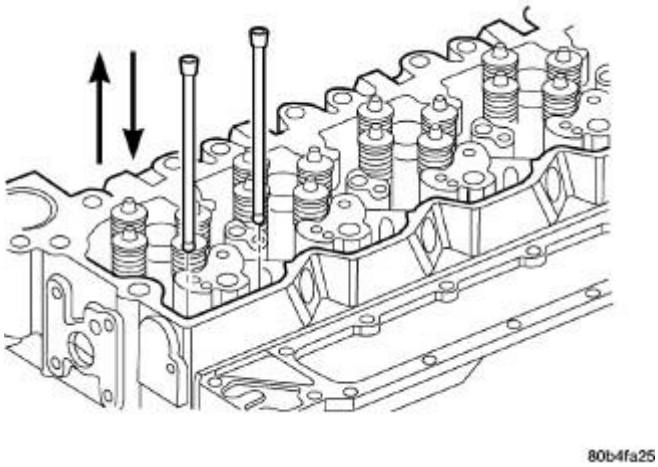

Fig. 124: Push Rod Removal/Installation
Courtesy of CHRYSLER GROUP, LLC

NOTE: **The No. 5 cylinder intake and the No. 6 cylinder intake and exhaust pushrods are removed by lifting them up and through the provided cowl panel access holes. Remove the rubber plugs to expose these relief holes.**

24. Remove the rocker arms, cross heads and push rods. Mark each component so they can be installed in their original positions.

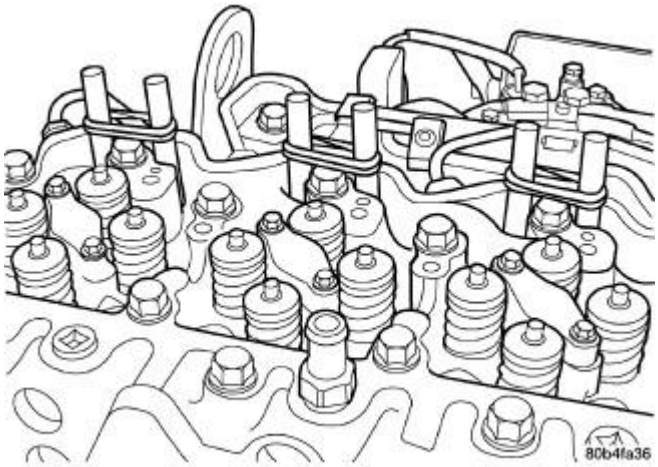

Fig. 125: Tappets Secured In Place Using Wooden Dowel Rods
Courtesy of CHRYSLER GROUP, LLC

25. Raise the tappets as follows, using the wooden dowel rods provided with the Tool Kit (special tool #8502, Remover/Installer).
    1. Insert the slotted end of the dowel rod into the tappet. **The dowel rods for the rear two cylinders will have to be cut for cowl panel clearance.** Press firmly to ensure that it is seated in the tappet.
    2. Raise the dowel rod to bring the tappet to the top of its travel, and wrap a rubber band around the dowel rods to prevent the tappets from dropping into the crankcase.

3. Repeat this procedure for the remaining cylinders.

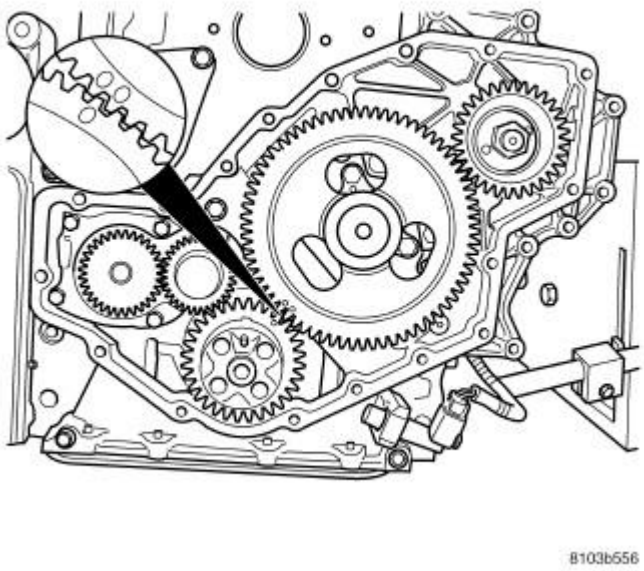

Fig. 126: Camshaft Gear & Crankshaft Gear Timing Mark Alignment
Courtesy of CHRYSLER GROUP, LLC

26. Verify that the camshaft timing marks are aligned with the crankshaft mark.
27. Remove the bolts from the thrust plate.
28. Remove engine mount through bolts.
29. Install Engine Support Fixture (special tool #8534B, Fixture, Driveline Support).

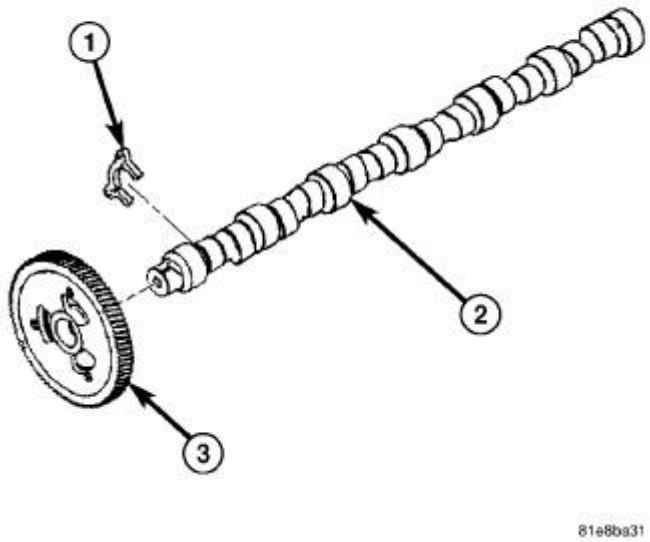

Fig. 127: Camshaft, Gear & Thrust Plate
Courtesy of CHRYSLER GROUP, LLC

30. Raise engine enough to allow camshaft removal.
31. Remove the camshaft (2), gear (3) and thrust plate (1).

INSPECTION

INSPECTION

CAMSHAFT

CAUTION: If Camshaft lobes are worn, requiring camshaft replacement, it is necessary to replace the tappets also. Refer to TAPPET(S), VALVE, REMOVAL, 6.7L.

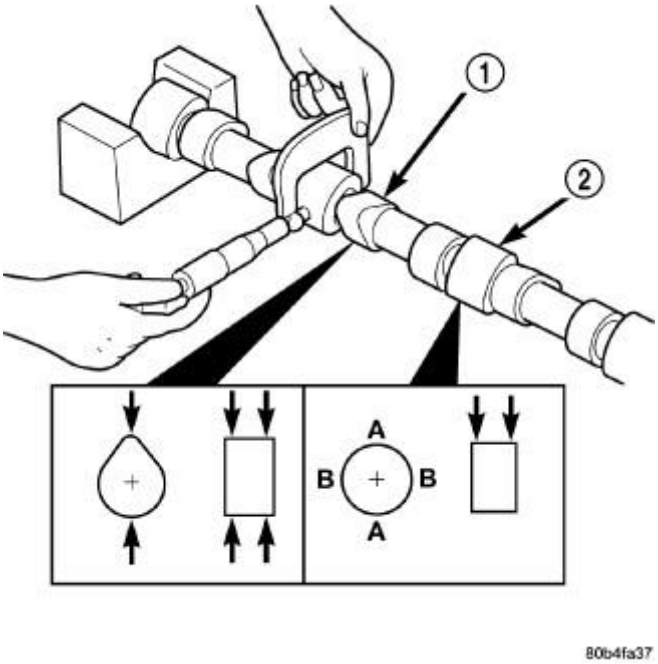

Fig. 128: Measuring Camshaft Lobes & Bearing Journals
Courtesy of CHRYSLER GROUP, LLC

1. Inspect the valve lobes (1) and bearing journals (2) for cracks, pitting, scoring or excessive wear. Replace any camshaft that exceeds the allowable limits.
2. Measure the bearing journals and lobes.

CAMSHAFT DIMENSIONS

CAMSHAFT DIMENSIONS	
Journal diameter (No. 1 and No. 7)	
Min.	54.028 mm. (2.127 in.)
Max.	54.048 mm. (2.128 in.)
Journal diameter (No. 2 through No. 6)	
Min.	53.962 mm. (2.1245 in.)
Max.	54.013 mm. (2.1265 in.)
DIAMETER OF PEAK OF LOBE	
Intake	
Min.	47.175 mm (1.857 in.)
Max	47.855 mm.
Exhaust	
Min.	45.632 mm. (1.797 in.)
Max.	46.312 mm. (1.823 in.)

CAMSHAFT BUSHING/BORES

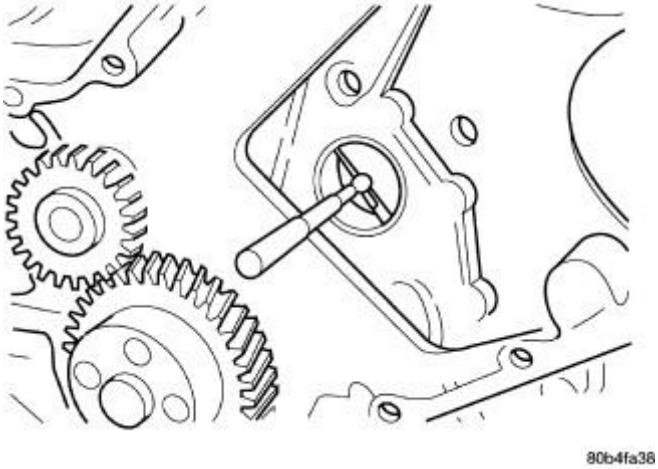

Fig. 129: Measuring Camshaft Bore
Courtesy of CHRYSLER GROUP, LLC

Camshaft bores No. 2-6 **do not** use a bushing.

1. Inspect the camshaft bushing and bores for signs of excessive wear.
2. Measure the camshaft bushing and bores with a telescoping bore gauge and micrometer. If out of specification. Refer to **CAMSHAFT, ENGINE, REMOVAL, 6.7L**.

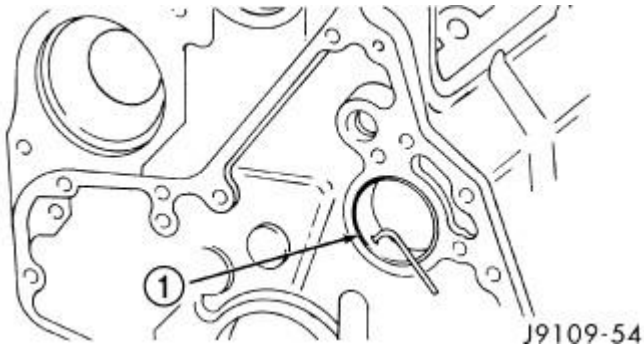

Fig. 130: Camshaft Bushing
Courtesy of CHRYSLER GROUP, LLC

3. Inspect the camshaft bushing (1) oil holes for alignment with cylinder block.

CAMSHAFT GEAR

Inspect the camshaft gear for cracks (gear and hub) and chipped/broken/fretted teeth. If replacement is necessary, camshaft and gear are replaced as an assembly. Refer to **CAMSHAFT, ENGINE, REMOVAL, 6.7L**.

THRUST PLATE

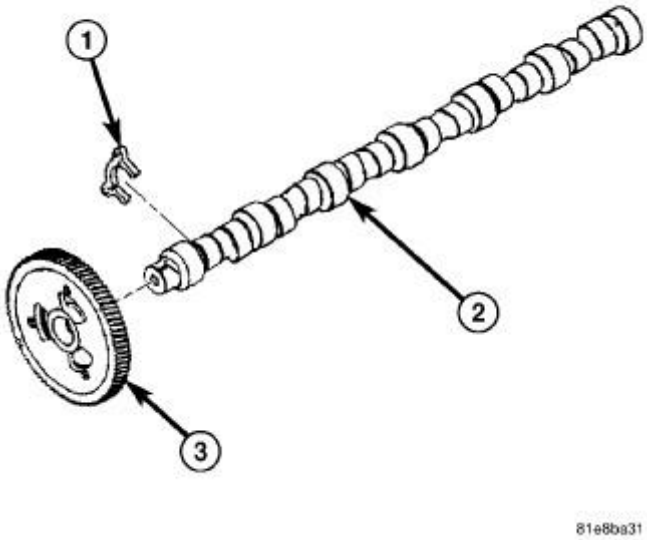

Fig. 131: Camshaft, Gear & Thrust Plate
Courtesy of CHRYSLER GROUP, LLC

Inspect the camshaft thrust plate (1) for excessive wear in the camshaft contact area. Measure thrust plate thickness. Replace any thrust plate that falls outside of the allowable limits.

CAMSHAFT THRUST PLATE THICKNESS

THRUST PLATE DIMENSIONS	
MIN.	9.34 mm (0.368 in.)
MAX.	9.60 mm (0.378 in.)

INSTALLATION

CAMSHAFT BEARINGS

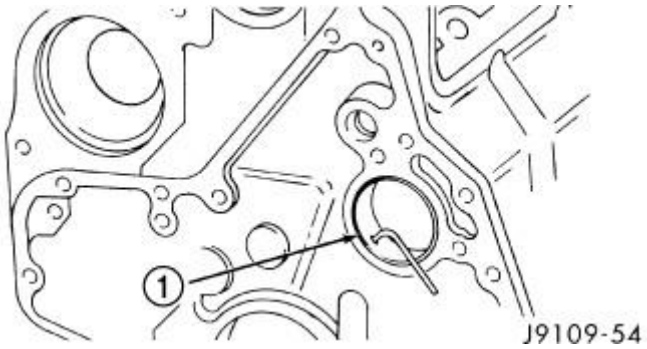

Fig. 132: Camshaft Bushing
Courtesy of CHRYSLER GROUP, LLC

1. Apply a coating of Loctite® 640 Adhesive to the backside of the new bushing. Avoid getting adhesive in the oil hole.
2. Use a universal cam bushing installation tool and install the front bushing (1) so that it is even with the front face of the cylinder block. The oil hole must be aligned. A 3.2 mm (0.128 inch) diameter rod must be able to pass through the hole.
3. Measure the installed bushings at the front bore. The minimum inside diameter is 54.083 mm (2.1293 inch), and the maximum inside diameter is 54.147 mm. (2.1318 in.).

CAMSHAFT INSTALLATION

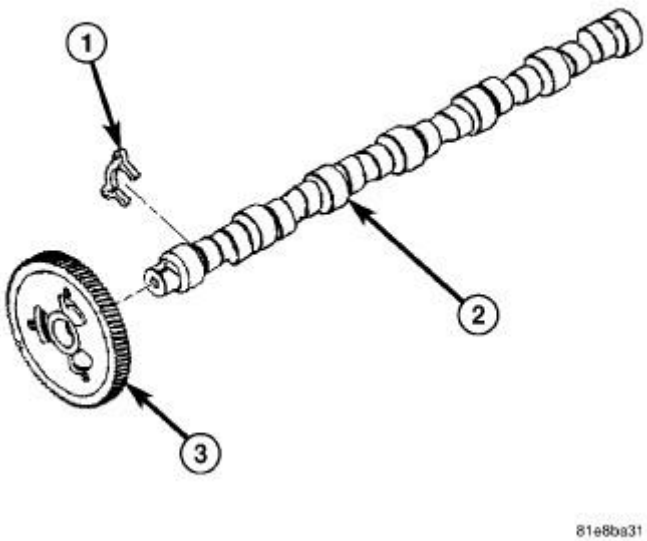

Fig. 133: Camshaft, Gear & Thrust Plate
Courtesy of CHRYSLER GROUP, LLC

1. Lubricate the camshaft bearings and with fresh engine oil or suitable equivalent.
2. Liberally coat the thrust plate (1) and the lobes and journals of the camshaft (2) with fresh engine oil or suitable equivalent.

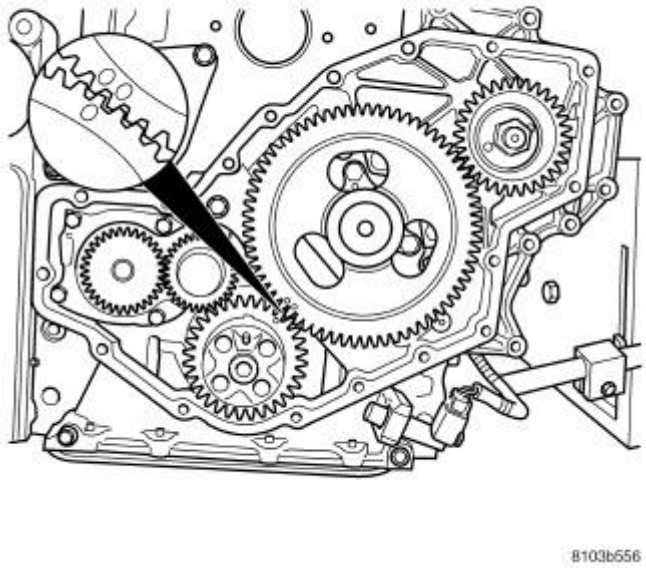

Fig. 134: Camshaft Gear & Crankshaft Gear Timing Mark Alignment
Courtesy of CHRYSLER GROUP, LLC

CAUTION: When installing the camshaft, DO NOT push it in farther than it will go with the thrust plate in place.

3. Install the camshaft and thrust plate. Align the timing marks as shown in illustration.
4. Install the thrust plate bolts and tighten to 24 N.m (18 ft. lbs.).
5. Measure camshaft back lash. Backlash should be within 0.075-0.250 mm (0.003-0.010 inch).
6. Measure camshaft end clearance. End clearance should be within 0.025 - 0.500 mm (0.001 - 0.020 inch).

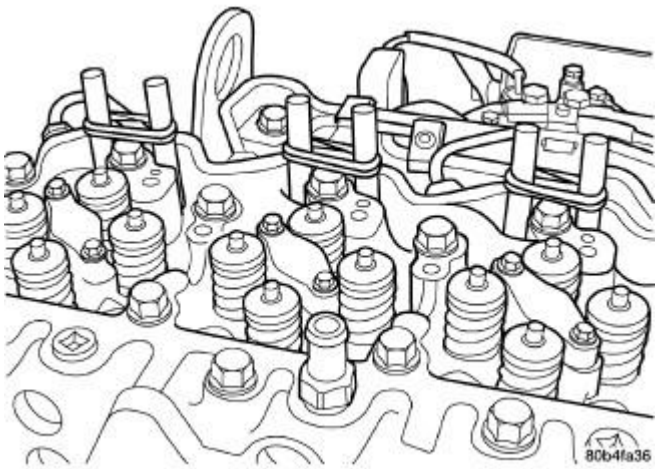

Fig. 135: Tappets Secured In Place Using Wooden Dowel Rods

Courtesy of CHRYSLER GROUP, LLC

7. Remove the wooden dowel rods and rubber bands from the tappets.

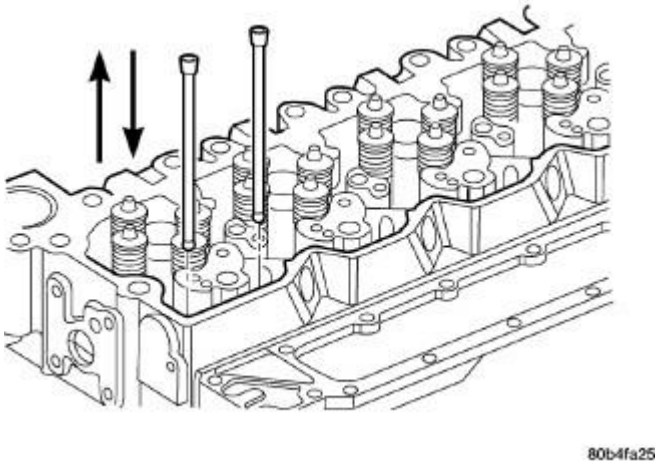

Fig. 136: Push Rod Removal/Installation
Courtesy of CHRYSLER GROUP, LLC

8. Lubricate the push rods with engine oil and install in their original location. **Verify that they are seated in the tappets.**
9. Lubricate the valve tips with engine oil and install the crossheads in their original locations.
10. Lubricate the crossheads and push rod sockets with engine oil and install the rocker arms and pedestals in their original locations. Tighten bolts to 36 N.m (27 ft. lbs.).
11. Verify valve lash adjustment. Refer to **Engine/Cylinder Head/VALVES, Intake and Exhaust - Standard Procedure**.
12. Install the cylinder head cover. Refer to **COVER(S), CYLINDER HEAD, INSTALLATION, 6.7L**.

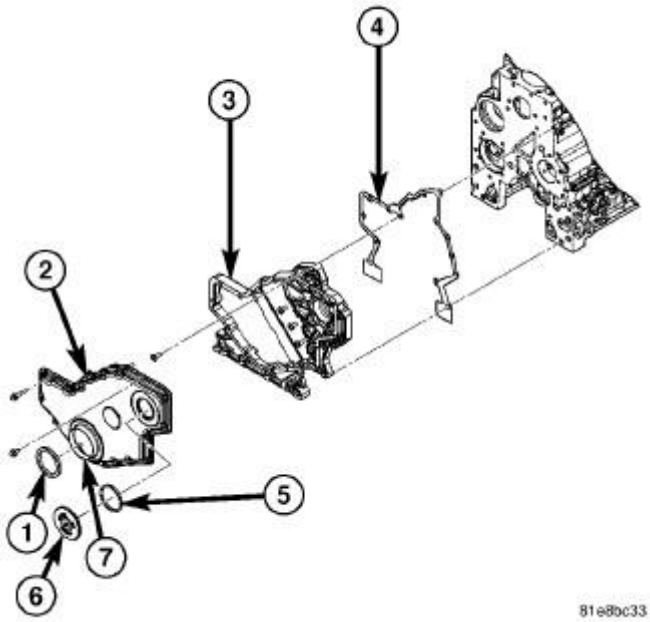

Fig. 137: Front Cover Assembly Components
Courtesy of CHRYSLER GROUP, LLC

13. Install gear housing cover. Refer to **COVER(S), ENGINE TIMING, INSTALLATION, 6.7L**.
14. Install front crankshaft dust seal.

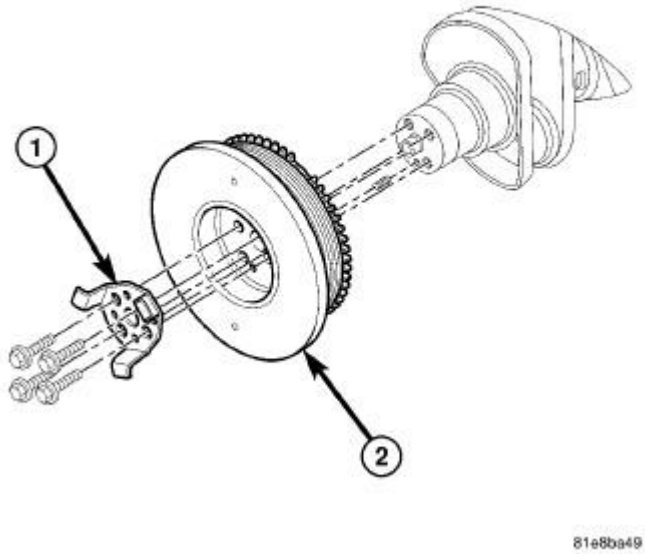

Fig. 138: Crankshaft Damper (Non-High Output Engine)
Courtesy of CHRYSLER GROUP, LLC

15. Install the crankshaft damper. Refer to **DAMPER, VIBRATION, INSTALLATION, 6.7L**.
16. Install the fan support/hub assembly. Refer to **FAN, COOLING, ELECTRIC, INSTALLATION** and **FAN, COOLING, VISCOUS, INSTALLATION** .

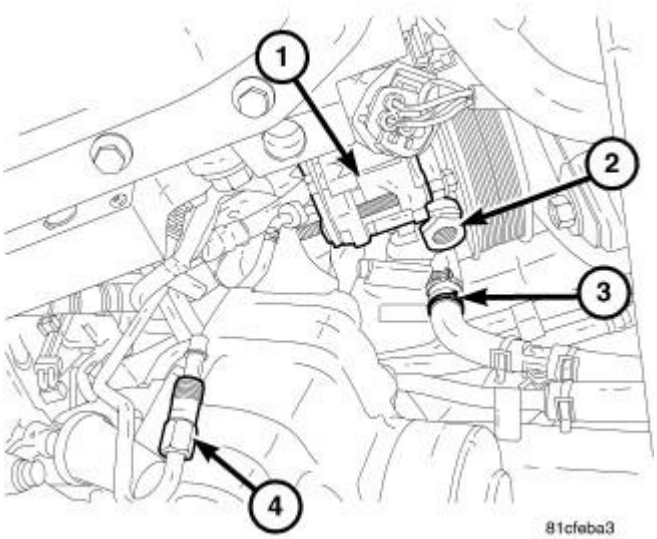

Fig. 139: Power Steering Pump Components
Courtesy of CHRYSLER GROUP, LLC

17. Install the power steering pump. Refer to **PUMP, INSTALLATION** .
18. Install the accessory drive belt tensioner. Tighten bolt to 43 N.m (32 ft. lbs.).
19. Install the accessory drive belt. Refer to **BELT, SERPENTINE, INSTALLATION** .

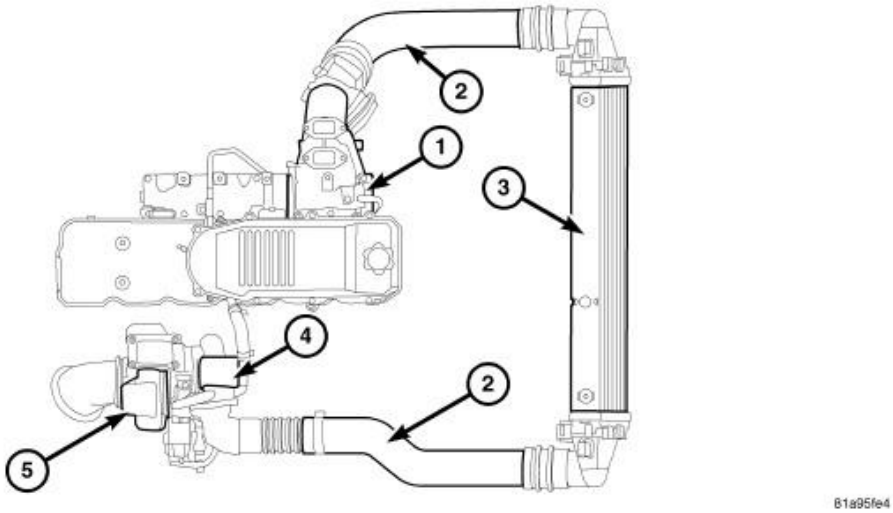

Fig. 140: Charge Air Cooler Assembly Components
Courtesy of CHRYSLER GROUP, LLC

1 - INTAKE MANIFOLD
2 - CHARGE AIR COOLER TUBE

3 - CHARGE AIR COOLER 4 - TURBOCHARGER FRESH AIR INTAKE 5 - TURBOCHARGER

20. Install the charge air cooler (with a/c condenser and auxiliary transmission oil cooler, if equipped) and tighten the mounting bolts to 2 N.m (18 in. lbs.).
21. Connect charge air cooler inlet and outlet pipes (2). Tighten clamps to 11 N.m (97 in. lbs.).
22. Install the radiator upper support panel.
23. Close radiator petcock and lower the radiator into the engine compartment. Tighten the mounting bolts to 11 N.m (97 in. lbs.).
24. Raise vehicle on hoist.
25. Connect radiator lower hose and install clamp.
26. Connect transmission auxiliary oil cooler lines (if equipped).
27. Lower vehicle.
28. Install the fan drive/shroud assembly. Refer to **FAN, COOLING, ELECTRIC, INSTALLATION** and **FAN, COOLING, VISCOUS, INSTALLATION** .
29. Install the coolant recovery and windshield washer fluid reservoirs to the fan shroud.
30. Connect the coolant recovery hose to the radiator filler neck.
31. Add engine coolant. Refer to **STANDARD PROCEDURE** .
32. Charge A/C system (if A/C equipped). Refer to **PLUMBING, STANDARD PROCEDURE** .
33. Connect the negative battery cables.

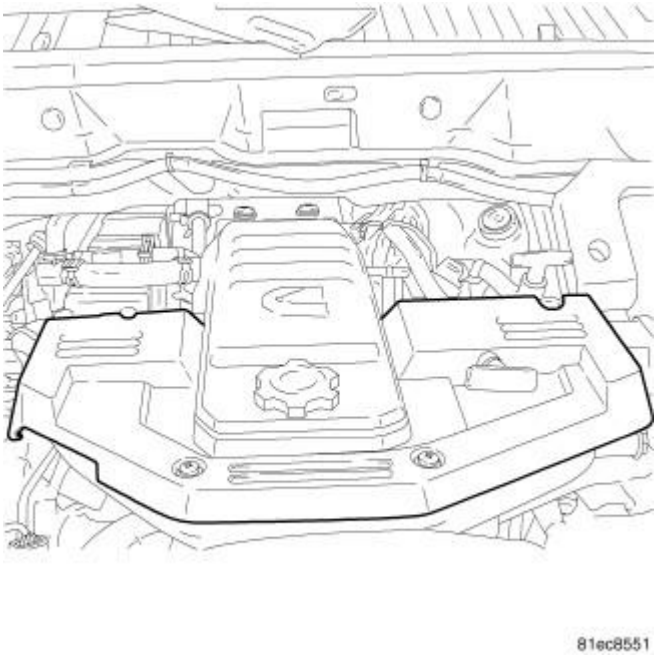

Fig. 141: Engine Cover
Courtesy of CHRYSLER GROUP, LLC

34. Start engine and check for engine oil and coolant leaks.
35. Install the engine cover.

CRANKSHAFT

DESCRIPTION

DESCRIPTION

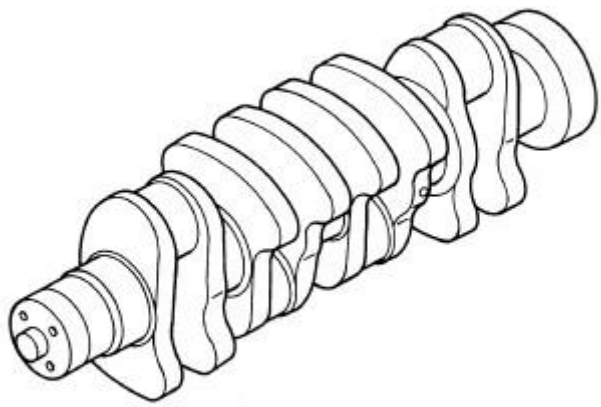

80c41fb5

Fig. 142: Crankshaft
Courtesy of CHRYSLER GROUP, LLC

The crankshaft is a forged steel, internally balanced unit. It is supported by seven main bearings, with position number six designated as the thrust journal. The crankshaft is held in place by main caps and 12 mm capscrews. The crankshaft also has internal cross drillings to supply the connecting rods with engine oil.

REMOVAL

REMOVAL

1. Remove the gear housing cover. Refer to **COVER(S), ENGINE TIMING, REMOVAL, 6.7L**.
2. Split the gear and remove it from the crankshaft.

INSTALLATION

INSTALLATION

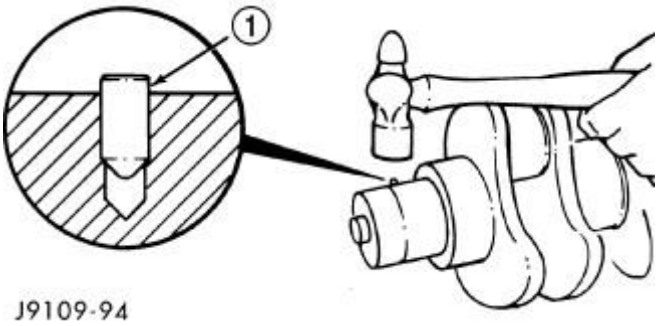

Fig. 143: Installing Alignment Pin
Courtesy of CHRYSLER GROUP, LLC

1 - ALIGNMENT PIN

1. Remove all burrs and make sure the gear surface on the end of the crankshaft is smooth.
2. If removed, install a new alignment pin. Drive the pin in using a ball- peen hammer, leaving it protruding 1.0 mm (0.039 inch) to 1.5 mm (0.059 inch) above the crankshaft.

WARNING: WEAR PROTECTIVE GLOVES TO PREVENT INJURY.

CAUTION: DO NOT heat the gear longer than 45 minutes.

3. Heat the crankshaft gear for 45 minutes at a temperature of 149°C (300°F). **Do not use torch, gear failure will occur.**
4. Apply a thin coat of lubricant to the nose of the crankshaft.
5. Position the gear with the timing mark out and install it on the crankshaft using the alignment pin. Make sure the gear contacts the shoulder.

DAMPER, VIBRATION

REMOVAL

REMOVAL

NON-HIGH OUTPUT ENGINE

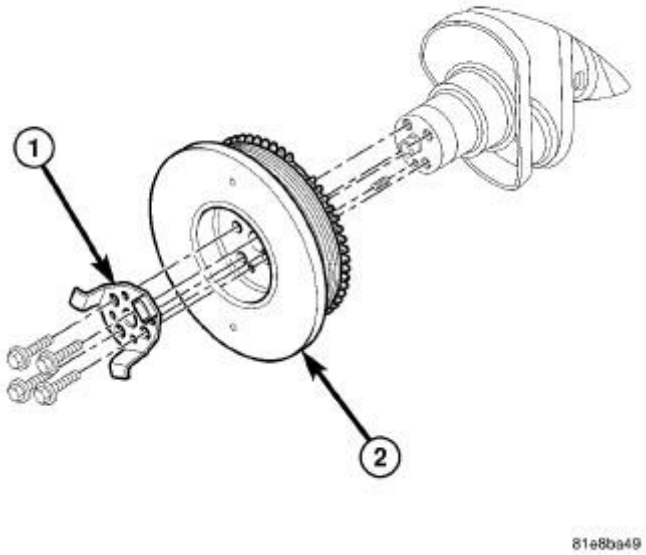

Fig. 144: Crankshaft Damper (Non-High Output Engine)
Courtesy of CHRYSLER GROUP, LLC

1. Remove the accessory drive belt. Refer to **BELT, SERPENTINE, REMOVAL** .
2. Remove the four bolts and the vibration damper.

HIGH OUTPUT ENGINE

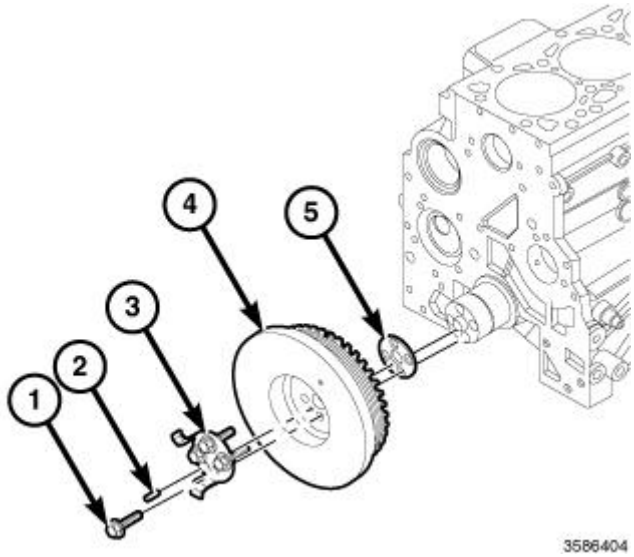

Fig. 145: Crankshaft Damper (High Output Engine)
Courtesy of CHRYSLER GROUP, LLC

1. Remove the accessory drive belt. Refer to **BELT, SERPENTINE, REMOVAL** .

NOTE: **Ensure that the friction shim stays with the damper when it is removed. It will need to be reinstalled with the damper.**

2. Remove the four bolts (1), vibration damper (4), and friction shim (5).

INSPECTION

INSPECTION

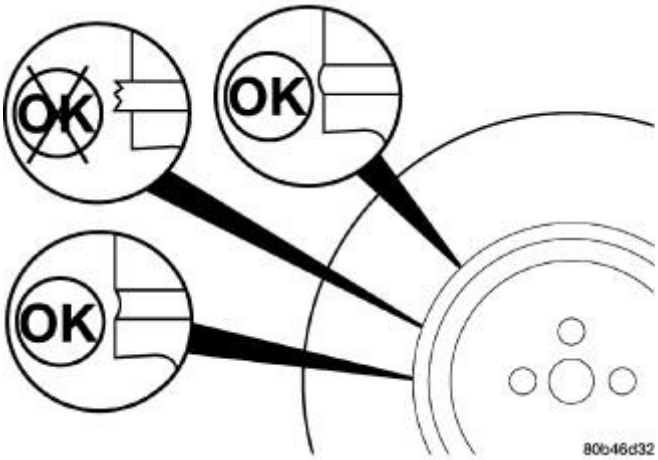

Fig. 146: Inspect Damper Rubber Member
Courtesy of CHRYSLER GROUP, LLC

NOTE: **The Crankshaft damper is of viscous design and the speed indicator is incorporated into the crankshaft damper.**

1. Inspect the damper hub for cracks and replace if any are found.
2. If the crankshaft damper is leaking fluid, discard and replace the crankshaft damper.

INSTALLATION

INSTALLATION

NON-HIGH OUTPUT ENGINE

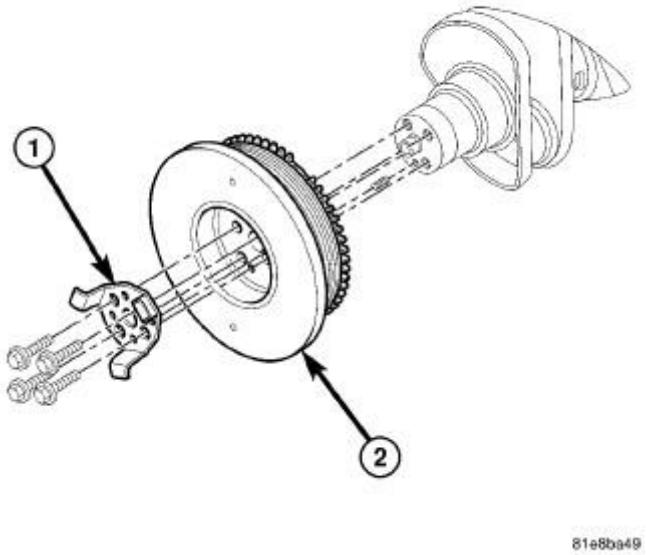

Fig. 147: Crankshaft Damper (Non-High Output Engine)
Courtesy of CHRYSLER GROUP, LLC

NOTE: The damper must be installed so the hole is located over the dowel pin.

1. Install the crankshaft damper and bolts. Tighten bolts to 40 N.m (30 ft. lbs.) plus an additional 60° in a criss-cross pattern.
2. Install the accessory drive belt. Refer to **BELT, SERPENTINE, INSTALLATION** .

HIGH OUTPUT ENGINE

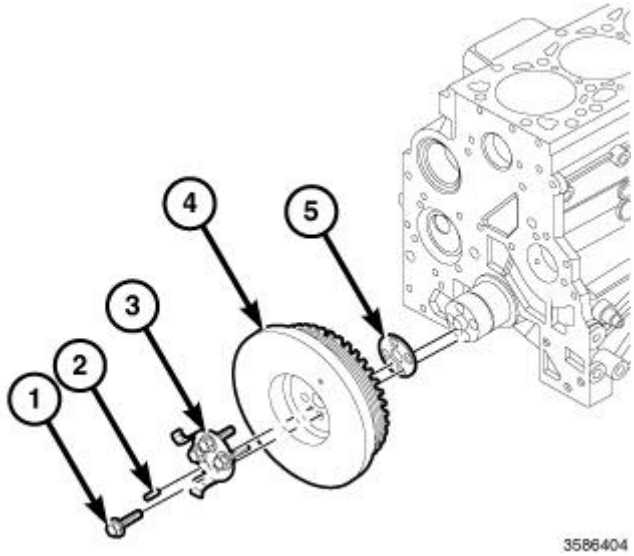

Fig. 148: Crankshaft Damper (High Output Engine)

Courtesy of CHRYSLER GROUP, LLC

NOTE: Ensure that the friction shim is installed, and that the damper is installed so the hole is located over the dowel pin (2).

1. Install the friction shim (5) vibration damper (4). Tighten bolts (1) to 40 N.m (30 ft. lbs.) plus an additional 60° in a criss-cross pattern.
2. Install the accessory drive belt. Refer to **BELT, SERPENTINE, INSTALLATION** .

RETAINER, CRANKSHAFT REAR OIL SEAL

REMOVAL

REMOVAL

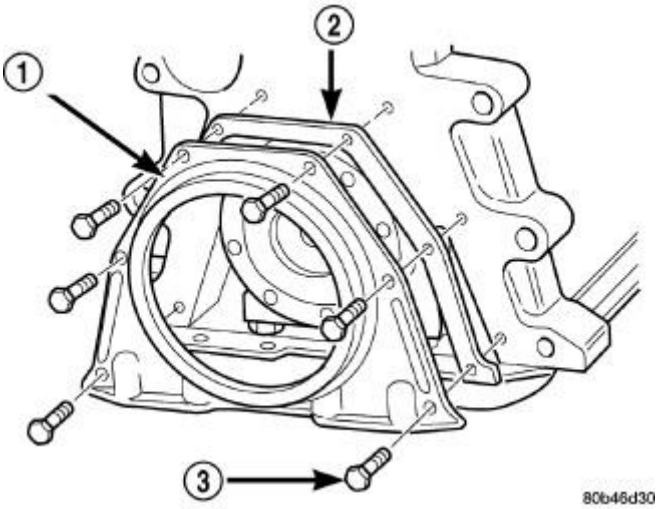

Fig. 149: Crankshaft Rear Seal Retainer, Gasket & Bolts
Courtesy of CHRYSLER GROUP, LLC

1 - RETAINER
2 - GASKET
3 - BOLT

1. Disconnect the battery negative cables.
2. Remove the oil pan drain plug and drain the engine oil. Re-install plug and tighten to 50 N.m (37 ft. lbs.).
3. Remove transmission and transfer case (if equipped) from vehicle.
4. Remove flywheel or torque converter drive plate.
5. Remove flywheel adapter plate.
6. Disconnect starter cables from starter motor.
7. Remove starter motor and transmission adapter plate assembly. Refer to **STARTER, REMOVAL** .
8. Remove four oil pan rear bolts. Slide a feeler gauge between the seal retainer and oil pan gasket to break

the seal.

9. Remove the six retainer-to-block bolts (3).
10. Remove the rear seal retainer, and gasket (2).
11. Support the seal retainer and drive out the crankshaft seal with a hammer and suitable punch.

INSTALLATION

INSTALLATION

CAUTION: The seal lip and the sealing surface on the crankshaft must be free from all oil residue to prevent seal leaks. The crankshaft and seal surfaces must be completely dry when the seal is installed. Use a soap and water solution on outside diameter of seal to ease assembly.

1. Clean the crankshaft journal with a suitable solvent and dry with a clean shop towel or compressed air. Wipe the inside bore of the crankshaft seal retainer with a clean shop towel.
2. Inspect the crankshaft journal for gouges, nicks, or other imperfections. If the seal groove in the crankshaft is excessively deep, install the new seal 1/8" deeper into the retainer bore, or obtain a crankshaft wear sleeve that is available in the aftermarket.
3. Install the seal pilot and new seal, provided in the replacement kit, onto the crankshaft.
4. Remove the seal pilot.
5. Install the installation tool over crankshaft.

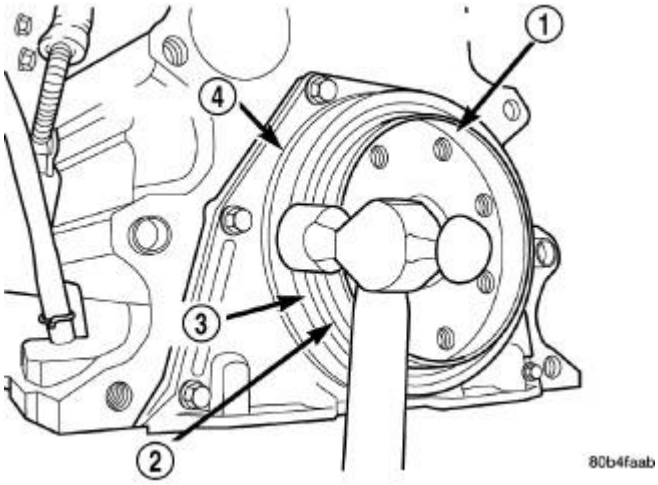

Fig. 150: Installing Seal Using Alignment Tool & Hammer
Courtesy of CHRYSLER GROUP, LLC

1 - SEAL PILOT TOOL
2 - INSTALLATION TOOL
3 - SEAL
4 - RETAINER

6. Using a ball peen hammer, strike the tool (2) at the 12, 3, 6, and 9 o'clock positions until the alignment tool bottoms out on the retainer.

NOTE: A new clamping ring must be used on early or late builds, automatic or manual. Do not reuse clamping ring.

7. Install the flywheel or converter drive plate, and clamping ring. Tighten the bolts to 137 N.m (101 ft. lbs.).
8. Install the clutch cover and disc (if equipped). Refer to **DISC, CLUTCH, INSTALLATION** .
9. Install the transmission and transfer case (if equipped).
10. Connect the negative battery cables.
11. Check engine oil level and adjust, if necessary.
12. Start engine and check for oil leaks.

RING(S), PISTON

STANDARD PROCEDURE

STANDARD PROCEDURE - PISTON RING FITTING

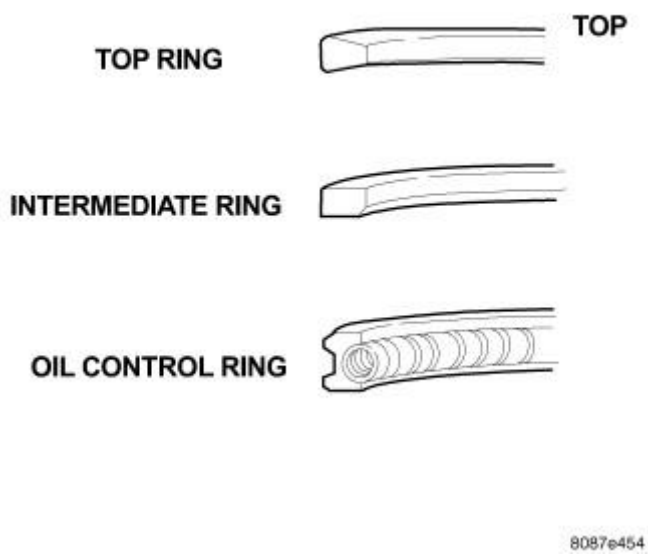

Fig. 151: Piston Ring Identification
Courtesy of CHRYSLER GROUP, LLC

1. Determine the piston diameter and obtain the appropriate ring set. The piston rings can be identified as shown in illustration.

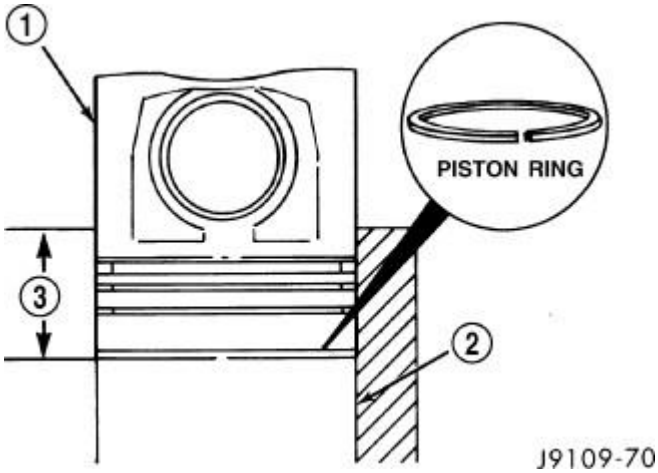

Fig. 152: Position Of Ring In Cylinder Bore
Courtesy of CHRYSLER GROUP, LLC

1 - PISTON
2 - CYLINDER BORE
3 - DEPTH

2. Position each ring in the cylinder and use a piston (1) to square it with the bore at a depth (3) of 89.0 mm (3.5 in.).

PISTON RING GAP CHART		
TOP RING	0.30 - 0. 46 mm	(0.012 - 0.018 in.)
INTERMEDIATE RING	0.82 - 1.18 mm	(0.032 - 0.047 in.)
OIL CONTROL RING	0.22 - 0.58 mm	(0.010 - 0.023 in.)

3. Use a feeler gauge to measure the piston ring gap.

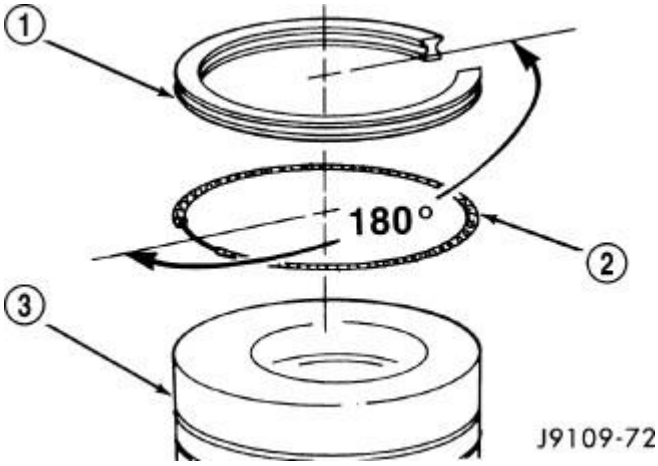

Fig. 153: Oil Control Ring, Expander & Piston

Courtesy of CHRYSLER GROUP, LLC

1 - OIL CONTROL RING
2 - EXPANDER
3 - PISTON

4. The top surface of all of the compression rings are identified with the word TOP or the supplier's MARK. Assemble the rings with the word TOP or the supplier's MARK up.
5. Lubricate the piston rings and piston ring grooves with clean CJ-4 engine oil.
6. Position the oil ring expander (2) in the oil control ring (1) groove (bottom groove).

NOTE: There is no (TOP) mark on the oil ring.

7. Install the oil control ring (1) with the end gap OPPOSITE the ends on the expander.

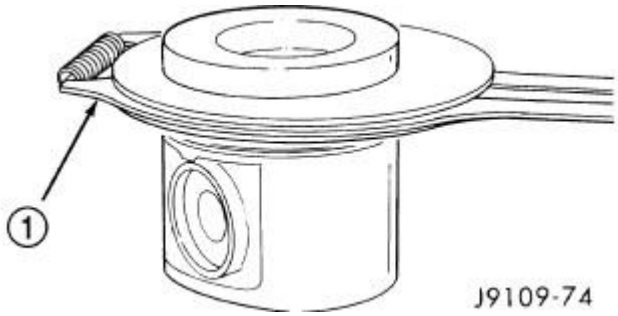

Fig. 154: Piston Ring Installation Tool
Courtesy of CHRYSLER GROUP, LLC

1 - PISTON RING INSTALLATION TOOL

8. Install the intermediate piston ring in the second groove.
9. Install the top piston ring in the top groove.

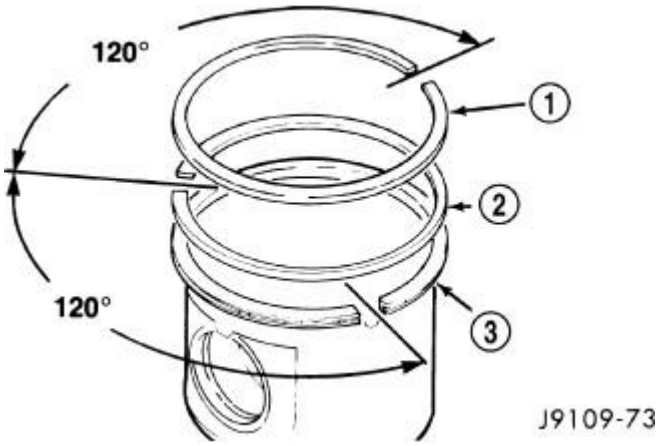

Fig. 155: Piston Ring Orientation

Courtesy of CHRYSLER GROUP, LLC

1 - TOP RING
2 - INTERMEDIATE RING
3 - OIL CONTROL RING

10. Install the piston rings with ring gaps 120 degrees apart. **Do not position ring gaps over the wrist pin hole.**

ROD, PISTON AND CONNECTING

DESCRIPTION

DESCRIPTION

PISTONS

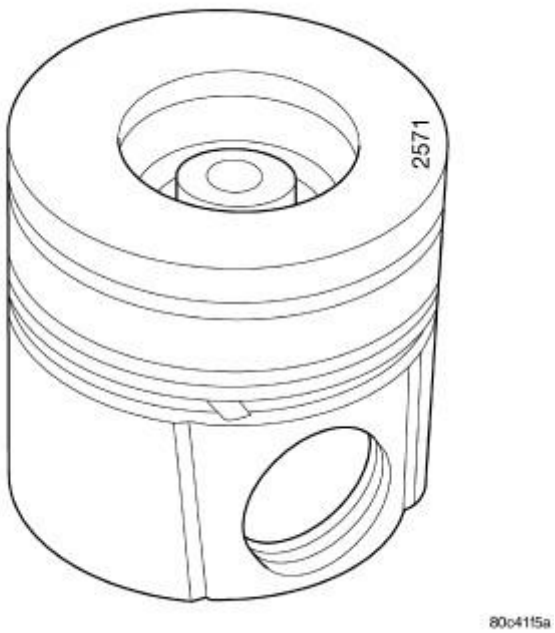

Fig. 156: Piston
Courtesy of CHRYSLER GROUP, LLC

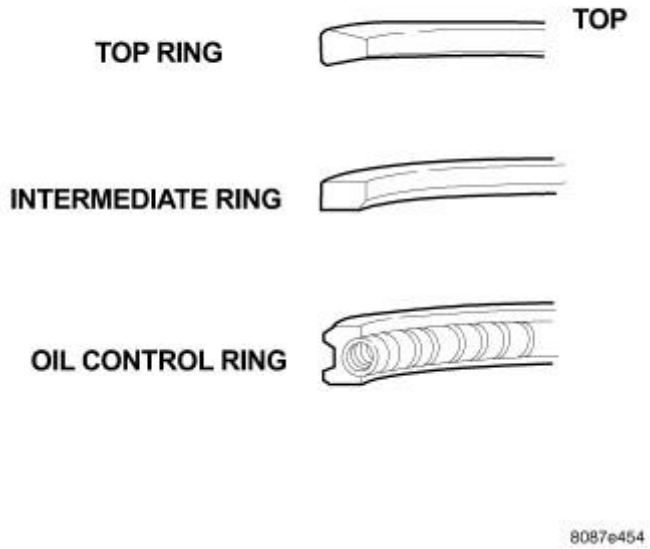

Fig. 157: Piston Ring Identification
Courtesy of CHRYSLER GROUP, LLC

The piston is constructed of aluminum and is gravity cast, free floating design. The piston incorporates a centrally located high swirl combustion bowl, and utilizes a "keystone" style top compression ring, and a "Tapered Face" intermediate ring, for superior cylinder wall scraping. Piston cooling nozzles cool the piston and pin with engine oil supplied by the crankshaft main journals. All pistons are gallery cooled and utilize J-jet piston cooling nozzles. Pistons are directional in order to provide clearance to piston cooling nozzles.

CONNECTING RODS

The connecting rods are a split angle design. They have a pressed-in-place wrist pin bushing that is lubricated by piston cooling nozzle oil spray.

Machined connecting rods are no longer used in the diesel engine. Do not install machined connecting rods into an engine that has fractured split connecting rods.

Fractured split connecting rods are first manufactured as a single piece and then fractured into two pieces. Fractured split connecting rods can be identified by a rough and irregular surface at the connecting rod split face. To properly assemble the rod cap to the connecting rod, the bearing tangs on the connecting rod and cap must be located on the same side of the rod. The long end of the connecting rod must be assembled on the intake or camshaft side of the engine.

NOTE: **Two different type of connecting rods have been used on the 6.7L. One type connecting rod has three bumps on the cap end and the other does not; due to weight differences in the rods, engine vibration will result if the rods are mixed in one engine. Special consideration must be given not to mix connecting rods. Only use the same type connecting rod when replacing.**

Each matched fractured split connecting rod and cap is an assembly and are not interchangeable. If a connecting rod or cap is damaged, the entire assembly must be replaced.

STANDARD PROCEDURE

STANDARD PROCEDURE - HEAD GASKET SELECTION

1. Measure piston protrusion for all six pistons.
2. Calculate the average piston protrusion. Maximum allowable protrusion is 0.516 - 0.485 mm (0.006 - 0.019 in.).

NOTE: There is only one head gasket available for the 6.7L engine.

REMOVAL

REMOVAL

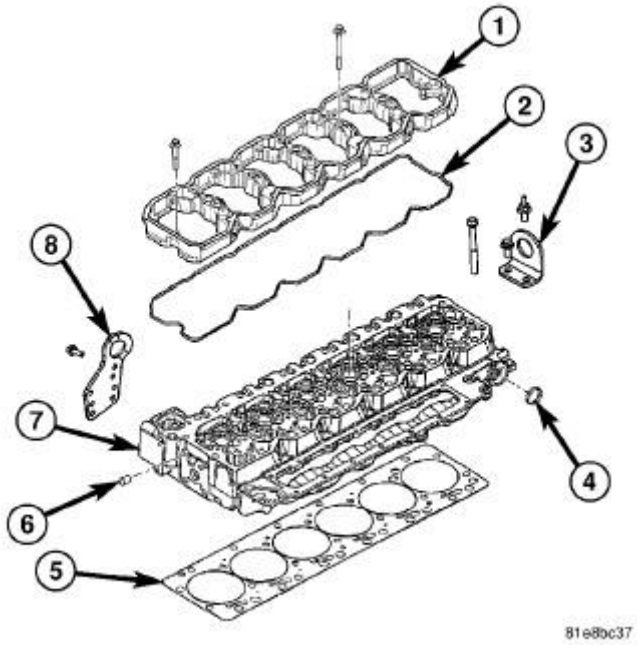

Fig. 158: Cylinder Head Assembly & Gasket
Courtesy of CHRYSLER GROUP, LLC

1. Disconnect both negative battery cables.
2. Remove the cylinder head. Refer to **CYLINDER HEAD, REMOVAL, 6.7L**.

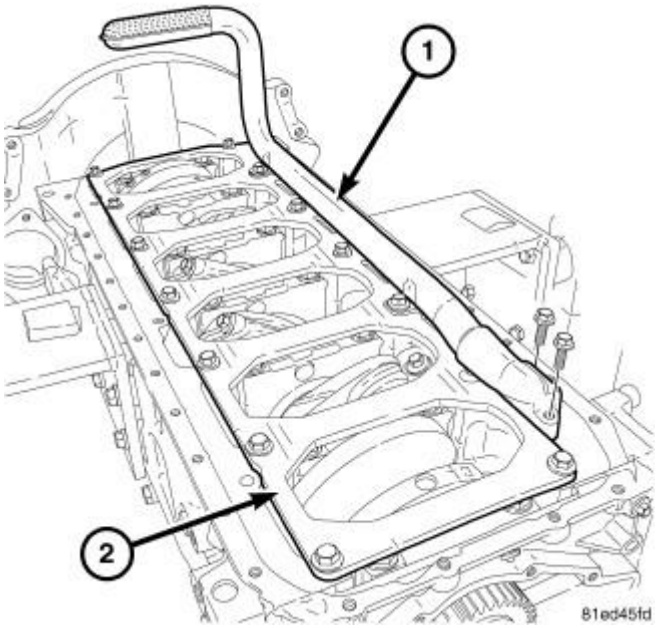

Fig. 159: Oil Pickup Tube
Courtesy of CHRYSLER GROUP, LLC

3. Remove the oil pan and suction tube. Refer to **PAN, OIL, REMOVAL, 6.7L**.

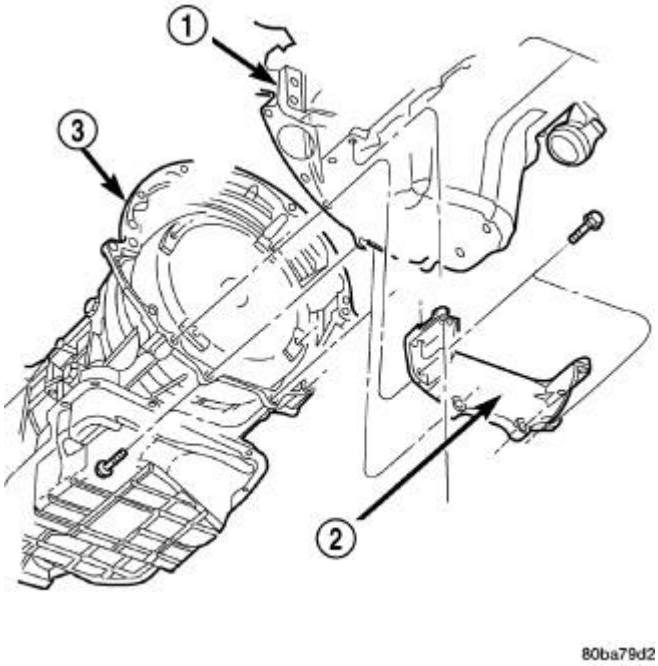

Fig. 160: Structural Cover & Bolts
Courtesy of CHRYSLER GROUP, LLC

1 - ENGINE
2 - STRUCTURAL DUST COVER

4. Remove bolts and the block stiffener.

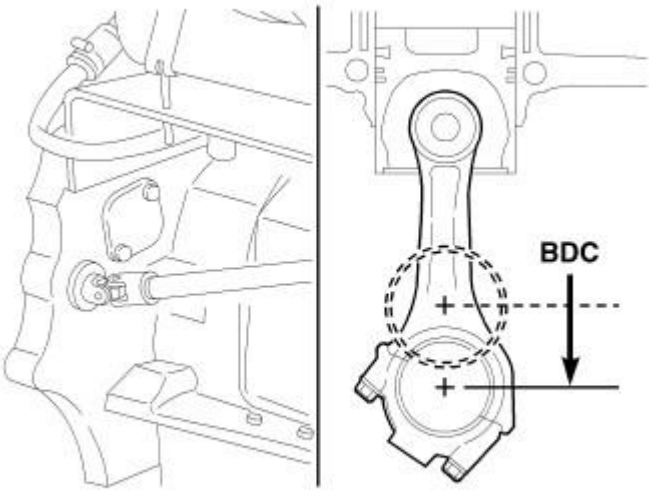

Fig. 161: Piston/Rod Assembly At BDC
Courtesy of CHRYSLER GROUP, LLC

5. Using Miller Tool (special tool #7471B, Barring Tool) crankshaft barring tool, rotate the crankshaft so all of the pistons are below TDC.
6. Before removing the piston(s) from the bore(s):
    1. Remove any carbon ridge formations or deposits at the top of the bore with a dull scraper or soft wire brush.
    2. If cylinder bore wear ridges are found, use a ridge reamer to cut the ridge from the bore. DO NOT remove more metal than necessary to remove the ridge.

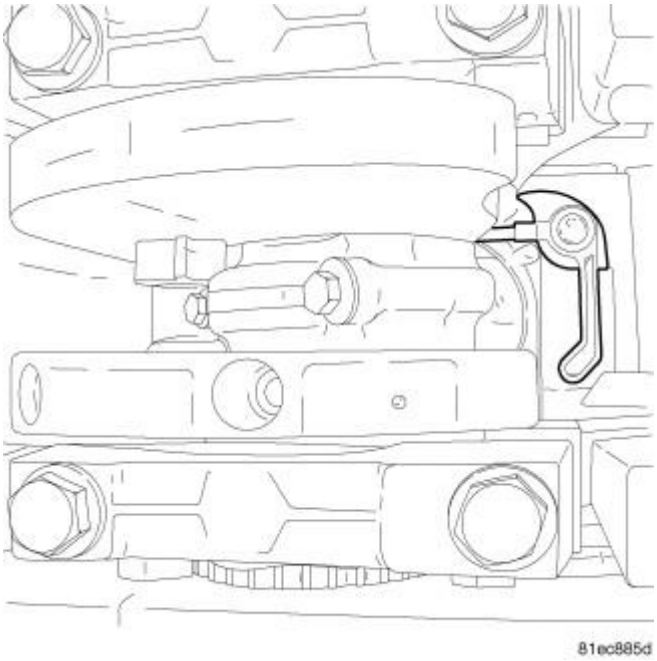

Fig. 162: J-Jet Piston Cooling Nozzle
Courtesy of CHRYSLER GROUP, LLC

7. Remove the J-jet cooling nozzles.

NOTE: If cylinders have ridges, the cylinders are oversize and will more than likely need boring.

8. Using a hammer and steel stamp, stamp the cylinder number in the top of each piston. The front of the piston is identified by a stamping on the top of the piston. DO NOT stamp in the outside 5 mm (.197 in.) of the piston diameter. DO NOT stamp over the piston pin.
9. Mark the connecting rod and cap with the corresponding cylinder numbers.
10. Remove the connecting rod bolts and rod caps. Use care so the cylinder bores and connecting rods are not damaged.
11. Use a hammer handle or similar object to push the piston and connecting rod through the cylinder bore.
12. Store the piston/rod assemblies in a rack.

CLEANING

CLEANING

CAUTION: DO NOT use bead blast to clean the pistons. DO NOT clean the pistons and rods in an acid tank.

PISTON

Clean the pistons and pins in a suitable solvent, rinse in hot water and blow dry with compressed air. Soaking

the pistons over night will loosen most of the carbon build up. De-carbon the ring grooves with a broken piston ring and again clean the pistons in solvent. Rinse in hot water and blow dry with compressed air.

CONNECTING ROD

Clean the connecting rods in a suitable solvent, rinse in hot water and blow dry with compressed air.

INSPECTION

PISTONS

PISTON SKIRT DIAMETER (MIN.)

Inspect the pistons for damage and excessive wear. Check top of the piston, ring grooves, skirt and pin bore. Measure the piston skirt diameter. If the piston is out of limits, replace the piston.

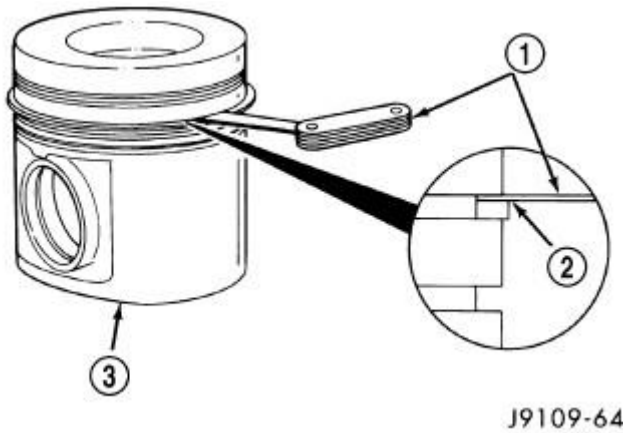

Fig. 163: Intermediate And Oil Ring To Piston Groove Clearances
Courtesy of CHRYSLER GROUP, LLC

1 - FEELER GAUGE
2 - RING
3 - PISTON

The upper groove only needs to be inspected for damage. Use a new piston ring (2) to measure the clearance in the intermediate ring groove. Minimum clearance is 0.040 mm (0.0016 inch), maximum clearance is 0.110 mm (.0043 inch). If the clearance of the intermediate ring exceeds specifications, replace the piston (3).

Use a new oil ring to measure the clearance in the oil groove. Minimum clearance is 0.040 mm (0.0016 inch), maximum clearance is 0.085 mm (.0033 inch). If the clearance exceeds specifications, replace the piston.

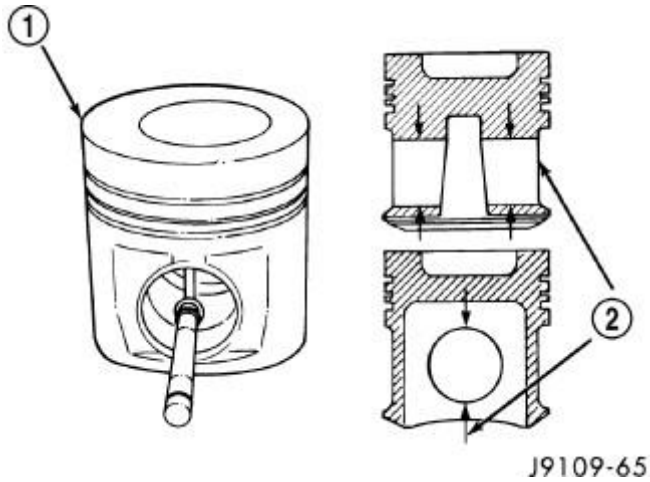

Fig. 164: Piston & Pin Bore
Courtesy of CHRYSLER GROUP, LLC

1 - PISTON
2 - PIN BORE

Measure the pin bore (2). The maximum diameter is 40.012 mm (1.5753 inch), Minimum is 40.006 mm (1.575 inch). If the bore is over limits, replace the piston (1).

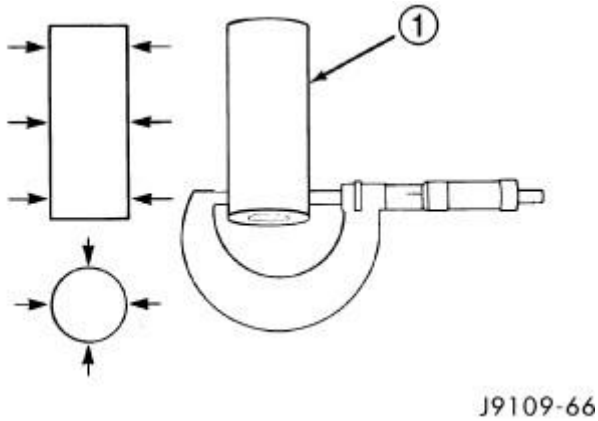

Fig. 165: Measuring Piston Pin Diameter
Courtesy of CHRYSLER GROUP, LLC

1 - PISTON PIN

Inspect the piston pin for nicks, gouges and excessive wear. Measure the pin diameter (1). The minimum diameter is 39.997 mm (1.5747 inch), maximum 40.003 mm (1.5749 inch). If the diameter is out of limits, replace the pin (1).

CONNECTING ROD

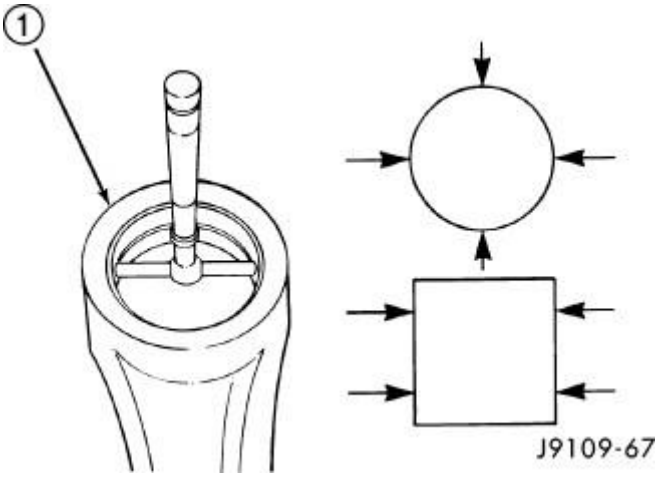

Fig. 166: Measuring Connecting Rod Pin Bore
Courtesy of CHRYSLER GROUP, LLC

1 - CONNECTING ROD

Inspect the connecting rod for damage and wear. The I-Beam section of the connecting rod cannot have dents or other damage. Damage to this part can cause stress risers which will progress to breakage.

Measure the connecting rod pin bore (1). The maximum diameter is 40.042 mm (1.5765 inch), minimum diameter is 40.019 mm (1.5756 inch). If out of limits, replace the connecting rod.

NOTE: **Two different type of connecting rods have been used on the 6.7L. One type connecting rod has three bumps on the cap end and the other does not; due to weight differences in the rods, engine vibration will result. Special consideration must be given not to mix connecting rods. Only use the same type connecting rod when replacing.**

INSTALLATION

INSTALLATION

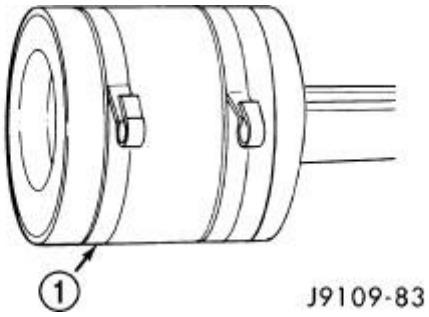

Fig. 167: Piston Ring Compressor Tool
Courtesy of CHRYSLER GROUP, LLC

1 - PISTON RING COMPRESSOR TOOL

1. Lubricate the cylinder bores with clean engine oil.
2. Generously lubricate the rings and piston skirts with clean engine oil.
3. Orientate the rings on the piston. Refer to **Engine/Engine Block/RING(S), Piston - Standard Procedure**.
4. Compress the rings using a piston ring compressor tool (1). If using a strap-type ring compressor, make sure the inside end of the strap does not hook on a ring gap and break the ring.

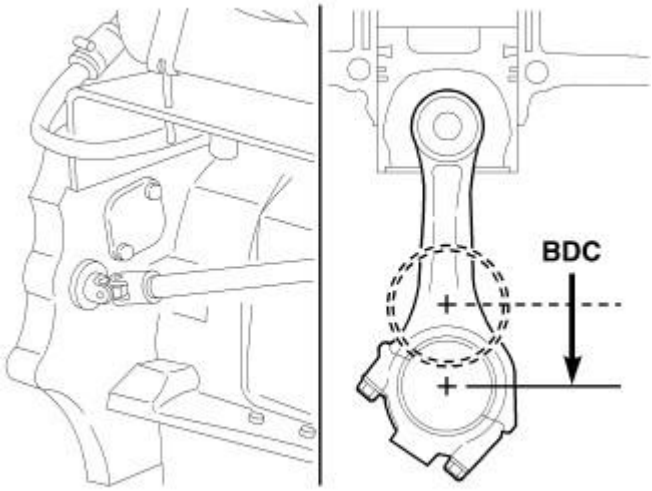

Fig. 168: Piston/Rod Assembly At BDC
Courtesy of CHRYSLER GROUP, LLC

5. Bar the crankshaft so the rod journal for the piston to be installed is at BDC (Bottom Dead Center).
6. Make sure the front of the piston is oriented properly according to the marking on the top of the piston and the connecting rod is oriented properly.
7. Position the piston and rod assembly into the cylinder bore with the front of the piston oriented properly according to the stamping in the top of the piston. Use care when you install the piston and connecting rod so the cylinder bore is not damaged. The long side of the connecting rod must be installed on the exhaust side of the engine.
8. Push the piston into the bore until the top of the piston is approximately 50 mm (2 in.) below the top of the block. Carefully pull the connecting rod onto the crankshaft journal.
9. Use clean engine oil to lubricate the threads and under the heads of the connecting rod bolts.
10. **For fractured/split type connecting rods,** the long end of the rod must be installed away from the intake side of the engine.
    1. The connecting rod split/face must face toward the same side as the piston notch feature on the skirt. The split face will face toward the exhaust side of the engine if properly installed.
11. Install the rod cap and bolts to the connecting rod. Tighten the connecting rod bolts evenly in 3 steps.
    - Tighten the bolts to 30 Nm (22 ft. lbs.).

- Tighten the bolts to 60 Nm (44 ft. lbs.).
- Rotate 60° clockwise.

12. The crankshaft must rotate freely. Check for freedom of rotation as the caps are installed. If the crankshaft does not rotate freely, check the installation of the rod bearing and the bearing size.
13. Measure the side clearance between the connecting rod and the crankshaft. DO NOT measure the clearance between the cap and crankshaft.

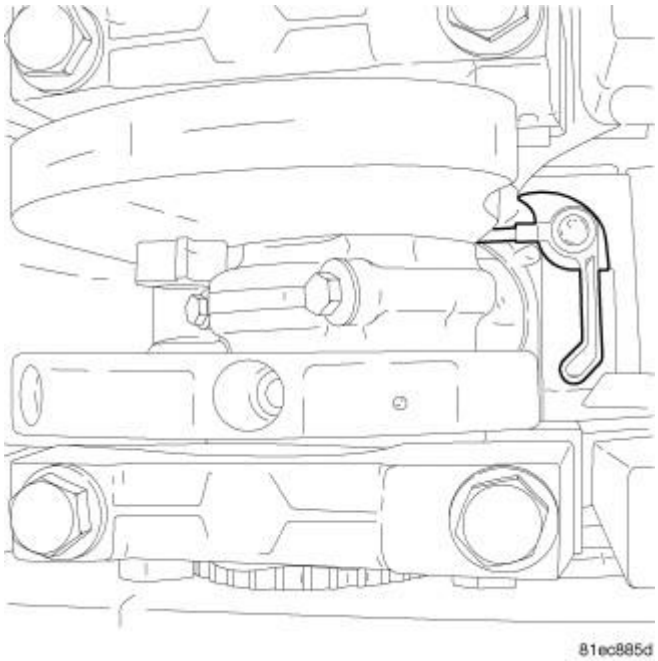

Fig. 169: J-Jet Piston Cooling Nozzle
Courtesy of CHRYSLER GROUP, LLC

14. Install J-jet piston cooling nozzles.

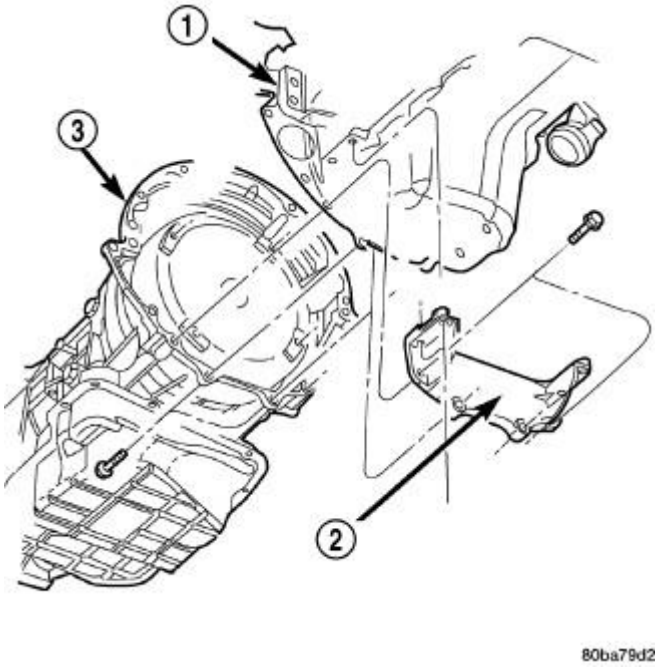

Fig. 170: Structural Cover & Bolts
Courtesy of CHRYSLER GROUP, LLC

1 - ENGINE
2 - STRUCTURAL DUST COVER
3 - TRANSMISSION

15. Install block stiffener. Tighten to 43 Nm (32 ft. lbs.).

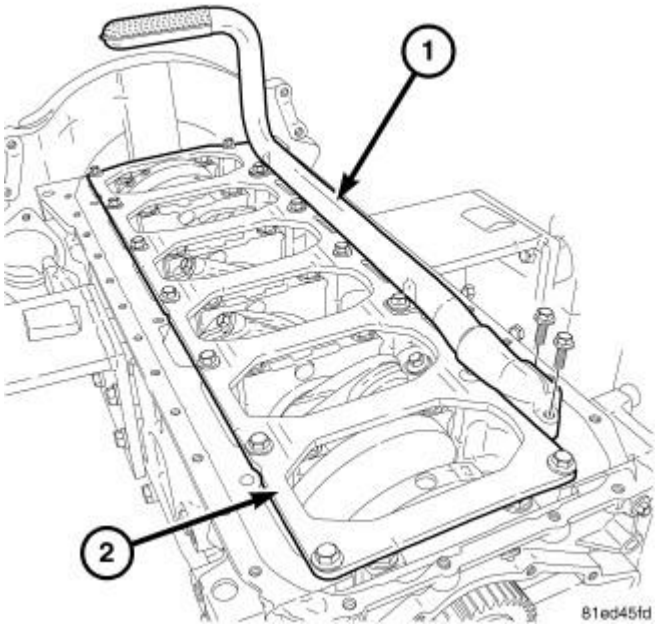

Fig. 171: Oil Pickup Tube

Courtesy of CHRYSLER GROUP, LLC

16. Install the suction tube and oil pan. Refer to **PAN, OIL, INSTALLATION, 6.7L**.

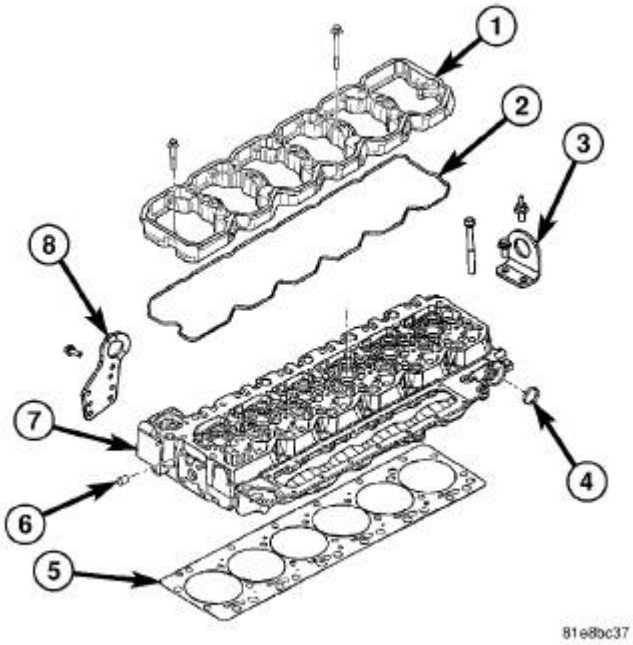

Fig. 172: Cylinder Head Assembly & Gasket
Courtesy of CHRYSLER GROUP, LLC

17. Install the cylinder head onto the engine. Refer to **CYLINDER HEAD, INSTALLATION, 6.7L**.
18. Install a new filter and fill the crankcase with new engine oil.**Prefill the filter with clean oil.**
19. Connect both negative battery cables.
20. Start engine and check for leaks.

SEAL, CRANKSHAFT OIL, FRONT

REMOVAL

REMOVAL

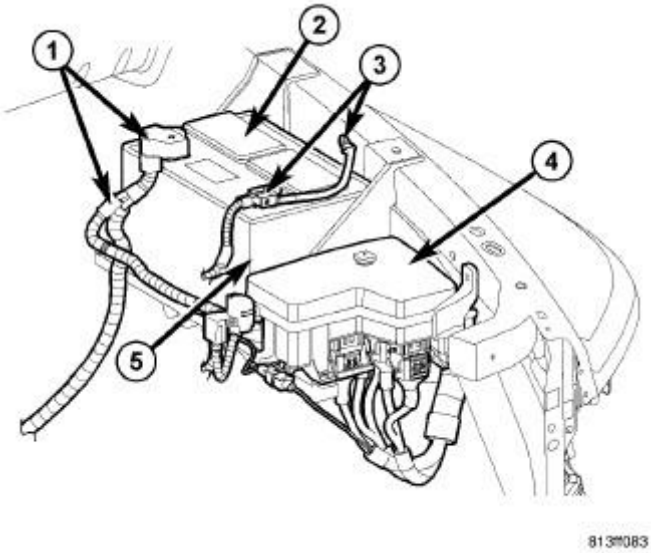

Fig. 173: Battery Cables
Courtesy of CHRYSLER GROUP, LLC

1. Disconnect the battery cables (1, 3).
2. Raise vehicle on hoist.
3. Partially drain engine coolant into container suitable for re-use. Refer to **STANDARD PROCEDURE** .
4. Lower vehicle.
5. Remove radiator upper hose.
6. Disconnect coolant recovery bottle hose from radiator filler neck.
7. Disconnect windshield washer pump supply hose and electrical connections and lift washer bottle off of fan shroud.
8. Remove viscous fan/drive assembly. Refer to **FAN, COOLING, ELECTRIC, REMOVAL** and **FAN, COOLING, VISCOUS, REMOVAL** .
9. Remove cooling fan shroud and fan assembly from the vehicle.
10. Remove the accessory drive belt. Refer to **BELT, SERPENTINE, REMOVAL** .
11. Remove the cooling fan support/hub from the front of the engine.
12. Raise the vehicle on hoist.

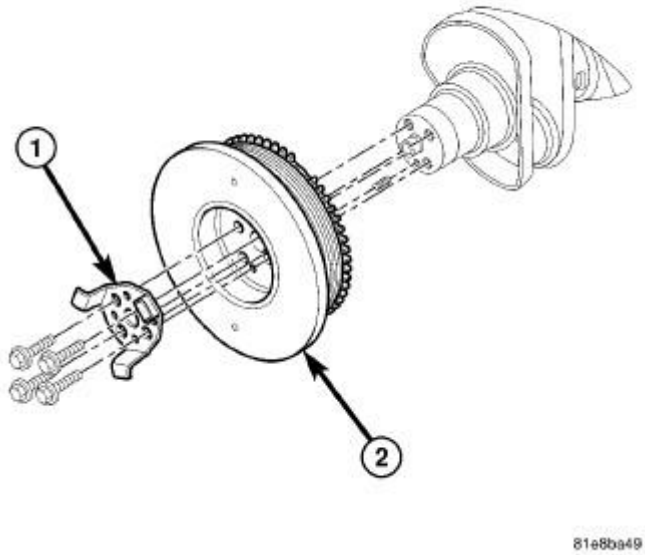

Fig. 174: Crankshaft Damper (Non-High Output Engine)
Courtesy of CHRYSLER GROUP, LLC

13. Remove the crankshaft damper.

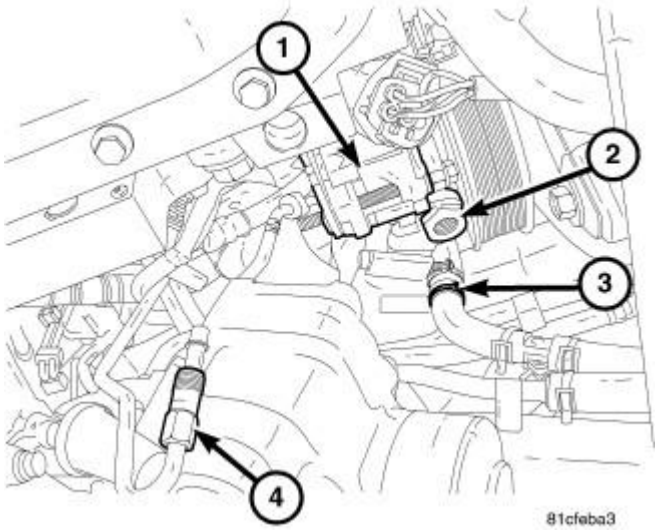

Fig. 175: Power Steering Pump Components
Courtesy of CHRYSLER GROUP, LLC

14. Remove power steering pump.
15. Remove accessory drive belt tensioner.

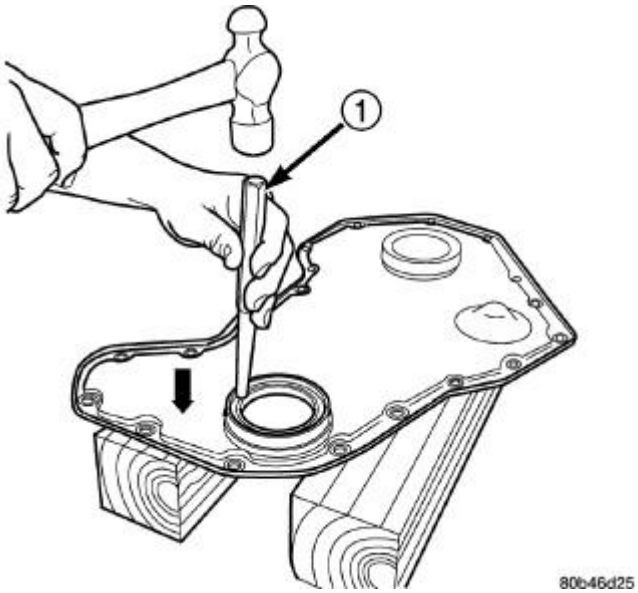

Fig. 176: Removing Seal From Cover
Courtesy of CHRYSLER GROUP, LLC

1 - PUNCH

16. Remove the gear cover-to-housing bolts and gently pry the cover away from the housing, taking care not to mar the gasket surfaces. Remove crank seal dust shield with cover.
17. Support the cover on a flat work surface with wooden blocks, and using a suitable punch (1) and hammer, drive the old seal out of the cover from the back side of the cover to the front side.

INSTALLATION

INSTALLATION

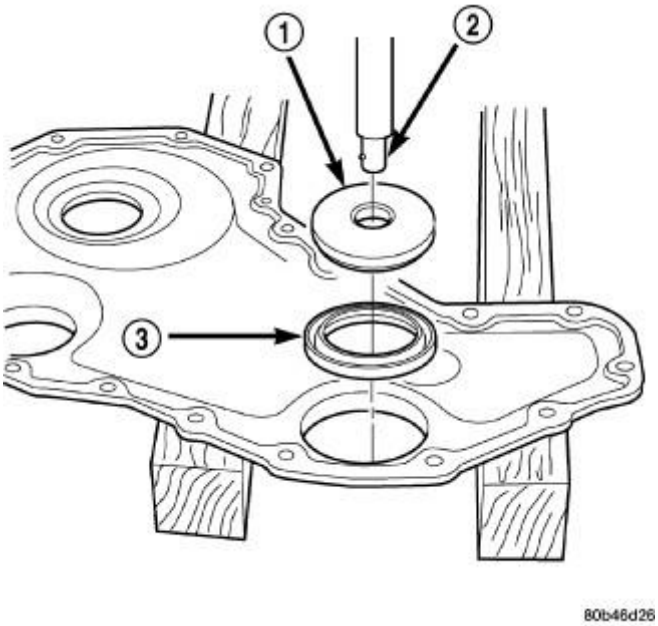

Fig. 177: Installing Seal Into Cover With Tool 8281
Courtesy of CHRYSLER GROUP, LLC

1 - SEAL INSTALLER 8281
2 - DRIVER HANDLE C4171
3 - SEAL

CAUTION: The seal lip and the sealing surface on the crankshaft must be free of all oil residue, to prevent leaks. The crankshaft and seal surface must be completely dry when the seal is installed.

1. Clean cover and housing gasket mating surfaces. Use a suitable scraper and be careful not to damage the gear housing surface. Remove any old sealer from the oil seal bore. Thoroughly clean the front seal area of the crankshaft. Do not sand this surface. The seal lip and the sealing surface on the crankshaft must be free from all oil residue to prevent seal leaks.
2. Inspect the gear housing and cover for cracks and replace if necessary. Carefully straighten any bends or imperfections in the gear cover with a ball-peen hammer on a flat surface. Inspect the crankshaft front journal for any grooves or nicks that would affect the integrity of the new seal.
3. Apply a bead of Mopar® Stud AND Bearing Mount to the outside diameter of the seal. Do not lubricate the inside diameter of the new seal.
4. With the cover supported by wood blocks, install the seal into the rear of the cover using crankshaft seal installer Special Tool (special tool #8281, Installer, Seal) used up to 2006. New Special Tool (special tool #10136, Installer, Crankshaft Front Oil Seal) used 2007 to present and driver handle (special tool #C-4171, Driver Handle, Universal). Strike the driver handle until the installation tool bottoms out on the inside of the cover.

CAUTION: Do not distort or damage seal.

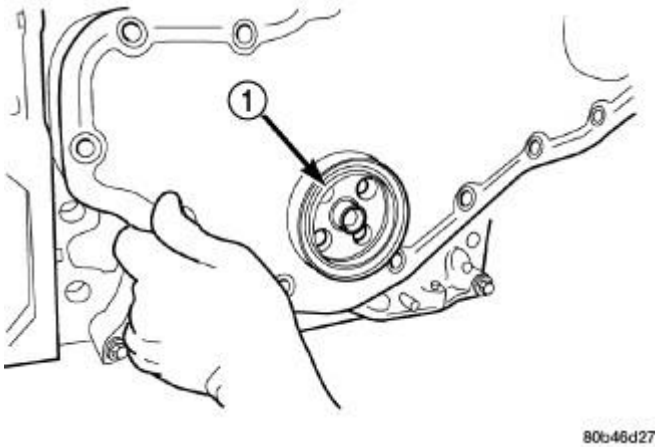

Fig. 178: Installing Front Cover With Seal Pilot
Courtesy of CHRYSLER GROUP, LLC

1 - SEAL PILOT

5. Install the plastic seal pilot (provided with seal kit) into the crankshaft seal.
6. Apply a bead of Mopar® Silicone Rubber Adhesive Sealant or equivalent to the gear housing cover sealing surface.
7. Install the cover to the gear housing, aligning the seal pilot with the nose of the crankshaft.

NOTE: **Failure to follow the cover installation procedure can result in misalignment of the crankshaft seal to the crankshaft, causing an oil leak.**

8. Install the cover bolts and hand snug 2 capscrews at the 3 o'clock and 9 o'clock position, to keep the cover from moving when the first capscrew is torqued. Tighten to 24 Nm (18 ft. lbs.). Remove pilot tool.
9. Install accessory drive belt tensioner. Tighten bolt to 43 Nm (32 ft. lbs.).

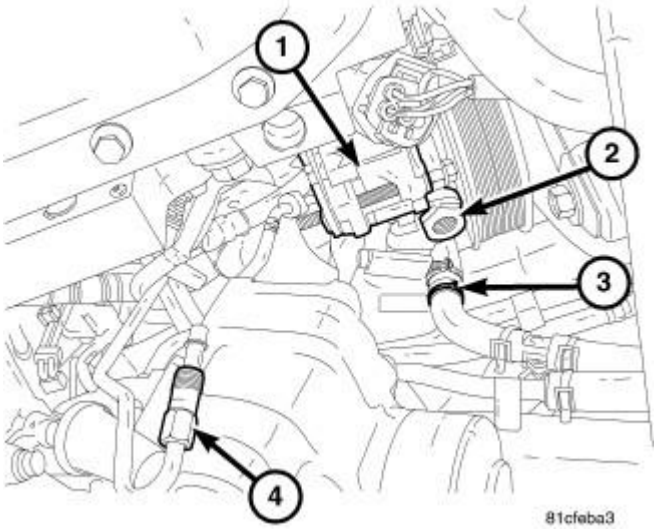

Fig. 179: Power Steering Pump Components
Courtesy of CHRYSLER GROUP, LLC

10. Install power steering pump.

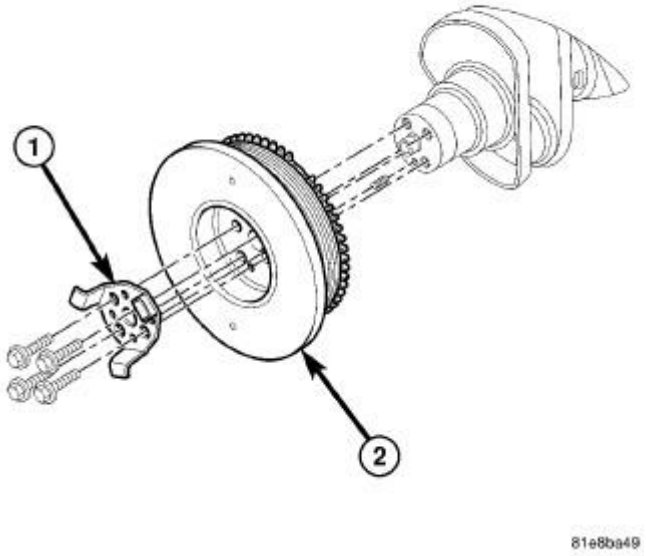

Fig. 180: Crankshaft Damper (Non-High Output Engine)
Courtesy of CHRYSLER GROUP, LLC

11. Install the crankshaft damper. Tighten the bolts to 40 Nm (30 ft. lbs.). Then rotate an additional 60°. Use the engine barring tool to keep the engine from rotating during tightening operation.
12. Install the fan support/hub assembly and tighten bolts to 32 Nm (24 ft. lbs.).
13. Install the accessory drive belt. Refer to **BELT, SERPENTINE, INSTALLATION** .

14. Install cooling fan. Refer to **FAN, COOLING, ELECTRIC, INSTALLATION** and **FAN, COOLING, VISCOUS, INSTALLATION** .
15. Install the viscous fan/drive assemble. Refer to **FAN, COOLING, ELECTRIC, INSTALLATION** and **FAN, COOLING, VISCOUS, INSTALLATION** .
16. Connect the windshield washer pump supply hose and electrical connections and attach the washer bottle to the fan shroud.
17. Connect the coolant recovery bottle hose to the radiator fill neck.
18. Install the radiator upper hose.
19. Refill cooling system. Refer to **STANDARD PROCEDURE** .

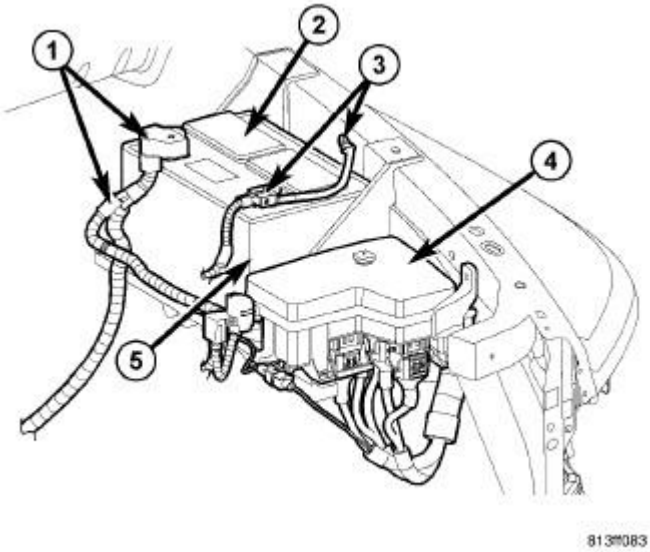

Fig. 181: Battery Cables
Courtesy of CHRYSLER GROUP, LLC

20. Connect the battery cables (1, 3).
21. Start the engine and check for oil leaks.

SEAL, CRANKSHAFT OIL, REAR

REMOVAL

REMOVAL

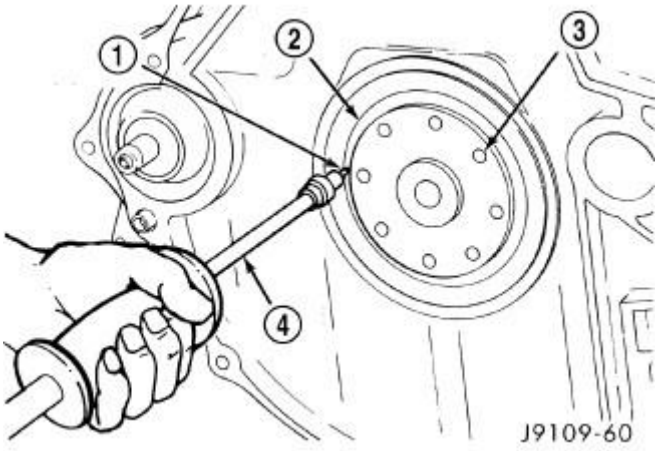

Fig. 182: Crankshaft Rear Seal Removal
Courtesy of CHRYSLER GROUP, LLC

1 - NO. 10 SCREW
2 - REAR SEAL
3 - CRANKSHAFT
4 - SLIDE HAMMER

1. Disconnect the battery negative cables.
2. Remove the transmission and transfer case (if equipped).
3. Remove the clutch cover and disc (if manual transmission equipped). Refer to **DISC, CLUTCH, REMOVAL** .
4. Remove the flywheel or converter drive plate.
5. Remove the flywheel adapter plate.
6. Drill holes 180° apart into the seal. Be careful not to contact the drill against the crankshaft.
7. Install # 10 sheet metal screws (1) in the drilled holes and remove the rear seal with a slide hammer (4).

INSTALLATION

INSTALLATION

CAUTION: The seal lip and the sealing surface on the crankshaft must be free from all oil residue to prevent seal leaks. The crankshaft and seal surfaces must be completely dry when the seal is installed. Use a soap and water solution on outside diameter of seal to ease assembly.

1. Clean the crankshaft journal with a suitable solvent and dry with a clean shop towel or compressed air. Wipe the inside bore of the crankshaft seal retainer with a clean shop towel.
2. Inspect the crankshaft journal for gouges, nicks, or other imperfections. If the seal groove in the crankshaft is excessively deep, install the new seal 1/8" deeper into the retainer bore, or obtain a crankshaft wear sleeve that is available in the aftermarket.

3. Install the seal pilot and new seal, provided in the replacement kit, onto the crankshaft.
4. Remove the seal pilot.
5. Install the installation tool over crankshaft.

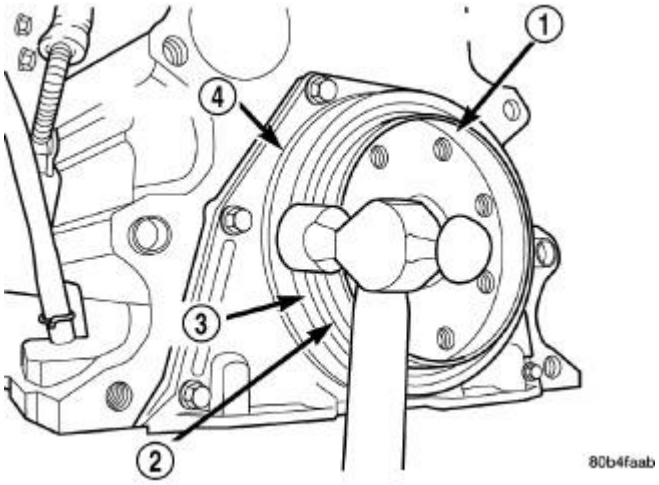

Fig. 183: Seal Installation Using Alignment Tool & Hammer
Courtesy of CHRYSLER GROUP, LLC

1 - SEAL PILOT TOOL
2 - INSTALLATION TOOL
3 - SEAL
4 - RETAINER

6. Using a ball peen hammer, strike the tool (2) at the 12, 3, 6, and 9 o'clock positions until the alignment tool bottoms out on the retainer.

NOTE: Always install a new clamping ring, never reuse the old clamping ring.

7. Install the flywheel or converter drive plate, and clamping ring. Tighten the bolts to 137 N.m (101 ft. lbs.).
8. Install the clutch cover and disc (if equipped). Refer to **DISC, CLUTCH, INSTALLATION** .
9. Install the transmission and transfer case (if equipped).
10. Lower vehicle.
11. Connect battery negative cables.
12. Check engine oil level and adjust, if necessary.
13. Start engine and check for oil leaks.

TAPPET(S), VALVE

REMOVAL

REMOVAL

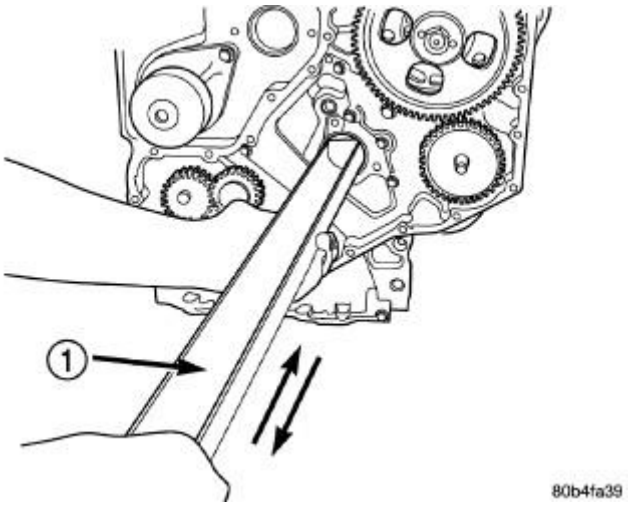

Fig. 184: Inserting The Trough Into Camshaft Bore
Courtesy of CHRYSLER GROUP, LLC

1 - TROUGH

NOTE: **This procedure requires use of Miller Tool (special tool #8502, Remover/Installer) Tappet Replacement Kit.**

1. Remove camshaft. Refer to **CAMSHAFT, ENGINE, REMOVAL, 6.7L**.
2. Insert the trough (1) (provided with tool kit) the full length of the camshaft bore. Make sure the cap end goes in first and the open side faces up (towards tappets).

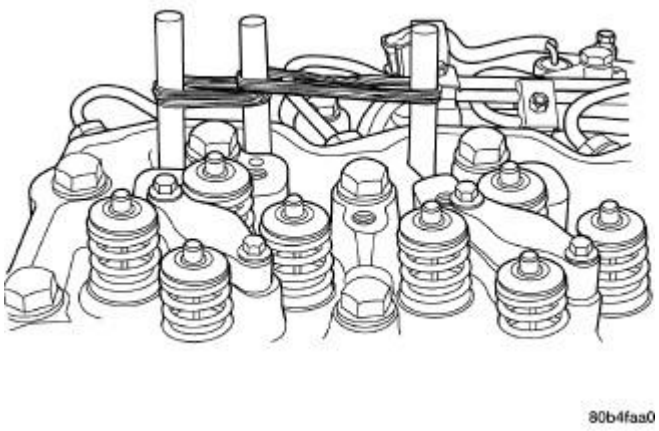

Fig. 185: Tappets Secured In Place Using Wooden Dowel Rods
Courtesy of CHRYSLER GROUP, LLC

3. **Remove only one tappet at a time.** Remove rubber band from one cylinder pair and attach tappet dowel not being removed to the next cylinder pair.

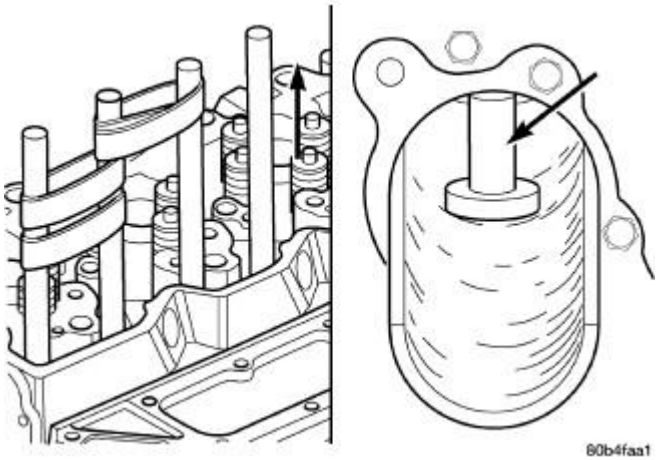

Fig. 186: Lift Dowel Rod To Disengage From Tappet
Courtesy of CHRYSLER GROUP, LLC

4. Raise dowel rod (disengage from tappet) and allow tappet to fall into trough.
5. Carefully remove trough **(do not rotate)** and tappet. If the tappet is not being replaced, mark it so it can be installed in its original location.

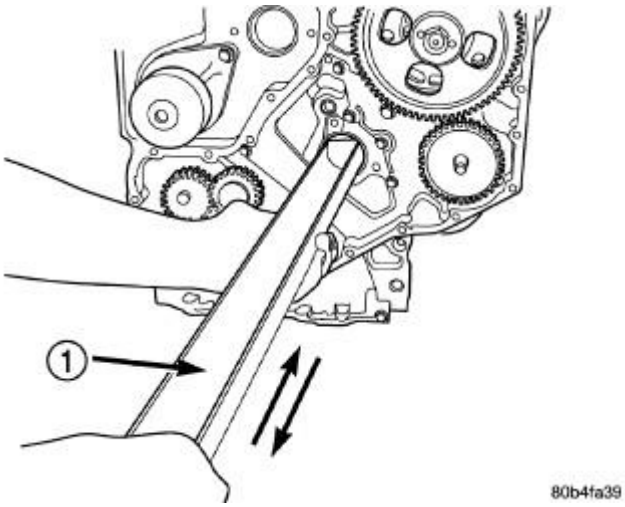

Fig. 187: Inserting The Trough Into Camshaft Bore
Courtesy of CHRYSLER GROUP, LLC

1 - TROUGH

6. Re-install trough (1) and repeat procedure on remaining tappets.

CLEANING

CLEANING

Clean tappet with a suitable solvent. Rinse in hot water and blow dry with a clean shop rag or compressed air.

INSPECTION

INSPECTION

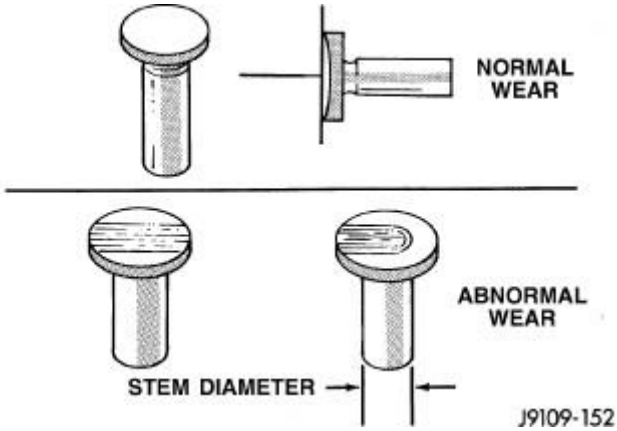

Fig. 188: Tappet Inspection
Courtesy of CHRYSLER GROUP, LLC

TAPPET STEM DIAMETER
15.936 mm (0.627 in.) MIN. 15.977 mm (0.629 in.) MAX.

1. Visually inspect the tappet the tappet socket, stem, and face for excessive wear, cracks, or obvious damage.
2. Measure the tappet stem diameter. Replace the tappet if it falls below the minimum size.

INSTALLATION

INSTALLATION

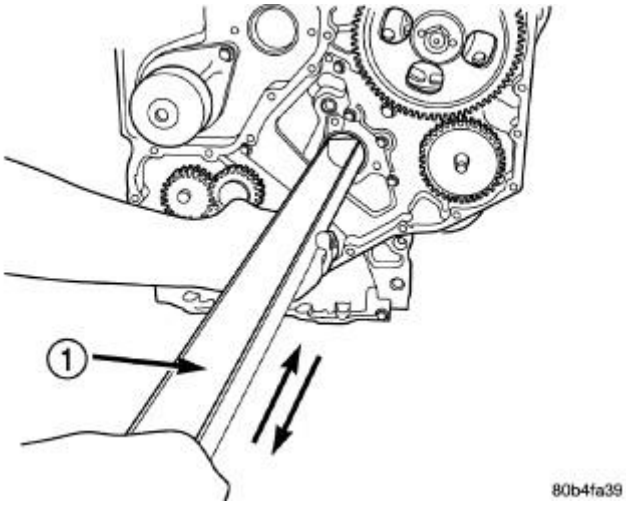

Fig. 189: Inserting The Trough Into Camshaft Bore
Courtesy of CHRYSLER GROUP, LLC

1 - TROUGH

1. Insert the trough (1) the full length of the camshaft bore. Again, make sure the cap end goes in first and the open side faces up (towards tappets).

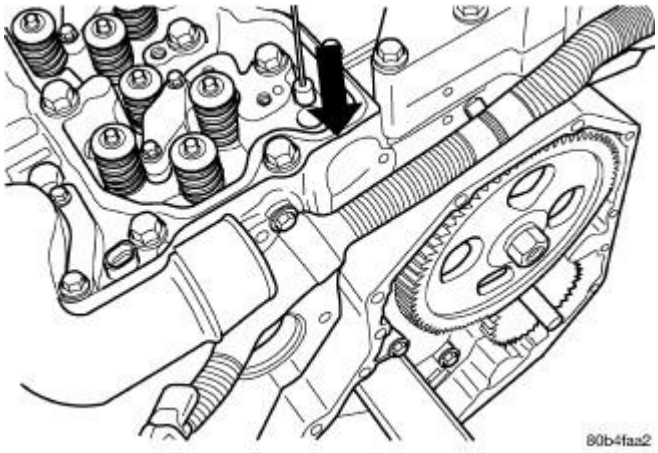

Fig. 190: Insert Installation Tool Through Push Rod Hole
Courtesy of CHRYSLER GROUP, LLC

2. Lower the tappet installation tool through the push rod hole and into the trough.

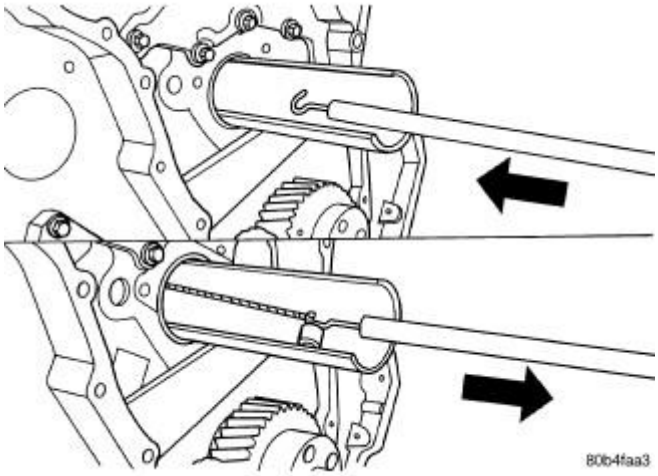

Fig. 191: Retrieve Tappet Installation Tool Through Cam Bore
Courtesy of CHRYSLER GROUP, LLC

3. Retrieve the tappet installation tool using the hooked rod provided with the tool kit.

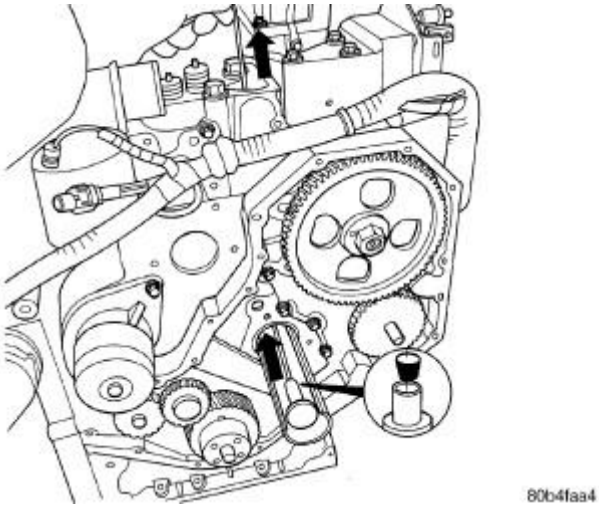

Fig. 192: Inserting Tool & Pulling Tappet Into Place
Courtesy of CHRYSLER GROUP, LLC

4. Lubricate the tappet with clean engine oil or suitable equivalent and install the tappet to the installation tool.
5. Pull the tappet up and into position. If difficulty is experienced getting the tappet to make the turn into the tappet bore, wiggle the trough while **gently** pulling up on the tappet.

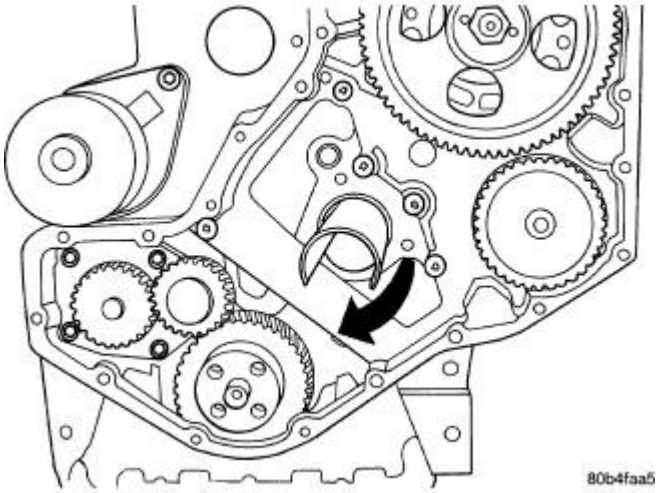

Fig. 193: Rotate Trough One Half Turn (180°)
Courtesy of CHRYSLER GROUP, LLC

6. With the tappet in place, rotate the trough one half turn so the open side is down (toward crankshaft).
7. Remove the tappet installation tool from the tappet.
8. Re-install a dowel rod and secure the rod with a rubber band.

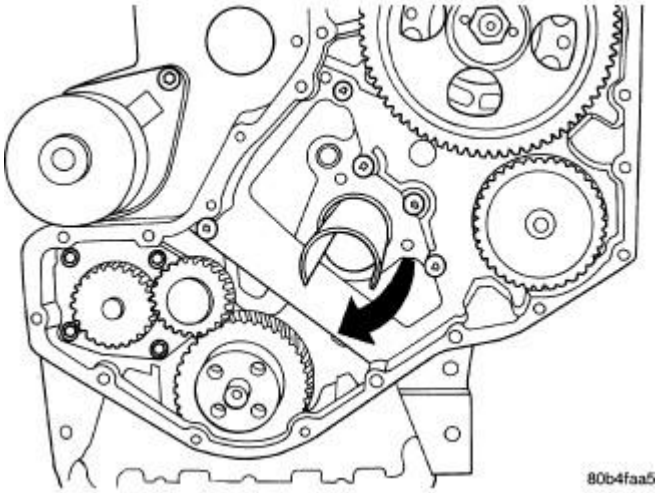

Fig. 194: Rotate Trough One Half Turn (180°)
Courtesy of CHRYSLER GROUP, LLC

9. Rotate the trough one half turn and repeat the procedure for the remaining tappets.
10. Install the camshaft. Refer to **CAMSHAFT, ENGINE, INSTALLATION, 6.7L**.

ENGINE MOUNTING

INSULATOR, ENGINE MOUNT, FRONT

REMOVAL

CAB CHASSIS

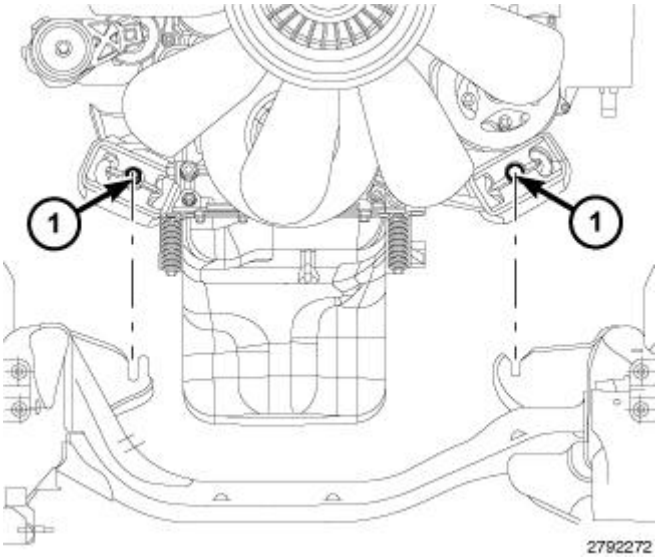

Fig. 195: Frame Mount Fasteners
Courtesy of CHRYSLER GROUP, LLC

1. Disconnect both negative battery cables.

2. Remove the viscous fan/drive assembly. Refer to **FAN, COOLING, ELECTRIC, REMOVAL** and **FAN, COOLING, VISCOUS, REMOVAL** .
3. Install Engine Support Fixture tool (special tool #8534B, Fixture, Driveline Support).
4. Loosen the right side and left side thru-bolt and nut (1).
5. Lift the engine **SLIGHTLY** and remove the thru-bolt and nut (1).

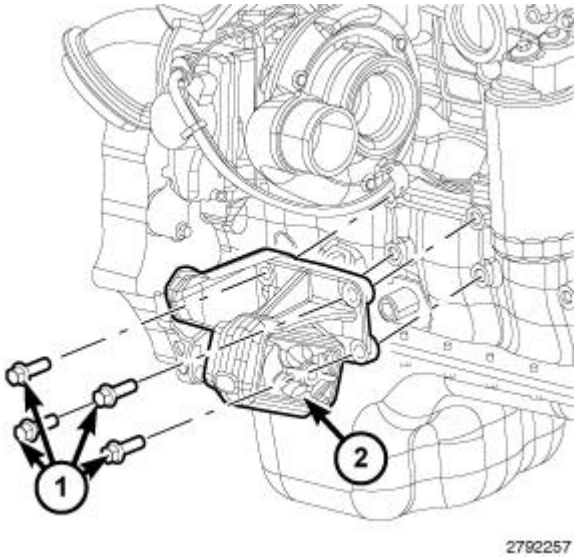

Fig. 196: RH Engine Mount & Bolts
Courtesy of CHRYSLER GROUP, LLC

6. Remove bolts (1) and the RH mount (2) from engine.

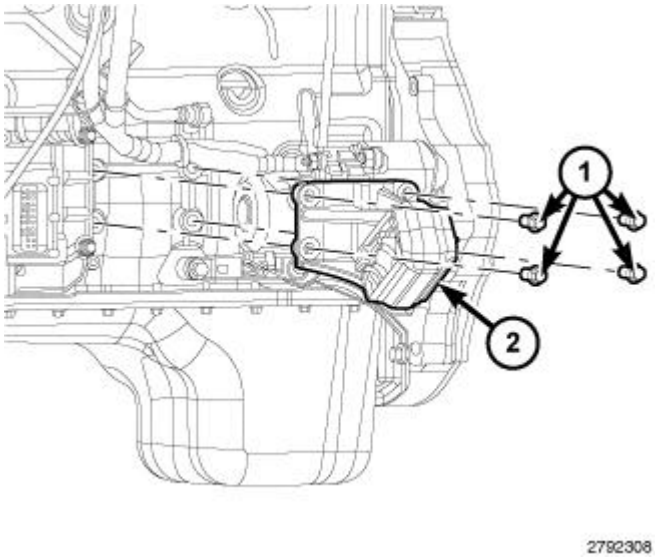

Fig. 197: LH Engine Mount & Bolts
Courtesy of CHRYSLER GROUP, LLC

NOTE: 4x4 engine mount shown in illustration 4x2 similar.

7. Remove bolts (1) and the LH mount (2) from engine.

PICK UP

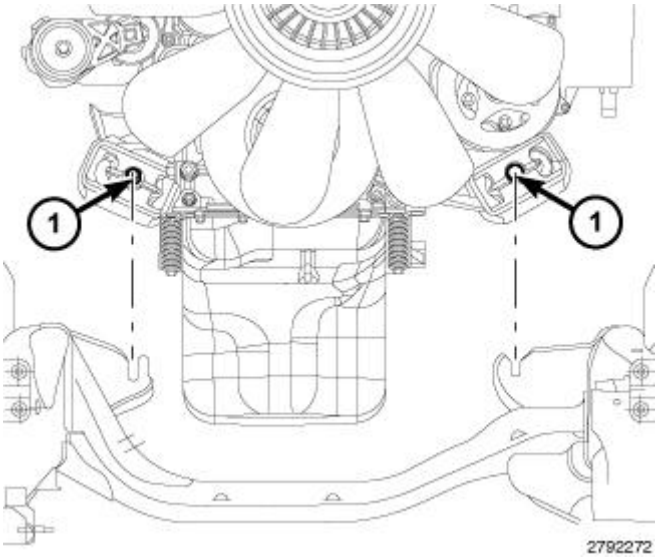

Fig. 198: Frame Mount Fasteners
Courtesy of CHRYSLER GROUP, LLC

1. Disconnect both negative battery cables.
2. Remove the viscous fan/drive assembly. Refer to **FAN, COOLING, ELECTRIC, REMOVAL** and **FAN, COOLING, VISCOUS, REMOVAL** .
3. Install Engine Support Fixture tool (special tool #8534B, Fixture, Driveline Support).
4. Loosen the right side and left side thru-bolt and nut (1).
5. Lift the engine **SLIGHTLY** and remove the thru-bolt and nut (1).

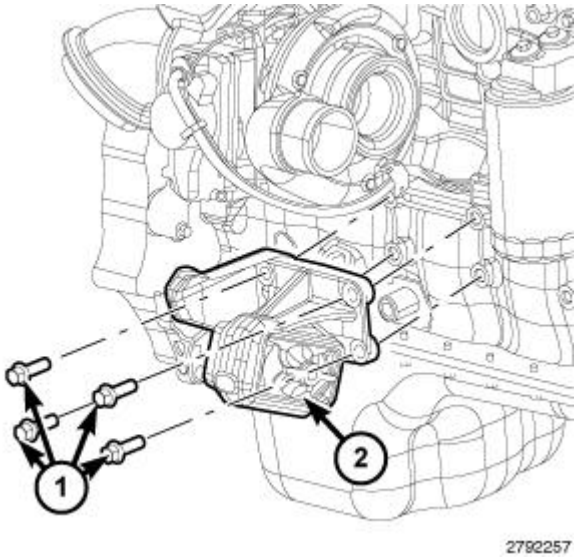

Fig. 199: RH Engine Mount & Bolts

Courtesy of CHRYSLER GROUP, LLC

6. Remove bolts (1) and the RH mount (2) from engine.

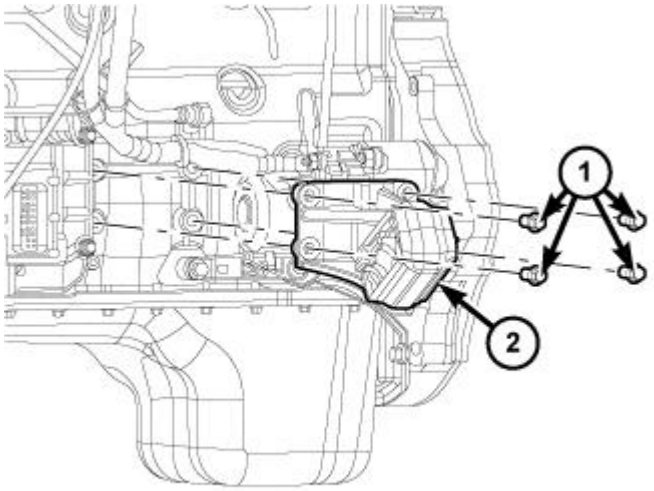

2792308

Fig. 200: LH Engine Mount & Bolts
Courtesy of CHRYSLER GROUP, LLC

NOTE: 4x4 engine mount shown in illustration 4x2 similar.

7. Remove bolts (1) and the LH mount (2) from engine.

INSTALLATION

CAB CHASSIS

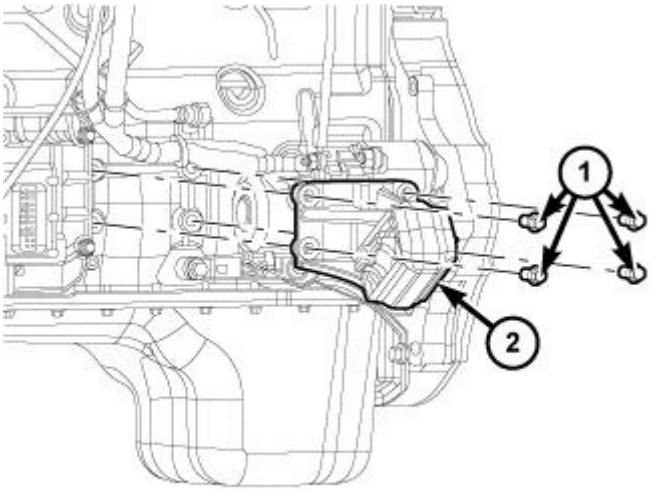

2792308

Fig. 201: LH Engine Mount & Bolts

Courtesy of CHRYSLER GROUP, LLC

NOTE: 4x4 engine mount shown in illustration 4x2 similar.

1. With engine raised **SLIGHTLY** , install the LH mount (2) to engine. Tighten bolts (1) to 95 N.m (70 ft. lbs.).

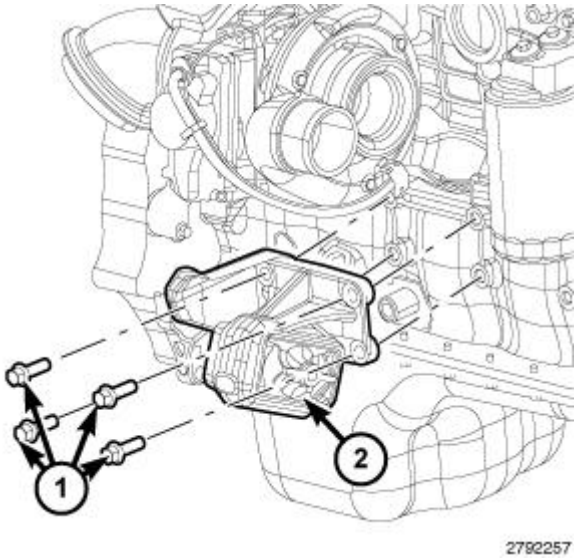

Fig. 202: RH Engine Mount & Bolts
Courtesy of CHRYSLER GROUP, LLC

2. With engine raised **SLIGHTLY** , install the RH mount (2) to engine. Tighten bolts (1) to 95 N.m (70 ft. lbs.).

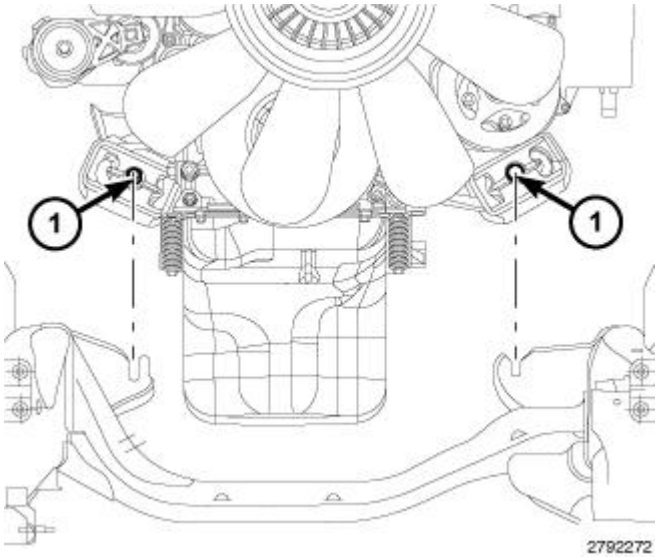

Fig. 203: Frame Mount Fasteners
Courtesy of CHRYSLER GROUP, LLC

3. Lower the engine support fixture tool (special tool #8534B, Fixture, Driveline Support), while guiding the mount and thru-bolt into the frame mounted brackets.
4. Install the thru-bolt nut (1). Tighten nut (1) to 129 N.m (95 ft. lbs.).
5. Remove the engine support fixture tool (special tool #8534B, Fixture, Driveline Support).
6. Install the viscous fan/drive assembly. Refer to **FAN, COOLING, ELECTRIC, INSTALLATION** and **FAN, COOLING, VISCOUS, INSTALLATION** .
7. Connect both negative battery cables.

PICK UP

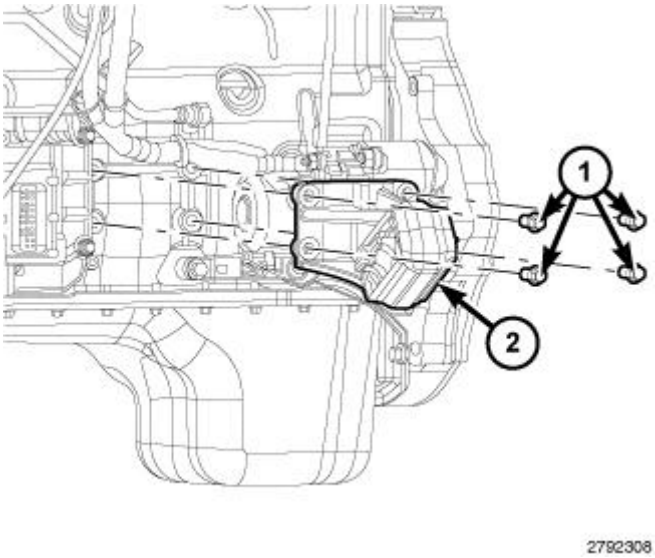

Fig. 204: LH Engine Mount & Bolts
Courtesy of CHRYSLER GROUP, LLC

NOTE: 4x4 engine mount shown in illustration 4x2 similar.

1. With engine raised **SLIGHTLY** , install the LH mount (2) to engine. Tighten bolts (1) to 95 N.m (70 ft. lbs.).

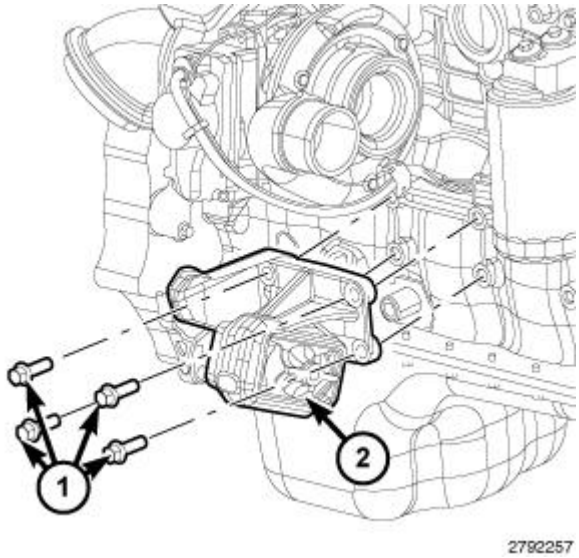

Fig. 205: RH Engine Mount & Bolts
Courtesy of CHRYSLER GROUP, LLC

2. With engine raised **SLIGHTLY** , install the RH mount (2) to engine. Tighten bolts (1) to 95 N.m (70 ft. lbs.).

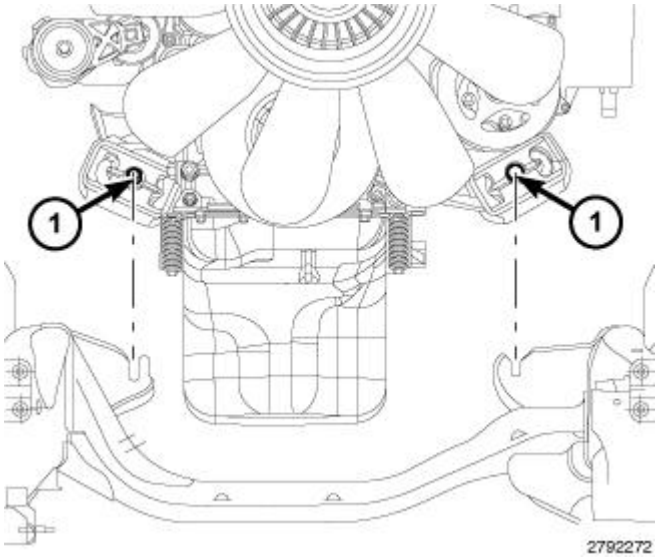

Fig. 206: Frame Mount Fasteners
Courtesy of CHRYSLER GROUP, LLC

3. Lower the engine support fixture tool (special tool #8534B, Fixture, Driveline Support), while guiding the mount and thru-bolt into the frame mounted brackets.
4. Install the thru-bolt nut (1). Tighten nut (1) to 129 N.m (95 ft. lbs.).
5. Remove the engine support fixture tool (special tool #8534B, Fixture, Driveline Support).
6. Install the viscous fan/drive assembly. Refer to **FAN, COOLING, ELECTRIC, INSTALLATION** and **FAN, COOLING, VISCOUS, INSTALLATION** .

7. Connect both negative battery cables.

INSULATOR, ENGINE MOUNT, REAR

REMOVAL

AS68RC AUTOMATIC

CAUTION: If replacing a engine mount/bracket, be certain to inspect all other engine mounts/brackets in the system. Failure to follow this caution may result in damage to the vehicle.

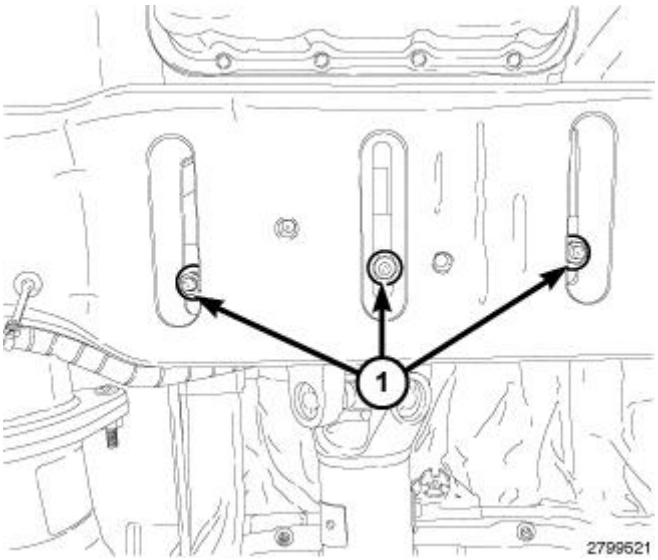

Fig. 207: Rear Transmission Mount To Crossmember Nuts - AS68RC A/T
Courtesy of CHRYSLER GROUP, LLC

1. Raise the vehicle on a hoist.
2. Position a transmission jack in place.
3. Remove the rear transmission mount to crossmember nuts (1).

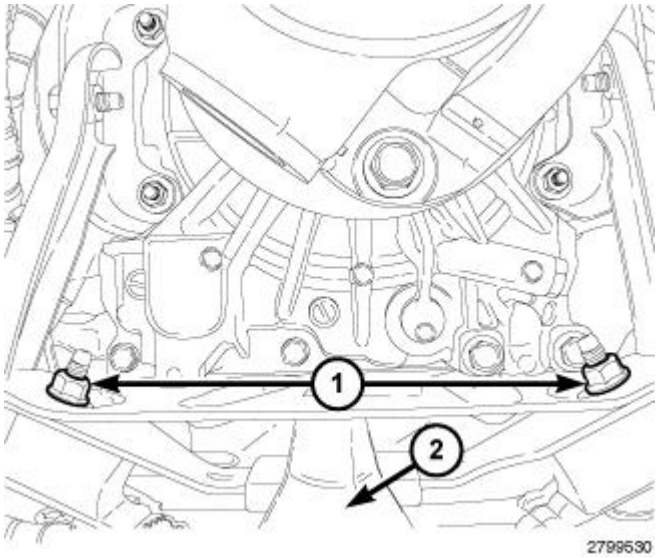

Fig. 208: Rear Transmission Mount & Nuts - AS68RC A/T
Courtesy of CHRYSLER GROUP, LLC

4. Remove nuts securing the rear transmission mount.
5. Using the transmission jack, raise the transmission.
6. Remove the rear transmission mount (2).

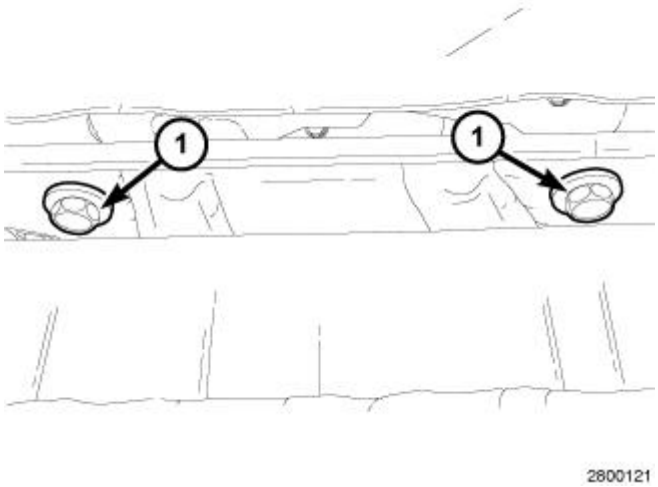

Fig. 209: Transmission Mount Support Bracket Bolts - AS68RC A/T
Courtesy of CHRYSLER GROUP, LLC

7. With the transmission raised, remove bolts (1) from the transmission mount support bracket to transmission.

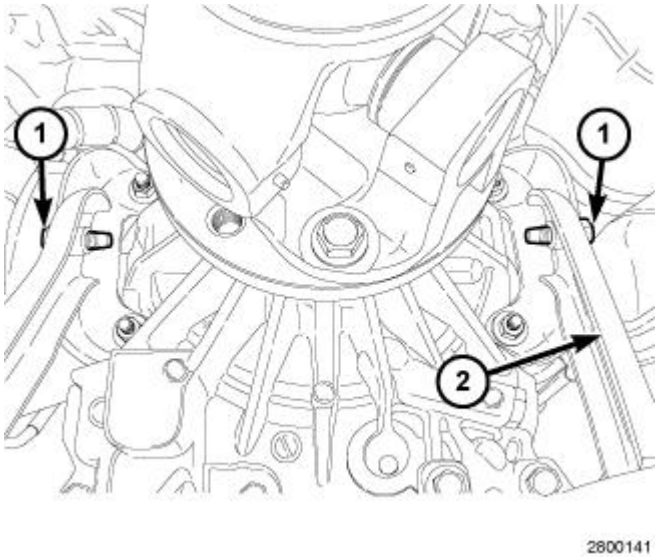

Fig. 210: Transmission Side Support Bracket & Bolts - AS68RC A/T
Courtesy of CHRYSLER GROUP, LLC

8. Remove the bolts (1) and the transmission support bracket (2).

G 56 MANUAL

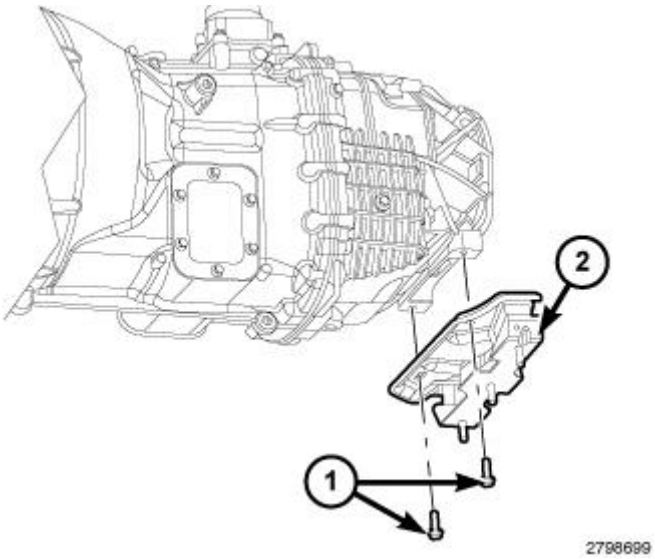

Fig. 211: Rear Transmission Mount & Bolts (M/T)
Courtesy of CHRYSLER GROUP, LLC

CAUTION: If replacing a engine mount/bracket, be certain to inspect all other engine mounts/brackets in the system. Failure to follow this caution may result in damage to the vehicle.

1. Raise the vehicle on a hoist.
2. Position transmission jack in place.

3. Remove nuts securing transmission mount to crossmember.
4. Raise the transmission.
5. Remove bolts (1) and the rear transmission mount (2).

68 RFE AUTOMATIC

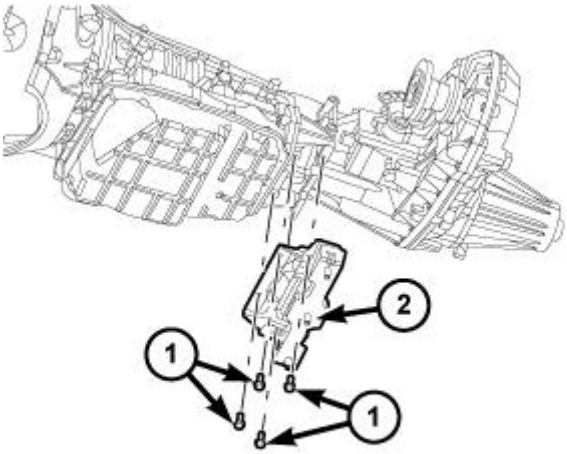

Fig. 212: Rear Transmission Mount & Bolts - 68RFE A/T - 4WD
Courtesy of CHRYSLER GROUP, LLC

NOTE: 4x4 Models.

CAUTION: If replacing a engine mount/bracket, be certain to inspect all other engine mounts/brackets in the system. Failure to follow this caution may result in damage to the vehicle.

1. Raise the vehicle on a hoist.
2. Position a transmission jack in place.
3. Remove nuts securing transmission mount to crossmember.
4. Raise the transmission.
5. Remove bolts (1) and the rear transmission mount (2).

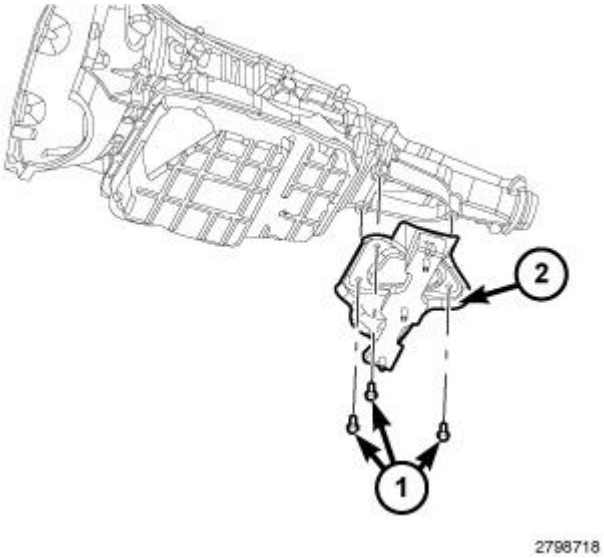

Fig. 213: Rear Transmission Mount & Bolts - 68RFE A/T - 4X2 Regular Cab Models
Courtesy of CHRYSLER GROUP, LLC

NOTE: 4x2 Regular Cab Models.

CAUTION: If replacing a engine mount/bracket, be certain to inspect all other engine mounts/brackets in the system. Failure to follow this caution may result in damage to the vehicle.

6. Raise the vehicle on a hoist.
7. Position a transmission jack in place.
8. Remove nuts securing transmission mount to crossmember.
9. Raise the transmission.
10. Remove bolts (1) and the rear transmission mount (2).

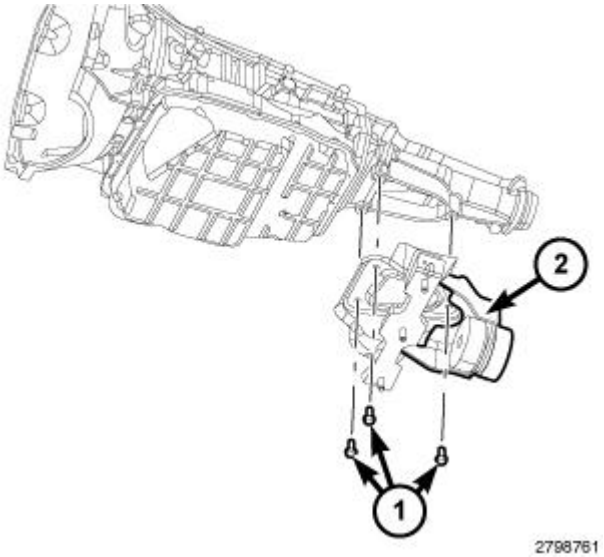

Fig. 214: Rear Transmission Mount & Bolts - 68RFE A/T - 4X2 Crew & Mega Cab Models
Courtesy of CHRYSLER GROUP, LLC

NOTE: 4x2 Crew and Mega Cab Models.

CAUTION: If replacing a engine mount/bracket, be certain to inspect all other engine mounts/brackets in the system. Failure to follow this caution may result in damage to the vehicle.

11. Raise the vehicle on a hoist.
12. Position a transmission jack in place.
13. Remove nuts securing transmission mount to crossmember.
14. Raise the transmission.
15. Remove bolts (1) and the rear transmission mount (2).

INSTALLATION

AS68RC AUTOMATIC

CAUTION: If replacing a engine mount/bracket, be certain to inspect all other engine mounts/brackets in the system. Failure to follow this caution may result in damage to the vehicle.

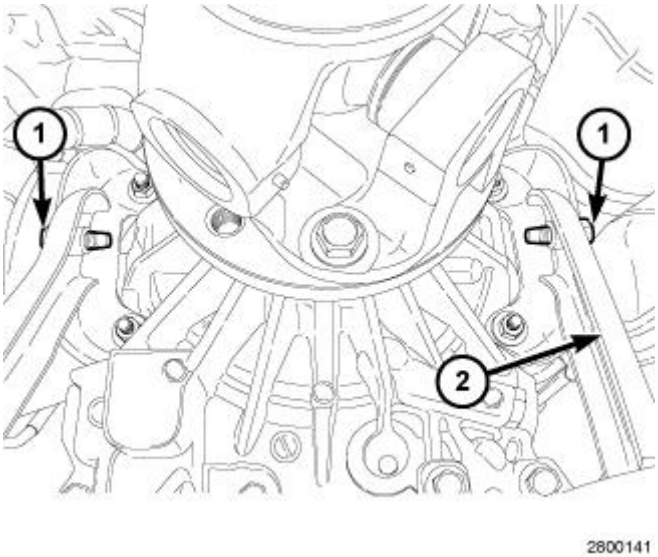

Fig. 215: Transmission Side Support Bracket & Bolts - AS68RC A/T
Courtesy of CHRYSLER GROUP, LLC

1. Position the transmission mount support bracket (2). Install bolts (1) finger tight.

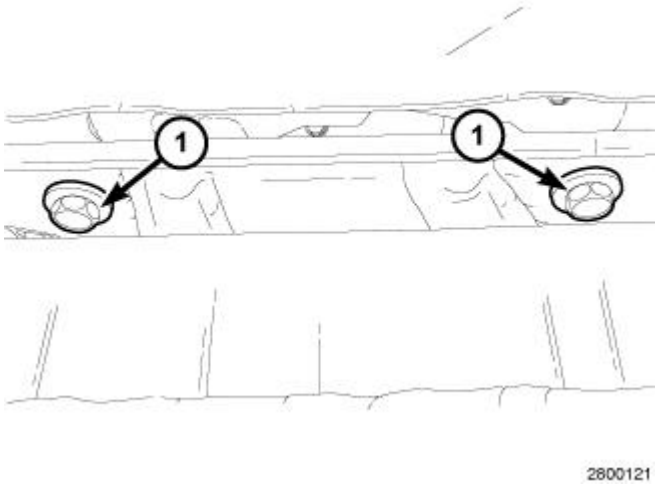

Fig. 216: Transmission Mount Support Bracket Bolts - AS68RC A/T
Courtesy of CHRYSLER GROUP, LLC

2. With the transmission raised, install the transmission mount support bracket to transmission bolts (1) and tighten to 54 N.m (40 ft. lbs.).

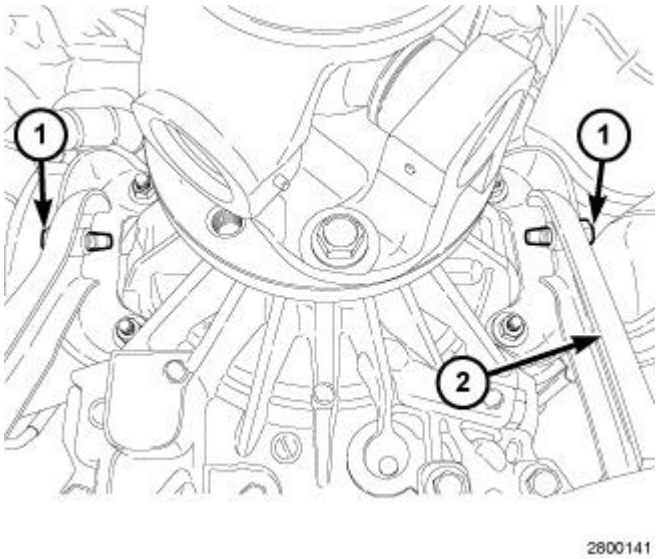

Fig. 217: Transmission Side Support Bracket & Bolts - AS68RC A/T
Courtesy of CHRYSLER GROUP, LLC

3. Tighten the side support bracket bolts (1) to 55 N.m (41 ft. lbs.).

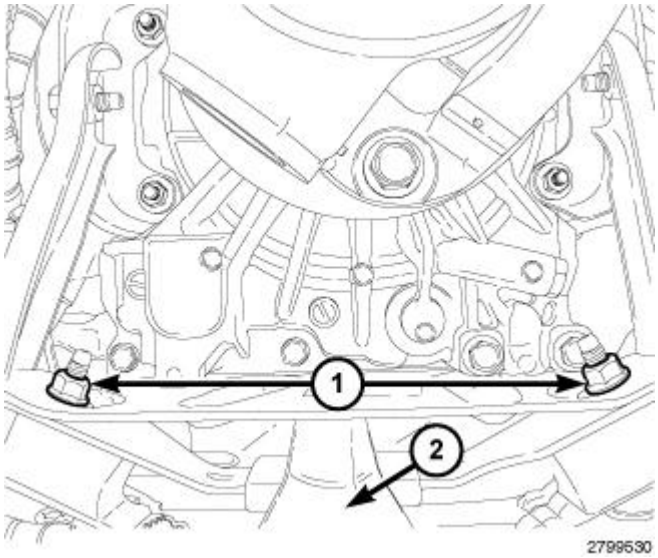

Fig. 218: Rear Transmission Mount & Nuts - AS68RC A/T
Courtesy of CHRYSLER GROUP, LLC

4. Install the rear transmission mount (2). Tighten nuts (1) to 47 N.m (35 ft. lbs.).
5. Using the transmission jack, lower the transmission onto the crossmember.

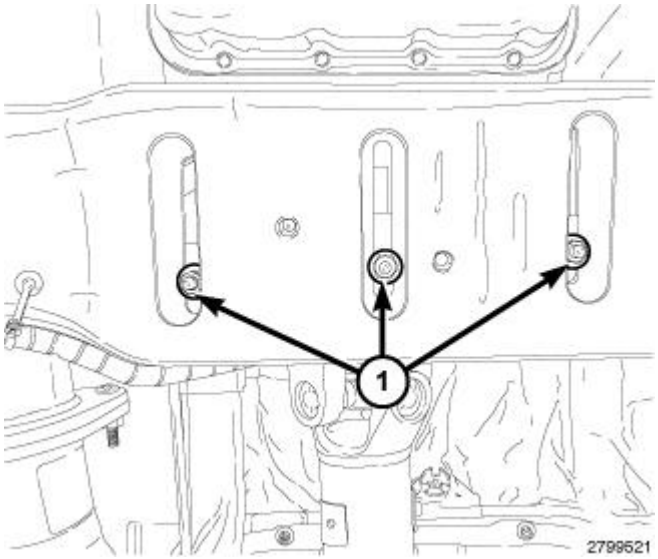

Fig. 219: Rear Transmission Mount To Crossmember Nuts - AS68RC A/T
Courtesy of CHRYSLER GROUP, LLC

6. Install the transmission mount to crossmember nuts (1) Tighten nuts (1) to 47 N.m (35 ft. lbs.).
7. Remove the transmission jack.
8. Lower the vehicle on a hoist.

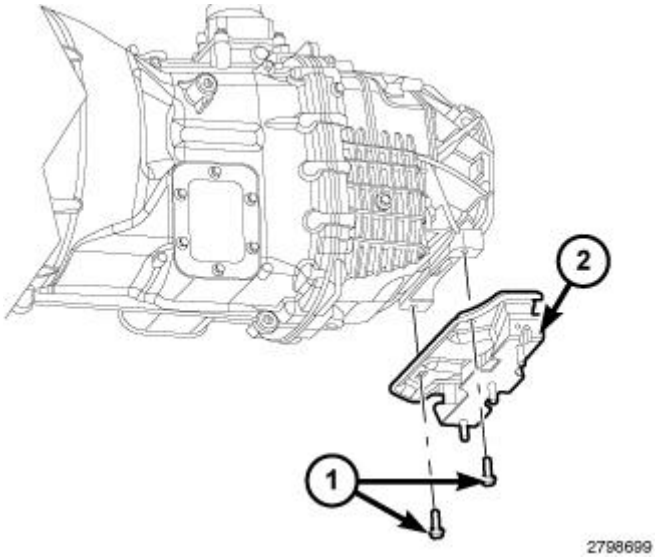

Fig. 220: Rear Transmission Mount & Bolts (M/T)
Courtesy of CHRYSLER GROUP, LLC

1. Install the rear transmission mount (2). Tighten bolts (1) to 50 N.m (37 ft. lbs.).
2. Lower the transmission.
3. Install nuts securing transmission mount to crossmember. Tighten nuts to 47 N.m (35 ft. lbs.).
4. Remove transmission jack.
5. Lower the vehicle.

68 RFE AUTOMATIC

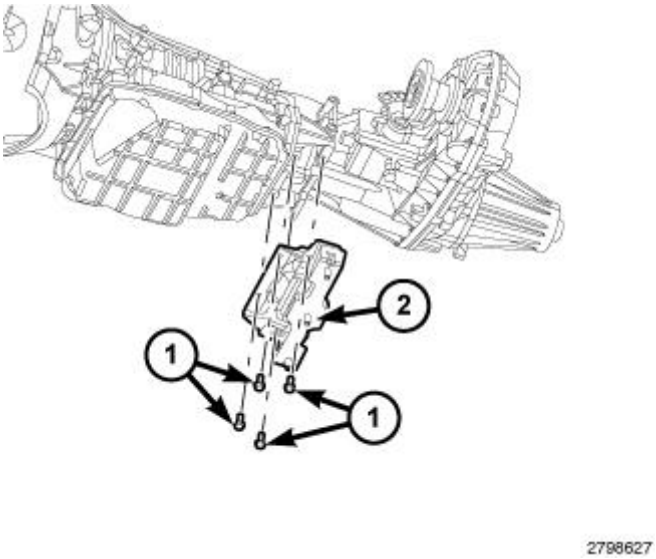

Fig. 221: Rear Transmission Mount & Bolts - 68RFE A/T - 4WD
Courtesy of CHRYSLER GROUP, LLC

NOTE: 4x4 Models

1. Install the rear transmission mount (2). Tighten bolts (1) to 50 N.m (37 ft. lbs.).
2. Lower the transmission.
3. Install nuts securing transmission mount to crossmember. Tighten nuts to 47 N.m (35 ft. lbs.).
4. Remove transmission jack.
5. Lower the vehicle.

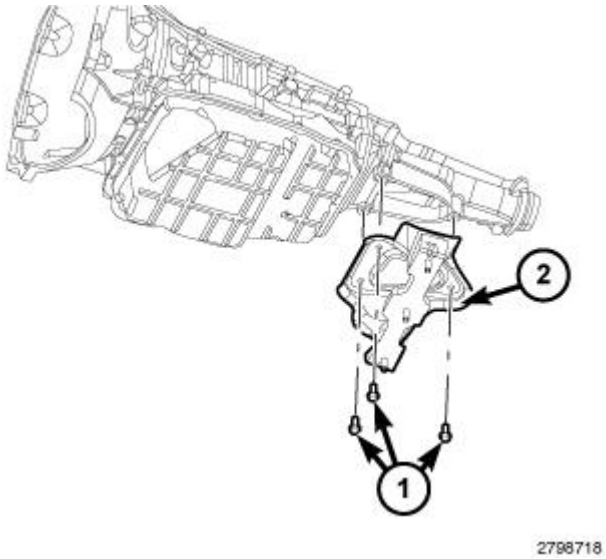

Fig. 222: Rear Transmission Mount & Bolts - 68RFE A/T - 4X2 Regular Cab Models
Courtesy of CHRYSLER GROUP, LLC

NOTE: 4x2 Regular Cab Models.

6. Install the rear transmission mount (2). Tighten bolts (1) to 50 N.m (37 ft. lbs.).
7. Lower the transmission.
8. Install nuts securing transmission mount to crossmember. Tighten nuts to 47 N.m (35 ft. lbs.).
9. Remove transmission jack.
10. Lower the vehicle.

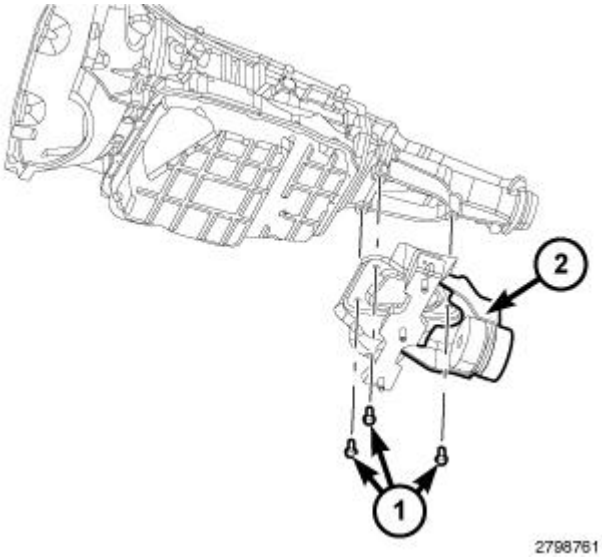

Fig. 223: Rear Transmission Mount & Bolts - 68RFE A/T - 4X2 Crew & Mega Cab Models
Courtesy of CHRYSLER GROUP, LLC

NOTE: 4x2 Crew and Mega Cab Models.

11. Install the rear transmission mount (2). Tighten bolts (1) to 50 N.m (37 ft. lbs.).
12. Lower the transmission.
13. Install nuts securing transmission mount to crossmember. Tighten nuts to 47 N.m (35 ft. lbs.).
14. Remove transmission jack.
15. Lower the vehicle.

LUBRICATION

DESCRIPTION

DESCRIPTION

A gear driven gerotor type oil pump is mounted behind the front gear cover in the lower right portion on the engine.

OPERATION

OPERATION

A gerotor style oil pump draws oil from the crankcase through the suction tube and delivers it through the block where it enters the oil cooler cover and pressure regulator valve. When oil pressure exceeds 517 kPa (75 PSI), the valve opens exposing the dump port, which routes excess oil back to the oil pump.

At the same time, oil is directed to a cast in passage in the oil cooler cover, leading to the oil cooler element. As the oil travels through the element plates, it is cooled by engine coolant traveling past the outside of the plates.

It is then routed to the oil filter head and through a full flow oil filter. If a plugged filter is encountered, the filter by-pass valve opens, allowing unfiltered oil to lubricate the engine. This condition can be avoided by frequent oil and filter changes, per the maintenance schedules found in the owners manual. The by-pass valve is calibrated to open when it sees a pressure drop of more than 345 kPa (50 psi) across the oil filter.

The oil filter head then divides the oil between the engine and the turbocharger. The turbocharger receives filtered, cooled and pressurized oil through a supply line from the filter head. The oil lubricates the turbocharger and returns to the pan by way of a drain tube connecting the bottom of the turbocharger to a tube in the cylinder block.

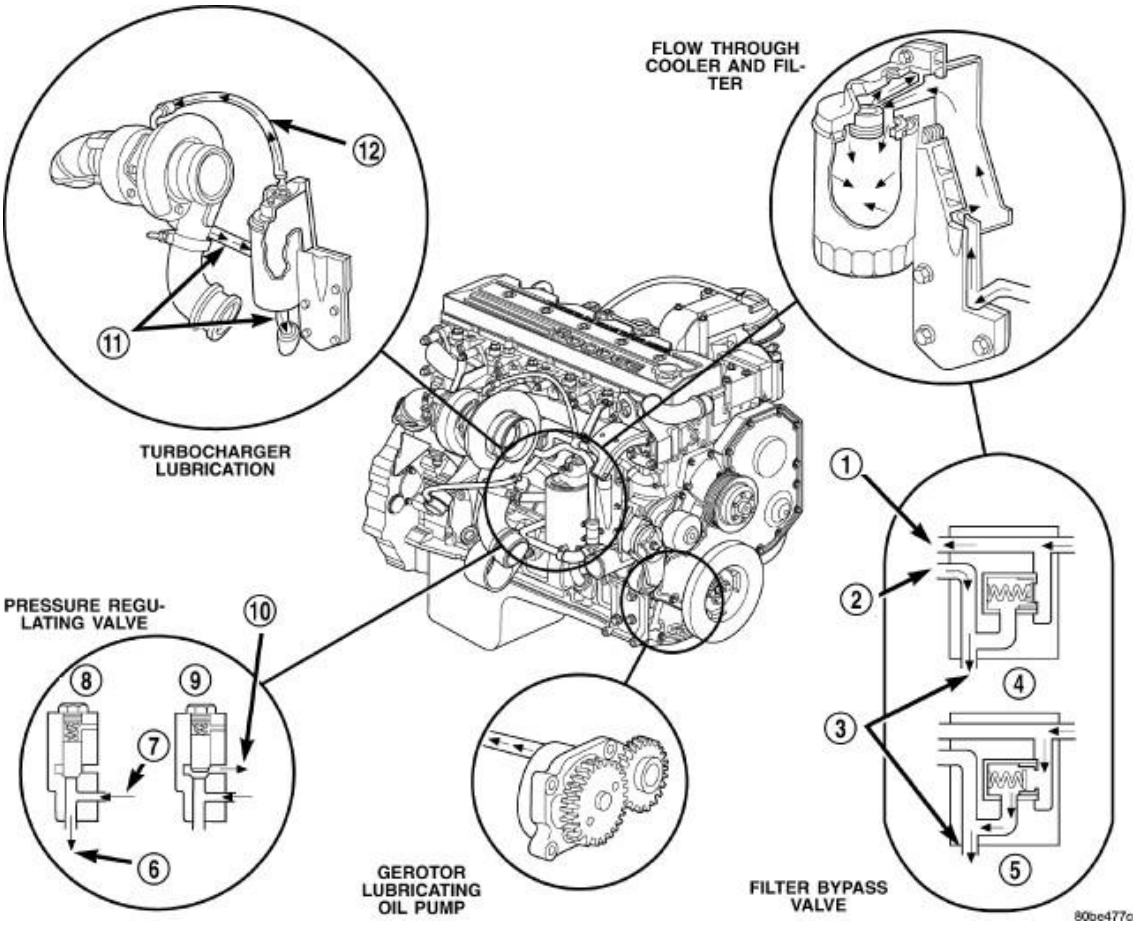

Fig. 224: Lubrication System Circulation (1 Of 2)
Courtesy of CHRYSLER GROUP, LLC

1 - TO FILTER
2 - FROM FILTER
3 - TO MAIN OIL RIFLE
4 - CLOSED
5 - OPEN
6 - TO COOLER
7 - FROM PUMP
8 - CLOSED

9 - OPEN
10 - OIL DRAINS BACK TO THE PUMP
11 - OIL DRAIN
12 - OIL SUPPLY

Oil is then carried across the block to an angle drilling which intersects the main oil rifle (3). The main oil rifle (3) runs the length of the block and delivers oil to the crankshaft main journals and valve train. Oil travels to the crankshaft through a series of transfer drillings (one for each main bearing) and lubricates a groove in the main bearing upper shell. From there another drilling feeds the camshaft main journals. J-jet piston cooling nozzles (1, 4) are supplied by a separate oil rifle. Plugs are used in place of saddle jets when J-jets are used. Crankshaft internal cross-drillings supply oil to the connecting rod journals.

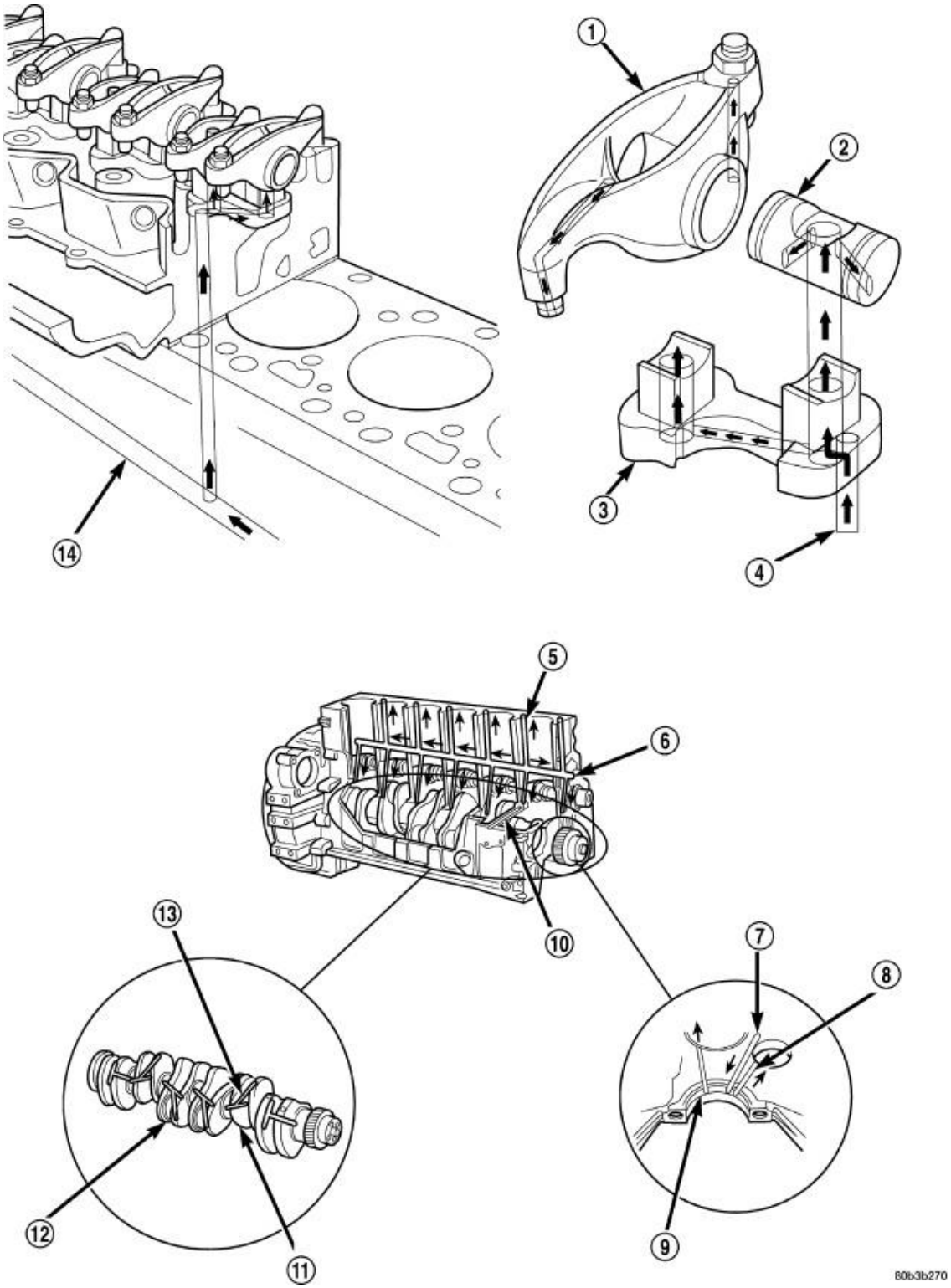

Fig. 225: Lubrication System Circulation (2 Of 2)
Courtesy of CHRYSLER GROUP, LLC

1 - ROCKER ARM

2 - ROCKER SHAFT
3 - PEDESTAL
4 - FROM MAIN OIL RIFLE
5 - TO VALVE TRAIN
6 - MAIN OIL RIFLE
7 - FROM MAIN OIL RIFLE
8 - TO CAMSHAFT
9 - TO PISTON COOLING NOZZLE
10 - FROM OIL COOLER
11 - CRANKSHAFT MAIN JOURNAL
12 - ROD JOURNAL
13 - TO ROD BEARING
14 - MAIN OIL RIFLE

Another series of transfer drillings intersecting the main oil rifle supply (14) the valve train components. Oil travels up the drilling, through a hole in the head gasket, and through a drilling in the cylinder head (one per cylinder), where it enters the rocker arm pedestal (3) and is divided between the intake and exhaust rocker arm (1). Oil travels up and around the rocker arm mounting bolt, and lubricates the rocker shaft (2) by cross drillings that intersect the mounting bolt hole. Grooves at both ends of the rocker shaft supply oil through the rocker arm where the oil travels to the push rod and socket balls.

DIAGNOSIS AND TESTING

DIAGNOSIS AND TESTING - ENGINE OIL PRESSURE

1. Remove the 1/8 npt plug from the top of the oil filter housing.
2. Install Oil Pressure Line and Gauge Tool (special tool #C-3292A, Gauge, Pressure) with a suitable adapter.
3. Start engine and warm to operating temperature.
4. Record engine oil pressure and compare with engine oil pressure chart.

CAUTION: If engine oil pressure is zero at idle, DO NOT RUN THE ENGINE.

Engine Oil Pressure (MIN)	
At Idle	68.9 kPa (10 psi)
At 2500 rpm	206.9 kPa (30 psi)

If minimum engine oil pressure is below these ranges. Refer to **DIAGNOSIS AND TESTING**.

5. Remove oil pressure gauge and install the 1/8 npt plug.

COOLER AND LINES, OIL

REMOVAL

REMOVAL

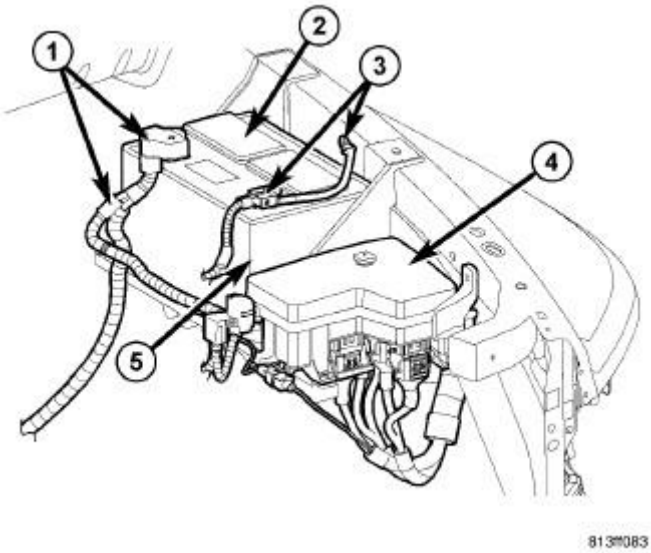

Fig. 226: Battery Cables
Courtesy of CHRYSLER GROUP, LLC

1. Disconnect both negative battery cables.
2. Drain the coolant. Refer to **STANDARD PROCEDURE** .

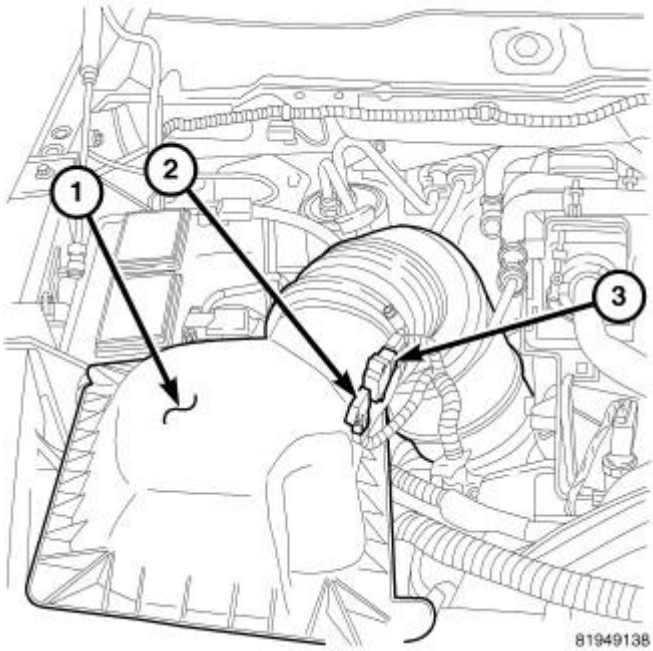

Fig. 227: Air Cleaner Housing
Courtesy of CHRYSLER GROUP, LLC

3. Remove air cleaner assembly. Refer to **BODY, AIR CLEANER, REMOVAL, 6.7L**.

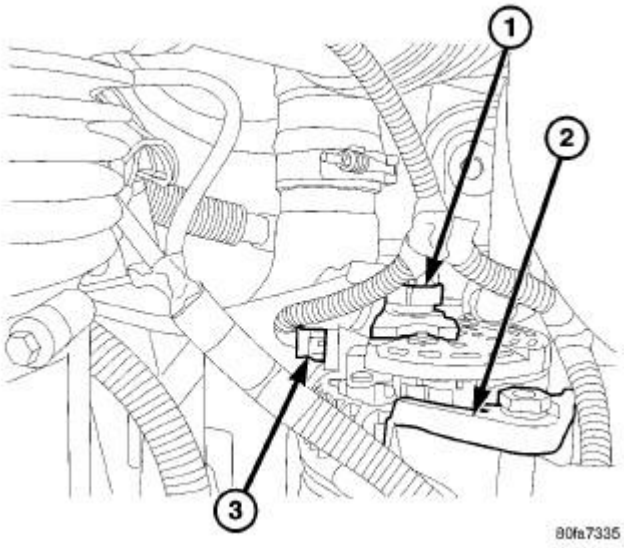

Fig. 228: Diesel Generator Connectors
Courtesy of CHRYSLER GROUP, LLC

1 - B+ CONNECTOR
2 - GENERATOR
3 - FIELD WIRE CONNECTOR

4. Remove the generator. Refer to **GENERATOR, REMOVAL** .

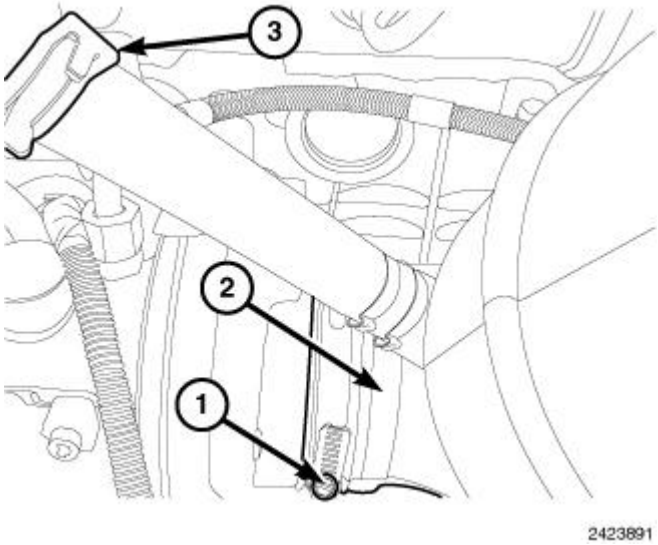

Fig. 229: Clamp, Outlet Tube & Breather Hose
Courtesy of CHRYSLER GROUP, LLC

5. Disconnect the breather hose (3).
6. Loosen the clamp (1) and remove the outlet tube (2) from the turbocharger.

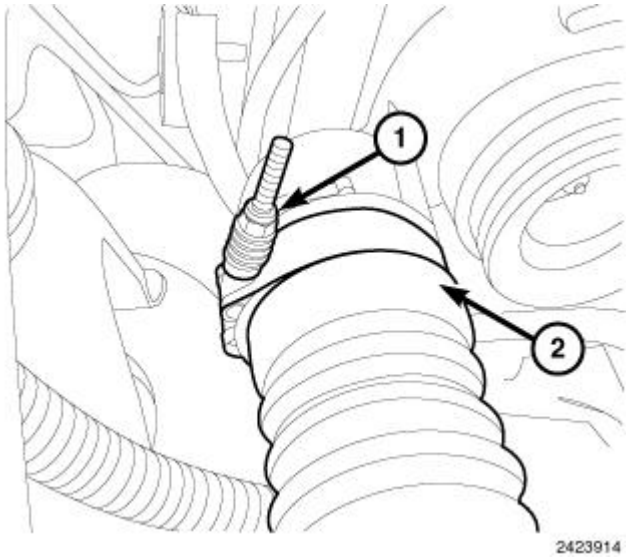

Fig. 230: Charge Air Inlet Tube & Clamp
Courtesy of CHRYSLER GROUP, LLC

7. Loosen clamp and disconnect the charge air inlet tube from the turbocharger.

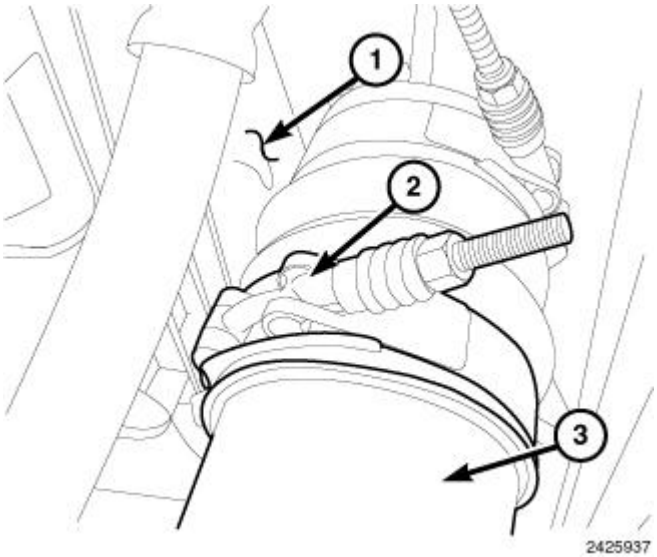

Fig. 231: Charge Air Cooler (CAC), Clamp & Charge Inlet Tube
Courtesy of CHRYSLER GROUP, LLC

8. Loosen the clamp (2), disconnect the charge inlet tube (3) from Charge Air Cooler (CAC) (1) and remove charge inlet tube (3).

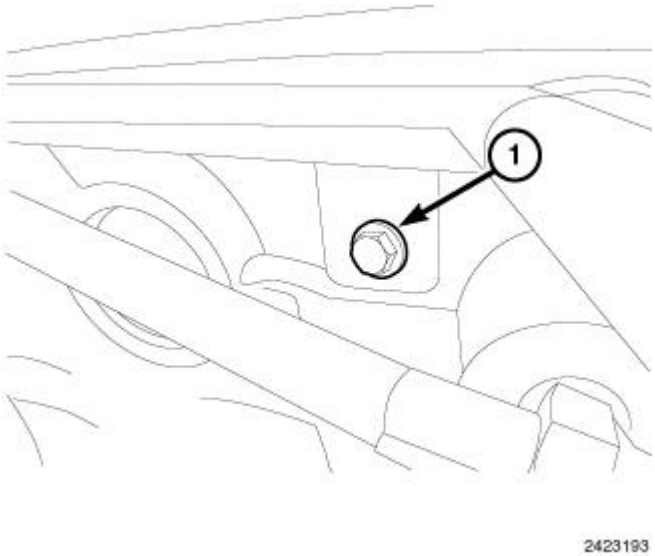

Fig. 232: Coolant Outlet Tube Bracket Bolt
Courtesy of CHRYSLER GROUP, LLC

9. Remove the coolant outlet tube bracket bolt (1).

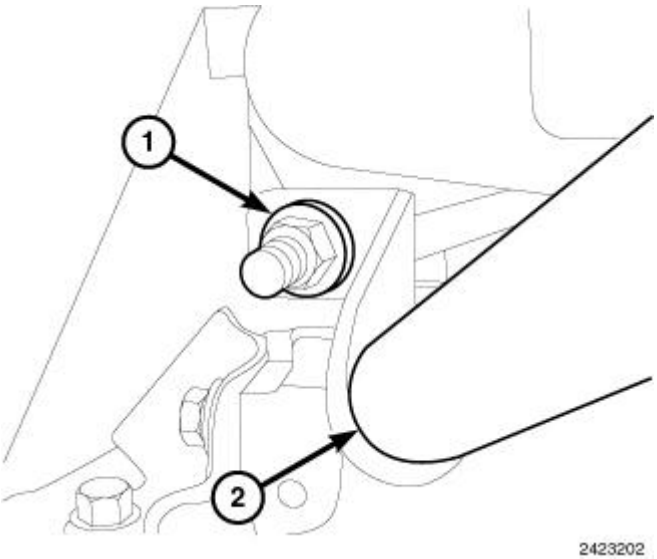

Fig. 233: Coolant Outlet Tube Bracket Nut
Courtesy of CHRYSLER GROUP, LLC

10. Remove the coolant outlet tube bracket nut (1).

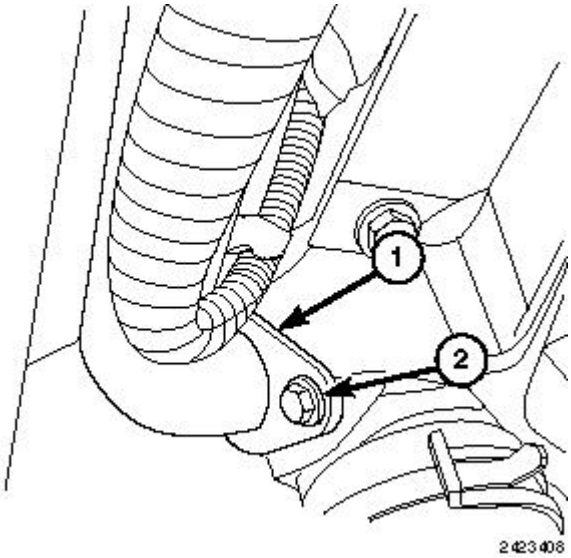

Fig. 234: Front Coolant Tube & Bolt
Courtesy of CHRYSLER GROUP, LLC

11. Remove the front coolant tube bolt (2).

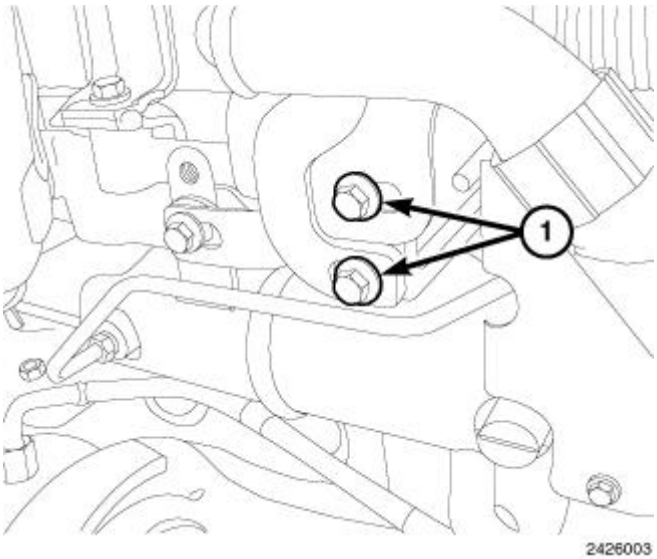

Fig. 235: Bracket Bolts
Courtesy of CHRYSLER GROUP, LLC

12. Remove the two bracket bolts.

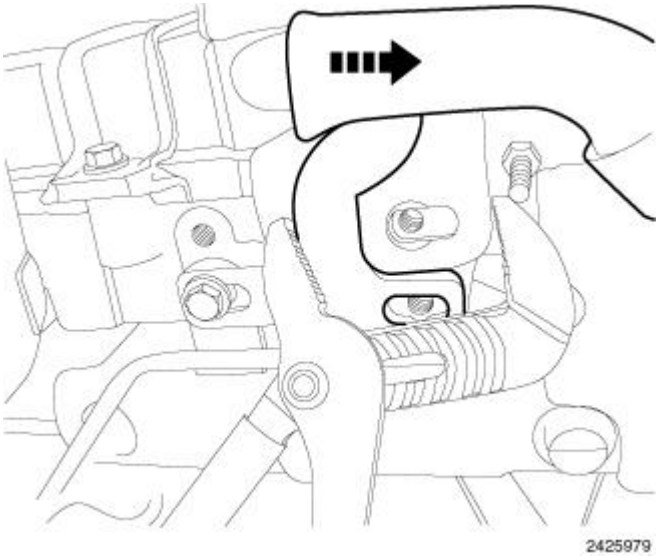

Fig. 236: Using Channel Lock Pliers To Separate Top Connection Of Front Coolant Tube From EGR Cooler
Courtesy of CHRYSLER GROUP, LLC

13. Using a suitable pair of channel lock pliers, separate the top connection of the front coolant tube from the EGR cooler.

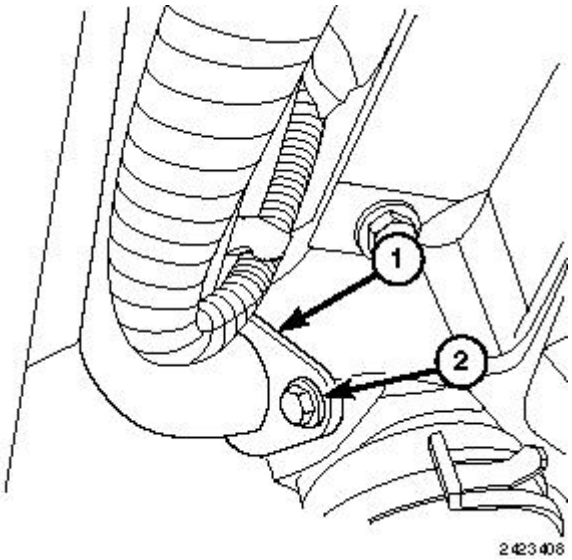

Fig. 237: Front Coolant Tube & Bolt
Courtesy of CHRYSLER GROUP, LLC

14. Disconnect the front coolant tube (1) from lower the radiator port and remove the front coolant outlet tube (1).

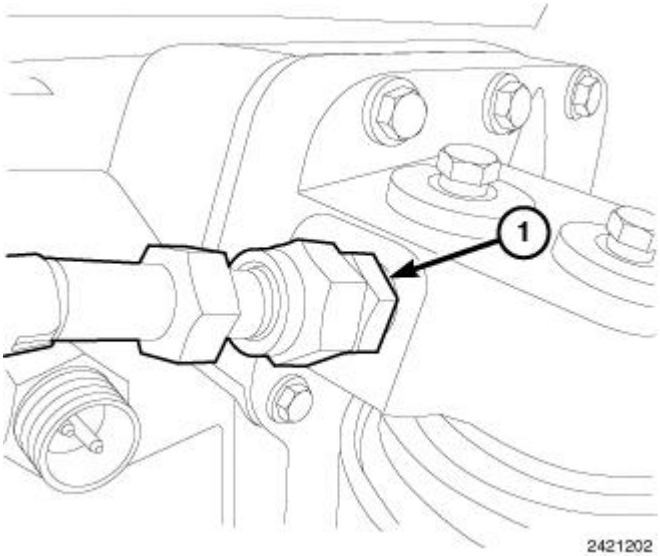

Fig. 238: Turbocharger Oil Supply Line
Courtesy of CHRYSLER GROUP, LLC

15. Remove the turbocharger oil supply line from oil cooler housing.

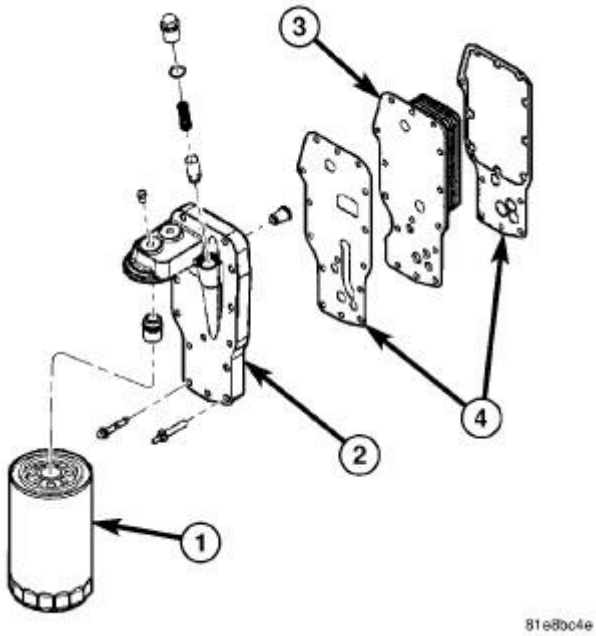

Fig. 239: Oil Filter, Oil Cooler Housing, Oil Cooler & Gaskets
Courtesy of CHRYSLER GROUP, LLC

16. Remove the oil filter. Refer to **FILTER, ENGINE OIL, REMOVAL, 6.7L**.
17. Remove and remove the 14 oil cooler capscrews and remove oil cooler housing and oil cooler from engine block.

CLEANING

CLEANING

Clean the sealing surfaces.

Apply 483 kPa (70 psi) air pressure to the element to check for leaks. If the element leaks, replace the element.

INSTALLATION

INSTALLATION

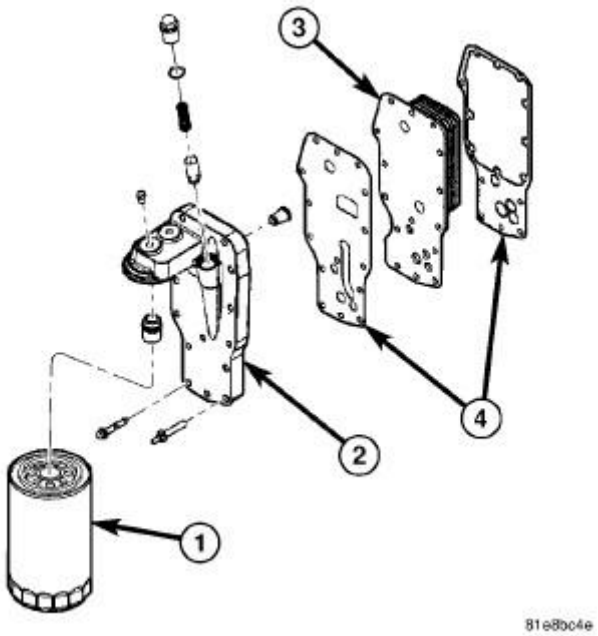

Fig. 240: Oil Filter, Oil Cooler Housing, Oil Cooler & Gaskets
Courtesy of CHRYSLER GROUP, LLC

1. Clean block surface, oil cooler, and oil cooler housing of debris, dirt and remaining gasket material.

NOTE: **Depending on the revision of oil cooler, mounting gaskets will differ. Make sure the gaskets line up with the oil cooler element and housing correctly. Failure to use correct gaskets will result in severe engine damage.**

2. Using new gaskets (4) install the oil cooler (3) and the oil cooler housing (2) to engine block. Tighten the 14 capscrews in a crisscross pattern to 24 N.m (18 ft. lbs.).
3. Install the new oil filter. Refer to **FILTER, ENGINE OIL, INSTALLATION, 6.7L**.

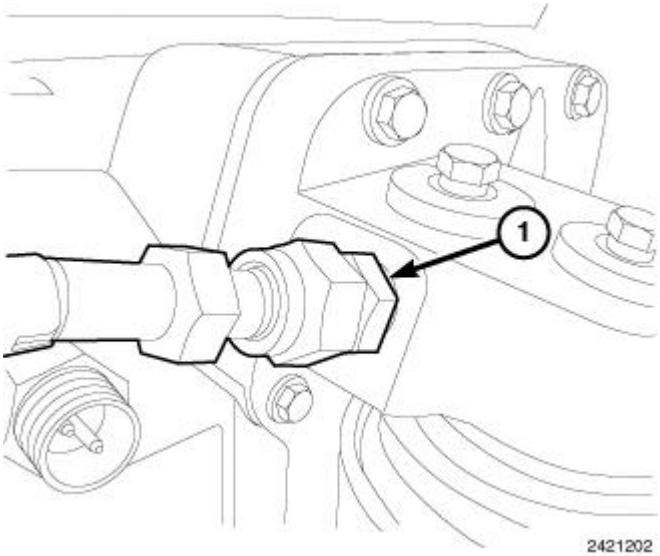

Fig. 241: Turbocharger Oil Supply Line
Courtesy of CHRYSLER GROUP, LLC

4. Install the turbocharger oil supply line to the oil cooler housing. Tighten to 36 N.m (27 ft. lbs.).

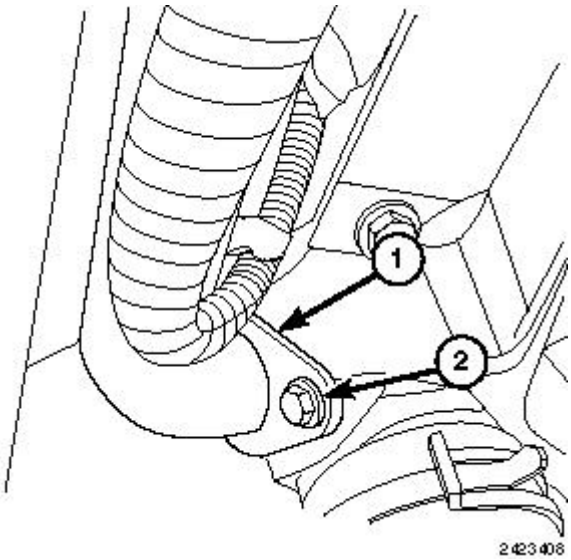

Fig. 242: Front Coolant Tube & Bolt
Courtesy of CHRYSLER GROUP, LLC

NOTE: Lubricate the new O-ring with a soap-water solution.

5. Using a new O-ring, install the coolant outlet tube.
6. Using a new O-ring, position the front coolant tube (1) back and install into the engine block lower radiator hose port. Install the bolt but do not tighten it at this time.

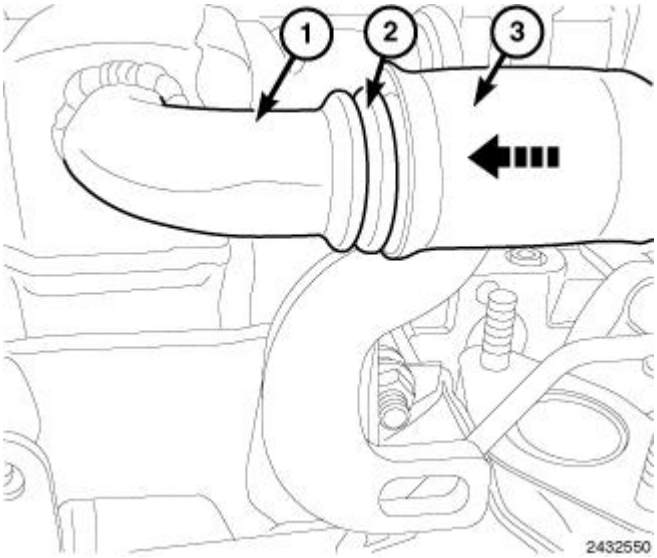

Fig. 243: EGR Cooler, O-ring & Forward Coolant Tube
Courtesy of CHRYSLER GROUP, LLC

NOTE: Lubricate the new O-rings with a soapy water solution.

7. Using a new O-ring (2), install forward coolant tube (3) to EGR cooler (1).

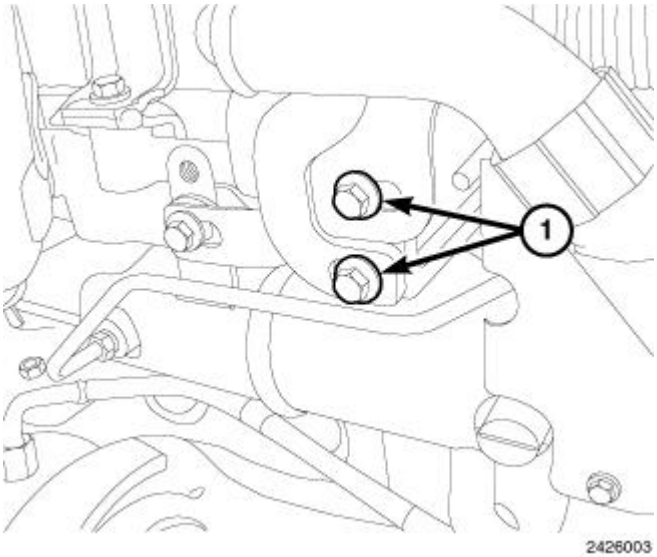

Fig. 244: Bracket Bolts
Courtesy of CHRYSLER GROUP, LLC

8. Install the two bracket bolts. Tighten bolts to 10 N.m (89 in. lbs.).

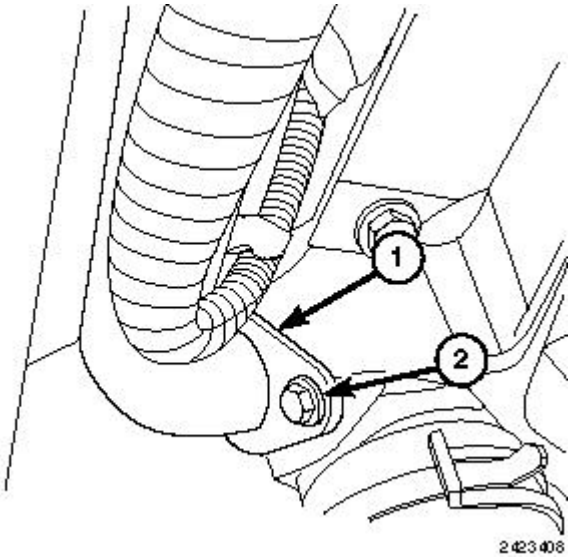

Fig. 245: Front Coolant Tube & Bolt
Courtesy of CHRYSLER GROUP, LLC

9. Tighten the front coolant tube bolt (2) to 10 N.m (89 in. lbs.).

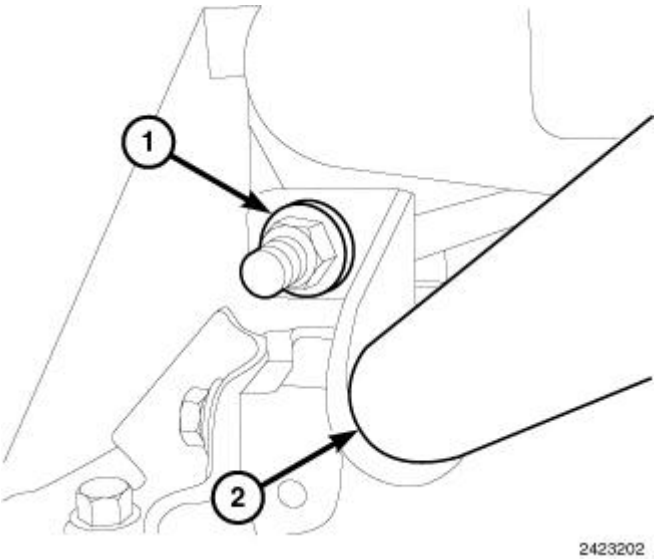

Fig. 246: Coolant Outlet Tube Bracket Nut
Courtesy of CHRYSLER GROUP, LLC

10. Install the coolant outlet tube bracket nut (1). Tighten to 24 N.m (18 ft. lbs.).

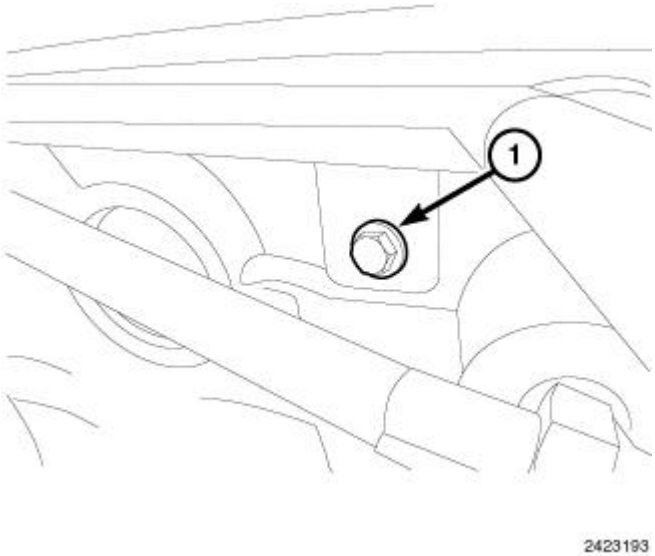

Fig. 247: Coolant Outlet Tube Bracket Bolt
Courtesy of CHRYSLER GROUP, LLC

11. Install the coolant outlet tube bracket bolt (1). Tighten bolt to 10 N.m (89 in. lbs.).

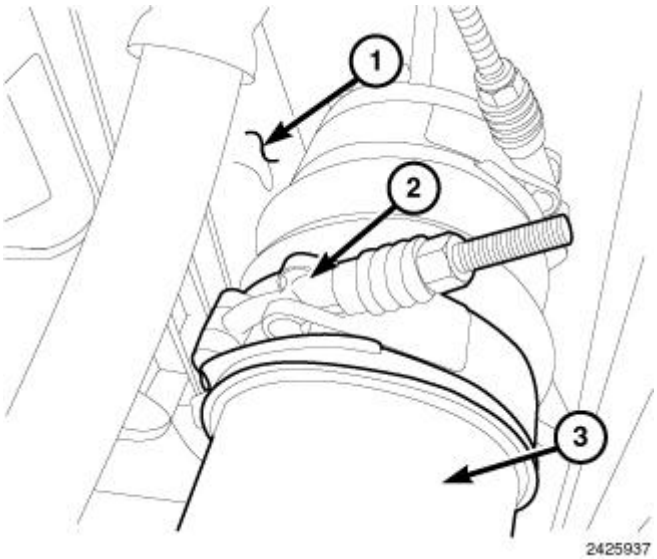

Fig. 248: Charge Air Cooler (CAC), Clamp & Charge Inlet Tube
Courtesy of CHRYSLER GROUP, LLC

12. Install charge inlet tube (3) to the Charge Air Cooler (CAC) (1). Tighten the clamp (2) to 11 N.m (95 in. lbs.).

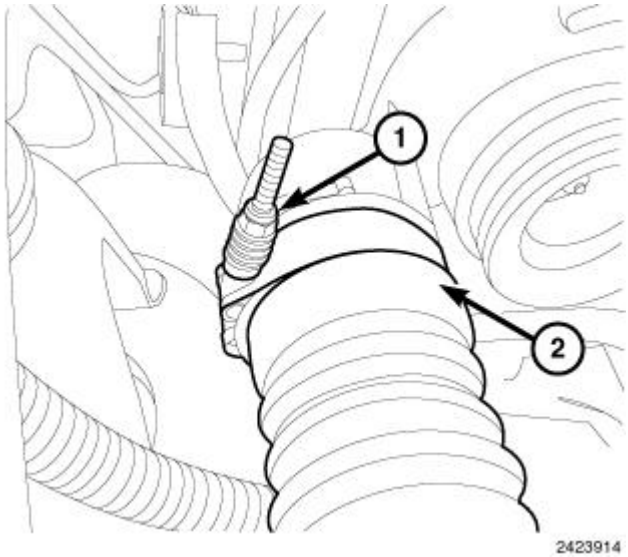

Fig. 249: Charge Air Inlet Tube & Clamp
Courtesy of CHRYSLER GROUP, LLC

13. Connect the charge air inlet tube (2) to the turbocharger. Tighten the clamp (1) to 11 N.m (95 in. lbs.).

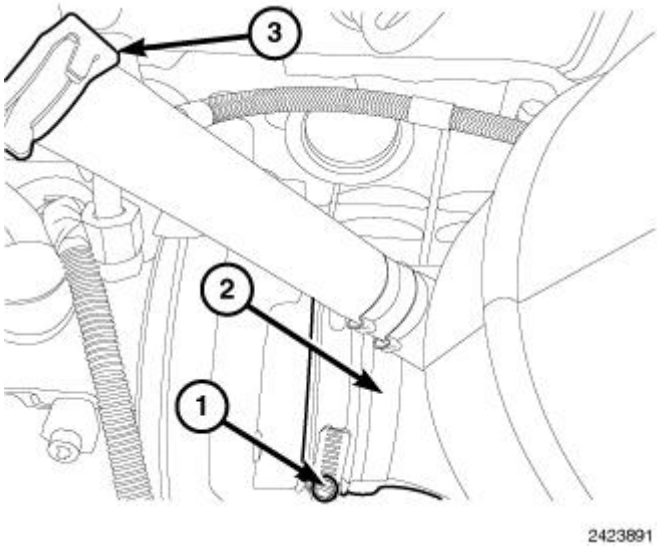

Fig. 250: Clamp, Outlet Tube & Breather Hose
Courtesy of CHRYSLER GROUP, LLC

14. Install the outlet tube (2) to the turbocharger. Tighten the clamp (1) to 11 N.m (95 in. lbs.).
15. Connect the breather hose (3).

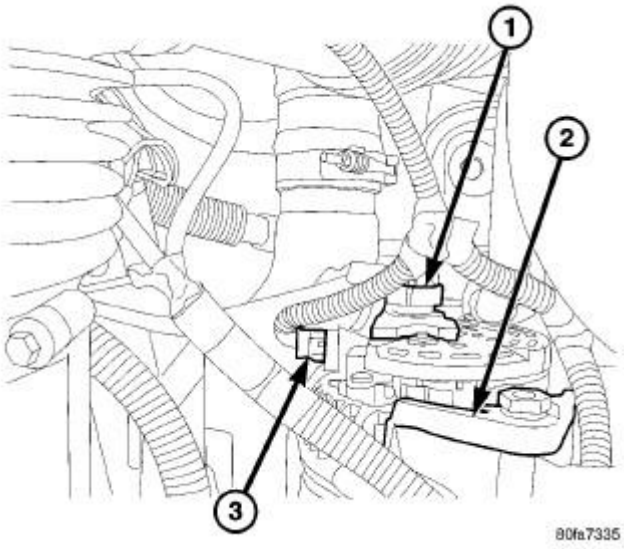

Fig. 251: Diesel Generator Connectors
Courtesy of CHRYSLER GROUP, LLC

1 - B+ CONNECTOR
2 - GENERATOR
3 - FIELD WIRE CONNECTOR

16. Install the generator. Refer to **GENERATOR, INSTALLATION** .

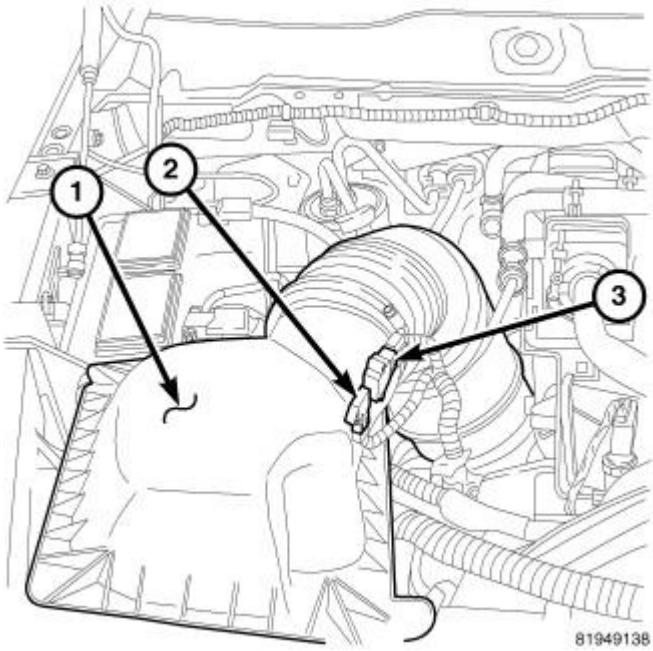

Fig. 252: Air Cleaner Housing
Courtesy of CHRYSLER GROUP, LLC

17. Install the Air Filter housing. Refer to **BODY, AIR CLEANER, INSTALLATION, 6.7L**.

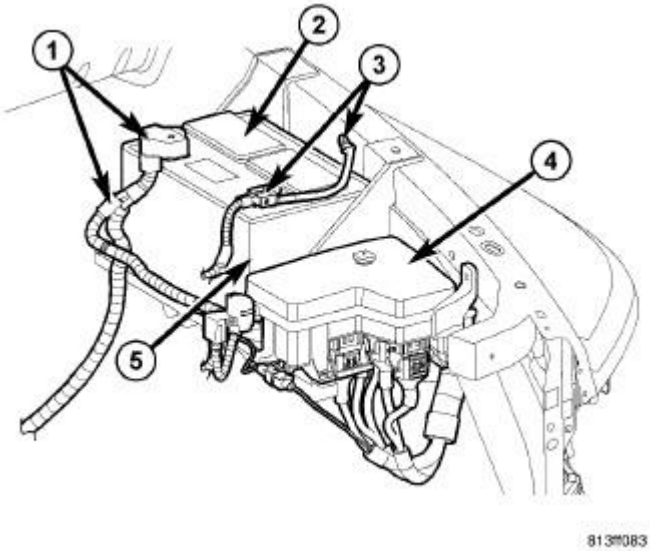

Fig. 253: Battery Cables
Courtesy of CHRYSLER GROUP, LLC

18. Fill Engine with coolant. Refer to **STANDARD PROCEDURE** .
19. Connect both negative battery cables.
20. Start engine and check for leaks.

FILTER, ENGINE OIL

REMOVAL

REMOVAL

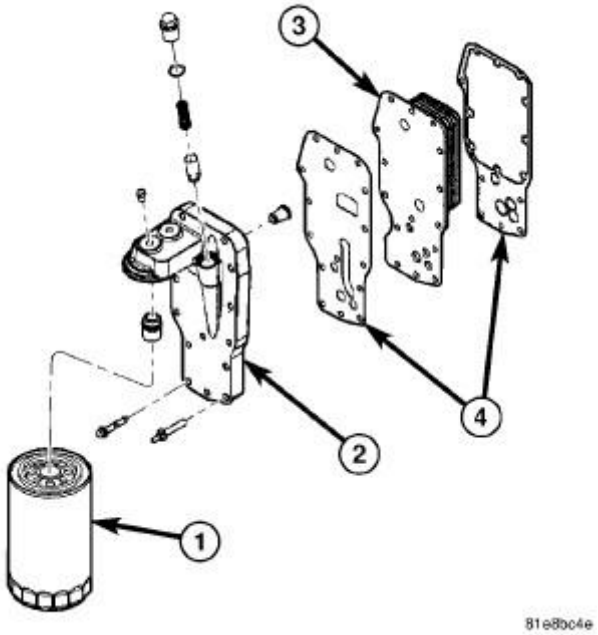

Fig. 254: Oil Filter, Oil Cooler Housing, Oil Cooler & Gaskets
Courtesy of CHRYSLER GROUP, LLC

1. Clean the area around the oil filter head. Remove the filter from below using a cap-style filter wrench.
2. Clean the gasket surface of the filter head. The filter canister O-Ring seal can stick on the filter head. Make sure it is removed.

INSTALLATION

INSTALLATION

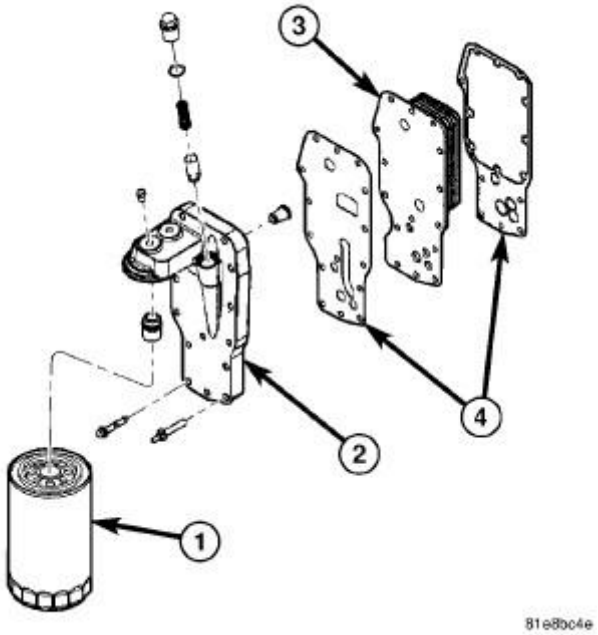

Fig. 255: Oil Filter, Oil Cooler Housing, Oil Cooler & Gaskets
Courtesy of CHRYSLER GROUP, LLC

1. Fill the oil filter element with clean oil before installation. Use the same type oil that will be used in the engine.
2. Apply a light film of lubricating oil to the sealing surface before installing the filter.

CAUTION: Mechanical over-tightening may distort the threads or damage the filter element seal.

3. Install the filter until it contacts the sealing surface of the oil filter adapter. Tighten filter an additional 1/2 turn.

GASKET, OIL PAN

REMOVAL

REMOVAL

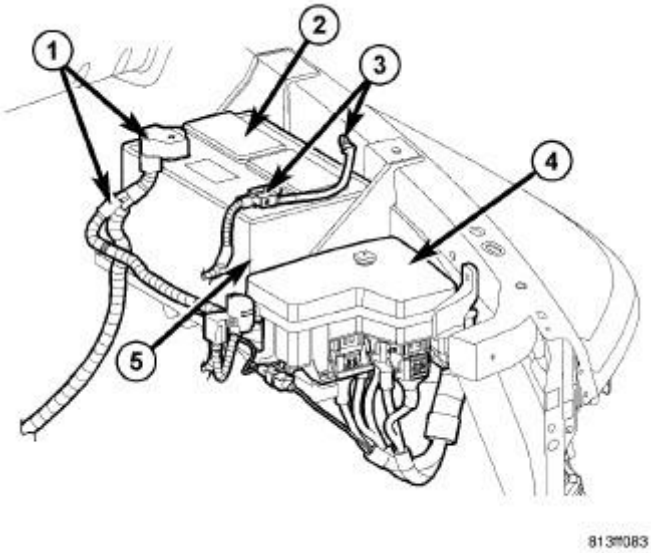

Fig. 256: Battery Cables
Courtesy of CHRYSLER GROUP, LLC

1. Disconnect the battery cables (1, 3).

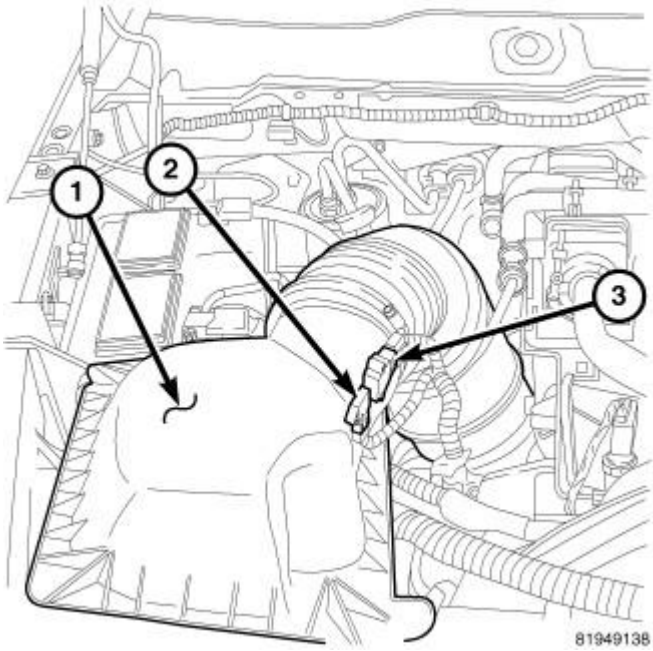

Fig. 257: Air Cleaner Housing
Courtesy of CHRYSLER GROUP, LLC

2. Remove the intake air assembly.
3. Remove the inner radiator shroud retaining bolts.
4. Remove the inner radiator shroud.
5. Raise and support the vehicle.

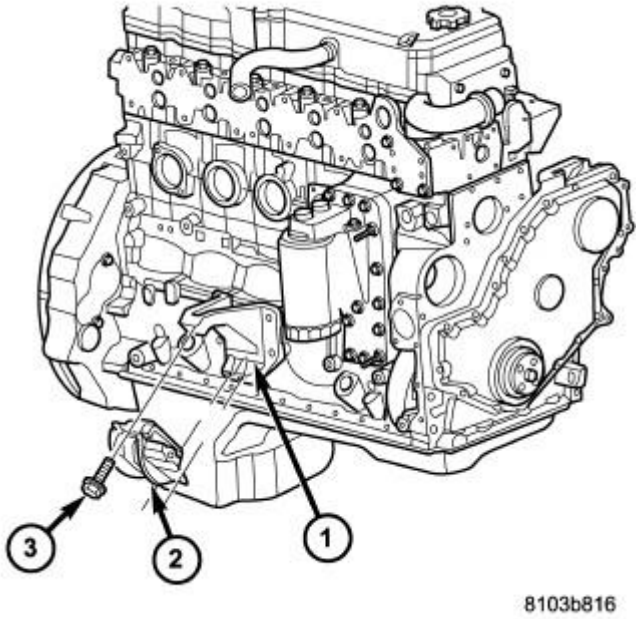

Fig. 258: Mount, Insulator & Bolt
Courtesy of CHRYSLER GROUP, LLC

1 - Mount
2 - Insulator
3 - Bolt

6. Remove the front suspension track bar. Refer to **TRACK BAR, FRONT, REMOVAL** .
7. Remove the right and left engine mount through bolt. Refer to **INSULATOR, ENGINE MOUNT, FRONT, REMOVAL, 6.7L** and **INSULATOR, ENGINE MOUNT, REAR, REMOVAL, 6.7L**.
8. Remove the steering gear retaining bolts. Refer to **GEAR, INDEPENDENT FRONT SUSPENSION, INSTALLATION** and **GEAR, LINK AND COIL, INSTALLATION** .

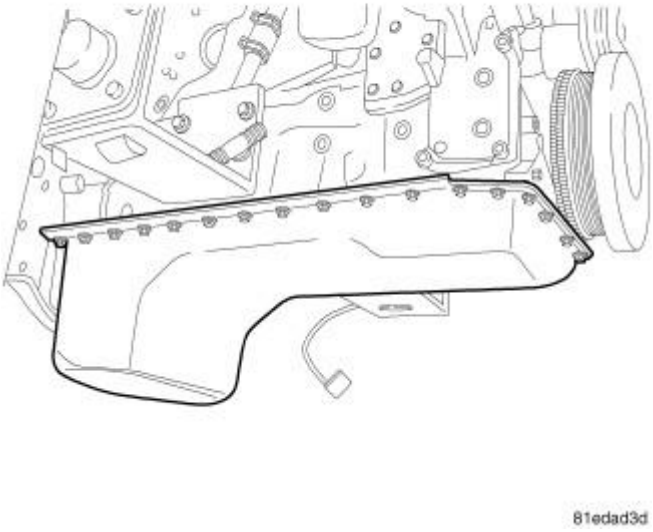

Fig. 259: Oil Pan
Courtesy of CHRYSLER GROUP, LLC

9. Drain the engine oil.
10. Lower the vehicle.
11. Install the engine lift fixture.
12. Use the engine lift fixture to raise the engine.
13. Raise the vehicle on the hoist.
14. Remove the oil pan retaining bolts.
15. Lower the oil pan enough to allow the removal of the oil pan gasket.
16. Remove the oil pan gasket.

INSTALLATION

INSTALLATION

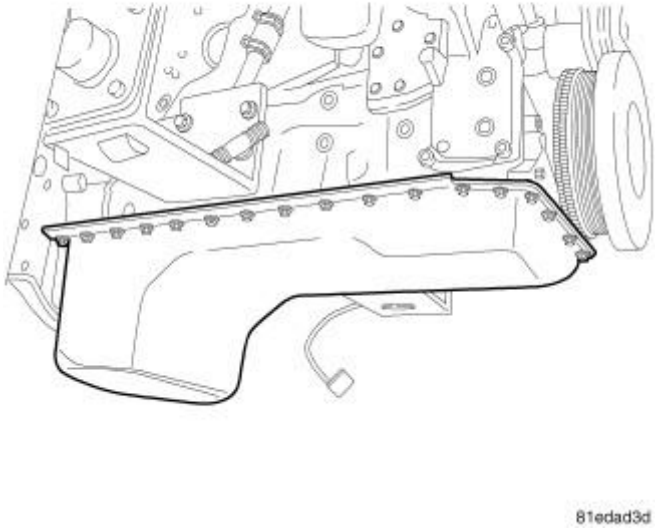

Fig. 260: Oil Pan
Courtesy of CHRYSLER GROUP, LLC

1. Clean the oil pan gasket surfaces to be sure the surfaces are free of debris and oil.
2. Install a new oil pan gasket.
3. Install the oil pan bolts in a cross pattern. Refer to **PAN, OIL, INSTALLATION, 6.7L**.
4. Install the steering gear retaining bolts. Refer to **GEAR, INDEPENDENT FRONT SUSPENSION, INSTALLATION** and **GEAR, LINK AND COIL, INSTALLATION** .
5. Lower the vehicle.
6. Lower the engine into the mounts.
7. Remove the engine lift fixture.
8. Fill the engine with oil.
9. Raise and support the vehicle.

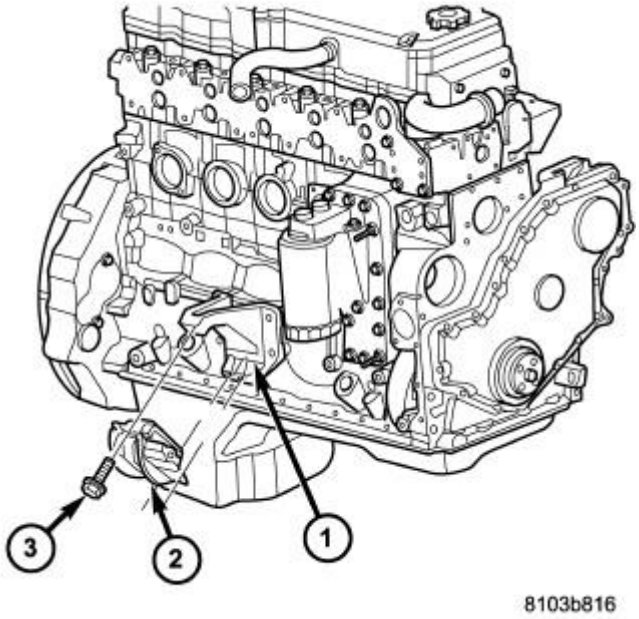

Fig. 261: Mount, Insulator & Bolt
Courtesy of CHRYSLER GROUP, LLC

1 - Mount
2 - Insulator
3 - Bolt

10. Install the left and right engine mount through bolt. Refer to **INSULATOR, ENGINE MOUNT, FRONT, INSTALLATION, 6.7L** and **INSULATOR, ENGINE MOUNT, REAR, INSTALLATION, 6.7L**.
11. Install the front suspension track bar. Refer to **TRACK BAR, FRONT, INSTALLATION** .
12. Lower the vehicle.
13. Install the radiator shroud.
14. Install the radiator shroud bolts.

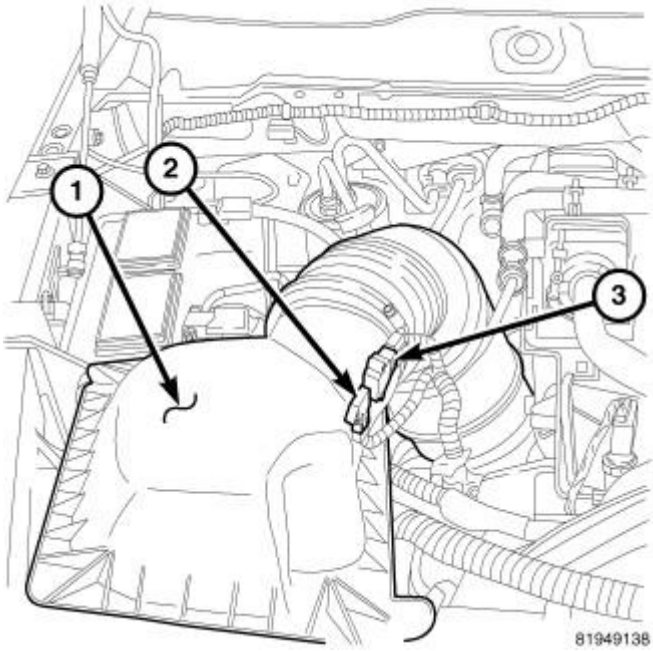

Fig. 262: Air Cleaner Housing
Courtesy of CHRYSLER GROUP, LLC

15. Install the intake air assembly. Refer to **BODY, AIR CLEANER, INSTALLATION, 6.7L**.

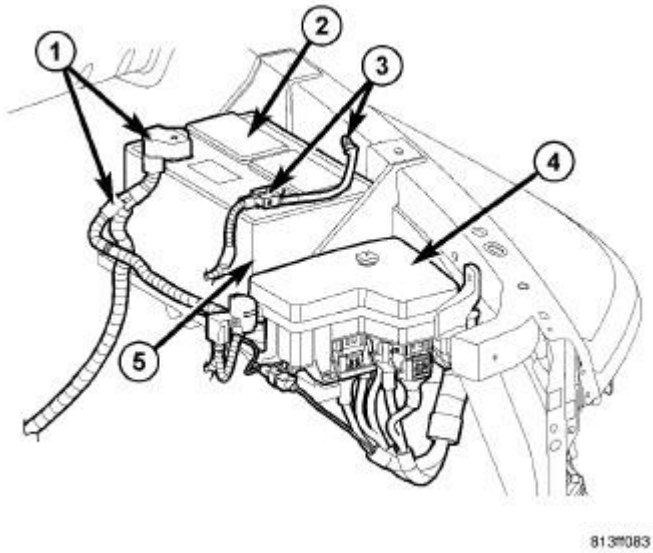

Fig. 263: Battery Cables
Courtesy of CHRYSLER GROUP, LLC

16. Connect the battery cables (1, 3).

OIL

STANDARD PROCEDURE

ENGINE OIL LEVEL

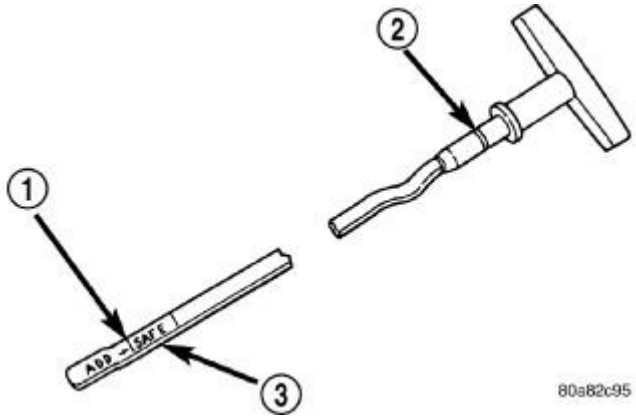

Fig. 264: Oil Level Indicator (Dipstick)
Courtesy of CHRYSLER GROUP, LLC

1 - ADD OIL MARK
2 - O-RING
3 - SAFE RANGE

CAUTION: Do not overfill crankcase with engine oil, oil foaming and oil pressure loss can result.

To ensure proper lubrication of an engine, the engine oil must be maintained at an acceptable level. The acceptable oil level is in the SAFE RANGE (3) on the engine oil dipstick.

NOTE: Note: The best time to check the engine oil level is after the engine is at operating temperature and has been turned off (not running) for 30 minutes.

1. Position vehicle on level surface.
2. With engine OFF, allow approximately 30 minutes for oil to settle to bottom of crankcase, remove engine oil dipstick.
3. Wipe dipstick clean.
4. Replace dipstick and verify it is seated in the tube.
5. Remove dipstick, with handle held above the tip, take oil level reading.
6. Add oil only if level is below the SAFE RANGE area on the dipstick.
7. Replace dipstick.

ENGINE OIL SERVICE

WARNING: Hot oil can cause personal injury.

NOTE: Change engine oil and filter at intervals specified in the owner's manual.

1. Operate the engine until the water temperature reaches 60°C (140°F). Shut the engine off.
2. Use a container that can hold at least 14 liters (15 quarts) to hold the used oil. Remove the oil drain plug and drain the used engine oil into the container.
3. Always check the condition of the used oil. This can give you an indication of engine problems that might exist.
   - Thin, black oil indicates fuel dilution.
   - Milky discoloration indicates coolant dilution.
4. Clean the area around the oil filter head. Remove the filter. Refer to **FILTER, ENGINE OIL, REMOVAL, 6.7L**.
5. Install new oil filter. Refer to **FILTER, ENGINE OIL, INSTALLATION, 6.7L**.
6. Clean the drain plug and the sealing surface of the pan. Check the condition of the threads and sealing surface on the oil pan and drain plug.
7. Install the drain plug. Tighten the plug to 50 N.m (37 ft. lbs.).
8. Use only High-Quality Low Ash Multi-Viscosity lubricating oil in the Cummins Turbo Diesel engine. Choose the correct oil for the operating conditions. Refer to **CAPACITIES AND RECOMMENDED FLUIDS, DESCRIPTION** .
9. Fill the engine with the correct grade of new oil. Refer to **CAPACITIES AND RECOMMENDED FLUIDS, SPECIFICATIONS** .
10. Start the engine and operate it at idle for several minutes. Check for leaks at the filter and drain plug.
11. Stop engine. Wait 30 minutes to allow the oil to drain back to the pan and check the level again.

USED ENGINE OIL DISPOSAL

Care should be exercised when disposing of used engine oil after it has been drained from a vehicle's engine.

PAN, OIL

REMOVAL

REMOVAL

4X4

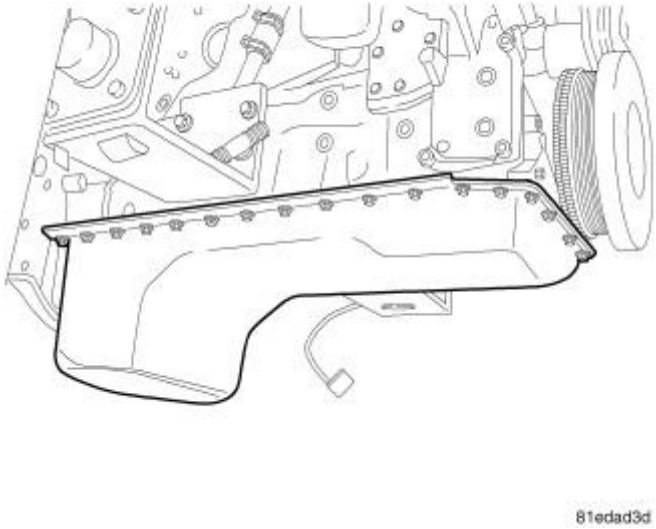

Fig. 265: Oil Pan
Courtesy of CHRYSLER GROUP, LLC

1. Disconnect the battery negative cables.
2. Remove the intake air assembly.
3. Remove the radiator shroud retaining bolts.
4. Install Engine Support Fixture No. (special tool #8534B, Fixture, Driveline Support).
5. Raise and support the vehicle.

WARNING: HOT OIL CAN CAUSE PERSONAL INJURY.

6. Drain the engine oil. Refer to **Engine/Lubrication/OIL - Standard Procedure**.

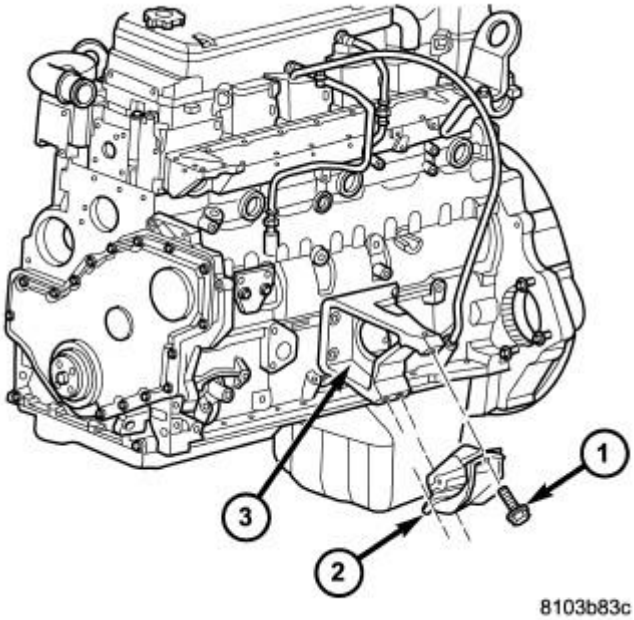

Fig. 266: Mount, Insulator & Bolt
Courtesy of CHRYSLER GROUP, LLC

1 - Bolt
2 - Insulator
3 - Mount

7. Loosen the front engine mount bolts.
8. Use the Engine Support Fixture No. (special tool #8534B, Fixture, Driveline Support) to raise engine out of the front mounts.
9. Remove the engine oil dipstick.

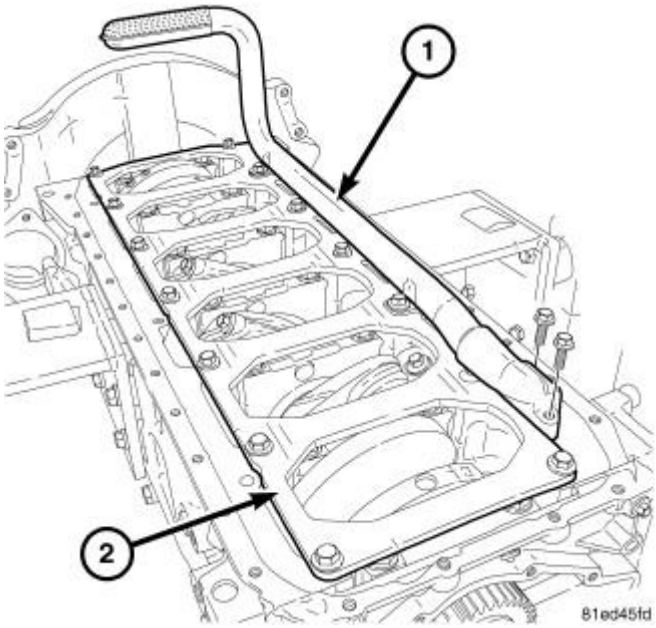

Fig. 267: Oil Pickup Tube
Courtesy of CHRYSLER GROUP, LLC

10. Remove oil pan bolts, break the pan to block seal, and lower pan slightly.
11. Remove oil suction tube bolts and lower the suction tube into oil pan.
12. Remove the 2 bolts from the front of the engine block stiffener.
13. Remove the oil pan.

4X2

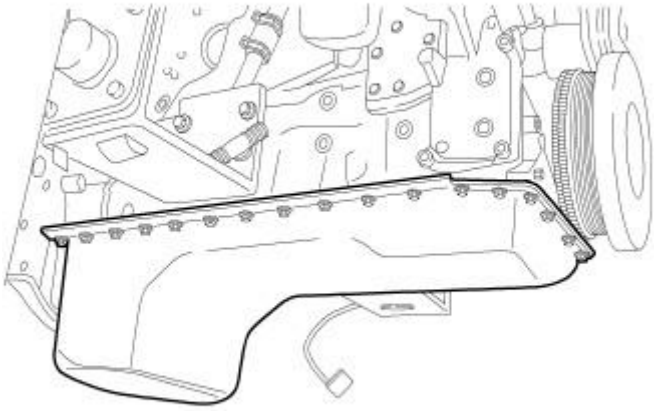

Fig. 268: Oil Pan
Courtesy of CHRYSLER GROUP, LLC

1. Disconnect both negative battery cables.
2. Raise and support the vehicle.
3. Remove the fan and fan shroud. Refer to **FAN, COOLING, ELECTRIC, REMOVAL** and **FAN, COOLING, VISCOUS, REMOVAL** .
4. Remove the starter. Refer to **STARTER, REMOVAL** .

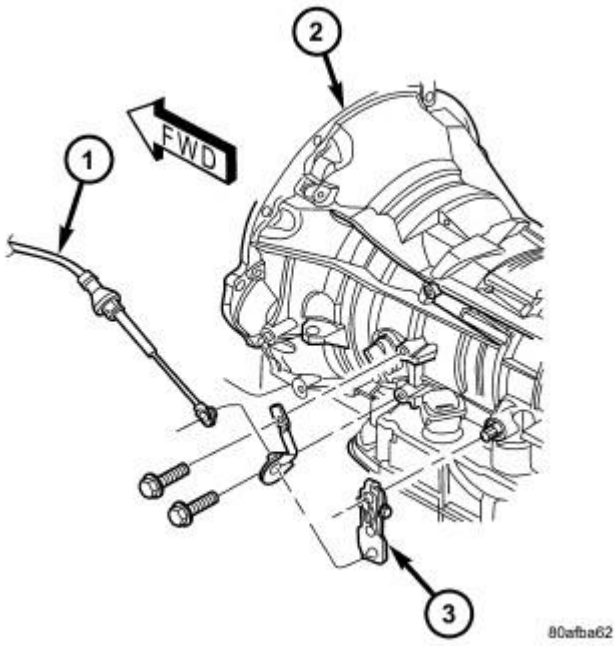

Fig. 269: Gearshift Cable, RFE Transmission & Manual Lever
Courtesy of CHRYSLER GROUP, LLC

1 - GEARSHIFT CABLE
2 - RFE TRANSMISSION
3 - MANUAL LEVER

5. Remove the transmission. Refer to appropriate Transmission Service Information article.
6. Remove the flywheel housing bolts (8).
7. Remove the flex plate bolts (8).
8. Remove the engine oil dip stick.
9. Drain the oil.
10. Remove the steering rack bolts.
11. Remove the oil pan bolts.

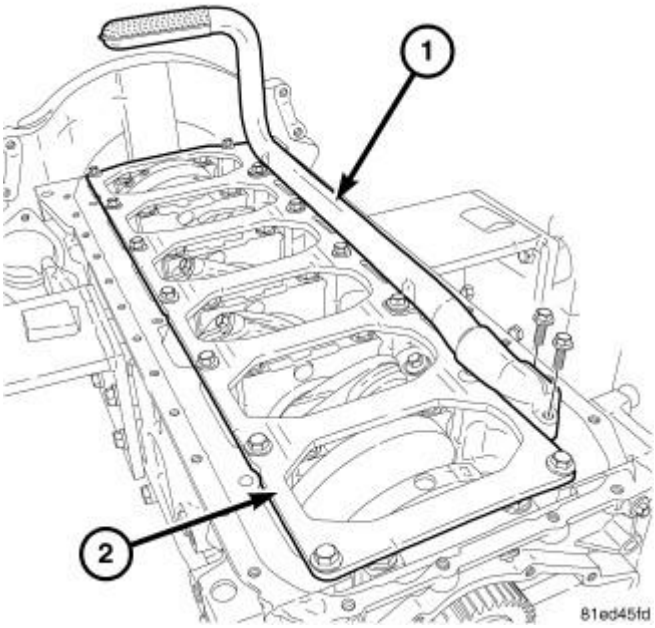

Fig. 270: Oil Pickup Tube
Courtesy of CHRYSLER GROUP, LLC

12. Remove the oil pickup bolts.
13. Remove the oil pan.

CLEANING

CLEANING

Remove all gasket material from the oil pan and cylinder block sealing surfaces. Extra effort may be required around T-joint areas. Clean oil pan and flush suction tube with a suitable solvent.

INSPECTION

INSPECTION

Inspect the oil pan, suction tube, and tube braces for cracks and damage. Replace any defective component. Inspect the oil drain plug and drain hole threads. Inspect the oil pan sealing surface for straightness. Repair any minor imperfections with a ball-peen hammer. Do not attempt to repair an oil pan by welding.

INSTALLATION

INSTALLATION

4X4

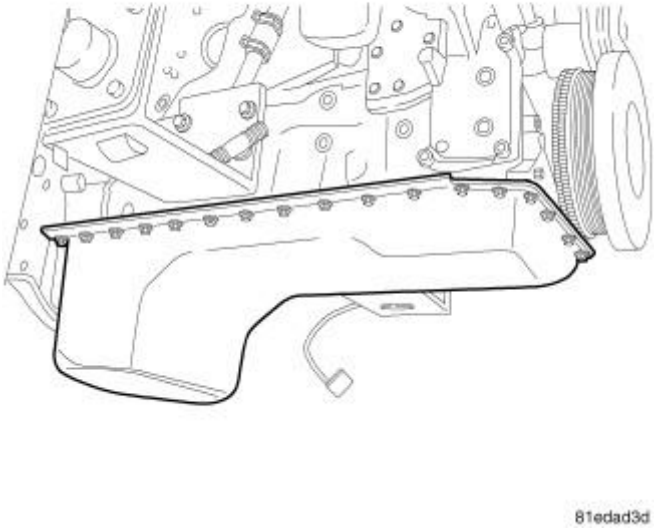

Fig. 271: Oil Pan
Courtesy of CHRYSLER GROUP, LLC

1. Clean the sealing surfaces of the cylinder block and oil pan with a suitable cleaner.
2. Clean the oil pan.
3. Clean the oil pan T-joints.
4. Fill the T-joint between the pan rail/gear housing and pan rail/rear seal retainer with sealant. Use Mopar® Silicone Rubber Adhesive Sealant or equivalent.
5. Position the new oil pan gasket.

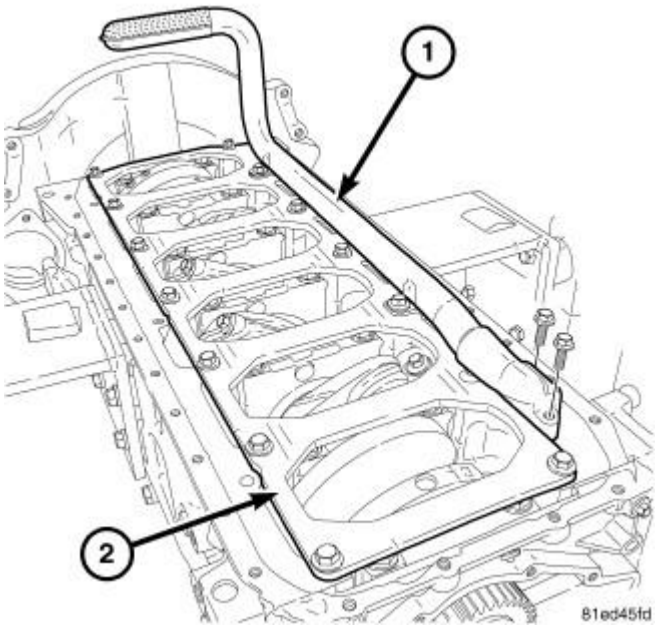

Fig. 272: Oil Pickup Tube
Courtesy of CHRYSLER GROUP, LLC

6. Place suction tube in oil pan and guide them into place. Using a new tube-to-block gasket, install the suction tube. Tighten the bolts to 24 N.m (18 ft. lbs.).
7. Install the engine block stiffener. Tighten bolts to 43 N.m (32 ft. lbs.).
8. Install the oil pan. Starting from the center and working outward, tighten the oil pan bolts to 28 N.m (21 ft. lbs.).
9. Install the engine oil dipstick.
10. Install the flywheel to crankshaft adapter. Tighten to 137 N.m (101 ft. lbs.).

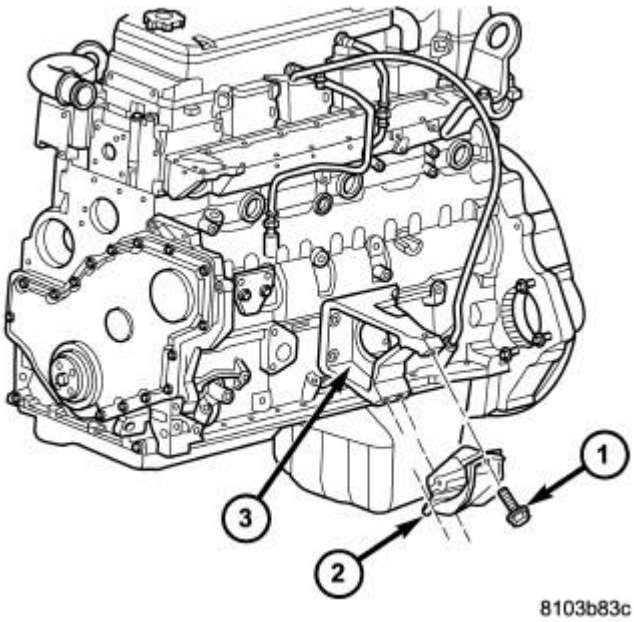

Fig. 273: Mount, Insulator & Bolt
Courtesy of CHRYSLER GROUP, LLC

1 - Bolt
2 - Insulator
3 - Mount

11. Lower the engine into the motor mounts and tighten the through bolts to 88 N.m (64 ft. lbs.).
12. Remove the Engine Support Fixture No. (special tool #8534B, Fixture, Driveline Support).

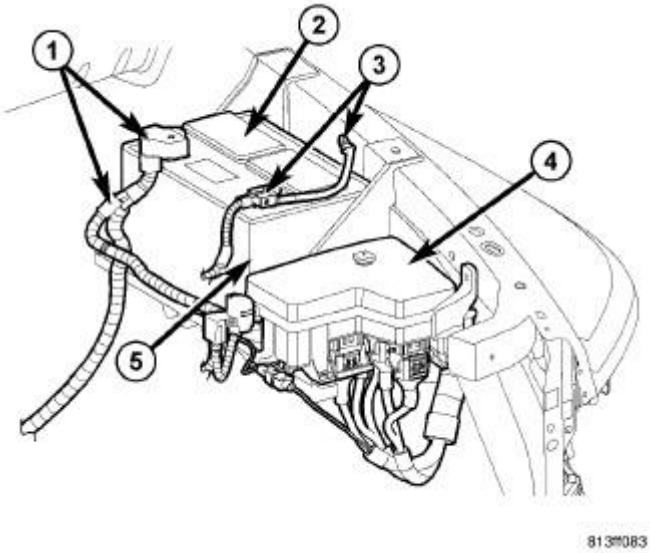

Fig. 274: Battery Cables
Courtesy of CHRYSLER GROUP, LLC

NOTE: **Make sure that the fan shroud seal is properly seated in the radiator fan shroud and that it is not out of position causing excessive contact with the radiator coolant tubes.**

13. Install the fan and fan shroud. Refer to **FAN, COOLING, ELECTRIC, INSTALLATION** and **FAN, COOLING, VISCOUS, INSTALLATION** .
14. Connect both negative battery cables.
15. Fill the crankcase with new engine oil.
16. Start engine and check for leaks. Stop engine, check oil level, and adjust, if necessary.

4X2

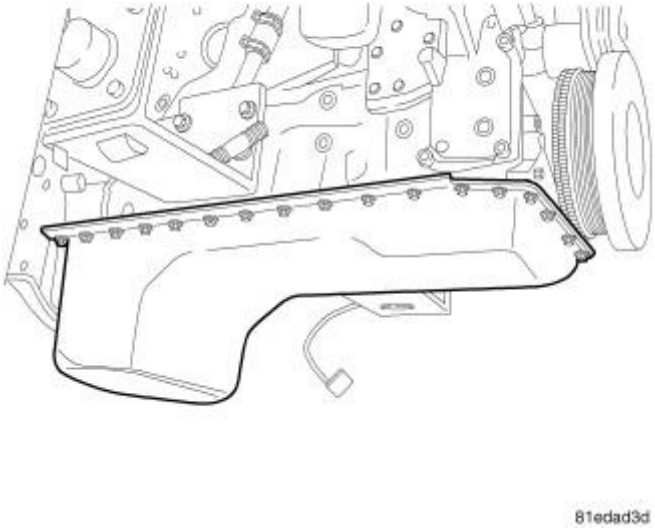

Fig. 275: Oil Pan
Courtesy of CHRYSLER GROUP, LLC

1. Clean the sealing surfaces of the cylinder block and oil pan with a suitable cleaner.
2. Clean the oil pan.
3. Clean the oil pan T-joints.
4. Fill the T-joint between the pan rail/gear housing and pan rail/rear seal retainer with sealant. Use Mopar® Silicone Rubber Adhesive Sealant or equivalent.
5. Position the new oil pan gasket.

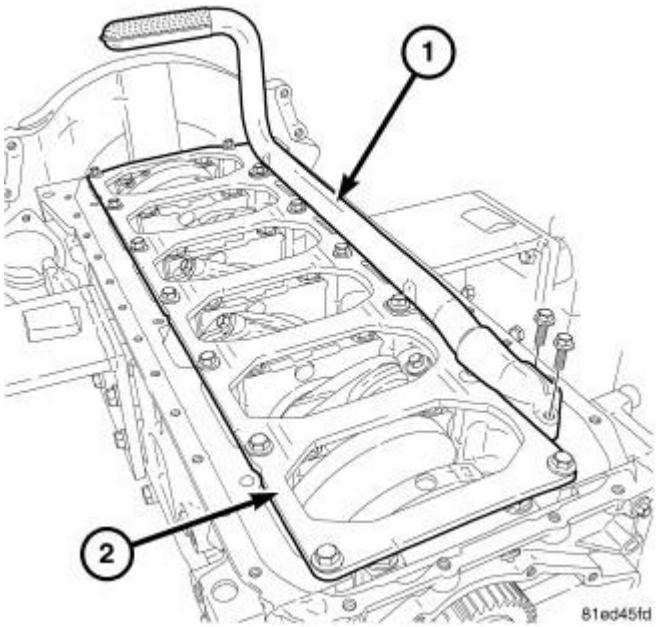

Fig. 276: Oil Pickup Tube
Courtesy of CHRYSLER GROUP, LLC

6. Place suction tube in oil pan and guide them into place. Using a new tube-to-block gasket, install the suction tube bolts. Tighten the bolts to 24 N.m (18 ft. lbs.). Tighten the remaining tube brace bolts to 43 N.m (32 ft. lbs.).
7. Starting in the center and working outward, tighten the oil pan bolts to 28 N.m (21 ft. lbs.).
8. Install the steering rack bolts. Tighten bolts to 251 N.m (185 ft. lbs.).
9. Install the flex plate. Tighten bolts to 137 N.m (101 ft. lbs.).
10. Install the flywheel to crankshaft adapter. Tighten to 137 N.m (101 ft. lbs.).
11. Install the flywheel housing assembly with the starter motor attached and tighten bolts to 77 N.m (57 ft. lbs.).

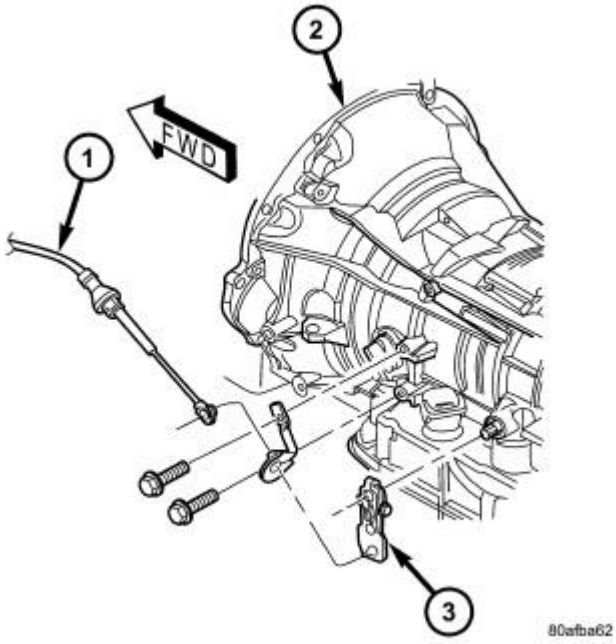

Fig. 277: Gearshift Cable, RFE Transmission & Manual Lever
Courtesy of CHRYSLER GROUP, LLC

1 - GEARSHIFT CABLE
2 - RFE TRANSMISSION
3 - MANUAL LEVER

12. Install transmission. Refer to appropriate Transmission Service Information article.
13. Install the starter. Refer to **STARTER, INSTALLATION** .

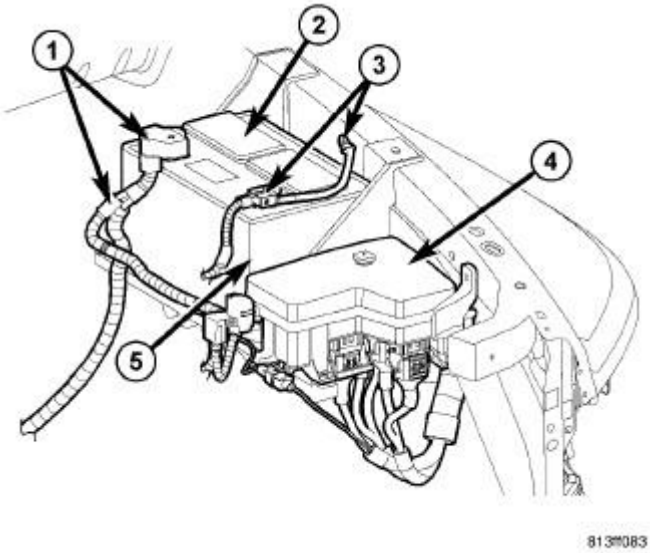

Fig. 278: Battery Cables
Courtesy of CHRYSLER GROUP, LLC

NOTE: **Make sure that the fan shroud seal is properly seated in the radiator fan shroud and that it is not out of position causing excessive contact with the radiator coolant tubes.**

14. Install the fan and fan shroud. Refer to **FAN, COOLING, ELECTRIC, INSTALLATION** and **FAN, COOLING, VISCOUS, INSTALLATION** .
15. Connect both negative battery cables.

PUMP, ENGINE OIL

REMOVAL

REMOVAL

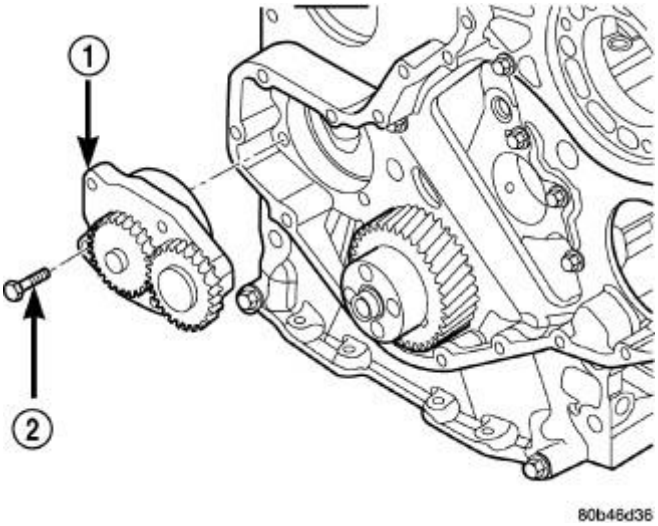

Fig. 279: Oil Pump & Bolts
Courtesy of CHRYSLER GROUP, LLC

1 - OIL PUMP
2 - BOLT (4)

1. Disconnect the battery negative cables.
2. Remove fan/drive assembly. Refer to **FAN, COOLING, ELECTRIC, REMOVAL** and **FAN, COOLING, VISCOUS, REMOVAL** .
3. Remove the accessory drive belt. Refer to **BELT, SERPENTINE, REMOVAL** .
4. Remove the fan support/hub assembly.
5. Remove crankshaft damper. Refer to **DAMPER, VIBRATION, REMOVAL, 6.7L**.
6. Remove power steering pump.
7. Remove accessory drive belt tensioner.
8. Remove the gear housing cover. Refer to **COVER(S), ENGINE TIMING, REMOVAL, 6.7L**.
9. Remove the four mounting bolts (2) and pull the oil pump (1) from the bore in the cylinder block.

CLEANING

CLEANING

Clean all parts in solvent and dry with compressed air. Clean the old sealer residue from the back of the gear housing cover and front of the gear housing.

INSPECTION

INSPECTION

Disassemble and inspect the oil pump as follows:

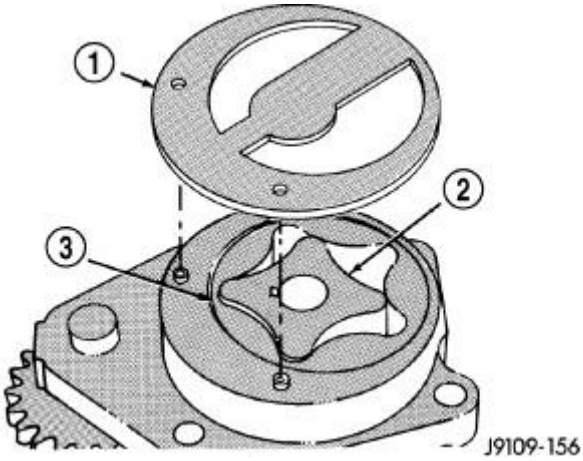

Fig. 280: Oil Pump Back Plate, Gerotor & Gerotor Planetary
Courtesy of CHRYSLER GROUP, LLC

1 - OIL PUMP BACK PLATE
2 - GEROTOR
3 - GEROTOR PLANETARY

1. Visually inspect the lube pump gears for chips, cracks or excessive wear.
2. Remove the back plate (1).
3. Mark TOP on the gerotor planetary (3) using a felt tip pen.
4. Remove the gerotor planetary (3) inspect for excessive wear or damage. Inspect the pump housing and gerotor drive (2) for damaged and excessive wear.

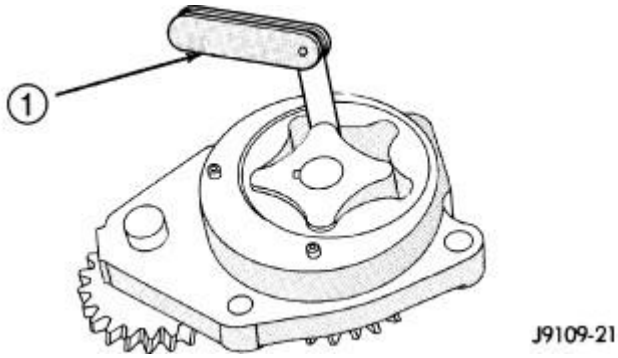

Fig. 281: Measuring Clearance Between Gerotor Tip & Housing
Courtesy of CHRYSLER GROUP, LLC

1 - FEELER GAUGE

5. Install the gerotor planetary in the original position.
6. Measure the tip clearance (1). Maximum clearance is 0.178 mm (0.007 inch). If the oil pump is out of limits, replace the pump.

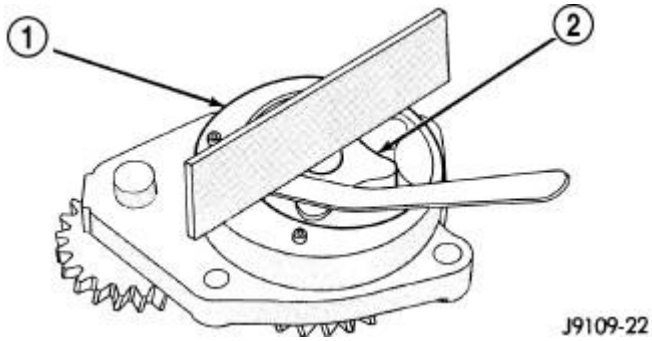

Fig. 282: Measuring Gerotor To Port Plate Clearance
Courtesy of CHRYSLER GROUP, LLC

1 - PORT PLATE
2 - GEROTOR

7. Measure the clearance of the gerotor drive/gerotor planetary (2) to port plate (1). Maximum clearance is 0.127 mm (0.005 inch). If the oil pump is out of limits, replace the pump.

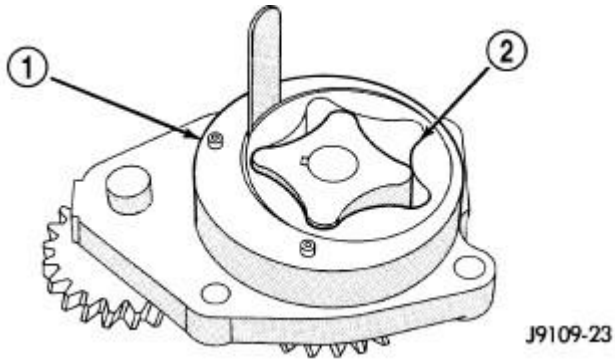

Fig. 283: Measuring Gerotor Planetary To Body Bore Clearance
Courtesy of CHRYSLER GROUP, LLC

1 - BODY BORE
2 - GEROTOR PLANETARY

8. Measure the clearance of the gerotor planetary to the body bore (1). Maximum clearance is 0.381 mm (0.015 inch). If the oil pump is out of limits, replace the pump.

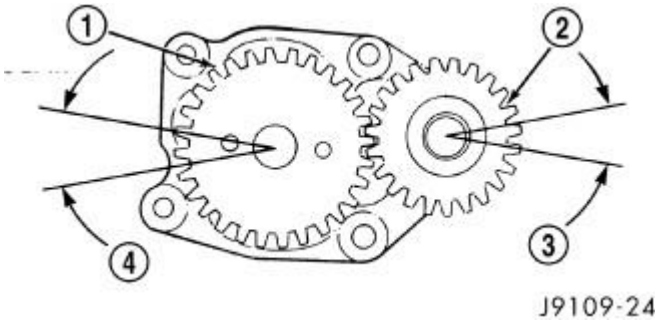

Fig. 284: Measure Gear Backlash
Courtesy of CHRYSLER GROUP, LLC

1 - OIL PUMP DRIVE GEAR
2 - IDLER GEAR
3 - BACKLASH
4 - BACKLASH

9. Measure the gears backlash (3, 4). The limits of a used pump is 0.15 - 0.25 mm (0.006 - 0.010 inch). If the backlash is out of limits, replace the oil pump.
10. Install the back plate.

INSTALLATION

INSTALLATION

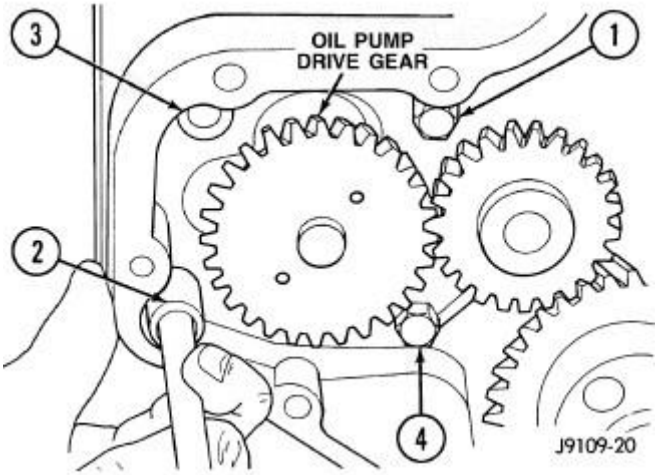

Fig. 285: Oil Pump Mounting Bolt Torque Sequence
Courtesy of CHRYSLER GROUP, LLC

1. Lubricate the pump with clean engine oil. Filling the pump with clean engine oil during installation will help to prime the pump at engine start up.
2. Install the pump. Verify the idler gear pin is installed in the locating bore in the cylinder block. Tighten the oil pump in **3** steps, in the following sequence.
    - Step 1: Push the pump firmly against the cylinder block and install the four (4) bolts finger tight.
    - Step 2: Tighten the bolts to 8 N.m (72 in. lbs).
    - Step 3: Tighten the bolts to 24 N.m (18 ft. lbs)

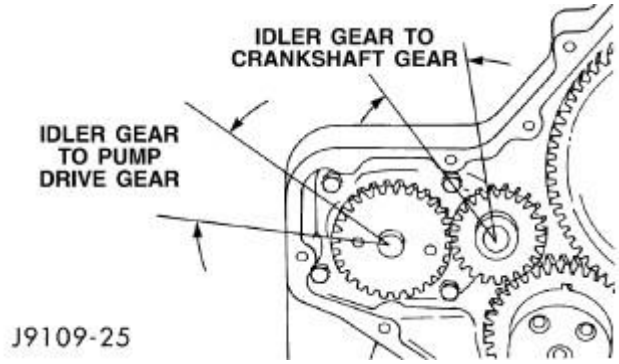

Fig. 286: Idler Gear To Pump Drive Gear & Crankshaft Gear Backlash
Courtesy of CHRYSLER GROUP, LLC

3. The back plate on the pump seats against the bottom of the bore in the cylinder block. When the pump is correctly installed, the flange on the pump will not touch the cylinder block.
4. Measure the idler gear to pump drive gear backlash and the idler gear to crankshaft gear backlash. The backlash should be 0.15-0.25 mm (0.006-0.010 inch). If the backlash is out of limits, replace the oil pump.
5. If the adjoining gear moves when you measure the backlash, the reading will be incorrect.
6. Apply a bead of Mopar® Silicone Rubber Adhesive Sealant or equivalent to the gear housing cover sealing surface.
7. Install the gear housing cover. Refer to **COVER(S), ENGINE TIMING, INSTALLATION, 6.7L**.
8. Install the vibration damper. Refer to **DAMPER, VIBRATION, INSTALLATION, 6.7L**.
9. Install the fan support/hub assembly. Refer to **FAN, COOLING, ELECTRIC, INSTALLATION** and **FAN, COOLING, VISCOUS, INSTALLATION** .
10. Install power steering pump.
11. Install accessory drive belt tensioner. Tighten bolt to 43 N.m (32 ft. lbs.).
12. Install the accessory drive belt. Refer to **BELT, SERPENTINE, INSTALLATION** .
13. Install the cooling fan. Refer to **FAN, COOLING, ELECTRIC, INSTALLATION** and **FAN, COOLING, VISCOUS, INSTALLATION** .
14. Connect battery negative cables.
15. Start engine and check for oil leaks.

SWITCH, OIL PRESSURE

REMOVAL

REMOVAL

1. Disconnect the battery negative cables.
2. Disconnect the oil pressure switch harness connector.
3. Remove the oil pressure switch from the engine block.

INSTALLATION

INSTALLATION

1. Using a new O-ring, install the oil pressure switch. Tighten to 18 N.m (159 in. lbs.).
2. Connect oil pressure switch harness connector.
3. Connect the battery negative cables.
4. Start engine and check for oil leaks at the switch.

VALVE, OIL PRESSURE RELIEF

REMOVAL

REMOVAL

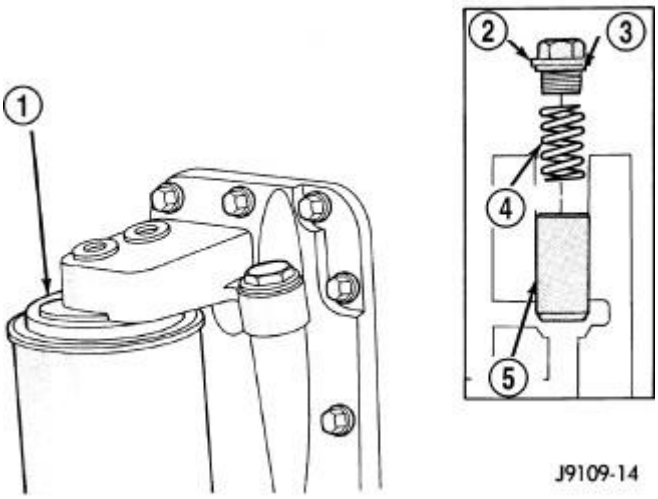

Fig. 287: Oil Filter & Oil Pressure Relief Valve
Courtesy of CHRYSLER GROUP, LLC

1 - OIL FILTER
2 - PLUG
3 - GASKET
4 - SPRING
5 - VALVE

1. Disconnect the battery negative cables.
2. Remove the threaded plug (2), spring (4) and valve (5). Insert a finger or a seal pick to lift the plunger from the bore.

NOTE: If the plunger is stuck in the bore, it will be necessary to remove the filter head.

CLEANING

CLEANING

1. Clean the regulator spring and plunger with a suitable solvent and blow dry with compressed air. If the plunger bore requires cleaning, it is necessary to remove the oil filter head to avoid getting debris into the engine.

INSPECTION

INSPECTION

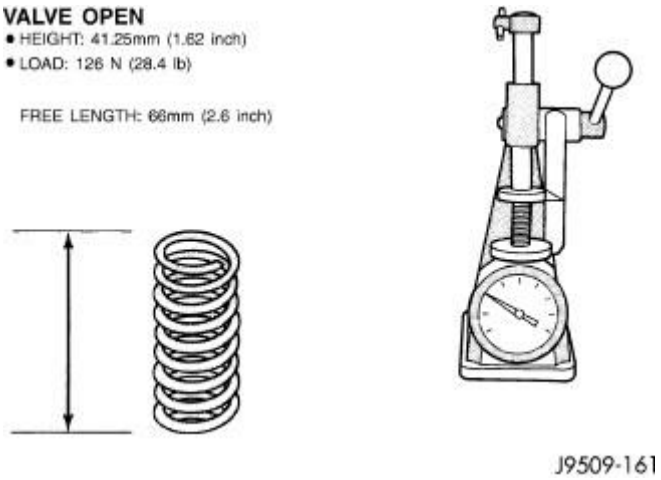

Fig. 288: Oil Pressure Regulator Spring Check
Courtesy of CHRYSLER GROUP, LLC

Inspect the plunger and plunger bore for cracks and excessive wear. Polished surfaces are acceptable. Verify that the plunger moves freely in the bore.

Check the spring for height and load limitations. Replace the spring if out of limits shown in the figure.

INSTALLATION

INSTALLATION

1. Install the plunger, spring, and plug as shown in illustration. Tighten the plug to 80 N.m (59 ft. lbs.).
2. Connect the battery negative cables.
3. Start the engine and verify that it has oil pressure.

MANIFOLDS

MANIFOLD, EXHAUST

REMOVAL

REMOVAL

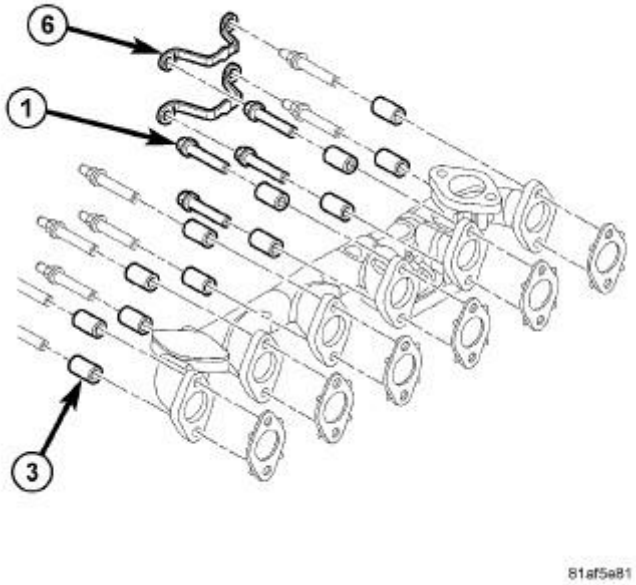

Fig. 289: Exhaust Manifold Assembly
Courtesy of CHRYSLER GROUP, LLC

1. Disconnect the battery negative cables.
2. Drain the coolant. Refer to **STANDARD PROCEDURE** .
3. Raise vehicle on hoist.
4. Remove the EGR cooler. Refer to **COOLER, EGR, REMOVAL** .
5. Remove the air filter housing. Refer to **BODY, AIR CLEANER, REMOVAL, 6.7L**.
6. Remove the air filter inlet hose from the turbo inlet.
7. Remove the delta-P line bracket capscrew nuts and remove the delta-P line from the exhaust manifold and thermostat housing.
8. Remove the heat shield and noise panel (if equipped) from the exhaust manifold.
9. Remove the turbocharger. Refer to **TURBOCHARGER, REMOVAL, 6.7L**.
10. Remove the two (2) rear exhaust manifold capscrew lock plates.
11. Remove the Cab Heater tubing/bracket from the exhaust manifold stud.
12. Remove the exhaust manifold.

CLEANING

CLEANING

Clean the cylinder head and exhaust manifold sealing surfaces with a suitable scraper. Use a Scotch-Brite™ pad or equivalent.

INSPECTION

INSPECTION

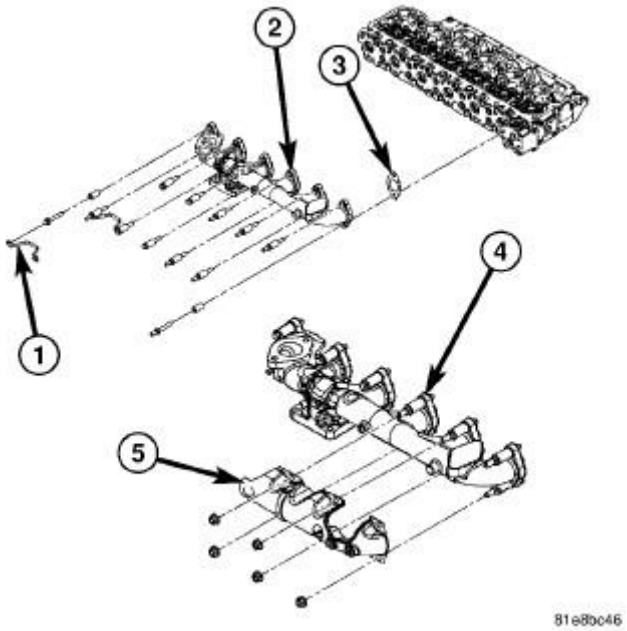

Fig. 290: Exhaust Manifold, Gasket, Heat Shield, Retainer & Bolts
Courtesy of CHRYSLER GROUP, LLC

1 - Retainer
2 - Exhaust Manifold
3 - Gasket
4 - Bolt
5 - Heat Shield

Inspect the exhaust manifold for cracks. Measure the exhaust manifold for flatness. Place a ruler over all of the exhaust ports and insert a feeler gauge between the port flange and the ruler. Maximum deviation from flat is 0.20 mm (.008 inch).

Inspection of turbocharger mounting flange: Using a straight edge across the longest sections of the flange, measure the flatness using a feeler gauge. Warpage shall not exceed 0.1 mm (0.0039 in). When measuring the exhaust manifold flanges, the total sum of exhaust flange and the turbocharger flange cannot exceed 0.1 mm (0.00039 in). If this is the case, the component with the greatest warpage must be replaced.

INSTALLATION

INSTALLATION

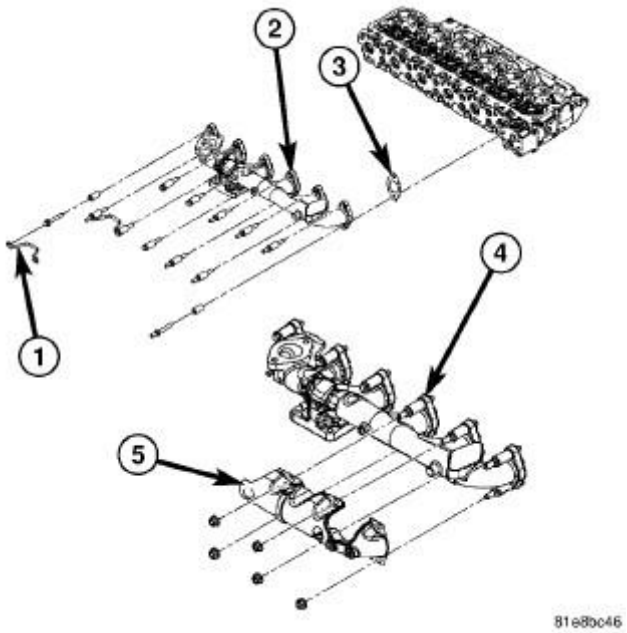

Fig. 291: Exhaust Manifold, Gasket, Heat Shield, Retainer & Bolts
Courtesy of CHRYSLER GROUP, LLC

1. Clean the exhaust manifold gasket surfaces.
2. Clean the cylinder head exhaust port gasket surfaces.
3. Clean the turbo mounting flange on the exhaust manifold.
4. Clean the turbo mounting flange on the turbocharger.
5. Install the exhaust manifold to turbocharger gasket and capscrews.
6. Install the exhaust manifold gasket.

NOTE: **The five exhaust manifold capscrews with studs are used at the No. 1 and No. 2 cylinder locations for the heat shield mounting and one on the rear lower corner of the manifold for the cabin heater tube bracket.**

7. Install the exhaust manifold spacers and capscrews.
8. Starting from the center and moving in a pattern outward, tighten the exhaust manifold bolts to 43 N.m (32 ft. lbs.)
9. Install the exhaust manifold capscrew lock plates.
10. Install the exhaust manifold heat shields/noise panels. Tighten the mounting nuts to 24 N.m (18 ft. lbs.).
11. Install the turbocharger. Refer to **TURBOCHARGER, INSTALLATION, 6.7L**.
12. Attach the mounting tabs and start the delta-P tube to exhaust manifold and thermostat capscrews.
13. Tighten the delta-P line bracket nut to 24 N.m (18 ft. lbs.).
14. Tighten the delta-P line bracket bolt to 10 N.m (89 in. lbs.).
15. Tighten the delta-P flare nuts to 10 N.m (89 in. lbs.).

16. Install the EGR cooler. Refer to **COOLER, EGR, INSTALLATION** .
17. Install the air filter housing. Refer to **BODY, AIR CLEANER, REMOVAL, 6.7L**.
18. Fill the coolant. Refer to **STANDARD PROCEDURE** .
19. Connect the battery negative cables.
20. Start the engine to check for leaks.

MANIFOLD, INTAKE

REMOVAL

REMOVAL

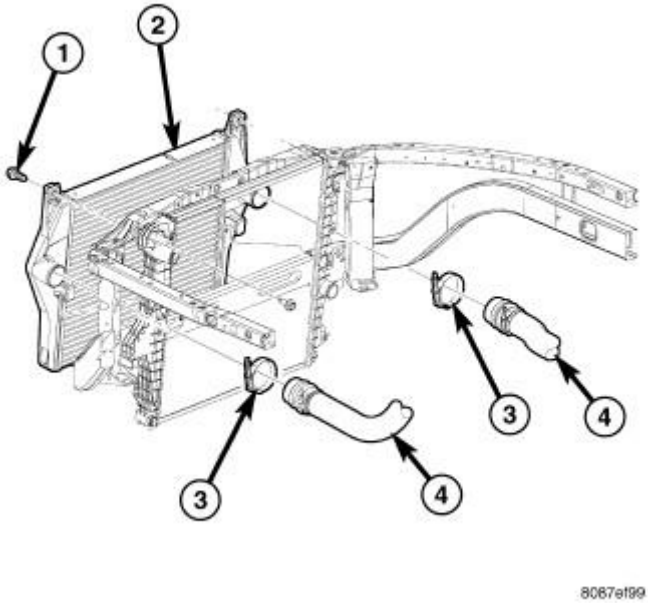

Fig. 292: Air Intake System Tubes
Courtesy of CHRYSLER GROUP, LLC

1. Disconnect both negative battery cables.
2. Disconnect the Charge Air Cooler (CAC) tube (4) from the EGR air flow control valve.

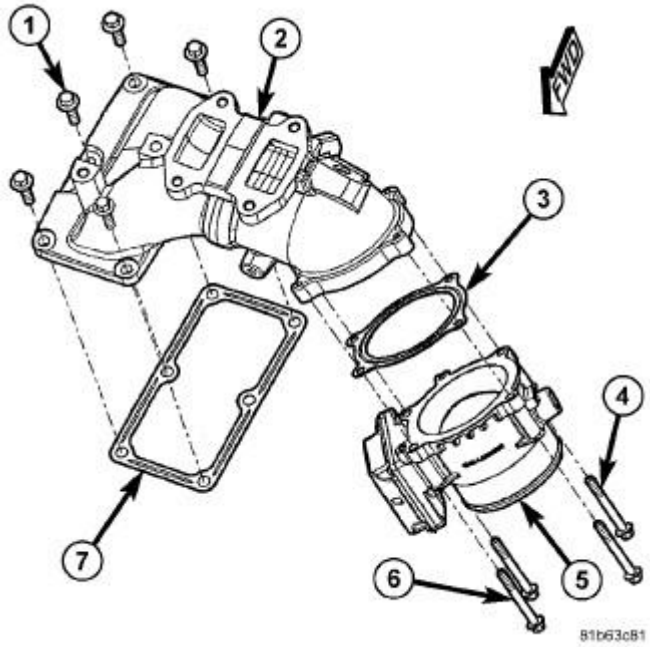

Fig. 293: EGR Air Flow Control - Exploded View
Courtesy of CHRYSLER GROUP, LLC

3. Remove the EGR crossover tube. Refer to **TUBE, EXHAUST GAS RECIRCULATION (EGR), CROSSOVER, REMOVAL** .
4. Disconnect EGR air flow control valve harness connector.
5. Disconnect the EGR valve harness connector.
6. Disconnect the boost pressure sensor harness connector.
7. Remove bolt and nut securing oil dipstick tube.
8. Remove bolts (1) and the intake manifold (2).

CLEANING

CLEANING

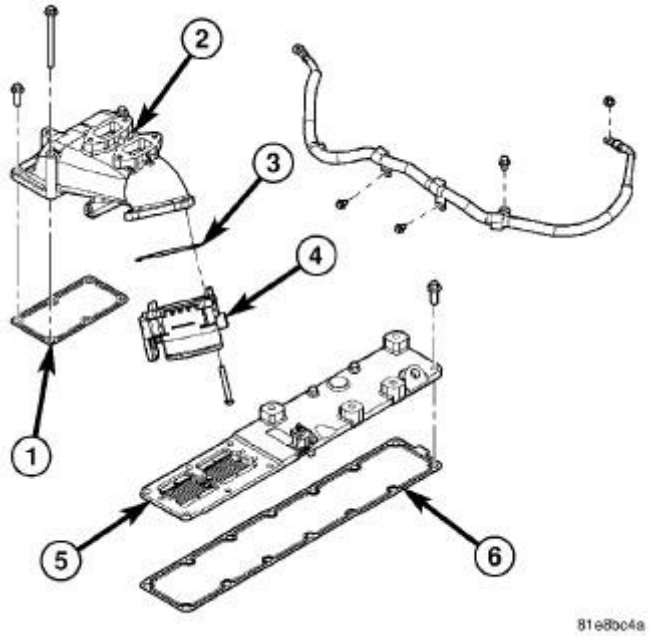

Fig. 294: Intake Air Heater Assembly
Courtesy of CHRYSLER GROUP, LLC

Clean the intake manifold in solvent and blow dry with compressed air.

Clean cylinder head gasket surfaces using a suitable solvent.

The plenum pan rail must be clean and dry (free of all foreign material).

INSPECTION

INSPECTION

Inspect manifold for cracks.

Inspect mating surfaces of manifold for flatness with a straightedge.

INSTALLATION

INSTALLATION

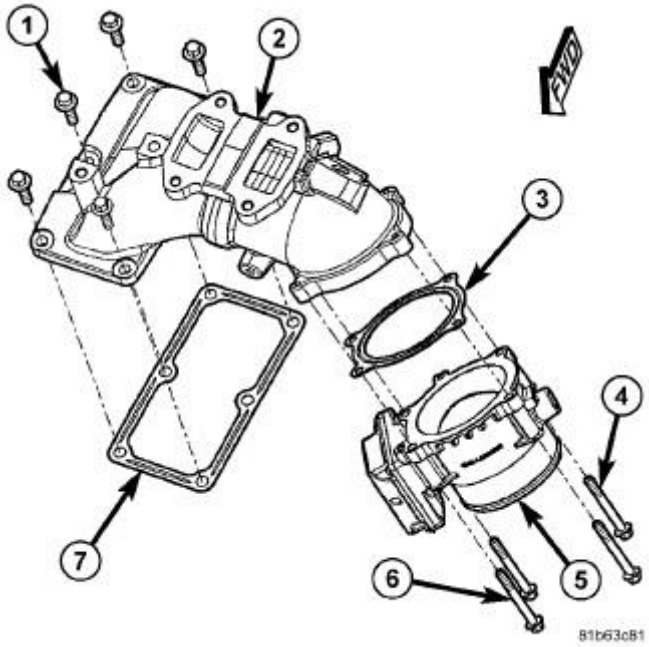

Fig. 295: EGR Air Flow Control - Exploded View
Courtesy of CHRYSLER GROUP, LLC

1. Clean all gasket mating surfaces.
2. Using a new gasket, install the intake manifold (2). Tighten bolts to 24 N.m (18 ft. lbs.).
3. Install bolt securing the oil dip stick tube-to-intake manifold and tighten to 24 N.m (18 ft. lbs.).
4. Connect the boost pressure sensor harness connector.
5. Connect the EGR valve harness connector.
6. Connect EGR air flow control valve harness connector.
7. Install the EGR crossover tube. Refer to **TUBE, EXHAUST GAS RECIRCULATION (EGR), CROSSOVER, INSTALLATION** .

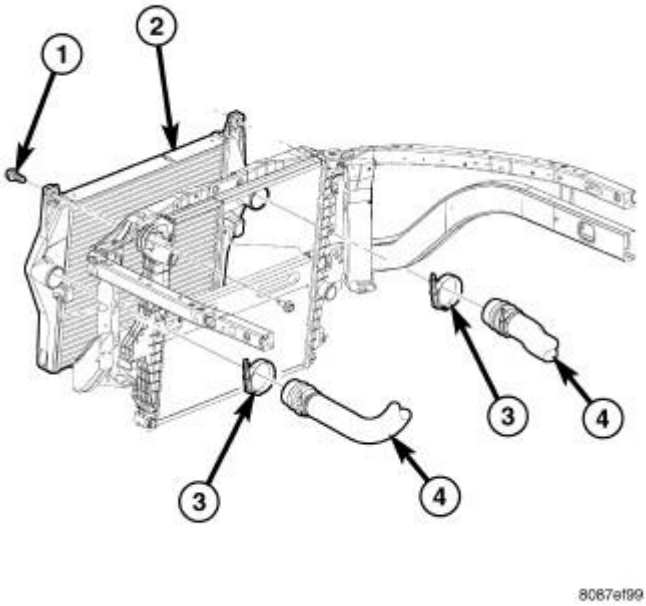

Fig. 296: Air Intake System Tubes
Courtesy of CHRYSLER GROUP, LLC

8. Connect the Charge Air Cooler (CAC) tube (4) to the EGR air flow control valve. Tighten clamp to 11 N.m (97 in. lbs.).
9. Connect both negative battery cables.

TURBOCHARGER SYSTEM

CLEANING

CLEANING

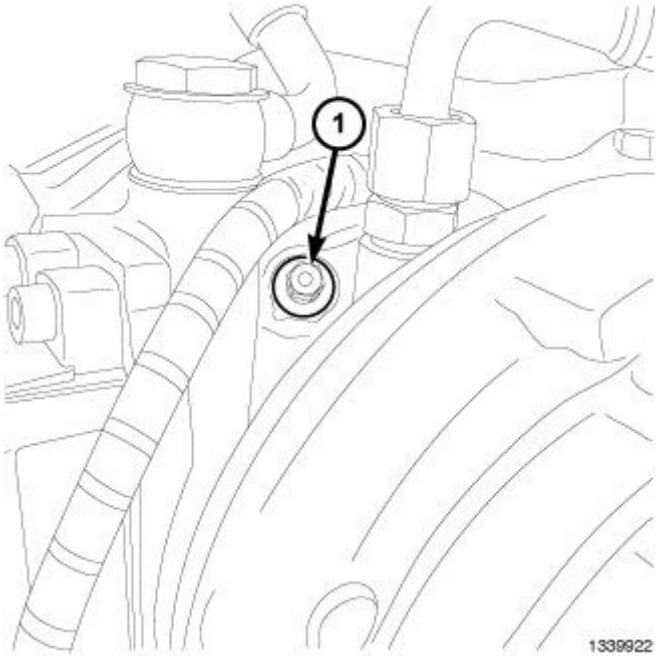

Fig. 297: Turbocharger Cleaning Port Plug
Courtesy of CHRYSLER GROUP, LLC

DETERMINE IF TURBOCHARGER HAS A CLEANING PORT

1. Inspect the engine turbocharger to determine if the turbocharger is equipped with a cleaning port
2. Does the turbocharger have a cleaning port?
3. **If YES GO TO** , **TURBOCHARGER CLEANING PROCEDURE**
4. **If NO GO TO** , **INSTALL A TURBOCHARGER CLEANING PORT**

INSTALL A TURBOCHARGER CLEANING PORT

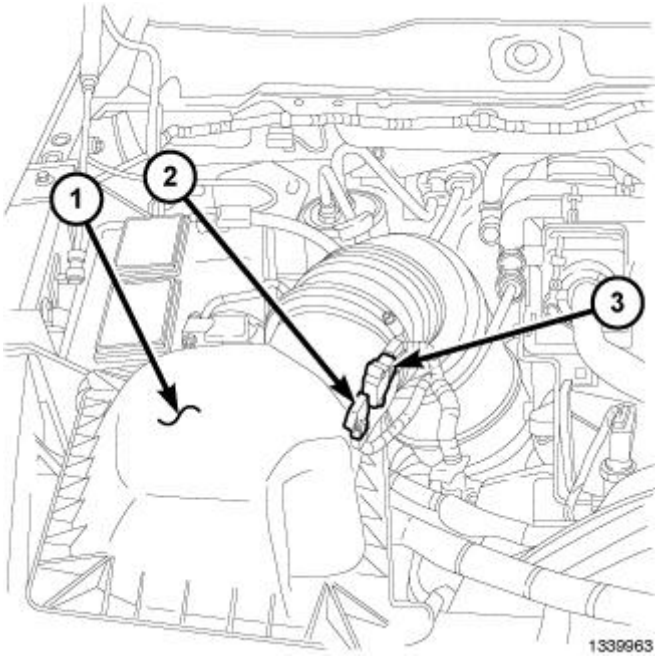

Fig. 298: Air Cleaner Housing
Courtesy of CHRYSLER GROUP, LLC

WARNING: **At no time should a combustible cleaner be used. To introduce a combustible cleaner to the engine and/or exhaust after treatment system may cause damage to those systems and possible personal injury.**

1. At the air filter housing cover, disconnect the Mass Air Flow (MAF) and the Inlet Air Temperature / Pressure (TBAP) sensors electrical connectors from the engine harness.
2. Remove the air filter housing cover (1) and fresh air tube together as an assembly.
3. With the turbocharger actuator electrical connector connected, turn the vehicle ignition switch to "ON/RUN" position. **DO NOT start the engine.**

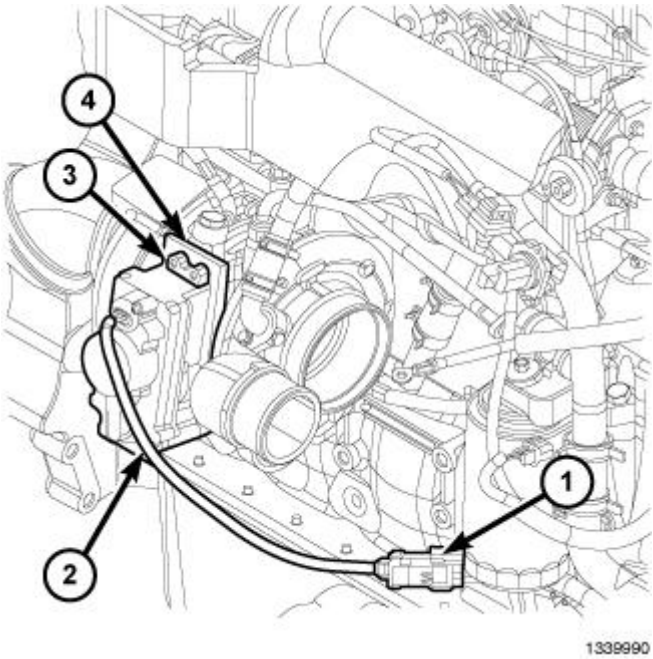

Fig. 299: Turbocharger Actuator Electrical Connector
Courtesy of CHRYSLER GROUP, LLC

4. Disconnect the turbocharger actuator electrical connector (1) from the engine harness.
5. Turn the vehicle ignition switch to the "OFF" position.
6. Disconnect and isolate negative battery cables on each battery.

CAUTION: Performing the above steps now will become very important later in this procedure. The above steps should not be overlooked. The above steps will insure that the nozzle ring inside the turbocharger is moved so that it will not come in contact with the drill bit or tap. Failure to perform the above steps may damage the turbocharger mechanism.

7. Locate the Closed Crankcase Ventilation (CCV) tube hold down cap screw on the steel section of the CCV tube. Remove the CCV tube hold down cap screw.
8. Rotate the CCV tube upward and out of the way of the turbocharger.
9. Locate the turbocharger speed sensor that is mounted on top of the center section (bearing housing) of the turbocharger housing.

NOTE: Clean the area of any dirt and/or debris that may be around the turbocharger speed sensor prior to removal.

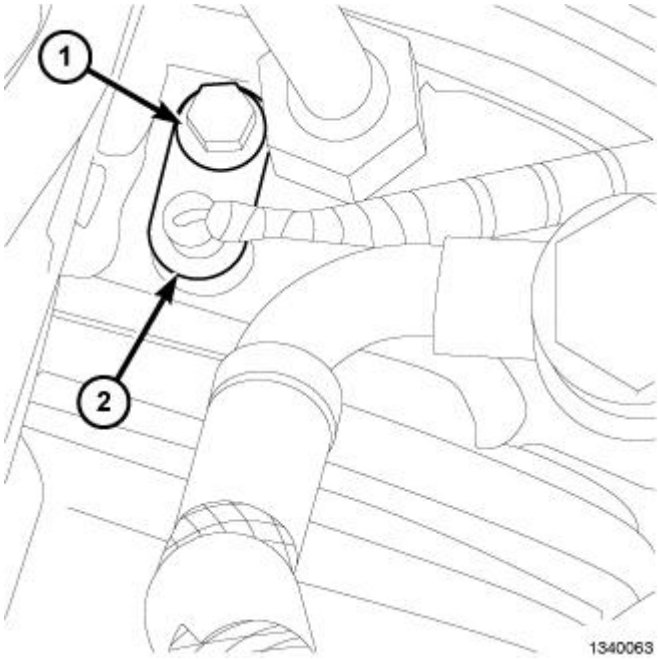

Fig. 300: Turbocharger Speed Sensor & Bolt
Courtesy of CHRYSLER GROUP, LLC

10. Remove the turbocharger speed sensor attaching bolt (1). The bolt will be used later to hold in place the drill/tap guide of the #(special tool #10143, Cummins Turbo Drilling Kit) turbocharger drill/tap kit
11. Remove the turbocharger speed sensor (2). Verify that the speed sensor o-ring remains with the speed sensor and does not remain in the turbocharger center section / bearing housing.

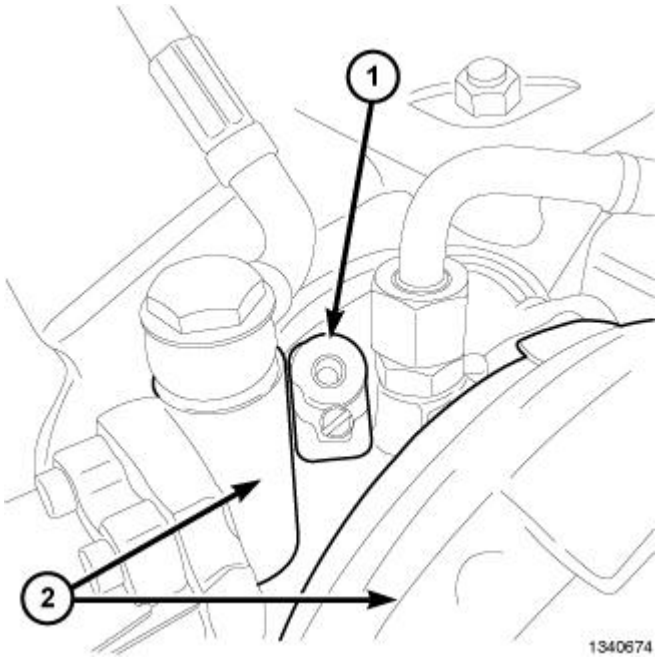

Fig. 301: Drill/Tap Guide
Courtesy of CHRYSLER GROUP, LLC

12. Using the #(special tool #10143, Cummins Turbo Drilling Kit) turbocharger drill/tap kit, install the drill/tap guide (1) into the turbocharger center section / bearing housing. Secure the drill/tap guide (1) in place with the previously removed turbocharger speed sensor attaching bolt. Tighten the bolt to 10 N.m. (89 in. lbs.)

NOTE: **There are two different size guide bushings that come with the #(special tool #10143, Cummins Turbo Drilling Kit) turbocharger drill/tap kit. The guide bushing with the smaller inner diameter center bore is used for guiding the drill bit. The guide bushing with the larger inner diameter center bore is used to guide the tap.**

13. Using the #(special tool #10143, Cummins Turbo Drilling Kit) turbocharger drill/tap kit, install and secure the guide bushing with the small diameter bore hole (drill bit guide bushing) into the drill/tap guide bore.

NOTE: **Only use special tool drill bit and stop (#(special tool #10143-4, Drill Assembly)) and tap (#(special tool #10143-5, Tap & Collar Assembly)) supplied in the Turbocharger Drill/Tap Kit #10143 to perform this Repair Procedure. ALWAYS check the drill stop to see if it is set correctly. It should be 42 mm (1 5/8 in.) from drill bit tip to bottom surface of the stop. VERIFY that the drill stop is set to the correct depth. VERIFY that the stop set screws are fully tightened. DO NOT over drill the hole.**

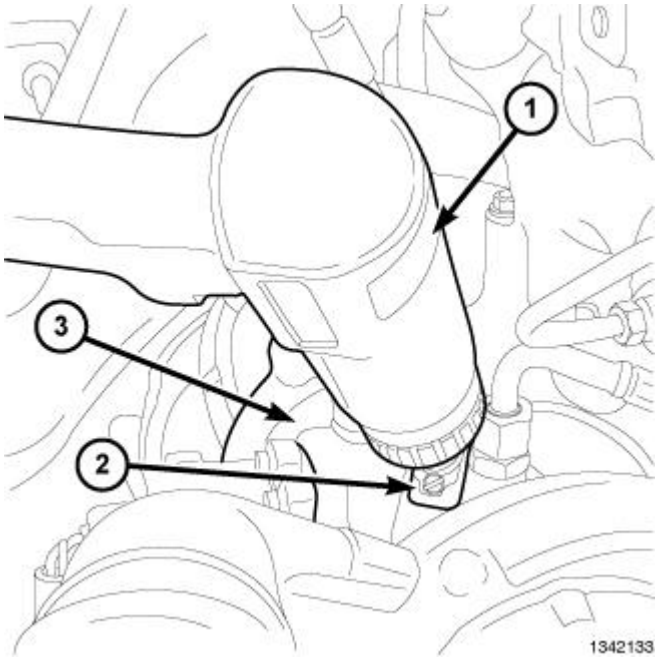

Fig. 302: Drilling Hole Through Turbocharger Center Housing
Courtesy of CHRYSLER GROUP, LLC

14. Obtain a shop vacuum with a crevice attachment end to collect drill bit fillings. Make certain that the crevice tool is held as close as possible to the drill tip when drilling, and to the tap tip when taping the

drilled hole. A small amount of filings that may enter into the drilled hole is acceptable.

NOTE: **DO NOT use any machining oil or other lubrication oil during the drilling and tapping operation. Use of machining oil or other lubricating oil may increase the number of drill and tap shavings introduced into the turbocharger, potentially leading to turbocharger mechanism failure.**

15. Using a drill on **SLOW speed** and the shop vacuum to collect filings, drill a hole through the turbocharger center housing casting to the correct depth. Continue to drill until the drill stop just makes contact with the turbocharger housing.
16. Remove the drill bit from the drill/tap guide. Remove the drill guide bushing from the drill/tap guide. First, **vacuum** any excess metal filings. Next, using a **pencil magnet** with a magnetic tip smaller than the drilled hole, insert the magnet through the drilled hole and remove shavings as possible. **DO NOT** use the magnet during the process of drilling and taping as this would cause the drill/tap fixture and the turbocharger housing to become magnetized.
17. Using the #(special tool #10143, Cummins Turbo Drilling Kit) turbocharger drill/tap kit, install and secure the guide bushing with the larger diameter guide bore (tap guide bushing) into the drill/tap guide bore.

NOTE: **Only use special tool drill bit and stop (#(special tool #10143-4, Drill Assembly)) and tap (#(special tool #10143-5, Tap & Collar Assembly)) supplied in the Turbocharger Drill/Tap Kit #10143 to perform this Repair Procedure. ALWAYS check the drill stop to see if it is set correctly. It should be 42 mm (1 5/8 in.) from drill bit tip to bottom surface of the stop. VERIFY that the drill stop is set to the correct depth. VERIFY that the stop set screws are fully tightened. DO NOT over drill the hole.**

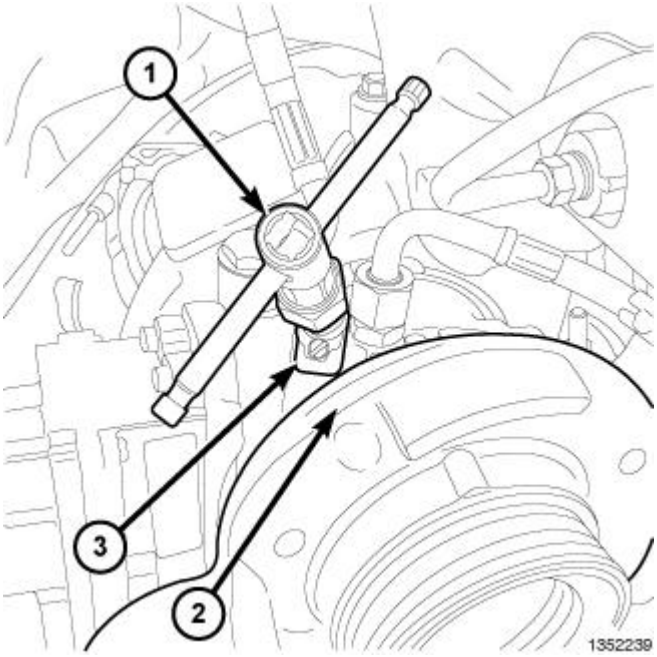

Fig. 303: Removing/Installing Tap

18. Using the #(special tool #10143, Cummins Turbo Drilling Kit) turbocharger drill/tap kit, install the tap into the tap bushing bore of the drill/tap guide.
19. Using the #(special tool #10143, Cummins Turbo Drilling Kit) turbocharger drill/tap kit, install the tap handle to the drive end of the tap. If additional clearance is desired, install the female end of a 3 inch or 6 inch long 1/4 inch drive socket extension to the tap and then install the male end of the 1/4 inch extension to the tap handle.

NOTE: **DO NOT use any machining oil or other lubrication oil during the drilling and tapping operation. Use of machining oil or other lubricating oil may increase the number of drill and tap shavings introduced into the turbocharger, potentially leading to turbocharger mechanism failure.**

20. Using the tap and tap handle from the #(special tool #10143, Cummins Turbo Drilling Kit) turbocharger drill/tap kit in conjunction with the shop vacuum to collect filings, tap the previously drilled hole made in the turbocharger center housing casting approximately **11 1/2 turns** . This should be just about when turbocharger housing just touches the bottom of the tap stop. **DO NOT OVER TAP THE HOLE** .
21. Remove the tap from the drill/tap guide. Remove the tap bushing from the drill/tap guide. First, **vacuum** any excess metal filings. Next, using a **pencil magnet** with a magnetic tip smaller than the drilled hole, insert the magnet through the drilled hole and remove as many shavings as possible. **DO NOT** use the magnet during the process of drilling and taping as this would cause the drill/tap fixture and the turbocharger housing to become magnetized.
22. Remove the drill/tap guide from the turbocharger center housing. First, **vacuum** any excess metal filings. Next, using a **pencil magnet** with a magnetic tip smaller than the drilled hole, insert the magnet through the drilled hole and remove as many shavings as possible.
23. Install the turbocharger speed sensor and attaching bolt to the turbocharger center housing. Tighten the attaching bolt to 10 N.m. (89 in. lbs.).
24. Install the stainless steel Mopar® turbocharger cleaning port plug into the cleaning port of the turbocharger. Tighten the plug to 10 N.m. (89 in. lbs.). Verify correct fit before proceeding.

NOTE: **The use of the proper Mopar® Turbocharger Cleaning Port plug is critical. Use of an unapproved plug of different material type and/or thread may cause damage to the turbocharger.**

25. Connect the engine harness connector to the turbocharger actuator connector.
26. Rotate the CCV tube into position and install the CCV tube cap screw. Tighten the cap screw to 10 N.m. (89 in. lbs.).
27. Install the air filter housing cover and fresh air tube hose. Tighten the fresh air hose clamp to 4 N.m. (35 in. lbs.). Verify that there is a good seal at each end of the air tube hose.
28. Connect the engine harness connectors to the MAF and the inlet air temperature / pressure (TBAP) sensor connectors.
29. Connect the negative battery cable to each battery.
30. Start the vehicle engine and verify correct engine operation.

31. Turn off vehicle engine. Verify that the ignition switch is in the "OFF" position.

TURBOCHARGER CLEANING PROCEDURE

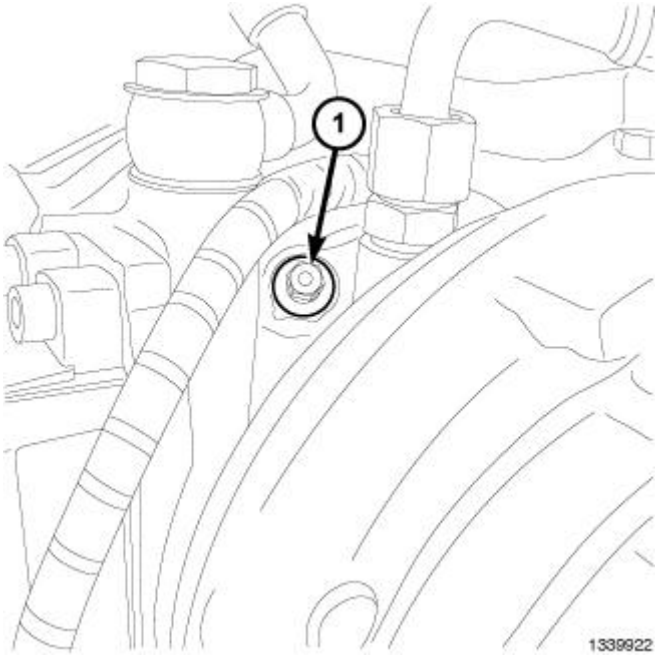

Fig. 304: Turbocharger Cleaning Port Plug
Courtesy of CHRYSLER GROUP, LLC

WARNING: **Use ONLY Mopar® Diesel Turbocharger Cleaner (# 68044565AA) to perform this repair. Mopar® Diesel Turbocharger Cleaner is a specially made WATER BASED solvent. Use of a flammable, or any low temperature combustible liquid/solvent, may cause severe damage to the engine and exhaust after treatment system components. Introduction of a flammable liquid/solvent to the engine intake system may cause engine run away, engine damage, and possible personal injury.**

1. Connect the vehicle tailpipe to the shop exhaust ventilation system. Turn the shop exhaust ventilation system ON.
2. If installed, remove the turbocharger cleaning port access plug (1).

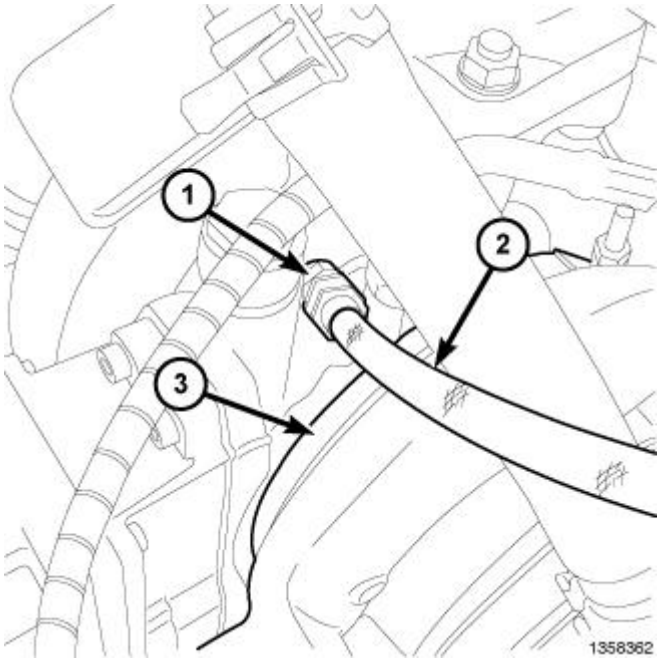

Fig. 305: Nozzle, Cleaning Tool Hose & Turbocharger
Courtesy of CHRYSLER GROUP, LLC

3. Locate the cleaning tool's hose and nozzle (1, 2) from the #(special tool #10142, Cummins Turbo Cleaning Kit) turbocharger cleaning kit special tool.

NOTE: **The spray nozzle in the #(special tool #10142, Cummins Turbo Cleaning Kit) Turbocharger Cleaning Kit uses a very small orifice for the cleaner to pass through. The design of the nozzle is important for the proper application of the chemical. If the orifice in the spray nozzle becomes restricted, carefully inspect and clean the filtering screen at the entrance to the nozzle of any debris. If careful, the nozzle may be partially disassembled for cleaning, should this be needed.**

4. Using the #(special tool #10142, Cummins Turbo Cleaning Kit) turbocharger cleaning kit, install the nozzle (1) of the turbocharger cleaning tool into the turbocharger cleaning port tapped hole. Use care not to cross-thread the tapped hole. Tighten the nozzle to 5.6 N.m. (50 in. lbs.).
5. Place a fender cover over the top of the right battery to isolate/insulate the battery terminal ends from the cleaning tool hose (2).

NOTE: **In the following steps, DO NOT INSTALL the cleaner can on the tool. In some instances, the scan tool may perform a series of tests that may instruct the technician NOT to clean the turbocharger. The tool is installed prior to warming the engine to prevent the technician from having to work on a hot turbocharger. Installing the can on the hose will puncture the can.**

6. Using the #(special tool #10142, Cummins Turbo Cleaning Kit) turbocharger cleaning kit, install the hose (2) of the turbocharger to the other end of the cleaning nozzle (1).

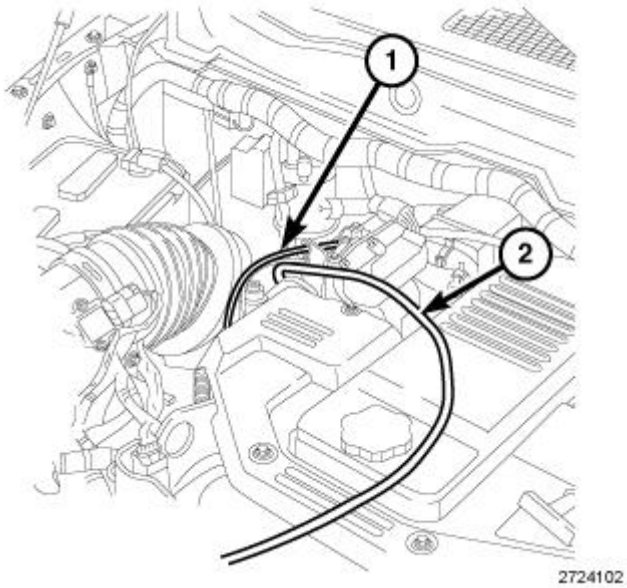

Fig. 306: Cleaning Tool Hose
Courtesy of CHRYSLER GROUP, LLC

7. Route the tap end of the cleaning tool hose under both cable sleeves of the EGR Cooler By-Pass Valve Assembly so that the cleaning tool hose is held away from the positive battery terminal by the throttle body cable sleeves.

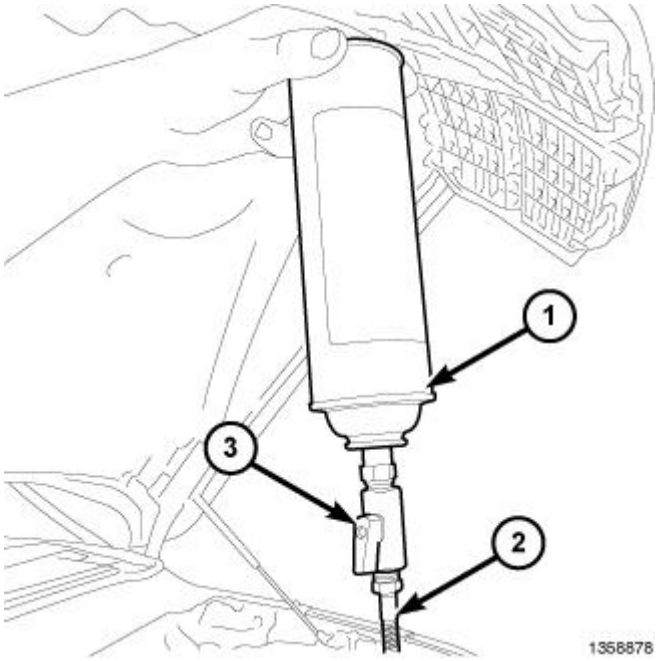

Fig. 307: Turbocharger Cleaner Can, Handle & Hose
Courtesy of CHRYSLER GROUP, LLC

8. Verify that the turbocharger cleaning tool tap cutoff valve is in the CLOSED position, the handle (3)

should be positioned 90° to the hose (2). **Do not install cleaner can (1) at this time.**

9. Make sure the truck is in "Park" (automatic transmission equipped) or "Neutral" (manual transmission equipped) and the parking brake is ON.
10. Start the vehicle engine and allow the engine to idle and warm.
11. Using the scan tool, from the "HOME" menu select, "PCM".
12. Using the scan tool, select "More Options".
13. Using the scan tool, select "System Test".
14. Using the scan tool, select "Start".
15. Using the scan tool, select "Set engine speed to 2, 000 RPM".
16. Follow the scan tool prompts, then select "Actuate".
17. Monitor the engine temperature and continue to run the vehicle engine until the engine temperature is **ABOVE 82C (180F).**

NOTE: **The vehicle engine must be fully warmed (82C/180F or higher) so that the turbocharger and accumulated soot are at the correct higher temperatures for this repair to be effective. The exhaust side of the turbocharger will be significantly higher in temperature than the 82C/180F engine operating temperature.**

NOTE: **If the following function does not appear on the scan tool, ensure the scan tool software is version 10.02 or later. If the scan tool has 10.02 or later, the PCM will need to be flashed to the latest available software before proceeding.**

18. Using the scan tool, from the "HOME" menu select, "ECU View".
19. Using the scan tool, select "PCM".
20. Using the scan tool, select "Misc Functions".
21. Using the scan tool, select "VG Turbo Cleaning Procedure".
22. Using the scan tool, select "Start".
23. Follow the scan tool prompts. When instructed, verify that the turbocharger cleaning tool tap cutoff valve is in the CLOSED position and install the Mopar® Diesel Turbocharger Cleaner # 68044565AA (1).
24. Continue to follow the scan tool prompts. The prompts in the cleaning process may instruct the technician to clean the turbocharger using a second or possibly a third can of Mopar® Diesel Turbocharger Cleaner # 68044565AA. Use as many cans as requested but **no more than 3 cans.** If cleaning is ineffective, the scan tool may prompt the technician to replace the turbocharger.

NOTE: **During the cleaning process, be sure to follow the on screen instructions carefully. Specifically, do not key off, press the accelerator or brake pedals, unplug the scan tool, release**

NOTE: **To dispense the full contents of the cleaner correctly, the Mopar® Diesel Turbocharger Cleaner can # 68044565AA (1) must be UPSIDE DOWN (can**

nozzle pointing towards the ground). It is preferred that the Mopar® Diesel Turbocharger Cleaner can # 68044565AA (1) be higher than the level of the turbocharger while the cleaner is being dispensed, if possible, hang the cleaner can on the hood latch.

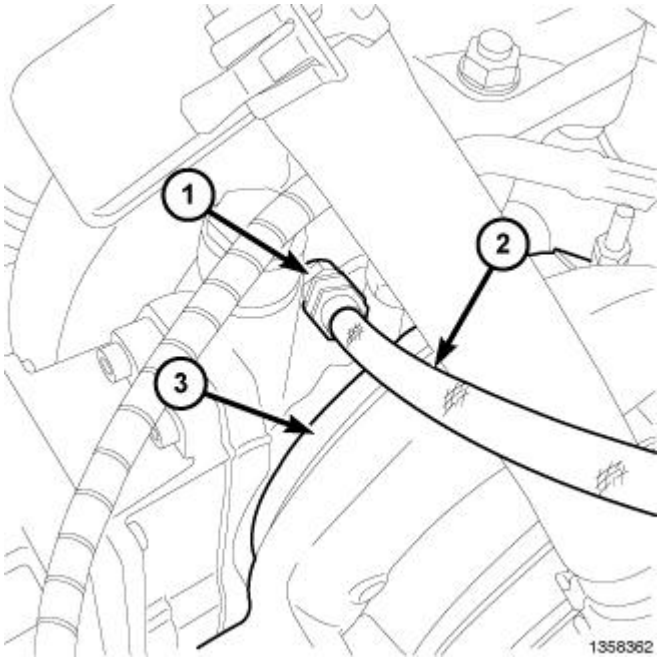

Fig. 308: Nozzle, Cleaning Tool Hose & Turbocharger
Courtesy of CHRYSLER GROUP, LLC

25. After completing the cleaning procedure via the scan tool, remove the #(special tool #10143, Cummins Turbo Drilling Kit) turbocharger cleaning tool hose (2) from the cleaning tool nozzle.
26. Remove the #(special tool #10143, Cummins Turbo Drilling Kit) turbocharger cleaning tool nozzle (1) from the turbocharger housing (3).

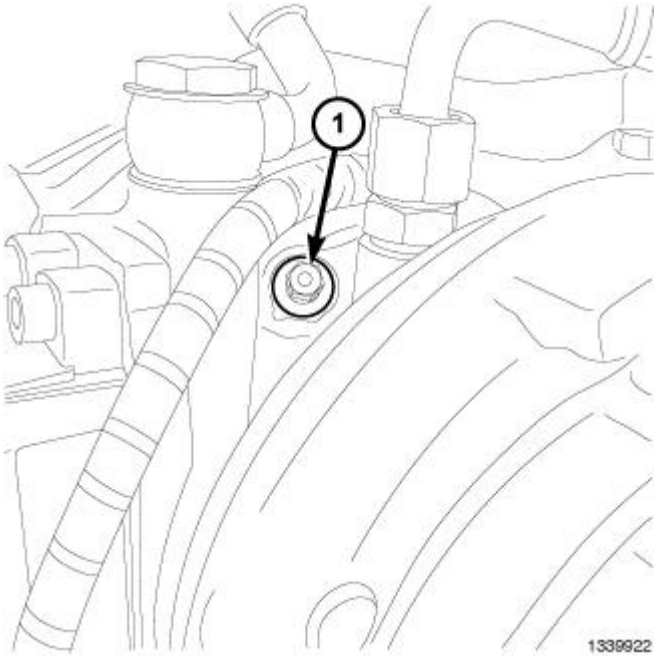

Fig. 309: Turbocharger Cleaning Port Plug
Courtesy of CHRYSLER GROUP, LLC

27. Install the stainless steel Mopar® turbocharger cleaning port plug (1) into the cleaning port of the turbocharger. Tighten the plug to 10 N.m. (89 in. lbs.).

NOTE: **The use of the proper Mopar® plug is critical. Use of an unapproved plug of different material type and/or thread may cause damage to the turbocharger.**

28. Remove the protective fender cover from the right battery.
29. Perform a powertrain verification test to ensure there are no additional issues.

NOTE: **It is important to perform the complete repair when cleaning a turbocharger. DO NOT omit any steps in the cleaning process**

ACTUATOR, TURBOCHARGER

DESCRIPTION

DESCRIPTION

ELECTRONICALLY CONTROLLED ACTUATOR

The Electronically Controlled Actuator is mounted to the turbocharger bearing housing. The actuator consists of an integrated controller and a gear train that controls the position of the sliding nozzle ring. The actuator uses a signal from the Engine Control Module (ECM) to control the relationship between the sliding nozzle ring and turbine blades.

Moving the nozzle ring rearward or forward redirects the exhaust flow so that the turbine wheel spins faster or slower as needed

- If the sliding nozzle is moved rearward, the turbocharger builds more pressure (turbine wheel moves faster)
- If the sliding nozzle is moved forward, the turbocharger builds less pressure (turbine wheel moves slower)

VGT EXHAUST BRAKE

The VGT Exhaust Brake works in conjunction with the engine and transmission to provide an integrated braking system to help slow the vehicle. This is commonly referred to as exhaust braking. Braking power is achieved by modulating the sliding nozzle ring to restrict the flow of exhaust gasses from the engine, this will create high back pressure on the engine. The high back pressure creates a high level of resistance to the motion of the pistons within the engine and this resistance is used to reduce engine speed and thus vehicle.

The exhaust brake feature will only function when the Exhaust Brake Switch to the ON position. With the switch in the ON Position and the vehicle moving faster then 5 MPH; the exhaust brake will automatically operate when pressure is removed from the accelerator pedal allowing the ECM to see 0% throttle and 0% fuel delivery.

REMOVAL

REMOVAL

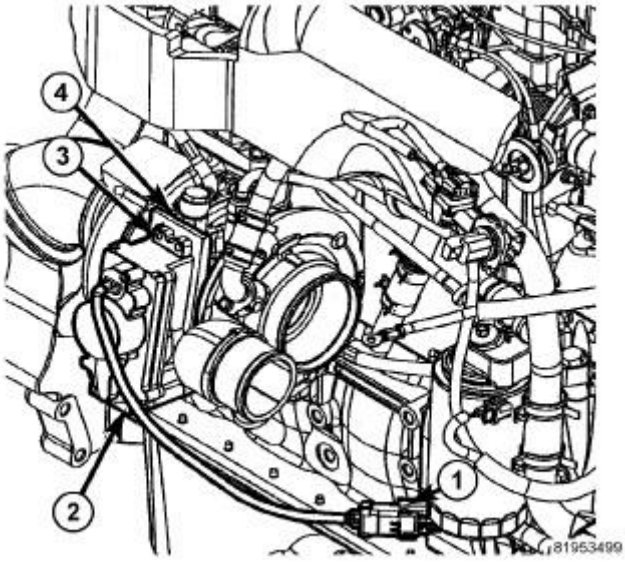

Fig. 310: Electrical Connector, Turbocharger Actuator, Mounting Bolts & Turbocharger
Courtesy of CHRYSLER GROUP, LLC

1 - ELECTRICAL CONNECTOR
2 - TURBOCHARGER ACTUATOR

3 - MOUNTING BOLTS
4 - TURBOCHARGER

1. Disconnect the battery negative cables.
2. Raise vehicle on hoist.
3. Drain cooling system. Refer to **STANDARD PROCEDURE** .
4. Remove air filter housing. Refer to **BODY, AIR CLEANER, REMOVAL, 6.7L**.
5. Disconnect turbocharger actuator electrical connector (1).
6. Remove turbocharger actuator mounting bolts (3).
7. Remove turbocharger actuator (2).
8. Clean mounting surface.

INSTALLATION

INSTALLATION

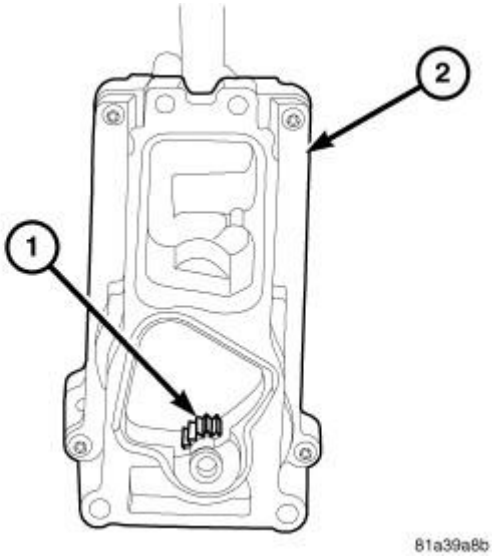

Fig. 311: Turbocharger Actuator Gear & Housing
Courtesy of CHRYSLER GROUP, LLC

1 - ACTUATOR GEAR
2 - ACTUATOR HOUSING

1. Clean turbocharger actuator housing (2) and turbocharger mounting surfaces.

CAUTION: The electronic turbocharger actuator (2) must be removed from the turbocharger to perform this function. Turbocharger failure could result if the electronic turbocharger actuator (2) is not removed from the turbocharger.

2. Position turbocharger actuator (2) in engine compartment so the actuator gear (1) will be free to rotate.
3. Connect turbocharger actuator electrical connector.
4. Connect negative battery cable.
5. Turn key on, **do not start engine.**
6. Using a scan tool function "Misc functions" under ECU, perform VG Turbo Actuator Pre-Align/Self Calibrate.

NOTE: This is a two step process, the tool will perform the Pre-align portion first followed by the Self Calibration portion.

NOTE: Do not turn key off or disconnect the tool after performing the turbo actuator pre-align portion of the routine.

CAUTION: Use only turbocharger actuator grease supplied in the service kit. Use of any other type of grease or too much grease may result in damage to turbocharger. Use the full amount of grease supplied with the service kit.

7. Apply grease to turbocharger actuator sector gear in a line across center of all teeth.
8. Install O-ring on turbocharger actuator.

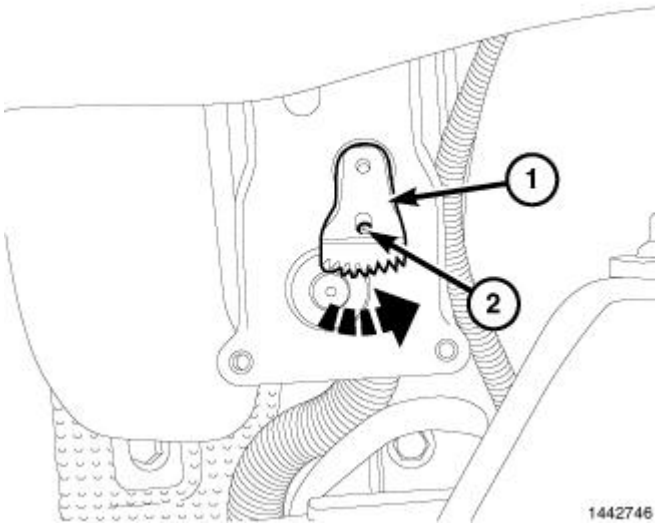

Fig. 312: Selector Gear - Forward Position & Selector Gear Alignment Hole
Courtesy of CHRYSLER GROUP, LLC

1 - SELECTOR GEAR - FORWARD POSITION
2 - SELECTOR GEAR ALIGNMENT HOLE

9. Rotate turbocharger sector gear (1) counterclockwise (forward). Insert large end of alignment pin (or a 0.187 in. pin or a 3/16 in. drill) through sector gear alignment hole (2) until it engages hole in

turbocharger bearing housing and sector gear will not rotate. Remove alignment pin from turbocharger actuator sector gear.

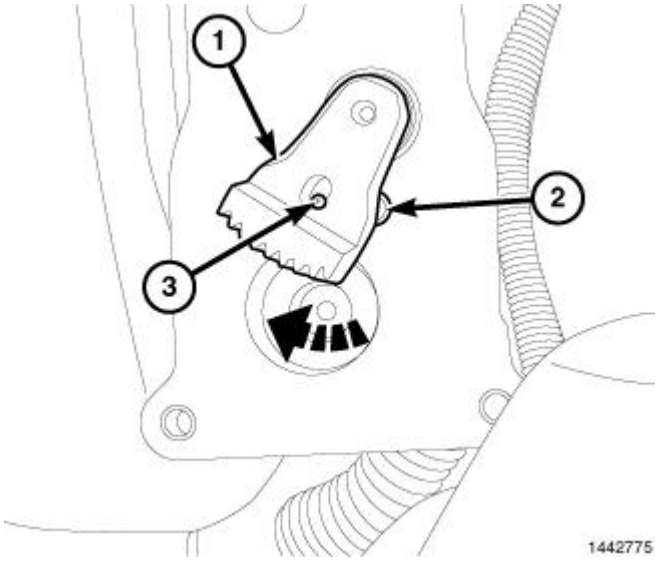

Fig. 313: Selector Gear - Rearward Position, Bearing Housing Alignment Hole & Selector Gear Alignment Hole
Courtesy of CHRYSLER GROUP, LLC

1 - SELECTOR GEAR - REARWARD POSITION
2 - BEARING HOUSING ALIGNMENT HOLE
3 - SELECTOR GEAR ALIGNMENT HOLE

10. Rotate the sector gear (1) clockwise (rearward) and insert small end of alignment tool (or 0.125 in. pin or a 1/8 in drill.) through the sector gear alignment hole (3) until it engages the alignment hole in turbocharger bearing housing (2) and sector gear will not rotate. If alignment pin does not engage hole in turbocharger bearing housing (2), variable geometry mechanism is not opening completely. Refer to **TURBOCHARGER, DIAGNOSIS AND TESTING, 6.7L**.
11. Install guide pins on turbocharger.
12. Remove alignment pin from turbocharger actuator sector gear. **Do not move the sector gear at this point.**
13. Position turbocharger actuator on guide pins and install.
14. Install two mounting screws. Hand tighten only.
15. Remove guide pins. Install remaining two mounting screws. Tighten mounting screws in a cross pattern to 11 N.m (96 in. lbs.).

CAUTION: The electronic turbocharger actuator must be installed on the turbocharger before performing this step. Incomplete installation of the electronic turbocharger actuator will result in failure of the calibration procedure.

16. Using the scan tool, perform the Self Calibrate portion of the "VG Turbo Actuator Pre-Align/Self

Calibrate" routine.

NOTE: **If the TURBO ACTUATOR SELF CALIBRATE procedure fails, remove actuator and repeat installation one additional time. If this fails to clear error, replace turbocharger.**

17. Place ignition in the OFF position.
18. Install air filter housing. Refer to **BODY, AIR CLEANER, INSTALLATION, 6.7L**.
19. Fill cooling system. Refer to **STANDARD PROCEDURE** .

COOLER AND HOSES, CHARGE AIR

DESCRIPTION

DESCRIPTION

The charge air system consists of the charge air cooler piping, charge air cooler and intake air grid heater.

The Charge Air Cooler is a heat exchanger that uses air flow from vehicle motion to dissipate heat from the intake air. As the turbocharger increases air pressure, the air temperature increases. Lowering the intake air temperature increases engine efficiency and power.

DIAGNOSIS AND TESTING

DIAGNOSIS AND TESTING - LEAKS

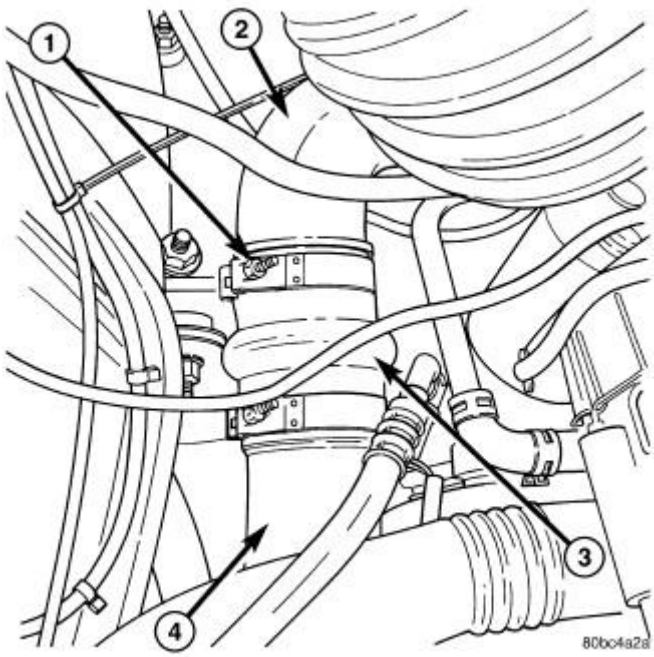

Fig. 314: Clamp, Turbocharger, Air Duct Rubber Sleeve & Air Inlet Duct

Courtesy of CHRYSLER GROUP, LLC

1 - CLAMP
2 - TURBOCHARGER
3 - AIR DUCT RUBBER SLEEVE
4 - AIR INLET DUCT

Low turbocharger boost pressure and low engine performance can be caused by leaks in the charge air cooler or plumbing. Fuel staining on the exhaust manifold can also be an indication that there are leaks in the air system. The following procedure outlines how to check for leaks in the charge air cooler system.

This procedure can also be used to check for leaks in the wastegate signal line or the wastegate canister.

1. Loosen clamp and remove air inlet hose from turbocharger.
2. Insert CAC Tester Tool (special tool #10137, Adapter, Charge Air) into the turbocharger inlet. Tighten tool clamp to 8 N.m (72 in. lbs.).

CAUTION: Do not apply more than 138 kPa (20 psi) air pressure to the charge air cooler system, severe damage to the charge air cooler system may occur.

3. Connect a regulated air supply to air fitting on CAC Tester (special tool #10137, Adapter, Charge Air). Apply 27.5 - 55 kPa (4 - 20 psi) to Tool (special tool #10137, Adapter, Charge Air).
4. Using MOPAR® Air Leak Detector, check the rubber sleeves, clamps, charge air cooler and intake manifold for leaks.
5. Using MOPAR® Air Leak Detector check for leaks at the wastegate signal line, wastegate canister and wastegate command valve.

REMOVAL

REMOVAL

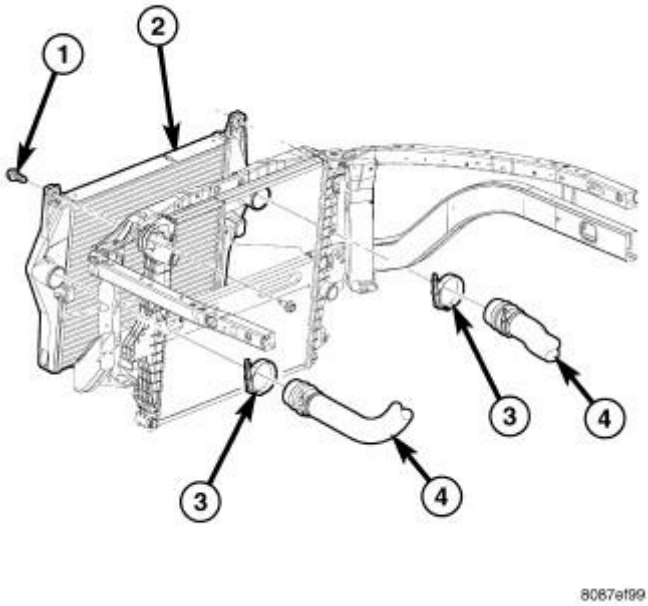

Fig. 315: Air Intake System Tubes
Courtesy of CHRYSLER GROUP, LLC

1 - BOLT
2 - CHARGE AIR COOLER
3 - CLAMP
4 - BOOST TUBE

WARNING: IF THE ENGINE WAS JUST TURNED OFF, THE AIR INTAKE SYSTEM TUBES MAY BE HOT.

1. Disconnect the battery negative cables.
2. Discharge the A/C system and remove the A/C condenser. Refer to **PLUMBING, STANDARD PROCEDURE** . If A/C equipped, refer to **CONDENSER, A/C, REMOVAL** .
3. Remove the front grille assembly. Refer to **GRILLE, REMOVAL** .
4. Remove the transmission auxiliary cooler. Refer to **COOLER, TRANSMISSION OIL, REMOVAL** .
5. Remove the intake air tubing (4) from the charge air cooler (2).
6. Remove the charge air cooler bolts. Pivot the charge air cooler (2) forward and up to remove.

CLEANING

CLEANING

CAUTION: Do not use caustic or acid based cleaners to clean the charge air cooler. Damage to the charge air cooler will result.

NOTE: **If internal debris cannot be removed from the cooler, the charge air cooler MUST be replaced.**

NOTE: **Charge air cooler must be a room temperature for this procedure.**

1. If the engine experiences a turbocharger failure or any other situation where oil or debris get into the charge air cooler, the charge air cooler must be cleaned internally.
2. Remove charge air cooler. Refer to **COOLER AND HOSES, CHARGE AIR, REMOVAL, 6.7L**.
3. Position the charge air cooler so the inlet and outlet tubes are vertical.
4. Thoroughly clean the charger air cooler internally with a non-caustic solvent (i.e. dish soap or laundry detergent / water mixture) in the direction opposite of the normal air flow.

WARNING: **DO NOT use mineral spirits, combustion cleaners or equivalents to clean the charge air cooler and hoses. Residue from these chemicals may enter the engine combustion chamber, enabling the engine to over rev and could possibly cause damage to the engine.**

5. Shake the cooler and lightly tap on the end tanks with a rubber mallet to dislodge trapped debris.
6. Continue flushing until all debris or oil are removed.
7. Rinse the cooler with hot soapy water to remove any remaining solvent.
8. Rinse thoroughly with clean water and blow dry with compressed air.

INSPECTION

INSPECTION

Visually inspect the charge air cooler for cracks, holes, or damage. Inspect the tubes, fins, and welds for tears, breaks, or other damage. Replace the charge air cooler if damage is found.

Pressure test the charge air cooler using Charge Air Cooler Tester Kit No. 3824556. This kit is available through Cummins® Service Products. Instructions are provided with the kit.

INSTALLATION

INSTALLATION

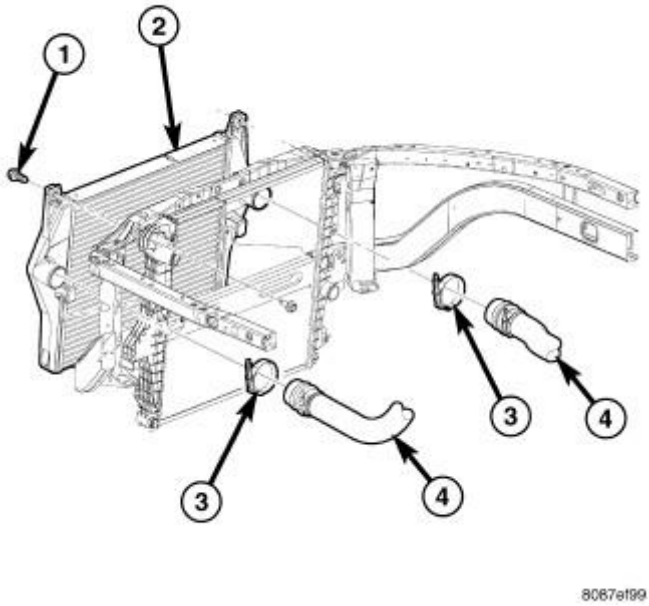

Fig. 316: Air Intake System Tubes
Courtesy of CHRYSLER GROUP, LLC

1 - BOLT
2 - CHARGE AIR COOLER
3 - CLAMP
4 - BOOST TUBE

1. Position the charge air cooler (2). Install the bolts (1) and tighten to 2 N.m (17 in. lbs.) torque.
2. Install the air intake system tubes (4) to the charge air cooler (2). With the clamps in position, tighten the clamps to 11 N.m (95 in. lbs.) torque.
3. Install the transmission auxiliary cooler (if equipped). Refer to **COOLER, TRANSMISSION OIL, INSTALLATION** .
4. Install the A/C condenser (if A/C equipped). Refer to **CONDENSER, A/C, INSTALLATION** . Recharge A/C system. Refer to **PLUMBING, STANDARD PROCEDURE** .
5. Connect the battery negative cables.
6. Start engine and check for boost system leaks.
7. Install the front grille assembly. Refer to **GRILLE, INSTALLATION** .

LINES AND HOSES, TURBOCHARGER, OIL AND COOLANT

REMOVAL

REMOVAL

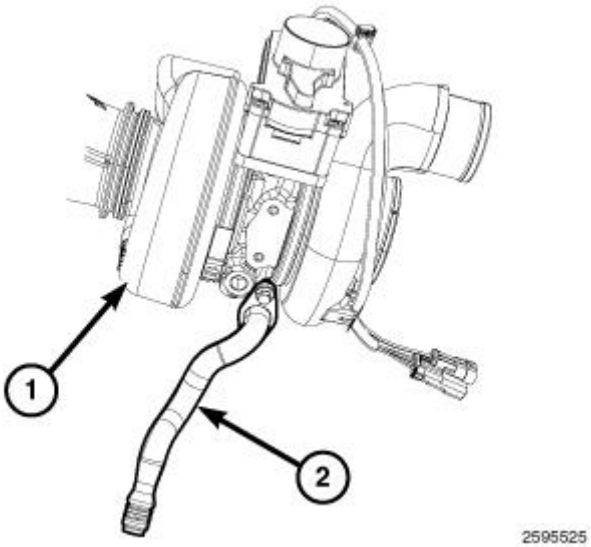

Fig. 317: Turbocharger & Drain Tube
Courtesy of CHRYSLER GROUP, LLC

1. Remove RH engine mount. Refer to **INSULATOR, ENGINE MOUNT, FRONT, REMOVAL, 6.7L** and **INSULATOR, ENGINE MOUNT, REAR, REMOVAL, 6.7L**.
2. Remove turbocharger drain tube (2) mounting bolts.
3. Remove turbocharger drain tube (2) from the turbocharger (1).

INSTALLATION

INSTALLATION

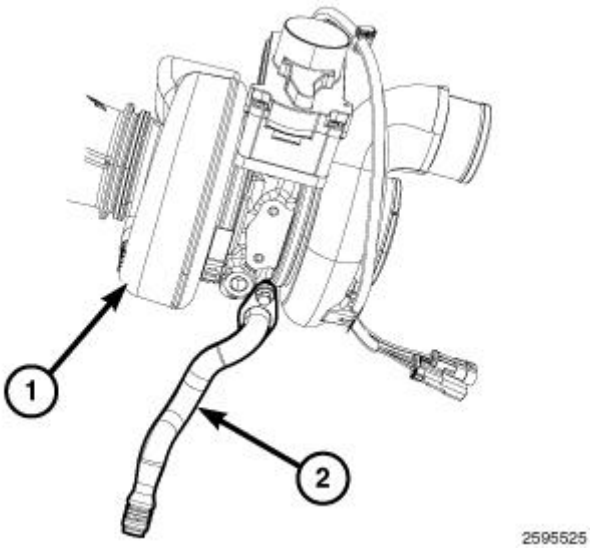

Fig. 318: Turbocharger & Drain Tube
Courtesy of CHRYSLER GROUP, LLC

1. Clean turbocharger drain tube (2) mounting surfaces.

2. Install new O-rings on turbocharger drain tube (2). Lubricate with clean engine oil.
3. Install turbocharger drain tube (2) into cylinder block.
4. Install new gasket and turbocharger drain tube (2) mounting bolts at turbocharger (1).
5. Tighten bolts to 24 N.m (18 ft. lbs.).
6. Install RH engine mount. Refer to **INSULATOR, ENGINE MOUNT, FRONT, INSTALLATION, 6.7L** and **INSULATOR, ENGINE MOUNT, REAR, INSTALLATION, 6.7L**.
7. Start engine and check for leaks.

SENSOR, TURBOCHARGER SPEED

REMOVAL

REMOVAL

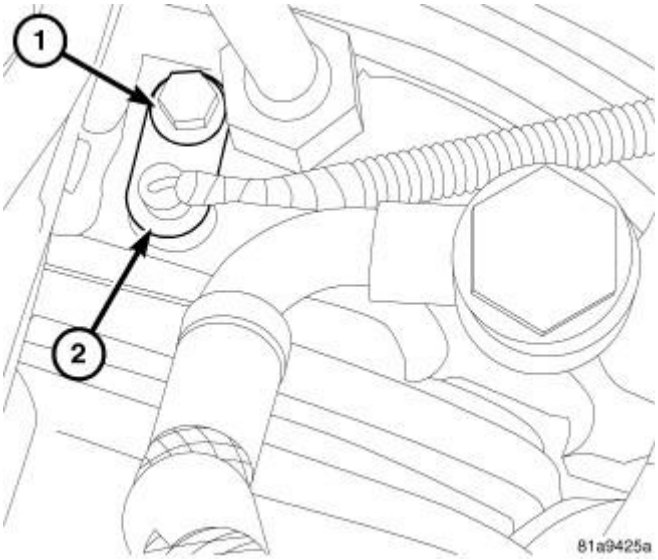

Fig. 319: Turbocharger Speed Sensor & Bolt
Courtesy of CHRYSLER GROUP, LLC

1 - BOLT
2 - TURBOCHARGER SPEED SENSOR

CAUTION: Do not use a screw driver or tool to pry sensor out of the turbocharger bearing housing. Damage to sensor may result. If sensor is damaged during removal, install a new sensor.

1. Disconnect negative battery cable.
2. Remove turbocharger oil supply line.
3. Disconnect speed sensor electrical connector.
4. Remove turbocharger speed sensor mounting bolt (1).
5. Remove turbocharger speed sensor (2).

INSTALLATION

INSTALLATION

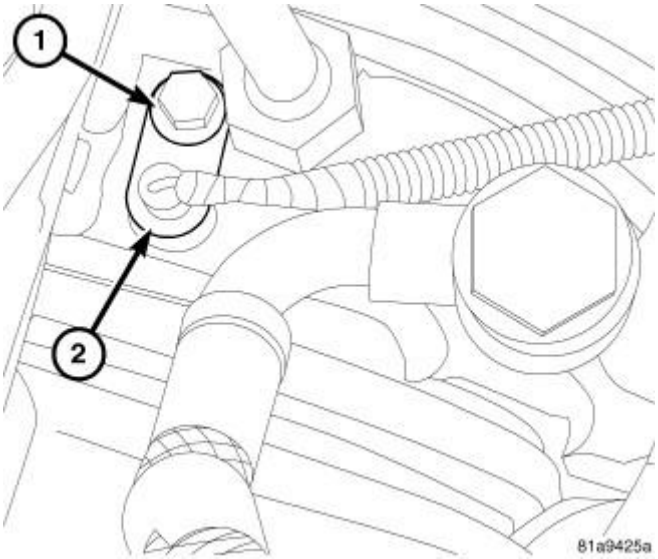

Fig. 320: Turbocharger Speed Sensor & Bolt
Courtesy of CHRYSLER GROUP, LLC

1 - BOLT
2 - TURBOCHARGER SPEED SENSOR

1. Install turbocharger speed sensor.
2. Install turbocharger speed sensor mounting bolt.
3. Tighten bolt to 10 N.m (89 in. lbs.).
4. Connect speed sensor electrical connector.
5. Install turbocharger oil supply line. Tighten fitting to 24 N.m (18 ft. lbs.)

TURBOCHARGER

DESCRIPTION

DESCRIPTION

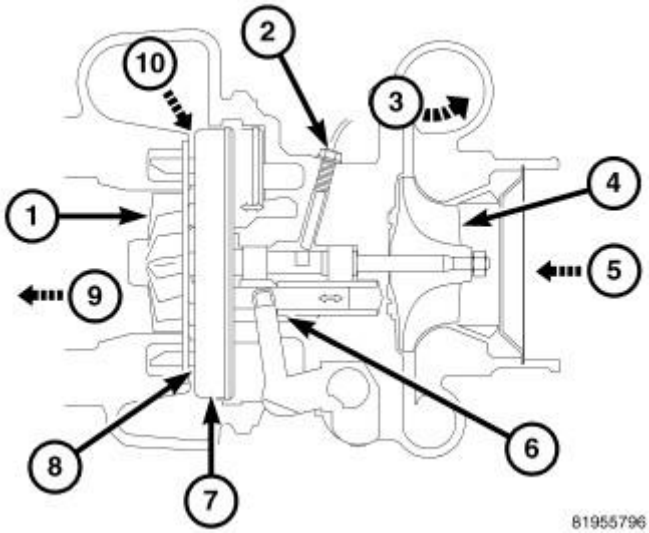

Fig. 321: 6.7L Turbocharger Components
Courtesy of CHRYSLER GROUP, LLC

1 - TURBINE
2 - TURBOCHARGER SPEED SENSOR
3 - COMPRESSED AIR FLOW
4 - COMPRESSOR
5 - FRESH AIR FLOW
6 - YOKE MECHANISM
7 - NOZZLE RING
8 - SHROUD PLATE
9 - AIR FLOW TO ENGINE
10 - VANES

The electronically controlled Variable Geometry (VG) turbocharger is a water cooled, exhaust-driven, oil lubricated compressor that increases the pressure and density of the air entering the engine. With the increase of air entering the engine, more fuel can be injected into the cylinders, which creates more power during combustion.

The VG turbocharger allows the engine to operate in a wide power and speed range to achieve the best power, torque, and engine operating conditions.

The VG turbocharger can also provide engine braking and to reduce engine warm up time.

The VG turbocharger assembly consists of:

- Turbocharger assembly
- Variable Geometry Nozzle (7)
- Water Cooled Bearing housing

- Electronically Controlled Actuator

OPERATION

OPERATION

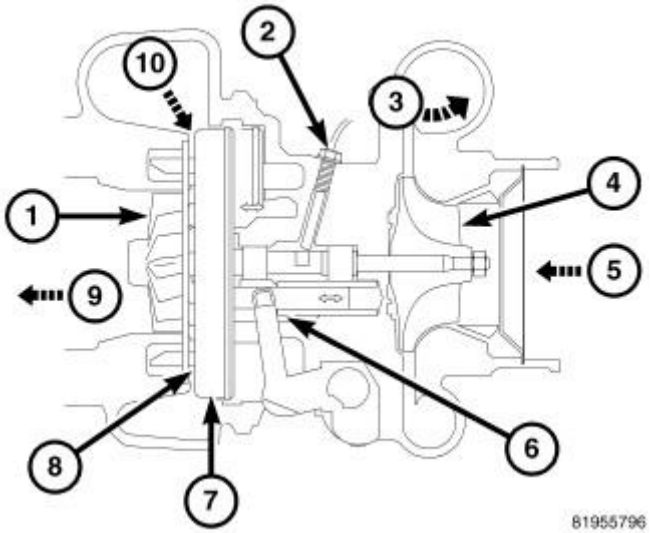

Fig. 322: 6.7L Turbocharger Components
Courtesy of CHRYSLER GROUP, LLC

1 - TURBINE
2 - TURBOCHARGER SPEED SENSOR
3 - COMPRESSED AIR FLOW
4 - COMPRESSOR
5 - FRESH AIR FLOW
6 - YOKE MECHANISM
7 - NOZZLE RING
8 - SHROUD PLATE
9 - AIR FLOW TO ENGINE
10 - VANES

The turbocharger is water cooled and lubricated by engine oil that is pressurized, cooled, and filtered. The oil is delivered to the turbocharger by a supply line that is tapped into the oil filter head. The oil travels into the bearing housing, where it lubricates the shaft and bearings. A return pipe at the bottom of the bearing housing, routes the engine oil back to the crankcase.

Exhaust gas enters the turbine section of the turbocharger as it leaves the combustion chamber. Heat and pressure are extracted from the exhaust gas and cause the turbine to rotate. The turbine is connected by shaft to the compressor section of the turbocharger. The rotating compressor draws in inlet air, compresses it and sends the compressed air through the Charge Air Cooler to the engine.

The Variable Geometry Turbocharger (VGT) uses a one piece sliding nozzle that moves continuously to vary the power of turbine and the amount of air delivered to the engine. This allows turbine power to be set to provide just enough energy to drive the compressor at the desired boost level in all engine operating modes.

Turbine power level changes are achieved by varying the position of the nozzle ring in relation to a set of guide vanes that control the flow through the turbine. An electrically controlled actuator positions the sliding nozzle over the guide vanes.

TURBOCHARGER EXHAUST BRAKE FUNCTION

The VGT works in conjunction with the engine and the transmission to provide an integrated braking system used to help slow the vehicle. This is commonly called exhaust braking. This braking power is achieved by modulating the turbo sliding nozzle ring to restrict the flow of exhaust gases from the engine, which in turn creates a high back pressure on the engine. The high back pressure creates a high level of resistance to the motion of the pistons within the engine and this resistance is used to reduce engine speed and thus vehicle speed.

The exhaust brake feature will only function when the driver turns the exhaust brake switch to the on position. Once the switch is in the on position and the vehicle is moving faster than 8 k/h (5 MPH); the exhaust brake will automatically operate when the driver removes pressure from the throttle pedal allowing the engine to see 0% throttle and 0 fuel delivery.

Exhaust braking is most effective when the engine RPM is higher. The automatic transmission has been programmed to downshift more aggressively when the exhaust brake is enabled to increase brake performance. Use of automatic transmission Tow/Haul Mode improves interaction between the engine and transmission. Inputs to the exhaust brake feature include:

- Coolant temperature
- Ambient air temperature
- Exhaust manifold pressure sensor
- Throttle pedal position sensor

Fault codes with any of these sensors will cause the exhaust brake feature to be disabled.

The exhaust brake feature can also be used to reduce the engine warm up time. To use the exhaust brake as a warm-up device, the vehicle must be moving less than 8 k/h (5 MPH), the exhaust brake switch must be in the on position, and the coolant temperature must below 82°C (180° F) and ambient temperature below 15.5°C (60° F).

TURBOCHARGER COOL DOWN

The most common turbocharger failure is bearing failure related to repeated hot shutdowns with inadequate "cool-down" periods. A sudden engine shut down after prolonged operation will result in the transfer of heat from the turbine section of the turbocharger to the bearing housing. This causes the oil to overheat and break down, which causes bearing and shaft damage the next time the vehicle is started.

Letting the engine idle after extended operation allows the turbine housing to cool to normal operating

temperature. The following chart should be used as a guide in determining the amount of engine idle time required to sufficiently cool down the turbocharger before shut down, depending upon the type of driving and the amount of cargo.

TURBOCHARGER "COOL DOWN" CHART

Driving Condition	Load	Turbocharger Temperature	Idle Time (in minutes) Before Shut Down
Stop AND Go	Empty	Cool	Less than 1
Stop AND Go	Medium	Warm	1
Highway Speeds	Medium	Warm	2
City Traffic	Max. GCWR	Warm	3
Highway Speeds	Max. GCWR	Warm	4
Uphill Grade	Max. GCWR	Hot	5

DIAGNOSIS AND TESTING

DIAGNOSIS AND TESTING - TURBOCHARGER BOOST PRESSURE

Low turbocharger boost pressure can cause poor engine performance and driveability concerns. The following procedure will test the turbocharger boost pressure.

Causes of low boost pressure include the following:

- Restricted air inlet system
- Leak in charge air cooler system
- Damaged wastegate command valve O-rings
- Restricted/high pressure drop across charge air cooler
- Damaged turbocharger compressor wheel housing
- Turbocharger wastegate stuck open
- Excessive exhaust restriction
- Stuck or sticking variable geometry components (6.7L diesel engine)
- Stuck or inoperative variable geometry actuator (6.7L diesel engine)

Causes of excessively high boost pressure include:

- Turbocharger wastegate stuck closed
- Turbocharger wastegate signal line leaking or damaged
- Damaged turbocharger actuator O-ring (6.7L Diesel)
- Wastegate command valve mechanically stuck in actuated position
- Stuck or sticking variable geometry components (6.7L diesel engine)
- stuck or inoperative variable geometry actuator (6.7L diesel engine)

Several Diagnostic Trouble Codes (DTCs) can be set that will indicate high or low system boost levels. There is

a DTC for circuit faults relating to the electronically controlled wastegate command valve.

for diagnosing of low or high boost pressure due to leaks. Refer to **COOLER AND HOSES, CHARGE AIR, DIAGNOSIS AND TESTING, 6.7L**.

NOTE: **If oil is present on either the inlet or exhaust side of the turbo charger, check the charge air cooler for evidence of oil. Clean charge air cooler of any oil before starting the engine. Failure to do this can result in severe engine damage.**

VARIABLE GEOMETRY MECHANISM CHECKS - 6.7L

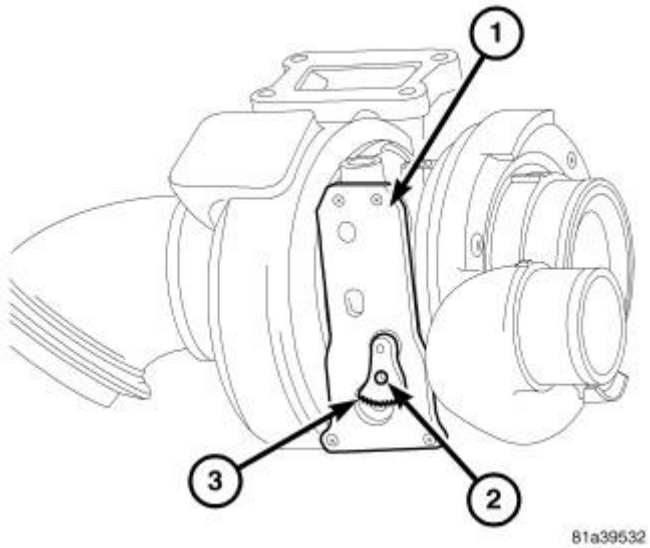

Fig. 323: Turbocharger Bearing Housing, Alignment Hole & Turbocharger Sector Gear
Courtesy of CHRYSLER GROUP, LLC

1 - TURBOCHARGER BEARING HOUSING
2 - ALIGNMENT HOLE
3 - TURBOCHARGER SECTOR GEAR

1. Remove turbocharger electronic actuator. Refer to **ACTUATOR, TURBOCHARGER, REMOVAL, 6.7L**.
2. Inspect turbocharger sector gear (3) and bearing housing (1) surface for damage. Replace turbocharger if damaged.

NOTE: **Only moderate force should be required to rotate sector gear (3). Do not use tools of any kind to force sector gear to move.**

3. Rotate sector gear (3) clockwise and counterclockwise. Movement should be smooth, without binding and require only moderate force. If the turbocharger sector gear (3) binds or does not move with moderate force, replace turbocharger.

NOTE: **Use stepped alignment pin from turbocharger actuator service kit. If service kit is not available, use pin or drill bit of specified size.**

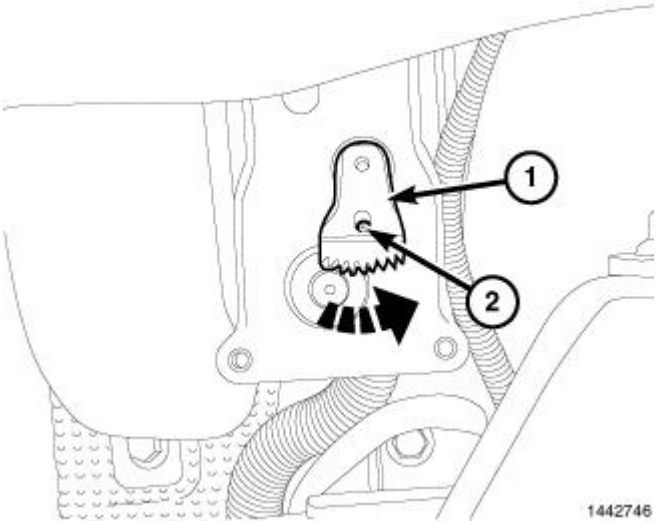

Fig. 324: Selector Gear - Forward Position & Selector Gear Alignment Hole
Courtesy of CHRYSLER GROUP, LLC

1 - SELECTOR GEAR - FORWARD POSITION
2 - SELECTOR GEAR ALIGNMENT HOLE

4. Rotate turbocharger sector gear (1) counterclockwise (forward). Insert large end of alignment pin (or a 0.187 in. pin or a 3/16 in. drill) through the turbocharger sector gear alignment hole (2) until it engages hole in turbocharger bearing housing and sector gear (1) will not rotate. If alignment pin does not engage hole in turbocharger bearing housing, variable geometry mechanism is not closing completely. Turbocharger must be replaced.

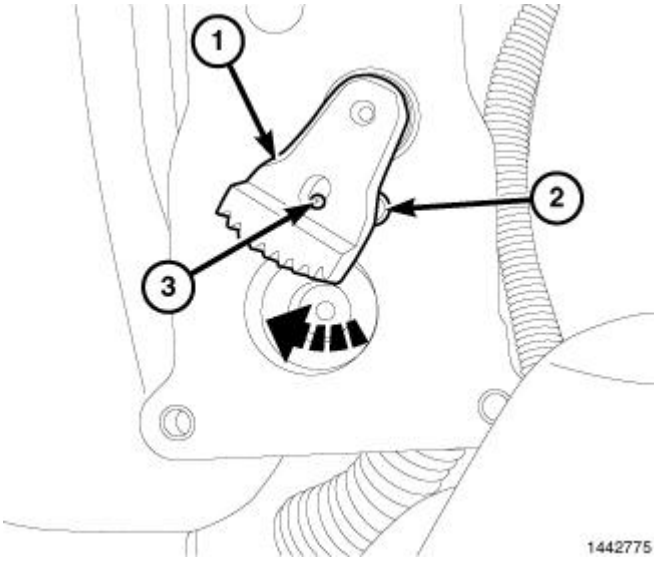

Fig. 325: Selector Gear - Rearward Position, Bearing Housing Alignment Hole & Selector Gear

Alignment Hole
Courtesy of CHRYSLER GROUP, LLC

1 - SELECTOR GEAR - REARWARD POSITION
2 - BEARING HOUSING ALIGNMENT HOLE
3 - SELECTOR GEAR ALIGNMENT HOLE

5. Remove alignment pin from sector gear and rotate sector gear (1) clockwise (rearward) and insert small end of alignment tool (or 0.125 in. pin or a 1/8 in drill.) through the sector gear alignment hole (3) until it engages the alignment hole (2) in turbocharger bearing housing and sector gear will not rotate. If alignment pin does not engage hole (2) in turbocharger bearing housing, variable geometry mechanism is not opening completely. Turbocharger must be replaced.

NOTE: **If turbocharger has passed sector gear movement checks, turbocharger is functional. Turbocharger actuator must be replaced. Leave alignment pin in place.**

6. Install electronic turbocharger actuator, refer to **ACTUATOR, TURBOCHARGER, INSTALLATION, 6.7L**.

REMOVAL

REMOVAL

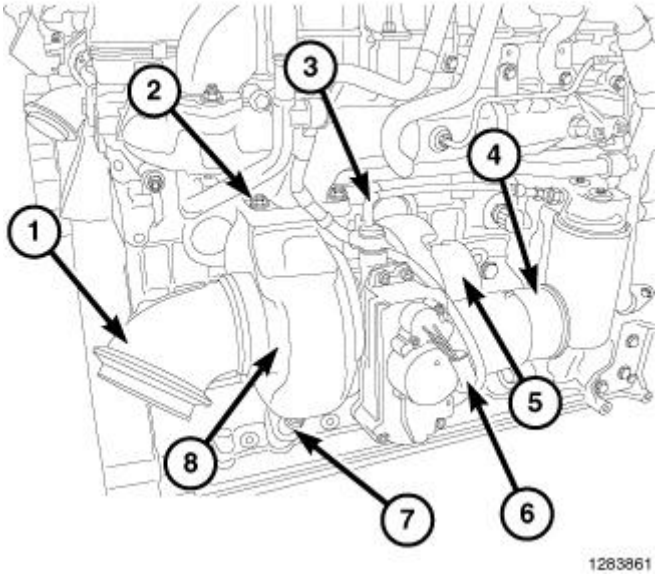

Fig. 326: Turbocharger Components
Courtesy of CHRYSLER GROUP, LLC

1. Disconnect the negative battery cable on both batteries.

2. Disconnect and re-position the right hand side positive battery cable.
3. Drain the coolant from the radiator and engine. Refer to **STANDARD PROCEDURE** .
4. Remove the air filter housing. Refer to **AIR CLEANER, REMOVAL, 6.7L**.
5. Disconnect the crankcase vent hose at the turbocharger air intake.
6. Remove the intake air tube at the turbocharger (5).
7. Remove the charge air cooler inlet tube at the turbocharger inlet (4).
8. Disconnect the turbocharger speed sensor electrical connector.
9. Disconnect the turbocharger actuator electrical connector (6).
10. Remove the turbocharger oil pressure line (3).
11. Remove the turbocharger coolant lines at the engine block and turbocharger.

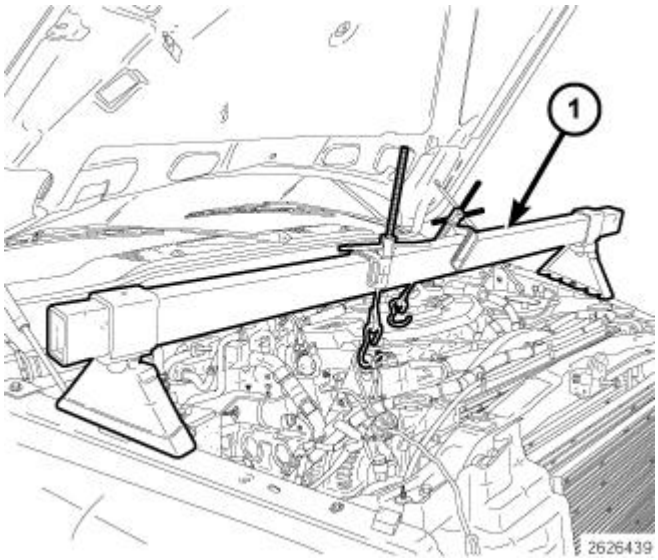

Fig. 327: Engine Support Fixture Tool 8534B
Courtesy of CHRYSLER GROUP, LLC

12. Remove the right side wheelhouse splash shield. Refer to **SHIELD, SPLASH, FRONT WHEELHOUSE, REMOVAL** and **SHIELD, SPLASH, REAR WHEELHOUSE, REMOVAL** .
13. Lower the vehicle.
14. Install the engine support fixture tool (special tool #8534B, Fixture, Driveline Support) (1).
15. Remove the right hand side engine mount. Refer to **INSULATOR, ENGINE MOUNT, FRONT, REMOVAL, 6.7L** and **INSULATOR, ENGINE MOUNT, REAR, REMOVAL, 6.7L**.

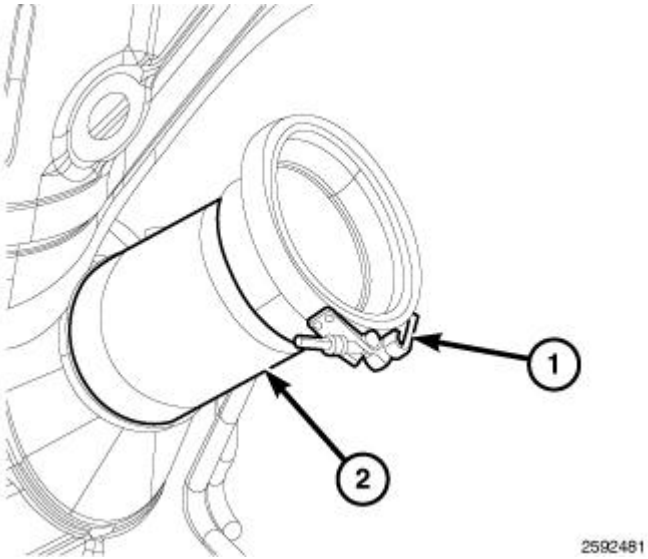

Fig. 328: Turbocharger Exhaust Outlet V-Clamp
Courtesy of CHRYSLER GROUP, LLC

16. Raise and support the vehicle.
17. Remove the exhaust steady rest bracket from transmission.
18. Remove the V-clamp (1) from the turbocharger exhaust outlet.

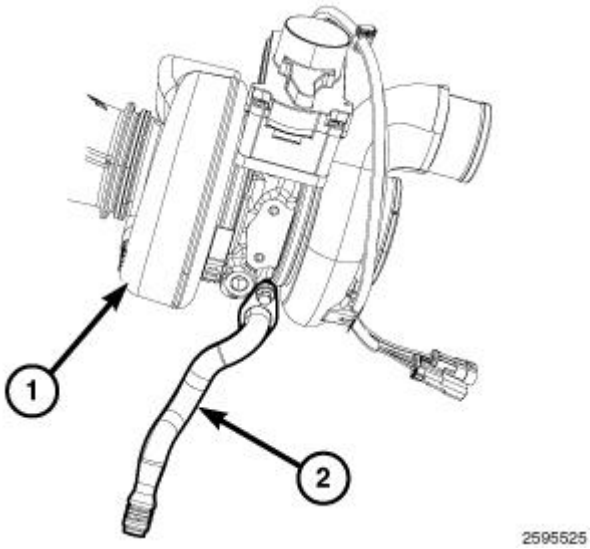

Fig. 329: Turbocharger & Drain Tube
Courtesy of CHRYSLER GROUP, LLC

19. Remove the turbocharger drain tube (2) at the turbocharger (1).
20. Remove the turbocharger drain tube from the cylinder block.
21. Lower the vehicle.
22. Remove and re-position the grid heater relay from the battery tray.
23. Using Tool (special tool #9866, Wrench, Turbo Charger Bolt), remove the turbocharger to exhaust

manifold mounting nuts.

24. Remove the turbocharger (1) from the vehicle by lifting from the top of the engine compartment.
25. Clean the turbocharger mating surfaces.
26. Inspect the turbocharger for damage, if necessary replace the turbocharger. Refer to **TURBOCHARGER, INSPECTION, 6.7L**.

INSPECTION

INSPECTION

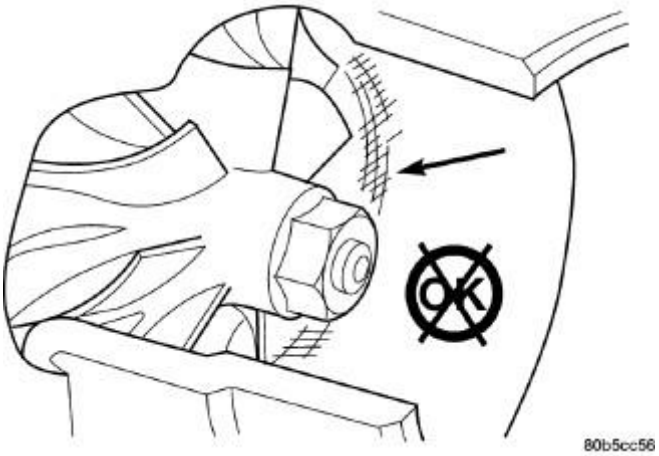

Fig. 330: Inspecting Compressor Housing For Impeller Rubbing Condition
Courtesy of CHRYSLER GROUP, LLC

Visually inspect turbocharger for excessive oil residue. Clean turbocharger if necessary. Refer to **TURBOCHARGER SYSTEM, CLEANING, 6.7L**.

Visually inspect charge air cooler tubing for excessive oil residue. Clean charge air cooler tubing if necessary. Refer to **COOLER AND HOSES, CHARGE AIR, CLEANING, 6.7L**.

Visually inspect the turbocharger and exhaust manifold gasket surfaces. Replace stripped or eroded mounting studs.

1. Visually inspect the turbocharger for cracks. The following cracks are NOT acceptable:
   - Cracks in the turbine and compressor housing that go completely through
   - Cracks in the mounting flange that are longer than 15 mm (0.6 in.)
   - Cracks in the mounting flange that intersect bolt through-holes
   - Two (2) Cracks in the mounting flange that are closer than 6.4 mm (0.25 in.) together
2. Using a straight edge and feeler gauge, measure the flatness between the two longest sections of the turbocharger mounting flange. Specification is 0.1 mm (0.0039 in.) maximum.
3. Using a straight edge and feeler gauge, the exhaust manifold flange. Specification is 0.1 mm (0.0039 in.) maximum. The combined measurements of the turbocharger and the exhaust manifold flanges must not exceed the maximum spec of either of the two flanges. Example: if the turbocharger flange measured

0.005 mm and the exhaust manifold flange measures 0.005 mm then the spec

4. Visually inspect the impeller and compressor wheel fins for nicks, cracks, or chips. Note: Some impellers may have a factory placed paint mark which, after normal operation, appears to be a crack. Remove this mark with a suitable solvent to verify that it is not a crack.
5. Visually inspect the turbocharger compressor housing for an impeller rubbing condition. Replace the turbocharger if the condition exists.

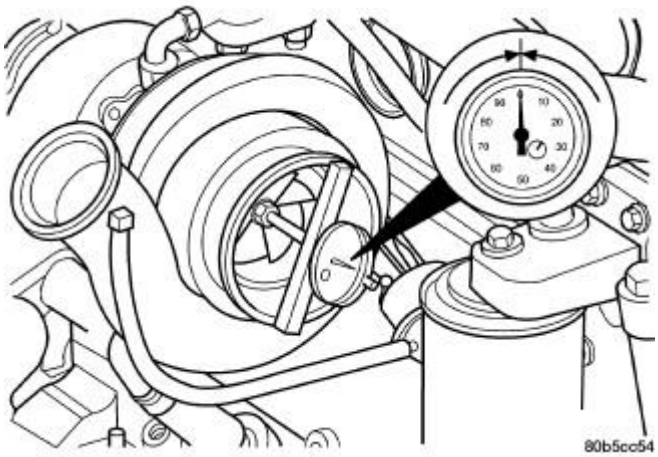

Fig. 331: Measure Turbocharger Axial End Play
Courtesy of CHRYSLER GROUP, LLC

6. Measure the turbocharger axial end play:
    1. Install a dial indicator as shown in illustration. Zero the indicator at one end of travel.
    2. Move the impeller shaft fore and aft and record the measurement. Allowable end play is 0.038 mm (0.00015 in.) MIN. and 0.093 mm (0.0037 in.) MAX. If the recorded measurement falls outside these parameters, replace the turbocharger assembly.

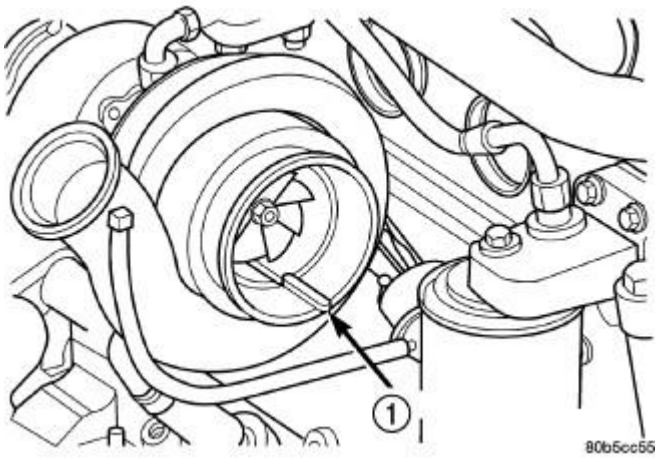

Fig. 332: Measuring Turbocharger Bearing Radial Clearance
Courtesy of CHRYSLER GROUP, LLC

1 - FEELER GAUGE

7. Measure the turbocharger bearing radial clearance:
    1. Insert a narrow blade or wire style feeler gauge between the compressor wheel and the housing.
    2. Gently push the compressor wheel toward the housing and record the clearance.
    3. With the feeler gauge in the same location, gently push the compressor wheel away from the housing and again record the clearance.
    4. Subtract the smaller clearance from the larger clearance. This is the radial bearing clearance.
    5. Allowable radial bearing clearance is 0.33 mm (0.013 in.) MIN. and 0.50 mm (0.020 in.) MAX. If the recorded measurement falls outside these specifications, replace the turbocharger assembly.

INSTALLATION

INSTALLATION

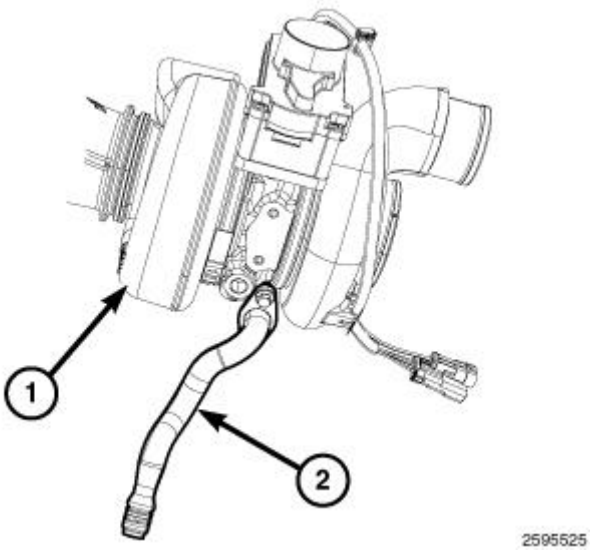

Fig. 333: Turbocharger & Drain Tube
Courtesy of CHRYSLER GROUP, LLC

CAUTION: Insure that turbocharger and charge air cooler are free of excess oil and debris. Do not allow any water or solvents to enter the turbocharger inlet or outlet. If necessary, clean turbocharger and the charge air cooler. Refer to TURBOCHARGER SYSTEM, CLEANING, 6.7L. Refer to COOLER AND HOSES, CHARGE AIR, CLEANING, 6.7L.

1. Prior to installation, inspect the turbocharger for any damage. Refer to **TURBOCHARGER, INSPECTION, 6.7L**.
2. Clean the turbocharger mating surfaces.
3. Replace the banjo fitting seals on the turbocharger coolant lines.
4. Using a new gasket, position the turbocharger onto the exhaust manifold studs by lowering the

turbocharger through the engine compartment.

NOTE: **If old gasket appeared to be leaking, check the turbocharger/exhaust manifold mounting flanges for warping. Using a straight edge and feeler gauge measure along the two longest sides of the flanges for warpage. Spec is 0.1 mm (0.0039 inch) for the turbocharger flange and 0.05 mm (0.002 inch) maximum.**

5. Install the turbocharger mounting nuts. Using Turbocharger Tool (special tool #9866, Wrench, Turbo Charger Bolt), using a cross pattern, tighten the nuts to 43 N.m (32 ft. lbs.)
6. Install the grid heater relay to the battery tray.
7. Inspect the oil drain tube O-rings for nicks or cuts. Replace if necessary. Oil the O-rings with new oil.
8. Raise and support the vehicle.
9. Position the turbocharger drain tube (2) into engine block.
10. Using a new gasket, install the turbocharger drain tube (2) mounting bolts. Tighten the mounting bolts to 24 N.m (18 ft. lbs.).

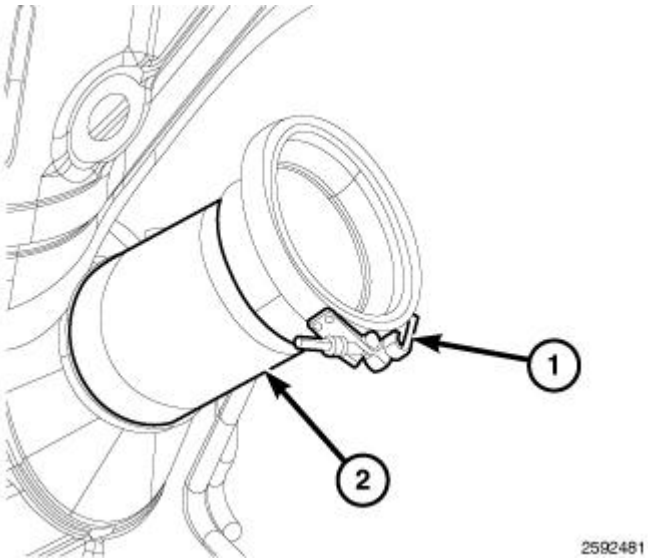

Fig. 334: Turbocharger Exhaust Outlet V-Clamp
Courtesy of CHRYSLER GROUP, LLC

11. Using a new clamp (1), connect the exhaust pipe to the turbocharger exhaust outlet with the clamp facing down as shown in illustration. Tighten the clamp (1) to 17 N.m (13 ft. lbs). Using a rubber mallet, hit the exhaust pipe to turbocharger clamp three times around the perimeter of the clamp (1) and tighten the clamp (1) to 17 N.m (13 ft. lbs).
12. Install the exhaust steady rest bracket to the transmission. Tighten bolts to 43 N.m (32 ft. lbs.).
13. Install the right hand side engine mount. Refer to **INSULATOR, ENGINE MOUNT, FRONT, INSTALLATION, 6.7L** and **INSULATOR, ENGINE MOUNT, REAR, INSTALLATION, 6.7L**.
14. Install the right side wheelhouse splash shield. Refer to **SHIELD, SPLASH, FRONT WHEELHOUSE, INSTALLATION** and **SHIELD, SPLASH, REAR WHEELHOUSE, INSTALLATION** .

15. Lower the vehicle.

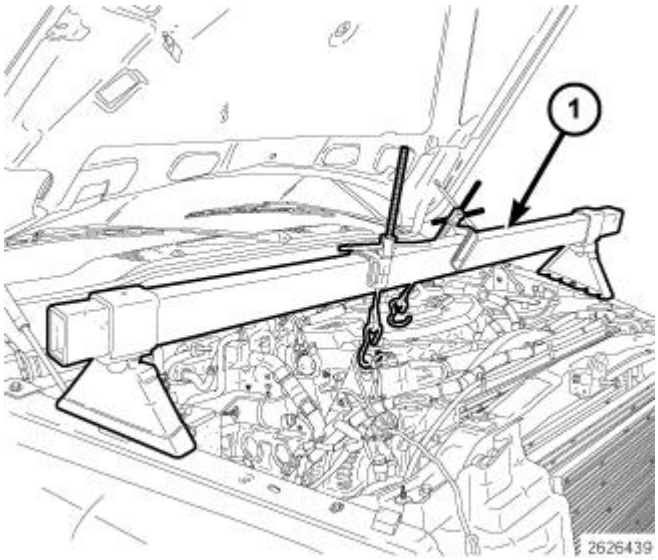

Fig. 335: Engine Support Fixture Tool 8534B
Courtesy of CHRYSLER GROUP, LLC

16. Remove the engine support fixture tool (special tool #8534B, Fixture, Driveline Support) (1).

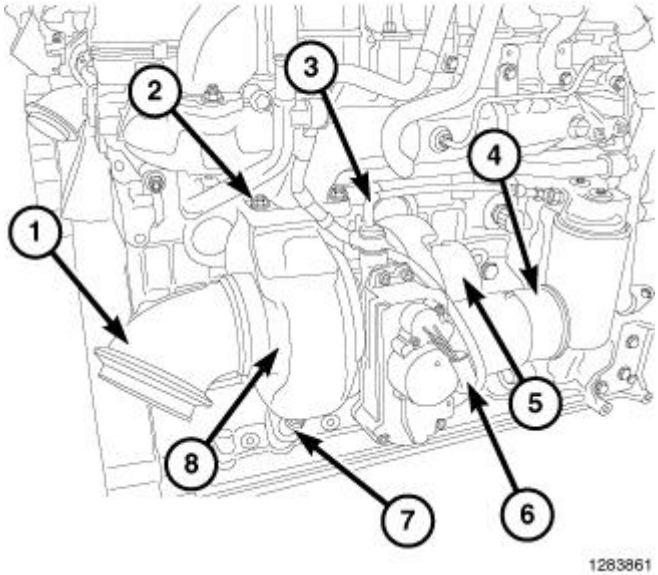

Fig. 336: Turbocharger Components
Courtesy of CHRYSLER GROUP, LLC

NOTE: Exhaust pipe removed for clarity.

17. Install the coolant lines at the engine block and turbocharger. Tighten the banjo fittings 24 N.m (18 ft.

lbs.).

18. Install the turbocharger oil return line. Tighten the fitting to 36 N.m (27 ft. lbs.).
19. Install the turbocharger oil pressure line (3). Tighten the fitting to 36 N.m (27 ft. lbs.).
20. Connect the turbocharger actuator electrical connector.
21. Connect the turbocharger speed sensor electrical connector.
22. Install the charge air tube to turbocharger inlet (4). Tighten the clamp to 11 N.m (8 ft. lbs.).
23. Pre-lube the turbocharger with 29.9 - 59.14 ml (1 - 2 oz.) clean engine oil.
24. Install the intake air tube at the turbocharger (5). Tighten the clamp to 11 N.m (8 ft. lbs.).
25. Connect the crankcase vent hose at the turbocharger air intake.
26. Install the air filter housing. Refer to **BODY, AIR CLEANER, INSTALLATION, 6.7L**.
27. Fill the cooling system. Refer to **STANDARD PROCEDURE** .
28. Position and connect the right hand side positive battery cable
29. Connect the negative battery cable on both batteries.
30. Check for any cooling or exhaust leaks and confirm the turbocharger is operating properly. Refer to **DIAGNOSIS AND TESTING** . Refer to **DIAGNOSIS AND TESTING** . Refer to **TURBOCHARGER, DIAGNOSIS AND TESTING, 6.7L**.

VALVE TIMING

STANDARD PROCEDURE

STANDARD PROCEDURE - TIMING VERIFICATION

1. Remove the cylinder head cover. Refer to **COVER(S), CYLINDER HEAD, REMOVAL, 6.7L**.
2. Remove fuel injector from cylinder No. 1. Refer to **INJECTOR(S), FUEL, REMOVAL** .
3. Using Barring Tool (special tool #7471B, Barring Tool) rotate the engine until the TDC mark on the damper is at 12 o'clock.
4. Using a 8 in. x 1/4 in. dowel rod inserted into cylinder No. 1, rock the crankshaft back and forth to verify piston No. 1 is at TDC.
5. With cylinder number still at TDC, inspect the keyway on the crankshaft gear for proper alignment (12 o'clock position).
6. If the keyway is not at 12 o'clock position replace the crankshaft gear assembly.
7. If the keyway is at 12 o'clock position, remove front gear cover and verify timing mark alignment between the camshaft gear and crankshaft gear, if not aligned inspect keyway on camshaft gear.
8. Inspect keyway on camshaft gear for proper alignment with the key in the camshaft, if alignment is off replace the camshaft/gear assembly.
9. If timing marks alignment is off and no damage is found at either the crankshaft or camshaft gear keyways, realign timing marks as necessary.

COVER(S), ENGINE TIMING

REMOVAL

REMOVAL

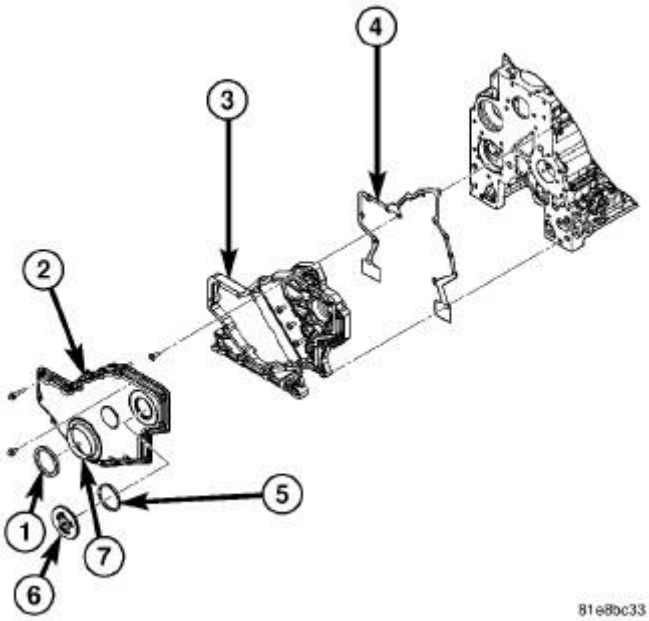

Fig. 337: Front Cover Assembly Components
Courtesy of CHRYSLER GROUP, LLC

1. Disconnect both battery negative cables.
2. Raise vehicle on hoist.
3. Partially drain engine coolant into container suitable for re-use. Refer to **STANDARD PROCEDURE** .
4. Lower vehicle.
5. Remove radiator upper hose.
6. Remove viscous fan/drive/shroud assembly. Refer to **FAN, COOLING, ELECTRIC, REMOVAL** and **FAN, COOLING, VISCOUS, REMOVAL** .
7. Remove the accessory drive belt. Refer to **BELT, SERPENTINE, REMOVAL** .

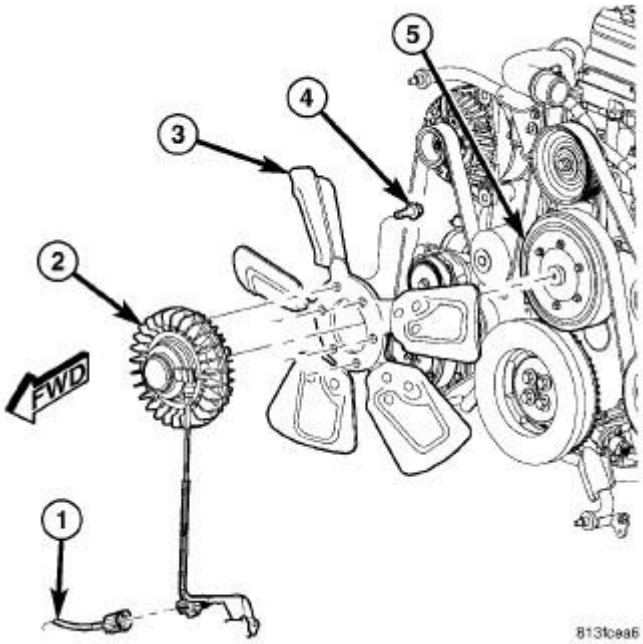

Fig. 338: Fan Blade/Viscous Fan Drive
Courtesy of CHRYSLER GROUP, LLC

1 - ELECTRICAL CONNECTOR
2 - VISCOUS FAN DRIVE
3 - FAN BLADE
4 - BOLT (6)
5 - RADIATOR FAN PULLEY

8. Remove the cooling fan support/hub from the front of the engine.
9. Raise the vehicle on hoist.
10. Remove power steering pump. Refer to **PUMP, REMOVAL** .
11. Remove accessory drive belt tensioner.
12. Remove the crankshaft damper. Refer to **DAMPER, VIBRATION, REMOVAL, 6.7L**.
13. Lower the vehicle.
14. Remove the gear cover-to-housing bolts and gently pry the cover away from the housing, taking care not to mar the gasket surfaces.

INSTALLATION

INSTALLATION

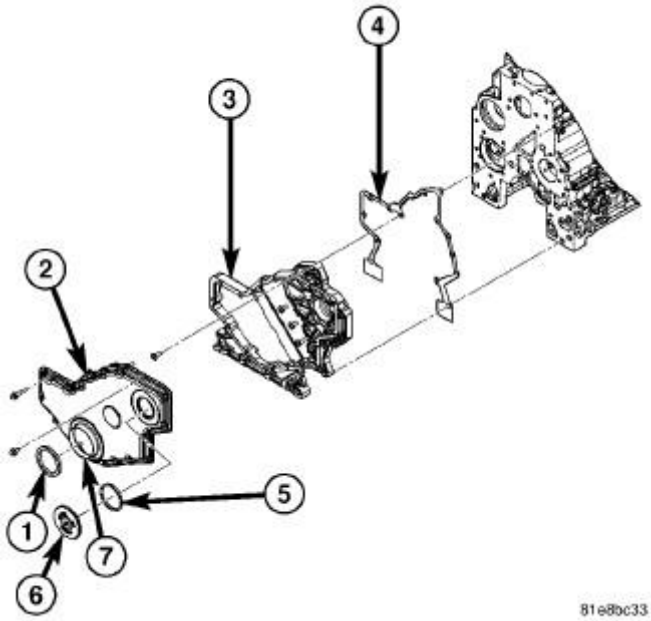

Fig. 339: Front Cover Assembly Components
Courtesy of CHRYSLER GROUP, LLC

1. Install a new front crankshaft oil seal.
2. Obtain a seal pilot (1) installation tool from a crankshaft front seal service kit and install the pilot into the seal.
3. Apply a bead of Mopar® Silicone Rubber Adhesive Sealant or equivalent to the gear housing cover. Be sure to surround all through holes.

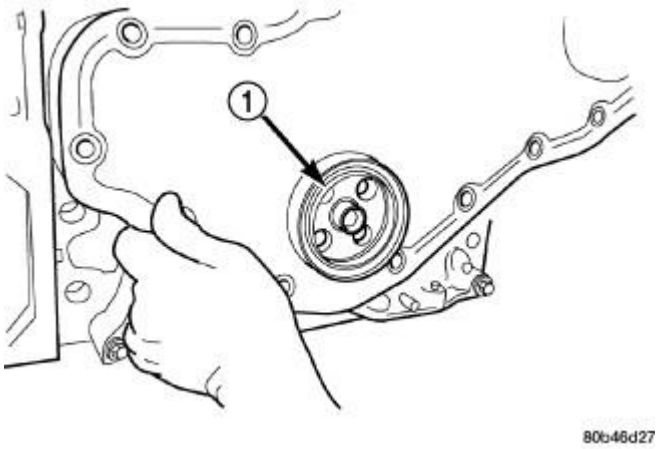

Fig. 340: Installing Front Cover With Seal Pilot
Courtesy of CHRYSLER GROUP, LLC

1 - SEAL

PILOT

4. Using the seal pilot to (1) align the cover, install the cover to the housing and install the bolts. Tighten the bolts at the 3 and 9 o'clock position finger tight, then in a clockwise direction starting at the 3 o'clock position, tighten to 24 N.m (18 ft. lbs).
5. Snug, but do not torque one bolt at the 3 o'clock and 9 o'clock positions. This centers the seal on the crankshaft.
6. Tighten the bolts to 24 N.m (18 ft. lbs.) in a circular pattern.
7. Remove the seal pilot. Install front seal dust shield.
8. Raise and support vehicle.
9. Install the crankshaft damper. Refer to **DAMPER, VIBRATION, INSTALLATION, 6.7L**.

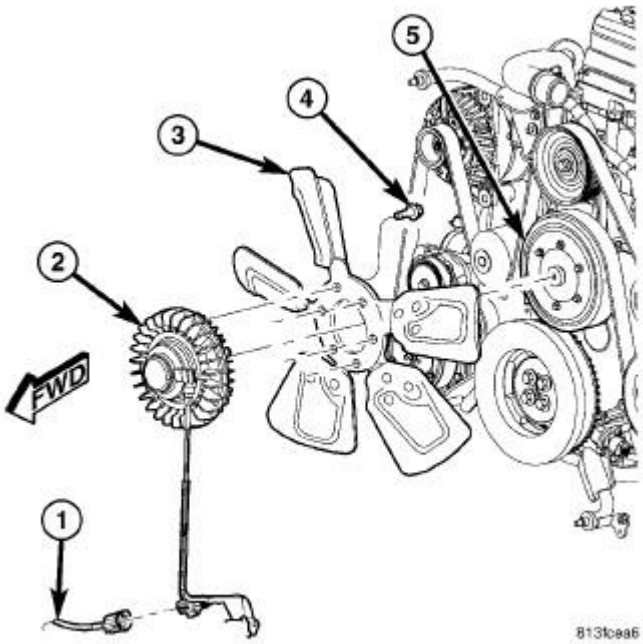

Fig. 341: Fan Blade/Viscous Fan Drive
Courtesy of CHRYSLER GROUP, LLC

1 - ELECTRICAL CONNECTOR
2 - VISCOUS FAN DRIVE
3 - FAN BLADE
4 - BOLT (6)
5 - RADIATOR FAN PULLEY

10. Install the fan support/hub assembly, and tighten bolts to 32 N.m (24 ft. lbs.).

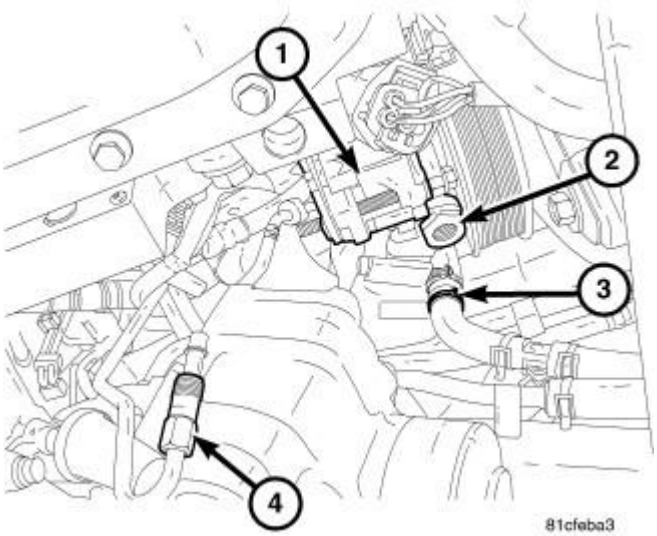

Fig. 342: Power Steering Pump Components
Courtesy of CHRYSLER GROUP, LLC

11. Install power steering pump. Refer to **PUMP, INSTALLATION** .
12. Install accessory drive belt tensioner. Tighten bolt to 43 N.m (32 ft. lbs.).
13. Install the accessory drive belt. Refer to **BELT, SERPENTINE, INSTALLATION** .
14. Install the cooling fan/drive/shroud assembly. Refer to **FAN, COOLING, ELECTRIC, INSTALLATION** and **FAN, COOLING, VISCOUS, INSTALLATION** .
15. Install the radiator upper hose and clamps.
16. Fill the coolant system. Refer to **STANDARD PROCEDURE** .
17. Connect both battery negative cables.
18. Start engine and inspect for leaks.

HOUSING, TIMING CASE, FRONT

REMOVAL

REMOVAL

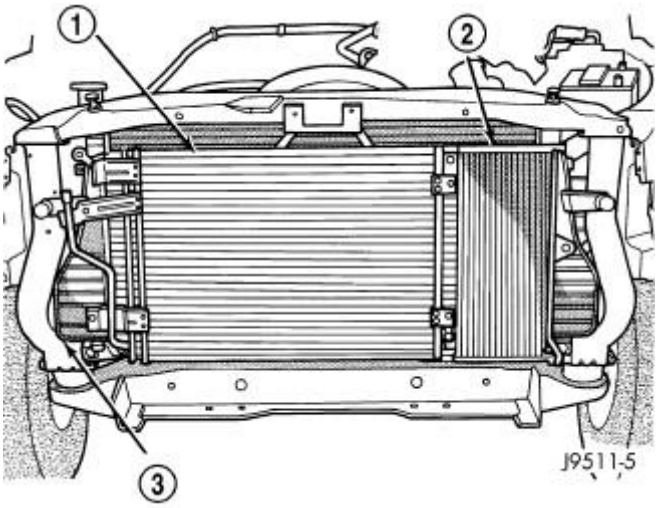

Fig. 343: A/C Condenser, Transmission Cooler & Intercooler
Courtesy of CHRYSLER GROUP, LLC

1 - A/C CONDENSER
2 - TRANSMISSION COOLER
3 - INTERCOOLER

1. Disconnect the negative battery cables.
2. Raise vehicle on hoist.
3. Partially drain engine coolant. Refer to **STANDARD PROCEDURE** .
4. Lower vehicle.
5. Remove radiator upper hose.
6. Disconnect coolant recovery bottle hose from radiator filler neck.
7. Remove viscous fan/drive/shroud assembly. Refer to **FAN, COOLING, ELECTRIC, REMOVAL** and **FAN, COOLING, VISCOUS, REMOVAL** .
8. Remove the accessory drive belt. Refer to **BELT, SERPENTINE, REMOVAL** .
9. Remove the accessory drive belt tensioner.

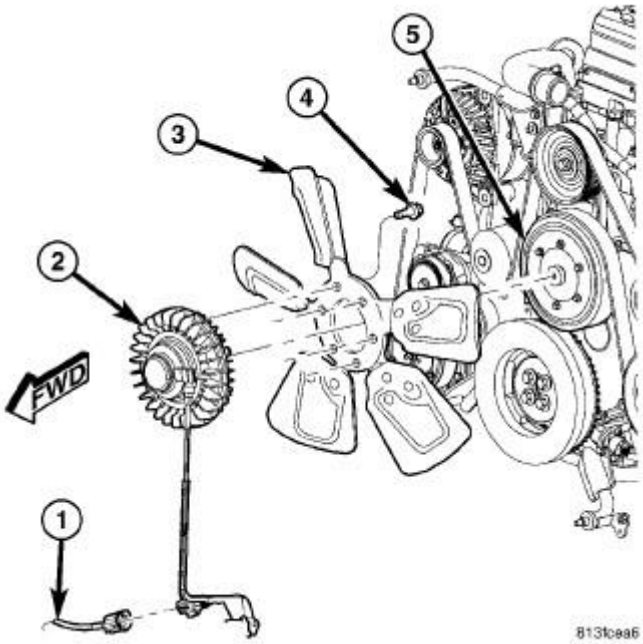

Fig. 344: Fan Blade/Viscous Fan Drive
Courtesy of CHRYSLER GROUP, LLC

1 - ELECTRICAL CONNECTOR
2 - VISCOUS FAN DRIVE
3 - FAN BLADE
4 - BOLT (6)
5 - RADIATOR FAN PULLEY

10. Remove the cooling fan support/hub from the front of the engine.
11. Raise the vehicle on hoist.

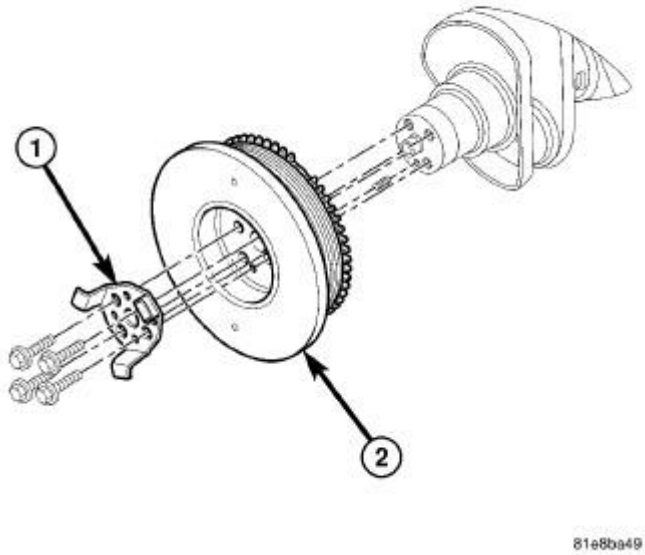

Fig. 345: Crankshaft Damper (Non-High Output Engine)
Courtesy of CHRYSLER GROUP, LLC

12. Remove the crankshaft damper. Refer to **DAMPER, VIBRATION, REMOVAL, 6.7L**.

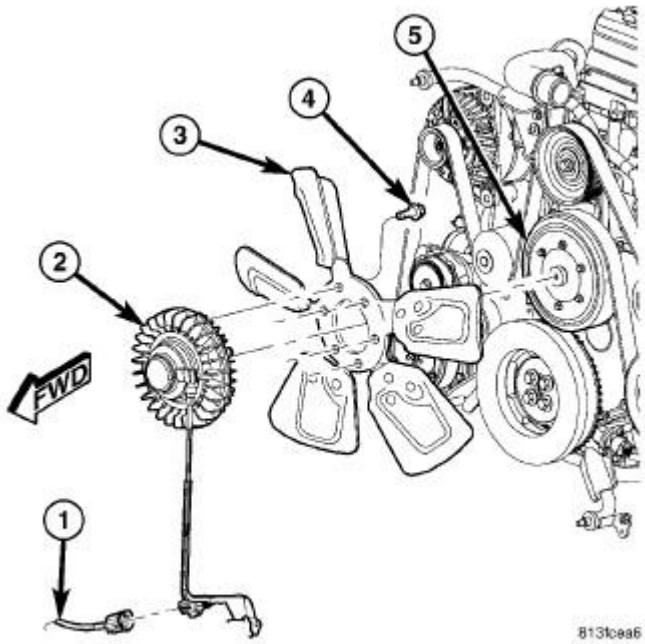

Fig. 346: Fan Blade/Viscous Fan Drive
Courtesy of CHRYSLER GROUP, LLC

1 - ELECTRICAL CONNECTOR
2 - VISCOUS FAN DRIVE
3 - FAN BLADE
4 - BOLT (6)
5 - RADIATOR FAN PULLEY

13. Remove the lower fan shroud bracket.
14. Remove the upper fan shroud bracket that is mounted to the gear housing.
15. Lower the vehicle.

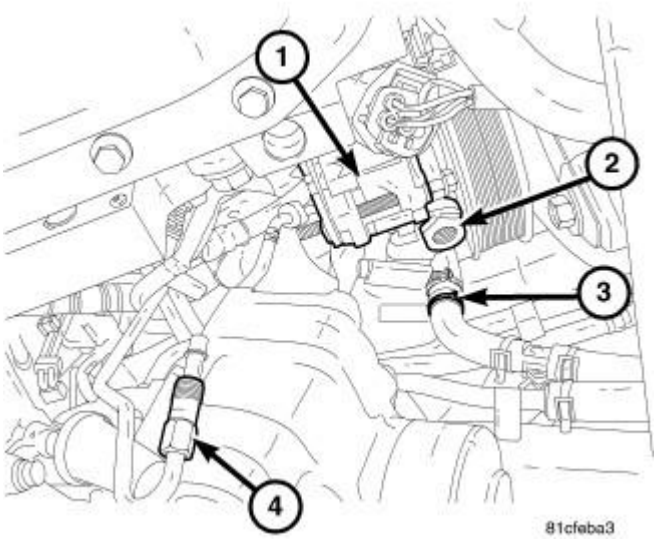

Fig. 347: Power Steering Pump Components
Courtesy of CHRYSLER GROUP, LLC

16. Remove the power steering pump. Refer to **PUMP, REMOVAL** .

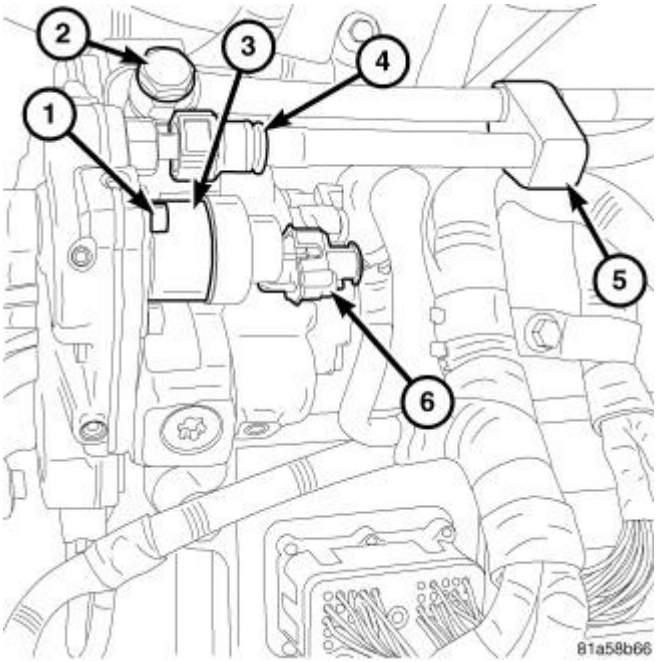

Fig. 348: Fuel Injection Pump Components - Rear View
Courtesy of CHRYSLER GROUP, LLC

17. Remove the fuel injection pump. Refer to **PUMP, FUEL INJECTION, REMOVAL** .

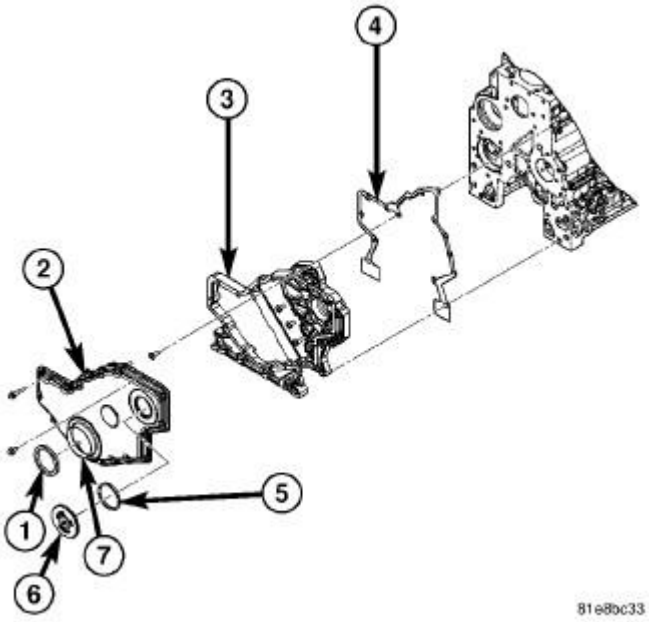

Fig. 349: Front Cover Assembly Components
Courtesy of CHRYSLER GROUP, LLC

18. Remove the gear cover-to-housing bolts and gently pry the cover away from the housing, taking care not to mar the gasket surfaces.

19. Disconnect the camshaft position sensor connector.
20. Disconnect and remove engine speed sensor.

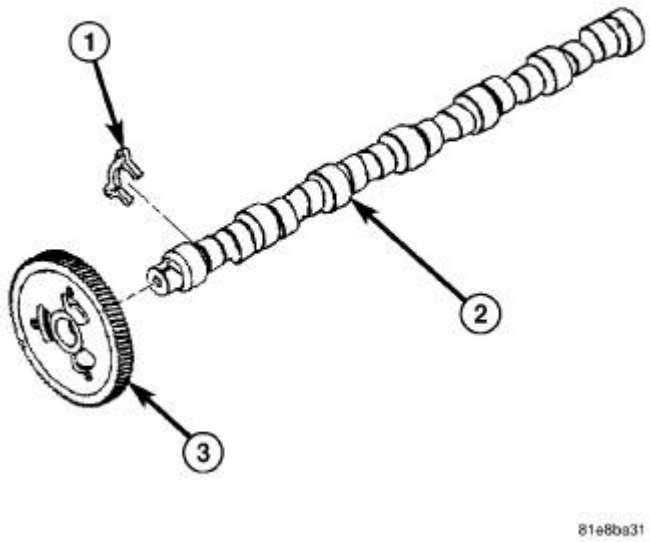

Fig. 350: Camshaft, Gear & Thrust Plate
Courtesy of CHRYSLER GROUP, LLC

21. Remove the camshaft. Refer to **CAMSHAFT, ENGINE, REMOVAL, 6.7L**.

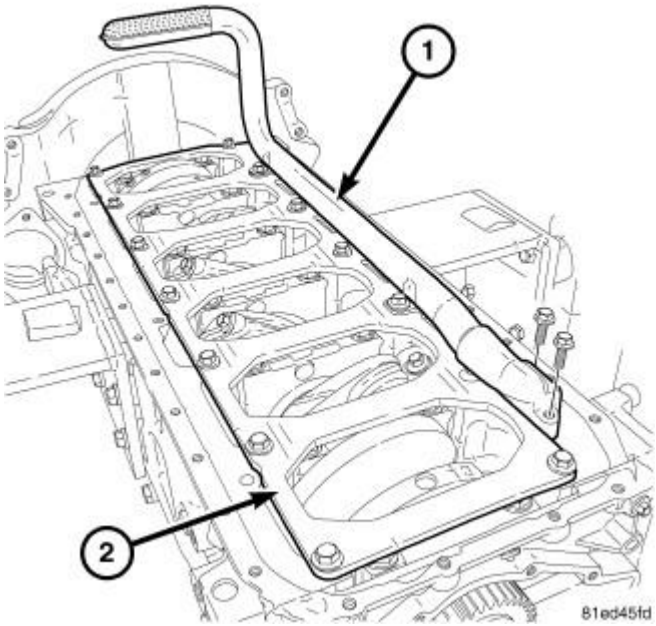

Fig. 351: Oil Pickup Tube

Courtesy of CHRYSLER GROUP, LLC

22. Remove the front six oil pan fasteners.
23. Remove the gear housing fasteners.

NOTE: **Use care when removing the gear housing, to avoid damage to the oil pan gasket, as the gasket will be reused if it is not damaged.**

24. Slide a feeler gauge between the gear housing and oil pan gasket, to break the gasket seal.
25. Remove the gear housing and gasket.
26. Clean the gasket material from the cylinder block and gear housing.

INSTALLATION

INSTALLATION

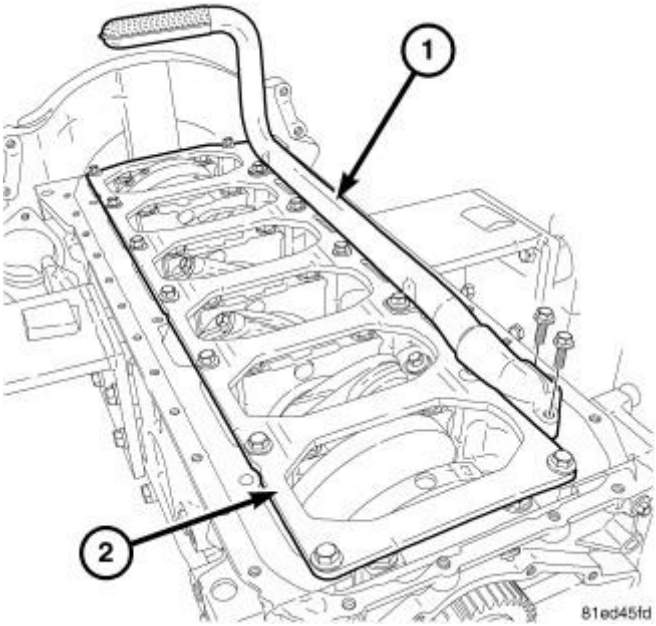

Fig. 352: Oil Pickup Tube
Courtesy of CHRYSLER GROUP, LLC

1. Inspect oil pan gasket. If torn, gasket must be replaced.
2. Install a new gear housing gasket onto cylinder block and trim any excess gasket material flush to oil pan rail.
3. Place a small amount of Mopar® engine RTV to the corners of the block and pan gasket T-joint to ensure a good seal.

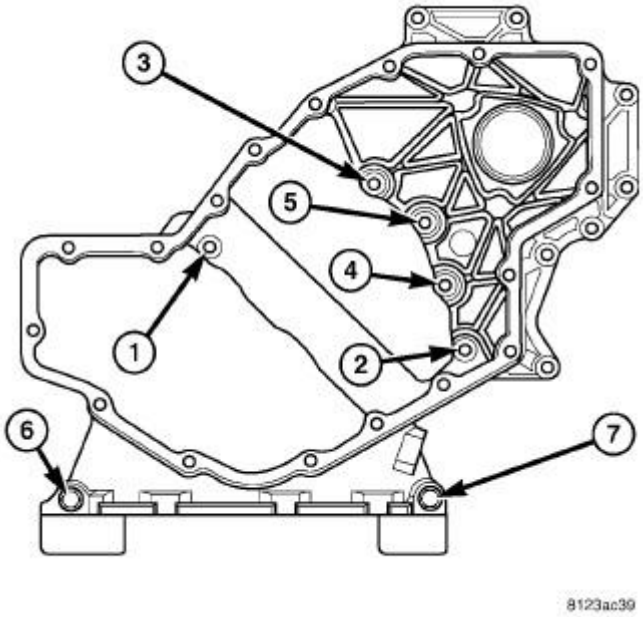

Fig. 353: Gear Housing Capscrew Torque Sequence
Courtesy of CHRYSLER GROUP, LLC

4. Install the gear housing. Tighten bolts to 24 N.m (18 ft. lbs.).
5. If a new housing is installed, the camshaft position sensor, and engine speed sensor must be transferred to the new housing.
6. Connect the camshaft position sensor connector.
7. Install and connect engine speed sensor.

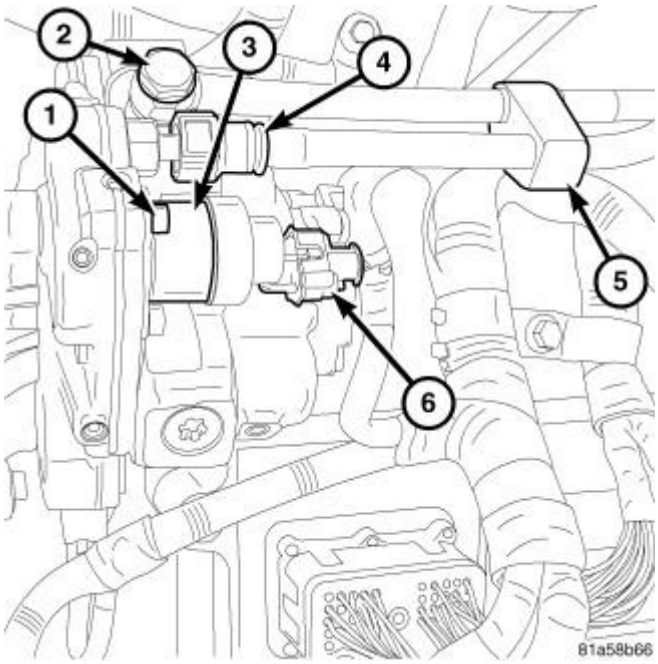

Fig. 354: Fuel Injection Pump Components - Rear View
Courtesy of CHRYSLER GROUP, LLC

8. Install the injection pump. Refer to **PUMP, FUEL INJECTION, INSTALLATION** .

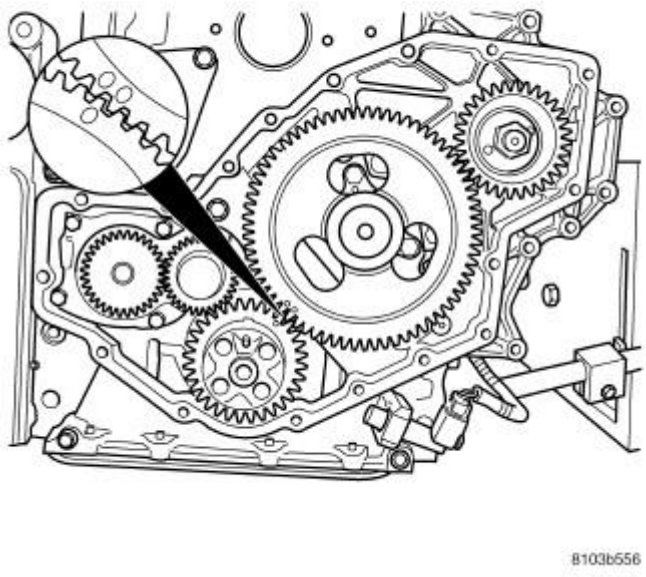

Fig. 355: Camshaft Gear & Crankshaft Gear Timing Mark Alignment
Courtesy of CHRYSLER GROUP, LLC

9. Install the camshaft Align the crankshaft and camshaft gear marks as shown in illustration. Refer to **CAMSHAFT, ENGINE, INSTALLATION, 6.7L**.

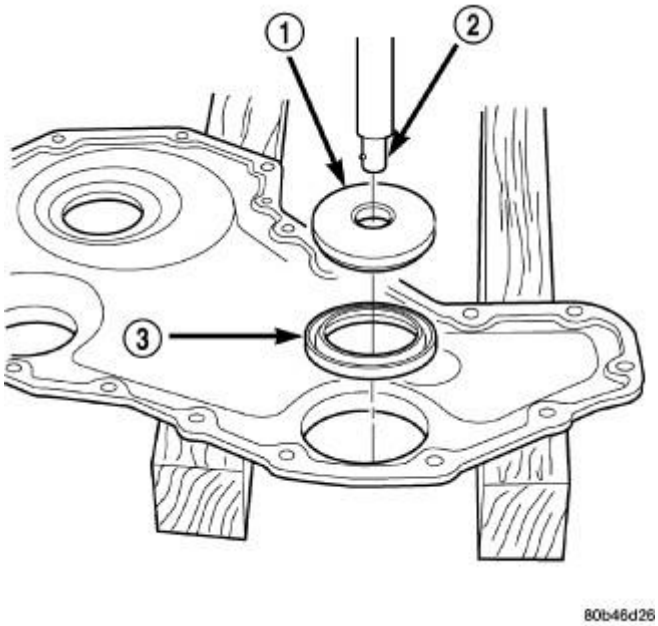

Fig. 356: Installing Seal Into Cover With Tool 8281
Courtesy of CHRYSLER GROUP, LLC

1 - SEAL INSTALLER 8281
2 - DRIVER HANDLE C4171
3 - SEAL

10. Install a new front crankshaft seal into the gear cover. Refer to **SEAL, CRANKSHAFT OIL, FRONT, INSTALLATION, 6.7L**.
11. Apply a bead of Mopar® Silicone Rubber Adhesive Sealant or equivalent to the gear housing cover. Be sure to surround all through holes.

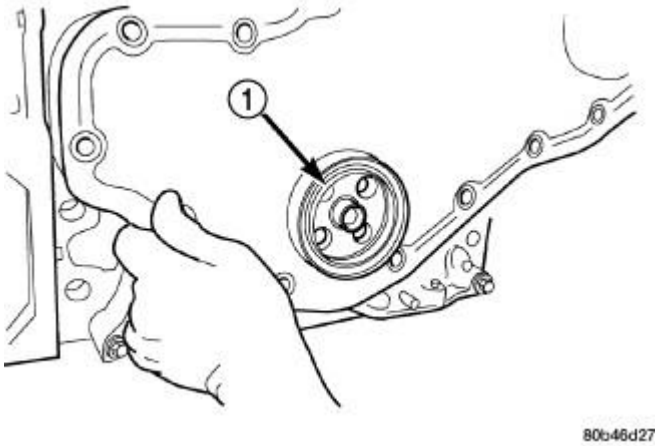

Fig. 357: Installing Front Cover With Seal Pilot
Courtesy of CHRYSLER GROUP, LLC

1 - SEAL PILOT

12. Using the seal pilot to align the cover, install the cover to the housing and install the bolts. Tighten the bolts at the 3 and 9 o'clock position finger tight, then in a clockwise direction starting at the 3 o'clock position, tighten to 24 N.m (18 ft. lbs.).
13. Snug, but do not torque one bolt at the 3 o'clock and 9 o'clock positions. This center's the seal on the crankshaft.
14. Tighten the bolt to 24 N.m (18 ft. lbs.) in a circular pattern.
15. Remove the seal pilot. Install front seal dust shield.

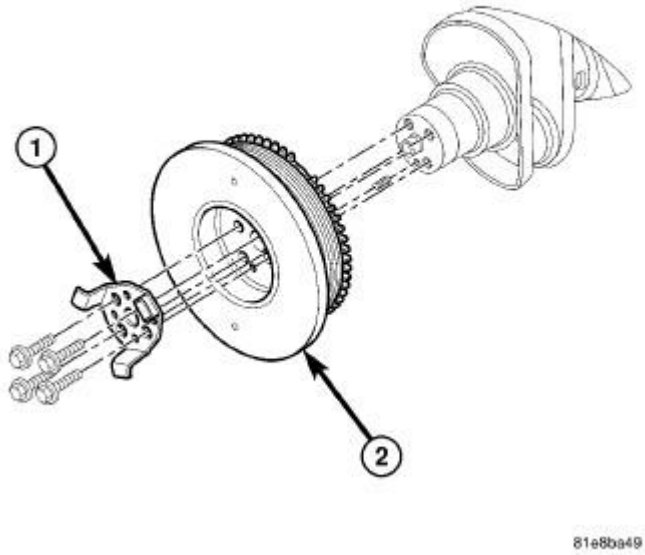

Fig. 358: Crankshaft Damper (Non-High Output Engine)
Courtesy of CHRYSLER GROUP, LLC

16. Install the crankshaft damper. Tighten bolts to 40 N.m (30 ft. lbs.), plus an additional 60°.
17. Install the lower fan shroud bracket. Tighten bolts to 24 N.m (18 ft. lbs.).
18. Install the upper fan shroud brackets. Hand tighten only.

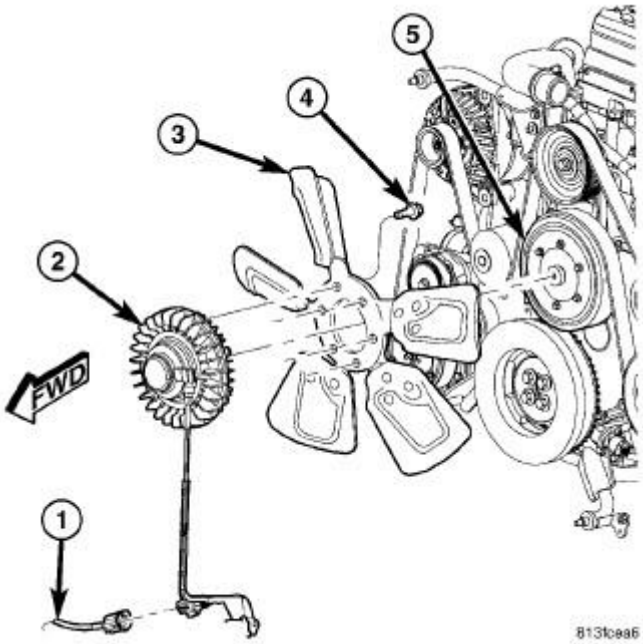

Fig. 359: Fan Blade/Viscous Fan Drive
Courtesy of CHRYSLER GROUP, LLC

1 - ELECTRICAL CONNECTOR
2 - VISCOUS FAN DRIVE
3 - FAN BLADE
4 - BOLT (6)
5 - RADIATOR FAN PULLEY

19. Install the fan support/hub assembly and tighten bolts to 32 N.m (24 ft. lbs.).

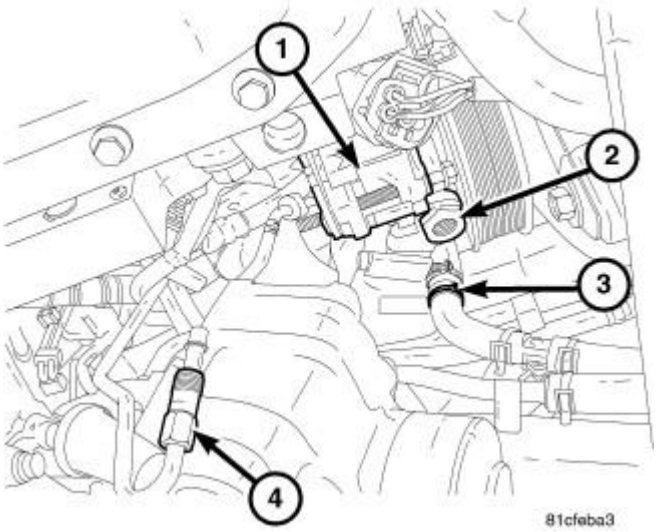

Fig. 360: Power Steering Pump Components
Courtesy of CHRYSLER GROUP, LLC

20. Install the power steering pump. Refer to **PUMP, INSTALLATION** .

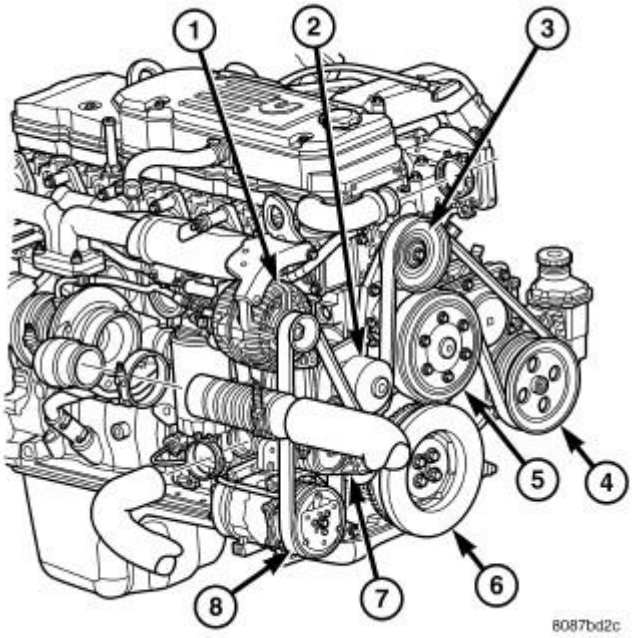

Fig. 361: Accessory Drive Belt & Driven Components
Courtesy of CHRYSLER GROUP, LLC

1 - GENERATOR
2 - WATER PUMP
3 - IDLER
4 - POWER STEERING PUMP
5 - RADIATOR FAN PULLEY
6 - CRANKSHAFT
7 - AUTOMATIC TENSIONER
8 - A/C COMPRESSOR

21. Install the accessory drive belt tensioner. Tighten bolt to 43 N.m (32 ft. lbs.).
22. Install the accessory drive belt. Refer to **BELT, SERPENTINE, INSTALLATION** .
23. Install the upper cooling fan/drive/shroud assembly. Refer to **FAN, COOLING, ELECTRIC, INSTALLATION** and **FAN, COOLING, VISCOUS, INSTALLATION** .

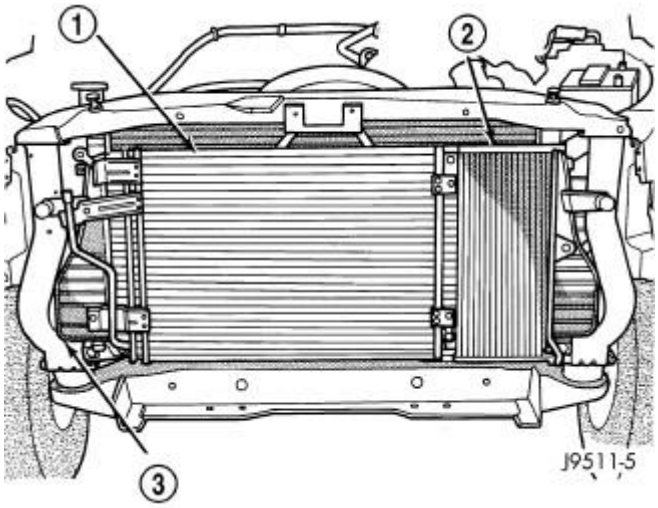

Fig. 362: A/C Condenser, Transmission Cooler & Intercooler
Courtesy of CHRYSLER GROUP, LLC

1 - A/C CONDENSER
2 - TRANSMISSION COOLER
3 - INTERCOOLER

24. Connect the coolant recovery bottle hose to the radiator filler neck.
25. Install the radiator upper hose and clamps.
26. Check engine oil level.
27. Fill the cooling system. Refer to **STANDARD PROCEDURE** .
28. Connect the negative battery cables.
29. Start engine and inspect for leaks.

DESCRIPTION

DESCRIPTION

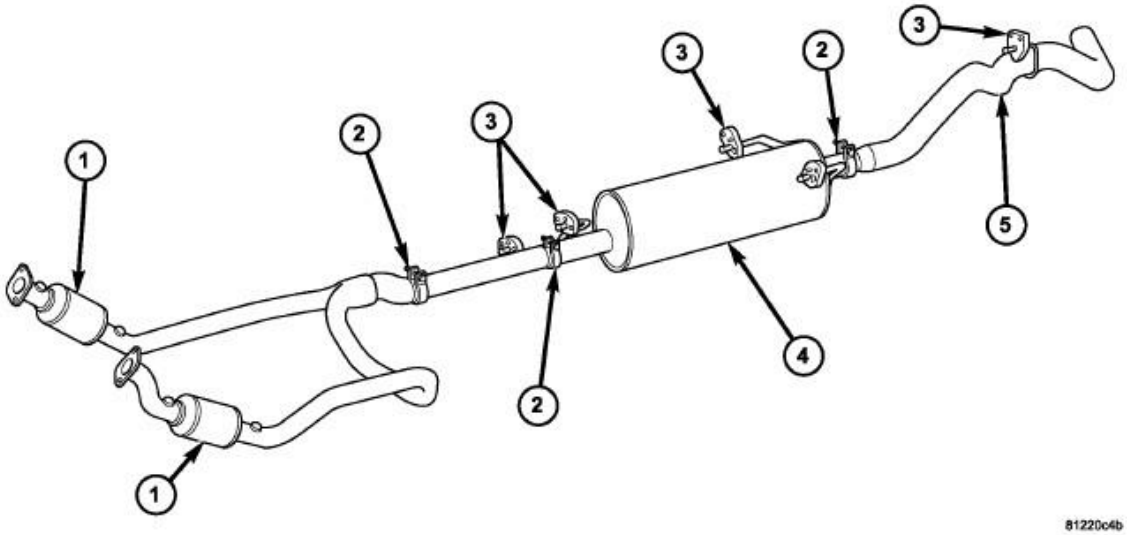

Fig. 1: Exhaust System - 3.7L - Typical
Courtesy of CHRYSLER GROUP, LLC

1 - CATALYTIC CONVERTER	4 - MUFFLER
2 - CLAMP	5 - TAILPIPE
3 - INSULATOR	

CAUTION: Avoid application of rust prevention compounds or undercoating materials to exhaust system floor pan exhaust heat shields. Light overspray near the edges is permitted. Application of coating will result in excessive floor pan temperatures and objectionable fumes.

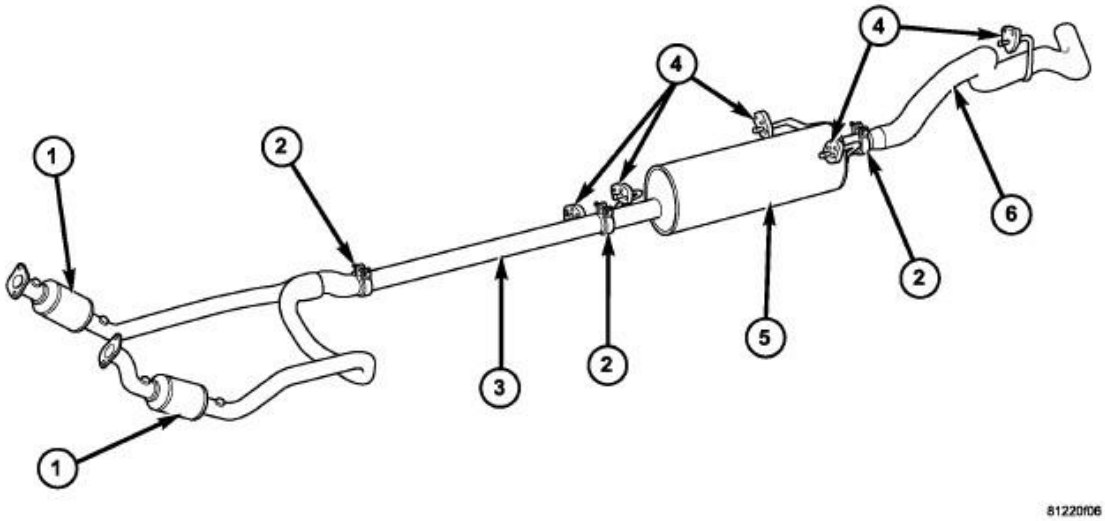

Fig. 2: Exhaust System - 4.7L - Typical
Courtesy of CHRYSLER GROUP, LLC

1 - CATALYTIC CONVERTER	4 - INSULATOR
2 - CLAMP	5 - MUFFLER
3 - EXTENSION PIPE	6 - TAILPIPE/RESONATOR

The federal gasoline engine exhaust system consists of engine exhaust manifolds, exhaust pipes, catalytic converter(s), extension pipe (if needed), exhaust heat shields, muffler and exhaust tailpipe.

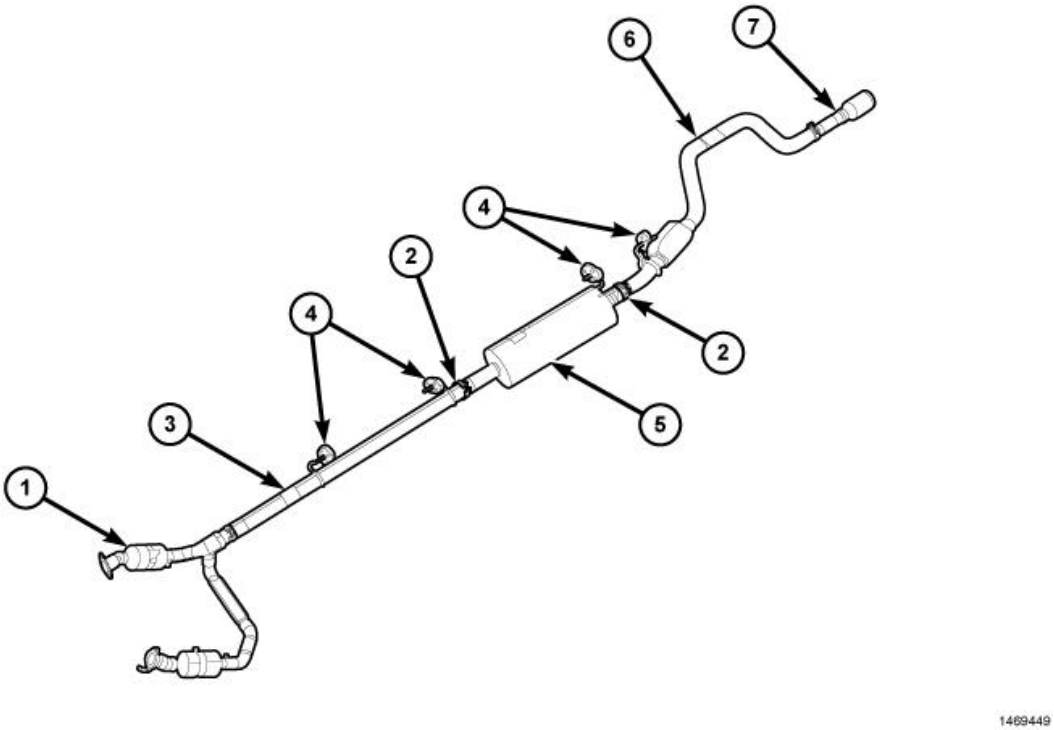

Fig. 3: Exhaust System 5.7L Engine - Typical
Courtesy of CHRYSLER GROUP, LLC

1 - CATALYTIC CONVERTER	4 - INSULATOR
2 - CLAMP	5 - MUFFLER
3 - EXTENSION PIPE	6 - TAILPIPE/RESONATOR

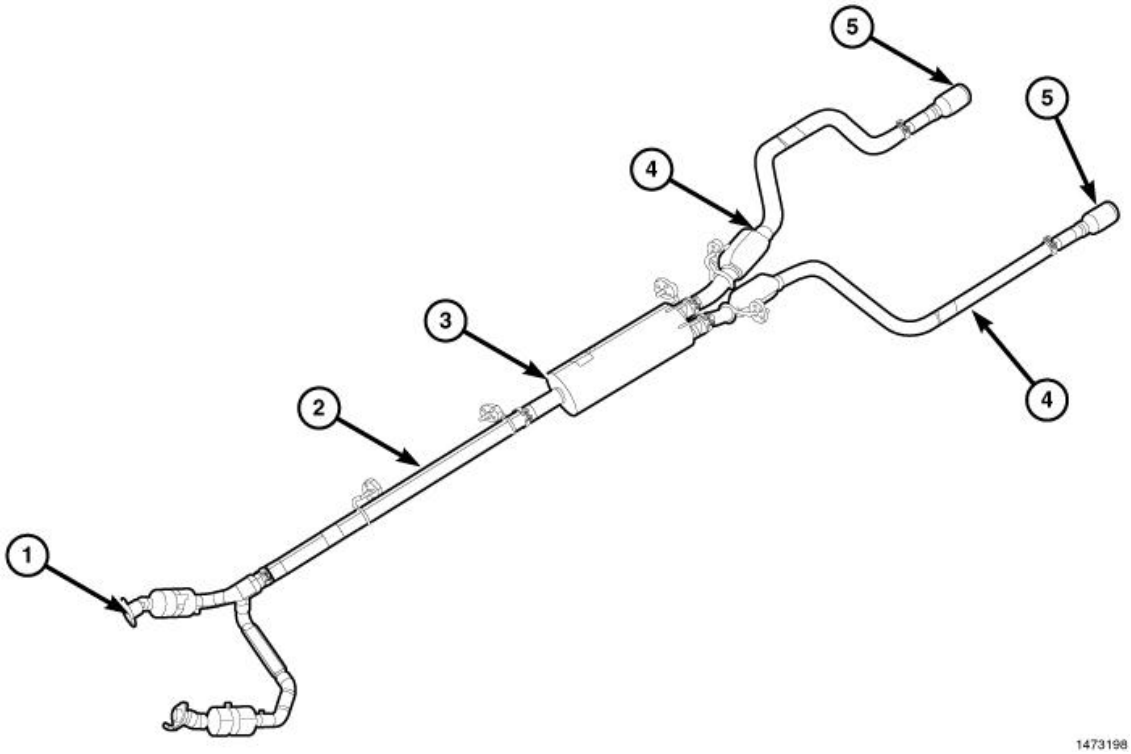

Fig. 4: Exhaust System 5.7L Engine - Dual
Courtesy of CHRYSLER GROUP, LLC

1 - CATALYTIC CONVERTER	4 - INSULATOR
2 - CLAMP	5 - MUFFLER
3 - EXTENSION PIPE	6 - TAILPIPE/RESONATOR

The California emission vehicles exhaust system also contains the above components as well as mini catalytic converters added to the exhaust pipe.

The exhaust system must be properly aligned to prevent stress, leakage and body contact. Minimum clearance between any exhaust component and the body or frame is 25.4 mm (1.0 in.). If the system contacts any body panel, it may amplify objectionable noises from the engine or body.

DIAGNOSIS AND TESTING

EXHAUST SYSTEM

EXHAUST SYSTEM DIAGNOSIS CHART

CONDITION	POSSIBLE CAUSE	CORRECTION
EXCESSIVE EXHAUST NOISE OR LEAKING EXHAUST GASES	1. Leaks at pipe joints.	1. Tighten clamps/bolts at leaking joints.
	2. Rusted or blown out muffler.	2. Replace muffler. Inspect exhaust system.
	3. Broken or rusted out exhaust pipe.	3. Replace exhaust pipe.
	4. Exhaust pipe leaking at manifold flange.	4. Tighten/replace flange attaching nuts/bolts.
	5. Exhaust manifold cracked or broken.	5. Replace exhaust manifold.
	6. Leak between exhaust manifold and cylinder head.	6. Tighten exhaust manifold to cylinder head bolts.
	7. Catalytic converter rusted or blown out.	7. Replace catalytic converter assembly and gasket.
	8. Restriction in exhaust system.	8. Remove restriction, if possible. Replace restricted part if necessary.
CAUTION: **When servicing and replacing exhaust system components, disconnect the oxygen sensor connector(s). Allowing the exhaust to hang by the oxygen sensor wires will damage the harness and/or sensor.**		

LEAK TESTING

WARNING: **The normal operating temperature of the exhaust system is very high. Therefore, never work around or attempt to service any part of the exhaust system until it is cooled. Special care should be taken when working near the catalytic converter. The temperature of the converter rises to a high level after a short period of engine operation time.**

1. Raise and support vehicle.

CAUTION: The air pressure must not exceed 4 psi, otherwise engine damage can occur.

2. Connect Tool (special tool #8404-ECT, Exhaust Cone, Truck), Exhaust Cone to Air Pressure Regulator (with hose) W-18-MIL-1146AS.
3. Attach shop air to the air pressure regulator.
4. Adjust the air pressure regulator to 4 psi
5. Insert Tool (special tool #8404-EC, Exhaust Cone) or (special tool #8404-ECT, Exhaust Cone, Truck), Exhaust Cone into the vehicle tail pipe.
6. If the vehicle is equipped with dual exhaust, use Tool (special tool #8404-EC, Exhaust Cone) or (special

tool #8404-ECT, Exhaust Cone, Truck), Exhaust Cone with equipped attached plug. Plug one side of the dual exhaust pipe. Pressurize the other as described.

7. Apply a mixture of MOPAR® Air Leak Detector to the following areas:
    - - All welded joints from 6 inches rearward of the downstream O2 sensor forward
    - - O2 sensor seal points
    - - O2 sensor boss welds
    - - Flange/joint connection(s)
    - - Exhaust manifold to cylinder head connection(s)
    - - EGR solenoid gasket base and tube seal points (if equipped)
8. Watch for the Air Detector to bubble.
9. Use the following definitions to help determine if system or component repair/replacement is necessary:

- **Type 1 Leak** is defined as a leak where very small foam like bubbles 1mm (.039 in.) or less appear. Any Type 1 or greater leaks found in welded joints, O2 sensor seal points or O2 sensor boss welds must be repaired or the component must be replaced.
- **Type 2 Leak** is defined as a leak where larger bubbles 8mm (.32 in.) or greater appear. Any Type 2 or greater leaks found in flange or joint connections, exhaust manifold to cylinder head connections, or EGR gasket and tube seal points must be repaired or the components must be replaced.

Leak Location	**Repair required if results at 4 psi reveal bubble size:**
Welded joints	Type 1 - 1 mm (.039 in.) or greater
O2 Sensor seal points	Type 1 - 1 mm (.039 in.) or greater
O2 Sensor boss welds	Type 1 - 1 mm (.039 in.) or greater
Flange/joint connections	Type 2 - 8 mm (.32 in.)

	or greater
Exhaust Manifold to cylinder head connections	Type 2 - 8 mm (.32in.) or greater
EGR gasket and tube seal points	Type 2 - 8 mm (.32 in.) or greater

If a leak is found that matches the above definition, repair or replace the component as necessary.

Once the repair is complete, repeat the procedure to verify that all leaks have been repaired.

SPECIFICATIONS

SPECIFICATIONS

DESCRIPTION	N.m	Ft. Lbs.	In. Lbs.
Bolt-Adjusting Strap	23	17	-
Nuts-Air Heater Power Supply	14	10	124
Nuts-Cab Heater Supply/Return Line	24	18	-
Nuts-Exhaust Clamp	54	40	-
Bolts-Exhaust Pipe to Manifold	31	23	-
Bolts-Generator Mounting	41	30	-
Nuts and Bolts-Heat Shield	11	8	97
Band Clamp Nut	54	40	-

SPECIAL TOOLS

SPECIAL TOOLS

.	8404-EC - Exhaust Cone 8404-ECT - Exhaust Cone, Truck (Originally Shipped In Kit Number(s) 8404-ECT.)

CATALYST, SELECTIVE CATALYTIC REDUCTION (SCR)

DESCRIPTION

DESCRIPTION

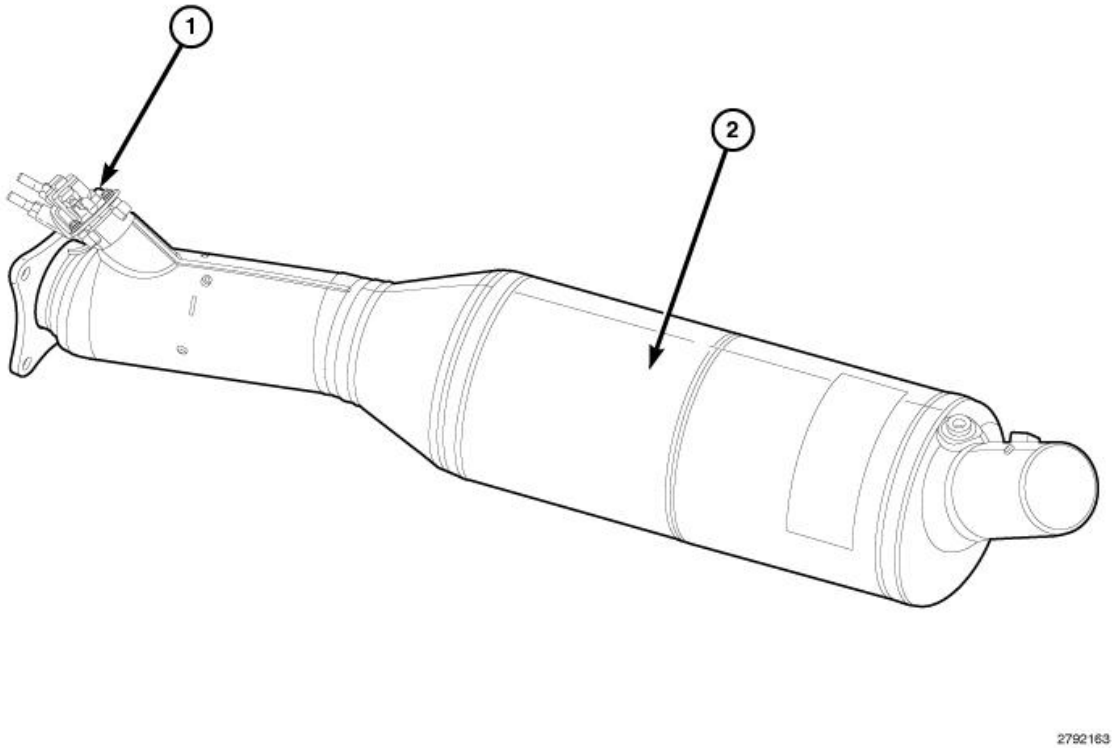

Fig. 5: Identifying Selective Catalytic Reduction (SCR)
Courtesy of CHRYSLER GROUP, LLC

The Selective Catalytic Reduction (SCR) is a catalyst element made of low precious metals used in reducing nitrous oxide gases (NOx) to an element of nitrogen. By injecting a Diesel Exhaust Fluid (DEF) solution upstream of a catalyst. The DEF solution will vaporize and decompose to form ammonia and carbon dioxide. When the ammonia vapor is introduced to the NOx gas, it converts it to a harmless nitrogen and water by product

REMOVAL

REMOVAL

WARNING: If torches are used when servicing the exhaust system, do not allow any flame near the fuel lines or the fuel tank. Failure to follow these instructions may result in possible serious or fatal injury.

1. Disconnect both negative battery cables.
2. Raise vehicle.
3. If equipped, remove skid plates.
4. Disconnect the temperature and NOx sensors.
5. Saturate bolts and nuts with heat valve lubricant. Allow 5 minutes for penetration.

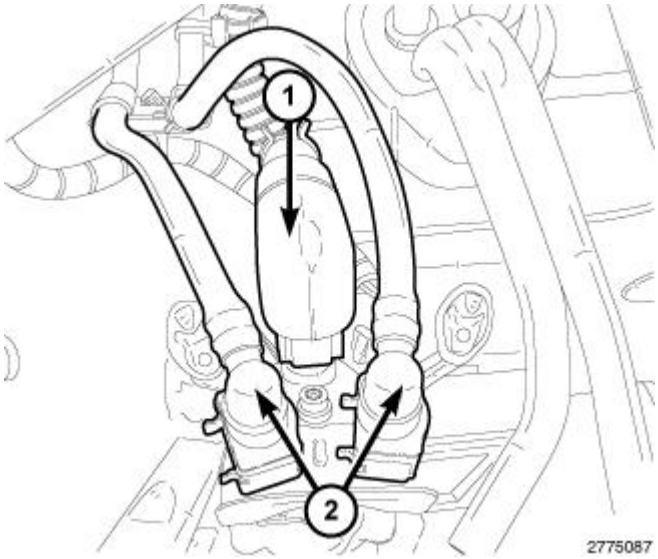

Fig. 6: Cooling Lines & Urea Supply Line
Courtesy of CHRYSLER GROUP, LLC

NOTE: **Do not remove the cooling lines (2) or the Urea supply line (1) to the Diesel Exhaust Fluid injector unless replacing the injector.**

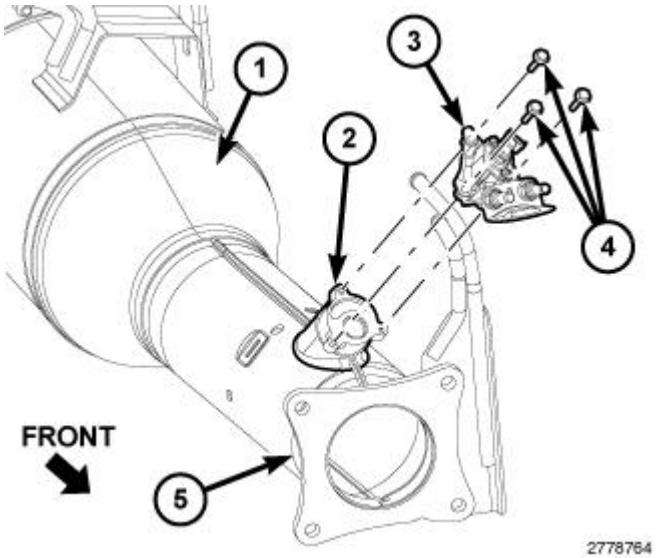

Fig. 7: DEF Injector & SCR Catalyst
Courtesy of CHRYSLER GROUP, LLC

6. Remove the DEF injector (3) from the SCR catalyst (1) and position aside.
7. Remove the tailpipe assembly. Refer to **TAILPIPE, EXHAUST, REMOVAL**.

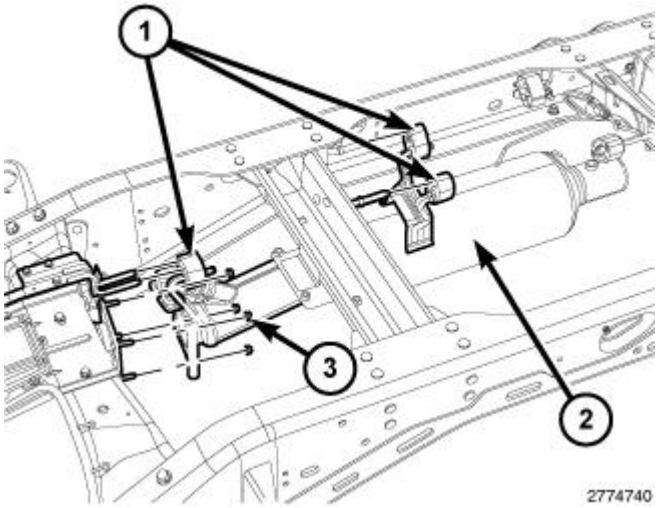

Fig. 8: Isolators, Flange Nuts & SCR
Courtesy of CHRYSLER GROUP, LLC

8. Remove the isolators (1).
9. Remove the flange nuts (3).
10. Remove the SCR (2).
11. Remove and discard flange gaskets.

INSTALLATION

INSTALLATION

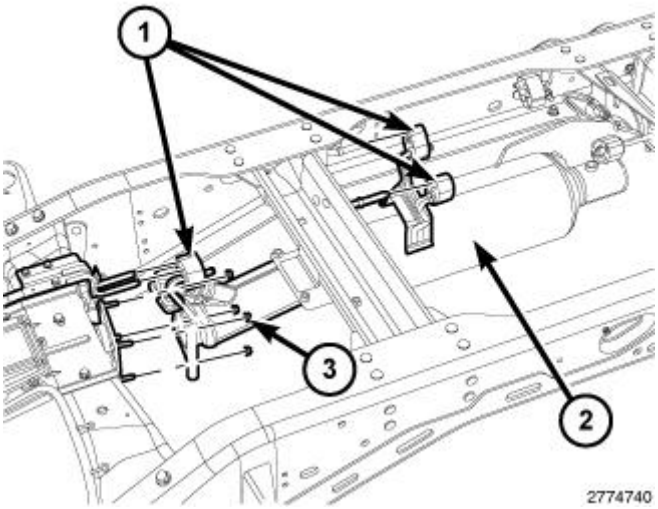

Fig. 9: Isolators, Flange Nuts & SCR
Courtesy of CHRYSLER GROUP, LLC

1. Install new exhaust flange gasket between the Selective Catalytic Reduction Catalyst (SCR) (2) and the

extension pipe.

2. Position the SCR (2) onto flange.
3. Install flange nuts (3). Hand tighten only.
4. Install the isolators (1).

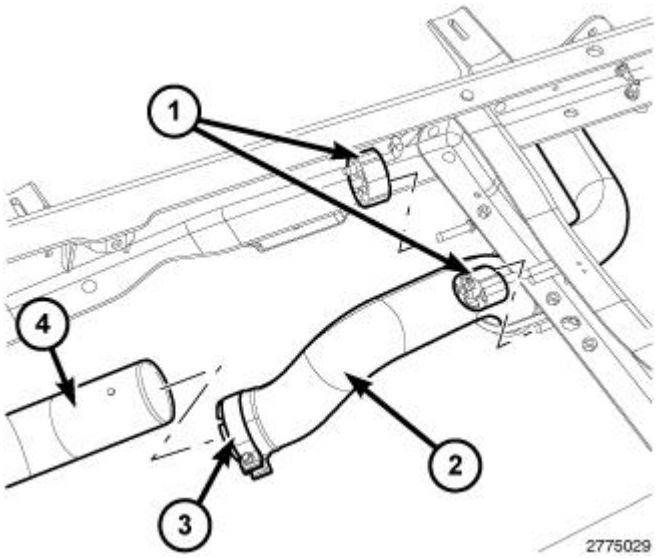

Fig. 10: Tail Pipe Assembly
Courtesy of CHRYSLER GROUP, LLC

5. Install the tail pipe assembly. Refer to **TAILPIPE, EXHAUST, INSTALLATION**.
6. Check the exhaust system for contact with the body panels. A minimum of 25 mm (1.0 in.) is required between the exhaust system components and body/frame parts. Make the necessary adjustments, if needed.
7. Tighten flange nuts (5) to 54 N.m (40 ft. lbs.).

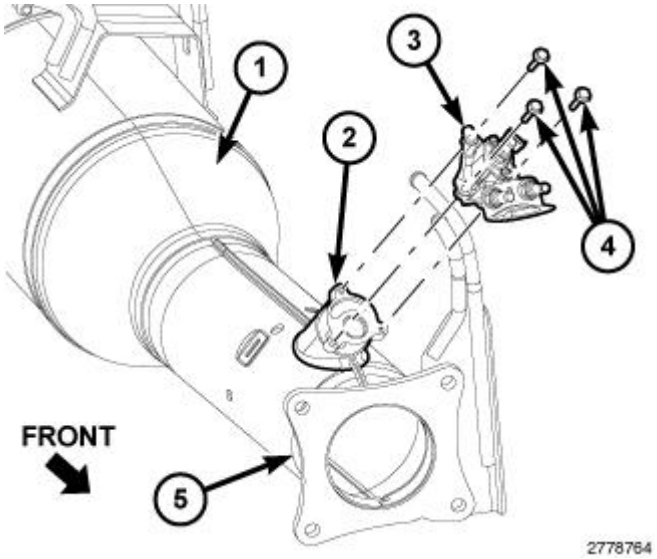

Fig. 11: DEF Injector & SCR Catalyst

Courtesy of CHRYSLER GROUP, LLC

8. Install the DEF injector. Refer to **INJECTOR, DIESEL EXHAUST FLUID, INSTALLATION** .
9. Connect temperature and NOx sensors.
10. If equipped, install skid plates.
11. Lower vehicle.
12. Connect negative battery cables.
13. Using a scan tool, perform RESET REGENERATIVE FILTER TIMERS function found under ENGINE MISC. FUNCTIONS.

CONVERTER, CATALYTIC

DESCRIPTION

DESCRIPTION

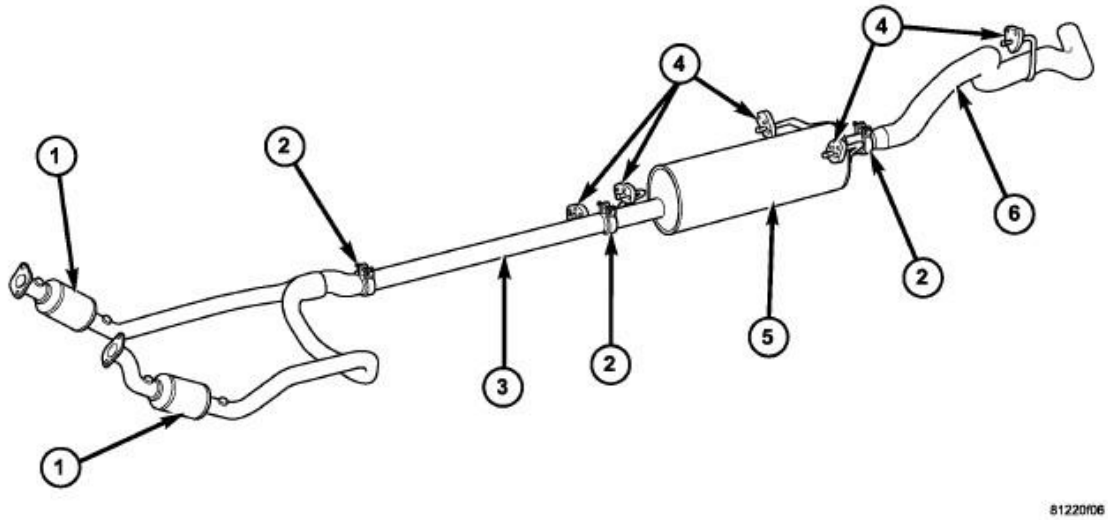

Fig. 12: Exhaust System - 4.7L - Typical
Courtesy of CHRYSLER GROUP, LLC

1 - CATALYTIC CONVERTER	4 - INSULATOR
2 - CLAMP	5 - MUFFLER
3 - EXTENSION PIPE	6 - TAILPIPE/RESONATOR

WARNING: **The normal operating temperature of the exhaust system is very high. Therefore, never work around or attempt to service any part of the exhaust system until it is cooled. Special care should be taken when working near the catalytic converter. The temperature of the converter rises to a high level after a short period of engine operation time.**

CAUTION: DO NOT remove spark plug wires from plugs or by any other means short out cylinders. Failure of the catalytic converter can occur due to a temperature increase caused by unburned fuel passing through the converter.

There are two catalytic converters welded to the front exhaust pipe (1) near each bank inlet. One converter collects the exhaust from the right bank and a second one collects the exhaust from the left bank. The catalytic converters are not serviceable separate from the front exhaust pipe. If either catalytic converter requires service, the front pipe will need to be replaced. Refer to **PIPE, EXHAUST, REMOVAL**.

.

INSPECTION

INSPECTION

Look at the stainless steel body of the Catalytic Converter assembly, inspect for bulging or other distortion that could be a result of overheating. Inspect for:

- Indiction of exhaust gas leakage such as soot trails.
- Temperature sensor wiring for damage
- Joint misalignment
- Denting of greater then 6.3 mm (0.25 in.)
- Outer shell torn, cracked or otherwise damaged
- Loose or damaged core

FILTER, DIESEL PARTICULATE

DESCRIPTION

DESCRIPTION

1. The Aftertreatment System consists of three catalyst elements, all working together to drastically reduce tailpipe emissions:

DIESEL OXIDATION CATALYST (DOC)

The Diesel Oxidation Catalyst (DOC) is a ceramic flow through substrate coated with a catalyst washcoat that is integral to the DOC assembly. The close coupled DOC treats engine exhaust gases by converting harmful carbon monoxide, unburned hydrocarbons and other compounds into water, carbon dioxide and heat.

Pick-up vehicles use a separate DOC assembly.

Cab-Chassis vehicles use a combination Diesel Oxidation Catalyst/Diesel Particulate Filter (DOC/DPF)

CLOSE COUPLED CATALYST (CCC)

The CCC is basically a diesel oxidation catalyst (DOC) that is mounted very close to the turbocharger exhaust outlet. It is a metallic flow through substrate coated with a catalyst washcoat that is essential to the integrated operation of the aftertreatment assembly. The close coupled DOC treats engine exhaust gases by converting harmful carbon monoxide, unburned hydrocarbons and other compounds into water, carbon dioxide and heat. The ability to create heat is an important part of the system regeneration process.

NOX ADSORBER CATALYST (NAC)

The NAC is located downstream of the CCC. Using the heat and exhaust constituents coming from the CCC, the NAC traps various oxides of nitrogen, and then converts those into Carbon Dioxide, Nitrogen (N2) and water via a regeneration process controlled by the engine's electronic control module (ECM). The NAC also plays a role in reducing non-methane hydrocarbons (NMHC) from the exhaust gas.

DIESEL PARTICULATE FILTER

The NAC is located downstream of the CCC. Using the heat and exhaust constituents coming from the CCC, the NAC traps various oxides of nitrogen, and then converts those into Carbon Dioxide, Nitrogen (N2) and water via a regeneration process controlled by the engine's electronic control module (ECM). The NAC also plays a role in reducing non-methane hydrocarbons (NMHC) from the exhaust gas. DIESEL PARTICULATE FILTER (DPF): The diesel particulate filter (DPF) is a wall-pass ceramic filter substrate coated with a catalyst washcoat. It is located just downstream of the NAC. Exhaust gases flow from the NAC into the catalyzed diesel particulate filter (DPF) which traps and accumulates particulate matter, and further treats the exhaust gases to reduce any remaining unburned hydrocarbons and other harmful compounds. The trapped particulate matter will be periodically removed from the DPF via a regeneration process controlled by the engine's electronic control module (ECM).

OPERATION

OPERATION

The oxidation catalyst raises the exhaust gas temperatures to regenerate the DPF, which is passive regeneration. If the passive regeneration cannot keep up with the build up of soot in the DPF, the ECM will actively regenerate the DPF to burn off the soot. Residue remains inside the DPF in the form of non burnable ash. Ash comes from the oils and other materials that are trapped in the oils and are present in the soot. The catalyst contains a large number of parallel channels, which run in the axial direction and are separated by thin porous walls. The channels are alternatively open at one end, but plugged at the other. The exhaust gases flow through the walls and escape through the pores in the wall material. Particulates, however, are too large to escape and are trapped in the monolith walls. The ECM starts the regeneration of the DPF if the soot load exceeds a performance map value. The ECM determines the load condition of the DPF based upon the exhaust gas pressure upstream and downstream of the DPC/DPF. A pressure differential sensor provides the pressure input to the ECM. During the regeneration process, the ECM raises the temperature in the DOC/DPF to burn off the soot accumulated. Under normal operation, the engine does not produce enough heat to oxidize the soot inside the DOC/DPF. This process requires temperatures above 550 °C (1, 022 °F). After regeneration, the ECM reads the actual pressure difference at the DOC/DPF and compares it with a reference value. From this comparison, the ECM determines the ash quantity inside the DOC/DPF.

DIAGNOSIS AND TESTING

DIAGNOSIS AND TESTING - DIESEL PARTICULATE FILTER

EVIC MESSAGE CENTER - MESSAGE - CATALYST FULL

The engine Electronic Control Module (ECM) monitors the soot load in the diesel particulate filter. Under normal operating conditions the diesel particulate filter is self-cleaning, where accumulated soot is converted to ash. Under light load operating conditions, the driver may be notified via the vehicle's Electronic Vehicle Information Center (EVIC) message center **"CATALYST FULL: SEE OWNERS MAN"** will be displayed on the overhead console of your vehicle if the exhaust particulate filter reaches 80% of its maximum storage capacity. Under conditions of exclusive short duration and low speed driving cycles, your Cummins engine and exhaust aftertreatment system may never reach the conditions required to remove the trapped PM. If this occurs, "Catalyst Full See Owner Manual" will be displayed on the overhead console in your vehicle. If this message is displayed you will hear one chime to assist in alerting you of this condition. Catalyst Stat::::::::::80% Catalyst Stat::::::::::80% will replace the message "Catalyst Full See Owner Manual" after it is displayed for one minute. The engine Powertrain Control Module (PCM) will continue to monitor the amount of particulate matter trapped in the particulate filter. This message indicates the percentage of the particulate filter capacity that has been used. By simply driving your vehicle at highway speeds for as little as 45 minutes you can remedy the condition in the particulate filter system and allow your Cummins engine and exhaust aftertreatment system to remove the trapped PM and restore the system to normal operating condition. Catalyst Stat::::::::::80%, 90%, 99% Catalyst Stat::::::::::80%, 90%, 99% If you are unable to drive your vehicle under these conditions for an extended period of time after the initial warning notification, the Engine PCM will continue to monitor the particulate filter and will display the progression of particulate filter usage (80, 90, 99%) on the EVIC message center. CATALYST FULL SERVICE REQD If the particulate filter reaches 99% of its capacity, the overhead console in your vehicle will chime twice and display the message CATALYST FULL SERVICE REQD. At this point the engine PCM will register a fault code, the instrument panel will display a MIL light and the engine PCM will derate the truck, reducing its horsepower and torque output. The PCM derates the engine in order to limit the likelihood of permanent damage to the aftertreatment system. If this condition is not corrected and a dealer service is not performed, extensive exhaust aftertreatment damage can occur. In order to correct this condition it will be necessary to have the truck serviced by your local authorized dealer.

Intervention Regeneration Strategy - EVIC Message Process Flow (Late Build) The Cummins diesel engine meets all EPA Heavy Duty Diesel Engine Emissions Standards, resulting in the lowest emitting diesel engine ever produced. NOTE: Depending on the build date of your vehicle or if the software has been updated, the EVIC may display the following messages. To achieve these emissions standards, your vehicle is equipped with a state-of-the-art engine and exhaust system. The engine and exhaust after-treatment system work together to achieve the EPA Heavy Duty Diesel Engine Emissions Standards. These systems are seamlessly integrated into your vehicle and managed by the Cummins Powertrain Control Module (PCM). The PCM manages engine combustion to allow the exhaust system's catalyst to trap and burn Particulate Matter (PM) pollutants, with no input or interaction on your part. Additionally, the overhead console in your vehicle has the ability to alert you to additional maintenance required on your truck or engine. Refer to the following messages that may be displayed on your Electronic Vehicle Information Center (EVIC):

Exhaust System - Regeneration Required Now "Exhaust System-Regeneration Required Now" will be displayed on the overhead console of your vehicle if the exhaust particulate filter reaches 80% of its maximum storage capacity. Under conditions of exclusive short duration and low speed driving cycles, your Cummins diesel engine and exhaust aftertreatment system may never reach the conditions required to remove the trapped PM. If this occurs, "Exhaust System - Regeneration Required Now" will be displayed on the overhead console in your vehicle. If this message is displayed, you will hear one chime to assist in alerting you of this condition.

By simply driving your vehicle at highway speeds for as little as 45 minutes, you can remedy the condition in the particulate filter system and allow your Cummins diesel engine and exhaust after-treatment system to remove the trapped PM and restore the system to normal operating condition. Exhaust Filter XX% Full Indicates that the Diesel Particulate Filter (DPF) is approaching full. Exhaust System - Regeneration in Process Indicates that the Diesel Particulate Filter (DPF) is selfcleaning. Maintain your current driving condition until regeneration is completed. Exhaust System - Regeneration Completed Indicates that the Diesel Particulate Filter (DPF) selfcleaning is completed. If this message is displayed, you will hear one chime to assist in alerting you of this condition. Service Required - See Dealer Now Regeneration has been disabled due to a system malfunction. At this point the engine PCM will register a fault code, the instrument panel will display a MIL light. IMMEDIATE SERVICE IS REQUIRED. See your authorized dealer as damage to the exhaust system could occur soon with continued operation. Exhaust Filter Full - Power Reduced See Dealer The PCM derates the engine in order to limit the likelihood of permanent damage to the after-treatment system. If this condition is not corrected and a dealer service is not performed, extensive exhaust after-treatment damage can occur. In order to correct this condition it will be necessary to have your vehicle serviced by your local authorized dealer. IMMEDIATE SERVICE IS REQUIRED. See your authorized dealer, as damage to the exhaust system could occur soon with continued operation.

STANDARD PROCEDURE

STANDARD PROCEDURE - STATIONARY DESOOT

WARNING: Due to the fact that the vehicle may be left unattended for up to one hundred (100) minutes during this procedure, every precautionary measure must be taken to ensure that the vehicle cannot be stolen and that no person comes in contact with the hot exhaust or hot exhaust gases during the procedure.

NOTE: Stationary DeSoot will not perform without a P1451 DTC. Updating the ECM will automatically clear the P1451 DTC from the ECM's memory. If the soot threshold is great enough where a Stationary DeSoot is required, it may be necessary to drive the vehicle so that the P1451 DTC will reset.

NOTE: When using Diagnostic Scan Tool software at release 9.05, the fuel minimum specification to run the test is 1/4 of a tank of fuel.

1. Fill the vehicle with three (3) gallons of Ultra Low Sulfur diesel fuel to perform the procedure.

   NOTE: In order for Stationary DeSoot to begin, the vehicle must be parked with the parking brake engaged, be at normal operating temperature, have no active DTC's unrelated to DeSoot, and have at least three gallons of fuel. If any of these conditions are violated after Stationary DeSoot begins, or if the service brake or accelerator pedal is pressed, Stationary DeSoot will abort.

2. Position the vehicle on a NONFLAMMABLE surface such as concrete.

WARNING: Exhaust temperatures will be extremely high. Do not perform this procedure on flammable surfaces such as asphalt, grass, etc. or adjacent to property that may be damaged by the exhaust gases, or in a location where individuals may be required to pass adjacent to the exhaust.

3. Apply the parking brake.
4. Position the shift lever in Park or Neutral.
5. Lower the spare tire down as far as possible. It is not necessary to remove the spare tire from the vehicle.
6. Mark an area 12 feet (3.66 meters) by 12 feet (3.66 meters) surrounding the exhaust outlet. The exhaust outlet should be six feet from the fore and aft ends of the marked off area.

NOTE: Ensure that the "HOT EXHAUST" labels are facing outward.

7. Ensure that the hood remains closed during the stationary regeneration operation.
8. If not already performed, connect the Diagnostic Scan Tool to the vehicle.
9. Start the engine.
10. Power ON the Diagnostic Scan Tool.
11. Scroll to the ECM menu
12. Select Stationary DeSoot

NOTE: During Stationary DeSoot, engine RPM will be elevated to 1, 100 RPM. When the engine RPM returns to normal idle, the Stationary DeSoot has completed or aborted.

13. Initiate Stationary DeSoot.

NOTE: Stationary DeSoot may take up to one hundred (100) minutes to complete. It is not necessary to monitor the stationary regeneration cycle the entire one hundred minutes. In addition, it is not necessary to leave the Diagnostic Scan Tool connected to the vehicle once the stationary regeneration has been initiated. Periodic monitoring of the cycle can be accomplished by monitoring the percent of completion through the EVIC or by connecting the Diagnostic Scan Tool and reviewing the percent of completion on the scan tool.

14. Stationary DeSoot will automatically abort once the cycle is complete. If Stationary DeSoot needs to be aborted prior to the end of the cycle, any of the following manual methods can be used:

Turning the ignition OFF
Depressing the brake pedal
Moving the PRNDL from P/N to D/R

15. Once Stationary DeSoot is complete, remove the anti-theft device.
16. Position the spare tire back into its stowage position.

REMOVAL

6.7L DIESEL - CAB CHASSIS

WARNING: If torches are used when servicing the exhaust system, do not allow any flame near the fuel lines or the fuel tank. Failure to follow these instructions may result in possible serious or fatal injury.

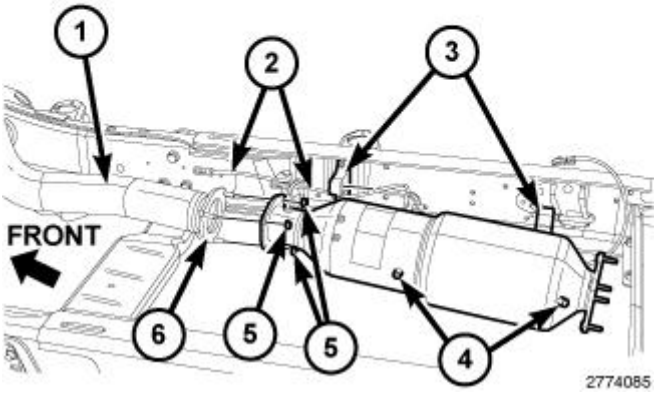

Fig. 13: Front Temperature Sensors, Isolators, Exhaust Down Pipe To DOC/DPF Flange Nuts, Courtesy of CHRYSLER GROUP, LLC

1. Disconnect and isolate negative battery cables.
2. Raise and support vehicle.
3. If equipped, remove skid plates.
4. On 4X4 models, remove transmission crossmember. Refer to **CROSSMEMBER, TRANSMISSION, REMOVAL** .
5. Saturate bolts and nuts with heat valve lubricant. Allow 5 minutes for penetration.
6. Remove flexible tubing from particulate filter pressure sensor tubing.
7. Loosen and remove particulate filter pressure sensor tubing from Diesel Oxidation Catalytic/Diesel Particulate Filter (DOC/DPF) at the ports (4).
8. Disconnect and remove front temperature sensors (2).
9. Remove the rear temperature sensor.
10. Remove NOx sensor.
11. Remove the isolators (3).
12. Remove the Selective Catalytic Reduction (SCR) Catalyst and the tail pipe assembly and move toward

rear of vehicle.

13. Remove exhaust down pipe to DOC/DPF flange nuts (5).
14. Remove DOC/DPF from the down pipe (1).
15. Remove and discard flange gaskets.

6.7L DIESEL - P/U

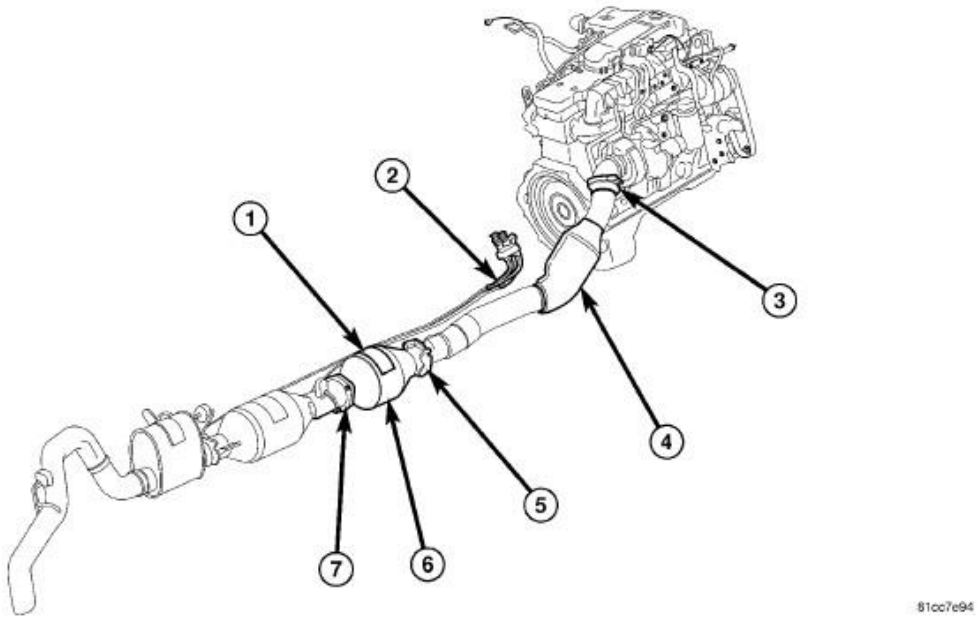

Fig. 14: Catalytic Converter 6.7L - Diesel - P/U
Courtesy of CHRYSLER GROUP, LLC

1 - TUBING SUPPORT BRACKET	5 - DOC TO NOx ABSORBER CATALYST (NAC) FLANGE
2 - FLEXIBLE PRESSURE DIFFERENTIAL TUBING	6 - NAC
3 - TURBOCHARGER CLAMP	7 - NAC TO DPF FLANGE
4 - DIESEL OXYGEN CATALYST (DOC)	8 - DIESEL PARTICULATE FILTER (DPF)

1. Disconnect and isolate negative battery cables.
2. Raise and support vehicle.
3. Saturate bolts and nuts with heat valve lubricant. Allow 5 minutes for penetration.
4. Disconnect flexible exhaust differential pressure sensor tubing (2).
5. Remove exhaust pressure differential sensor tubing from Diesel Particulate Filter (DPF) (1).

6. When equipped, remove skid plates.
7. On 4X4 models, remove transmission crossmember. Refer to **CROSSMEMBER, TRANSMISSION, REMOVAL** .
8. Remove Diesel Particulate Filter (DPF) to NOx Absorber Catalyst (NAC) flange nuts (7).
9. Remove NAC to Diesel Oxidation Catalyst (DOC) to NAC flange nuts (5). Discard gasket.
10. Remove NAC (7) from isolators.
11. Remove DOC to muffler band clamp.
12. Remove DOC from vehicle.

INSTALLATION

6.7L DIESEL - CAB CHASSIS

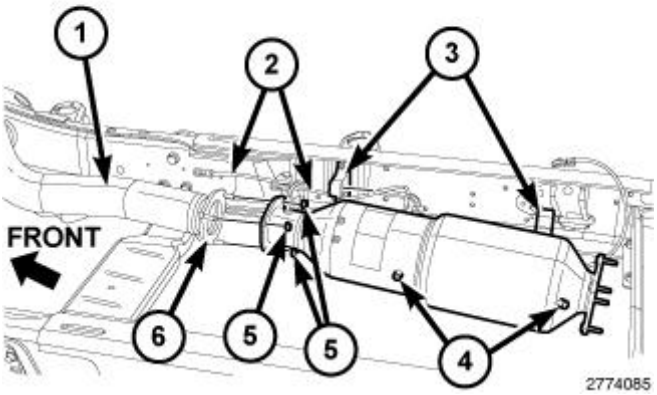

Fig. 15: Front Temperature Sensors, Isolators, Exhaust Down Pipe To DOC/DPF Flange Nuts, Courtesy of CHRYSLER GROUP, LLC

1. Position new exhaust flange gasket on exhaust down pipe (1) flange (6).
2. Mount the DOC/DPF input to the down pipe (1).
3. Install flange nuts (5). Hand tighten only.
4. Install the isolators (3).
5. Position new exhaust flange gasket on DOC/DPF output flange.
6. If equipped, install the extension pipe.
7. Install the Selective Catalytic Reduction (SCR) catalyst. Refer to **CATALYST, SELECTIVE CATALYTIC REDUCTION (SCR), INSTALLATION**.
8. Install flange nuts. Hand tighten only.
9. Check the exhaust system for contact with the body panels. A minimum of 25 mm (1.0 in.) is required between the exhaust system components and body/frame parts. Make the necessary adjustments, if needed.

10. Tighten flange nuts to 54 N.m (40 ft. lbs.).
11. Install temperature sensors (2). Tighten to 30 N.m (22 ft. lbs.).
12. Install NOx sensor. Tighten to 50 N.m (37 ft. lbs.).

NOTE: Make sure there is not a dip in the pressure differential tubing.

13. Install exhaust differential pressure tubing. Tighten to 30 N.m (22 ft. lbs.).
14. Install flexible exhaust differential pressure sensor tubing.
15. Connect electrical connectors.
16. On 4X4 models, install transmission crossmember. Refer to **CROSSMEMBER, TRANSMISSION, INSTALLATION** .
17. If equipped, install skid plates.
18. Lower vehicle.
19. Connect negative battery cables.
20. Using a scan tool, perform RESET REGENERATIVE FILTER TIMERS function found under ENGINE MISC. FUNCTIONS.

6.7L DIESEL - P/U

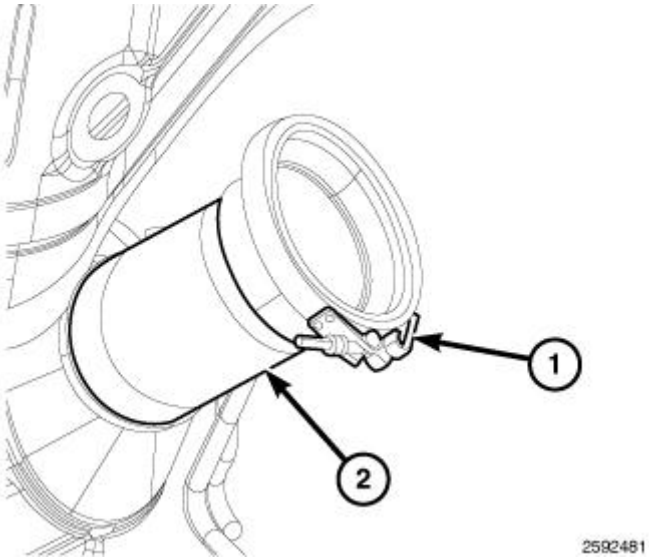

Fig. 16: Turbocharger Exhaust Outlet V-clamp
Courtesy of CHRYSLER GROUP, LLC

1. Position the catalytic converter onto the turbocharger with the clamp (1) facing down as shown in illustration. Install the clamp (1) finger tight.

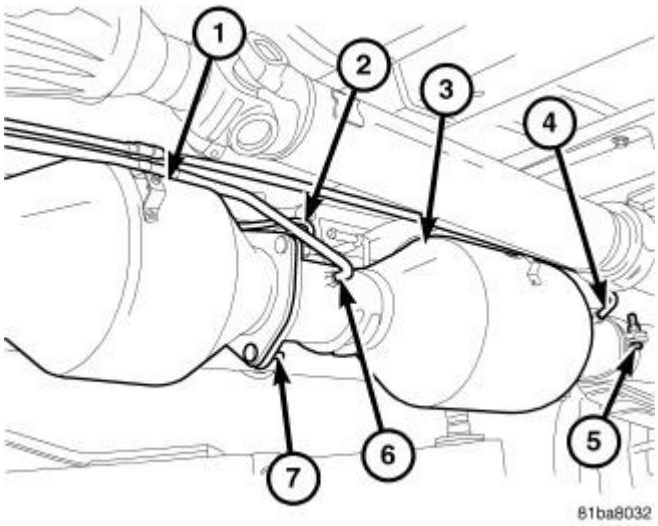

Fig. 17: DPF - 6.7L Diesel- P/U
Courtesy of CHRYSLER GROUP, LLC

1 - MOUNTING BOLT
2 - TEMPERATURE SENSOR
3 - DIESEL PARTICULATE FILTER
4 - REAR DIFFERENTIAL PRESSURE TUBE
5 - BAND CLAMP
6 - FRONT DIFFERENTIAL PRESSURE TUBE
7 - CATALYTIC CONVERTER TO DPF FLANGE

2. Position new exhaust flange gaskets on catalytic converter to DPF flange.
3. Install flange bolts. Hand tighten only.
4. Install muffler and tailpipe assembly.
5. Install new band clamp. Hand tighten only.
6. Check the exhaust system for contact with the body panels. A minimum of 25 mm (1.0 in.) is required between the exhaust system components and body/frame parts. Make the necessary adjustments, if needed.
7. Tighten flange nuts to 54 N.m (40 ft. lbs.).
8. Tighten band clamp nuts to 52 N.m (40 ft. lbs.).
9. Install temperature sensor. Tighten to 29.8 N.m (22 ft. lbs.).
10. Install front and rear (6 and 4) exhaust differential pressure tubing. Tighten to 30 N.m (22 ft. lbs.).
11. Tighten the catalytic converter to turbocharger clamp to 17 N.m (13 ft. lbs.). Using a rubber mallet, hit the DOC to turbocharger clamp three times around the perimeter of the clamp and tighten the clamp to 17 N.m (13 ft. lbs.).
12. Install flexible exhaust differential pressure sensor tubing.
13. On 4X4 models, install transmission crossmember. Refer to **CROSSMEMBER, TRANSMISSION, INSTALLATION** .

14. When equipped, install skid plates.
15. Reconnect negative battery cables.
16. Using a scan tool, perform RESET REGENERATIVE FILTER TIMERS function found under ENGINE MISC. FUNCTIONS.

MUFFLER, EXHAUST

REMOVAL

3.7L/4.7L/5.7L ENGINE EXHAUST

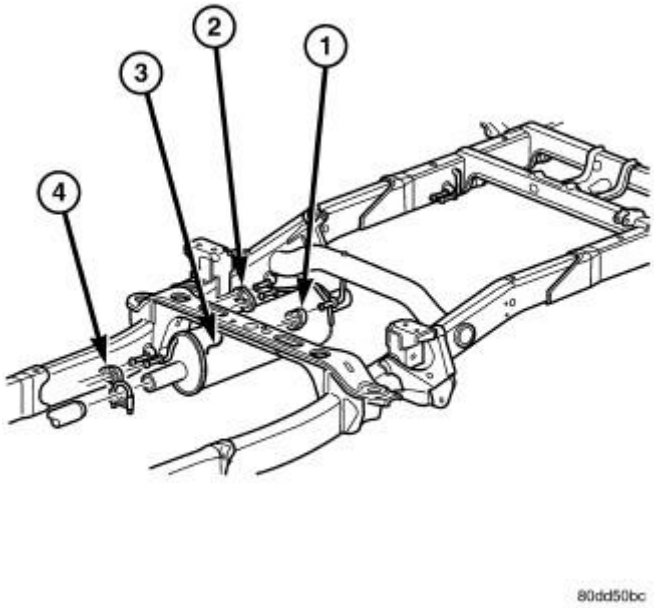

Fig. 18: Muffler & Insulators
Courtesy of CHRYSLER GROUP, LLC

1 - INSULATOR
2 - INSULATOR
3 - MUFFLER
4 - INSULATOR

1. Raise and support the vehicle.
2. Saturate the clamp nuts with spray lubricant. Allow 5 minutes for penetration.
3. Remove the tailpipe assembly. Refer to **TAILPIPE, EXHAUST, REMOVAL**.
4. Loosen clamps and nuts from muffler assembly (3).
5. Remove the muffler assembly (3) from the isolators (1, 2 and 4). Refer to **Fig. 18**.

5.7L ENGINE DUAL EXHAUST

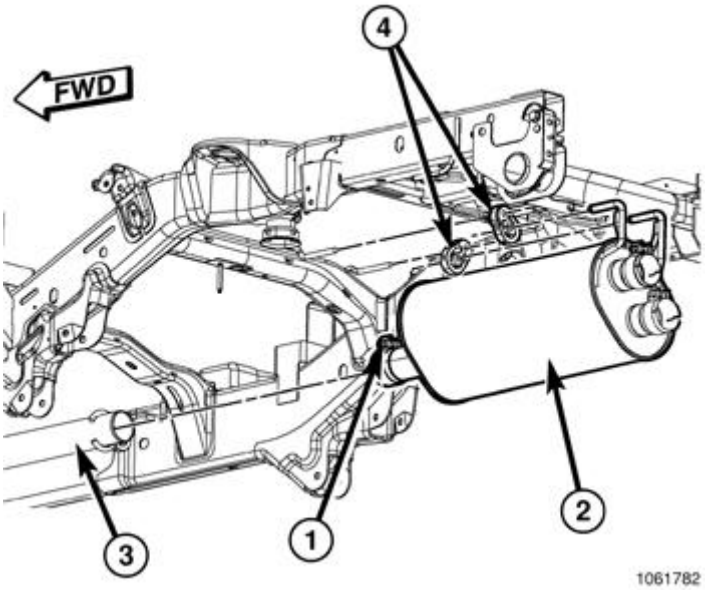

Fig. 19: Muffler, Isolators & Clamp
Courtesy of CHRYSLER GROUP, LLC

1. Raise and support the vehicle.
2. Remove the tailpipe assembly. Refer to **TAILPIPE, EXHAUST, REMOVAL**.
3. Saturate the muffler exhaust clamp nut (1) located on the front of the muffler assembly (2) with spray lubricant.
4. Loosen the muffler exhaust clamp (1).
5. Remove the muffler (2) from the isolators (4) and remove from the exhaust pipe (3).

DIESEL

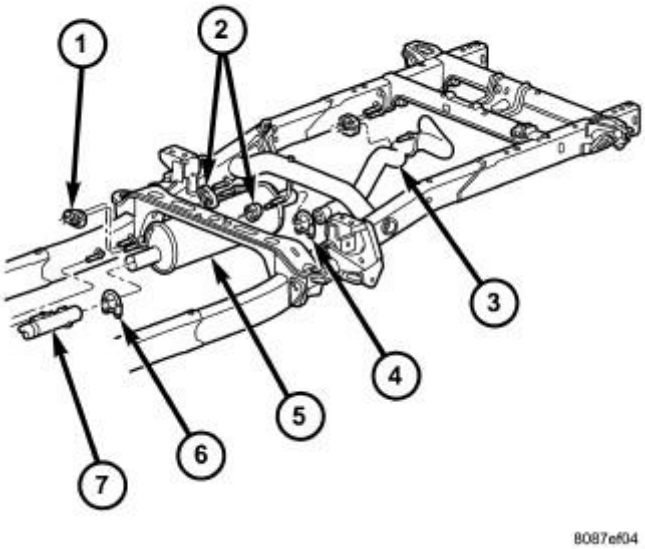

Fig. 20: Muffler Mounting Components
Courtesy of CHRYSLER GROUP, LLC

1 - INSULATOR
2 - ISOLATOR
3 - TAILPIPE
4 - CLAMP
5 - MUFFLER
6 - CLAMP
7 - EXTENSION PIPE

1. Disconnect the battery negative cables.
2. Raise and support the vehicle.
3. Remove the muffler to tail pipe and extension pipe clamps.
4. Disconnect the muffler from the hanger isolators.
5. Disconnect the muffler from the tailpipe.
6. Disconnect the muffler from the extension pipe and remove from the vehicle.

INSTALLATION

3.7L/4.7L/5.7L ENGINE EXHAUST

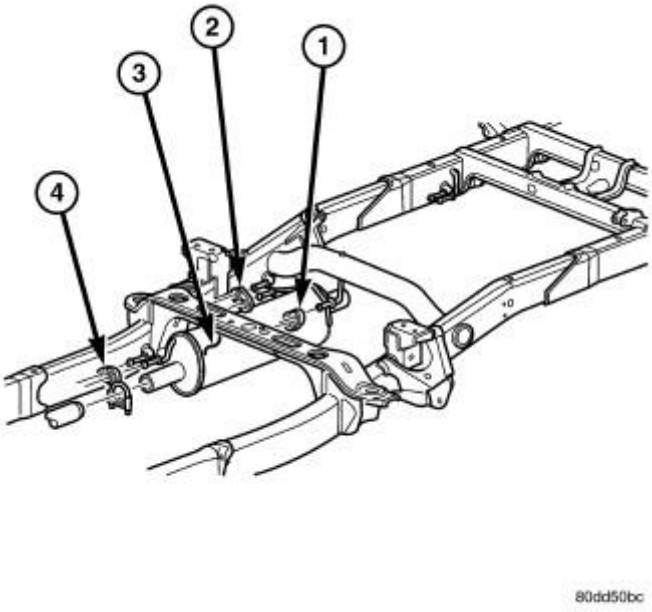

Fig. 21: Muffler & Insulators
Courtesy of CHRYSLER GROUP, LLC

1 - INSULATOR
2 - INSULATOR
3 - MUFFLER
4 - INSULATOR

1. Assemble muffler assembly (3) and clamps loosely to permit proper alignment of all parts.
2. Hang the muffler assembly (3) to the isolators (1, 2 and 4).
3. Tighten the clamp nuts to 54 N.m (40 ft. lbs.) torque.
4. Install the tailpipe assembly. Refer to **TAILPIPE, EXHAUST, INSTALLATION**.
5. Insure isolators (1, 2, and 4) are fully seated on exhaust hangers.
6. Check the exhaust system for contact with the body panels. A minimum of 25 mm (1.0 in.) is required between the exhaust system components and body/frame parts. Make the necessary adjustments, if needed.
7. Lower the vehicle.
8. Start the engine and inspect for exhaust leaks. Repair exhaust leaks as necessary.

5.7L ENGINE DUAL EXHAUST

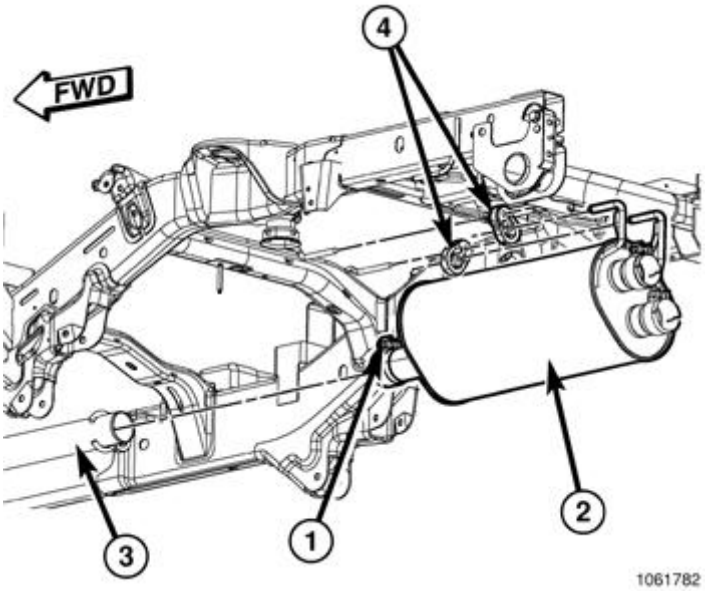

Fig. 22: Muffler, Isolators & Clamp
Courtesy of CHRYSLER GROUP, LLC

1. Pre-assemble muffler (2) and clamp (1) loosely to permit proper alignment of all parts.
2. Raise and support the vehicle.
3. Hang the dual outlet muffler (2) on the isolators (4).
4. Install muffler (2) on the exhaust pipe (3). Tighten to 54 N.m (40 ft. lbs.).
5. Check the exhaust system for contact with the body panels. A minimum of 25 mm (1.0 in.) is required between the exhaust system components and body/frame parts. Make the necessary adjustments, if needed.

DIESEL

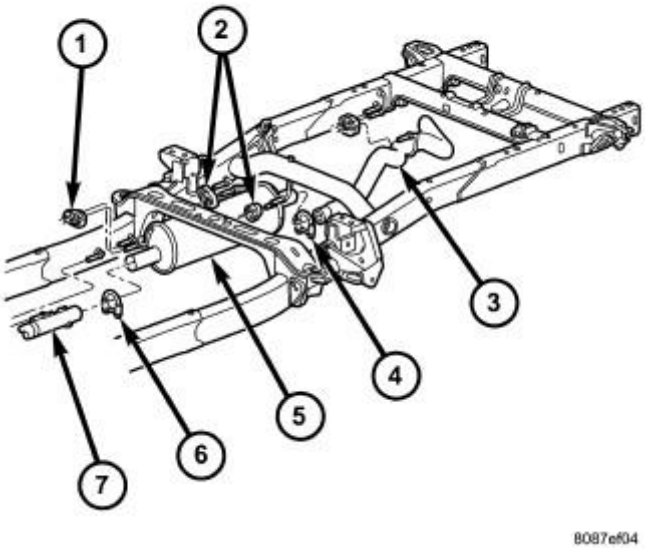

Fig. 23: Muffler Mounting Components
Courtesy of CHRYSLER GROUP, LLC

1 - INSULATOR
2 - ISOLATOR
3 - TAILPIPE
4 - CLAMP
5 - MUFFLER
6 - CLAMP
7 - EXTENSION PIPE

1. Install the muffler hanger rods into the isolators.
2. Install the muffler into the extension pipe.
3. Install the muffler into the tail pipe.
4. Install the exhaust clamps, align the exhaust system, and tighten the exhaust clamps to 54 N.m (40 ft. lbs.).
5. Check the exhaust system for contact with the body panels. A minimum of 25 mm (1.0 in.) is required between the exhaust system components and body/frame parts. Make the necessary adjustments, if needed.
6. Insure isolators are fully seated on exhaust hangers.
7. Lower the vehicle.
8. Connect the battery negative cables.
9. Start the engine and inspect for exhaust leaks. Repair exhaust leaks as necessary.

PIPE, EXHAUST

REMOVAL

3.7L/4.7L/5.7L ENGINE

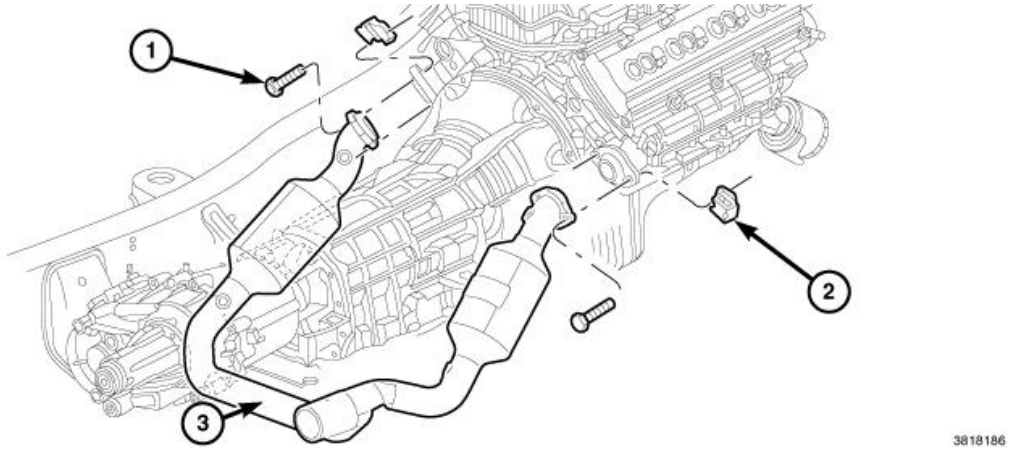

Fig. 24: Exhaust Pipe, Manifold Bolts & J-Nuts
Courtesy of CHRYSLER GROUP, LLC

1. Raise and support the vehicle.
2. Unplug the upstream and downstream oxygen sensors. Swap over the sensors as necessary.
3. Remove and **discard** the exhaust pipe to manifold bolts (1) and J-nuts (2).
4. Loosen the exhaust pipe to Y-pipe clamp and separate the two pipes.
5. Shift the rear exhaust pipe rearward.
6. Carefully remove the exhaust system Y-pipe.

6.7L DIESEL

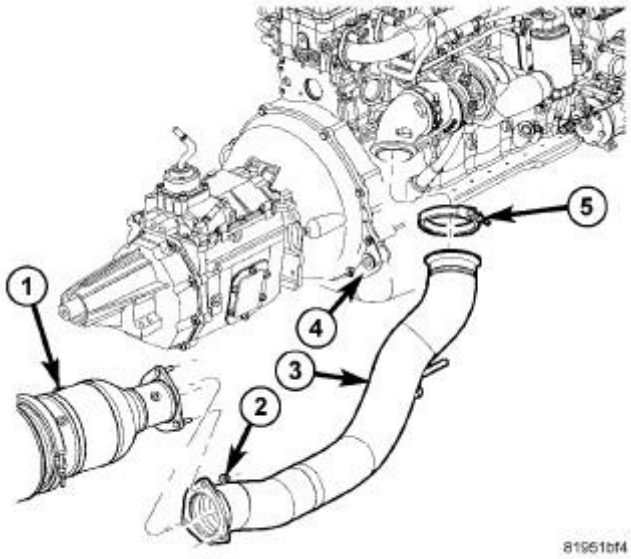

Fig. 25: 6.7L Exhaust Pipe Components
Courtesy of CHRYSLER GROUP, LLC

1 - DOC/DPF
2 - NUTS
3 - EXHAUST PIPE -
4 - EXHAUST PIPE SUPPORT
5 - TURBOCHARGER CLAMP

1. Raise and support the vehicle on a hoist.
2. Saturate the bolts and nuts with heat valve lubricant. Allow 5 minutes for penetration.
3. Remove the exhaust pipe-to-DOC/DPF flange nuts (2).
4. 4X4 Vehicles - Remove transfer case skid plate. Refer to **PLATE, SKID, TRANSFER CASE, REMOVAL** .
5. 4X4 Vehicles - Remove transmission crossmember. Refer to **CROSSMEMBER, TRANSMISSION, REMOVAL** .
6. Remove the exhaust pipe-to-turbocharger clamp (5) and discard.
7. Remove the transmission mounted exhaust pipe support (4).
8. Separate the exhaust pipe (3).
9. Remove exhaust pipe (3).

INSPECTION

INSPECTION

Discard rusted clamps, broken or worn supports and attaching parts. Replace a component with original equipment parts, or equivalent. This will assure proper alignment with other parts in the system and provide acceptable exhaust noise levels.

INSTALLATION

3.7L/4.7L/5.7L

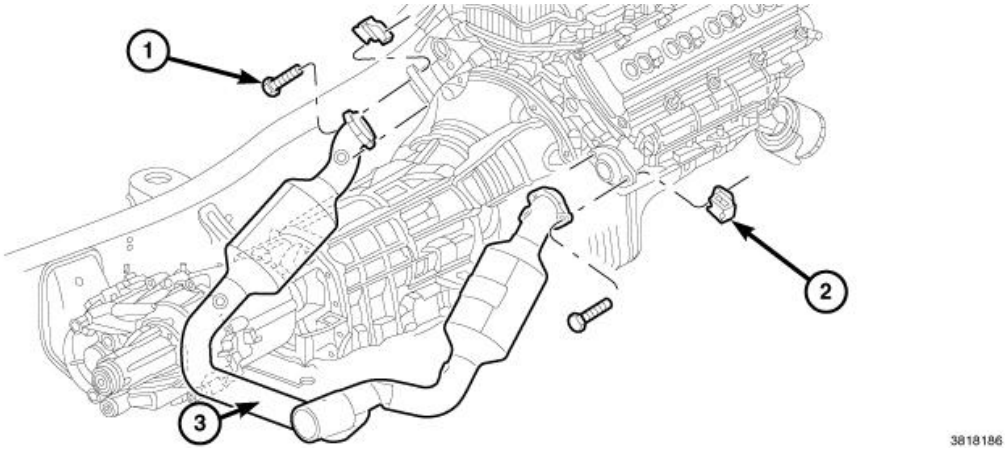

Fig. 26: Exhaust Pipe, Manifold Bolts & J-Nuts
Courtesy of CHRYSLER GROUP, LLC

1. Position the exhaust pipe (3) with proper clearance between the frame and underbody parts. A minimum clearance of 25 mm (1.0 in.) is required.
2. Position the exhaust pipe (3) to manifolds. Install the **new** bolts (1) and **new** J-nuts (2).
3. Hand tighten the nuts while making sure the flange is **evenly** positioned around the pipe.
4. Alternate tightening sequence to further ensure the flange stays even around the pipe. Tighten the nuts to 31 N.m (23 ft. lbs.).
5. Tighten the clamp nuts to 54 N.m (40 ft. lbs.) torque.
6. Lower the vehicle.
7. Start the engine and inspect for exhaust leaks and exhaust system contact with the body panels. Adjust the alignment, if needed. Refer to **DIAGNOSIS AND TESTING**.

6.7L DIESEL

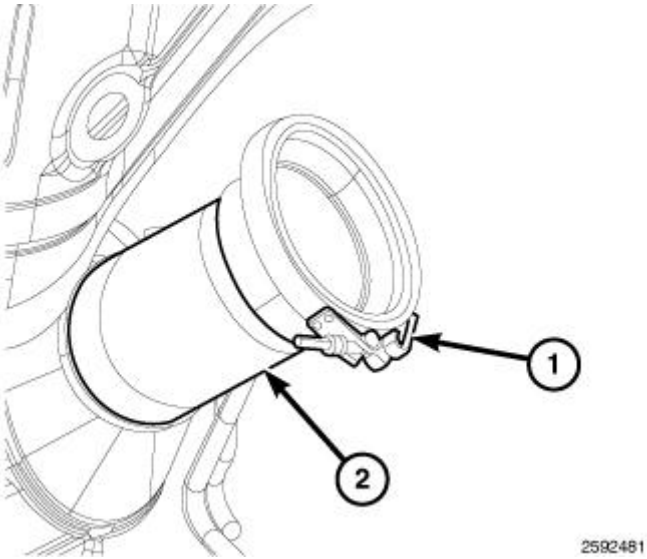

Fig. 27: Turbocharger Exhaust Outlet V-clamp
Courtesy of CHRYSLER GROUP, LLC

1. Position DOC onto the turbocharger with the clamp (1) facing down as shown in illustration. Install the clamp (1) finger tight.

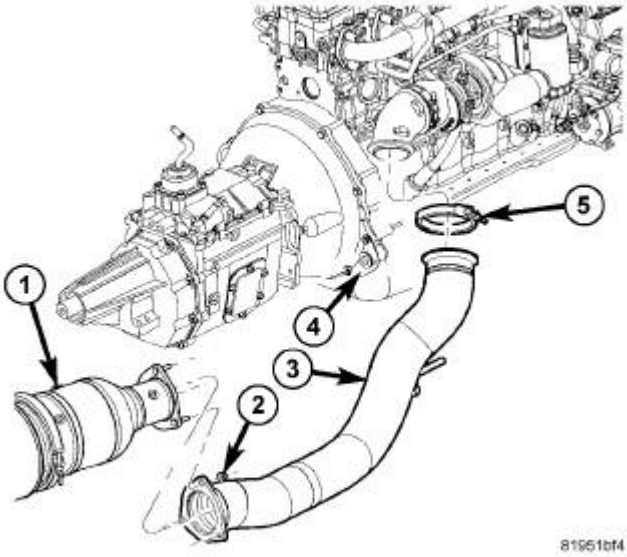

Fig. 28: 6.7L Exhaust Pipe Components
Courtesy of CHRYSLER GROUP, LLC

1 - DOC/DPF
2 - NUTS
3 - EXHAUST PIPE -
4 - EXHAUST PIPE SUPPORT
5 - TURBOCHARGER CLAMP

2. Using a new flange gasket, position exhaust pipe (3) on DOC/DPF flange and turbocharger flange.
3. Install flange nuts (2). Tighten nuts (2) to 54 N.m (40 ft. lbs.).
4. Install transmission mounted exhaust pipe support (4). Tighten bolts to 43 N.m (32 ft. lbs.).
5. 4X4 Vehicles - Install transmission crossmember. Refer to **CROSSMEMBER, TRANSMISSION, INSTALLATION** .
6. 4X4 Vehicles - Install transfer case skid plate. Refer to **PLATE, SKID, TRANSFER CASE, INSTALLATION** .
7. Check the exhaust system for contact with the body panels. A minimum of 25 mm (1.0 in.) is required between the exhaust system components and body/frame parts. Make the necessary adjustments, if needed.
8. Tighten the DOC to turbocharger clamp to 17 N.m (13 ft. lbs). Using a rubber mallet, hit the DOC to turbocharger clamp three times around the perimeter of the clamp and tighten the clamp to 17 N.m (13 ft. lbs).
9. Lower the vehicle.
10. Start the engine and inspect for exhaust leaks. Repair exhaust leaks as necessary.

SENSOR, DIFFERENTIAL PRESSURE

DESCRIPTION

DESCRIPTION

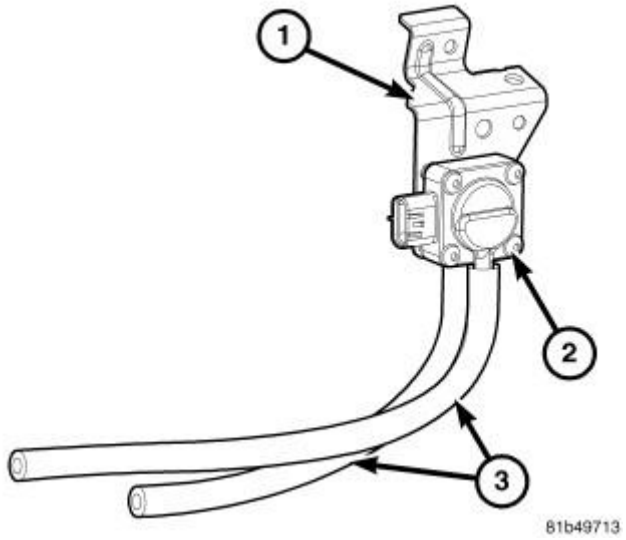

Fig. 29: Identifying Pressure Differential Sensor
Courtesy of CHRYSLER GROUP, LLC

1 - MOUNTING BRACKET
2 - PRESSURE DIFFERENTIAL SENSOR
3 - HOSE

The Exhaust Differential Pressure Sensor is remotely mounted on the transmission housing. Two pressure tubes measure pressure before and after the Diesel Particulate Filter (DPF)/Diesel Oxidation Catalyst (DOC). The sensor is critical for fail-safe of regeneration strategy, because it interprets high pressure drops as possible high soot loads.

REMOVAL

REMOVAL

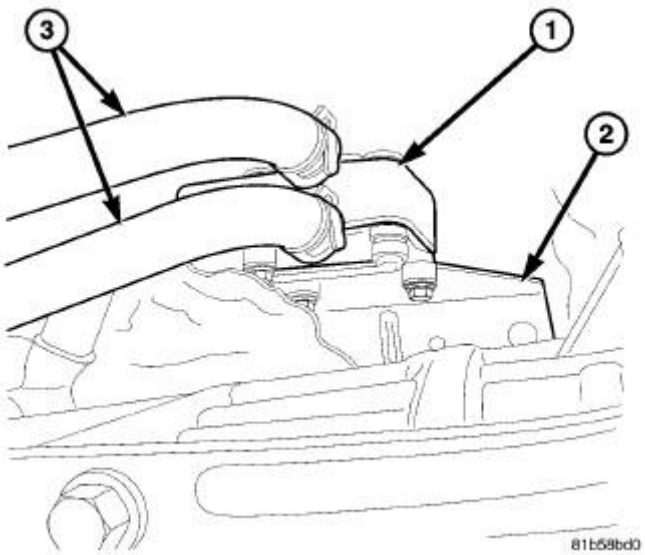

Fig. 30: Pressure Differential Sensor & Bracket
Courtesy of CHRYSLER GROUP, LLC

1. Raise and support vehicle.
2. Disconnect electrical connector.
3. Disconnect hoses at pressure differential pressure sensor.
4. Remove mounting bolt and differential pressure sensor.
5. Remove mounting bolts (1).

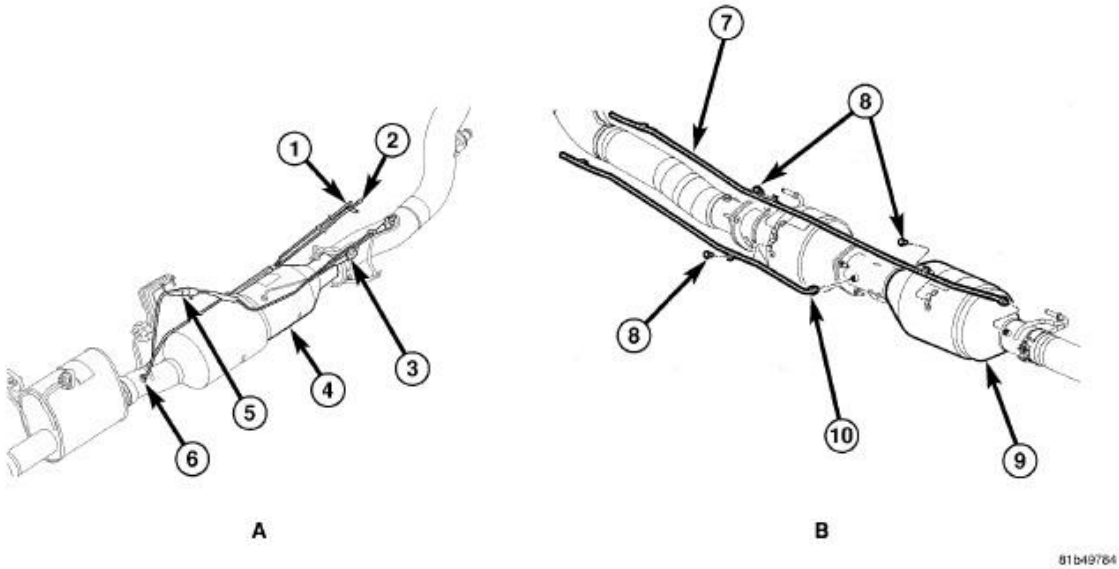

Fig. 31: Identifying Pressure Differential Tubing
Courtesy of CHRYSLER GROUP, LLC

A - CAB CHASSIS	5 - REAR EXHAUST TEMP SENSOR CONNECTOR-CAB/CHASSIS
B - P/U	6 - REAR EXHAUST TEMP SENSOR - CAB/CHASSIS
1 - REAR DIFFERENTIAL PRESSURE SENSOR TUBING - CAB/CHASSIS	7 - REAR PRESSURE DIFFERENTIAL TUBING - P/U
2 - FRONT DIFFERENTIAL PRESSURE SENSOR TUBING - CAB/CHASSIS	8 - MOUNTING BOLTS
3 - FRONT EXHAUST TEMP SENSOR CONNECTOR - CAB/CHASSIS	9 - DPF - P/U
4 - DOC/DPF - CAB/CHASSIS	10 - FRONT PRESSURE DIFFERENTIAL TUBING - P/U

6. Remove pressure differential pressure tubing.

INSTALLATION

INSTALLATION

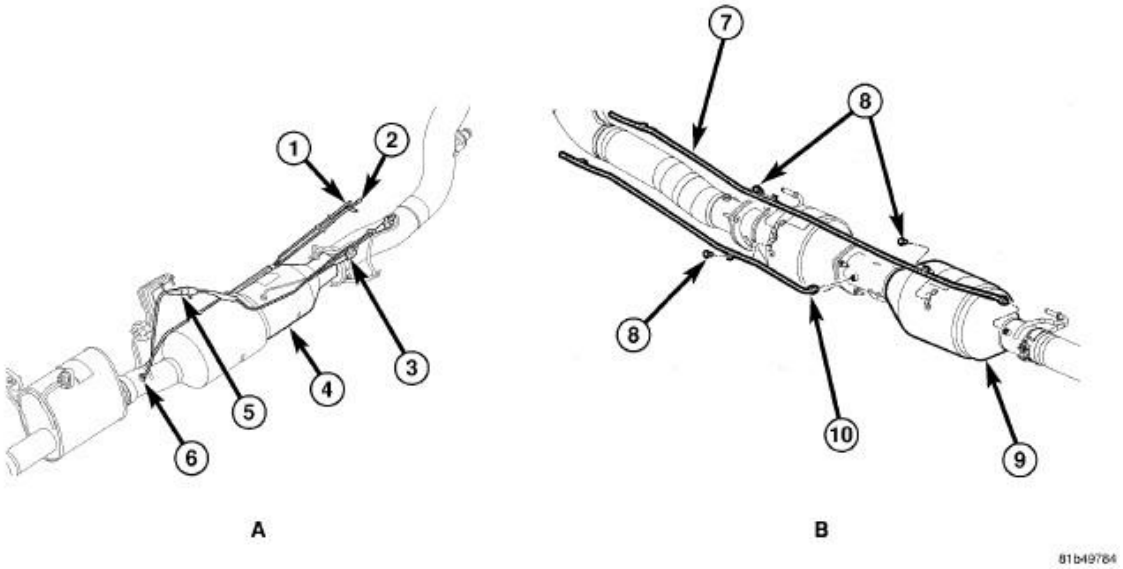

Fig. 32: Identifying Pressure Differential Tubing
Courtesy of CHRYSLER GROUP, LLC

A - CAB CHASSIS	5 - REAR EXHAUST TEMP SENSOR CONNECTOR-CAB/CHASSIS
B - P/U	6 - REAR EXHAUST TEMP SENSOR - CAB/CHASSIS
1 - REAR DIFFERENTIAL PRESSURE SENSOR TUBING - CAB/CHASSIS	7 - REAR PRESSURE DIFFERENTIAL TUBING - P/U
2 - FRONT DIFFERENTIAL PRESSURE SENSOR TUBING - CAB/CHASSIS	8 - MOUNTING BOLTS
3 - FRONT EXHAUST TEMP SENSOR CONNECTOR - CAB/CHASSIS	9 - DPF - P/U
4 - DOC/DPF - CAB/CHASSIS	10 - FRONT PRESSURE DIFFERENTIAL TUBING - P/U

1. Install differential pressure tubing, if removed. Tighten fittings to 30 N.m (22 ft. lbs.).

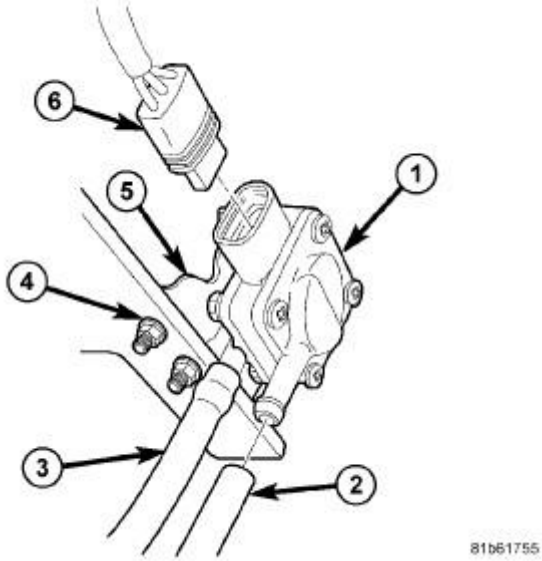

Fig. 33: Pressure Differential Sensor, Hoses & Connector
Courtesy of CHRYSLER GROUP, LLC

1 - DIFFERENTIAL PRESSURE SENSOR
2 - REAR HOSE
3 - FRONT HOSE
4 - MOUNTING NUT
5 - MOUNTING BRACKET
6 - ELECTRICAL CONNECTOR

2. Position differential pressure sensor (1).
3. Install mounting nuts (5) and bolts. Tighten to 10 N.m (89 in. lbs.).

NOTE: **Before installing, inspect both pressure hoses and make sure there is not any dip across the hoses. In cases where water is frozen, a dip across the hoses can cause condensation which can set a MIL.**

4. Install hose (2) to the rear DPF tubing.
5. Install hose (3) to the front DPF tubing.
6. Connect electrical connector (6).
7. Lower vehicle.

SENSOR, EXHAUST TEMPERATURE

DESCRIPTION

DESCRIPTION

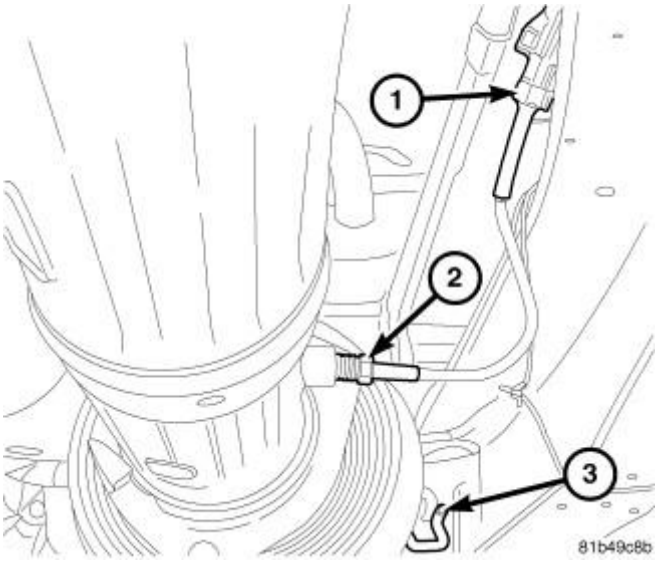

Fig. 34: Diesel Exhaust Temperature Sensor
Courtesy of CHRYSLER GROUP, LLC

1 - ELECTRICAL CONNECTOR
2 - DIESEL EXHAUST TEMPERATURE SENSOR

The Diesel Exhaust Temperature Sensors are thermistors and change resistance based on the temperature being measured. The Engine Control Module (ECM) provides a 5 volt reference voltage to the sensor. The ECM monitors the change in signal voltage and converts this to a temperature value.

OPERATION

OPERATION

When the exhaust gas temperature is cold, the sensor resistance is high, the Engine Control Module (ECM) will sense the resistance and sense the exhaust temperature as cold.

When the exhaust gas temperature is high, the sensor resistance is low, the ECM will sense the resistance and sense the exhaust temperature as high.

REMOVAL

REMOVAL

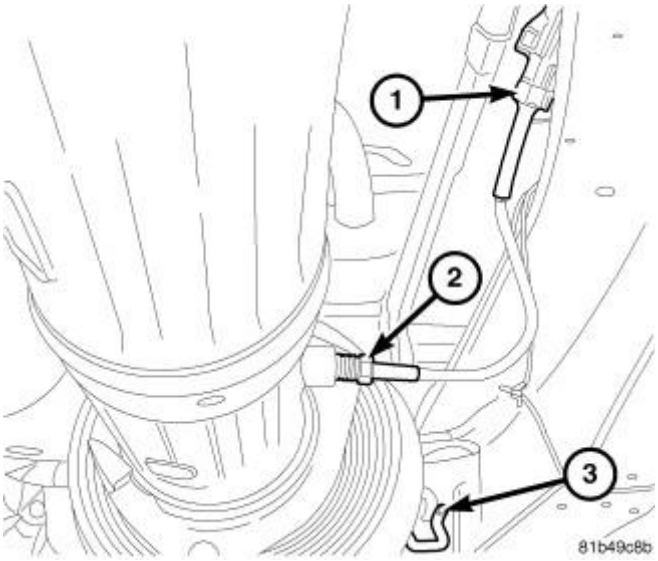

Fig. 35: Diesel Exhaust Temperature Sensor
Courtesy of CHRYSLER GROUP, LLC

1 - ELECTRICAL CONNECTOR
2 - DIESEL EXHAUST TEMPERATURE SENSOR

1. Raise and support vehicle.
2. Disconnect diesel exhaust temperature sensor electrical connector (1).
3. Remove diesel exhaust temperature sensor (2).

INSTALLATION

INSTALLATION

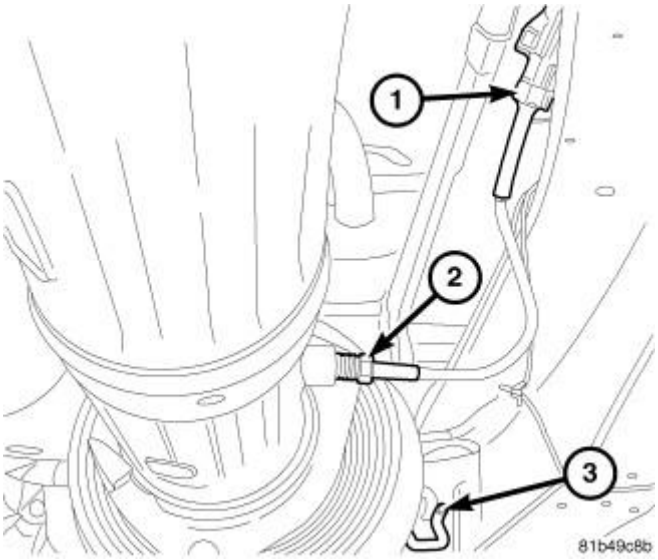

Fig. 36: Diesel Exhaust Temperature Sensor

Courtesy of CHRYSLER GROUP, LLC

1 - ELECTRICAL CONNECTOR
2 - DIESEL EXHAUST TEMPERATURE SENSOR

1. Install the diesel exhaust temperature sensor (2). Tighten sensor to 30 N.m (22 ft. lbs.).
2. Connect diesel exhaust temperature sensor electrical connector (1)
3. Lower vehicle.

SHIELD, HEAT

DESCRIPTION

DESCRIPTION

There are two types of heat shields used. One is stamped steel the other is molded foil sheets. The shields attach to the vehicle around the exhaust system to prevent heat from the exhaust system from entering the passenger area and other areas where the heat can cause damage to other components.

REMOVAL

REMOVAL

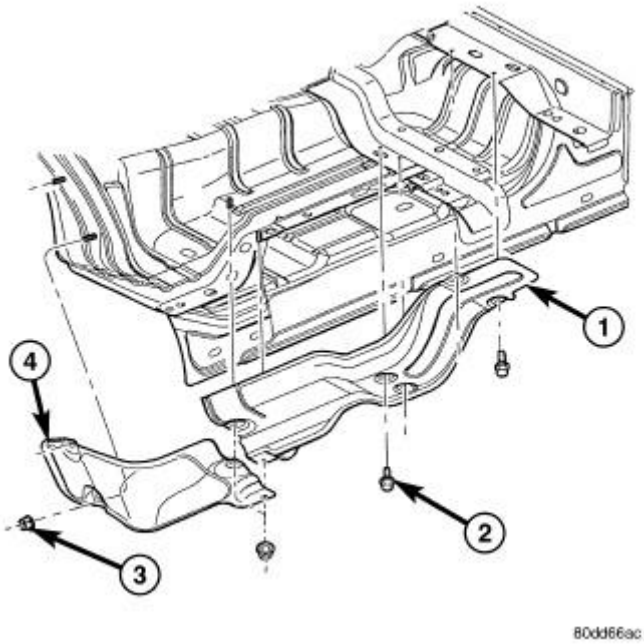

Fig. 37: Heat Shields - RH - Reg Cab
Courtesy of CHRYSLER GROUP, LLC

1 - HEAT SHIELD
2 - FASTENER
3 - NUT
4 - HEAT SHIELD

1. Raise and support the vehicle.

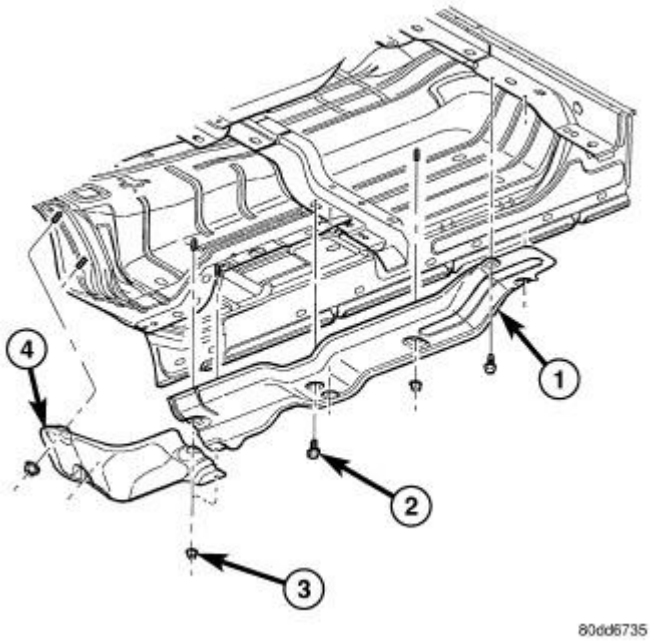

Fig. 38: Heat Shields - RH - Quad Cab
Courtesy of CHRYSLER GROUP, LLC

1 - HEAT SHIELD
2 - FASTENER
3 - NUT
4 - HEAT SHIELD

2. Remove the nuts (3) or bolts (2) holding the exhaust heat shield (1) to the floor pan, crossmember or bracket. Refer to **Fig. 39** or **Fig. 38** or **Fig. 37**.

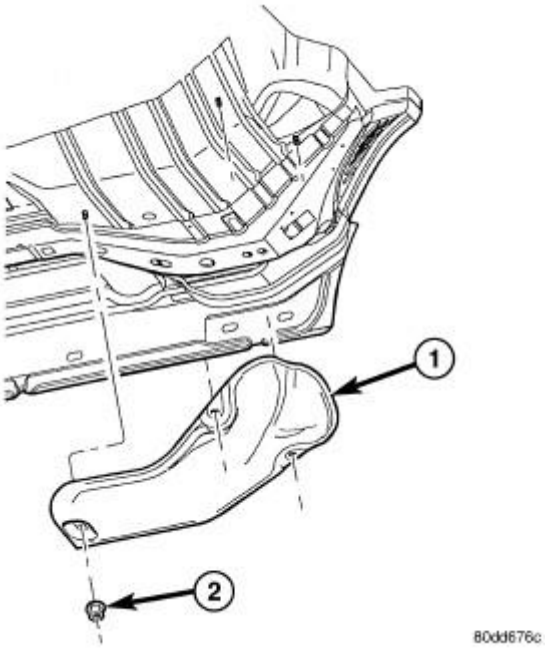

Fig. 39: Heat Shield LH
Courtesy of CHRYSLER GROUP, LLC

1 - HEAT SHIELD
2 - NUT

3. Slide the shield (1) out around the exhaust system.

INSTALLATION

INSTALLATION

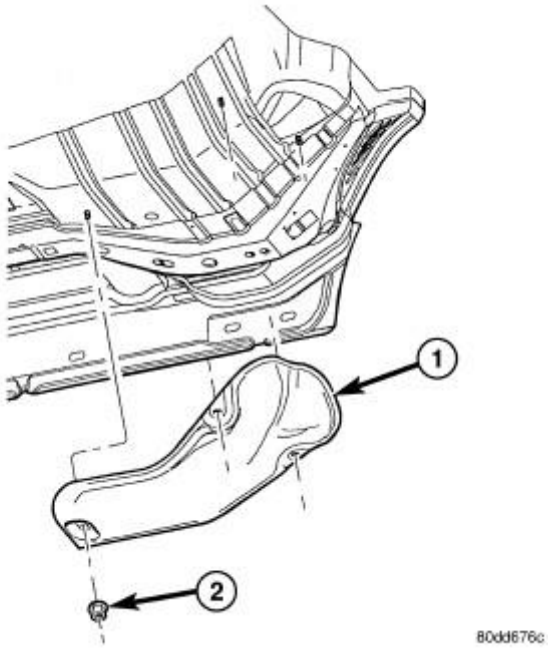

Fig. 40: Heat Shield LH
Courtesy of CHRYSLER GROUP, LLC

1 - HEAT SHIELD
2 - NUT

1. Position the exhaust heat shield (1) to the floor pan, crossmember or bracket and install the nuts (2) or bolts.

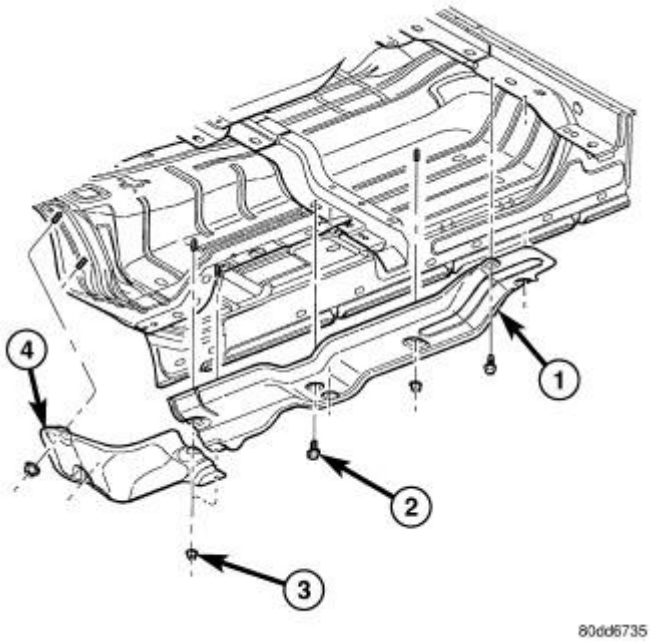

Fig. 41: Heat Shields - RH - Quad Cab
Courtesy of CHRYSLER GROUP, LLC

1 - HEAT SHIELD
2 - FASTENER
3 - NUT
4 - HEAT SHIELD

2. Tighten the nuts (3) and bolts (2) to 11 N.m (97 in. lbs.).

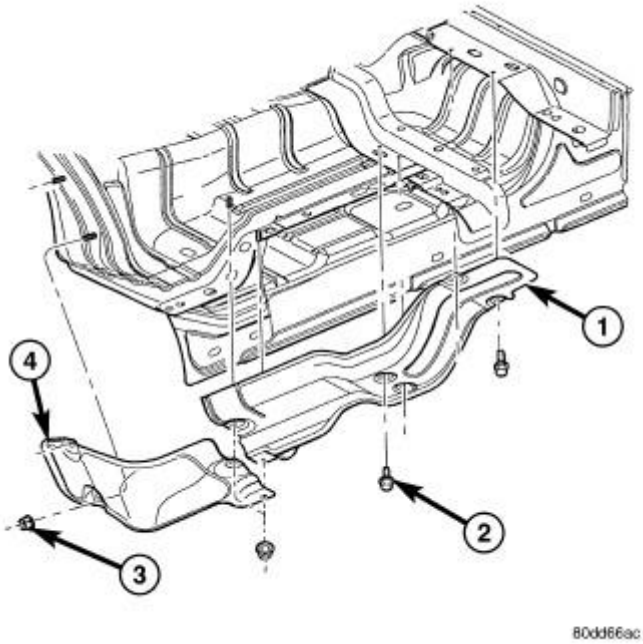

Fig. 42: Heat Shields - RH - Reg Cab
Courtesy of CHRYSLER GROUP, LLC

1 - HEAT SHIELD
2 - FASTENER
3 - NUT
4 - HEAT SHIELD

3. Lower the vehicle.

TAILPIPE, EXHAUST

REMOVAL

3.7L/4.7L/5.7L

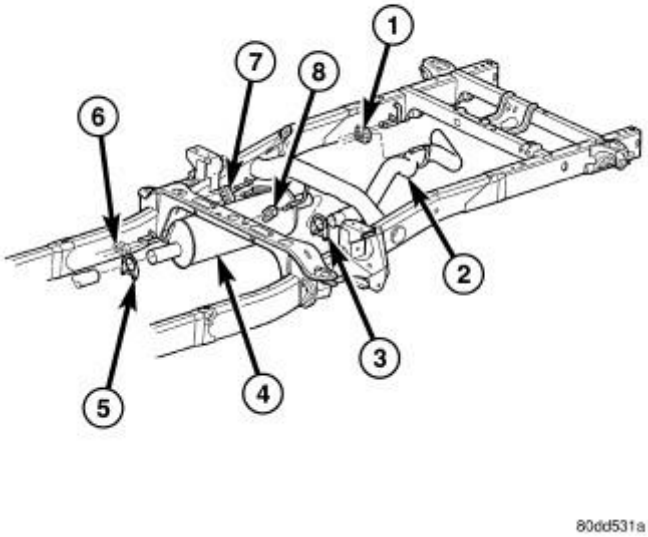

Fig. 43: Tailpipe Components
Courtesy of CHRYSLER GROUP, LLC

1 - INSULATOR
2 - TAILPIPE
3 - CLAMP
4 - MUFFLER
5 - CLAMP
6 - INSULATOR
7 - INSULATOR
8 - INSULATOR

1. Raise and support the vehicle.
2. Saturate the clamp (3) nuts with heat valve lubricant. Allow 5 minutes for penetration.
3. Remove clamps and nuts.
4. Disconnect the exhaust tailpipe (2) from the isolator (1).
5. Remove the exhaust tailpipe (2).

5.7L ENGINE DUAL EXHAUST

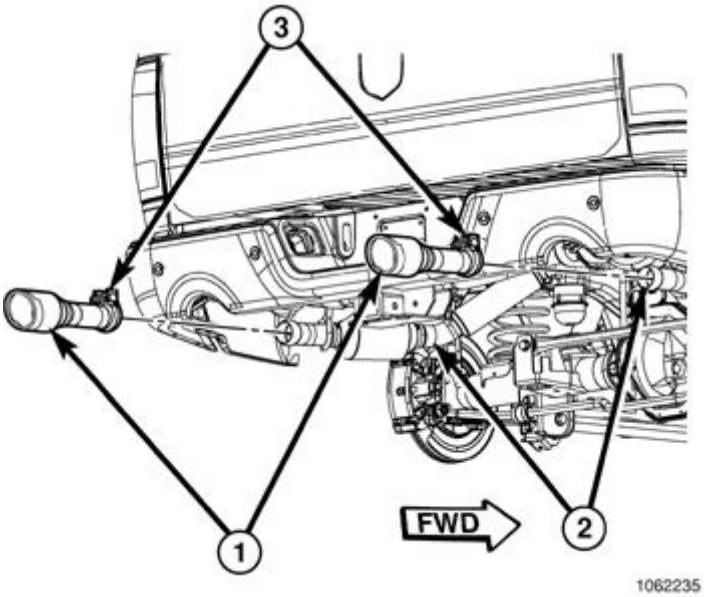

Fig. 44: Exhaust Tailpipe Tips
Courtesy of CHRYSLER GROUP, LLC

1. Raise and support the vehicle.
2. Saturate the tailpipe tip clamp nuts (3) with spray lubricant.
3. Loosen the exhaust tailpipe tip clamp nuts (3) and remove the exhaust tailpipe tips (1).
4. Saturate the muffler exhaust clamp nuts located on the muffler assembly (3) with spray lubricant.
5. Loosen the muffler exhaust clamp nuts located on the rear muffler assembly (3).

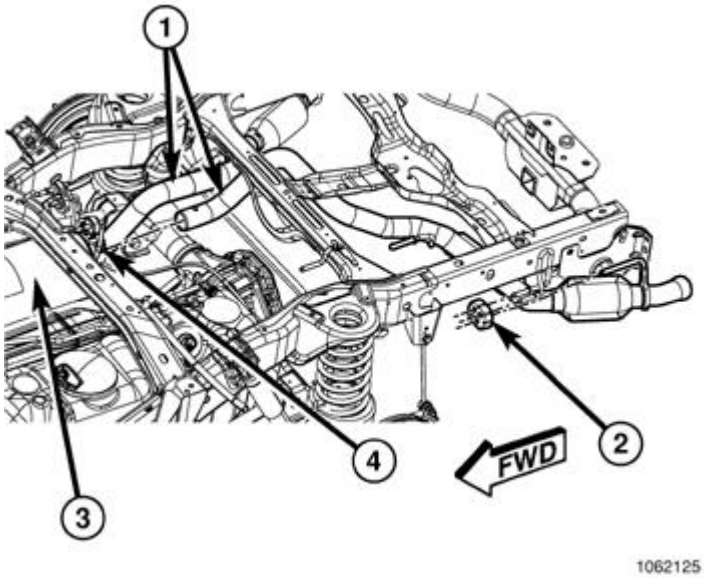

Fig. 45: Exhaust Isolator
Courtesy of CHRYSLER GROUP, LLC

6. Pull the exhaust tailpipes off the isolators (2) and remove the exhaust tailpipes (1) from the dual outlet

muffler assembly (3).

6.7L DIESEL ENGINE

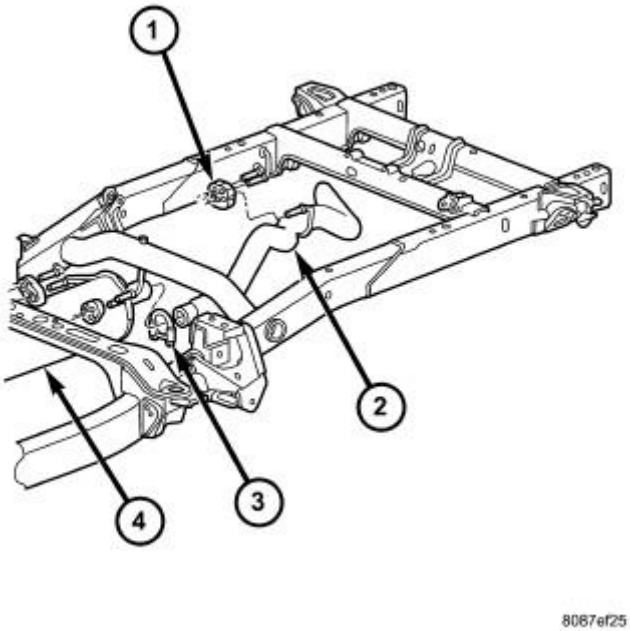

Fig. 46: Identifying Tailpipe - 5.9L Diesel
Courtesy of CHRYSLER GROUP, LLC

1 - ISOLATOR
2 - TAILPIPE
3 - CLAMP
4 - MUFFLER

1. Disconnect the battery negative cables.
2. Raise and support the vehicle.
3. Saturate the clamp nuts with heat valve lubricant. Allow 5 minutes for penetration.
4. Disconnect the exhaust tailpipe support hanger isolators.
5. Remove the muffler-to-tailpipe clamps.
6. Remove the tailpipe from the vehicle.

INSPECTION

INSPECTION

Discard rusted clamps, broken or worn supports and attaching parts. Replace a component with original equipment parts, or equivalent. This will assure proper alignment with other parts in the system and provide acceptable exhaust noise levels.

INSTALLATION

3.7L/4.7L/5.7L ENGINE

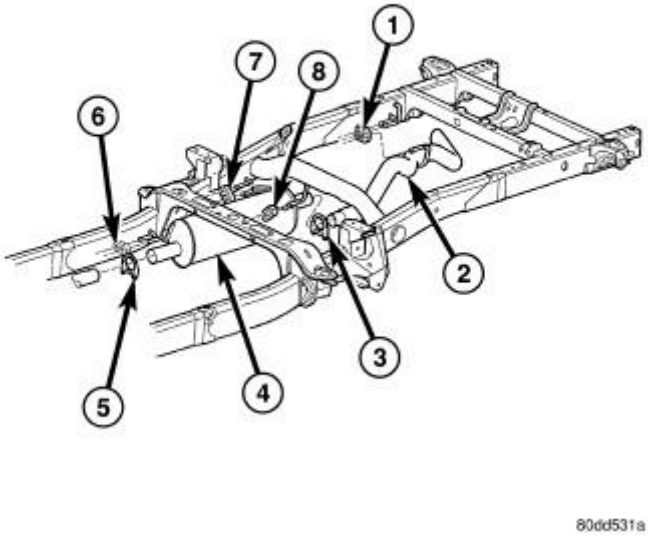

Fig. 47: Tailpipe Components
Courtesy of CHRYSLER GROUP, LLC

1 - INSULATOR
2 - TAILPIPE
3 - CLAMP
4 - MUFFLER
5 - CLAMP
6 - INSULATOR
7 - INSULATOR
8 - INSULATOR

1. Loosely assemble exhaust tailpipe (2) and clamp (2) to permit proper alignment of all parts.
2. Position the exhaust tailpipe (2) for proper clearance with the underbody parts.
3. Tighten all clamp nuts to 54 N.m (40 ft. lbs.) torque.
4. Hang the tailpipe (2) onto the isolator (1).
5. Check the exhaust system for contact with the body panels. A minimum of 25 mm (1.0 in.) is required between the exhaust system components and body/frame parts. Make the necessary adjustments, if needed.
6. Lower the vehicle.
7. Start the engine and inspect for exhaust leaks. Repair exhaust leaks as necessary. Refer to **DIAGNOSIS**

AND TESTING.

5.7L ENGINE DUAL EXHAUST

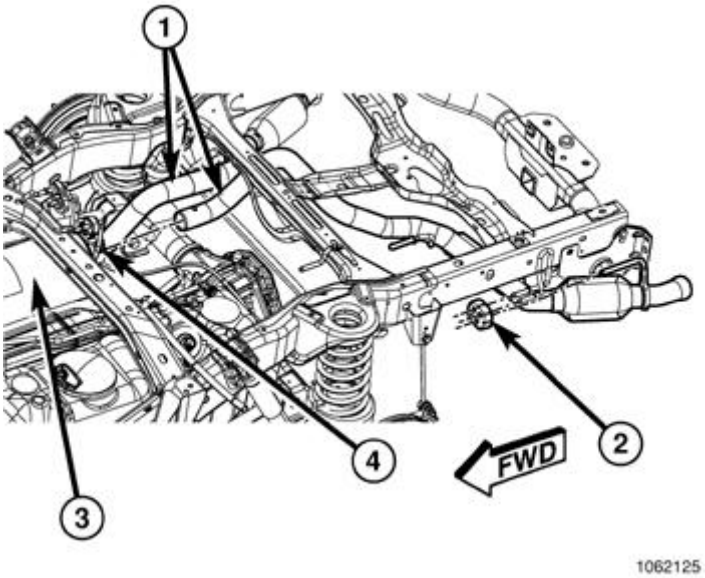

Fig. 48: Exhaust Isolator
Courtesy of CHRYSLER GROUP, LLC

1. Pre-assemble tailpipe (2) and clamp (1) loosely to permit proper alignment of all parts.
2. Raise and support the vehicle.
3. Hang the driver side tailpipe assembly (1) on the isolator (2).
4. Install driver side tailpipe assembly (1) to the top left outlet of the muffler assembly (3). Tighten to 54 N.m (40 ft. lbs.).
5. Install passenger side tailpipe assembly (1) to the lower right outlet of the muffler assembly (3). Tighten to 54 N.m (40 ft. lbs.).

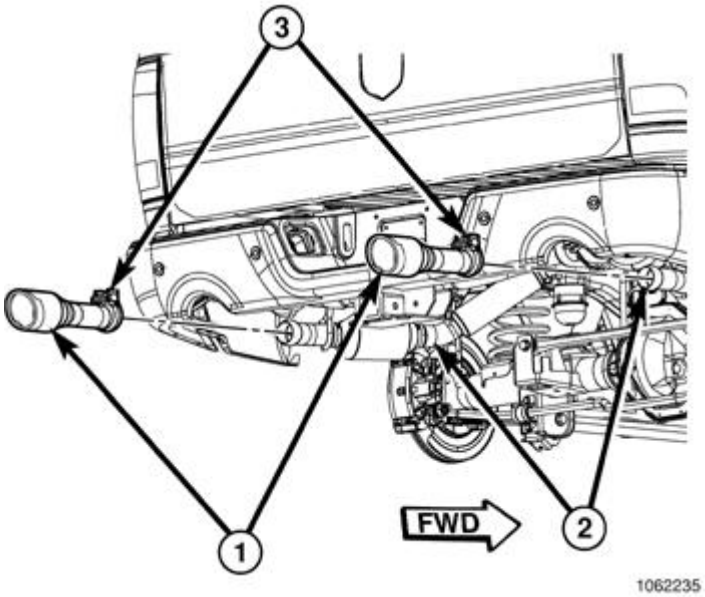

Fig. 49: Exhaust Tailpipe Tips
Courtesy of CHRYSLER GROUP, LLC

6. Loosely install tailpipe tips (1) to the tailpipe assembly (2).

NOTE: DO NOT tighten tailpipe tips at this time.

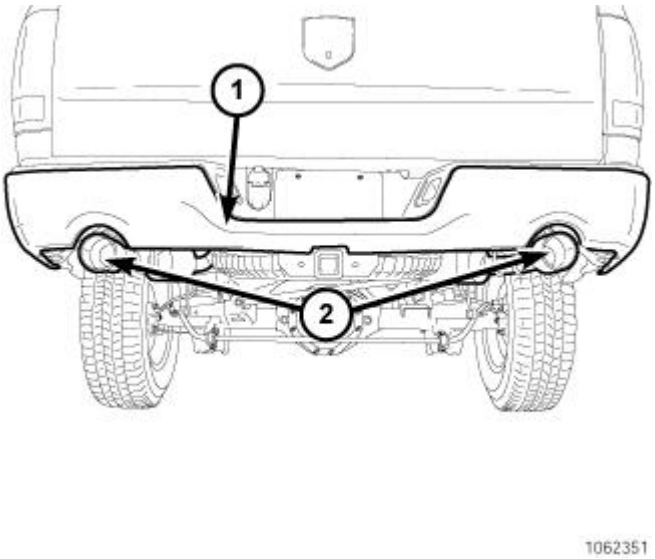

Fig. 50: Tailpipe Tips
Courtesy of CHRYSLER GROUP, LLC

7. Check the exhaust system components for any contact with the body panels. A minimum of 25 mm (1.0 in.) is required between the exhaust system components and body/frame parts. Make the necessary adjustments, if needed.
8. One properly aligned, tighten the tailpipe tips (2) to 25 N.m (19 ft. lbs.).

9. Lower the vehicle.
10. Start the engine and inspect for exhaust leaks. Repair exhaust leaks as necessary. Refer to **DIAGNOSIS AND TESTING**.

6.7L DIESEL ENGINE

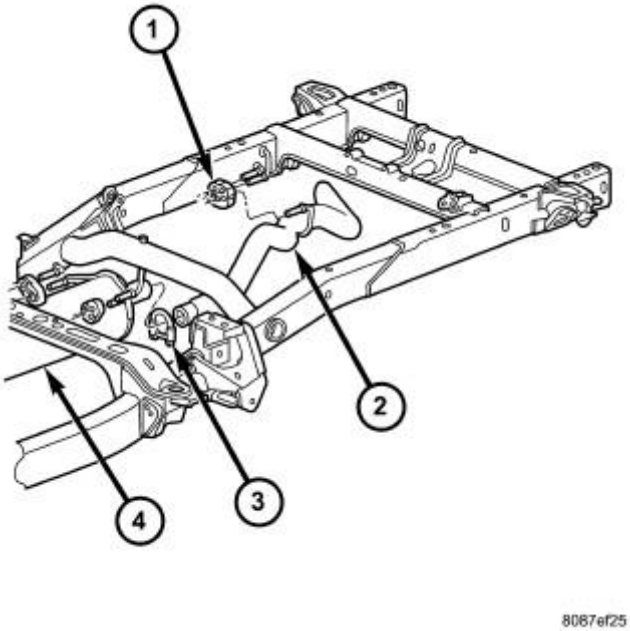

Fig. 51: Identifying Tailpipe - 5.9L Diesel
Courtesy of CHRYSLER GROUP, LLC

1 - ISOLATOR
2 - TAILPIPE
3 - CLAMP
4 - MUFFLER

1. Install the tailpipe into the muffler.
2. Install the tailpipe hanger rods into the isolators
3. Install the exhaust clamp, align the exhaust system, and tighten the clamp 48 N.m (35 ft. lbs.) torque.
4. Check the exhaust system for contact with the body panels. A minimum of 25 mm (1.0 in.) is required between the exhaust system components and body/frame parts. Make the necessary adjustments, if needed.
5. Lower the vehicle.
6. Connect the battery negative cables.
7. Start the engine and inspect for exhaust leaks. Repair exhaust leaks as necessary.

FUEL DELIVERY, 6.7L DIESEL

DESCRIPTION

DESCRIPTION

WARNING: High-pressure fuel lines deliver diesel fuel under extreme pressure from the injection pump to the fuel injectors. This may be as high as 180, 000 kpa (26, 107 psi). Use extreme caution when inspecting for high-pressure fuel leaks. Inspect for high-pressure fuel leaks with a sheet of cardboard. High fuel injection pressure can cause personal injury if contact is made with the skin.

The fuel system used on the Cummins engine is an electronically controlled, Bosch HPCR (High-Pressure Common Rail) system. The HPCR system consists of five main components:

- Electric Fuel Transfer (lift) Pump Located in the Fuel Tank
- Fuel Pump/Gear Pump (attached to fuel injection pump)
- High-Pressure Fuel Injection Pump
- Fuel Injection Rail
- Fuel Injectors

Also to be considered as part of the overall fuel system are:

- Accelerator Pedal
- Air Cleaner Housing/Element
- Check Valve Banjo Fitting at Rear of Cylinder Head
- Fuel Connector Tubes
- Fuel Drain Manifold (passage)
- Fuel Drain Valve (at filter)
- Fuel Filter/Water Separator
- Fuel Heater
- Fuel Heater Relay
- Fuel Transfer Pump Relay
- Fuel Level (gauge) Sending Unit
- Fuel Pressure Limiting Valve
- Fuel Tank
- Fuel Tank Module (containing a fuel gauge sending unit, separate fuel filter located at bottom of tank

module, and fuel transfer pump)
- Fuel Tank Filler/Vent Tube Assembly
- Fuel Tank Filler Tube Cap
- Fuel Tubes/Lines/Hoses
- High-Pressure Fuel Injector Lines
- In-Tank Fuel Filter (at bottom of fuel tank module)
- Low-Pressure Fuel Supply Lines
- Low-Pressure Fuel Return Lines
- Overflow Valve
- Quick-Connect Fuel Line Fittings
- Accelerator Pedal Position Sensor (APPS) Located in Cab
- Water Draining (maintenance)
- Water-In-Fuel (WIF) Sensor
- Screened Banjo Bolt (22)

The fuel injection pump supplies high pressure to the fuel rail independent of engine speed. This high pressure fuel is then accumulated in the fuel rail. High pressure fuel is constantly supplied to the injectors by the fuel rail. The Engine Control Module (ECM) controls the fueling and timing of the engine by actuating the injectors.

Fuel enters the system from the electric fuel transfer (lift) pump, which is located inside of the fuel tank and attached to the fuel tank module (the fuel transfer pump is no longer attached to the engine). Fuel is forced through the fuel filter element and then enters the Fuel Pump/Gear Pump, which is attached to the rear of the fuel injection pump. The Fuel Pump/Gear Pump is a low-pressure pump and produce pressures ranging from 551.5 kpa (80 psi) to 1241 kpa (180) psi. Fuel then enters the fuel injection pump. Low pressure fuel is then supplied to the FCA (Fuel Control Actuator).

The FCA is an electronically controlled solenoid valve. The ECM controls the amount of fuel that enters the high-pressure pumping chambers by opening and closing the FCA based on a demanded fuel pressure. The FPS (Fuel Pressure Sensor) on the fuel rail monitors the actual fuel pressure and provides it as an input to the ECM. When the actuator is opened, the maximum amount of fuel is being supplied to the fuel injection pump. Any fuel that does not enter the injection pump is directed to the overflow valve. The overflow valve regulates how much excess fuel is used for lubrication of the pump and how much is returned to the tank through the drain manifold.

Fuel entering the injection pump is pressurized to between 200-1800 bar (2900-26107 psi) by three radial pumping chambers. The pressurized fuel is then supplied to the fuel rail.

STANDARD PROCEDURE

WATER DRAINING AT FUEL FILTER HOUSING

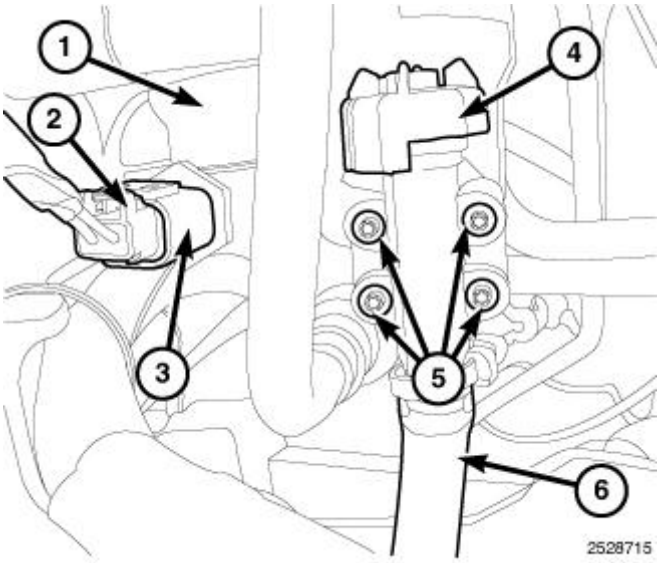

Fig. 1: Identifying Drain Valve, Drain Hose, Mounting Screws, Sensor Harness Connector & Filter Housing
Courtesy of CHRYSLER GROUP, LLC

The housing drain valve (4) serves two purposes. One is to **partially** drain the filter housing of excess water. The other is to drain the housing for fuel filter or Water In Fuel (WIF) sensor replacement.

The filter housing (1) should be partially drained whenever the WIF warning lamp remains illuminated. (Note that lamp will be illuminated for approximately two seconds when ignition key is initially placed in ON position for a bulb check).

1. A drain hose (6) is located at the bottom of drain valve. Place drain pan under drain hose.
2. **With engine not running,** Route the fuel drain hose to an appropriate container and rotate drain valve (4) one quarter turn counter clockwise to open it. Also loosen the fuel filter housing cover a 1/2 turn and allow the fuel to drain from the fuel filter housing for two minutes. Rotate the drain valve (4) clockwise one quarter turn to close it.

DIESEL FUEL SYSTEM CLEANING PROCEDURE

CAUTION: Cleanliness cannot be overemphasized when handling or replacing diesel fuel system components. This especially includes the fuel injectors, high-pressure fuel lines and fuel injection pump. Very tight tolerances are used with these parts. Dirt contamination could cause rapid part wear and possible plugging of fuel injector nozzle tip holes. This in turn could lead to possible engine misfire. Always wash/clean any fuel system component thoroughly before disassembly and then air dry. Cap or cover any open part after disassembly. Before assembly, examine each part for dirt, grease or other contaminants and clean if necessary. When installing new parts, lubricate them with clean engine oil or clean diesel fuel only.

NOTE: **Do not use any chemical cleaners or solvents on any fuel system lines or metal components. Metal lines, rails and tubes have a coating that will be damaged by these cleaners.**

NOTE: **Before cleaning the fuel system, perform the Lift Pump Flow test to determine if the Lift Pump was damaged and will require replacement while the Fuel Tank is out of the vehicle. Refer to DIAGNOSIS AND TESTING, 6.7L .**

1. Remove all of the steel fuel lines from the vehicle.
2. Flush tank to engine compartment bundle lines, supply and return, both directions.
3. Remove the fuel rail and remove the Pressure Limiting Valve (PLV) and pressure switch.
4. Submerge and soak all removed parts in clean diesel fuel.
5. Remove components from the diesel fuel and clean the inside and outside with compressed air.
6. Flush fuel rail with clean diesel and air. Both directions, multiple times.
7. Clean the PLV and pressure switch with compressed air.
8. Remove and flush out the Fuel Tank with clean diesel fuel. Wipe out the inside of the tank with a clean cloth. Use an appropriate fuel container. Dispose of the contaminated fuel using the proper procedures. Refer to **TANK, FUEL, REMOVAL**.

CAUTION: Dispose of petroleum based products in a manner consistent with all applicable Local, State, Federal, and Provincial regulations.

9. Inspect the Lift Pump Module screen for extreme dirt accumulation. Clean/flush the Lift Pump Module. Replace if necessary. (Most can be cleaned).
10. Install vent tubes on the rollover valves on the Fuel Tank to prevent water/dirt intrusion.
11. Reinstall the tank and 10 to 15 gallons of clean diesel fuel. Flash any controllers to the latest available software version (PCM/TIPM/CCN). Refer to **TANK, FUEL, INSTALLATION**.
12. Clean fuel filter housing and install new (latest number available) Mopar Fuel Filter.
13. Pour half a bottle (approximately 15 ounces) of CRC #05232 Diesel Fuel Therapy or equivalent diesel fuel injector cleaner into the Fuel Tank with the clean fuel.
14. Warm engine while checking for leaks or running concerns. Correct concerns as necessary.
15. Drive the truck a short distance (parking lot) and stop several times to agitate the cleaner/fuel mixture in the fuel tank. (Slosh fuel mixture in tank).
16. Monitor the scan tool and validate engine has reached operating temperature of 180°F (82°C).
17. Enable "Injector High Pressure Override" 3 times. This will stress the injectors and High Pressure Delivery Pump and circulate the cleaner/fuel mixture through the entire system.
18. Safely drive truck somewhat aggressively. Perform three times, wide open throttle 0 to 60 hard accelerations in a safe area to circulate cleaner and allow fuel to flush/clean injectors.
19. Verify repair by performing the Diesel Aftertreatment Validation - 6.7L procedure. Refer to **STANDARD PROCEDURE** or **STANDARD PROCEDURE** . .

FUEL SYSTEM PRIMING - DIESEL

A certain amount of air becomes trapped in the fuel system when fuel system components on the supply and/or high-pressure side are serviced or replaced. Fuel system priming is accomplished using the electric fuel transfer (lift) pump.

Servicing or replacing fuel system components will not require fuel system priming.

The fuel transfer (lift) pump is self-priming: When the key is first turned on (without cranking engine), the pump operates for approximately 1 to 2 second and then shuts off (Note: When ambient temperatures are cold enough to cause the intake air heaters to operate, the fuel lift pump will operate during the entire intake air pre-heat cycle). The pump will also operate for up to 25 seconds after the starter is quickly engaged, and then disengaged without allowing the engine to start. The pump shuts off immediately if the key is on and the engine stops running.

1. Turn key to CRANK position and quickly release key to ON position before engine starts. This will operate fuel transfer pump for approximately 25 seconds.
2. Crank engine. If the engine does not start after 25 seconds, turn key to OFF position, and leave it off for at least 5 seconds. Repeat previous step until engine starts.
3. Fuel system priming is now completed.
4. Attempt to start engine. If engine will not start, proceed to following steps. **When engine does start, it may run erratically and be noisy for a few minutes. This is a normal condition.**

CAUTION: Do not engage the starter motor for more than 30 seconds at a time. Allow two minutes between cranking intervals.

5. Perform previous fuel priming procedure steps using fuel transfer pump. Be sure fuel is present at fuel tank.
6. Crank the engine for 30 seconds at a time to allow fuel system to prime.

WARNING: The fuel injection pump supplies extremely high fuel pressure to each individual injector through the high-pressure lines. Fuel under this amount of pressure can penetrate the skin and cause personal injury. Wear safety goggles and adequate protective clothing. Do not loosen fuel fittings while engine is running.

WARNING: Engine may start while cranking starter motor.

DRAINING FUEL TANK

NOTE: Two different procedures may be used to drain fuel tank: using a diagnostic scan tool to activate the fuel pump relay and drain the fuel tank, or remove the fuel pump. Due to a one-way check valve installed into the fuel fill opening fitting at the tank, the tank cannot be drained conventionally at the fill cap.

CONVENTIONAL PROCEDURE

1. Disconnect the fuel supply line quick-connect fitting at the fuel filter. Refer to **STANDARD PROCEDURE - QUICK-CONNECT FITTINGS**. .
2. Install the appropriate Fuel Line Adapters / Fitting from the (special tool #8978A, Decay Tool, Fuel). Route the opposite end of this hose to an diesel fuel draining station. Using a scan tool, activate the fuel pump and drain the tank until empty.

ALTERNATIVE PROCEDURE

NOTE: If electric fuel pump is not operating, fuel must be drained through fuel fill fitting at tank. Refer to following procedures.

1. Disconnect the negative battery cable.
2. Remove the fuel pump module. Refer to **MODULE, FUEL PUMP, REMOVAL**.
3. After the fuel pump module has been removed, drain fuel tank into an approved diesel fuel draining station.

DIESEL FUEL CONTAMINATION TESTING PROCEDURE

OVERVIEW

This procedure explains the proper method for extracting a fuel sample and specific methods to inspect for contamination of any kind. The contamination we are looking for on the clean side of the Fuel Filter is very small. We don't say dirt because it may be metal, water, plastic or any other contamination, other than clean diesel fuel. The smallest we can see with naked eye is about 30 Microns. Our Fuel Filters have 5 Micron rating. The only way we can see this size of contamination is to properly collect it and view it. The fuel sample needs to be taken from the clean side of the system. In order to get a good clean side sample to inspect, perform the following procedure exactly.

Required Equipment
ONE LITER GLASS MEASURING CUP
FOUR FEET OF CLEAR, FLEXIBLE TUBING, 5/16 ID (available at the local hardware)
MULTI-BULB LED FLASHLIGHT HPDP FUEL RETURN HOSE
BRAKE CLEANER SPRAY SELF LIGHTING MAGNIFIER (Optional)
All items used for collecting fuel MUST be cleaned with clean diesel fuel, brake clean, and air ONLY. Failure to clean these items will contaminate the fuel sample. Do Not use towels to wipe out the measuring cup.

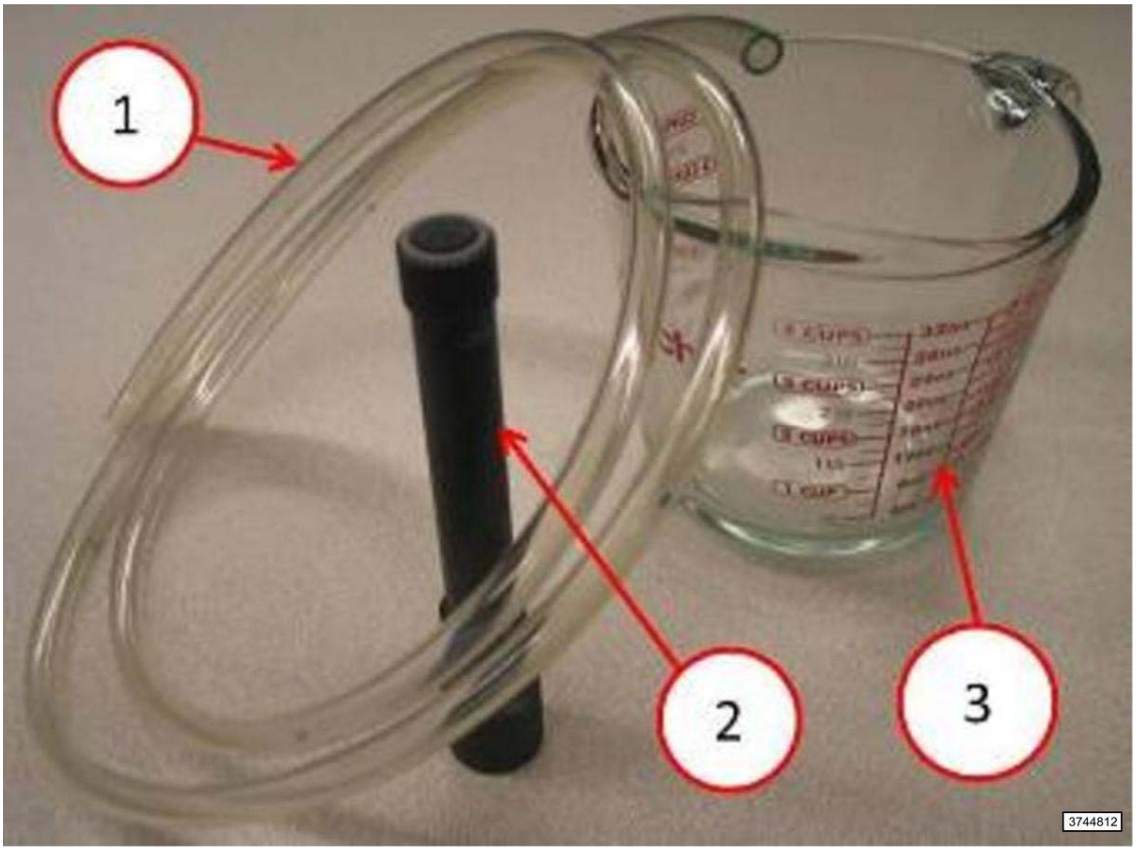

Fig. 2: Clear Tubing, Flashlight & Measuring Cup
Courtesy of CHRYSLER GROUP, LLC

1. 5/16" CLEAR TUBING (20' Length)
2. MULTI-BULB LED FLASHLIGHT
3. 4 CUP (1 LITER) "PYREX" STYLE MEASURING CUP

Fig. 3: Locating Return Flow Quick Disconnect & Engine Fuel Drain Tube Connection
Courtesy of CHRYSLER GROUP, LLC

A. HPDP return flow quick disconnect (at front of Fuel Filter mount)
B. Engine fuel drain tube connection - All return flow to tank

DIAGNOSTIC TEST

1. **CLEAN SIDE DIESEL FUEL SAMPLE COLLECTION AND INSPECTION**

NOTE: **The three photos in this test step illustrate the steps in this test procedure for clarification.**

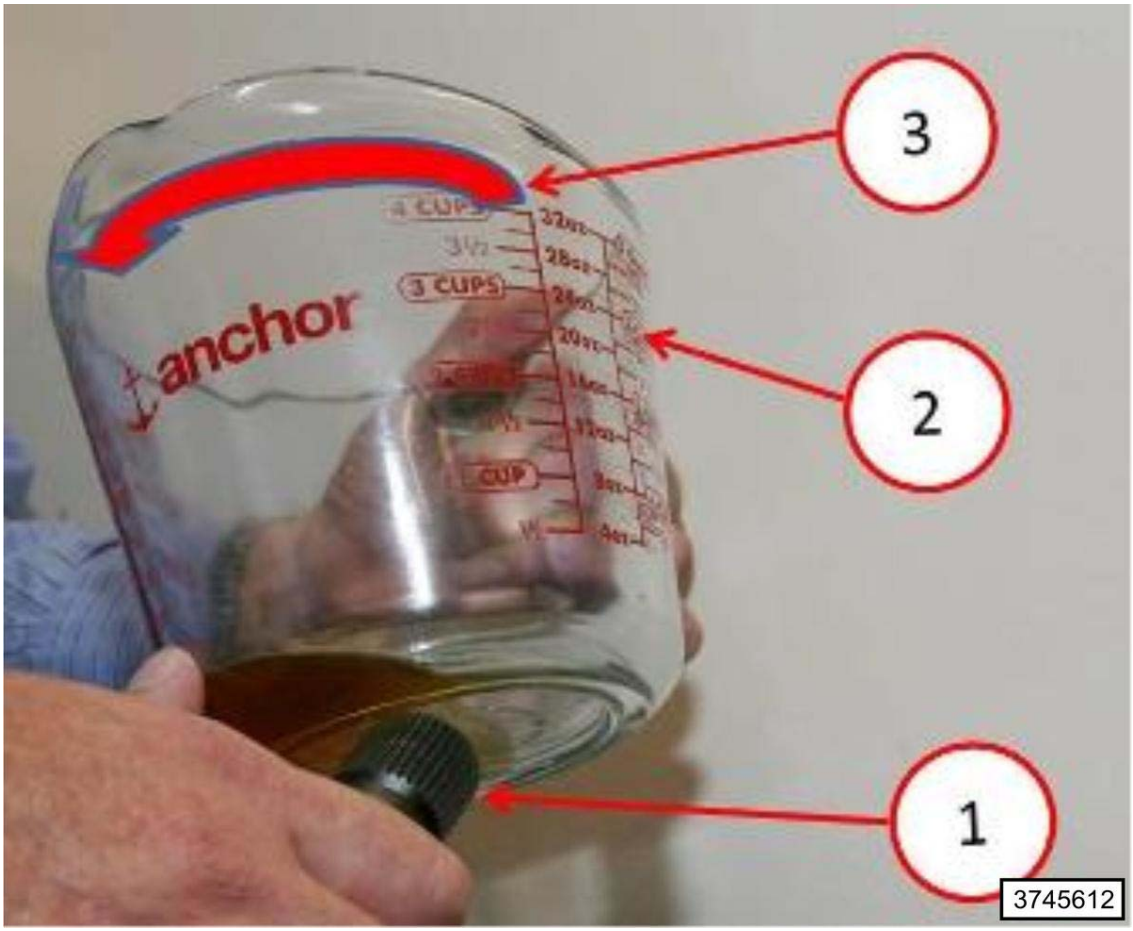

Fig. 4: Tilting Measuring Cup & Positioning Flashlight On Bottom Of Cup
Courtesy of CHRYSLER GROUP, LLC

1. LED FLASHLIGHT
2. MEASURING CUP
3. SLOWLY TILT THE CUP TOWARD YOU

NOTE: **The fuel filter MUST NOT be removed or replaced prior to taking sample in order to get accurate results.**

NOTE: **Warm the engine before collecting the fuel sample.**

1. Start the engine and using a scan tool, monitor the Coolant Temperature Sensor reading in Data Display.
2. While the engine is warming up, clean the clear tubing with clean diesel fuel and the glass measuring cup using brake clean and compressed air only. Do not use a towel.

NOTE: **Do not use brake clean or other chemicals on any vehicle parts for the fuel handling system such as lines, pumps or fittings.**

3. Monitor the scan tool until the vehicle has reached an operating temperature of 180°F (82°C).
4. Turn the engine off.
5. Remove the HPDP return line quick disconnect from the fitting located at the front of the Fuel Filter housing at the banjo bolt joining the Pressure Limiting Valve return (Connection A in the fuel system connections figure above).

NOTE: **The fuel flowing from the return of the High Pressure Delivery Pump (HPDP) MUST NOT be part of our sample. We are looking primarily for injector return fuel. The easiest way is to eliminate the HPDP return line and pull the injector return flow sample from the filter mount, on the front side.**

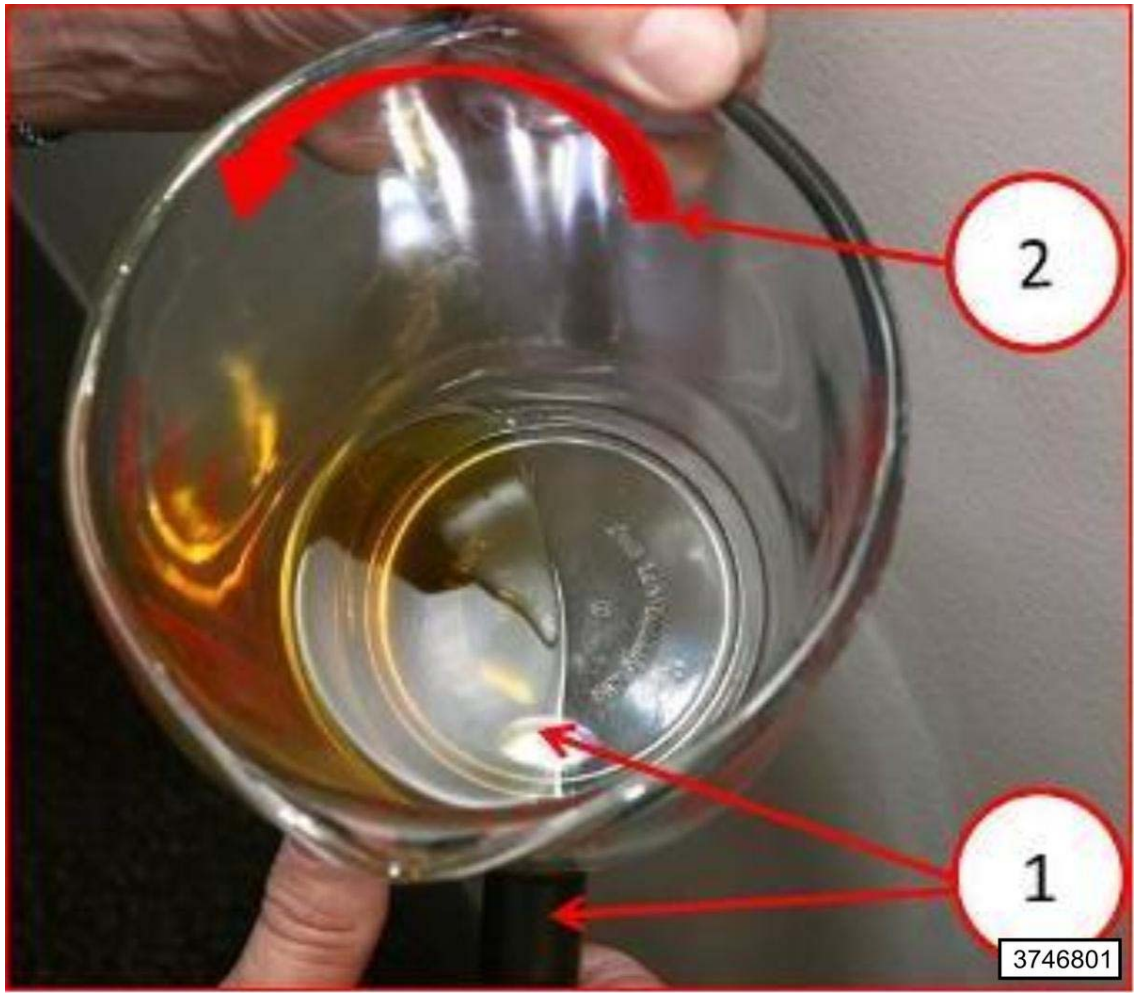

Fig. 5: Shining Flashlight Through Bottom Of Measuring Cup While Tilting Cup
Courtesy of CHRYSLER GROUP, LLC

1. LED FLASHLIGHT POINTING THROUGH BOTTOM OF CUP (Shine Toward the Handle)
2. SLOWLY TILT THE CUP TOWARD YOU

6. Cap off the male fitting that the HPDP return line was disconnected from.
7. Disconnect the quick connect fitting for the fuel return line located on the back side of the Fuel Filter housing (Connection B in the fuel system connections figure above).
8. Attach the four foot length of 5/16" clear tubing to this exposed male fitting and orientate it on a downhill angle in to a drain pan. This will be your sample source hose.
9. Using a hose with two male fittings, attach one end to the HPDP return line disconnected in step 5. Connect the other end to the fuel return line disconnected in step 7. This will return the High Pressure Pump return flow back to the tank while collecting the sample.
10. Start the engine, and continue monitoring the coolant temperature to maintain the 180°F (82°C).
11. Using the scan tool, navigate to PCM > System Tests > Fuel Pressure Override Test and select start.
12. Initiate the Fuel Pressure Override Test two consecutive times to further warm the fuel and allow the tubing to be thoroughly rinsed clean.
13. Start the Fuel Pressure Override Test a third time. At mid stream of the test move the clear tube to the measuring cup. Collect a sample of approximately 1/4 inch of fuel in the measuring cup.
14. Turn the engine off.

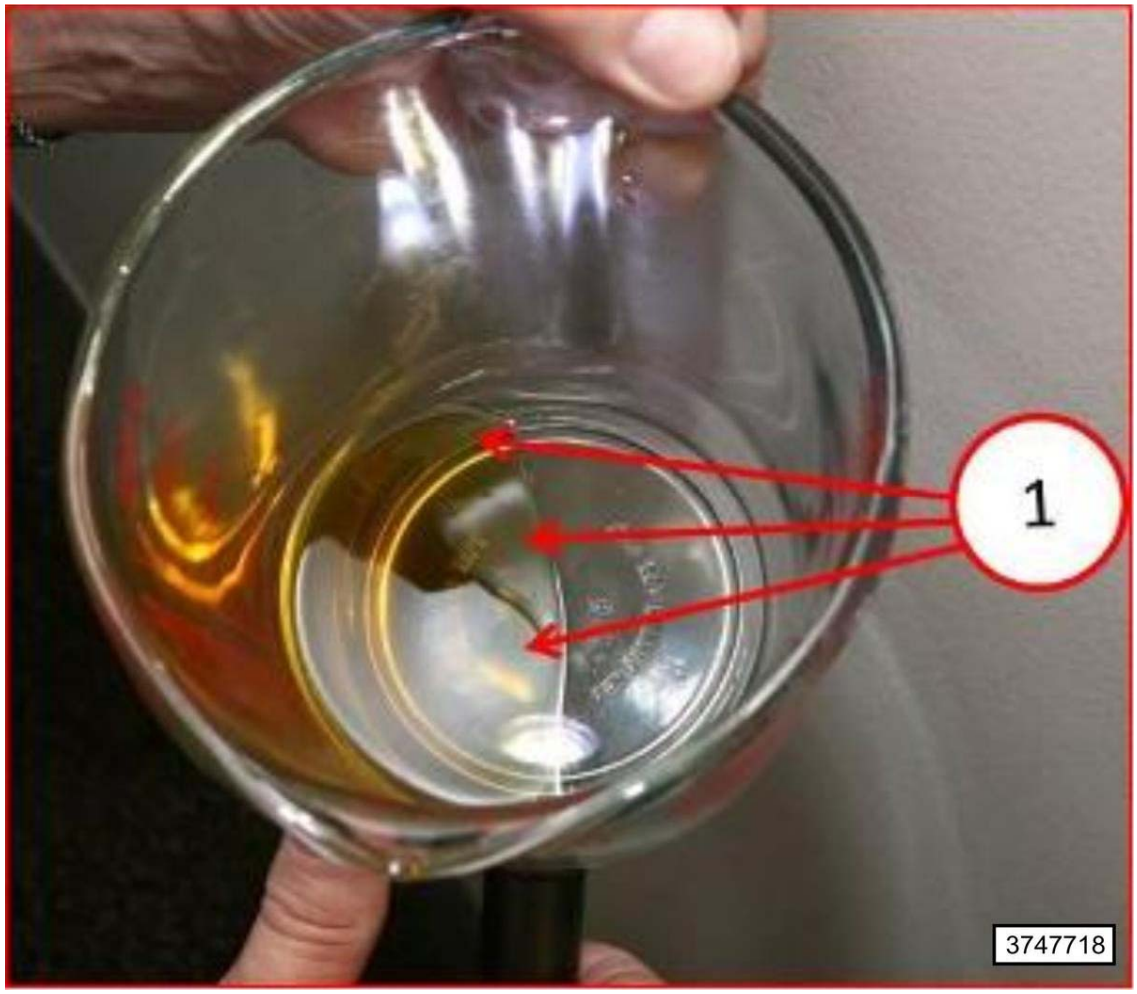

Fig. 6: Locating Fuel Contamination In Measuring Cup

1. Contamination will gather at the trailing edge of fuel.
VIEW CAREFULLY, LOOKING FOR VERY SMALL PARTICULATE MATTER (May Look Cloudy)

NOTE: **Follow these next steps exactly to inspect the sample for contamination.**

15. Allow the sample to sit for 10 minutes in a dust free environment to allow the debris to settle to the bottom. **It is important to not allow any air born contaminates to get into the fuel sample. Do not shake, swirl, or agitate the fuel in any way. The contamination should settle to the bottom.**
16. Hold the measuring cup (2) by the handle in one hand and shine the LED flashlight (1) through the bottom of the container toward the handle of the cup.
17. Slowly tilt the measuring cup (2) toward you and keep the LED flashlight (1) at the **trailing edge** of the fuel as it comes down the bottom of the cup and inspect for contamination.
    - Any dirt in the fuel will collect and be pulled by this trailing edge of fuel **(Number one in the last figure)** . It may be any color and sometimes looks as though the fuel is cloudy. **This is the contamination.** .
    - If you see **ANYTHING AT ALL** , the fuel is contaminated.

View the following repair options:

The fuel sample is found to be contaminated:

- To ensure that the In Tank Lift Pump is operating properly, perform the Lift Pump Flow Test. For instruction and specifications on this procedure, refer to **DIAGNOSIS AND TESTING, 6.7L** . After checking the In Tank Lift Pump operation, refer to **DIESEL FUEL SYSTEM CLEANING PROCEDURE**. .
- Go To 2.

The Fuel sample is clean:

- Install new fuel filter and Mopar (CRC) fuel injector cleaner into the fuel tank at a ratio four times the recommend concentration.
- Go To 2.

2. **DIAGNOSTIC PATH**

Were you instructed to inspect for Fuel Contamination from the MIL LIGHT ON PRETEST PROCEDURE?

Yes

- Perform the diagnostic trouble code test that was found to be present. Refer to the appropriate Electrical Diagnostic article. .

No

- Go To 3.

3. **DIAGNOSTIC PATH CONTINUED**

   Were you instructed to inspect for Fuel Contamination from a Non-DTC TEST PROCEDURE?

   Yes

   - Perform the DIESEL AFTERTREATMENT VALIDATION 6.7L procedure. Refer to **STANDARD PROCEDURE** or **STANDARD PROCEDURE** . .

   No

   - Return to Diagnostic Test that directed you to inspect for fuel contamination.

SPECIFICATIONS

FUEL INJECTOR FIRING ORDER - DIESEL

The firing order for the Cummins turbo-diesel engine is **1-5-3-6-2-4** .

TORQUE SPECIFICATIONS - 6.7L

DESCRIPTION	N.m	Ft. Lbs.	In. Lbs.
Air Intake Heater	24	18	-
Crankshaft Position Sensor	10	-	89
Engine Coolant Temperature Sensor	18	-	159
Fuel Connector Nut at Cylinder Head	55	41	-
Fuel Control Actuator	24	18	-
Fuel Filler Hose Clamp at Tank	3	-	27
Fuel Filter Housing Cover	31	23	-
Fuel Filler Housing-to-Body Screws	2	-	18
Fuel Heater Element	2	-	18
Fuel Injector Bolts	5	-	44
Step 2	10	-	89
Fuel Injector Solenoid Nuts	1.25	-	11
Fuel Injection Pump Drive Gear Access Cover	8	-	71
Fuel Injection Pump			

Mounting Nuts	24	18	-
Fuel Injection Pump-to-Gear Shaft Nut	105	77	-
Fuel Line Banjo Fitting Bolts	24	18	-
Fuel Line Banjo Fitting Bolts at Fuel Filter Housing	24	18	-
Fuel Line Brace-to-Intake Manifold Cover Bolt (High-Pressure)	24	18	-
Fuel Line Fittings (High-Pressure - Pump to Rail)	40	30	-
Fuel Line Fittings (High-Pressure - Cylinder Head to Rail)	40	30	-
Fuel Pressure Limiting Valve (Banjo Bolt)	24	18	-
Fuel Pressure Limiting Valve (In Fuel Rail)	101	74	-
Fuel Pressure Sensor	70	52	-
Fuel Rail Mounting Bolts	24	18	-
Fuel Tank Mounting Straps (Mid-Ship)	41	30	-
High Pressure Connector Retaining Nut	15	-	133
Step 2	50	37	-
Intake Air Temperature Sensor	1	-	9
Intake Manifold Bolts	24	18	-
Mass Air Flow Sensor	1	-	9
Map Sensor Screws	1	-	9
No. 6 Fuel Line Shield Bolts	43	32	-
Oxygen Sensor	41	30	-
Oxygen Sensor Module	6	-	53
Rear Engine Lift Bracket Bolts	77	57	-
Rear Fuel Tank Straps	55	41	-
Screened Quick Connect	27	20	-

SPECIAL TOOLS

SPECIAL TOOLS

	8978A - Decay Tool, Fuel 9340 - SAE Fuel Pump Lock Ring Wrench (Originally Shipped In Kit Number(s) 9327, 9327CC, 9397, 9575.) L-4407A - Puller, Gear

FILTER, FUEL

REMOVAL

REMOVAL

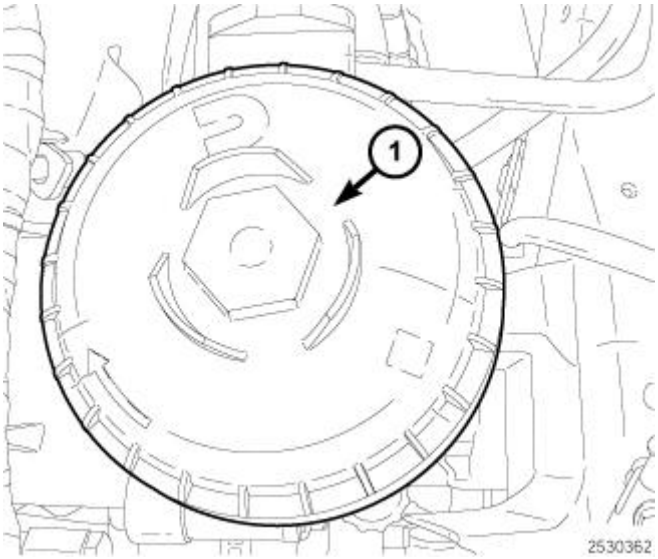

Fig. 7: Fuel Filter Housing Cover
Courtesy of CHRYSLER GROUP, LLC

NOTE: **Refer to MAINTENANCE SCHEDULES or the Owner's Manual for recommended fuel filter replacement intervals.**

1. Clean all debris from around filter canister (1) and canister cover.
2. Using a socket, rotate the fuel filter housing cover (1) counter clockwise and remove cover (1).

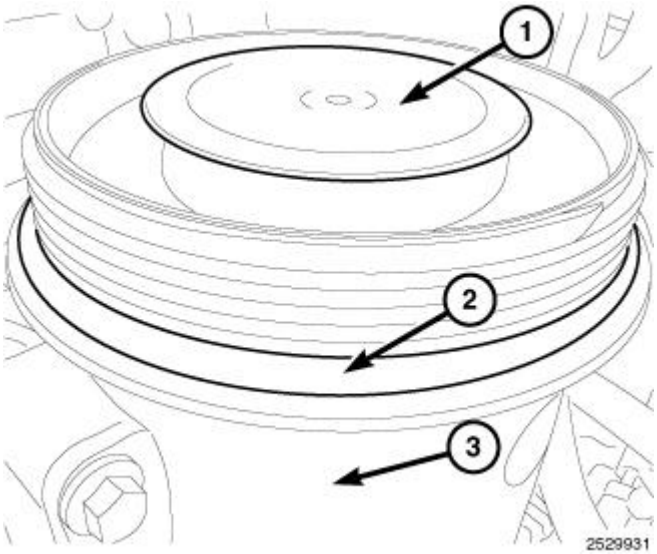

Fig. 8: Fuel Filter Element & O-Ring
Courtesy of CHRYSLER GROUP, LLC

3. Remove and discard the O-ring (2).
4. Remove fuel filter element (1).

INSTALLATION

INSTALLATION

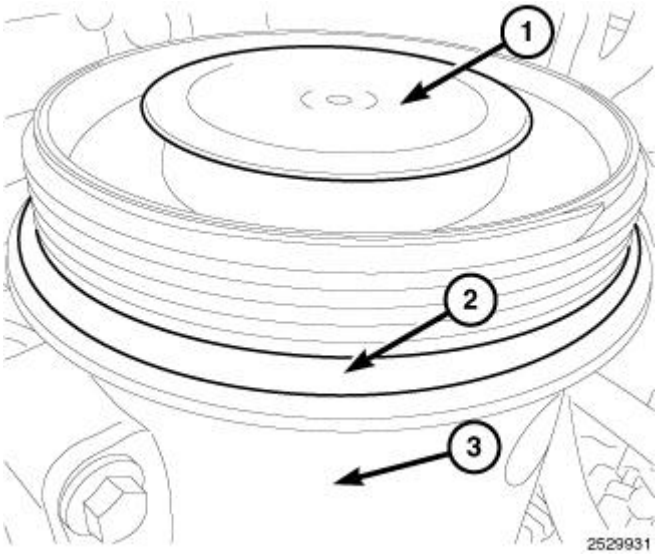

Fig. 9: Fuel Filter Element & O-Ring
Courtesy of CHRYSLER GROUP, LLC

CAUTION: Do not pre-fill the fuel filter with fuel. Severe damage to fuel system and injection system components may result.

NOTE: **The engine has a self-priming low-pressure fuel system. Refer to FUEL SYSTEM PRIMING - DIESEL. .**

NOTE: **DO NOT USE brake cleaner, carburetor cleaner, or similar harsh solvents for cleaning the internal housing walls.**

1. Ensure that the internal housing wall is clean of debris before installing a new fuel filter cartridge.
2. Install fuel filter element (1).
3. Lubricate with clean engine oil and install the new O-ring (2).

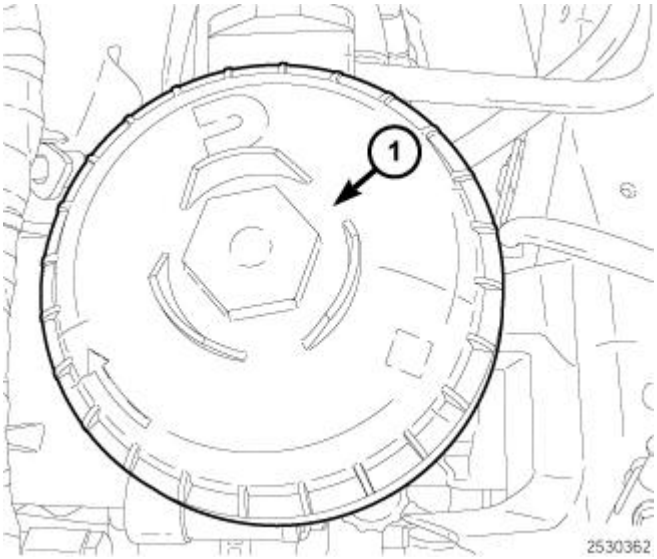

Fig. 10: Fuel Filter Housing Cover
Courtesy of CHRYSLER GROUP, LLC

4. Install the fuel filter housing cover (1) and tighten to 31 N.m (23 ft. lbs.).

FITTING, QUICK CONNECT

DESCRIPTION

DESCRIPTION

Different types of quick-connect fittings are used to attach the various fuel system components, lines and tubes. These are: a single-button type, a two-button type, a pinch type, a single-tab type, a two-tab type or a plastic retainer ring type. Some are equipped with safety latch clips. Some may require the use of a special tool for disconnection and removal. Refer to **STANDARD PROCEDURE - QUICK-CONNECT FITTINGS**. .

CAUTION: **Before separating a Quick-Connect fitting, pay attention to what type of fitting is being used. Refer to STANDARD PROCEDURE - QUICK-CONNECT FITTINGS. . This will prevent unnecessary fitting or fitting latch breakage.**

CAUTION: The interior components (O-rings, clips) of quick-connect fittings are not serviced separately, but new plastic spacers and latches are available for some types. If service parts are not available, do not attempt to repair the damaged fitting or fuel line (tube). If repair is necessary, replace the complete fuel line (tube) assembly.

STANDARD PROCEDURE

STANDARD PROCEDURE - QUICK-CONNECT FITTINGS

Different types of quick-connect fittings are used to attach the various fuel system components, lines and tubes. Some quick-connect fittings require the use of a special tool for disconnection and removal.

These are the quick-connect fittings:

- Redundant Latch Single Button Type Fitting
- Single Button Type Fitting
- Pinch Type Fitting
- Single Tab Type Fitting
- Two Tab Type Fitting
- Plastic Retainer Ring Type Fitting
- Latch Clip Type 1 Fitting
- Latch Clip Type 2 Fitting
- Wing Type Fitting

DISCONNECTING

WARNING: The fuel system is under a constant pressure (even with engine off). Before servicing any fuel system hose, fitting or line, fuel system pressure must be released. Refer to FUEL SYSTEM PRESSURE RELEASE. .

CAUTION: Before separating a Quick-Connect fitting, pay attention to what type of fitting is being used. Refer to STANDARD PROCEDURE - QUICK-CONNECT FITTINGS. . This will prevent unnecessary fitting or fitting latch breakage.

CAUTION: The interior components (O-rings, clips) of quick-connect fittings are not serviced separately, but new plastic spacers and latches are available for some types. If service parts are not available, do not attempt to repair the damaged fitting or fuel line (tube). If repair is necessary, replace the complete fuel line (tube) assembly.

REDUNDANT LATCH SINGLE BUTTON TYPE FITTING:

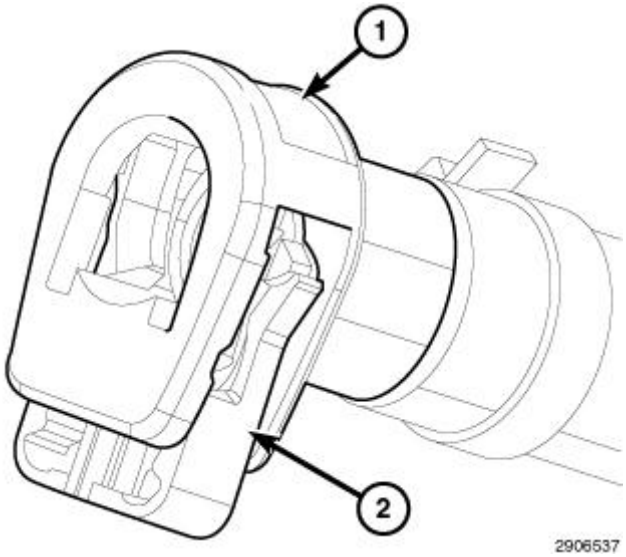

Fig. 11: Redundant Latch & Push Button
Courtesy of CHRYSLER GROUP, LLC

This type of quick-connect fitting is equipped with a redundant latch (2) and a single push button (1) that releases two internal latches located in the quick-connect fitting. Special tools are not required for removal.

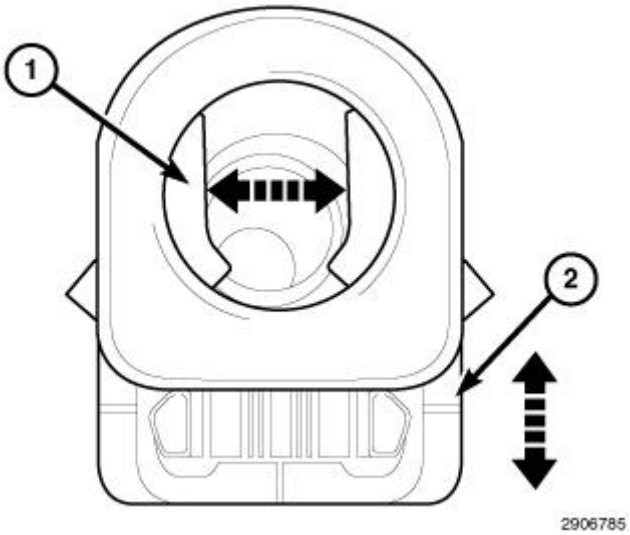

Fig. 12: Redundant Latch & Internal Latches
Courtesy of CHRYSLER GROUP, LLC

CAUTION: Do not pry or pull up on the push button as damage to the latches of the quick-connect fitting will occur.

1. Pull the redundant latch (2) out away from the quick-connect fitting.
2. Press on the push button with your thumb, release the internal latches (1) and remove the quick-connect fitting from the fuel system component.

SINGLE BUTTON TYPE FITTING:

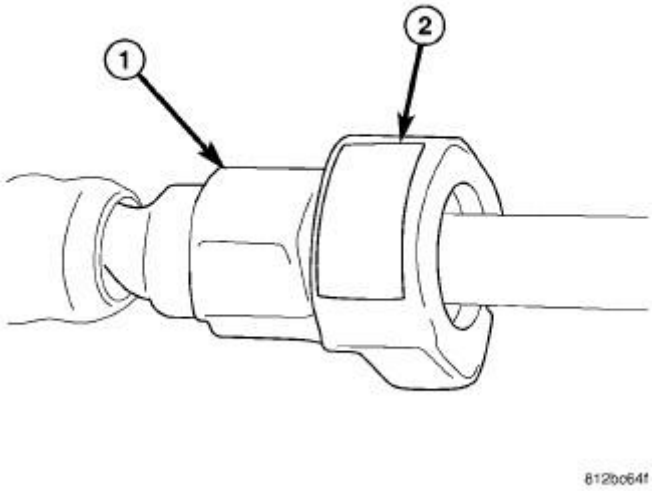

Fig. 13: Single Button Fitting
Courtesy of CHRYSLER GROUP, LLC

CAUTION: Do not pry or pull up on the push button as damage to the latches of the quick-connect fitting will occur.

This type of quick-connect fitting is equipped with a single push button (2) that releases two internal latches located in the quick-connect fitting. Special tools are not required for removal.

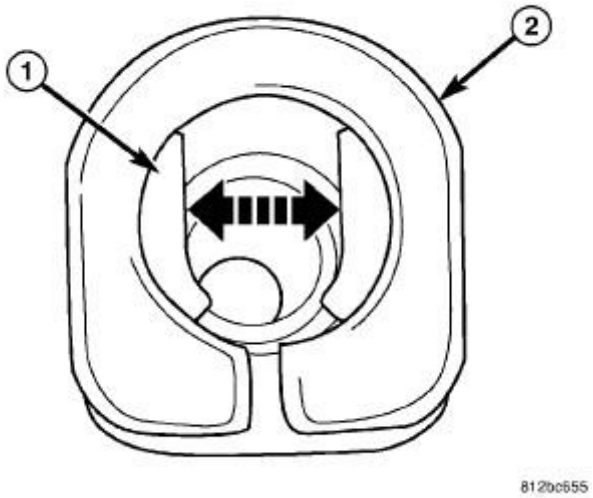

Fig. 14: Quick-Connect Fitting Latches
Courtesy of CHRYSLER GROUP, LLC

1. Press on the push button with your thumb, release the internal latches (1).
2. Remove the quick-connect fitting from the fuel system component.

2 BUTTON TYPE FITTING

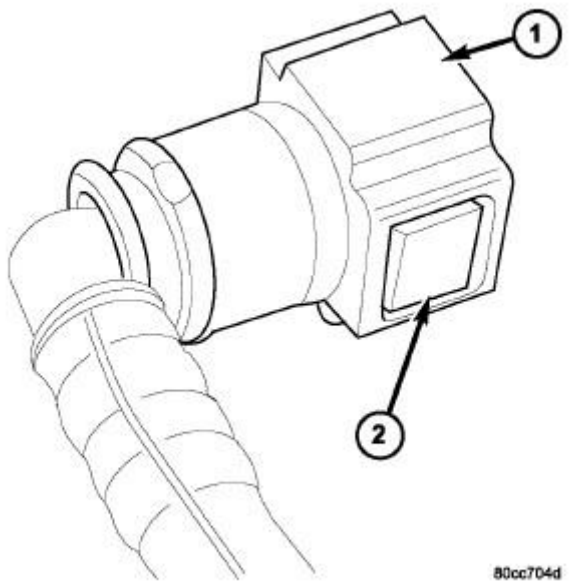

Fig. 15: View Of 2-Button Type Fitting
Courtesy of CHRYSLER GROUP, LLC

This type of quick-connect fitting (1) is equipped with two push buttons (2) that releases two internal latches located in the quick-connect fitting. Special tools are not required for removal.

1. Press on both push buttons with your thumb, release the internal latches.
2. While holding the two push buttons simultaneously, remove the quick-connect fitting from the fuel system component.

PINCH TYPE FITTING

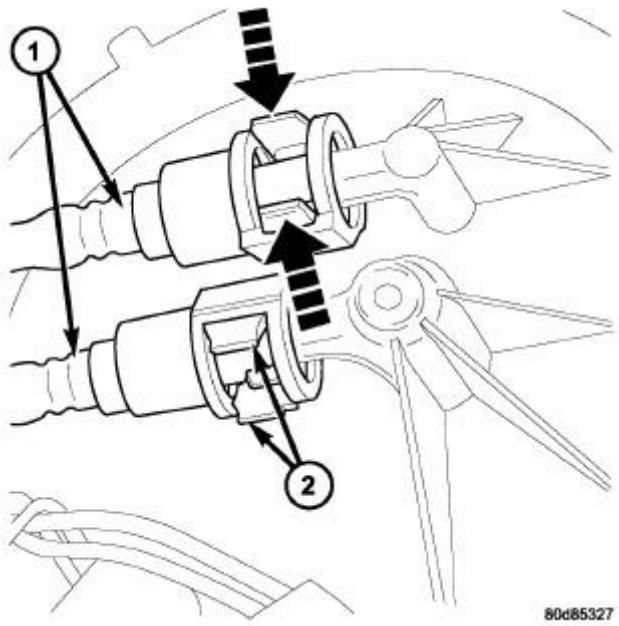

Fig. 16: View Of Pinch Type Quick-Connect Fitting
Courtesy of CHRYSLER GROUP, LLC

This type of quick-connect fitting (1) is equipped with two finger tabs (2). Special tools are not required for removal.

1. Pinch both tabs (2) together and release the quick-connect fitting.
2. Remove the quick-connect fitting from the fuel system component.

SINGLE TAB TYPE FITTING

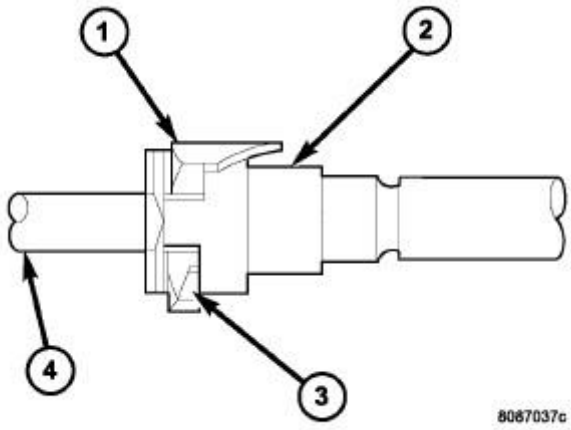

Fig. 17: View Of Single-Tab Type Fitting
Courtesy of CHRYSLER GROUP, LLC

This type of quick-connect fitting (3) is equipped with a single pull tab (1). The tab is removable. After tab is removed the quick-connect fitting can be separated from the fuel system component. Special tools are not required for removal.

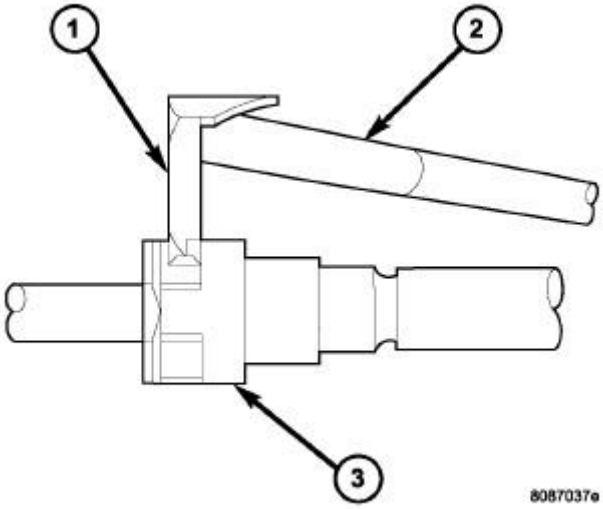

Fig. 18: Disconnecting Single-Tab Type Fitting
Courtesy of CHRYSLER GROUP, LLC

1. Press release tab on side of fitting to release pull tab (1). **If release tab is not pressed prior to releasing pull tab, pull tab will be damaged.**
2. While pressing the release tab on the side of the quick-connect fitting use a screwdriver (2) to pry up the pull tab.
3. Raise the pull tab until it separates from the quick-connect fitting.
4. Remove the quick-connect fitting from the fuel system component.

TWO TAB TYPE FITTING

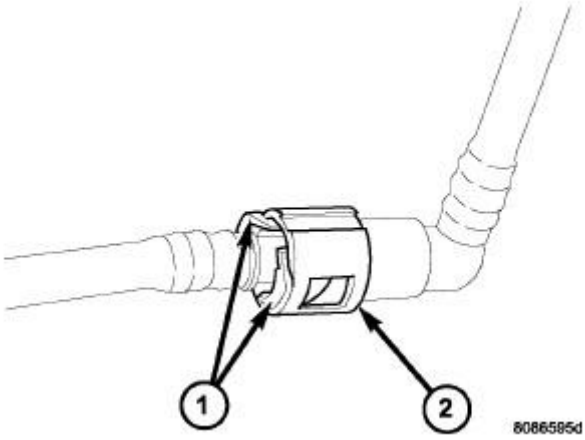

Fig. 19: Identifying Typical 2-Tab Type Fitting
Courtesy of CHRYSLER GROUP, LLC

This type of quick-connect fitting (2) is equipped with tabs located on both sides of the fitting (1). These tabs are integral to the fuel system component. The plastic tabs will remain on the component being serviced after the quick-connect fitting is removed. The O-ring and spacer will remain in the quick-connect fitting. Special tools are not required for removal.

1. Squeeze the plastic tabs (1) against the sides of component being serviced with your fingers.
2. Remove the quick-connect fitting from the fuel system component.

PLASTIC RETAINER RING TYPE FITTING

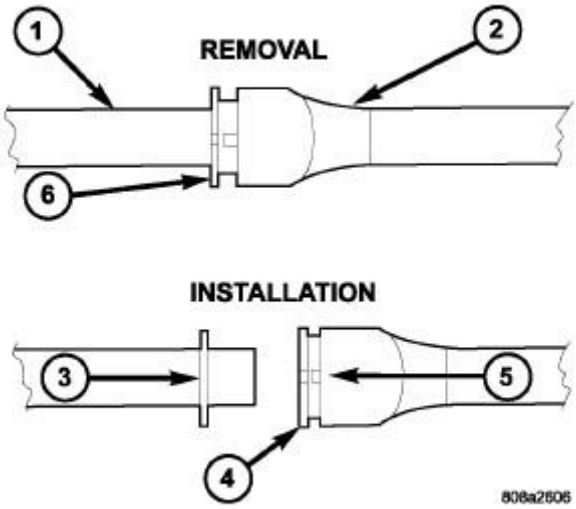

Fig. 20: Plastic Retainer Ring Type Fitting
Courtesy of CHRYSLER GROUP, LLC

This type of fitting can be identified by the use of a round plastic retainer ring (4) usually black in color. Special tools are not required for removal.

NOTE: **The round plastic retainer ring must be pressed squarely into the quick-connect fitting body. If this retainer is cocked during removal it will be difficult to disconnect the quick-connect fitting. Use an open-end wrench on the shoulder of the plastic retainer ring to aid in disconnection.**

1. Firmly push the quick-connect fitting (5) towards the component being serviced while firmly pushing the round plastic retainer ring into the quick-connect fitting (6). With the round plastic ring depressed, remove the quick-connect fitting from the fuel system component.
2. After removal the plastic retainer ring will remain with the quick-connect fitting.

LATCH CLIP TYPE 1 FITTING

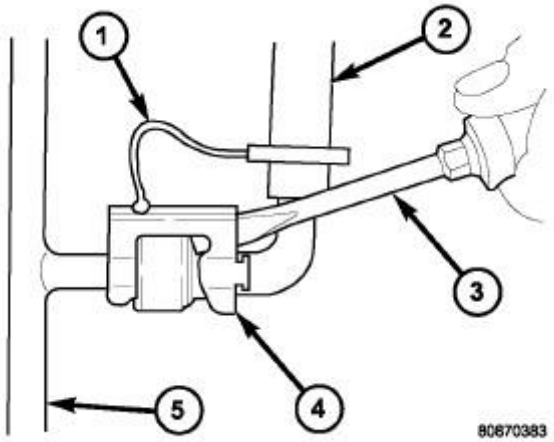

Fig. 21: Latch Clip Type 1
Courtesy of CHRYSLER GROUP, LLC

Depending on vehicle model and engine, 2 different types of safety latch clips are used. One is tethered (1) to fuel line and the other is not. A special tool will be necessary to disconnect the fuel line after latch clip is removed. The latch clip may be used on certain fuel line and fuel rail connections or to join fuel lines together.

1. Pry up on the latch clip (4) with a screwdriver (3).
2. Slide the latch clip away from the quick-connect fitting while lifting the screwdriver and position aside.

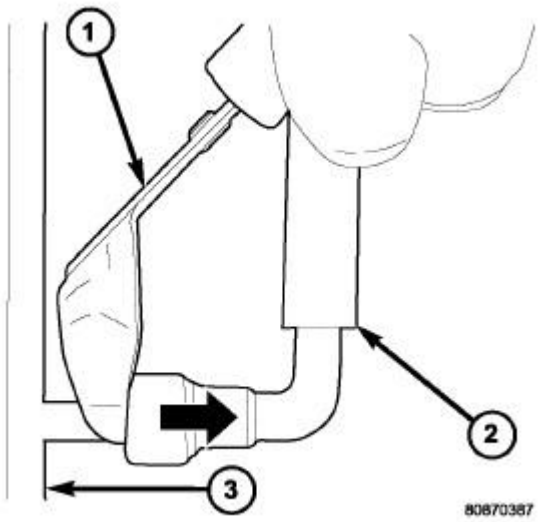

Fig. 22: Fuel Line Disconnection Using Special Tool
Courtesy of CHRYSLER GROUP, LLC

3. Insert the commercially available fuel line removal tool (1) into the quick-connect fitting and release the internal latches.

NOTE: After removal the internal latches will remain in the quick-connect fitting.

4. With the commercially available fuel line removal tool (1) still inserted, remove the quick-connect fitting from the fuel system component.

LATCH CLIP TYPE 2 FITTING

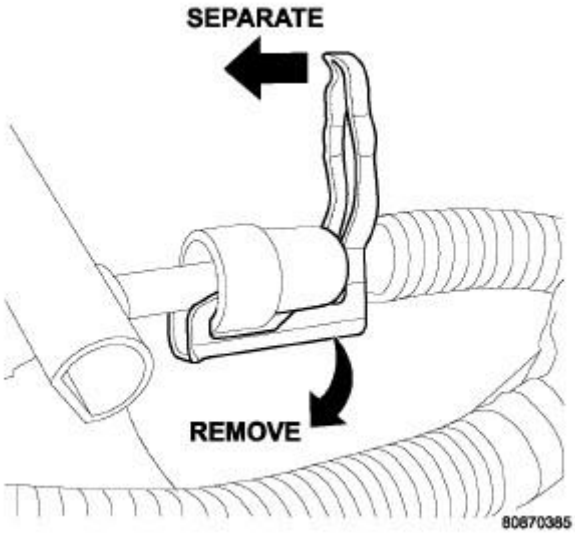

Fig. 23: Latch Clip Type 2
Courtesy of CHRYSLER GROUP, LLC

Depending on vehicle model and engine, 2 different types of safety latch clips are used. One is tethered to the fuel line and the other is not. A special tool will be necessary to disconnect the fuel line after the latch clip is removed. The latch clip may be used on certain fuel line and fuel rail connections or to join fuel lines together.

1. Unlatch the small arms on the end of clip, swing away and separate from the fuel system component.
2. Slide the latch clip away from the quick-connect fitting while lifting with a screwdriver and position aside.

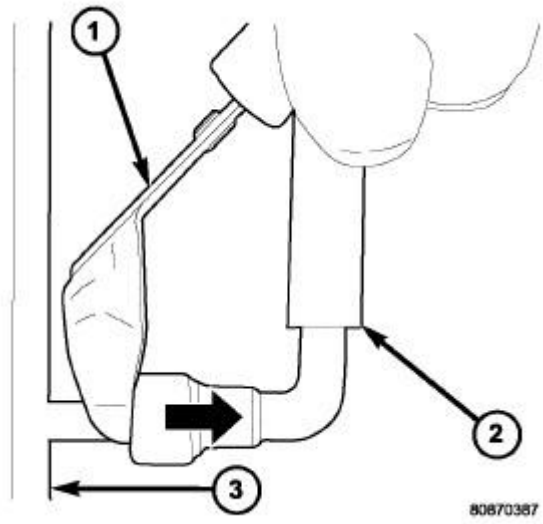

Fig. 24: Fuel Line Disconnection Using Special Tool
Courtesy of CHRYSLER GROUP, LLC

3. Insert the commercially available fuel line removal tool (1) into the quick-connect fitting and release the internal latches.

NOTE: After removal the internal latches will remain in the quick-connect fitting.

4. With the commercially available fuel line removal tool (1) inserted, remove the quick-connect fitting from the fuel system component.

WING TYPE FITTING

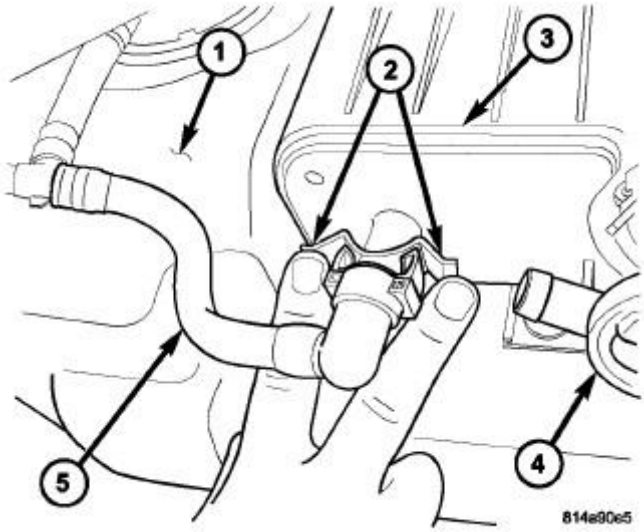

Fig. 25: Wing Type Fitting

Courtesy of CHRYSLER GROUP, LLC

The wing type fitting is used on fuel system and emission components. The wing type fitting is most commonly used on the EVAP canister (3). Special tools are not required for removal.

1. Using two fingers, press both wings (2) and release the locking tabs.

   NOTE: After removal the locking tabs will remain with the quick-connect fitting.

2. While holding the wings, remove the quick-connect fitting from the fuel system component.

CONNECTING

1. Inspect the quick-connect fitting body and fuel system components for damage. Replace as necessary.
2. Prior to connecting any quick-connect fitting to components, check condition of fitting and components. Clean parts with a lint-free cloth. Lubricate with clean engine oil.
3. Insert the quick-connect fitting onto the fuel tube or fuel system component until the built-in stop on the fuel tube or component rests against the back of fitting.
4. Continue pushing until a click is felt.
5. If Equipped:
   - **Redundant Latch Single Button Type Fitting:** Push redundant latch until it locks into position in the quick-connect fitting.
   - **Single Tab Type Fitting:** Push new tab down until it locks into position in the quick-connect fitting.
   - **Latch Clip Type Fitting:** Install latch clip (snaps into position). **If latch clip will not snap into position, this indicates the quick-connect fitting is not properly installed onto fuel system component, recheck the connection.**
6. Verify a locked condition by firmly pulling on the quick-connect fitting connection of the fuel system component.

HEATER, FUEL

OPERATION

OPERATION

The fuel heater is used to prevent diesel fuel from waxing during cold weather operation.

When the fuel temperature is below 32° F (0° C), the temperature sensor allows current to flow to the heater element warming the fuel. When the fuel temperature is above 64° F (18° C), the sensor stops current flow to the heater element.

Battery voltage to operate the fuel heater element is supplied from the ignition switch and through a solid stated device in the TIPM. **The fuel heater element and "solid state device in TIPM" are not computer controlled.** The heater element operates on 12 volts, 300 watts at 0° F (-18° C).

DIAGNOSIS AND TESTING

DIAGNOSIS AND TESTING - FUEL HEATER

The fuel heater is used to prevent diesel fuel from waxing during cold weather operation.

NOTE: The fuel heater element, "solid state device in TIPM" is not controlled by the Powertrain Control Module (PCM).

A malfunctioning fuel heater can cause a wax build-up in the fuel filter/water separator. Wax build-up in the filter/separator can cause engine starting problems and prevent the engine from revving up. It can also cause blue or white fog-like exhaust. If the heater is not operating in cold temperatures, the engine may not operate due to fuel waxing.

The fuel heater assembly is located on the side of fuel filter housing and internal to the fuel filter housing.

The heater assembly is equipped with a built-in fuel temperature sensor (thermostat) that senses fuel temperature. When fuel temperature drops below 32° F (0° C), the sensor allows current to flow to built-in heater element to warm fuel. When fuel temperature rises above 64° F (18° C), the sensor stops current flow to heater element (circuit is open).

Voltage to operate fuel heater element is supplied from ignition switch, through "solid state device in TIPM", to fuel temperature sensor and on to fuel heater element.

The heater element operates on 12 volts, 300 watts at 0 °F (-18° C). As temperature increases, power requirements decrease.

A minimum of 7 volts is required to operate the fuel heater. The resistance value of the heater element is less than 1 ohm (cold) and up to 1000 ohms warm.

TESTING

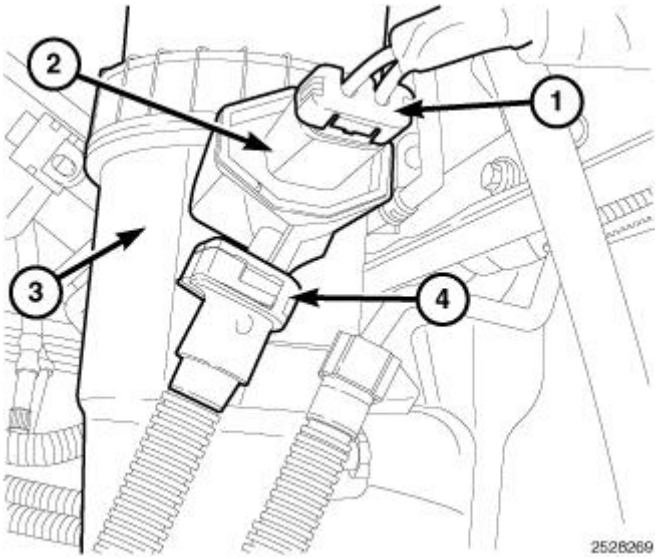

Fig. 26: Fuel Filter Housing Assembly & Harness Connector
Courtesy of CHRYSLER GROUP, LLC

NOTE: The Fuel Heater is not a separately serviceable item. If diagnostics have led you to replace this sensor, then the whole fuel filter housing assembly (3) needs to be changed.

1. Disconnect harness connector (1) from heater element.

   Ambient temperature must be below the circuit close temperature. If necessary, induce this ambient temperature by placing ice packs on thermostat to produce an effective ambient temperature below circuit close temperature.

   Measure resistance across two pins. Operating range is 0.3 - 0.45 Ohms.

2. If resistance is out of range, replace the fuel filter housing.

REMOVAL

REMOVAL

NOTE: The Fuel Heater is not a separately serviceable item. If diagnostics have led you to replace this sensor, then the whole fuel filter housing assembly needs to be changed. Refer to SEPARATOR AND FILTER, FUEL AND WATER, REMOVAL.

MANIFOLD, FUEL DRAIN

OPERATION

OPERATION

The Fuel Drain Circuit incorporates several sources of fuel return. Fuel travels from the fuel tank (via the fuel transfer pump) and is forced through the fuel filter. This fuel then travels into the fuel injection pump. It then goes to a fuel drain line and returns back to the fuel tank.

The fuel that flows to the fuel pump is pressurized by a gear pump and internally transferred to the fuel injection pump. At this point the fuel is channeled into two passages. One passage sends fuel to the FCA (Fuel Control Actuator). The other passage sends fuel to the cascade overflow valve. The overflow valve sends some fuel to a lubrication passage. The rest of the fuel is sent to a drain passage which connects to an external fuel line.

Fuel that travels through the FCA is pressurized by the fuel injection pump and sent through an external high pressure fuel line to the fuel rail. At the fuel rail, fuel is sent to the fuel injectors. If fuel pressure in the fuel rail becomes excessive, the pressure limiting valve opens and sends fuel through an external fuel line.

At the fuel injector, fuel that is not injected is used for lubrication of the fuel injectors. This fuel then travels through an internal passage that is connected to the rear of the cylinder head, an then into an external fuel line. This line is connected to the vehicles fuel return line, and returns excess fuel back and into the fuel tank.

REMOVAL

REMOVAL

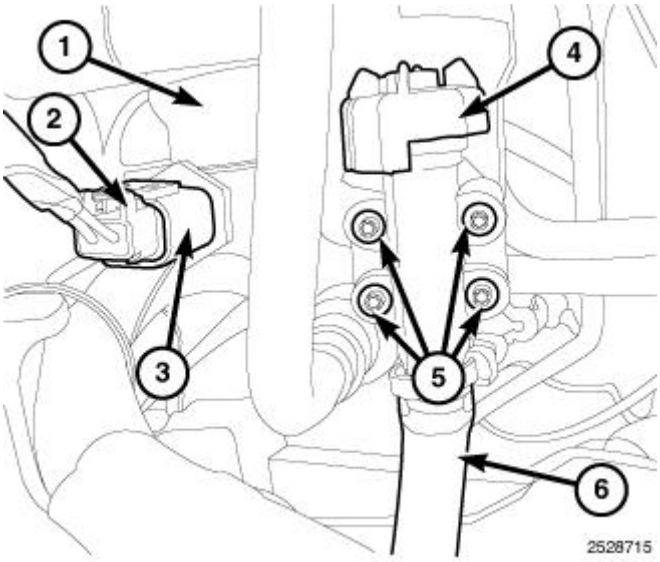

Fig. 27: Identifying Drain Valve, Drain Hose, Mounting Screws, Sensor Harness Connector & Filter Housing
Courtesy of CHRYSLER GROUP, LLC

1. **With engine not running,** Route the fuel drain hose to an appropriate container and rotate drain valve (4) one quarter turn counter clockwise to open it. Turn the key to the "ON" position. This will cycle the fuel pump for 2 seconds and drain the fluid from the fuel filter housing. Turn the key to the "OFF" position and rotate the drain valve (4) clockwise one quarter turn to close it.
2. Disconnect drain hose (6) from the fuel drain valve.
3. Remove four drain valve mounting screws (5) and the drain valve (4) from filter housing (1).

INSTALLATION

INSTALLATION

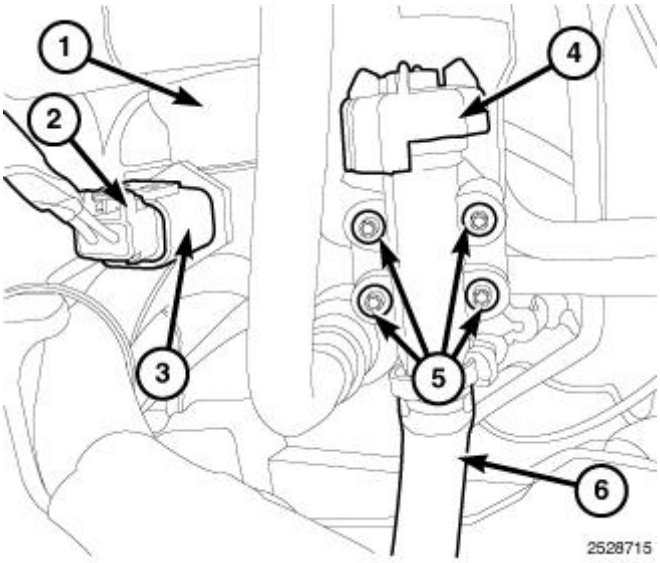

Fig. 28: Identifying Drain Valve, Drain Hose, Mounting Screws, Sensor Harness Connector & Filter Housing
Courtesy of CHRYSLER GROUP, LLC

NOTE: **The engine has a self-priming low-pressure fuel system. Refer to FUEL SYSTEM PRIMING - DIESEL. .**

1. Install the drain valve (4) to filter housing (1) and securely tighten the four drain valve mounting screws.
2. Connect drain hose (6) from the fuel drain valve.
3. Start the engine and check for leaks.

MODULE, FUEL PUMP

DESCRIPTION

DESCRIPTION

.

The fuel tank module is installed in the top of the fuel tank. The fuel tank module contains the following components:

- An electric fuel transfer (lift) pump
- Fuel reservoir
- A separate in-tank fuel filter
- Fuel gauge sending unit (fuel level sensor)
- Fuel supply line connection
- A special lock ring to retain module to fuel tank
- Fuel return line connection

REMOVAL

REMOVAL

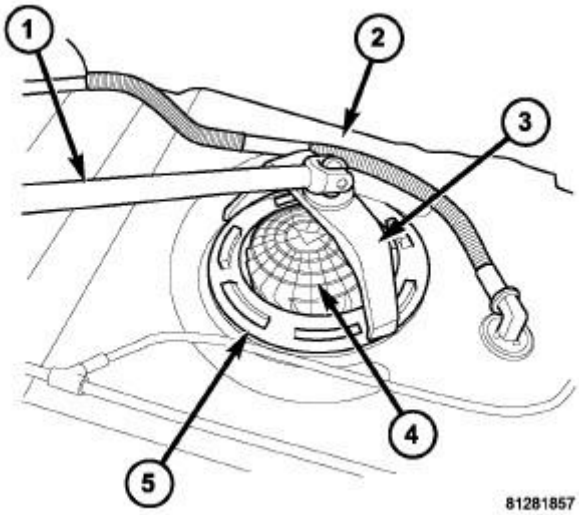

Fig. 29: Fuel Pump Module Location
Courtesy of CHRYSLER GROUP, LLC

1. Drain the fuel tank. Refer to **DRAINING FUEL TANK**. .
2. Remove fuel tank. Refer to **TANK, FUEL, REMOVAL**.
3. Note rotational position of module before attempting removal. An indexing arrow is located on top of module for this purpose.
4. Position SAE Fuel Pump Lock Ring Wrench (special tool #9340, SAE Fuel Pump Lock Ring Wrench) (3) into notches on outside edge of lock ring (5).
5. Install 1/2 inch drive breaker bar (1) to SAE Fuel Pump Lock Ring Wrench (special tool #9340, SAE Fuel Pump Lock Ring Wrench) (3).
6. Rotate breaker bar counterclockwise to remove lock ring.
7. Remove lock ring. The module will spring up slightly when lock ring is removed.
8. Remove module from fuel tank. Be careful not to bend float arm while removing.

INSTALLATION

INSTALLATION

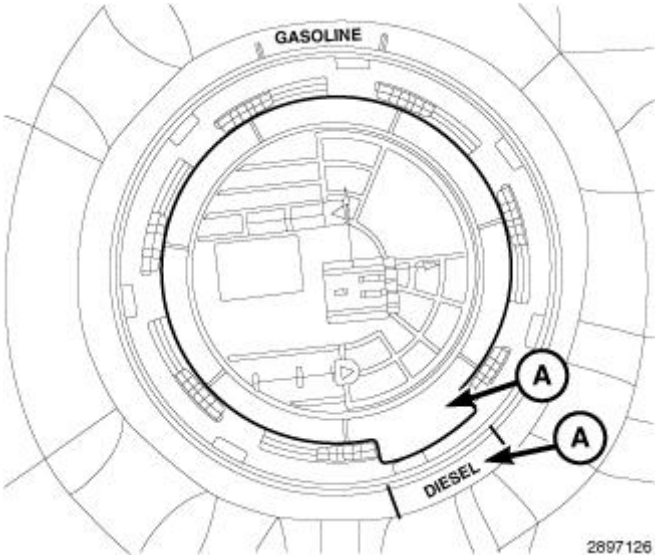

Fig. 30: Aligning Locator Tab With Index Mark
Courtesy of CHRYSLER GROUP, LLC

CAUTION: Whenever the fuel pump module is serviced, the rubber O-ring seal must be replaced.

1. Using a new O-ring seal (gasket), position fuel pump module into opening in fuel tank and align the locator tab (A) with index mark (A) on fuel tank.

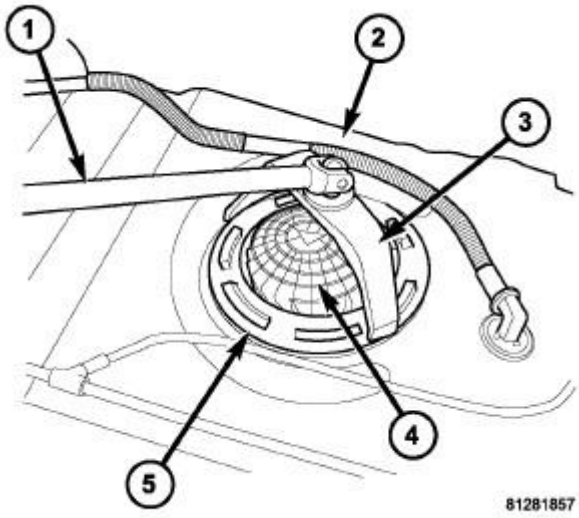

Fig. 31: Fuel Pump Module Location
Courtesy of CHRYSLER GROUP, LLC

2. Position lock ring (5) over top of fuel pump module.
3. Rotate module until embossed alignment arrow points to center alignment mark. This step must be

performed to prevent float from contacting side of fuel tank. Also be sure fuel fitting on top of pump module is pointed to drivers side of vehicle.

4. Install SAE Fuel Pump Lock Ring Wrench (special tool #9340, SAE Fuel Pump Lock Ring Wrench) (3) to lock ring.
5. Install 1/2 inch drive breaker (1) into SAE Fuel Pump Lock Ring Wrench (special tool #9340, SAE Fuel Pump Lock Ring Wrench) (3).
6. Tighten lock ring (clockwise) until all seven notches have engaged.
7. Install fuel tank. Refer to **TANK, FUEL, INSTALLATION**.

PUMP, FUEL INJECTION

DESCRIPTION

DESCRIPTION

A Robert Bosch high-pressure fuel injection pump is used. The pump is attached to the back of the timing gear housing at the left /front side of the engine.

OPERATION

OPERATION

The fuel injection pump supplies high pressure to the fuel rail independent of engine speed. This high pressure is then accumulated in the fuel rail. High pressure fuel is constantly supplied to the injectors by the fuel rail. The Powertrain Control Module (PCM) controls the fueling and timing of the engine by actuating the injectors.

Fuel enters the system from the electric fuel transfer (lift) pump, which is located in the fuel tank. Fuel is forced through the fuel filter element and then enters the Fuel Pump/Gear Pump, which is attached to the rear of the fuel injection pump. The Fuel Pump/Gear Pump is a low-pressure pump and produce a minimum pressure of 440 kpa (64 psi). Fuel then enters the fuel injection pump. Low pressure fuel is then supplied to the Fuel Control Actuator (FCA).

The FCA is an electronically controlled solenoid valve. The PCM controls the amount of fuel that enters the high-pressure pumping chambers by opening and closing the FCA based on a demanded fuel pressure. The Fuel Pressure Sensor (FPS) on the fuel rail provides the actual fuel pressure. When the actuator is opened, the maximum amount of fuel is being supplied to the fuel injection pump. Any fuel that does not enter the injection pump is directed to the cascade overflow valve. The cascade overflow valve regulates how much excess fuel is used for lubrication of the pump and how much is returned to the tank through the drain manifold.

Fuel entering the injection pump is pressurized to between 200 -1800 bar (2901 - 26107 psi) by three radial pumping chambers. The pressurized fuel is then supplied to the fuel rail.

REMOVAL

REMOVAL

CAUTION: Cleanliness cannot be overemphasized when handling or replacing diesel

fuel system components. This especially includes the fuel injectors, high-pressure fuel lines and fuel injection pump. Very tight tolerances are used with these parts. Dirt contamination could cause rapid part wear and possible plugging of fuel injector nozzle tip holes. This in turn could lead to possible engine misfire. Always wash/clean any fuel system component thoroughly before disassembly and then air dry. Cap or cover any open part after disassembly. Before assembly, examine each part for dirt, grease or other contaminants and clean if necessary. When installing new parts, lubricate them with clean engine oil or clean diesel fuel only.

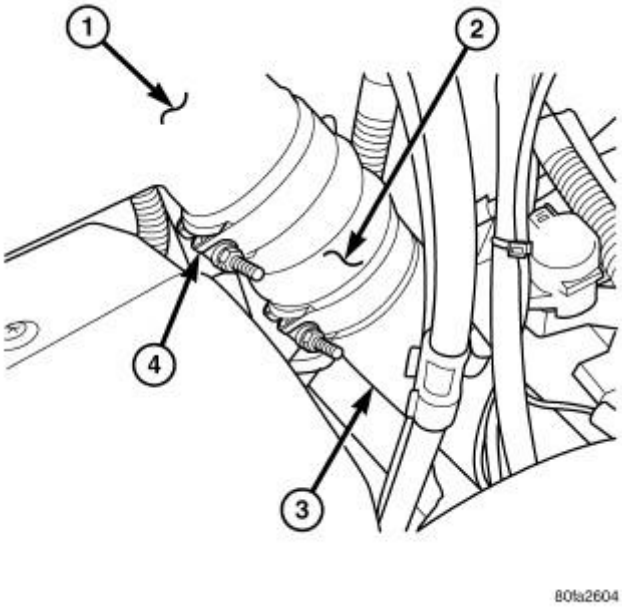

Fig. 32: Intake Tube & Connecting Hose
Courtesy of CHRYSLER GROUP, LLC

1 - MANIFOLD ABOVE HEATERS
2 - RUBBER CONNECTING HOSE
3 - METAL INTAKE TUBE
4 - CLAMPS (2)

1. Disconnect both negative battery cables at both batteries. Cover and isolate ends of both cables.
2. Remove intake manifold air intake tube (above injection pump) and its rubber connector hose (2).
3. Remove accessory drive belt.

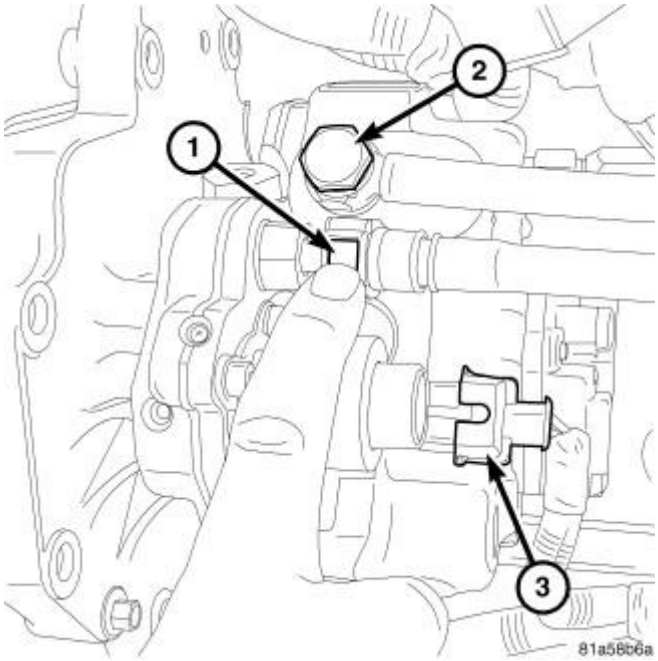

Fig. 33: Injection Pump Quick-Connect Fitting & Fuel Control Actuator
Courtesy of CHRYSLER GROUP, LLC

4. Thoroughly clean rear of injection pump, and attachment points for its fuel lines. Also clean the opposite ends of these same lines at their attachment points.
5. Disconnect quick-connect fitting by pressing on button (1).

CAUTION: Whenever a fuel line fitting is connected to a secondary fitting, always use a back-up wrench on the secondary fitting. Do not allow the secondary fitting to rotate.

6. Remove high-pressure fuel line to fuel rail.
7. Remove banjo bolt (2).
8. Disconnect FCA (Fuel Control Actuator) electrical connector (3).

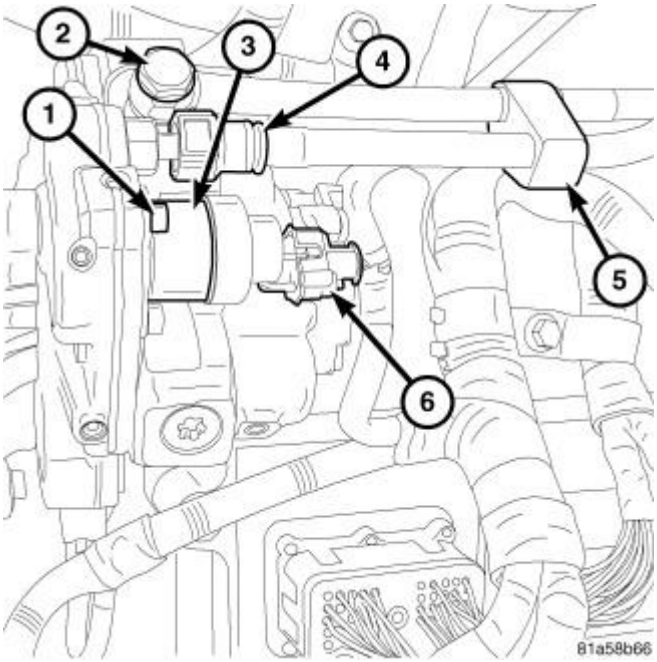

Fig. 34: Fuel Injection Pump Components
Courtesy of CHRYSLER GROUP, LLC

9. Remove line clamp (5).

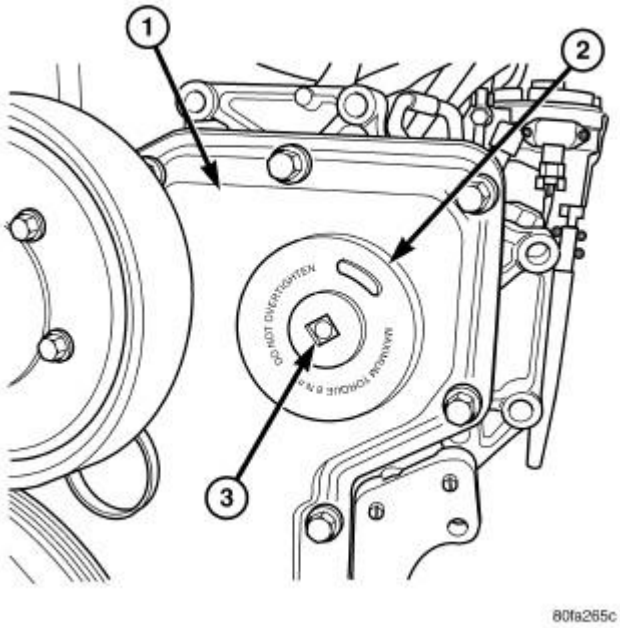

Fig. 35: Pump Drive Gear Access Cover
Courtesy of CHRYSLER GROUP, LLC

1 - FRONT TIMING GEAR COVER

2 - GEAR ACCESS PLATE (COVER)
3 - SQUARE DRIVE (FOR COVER REMOVAL/INSTALLATION)

10. Remove fuel pump drive gear access cover with a 3/8" drive ratchet. Access cover (2) is threaded to timing gear cover.
11. Remove fuel pump drive gear mounting nut and washer.

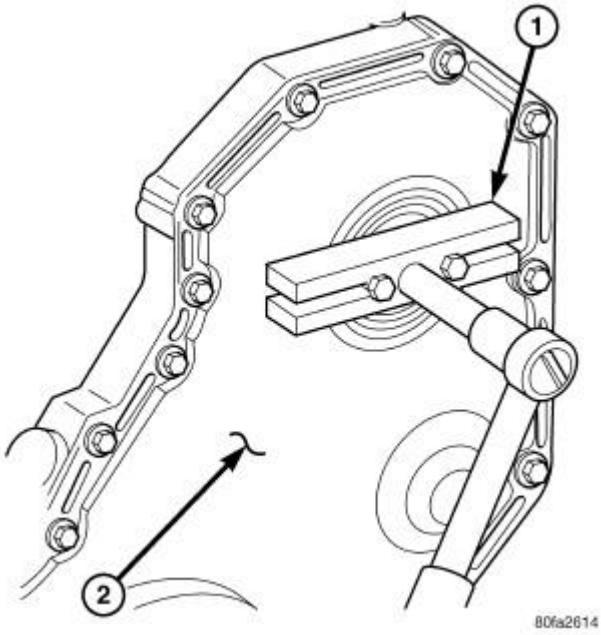

Fig. 36: Removing Pump Drive Gear
Courtesy of CHRYSLER GROUP, LLC

1 - FRONT TIMING GEAR COVER
2 - GEAR PULLER TOOL

12. Attach C3428B, or (special tool #L-4407A, Puller, Gear) (or equivalent) gear puller (1) to pump drive gear with 2 bolts, and separate gear from pump (a keyway is not used on this particular injection pump). Leave drive gear hanging loose within timing gear cover.

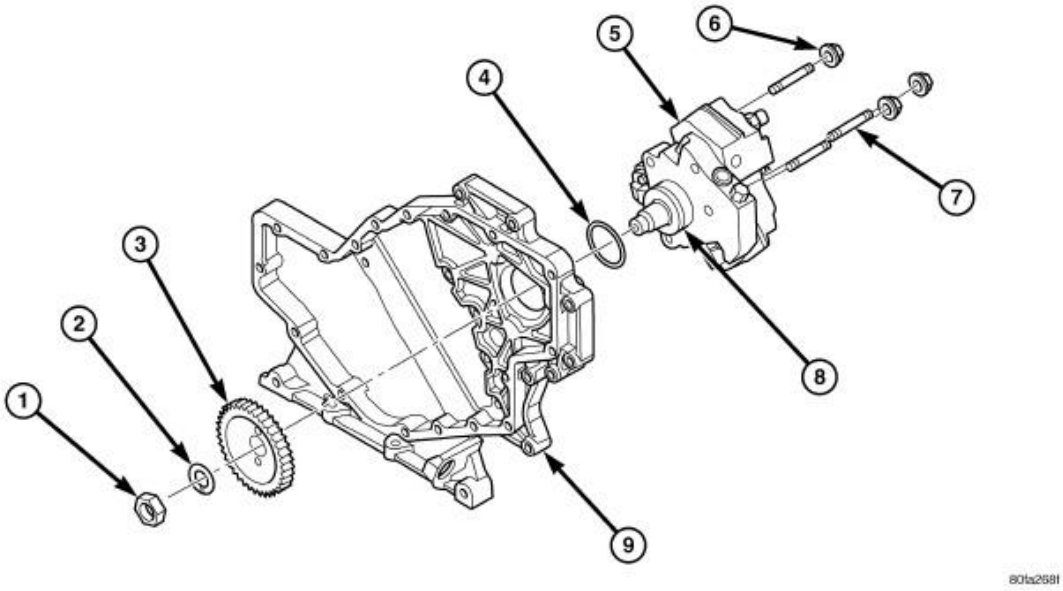

Fig. 37: Fuel Injection Pump & Mounting Components
Courtesy of CHRYSLER GROUP, LLC

1 - PUMP DRIVE GEAR NUT
2 - WASHER
3 - PUMP DRIVE GEAR
4 - RUBBER O-RING
5 - FUEL INJECTION PUMP
6 - PUMP MOUNTING NUTS (3)
7 - PUMP MOUNTING STUDS (3)
8 - O-RING MACHINED GROOVE
9 - FRONT TIMING GEAR HOUSING

13. Remove three injection pump mounting nuts (6), and remove pump from engine.

INSTALLATION

INSTALLATION

CAUTION: Cleanliness cannot be overemphasized when handling or replacing diesel fuel system components. This especially includes the fuel injectors, high-pressure fuel lines and fuel injection pump. Very tight tolerances are used with these parts. Dirt contamination could cause rapid part wear and possible plugging of fuel injector nozzle tip holes. This in turn could lead to possible engine misfire. Always wash/clean any fuel system component thoroughly before disassembly and then air dry. Cap or cover any open part after disassembly. Before assembly, examine each part for dirt, grease or other contaminants and clean if necessary. When installing new

parts, lubricate them with clean engine oil or clean diesel fuel only.

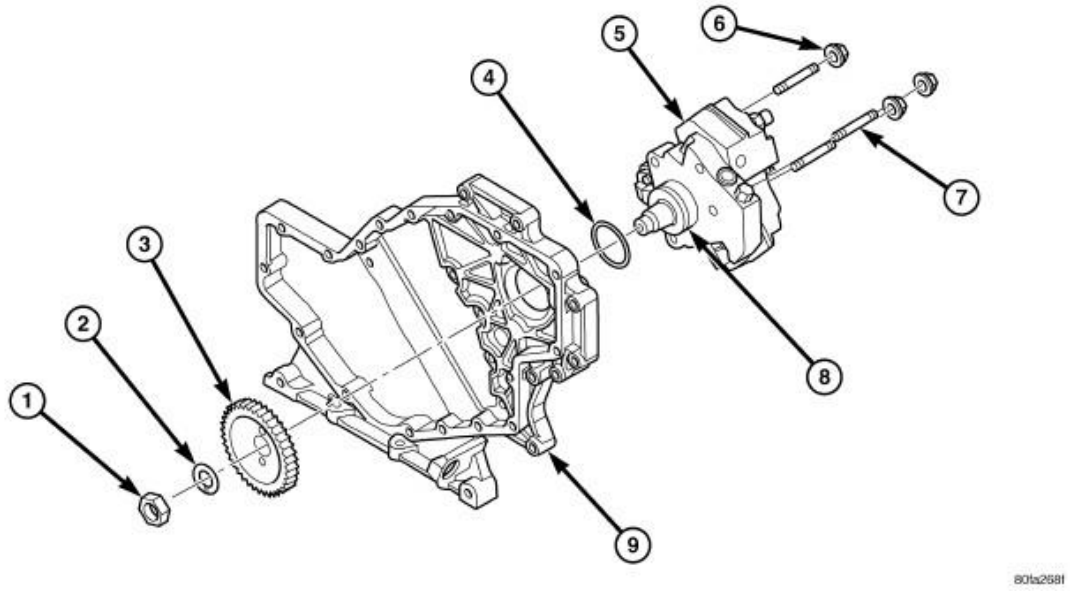

Fig. 38: Fuel Injection Pump & Mounting Components
Courtesy of CHRYSLER GROUP, LLC

1 - PUMP DRIVE GEAR NUT
2 - WASHER
3 - PUMP DRIVE GEAR
4 - RUBBER O-RING
5 - FUEL INJECTION PUMP
6 - PUMP MOUNTING NUTS (3)
7 - PUMP MOUNTING STUDS (3)
8 - O-RING MACHINED GROOVE
9 - FRONT TIMING GEAR HOUSING

1. Inspect pump mounting surfaces at pump and mounting flange and pilot bore for nicks, cuts or damage. Inspect O-ring surfaces for nicks, cuts or damage.
2. Clean injection pump mounting flange and pilot bore at gear housing. Also clean front of injection pump.
3. Install new rubber O-ring (square) (4) into machined groove at pump mounting area.
4. Apply clean engine oil **to injection pump O-ring and pilot bore only.**

   The machined tapers on both injection pump shaft and injection pump gear must be absolutely dry, clean and free of any dirt or oil film. This will ensure proper gear-to-shaft tightening.

5. Clean pump gear and pump shaft at machined tapers with an evaporative type cleaner such as brake cleaner.

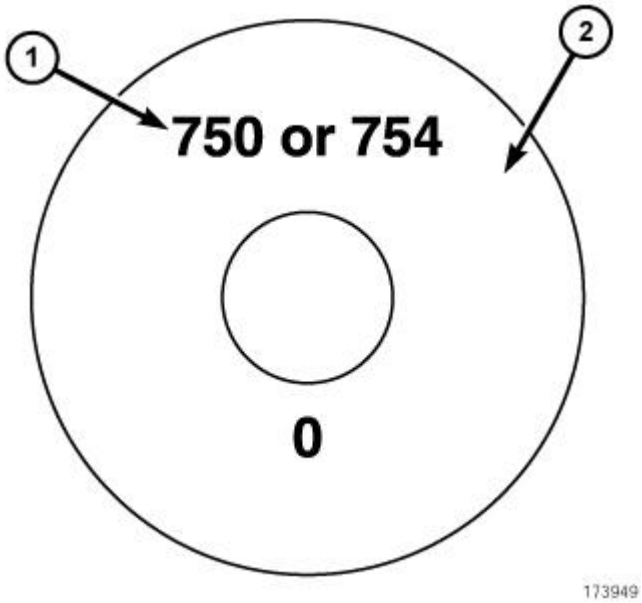

Fig. 39: Injection Pump Shaft Phasing Marks
Courtesy of CHRYSLER GROUP, LLC

6. **FUEL INJECTION PUMP PHASING:** Perform the following phasing procedure anytime the injection pump has been removed and reinstalled.
7. Locate the end of the fuel injection pump shaft (2). Two numbers (750 or 754 and 0) are stamped into the end of the shaft.

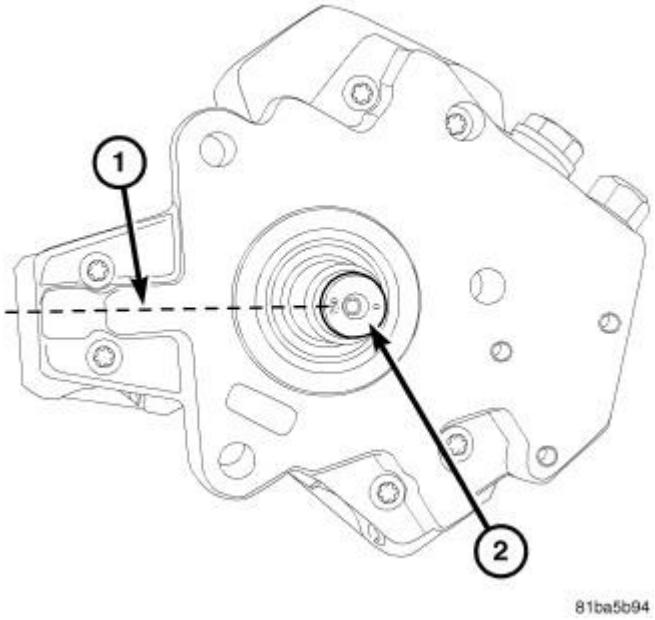

Fig. 40: Injection Pump Shaft Position
Courtesy of CHRYSLER GROUP, LLC

NOTE: Fuel Injection Pump used for illustration has number 750.

8. Rotate the injection pump shaft until the number 5 (located in the center of number 750 or 754) is positioned at 9 o'clock (1).
9. Position injection pump to mounting flange on gear housing while aligning injection pump shaft through back of injection pump gear. Be sure the number 5 is still at the 9 o'clock position (1).
10. Bring the engine to TDC position. Do this by rotating the crankshaft until the TDC mark on the crankshaft damper is at 12 o'clock position. It does not matter if cylinder No. 1 or No. 6 is at TDC. Again, check to be sure the number 5 is still at the 9 o'clock position (1). Rotate pump shaft accordingly.

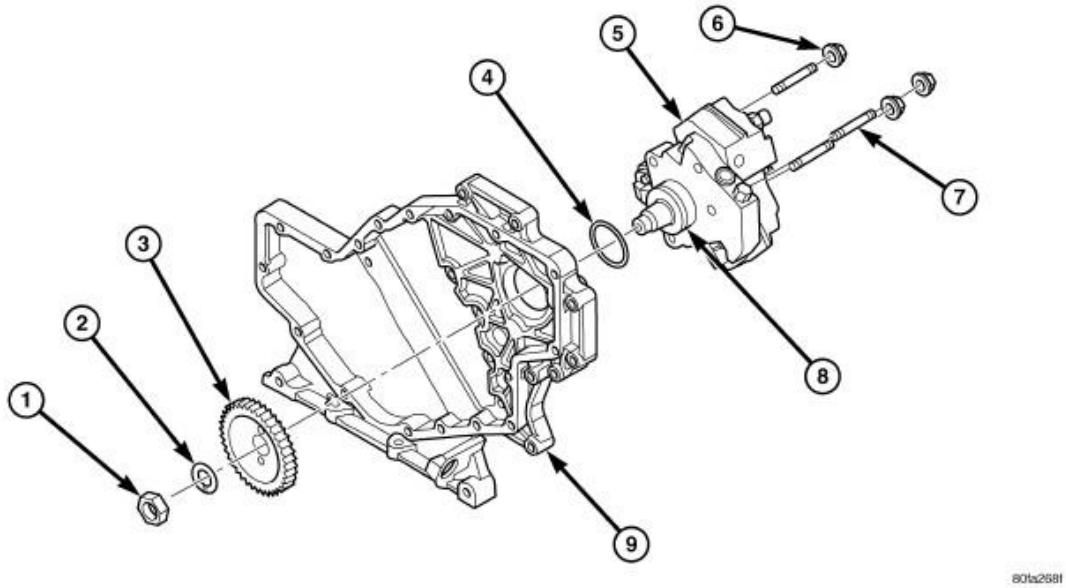

Fig. 41: Fuel Injection Pump & Mounting Components
Courtesy of CHRYSLER GROUP, LLC

1 - PUMP DRIVE GEAR NUT
2 - WASHER
3 - PUMP DRIVE GEAR
4 - RUBBER O-RING
5 - FUEL INJECTION PUMP
6 - PUMP MOUNTING NUTS (3)
7 - PUMP MOUNTING STUDS (3)
8 - O-RING MACHINED GROOVE
9 - FRONT TIMING GEAR HOUSING

11. After pump is positioned flat to mounting flange, install three pump mounting nuts (6) and tighten **finger tight only.** Do not attempt a final tightening at this time. **Do not attempt to tighten (pull) pump to gear housing using mounting nuts. Damage to pump or gear housing may occur. The pump must be positioned flat to its mounting flange before attempting to tighten three mounting nuts.**
12. To prevent damage or cracking of components, install and tighten nuts in the following sequence:
    1. Install injection pump shaft washer and nut to pump shaft. Tighten nut **finger tight only.**

2. Do preliminary (light) tightening of injection pump shaft nut (1).
3. Tighten three injection pump mounting nuts to 24 N.m (18 ft. lbs.).
4. Do a final tightening of pump shaft nut (1) to 105 N.m (77 ft. lbs.).

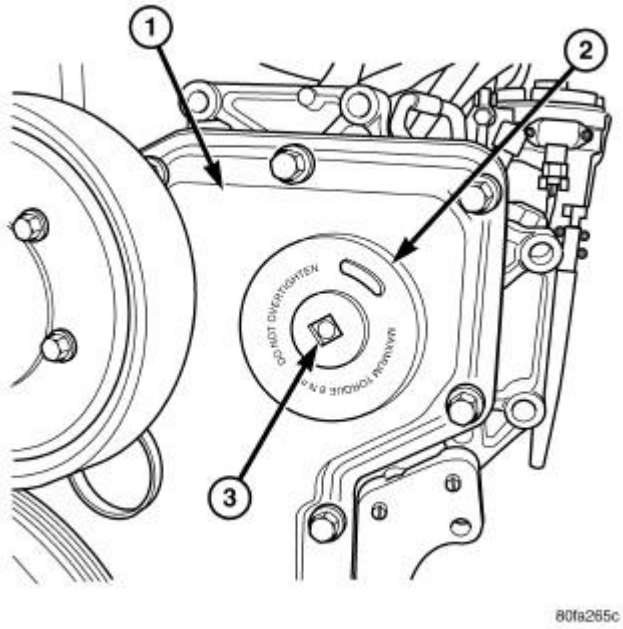

Fig. 42: Pump Drive Gear Access Cover
Courtesy of CHRYSLER GROUP, LLC

1 - FRONT TIMING GEAR COVER
2 - GEAR ACCESS PLATE (COVER)
3 - SQUARE DRIVE (FOR COVER REMOVAL/INSTALLATION)

13. Install drive gear access cover (2) using a 3/8" drive ratchet. Access cover is threaded to timing gear cover. Tighten to 8 N.m (71 in. lbs.).

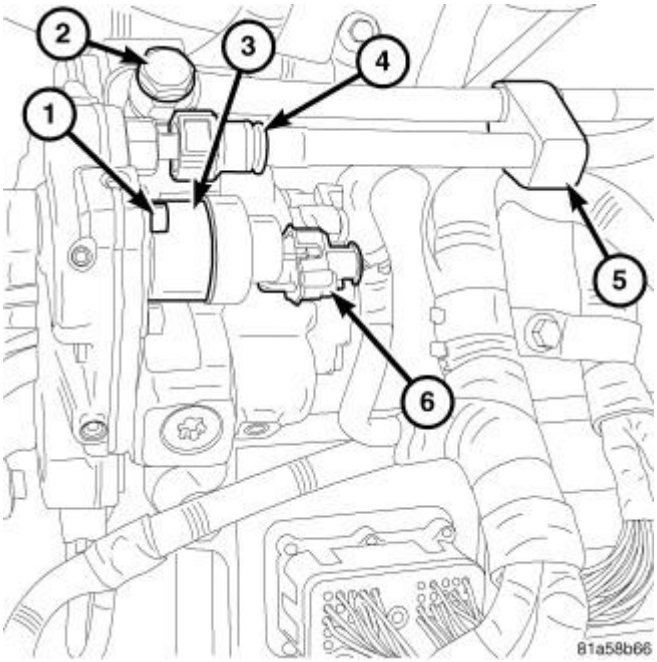

Fig. 43: Fuel Injection Pump Components
Courtesy of CHRYSLER GROUP, LLC

14. Install fuel return line. Tighten banjo bolt (2) to 24 N.m (18 ft. lbs.).
15. Install quick-connect fitting (4).
16. Install fuel line (injection pump-to-fuel rail). Using a back up wrench, tighten fitting at fuel pump to 40 N.m (30 ft. lbs.). Tighten fitting at fuel rail to 40 N.m (30 ft. lbs.).
17. Install clamp (5).
18. Connect Fuel Control Actuator (FCA) electrical connector (6) to rear of injection pump.

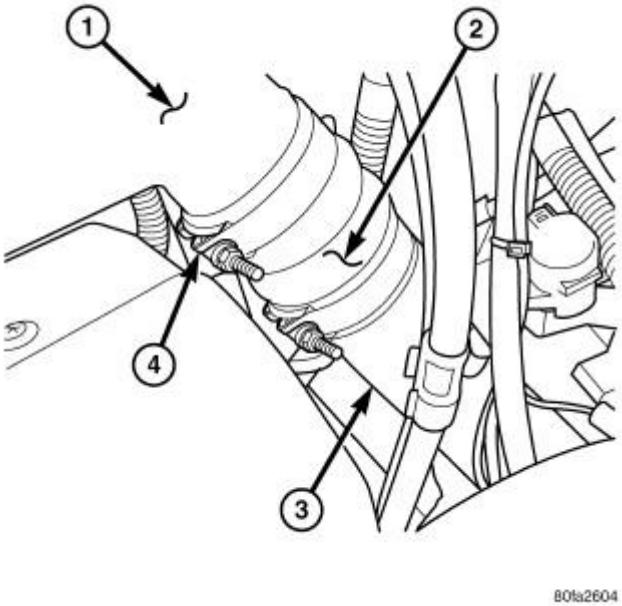

Fig. 44: Intake Tube & Connecting Hose
Courtesy of CHRYSLER GROUP, LLC

1 - MANIFOLD ABOVE HEATERS
2 - RUBBER CONNECTING HOSE
3 - METAL INTAKE TUBE
4 - CLAMPS (2)

19. Install rubber intake manifold air intake tube (2). Tighten clamps (4).
20. Install accessory drive belt.
21. Connect both negative battery cables.
22. Check system for fuel or engine oil leaks.

PUMP, FUEL TRANSFER

DESCRIPTION

DESCRIPTION

The fuel transfer pump (fuel lift pump) is part of the fuel pump module. The fuel pump module is located in the fuel tank. The 12-volt electric pump is operated and controlled by the Powertrain Control Module (PCM). The PCM controls a relay in the Intelligent Power Module (IPM) for transfer pump operation.

OPERATION

OPERATION

The purpose of the fuel transfer pump is to supply (transfer) a low-pressure fuel source: **from** the fuel tank, **through** the fuel filter/water separator and **to** the fuel injection pump. Here, the low-pressure is raised to a high-pressure by the fuel injection pump for operation of the high-pressure fuel injectors. Check valves within the pump, control direction of fuel flow and prevent fuel bleed-back during engine shut down.

Maximum current flow to the pump is 5 amperes.

With the engine running, the pump has a 100 percent duty-cycle.

The transfer pump is self-priming: When the key is first turned on (without cranking engine), the pump will operate for approximately 2 seconds and then shut off (Note: When ambient temperatures are cold enough to cause the intake air heaters to operate, the fuel lift pump will operate during the entire intake air pre-heat cycle). The pump will also operate for up to 25 seconds after the starter is engaged, and then disengaged and the engine is not running. The pump shuts off immediately if the key is on and the engine stops running.

The fuel volume of the transfer pump will always provide more fuel than the fuel injection pump requires. Excess fuel is returned from the injection pump through an overflow valve, and then back to the fuel tank.

REMOVAL

REMOVAL

The fuel transfer pump (fuel lift pump) is a part of the fuel tank module. It is not serviced separately. For procedures, refer to **MODULE, FUEL PUMP, REMOVAL**

INSTALLATION

INSTALLATION

The fuel transfer pump (fuel lift pump) is a part of the fuel tank module. It is not serviced separately. Refer to **MODULE, FUEL PUMP, INSTALLATION**.

RAIL, FUEL

OPERATION

OPERATION

The fuel rail is used as a distribution device to supply high-pressure fuel to the high-pressure fuel lines.

REMOVAL

REMOVAL

CAUTION: Cleanliness cannot be overemphasized when handling or replacing diesel fuel system components. This especially includes the fuel injectors, high-pressure fuel lines and fuel injection pump. Very tight tolerances are used with these parts. Dirt contamination could cause rapid part wear and

possible plugging of fuel injector nozzle tip holes. This in turn could lead to possible engine misfire. Always wash/clean any fuel system component thoroughly before disassembly and then air dry. Cap or cover any open part after disassembly. Before assembly, examine each part for dirt, grease or other contaminants and clean if necessary. When installing new parts, lubricate them with clean engine oil or clean diesel fuel only.

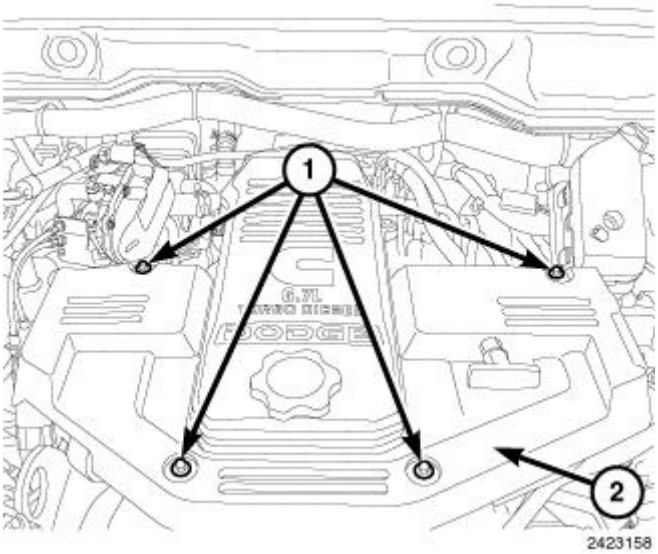

Fig. 45: EGR Crossover Tube Cover
Courtesy of CHRYSLER GROUP, LLC

1. Disconnect both negative battery cables.
2. Remove the oil dipstick tube.
3. Remove bolts (1), and EGR crossover tube cover (2).

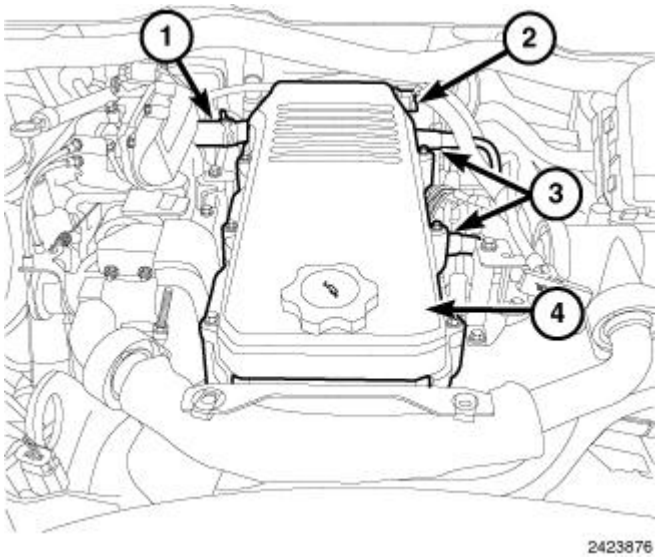

Fig. 46: CCV Oil Drain Hoses, Cylinder Head Cover & Crankcase Pressure Sensor Connector
Courtesy of CHRYSLER GROUP, LLC

4. Remove the CCV oil drain hoses (3) from cylinder head cover.
5. Disconnect the crankcase pressure sensor connector (2).
6. Disconnect both fuel injector harness connectors.

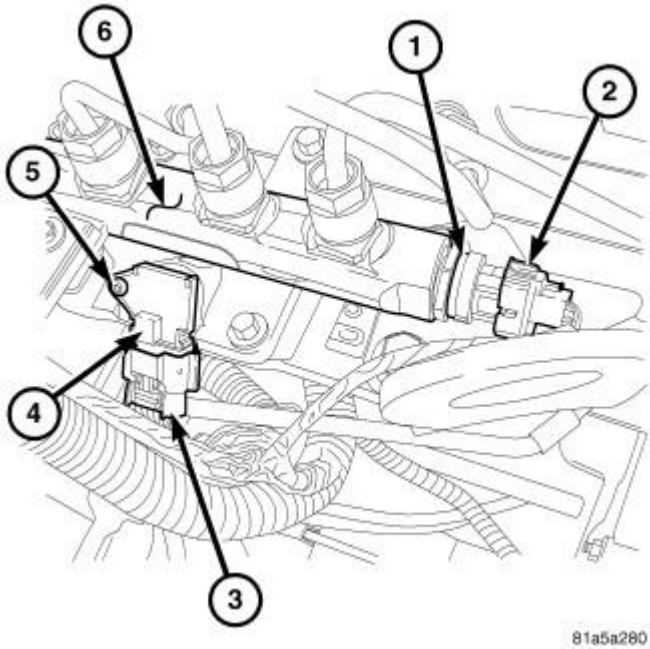

Fig. 47: Fuel Rail, Fuel Pressure Sensor & Connector, IAT/MAP Sensor, IAT/MAP Electrical Connector & Mounting Screw
Courtesy of CHRYSLER GROUP, LLC

7. Disconnect the fuel pressure sensor harness connector (2).
8. Disconnect necessary wiring harness retention clips from intake manifold.
9. Remove bolt and nut securing the oil dipstick tube.

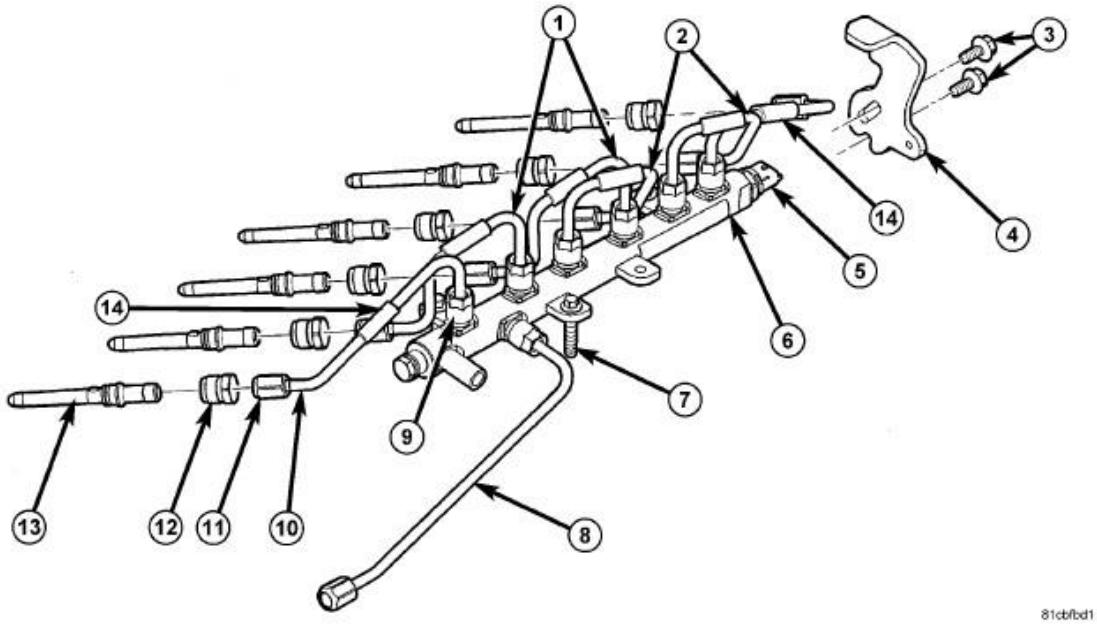

Fig. 48: Exploded View Of Fuel Lines, Fuel Rail & Injectors
Courtesy of CHRYSLER GROUP, LLC

CAUTION: WHEN LOOSENING OR TIGHTENING HIGH-PRESSURE LINE FITTINGS (11) ATTACHED TO A SEPARATE FITTING (12), USE A BACK-UP WRENCH ON FITTING (12). DO NOT ALLOW FITTING (12) TO ROTATE. DAMAGE TO BOTH FUEL LINE AND FITTING WILL RESULT.

10. Remove the fuel tubes (8).
11. Loosen fittings (9) for all fuel tubes at fuel rail.

NOTE: Clean any dirt/debris from around fuel injector area.

12. If removing fuel tube at No. 6 cylinder, a bracket (4) is located above fuel tube connection at cylinder head. Two bolts (3) secure this bracket to rear of cylinder head. The upper bolt hole is slotted. Loosen (but do not remove) these two bracket bolts. Tilt bracket down to gain access to No. 6 fuel line connection.
13. Loosen fittings (11) and remove all fuel tubes (1). Note and mark position of each fuel tube while removing.
14. Remove the fuel return line banjo bolt at fuel rail and discard sealing washers.
15. Remove bolts (7) and the fuel rail (6).

INSTALLATION

INSTALLATION

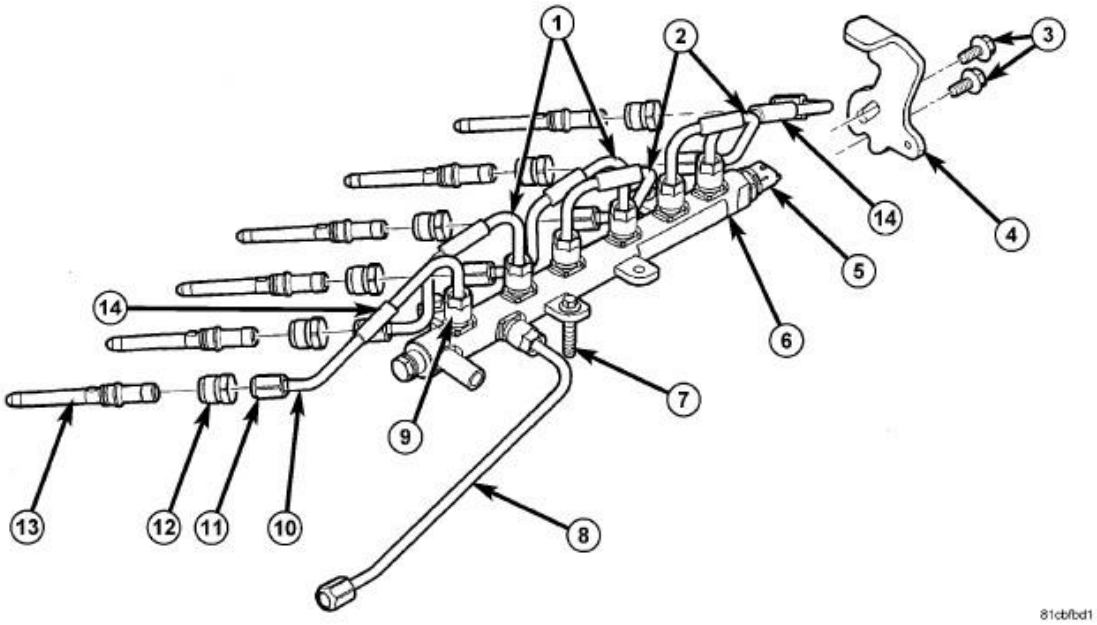

Fig. 49: Exploded View Of Fuel Lines, Fuel Rail & Injectors
Courtesy of CHRYSLER GROUP, LLC

1. Clean any dirt/debris from top of intake manifold and bottom of fuel rail.
2. Install fuel rail (6). Tighten bolts (7) to 24 N.m (18 ft. lbs.).
3. Install two new sealing washers to fuel line banjo bolt connecting injection pump to fuel rail. Tighten to 24 N.m (18 ft. lbs.).

CAUTION: WHEN LOOSENING OR TIGHTENING HIGH-PRESSURE LINE FITTINGS (11) ATTACHED TO A SEPARATE FITTING (12), USE A BACK-UP WRENCH ON FITTING (12). DO NOT ALLOW FITTING (12) TO ROTATE. DAMAGE TO BOTH FUEL LINE AND FITTING WILL RESULT.

NOTE: Noise isolators (14) are used on the six high-pressure fuel lines. They should be positioned in the middle of the horizontal or longest straight section of each fuel line. The split on each isolator should be facing downward. Be sure the noise isolator is not touching another isolator or any other components.

4. If fuel tube at No. 6 cylinder has been replaced, tilt metal bracket (4) upward to install the No. 6 fuel tube.
5. Install all high-pressure tubes to rail and fuel injectors. Tighten fittings (9 and 11) to 40 N.m (30 ft. lbs.).
6. Position the metal bracket (4) at the rear of cylinder head back and tighten bolts (3) to 43 N.m (32 ft. lbs.).

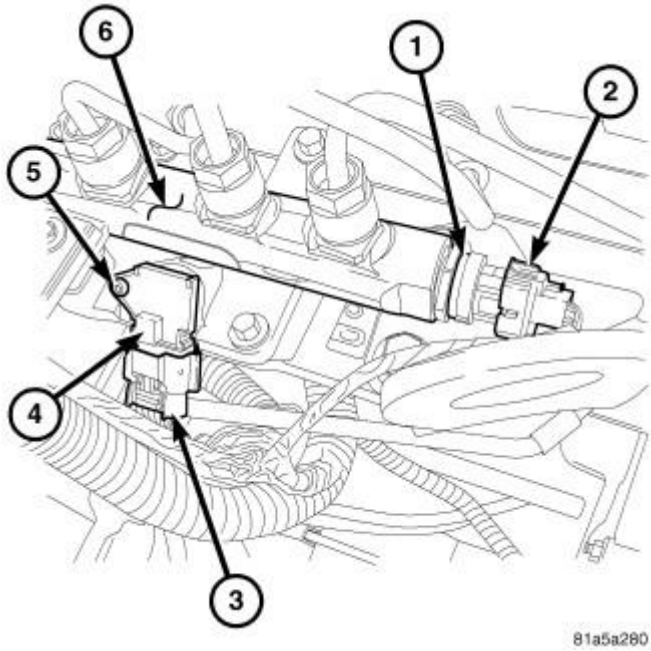

Fig. 50: Fuel Rail, Fuel Pressure Sensor & Connector, IAT/MAP Sensor, IAT/MAP Electrical Connector & Mounting Screw
Courtesy of CHRYSLER GROUP, LLC

7. Install the oil dipstick nut and tighten to 9 N.m (80 in. lbs).
8. Install the oil dipstick bolt and tighten to 24 N.m (18 ft. lbs).
9. Connect necessary wiring harness retention clips to the intake manifold.
10. Connect the fuel pressure sensor (2) harness connector.

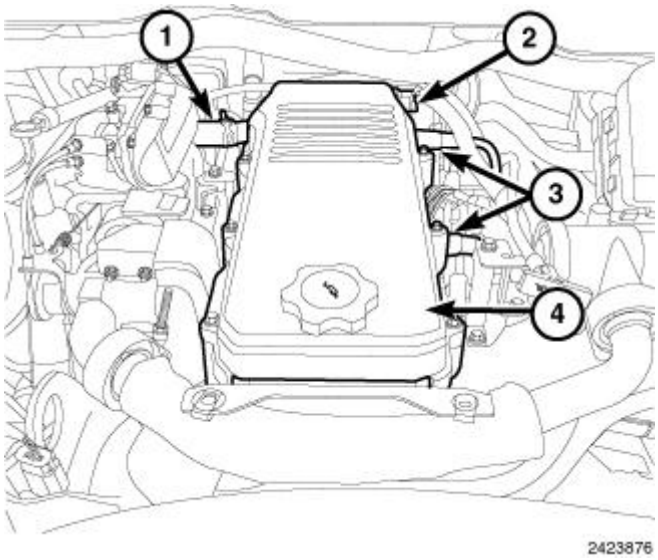

Fig. 51: CCV Oil Drain Hoses, Cylinder Head Cover & Crankcase Pressure Sensor Connector
Courtesy of CHRYSLER GROUP, LLC

11. Connect both fuel injector harness connectors.

12. Connect the crankcase pressure sensor connector (2).
13. Install the CCV oil drains hoses (3) to cylinder head cover.

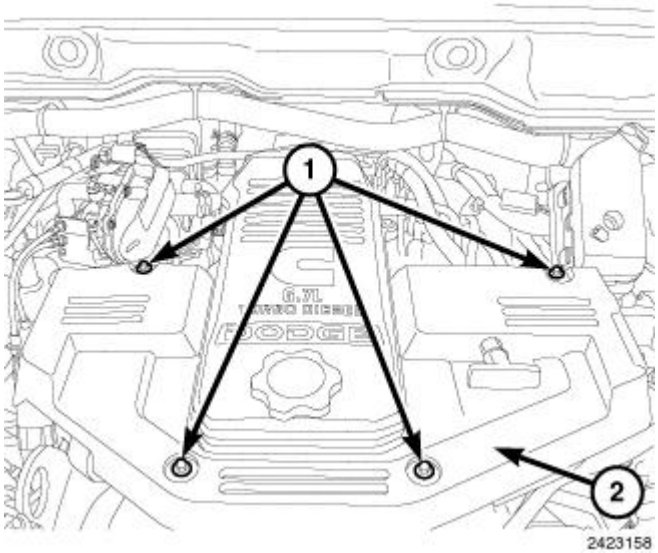

Fig. 52: EGR Crossover Tube Cover
Courtesy of CHRYSLER GROUP, LLC

14. Install the EGR crossover tube cover (2). Tighten bolts (1) to 10 N.m (89 in. lbs).
15. Install the oil dipstick tube.
16. Connect both negative battery cables.
17. Start engine and check for leaks.

SENDING UNIT AND SENSOR, FUEL LEVEL

REMOVAL

REMOVAL

For diesel removal and installation procedures, refer to **REMOVAL**.

SENSOR, FUEL PRESSURE

OPERATION

OPERATION

The fuel pressure sensor monitors actual high-pressure within the fuel rail. An output signal from this sensor (relating to fuel pressure) is sent to the Powertrain Control Module (PCM).

REMOVAL

REMOVAL

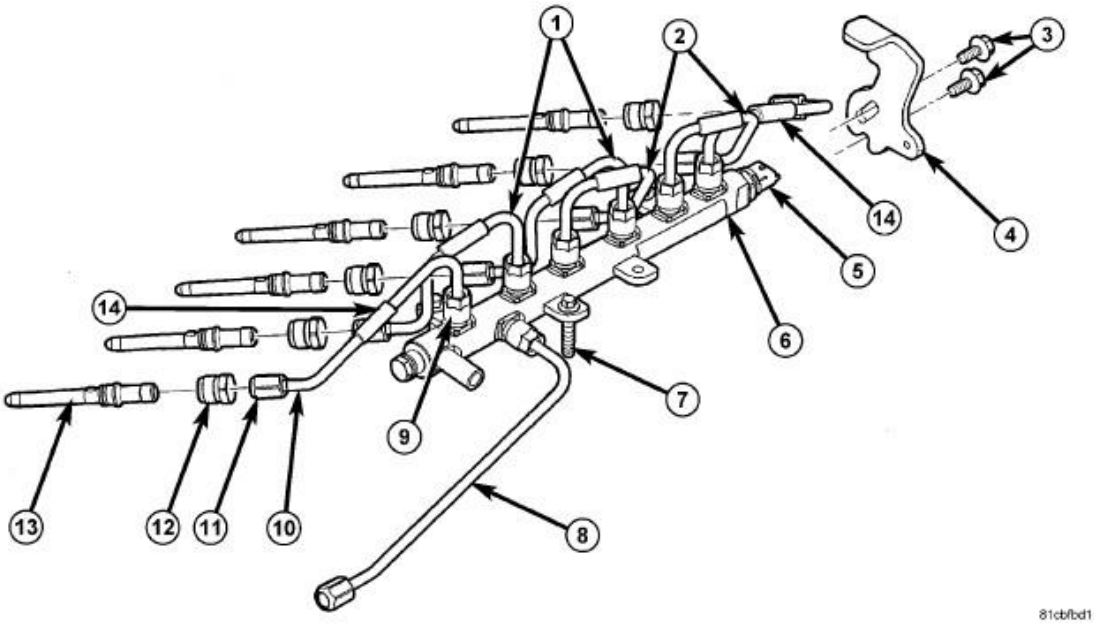

Fig. 53: Exploded View Of Fuel Lines, Fuel Rail & Injectors
Courtesy of CHRYSLER GROUP, LLC

1. Remove two bolts (3) and bracket (4) at rear of cylinder head.
2. Remove cylinder No. 5 and No. 6 fuel lines (1).

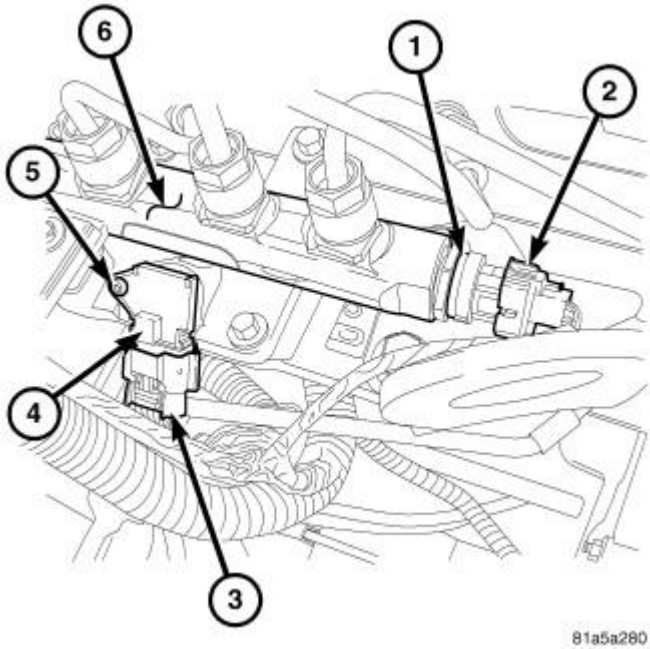

Fig. 54: Fuel Rail, Fuel Pressure Sensor & Connector, IAT/MAP Sensor, IAT/MAP Electrical Connector & Mounting Screw
Courtesy of CHRYSLER GROUP, LLC

3. Disconnect the fuel pressure sensor harness connector (2).

4. Remove fuel pressure sensor (1).

INSTALLATION

INSTALLATION

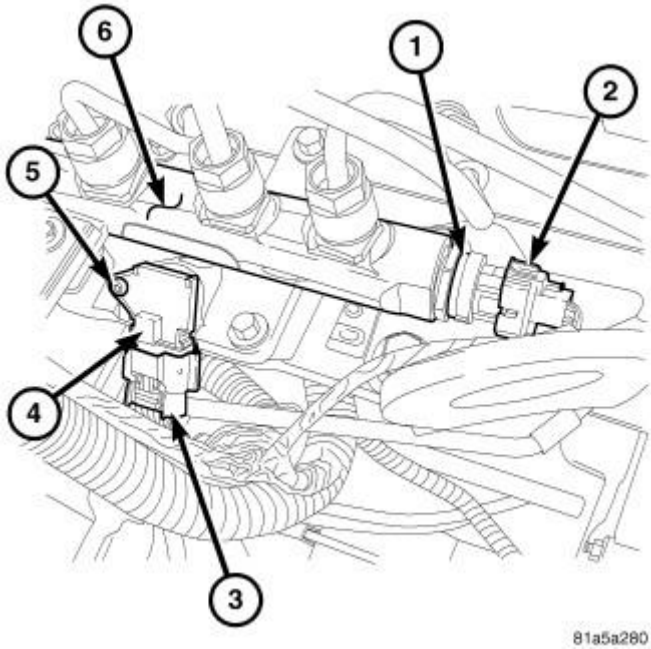

Fig. 55: Fuel Rail, Fuel Pressure Sensor & Connector, IAT/MAP Sensor, IAT/MAP Electrical Connector & Mounting Screw
Courtesy of CHRYSLER GROUP, LLC

1. Inspect fuel pressure sensor sealing surface.
2. Lubricate sensor threads with clean diesel fuel.
3. Install fuel pressure sensor (1). Tighten to 70 N.m (52 ft. lbs.).
4. Connect fuel pressure sensor harness connector (2).

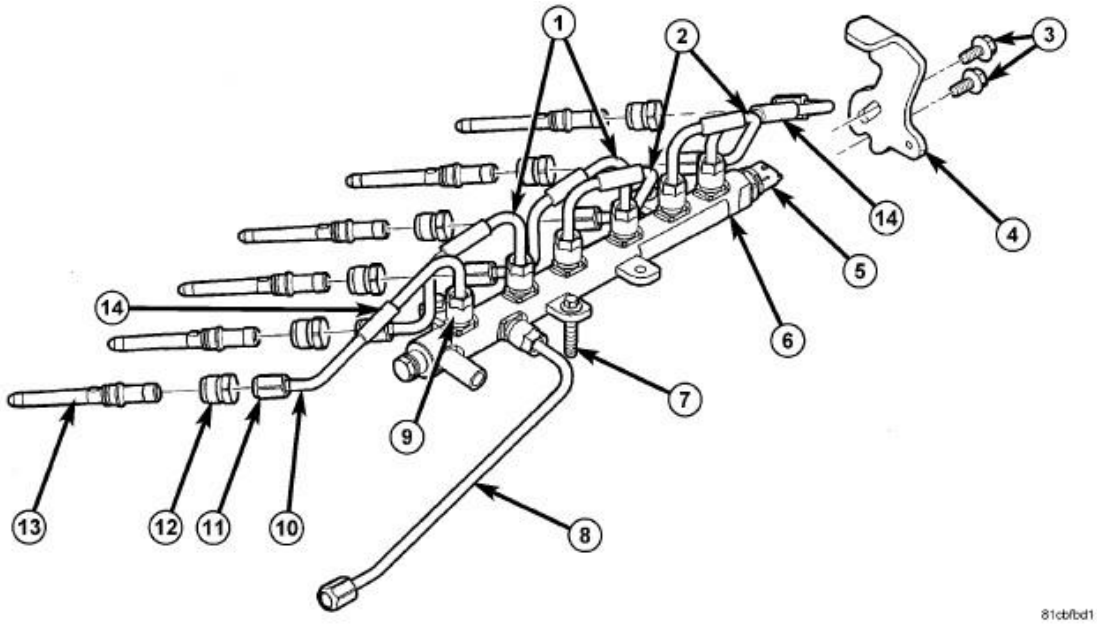

Fig. 56: Exploded View Of Fuel Lines, Fuel Rail & Injectors
Courtesy of CHRYSLER GROUP, LLC

CAUTION: Anytime a high-pressure line is removed from the engine, its fuel connector nut (12) at the cylinder head must first be retorqued.

5. Tighten nuts (12) at high pressure injector connector nut at the cylinder head to 50 N.m (37 ft. lbs.).
6. Install cylinder No. 5 and No. 6 fuel lines (1).
7. Tighten fuel line at cylinder head to 40 N.m (30 ft. lbs.).
8. Tighten fuel line nuts at fuel rail to 40 N.m (30 ft. lbs.).
9. Install rear engine lift bracket (4). Tighten bolts (3) to 43 N.m (32 ft. lbs.).

   Noise isolators (14) are used on the six high-pressure fuel lines. They should be positioned in the middle of the horizontal or longest straight section of each fuel line. The split on each isolator should be facing downward. Be sure the noise isolator is not touching another isolator or any other components.

10. Start engine and check for fuel leaks.

SENSOR, WATER IN FUEL

DESCRIPTION

DESCRIPTION

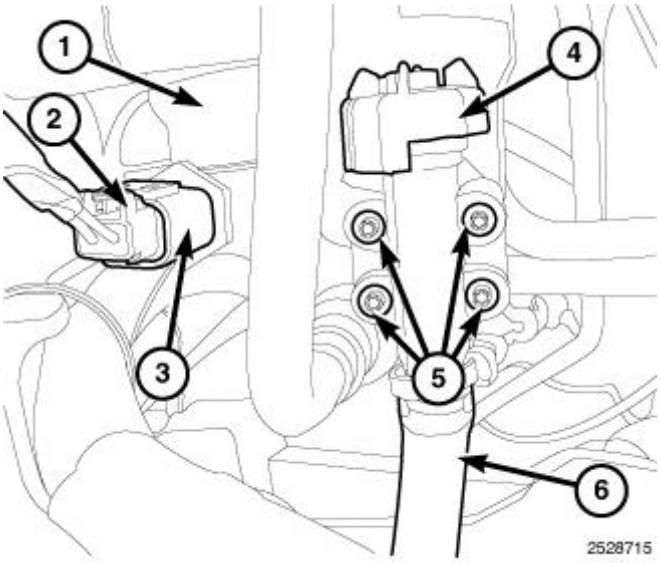

Fig. 57: Identifying Drain Valve, Drain Hose, Mounting Screws, Sensor Harness Connector & Filter Housing
Courtesy of CHRYSLER GROUP, LLC

The Water-In-Fuel (WIF) sensor (3) is located on the bottom of the fuel filter/water separator housing (1).

OPERATION

OPERATION

The sensor sends an input to the Powertrain Control Module (PCM) when it senses water in the fuel filter/water separator. As the water level in the filter/separator increases, the resistance across the Water in Fuel (WIF) sensor decreases. This decrease in resistance is sent as a signal to the PCM and compared to a high water standard value. Once the value reaches 30 to 40 kilohms, the PCM will activate the water-in-fuel warning lamp through CCD bus circuits. This all takes place when the ignition key is initially put in the ON position. The PCM continues to monitor the input while the engine is running.

REMOVAL

REMOVAL

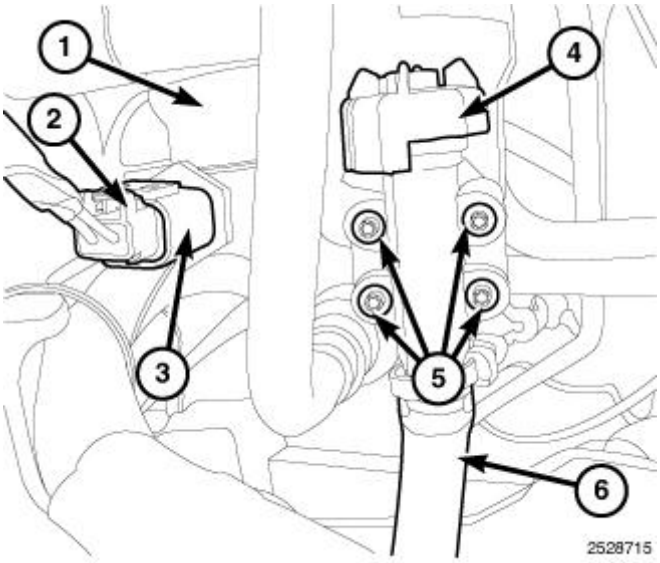

Fig. 58: Identifying Drain Valve, Drain Hose, Mounting Screws, Sensor Harness Connector & Filter Housing
Courtesy of CHRYSLER GROUP, LLC

1. **With engine not running,** Route the fuel drain hose to an appropriate container and rotate drain valve (4) one quarter turn counter clockwise to open it. Also, loosen the fuel filter housing cover a 1/2 turn and allow the fuel drain from the fuel filter housing for two minutes. Rotate the drain valve (4) clockwise one quarter turn to close it.
2. Disconnect the Water In Fuel (WIF) sensor harness connector (2).
3. Remove the WIF sensor (3).

INSTALLATION

INSTALLATION

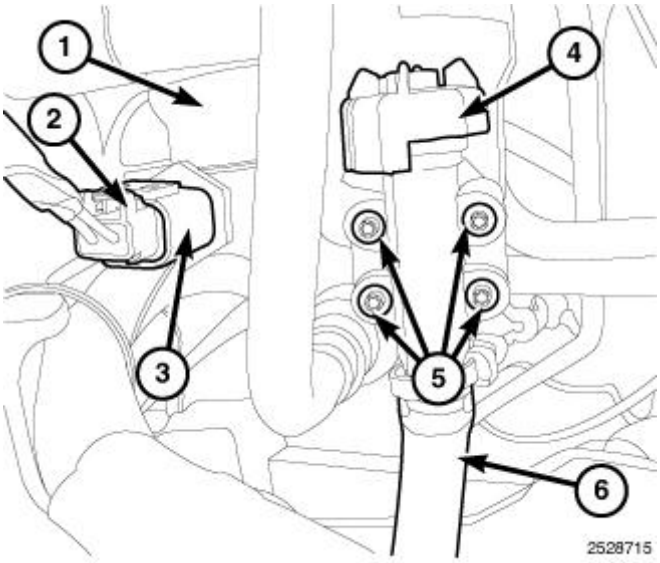

Fig. 59: Identifying Drain Valve, Drain Hose, Mounting Screws, Sensor Harness Connector & Filter Housing
Courtesy of CHRYSLER GROUP, LLC

NOTE: The engine has a self-priming low-pressure fuel system. To prim the fuel system. Refer to FUEL SYSTEM PRIMING - DIESEL. .

1. Using a new O-ring, install the Water in Fuel (WIF) sensor (3) and securely tighten the WIF sensor.
2. Connect the WIF sensor harness connector (2).
3. Start engine and check for leaks.

SEPARATOR AND FILTER, FUEL AND WATER

DESCRIPTION

DESCRIPTION

The fuel filter/water separator assembly is located on left side of engine above the starter motor. The assembly also includes the fuel heater, water drain valve, Water-In-Fuel (WIF) sensor.

OPERATION

OPERATION

The fuel filter/water separator protects the fuel injection pump by removing water and contaminants from the fuel. The construction of the filter/separator allows fuel to pass through it, but helps prevent moisture (water) from doing so. Moisture collects at the bottom of the filter.

Refer to the maintenance schedules in the owners manual for the recommended fuel filter replacement intervals.

For draining of water from canister, refer to **REMOVAL**.

A Water-In-Fuel (WIF) sensor is attached to the bottom of fuel filter element. Refer to **SENSOR, WATER IN FUEL**.

The fuel heater is installed into the side of the filter/separator housing. Refer to **HEATER, FUEL**.

REMOVAL

REMOVAL

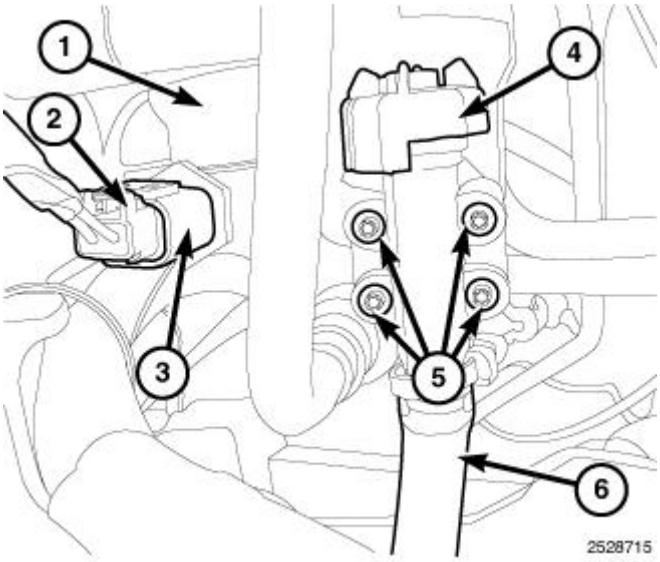

Fig. 60: Identifying Drain Valve, Drain Hose, Mounting Screws, Sensor Harness Connector & Filter Housing
Courtesy of CHRYSLER GROUP, LLC

1. Remove all low-pressure fuel lines at filter housing.
2. Disconnect the Water In Fuel (WIF) sensor harness connector (2).

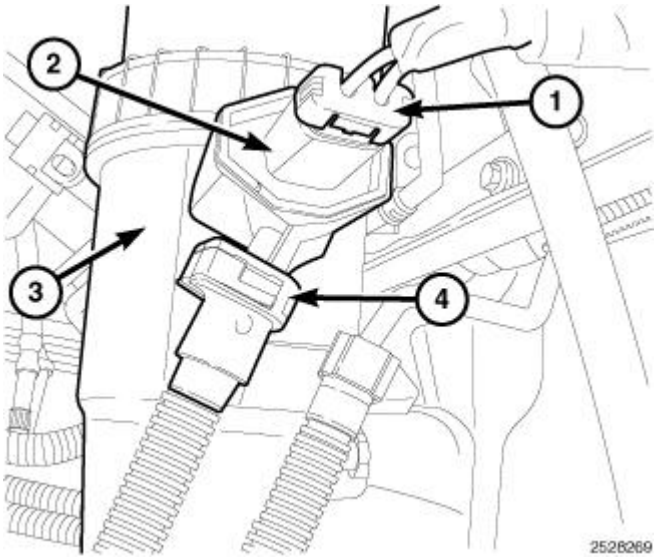

Fig. 61: Fuel Filter Housing Assembly & Harness Connector
Courtesy of CHRYSLER GROUP, LLC

3. Disconnect the fuel heater harness connector (1).

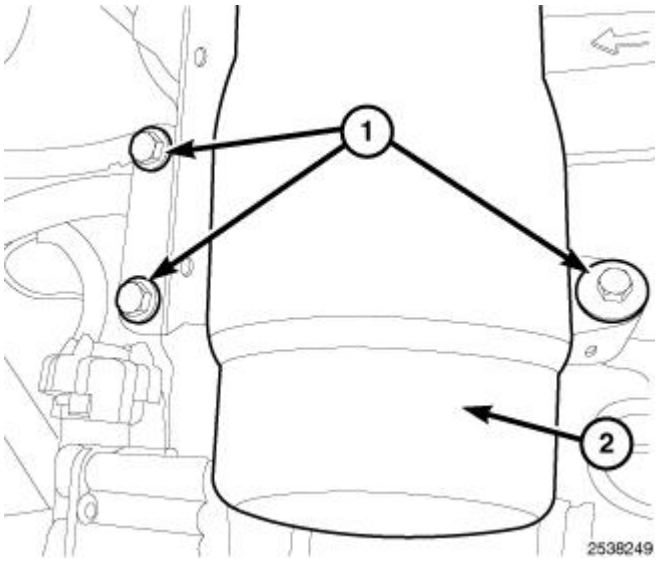

Fig. 62: Fuel Filter Housing & Bolts
Courtesy of CHRYSLER GROUP, LLC

4. Remove bolts (1) and the fuel filter housing (2) from engine block.

INSTALLATION

INSTALLATION

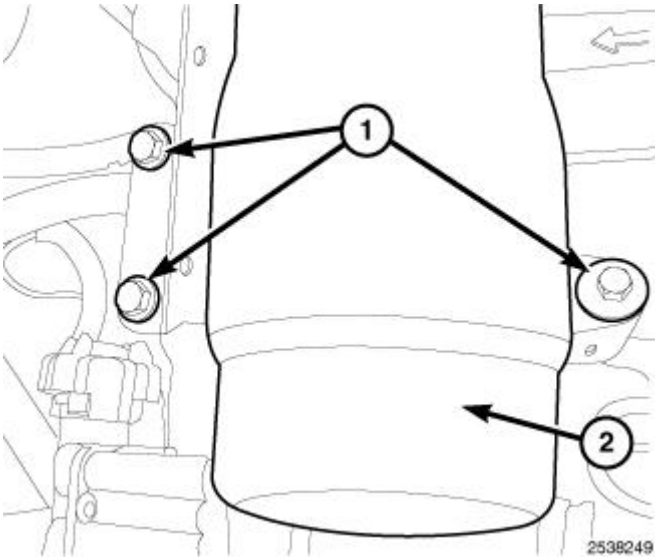

Fig. 63: Fuel Filter Housing & Bolts
Courtesy of CHRYSLER GROUP, LLC

NOTE: **The engine has a self-priming low-pressure fuel system. Refer to FUEL SYSTEM PRIMING - DIESEL. .**

1. Install fuel filter housing (2) to engine block. Tighten bolts (1) to 32 N.m (24 ft. lbs.).

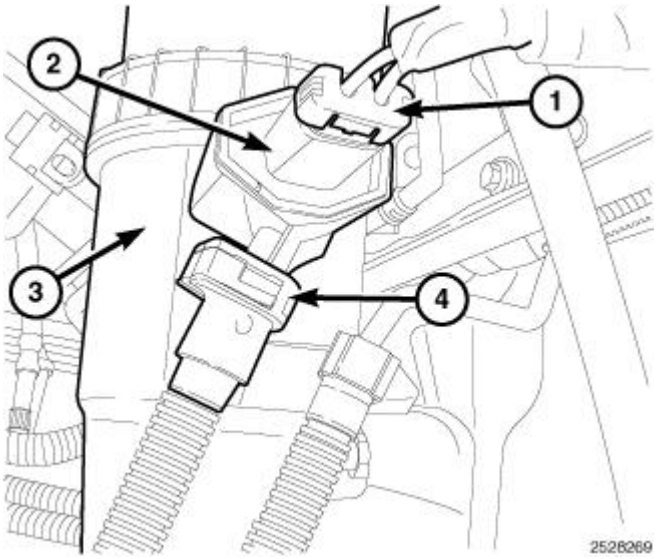

Fig. 64: Fuel Filter Housing Assembly & Harness Connector
Courtesy of CHRYSLER GROUP, LLC

2. Connect the fuel heater harness connector (1).

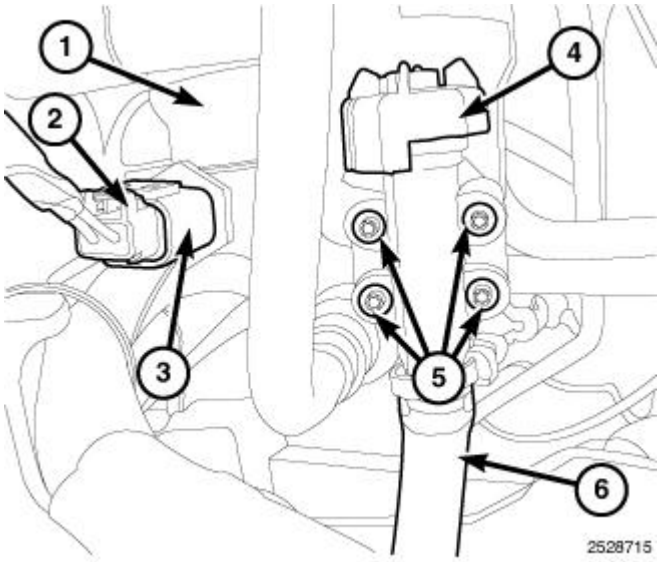

Fig. 65: Identifying Drain Valve, Drain Hose, Mounting Screws, Sensor Harness Connector & Filter Housing
Courtesy of CHRYSLER GROUP, LLC

3. Connect the Water In Fuel (WIF) sensor harness connector (2).

4. Install all low-pressure fuel lines at filter housing.

TANK, FUEL

REMOVAL

REMOVAL

REAR MOUNTED FUEL TANK

1. Release fuel system pressure. Refer to **FUEL SYSTEM PRESSURE RELEASE**. .
2. Raise and support vehicle.
3. Drain fuel tank. Refer to **DRAINING FUEL TANK**.

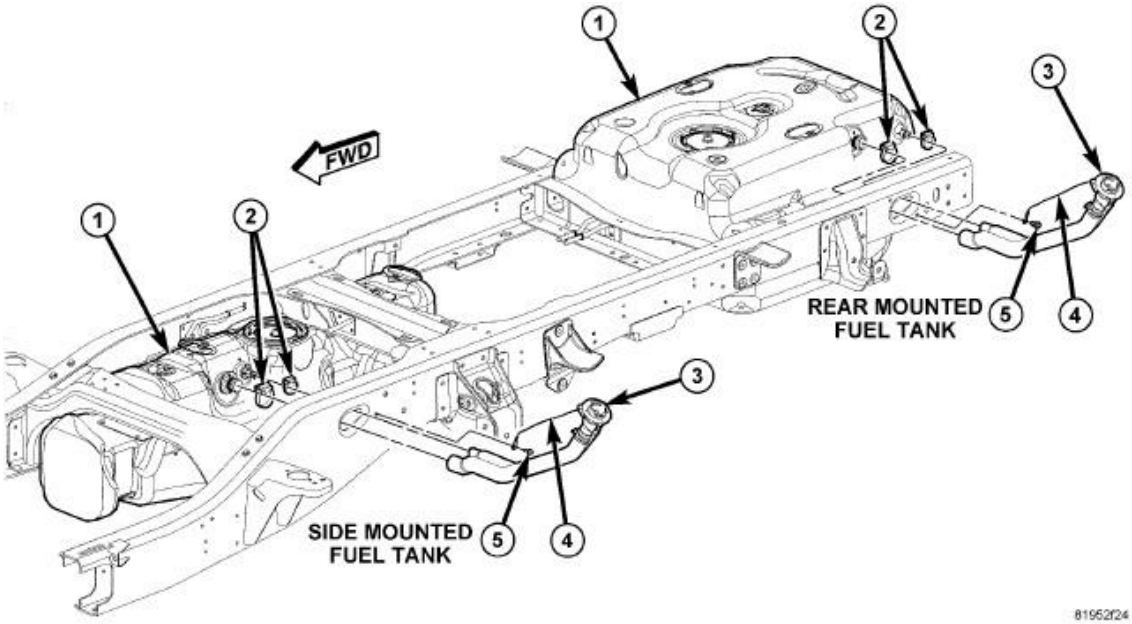

Fig. 66: Fuel Fill Hoses - Rear & Side Mounted Tanks
Courtesy of CHRYSLER GROUP, LLC

4. Remove both clamps (2).
5. Remove ground wire screw (5) and disconnect ground wire (4).
6. Remove fuel fill hose assembly (3).

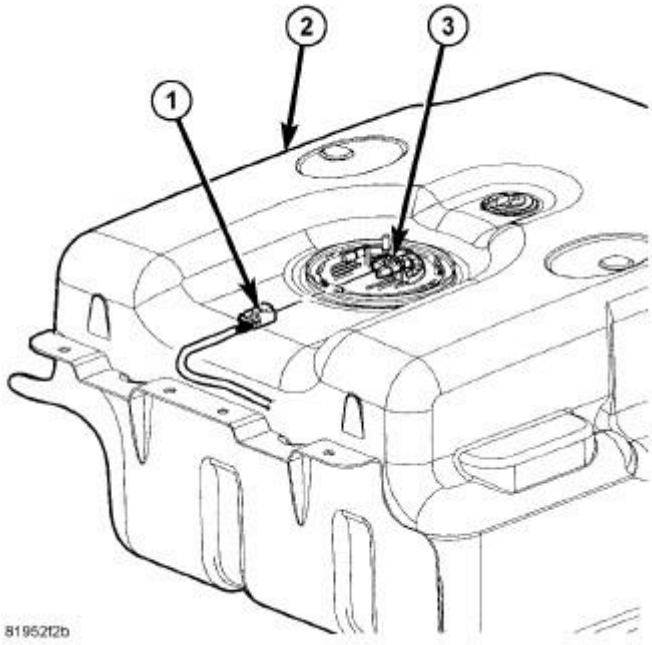

Fig. 67: Electrical Connector - Rear Tank
Courtesy of CHRYSLER GROUP, LLC

7. Disconnect electrical connector (1) from module (3).

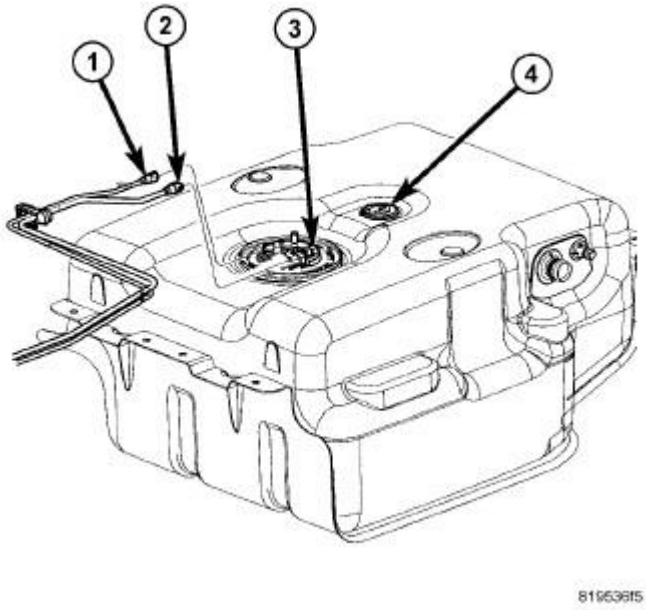

Fig. 68: Diesel Fuel Line Connection - Rear Tank
Courtesy of CHRYSLER GROUP, LLC

8. Disconnect fuel return and supply line quick-connect fittings (1) and (2).
9. Support tank with a hydraulic jack.

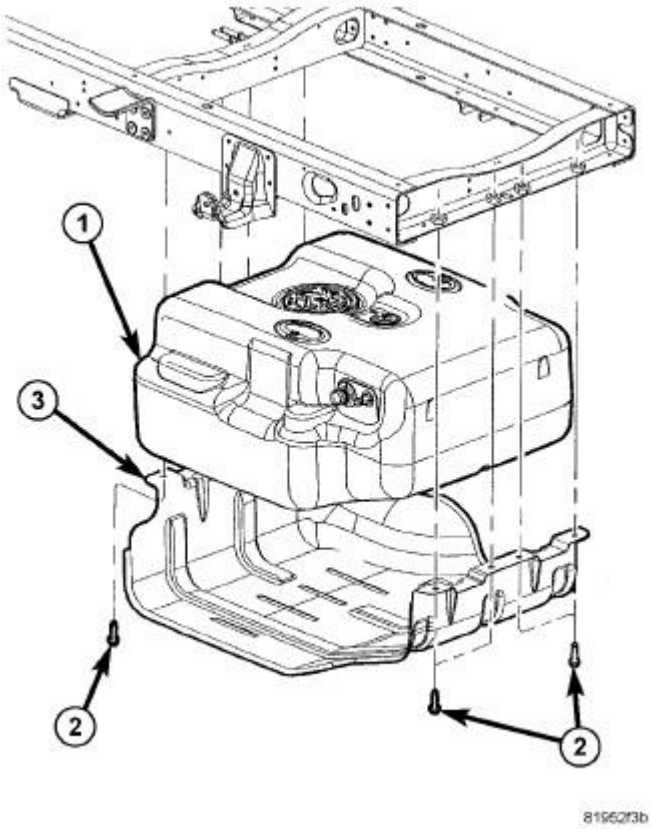

Fig. 69: Mounting - Rear Tank
Courtesy of CHRYSLER GROUP, LLC

10. Certain models may have an optional fuel tank skid plate (3). The same mounting bolts (2) are used to retain both the skid plate and fuel tank. Remove bolts (2).
11. Lower the tank assembly from vehicle and lift tank from skid plate.
12. If fuel tank module (diesel) is being removed, refer to **MODULE, FUEL PUMP, REMOVAL**.

SIDE (MID-SHIP) MOUNTED FUEL TANK

1. Release fuel system pressure. Refer to **FUEL SYSTEM PRESSURE RELEASE**. .
2. Raise and support vehicle.
3. Drain fuel tank. Refer to **DRAINING FUEL TANK**.

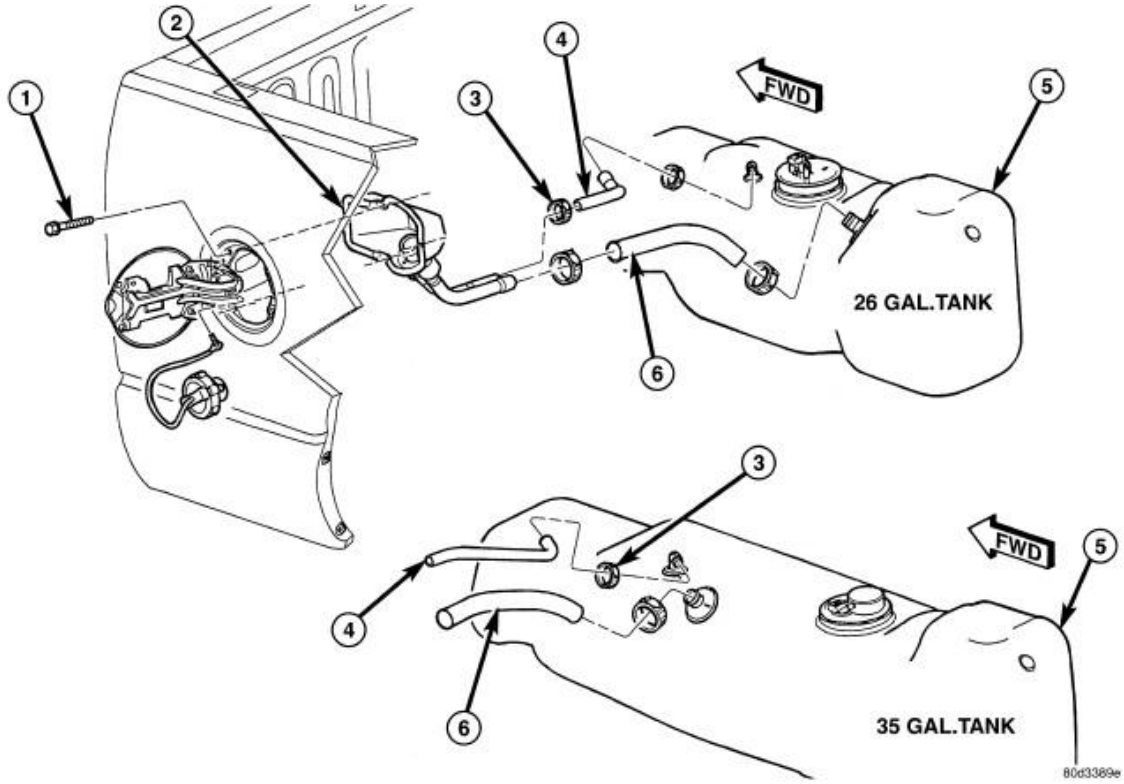

Fig. 70: Fuel Tank Fill/Vent Hoses - Mid Tank
Courtesy of CHRYSLER GROUP, LLC

4. Loosen clamps (3).
5. Remove hoses (4) and (6) from tank.

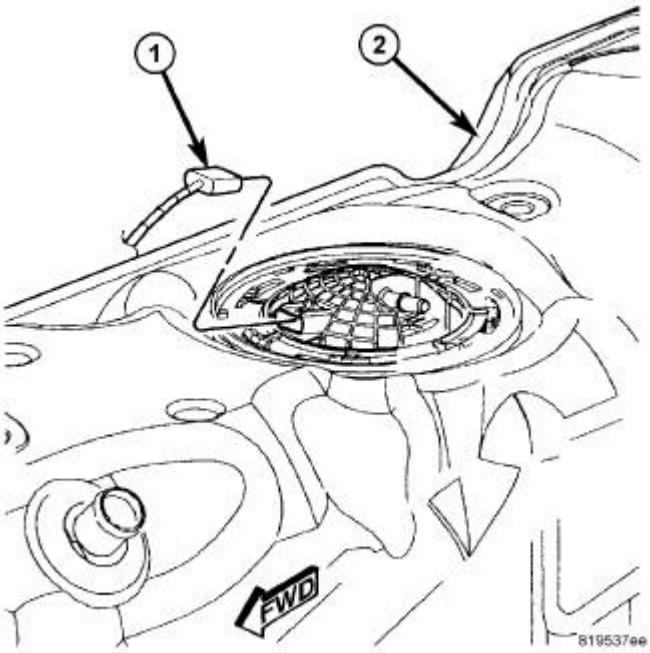

Fig. 71: Electrical Connector - Mid Tank
Courtesy of CHRYSLER GROUP, LLC

6. Disconnect electrical connector (1) at top of module.

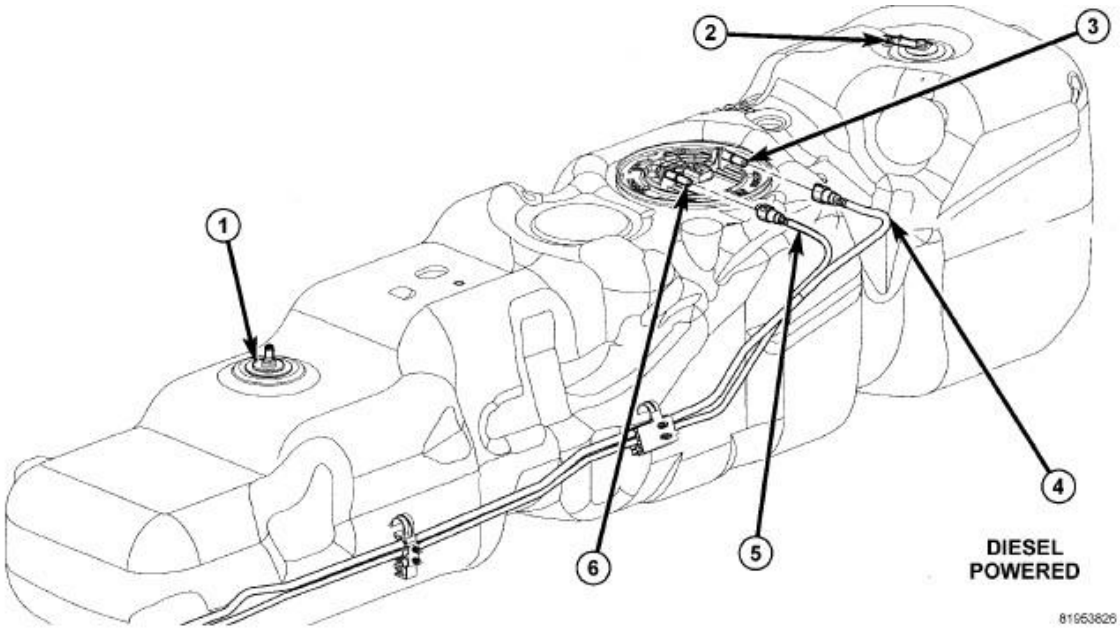

Fig. 72: Fuel Line Connections - Diesel Mid Tank
Courtesy of CHRYSLER GROUP, LLC

7. Disconnect fuel return and supply line quick-connect fittings (4) and (5).
8. Support tank with a hydraulic jack.

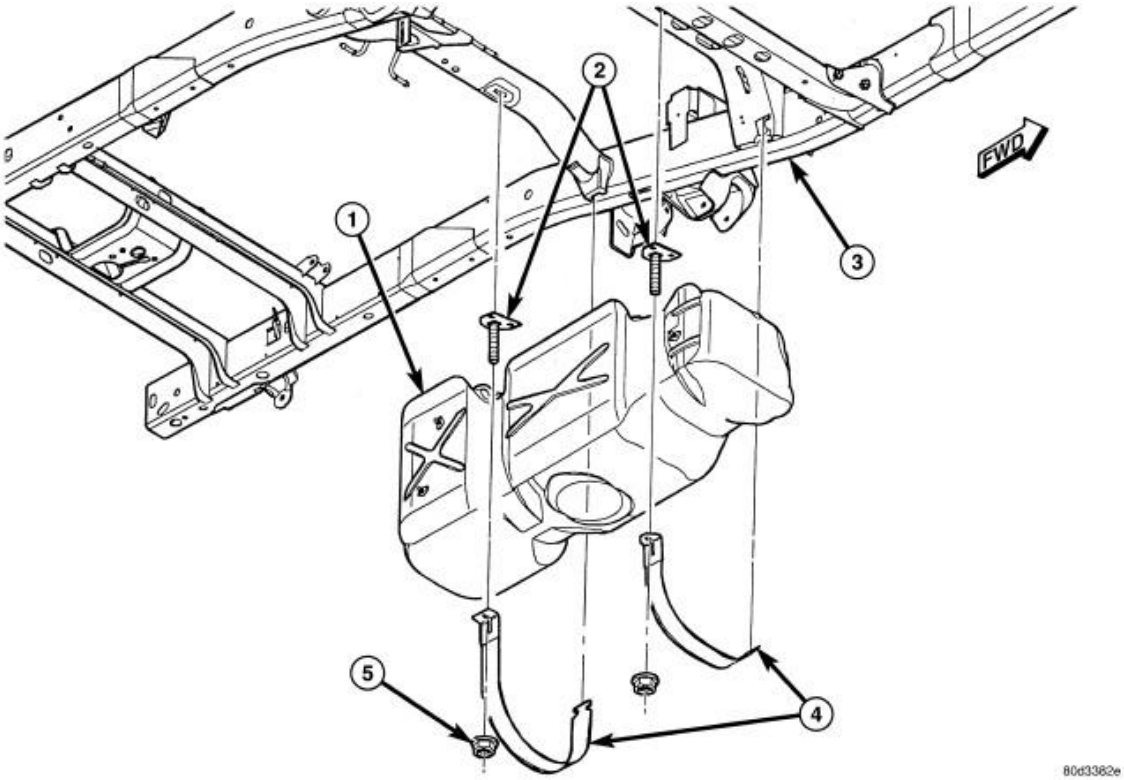

Fig. 73: Fuel Tank Mounting - Mid Tank
Courtesy of CHRYSLER GROUP, LLC

9. Remove nuts (5).
10. Remove both tank straps (4).
11. Lower tank and remove from hydraulic jack.
12. If fuel pump module (diesel) is being removed, refer to **MODULE, FUEL PUMP, REMOVAL**.

INSTALLATION

INSTALLATION

REAR MOUNTED FUEL TANK

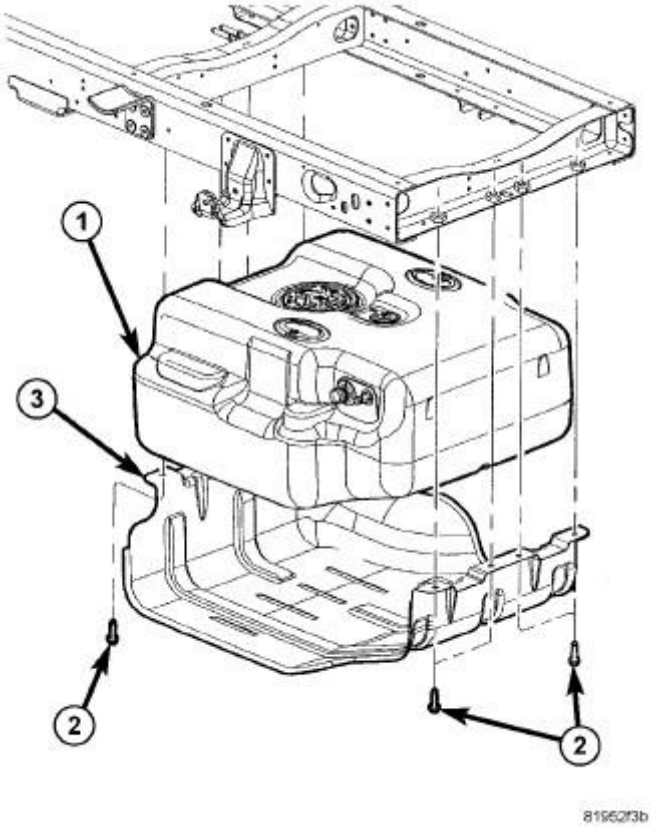

Fig. 74: Mounting - Rear Tank
Courtesy of CHRYSLER GROUP, LLC

1. If fuel pump module is being installed, refer to **MODULE, FUEL PUMP, INSTALLATION**.
2. Position fuel tank into fuel tank skid plate.
3. Place assembly to a hydraulic jack.
4. Raise assembly up to frame.
5. Install bolts (2) and tighten to 55 N.m (41 ft. lbs.).

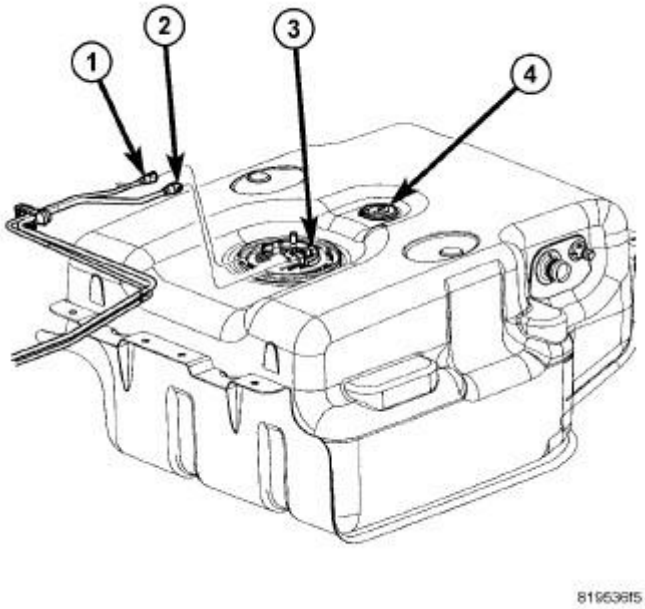

Fig. 75: Diesel Fuel Line Connection - Rear Tank
Courtesy of CHRYSLER GROUP, LLC

6. Connect fuel return and supply line quick-connect fittings (1 and 2).

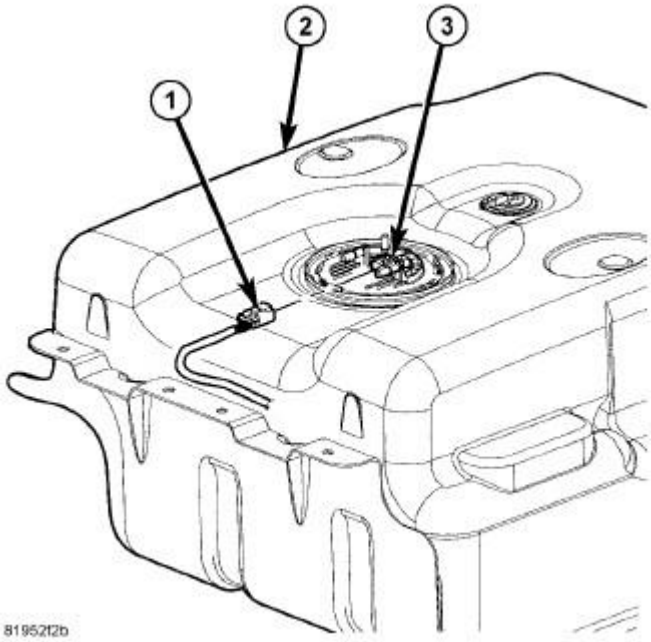

Fig. 76: Electrical Connector - Rear Tank
Courtesy of CHRYSLER GROUP, LLC

7. Connect harness connector (1) to module (3).

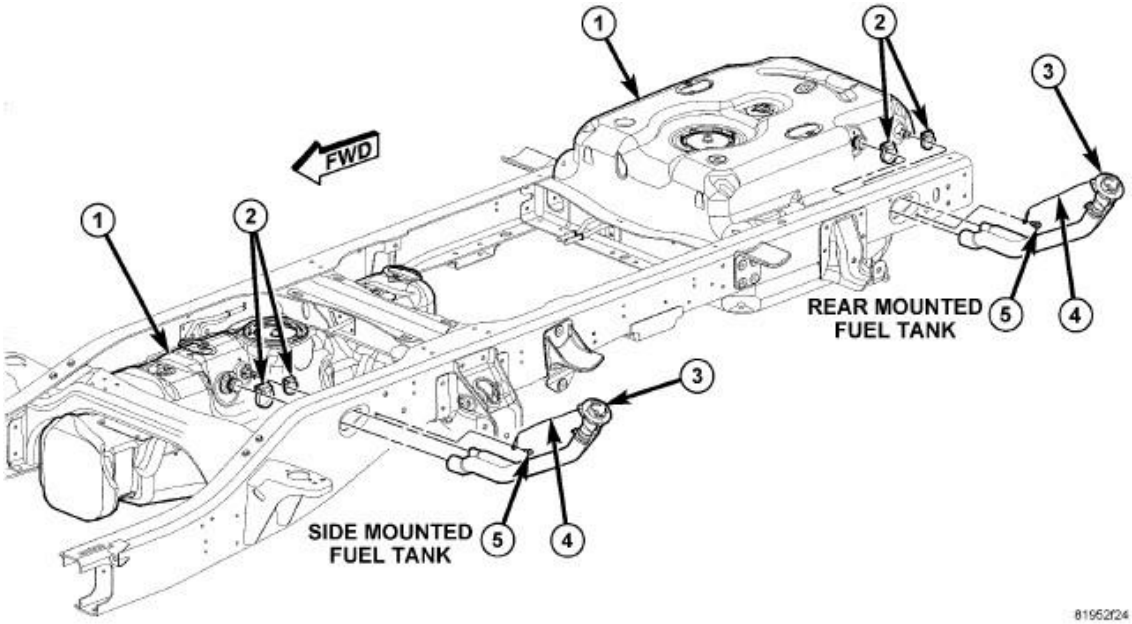

Fig. 77: Fuel Fill Hoses - Rear & Side Mounted Tanks
Courtesy of CHRYSLER GROUP, LLC

8. Fit fuel fill hose assembly (3) to tank fittings.
9. Install both clamps (2).
10. Install ground wire screw (5) and ground wire (4).
11. Fill tank and check for leaks.

SIDE (MID-SHIP) MOUNTED FUEL TANK

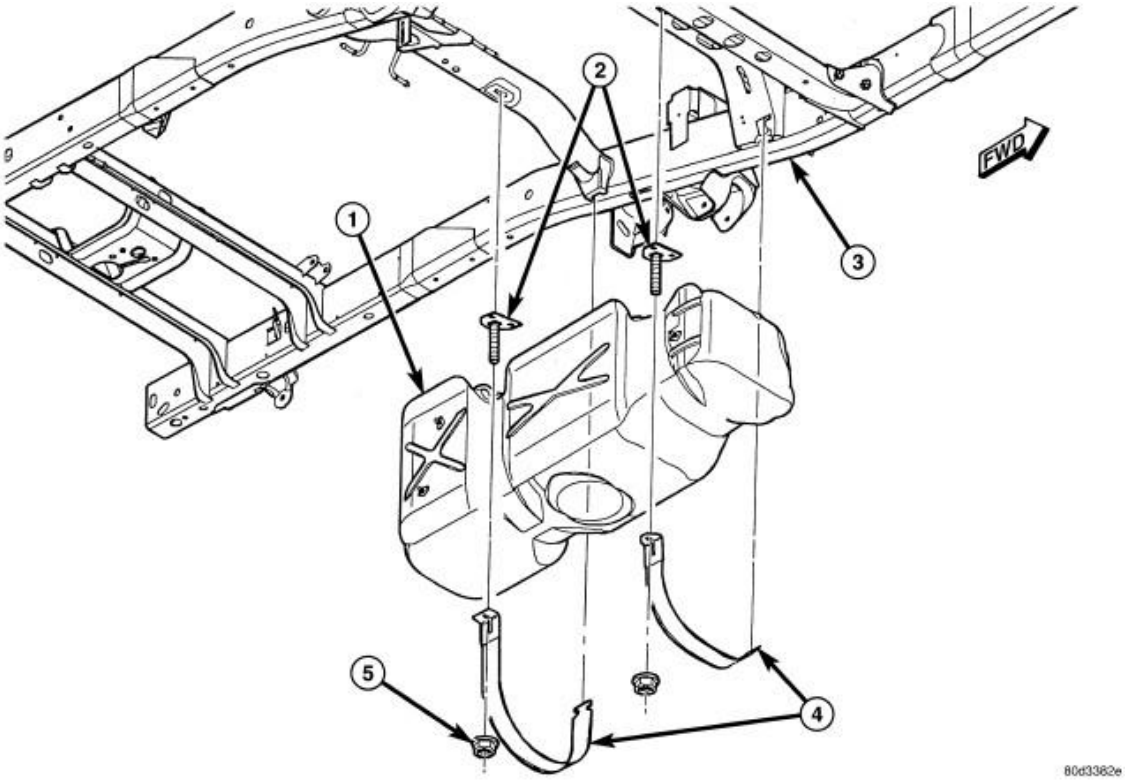

Fig. 78: Fuel Tank Mounting - Mid Tank
Courtesy of CHRYSLER GROUP, LLC

1. If fuel pump module is being installed, refer to **MODULE, FUEL PUMP, INSTALLATION**.
2. Place assembly to a hydraulic jack.
3. Raise assembly up to frame.
4. Install fuel tank straps (4). Tighten nuts (5) to 41 N.m (30 ft. lbs.).

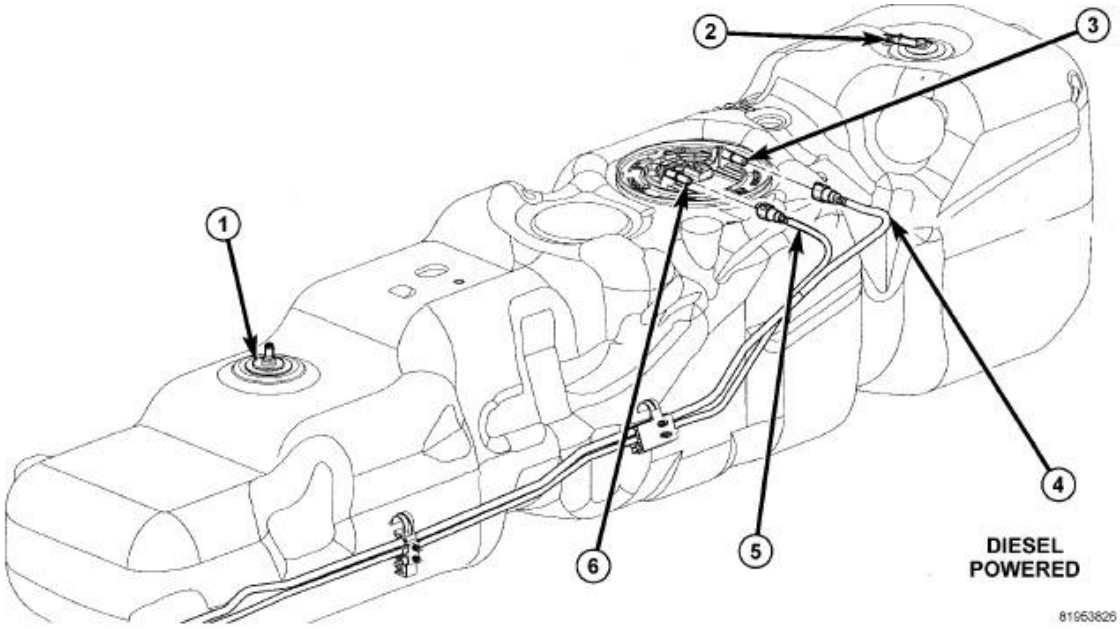

Fig. 79: Fuel Line Connections - Diesel Mid Tank
Courtesy of CHRYSLER GROUP, LLC

5. Connect fuel return and supply line quick-connect fittings (4 and 5).

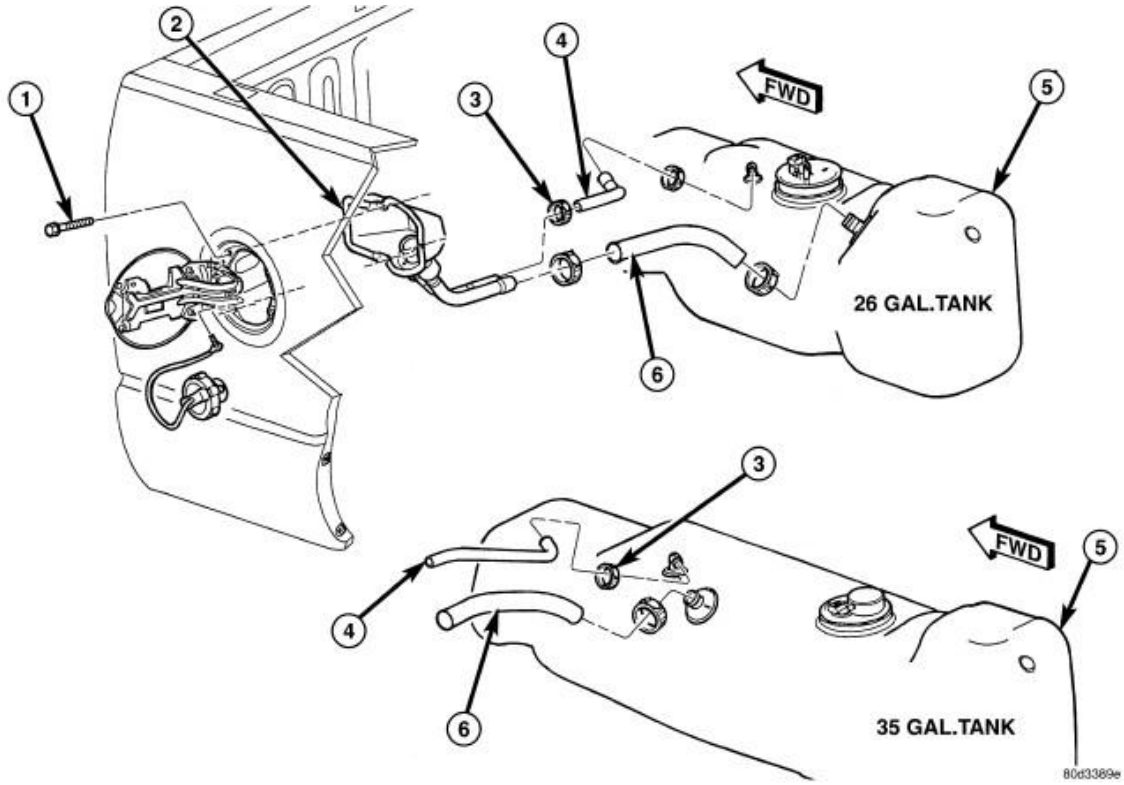

Fig. 80: Fuel Tank Fill/Vent Hoses - Mid Tank
Courtesy of CHRYSLER GROUP, LLC

6. Position hoses (4 and 6) to tank fittings.
7. Tighten clamps (3).

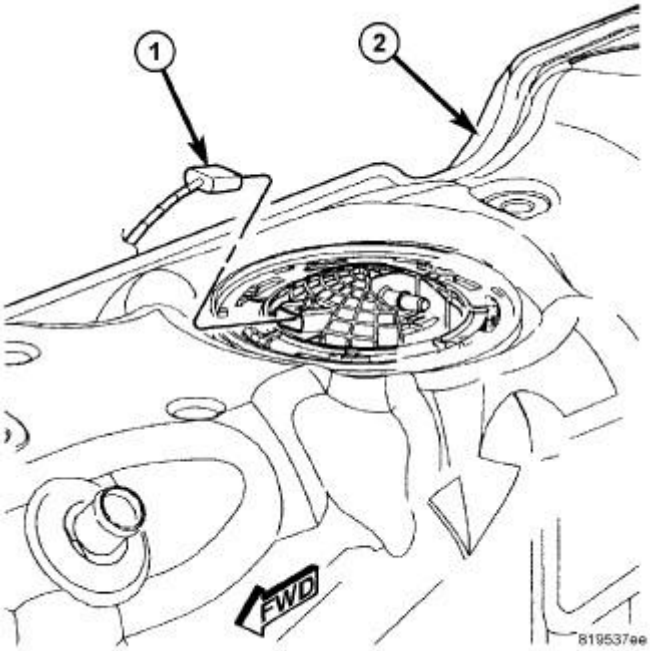

Fig. 81: Electrical Connector - Mid Tank
Courtesy of CHRYSLER GROUP, LLC

8. Connect harness connector (1) at top of module.
9. Fill tank and check for leaks.

TUBE(S), FUEL

DESCRIPTION

DESCRIPTION

LOW-PRESSURE LINES ARE:

- the fuel supply line from fuel tank to fuel filter housing.
- the fuel return line back to fuel tank.
- the fuel drain (manifold) line at rear of cylinder head.
- the fuel supply line from fuel filter to fuel injection pump.
- the fuel injection pump return line.

HIGH-PRESSURE LINES ARE:

- the fuel line from fuel injection pump to fuel rail.
- the six fuel lines from fuel rail up to injector connector tubes

WARNING: High-pressure fuel lines deliver diesel fuel under extreme pressure from the injection pump to the fuel injectors. This may be as high as 180, 000

kpa (26, 107 psi). Use extreme caution when inspecting for high-pressure fuel leaks. Inspect for high-pressure fuel leaks with a sheet of cardboard. High fuel injection pressure can cause personal injury if contact is made with the skin.

OPERATION

OPERATION

HIGH-PRESSURE LINES

CAUTION: The high-pressure fuel lines must be held securely in the brace. The lines cannot contact each other or other components. Do not attempt to weld high-pressure fuel lines or to repair lines that are damaged. If lines are ever kinked or bent, they must be replaced. Use only the recommended lines when replacement of high-pressure fuel line is necessary.

CAUTION: Do not squeeze low pressure fuel lines with pliers, vice grips, or similar tools as this will damage to the fuel line.

High-pressure fuel lines deliver fuel (under pressure) of up to approximately 180, 000 kPa (26, 107 PSI) from the injection pump to the fuel injectors. The lines expand and contract from the high-pressure fuel pulses generated during the injection process. All high-pressure fuel lines are of the same length and inside diameter. Correct high-pressure fuel line usage and installation is critical to smooth engine operation.

WARNING: Use extreme caution when inspecting for high-pressure fuel leaks. Inspect for high-pressure fuel leaks with a sheet of cardboard. High fuel injection pressure can cause personal injury if contact is made with the skin.

DIAGNOSIS AND TESTING

DIAGNOSIS AND TESTING - HIGH - PRESSURE FUEL LINE LEAKS

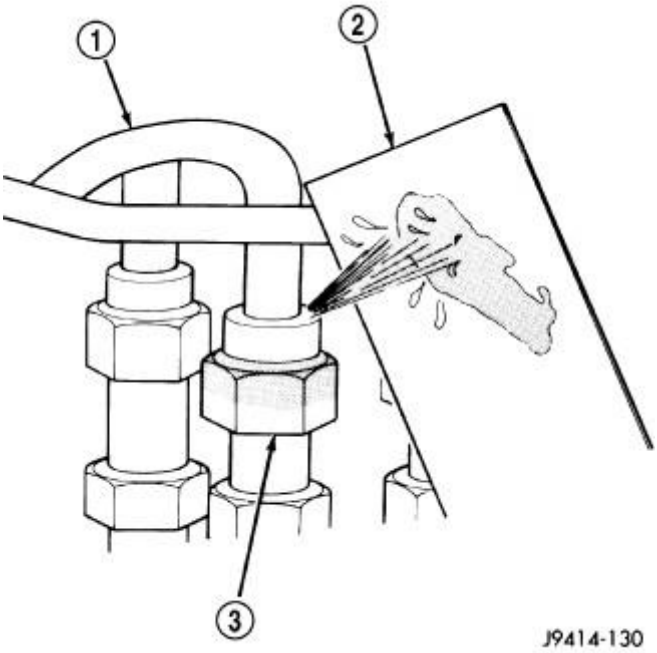

Fig. 82: Checking For Fuel Spray
Courtesy of CHRYSLER GROUP, LLC

1 - HIGH-PRESSURE LINE
2 - CARDBOARD
3 - TYPICAL HIGH-PRESSURE FITTING

High-pressure fuel line leaks can cause starting problems and poor engine performance.

WARNING: **Due to extreme fuel pressures of up to 180, 000 kpa (26, 107 psi), use extreme caution when inspecting for high-pressure fuel leaks. Do not get your hand or a finger near a suspected leak. Inspect for high-pressure fuel leaks with a sheet of cardboard (2) (typical picture). High fuel injection pressure can cause personal injury if contact is made with the skin.**

Start the engine. Move the cardboard (2) over the suspected high-pressure fuel line leak, and check for fuel spray onto the cardboard. If line is leaking, retorque line while engine is shutdown. Replace damaged, restricted or leaking high-pressure fuel lines with the correct replacement line.

CAUTION: **The high-pressure fuel lines must be clamped securely in place in the brace. The lines cannot contact each other or other components. Do not attempt to weld high-pressure fuel lines or to repair lines that are damaged. Only use the recommended lines when replacement of high-pressure fuel line is necessary.**

NOISE ISOLATORS

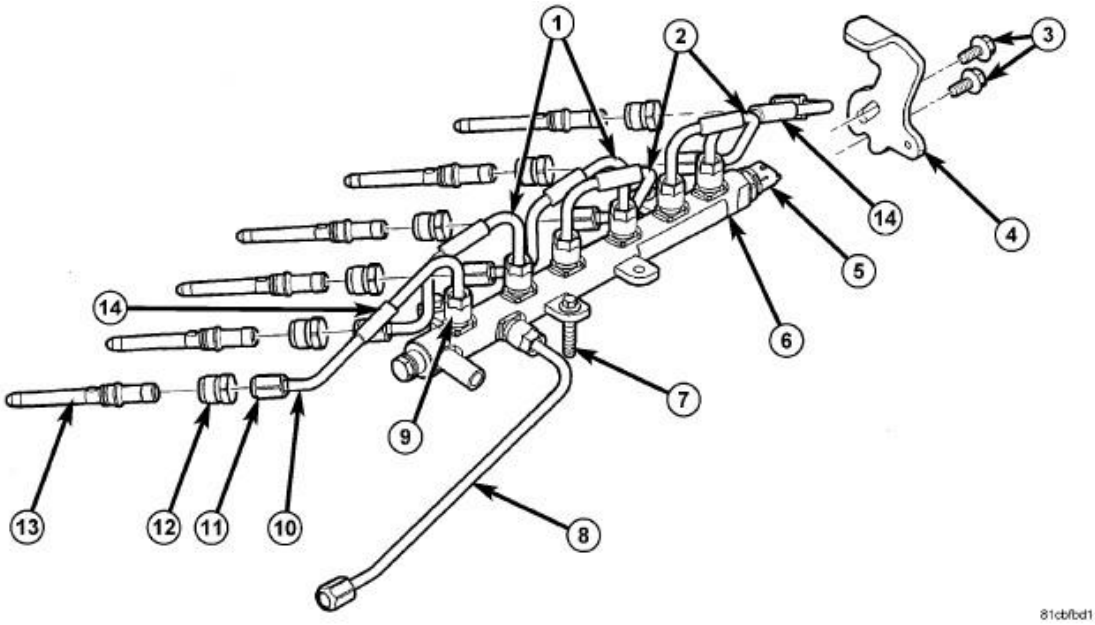

Fig. 83: Exploded View Of Fuel Lines, Fuel Rail & Injectors
Courtesy of CHRYSLER GROUP, LLC

Noise isolators (14) are used on the six high-pressure fuel lines. They should be positioned in the middle of the horizontal or longest straight section of each fuel line. The split on each isolator should be facing downward. Be sure the noise isolator is not touching another isolator or any other components.

REMOVAL

REMOVAL

CAUTION: Cleanliness cannot be overemphasized when handling or replacing diesel fuel system components. This especially includes the fuel injectors, high-pressure fuel lines and fuel injection pump. Very tight tolerances are used with these parts. Dirt contamination could cause rapid part wear and possible plugging of fuel injector nozzle tip holes. This in turn could lead to possible engine misfire. Always wash/clean any fuel system component thoroughly before disassembly and then air dry. Cap or cover any open part after disassembly. Before assembly, examine each part for dirt, grease or other contaminants and clean if necessary. When installing new parts, lubricate them with clean engine oil or clean diesel fuel only.

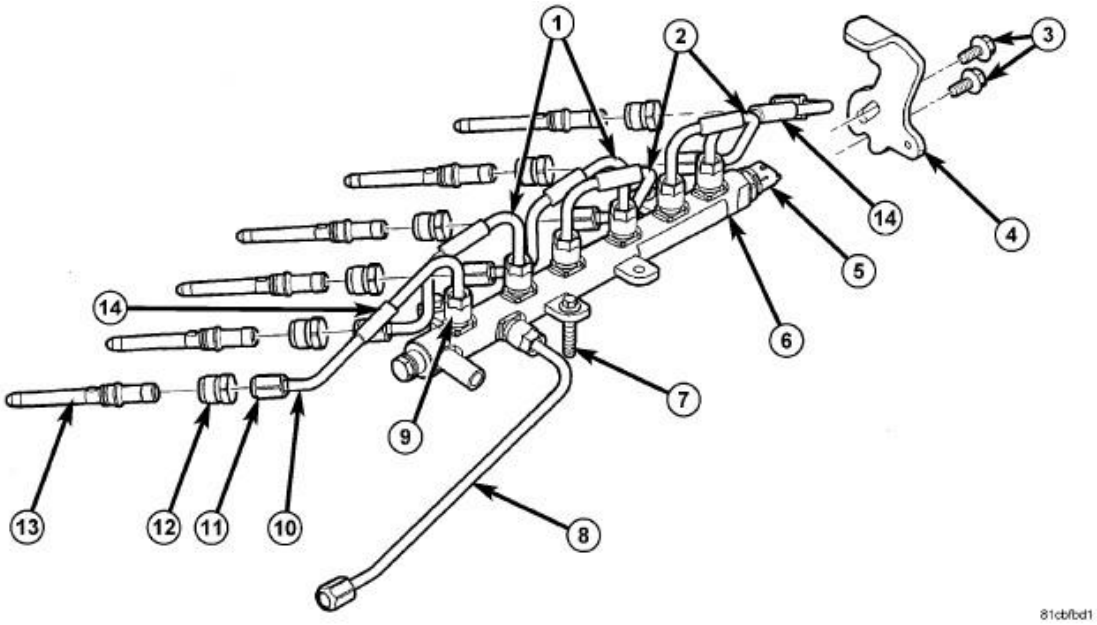

Fig. 84: Exploded View Of Fuel Lines, Fuel Rail & Injectors
Courtesy of CHRYSLER GROUP, LLC

1. Disconnect both negative battery cables.
2. Thoroughly clean fuel tubes at both ends.

CAUTION: When loosening or tightening high-pressure lines attached to a separate fitting (11), use a back-up wrench on fitting (12). Do not allow fittings (12) to rotate. Damage to both fuel line and fitting will result.

3. If removing fuel tube at No. 6 cylinder, a bracket (4) is located above fuel tube connection at cylinder head. Two bolts (3) secure this bracket to rear of cylinder head. The upper bolt hole is slotted. Loosen (but do not remove) these two bracket bolts. Tilt bracket down to gain access to No. 6 fuel line connection.

NOTE: Before fuel tubes No. 1 or No. 2 can be removed the intake manifold need to be removed first. Refer to MANIFOLD, INTAKE, REMOVAL, 6.7L .

4. If removing fuel tube at either No. 1 or No. 2 cylinder.
5. Place shop towels around fuel tubes at fuel rail and injectors. If possible, do not allow fuel to drip down side of engine.
6. Carefully remove each fuel tube from engine. Note position of each while removing. **Do not bend lines while removing.**

INSTALLATION

INSTALLATION

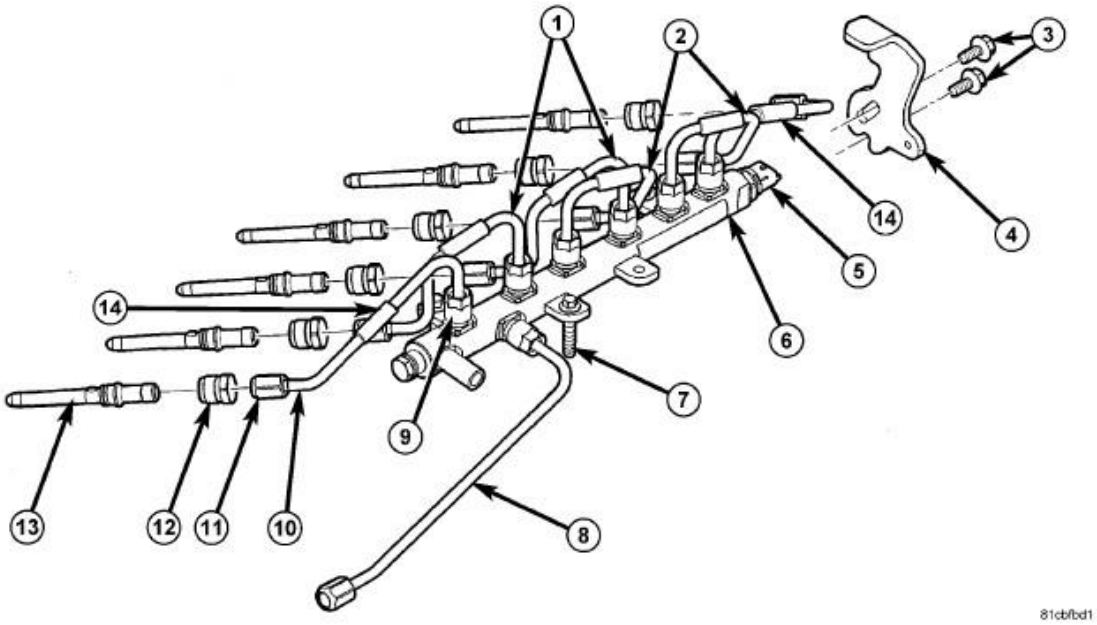

Fig. 85: Exploded View Of Fuel Lines, Fuel Rail & Injectors
Courtesy of CHRYSLER GROUP, LLC

CAUTION: Anytime a high-pressure line is removed from the engine, its fuel connector nut (12) at the cylinder head must first be retorqued.

1. Tighten nuts (12) at high pressure injector connector nut at the cylinder head to 50 N.m (37 ft. lbs.).

NOTE: Use care not to bend fuel tubs when installing.

2. Install proper fuel tube to proper injector on engine. Tighten fittings hand tight at both ends of line.
3. Tighten fuel tube nut at cylinder head to 40 N.m (30 ft. lbs.).
4. Tighten fuel tube nuts at fuel rail to 40 N.m (30 ft. lbs.).
5. If fuel tube at No. 6 cylinder has been replaced, tilt metal bracket (4) upward and tighten two bolts (3) at rear of cylinder head. Tighten to 43 N.m (32 ft. lbs.).
6. If necessary, install intake manifold. Refer to **MANIFOLD, INTAKE, INSTALLATION, 6.7L** .
7. **Noise isolators (14)** are used on the six high-pressure fuel lines. They should be positioned in the middle of the horizontal or longest straight section of each fuel tube. The split on each isolator should be facing downward. Be sure the noise isolator is not touching another isolator or any other components.
8. Connect both negative battery cables.
9. Prime fuel system. Refer to **FUEL SYSTEM PRIMING - DIESEL**. .
10. Check lines/fittings for leaks.

VALVE, FUEL PRESSURE LIMITING

OPERATION

OPERATION

Fuel pressure at the fuel rail is monitored by the fuel rail pressure sensor. If fuel pressure becomes excessive, the pressure limiting valve opens and vents excess fuel pressure vents through the fuel pressure limiting valve drain port.

REMOVAL

REMOVAL

CAUTION: Cleanliness cannot be overemphasized when handling or replacing diesel fuel system components. This especially includes the fuel injectors, high-pressure fuel lines and fuel injection pump. Very tight tolerances are used with these parts. Dirt contamination could cause rapid part wear and possible plugging of fuel injector nozzle tip holes. This in turn could lead to possible engine misfire. Always wash/clean any fuel system component thoroughly before disassembly and then air dry. Cap or cover any open part after disassembly. Before assembly, examine each part for dirt, grease or other contaminants and clean if necessary. When installing new parts, lubricate them with clean engine oil or clean diesel fuel only.

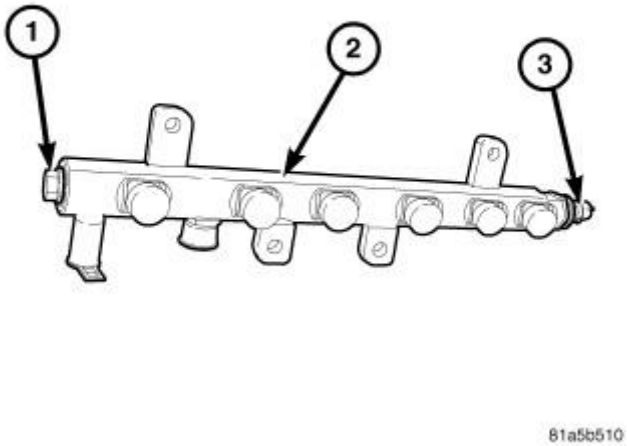

Fig. 86: Fuel Pressure Limiting Valve & Fuel Rail
Courtesy of CHRYSLER GROUP, LLC

The fuel pressure limiting valve (1) is screwed into the front of the fuel rail (2).

The fuel pressure limiting valve drain port is located on the side of the fuel rail next to the limiting valve. The drain port is not serviceable.

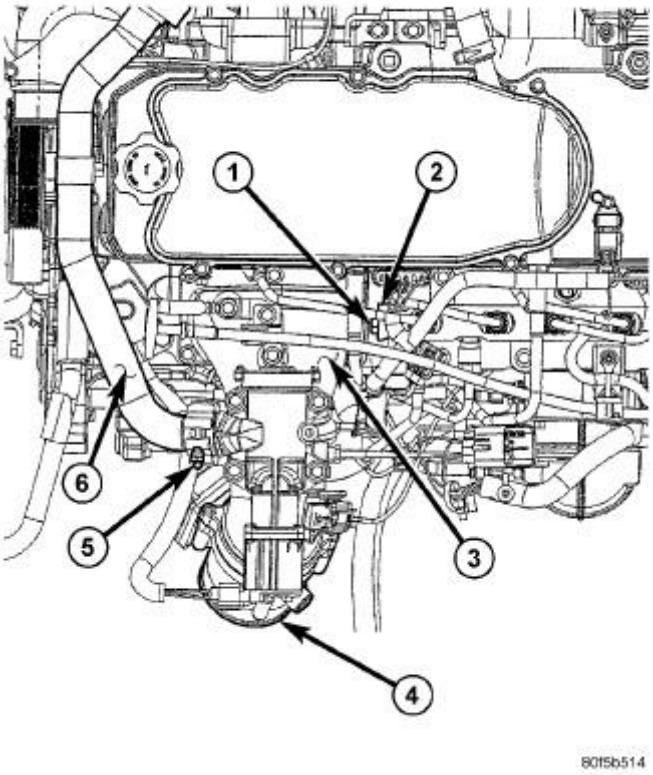

Fig. 87: Engine Fuel Pressure Limiting Valve System Components -- Top View
Courtesy of CHRYSLER GROUP, LLC

1. Thoroughly clean area at pressure limiting valve (1).
2. Remove the EGR crossover tube. Refer to **TUBE, EXHAUST GAS RECIRCULATION (EGR), CROSSOVER, REMOVAL** .

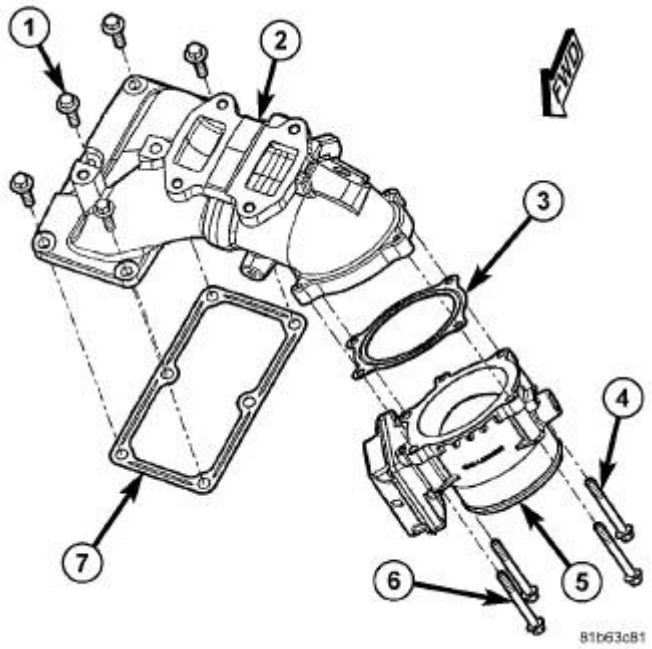

Fig. 88: EGR Air Flow Control - Exploded View
Courtesy of CHRYSLER GROUP, LLC

3. Remove six bolts (1) and the intake manifold (2).
4. Discard gasket (7).

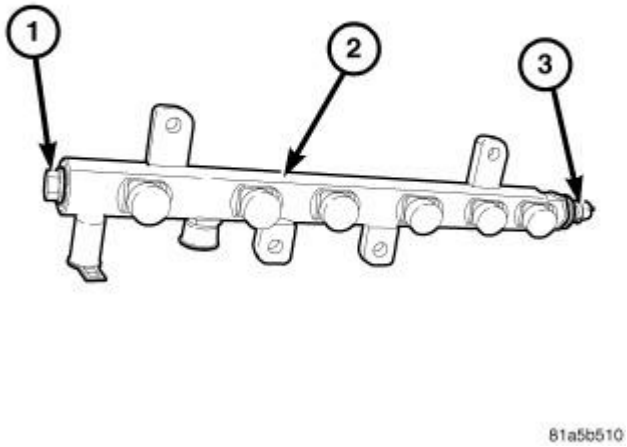

Fig. 89: Fuel Pressure Limiting Valve & Fuel Rail
Courtesy of CHRYSLER GROUP, LLC

5. Remove pressure limiting valve (1) from fuel rail (2).

INSTALLATION

INSTALLATION

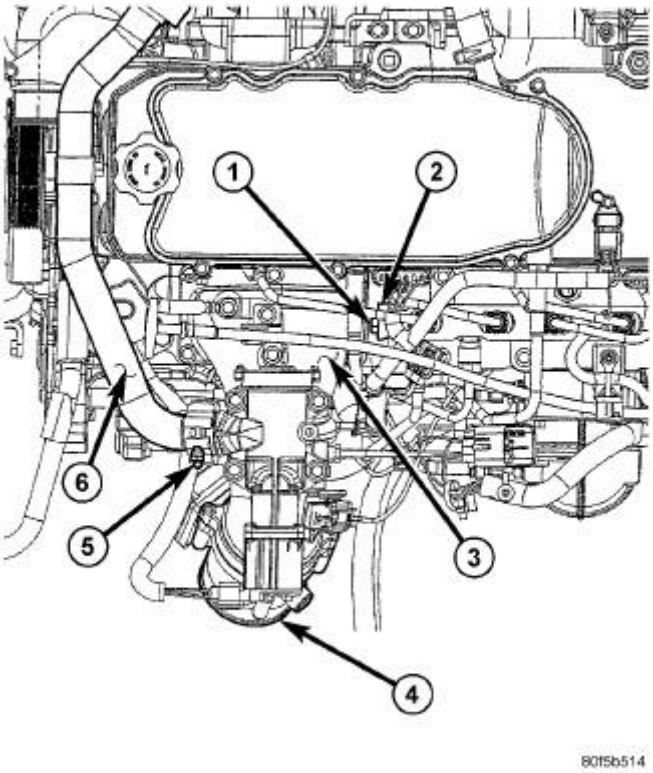

Fig. 90: Engine Fuel Pressure Limiting Valve System Components -- Top View
Courtesy of CHRYSLER GROUP, LLC

1. Be sure both end of manifold and limiting valve mounting area are clean.
2. Lubricate O-ring on limiting valve with fresh diesel oil. Also lubricate limiting valve threads with fresh diesel oil.
3. Install the limiting valve (1). Tighten to 100 N.m (74 ft. lbs.).

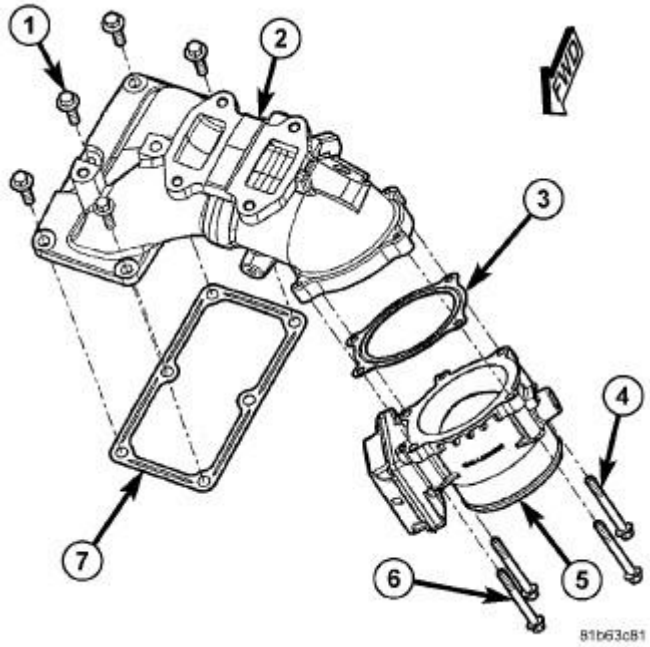

Fig. 91: EGR Air Flow Control - Exploded View
Courtesy of CHRYSLER GROUP, LLC

4. Using a new gasket (7), install the intake manifold (2). Tighten bolts (1) to 24 N.m (18 ft. lbs.).
5. Install the EGR crossover tube. Refer to **TUBE, EXHAUST GAS RECIRCULATION (EGR), CROSSOVER, INSTALLATION** .
6. **Using a diagnostic scan tool, reset vale life by using the "Reset Two-Stage Dump Valve Accumulator" function in the PCM portion of the diagnostic tool.**
7. Start engine and check for leaks.

VALVE, OVERFLOW

DESCRIPTION

DESCRIPTION

NOTE: **The cascade overflow valve is not serviced separately.**

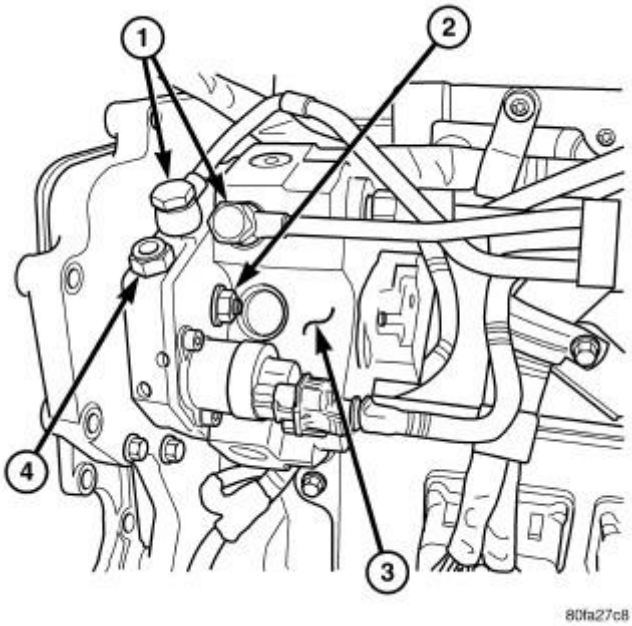

Fig. 92: Overflow Valve
Courtesy of CHRYSLER GROUP, LLC

1 - BANJO BOLTS
2 - PUMP MOUNTING NUTS (3)
3 - FUEL INJECTION PUMP
4 - CASCADE OVERFLOW VALVE

The cascade overflow valve (4) is located on the top/rear side of the fuel injection pump. Refer to **Fig. 92**.

OPERATION

OPERATION

When the fuel control actuator (FCA) is opened, the maximum amount of fuel is being delivered to the fuel injection pump. The cascade valve regulates how much excess fuel is used for lubrication of the injection pump, and is also used to route excess fuel through the drain circuit and back into the fuel tank.

FUEL INJECTION, 6.7L DIESEL

OPERATION

FUEL ECONOMY AND MAINTENANCE

A vehicle that is not properly tuned and maintained cannot be expected to perform at its maximum efficiency and can have an adverse effect on fuel economy. The following recommendations will ensure that the vehicle is performing at its maximum efficiency:

- **Use the recommended motor oil grade.** Using the manufacturer's recommended grade of Mopar® motor oil can improve fuel mileage by 1-2%. Mopar® motor oil labeled "Energy Conserving" contains friction-reducing additives.
- **Check and replace air filters.** Replacing a clogged air filter with a new Mopar® air filter can improve fuel mileage by as much as 10%.
- **Keep the engine tuned.** Repairing a vehicle that is noticeably out of tune can improve fuel mileage by an average of 4%. Maintaining a vehicle and repairing problems, such as a faulty oxygen sensor, can improve mileage by as much as 40%.
- **Keep tires properly inflated.** Underinflated tires can lower fuel mileage by 0.4% for every 1 psi drop in pressure of all four tires.

SPECIAL TOOLS

SPECIAL TOOLS

	9010A - Remover/Installer, Fuel Injector (Originally Shipped In Kit Number(s) 8848, 8849.) 9015 - Remover, High Pressure Connector (Originally Shipped In Kit Number(s) 8848, 8849, 8849CC.)

ACTUATOR, FUEL CONTROL

DESCRIPTION

DESCRIPTION

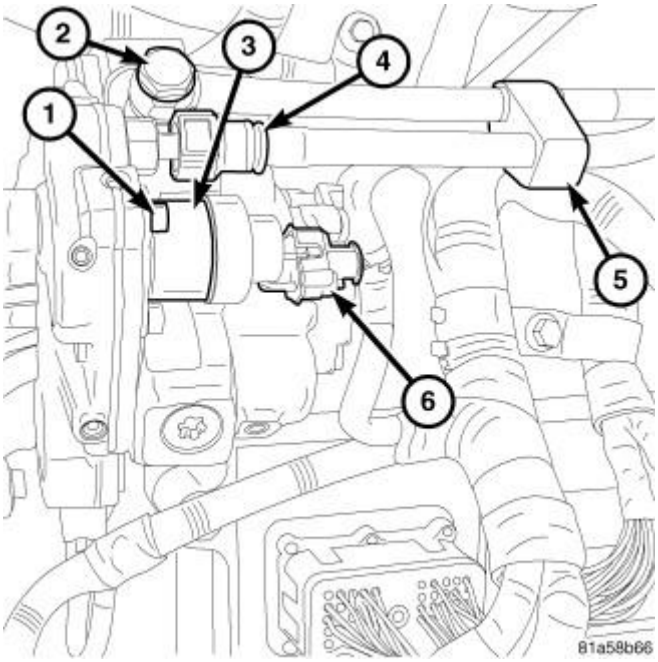

Fig. 93: Fuel Injection Pump Components
Courtesy of CHRYSLER GROUP, LLC

The Fuel Control Actuator (FCA) (3) is located at the rear of the high-pressure, fuel injection pump.

OPERATION

OPERATION

The Fuel Control Actuator (FCA) is an electronically controlled solenoid valve. The Powertrain Control Module (PCM) controls the amount of fuel that enters the high-pressure pumping chambers by opening and closing the FCA based on a demanded fuel pressure. When the FCA is opened, the maximum amount of fuel is being supplied to the fuel injection pump. Any fuel that does not enter the injection pump is directed to the cascade overflow valve. The cascade overflow valve regulates how much excess fuel is used for lubrication of the pump and how much is returned to the fuel tank through the drain manifold.

An audible click from the FCA is normal when operating the key from the ON to the OFF position.

REMOVAL

REMOVAL

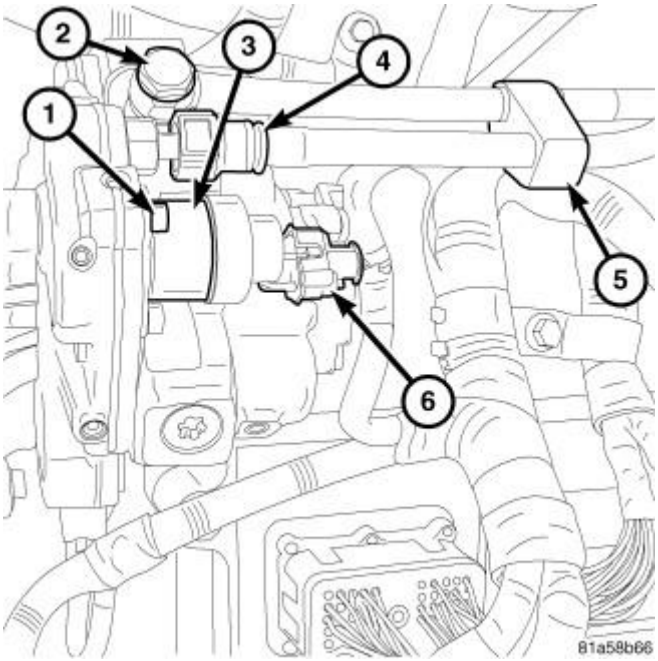

Fig. 94: Fuel Injection Pump Components
Courtesy of CHRYSLER GROUP, LLC

1. Disconnect the Fuel Control Actuator (FCA) harness connector (6).
2. Remove screws (1) and the FCA from injection pump.

INSTALLATION

INSTALLATION

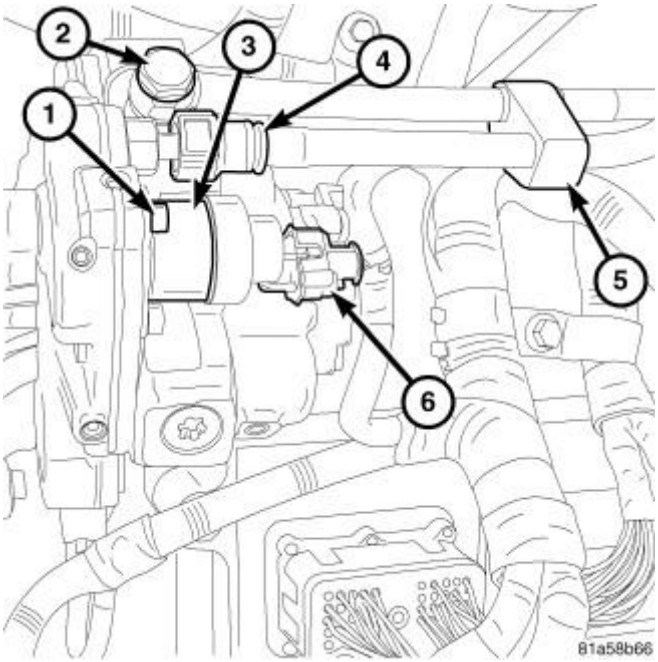

Fig. 95: Fuel Injection Pump Components
Courtesy of CHRYSLER GROUP, LLC

1. Lubricate new Fuel Control Actuator (FCA) O-ring with clean oil.
2. Install FCA into the injection pump. Tighten screws (1) to 7 N.m (62 in. lbs).

HEATER, AIR INTAKE

OPERATION

OPERATION

The air heater element is used to heat incoming air to the intake manifold. This is done to help engine starting and improve driveability with cool or cold outside temperatures.

Electrical supply for the air heater element is controlled by the Powertrain Control Module (PCM) through the air heater relay. Refer to appropriate Electrical Diagnostic article for more information.

A heavy-duty cable connects the air heater element to the air heater relay. This cable will supply 12-volts to an individual heating element within the heater block assembly.

The following chart displays the pre-heat, or turn-on times (in seconds) of the wait-to-start lamp. If the intake manifold temperature is above 66.09 degrees Fahrenheit, the wait-to-start lamp will not illuminate. Consequently, the intake air heater element will not be activated.

WAIT-TO-START LAMP TURN-ON TIMES

PRE-HEAT TIME WITH INTAKE MANIFOLD TEMPERATURE AT: (IN	PRE-HEAT TIME WITH BARO AT: (IN. HG.)				
	19.99 IN.	23.00 IN.	25.00 IN.	26.99	29.00 IN.

DEGREES ° F)	HG	HG.	HG.	IN.HG.	HG.
-40.09° F	30.0 seconds	30.0 seconds	30.0 seconds	30.0 seconds	30.0 seconds
-20.00° F	30.0 seconds	30.0 seconds	30.0 seconds	30.0 seconds	30.0 seconds
0.00° F	30.0 seconds	30.0 seconds	30.0 seconds	30.0 seconds	30.0 seconds
0.09° F	15.0 seconds	15.0 seconds	15.0 seconds	15.0 seconds	15.0 seconds
15.00° F	15.0 seconds	15.0 seconds	15.0 seconds	15.0 seconds	15.0 seconds
15.09° F	10.0 seconds	10.0 seconds	10.0 seconds	10.0 seconds	10.0 seconds
32.00° F	10.0 seconds	10.0 seconds	10.0 seconds	10.0 seconds	10.0 seconds
50.00° F	10.0 seconds	10.0 seconds	10.0 seconds	10.0 seconds	10.0 seconds
66.00° F	10.0 seconds	10.0 seconds	10.0 seconds	10.0 seconds	10.0 seconds
66.09° F	00.0 seconds	00.0 seconds	00.0 seconds	00.0 seconds	00.0 seconds

REMOVAL

REMOVAL

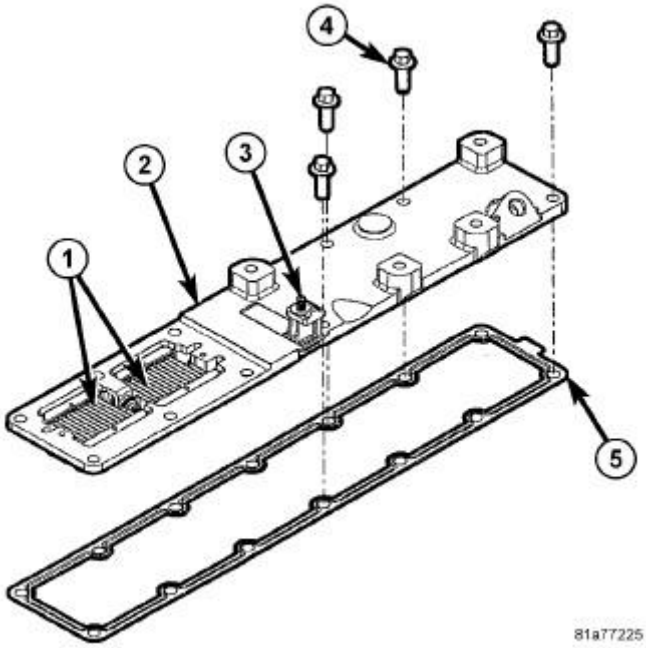

Fig. 96: Air Intake Heater Assembly
Courtesy of CHRYSLER GROUP, LLC

NOTE: **If servicing the heater element (1) is required, the entire air intake heater assembly (2) must be replaced.**

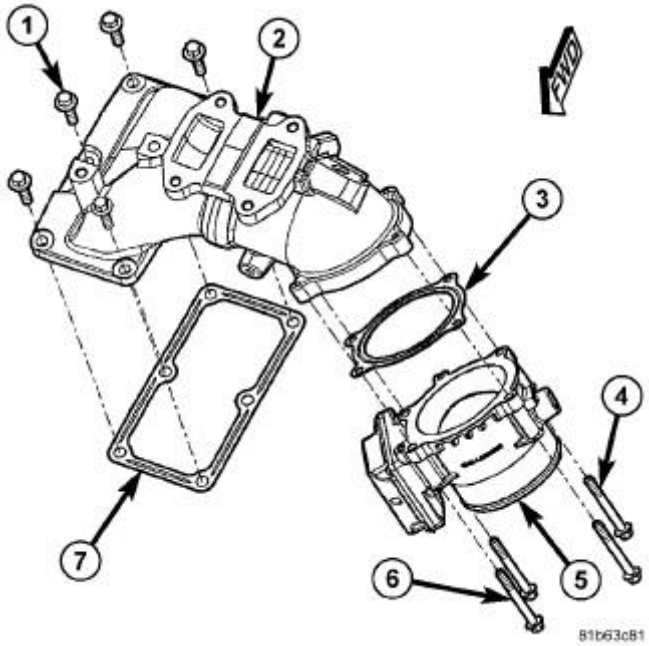

Fig. 97: EGR Air Flow Control - Exploded View
Courtesy of CHRYSLER GROUP, LLC

1. Disconnect both negative battery cables.
2. Remove the intake manifold (2). Refer to **MANIFOLD, INTAKE, REMOVAL, 6.7L** .
3. Remove fuel rail. Refer to **RAIL, FUEL, REMOVAL**.

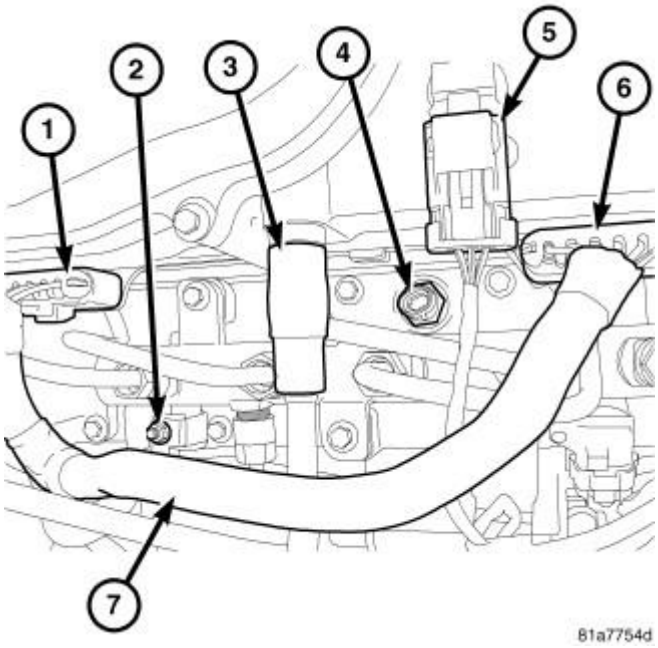

Fig. 98: Identifying Intake Heater Cable Connection
Courtesy of CHRYSLER GROUP, LLC

4. Remove heater cable nut (2) and the heater cable from stud.
5. Disconnect fuel injector harness connectors (1) and (6).
6. Disconnect crankcase vent line (3) at top of valve cover.
7. Disconnect crankcase pressure sensor harness connector (5).

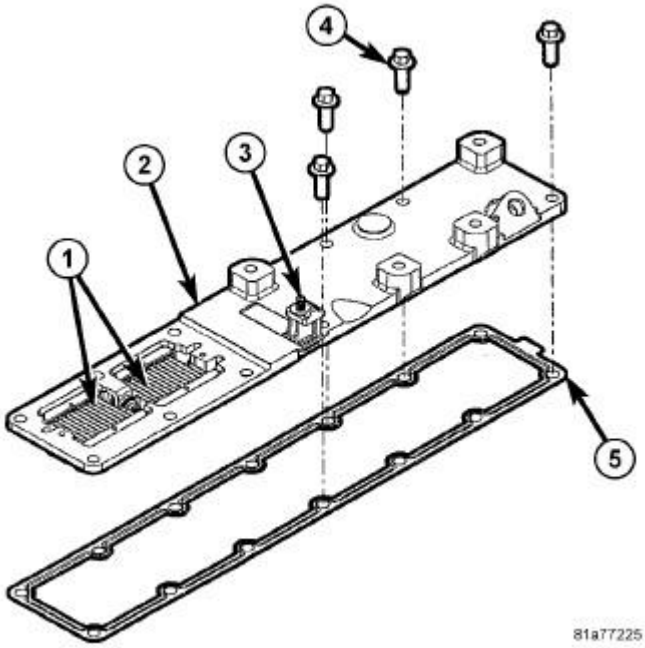

Fig. 99: Air Intake Heater Assembly
Courtesy of CHRYSLER GROUP, LLC

8. Remove bolts (4) and the air intake heater assembly (2).
9. Remove and discard gasket (5).

INSTALLATION

INSTALLATION

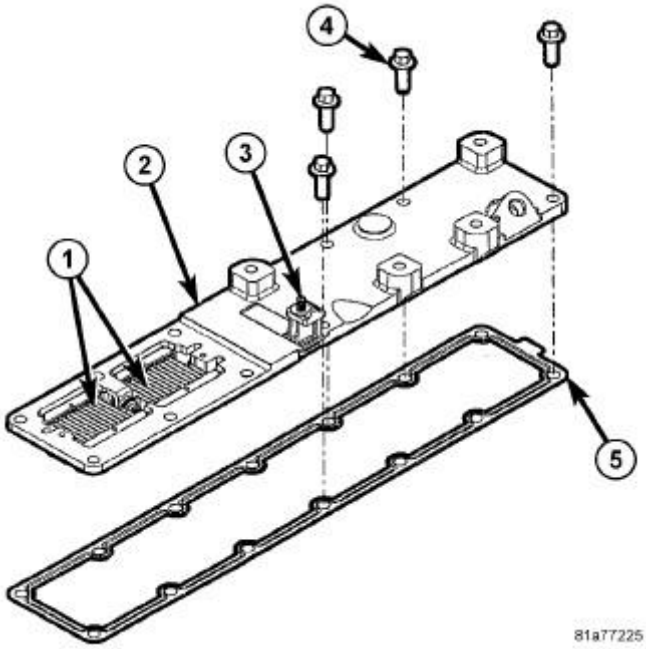

Fig. 100: Air Intake Heater Assembly
Courtesy of CHRYSLER GROUP, LLC

1. Clean all gasket mating surfaces.
2. Using a new gasket (5), install the air intake heater (2). Tighten bolts (4) to 24 N.m (18 ft. lbs.).

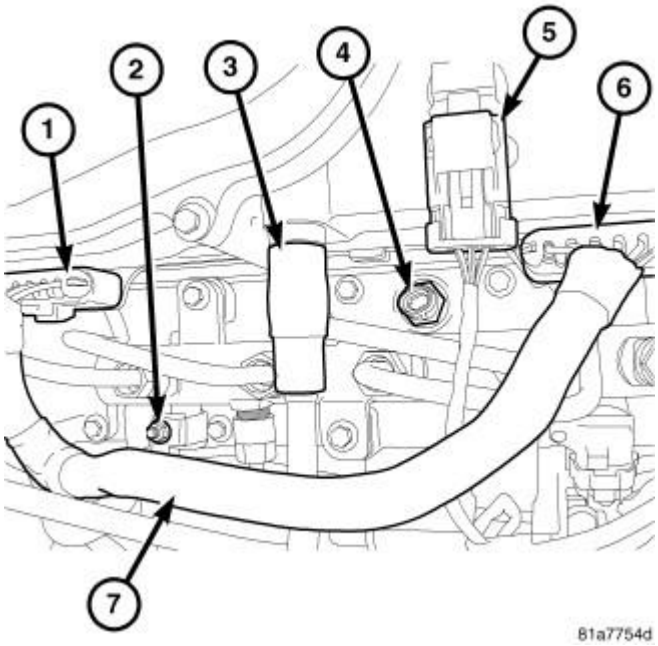

Fig. 101: Identifying Intake Heater Cable Connection
Courtesy of CHRYSLER GROUP, LLC

3. Connect crankcase pressure sensor harness connector (5).
4. Connect crankcase vent line (3) at top of valve cover.
5. Connect the fuel injector harness connectors (1) and (6).
6. Install heater cable to stud. Tighten nut (2) 10 N.m (89 in. lbs.).

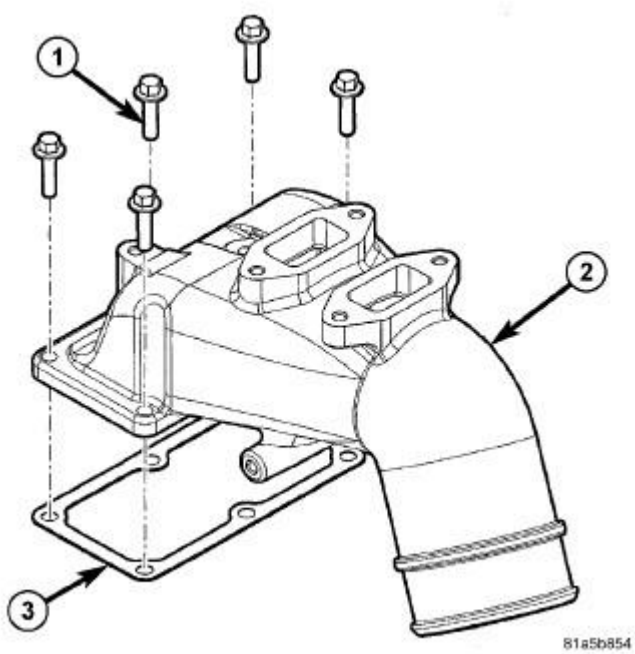

Fig. 102: Air Intake Manifold
Courtesy of CHRYSLER GROUP, LLC

7. Install fuel rail. Refer to **RAIL, FUEL, INSTALLATION**.
8. Install intake manifold (2). Refer to **MANIFOLD, INTAKE, INSTALLATION, 6.7L** .
9. Connect both negative battery cables.

INJECTOR(S), FUEL

DESCRIPTION

DESCRIPTION

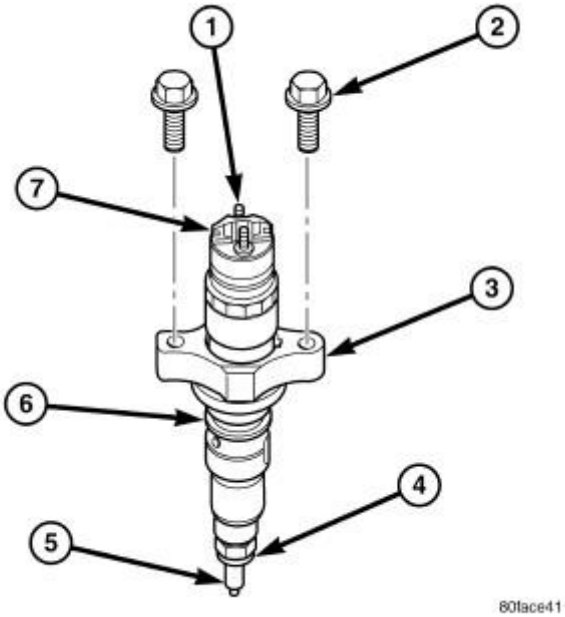

Fig. 103: Fuel Injector - Diesel
Courtesy of CHRYSLER GROUP, LLC

1 - SOLENOID ELECTRICAL CONNECTOR STUDS
2 - MOUNTING BOLTS
3 - MOUNTING PLATES
4- COPPER SEALING WASHER
5 - INJECTOR TIP
6 - INJECTOR O-RING
7 - INJECTOR ELECTRICAL SOLENOID

Six individual, solenoid actuated high-pressure fuel injectors are used (6). The injectors are vertically mounted into a bored hole in the top of the cylinder head. This bored hole is located between the intake/exhaust valves.

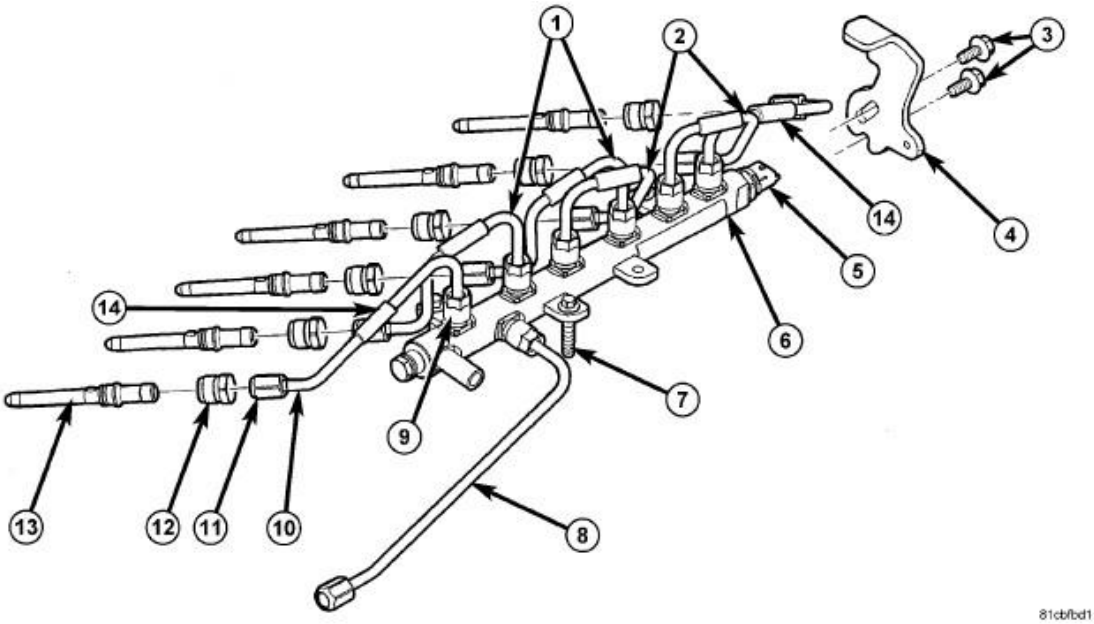

Fig. 104: Exploded View Of Fuel Lines, Fuel Rail & Injectors
Courtesy of CHRYSLER GROUP, LLC

High-pressure connectors (13), mounted into the side of the cylinder head, connect each fuel injector to each high-pressure fuel line (1).

FUEL INJECTOR ID CORRECTION CODES

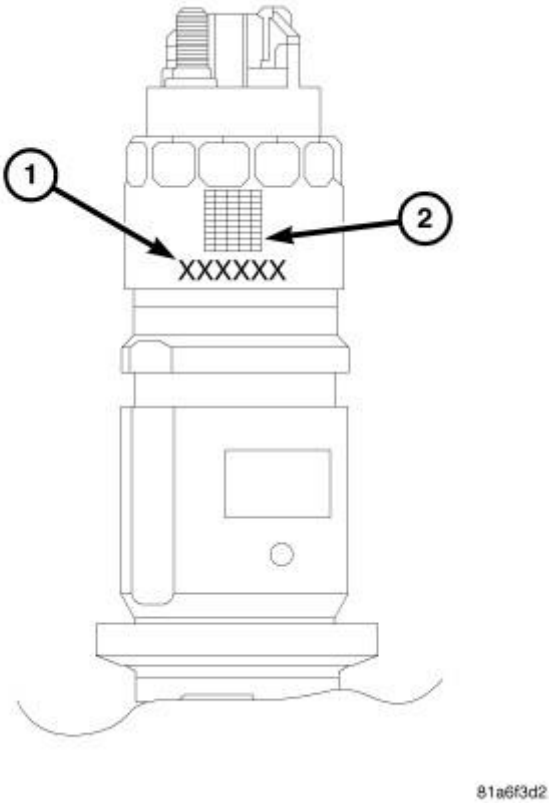

Fig. 105: Fuel Injector ID Correction Code
Courtesy of CHRYSLER GROUP, LLC

Each fuel injector has a six-digit alphanumeric correction code. The correction code is printed on the intake side of the fuel injector (1) and is used to identify injector calibration. When replacing any fuel injectors, this code must be entered into the vehicles Powertrain Control Module (PCM) using a diagnostic scan tool. In addition, if a new PCM is installed, use a diagnostic scan tool to program all six of the injector codes from the original fuel injectors into the new PCM.

The valve cover and valve cover gasket will need to be removed in order to manually record the values from the original injectors. Contact cleaner or brake cleaner may be used to clean the fuel injector.

OPERATION

OPERATION

High-pressure fuel is supplied from the injection pump, through a high-pressure fuel line, into a fuel rail, through high-pressure lines, through steel connectors and into the solenoid actuated fuel injector. The Powertrain Control Module (PCM) actuates the solenoid causing the needle valve to rise and fuel flows through the spray holes in the nozzle tip into the combustion chamber.

Each fuel injector is connected to the fuel rail by a high-pressure fuel line and a steel connector. This steel connector is positioned into the cylinder head and sealed with an O-ring. The connector is retained in the cylinder head by a nut (fitting) that is threaded into the cylinder head.

The torquing force of this threaded nut (fitting) provides a sealing pressure between the fuel line connector and the fuel injector. **Retaining nut torque is very critical.** If the nut (fitting) is under torqued, the mating surfaces will not seal and a high-pressure fuel leak will result. If the fitting is over torqued, the connector and injector will deform and also cause a high-pressure fuel leak. This leak will be inside the cylinder head and will not be visible. The result will be a possible fuel injector miss-fire and low power, or a no-start condition.

The fuel injectors use hole type nozzles. High-pressure flows into the side of the injector, the PCM activates the solenoid causing the injector needle to lift and fuel to be injected. The clearances in the nozzle bore are extremely small and any dirt or contaminants will cause the injector to stick. Because of this, it is very important to do a thorough cleaning of any lines before opening up any fuel system component. Always cover or cap any open fuel connections before a fuel system repair is performed.

Each fuel injector connector tube contains an edge filter that is designed to break up small contaminants before entering the fuel injector. **The edge filters are not a substitute for proper cleaning and covering of all fuel system components during repair.**

The bottom of each fuel injector is sealed to the cylinder head with a **1.5 mm** thick copper shim (gasket). The correct thickness shim must always be re-installed after removing an injector.

Fuel pressure in the injector circuit decreases after injection. The injector needle valve is immediately closed and fuel flow into the combustion chamber is stopped. Exhaust gases are prevented from entering the injector nozzle by the needle valve.

REMOVAL

REMOVAL

CAUTION: Refer to <u>DIESEL FUEL SYSTEM CLEANING PROCEDURE</u>.

NOTE: **Six individual, solenoid actuated high-pressure fuel injectors are used. The injectors are vertically mounted into a bored hole in the top of the cylinder head. This bored hole is located between the intake/exhaust valves. High-pressure connectors, mounted into the side of the cylinder head, connect each fuel injector to each high-pressure fuel line.**

NOTE: **Each fuel injector has a six-digit alphanumeric correction code. The correction code is printed on the intake side of the fuel injector and is used to identify injector calibration. When replacing any fuel injectors, this code must be entered into the vehicles Powertrain Control Module (PCM) using a scan tool. In addition, if a new PCM is installed, use a scan tool to program all six of the injector codes from the original fuel injectors into the new PCM.**

NOTE: **If the fuel injectors are being removed such as for engine tear down or diagnostic purposes, be sure to mark each injector with its corresponding cylinder number. The fuel injectors MUST be reinstalled into the original (same)**

cylinder due to the fuel injector correction code.

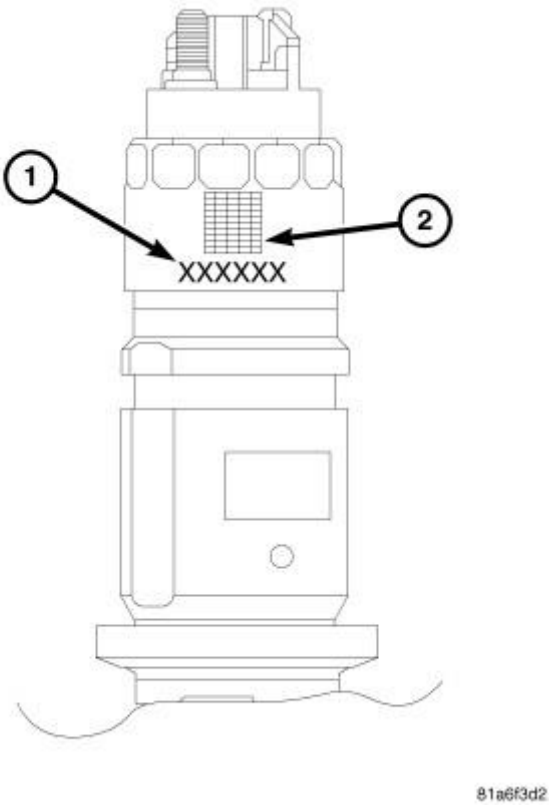

Fig. 106: Fuel Injector ID Correction Code
Courtesy of CHRYSLER GROUP, LLC

1. Disconnect both negative battery cables.
2. Remove engine cover.
3. Remove breather assembly and tubes.
4. Remove cylinder head cover. Refer to **COVER(S), CYLINDER HEAD, REMOVAL, 6.7L** .

NOTE: **Each fuel injector has a six-digit alphanumeric correction code. The correction code is printed on the intake side of the fuel injector and is used to identify injector calibration.**

5. Mark each injector (2) with its corresponding cylinder number. If required, make note of each fuel injector six-digit alphanumeric correction code (1).

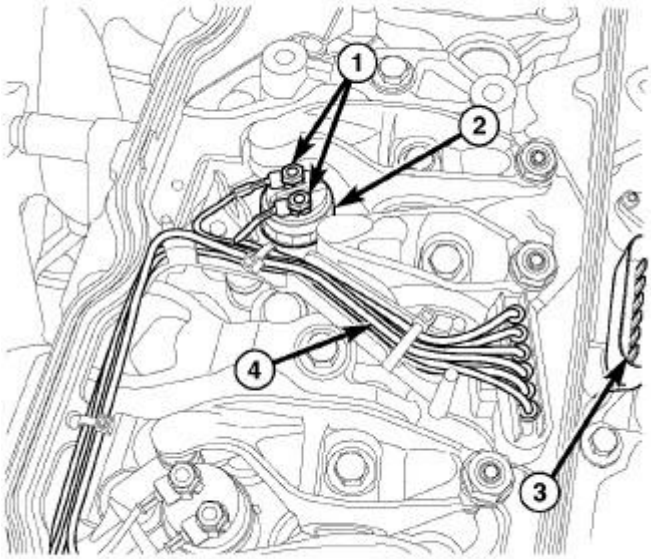

814861ea

Fig. 107: Fuel Injector Wiring Harness Components
Courtesy of CHRYSLER GROUP, LLC

1 - FUEL INJECTOR WIRE HARNESS NUTS
2 - FUEL INJECTOR
3 - FUEL INJECTOR HARNESS CONNECTOR (OUTSIDE OF VALVE COVER)
4 - INTEGRATED WIRING HARNESS

6. Remove all 12 fuel injector wire harness nuts (1) securing integrated wiring harness to all 6 fuel injectors.

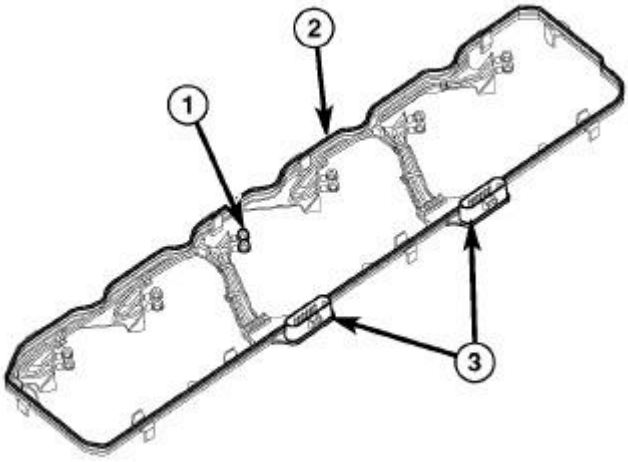

81486406

Fig. 108: Fuel Injector Harness Connectors & Gasket
Courtesy of CHRYSLER GROUP, LLC

7. Disconnect both fuel injector harness connectors (3) and remove the integrated gasket.

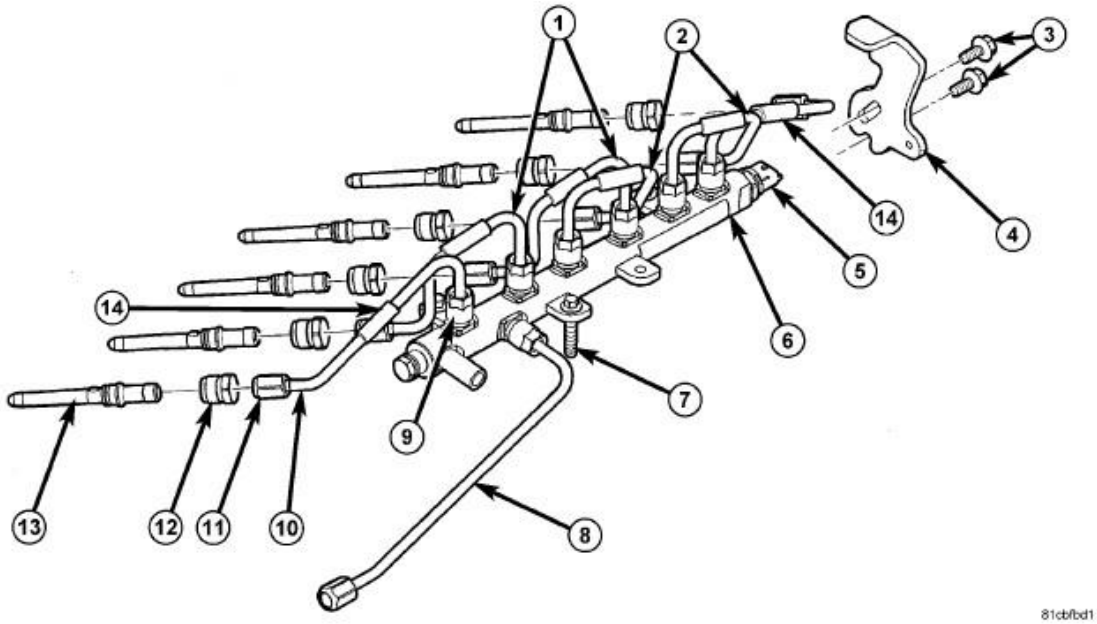

Fig. 109: Exploded View Of Fuel Lines, Fuel Rail & Injectors
Courtesy of CHRYSLER GROUP, LLC

8. Remove the high pressure fuel tubes. Refer to **TUBE(S), FUEL, REMOVAL**.
9. Remove connector retainer nuts (12).

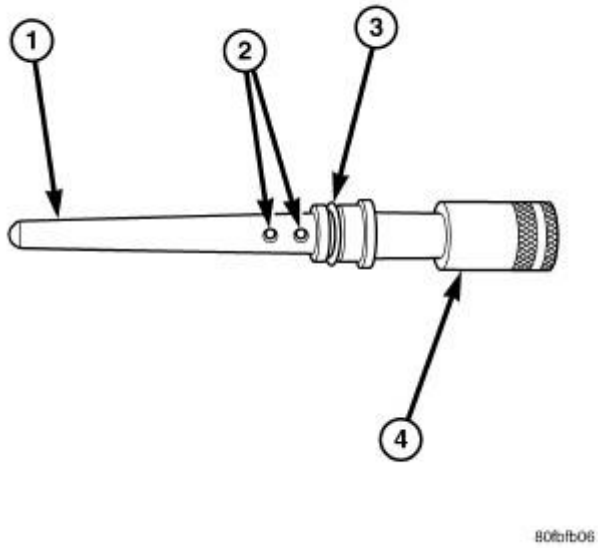

Fig. 110: Tool #9015 & Connector Tube
Courtesy of CHRYSLER GROUP, LLC

1 - CONNECTOR TUBE
2 - LOCATING PINS
3 - RUBBER O-RING
4 - TOOL #9015

10. Install the High Pressure Connector Remover (special tool #9015, Remover, High Pressure Connector) (4) onto high-pressure connector tube located in cylinder head.

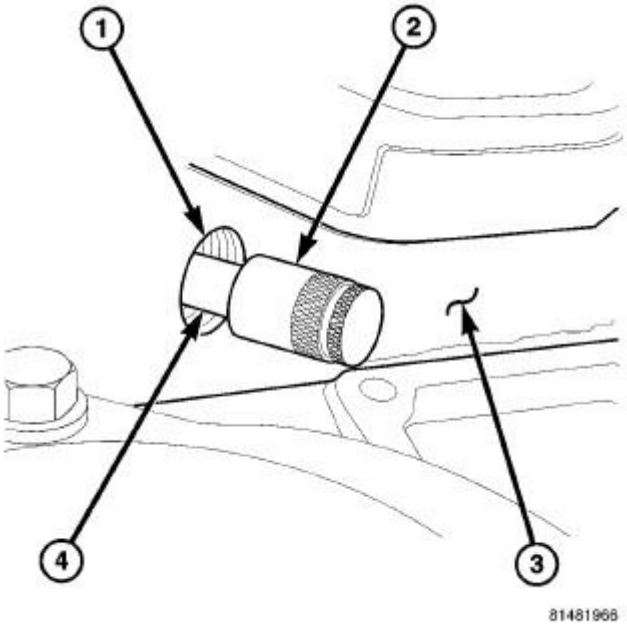

Fig. 111: Removing High Pressure Connector Tube
Courtesy of CHRYSLER GROUP, LLC

11. Using Thread High Pressure Connector Remover (special tool #9015, Remover, High Pressure Connector) (2), pry and remove the high-pressure connector tube(s) (4) from the cylinder head.

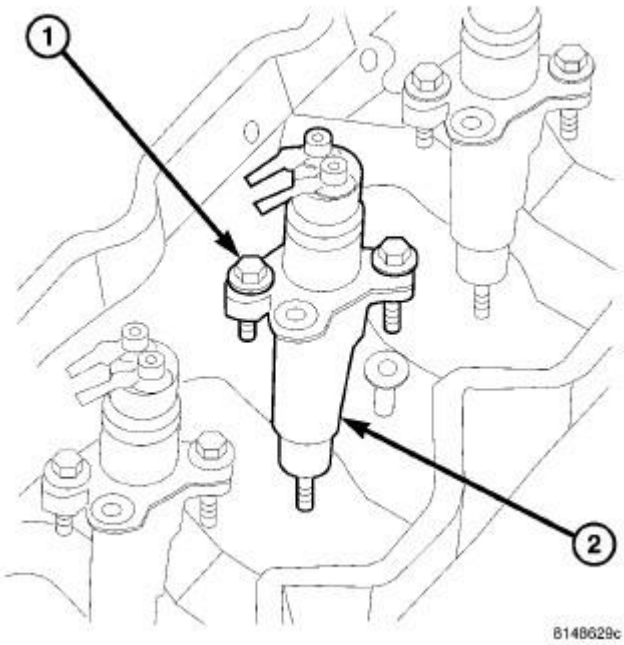

Fig. 112: Fuel Injector & Mounting Bolts
Courtesy of CHRYSLER GROUP, LLC

12. Remove fuel injector hold-down clamp bolts (1)
13. Remove necessary intake and exhaust rocker arm assembly(s).

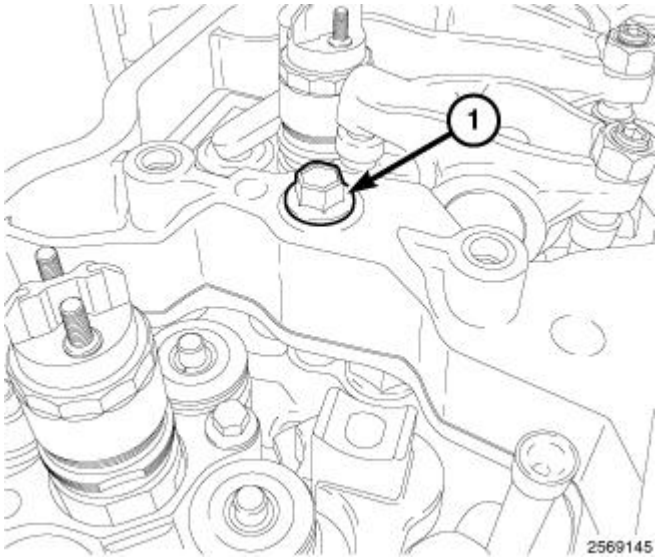

Fig. 113: Rocker Housing Mounting Bolt
Courtesy of CHRYSLER GROUP, LLC

NOTE: **The rocker housing support bridge is bolted to the top of cylinder head. The mounting stud from Fuel Injector Removal/Installer (special tool #9010A, Remover/Installer, Fuel Injector) was meant to temporarily replace a rocker housing mounting bolt.**

14. Remove the necessary rocker housing mounting bolt.

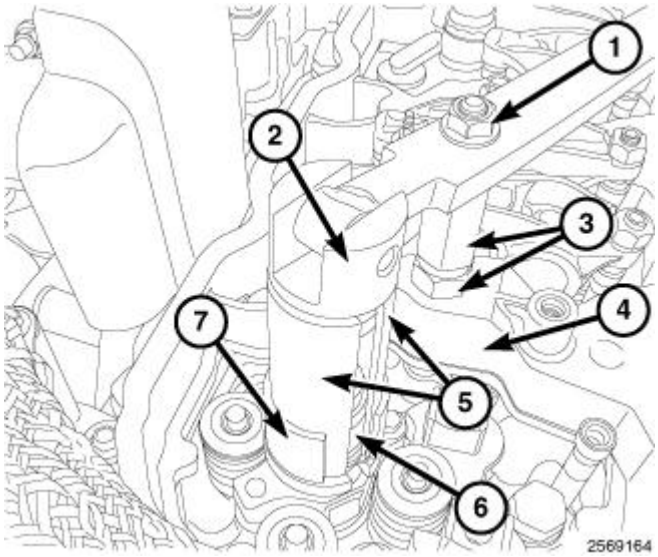

Fig. 114: Removing Fuel Injector
Courtesy of CHRYSLER GROUP, LLC

CAUTION: Fuel Injector Removal/Installer (special tool #9010A, Remover/Installer, Fuel Injector) is equipped with 2 clamshell clamps, a sliding retainer sleeve to retain the clamshell clamps, a 2-piece mounting stud and a pivoting handle. Do not attempt to remove the fuel injectors with any other device. Damage to injector will occur.

15. Install and tighten 2-piece mounting stud (3) of Fuel Injector Removal/Installer (special tool #9010A, Remover/Installer, Fuel Injector), to rocker housing (4). If removing the No. 6 fuel injector, separate the 2-piece mounting stud (3). Install lower half of mounting stud (3) to center of rocker housing bridge (4) and upper half of mounting stud to lower half.
16. Position tool handle (2) to mounting stud (3) and install handle nut (1). Leave handle nut (1) loose to allow a pivoting action.
17. Position lower part of clamshell halves (5) to sides of fuel injector (6) (wider shoulder to bottom). The upper part of clamshell halves should also be positioned into machined shoulder on the handles (2) pivoting head.
18. Slide the retainer sleeve (7) over pivoting handle head (2) to lock clamshell halves (5) together. Be sure handle pivot nut (1) is loose.
19. Depress handle of Fuel Injector Removal/Installer (special tool #9010A, Remover/Installer, Fuel Injector) (2) downward to remove fuel injector straight up from cylinder head bore.

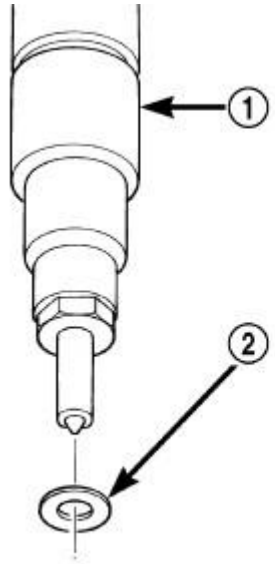

80b4b8b1

Fig. 115: Fuel Injector & Sealing Washer (Shim)
Courtesy of CHRYSLER GROUP, LLC

1 - FUEL INJECTOR
2 - COPPER SEALING WASHER (SHIM)

NOTE: If the fuel injectors are being removed such as for engine tear down or diagnostic purposes, be sure to mark each injector with its corresponding cylinder number. The fuel injectors MUST be reinstalled into the original

(same) cylinder due to the fuel injector correction code.

20. Remove and discard injector sealing washer (2). This washer should be located on tip of injector (1), or may have remained in the injector bore.

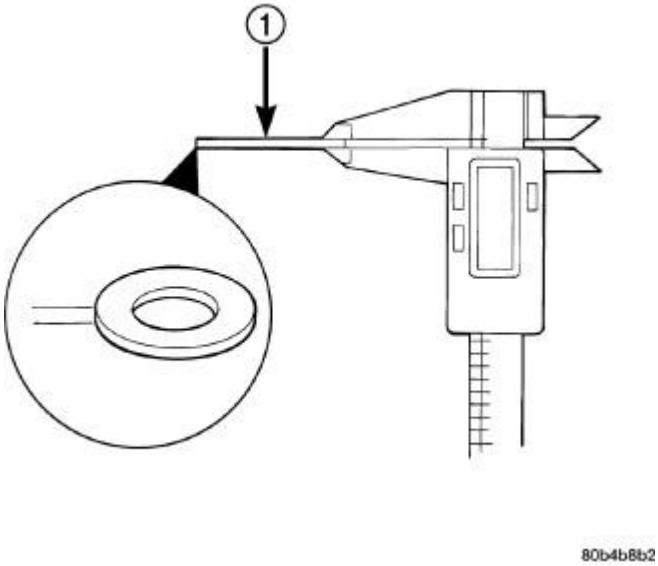

Fig. 116: Measuring Injector Sealing Washer (Shim)
Courtesy of CHRYSLER GROUP, LLC

1 - SHIM

NOTE: **Do not install new fuel injectors unless the alphanumeric codes have been recorded.**

21. Measure injector sealing washer (1).

INSTALLATION

INSTALLATION

1. **Inspect fuel injector :**
    1. Look for burrs on injector inlet.
    2. Check nozzle holes for hole erosion or plugging.
    3. Inspect end of nozzle for burrs or rough machine marks.
    4. Look for cracks at nozzle end.
    5. If any of these conditions occur, replace injector.
2. Record six-digit alphanumeric correction code located on the side of injector.
3. **Inspect high-pressure fuel injector connector for :**
    1. Damaged tip.

2. Loose of missing alignment pin.
3. Cut or missing O-ring.

4. Thoroughly clean fuel injector cylinder head bore. Blow out bore hole with compressed air.

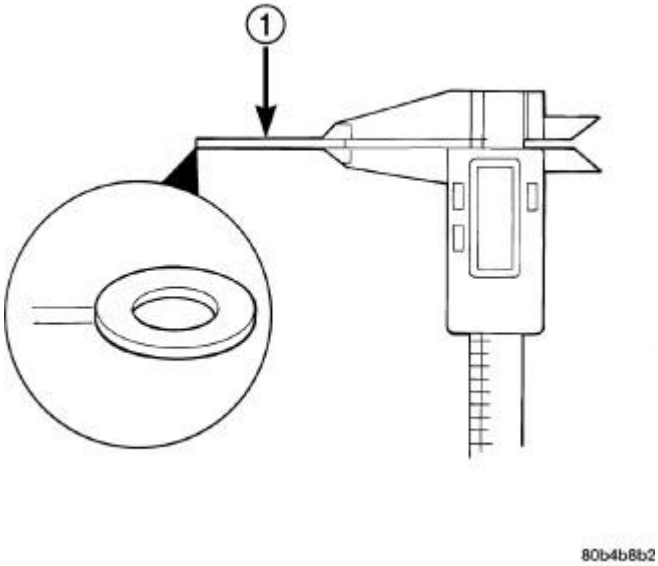

Fig. 117: Measuring Injector Sealing Washer (Shim)
Courtesy of CHRYSLER GROUP, LLC

1 - SHIM

5. The bottom of fuel injector is sealed to cylinder head bore with a copper sealing washer (shim) (1) of a certain thickness. A new shim (1) with correct thickness must always be re-installed after removing injector. Measure thickness of injector shim (1). **Shim Thickness: 1.5 mm (.060")**
6. Install new shim (1) (washer) to bottom of injector. Apply light coating of clean engine oil to washer. This will keep washer in place during installation.
7. Install new O-ring to fuel injector. Apply small amount of clean engine oil to O-ring and injector bore.

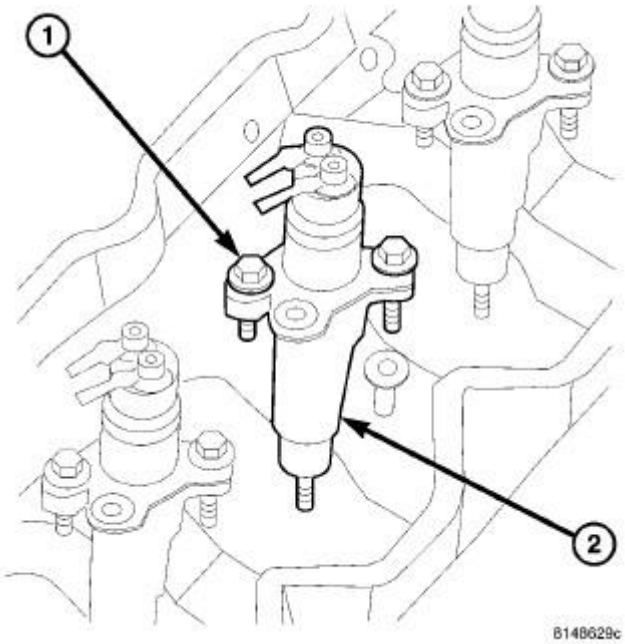

Fig. 118: Fuel Injector & Mounting Bolts
Courtesy of CHRYSLER GROUP, LLC

8. Install injector into cylinder head with male (high-pressure) connector port facing the intake manifold. Push down on fuel injector mounting flange to engage O-ring and seat injector.

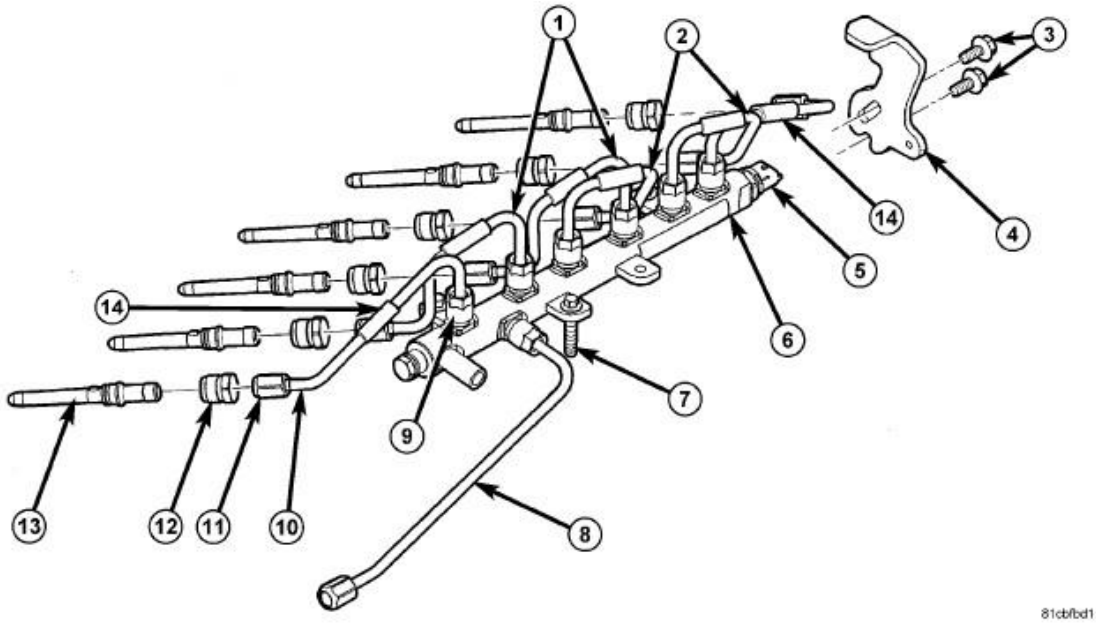

Fig. 119: Exploded View Of Fuel Lines, Fuel Rail & Injectors
Courtesy of CHRYSLER GROUP, LLC

9. Tightening Sequence:

1. Install fuel injector hold-down clamp (mounting flange) bolts. Be sure the clamp is perpendicular to the injector body. **Do a preliminary tightening of these bolts to 5 N.m (44 in. lbs.) torque. This preliminary tightening insures the fuel injector is seated and centered.**
2. After tightening, relieve bolt torque, but leave both bolts threaded in place.
3. Install high-pressure connector (13) and retaining nut (12). Do a preliminary tightening of nut (12) to 15 N.m (133 in. lbs.).
4. Alternately tighten injector hold-down bolts to 10 N.m (89 in. lbs.).
5. Do a final tightening of the high-pressure connector and retaining nut (12). Tighten to 50 N.m (37 ft. lbs.).

10. **Noise isolators (14)** are used on the six high-pressure fuel lines. They should be positioned in the middle of the horizontal or longest straight section of each fuel line. The split on each isolator should be facing downward. Be sure the noise isolator is not touching another isolator or any other components.

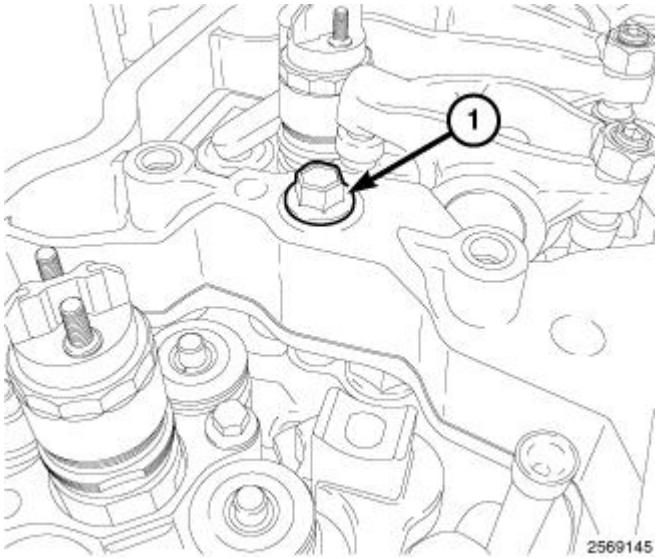

Fig. 120: Rocker Housing Mounting Bolt
Courtesy of CHRYSLER GROUP, LLC

11. Install the necessary rocker housing mounting bolt (1) and tighten to 24 N.m (18 ft. lbs).

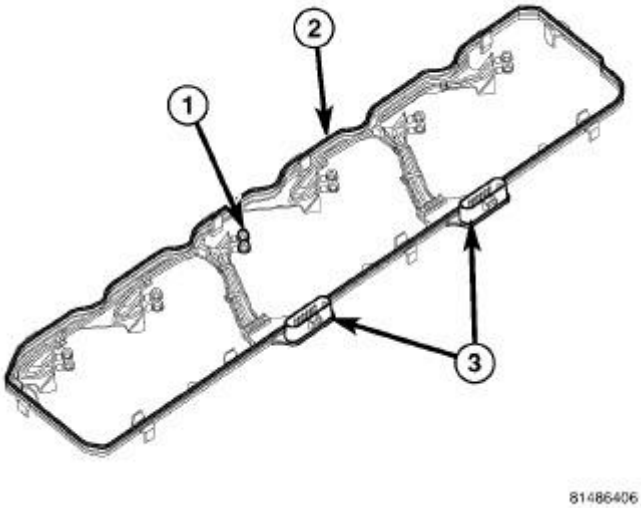

Fig. 121: Fuel Injector Harness Connectors & Gasket
Courtesy of CHRYSLER GROUP, LLC

12. Install integrated gasket (2).

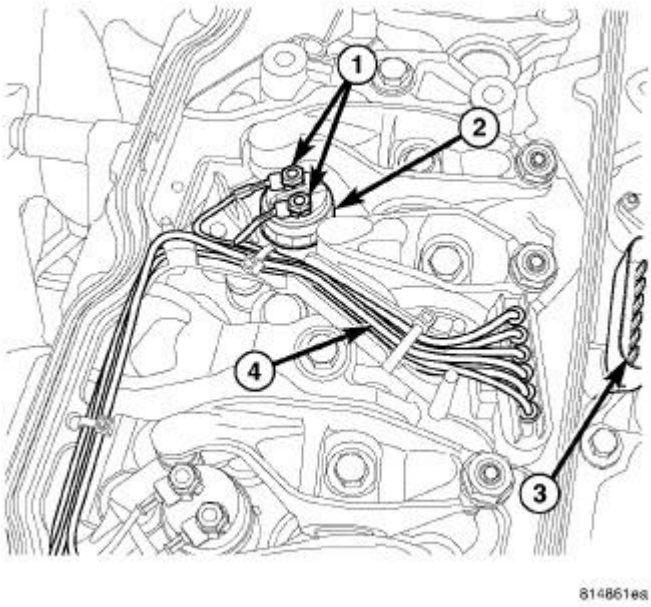

Fig. 122: Fuel Injector Wiring Harness Components
Courtesy of CHRYSLER GROUP, LLC

1 - FUEL INJECTOR WIRE HARNESS NUTS
2 - FUEL INJECTOR
3 - FUEL INJECTOR HARNESS CONNECTOR

(OUTSIDE OF VALVE COVER)
4 - INTEGRATED WIRING HARNESS

13. Connect fuel injector solenoid wires and nuts (1) to top of injectors. Tighten connector nuts to 1.25 N.m (11 in. lbs.). **Be very careful not to overtighten these nuts as damage to fuel injector will occur.**
14. Install the intake and exhaust rocker arm assembly. Refer to **ROCKER ARM, VALVE, INSTALLATION, 6.7L** .
15. Set exhaust valve lash. Refer to **VALVE LASH ADJUSTMENT AND VERIFICATION** .
16. Install fuel connector tube nut at cylinder head and tighten to 50 N.m (37 ft. lbs.). **Be sure to use a secondary back-up wrench on the connector nut (fitting) while torquing fuel line fitting.** Refer to **TUBE(S), FUEL, INSTALLATION**.
17. Install valve cover. Refer to **COVER(S), CYLINDER HEAD, INSTALLATION, 6.7L** .
18. Install breather assembly.

FUEL INJECTOR ID CORRECTION CODES:

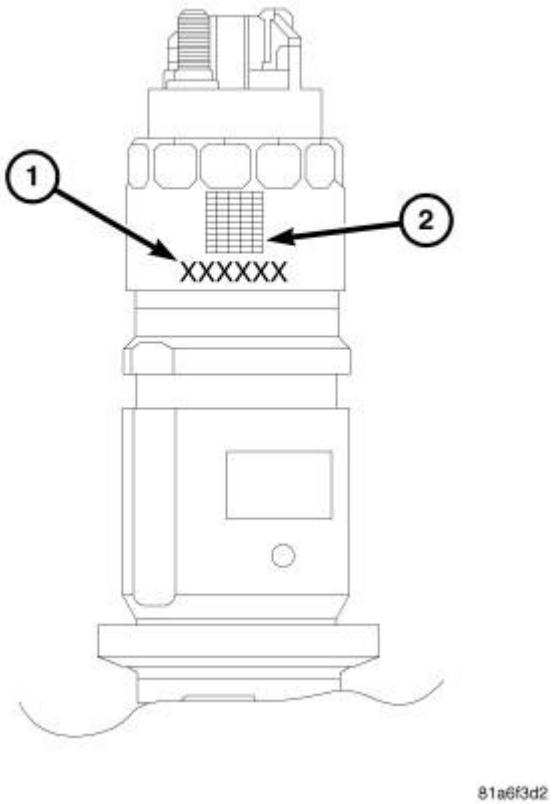

Fig. 123: Fuel Injector ID Correction Code
Courtesy of CHRYSLER GROUP, LLC

Each fuel injector has a six-digit alphanumeric correction code. The correction code is printed on the intake side of the fuel injector (1) and is used to identify injector calibration. When replacing any fuel injectors, this code must be entered into the vehicles Powertrain Control Module (PCM) using a

diagnostic scan tool. In addition, if a new PCM is installed, use a diagnostic scan tool to program all six of the injector codes from the original fuel injectors into the new PCM.

19. Connect negative battery cables to both batteries.
20. **Programming Fuel Injector Correction Code:**

- Turn ignition switch "ON".
- Using a diagnostic scan tool, select ECU View> PCM > MISCELLANEOUS FUNCTIONS.
- Select Injector Quantity Adjustments and click Start.
- Choose appropriate cylinder number and click next.
- Click on Show Keyboard. **NOTE: A fault code will be set if incorrect serialization codes have been inputted.**
- Input six-digit Injector Correction Code and click enter.
- Review code as it was typed, then click Next if correct, or edit if necessary.
- Repeat the preceding steps for other cylinders if necessary.
- Once all fuel injector correction codes are entered, cycle the ignition to complete.

RELAY, INTAKE AIR HEATER

DESCRIPTION

DESCRIPTION

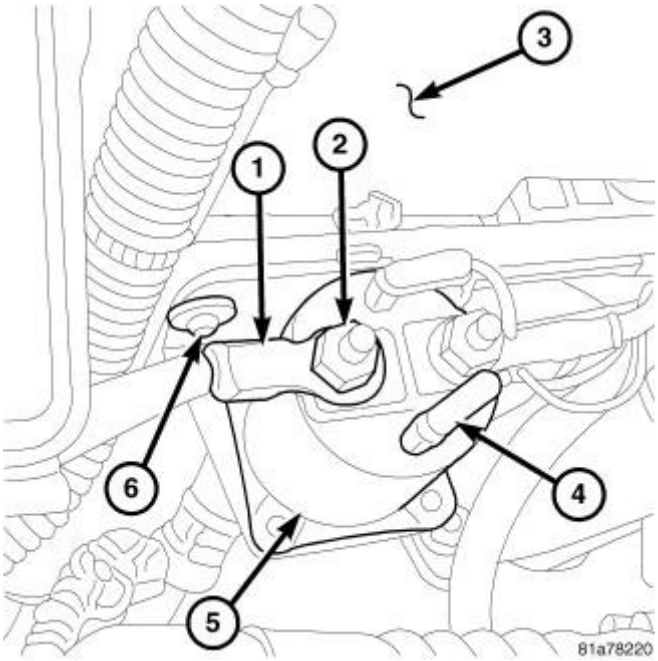

Fig. 124: Intake Heater Relay
Courtesy of CHRYSLER GROUP, LLC

The air intake heater relay (5) is located in the engine compartment. It attached to a bracket located to the right battery tray (3).

OPERATION

OPERATION

The Powertrain Control Module (PCM) operates the heating element through the intake manifold air heater relay. For an electrical operation and complete description of the intake heater, including pre-heat and post-heat cycles. Refer to the appropriate Electrical Diagnostic article.

REMOVAL

REMOVAL

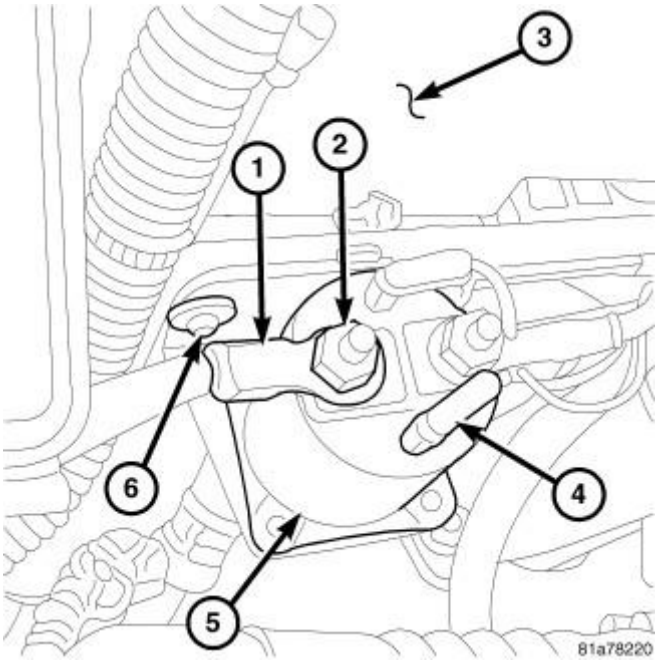

Fig. 125: Intake Heater Relay
Courtesy of CHRYSLER GROUP, LLC

The air intake heater relay (5) is located in the engine compartment. It attached to a bracket. This bracket is attached to the right battery tray (3).

The mounting bracket and relay is replaced as an assembly.

1. Disconnect both negative battery cables.
2. Disconnect relay trigger wires (4) at relays. Note position of wiring before removing.
3. Remove nuts (2) at cable connectors and disconnect cables (1) from mounting studs. Note position of cables before removing.
4. Remove two relay mounting bracket screws (6) and remove relay assembly.

INSTALLATION

INSTALLATION

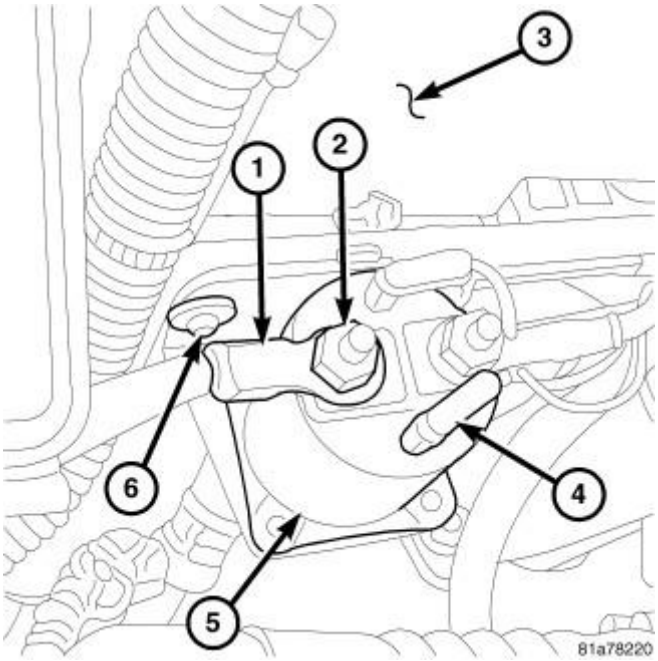

Fig. 126: Intake Heater Relay
Courtesy of CHRYSLER GROUP, LLC

NOTE: The mounting bracket and relay is replaced as an assembly.

1. Position relay and install two relay mounting bracket screws (6).
2. Install cables (1) to mounting studs. Tighten nuts (2) 10 N.m (89 in. lbs.).
3. Connect relay trigger wires (4) at relays.
4. Connect both negative battery cables.

SENSOR, PTO SWITCH

DESCRIPTION

DESCRIPTION

This Powertrain Control Module (PCM) input is used only on models equipped with aftermarket Power Take Off (PTO) units.

OPERATION

OPERATION

This input is used only to tell the Powertrain Control Module (PCM) that the aftermarket PTO (Power Take Off) unit has been engaged. The PCM will disable (temporarily shut down) certain OBD II diagnostic trouble codes when the PTO unit is engaged.

SENSOR, ACCELERATOR PEDAL POSITION

DESCRIPTION

DESCRIPTION

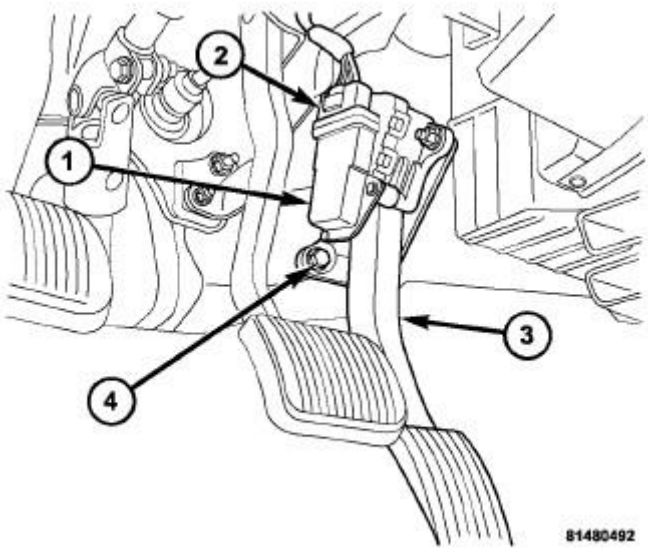

Fig. 127: Accelerator Pedal Position Sensor (APPS)
Courtesy of CHRYSLER GROUP, LLC

1 - APPS
2 - APPS 6-Way Electrical Connector
3 - Accelerator Pedal
4 - Mounting Bolts/Nuts

The Accelerator Pedal Position Sensor (APPS) (1) is located inside the vehicle. It is attached to the accelerator pedal assembly (3).

OPERATION

OPERATION

The Accelerator Pedal Position Sensor (APPS) provides the Powertrain Control Module (PCM) with two DC voltage signals which change as the position of the accelerator pedal changes. One of the DC voltage signals will be half the voltage of the other signal.

REMOVAL

REMOVAL

CAUTION: Do not attempt to separate or remove the Accelerator Pedal Position Sensor (APPS) from the accelerator pedal assembly. The APPS and the accelerator pedal is replaced as an assembly. If the sensor is removed

from the pedal, the electronic calibration may be destroyed.

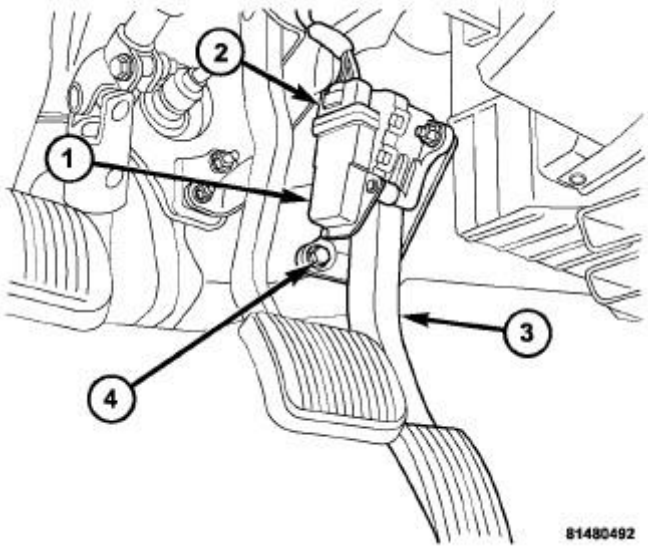

Fig. 128: Accelerator Pedal Position Sensor (APPS)
Courtesy of CHRYSLER GROUP, LLC

1 - APPS
2 - APPS 6-Way Electrical Connector
3 - Accelerator Pedal
4 - Mounting Bolts/Nuts

1. Disconnect 6-way electrical connector at top of APPS (2).
2. Remove APPS lower mounting bolt (4) and two mounting nuts.
3. Remove pedal and APPS assembly from vehicle.

INSTALLATION

INSTALLATION

CAUTION: Do not attempt to separate or remove the Accelerator Pedal Position Sensor (APPS) from the accelerator pedal assembly. The APPS and the accelerator pedal is replaced as an assembly. If the sensor is removed from the pedal, the electronic calibration may be destroyed.

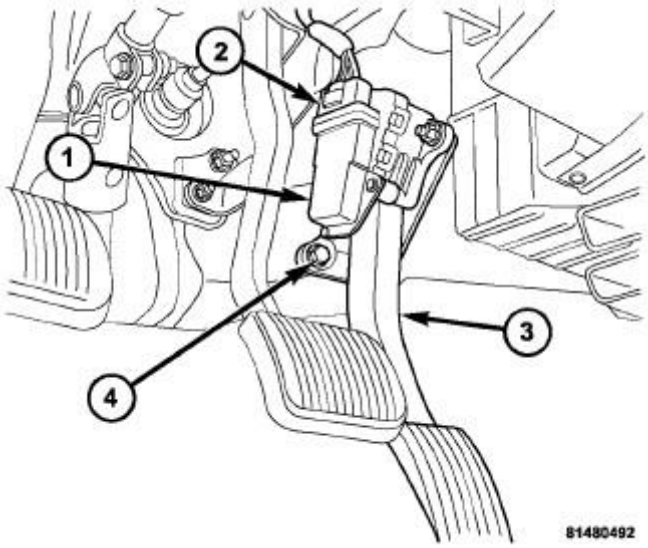

Fig. 129: Accelerator Pedal Position Sensor (APPS)
Courtesy of CHRYSLER GROUP, LLC

1 - APPS
2 - APPS 6-Way Electrical Connector
3 - Accelerator Pedal
4 - Mounting Bolts/Nuts

1. Position pedal and APPS assembly to its mounting bracket.
2. Connect 6-way electrical connector to top of APPS (2).
3. Install APPS lower mounting bolt (4) and two mounting nuts.
4. If necessary, use a Scan Tool to erase any Diagnostic Trouble Codes (DTC's).

SENSOR, AIR TEMPERATURE, INTAKE (INTAKE MANIFOLD AIR TEMPERATURE SENSOR/MAP SENSOR)

OPERATION

OPERATION

The combination, dual function Intake Manifold Air Temperature Sensor/MAP Sensor is installed into the top of the intake manifold with the sensor element extending into the air stream.

The IAT portion of the sensor provides an input voltage to the Powertrain Control Module (PCM) indicating intake manifold air temperature. The MAP portion of the sensor provides an input voltage to the PCM indicating turbocharger boost pressure.

REMOVAL

CAB/CHASSIS MODELS

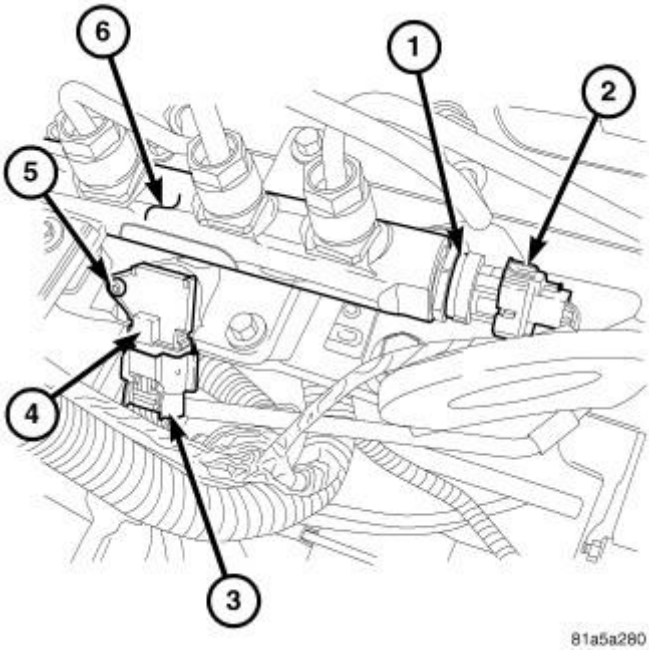

Fig. 130: Fuel Rail, Fuel Pressure Sensor & Connector, IAT/MAP Sensor, IAT/MAP Electrical Connector & Mounting Screw
Courtesy of CHRYSLER GROUP, LLC

The combination, dual function Intake Manifold Air Temperature Sensor/MAP (IAT/MAP) (4) sensor is installed into the top of the intake manifold.

1. Clean area around sensor.
2. Disconnect electrical connector (3) from IAT/MAP sensor.
3. Remove mounting screw (5).
4. Remove sensor from intake manifold.
5. Check condition of sensor O-ring.

PICK UP MODELS

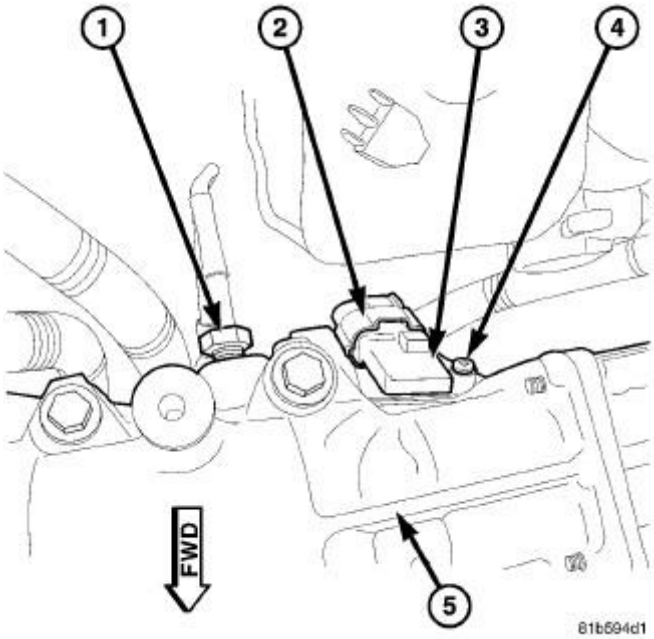

Fig. 131: Intake Manifold Air Temperature Sensor/MAP Sensor
Courtesy of CHRYSLER GROUP, LLC

The combination, dual function Intake Manifold Air Temperature Sensor/MAP (IAT/MAP) (3) sensor is installed into the intake air connection manifold, below, and to the rear of the EGR valve (5).

1. Clean area around sensor.
2. Disconnect electrical connector (2) from IAT/MAP sensor.
3. Remove mounting screw (4).
4. Remove sensor from manifold.
5. Check condition of sensor O-ring.

INSTALLATION

CAB/CHASSIS MODELS

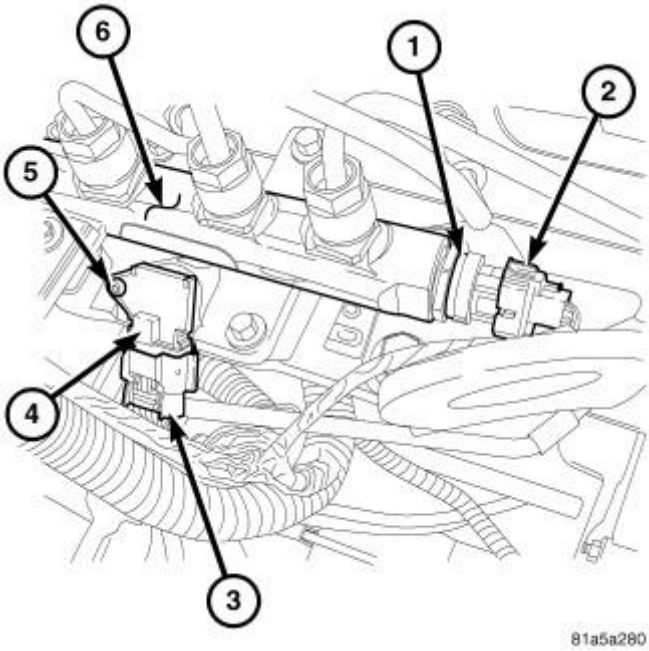

Fig. 132: Fuel Rail, Fuel Pressure Sensor & Connector, IAT/MAP Sensor, IAT/MAP Electrical Connector & Mounting Screw
Courtesy of CHRYSLER GROUP, LLC

1. Check condition of sensor O-ring.
2. Clean sensor mounting area at intake manifold.
3. Lubricate sensor O-ring and sensor mounting hole in intake manifold cover with clean engine oil.
4. Position sensor (4) into intake manifold.
5. Install and tighten sensor mounting screw (5) to 1 N.m (9 in. lbs.) torque.
6. Connect electrical connector (3) to sensor.

INSTALLATION

PICK UP MODELS

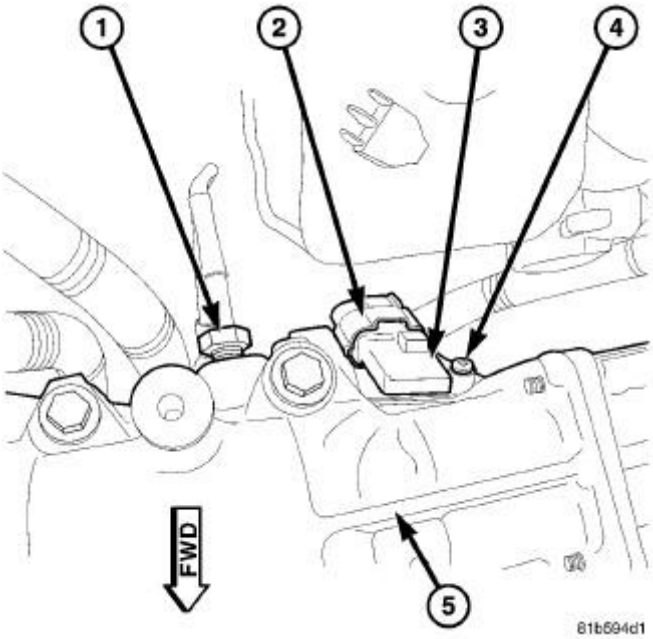

Fig. 133: Intake Manifold Air Temperature Sensor/MAP Sensor
Courtesy of CHRYSLER GROUP, LLC

The combination, dual function Intake Manifold Air Temperature Sensor/MAP (IAT/MAP) (3) sensor is installed into the intake air connection manifold, below, and to the rear of the EGR valve (5).

1. Check condition of sensor O-ring.
2. Clean sensor mounting area at intake manifold.
3. Lubricate sensor O-ring and sensor mounting hole in intake manifold with clean engine oil.
4. Position sensor (3) into intake manifold.
5. Install and tighten sensor mounting screw (4) to 1 N.m (9 in. lbs.) torque.
6. Connect electrical connector (2) to sensor.

SENSOR, AIR TEMPERATURE, INTAKE (INLET AIR TEMPERATURE/PRESSURE SENSOR)

OPERATION

OPERATION

The Inlet Air Temperature/Pressure Sensor is a combination dual-function sensor. The sensor element extends into the intake air stream at the top of the air filter housing. Ambient air temperature as well as barometric pressure is monitored by this sensor. The Powertrain Control Module (PCM) monitors signals from this sensor.

REMOVAL

REMOVAL

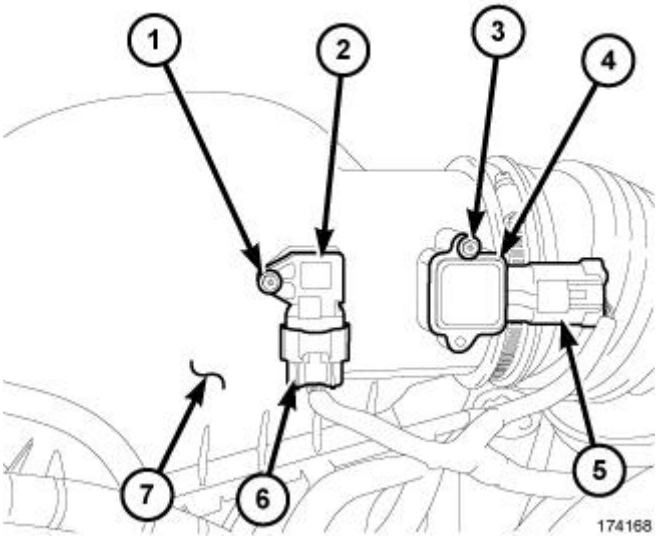

Fig. 134: Intake Air Temperature/Pressure Sensor & Mass Airflow Sensor
Courtesy of CHRYSLER GROUP, LLC

The Inlet Air Temperature/Pressure Sensor (2) is located on the air cleaner cover.

1. Disconnect electrical connector (6) at sensor.
2. Remove mounting screw (1).
3. Remove sensor from air cleaner cover.
4. Check condition of sensor O-ring.

INSTALLATION

INSTALLATION

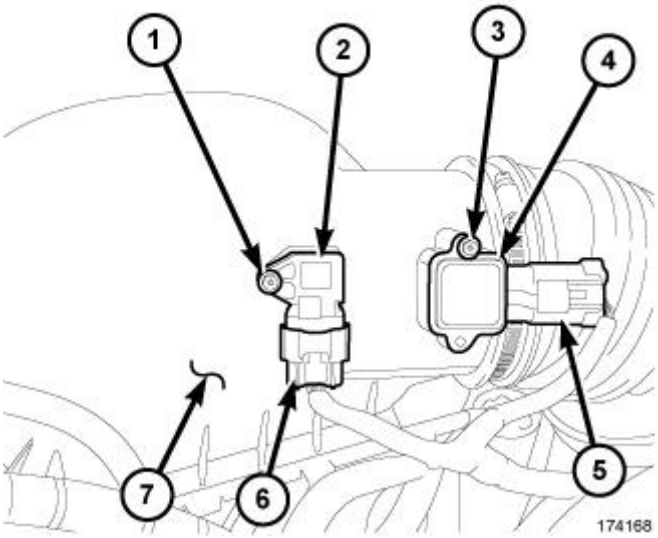

Fig. 135: Intake Air Temperature/Pressure Sensor & Mass Airflow Sensor
Courtesy of CHRYSLER GROUP, LLC

1. Check condition of sensor O-ring.
2. Position sensor (2) into top of air cleaner cover with a slight twisting action.
3. Install mounting screw (1).
4. Install electrical connector (6).

SENSOR, CRANKSHAFT POSITION

DESCRIPTION

DESCRIPTION

The Crankshaft Position Sensor (CKP) on the diesel engine is attached at the front / left side of the engine next to the engine harmonic balancer (crankshaft damper).

OPERATION

OPERATION

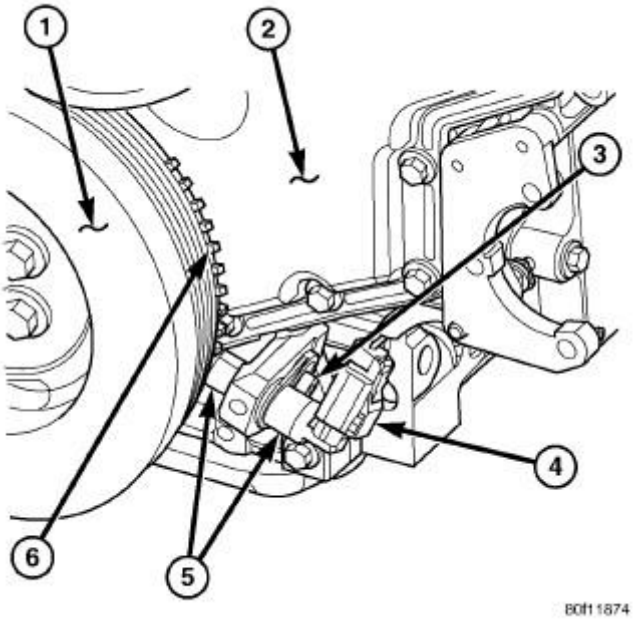

Fig. 136: Crankshaft Position Sensor Components
Courtesy of CHRYSLER GROUP, LLC

1 - ENGINE HARMONIC BALANCER
2 - FRONT OF TIMING GEAR COVER
3 - CKP MOUNTING BOLT
4 - ELEC. CONNECTOR
5 - CKP SENSOR
6 - NOTCHES

The Crankshaft Position Sensor (CKP) (5) is the primary engine speed indicator for the engine after the engine is running.

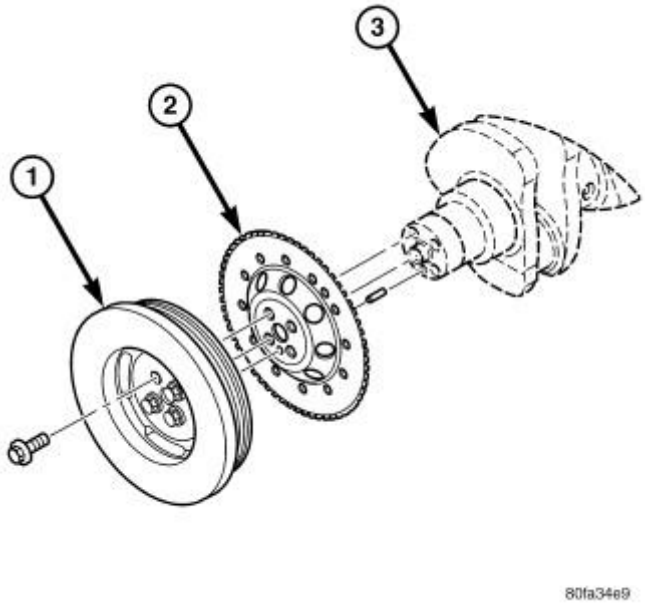

Fig. 137: Crankshaft Position Sensor Notched Tonewheel
Courtesy of CHRYSLER GROUP, LLC

1 - ENGINE HARMONIC BALANCER
2 - NOTCHED TONEWHEEL
3 - FRONT OF CRANKSHAFT

The CKP contains a hall effect device. A rotating, notched target wheel (tonewheel) for the CKP is located behind the engine harmonic balancer (2). This hall effect device detects notches located on the tonewheel. As the tonewheel rotates, the notches pass the tip of the CKP.

When the leading edge of the tonewheel notch passes the tip of the CKP, the following occurs: The interruption of magnetic field causes the voltage to switch high resulting in a signal of approximately 5 volts.

When the trailing edge of the tonewheel notch passes the tip of the CKP, the following occurs: The change of the magnetic field causes the signal voltage to switch low to 0 volts.

The Camshaft Position Sensor (CMP) also provides a signal to the Powertrain Control Module (PCM) at all times when the engine is running. The PCM uses this CMP information primarily on engine start-up. Once the engine is running, the PCM uses the CMP as a backup sensor for engine speed.

REMOVAL

REMOVAL

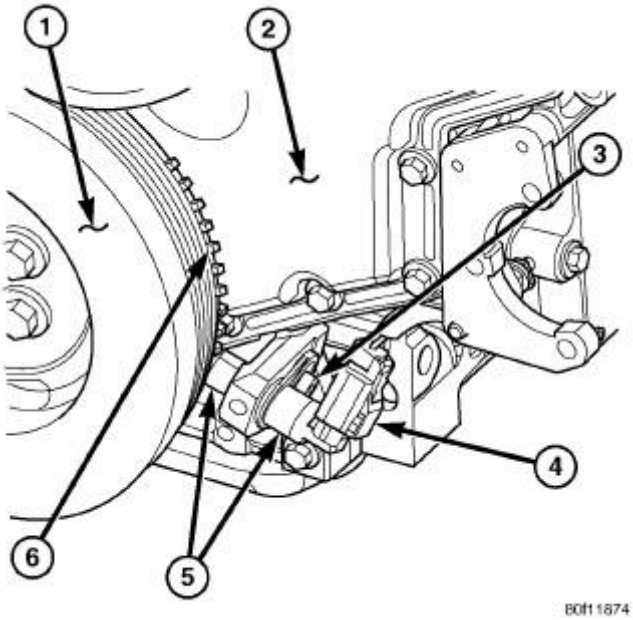

Fig. 138: Crankshaft Position Sensor Components
Courtesy of CHRYSLER GROUP, LLC

1 - ENGINE HARMONIC BALANCER
2 - FRONT OF TIMING GEAR COVER
3 - CKP MOUNTING BOLT
4 - ELEC. CONNECTOR
5 - CKP SENSOR
6 - NOTCHES

1. Disconnect both negative battery cables.
2. Disconnect Crankshaft Position (CKP) sensor harness connector (4).
3. Remove bolt (3) and the CKP sensor (5).

INSTALLATION

INSTALLATION

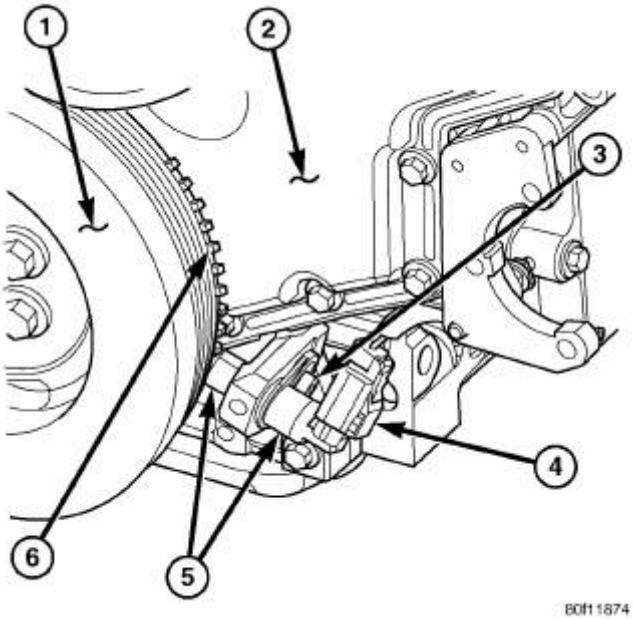

Fig. 139: Crankshaft Position Sensor Components
Courtesy of CHRYSLER GROUP, LLC

1 - ENGINE HARMONIC BALANCER
2 - FRONT OF TIMING GEAR COVER
3 - CKP MOUNTING BOLT
4 - ELEC. CONNECTOR
5 - CKP SENSOR
6 - NOTCHES

1. Install the Crankshaft Position (CKP) sensor (5). Tighten bolt to 10 N.m (89 in. lbs.).
2. Connect (CKP) sensor harness connector (4).
3. Connect both negative battery cables.

SENSOR, MANIFOLD AIR PRESSURE (MAP)

DESCRIPTION

DESCRIPTION

A combination, dual function Intake Manifold Air Temperature Sensor/MAP Sensor is used. For information, refer to **OPERATION**.

SENSOR, MASS AIRFLOW (MAF)

DESCRIPTION

DESCRIPTION

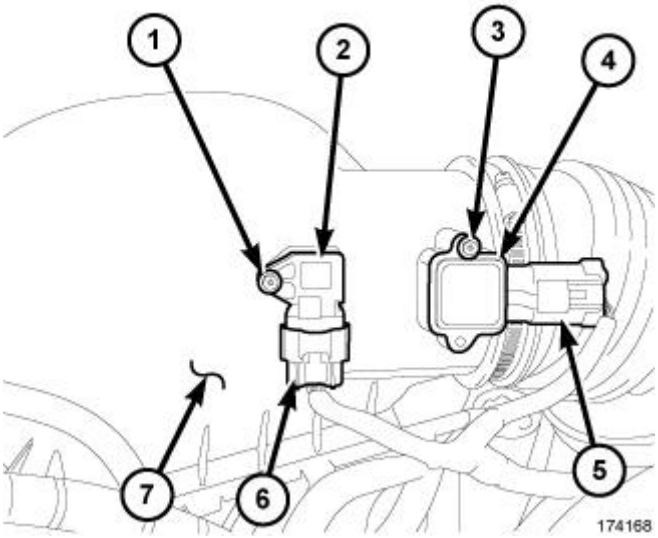

Fig. 140: Intake Air Temperature/Pressure Sensor & Mass Airflow Sensor
Courtesy of CHRYSLER GROUP, LLC

The Mass Airflow Sensor (4) is located on the air cleaner cover (7).

OPERATION

OPERATION

The Mass Airflow (MAF) sensor is a frequency based device. A constant voltage is applied to a heated wire on the sensor. This wire is positioned in the air cleaner air stream and is heated by the electrical current that the voltage produces. As air flows across it, it cools down. The heated wire or film is a positive temperature coefficient resistor. This means that its resistance drops when its temperature drops. The drop in resistance allows more current to flow through it in order to maintain the programmed temperature. This current is changed to a frequency which is sent to the Powertrain Control Module (PCM) and interpreted as air flow. Adjustments for air temperature and humidity are taken into consideration because they also affect the temperature of the heated wire or film.

REMOVAL

REMOVAL

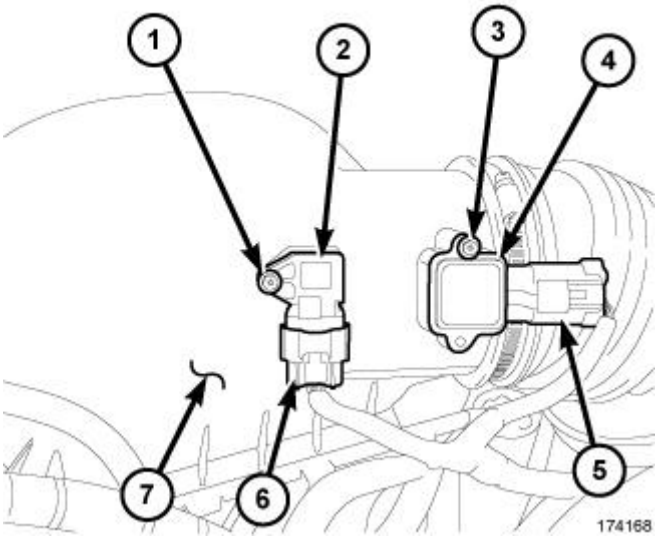

Fig. 141: Intake Air Temperature/Pressure Sensor & Mass Airflow Sensor
Courtesy of CHRYSLER GROUP, LLC

1. Disconnect both negative battery cables.
2. Disconnect the Mass Air Flow (MAF) sensor harness connector (5).
3. Remove screws (3) and the MAF sensor (4) from the air cleaner cover (7).

INSTALLATION

INSTALLATION

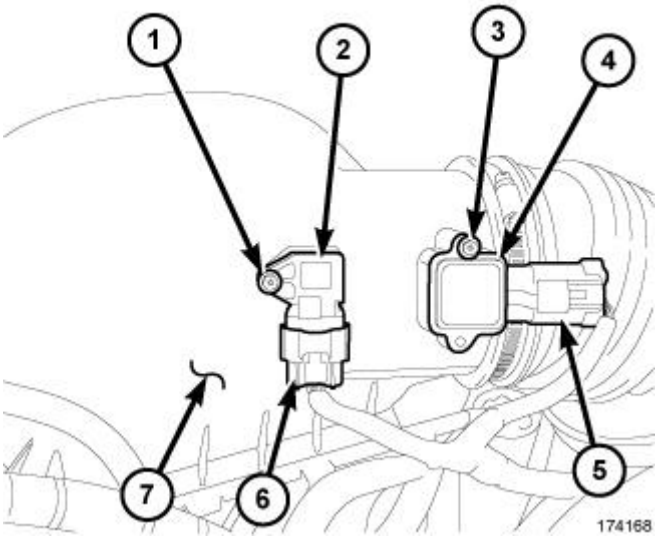

Fig. 142: Intake Air Temperature/Pressure Sensor & Mass Airflow Sensor
Courtesy of CHRYSLER GROUP, LLC

1. Check the condition of the sensor O-ring.
2. Install the Mass Air Flow (MAF) sensor (4) into top of the air cleaner (7). Tighten screw (3) to 1 N.m (9 in. lbs.).
3. Connect the MAF sensor harness connector (5).
4. Connect both negative battery cables.

SENSOR, OXYGEN

DESCRIPTION

DESCRIPTION

PICK UP MODELS

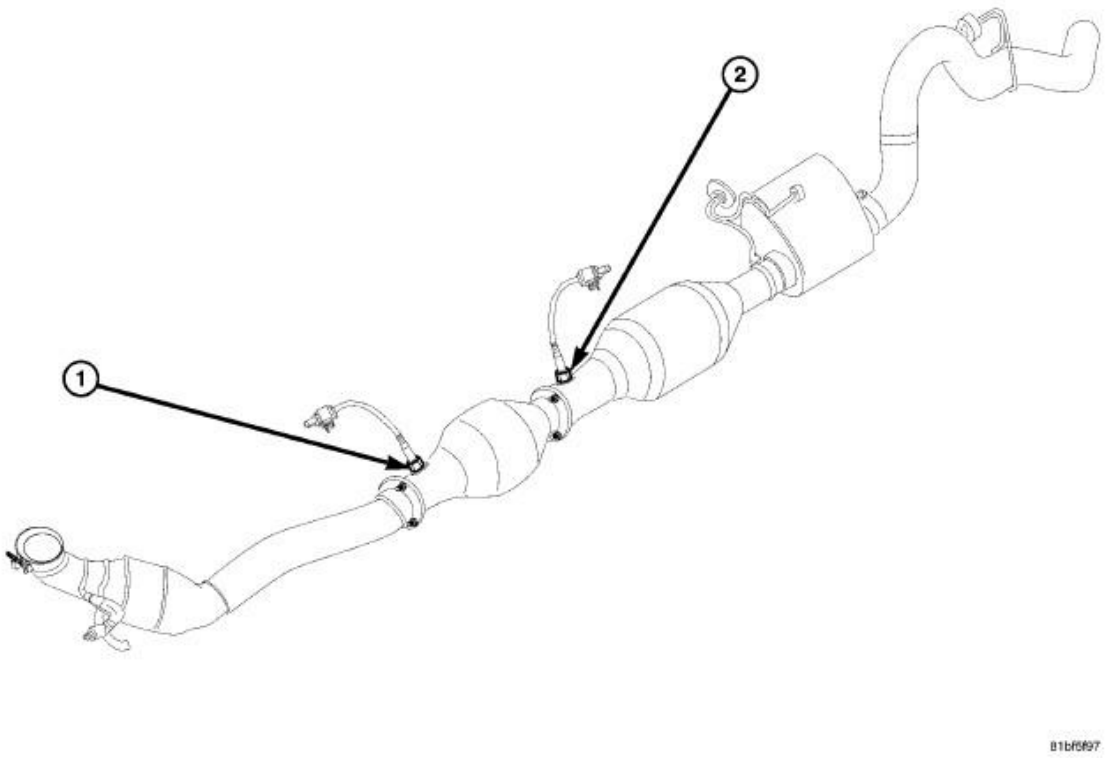

Fig. 143: O2 Sensors
Courtesy of CHRYSLER GROUP, LLC

Two different six-wire Oxygen (O2) Sensor are used. These sensors are titled 1/1 upstream (1), and 1/2 downstream (2). These (O2) sensors are located on each end of the No. 2 catalyst.

OPERATION

OPERATION

PICK UP MODELS

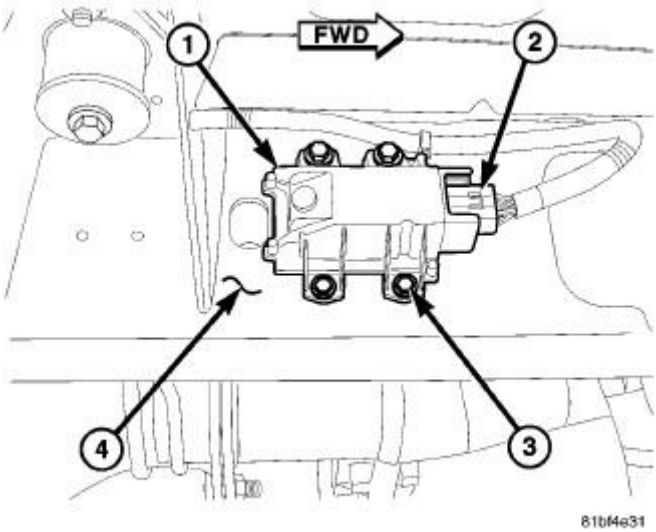

Fig. 144: O2 Sensor Module
Courtesy of CHRYSLER GROUP, LLC

A separate O2 Sensor Module (1) is also used.

The engine aftertreatment system monitors the O2 content in the diesel engine exhaust. The Powertrain Control Module (PCM) monitors the exhaust gases for oxygen content and varies the rich/lean fuel mixture of the intake air fuel mixture to adjust the system. This diagnostic monitors the status message broadcast by the O2 Sensor Module (1) for the upstream O2 sensor's internal heater circuit. The PCM will set the fault if it receives a FMI (Failure Mode Indicator) message from the O2 Sensor Module. The PCM will illuminate the MIL lamp immediately when the diagnostic runs and fails. The PCM will turn off the MIL lamp diagnostic runs and passes in four consecutive drive cycles.

REMOVAL

REMOVAL

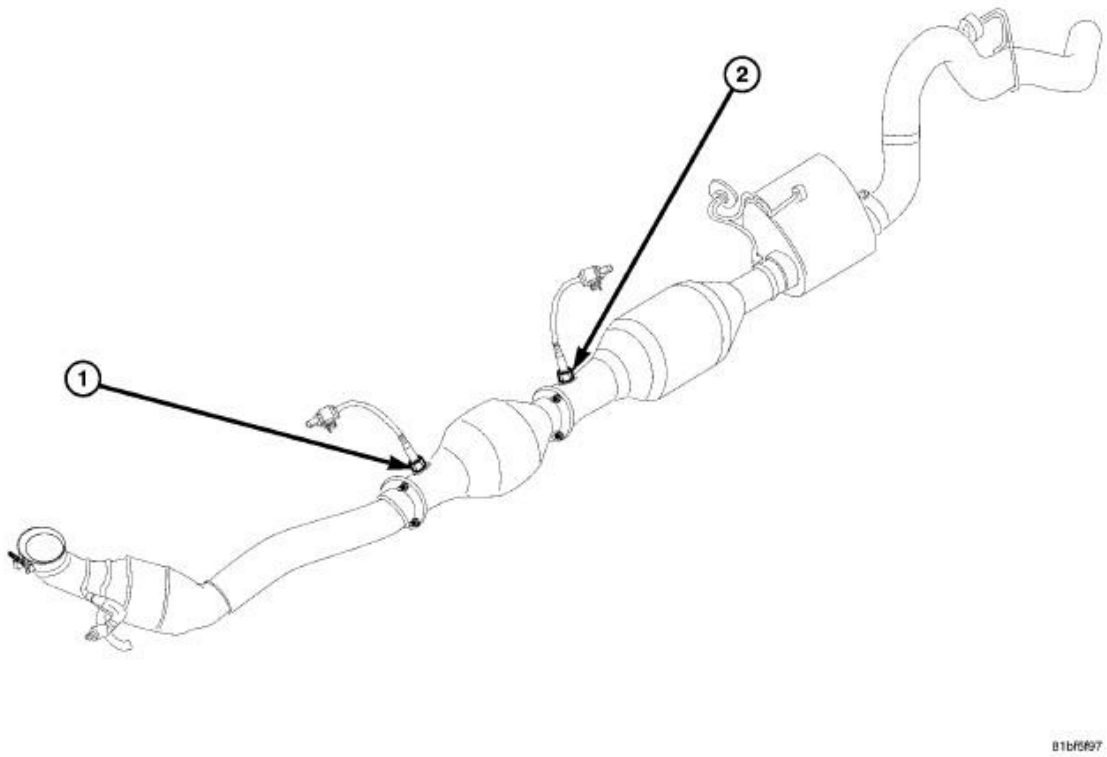

Fig. 145: O2 Sensors
Courtesy of CHRYSLER GROUP, LLC

CAUTION: Never apply any type of grease to the Oxygen (O2) sensor harness connector, or attempt any soldering of the sensor wiring harness.

WARNING: The exhaust manifold, exhaust pipes and catalytic converters become very hot during engine operation. Allow engine to cool before removing oxygen sensor.

1. Disconnect both negative battery cables.
2. Raise and support the vehicle.

CAUTION: When disconnecting the O2 sensor harness connector, do not pull directly on the wire going into sensor.

3. Disconnect the O2 sensor harness connector.
4. Remove the O2 sensor.
5. Clean the threads in catalytic convertor using the appropriate tap.

INSTALLATION

INSTALLATION

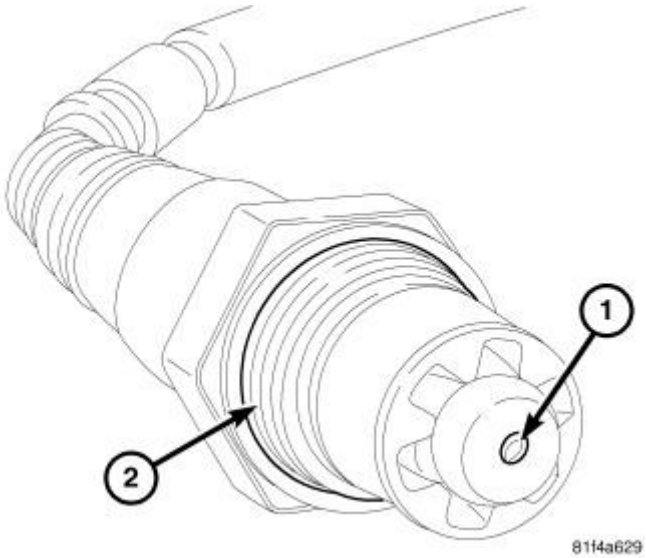

Fig. 146: O2S Sensor Center Hole & Threads
Courtesy of CHRYSLER GROUP, LLC

1 - CENTER HOLE
2 - THREADS

NOTE: **Threads of NEW Oxygen (O2) sensors are factory coated with anti-seize compound to aid in removal.DO NOT add any additional anti-seize compound to threads of a new oxygen sensor. Be careful not to get anti-seize compound on sensor tip.**

1. Inspect the O2 sensor wiring boot for cuts, tears or damage.
2. If the O2 sensor (2) is going to be reinstalled, apply pressurized shop air directly into center hole (1) of O2 sensor.
3. Wipe excess soot off the O2 sensor (2) with a soft cloth.

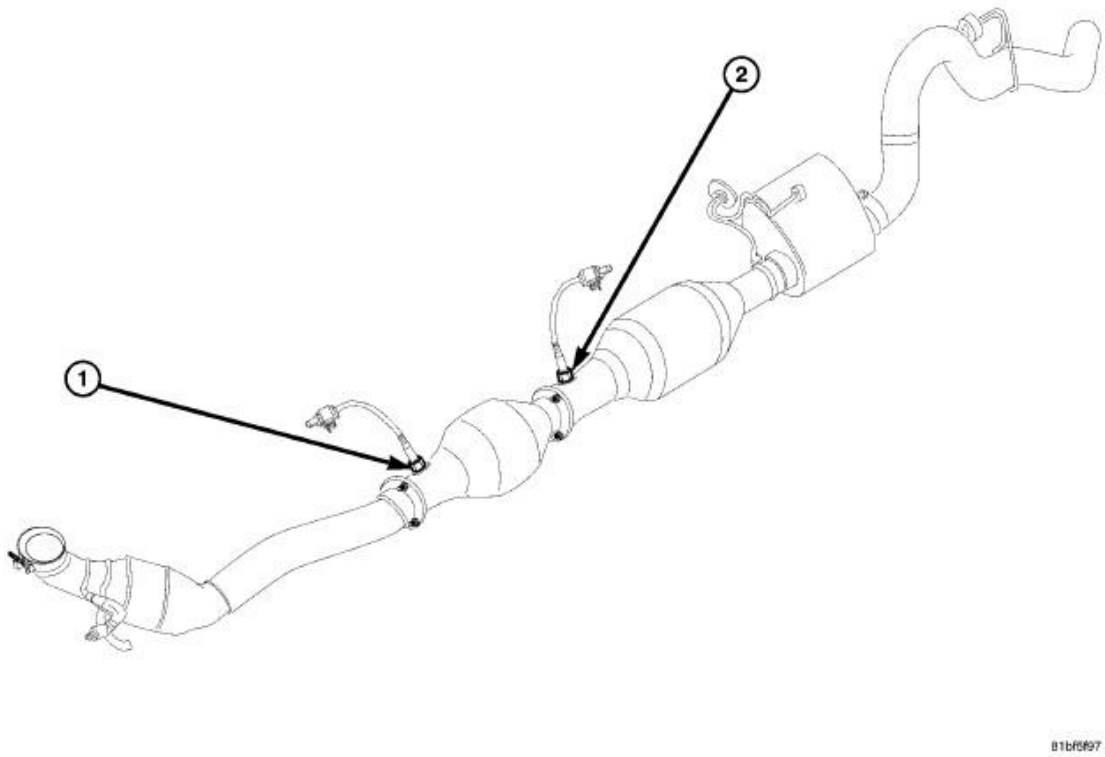

Fig. 147: O2 Sensors
Courtesy of CHRYSLER GROUP, LLC

4. Install the O2 sensor (2). Tighten to 50 N.m (37 ft. lbs.).
5. Connect the O2 sensor harness connector.
6. Lower vehicle.
7. Connect both negative battery cables.

FUEL DELIVERY, GAS

STANDARD PROCEDURE

FUEL SYSTEM PRESSURE RELEASE

Use this procedure whether or not the fuel rail is equipped with a fuel pressure test port.

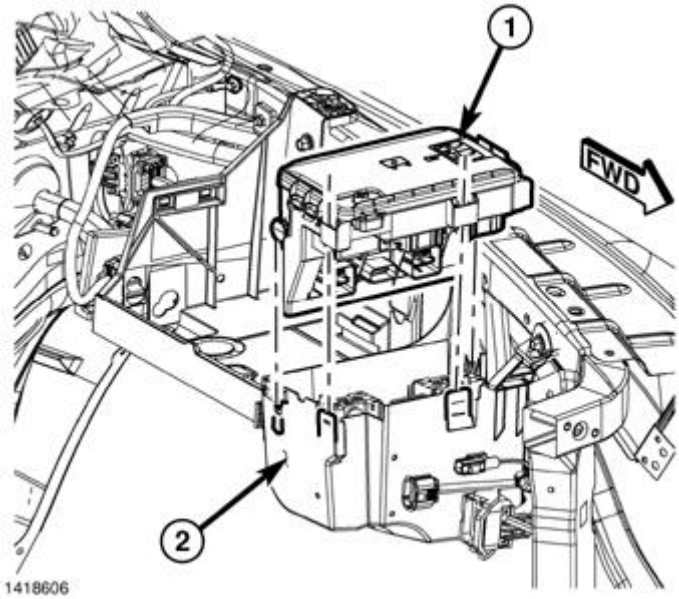

Fig. 148: Totally Integrated Power Module (TIPM)
Courtesy of CHRYSLER GROUP, LLC

A separate fuel pump relay is no longer used. A circuit within the Totally Integrated Power Module (TIPM) is used to control the electric fuel pump located within the fuel pump module. The TIPM (2) is located in the engine compartment in front of the battery.

1. Remove the fuel fill cap.
2. Remove the TIPM cover (1) from the TIPM housing base (2).

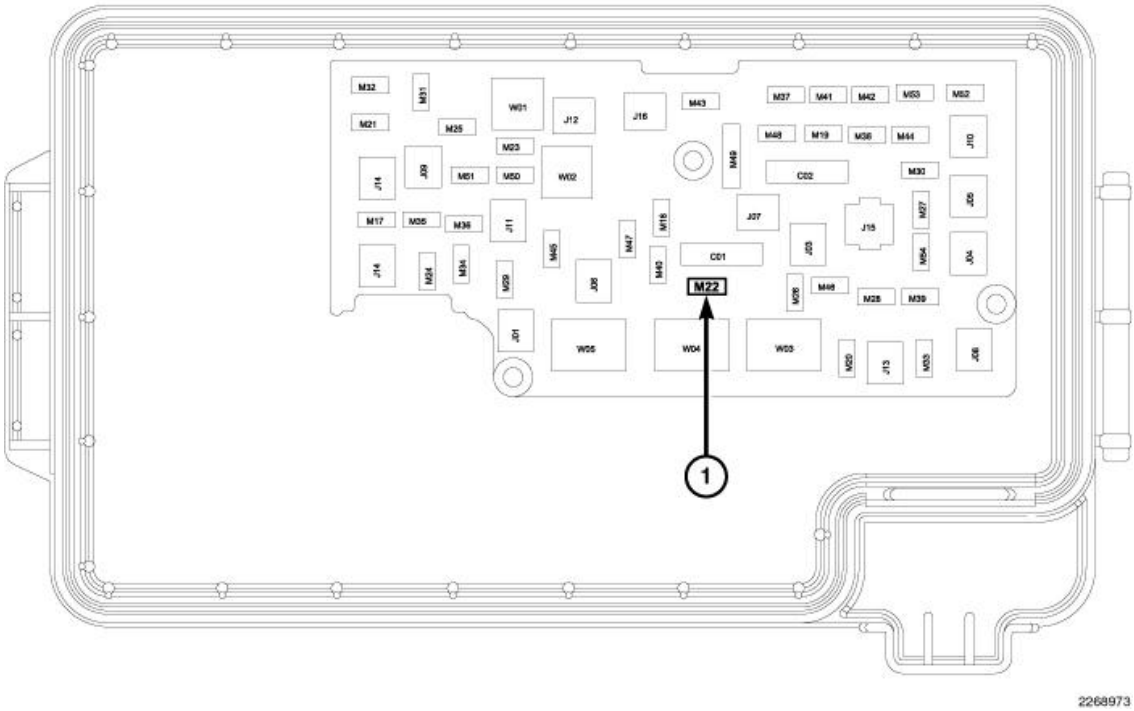

Fig. 149: Locating Fuse M22 In TIPM
Courtesy of CHRYSLER GROUP, LLC

3. Remove fuse M22 from the TIPM (1).
4. Start and run the engine until it stalls.
5. Attempt restarting the engine until it will no longer start.
6. Turn the ignition key to the OFF position.

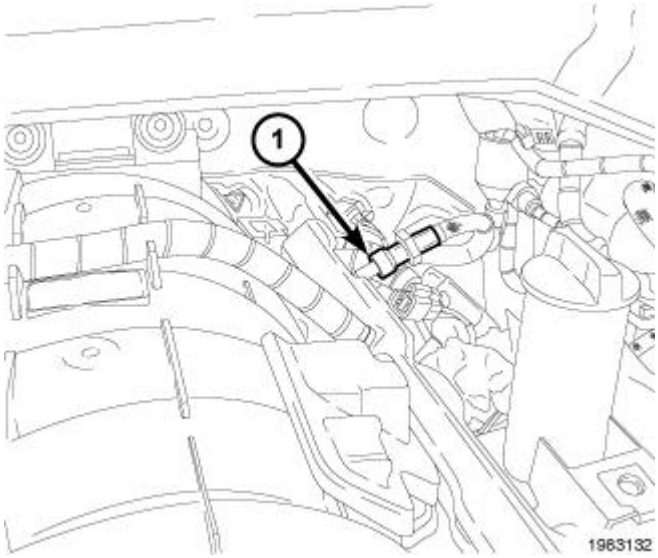

Fig. 150: Fuel Supply Line Quick Connect Fitting At Fuel Rail
Courtesy of CHRYSLER GROUP, LLC

CAUTION: Before separating a Quick-Connect fitting, pay attention to what type of fitting is being used. Refer to STANDARD PROCEDURE - QUICK-CONNECT FITTINGS. . This will prevent unnecessary fitting or fitting latch breakage.

NOTE: Excessive fuel spillage onto the gaskets can cause gaskets to expand and dislodge from gasket groove.

7. Place a rag or towel below the fuel line quick-connect fitting at the fuel rail.
8. Disconnect the fuel line quick-connect fitting at the fuel rail (1) and plug with a shipping cap to prevent spillage. Refer to **STANDARD PROCEDURE - QUICK-CONNECT FITTINGS**. .

NOTE: One or more Diagnostic Trouble Codes (DTC's) may have been stored in the PCM memory due to disconnecting fuel pump module circuit. A diagnostic scan tool must be used to erase a DTC.

DRAINING FUEL TANK

CONVENTIONAL PROCEDURE

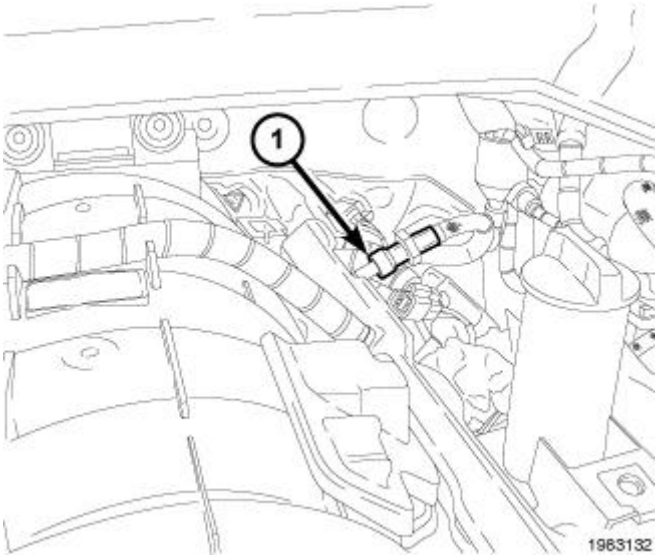

Fig. 151: Fuel Supply Line Quick Connect Fitting At Fuel Rail
Courtesy of CHRYSLER GROUP, LLC

WARNING: The fuel system may be under constant fuel pressure even with the engine off. This pressure must be released before servicing the fuel tank.

Due to a one-way check valve installed into the fuel fill fitting at the tank, the tank cannot be drained at the fuel fill cap.

1. Perform the fuel system pressure release procedure. Refer to **FUEL SYSTEM PRESSURE RELEASE**.

.

2. Disconnect the fuel supply line (2) from the fuel rail. Refer to **STANDARD PROCEDURE - QUICK-CONNECT FITTINGS**. .

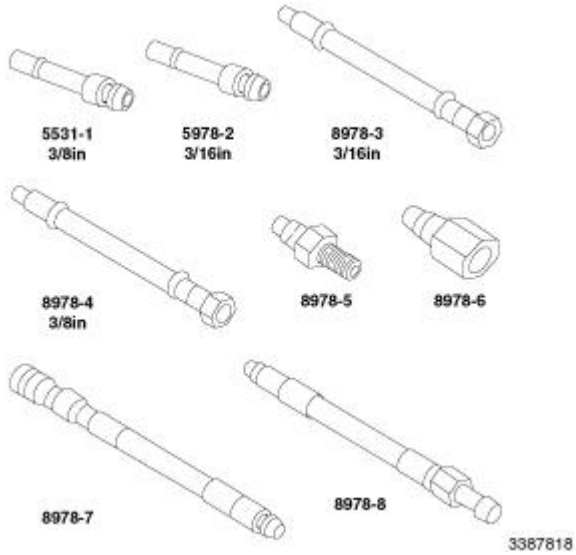

Fig. 152: Fuel Line Adapters
Courtesy of CHRYSLER GROUP, LLC

NOTE: **Tool number 8978-2 is used on 5/16" fuel lines while tool number 8531-1 is used on 3/8" fuel lines.**

3. Install the appropriate fuel line adapter fitting from the Decay Tool, Fuel 8978A to the fuel supply line. Route the opposite end of this hose to an OSHA approved fuel storage tank such as the John Dow Gas Caddy 320-FC-P30-A or equivalent.
4. Using a diagnostic scan tool, activate the fuel pump until the fuel tank has been evacuated.

ALTERNATIVE PROCEDURE

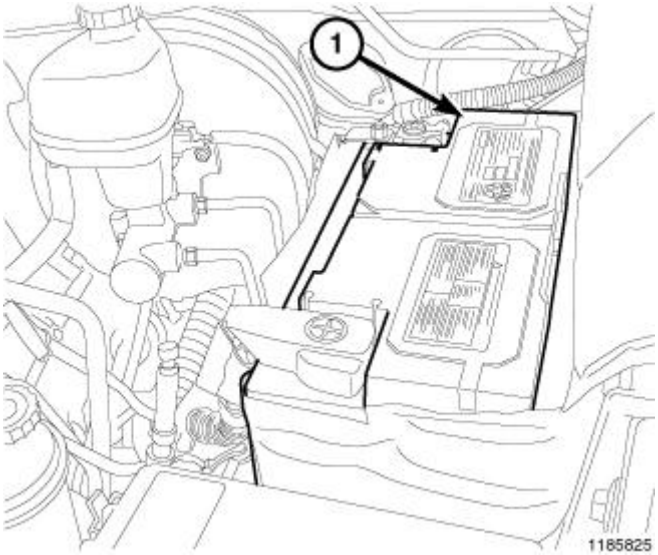

Fig. 153: Battery
Courtesy of CHRYSLER GROUP, LLC

NOTE: **If the electric fuel pump is not operating, the fuel tank must be removed and drained through the fuel pump module opening of the fuel tank.**

1. Perform the Fuel System Pressure Release procedure. Refer to **FUEL SYSTEM PRESSURE RELEASE**. .
2. Disconnect and isolate the negative battery cable (1).
3. Raise and support the vehicle.
4. Remove the fuel tank. Refer to **TANK, FUEL, REMOVAL**.

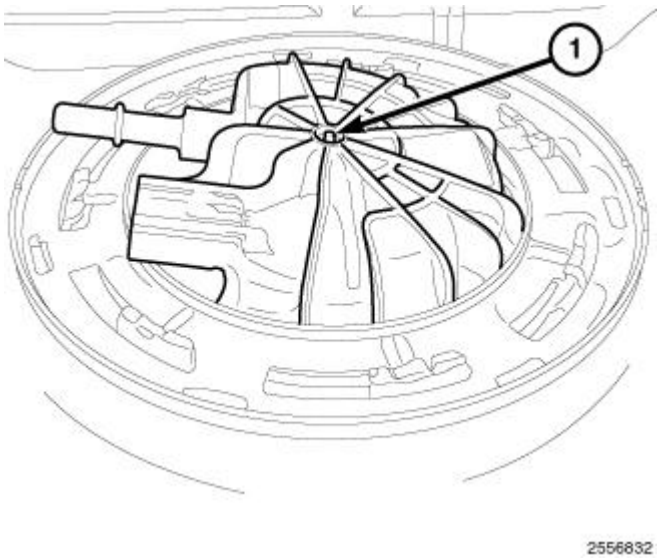

Fig. 154: Fuel Pump Module
Courtesy of CHRYSLER GROUP, LLC

5. Remove the fuel pump module (1). Refer to **MODULE, FUEL PUMP, REMOVAL**.
6. Position a 3/8" hose into the fuel pump module opening of the fuel tank.
7. Attach the opposite end of this hose to the Fuel Chief Gas Caddy 320-FC-P30-A or an OSHA approved gas caddy.
8. Using the gas caddy, evacuate the fuel tank.

SPECIFICATIONS

FUEL SYSTEM PRESSURE

58 psi +/- 2 psi

TORQUE SPECIFICATIONS

DESCRIPTION	N.m	Ft. lbs.	In. lbs.
Accelerator Pedal Bracket Mounting	12	-	105
Accelerator Pedal Position Sensor Bracket-to-Battery Tray Bolts	3	-	30
Crankshaft Position Sensor - 3.7L	28	21	-
Crankshaft Position Sensor - 4.7L	28	21	-
Crankshaft Position Sensor - 5.7L	12	-	105 (+/-20)
Camshaft Position Sensor - 3.7L	12	-	106
Camshaft Position Sensor - 4.7L	12	-	106
Camshaft Position Sensor - 5.7L	12	9	105 (+/-) 20
EVAP Canister- to-Bracket Nuts	8.5	-	75
EVAP Canister-to-Frame Bolts	34	25	
Fuel Filler Hose Clamp at Tank	3	-	30
Fuel Filler Housing-to-Body Screws	2	-	17
Fuel Rail Mounting Bolts - 3.7L	11	-	100
Fuel Rail Mounting Bolts - 4.7L	11	-	100

Fuel Rail Mounting Bolts - 5.7L	11	-	100
Fuel Tank Mounting Straps	41	30	-
Fuel Tank Mounting Bolts - 52 Gallon Tank	55	41	-
Map Sensor Mounting Screws - 3.7L	3	-	25
Map Sensor Mounting Screws - 4.7L	3	-	25
PCM-to-Mounting Bracket Mounting Screws	4	-	35
Throttle Body Mounting Bolts - 3.7L	7.5	-	65
Throttle Body Mounting Bolts - 4.7L	7.5	-	65
Throttle Body Mounting Bolts - 5.7L	5.6	-	50
Oxygen Sensors	41	30	-
Ignition Coil Mounting Bolts	11	-	100

SPECIAL TOOLS

SPECIAL TOOLS

	9340 - SAE Fuel Pump Lock Ring Wrench (Originally Shipped In Kit Number(s) 9327, 9327CC, 9397, 9575.)

FITTING, QUICK CONNECT

DESCRIPTION

DESCRIPTION

Different types of quick-connect fittings are used to attach the various fuel system components, lines and tubes. These are: a single-button type, a two-button type, a pinch type, a single-tab type, a two-tab type or a plastic retainer ring type. Some are equipped with safety latch clips. Some may require the use of a special tool for disconnection and removal. Refer to **STANDARD PROCEDURE - QUICK-CONNECT FITTINGS**. .

CAUTION: Before separating a Quick-Connect fitting, pay attention to what type of fitting is being used. Refer to STANDARD PROCEDURE - QUICK-CONNECT FITTINGS. . This will prevent unnecessary fitting or fitting latch breakage.

CAUTION: The interior components (O-rings, clips) of quick-connect fittings are not serviced separately, but new plastic spacers and latches are available for some types. If service parts are not available, do not attempt to repair the damaged fitting or fuel line (tube). If repair is necessary, replace the complete fuel line (tube) assembly.

STANDARD PROCEDURE

STANDARD PROCEDURE - QUICK-CONNECT FITTINGS

Different types of quick-connect fittings are used to attach the various fuel system components, lines and tubes. Some quick-connect fittings require the use of a special tool for disconnection and removal.

These are the quick-connect fittings:

- Redundant Latch Single Button Type Fitting
- Single Button Type Fitting
- Pinch Type Fitting
- Single Tab Type Fitting
- Two Tab Type Fitting
- Plastic Retainer Ring Type Fitting
- Latch Clip Type 1 Fitting
- Latch Clip Type 2 Fitting
- Wing Type Fitting

DISCONNECTING

WARNING: The fuel system is under a constant pressure (even with engine off). Before servicing any fuel system hose, fitting or line, fuel system pressure must be released. Refer to FUEL SYSTEM PRESSURE RELEASE. .

CAUTION: Before separating a Quick-Connect fitting, pay attention to what type of fitting is being used. Refer to STANDARD PROCEDURE - QUICK-CONNECT FITTINGS. . This will prevent unnecessary fitting or fitting latch breakage.

CAUTION: The interior components (O-rings, clips) of quick-connect fittings are not serviced separately, but new plastic spacers and latches are available for some types. If service parts are not available, do not attempt to repair the damaged fitting or fuel line (tube). If repair is necessary, replace the complete fuel line (tube) assembly.

REDUNDANT LATCH SINGLE BUTTON TYPE FITTING:

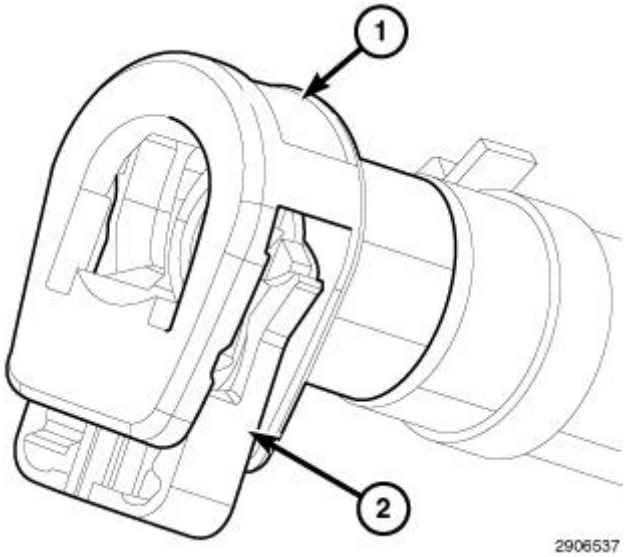

Fig. 155: Redundant Latch & Push Button
Courtesy of CHRYSLER GROUP, LLC

This type of quick-connect fitting is equipped with a redundant latch (2) and a single push button (1) that releases two internal latches located in the quick-connect fitting. Special tools are not required for removal.

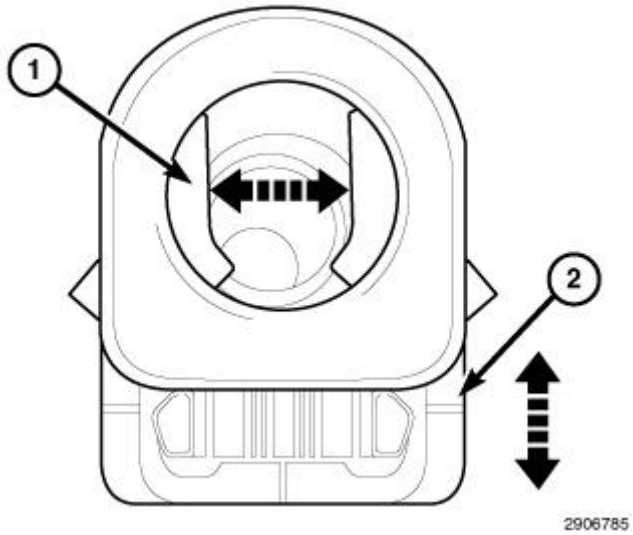

Fig. 156: Redundant Latch & Internal Latches
Courtesy of CHRYSLER GROUP, LLC

CAUTION: Do not pry or pull up on the push button as damage to the latches of the quick-connect fitting will occur.

1. Pull the redundant latch (2) out away from the quick-connect fitting.
2. Press on the push button with your thumb, release the internal latches (1) and remove the quick-connect fitting from the fuel system component.

SINGLE BUTTON TYPE FITTING:

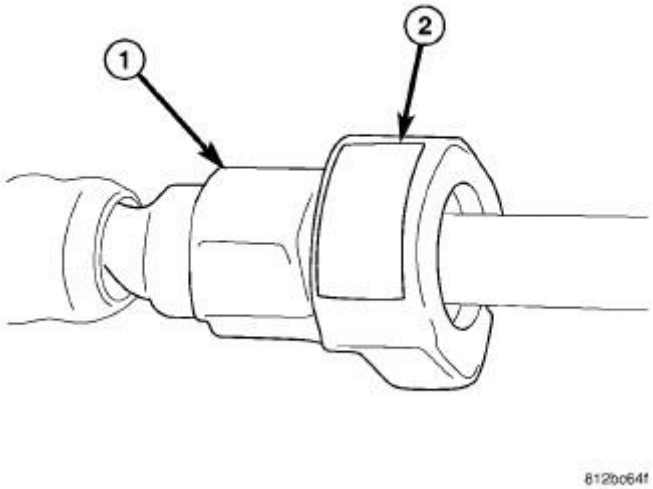

Fig. 157: Single Button Fitting
Courtesy of CHRYSLER GROUP, LLC

CAUTION: Do not pry or pull up on the push button as damage to the latches of the quick-connect fitting will occur.

This type of quick-connect fitting is equipped with a single push button (2) that releases two internal latches located in the quick-connect fitting. Special tools are not required for removal.

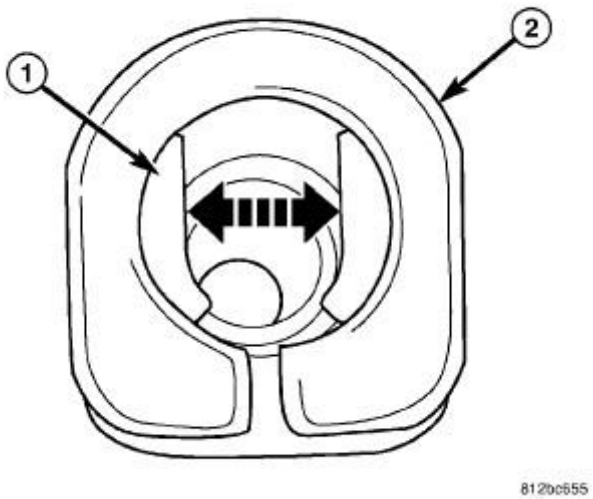

Fig. 158: Quick-Connect Fitting Latches
Courtesy of CHRYSLER GROUP, LLC

1. Press on the push button with your thumb, release the internal latches (1).
2. Remove the quick-connect fitting from the fuel system component.

2 BUTTON TYPE FITTING

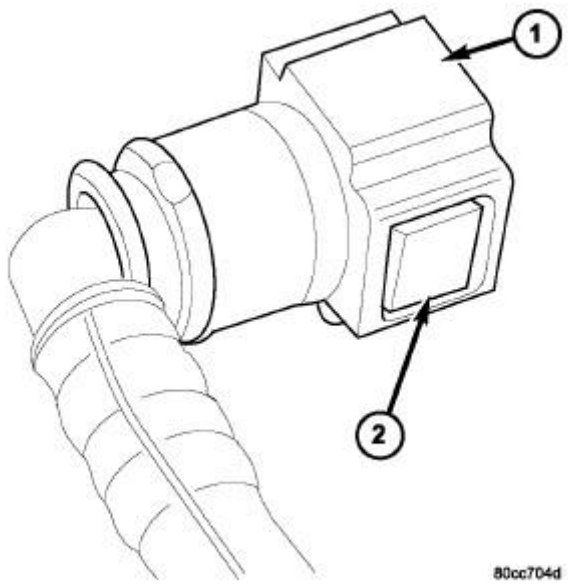

Fig. 159: View Of 2-Button Type Fitting
Courtesy of CHRYSLER GROUP, LLC

This type of quick-connect fitting (1) is equipped with two push buttons (2) that releases two internal latches located in the quick-connect fitting. Special tools are not required for removal.

1. Press on both push buttons with your thumb, release the internal latches.
2. While holding the two push buttons simultaneously, remove the quick-connect fitting from the fuel system component.

PINCH TYPE FITTING

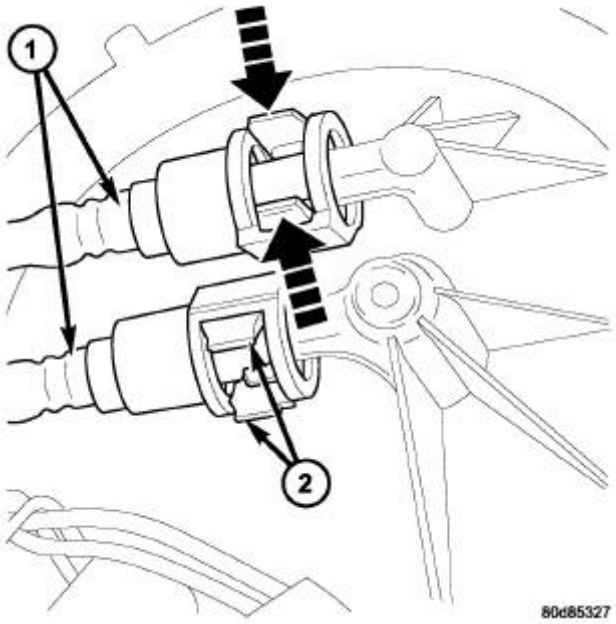

Fig. 160: View Of Pinch Type Quick-Connect Fitting
Courtesy of CHRYSLER GROUP, LLC

This type of quick-connect fitting (1) is equipped with two finger tabs (2). Special tools are not required for removal.

1. Pinch both tabs (2) together and release the quick-connect fitting.
2. Remove the quick-connect fitting from the fuel system component.

SINGLE TAB TYPE FITTING

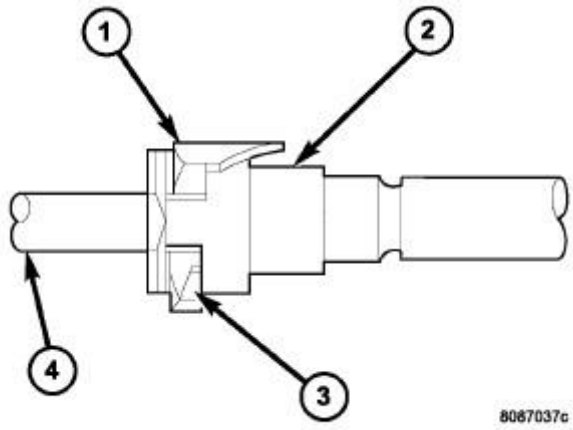

Fig. 161: View Of Single-Tab Type Fitting
Courtesy of CHRYSLER GROUP, LLC

This type of quick-connect fitting (3) is equipped with a single pull tab (1). The tab is removable. After tab is removed the quick-connect fitting can be separated from the fuel system component. Special tools are not required for removal.

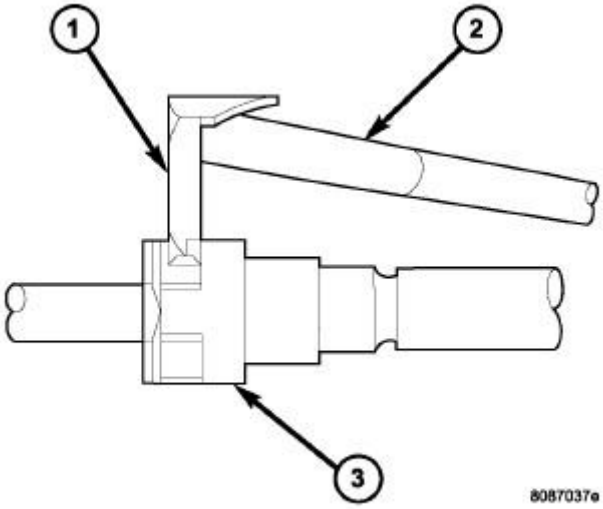

Fig. 162: Disconnecting Single-Tab Type Fitting
Courtesy of CHRYSLER GROUP, LLC

1. Press release tab on side of fitting to release pull tab (1). **If release tab is not pressed prior to releasing pull tab, pull tab will be damaged.**
2. While pressing the release tab on the side of the quick-connect fitting use a screwdriver (2) to pry up the pull tab.
3. Raise the pull tab until it separates from the quick-connect fitting.
4. Remove the quick-connect fitting from the fuel system component.

TWO TAB TYPE FITTING

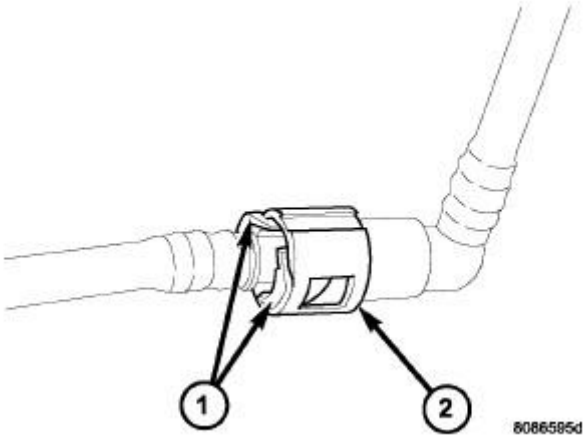

Fig. 163: Identifying Typical 2-Tab Type Fitting
Courtesy of CHRYSLER GROUP, LLC

This type of quick-connect fitting (2) is equipped with tabs located on both sides of the fitting (1). These tabs are integral to the fuel system component. The plastic tabs will remain on the component being serviced after the quick-connect fitting is removed. The O-ring and spacer will remain in the quick-connect fitting. Special tools are not required for removal.

1. Squeeze the plastic tabs (1) against the sides of component being serviced with your fingers.
2. Remove the quick-connect fitting from the fuel system component.

PLASTIC RETAINER RING TYPE FITTING

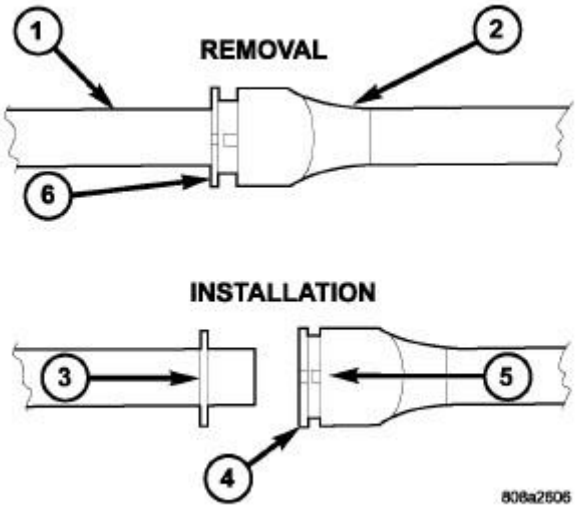

Fig. 164: Plastic Retainer Ring Type Fitting
Courtesy of CHRYSLER GROUP, LLC

This type of fitting can be identified by the use of a round plastic retainer ring (4) usually black in color. Special tools are not required for removal.

NOTE: **The round plastic retainer ring must be pressed squarely into the quick-connect fitting body. If this retainer is cocked during removal it will be difficult to disconnect the quick-connect fitting. Use an open-end wrench on the shoulder of the plastic retainer ring to aid in disconnection.**

1. Firmly push the quick-connect fitting (5) towards the component being serviced while firmly pushing the round plastic retainer ring into the quick-connect fitting (6). With the round plastic ring depressed, remove the quick-connect fitting from the fuel system component.
2. After removal the plastic retainer ring will remain with the quick-connect fitting.

LATCH CLIP TYPE 1 FITTING

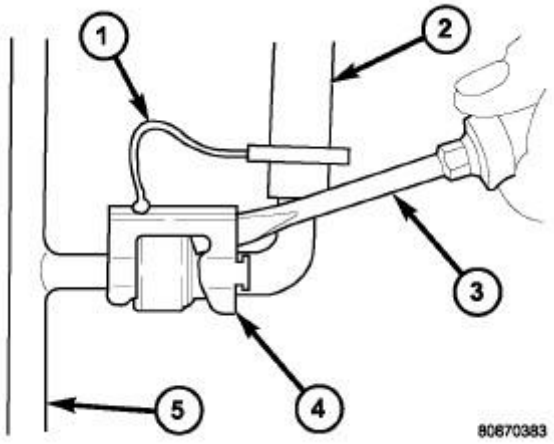

Fig. 165: Latch Clip Type 1
Courtesy of CHRYSLER GROUP, LLC

Depending on vehicle model and engine, 2 different types of safety latch clips are used. One is tethered (1) to fuel line and the other is not. A special tool will be necessary to disconnect the fuel line after latch clip is removed. The latch clip may be used on certain fuel line and fuel rail connections or to join fuel lines together.

1. Pry up on the latch clip (4) with a screwdriver (3).
2. Slide the latch clip away from the quick-connect fitting while lifting the screwdriver and position aside.

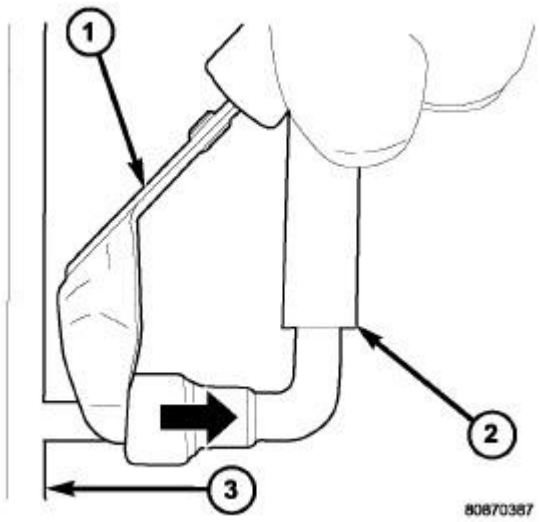

Fig. 166: Fuel Line Disconnection Using Special Tool
Courtesy of CHRYSLER GROUP, LLC

3. Insert the commercially available fuel line removal tool (1) into the quick-connect fitting and release the internal latches.

NOTE: After removal the internal latches will remain in the quick-connect fitting.

4. With the commercially available fuel line removal tool (1) still inserted, remove the quick-connect fitting from the fuel system component.

LATCH CLIP TYPE 2 FITTING

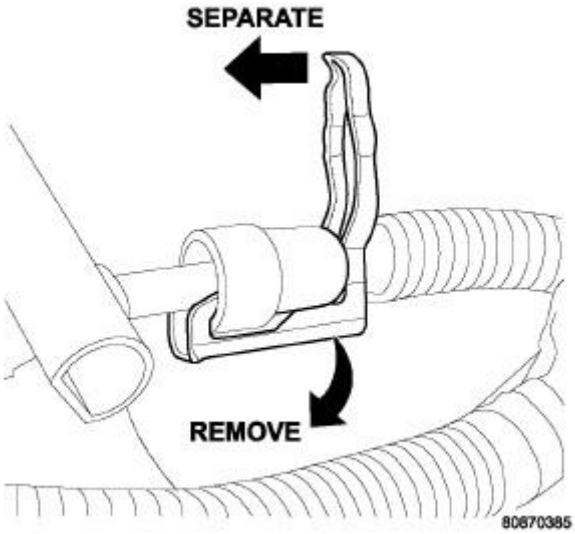

Fig. 167: Latch Clip Type 2
Courtesy of CHRYSLER GROUP, LLC

Depending on vehicle model and engine, 2 different types of safety latch clips are used. One is tethered to the fuel line and the other is not. A special tool will be necessary to disconnect the fuel line after the latch clip is removed. The latch clip may be used on certain fuel line and fuel rail connections or to join fuel lines together.

1. Unlatch the small arms on the end of clip, swing away and separate from the fuel system component.
2. Slide the latch clip away from the quick-connect fitting while lifting with a screwdriver and position aside.

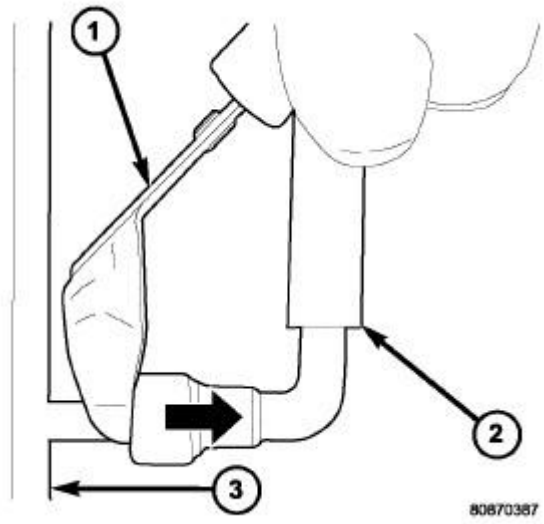

Fig. 168: Fuel Line Disconnection Using Special Tool
Courtesy of CHRYSLER GROUP, LLC

3. Insert the commercially available fuel line removal tool (1) into the quick-connect fitting and release the internal latches.

NOTE: After removal the internal latches will remain in the quick-connect fitting.

4. With the commercially available fuel line removal tool (1) inserted, remove the quick-connect fitting from the fuel system component.

WING TYPE FITTING

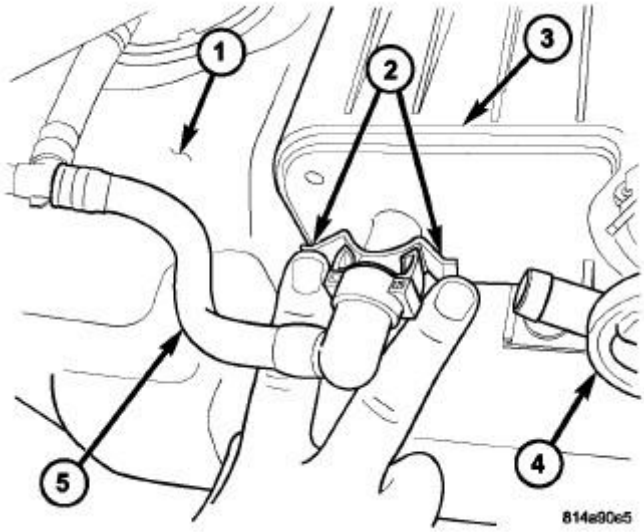

Fig. 169: Wing Type Fitting

Courtesy of CHRYSLER GROUP, LLC

The wing type fitting is used on fuel system and emission components. The wing type fitting is most commonly used on the EVAP canister (3). Special tools are not required for removal.

1. Using two fingers, press both wings (2) and release the locking tabs.

   NOTE: After removal the locking tabs will remain with the quick-connect fitting.

2. While holding the wings, remove the quick-connect fitting from the fuel system component.

CONNECTING

1. Inspect the quick-connect fitting body and fuel system components for damage. Replace as necessary.
2. Prior to connecting any quick-connect fitting to components, check condition of fitting and components. Clean parts with a lint-free cloth. Lubricate with clean engine oil.
3. Insert the quick-connect fitting onto the fuel tube or fuel system component until the built-in stop on the fuel tube or component rests against the back of fitting.
4. Continue pushing until a click is felt.
5. If Equipped:
   - **Redundant Latch Single Button Type Fitting:** Push redundant latch until it locks into position in the quick-connect fitting.
   - **Single Tab Type Fitting:** Push new tab down until it locks into position in the quick-connect fitting.
   - **Latch Clip Type Fitting:** Install latch clip (snaps into position). **If latch clip will not snap into position, this indicates the quick-connect fitting is not properly installed onto fuel system component, recheck the connection.**
6. Verify a locked condition by firmly pulling on the quick-connect fitting connection of the fuel system component.

MODULE, FUEL PUMP, ELECTRIC

DESCRIPTION

DESCRIPTION

The electric fuel pump is located inside of the fuel pump module. A 12 volt, permanent magnet, electric motor powers the fuel pump. The electric fuel pump is not a separate, serviceable component.

OPERATION

ELECTRIC FUEL PUMP

Voltage to operate the electric pump is supplied through the fuel pump relay.

Fuel is drawn in through a filter at the bottom of the module and pushed through the electric motor gearset to

the pump outlet.

Check Valve Operation: The bottom section of the fuel pump module contains a one-way check valve to prevent fuel flow back into the tank and to maintain fuel supply line pressure (engine warm) when pump is not operational. It is also used to keep the fuel supply line full of gasoline when pump is not operational. After the vehicle has cooled down, fuel pressure may drop to 0 psi (cold fluid contracts), but liquid gasoline will remain in fuel supply line between the check valve and fuel injectors.**Fuel pressure that has dropped to 0 psi on a cooled down vehicle (engine off) is a normal condition.**

The electric fuel pump is not a separate, serviceable component.

MODULE, FUEL PUMP

DESCRIPTION

FUEL PUMP MODULE

The fuel pump module assembly is located on the top of the fuel tank . The complete assembly contains the following components:

- A combination fuel filter/fuel pressure regulator
- A separate fuel pick-up, or inlet filter
- An electric fuel pump
- A lock ring to retain pump module to tank
- A soft gasket between tank flange and module
- A fuel gauge sending unit (fuel level sensor)
- Fuel line connection

The fuel gauge sending unit may be serviced separately. If the electrical fuel pump, primary inlet filter, fuel filter or fuel pressure regulator require service, the fuel pump module must be replaced.

OPERATION

OPERATION

Refer to **REGULATOR, FUEL PRESSURE** and **SENDING UNIT AND SENSOR, FUEL LEVEL**.

REMOVAL

REMOVAL

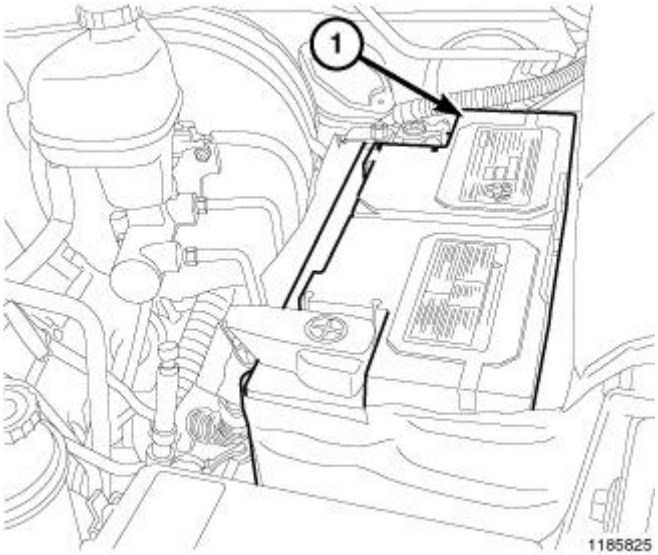

Fig. 170: Battery
Courtesy of CHRYSLER GROUP, LLC

WARNING: **The fuel system may be under a constant pressure (even with the engine off). Before servicing the fuel pump module, the fuel system pressure must be released.**

1. Perform the fuel system pressure release procedure. Refer to **FUEL SYSTEM PRESSURE RELEASE**.
.
2. Disconnect and isolate the negative battery cable (1).
3. Remove the fuel tank. Refer to **TANK, FUEL, REMOVAL**.

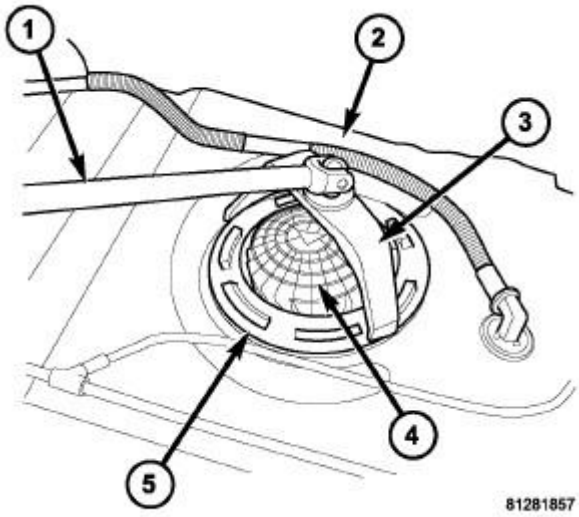

Fig. 171: Fuel Pump Module Lock Ring
Courtesy of CHRYSLER GROUP, LLC

NOTE: **Prior to removing the fuel pump module, use compressed air to remove any accumulated dirt and debris from around fuel tank opening.**

CAUTION: An indexing arrow is located on top of the main fuel pump module to clock it's position into the fuel tank, note it's location for reassembly.

4. Position the lock ring remover/installer (special tool #9340, SAE Fuel Pump Lock Ring Wrench) (3) into the notches on the outside edge of the lock ring (5).
5. Install a 1/2 inch drive breaker bar (1) into the lock ring remover/installer (special tool #9340, SAE Fuel Pump Lock Ring Wrench) (3).
6. Rotate the breaker bar counterclockwise and remove the lock ring.

CAUTION: Whenever the fuel pump module is serviced, the rubber O-ring seal must be replaced.

7. Remove the fuel pump module (4) from the fuel tank. Be careful not to bend float arm during removal.
8. Remove and discard the rubber O-ring seal.

INSTALLATION

INSTALLATION

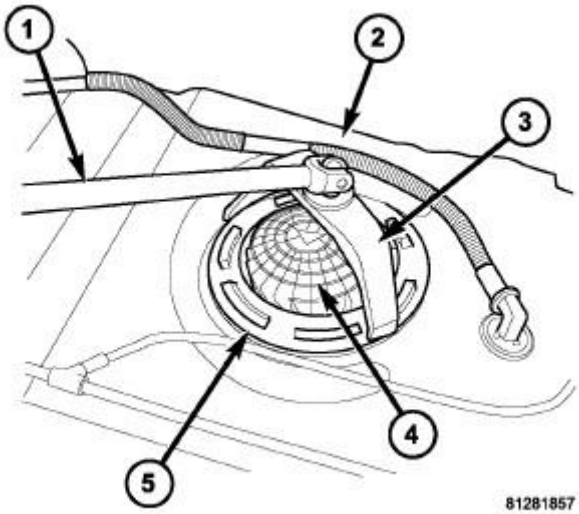

Fig. 172: Fuel Pump Module Lock Ring
Courtesy of CHRYSLER GROUP, LLC

CAUTION: An indexing arrow is located on top of the main fuel pump module to clock it's position into the fuel tank. The fuel pump module must be installed in the same position as removed.

1. Using a new rubber O-ring seal, position the fuel pump module into the fuel tank opening.
2. Position the lock ring (5) over top of the fuel pump module.
3. Rotate the fuel pump module until the embossed alignment arrow points to the center alignment mark or the same position as noted during removal. This step must be performed to prevent the float from contacting the side of the fuel tank.
4. Install the lock ring remover/installer (special tool #9340, SAE Fuel Pump Lock Ring Wrench) (3) into the notches on the outside edge of the lock ring (5).
5. Install a 1/2 inch drive breaker bar (1) into the lock ring remover/installer (special tool #9340, SAE Fuel Pump Lock Ring Wrench) (3).
6. Rotate the breaker bar clockwise until all seven notches of the lock ring have engaged.
7. Install the fuel tank. Refer to **TANK, FUEL, INSTALLATION**.

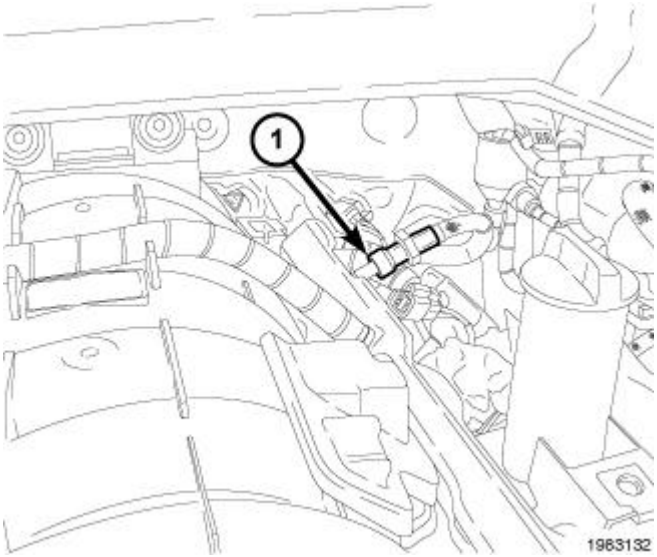

Fig. 173: Fuel Supply Line Quick Connect Fitting At Fuel Rail
Courtesy of CHRYSLER GROUP, LLC

8. Connect the fuel line quick-connect fitting at the fuel rail (1).

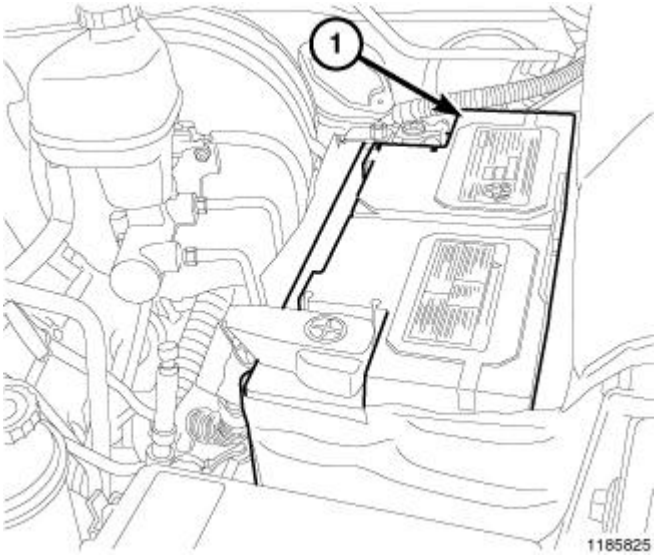

Fig. 174: Battery
Courtesy of CHRYSLER GROUP, LLC

9. Connect the negative battery cable (1).
10. Fill the fuel tank.
11. Start the engine and check for leaks at all fuel tank connections.

RAIL, FUEL

DESCRIPTION

DESCRIPTION

The fuel injector rail is used to mount the fuel injectors to the engine.

OPERATION

OPERATION

High pressure from the fuel pump is routed to the fuel rail. The fuel rail then supplies the necessary fuel to each individual fuel injector.

A quick-connect fitting with a safety latch clip is used to attach the fuel line to the fuel rail.

The fuel rail is not repairable.

CAUTION: The left and right sections of the fuel rail are connected with either a flexible connecting hose, or joints. Do not attempt to separate the rail halves at these connecting hose or joints. Due to the design of the connecting hose or joint, it does not use any clamps. Never attempt to install a clamping device of any kind to the hose or joint. When removing the fuel rail assembly for any reason, be careful not to bend or kink the

connecting hose or joint.

REMOVAL

3.7L

WARNING: The fuel system is under constant pressure even with engine off. Before servicing fuel rail, fuel system pressure must be released.

CAUTION: The left and right fuel rails are replaced as an assembly. Do not attempt to separate rail halves at connector tubes. Refer to Fig. 176. Due to design of tubes, it does not use any clamps. Never attempt to install a clamping device of any kind to tubes. When removing fuel rail assembly for any reason, be careful not to bend or kink tubes.

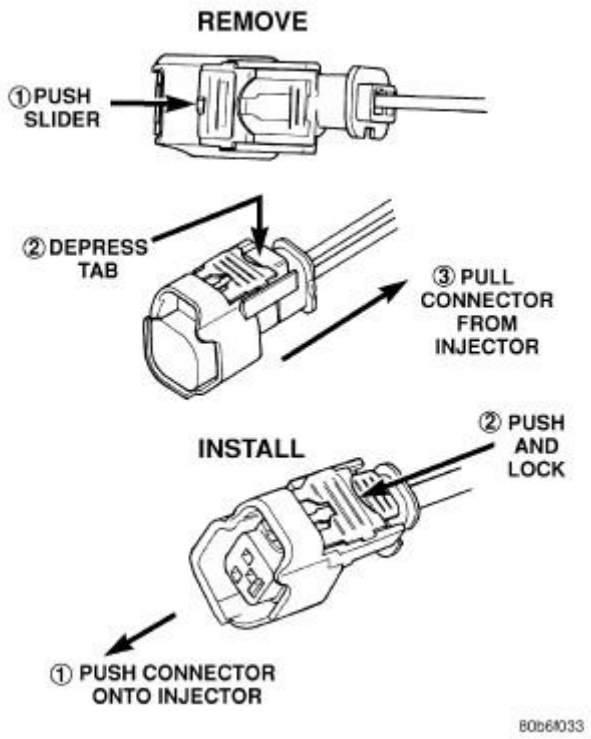

Fig. 175: Removing/Installing Injector Connector
Courtesy of CHRYSLER GROUP, LLC

1. Remove fuel tank filler tube cap.
2. Perform Fuel System Pressure Release Procedure. Refer to **FUEL SYSTEM PRESSURE RELEASE**. .
3. Remove negative battery cable at battery.
4. Remove air duct at throttle body air box.
5. Remove air box at throttle body.

6. Remove air resonator mounting bracket at front of throttle body (2 bolts).
7. Disconnect fuel line latch clip and fuel line at fuel rail. A special tool will be necessary for fuel line disconnection. Refer to **STANDARD PROCEDURE - QUICK-CONNECT FITTINGS**. .
8. Remove necessary vacuum lines at throttle body.
9. Disconnect electrical connectors at all 6 fuel injectors. To remove connector. Refer to **Fig. 175**. Push red colored slider away from injector (1). While pushing slider, depress tab (2) and remove connector (3) from injector. The factory fuel injection wiring harness is numerically tagged (INJ 1, INJ 2, etc.) for injector position identification. If harness is not tagged, note wiring location before removal.
10. Disconnect electrical connectors at all throttle body sensors.
11. Remove 6 ignition coils. Refer to **COIL, IGNITION, REMOVAL** .

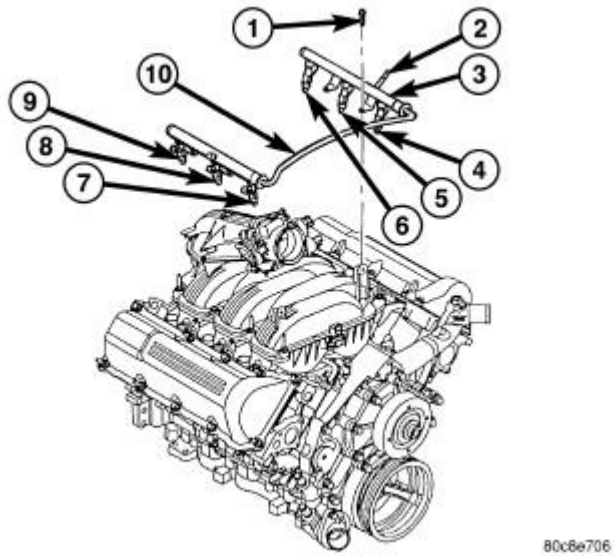

Fig. 176: Fuel Rail - 3.7L V-6
Courtesy of CHRYSLER GROUP, LLC

1 - MOUNTING BOLTS (4)
2 - QUICK-CONNECT FITTING
3 - FUEL RAIL
4 - INJ. #1
5 - INJ. #3
6 - INJ. #5
7 - INJ. #2
8 - INJ. #4
9 - INJ. #6
10 - CONNECTOR TUBE

12. Remove 4 fuel rail mounting bolts (1). Refer to **Fig. 176**.
13. Gently rock and pull **left** side of fuel rail until fuel injectors just start to clear machined holes in cylinder

head. Gently rock and pull **right** side of rail until injectors just start to clear cylinder head holes. Repeat this procedure (left/right) until all injectors have cleared cylinder head holes.

14. Remove fuel rail (with injectors attached) from engine.
15. If fuel injectors are to be removed. Refer to **INJECTOR(S), FUEL, REMOVAL**.

4.7L

WARNING: The fuel system is under constant pressure even with engine off. Before servicing fuel rail, fuel system pressure must be released.

CAUTION: The left and right fuel rails are replaced as an assembly. Do not attempt to separate rail halves at connector tubes. Refer to Fig. 178. Due to design of tubes, it does not use any clamps. Never attempt to install a clamping device of any kind to tubes. When removing fuel rail assembly for any reason, be careful not to bend or kink tubes.

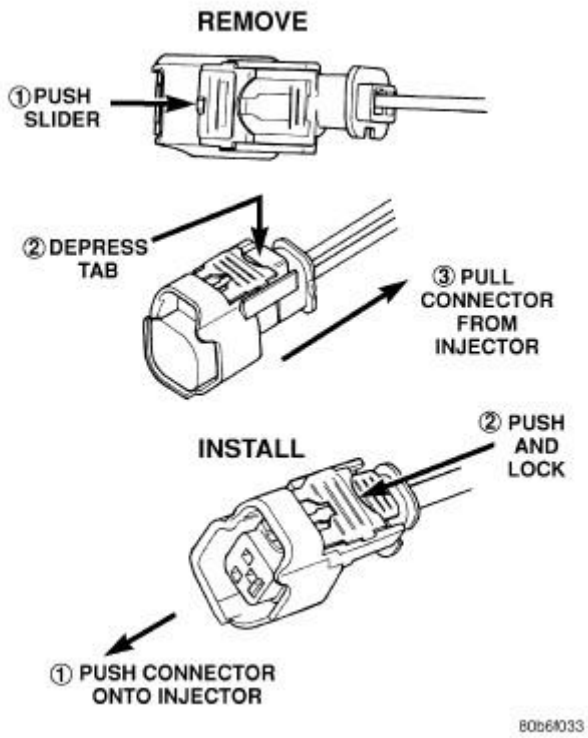

Fig. 177: Removing/Installing Injector Connector
Courtesy of CHRYSLER GROUP, LLC

1. Remove fuel tank filler tube cap.
2. Perform Fuel System Pressure Release Procedure. Refer to **FUEL SYSTEM PRESSURE RELEASE**. .
3. Remove negative battery cable at battery.
4. Remove air duct at throttle body air box.

5. Remove air box at throttle body.
6. Remove air resonator mounting bracket at front of throttle body (2 bolts).
7. Disconnect fuel line latch clip and fuel line at fuel rail. A special tool will be necessary for fuel line disconnection. Refer to **STANDARD PROCEDURE - QUICK-CONNECT FITTINGS**. .
8. Remove necessary vacuum lines at throttle body.
9. Disconnect electrical connectors at all 8 fuel injectors. To remove connector. Refer to **Fig. 177**. Push red colored slider away from injector (1). While pushing slider, depress tab (2) and remove connector (3) from injector. The factory fuel injection wiring harness is numerically tagged (INJ 1, INJ 2, etc.) for injector position identification. If harness is not tagged, note wiring location before removal.
10. Disconnect electrical connectors at all throttle body sensors.
11. Remove 8 ignition coils. Refer to **COIL, IGNITION, REMOVAL** .

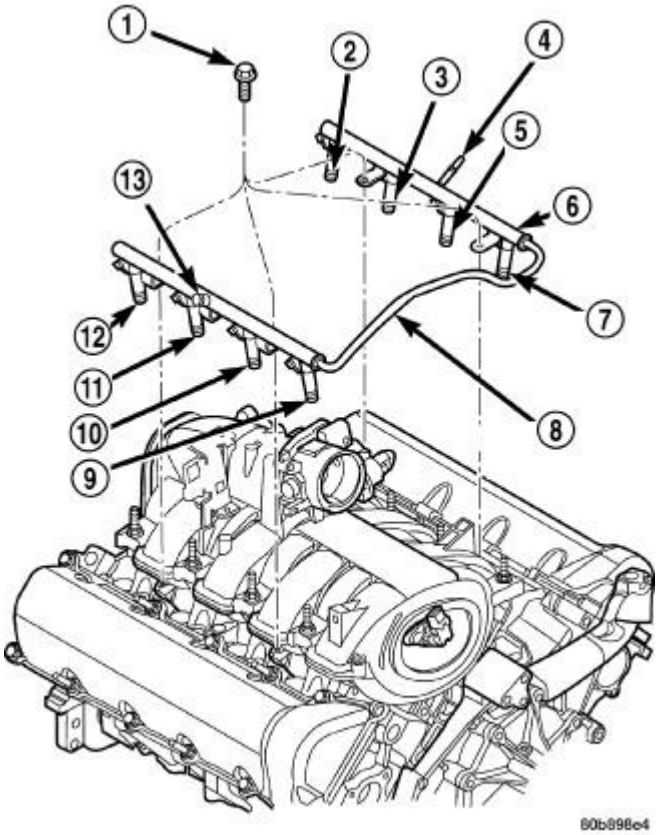

Fig. 178: Fuel Rail - 4.7L V-8
Courtesy of CHRYSLER GROUP, LLC

1 - MOUNTING BOLTS (4)
2 - INJ.#7
3 - INJ.#5
4 - QUICK-CONNECT FITTING
5 - INJ.#3

6 - FUEL INJECTOR RAIL
7 - INJ.#1
8 - CONNECTOR TUBE
9 - INJ.#2
10 - INJ.#4
11 - INJ.#6
12 - INJ.#8
13 - PRESSURE TEST PORT CAP

12. Remove 4 fuel rail mounting bolts (1). Refer to **Fig. 178**.
13. Gently rock and pull **left** side of fuel rail until fuel injectors just start to clear machined holes in cylinder head. Gently rock and pull **right** side of rail until injectors just start to clear cylinder head holes. Repeat this procedure (left/right) until all injectors have cleared cylinder head holes.
14. Remove fuel rail (with injectors attached) from engine.
15. If fuel injectors are to be removed. Refer to **INJECTOR(S), FUEL, REMOVAL**.

5.7L

WARNING: **The fuel system is under constant pressure even with engine off. Before servicing the fuel rail, fuel system pressure must be released.**

1. Perform the fuel system pressure release procedure. Refer to **FUEL SYSTEM PRESSURE RELEASE**.
.
2. Remove the negative battery cable.

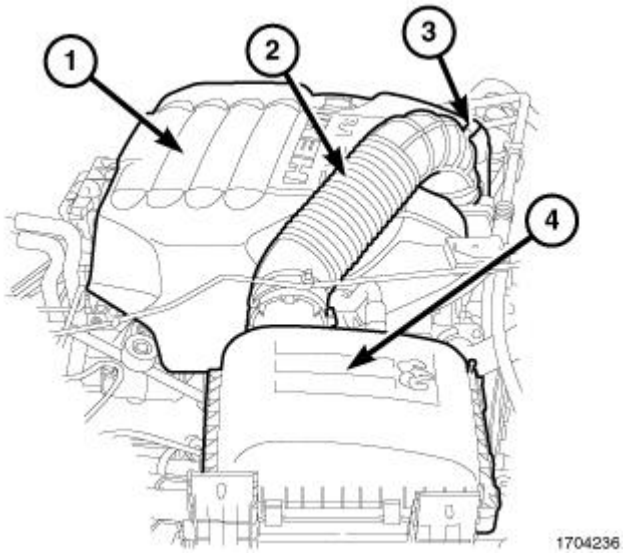

Fig. 179: Engine Cover, Clean Air Hose, Intake Air Temperature (IAT) Sensor Electrical Connector & Air Cleaner Housing
Courtesy of CHRYSLER GROUP, LLC

3. Disconnect the IAT sensor electrical connector (3).
4. Remove the clean air tube (2) from the air cleaner housing (4) and the throttle body.

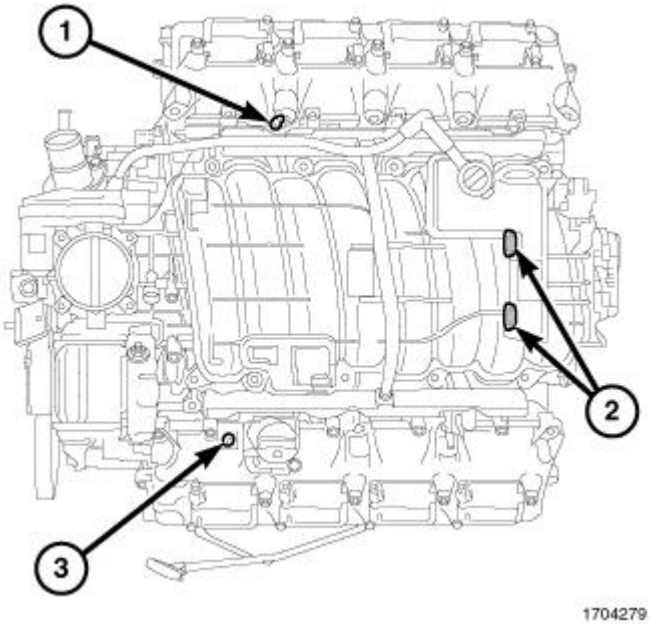

Fig. 180: Engine Cover Mounts
Courtesy of CHRYSLER GROUP, LLC

NOTE: **The front grommets (1, 3) are a ball stud type mount and the rear grommets (2) are a sliding peg design.**

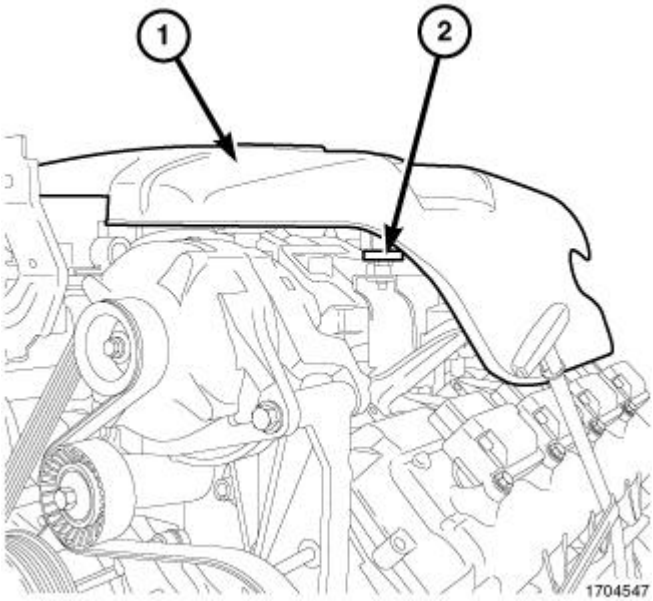

Fig. 181: Engine Cover & Grommets

Courtesy of CHRYSLER GROUP, LLC

5. Lift up the front of the engine cover (1) and separate the engine cover front grommets (2) from the ball studs on the intake manifold.

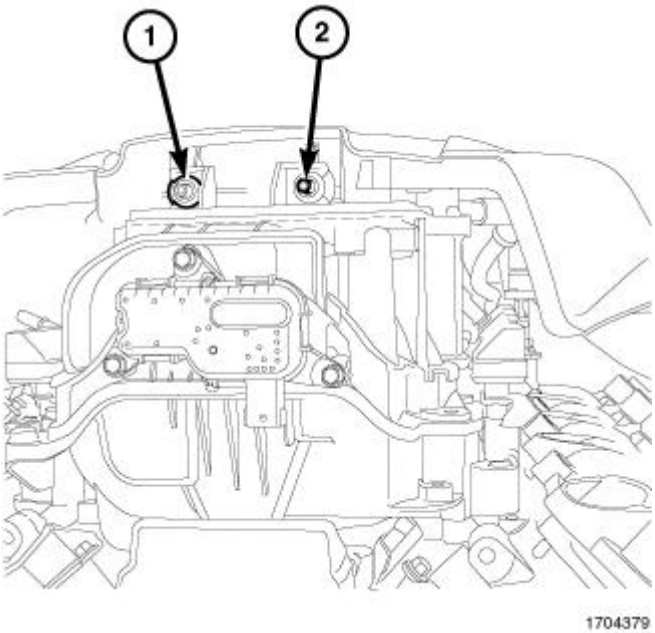

Fig. 182: Engine Cover Pegs & Grommets
Courtesy of CHRYSLER GROUP, LLC

6. Slightly raise the front of the engine cover and slide forward to remove the rear engine cover pegs (2) from the grommets (1) located on the rear of the intake manifold and remove the engine cover.

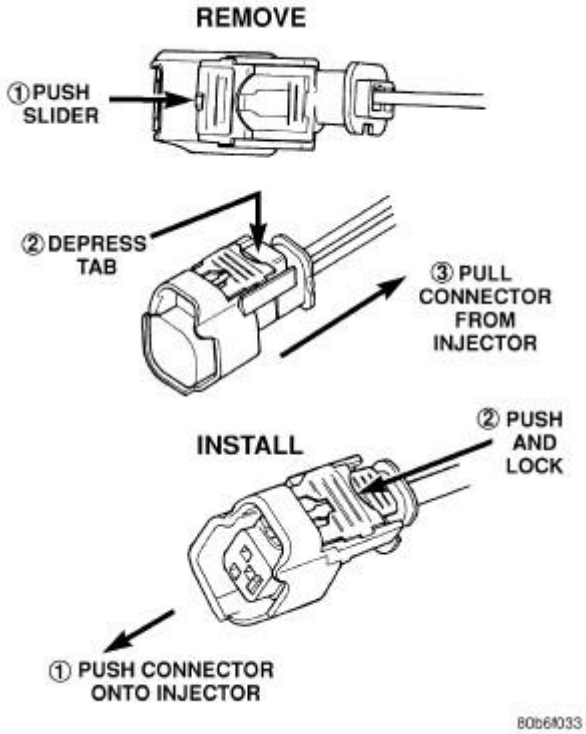

Fig. 183: Removing/Installing Fuel Injector Connector
Courtesy of CHRYSLER GROUP, LLC

CAUTION: The left and right fuel rails are replaced as an assembly. Do not attempt to separate the fuel rail halves at the connector tube. Due to the design of the connector tube, it does not use any clamps. Never attempt to install a clamping device of any kind to the connector tube. When removing the fuel rail assembly for any reason, be careful not to bend or kink the connector tube.

NOTE: The factory fuel injection electrical harness is numerically tagged (INJ 1, INJ 2, etc.) for injector position identification. If the electrical harness is not tagged, note the injector position before electrical harness removal.

7. Disconnect the electrical connectors at all eight fuel injectors. Push the red colored slider away from the injector (1) while pushing slider, depress tab (2) and remove the electrical connector (3) from the injector.

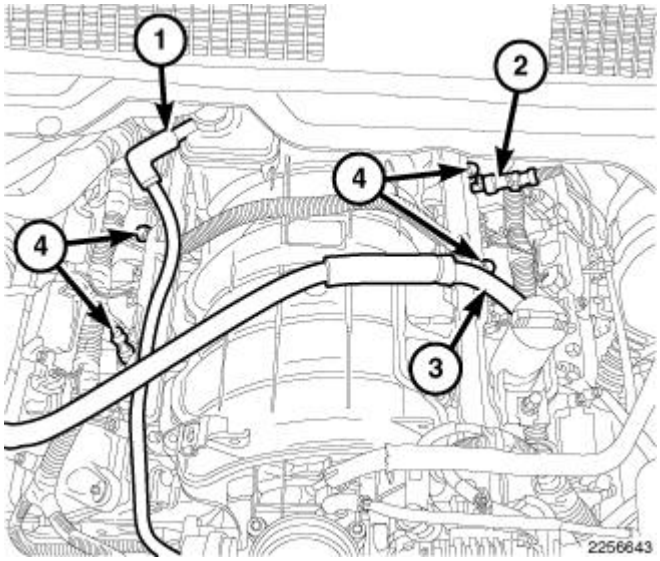

Fig. 184: PCV Hose & Fuel Line Quick Connect Fitting
Courtesy of CHRYSLER GROUP, LLC

8. Disconnect the PCV hose (1) and position aside to gain access to the fuel rail.
9. Disconnect the fuel line quick connect fitting (2) at the fuel rail. Refer to **STANDARD PROCEDURE - QUICK-CONNECT FITTINGS**. .
10. Disconnect the make up air hose (3) and position aside to gain access to the fuel rail.
11. Remove the four fuel rail mounting bolts (4) from both the left and right fuel rails.
12. Using a side to side motion, gently rock the left fuel rail while pulling up until all four left side fuel injectors just start to clear the machined holes in the intake manifold.
13. Using a side to side motion, gently rock the right fuel rail while pulling up until all four right side fuel injectors just start to clear the machined holes in the intake manifold.

NOTE: Make sure the O-rings are still attached to the fuel injectors during removal.

14. Remove the left and right fuel rails (with injectors attached) as an assembly from the engine.

NOTE: If the same fuel injectors are to be reinstalled, install new O-rings.

15. If the fuel injectors are to be removed from the fuel rail. Refer to **INJECTOR(S), FUEL, REMOVAL**.

INSTALLATION

3.7L

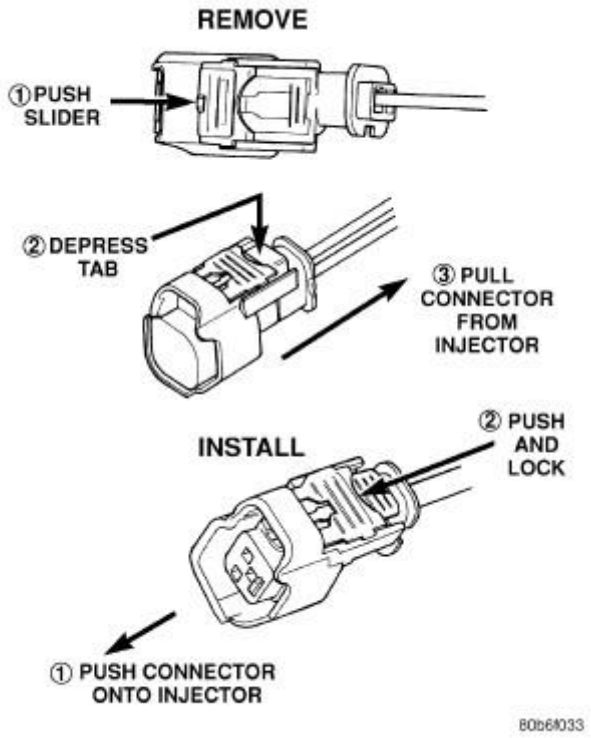

Fig. 185: Removing/Installing Injector Connector
Courtesy of CHRYSLER GROUP, LLC

1. If fuel injectors are to be installed. Refer to **INJECTOR(S), FUEL, INSTALLATION**.
2. Clean out fuel injector machined bores in intake manifold.
3. Apply a small amount of engine oil to each fuel injector O-ring. This will help in fuel rail installation.
4. Position fuel rail/fuel injector assembly to machined injector openings in cylinder head.
5. Guide each injector into cylinder head. Be careful not to tear injector O-rings.
6. Push **right** side of fuel rail down until fuel injectors have bottomed on cylinder head shoulder. Push **left** fuel rail down until injectors have bottomed on cylinder head shoulder.
7. Install 4 fuel rail mounting bolts and tighten. Refer to **SPECIFICATIONS**. .
8. Install 6 ignition coils. Refer to **COIL, IGNITION, INSTALLATION** .
9. Connect electrical connectors to throttle body.
10. Connect electrical connectors at all fuel injectors. To install connector. Refer to **Fig. 185**. Push connector onto injector (1) and then push and lock red colored slider (2). Verify connector is locked to injector by lightly tugging on connector.
11. Connect necessary vacuum lines to throttle body.
12. Install air resonator mounting bracket near front of throttle body (2 bolts).
13. Connect fuel line latch clip and fuel line to fuel rail. Refer to **STANDARD PROCEDURE - QUICK-CONNECT FITTINGS**. .
14. Install air box to throttle body.
15. Install air duct to air box.

16. Connect battery cable to battery.
17. Start engine and check for leaks.

4.7L

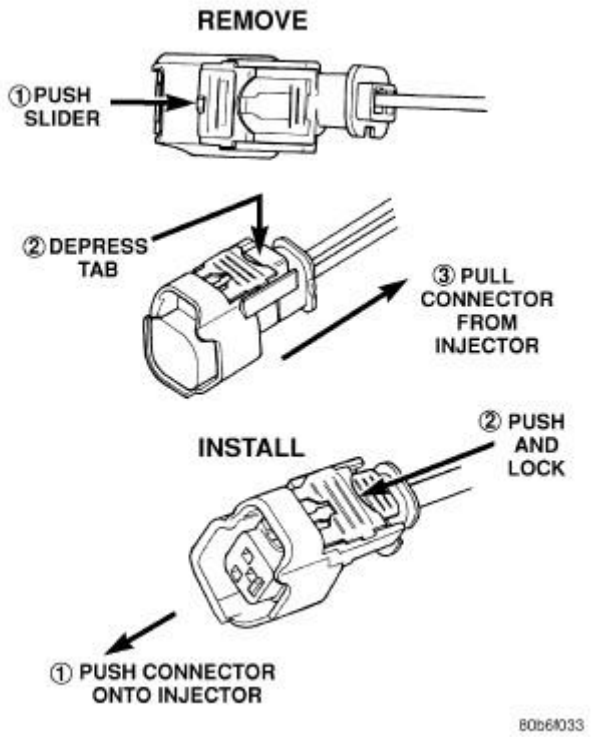

Fig. 186: Removing/Installing Injector Connector
Courtesy of CHRYSLER GROUP, LLC

1. If fuel injectors are to be installed. Refer to **INJECTOR(S), FUEL, INSTALLATION**.
2. Clean out fuel injector machined bores in intake manifold.
3. Apply a small amount of engine oil to each fuel injector O-ring. This will help in fuel rail installation.
4. Position fuel rail/fuel injector assembly to machined injector openings in cylinder head.
5. Guide each injector into cylinder head. Be careful not to tear injector O-rings.
6. Push **right** side of fuel rail down until fuel injectors have bottomed on cylinder head shoulder. Push **left** fuel rail down until injectors have bottomed on cylinder head shoulder.
7. Install 4 fuel rail mounting bolts and tighten. Refer to **SPECIFICATIONS**. .
8. Install 8 ignition coils. Refer to **COIL, IGNITION, INSTALLATION** .
9. Connect electrical connectors to throttle body.
10. Connect electrical connectors at all fuel injectors. To install connector. Refer to **Fig. 186**. Push connector onto injector (1) and then push and lock red colored slider (2). Verify connector is locked to injector by lightly tugging on connector.
11. Connect necessary vacuum lines to throttle body.

12. Install air resonator mounting bracket near front of throttle body (2 bolts).
13. Connect fuel line latch clip and fuel line to fuel rail. Refer to **STANDARD PROCEDURE - QUICK-CONNECT FITTINGS**. .
14. Install air box to throttle body.
15. Install air duct to air box.
16. Connect battery cable to battery.
17. Start engine and check for leaks.

5.7L

1. If the fuel injectors are to be installed into the fuel rail. Refer to **INJECTOR(S), FUEL, INSTALLATION**.
2. Clean out the fuel injector machined holes in the intake manifold.

NOTE: If the same fuel injectors are to be reinstalled, install new O-rings.

3. Apply a small amount of engine oil to each fuel injector O-ring. This will help in the fuel rail installation.
4. Position the fuel rail assembly while aligning the injectors into the machined holes in the intake manifold.
5. Guide each injector into the intake manifold using care not to tear the injector O-rings.
6. Using a side to side motion, gently rock the left fuel rail while pushing down until all four left side fuel injectors have completely seated into the machined holes in the intake manifold.
7. Using a side to side motion, gently rock the right fuel rail while pushing down until all four right side fuel injectors have completely seated into the machined holes in the intake manifold.

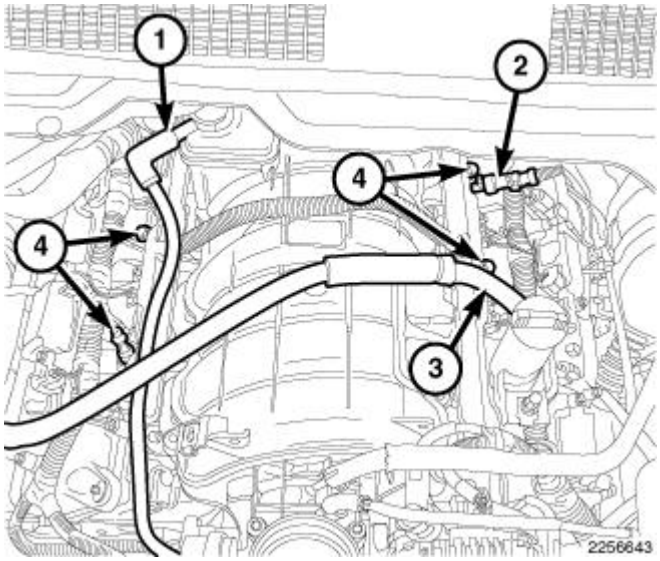

Fig. 187: PCV Hose & Fuel Line Quick Connect Fitting
Courtesy of CHRYSLER GROUP, LLC

8. Install the four fuel rail mounting bolts (4) and tighten to 11 N.m (8 ft. lbs.).
9. Connect the make up air hose (3).

10. Connect the fuel line quick connect fitting to the fuel rail (2). Refer to **STANDARD PROCEDURE - QUICK-CONNECT FITTINGS**. .
11. Connect the PCV hose (1).

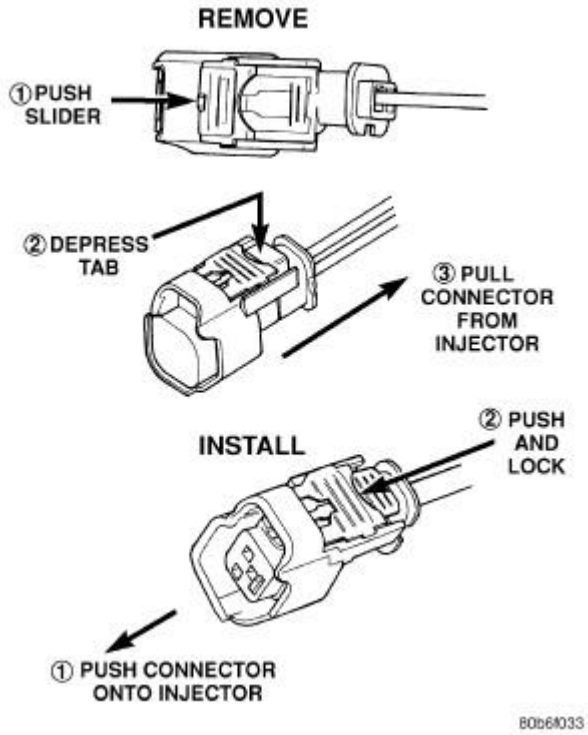

Fig. 188: Removing/Installing Fuel Injector Connector
Courtesy of CHRYSLER GROUP, LLC

12. Connect the electrical connectors to all eight fuel injectors. Push the connector onto the injector (1) and then push and lock the red colored slider (2). Verify the connector is locked to the injector by lightly tugging on the connector.

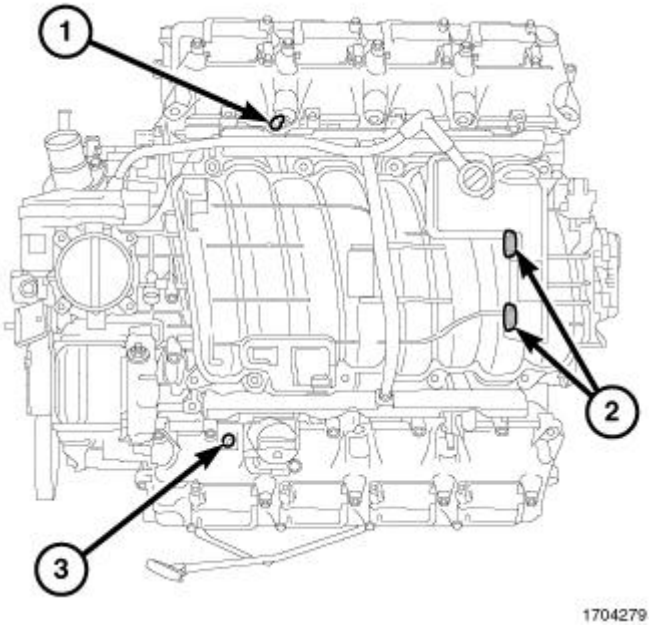

Fig. 189: Engine Cover Mounts
Courtesy of CHRYSLER GROUP, LLC

NOTE: **The front grommets (1, 3) are a ball stud type mount and the rear grommets (2) are a sliding peg design.**

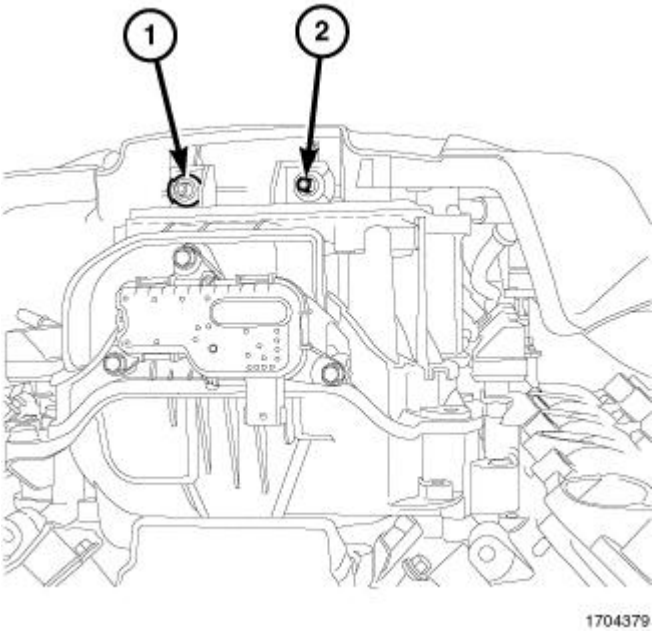

Fig. 190: Engine Cover Pegs & Grommets
Courtesy of CHRYSLER GROUP, LLC

13. Slightly tilt the rear of the engine cover and slide the rear engine cover pegs (2) into the grommets (1) on

the rear of the intake manifold until the cover stops.

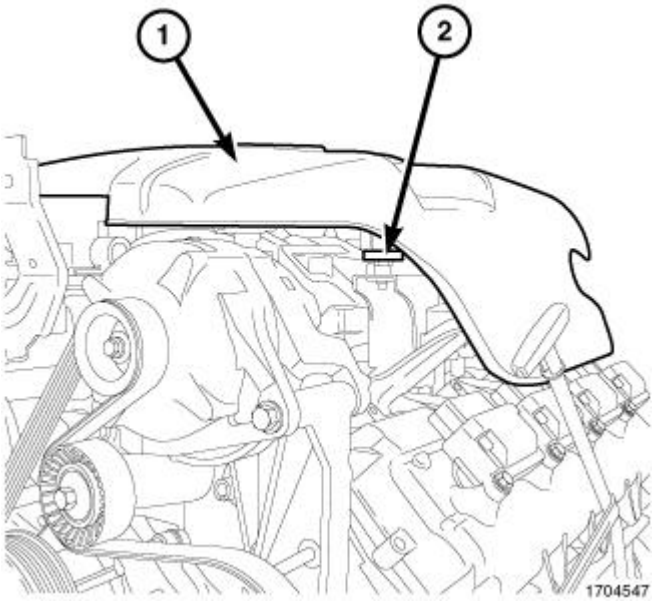

Fig. 191: Engine Cover & Grommets
Courtesy of CHRYSLER GROUP, LLC

NOTE: While installing the engine cover, the front ball studs will make a popping or suction sound as the ball studs are inserted into the front grommets.

14. Lower the front of the engine cover (1) and line up the front ball studs with the grommets (2) on the front of the intake manifold and with a downward motion push the engine cover front grommets onto the ball studs.
15. Lightly lift the front of the engine cover to insure the front the front grommets are seated onto the ball studs correctly.

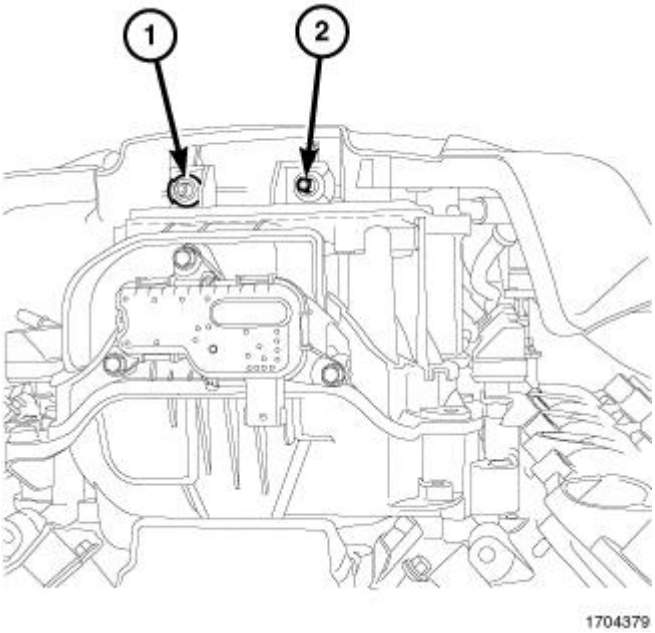

Fig. 192: Engine Cover Pegs & Grommets
Courtesy of CHRYSLER GROUP, LLC

16. Check to insure the engine cover is installed properly by reaching behind the left side of the cover to verify that the pegs (2) are located in the grommets (1).

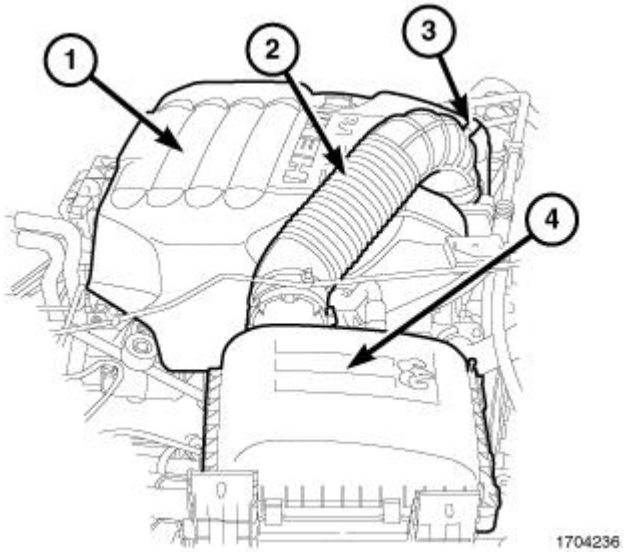

Fig. 193: Engine Cover, Clean Air Hose, Intake Air Temperature (IAT) Sensor Electrical Connector & Air Cleaner Housing
Courtesy of CHRYSLER GROUP, LLC

17. Install the clean air tube (2) onto the air cleaner housing (4) and the throttle body.
18. Connect the IAT sensor electrical connector (3).
19. Connect the negative battery cable.

20. Start the engine and check for leaks.

REGULATOR, FUEL PRESSURE

DESCRIPTION

DESCRIPTION

The fuel pressure regulator is located in the fuel pump module assembly and is non-serviceable.

SENDING UNIT AND SENSOR, FUEL LEVEL

DESCRIPTION

DESCRIPTION

The fuel gauge sending unit (fuel level sensor) is attached to the fuel pump module. The sending unit consists of a float, an arm, and a variable resistor track (card).

The sensor is non-servicable. If replacement is necessary, the fuel pump module assembly must be replaced.

TANK, FUEL

REMOVAL

REMOVAL

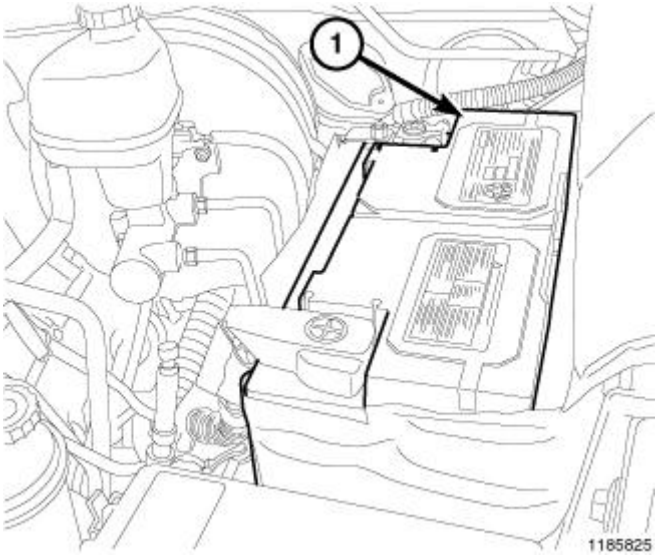

Fig. 194: Battery
Courtesy of CHRYSLER GROUP, LLC

WARNING: The fuel system may be under a constant pressure (even with the engine off). Before servicing the fuel pump module, the fuel system pressure

must be released.

1. Perform the fuel system pressure release procedure. Refer to **FUEL SYSTEM PRESSURE RELEASE**. .
2. Disconnect and isolate the negative battery cable (1).

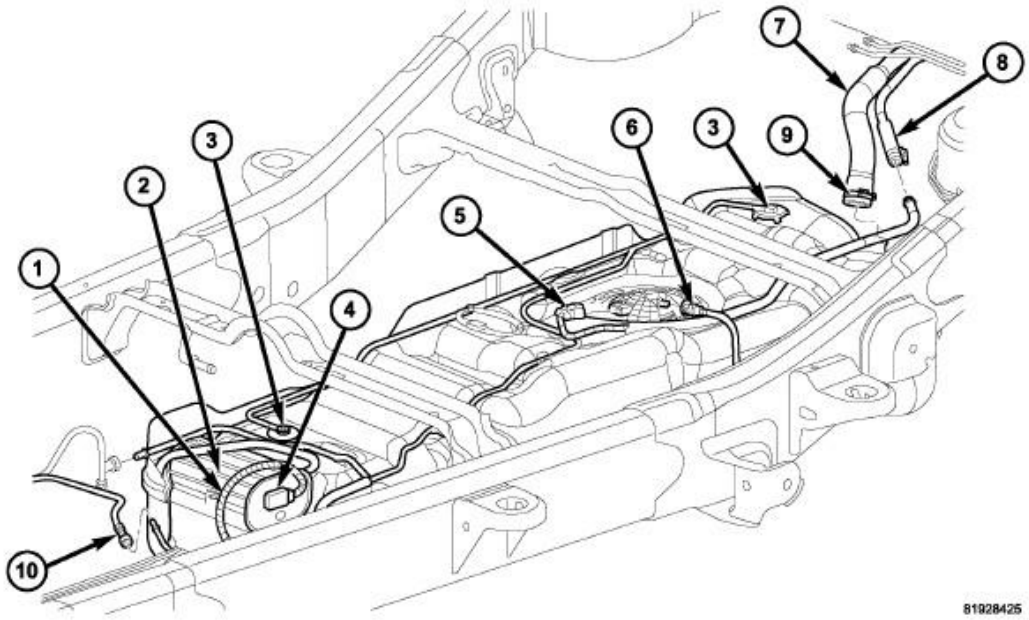

Fig. 195: Fuel Tank, Connectors, Fittings, Hoses & Clamps
Courtesy of CHRYSLER GROUP, LLC

3. Raise and support vehicle.
4. Perform the fuel tank draining procedure. Refer to **DRAINING FUEL TANK**. .
5. Disconnect the electrical connector from ESIM switch (4).
6. Disconnect the quick-connect fitting at the front of the fuel tank (10).
7. Disconnect the quick-connect fitting (8) at the rear of the fuel tank.
8. Loosen the fill hose retaining clamp (9) at the rear of the fuel tank and disconnect the fill hose.
9. Using a suitable hydraulic jack with a fuel tank adapter, support the fuel tank.

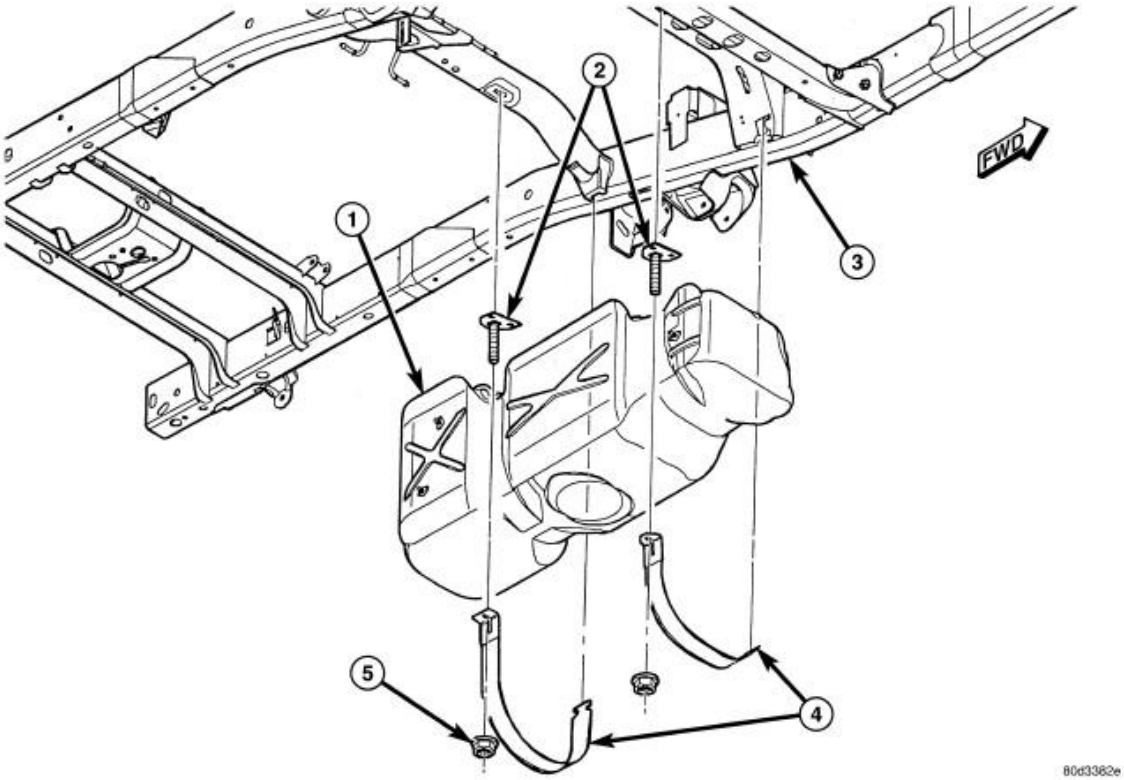

Fig. 196: Fuel Tank Mounting
Courtesy of CHRYSLER GROUP, LLC

10. Remove the two fuel tank support strap retaining nuts (5) and remove both fuel tank support straps (4).
11. Carefully lower the fuel tank a few inches and disconnect the fuel pump module electrical connector.
12. Disconnect the fuel line quick-connect fitting at the fuel pump module.
13. Lower the fuel tank and remove from hydraulic jack.
14. If fuel pump module removal is necessary, refer to **MODULE, FUEL PUMP, REMOVAL**.

INSTALLATION

INSTALLATION

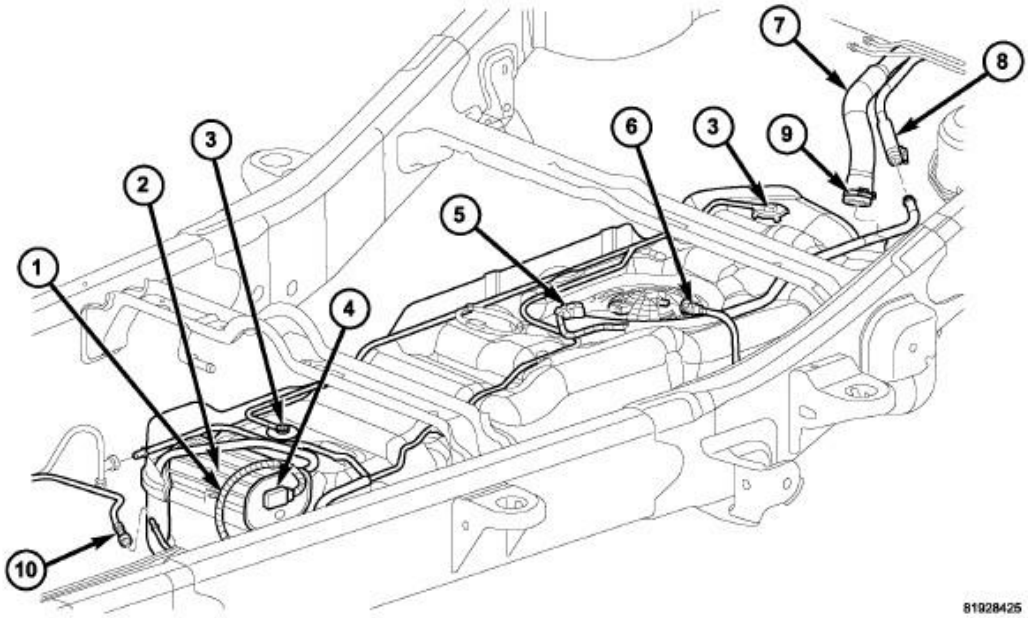

Fig. 197: Fuel Tank, Connectors, Fittings, Hoses & Clamps
Courtesy of CHRYSLER GROUP, LLC

1. If fuel pump module installation is necessary, refer to **MODULE, FUEL PUMP, INSTALLATION**.
2. Secure the fuel tank onto a suitable hydraulic jack with a fuel tank adapter.
3. Raise and position the fuel tank leaving room to make the connections at the top of the fuel tank.
4. Connect the fuel supply line (6) to the fuel pump module.
5. Connect the electrical connector (5) to the fuel pump module.

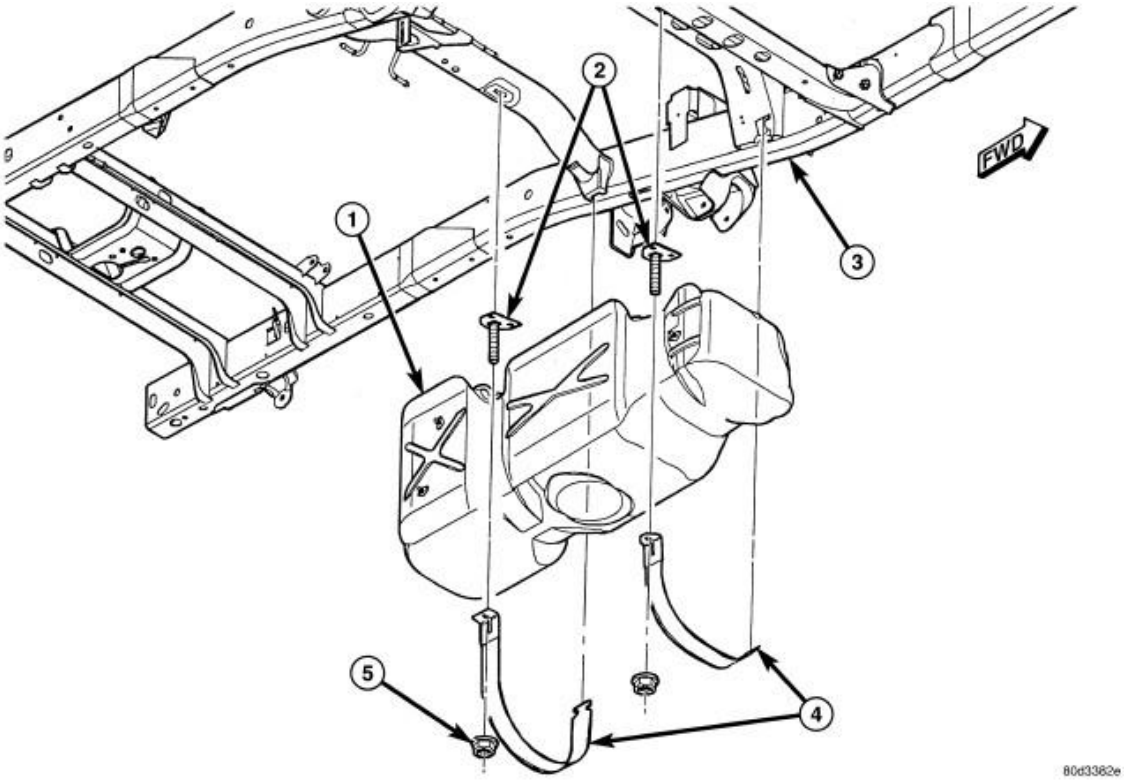

Fig. 198: Fuel Tank Mounting
Courtesy of CHRYSLER GROUP, LLC

6. Raise the fuel tank (1) until snug to the body.
7. Install the fuel tank straps (4).
8. Install the strap nuts (5) and tighten to 41 N.m (30 ft. lbs.).
9. Remove the hydraulic jack.

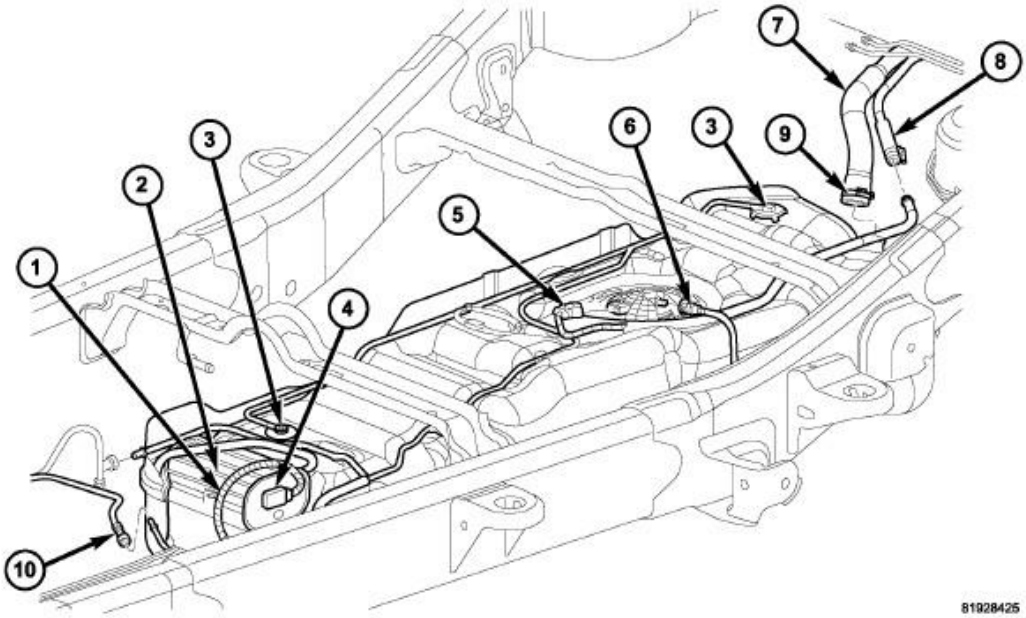

Fig. 199: Fuel Tank, Connectors, Fittings, Hoses & Clamps
Courtesy of CHRYSLER GROUP, LLC

10. Connect the electrical connector to the ESIM switch (4).
11. Connect the quick-connect fitting at the front of the fuel tank (10).
12. Connect the quick-connect fitting (8) at the rear of the fuel tank.
13. Connect the fill hose (7) at the rear of the fuel tank and securely tighten the fill hose retaining clamp (9).

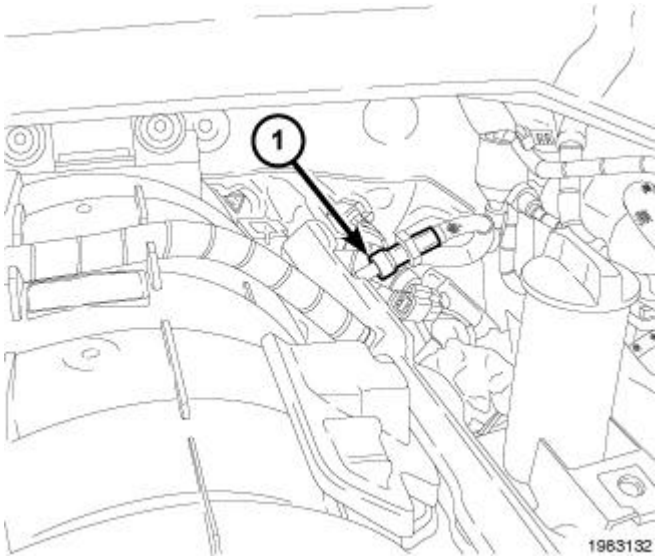

Fig. 200: Fuel Supply Line Quick Connect Fitting At Fuel Rail
Courtesy of CHRYSLER GROUP, LLC

14. Connect the fuel line quick-connect fitting at the fuel rail (1).

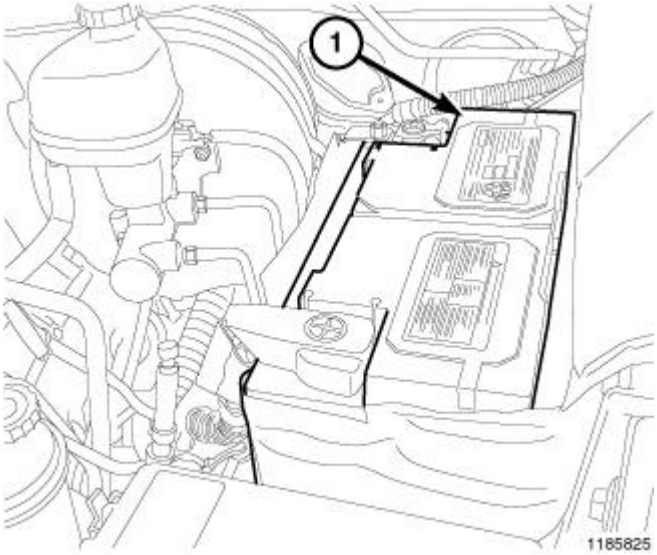

Fig. 201: Battery
Courtesy of CHRYSLER GROUP, LLC

15. Connect the negative battery cable (1).
16. Fill the fuel tank.
17. Start the engine and check for leaks at all fuel tank connections.

TUBE(S), FUEL

DESCRIPTION

DESCRIPTION

Also, refer to **STANDARD PROCEDURE - QUICK-CONNECT FITTINGS**.

> WARNING: **The fuel system may be under a constant pressure (even with the engine off). Before servicing any fuel system hoses, fittings, lines, or most components, fuel system pressure must be released. Refer to FUEL SYSTEM PRESSURE RELEASE.**

The lines/tubes/hoses used on fuel injected vehicles are of a special construction. This is due to the higher fuel pressures and the possibility of contaminated fuel in this system. If it is necessary to replace these lines/tubes/hoses, only those marked EFM/EFI may be used.

If equipped: The hose clamps used to secure rubber hoses on fuel injected vehicles are of a special rolled edge construction. This construction is used to prevent the edge of the clamp from cutting into the hose. Only these rolled edge type clamps may be used in this system. All other types of clamps may cut into the hoses and cause high-pressure fuel leaks.

Use new original equipment type hose clamps.

FUEL INJECTION, GAS

OPERATION

FUEL ECONOMY AND MAINTENANCE

A vehicle that is not properly tuned and maintained cannot be expected to perform at its maximum efficiency and can have an adverse effect on fuel economy. The following recommendations will ensure that the vehicle is performing at its maximum efficiency:

- **Use the recommended motor oil grade.** Using the manufacturer's recommended grade of Mopar® motor oil can improve fuel mileage by 1-2%. Mopar® motor oil labeled "Energy Conserving" contains friction-reducing additives.
- **Check and replace air filters.** Replacing a clogged air filter with a new Mopar® air filter can improve fuel mileage by as much as 10%.
- **Keep the engine tuned.** Repairing a vehicle that is noticeably out of tune can improve fuel mileage by an average of 4%. Maintaining a vehicle and repairing problems, such as a faulty oxygen sensor, can improve mileage by as much as 40%.
- **Keep tires properly inflated.** Underinflated tires can lower fuel mileage by 0.4% for every 1 psi drop in pressure of all four tires.

INJECTOR(S), FUEL

DESCRIPTION

DESCRIPTION

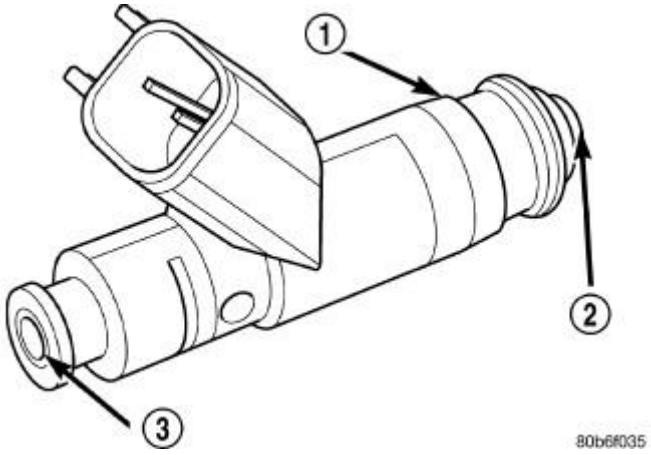

Fig. 202: Fuel Injector
Courtesy of CHRYSLER GROUP, LLC

1 - FUEL INJECTOR
2 - NOZZLE

3 - TOP (FUEL ENTRY)

An individual fuel injector (1) is used for each individual cylinder. Refer to **Fig. 202**.

OPERATION

FUEL INJECTOR

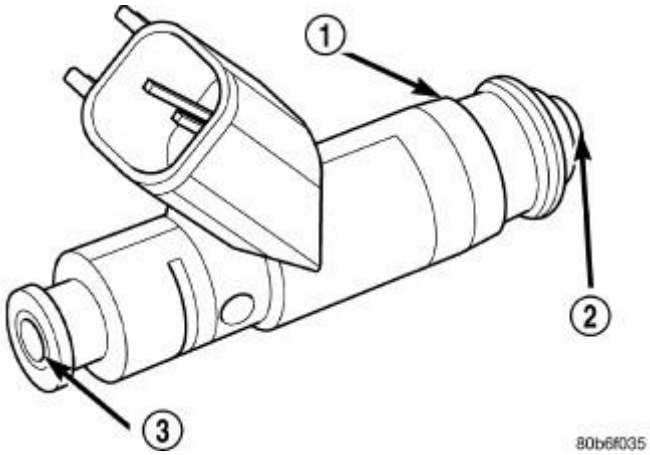

Fig. 203: Fuel Injector
Courtesy of CHRYSLER GROUP, LLC

1 - FUEL INJECTOR
2 - NOZZLE
3 - TOP (FUEL ENTRY)

The top (fuel entry) end of the injector (1) is attached into an opening on the fuel rail. Refer to **Fig. 203**.

The fuel injectors are electrical solenoids. The injector contains a pintle that closes off an orifice at the nozzle end. When electric current is supplied to the injector, the armature and needle move a short distance against a spring, allowing fuel to flow out the orifice. Because the fuel is under high pressure, a fine spray is developed in the shape of a pencil stream. The spraying action atomizes the fuel, adding it to the air entering the combustion chamber.

The nozzle (outlet) ends of the injectors are positioned into openings in the intake manifold just above the intake valve ports of the cylinder head. The engine wiring harness connector for each fuel injector is equipped with an attached numerical tag (INJ 1, INJ 2 etc.). This is used to identify each fuel injector.

The injectors are energized individually in a sequential order by the Powertrain Control Module (PCM). The PCM will adjust injector pulse width by switching the ground path to each individual injector on and off. Injector pulse width is the period of time that the injector is energized. The PCM will adjust injector pulse width based on various inputs it receives.

Battery voltage is supplied to the injectors through the ASD relay.

The PCM determines injector pulse width based on various inputs.

PCM OUTPUT

The nozzle ends of the injectors are positioned into openings in the intake manifold just above the intake valve ports of the cylinder head. The engine wiring harness connector for each fuel injector is equipped with an attached numerical tag (INJ 1, INJ 2 etc.). This is used to identify each fuel injector with its respective cylinder number.

The injectors are energized individually in a sequential order by the Powertrain Control Module (PCM). The PCM will adjust injector pulse width by switching the ground path to each individual injector on and off. Injector pulse width is the period of time that the injector is energized. The PCM will adjust injector pulse width based on various inputs it receives.

Battery voltage (12 volts +) is supplied to the injectors through the ASD relay. The ASD relay will shut-down the 12 volt power source to the fuel injectors if the PCM senses the ignition is on, but the engine is not running. This occurs after the engine has not been running for approximately 1.8 seconds.

The PCM determines injector on-time (pulse width) based on various inputs.

REMOVAL

3.7L/4.7L

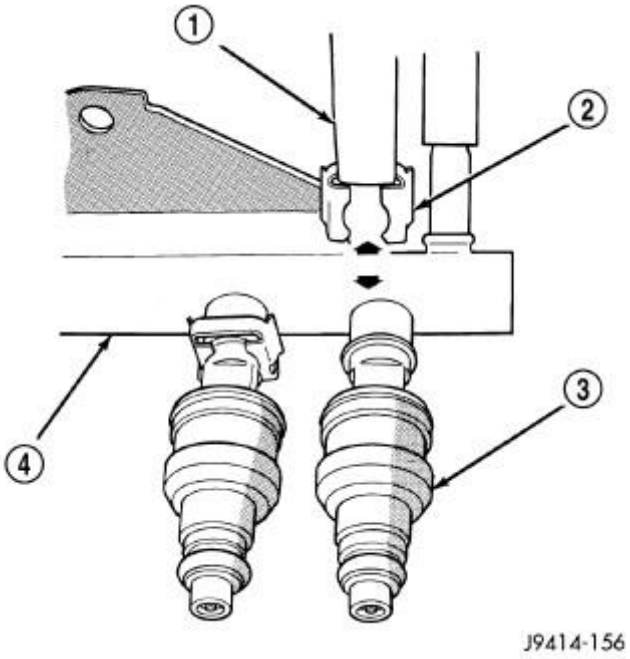

Fig. 204: Injector Retaining Clip
Courtesy of CHRYSLER GROUP, LLC

1 - PLIERS

2 - INJECTOR CLIP
3 - FUEL INJECTOR - TYPICAL
4 - FUEL RAIL - TYPICAL

1. Remove the fuel rail assembly. Refer to **RAIL, FUEL, REMOVAL**.
2. Using suitable pliers (1), remove the fuel injector retaining clip (2).
3. Remove the fuel injector (3) from the fuel rail (4) using a side to side motion while pulling the injector out of the fuel rail assembly.

5.7L

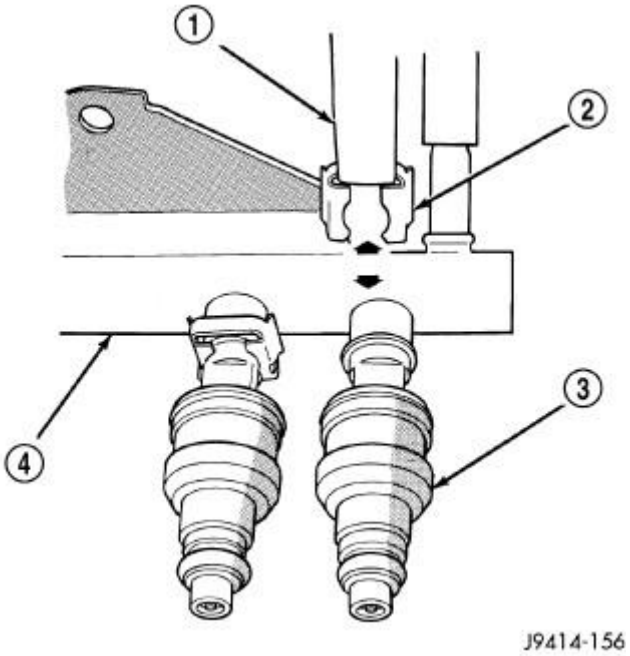

Fig. 205: Injector Retaining Clip
Courtesy of CHRYSLER GROUP, LLC

1 - PLIERS
2 - INJECTOR CLIP
3 - FUEL INJECTOR - TYPICAL
4 - FUEL RAIL - TYPICAL

1. Remove the fuel rail assembly. Refer to **RAIL, FUEL, REMOVAL**.
2. Using suitable pliers (1), remove the fuel injector retaining clip (2).
3. Remove the fuel injector (3) from the fuel rail (4) using a side to side motion while pulling the injector out of the fuel rail assembly.

INSTALLATION

3.7L/4.7L

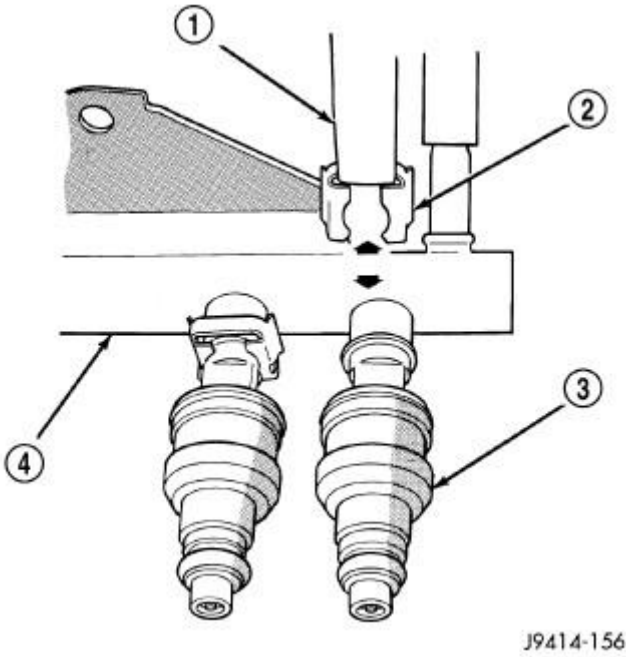

Fig. 206: Injector Retaining Clip
Courtesy of CHRYSLER GROUP, LLC

1 - PLIERS
2 - INJECTOR CLIP
3 - FUEL INJECTOR - TYPICAL
4 - FUEL RAIL - TYPICAL

NOTE: **If the same fuel injector is to be reinstalled, install new O-rings.**

NOTE: **Apply a small amount of clean engine oil to each injector O-ring. This will aid in the installation.**

1. Install the fuel injector (3) into the fuel rail (4) using a side to side motion while pushing injector into the fuel rail assembly.
2. Using suitable pliers (1), install the fuel injector retaining clip (2).
3. Install the fuel rail assembly. Refer to **RAIL, FUEL, INSTALLATION**.
4. Start the engine and check for fuel leaks.

5.7L

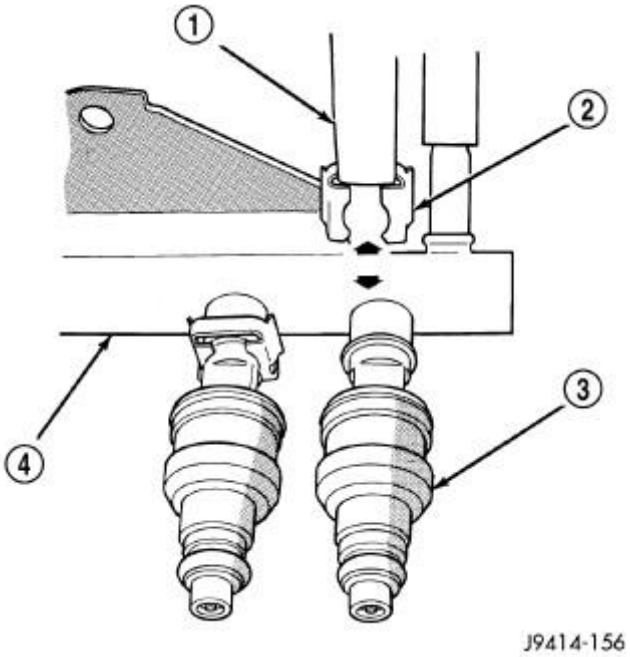

Fig. 207: Injector Retaining Clip
Courtesy of CHRYSLER GROUP, LLC

1 - PLIERS
2 - INJECTOR CLIP
3 - FUEL INJECTOR - TYPICAL
4 - FUEL RAIL - TYPICAL

NOTE: **If the same fuel injector is to be reinstalled, install new O-rings.**

NOTE: **Apply a small amount of clean engine oil to each injector O-ring. This will aid in the installation.**

1. Install the fuel injector (3) into the fuel rail (4) using a side to side motion while pushing injector into the fuel rail assembly.
2. Using suitable pliers (1), install the fuel injector retaining clip (2).
3. Install the fuel rail assembly. Refer to **RAIL, FUEL, INSTALLATION**.
4. Start the engine and check for fuel leaks.

PEDAL, ACCELERATOR

REMOVAL

REMOVAL

CAUTION: Do not attempt to separate or remove the Accelerator Pedal Position

Sensor (APPS) from the accelerator pedal assembly. The APPS and the accelerator pedal is replaced as an assembly. If the sensor is removed from the pedal, the electronic calibration may be destroyed.

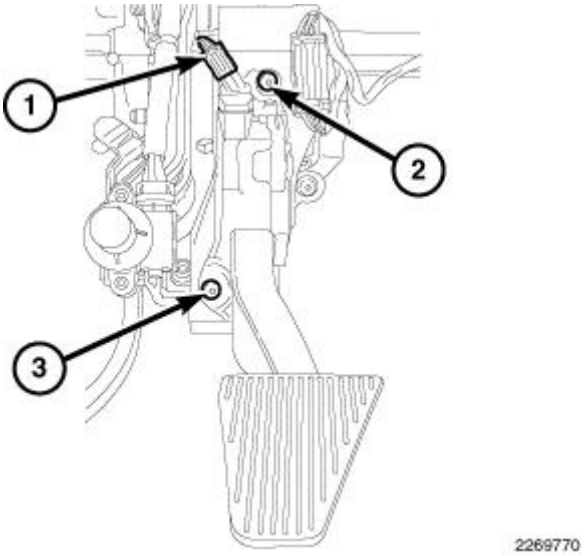

Fig. 208: Accelerator Pedal Position Sensor (APPS)
Courtesy of CHRYSLER GROUP, LLC

1. Disconnect the 6-way electrical connector at the APPS (1).
2. Remove the upper accelerator pedal mounting bolt (2).
3. Remove the lower accelerator pedal mounting bolt (3).
4. Remove the accelerator pedal assembly from the vehicle.

INSTALLATION

INSTALLATION

CAUTION: Do not attempt to separate or remove the Accelerator Pedal Position Sensor (APPS) from the accelerator pedal assembly. The APPS and the accelerator pedal is replaced as an assembly. If the sensor is removed from the pedal, the electronic calibration may be destroyed.

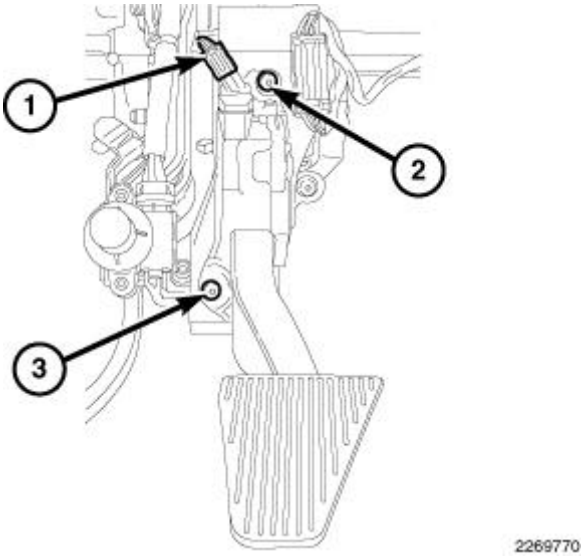

Fig. 209: Accelerator Pedal Position Sensor (APPS)
Courtesy of CHRYSLER GROUP, LLC

1. Position the accelerator pedal assembly on the pedal sled.
2. Install the lower accelerator pedal mounting bolt (3) and tighten to 7 N.m (5 ft. lbs.).
3. Install the upper accelerator pedal mounting bolt (2) 7 N.m (5 ft. lbs.).
4. Connect the 6-way electrical connector at the APPS (1).
5. If necessary, use a Scan Tool to erase any Diagnostic Trouble Codes (DTC's).

RELAY, FUEL PUMP

DESCRIPTION

DESCRIPTION

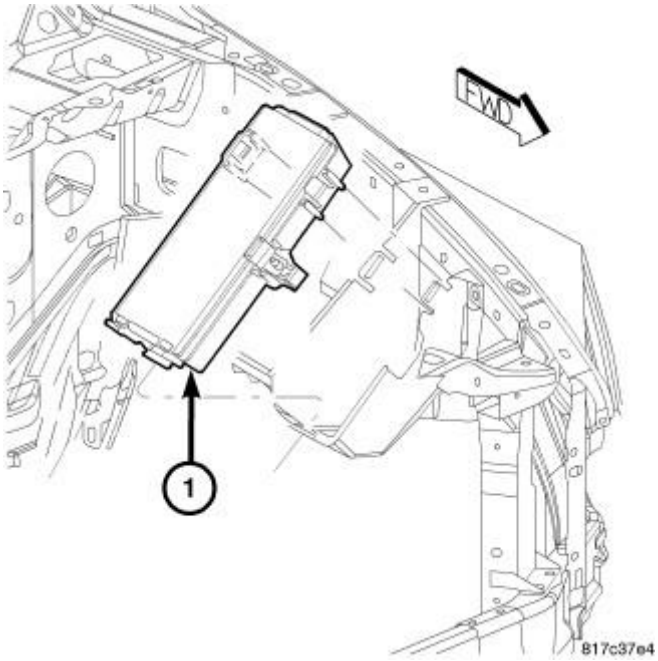

Fig. 210: TIPM Location
Courtesy of CHRYSLER GROUP, LLC

1 - TIPM Location

A separate fuel pump relay is no longer used. A circuit within the TIPM (Totally Integrated Power Module) is used to control the electric fuel pump located within the fuel pump module. The TIPM (1) is located in the engine compartment in front of the battery.

OPERATION

OPERATION

The Powertrain Control Module (PCM) energizes the electric fuel pump through the fuel pump relay. The fuel pump relay is energized by first applying battery voltage to it when the ignition key is turned ON, and then applying a ground signal to the relay from the PCM.

Whenever the ignition key is turned ON, the electric fuel pump will operate. But, the PCM will shut-down the ground circuit to the fuel pump relay in approximately 1-3 seconds unless the engine is operating or the starter motor is engaged.

SENSOR, ACCELERATOR PEDAL POSITION

DESCRIPTION

DESCRIPTION

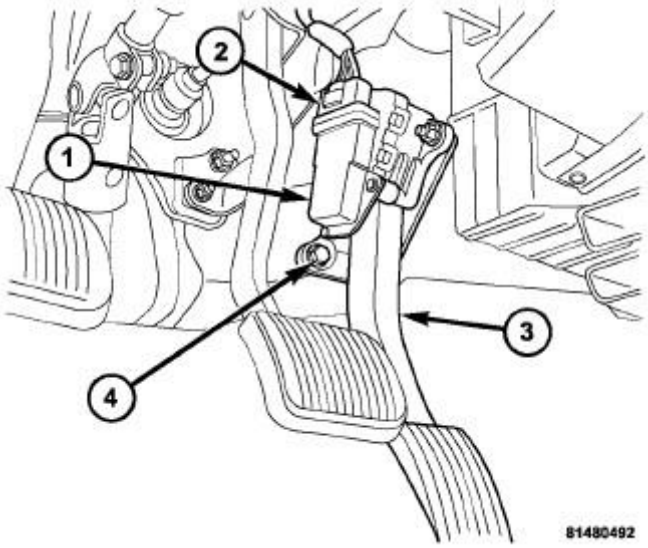

Fig. 211: Accelerator Pedal Position Sensor
Courtesy of CHRYSLER GROUP, LLC

1 - APPS
2 - APPS 6-Way Electrical Connector
3 - Accelerator Pedal
4 - Mounting Bolts/Nuts

The Accelerator Pedal Position Sensor (APPS) (1) is located inside the vehicle. It is attached to the accelerator pedal assembly (3). It is used only with 3.7L V-6 and 5.7L V-8 gas engines.

OPERATION

OPERATION

The Accelerator Pedal Position Sensor (APPS) provides the Powertrain Control Module (PCM) with two DC voltage signals which change as the position of the accelerator pedal changes. One of the DC voltage signals will be half the voltage of the other signal.

REMOVAL

REMOVAL

CAUTION: Do not attempt to separate or remove the Accelerator Pedal Position Sensor (APPS) from the accelerator pedal assembly. The APPS and the accelerator pedal is replaced as an assembly. If the sensor is removed from the pedal, the electronic calibration may be destroyed.

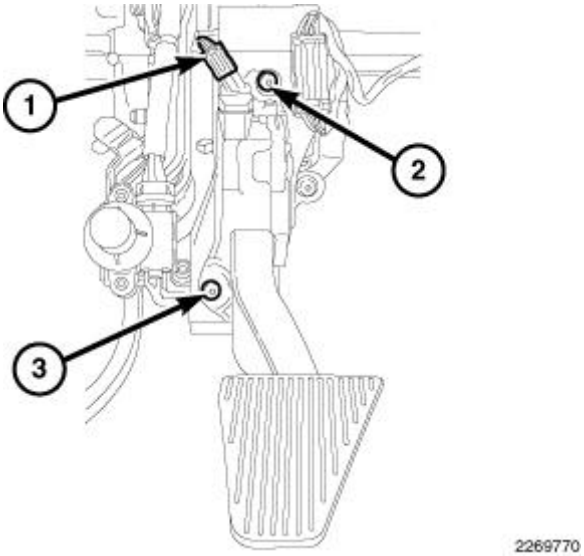

Fig. 212: Accelerator Pedal Position Sensor (APPS)
Courtesy of CHRYSLER GROUP, LLC

1. Remove the accelerator pedal assembly. Refer to **PEDAL, ACCELERATOR, REMOVAL**.

INSTALLATION

INSTALLATION

CAUTION: Do not attempt to separate or remove the Accelerator Pedal Position Sensor (APPS) from the accelerator pedal assembly. The APPS and the accelerator pedal is replaced as an assembly. If the sensor is removed from the pedal, the electronic calibration may be destroyed.

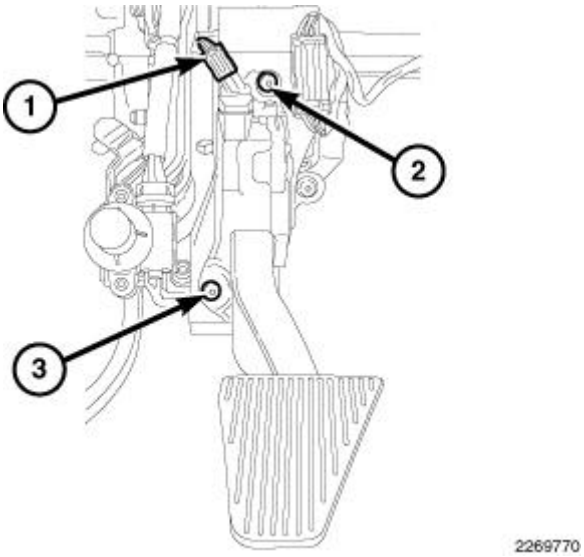

Fig. 213: Accelerator Pedal Position Sensor (APPS)
Courtesy of CHRYSLER GROUP, LLC

1. Install the accelerator pedal assembly. Refer to **PEDAL, ACCELERATOR, INSTALLATION**.
2. If necessary, use a Scan Tool to erase any Diagnostic Trouble Codes (DTC's).

SENSOR, AIR TEMPERATURE, INTAKE

OPERATION

OPERATION

The IAT sensor provides an input voltage to the Powertrain Control Module (PCM) indicating the density of the air entering the intake manifold based upon intake manifold temperature. At key-on, a 5-volt power circuit is supplied to the sensor from the PCM. The sensor is grounded at the PCM through a low-noise, sensor-return circuit.

The PCM uses this input to calculate the following:

- Injector pulse-width
- Adjustment of spark timing (to help prevent spark knock with high intake manifold air-charge temperatures)

The resistance values of the IAT sensor is the same as for the Engine Coolant Temperature (ECT) sensor.

REMOVAL

3.7L

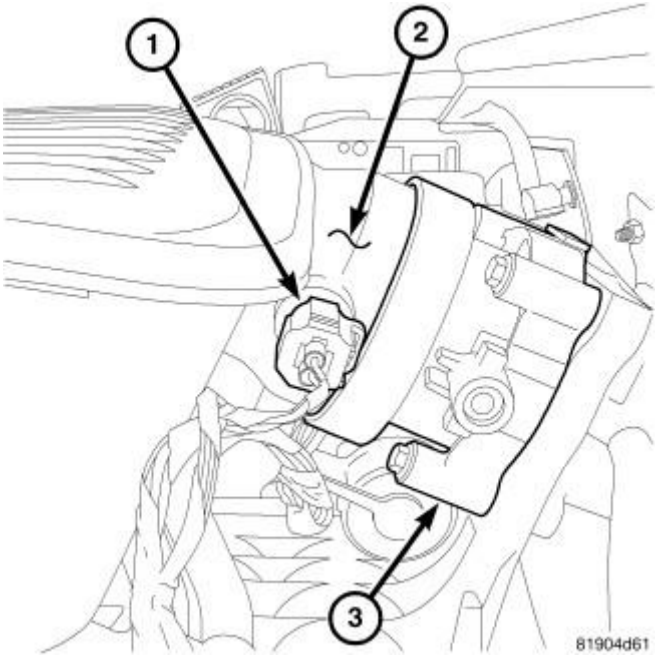

Fig. 214: IAT Sensor - 3.7L
Courtesy of CHRYSLER GROUP, LLC

The intake manifold air temperature (IAT) sensor (1) is installed into the air intake tube near the throttle body (2).

1. Disconnect electrical connector (1) from IAT sensor.
2. Clean dirt from intake tube at sensor base.

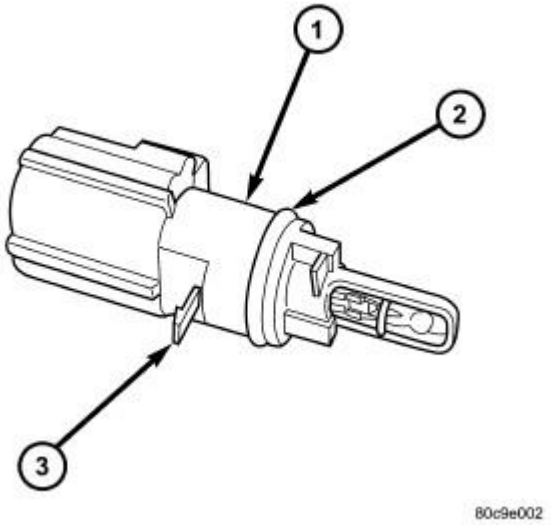

Fig. 215: IAT Sensor Tab/O-Ring
Courtesy of CHRYSLER GROUP, LLC

1 - IAT SENSOR
2 - SENSOR O-RING
3 - RELEASE TAB

3. Gently lift on small plastic release tab (3) and rotate sensor about 1/4 turn counter-clockwise for removal.
4. Check condition of sensor o-ring (2).

4.7L

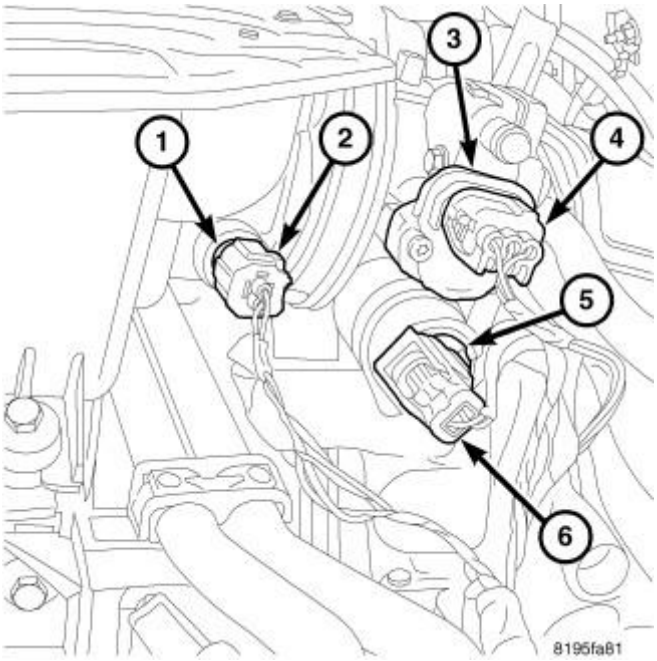

Fig. 216: IAT Sensor - 4.7L
Courtesy of CHRYSLER GROUP, LLC

The intake manifold air temperature (IAT) sensor (1) is located near the throttle body.

1. Disconnect electrical connector (2) from IAT sensor.

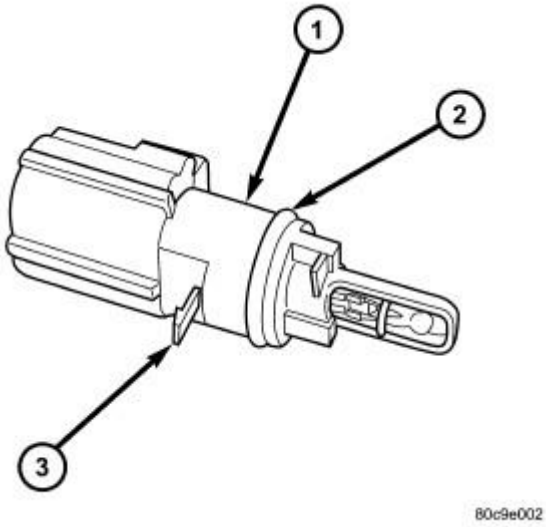

Fig. 217: IAT Sensor Tab/O-Ring
Courtesy of CHRYSLER GROUP, LLC

1 - IAT SENSOR
2 - SENSOR O-RING

3 - RELEASE TAB

2. Clean dirt from sensor base.
3. Gently lift on small plastic release tab (3) and rotate sensor about 1/4 turn counter-clockwise for removal.
4. Check condition of sensor o-ring (2).

5.7L

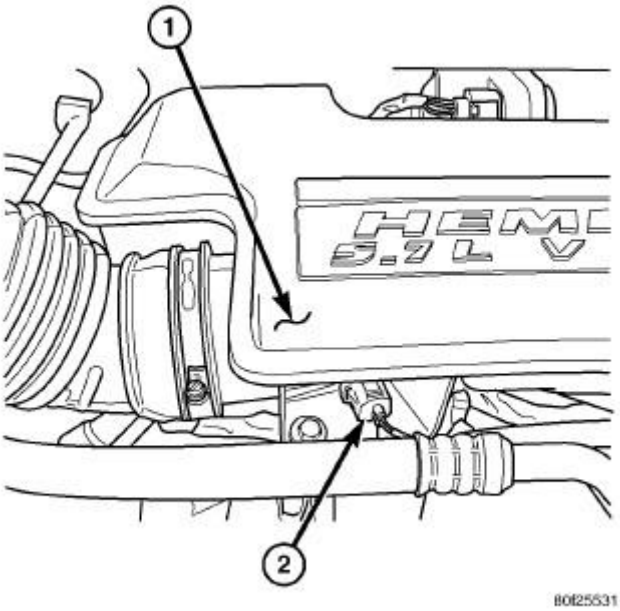

Fig. 218: IAT Sensor - 5.7L
Courtesy of CHRYSLER GROUP, LLC

1 - FRONT OF INTAKE MANIFOLD PLENUM
2 - IAT ELECTRICAL CONNECTOR

The intake manifold air temperature (IAT) sensor (2) is installed into the front of the intake manifold air box plenum. Refer to **Fig. 218**.

1. Disconnect electrical connector (2) from IAT sensor. Refer to **Fig. 218**.
2. Clean dirt from intake manifold at sensor base.

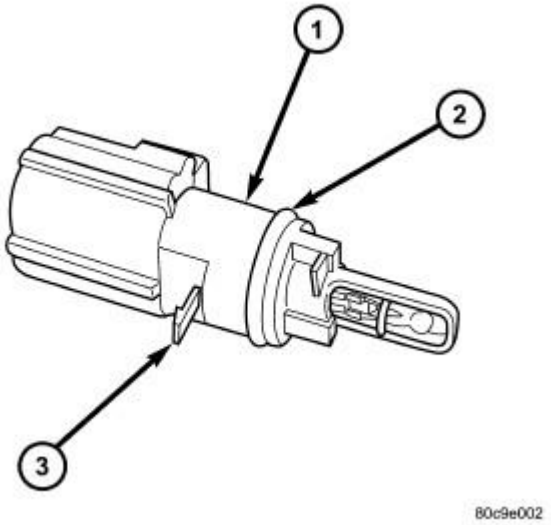

Fig. 219: IAT Sensor Tab/O-Ring
Courtesy of CHRYSLER GROUP, LLC

1 - IAT SENSOR
2 - SENSOR O-RING
3 - RELEASE TAB

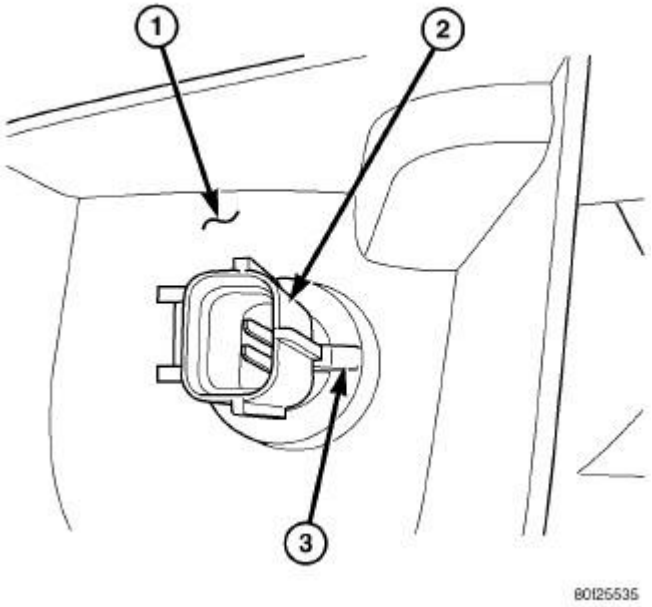

Fig. 220: Identifying IAT Sensor - 5.7L
Courtesy of CHRYSLER GROUP, LLC

1 - FRONT OF INTAKE MANIFOLD PLENUM
2 - IAT SENSOR
3 - RELEASE TAB

3. Gently lift on small plastic release tab (3) and rotate sensor about 1/4 turn counterclockwise for removal. Refer to **Fig. 220**.
4. Check condition of sensor O-ring.

INSTALLATION

3.7L

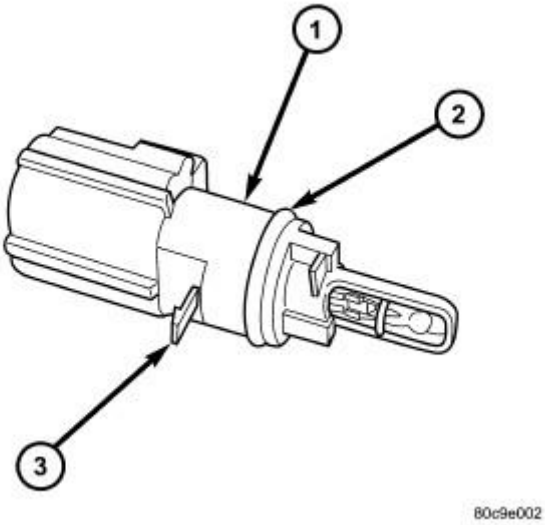

Fig. 221: IAT Sensor Tab/O-Ring
Courtesy of CHRYSLER GROUP, LLC

1 - IAT SENSOR
2 - SENSOR O-RING
3 - RELEASE TAB

1. Check condition of sensor o-ring (2).

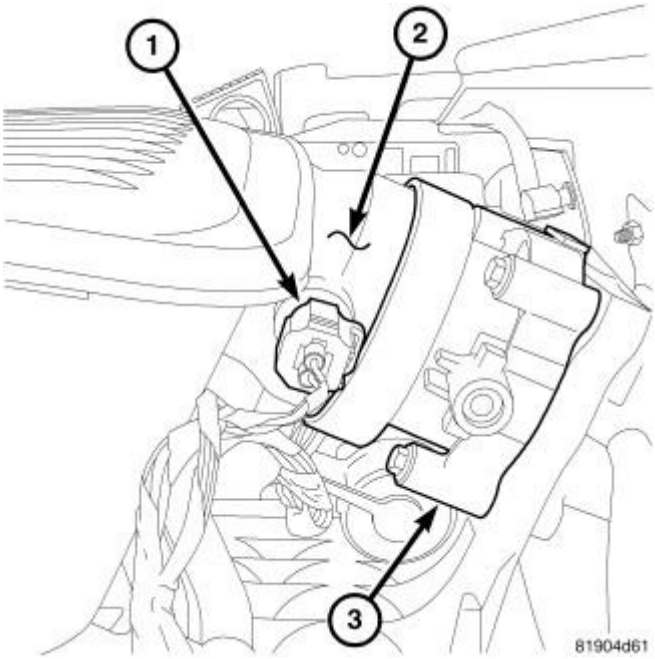

Fig. 222: IAT Sensor - 3.7L
Courtesy of CHRYSLER GROUP, LLC

2. Clean sensor mounting hole in air intake tube.
3. Position sensor into air intake tube and rotate clockwise until past release tab.
4. Install electrical connector (1).

4.7L

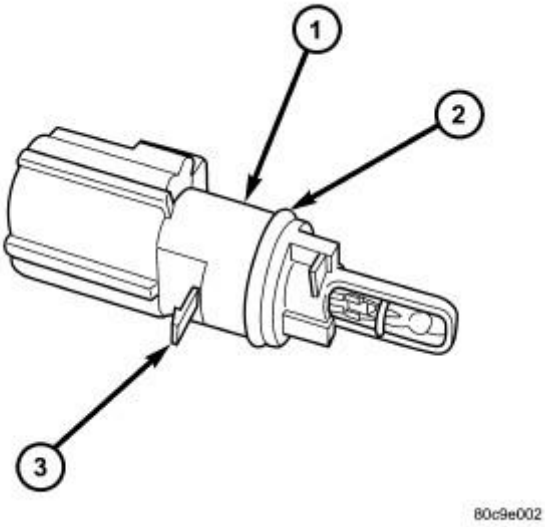

Fig. 223: IAT Sensor Tab/O-Ring
Courtesy of CHRYSLER GROUP, LLC

1 - IAT SENSOR
2 - SENSOR O-RING
3 - RELEASE TAB

1. Check condition of sensor o-ring (2).
2. Clean sensor mounting hole.
3. Position sensor (1) into base and rotate clockwise until past release tab (3).

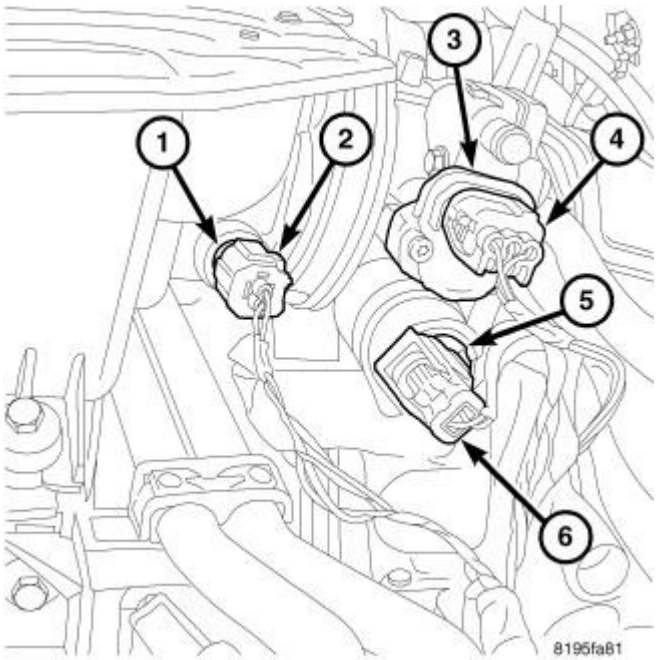

Fig. 224: IAT Sensor - 4.7L
Courtesy of CHRYSLER GROUP, LLC

4. Install electrical connector (2).

5.7L

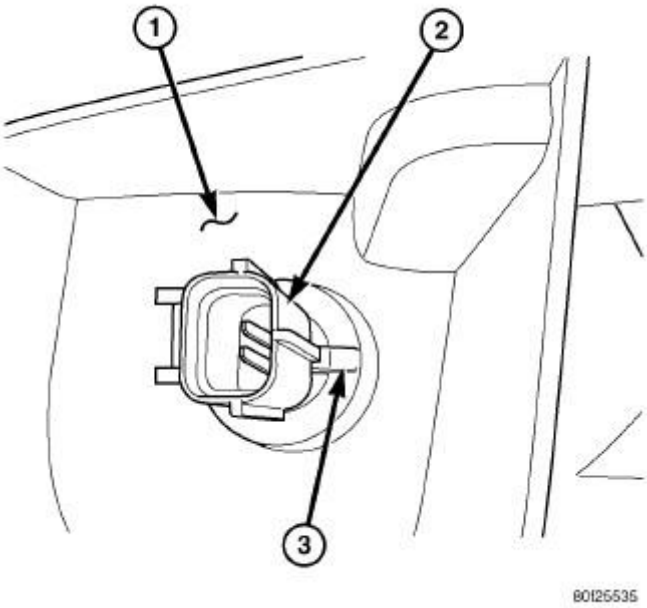

Fig. 225: Identifying IAT Sensor - 5.7L
Courtesy of CHRYSLER GROUP, LLC

1 - FRONT OF INTAKE MANIFOLD PLENUM
2 - IAT SENSOR
3 - RELEASE TAB

The intake manifold air temperature (IAT) sensor (2) is installed into the front of the intake manifold air box plenum. Refer to **Fig. 225**.

1. Check condition of sensor O-ring.
2. Clean sensor mounting hole in intake manifold.
3. Position sensor into intake manifold and rotate clockwise until past release tab.
4. Install electrical connector.

SENSOR, CRANKSHAFT POSITION

DESCRIPTION

3.7L

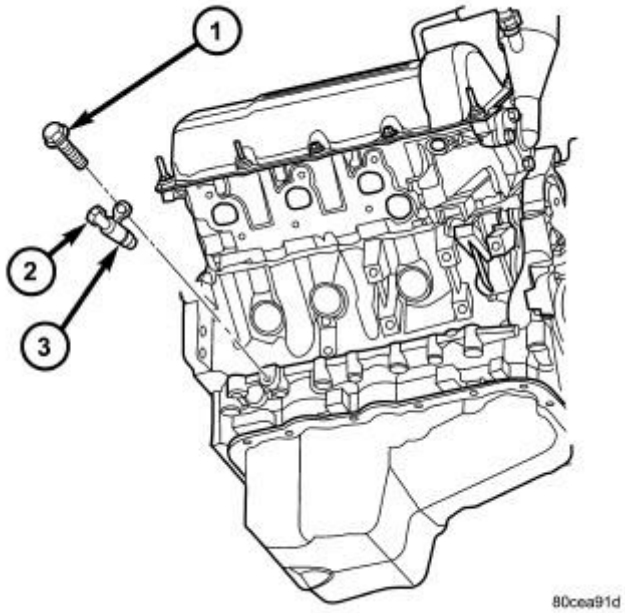

Fig. 226: CKP Sensor - 3.7L
Courtesy of CHRYSLER GROUP, LLC

1 - MOUNTING BOLT
2 - CKP SENSOR
3 - O-RING

The Crankshaft Position (CKP) (2) sensor is mounted into the right rear side of the cylinder block. Refer to **Fig. 226**. It is positioned and bolted into a machined hole.

4.7L

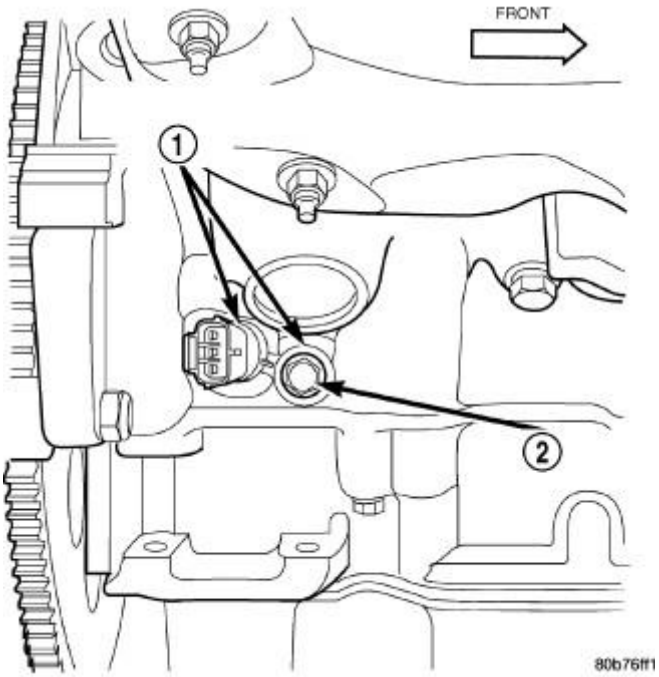

Fig. 227: CKP Sensor - 4.7L
Courtesy of CHRYSLER GROUP, LLC

1 - CRANKSHAFT POSITION SENSOR
2 - MOUNTING BOLT

The Crankshaft Position (CKP) (1) sensor is mounted into the right rear side of the cylinder block. Refer to **Fig. 227**. It is positioned and bolted into a machined hole.

5.7L

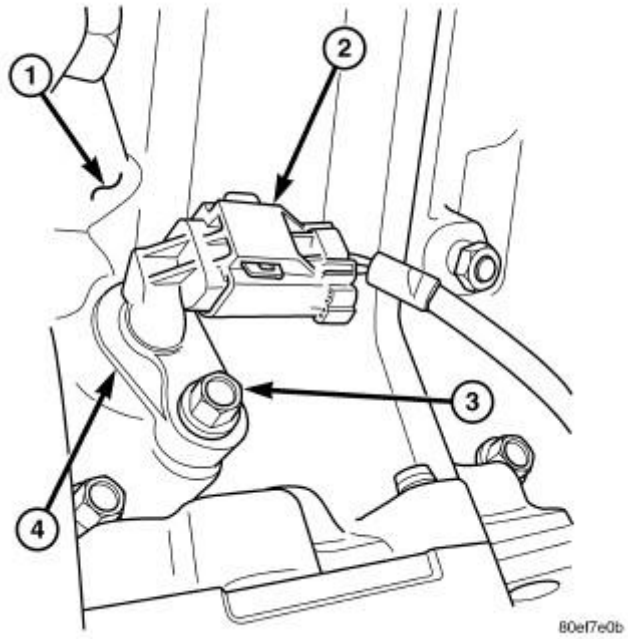

Fig. 228: CKP Sensor - 5.7L
Courtesy of CHRYSLER GROUP, LLC

1 - CYLINDER BLOCK - RIGHT / REAR
2 - ELEC. CONNECTOR
3 - MOUNTING BOLT
4 - CKP SENSOR

The Crankshaft Position (CKP) (4) sensor is mounted into the right rear side of the cylinder block. Refer to **Fig. 228**. It is positioned and bolted into a machined hole.

OPERATION

3.7L

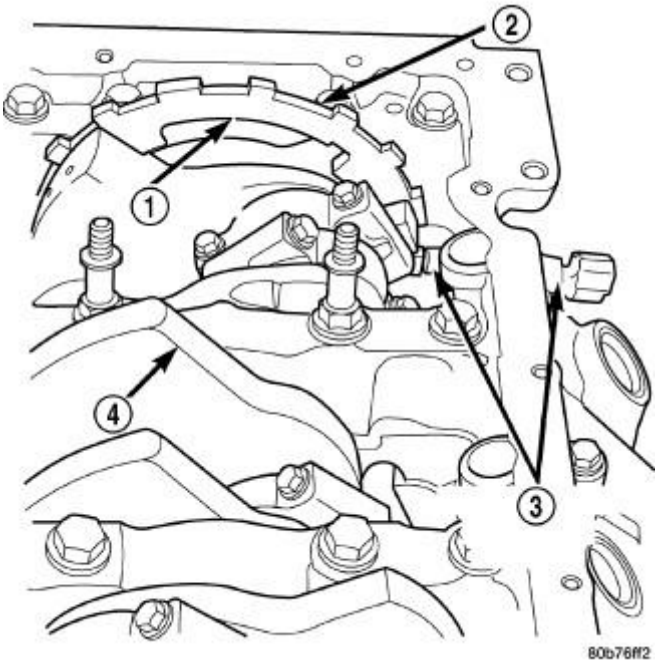

Fig. 229: Crankshaft Position Sensor, Engine Crankshaft, & Tonewheel Notches
Courtesy of CHRYSLER GROUP, LLC

1 - TONEWHEEL
2 - NOTCHES
3 - CRANKSHAFT POSITION SENSOR
4 - CRANKSHAFT

Engine speed and crankshaft position are provided through the CKP (Crankshaft Position) sensor. The sensor generates pulses that are the input sent to the Powertrain Control Module (PCM). The PCM interprets the sensor input to determine the crankshaft position. The PCM then uses this position, along with other inputs, to determine injector sequence and ignition timing.

The sensor is a hall effect device combined with an internal magnet. It is also sensitive to steel within a certain distance from it.

A tonewheel (targetwheel) (1) is bolted to the engine crankshaft. Refer to **Fig. 229**. This tonewheel has sets of notches (2) at its outer edge. Refer to **Fig. 229**.

The notches cause a pulse to be generated when they pass under the sensor. The pulses are the input to the PCM.

4.7L

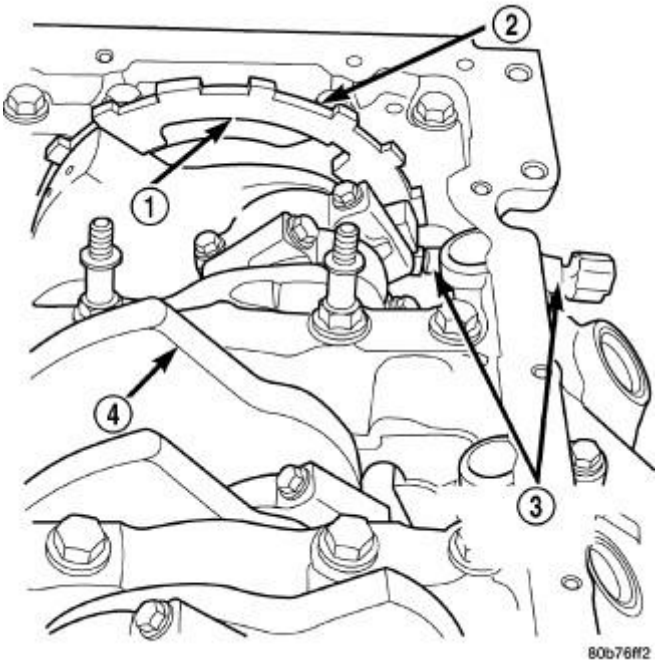

Fig. 230: Crankshaft Position Sensor, Engine Crankshaft, & Tonewheel Notches
Courtesy of CHRYSLER GROUP, LLC

1 - TONEWHEEL
2 - NOTCHES
3 - CRANKSHAFT POSITION SENSOR
4 - CRANKSHAFT

Engine speed and crankshaft position are provided through the CKP (Crankshaft Position) sensor. The sensor generates pulses that are the input sent to the Powertrain Control Module (PCM). The PCM interprets the sensor input to determine the crankshaft position. The PCM then uses this position, along with other inputs, to determine injector sequence and ignition timing.

The sensor is a hall effect device combined with an internal magnet. It is also sensitive to steel within a certain distance from it.

A tonewheel (1) is bolted to the engine crankshaft. Refer to **Fig. 230**. This tonewheel has sets of notches (2) at its outer edge. Refer to **Fig. 230**.

The notches cause a pulse to be generated when they pass under the sensor. The pulses are the input to the PCM.

5.7L

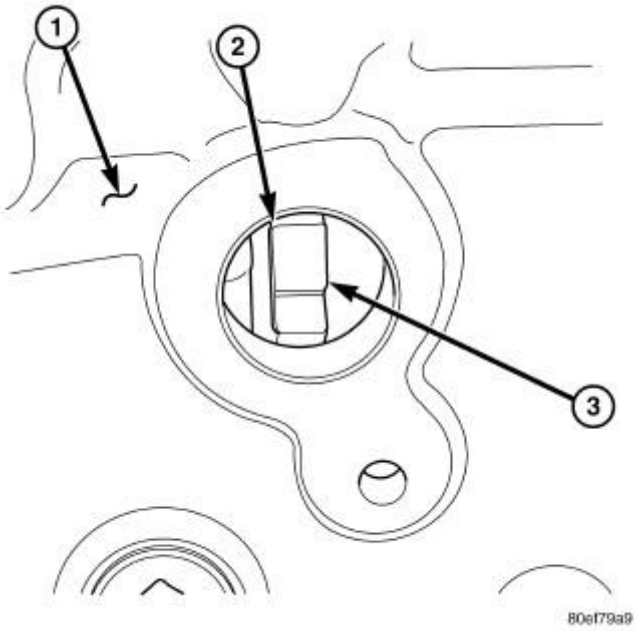

Fig. 231: Tonewheel Notches
Courtesy of CHRYSLER GROUP, LLC

1 - RIGHT / REAR SIDE OF CYLINDER BLOCK
2 - MACHINED HOLE
3 - NOTCHES

Engine speed and crankshaft position are provided through the CKP (Crankshaft Position) sensor. The sensor generates pulses that are the input sent to the Powertrain Control Module (PCM). The PCM interprets the sensor input to determine the crankshaft position. The PCM then uses this position, along with other inputs, to determine injector sequence and ignition timing.

The sensor is a hall effect device combined with an internal magnet. It is also sensitive to steel within a certain distance from it.

A tonewheel is bolted to the engine crankshaft. This tonewheel has sets of notches (3) at its outer edge. Refer to **Fig. 231**.

The notches cause a pulse to be generated when they pass under the sensor. The pulses are the input to the PCM.

REMOVAL

3.7L

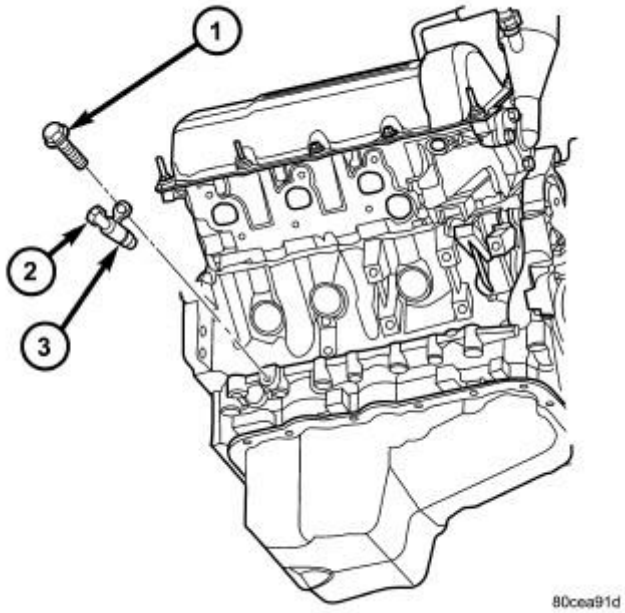

Fig. 232: CKP Sensor - 3.7L
Courtesy of CHRYSLER GROUP, LLC

1 - MOUNTING BOLT
2 - CKP SENSOR
3 - O-RING

The Crankshaft Position (CKP) sensor is mounted into the right rear side of the cylinder block. Refer to **Fig. 232**. It is positioned and bolted into a machined hole.

1. Raise vehicle.
2. Disconnect sensor electrical connector.
3. Remove sensor mounting bolt (1). Refer to **Fig. 232**.
4. Carefully twist sensor (2) from cylinder block.
5. Check condition of sensor O-ring (3).

4.7L

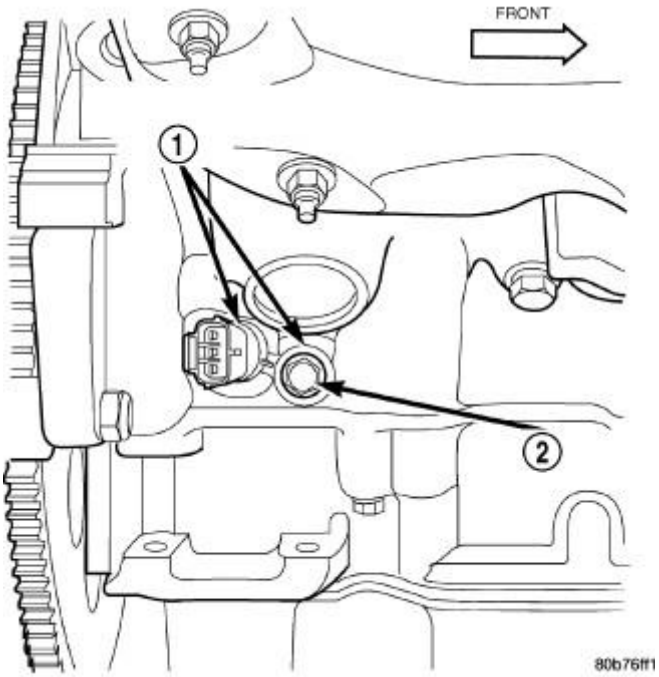

Fig. 233: CKP Sensor - 4.7L
Courtesy of CHRYSLER GROUP, LLC

1 - CRANKSHAFT POSITION SENSOR
2 - MOUNTING BOLT

The Crankshaft Position (CKP) sensor is located at the right-rear side of the engine cylinder block. Refer to **Fig. 233**. It is positioned and bolted into a machined hole in the engine block.

1. Raise vehicle.
2. Disconnect CKP electrical connector at sensor.
3. Remove CKP mounting bolt (2). Refer to **Fig. 233**.
4. Carefully twist sensor (1) from cylinder block.
5. Remove sensor from vehicle.
6. Check condition of sensor O-ring.

5.7L

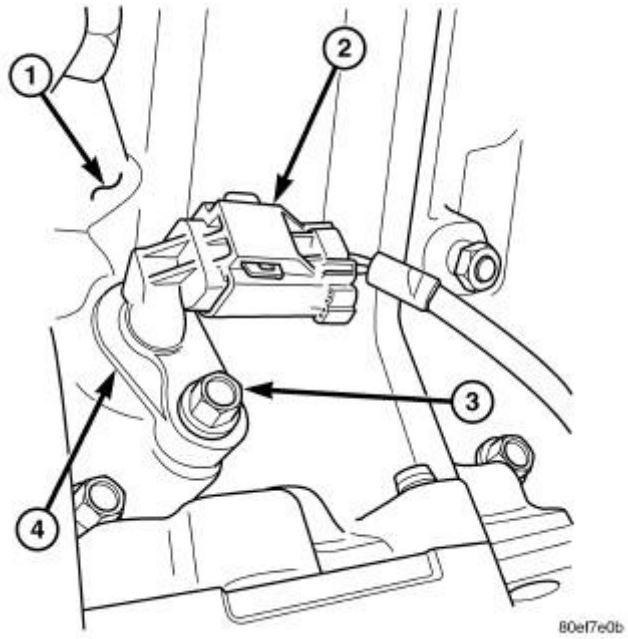

Fig. 234: CKP Sensor - 5.7L
Courtesy of CHRYSLER GROUP, LLC

1 - CYLINDER BLOCK - RIGHT / REAR
2 - ELEC. CONNECTOR
3 - MOUNTING BOLT
4 - CKP SENSOR

The Crankshaft Position (CKP) sensor (4) is located at the right-rear side of the engine cylinder block. Refer to **Fig. 234**. It is positioned and bolted into a machined hole in the engine block.

1. Raise vehicle.
2. Disconnect CKP electrical connector at sensor. Refer to **Fig. 234**.
3. Remove CKP mounting bolt (3). Refer to **Fig. 234**.
4. Carefully twist sensor (4) from cylinder block.
5. Remove sensor from vehicle.
6. Check condition of sensor O-ring.

INSTALLATION

3.7L

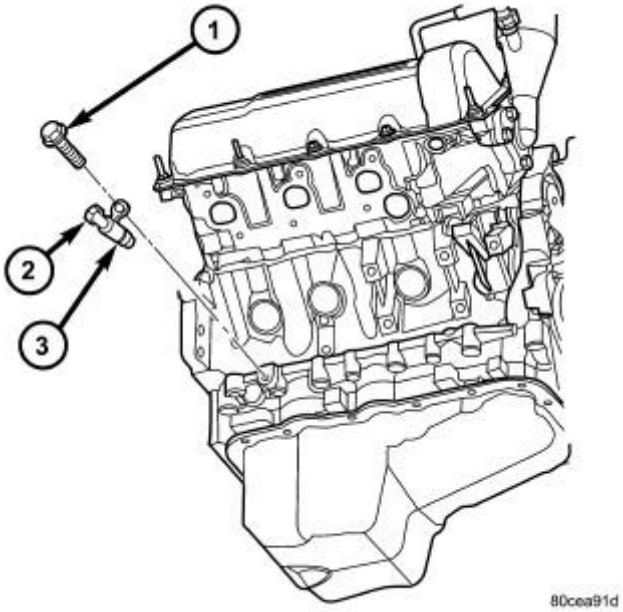

Fig. 235: CKP Sensor - 3.7L
Courtesy of CHRYSLER GROUP, LLC

1 - MOUNTING BOLT
2 - CKP SENSOR
3 - O-RING

1. Clean out machined hole in engine block.
2. Apply a small amount of engine oil to sensor O-ring (3).
3. Install sensor into engine block with a slight rocking and twisting action. Refer to **Fig. 235**.

CAUTION: Before tightening the CKP sensor mounting bolt, be sure the sensor is completely flush to the cylinder block. If the CKP sensor is not flush, damage to the sensor mounting tang may result.

4. Install mounting bolt and tighten to 28 N.m (21 ft. lbs.) torque.
5. Connect electrical connector to sensor.
6. Lower vehicle.

4.7L

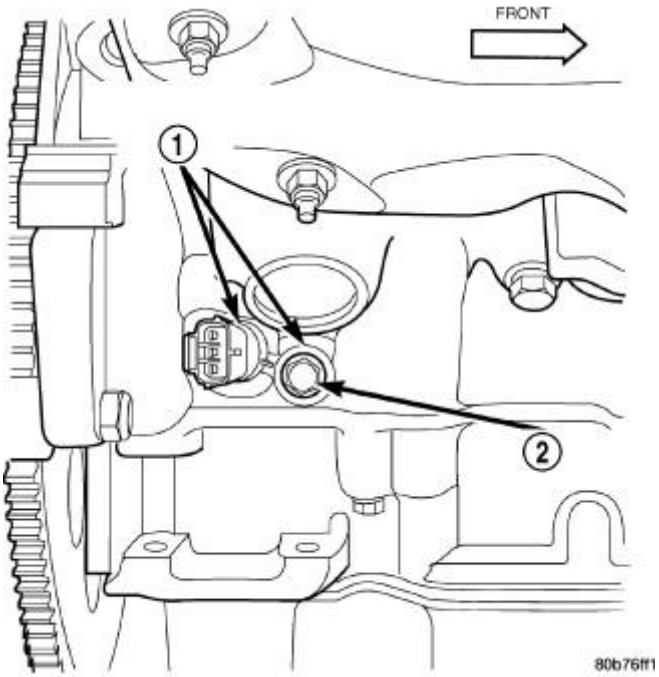

Fig. 236: CKP Sensor - 4.7L
Courtesy of CHRYSLER GROUP, LLC

1 - CRANKSHAFT POSITION SENSOR
2 - MOUNTING BOLT

1. Clean out machined hole in engine block.
2. Apply a small amount of engine oil to sensor o-ring.
3. Install sensor (1) into engine block with a slight rocking and twisting action. Refer to **Fig. 236**.

CAUTION: Before tightening the CKP sensor mounting bolt, be sure the sensor is completely flush to the cylinder block. If the CKP sensor is not flush, damage to the sensor mounting tang may result.

4. Install mounting bolt and tighten to 28 N.m (21 ft. lbs.) torque.
5. Connect electrical connector to sensor.
6. Lower vehicle.

5.7L

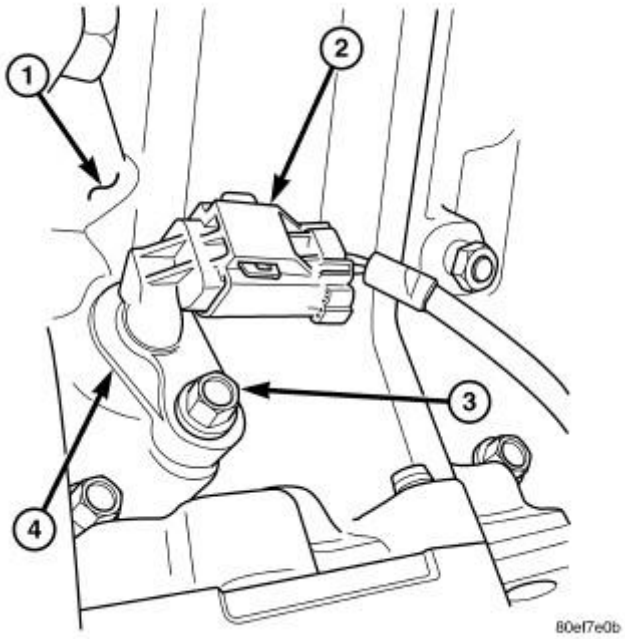

Fig. 237: CKP Sensor - 5.7L
Courtesy of CHRYSLER GROUP, LLC

1 - CYLINDER BLOCK - RIGHT / REAR
2 - ELEC. CONNECTOR
3 - MOUNTING BOLT
4 - CKP SENSOR

1. Clean out machined hole in engine block.
2. Apply a small amount of engine oil to sensor o-ring.
3. Install sensor (4) into engine block with a slight rocking and twisting action. Refer to **Fig. 237**.

CAUTION: Before tightening the CKP sensor mounting bolt, be sure the sensor is completely flush to the cylinder block. If the CKP sensor is not flush, damage to the sensor mounting tang may result.

4. Install mounting bolt (3) and tighten to 28 N.m (21 ft. lbs.) torque.
5. Connect electrical connector to sensor.
6. Lower vehicle.

SENSOR, MANIFOLD AIR PRESSURE (MAP)

OPERATION

OPERATION

The MAP sensor is used as an input to the Powertrain Control Module (PCM). It contains a silicon based sensing unit to provide data on the manifold vacuum that draws the air/fuel mixture into the combustion chamber. The PCM requires this information to determine injector pulse width and spark advance. When manifold absolute pressure (MAP) equals Barometric pressure, the pulse width will be at maximum.

A 5 volt reference is supplied from the PCM and returns a voltage signal to the PCM that reflects manifold pressure. The zero pressure reading is 0.5V and full scale is 4.5V. For a pressure swing of 0-15 psi, the voltage changes 4.0V. To operate the sensor, it is supplied a regulated 4.8 to 5.1 volts. Ground is provided through the low-noise, sensor return circuit at the PCM.

The MAP sensor input is the number one contributor to fuel injector pulse width. The most important function of the MAP sensor is to determine barometric pressure. The PCM needs to know if the vehicle is at sea level or at a higher altitude, because the air density changes with altitude. It will also help to correct for varying barometric pressure. Barometric pressure and altitude have a direct inverse correlation; as altitude goes up, barometric goes down. At key-on, the PCM powers up and looks at MAP voltage, and based upon the voltage it sees, it knows the current barometric pressure (relative to altitude). Once the engine starts, the PCM looks at the voltage again, continuously every 12 milliseconds, and compares the current voltage to what it was at key-on. The difference between current voltage and what it was at key-on, is manifold vacuum.

During key-on (engine not running) the sensor reads (updates) barometric pressure. A normal range can be obtained by monitoring a known good sensor.

As the altitude increases, the air becomes thinner (less oxygen). If a vehicle is started and driven to a very different altitude than where it was at key-on, the barometric pressure needs to be updated. Any time the PCM sees Wide Open Throttle (WOT), based upon Throttle Position Sensor (TPS) angle and RPM, it will update barometric pressure in the MAP memory cell. With periodic updates, the PCM can make its calculations more effectively.

The PCM uses the MAP sensor input to aid in calculating the following:

- Manifold pressure
- Barometric pressure
- Engine load
- Injector pulse-width
- Spark-advance programs
- Shift-point strategies (certain automatic transmissions only)
- Idle speed
- Decel fuel shutoff

The MAP sensor signal is provided from a single piezoresistive element located in the center of a diaphragm. The element and diaphragm are both made of silicone. As manifold pressure changes, the diaphragm moves causing the element to deflect, which stresses the silicone. When silicone is exposed to stress, its resistance changes. As manifold vacuum increases, the MAP sensor input voltage decreases proportionally. The sensor also contains electronics that condition the signal and provide temperature compensation.

The PCM recognizes a decrease in manifold pressure by monitoring a decrease in voltage from the reading

stored in the barometric pressure memory cell. The MAP sensor is a linear sensor; meaning as pressure changes, voltage changes proportionately. The range of voltage output from the sensor is usually between 4.6 volts at sea level to as low as 0.3 volts at 26 in. of Hg. Barometric pressure is the pressure exerted by the atmosphere upon an object. At sea level on a standard day, no storm, barometric pressure is approximately 29.92 in Hg. For every 100 feet of altitude, barometric pressure drops 0.10 in. Hg. If a storm goes through, it can change barometric pressure from what should be present for that altitude. You should know what the average pressure and corresponding barometric pressure is for your area.

REMOVAL

3.7L/4.7L

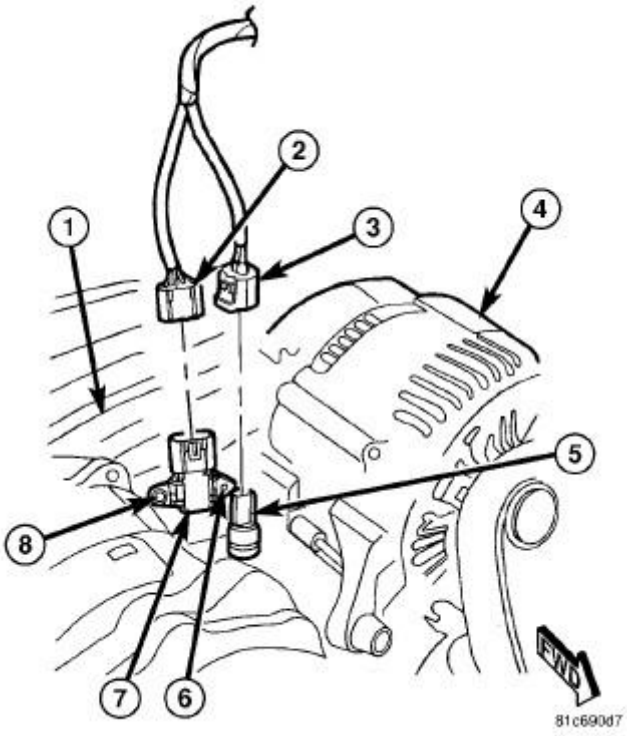

Fig. 238: MAP Sensor - 3.7L/4.7L
Courtesy of CHRYSLER GROUP, LLC

The Manifold Absolute Pressure (MAP) sensor (7) is mounted into the front of the intake manifold (1).

1. Disconnect electrical connector (2) at sensor.
2. Clean area around MAP sensor.
3. Remove one sensor mounting screw (8).
4. Remove MAP sensor from intake manifold by slipping it from locating pin (6).

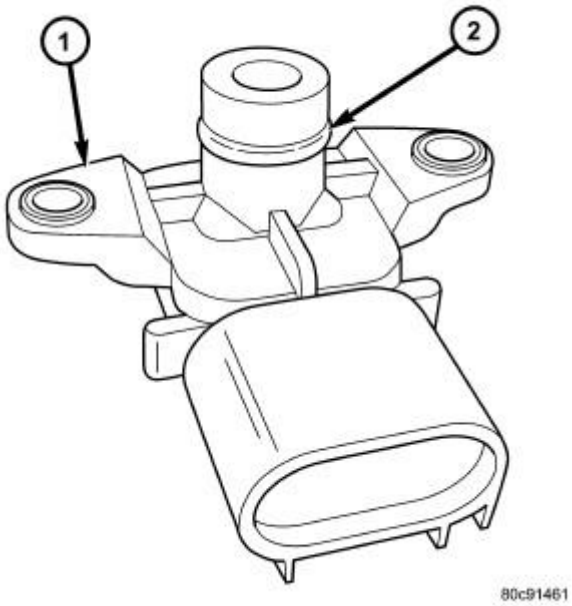

Fig. 239: MAP Sensor O-Ring 3.7L / 4.7L
Courtesy of CHRYSLER GROUP, LLC

1 - MAP SENSOR
2 - O-RING

5. Check condition of sensor o-ring (2)

5.7L

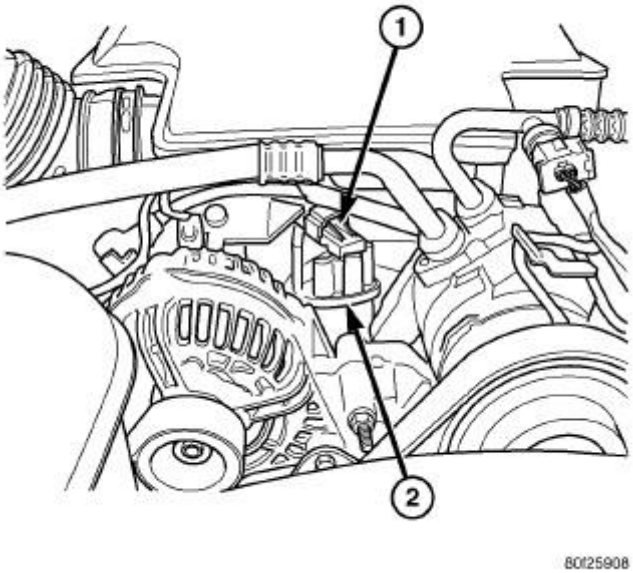

Fig. 240: MAP Sensor Location - 5.7L
Courtesy of CHRYSLER GROUP, LLC

1 - MAP SENSOR
2 - FRONT OF INTAKE MANIFOLD

The Manifold Absolute Pressure (MAP) sensor is mounted to the front of the intake manifold air plenum box. Refer to **Fig. 240**.

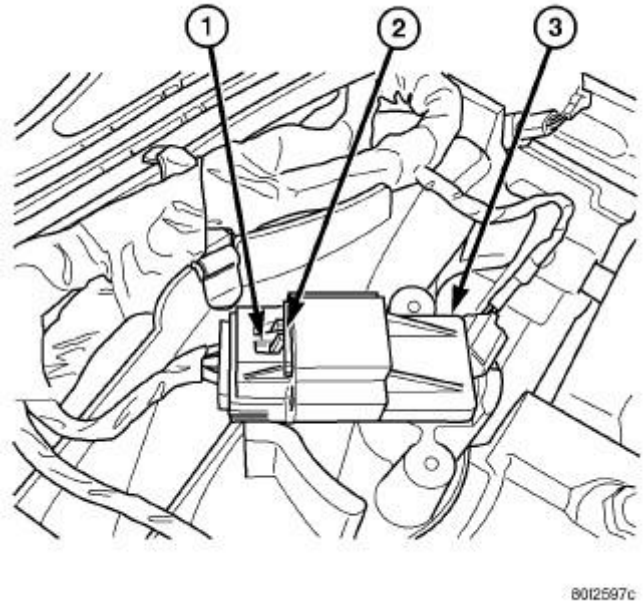

Fig. 241: 5.7L MAP Sensor Connector
Courtesy of CHRYSLER GROUP, LLC

1 - PRESS DOWN
2 - SLIDE RELEASE LOCK
3 - MAP SENSOR

1. Disconnect electrical connector at sensor by sliding release lock out. Refer to **Fig. 241**. Press down on lock tab for removal.
2. Rotate sensor (3) 1/4 turn counterclockwise for removal.
3. Check condition of sensor O-ring.

INSTALLATION

3.7L/4.7L

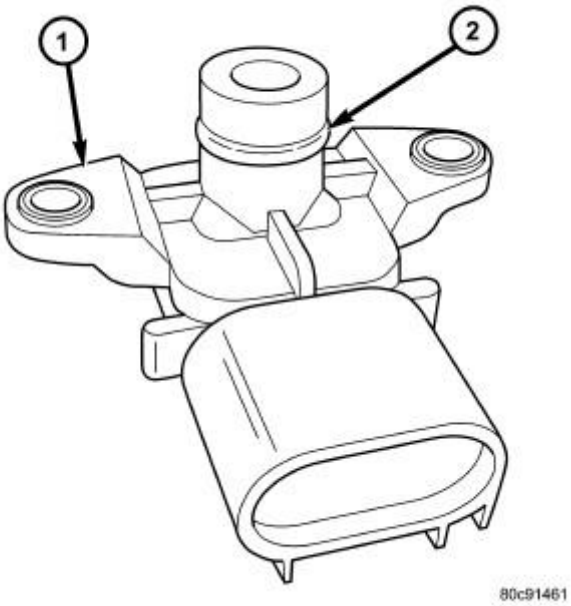

Fig. 242: MAP Sensor O-Ring 3.7L / 4.7L
Courtesy of CHRYSLER GROUP, LLC

1 - MAP SENSOR
2 - O-RING

1. Clean MAP sensor mounting hole at intake manifold.
2. Check MAP sensor o-ring seal (2) for cuts or tears.

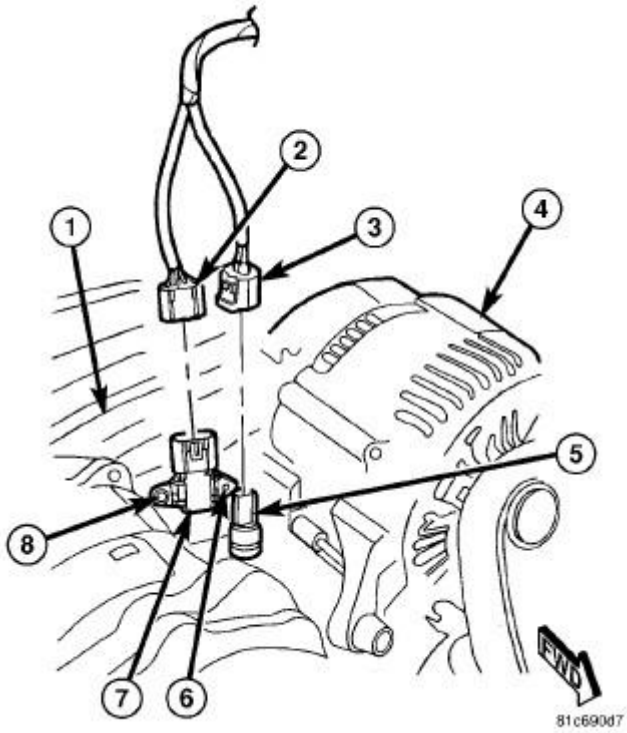

Fig. 243: MAP Sensor - 3.7L/4.7L
Courtesy of CHRYSLER GROUP, LLC

3. Position MAP sensor into manifold by sliding sensor over locating pin (6).
4. Install mounting bolt (8). Tighten to 3 N.m (25 in. lbs.) torque.
5. Connect electrical connector (2).

5.7L

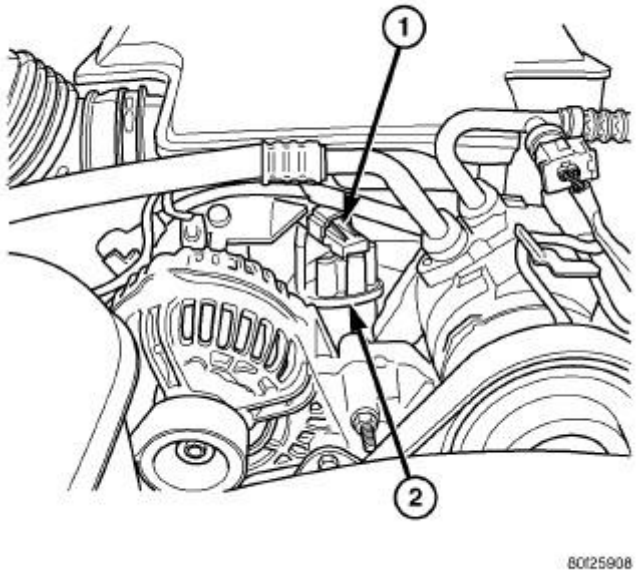

Fig. 244: MAP Sensor Location - 5.7L
Courtesy of CHRYSLER GROUP, LLC

1 - MAP SENSOR
2 - FRONT OF INTAKE MANIFOLD

The Manifold Absolute Pressure (MAP) sensor (1) is mounted to the front of the intake manifold air plenum box. Refer to **Fig. 244**.

1. Clean MAP sensor mounting hole at intake manifold.
2. Check MAP sensor O-ring seal for cuts or tears.
3. Position sensor into manifold.
4. Rotate sensor 1/4 turn clockwise for installation.
5. Connect electrical connector.

SENSOR, OXYGEN

DESCRIPTION

DESCRIPTION

The Oxygen Sensors (O2S) are attached to, and protrude into the vehicle exhaust system. Depending on the engine or emission package, the vehicle may use a total of either 2 or 4 sensors.

Federal Emission Packages : Two sensors are used: upstream (referred to as 1/1) and downstream (referred to as 1/2). With this emission package, the upstream sensor (1/1) is located just before the main catalytic convertor. The downstream sensor (1/2) is located just after the main catalytic convertor.

California Emission Packages: On this emissions package, 4 sensors are used: 2 upstream (referred to as 1/1 and 2/1) and 2 downstream (referred to as 1/2 and 2/2). With this emission package, the right upstream sensor (2/1) is located in the right exhaust downpipe just before the mini-catalytic convertor. The left upstream sensor (1/1) is located in the left exhaust downpipe just before the mini-catalytic convertor. The right downstream sensor (2/2) is located in the right exhaust downpipe just after the mini-catalytic convertor, and before the main catalytic convertor. The left downstream sensor (1/2) is located in the left exhaust downpipe just after the mini-catalytic convertor, and before the main catalytic convertor.

REMOVAL

REMOVAL

CAUTION: Never apply any type of grease to the oxygen sensor electrical connector, or attempt any repair of the sensor wiring harness.

WARNING: The exhaust pipes and catalytic converter become very hot during engine operation. Allow the engine to cool before removing the oxygen sensor.

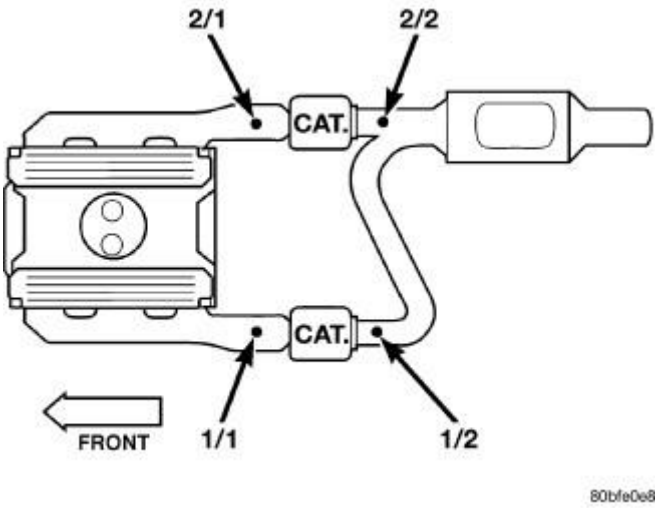

Fig. 245: Locating Oxygen Sensors (4 Sensors)
Courtesy of CHRYSLER GROUP, LLC

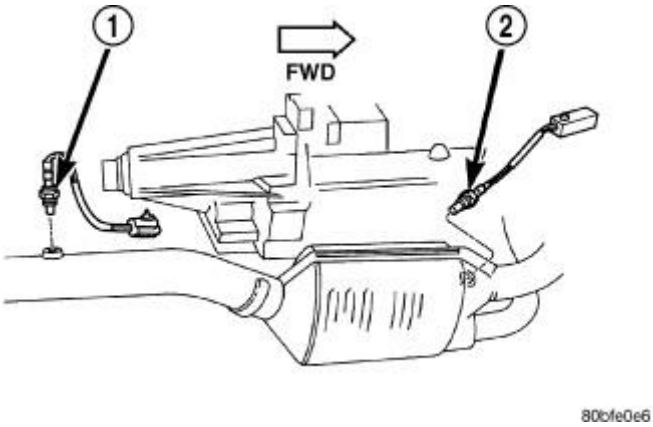

Fig. 246: Pre-Catalyst & Post Catalyst Oxygen Sensors
Courtesy of CHRYSLER GROUP, LLC

1 - POST CATALYST OXYGEN SENSOR (1/3)
2 - PRE-CATALYST OXYGEN SENSOR (1/2)

1. Raise and support vehicle.
2. Disconnect wire connector from O2S sensor.

CAUTION: When disconnecting the oxygen sensor electrical connector, do not pull directly on the wire going into the sensor. The sensor wiring can be damaged resulting in sensor failure.

3. Remove O2S sensor with an oxygen sensor removal and installation tool.
4. Clean threads in exhaust pipe using appropriate tap.

INSTALLATION

INSTALLATION

Threads of new oxygen sensors are factory coated with anti-seize compound to aid in removal.**DO NOT add any additional anti-seize compound to threads of a new oxygen sensor.**

1. Install O2S sensor. Tighten to 41N.m (30 ft. lbs.) torque.
2. Connect O2S sensor wire connector.
3. Lower vehicle.

THROTTLE BODY

DESCRIPTION

DESCRIPTION

The throttle body is located on the intake manifold. Fuel does not enter the intake manifold through the throttle

body. Fuel is sprayed into the manifold by the fuel injectors.

REMOVAL

3.7L

CAUTION: Using a diagnostic scan tool, record any previous DTC's (Diagnostic Trouble Codes).

CAUTION: Never have the ignition key in the ON position when checking the throttle body shaft for a binding condition. This may set DTC's.

A (factory adjusted) set screw is used to mechanically limit the position of the throttle body throttle plate. **Never attempt to adjust the engine idle speed using this screw.** All idle speed functions are controlled by the Powertrain Control Module (PCM).

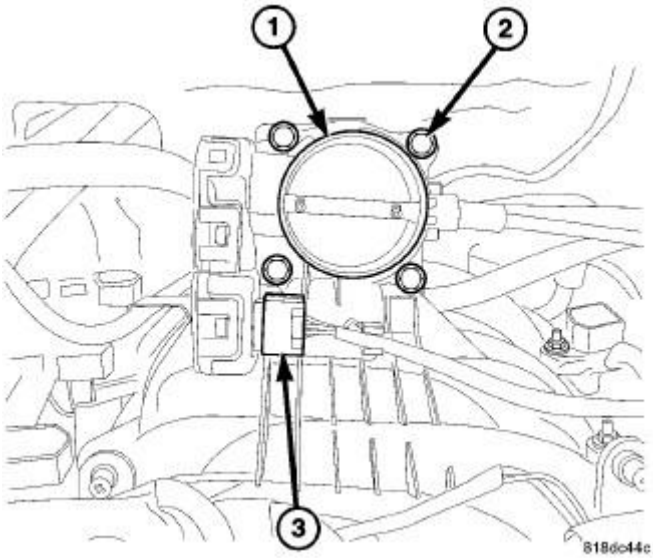

Fig. 247: Throttle Body 3.7L
Courtesy of CHRYSLER GROUP, LLC

1. Disconnect and isolate negative battery cable at battery.
2. Remove air intake tube at throttle body flange (1).
3. Disconnect throttle body electrical connector (3).
4. Disconnect necessary vacuum lines at throttle body.
5. Remove four throttle body mounting bolts (2).
6. Remove throttle body from intake manifold.
7. Check condition of old throttle body-to-intake manifold o-ring.

4.7L

CAUTION: Using a diagnostic scan tool, record any previous DTC's (Diagnostic Trouble Codes).

CAUTION: Never have the ignition key in the ON position when checking the throttle body shaft for a binding condition. This may set DTC's.

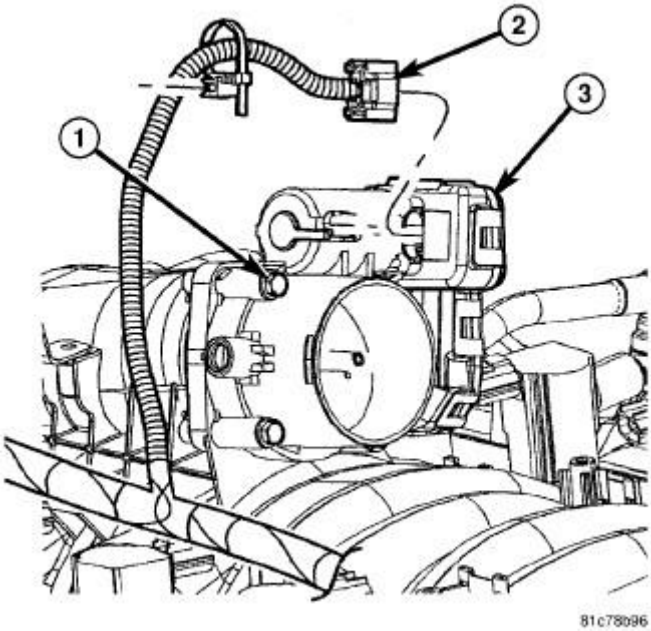

Fig. 248: Throttle Body - 4.7L
Courtesy of CHRYSLER GROUP, LLC

1. Disconnect and isolate negative battery cable at battery.
2. Remove air duct and air resonator box at throttle body (3).
3. Disconnect throttle body electrical connector (2).
4. Disconnect necessary vacuum lines at throttle body.
5. Remove four throttle body mounting bolts (1).
6. Remove throttle body from intake manifold.
7. Check condition of old throttle body-to-intake manifold o-ring.

5.7L

CAUTION: Using a diagnostic scan tool, record any previous DTC's (Diagnostic Trouble Codes).

CAUTION: Never have the ignition key in the ON position when checking the throttle body shaft for a binding condition. This may set DTC's.

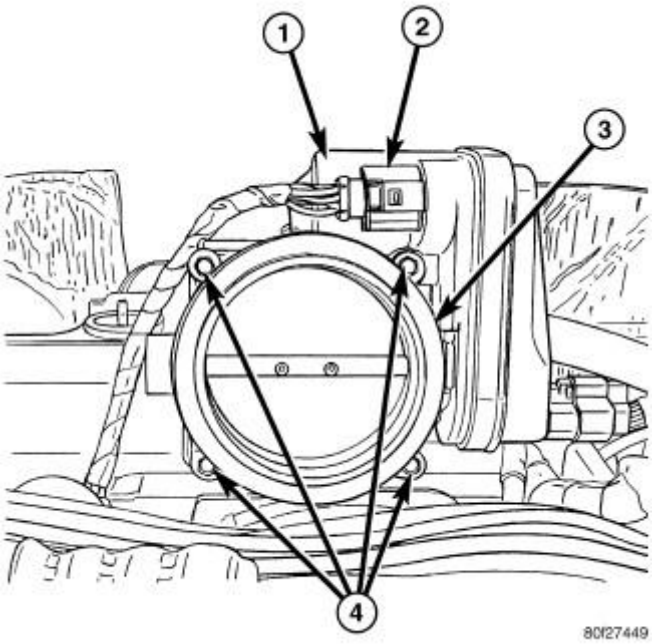

Fig. 249: Throttle Body - 5.7L
Courtesy of CHRYSLER GROUP, LLC

1. Disconnect and isolate negative battery cable from battery.
2. Remove air duct and air resonator box at throttle body.
3. Disconnect electrical connector (2) at throttle body.
4. Remove four throttle body mounting bolts (4).
5. Remove throttle body from intake manifold.

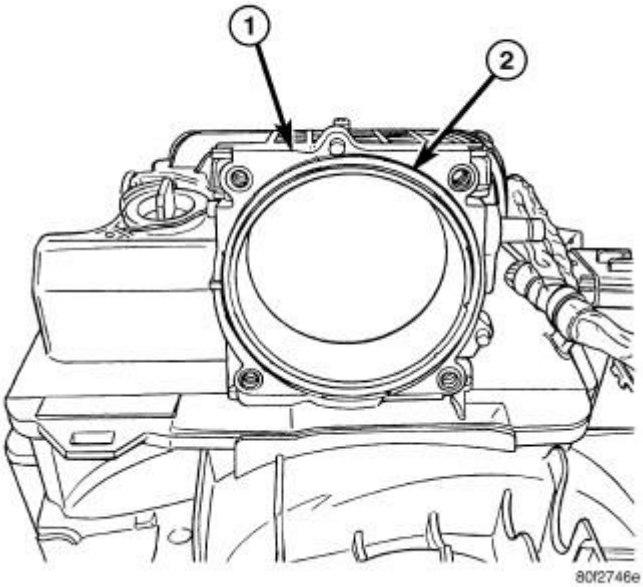

Fig. 250: Throttle Body O-Ring - 5.7L
Courtesy of CHRYSLER GROUP, LLC

1 - INTAKE MANIFOLD
2 - THROTTLE BODY O-RING

6. Check condition of throttle body O-ring (2).

INSTALLATION

3.7L

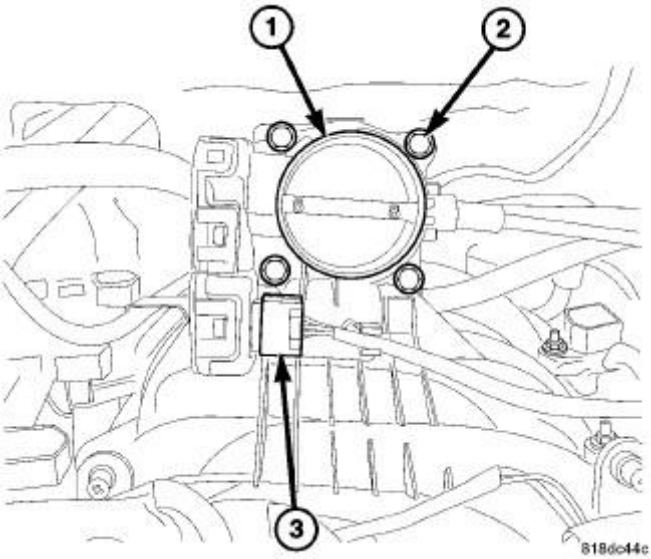

Fig. 251: Throttle Body 3.7L
Courtesy of CHRYSLER GROUP, LLC

1. Check condition of throttle body-to-intake manifold O-ring. Replace as necessary.
2. Clean mating surfaces of throttle body and intake manifold.
3. Install O-ring between throttle body and intake manifold.
4. Position throttle body (1) to intake manifold.
5. Install all throttle body mounting bolts (2) finger tight.

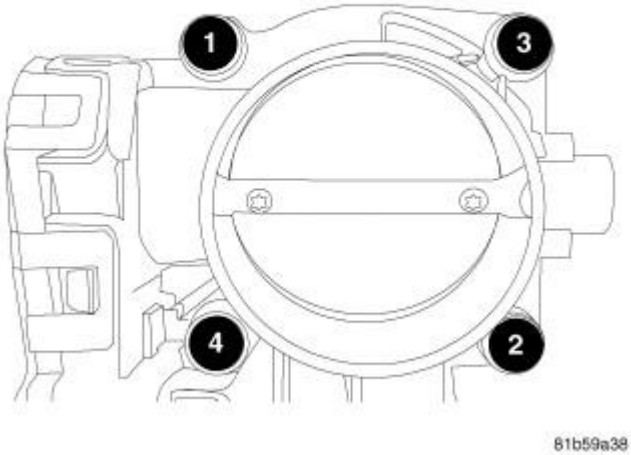

Fig. 252: Throttle Body Tightening Sequence
Courtesy of CHRYSLER GROUP, LLC

CAUTION: The throttle body mounting bolts MUST be tightened to specifications. Over tightening can cause damage to the throttle

body or the intake manifold.

6. Obtain a torque wrench. Tighten mounting bolts (as shown in illustration) in a mandatory torque criss-cross pattern sequence to 7.5 N.m (65 in. lbs.).

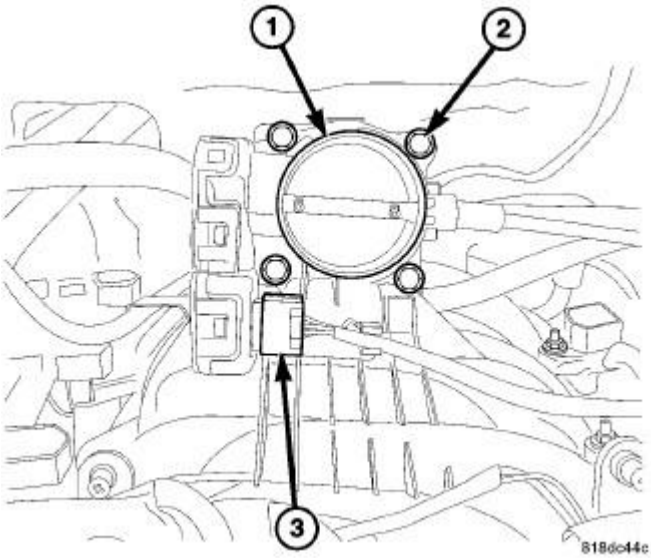

Fig. 253: Throttle Body 3.7L
Courtesy of CHRYSLER GROUP, LLC

7. Install electrical connector (3).
8. Install necessary vacuum lines.
9. Install air cleaner duct at throttle body.
10. Connect negative battery cable.
11. Using the diagnostic scan tool, erase all previous DTC's and perform the ETC Relearn function.

4.7L

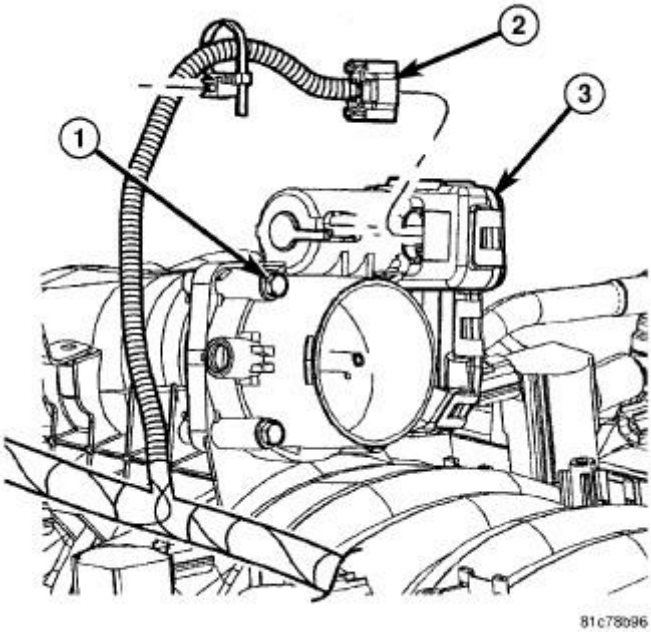

Fig. 254: Throttle Body - 4.7L
Courtesy of CHRYSLER GROUP, LLC

1. Check condition of throttle body-to-intake manifold O-ring. Replace as necessary.
2. Clean mating surfaces of throttle body and intake manifold.
3. Install throttle body-to-intake manifold O-ring.
4. Install all throttle body mounting bolts (1) finger tight.

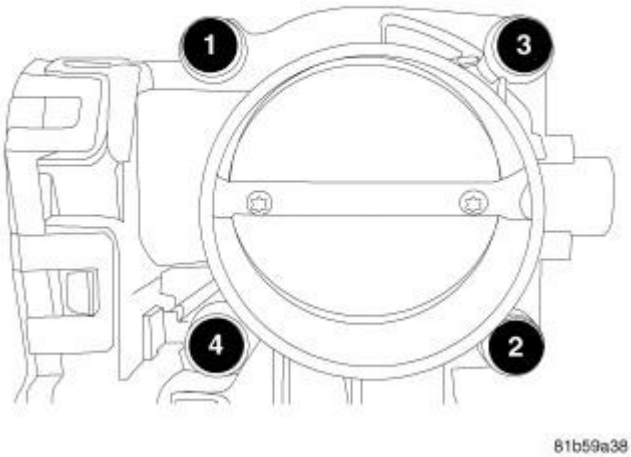

Fig. 255: Throttle Body Tightening Sequence
Courtesy of CHRYSLER GROUP, LLC

CAUTION: The throttle body mounting bolts MUST be tightened to specifications. Over tightening can cause damage to the throttle body or the intake manifold.

5. Obtain a torque wrench. Tighten mounting bolts (as shown in illustration) in a mandatory torque criss-cross pattern sequence to 7.5 N.m (65 in. lbs.).

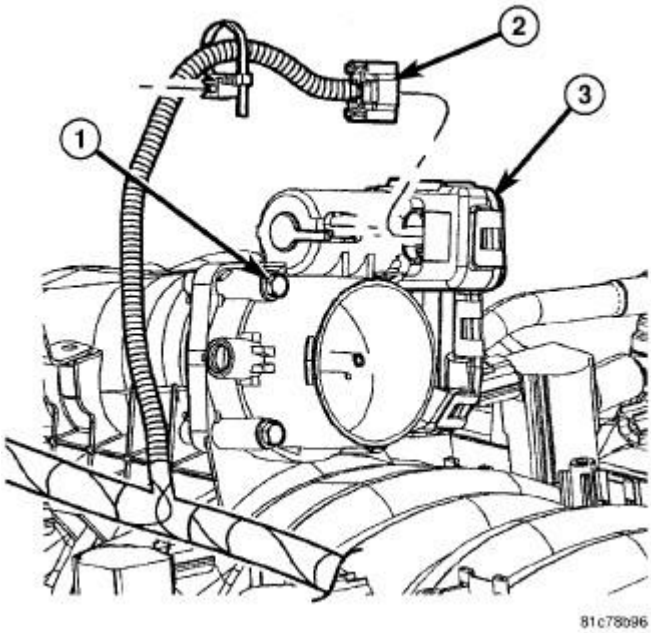

Fig. 256: Throttle Body - 4.7L
Courtesy of CHRYSLER GROUP, LLC

6. Install electrical connector (2).
7. Install necessary vacuum lines.
8. Install air cleaner duct and plenum at throttle body.
9. Connect negative battery cable.
10. Using the diagnostic scan tool, erase all previous DTC's and perform the ETC Relearn function.

5.7L

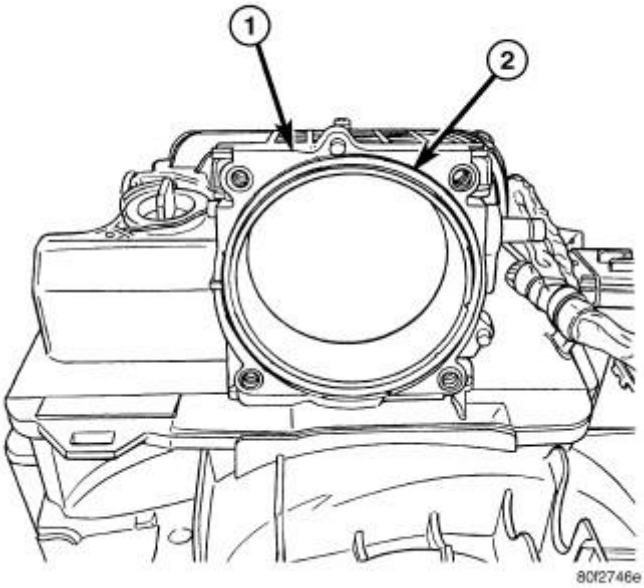

Fig. 257: Throttle Body O-Ring - 5.7L
Courtesy of CHRYSLER GROUP, LLC

1 - INTAKE MANIFOLD
2 - THROTTLE BODY O-RING

1. Clean and check condition of throttle body-to-intake manifold O-ring (2).
2. Clean mating surfaces of throttle body and intake manifold.
3. Install O-ring (2) between throttle body and intake manifold.
4. Install throttle body to intake manifold by positioning throttle body to manifold alignment pins.
5. Install all throttle body mounting bolts finger tight.

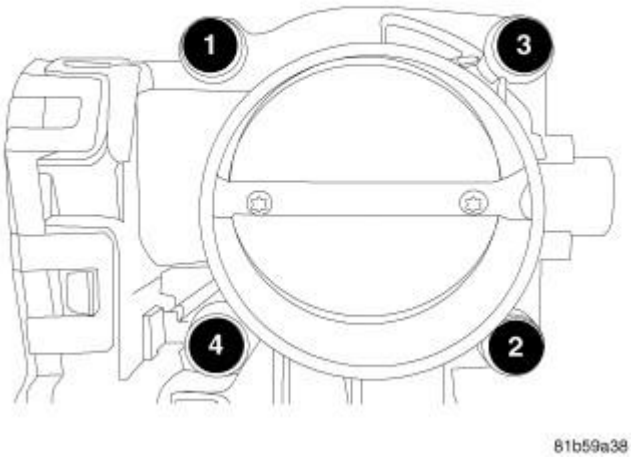

Fig. 258: Throttle Body Tightening Sequence
Courtesy of CHRYSLER GROUP, LLC

CAUTION: The throttle body mounting bolts MUST be tightened to specifications. Over tightening can cause damage to the throttle body or the intake manifold.

6. Obtain a torque wrench. Tighten mounting bolts (as shown in illustration) in a mandatory torque criss-cross pattern sequence to 5.6 N.m (50 in. lbs.).

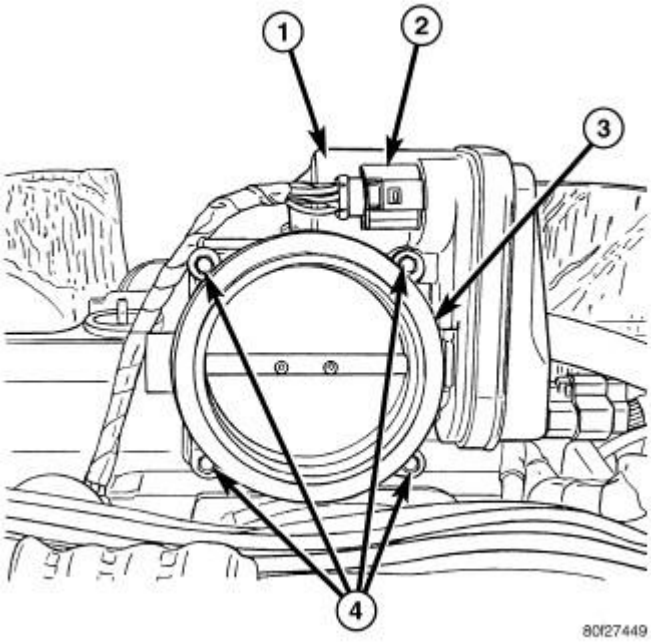

Fig. 259: Throttle Body - 5.7L
Courtesy of CHRYSLER GROUP, LLC

7. Install electrical connector (2).
8. Install air plenum to flange (3).
9. Connect negative battery cable.
10. Using the diagnostic scan tool, erase all previous DTC's and perform the ETC Relearn function.

VALVE, SHORT RUNNER

DESCRIPTION

DESCRIPTION

The intake manifold features a dual shaft Short Runner Valve (SRV) system to maximize both low end torque and peak power. The SRV is bolted to the rear of the intake manifold and can be service separately from the manifold.

The SRV system operates under Wide Open Throttle conditions to maximize engine performance. When activated by the PCM, the SRV actuates a mechanical linkage to redirect the intake air flow to eight short runners. The PCM looks for a signal feedback when the actuator is activated. If the signal feedback is not present, the PCM sets the DTC.

REMOVAL

REMOVAL

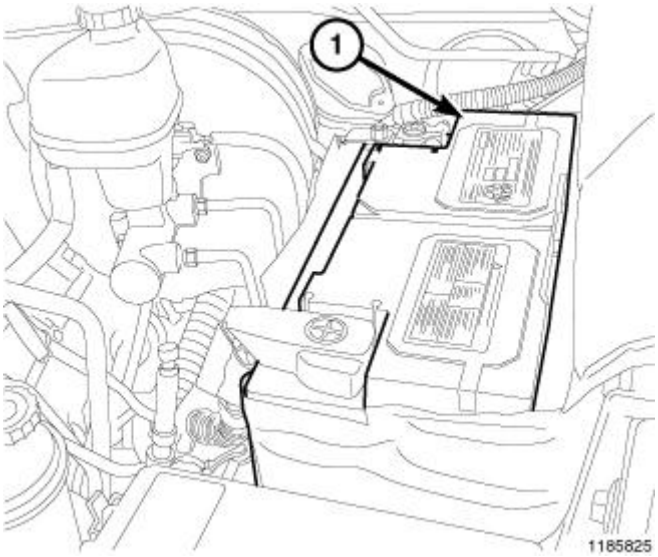

Fig. 260: Battery
Courtesy of CHRYSLER GROUP, LLC

1. Disconnect the negative battery cable (1).

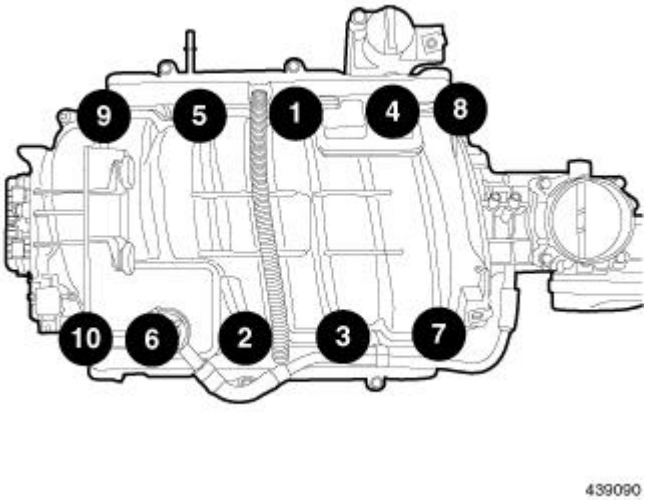

Fig. 261: Intake Manifold Retaining Bolt Removal & Tightening Sequence
Courtesy of CHRYSLER GROUP, LLC

2. Remove the intake manifold and throttle body as an assembly. Refer to **MANIFOLD, INTAKE, REMOVAL, 4.7L** or **MANIFOLD, INTAKE, REMOVAL, 5.7L** .

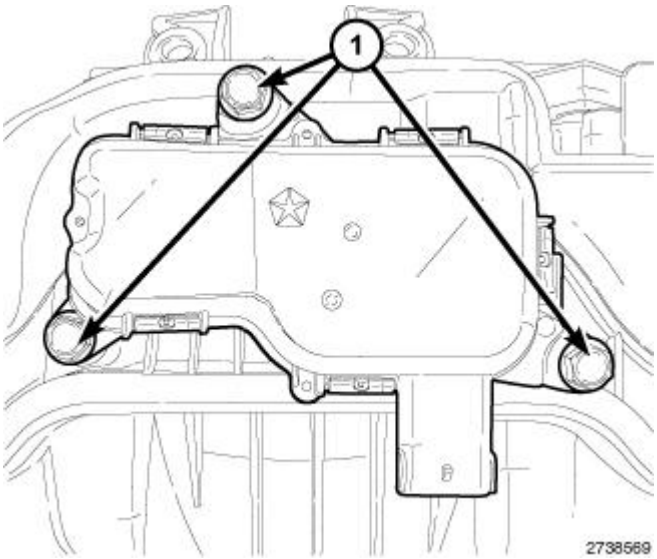

Fig. 262: Short Runner Valve Actuator Retaining Bolts
Courtesy of CHRYSLER GROUP, LLC

3. Remove the short runner valve actuator retaining bolts (1) and remove valve.

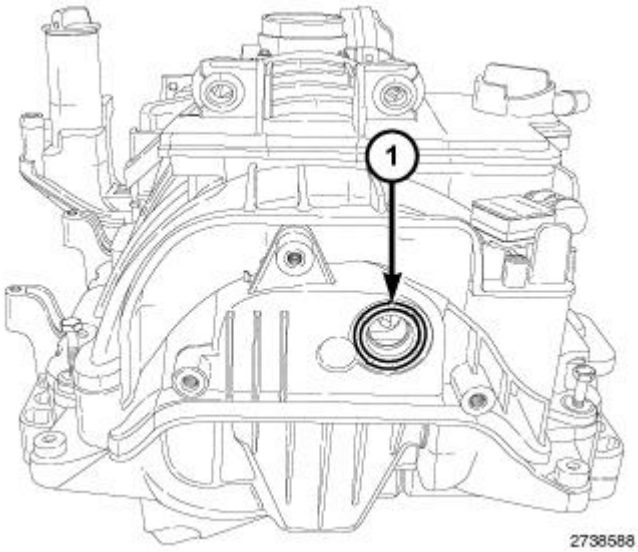

Fig. 263: Short Runner Valve Actuator Rubber O-Ring Seal
Courtesy of CHRYSLER GROUP, LLC

4. Remove and discard the short runner valve actuator rubber O-ring seal (1).

INSTALLATION

INSTALLATION

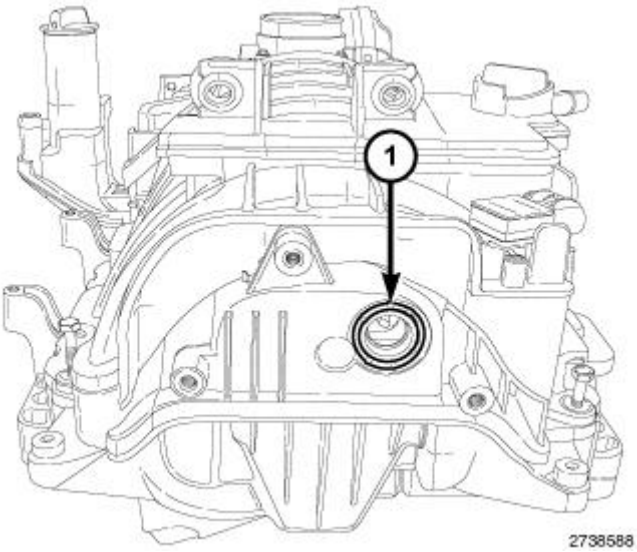

Fig. 264: Short Runner Valve Actuator Rubber O-Ring Seal
Courtesy of CHRYSLER GROUP, LLC

1. Install a new short runner valve actuator rubber O-ring seal (1).

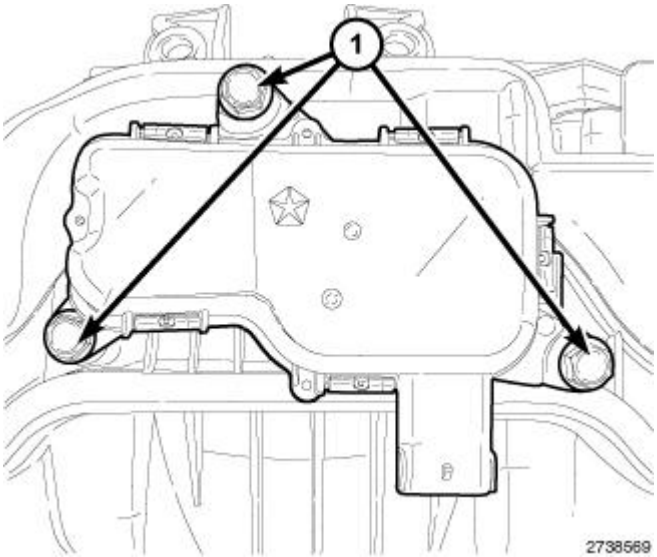

Fig. 265: Short Runner Valve Actuator Retaining Bolts
Courtesy of CHRYSLER GROUP, LLC

2. Position the short runner valve actuator, install the retaining bolts (1) and tighten to 5 N.m (44 in. lb.).

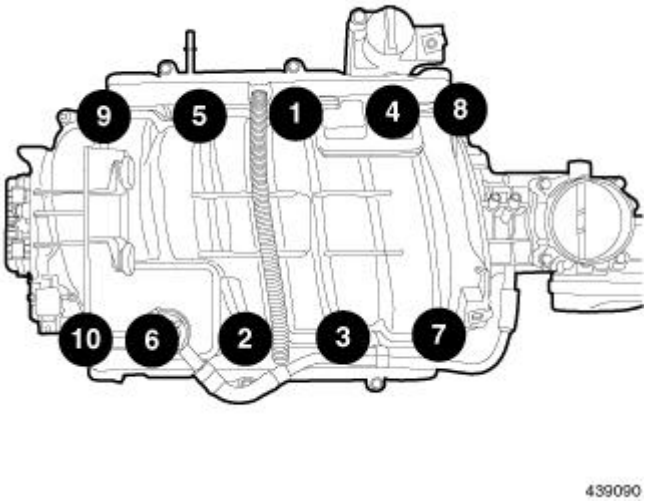

Fig. 266: Intake Manifold Retaining Bolt Removal & Tightening Sequence
Courtesy of CHRYSLER GROUP, LLC

3. Install the intake manifold and throttle body as an assembly. Refer to **MANIFOLD, INTAKE, INSTALLATION, 4.7L** or **MANIFOLD, INTAKE, INSTALLATION, 5.7L** .

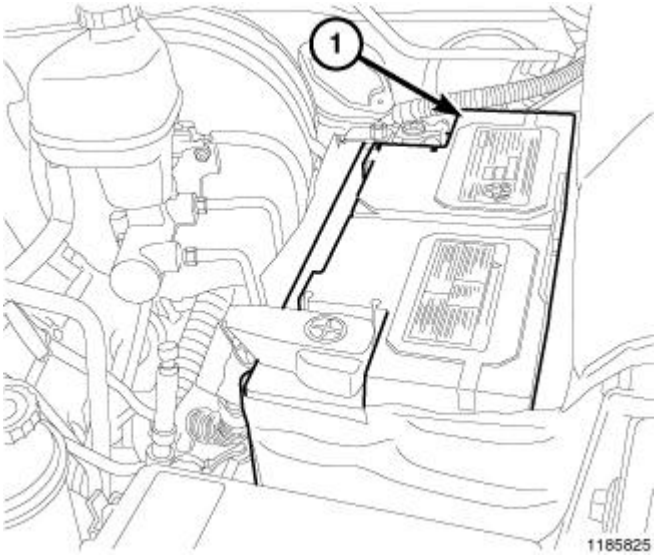

Fig. 267: Battery
Courtesy of CHRYSLER GROUP, LLC

4. Connect the negative battery cable (1).

SPECIFICATIONS

TORQUE SPECIFICATIONS

DESCRIPTION	N.m	Ft. Lbs.	In. Lbs.
Camshaft Position Sensor - 3.7L, 4.7L AND 5.7L Gas Engines	12	-	106
Crankshaft Position Sensor - 3.7L AND 4.7L	28	21	205
Crankshaft Position Sensor - 5.7L	12	9	105
Ignition Coil Mounting - 3.7L	8	-	70
Ignition Coil Mounting - 4.7L ***	12	-	106
Ignition Coil Mounting - 5.7L	7	-	62
* Knock Sensor - 3.7L, 4.7L, 5.7L	20	15 +/- 2	176
Spark Plugs - All 4.7L (Upper or lower row) (New plugs/gaskets)	27 +/- 3	20	-
Spark Plugs - All 4.7L (Upper or lower row) (Used plugs/gaskets)	22 +/- 3	16	-
** Spark Plugs - 5.7L	18 (± 3)	13 (± 2)	-
* Do not apply any sealant, thread-locker or adhesive to bolts. Poor sensor performance may result.			
** Torque critical tapered design. Do not exceed 15 ft. lbs.			
*** This same bolt is also used to mount the intake manifold.			

ENGINE FIRING ORDER - 3.7L

1 - 6 - 5 - 4 - 3 - 2

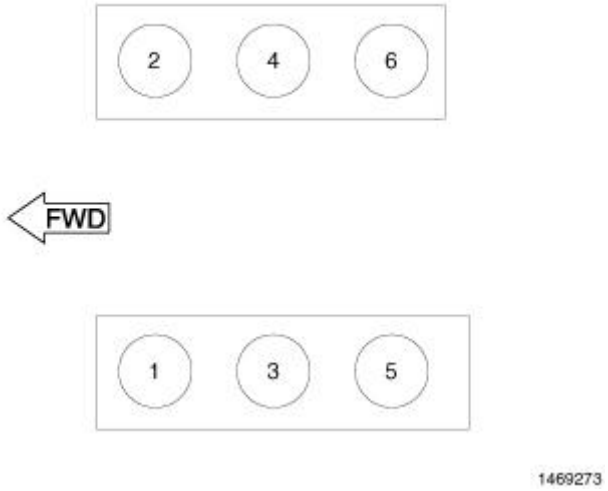

Fig. 1: Engine Cylinder Arrangement - 3.7L V6
Courtesy of CHRYSLER GROUP, LLC

ENGINE FIRING ORDER - 4.7L

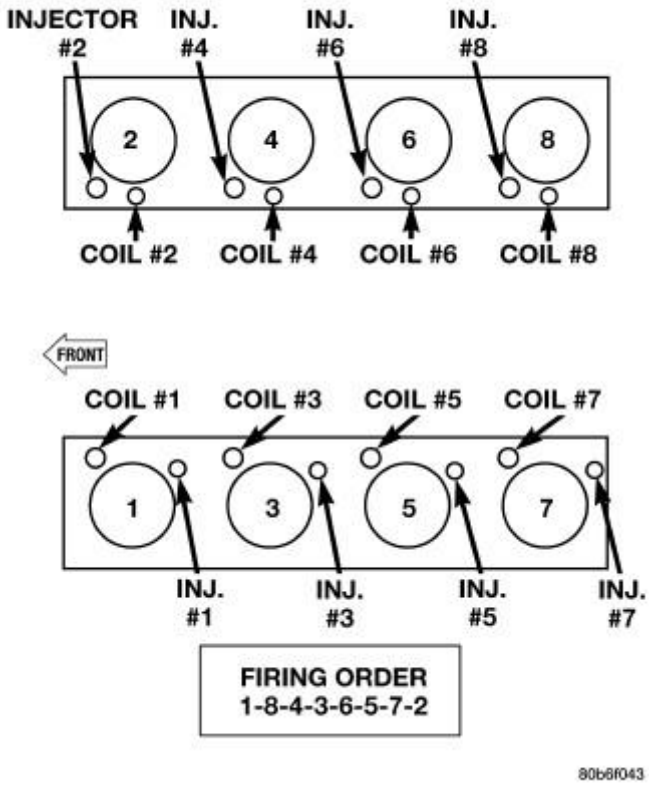

Fig. 2: Identifying Engine Firing Order - 3.7L V6
Courtesy of CHRYSLER GROUP, LLC

SPARK PLUGS

ENGINE	PLUG TYPE	ELECTRODE GAP
3.7L	ZFR6F - 11G (NGK)	1.1mm (0.043 in.)
4.7L (intake/upper row)	FR8TE2	1.0 mm (.040 in.)
4.7L (exhaust/lower row)	FR8T1332 (iridium tip)	1.2mm (0.50 in.)
5.7L	REC14MCC4	1.0 mm (.040 in.)

ENGINE FIRING ORDER - 5.7L

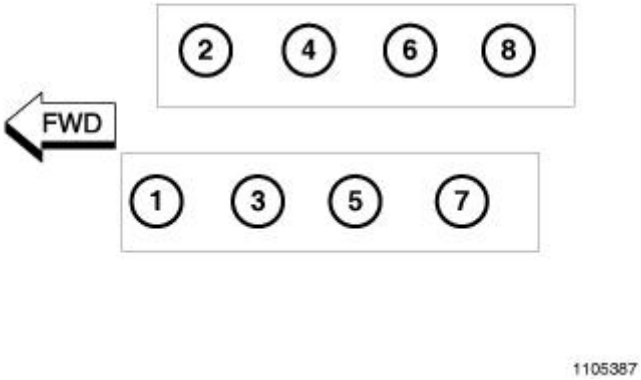

Fig. 3: Engine Cylinder Arrangement - 5.7L
Courtesy of CHRYSLER GROUP, LLC

The firing order for the 5.7L is 1-8-4-3-6-5-7-2.

IGNITION COIL RESISTANCE - 3.7L

PRIMARY RESISTANCE 21-27°C (70-80°F)	SECONDARY RESISTANCE 21-27°C (70-80°F)
0.6 - 0.9 Ohms	6, 000 - 9, 000 Ohms

IGNITION COIL RESISTANCE - 4.7L

PRIMARY RESISTANCE 21-27°C (70-80°F)	SECONDARY RESISTANCE 21-27°C (70-80°F)
0.6 - 0.9 Ohms	6, 000 - 9, 000 Ohms

IGNITION COIL RESISTANCE - 5.7L

PRIMARY RESISTANCE @ 21-27°C (70-80°F)
0.558 - 0.682 Ohms

(Plus or Minus 10% @ 70-80° F)

IGNITION TIMING

Ignition timing is not adjustable on any engine.

CAPACITOR, IGNITION

DESCRIPTION

DESCRIPTION

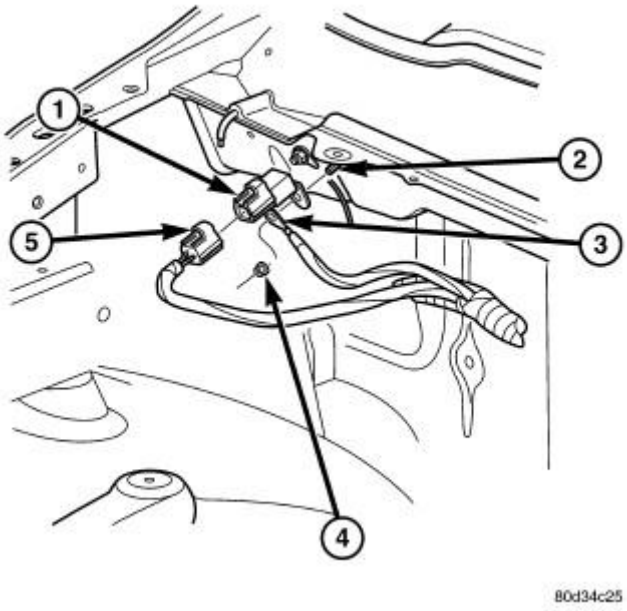

Fig. 4: Ignition Coil Capacitor
Courtesy of CHRYSLER GROUP, LLC

1 - COIL CAPACITOR
2 - MOUNTING STUD
3 - GROUND STRAP
4 - MOUNTING NUT
5 - ELEC. CONNECT.

One coil capacitor (1) is used. It is located in the right-rear section of the engine compartment.

OPERATION

OPERATION

The coil capacitor(s) help dampen the amount of conducted electrical noise to the camshaft position sensor, crankshaft position sensor, and throttle position sensor. This noise is generated on the 12V supply wire to the ignition coils and fuel injectors.

REMOVAL

REMOVAL

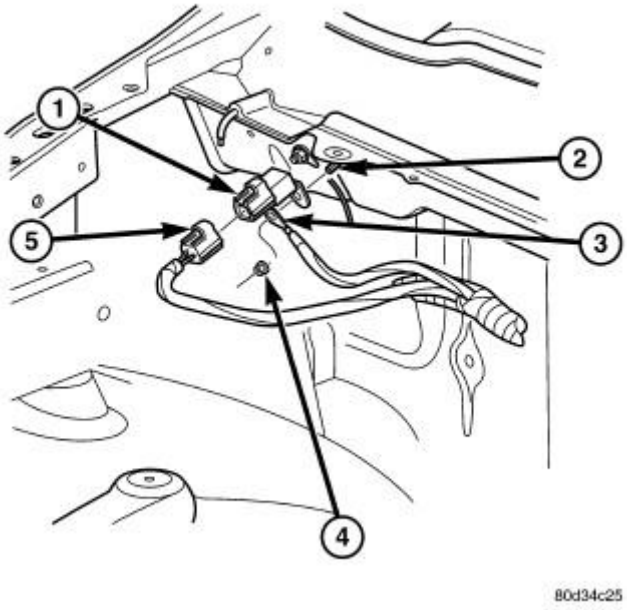

Fig. 5: Ignition Coil Capacitor
Courtesy of CHRYSLER GROUP, LLC

1 - COIL CAPACITOR
2 - MOUNTING STUD
3 - GROUND STRAP
4 - MOUNTING NUT
5 - ELEC. CONNECT.

The coil capacitor is located in the right-rear section of the engine compartment. It is attached with a mounting stud and nut.

1. Disconnect electrical connector (5) at capacitor.
2. Remove mounting nut and remove ground strap.
3. Remove capacitor (1).

INSTALLATION

INSTALLATION

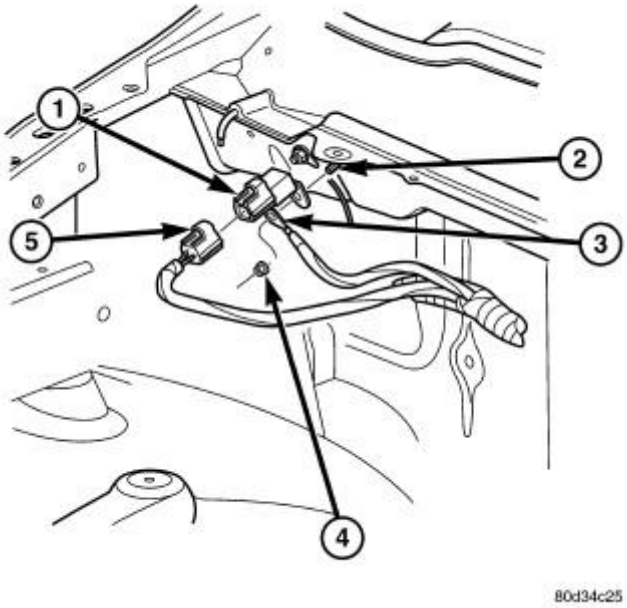

Fig. 6: Ignition Coil Capacitor
Courtesy of CHRYSLER GROUP, LLC

1 - COIL CAPACITOR
2 - MOUNTING STUD
3 - GROUND STRAP
4 - MOUNTING NUT
5 - ELEC. CONNECT.

1. Position capacitor (1) to mounting stud (2).
2. Position ground strap (3) to mounting stud (2).
3. Tighten nut (4) to 7 N.m (60 in. lbs.) torque.
4. Connect electrical connector (5) to coil capacitor.

COIL, IGNITION

REMOVAL

3.7L

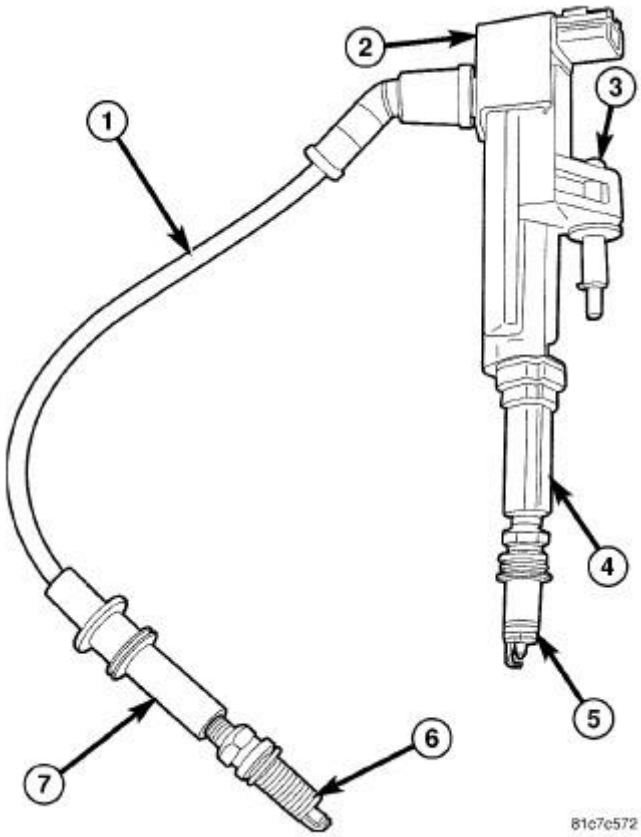

Fig. 7: Ignition Coil, Spark Plug Wire, Rubber Boot & Spark Plug
Courtesy of CHRYSLER GROUP, LLC

NOTE: **An ignition coil (2) with a spark plug wire (1) attached is used for two cylinders. The three coils fits into machined holes in the cylinder head for cylinders 1, 3, and 5. A mounting stud/nut secures each coil to the top of the intake manifold. The bottom of the coil is equipped with a rubber boot (4) to seal the spark plug (5) to the coil. Inside each rubber boot is a spring. The spring is used for a mechanical contact between the coil and the top of the spark plug. These rubber boots and springs are a permanent part of the coil and are not serviced separately. An O-ring is used to seal the coil at the opening into the cylinder head.**

1. Depending on which coil is being removed, the throttle body air intake tube or intake box may need to be removed to gain access to coil.
2. Disconnect electrical connector from coil by pushing downward on release lock on top of connector and pull connector from coil.
3. Disconnect spark plug wire from coil (1).
4. Clean area at base of coil with compressed air before removal.

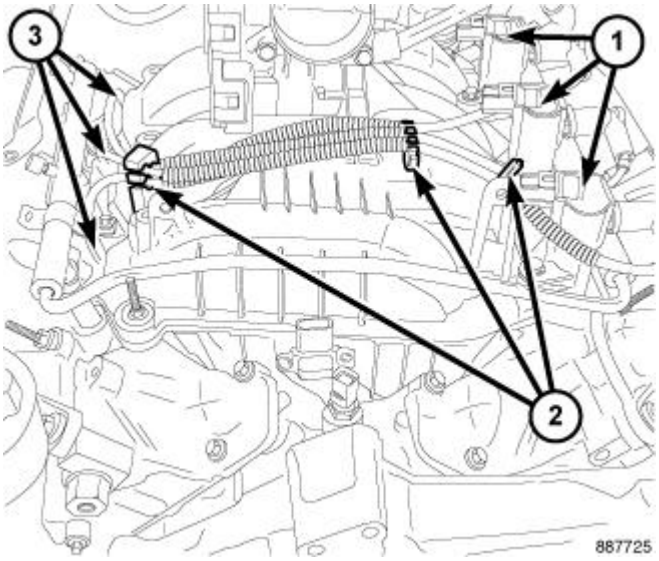

Fig. 8: Locating Ignition Coils
Courtesy of CHRYSLER GROUP, LLC

5. Remove coil mounting bolt.
6. Carefully pull up coil (1) from cylinder head opening with a slight twisting action.
7. Remove coil from vehicle.

4.7L

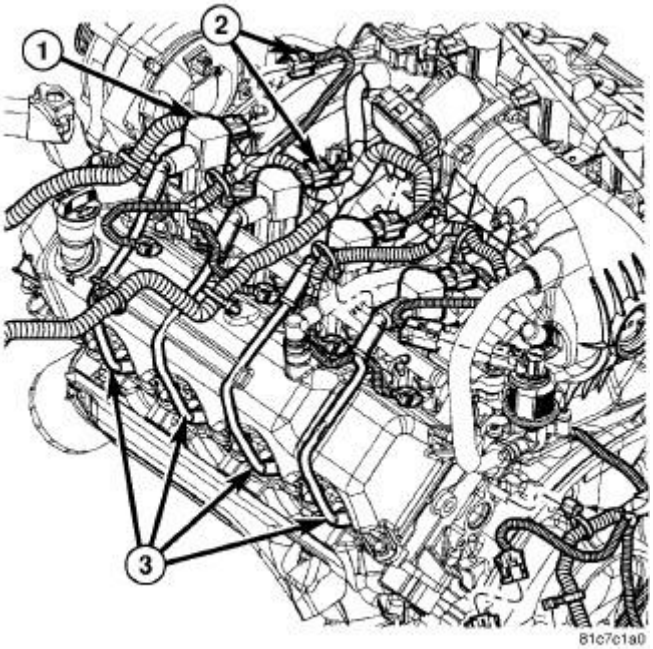

Fig. 9: Ignition Coil Location - 4.7L
Courtesy of CHRYSLER GROUP, LLC

An individual ignition coil (1) is used for each pair of spark plugs. Each coil attaches directly to the top of the eight **upper** bank of spark plugs. Secondary cables (3) connect each coil to the eight **lower** bank of spark plugs. The coils themselves fit into machined holes in the cylinder head. Each coil also has its own individual electrical connector (2).

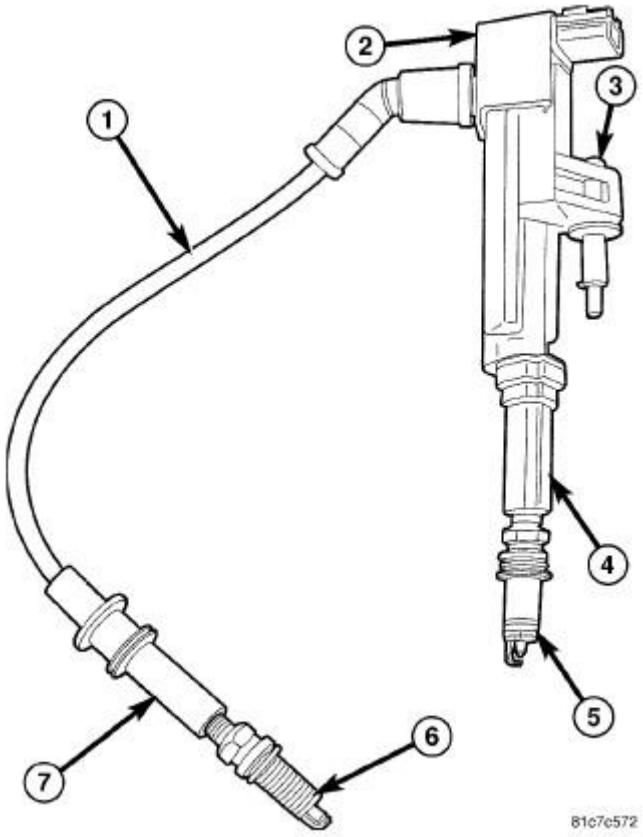

Fig. 10: Ignition Coil, Spark Plug Wire, Rubber Boot & Spark Plug
Courtesy of CHRYSLER GROUP, LLC

NOTE: **The bolt used to mount the ignition coil assembly is the same bolt used to mount the intake manifold. If replacing either one or all eight coils, check and re-torque all eight bolts.**

A mounting bolt (3) secures each coil assembly to the top of the intake manifold. The bottom of the coil assembly is equipped with a rubber boot (4) to seal the spark plug (5) to the coil. Inside each rubber boot is a spring. The spring is used for a mechanical contact between the coil and the top of the upper bank of spark plugs. These rubber boots and springs are a permanent part of the coil assembly and are not serviced separately. The rubber boot (4) is also used to seal the coil at the opening into the cylinder head.

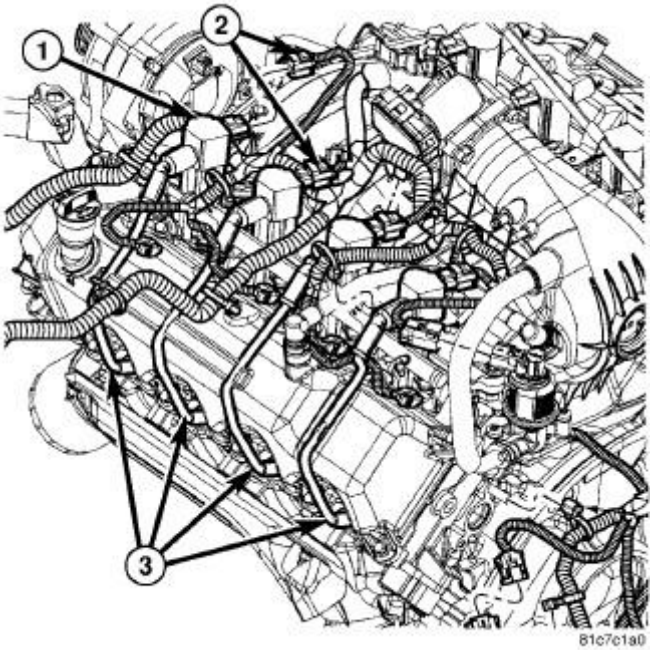

Fig. 11: Ignition Coil Location - 4.7L
Courtesy of CHRYSLER GROUP, LLC

1. Depending on which coil assembly is being removed, the throttle body air intake tube or intake box may need to be removed, to gain access to the coil.
2. Disconnect the electrical connector (2) from the coil assembly by pushing downward on the release lock on the top of the connector and pull connector from the coil.
3. Disconnect the secondary cable (3) at the coil assembly.

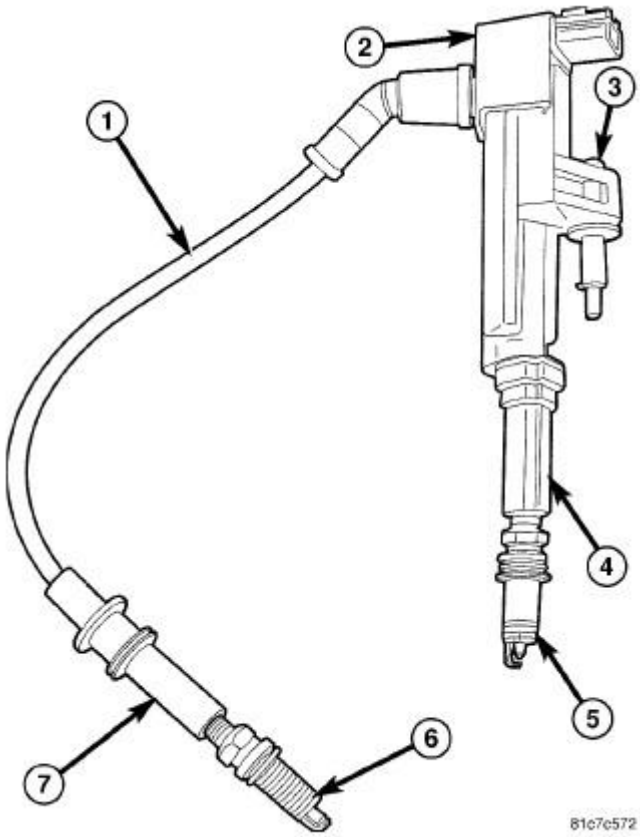

Fig. 12: Ignition Coil, Spark Plug Wire, Rubber Boot & Spark Plug
Courtesy of CHRYSLER GROUP, LLC

4. Clean the area at the base of the coil assembly with compressed air before removal.
5. Remove the coil assembly mounting bolt (3).
6. Carefully pull up the coil assembly (2) from the cylinder head opening with a slight twisting action. This helps to disengage the rubber boot (4) from the spark plug (5).
7. Remove the coil assembly from the engine.

5.7L

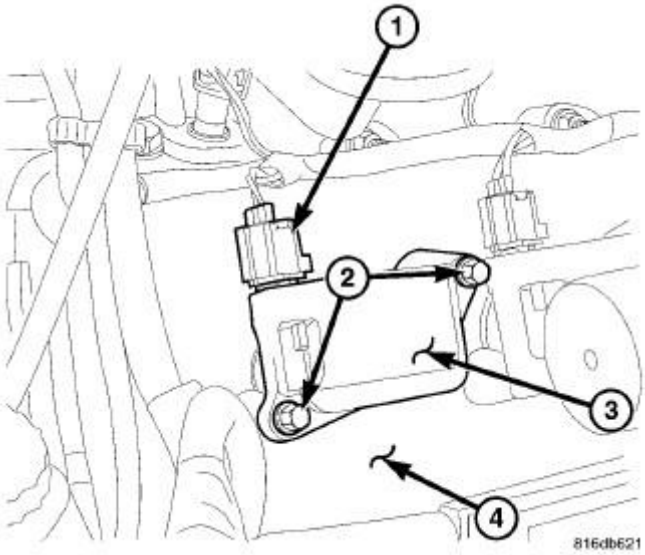

Fig. 13: Identifying 5.7L Ignition Coil
Courtesy of CHRYSLER GROUP, LLC

1. Disconnect the electrical connector (1) from coil (3).
2. Clean area at base of coil with compressed air before removal.
3. Remove two mounting bolts (2) (note that mounting bolts are retained to coil).

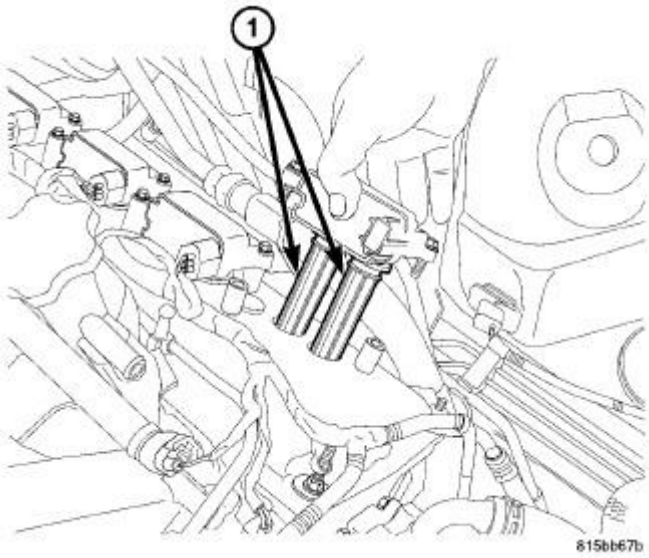

Fig. 14: Removing/Installing Ignition Coil
Courtesy of CHRYSLER GROUP, LLC

4. Carefully pull up coil (1) from valve cover.
5. Remove coil (1) from vehicle.

INSTALLATION

3.7L

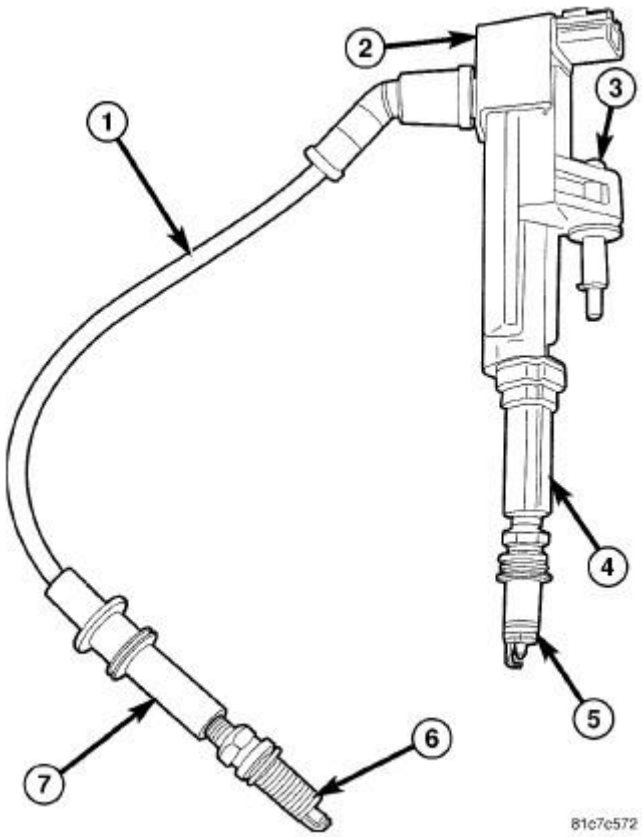

Fig. 15: Ignition Coil, Spark Plug Wire, Rubber Boot & Spark Plug
Courtesy of CHRYSLER GROUP, LLC

1. Using compressed air, blow out any dirt or contaminants from around top of spark plug.
2. Check the condition of the coil rubber boot (4). To aid in coil installation, apply silicone based grease such as Mopar® Dielectric Grease # J8126688 into the spark plug end of the rubber boot (4) and to the top of the spark plug (5).

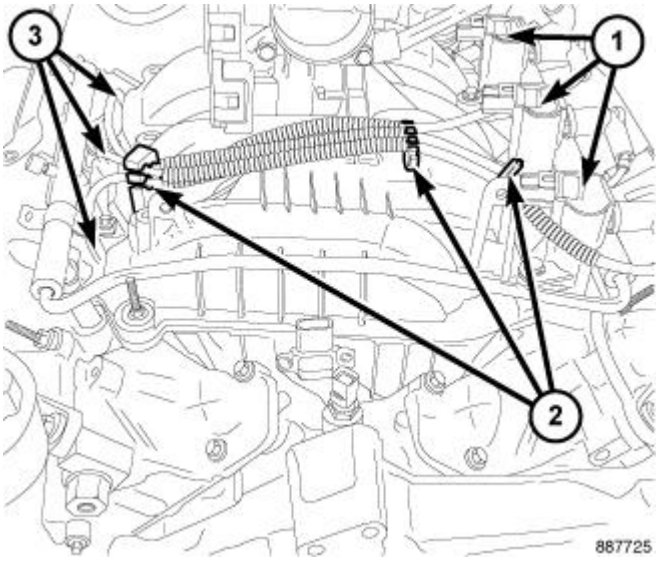

Fig. 16: Locating Ignition Coils
Courtesy of CHRYSLER GROUP, LLC

3. Position the ignition coil assembly (1) into the cylinder head opening. Using a twisting action, push the ignition coil assembly onto the spark plug.
4. Install coil mounting bolt. Tighten to 8 N.m (70 in.lbs).
5. Connect the electrical connector to the ignition coil assembly (1) by snapping into position.
6. Install the spark plug wires (3).
7. If necessary, install the throttle body air intake tube, or intake air box.

4.7L

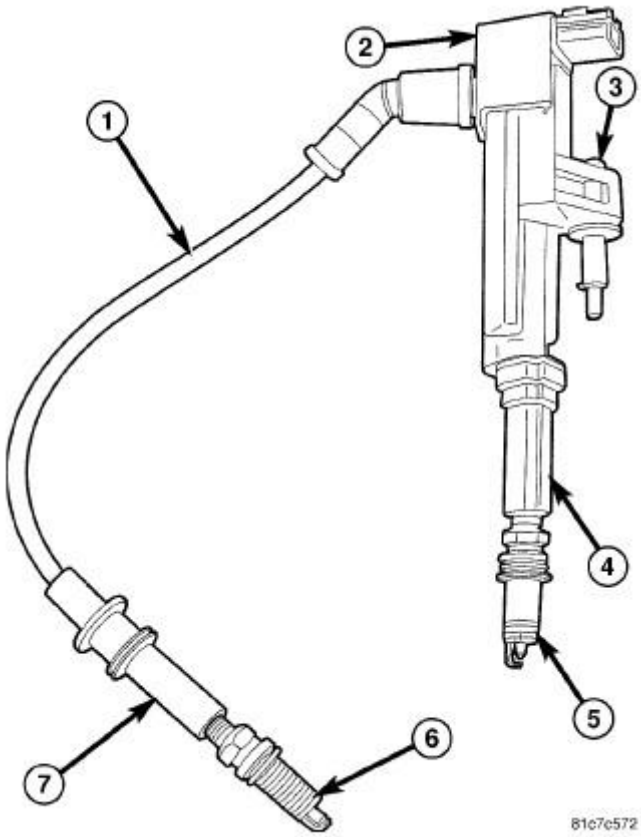

Fig. 17: Ignition Coil, Spark Plug Wire, Rubber Boot & Spark Plug
Courtesy of CHRYSLER GROUP, LLC

1. Using compressed air, blow out any dirt or contaminants from around the top of the spark plug.
2. Check the condition of the coil rubber boot (4). To aid in coil installation, apply silicone based grease such as Mopar® Dielectric Grease # J8126688 into the spark plug end of the rubber boot (4) and to the top of the spark plug (5).
3. Position the ignition coil assembly into the cylinder head opening. Using a twisting action, push the ignition coil assembly onto the spark plug.

NOTE: **Note: The bolt used to mount the ignition coil assembly is also the same bolt used to mount the intake manifold. If replacing either one or all eight coils, check and re-torque all eight bolts.**

4. Tighten the coil assembly mounting bolt (3) to 12 N.m (9 ft. lbs.).

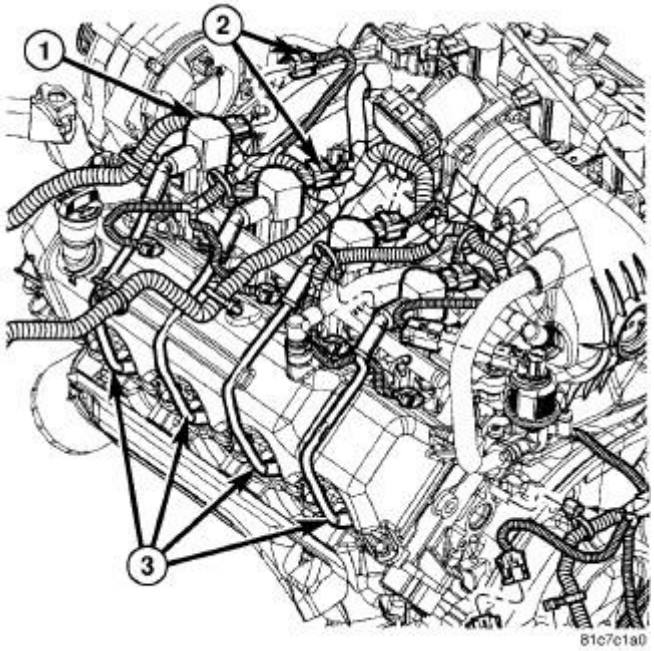

Fig. 18: Ignition Coil Location - 4.7L
Courtesy of CHRYSLER GROUP, LLC

5. Connect the electrical connector (2) to the coil assembly by snapping into position.
6. Connect the secondary cable (3) to the coil assembly (1).
7. If necessary, install the throttle body air intake tube or intake air box to the top of the engine.

5.7L

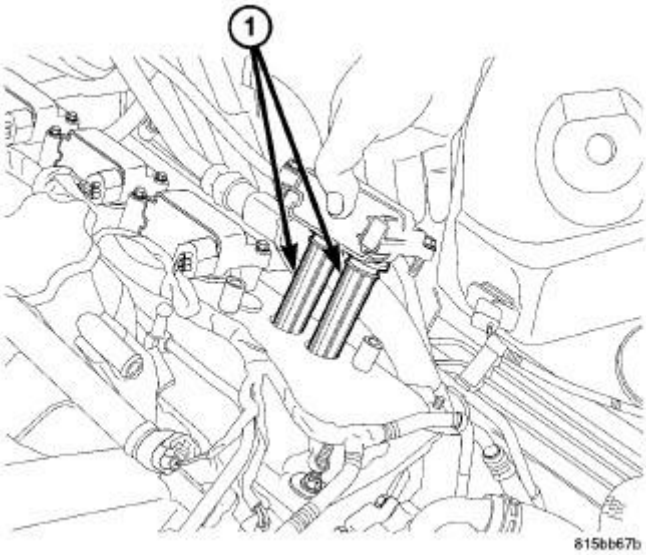

Fig. 19: Removing/Installing Ignition Coil
Courtesy of CHRYSLER GROUP, LLC

1. Using compressed air, blow out any dirt or contaminants from around top of spark plug.

NOTE: **Use dielectric grease on each of the spark plug boots before installing the coil.**

2. Position ignition coil (1) into valve cover and push onto spark plugs.

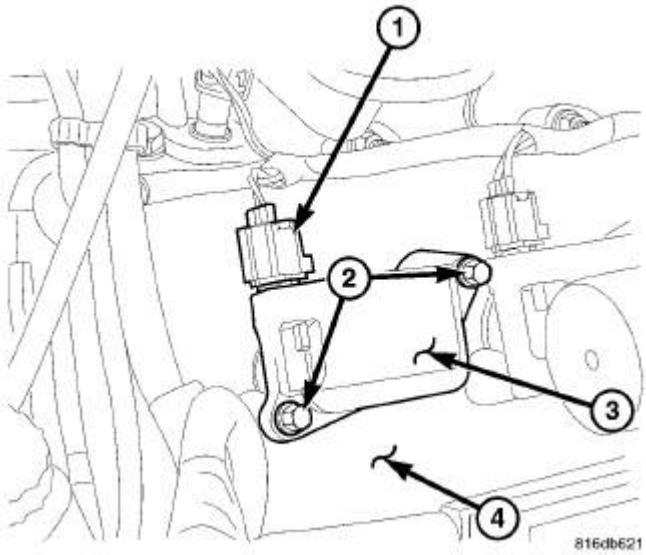

Fig. 20: Identifying 5.7L Ignition Coil
Courtesy of CHRYSLER GROUP, LLC

3. Install 2 coil mounting bolts (2). Tighten to 7N.m (62 in.lbs.).
4. Connect electrical connector (1) to coil by snapping into position.

SENSOR, CAMSHAFT POSITION

DESCRIPTION

3.7L AND 4.7L

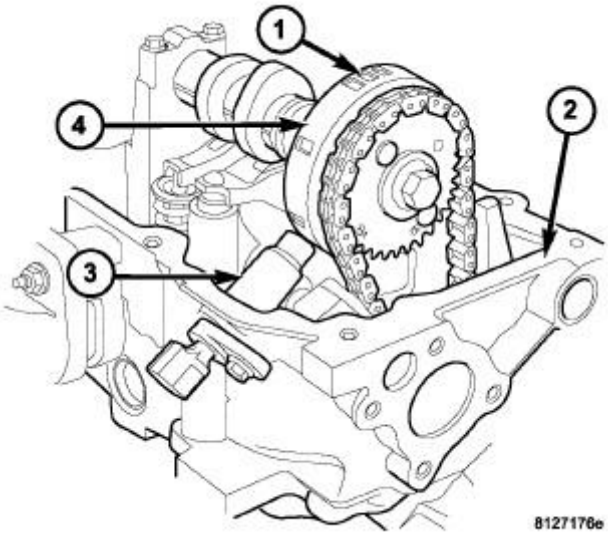

Fig. 21: CMP Sensor & Tone Wheel
Courtesy of CHRYSLER GROUP, LLC

The Camshaft Position Sensor (CMP) (3) is bolted to the right-front side of the right cylinder head (2).

5.7L

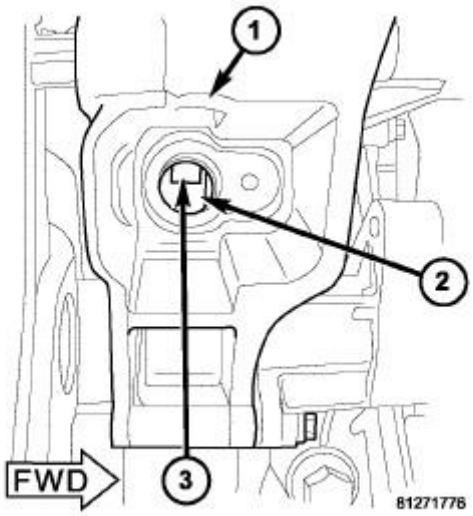

Fig. 22: Locating CMP Sensor - 5.7L
Courtesy of CHRYSLER GROUP, LLC

The Camshaft Position Sensor (CMP) (2) is located below the generator on the timing chain / case cover (1) on the right/front side of engine.

OPERATION

3.7L

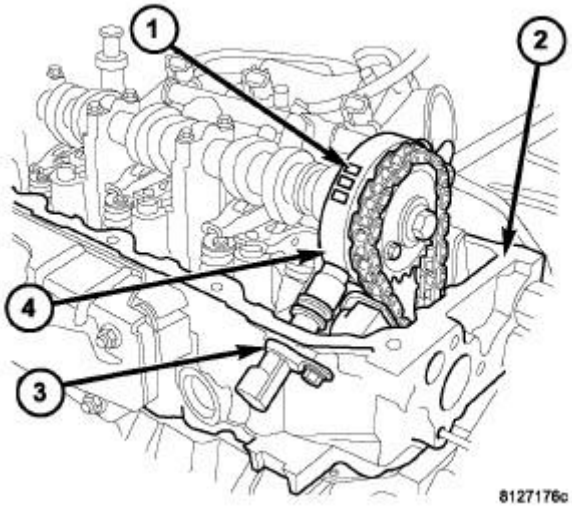

Fig. 23: Camshaft Position Sensor Location - 3.7L
Courtesy of CHRYSLER GROUP, LLC

The Camshaft Position Sensor (CMP) sensor on the 3.7L (3) contains a hall effect device referred to as a sync signal generator. A rotating target wheel (tonewheel) (4) for the CMP is located at the front of the camshaft for the right cylinder head (2). This sync signal generator detects notches (1) located on a tonewheel. As the tonewheel rotates, the notches pass through the sync signal generator. The signal from the CMP sensor is used in conjunction with the Crankshaft Position Sensor (CKP) to differentiate between fuel injection and spark events. It is also used to synchronize the fuel injectors with their respective cylinders.

When the leading edge of the tonewheel notch enters the tip of the CMP, the interruption of magnetic field causes the voltage to switch high, resulting in a sync signal of approximately 5 volts.

When the trailing edge of the tonewheel notch leaves the tip of the CMP, the change of the magnetic field causes the sync signal voltage to switch low to 0 volts.

4.7L

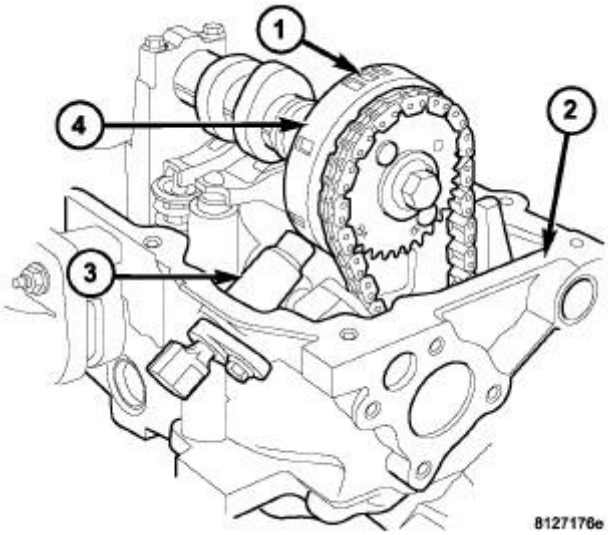

Fig. 24: CMP Sensor & Tone Wheel
Courtesy of CHRYSLER GROUP, LLC

The CMP sensor engine contains a hall effect device called a sync signal generator to generate a fuel sync signal. This sync signal generator detects notches located on a tonewheel. The tonewheel (4) is located at the front of the camshaft for the right cylinder head (2). As the tonewheel rotates, the notches (1) pass through the sync signal generator. The pattern of the notches (viewed counter-clockwise from front of engine) is: 1 notch, 2 notches, 3 notches, 3 notches, 2 notches, 1 notch, 3 notches and 1 notch. The signal from the CMP sensor is used in conjunction with the crankshaft position sensor to differentiate between fuel injection and spark events. It is also used to synchronize the fuel injectors with their respective cylinders.

5.7L

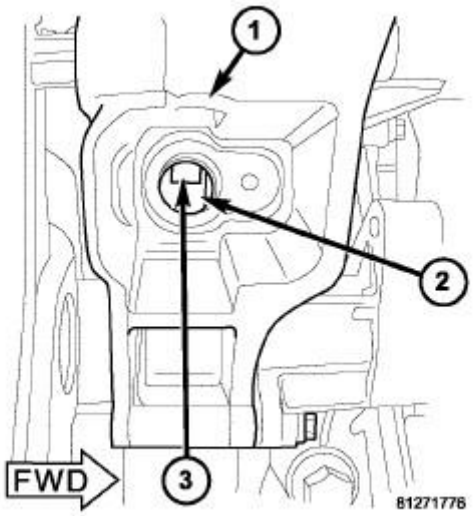

Fig. 25: Locating CMP Sensor - 5.7L

Courtesy of CHRYSLER GROUP, LLC

The CMP sensor is used in conjunction with the crankshaft position sensor to differentiate between fuel injection and spark events. It is also used to synchronize the fuel injectors with their respective cylinders. The sensor generates electrical pulses. These pulses (signals) are sent to the Powertrain Control Module (PCM). The PCM will then determine crankshaft position from both the camshaft position sensor and crankshaft position sensor.

The tonewheel is located at the front of the camshaft (2). As the tonewheel rotates, notches (3) pass through the sync signal generator.

When the cam gear is rotating, the sensor will detect the notches. Input voltage from the sensor to the PCM will then switch from a low (approximately 0.3 volts) to a high (approximately 5 volts). When the sensor detects a notch has passed, the input voltage switches back low to approximately 0.3 volts.

REMOVAL

3.7L

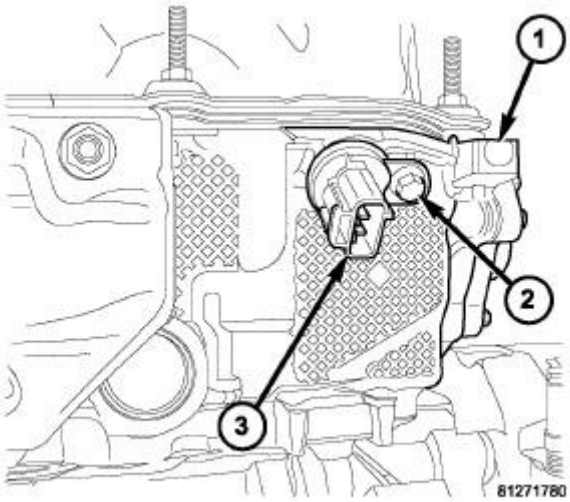

Fig. 26: Camshaft Position Sensor
Courtesy of CHRYSLER GROUP, LLC

The Camshaft Position Sensor (CMP) (3) is bolted to the front/top of the right cylinder head (1).

1. Disconnect electrical connector at CMP sensor.
2. Remove sensor mounting bolt (2).
3. Carefully twist sensor from cylinder head.
4. Check condition of sensor O-ring.

4.7L

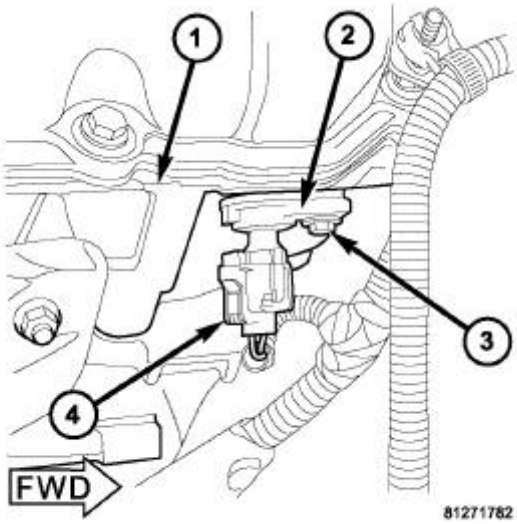

Fig. 27: Cylinder Head, CMP Sensor, Retaining Bolt & Connector
Courtesy of CHRYSLER GROUP, LLC

The Camshaft Position Sensor (CMP) (2) is bolted to the front/top of the right cylinder head (1).

1. Raise and support vehicle.
2. Disconnect electrical connector (4) at CMP sensor.
3. Remove sensor mounting bolt (3).
4. Carefully twist sensor from cylinder head.
5. Check condition of sensor O-ring.

5.7L

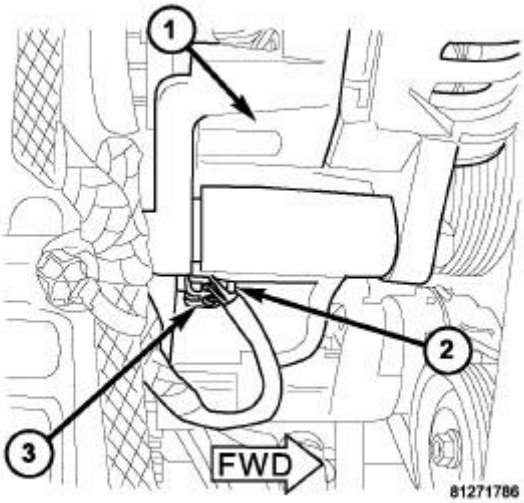

Fig. 28: Locating Camshaft Position Sensor - 5.7L
Courtesy of CHRYSLER GROUP, LLC

The Camshaft Position Sensor (CMP) (3) is located on right side of timing gear/chain cover below generator (1).

1. Disconnect electrical connector (3) at CMP sensor.

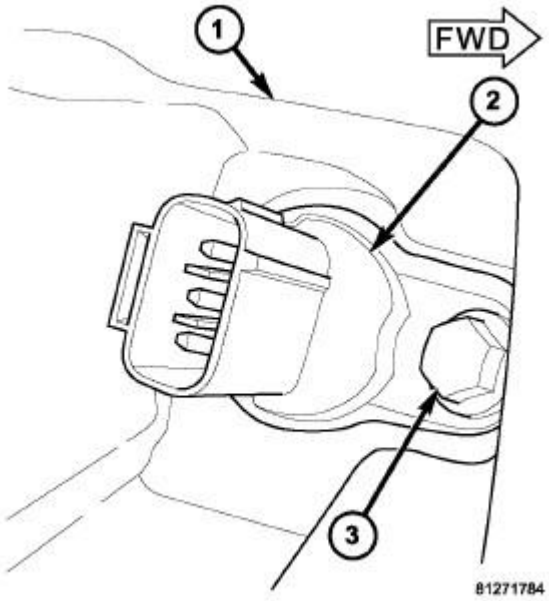

Fig. 29: Sensor & Sensor Mounting Bolt
Courtesy of CHRYSLER GROUP, LLC

2. Remove sensor mounting bolt (3).
3. Carefully twist sensor (2) from timing gear/chain cover.
4. Check condition of sensor O-ring.

INSTALLATION

3.7L

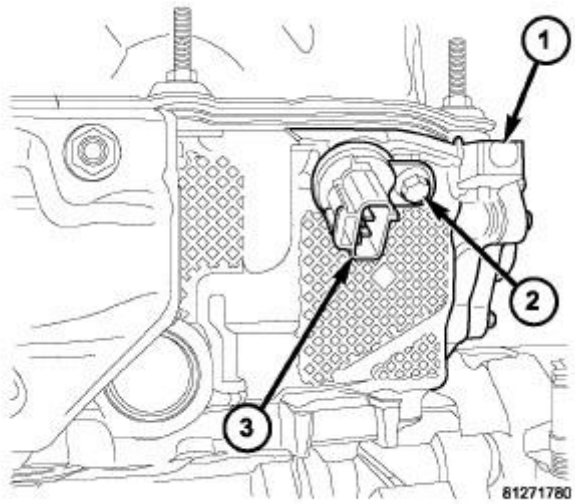

Fig. 30: Camshaft Position Sensor
Courtesy of CHRYSLER GROUP, LLC

1. Clean out machined hole in cylinder head.
2. Apply a small amount of engine oil to sensor O-ring.
3. Install sensor (3) into cylinder head (1) with a slight rocking and twisting action.

CAUTION: Before tightening sensor mounting bolt, be sure sensor is completely flush to cylinder head. If sensor is not flush, damage to sensor mounting tang may result.

4. Install mounting bolt (2) and tighten to 12 N.m (106 in. lbs.).
5. Connect electrical connector to sensor.

4.7L

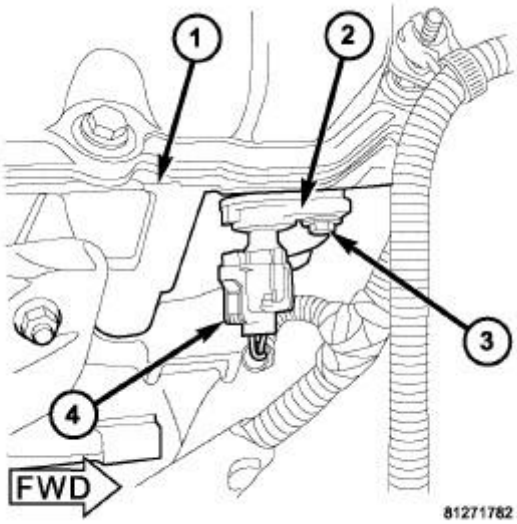

Fig. 31: Cylinder Head, CMP Sensor, Retaining Bolt & Connector
Courtesy of CHRYSLER GROUP, LLC

1. Clean out machined hole in cylinder head.
2. Apply a small amount of engine oil to sensor O-ring.
3. Install sensor (2) into cylinder head (1) with a slight rocking action. Do not twist sensor into position as damage to O-ring may result.

CAUTION: Before tightening sensor mounting bolt, be sure sensor is completely flush to cylinder head. If sensor is not flush, damage to sensor mounting tang may result.

4. Install mounting bolt (3) and tighten to 12 N.m (106 in.lbs.).
5. Connect electrical connector to sensor.

5.7L

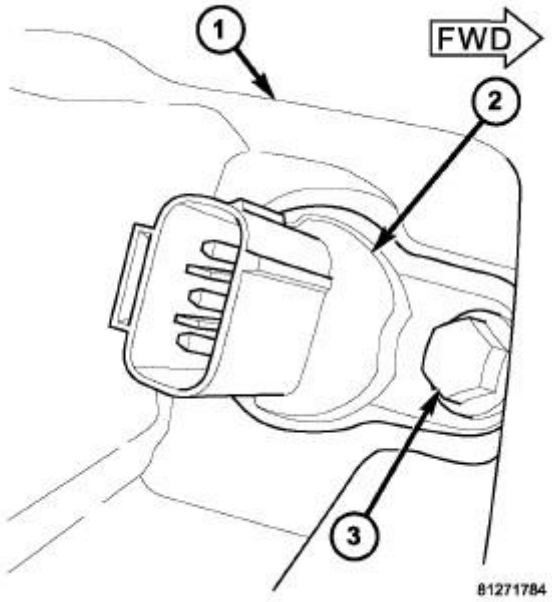

Fig. 32: Sensor & Sensor Mounting Bolt
Courtesy of CHRYSLER GROUP, LLC

1. Clean out machined hole in timing gear/chain cover.
2. Install sensor (2) into timing gear/chain cover with a slight rocking action. Do not twist sensor into position as damage to O-ring may result.

CAUTION: Before tightening the CMP sensor retaining bolt, be sure the sensor is completely flush to the timing cover. If the sensor is not flush, damage to the sensor mounting tang may result.

3. Install mounting bolt (3) and tighten to 12 N.m (106 in.lbs.).
4. Connect electrical connector to sensor.

SENSOR, KNOCK

DESCRIPTION

DESCRIPTION

Two knock sensors are bolted into the cylinder block under the intake manifold **3.7L** .

The knock sensor is bolted to the cylinder block under the intake manifold **4.7L** .

Two knock sensors are also used with the **5.7L** . These are bolted into each side of the cylinder block (outside) under the exhaust manifold.

OPERATION

OPERATION

When the knock sensor detects a knock in one of the cylinders on the corresponding bank, it sends an input signal to the Powertrain Control Module (PCM). In response, the PCM retards ignition timing for all cylinders by a scheduled amount.

Knock sensors contain a piezoelectric crystal which constantly vibrates and sends an input voltage (signal) to the PCM while the engine operates. As the intensity of the crystal's vibration increases, the knock sensor output voltage also increases.

The voltage signal produced by the knock sensor increases with the amplitude of vibration. The PCM receives the knock sensor voltage signal as an input. If the signal rises above a predetermined level, the PCM will store that value in memory and retard ignition timing to reduce engine knock. If the knock sensor voltage exceeds a preset value, the PCM retards ignition timing for all cylinders. It is not a selective cylinder retard.

The PCM ignores knock sensor input during engine idle conditions. Once the engine speed exceeds a specified value, knock retard is allowed.

Knock retard uses its own short term and long term memory program.

Long term memory stores previous detonation information in its battery-backed RAM. The maximum authority that long term memory has over timing retard can be calibrated.

Short term memory is allowed to retard timing up to a preset amount under all operating conditions (as long as rpm is above the minimum rpm) except at Wide Open Throttle (WOT). The PCM, using short term memory, can respond quickly to retard timing when engine knock is detected. Short term memory is lost any time the ignition key is turned off.

NOTE: **Over or under tightening the sensor mounting bolts will affect knock sensor performance, possibly causing improper spark control. Always use the specified torque when installing the knock sensors.**

REMOVAL

3.7L

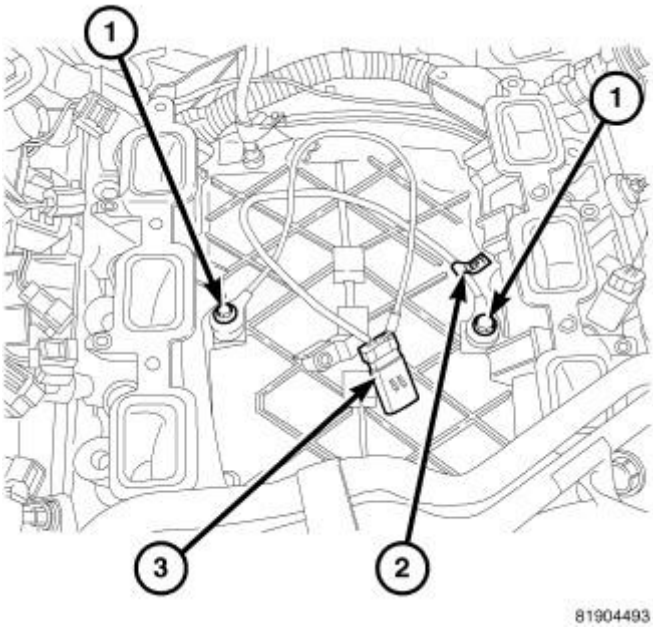

Fig. 33: Knock Sensor & Identification Tag
Courtesy of CHRYSLER GROUP, LLC

The two knock sensors (1) are bolted into the cylinder block under the intake manifold. The two sensors share a common wiring harness using one electrical connector (3). Because of this, they must be replaced as a pair.

NOTE: **The left sensor is identified by an identification tag (LEFT) (2). It is also identified by a larger bolt head. The Powertrain Control Module (PCM) must have and know the correct sensor left/right positions. Do not mix the sensor locations.**

1. Remove intake manifold. Refer to **MANIFOLD, INTAKE, REMOVAL, 3.7L** .
2. Disconnect knock sensor dual pigtail harness from engine wiring harness. This connection is made near rear of engine.
3. Remove both sensor mounting bolts. Note foam strip on bolt threads. This foam is used only to retain the bolts to sensors for plant assembly. It is not used as a sealant. Do not apply any adhesive, sealant or thread locking compound to these bolts.
4. Remove sensors from engine.

4.7L

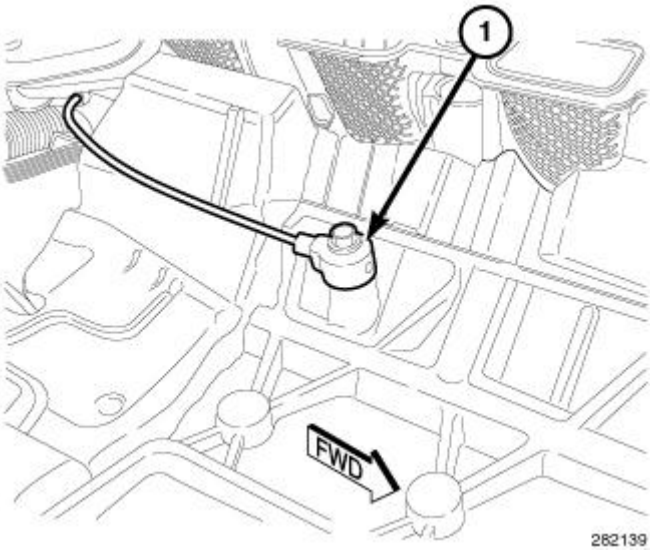

Fig. 34: Knock Sensor - 4.7L
Courtesy of CHRYSLER GROUP, LLC

1. Remove the intake manifold. Refer to **MANIFOLD, INTAKE, REMOVAL, 4.7L** .
2. Remove the knock sensor retaining bolt and remove the knock sensor (1).

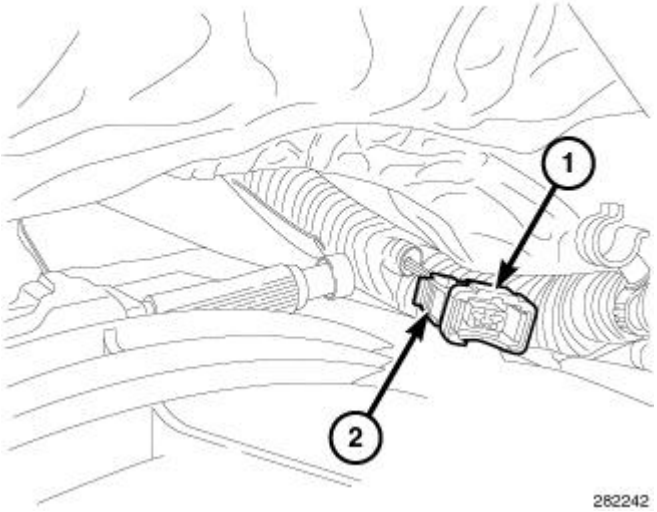

Fig. 35: Knock Sensor Electrical Connector
Courtesy of CHRYSLER GROUP, LLC

3. Disconnect the knock sensor electrical connector (1) from the engine harness located at the back of engine by pressing on the connector lock tab (2).
4. Thoroughly clean the knock sensor mounting hole.

5.7L

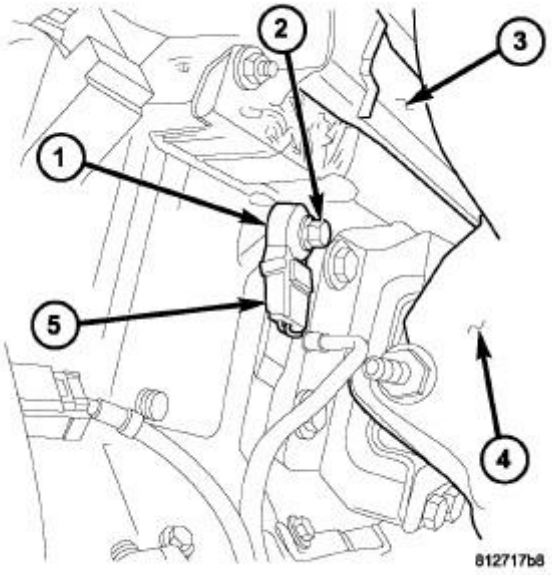

Fig. 36: Knock Sensor - 5.7L
Courtesy of CHRYSLER GROUP, LLC

Two knock sensors (1) are used. Each sensor is bolted to the outside of the cylinder block below the exhaust manifold(s) (3).

1. Raise and support the vehicle.
2. Disconnect the knock sensor electrical connector(s) (5).
3. Remove the knock sensor retaining bolt(s) (2).

NOTE: **Note the foam strip on bolt threads. This foam strip is used only to retain the bolts to the sensors for plant assembly. It is not used as a sealant. Do not apply any adhesive, sealant or thread locking compound to these bolts.**

4. Remove the knock sensor(s) (1) from the cylinder block.

INSTALLATION

3.7L

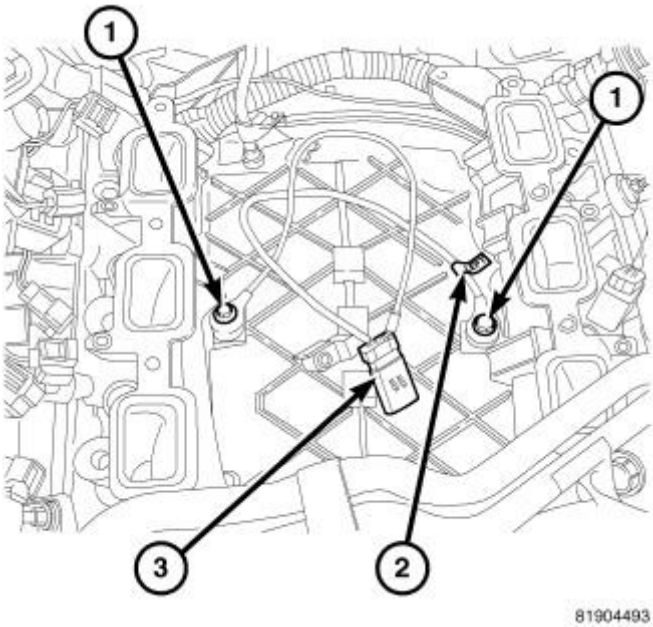

Fig. 37: Knock Sensor & Identification Tag
Courtesy of CHRYSLER GROUP, LLC

NOTE: **The left sensor is identified by an identification tag (LEFT) (2). It is also identified by a larger bolt head. The Powertrain Control Module (PCM) must have and know the correct sensor left/right positions. Do not mix the sensor locations.**

1. Thoroughly clean knock sensor mounting holes.
2. Install sensors (1) into cylinder block.

NOTE: **Over or under tightening the sensor mounting bolts will affect knock sensor performance, possibly causing improper spark control. Always use the specified torque when installing the knock sensors. The torque for the knock senor bolt is relatively light for an 8 mm bolt.**

NOTE: **Note foam strip on bolt threads. This foam is used only to retain the bolts to sensors for plant assembly. It is not used as a sealant. Do not apply any adhesive, sealant or thread locking compound to these bolts.**

3. Install and tighten mounting bolts. Tighten to 15 +/- 2 ft.lbs. (20 N.m) (176 in.lbs).
4. Connect knock sensor wiring harness to engine harness at rear of intake manifold.
5. Install intake manifold. Refer to **MANIFOLD, INTAKE, INSTALLATION, 3.7L** .

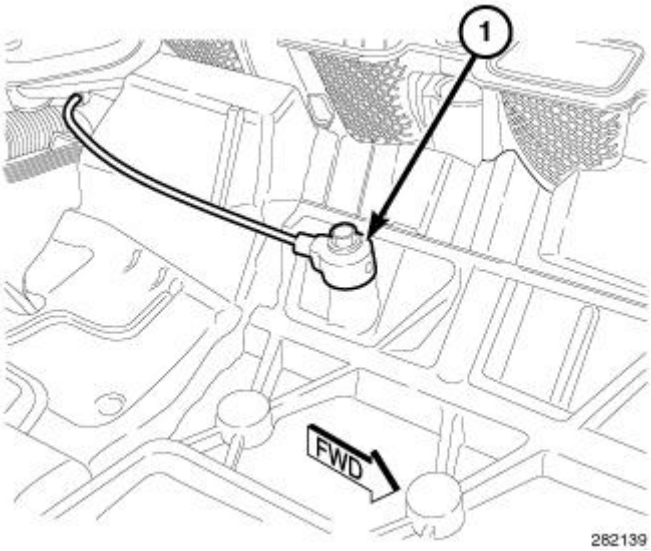

Fig. 38: Knock Sensor - 4.7L
Courtesy of CHRYSLER GROUP, LLC

1. Thoroughly clean the knock sensor mounting hole.
2. Position the knock sensor (1) in place.

NOTE: **Over or under tightening the sensor mounting bolts will affect knock sensor performance, possibly causing improper spark control. Always use the specified torque when installing the knock sensors.**

NOTE: **Note the foam strip on the bolt threads. This foam is used only to retain the bolts to the sensors for plant assembly. It is not used as a sealant. Do not apply any adhesive, sealant or thread locking compound to these bolts.**

3. Tighten the knock sensor retaining bolt to 20 N.m (15 ft. lbs.).

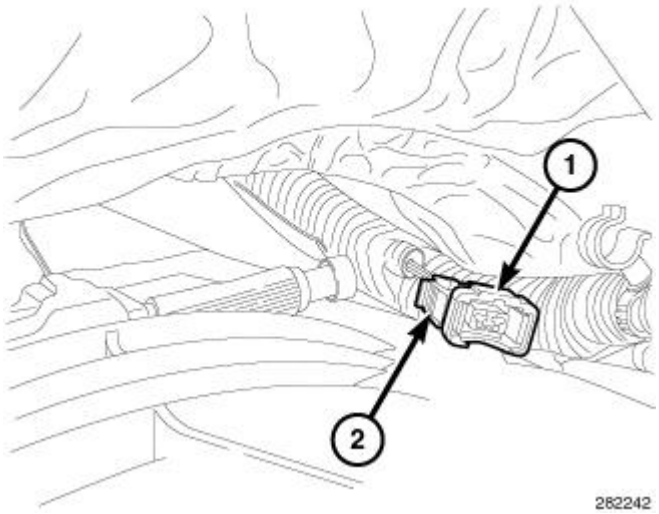

Fig. 39: Knock Sensor Electrical Connector
Courtesy of CHRYSLER GROUP, LLC

4. Connect the knock sensor electrical connector (1) to the engine harness located at the back of the engine.
5. Install the intake manifold. Refer to **MANIFOLD, INTAKE, INSTALLATION, 4.7L** .

5.7L

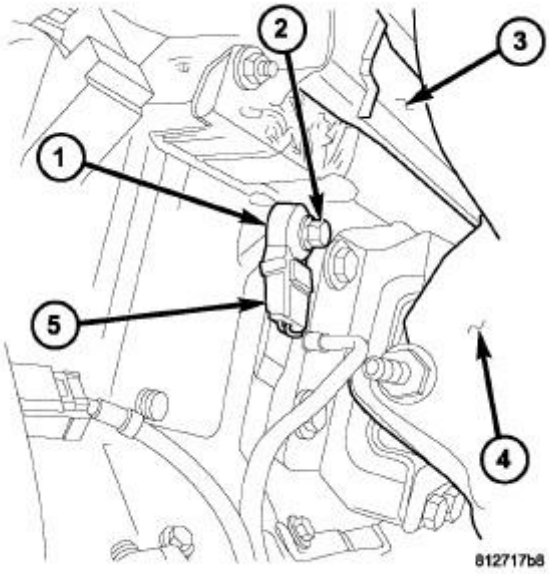

Fig. 40: Knock Sensor - 5.7L
Courtesy of CHRYSLER GROUP, LLC

1. Thoroughly clean the knock sensor(s) mounting hole.

2. Install the knock sensor(s) (1) into the cylinder block.

NOTE: **Over or under tightening the sensor mounting bolts will affect knock sensors performance, possibly causing improper spark control. Always use the specified torque when installing the knock sensors. The torque for the knock sensor bolt is relatively light for an 8 mm bolt (2).**

NOTE: **Note foam strip on bolt threads. This foam is used only to retain the bolts to sensors for plant assembly. It is not used as a sealant. Do not apply any adhesive, sealant or thread locking compound to these bolts.**

3. Position the knock sensor(s) (1), install the retaining bolt(s) (2) and tighten to 20 N.m (15 ft. lbs.).
4. Install the electrical connector(s) (5).

SPARK PLUG

REMOVAL

3.7L

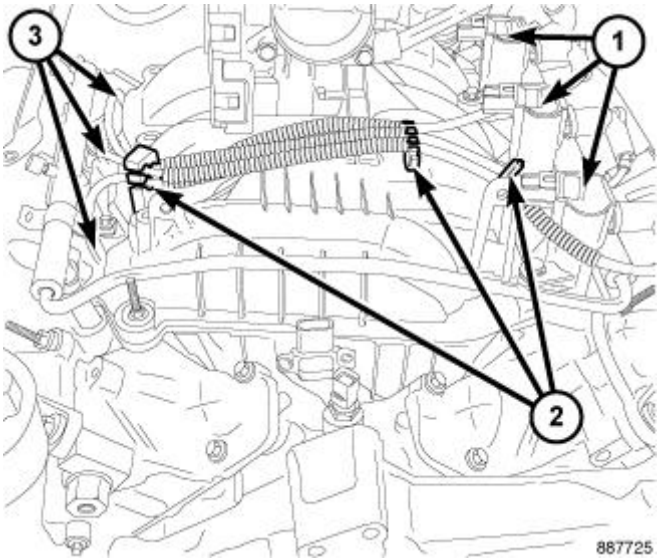

Fig. 41: Locating Ignition Coils
Courtesy of CHRYSLER GROUP, LLC

1. Remove the necessary air filter tubing and air intake components at the top of the engine at the throttle body.

NOTE: **The three spark plugs located on the left bank of the engine are under three individual ignition coils (1). Each individual ignition coil must be removed to gain access to each spark plug located on the left bank of the engine.**

2. Prior to removing the ignition coil, spray compressed air around the coil base at the cylinder head.
3. Remove the ignition coil (1) check the condition of ignition coil O-ring and replace as necessary. Refer to **COIL, IGNITION, REMOVAL**.
4. Prior to removing the spark plug, spray compressed air into the cylinder head opening. This will help prevent foreign material from entering combustion chamber.
5. Remove the spark plug from the cylinder head using a quality thin wall socket with a rubber or foam insert.
6. Inspect the spark plug condition.

4.7L

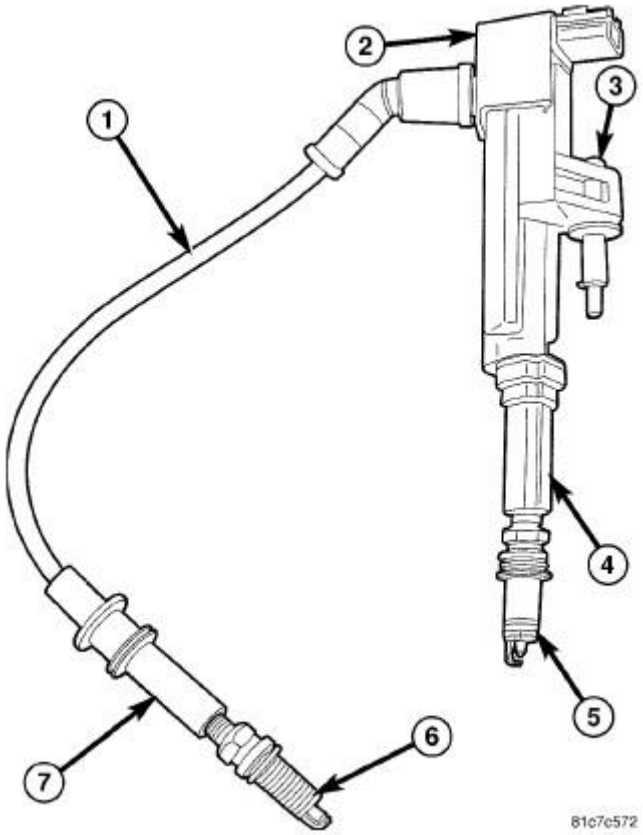

Fig. 42: Ignition Coil, Spark Plug Wire, Rubber Boot & Spark Plug
Courtesy of CHRYSLER GROUP, LLC

CAUTION: This engine uses TWO DIFFERENT types of spark plugs. A total of 16 plugs are used. The plugs are mounted in two rows (banks). The upper row (5) is used on the intake valve side of the cylinder head. The lower row (6) is used on the exhaust valve side of the cylinder head. The upper row (5) uses Bosch Nickel Yttrium plugs. The lower row (6) uses Bosch Iridium plugs. DO NOT INTERCHANGE THESE PLUGS.

1. Remove necessary air filter tubing and air intake components at top of engine and at throttle body.

NOTE: To remove the upper row of spark plugs (5), each individual ignition coil (2) must be removed first.

2. Remove the ignition coil(s). Refer to **COIL, IGNITION, REMOVAL**.
3. Prior to removing the spark plug(s), spray compressed air into cylinder head opening. This will help prevent foreign material from entering combustion chamber.

CAUTION: Due to tight clearances between UPPER row of plugs (5) and cylinder head, a conventional deep, thick-wall spark plug socket will not fit. Use a deep, THIN-WALL 5/8" spark plug socket for plug removal and installation.

CAUTION: Do not attempt to clean any of the spark plugs. Replace only.

4. Remove the spark plug(s) and inspect their condition.

5.7L

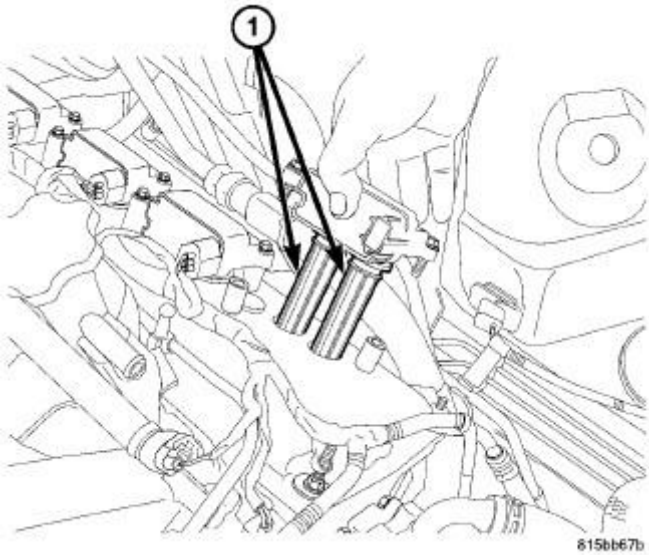

Fig. 43: Removing/Installing Ignition Coil
Courtesy of CHRYSLER GROUP, LLC

1. Remove all the necessary air filter tubing and air intake components at the top of the engine and at the throttle body. Refer to **BODY, AIR CLEANER, REMOVAL, 5.7L** .
2. Prior to removing the ignition coil, spray compressed air around the base of the ignition coil at the cylinder head.

3. Remove the ignition coil (1). Refer to **COIL, IGNITION, REMOVAL**.
4. Prior to removing the spark plug, spray compressed air into the cylinder head opening.
5. Remove the spark plug from the cylinder head using a quality thin wall socket with a rubber or foam insert.
6. Inspect the spark plug condition.

INSTALLATION

3.7L

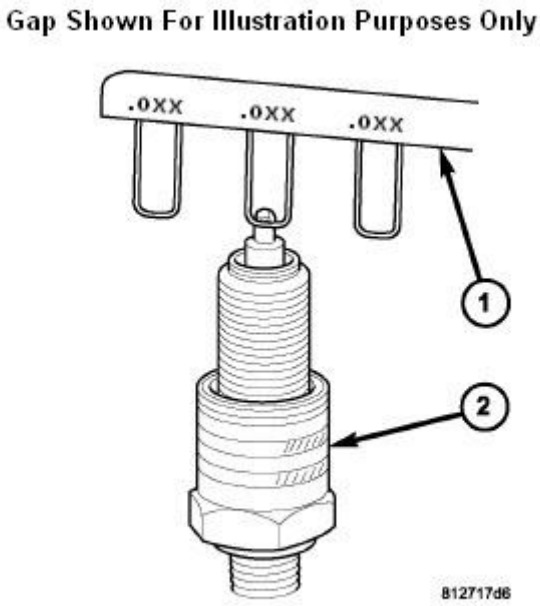

Fig. 44: Setting Spark Plug Gap
Courtesy of CHRYSLER GROUP, LLC

1. Check and adjust the spark plug gap with a gap gauging tool (1). Refer to **SPARK PLUGS**.

CAUTION: Special care should be taken when installing spark plugs into the cylinder head spark plug wells. Be sure the plugs do not drop into the plug wells as electrodes can be damaged.

2. Start the spark plug into the cylinder head by hand to avoid cross threading.
3. Tighten the spark plugs to 27 N.m (20 ft. lbs.).

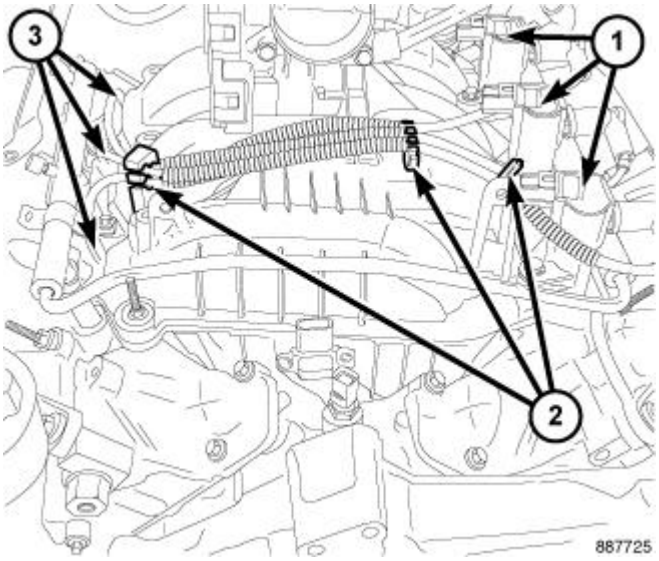

Fig. 45: Locating Ignition Coils
Courtesy of CHRYSLER GROUP, LLC

4. Before installing the ignition coil (1), check the condition of the coil O-ring and replace as necessary. Apply silicone based grease such as Mopar® Dielectric Grease into the spark plug end of the rubber boot, coil O-rings and to the top of spark plugs.
5. Install the ignition coil (1). Refer to **COIL, IGNITION, INSTALLATION**.
6. Install all the necessary air filter tubing and air intake components at the top of the engine and at the throttle body.

4.7L

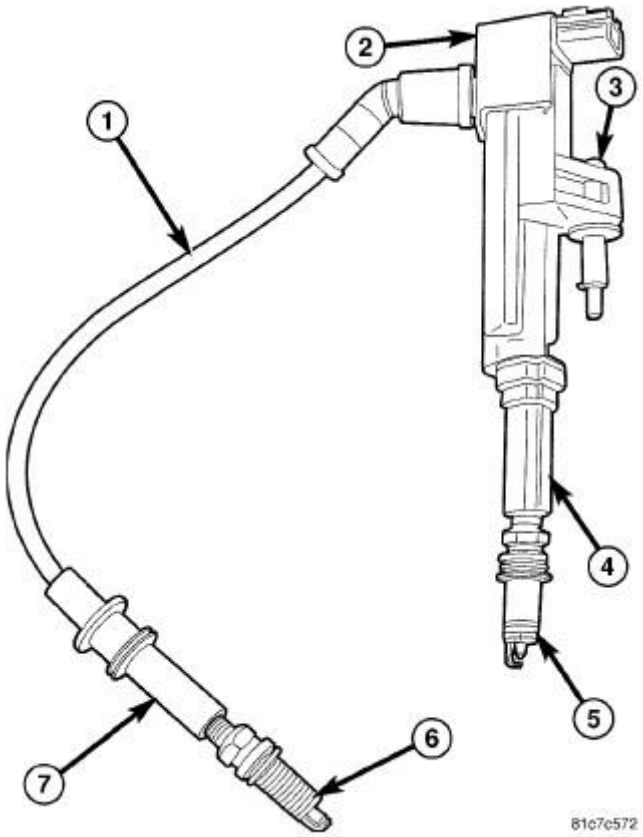

Fig. 46: Ignition Coil, Spark Plug Wire, Rubber Boot & Spark Plug
Courtesy of CHRYSLER GROUP, LLC

CAUTION: This engine uses TWO DIFFERENT types of spark plugs. A total of 16 plugs are used. The plugs are mounted in two rows (banks). The upper row (5) is used on the intake valve side of the cylinder head. The lower row (6) is used on the exhaust valve side of the cylinder head. The upper row (5) uses Bosch Nickel Yttrium plugs. The lower row (6) uses Bosch Iridium plugs. DO NOT INTERCHANGE THESE PLUGS.

CAUTION: Never use a motorized wire wheel brush to clean spark plugs. Metallic deposits will remain on spark plug insulator and will cause plug misfire.

CAUTION: Do not attempt to clean any of the spark plugs. Replace only.

1. To aid in coil installation, apply silicone based grease such as Mopar® Dielectric Grease into spark plug end of rubber boots (4) and (7). Also apply this grease to the tops of spark plugs (5) and (6).

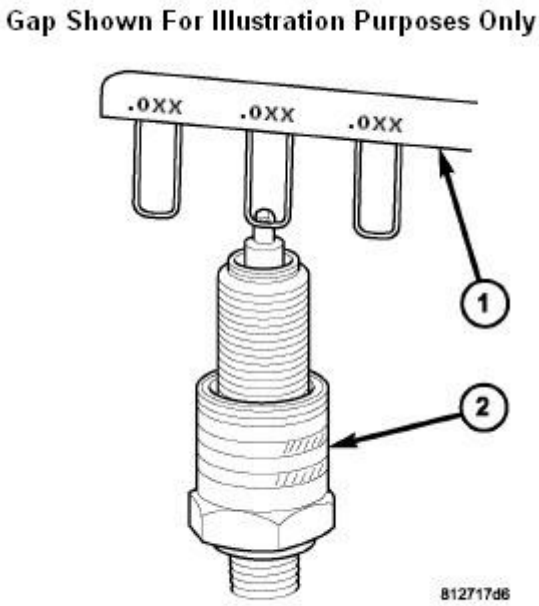

Fig. 47: Setting Spark Plug Gap
Courtesy of CHRYSLER GROUP, LLC

NOTE: Two different spark plug gaps are used.

2. Check and adjust spark plug gap(s) with a plug gap gauging tool (1). Refer to **SPARK PLUGS**.

NOTE: Do not drop spark plugs into the plug wells as electrode damage can occur.

NOTE: Always tighten spark plugs to the specified torque. Certain engines use torque sensitive spark plugs. Over tightening can cause distortion resulting in a change to the spark plug gap, or a cracked porcelain insulator.

CAUTION: Due to tight clearances between upper row of plugs (5) and cylinder head, a conventional deep, thick-wall spark plug socket will not fit. Use a deep, THIN-WALL 5/8" spark plug socket for plug removal and installation.

3. Using special care install spark plug(s) into the cylinder head by hand to avoid cross threading.
4. Tighten spark plug(s) to the specified torque. Refer to **SPECIFICATIONS**.
5. Install ignition coil(s). Refer to **COIL, IGNITION, INSTALLATION**.
6. Install necessary air filter tubing and air intake components to top of engine and to throttle body.

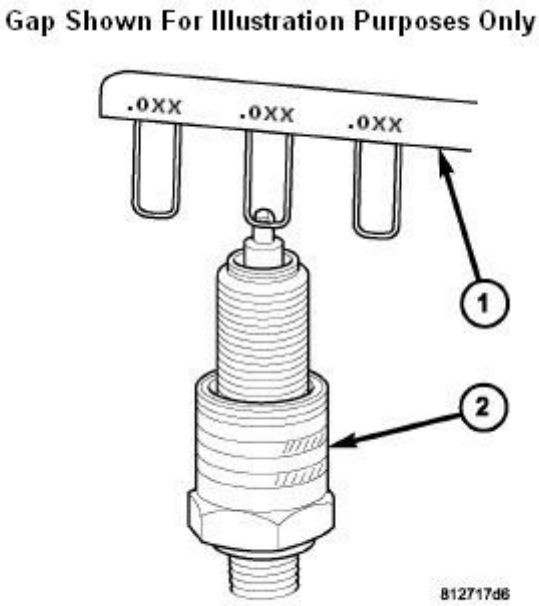

Fig. 48: Setting Spark Plug Gap
Courtesy of CHRYSLER GROUP, LLC

CAUTION: Never use a motorized wire wheel brush to clean spark plugs. Metallic deposits will remain on spark plug insulator and will cause plug misfire.

CAUTION: Do not attempt to clean any of the spark plugs. Replace only.

1. Check and adjust the spark plug gap with a gap gauging tool (1). Refer to **SPARK PLUGS**.

CAUTION: Special care should be taken when installing spark plugs into the cylinder head spark plug wells. Be sure the plugs do not drop into the plug wells as electrodes can be damaged.

2. Start the spark plug into the cylinder head by hand to avoid cross threading.

NOTE: Always tighten spark plugs to the specified torque. Certain engines use torque sensitive spark plugs. Over tightening can cause distortion resulting in a change in the spark plug gap, or a cracked porcelain insulator.

NOTE: Spark plugs have a torque critical tapered design. Do not exceed 20 N.m (15 ft. lbs.).

3. Tighten the spark plugs to 18 N.m (13 ft. lbs.).

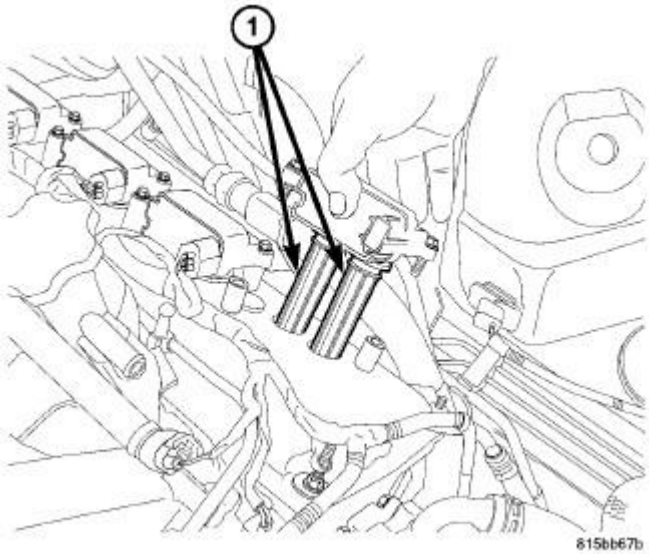

Fig. 49: Removing/Installing Ignition Coil
Courtesy of CHRYSLER GROUP, LLC

4. To aid in coil installation, apply silicone based grease such as Mopar® Dielectric Grease into spark plug end of ignition coil rubber boots. Also apply this grease to the tops of spark plugs.
5. Install the ignition coil(s) (1). Refer to **COIL, IGNITION, INSTALLATION**.
6. Install all necessary air filter tubing and air intake components to top of engine and to throttle body. Refer to **BODY, AIR CLEANER, INSTALLATION, 5.7L** .

SWITCH, IGNITION

DESCRIPTION

DESCRIPTION

This vehicle is equipped with a Wireless Ignition Node (WIN). The WIN, along with the FOB with Integrated Key (FOBIK) are the primary components of the keyless ignition system. The only visible component of the WIN is the ignition switch located on the face of the instrument panel just to the inboard side of the steering column. The remainder of the WIN including its mounting provisions and electrical connections are concealed within the instrument panel.

In addition to replacing a conventional keyed ignition switch, the WIN is an integrated electronic receiver that serves as the base station in the vehicle. It communicates with other electronic modules in the vehicle over the Controller Area Network (CAN) data bus.

The WIN interfaces with the Remote Keyless Entry (RKE) FOBIK and the Tire Pressure Monitor (TPM) sensors (if equipped) using Radio Frequency (RF) communication, with the Sentry Key Immobilizer System (SKIS) transponder within the FOBIK using Low Frequency (LF) RF communication.

The WIN cannot be adjusted or repaired, but is flash update capable. If ineffective or damaged the entire WIN must be replaced. Refer to **RECEIVER, WIRELESS IGNITION NODE, REMOVAL** .

DIAGNOSIS AND TESTING

REMOTE START INHIBITORS

1. Using the scan tool, select ECU VIEW.
2. Select the TIPM or FCM section.
3. Select MORE OPTIONS
4. Select SYSTEM TESTS
5. Select REMOTE START INHIBIT DATA.

The following table below is a list of possible causes for the inoperative Remote Start System. If any of the following conditions exist, the Remote Start System will not work. Use this information as a guide to the diagnosis of the Remote Start System.

- ABORT
- BATTERY VOLTAGE HIGH
- BATTERY VOLTAGE LOW
- BRAKE PRESSED
- COOLANT TEMPERATURE HIGH
- CRANK NO START
- DRIVER DOOR AJAR
- PASSENGER DOOR AJAR
- LEFT REAR DOOR AJAR
- RIGHT REAR DOOR AJAR
- TRUNK/LIFTGATE AJAR
- HOOD AJAR
- NO HOOD SWITCH (INOPERATIVE)
- EXCESSIVE GLOW PLUG TIME (DIESEL ONLY)
- FAILED COUNTER REACHED (START)
- HAZARD LAMPS (SWITCH PRESSED)
- IGNITION IN RUN/START
- IGNITION NOT IN LOCK
- IGNITION SNA (SIGNAL NOT AVAILABLE FROM OTHER MODULE)
- INVALID KEY
- KEY IN IGNITION
- LOW RPM SHUTDOWN

- MIL ON
- NO AUTOMATIC TRANSMISSION
- NORMAL TIME OUT CUSTOMER ACCESS
- NORMAL TIME OUT RUN MODE (15 MINUTES)
- NOT CONFIGURED
- NOT ENABLED
- NOT IN PARK OR NEUTRAL
- NOT PROGRAMMED
- OIL PRESSURE LOW
- PANIC MODE (ACTIVATED)
- POWER LOSS
- RKE OFF MESSAGE
- RPM TOO HIGH (EXCEEDS 2500)
- START COUNTER REACHED
- VEHICLE SPEED HIGH
- VTA ALARMING

If all of the previous items checked OK, and the remote starting system will not operate, refer to the REMOTE START POOR PERFORMANCE diagnostic procedure. . Refer to **DIAGNOSIS AND TESTING**.

REMOTE KEYLESS ENTRY TRANSMITTER

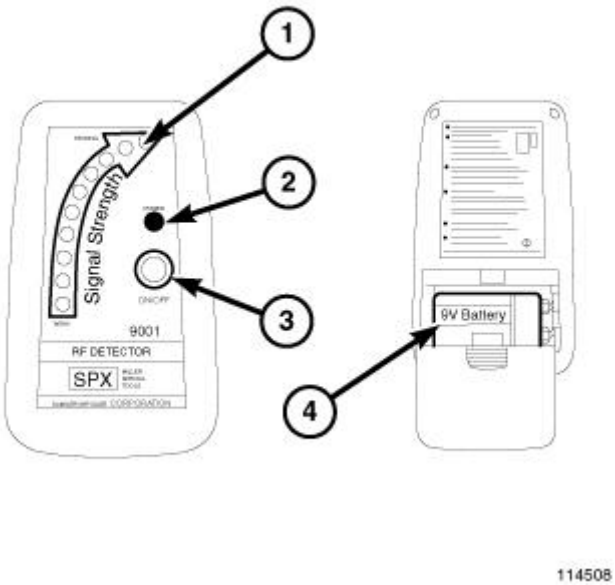

Fig. 1: Remote Keyless Entry Transmitter
Courtesy of CHRYSLER GROUP, LLC

Using special tool (special tool #9001, Rf Detector), first test to ensure that the transmitter is functioning. Typical testing distance is 2.5 centimeters (1 inch) for Asian transmitters and 30.5 centimeters (12 inches) for all others. To test, position the transmitter as shown in the illustration above. Press any transmitter button, then test each button individually. The tool will beep if a radio signal strength that lights five or more LED's is detected. Repeat this test three times. If transmitter fails any of the test. Refer to **POWER LOCKS - DIAGNOSIS AND TESTING** .

REMOTE START POOR PERFORMANCE

For a complete wiring diagram, **refer to appropriate SYSTEM WIRING DIAGRAMS article** .

THEORY OF OPERATION

The customer may notice that the signal range of the Remote Keyless Entry (RKE) system is reduced. The RKE key fob may need to be closer than 3 meters (10 feet) before the functions available on the key fob will operate. This condition may be due to the RKE antenna. The diagnostic flow chart is provide as a diagnostic aid for dealer technician.

DIAGNOSTIC TEST

1. **LOCK/UNLOCK FUNCTION**

   NOTE: For all RKE tests, the key must be out of the ignition.

   Does the Lock/Unlock function with the interior door switches?

   Yes

   - Go To 2.

   No

   - Perform Power Lock/Unlock System diagnosis.
2. **RKE FUNCTION AT 20 FEET**

   Does the RKE Function at 20 feet?

   Yes

   - Go To 3.

   No

   - Go To 4.
3. **RKE FUNCTION AT 100 FEET**

   Does the RKE Function at 100 feet?

Yes

- Test complete.

No

- Replace the antenna in accordance with the Service Information.

4. **WCM/WIN DTCS**

   Does the WCM/WIN display any DTCs?

   Yes

   - Perform WCM/WIN diagnosis.

   No

   - Go To 5.

5. **RKE FUNCTION INSIDE VEHICLE**
   1. Sit inside the vehicle.
   2. Push the Key Fob RKE Lock/Unlock buttons.

      Does the RKE Lock/Unlock work?

      Yes

      - Go To 6.

      No

      - Go To 9.

6. **ANTENNA COAX CABLE NOT PROPERLY CONNECTED**
   1. Pull on the Antenna COAX cable connector at the WCM/WIN.

      Did the connector come off without releasing the lock tab (not properly seated) ?

      Yes

      - Connect Antenna
      - Go To 2.

      No

      - Go To 7.

7. **VERIFY COAX CONNECTION AT WCM/WIN**

1. Pull Antenna connector off WCM/WIN. Verify no bent pins.

   Are there any bent pins?

   Yes

   - Replace antenna.
   - Go To 2.

   No

   - Go To 8.

8. **PINCHED WIRE**
   1. Inspect the ANTENNA Lead COAX Cable for a pinched wire.

      Has the COAX cable been pinched or damaged?

      Yes

      - Replace antenna.
      - Go To 2.

      No

      - Perform WCM/WIN diagnostics.

9. **RKE FUNCTION INSIDE VEHICLE**
   1. Disconnect the Antenna COAX Cable lead connector to WCM/WIN.
   2. Sit inside the vehicle. Push the RKE Key Fob Lock/Unlock buttons.

      Does the RKE Lock/Unlock work?

      Yes

      - Replace the antenna.

      No

      - Go To 10.

10. **CHECK FOR 12 VOLTS AT WCM/WIN**
    1. Connect the Antenna Lead to WCM/WIN.
    2. Disconnect the WCM/WIN harness connector.
    3. Using the appropriate wiring diagrams, check for Fused B+ at the WCM/WIN harness connector.

       Is Fused B+ present?

Yes

- Perform WCM/WIN diagnostics.

No

- Repair the appropriate circuits.

SWITCH - CLUTCH STARTER INTERLOCK

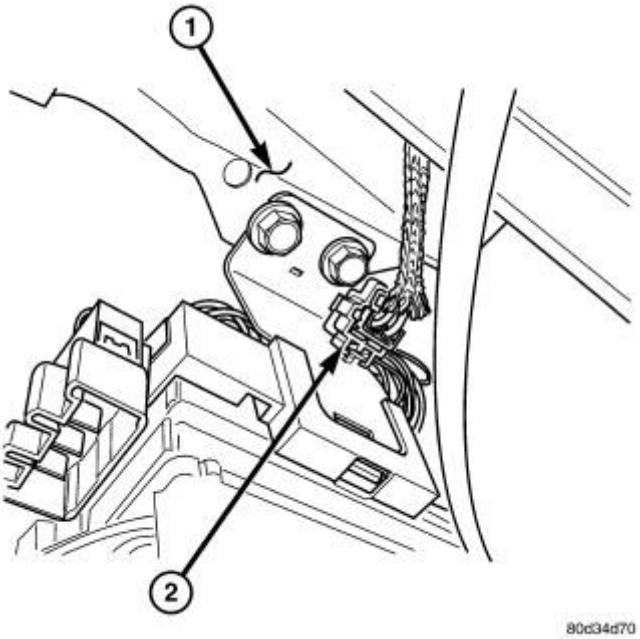

Fig. 2: Clutch Switch Test Point
Courtesy of CHRYSLER GROUP, LLC

1. Disconnect switch 2-wire connector (2) attached to pedal support bracket (1), under instrument panel to left of clutch pedal.
2. Check switch continuity with an ohmmeter while operating clutch pedal.
   - Pedal Depressed - Continuity
   - Pedal Released - No Continuity
3. If continuity is not present or always present, replace clutch master cylinder. Switch is not serviced separately.

Starting - Service Information - Ram Pickup

OPERATION

REMOTE STARTING SYSTEM

The remote starting system will allow the vehicle to be started from distances of up to approximately 300 feet away from the vehicle. It operates using the remote keyless entry key fob which is part of your ignition key.

In order to remote start your vehicle, the hood and all the doors must be closed.

To remote start your vehicle, press the REMOTE START button on the key fob twice within three seconds. To indicate that the vehicle is about to start, the parking lights will flash and the horn will sound briefly.

Once the vehicle has started, the engine will run for 15 minutes. To cancel remote start, press the REMOTE START button once.

The parking lamps will remain illuminated to indicate that the vehicle has remote started and the engine is running. The lamps will turn off when the ignition is turned to RUN or the remote start is cancelled.

To enter the vehicle while the engine is running during a remote start, you must first unlock the vehicle using the UNLOCK button on the key fob. After the vehicle is unlocked, you have 60 seconds to enter the vehicle, insert the key in the Ignition and move it to the RUN position, otherwise the engine will cancel remote start and automatically turn off.

Remote start will also cancel if any of the following occur:

- If the engine stalls or RPM exceeds 2500
- Any engine warning lamps come on
- The hood is opened
- The hazard switch is pressed
- The transmission is moved out of park
- The brake pedal is pressed.

The vehicle can be started remotely up to a maximum of two times. The vehicle is also allowed a maximum of one failed start. This is where the remote start sequence was initiated but the engine stopped cranking without starting. After either of these conditions, or if the Vehicle Theft Alarm is alarming, or if the PANIC button was pressed, the vehicle must be reset by inserting a valid key into the ignition and moving it to the RUN position, then back to LOCK.

DIAGNOSIS AND TESTING

REMOTE START SYSTEM

Before attempting to diagnose a problem with the remote starting system, first be sure the starter motor and starter solenoid are working properly. The starter should operate with the use of the standard ignition key in the ignition switch. Any starter or solenoid problems must be repaired first.

Also be sure the engine will easily start and run with the use of the standard ignition key in the ignition switch. Any engine running, idling or driveability problems must be repaired first.

Also note that the remote start system will automatically be cancelled if any of the following occur:

- IF THE ENGINE STALLS OR RPM EXCEEDS 2500
- NORMAL TIME OUT RUN MODE (15 MINUTES)
- CUSTOMER MOVES IGNITION INTO RUN/START
- ANY VEHICLE DOOR AJAR
- TRUNK/LIFTGATE AJAR
- HOOD AJAR
- START COUNTER REACHED
- LOW RPM SHUTDOWN
- KEY IN IGNITION
- BRAKE PRESSED
- THE HAZARD SWITCH IS PRESSED
- NOT IN PARK OR NEUTRAL
- VEHICLE SPEED HIGH
- VTA ALARM TRIGGERED
- PANIC MODE ACTIVATED
- BATTERY VOLTAGE HIGH
- BATTERY VOLTAGE LOW
- LOSS OF BATTERY VOLTAGE
- MIL ON
- LOW OIL PRESSURE
- COOLANT TEMPERATURE HIGH
- CRANK NO START
- RKE OFF MESSAGE
- VEHICLE NOT CONFIGURED
- HOOD SWITCH NOT INSTALLED OR INOPERATIVE
- NO AUTOMATIC TRANSMISSION
- INVALID KEY
- IGNITION SNA
- IGNITION NOT IN LOCK
- VEHICLE IN SHIPPING MODE
- VEHICLE NOT PROGRAMMED

If all of the previous items checked OK, and the remote starting system will not operate. Refer to **DIAGNOSIS AND TESTING** .

STARTING SYSTEM

The battery, starting, and charging systems operate in conjunction with one another, and must be tested as a complete system. For correct starting/charging system operation, all of the components involved in these three systems must perform within specifications.

STARTING SYSTEM DIAGNOSIS

CONDITION	POSSIBLE CAUSE	CORRECTION
STARTER FAILS TO OPERATE	1. Battery discharged or inoperative	1. Charge and test battery. Refer to **DIAGNOSIS AND TESTING** . Replace battery, if required.
	2. Starter motor or solenoid inoperative	2. Test the starter motor and solenoid. Refer to **STARTER, DIAGNOSIS AND TESTING**. Replace starter motor, if required.
	3. Starter relay inoperative	3. Refer to appropriate Wiring Information. Test and replace the starter relay, if required
	4. Clutch pedal position switch inoperative (if equipped with manual transmission)	4. Refer to **SWITCH - CLUTCH STARTER INTERLOCK** . Test and adjust or replace switch, if required.
	5. Park/Neutral position switch inoperative (if equipped with automatic transmission)	5. Refer to appropriate Electrical Diagnostic article. Test and adjust or replace switch, if required.
	6. Ignition switch inoperative	6. Test the Ignition Switch and Key Lock Cylinder. Replace ignition switch if required.
	7. Starting circuit wiring inoperative	7. Refer to appropriate Wiring Information. Test and repair starter feed and/or control circuits, if required.
STARTER ENGAGES, BUT FAILS TO TURN ENGINE	1. Battery discharged or inoperative	1. Charge and test battery. Refer to **DIAGNOSIS AND TESTING** . Replace battery if required.
	2. Starter motor or solenoid inoperative	2. Test the starter motor and solenoid. Refer to **STARTER, DIAGNOSIS AND TESTING**. Replace starter motor if required.
	3. Starting circuit wiring inoperative	3. Refer to appropriate Wiring Information. Test and repair starter feed and/or control circuits, if

		required.
	4. Engine seized	4. Refer to appropriate Engine Diagnostic article. Test and repair engine as required.
STARTER ENGAGES, BUT THEN DISENGAGES BEFORE ENGINE STARTS	1. Starter motor or solenoid inoperative	1. Test the starter motor and solenoid. Refer to **STARTER, DIAGNOSIS AND TESTING**. Replace starter motor, if required.
	2. Starter ring gear damaged	2. Remove starter motor and inspect starter ring gear. Refer to **STARTER, REMOVAL**. Replace starter ring gear, if required.
STARTER DOES NOT DISENGAGE	1. Starter motor incorrectly installed or solenoid inoperative	1. Inspect and test the starter motor and solenoid. Refer to **STARTER, DIAGNOSIS AND TESTING**. Replace starter motor, if required.
	2. Starter relay inoperative	2. Refer to appropriate Wiring Information. Test and replace the starter relay, if required.
	3. Ignition switch inoperative	3. Test the Ignition Switch and Key Lock Cylinder. Replace ignition switch, if required.

STARTING SYSTEM TESTING

COLD CRANKING TEST

NOTE: Refer to appropriate Wiring Information for complete starter wiring circuit diagrams.

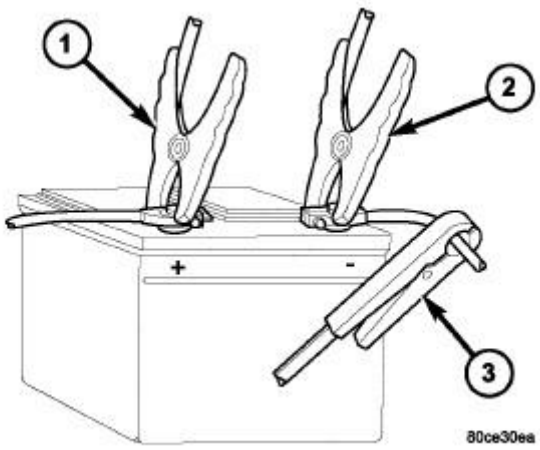

Fig. 1: Volts-Amps Tester Connections
Courtesy of CHRYSLER GROUP, LLC

1. Fully charge and load-test the battery. Refer to **DIAGNOSIS AND TESTING** .
2. Connect volt-ampere tester leads (1 and 2 to the battery terminals. Connect volt-ampere tester lead (3) around the positive battery cable. See instructions provided by manufacturer of volt-ampere tester being used.
3. Place transmission in Park or Neutral with the parking brake set (depending on transmission application).
4. If equipped with manual transmission, block clutch pedal in fully depressed position.
5. Verify that all lamps and accessories are turned off.
6. To prevent a gasoline engine from starting, remove Automatic ShutDown (ASD) relay. To prevent a diesel engine from starting, remove Fuel Pump Relay. Refer to appropriate Wiring Information for relay locations.

WARNING: **Attempt to start engine a few times before proceeding with following step.**

NOTE: **A cold engine will increase starter current (amperage) draw reading, and reduce battery voltage reading.**

7. Rotate and hold ignition switch in Start position. Note cranking voltage and current (amperage) draw readings shown on volt-ampere tester.
    1. If voltage reads below 9.6 volts, refer to **STARTER, DIAGNOSIS AND TESTING**. If starter motor is OK, refer to appropriate Engine Diagnostic article. If starter motor is not OK, replace the starter motor. Refer to **STARTER, REMOVAL**.
    2. Refer to **FEED CIRCUIT TEST** if voltage reads above 9.6 volts and current (amperage) draw reads below specifications.
    3. Refer to **FEED CIRCUIT TEST** if voltage reads 12.5 volts or greater and starter motor does not turn or turns very slowly.

FEED CIRCUIT TEST

NOTE: **Refer to appropriate Wiring Information for complete starter wiring circuit diagrams.**

The starter feed circuit test (voltage drop method) will determine if there is excessive resistance in high-amperage feed circuit.

When performing these tests, it is important to remember that voltage drop is giving an indication of resistance between two points at which voltmeter probes are attached.

Example: When testing resistance of positive battery cable, touch voltmeter leads to positive battery cable clamp and cable connector at starter solenoid. If you probe positive battery terminal post and cable connector at starter solenoid, you are reading combined voltage drop in positive battery cable clamp-to-terminal post connection and positive battery cable.

The following procedure requires a voltmeter accurate to 1/10 (0.10) volt. Before proceeding, be certain that the

following are accomplished:

- Fully charge and load-test the battery. Refer to **DIAGNOSIS AND TESTING** .
- Place transmission in Park or Neutral with the parking brake set (depending on transmission application).
- If equipped with manual transmission, block clutch pedal in fully depressed position.
- Verify that all lamps and accessories are turned off.
- To prevent a gasoline engine from starting, remove Automatic ShutDown (ASD) relay. Refer to appropriate Wiring Information for relay locations.

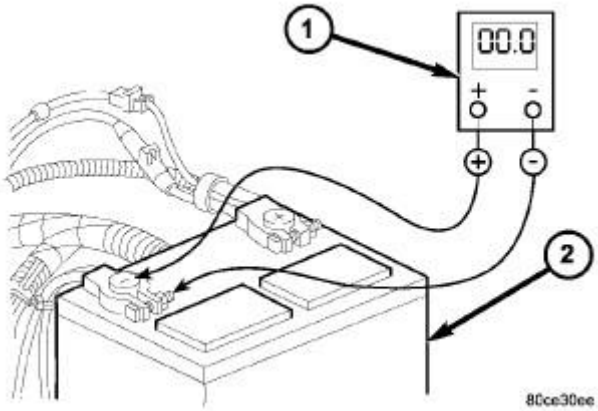

Fig. 2: Testing Battery Negative Connection Voltage Draw
Courtesy of CHRYSLER GROUP, LLC

1 - VOLTMETER
2 - BATTERY

1. Connect positive lead of voltmeter (1) to negative battery cable terminal post. Connect negative lead of voltmeter to negative battery cable clamp. Rotate and hold ignition switch in Start position. Observe voltmeter. If voltage is detected, correct poor contact between cable clamp and terminal post.

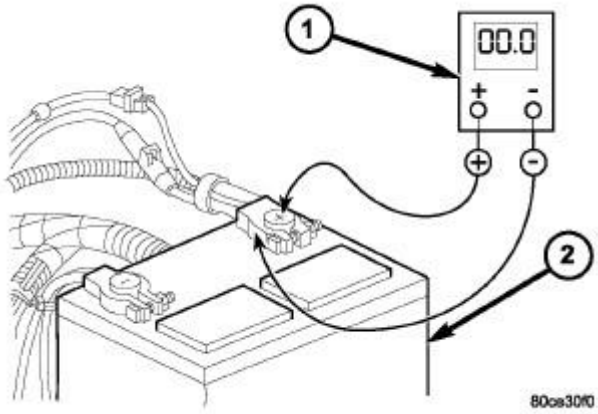

Fig. 3: Testing Battery Positive Connection Voltage Draw
Courtesy of CHRYSLER GROUP, LLC

1 - VOLTMETER
2 - BATTERY

2. Connect positive lead of voltmeter to positive battery terminal post. Connect negative lead of voltmeter to battery positive cable clamp. Rotate and hold ignition switch in Start position. Observe voltmeter. If voltage is detected, correct poor contact between cable clamp and terminal post.

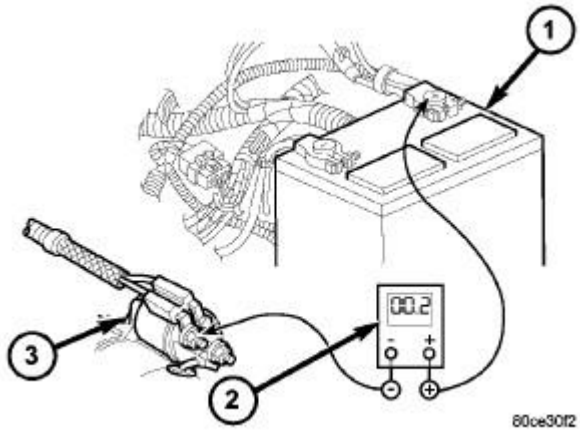

Fig. 4: Testing Battery Positive Cable Voltage Draw
Courtesy of CHRYSLER GROUP, LLC

1 - BATTERY
2 - VOLTMETER
3 - STARTER MOTOR

3. Connect voltmeter (2) to measure between positive terminal post on battery (1) and the battery terminal

stud on the starter solenoid (3). Rotate and hold ignition switch in Start position. Observe voltmeter. If reading is above 0.2 volt, clean and tighten battery cable connection at solenoid and repeat test. If reading is still above 0.2 volt, replace the positive battery cable.

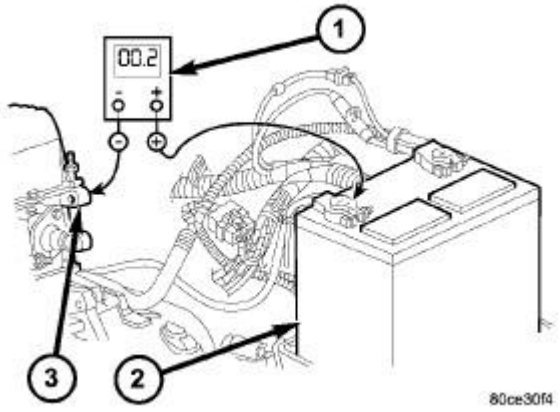

Fig. 5: Testing Ground Circuit Voltage Draw
Courtesy of CHRYSLER GROUP, LLC

1 - VOLTMETER
2 - BATTERY
3 - ENGINE GROUND

4. Connect voltmeter (1) to measure between negative terminal post on battery (2) and a good clean ground on engine block (3). Rotate and hold ignition switch in Start position. Observe voltmeter. If reading is above 0.2 volt, clean and tighten negative battery cable attachment on engine block and repeat test. If reading is still above 0.2 volt, replace the negative battery cable.

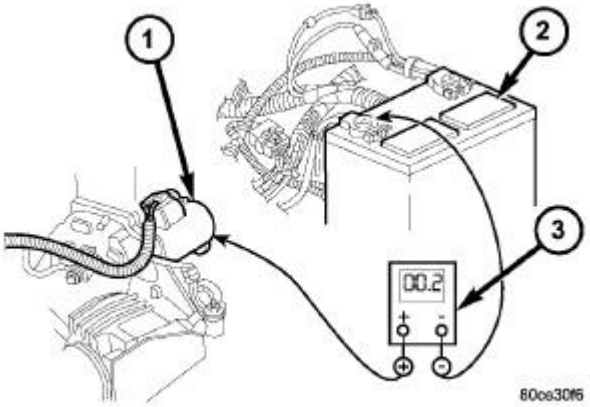

Fig. 6: Testing Starter Ground Voltage Draw
Courtesy of CHRYSLER GROUP, LLC

1 - STARTER MOTOR
2 - BATTERY
3 - VOLTMETER

NOTE: **Certain diesel equipped models use dual batteries. If equipped with dual battery system, this procedure must be performed twice, once for each battery.**

5. Connect positive lead of voltmeter (3) to starter housing (1). Connect negative lead of voltmeter to negative terminal post on battery (2). Rotate and hold ignition switch in Start position. Observe voltmeter. If reading is above 0.2 volt, correct poor starter to engine block ground contact.
6. If equipped with dual battery system (certain diesel equipped models), connect positive lead of voltmeter to positive battery cable clamp on battery located on left side of vehicle. Connect negative lead of voltmeter to positive battery terminal post on battery located on right side of vehicle. Rotate and hold ignition switch in Start position. Observe voltmeter. If reading is above 0.2 volt, clean and tighten battery cables at both batteries and repeat test. If reading is still above 0.2 volt, replace positive battery cable.
7. If resistance tests detect no feed circuit problems, inspect and test the starter motor and solenoid. Refer to **STARTER, DIAGNOSIS AND TESTING**.

SPECIFICATIONS

STARTING SYSTEM

Starter Motor		
Engine Application	3.7L / 4.7L Gas Powered	5.7L Gas Powered
Power Rating	1.2 Kilowatt	1.4 Kilowatt / 1.9 Horsepower
* Cranking Amperage Draw Test	100 - 200 Amperes	125 - 250 Amperes
* Test at operating temperature. Cold engine, tight (new) engine, or heavy oil will increase starter amperage draw.		

TORQUE SPECIFICATIONS

DESCRIPTION	N.m	Ft. Lbs.	In. Lbs.
Battery Cable Eyelet Nut at Solenoid	14	10	124
Starter Mounting Bolts - Gas Engines	68	50	-
Starter Mounting Nut - Gas Engines	68	50	-

ANTENNA, REMOTE START

DESCRIPTION

DESCRIPTION

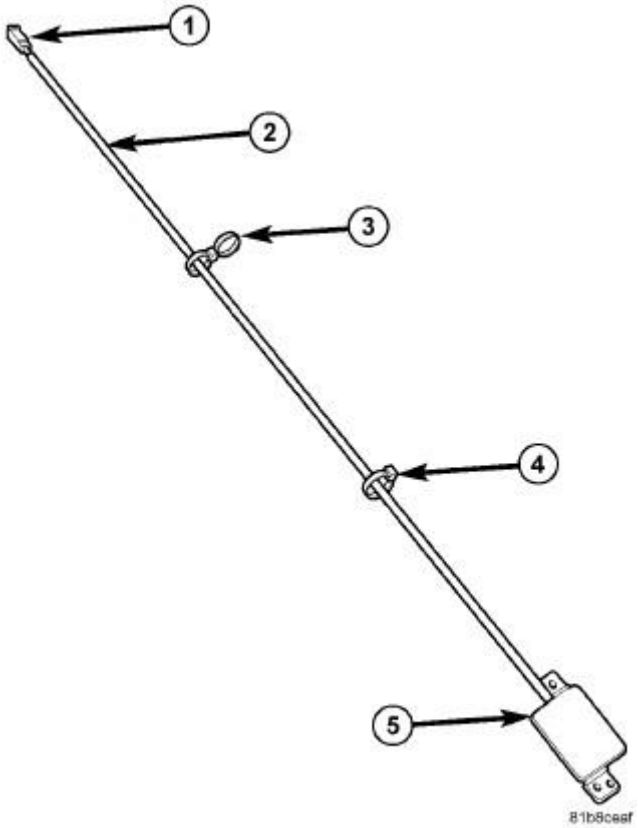

Fig. 7: Remote Start Antenna Module Assembly
Courtesy of CHRYSLER GROUP, LLC

The Remote Start Antenna Module Assembly consists of an electrical connection (1) to the Wireless Ignition Node, a length of coax cable (2), two mounting clips (3) and (4), and a antenna (5).

REMOVAL

REMOVAL

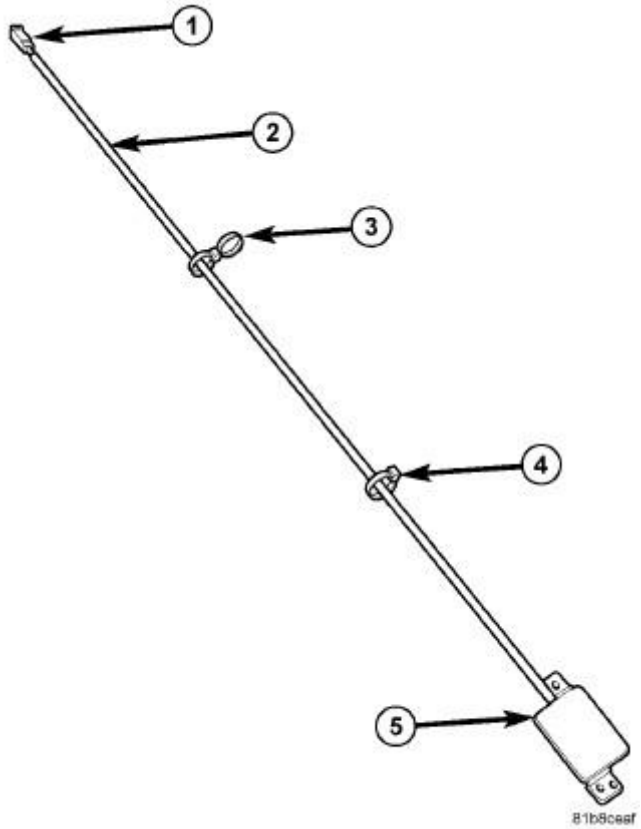

Fig. 8: Remote Start Antenna Module Assembly
Courtesy of CHRYSLER GROUP, LLC

The Remote Start Antenna Module Assembly consists of an electrical connection to the WIN (1), a length of coax cable (2), two mounting clips (3) and (4), and a control module/antenna (5).

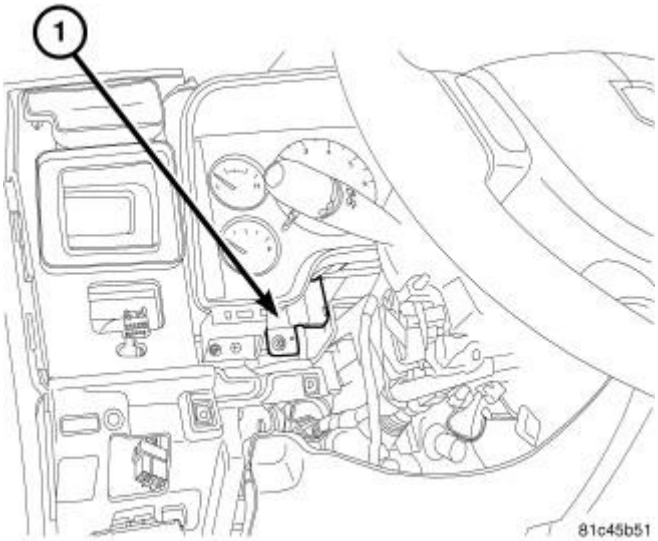

Fig. 9: Locating Remote Start Antenna Module Assembly

Courtesy of CHRYSLER GROUP, LLC

The control module (1) is located behind the instrument panel cluster. The module electrical connector plugs into the WIN at the right side of the steering column.

1. Disconnect and isolate negative battery cable.
2. Remove steering column trim panel (knee blocker).
3. Remove steering column shrouds.
4. Remove IP cluster bezel.
5. Remove IP cluster and its three connectors.

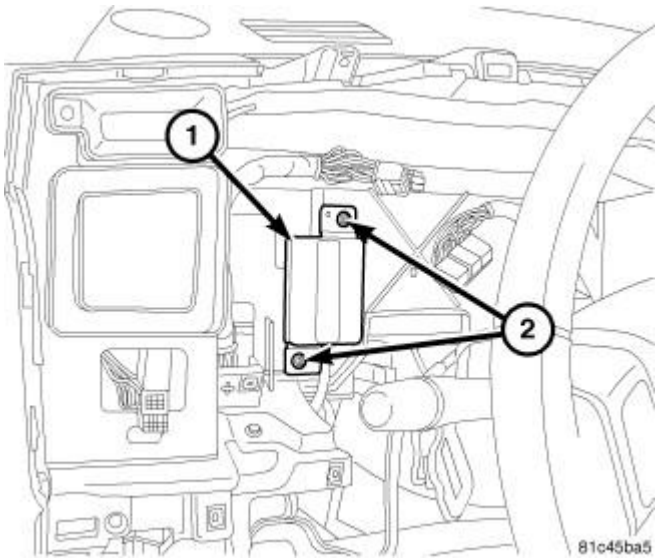

Fig. 10: Remote Start Module & Screws
Courtesy of CHRYSLER GROUP, LLC

6. Remove two module mounting screws (2) from module (1).

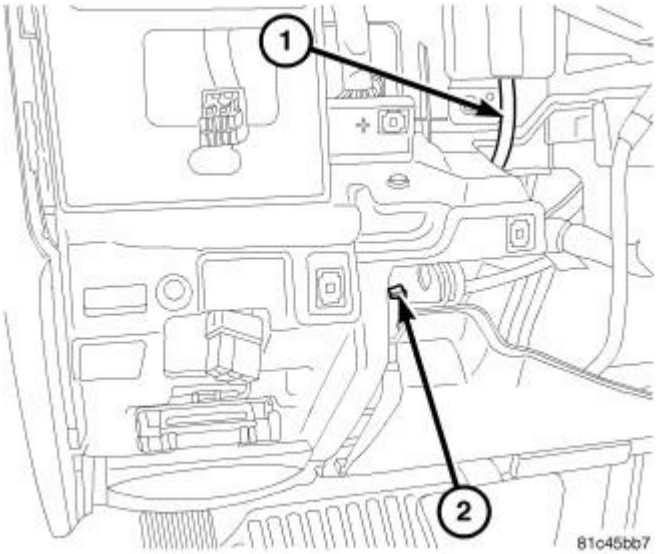

Fig. 11: Remote Start Coax Mounting Clip
Courtesy of CHRYSLER GROUP, LLC

7. Using a pair of long needle hose pliers, disengage coax cable retainer clip (2) from IP.

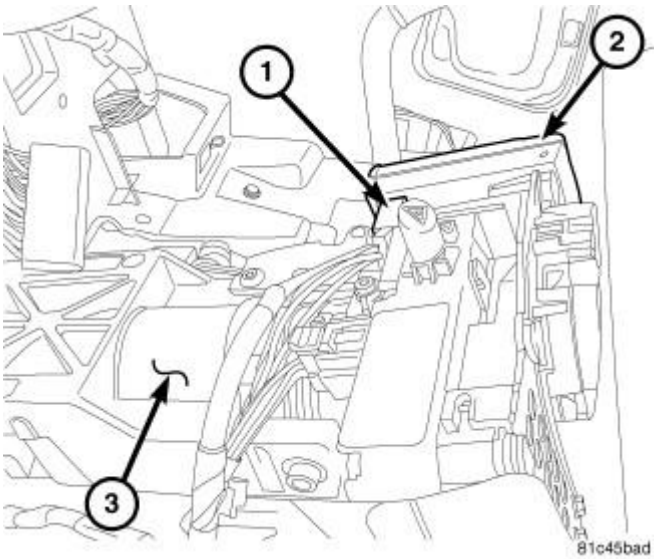

Fig. 12: WIN & Remote Start Coax Connector
Courtesy of CHRYSLER GROUP, LLC

8. Disconnect coax cable electrical connector (1) at WIN (2).
9. Remove remote module assembly.

INSTALLATION

INSTALLATION

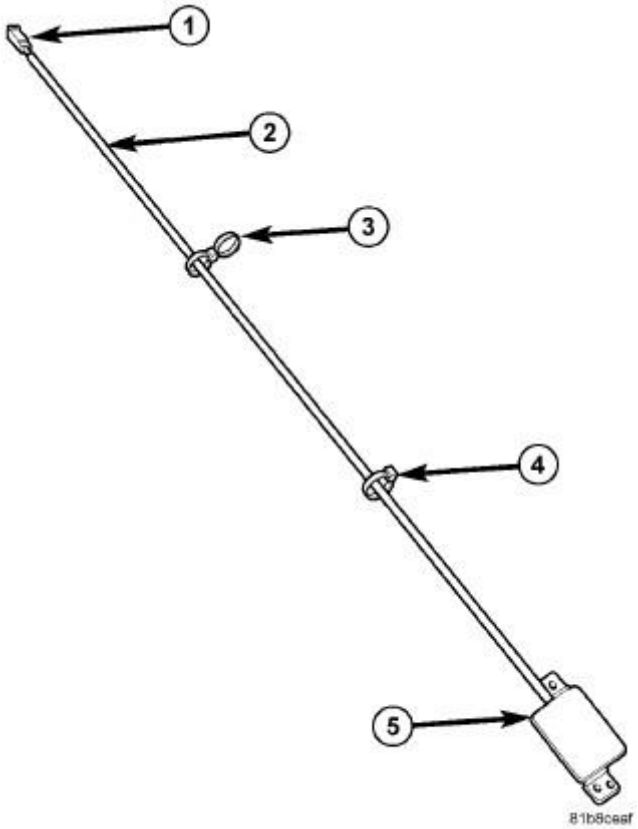

Fig. 13: Remote Start Antenna Module Assembly
Courtesy of CHRYSLER GROUP, LLC

The Remote Start Antenna Module Assembly consists of an electrical connection to the WIN (1), a length of coax cable (2), two mounting clips (3) and (4), and a control module/antenna (5).

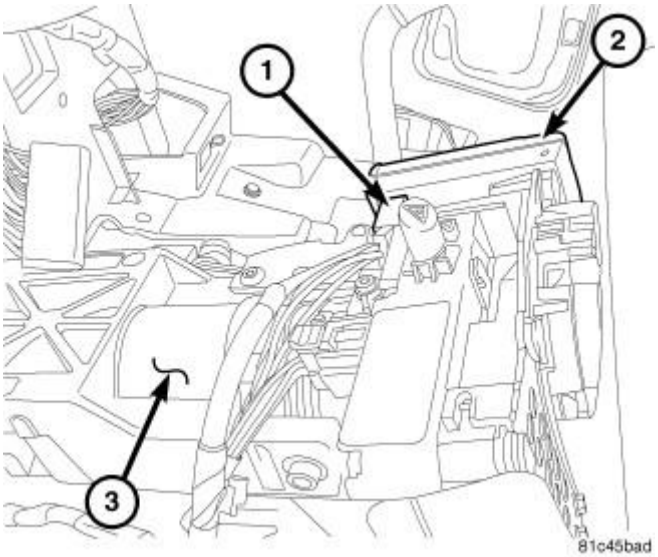

Fig. 14: WIN & Remote Start Coax Connector

Courtesy of CHRYSLER GROUP, LLC

1. Connect coax cable electrical connector (1) to WIN module (2).

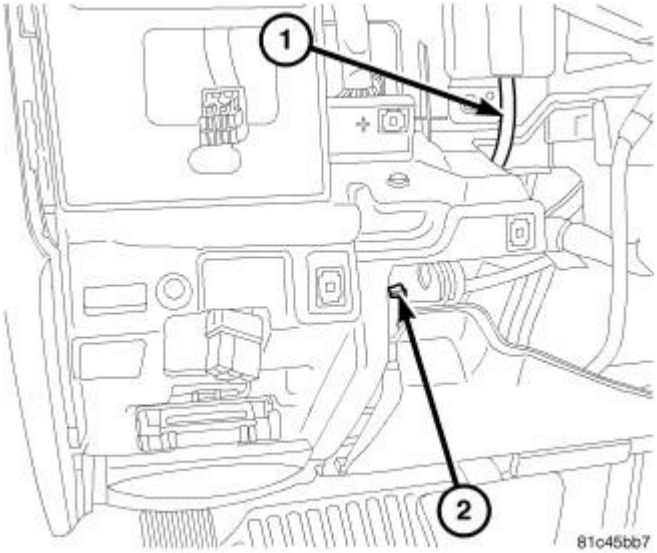

Fig. 15: Remote Start Coax Mounting Clip
Courtesy of CHRYSLER GROUP, LLC

Route coax cable and install cable clip (2) to IP.

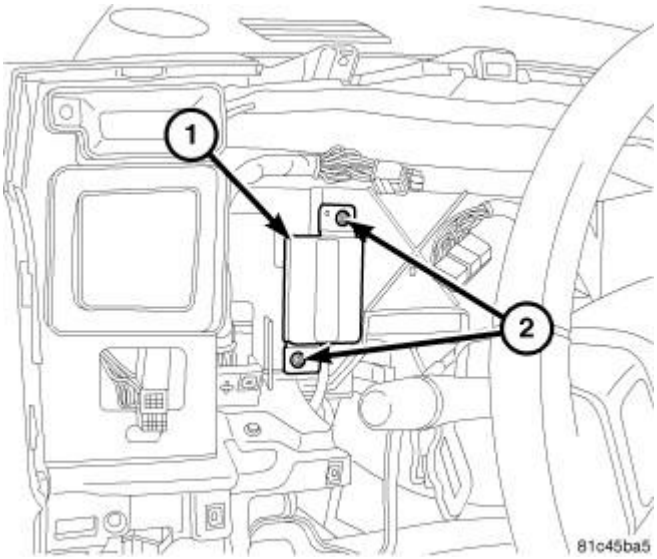

Fig. 16: Remote Start Module & Screws
Courtesy of CHRYSLER GROUP, LLC

2. Position module (1) and install two module mounting screws (2).
3. Install IP cluster and its three connectors.
4. Install IP cluster bezel.
5. Install steering column trim panel (knee blocker).

6. Install steering column shrouds.
7. Connect negative battery cable.

RELAY, STARTER

DESCRIPTION

DESCRIPTION

The starter relay is located within the Totally Integrated Power Module (TIPM) and is not serviceable.

STARTER

DIAGNOSIS AND TESTING

DIAGNOSIS AND TESTING - STARTER MOTOR

NOTE: This test can only be performed with starter motor removed from vehicle.

Correct starter motor operation can be confirmed by performing the following free running bench test. For starter motor specifications, refer to **SPECIFICATIONS**.

1. Remove starter motor from vehicle. Refer to **REMOVAL**.
2. Mount starter motor securely in a soft-jawed bench vise. The vise jaws should be clamped on the mounting flange of starter motor. Never clamp on starter motor by field frame.
3. Connect a suitable volt-ampere tester and a 12-volt battery to starter motor in series, and set ammeter to 100 ampere scale. See instructions provided by manufacturer of volt-ampere tester being used.
4. Install jumper wire from solenoid terminal to solenoid battery terminal. The starter motor should operate. If starter motor fails to operate, replace faulty starter motor assembly.
5. Adjust carbon pile load of tester to obtain free running test voltage. Refer to **SPECIFICATIONS** for starter motor free running test voltage specifications.
6. Note reading on ammeter and compare reading to free running test maximum amperage draw. Refer to **SPECIFICATIONS** for starter motor free running test maximum amperage draw specifications.
7. If ammeter reading exceeds maximum amperage draw specification, replace faulty starter motor assembly.

STARTER SOLENOID

NOTE: Certain vehicles with certain engines may require starter motor removal for the following test.

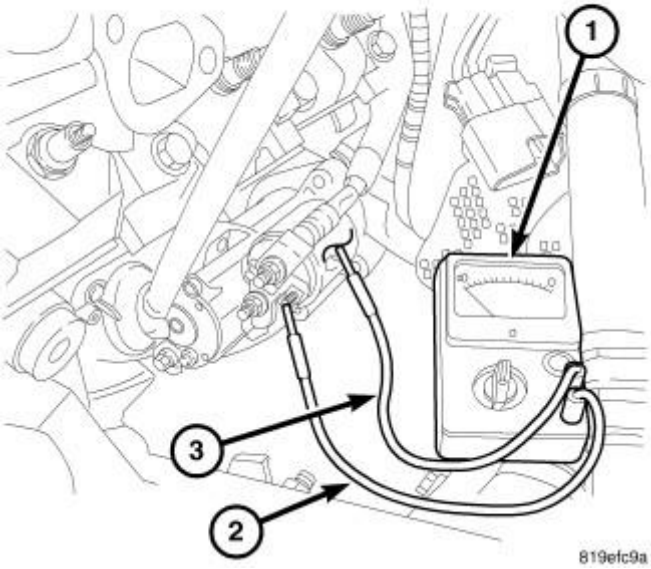

Fig. 17: Solenoid Continuity Test
Courtesy of CHRYSLER GROUP, LLC

1. If necessary, remove starter motor from vehicle. Refer to **REMOVAL**.
2. Disconnect solenoid connector wiring from starter motor.
3. Check for continuity between solenoid terminal (2) and solenoid case (3). There should be continuity. If not OK, replace faulty starter motor assembly.

REMOVAL

3.7L / 4.7L

1. Disconnect and isolate the negative battery cable.
2. Raise and support the vehicle.
3. Note: If equipped with 4WD and certain transmissions, a support bracket is used between front axle and side of transmission. Remove two support bracket bolts at the transmission. Pry the support bracket slightly to gain access to the lower starter mounting bolt.

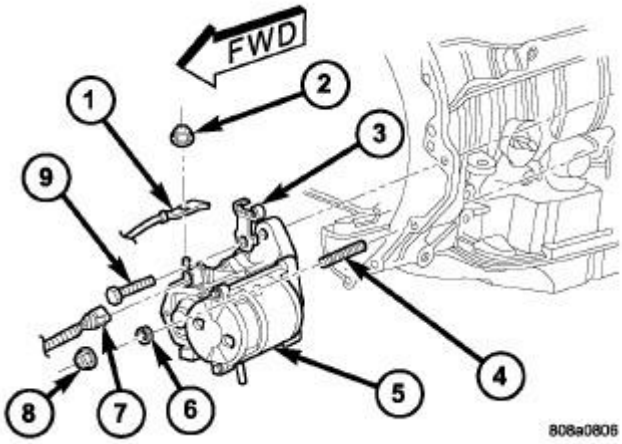

Fig. 18: Starter Motor, Connectors, Nuts & Screws
Courtesy of CHRYSLER GROUP, LLC

1 - EYELET TERMINAL
2 - NUT
3 - BRACKET
4 - STUD
5 - STARTER MOTOR
6 - LOCK WASHER
7 - WIRE HARNESS CONNECTOR
8 - NUT
9 - SCREW AND WASHER (2)

4. Remove the one bolt and one nut if equipped with a manual transmission. Refer to **Fig. 18**.

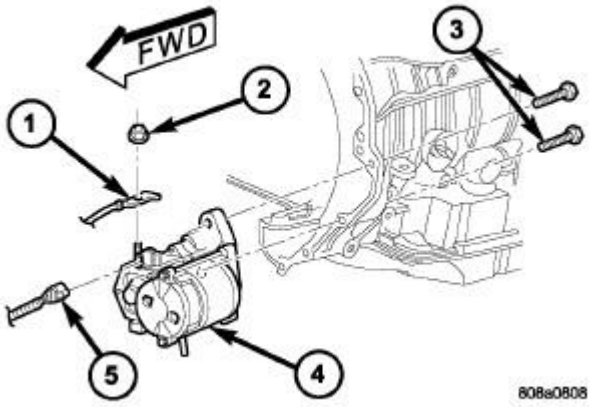

Fig. 19: Starter Motor, Connector, Screws & Nut
Courtesy of CHRYSLER GROUP, LLC

1 - EYELET TERMINAL
2 - NUT
3 - SCREW AND WASHER (2)
4 - STARTER MOTOR
5 - WIRE HARNESS CONNECTOR

5. Remove the two bolts if equipped with an automatic transmission. Refer to **Fig. 19**.
6. Move the starter motor towards the front of vehicle far enough for the nose of the starter pinion housing to clear the housing. Always support the starter motor during this process, do not let the starter motor hang from the wire harness.
7. Tilt the nose downwards and lower the starter motor far enough to access and remove the nut that secures the battery positive cable connector eyelet to the solenoid battery terminal stud. Do not let the starter motor hang from the wire harness.
8. Remove the battery positive cable connector eyelet from the solenoid battery terminal stud.
9. Disconnect the battery positive cable connector from the solenoid terminal connector receptacle.
10. Remove the starter motor.

5.7L

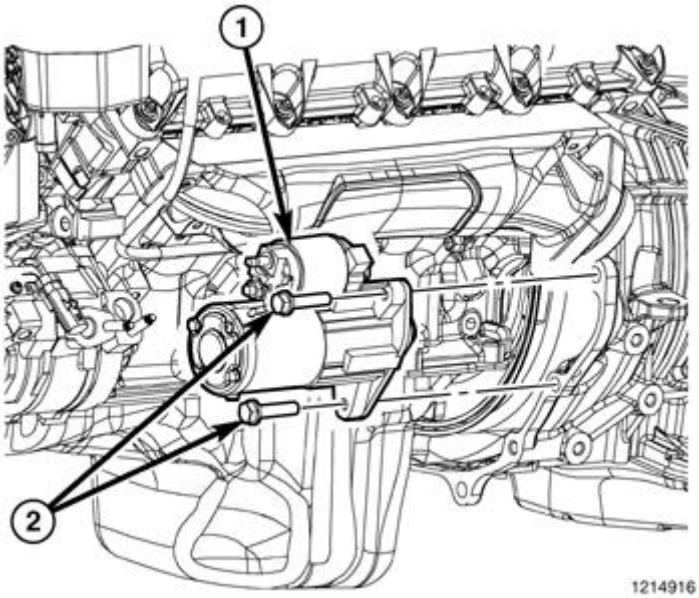

Fig. 20: Starter Mounting Bolts
Courtesy of CHRYSLER GROUP, LLC

1. Disconnect and isolate the negative battery cable.
2. Raise and support the vehicle.
3. Note: If equipped with 4WD and certain transmissions, a support bracket is used between front axle and side of transmission. Remove 2 support bracket bolts at transmission. Pry support bracket slightly to gain access to lower starter mounting bolt.
4. Remove the two mounting bolts (2).

5. Move the starter motor towards front of vehicle far enough for the nose of the starter pinion housing to clear the housing. Always support the starter motor during this process, do not let the starter motor hang from wire harness.
6. Tilt nose the downwards and lower starter motor far enough to access and remove the nut that secures the battery positive cable wire harness connector to the solenoid battery terminal stud. Do not let the starter motor hang from the wire harness.

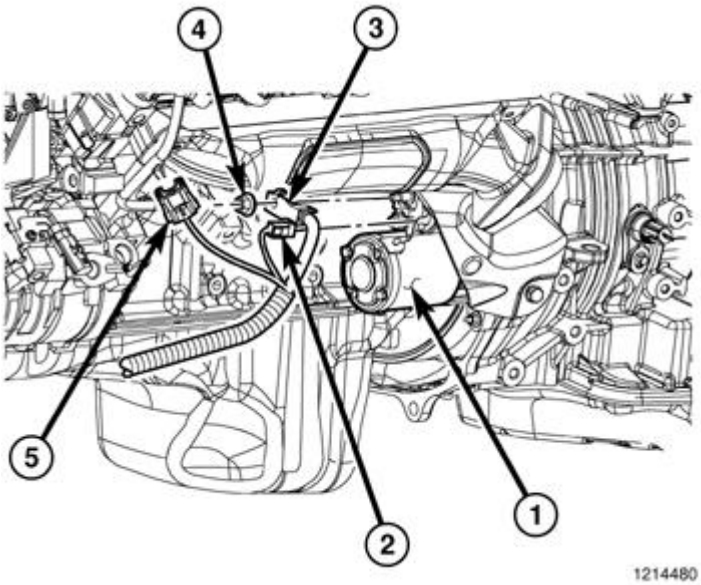

Fig. 21: Starter Electrical Connectors
Courtesy of CHRYSLER GROUP, LLC

7. Remove the battery positive cable wire harness connector eyelet (3) from the solenoid battery terminal stud.
8. Disconnect the battery positive cable wire harness connector from the solenoid terminal connector receptacle.
9. Remove the starter motor.

DIESEL

5.9L DIESEL

1. Disconnect and isolate both negative battery cables at both batteries.
2. Raise and support vehicle.

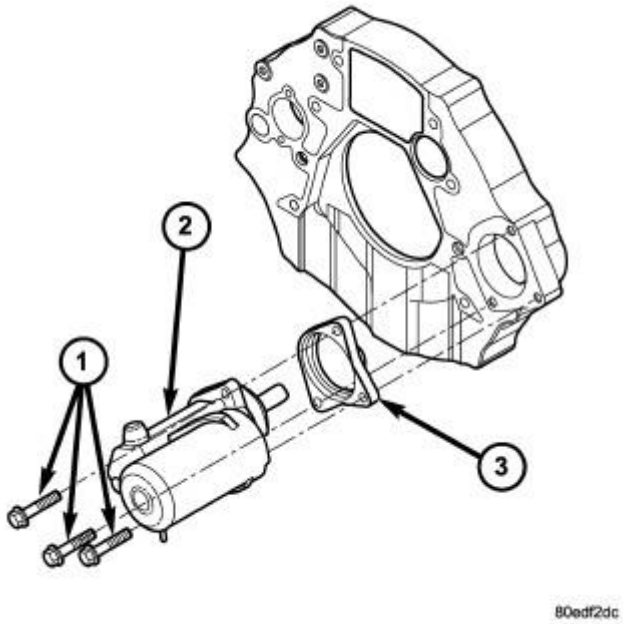

Fig. 22: Removing/Installing Starter - 5.9L Diesel
Courtesy of CHRYSLER GROUP, LLC

1 - MOUNTING BOLTS (3)
2 - STARTER MOTOR
3 - SPACER (CERTAIN TRANSMISSIONS)

3. Remove 3 starter mounting bolts. Refer to **Fig. 22**.
4. Move starter motor towards front of vehicle far enough for nose of starter pinion housing to clear housing. Always support starter motor during this process. Do not let starter motor hang from wire harness.
5. Tilt nose downwards and lower starter motor far enough to access and remove nuts securing starter wiring harness to starter. Refer to **Fig. 23**. Do not let starter motor hang from wire harness.

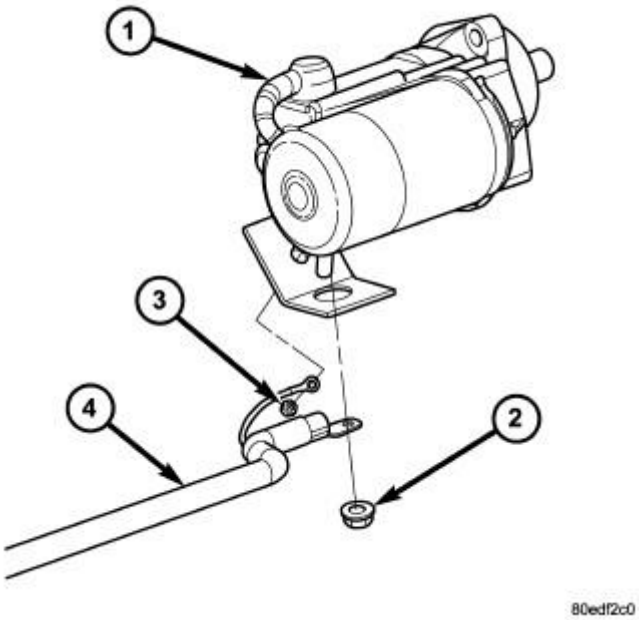

Fig. 23: Locating Starter Electrical Connectors - 5.9L Diesel
Courtesy of CHRYSLER GROUP, LLC

1 - STARTER MOTOR
2 - BATTERY CABLE NUT
3 - SOLENOID NUT
4 - HARNESS ASSEMBLY

6. Remove starter motor from engine. Note: Certain diesel engines use an aluminum spacer. Refer to **Fig. 22**. Note position and orientation of spacer before removal.

6.7L DIESEL

1. Disconnect and isolate both negative battery cables at both batteries.
2. Raise and support vehicle.

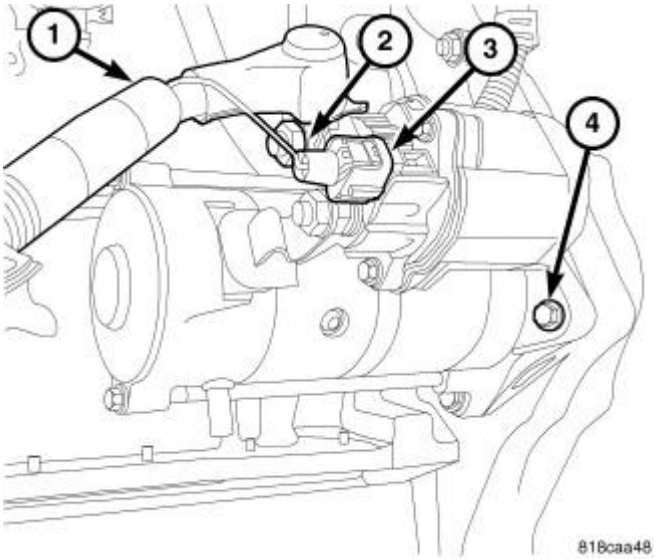

Fig. 24: Identifying Starter Components - 6.7L Diesel
Courtesy of CHRYSLER GROUP, LLC

1 - BATTERY CABLE
2 - BATT. CABLE MOUNTING NUT
3 - SOLENOID CONNECTOR
4 - MOUNTING BOLTS (3)

3. Disconnect solenoid electrical connector (3).
4. Remove battery cable mounting nut (2).
5. Remove battery cable (1) from stud.
6. Remove three starter mounting bolts (4).
7. Remove starter motor from engine.

INSTALLATION

3.7L / 4.7L

1. Connect the solenoid wire to the starter motor (snaps on).
2. Position the battery cable to the solenoid stud. Install and tighten the battery cable eyelet nut to 13 N.m (10 ft. lbs.). Do not allow the starter motor to hang from the wire harness.
3. Position the starter motor to the transmission.
4. If equipped with a automatic transmission, slide the cooler tube bracket into position.
5. Install and tighten both bolts (auto. trans.), or one nut and one bolt (man. trans.) to 50 ft. lbs. (68 N.m).
6. Lower the vehicle.
7. Connect the negative battery cable.

5.7L

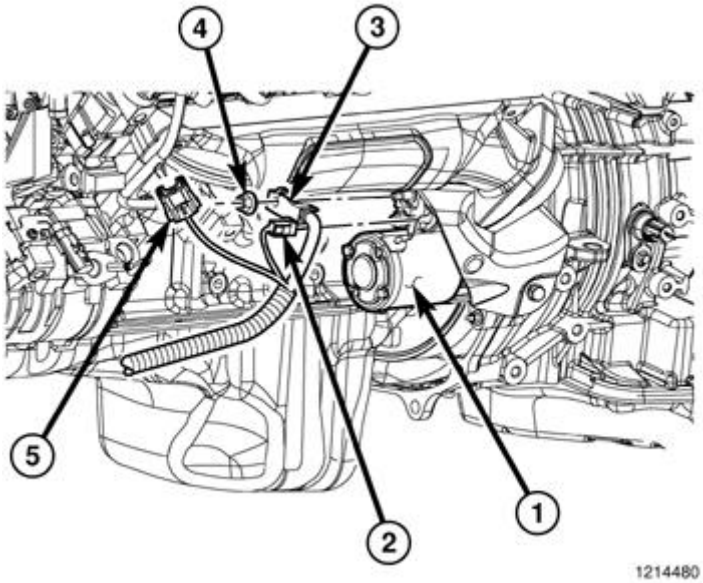

Fig. 25: Starter Electrical Connectors
Courtesy of CHRYSLER GROUP, LLC

1. Connect the solenoid wire to starter motor (snaps on).
2. Position the battery cable to the solenoid stud. Install and tighten the battery cable eyelet nut to 13 N.m (10 ft. lbs.). Do not allow the starter motor to hang from the wire harness.

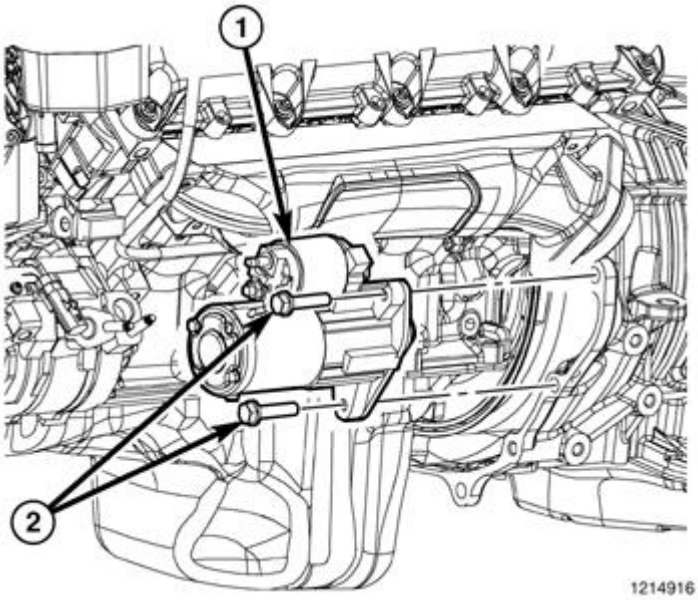

Fig. 26: Starter Mounting Bolts
Courtesy of CHRYSLER GROUP, LLC

3. Position the starter motor to engine.
4. If equipped with automatic transmission, slide the cooler tube bracket into position.
5. Install and tighten both mounting bolts. Tighten to 68 N.m (50 ft. lbs.).

6. Lower the vehicle.
7. Connect the negative battery cable.

DIESEL

5.9L DIESEL

1. **If Equipped:** Position and hold aluminum spacer to rear of starter while positioning starter to engine.
2. Connect solenoid wire to starter motor. Tighten nut to 4.4 ft. lbs. (6 N.m).
3. Position battery cable to starter stud. Install and tighten battery cable nut to 10.3 ft. lbs. (14 N.m). Do not allow starter motor to hang from wire harness.
4. Position starter motor to transmission.
5. If equipped with automatic transmission, slide cooler tube bracket into position.
6. Install and tighten 3 starter mounting bolts to 32 ft. lbs. (43 N.m).
7. Lower vehicle.
8. Connect both negative battery cables to both batteries.

6.7L DIESEL

1. Connect solenoid wire to starter motor. Tighten nut to 4.4 ft. lbs. (6 N.m).
2. Position battery cable to starter stud. Install and tighten battery cable nut to 10.3 ft. lbs. (14 N.m). Do not allow starter motor to hang from wire harness.
3. Position starter motor to transmission.
4. Install and tighten 3 starter mounting bolts to 32 ft. lbs. (43 N.m).
5. Lower vehicle.
6. Connect both negative battery cables to both batteries.

TIP START

DESCRIPTION

DESCRIPTION

TIP Start system prevents double starts and preserves battery, ignition and gear life

OPERATION

OPERATION

Do not press the accelerator. Use the Fob with Integrated Key to briefly turn the ignition switch to the START position and release it as soon as the starter engages. The starter motor will continue to run, and it will disengage automatically when the engine is running. If the engine fails to start, the starter will disengage automatically in 10 seconds. If this occurs, turn the ignition switch to the LOCK position, wait 10 to 15 seconds, then repeat the normal starting procedure.

Driveability - Diesel - Non-DTC Based Diagnostics, 6.7L Diesel - 2500, 3500, 3500 Cab & Chassis, 4500 & 5500

DIAGNOSIS AND TESTING

PRE-DIAGNOSTIC TROUBLESHOOTING PROCEDURE - 6.7L

For a complete wiring diagram, **refer to appropriate SYSTEM WIRING DIAGRAMS article** .

DIAGNOSTIC TEST

1. **NO RESPONSE**
    1. Make sure the scan tool will communicate with the appropriate modules.

       Are you currently experiencing a NO RESPONSE condition?

       Yes

       - The NO RESPONSE condition must be properly diagnosed before continuing.
       - Perform the appropriate BUS Communication test. Refer to **DIAGNOSIS AND TESTING** .

       No

       - Go To 2.
2. **DTC PRESENT**

   NOTE: Before continuing, complete the 6.7L Cummins Turbo Diesel Diagnostic Worksheet. Go to the TechConnect > submit the vehicle's VIN number > Search Tab > and Select Create Diagnostic Worksheet.

    1. Turn the ignition on.
    2. With the scan tool, view PCM for DTCs.

       Is there a DTC present?

       Yes

       - Proceed to the MIL LIGHT ON PRETEST PROCEDURE. Refer to **2500 & 3500 - MIL LIGHT ON PRETEST PROCEDURE** or **3500 CAB & CHASSIS, 4500 & 5500 - MIL LIGHT ON PRETEST PROCEDURE** .

       No

       - Go To 3.

3. **CHECK FOR SYMPTOM BASED ISSUES**
    1. Check the vehicle for one of the following conditions:
        - Engine No Start / Hard Start
        - Engine Misfires / Runs Rough / Poor Performance
        - Engine Noise
        - Excessive Smoke (Black/Blue/White)

    Do one of the following conditions exist?

    Yes

    - Perform the appropriate symptom based diagnostic procedure. Refer to **DIAGNOSIS AND TESTING, 6.7L**.

    No

    - Verify the vehicles performance by performing the Diesel Fuel System Validation procedure. Refer to **2500 & 3500 - DIESEL AFTERTREATMENT VALIDATION- 6.7L** or **3500 CAB & CHASSIS, 4500 & 5500 - DIESEL AFTERTREATMENT VALIDATION- 6.7L** .

AFTERTREATMENT INSPECTION GUIDELINE

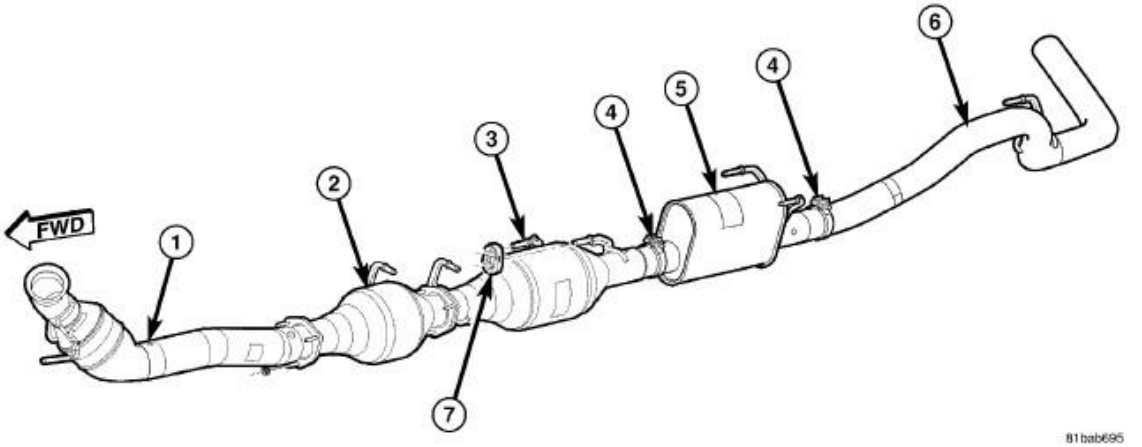

Fig. 1: Exhaust System - 6.7L Diesel - P/U
Courtesy of CHRYSLER GROUP, LLC

1 - DIESEL OXIDATION CATALYST (DOC)	5 - MUFFLER
2 - NOx ABSORBER CATALYST (NAC)	6 - TAILPIPE
3 - DIESEL PARTICULATE FILTER (DPF)	7 - INSULATOR
4 - BAND CLAMP	

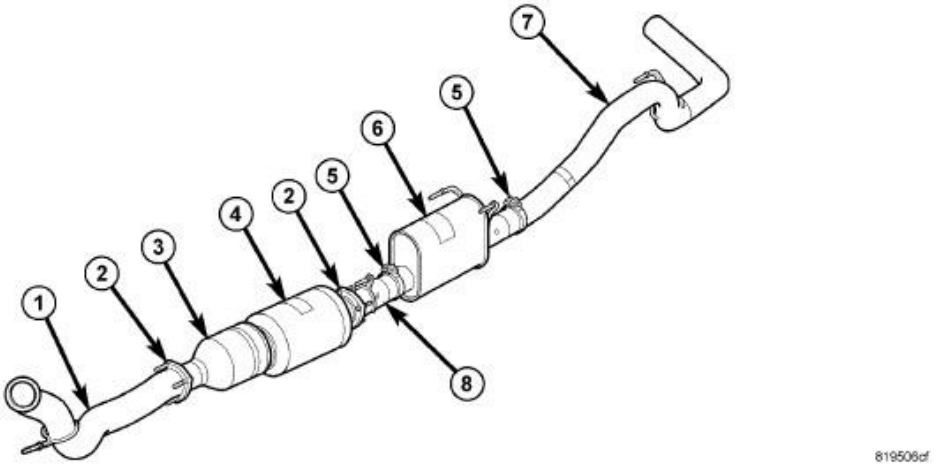

Fig. 2: Exhaust System - 6.7L Diesel - Cab & Chassis
Courtesy of CHRYSLER GROUP, LLC

1 - EXHAUST PIPE	5 - BAND CLAMP
2 - FLANGE NUTS	6 - MUFFLER
3 - DIESEL OXIDATION CATALYST (DOC)	7 - TAILPIPE
4 - DIESEL PARTICULATE FILTER (DFP)	8 - INTERMEDIATE PIPE

OVERVIEW

This service document provides visual inspection guidelines for the aftertreatment systems used in Cummins 6.7L powered Dodge Ram vehicles. This includes both Pickup truck, model years 2007-Present (2500 & 3500 Series) and Cab Chassis model years 2007-2010 (4500 & 5500 Series). For removal and installation procedures, reference the appropriate Service information. The Aftertreatment systems are uniquely different for the Pickup truck and Chassis Cab. **Above are diagrams of both systems.**

DIAGNOSTIC TEST

1. **PICKUP OR CAB CHASSIS VEHICLE**

   Is the vehicle a Pickup or Cab Chassis frame?

   Pickup

   - Go To 2.

   Cab Chassis

   - Go To 5.
2. **PICKUP VEHICLE INSPECTION OF THE DIESEL PARTICULATE FILTER (DPF)**

NOTE: **The primary failure modes for the DPF are inlet face plugging, internal cracking and internal melting. Inlet face plugging is easily diagnosed. Internal cracking and melting can be identified by soot patterns on the DPF outlet and/or evidence of soot on the outlet tail pipe.**

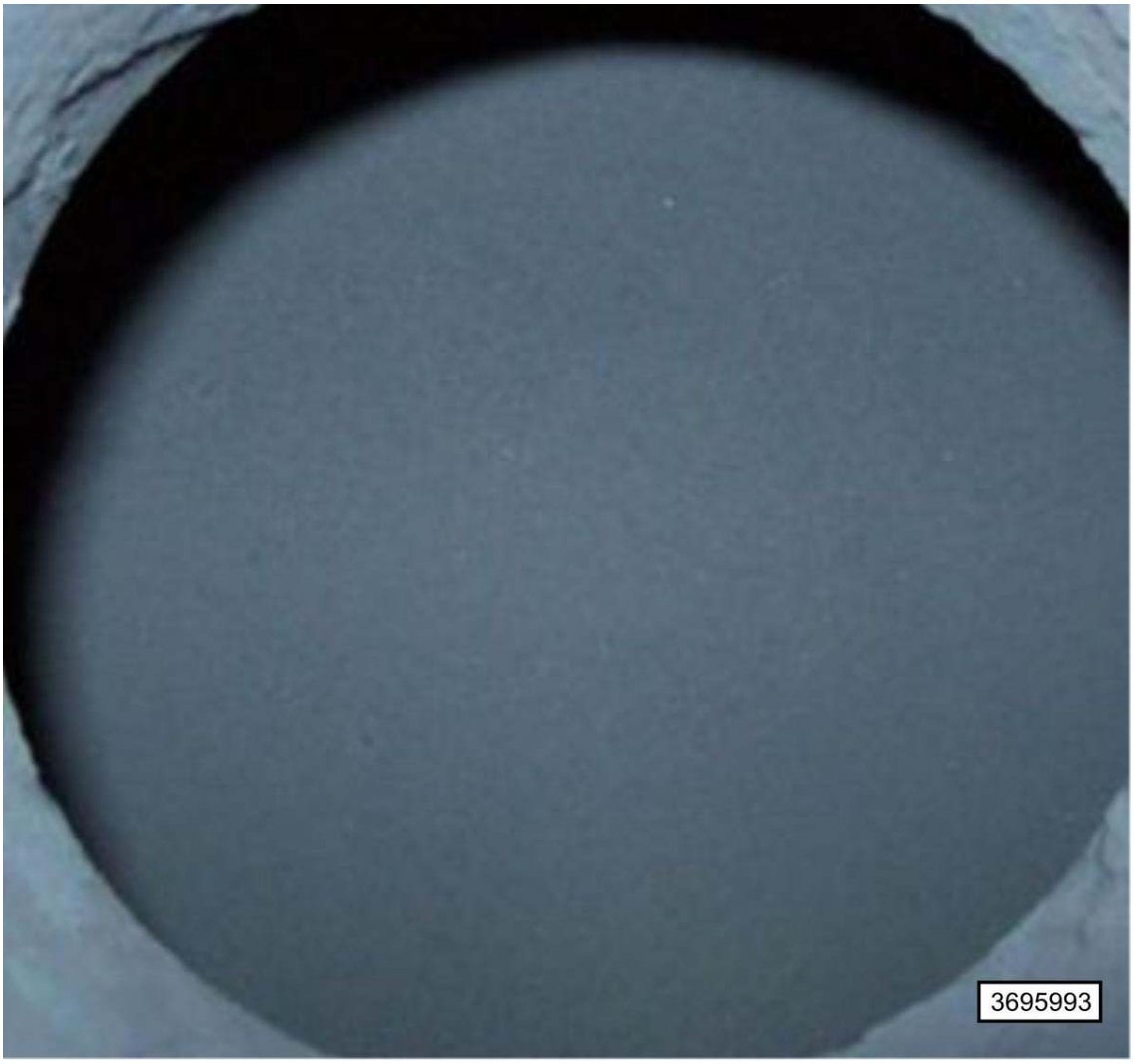

Fig. 3: Example Of A Failed DPF Due To Severe Face Plugging
Courtesy of CHRYSLER GROUP, LLC

1. Remove the DPF from the vehicle.
2. Inspect the inlet face of the DPF.

   NOTE: **DPF Inlet is the flanged side.**

3. **This figure is an example of a failed DPF due to severe face plugging.** All inlet channel openings are completely plugged. Symptoms would possibly include hard or no start and/or related P-codes.

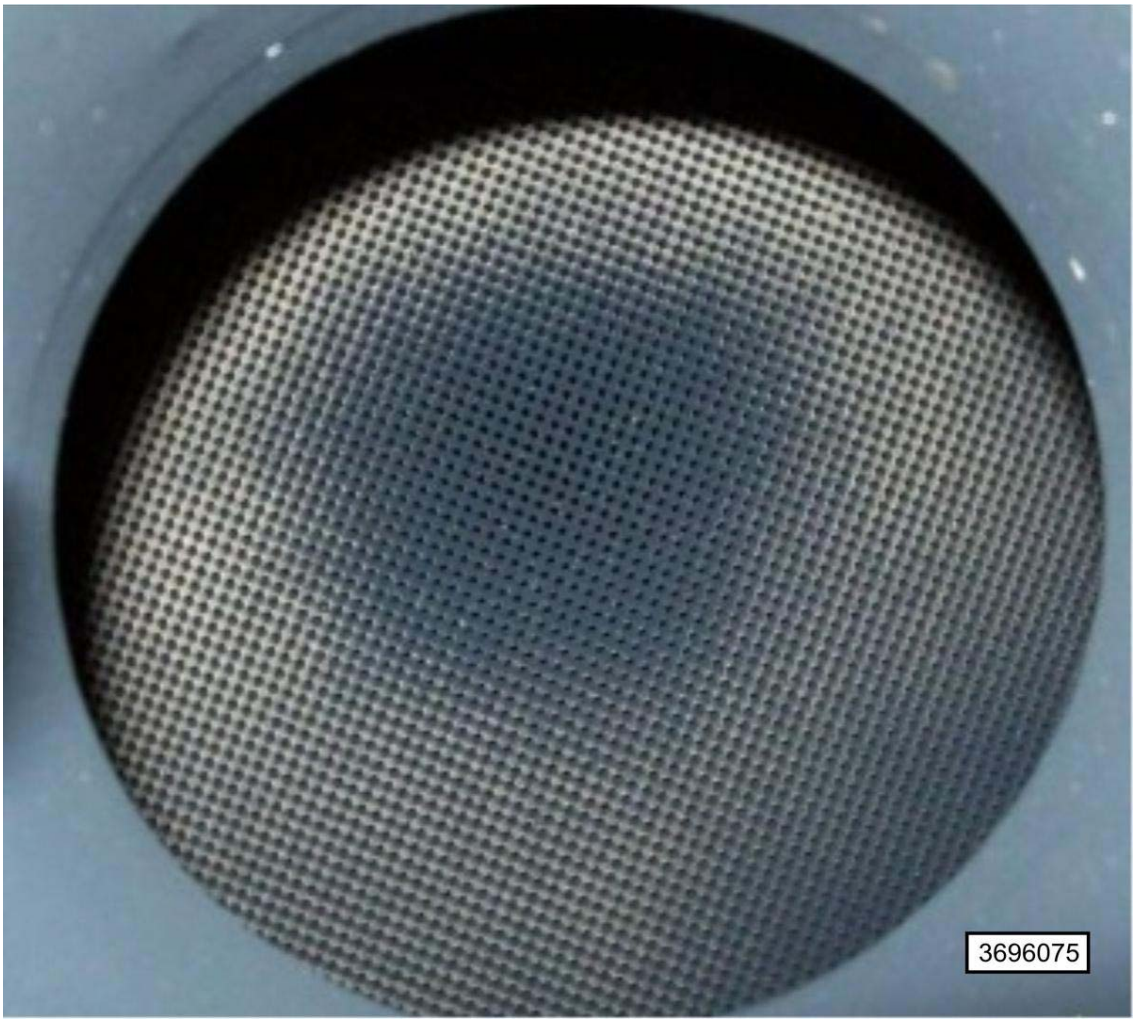

Fig. 4: Example Of A Good DPF Inlet
Courtesy of CHRYSLER GROUP, LLC

4. **This figure is an example of a good DPF inlet.** Note that immediately following a regeneration event, the inlet face will/may look cleaner. Also note that it is normal for the inlet face to be coated with soot. Inlet channels should be open and visible. As long as cell matrix is visible the inlet is ok.

Fig. 5: Example Of A Failed DPF Due To An Internal Melting Of Cells
Courtesy of CHRYSLER GROUP, LLC

5. Inspect the outlet of the DPF.
6. **This figure is an example of a failed DPF due to an internal melting of cells.** The DPF outlet face and pipe show evidence of soot. Symptoms can include Black Smoke, and/or related P-codes.

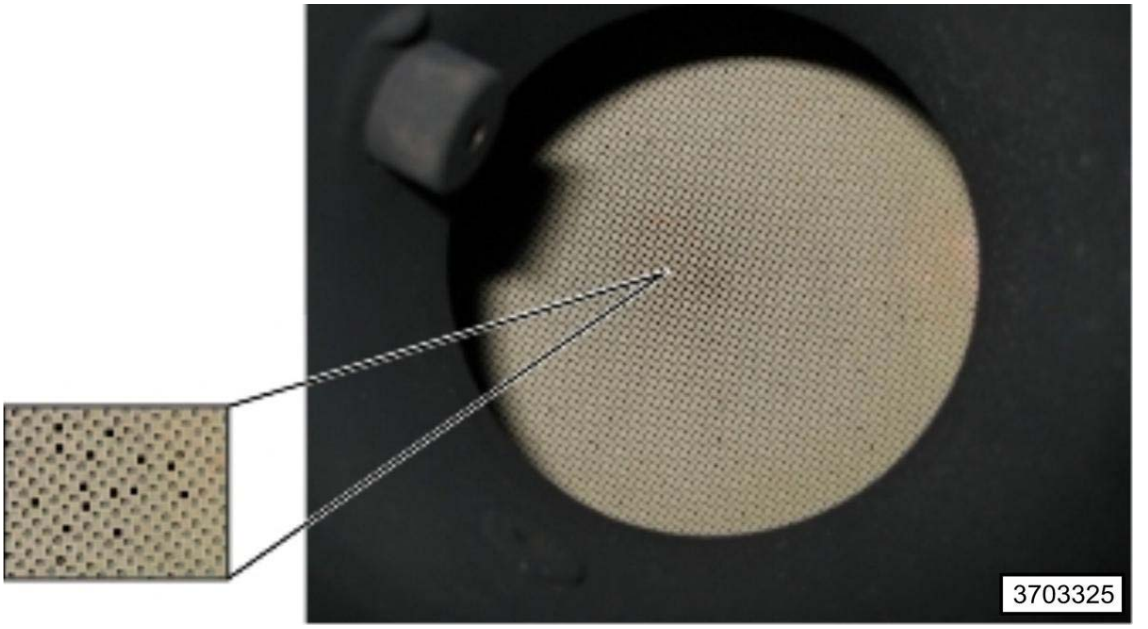

Fig. 6: Example Of A Failed DPF Due To An Internal Cracking Of The Substrate
Courtesy of CHRYSLER GROUP, LLC

7. **This figure is an example of a failed DPF due to an internal cracking of the substrate.** The DPF outlet channel openings show evidence of soot. Close inspection shows several blackened channel openings or "black cells. Also Outlet pipe shows evidence of soot. Symptoms can include Black Smoke, and / or related P-codes.

Fig. 7: Example Of A Failed DPF Due To A Leak At The DPF Outlet Rim Of Substrate
Courtesy of CHRYSLER GROUP, LLC

8. **This figure is an example of a failed DPF due to a leak at the DPF Outlet rim of substrate.** Look for black cells on the outlet face.

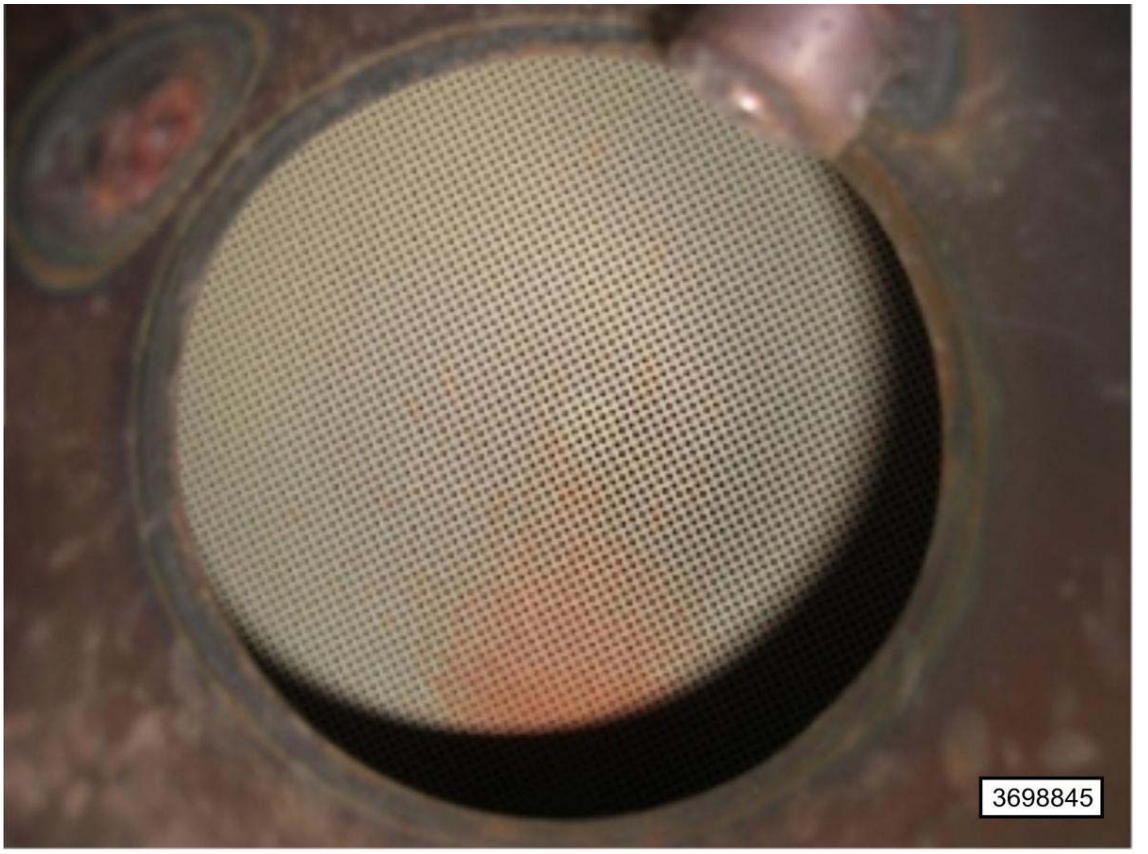

Fig. 8: Examples Of A Good DPF
Courtesy of CHRYSLER GROUP, LLC

9. **This figure and the next are examples of a good DPF.** In this figure, it is not black or does not show any black cells. Note orange appearance near weep hole at bottom. This is dirt ingestion from dusty areas that does not affect filter performance. Outlet pipe is not sooty as compared to a failed part. Normally outlet face is off white or tan in appearance.

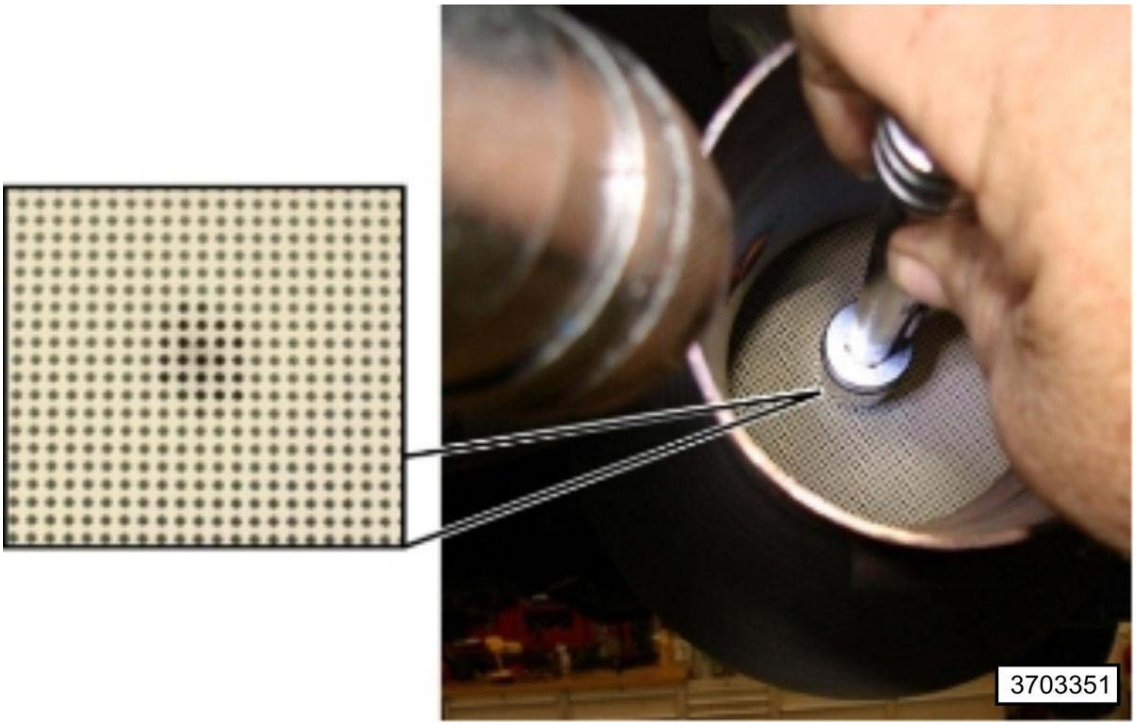

Fig. 9: Checking Pass Or Fail Condition Of DPF Using A 1 Inch Socket
Courtesy of CHRYSLER GROUP, LLC

10. This figure shows an enlarged section with a small black circle near the center of substrate. This is the only sign of soot evident in the entire outlet inspection. A quick check with a 1" socket will show pass/fail of this part. Using a one inch socket (1.375 inches Outer Diameter) and extension, cover the black spot at the center of DPF outlet face. **If the 1 inch socket covers the black spot and no other black cells are visible, DPF doesn't need to be replaced.** If there are any black cells visible around the 1 inch socket, DPF does not meet pass criteria and should be replaced. If there are any black cells on other portions of the outlet face in addition to a black spot in the center, DPF should be replaced.

NOTE: **Make sure one inch socket has about 1.375 inches of outer diameter (Standard socket not impact). DPF outlet thermistor may be removed, if it is in the path of the black spot.**

Does the DPF show signs of face plugging, internal cracking or melting?

Yes

- Replace the Diesel Particulate Filter in accordance with the service information.

No

- Go To 3.

3. **INSPECTION OF THE NOx ABSORBER (NAC) ON A PICKUP**

NOTE: **The primary failure modes for the DPF are inlet face plugging, cracking and internal melting. Inlet face plugging is easily diagnosed (would resemble the figure showing face plugging of the DPF).**

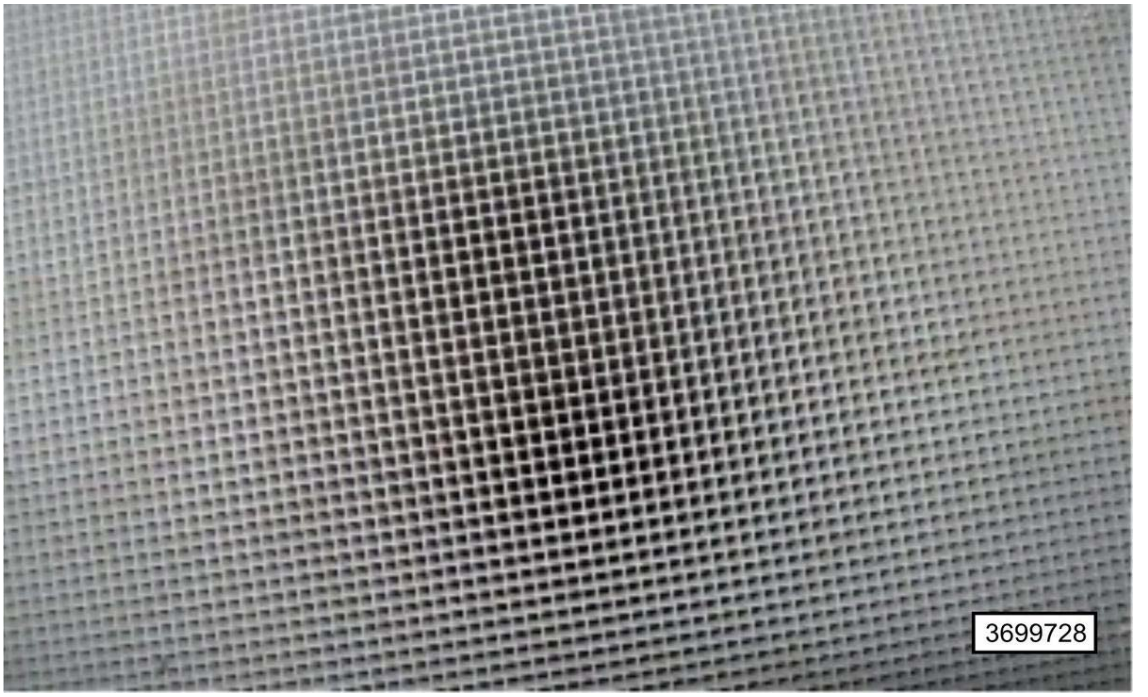

Fig. 10: Examples Of A Good NAC
Courtesy of CHRYSLER GROUP, LLC

1. Remove the NAC from the vehicle for inspection.
2. Inspect the inlet side of the NAC.
3. **This figure and the next are examples of a good NAC.** The inlet shows no signs of face plugging, melted spots, or cracks on the face of the grid. A typical NAC inlet will be coated with soot. **The inspection process is to verify that light can be seen through the cells. If light can be seen through the cell matrix then the part is good.**

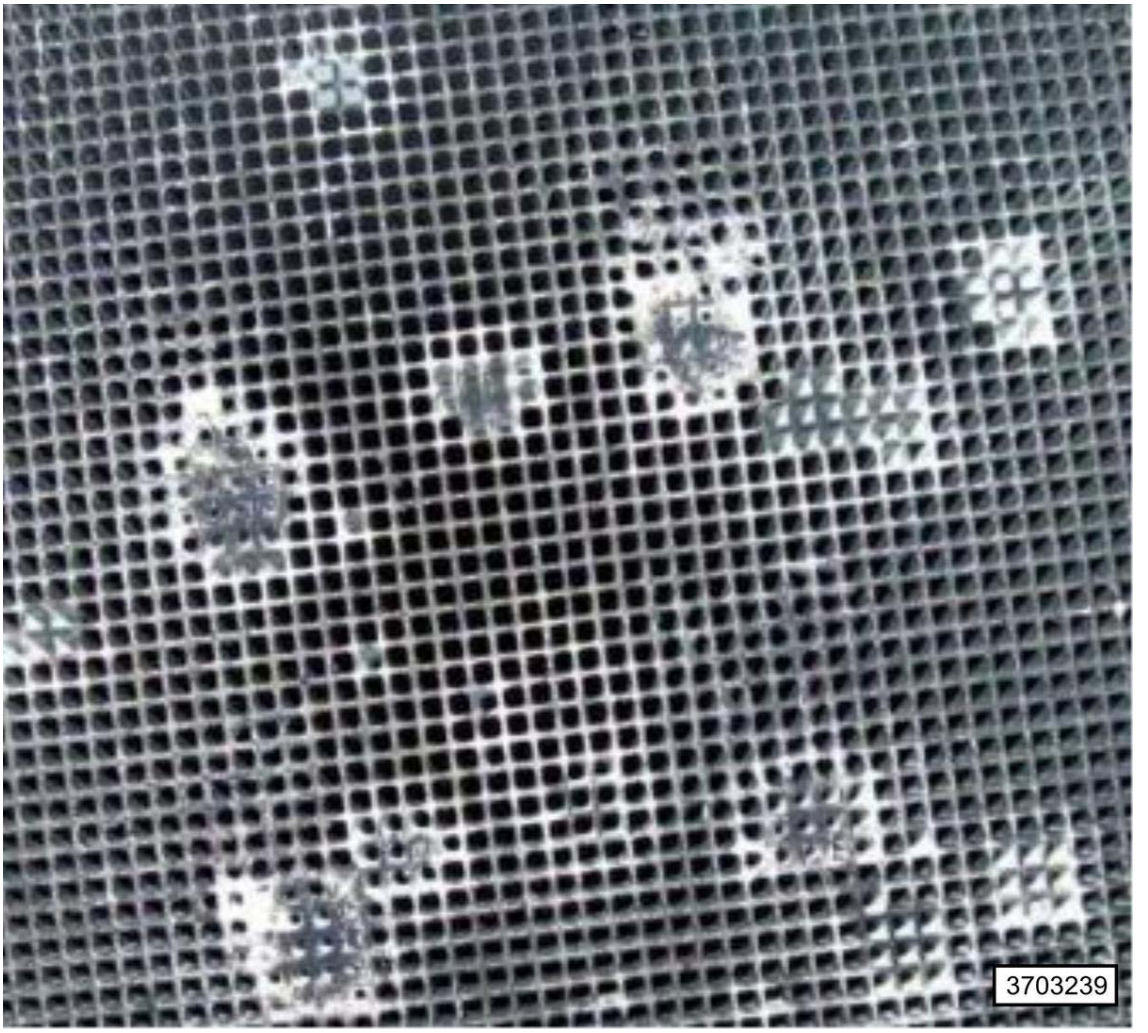

Fig. 11: Close Up View Of Wash-Coat Spots
Courtesy of CHRYSLER GROUP, LLC

4. This figure is a zoomed view to show close pictures of wash-coat spots. Typically the size of these spots are 3/16". **These are not due to melting and does not require replacement.**

   Does the NAC show signs of face plugging, internal cracking or melting?

   Yes

   - Replace the NOx Absorber (NAC) in accordance with the service information.

   No

   - Go To 4.

4. **INSPECTION OF THE DIESEL OXIDATION CATALYST (DOC)**

Fig. 12: Example Of A Good DOC
Courtesy of CHRYSLER GROUP, LLC

NOTE: **The DOC inlet is the only portion that can be inspected easily. Key modes of failure are FACE plugging, debris and possibly melted channels.**

1. This figure is an example of a good DOC. **Soot is present on the inlet which is normal.** As long as cell matrix is visible the inlet is ok.

   Does the DOC show signs of face plugging, internal cracking or melting?

   Yes

   - Replace the Diesel Oxidation Catalyst (DOC) in accordance with the service information.

   No

   - Test complete.

5. **CAB CHASSIS VEHICLE INSPECTION OF THE DOC/DPF (DIESEL OXIDATION CATALYST AND DIESEL PARTICULATE FILTER)**

Fig. 13: Identifying DOC Inlet And Diffuser
Courtesy of CHRYSLER GROUP, LLC

NOTE: **The inlet side to the DOC/DPF on the Cab Chassis is the Catalyst portion. It resembles the Pickup NAC in appearance. The outlet side is the Diesel Particulate Filter portion. This functions exactly the same as the DPF on the pickup truck. Because they are combined, only the inlet of the DOC and outlet of DPF on the cab chassis can be inspected.**

1. Remove the DOC/DPF from the vehicle for inspection.
2. Inspect the DOC inlet. Look for signs of FACE plugging, debris and possibly melted channels.

   NOTE: **The DOC inlet can be identified by a "diffuser" leading into the inlet.**

3. **This figure and the next are examples of a good DOC.** The inlet shows no signs of face plugging, melted spots, or cracks on the face of the grid.

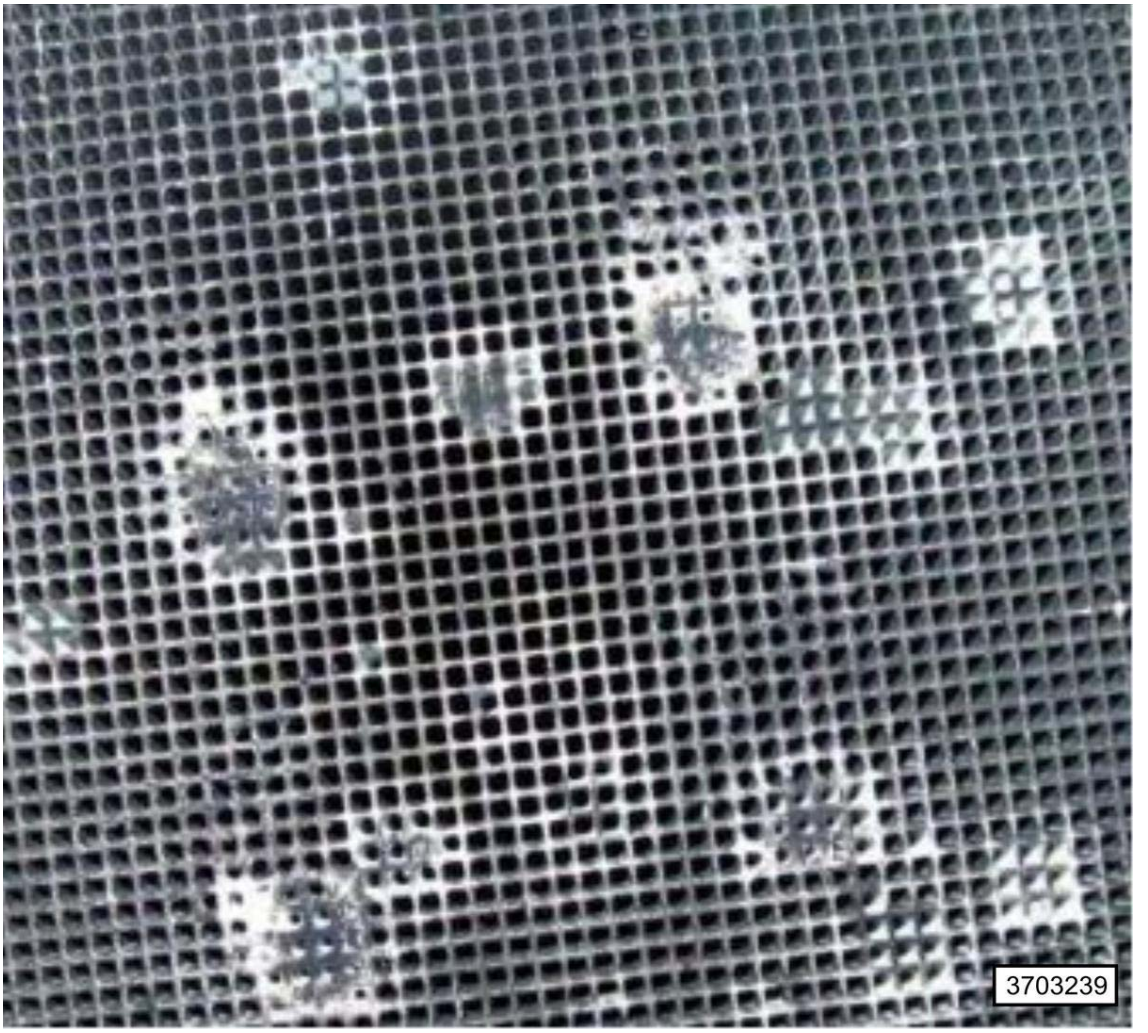

<u>Fig. 14: Close Up View Of Wash-Coat Spots</u>
Courtesy of CHRYSLER GROUP, LLC

4. This figure is a zoomed view to show close pictures of wash-coat spots. Typically the size of these spots are 3/16". **These are not due to melting and does not require replacement.**

Fig. 15: Example Of A Failed DPF Due To An Internal Melting Of Cells
Courtesy of CHRYSLER GROUP, LLC

5. Inspect the outlet of the DPF.
6. **This figure is an example of a failed DPF due to an internal melting of cells.** The DPF outlet face and pipe show evidence of soot. Symptoms can include Black Smoke, and/or related P-codes.

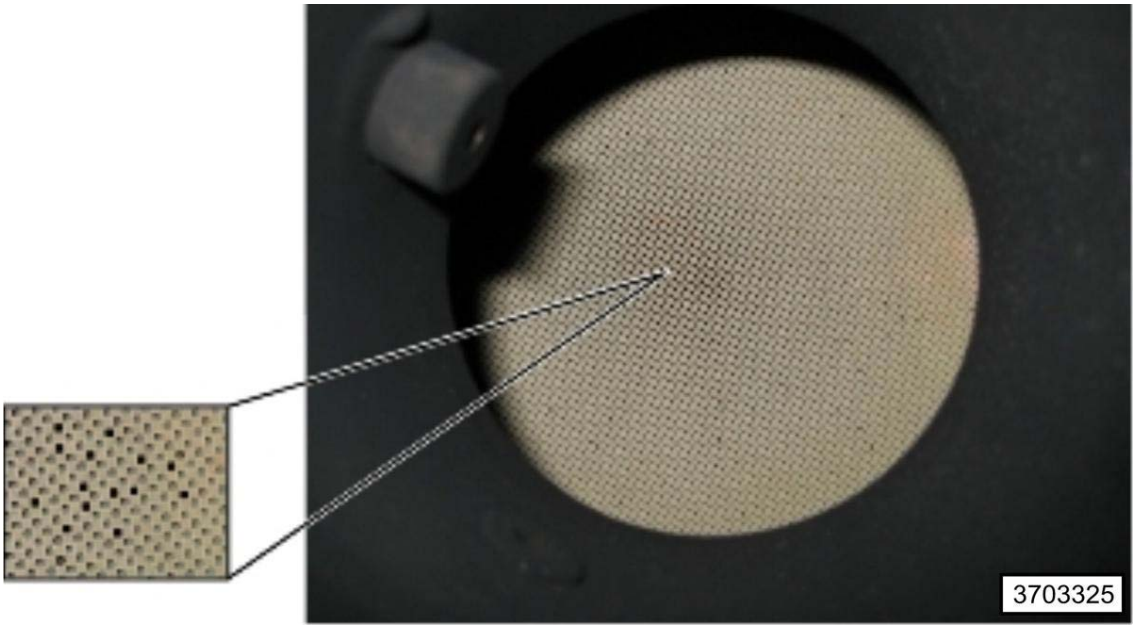

Fig. 16: Example Of A Failed DPF Due To An Internal Cracking Of The Substrate
Courtesy of CHRYSLER GROUP, LLC

7. **This figure is an example of a failed DPF due to an internal cracking of the substrate.** The DPF outlet channel openings show evidence of soot. Close inspection shows several blackened channel openings or "black cells. Also Outlet pipe shows evidence of soot. Symptoms can include Black Smoke, and / or related P-codes.

Fig. 17: Example Of A Failed DPF Due To A Leak At The DPF Outlet Rim Of Substrate
Courtesy of CHRYSLER GROUP, LLC

8. **This figure is an example of a failed DPF due to a leak at the DPF Outlet rim of substrate.** Look for black cells on the outlet face.

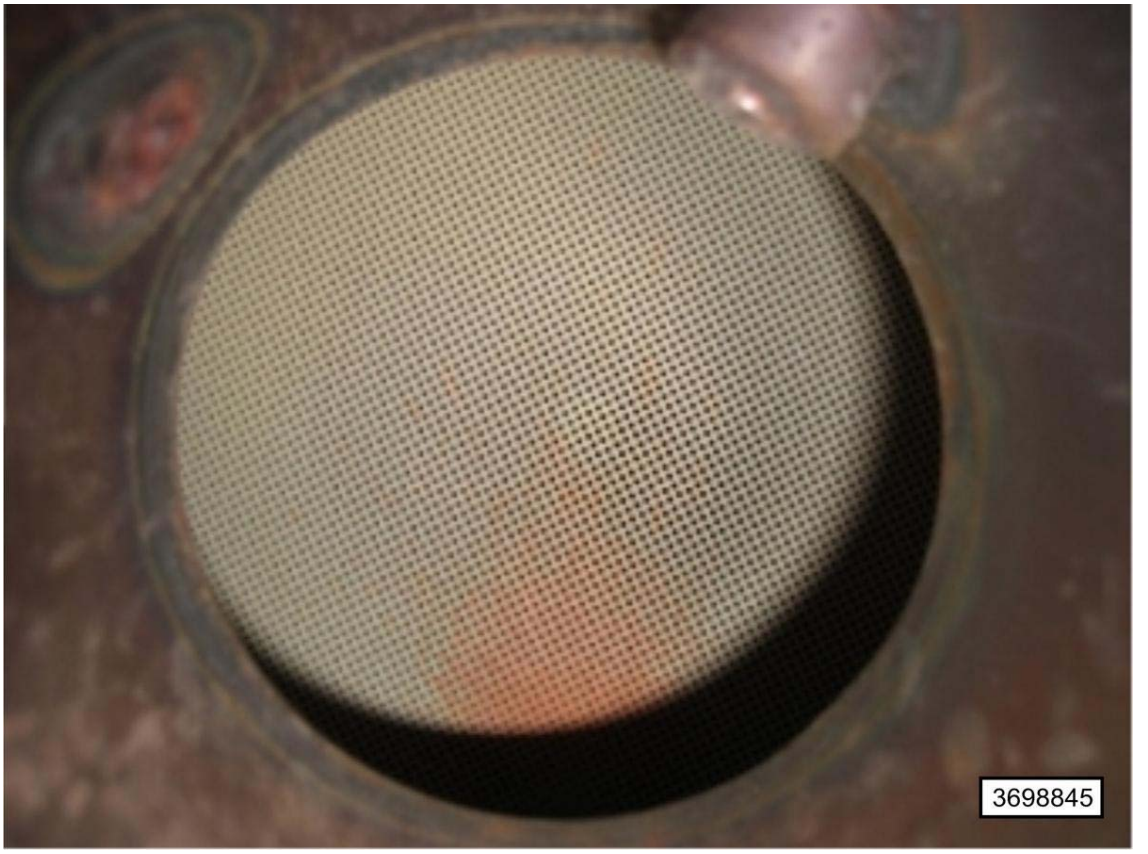

Fig. 18: Examples Of A Good DPF
Courtesy of CHRYSLER GROUP, LLC

9. **This figure and the next are examples of a good DPF.** In this figure, it is not black or does not show any black cells. Note orange appearance near weep hole at bottom. This is dirt ingestion from dusty areas that does not affect filter performance. Outlet pipe is not sooty as compared to a failed part. Normally outlet face is off white or tan in appearance.

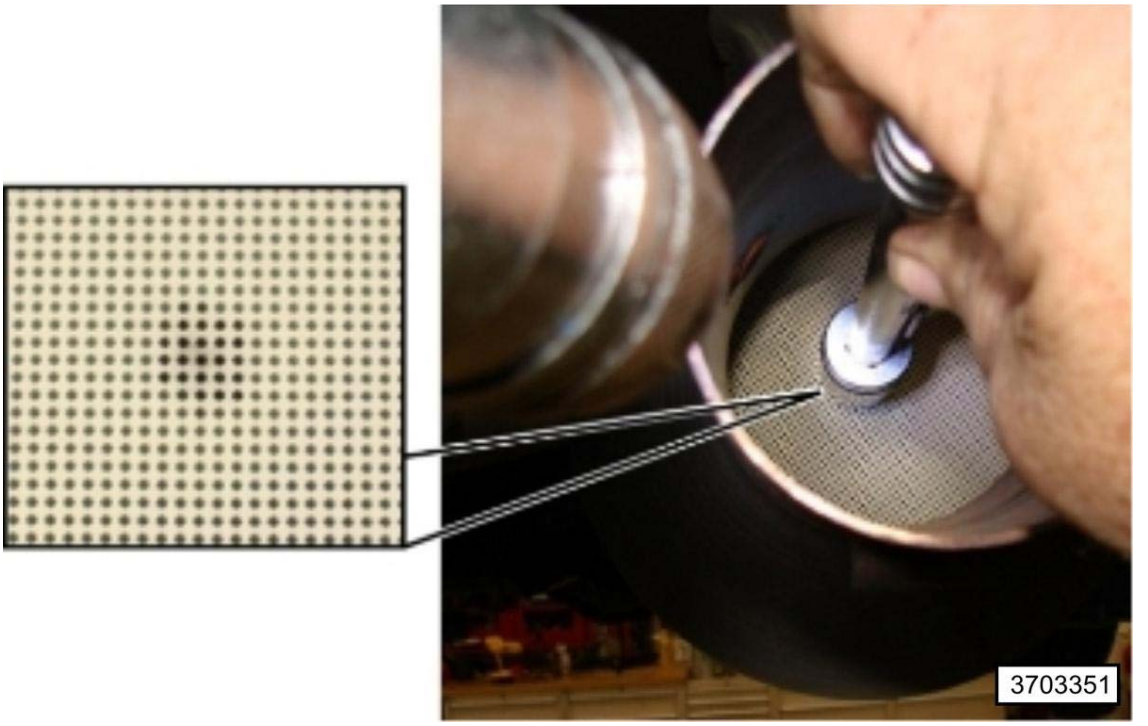

Fig. 19: Checking Pass Or Fail Condition Of DPF Using A 1 Inch Socket
Courtesy of CHRYSLER GROUP, LLC

10. This figure shows an enlarged section with a small black circle near the center of substrate. This is the only sign of soot evident in the entire outlet inspection. A quick check with a 1" socket will show pass/fail of this part. Using a one inch socket (1.375 inches Outer Diameter) and extension, cover the black spot at the center of DPF outlet face. **If the 1 inch socket covers the black spot and no other black cells are visible, DPF doesn't need to be replaced.** If there are any black cells visible around the 1 inch socket, DPF does not meet pass criteria and should be replaced. If there are any black cells on other portions of the outlet face in addition to a black spot in the center, DPF should be replaced.

NOTE: **Make sure one inch socket has about 1.375 inches of outer diameter (Standard socket not impact). DPF outlet thermistor may be removed, if it is in the path of the black spot.**

Does the DOC/DPF appear to be face plugged, melted or have any internal cracking?

Yes

- Replace the DOC/DPF in accordance with the service information.

No

- Test complete.

CHECKING ENGINE MISFIRE / RUNS ROUGH / PERFORMANCE TEST

THEORY OF OPERATION

There are two purposes to this diagnostic test. The first purpose is to try to determine whether an engine misfire or rough running condition can be narrowed down to a specific cylinder or if it is due to a fuel, air handling, or exhaust system issue. The second purpose is to help the technician follow the correct path to diagnose and completely repair the system at fault.

DIAGNOSTIC TEST

1. **RELATED TSBs**

   NOTE: If there are DTCs present in the PCM, TCM, or ABS Modules, repair the DTCs before proceeding.

   1. Check for any TSBs or, PCM or CCN software updates that may relate to customer's complaint.
   2. Follow the appropriate diagnostic procedure in the TSB.

      Is vehicle repaired?

      Yes

      - Repair complete.
      - Perform the POWERTRAIN VERIFICATION TEST - 6.7L. Refer to **2500 & 3500 - POWERTRAIN VERIFICATION TEST - 6.7L** or **3500 CAB & CHASSIS - POWERTRAIN VERIFICATION TEST** or **3500 CAB & CHASSIS, 4500 & 5500 - POWERTRAIN VERIFICATION TEST - 6.7L** .

      No

      - Go To 2.
2. **VISUAL INSPECTION**
   1. Perform an inspection of the following:
      - Verify there are no external fuel or coolant leaks.
      - Verify the oil level. An excessively high or low oil level may cause a performance issue.
      - Visually inspect the air filter for a restriction.
      - Verify that the battery voltage is between 12.5 and 14.0 Volts when running.
      - Verify that there are no Non-OEM engine modifications installed on the vehicle.
      - Verify proper fuel level.
      - Listen for any obvious intake or exhaust leaks.

      Were any of the above conditions found?

      Yes

- Repair as necessary and verify repair.
- Perform the POWERTRAIN VERIFICATION TEST - 6.7L. Refer to **2500 & 3500 - POWERTRAIN VERIFICATION TEST - 6.7L** or **3500 CAB & CHASSIS - POWERTRAIN VERIFICATION TEST** or **3500 CAB & CHASSIS, 4500 & 5500 - POWERTRAIN VERIFICATION TEST - 6.7L** .

No

- Go To 3.

3. **CHECKING THE AIR FILTER**
   1. Visually inspect the Air Filter for modifications, or excessive dirt or debris causing a restriction.

      Were any issues found?

      Yes

      - Replace the Air Filter.
      - Go To 4.

      No

      - Go To 4.
4. **CHECKING FUEL QUALITY/CONTAMINATION**
   1. Check the quality of the fuel using the DIESEL FUEL CONTAMINATION TEST PROCEDURE. Refer to **DIESEL FUEL CONTAMINATION TESTING PROCEDURE**.

      Was any contamination detected?

      Yes

      - Perform the appropriate repair according to the testing and cleaning procedure.
      - Perform the POWERTRAIN VERIFICATION TEST - 6.7L. Refer to **2500 & 3500 - POWERTRAIN VERIFICATION TEST - 6.7L** or **3500 CAB & CHASSIS - POWERTRAIN VERIFICATION TEST** or **3500 CAB & CHASSIS, 4500 & 5500 - POWERTRAIN VERIFICATION TEST - 6.7L** .

      No

      - Go To 5.
5. **CHECKING CYLINDER CONTRIBUTION**
   1. Using the scan tool, navigate to Miscellaneous Functions and perform the Injector Kill test procedure.

      Do the results indicate that a cylinder is low?

Yes

- Go To 6.

No

- Go To 11.

6. **INJECTOR RETURN FLOW TEST**
   1. Refer to **DIAGNOSIS AND TESTING, 6.7L** and perform the INJECTOR RETURN FLOW TEST diagnostic procedure.

      Did the INJECTOR RETURN FLOW TEST pass?

      Yes

      - Go To 7.

      No

      - Repair as necessary and verify repair. Inspect and clean any soot fouling in the Air Handling and Exhaust systems as needed.
      - Perform the POWERTRAIN VERIFICATION TEST - 6.7L. Refer to **2500 & 3500 - POWERTRAIN VERIFICATION TEST - 6.7L** or **3500 CAB & CHASSIS - POWERTRAIN VERIFICATION TEST** or **3500 CAB & CHASSIS, 4500 & 5500 - POWERTRAIN VERIFICATION TEST - 6.7L** .

7. **CHECKING FUEL INJECTOR AND VALVE COVER HARNESS TERMINALS**
   1. Turn the ignition off.
   2. Visually check the valve cover connectors and Fuel Injector terminals for loose connections or damaged threads.
   3. Check the torque of the Fuel injector nuts.

      NOTE: The Fuel injector nuts should be torqued to 8.8 in/lbs.

      Are the Fuel injector nuts torqued correctly and the connections and terminals good?

      Yes

      - Go To 8.

      No

      - Repair the connections as necessary.
      - Perform the POWERTRAIN VERIFICATION TEST - 6.7L. Refer to **2500 & 3500 - POWERTRAIN VERIFICATION TEST - 6.7L** or **3500 CAB & CHASSIS - POWERTRAIN VERIFICATION TEST** or **3500 CAB & CHASSIS, 4500 & 5500 -**

POWERTRAIN VERIFICATION TEST - 6.7L .

8. **CHECKING VALVE LASH**
    1. Check the valve lash adjustment on the suspect cylinder or cylinders.

       Is the valve lash within specification?

       Yes

       - Go To 9.

       No

       - Adjust the valve lash to specifications.
       - Perform the POWERTRAIN VERIFICATION TEST - 6.7L. Refer to **2500 & 3500 - POWERTRAIN VERIFICATION TEST - 6.7L** or **3500 CAB & CHASSIS - POWERTRAIN VERIFICATION TEST** or **3500 CAB & CHASSIS, 4500 & 5500 - POWERTRAIN VERIFICATION TEST - 6.7L** .
9. **COMPRESSION CHECK**
    1. Perform a manual compression check of the cylinder.

       Is the compression within specification?

       Yes

       - Go To 10.

       No

       - Perform a cylinder leak down test to determine if the low compression is caused a by piston or cylinder head/valve condition and repair as necessary. Inspect and clean any soot fouling in the Air Handling and Exhaust systems as needed.
       - Perform the POWERTRAIN VERIFICATION TEST - 6.7L. Refer to **2500 & 3500 - POWERTRAIN VERIFICATION TEST - 6.7L** or **3500 CAB & CHASSIS - POWERTRAIN VERIFICATION TEST** or **3500 CAB & CHASSIS, 4500 & 5500 - POWERTRAIN VERIFICATION TEST - 6.7L** .
10. **FUEL INJECTORS**
    1. Change the Fuel Injector with a Fuel Injector from another good cylinder.
    2. With the scan tool, perform the Cylinder Cut-Out test.

       Did the performance issue follow the Fuel Injector?

       Yes

       - Replace the Fuel Injector and check for fuel contamination. If fuel is found to be contaminated determine the point of entry of the contamination and repair. Inspect and clean

any soot fouling in the Air Handling and Exhaust systems as needed.

- Perform the POWERTRAIN VERIFICATION TEST - 6.7L. Refer to **2500 & 3500 - POWERTRAIN VERIFICATION TEST - 6.7L** or **3500 CAB & CHASSIS - POWERTRAIN VERIFICATION TEST** or **3500 CAB & CHASSIS, 4500 & 5500 - POWERTRAIN VERIFICATION TEST - 6.7L** .

No

- Go To 15.

11. **CHECK THE FUEL DELIVERY SYSTEM**
    1. Perform the CHECKING THE FUEL DELIVERY SYSTEM diagnostic procedure. Refer to **DIAGNOSIS AND TESTING, 6.7L**.

    Were any fuel system issues found?

    Yes

    - Repair the Fuel Delivery System. Inspect and clean any soot fouling in the Air Handling and Exhaust systems as needed.
    - Perform the POWERTRAIN VERIFICATION TEST - 6.7L. Refer to **2500 & 3500 - POWERTRAIN VERIFICATION TEST - 6.7L** or **3500 CAB & CHASSIS - POWERTRAIN VERIFICATION TEST** or **3500 CAB & CHASSIS, 4500 & 5500 - POWERTRAIN VERIFICATION TEST - 6.7L** .

    No

    - Go To 12.

12. **CHECK THE ENGINE PRESSURE SENSORS**

NOTE: **Perform steps 5, 6, and 7 of the 6.7L Cummins Diagnostic Worksheet. Star Center must be contacted before worksheet steps 5, 6, and 7 can be completed.**

1. Turn the engine off, ignition on.
2. With the scan tool, compare the Barometric Sensor reading and the Exhaust Pressure Sensor reading.

   Are the two readings equal?

   Yes

   - Go To 13.

   No

- Compare the two readings to the Inlet Air Pressure Sensor reading. Replace the sensor that does not match the Inlet Air Pressure Sensor.
- Perform the POWERTRAIN VERIFICATION TEST - 6.7L. Refer to **2500 & 3500 - POWERTRAIN VERIFICATION TEST - 6.7L** or **3500 CAB & CHASSIS - POWERTRAIN VERIFICATION TEST** or **3500 CAB & CHASSIS, 4500 & 5500 - POWERTRAIN VERIFICATION TEST - 6.7L** .

13. **CHECKING MASS AIR FLOW SENSOR OPERATION**
    1. Turn the ignition on, engine not running.
    2. With the scan tool, read the MAF Sensor value:
       - The MAF Sensor should be reading close to 0.01lb/min.
    3. Start the engine, allow it to reach operating temperature and then idle for five minutes.

       NOTE: This is how long it takes for the EGR Valve to close.

    4. With the scan tool in Data Display, verify that the EGR Valve is at 0%.
    5. With the scan tool, read the MAF Sensor value:
       - For an automatic transmission the MAF Sensor should read 3.0 - 6.75 lb/min at idle.
       - For a manual transmission the MAF Sensor should read 3.5 - 7.5 lb/min at idle.

       Is the MAF Sensor reading within specification?

       Yes

       - Go To 14.

       No

       - Replace the MAF Sensor in accordance with the service information.
       - Perform the POWERTRAIN VERIFICATION TEST - 6.7L. Refer to **2500 & 3500 - POWERTRAIN VERIFICATION TEST - 6.7L** or **3500 CAB & CHASSIS - POWERTRAIN VERIFICATION TEST** or **3500 CAB & CHASSIS, 4500 & 5500 - POWERTRAIN VERIFICATION TEST - 6.7L** .

14. **CHECK CRANKCASE FILTER**
    1. Verify proper Crankcase Filter operation.

       Were any problems found?

       Yes

       - Repair as necessary.
       - Perform the POWERTRAIN VERIFICATION TEST - 6.7L. **2500 & 3500 - POWERTRAIN VERIFICATION TEST - 6.7L** or **3500 CAB & CHASSIS - POWERTRAIN VERIFICATION TEST** or **3500 CAB & CHASSIS, 4500 & 5500 -**

POWERTRAIN VERIFICATION TEST - 6.7L .

No

- Go To 15.

15. **CHECKING THE INTAKE SYSTEM**
    1. Check for inlet restriction, inspect air filter for excessive dirt/debris. Verify air intake lines are not kinked or restricted.
    2. Refer to **DIAGNOSIS AND TESTING, 6.7L** and perform the CHECKING THE INTAKE AIR SYSTEM PRESSURE diagnostic procedure.
    3. Inspect Turbocharger for wheel clearance and proper wastegate operation.

    Were any problems found?

    Yes

    - Repair as necessary. Inspect and clean any soot fouling in the Air Handling and Exhaust systems as needed.
    - Perform the POWERTRAIN VERIFICATION TEST - 6.7L. Refer to **2500 & 3500 - POWERTRAIN VERIFICATION TEST - 6.7L** or **3500 CAB & CHASSIS - POWERTRAIN VERIFICATION TEST** or **3500 CAB & CHASSIS, 4500 & 5500 - POWERTRAIN VERIFICATION TEST - 6.7L** .

    No

    - Go To 16.

16. **CHECKING THE EGR SYSTEM**
    1. Perform the following EGR system checks:
       - Look for visible signs (soot streaks) of an external EGR system leak.
       - Remove the EGR Outlet Temperature Sensor from the thermostat outlet. Check the outlet for blockage or debris.
       - Remove EGR Crossover Tube from EGR Cooler and EGR Valve. Inspect the tube for a restriction.
       - Verify EGR Cooler is not leaking. Check for coolant in EGR plumbing, engine overheat fault codes, and low coolant level.
       - Check the Air Intake Grid Heater for excessive soot build up or restriction.

    Were any problems found?

    Yes

    - If the soot inside the EGR Crossover Tube is oily, inspect the Turbocharger for leaking oil into the intake system. If Turbo is leaking, replace the Turbo. If Turbo is not leaking, clean the Crossover Tube, remove and clean the EGR Valve and EGR Cooler.

- Go To 17.

No

- Go To 17.

17. **CHECK THE EXHAUST AFTERTREATMENT SYSTEM FOR A RESTRICTION**
    1. Perform the AFTERTREATMENT INSPECTION GUIDELINE procedure. Refer to **DIAGNOSIS AND TESTING, 6.7L**.

       Were any problems found during the inspection?

       Yes

       - Perform the appropriate repair.
       - Perform the POWERTRAIN VERIFICATION TEST - 6.7L. Refer to **2500 & 3500 - POWERTRAIN VERIFICATION TEST - 6.7L** or **3500 CAB & CHASSIS - POWERTRAIN VERIFICATION TEST** or **3500 CAB & CHASSIS, 4500 & 5500 - POWERTRAIN VERIFICATION TEST - 6.7L** .

       No

       - Perform the DIESEL FUEL VALIDATION procedure. Refer to **2500 & 3500 - DIESEL AFTERTREATMENT VALIDATION- 6.7L** or **3500 CAB & CHASSIS, 4500 & 5500 - DIESEL AFTERTREATMENT VALIDATION- 6.7L** . If the vehicles passes the validation, the vehicle is operating properly. If the vehicle fails the validation, the issue was missed during diagnostics.
       - Perform the POWERTRAIN VERIFICATION TEST - 6.7L. Refer to **2500 & 3500 - POWERTRAIN VERIFICATION TEST - 6.7L** or **3500 CAB & CHASSIS - POWERTRAIN VERIFICATION TEST** or **3500 CAB & CHASSIS, 4500 & 5500 - POWERTRAIN VERIFICATION TEST - 6.7L** .

CHECKING THE FUEL DELIVERY SYSTEM

For a complete wiring diagram, **refer to appropriate SYSTEM WIRING DIAGRAMS article** .

POSSIBLE CAUSES

Possible Causes
LOW PRESSURE FUEL DELIVERY SYSTEM LEAKING/DAMAGED
LOW BATTERY VOLTAGE
FUEL FILTER/WATER SEPARATOR
DEBRIS IN LOW PRESSURE FUEL DELIVERY SYSTEM
FUEL CONTROL ACTUATOR
FUEL QUALITY/CONTAMINATION
PLUGGED OR IMPROPERLY VENTED FUEL TANK VENTS

FUEL INJECTOR
HIGH PRESSURE FUEL PUMP
FUEL TANK MODULE (IN-TANK LIFT PUMP) WIRING
FUEL TANK MODULE (IN-TANK LIFT PUMP)

WARNING: Follow these safety precautions to reduce the risk of fire and possible serious or fatal injury when performing this test procedure.

- **Fuel or fuel vapors are highly flammable. A fire could occur if an ignition source is present. Do not expose the fuel or the test equipment used in this procedure to open flames or sparks.**
- **Inhalation of fuel vapors could lead to disorientation and personal injury. Keep the service area well ventilated, or perform this test procedure in an area where there is a building exhaust removal system.**
- **Relieve fuel system pressure before servicing fuel system components.**
- **Use extreme caution when connecting and disconnecting fuel lines.**
- **Considerable fuel leakage may occur when servicing the fuel system. Wear protective eyewear and clothing to protect from fuel splash, and take suitable fuel containment measures.**
- **Wrap a shop towel around the fuel pressure gauge connection to absorb fuel leakage that occurs when connecting the test equipment. Place the towel in an approved container when complete.**
- **Never store fuel in an open container due to the possibility of fire or explosion. Have a dry chemical (Class B) fire extinguisher nearby.**
- **High-pressure fuel lines deliver diesel fuel under extreme pressure from the injection pump to the fuel injectors. This may be as high as 26, 107 psi (1800 bar). Use extreme caution when inspecting for high-pressure fuel leaks. Fuel under this amount of pressure can penetrate skin causing possible serious or fatal injury.**

DIAGNOSTIC TEST

1. **VISUALLY CHECK THE FUEL DELIVERY SYSTEM FOR LEAKS AND DAMAGE**

NOTE: Make sure that both Batteries are fully charged before proceeding. A weak battery can cause inaccurate fuel volume readings.

1. Turn the ignition off.
2. Visually inspect the Fuel Delivery System for external leaks and damage.
3. Visually inspect the Fuel tank vents and hoses for any signs of a possible restriction or plugging.

Is the system leaking, plugged, or damaged?

Yes

- Repair/replace as necessary.
- Perform the POWERTRAIN VERIFICATION TEST - 6.7L. Refer to **2500 & 3500 - POWERTRAIN VERIFICATION TEST - 6.7L** or **3500 CAB & CHASSIS - POWERTRAIN VERIFICATION TEST** or **3500 CAB & CHASSIS, 4500 & 5500 - POWERTRAIN VERIFICATION TEST - 6.7L** .

No

- Go To 2.

2. **CHECKING FUEL QUALITY/CONTAMINATION**
   1. Check the quality of the fuel using the DIESEL FUEL CONTAMINATION TEST PROCEDURE. Refer to **DIESEL FUEL CONTAMINATION TESTING PROCEDURE**.

      Were any signs of contamination detected?

      Yes

      - Perform the appropriate repair according to the testing and cleaning procedure.
      - Go To 3.

      No

      - Go To 3.

3. **IN-TANK FUEL LIFT PUMP FLOW TEST WITH DECAY TESTER**

NOTE: **Before performing the IN-TANK FUEL LIFT PUMP FLOW test, verify that the fuel level in the fuel tank is above 1/4 full. If fuel tank is not above 1/4 full the pump will take in air causing the test results to be inaccurate.**

   1. Disconnect the low pressure fuel supply line from the High Pressure Fuel Pump. Connect the (special tool #8978A, Decay Tool, Fuel) to the low pressure fuel supply line.

      WARNING: **To reduce the risk of fire and serious possible serious or fatal injury, place the Reservoir Assembly 534960 (3) on the floor and out of the way so that it is not a trip hazard.**

   2. Perform the following to purge air from the system:
      - With the scan tool, actuate the In-Tank Fuel Lift Pump Module.
      - Open the Flow Test Valve and allow the fuel to flow into the Reservoir for 10 seconds, then close the Flow Test Valve.
      - Turn the ignition off.
      - Disconnect, empty, and then reconnect the Reservoir Assembly.

3. Perform the following three times to find the average flow rate:
    - With the scan tool, actuate the In-Tank Fuel Lift Pump Module.
    - Open the Flow Test Valve (1) for 10 seconds, then close the Valve.
    - Turn the ignition off.
    - Measure and record the amount of fuel in the Reservoir Assembly.
    - Disconnect, empty, and then reconnect the Reservoir Assembly.
4. Add the three recorded measurements and then divide the total by three to calculate the average flow rate. The flow rate is 500 ml in 10 seconds.

   Does the average flow rate meet or exceed the specification?

   Yes - Vehicle starts and runs:

   - Go To 5.

   Yes - Vehicle is a no start:

   - Go To 10.

   No

   - Leave the Fuel Decay Tester installed. Replace the Fuel Filter/Water Separator in accordance with the service information. During Fuel Filter replacement, be sure to check and clean the secondary filter screen in the filter head outlet.
   - Go To 4.

4. **RECHECK IN-TANK FUEL LIFT PUMP FLOW**
    1. Perform the following to purge air from the system:
        - With the scan tool, actuate the In-Tank Fuel Lift Pump Module.
        - Open the Flow Test Valve (1) for 10 seconds, then close the Valve.
        - Turn the ignition off.
        - Disconnect, empty, and then reconnect the Reservoir Assembly (2).
    2. Perform the following three times to find the average flow rate:
        - With the scan tool, actuate the In-Tank Fuel Lift Pump Module.
        - Open the Flow Test Valve (1) for 10 seconds, then close the valve.
        - Turn the ignition off.
        - Measure and record the amount of fuel in the Reservoir Assembly (2).
        - Disconnect, empty, and then reconnect the Reservoir Assembly (2).
    3. Add the three recorded measurements and then divide the total by three to calculate the average flow rate. The flow rate is 500 ml in 10 seconds.

       Does the average flow rate meet or exceed the specification?

Yes

- Repair complete.
- Perform the POWERTRAIN VERIFICATION TEST - 6.7L. Refer to **2500 & 3500 - POWERTRAIN VERIFICATION TEST - 6.7L** or **3500 CAB & CHASSIS - POWERTRAIN VERIFICATION TEST** or **3500 CAB & CHASSIS, 4500 & 5500 - POWERTRAIN VERIFICATION TEST - 6.7L** .

No

- Use the wiring diagram as a guide to check the In-Tank Fuel Lift Pump wiring for an open, high resistance, or short to ground. If the In-Tank Fuel Lift Pump wiring is okay, remove the fuel tank and replace the In-Tank Fuel Lift Pump Module in accordance with the service information.
- Perform the POWERTRAIN VERIFICATION TEST - 6.7L. Refer to **2500 & 3500 - POWERTRAIN VERIFICATION TEST - 6.7L** or **3500 CAB & CHASSIS - POWERTRAIN VERIFICATION TEST** or **3500 CAB & CHASSIS, 4500 & 5500 - POWERTRAIN VERIFICATION TEST - 6.7L** .

5. **PRESSURE LIMITING VALVE**

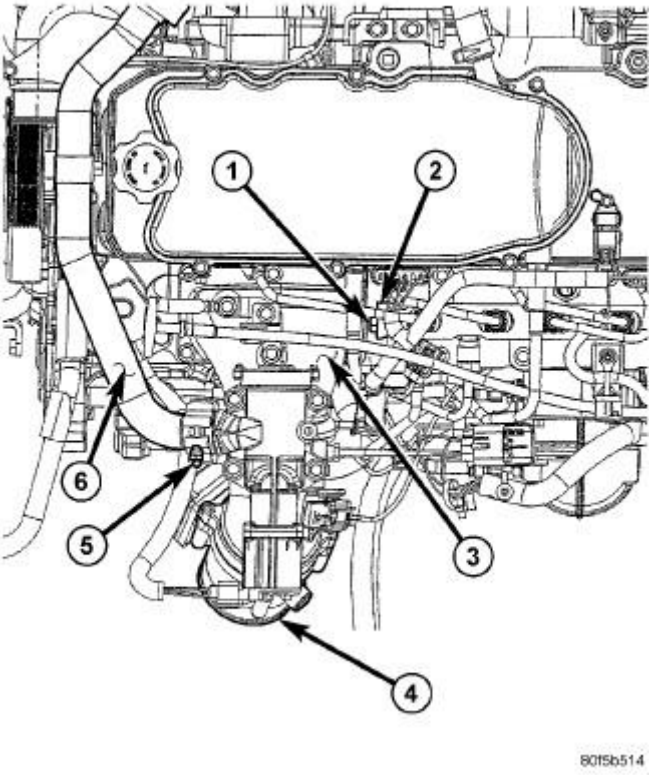

Fig. 20: Fuel Pressure Limiting Valve
Courtesy of CHRYSLER GROUP, LLC

NOTE: **In the illustration provided, the pressure-limiting valve location is indicated by the number (1).**

1. Reconnect the fuel supply hose.
2. Remove the banjo bolt from the Pressure Limiting Valve on the fuel rail.
3. Install the (special tool #9012, Fitting, Fuel System Test) into the Pressure Limiting Valve.
4. Attach one end of a fuel hose to the fuel fitting and put the other end of the fuel hose into a container.

   NOTE: **NOTE: Do not drive the vehicle with any portion of this test kit installed.**

5. Start the engine and operate the engine at idle. Watch for fuel flow into the fuel container.

   NOTE: **There should be no fuel flow into the container.**

6. While the engine is at idle, actuate the Fuel Pressure Override Test with the scan tool. Watch for fuel flow into the fuel container.

   NOTE: **You may observe a few dribbles of fuel from Pressure Limiting Valve during Fuel Pressure Override Test. One drop per second or 8 ml in 30 seconds is considered normal. Do not replace this valve unless you can see continuous leak.**

   Is fuel flowing into the container?

   Yes

   - Replace the Pressure Limiting Valve in accordance with the service information.
   - Perform the POWERTRAIN VERIFICATION TEST - 6.7L. Refer to **2500 & 3500 - POWERTRAIN VERIFICATION TEST - 6.7L** or **3500 CAB & CHASSIS - POWERTRAIN VERIFICATION TEST** or **3500 CAB & CHASSIS, 4500 & 5500 - POWERTRAIN VERIFICATION TEST - 6.7L** .

   No

   - Go To 6.

6. **ENGINE RUNNING INJECTOR RETURN FLOW TEST**

NOTE: **The purpose of this test is to determine if the Fuel Injectors are leaking internally into the fuel return.**

1. Turn the engine off.
2. Remove the (special tool #9012, Fitting, Fuel System Test) from the Pressure Limiting Valve.

3. Operate the engine until the coolant temperature is above 82.2°C (180°F).
4. Turn the engine off.
5. Remove the banjo connector from the fuel drain tube at the rear of the fuel filter housing.
6. Install the (special tool #9012, Fitting, Fuel System Test) in place of the banjo connector.

NOTE: Do not use fitting 9014. This fitting will block return flow from the High Pressure Delivery Pump and damage the seal and could potentially damage the engine.

7. Install a 5/16 diameter rubber fuel hose **(Hose A)** onto the test fitting and into a fuel container.

NOTE: This hose will be used to measure the High Pressure Pump return flow in the next test procedure.

8. Remove the vehicle fuel return line (Quick connect) from the engine fuel drain tube.
9. Install a 5/16 diameter rubber fuel hose **(Hose B)** onto the engine fuel drain tube and into the fuel container.

NOTE: This hose will be used to measure the Injector return flow for this procedure.

10. Start engine and allow to idle for 30 seconds. This step allows the flows to stabilize.
11. Using the scan tool, navigate to ECM view -> PCM Cummins -> More Options-> System Tests -> Fuel Pressure Override Test. Select Start, then press Next.

NOTE: While the test is running, record the FCA duty cycle % and actual rail pressure.

12. Press the Run button to start the Fuel Pressure Override Test. The engine speed will elevate rapidly to 1200 RPM and the rail pressure will increase to 26107 psi (1800 bar). At this point, move **(Hose B)** from the bucket and insert it into a graduated cylinder.**Collect the fuel until the Fuel Pressure Override Test times out (30 seconds).**
13. Measure and record the amount of fuel collected in the graduated cylinder. Repeat this three times and take the average of the three results.

NOTE: Flow should be less than 210 ml for 30 seconds.

14. If the flow is less than 210 ml/30 seconds, the test has successfully passed. If the flow is greater than 210 ml/30 seconds, turn off the engine and remove all 6 high pressure fuel lines. Re-torque the high-pressure connector nut for each injector. Inspect for damage, repair/replace as necessary. Reinstall the high pressure fuel lines. Re-measure the injector return flow using steps 10 through 13 as a guide. Continue on to next step.
15. If the amount of fuel is still greater than 210 ml/30 seconds after re-torquing the high-pressure connector nuts, turn the engine off and remove the #1 high pressure fuel line. Cap the #1 fuel port

using tool (special tool #9864, Cap, Fuel Rail) for the 6.7L engine on the fuel rail and re-measure the injector return flow using steps 10 through 13 as a guide. Repeat this procedure for injectors 2-6. Continue on to next step.

16. Replace the Fuel Injector and High pressure connector of the injector that shows the largest amount of change when capped off.

    Did the vehicle pass the Injector Return Flow test at step 12 without any repairs needed?

    Yes

    - Go To 7.

    No

    - Perform the necessary repairs and verify fuel system operation.
    - Perform the POWERTRAIN VERIFICATION TEST - 6.7L. Refer to **2500 & 3500 - POWERTRAIN VERIFICATION TEST - 6.7L** or **3500 CAB & CHASSIS - POWERTRAIN VERIFICATION TEST** or **3500 CAB & CHASSIS, 4500 & 5500 - POWERTRAIN VERIFICATION TEST - 6.7L** .

7. **HIGH PRESSURE DELIVERY PUMP RETURN FLOW TEST**
    1. Move **(Hose B)** back into the fuel container.
    2. Empty the graduated cylinder.
    3. Move **(Hose A)** into the graduated cylinder.
    4. Allow the engine to idle for one minute while collecting the fuel from **(Hose A)** .
    5. Measure the amount of fuel collected from **(Hose A)** in the graduated cylinder.

    NOTE: The fuel flow should be less than 1, 150 ml/minute at idle.

    Is the flow less than 1, 150 ml/minute at idle?

    Yes

    - Go To 8.

    No

    - Replace the High Pressure Delivery Pump in accordance with the service information.
    - Perform the POWERTRAIN VERIFICATION TEST - 6.7L. Refer to **2500 & 3500 - POWERTRAIN VERIFICATION TEST - 6.7L** or **3500 CAB & CHASSIS - POWERTRAIN VERIFICATION TEST** or **3500 CAB & CHASSIS, 4500 & 5500 - POWERTRAIN VERIFICATION TEST - 6.7L** .

8. **HIGH PRESSURE DELIVERY PUMP PERFORMANCE TEST**
    1. Turn the engine off.
    2. Remove the (special tool #9012, Fitting, Fuel System Test) and reinstall the banjo connector.

3. Disconnect the Fuel Control Actuator harness connector.
4. Disconnect high pressure fuel line from the fuel rail and route the high pressure fuel line into a graduated cylinder.
5. Crank the engine until fuel exits this line. This will not be high pressure fuel.
6. Crank the engine for three 10 second intervals.

NOTE: This will give you 30 total seconds of flow time. These are broken into three separate intervals to prevent damage to the starter.

7. Fuel flow specification's based on engine cranking speed. If you do not collect the stated amount of fuel in 30 seconds, replace the pump:
   - Minimum fuel pump flow at 150 RPM cranking speed is 70mL.
   - Minimum fuel pump flow at 200 RPM cranking speed is 90mL.

   Does the fuel flow exceed the minimum specification?

   Yes

   - Go To 9.

   No

   - Replace the High Pressure Delivery Pump in accordance with the service information.
   - Perform the POWERTRAIN VERIFICATION TEST - 6.7L. Refer to **2500 & 3500 - POWERTRAIN VERIFICATION TEST - 6.7L** or **3500 CAB & CHASSIS - POWERTRAIN VERIFICATION TEST** or **3500 CAB & CHASSIS, 4500 & 5500 - POWERTRAIN VERIFICATION TEST - 6.7L** .

9. **CHECKING THE FUEL CONTROL ACTUATOR**
   1. Reconnect the Fuel Control Actuator harness connector.
   2. Reconnect all fuel lines and hoses.
   3. Start the engine.
   4. With the scan tool, navigate to Systems Tests and select the Fuel Pressure Override Test.
   5. Allow the engine speed and fuel pressure to ramp up and stabilize and then stop actuation.

   Does the engine speed and fuel pressure ramp up and stabilize when actuated and then come back to rest at idle and stabilize when actuation is stopped?

   Yes

   - The fuel system is operating normally. Check for any Service Bulletins that may apply.
   - Perform the POWERTRAIN VERIFICATION TEST - 6.7L. Refer to **2500 & 3500 - POWERTRAIN VERIFICATION TEST - 6.7L** or **3500 CAB & CHASSIS - POWERTRAIN VERIFICATION TEST** or **3500 CAB & CHASSIS, 4500 & 5500 -**

POWERTRAIN VERIFICATION TEST - 6.7L .

No

- Replace the Fuel Control Actuator in accordance with the service information.
- Perform the POWERTRAIN VERIFICATION TEST - 6.7L. Refer to **2500 & 3500 - POWERTRAIN VERIFICATION TEST - 6.7L** or **3500 CAB & CHASSIS - POWERTRAIN VERIFICATION TEST** or **3500 CAB & CHASSIS, 4500 & 5500 - POWERTRAIN VERIFICATION TEST - 6.7L** .

10. **PRESSURE LIMITING VALVE (NO START)**

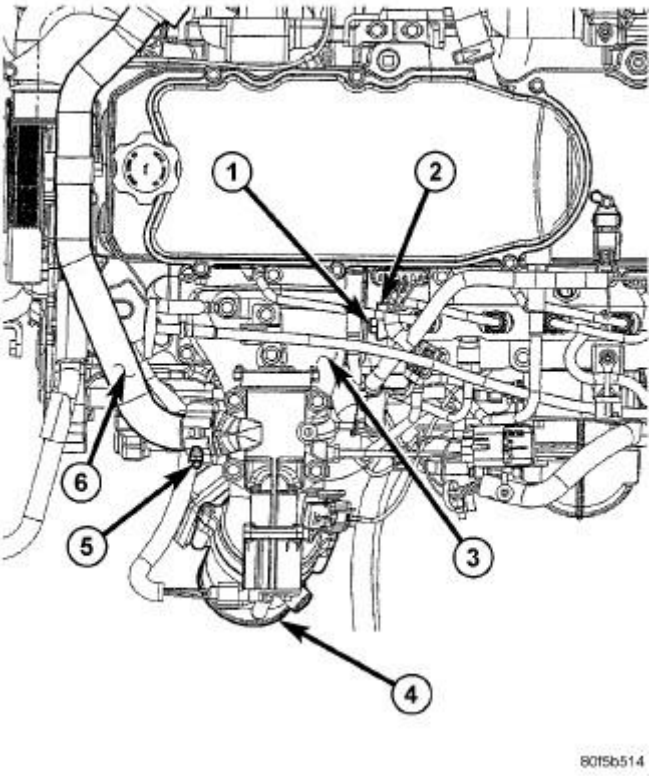

Fig. 21: Fuel Pressure Limiting Valve
Courtesy of CHRYSLER GROUP, LLC

NOTE: In the illustration provided, the pressure-limiting valve location is indicated by the number (1).

1. Reconnect the fuel supply hose.
2. Remove the banjo bolt from the Pressure Limiting Valve on the fuel rail.
3. Install the (special tool #9012, Fitting, Fuel System Test) into the Pressure Limiting Valve.
4. Attach one end of a fuel hose to the fuel fitting and put the other end of the fuel hose into a

container.

5. Crank the engine and look for fuel leaking from the Pressure Limiting Valve.

NOTE: There should be no fuel flow into the container.

Is fuel flowing into the container?

Yes

- Replace the Pressure Limiting Valve in accordance with the service information.
- Perform the POWERTRAIN VERIFICATION TEST - 6.7L. Refer to **2500 & 3500 - POWERTRAIN VERIFICATION TEST - 6.7L** or **3500 CAB & CHASSIS - POWERTRAIN VERIFICATION TEST** or **3500 CAB & CHASSIS, 4500 & 5500 - POWERTRAIN VERIFICATION TEST - 6.7L** .

No

- Go To 11.

11. **INJECTOR RETURN FLOW TEST DURING ENGINE CRANKING @ 200 RPM (NO START)**
    1. Remove the (special tool #9012, Fitting, Fuel System Test) from the Pressure Limiting Valve.
    2. Remove the banjo connector from the fuel drain tube at the rear of the fuel filter housing.
    3. Install the (special tool #9012, Fitting, Fuel System Test) in place of the banjo connector.

    NOTE: Do not use fitting 9014. This fitting will block return flow from the High Pressure Delivery Pump and damage the seal and could potentially damage the engine.

    4. Install a 5/16 diameter rubber fuel hose **(Hose A)** onto the test fitting and into a fuel container.
    5. Remove the vehicle fuel return line (Quick connect) from the engine fuel drain tube.
    6. Install a 5/16 diameter rubber fuel hose **(Hose B)** onto the engine fuel drain tube and into the fuel container. Make sure test lines are straight and slope downward their entire length. This is to avoid trapping air/fuel in the lines while testing.

    NOTE: This will be used to measure the Injector return flow for this procedure.

    7. Unplug the injector harnesses at the valve cover, unplug the harness connector to the FCA.
    8. Crank the engine for least 10 seconds until fuel starts to flow out of the pump and injector return hoses. Turn Key off when finished.
    9. Let all the fuel drain out of each line before continuing.
    10. Place **(Hose B)** into a graduated cylinder.
    11. Crank the engine for 10 seconds (Go from Key off to Crank back to Key off). Do not leave the ignition on between tests.

12. Let all of the fuel drain out of the injector hose.
13. Record the amount of injector return flow for a 10 second crank.

NOTE: Flow should be less than 40 ml for 10 seconds of cranking.

14. If the flow is less than 40 ml, the test has successfully passed. If the flow is greater than 40 ml, remove all 6 high pressure fuel lines and re-torque the high-pressure connector nut for each injector. Inspect for damage, repair/replace as necessary. Reinstall the high pressure fuel lines. Re-measure the injector return flow using steps 7 through 12 as a guide. Continue on to next step.
15. If the amount collected is still greater than 40 ml, remove the #1 high pressure fuel line. Cap the #1 fuel port using tool (special tool #9864, Cap, Fuel Rail) for the 6.7L engine on the fuel rail and re-measure the injector return flow using steps 7 through 12 as a guide. Continue on to next step.
16. If the amount collected is less than 40 ml for 10 seconds after capping the #1 fuel port, remove and replace the #1 Fuel Injector and #1 High pressure connector. If the amount of fuel collected is still greater than 40 ml after capping the #1 fuel port, repeat step 14 for injectors 2-6.

Did the vehicle pass the Injector Return Flow test at step 13 without any repairs needed?

Yes

- Go To 12.

No

- Perform the necessary repair.
- Perform the POWERTRAIN VERIFICATION TEST - 6.7L. Refer to **2500 & 3500 - POWERTRAIN VERIFICATION TEST - 6.7L** or **3500 CAB & CHASSIS - POWERTRAIN VERIFICATION TEST** or **3500 CAB & CHASSIS, 4500 & 5500 - POWERTRAIN VERIFICATION TEST - 6.7L** .

12. **HIGH PRESSURE FUEL PUMP PERFORMANCE TEST (NO START)**
    1. Turn the engine off.
    2. Disconnect the (special tool #9012, Fitting, Fuel System Test).
    3. Reconnect the banjo connector to the drain tube.
    4. Disconnect the FCA harness connector.
    5. Disconnect high pressure fuel line from the fuel rail and route the high pressure fuel line into a graduated cylinder.
    6. Crank the engine until fuel exits this line. **This will not be high pressure fuel.**
    7. Crank the engine for three 10 second intervals.

NOTE: This will give you 30 total seconds of flow time. These are broken into three separate intervals to prevent damage to the starter.

    8. Fuel flow specification's based on engine cranking speed. If you do not collect the stated amount of

fuel in 30 seconds, replace the pump:

- Minimum fuel pump flow at 150 RPM cranking speed is 70mL.
- Minimum fuel pump flow at 200 RPM cranking speed is 90mL.

Does the fuel flow exceed the minimum specification?

Yes

- The fuel system is operating normally. Check for any Service Bulletins that may apply.
- Perform the POWERTRAIN VERIFICATION TEST - 6.7L. Refer to **2500 & 3500 - POWERTRAIN VERIFICATION TEST - 6.7L** or **3500 CAB & CHASSIS - POWERTRAIN VERIFICATION TEST** or **3500 CAB & CHASSIS, 4500 & 5500 - POWERTRAIN VERIFICATION TEST - 6.7L** .

No

- Replace the High Pressure Delivery Pump in accordance with the service information.
- Perform the POWERTRAIN VERIFICATION TEST - 6.7L. Refer to **2500 & 3500 - POWERTRAIN VERIFICATION TEST - 6.7L** or **3500 CAB & CHASSIS - POWERTRAIN VERIFICATION TEST** or **3500 CAB & CHASSIS, 4500 & 5500 - POWERTRAIN VERIFICATION TEST - 6.7L** .

CHECKING THE PCM POWER AND GROUNDS

For a complete wiring diagram, **refer to appropriate SYSTEM WIRING DIAGRAMS article** .

POSSIBLE CAUSES

Possible Causes
PCM GROUND CIRCUIT(S) OPEN (A209) FUSED B+ CIRCUIT OPEN (F202) FUSED IGNITION SWITCH OUTPUT CIRCUIT OPEN

DIAGNOSTIC TEST

1. **PCM GROUND CIRCUIT(S) OPEN**
    1. Turn the ignition off.
    2. Disconnect the PCM C2 harness connector.
    3. Using a 12-volt test light connected to 12 volts, probe each of the PCM ground circuit (terminals 4 and 6) at PCM C2 harness connector.

    Did the test light illuminate for each cavity?

    Yes

- Go To 2.

No

- Repair the PCM Ground circuit(s) for an open.
- Perform the POWERTRAIN VERIFICATION TEST - 6.7L. Refer to **2500 & 3500 - POWERTRAIN VERIFICATION TEST - 6.7L** or **3500 CAB & CHASSIS - POWERTRAIN VERIFICATION TEST** or **3500 CAB & CHASSIS, 4500 & 5500 - POWERTRAIN VERIFICATION TEST - 6.7L** .

2. **CHECK THE (F202) FUSED IGNITION SWITCH OUTPUT CIRCUIT**
   1. Using a 12-volt test light connected to ground, probe the (F202) Fused Ignition Switch Output circuit (terminal 71) at PCM C2 harness connector.
   2. Turn the ignition on.

   Is the test light on?

   Yes

   - Go To 3.

   No

   - Repair the (F202) Fused Ignition Switch Output circuit for an open or short to ground.
   - Perform the POWERTRAIN VERIFICATION TEST - 6.7L. Refer to **2500 & 3500 - POWERTRAIN VERIFICATION TEST - 6.7L** or **3500 CAB & CHASSIS - POWERTRAIN VERIFICATION TEST** or **3500 CAB & CHASSIS, 4500 & 5500 - POWERTRAIN VERIFICATION TEST - 6.7L** .

3. **CHECK THE (A209) FUSED B+ CIRCUIT**
   1. Using a 12-volt test light connected to ground, probe the (A209) Fused B+ circuit (terminals 3 and 5) at PCM C2 harness connector.

   Does the test light illuminate brightly for each circuit?

   Yes

   - Test Complete.
   - Perform the POWERTRAIN VERIFICATION TEST - 6.7L. Refer to **2500 & 3500 - POWERTRAIN VERIFICATION TEST - 6.7L** or **3500 CAB & CHASSIS - POWERTRAIN VERIFICATION TEST** or **3500 CAB & CHASSIS, 4500 & 5500 - POWERTRAIN VERIFICATION TEST - 6.7L** .

   No

   - Repair the Fused B+ Output circuit for an open or short to ground.
   - Perform the POWERTRAIN VERIFICATION TEST - 6.7L. Refer to **2500 & 3500 -**

POWERTRAIN VERIFICATION TEST - 6.7L or **3500 CAB & CHASSIS - POWERTRAIN VERIFICATION TEST** or **3500 CAB & CHASSIS, 4500 & 5500 - POWERTRAIN VERIFICATION TEST - 6.7L** .

CHECKING THE EXHAUST SYSTEM FOR LEAKS

DIAGNOSTIC TEST

1. **CHECKING THE EXHAUST SYSTEM FOR LEAKS**
    1. Turn the ignition off.
    2. Raise the vehicle in accordance with the service information.

        WARNING: The normal operating temperature of the exhaust system is very high. Never work around or attempt to service any part of the exhaust system until it has cooled. Special care should be taken when working near the catalytic converter. The temperature of the converter rises to a high level after a short period of engine operating time.

    3. Connect the (special tool #8404-ECT, Exhaust Cone, Truck) to the Air Pressure Regulator (with hose) W-18-MIL-1146AS.

        CAUTION: The air pressure must not exceed 4 psi, otherwise engine damage can occur.

    4. Attach shop air to the air pressure regulator.
    5. Adjust the Air Pressure Regulator to 4.0 psi.
    6. Insert the exhaust cone into the vehicle tail pipe.
    7. If the vehicle is equipped with dual exhaust. Use the (special tool #8404-ECT, Exhaust Cone, Truck) with equipped attached plug, plug one side of the dual exhaust pipe. Pressurize the other as described above.
    8. Apply Mopar Air Leak Detector or Equivalent to the following areas:
        - All welded joints from 6 inches rearward of the Downstream O2 Sensor forward.
        - O2 sensor seal points.
        - O2 sensor boss welds.
        - Flange/joint connection(s).
        - Exhaust Manifold to Cylinder Head connection(s).
        - EGR Solenoid gasket base and tube seal points (if equipped).
        - Watch for the liquid/soapy water to bubble.
    9. Use the following definitions to help determine if system or component repair/replacement is necessary:
        - **Type 1 Leak** is defined as a leak where very small foam like bubbles (1.0 mm or less) appear.

Any Type 1 or greater leaks found in welded joints, O2 Sensor seal points or O2 Sensor boss welds must be repaired or the component must be replaced.

- **Type 2 Leak** is defined as a leak where larger bubbles (pea size, 8.0 mm or greater) appear.

  Any Type 2 or greater leaks found in welded joints, O2 Sensor seal points or O2 Sensor boss welds must be repaired or the component must be replaced.

Leak Location	Repair required if results at 4 psi reveal bubble size:
Welded joints	Type 1 (1.0 mm) or greater
O2 Sensor seal points	Type 1 (1.0 mm) or greater
O2 Sensor boss welds	Type 1 (1.0 mm) or greater
Flange / joint connections	Type 2 (8.0 mm) or greater
Exhaust Manifold to cylinder head connections	Type 2 (8.0 mm) or greater
EGR gasket and tube seal points	Type 2 (8.0 mm) or greater

10. If a leak is found that matches the above definition, repair or replace the component as necessary.
11. Once the repair is complete, repeat the procedure to verify that all leaks have been repaired.

Were any exhaust leaks found?

Yes

- Repair or replace the leaking exhaust parts as necessary.
- Perform the POWERTRAIN VERIFICATION TEST - 6.7L. Refer to **2500 & 3500 - POWERTRAIN VERIFICATION TEST - 6.7L** or **3500 CAB & CHASSIS - POWERTRAIN VERIFICATION TEST** or **3500 CAB & CHASSIS, 4500 & 5500 - POWERTRAIN VERIFICATION TEST - 6.7L** .

No

- Test complete.

DIESEL FUEL CONTAMINATION TESTING PROCEDURE

OVERVIEW

This procedure explains the proper method for extracting a fuel sample and specific methods to inspect for contamination of any kind. The contamination we are looking for on the clean side of the Fuel Filter is very small. We don't say dirt because it may be metal, water, plastic or any other contamination, other than clean diesel fuel. The smallest we can see with naked eye is about 30 Microns. Our Fuel Filters have 5 Micron rating. The only way we can see this size of contamination is to properly collect it and view it. The fuel sample needs to be taken from the clean side of the system. In order to get a good clean side sample to inspect, perform the following procedure exactly.

Required Equipment
ONE LITER GLASS MEASURING CUP
FOUR FEET OF CLEAR, FLEXIBLE TUBING, 5/16 ID (available at the local hardware)
MULTI-BULB LED FLASHLIGHT HPDP FUEL RETURN HOSE
BRAKE CLEANER SPRAY SELF LIGHTING MAGNIFIER (Optional)
All items used for collecting fuel MUST be cleaned with clean diesel fuel, brake clean, and air ONLY. Failure to clean these items will contaminate the fuel sample. Do Not use towels to wipe out the measuring cup.

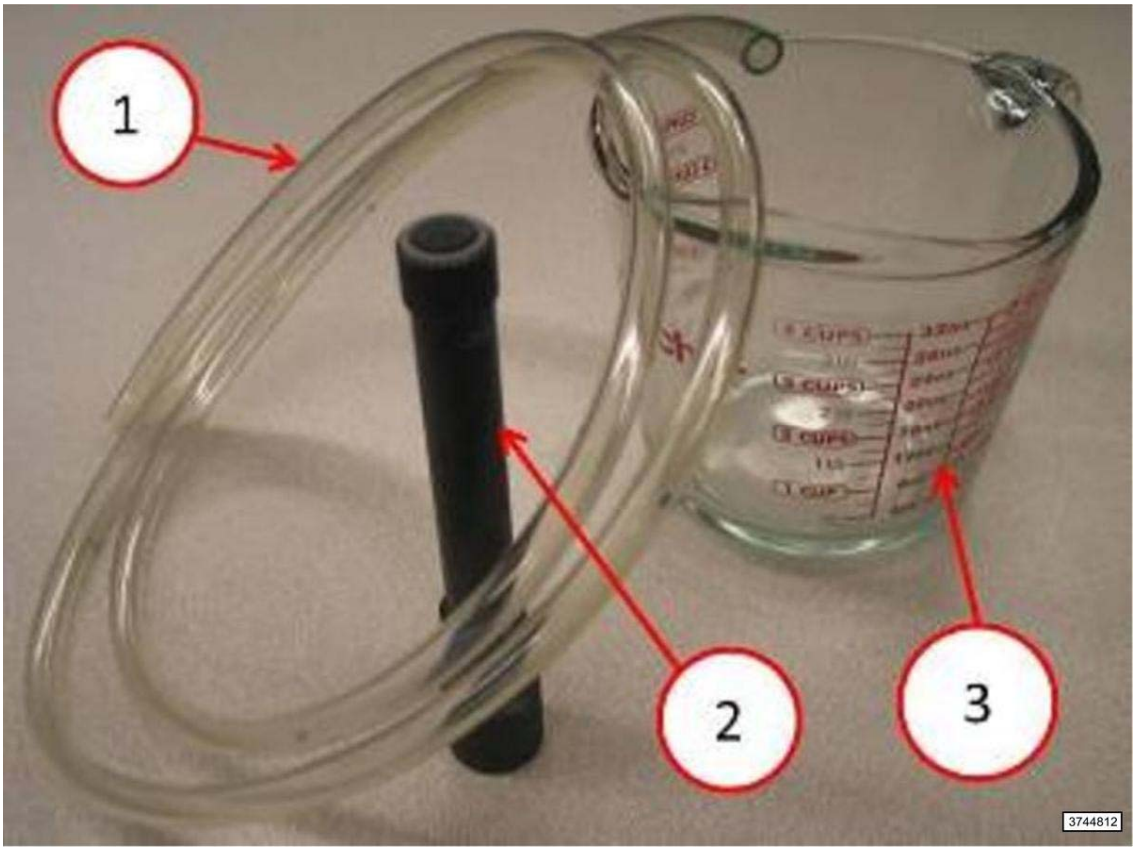

Fig. 22: Clear Tubing, Flashlight & Measuring Cup
Courtesy of CHRYSLER GROUP, LLC

1. 5/16" CLEAR TUBING (20' Length)
2. MULTI-BULB LED FLASHLIGHT
3. 4 CUP (1 LITER) "PYREX" STYLE MEASURING CUP

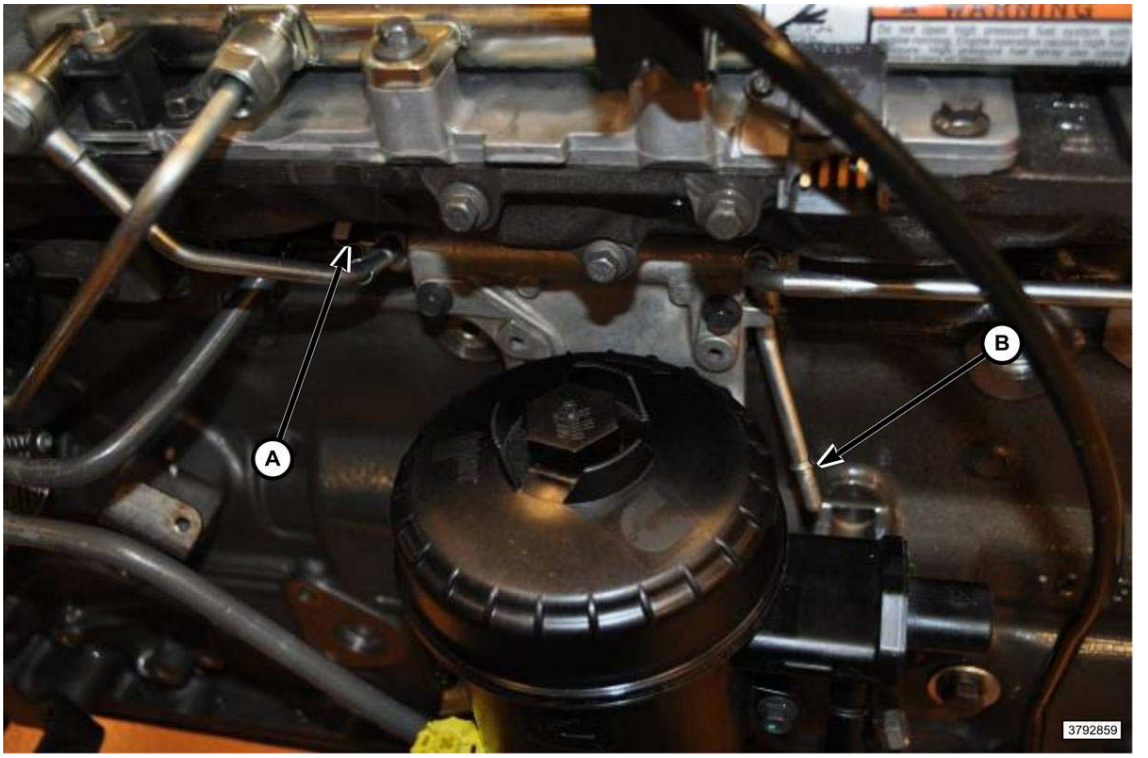

Fig. 23: Locating Return Flow Quick Disconnect & Engine Fuel Drain Tube Connection
Courtesy of CHRYSLER GROUP, LLC

A. HPDP return flow quick disconnect (at front of Fuel Filter mount)
B. Engine fuel drain tube connection - All return flow to tank

DIAGNOSTIC TEST

1. **CLEAN SIDE DIESEL FUEL SAMPLE COLLECTION AND INSPECTION**

NOTE: **The three photos in this test step illustrate the steps in this test procedure for clarification.**

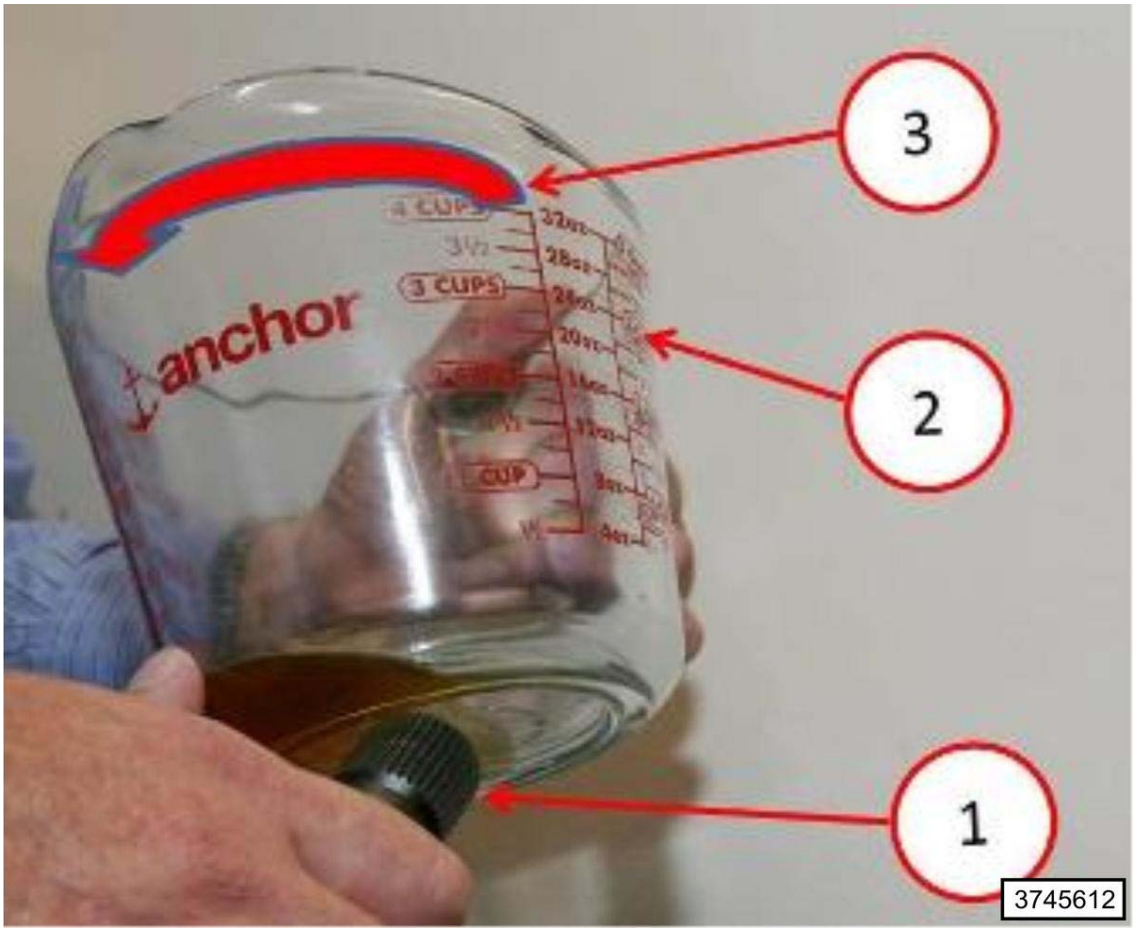

Fig. 24: Tilting Measuring Cup & Positioning Flashlight On Bottom Of Cup
Courtesy of CHRYSLER GROUP, LLC

1. LED FLASHLIGHT
2. MEASURING CUP
3. SLOWLY TILT THE CUP TOWARD YOU

NOTE: **The fuel filter MUST NOT be removed or replaced prior to taking sample in order to get accurate results.**

NOTE: **Warm the engine before collecting the fuel sample.**

1. Start the engine and using a scan tool, monitor the Coolant Temperature Sensor reading in Data Display.
2. While the engine is warming up, clean the clear tubing with clean diesel fuel and the glass measuring cup using brake clean and compressed air only. Do not use a towel.

NOTE: **Do not use brake clean or other chemicals on any vehicle parts for the fuel handling system such as lines, pumps or fittings.**

3. Monitor the scan tool until the vehicle has reached an operating temperature of 180°F (82°C).
4. Turn the engine off.
5. Remove the HPDP return line quick disconnect from the fitting located at the front of the Fuel Filter housing at the banjo bolt joining the Pressure Limiting Valve return (Connection A in the fuel system connections figure above).

NOTE: **The fuel flowing from the return of the High Pressure Delivery Pump (HPDP) MUST NOT be part of our sample. We are looking primarily for injector return fuel. The easiest way is to eliminate the HPDP return line and pull the injector return flow sample from the filter mount, on the front side.**

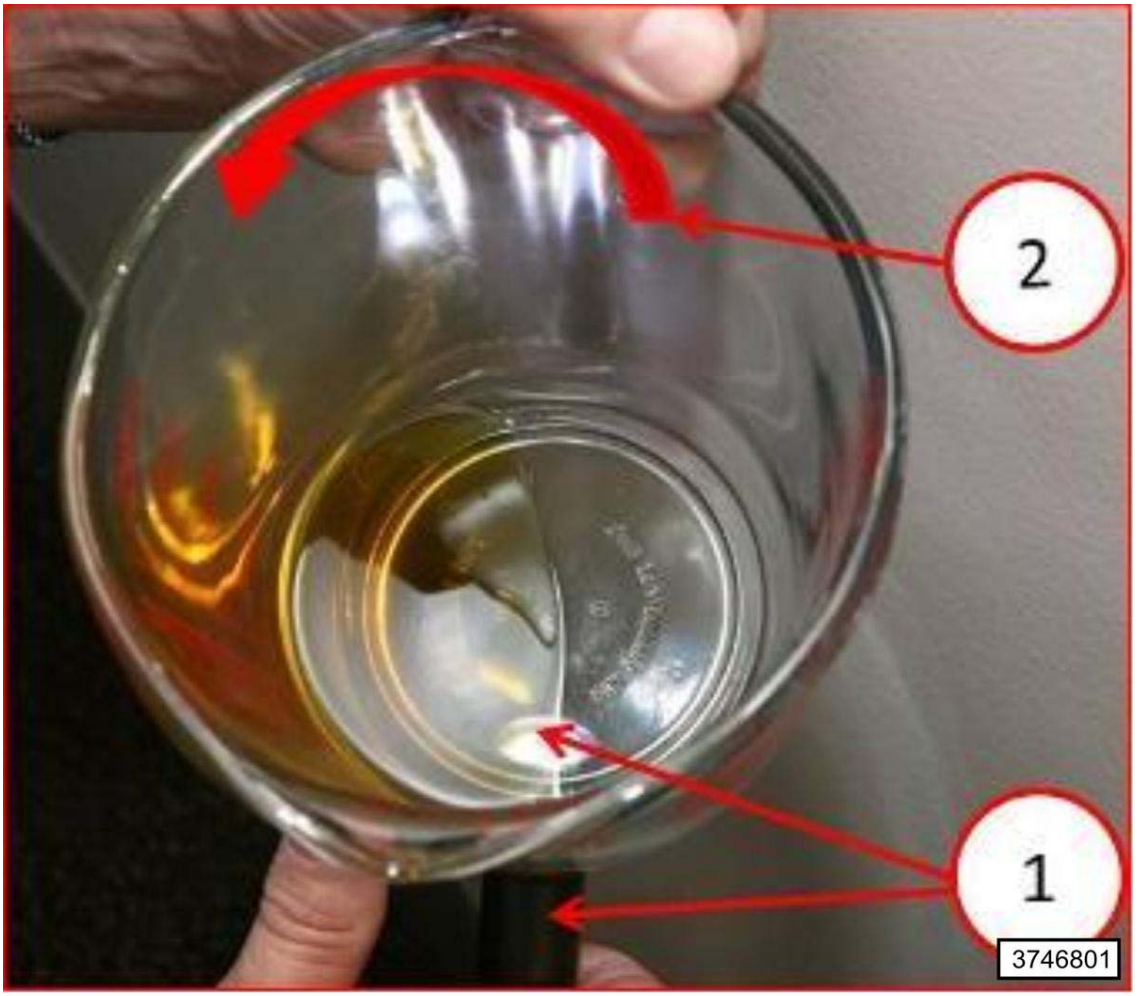

Fig. 25: Shining Flashlight Through Bottom Of Measuring Cup While Tilting Cup
Courtesy of CHRYSLER GROUP, LLC

1. LED FLASHLIGHT POINTING THROUGH BOTTOM OF CUP (Shine Toward the Handle)
2. SLOWLY TILT THE CUP TOWARD YOU

6. Cap off the male fitting that the HPDP return line was disconnected from.
7. Disconnect the quick connect fitting for the fuel return line located on the back side of the Fuel Filter housing (Connection B in the fuel system connections figure above).
8. Attach the four foot length of 5/16" clear tubing to this exposed male fitting and orientate it on a downhill angle in to a drain pan. This will be your sample source hose.
9. Using a hose with two male fittings, attach one end to the HPDP return line disconnected in step 5. Connect the other end to the fuel return line disconnected in step 7. This will return the High Pressure Pump return flow back to the tank while collecting the sample.
10. Start the engine, and continue monitoring the coolant temperature to maintain the 180°F (82°C).
11. Using the scan tool, navigate to PCM > System Tests > Fuel Pressure Override Test and select start.
12. Initiate the Fuel Pressure Override Test two consecutive times to further warm the fuel and allow the tubing to be thoroughly rinsed clean.
13. Start the Fuel Pressure Override Test a third time. At mid stream of the test move the clear tube to the measuring cup. Collect a sample of approximately 1/4 inch of fuel in the measuring cup.
14. Turn the engine off.

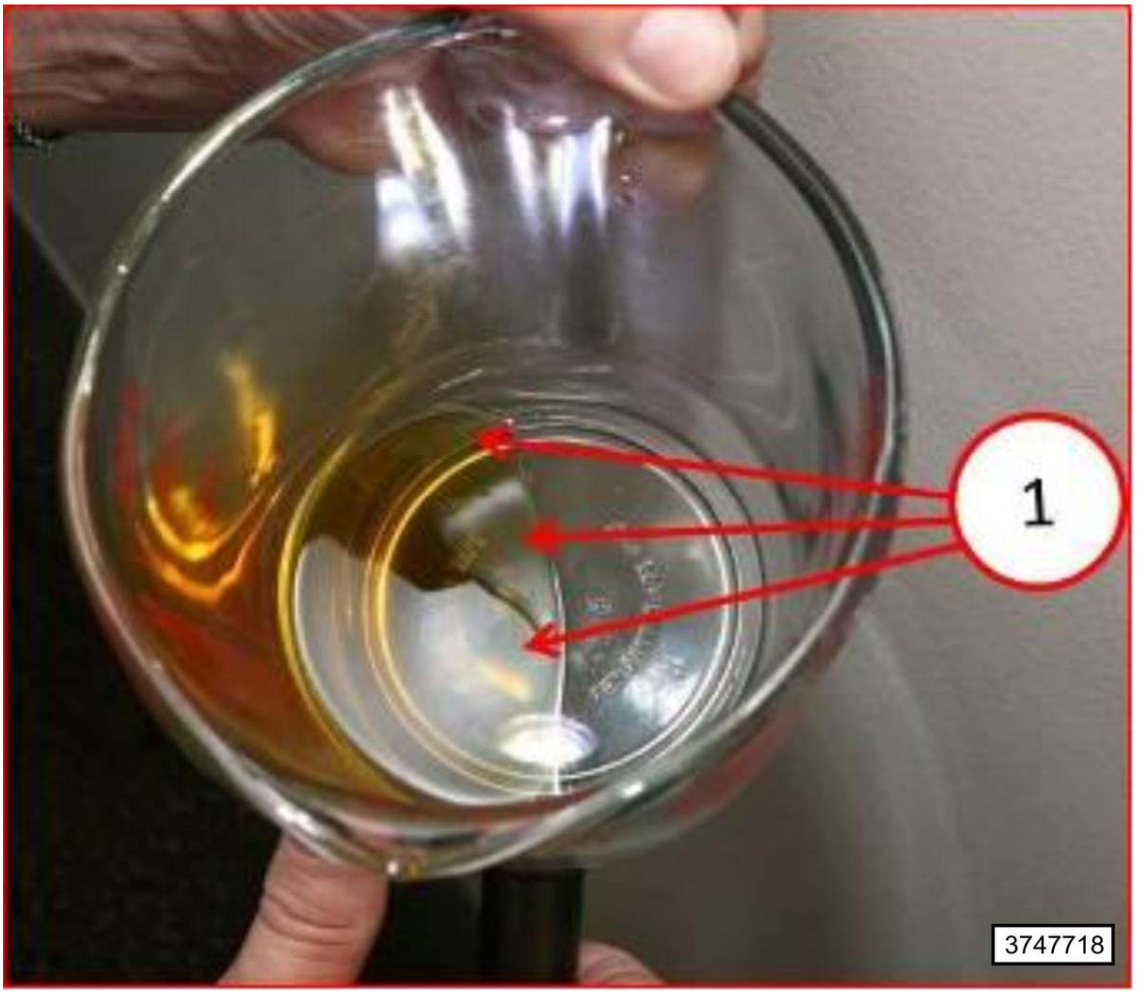

Fig. 26: Locating Fuel Contamination In Measuring Cup

1. Contamination will gather at the trailing edge of fuel.
VIEW CAREFULLY, LOOKING FOR VERY SMALL PARTICULATE MATTER (May Look Cloudy)

NOTE: **Follow these next steps exactly to inspect the sample for contamination.**

15. Allow the sample to sit for 10 minutes in a dust free environment to allow the debris to settle to the bottom. **It is important to not allow any air born contaminates to get into the fuel sample. Do not shake, swirl, or agitate the fuel in any way. The contamination should settle to the bottom.**
16. Hold the measuring cup (2) by the handle in one hand and shine the LED flashlight (1) through the bottom of the container toward the handle of the cup.
17. Slowly tilt the measuring cup (2) toward you and keep the LED flashlight (1) at the **trailing edge** of the fuel as it comes down the bottom of the cup and inspect for contamination.
    - Any dirt in the fuel will collect and be pulled by this trailing edge of fuel **(Number one in the last figure)** . It may be any color and sometimes looks as though the fuel is cloudy. **This is the contamination.** .
    - If you see **ANYTHING AT ALL** , the fuel is contaminated.

View the following repair options:

The fuel sample is found to be contaminated:

- To ensure that the In Tank Lift Pump is operating properly, perform the Lift Pump Flow Test. For instruction and specifications on this procedure, refer to the CHECKING THE FUEL DELIVERY SYSTEM procedure, test step 5. After checking the In Tank Lift Pump operation, perform the DIESEL FUEL SYSTEM CLEANING PROCEDURE. Refer to **DIESEL FUEL SYSTEM CLEANING PROCEDURE** .
- Go To 2.

The Fuel sample is clean:

- Install new fuel filter and Mopar (CRC) fuel injector cleaner into the fuel tank at a ratio four times the recommend concentration.
- Go To 2.

2. **DIAGNOSTIC PATH**

Were you instructed to inspect for Fuel Contamination from the MIL LIGHT ON PRETEST PROCEDURE?

Yes

- Perform the diagnostic trouble code test that was found to be present. Refer to **6.7L -**

DIAGNOSTIC CODE INDEX - 2500 & 3500 or **6.7L - DIAGNOSTIC CODE INDEX - 3500 CAB & CHASSIS, 4500 & 5500** .

No

- Go To 3.

3. **DIAGNOSTIC PATH CONTINUED**

   Were you instructed to inspect for Fuel Contamination from a Non-DTC TEST PROCEDURE?

   Yes

   - Perform the DIESEL AFTERTREATMENT VALIDATION 6.7L procedure. Refer to **2500 & 3500 - DIESEL AFTERTREATMENT VALIDATION- 6.7L** or **3500 CAB & CHASSIS, 4500 & 5500 - DIESEL AFTERTREATMENT VALIDATION- 6.7L** .

   No

   - Return to Diagnostic Test that directed you to inspect for fuel contamination.

ENGINE NO START/HARD START

POSSIBLE CAUSES

Possible Causes
DTC/PRODUCT IMPROVEMENT
BATTERY VOLTAGE
STARTING ACCESSORIES
ENGINE TIMING
FUEL DELIVERY SYSTEM
FUEL RETURN
AIR SYSTEM
OTHER VEHICLE SYSTEMS
BASE ENGINE

Always perform the Pre-Diagnostic Troubleshooting procedure before proceeding. Refer to 2500 & 3500 - PRE-DIAGNOSTIC TROUBLESHOOTING PROCEDURE - 6.7L or 3500 CAB & CHASSIS, 4500 & 5500 - PRE-DIAGNOSTIC TROUBLESHOOTING PROCEDURE - 6.7L .

DIAGNOSTIC TEST

1. **DTC/PRODUCT IMPROVEMENT**
   1. Check for any TSBs related to customer's complaint or DTCs present.
   2. Follow appropriate guidelines in DTC troubleshooting tree or instructions in TSB.

Is vehicle repaired?

Yes

- Repair complete.
- Perform the PCM VERIFICATION TEST - 6.7L. Refer to **2500 & 3500 - POWERTRAIN VERIFICATION TEST - 6.7L** or **3500 CAB & CHASSIS - POWERTRAIN VERIFICATION TEST** or **3500 CAB & CHASSIS, 4500 & 5500 - POWERTRAIN VERIFICATION TEST - 6.7L** .

No

- Go To 2.

2. **NO CRANK CONDITION**

Does the engine crank?

Yes

- Go To 6.

No

- Go To 3.

3. **BATTERY VOLTAGE**
   1. Check for low battery voltage.

      Is battery voltage okay?

      No

      - Repair low battery voltage.
      - Perform the PCM VERIFICATION TEST - 6.7L. Refer to **2500 & 3500 - POWERTRAIN VERIFICATION TEST - 6.7L** or **3500 CAB & CHASSIS - POWERTRAIN VERIFICATION TEST** or **3500 CAB & CHASSIS, 4500 & 5500 - POWERTRAIN VERIFICATION TEST - 6.7L** .

      Yes

      - Go To 4.

4. **OTHER VEHICLE SYSTEMS**
   1. Verify proper operation of the Transmission Clutch.
   2. Verify proper operation of the Transmission.
   3. Verify proper operation of the Engine driven accessories.

Were any issues found?

Yes

- Perform the appropriate repairs.
- Perform the PCM VERIFICATION TEST - 6.7L. Refer to **2500 & 3500 - POWERTRAIN VERIFICATION TEST - 6.7L** or **3500 CAB & CHASSIS - POWERTRAIN VERIFICATION TEST** or **3500 CAB & CHASSIS, 4500 & 5500 - POWERTRAIN VERIFICATION TEST - 6.7L** .

No

- Go To 5.

5. **STARTING ACCESSORIES**
   1. Inspect the Ignition switch (check for proper output voltage and/or open circuit).
   2. Inspect the Starter operation.
   3. Inspect the Grid Heater operation.
   4. Inspect the Fuel Heater operation.

   Were any problems found?

   Yes

   - Perform the appropriate repairs.
   - Perform the PCM VERIFICATION TEST - 6.7L. Refer to **2500 & 3500 - POWERTRAIN VERIFICATION TEST - 6.7L** or **3500 CAB & CHASSIS - POWERTRAIN VERIFICATION TEST** or **3500 CAB & CHASSIS, 4500 & 5500 - POWERTRAIN VERIFICATION TEST - 6.7L** .

   No

   - Check for internal engine damage.

6. **ENGINE TIMING**
   1. Inspect speed indicator ring for damaged/missing teeth.
   2. Inspect for dirty or damaged pins at Crankshaft position sensor (CKP) or Camshaft position sensor (CMP).
   3. Verify proper overhead adjustments.

   Were any problems found?

   Yes

   - Perform the appropriate repairs.
   - Perform the PCM VERIFICATION TEST - 6.7L. Refer to **2500 & 3500 - POWERTRAIN**

VERIFICATION TEST - 6.7L or **3500 CAB & CHASSIS - POWERTRAIN VERIFICATION TEST** or **3500 CAB & CHASSIS, 4500 & 5500 - POWERTRAIN VERIFICATION TEST - 6.7L** .

No

- Go To 7.

7. **CHECK THE FUEL PRESSURE ACTUAL -VS- SETPOINT**
   1. Using a scan tool, compare the fuel pressure actual reading to the set point while cranking the engine.

      Does the actual fuel pressure fluctuate more then +/- 500 psi of set point?

      Yes

      - Go To 8.

      No

      - Perform the CHECKING THE FUEL DELIVERY SYSTEM test procedure. Refer to **DIAGNOSIS AND TESTING, 6.7L**.

8. **CHECK THE EGR AIRFLOW CONTROL VALVE OPERATION**
   1. Turn the ignition off.
   2. Remove the inlet hose to the EGR Airflow Control Valve.
   3. Use a mirror to inspect the valve while and assistant cycles the ignition on and off several times.

      Does the EGR Airflow Control Valve cycle open and closed without sticking when the ignition is cycled on and off?

      Yes

      - Go To 9.

      No

      - Check the electrical circuits for the EGR Airflow Control Valve. If the wiring is good, replace the EGR Airflow Control Valve.
      - Perform the PCM VERIFICATION TEST - 6.7L. Refer to **2500 & 3500 - POWERTRAIN VERIFICATION TEST - 6.7L** or **3500 CAB & CHASSIS - POWERTRAIN VERIFICATION TEST** or **3500 CAB & CHASSIS, 4500 & 5500 - POWERTRAIN VERIFICATION TEST - 6.7L** .

9. **CHECK FOR A PLUGGED EXHAUST SYSTEM**
   1. Separate the exhaust system and attempt to start the engine.

      Does the engine start?

Yes

- Perform the AFTERTREATMENT INSPECTION GUIDELINE procedure. Refer to **DIAGNOSIS AND TESTING, 6.7L**.

  NOTE: It is imperative to determine root cause of excessive soot build up.

- After repair perform the DIESEL FUEL VALIDATION TEST. Refer to **2500 & 3500 - DIESEL AFTERTREATMENT VALIDATION- 6.7L** or **3500 CAB & CHASSIS, 4500 & 5500 - DIESEL AFTERTREATMENT VALIDATION- 6.7L** .

No

- Go To 10.

10. **CHECKING FUEL QUALITY/CONTAMINATION**
    1. Check the quality of the fuel using the DIESEL FUEL CONTAMINATION PROCEDURE. Refer to **DIESEL FUEL CONTAMINATION TESTING PROCEDURE**.

       Was any contamination detected?

       Yes

       - Perform the appropriate repair according to the testing and cleaning procedure.
       - Perform the POWERTRAIN VERIFICATION TEST - 6.7L. Refer to **2500 & 3500 - POWERTRAIN VERIFICATION TEST - 6.7L** or **3500 CAB & CHASSIS - POWERTRAIN VERIFICATION TEST** or **3500 CAB & CHASSIS, 4500 & 5500 - POWERTRAIN VERIFICATION TEST - 6.7L** .

       No

       - Go To 11.

11. **CHECK THE INTAKE SYSTEM**
    1. Check for inlet restriction, inspect the Air Filter for excessive dirt/debris. Verify air intake lines are not kinked or restricted.
    2. Inspect Turbocharger for wheel clearance and proper wastegate operation.
    3. Check for air system leaks. Perform INTAKE AIR SYSTEM PRESSURE TEST procedure. Refer to **DIAGNOSIS AND TESTING, 6.7L**.

       Were any issues found?

       Yes

       - Perform the appropriate repairs.
       - Perform the PCM VERIFICATION TEST - 6.7L. Refer to **2500 & 3500 - POWERTRAIN**

VERIFICATION TEST - 6.7L or **3500 CAB & CHASSIS - POWERTRAIN VERIFICATION TEST** or **3500 CAB & CHASSIS, 4500 & 5500 - POWERTRAIN VERIFICATION TEST - 6.7L** .

No

- Check for an engine mechanical problem such as low compression due to damaged pistons, cylinder walls, or valve train.
- Perform the PCM VERIFICATION TEST - 6.7L. Refer to **2500 & 3500 - POWERTRAIN VERIFICATION TEST - 6.7L** or **3500 CAB & CHASSIS - POWERTRAIN VERIFICATION TEST** or **3500 CAB & CHASSIS, 4500 & 5500 - POWERTRAIN VERIFICATION TEST - 6.7L** .

ENGINE NOISE

ENGINE NOISE OVERVIEW

DIAGNOSTIC TEST

NOTE: When diagnosing engine noise problems, make sure that noises caused by accessories, such as the A/C Compressor and power takeoff, are not mistaken for engine noises. Remove the accessory drive belts to eliminate noise caused by these units. Noise will also travel to other metal parts not related to the problem.

NOTE: The use of a stethoscope can help locate an engine noise.

Engine noises heard that are at Crankshaft speed (engine RPM), are noises related to the Crankshaft, Pistons, Connecting Rods, and piston pins. Noises heard that are at Camshaft speed (one-half of the engine RPM), are related to the valve train. A handheld digital tachometer can help to determine if the noise is related to components operating at crankshaft or camshaft speed. Engine noise can sometimes be isolated by performing a cylinder cutout test. If the volume of the noise decreases or the noise disappears, it is related to that particular engine cylinder. There is not a definite rule or test that will positively determine the source of a noise complaint. Engine driven components and accessories, such as gear-driven fan clutches, hydraulic pumps, belt-driven Alternators, A/C Compressors, and Turbochargers can contribute to engine noise. Use the following information as a guide to diagnosing engine noises.

MAIN BEARING NOISE

The noise caused by a main bearing with excessive clearance is a loud dull knock heard when the engine is under a load. The knock is heard regularly every other revolution. If all of the main bearings have excessive clearance, a loud clatter will be heard. The noise is the loudest when the engine is lugging or under heavy load. The knock is duller than a connecting rod noise. Low oil pressure can also accompany this condition. Look for an oil light on instrument cluster. If the bearing is not loose enough to produce a knock by itself, the bearing can knock if the oil is too thin, or if there is no oil at the bearing. An irregular noise can indicate worn crankshaft thrust bearings. An intermittent sharp knock indicates excessive crankshaft end clearance. Repeated clutch disengagements can cause a change in the noise.

CONNECTING ROD BEARING NOISE

Connecting rods with excessive clearance knock at all engine speeds, and under both idle and load conditions. The knock is usually rhythmic and the speed and volume will increase and decrease relative to engine speed. When the bearings begin to become loose, the noise can sometimes be confused with piston slap or loose piston pins. Low oil pressure can also accompany this condition. Look for an oil light on instrument cluster.

PISTON NOISE

It can be difficult to tell the difference between a piston pin, connecting rod, or piston noise. A loose piston pin causes a loud double knock which is usually heard when the engine is idling. When the injector to this cylinder is cut out, a noticeable change will be heard in the sound of the knocking noise. On some engines the knock becomes more noticeable when the vehicle is operated on the road at steady speed condition.

TURBOCHARGER

A Turbocharger noise can be identified by one of the following:

1. **A loud whine or whistle during acceleration**
   - This condition is most often the result of a loose clamp/hose at the Turbocharger compressor outlet, charge air cooler (CAC) inlet, CAC outlet or at the Intake Manifold. Some things to look for:
     a. With the engine running at idle, the Transmission in Park or Neutral, and with the parking brake set, feel for boost air escaping at each connection between the Turbocharger compressor outlet and Intake Manifold. For limited access areas, spray soapy water on those connectors and look for bubbles.
     b. Check the Exhaust Manifold and exhaust system for leaks.
2. **Exhaust howling during turbo boost**
   - This condition usually occurs over a narrow speed range and may be caused by an issue with the muffler (usually external damage) bent touching frame or bent restricting exhaust flow.
3. **Loud popping, whooshing, flushing, fluttering, noise emitted during closed throttle deceleration**
   - This condition is caused by inability of the engine to intake higher boost levels that are present at the beginning of closed throttle deceleration. Pressure generated by the Turbocharger has nowhere to go, thus causing it to "stall" or "surge". The noise will sound as though it is coming through the air cleaner, **however this is a normal condition.** No damage will be sustained and the Turbocharger should not be changed for this condition.
4. **Low boost pressure**
   - Low boost pressure is usually a symptom of low fuel injection pump fuel delivery and is associated low power complaints. Generally Turbocharger replacement will be related to turbine shaft failures or Turbocharger housing seal leaks. To check for turbine shaft bearing damage, perform the following checks:
     a. With the engine off, remove the air cleaner to Turbocharger intake tube.
     b. Visually inspect the Turbocharger compressor fan. The fan blades should not contact the fan housing and the fan blades should not be chipped, bent or damaged in any way.
     c. Check the end play of the compressor to fan. A small amount of fore/aft play is normal. Excessive play that would cause fan distortion or fan to housing contact is not acceptable. In

this case, replace the Turbocharger.

d. While pushing the turbine shaft left, right, up and down, gently rotate the compressor wheel. The compressor fan should turn freely by hand, if it doesn't replace the turbocharger.

FUEL SYSTEM

A fuel system noise can be identified by one of the following conditions:

1. **Loud knock (Rap) type sound with rough idle (vibration and smoke**

- This condition can be caused by one of the following:
  a. Alternative fuel or fuel contamination. Refer to **DIESEL FUEL CONTAMINATION TESTING PROCEDURE** and perform the DIESEL FUEL CONTAMINATION TEST procedure.
  b. There may be air in the fuel system. This requires checking and correction.
  c. Fuel Injection Pump phasing may be incorrect. Check the Fuel Injection Pump phasing if necessary. to find the timing procedure. Refer to **PUMP, FUEL INJECTION, INSTALLATION** .
  d. Excessive pressure in the high pressure side of the system. This should be accompanied by a fault.
  e. The fuel injectors may be stuck or have low opening pressure. This requires replacement of defective injectors. A cylinder cut out test or mechanical blocking of injectors (injector block off (special tool #9011, Adapter, Fuel Pressure Test)) can be used to identify failed injectors.

EXCESSIVE BLACK SMOKE OUT EXHAUST

POSSIBLE CAUSES

Possible Causes
FAULTY AFTERTREATMENT SYSTEM OUTDATED ECM/PCM CALIBRATION
POOR FUEL QUALITY/CONTAMINATION
AIR FILTER RESTRICTION LEAK IN THE INTAKE AIR SYSTEM EXHAUST SYSTEM LEAKS/RESTRICTIONS FAULTY FUEL INJECTOR
FUEL SYSTEM ISSUES

DIAGNOSTIC TEST

1. **CHECK TSBs**

NOTE: **This vehicle is equipped with a Diesel Particulate Filter (DPF) which should trap most particles that would appear out of the tail pipe in the form of black or blue smoke. If black or blue smoke is coming from the tail pipe, the DPF should be inspected for damage after the root cause of the problem is diagnosed and corrected.**

1. With the scan tool, check for any TSBs that may apply.

   Were there any TSBs that applied to and repaired the condition?

   Yes

   - Perform the appropriate repair.
   - Perform the AFTERTREATMENT INSPECTION GUIDELINE procedure. Refer to **DIAGNOSIS AND TESTING, 6.7L**.

   No

   - Go To 2.

2. **CHECK FUEL FOR CONTAMINATION**
   1. Perform the DIESEL FUEL CONTAMINATION AND CLEANING PROCEDURE. Refer to **DIAGNOSIS AND TESTING, 6.7L**.

      Is the fuel contaminated with debris?

      Yes

      - Follow step three of the DIESEL FUEL CONTAMINATION AND CLEANING PROCEDURE and clean the diesel fuel system and Fuel Injectors.
      - Perform the AFTERTREATMENT INSPECTION GUIDELINE procedure. Refer to **DIAGNOSIS AND TESTING, 6.7L**.

      No

      - Go To 3.

3. **CHECKING CYLINDER CONTRIBUTION**
   1. Using the scan tool, navigate to Miscellaneous Functions perform the Fuel System Run Up test procedure.

      NOTE: This test will take approximately 270 seconds to complete. The PCM will cut out each individual Fuel Injector three times and calculate the delta RPM change. Based on the delta RPM change, the test will indicate a bad cylinder based on the limits that have been set. When the test is complete, the engine will return to idle.

      Do the results indicate that a cylinder is out of spec?

      Yes

      - Refer to the CHECKING ENGINE MISFIRE / RUNS ROUGH / PERFORMANCE TEST and begin at **test step 5** for diagnosing a single cylinder issue. Refer to **DIAGNOSIS AND**

TESTING, 6.7L.

No

- Go To 4.

4. **CHECK THE FUEL DELIVERY SYSTEM**
   1. Perform the CHECKING THE FUEL DELIVERY SYSTEM test procedure. Refer to **DIAGNOSIS AND TESTING, 6.7L**.

      Were any problems found?

      Yes

      - Perform the appropriate repair.
      - Perform the AFTERTREATMENT INSPECTION GUIDELINE procedure. Refer to **DIAGNOSIS AND TESTING, 6.7L**.

      No

      - Refer to the CHECKING ENGINE MISFIRE / RUNS ROUGH / PERFORMANCE TEST and begin at **test step 8** . Refer to **DIAGNOSIS AND TESTING, 6.7L**.

EXCESSIVE BLUE SMOKE OUT EXHAUST

POSSIBLE CAUSES

Possible Causes
FAULTY AFTERTREATMENT SYSTEM AIR FILTER RESTRICTION
RESTRICTION IN THE CLOSED CRANKCASE VENTILATION (CCV) SYSTEM
TURBOCHARGER LEAKING OIL INTO INTAKE SYSTEM
RESTRICTED TURBOCHARGER DRAIN TUBE
POOR FUEL QUALITY/CONTAMINATION
WORN VALVE SEAL OR GUIDES INTAKE SYSTEM LEAKS
EXHAUST SYSTEM LEAKS/RESTRICTIONS WORN OR DAMAGED PISTONS, PISTON RINGS, OR CYLINDER WALLS

DIAGNOSTIC TEST

1. **CHECK TSBs**

   NOTE: **This vehicle is equipped with a Diesel Particulate Filter (DPF) which should trap most particles that would appear out of the tail pipe in the form of black or blue smoke. If black or blue smoke is coming from the tail pipe,**

the DPF should be inspected for damage after the root cause of the problem is diagnosed and corrected.

1. With the scan tool, check for any TSBs that may apply.

   Were there any TSBs that applied to and repaired the condition?

   Yes

   - Perform the appropriate repair.
   - Perform the AFTERTREATMENT INSPECTION GUIDELINE procedure. Refer to **DIAGNOSIS AND TESTING, 6.7L**.

   No

   - Go To 2.

2. **CHECK THE AIR FILTER**
   1. Perform an inspection of the Air Filter. Check for an improper filter or signs of a restriction such as excessive debris or a filter that is out of shape.

      Does the Air Filter system appear in good shape?

      Yes

      - Go To 3.

      No

      - Replace the Air Filter assembly. Go To 3.

3. **CHECK THE CCV FILTER AND SYSTEM**
   1. Perform an inspection of the CCV system. Are there signs of a restriction in the system.

      Are there signs of a restriction in the CCV system?

      Yes

      - Replace CCV Filter and determine root cause.
      - Perform the AFTERTREATMENT INSPECTION GUIDELINE procedure. Refer to **DIAGNOSIS AND TESTING, 6.7L**.

      No

      - Go To 4.

4. **CHECK THE TURBOCHARGER FOR OIL LEAK INTO THE INTAKE SYSTEM**
   1. Remove the inlet to the Turbocharger assembly.

2. Inspect the Turbocharger inlet compressor for oil leaking into the Air Handling system.

   Was oil leaking into the Air Handling system from the Turbocharger?

   Yes

   - Check the Turbocharger oil drain for a restriction. If restricted, clean or replace the oil drain tube. If not restricted, replace the Turbocharger assembly.
   - Perform the AFTERTREATMENT INSPECTION GUIDELINE procedure. Refer to **DIAGNOSIS AND TESTING, 6.7L**.

   No

   - Go To 5.

5. **CHECK THE TURBOCHARGER FOR OIL LEAK INTO THE EXHAUST SYSTEM**
   1. Inspect the Turbocharger turbine for oil leaking into the exhaust system.

      Was oil leaking into the exhaust system from the Turbocharger?

      Yes

      - Go To 6.

      No

      - Go To 7.

6. **CHECK FOR OIL LEAKING INTO THE EXHAUST MANIFOLD**
   1. Remove the Turbocharger and inspect for oil leaking into the Exhaust Manifold.

      Was oil leaking into the Exhaust Manifold from the Turbocharger?

      Yes

      - Go To 8.

      No

      - Replace the Turbocharger assembly.
      - Perform the AFTERTREATMENT INSPECTION GUIDELINE procedure. Refer to **DIAGNOSIS AND TESTING, 6.7L**.

7. **CHECK THE INTAKE SYSTEM FOR LEAKS**
   1. Perform the INTAKE AIR SYSTEM PRESSURE TEST procedure. Refer to **DIAGNOSIS AND TESTING, 6.7L**.

      Were any leaks found?

Yes

- Perform the appropriate repairs.
- Perform the AFTERTREATMENT INSPECTION GUIDELINE procedure. Refer to **DIAGNOSIS AND TESTING, 6.7L**.

No

- Go To 8.

8. **CHECK THE VALVE TRAIN**
   1. Remove the Valve Cover.
   2. Inspect the Valve seals. Look for any broken, brittle, or improperly installed seals.

   Were problems found?

   Yes

   - Perform the appropriate repairs.
   - Perform the AFTERTREATMENT INSPECTION GUIDELINE procedure. Refer to **DIAGNOSIS AND TESTING, 6.7L**.

   No

   - Remove the Cylinder Head. Inspect for any worn or damaged pistons, piston rings, or cylinder walls. Check for excessive clearance/wear in the valve guides.
   - Perform the AFTERTREATMENT INSPECTION GUIDELINE procedure. Refer to **DIAGNOSIS AND TESTING, 6.7L**.

EXCESSIVE WHITE SMOKE OUT EXHAUST

POSSIBLE CAUSES

Possible Causes
INTAKE HEATER SYSTEM NOT OPERATING PROPERLY FAULTY THERMOSTAT FUEL HEATER NOT OPERATING PROPERLY COOLANT LEAKING INTO THE COMBUSTION CHAMBER IMPROPER OR CONTAMINATED DIESEL FUEL
FAULTY FUEL SYSTEM / FUEL INJECTOR

DIAGNOSTIC TEST

1. **CHECK THE COOLING SYSTEM FOR LEAKS**
   1. Pressure test the cooling system.

Is the cooling system holding pressure?

Yes

- Go To 2.

No

- Diagnose and repair the coolant leak. We are looking for coolant leaking into the combustion chamber. Check EGR Cooler for internal cracks. If the cooler is not leaking then check the engine internally for faulty cylinder head gasket, or cracks to the cylinder head or block.

2. **VERIFY CONDITION**

NOTE: **Some white smoke from the tail pipe during initial start up is normal, especially during cold ambient temperatures. If the white smoke is excessive, continue with this test.**

1. Allow the engine to cool to ambient temperature if possible.
2. Start the engine and allow it to idle monitoring smoke during warm up.

Is the white smoke occurring during cold ambient temperatures at initial start up ONLY?

Yes

- Condition is normal. Verify proper operation of the Intake and Fuel Heaters.

No

- Go To 3.

3. **CHECK THE ENGINE COOLANT THERMOSTAT**
   1. Verify the operation of the cooling system Thermostat.

Does the engine heat up properly to operating temperature?

Yes

- Go To 4.

No

- Replace the cooling system Thermostat.

4. **CHECK THE FUEL HEATER OPERATION**
   1. Verify that the Fuel Heater and temperature sensor is operating properly.

Is the fuel heater system operating normal?

Yes

- Go To 5.

No

- Diagnose and repair the Fuel Heater system as necessary.

5. **CHECK FOR IMPROPER FUEL OR CONTAMINATION**
   1. Perform the DIESEL FUEL CONTAMINATION AND CLEANING PROCEDURE. Refer to **DIAGNOSIS AND TESTING, 6.7L**.

      Is the fuel improper or contaminated with debris?

      Yes

      - Follow step three of the DIESEL FUEL CONTAMINATION AND CLEANING PROCEDURE and clean the diesel fuel system and Fuel Injectors.
      - Perform the AFTERTREATMENT INSPECTION GUIDELINE procedure. Refer to **DIAGNOSIS AND TESTING, 6.7L**.

      No

      - Go To 6.

6. **CHECKING CYLINDER CONTRIBUTION**
   1. Using the scan tool, navigate to Miscellaneous Functions perform the Fuel System Run Up test procedure.

      NOTE: **This test will take approximately 270 seconds to complete. The PCM will cut out each individual Fuel Injector three times and calculate the delta RPM change. Based on the delta RPM change, the test will indicate a bad cylinder based on the limits that have been set. When the test is complete, the engine will return to idle.**

      Do the results indicate that a cylinder is out of spec?

      Yes

      - Refer to the CHECKING ENGINE MISFIRE / RUNS ROUGH / PERFORMANCE TEST and begin at **test step 5** for diagnosing a single cylinder issue. Refer to **DIAGNOSIS AND TESTING, 6.7L**.

      No

      - Go To 7.

7. **CHECK THE FUEL DELIVERY SYSTEM**

1. Perform the CHECKING THE FUEL DELIVERY SYSTEM test procedure. Refer to **DIAGNOSIS AND TESTING, 6.7L**.

   Were any problems found?

   Yes

   - Perform the appropriate repair.
   - Perform the AFTERTREATMENT INSPECTION GUIDELINE procedure. Refer to **DIAGNOSIS AND TESTING, 6.7L**.

   No

   - Refer to the CHECKING ENGINE MISFIRE / RUNS ROUGH / PERFORMANCE TEST and begin at **test step 8** . Refer to **DIAGNOSIS AND TESTING, 6.7L**.

INJECTOR RETURN FLOW TEST

DIAGNOSTIC TEST

1. **ENGINE RUNS**

   NOTE: Review Warranty bulletin D-05-24.

   Does the engine run?

   Yes

   - Go To 2.

   No

   - Go To 3.
2. **INJECTOR RETURN FLOW TEST @ 1200 RPM AND 1800 BAR RAIL PRESSURE**
   1. Operate the engine until the coolant temperature is above 82.2°C (180°F).
   2. Turn the engine off.
   3. Remove the banjo connector from the fuel drain tube at the rear of the fuel filter housing.
   4. Install fuel system test fitting (special tool #9012, Fitting, Fuel System Test) in place of the banjo connector.

      NOTE: Do not use test fitting (special tool #9014, Fitting, Fuel System Test). This fitting will block return flow from the High Pressure Delivery Pump and damage the seal and could potentially damage the engine.

   5. Install a 5/16 diameter rubber fuel hose **(Hose A)** onto the test fitting and into a fuel container.

NOTE: This hose is used to measure the High Pressure Pump return flow.

6. Remove the vehicle fuel return line (Quick connect) from the engine fuel drain tube.
7. Install a 5/16 diameter rubber fuel hose **(Hose B)** onto the engine fuel drain tube and into the fuel container.

NOTE: This hose will be used to measure the Injector return flow for this procedure.

8. Start engine and allow to idle for 30 seconds. This step allows the flows to stabilize.
9. Using the scan tool, navigate to ECM view -> PCM Cummins -> More Options-> System Tests -> Fuel Pressure Override Test. Select Start, then press Next.

NOTE: While the test is running, record the FCA duty cycle % and actual rail pressure.

10. Press the Run button to start the Fuel Pressure Override Test. The engine speed will elevate rapidly to 1200 RPM and the rail pressure will increase to 26107 psi (1800 bar). At this point, move **(Hose B)** from the bucket and insert it into a graduated cylinder.**Collect the fuel until the Fuel Pressure Override Test times out (30 seconds).**
11. Measure and record the amount of fuel collected in the graduated cylinder. Repeat this three times and take the average of the three results.

NOTE: Flow should be less than 210 ml for 30 seconds.

12. If the flow is less than 210 ml/30 seconds, the test has successfully passed. If the flow is greater than 210 ml/30 seconds, turn off the engine and remove all 6 high pressure fuel lines. Re-torque the high-pressure connector nut for each injector. Inspect for damage, repair/replace as necessary. Reinstall the high pressure fuel lines. Re-measure the injector return flow using steps 10 through 13 as a guide. Continue on to next step.
13. If the amount of fuel is still greater than 210 ml/30 seconds after re-torquing the high-pressure connector nuts, turn the engine off and remove the #1 high pressure fuel line. Cap the #1 fuel port using tool (special tool #9864, Cap, Fuel Rail) for the 6.7L engine on the fuel rail and re-measure the injector return flow using steps 8 through 11 as a guide. Repeat this procedure for injectors 2-6. Continue on to next step.
14. Replace the Fuel Injector and High pressure connector of the injector that shows the largest amount of change when capped off.

Did the vehicle pass the Injector Return Flow test at step 12 without any repairs needed

Yes

- Injector return flow is within specification, and no repair is needed.

No

- Replace the failed Fuel Injector(s) and verify repair.
- Perform the POWERTRAIN VERIFICATION TEST - 6.7L. Refer to **2500 & 3500 - POWERTRAIN VERIFICATION TEST - 6.7L** or **3500 CAB & CHASSIS - POWERTRAIN VERIFICATION TEST** or **3500 CAB & CHASSIS, 4500 & 5500 - POWERTRAIN VERIFICATION TEST - 6.7L** .

3. **NO START INJECTOR RETURN FLOW TEST DURING ENGINE CRANKING @200 RPM**

NOTE: Battery charger may be utilized if cranking speed is below 170 RPM.

1. Install (special tool #9012, Fitting, Fuel System Test) fitting in standard location on back of fuel filter head to measure pump and injector return flows.
2. Install hoses to the test fitting and the injector return line and route them to a bucket or other container. Make sure test lines are straight and slope downward their entire length. This is to avoid trapping air/fuel in the lines while testing.
3. Unplug the injector harnesses at the valve cover, Unplug the connector to the FCA.
4. Crank the engine for least 10 seconds until fuel starts to flow out of the pump and injector return hoses. Turn Key off when finished.
5. Let all the fuel drain out of each line before continuing.
6. Place the injector return hose into an appropriate measuring device.
7. Crank the engine for 10 seconds. Go from Keyoff to Crank back to Keyoff. Do not leave the ignition on between tests.
8. Let all of the fuel drain out of the injector hose.
9. Record the amount of injector return for a 10 sec crank.
10. Flow should be less than 40 ml for 10 seconds of cranking.
11. If the flow is greater than 40 ml after step 10, remove the #1 fuel injector supply line. Re-torque the high-pressure connector nut. Cap the #1 fuel port using tool (special tool #9864, Cap, Fuel Rail) for the 6.7L engine and (special tool #9011, Adapter, Fuel Pressure Test) for 5.9L engine on the fuel rail.
12. Crank the engine and perform steps 7 through 9.
13. Measure the amount of fuel in the graduated cylinder.
14. If the amount of fuel is less than 40 ml, remove the #1 high pressure connector and the #1 fuel injector. Inspect for damage, repair/replace as necessary.
15. If the amount of fuel is not less than 40 ml, repeat steps 12-14 for cylinders 2-6.
16. Install all high-pressure connectors, fuel injectors, and fuel injector supply lines. Repeat steps 1-12 to confirm repair.

    SPECIFICATION: Less than 40 ml total fuel return flow for 10 seconds. Did the vehicle pass the Injector Return Flow test at step 12 without any repairs needed

    Yes

    - Injector return flow is within specification, and no repair is needed.

No

- Replace the failed Fuel Injector(s) and verify repair.
- Perform the POWERTRAIN VERIFICATION TEST - 6.7L. Refer to **2500 & 3500 - POWERTRAIN VERIFICATION TEST - 6.7L** or **3500 CAB & CHASSIS - POWERTRAIN VERIFICATION TEST** or **3500 CAB & CHASSIS, 4500 & 5500 - POWERTRAIN VERIFICATION TEST - 6.7L** .

INTAKE AIR SYSTEM PRESSURE TEST

DIAGNOSTIC TEST

1. **CHARGE AIR COOLER PRESSURE TEST**
    1. Loosen the Air Inlet Tube clamp at the Turbocharger.
    2. Remove the air filter housing and the inlet tube from the vehicle as an assembly.
    3. Install the (special tool #10137, Adapter, Charge Air) on the turbo, securing it in place with the supplied three-fingered band clamp, tighten tool clamp to 8 N.m (72 in lbs) then tighten the 3 wing nuts to the puck.

    CAUTION: Never attempt to start or run the vehicle at any time during this test, engine damage may occur.

    4. Before attaching shop air to the pressure regulator verify that the regulator is at its lowest pressure setting (0 psi).
    5. Attach an air supply to the regulator and slowly increase the pressure until the pressure gauge reads 20 psi.

    WARNING: Never apply more than 30 PSI.

    6. Using Mopar Air Leak Detector or Equivalent, spray the Turbocharger, Turbocharger wastegate, Charge Air Cooler (CAC) Heat Exchange and CAC Hoses while watching for leaks.
    7. Before any attempt to repair the CAC system is made, it's necessary to completely discharge the system. This can be accomplished by turning the regulator knob counter clockwise.
    8. Allow for adequate time to pass before removing the CAC Pressure tester from the turbocharger inlet.
    9. Position the Air Filter Housing over the three mounting studs located on the inside front fender well and press down firmly to lock housing into place.
    10. Install Air Inlet Tube over the Turbocharger inlet and torque the band clamp to 35 in.lbs.

    View Repair

    Repair

- Test complete.
- Perform the POWERTRAIN VERIFICATION TEST - 6.7L. Refer to **2500 & 3500 - POWERTRAIN VERIFICATION TEST - 6.7L** or **3500 CAB & CHASSIS - POWERTRAIN VERIFICATION TEST** or **3500 CAB & CHASSIS, 4500 & 5500 - POWERTRAIN VERIFICATION TEST - 6.7L** .

DIAGNOSIS AND TESTING

CHECKING THE EXHAUST SYSTEM FOR LEAKS

DIAGNOSTIC TEST

1. **CHECKING THE EXHAUST SYSTEM FOR LEAKS**
    1. Turn the ignition off.
    2. Raise the vehicle in accordance with the Service Information.

WARNING: The normal operating temperature of the exhaust system is very high. Never work around or attempt to service any part of the exhaust system until it has cooled. Special care should be taken when working near the catalytic converter. The temperature of the converter rises to a high level after a short period of engine operating time.

    3. Connect Exhaust Cone (special tool #8404-EC, Exhaust Cone) or (special tool #8404-ECT, Exhaust Cone, Truck) to Air Pressure Regulator (with hose) W-18-MIL-1146AS.

CAUTION: The air pressure must not exceed 27.6 kPa (4 psi), otherwise engine damage can occur.

    4. Attach shop air to the air pressure regulator.
    5. Adjust the Air Pressure Regulator to 27.6 kPa (4 psi)
    6. Insert the exhaust cone into the vehicle tail pipe.
    7. If the vehicle is equipped with dual exhaust. Use the (special tool #8404-ECT, Exhaust Cone, Truck) with equipped attached plug, plug one side of the dual exhaust pipe. Pressurize the other as described above.
    8. Apply Mopar® Air Leak Detector PN 05191804AA (or an equivalent leak finder liquid) to the following areas:
        - All welded joints from the exhaust manifold to 45.72 cm (18 inches) behind the downstream O2 sensor
        - O2 sensor seal points
        - O2 sensor boss welds
        - Flange/joint connection(s)
        - Exhaust manifold to cylinder head connection(s)
        - EGR solenoid gasket base and tube seal points (if equipped)
    9. Watch for the Mopar® Air Leak Detector PN 05191804AA (or the equivalent leak finder liquid) to

bubble.

10. Use the following definitions to help determine if system or component repair/replacement is necessary:
    - **Type 1 Leak** is defined as a leak where very small foam like bubbles 1 mm (0.04 of an inch) or less appear. Any Type 1 or greater leaks found in welded joints, O2 sensor seal points or O2 sensor boss welds must be repaired or the component must be replaced.
    - **Type 2 Leak** is defined as a leak where larger bubbles pea size, 8 mm (0.3 of an inch) or greater appear. Any Type 2 or greater leaks found in flange or joint connections, exhaust manifold to cylinder head connections, or EGR gasket and tube seal points must be repaired or the components must be replaced.

Leak Location	Repair required if results at 27.6 kPa (4 psi) reveal bubble size:
Welded joints	Type 1, 1 mm (0.04 of an inch) or greater
O2 Sensor seal points	Type 1, 1 mm (0.04 of an inch) or greater
O2 Sensor boss welds	Type 1, 1 mm (0.04 of an inch) or greater
Flange / joint connections	Type 2, 8 mm (0.3 of an inch) or greater
Exhaust Manifold to cylinder head connections	Type 2, 8 mm (0.3 of an inch) or greater
EGR gasket and tube seal points	Type 2, 8 mm (0.3 of an inch) or greater

11. If a leak is found that matches the above definition, repair or replace the component as necessary.
12. Once the repair is complete, repeat the procedure to verify that all leaks have been repaired.

    Were any exhaust leaks found?

    Yes

    - Repair or replace the leaking exhaust parts as necessary.
    - Perform the POWERTRAIN VERIFICATION TEST. Refer to **1500 & 2500 - 3.7L, 4.7L & 5.7L - POWERTRAIN VERIFICATION TEST** or **3500 CAB & CHASSIS - POWERTRAIN VERIFICATION TEST** .

    No

    - Test complete.

CHECKING THE FUEL DELIVERY SYSTEM

For a complete wiring diagram, **refer to appropriate SYSTEM WIRING DIAGRAMS article** .

POSSIBLE CAUSES

Possible Causes
RESTRICTED FUEL SUPPLY LINE

FUEL PUMP INLET STRAINER PLUGGED
(N1) FUEL PUMP CONTROL OUTPUT CIRCUIT OPEN
TOTALLY INTEGRATED POWER MODULE (TIPM)
FUEL PUMP

DIAGNOSTIC TEST

1. **FUEL PUMP OPERATION**
   1. Ignition on, engine not running.
   2. With a scan tool, actuate the Fuel System test.

      NOTE: It may be necessary to use a mechanics stethoscope in the next step.

   3. Listen for fuel pump operation at the fuel tank.

      Does the Fuel Pump operate?

      Yes

      - Go To 2.

      No

      - Go To 5.

      CAUTION: Stop All Actuations.

2. **FUEL PRESSURE**

   WARNING: The fuel system is under a constant pressure (even with the engine off). Before testing or servicing any fuel system hose, fitting or line, the fuel system pressure must be released. Failure to follow these instructions can result in possible serious or fatal injury.

   1. Turn the ignition off.
   2. Install Fuel Pressure Decay Tester (special tool #8978A, Decay Tool, Fuel) at the engine.
   3. Ignition on, engine not running.
   4. With the scan tool, actuate the ASD Fuel System test and observe the fuel pressure gauge.

      NOTE: Fuel pressure specification is 407 KPa +/- 34 KPa (59 psi +/- 5 psi).

      Choose a conclusion that best matches your fuel pressure reading.

Below Specification

- Go To 3.

Within Specification

- Test Complete.

Above Specification

- Replace the fuel filter/fuel pressure regulator.
- Perform the POWERTRAIN VERIFICATION TEST. Refer to **1500 & 2500 - 3.7L, 4.7L & 5.7L - POWERTRAIN VERIFICATION TEST** or **3500 CAB & CHASSIS - POWERTRAIN VERIFICATION TEST** .

CAUTION: Stop All Actuations.

3. **RESTRICTED FUEL SUPPLY LINE**

WARNING: The fuel system is under a constant pressure even with the engine off. Before testing or servicing any fuel system hose, fitting or line, the fuel system pressure must be released.

1. Turn the ignition off.
2. Disconnect the Fuel Pressure Decay Tester (special tool #8978A, Decay Tool, Fuel).
3. Raise the vehicle on a hoist, and disconnect the fuel pressure line at the fuel pump module.
4. Install the Fuel Pressure Decay Tester (special tool #8978A, Decay Tool, Fuel) between the fuel supply line and the fuel pump module.
5. Ignition on, engine not running.
6. With the scan tool, actuate the ASD Fuel System test and observe the fuel pressure gauge.

NOTE: Fuel pressure specification is 407 KPa +/- 34 KPa (59 psi +/- 5 psi).

Is the fuel pressure within specification now?

Yes

- Repair/replace fuel supply line as necessary.
- Perform the POWERTRAIN VERIFICATION TEST. Refer to **1500 & 2500 - 3.7L, 4.7L & 5.7L - POWERTRAIN VERIFICATION TEST** or **3500 CAB & CHASSIS - POWERTRAIN VERIFICATION TEST** .

No

- Go To 4.

CAUTION: Stop All Actuations.

4. **CHECKING FUEL INLET STRAINER**

WARNING: The fuel system is under a constant pressure (even with the engine off). Before testing or servicing any fuel system hose, fitting or line, the fuel system pressure must be released. Failure to follow these instructions can result in possible serious or fatal injury.

1. Turn the ignition off.
2. Remove the Fuel Pump Module and inspect the Fuel Inlet Strainer.

   Is the Fuel Inlet Strainer plugged?

   Yes

   - Replace the Fuel Pump Inlet Strainer.
   - Perform the POWERTRAIN VERIFICATION TEST. Refer to **1500 & 2500 - 3.7L, 4.7L & 5.7L - POWERTRAIN VERIFICATION TEST** or **3500 CAB & CHASSIS - POWERTRAIN VERIFICATION TEST** .

   No

   - Replace the Fuel Pump Module.
   - Perform the POWERTRAIN VERIFICATION TEST. Refer to **1500 & 2500 - 3.7L, 4.7L & 5.7L - POWERTRAIN VERIFICATION TEST** > or **3500 CAB & CHASSIS - POWERTRAIN VERIFICATION TEST** .

5. **(N1) FUEL PUMP RELAY OUTPUT CIRCUIT**

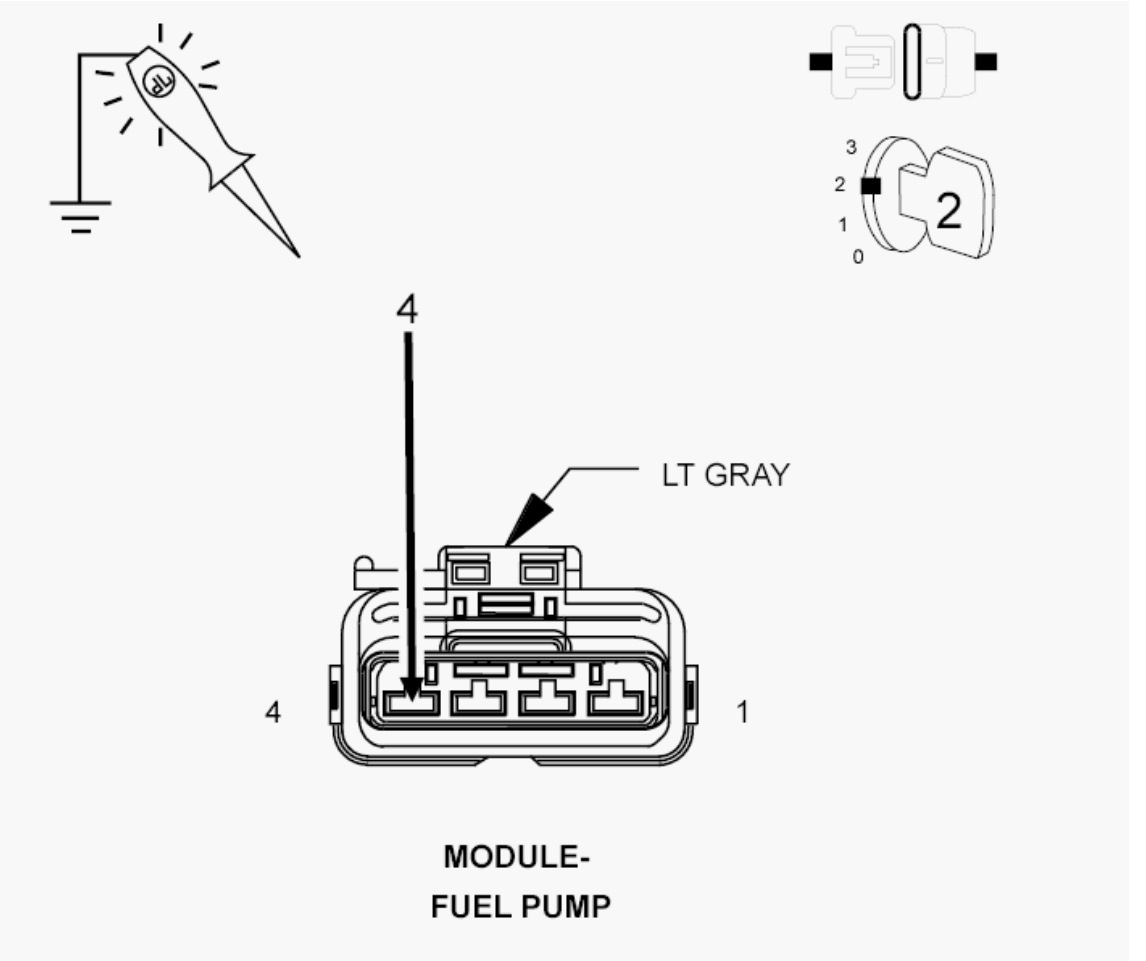

Fig. 1: Measuring Fuel Pump Relay Output Circuit Voltage
Courtesy of CHRYSLER GROUP, LLC

1. Turn the ignition off.
2. Disconnect the TIPM C6 harness connector.
3. Disconnect the Fuel Pump Module harness connector.
4. Using a 12-volt test light connected to ground, probe the (N1) Fuel Pump Control Output circuit at the Fuel Pump harness connector.

   NOTE: Make sure the test light is probing the circuit before actuating the Fuel Pump or a DTC may set and not allow the actuation.

5. With a scan tool, actuate the Fuel Pump Module.

   Does the test light illuminate brightly during the actuation?

   Yes

   - Replace the Fuel Pump Module.

- Perform the POWERTRAIN VERIFICATION TEST. Refer to **1500 & 2500 - 3.7L, 4.7L & 5.7L - POWERTRAIN VERIFICATION TEST** > or **3500 CAB & CHASSIS - POWERTRAIN VERIFICATION TEST** .

No

- Repair the open or short to ground in the (N1 Fuel Pump Control Output circuit.
- Perform the POWERTRAIN VERIFICATION TEST. Refer to **1500 & 2500 - 3.7L, 4.7L & 5.7L - POWERTRAIN VERIFICATION TEST** > or **3500 CAB & CHASSIS - POWERTRAIN VERIFICATION TEST** .

CHECKING THE OXYGEN SENSOR OPERATION

For a complete wiring diagram **refer to appropriate SYSTEM WIRING DIAGRAMS article** .

DIAGNOSTIC TEST

1. **OXYGEN SENSOR, WIRING, OR CONNECTORS**

NOTE: **Diagnose and repair any O2 sensor or rationality DTCs before proceeding with this test.**

NOTE: **When performing this procedure as part of another diagnostic process, it may be necessary to repeat this test for all of the oxygen sensors on the vehicle.**

1. Turn the ignition off.
2. Using the wiring diagram/schematic as a guide, inspect the wiring and connectors between the Oxygen sensor and the PCM.
3. Look for any chafed, pierced, pinched, or partially broken wires.
4. Look for broken, bent, pushed out or corroded terminals.
5. Turn the ignition on.
6. Monitor the scan tool data relative to the sensor and wiggle test the wiring and connectors.
7. Look for the data to change or for a DTC to set during the wiggle test. If necessary, check each sensor circuit for high resistance or a shorted condition.

Were any problems found?

Yes

- Repair as necessary.
- Perform the POWERTRAIN VERIFICATION TEST. Refer to **1500 & 2500 - 3.7L, 4.7L & 5.7L - POWERTRAIN VERIFICATION TEST** or **3500 CAB & CHASSIS - POWERTRAIN VERIFICATION TEST** .

No

- Go to 2.

2. **OXYGEN SENSOR VOLTAGE**
   1. Start the engine and allow it to reach normal operating temperature.

      WARNING: When the engine is operating, do not stand in direct line with the fan. Do not put your hands near the pulleys, belts or fan. Do not wear loose clothing. Failure to follow these instructions may result in possible serious or fatal injury.

   2. With a scan tool, monitor all O2 Sensor voltage readings.

      Is the voltage switching between 2.5 and 3.4 volts for all O2 sensors?

      Yes

      - Go to 3.
      - Perform the POWERTRAIN VERIFICATION TEST. Refer to **1500 & 2500 - 3.7L, 4.7L & 5.7L - POWERTRAIN VERIFICATION TEST** or **3500 CAB & CHASSIS - POWERTRAIN VERIFICATION TEST** .

      No

      - Go to 4.

3. **O2 SENSOR HEATER OPERATION**
   1. Turn the ignition off.

      NOTE: Wait a minimum of 10 minutes to allow the O2 Sensor to cool down before continuing the test. Allow the O2 Sensor voltage to stabilize at 5.0 volts.

   2. Turn the ignition on.
   3. With a scan tool, actuate the O2 Sensor heater.
   4. With the scan tool, monitor O2 Sensor voltage for at least 2 minutes.

      Does the voltage stay above 4.5 volts?

      Yes

      - Go to 4.
      - Perform the POWERTRAIN VERIFICATION TEST. Refer to **1500 & 2500 - 3.7L, 4.7L & 5.7L - POWERTRAIN VERIFICATION TEST** or **3500 CAB & CHASSIS - POWERTRAIN VERIFICATION TEST** .

No

- Test complete.

4. **O2 SENSOR**
   1. Turn the ignition off.

      NOTE: Check for contaminants that may cause improper O2 Sensor operation, such as contaminated fuel, unapproved silicone, or evidence of oil or coolant.

   2. Disconnect the O2 Sensor harness connector.
   3. Turn the ignition on.
   4. With a scan tool, monitor the O2 Sensor voltage.

      NOTE: The voltage should be approximately 5.0 volts with the connector disconnected.

   5. Connect a jumper wire between the signal circuit and the return circuit in the O2 Sensor harness connector.

      NOTE: The voltage should drop from 5.0 volts to 2.5 volts with the jumper wire in place.

      Is the O2 Sensor voltage displayed on the scan tool as described?

      Yes

      - Replace the O2 Sensor.
      - Perform the POWERTRAIN VERIFICATION TEST. Refer to **1500 & 2500 - 3.7L, 4.7L & 5.7L - POWERTRAIN VERIFICATION TEST** > or **3500 CAB & CHASSIS - POWERTRAIN VERIFICATION TEST** .

      No

      - Go to 5.

5. **O2 SENSOR SIGNAL CIRCUIT**
   1. Using the wiring diagram/schematic as a guide, inspect the O2 Sensor Signal circuit and connectors between the O2 sensor and the PCM.
   2. Check the O2 Sensor signal circuit for a short to ground, open circuit, short to voltage, or high resistance.

      Were any problems found?

      Yes

- Repair as necessary.
- Perform the POWERTRAIN VERIFICATION TEST. Refer to **1500 & 2500 - 3.7L, 4.7L & 5.7L - POWERTRAIN VERIFICATION TEST** > or **3500 CAB & CHASSIS - POWERTRAIN VERIFICATION TEST** .

No

- Go to 6.

6. **O2 SENSOR RETURN CIRCUIT**
   1. Using the wiring diagram/schematic as a guide, inspect the O2 Sensor Return circuit and connectors between the O2 sensor and the PCM.
   2. Check the O2 Sensor return circuit for a short to ground, open circuit, short to voltage or high resistance.

   Were any problems found?

   Yes

   - Repair as necessary.
   - Perform the POWERTRAIN VERIFICATION TEST. Refer to **1500 & 2500 - 3.7L, 4.7L & 5.7L - POWERTRAIN VERIFICATION TEST** > or **3500 CAB & CHASSIS - POWERTRAIN VERIFICATION TEST** .

   No

   - Go to 7.

7. **POWERTRAIN CONTROL MODULE (PCM)**
   1. Using the wiring diagram/schematic as a guide, inspect the wiring and connectors between the O2 sensor and the PCM.
   2. Look for any chafed, pierced, pinched, or partially broken wires.
   3. Look for broken, bent, pushed out or corroded terminals.
   4. Monitor the scan tool data relative to the components tested in this procedure and wiggle test the wiring and connectors.
   5. Look for the data to change or for a DTC to set during the wiggle test.
   6. Refer to any Technical Service Bulletins that may apply.

   Were any problems found?

   Yes

   - Repair as necessary.
   - Perform the POWERTRAIN VERIFICATION TEST. Refer to **1500 & 2500 - 3.7L, 4.7L & 5.7L - POWERTRAIN VERIFICATION TEST** > or **3500 CAB & CHASSIS - POWERTRAIN VERIFICATION TEST** .

No

- Replace and program the Powertrain Control Module (PCM) in accordance with the Service Information.
- Perform the POWERTRAIN VERIFICATION TEST. Refer to **1500 & 2500 - 3.7L, 4.7L & 5.7L - POWERTRAIN VERIFICATION TEST** > or **3500 CAB & CHASSIS - POWERTRAIN VERIFICATION TEST** .

CHECKING THE PCM POWER AND GROUND CIRCUITS

For a complete wiring diagram **refer to appropriate SYSTEM WIRING DIAGRAMS article** .

DIAGNOSTIC TEST

1. **PCM WIRING OR CONNECTORS**
    1. Turn the ignition off.
    2. Using the wiring diagram/schematic as a guide, inspect the wiring and each connector at the PCM.
    3. Look for any chafed, pierced, pinched, or partially broken wires.
    4. Look for broken, bent, pushed out or corroded terminals.

    Were any problems found?

    Yes

    - Repair as necessary.
    - Perform the POWERTRAIN VERIFICATION TEST. Refer to **1500 & 2500 - 3.7L, 4.7L & 5.7L - POWERTRAIN VERIFICATION TEST** or **3500 CAB & CHASSIS - POWERTRAIN VERIFICATION TEST** .

    No

    - Go To 2.
2. **CHECKING THE PCM GROUND CIRCUITS**

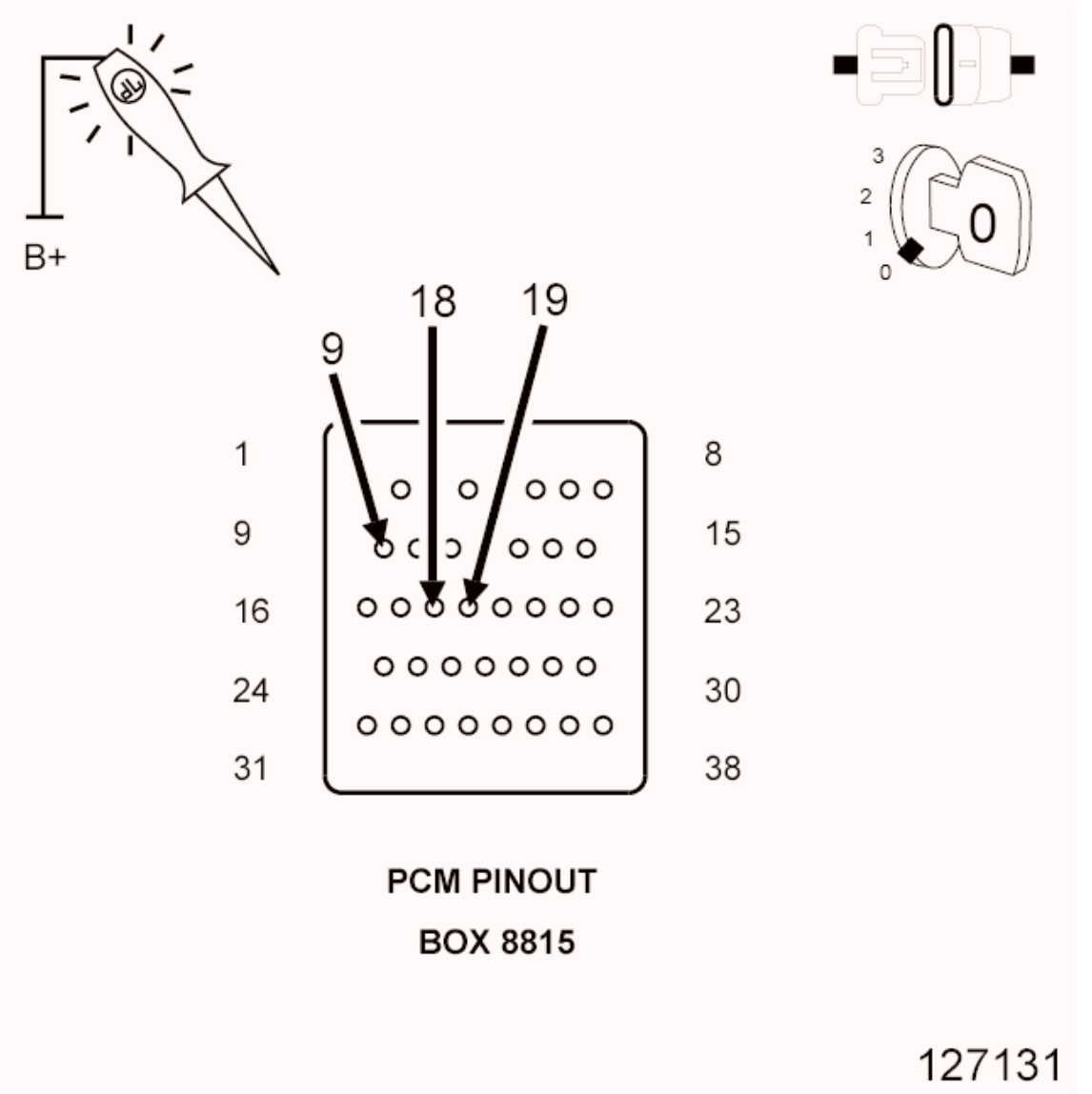

Fig. 2: Measuring Voltage Of The PCM Ground Circuits
Courtesy of CHRYSLER GROUP, LLC

1. Turn the ignition off.

CAUTION: Do not probe the PCM harness connectors. Probing the PCM harness connectors will damage the PCM terminals resulting in poor terminal to pin connection. Install the PCM Pinout Box (special tool #8815A, Kit, NGC, 38 Position) to perform diagnosis.

2. Using a 12 volt test light connected to 12 volts, check the PCM ground circuits.
3. Wiggle test each circuit during the test to check for an intermittent open in the circuit.

NOTE: **The test light should be illuminated and bright. Compare the brightness to that of a direct connection to the battery.**

Is the test light illuminated and bright?

Yes

- Go To 3.

No

- Repair the PCM ground circuit(s) for an open circuit or high resistance.
- Perform the POWERTRAIN VERIFICATION TEST. Refer to **1500 & 2500 - 3.7L, 4.7L & 5.7L - POWERTRAIN VERIFICATION TEST** or **3500 CAB & CHASSIS - POWERTRAIN VERIFICATION TEST** .

3. **CHECKING THE PCM FUSED IGNITION CIRCUITS**

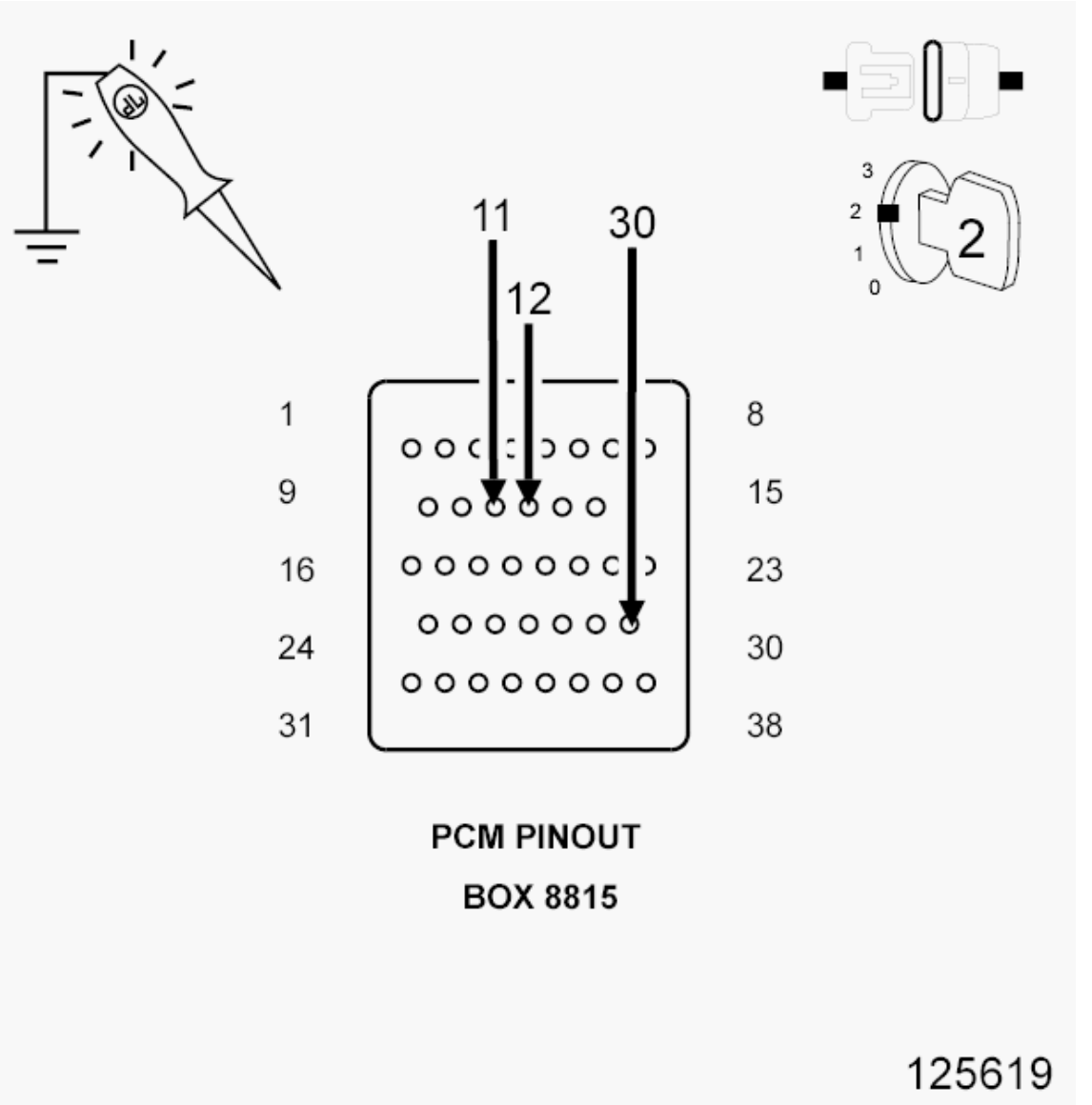

Fig. 3: Measuring Voltage Of The PCM Fused Ignition Circuits
Courtesy of CHRYSLER GROUP, LLC

CAUTION: Do not probe the PCM harness connectors. Probing the PCM harness connectors will damage the PCM terminals resulting in poor terminal to pin connection. Install the PCM Pinout Box (special tool #8815A, Kit, NGC, 38 Position) to perform diagnosis.

1. Turn the ignition on.
2. Using a 12 volt test light connected to ground, check the PCM Fused Ignition circuits.
3. Check each circuit with the ignition on, engine running position, and during cranking.
4. Wiggle test each circuit during the test to check for an intermittent open in the circuit.

NOTE: The test light should be illuminated and bright. Compare the

brightness to that of a direct connection to the battery.

Is the test light illuminated and bright?

Yes

- Go To 4.

No

- Repair the open or short to ground in the PCM Fused Ignition circuits.
- Perform the POWERTRAIN VERIFICATION TEST. Refer to **1500 & 2500 - 3.7L, 4.7L & 5.7L - POWERTRAIN VERIFICATION TEST** or **3500 CAB & CHASSIS - POWERTRAIN VERIFICATION TEST** .

4. **CHECKING THE PCM FUSED B+ CIRCUITS**

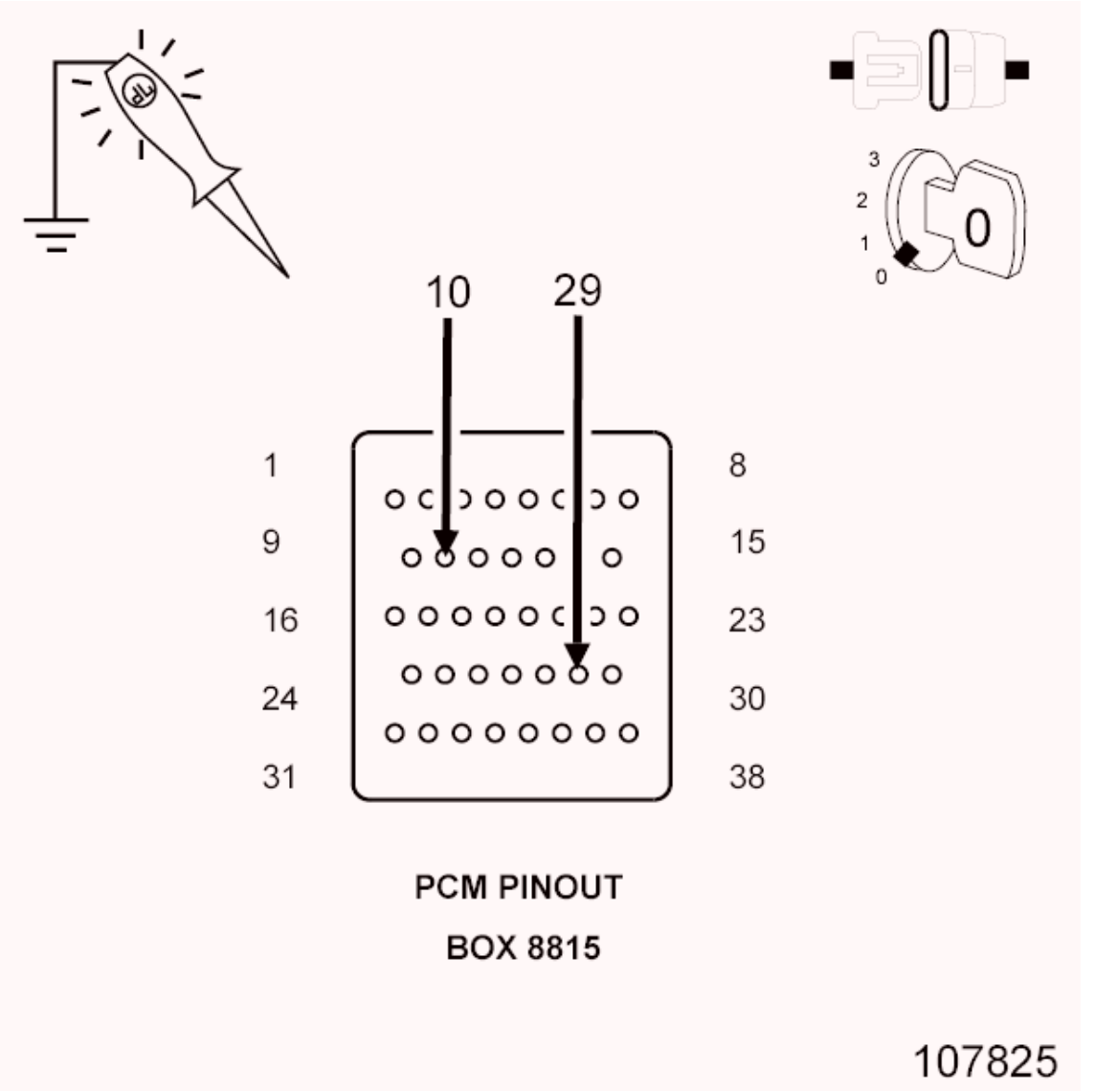

Fig. 4: Checking The PCM Fused B+ Circuits
Courtesy of CHRYSLER GROUP, LLC

1. Turn the ignition off.

CAUTION: Do not probe the PCM harness connectors. Probing the PCM harness connectors will damage the PCM terminals resulting in poor terminal to pin connection. Install the PCM Pinout Box (special tool #8815A, Kit, NGC, 38 Position) to perform diagnosis.

2. Using a 12 volt test light connected to Ground, check the PCM Fused B+ circuits.
3. Wiggle test each circuit during the test to check for an intermittent open in the circuit.

NOTE: The test light should be illuminated and bright with the ignition on

and not illuminated with the ignition off. Compare the brightness to that of a direct connection to the battery.

Is the test light illuminated as described above?

Yes

- Test complete.

No

- Repair the open or short to ground in the PCM Fused B+ circuit(s) for as necessary.
- Perform the POWERTRAIN VERIFICATION TEST. Refer to **1500 & 2500 - 3.7L, 4.7L & 5.7L - POWERTRAIN VERIFICATION TEST** or **3500 CAB & CHASSIS - POWERTRAIN VERIFICATION TEST** .

ENGINE CRANKS BUT DOES NOT START

For a complete wiring diagram, **refer to appropriate SYSTEM WIRING DIAGRAMS article** .

POSSIBLE CAUSES

Possible Causes
POWERTRAIN FUSES OPEN
CRANKSHAFT POSITION SENSOR
CAMSHAFT POSITION SENSOR
ASD RELAY
FUSED B+ CIRCUIT OPEN OR SHORTED TO GROUND
(F342) FUSED ASD RELAY OUTPUT CIRCUIT OPEN
FUEL CONTAMINATION
ENGINE MECHANICAL
PCM

DIAGNOSTIC TEST

1. **NO START PRE-TEST**

NOTE: **Verify no codes are set in the Occupant Restraint Controller. If codes are present, they may be the cause of a No Start condition.**

NOTE: **The following list of items must be checked before continuing with any no start tests.**

1. The battery must be fully charged and in good condition. A low charged battery may produce invalid test results. If the battery is low, charge the battery and then attempt to start the vehicle by

cranking the engine for 15 seconds, three consecutive times. This will allow any DTCs to set that may have been erased due to a dead battery.

2. Try to communicate with PCM using a scan tool. If communication between the scan tool and PCM is not allowed inspect fuses. If the fuses appear ok, Refer to **COMMUNICATION - DIAGNOSIS AND TESTING** for the No Response from PCM diagnostic procedure.
3. Read the PCM DTCs with the scan tool. If any DTCs are present, they must be repaired before continuing with any other No Start diagnostic tests. Refer to **3.7L/4.7L/5.7L - DIAGNOSTIC CODE INDEX - NGC - 1500 & 2500** or **5.7L - DIAGNOSTIC CODE INDEX - 3500 CAB & CHASSIS** for the related P-code that is reported by the PCM.
4. Make sure that the Bus is functional. Attempt to communicate with the Instrument Cluster and Wireless Ignition Node. If you are unable to establish communication with any modules, Refer to **COMMUNICATION - DIAGNOSIS AND TESTING** for the Diagnostic CAN C diagnostic procedures.
5. The Wireless Ignition Node must be operating properly. Check for communication with the scan tool and check for DTCs that may be stored in the Wireless Ignition Node. Refer to **WIN - DIAGNOSIS AND TESTING** . Repair the DTCs before continuing.
6. If no DTCs are found, using the scan tool, select Clear PCM (BATT Disconnect).
7. Crank the engine several times. Using the scan tool, View DTCs. If a DTC is present go to and perform the appropriate diagnostic procedure before continuing.

   Were any problems found?

   Yes

   - Repair as necessary.
   - Perform the POWERTRAIN VERIFICATION TEST. Refer to **1500 & 2500 - 3.7L, 4.7L & 5.7L - POWERTRAIN VERIFICATION TEST** > or **3500 CAB & CHASSIS - POWERTRAIN VERIFICATION TEST** .

   No

   - Go To 2.

2. **OPEN FUSE**
   1. Check for any open fuses in the TIPM or Junction Block that may be related to the No Start condition.

      Are any of the fuses open?

      Yes

      - Check the related circuit(s) for a short to ground and replace the open fuse.
      - Perform the POWERTRAIN VERIFICATION TEST. Refer to **1500 & 2500 - 3.7L, 4.7L & 5.7L - POWERTRAIN VERIFICATION TEST** > or **3500 CAB & CHASSIS - POWERTRAIN VERIFICATION TEST** .

No

- Go To 3.

3. **CRANKSHAFT POSITION SENSOR (CKP)**
    1. Turn the ignition off.
    2. Disconnect the CKP Sensor.
    3. Attempt to start the engine.

    Does the engine start?

    Yes

    - Replace the Crankshaft Position Sensor in accordance with the Service Information.
    - Perform the POWERTRAIN VERIFICATION TEST. Refer to **1500 & 2500 - 3.7L, 4.7L & 5.7L - POWERTRAIN VERIFICATION TEST** > or **3500 CAB & CHASSIS - POWERTRAIN VERIFICATION TEST** .

    No

    - Go To 4.

4. **CAMSHAFT POSITION SENSOR (CMP)**
    1. Turn the ignition off.
    2. Connect the CKP Sensor.
    3. Disconnect the CMP Sensor.
    4. Attempt to start the engine.

    Does the engine start?

    Yes

    - Replace the Camshaft Position Sensor in accordance with the Service Information.
    - Perform the POWERTRAIN VERIFICATION TEST. Refer to **1500 & 2500 - 3.7L, 4.7L & 5.7L - POWERTRAIN VERIFICATION TEST** > or **3500 CAB & CHASSIS - POWERTRAIN VERIFICATION TEST** .

    No

    - Go To 5.

5. **FUSED B+ CIRCUIT CHECK**

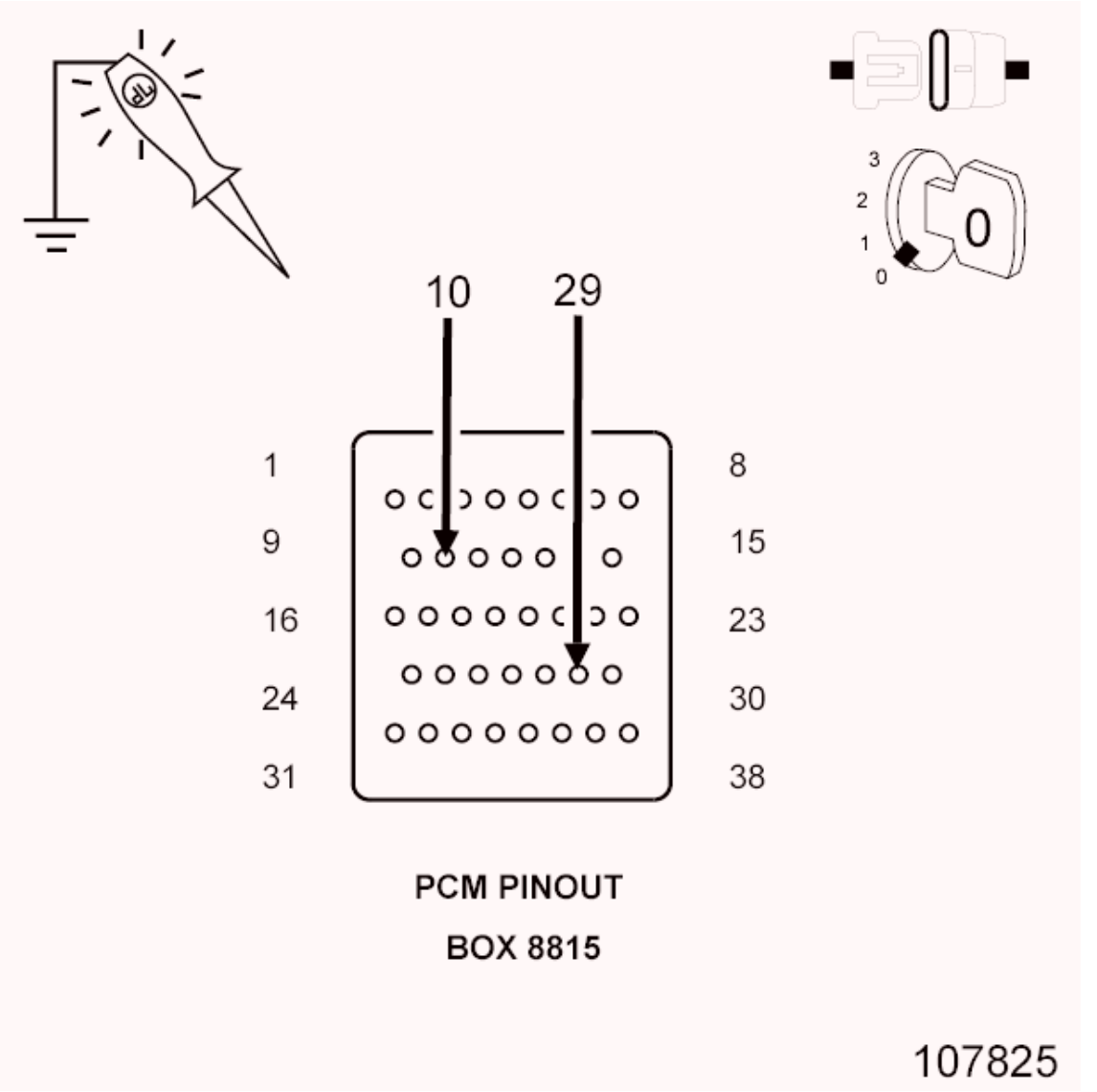

Fig. 5: Checking The PCM Fused B+ Circuits
Courtesy of CHRYSLER GROUP, LLC

1. Turn the ignition off.
2. Disconnect the C1 PCM harness connector.

CAUTION: Do not probe the PCM harness connectors. Probing the PCM harness connectors will damage the PCM terminals resulting in poor terminal to pin connection. Install the PCM Pinout Box (special tool #8815A, Kit, NGC, 38 Position) to perform diagnosis.

3. Using a 12-volt test light connected to ground probe the Fused B+ circuits.

   Does the test light illuminate brightly?

Yes

- Go To 6.

No

- Repair the open or short to ground in the Fused B+ circuit.
- Perform the POWERTRAIN VERIFICATION TEST. Refer to **1500 & 2500 - 3.7L, 4.7L & 5.7L - POWERTRAIN VERIFICATION TEST** > or **3500 CAB & CHASSIS - POWERTRAIN VERIFICATION TEST** .

6. **(F342) ASD CONTROL OUTPUT CIRCUIT OPEN**
   1. Turn the ignition off.
   2. Disconnect the C5 TIPM harness connector.
   3. Disconnect the C1 and C3 PCM harness connectors.
   4. Measure the resistance of the ASD Control Output circuit from the C5 TIPM harness connector to the appropriate terminals of the PCM Pinout Box (special tool #8815A, Kit, NGC, 38 Position), Ignition coil, and the fuel injectors.

      Is the resistance below 5.0 Ohms?

      Yes

      - Go To 7.

      No

      - Repair the open in the (K342) ASD Relay Output circuits.
      - Perform the POWERTRAIN VERIFICATION TEST. Refer to **1500 & 2500 - 3.7L, 4.7L & 5.7L - POWERTRAIN VERIFICATION TEST** > or **3500 CAB & CHASSIS - POWERTRAIN VERIFICATION TEST** .

7. **FUEL PUMP DELIVERY**
   1. Verify that the Fuel tank is not empty before continuing.
   2. Follow the diagnostics for Checking the Fuel Delivery System in the Appropriate Diagnostic Information.

      Was the No Start condition solved after following the Checking the Fuel Delivery System diagnostic procedure?

      Yes

      - Test Complete.

      No

      - Go To 8.

8. **ENGINE MECHANICAL**

   Check for any of the following conditions/mechanical problems:

   - ENGINE COMPRESSION - must be within specifications.
   - ENGINE EXHAUST SYSTEM - must be free of any restrictions or leaks.
   - ENGINE VALVE TIMING - must be within specifications, check for broken timing components

   Are there any engine mechanical problems?

   Yes

   - Repair as necessary.
   - Perform the POWERTRAIN VERIFICATION TEST. Refer to **1500 & 2500 - 3.7L, 4.7L & 5.7L - POWERTRAIN VERIFICATION TEST** > or **3500 CAB & CHASSIS - POWERTRAIN VERIFICATION TEST** .

   No

   - Go To 9.

9. **POWERTRAIN CONTROL MODULE (PCM)**
   1. Using the wiring diagram/schematic as a guide, inspect the wiring and connectors between the related Sensors and the Powertrain Control Module (PCM).
   2. Look for any chafed, pierced, pinched or partially broken wires.
   3. Look for broken, bent, pushed out or corroded terminals. Verify that there is good pin to terminal contact in the related Sensors and the Powertrain Control Module connectors.
   4. Refer to any Technical Service Bulletins (TSBs) that may apply.

      Were there any problems found?

      Yes

      - Repair as necessary.
      - Perform the POWERTRAIN VERIFICATION TEST. Refer to **1500 & 2500 - 3.7L, 4.7L & 5.7L - POWERTRAIN VERIFICATION TEST** > or **3500 CAB & CHASSIS - POWERTRAIN VERIFICATION TEST** .

      No

      - Replace and program the Powertrain Control Module per Service Information.
      - Perform the POWERTRAIN VERIFICATION TEST. Refer to **1500 & 2500 - 3.7L, 4.7L & 5.7L - POWERTRAIN VERIFICATION TEST** > or **3500 CAB & CHASSIS - POWERTRAIN VERIFICATION TEST** .

ETC INTERMITTENT NO CRANK CONDITION

For a complete wiring diagram **refer to appropriate SYSTEM WIRING DIAGRAMS article** .

POSSIBLE CAUSES

Possible Causes
ETC STARTER INHIBIT

DIAGNOSTIC TEST

1. **ETC STARTER INHIBIT**

NOTE: **This ETC equipped engine will try to relearn ETC position when the key is left in the on position for an extended period of time and will not allow the starter to crank during this procedure. This procedure can take up to 2.5 seconds.**

1. To verify the cause of the no crank condition or delayed crank use the scan tool, and read the ETC Starter Inhibit mileage.
2. The controller will store the mileage at which the no start condition occurred because of the ETC testing procedure.
3. This is considered normal operation for a vehicle equipped with an Electronic Throttle Control System and no repairs are necessary.

Is a mileage stored under the ETC Starter Inhibit?

Yes

- Test Complete.

No

- Refer to the appropriate diagnostic procedure for further assistance if any other DTC's are set.
- Perform the POWERTRAIN VERIFICATION TEST. Refer to **1500 & 2500 - 3.7L, 4.7L & 5.7L - POWERTRAIN VERIFICATION TEST** > or **3500 CAB & CHASSIS - POWERTRAIN VERIFICATION TEST** .

FUEL DELIVERY SYSTEM OUTPUT - FLOW TEST

For a complete wiring diagram, **refer to appropriate SYSTEM WIRING DIAGRAMS article** .

DIAGNOSTIC TEST

WARNING: **Follow these safety precautions to reduce the risk of fire and possible**

serious or fatal injury when performing this test procedure.

- **Fuel or fuel vapors are highly flammable. A fire could occur if an ignition source is present. Do not expose the fuel or the test equipment used in this procedure to open flames or sparks.**
- **Inhalation of fuel vapors could lead to disorientation and personal injury. Keep the service area well ventilated, or perform this test procedure in an area where there is a building exhaust removal system.**
- **Relieve fuel system pressure before servicing fuel system components.**
- **Use extreme caution when connecting and disconnecting fuel lines.**
- **Considerable fuel leakage may occur when servicing the fuel system. Wear protective eyewear and clothing to protect from fuel splash, and take suitable fuel containment measures.**
- **Wrap a shop towel around the fuel pressure gauge connection to absorb fuel leakage that occurs when connecting the test equipment. Place the towel in an approved container when complete.**
- **Never store fuel in an open container due to the possibility of fire or explosion. Have a dry chemical (Class B) fire extinguisher nearby.**

DIAGNOSTIC TEST

1. **CHECK FUEL DELIVERY SYSTEM FOR LEAKS AND DAMAGE**

   WARNING: **The fuel system is under a constant pressure (even with the engine off). Before testing or servicing any fuel system hose, fitting, or line, the fuel system pressure must be released. Failure to follow these instructions can result in possible serious or fatal injury.**

   1. Visually and physically inspect the fuel delivery system for external leaks and damage.

      Is the system leaking or damaged?

      Yes

      - Repair or replace as necessary.
      - Perform the POWERTRAIN VERIFICATION TEST. Refer to **1500 & 2500 - 3.7L, 4.7L & 5.7L - POWERTRAIN VERIFICATION TEST** or **3500 CAB & CHASSIS - POWERTRAIN VERIFICATION TEST** .

      No

      - Go To 2.
2. **INSTALL APPROPRIATE FUEL LINE ADAPTERS / FITTING FROM THE GAS AND DIESEL**

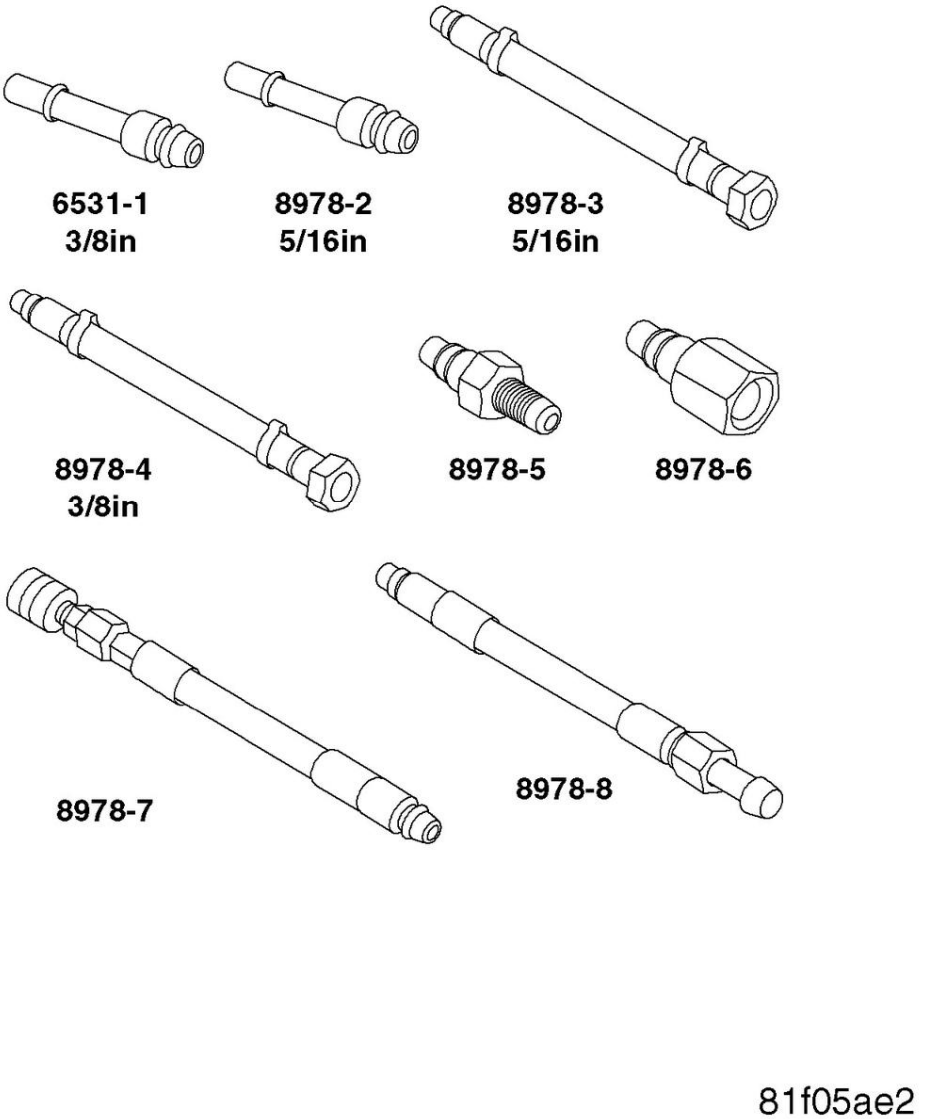

Fig. 6: Fuel Line Adapters/Fitting
Courtesy of CHRYSLER GROUP, LLC

1. Turn the ignition off.

WARNING: The fuel system is under a constant pressure (even with the engine off). Before testing or servicing any fuel system hose, fitting, or line, the fuel system pressure must be released. Failure to follow these instructions can result in possible serious or fatal injury.

2. Disconnect the frame rail fuel supply line connector between the fuel supply line and the fuel rail.
3. Install the appropriate Fuel Line Adapters / Fitting from the Gas and Diesel Fuel Pressure/Decay Tester (special tool #8978A, Decay Tool, Fuel).

Proceed

- Go To 3.

3. **INSTALL FUEL PRESSURE GAUGE ASSEMBLY**

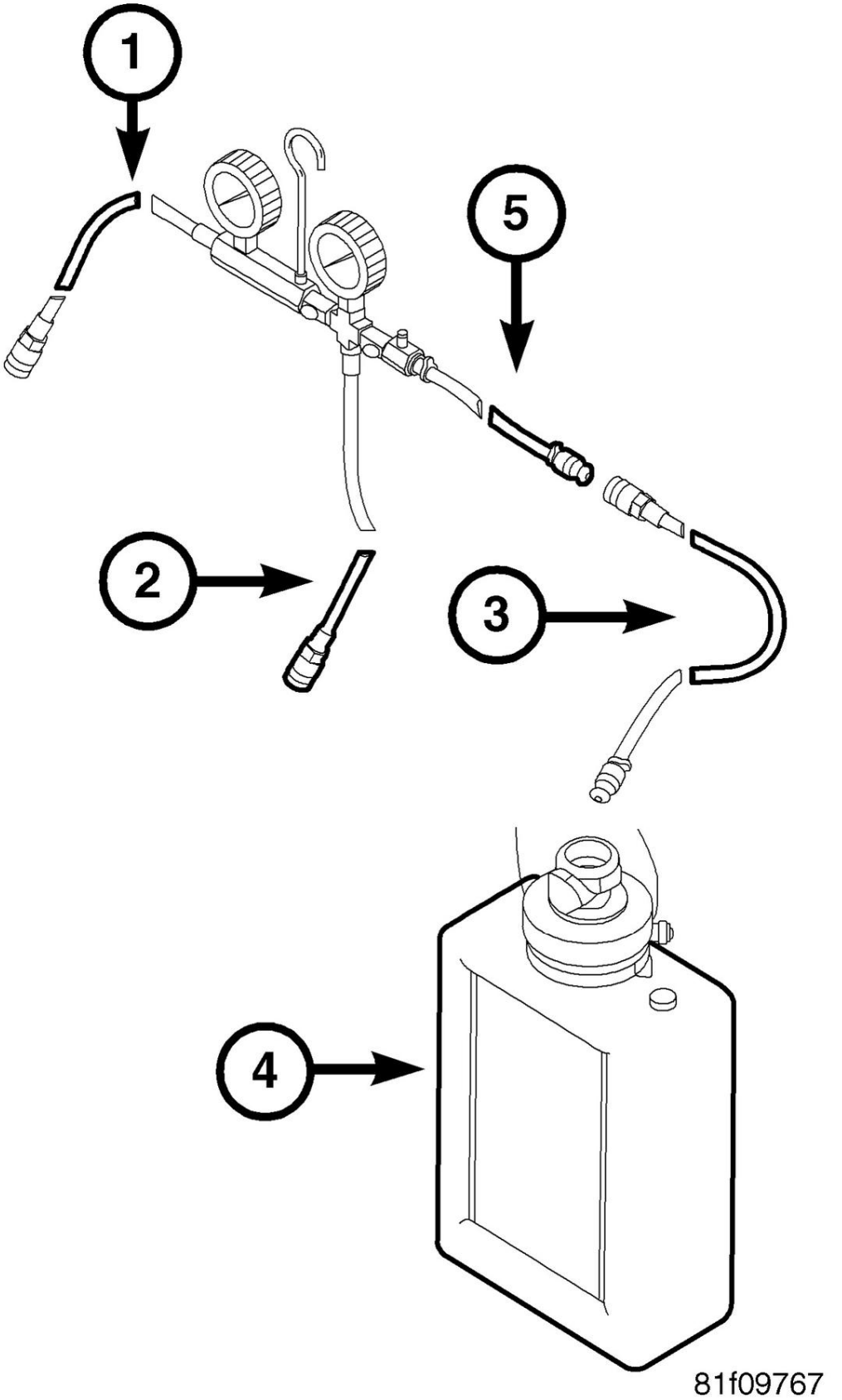
1
5
2
3
4
81f09767

Fig. 7: Identifying Fuel Pressure Gauge Assembly
Courtesy of CHRYSLER GROUP, LLC

WARNING: The fuel system is under a constant pressure (even with the engine off). Before testing or servicing any fuel system hose, fitting, or line, the fuel system pressure must be released. Failure to follow these instructions can result in possible serious or fatal injury.

1. Connect the Gas and Diesel Fuel Pressure/Decay Tester (special tool #8978A, Decay Tool, Fuel), Fuel Inlet Hose (1) and Fuel Outlet Hose (2) to the Fuel Line Adapters / Fitting.
2. Connect special tool Drain Extension Hose 535680 (3) to the Fuel Pressure Gauge Assembly Drain Hose (5).
3. Connect Reservoir Assembly 534960 (4) to Drain Extension Hose 535680 (3).

WARNING: To reduce the risk of fire and possible serious or fatal injury, place Reservoir Assembly 534960 (4) on the floor and out of the way so that it is not a trip hazard.

Proceed

- Go To 4.

4. **CHECK FUEL PRESSURE**

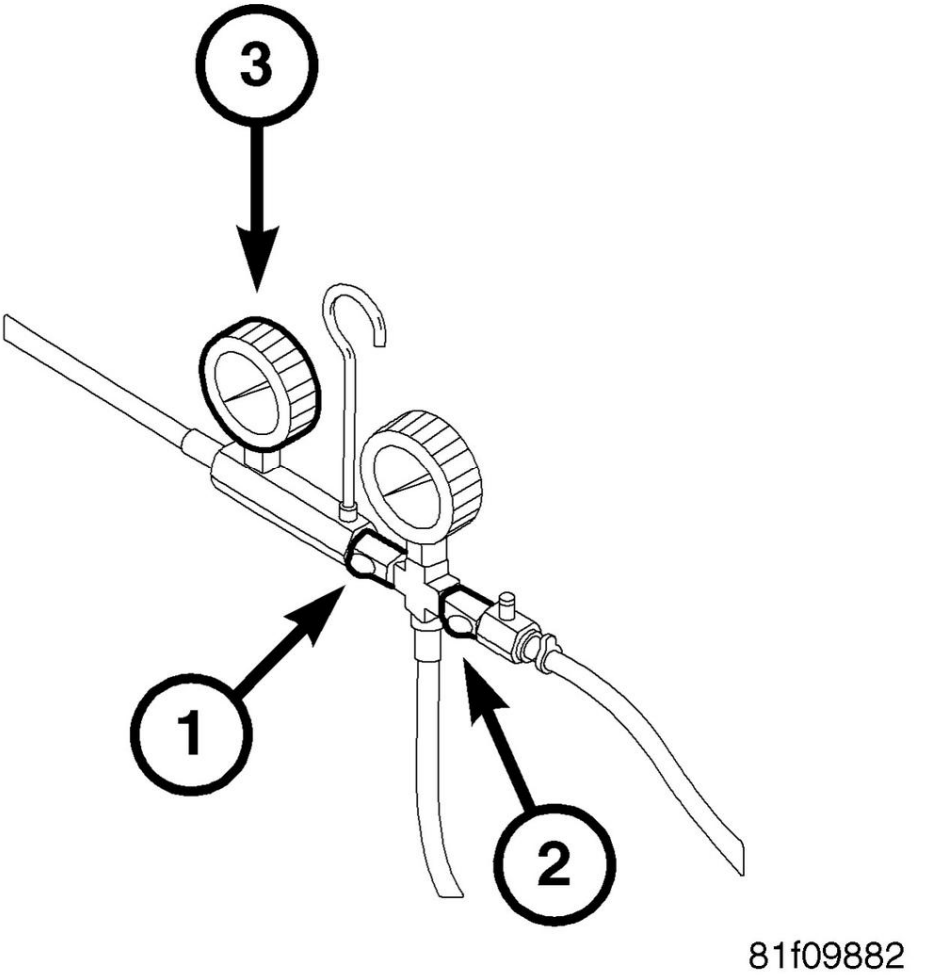

Fig. 8: Checking Fuel Pressure
Courtesy of CHRYSLER GROUP, LLC

WARNING: **The fuel system is under a constant pressure (even with the engine off). Before testing or servicing any fuel system hose, fitting, or line, the fuel system pressure must be released. Failure to follow these instructions can result in possible serious or fatal injury.**

Perform the following procedure to purge air from the system:

- Open the Fuel System Isolation Valve (1).
- Close the Flow Test Valve (2).
- Ignition on, engine not running.
- With the scan tool, actuate the fuel pump.
- Open the Flow Test Valve (1) for 10 seconds, then close the Valve.
- **CAUTION: Stop All Actuations.**
- Turn the ignition off.

- Disconnect, empty and then reconnect the Reservoir Assembly.

1. Turn the ignition on, wait five seconds, turn the ignition off and then wait one minute before proceeding.
2. Read the Fuel Pressure Gauge (3) and record the reading. **Non SRT-4** fuel pressure specification is 407 kPa +/- 34 kPa (59 psi +/- 5 psi). **SRT-4** fuel pressure specification is 552 kPa +/- 34 kPa (80 psi +/- 5 psi).

   Is the fuel pressure within specifications?

   Yes

   - Go To 5.

   No

   - Refer to **DIAGNOSIS AND TESTING** and perform the CHECKING THE FUEL DELIVERY SYSTEM diagnostic procedure.

5. **CHECK FUEL DELIVERY SYSTEM OUTPUT**

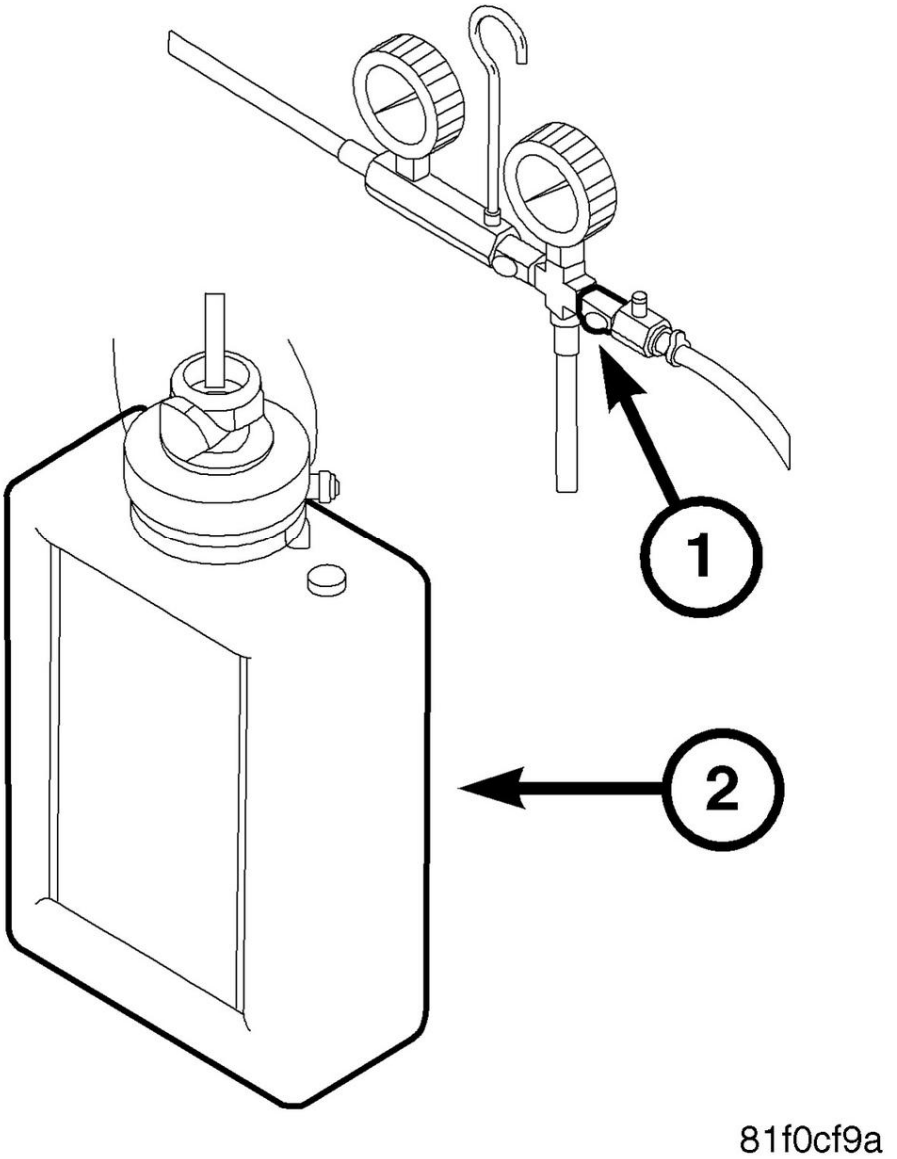

Fig. 9: Checking Fuel Delivery System Output
Courtesy of CHRYSLER GROUP, LLC

WARNING: **The fuel system is under a constant pressure (even with the engine off). Before testing or servicing any fuel system hose, fitting, or line, the fuel system pressure must be released. Failure to follow these instructions can result in possible serious or fatal injury.**

1. Ignition on, engine not running.
2. With the scan tool, actuate the fuel pump.
3. Open the Flow Test Valve (1) for 20 seconds, then close the Valve.

CAUTION: Stop All Actuations.

4. Turn the ignition off.
5. Measure the amount of fuel in the Reservoir Assembly (2). The fuel output specification is ml/s X 20 seconds = fuel flow in ml.

FUEL FLOW		
ENGINE	ml/s	ml per 20 Seconds
4 Cylinder and 6 Cylinder	20.8333A	417
8 Cylinder	38.88889	778
SRT-4	50	1000

Does the amount of fuel in the reservoir meet or exceed the specification?

Yes

- Test complete.

No

- Refer to **DIAGNOSIS AND TESTING** and perform the CHECKING THE FUEL DELIVERY SYSTEM diagnostic procedure.

FUEL PRESSURE LEAK DOWN

For a complete wiring diagram, **refer to appropriate SYSTEM WIRING DIAGRAMS article** .

POSSIBLE CAUSES

Possible Causes
FUEL DELIVERY SYSTEM LEAKING OR DAMAGED
FUEL PUMP MODULE
FUEL INJECTOR(S)

WARNING: Follow these safety precautions to reduce the risk of fire and serious possible serious or fatal injury when performing this test procedure.

- **Fuel or fuel vapors are highly flammable. A fire could occur if an ignition source is present. Do not expose the fuel or the test equipment used in this procedure to open flames or sparks.**
- **Inhalation of fuel vapors could lead to disorientation and personal injury. Keep the service area well ventilated, or perform this test procedure in an area where there is a building exhaust removal**

system.

- **Relieve fuel system pressure before servicing fuel system components.**
- **Use extreme caution when connecting and disconnecting fuel lines.**
- **Considerable fuel leakage may occur when servicing the fuel system. Wear protective eye wear and clothing to protect from fuel splash, and take suitable fuel containment measures.**
- **Wrap a shop towel around the fuel pressure gauge connection to absorb fuel leakage that occurs when connecting the test equipment. Place the towel in an approved container when complete.**
- **Never store fuel in an open container due to the possibility of fire or explosion. Have a dry chemical (Class B) fire extinguisher nearby.**

DIAGNOSTIC TEST

1. **CHECK FUEL DELIVERY SYSTEM FOR LEAKS AND DAMAGE**

   WARNING: **The fuel system is under a constant pressure (even with the engine off). Before testing or servicing any fuel system hose, fitting, or line, the fuel system pressure must be released. Failure to follow these instructions can result in possible serious or fatal injury.**

   1. Visually and physically inspect the fuel delivery system for external leaks and damage.

      Is the system leaking or damaged?

      Yes

      - Repair / replace as necessary.
      - Perform the POWERTRAIN VERIFICATION TEST. Refer to **1500 & 2500 - 3.7L, 4.7L & 5.7L - POWERTRAIN VERIFICATION TEST** or **3500 CAB & CHASSIS - POWERTRAIN VERIFICATION TEST** .

      No

      - Go To 2.

2. **INSTALL APPROPRIATE FUEL LINE ADAPTERS / FITTING FROM GAS AND DIESEL FUEL PRESSURE/DECAY TESTER 8978A**

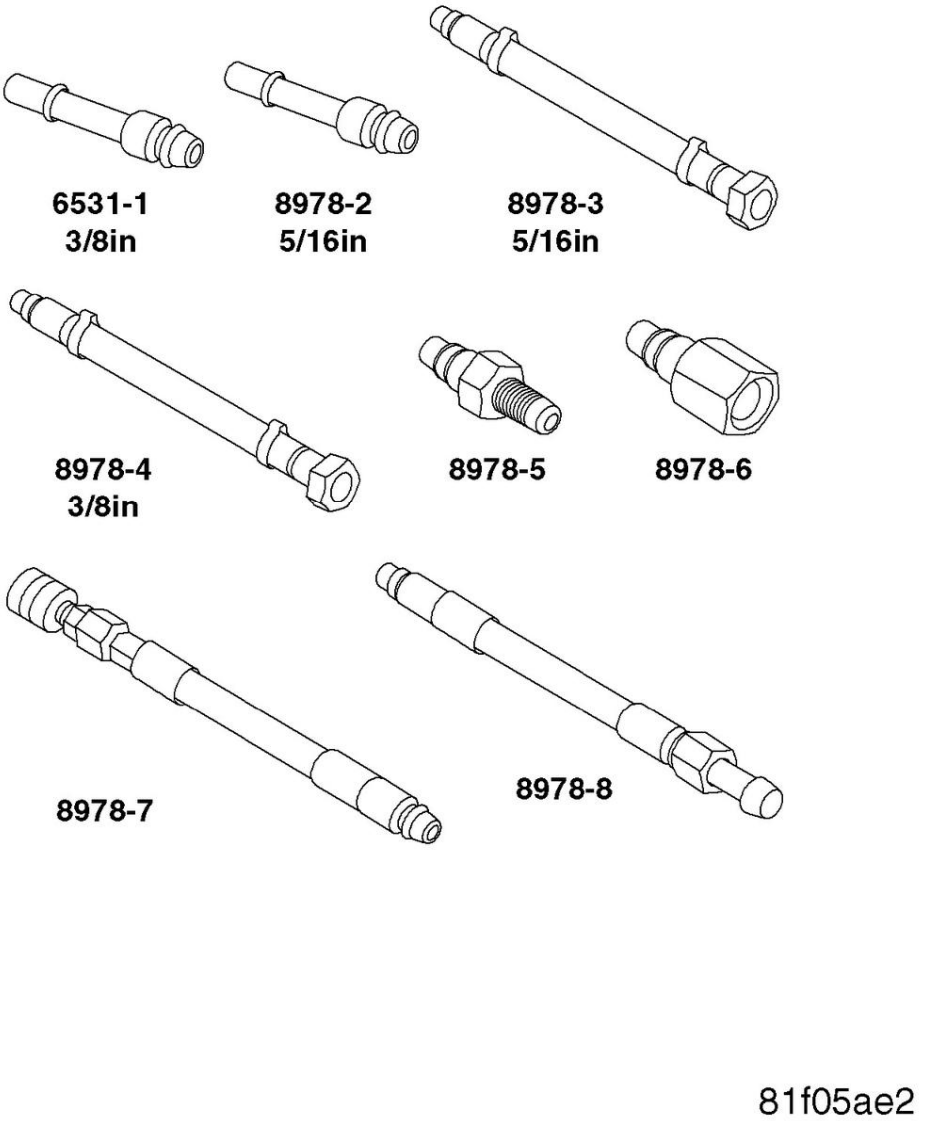

Fig. 10: Fuel Line Adapters/Fitting
Courtesy of CHRYSLER GROUP, LLC

1. Turn the ignition off.

> **WARNING: The fuel system is under a constant pressure (even with the engine off). Before testing or servicing any fuel system hose, fitting, or line, the fuel system pressure must be released. Failure to follow these instructions can result in possible serious or fatal injury.**

2. Disconnect the frame rail fuel supply line connector between the fuel supply line and the fuel rail.

3. Install the appropriate Fuel Line Adapters / Fitting from Gas and Diesel Fuel Pressure/Decay Tester (special tool #8978A, Decay Tool, Fuel).

   Proceed

   - Go To 3.

3. **INSTALL FUEL PRESSURE GAUGE ASSEMBLY**

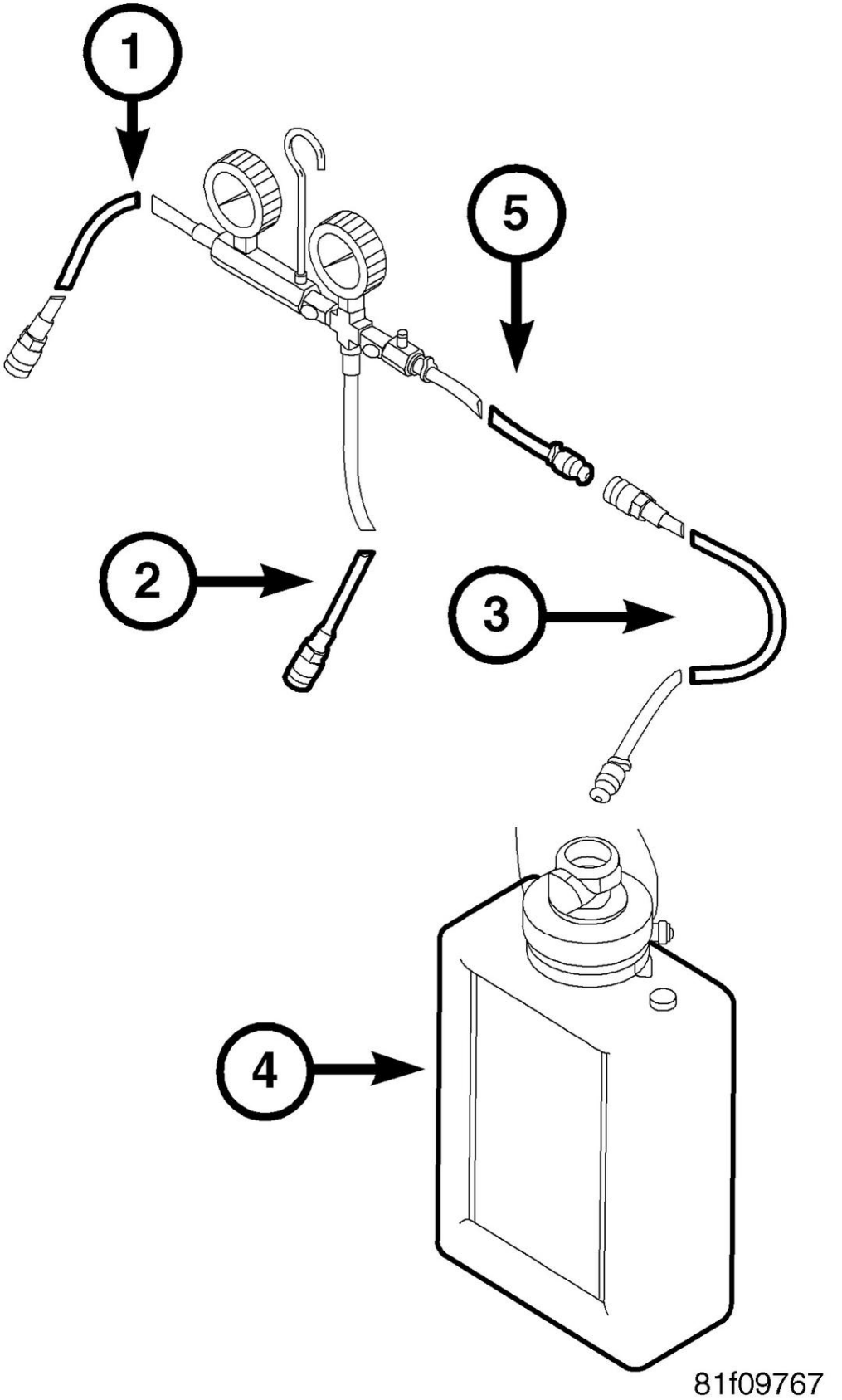
1
5
2
3
4
81f09767

Fig. 11: Identifying Fuel Pressure Gauge Assembly
Courtesy of CHRYSLER GROUP, LLC

WARNING: The fuel system is under a constant pressure (even with the engine off). Before testing or servicing any fuel system hose, fitting, or line, the fuel system pressure must be released. Failure to follow these instructions can result in possible serious or fatal injury.

1. Connect Fuel Pressure Gauge Assembly Fuel Inlet Hose (special tool #8978-1, Gauge, Fuel Pressure Assembly) (1) and Fuel Outlet Hose (2) to the Fuel Line Adapters / Fitting.
2. Connect Drain Extension Hose 535680 (3) to the Fuel Pressure Gauge Assembly Drain Hose (5).
3. Connect the Reservoir Assembly 534960 (4) to the Drain Extension Hose 535680 (3).

WARNING: To reduce the risk of fire and serious possible serious or fatal injury, place Reservoir Assembly 534960 (4) on the floor and out of the way so that it is not a trip hazard.

Proceed

- Go To 4.

4. **CHECK FUEL PRESSURE**

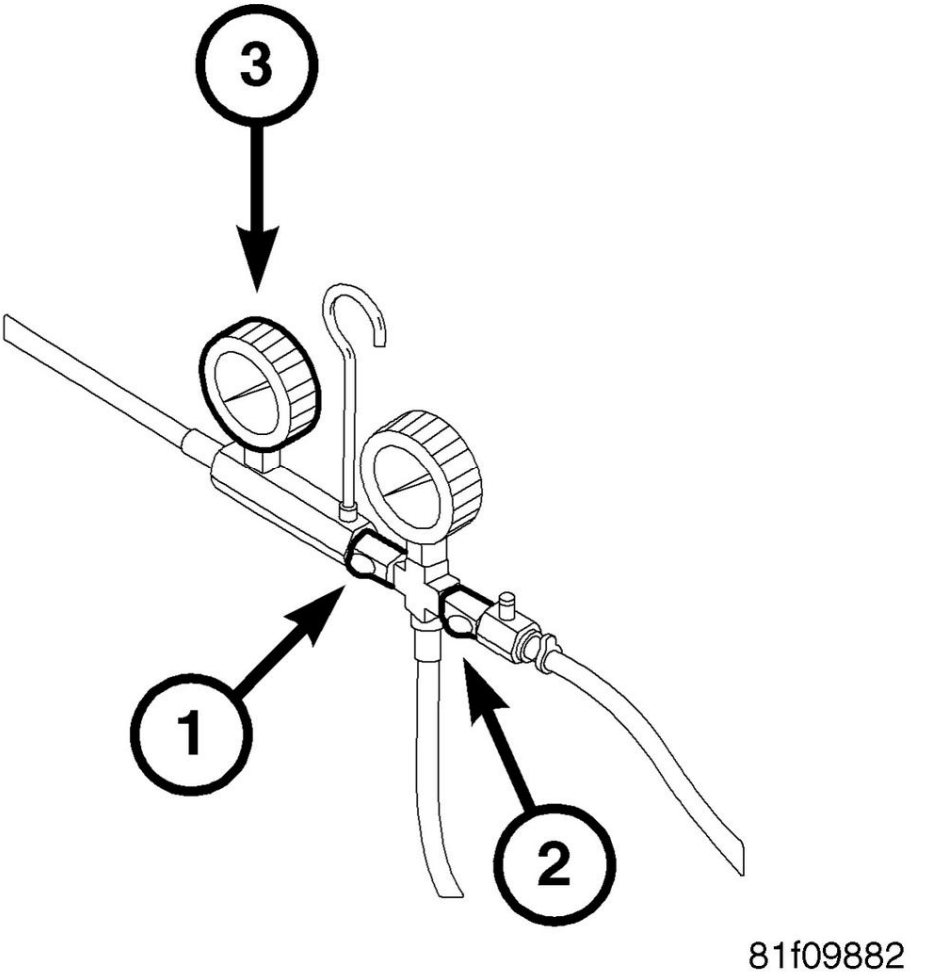

Fig. 12: Checking Fuel Pressure
Courtesy of CHRYSLER GROUP, LLC

WARNING: **The fuel system is under a constant pressure (even with the engine off). Before testing or servicing any fuel system hose, fitting, or line, the fuel system pressure must be released. Failure to follow these instructions can result in possible serious or fatal injury.**

1. Perform the following procedure to purge air from the system:
   - Open the Fuel System Isolation Valve (1).
   - Close the Flow Test Valve (2).
   - Ignition on, engine not running.
   - With the scan tool, actuate the fuel pump.
   - Open the Flow Test Valve (1) for 10 seconds, then close the Valve.
   - **CAUTION: Stop All Actuations.**
   - Turn the ignition off.

- Disconnect, empty and then reconnect the Reservoir Assembly.

2. Turn the ignition on, wait five seconds, turn the ignition off and then wait 1 minute before proceeding.
3. Read the Fuel Pressure Gauge (3) and record the reading. **Non SRT-4** fuel pressure specification is 407 KPa +/- 34 KPa (59 psi +/- 5 psi). **SRT-4** fuel pressure specification is 552 KPa +/- 34 KPa (80 psi +/- 5 psi).

   Is the fuel pressure within specifications?

   Yes

   - Go To 5.

   No

   - Perform the Checking The Fuel Delivery System diagnostic procedure as directed.

5. **CHECK FUEL DELIVERY SYSTEM FOR LEAK DOWN**

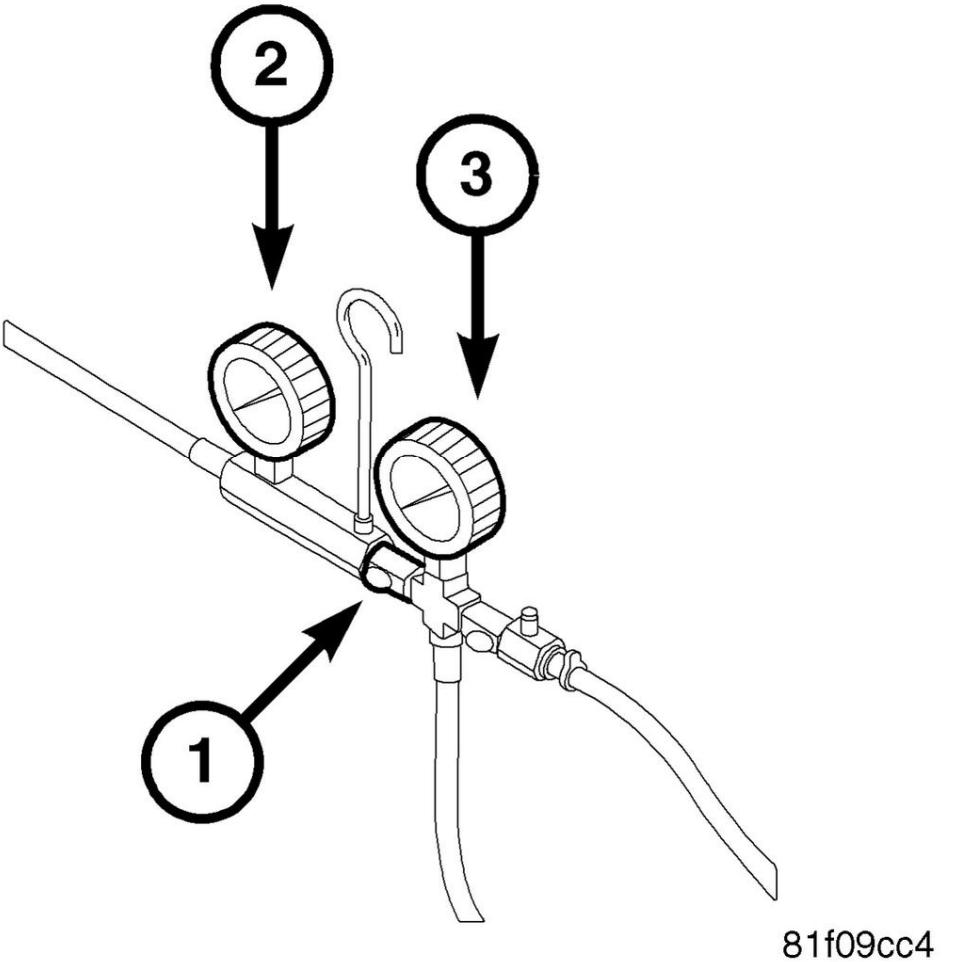

Fig. 13: Checking Fuel Delivery System For Leak Down
Courtesy of CHRYSLER GROUP, LLC

WARNING: The fuel system is under a constant pressure (even with the engine off). Before testing or servicing any fuel system hose, fitting, or line, the fuel system pressure must be released. Failure to follow these instructions can result in possible serious or fatal injury.

1. Close the Fuel System Isolation Valve (1) and then wait five minutes before proceeding.
2. Read the Fuel Inlet (2) and Fuel Outlet (3) Pressure Gauges. The pressure should not drop more than 10 psi on either gauge.

   Does the fuel pressure drop more than 10 psi?

   Yes - On Fuel Inlet Gauge (1)

   - Replace the fuel pump module.
   - Perform the POWERTRAIN VERIFICATION TEST. Refer to **1500 & 2500 - 3.7L, 4.7L & 5.7L - POWERTRAIN VERIFICATION TEST** or **3500 CAB & CHASSIS - POWERTRAIN VERIFICATION TEST** .

   Yes - On Fuel Outlet Gauge (2)

   - Replace the leaking fuel injector(s).
   - Perform the POWERTRAIN VERIFICATION TEST. Refer to **1500 & 2500 - 3.7L, 4.7L & 5.7L - POWERTRAIN VERIFICATION TEST** or **3500 CAB & CHASSIS - POWERTRAIN VERIFICATION TEST** .

   No

   - If directed here by another test, return to that test. Otherwise, test complete.

HARD START FUEL SYSTEM

For a complete wiring diagram, **refer to appropriate SYSTEM WIRING DIAGRAMS article** .

POSSIBLE CAUSES

Possible Causes
FUEL CONTAMINATION
RESTRICTED FUEL SUPPLY LINE
FUEL PUMP INLET STRAINER PLUGGED
FUEL PUMP MODULE
FUEL INJECTOR(S)

WARNING: Follow these safety precautions to reduce the risk of fire and serious possible serious or fatal injury when performing this test procedure.

- **Fuel or fuel vapors are highly flammable. A fire could occur if an ignition source is present. Do not expose the fuel or the test equipment used in this procedure to open flames or sparks.**
- **Inhalation of fuel vapors could lead to disorientation and personal injury. Keep the service area well ventilated, or perform this test procedure in an area where there is a building exhaust removal system.**
- **Relieve fuel system pressure before servicing fuel system components.**
- **Use extreme caution when connecting and disconnecting fuel lines.**
- **Considerable fuel leakage may occur when servicing the fuel system. Wear protective eye wear and clothing to protect from fuel splash, and take suitable fuel containment measures.**
- **Wrap a shop towel around the fuel pressure gauge connection to absorb fuel leakage that occurs when connecting the test equipment. Place the towel in an approved container when complete.**
- **Never store fuel in an open container due to the possibility of fire or explosion. Have a dry chemical (Class B) fire extinguisher nearby.**

DIAGNOSTIC TEST

1. **CHECK FUEL DELIVERY SYSTEM FOR LEAKS AND DAMAGE**

WARNING: The fuel system is under a constant pressure (even with the engine off). Before testing or servicing any fuel system hose, fitting, or line, the fuel system pressure must be released. Failure to follow these instructions can result in possible serious or fatal injury.

1. Visually and physically inspect the fuel delivery system for external leaks and damage.

   Is the system leaking or damaged?

   Yes

   - Repair / replace as necessary.
   - Perform the POWERTRAIN VERIFICATION TEST. Refer to **1500 & 2500 - 3.7L, 4.7L & 5.7L - POWERTRAIN VERIFICATION TEST** or **3500 CAB & CHASSIS - POWERTRAIN VERIFICATION TEST** .

   No

   - Go To 2.

2. **INSTALL APPROPRIATE FUEL LINE ADAPTERS / FITTING FROM GAS AND DIESEL FUEL PRESSURE/DECAY TESTER 8978A**

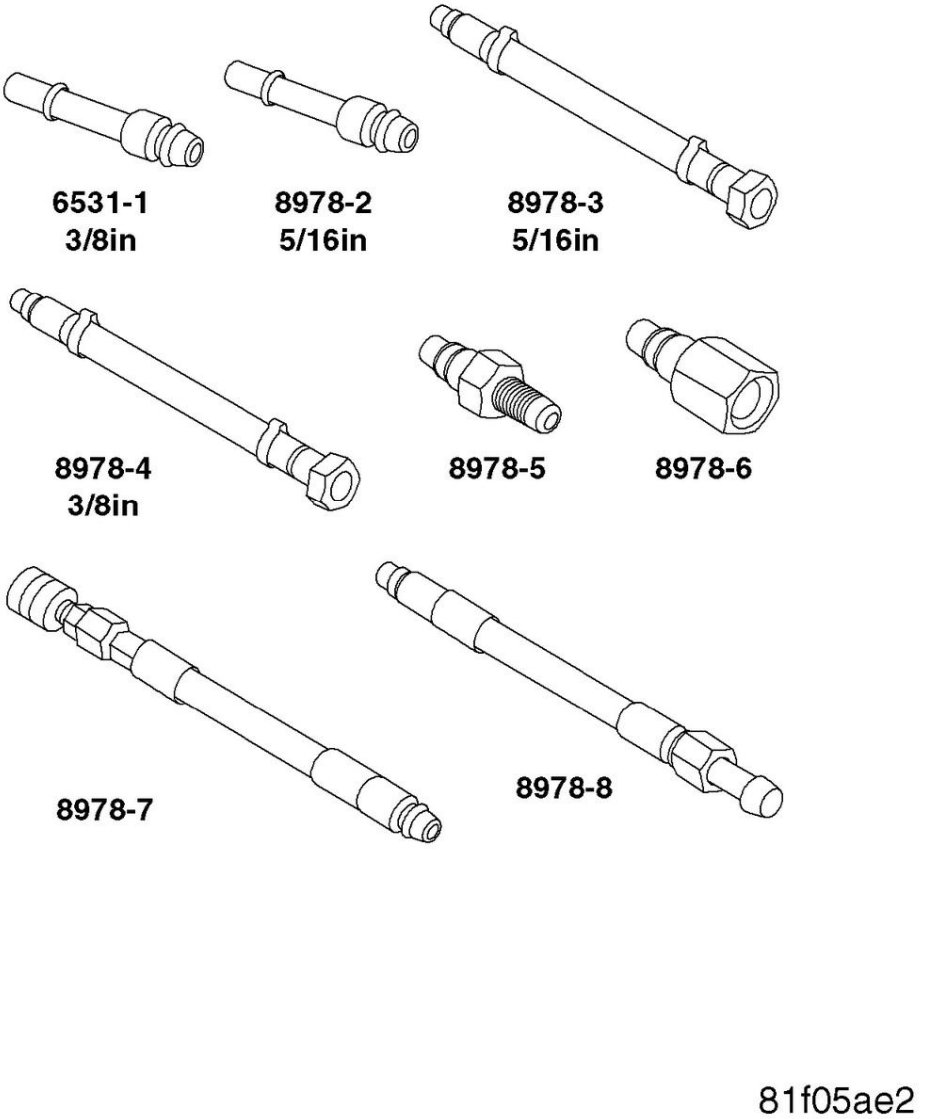

Fig. 14: Fuel Line Adapters/Fitting
Courtesy of CHRYSLER GROUP, LLC

WARNING: **The fuel system is under a constant pressure (even with the engine off). Before testing or servicing any fuel system hose, fitting, or line, the fuel system pressure must be released. Failure to follow these instructions can result in possible serious or fatal injury.**

1. Turn the ignition off.

2. Disconnect the frame rail fuel supply line connector between the fuel supply line and the fuel rail.
3. Install the appropriate Fuel Line Adapters / Fitting from Gas and Diesel Fuel Pressure/Decay Tester (special tool #8978A, Decay Tool, Fuel).

Proceed

- Go To 3.

3. **INSTALL FUEL PRESSURE GAUGE ASSEMBLY**

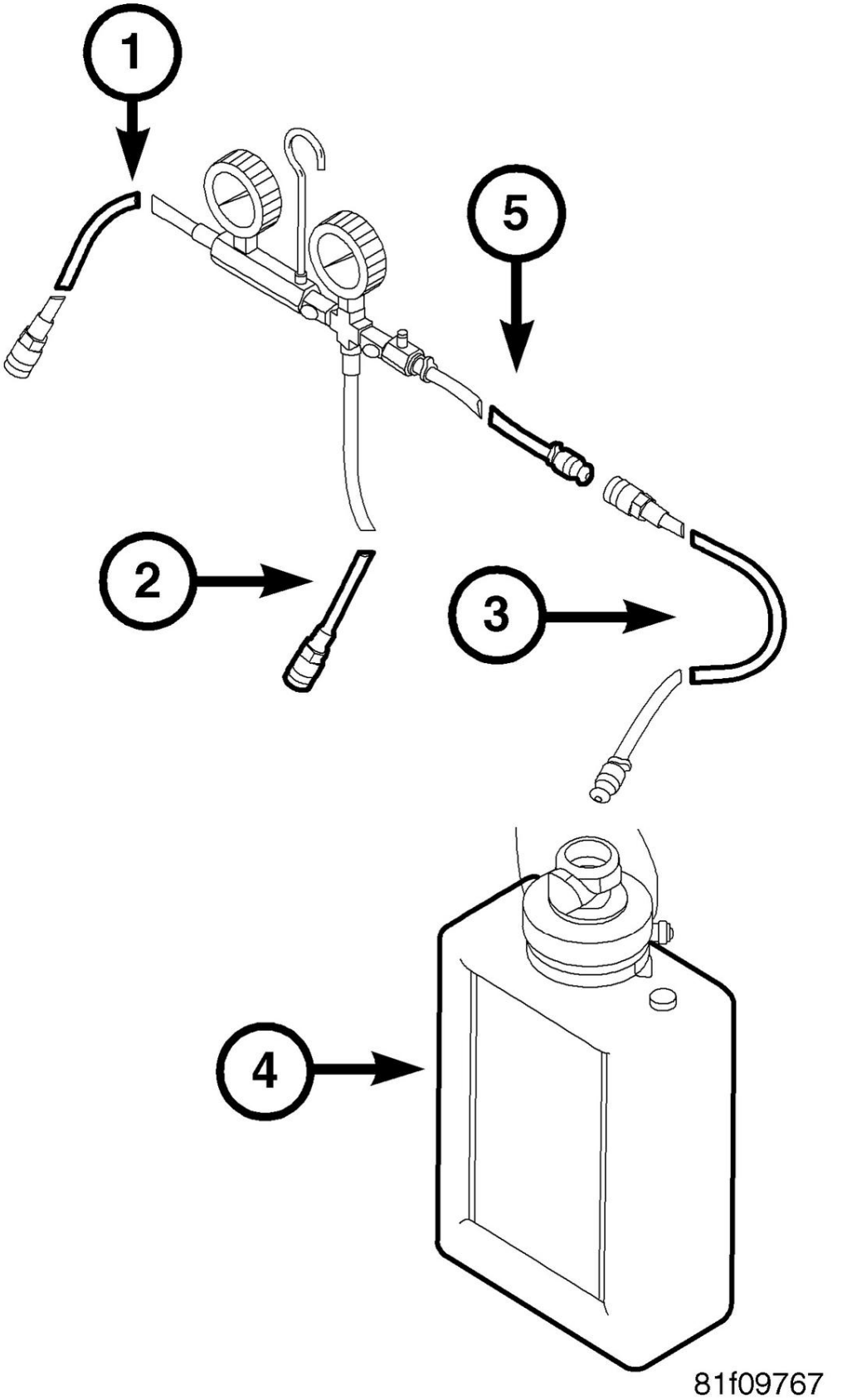
1
5
2
3
4
81f09767

Fig. 15: Identifying Fuel Pressure Gauge Assembly
Courtesy of CHRYSLER GROUP, LLC

WARNING: The fuel system is under a constant pressure (even with the engine off). Before testing or servicing any fuel system hose, fitting, or line, the fuel system pressure must be released. Failure to follow these instructions can result in possible serious or fatal injury.

1. Connect Gas and Diesel Fuel Pressure/Decay Tester (special tool #8978A, Decay Tool, Fuel), Fuel Inlet Hose(1), and Fuel Outlet Hose (2) to the Fuel Line Adapters / Fitting.
2. Connect Drain Extension Hose 535680 (3) to the Fuel Pressure Gauge Assembly Drain Hose (5).
3. Connect the Reservoir Assembly 534960 (4) to the Drain Extension Hose 535680 (3).

WARNING: To reduce the risk of fire and serious possible serious or fatal injury, place Reservoir Assembly 534960 (4) on the floor and out of the way so that it is not a trip hazard.

Proceed

- Go To 4.

4. **CHECKING FUEL PRESSURE**

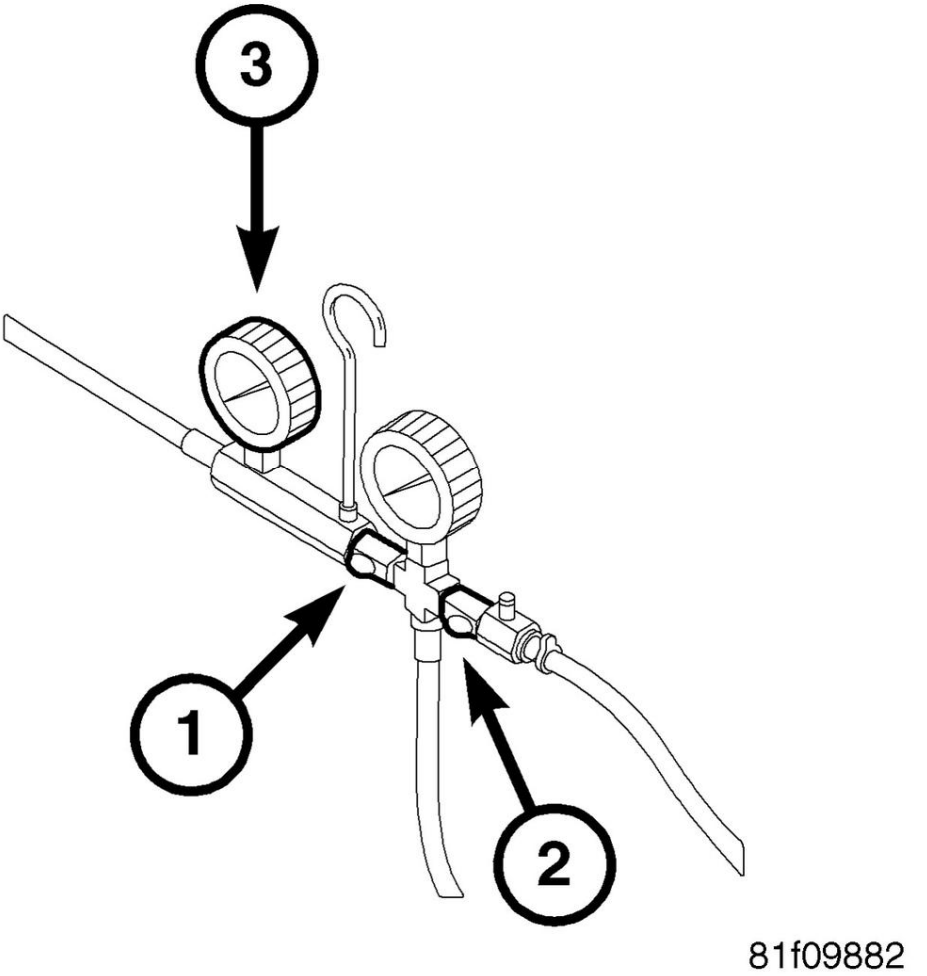

Fig. 16: Checking Fuel Pressure
Courtesy of CHRYSLER GROUP, LLC

WARNING: The fuel system is under a constant pressure (even with the engine off). Before testing or servicing any fuel system hose, fitting, or line, the fuel system pressure must be released. Failure to follow these instructions can result in possible serious or fatal injury.

1. Turn the ignition off.
2. Install the Fuel Pressure Decay Tester (special tool #8978A, Decay Tool, Fuel) on the fuel line near the intake manifold
3. Perform the following procedure to purge air from the system:
   - Open the Fuel System Isolation Valve (1).
   - Close the Flow Test Valve (2).
   - Ignition on, engine not running.
   - With the scan tool, actuate the fuel pump.
   - Open the Flow Test Valve (1) for 10 seconds, then close the Valve.

- **CAUTION: Stop All Actuations.**
- Turn the ignition off.
- Disconnect, empty and then reconnect the Reservoir Assembly.

4. Ignition on, engine not running.
5. With the scan tool, actuate the ASD Fuel System test and observe the fuel pressure gauge.

NOTE: Fuel pressure specification is 407 KPa +/- 34 KPa (59 psi +/- 5 psi).

Choose a conclusion that best matches your fuel pressure reading.

Below Specification

- Go To 5.

Within Specification

- Go To 7.

5. **RESTRICTED FUEL SUPPLY LINE**

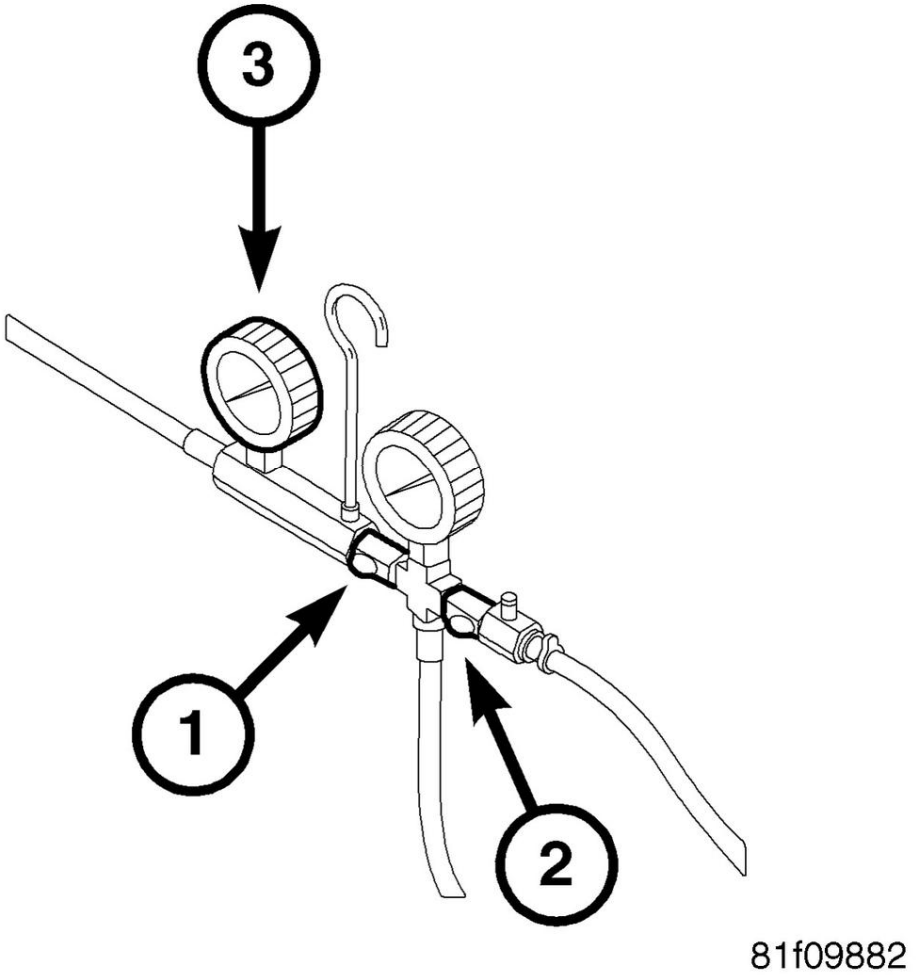

Fig. 17: Checking Fuel Pressure
Courtesy of CHRYSLER GROUP, LLC

WARNING: The fuel system is under a constant pressure (even with the engine off). Before testing or servicing any fuel system hose, fitting or line, the fuel system pressure must be released. Failure to follow these instructions can result in possible serious or fatal injury.

1. Turn the ignition off.
2. Remove the Fuel Pressure Decay Tester (special tool #8978A, Decay Tool, Fuel).
3. Raise the vehicle on a hoist and disconnect the fuel supply line at the fuel pump module.
4. Install the Fuel Pressure Decay Tester (special tool #8978A, Decay Tool, Fuel) at the fuel pump.
5. Perform the following procedure to purge air from the system:
    - Open the Fuel System Isolation Valve (1).
    - Close the Flow Test Valve (2).
    - Ignition on, engine not running.

- With the scan tool, actuate the fuel pump.
- Open the Flow Test Valve (1) for 10 seconds, then close the Valve.
- **CAUTION: Stop All Actuations.**
- Turn the ignition off.
- Disconnect, empty and then reconnect the Reservoir Assembly.

6. Ignition on, engine not running.
7. With the scan tool, actuate the ASD Fuel System test and observe the fuel pressure gauge.

NOTE: Fuel pressure specification is 407 KPa +/- 34 KPa (59 psi +/- 5 psi).

Is the fuel pressure within specification?

Yes

- Visually and physically inspect the fuel supply lines between the fuel tank and the fuel rail. Repair/replace as necessary.
- Perform the POWERTRAIN VERIFICATION TEST. Refer to **1500 & 2500 - 3.7L, 4.7L & 5.7L - POWERTRAIN VERIFICATION TEST** or **3500 CAB & CHASSIS - POWERTRAIN VERIFICATION TEST** .

No

- Go To 6.

6. **CHECKING THE FUEL INLET STRAINER**

WARNING: The fuel system is under a constant pressure (even with the engine off). Before testing or servicing any fuel system hose, fitting or line, the fuel system pressure must be released. Failure to follow these instructions can result in possible serious or fatal injury.

1. Turn the ignition off.
2. Remove the Fuel Pump Module and inspect the Fuel Inlet Strainer.

Is the Fuel Inlet Strainer plugged?

Yes

- Replace the Fuel Pump Inlet Strainer.
- Perform the POWERTRAIN VERIFICATION TEST. Refer to **1500 & 2500 - 3.7L, 4.7L & 5.7L - POWERTRAIN VERIFICATION TEST** or **3500 CAB & CHASSIS - POWERTRAIN VERIFICATION TEST** .

No

- Replace the Fuel Pump Module.
- Perform the POWERTRAIN VERIFICATION TEST. Refer to **1500 & 2500 - 3.7L, 4.7L & 5.7L - POWERTRAIN VERIFICATION TEST** or **3500 CAB & CHASSIS - POWERTRAIN VERIFICATION TEST** .

7. **FUEL PUMP MODULE**

NOTE: Before continuing visually and physically inspect the fuel delivery system for external leaks or damage. Repair / replace as necessary.

WARNING: The fuel system is under a constant pressure (even with the engine off). Before testing or servicing any fuel system hose, fitting or line, the fuel system pressure must be released. Failure to follow these instructions can result in possible serious or fatal injury.

1. Turn the ignition off.
2. Install the Fuel Pressure Decay Tester (special tool #8978A, Decay Tool, Fuel) at the intake manifold.
3. Start the engine and allow the fuel system to reach maximum pressure.
4. Turn the ignition off.
5. Close the Fuel System Isolation Valve and then wait five minutes before proceeding.

NOTE: Fuel specification is 407 KPa +/- 34 KPa (59 psi +/- 5 psi).

6. Read the Fuel Inlet and Fuel Outlet Pressure Gauges. The pressure should not drop more than 10 psi on either gauge.
7. Monitor the fuel pressure gauge for a minimum of five minutes.

Does the fuel pressure drop more than 10 psi?

Yes - On Fuel Inlet Gauge

- Replace Fuel Pump Module.
- Perform the POWERTRAIN VERIFICATION TEST. Refer to **1500 & 2500 - 3.7L, 4.7L & 5.7L - POWERTRAIN VERIFICATION TEST** or **3500 CAB & CHASSIS - POWERTRAIN VERIFICATION TEST** .

Yes - On Fuel Outlet Gauge

- Replace the leaking fuel injector(s).
- Perform the POWERTRAIN VERIFICATION TEST. Refer to **1500 & 2500 - 3.7L, 4.7L & 5.7L - POWERTRAIN VERIFICATION TEST** or **3500 CAB & CHASSIS - POWERTRAIN VERIFICATION TEST** .

No

- If directed here by another test, return to that test. Otherwise, test complete.

NO CRANK CONDITION

For a complete wiring diagram, **refer to appropriate SYSTEM WIRING DIAGRAMS article** .

POSSIBLE CAUSES

Possible Causes
MECHANICAL CONDITION
BATTERY CIRCUIT RESISTANCE TOO HIGH
FUSED B+ CIRCUIT OPEN
(T752) STARTER RELAY OUTPUT CIRCUIT OPEN
(T750) STARTER RELAY CONTROL CIRCUIT OPEN
TRANSMISSION RANGE SENSOR
REMOTE START ANTENNA (IF EQUIPPED)
TOTALLY INTEGRATED POWER MODULE (TIPM)
STARTER

DIAGNOSTIC TEST

1. **MECHANICAL CONDITION**

NOTE: **Install a known good Starter relay and see if the vehicle will start.**

NOTE: **Verify the battery is fully charged and capable of passing a load test before continuing.**

WARNING: **Make sure the battery is disconnected, then wait two minutes before proceeding. Failure to do so may result in possible serious or fatal injury.**

1. Turn the engine over by hand to make sure the engine is not seized.

   Is the engine able to turn over?

   Yes

   - Go To 2.

   No

   - Repair the mechanical condition preventing the starter motor from cranking.
   - Perform the POWERTRAIN VERIFICATION TEST. Refer to **1500 & 2500 - 3.7L, 4.7L &**

5.7L - POWERTRAIN VERIFICATION TEST or **3500 CAB & CHASSIS - POWERTRAIN VERIFICATION TEST** .

2. **REMOTE START ANTENNA**

NOTE: **If the vehicle is not equipped with Remote Start, proceed to the next test step.**

1. Reconnect the battery.
2. Turn the ignition on.
3. Using the scan tool, erase DTCs.
4. Turn the ignition off.
5. Disconnect the Remote Start Antenna from the Wireless Ignition Node (WIN).
6. Using the ignition key, start the vehicle.

Did the vehicle start?

Yes

- Replace the Remote Start Antenna in accordance with the Service Information.
- Perform the BODY VERIFICATION TEST. Refer to **STANDARD PROCEDURE** .

No

- Go To 3.

3. **PCM FUSED B+ CIRCUITS**

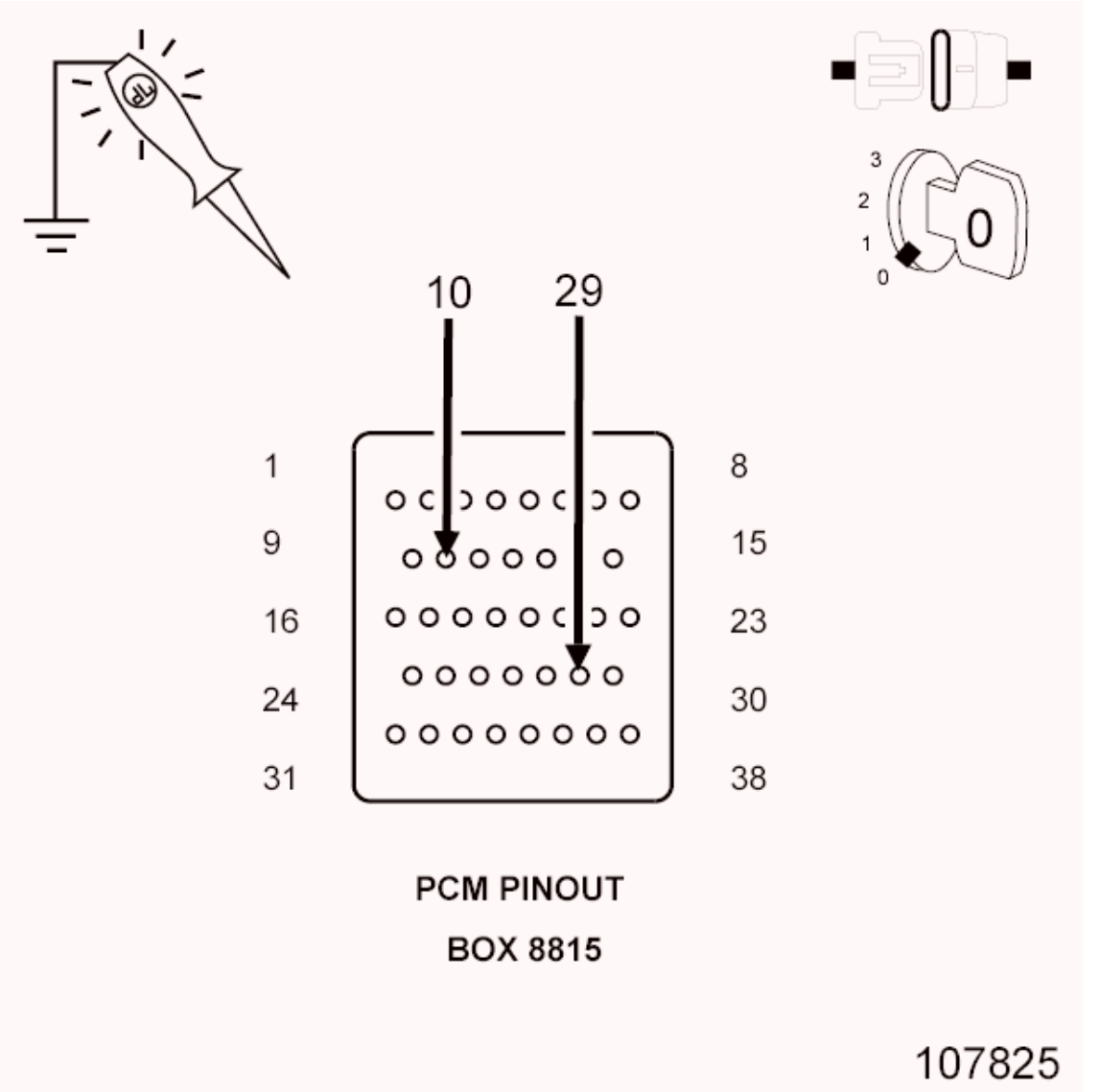

Fig. 18: Checking The PCM Fused B+ Circuits
Courtesy of CHRYSLER GROUP, LLC

1. Turn the ignition off.
2. Disconnect the C1 PCM harness connector.

CAUTION: Do not probe the PCM harness connectors. Probing the PCM harness connectors will damage the PCM terminals resulting in poor terminal to pin connection. Install the PCM Pinout Box (special tool #8815A, Kit, NGC, 38 Position) to perform diagnosis.

3. Using a 12-volt test light connected to ground, probe the Fused B+ circuits at the appropriate terminals of the PCM Pinout Box (special tool #8815A, Kit, NGC, 38 Position).

Does the test light illuminate brightly?

Yes

- Go To 4.

No

- Repair the open or short to ground in the PCM Fused B+ circuits.
- Perform the POWERTRAIN VERIFICATION TEST. Refer to **1500 & 2500 - 3.7L, 4.7L & 5.7L - POWERTRAIN VERIFICATION TEST** or **3500 CAB & CHASSIS - POWERTRAIN VERIFICATION TEST** .

4. **TRANSMISSION RANGE SENSOR**
   1. Turn the ignition off.
   2. Disconnect the TRS harness connectors.
   3. Move the Gear selector through all gear positions, from Park to 1st and back.
   4. While moving the gear selector through each gear, measure the resistance between ground and the TRS (T41) Sense (P/N Position Switch Sense) circuit at the TRS connector.

NOTE: **The circuit is grounded in Park and Neutral and open in the other positions.**

Did the resistance change from above 100 kOhms (open) to below 10.0 Ohms (grounded) ?

Yes

- Go To 5.

No

- Replace the Transmission Range Sensor.
- Perform the POWERTRAIN VERIFICATION TEST. Refer to **1500 & 2500 - 3.7L, 4.7L & 5.7L - POWERTRAIN VERIFICATION TEST** or **3500 CAB & CHASSIS - POWERTRAIN VERIFICATION TEST** .

5. **EXCESSIVE RESISTANCE IN THE BATTERY CIRCUIT**
   1. Turn the ignition off.
   2. Check the Battery Cables for excessive resistance using the service information procedure.

Did either Battery Cable have a voltage drop greater than 0.2 of a volt?

Yes

- Repair the excessive resistance in the Battery circuit.
- Perform the POWERTRAIN VERIFICATION TEST. Refer to **1500 & 2500 - 3.7L, 4.7L &**

5.7L - POWERTRAIN VERIFICATION TEST or **3500 CAB & CHASSIS - POWERTRAIN VERIFICATION TEST** .

No

- Go To 6.

6. **STARTER**

CAUTION: The Parking Brake must be on and the Transmission must be in park for a vehicle equipped with an automatic transmission.

WARNING: When the engine is operating, do not stand in direct line with the fan. Do not put your hands near the pulleys, belts or fan. Do not wear loose clothing. Failure to follow these instructions may result in possible serious or fatal injury.

1. Turn ignition off.
2. Disconnect the Starter Solenoid harness connector.

NOTE: The Stater Solenoid harness connector must remain disconnected at this time.

3. Have an assistant turn the ignition key to the CRANK position.
4. Using a 12-volt test light connected ground, probe the (T750) Stater Relay Output circuit in the Starter Solenoid harness connector while the ignition key is in the CRANK position.

Does the test light illuminate brightly?

Yes

- Replace the Starter in accordance with the service information.
- Perform the POWERTRAIN VERIFICATION TEST. Refer to **1500 & 2500 - 3.7L, 4.7L & 5.7L - POWERTRAIN VERIFICATION TEST** or **3500 CAB & CHASSIS - POWERTRAIN VERIFICATION TEST** .

No

- Go To 7.

7. **(T752) STARTER OVERRIDE CIRCUIT CHECK**

NOTE: Inspect fuses related to the Starter.

1. Turn the ignition off.
2. Disconnect the TIPM C2 harness connector.

3. Disconnect the PCM C3 harness connector.

CAUTION: Do not probe the PCM harness connectors. Probing the PCM harness connectors will damage the PCM terminals resulting in poor terminal to pin connection. Install the PCM Pinout Box (special tool #8815A, Kit, NGC, 38 Position) to perform diagnosis.

4. Check the T752 Starter Relay Control circuit for and open or short to ground.

   Were any problems found in the T752 Starter Override circuit between the TIPM and PCM?

   Yes

   - Repair as necessary.
   - Perform the POWERTRAIN VERIFICATION TEST. Refer to **1500 & 2500 - 3.7L, 4.7L & 5.7L - POWERTRAIN VERIFICATION TEST** or **3500 CAB & CHASSIS - POWERTRAIN VERIFICATION TEST** .

   No

   - Go To 8.

8. **(T750) STARTER CONTROL OUTPUT CIRCUIT OPEN**
   1. Disconnect the Starter Solenoid connector.
   2. Measure the resistance of the (T750) Starter Control Output circuit between the Starter Solenoid harness connector and the TIPM C2 harness connector.

      Is the resistance below 5.0 Ohms?

      Yes

      - Go To 9.

      No

      - Repair the open in the (T750) Starter Control Output circuit.
      - Perform the POWERTRAIN VERIFICATION TEST. Refer to **1500 & 2500 - 3.7L, 4.7L & 5.7L - POWERTRAIN VERIFICATION TEST** or **3500 CAB & CHASSIS - POWERTRAIN VERIFICATION TEST** .

9. **(T750) STARTER CONTROL OUTPUT CIRCUIT SHORTED TO GROUND**
   1. Measure the resistance between ground and the (T750) Starter Control Output circuit in the Starter Solenoid harness connector.

      Is the resistance below 100 Ohms?

Yes

- Repair the short to ground in the (T750) Starter Control Output circuit.
- Perform the POWERTRAIN VERIFICATION TEST. Refer to **1500 & 2500 - 3.7L, 4.7L & 5.7L - POWERTRAIN VERIFICATION TEST** or **3500 CAB & CHASSIS - POWERTRAIN VERIFICATION TEST** .

No

- Go To 10.

10. **TOTALLY INTEGRATED POWER MODULE**

NOTE: Before continuing, check the TIPM harness connector terminals for corrosion, damage, or terminal push out. Repair as necessary.

1. Using the schematics as a guide, inspect the wire harness and connectors.
2. Pay particular attention to all Power and Ground circuits.

Were any problems found?

Yes

- Repair as necessary.
- Perform the BODY VERIFICATION TEST. Refer to **STANDARD PROCEDURE** .

No

- Replace the Totally Integrated Power Module in accordance with the Service Information.
- Perform the BODY VERIFICATION TEST. Refer to **STANDARD PROCEDURE** .

NO RESPONSE WITH A NO START CONDITION

For a complete wiring diagram **refer to appropriate SYSTEM WIRING DIAGRAMS article** .

POSSIBLE CAUSES

Possible Causes
(A919) (A918) PCM FUSED B+ CIRCUITS
PCM NO RESPONSE
(F202) (F1) (T751) PCM FUSED IGNITION SWITCH OUTPUT CIRCUITS
(Z130) (Z131) (Z951) PCM GROUND CIRCUITS
CRANKSHAFT POSITION SENSOR
(F855) 5-VOLT SENSOR OPEN/SHORTED
(F855) 5-VOLT SUPPLY CIRCUIT SHORTED TO GROUND

(F856) 5-VOLT SUPPLY CIRCUIT SHORTED TO GROUND
PCM

DIAGNOSTIC TEST

1. **(A919) (A918) PCM FUSED B+ CIRCUITS**

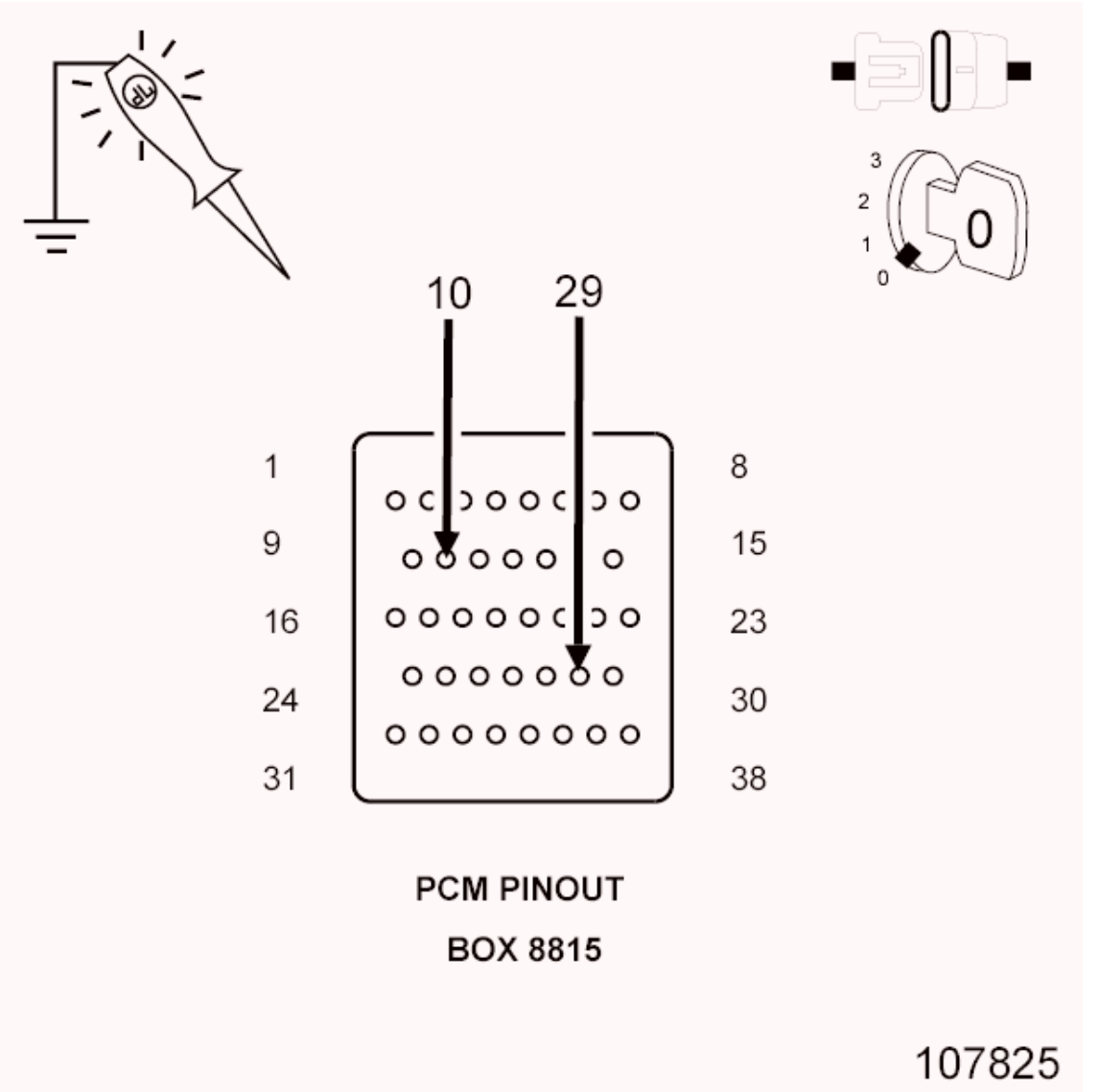

Fig. 19: Checking The PCM Fused B+ Circuits
Courtesy of CHRYSLER GROUP, LLC

NOTE: **The scan tool and cable must be operating properly for the results of this test to be valid.**

NOTE: **Make sure the ignition switch was on while trying to communicate with the PCM.**

1. Turn the ignition off.
2. Disconnect the PCM harness connectors.

CAUTION: Do not probe the PCM harness connectors. Probing the PCM harness connectors will damage the PCM terminals resulting in poor terminal to pin connection. Install the PCM Pinout Box (special tool #8815A, Kit, NGC, 38 Position) to perform diagnosis.

3. Using a 12-volt test light connected to ground probe the appropriate terminal of special tool # (special tool #8815A, Kit, NGC, 38 Position).

   Does the test light illuminate brightly?

   Yes

   - Go To 2.

   No

   - Repair the open or short to ground in the (A919) Fused B+ circuit. Inspect and replace fuses as necessary.
   - Perform the POWERTRAIN VERIFICATION TEST. Refer to **1500 & 2500 - 3.7L, 4.7L & 5.7L - POWERTRAIN VERIFICATION TEST** or **3500 CAB & CHASSIS - POWERTRAIN VERIFICATION TEST** .

2. **(F202), (F1), (T751) PCM FUSED IGNITION SWITCH CIRCUITS**

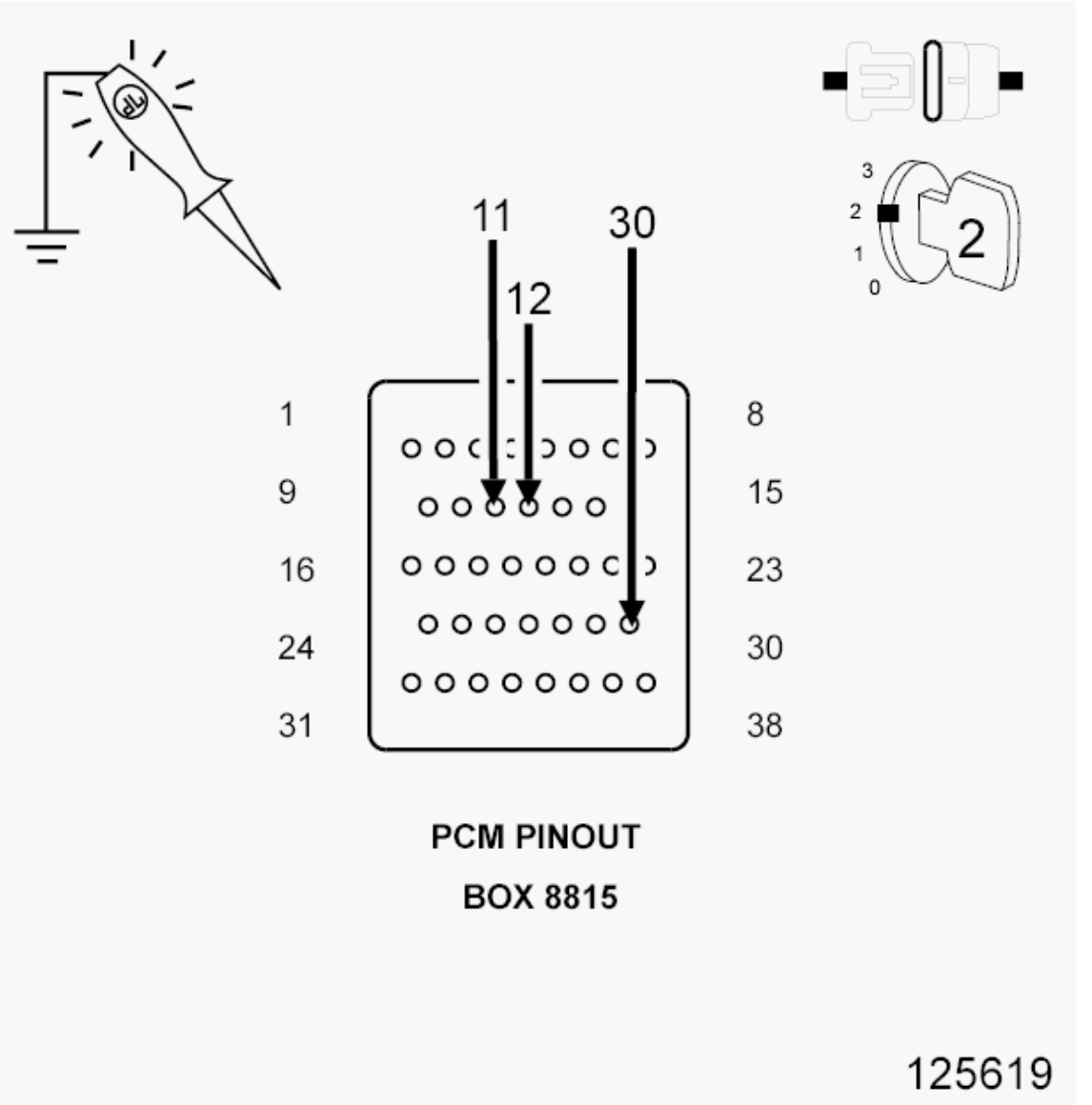

Fig. 20: Measuring Voltage Of The PCM Fused Ignition Circuits
Courtesy of CHRYSLER GROUP, LLC

1. Using a 12-volt test light connected to ground, probe the PCM Fused Ignition Switch Output circuits in the appropriate terminals of special tool #(special tool #8815A, Kit, NGC, 38 Position).

   Does the test light illuminate brightly?

   Yes

   - Go To 3.

   No

   - Repair the (F202) (F1) (T751) Ignition Switch Output circuits. Inspect and replace fuses as

necessary.

- Perform the POWERTRAIN VERIFICATION TEST. Refer to **1500 & 2500 - 3.7L, 4.7L & 5.7L - POWERTRAIN VERIFICATION TEST** or **3500 CAB & CHASSIS - POWERTRAIN VERIFICATION TEST** .

3. **(Z130), (Z131), AND (Z951) PCM GROUND CIRCUITS**

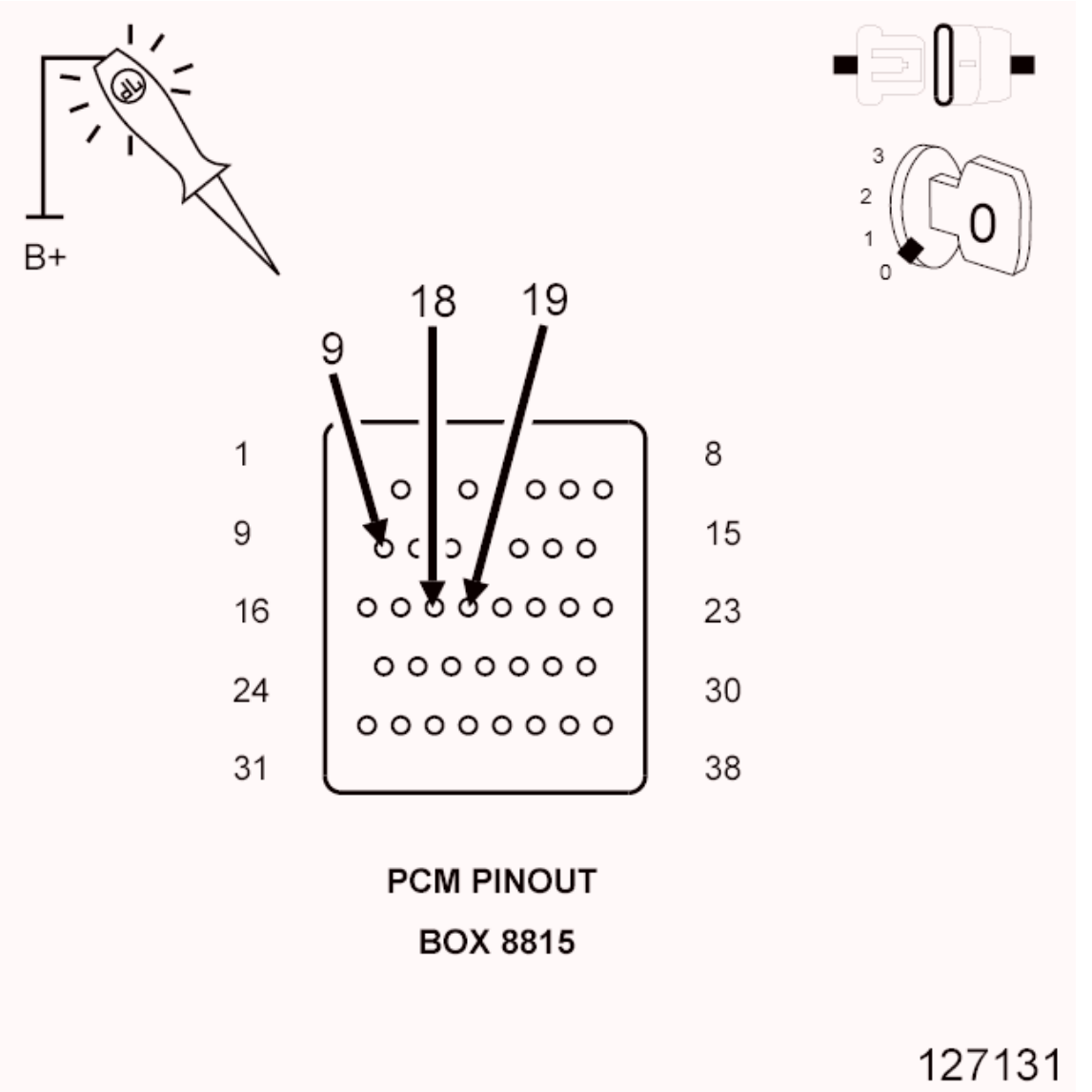

Fig. 21: Measuring Voltage Of The PCM Ground Circuits
Courtesy of CHRYSLER GROUP, LLC

1. Using a 12-volt test light connected to battery voltage, probe the (Z130) (Z131) PCM ground circuits in the appropriate terminals of special tool #(special tool #8815A, Kit, NGC, 38 Position).

   Does the test light illuminate brightly?

   Yes

- Go To 4.

No

- Repair the PCM ground circuits.
- Perform the POWERTRAIN VERIFICATION TEST. Refer to **1500 & 2500 - 3.7L, 4.7L & 5.7L - POWERTRAIN VERIFICATION TEST** or **3500 CAB & CHASSIS - POWERTRAIN VERIFICATION TEST** .

4. **(F855) 5-VOLT SUPPLY CIRCUIT**

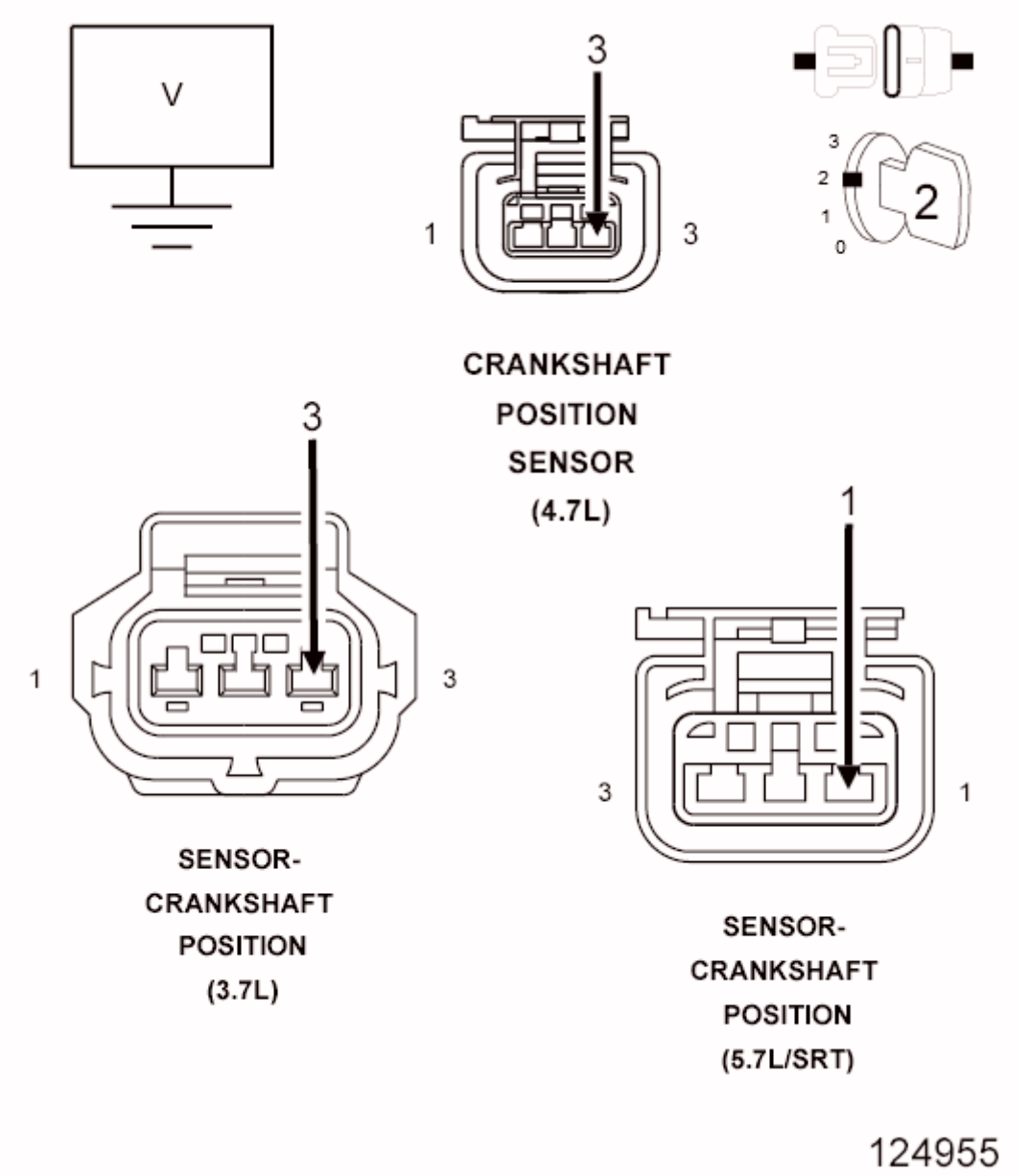

Fig. 22: Measuring Voltage On CKP Sensor 5-Volt Supply Circuit
Courtesy of CHRYSLER GROUP, LLC

1. Turn the ignition off.
2. Connect the PCM harness connectors.
3. Disconnect the Crankshaft Position Sensor harness connector.
4. Ignition on, engine not running.
5. Measure the voltage on the (F855) 5-volt Supply circuit.

   Is the voltage between 4.5 and 5.2 volts?

   Yes

   - Go To 5.

   No

   - Go To 6.

5. **CKP SENSOR**

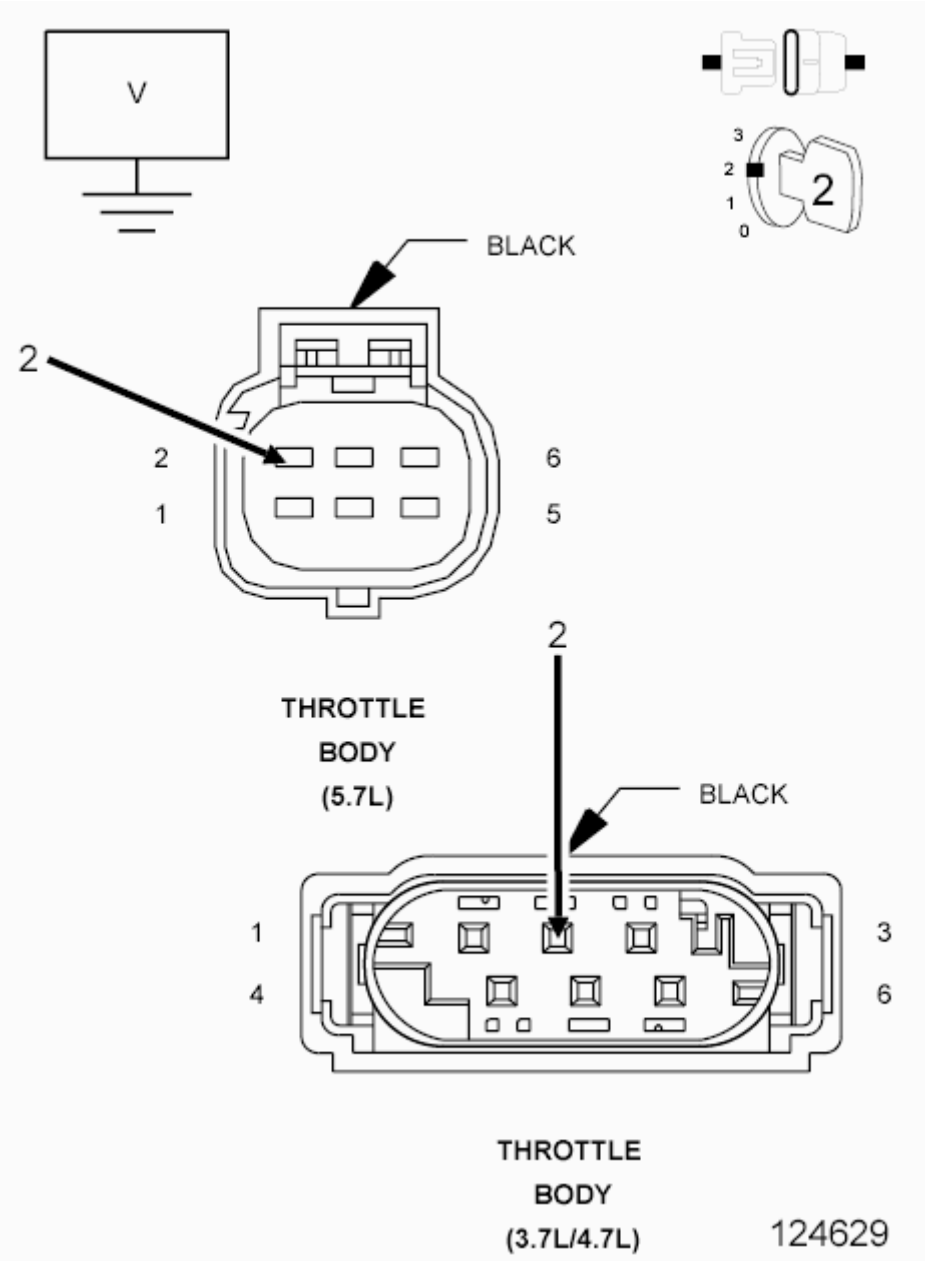

Fig. 23: Measuring Voltage On Primary 5-Volt Supply Circuit At Throttle Body Harness Connector
Courtesy of CHRYSLER GROUP, LLC

1. Turn the ignition off.
2. Disconnect the Throttle Body Harness connector.
3. Ignition on, engine not running.
4. Measure the voltage on the (F855) 5-volt Supply circuit in the Throttle Body harness connector.

   Is the voltage between 4.5 and 5.2 volts?

Yes

- If communication is available with a PCM on a like vehicle, replace and program the Powertrain Control Module per Service Information.
- Perform the POWERTRAIN VERIFICATION TEST. Refer to **1500 & 2500 - 3.7L, 4.7L & 5.7L - POWERTRAIN VERIFICATION TEST** or **3500 CAB & CHASSIS - POWERTRAIN VERIFICATION TEST** .

No

- Replace the Crankshaft Position Sensor.
- Perform the POWERTRAIN VERIFICATION TEST. Refer to **1500 & 2500 - 3.7L, 4.7L & 5.7L - POWERTRAIN VERIFICATION TEST** or **3500 CAB & CHASSIS - POWERTRAIN VERIFICATION TEST** .

6. **(F855) 5-VOLT SENSOR OPEN/SHORTED**

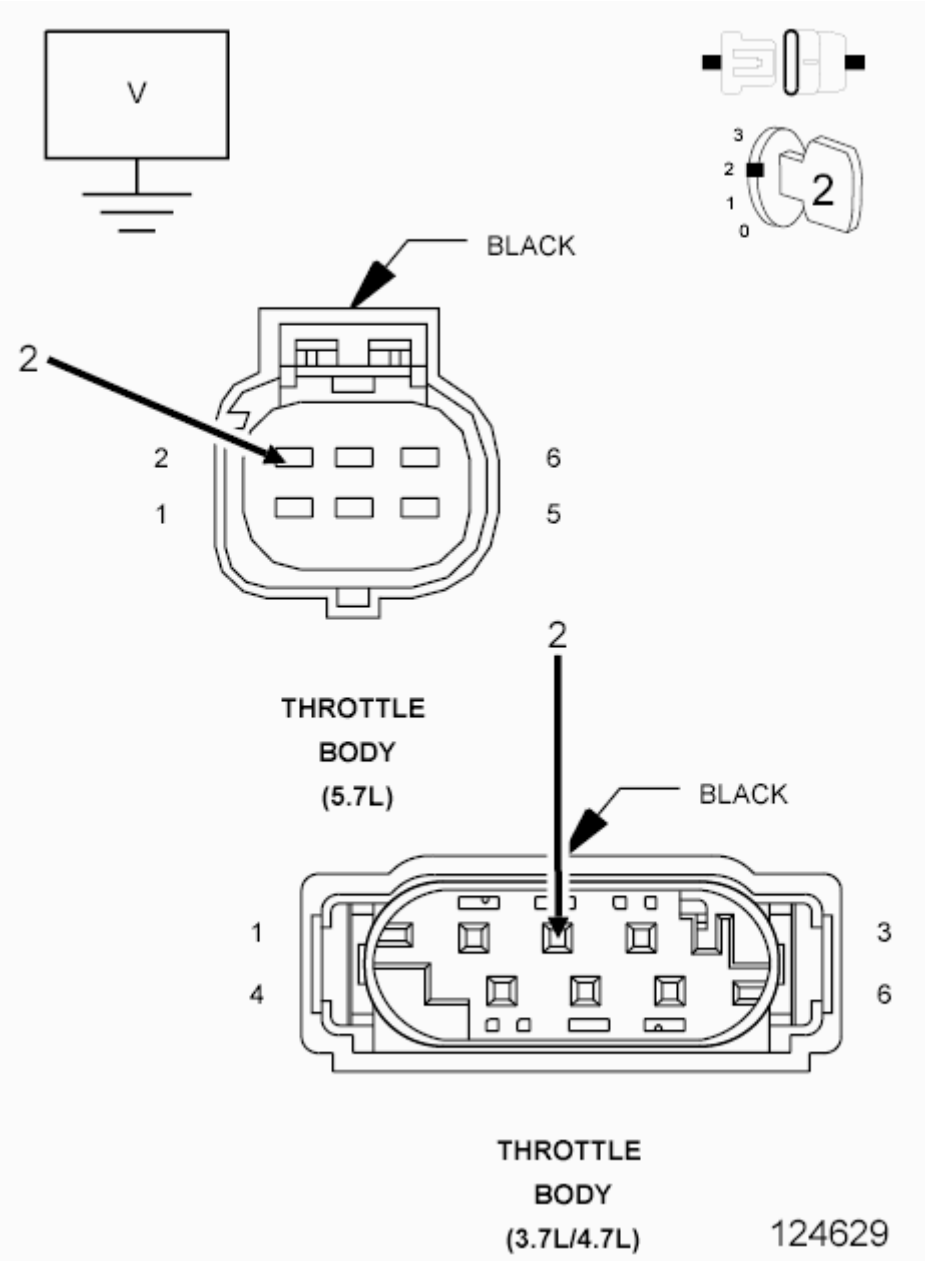

Fig. 24: Measuring Voltage On Primary 5-Volt Supply Circuit At Throttle Body Harness Connector
Courtesy of CHRYSLER GROUP, LLC

1. Turn the ignition off.
2. Disconnect the Throttle Body harness connector.
3. Ignition on, engine not running.
4. Measure the voltage on the (F855) 5-volt Supply circuit.
5. Disconnect all the sensors that use the (F855) 5-volt Supply circuit.

   Did the voltage return to 4.5 to 5.2 volts when disconnecting any of the sensors.

Yes

- Replace the sensor that is pulling down the (F855) 5-volt supply.
- Perform the POWERTRAIN VERIFICATION TEST. Refer to **1500 & 2500 - 3.7L, 4.7L & 5.7L - POWERTRAIN VERIFICATION TEST** or **3500 CAB & CHASSIS - POWERTRAIN VERIFICATION TEST** .

No

- Go To 7.

7. **(F855) 5-VOLT SUPPLY CIRCUIT SHORTED TO GROUND**
   1. Turn the ignition off.
   2. Disconnect C2 PCM harness connector.
   3. Disconnect all the sensors that share the (F855) 5-volt Supply circuit.
   4. Measure the resistance between ground and the (F855) 5-volt Supply circuit at one of the sensor harness connectors.

   Is the resistance below 100 ohms?

   Yes

   - Repair the short to ground in the (F855) 5-volt Supply circuit.
   - Perform the POWERTRAIN VERIFICATION TEST. Refer to **1500 & 2500 - 3.7L, 4.7L & 5.7L - POWERTRAIN VERIFICATION TEST** or **3500 CAB & CHASSIS - POWERTRAIN VERIFICATION TEST** .

   No

   - Go To 8.

8. **(F856) 5-VOLT SUPPLY CIRCUIT SHORTED TO GROUND**
   1. Disconnect all the sensors that share the (F856) 5-volt Supply circuit.
   2. Measure the resistance between ground and the (F856) 5-volt Supply circuit at one of the sensor harness connectors.

   Is the resistance below 100 ohms?

   Yes

   - Repair the short to ground in the (F856) 5-volt Supply circuit.
   - Perform the POWERTRAIN VERIFICATION TEST. Refer to **1500 & 2500 - 3.7L, 4.7L & 5.7L - POWERTRAIN VERIFICATION TEST** or **3500 CAB & CHASSIS - POWERTRAIN VERIFICATION TEST** .

   No

- Go To 9.

9. **POWERTRAIN CONTROL MODULE (PCM)**
    1. Using the wiring diagram/schematic as a guide, inspect the wiring and connectors between the related Sensors and the Powertrain Control Module (PCM).
    2. Look for any chafed, pierced, pinched, or partially broken wires.
    3. Look for broken, bent, pushed out or corroded terminals. Verify that there is good pin to terminal contact in the related Sensors and the Powertrain Control Module connectors.
    4. Refer to any Technical Service Bulletins that may apply.

    Were there any problems found?

    Yes

    - Repair as necessary.
    - Perform the POWERTRAIN VERIFICATION TEST. Refer to **1500 & 2500 - 3.7L, 4.7L & 5.7L - POWERTRAIN VERIFICATION TEST** or **3500 CAB & CHASSIS - POWERTRAIN VERIFICATION TEST** .

    No

    - Replace and program the Powertrain Control Module per Service Information.
    - Perform the POWERTRAIN VERIFICATION TEST. Refer to **1500 & 2500 - 3.7L, 4.7L & 5.7L - POWERTRAIN VERIFICATION TEST** or **3500 CAB & CHASSIS - POWERTRAIN VERIFICATION TEST** .

START AND STALL CONDITION

For a complete wiring diagram, **refer to appropriate SYSTEM WIRING DIAGRAMS article** .

POSSIBLE CAUSES

Possible Causes
CURRENT PCM DTCS
CURRENT WIN DTCS
RESTRICTED EXHAUST
ENGINE MECHANICAL
VACUUM LEAKS
CRACKED SPARK PLUG(S), CARBON TRACKING SPARK PLUG AND COIL
CARBON BUILDUP ON THROTTLE BODY
FUEL CONTAMINATION
FUEL DELIVERY
VALVE TIME OUT OF SPECIFICATION
5 VOLT SUPPLY CIRCUIT

SENSOR GROUND CIRCUIT
CMP SIGNAL CIRCUIT
CAMSHAFT POSITION SENSOR
CKP SIGNAL CIRCUIT
CRANKSHAFT POSITION SENSOR
FLEX PLATE (TARGET WHEEL)
CMP AIRGAP
CKP AIRGAP
POWERTRAIN CONTROL MODULE (PCM)

Always perform the Pre-Diagnostic Troubleshooting procedure before proceeding. Refer to 1500 & 2500 - PRE-DIAGNOSTIC TROUBLESHOOTING PROCEDURE or 3500 CAB & CHASSIS - PRE-DIAGNOSTIC TROUBLESHOOTING PROCEDURE .

DIAGNOSTIC TEST

1. **CHECKING DIAGNOSTIC TROUBLE CODES (DTCS)**

   NOTE: Before continuing with this procedure, review the Technical Service Bulletins (TSBs) that may be related to a start and stall condition.

   NOTE: It may be helpful to review Secondary Indicators, if a two trip DTC is present, drive the vehicle to try and mature the DTC to Active.

   1. Ignition on, engine not running.
   2. Using a scan tool, read DTCs.

      Are any DTCs present?

      Yes

      - Perform the appropriate diagnostic procedure.
      - Perform the POWERTRAIN VERIFICATION TEST. Refer to **1500 & 2500 - 3.7L, 4.7L & 5.7L - POWERTRAIN VERIFICATION TEST** or **3500 CAB & CHASSIS - POWERTRAIN VERIFICATION TEST** .

      No

      - Go To 2.

2. **CHECKING WIRELESS IGNITION NODE (WIN) DTCS**

   NOTE: If you are unable to communicate with the Wireless Ignition Node (WIN), and perform the No Response from WIN diagnostic procedure. Refer to COMMUNICATION - DIAGNOSIS AND TESTING .

1. Using the scan tool, read the WIN codes.

   Are there any active DTCs in the WIN?

   Yes

   - Refer to **WIN - DIAGNOSIS AND TESTING** and perform the appropriate diagnostic procedure.

   No

   - Go To 3.

3. **CAM/CRANK VERIFICATION**
   1. Using a scan tool, under OBDII Monitors, read and record the Cam Crank Synchronization Event Monitors.

CAM EVENT STATUS						
CM1ULTRH	CM1ULTLH	CM1TOL1	CM1LOW	CM1ULZERO	CM1MFS	CM1MF
CM1IF	CM1ONLY	CM2ULTRH	CM2ULTLH	CM2TOL1	CM2LOW	CM2ULZE
CM2MFS	CM2MFR	CM2IF	CM2ONLY	CM3ULTRH	CM3ULTLH	CM3TOI
CM3LOW	CM3ULZERO	CM3MFS	CM3MFR	CM3IF	CM3ONLY	CM4ULTI
CM4ULTLH	CM4TOL1	CM4LOW	CM4ULZERO	CM4MFS	CM4MFR	CM4IF
CM4ONLY	SYULCAM	-	-	-	-	-
CRANK EVENT STATUS						
CKULTRH	CKULTLH	CKLOW	CKUL60M2	CKMFS	CKMFR	CK1IF
CKULGTRH	CKULGTLH	CKULGTVR	CKULGTVL	CKUL220	CKUL40	SYULCR
SYNOCLCK	-	-	-	-	-	-
SYNC EVENT STATUS						
SYULTOL	SYTOLF	-	-	-	-	-

   Use the table above and determine if any of the values are present in the Cam Crank Synchronization Event Monitor display.

   CAM EVENT STATUS ONLY

   - Go To 7.

   CRANK EVENT STATUS ONLY

   - Go To 14.

   CAM, CKP and/or SYNC EVENT STATUS

   - Go To 21.

None Present

- Go To 4.

4. **SPARK PLUG(S)**

NOTE: **Inspect the ignition coil for damage, carbon tracking on the coil or a damaged spark plug insulator boot. If a problem is found, replace the ignition coil.**

1. Turn the ignition off.
2. Remove the spark plug.
3. Inspect the spark plug for any of the following conditions:
   - Cracks or damage
   - Carbon tracking
   - Foreign material
   - Gap not within specification
   - Loose or broken electrode

NOTE: **Lightly tap the bottom of the spark plug on a solid surface. The electrode in the spark plug should not move.**

Were any problems found?

Yes

- Replace the spark plug.
- Perform the POWERTRAIN VERIFICATION TEST. Refer to **1500 & 2500 - 3.7L, 4.7L & 5.7L - POWERTRAIN VERIFICATION TEST** or **3500 CAB & CHASSIS - POWERTRAIN VERIFICATION TEST** .

No

- Go To 5.

5. **POSSIBLE CAUSES OF START AND STALL CONDITION**

The following items should be checked as a possible cause for a start and stall condition:

- Perform any Technical Service Bulletins (TSBs) that may apply to the symptom.
- The exhaust system must be free of any restrictions.
- The engine compression must be within specifications.
- The engine valve timing must be within specifications.
- The engine must be free from vacuum leaks.
- The throttle body must be free of carbon buildup and dirt.

- Cracked spark plugs, carbon track on spark plugs, spark plug wires if applicable, coil and coil boot.

Do any of the above conditions exist?

Yes

- Repair as necessary.
- Perform the POWERTRAIN VERIFICATION TEST. Refer to **1500 & 2500 - 3.7L, 4.7L & 5.7L - POWERTRAIN VERIFICATION TEST** or **3500 CAB & CHASSIS - POWERTRAIN VERIFICATION TEST** .

No

- Go To 6.

6. **FUEL PUMP DELIVERY**
   1. Verify that the Fuel tank is not empty before continuing.
   2. Refer to **DIAGNOSIS AND TESTING** and perform the CHECKING THE FUEL DELIVERY SYSTEM diagnostic procedure.

      Was the No Start condition solved after following the above diagnostic test?

      Yes

      - Test Complete.

      No

      - Check for contamination/water in the fuel. Make sure the fuel being used in this vehicle meets OEM Fuel Requirement, perform the appropriate service procedure.
      - Perform the POWERTRAIN VERIFICATION TEST. Refer to **1500 & 2500 - 3.7L, 4.7L & 5.7L - POWERTRAIN VERIFICATION TEST** or **3500 CAB & CHASSIS - POWERTRAIN VERIFICATION TEST** .
7. **5 VOLT SUPPLY CIRCUIT VOLTAGE (CMP)**
   1. Turn the ignition off.
   2. Disconnect the Camshaft Position Sensor connector.
   3. Turn the ignition on.
   4. Measure the voltage of the 5 Volt Supply circuit in the Camshaft Position Sensor harness connector.

      Is the voltage 5.0 Volts?

      Yes

      - Go To 8.

No

- Repair the 5 Volt Supply.

NOTE: **A battery disconnect must be performed to clear the Cam Crank Synchronization Events.**

- Perform the POWERTRAIN VERIFICATION TEST. Refer to **1500 & 2500 - 3.7L, 4.7L & 5.7L - POWERTRAIN VERIFICATION TEST** or **3500 CAB & CHASSIS - POWERTRAIN VERIFICATION TEST** .

8. **SENSOR GROUND CIRCUIT TEST**
   1. Turn the ignition off.
   2. Using a 12-volt test light connected to 12 Volts, probe the Sensor Ground circuit in the Camshaft Position Sensor harness connector.

NOTE: **The test light should be illuminated and bright. Compare the brightness to that of a direct connection to the battery.**

Is the test light illuminated and bright?

Yes

- Go To 9.

No

- Repair the Ground Circuit.

NOTE: **A battery disconnect must be performed to clear the Cam Crank Synchronization Events.**

- Perform the POWERTRAIN VERIFICATION TEST. Refer to **1500 & 2500 - 3.7L, 4.7L & 5.7L - POWERTRAIN VERIFICATION TEST** or **3500 CAB & CHASSIS - POWERTRAIN VERIFICATION TEST** .

9. **CMP SIGNAL**
   1. Turn the ignition on.
   2. Measure the voltage of the CMP Signal circuit in the Camshaft Position Sensor harness connector.

Is the voltage between 4.7 and 5.0 Volts?

Yes

- Go To 13.

No

- Go To 10.

10. **CMP SIGNAL CIRCUIT SHORTED TO VOLTAGE**
    1. Turn the ignition off.
    2. Disconnect the Powertrain Control Module harness connector.
    3. Turn the ignition on.
    4. Measure the voltage of the CMP Signal circuit in the Camshaft Position Sensor harness connector.

    Is there any voltage present?

    Yes

    - Repair the CMP Signal circuit for a short to voltage.

      NOTE: A battery disconnect must be performed to clear the Cam Crank Synchronization Events.

    - Perform the POWERTRAIN VERIFICATION TEST. Refer to **1500 & 2500 - 3.7L, 4.7L & 5.7L - POWERTRAIN VERIFICATION TEST** or **3500 CAB & CHASSIS - POWERTRAIN VERIFICATION TEST** .

    No

    - Go To 11.

11. **CMP SIGNAL CIRCUIT SHORTED TO GROUND**
    1. Turn the ignition off.
    2. Measure the resistance between ground and the CMP Signal circuit in the Camshaft Position Sensor harness connector.

    Is the resistance above 100 Ohms?

    Yes

    - Go To 12.

    No

    - Repair the CMP Signal circuit for a short to ground.

      NOTE: A battery disconnect must be performed to clear the Cam Crank Synchronization Events.

    - Perform the POWERTRAIN VERIFICATION TEST. Refer to **1500 & 2500 - 3.7L, 4.7L & 5.7L - POWERTRAIN VERIFICATION TEST** or **3500 CAB & CHASSIS - POWERTRAIN VERIFICATION TEST** .

12. **CMP SIGNAL CIRCUIT OPEN OR HIGH RESISTANCE**

CAUTION: Do not probe the PCM harness connectors. Probing the PCM harness connectors will damage the PCM terminals, resulting in poor terminal to pin connection. Install the PCM Pinout Box (special tool #8815A, Kit, NGC, 38 Position) to perform diagnosis.

1. Measure the resistance of the CMP Signal circuit between the Camshaft Position Sensor harness connector and the appropriate terminal of the PCM Pinout Box (special tool #8815A, Kit, NGC, 38 Position).

   Is the resistance below 5.0 Ohms?

   Yes

   - Go To 24.

   No

   - Repair the CMP Signal circuit for an open circuit or excessive resistance.

     NOTE: A battery disconnect must be performed to clear the Cam Crank Synchronization Events.

   - Perform the POWERTRAIN VERIFICATION TEST. Refer to **1500 & 2500 - 3.7L, 4.7L & 5.7L - POWERTRAIN VERIFICATION TEST** or **3500 CAB & CHASSIS - POWERTRAIN VERIFICATION TEST** .

13. **CAMSHAFT POSITION SENSOR SIGNAL**

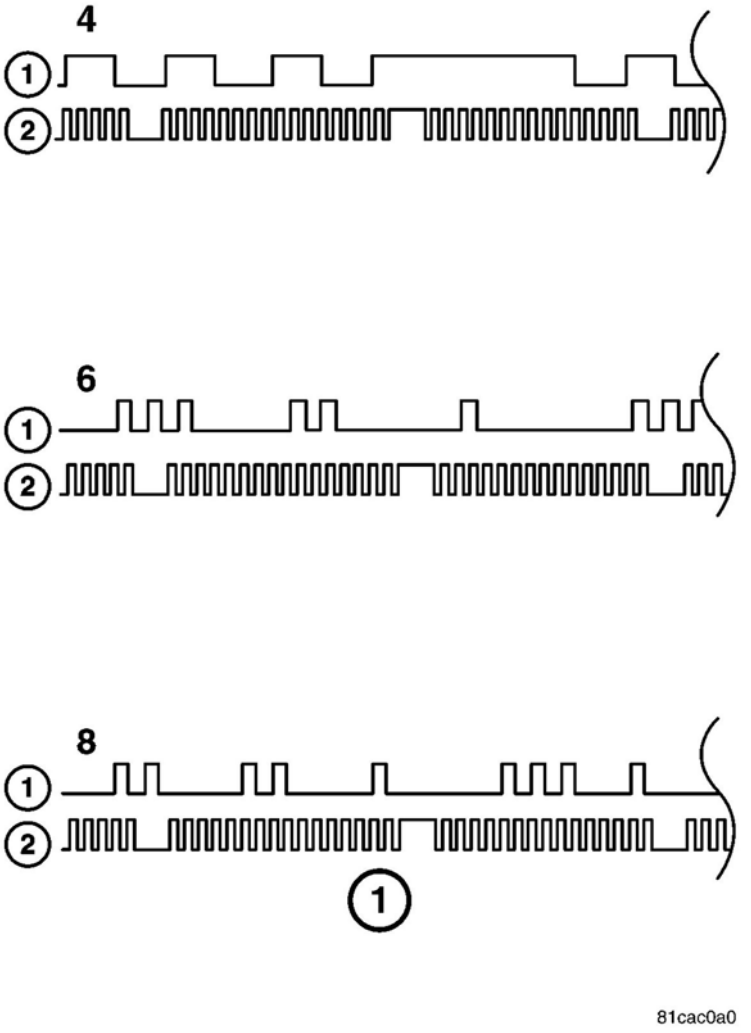

Fig. 25: Typical Camshaft Position Sensor Signal (1 Of 2)
Courtesy of CHRYSLER GROUP, LLC

1. Turn the ignition off.
2. **Fig. 25 is a depiction of typical scope patterns of the Cam (1) and Crank (2) sensors for 4, 6**

and 8 cylinder engines. The square wave patterns are uniform and are identical to one another. The patterns must be evenly spread apart and at the same height. The larger gap pattern (signature) after the shorter wave forms are used for cylinder identification (Crank signal) and the distance between the series of slots (trigger) on the camshaft pulley (cam signal). Any variation of the pattern will indicate an issue with the sensor, wiring or trigger (target) wheel.

CAUTION: Do not probe the PCM harness connectors. Probing the PCM harness connectors will damage the PCM terminals resulting in poor terminal to pin connection. Install the PCM Pinout Box (special tool #8815A, Kit, NGC, 38 Position) along with the Adapter (special tool #8815-1, PCM Pinout Box Adapter) to perform the diagnosis.

3. With a lab scope, probe the CMP Signal circuit in the appropriate terminal of the PCM Pinout Box (special tool #8815A, Kit, NGC, 38 Position).

WARNING: When the engine is operating, do not stand in direct line with the fan. Do not put your hands near the pulleys, belts or fan. Do not wear loose clothing. Failure to follow these instructions may result in possible serious or fatal injury.

4. Start and allow the engine to run.
5. Observe the lab scope screen.

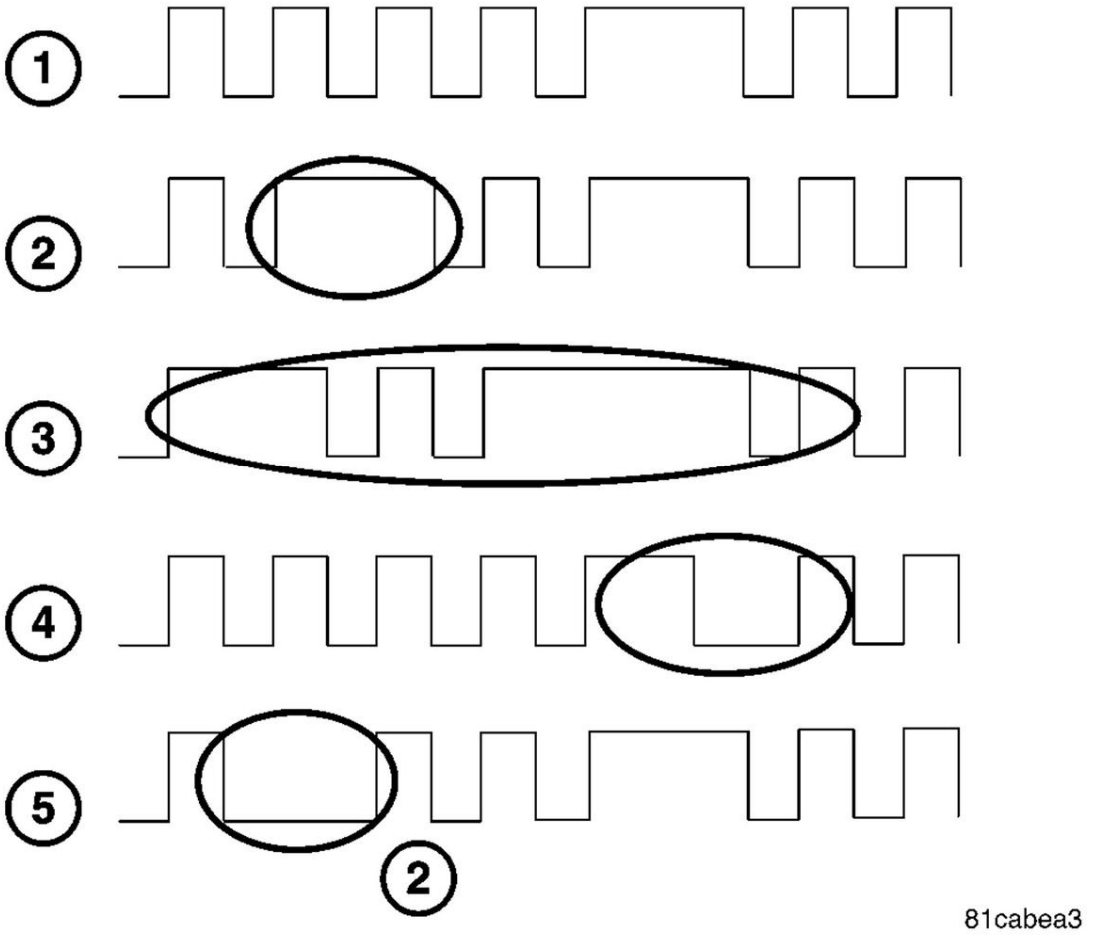

Fig. 26: Typical Camshaft Position Sensor Signal (2 Of 2)
Courtesy of CHRYSLER GROUP, LLC

6. Compare the scope pattern with the ones in **Fig. 26**.

   1. Pattern indicates a clean (good) square wave form that is identical to what the cam and crank should be. The square wave patterns are uniformed and are identical to one another.

   2. Two pulses joined together in the same spot on target. Indicates damage to the target (trigger) on the flexplate or broke tooth, runout in the target or large airgap between the sensor and the target

wheel.

3. Wide airgap or intermittent connection.

4. Early signature, predominately at high speed. Large airgap between the sensor and the target wheel.

5. Missed pulse. Possible burr or light damage to target or incorrect lateral position of the crank sensor to target (trigger).

NOTE: If any of the above (except pattern 1) is displayed on the lab scope repair as necessary.

Was the square wave found to match any of the above except pattern 1?

Yes

- Repair as necessary.
- Perform the POWERTRAIN VERIFICATION TEST. Refer to **1500 & 2500 - 3.7L, 4.7L & 5.7L - POWERTRAIN VERIFICATION TEST** or **3500 CAB & CHASSIS - POWERTRAIN VERIFICATION TEST** .

No

- Replace the Camshaft Position Sensor in accordance with the Service Information.

  NOTE: A battery disconnect must be performed to clear the Cam Crank Synchronization Events.

- Perform the POWERTRAIN VERIFICATION TEST. Refer to **1500 & 2500 - 3.7L, 4.7L & 5.7L - POWERTRAIN VERIFICATION TEST** or **3500 CAB & CHASSIS - POWERTRAIN VERIFICATION TEST** .

14. **5 VOLT SUPPLY CIRCUIT VOLTAGE (CKP)**
    1. Turn the ignition off.
    2. Disconnect the Crankshaft Position Sensor connector.
    3. Turn the ignition on.
    4. Measure the voltage of the 5 Volt Supply circuit in the Crankshaft Position Sensor harness connector.

    Is the voltage 5.0 Volts?

    Yes

    - Go To 15.

No

- Repair the 5 Volt Supply for an open circuit or excessive resistance.

NOTE: **A battery disconnect must be performed to clear the Cam Crank Synchronization Events.**

- Perform the POWERTRAIN VERIFICATION TEST. Refer to **1500 & 2500 - 3.7L, 4.7L & 5.7L - POWERTRAIN VERIFICATION TEST** or **3500 CAB & CHASSIS - POWERTRAIN VERIFICATION TEST** .

15. **SENSOR GROUND CIRCUIT TEST**
    1. Turn the ignition off.
    2. Using a 12-volt test light connected to 12 Volts, check the Sensor Ground circuit in the Crankshaft Position Sensor harness connector.

NOTE: **The test light should be illuminated and bright. Compare the brightness to that of a direct connection to the battery.**

Is the test light illuminated and bright?

Yes

- Go To 16.

No

- Repair the Ground Circuit for an open circuit or excessive resistance.

NOTE: **A battery disconnect must be performed to clear the Cam Crank Synchronization Events.**

- Perform the POWERTRAIN VERIFICATION TEST. Refer to **1500 & 2500 - 3.7L, 4.7L & 5.7L - POWERTRAIN VERIFICATION TEST** or **3500 CAB & CHASSIS - POWERTRAIN VERIFICATION TEST** .

16. **CKP SIGNAL**
    1. Turn the ignition on.
    2. Measure the voltage of the CKP Signal circuit in the Crankshaft Position Sensor harness connector.

Is the voltage between 4.7 and 5.0 Volts?

Yes

- Go To 20.

No

- Go To 17.

17. **CKP SIGNAL CIRCUIT SHORTED TO VOLTAGE**
    1. Turn the ignition off.
    2. Disconnect the Powertrain Control Module (PCM) harness connector.
    3. Turn the ignition on.
    4. Measure the voltage of the CKP Signal circuit in the Crankshaft Position Sensor harness connector.

    Is there any voltage present?

    Yes

    - Repair the CKP Signal circuit for a short to voltage.

      NOTE: A battery disconnect must be performed to clear the Cam Crank Synchronization Events.

    - Perform the POWERTRAIN VERIFICATION TEST. Refer to **1500 & 2500 - 3.7L, 4.7L & 5.7L - POWERTRAIN VERIFICATION TEST** or **3500 CAB & CHASSIS - POWERTRAIN VERIFICATION TEST** .

    No

    - Go To 18.

18. **CKP SIGNAL CIRCUIT SHORTED TO GROUND**
    1. Turn the ignition off.
    2. Measure the resistance between ground and the CKP Signal circuit in the Crankshaft Position Sensor harness connector.

    Is the resistance above 100 Ohms?

    Yes

    - Go To 19.

    No

    - Repair the CMP Signal circuit for a short to ground.

      NOTE: A battery disconnect must be performed to clear the Cam Crank Synchronization Events.

    - Perform the POWERTRAIN VERIFICATION TEST. Refer to **1500 & 2500 - 3.7L, 4.7L & 5.7L - POWERTRAIN VERIFICATION TEST** or **3500 CAB & CHASSIS - POWERTRAIN VERIFICATION TEST** .

19. **CKP SIGNAL CIRCUIT OPEN OR HIGH RESISTANCE**

CAUTION: Do not probe the PCM harness connectors. Probing the PCM harness connectors will damage the PCM terminals, resulting in poor terminal to pin connection. Install the PCM Pinout Box (special tool #8815A, Kit, NGC, 38 Position) to perform diagnosis.

1. Measure the resistance of the CKP Signal circuit between the Camshaft Position Sensor harness connector and the appropriate terminal of the PCM Pinout Box (special tool #8815A, Kit, NGC, 38 Position).

   Is the resistance below 5.0 Ohms?

   Yes

   - Go To 24.

   No

   - Repair the CMP Signal circuit for an open circuit or high resistance.

     NOTE: A battery disconnect must be performed to clear the Cam Crank Synchronization Events.

   - Perform the POWERTRAIN VERIFICATION TEST. Refer to **1500 & 2500 - 3.7L, 4.7L & 5.7L - POWERTRAIN VERIFICATION TEST** or **3500 CAB & CHASSIS - POWERTRAIN VERIFICATION TEST** .

20. **CRANKSHAFT POSITION SENSOR SIGNAL**

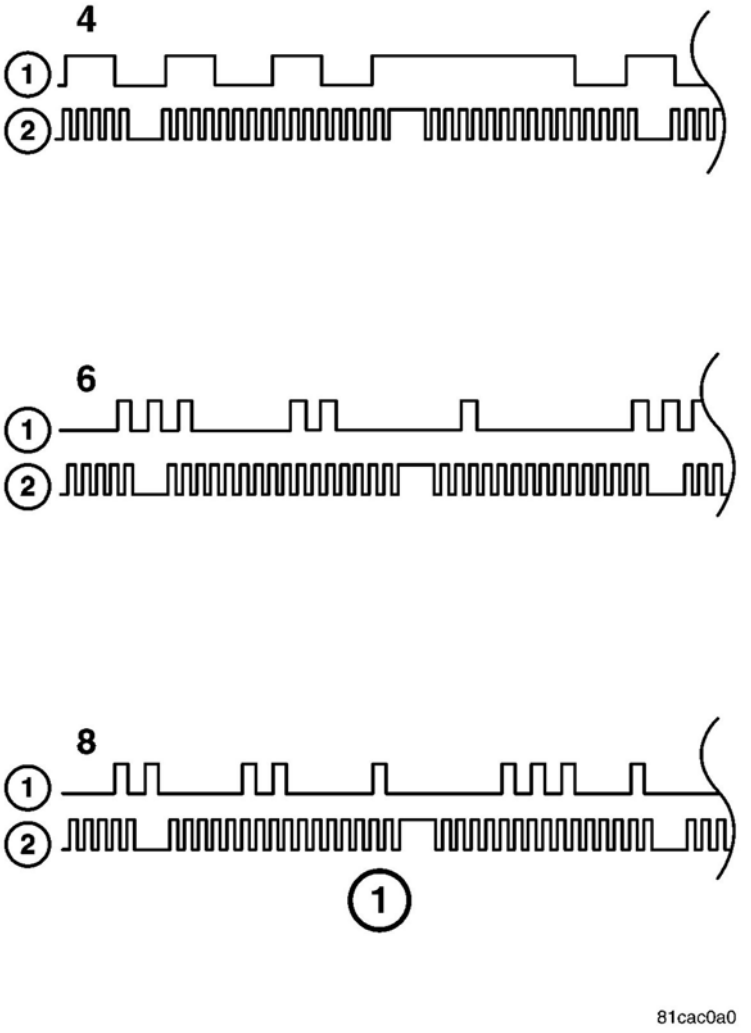

Fig. 27: Typical Crankshaft Position Sensor Signal (1 Of 2)
Courtesy of CHRYSLER GROUP, LLC

1. Turn the ignition off.
2. **Fig. 27 is a depiction of typical scope patterns of the Cam (1) and Crank (2) sensors for 4, 6**

and 8 cylinder engines. The square wave patterns are uniform and are identical to one another. The patterns must be evenly spread apart and at the same height. The larger gap pattern (signature) after the shorter wave forms are used for cylinder identification (Crank signal) and the distance between the series of slots (trigger) on the camshaft pulley (cam signal). Any variation of the pattern will indicate an issue with the sensor, wiring and trigger (target) wheel.

CAUTION: Do not probe the PCM harness connectors. Probing the PCM harness connectors will damage the PCM terminals resulting in poor terminal to pin connection. Install the PCM Pinout Box (special tool #8815A, Kit, NGC, 38 Position) along with the Adapter (special tool #8815-1, PCM Pinout Box Adapter) to perform the diagnosis.

3. With a lab scope, probe the CKP Signal circuit in the appropriate terminal of the PCM Pinout Box (special tool #8815A, Kit, NGC, 38 Position).

WARNING: When the engine is operating, do not stand in direct line with the fan. Do not put your hands near the pulleys, belts or fan. Do not wear loose clothing. Failure to follow these instructions may result in possible serious or fatal injury.

4. Start and allow the engine to run.
5. Observe the lab scope screen.

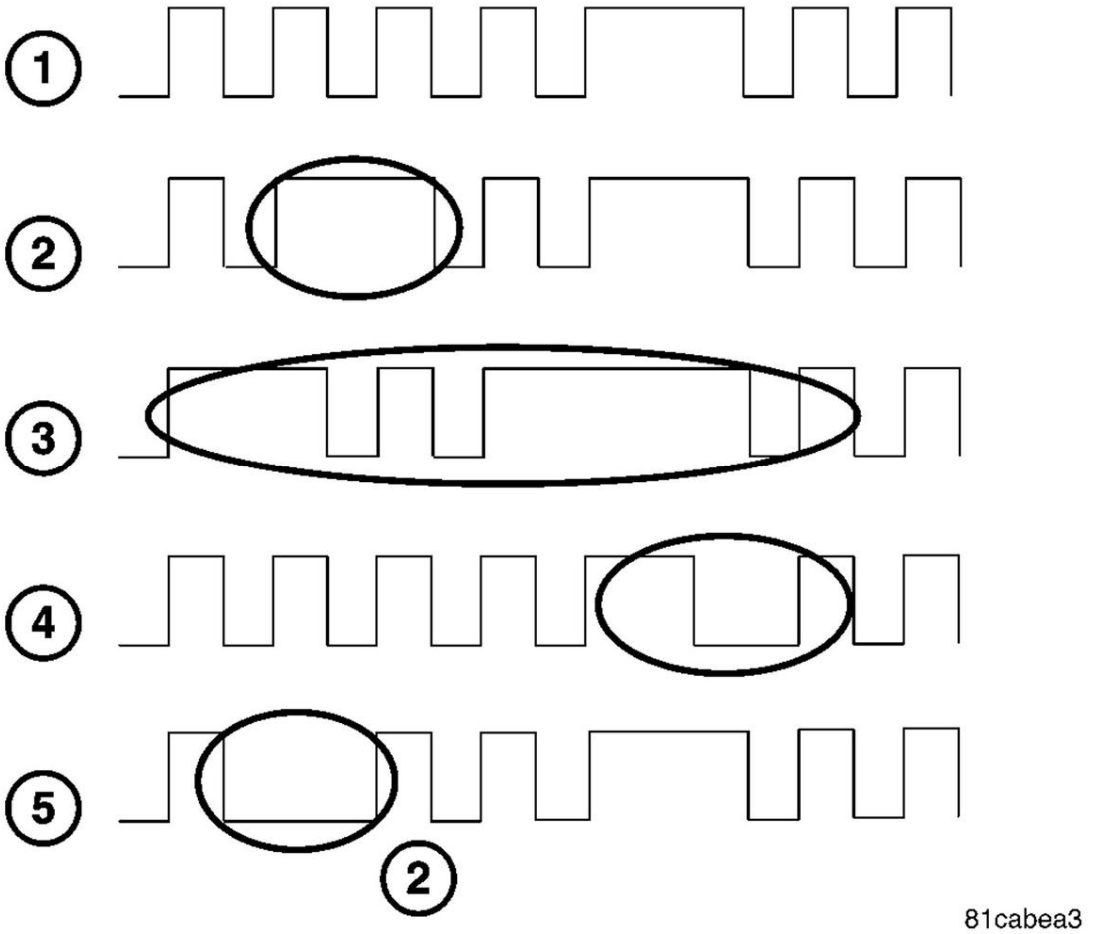

Fig. 28: Typical Crankshaft Position Sensor Signal (2 Of 2)
Courtesy of CHRYSLER GROUP, LLC

6. Compare the scope pattern with the ones in **Fig. 28**.

   1. Pattern indicates a clean (good) square wave form that is identical to what the cam and crank should be. The square wave patterns are uniformed and are identical to one another.

   2. Two pulses joined together in the same spot on target. Indicates damage to the target (trigger) on the flexplate or broke tooth, runout in the target or large airgap between the sensor and the target

wheel.

3. Wide airgap or intermittent connection.

4. Early signature, predominately at high speed. Large airgap between the sensor and the target wheel.

5. Missed pulse. Possible burr or light damage to target or incorrect lateral position of the crank sensor to target (trigger).

NOTE: If any of the above (except pattern 1) is displayed on the lab scope repair as necessary.

Was the square wave found to match any of the above except pattern 1?

Yes

- Repair as necessary.

  NOTE: A battery disconnect must be performed to clear the Cam Crank Synchronization Events.

-
- Perform the POWERTRAIN VERIFICATION TEST. Refer to **1500 & 2500 - 3.7L, 4.7L & 5.7L - POWERTRAIN VERIFICATION TEST** or **3500 CAB & CHASSIS - POWERTRAIN VERIFICATION TEST** .

No

- Replace the Crankshaft Position Sensor.

  NOTE: A battery disconnect must be performed to clear the Cam Crank Synchronization Events.

- Perform the POWERTRAIN VERIFICATION TEST. Refer to **1500 & 2500 - 3.7L, 4.7L & 5.7L - POWERTRAIN VERIFICATION TEST** or **3500 CAB & CHASSIS - POWERTRAIN VERIFICATION TEST** .

21. **VALVE TIMING**
    1. Make sure the valve timing is within specification. Refer to the appropriate Service Information of the appropriate engine being diagnosed.

       Was the valve timing within specification?

       Yes

- Go To 22.

No

- Repair as necessary.
- Perform the POWERTRAIN VERIFICATION TEST. Refer to **1500 & 2500 - 3.7L, 4.7L & 5.7L - POWERTRAIN VERIFICATION TEST** or **3500 CAB & CHASSIS - POWERTRAIN VERIFICATION TEST** .

22. **5 VOLT SUPPLY CIRCUIT VOLTAGE (CMP/CKP)**

NOTE: The 5 Volt Supply circuit must be present at both CMP and CKP Sensors.

1. Turn the ignition off.
2. Disconnect the Camshaft Position Sensor connector.
3. Turn the ignition on.
4. Measure the voltage of the 5 Volt Supply circuit in the Camshaft Position Sensor harness connector.
5. **Repeat the above test at the Crankshaft Position Sensor (Crankshaft Position Sensor harness connector measure).**

Is the voltage 5.0 Volts at each sensor?

Yes

- Go To 23.

No

- Repair the 5 Volt Supply circuit(s) as necessary.

NOTE: A battery disconnect must be performed to clear the Cam Crank Synchronization Events.

- Perform the POWERTRAIN VERIFICATION TEST. Refer to **1500 & 2500 - 3.7L, 4.7L & 5.7L - POWERTRAIN VERIFICATION TEST** or **3500 CAB & CHASSIS - POWERTRAIN VERIFICATION TEST** .

23. **SENSOR GROUND CIRCUIT**

NOTE: The Ground circuit must be present at both CMP and CKP Sensors.

1. Turn the ignition off.
2. Using a 12-volt test light connected to 12 Volts, probe the Sensor Ground circuit in the Camshaft Position Sensor harness connector.
3. **Repeat the above test at the Crankshaft Position Sensor (Crankshaft Position Sensor harness**

connector measure).

NOTE: The test light should be illuminated and bright. Compare the brightness to that of a direct connection to the battery.

Is the test light illuminated and bright?

Yes

- Replace both the Camshaft Position Sensor and Crankshaft Position Sensor in accordance with the Service Information.

  NOTE: A battery disconnect must be performed to clear the Cam Crank Synchronization Events.

- Perform the POWERTRAIN VERIFICATION TEST. Refer to **1500 & 2500 - 3.7L, 4.7L & 5.7L - POWERTRAIN VERIFICATION TEST** or **3500 CAB & CHASSIS - POWERTRAIN VERIFICATION TEST** .

No

- Repair the Ground Circuit(s) as necessary.

  NOTE: A battery disconnect must be performed to clear the Cam Crank Synchronization Events.

- Perform the POWERTRAIN VERIFICATION TEST. Refer to **1500 & 2500 - 3.7L, 4.7L & 5.7L - POWERTRAIN VERIFICATION TEST** or **3500 CAB & CHASSIS - POWERTRAIN VERIFICATION TEST** .

24. **POWERTRAIN CONTROL MODULE (PCM)**
    1. Using the wiring diagram/schematic as a guide, inspect the wiring and connectors between the Camshaft Position Sensor and the Powertrain Control Module (PCM).
    2. Look for any chafed, pierced, pinched or partially broken wires.
    3. Look for broken, bent, pushed out or corroded terminals.
    4. Monitor the scan tool data relative to this circuit and wiggle test the wiring and connectors.
    5. Look for the data to change or for the DTC to reset during the wiggle test.
    6. Perform any Technical Service Bulletins (TSBs) that may apply.

    Were any problems found?

    Yes

    - Repair as necessary.

NOTE: **A battery disconnect must be performed to clear the Cam Crank Synchronization Events.**

- Perform the POWERTRAIN VERIFICATION TEST. Refer to **1500 & 2500 - 3.7L, 4.7L & 5.7L - POWERTRAIN VERIFICATION TEST** or **3500 CAB & CHASSIS - POWERTRAIN VERIFICATION TEST** .

No

- Replace and program the Powertrain Control Module (PCM) in accordance with the Service Information.
- Perform the POWERTRAIN VERIFICATION TEST. Refer to **1500 & 2500 - 3.7L, 4.7L & 5.7L - POWERTRAIN VERIFICATION TEST** or **3500 CAB & CHASSIS - POWERTRAIN VERIFICATION TEST** .

EMISSION APPLICATIONS

2012 Cab & Chassis Diesel

Engine & Fuel System	(1) Emission Control Systems & Devices	(2) EGR Test No.
6.7L (410") 6-Cyl. FI	**AIH, CB, OC, DPF, SCR, NOx, EGR, HO2S, MIL**	2

(1) Major emission control systems and devices are listed in bold type; components and other related devices are listed in light type.

(2) See CHRYSLER LLC under DOMESTIC CARS & TRUCKS in EGR FUNCTION TESTING - DIESEL section. Use test number specified in table.

EMISSION APPLICATIONS

2012 Pickup, Cab & Chassis

Engine & Fuel System	(1) Emission Control Systems & Devices	(2) EGR Test No.
3.7L (226") V6 SFI	**PCV, EVAP, TWC, FR, EGR, SPK, (3) HO2S, CEC, MIL,** EVAP-LDP, EVAP-PSOL, EVAP-VC, FP-CKV, ORVR-CV, ORVR-FMV, SPK-CC	9
4.7L (287") V8 SFI	**PCV, EVAP, TWC, FR, EGR, SPK, (3) HO2S, CEC, MIL,** EVAP-LDP, EVAP-PSOL, EVAP-VC, FP-CKV, ORVR-CV, ORVR-FMV, SPK-CC	9
5.7L (348") V8 SFI	**PCV, EVAP, TWC, FR, EGR, SPK, (3) HO2S, CEC, MIL,** EVAP-LDP, EVAP-PSOL, EVAP-VC, FP-CKV, ORVR-CV, ORVR-FMV, SPK-CC	9

(1) Major emission control systems and devices are listed in bold type; components and other related devices are listed in light type.

(2) See CHRYSLER under DOMESTIC TRUCKS in EGR FUNCTION TESTING section. Use EGR test number specified in table.

(3) Equipped with 4.

SPECIAL TOOLS

SPECIAL TOOLS

	10189 - Wrench, DEF Module Lock Ring (Originally Shipped In Kit Number(s) 10189, 9896.)

DIESEL EXHAUST FLUID EMISSIONS, 6.7L DIESEL

DESCRIPTION

DESCRIPTION

The Diesel Exhaust Fluid Emissions system uses a Selective Catalytic Reduction (SCR). This is a technology that uses a urea based Diesel Exhaust Fluid (DEF) and a catalytic converter to significantly reduce nitrous oxides (NOx) emissions. The system accomplishes this by injecting small quantities of Diesel Exhaust Fluid (DEF) into the Selective Catalytic Reduction (SCR) where its vaporizes and decomposes to form ammonia and carbon dioxide. The Diesel Exhaust Fluid (DEF) Dosing Control unit is used to control the operation and monitoring of the DEF system. The ammonia is the desired by-product which in conjunction to the SCR Catalyst, converts the NOx to a harmless nitrogen and water. The SCR system is equipped with two NOx Sensors and modules that are used to monitor the efficiency of the SCR Catalyst and DEF system.

DIAGNOSIS AND TESTING

DIAGNOSIS AND TESTING - DIESEL EXHAUST FLUID

WARNING: **Diesel Exhaust Fluid (DEF) contains urea. Do not get the substance in your eyes. In case of contact, immediately flush eyes with large amounts of water for a minimum of 15 minutes. Do not swallow. In the event the DEF is ingested, contact a physician immediately. Reference the Materials Safety Data Sheet (MSDS) for additional information.**

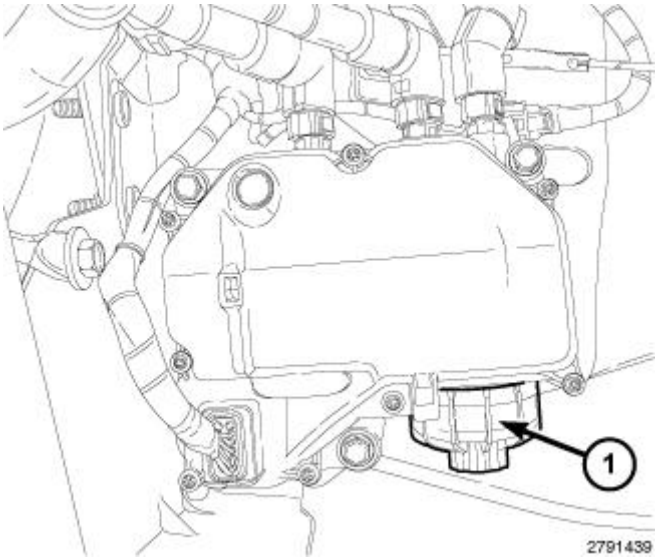

Fig. 1: DEF Filter Cap
Courtesy of CHRYSLER GROUP, LLC

1. Clean the Diesel Exhaust Fluid (DEF) pump to remove contamination or debris by the fluid filter.
2. Remove the DEF filter cap (1).
3. Visually inspect the fluid for sign of contamination or debris.

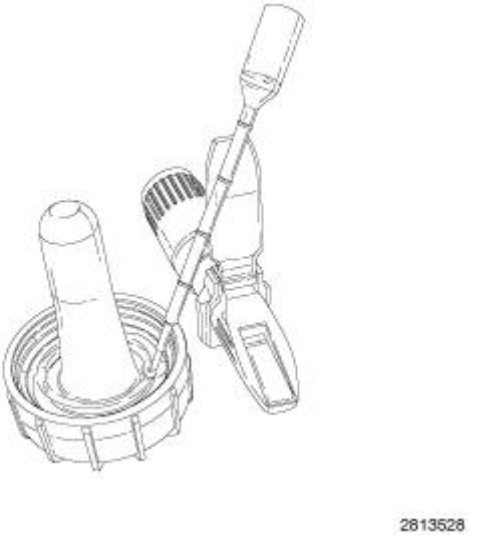

Fig. 2: Collecting Diesel Exhaust Fluid
Courtesy of CHRYSLER GROUP, LLC

4. Collect a sample of diesel exhaust fluid from the system.
5. Test the quality of the DEF using the DEF/UREA Refractometer 94-F-OOK-108-456 available through Pentastar Service Equipment or with a litmus test paper.
    1. The DEF should register approximately 32.5 percent using a refractometer or with litmus paper 9 pH.

6. If the DEF is not within specifications then the tank needs to be drained and cleaned and refilled with a minimum of 2.5 gallons good DEF.

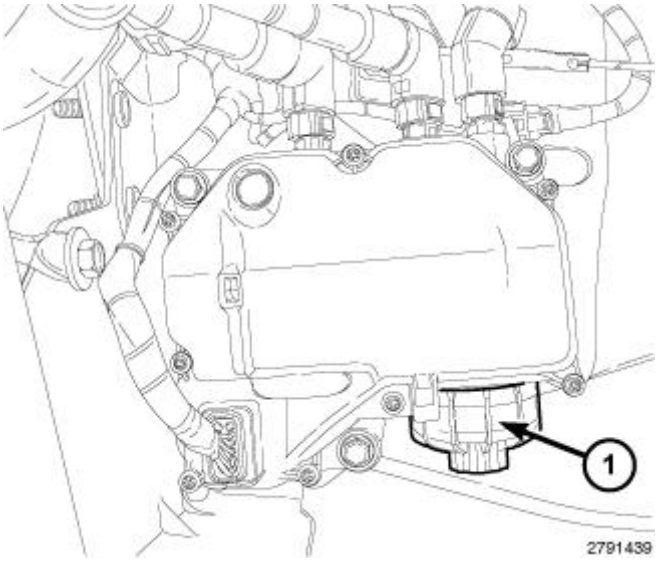

Fig. 3: DEF Filter Cap
Courtesy of CHRYSLER GROUP, LLC

7. Install the DEF filter cap (1). Tighten to (1) to 20 N.m (177 in. lbs).

ASSEMBLY, DIESEL EXHAUST FLUID PUMP

DESCRIPTION

DESCRIPTION

The Diesel Exhaust Fluid (DEF) Supply Pump is mounted on the outside left frame rail of the vehicle near the DEF tank. The DEF Supply Pump:

- Has an operating pressure of 9 bar (131 psi)
- Capable of reverse flow to evacuate system on shut-down
- Has a serviceable filter
- Electrically Heated

OPERATION

OPERATION

The Diesel Exhaust Fluid (DEF) Supply Pump has many functions. It's primary purpose is to draw fluid from the tank and build adequate system pressure for dosing into the exhaust. The DEF Dosing Control Unit provides the 12 Volt supply and ground to the pump. The DEF Dosing Control Unit provides a Pulse Width Modulated (PWM) signal to the DEF Supply Pump to control the speed and output of the pump. The DEF Supply Pump has an internal temperature sensor which reports the internal temperature of the DEF Supply Pump to the DEF

Dosing Control Unit.

REMOVAL

REMOVAL

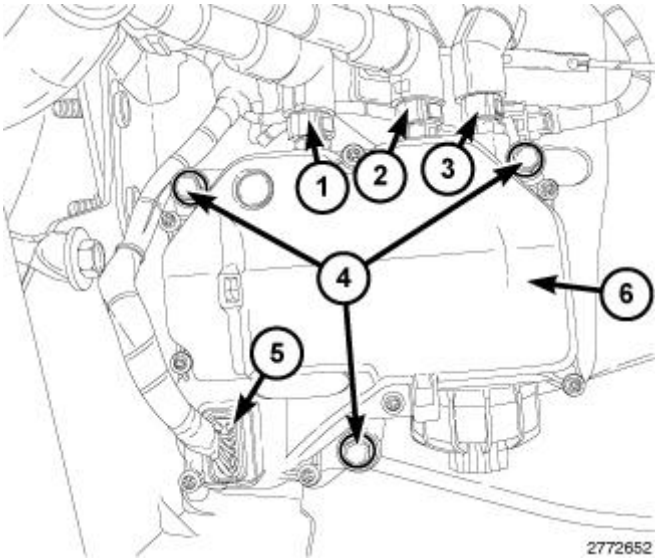

Fig. 4: DEF Supply Pump, Connector, Lines & Bolts
Courtesy of CHRYSLER GROUP, LLC

1. Disconnect both negative battery cables.
2. Disconnect the Diesel Exhaust Fluid (DEF) supply line (1).
3. Disconnect the DEF return line (2).
4. Disconnect the DEF pressure line (3).
5. Disconnect the DEF supply pump harness connector (5).
6. Remove bolts (4) and the DEF supply pump (6).

INSTALLATION

INSTALLATION

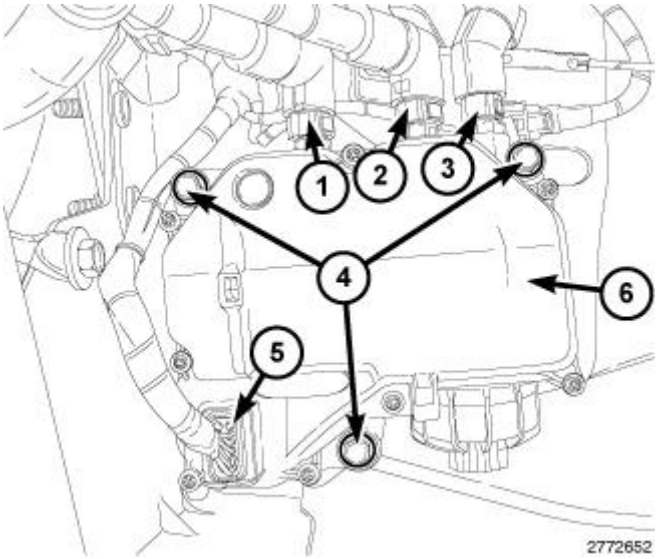

Fig. 5: DEF Supply Pump, Connector, Lines & Bolts
Courtesy of CHRYSLER GROUP, LLC

1. Install the Diesel Exhaust Fluid (DEF) supply pump (6). Tighten bolts (4) to 25 N.m (18 ft. lbs.).
2. Connect the DEF supply pump harness connector (5).
3. Connect the DEF pressure line (3).
4. Connect the DEF return line (2).
5. Connect the DEF supply line (1).
6. Connect both negative battery cables.

FILTER, DIESEL EXHAUST FLUID

DESCRIPTION

DESCRIPTION

The Diesel Exhaust Fluid (DEF) pump filter is a 10-micron filter designed to prevent foreign objects from entering the dosing system. Debris can cause permanent damage and premature failure to either the aftertreatment diesel exhaust fluid pump or the aftertreatment diesel exhaust fluid injector. The aftertreatment diesel exhaust fluid pump filter is a maintenance item.

REMOVAL

REMOVAL

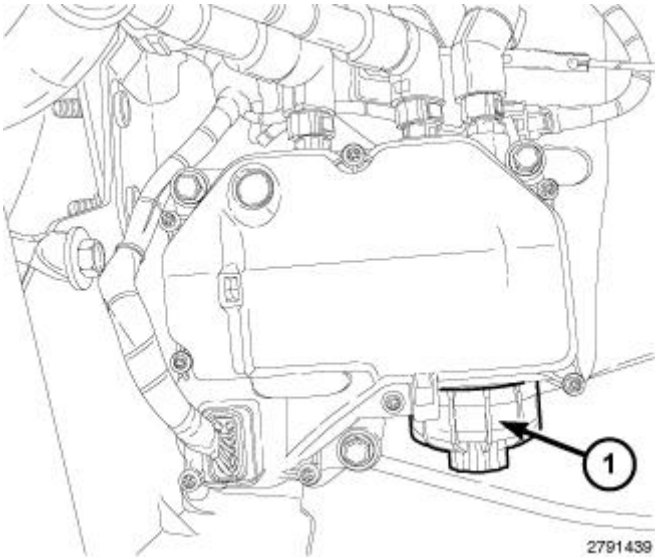

Fig. 6: DEF Filter Cap
Courtesy of CHRYSLER GROUP, LLC

1. Disconnect both negative battery cables.
2. Clean the Diesel Exhaust Fluid (DEF) pump to remove contamination or debris by the fluid filter.
3. Remove the DEF filter cap (1).

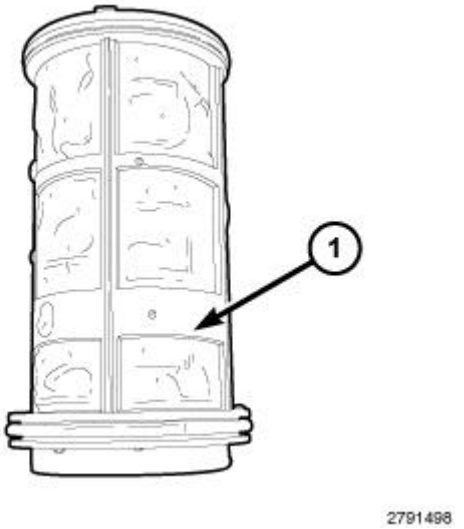

Fig. 7: DEF Filter Element
Courtesy of CHRYSLER GROUP, LLC

4. Pull out the old DEF filter element from DEF supply pump and discard.

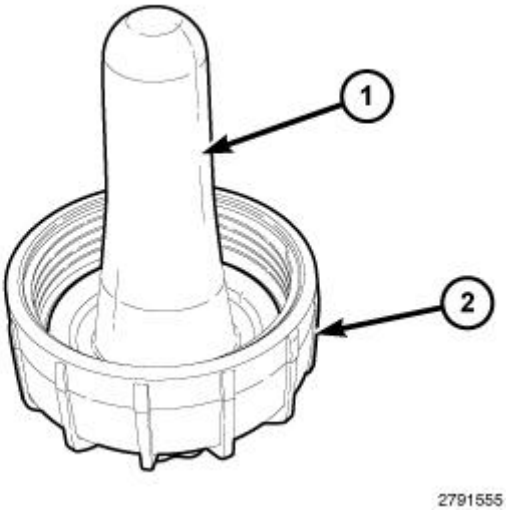

Fig. 8: DEF Filter Cap & Rubber Seal
Courtesy of CHRYSLER GROUP, LLC

5. Inspect the DEF filter cap and rubber seal for damage or cracks.

INSTALLATION

INSTALLATION

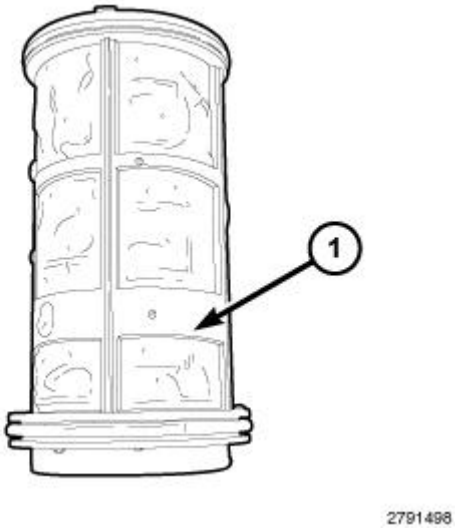

Fig. 9: DEF Filter Element
Courtesy of CHRYSLER GROUP, LLC

1. Lubricate the Diesel Exhaust Fluid (DEF) filter element O-rings.
2. Install the new DEF filter element (1) into the DEF supply pump.

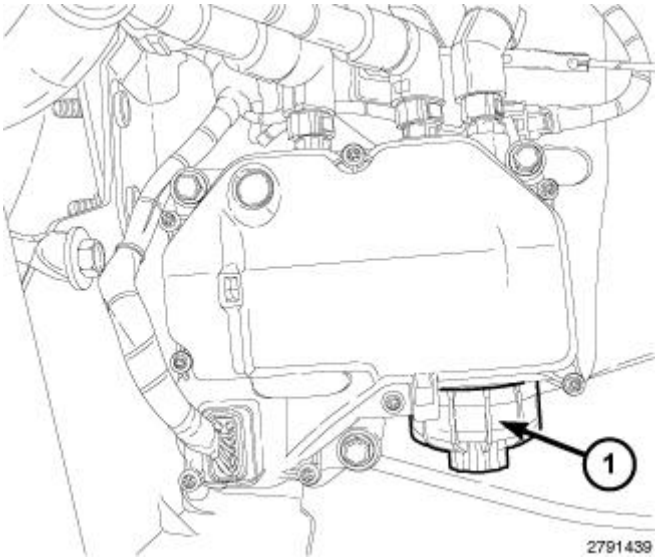

Fig. 10: DEF Filter Cap
Courtesy of CHRYSLER GROUP, LLC

3. Install the DEF filter cap (1). Tighten cap (1) to 20 N.m (177 in. lbs).
4. Connect both negative battery cables.

FITTING(S), DIESEL EXHAUST FLUID PUMP

DESCRIPTION

DESCRIPTIONS

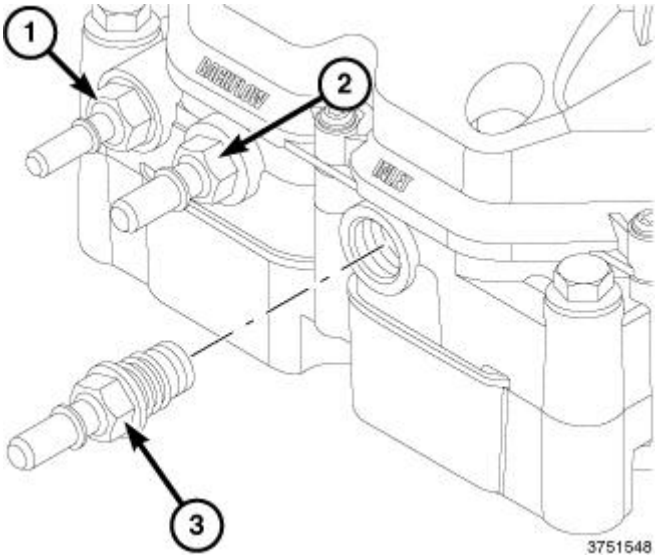

Fig. 11: DEF Quick Connect Service Port Fittings
Courtesy of CHRYSLER GROUP, LLC

The diesel exhaust fluid pump has three quick connect service port fitting. There is an inlet (3), backflow (2),

and outlet service port fitting (1) that has an O-ring seal which is serviceable. Each quick connect service port fitting is unique to its location and can not be switched with another service port fitting.

The inlet quick connect service port (1) is equipped with a screen filter.

The backflow quick connect service port (2) is equipped with a screen filter and an inserted orifice.

The outlet quick connect service port (1) is not equipped with a screen filter.

Do not attempt to remove the screen filters or orifice as then are not removable, they can only be cleaned. If the quick connect service port fitting is damaged in any way then the quick connect service port fitting must be replaced.

REMOVAL

REMOVAL

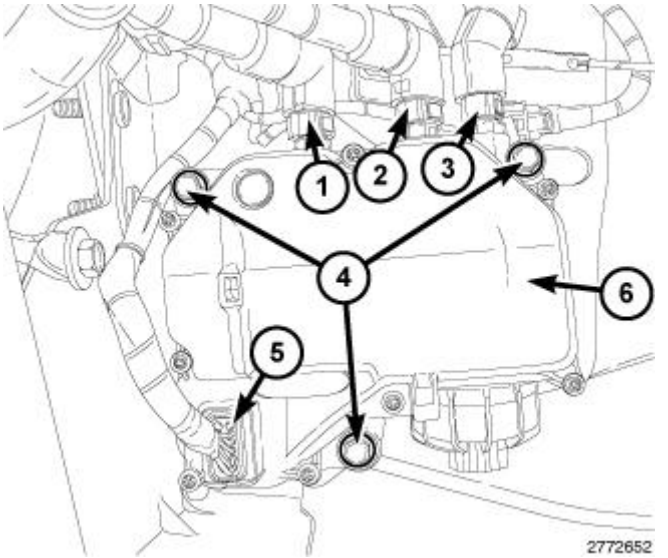

Fig. 12: DEF Supply Pump, Connector, Lines & Bolts
Courtesy of CHRYSLER GROUP, LLC

1. Raise and support the vehicle. Refer to **HOISTING, STANDARD PROCEDURE** .
2. Disconnect the appropriate quick connect line fitting (1, 2, or 3) from the Diesel Exhaust Fluid (DEF) supply pump (6). Refer to **STANDARD PROCEDURE - QUICK-CONNECT FITTINGS** . .

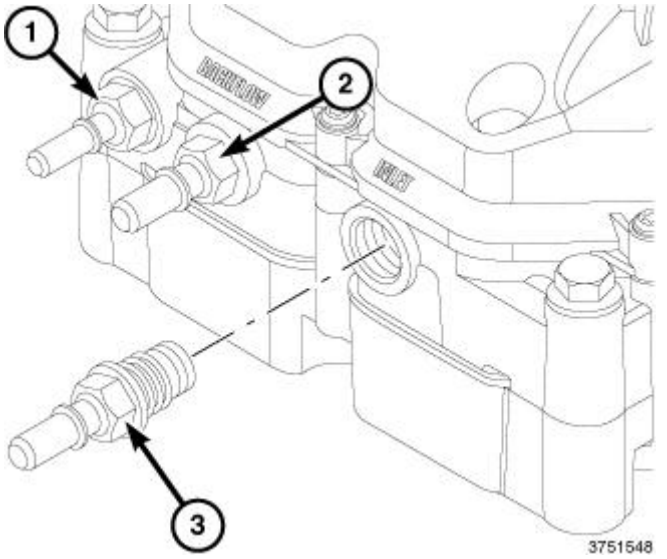

Fig. 13: DEF Quick Connect Service Port Fittings
Courtesy of CHRYSLER GROUP, LLC

3. Clean the area surrounding Diesel Exhaust Fluid (DEF) fitting.
4. Remove the appropriate DEF pump fitting (1, 2, or 3) from the DEF fluid pump.

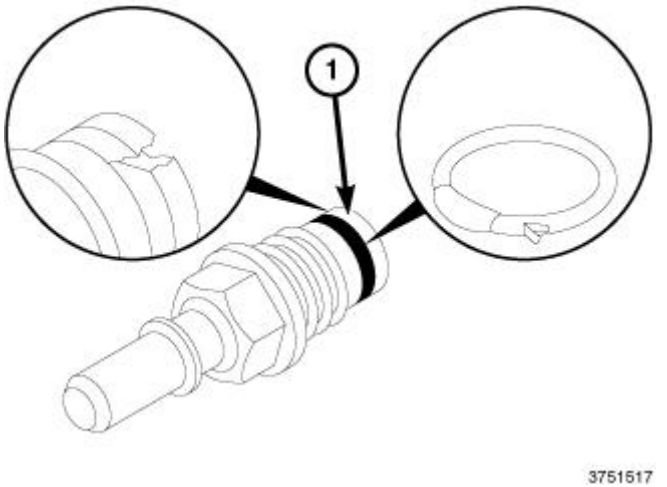

Fig. 14: DEF Fluid Pump Fitting & O-Ring Seal
Courtesy of CHRYSLER GROUP, LLC

5. Inspect the DEF fluid pump fitting and O-ring seal (1) for damage and replace as necessary.

CLEANING

CLEANING

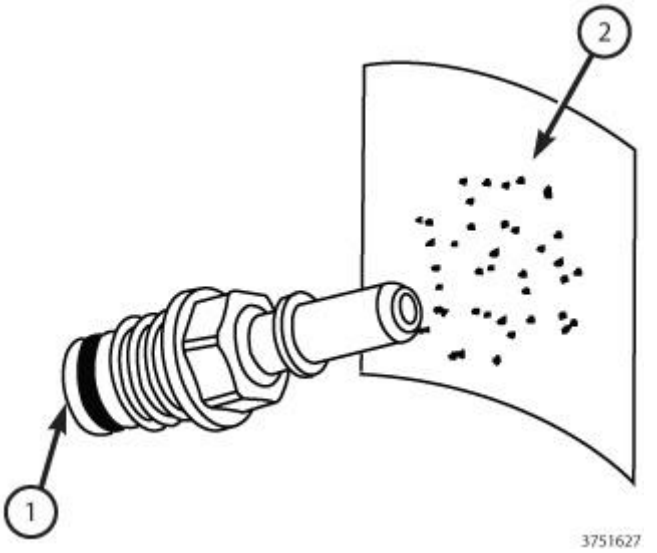

Fig. 15: Using Paper To Inspect For Debris
Courtesy of CHRYSLER GROUP, LLC

1. Do not attempt to remove the screen filter or orifice from the quick connect service port fitting.
2. Using shop air and a rubber tip blow gun, blow air through the backside (1) of the inlet fitting onto a white piece of paper and inspect for debris on the paper (2).
3. If debris is found in service fitting then remove the Diesel Exhaust Fluid (DEF) tank level temperature sensor and inspect the filter and replace as necessary. Refer to **SENSOR, DIESEL EXHAUST FLUID LEVEL/TEMPERATURE, REMOVAL**.
4. If necessary clean the DEF tank. Refer to **TANK, DIESEL EXHAUST FLUID, CLEANING**.

INSTALLATION

INSTALLATION

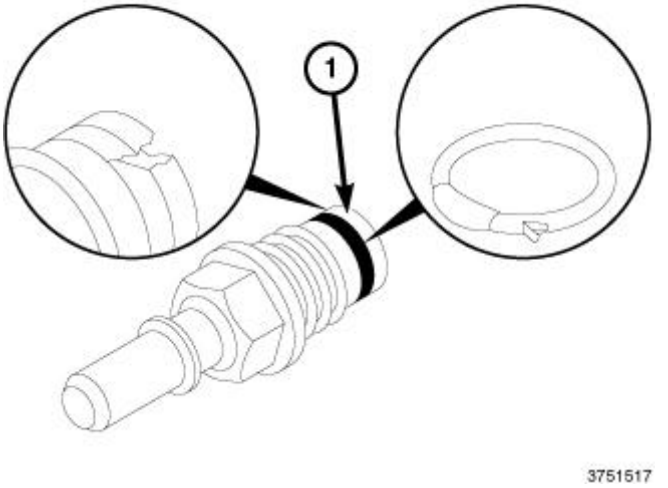

Fig. 16: DEF Fluid Pump Fitting & O-Ring Seal

Courtesy of CHRYSLER GROUP, LLC

1. If necessary, install a new O-ring seal (1).

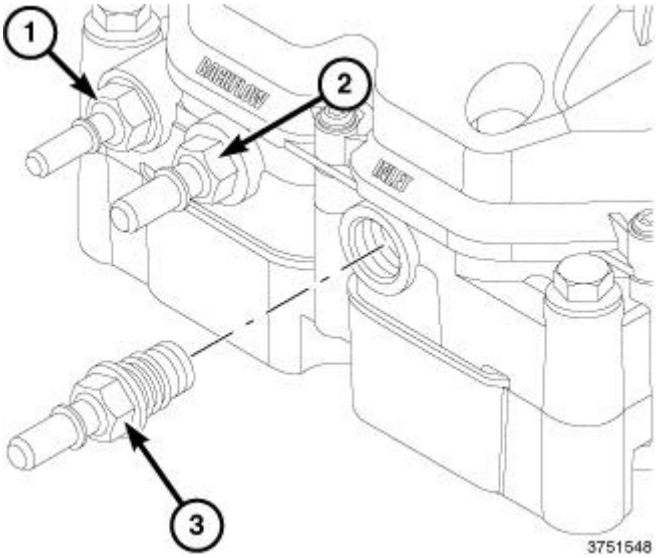

Fig. 17: DEF Quick Connect Service Port Fittings
Courtesy of CHRYSLER GROUP, LLC

2. Install the appropriate Diesel Exhaust Fluid (DEF) pump fitting (1, 2, or 3) into the DEF fluid pump. Tighten pump fitting 4 N.m (35 in. lbs.).

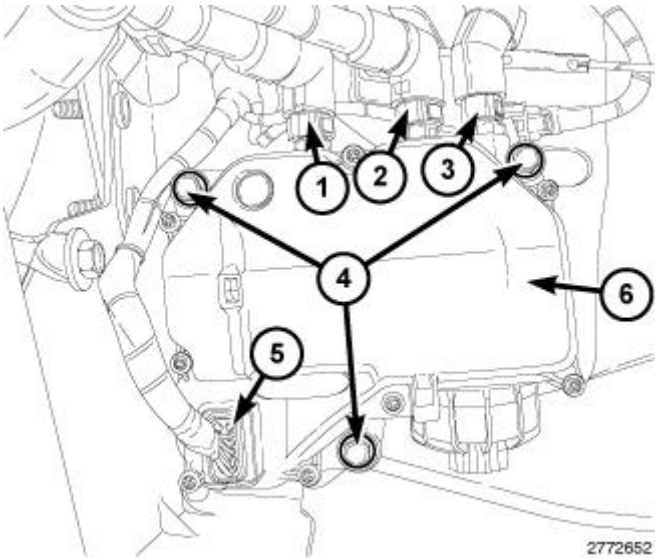

Fig. 18: DEF Supply Pump, Connector, Lines & Bolts
Courtesy of CHRYSLER GROUP, LLC

3. Connect the appropriate quick connect line fitting (1, 2, or 3) to the Diesel Exhaust Fluid (DEF) supply pump (6).
4. Lower the vehicle.

INJECTOR, DIESEL EXHAUST FLUID

DESCRIPTION

DESCRIPTION

The Diesel Exhaust Fluid (DEF) injector is similar to a fuel injector, but modified to be compatible with the Urea fluid. The DEF injector is mounted to the front of the Selective Catalytic Reduction (SCR) catalyst and is designed to operate in a underbody environment.

OPERATION

OPERATION

The Diesel Exhaust Fluid (DEF) Injector is mounted to the decomposition tube at the inlet of the Selective Catalytic Reduction (SCR) Catalyst. The DEF dosing Control Unit sends a Pulse Width Modulated (PWM) signal to the DEF Injector to vary the amount of fluid sprayed into the exhaust stream.

REMOVAL

REMOVAL

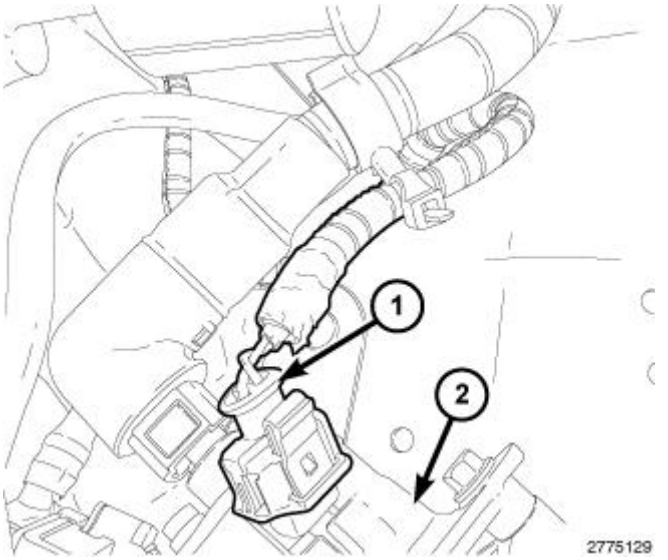

Fig. 19: DEF Injector Harness Connector
Courtesy of CHRYSLER GROUP, LLC

1. Disconnect both negative battery cables.
2. Drain the cooling system. Refer to **STANDARD PROCEDURE** .
3. Disconnect the DEF injector harness connector (1).

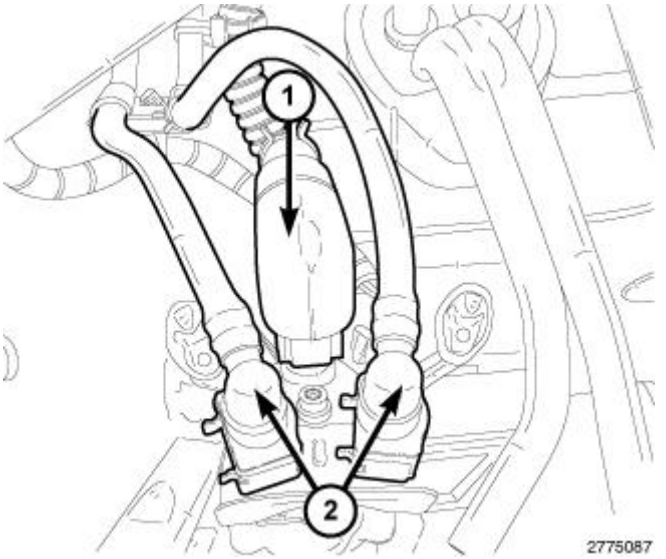

Fig. 20: Cooling Lines & Urea Supply Line
Courtesy of CHRYSLER GROUP, LLC

4. Disconnect the coolant supply and return lines (2).
5. Disconnect the Diesel Exhaust Fluid (DEF) fluid pressure line (1).

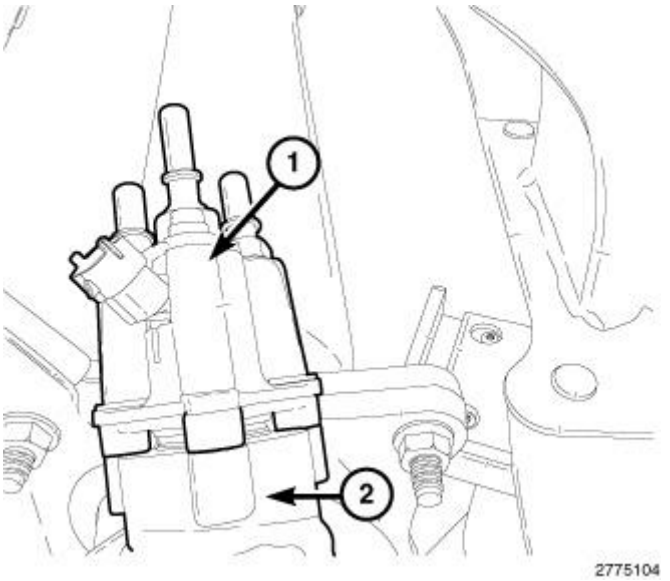

Fig. 21: DEF Injector & Bolts
Courtesy of CHRYSLER GROUP, LLC

6. Remove bolts (2) and the DEF injector (1) from the Selective Catalytic Reduction (SCR) catalyst (3).

INSTALLATION

INSTALLATION

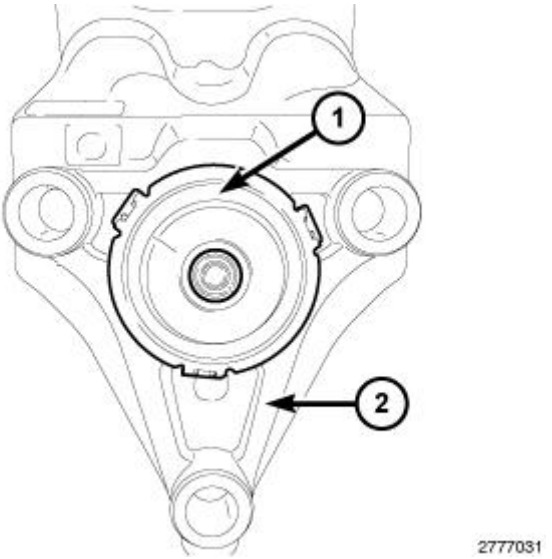

Fig. 22: Installing DEF Injector Gasket
Courtesy of CHRYSLER GROUP, LLC

1. Install a new Diesel Exhaust Fluid (DEF) injector gasket (1).

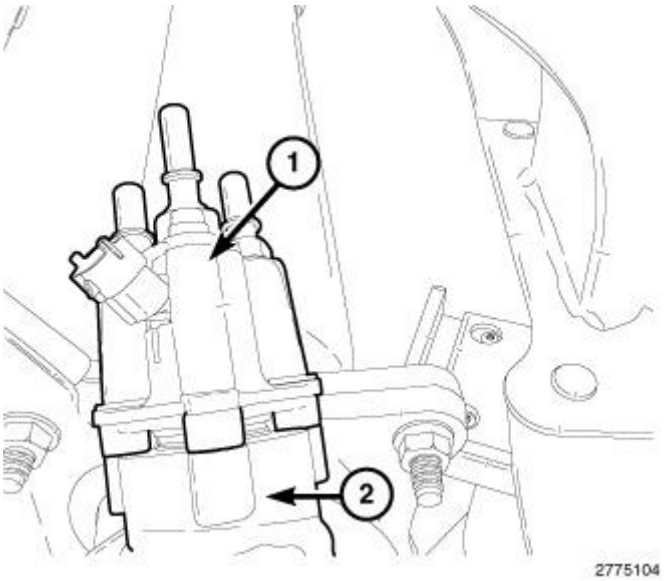

Fig. 23: DEF Injector & Bolts
Courtesy of CHRYSLER GROUP, LLC

2. Install the DEF injector (1) onto Selective Catalytic Reduction (SCR) catalyst (2).

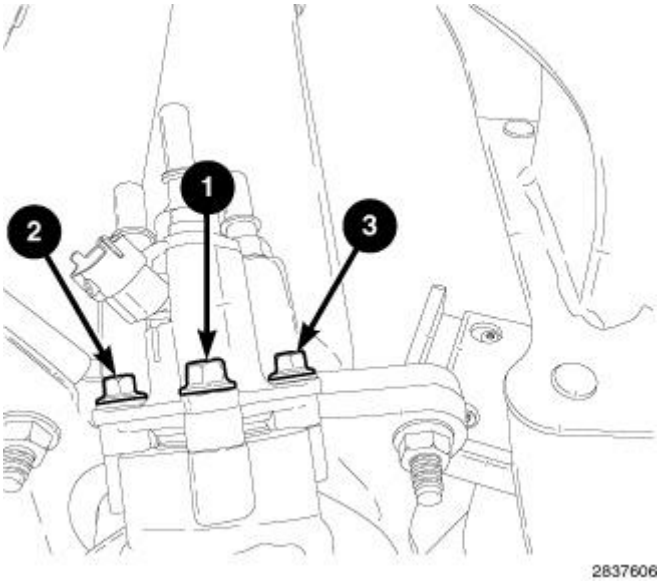

Fig. 24: DEF Injector Bolt Tightening Sequence
Courtesy of CHRYSLER GROUP, LLC

CAUTION: Failure to follow the installation and tightening procedure may result in damage to the DEF injector housing.

3. Using the sequence shown in illustration. Install bolts finger tight.
4. Using the sequence shown in illustration. Tighten bolts to 11 N.m (97 in. lbs.).

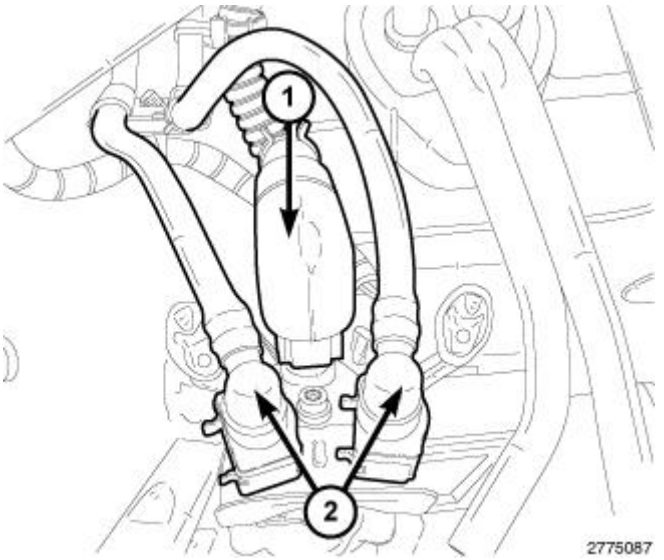

Fig. 25: Cooling Lines & Urea Supply Line
Courtesy of CHRYSLER GROUP, LLC

5. Connect the DEF fluid pressure line (1).
6. Connect the coolant supply and return lines (2).

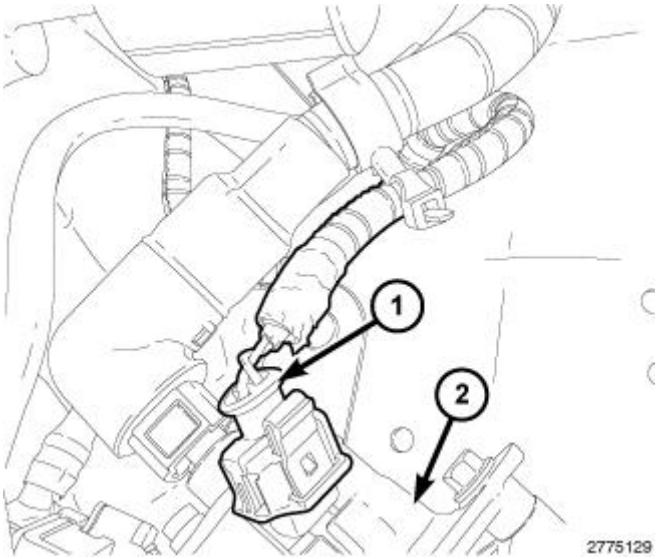

Fig. 26: DEF Injector Harness Connector
Courtesy of CHRYSLER GROUP, LLC

7. Connect the DEF injector harness connector (1).
8. Fill the cooling system. Refer to **STANDARD PROCEDURE - FILLING** .
9. Connect both negative battery cables.

LINE, DIESEL EXHAUST FLUID PRESSURE

DESCRIPTION

DESCRIPTION

The Diesel Exhaust Fluid (DEF) pressure line supplies fluid from the pump to the injector and has connectors similar to fuel lines. The line also incorporates a heater to keep the DEF fluid from freezing.

OPERATION

OPERATION

Each of the Diesel Exhaust Fluid (DEF) system hoses has a built in heater to warm the fluid in the line. The line heater has power supplied to it via the DEF Line Relay which is controlled by the DEF Dosing Control Module. The Line heater circuits are monitored on the return side of the circuit.

REMOVAL

REMOVAL

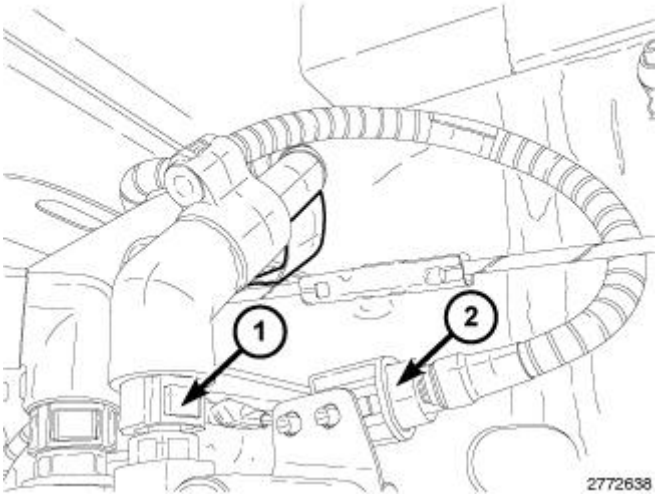

Fig. 27: DEF Pressure Line & Heater Harness Connector
Courtesy of CHRYSLER GROUP, LLC

1. Disconnect both negative battery cables.
2. Disconnect the Diesel Exhaust Fluid (DEF) pressure line heater harness connector (2).
3. Disconnect the DEF pressure line (1) at the DEF supply pump. Refer to **STANDARD PROCEDURE - QUICK-CONNECT FITTINGS** . .

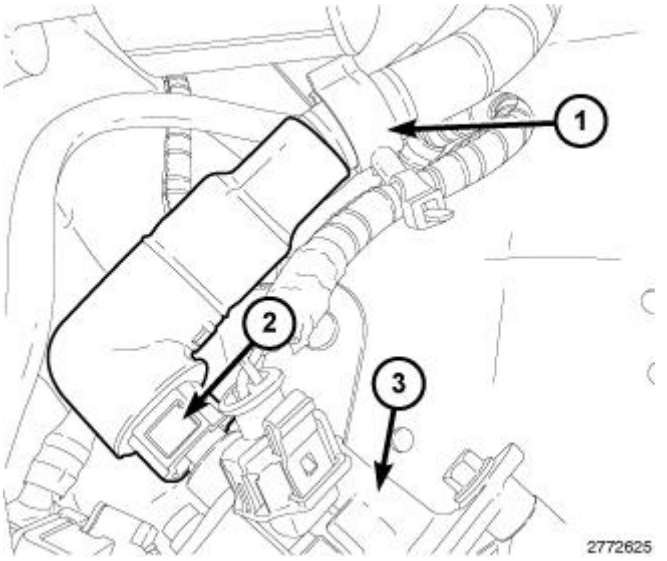

Fig. 28: DEF Pressure Line, Injector & Coolant Lines
Courtesy of CHRYSLER GROUP, LLC

4. Disconnect the DEF pressure line retainer at the frame rail and coolant lines (1).
5. Disconnect and remove the DEF pressure line (2) at DEF injector (3). Refer to **STANDARD PROCEDURE - QUICK-CONNECT FITTINGS** . .

INSTALLATION

INSTALLATION

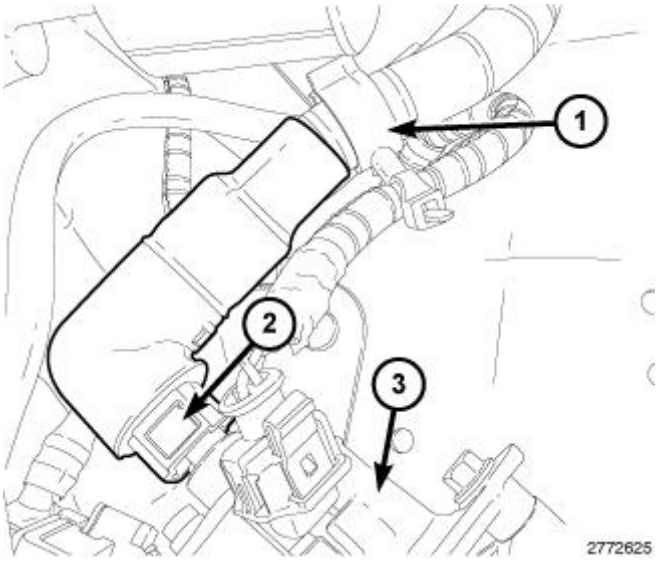

Fig. 29: DEF Pressure Line, Injector & Coolant Lines
Courtesy of CHRYSLER GROUP, LLC

1. Install the DEF pressure line (2) at injector (3).
2. Connect the DEF pressure line retainer at the frame rail and coolant lines (1).

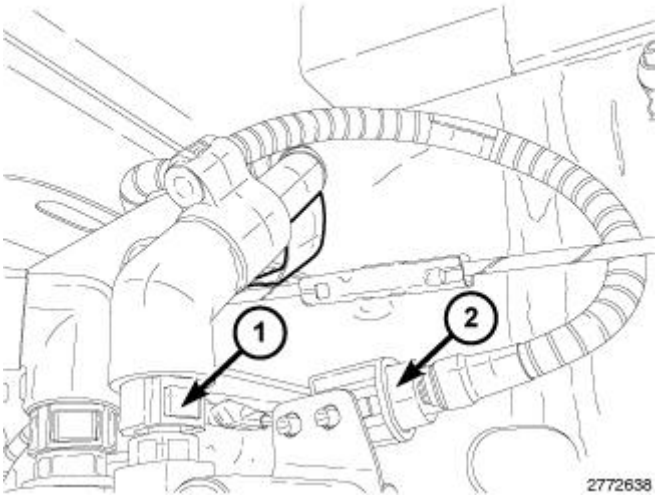

Fig. 30: DEF Pressure Line & Heater Harness Connector
Courtesy of CHRYSLER GROUP, LLC

3. Connect the DEF pressure line (1) at the DEF supply pump.
4. Connect the Diesel Exhaust Fluid (DEF) pressure line heater harness connector (2).
5. Connect both negative battery cables.

LINE, DIESEL EXHAUST FLUID RETURN

DESCRIPTION

DESCRIPTION

The Diesel Exhaust Fluid (DEF) return line allows unused DEF fluid to be pumped back into the tank and has connectors similar to fuel lines. The line also incorporates a heater to keep the DEF fluid from freezing. The DEF supply and return line heater also share the same wire harness connector.

OPERATION

OPERATION

Each of the Diesel Exhaust Fluid (DEF) system hoses has a built in heater to warm the fluid in the line. The line heater has power supplied to it via the DEF Line Relay which is controlled by the DEF Dosing Control Module. The Line heater circuits are monitored on the return side of the circuit.

REMOVAL

REMOVAL

1. For Diesel Exhaust Fluid (DEF) return line removal, refer to **LINE, DIESEL EXHAUST FLUID SUPPLY, REMOVAL**.

INSTALLATION

INSTALLATION

NOTE: The supply and return lines are serviced and removed together.

1. For Diesel Exhaust Fluid (DEF) return line installation, refer to **LINE, DIESEL EXHAUST FLUID SUPPLY, INSTALLATION**.

LINE, DIESEL EXHAUST FLUID SUPPLY

DESCRIPTION

DESCRIPTION

The Diesel Exhaust Fluid (DEF) supply line supplies fluid from the tank to the pump and has connectors similar to fuel lines. The line also incorporates a heater to keep the DEF fluid from freezing. The DEF supply and return line heater also share the same wire harness connector.

OPERATION

OPERATION

Each of the Diesel Exhaust Fluid (DEF) system hoses has a built in heater to warm the fluid in the line. The line heater has power supplied to it via the DEF Line Relay which is controlled by the DEF Dosing Control Module. The Line heater circuits are monitored on the return side of the circuit.

REMOVAL

REMOVAL

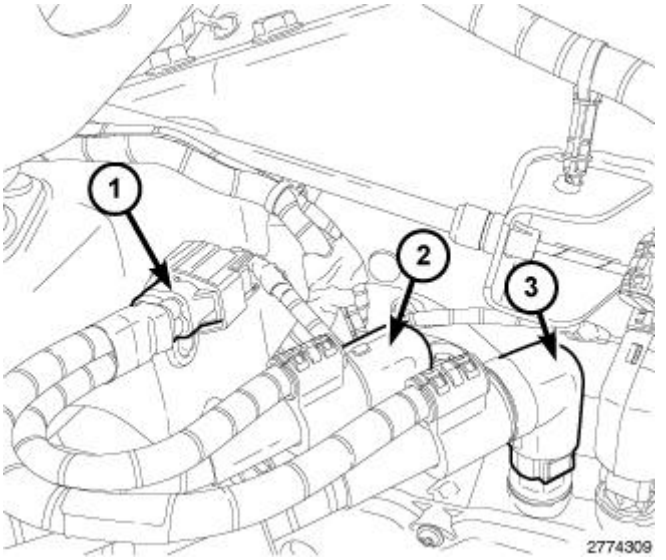

Fig. 31: Connector & DEF Supply/Return Lines
Courtesy of CHRYSLER GROUP, LLC

NOTE: The Diesel Exhaust Fluid (DEF) supply and return lines share the same wire harness connectors. Servicing requires both lines to be removed together.

1. Disconnect both negative battery cables.
2. Disconnect the supply and return line heater harness connector (1).
3. Disconnect the supply (2) and return (3) line from the Diesel Exhaust Fluid (DEF) supply pump. Refer to **STANDARD PROCEDURE - QUICK-CONNECT FITTINGS** . .

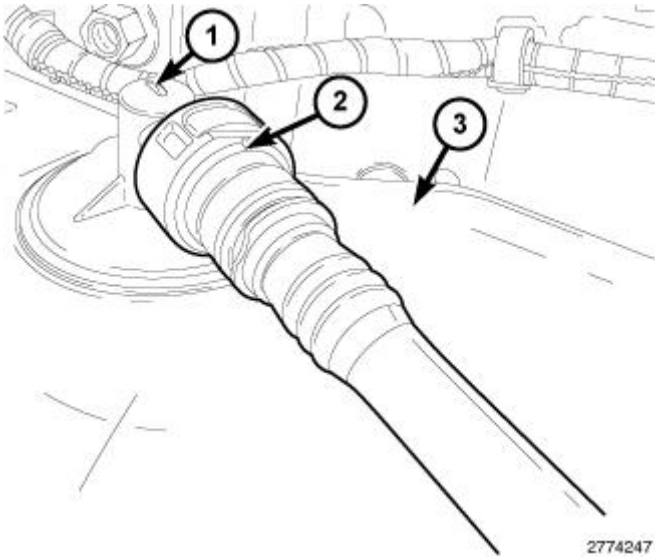

Fig. 32: Fill Tube Vent Line & Valve

Courtesy of CHRYSLER GROUP, LLC

4. Disconnect the fill tube vent line (2) from fluid limit vent valve (1). Refer to **STANDARD PROCEDURE - QUICK-CONNECT FITTINGS** . .

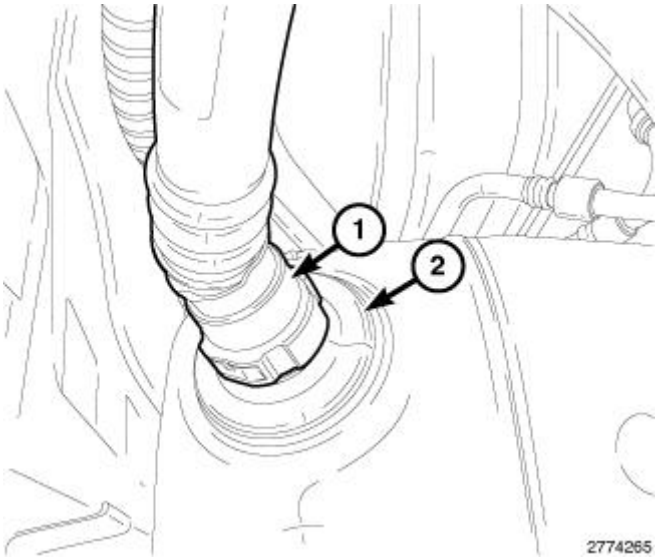

Fig. 33: DEF Tank & Fill Tube
Courtesy of CHRYSLER GROUP, LLC

5. Disconnect the fill tube (1) from DEF tank (2). Refer to **STANDARD PROCEDURE - QUICK-CONNECT FITTINGS** . .

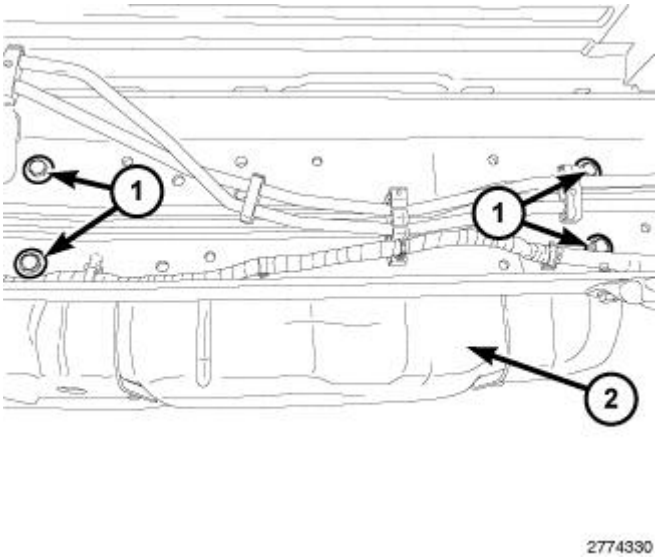

Fig. 34: DEF Tank Bolts
Courtesy of CHRYSLER GROUP, LLC

6. Position a transmission jack under DEF tank.
7. Remove bolts (1) and partially lower the DEF tank (2).

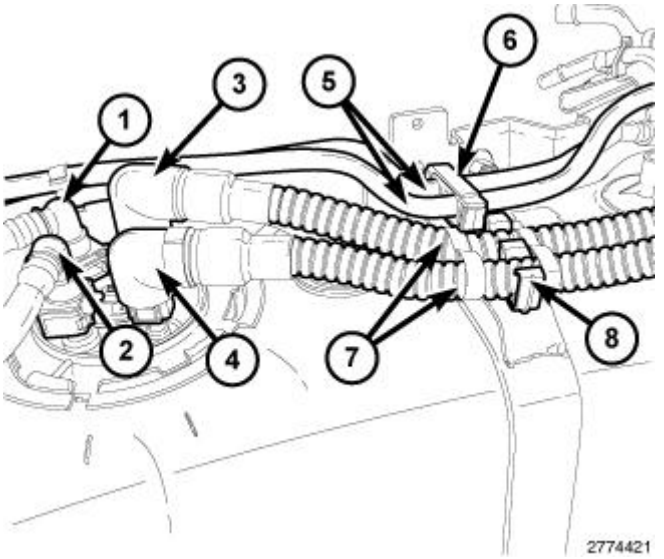

Fig. 35: DEF Supply/Return Lines, Coolant Supply/Return Lines & Clips
Courtesy of CHRYSLER GROUP, LLC

8. Disconnect the supply and return lines (7) from routing clip (8).
9. Disconnect and remove the supply (3) and return (4) lines from the DEF tank. Refer to **STANDARD PROCEDURE - QUICK-CONNECT FITTINGS** . .

INSTALLATION

INSTALLATION

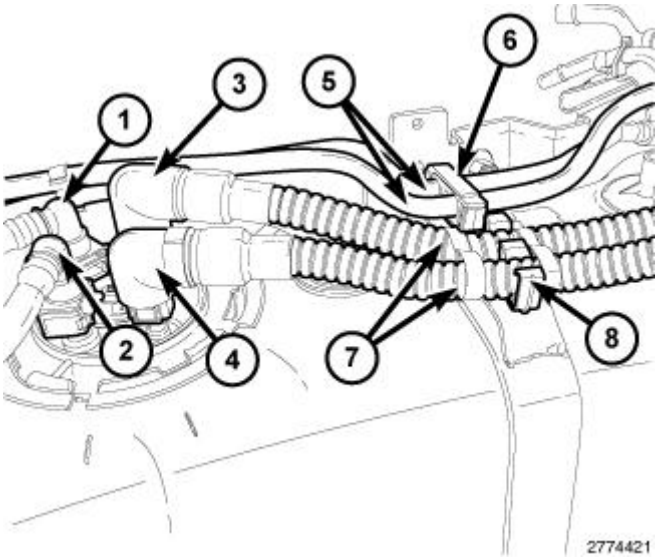

Fig. 36: DEF Supply/Return Lines, Coolant Supply/Return Lines & Clips
Courtesy of CHRYSLER GROUP, LLC

NOTE: **The Diesel Exhaust Fluid (DEF) supply and return lines share the same wire harness connectors. Servicing requires both lines to be removed together.**

1. Connect and install the supply (3) and return (4) line to the Diesel Exhaust Fluid (DEF) tank.
2. Connect the supply and return lines (7) to routing clip (8).

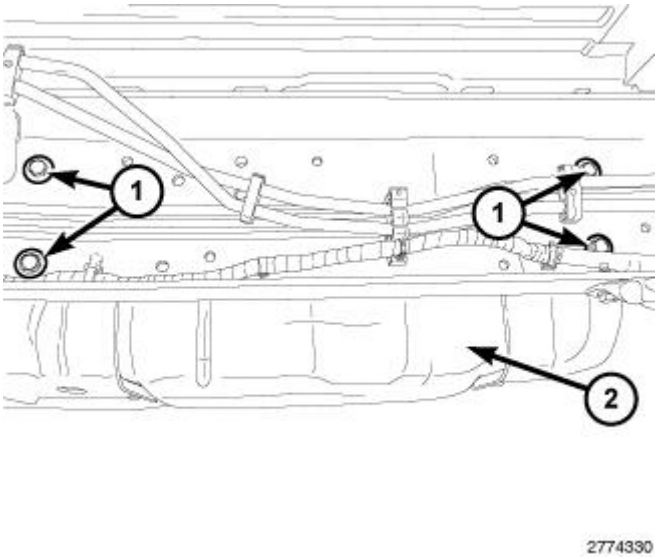

Fig. 37: DEF Tank Bolts
Courtesy of CHRYSLER GROUP, LLC

3. Install the DEF tank (2). Tighten bolts (1) to 60 N.m (44 ft. lbs.).

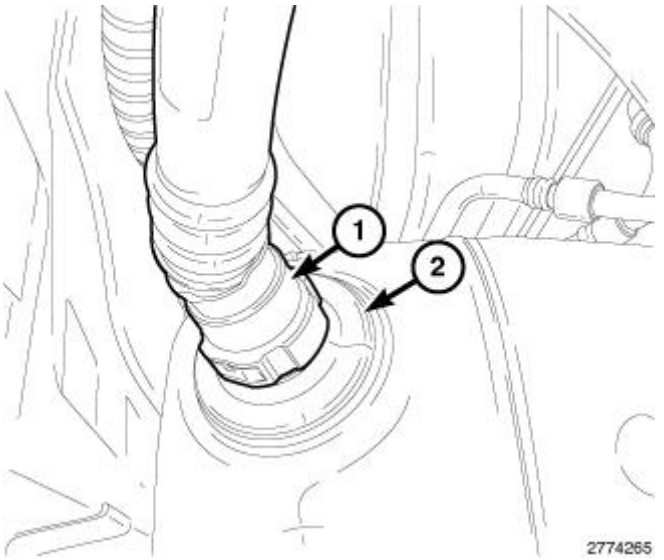

Fig. 38: DEF Tank & Fill Tube
Courtesy of CHRYSLER GROUP, LLC

4. Connect the fill tube (1) to DEF tank (2).

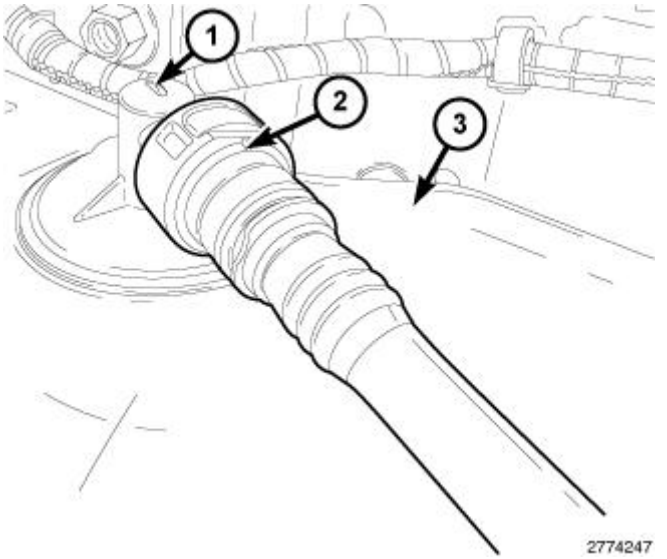

Fig. 39: Fill Tube Vent Line & Valve
Courtesy of CHRYSLER GROUP, LLC

5. Connect the fill tube vent line (2) to fluid limit vent valve (1).

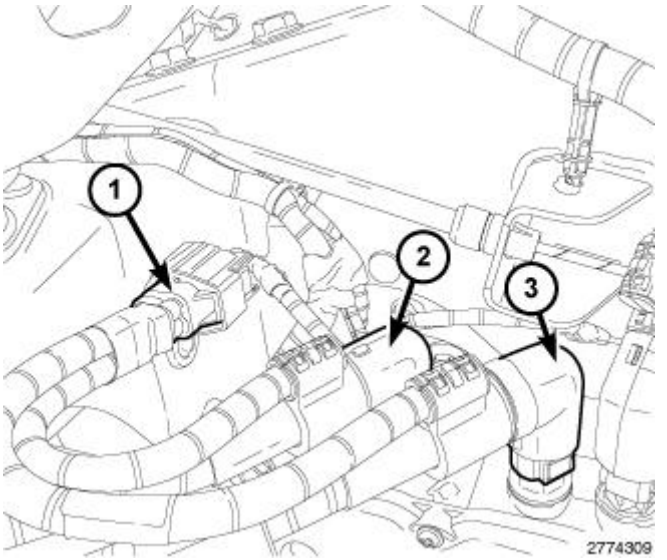

Fig. 40: Connector & DEF Supply/Return Lines
Courtesy of CHRYSLER GROUP, LLC

6. Connect the supply (2) and return (3) line to the DEF pump.
7. Connect the supply and return line heater harness connector (1).
8. Connect both negative battery cables.

RELAY, DIESEL EXHAUST FLUID LINE HEATER

DESCRIPTION

DESCRIPTION

The Diesel Exhaust Fluid (DEF) Relay receives a power signal from the DEF Dosing Control Unit based on ambient air temperature to thaw the DEF fluid lines if frozen. The DEF Relay also sends power to the DEF Engine Coolant Control Valve to allow warm engine coolant to thaw the DEF fluid inside the tank.

SENSOR, DIESEL EXHAUST FLUID AMBIENT TEMPERATURE

DESCRIPTION

DESCRIPTION

The ambient temperature sensor monitors the underbody temperature surrounding the Diesel Exhaust Fluid (DEF) supply pump and communicates to the ECU when the DEF system heaters are required.

REMOVAL

REMOVAL

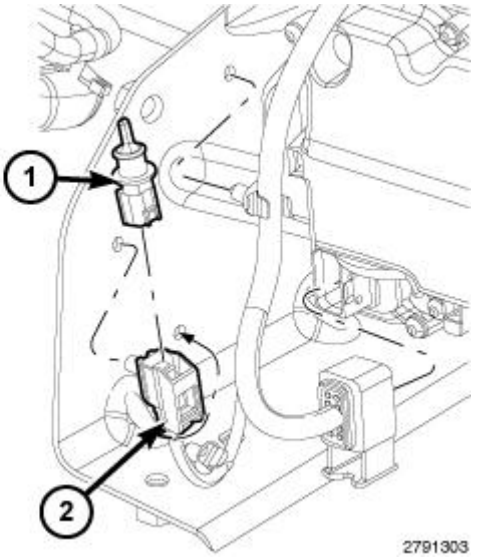

Fig. 41: DEF Ambient Temperature Sensor & Connector
Courtesy of CHRYSLER GROUP, LLC

1. Disconnect both negative battery cables.
2. Clean the area surrounding the Diesel Exhaust Fluid (DEF) ambient air temperature sensor
3. Disconnect and remove the DEF ambient temperature sensor (1) from the harness connector (2).

INSTALLATION

INSTALLATION

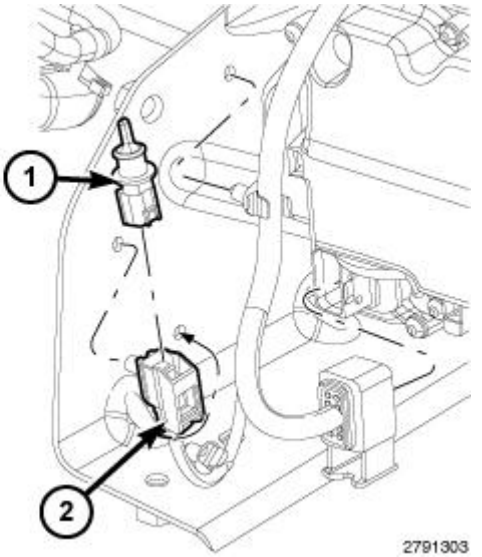

Fig. 42: DEF Ambient Temperature Sensor & Connector
Courtesy of CHRYSLER GROUP, LLC

1. Install and connect the DEF ambient temperature sensor (1) to the harness connector (2).
2. Connect both negative battery cables.

SENSOR, DIESEL EXHAUST FLUID LEVEL/TEMPERATURE

DESCRIPTION

DESCRIPTION

The Diesel Exhaust Fluid (DEF) Tank Level Sensor and the Diesel Exhaust Fluid Sensor (DEF) Tank Temperature Sensor are a combination sensor used to measure the fluid level of the tank and the temperature of the fluid in the DEF tank.

OPERATION

OPERATION

The Diesel Exhaust Fluid (DEF) Tank Level Sensor and Diesel Exhaust Fluid (DEF) Tank Temperature Sensor are a combined sensor used to measure the level and temperature of the fluid in the DEF Tank. Though combined, the level sensor and the temperature sensor operate independent of each other. Both sensors operate as a two wire 5-Volt sensor. The DEF Tank Level Sensor is a 14 point magnetic reed switch sensor. The DEF Tank Temperature Sensor is a negative temperature coefficient sensor.

REMOVAL

REMOVAL

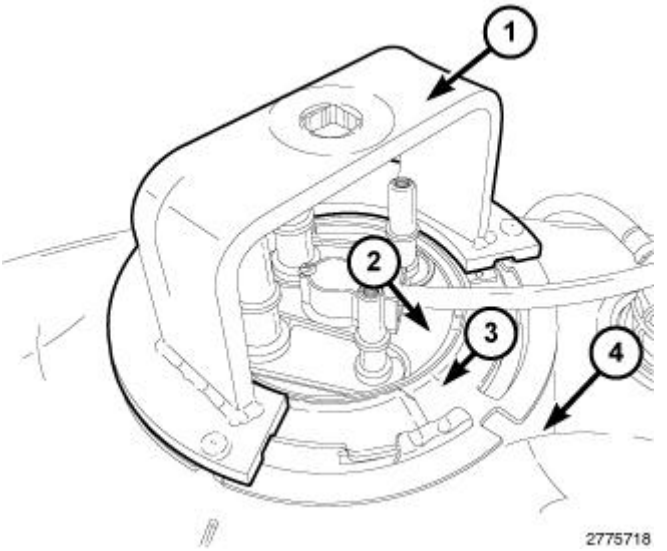

Fig. 43: Lock Ring Wrench, Lock Ring, Tank & Sensor
Courtesy of CHRYSLER GROUP, LLC

1. Disconnect both negative battery cables.
2. Remove Diesel Exhaust Fluid (DEF) tank. Refer to **TANK, DIESEL EXHAUST FLUID, REMOVAL**.
3. Using the DEF Module Lock Ring Wrench (special tool #10189, Wrench, DEF Module Lock Ring) (1), remove the lock ring (3) from the DEF tank (4).
4. Remove the level/temperature sensor (2) from DEF tank (4).
5. Remove and discard O-ring seal.

INSTALLATION

INSTALLATION

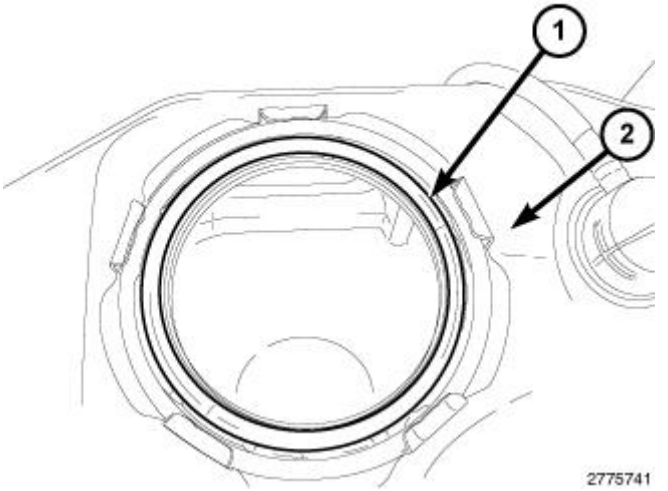

Fig. 44: Installing New O-Ring Seal
Courtesy of CHRYSLER GROUP, LLC

1. Clean O-ring sealing surfaces.
2. Install a new O-ring seal onto the Diesel Exhaust Fluid (DEF) tank.

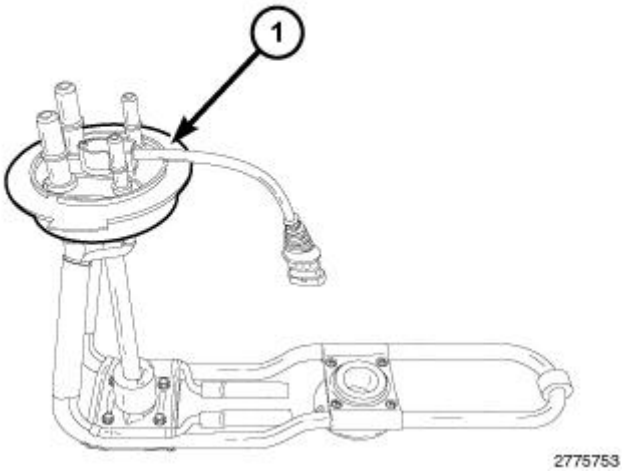

Fig. 45: DEF Tank Level/Temperature Sensor
Courtesy of CHRYSLER GROUP, LLC

3. Install the DEF tank level/temperature sensor (1) into tank.

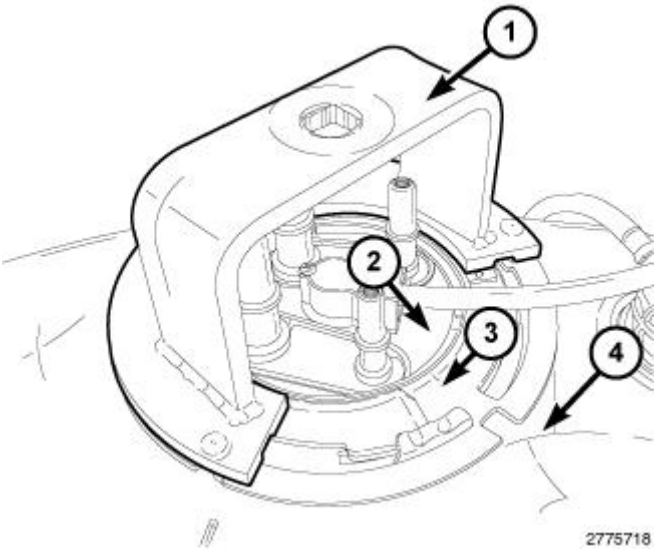

Fig. 46: Lock Ring Wrench, Lock Ring, Tank & Sensor
Courtesy of CHRYSLER GROUP, LLC

4. Using the DEF Module Lock Ring Wrench (special tool #10189, Wrench, DEF Module Lock Ring) (1), install the lock ring (3) onto the DEF tank (4) and lock in place.
5. Install the DEF tank. Refer to **TANK, DIESEL EXHAUST FLUID, INSTALLATION**.
6. Connect both negative battery cables.

SENSOR, DIESEL EXHAUST FLUID, PRESSURE

DESCRIPTION

DESCRIPTION

The Diesel Exhaust Fluid (DEF) Pressure Sensor is housed inside the DEF Supply Pump that monitors supplied pressure to the DEF Injector. The DEF Pressure Sensor is not a serviceable item as it is part of the DEF Supply Pump.

OPERATION

OPERATION

The Diesel Exhaust Fluid (DEF) Pressure Sensor is a three wire sensor, housed inside the DEF Supply Pump that monitors supplied pressure to the DEF Injector. The DEF Dosing Control Unit provides a 5-Volt supply and ground to the DEF Pressure Sensor. The sensor provides a signal to the DEF Dosing Control Unit on the DEF Pressure Sensor Signal circuit. This DEF Pressure Sensor Signal voltage changes, based on the diesel exhaust fluid pressure supplied by the DEF Supply Pump. The DEF Dosing Control Unit uses this information to vary pump speed and maintain the 130 psi (9 bar) pressure needed for proper DEF Injection.

SENSOR, NOX

DESCRIPTION

DESCRIPTION

The Pre-NOx sensor is mounted at the inlet of Selective Catalytic Reduction (SCR) Catalyst and measures incoming NOx gases. The Post-NOx sensor is mounted at the rear outlet of Selective Catalytic Reduction (SCR) Catalyst and measures outgoing NOx gases.

OPERATION

OPERATION

There are two NOx modules and sensors used in the DEF fluid system, upstream and downstream. Both operate similarly to a wide band O2 sensor. The sensors are zirconium-based, multi-layer sensors with oxygen pumps. The NOx modules communicate the amount of NOx to the ECM over the J1939 communication bus. The upstream module is located on the right frame rail and the sensor is at the front of the Diesel Particulate Filter (DPF). The upstream module and sensor are used by the ECM to monitor NOx entering the catalyst. By comparing the inlet sensor to the outlet sensor, SCR efficiency can be determined by the ECM.

REMOVAL

BANK 1 SENSOR 1

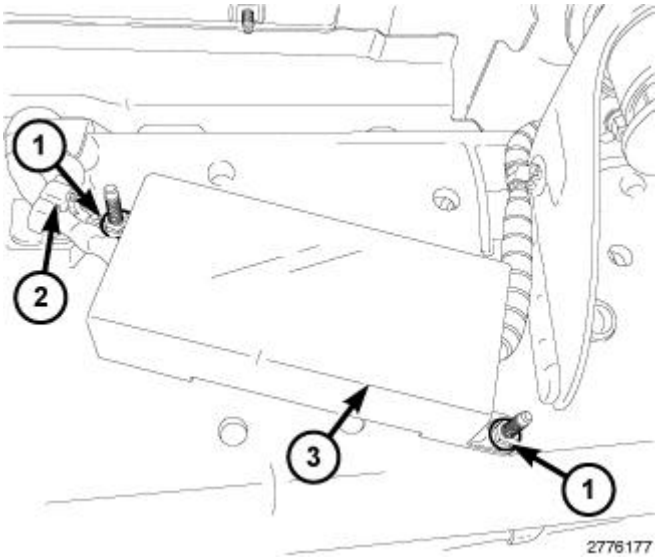

Fig. 47: NOx Sensor Module Cover, Nuts & Wire Harness Retainer
Courtesy of CHRYSLER GROUP, LLC

1. Disconnect both negative battery cables.
2. Remove nuts (1) and the NOx sensor module cover (3).
3. Disconnect the NOx sensor wire harness retainer (2).

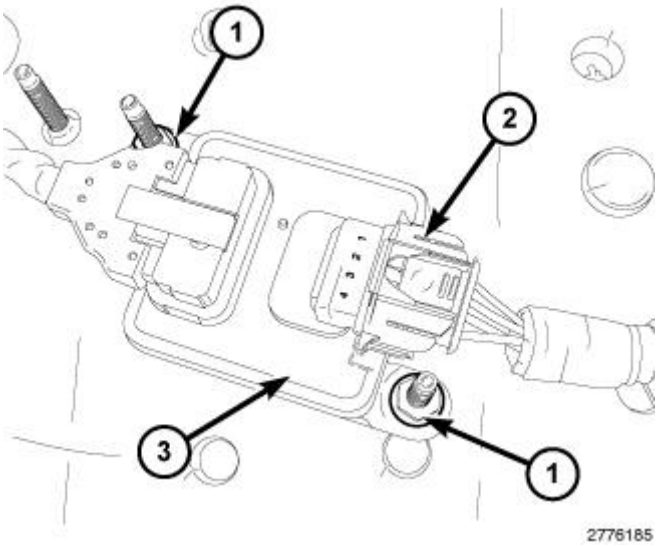

Fig. 48: NOx Sensor Module, Connector & Nuts (Sensor 1)
Courtesy of CHRYSLER GROUP, LLC

4. Disconnect the NOx sensor harness connector (2).
5. Remove nuts (1) and the NOx sensor module (3).

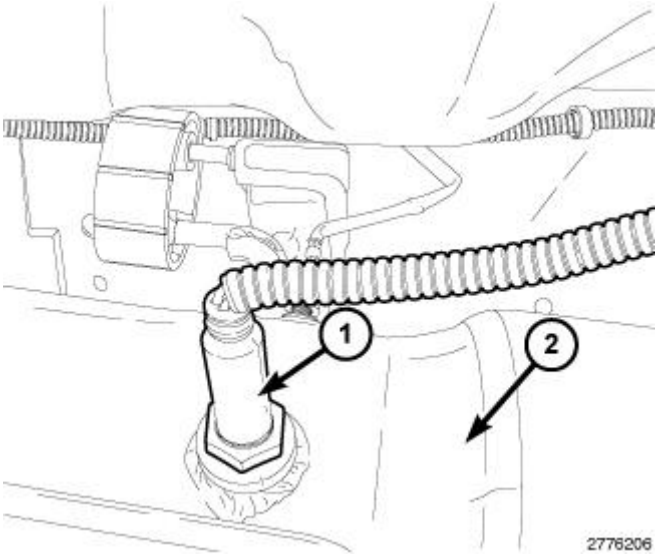

Fig. 49: NOx Sensor
Courtesy of CHRYSLER GROUP, LLC

6. Remove the NOx sensor (1) from the Diesel Oxidation Catalytic/Diesel Particulate Filter (DOC/DPF) (2).

BANK 1 SENSOR 2

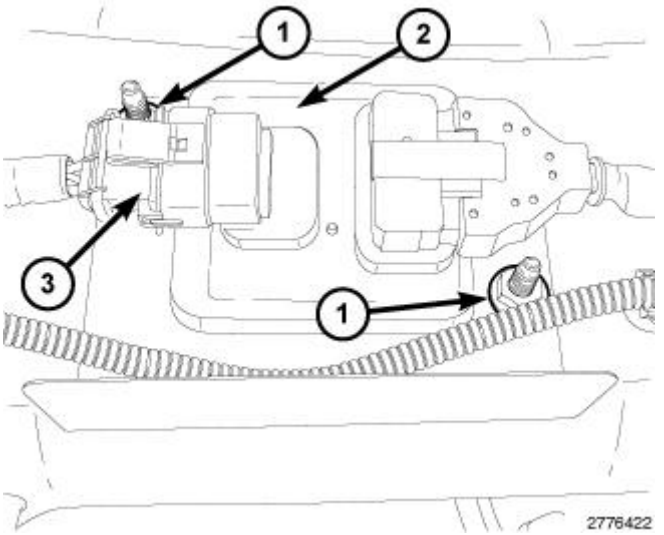

Fig. 50: NOx Sensor Module, Connector & Nuts (Sensor 2)
Courtesy of CHRYSLER GROUP, LLC

1. Disconnect both negative battery cables.
2. Disconnect the NOx sensor module harness connector (3).
3. Remove nuts (1) and the NOx module (2).

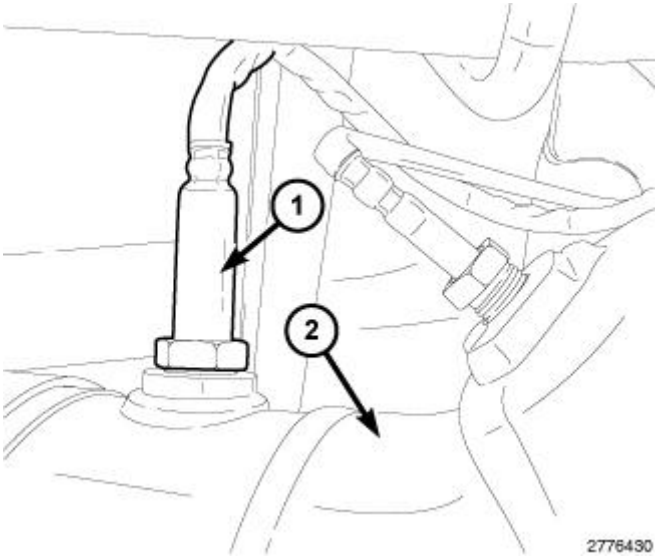

Fig. 51: NOx Sensor
Courtesy of CHRYSLER GROUP, LLC

4. Disconnect the wire harness retainers.
5. Remove the NOx sensor (1) from the Selective Catalytic Reduction (SCR) catalyst (2).

INSTALLATION

BANK 1 SENSOR 1

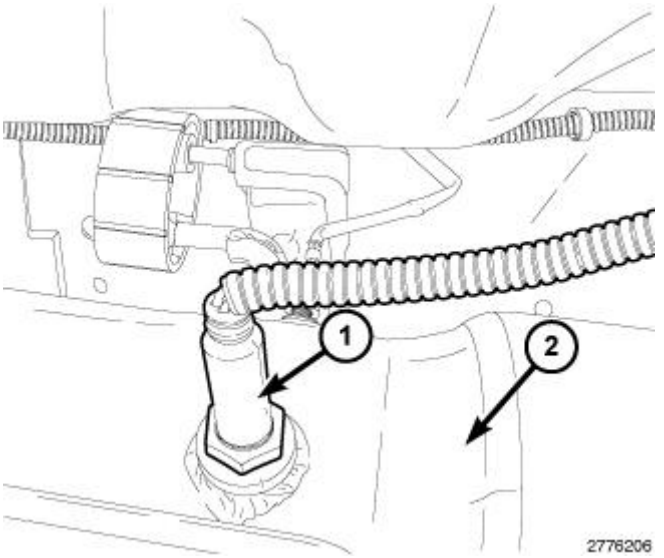

Fig. 52: NOx Sensor
Courtesy of CHRYSLER GROUP, LLC

NOTE: **The front NOx sensor at the inlet side of the Diesel Particulate Filter (DEF) has a white wire harness connector. Make sure the right NOx sensor is being installed.**

1. Install the NOx sensor (1) into the Diesel Oxidation Catalytic/Diesel Particulate Filter (DOC/DPF) (2). Tighten sensor (1) to 50 N.m (37 ft. lbs.).

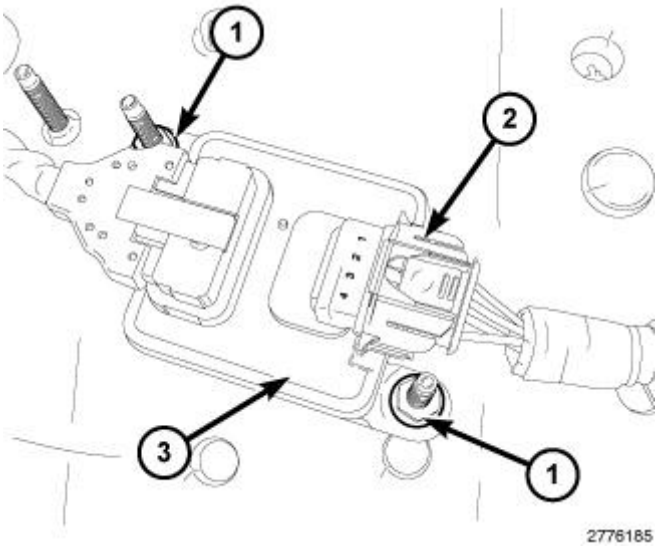

Fig. 53: NOx Sensor Module, Connector & Nuts (Sensor 1)
Courtesy of CHRYSLER GROUP, LLC

2. Install the NOx module (3). Tighten nuts (1) to 9 N.m (80 in. lbs.).
3. Connect the NOx sensor harness connector (2).

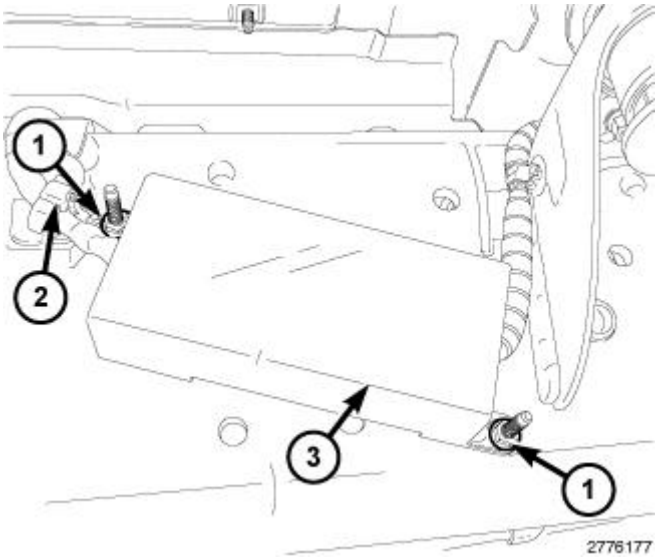

Fig. 54: NOx Sensor Module Cover, Nuts & Wire Harness Retainer
Courtesy of CHRYSLER GROUP, LLC

4. Connect the NOx sensor wire harness retainers (2).
5. Install the NOx sensor module cover (3). Tighten nuts (1) to 9 N.m (80 in. lbs.).
6. Connect both negative battery cables.

BANK 1 SENSOR 2

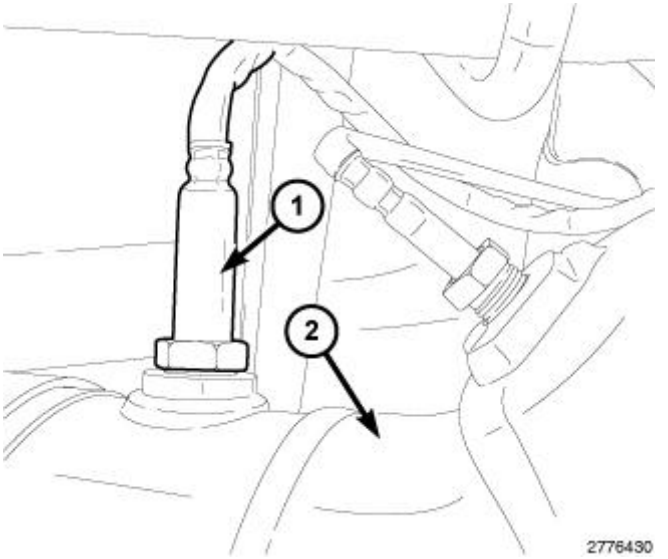

Fig. 55: NOx Sensor
Courtesy of CHRYSLER GROUP, LLC

NOTE: **The rear NOx sensor at the outlet side of the Selective Catalytic Reduction (SCR) has a black wire harness connector. Make sure the right NOx sensor is being installed.**

1. Install the NOx sensor (1) into the Selective Catalytic Reduction (SCR) catalyst (2). Tighten NOx sensor (1) to 50 N.m 37 (ft. lbs.).
2. Connect the wire harness retainers.

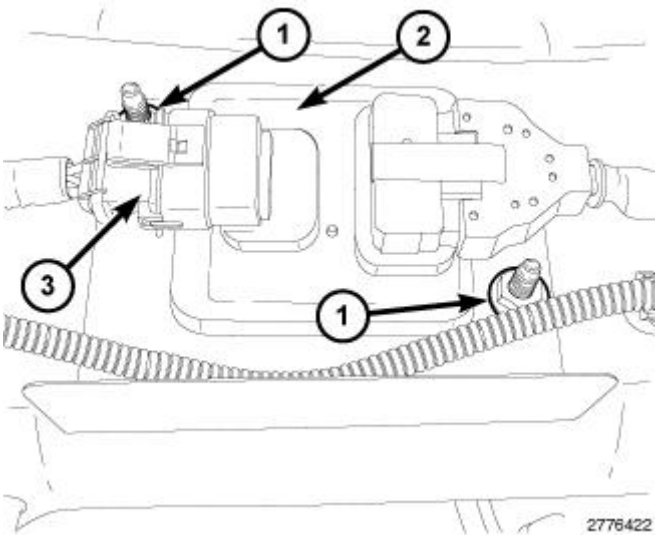

Fig. 56: NOx Sensor Module, Connector & Nuts (Sensor 2)
Courtesy of CHRYSLER GROUP, LLC

3. Install the NOx sensor module (2). Tighten nuts (1) to 9 N.m (80 in. lbs.).
4. Connect the NOx sensor module harness connector (3).
5. Connect both negative battery cables.

TANK, DIESEL EXHAUST FLUID

DESCRIPTION

DESCRIPTION

The Diesel Exhaust Fluid (DEF) tank is mounted to the frame of the vehicle on the left side and is equipped with:

- Engine Coolant Heat Exchanger
- Level Sensor
- Temp Sensor
- Vent Valve
- Fluid Limit Vent Valve

REMOVAL

REMOVAL

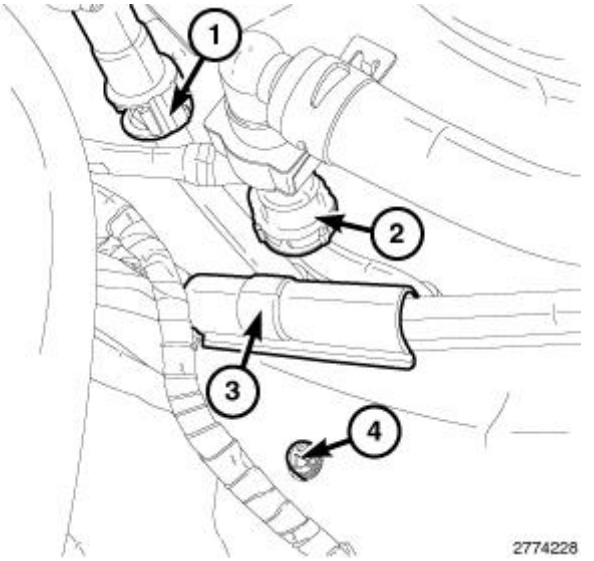

Fig. 57: DEF Coolant Lines, Push Pin & Coolant Lines Bracket
Courtesy of CHRYSLER GROUP, LLC

1. Disconnect both negative battery cables.
2. Drain the cooling system. Refer to **STANDARD PROCEDURE** .
3. Disconnect the coolant lines (1 and 2) going to Diesel Exhaust Fluid (DEF) tank.
4. Remove push pin (4) and unclip coolant lines bracket (3) from frame rail.

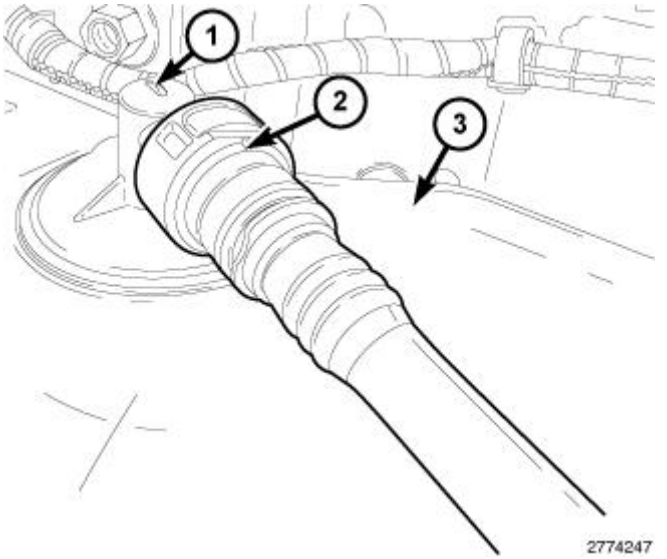

Fig. 58: Fill Tube Vent Line & Valve
Courtesy of CHRYSLER GROUP, LLC

5. Disconnect the fill tube vent line (2) from fluid limit vent valve (1).

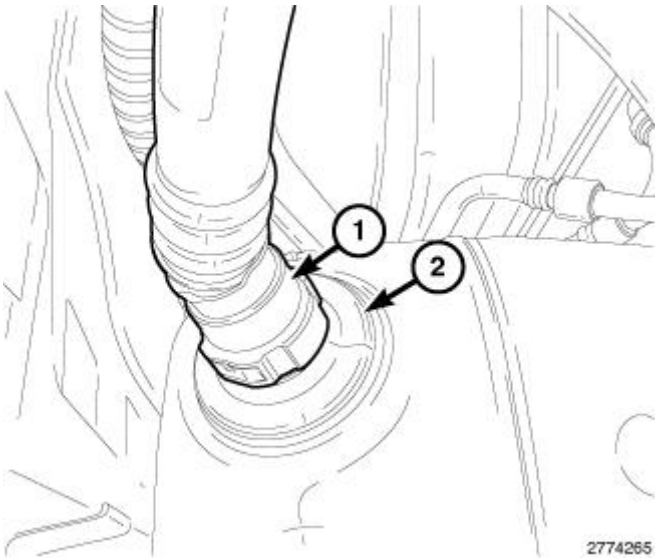

Fig. 59: DEF Tank & Fill Tube
Courtesy of CHRYSLER GROUP, LLC

6. Disconnect the fill tube (1) from DEF tank (2).

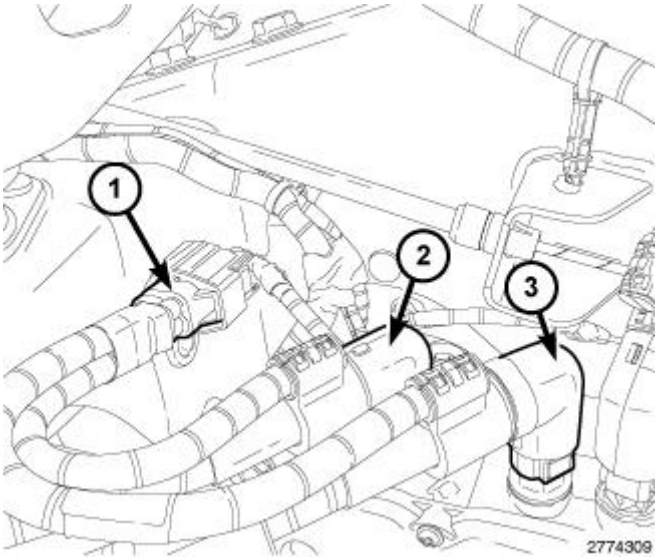

Fig. 60: Connector & DEF Supply/Return Lines
Courtesy of CHRYSLER GROUP, LLC

7. Disconnect the DEF supply/return line heater harness connector (1).
8. Disconnect the DEF supply (2) and return (3) lines from the DEF supply pump.

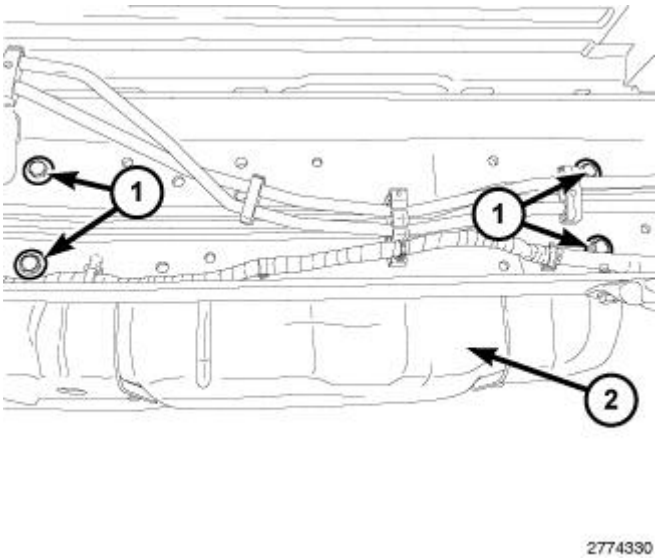

Fig. 61: DEF Tank Bolts
Courtesy of CHRYSLER GROUP, LLC

9. Position a transmission jack under DEF tank.
10. Remove bolts (1) and partially lower the DEF tank (2).

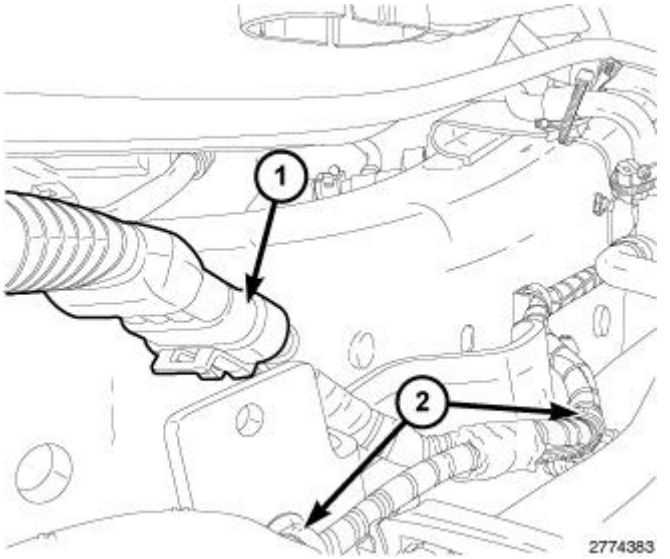

Fig. 62: DEF Tank Level/Temperature Sensor Harness Connector & Harness Loom Retainers
Courtesy of CHRYSLER GROUP, LLC

11. Disconnect the DEF tank level/temperature sensor harness connector (1).
12. Disconnect the wire harness loom retainers (2) from bracket.

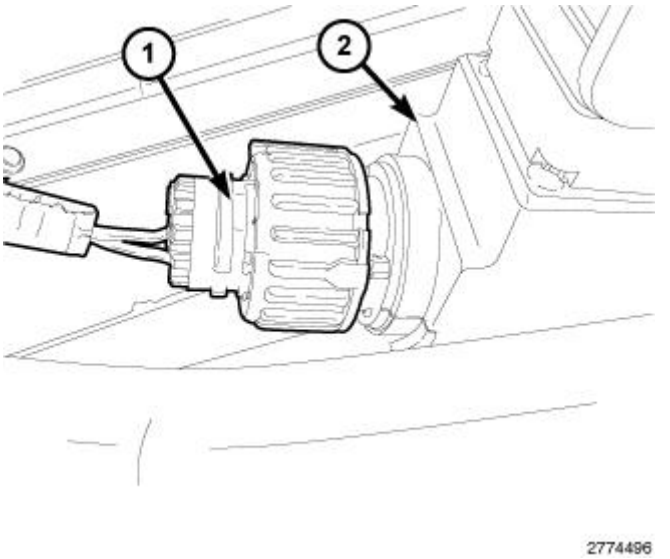

Fig. 63: Coolant Control Valve Harness Connector
Courtesy of CHRYSLER GROUP, LLC

13. Disconnect the coolant control valve harness connector (1).
14. Remove the DEF tank.

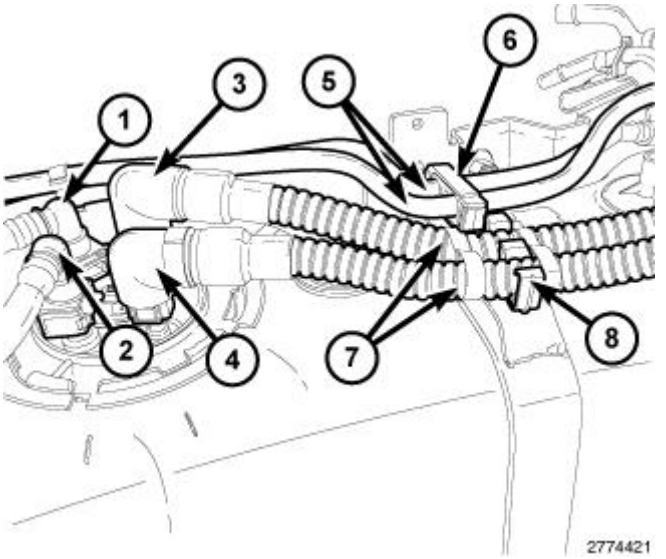

Fig. 64: DEF Supply/Return Lines, Coolant Supply/Return Lines & Clips
Courtesy of CHRYSLER GROUP, LLC

15. Disconnect the coolant supply (1) and return lines (2) from DEF tank.
16. Disconnect the DEF supply (3) and return (4) lines from DEF tank.
17. Disconnect the coolant lines (5) at routing clip (6).
18. Disconnect DEF lines (7) at routing clip (8) and remove lines.

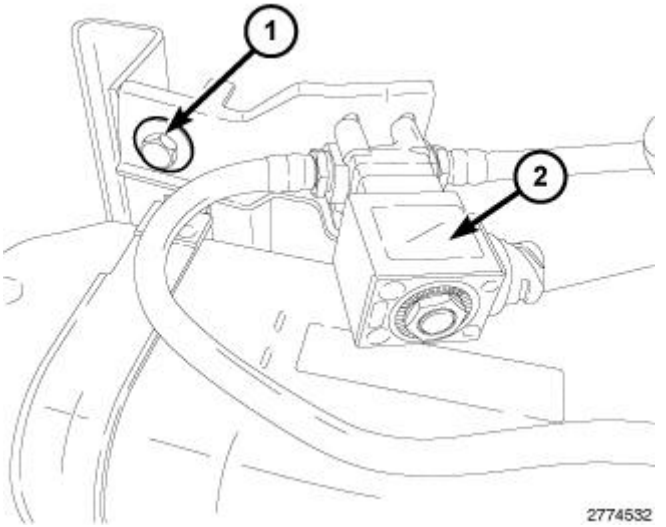

Fig. 65: Coolant Control Valve Assembly
Courtesy of CHRYSLER GROUP, LLC

19. Remove bolt (1) and the coolant control valve assembly (2).

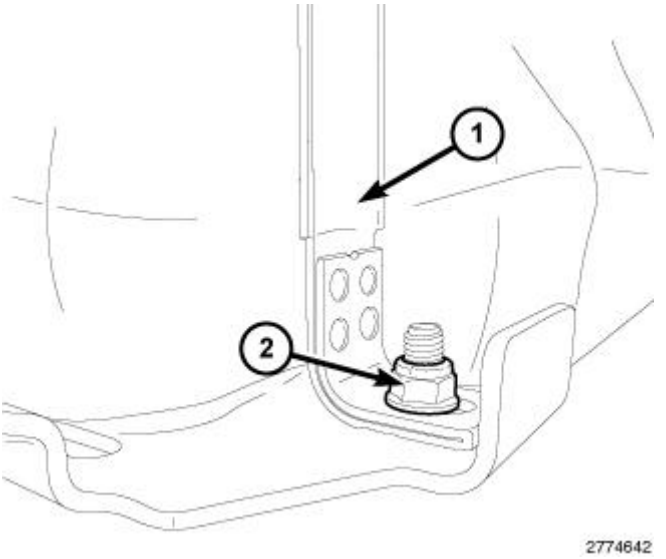

Fig. 66: Front Tank Strap & Nut
Courtesy of CHRYSLER GROUP, LLC

20. Remove nut (2) and the front tank strap (1).

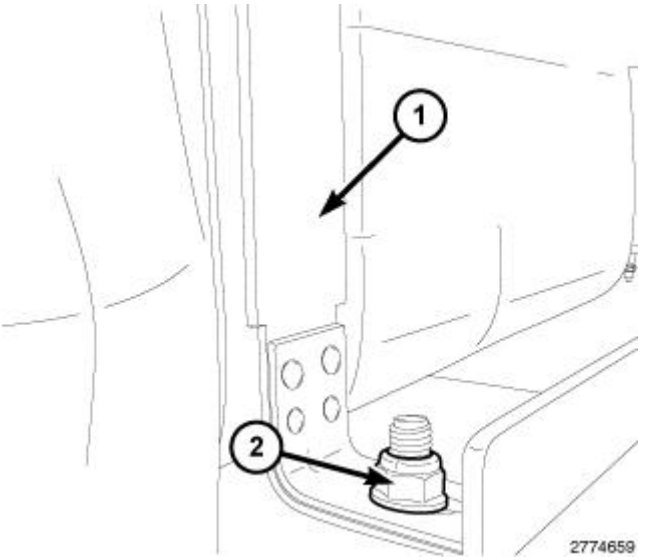

Fig. 67: Rear Tank Strap & Nut
Courtesy of CHRYSLER GROUP, LLC

21. Remove nut (2) and the rear tank strap (1).

CLEANING

CLEANING

NOTE: **If diagnosis has confirmed the Diesel Exhaust Fluid (DEF) UREA is contaminated the following should be followed for cleaning the DEF tank.**

1. Remove the DEF tank level temperature sensor. Refer to **SENSOR, DIESEL EXHAUST FLUID LEVEL/TEMPERATURE, REMOVAL**.

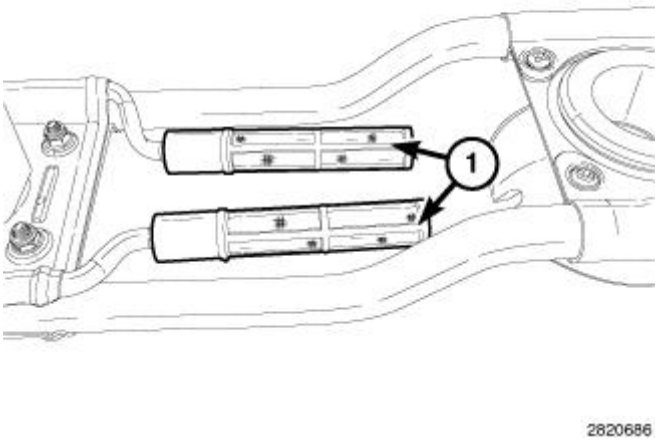

Fig. 68: DEF Level/Temperature Sensor Filters
Courtesy of CHRYSLER GROUP, LLC

2. Clean the DEF level/temperature sensor filters (1).
3. Drain the contaminated DEF from tank.

NOTE: **If it has been determined that a petroleum based liquids were added to the tank flush the tank with a dish soap.**

4. Flush and clean the tank with tap water.
5. Remove and discard the DEF filter. Refer to **FILTER, DIESEL EXHAUST FLUID, REMOVAL**.
6. Remove the DEF pressure line. Refer to **LINE, DIESEL EXHAUST FLUID PRESSURE, REMOVAL**.
7. Remove the DEF supply and return lines.
8. Flush the pressure, supply, and return lines with tap water.
9. Install the DEF supply and return lines. Refer to **LINE, DIESEL EXHAUST FLUID SUPPLY, INSTALLATION**.
10. Install the DEF pressure line. Refer to **LINE, DIESEL EXHAUST FLUID PRESSURE, INSTALLATION**.
11. Install a new DEF filter. Refer to **FILTER, DIESEL EXHAUST FLUID, INSTALLATION**.
12. Install the DEF tank level temperature sensor. Refer to **SENSOR, DIESEL EXHAUST FLUID LEVEL/TEMPERATURE, INSTALLATION**.
13. Fill the DEF tank with a minimum of 2.5 gallons of good clean DEF fluid.

INSTALLATION

INSTALLATION

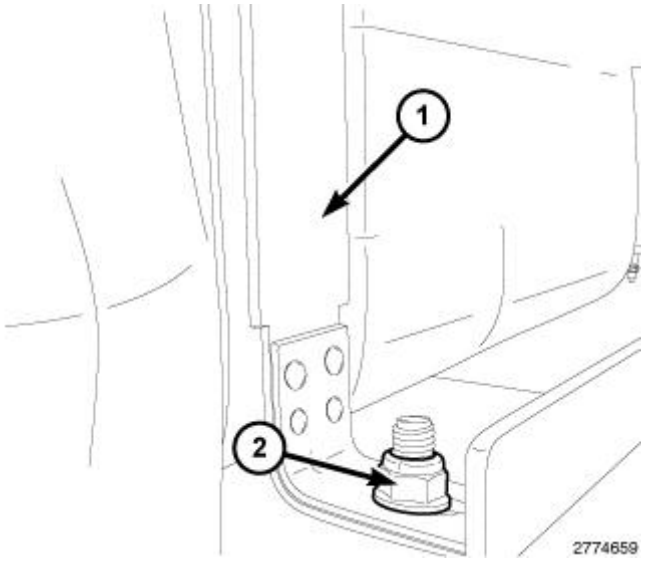

Fig. 69: Rear Tank Strap & Nut
Courtesy of CHRYSLER GROUP, LLC

1. Install the rear tank strap (1). Tighten nut (2) to 54 N.m (40 ft. lbs.).

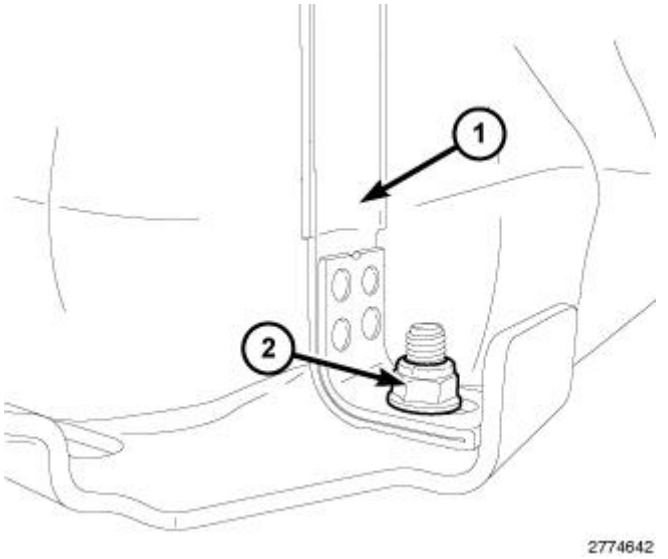

Fig. 70: Front Tank Strap & Nut
Courtesy of CHRYSLER GROUP, LLC

2. Install the front tank strap (1). Tighten nut (2) to 54 N.m (40 ft. lbs.).

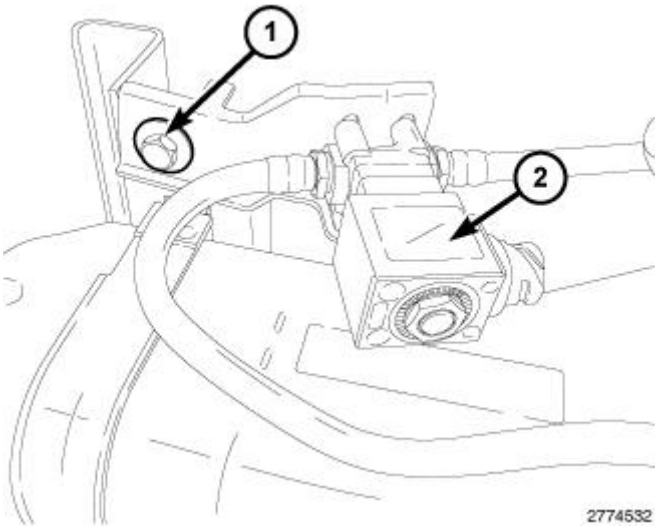

Fig. 71: Coolant Control Valve Assembly
Courtesy of CHRYSLER GROUP, LLC

3. Install the coolant control valve assembly (2). Tighten bolt (1) to 54 N.m (40 ft. lbs.).

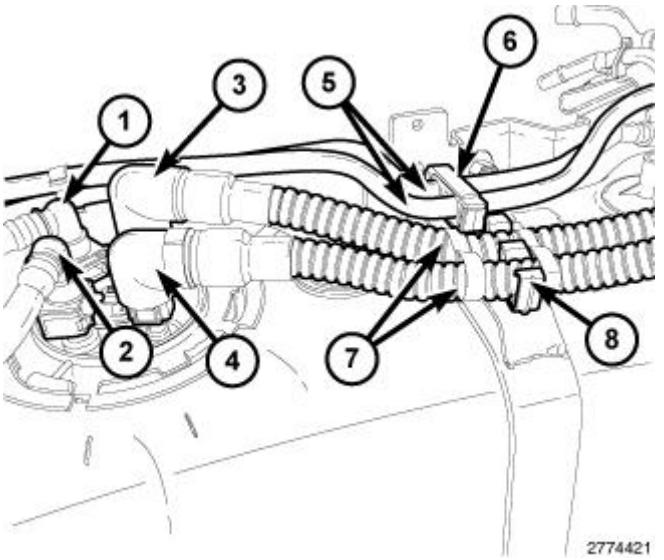

Fig. 72: DEF Supply/Return Lines, Coolant Supply/Return Lines & Clips
Courtesy of CHRYSLER GROUP, LLC

4. Position and connect the DEF coolant lines (7) into routing clip (8).
5. Position and connect the DEF coolant lines (5) into routing clip (6).
6. Connect the DEF supply (3) and return (4) lines to DEF tank.
7. Connect the coolant supply (1) and return lines (2) to DEF tank.

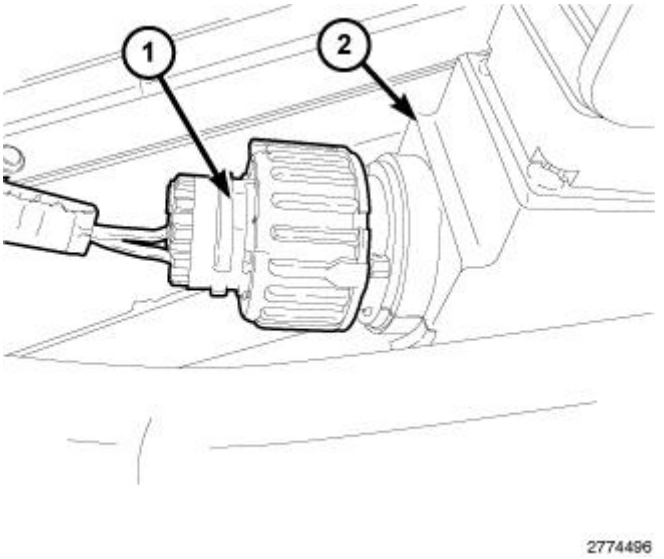

Fig. 73: Coolant Control Valve Harness Connector
Courtesy of CHRYSLER GROUP, LLC

8. Position the DEF tank into place, but not fully mounted.
9. Connect the coolant control valve harness connector (1).

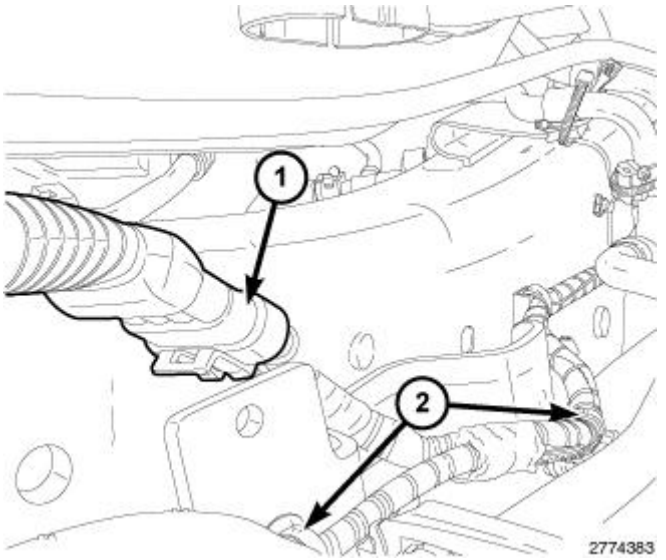

Fig. 74: DEF Tank Level/Temperature Sensor Harness Connector & Harness Loom Retainers
Courtesy of CHRYSLER GROUP, LLC

10. Connect the wire harness loom retainers (2) to bracket.
11. Connect the DEF tank level/temperature sensor harness connector (1).

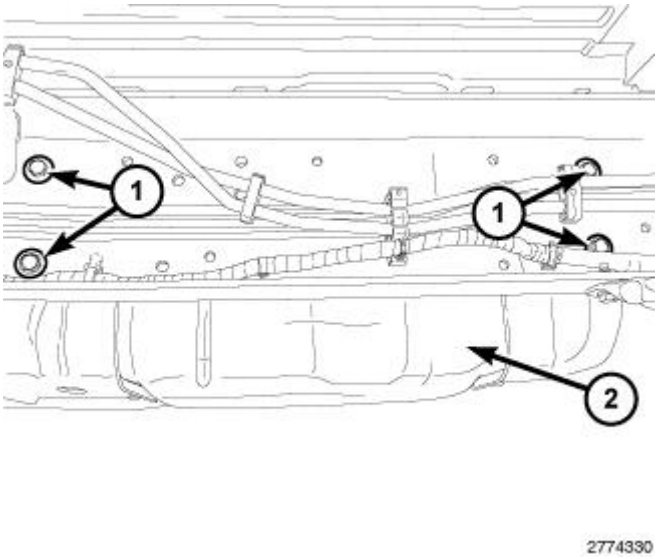

Fig. 75: DEF Tank Bolts
Courtesy of CHRYSLER GROUP, LLC

12. Install the DEF tank (2) into place. Tighten bolts (1) to 108 N.m (80 ft. lbs.).
13. Remove the transmission jack.

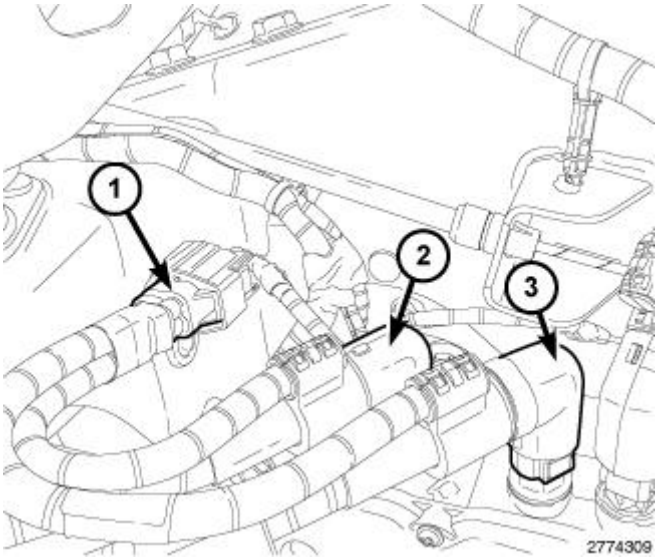

Fig. 76: Connector & DEF Supply/Return Lines
Courtesy of CHRYSLER GROUP, LLC

14. Connect the DEF supply (2) and return (3) lines to DEF supply pump.
15. Connect the DEF supply/return line heater harness connector (1).

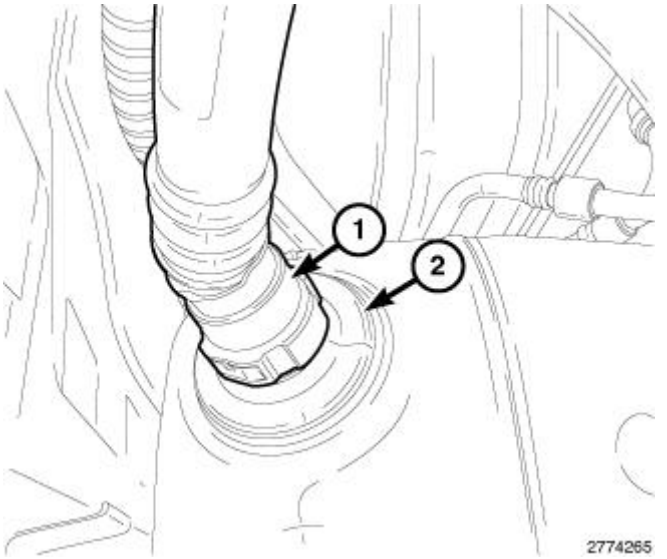

Fig. 77: DEF Tank & Fill Tube
Courtesy of CHRYSLER GROUP, LLC

16. Connect the fill tube (1) to DEF tank (2).

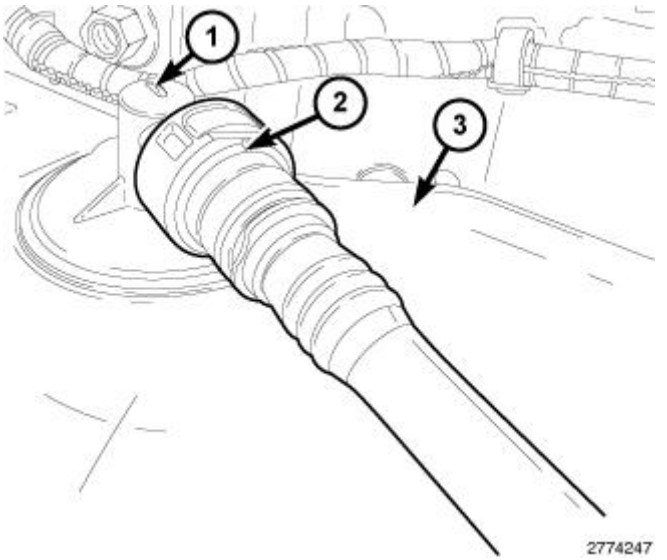

Fig. 78: Fill Tube Vent Line & Valve
Courtesy of CHRYSLER GROUP, LLC

17. Connect the fill tube vent line (2) to fluid limit vent valve (1).

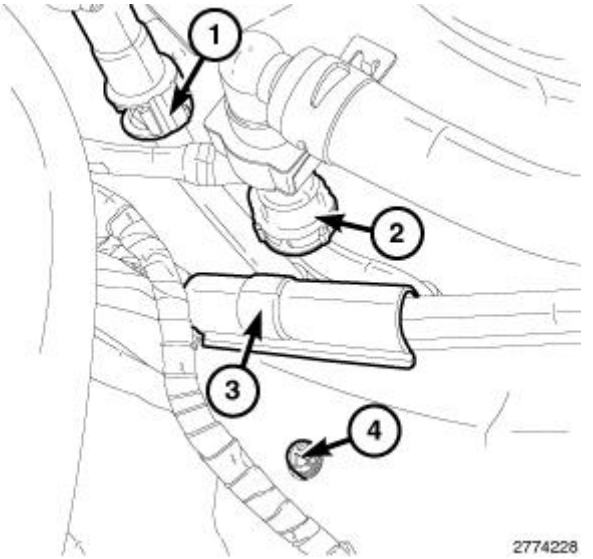

Fig. 79: DEF Coolant Lines, Push Pin & Coolant Lines Bracket
Courtesy of CHRYSLER GROUP, LLC

18. Clip coolant lines bracket (3) to frame rail and install push pin (4).
19. Connect the coolant lines (1 and 2) going to DEF tank.
20. Fill the cooling system. Refer to **STANDARD PROCEDURE - FILLING** .
21. Connect both negative battery cables.

TUBE, DIESEL EXHAUST FLUID TANK FILL

REMOVAL

REMOVAL

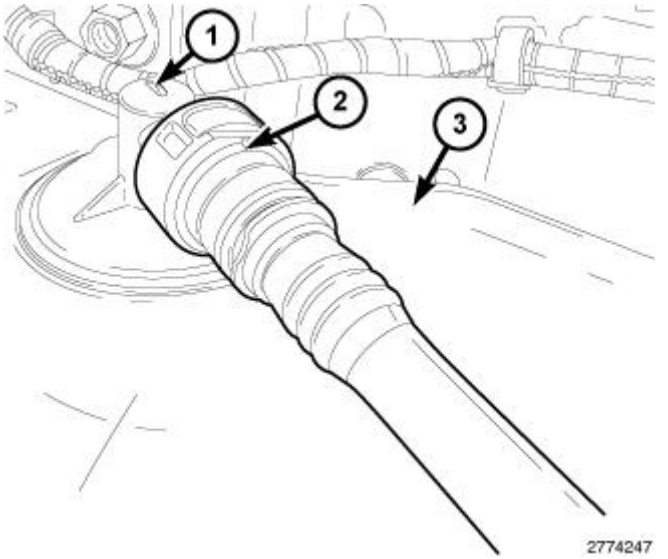

Fig. 80: Fill Tube Vent Line & Valve
Courtesy of CHRYSLER GROUP, LLC

1. Remove the Diesel Exhaust Fluid (DEF) filler tube cap.
2. Disconnect the fill tube vent line (2) from fluid limit vent valve (1).

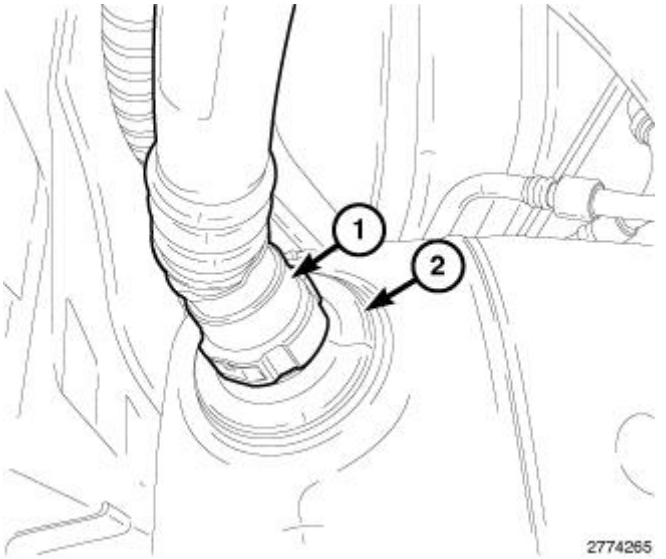

Fig. 81: DEF Tank & Fill Tube
Courtesy of CHRYSLER GROUP, LLC

3. Disconnect the fill tube (1) from DEF tank (2).

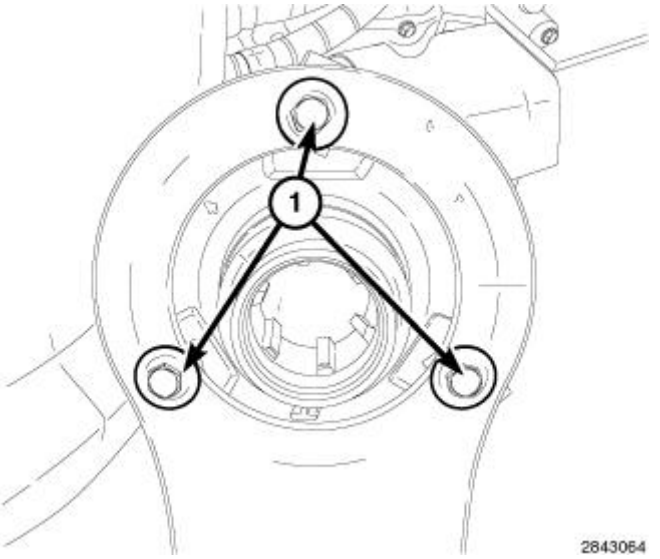

Fig. 82: DEF Fill Tube Screws
Courtesy of CHRYSLER GROUP, LLC

4. Remove screws and the DEF fill tube.

INSTALLATION

INSTALLATION

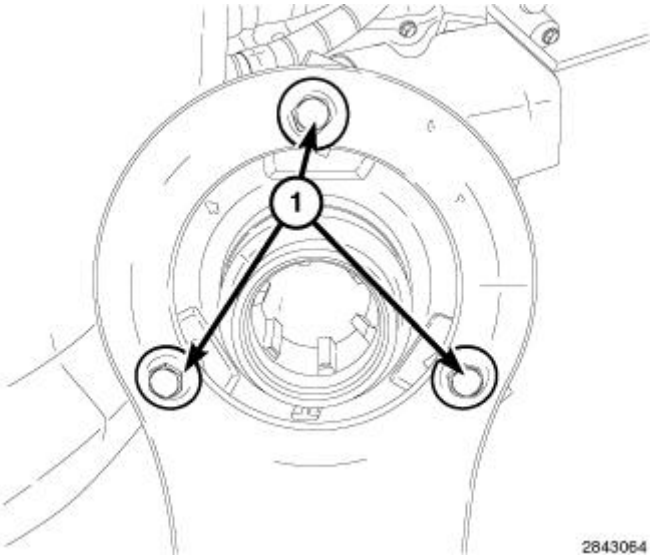

Fig. 83: DEF Fill Tube Screws
Courtesy of CHRYSLER GROUP, LLC

1. Install the Diesel Exhaust Fluid (DEF) fill tube and securely tighten fasteners.

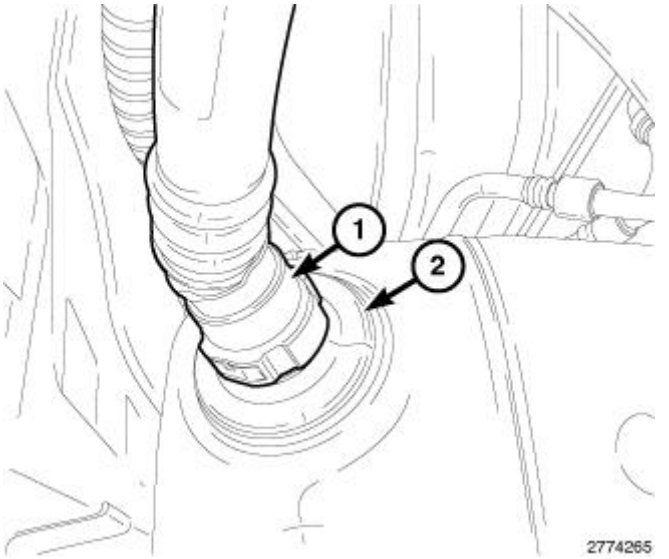

Fig. 84: DEF Tank & Fill Tube
Courtesy of CHRYSLER GROUP, LLC

2. Connect the fill tube (1) to DEF tank (2).

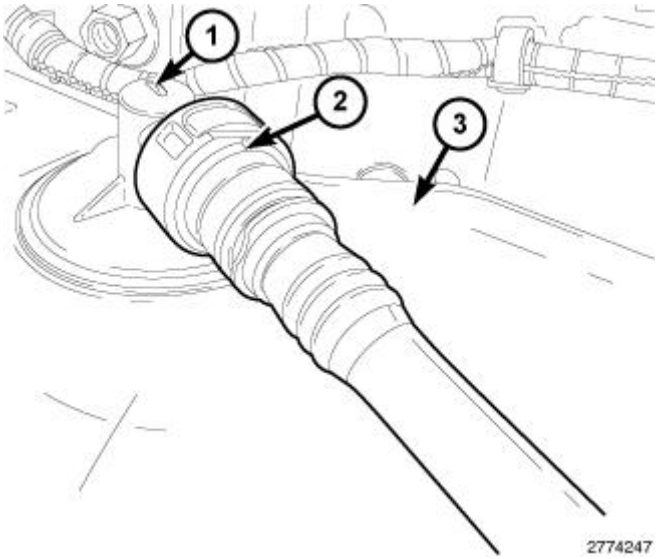

Fig. 85: Fill Tube Vent Line & Valve
Courtesy of CHRYSLER GROUP, LLC

3. Connect the fill tube vent line (2) to fluid limit vent valve (1).
4. Install the DEF filler tube cap.

UNIT, DIESEL EXHAUST FLUID DOSING CONTROL

DESCRIPTION

DESCRIPTION

The Diesel Exhaust Fluid (DEF) Dosing Control Unit controls the function of the Urea's "wet system" (heaters, pump, and injector). The DEF Dosing Control Unit receives a signal from the ECU on when to inject.

OPERATION

OPERATION

The Diesel Exhaust Fluid (DEF) Dosing Control Unit is used to control the operation and monitoring of the Diesel Exhaust Fluid system. The DEF Dosing Control Unit shares information with the ECU over the J1939 Data Link.

REMOVAL

REMOVAL

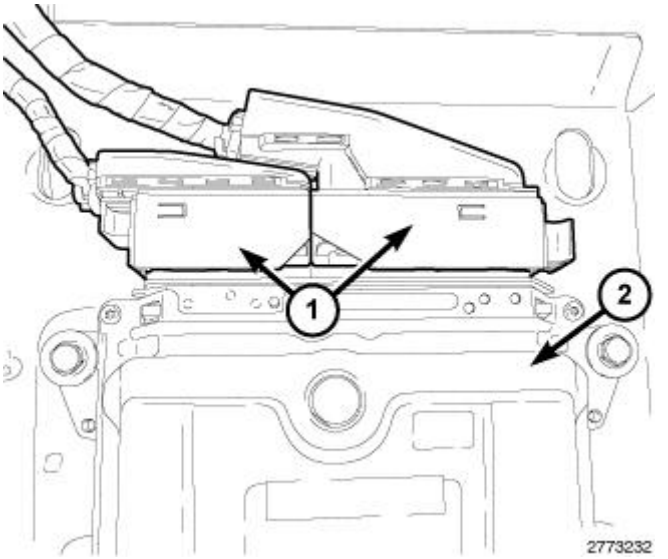

Fig. 86: DEF Dosing Control Unit & Harness Connectors
Courtesy of CHRYSLER GROUP, LLC

NOTE: **For clarity purposes the Dosing Control Unit mounting bracket was removed from the frame.**

1. Disconnect both negative battery cables.
2. Disconnect the Diesel Exhaust Fluid DEF dosing control unit (2) harness connectors (1).

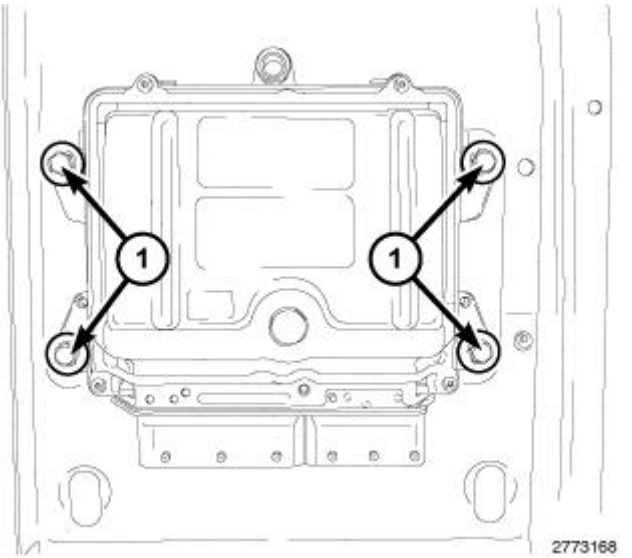

Fig. 87: DEF Dosing Control Unit Mounting Bolts
Courtesy of CHRYSLER GROUP, LLC

NOTE: **For clarity purposes the Dosing Control Unit mounting bracket was removed from the frame.**

3. Remove bolts (1) and the DEF dosing control unit from bracket.

INSTALLATION

INSTALLATION

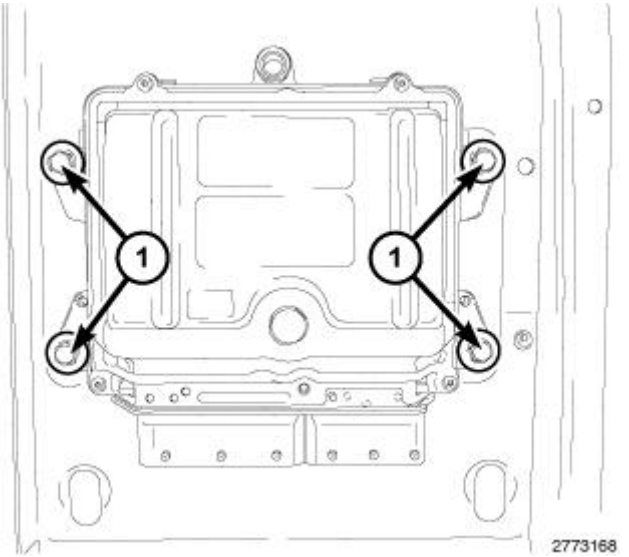

Fig. 88: DEF Dosing Control Unit Mounting Bolts
Courtesy of CHRYSLER GROUP, LLC

NOTE: For clarity purposes the Dosing Control Unit was removed from the frame mounting bracket.

1. Position the Diesel Exhaust Fluid (DEF) dosing control unit to bracket. Tighten bolts (1) to 12 N.m (106 in. lbs.).

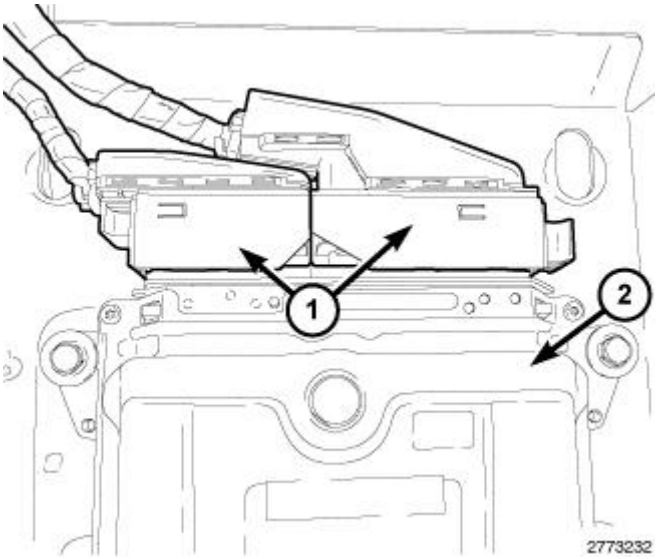

Fig. 89: DEF Dosing Control Unit & Harness Connectors

Courtesy of CHRYSLER GROUP, LLC

NOTE: **For clarity purposes the Dosing Control Unit was removed from the frame mounting bracket.**

2. Connect the DEF dosing control unit (2) harness connector (1).
3. Connect both negative battery cables.

VALVE, DIESEL EXHAUST FLUID ENGINE COOLANT CONTROL

DESCRIPTION

DESCRIPTION

The Diesel Exhaust Fluid (DEF) Engine Coolant Control Valve is used to allow engine coolant to being circulated in the DEF tank or blocked depending on ambient air temperature.

OPERATION

OPERATION

The Diesel Exhaust Fluid (DEF) Tank has an internal heating coil to help eliminate freezing of DEF. The DEF Dosing Control Unit monitors the temperature of the DEF in the tank. When it is determined that the DEF needs to be heated, the DEF Dosing Control Unit opens the DEF Engine Coolant Valve and allows warm engine coolant to circulate through the heating coil to warm the DEF in the tank.

REMOVAL

REMOVAL

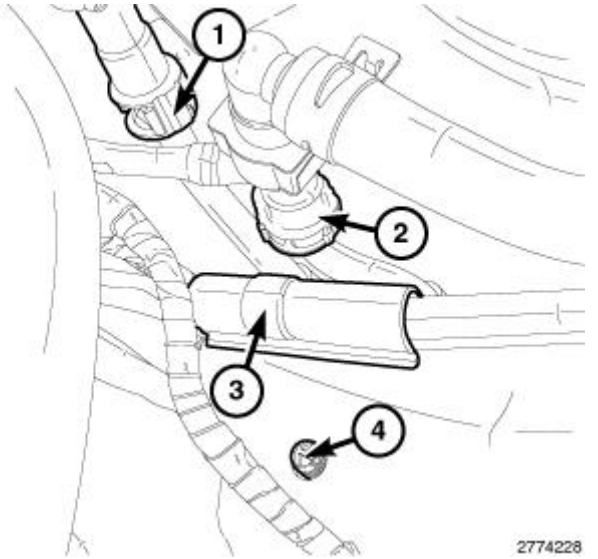

Fig. 90: DEF Coolant Lines, Push Pin & Coolant Lines Bracket
Courtesy of CHRYSLER GROUP, LLC

1. Disconnect both negative battery cables.
2. Drain the cooling system. Refer to **STANDARD PROCEDURE** .
3. Disconnect the coolant lines (1 and 2) going to Diesel Exhaust Fluid (DEF) tank.
4. Remove push pin (4) and unclip coolant lines bracket (3) from frame rail.

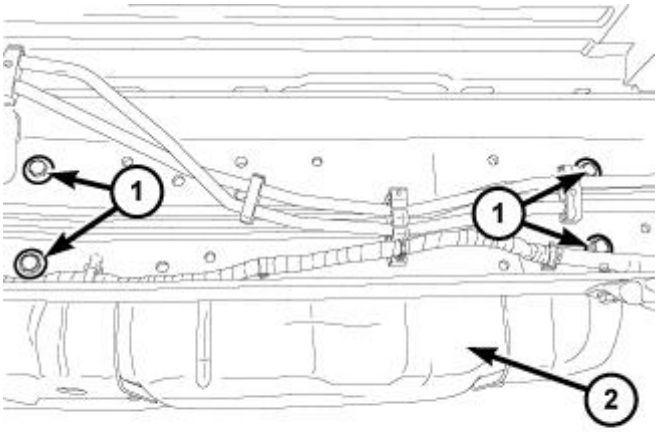

2774330

Fig. 91: DEF Tank Bolts
Courtesy of CHRYSLER GROUP, LLC

5. Position a transmission jack under DEF tank.
6. Remove bolts (1) and partially lower the DEF tank (2).

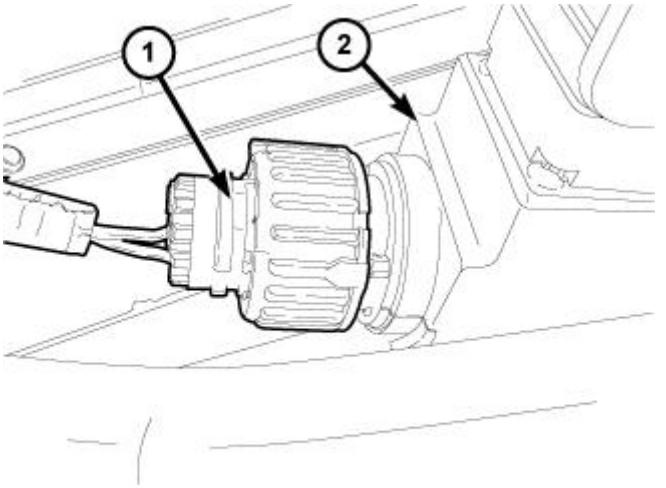

2774496

Fig. 92: Coolant Control Valve Harness Connector
Courtesy of CHRYSLER GROUP, LLC

7. Disconnect the DEF engine coolant control valve harness connector (1).

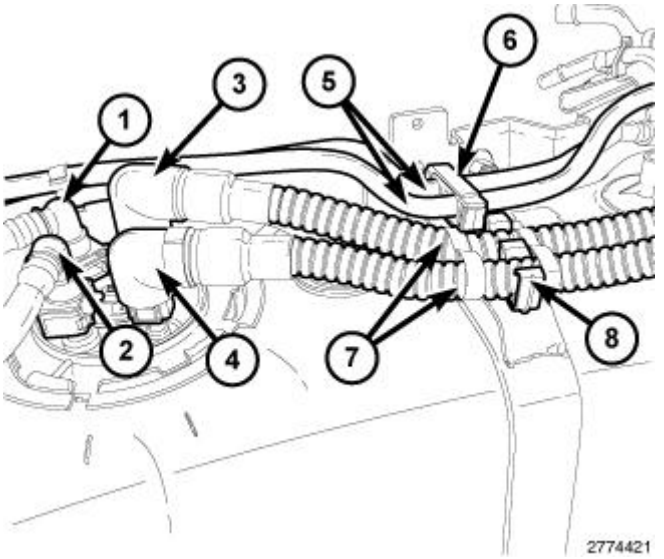

Fig. 93: DEF Supply/Return Lines, Coolant Supply/Return Lines & Clips
Courtesy of CHRYSLER GROUP, LLC

8. Disconnect the coolant supply (1) and return lines (2) from DEF tank.
9. Disconnect the coolant lines (5) at routing clip (6).

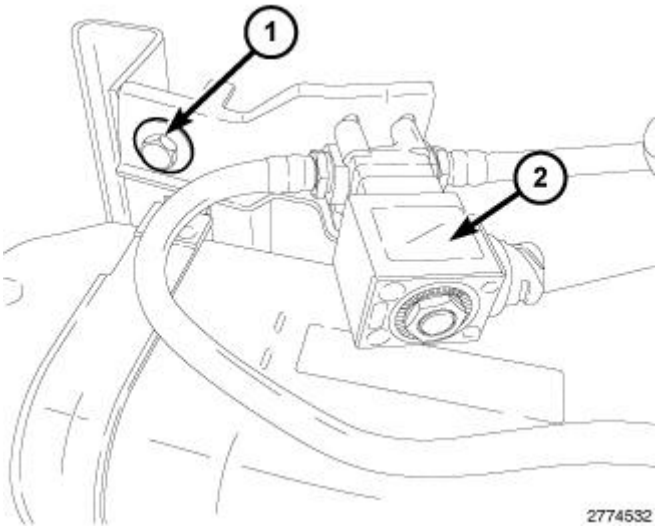

Fig. 94: Coolant Control Valve Assembly
Courtesy of CHRYSLER GROUP, LLC

10. Remove bolt (1) and the DEF engine coolant control valve assembly (2).

INSTALLATION

INSTALLATION

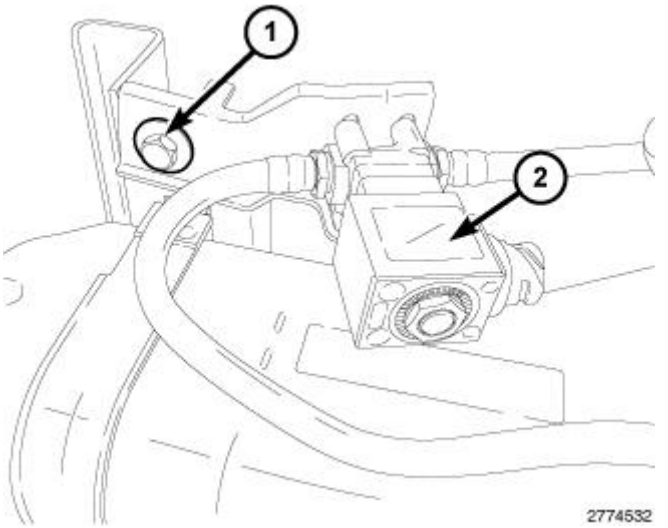

Fig. 95: Coolant Control Valve Assembly
Courtesy of CHRYSLER GROUP, LLC

1. Install the coolant control valve assembly (2). Tighten bolt (1) to 54 N.m (40 ft. lbs.).

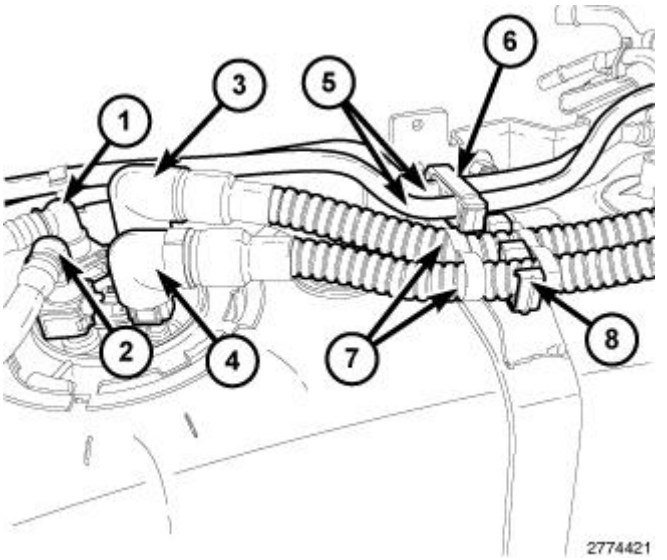

Fig. 96: DEF Supply/Return Lines, Coolant Supply/Return Lines & Clips
Courtesy of CHRYSLER GROUP, LLC

2. Position and connect the DEF coolant lines (5) into routing clip (6).
3. Connect the coolant supply (1) and return lines (2) to DEF tank.

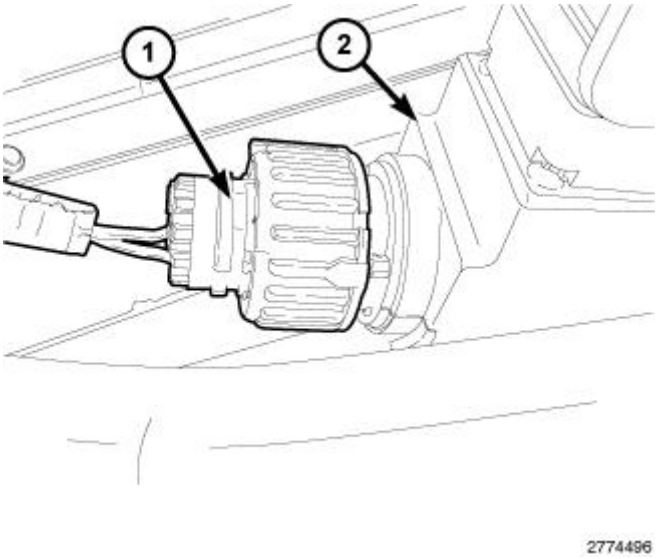

Fig. 97: Coolant Control Valve Harness Connector
Courtesy of CHRYSLER GROUP, LLC

4. Connect the coolant control valve harness connector (1).

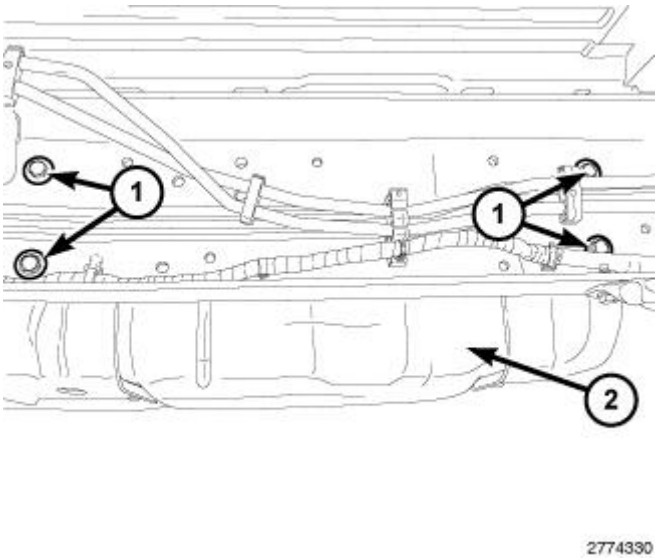

Fig. 98: DEF Tank Bolts
Courtesy of CHRYSLER GROUP, LLC

5. Install the DEF tank (2) into place. Tighten bolts (1) to 108 N.m (80 ft. lbs.).
6. Remove the transmission jack.

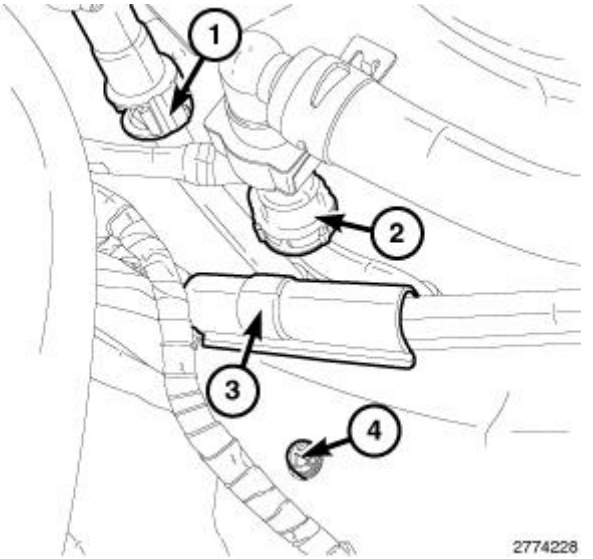

Fig. 99: DEF Coolant Lines, Push Pin & Coolant Lines Bracket
Courtesy of CHRYSLER GROUP, LLC

7. Clip coolant lines bracket (3) to frame rail and install push pin (4).
8. Connect the coolant hoses (1 and 2) going to DEF tank.
9. Fill the cooling system. Refer to **STANDARD PROCEDURE - FILLING** .
10. Connect both negative battery cables.

EVAPORATIVE EMISSIONS, 6.7L DIESEL

SPECIFICATIONS

SPECIFICATIONS

DESCRIPTION	N.m	In. Lbs.	Ft. Lbs.
Breather Cover Bolts	10	89	-
Crankcase Pressure Sensor	3	27	-
Exhaust Gas Pressure Sensor	18	159	-

SENSOR, CRANKCASE PRESSURE, 6.7L

DESCRIPTION

DESCRIPTION

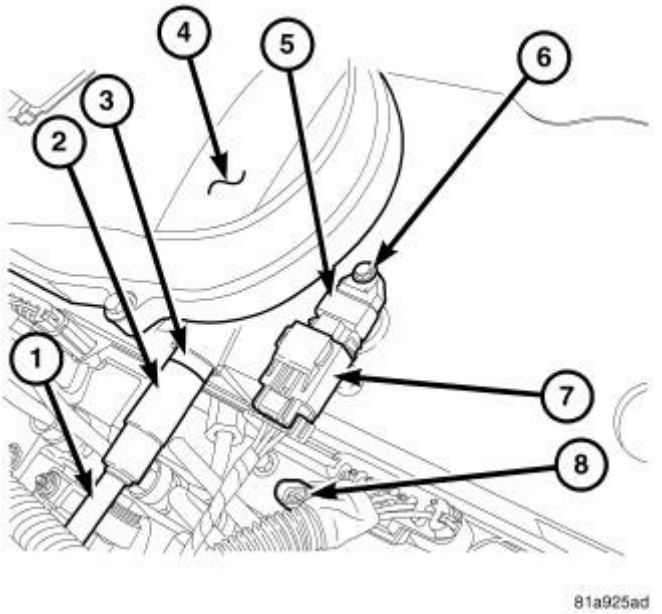

Fig. 100: Locating Crankcase Pressure Sensor
Courtesy of CHRYSLER GROUP, LLC

The Crankcase Pressure (CP) Sensor (5) is mounted on the valve cover (4).

OPERATION

OPERATION

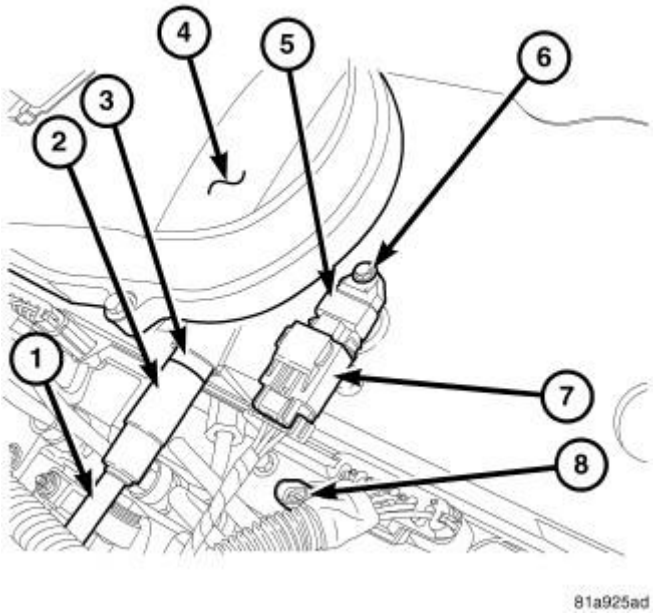

Fig. 101: Locating Crankcase Pressure Sensor
Courtesy of CHRYSLER GROUP, LLC

The Crankcase Pressure (CP) Sensor (5) is mounted on the valve cover (4). The CP sensor monitors crankcase pressure that builds up as the result of combustion gas blow-by. The Powertrain Control Module (PCM) uses data from the CP sensor to determine the condition of the crankcase breather (ventilation) filter. The PCM can also determine if a crankcase breather (ventilation) filter is present.

REMOVAL

REMOVAL

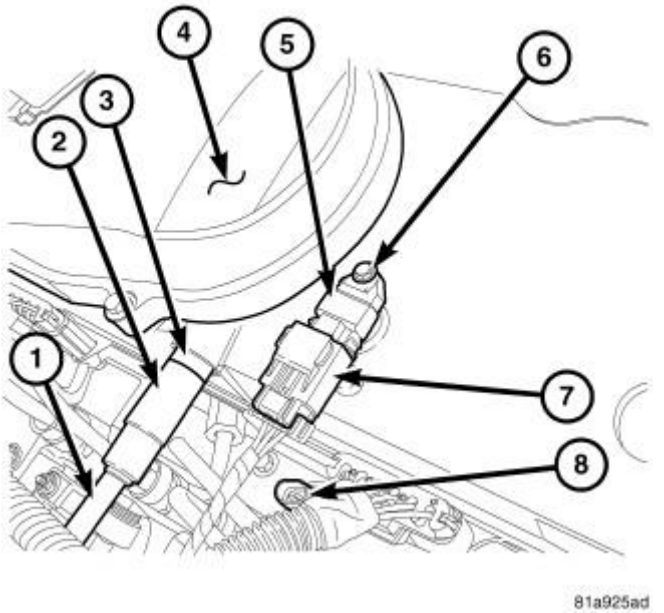

Fig. 102: Locating Crankcase Pressure Sensor
Courtesy of CHRYSLER GROUP, LLC

1. Disconnect both negative battery cables.
2. Disconnect the CP sensor harness connector (7).
3. Remove bolt (6) and the CP sensor (5) from valve cover (4).

INSTALLATION

INSTALLATION

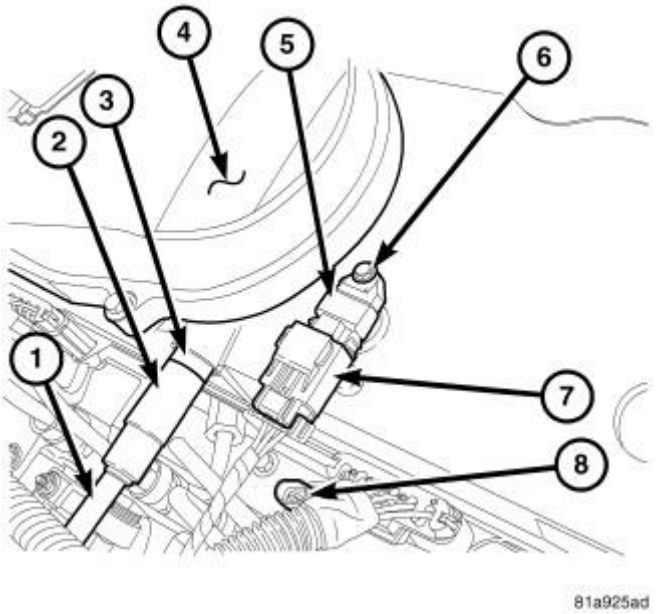

Fig. 103: Locating Crankcase Pressure Sensor
Courtesy of CHRYSLER GROUP, LLC

1. Check condition of sensor O-ring.
2. Install the CP sensor (5) into valve cover (4). Tighten bolt (6) to 3 N.m (27 in. lbs.).
3. Connect the CP sensor harness connector (7).
4. Connect both negative battery cables.

SENSOR, EXHAUST GAS PRESSURE

REMOVAL

REMOVAL

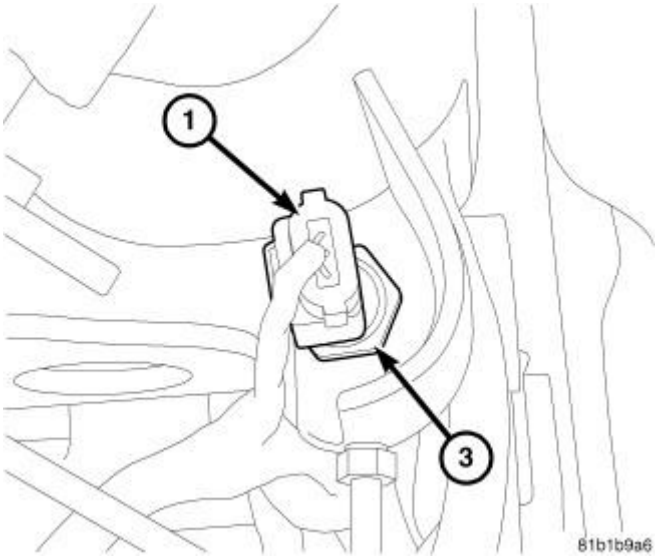

Fig. 104: Exhaust Gas Pressure Sensor - 6.7L Diesel
Courtesy of CHRYSLER GROUP, LLC

1 - ELECTRICAL CONNECTOR
2 - EXHAUST GAS PRESSURE SENSOR

1. Disconnect both negative battery cable.
2. Disconnect exhaust gas pressure sensor harness connector (1).
3. Remove exhaust gas sensor (3).

INSTALLATION

INSTALLATION

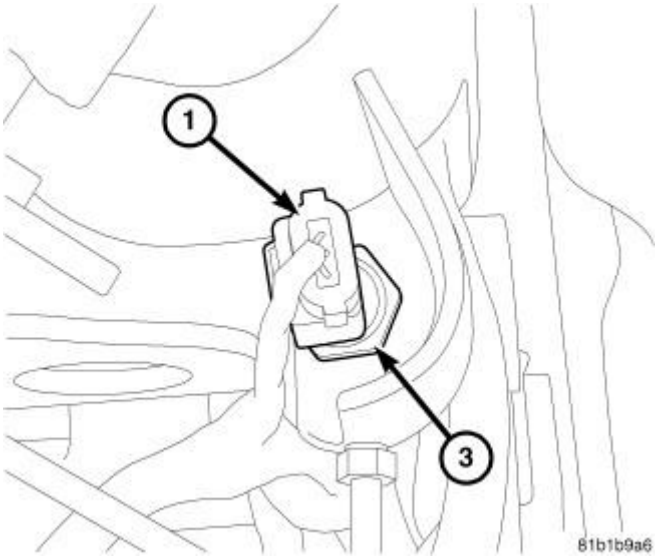

Fig. 105: Exhaust Gas Pressure Sensor - 6.7L Diesel
Courtesy of CHRYSLER GROUP, LLC

1 - ELECTRICAL CONNECTOR
2 - EXHAUST GAS PRESSURE SENSOR

1. Install exhaust gas pressure sensor (3). Tighten to 18 N.m (159 in. lbs.).
2. Connect exhaust gas pressure sensor harness connector (1).
3. Connect both negative battery cable.

SYSTEM, CLOSED CRANKCASE VENTILATION (CCV)

DESCRIPTION

DESCRIPTION

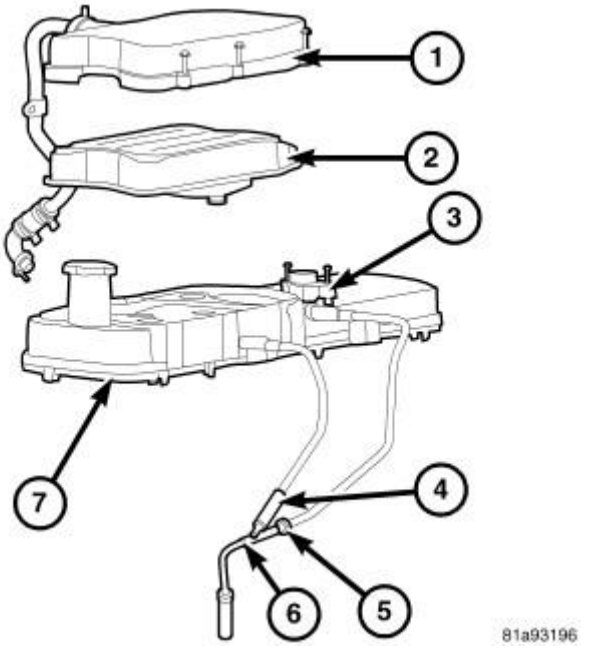

Fig. 106: Identifying CCV System & Components
Courtesy of CHRYSLER GROUP, LLC

The CCV system contains the following components:

- Cylinder Head Cover Assembly (7)
- Breather Element (2)
- Breather Cover (1)
- Crankcase Pressure Sensor (3)
- Crankcase Differential Regulator (CDR) Valve; a part of the breather filter cover (1)

The cylinder head cover assembly (7) is made of a composite material. The cover has a recessed area for the breather element and passages for oil draining from the breather element, back to the crankcase. The breather element is serviced separately. The drain tubes have one-way check valves (4), (5) and (6) that prevent oil from

being forced up the tubes by excessive crankcase pressure. The external fittings to the breather tube and breather drain tube are serviceable.

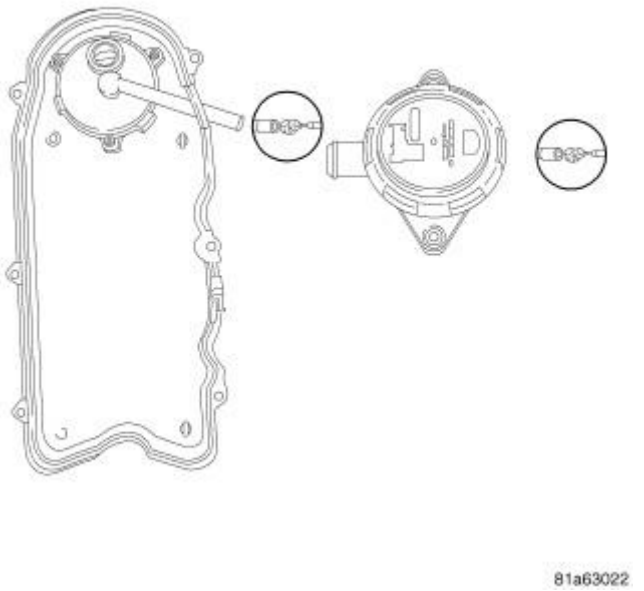

Fig. 107: CCV Valve
Courtesy of CHRYSLER GROUP, LLC

The closed crankcase ventilation valve is used to vent the crankcase gases back into the intake of engine. If the crankcase ventilation filter becomes too restrictive, under high intake vacuum situations, the closed crankcase ventilation prevents the engine from siphoning crankcase gases/oil from the crankcase of the engine. The closed crankcase ventilation valve is located under the crankcase ventilation filter cover at the top of the engine.

OPERATION

OPERATION

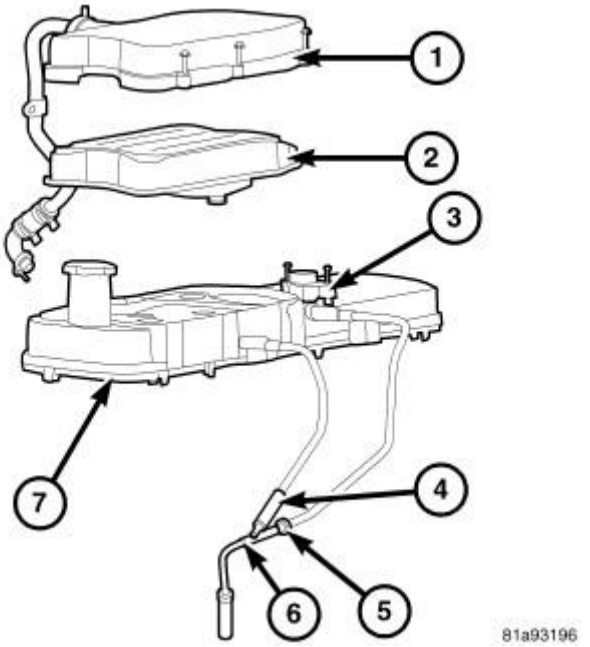

Fig. 108: Identifying CCV System & Components
Courtesy of CHRYSLER GROUP, LLC

The CCV system reroutes crankcase ventilation (blow-by) gases from the breather assembly back into the engine intake airflow to be used for combustion. The crankcase ventilation system uses a coalescing filter (2) which captures and filters crankcase blow-by gases and then returns oil directly to the sump.

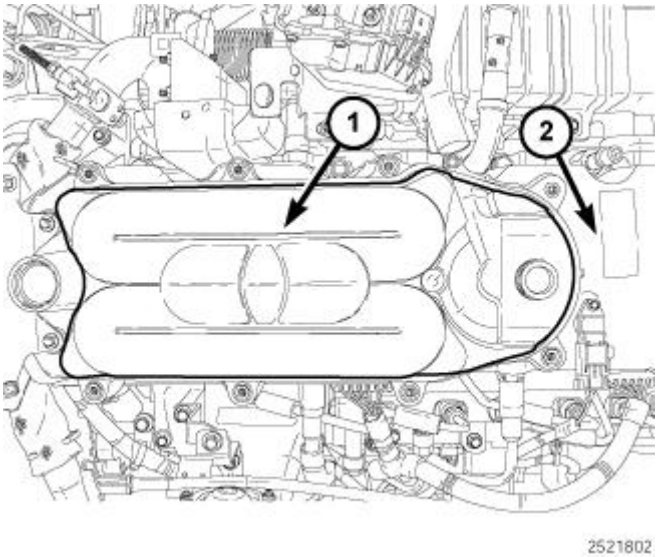

Fig. 109: Breather Element Location
Courtesy of CHRYSLER GROUP, LLC

The Closed Crankcase Ventilation System (CCV) consists of several parts to make it functional. One part is the breather element (1). The breather element (1) is serviceable and prevents oil mist from entering the discharge tube of the CCV system. The breather element (1) should be replaced at 67, 500 mile intervals.

Crankcase gasses travel into the breather cavity under the breather cover where they pass through a filtering media (serviceable maintenance component) which separates the oil from the crankcase gasses. The oil drains back into the engine block through two hoses (2) on the left side of the engine.

The crankcase gasses are directed through the Crankcase Depression Regulator (CDR) valve which allows the system to maintain a constant positive pressure in the crankcase. The CDR valve is a non-serviceable component located on the underside of the breather cover. Clean crankcase gasses flow from the CDR valve into the fresh air side of the turbocharger compressor.

DIAGNOSIS AND TESTING

DIAGNOSIS AND TESTING - CLOSED CRANKCASE VENTILATION (CCV)

1. If troubleshooting high crankcase pressure, the following items can be causing the closed crankcase ventilation valve to close during engine operation:
   - A restricted crankcase ventilation filter. Change the filter
   - A malfunctioning or incorrectly assembled closed crankcase ventilation valve. Check the valve operation.
2. The closed crankcase ventilation valve should allow crankcases gases to flow when the engine is not running and/or removed from the engine.

NOTE: Application of air can be applied either to the inlet or outlet of the closed crankcase ventilation valve.

3. A small amount of air can be blown through the closed crankcase ventilation valve (less than 34 kPa [5 psi]) to check the closed crankcase ventilation valve.
4. If air does not go through the closed crankcase ventilation valve, replace the valve.

REMOVAL

REMOVAL

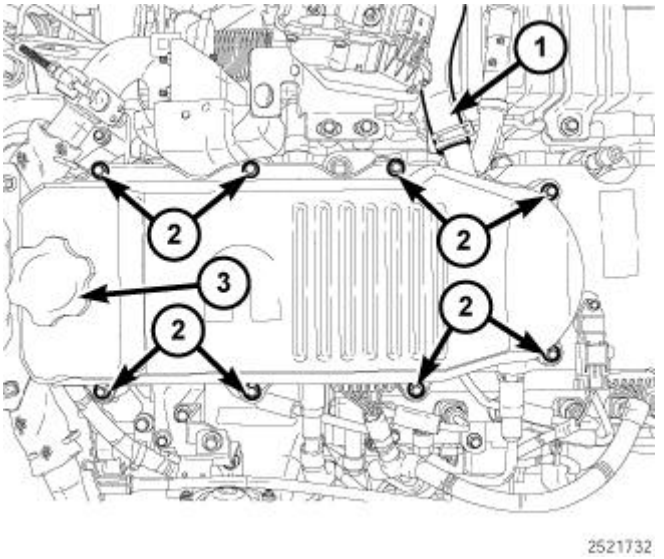

Fig. 110: Breather Hose, Oil Fill Cap & Bolts
Courtesy of CHRYSLER GROUP, LLC

1. If equipped, remove the engine cover.
2. Remove the breather hose (1) from the breather cover.

CAUTION: The use of air tools is not recommended as damage to the component may result.

3. Remove the oil fill cap (3), the bolts (2) and the breather cover.

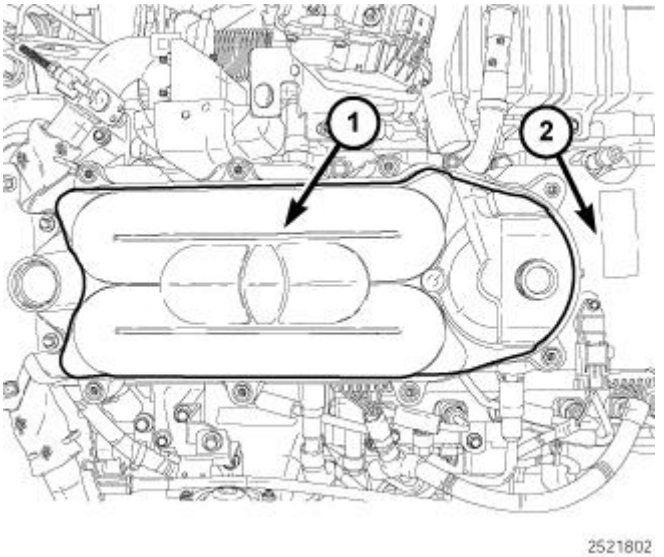

Fig. 111: Breather Element Location
Courtesy of CHRYSLER GROUP, LLC

4. Remove the breather element (1) from the cylinder head cover (2).

INSPECTION

INSPECTION

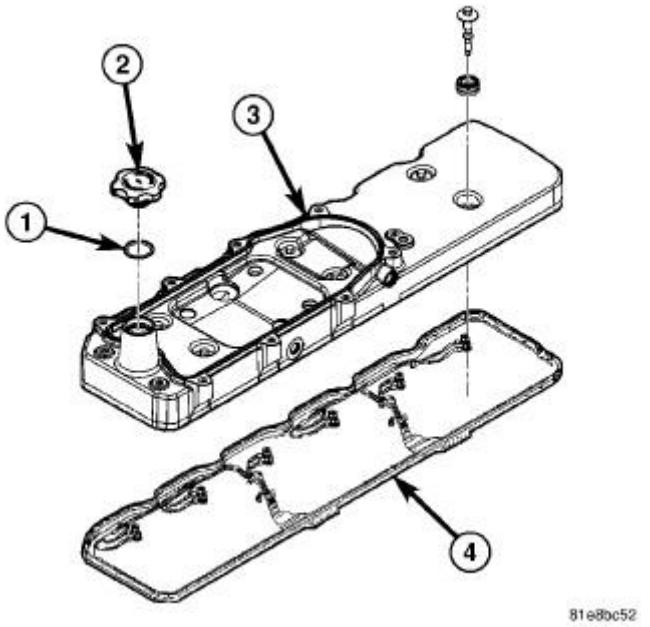

Fig. 112: Identifying Oil Filler Cap, O-Ring & Gaskets
Courtesy of CHRYSLER GROUP, LLC

1. Inspect the Close Crankcase Ventilation System (CCV) by ensuring the oil drain hoses are not kinked or cracked.
2. Inspect the breather element sealing gasket (3) and surface area for gouges or cracks; this surface should be smooth and free of abrasions.

INSTALLATION

INSTALLATION

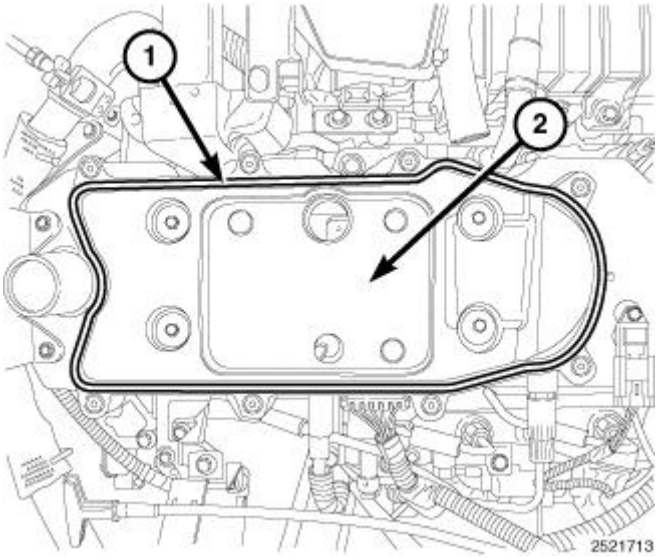

Fig. 113: Installing Gasket & Cylinder Head Cover
Courtesy of CHRYSLER GROUP, LLC

1. Clean the filter sealing surface on the cylinder head cover (2) with a clean shop towel.
2. Install a new gasket (1) onto the cylinder head cover (2).

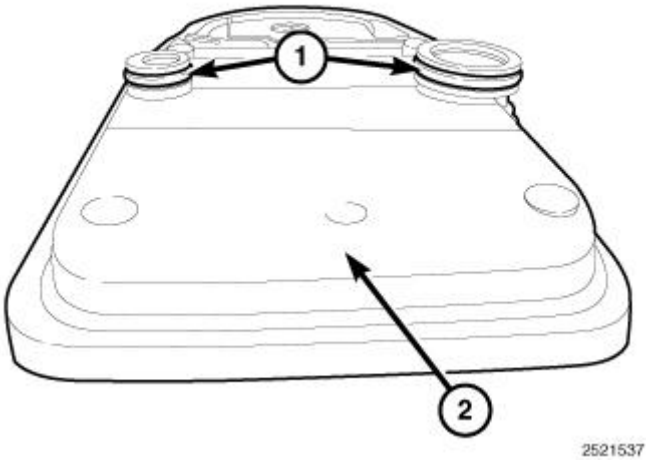

Fig. 114: Identifying O-Ring & Breather Element
Courtesy of CHRYSLER GROUP, LLC

3. Apply clean engine oil to the two bottom O-ring (1) on the breather element (2) and install the new breather element onto the cylinder head cover.

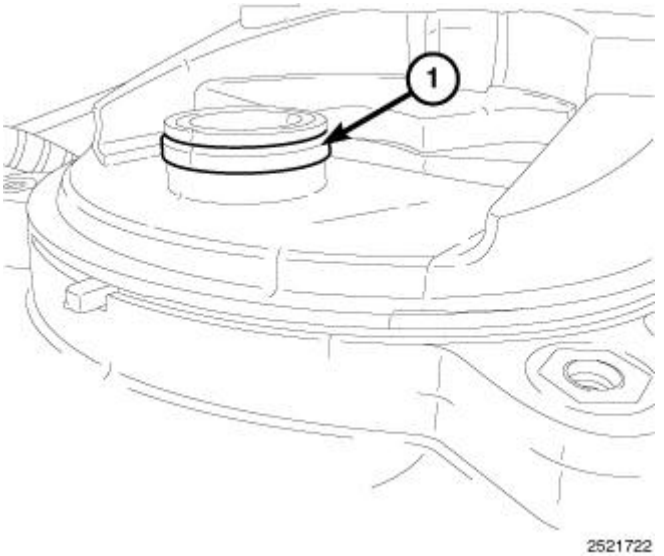

Fig. 115: Identifying O-Ring
Courtesy of CHRYSLER GROUP, LLC

4. Apply clean engine oil to the top O-ring (1) on the breather element (2).

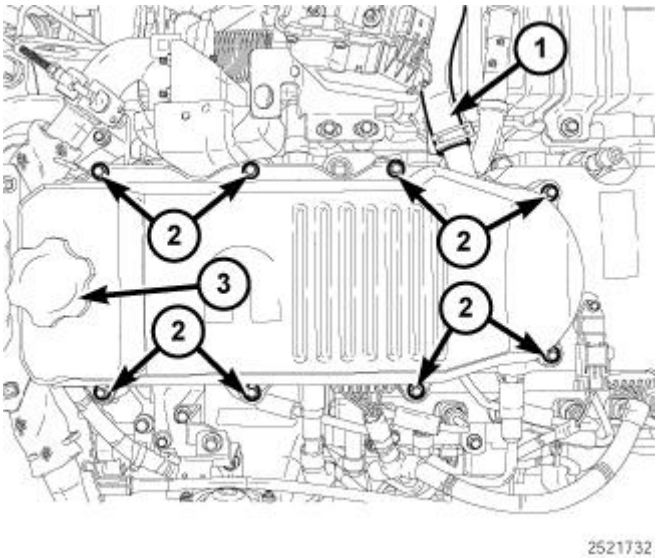

Fig. 116: Breather Hose, Oil Fill Cap & Bolts
Courtesy of CHRYSLER GROUP, LLC

CAUTION: The use of air tools is not recommended as damage to the component may result.

5. Install the breather cover and the oil fill cap (3). Tighten bolts (2) to 10 N.m (89 in. lbs.).
6. Install the breather hose (1) onto the breather cover.
7. If equipped, install engine covers.

EXHAUST GAS RECIRCULATION, 6.7L DIESEL

SPECIFICATIONS

SPECIFICATIONS

DESCRIPTION	N.m	In. Lbs.	Ft. Lbs.
EGR Air Flow Control Valve	10	89	-
EGR Crossover Tube Bolt	10	89	-
EGR Crossover Tube Clamp	10	89	-
EGR Cooler Bypass Valve Bolt	24	-	18
EGR Cooler Bypass Valve Inside Bracket Bolt	10	89	-
EGR Cooler Bypass Valve Lower Head Shield Bolt	10	89	-
EGR Cooler Bypass Valve Lower Head Shield Nut	10	89	-
EGR Cooler Bypass Valve Outside Bracket Bolt	24	-	18
EGR Cooler Bypass Valve Upper Head Shield Nut	10	10	-
EGR Temperature Sensor	18	159	-
P-Clamp	10	89	-

SENSOR, EGR TEMPERATURE

DESCRIPTION

DESCRIPTION

The EGR Temperature Sensor (1) is located on the EGR crossover tube (6) near the EGR valve.

OPERATION

OPERATION

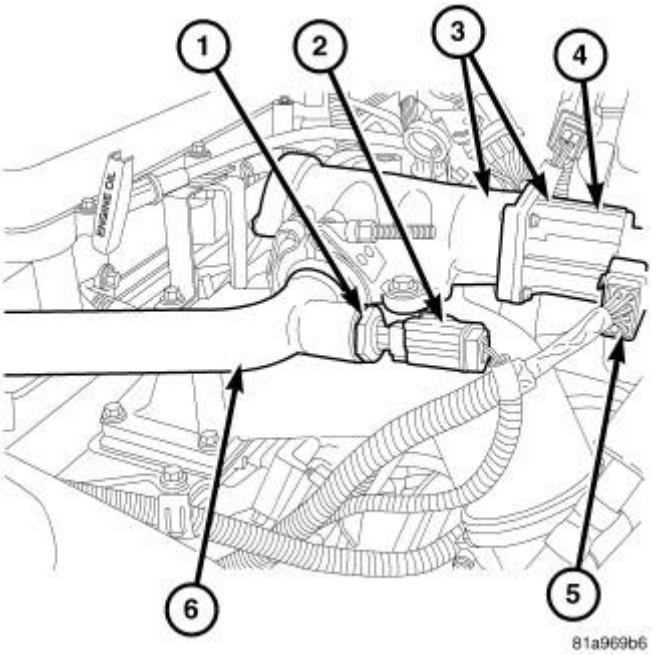

Fig. 117: EGR Temperature Sensor
Courtesy of CHRYSLER GROUP, LLC

The EGR temperature sensor is a negative temperature coefficient thermistor used to measure the temperature of the EGR gas flow after it exits the EGR cooler.

The Powertrain Control Module (PCM) supplies 5 volts to the EGR temperature signal circuit. To determine the temperature of the EGR gas flow, the PCM monitors the change in voltage caused by changes in the resistance of the sensor. The PCM uses the exhaust gas recirculation temperature value for the engine protection system, and also for engine emissions control.

REMOVAL

PICK UP MODELS

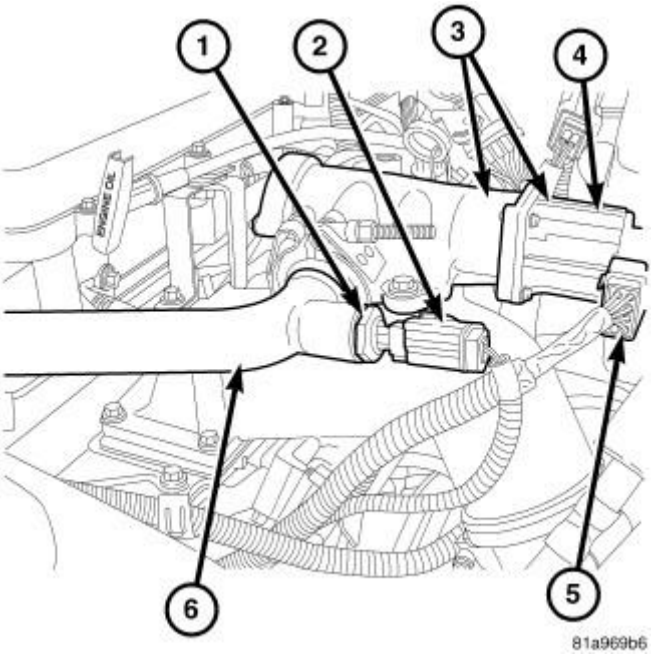

Fig. 118: EGR Temperature Sensor
Courtesy of CHRYSLER GROUP, LLC

1. Disconnect EGR Temperature Sensor (1) harness connector (2).
2. Remove EGR Temperature Sensor (1) from EGR tube (6).

INSTALLATION

PICK UP MODELS

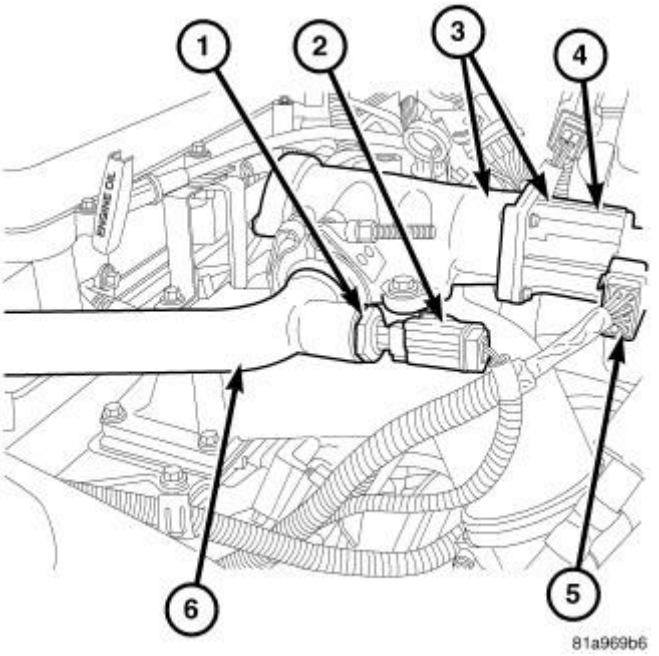

Fig. 119: EGR Temperature Sensor

Courtesy of CHRYSLER GROUP, LLC

1. Clean EGR crossover tube at sensor mounting point.
2. Check condition of the sensors metal gasket and replace if necessary.
3. Install EGR temperature sensor (1) to EGR tube (6). Tighten to 18 N.m (159 in. lbs.).
4. Connect EGR temperature sensor (1) harness connector (2).

SYSTEM, EXHAUST GAS RECIRCULATION (EGR)

OPERATION

OPERATION

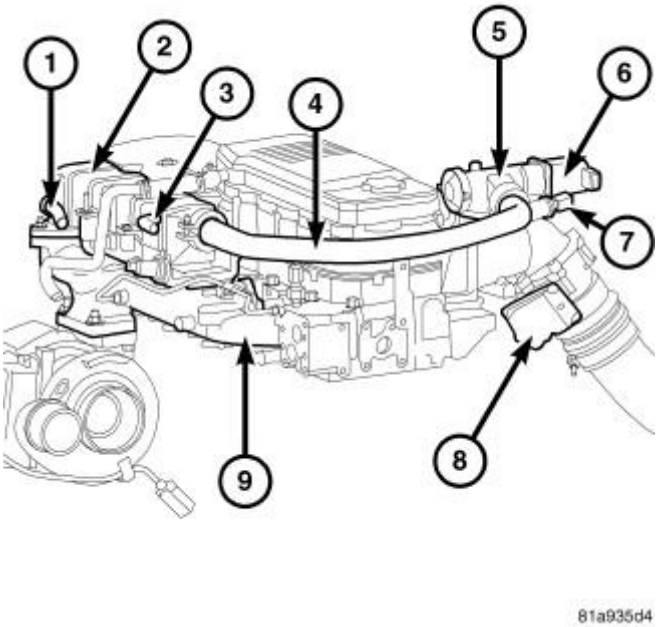

Fig. 120: EGR System Components
Courtesy of CHRYSLER GROUP, LLC

The EGR (Exhaust Gas Recirculation) system is designed to reduce NOx in the exhaust system by reducing combustion temperatures. This is done by introducing inert gas (exhaust) into the combustion process. The intake air charge is diluted by a precisely metered amount of exhaust gas for the operating mode. For example at idle and part throttle, more EGR is introduced than at high-speed cruise conditions. A cooler (2) reduces the temperature of the exhaust gas before it is combined with the intake air, which increases the ability of the existing volume of inert gas to reduce NOx. The EGR cooler is cooled by the engine coolant.

The EGR system contains the following components:

- EGR Cooler (2)
- EGR Valve Assembly (5)
- EGR Valve Crossover Tube (4)

- EGR Temperature Sensor (7)
- EGR Valve Actuator (6)
- EGR Air Flow Control Valve (8)

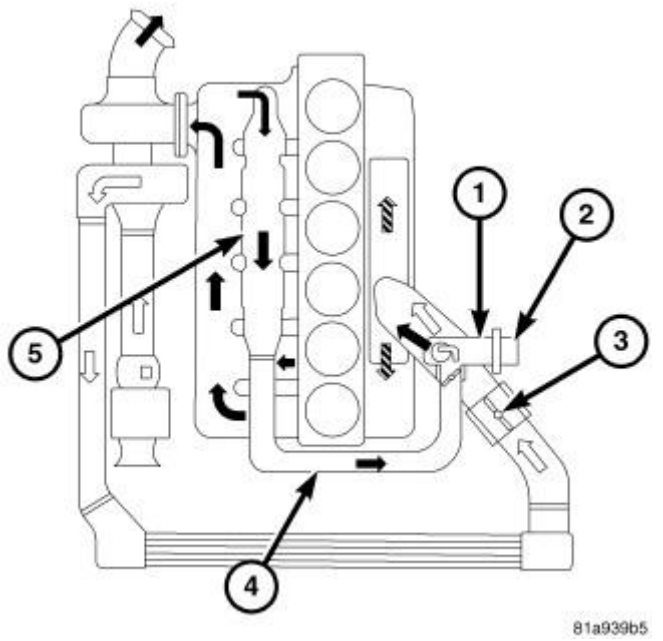

Fig. 121: EGR System Flow & Layout
Courtesy of CHRYSLER GROUP, LLC

EGR is active at low load and speed ranges. Control of EGR flow is based on engine load and engine speed. The ECM (Engine Control Module) gathers information from engine input sensors, and after evaluating the input signals, uses a stored performance map to operate the EGR Valve Actuator (2) and EGR Airflow Throttle Control Valve (3). The calculation allows for a precise EGR flow rate.

The EGR Valve Assembly (1) is located at the left front of the engine, in the upper corner of the intake manifold. The EGR valve has two poppet valves connected by a valve shaft. Cooled exhaust gases flow from the EGR cooler to the center of the valve. When the valves open, exhaust gasses flow into the intake air stream from both the top and the bottom of the passage.

The EGR valve motor (actuator) (2) is a three-phase, brushless DC motor controlled by the ECM. The motor assembly also contains three Hall-effect sensors that detect EGR valve position.

TUBE, EXHAUST GAS RECIRCULATION (EGR), CROSSOVER

REMOVAL

CAB/CHASSIS MODELS

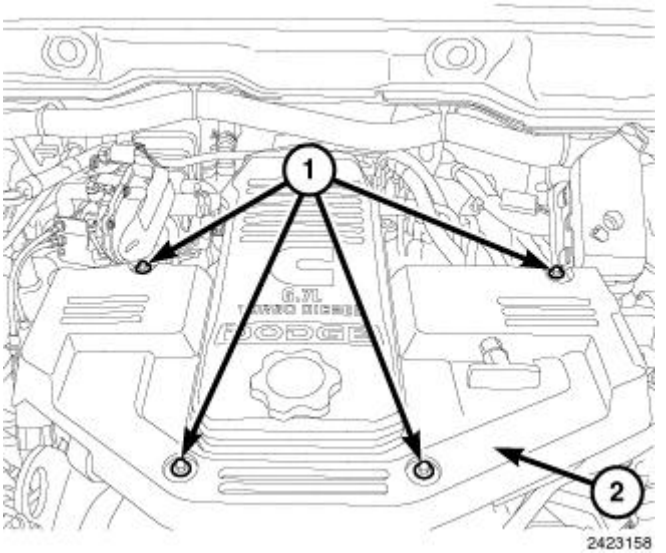

Fig. 122: EGR Crossover Tube Cover
Courtesy of CHRYSLER GROUP, LLC

1. Disconnect both negative battery cables.
2. Remove four bolts (1) and EGR crossover tube cover (2).

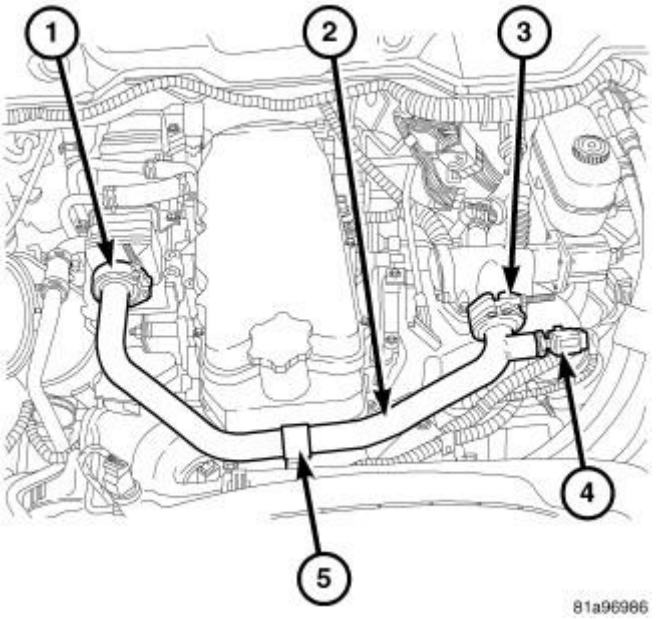

Fig. 123: EGR Crossover Tube
Courtesy of CHRYSLER GROUP, LLC

3. Disconnect EGR Temperature Sensor harness connector (4).
4. Loosen and remove two clamps (1) and (3) at ends of EGR Crossover Tube.
5. Remove "P" clamp mounting bolt (5) at center of EGR Crossover Tube.
6. Remove EGR Crossover Tube (2).

7. Remove and discard gaskets (doughnuts) at each end of tube.

PICK UP MODELS

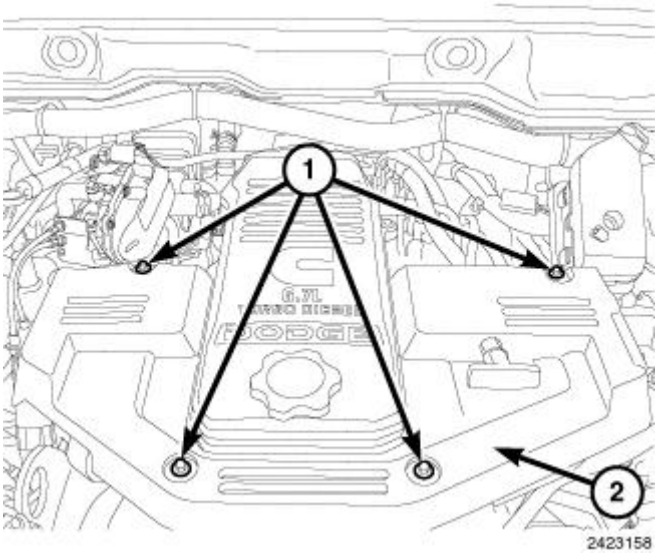

Fig. 124: EGR Crossover Tube Cover
Courtesy of CHRYSLER GROUP, LLC

1. Disconnect and isolate both negative battery cables at batteries.
2. Remove bolts (1) and the EGR crossover tube cover (2).

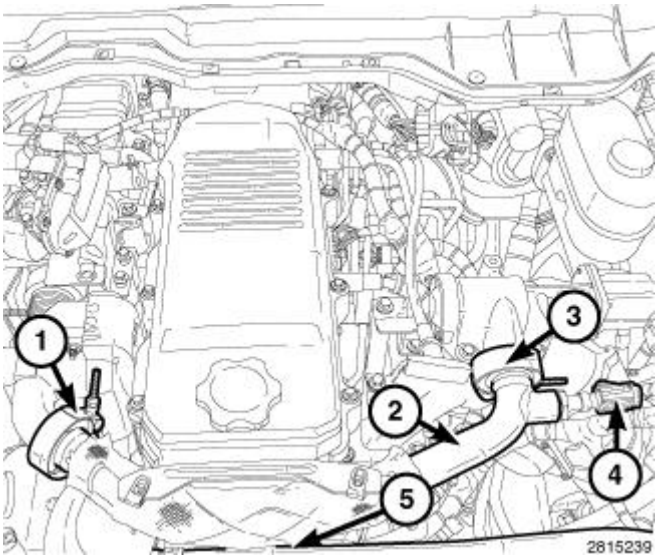

Fig. 125: EGR Crossover Tube, Clamps & Connector
Courtesy of CHRYSLER GROUP, LLC

3. Loosen and remove two clamps (1 and 3) at ends of EGR Crossover Tube (2).
4. Disconnect the EGR temperature sensor harness connector (4).
5. Remove clamp mounting bolt (5) at center bottom of EGR crossover tube.

6. Remove EGR crossover tube (2).
7. Remove and discard gaskets at each end of tube (2).

INSTALLATION

CAB/CHASSIS MODELS

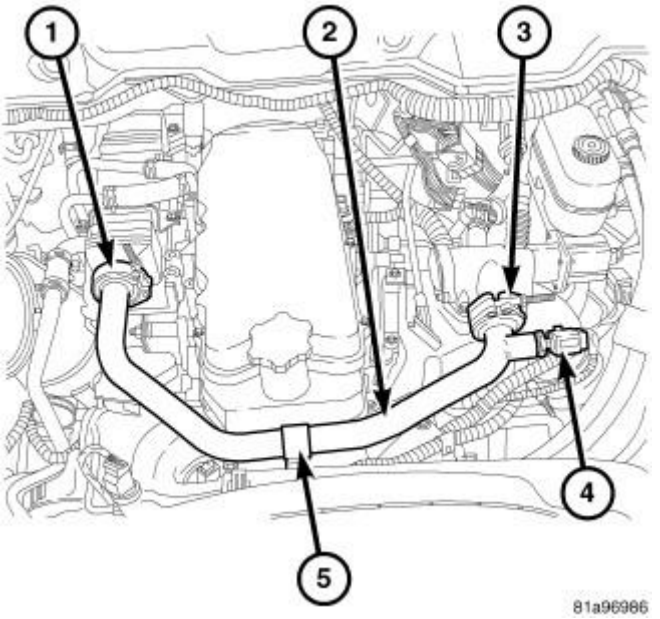

Fig. 126: EGR Crossover Tube
Courtesy of CHRYSLER GROUP, LLC

1. Clean each end of EGR crossover tube, and its connection points of any old gasket material
2. Install new gaskets (doughnuts) to each end of tube.
3. Position EGR crossover tube (2) to engine.
4. Position "P" clamp (5) at center of EGR crossover tube. Install "P" clamp bolt loosely (finger tight).
5. First, tighten EGR crossover tube clamp (1) to 10 N.m (89 in. lbs.), then tighten clamp (3) to 10 N.m (89 in. lbs.).
6. Tighten "P" clamp bolt (5) to 10 N.m (89 in. lbs.).
7. Connect harness connector (4) to EGR temperature sensor.

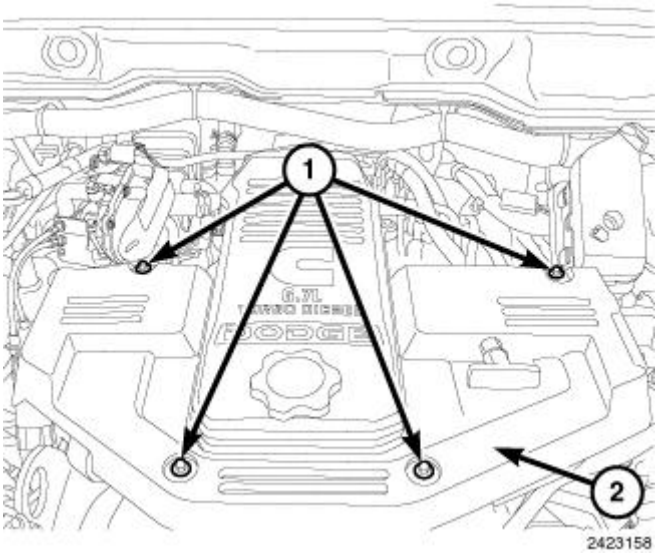

Fig. 127: EGR Crossover Tube Cover
Courtesy of CHRYSLER GROUP, LLC

8. Install the EGR crossover tube cover (1). Tighten bolts (2) to 10 N.m (89 in. lbs.).
9. Connect both negative battery cables.

PICK UP MODELS

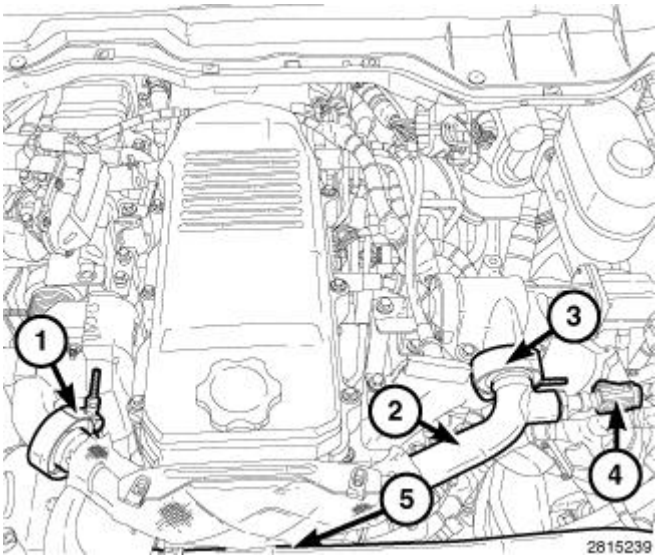

Fig. 128: EGR Crossover Tube, Clamps & Connector
Courtesy of CHRYSLER GROUP, LLC

1. Clean each end of EGR crossover tube and its connection points of any old gasket material.
2. Install new gaskets to each end of the EGR crossover tube (2).
3. Position EGR crossover tube (2) to engine.
4. Install bolt (5) finger tight at center bottom of EGR crossover tube.

5. First, tighten EGR tube clamp (1) to 10 N.m (89 in. lbs.), then tighten clamp (3) to 10 N.m (89 in. lbs.).
6. Tighten bolt (5) to 10 N.m (89 in. lbs.).
7. Connect the EGR temperature sensor harness connector (4).

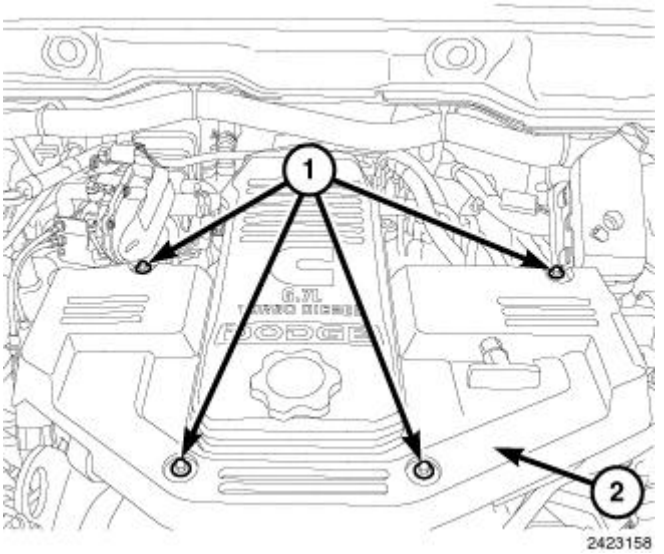

Fig. 129: EGR Crossover Tube Cover
Courtesy of CHRYSLER GROUP, LLC

8. Install the EGR crossover tube cover (2). Tighten bolts (1) to 10 N.m (89 in. lbs.).
9. Connect both negative battery cables.

VALVE, EXHAUST GAS RECIRCULATION (EGR), 6.7L DIESEL

REMOVAL

PICK UP MODELS

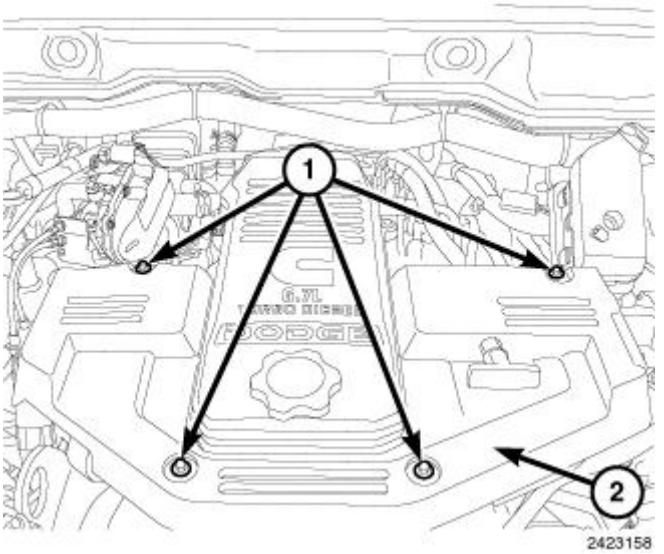

Fig. 130: EGR Crossover Tube Cover
Courtesy of CHRYSLER GROUP, LLC

1. Disconnect both negative battery cables.
2. Remove bolts (1) and the EGR crossover tube cover (2).

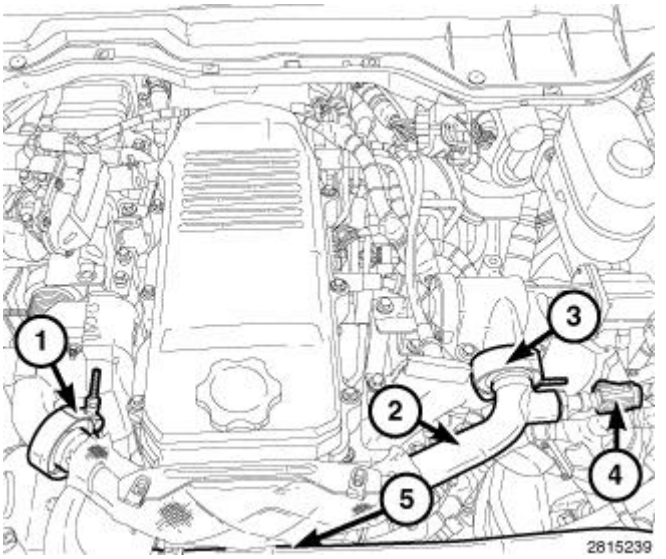

Fig. 131: EGR Crossover Tube, Clamps & Connector
Courtesy of CHRYSLER GROUP, LLC

3. Loosen clamp (1). Remove clamp (3) at end of EGR crossover tube (2).
4. Remove bolt (5) at center bottom of EGR crossover tube.

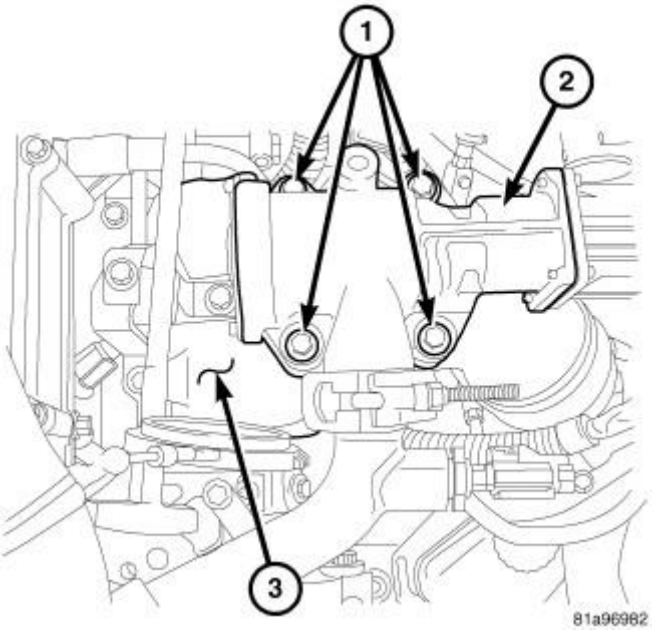

Fig. 132: EGR Valve Assembly & Bolts

Courtesy of CHRYSLER GROUP, LLC

5. Disconnect the EGR valve harness connector.
6. Remove the four EGR valve assembly mounting bolts (1).
7. Remove EGR valve assembly (2) from intake connector (3) by prying up.

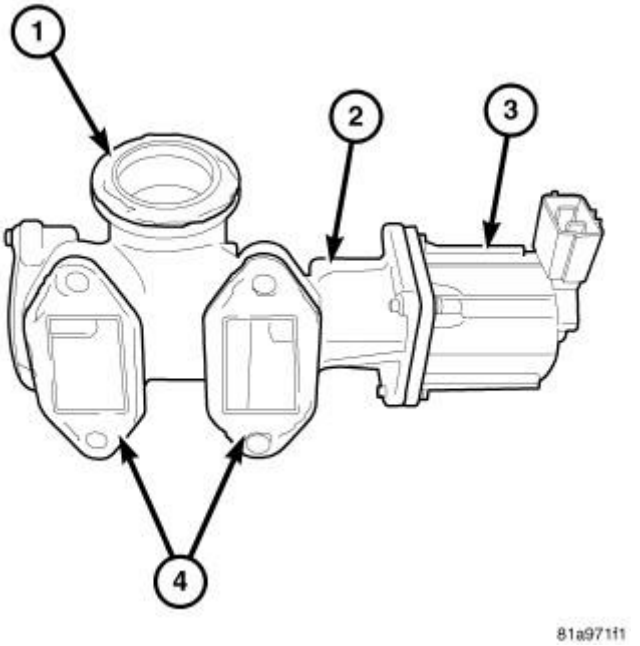

Fig. 133: EGR Valve Gaskets
Courtesy of CHRYSLER GROUP, LLC

8. Remove crossover tube gasket (1) and clean EGR valve. Also clean end of EGR tube of any old gasket material.
9. Remove two gaskets on bottom EGR valve (4). Clean bottom of EGR valve and top of its intake connection point of any old gasket material.

CAB/CHASSIS MODELS

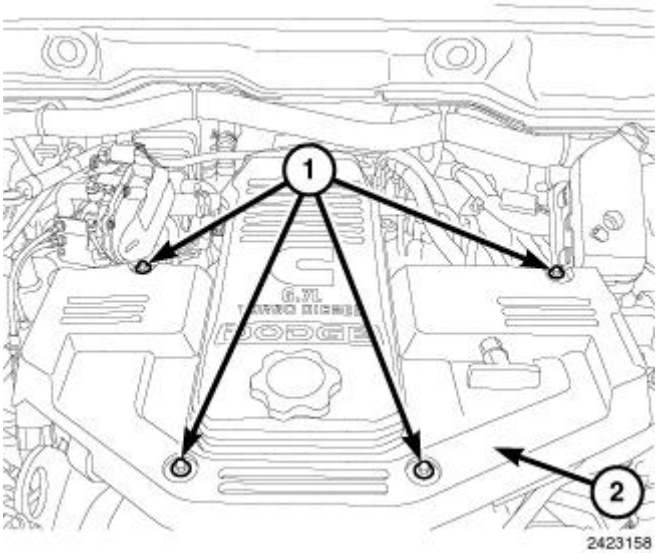

Fig. 134: EGR Crossover Tube Cover
Courtesy of CHRYSLER GROUP, LLC

1. Disconnect both negative battery cables.
2. Remove four bolts (1) and remove EGR crossover tube cover (2).

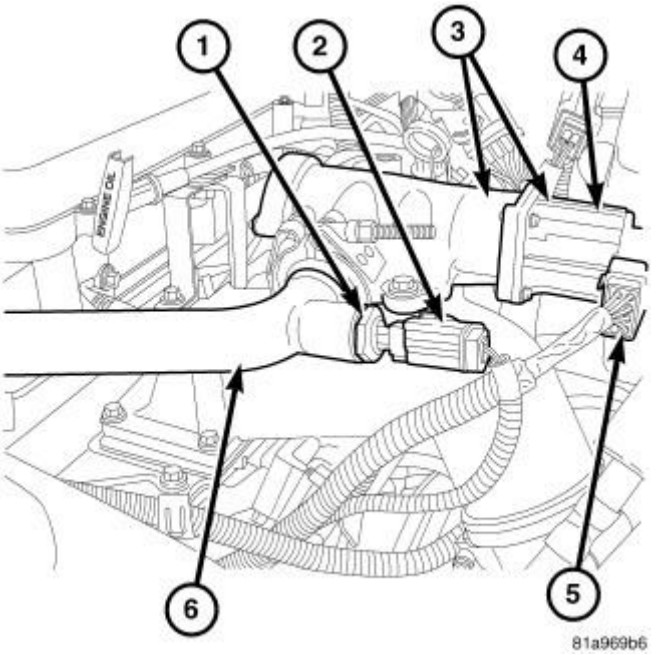

Fig. 135: EGR Temperature Sensor
Courtesy of CHRYSLER GROUP, LLC

3. Disconnect electrical connector (5) at EGR actuator.

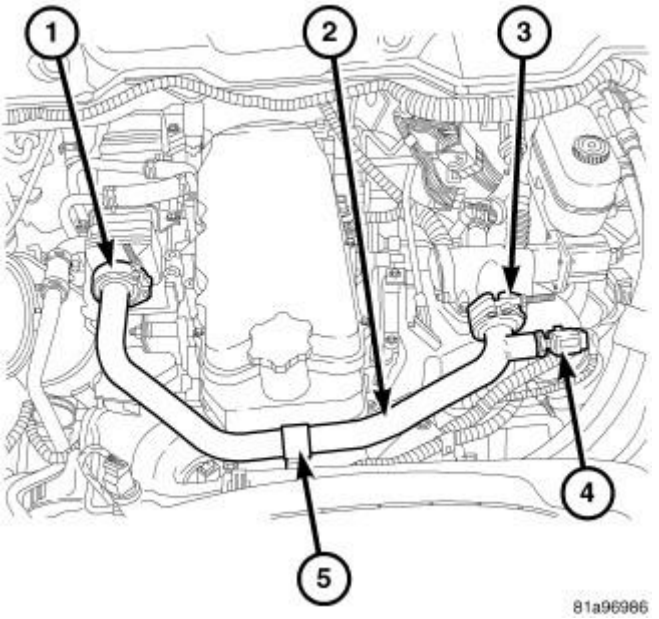

Fig. 136: EGR Crossover Tube
Courtesy of CHRYSLER GROUP, LLC

4. Loosen (only) clamp (1). Remove clamp (3) at end of EGR Crossover Tube.
5. Loosen (only) bolt at "P" clamp (5) at center bottom of EGR Crossover Tube.

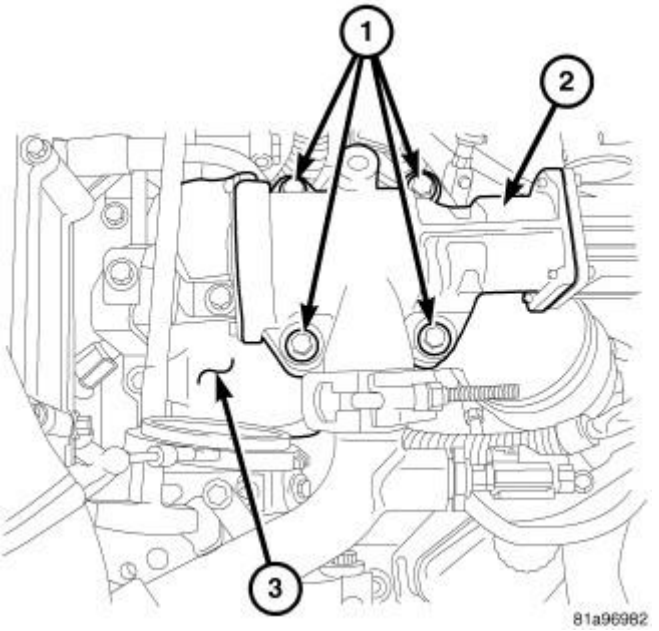

Fig. 137: EGR Valve Assembly & Bolts
Courtesy of CHRYSLER GROUP, LLC

6. Remove the four EGR valve assembly mounting bolts (1).

7. Remove EGR valve assembly (2) from intake connector (3) by prying up.

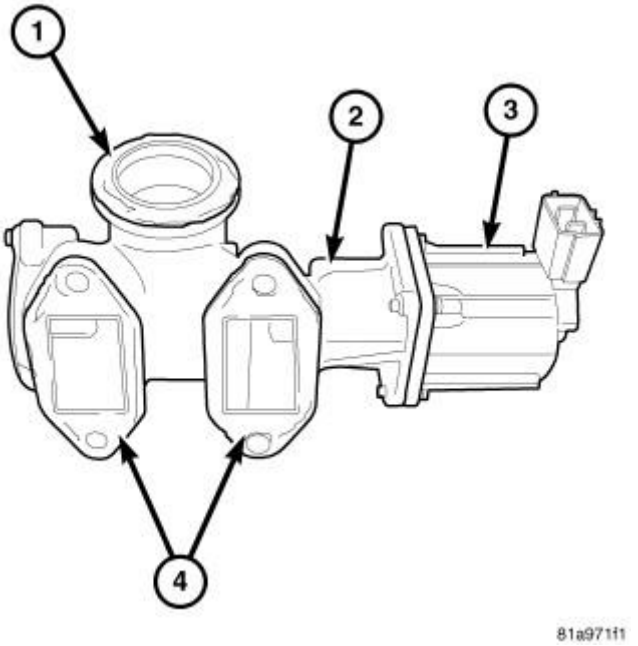

Fig. 138: EGR Valve Gaskets
Courtesy of CHRYSLER GROUP, LLC

8. Remove crossover tube doughnut gasket (1) and clean EGR valve. Also clean end of EGR tube of any old gasket material.
9. Remove two gaskets on bottom EGR valve (4). Clean bottom of EGR valve and top of its intake connection point of any old gasket material.

CLEANING

CLEANING

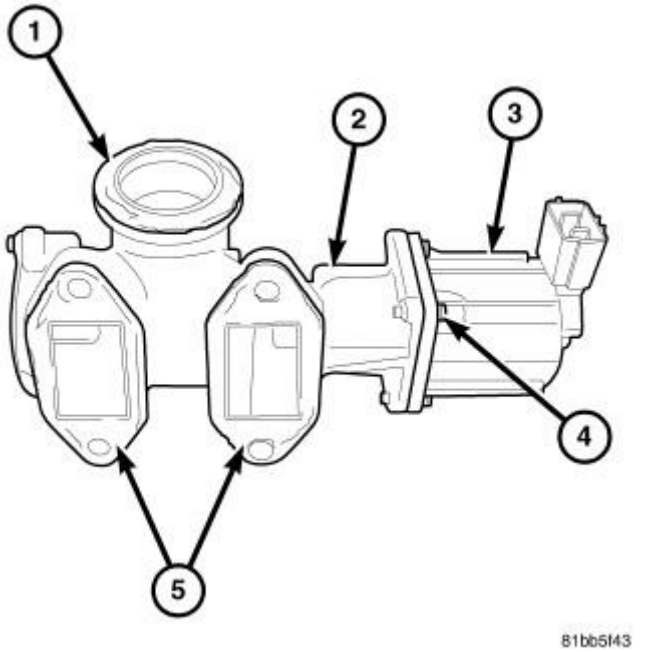

Fig. 139: EGR Valve - 6.7L
Courtesy of CHRYSLER GROUP, LLC

1. Remove EGR valve. Refer to **VALVE, EXHAUST GAS RECIRCULATION (EGR), 6.7L DIESEL [ETJ], REMOVAL**.
2. Remove the four screws (4) from EGR valve motor (3).

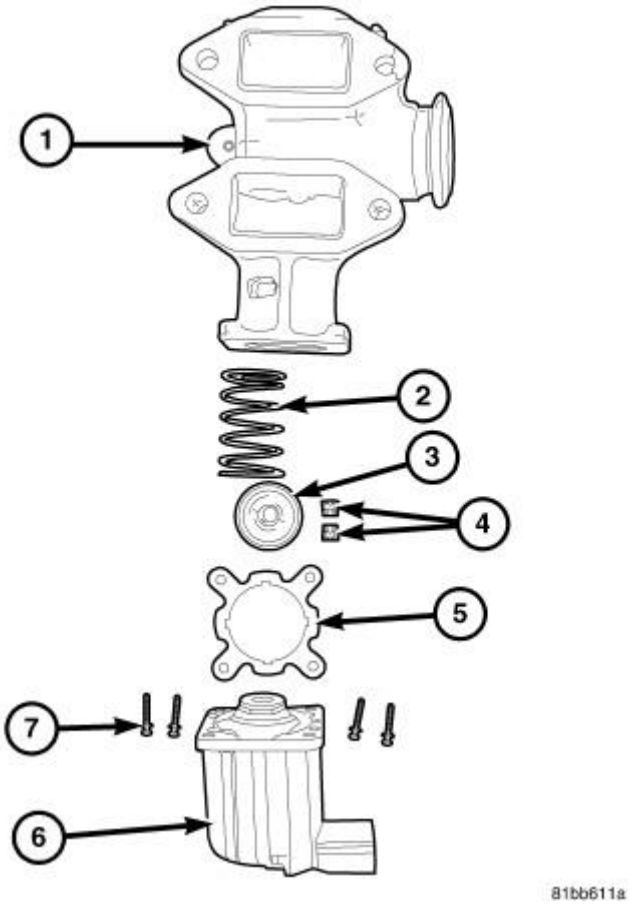

Fig. 140: 6.7L EGR Valve - Exploded View
Courtesy of CHRYSLER GROUP, LLC

NOTE: The original EGR valve motor and its shim must be reinstalled onto the original EGR valve housing.

3. Remove the valve motor (6) and shim (5) from EGR valve housing (1). Motor (6) and shim (5) must be kept for reassembly.

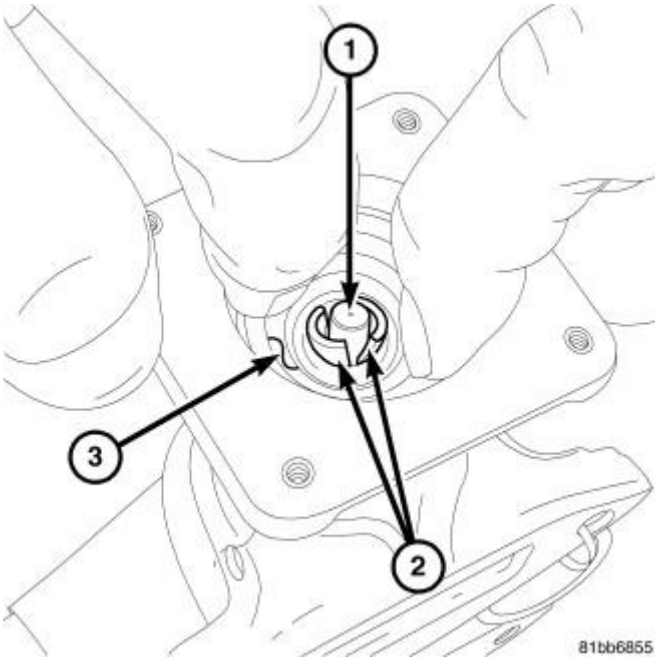

Fig. 141: 6.7L EGR Valve Spring Keepers
Courtesy of CHRYSLER GROUP, LLC

4. Use two fingers to press down on valve spring retainer (3) to unlock two valve keepers (2). If valve keepers will not release using finger pressure, locate a 5/8" deep socket to the spring retainer (3). Gently tap on the socket with a small hammer to release keepers, then use two fingers and press for keeper removal.

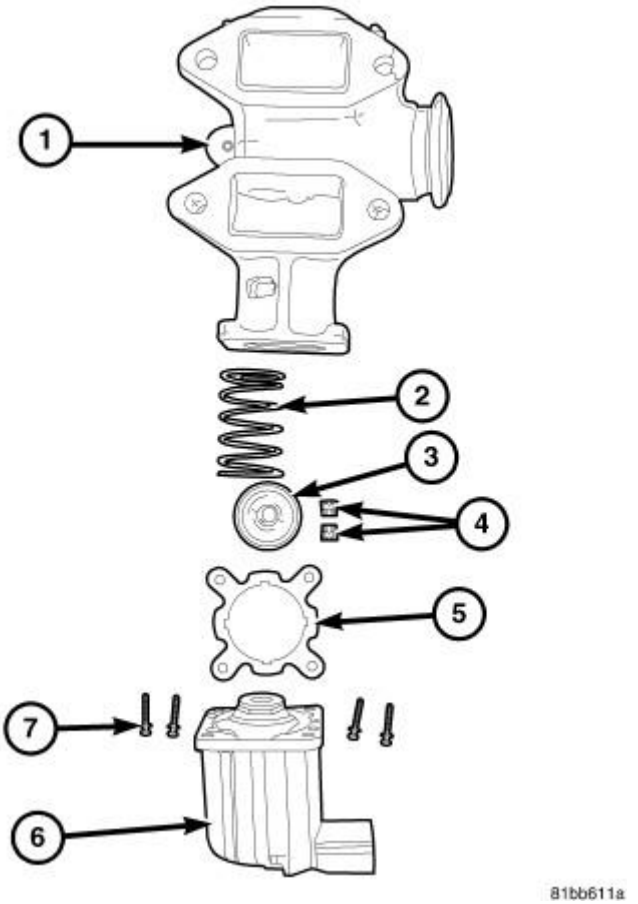

Fig. 142: 6.7L EGR Valve - Exploded View
Courtesy of CHRYSLER GROUP, LLC

5. Remove the valve spring retainer (3) and valve spring (2).

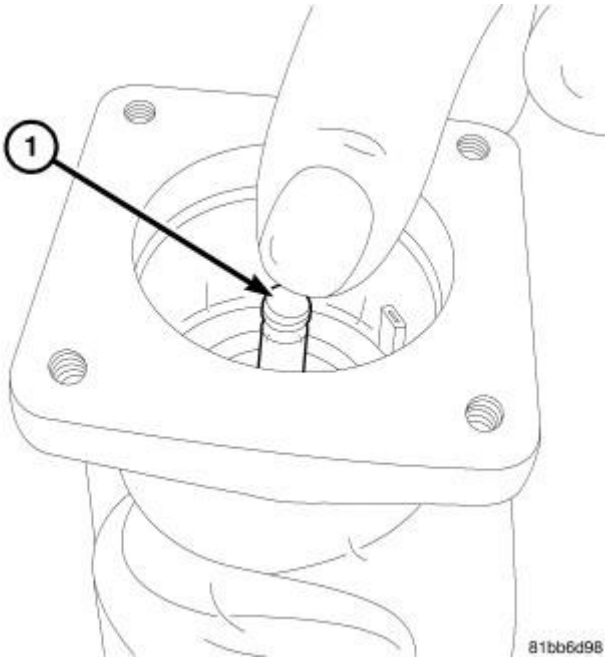

Fig. 143: 6.7L EGR - Valve Stem
Courtesy of CHRYSLER GROUP, LLC

6. Lightly press on valve stem (1) about 3/8" to force valve faces from valve seats.
7. Using a small steel wire bristled brush, brush away loose soot from EGR valve housing.

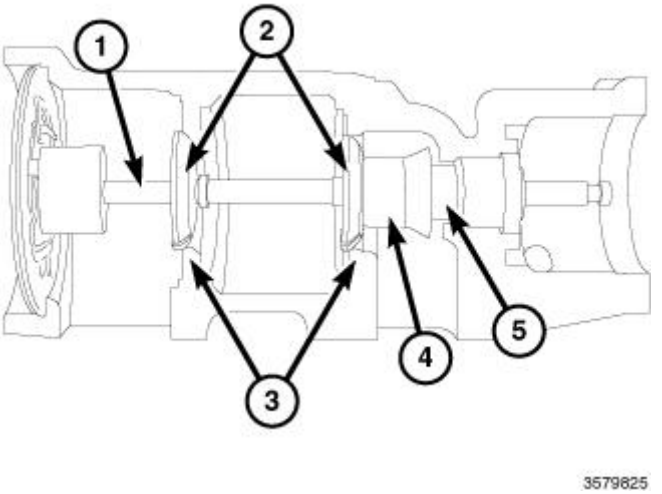

Fig. 144: EGR Valve Shaft Assembly
Courtesy of CHRYSLER GROUP, LLC

8. The EGR valve shaft assembly (1) is comprised of two poppets (2), two seats (3), and a lower soot guard (4). An upper soot guard (5) is pressed into the housing.
9. Using the same steel wire bristle brush, clean the soot from both poppets (2) and both seats (3); Ensure there is metal to metal contact between both poppet/seats interfaces so that the valve is fully closed.

10. Using the same steel wire bristle brush bend to a 45 degree angle or 90 degree angle, clean the soot between the lower soot guard (4) and the upper soot guard (5) interface while rotating the shaft.
11. Completely submerge valve housing using a mixture of hot tap water and MOPAR® EGR System Cleaner (ESC). Mix cleaning solution 1 part ESC and 4 parts water. Allow the valve to soak in the cleaning solution for 1 hour, and occasionally agitating the shaft or moving it up and down through its full stroke.
12. Remove the valve assembly from cleaning solution. Completely remove remaining soot from shaft assembly (1), poppets (2), seats (3), and between the lower soot guard (4) and upper soot guard (5) using the wire bristle brushes.
13. Dispose of cleaning solution per local governmental regulations.
14. Rinse EGR valve housing in hot tap water until all cleaning solution is rinsed clean. Using shop air, blow dry the EGR valve completely.

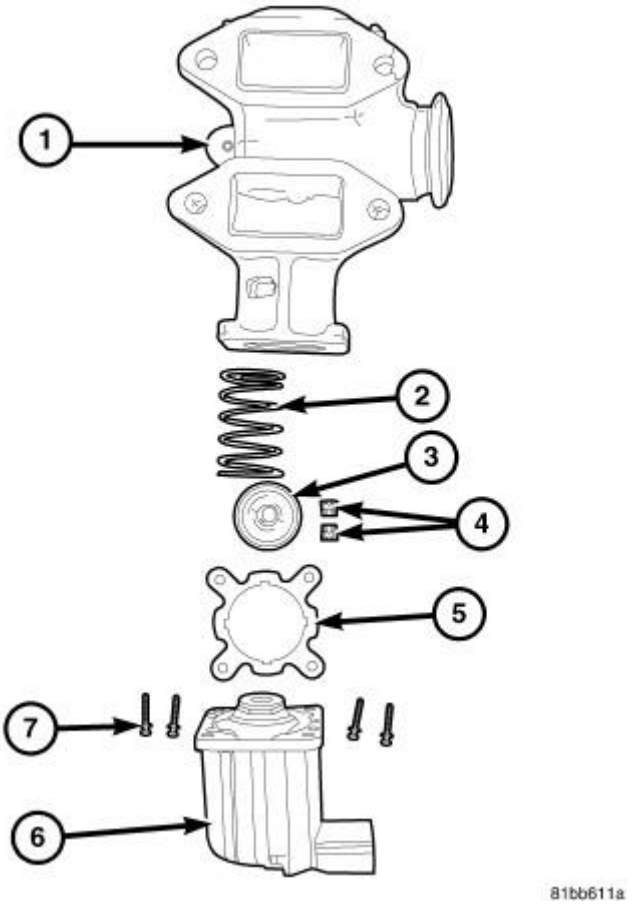

Fig. 145: 6.7L EGR Valve - Exploded View
Courtesy of CHRYSLER GROUP, LLC

15. Assemble valve spring (2) and retainer (3) to housing.

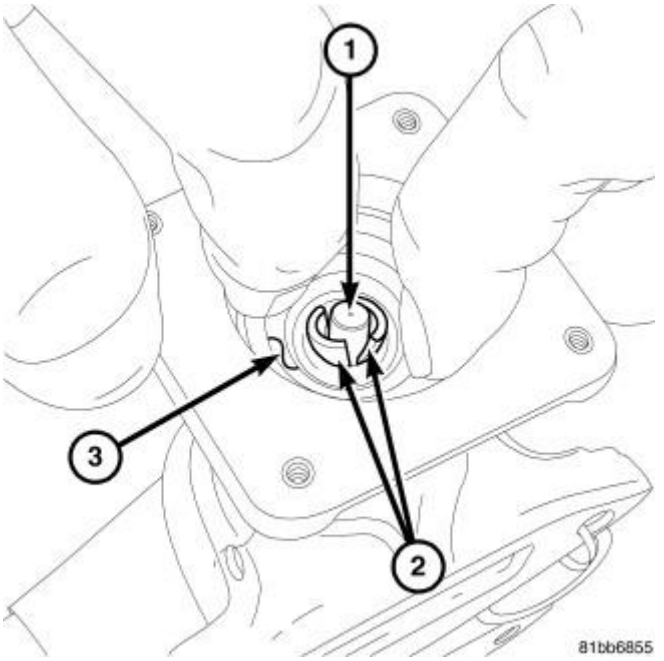

Fig. 146: 6.7L EGR Valve Spring Keepers
Courtesy of CHRYSLER GROUP, LLC

16. Position valve keepers (2). Press down on retainer (3) until groves on valve keepers lock into valve stem (1).

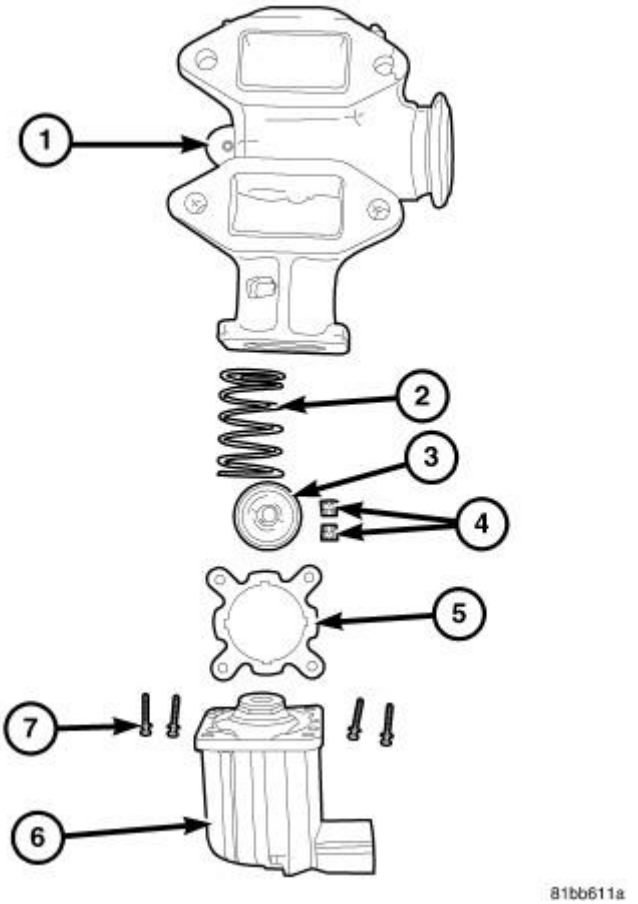

Fig. 147: 6.7L EGR Valve - Exploded View
Courtesy of CHRYSLER GROUP, LLC

17. Install original shim (5) and original motor (6) to housing. Motor is not indexed. Rotate motor until its electrical connector is pointed towards front of vehicle. Install four mounting screws (7).
18. Install EGR valve. Refer to **VALVE, EXHAUST GAS RECIRCULATION (EGR), 6.7L DIESEL [ETJ], INSTALLATION**.

INSTALLATION

PICK UP MODELS

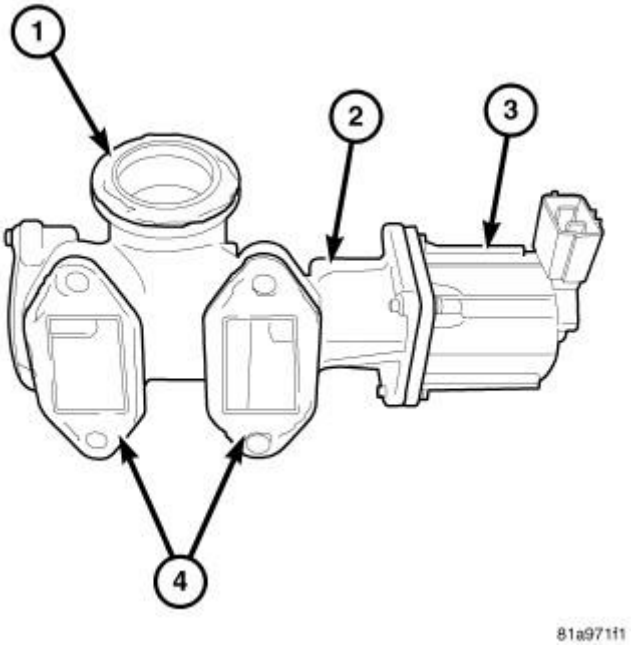

Fig. 148: EGR Valve Gaskets
Courtesy of CHRYSLER GROUP, LLC

1. Install a new EGR crossover tube gasket (1).
2. Install a new gasket (4) to bottom of EGR valve (2).

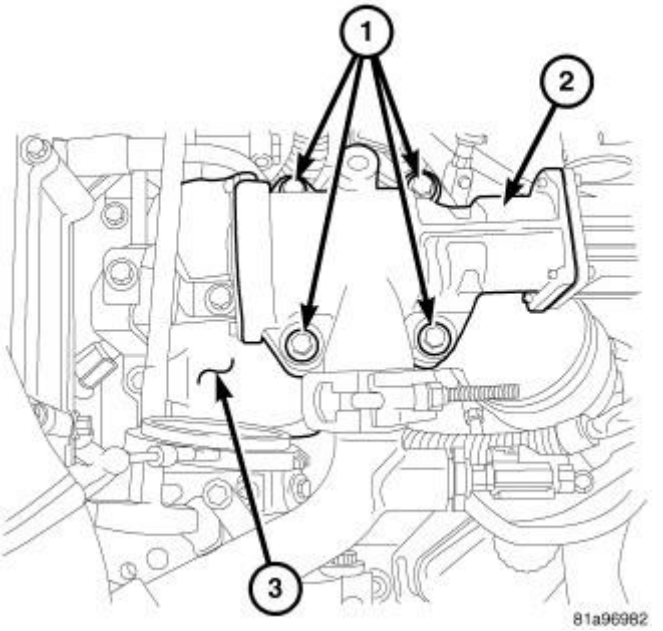

Fig. 149: EGR Valve Assembly & Bolts
Courtesy of CHRYSLER GROUP, LLC

3. Position EGR valve assembly (2) and install the four EGR valve mounting bolts (1) finger tight.

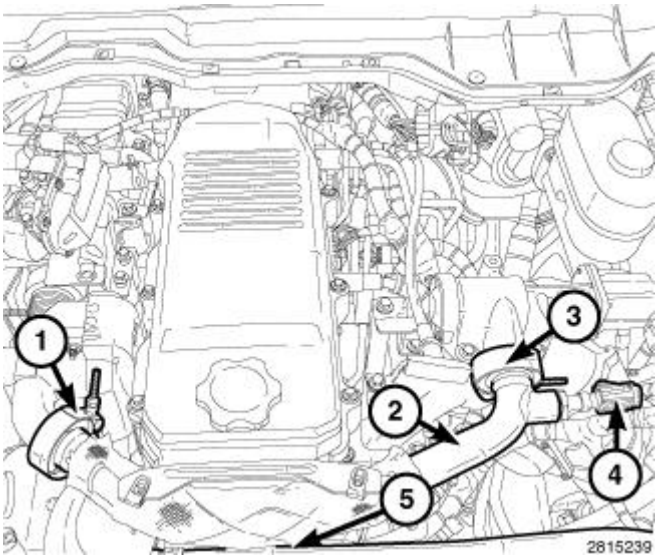

Fig. 150: EGR Crossover Tube, Clamps & Connector
Courtesy of CHRYSLER GROUP, LLC

4. Install clamps (3) at end of EGR crossover tube (2).
5. Install bolt (5) at center bottom of EGR crossover tube finger tight.
6. Tighten clamp (3) first to 10 N.m. (89 in. lbs.), then tighten clamp (1) to 10 N.m. (89 in. lbs.).
7. Tighten bolt (5) to 10 N.m (89 in. lbs.).

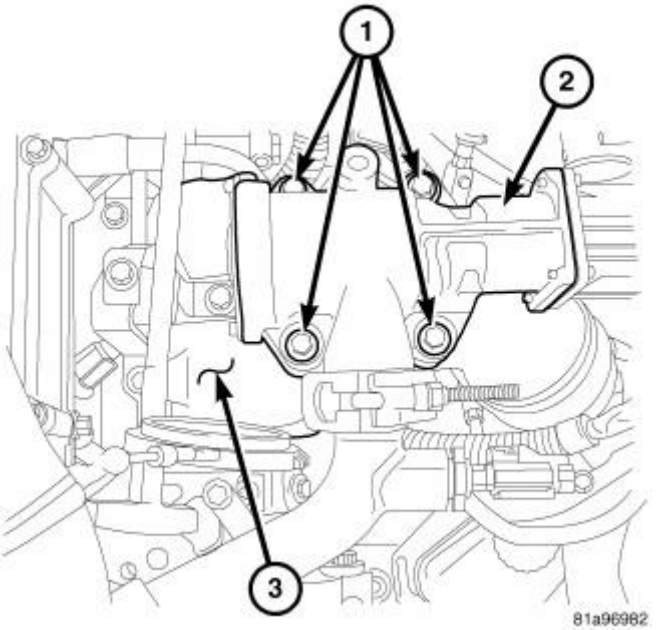

Fig. 151: EGR Valve Assembly & Bolts
Courtesy of CHRYSLER GROUP, LLC

8. Tighten the four EGR valve mounting bolts (1) in a cross-cross fashion to 24 N.m (18 ft. lbs.).

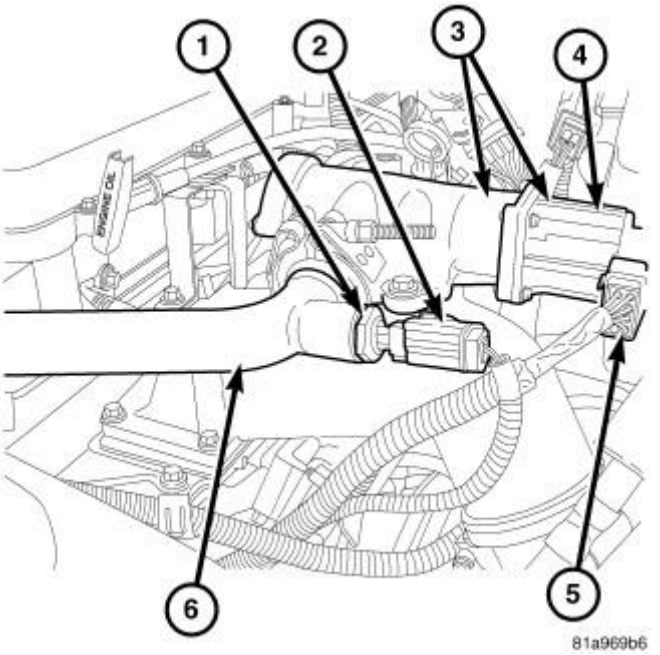

Fig. 152: EGR Temperature Sensor
Courtesy of CHRYSLER GROUP, LLC

9. Connect the EGR valve harness connector (5).

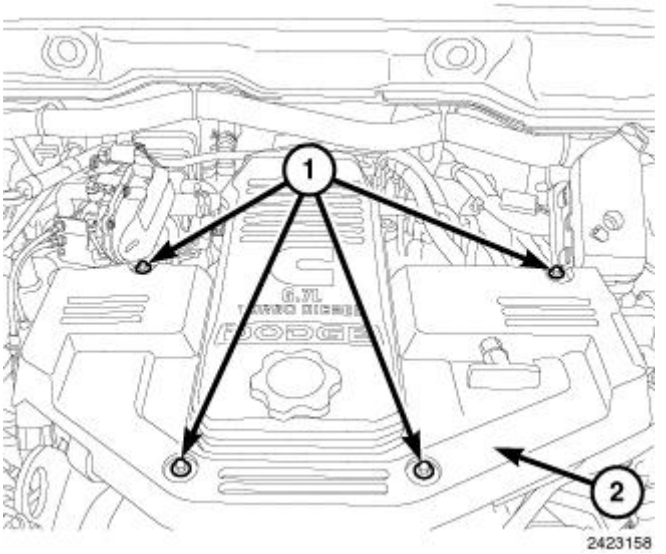

Fig. 153: EGR Crossover Tube Cover
Courtesy of CHRYSLER GROUP, LLC

10. Install EGR crossover tube cover (2). Tighten bolts (1) to 10 N.m (89 in. lbs.).
11. Connect both negative battery cables.

CAB/CHASSIS MODELS

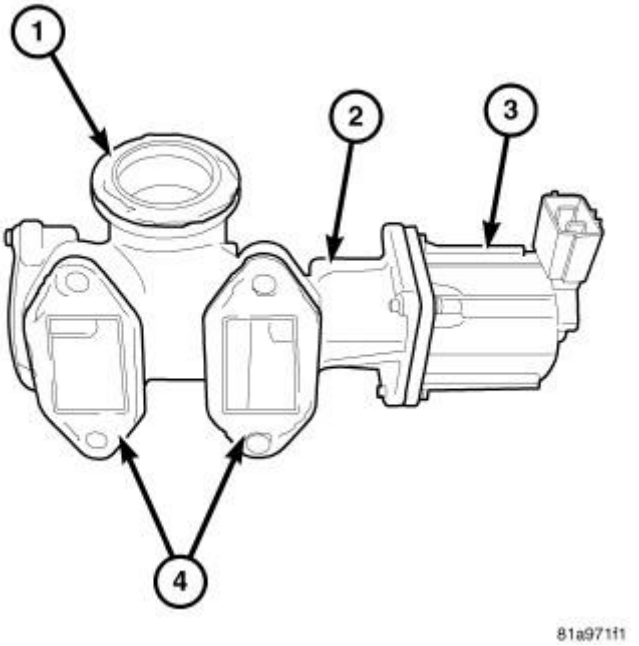

Fig. 154: EGR Valve Gaskets
Courtesy of CHRYSLER GROUP, LLC

1. Install new gasket (1) to end of EGR tube.

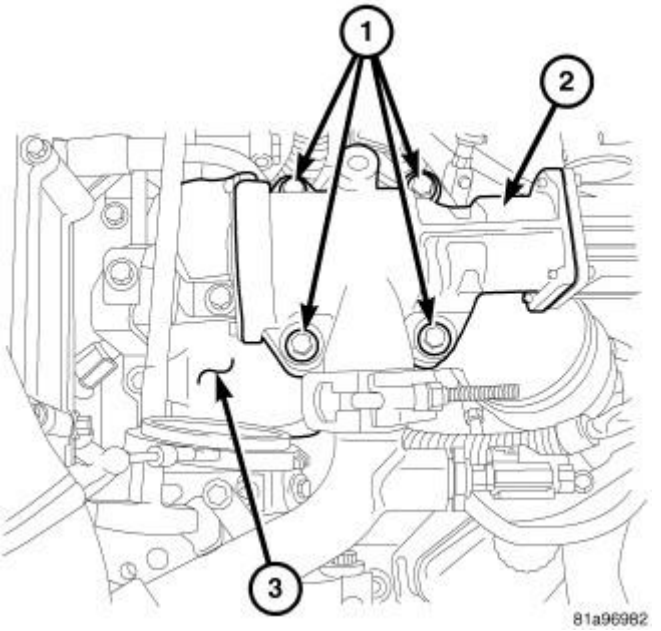

Fig. 155: EGR Valve Assembly & Bolts
Courtesy of CHRYSLER GROUP, LLC

2. Position EGR valve assembly (2) and install the four EGR valve mounting bolts (1) finger tight.

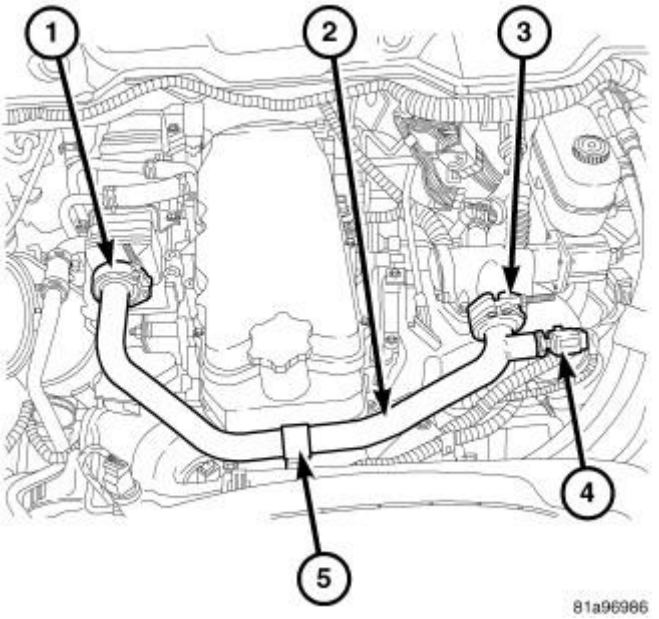

Fig. 156: EGR Crossover Tube
Courtesy of CHRYSLER GROUP, LLC

3. Install and lightly tighten two clamps (1) and (3) at ends of EGR crossover tube.
4. Install "P" clamp bolt (5) finger tight only.
5. Tighten clamp (1) first to 10 N.m. (89 in. lbs.), then tighten clamp (3) to 10 N.m. (89 in. lbs.).
6. Tighten "P" clamp bolt (5) to 10 N.m (89 in. lbs.).

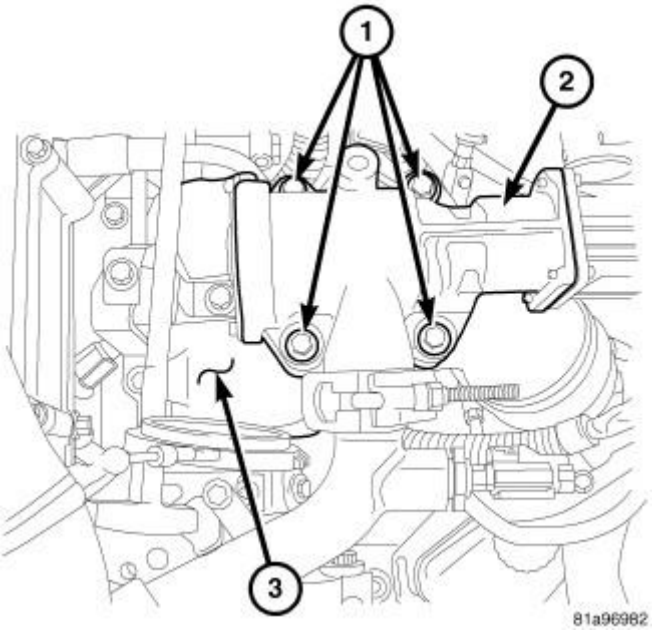

Fig. 157: EGR Valve Assembly & Bolts
Courtesy of CHRYSLER GROUP, LLC

7. Tighten the four EGR valve mounting bolts in a criss-cross fashion to 24 N.m (18 ft. lbs.).

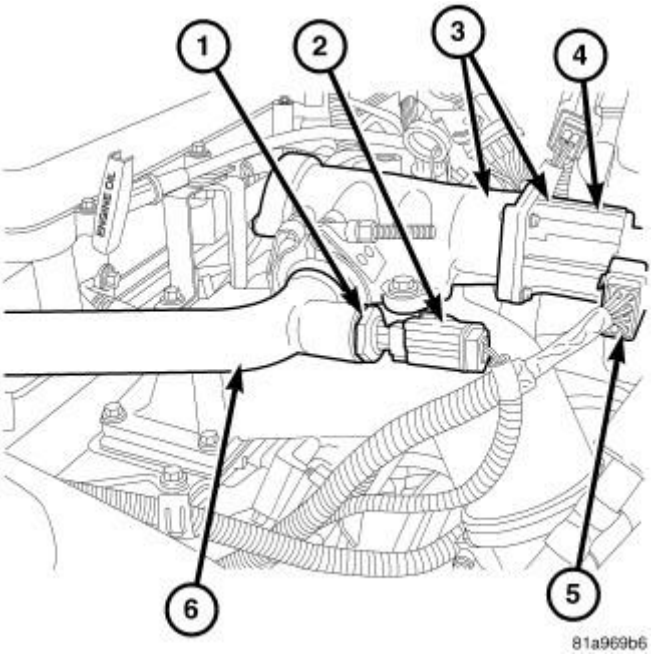

Fig. 158: EGR Temperature Sensor
Courtesy of CHRYSLER GROUP, LLC

8. Connect the EGR Actuator harness connector (5).

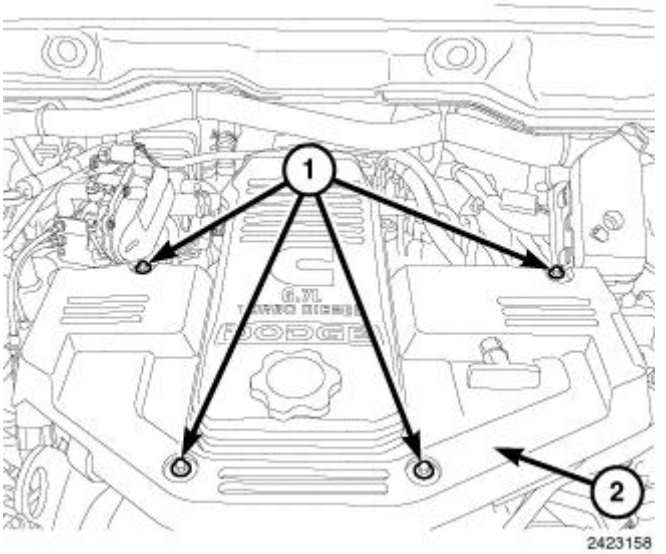

Fig. 159: EGR Crossover Tube Cover
Courtesy of CHRYSLER GROUP, LLC

9. Install EGR crossover tube cover (2). Tighten bolts (1) to 10 N.m (89 in. lbs.).
10. Connect both negative battery cables.

VALVE, EXHAUST GAS RECIRCULATION (EGR) AIRFLOW CONTROL

REMOVAL

REMOVAL

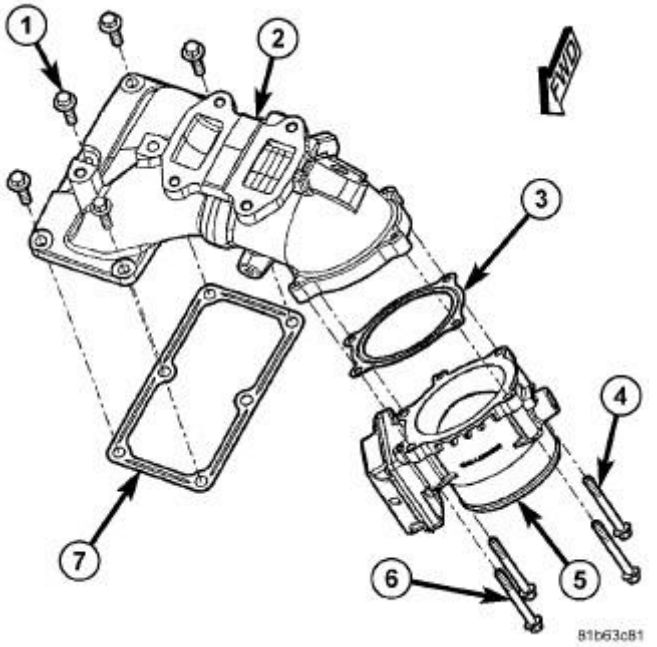

Fig. 160: EGR Air Flow Control - Exploded View
Courtesy of CHRYSLER GROUP, LLC

The EGR Air Flow Control Valve (5) is bolted to the end of the air intake connection (2).

1. Remove clamp for charge air cooler duct at point (5). Disconnect air cooler duct at this point.

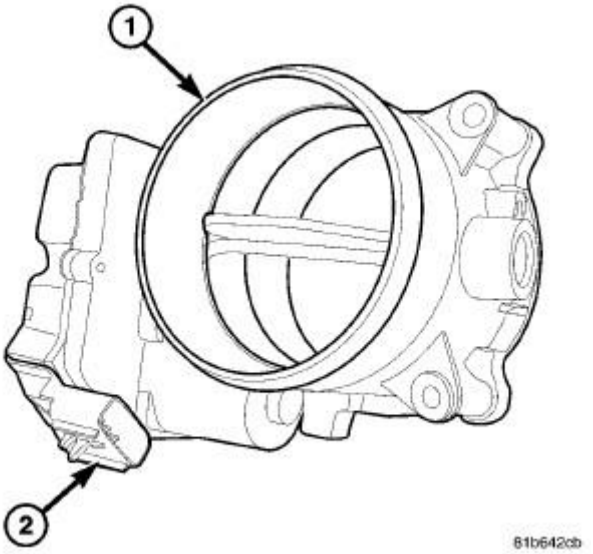

Fig. 161: EGR Air Flow Control Valve
Courtesy of CHRYSLER GROUP, LLC

2. Disconnect electrical connector at point (2). This point is located at bottom/inside of air control valve (1).

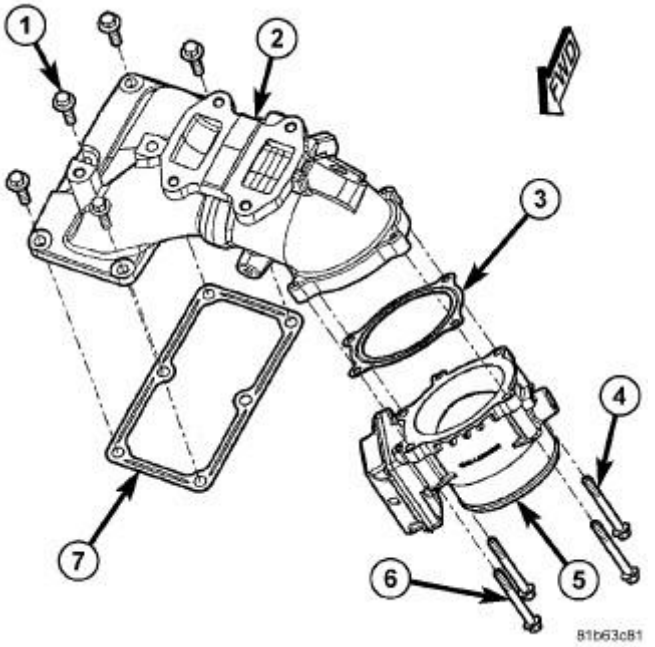

Fig. 162: EGR Air Flow Control - Exploded View
Courtesy of CHRYSLER GROUP, LLC

3. Remove four mounting bolts (4) and (6) and remove air flow control valve (5).
4. Remove gasket (3) and discard.

INSTALLATION

INSTALLATION

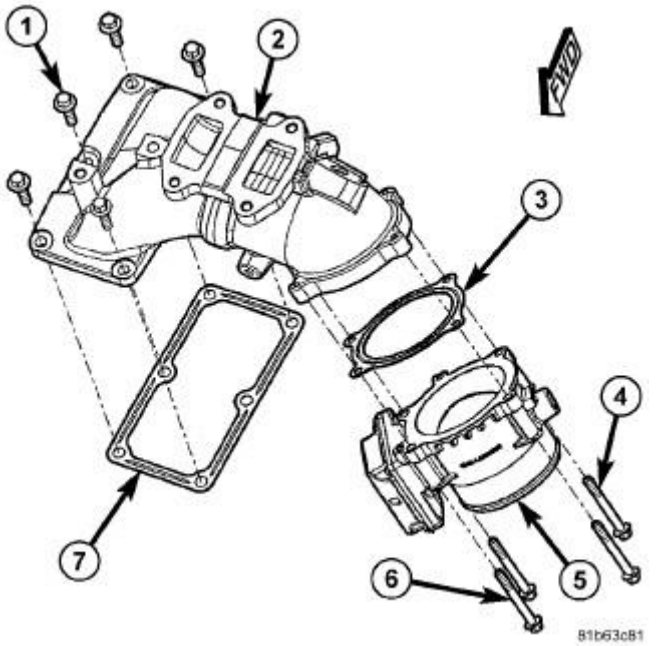

Fig. 163: EGR Air Flow Control - Exploded View
Courtesy of CHRYSLER GROUP, LLC

The EGR Air Flow Control Valve (5) is bolted to the end of the air intake connection (2).

1. Obtain a new gasket (3). Before positioning the new gasket (3), be sure to clean mating surfaces at the top of air flow control valve and the bottom of air intake connection (2).
2. Install four mounting bolts (4) and (6). Tighten four bolts to 10 Nm (89 in. lbs.).

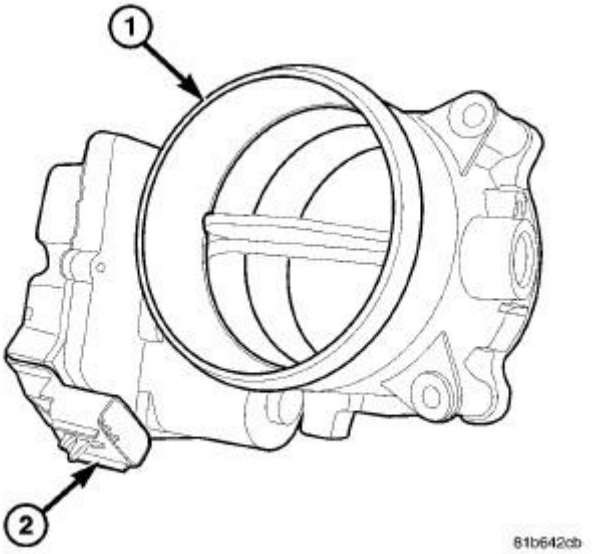

Fig. 164: EGR Air Flow Control Valve
Courtesy of CHRYSLER GROUP, LLC

3. Connect the electrical connector at point (2).
4. Connect the air cooler duct to bottom of air flow control valve. Install and tighten the duct clamp.

VALVE, EXHAUST GAS RECIRCULATION (EGR) COOLER BYPASS

REMOVAL

REMOVAL

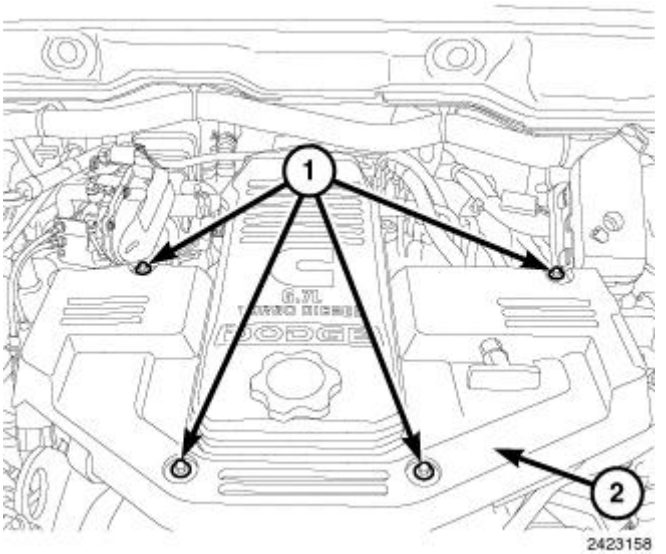

Fig. 165: EGR Crossover Tube Cover
Courtesy of CHRYSLER GROUP, LLC

1. Disconnect both negative battery cables.
2. Remove bolts (1) and the EGR crossover tube cover (2).

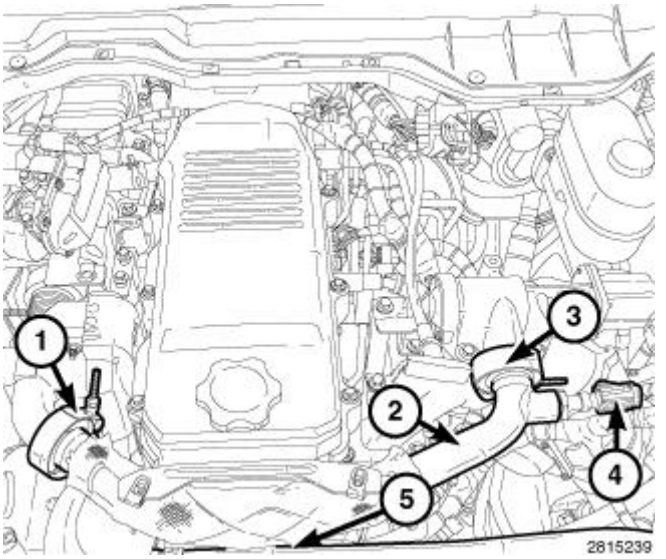

Fig. 166: EGR Crossover Tube, Clamps & Connector
Courtesy of CHRYSLER GROUP, LLC

3. Loosen and remove two clamps (1 and 3) at ends of EGR crossover tube (2).
4. Disconnect the EGR temperature sensor harness connector (4).
5. Remove clamp mounting bolt (5) at center bottom of EGR crossover tube.
6. Remove EGR crossover tube (2).
7. Remove and discard gaskets at each end of tube (2).

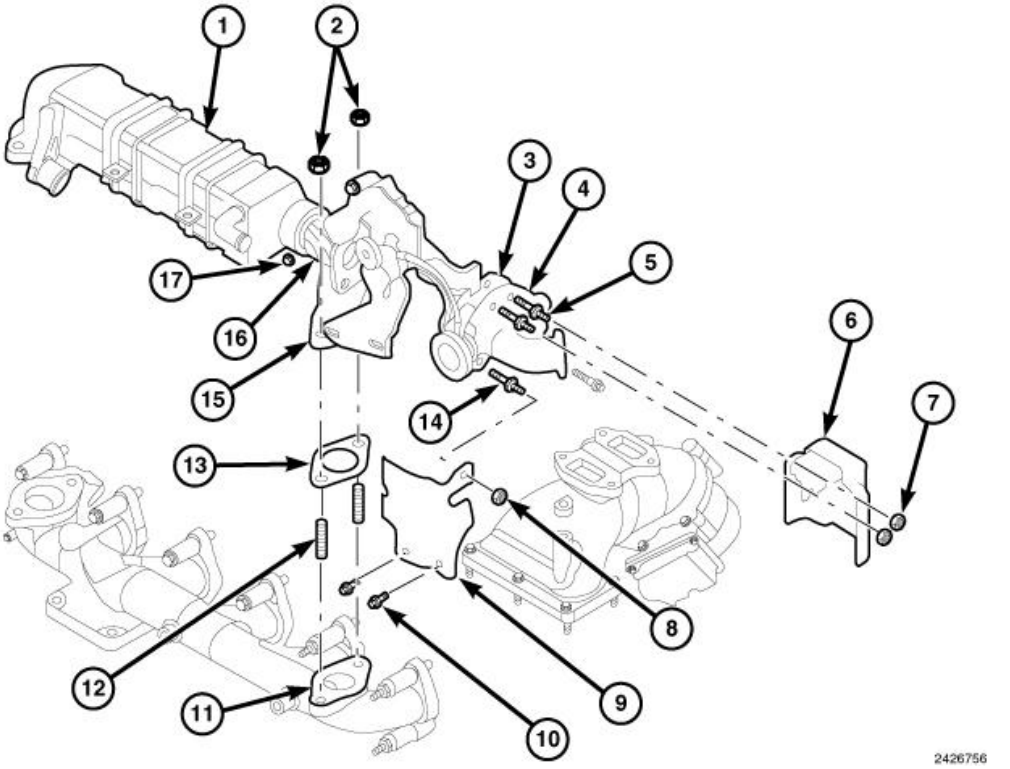

Fig. 167: EGR Cooler Exploded View
Courtesy of CHRYSLER GROUP, LLC

8. Remove nuts (7) and remove upper heat shield (6).
9. Remove bolts (10), nut (8) and remove lower heat shield (9).
10. Remove bolts (5) and (14).
11. Separate the bypass valve (4) from exhaust transfer connection (15) and discard gasket (3).

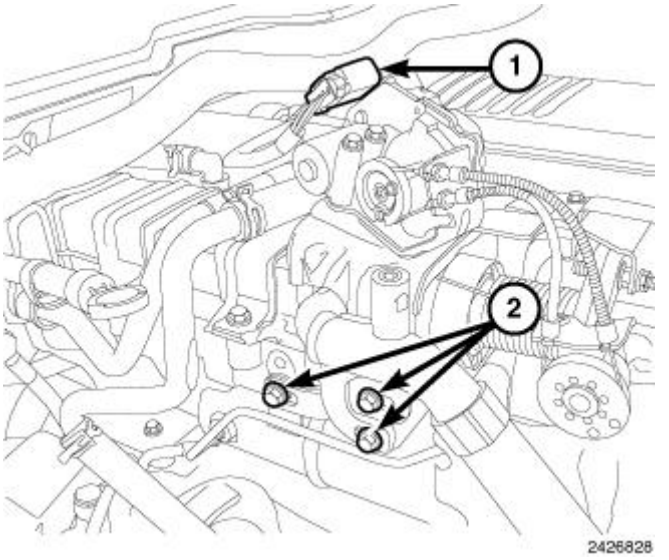

Fig. 168: EGR Bypass Valve Harness Connector & Bracket Bolts
Courtesy of CHRYSLER GROUP, LLC

12. Disconnect EGR bypass valve harness connector (1).
13. Remove bracket bolts (2) at outside of mounting bracket.

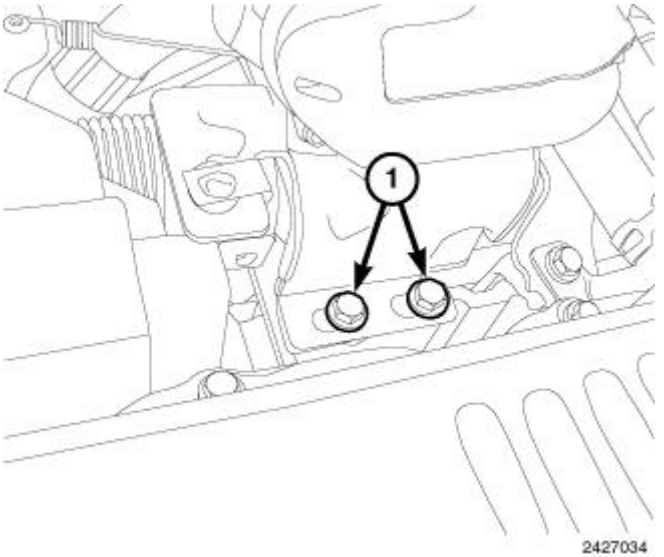

Fig. 169: EGR Bypass Valve Bracket Bolts
Courtesy of CHRYSLER GROUP, LLC

14. Remove bracket bolts at inside of mounting bracket.

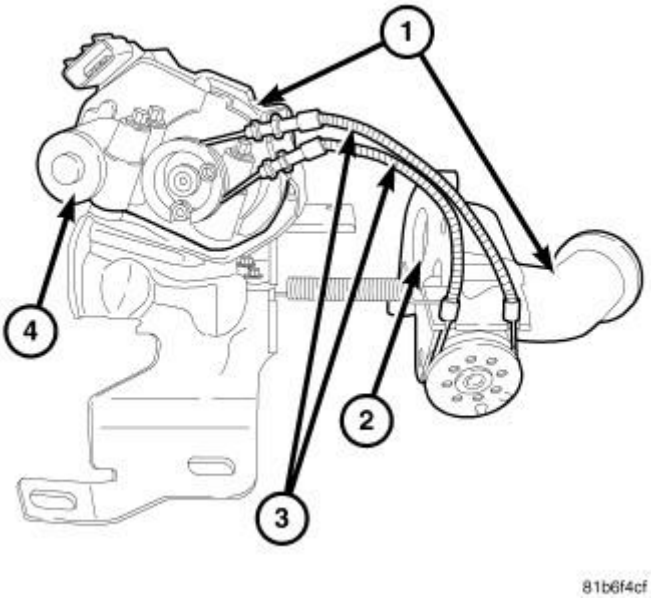

Fig. 170: EGR Cooler Bypass Valve Assembly
Courtesy of CHRYSLER GROUP, LLC

15. Remove EGR cooler bypass valve assembly (1).

INSTALLATION

INSTALLATION

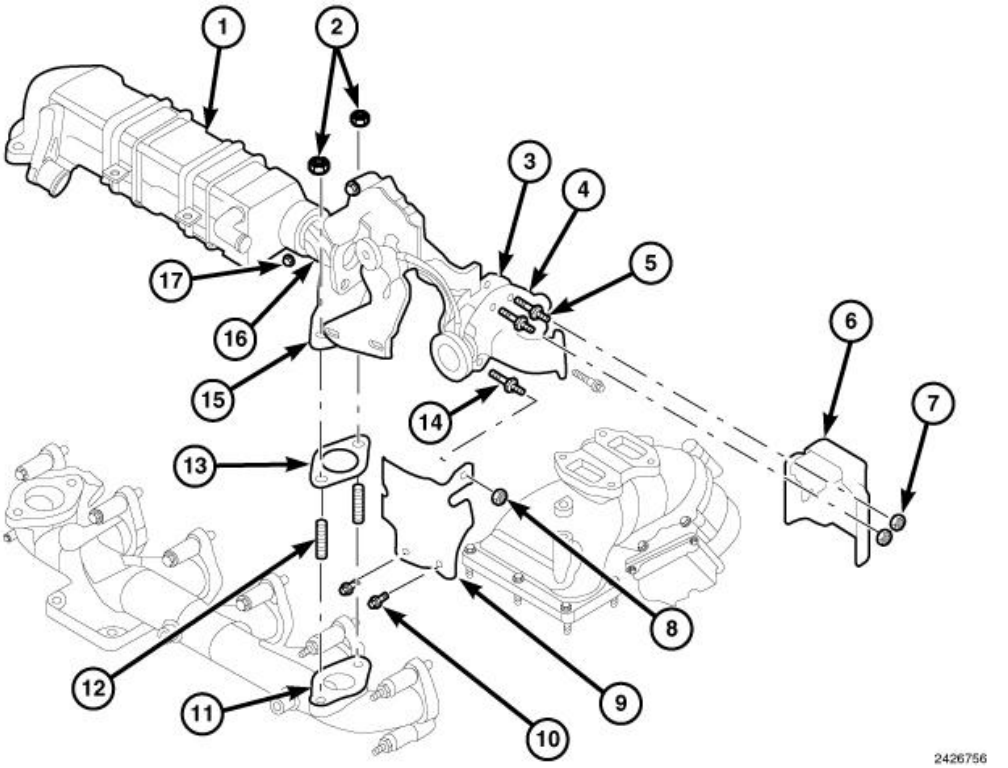

Fig. 171: EGR Cooler Exploded View
Courtesy of CHRYSLER GROUP, LLC

1. Clean gasket mating surfaces on castings (4) and (15).
2. Position EGR cooler bypass valve assembly to engine.
3. Position new gasket (3) between castings (4) and (15).
4. Install bolts (5) and (14). Do not tighten bolts at this time.

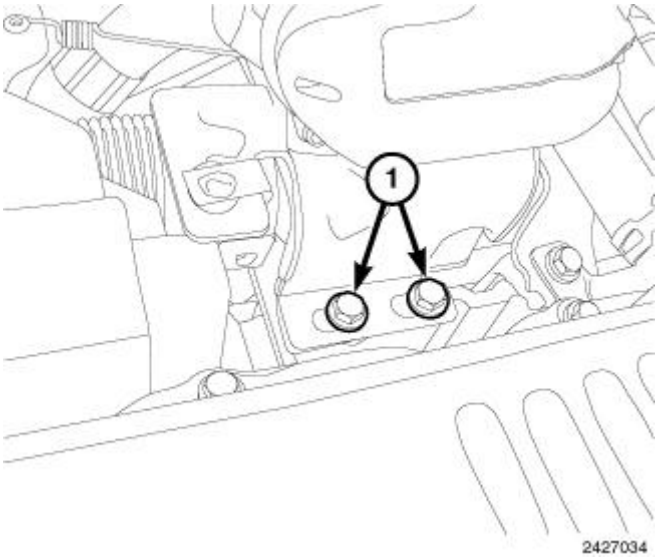

Fig. 172: EGR Bypass Valve Bracket Bolts
Courtesy of CHRYSLER GROUP, LLC

5. Install the inside bracket bolts (1). Tighten bolts (1) to 10 N.m (89 in. lbs.).

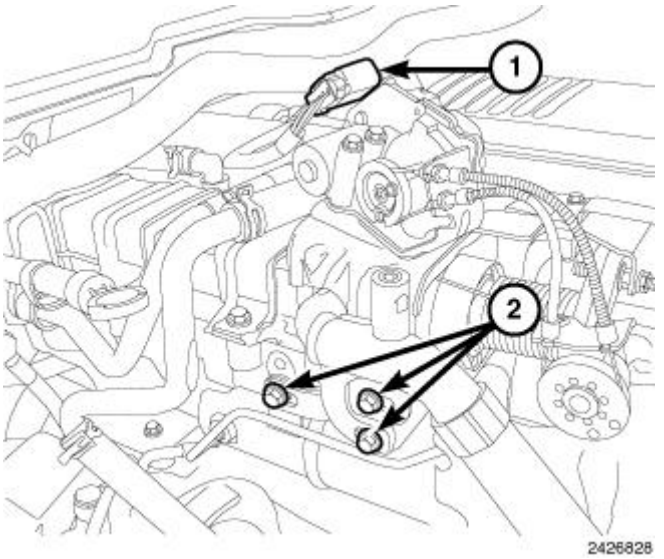

Fig. 173: EGR Bypass Valve Harness Connector & Bracket Bolts
Courtesy of CHRYSLER GROUP, LLC

6. Install the outside bracket bolts (2). Tighten bolts (2) to 24 N.m (18 ft. lbs.).
7. Connect EGR bypass valve harness connector (1).

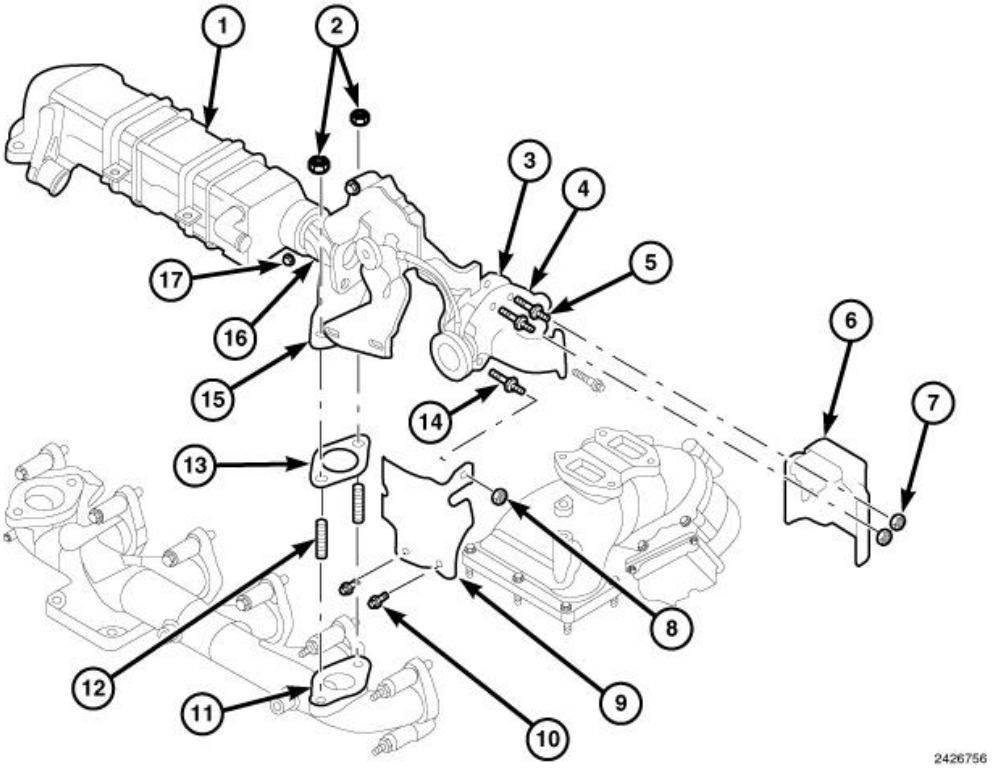

Fig. 174: EGR Cooler Exploded View
Courtesy of CHRYSLER GROUP, LLC

8. Tighten bolts (5) and (14) to 24 N.m (18 ft. lbs.).
9. Install lower heat shield (9), bolts (10), and nut (8). Tighten nut/bolts to 10 N.m (89 in. lbs.).
10. Install upper heat shield (6) and nuts (7). Tighten nuts to 10 N.m (89 in. lbs.).

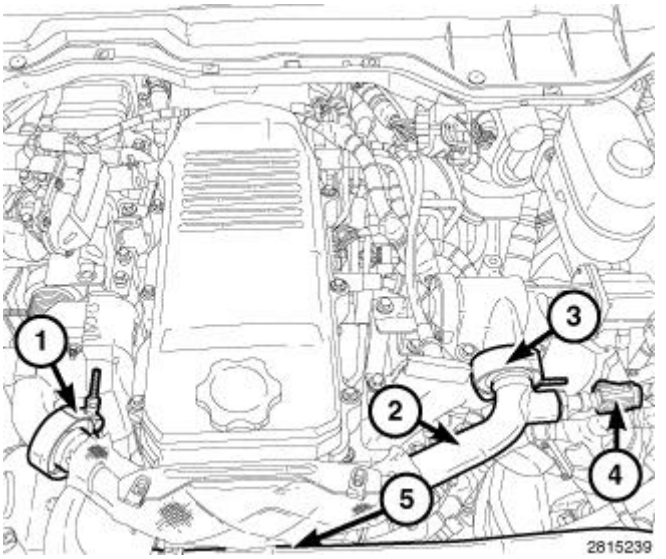

Fig. 175: EGR Crossover Tube, Clamps & Connector
Courtesy of CHRYSLER GROUP, LLC

11. Clean each end of EGR crossover tube and its connection points of any old gasket material
12. Install new gaskets to each end of the EGR crossover tube (2).
13. Position EGR crossover tube (2) to engine.
14. Install bolt (5) finger tight at center bottom of the EGR crossover tube.
15. First, tighten EGR tube clamp (1) to 10 N.m (89 in. lbs.), then tighten clamp (3) to 10 N.m (89 in. lbs.).
16. Tighten EGR crossover tube bolt (5) to 10 N.m (89 in. lbs.).
17. Connect the EGR temperature sensor harness connector (4).

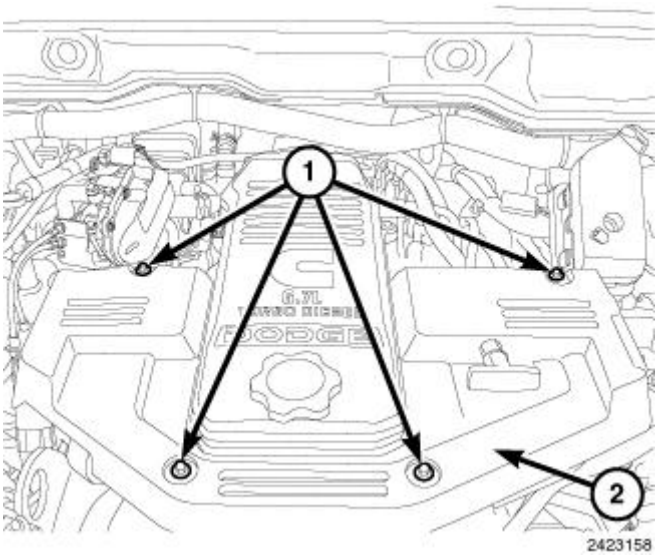

Fig. 176: EGR Crossover Tube Cover
Courtesy of CHRYSLER GROUP, LLC

18. Install the EGR crossover tube cover (2). Tighten bolts (1) to 10 N.m (89 in. lbs.).
19. Connect and both negative battery cables.

EVAPORATIVE EMISSIONS

CANISTER, VAPOR

OPERATION

OPERATION

Depending on engine displacement, either one or two EVAP canisters may be used. Also depending on vehicle model and fuel tank size, the canisters may be mounted either vertically or horizontally.

The ESIM (Emission System Integrity Monitor) switch is mounted to the EVAP canister. The NVLD system is no longer used on any engine.

The EVAP canister(s) are filled with granules of an activated carbon mixture. Fuel vapors entering the EVAP canisters are absorbed by the charcoal granules.

Fuel tank pressure vents into the EVAP canisters. Fuel vapors are temporarily held in the canisters until they can be drawn into the intake manifold. The duty cycle EVAP canister purge solenoid allows the EVAP canisters to be purged at predetermined times and at certain engine operating conditions.

REMOVAL

REMOVAL

TYPE-1 CANISTERS

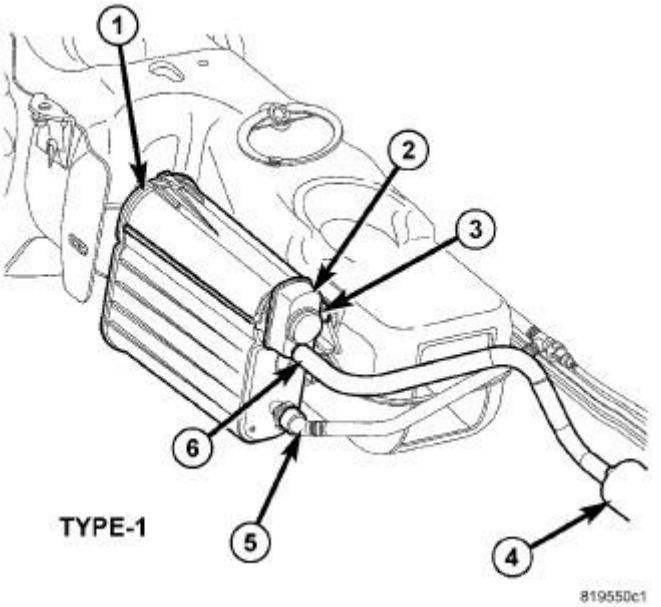

Fig. 177: EVAP Canister Type 1
Courtesy of CHRYSLER GROUP, LLC

A single, vertically mounted EVAP canister (1) is used with Type 1. The ESIM (Emission System Integrity Monitor) switch (3) is mounted to the canister.

1. Raise and support vehicle.
2. If equipped, remove necessary skid plates. Certain models, equipped with a certain fuel tank size, may require the removal of the fuel tank skid plate and/or the transfer case skid plate to gain access to the EVAP canister(s).
3. Disconnect electrical wiring connector from ESIM switch (3).
4. Disconnect vapor line (6) from ESIM switch.
5. Disconnect quick-connect vapor line (5) from canister.
6. Remove canister mounting bracket bolt. This is located below and near the ESIM switch.
7. Pull canister from mounting bracket while guiding two canister locating pins from mounting bracket.

TYPE-2 CANISTERS

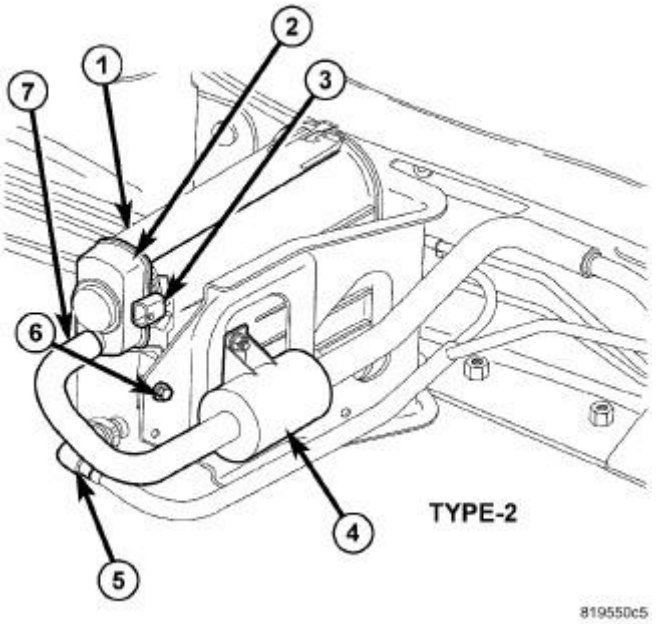

Fig. 178: EVAP Canister Type 2
Courtesy of CHRYSLER GROUP, LLC

A single, vertically mounted EVAP canister (1) is used with Type 2. The ESIM (Emission System Integrity Monitor) switch (2) is mounted to the canister.

1. Raise and support vehicle.
2. If equipped, remove necessary skid plates. Certain models, equipped with a certain fuel tank size, may require the removal of the fuel tank skid plate and/or the transfer case skid plate to gain access to the EVAP canister(s).
3. Disconnect electrical wiring connector from ESIM switch (3).
4. Disconnect vapor line (7) from ESIM switch.
5. Disconnect quick-connect vapor line (5) at canister.
6. Remove canister mounting bracket bolt (6).
7. Pull canister from mounting bracket while guiding two canister locating pins from mounting bracket.

TYPE-3 CANISTERS

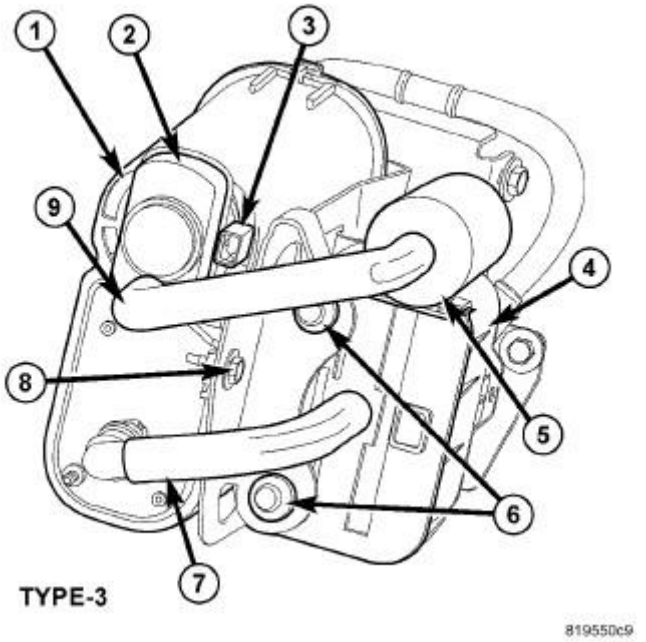

Fig. 179: EVAP Canister Type 3
Courtesy of CHRYSLER GROUP, LLC

Dual, vertically mounted EVAP canisters (1) and (4) are used with Type 3. The ESIM (Emission System Integrity Monitor) switch (2) is mounted to the main canister (1). Canister (4) is considered a secondary canister.

1. Raise and support vehicle.
2. If equipped, remove necessary skid plates. Certain models, equipped with a certain fuel tank size, may require the removal of the fuel tank skid plate and/or the transfer case skid plate to gain access to the EVAP canister(s).
3. Disconnect electrical wiring connector from ESIM switch (3).
4. Disconnect vapor line (9) from ESIM switch.
5. Disconnect quick-connect vapor line (7) at main canister.
6. Remove canister mounting bracket bolt (8).
7. Pull canister from mounting bracket while guiding two canister locating pins from mounting bracket.
8. To remove the secondary canister (4), remove mounting bolt. Pull canister from mounting bracket while guiding two canister locating pins (6) from mounting bracket.

TYPE-4 CANISTERS

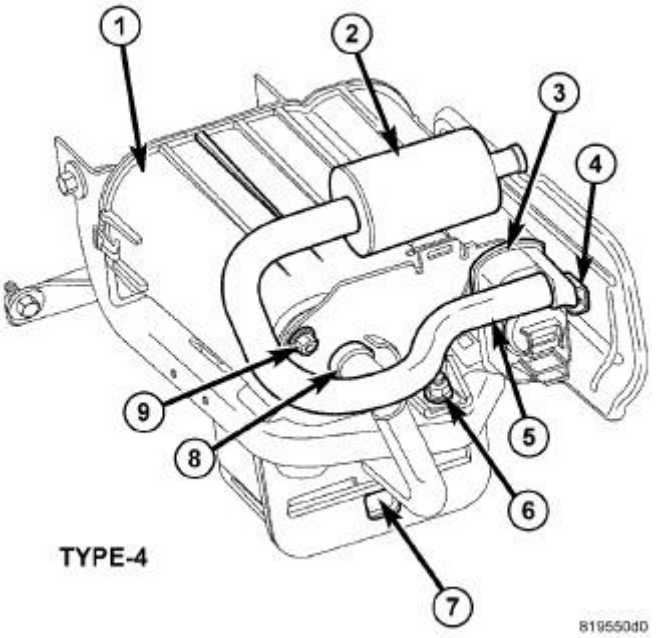

Fig. 180: EVAP Canister Type 4
Courtesy of CHRYSLER GROUP, LLC

Dual, horizontally mounted EVAP canisters (1) and (7) are used with Type 4. The ESIM (Emission System Integrity Monitor) switch (3) is mounted to the main, primary canister (1). Canister (7) is considered a secondary canister.

1. Raise and support vehicle.
2. If equipped, remove necessary skid plates. Certain models, equipped with a certain fuel tank size, may require the removal of the fuel tank skid plate and/or the transfer case skid plate to gain access to the EVAP canister(s).
3. Disconnect electrical wiring connector from ESIM switch (4).
4. Disconnect vapor line (5) from ESIM switch.
5. Disconnect quick-connect vapor line (8) at main canister.
6. Remove primary canister mounting bracket nut (9).
7. Pull canister from mounting bracket while guiding two canister locating pins from mounting bracket.
8. To remove the secondary canister (7), remove mounting nut (6). Pull canister from mounting bracket while guiding two canister locating pins from mounting bracket.

INSTALLATION

INSTALLATION

TYPE-1 CANISTERS

CAUTION: After installing any EVAP canister or ESIM switch, the electrical connector

on the switch MUST be in the 3 O'clock position (as viewed from front). This step must be done for proper ESIM switch operation.

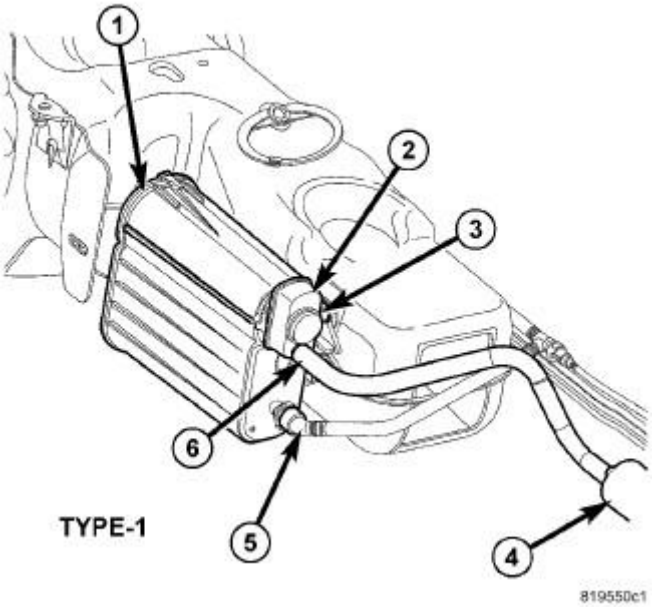

Fig. 181: EVAP Canister Type 1
Courtesy of CHRYSLER GROUP, LLC

A single, vertically mounted EVAP canister (1) is used with Type 1. The ESIM (Emission System Integrity Monitor) switch (3) is mounted to the canister.

1. Two locating pins are located at rear of canister. Push these two pins into canister mounting bracket.
2. Install canister mounting bracket bolt. This is located below and near the ESIM switch.
3. Connect quick-connect vapor line (5) to canister.
4. Connect vapor line (6) to ESIM switch.
5. Connect electrical wiring connector to ESIM switch (3).
6. If equipped, install necessary skid plates.
7. **All vapor/vacuum lines and hoses must be firmly connected. Also check the vapor/vacuum lines at the EVAP canister purge solenoid for damage or leaks. If a leak is present, a Diagnostic Trouble Code (DTC) may be set.**
8. Lower vehicle.

TYPE-2 CANISTERS

CAUTION: After installing any EVAP canister or ESIM switch, the electrical connector on the switch MUST be in the 3 O'clock position (as viewed from front). This step must be done for proper ESIM switch operation.

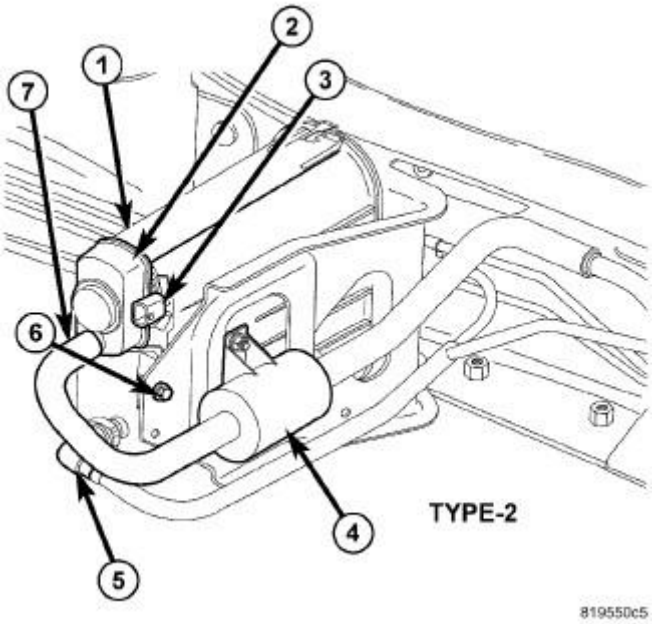

Fig. 182: EVAP Canister Type 2
Courtesy of CHRYSLER GROUP, LLC

A single, vertically mounted EVAP canister (1) is used with Type 2. The ESIM (Emission System Integrity Monitor) switch (2) is mounted to the canister.

1. Two locating pins are located at rear of canister. Push these two pins into canister mounting bracket.
2. Install canister mounting bracket bolt (6).
3. Connect quick-connect vapor line (5) to canister.
4. Connect vapor line (7) to ESIM switch.
5. Connect electrical wiring connector to ESIM switch (3).
6. If equipped, install necessary skid plates.
7. **All vapor/vacuum lines and hoses must be firmly connected. Also check the vapor/vacuum lines at the EVAP canister purge solenoid for damage or leaks. If a leak is present, a Diagnostic Trouble Code (DTC) may be set.**
8. Lower vehicle.

TYPE-3 CANISTERS

CAUTION: After installing any EVAP canister or ESIM switch, the electrical connector on the switch MUST be in the 3 O'clock position (as viewed from front). This step must be done for proper ESIM switch operation.

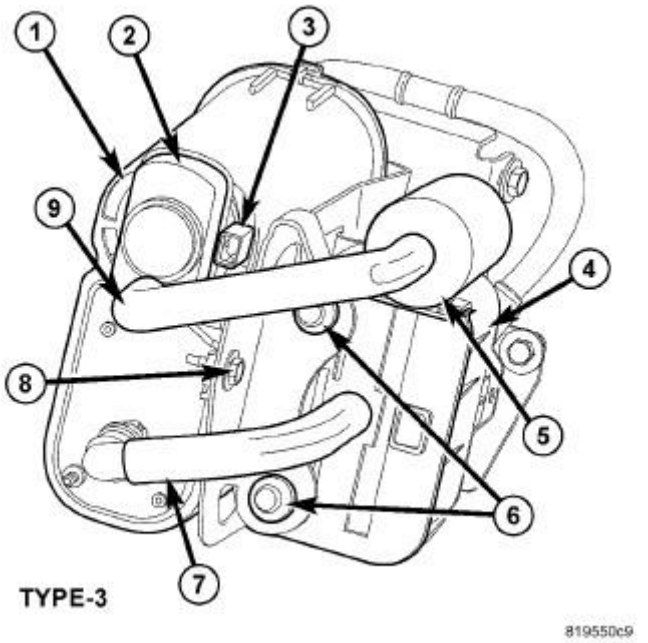

Fig. 183: EVAP Canister Type 3
Courtesy of CHRYSLER GROUP, LLC

Dual, vertically mounted EVAP canisters (1) and (4) are used with Type 3. The ESIM (Emission System Integrity Monitor) switch (2) is mounted to the main canister (1). Canister (4) is considered a secondary canister.

1. Push secondary canister (4) into mounting bracket while guiding two canister locating pins (6) into mounting bracket. Install mounting bolt.
2. Push main, primary canister (1) into mounting bracket while guiding two canister locating pins into mounting bracket.
3. Install main canister mounting bracket bolt (8).
4. Connect quick-connect vapor line (7) to main canister.
5. Connect vapor line (9) to ESIM switch.
6. Connect electrical wiring connector to ESIM switch (3).
7. If equipped, install necessary skid plates.
8. **All vapor/vacuum lines and hoses must be firmly connected. Also check the vapor/vacuum lines at the EVAP canister purge solenoid for damage or leaks. If a leak is present, a Diagnostic Trouble Code (DTC) may be set.**
9. Lower vehicle.

TYPE-4 CANISTERS

CAUTION: After installing any EVAP canister or ESIM switch, the electrical connector on the switch MUST be in the 3 O'clock position (as viewed from front). This step must be done for proper ESIM switch operation.

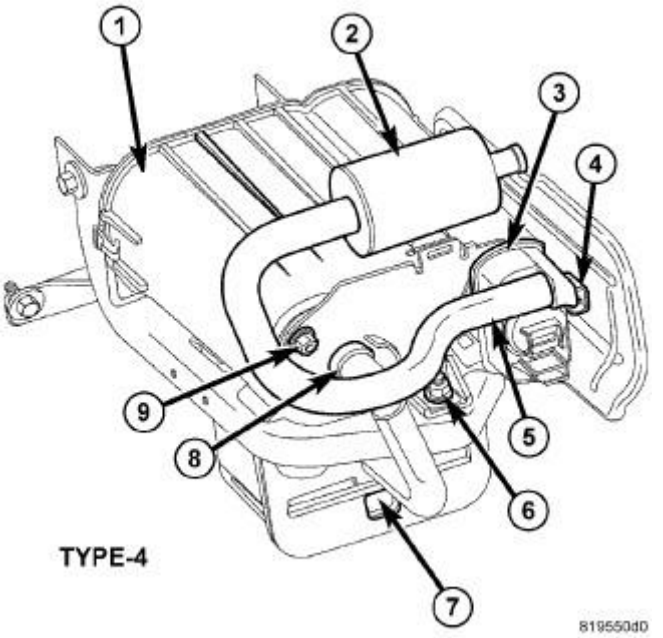

Fig. 184: EVAP Canister Type 4
Courtesy of CHRYSLER GROUP, LLC

Dual, horizontally mounted EVAP canisters (1) and (7) are used with Type 4. The ESIM (Emission System Integrity Monitor) switch (3) is mounted to the main, primary canister (1). Canister (7) is considered a secondary canister.

1. Position two secondary canister locating pins into mounting bracket. Install mounting nut (6).
2. Position two primary canister locating pins into mounting bracket.
3. Install primary canister mounting bracket nut (9).
4. Connect quick-connect vapor line (8) to main canister.
5. Connect vapor line (5) to ESIM switch.
6. Connect electrical wiring connector to ESIM switch (4).
7. If equipped, install necessary skid plates.
8. **All vapor/vacuum lines and hoses must be firmly connected. Also check the vapor/vacuum lines at the EVAP canister purge solenoid for damage or leaks. If a leak is present, a Diagnostic Trouble Code (DTC) may be set.**
9. Lower vehicle.

CAP, FUEL FILLER

DESCRIPTION

DESCRIPTION

The plastic fuel fill cap is a threaded/quarter turn onto the end of the fuel filler tube. Its purpose is to retain

vapors and fuel in the fuel tank.

OPERATION

OPERATION

The loss of any fuel vapor out of fuel filler tube is prevented by the use of pressure-vacuum fuel fill cap. Relief valves inside the cap will release fuel tank pressure at predetermined pressures. Fuel tank vacuum will also be released at predetermined values. This cap must be replaced by a similar unit if replacement is necessary. This is in order for the system to remain effective.

> **CAUTION: Remove the fill cap before servicing any fuel system component to relieve fuel tank pressure. If the cap is left off or loose, a Diagnostic Trouble Code (DTC) may be set.**

ONBOARD REFUEL VAPOR RECOVERY (ORVR)

DESCRIPTION

DESCRIPTION

The ORVR (On-Board Refueling Vapor Recovery) system consists of a unique fuel tank, flow management valve, fluid control valve, one-way check valve and vapor canister.

OPERATION

OPERATION

The ORVR (On-Board Refueling Vapor Recovery) system is used to remove excess fuel tank vapors. This is done while the vehicle is being refueled.

Fuel flowing into the fuel filler tube (approx. 1" I.D.) creates an aspiration effect drawing air into the fuel fill tube. During refueling, the fuel tank is vented to the EVAP canister to capture escaping vapors. With air flowing into the filler tube, there are no fuel vapors escaping to the atmosphere. Once the refueling vapors are captured by the EVAP canister, the vehicle's computer controlled purge system draws vapor out of the canister for the engine to burn. The vapor flow is metered by the purge solenoid so that there is no, or minimal impact on driveability or tailpipe emissions.

As fuel starts to flow through the fuel fill tube, it opens the normally closed check valve and enters the fuel tank. Vapor or air is expelled from the tank through the control valve and on to the vapor canister. Vapor is absorbed in the EVAP canister until vapor flow in the lines stops. This stoppage occurs following fuel shut-off, or by having the fuel level in the tank rise high enough to close the control valve. This control valve contains a float that rises to seal the large diameter vent path to the EVAP canister. At this point in the refueling process, fuel tank pressure increases, the check valve closes (preventing liquid fuel from spiting back at the operator), and fuel then rises up the fuel filler tube to shut off the dispensing nozzle.

SOLENOID, EVAPORATIVE EMISSIONS PURGE

REMOVAL

REMOVAL

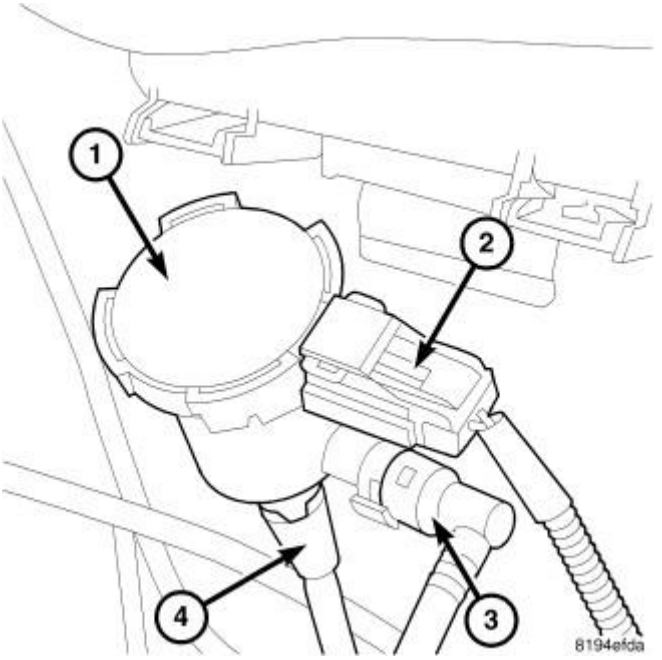

Fig. 185: EVAP Purge Solenoid
Courtesy of CHRYSLER GROUP, LLC

The duty cycle EVAP canister purge solenoid (1) is located in the engine compartment below and near the battery.

1. Carefully pull the solenoid assembly straight up from the tongue-type bracket without bending the two vapor lines.
2. Disconnect electrical wiring connector (2) at solenoid.
3. Disconnect vapor line quick-connect fitting (3) at solenoid.
4. Disconnect vapor line quick-connect fitting (4) at solenoid.

INSTALLATION

INSTALLATION

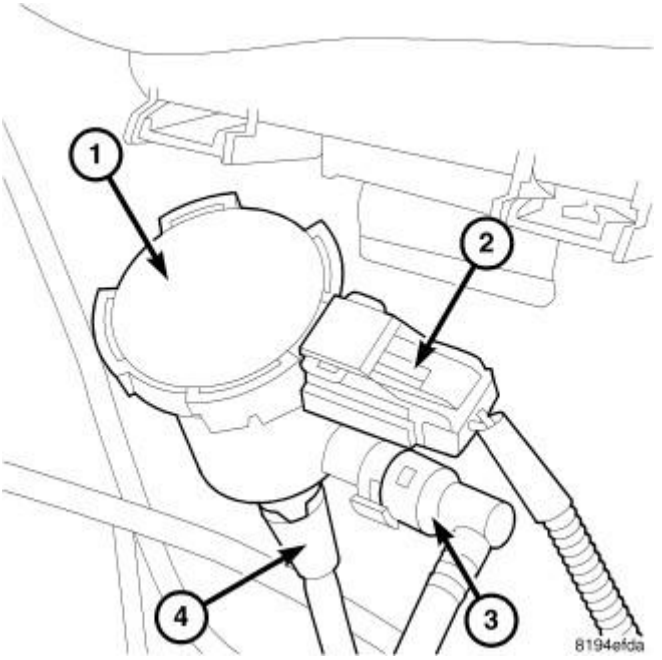

Fig. 186: EVAP Purge Solenoid
Courtesy of CHRYSLER GROUP, LLC

1. Connect vapor line quick-connect fitting (3) to solenoid.
2. Connect vapor line quick-connect fitting (4) to solenoid.
3. Connect electrical wiring connector (2) to solenoid.
4. Carefully push the solenoid assembly (1) straight down onto the tongue-type bracket without bending the two vapor lines.

SWITCH, EVAPORATIVE EMISSIONS SYSTEM MONITOR

OPERATION

OPERATION

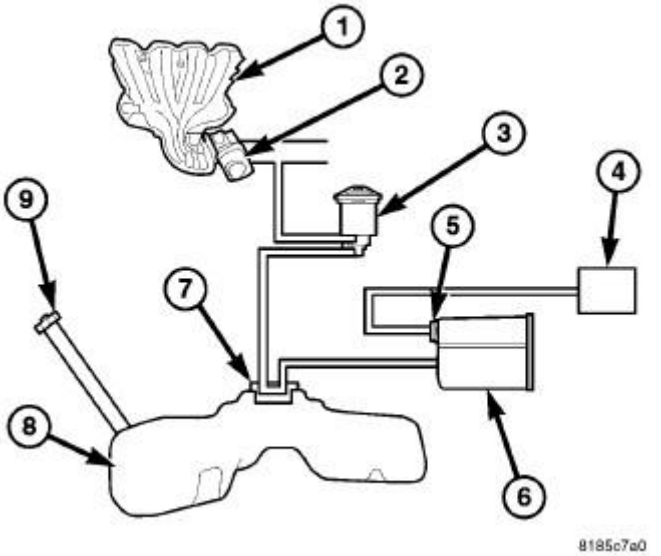

Fig. 187: Evaporative Emissions System Components
Courtesy of CHRYSLER GROUP, LLC

1 - Intake Manifold
2 - Throttle Body
3 - Purge Solenoid
4 - Filter
5 - ESIM
6 - Vapor Canister
7 - Control Valve
8 - Fuel Tank
9 - Gas Cap

The ESIM (Evaporative System Integrity Monitor) is very similar to the NVLD. However, the design of the ESIM has been simplified and unlike the NVLD the ESIM does not require a solenoid. The ESIM mounts directly to the canister, eliminating the need for a mounting bracket. It is critical that the ESIM is mounted vertically. On vehicles where the canister is mounted on an angle, the ESIM requires an adaptor to maintain a vertical position. When the ESIM is installed vertically, the electrical connector is in the 3 o'clock position.

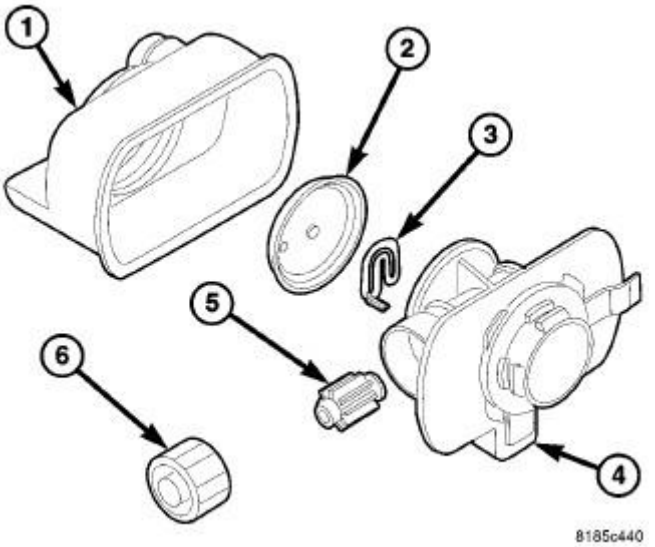

Fig. 188: Exploded View Of ESIM
Courtesy of CHRYSLER GROUP, LLC

1 - ESIM Housing
2 - Diaphragm
3 - Switch
4 - Cover
5 - Small Check Valve
6 - Large Check Valve

The ESIM assembly consists of a housing, a small weight and a large weight that serve as check valves, a diaphragm, a switch and a cover. There is one large weight and one small weight check valve in the ESIM assembly. A seal is attached at the end of each weighted check valve. The large weight check valve seals for pressure. The small weight check valve seals for vacuum. The weighted check valves are contained within the ESIM housing.

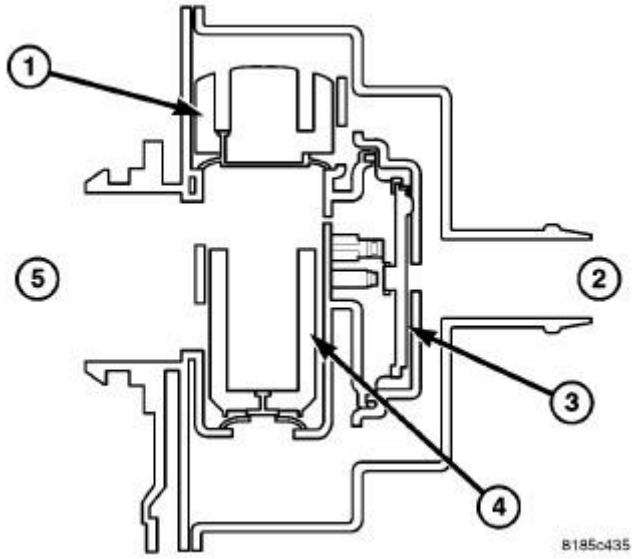

Fig. 189: Cut Away View Of ESIM
Courtesy of CHRYSLER GROUP, LLC

1 - Large Check Valve
2 - Fresh Air Inlet 3 - Diagram 4 - Small Check Valve 5 - Vapor Canister

The ESIM (Evaporative System Integrity Monitor), while physically different than the NVLD system, performs the same basic function as the NVLD does - controlling evaporative emissions. The ESIM has been simplified because the solenoid used on the NVLD is not used on the ESIM.

The ESIM consists of housing, two check valves (sometimes referred to as weights), a diaphragm, a switch and a cover. The larger check valve seals for pressure and the smaller one seals for vacuum.

During refueling, pressure is built up in the evaporative system. When pressure reaches approximately.5 inches of water, the large check valve unseats and pressure vents to the fresh air filter.

Conversely, when the system cools, and the resulting vacuum lifts the small check valve from its seat and allows fresh air to enter the system and relieves the vacuum condition. When a calibrated amount of vacuum is achieved in the evaporative system, the diaphragm is pulled inward, pushing on the spring and closing the contacts.

The ESIM conducts test on the evaporative system as follows: An engine off, non-intrusive test for small leaks and an engine running, intrusive test for medium/large leaks.

The ESIM weights seal the EVAP. system during engine off conditions. If the EVAP. system is sealed, it will be pulled into a vacuum, either due to the cool down from operating temperature or diurnal ambient temperature cycling. When the vacuum in the system exceeds about 1" H20, the vacuum switch closes. The switch closure

sends a signal to the PCM. In order to pass the non-intrusive small leak test, the ESIM switch must close within a calculated amount of time and within a specified amount of key-off events.

If the ESIM switch does not close as specified, the test is considered inconclusive and the intrusive engine running test will be run during the next key-on cycle. This intrusive test will run on the next cold engine running condition.

Conditions for running the intrusive test are:

- After the vehicle is started, the engine coolant temperature must be within 50°F (10°C) of ambient to indicate a cold start.
- The fuel level must be between 12% and 88%.
- The engine must be in closed loop.
- Manifold vacuum must be greater than a minimum specified value.
- Ambient temperature must be between 39°F and 98°F (4°C and 37°C) and the elevation level must be below 8500 feet (2591 meters).

The test is accomplished by the PCM activating the purge solenoid to create a vacuum in the evaporative system. The PCM then measures the amount of time it takes for the vacuum to dissipate. This is known as the vacuum decay method. If the switch opens quickly a large leak is recorded. If the switch opens after a predetermined amount of time, then the small leak matures. If the switch does not close, then a general evaporative failure is recorded. The purge monitor tests the integrity of the hose attached between the purge valve and throttle body/intake. The purge monitor is a two stage test and it runs only after the evaporative system passes the small leak test.

Even when all of the thresholds are met, a small leak won't be recorded until after the medium/large leak monitor has been run. This is accomplished by the PCM activating the purge solenoid to create a vacuum in the evaporative system. The PCM then measures the amount of time it takes for the vacuum to dissipate. This is known as the vacuum decay method. If the switch opens quickly a large leak is recorded. If the switch opens after a predetermined amount of time, then the small leak matures. If the medium/large leak test runs and the ESIM switch doesn't close, a general evaporative test is run. The purge solenoid is activated for approximately 10 seconds, increasing the amount of vacuum in the system. If the ESIM switch closes after the extended purge activation, a large leak fault is generated. If the switch doesn't close, a general evaporative system fault is generated.

The purge monitor tests the integrity of the hose attached between the purge valve and throttle body/intake. The purge monitor is a two stage test and it runs only after the evaporative system passes the small leak test.

Stage one of the purge monitor is non-intrusive. The PCM monitors the purge vapor ratio. If the ratio is above a calibrated specification, the monitor passes. Stage two is an intrusive test and it runs only if stage one fails. During the stage two test, the PCM commands the purge solenoid to flow at a specified rate to force the purge vapor ratio to update. The vapor ratio is compared to a calibrated specification and if it is less than specified, a one-trip failure is recorded.

The ESIM switch stuck closed monitor checks to see if the switch is stuck closed. This is a power down test that runs at key-off; when the PCM sees 0 rpm's, the purge solenoid is energized for a maximum of 30 seconds, venting any vacuum trapped in the evaporative system. If the switch opens or was open before the test began,

the monitor passes. If the switch doesn't open, the monitor fails. This is a two-trip MIL. The star scan tool can be used to force the ESIM switch stick closed monitor to run.

The PCM also uses the ESIM to detect a loose or missing gas cap. The PCM controller looks for a change in the fuel level (25% minimum) and then gas cap is loose or missing. If a medium/large leak is detected, a loose gas cap light illuminates and a pending one-trip fault code is set. On the PCM, this is a three-trip fault before the code matures

REMOVAL

REMOVAL

The ESIM (EVAP System Integrity Monitor) switch is attached to the EVAP canister and is usually not serviceable. Replace the switch by replacing the EVAP canister. Refer to **REMOVAL**.

If servicing separately, refer to the following:

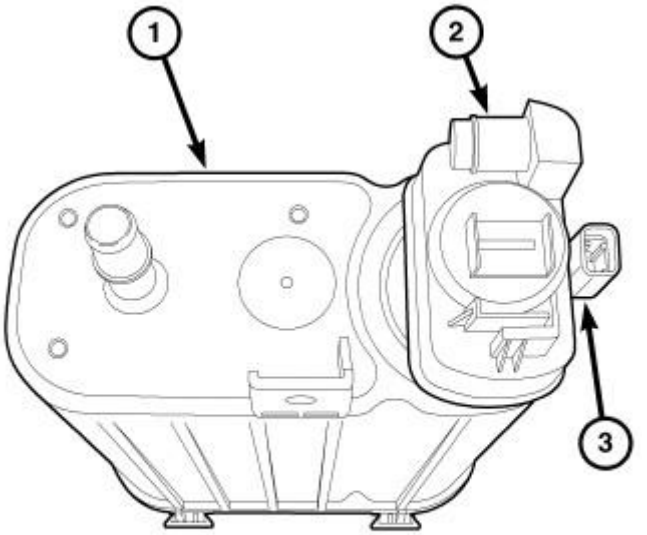

818fa833

Fig. 190: Locating ESIM Switch
Courtesy of CHRYSLER GROUP, LLC

The ESIM switch (2) is located on the EVAP canister (1) **The picture displays a typical EVAP Canister and a typical ESIM switch.**

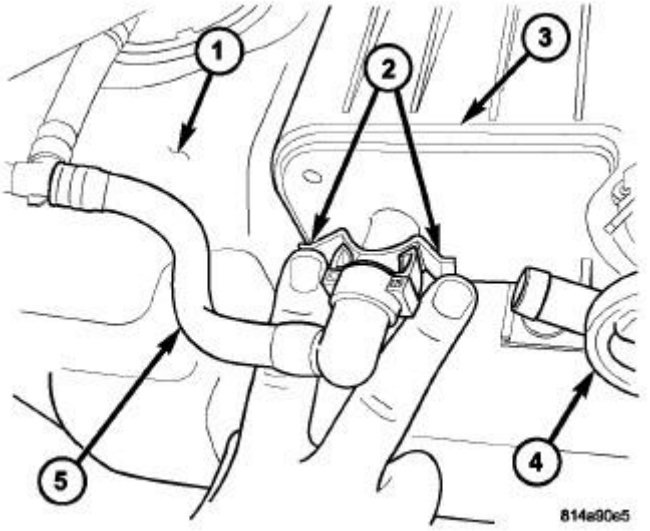

Fig. 191: Removing EVAP Canister Vapor Hose
Courtesy of CHRYSLER GROUP, LLC

1. Remove both plastic lines from switch by folding line tabs (2).

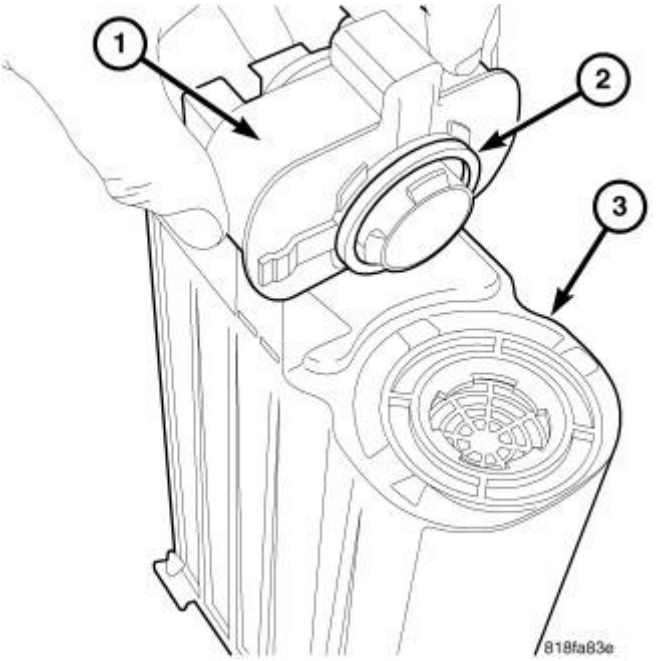

Fig. 192: ESIM Switch, O-Ring & EVAP Canister Opening
Courtesy of CHRYSLER GROUP, LLC

2. Disconnect electrical connector at switch.
3. Clean any dirt from ESIM switch and its lines.

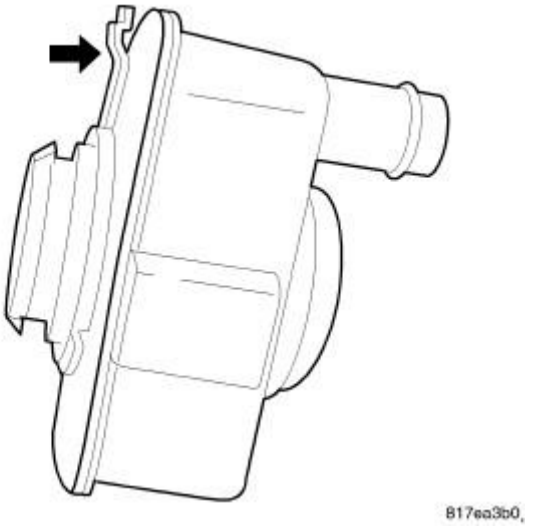

Fig. 193: Locating Lock Tab
Courtesy of CHRYSLER GROUP, LLC

4. A lock tab (see arrow) is used on the back of the switch. Push lock tab towards switch while rotating switch counterclockwise 1/4 turn for removal.
5. The fresh air lines and hoses from the ESIM must have a clear opening to the atmosphere. Check the fresh air lines, including the fresh air filter, for obstructions or restrictions at the ESIM. Also check the routing to the exit to atmosphere. If a restriction is present, the system will not allow free flow passage of clean air, and an early shut off of the fuel fill nozzle may occur during fuel fill.

INSTALLATION

INSTALLATION

The following pictures display a TYPICAL EVAP Canister and a typical ESIM switch. After installing any ESIM switch, the electrical connector on the switch must be in the 3 O'clock position. This step must be done for proper ESIM switch operation.

1. The fresh air lines and hoses from the ESIM must have a clear opening to the atmosphere. Check the fresh air lines, including the fresh air filter, for obstructions or restrictions at the ESIM. Also check the routing to the exit to atmosphere. If a restriction is present, the system will not allow free flow passage of clean air, and an early shut off of the fuel fill nozzle may occur during fuel fill.

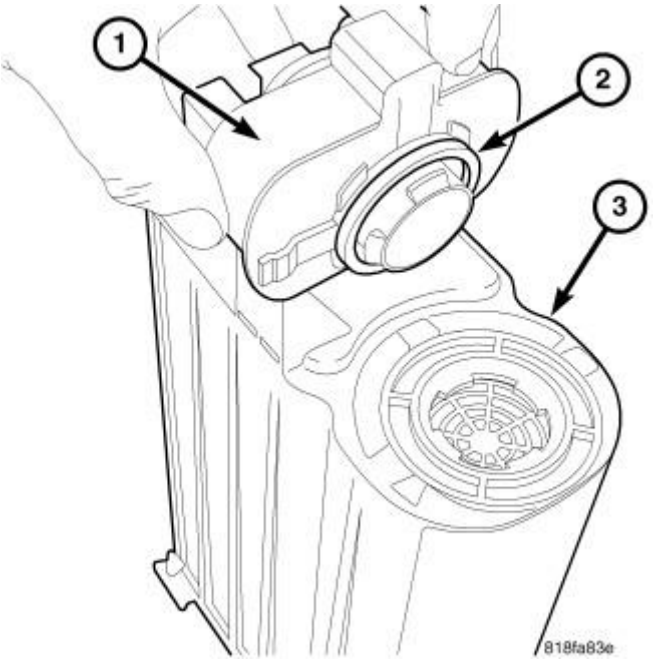

Fig. 194: ESIM Switch, O-Ring & EVAP Canister Opening
Courtesy of CHRYSLER GROUP, LLC

2. Be sure O-ring (2) and EVAP canister opening are clean.

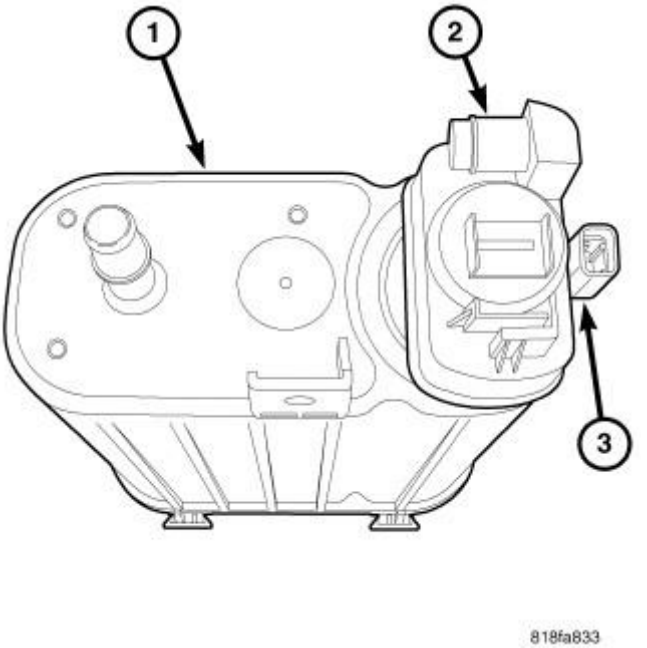

Fig. 195: Locating ESIM Switch
Courtesy of CHRYSLER GROUP, LLC

1 - EVAP Canister
2 - ESIM Switch

3 - Electrical Connector

CAUTION: The electrical connector (4) on the ESIM switch must be in 3 O'clock position after installation. This step must be done for proper switch operation.

3. Position ESIM switch (2) into EVAP canister (1) and rotate until electrical connector is in 3 O'clock position (3).
4. Connect electrical connector.
5. Connect plastic lines to ESIM switch.

VALVE, POSITIVE CRANKCASE VENTILATION (PCV), 3.7L

REMOVAL

REMOVAL

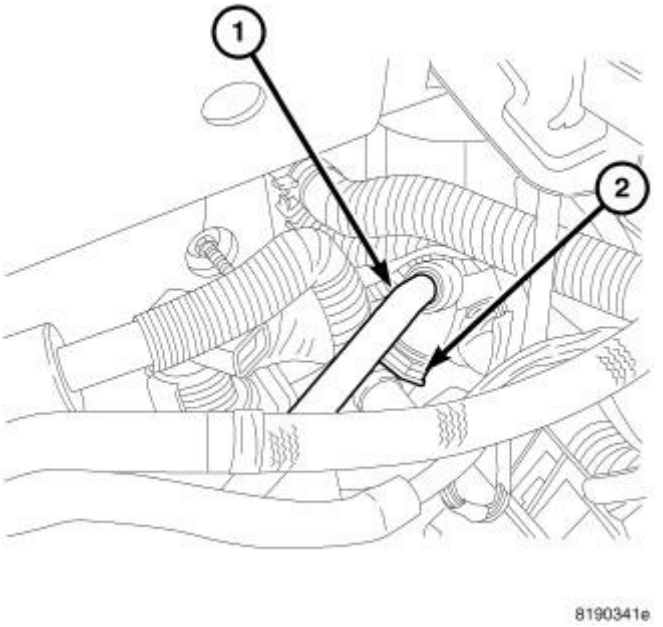

Fig. 196: PCV Valve Location - 3.7L
Courtesy of CHRYSLER GROUP, LLC

The PCV valve is located at the rear of the left cylinder head.

1. Remove line (1) and rubber connector hose from PCV valve.

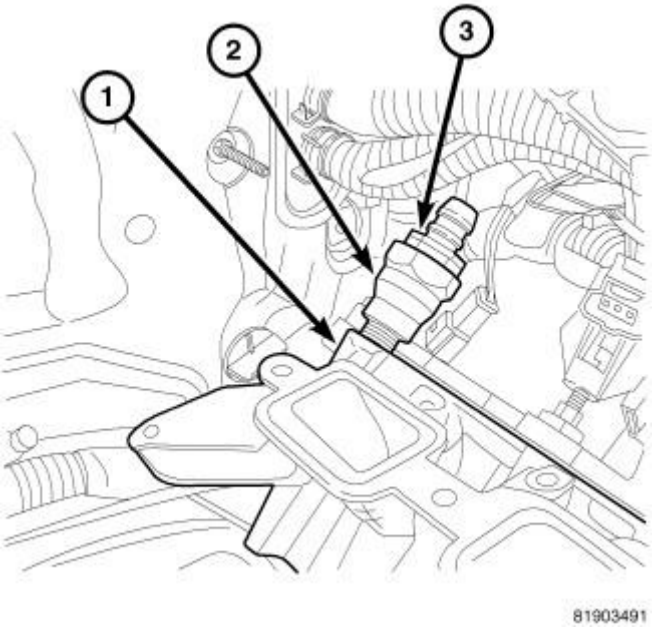

Fig. 197: PCV Valve & Metal Fitting
Courtesy of CHRYSLER GROUP, LLC

2. Unthread PCV valve (3) from metal fitting (2).

INSTALLATION

INSTALLATION

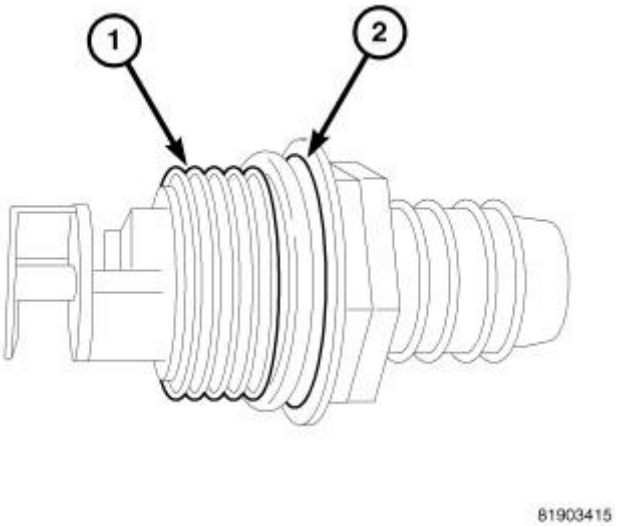

Fig. 198: PCV Valve & Rubber O-Ring
Courtesy of CHRYSLER GROUP, LLC

1. Check condition of PCV valve rubber O-ring (2).

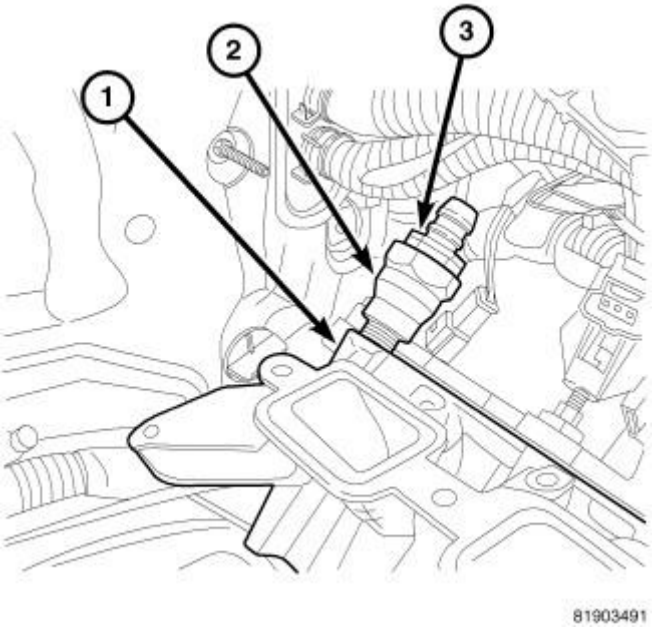

Fig. 199: PCV Valve & Metal Fitting
Courtesy of CHRYSLER GROUP, LLC

2. Clean fitting (2).
3. Install PCV valve (3) into fitting (2).

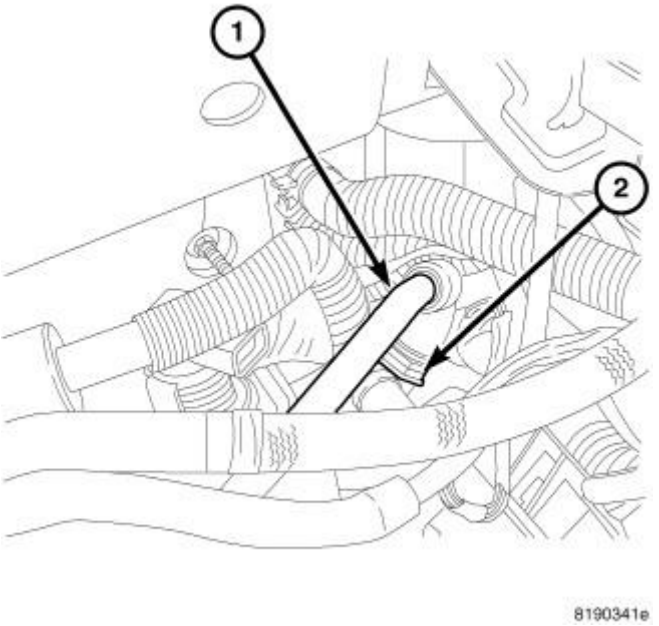

Fig. 200: PCV Valve Location - 3.7L
Courtesy of CHRYSLER GROUP, LLC

4. Install PCV line (1) and rubber connector to valve.

VALVE, POSITIVE CRANKCASE VENTILATION (PCV), 4.7L

REMOVAL

REMOVAL

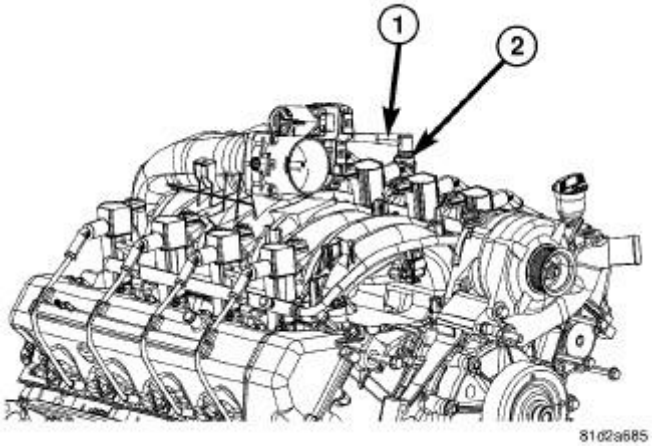

Fig. 201: PCV Valve Location - 4.7L V-8
Courtesy of CHRYSLER GROUP, LLC

The PCV valve (2) is mounted into the top/rear of the left valve cover.

1. Disconnect plastic line (1) from end of PCV valve.
2. Use a small screwdriver to disengage PCV valve from valve cover.

INSTALLATION

INSTALLATION

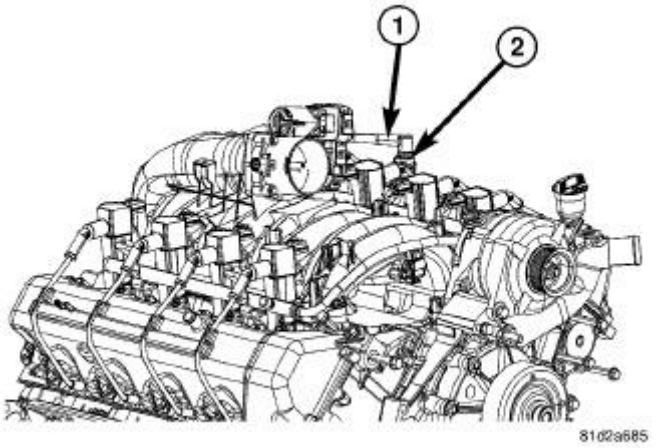

Fig. 202: PCV Valve Location - 4.7L V-8
Courtesy of CHRYSLER GROUP, LLC

1. Clean out PCV valve opening at valve cover.
2. Check condition of PCV valve o-ring.
3. Apply engine oil to o-ring.
4. Place PCV valve (2) into valve cover.
5. Attach plastic line (1) to valve.

VALVE, POSITIVE CRANKCASE VENTILATION (PCV), 5.7L

REMOVAL

REMOVAL

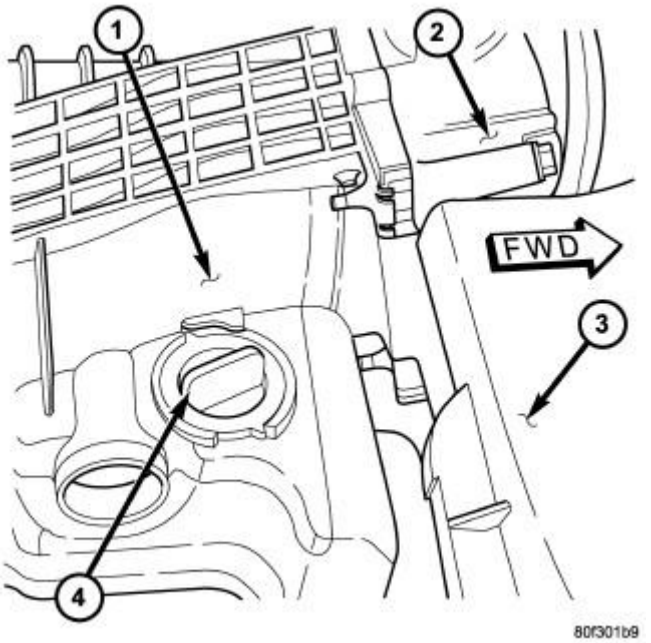

Fig. 203: Identifying PCV Valve Location - 5.7L
Courtesy of CHRYSLER GROUP, LLC

The PCV valve (4) is mounted into the top of the intake manifold (1). This is located to the right / rear of the throttle body (2).

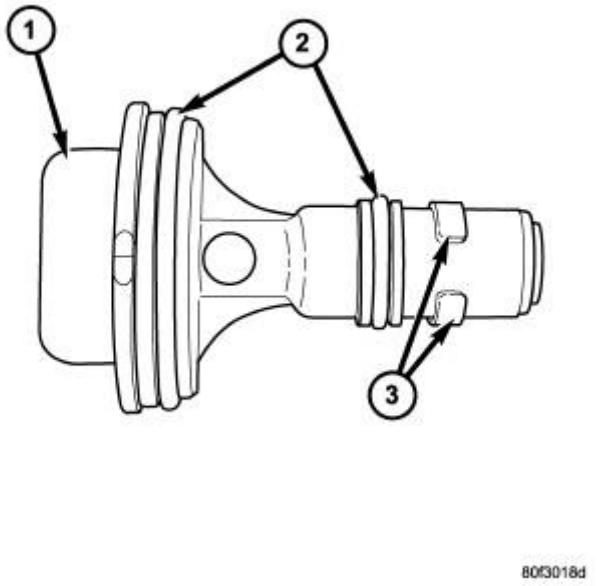

Fig. 204: PCV Valve - 5.7L
Courtesy of CHRYSLER GROUP, LLC

1. The PCV valve is sealed to the intake manifold with 2 O-rings (2).
2. Remove PCV valve by rotating counter-clockwise 90 degrees until locating tabs (3) have been freed. After tabs have cleared, pull valve straight up from intake manifold.
3. After valve is removed, check condition of 2 valve O-rings (2).

INSTALLATION

INSTALLATION

1. Clean out intake manifold opening.
2. Check condition of two o-rings on PCV valve.
3. Apply engine oil to two o-rings.
4. Place PCV valve into intake manifold and rotate 90 degrees clockwise for installation.

EXHAUST GAS RECIRCULATION

SPECIFICATIONS

SPECIFICATIONS

DESCRIPTION	N.m	Ft. lbs.	Inch lbs.
EGR Valve-to-Cyl. Head 3.7L/4.7L	28	21	248

ERG Tube-to-EGR Valve Bolts	13	9.6	115
EGR Valve-to-Cyl. Head 5.7L	28	21	248

VALVE, EXHAUST GAS RECIRCULATION (EGR), 3.7L

REMOVAL

REMOVAL

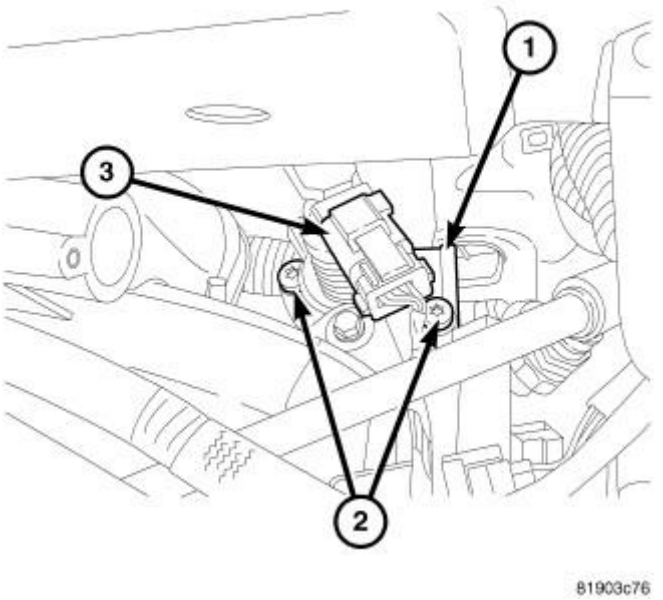

Fig. 205: EGR Valve & Solenoid Assembly
Courtesy of CHRYSLER GROUP, LLC

The electronic EGR valve and solenoid assembly (1) is attached to the rear of the left cylinder head.

1. Use a diagnostic scan tool to record any DTC's (Diagnostic Trouble Codes).
2. Disconnect and isolate the negative battery cable.

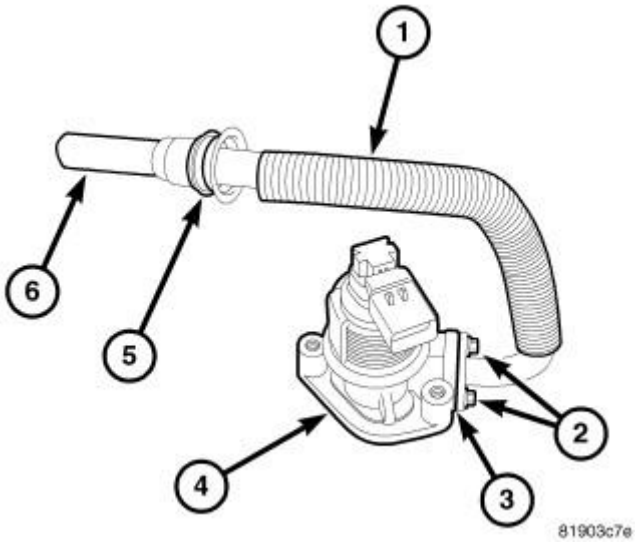

Fig. 206: Identifying Tube Mounting Bolts, Solenoid & Gasket
Courtesy of CHRYSLER GROUP, LLC

An exhaust gas routing tube (1) connects the EGR valve (4) to the intake manifold.

3. Remove two tube mounting bolts (2).
4. Remove tube (1) from solenoid (4). Slip opposite end of tube (6) from intake manifold.
5. Remove gasket (3) located between EGR valve solenoid and tube flange.

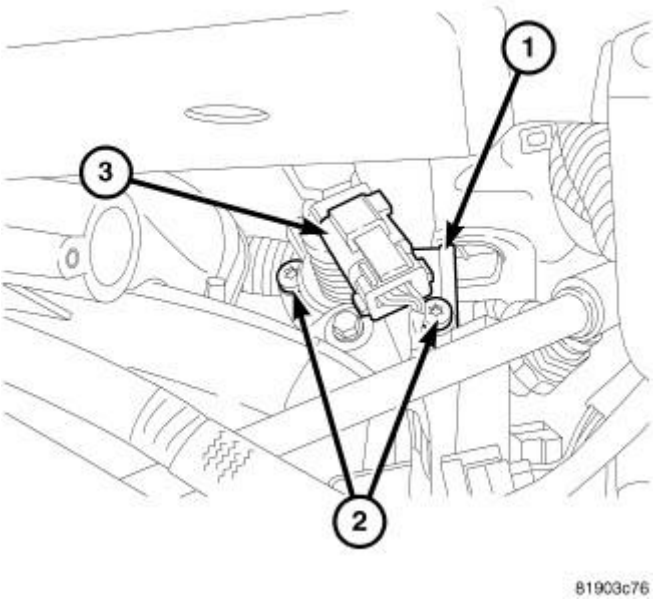

Fig. 207: EGR Valve & Solenoid Assembly
Courtesy of CHRYSLER GROUP, LLC

6. Disconnect electrical connector (3) at solenoid (1).

7. Remove two EGR valve solenoid mounting bolts (2).
8. Remove solenoid (1) from engine.

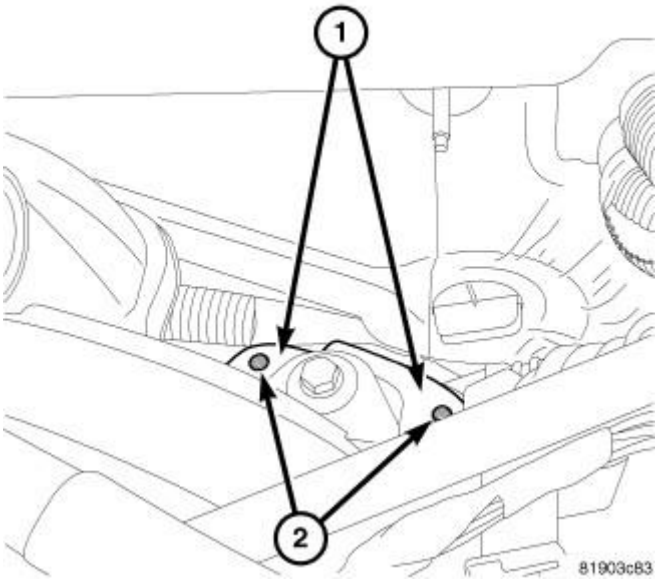

Fig. 208: EGR Valve Solenoid Gasket
Courtesy of CHRYSLER GROUP, LLC

9. Remove and discard gasket (1) located under EGR solenoid.

INSTALLATION

INSTALLATION

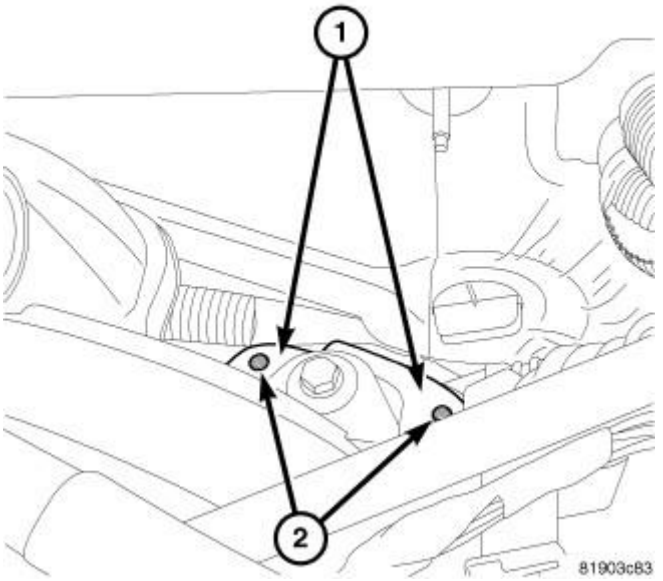

Fig. 209: EGR Valve Solenoid Gasket
Courtesy of CHRYSLER GROUP, LLC

1. Clean gasket area (1) at rear of left cylinder head where it joins base of EGR valve.
2. Clean EGR tube where it joins EGR valve.
3. Position new gasket between EGR valve and cylinder head.

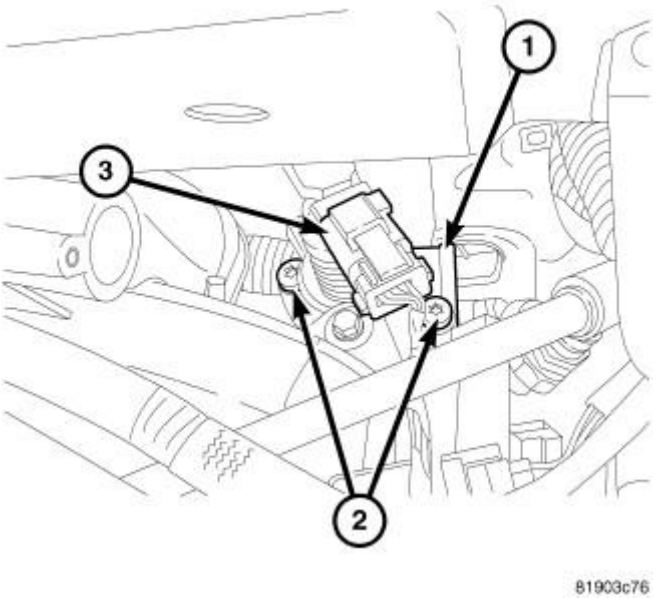

Fig. 210: EGR Valve & Solenoid Assembly
Courtesy of CHRYSLER GROUP, LLC

4. Position EGR valve to cylinder head. Install and tighten two bolts (2). Torque to 9 N.m (80 in. lbs.).

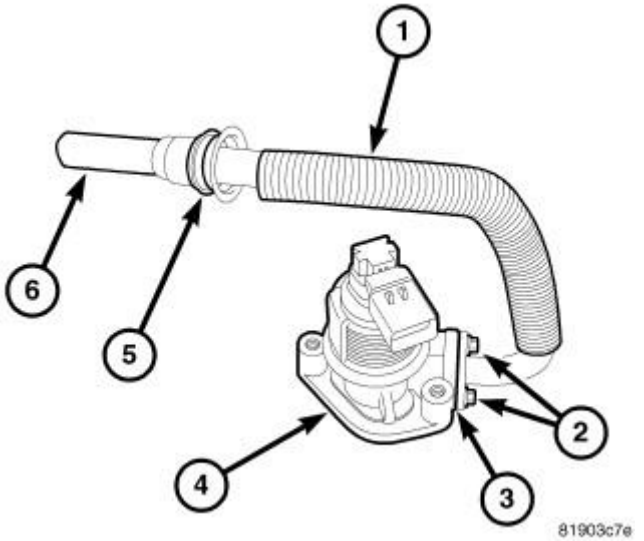

Fig. 211: Identifying Tube Mounting Bolts, Solenoid & Gasket
Courtesy of CHRYSLER GROUP, LLC

5. Position new gasket (3) between EGR tube flange and EGR valve assembly.
6. Position EGR tube (1) to side of EGR valve. Position end of tube (6) into intake manifold. Install two bolts (2). Torque to 11 N.m (8.5 ft. lbs.).

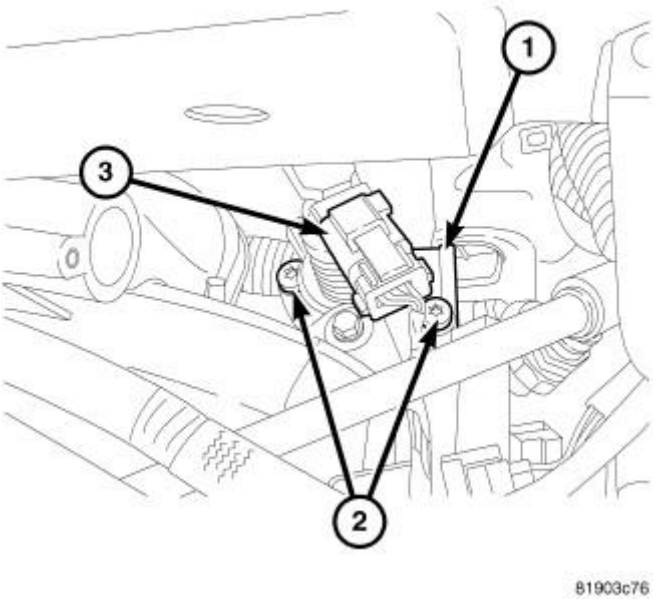

Fig. 212: EGR Valve & Solenoid Assembly
Courtesy of CHRYSLER GROUP, LLC

7. Connect electrical connector (3) to top of EGR valve solenoid (1).

8. Connect negative battery cable.
9. Using a diagnostic scan tool, erase any previously recorded DTC's (Diagnostic Trouble Codes).

VALVE, EXHAUST GAS RECIRCULATION (EGR), 4.7L

REMOVAL

REMOVAL

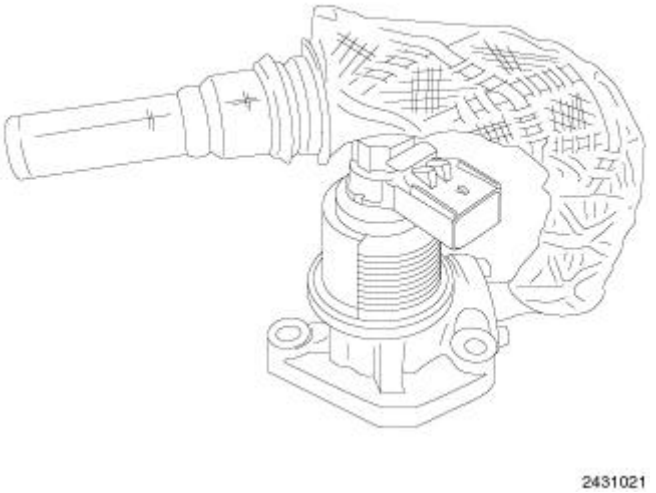

Fig. 213: EGR Valve - 4.7L
Courtesy of CHRYSLER GROUP, LLC

The electronic EGR valve and solenoid assembly is attached to the rear of the left cylinder head. An exhaust gas routing tube connects the EGR valve to the intake manifold.

1. Use a diagnostic scan tool to record any Diagnostic Trouble Codes (DTC).
2. Remove the throttle body resonator.
3. Perform the fuel system pressure release procedure. Refer to **FUEL SYSTEM PRESSURE RELEASE** . .
4. Disconnect and isolate the negative battery cable.

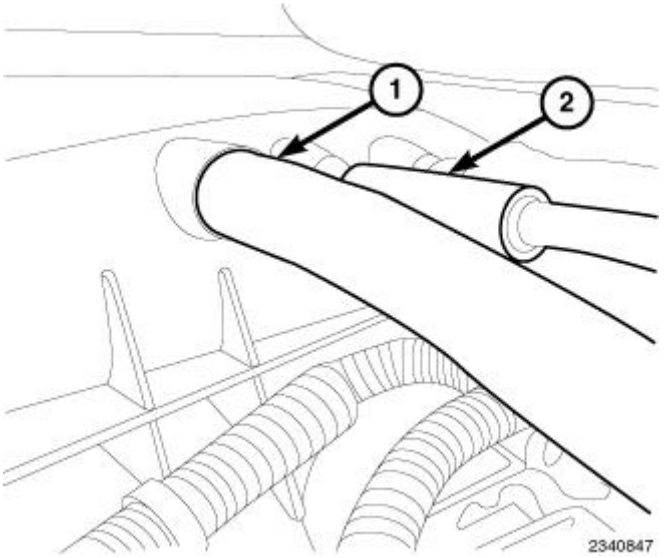

Fig. 214: Power Brake Booster Vacuum Hose & Vapor Canister Purge Hose
Courtesy of CHRYSLER GROUP, LLC

5. Disconnect the power brake booster vacuum hose (1) and the vapor canister purge hose (2) at the intake manifold.

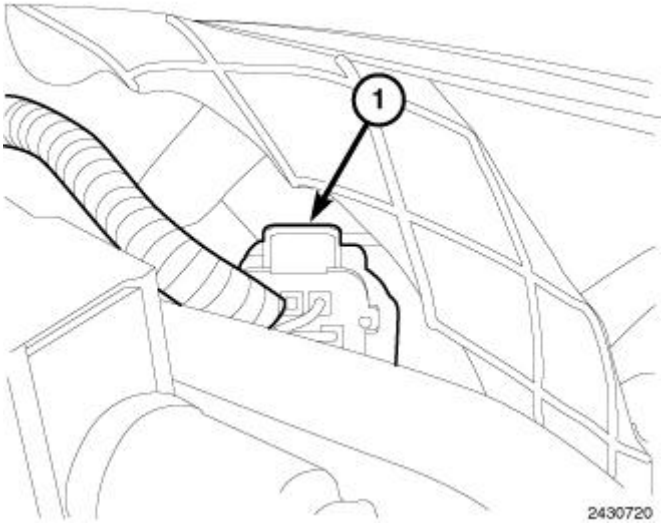

Fig. 215: EGR Valve Solenoid Electrical Connector
Courtesy of CHRYSLER GROUP, LLC

6. Disconnect the EGR valve solenoid electrical connector (1).

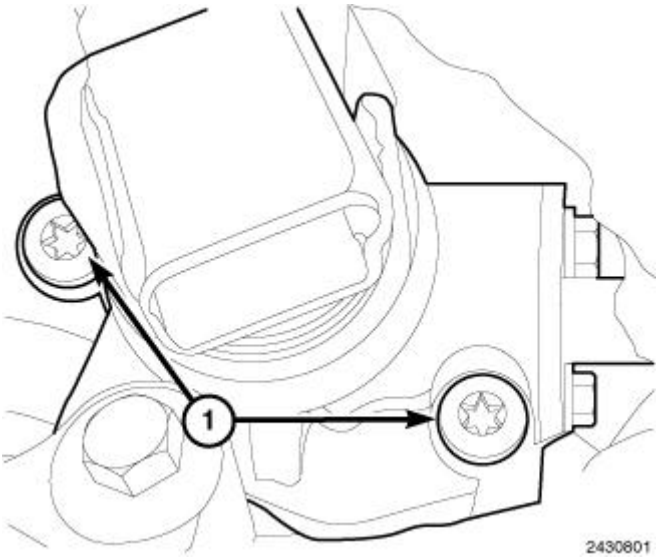

Fig. 216: EGR Valve Assembly Retaining Bolts
Courtesy of CHRYSLER GROUP, LLC

7. Remove the EGR valve assembly retaining bolts (1).
8. Remove the EGR valve and the EGR routing tube from the engine as an assembly.
9. Remove and discard the metal gasket located between the cylinder head and the EGR valve assembly.

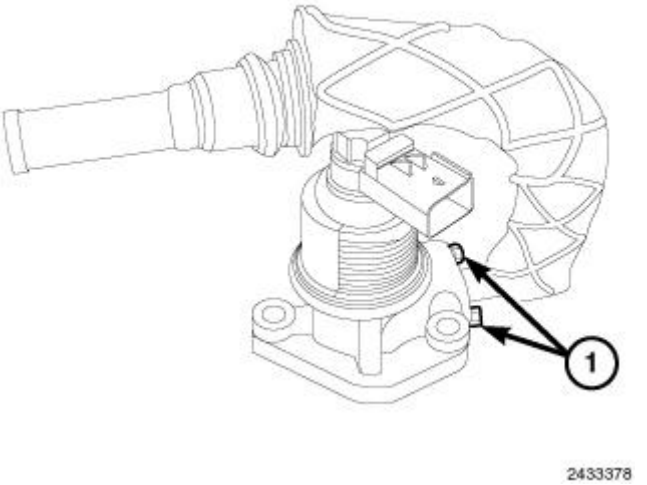

Fig. 217: EGR Valve Routing Tube Retaining Bolts
Courtesy of CHRYSLER GROUP, LLC

10. Remove the EGR valve routing tube retaining bolts (1) at the EGR valve assembly
11. Remove the EGR valve routing tube and discard the gasket.

INSTALLATION

INSTALLATION

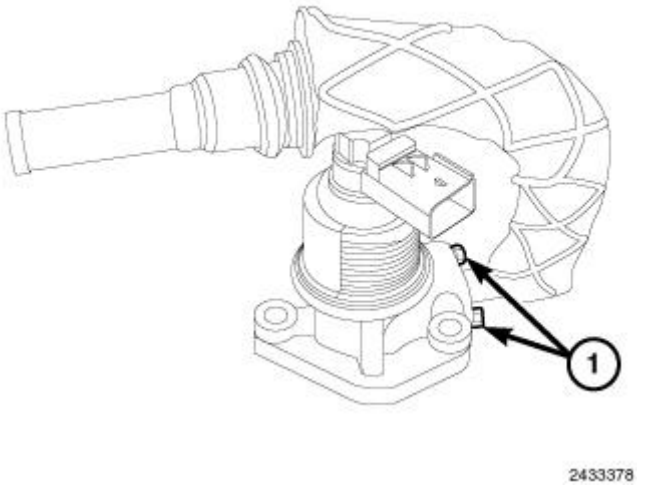

Fig. 218: EGR Valve Routing Tube Retaining Bolts
Courtesy of CHRYSLER GROUP, LLC

1. Clean the EGR valve mounting surface of the left cylinder head.
2. Clean the EGR valve surface where it joins the left cylinder head.
3. Clean the EGR valve surface where it joins the EGR valve routing tube.
4. Clean the EGR valve routing tube surface where it joins the EGR valve.
5. Install a new O-ring gasket on the EGR vale routing tube.
6. Position a new gasket between the EGR valve routing tube flange and the EGR valve assembly.
7. Position the EGR valve routing tube to the EGR valve assembly, install retaining bolts (1) and tighten to 11 N.m (8 ft. lbs.).
8. Position the new EGR valve gasket on the cylinder head.

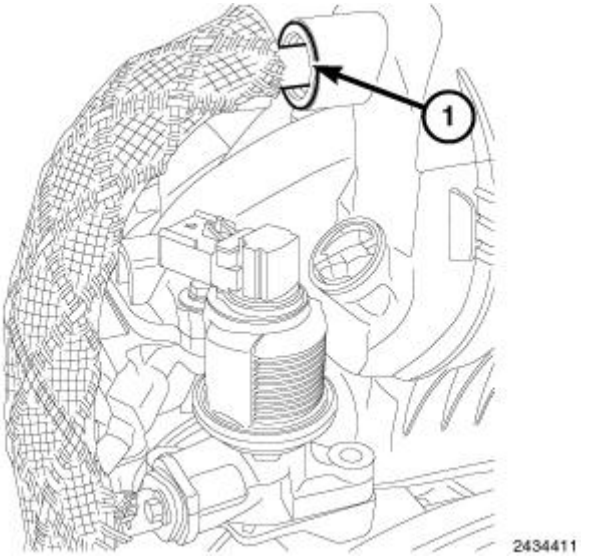

Fig. 219: EGR Valve Routing Tube Flange
Courtesy of CHRYSLER GROUP, LLC

9. Position the EGR valve routing tube into the intake manifold until the EGR valve routing tube flange (1) is flush with the intake manifold.
10. Align the EGR valve to the cylinder head while holding the EGR valve gasket in place.

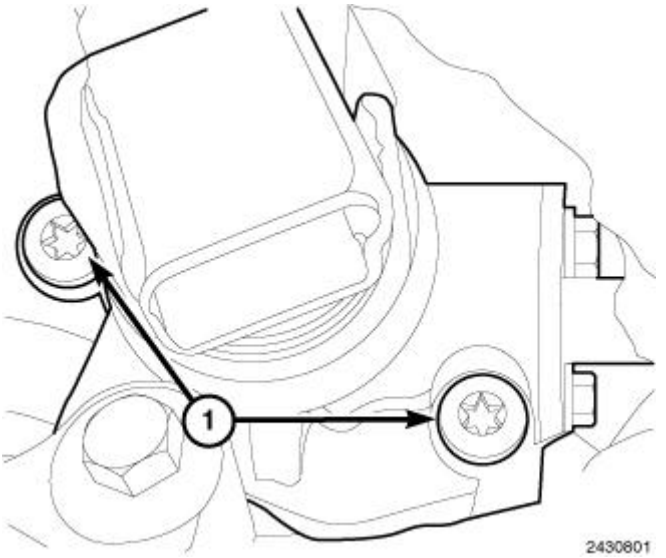

Fig. 220: EGR Valve Assembly Retaining Bolts
Courtesy of CHRYSLER GROUP, LLC

11. Install the EGR valve assembly retaining bolts (1) and tighten to 9 N.m (80 in. lbs.).

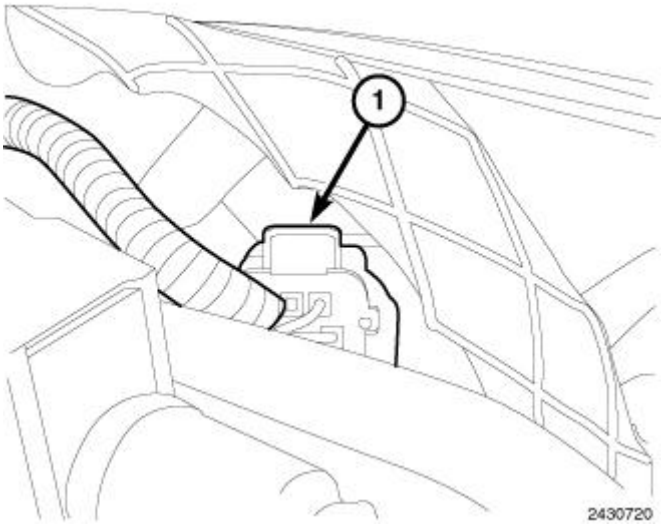

Fig. 221: EGR Valve Solenoid Electrical Connector
Courtesy of CHRYSLER GROUP, LLC

12. Connect the EGR valve solenoid electrical connector (1).
13. Connect the fuel line to the fuel rail.

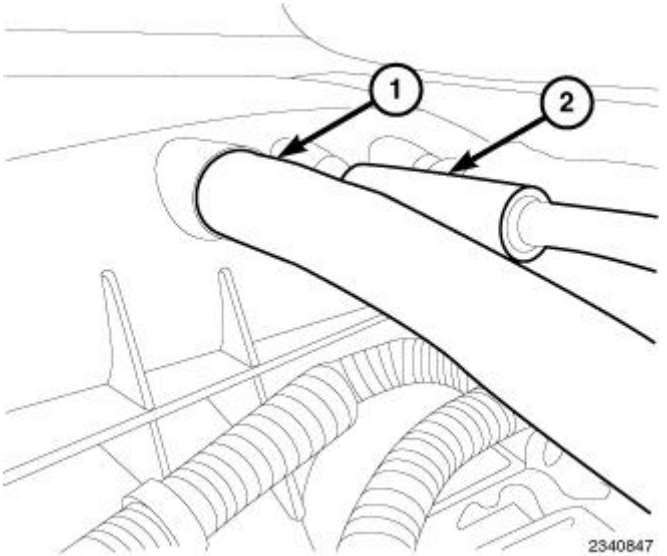

Fig. 222: Power Brake Booster Vacuum Hose & Vapor Canister Purge Hose
Courtesy of CHRYSLER GROUP, LLC

14. Connect the power brake booster vacuum hose (1) and the vapor canister purge hose (2) at the intake manifold.
15. Install the throttle body resonator.
16. Connect the negative battery cable.
17. Using a diagnostic scan tool, erase any previously recorded DTC's.

VALVE, EXHAUST GAS RECIRCULATION (EGR), 5.7L

REMOVAL

REMOVAL

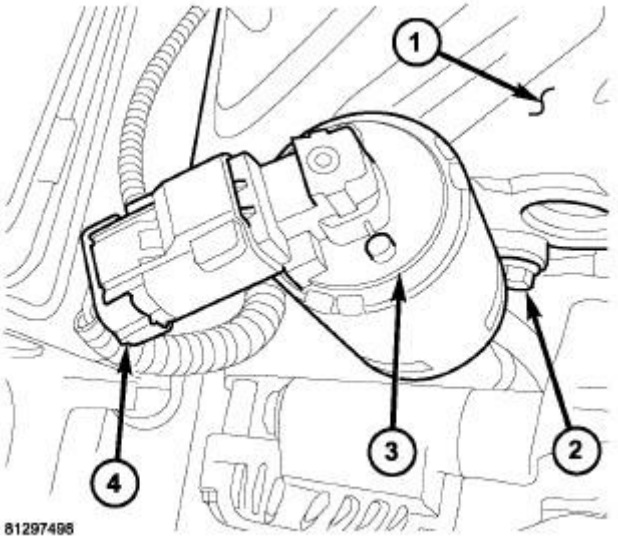

Fig. 223: EGR Valve & Solenoid Assembly
Courtesy of CHRYSLER GROUP, LLC

The electronic EGR valve and solenoid assembly (3) is attached to the front of the right cylinder head (1). An exhaust gas routing tube connects the EGR valve to the intake manifold.

1. Use a diagnostic scan tool to record any DTC's (Diagnostic Trouble Codes).
2. Disconnect and isolate the negative battery cable.

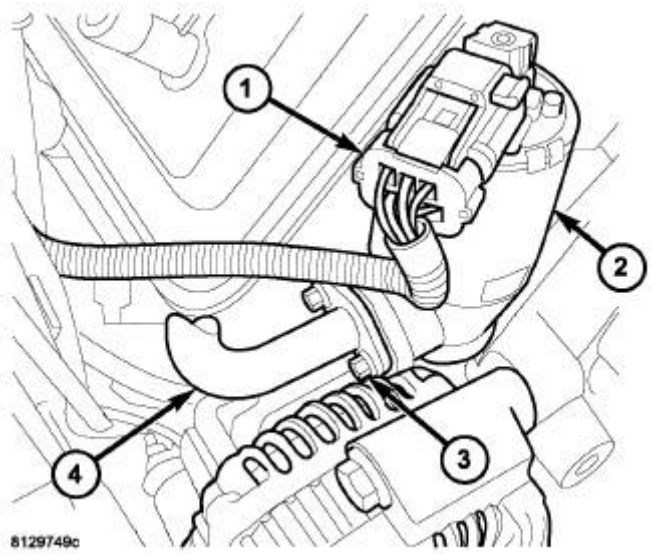

Fig. 224: EGR Tube Bolts
Courtesy of CHRYSLER GROUP, LLC

3. Disconnect electrical connector (1) from EGR solenoid (2).
4. Remove two bolts (3) connecting EGR tube (4) to valve assembly.
5. Remove gasket located between EGR tube flange and EGR valve assembly.

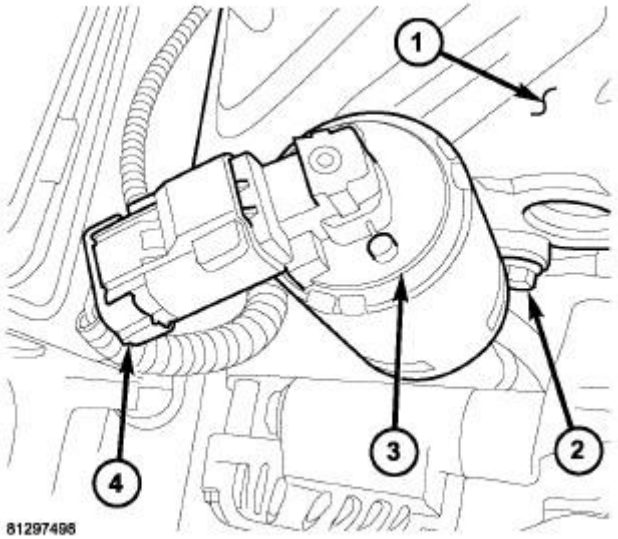

Fig. 225: EGR Valve & Solenoid Assembly
Courtesy of CHRYSLER GROUP, LLC

6. Remove two mounting bolts (2).
7. Separate valve assembly (3) from cylinder head (1).
8. Remove and discard metal gasket located between cylinder head and valve assembly.

INSTALLATION

INSTALLATION

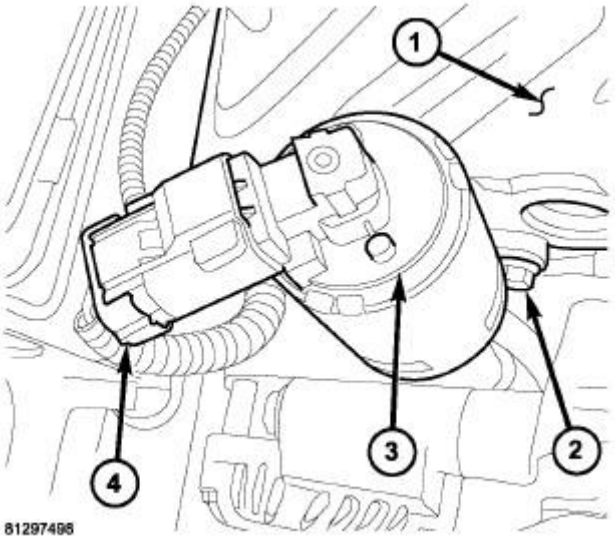

Fig. 226: EGR Valve & Solenoid Assembly
Courtesy of CHRYSLER GROUP, LLC

1. Position a new metal gasket between cylinder head (1) and valve assembly (3).
2. Install two mounting bolts (2) and tighten to 20 ft. lbs. (27 N.m).

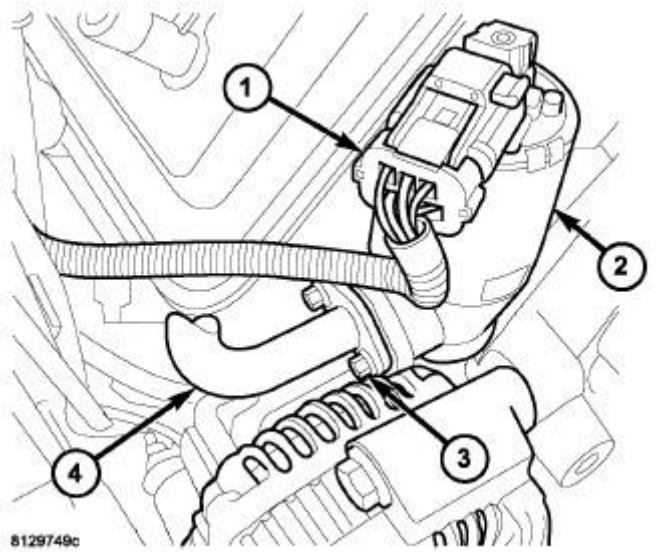

Fig. 227: EGR Tube Bolts
Courtesy of CHRYSLER GROUP, LLC

3. Clean EGR tube where it joins EGR valve.
4. Position new gasket between EGR tube flange and EGR valve assembly.
5. Install two bolts (3) connecting EGR tube (4) to valve assembly (2). Tighten bolts to 20 ft. lbs. (27 N.m).
6. Connect electrical connector (1) to EGR solenoid (2).
7. Connect negative battery cable.
8. Using a diagnostic scan tool, erase any previously recorded DTC's (Diagnostic Trouble Codes).

ON-BOARD DIAGNOSTICS

DESCRIPTION

DESCRIPTION

Acronym	Description
APPS	Accelerator Pedal Position Sensor
AAT	Ambient Air Temperature
ABS	Anti-Lock Brake System
ASD	Auto Shut Down
BARO	Barometric
CGW	Central Gateway
CKP	Crankshaft Position Sensor

CMP	Camshaft Position Sensor
CMTC	Compass/Mini-Trip Computer
DLC	Data Link Connector
DTC	Diagnostic Trouble Code
EATX	Electronic Automatic Transaxle
ECT	Engine Coolant Temperature
ECM	Engine Control Module
EGR	Exhaust Gas Recirculation
ETC	Electronic Throttle Control
GEN	Generator
GPEC	Global Powertrain Engine Controller
FCM	Front Control Module
FDCM	Final Drive Control Module
IAT	Intake/Inlet Air Temperature
IAC	Idle Air Control
IOD	Ignition Off-Draw
IPM	Integrated Power Module
JTEC	Jeep Truck Engine Controller
KS	Knock Sensor
LDP	Leak Detection Pump
MAP	Manifold Air Pressure
MDS	Multi-DisplacementSystem
MIC	Mechanical Instrument Cluster
MIL	Malfunction Indicator Lamp
MTV	Manifold Tuning Valve
NGC	Next Generation Controller
NVLD	Natural Vacuum Leak Detection
O2S	Oxygen Sensor
OBD	On Board Diagnostic
PDC	Power Distribution Center
PCI	Programmable Communication Interface
PCM	Powertrain Control Module
PCV	Positive Crankcase Ventilation
PEP	Peripheral Expansion Port
SBEC	Single Board Engine Controller
SCM	Steering Control Module
S/C	Speed Control
SKIM	Sentry Key Immobilizer Module
SKIS	Sentry Key Immobilizer System
SOL	Solenoid
SRV	Short Runner Valve
TCM	

	Transmission Control Module
TCC	Torque Converter Clutch
TIP	Throttle Inlet Pressure
TIPM	Totally Integrated Power Module
TP	Throttle Position
TPMS	Tire Pressure Monitor System
TRS	Transmission Range Sensor
VSS	Vehicle Speed Sensor/Signal
WIN	Wireless Ignition Node

OPERATION

OPERATION

The following procedure has been established to assist technicians in the field with enabling and running OBD II Monitors. The order listed in the following procedure is intended to allow the technician to effectively complete each monitor and to set the CARB Readiness Status in the least time possible.

NOTE: **Once the monitor run process has begun, do not turn off the ignition. By turning the ignition key off, monitor enabling conditions will be lost. EVAP Monitor runs after key off. By performing a Battery Disconnect, or Selecting Erase DTCs, the CARB Readiness and all additional OBD II information will be cleared.**

MONITOR PRELIMINARY CHECKS:

1. Plug a scan tool into the vehicle's Data Link Connector (DLC).
2. Turn the ignition, KEY ON - ENGINE OFF. Watch for the MIL lamp illumination during the bulb check. MIL lamp must illuminate, if not, repair MIL lamp.
3. Using a scan tool check for Powertrain related DTCs.

- Verify that No Emissions Related DTCs are Present. If an Emissions DTC is Present, the OBD II Monitors may not run and the CARB Readiness will not update.
- The Emissions related DTC, will need to be repaired, then cleared. By clearing DTCs, the OBD Monitors will need to be run and completed to set the CARB Readiness Status.

Using the scan tool check the CARB Readiness Status.

Do all the CARB Readiness Status Locations read YES?

- YES - all monitors have been completed and this vehicle is ready to be I/M or Emission Tested.
- NO - then the following procedure needs to be followed to run/complete all available monitors.

NOTE: **Only the monitors, which are not YES in the CARB Readiness Status, need to be**

completed. Specific criteria need to be met for each monitor. The most efficient order to run the monitors has been outlined below, including suggestions to aid the process.

EVAPORATIVE EMISSION SYSTEM LEAK DETECTION WITH PURGE MONITOR

This monitor requires a cool down cycle, usually an overnight soak for at least 8 hours without the engine running. The ambient temperature must decrease overnight - parking the vehicle outside is advised. To run this test the fuel level must be between 15-85% full. Criteria for EVAP monitor:

- Engine off time greater than one hour.
- Fuel Level between 15% and 85%.
- Start Up ECT and IAT within 10°C (18°F).
- Vehicle started and run until Purge Monitor reports a result.

NOTE: **If the vehicle does not report a result and the conditions where correct. It may take up to two weeks to fail the small leak monitor. DO NOT use this test to attempt to determine a fault. Use the appropriate service information procedure for finding a small leak. If there are no faults and the conditions are correct this test will run and report a pass. Note the Small leak test can find leaks less than 10 thousands of an inch. If a small leak is present it takes approximately one week of normal driving to report a failure.**

CATALYST / O2 MONITOR

The Catalyst and O2 Monitor information are acquired and processed at the same time. Most vehicles will need to be driven at highway speed (less than 50 mph) (73km/h) for a few minutes. Some vehicles run the monitor at idle in drive. If the vehicle is equipped with a manual transmission, using 4th gear may assist in meeting the monitor running criteria.

- Engine RPM between 1200 to 3000.
- Engine temperature greater than 70°C (158°F)
- Engine run time greater than 92 seconds
- MAP between 10 - 20 kPa (7.5 - 15 Hg)
- Vehicle speed between 20 - 70 mph (29-103 km/h)

EGR MONITOR

After the vehicle has reached the below conditions and during a throttle decel the EGR monitor will run.

- Engine RPM between 1375 - 2500
- Engine temperature greater than 70°C (158°F)
- Engine run time greater than 125 seconds
- Vehicle speed between 25 - 70 mph (37-103 km/h)

O2 SENSOR HEATER MONITOR

This monitor is now continuously running once the heaters are energized. Pass information will be processed at power down.

MIS-FIRE MONITOR

The Misfire Monitor is a continuous two-trip monitor. The monitor uses two different tests/counters:

NOTE: **The Adaptive Numerator must be learned before the PCM will run the Mis-Fire Monitor. The PCM updates the Adaptive Numerator at every key-ON, and is relearned after battery disconnect. The Misfire Monitor will not run until the Adaptive Numerator has updated since the last battery disconnect. If the Adaptive Numerator is equal to the default value then the PCM knows that the Adaptive Numerator has not been learned and does not permit the Misfire Monitor to run. If the Adaptive Numerator exceeds a calibrated percentage, the PCM sets a DTC for CKP NOT LEARNED and illuminates the MIL.**

- 200 Revolution Counter - Looks for misfire that can cause immediate catalyst damage.
- 1000 Revolution Counter - Looks for misfire that can cause emissions to increase 1.5 times the Federal Test Procedure (FTP) standards. This test must also identify misfire percentages that might cause a "durability demonstration vehicle" to fail an Inspection and Maintenance Program tailpipe emissions test.

TASK MANAGER

DESCRIPTION

DESCRIPTION

The PCM is responsible for efficiently coordinating the operation of all the emissions-related components. The PCM is also responsible for determining if the diagnostic systems are operating properly. The software designed to carry out these responsibilities is call the "Task Manager".

OPERATION

OPERATION

The Task Manager determines when tests happen and when functions occur. Many of the diagnostic steps required by OBD II must be performed under specific operating conditions. The Task Manager software organizes and prioritizes the diagnostic procedures. The job of the Task Manager is to determine if conditions are appropriate for tests to be run, monitor the parameters for a trip for each test, and record the results of the test. Following are the responsibilities of the Task Manager software:

- Test Sequence
- MIL Illumination
- Diagnostic Trouble Codes (DTCs)
- Trip Indicator

- Freeze Frame Data Storage
- Similar Conditions Window

PENDING

Under some situations the Task Manager will not run a monitor if the MIL is illuminated and a fault is stored from another monitor. In these situations, the Task Manager postpones monitors **pending** resolution of the original fault. The Task Manager does not run the test until the problem is remedied.

For example, when the MIL is illuminated for an Oxygen Sensor fault, the Task Manager does not run the Catalyst Monitor until the Oxygen Sensor fault is remedied. Since the Catalyst Monitor is based on signals from the Oxygen Sensor, running the test would produce inaccurate results.

CONFLICT

There are situations when the Task Manager does not run a test if another monitor is in progress. In these situations, the effects of another monitor running could result in an erroneous failure. If this **conflict** is present, the monitor is not run until the conflicting condition passes. Most likely the monitor will run later after the conflicting monitor has passed.

For example, if the Fuel System Monitor is in progress, the Task Manager does not run the catalyst Monitor. Since both tests monitor changes in air/fuel ratio and adaptive fuel compensation, the monitors will conflict with each other.

SUSPEND

Occasionally the Task Manager may not allow a two trip fault to mature. The Task Manager will **suspend** the maturing of a fault if a condition exists that may induce an erroneous failure. This prevents illuminating the MIL for the wrong fault and allows more precise diagnosis.

For example, if the PCM is storing a one trip fault for the Oxygen Sensor and the catalyst monitor, the Task Manager may still run the catalyst Monitor but will suspend the results until the Oxygen Sensor Monitor either passes or fails. At that point the Task Manager can determine if the catalyst system is actually failing or if an Oxygen Sensor is failing.

TEST SEQUENCE

In many instances, emissions systems must fail diagnostic tests more than once before the PCM illuminates the MIL. These tests are known as 'two trip monitors.' Other tests that turn the MIL lamp on after a single failure are known as 'one trip monitors.' A trip is defined as 'start the vehicle and operate it to meet the criteria necessary to run the given monitor.'

Many of the diagnostic tests must be performed under certain operating conditions. However, there are times when tests cannot be run because another test is in progress (conflict), another test has failed (pending) or the Task Manager has set a fault that may cause a failure of the test (suspend).

MIL ILLUMINATION

The PCM Task Manager carries out the illumination of the MIL. The Task Manager triggers MIL illumination upon test failure, depending on monitor failure criteria.

The Task Manager Screen shows both a Requested MIL state and an Actual MIL state. When the MIL is illuminated upon completion of a test for a good trip, the Requested MIL state changes to OFF. However, the MIL remains illuminated until the next key cycle. (On some vehicles, the MIL will actually turn OFF during the third good trip) During the key cycle for the third good trip, the Requested MIL state is OFF, while the Actual MIL state is ON. After the next key cycle, the MIL is not illuminated and both MIL states read OFF.

DIAGNOSTIC TROUBLE CODES (DTCS)

With OBD II, different DTC faults have different priorities according to regulations. As a result, the priorities determine MIL illumination and DTC erasure. DTCs are entered according to individual priority. DTCs with a higher priority overwrite lower priority DTCs.

Priorities

- Priority 1 One-Trip Failure of Non-Fuel or Non-Mis-Fire Fault (e.g., Cat Mon Failure)
- Priority 3 Matured Fault (either One-Trip or Two-Trip) Non-Fuel AND Non-Mis-Fire
- Priority 4 One-Trip Failure of Fuel System or Mis-Fire Fault
- Priority 6 Matured Fault for Fuel System or Mis-Fire (either One-Trip or Two-Trip)

Non-emissions related failures have no priority. One trip failures of two trip faults have low priority. Two trip failures or matured faults have higher priority. One and two trip failures of fuel system and misfire monitor take precedence over non-fuel system and non-misfire failures.

DTC SELF ERASURE

With one trip components or systems, the MIL is illuminated upon test failure and DTCs are stored.

Two trip monitors are components requiring failure in two consecutive trips for MIL illumination. Upon failure of the first test, the Task Manager enters a maturing code. If the component fails the test for a second time the code matures and a DTC is set.

After three good trips the MIL is extinguished and the Task Manager automatically switches the trip counter to a warm-up cycle counter. DTCs are automatically erased following 40 warm-up cycles if the component does not fail again.

For misfire and fuel system monitors, the component must pass the test under a Similar Conditions Window in order to record a good trip. A Similar Conditions Window is when engine RPM is within ±375 RPM and load is within ±20% of when the fault occurred.

NOTE: **It is important to understand that a component does not have to fail under a similar window of operation to mature. It must pass the test under a Similar Conditions Window when it failed to record a Good Trip for DTC erasure for misfire and fuel system monitors.**

DTCs can be erased anytime with a scan tool. Erasing the DTC with the scan tool erases all OBD II information. The scan tool automatically displays a warning that erasing the DTC will also erase all OBD II monitor data. This includes all counter information for warm-up cycles, trips and Freeze Frame.

TRIP INDICATOR

The **Trip** is essential for running monitors and extinguishing the MIL. In OBD II terms, a trip is a set of vehicle operating conditions that must be met for a specific monitor to run. All trips begin with a key cycle.

Good Trip

The Good Trip counters are as follows:

- Global Good Trip
- Fuel System Good Trip
- Misfire Good Trip
- Alternate Good Trip (appears as a Global Good Trip on scan tool)
    a. Comprehensive Components
    b. Major Monitor
- Warm-Up Cycles

Global Good Trip

To increment a Global Good Trip, the Oxygen sensor and Catalyst efficiency monitors must have run and passed, and 2 minutes of engine run time.

Fuel System Good Trip

To count a good trip (three required) and turn off the MIL, the following conditions must occur:

- Engine in closed loop
- Operating in Similar Conditions Window
- Short Term multiplied by Long Term less than threshold
- Less than threshold for a predetermined time

If all of the previous criteria are met, the PCM will count a good trip (three required) and turn off the MIL.

Misfire Good Trip

If the following conditions are met the PCM will count one good trip (three required) in order to turn off the MIL:

- Operating in Similar Condition Window
- 1000 engine revolutions with no misfire

Alternate Good Trip

Alternate Good Trips are used in place of Global Good Trips for Comprehensive Components and Major Monitors. If the Task Manager cannot run a Global Good Trip because a component fault is stopping the monitor from running, it will attempt to count an Alternate Good Trip.

The Task Manager counts an Alternate Good Trip for Comprehensive components when the following conditions are met:

- Two minutes of engine run time, idle or driving
- No other faults occur

The Task Manager counts an Alternate Good Trip for a Major Monitor when the monitor runs and passes. Only the Major Monitor that failed needs to pass to count an Alternate Good Trip.

Warm-Up Cycles

Once the MIL has been extinguished by the Good Trip Counter, the PCM automatically switches to a Warm-Up Cycle Counter that can be viewed on the scan tool. Warm-Up Cycles are used to erase DTCs and Freeze Frames. Forty Warm-Up cycles must occur in order for the PCM to self-erase a DTC and Freeze Frame. A Warm-Up Cycle is defined as follows:

- Engine coolant temperature must start below and rise above 160° F (71° C)
- Engine coolant temperature must rise by 40° F (4.5° C)
- No further faults occur

FREEZE FRAME DATA STORAGE

Once a failure occurs, the Task Manager records several engine operating conditions and stores it in a Freeze Frame. The Freeze Frame is considered one frame of information taken by an on-board data recorder. When a fault occurs, the PCM stores the input data from various sensors so that technicians can determine under what vehicle operating conditions the failure occurred.

The data stored in Freeze Frame is usually recorded when a system fails the first time for two trip faults. Freeze Frame data will only be overwritten by a different fault with a higher priority.

CAUTION: Erasing DTCs, either with the scan tool, or by disconnecting the battery, also clears all Freeze Frame data.

SIMILAR CONDITIONS WINDOW

The Similar Conditions Window displays information about engine operation during a monitor. Absolute MAP (engine load) and Engine RPM are stored in this window when a failure occurs. There are two different Similar conditions Windows: Fuel System and Misfire.

FUEL SYSTEM

- **Fuel System Similar Conditions Window** - An indicator that 'Absolute MAP When Fuel Sys Fail' and 'RPM When Fuel Sys Failed' are all in the same range when the failure occurred. Indicated by switching from 'NO' to 'YES'.
- **Absolute MAP When Fuel Sys Fail** - The stored MAP reading at the time of failure. Informs the user at what engine load the failure occurred.
- **Absolute MAP** - A live reading of engine load to aid the user in accessing the Similar Conditions Window.
- **RPM When Fuel Sys Fail** - The stored RPM reading at the time of failure. Informs the user at what engine RPM the failure occurred.
- **Engine RPM** - A live reading of engine RPM to aid the user in accessing the Similar Conditions Window.
- **Adaptive Memory Factor** - The PCM utilizes both Short Term Compensation and Long Term Adaptive to calculate the Adaptive Memory Factor for total fuel correction.
- **Upstream O2S Volts** - A live reading of the Oxygen Sensor to indicate its performance. For example, stuck lean, stuck rich, etc.
- **SCW Time in Window (Similar Conditions Window Time in Window)** - A timer used by the PCM that indicates that, after all Similar Conditions have been met, if there has been enough good engine running time in the SCW without failure detected. This timer is used to increment a Good Trip.
- **Fuel System Good Trip Counter** - A Trip Counter used to turn OFF the MIL for Fuel System DTCs. To increment a Fuel System Good Trip, the engine must be in the Similar Conditions Window, Adaptive Memory Factor must be less than calibrated threshold and the Adaptive Memory Factor must stay below that threshold for a calibrated amount of time.
- **Test Done This Trip** - Indicates that the monitor has already been run and completed during the current trip.

MISFIRE

- **Same Misfire Warm-Up State** - Indicates if the misfire occurred when the engine was warmed up (above 160° F).
- **In Similar Misfire Window** - An indicator that 'Absolute MAP When Misfire Occurred' and 'RPM When Misfire Occurred' are all in the same range when the failure occurred. Indicated by switching from 'NO' to 'YES'.
- **Absolute MAP When Misfire Occurred** - The stored MAP reading at the time of failure. Informs the user at what engine load the failure occurred.
- **Absolute MAP** - A live reading of engine load to aid the user in accessing the Similar Conditions Window.
- **RPM When Misfire Occurred** - The stored RPM reading at the time of failure. Informs the user at what engine RPM the failure occurred.
- **Engine RPM** - A live reading of engine RPM to aid the user in accessing the Similar Conditions Window.
- **Adaptive Memory Factor** - The PCM utilizes both Short Term Compensation and Long Term Adaptive to calculate the Adaptive Memory Factor for total fuel correction.
- **200 Rev Counter** - Counts 0-100 720 degree cycles.

- **SCW Cat 200 Rev Counter** - Counts when in similar conditions.
- **SCW FTP 1000 Rev Counter** - Counts 0-4 when in similar conditions.
- **Misfire Good Trip Counter** - Counts up to three to turn OFF the MIL.

FIRING ORDER & CYLINDER IDENTIFICATION

NOTE: **This information is intended as a quick reference for firing order and cylinder identification only. The information provided covers many vehicles and may include some information that does not apply to the vehicle you have currently selected.**

4 CYLINDER ENGINE

Engine Configuration	Firing Order	Cylinder Identification
In-Line 4	1-3-4-2	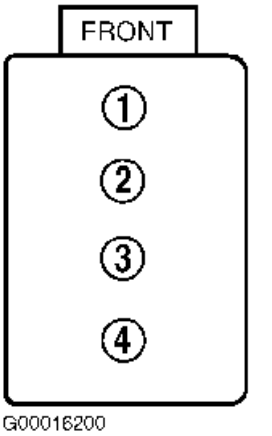

5 CYLINDER ENGINE

Engine Configuration	Firing Order	Cylinder Identification
In-Line 5	1-2-4-5-3	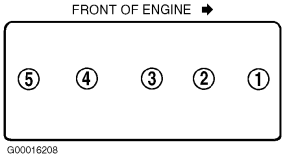

IN-LINE 6 ENGINE

Engine Configuration	Firing Order	Cylinder Identification

In-Line 6	1-5-3-6-2-4	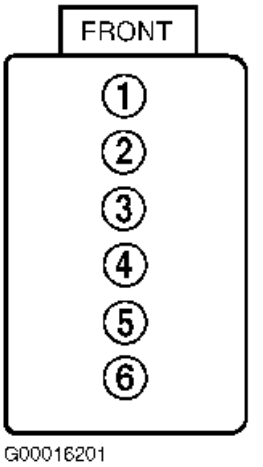

V6 ENGINE

3.0L Turbo Diesel V6 Engine

Engine Configuration	Firing Order	Cylinder Identification
3.0L Turbo Diesel	1-4-2-5-3-6	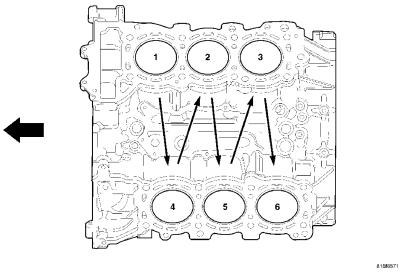

3.2L (VIN L & N) V6 Engines

Engine Configuration	Firing Order	Cylinder Identification
3.2L (VIN L & N)	1-4-3-6-2-5	

		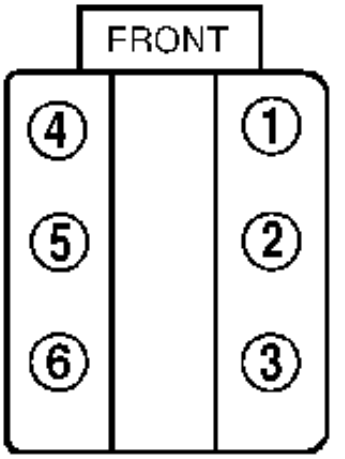 G00016204

3.7L & 3.9L V6 Engines

Engine Configuration	Firing Order	Cylinder Identification
3.7L & 3.9L	1-6-5-4-3-2	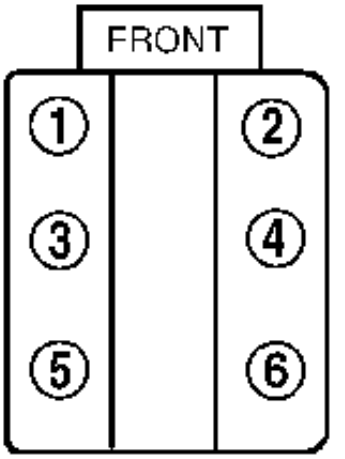 G00016202

All Other V6 Engines

Engine Configuration	Firing Order	Cylinder Identification
All Others	1-2-3-4-5-6	

		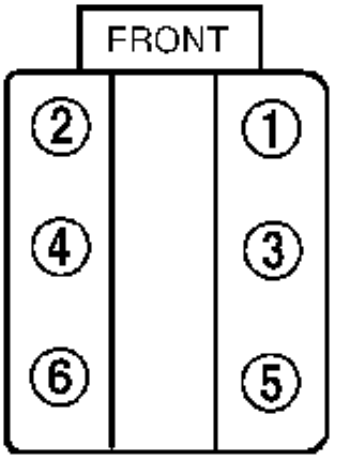 G00016203

V8 ENGINE

Engine Configuration	Firing Order	Cylinder Identification
V8	1-8-4-3-6-5-7-2	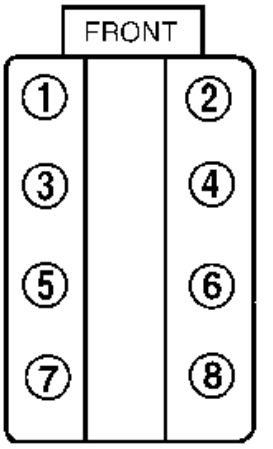 G00016205

V10 ENGINE

Engine Configuration	Firing Order	Cylinder Identification
V10	1-10-9-4-3-6-5-8-7-2	

		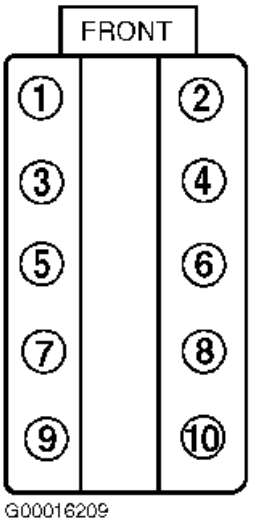 FRONT 1 2 3 4 5 6 7 8 9 10 G00016209

Mode 6 - Chrysler

INTRODUCTION

Mode 6 is designed to allow access to the results of onboard diagnostic monitoring tests of specific components/systems that are not continuously monitored. These systems include the catalytic converter, EVAP system, oxygen sensor, oxygen sensor heater, EGR system, secondary AIR system, and sometimes misfire.

Mode 6 data is output from the PCM/ECM in hexadecimal form. The $ sign indicates a hexadecimal number. Depending on the software in the scanner, the output could be displayed in hexadecimal numbers (no conversion), raw data (conversion to decimal numbers), or measurable values (applying conversion factor to raw data).

Before reading mode 6 information, ensure that the monitor for the information you are accessing has run to completion. If the monitor is not complete, the mode 6 data will not be accurate.

1996

PID	PID Description	SBEC Application			JTEC Application		
		Supported	Comp ID	Scaling (bit wt.)	Supported	Comp ID	Scaling (bit wt.)
00	Test PIDs Supported ($01 - $20)	X	FF	---	X	FF	---
20	Test PIDs Supported ($21 - $40)	X	FF	---	X	FF	---
40	Test PIDs Supported ($41 - $60)	X	FF	---	X	FF	---
60	Test PIDs Supported ($61 - $80)	X	FF	---	X	FF	---
O2 SENSOR MONITOR							
11	O2 Sensor 1/1 Half-Cycle Counter	X	80	1 count per bit	X	81	1 count per bit
13	O2 Sensor 1/1 Big-Slope Counter	X	80	1 count per bit	X	81	1 count per bit
31	O2 Sensor 2/1 Half-Cycle Counter	Dual-bank	80	1 count per bit	Dual-bank	81	1 count per bit
33	O2 Sensor 2/1 Big-Slope Counter	Dual-bank	80	1 count per bit	Dual-bank	81	1 count per bit
O2 HEATER MONITOR							
19	O_2 Heater 1/1 Hot Trend Counter	X	80	1 count/bit	---	---	---
"	O_2 Heater 1/1 Time to Reach Voltage	---	---	---	X	01	11 ms/bit
1A	O_2 Heater 1/2 Hot Trend Counter	X	80	1 count/bit	---	---	---
"	O_2 Heater 1/2 Time to Reach Voltage	---	---	---	X	01	11 ms/bit
1B	O_2 Heater 1/1 Δ Voltage	X	80	20 mv/bit	---	---	---
"	O_2 Heater 1/2 Time (JTEC, MD 8.0L truck)	---	---	---	O	01	11 ms/bit
1C	O_2 Heater 1/2 Δ Voltage	X	80	20 mv/bit	---	---	---
"	O_2 Heater 1/3 Time (JTEC, MD 8.0L truck)	---	---	---	O	01	11 ms/bit
39	O_2 Heater 2/1 Hot Trend Counter	O	80	1 count/bit	---	---	---
"	O_2 Heater 2/1 Time to Reach Voltage	---	---	---	O	01	11 ms/bit
3A	O_2 Heater 2/2 Hot Trend Counter	O	80	1 count/bit	---	---	---
"	O_2 Heater 2/2 Time to Reach Voltage	---	---	---	O	01	11 ms/bit
3B	O_2 Heater 2/1 Δ Voltage	O	80	20 mv/bit	---	---	---
3C	O_2 Heater 2/2 Δ Voltage	O	80	20 mv/bit	---	---	---
CATALYST SYSTEM MONITOR							
21	Catalyst 1/1 Switch Frequency Ratio	X	00	0.39% per bit	X	01	0.39% per bit
22	Catalyst 2/1 Switch Frequency Ratio	Dual-bank	00	0.39% per bit	Dual-bank	01	0.39% per bit
EGR SYSTEM MONITOR							
41	EGR Monitor Δ Adaptive Fuel Shift	X	80	0.19%/bit	---	---	---
"	EGR Monitor Fail Counter	---	---	---	X	01	1 count/bit
PURGE FLOW SYSTEM MONITOR							
51	Purge Monitor Δ IAC Shift	X	80	1 step per bit	X	81	1 step per bit
52	Purge Monitor Δ Adaptive Fuel Shift	X	80	0.19% per bit	X	81	0.39% per bit (use LSB only)
53	Purge Monitor Δ RPM Shift	X	80	1/8 RPM per bit	X	81	1/8 RPM per bit
EVAPORATIVE SYSTEM MONITOR							
61	0.040" Leak Detection Pump Period	X	80	100 ms per bit	X	81	11 ms per bit

NOTE: An 'X' in the column for SBEC, or JTEC, Engine applications indicates that this PID is supported for all unleaded gasoline engine applications. An 'O' indicates that this PID is application-specific and applies only to certain packages such as dual-bank O_2 systems, dual-bank catalyst systems, etc. A '---' indicates that this PID is not supported by this application. The component ID of $00 for SBEC, or $01 for JTEC represents a maximum test limit. For a minimum test limit, the component ID will be either $80 for SBEC, or the component ID will be $81 for JTEC.

Fig. 1: Mode $06 Data For SBEC & JTEC Engine Controllers
Courtesy of CHRYSLER CORP.

1997-1998

PID	PID Description	SBEC Application			JTEC Application		
		Supported	Comp ID	Scaling (bit wt.)	Supported	Comp ID	Scaling (bit wt.)
00	Test PIDs Supported ($01 - $20)	X	FF	---	X	FF	---
20	Test PIDs Supported ($21 - $40)	X	FF	---	X	FF	---
40	Test PIDs Supported ($41 - $60)	X	FF	---	X	FF	---
60	Test PIDs Supported ($61 - $80)	X	FF	---	X	FF	---
O2 SENSOR MONITOR							
11	O2 Sensor 1/1 Half-Cycle Counter	X	80	1 count per bit	X	81	1 count per bit
13	O2 Sensor 1/1 Big-Slope Counter	X	80	1 count per bit	X	81	1 count per bit
31	O2 Sensor 2/1 Half-Cycle Counter	Dual-bank	80	1 count per bit	Dual-bank	81	1 count per bit
33	O2 Sensor 2/1 Big-Slope Counter	Dual-bank	80	1 count per bit	Dual-bank	81	1 count per bit
O2 HEATER MONITOR							
19	O_2 Heater 1/1 Hot Trend Counter	X	80	1 count/bit	---	---	---
"	O_2 Heater 1/1 Time to Reach Voltage	---	---	---	X	01	11 ms/bit
1A	O_2 Heater 1/2 Hot Trend Counter	X	80	1 count/bit	---	---	---
"	O_2 Heater 1/2 Time to Reach Voltage	---	---	---	X	01	11 ms/bit
1B	O_2 Heater 1/1 Δ Voltage	X	80	20 mv/bit	---	---	---
"	O_2 Heater 1/2 Time (JTEC, MD 8.0L truck)	---	---	---	O	01	11 ms/bit
1C	O_2 Heater 1/2 Δ Voltage	X	80	20 mv/bit	---	---	---
"	O_2 Heater 1/3 Time (JTEC, MD 8.0L truck)	---	---	---	O	01	11 ms/bit
39	O_2 Heater 2/1 Hot Trend Counter	O	80	1 count/bit	---	---	---
"	O_2 Heater 2/1 Time to Reach Voltage	---	---	---	O	01	11 ms/bit
3A	O_2 Heater 2/2 Hot Trend Counter	O	80	1 count/bit	---	---	---
"	O_2 Heater 2/2 Time to Reach Voltage	---	---	---	O	01	11 ms/bit
3B	O_2 Heater 2/1 Δ Voltage	O	80	20 mv/bit	---	---	---
3C	O_2 Heater 2/2 Δ Voltage	O	80	20 mv/bit	---	---	---
CATALYST SYSTEM MONITOR							
15	Catalyst Slow O_2 1/1 Response Counter	X	80	1 count/bit	---	---	---
"	Catalyst 1/1 Phase Response Counter	---	---	---	X	81	1 count/bit
21	Catalyst 1/1 Switch Frequency Ratio	X	00	0.39% per bit	X	01	0.39% per bit
22	Catalyst 2/1 Switch Frequency Ratio	Dual-bank	00	0.39% per bit	Dual-bank	01	0.39% per bit
35	Catalyst Slow O_2 2/1 Response Counter	X	80	1 count/bit	---	---	---
EGR SYSTEM MONITOR							
41	EGR Monitor Δ Adaptive Fuel Shift	X	80	0.19%/bit	---	---	---
"	EGR Monitor Fail Counter	---	---	---	X	01	1 count/bit
PURGE FLOW SYSTEM MONITOR							
51	Purge Monitor Δ IAC Shift	X	80	1 step per bit	X	81	1 step per bit
52	Purge Monitor Δ Adaptive Fuel Shift	X	80	0.19% per bit	X	81	0.39% per bit (use LSB only)
53	Purge Monitor Δ RPM Shift	X	80	1/8 RPM per bit	X	81	1/8 RPM per bit
EVAPORATIVE SYSTEM MONITOR							
61	0.040" Leak Detection Pump Period	X	80	100 ms per bit	X	81	11 ms per bit

NOTE: An 'X' in the column for SBEC, or JTEC, Engine applications indicates that this PID is supported for all unleaded gasoline engine applications. An 'O' indicates that this PID is application-specific and applies only to certain packages such as dual-bank O_2 systems, dual-bank catalyst systems, etc. A '---' indicates that this PID is not supported by this application. The component ID of $00 for SBEC, or $01 for JTEC represents a maximum test limit. For a minimum test limit, the component ID will be either $80 for SBEC, or the component ID will be $81 for JTEC.

Fig. 2: Mode $06 Data For SBEC & JTEC Engine Controllers
Courtesy of CHRYSLER CORP.

1999

PID	PID Description	SBEC Application			JTEC Application		
		Supported	Comp ID	Scaling (bit wt.)	Supported	Comp ID	Scaling (bit wt.)
00	Test PIDs Supported ($01 - $20)	X	FF	---	X	FF	---
20	Test PIDs Supported ($21 - $40)	X	FF	---	X	FF	---
40	Test PIDs Supported ($41 - $60)	X	FF	---	X	FF	---
60	Test PIDs Supported ($61 - $80)	X	FF	---	X	FF	---
O2 SENSOR MONITOR							
11	O2 Sensor 1/1 Half-Cycle Counter	X	80	1 count per bit	X	81	1 count per bit
13	O2 Sensor 1/1 Big-Slope Counter	X	80	1 count per bit	X	81	1 count per bit
16	O2 Sensor 1/2 High Voltage	X	80	20 mv per bit	X	81	20 mv per bit
17	O2 Sensor 1/2 Low Voltage	X	00	20 mv per bit	X	01	20 mv per bit
1D	O2 Sensor 1/3 Low Voltage	---	---	---	X	01	20 mv per bit
1E	O2 Sensor 1/3 High Voltage	---	---	---	X	81	20 mv per bit
31	O2 Sensor 2/1 Half-Cycle Counter	Dual-bank	80	1 count per bit	Dual-bank	81	1 count per bit
33	O2 Sensor 2/1 Big-Slope Counter	Dual-bank	80	1 count per bit	Dual-bank	81	1 count per bit
36	O2 Sensor 2/2 High Voltage	Dual-bank	80	20 mv per bit	Dual-bank	81	20 mv per bit
37	O2 Sensor 2/2 Low Voltage	Dual-bank	00	20 mv per bit	Dual-bank	01	20 mv per bit
O2 HEATER MONITOR							
19	O_2 Heater 1/1 Hot Trend Counter	X	80	1 count/bit	---	---	---
"	O_2 Heater 1/1 Time to Reach Voltage	---	---	---	X	01	11 ms/bit
1A	O_2 Heater 1/2 Hot Trend Counter	X	80	1 count/bit	---	---	---
"	O_2 Heater 1/2 Time to Reach Voltage	---	---	---	X	01	11 ms/bit
1B	O_2 Heater 1/1 Δ Voltage	X	80	20 mv/bit	---	---	---
"	O_2 Heater 1/2 Time (JTEC, MD 8.0L truck)	---	---	---	O	01	11 ms/bit
1C	O_2 Heater 1/2 Δ Voltage	X	80	20 mv/bit	---	---	---
"	O_2 Heater 1/3 Time (JTEC, MD 8.0L truck)	---	---	---	O	01	11 ms/bit
39	O_2 Heater 2/1 Hot Trend Counter	O	80	1 count/bit	---	---	---
"	O_2 Heater 2/1 Time to Reach Voltage	---	---	---	O	01	11 ms/bit
3A	O_2 Heater 2/2 Hot Trend Counter	O	80	1 count/bit	---	---	---
"	O_2 Heater 2/2 Time to Reach Voltage	---	---	---	O	01	11 ms/bit
3B	O_2 Heater 2/1 Δ Voltage	O	80	20 mv/bit	---	---	---
3C	O_2 Heater 2/2 Δ Voltage	O	80	20 mv/bit	---	---	---
CATALYST SYSTEM MONITOR							
15	Catalyst Slow O_2 1/1 Response Counter	X	80	1 count/bit	---	---	---
"	Catalyst 1/1 Phase Response Counter	---	---	---	X	81	1 count/bit
21	Catalyst 1/1 Switch Frequency Ratio	X	00	0.39% per bit	X	01	0.39% per bit
22	Catalyst 2/1 Switch Frequency Ratio	Dual-bank	00	0.39% per bit	Dual-bank	01	0.39% per bit
35	Catalyst Slow O_2 2/1 Response Counter	X	80	1 count/bit	---	---	---
EGR SYSTEM MONITOR							
41	EGR Monitor Δ Adaptive Fuel Shift	X	80	0.19%/bit	---	---	---
"	EGR Monitor Fail Counter	---	---	---	X	01	1 count/bit

NOTE: An 'X' in the column for SBEC, or JTEC, Engine applications indicates that this PID is supported for all unleaded gasoline engine applications. An 'O' indicates that this PID is application-specific and applies only to certain packages such as dual-bank O_2 systems, dual-bank catalyst systems, etc. A '---' indicates that this PID is not supported by this application. The component ID of $00 for SBEC, or $01 for JTEC represents a maximum test limit. For a minimum test limit, the component ID will be either $80 for SBEC, or the component ID will be $81 for JTEC.

Fig. 3: Mode $06 Data For SBEC & JTEC Engine Controllers (1 Of 2)
Courtesy of CHRYSLER CORP.

PURGE FLOW SYSTEM MONITOR							
51	Purge Monitor Δ IAC Shift	X	80	1 step per bit	X	81	1 step per bit
52	Purge Monitor Δ Adaptive Fuel Shift	X	80	0.19% per bit	X	81	0.39% per bit (use LSB only)
53	Purge Monitor Δ RPM Shift	X	80	1/8 RPM per bit	X	81	1/8 RPM per bit
EVAPORATIVE SYSTEM MONITOR							
61	0.040" Leak Detection Pump Period	X	80	100 ms per bit	X	81	11 ms per bit

NOTE: An 'X' in the column for SBEC, or JTEC, Engine applications indicates that this PID is supported for all unleaded gasoline engine applications. An 'O' indicates that this PID is application-specific and applies only to certain packages such as dual-bank O_2 systems, dual-bank catalyst systems, etc. A '---' indicates that this PID is not supported by this application. The component ID of $00 for SBEC, or $01 for JTEC represents a maximum test limit. For a minimum test limit, the component ID will be either $80 for SBEC, or the component ID will be $81 for JTEC.

Fig. 4: Mode $06 Data For SBEC & JTEC Engine Controllers (2 Of 2)
Courtesy of CHRYSLER CORP.

2000

PID	PID Description	SBEC Application			JTEC Application		
		Supported	Comp ID	Scaling (bit wt.)	Supported	Comp ID	Scaling (bit wt.)
00	Test PIDs Supported ($01 - $20)	X	FF	---	X	FF	---
20	Test PIDs Supported ($21 - $40)	X	FF	---	X	FF	---
40	Test PIDs Supported ($41 - $60)	X	FF	---	X	FF	---
60	Test PIDs Supported ($61 - $80)	X	FF	---	X	FF	---
O2 SENSOR MONITOR							
11	O2 Sensor 1/1 Half-Cycle Counter	X	80	1 count per bit	X	81	1 count per bit
13	O2 Sensor 1/1 Big-Slope Counter	X	80	1 count per bit	X	81	1 count per bit
16	O2 Sensor 1/2 High Voltage	X	80	20 mv per bit	X	81	20 mv per bit
17	O2 Sensor 1/2 Low Voltage	X	00	20 mv per bit	X	01	20 mv per bit
1D	O2 Sensor 1/3 Low Voltage	---	---	---	X	01	20 mv per bit
1E	O2 Sensor 1/3 High Voltage	---	---	---	X	81	20 mv per bit
31	O2 Sensor 2/1 Half-Cycle Counter	Dual-bank	80	1 count per bit	Dual-bank	81	1 count per bit
33	O2 Sensor 2/1 Big-Slope Counter	Dual-bank	80	1 count per bit	Dual-bank	81	1 count per bit
36	O2 Sensor 2/2 High Voltage	Dual-bank	80	20 mv per bit	Dual-bank	81	20 mv per bit
37	O2 Sensor 2/2 Low Voltage	Dual-bank	00	20 mv per bit	Dual-bank	01	20 mv per bit
O2 HEATER MONITOR							
19	O_2 Heater 1/1 Hot Trend Counter	X	80	1 count/bit	---	---	---
"	O_2 Heater 1/1 Time to Reach Voltage	---	---	---	X	01	11 ms/bit
1A	O_2 Heater 1/2 Hot Trend Counter	X	80	1 count/bit	---	---	---
"	O_2 Heater 1/2 Time to Reach Voltage	---	---	---	X	01	11 ms/bit
1B	O_2 Heater 1/1 Δ Voltage	X	80	20 mv/bit	---	---	---
"	O_2 Heater 1/2 Time (JTEC, MD 8.0L truck)	---	---	---	O	01	11 ms/bit
1C	O_2 Heater 1/2 Δ Voltage	X	80	20 mv/bit	---	---	---
"	O_2 Heater 1/3 Time (JTEC, MD 8.0L truck)	---	---	---	O	01	11 ms/bit
39	O_2 Heater 2/1 Hot Trend Counter	O	80	1 count/bit	---	---	---
"	O_2 Heater 2/1 Time to Reach Voltage	---	---	---	O	01	11 ms/bit
3A	O_2 Heater 2/2 Hot Trend Counter	O	80	1 count/bit	---	---	---
"	O_2 Heater 2/2 Time to Reach Voltage	---	---	---	O	01	11 ms/bit
3B	O_2 Heater 2/1 Δ Voltage	O	80	20 mv/bit	---	---	---
3C	O_2 Heater 2/2 Δ Voltage	O	80	20 mv/bit	---	---	---
CATALYST SYSTEM MONITOR							
15	Catalyst Slow O_2 1/1 Response Counter	X	80	1 count/bit	---	---	---
"	Catalyst 1/1 Phase Response Counter	---	---	---	X	81	1 count/bit
21	Catalyst 1/1 Switch Frequency Ratio	X	00	0.39% per bit	X	01	0.39% per bit
22	Catalyst 2/1 Switch Frequency Ratio	Dual-bank	00	0.39% per bit	Dual-bank	01	0.39% per bit
35	Catalyst Slow O_2 2/1 Response Counter	X	80	1 count/bit	---	---	---
EGR SYSTEM MONITOR							
41	EGR Monitor Δ Adaptive Fuel Shift	X	80	0.19%/bit	---	---	---
"	EGR Monitor Fail Counter	---	---	---	X	01	1 count/bit

NOTE: An 'X' in the column for SBEC, or JTEC, Engine applications indicates that this PID is supported for all unleaded gasoline engine applications. An 'O' indicates that this PID is application-specific and applies only to certain packages such as dual-bank O_2 systems, dual-bank catalyst systems, etc. A '---' indicates that this PID is not supported by this application. The component ID of $00 for SBEC, or $01 for JTEC represents a maximum test limit. For a minimum test limit, the component ID will be either $80 for SBEC, or the component ID will be $81 for JTEC.

Fig. 5: Mode $06 Data For SBEC & JTEC Engine Controllers (1 Of 2)
Courtesy of CHRYSLER CORP.

PURGE FLOW SYSTEM MONITOR							
51	Purge Monitor Δ IAC Shift	X	80	1 step per bit	X	81	1 step per bit
52	Purge Monitor Δ Adaptive Fuel Shift	X	80	0.19% per bit	X	81	0.39% per bit (use LSB only)
53	Purge Monitor Δ RPM Shift	X	80	1/8 RPM per bit	X	81	1/8 RPM per bit
EVAPORATIVE SYSTEM MONITOR							
61	0.040" Leak Detection Pump Period	X	80	100 ms per bit	X	81	11 ms per bit
62	0.020" Leak Detection Pump Period	X	80	100 ms per bit	X	81	11 ms per bit
63	Pinched Line Detection Pump Period	X	00	100 ms per bit	---	---	---

NOTE: An 'X' in the column for SBEC, or JTEC, Engine applications indicates that this PID is supported for all unleaded gasoline engine applications. An 'O' indicates that this PID is application-specific and applies only to certain packages such as dual-bank O_2 systems, dual-bank catalyst systems, etc. A '---' indicates that this PID is not supported by this application. The component ID of $00 for SBEC, or $01 for JTEC represents a maximum test limit. For a minimum test limit, the component ID will be either $80 for SBEC, or the component ID will be $81 for JTEC.

Fig. 6: Mode $06 Data For SBEC & JTEC Engine Controllers (2 Of 2)
Courtesy of CHRYSLER CORP.

2001

PID	PID Description	Passenger Car/Minivan Applications				Jeep/Truck/Viper Applications		
		SBEC	SIM-70	Comp ID	Scaling (bit wt.)	JTEC	Comp ID	Scaling (bit wt.)
00	Test PIDs Supported ($01 - $20)	X	X	FF	---	X	FF	---
20	Test PIDs Supported ($21 - $40)	X	X	FF	---	X	FF	---
40	Test PIDs Supported ($41 - $60)	X	X	FF	---	X	FF	---
60	Test PIDs Supported ($61 - $80)	X	X	FF	---	X	FF	---
O2 SENSOR MONITOR								
11	O_2 Sensor 1/1 Half-Cycle Counter	X	---	80	1 count/bit	X	81	1 count/bit
13	O_2 Sensor 1/1 Big-Slope Counter	X	---	80	1 count/bit	X	81	1 count/bit
16	O_2 Sensor 1/2 Rich (High) Voltage	X	X	80	20 mv/bit	X	81	20 mv/bit
17	O_2 Sensor 1/2 Lean (Low) Voltage	X	X	00	20 mv/bit	X	01	20 mv/bit
18	O_2 Sensor 1/1 Period Summation	---	X	00	10 ms/bit	---	---	---
1D	O_2 Sensor 1/3 Lean (Low) Voltage	---	---	---	---	X	01	20 mv/bit
1E	O_2 Sensor 1/3 Rich (High) Voltage	---	---	---	---	X	81	20 mv/bit
1F	O_2 Sensor 1/1 Glitch Counter	---	X	00	1 count/bit	---	---	---
31	O_2 Sensor 2/1 Half-Cycle Counter	O	---	80	1 count/bit	O	81	1 count/bit
33	O_2 Sensor 2/1 Big-Slope Counter	O	---	80	1 count/bit	O	81	1 count/bit
36	O_2 Sensor 2/2 Rich (High) Voltage	O	---	80	20 mv/bit	O	81	20 mv/bit
37	O_2 Sensor 2/2 Lean (Low) Voltage	O	---	00	20 mv/bit	O	01	20 mv/bit
O2 HEATER MONITOR								
19	O_2 Heater 1/1 Hot Trend Counter	X	---	80	1 count/bit	---	---	---
	O_2 Heater 1/1 Time to Reach Voltage	---	---	---	---	X	01	11 ms/bit
1A	O_2 Heater 1/2 Hot Trend Counter	X	---	80	1 count/bit			
	O_2 Heater 1/2 Time to Reach Voltage	---	---	---	---	X	01	11 ms/bit
1B	O_2 Heater 1/1 Δ Voltage	X	---	80	20 mv/bit	---	---	---
	O_2 Heater 1/2 Time (JTEC, MD 8.0L truck)	---	---	---	---	O	01	11 ms/bit
1C	O_2 Heater 1/2 Δ Voltage	X	---	80	20 mv/bit	---	---	---
	O_2 Heater 1/3 Time (JTEC, MD 8.0L truck)	---	---	---	---	O	01	11 ms/bit
39	O_2 Heater 2/1 Hot Trend Counter	O	---	80	1 count/bit	---	---	---
	O_2 Heater 2/1 Time to Reach Voltage	---	---	---	---	O	01	11 ms/bit
3A	O_2 Heater 2/2 Hot Trend Counter	O	---	80	1 count/bit	---	---	---
	O_2 Heater 2/2 Time to Reach Voltage	---	---	---	---	O	01	11 ms/bit
3B	O_2 Heater 2/1 Δ Voltage	O	---	80	20 mv/bit	---	---	---
3C	O_2 Heater 2/2 Δ Voltage	O	---	80	20 mv/bit	---	---	---
CATALYST SYSTEM MONITOR								
21	Catalyst 1/1 Switch Frequency Ratio	X	---	00	0.39%/bit	X	01	0.39%/bit
22	Catalyst 2/1 Switch Frequency Ratio	O	---	00	0.39%/bit	O	01	0.39%/bit
23	Catalyst O_2 Sensor 1/2 Voltage Summation	---	X	00	3.9 mv/bit	---	---	---
15	Catalyst Slow O_2 1/1 Response Counter	X	---	80	1 count/bit	---	---	---
	Catalyst 1/1 Phase Response Counter	---	---	---	---	X	01	1 count/bit
35	Catalyst Slow O_2 2/1 Response Counter	O	---	80	1 count/bit	---	---	---

NOTE: An 'X' in the column for SBEC, or JTEC, Engine applications indicates that this PID is supported for all unleaded gasoline engine applications. An 'O' indicates that this PID is application-specific and applies only to certain packages such as dual-bank O_2 systems, dual-bank catalyst systems, etc. A '---' indicates that this PID is not supported by this application. The component ID of $00 for SBEC, or $01 for JTEC represents a maximum test limit. For a minimum test limit, the component ID will be either $80 for SBEC, or the component ID will be $81 for JTEC.

Fig. 7: Mode $06 Data For SBEC & JTEC Engine Controllers (1 Of 2)
Courtesy of CHRYSLER CORP.

EGR SYSTEM MONITOR								
41	EGR Monitor Δ Adaptive Fuel Shift	X	---	00, 80	0.19%/bit	---	---	---
	EGR Monitor Fail Counter	---	---	---	---	X	01	1 count/bit
PURGE FLOW SYSTEM MONITOR								
51	Purge Monitor Δ IAC Shift	X	---	80	1 step/bit	X	81	1 step/bit
52	Purge Monitor Δ Adaptive Fuel Shift	X	---	80	0.19%/bit	X	81	0.39%/bit (LSB only)
53	Purge Monitor Δ RPM Shift	X	---	80	1/8 RPM/bit	X	81	1/8 RPM/bit
54	Purge Flow Pump Period	---	X	00	10 ms/bit	---	---	---
EVAPORATIVE SYSTEM MONITOR								
61	0.040" Leak Detection Pump Period	X	X	80	100 ms/bit	X	81	11 ms/bit
62	0.020" Leak Detection Pump Period	X	X	80	100 ms/bit	X	81	11 ms/bit
63	Pinched Line Detection Pump Period	X	X	00	100 ms/bit	---	---	---

NOTE: An 'X' in the column for SBEC, or JTEC, Engine applications indicates that this PID is supported for all unleaded gasoline engine applications. An 'O' indicates that this PID is application-specific and applies only to certain packages such as dual-bank O_2 systems, dual-bank catalyst systems, etc. A '---' indicates that this PID is not supported by this application. The component ID of $00 for SBEC, or $01 for JTEC represents a maximum test limit. For a minimum test limit, the component ID will be either $80 for SBEC, or the component ID will be $81 for JTEC.

Fig. 8: Mode $06 Data For SBEC & JTEC Engine Controllers (2 Of 2)
Courtesy of CHRYSLER CORP.

2002

PID	PID Description	Engine Controller Applications											
		NGC-Engine	Component ID	Scaling (bit. Wt.)	SBEC	Component ID	Scaling (bit. Wt.)	SIM-70	Component ID	Scaling (bit. Wt.)	JTEC	Component ID	Scaling (bit. Wt.)
00	Test PIDs Supported ($01 - $20)	X	FF	---	X	FF	---	X	FF	---	X	FF	---
20	Test PIDs Supported ($21 - $40)	X	FF	---	X	FF	---	X	FF	---	X	FF	---
40	Test PIDs Supported ($41 - $60)	X	FF	---	X	FF	---	X	FF	---	X	FF	---
60	Test PIDs Supported ($61 - $80)	X	FF	---	X	FF	---	X	FF	---	X	FF	---
O2 SENSOR MONITOR													
11	O_2 Sensor 1/1 Half-Cycle Switch Counter	---	---	---	X	80	1 count/bit	---	---	---	X	81	1 count/bit
13	O_2 Sensor 1/1 Big-Slope Counter	---	---	---	X	80	1 count/bit	---	---	---	X	81	1 count/bit
16	O_2 Sensor 1/2 Rich (High) Voltage	X	80	20 mv/bit	X	80	20 mv/bit	X	80	20 mv/bit	X	81	20 mv/bit
17	O_2 Sensor 1/2 Lean (Low) Voltage	X	00	20 mv/bit	X	00	20 mv/bit	X	00	20 mv/bit	X	01	20 mv/bit
18	O_2 Sensor 1/1 Period Summation	---	---	---	---	---	---	X	00	10 ms/bit	---	---	---
1D	O_2 Sensor 1/3 Lean (Low) Voltage	---	---	---	---	---	---	---	---	---	X	01	20 mv/bit
1E	O_2 Sensor 1/3 Rich (High) Voltage	---	---	---	---	---	---	---	---	---	X	81	20 mv/bit
1F	O_2 Sensor 1/1 Glitch Counter	---	---	---	---	---	---	X	00	1 count/bit	---	---	---
31	O_2 Sensor 2/1 Half-Cycle Switch Counter	---	---	---	O	80	1 count/bit	---	---	---	O	81	1 count/bit
33	O_2 Sensor 2/1 Big-Slope Counter	---	---	---	O	80	1 count/bit	---	---	---	O	81	1 count/bit
36	O_2 Sensor 2/2 Rich (High) Voltage	O	80	20 mv/bit	O	80	20 mv/bit	---	---	---	O	81	20 mv/bit
37	O_2 Sensor 2/2 Lean (Low) Voltage	O	00	20 mv/bit	O	00	20 mv/bit	---	---	---	O	01	20 mv/bit
O2 HEATER MONITOR													
19	O_2 Heater 1/1 Hot Trend Counter	---	---	---	X	80	1 count/bit	---	---	---	---	---	---
"	O_2 Heater 1/1 Time to Reach Voltage	---	---	---	---	---	---	---	---	---	X	01	11 ms/bit
1A	O_2 Heater 1/2 Hot Trend Counter	---	---	---	X	80	1 count/bit	---	---	---	---	---	---
"	O_2 Heater 1/2 Time to Reach Voltage	---	---	---	---	---	---	---	---	---	X	01	11 ms/bit
1B	O_2 Heater 1/1 Δ Voltage	---	---	---	X	80	20 mv/bit	---	---	---	---	---	---
"	O_2 Heater 1/2 Time (JTEC, MD 8.0L truck)	---	---	---	---	---	---	---	---	---	O	01	11 ms/bit
1C	O_2 Heater 1/2 Δ Voltage	---	---	---	X	80	20 mv/bit	---	---	---	---	---	---
"	O_2 Heater 1/3 Time (JTEC, MD 8.0L truck)	---	---	---	---	---	---	---	---	---	O	01	11 ms/bit
39	O_2 Heater 2/1 Hot Trend Counter	---	---	---	O	80	1 count/bit	---	---	---	---	---	---
"	O_2 Heater 2/1 Time to Reach Voltage	---	---	---	---	---	---	---	---	---	O	01	11 ms/bit
3A	O_2 Heater 2/2 Hot Trend Counter	---	---	---	O	80	1 count/bit	---	---	---	---	---	---
"	O_2 Heater 2/2 Time to Reach Voltage	---	---	---	---	---	---	---	---	---	O	01	11 ms/bit
3B	O_2 Heater 2/1 Δ Voltage	---	---	---	O	80	20 mv/bit	---	---	---	---	---	---
3C	O_2 Heater 2/2 Δ Voltage	---	---	---	O	80	20 mv/bit	---	---	---	---	---	---

NOTE: An 'X' in the column for SBEC, JTEC, SIM-70, or NGC-I/II Engine applications indicates that this PID is supported for all unleaded gasoline engine applications. An 'O' indicates that this PID is application-specific and applies only to certain packages such as dual-bank O_2 systems, dual-bank catalyst systems, etc. A '---' indicates that this PID is not supported by this application. The component ID of $00 for SBEC, NGC-I/II Engine, or Siemens SIM-70, or $01 for JTEC represents a maximum test limit. For a minimum test limit, the component ID will be either $80 for SBEC, NGC-I/II Engine, or Siemens SIM-70, or the component ID will be $81 for JTEC.

Fig. 9: Mode $06 Data For SBEC, JTEC, SIM-70 & NGC Engine Controllers (1 Of 2)
Courtesy of CHRYSLER CORP.

PID	PID Description	Engine Controller Applications											
		NGC-Engine	Component ID	Scaling (bit. Wt.)	SBEC	Component ID	Scaling (bit. Wt.)	SIM-70	Component ID	Scaling (bit. Wt.)	JTEC	Component ID	Scaling (bit. Wt.)
00	Test PIDs Supported ($01 - $20)	X	FF	---	X	FF	---	X	FF	---	X	FF	---
20	Test PIDs Supported ($21 - $40)	X	FF	---	X	FF	---	X	FF	---	X	FF	---
40	Test PIDs Supported ($41 - $60)	X	FF	---	X	FF	---	X	FF	---	X	FF	---
60	Test PIDs Supported ($61 - $80)	X	FF	---	X	FF	---	X	FF	---	X	FF	---
CATALYST SYSTEM MONITOR													
21	Catalyst 1/1 Switch Frequency Ratio	X	00	0.39%/bit	X	00	0.39%/bit	---	---	---	X	01	0.39%/bit
22	Catalyst 2/1 Switch Frequency Ratio	O	00	0.39%/bit	O	00	0.39%/bit	---	---	---	O	01	0.39%/bit
23	Catalyst O_2 Sensor 1/2 Voltage Summation	---	---	---	---	---	---	X	00	3.9 mv/bit	---	---	---
24	Catalyst O_2 Sensor 1/1 Full-Cycle Switch Counter	X	80	1 count/bit	---	---	---	---	---	---	---	---	---
25	Catalyst O_2 Sensor 2/1 Full-Cycle Switch Counter	O	80	1 count/bit	---	---	---	---	---	---	---	---	---
15	Catalyst O_2 Sensor 1/1 Slow Response Counter	---	---	---	X	80	1 count/bit	---	---	---	---	---	---
"	Catalyst 1/1 Phase Response Counter	---	---	---	---	---	---	---	---	---	X	01	1 count/bit
35	Catalyst O_2 Sensor 2/1 Slow Response Counter	---	---	---	O	80	1 count/bit	---	---	---	---	---	---
EGR SYSTEM MONITOR													
41	EGR Monitor Δ Adaptive Fuel Shift	---	---	---	X	00,80	0.19%/bit	---	---	---	---	---	---
"	EGR Monitor Fail Counter	---	---	---	---	---	---	---	---	---	X	01	1 count/bit
42	EGR Monitor Engine RPM Roughness Counter	O	80	1 count/bit	---	---	---	---	---	---	---	---	---
PURGE FLOW SYSTEM MONITOR													
51	Purge Monitor Δ IAC Shift	---	---	---	X	80	1 step/bit	---	---	---	X	81	1 step/bit
52	Purge Monitor Δ Adaptive Fuel Shift	---	---	---	X	80	0.19%/bit	---	---	---	X	81	0.39%/bit
53	Purge Monitor Δ RPM Shift	---	---	---	X	80	1/8 RPM/bit	---	---	---	X	81	1/8 RPM/bit
54	Purge Flow Pump Period	---	---	---	---	---	---	X	00	10 ms/bit	---	---	---
EVAPORATIVE SYSTEM MONITOR													
61	0.040" Leak Detection Pump Period	---	---	---	X	80	100 ms/bit	X	80	100 ms/bit	X	81	11 ms/bit
62	0.020" Leak Detection Pump Period	---	---	---	X	80	100 ms/bit	X	80	100 ms/bit	X	81	11 ms/bit
63	Pinched Line Detection Pump Period	---	---	---	X	00	100 ms/bit	X	00	100 ms/bit	---	---	---
71	Purge Monitor NVLD Switch Input (Discrete states: 5V = switch closed; 0V = switch open)	X	80	20 mv/bit	---	---	---	---	---	---	---	---	---
72	Purge Monitor Valve Fraction	X	80	0.0078125 grams/bit	---	---	---	---	---	---	---	---	---
73	Small Leak Detection - Accumulated Engine 'On' Time	X	00	1 min/bit	---	---	---	---	---	---	---	---	---
74	Small Leak Detection - Accumulated Engine 'Off' Time (Shutdown Period)	X	00	1 min/bit	---	---	---	---	---	---	---	---	---
75	Medium Leak Detection Test Time	X	80	12.5 ms/bit	---	---	---	---	---	---	---	---	---
76	Large Leak Detection Test Time	X	80	12.5 ms/bit	---	---	---	---	---	---	---	---	---
77	General Evap Monitor System Test Time	X	00	12.5 ms/bit	---	---	---	---	---	---	---	---	---

NOTE: An 'X' in the column for SBEC, JTEC, SIM-70, or NGC-I/II Engine applications indicates that this PID is supported for all unleaded gasoline engine applications. An 'O' indicates that this PID is application-specific and applies only to certain packages such as dual-bank O_2 systems, dual-bank catalyst systems, etc. A '---' indicates that this PID is not supported by this application. The component ID of $00 for SBEC, NGC-I/II Engine, or Siemens SIM-70, or $01 for JTEC represents a maximum test limit. For a minimum test limit, the component ID will be either $80 for SBEC, NGC-I/II Engine, or Siemens SIM-70, or the component ID will be $81 for JTEC.

Fig. 10: Mode $06 Data For SBEC, JTEC, SIM-70 & NGC Engine Controllers (2 Of 2)
Courtesy of CHRYSLER CORP.

2003-2004

PID	PID Description	Engine Controller Applications											
		NGC-I/II Engine	Component ID	Scaling (bit. Wt.)	SBEC	Component ID	Scaling (bit. Wt.)	SIM-70	Component ID	Scaling (bit. Wt.)	JTEC	Component ID	Scaling (bit. Wt.)
00	Test PIDs Supported ($01 - $20)	X	FF	---	X	FF	---	X	FF	---	X	FF	---
20	Test PIDs Supported ($21 - $40)	X	FF	---	X	FF	---	X	FF	---	X	FF	---
40	Test PIDs Supported ($41 - $60)	X	FF	---	X	FF	---	X	FF	---	X	FF	---
60	Test PIDs Supported ($61 - $80)	X	FF	---	X	FF	---	X	FF	---	X	FF	---
O2 SENSOR MONITOR													
11	O_2 Sensor 1/1 Half-Cycle Switch Counter	---	---	---	X	80	1 count/bit	---	---	---	X	81	1 count/bit
13	O_2 Sensor 1/1 Big-Slope Counter	---	---	---	X	80	1 count/bit	---	---	---	X	81	1 count/bit
16	O_2 Sensor 1/2 Rich (High) Voltage	X	80	20 mv/bit	X	80	20 mv/bit	X	80	20 mv/bit	X	81	20 mv/bit
17	O_2 Sensor 1/2 Lean (Low) Voltage	X	00	20 mv/bit	X	00	20 mv/bit	X	00	20 mv/bit	X	01	20 mv/bit
18	O_2 Sensor 1/1 Period Summation	---	---	---	---	---	---	X	00	10 ms/bit	---	---	---
1D	O_2 Sensor 1/3 Lean (Low) Voltage	---	---	---	---	---	---	---	---	---	X	01	20 mv/bit
1E	O_2 Sensor 1/3 Rich (High) Voltage	---	---	---	---	---	---	---	---	---	X	81	20 mv/bit
1F	O_2 Sensor 1/1 Glitch Counter	---	---	---	---	---	---	X	00	1 count/bit	---	---	---
31	O_2 Sensor 2/1 Half-Cycle Switch Counter	---	---	---	O	80	1 count/bit	---	---	---	O	81	1 count/bit
33	O_2 Sensor 2/1 Big-Slope Counter	---	---	---	O	80	1 count/bit	---	---	---	O	81	1 count/bit
36	O_2 Sensor 2/2 Rich (High) Voltage	O	80	20 mv/bit	O	80	20 mv/bit	---	---	---	O	81	20 mv/bit
37	O_2 Sensor 2/2 Lean (Low) Voltage	O	00	20 mv/bit	O	00	20 mv/bit	---	---	---	O	01	20 mv/bit
O2 HEATER MONITOR													
19	O_2 Heater 1/1 Hot Trend Counter	---	---	---	X	80	1 count/bit	---	---	---	---	---	---
"	O_2 Heater 1/1 Time to Reach Voltage	---	---	---	---	---	---	---	---	---	X	01	11 ms/bit
1A	O_2 Heater 1/2 Hot Trend Counter	---	---	---	X	80	1 count/bit	---	---	---	---	---	---
"	O_2 Heater 1/2 Time to Reach Voltage	---	---	---	---	---	---	---	---	---	X	01	11 ms/bit
1B	O_2 Heater 1/1 Δ Voltage	---	---	---	X	80	20 mv/bit	---	---	---	---	---	---
"	O_2 Heater 1/2 Time (JTEC, MD 8.0L truck)	---	---	---	---	---	---	---	---	---	O	01	11 ms/bit
1C	O_2 Heater 1/2 Δ Voltage	---	---	---	X	80	20 mv/bit	---	---	---	---	---	---
"	O_2 Heater 1/3 Time (JTEC, MD 8.0L truck)	---	---	---	---	---	---	---	---	---	O	01	11 ms/bit
39	O_2 Heater 2/1 Hot Trend Counter	---	---	---	O	80	1 count/bit	---	---	---	---	---	---
"	O_2 Heater 2/1 Time to Reach Voltage	---	---	---	---	---	---	---	---	---	O	01	11 ms/bit
3A	O_2 Heater 2/2 Hot Trend Counter	---	---	---	O	80	1 count/bit	---	---	---	---	---	---
"	O_2 Heater 2/2 Time to Reach Voltage	---	---	---	---	---	---	---	---	---	O	01	11 ms/bit
3B	O_2 Heater 2/1 Δ Voltage	---	---	---	O	80	20 mv/bit	---	---	---	---	---	---
3C	O_2 Heater 2/2 Δ Voltage	---	---	---	O	80	20 mv/bit	---	---	---	---	---	---

NOTE: An 'X' in the column for SBEC, JTEC, SIM-70, or NGC-I/II Engine applications indicates that this PID is supported for all unleaded gasoline engine applications. An 'O' indicates that this PID is application-specific and applies only to certain packages such as dual-bank O_2 systems, dual-bank catalyst systems, etc. A '---' indicates that this PID is not supported by this application. The component ID of $00 for SBEC, NGC-I/II Engine, or Siemens SIM-70, or $01 for JTEC represents a maximum test limit. For a minimum test limit, the component ID will be either $80 for SBEC, NGC-I/II Engine, or Siemens SIM-70, or the component ID will be $81 for JTEC.

Fig. 11: Mode $06 Data For SBEC, JTEC, SIM-70 & NGC I/II Engine Controllers (1 Of 2)
Courtesy of CHRYSLER CORP.

PID	PID Description	Engine Controller Applications											
		NGC-I/II Engine	Component ID	Scaling (bit. Wt.)	SBEC	Component ID	Scaling (bit. Wt.)	SIM-70	Component ID	Scaling (bit. Wt.)	JTEC	Component ID	Scaling (bit. Wt.)
00	Test PIDs Supported ($01 - $20)	X	FF	---	X	FF	---	X	FF	---	X	FF	---
20	Test PIDs Supported ($21 - $40)	X	FF	---	X	FF	---	X	FF	---	X	FF	---
40	Test PIDs Supported ($41 - $60)	X	FF	---	X	FF	---	X	FF	---	X	FF	---
60	Test PIDs Supported ($61 - $80)	X	FF	---	X	FF	---	X	FF	---	X	FF	---
CATALYST SYSTEM MONITOR													
21	Catalyst 1/1 Switch Frequency Ratio	X	00	0.39%/bit	X	00	0.39%/bit	---	---	---	X	01	0.39%/bit
22	Catalyst 2/1 Switch Frequency Ratio	O	00	0.39%/bit	O	00	0.39%/bit	---	---	---	O	01	0.39%/bit
23	Catalyst O_2 Sensor 1/2 Voltage Summation	---	---	---	---	---	---	X	00	3.9 mv/bit	---	---	---
24	Catalyst O_2 Sensor 1/1 Full-Cycle Switch Counter	X	80	1 count/bit	---	---	---	---	---	---	---	---	---
25	Catalyst O_2 Sensor 2/1 Full-Cycle Switch Counter	O	80	1 count/bit	---	---	---	---	---	---	---	---	---
15	Catalyst O_2 Sensor 1/1 Slow Response Counter	---	---	---	X	80	1 count/bit	---	---	---	---	---	---
"	Catalyst 1/1 Phase Response Counter	---	---	---	---	---	---	---	---	---	X	01	1 count/bit
35	Catalyst O_2 Sensor 2/1 Slow Response Counter	---	---	---	O	80	1 count/bit	---	---	---	---	---	---
EGR SYSTEM MONITOR													
41	EGR Monitor Δ Adaptive Fuel Shift	---	---	---	X	00,80	0.19%/bit	---	---	---	---	---	---
"	EGR Monitor Fail Counter	---	---	---	---	---	---	---	---	---	X	01	1 count/bit
42	EGR Monitor Engine RPM Roughness Counter	O	80	1 count/bit	---	---	---	---	---	---	---	---	---
PURGE FLOW SYSTEM MONITOR													
51	Purge Monitor Δ IAC Shift	---	---	---	X	80	1 step/bit	---	---	---	X	81	1 step/bit
52	Purge Monitor Δ Adaptive Fuel Shift	---	---	---	X	80	0.19%/bit	---	---	---	X	81	0.39%/bit
53	Purge Monitor Δ RPM Shift	---	---	---	X	80	1/8 RPM/bit	---	---	---	X	81	1/8 RPM/bit
54	Purge Flow Pump Period	---	---	---	---	---	---	X	00	10 ms/bit	---	---	---
EVAPORATIVE SYSTEM MONITOR													
61	0.040" Leak Detection Pump Period	---	---	---	X	80	100 ms/bit	X	80	100 ms/bit	X	81	11 ms/bit
62	0.020" Leak Detection Pump Period	---	---	---	X	80	100 ms/bit	X	80	100 ms/bit	X	81	11 ms/bit
63	Pinched Line Detection Pump Period	---	---	---	X	00	100 ms/bit	X	00	100 ms/bit	---	---	---
71	Purge Monitor NVLD Switch Input (Discrete states: 5V = switch closed; 0V = switch open)	X	80	20 mv/bit	---	---	---	---	---	---	---	---	---
72	Purge Monitor Valve Fraction	X	80	0.0078125 grams/bit	---	---	---	---	---	---	---	---	---
73	Small Leak Detection - Accumulated Engine 'On' Time	X	00	1 min/bit	---	---	---	---	---	---	---	---	---
74	Small Leak Detection - Accumulated Engine 'Off' Time (Shutdown Period)	X	00	1 min/bit	---	---	---	---	---	---	---	---	---
75	Medium Leak Detection Test Time	X	80	12.5 ms/bit	---	---	---	---	---	---	---	---	---
76	Large Leak Detection Test Time	X	80	12.5 ms/bit	---	---	---	---	---	---	---	---	---
77	General Evap Monitor System Test Time	X	00	12.5 ms/bit	---	---	---	---	---	---	---	---	---

NOTE: An 'X' in the column for SBEC, JTEC, SIM-70, or NGC-I/II Engine applications indicates that this PID is supported for all unleaded gasoline engine applications. An 'O' indicates that this PID is application-specific and applies only to certain packages such as dual-bank O_2 systems, dual-bank catalyst systems, etc. A '---' indicates that this PID is not supported by this application. The component ID of $00 for SBEC, NGC-I/II Engine, or Siemens SIM-70, or $01 for JTEC represents a maximum test limit. For a minimum test limit, the component ID will be either $80 for SBEC, NGC-I/II Engine, or Siemens SIM-70, or the component ID will be $81 for JTEC.

Fig. 12: Mode $06 Data For SBEC, JTEC, SIM-70 & NGC I/II Engine Controllers (2 Of 2)
Courtesy of CHRYSLER CORP.

a) **Mandatory (M)** 'M' in the column under Service ID $06 indicates that this PID is supported for all applications.
b) **Conditional (C)** 'C' indicates that this PID is application-specific and applies only to certain conditional packages such as dual-bank O_2 systems, CNG/LPG fuels, charge temp equipped packages, etc.
c) **User-Defined (U)** 'U" indicates that this PID is user-defined and optionally supported.

OBDMID (Hex)	OBDMID Description	Test ID (TID)	Scaling ID	Service ID $06 'HB' Durango All Engines
00	OBDMIDs supported ($01 - $20)	-	-	M
01	Oxygen Sensor Monitor Bank 1 - Sensor 1			
	- O2 Sensor Full Cycle Switch Counter (old monitor, data always = 0)	81	24	M
	- O2 Sensor Final Ratio Result (new monitor)	91	2F	M
02	Oxygen Sensor Monitor Bank 1 - Sensor 2			
	- Maximum sensor voltage for test cycle	08	0B	M
	- Minimum sensor voltage for test cycle	07	0B	M
05	Oxygen Sensor Monitor Bank 2 - Sensor 1			
	- O2 Sensor Full Cycle Switch Counter (old monitor, data always = 0)	81	24	C
	- O2 Sensor Final Ratio Result (new monitor)	91	2F	C
06	Oxygen Sensor Monitor Bank 2 - Sensor 2			
	- Maximum sensor voltage for test cycle	08	0B	C
	- Minimum sensor voltage for test cycle	07	0B	C
20	OBDMIDs supported ($21 - $40)	-	-	M
21	Catalyst Monitor Bank 1			
	- O2 Sensor Switch Frequency Ratio (old monitor, data always = 0)	80	2F	M
	- O2 Sensor Test Ratio Result (new monitor)	92	2F	M
22	Catalyst Monitor Bank 2			
	- O2 Sensor Switch Frequency Ratio (old monitor, data always = 0)	80	2F	C
	- O2 Sensor Test Ratio Result (new monitor)	92	2F	C
31	EGR Monitor Bank 1			
	- Fuel Shift Above Threshold Counter	93	24	C
	- Fuel Shift Below Threshold Counter	94	24	C
	- Fuel Shift Trim Percent of Bank 1	95	39	C
	- Fuel Shift Trim Percent of Bank 2	96	39	C
39	EVAP Monitor (Cap Off)			
	- Natural Vacuum Leak Detection (NVLD) Test Time	87	35	M
3A	EVAP Monitor (0.090")			
	- Natural Vacuum Leak Detection (NVLD) Test Time	87	35	M
3B	EVAP Monitor (0.040")			
3C	EVAP Monitor (0.020")			
	- Natural Vacuum Leak Detection (NVLD) Accumulated Engine 'ON' Time	85	34	M
	- Natural Vacuum Leak Detection (NVLD) Accumulated Engine 'OFF' Time	86	34	M
	- Switch Time to Close	90	34	C
3D	Purge Flow Monitor			
	- Natural Vacuum Leak Detection Switch Input	83	2E	M
	- Purge Valve Fraction	84	30	M
40	OBDMIDs supported ($41 - $60)	-	-	M
41	Oxygen Sensor Heater Monitor Bank 1 - Sensor 1			
	- O_2 Heater Temperature Error	97	16	M
	- O_2 Heater Temperature Error In-Control Time	98	35	M

Fig. 13: Mode $06 Data For 2004 NGC III CAN Engine Controllers (HB Durango) (1 Of 2)
Courtesy of CHRYSLER CORP.

OBDMID (Hex)	OBDMID Description	Test ID (TID)	Scaling ID	Service ID $06
				'HB' Durango All Engines
42	Oxygen Sensor Heater Monitor Bank 1 - Sensor 2			
	- O_2 Heater Temperature Error	97	16	M
	- O_2 Heater Temperature Error In-Control Time	98	35	M
45	Oxygen Sensor Heater Monitor Bank 2 - Sensor 1			
	- O_2 Heater Temperature Error	97	16	C
	- O_2 Heater Temperature Error In-Control Time	98	35	C
46	Oxygen Sensor Heater Monitor Bank 2 - Sensor 2			
	- O_2 Heater Temperature Error	97	16	C
	- O_2 Heater Temperature Error In-Control Time	98	35	C
60	OBDMIDs supported ($61 - $80)	-	-	M
80	OBDMIDs supported ($81 - $A0)	-	-	M
A0	OBDMIDs supported ($A1 - $C0)	-	-	M
A2	Misfire Cylinder 1 Data			
	- EWMA (Exponential Weighted Moving Average)	0B	24	M
	- Misfire counts for last/current driving cycles	0C	24	M
A3	Misfire Cylinder 2 Data			
	- EWMA (Exponential Weighted Moving Average)	0B	24	M
	- Misfire counts for last/current driving cycles	0C	24	M
A4	Misfire Cylinder 3 Data			
	- EWMA (Exponential Weighted Moving Average)	0B	24	M
	- Misfire counts for last/current driving cycles	0C	24	M
A5	Misfire Cylinder 4 Data			
	- EWMA (Exponential Weighted Moving Average)	0B	24	M
	- Misfire counts for last/current driving cycles	0C	24	M
A6	Misfire Cylinder 5 Data			
	- EWMA (Exponential Weighted Moving Average)	0B	24	C
	- Misfire counts for last/current driving cycles	0C	24	C
A7	Misfire Cylinder 6 Data			
	- EWMA (Exponential Weighted Moving Average)	0B	24	C
	- Misfire counts for last/current driving cycles	0C	24	C
A8	Misfire Cylinder 7 Data			
	- EWMA (Exponential Weighted Moving Average)	0B	24	C
	- Misfire counts for last/current driving cycles	0C	24	C
A9	Misfire Cylinder 8 Data			
	- EWMA (Exponential Weighted Moving Average)	0B	24	C
	- Misfire counts for last/current driving cycles	0C	24	C
C0	OBDMIDs supported ($C1 - $E0)	-	-	M
E0	OBDMIDs supported ($E1 - $FF)	-	-	M
E1	EVAP Monitor (General)			
	- Natural Vacuum Leak Detection (NVLD) Test Time	87	35	M

Fig. 14: Mode $06 Data For 2004 NGC III CAN Engine Controllers (HB Durango) (2 Of 2)
Courtesy of CHRYSLER CORP.

NOTE: An 'X' in the column indicates that this PID is supported for all unleaded gasoline engine applications. An 'O' indicates that this PID is application-specific and applies only to certain packages such as dual-bank O_2 systems, dual-bank catalyst systems, etc. The component ID of $00 represents a maximum test limit. For a minimum test limit, the component ID will be $80.

PID	PID Description	NGC-III Engine	Component ID	Scaling – Low / High / bit. Wt.
00	Test PIDs Supported ($01 - $20)	X	FF	---
20	Test PIDs Supported ($21 - $40)	X	FF	---
40	Test PIDs Supported ($41 - $60)	X	FF	---
60	Test PIDs Supported ($61 - $80)	X	FF	---
O2 SENSOR MONITOR				
16	O_2 Sensor 1/2 Rich (High) Voltage	X	80	0 / 65.535 / 0.001 volts
17	O_2 Sensor 1/2 Lean (Low) Voltage	X	00	0 / 65.535 / 0.001 volts
26	O_2 Sensor 1/1 Final Ratio	X	80	0 / 655.35 / 0.01%
27	O_2 Sensor 2/1 Final Ratio	O	80	0 / 655.35 / 0.01%
36	O_2 Sensor 2/2 Rich (High) Voltage	O	80	0 / 65.535 / 0.001 volts
37	O_2 Sensor 2/2 Lean (Low) Voltage	O	00	0 / 65.535 / 0.001 volts
O2 HEATER MONITOR				
28	O_2 Heater 1/1 Temperature Error	X	00	-40 / 6513.5 / 0.1Deg C
29	O_2 Heater 1/2 Temperature Error	X	00	-40 / 6513.5 / 0.1Deg C
2A	O_2 Heater 2/1 Temperature Error	O	00	-40 / 6513.5 / 0.1Deg C
2B	O_2 Heater 2/2 Temperature Error	O	00	-40 / 6513.5 / 0.1Deg C
2C	O_2 Heater 1/1 Temperature Error In-Control Time	X	80	0 / 655.35 / 10 ms
2D	O_2 Heater 1/2Temperature Error In-Control Time	X	80	0 / 655.35 / 10 ms
2E	O_2 Heater 2/1 Temperature Error In-Control Time	O	80	0 / 655.35 / 10 ms
2F	O_2 Heater 2/2 Temperature Error In-Control Time	O	80	0 / 655.35 / 10 ms
CATALYST SYSTEM MONITOR				
3D	Catalyst 1/1 - O_2 Sensor Test Ratio	X	00	0 / 655.35 / 0.01%
3E	Catalyst 2/1 - O_2 Sensor Test Ratio	O	00	0 / 655.35 / 0.01%
EGR SYSTEM MONITOR				
55	EGR Fuel Shift Above Threshold Counter	O	00	0 / 65535 / 1 count
56	EGR Fuel Shift Below Threshold Counter	O	00	0 / 65535 / 1 count
57	EGR Fuel System Bank 1 Delta – High Threshold	O	00	-327.68 / 327.67 / 0.01%
58	EGR Fuel System Bank 1 Delta – Low Threshold	O	80	-327.68 / 327.67 / 0.01%
59	EGR Fuel System Bank 2 Delta – High Threshold	O	00	-327.68 / 327.67 / 0.01%
5A	EGR Fuel System Bank 1 Delta – Low Threshold	O	80	-327.68 / 327.67 / 0.01%
PURGE FLOW SYSTEM MONITOR				
71	Purge Flow Monitor – Vacuum Switch Result	X	80	0 / 1 / 0 0=false, 1=true
72	Purge Flow Monitor – Valve Fraction	X	80	0 / 100 / 0.001526 %
EVAPORATIVE EMISSION SYSTEM MONITOR				
5B	EVAP Monitor(.020) Switch Time to Close – High Threshold	X	00	0 / 65535 / 1 minute
5C	EVAP Monitor(.020) Switch Time to Close – Low Threshold	X	00	0 / 65535 / 1 minute
73	EVAP Monitor(.020) Accumulated Engine "ON" Time	X	00	0 / 65535 / 1 minute
74	EVAP Monitor(.020) Accumulated Engine "OFF" Time	X	00	0 / 65535 / 1 minute
75	EVAP Monitor(.090) Switch Time to Open	X	80	0 / 655.35 / 10 msec
76	EVAP Monitor(Cap Off) Switch Time to Open	X	80	0 / 655.35 / 10 msec
77	EVAP Monitor(General EVAP Failure) Time	X	00	0 / 655.35 / 10 msec

Fig. 15: Mode $06 Data For 2004 NGC III J1850 Engine Controllers
Courtesy of CHRYSLER CORP.

2005

This application chart provides documentation for what Service IDs, PIDS, OBDMIDs, TIDs, and INFOTYPEs that are implemented in the NGCIII DaimlerChrysler ECU. The following defines the convention used to determine the required level of support, with the following appreciation being used:

a) **Mandatory (M)** 'M' in the column under Service ID $06 indicates that this PID is supported for all applications.
b) **Conditional (C)** 'C' indicates that this PID is application-specific and applies only to certain conditional packages such as dual-bank O_2 systems, CNG/LPG fuels, charge temp equipped packages, etc.
c) **User-Defined (U)** 'U" indicates that this PID is user-defined and optionally supported.

OBDMID (Hex)	OBDMID Description	Test ID (TID)	Scaling ID	Service ID $06
				'HB' 'LX' 'ND' 'WK' All Engines
00	OBDMIDs supported ($01 - $20)	-	-	M
01	Oxygen Sensor Monitor Bank 1 - Sensor 1			
	- O2 Sensor Full Cycle Switch Counter (old monitor, data always = 0)	81	24	M
	- O2 Sensor Final Ratio Result (new monitor)	91	2F	M
02	Oxygen Sensor Monitor Bank 1 - Sensor 2			
	- Maximum sensor voltage for test cycle	08	0B	M
	- Minimum sensor voltage for test cycle	07	0B	M
05	Oxygen Sensor Monitor Bank 2 - Sensor 1			
	- O2 Sensor Full Cycle Switch Counter (old monitor, data always = 0)	81	24	C
	- O2 Sensor Final Ratio Result (new monitor)	91	2F	C
06	Oxygen Sensor Monitor Bank 2 - Sensor 2			
	- Maximum sensor voltage for test cycle	08	0B	C
	- Minimum sensor voltage for test cycle	07	0B	C
20	OBDMIDs supported ($21 - $40)	-	-	M
21	Catalyst Monitor Bank 1			
	- O2 Sensor Switch Frequency Ratio (old monitor, data always = 0)	80	2F	M
	- O2 Sensor Test Ratio Result (new monitor)	92	2F	M
22	Catalyst Monitor Bank 2			
	- O2 Sensor Switch Frequency Ratio (old monitor, data always = 0)	80	2F	C
	- O2 Sensor Test Ratio Result (new monitor)	92	2F	C
31	EGR Monitor Bank 1			
	- Fuel Shift Above Threshold Counter	93	24	C
	- Fuel Shift Below Threshold Counter	94	24	C
	- Fuel Shift Trim Percent of Bank 1	95	39	C
	- Fuel Shift Trim Percent of Bank 2	96	39	C
39	EVAP Monitor (Cap Off)			
	- Natural Vacuum Leak Detection (NVLD) Test Time	87	35	M
3A	EVAP Monitor (0.090")			
	- Natural Vacuum Leak Detection (NVLD) Test Time	87	35	M
3B	EVAP Monitor (0.040")			
3C	EVAP Monitor (0.020")			
	- Natural Vacuum Leak Detection (NVLD) Accumulated Engine 'ON' Time	85	34	M
	- Natural Vacuum Leak Detection (NVLD) Accumulated Engine 'OFF' Time	86	34	M
	- Switch Time to Close	90	34	C
3D	Purge Flow Monitor			
	- Natural Vacuum Leak Detection Switch Input	83	2E	M
	- Purge Valve Fraction	84	30	M
40	OBDMIDs supported ($41 - $60)	-	-	M
41	Oxygen Sensor Heater Monitor Bank 1 - Sensor 1			
	- O_2 Heater Temperature Error	97	16	M

Fig. 16: Mode $06 Data For NGC III CAN Engine Controllers (1 Of 2)
Courtesy of CHRYSLER CORP.

OBDMID (Hex)	OBDMID Description	Test ID (TID)	Scaling ID	Service ID $06
				'HB' 'LX' 'ND' 'WK' All Engines
	- O_2 Heater Temperature Error In-Control Time	98	35	M
42	Oxygen Sensor Heater Monitor Bank 1 - Sensor 2			
	- O_2 Heater Temperature Error	97	16	M
	- O_2 Heater Temperature Error In-Control Time	98	35	M
45	Oxygen Sensor Heater Monitor Bank 2 - Sensor 1			
	- O_2 Heater Temperature Error	97	16	C
	- O_2 Heater Temperature Error In-Control Time	98	35	C
46	Oxygen Sensor Heater Monitor Bank 2 - Sensor 2			
	- O_2 Heater Temperature Error	97	16	C
	- O_2 Heater Temperature Error In-Control Time	98	35	C
60	OBDMIDs supported ($61 - $80)	-	-	M
80	OBDMIDs supported ($81 - $A0)	-	-	M
A0	OBDMIDs supported ($A1 - $C0)	-	-	M
A2	Misfire Cylinder 1 Data			
	- EWMA (Exponential Weighted Moving Average)	0B	24	M
	- Misfire counts for last/current driving cycles	0C	24	M
A3	Misfire Cylinder 2 Data			
	- EWMA (Exponential Weighted Moving Average)	0B	24	M
	- Misfire counts for last/current driving cycles	0C	24	M
A4	Misfire Cylinder 3 Data			
	- EWMA (Exponential Weighted Moving Average)	0B	24	M
	- Misfire counts for last/current driving cycles	0C	24	M
A5	Misfire Cylinder 4 Data			
	- EWMA (Exponential Weighted Moving Average)	0B	24	M
	- Misfire counts for last/current driving cycles	0C	24	M
A6	Misfire Cylinder 5 Data			
	- EWMA (Exponential Weighted Moving Average)	0B	24	C
	- Misfire counts for last/current driving cycles	0C	24	C
A7	Misfire Cylinder 6 Data			
	- EWMA (Exponential Weighted Moving Average)	0B	24	C
	- Misfire counts for last/current driving cycles	0C	24	C
A8	Misfire Cylinder 7 Data			
	- EWMA (Exponential Weighted Moving Average)	0B	24	C
	- Misfire counts for last/current driving cycles	0C	24	C
A9	Misfire Cylinder 8 Data			
	- EWMA (Exponential Weighted Moving Average)	0B	24	C
	- Misfire counts for last/current driving cycles	0C	24	C
C0	OBDMIDs supported ($C1 - $E0)	-	-	M
E0	OBDMIDs supported ($E1 - $FF)	-	-	M
E1	EVAP Monitor (General)			
	- Natural Vacuum Leak Detection (NVLD) Test Time	87	35	M

Fig. 17: Mode $06 Data For NGC III CAN Engine Controllers (2 Of 2)
Courtesy of CHRYSLER CORP.

NOTE: An 'X' in the column indicates that this PID is supported for all unleaded gasoline engine applications. An 'O' indicates that this PID is application-specific and applies only to certain packages such as dual-bank O_2 systems, dual-bank catalyst systems, etc. The component ID of $00 represents a maximum test limit. For a minimum test limit, the component ID will be $80.

PID	PID Description	NGC-III Engine	Component ID	Scaling – Low / High / bit. Wt.
00	Test PIDs Supported ($01 - $20)	X	FF	---
20	Test PIDs Supported ($21 - $40)	X	FF	---
40	Test PIDs Supported ($41 - $60)	X	FF	---
60	Test PIDs Supported ($61 - $80)	X	FF	---
O2 SENSOR MONITOR				
16	O_2 Sensor 1/2 Rich (High) Voltage	X	80	0 / 65.535 / 0.001 volts
17	O_2 Sensor 1/2 Lean (Low) Voltage	X	00	0 / 65.535 / 0.001 volts
26	O_2 Sensor 1/1 Final Ratio	X	80	0 / 655.35 / 0.01%
27	O_2 Sensor 2/1 Final Ratio	O	80	0 / 655.35 / 0.01%
36	O_2 Sensor 2/2 Rich (High) Voltage	O	80	0 / 65.535 / 0.001 volts
37	O_2 Sensor 2/2 Lean (Low) Voltage	O	00	0 / 65.535 / 0.001 volts
O2 HEATER MONITOR				
28	O_2 Heater 1/1 Temperature Error	X	00	-40 / 6513.5 / 0.1Deg C
29	O_2 Heater 1/2 Temperature Error	X	00	-40 / 6513.5 / 0.1Deg C
2A	O_2 Heater 2/1 Temperature Error	O	00	-40 / 6513.5 / 0.1Deg C
2B	O_2 Heater 2/2 Temperature Error	O	00	-40 / 6513.5 / 0.1Deg C
2C	O_2 Heater 1/1 Temperature Error In-Control Time	X	80	0 / 655.35 / 10 ms
2D	O_2 Heater 1/2Temperature Error In-Control Time	X	80	0 / 655.35 / 10 ms
2E	O_2 Heater 2/1 Temperature Error In-Control Time	O	80	0 / 655.35 / 10 ms
2F	O_2 Heater 2/2 Temperature Error In-Control Time	O	80	0 / 655.35 / 10 ms
CATALYST SYSTEM MONITOR				
3D	Catalyst 1/1 - O_2 Sensor Test Ratio	X	00	0 / 655.35 / 0.01%
3E	Catalyst 2/1 - O_2 Sensor Test Ratio	O	00	0 / 655.35 / 0.01%
EGR SYSTEM MONITOR				
55	EGR Fuel Shift Above Threshold Counter	O	00	0 / 65535 / 1 count
56	EGR Fuel Shift Below Threshold Counter	O	00	0 / 65535 / 1 count
57	EGR Fuel System Bank 1 Delta – High Threshold	O	00	-327.68 / 327.67 / 0.01%
58	EGR Fuel System Bank 1 Delta – Low Threshold	O	80	-327.68 / 327.67 / 0.01%
59	EGR Fuel System Bank 2 Delta – High Threshold	O	00	-327.68 / 327.67 / 0.01%
5A	EGR Fuel System Bank 1 Delta – Low Threshold	O	80	-327.68 / 327.67 / 0.01%
PURGE FLOW SYSTEM MONITOR				
71	Purge Flow Monitor – Vacuum Switch Result	X	80	0 / 1 / 0 0=false, 1=true
72	Purge Flow Monitor – Valve Fraction	X	80	0 / 100 / 0.001526 %
EVAPORATIVE EMISSION SYSTEM MONITOR				
5B	EVAP Monitor(.020) Switch Time to Close – High Threshold	X	00	0 / 65535 / 1 minute
5C	EVAP Monitor(.020) Switch Time to Close – Low Threshold	X	00	0 / 65535 / 1 minute
73	EVAP Monitor(.020) Accumulated Engine "ON" Time	X	00	0 / 65535 / 1 minute
74	EVAP Monitor(.020) Accumulated Engine "OFF" Time	X	00	0 / 65535 / 1 minute
75	EVAP Monitor(.090) Switch Time to Open	X	80	0 / 655.35 / 10 msec
76	EVAP Monitor(Cap Off) Switch Time to Open	X	80	0 / 655.35 / 10 msec
77	EVAP Monitor(General EVAP Failure) Time	X	00	0 / 655.35 / 10 msec

Fig. 18: Mode $06 Data For NGC III J1850 Engine Controllers
Courtesy of CHRYSLER CORP.

2006

This application chart provides documentation for what Service IDs, PIDS, OBDMIDs, TIDs, and INFOTYPEs that are implemented in the NGCIII DaimlerChrysler ECU. The following defines the convention used to determine the required level of support, with the following appreciation being used:

a) **Mandatory (M)** 'M' in the column under Service ID $06 indicates that this PID is supported for all applications.
b) **Conditional (C)** 'C' indicates that this PID is application-specific and applies only to certain conditional packages such as dual-bank O_2 systems, CNG/LPG fuels, charge temp equipped packages, etc.
c) **User-Defined (U)** 'U" indicates that this PID is user-defined and optionally supported.

OBDMID (Hex)	OBDMID Description	Test ID (TID)	Scaling ID	Service ID $06
				'HB' 'LX' 'ND' 'NM' 'WK' 'KJ' 'DR' 'PT' All Engines
00	OBDMIDs supported ($01 - $20)	-	-	M
01	Oxygen Sensor Monitor Bank 1 - Sensor 1			
	- O2 Sensor Full Cycle Switch Counter (old monitor, data always = 0)	81	24	M
	- O2 Sensor Final Ratio Result (new monitor)	91	2F	M
02	Oxygen Sensor Monitor Bank 1 - Sensor 2			
	- Maximum sensor voltage for test cycle	08	0B	M
	- Minimum sensor voltage for test cycle	07	0B	M
05	Oxygen Sensor Monitor Bank 2 - Sensor 1			
	- O2 Sensor Full Cycle Switch Counter (old monitor, data always = 0)	81	24	C
	- O2 Sensor Final Ratio Result (new monitor)	91	2F	C
06	Oxygen Sensor Monitor Bank 2 - Sensor 2			
	- Maximum sensor voltage for test cycle	08	0B	C
	- Minimum sensor voltage for test cycle	07	0B	C
20	OBDMIDs supported ($21 - $40)	-	-	M
21	Catalyst Monitor Bank 1			
	- O2 Sensor Switch Frequency Ratio (old monitor, data always = 0)	80	2F	M
	- O2 Sensor Test Ratio Result (new monitor)	92	2F	M
22	Catalyst Monitor Bank 2			
	- O2 Sensor Switch Frequency Ratio (old monitor, data always = 0)	80	2F	C
	- O2 Sensor Test Ratio Result (new monitor)	92	2F	C
31	EGR Monitor Bank 1			
	- Fuel Shift Above Threshold Counter	93	24	C
	- Fuel Shift Below Threshold Counter	94	24	C
	- Fuel Shift Trim Percent of Bank 1	95	39	C
	- Fuel Shift Trim Percent of Bank 2	96	39	C
39	EVAP Monitor (Cap Off)			
	- Natural Vacuum Leak Detection (NVLD) Test Time	87	35	M
3A	EVAP Monitor (0.090")			
	- Natural Vacuum Leak Detection (NVLD) Test Time	87	35	M
3B	EVAP Monitor (0.040")			
3C	EVAP Monitor (0.020")			
	- Natural Vacuum Leak Detection (NVLD) Accumulated Engine 'ON' Time	85	34	M
	- Natural Vacuum Leak Detection (NVLD) Accumulated Engine 'OFF' Time	86	34	M
	- Switch Time to Close	90	34	M
3D	Purge Flow Monitor			
	- Natural Vacuum Leak Detection Switch Input	83	2E	M
	- Purge Valve Fraction	84	30	M
40	OBDMIDs supported ($41 - $60)	-	-	M
41	Oxygen Sensor Heater Monitor Bank 1 - Sensor 1			

Fig. 19: Mode $06 Data For NGC III CAN Engine Controllers (1 Of 2)
Courtesy of CHRYSLER CORP.

OBDMID (Hex)	OBDMID Description	Test ID (TID)	Scaling ID	Service ID $06
				'HB' 'LX' 'ND' 'NM' 'WK' 'KJ' 'DR' 'PT' All Engines
	- O_2 Heater Temperature Error	97	16	M
	- O_2 Heater Temperature Error In-Control Time	98	35	M
42	Oxygen Sensor Heater Monitor Bank 1 - Sensor 2			
	- O_2 Heater Temperature Error	97	16	M
	- O_2 Heater Temperature Error In-Control Time	98	35	M
45	Oxygen Sensor Heater Monitor Bank 2 - Sensor 1			
	- O_2 Heater Temperature Error	97	16	C
	- O_2 Heater Temperature Error In-Control Time	98	35	C
46	Oxygen Sensor Heater Monitor Bank 2 - Sensor 2			
	- O_2 Heater Temperature Error	97	16	C
	- O_2 Heater Temperature Error In-Control Time	98	35	C
60	OBDMIDs supported ($61 - $80)	-	-	M
80	OBDMIDs supported ($81 - $A0)	-	-	M
A0	OBDMIDs supported ($A1 - $C0)	-	-	M
A2	Misfire Cylinder 1 Data			
	- EWMA (Exponential Weighted Moving Average)	0B	24	M
	- Misfire counts for last/current driving cycles	0C	24	M
A3	Misfire Cylinder 2 Data			
	- EWMA (Exponential Weighted Moving Average)	0B	24	M
	- Misfire counts for last/current driving cycles	0C	24	M
A4	Misfire Cylinder 3 Data			
	- EWMA (Exponential Weighted Moving Average)	0B	24	M
	- Misfire counts for last/current driving cycles	0C	24	M
A5	Misfire Cylinder 4 Data			
	- EWMA (Exponential Weighted Moving Average)	0B	24	M
	- Misfire counts for last/current driving cycles	0C	24	M
A6	Misfire Cylinder 5 Data			
	- EWMA (Exponential Weighted Moving Average)	0B	24	C
	- Misfire counts for last/current driving cycles	0C	24	C
A7	Misfire Cylinder 6 Data			
	- EWMA (Exponential Weighted Moving Average)	0B	24	C
	- Misfire counts for last/current driving cycles	0C	24	C
A8	Misfire Cylinder 7 Data			
	- EWMA (Exponential Weighted Moving Average)	0B	24	C
	- Misfire counts for last/current driving cycles	0C	24	C
A9	Misfire Cylinder 8 Data			
	- EWMA (Exponential Weighted Moving Average)	0B	24	C
	- Misfire counts for last/current driving cycles	0C	24	C
C0	OBDMIDs supported ($C1 - $E0)	-	-	M
E0	OBDMIDs supported ($E1 - $FF)	-	-	M
E1	EVAP Monitor (General)			
	- Natural Vacuum Leak Detection (NVLD) Test Time	87	35	M

Fig. 20: Mode $06 Data For NGC III CAN Engine Controllers (2 Of 2)
Courtesy of CHRYSLER CORP.

NOTE: An 'X' in the column indicates that this PID is supported for all unleaded gasoline engine applications. An 'O' indicates that this PID is application-specific and applies only to certain packages such as dual-bank O_2 systems, dual-bank catalyst systems, etc. The component ID of $00 represents a maximum test limit. For a minimum test limit, the component ID will be $80.

PID	PID Description	NGC-III Engine	Component ID	Scaling – Low / High / bit. Wt.
00	Test PIDs Supported ($01 - $20)	X	FF	---
20	Test PIDs Supported ($21 - $40)	X	FF	---
40	Test PIDs Supported ($41 - $60)	X	FF	---
60	Test PIDs Supported ($61 - $80)	X	FF	---
O2 SENSOR MONITOR				
16	O_2 Sensor 1/2 Rich (High) Voltage	X	80	0 / 65.535 / 0.001 volts
17	O_2 Sensor 1/2 Lean (Low) Voltage	X	00	0 / 65.535 / 0.001 volts
26	O_2 Sensor 1/1 Final Ratio	X	80	0 / 655.35 / 0.01%
27	O_2 Sensor 2/1 Final Ratio	O	80	0 / 655.35 / 0.01%
36	O_2 Sensor 2/2 Rich (High) Voltage	O	80	0 / 65.535 / 0.001 volts
37	O_2 Sensor 2/2 Lean (Low) Voltage	O	00	0 / 65.535 / 0.001 volts
O2 HEATER MONITOR				
28	O_2 Heater 1/1 Temperature Error	X	00	-40 / 6513.5 / 0.1Deg C
29	O_2 Heater 1/2 Temperature Error	X	00	-40 / 6513.5 / 0.1Deg C
2A	O_2 Heater 2/1 Temperature Error	O	00	-40 / 6513.5 / 0.1Deg C
2B	O_2 Heater 2/2 Temperature Error	O	00	-40 / 6513.5 / 0.1Deg C
2C	O_2 Heater 1/1 Temperature Error In-Control Time	X	80	0 / 655.35 / 10 ms
2D	O_2 Heater 1/2Temperature Error In-Control Time	X	80	0 / 655.35 / 10 ms
2E	O_2 Heater 2/1 Temperature Error In-Control Time	O	80	0 / 655.35 / 10 ms
2F	O_2 Heater 2/2 Temperature Error In-Control Time	O	80	0 / 655.35 / 10 ms
CATALYST SYSTEM MONITOR				
3D	Catalyst 1/1 - O_2 Sensor Test Ratio	X	00	0 / 655.35 / 0.01%
3E	Catalyst 2/1 - O_2 Sensor Test Ratio	O	00	0 / 655.35 / 0.01%
EGR SYSTEM MONITOR				
55	EGR Fuel Shift Above Threshold Counter	O	00	0 / 65535 / 1 count
56	EGR Fuel Shift Below Threshold Counter	O	00	0 / 65535 / 1 count
57	EGR Fuel System Bank 1 Delta – High Threshold	O	00	-327.68 / 327.67 / 0.01%
58	EGR Fuel System Bank 1 Delta – Low Threshold	O	80	-327.68 / 327.67 / 0.01%
59	EGR Fuel System Bank 2 Delta – High Threshold	O	00	-327.68 / 327.67 / 0.01%
5A	EGR Fuel System Bank 1 Delta – Low Threshold	O	80	-327.68 / 327.67 / 0.01%
PURGE FLOW SYSTEM MONITOR				
71	Purge Flow Monitor – Vacuum Switch Result	X	80	0 / 1 / 0 0=false, 1=true
72	Purge Flow Monitor – Valve Fraction	X	80	0 / 100 / 0.001526 %

Fig. 21: Mode $06 Data For NGC III J1850 Engine Controllers (1 Of 2)
Courtesy of CHRYSLER CORP.

EVAPORATIVE EMISSION SYSTEM MONITOR				
5B	EVAP Monitor(.020) Switch Time to Close – High Threshold	X	00	0 / 65535 / 1 minute
5C	EVAP Monitor(.020) Switch Time to Close – Low Threshold	X	00	0 / 65535 / 1 minute
73	EVAP Monitor(.020) Accumulated Engine "ON" Time	X	00	0 / 65535 / 1 minute
74	EVAP Monitor(.020) Accumulated Engine "OFF" Time	X	00	0 / 65535 / 1 minute
75	EVAP Monitor(.090) Switch Time to Open	X	80	0 / 655.35 / 10 msec
76	EVAP Monitor(Cap Off) Switch Time to Open	X	80	0 / 655.35 / 10 msec
77	EVAP Monitor(General EVAP Failure) Time	X	00	0 / 655.35 / 10 msec

Fig. 22: Mode $06 Data For NGC III J1850 Engine Controllers (2 Of 2)
Courtesy of CHRYSLER CORP.

2007

This application chart provides documentation for what Service ID $06 OBDMIDs, TIDs, and scaling IDs are implemented in the GPECI DaimlerChrysler ECU. The following defines the convention used to determine the required level of support, with the following appreciation being used:

a) **Mandatory (M)** 'M' in the column under Service ID $06 indicates that this PID is supported for all applications.
b) **Conditional (C)** 'C' indicates that this PID is application-specific and applies only to certain conditional packages such as dual-bank O_2 systems, CNG/LPG fuels, charge temp equipped packages, etc.
c) **User-Defined (U)** 'U" indicates that this PID is user-defined and optionally supported.

OBDMID (Hex)	OBDMID Description	Test ID (TID)	Scaling ID	Service ID $06
				'All I4 Engines'
00	OBDMIDs supported ($01 - $20)	-	-	M
01	Oxygen Sensor Monitor Bank 1 - Sensor 1			
	- O2 Sensor Final Ratio Result	91	2F	M
02	Oxygen Sensor Monitor Bank 1 - Sensor 2			
	- Mean value of ratio between the monitor sensor switching time and the threshold value - rich to lean	81	05	M
	- Sum of voltage change over test time for lean to rich	82	24	M
20	OBDMIDs supported ($21 - $40)	-	-	M
21	Catalyst Monitor Bank 1			
	- O2 Sensor Test Ratio Result	92	2F	M
39	EVAP Monitor (Cap Off)			
	-Leak Test Time	87	35	M
3A	EVAP Monitor (0.090")			
	- Leak Test Time	87	35	M
3C	EVAP Monitor (0.020")			
	- Small Leak Accumulated Engine 'ON' Time	85	34	M
	- Small Leak Accumulated Engine 'OFF' Time	86	34	M
	- Leak Detection Switch Time to Close	90	34	M
3D	Purge Flow Monitor			
	- Leak Detection Switch Input	83	2E	M
	- Purge Valve Fraction	84	30	M
	- Purge Flow Error	85	84	M
	- Purge O2Factor Shift	86	84	M
	- Leak Detection Switch - Ratio - closed to open	87	04	M
40	OBDMIDs supported ($41 - $60)	-	-	M
41	Oxygen Sensor Heater Monitor Bank 1 - Sensor 1			
	- O_2 Heater Temperature Error	97	16	M
	- O_2 Heater Temperature Error In-Control Time	98	24	M
42	Oxygen Sensor Heater Monitor Bank 1 - Sensor 2			
	- O_2 Heater Temperature Error	97	16	M
	- O_2 Heater Temperature Error In-Control Time	98	24	M
60	OBDMIDs supported ($61 - $80)	-	-	M
80	OBDMIDs supported ($81 - $A0)	-	-	M
A0	OBDMIDs supported ($A1 - $C0)	-	-	M
A2	Misfire Cylinder 1 Data			
	- EWMA (Exponential Weighted Moving Average)	0B	24	M
	- Misfire counts for last/current driving cycles	0C	24	M
A3	Misfire Cylinder 2 Data			
	- EWMA (Exponential Weighted Moving Average)	0B	24	M
	- Misfire counts for last/current driving cycles	0C	24	M
A4	Misfire Cylinder 3 Data			

Fig. 23: Mode $06 Data For GPECI CAN Engine Controllers (1 Of 2)
Courtesy of CHRYSLER CORP.

OBDMID (Hex)	OBDMID Description	Test ID (TID)	Scaling ID	Service ID $06
				'All I4 Engines'
	- EWMA (Exponential Weighted Moving Average)	0B	24	M
	- Misfire counts for last/current driving cycles	0C	24	M
A5	Misfire Cylinder 4 Data			
	- EWMA (Exponential Weighted Moving Average)	0B	24	M
	- Misfire counts for last/current driving cycles	0C	24	M
C0	OBDMIDs supported ($C1 - $E0)	-	-	M
E0	OBDMIDs supported ($E1 - $FF)	-	-	M
E1	EVAP Monitor (General)			
	- General Evap Test Time	87	35	M

Fig. 24: Mode $06 Data For GPECI CAN Engine Controllers (2 Of 2)
Courtesy of CHRYSLER CORP.

This application chart provides documentation for what Service ID $06 OBDMIDs, TIDs, and scaling IDs are implemented in the NGCIII DaimlerChrysler ECU. The following defines the convention used to determine the required level of support, with the following appreciation being used:

d) **Mandatory (M)** 'M' in the column under Service ID $06 indicates that this PID is supported for all applications.

e) **Conditional (C)** 'C' indicates that this PID is application-specific and applies only to certain conditional packages such as dual-bank O_2 systems, CNG/LPG fuels, charge temp equipped packages, etc.

f) **User-Defined (U)** 'U" indicates that this PID is user-defined and optionally supported.

OBDMID (Hex)	OBDMID Description	Test ID (TID)	Scaling ID	Service ID $06 'PT' 'RS' All Engines
00	OBDMIDs supported ($01 - $20)	-	-	M
01	Oxygen Sensor Monitor Bank 1 - Sensor 1			
	- O2 Sensor Full Cycle Switch Counter (old monitor, data always = 0)	81	24	M
	- O2 Sensor Final Ratio Result (new monitor)	91	2F	M
02	Oxygen Sensor Monitor Bank 1 - Sensor 2			
	- Minimum sensor voltage for test cycle	07	0B	M
	- Maximum sensor voltage for test cycle	08	0B	M
05	Oxygen Sensor Monitor Bank 2 - Sensor 1			
	- O2 Sensor Full Cycle Switch Counter (old monitor, data always = 0)	81	24	C
	- O2 Sensor Final Ratio Result (new monitor)	91	2F	C
06	Oxygen Sensor Monitor Bank 2 - Sensor 2			
	- Minimum sensor voltage for test cycle	07	0B	M
	- Maximum sensor voltage for test cycle	08	0B	M
20	OBDMIDs supported ($21 - $40)	-	-	M
21	Catalyst Monitor Bank 1			
	- O2 Sensor Switch Frequency Ratio (old monitor, data always = 0)	80	2F	M
	- O2 Sensor Test Ratio Result (new monitor)	92	2F	M
22	Catalyst Monitor Bank 2			
	- O2 Sensor Switch Frequency Ratio (old monitor, data always = 0)	80	2F	C
	- O2 Sensor Test Ratio Result (new monitor)	92	2F	C
31	EGR Monitor Bank 1			
	- Fuel Shift Above Threshold Counter	93	24	C
	- Fuel Shift Below Threshold Counter	94	24	C
	- Fuel Shift Trim Percent of Bank 1	95	39	C
	- Fuel Shift Trim Percent of Bank 2	96	39	C
39	EVAP Monitor (Cap Off)			
	- Natural Vacuum Leak Detection (NVLD) Test Time	87	35	M
3A	EVAP Monitor (0.090")			
	- Natural Vacuum Leak Detection (NVLD) Test Time	87	35	M
3C	EVAP Monitor (0.020")			
	- Natural Vacuum Leak Detection (NVLD) Accumulated Engine 'ON' Time	85	34	M
	- Natural Vacuum Leak Detection (NVLD) Accumulated Engine 'OFF' Time	86	34	M
	- Switch Time to Close	90	34	M
3D	Purge Flow Monitor			
	- Natural Vacuum Leak Detection Switch Input	83	2E	M
	- Purge Valve Fraction	84	30	M
40	OBDMIDs supported ($41 - $60)	-	-	M
41	**Oxygen Sensor Heater Monitor Bank 1 - Sensor 1**			
	- O_2 Heater Temperature Error	97	16	M
	- O_2 Heater Temperature Error In-Control Time	98	35	M

Fig. 25: Mode $06 Data For NGC III CAN Engine Controllers (1 Of 2)
Courtesy of CHRYSLER CORP.

OBDMID (Hex)	OBDMID Description	Test ID (TID)	Scaling ID	Service ID $06
				'PT' 'RS' All Engines
42	Oxygen Sensor Heater Monitor Bank 1 - Sensor 2			
	- O_2 Heater Temperature Error	97	16	M
	- O_2 Heater Temperature Error In-Control Time	98	35	M
45	Oxygen Sensor Heater Monitor Bank 2 - Sensor 1			
	- O_2 Heater Temperature Error	97	16	C
	- O_2 Heater Temperature Error In-Control Time	98	35	C
46	Oxygen Sensor Heater Monitor Bank 2 - Sensor 2			
	- O_2 Heater Temperature Error	97	16	C
	- O_2 Heater Temperature Error In-Control Time	98	35	C
60	OBDMIDs supported ($61 - $80)	-	-	M
80	OBDMIDs supported ($81 - $A0)	-	-	M
A0	OBDMIDs supported ($A1 - $C0)	-	-	M
A2	Misfire Cylinder 1 Data			
	- EWMA (Exponential Weighted Moving Average)	0B	24	M
	- Misfire counts for last/current driving cycles	0C	24	M
A3	Misfire Cylinder 2 Data			
	- EWMA (Exponential Weighted Moving Average)	0B	24	M
	- Misfire counts for last/current driving cycles	0C	24	M
A4	Misfire Cylinder 3 Data			
	- EWMA (Exponential Weighted Moving Average)	0B	24	M
	- Misfire counts for last/current driving cycles	0C	24	M
A5	Misfire Cylinder 4 Data			
	- EWMA (Exponential Weighted Moving Average)	0B	24	M
	- Misfire counts for last/current driving cycles	0C	24	M
A6	Misfire Cylinder 5 Data			
	- EWMA (Exponential Weighted Moving Average)	0B	24	C
	- Misfire counts for last/current driving cycles	0C	24	C
A7	Misfire Cylinder 6 Data			
	- EWMA (Exponential Weighted Moving Average)	0B	24	C
	- Misfire counts for last/current driving cycles	0C	24	C
A8	Misfire Cylinder 7 Data			
	- EWMA (Exponential Weighted Moving Average)	0B	24	C
	- Misfire counts for last/current driving cycles	0C	24	C
A9	Misfire Cylinder 8 Data			
	- EWMA (Exponential Weighted Moving Average)	0B	24	C
	- Misfire counts for last/current driving cycles	0C	24	C
C0	OBDMIDs supported ($C1 - $E0)	-	-	M
E0	OBDMIDs supported ($E1 - $FF)	-	-	M
E1	EVAP Monitor (General)			
	- Natural Vacuum Leak Detection (NVLD) Test Time	87	35	M

Fig. 26: Mode $06 Data For NGC III CAN Engine Controllers (2 Of 2)
Courtesy of CHRYSLER CORP.

This application chart provides documentation for what Service ID $06 OBDMIDs, TIDs, and scaling IDs are implemented in the NGCIV DaimlerChrysler ECU. The following defines the convention used to determine the required level of support, with the following appreciation being used:

g) **Mandatory (M)** 'M' in the column under Service ID $06 indicates that this PID is supported for all applications.

h) **Conditional (C)** 'C' indicates that this PID is application-specific and applies only to certain conditional packages such as dual-bank O_2 systems, CNG/LPG fuels, charge temp equipped packages, etc.

i) **User-Defined (U)** 'U" indicates that this PID is user-defined and optionally supported.

OBDMID (Hex)	OBDMID Description	Test ID (TID)	Scaling ID	Service ID $06
				'All V6/V8 Engines'
00	OBDMIDs supported ($01 - $20)	-	-	M
01	Oxygen Sensor Monitor Bank 1 - Sensor 1			
	- O2 Sensor Final Ratio Result (new monitor)	91	2F	M
02	Oxygen Sensor Monitor Bank 1 - Sensor 2			
	- Minimum sensor voltage for test cycle	07	0B	M
	- Maximum sensor voltage for test cycle	08	0B	M
	- Slow Response Rich to Lean Result	81	04	M
	- Signal Biased Rich Mass Flow Result	82	01	M
	- Signal Biased Rich Voltage Result	83	8A	M
05	Oxygen Sensor Monitor Bank 2 - Sensor 1			
	- O2 Sensor Final Ratio Result	91	2F	M
06	Oxygen Sensor Monitor Bank 2 - Sensor 2			
	- Minimum sensor voltage for test cycle	07	0B	M
	- Maximum sensor voltage for test cycle	08	0B	M
	- Slow Response Rich to Lean Result	81	04	M
	- Signal Biased Rich Mass Flow Result	82	01	M
	- Signal Biased Rich Voltage Result	83	8A	M
20	OBDMIDs supported ($21 - $40)	-	-	M
21	Catalyst Monitor Bank 1			
	- O2 Sensor Test Ratio Result	92	2F	M
22	Catalyst Monitor Bank 2			
	- O2 Sensor Test Ratio Result	92	2F	M
31	EGR Monitor Bank 1			
	- Fuel Shift Above Threshold Counter	93	24	C
	- Fuel Shift Below Threshold Counter	94	24	C
	- Fuel Shift Trim Percent of Bank 1	95	39	C
	- Fuel Shift Trim Percent of Bank 2	96	39	C
39	EVAP Monitor (Cap Off)			
	- Natural Vacuum Leak Detection (NVLD) Test Time	87	35	M
3A	EVAP Monitor (0.090")			
	- Natural Vacuum Leak Detection (NVLD) Test Time	87	35	M
3C	EVAP Monitor (0.020")			
	- Natural Vacuum Leak Detection (NVLD) Accumulated Engine 'ON' Time	85	34	M
	- Natural Vacuum Leak Detection (NVLD) Accumulated Engine 'OFF' Time	86	34	M
	- Switch Time to Close	90	34	M
3D	Purge Flow Monitor			
	- Natural Vacuum Leak Detection Switch Input	83	2E	M
	- Purge Valve Fraction	84	30	M

Fig. 27: Mode $06 Data For NGC IV CAN Engine Controllers (1 Of 2)
Courtesy of CHRYSLER CORP.

OBDMID (Hex)	OBDMID Description	Test ID (TID)	Scaling ID	Service ID $06
				'All V6/V8 Engines'
	- Flow Error Result	85	83	M
	- O2 Factor Shift Result	86	05	M
	- Switch Ratio Result	87	04	M
	- Gas Flow Average Ratio Result	88	04	M
40	OBDMIDs supported ($41 - $60)	-	-	M
41	Oxygen Sensor Heater Monitor Bank 1 - Sensor 1			
	- O_2 Heater Temperature Error	97	16	M
	- O_2 Heater Temperature Error In-Control Time	98	35	M
42	Oxygen Sensor Heater Monitor Bank 1 - Sensor 2			
	- O_2 Heater Temperature Error	97	16	M
	- O_2 Heater Temperature Error In-Control Time	98	35	M
45	Oxygen Sensor Heater Monitor Bank 2 - Sensor 1			
	- O_2 Heater Temperature Error	97	16	M
	- O_2 Heater Temperature Error In-Control Time	98	35	M
46	Oxygen Sensor Heater Monitor Bank 2 - Sensor 2			
	- O_2 Heater Temperature Error	97	16	M
	- O_2 Heater Temperature Error In-Control Time	98	35	M
60	OBDMIDs supported ($61 - $80)	-	-	M
80	OBDMIDs supported ($81 - $A0)	-	-	M
A0	OBDMIDs supported ($A1 - $C0)	-	-	M
A2	Misfire Cylinder 1 Data			
	- EWMA (Exponential Weighted Moving Average)	0B	24	M
	- Misfire counts for last/current driving cycles	0C	24	M
A3	Misfire Cylinder 2 Data			
	- EWMA (Exponential Weighted Moving Average)	0B	24	M
	- Misfire counts for last/current driving cycles	0C	24	M
A4	Misfire Cylinder 3 Data			
	- EWMA (Exponential Weighted Moving Average)	0B	24	M
	- Misfire counts for last/current driving cycles	0C	24	M
A5	Misfire Cylinder 4 Data			
	- EWMA (Exponential Weighted Moving Average)	0B	24	M
	- Misfire counts for last/current driving cycles	0C	24	M
A6	Misfire Cylinder 5 Data			
	- EWMA (Exponential Weighted Moving Average)	0B	24	M
	- Misfire counts for last/current driving cycles	0C	24	M
A7	Misfire Cylinder 6 Data			
	- EWMA (Exponential Weighted Moving Average)	0B	24	M
	- Misfire counts for last/current driving cycles	0C	24	M
A8	Misfire Cylinder 7 Data			
	- EWMA (Exponential Weighted Moving Average)	0B	24	C
	- Misfire counts for last/current driving cycles	0C	24	C
A9	Misfire Cylinder 8 Data			
	- EWMA (Exponential Weighted Moving Average)	0B	24	C
	- Misfire counts for last/current driving cycles	0C	24	C
C0	OBDMIDs supported ($C1 - $E0)	-	-	M
E0	OBDMIDs supported ($E1 - $FF)	-	-	M
E1	EVAP Monitor (General)			
	- Natural Vacuum Leak Detection (NVLD) Test Time	87	35	M

Fig. 28: Mode $06 Data For NGC IV CAN Engine Controllers (2 Of 2)
Courtesy of CHRYSLER CORP.

2008

2008 GPECI VEHICLES WITH CAN - ISO 15765-4 PROTOCOL

Caliber(PM), Compass(MK), Patriot(MK74), Sebring/Avenger(JS) with 4 cylinder engines, and Journey(JC) with 4 cylinder engines

This application chart provides documentation for what Service IDs, PIDS, OBDMIDs, TIDs, and INFOTYPEs that are implemented in the GPECI DaimlerChrysler ECU. The following defines the convention used to determine the required level of support, with the following appreciation being used:

a. **Mandatory (M)** 'M' in the column under Service ID $06 indicates that this PID is supported for all applications.
b. **Conditional (C)** 'C' indicates that this PID is application-specific and applies only to certain conditional packages such as dual-bank O_2 systems, CNG/LPG fuels, charge temp equipped packages, etc.
c. **User-Defined (U)** 'U" indicates that this PID is user-defined and optionally supported.

GPECI VEHICLES WITH CAN

OBDMID (Hex)	OBDMID Description	Test ID (TID)	Scaling ID	Service ID $06
				All I4 Engines'
00	OBDMIDs supported ($01 - $20)	-	-	M
01	Oxygen Sensor Monitor Bank 1 - Sensor 1			
	○ **O2 Sensor Final Ratio Result (new monitor)**	91	2F	M
02	Oxygen Sensor Monitor Bank 1 - Sensor 2			
	○ Mean value of ratio between the monitor sensor switching time and the threshold value - rich to lean	81	05	M
	○ Sum of voltage change over test time for lean to rich	82	24	M
20	OBDMIDs supported ($21 - $40)	-	-	M
21	Catalyst Monitor Bank 1			

	○ **O2 Sensor Test Ratio Result (new monitor)**	92	2F	M
39	EVAP Monitor (Cap Off)			
	○ **Leak Test Time**	87	35	M
3A	EVAP Monitor (0.090")			
	○ Leak Test Time	87	35	M
3B	EVAP Monitor (0.040")			
3C	EVAP Monitor (0.020")			
	○ **Small Leak Accumulated Engine 'ON' Time**	85	34	M
	○ **Small Leak Accumulated Engine 'OFF' Time**	86	34	M
	○ **Leak Detection Switch Time to Close**	90	34	M
3D	Purge Flow Monitor			
	○ **Leak Detection Switch Input**	83	2E	M
	○ **Purge Valve Fraction**	84	30	M
	○ Purge Flow Error	85	84	M
	○ Purge O2Factor Shift	86	84	M
	○ **Leak Detection Switch - Ratio - closed to open**	87	04	M
	○ **Natural Vacuum Leak Detection (NVLD) Test Time**	89	35	M(1)
40	OBDMIDs supported ($41 - $60)	-	-	M
41	Oxygen Sensor Heater Monitor Bank 1 - Sensor 1			
	○ **O_2 Heater Temperature Error**	97	16	M
		98	24	M

	○ **O_2 Heater Temperature Error In-Control Time**			
42	Oxygen Sensor Heater Monitor Bank 1 - Sensor 2			
	○ **O2 Heater Temperature Error**	97	16	M
	○ **O2 Heater Temperature Error In-Control Time**	98	24	M
60	OBDMIDs supported ($61 - $80)	-	-	M
71	Secondary Air Monitor 1			
	Air Flow - Too Low	81	2A	C
72	Secondary Air Monitor 2			
	Air Flow - Too High	81	2A	C
80	OBDMIDs supported ($81 - $A0)	-	-	M
A0	OBDMIDs supported ($A1 - $C0)	-	-	M
A2	Misfire Cylinder 1 Data			
	○ **EWMA (Exponential Weighted Moving Average)**	0B	24	M
	○ **Misfire counts for last/current driving cycles**	0C	24	M
A3	Misfire Cylinder 2 Data			
	○ **EWMA (Exponential Weighted Moving Average)**	0B	24	M
	○ **Misfire counts for last/current driving cycles**	0C	24	M
A4	Misfire Cylinder 3 Data			
	○ **EWMA (Exponential**	0B	24	M

	Weighted Moving Average)			
	○ **Misfire counts for last/current driving cycles**	0C	24	M
A5	Misfire Cylinder 4 Data			
	○ **EWMA (Exponential Weighted Moving Average)**	0B	24	M
	○ **Misfire counts for last/current driving cycles**	0C	24	M
C0	OBDMIDs supported ($C1 - $E0)	-	-	M
E0	OBDMIDs supported ($E1 - $FF)	-	-	M
E1	EVAP Monitor (General)			
	○ **General Evap Test Time**	87	35	M
(1) The test result under MID E1 TID 87 is moving to MID 3D TID 89 as new software is released for 2008 and 2009 models.				

2008 NGCIII VEHICLES WITH CAN - ISO 15765-4 PROTOCOL

PT Cruiser(PT)

This application chart provides documentation for what Service ID $06 OBDMIDs, TIDs, and scaling IDs are implemented in the NGCIII DaimlerChrysler ECU. The following defines the convention used to determine the required level of support, with the following appreciation being used:

a. **a) Mandatory (M)** 'M' in the column under Service ID $06 indicates that this PID is supported for all applications.
b. **b) Conditional (C)** 'C' indicates that this PID is application-specific and applies only to certain conditional packages such as dual-bank O_2 systems, CNG/LPG fuels, charge temp equipped packages, etc.
c. **c) User-Defined (U)** 'U" indicates that this PID is user-defined and optionally supported.

NGCIII VEHICLES WITH CAN

OBDMID (Hex)	OBDMID Description	Test ID (TID)	Scaling ID	Service ID $06
				PT' All I4 Engines
00	OBDMIDs supported ($01	-	-	M

	- $20)			
01	Oxygen Sensor Monitor Bank 1 - Sensor 1			
	○ **O2 Sensor Full Cycle Switch Counter (old monitor, data always = 0)**	81	24	M
	○ **O2 Sensor Final Ratio Result (new monitor)**	91	2F	M
02	Oxygen Sensor Monitor Bank 1 - Sensor 2			
	○ **Minimum sensor voltage for test cycle**	07	0B	M
	○ **Maximum sensor voltage for test cycle**	08	0B	M
20	OBDMIDs supported ($21 - $40)	-	-	M
21	Catalyst Monitor Bank 1			
	○ **O2 Sensor Switch Frequency Ratio (old monitor, data always = 0)**	80	2F	M
	○ **O2 Sensor Test Ratio Result (new monitor)**	92	2F	M
39	EVAP Monitor (Cap Off)			
	○ **Natural Vacuum Leak Detection (NVLD) Test Time**	87	35	M
3A	EVAP Monitor (0.090")			
	○ Natural Vacuum Leak Detection (NVLD) Test Time	87	35	M
3C	EVAP Monitor (0.020")			
	○ **Natural Vacuum Leak Detection (NVLD) Accumulated Engine 'ON' Time**	85	34	M

	○ **Natural Vacuum Leak Detection (NVLD) Accumulated Engine 'OFF' Time**	86	34	M
	○ **Switch Time to Close**	90	34	M
3D	Purge Flow Monitor			
	○ **Natural Vacuum Leak Detection Switch Input**	83	2E	M
	○ **Purge Valve Fraction**	84	30	M
40	OBDMIDs supported ($41 - $60)	-	-	M
41	Oxygen Sensor Heater Monitor Bank 1 - Sensor 1			
	○ **O_2 Heater Temperature Error**	97	16	M
	○ **O_2 Heater Temperature Error In-Control Time**	98	35	M
42	Oxygen Sensor Heater Monitor Bank 1 - Sensor 2			
	○ **O_2 Heater Temperature Error**	97	16	M
	○ **O_2 Heater Temperature Error In-Control Time**	98	35	M
60	OBDMIDs supported ($61 - $80)	-	-	M
80	OBDMIDs supported ($81 - $A0)	-	-	M
A0	OBDMIDs supported ($A1 - $C0)	-	-	M
A2	Misfire Cylinder 1 Data			
		0B	24	M

	○ **EWMA (Exponential Weighted Moving Average)**			
	○ **Misfire counts for last/current driving cycles**	0C	24	M
A3	Misfire Cylinder 2 Data			
	○ **EWMA (Exponential Weighted Moving Average)**	0B	24	M
	○ **Misfire counts for last/current driving cycles**	0C	24	M
A4	Misfire Cylinder 3 Data			
	○ **EWMA (Exponential Weighted Moving Average)**	0B	24	M
	○ **Misfire counts for last/current driving cycles**	0C	24	M
A5	Misfire Cylinder 4 Data			
	○ **EWMA (Exponential Weighted Moving Average)**	0B	24	M
	○ **Misfire counts for last/current driving cycles**	0C	24	M
C0	OBDMIDs supported ($C1 - $E0)	-	-	M
E0	OBDMIDs supported ($E1 - $FF)	-	-	M
E1	EVAP Monitor (General)			
	○ **Natural Vacuum Leak Detection (NVLD) Test Time**	87	35	M

2008-10 VIPER

2008/2009/2010 VIPER, 8.4L V10 ENGINE

This application chart provides documentation for what Service ID $06 OBDMIDs, TIDs, and scaling IDs are implemented in the 2008, 2009, and 2010 Dodge Viper "Venom" engine controller.

VIPER, 8.4L V10 ENGINE

OBDMID (Hex)	OBDMID Description	Test ID (TID) (hex)	Scaling ID (hex)
00	OBDMIDs supported ($01 - $20)	-	-
01	Oxygen Sensor Monitor Bank 1 - Sensor 1		
	○ **Rich to lean sensor switch time**	5	10
	○ **Lean to rich sensor switch time**	6	10
	○ **Response time (Lean to Rich)**	A0	10
	○ **Response time (Rich to Lean)**	A1	10
	○ **Response time ratio**	A2	20
02	Oxygen Sensor Monitor Bank 1 - Sensor 2		
	○ **Rich to lean sensor switch time**	5	10
	○ **Lean to rich sensor switch time**	6	10
05	Oxygen Sensor Monitor Bank 2 - Sensor 1		
	○ **Rich to lean sensor switch time**	5	10
	○ **Lean to rich sensor switch time**	6	10
	○ **Response time (Lean to Rich)**	A3	10
	○ **Response time (Rich to Lean)**	A4	10
	○ **Response time ratio**	A5	20
06	Oxygen Sensor Monitor Bank 2 - Sensor 2		
	○ **Rich to lean sensor switch time**	5	10
	○ **Lean to rich sensor switch time**	6	10

20	OBDMIDs supported ($21 - $40)	-	-
21	Catalyst Monitor Bank 1		
	○ **Catalyst oxygen storage metric**	AD	10
22	Catalyst Monitor Bank 2		
	○ **Catalyst oxygen storage metric**	AE	10
3A	EVAP Monitor (0.090")		
	○ **Leak Test Time**	AA	10
3B	EVAP Monitor (0.040")		
	○ **Leak Test Time**	AB	10
3C	EVAP Monitor (0.020")		
	○ **Leak Test Time**	AC	10
3D	Purge Valve Diagnostic		
	Purge Valve Diagnostic off idle test fuelling deviation	B0	39
	Purge Valve Diagnostic idle test torque deviation	B1	82
	Purge Valve Diagnostic idle test fuelling deviation	B2	39
	Purge Valve Diagnostic idle stability test idle speed error differential	B3	81
	Purge Valve Diagnostic idle stability test idle speed error	B4	82
40	OBDMIDs supported ($41 - $60)	-	-
41	Oxygen Sensor Heater Monitor Bank 1 - Sensor 1		
	○ **O_2 Sensor Heater Resistance**	A6	13
42	Oxygen Sensor Heater Monitor Bank 1 - Sensor 2		
	○ **O_2 Sensor Heater Resistance**	A7	13
45	Oxygen Sensor Heater Monitor Bank 2 - Sensor 1		
	○ **O_2 Sensor Heater**	A8	13

	Resistance		
46	Oxygen Sensor Heater Monitor Bank 2 - Sensor 2		
	○ **O_2 Sensor Heater Resistance**	A9	13
60	OBDMIDs supported ($61 - $80)	-	-
80	OBDMIDs supported ($81 - $A0)	-	-
81	Fuel System Monitor Bank 1		
	○ **Fuel Shift Trim Percent of Bank 1**	95	39
82	Fuel System Monitor Bank 2		
	○ **Fuel Shift Trim Percent of Bank 2**	96	39
A0	OBDMIDs supported ($A1 - $C0)	-	-
A2	Misfire Cylinder 1 Data		
	○ **EWMA (Exponential Weighted Moving Average)**	0B	24
	○ **Misfire counts for last/current driving cycles**	0C	24
A3	Misfire Cylinder 2 Data		
	○ **EWMA (Exponential Weighted Moving Average)**	0B	24
	○ **Misfire counts for last/current driving cycles**	0C	24
A4	Misfire Cylinder 3 Data		
	○ **EWMA (Exponential Weighted Moving Average)**	0B	24
	○ **Misfire counts for last/current driving**	0C	24

	cycles		
A5	Misfire Cylinder 4 Data		
	○ **EWMA (Exponential Weighted Moving Average)**	0B	24
	○ **Misfire counts for last/current driving cycles**	0C	24
A6	Misfire Cylinder 5 Data		
	○ **EWMA (Exponential Weighted Moving Average)**	0B	24
	○ **Misfire counts for last/current driving cycles**	0C	24
A7	Misfire Cylinder 6 Data		
	○ **EWMA (Exponential Weighted Moving Average)**	0B	24
	○ **Misfire counts for last/current driving cycles**	0C	24
A8	Misfire Cylinder 7 Data		
	○ **EWMA (Exponential Weighted Moving Average)**	0B	24
	○ **Misfire counts for last/current driving cycles**	0C	24
A9	Misfire Cylinder 8 Data		
	○ **EWMA (Exponential Weighted Moving Average)**	0B	24
	○ **Misfire counts for last/current driving cycles**	0C	24
AA	Misfire Cylinder 9 Data		

	○ **EWMA (Exponential Weighted Moving Average)**	0B	24
	○ **Misfire counts for last/current driving cycles**	0C	24
AB	Misfire Cylinder 10 Data		
	○ **EWMA (Exponential Weighted Moving Average)**	0B	24
	○ **Misfire counts for last/current driving cycles**	0C	24

2009-10 PT CRUISER

2009/2010 PT CRUISER(PT)

This application chart provides documentation for what Service ID $06 OBDMIDs, TIDs, and scaling IDs are implemented in the NGCIII Chrysler ECU. The following defines the convention used to determine the required level of support, with the following appreciation being used:

Mandatory (M) 'M' in the column under Service ID $06 indicates that this PID is supported for all applications.

Conditional (C) 'C' indicates that this PID is application-specific and applies only to certain conditional packages such as dual-bank O_2 systems, CNG/LPG fuels, charge temp equipped packages, etc.

PT CRUISER

OBDMID (Hex)	OBDMID Description	Test ID (TID)	Scaling ID	Service ID $06
				All I4 Engines
00	OBDMIDs supported ($01 - $20)	-	-	M
01	Oxygen Sensor Monitor Bank 1 - Sensor 1			
	○ **O2 Sensor Full Cycle Switch Counter (old monitor, data always = 0)**	81	24	M
	○ **O2 Sensor Final Ratio Result (new**	91	2F	M

	monitor)			
02	Oxygen Sensor Monitor Bank 1 - Sensor 2			
	○ **Minimum sensor voltage for test cycle**	07	0B	M
	○ **Maximum sensor voltage for test cycle**	08	0B	M
20	OBDMIDs supported ($21 - $40)	-	-	M
21	Catalyst Monitor Bank 1			
	○ **O2 Sensor Switch Frequency Ratio (old monitor, data always = 0)**	80	2F	M
	○ **O2 Sensor Test Ratio Result (new monitor)**	92	2F	M
39	EVAP Monitor (Cap Off)			
	○ **Natural Vacuum Leak Detection (NVLD) Test Time**	87	35	M
3A	EVAP Monitor (0.090")			
	○ Natural Vacuum Leak Detection (NVLD) Test Time	87	35	M
3C	EVAP Monitor (0.020")			
	○ **Natural Vacuum Leak Detection (NVLD) Accumulated Engine 'ON' Time**	85	34	M
	○ **Natural Vacuum Leak Detection (NVLD) Accumulated Engine 'OFF' Time**	86	34	M
	○ **Switch Time to Close**	90	34	M
3D	Purge Flow Monitor			
		83	2E	M

	○ **Natural Vacuum Leak Detection Switch Input**			
	○ **Purge Valve Fraction**	84	30	M
40	OBDMIDs supported ($41 - $60)	-	-	M
41	Oxygen Sensor Heater Monitor Bank 1 - Sensor 1			
	○ **O_2 Heater Temperature Error**	97	16	M
	○ **O_2 Heater Temperature Error In-Control Time**	98	35	M
42	Oxygen Sensor Heater Monitor Bank 1 - Sensor 2			
	○ **O_2 Heater Temperature Error**	97	16	M
	○ **O_2 Heater Temperature Error In-Control Time**	98	35	M
60	OBDMIDs supported ($61 - $80)	-	-	M
80	OBDMIDs supported ($81 - $A0)	-	-	M
A0	OBDMIDs supported ($A1 - $C0)	-	-	M
A2	Misfire Cylinder 1 Data			
	○ **EWMA (Exponential Weighted Moving Average)**	0B	24	M
	○ **Misfire counts for last/current driving cycles**	0C	24	M
A3	Misfire Cylinder 2 Data			
	○ **EWMA**	0B	24	M

	(Exponential Weighted Moving Average)			
	○ **Misfire counts for last/current driving cycles**	0C	24	M
A4	Misfire Cylinder 3 Data			
	○ **EWMA (Exponential Weighted Moving Average)**	0B	24	M
	○ **Misfire counts for last/current driving cycles**	0C	24	M
A5	Misfire Cylinder 4 Data			
	○ **EWMA (Exponential Weighted Moving Average)**	0B	24	M
	○ **Misfire counts for last/current driving cycles**	0C	24	M
C0	OBDMIDs supported ($C1 - $E0)	-	-	M
E0	OBDMIDs supported ($E1 - $FF)	-	-	M
E1	EVAP Monitor (General)			
	○ **Natural Vacuum Leak Detection (NVLD) Test Time**	87	35	M

2009 - ALL VEHICLES WITH V6 OR V8 ENGINES

2009 - ALL VEHICLES WITH V6 OR V8 ENGINES

Aspen (HG), Durango (HB), Caravan (RT), Challenger (LC), Charger (LX), Commander (XK), Chrysler 300/300C (LX), Dakota (ND), Grand Cherokee (WK), Journey(JC), Liberty (KK), Nitro (KA), Raider (NM), Ram Pickup (DS, DC, DH), Sebring/Avenger (JS), Wrangler (JK), Town and Country (RT), Routan (RM)

This application chart provides documentation for what Service ID $06 OBDMIDs, TIDs, and scaling IDs are implemented in the NGC4 and NGC4A Chrysler ECU. The following defines the convention used to determine the required level of support, with the following appreciation being used:

Mandatory (M) 'M' in the column under Service ID $06 indicates that this PID is supported for all applications.

Conditional (C) 'C' indicates that this PID is application-specific and applies only to certain conditional packages such as dual-bank O_2 systems, CNG/LPG fuels, charge temp equipped packages, etc.

VEHICLES WITH V6 OR V8 ENGINES

OBDMID (Hex)	OBDMID Description	Test ID (TID)	Scaling ID	Service ID $06
				All v6/v8 Gasoline Engines
00	OBDMIDs supported ($01 - $20)	-	-	M
01	Oxygen Sensor Monitor Bank 1 - Sensor 1			
	○ **O2 Sensor Final Ratio Result**	91	2F	M
02	Oxygen Sensor Monitor Bank 1 - Sensor 2			
	○ **Minimum sensor voltage for test cycle**	07	0B	M
	○ **Maximum sensor voltage for test cycle**	08	0B	M
	○ Slow Response Rich to Lean Result	81	04	M
	○ Signal Biased Rich Mass Flow Result	82	01	M
	○ Signal Biased Rich Voltage Result	83	8A	M
05	Oxygen Sensor Monitor Bank 2 - Sensor 1			
	○ **O2 Sensor Final Ratio Result**	91	2F	M
06	Oxygen Sensor Monitor Bank 2 - Sensor 2			
	○ **Minimum sensor voltage for test cycle**	07	0B	M
	○ **Maximum sensor voltage for test cycle**	08	0B	M
	○ Slow Response Rich to Lean Result	81	04	M
	○ Signal Biased Rich	82	01	M

	Mass Flow Result			
	○ Signal Biased Rich Voltage Result	83	8A	M
20	OBDMIDs supported ($21 - $40)	-	-	M
21	Catalyst Monitor Bank 1			
	○ **O2 Sensor Test Ratio Result**	92	2F	M
22	Catalyst Monitor Bank 2			
	○ **O2 Sensor Test Ratio Result**	92	2F	M
31	EGR Monitor Bank 1			
	○ **Fuel Shift Above Threshold Counter**	93	24	C
	○ **Fuel Shift Below Threshold Counter**	94	24	C
	○ **Fuel Shift Trim Percent of Bank 1**	95	39	C
	○ **Fuel Shift Trim Percent of Bank 2**	96	39	C
35	VVT/VCT Monitor Bank 1			
	○ **Exhaust CAM Slow Response**	82	1C	C
	○ **Exhaust CAM Target Error**	84	1C	C
39	EVAP Monitor (Cap Off)			
	○ **Natural Vacuum Leak Detection (NVLD) Test Time**	87	35	M
3A	EVAP Monitor (0.090")			
	○ Natural Vacuum Leak Detection (NVLD) Test Time	87	35	M
3C	EVAP Monitor (0.020")			
	○ **Natural Vacuum Leak Detection (NVLD) Accumulated Engine 'ON' Time**	85	34	M
	○ **Natural Vacuum**	86	34	M

	Leak Detection (NVLD) Accumulated Engine 'OFF' Time			
	○ **Switch Time to Close**	90	34	M
3D	Purge Flow Monitor			
	○ **Natural Vacuum Leak Detection Switch Input**	83	2E	M
	○ **Purge Valve Fraction**	84	30	M
	○ Flow Error Result	85	83	M
	○ O2 Factor Shift Result	86	05	M
	○ Switch Ratio Result	87	04	M
	○ Gas Flow Average Ratio Result	88	04	M
	○ **Natural Vacuum Leak Detection (NVLD) Test Time**	89	35	M(1)
40	OBDMIDs supported ($41 - $60)	-	-	M
41	Oxygen Sensor Heater Monitor Bank 1 - Sensor 1			
	○ **O_2 Heater Temperature Error**	97	16	M
	○ **O_2 Heater Temperature Error In-Control Time**	98	35	M
42	Oxygen Sensor Heater Monitor Bank 1 - Sensor 2			
	○ **O_2 Heater Temperature Error**	97	16	M
	○ **O_2 Heater Temperature Error In-Control**	98	35	M

	Time			
45	Oxygen Sensor Heater Monitor Bank 2 - Sensor 1			
	○ **O_2 Heater Temperature Error**	97	16	M
	○ **O_2 Heater Temperature Error In-Control Time**	98	35	M
46	Oxygen Sensor Heater Monitor Bank 2 - Sensor 2			
	○ **O_2 Heater Temperature Error**	97	16	M
	○ **O_2 Heater Temperature Error In-Control Time**	98	35	M
60	OBDMIDs supported ($61 - $80)	-	-	M
80	OBDMIDs supported ($81 - $A0)	-	-	M
A0	OBDMIDs supported ($A1 - $C0)	-	-	M
A2	Misfire Cylinder 1 Data			
	○ **EWMA (Exponential Weighted Moving Average)**	0B	24	M
	○ **Misfire counts for last/current driving cycles**	0C	24	M
A3	Misfire Cylinder 2 Data			
	○ **EWMA (Exponential Weighted Moving Average)**	0B	24	M
	○ **Misfire counts for last/current driving cycles**	0C	24	M
A4	Misfire Cylinder 3 Data			

	○ **EWMA (Exponential Weighted Moving Average)**	0B	24	M
	○ **Misfire counts for last/current driving cycles**	0C	24	M
A5	Misfire Cylinder 4 Data			
	○ **EWMA (Exponential Weighted Moving Average)**	0B	24	M
	○ **Misfire counts for last/current driving cycles**	0C	24	M
A6	Misfire Cylinder 5 Data			
	○ **EWMA (Exponential Weighted Moving Average)**	0B	24	M
	○ **Misfire counts for last/current driving cycles**	0C	24	M
A7	Misfire Cylinder 6 Data			
	○ **EWMA (Exponential Weighted Moving Average)**	0B	24	M
	○ **Misfire counts for last/current driving cycles**	0C	24	M
A8	Misfire Cylinder 7 Data			
	○ **EWMA (Exponential Weighted Moving Average)**	0B	24	C
	○ **Misfire counts for last/current driving cycles**	0C	24	C
A9	Misfire Cylinder 8 Data			
	○ **EWMA (Exponential**	0B	24	C

	Weighted Moving Average)			
	○ **Misfire counts for last/current driving cycles**	0C	24	C

2009 VEHICLES WITH THE "WORLD I4" 4 CYLINDER ENGINE

2009 VEHICLES WITH THE "WORLD I4" 4 CYLINDER ENGINE

Caliber (PM), Compass (MK), Patriot (MK74), Sebring/Avenger (JS) and Journey (JC) with 4 cylinder engines

This application chart provides documentation for what Service IDs, PIDS, OBDMIDs, TIDs, and INFOTYPEs that are implemented in the GPECI Chrysler ECU. The following defines the convention used to determine the required level of support, with the following appreciation being used:

Mandatory (M) 'M' in the column under Service ID $06 indicates that this PID is supported for all applications.

Conditional (C) 'C' indicates that this PID is application-specific and applies only to certain conditional packages such as dual-bank O_2 systems, CNG/LPG fuels, charge temp equipped packages, etc.

"WORLD I4" 4 CYLINDER ENGINE

OBDMID (Hex)	OBDMID Description	Test ID (TID)	Scaling ID	Service ID $06
				All I4 Engines
00	OBDMIDs supported ($01 - $20)	-	-	M
01	Oxygen Sensor Monitor Bank 1 - Sensor 1			
	○ **O2 Sensor Final Ratio Result (new monitor)**	91	2F	M
02	Oxygen Sensor Monitor Bank 1 - Sensor 2			
	○ Mean value of ratio between the monitor sensor switching time and the threshold value - rich to lean	81	05	M
	○ Sum of voltage change over test time for lean to rich	82	24	M
20	OBDMIDs supported ($21 - $40)	-	-	M

21	Catalyst Monitor Bank 1			
	○ **O2 Sensor Test Ratio Result (new monitor)**	92	2F	M
39	EVAP Monitor (Cap Off)			
	○ **Leak Test Time**	87	35	M
3A	EVAP Monitor (0.090")			
	○ Leak Test Time	87	35	M
3B	EVAP Monitor (0.040")			
3C	EVAP Monitor (0.020")			
	○ **Small Leak Accumulated Engine 'ON' Time**	85	34	M
	○ **Small Leak Accumulated Engine 'OFF' Time**	86	34	M
	○ **Leak Detection Switch Time to Close**	90	34	M
3D	Purge Flow Monitor			
	○ **Leak Detection Switch Input**	83	2E	M
	○ **Purge Valve Fraction**	84	30	M
	○ Purge Flow Error	85	84	M
	○ Purge O2Factor Shift	86	84	M
	○ **Leak Detection Switch - Ratio - closed to open**	87	04	M
	○ **Natural Vacuum Leak Detection (NVLD) Test Time**	89	35	M
40	OBDMIDs supported ($41 - $60)	-	-	M
41	Oxygen Sensor Heater Monitor Bank 1 - Sensor 1			
	○ **O_2 Heater Temperature Error**	97	16	M

	○ **O_2 Heater Temperature Error In-Control Time**	98	24	M
42	Oxygen Sensor Heater Monitor Bank 1 - Sensor 2			
	○ **O_2 Heater Temperature Error**	97	16	M
	○ **O_2 Heater Temperature Error In-Control Time**	98	24	M
60	OBDMIDs supported ($61 - $80)	-	-	M
71	Secondary Air Monitor 1			
	Air Flow - Too Low	81	2A	C
72	Secondary Air Monitor 2			
	Air Flow - Too High	81	2A	C
80	OBDMIDs supported ($81 - $A0)	-	-	M
A0	OBDMIDs supported ($A1 - $C0)	-	-	M
A2	Misfire Cylinder 1 Data			
	○ **EWMA (Exponential Weighted Moving Average)**	0B	24	M
	○ **Misfire counts for last/current driving cycles**	0C	24	M
A3	Misfire Cylinder 2 Data			
	○ **EWMA (Exponential Weighted Moving Average)**	0B	24	M
	○ **Misfire counts for last/current driving cycles**	0C	24	M
A4	Misfire Cylinder 3 Data			
	○ **EWMA (Exponential**	0B	24	M

	Weighted Moving Average)			
	○ **Misfire counts for last/current driving cycles**	0C	24	M
A5	Misfire Cylinder 4 Data			
	○ **EWMA (Exponential Weighted Moving Average)**	0B	24	M
	○ **Misfire counts for last/current driving cycles**	0C	24	M

2010 - ALL VEHICLES WITH V6 OR V8 ENGINES

2010 - ALL VEHICLES WITH V6 OR V8 ENGINES

Caravan(RT), Challenger(LC), Charger(LX), Commander(XK), Chrysler 300/300C(LX), Dakota(ND), Grand Cherokee (WK), Journey(JC), Liberty(KK), Nitro(KA), Raider(NM), Ram Pickup(DS, DC, DH), Sebring/Avenger(JS), Wrangler (JK), Town and Country(RT), Routan(RM)

This application chart provides documentation for what Service ID $06 OBDMIDs, TIDs, and scaling IDs are implemented in the NGC4 and NGC4A Chrysler ECU. The following defines the convention used to determine the required level of support, with the following appreciation being used:

Mandatory (M) 'M' in the column under Service ID $06 indicates that this PID is supported for all applications.

Conditional (C) 'C' indicates that this PID is application-specific and applies only to certain conditional packages such as dual-bank O_2 systems, CNG/LPG fuels, charge temp equipped packages, etc.

VEHICLES WITH V6 OR V8 ENGINES

OBDMID (Hex)	OBDMID Description	Test ID (TID)	Scaling ID	Service ID $06
				All v6/v8 Gasoline Engines
00	OBDMIDs supported ($01 - $20)	-	-	M
01	Oxygen Sensor Monitor Bank 1 - Sensor 1			
	○ **O2 Sensor Final Ratio Result**	91	2F	M
02	Oxygen Sensor Monitor Bank 1 - Sensor 2			

	○ **Minimum sensor voltage for test cycle**	07	0B	M
	○ **Maximum sensor voltage for test cycle**	08	0B	M
	○ Slow Response Rich to Lean Result	81	04	M
	○ Signal Biased Rich Mass Flow Result	82	01	M
	○ Signal Biased Rich Voltage Result	83	8A	M
05	Oxygen Sensor Monitor Bank 2 - Sensor 1			
	○ **O2 Sensor Final Ratio Result**	91	2F	M
06	Oxygen Sensor Monitor Bank 2 - Sensor 2			
	○ **Minimum sensor voltage for test cycle**	07	0B	M
	○ **Maximum sensor voltage for test cycle**	08	0B	M
	○ Slow Response Rich to Lean Result	81	04	M
	○ Signal Biased Rich Mass Flow Result	82	01	M
	○ Signal Biased Rich Voltage Result	83	8A	M
20	OBDMIDs supported ($21 - $40)	-	-	M
21	Catalyst Monitor Bank 1			
	○ **O2 Sensor Test Ratio Result**	92	2F	M
22	Catalyst Monitor Bank 2			
	○ **O2 Sensor Test Ratio Result**	92	2F	M
31	EGR Monitor Bank 1			
	○ **Fuel Shift Above Threshold Counter**	93	24	C
	○ **Fuel Shift Below Threshold Counter**	94	24	C
	○ **Fuel Shift Trim**	95	39	C

	Percent of Bank 1			
	○ **Fuel Shift Trim Percent of Bank 2**	96	39	C
35	VVT/VCT Monitor Bank 1			
	○ **Exhaust CAM Slow Response/Target Error**	82	1C	C
39	EVAP Monitor (Cap Off)			
	○ **Natural Vacuum Leak Detection (NVLD) Test Time**	87	35	M
3A	EVAP Monitor (0.090")			
	○ Natural Vacuum Leak Detection (NVLD) Test Time	87	35	M
3C	EVAP Monitor (0.020")			
	○ **Natural Vacuum Leak Detection (NVLD) Accumulated Engine 'ON' Time**	85	34	M
	○ **Natural Vacuum Leak Detection (NVLD) Accumulated Engine 'OFF' Time**	86	34	M
	○ **Switch Time to Close**	90	34	M
3D	Purge Flow Monitor			
	○ **Natural Vacuum Leak Detection Switch Input**	83	2E	M
	○ **Purge Valve Fraction**	84	30	M
	○ Flow Error Result	85	83	M
	○ O2 Factor Shift Result	86	05	M
	○ Switch Ratio Result	87	04	M
	○ Gas Flow Average Ratio Result	88	04	M
	○ **Natural Vacuum Leak Detection (NVLD) Test Time**	89	35	M
40	OBDMIDs supported ($41 - $60)	-	-	M

41	Oxygen Sensor Heater Monitor Bank 1 - Sensor 1			
	○ **O_2 Heater Temperature Error**	97	16	M
	○ **O_2 Heater Temperature Error In-Control Time**	98	35	M
42	Oxygen Sensor Heater Monitor Bank 1 - Sensor 2			
	○ **O_2 Heater Temperature Error**	97	16	M
	○ **O_2 Heater Temperature Error In-Control Time**	98	35	M
45	Oxygen Sensor Heater Monitor Bank 2 - Sensor 1			
	○ **O_2 Heater Temperature Error**	97	16	M
	○ **O_2 Heater Temperature Error In-Control Time**	98	35	M
46	Oxygen Sensor Heater Monitor Bank 2 - Sensor 2			
	○ **O_2 Heater Temperature Error**	97	16	M
	○ **O_2 Heater Temperature Error In-Control Time**	98	35	M
60	OBDMIDs supported ($61 - $80)	-	-	M
80	OBDMIDs supported ($81 - $A0)	-	-	M
A0	OBDMIDs supported ($A1 - $C0)	-	-	M
A2	Misfire Cylinder 1 Data			
	○ **EWMA (Exponential Weighted Moving Average)**	0B	24	M
	○ **Misfire counts for last/current driving**	0C	24	M

	cycles			
A3	Misfire Cylinder 2 Data			
	○ **EWMA (Exponential Weighted Moving Average)**	0B	24	M
	○ **Misfire counts for last/current driving cycles**	0C	24	M
A4	Misfire Cylinder 3 Data			
	○ **EWMA (Exponential Weighted Moving Average)**	0B	24	M
	○ **Misfire counts for last/current driving cycles**	0C	24	M
A5	Misfire Cylinder 4 Data			
	○ **EWMA (Exponential Weighted Moving Average)**	0B	24	M
	○ **Misfire counts for last/current driving cycles**	0C	24	M
A6	Misfire Cylinder 5 Data			
	○ **EWMA (Exponential Weighted Moving Average)**	0B	24	M
	○ **Misfire counts for last/current driving cycles**	0C	24	M
A7	Misfire Cylinder 6 Data			
	○ **EWMA (Exponential Weighted Moving Average)**	0B	24	M
	○ **Misfire counts for last/current driving cycles**	0C	24	M
A8	Misfire Cylinder 7 Data			
	○ **EWMA (Exponential Weighted Moving Average)**	0B	24	C
	○ **Misfire counts for last/current driving**	0C	24	C

	cycles			
A9	Misfire Cylinder 8 Data			
	○ **EWMA (Exponential Weighted Moving Average)**	0B	24	C
	○ **Misfire counts for last/current driving cycles**	0C	24	C

2010 VEHICLES

2010 VEHICLES WITH THE "WORLD I4" 4 CYLINDER ENGINE

Caliber(PM), Compass(MK), Patriot(MK74), Sebring/Avenger(JS) with 4 cylinder engines, and Journey(JC) with 4 cylinder engines

This application chart provides documentation for what Service IDs, PIDS, OBDMIDs, TIDs, and INFOTYPEs that are implemented in the GPECI Chrysler ECU. The following defines the convention used to determine the required level of support, with the following appreciation being used:

Mandatory (M) 'M' in the column under Service ID $06 indicates that this PID is supported for all applications.

Conditional (C) 'C' indicates that this PID is application-specific and applies only to certain conditional packages such as dual-bank O_2 systems, CNG/LPG fuels, charge temp equipped packages, etc.

"WORLD I4" 4 CYLINDER ENGINE

OBDMID (Hex)	OBDMID Description	Test ID (TID)	Scaling ID	Service ID $06
				All I4 Engines
00	OBDMIDs supported ($01 - $20)	-	-	M
01	Oxygen Sensor Monitor Bank 1 - Sensor 1			
	○ **O2 Sensor Final Ratio Result (new monitor)**	91	2F	M
02	Oxygen Sensor Monitor Bank 1 - Sensor 2			
	○ Mean value of ratio between the monitor sensor switching time and the threshold value - rich to lean	81	05	M
	○ Sum of voltage	82	24	M

	change over test time for lean to rich			
20	OBDMIDs supported ($21 - $40)	-	-	M
21	Catalyst Monitor Bank 1			
	○ **O2 Sensor Test Ratio Result (new monitor)**	92	2F	M
39	EVAP Monitor (Cap Off)			
	○ **Leak Test Time**	87	35	M
3A	EVAP Monitor (0.090")			
	○ Leak Test Time	87	35	M
3B	EVAP Monitor (0.040")			
3C	EVAP Monitor (0.020")			
	○ **Small Leak Accumulated Engine 'ON' Time**	85	34	M
	○ **Small Leak Accumulated Engine 'OFF' Time**	86	34	M
	○ **Leak Detection Switch Time to Close**	90	34	M
3D	Purge Flow Monitor			
	○ **Leak Detection Switch Input**	83	2E	M
	○ **Purge Valve Fraction**	84	30	M
	○ Purge Flow Error	85	84	M
	○ Purge O2Factor Shift	86	84	M
	○ **Leak Detection Switch - Ratio - closed to open**	87	04	M
	○ **Natural Vacuum Leak Detection (NVLD) Test Time**	89	35	M
40	OBDMIDs supported ($41 - $60)	-	-	M
41	Oxygen Sensor Heater			

	Monitor Bank 1 - Sensor 1			
	○ **O_2 Heater Temperature Error**	97	16	M
	○ **O_2 Heater Temperature Error In-Control Time**	98	24	M
42	Oxygen Sensor Heater Monitor Bank 1 - Sensor 2			
	○ **O_2 Heater Temperature Error**	97	16	M
	○ **O_2 Heater Temperature Error In-Control Time**	98	24	M
60	OBDMIDs supported ($61 - $80)	-	-	M
71	Secondary Air Monitor 1			
	Air Flow - Too Low	81	2A	C
72	Secondary Air Monitor 2			
	Air Flow - Too High	81	2A	C
80	OBDMIDs supported ($81 - $A0)	-	-	M
A0	OBDMIDs supported ($A1 - $C0)	-	-	M
A2	Misfire Cylinder 1 Data			
	○ **EWMA (Exponential Weighted Moving Average)**	0B	24	M
	○ **Misfire counts for last/current driving cycles**	0C	24	M
A3	Misfire Cylinder 2 Data			
	○ **EWMA (Exponential Weighted Moving Average)**	0B	24	M
	○ **Misfire counts for**	0C	24	M

	last/current driving cycles			
A4	Misfire Cylinder 3 Data			
	○ **EWMA (Exponential Weighted Moving Average)**	0B	24	M
	○ **Misfire counts for last/current driving cycles**	0C	24	M
A5	Misfire Cylinder 4 Data			
	○ **EWMA (Exponential Weighted Moving Average)**	0B	24	M
	○ **Misfire counts for last/current driving cycles**	0C	24	M

2010 VEHICLES WITH V6 OR V8 ENGINES

Caravan(RT), Challenger(LC), Charger(LX), Commander(XK), Chrysler 300/300C(LX), Dakota(ND), Grand Cherokee (WK), Journey(JC), Liberty(KK), Nitro(KA), Raider(NM), Ram Pickup(DS,DC,DH), Sebring/Avenger(JS), Wrangler (JK), Town and Country(RT), Routan(RM)

This application chart provides documentation for what Service IDs, PIDS, OBDMIDs, TIDs, and INFOTYPEs that are implemented in the GPECI Chrysler ECU. The following defines the convention used to determine the required level of support, with the following appreciation being used:

Mandatory (M) 'M' in the column under Service ID $06 indicates that this PID is supported for all applications.

Conditional (C) 'C' indicates that this PID is application-specific and applies only to certain conditional packages such as dual-bank O_2 systems, CNG/LPG fuels, charge temp equipped packages, etc.

V6 OR V8 ENGINES

OBDMID (Hex)	OBDMID Description	Test ID (TID)	Scaling ID	Service ID $06
				All V6/V8 Gasoline Engines
00	OBDMIDs supported ($01 - $20)	-	-	M
01	Oxygen Sensor Monitor Bank 1 - Sensor 1			
	○ **O2 Sensor Final Ratio Result**	91	2F	M

02	Oxygen Sensor Monitor Bank 1 - Sensor 2			
	○ **Minimum sensor voltage for test cycle**	07	0B	M
	○ **Maximum sensor voltage for test cycle**	08	0B	M
	○ Slow Response Rich to Lean Result	81	04	M
	○ Signal Biased Rich Mass Flow Result	82	01	M
	○ Signal Biased Rich Voltage Result	83	8A	M
05	Oxygen Sensor Monitor Bank 2 - Sensor 1			
	○ **O2 Sensor Final Ratio Result**	91	2F	M
06	Oxygen Sensor Monitor Bank 2 - Sensor 2			
	○ **Minimum sensor voltage for test cycle**	07	0B	M
	○ **Maximum sensor voltage for test cycle**	08	0B	M
	○ Slow Response Rich to Lean Result	81	04	M
	○ Signal Biased Rich Mass Flow Result	82	01	M
	○ Signal Biased Rich Voltage Result	83	8A	M
20	OBDMIDs supported ($21 - $40)	-	-	M
21	Catalyst Monitor Bank 1			
	○ **O2 Sensor Test Ratio Result**	92	2F	M
22	Catalyst Monitor Bank 2			
	○ **O2 Sensor Test Ratio Result**	92	2F	M
31	EGR Monitor Bank 1			
	○ **Fuel Shift Above Threshold Counter**	93	24	C
	○ **Fuel Shift Below Threshold Counter**	94	24	C

	○ **Fuel Shift Trim Percent of Bank 1**	95	39	C
	○ **Fuel Shift Trim Percent of Bank 2**	96	39	C
35	VVT/VCT Monitor Bank 1	1		
	○ **Exhaust CAM Slow Response/Target Error**	82	1C	C
39	EVAP Monitor (Cap Off)			
	○ **Natural Vacuum Leak Detection (NVLD) Test Time**	87	35	M
3A	EVAP Monitor (0.090")			
	○ Natural Vacuum Leak Detection (NVLD) Test Time	87	35	M
3C	EVAP Monitor (0.020")			
	○ **Natural Vacuum Leak Detection (NVLD) Accumulated Engine 'ON' Time**	85	34	M
	○ **Natural Vacuum Leak Detection (NVLD) Accumulated Engine 'OFF' Time**	86	34	M
	○ **Switch Time to Close**	90	34	M
3D	Purge Flow Monitor			
	○ **Natural Vacuum Leak Detection Switch Input**	83	2E	M
	○ **Purge Valve Fraction**	84	30	M
	○ Flow Error Result	85	83	M
	○ O2 Factor Shift Result	86	05	M
	○ Switch Ratio Result	87	04	M
	○ Gas Flow Average Ratio Result	88	04	M
	○ **Natural Vacuum Leak Detection (NVLD) Test Time**	89	35	M
40	OBDMIDs supported ($41 - $60)	-	-	M
41	Oxygen Sensor Heater Monitor Bank 1 - Sensor 1			

	○ **O_2 Heater Temperature Error**	97	16	M
	○ **O_2 Heater Temperature Error In-Control Time**	98	35	M
42	Oxygen Sensor Heater Monitor Bank 1 - Sensor 2			
	○ **O_2 Heater Temperature Error**	97	16	M
	○ **O_2 Heater Temperature Error In-Control Time**	98	35	M
45	Oxygen Sensor Heater Monitor Bank 2 - Sensor 1			
	○ **O_2 Heater Temperature Error**	97	16	M
	○ **O_2 Heater Temperature Error In-Control Time**	98	35	M
46	Oxygen Sensor Heater Monitor Bank 2 - Sensor 2			
	○ **O_2 Heater Temperature Error**	97	16	M
	○ **O_2 Heater Temperature Error In-Control Time**	98	35	M
60	OBDMIDs supported ($61 - $80)	-	-	M
80	OBDMIDs supported ($81 - $A0)	-	-	M
A0	OBDMIDs supported ($A1 - $C0)	-	-	M
A2	Misfire Cylinder 1 Data			
	○ **EWMA (Exponential Weighted Moving Average)**	0B	24	M
	○ **Misfire counts for last/current driving cycles**	0C	24	M
A3	Misfire Cylinder 2 Data			
	○ **EWMA (Exponential Weighted Moving Average)**	0B	24	M
	○ **Misfire counts for last/current driving cycles**	0C	24	M
A4	Misfire Cylinder 3 Data			

	○ **EWMA (Exponential Weighted Moving Average)**	0B	24	M
	○ **Misfire counts for last/current driving cycles**	0C	24	M
A5	Misfire Cylinder 4 Data			
	○ **EWMA (Exponential Weighted Moving Average)**	0B	24	M
	○ **Misfire counts for last/current driving cycles**	0C	24	M
A6	Misfire Cylinder 5 Data			
	○ **EWMA (Exponential Weighted Moving Average)**	0B	24	M
	○ **Misfire counts for last/current driving cycles**	0C	24	M
A7	Misfire Cylinder 6 Data			
	○ **EWMA (Exponential Weighted Moving Average)**	0B	24	M
	○ **Misfire counts for last/current driving cycles**	0C	24	M
A8	Misfire Cylinder 7 Data			
	○ **EWMA (Exponential Weighted Moving Average)**	0B	24	C
	○ **Misfire counts for last/current driving cycles**	0C	24	C
A9	Misfire Cylinder 8 Data			
	○ **EWMA (Exponential Weighted Moving Average)**	0B	24	C
	○ **Misfire counts for last/current driving cycles**	0C	24	C

2011 VEHICLES

2011 VEHICLES WITH I4, V6 OR V8 ENGINES

Caliber(PM), Caravan(RT), Challenger(LC), Charger(LD), Chrysler 300/300C(LX), Durango(WD), Compass(MK), Dakota(ND), Grand Cherokee(WK), Journey(JC), Liberty(KK), Nitro(KA), Patriot(MK74), Ram Pickup(DS,DJ,DD),

Sebring/Avenger(JS), Wrangler(JK), Town and Country(RT), Routan(RM)

This application chart provides documentation for what Service ID $06 OBDMIDs, TIDs, and scaling IDs are implemented in the GPECII and NGC4A Chrysler ECU. The following defines the convention used to determine the required level of support, with the following appreciation being used:

Mandatory (M) 'M' in the column under Service ID $06 indicates that this PID is supported for all applications.

Conditional (C) 'C' indicates that this PID is application-specific and applies only to certain conditional packages such as dual-bank O_2 systems, CNG/LPG fuels, charge temp equipped packages, etc.

I4, V6 OR V8 ENGINES

OBDMID (Hex)	OBDMID Description	Test ID (TID)	Scaling ID	Service ID $06
				All V6/V8 Gasoline Engines
00	OBDMIDs supported ($01 - $20)	-	-	M
01	Oxygen Sensor Monitor Bank 1 - Sensor 1			
	○ **O2 Sensor Final Ratio Result**	91	2F	M
	○ **O2 Sensor High Frequency Response Result**	92	05	C
02	Oxygen Sensor Monitor Bank 1 - Sensor 2			
	○ **Minimum sensor voltage for test cycle**	07	0B	M
	○ **Maximum sensor voltage for test cycle**	08	0B	M
	○ Slow Response Rich to Lean Result	81	04	M
	○ Signal Biased Rich Mass Flow Result	82	01	M
	○ Signal Biased Rich Voltage Result	83	8A	M
05	Oxygen Sensor Monitor Bank 2 - Sensor 1			
	○ **O2 Sensor Final Ratio Result**	91	2F	M
	○ **O2 Sensor High Frequency Response Result**	92	05	C

06	Oxygen Sensor Monitor Bank 2 - Sensor 2			
	○ **Minimum sensor voltage for test cycle**	07	0B	M
	○ **Maximum sensor voltage for test cycle**	08	0B	M
	○ Slow Response Rich to Lean Result	81	04	M
	○ Signal Biased Rich Mass Flow Result	82	01	M
	○ Signal Biased Rich Voltage Result	83	8A	M
20	OBDMIDs supported ($21 - $40)	-	-	M
21	Catalyst Monitor Bank 1			
	○ **O2 Sensor Test Ratio Result**	92	2F	M
22	Catalyst Monitor Bank 2			
	○ **O2 Sensor Test Ratio Result**	92	2F	M
31	EGR Monitor Bank 1			
	○ **Fuel Shift Above Threshold Counter**	93	24	C
	○ **Fuel Shift Below Threshold Counter**	94	24	C
	○ **Fuel Shift Trim Percent of Bank 1**	95	39	C
	○ **Fuel Shift Trim Percent of Bank 2**	96	39	C
35	VVT/VCT Monitor Bank 1	1		
	○ **Intake CAM Slow Response/Target Error**	81	1C	C
	○ **Exhaust CAM Slow Response/Target Error**	82	1C	C
36	VVT/VCT Monitor Bank 2			
	○ **Intake CAM Slow Response/Target Error**	81	1C	C
	○ **Exhaust CAM Slow Response/Target Error**	82	1C	C
39	EVAP Monitor (Cap Off)			
	○ **Natural Vacuum Leak**	87	35	M

	Detection (NVLD) Test Time			
3A	EVAP Monitor (0.090")			
	○ Natural Vacuum Leak Detection (NVLD) Test Time	87	35	M
3C	EVAP Monitor (0.020")			
	○ **Natural Vacuum Leak Detection (NVLD) Accumulated Engine 'ON' Time**	85	34	M
	○ **Natural Vacuum Leak Detection (NVLD) Accumulated Engine 'OFF' Time**	86	34	M
	○ **Switch Time to Close**	90	34	M
3D	Purge Flow Monitor			
	○ **Natural Vacuum Leak Detection Switch Input**	83	2E	M
	○ **Purge Valve Fraction**	84	30	M
	○ Flow Error Result	85	83	M
	○ O2 Factor Shift Result	86	05	M
	○ Switch Ratio Result	87	04	M
	○ Gas Flow Average Ratio Result	88	04	M
	○ **Natural Vacuum Leak Detection (NVLD) Test Time**	89	35	M
40	OBDMIDs supported ($41 - $60)	-	-	M
41	Oxygen Sensor Heater Monitor Bank 1 - Sensor 1			
	○ **O_2 Heater Temperature Error**	97	16	M
	○ **O_2 Heater Temperature Error In-Control Time**	98	35	M
42	Oxygen Sensor Heater Monitor Bank 1 - Sensor 2			
	○ **O_2 Heater Temperature Error**	97	16	M

	○ **O_2 Heater Temperature Error In-Control Time**	98	35	M
45	Oxygen Sensor Heater Monitor Bank 2 - Sensor 1			
	○ **O_2 Heater Temperature Error**	97	16	C
	○ **O_2 Heater Temperature Error In-Control Time**	98	35	C
46	Oxygen Sensor Heater Monitor Bank 2 - Sensor 2			
	○ **O_2 Heater Temperature Error**	97	16	C
	○ **O_2 Heater Temperature Error In-Control Time**	98	35	C
60	OBDMIDs supported ($61 - $80)	-	-	M
71	Secondary Air Monitor 1			
	○ **Secondary Air Monitor 1 Airflow Test**	9B	03	C
80	OBDMIDs supported ($81 - $A0)	-	-	M
81	Fuel System Monitor Bank 1			
	○ **Individual Cylinder Fuel Control Lean Test**	90	05	C
	○ **Individual Cylinder Fuel Control Rich Test**	91	05	C
	○ **Cylinder Imbalance Bank Detection Test**	92	05	C
82	Fuel System Monitor Bank 2			
	○ **Individual Cylinder Fuel Control Lean Test**	90	05	C
	○ **Individual Cylinder Fuel Control Rich Test**	91	05	C
	○ **Cylinder Imbalance Bank Detection Test**	92	05	C
A0	OBDMIDs supported ($A1 - $C0)	-	-	M
A2	Misfire Cylinder 1 Data			
	○ **EWMA (Exponential Weighted Moving Average)**	0B	24	M

	○ **Misfire counts for last/current driving cycles**	0C	24	M
A3	Misfire Cylinder 2 Data			
	○ **EWMA (Exponential Weighted Moving Average)**	0B	24	M
	○ **Misfire counts for last/current driving cycles**	0C	24	M
A4	Misfire Cylinder 3 Data			
	○ **EWMA (Exponential Weighted Moving Average)**	0B	24	M
	○ **Misfire counts for last/current driving cycles**	0C	24	M
A5	Misfire Cylinder 4 Data			
	○ **EWMA (Exponential Weighted Moving Average)**	0B	24	M
	○ **Misfire counts for last/current driving cycles**	0C	24	M
A6	Misfire Cylinder 5 Data			
	○ **EWMA (Exponential Weighted Moving Average)**	0B	24	C
	○ **Misfire counts for last/current driving cycles**	0C	24	C
A7	Misfire Cylinder 6 Data			
	○ **EWMA (Exponential Weighted Moving Average)**	0B	24	C
	○ **Misfire counts for last/current driving cycles**	0C	24	C
A8	Misfire Cylinder 7 Data			
	○ **EWMA (Exponential Weighted Moving Average)**	0B	24	C
	○ **Misfire counts for last/current driving cycles**	0C	24	C
A9	Misfire Cylinder 8 Data			
	○ **EWMA (Exponential Weighted Moving**	0B	24	C

	Average)			
	○ **Misfire counts for last/current driving cycles**	0C	24	C

2012 VEHICLES

2012 VEHICLES WITH I4, V6 OR V8 ENGINES

Caliber(PM), Caravan(RT), Challenger(LC), Charger(LD), Chrysler 300/300C(LX), Durango(WD), Compass(MK), Grand Cherokee(WK), Journey(JC), Liberty(KK), Patriot(MK74), Ram Pickup(DS,DJ,DD), Sebring/Avenger(JS), Wrangler(JK), Town and Country(RT), Routan(RM)

This application chart provides documentation for what Service ID $06 OBDMIDs, TIDs, and scaling IDs are implemented in the GPECII and NGC4A Chrysler ECU. The following defines the convention used to determine the required level of support, with the following appreciation being used:

Mandatory (M) 'M' in the column under Service ID $06 indicates that this PID is supported for all applications.

Conditional (C) 'C' indicates that this PID is application-specific and applies only to certain conditional packages such as dual-bank O_2 systems, CNG/LPG fuels, charge temp equipped packages, etc.

I4, V6 OR V8 ENGINES

OBDMID (Hex)	OBDMID Description	Test ID (TID)	Scaling ID	Service ID $06
				All V6/V8 Gasoline Engines
00	OBDMIDs supported ($01 - $20)	-	-	M
01	Oxygen Sensor Monitor Bank 1 - Sensor 1			
	○ **O2 Sensor Final Ratio Result**	91	2F	M
	○ **O2 Sensor High Frequency Response Result**	92	05	C
02	Oxygen Sensor Monitor Bank 1 - Sensor 2			
	○ **Minimum sensor voltage for test cycle**	07	0B	M
	○ **Maximum sensor voltage for test cycle**	08	0B	M
	○ Slow Response Rich to Lean Result	81	04	M
	○ Signal Biased Rich Mass	82	01	M

	Flow Result			
	○ Signal Biased Rich Voltage Result	83	8A	M
05	Oxygen Sensor Monitor Bank 2 - Sensor 1			
	○ **O2 Sensor Final Ratio Result**	91	2F	M
	○ **O2 Sensor High Frequency Response Result**	92	05	C
06	Oxygen Sensor Monitor Bank 2 - Sensor 2			
	○ **Minimum sensor voltage for test cycle**	07	0B	M
	○ **Maximum sensor voltage for test cycle**	08	0B	M
	○ Slow Response Rich to Lean Result	81	04	M
	○ Signal Biased Rich Mass Flow Result	82	01	M
	○ Signal Biased Rich Voltage Result	83	8A	M
20	OBDMIDs supported ($21 - $40)	-	-	M
21	Catalyst Monitor Bank 1			
	○ **O2 Sensor Test Ratio Result**	92	2F	M
22	Catalyst Monitor Bank 2			
	○ **O2 Sensor Test Ratio Result**	92	2F	M
31	EGR Monitor Bank 1			
	○ **Fuel Shift Above Threshold Counter**	93	24	C
	○ **Fuel Shift Below Threshold Counter**	94	24	C
	○ **Fuel Shift Trim Percent of Bank 1**	95	39	C
	○ **Fuel Shift Trim Percent of Bank 2**	96	39	C
35	VVT/VCT Monitor Bank 1	1		
	○ **Intake CAM Slow**	81	1C	C

	Response/Target Error			
	○ **Exhaust CAM Slow Response/Target Error**	82	1C	C
36	VVT/VCT Monitor Bank 2			
	○ **Intake CAM Slow Response/Target Error**	81	1C	C
	○ **Exhaust CAM Slow Response/Target Error**	82	1C	C
39	EVAP Monitor (Cap Off)			
	○ **Natural Vacuum Leak Detection (NVLD) Test Time**	87	35	M
3A	EVAP Monitor (0.090")			
	○ Natural Vacuum Leak Detection (NVLD) Test Time	87	35	M
3C	EVAP Monitor (0.020")			
	○ **Natural Vacuum Leak Detection (NVLD) Accumulated Engine 'ON' Time**	85	34	M
	○ **Natural Vacuum Leak Detection (NVLD) Accumulated Engine 'OFF' Time**	86	34	M
	○ **Switch Time to Close**	90	34	M
3D	Purge Flow Monitor			
	○ **Natural Vacuum Leak Detection (NVLD) Test Time**	89	35	M
	○ **Intrusive Side 1 Result**	90	81	M
	○ **Intrusive Side 2 Result**	91	81	M
	○ **Non-Intrusive Side 1 Result**	92	81	M
	○ **Fuel Tank Pressure Sensor Result**	93	81	M
	○ **Non-Intrusive Side 2 Result**	94	81	M
40	OBDMIDs supported ($41 - $60)	-	-	M
41	Oxygen Sensor Heater Monitor			

	Bank 1 - Sensor 1			
	○ **O_2 Heater Temperature Error**	97	16	M
	○ **O_2 Heater Temperature Error In-Control Time**	98	35	M
42	Oxygen Sensor Heater Monitor Bank 1 - Sensor 2			
	○ **O_2 Heater Temperature Error**	97	16	M
	○ **O_2 Heater Temperature Error In-Control Time**	98	35	M
45	Oxygen Sensor Heater Monitor Bank 2 - Sensor 1			
	○ **O_2 Heater Temperature Error**	97	16	C
	○ **O_2 Heater Temperature Error In-Control Time**	98	35	C
46	Oxygen Sensor Heater Monitor Bank 2 - Sensor 2			
	○ **O_2 Heater Temperature Error**	97	16	C
	○ **O_2 Heater Temperature Error In-Control Time**	98	35	C
60	OBDMIDs supported ($61 - $80)	-	-	M
71	Secondary Air Monitor 1			
	○ **Secondary Air Monitor 1 Airflow Test**	9B	03	C
80	OBDMIDs supported ($81 - $A0)	-	-	M
81	Fuel System Monitor Bank 1			
	○ **Individual Cylinder Fuel Control Lean Test**	90	05	C
	○ **Individual Cylinder Fuel Control Rich Test**	91	05	C
	○ **Cylinder Imbalance Bank Detection Test**	92	05	C
82	Fuel System Monitor Bank 2			
	○ **Individual Cylinder Fuel Control Lean Test**	90	05	C

	○ **Individual Cylinder Fuel Control Rich Test**	91	05	C
	○ **Cylinder Imbalance Bank Detection Test**	92	05	C
A0	OBDMIDs supported ($A1 - $C0)	-	-	M
A2	Misfire Cylinder 1 Data			
	○ **EWMA (Exponential Weighted Moving Average)**	0B	24	M
	○ **Misfire counts for last/current driving cycles**	0C	24	M
A3	Misfire Cylinder 2 Data			
	○ **EWMA (Exponential Weighted Moving Average)**	0B	24	M
	○ **Misfire counts for last/current driving cycles**	0C	24	M
A4	Misfire Cylinder 3 Data			
	○ **EWMA (Exponential Weighted Moving Average)**	0B	24	M
	○ **Misfire counts for last/current driving cycles**	0C	24	M
A5	Misfire Cylinder 4 Data			
	○ **EWMA (Exponential Weighted Moving Average)**	0B	24	M
	○ **Misfire counts for last/current driving cycles**	0C	24	M
A6	Misfire Cylinder 5 Data			
	○ **EWMA (Exponential Weighted Moving Average)**	0B	24	C
	○ **Misfire counts for last/current driving cycles**	0C	24	C
A7	Misfire Cylinder 6 Data			
	○ **EWMA (Exponential Weighted Moving Average)**	0B	24	C
	○ **Misfire counts for**	0C	24	C

	last/current driving cycles			
A8	Misfire Cylinder 7 Data			
	○ **EWMA (Exponential Weighted Moving Average)**	0B	24	C
	○ **Misfire counts for last/current driving cycles**	0C	24	C
A9	Misfire Cylinder 8 Data			
	○ **EWMA (Exponential Weighted Moving Average)**	0B	24	C
	○ **Misfire counts for last/current driving cycles**	0C	24	C

DIAGNOSTIC CODE INDEX

DIAGNOSTIC CODE INDEX

DTC	Description
P000B	BANK 1 CAMSHAFT 2 POSITION SLOW RESPONSE
P0013	BANK 1 CAMSHAFT 2 POSITION ACTUATOR CIRCUIT OPEN
P0014	EXHAUST TARGET ERROR BANK 1
P0016	CRANKSHAFT/CAMSHAFT TIMING MISALIGNMENT
P0031	O2 SENSOR 1/1 HEATER CIRCUIT LOW
P0032	O2 SENSOR 1/1 HEATER CIRCUIT HIGH
P0037	O2 SENSOR 1/2 HEATER CIRCUIT LOW
P0038	O2 SENSOR 1/2 HEATER CIRCUIT HIGH
P0051	O2 SENSOR 2/1 HEATER CIRCUIT LOW
P0052	O2 SENSOR 2/1 HEATER CIRCUIT HIGH
P0057	O2 SENSOR 2/2 HEATER CIRCUIT LOW
P0058	O2 SENSOR 2/2 HEATER CIRCUIT HIGH
P0071	AMBIENT AIR TEMPERATURE SENSOR PERFORMANCE
P0072	AMBIENT AIR TEMPERATURE SENSOR CIRCUIT LOW
P0073	AMBIENT AIR TEMPERATURE SENSOR CIRCUIT HIGH
P0107	MANIFOLD ABSOLUTE PRESSURE SENSOR CIRCUIT LOW
P0108	MANIFOLD ABSOLUTE PRESSURE SENSOR CIRCUIT HIGH
P0111	INTAKE AIR TEMPERATURE SENSOR RATIONALITY
P0112	INTAKE AIR TEMPERATURE SENSOR CIRCUIT LOW
P0113	INTAKE AIR TEMPERATURE SENSOR CIRCUIT HIGH
P0116	ENGINE COOLANT TEMPERATURE SENSOR CIRCUIT PERFORMANCE
P0117	ENGINE COOLANT TEMPERATURE SENSOR CIRCUIT LOW
P0118	ENGINE COOLANT TEMPERATURE SENSOR CIRCUIT HIGH
P0121	THROTTLE POSITION SENSOR 1 PERFORMANCE
P0122	THROTTLE POSITION SENSOR 1 CIRCUIT LOW
P0123	THROTTLE POSITION SENSOR 1 CIRCUIT HIGH
P0125	INSUFFICIENT COOLANT TEMP FOR CLOSED-LOOP FUEL CONTROL
P0128	THERMOSTAT RATIONALITY
P0129	BAROMETRIC PRESSURE OUT-OF-RANGE LOW
P0131	O2 SENSOR 1/1 CIRCUIT LOW
P0132	O2 SENSOR 1/1 CIRCUIT HIGH
P0133	O2 SENSOR 1/1 SLOW RESPONSE
P0135	O2 SENSOR 1/1 HEATER PERFORMANCE
P0137	O2 SENSOR 1/2 CIRCUIT LOW

P0138	O2 SENSOR 1/2 CIRCUIT HIGH
P0139	O2 SENSOR 1/2 SLOW RESPONSE
P0140	O2 SENSOR 1/2 NO ACTIVITY DETECTED
P0141	O2 SENSOR 1/2 HEATER PERFORMANCE
P0151	O2 SENSOR 2/1 CIRCUIT LOW
P0152	O2 SENSOR 2/1 CIRCUIT HIGH
P0153	O2 SENSOR 2/1 SLOW RESPONSE
P0155	O2 SENSOR 2/1 HEATER PERFORMANCE
P0157	O2 SENSOR 2/2 CIRCUIT LOW
P0158	O2 SENSOR 2/2 CIRCUIT HIGH
P0159	O2 SENSOR 2/2 SLOW RESPONSE
P0160	O2 SENSOR 2/2 NO ACTIVITY DETECTED
P0161	O2 SENSOR 2/2 HEATER PERFORMANCE
P0171	FUEL SYSTEM 1/1 LEAN
P0172	FUEL SYSTEM 1/1 RICH
P0174	FUEL SYSTEM 2/1 LEAN
P0175	FUEL SYSTEM 2/1 RICH
P0196	ENGINE OIL TEMPERATURE SENSOR PERFORMANCE
P0197	ENGINE OIL TEMPERATURE SENSOR CIRCUIT LOW
P0198	ENGINE OIL TEMPERATURE SENSOR CIRCUIT HIGH
P0201	FUEL INJECTOR 1 CIRCUIT
P0202	FUEL INJECTOR 2 CIRCUIT
P0203	FUEL INJECTOR 3 CIRCUIT
P0204	FUEL INJECTOR 4 CIRCUIT
P0205	FUEL INJECTOR 5 CIRCUIT
P0206	FUEL INJECTOR 6 CIRCUIT
P0207	FUEL INJECTOR 7 CIRCUIT
P0208	FUEL INJECTOR 8 CIRCUIT
P0221	THROTTLE POSITION SENSOR 2 PERFORMANCE
P0222	THROTTLE POSITION SENSOR 2 CIRCUIT LOW
P0223	THROTTLE POSITION SENSOR 2 CIRCUIT HIGH
P0298	ENGINE OIL TEMPERATURE TOO HIGH
P0300	MULTIPLE CYLINDER MISFIRE
P0301	CYLINDER 1 MISFIRE
P0302	CYLINDER 2 MISFIRE
P0303	CYLINDER 3 MISFIRE
P0304	CYLINDER 4 MISFIRE
P0305	CYLINDER 5 MISFIRE
P0306	CYLINDER 6 MISFIRE
P0307	CYLINDER 7 MISFIRE
P0308	CYLINDER 8 MISFIRE
P0315	

	NO CRANK SENSOR LEARNED
P0325	KNOCK SENSOR 1 CIRCUIT
P0330	KNOCK SENSOR 2 CIRCUIT
P0335	CRANKSHAFT POSITION SENSOR CIRCUIT
P0339	CRANKSHAFT POSITION SENSOR INTERMITTENT
P0340	CAMSHAFT POSITION SENSOR CIRCUIT
P0344	CAMSHAFT POSITION SENSOR INTERMITTENT
P0420	CATALYST EFFICIENCY (BANK 1)
P0430	CATALYST EFFICIENCY (BANK 2)
P0440	GENERAL EVAP SYSTEM FAILURE
P0441	EVAP PURGE SYSTEM PERFORMANCE
P0443	EVAP PURGE SOLENOID CIRCUIT
P0452	EVAP PRESSURE SWITCH STUCK CLOSED
P0455	EVAP PURGE SYSTEM LARGE LEAK
P0456	EVAP PURGE SYSTEM SMALL LEAK
P0457	LOOSE FUEL CAP
P0461	FUEL LEVEL SENSOR 1 PERFORMANCE
P0462	FUEL LEVEL SENSOR 1 CIRCUIT LOW
P0463	FUEL LEVEL SENSOR 1 CIRCUIT HIGH
P0480	COOLING FAN 1 CONTROL CIRCUIT
P0501	VEHICLE SPEED SENSOR 1 PERFORMANCE
P0503	VEHICLE SPEED SENSOR 1 ERRATIC
P0506	IDLE SPEED PERFORMANCE LOWER THAN EXCEPTED
P0507	IDLE SPEED PERFORMANCE HIGHER THAN EXCEPTED
P050B	COLD START IGNITION TIMING PERFORMANCE
P0513	INVALID SKIM KEY
P0520	ENGINE OIL PRESSURE SENSOR CIRCUIT
P0521	ENGINE OIL PRESSURE SENSOR PERFORMANCE
P0522	ENGINE OIL PRESSURE SENSOR CIRCUIT LOW 5.7L
P0523	ENGINE OIL PRESSURE SENSOR CIRCUIT HIGH
P0532	A/C PRESSURE SENSOR CIRCUIT LOW
P0533	A/C PRESSURE SENSOR CIRCUIT HIGH
P0562	BATTERY VOLTAGE LOW
P0563	BATTERY VOLTAGE HIGH
P0571	BRAKE SWITCH 1 PERFORMANCE
P0572	BRAKE SWITCH 1 STUCK ON
P0573	BRAKE SWITCH 1 STUCK OFF
P0579	SPEED CONTROL SWITCH 1 PERFORMANCE
P0580	SPEED CONTROL SWITCH 1 CIRCUIT LOW
P0581	SPEED CONTROL SWITCH 1 CIRCUIT HIGH
P0585	SPEED CONTROL SWITCH 1/2 CORRELATION
P0591	

	SPEED CONTROL SWITCH 2 PERFORMANCE
P0592	SPEED CONTROL SWITCH 2 CIRCUIT LOW
P0593	SPEED CONTROL SWITCH 2 CIRCUIT HIGH
P0600	SERIAL COMMUNICATION LINK
P0601	INTERNAL MEMORY CHECKSUM INVALID
P0602	CONTROL MODULE PROGRAMMING ERROR/NOT PROGRAMMED
P0606	INTERNAL ECM PROCESSOR
P060B	ETC A/D GROUND PERFORMANCE
P060D	ETC LEVEL 2 APP PERFORMANCE
P060E	ETC LEVEL 2 TPS PERFORMANCE
P060F	ETC LEVEL 2 ECT PERFORMANCE
P061A	ETC LEVEL 2 TORQUE PERFORMANCE
P061C	ETC LEVEL 2 RPM PERFORMANCE
P0622	GENERATOR FIELD CONTROL CIRCUIT
P0627	FUEL PUMP CONTROL CIRCUIT
P062C	ETC LEVEL 2 MPH PERFORMANCE
P0630	VIN NOT PROGRAMMED IN PCM
P0632	ODOMETER NOT PROGRAMMED IN PCM
P0633	SKIM KEY NOT PROGRAMMED IN PCM
P063A	GENERATOR VOLTAGE SENSE CIRCUIT
P0642	SENSOR REFERENCE VOLTAGE 1 CIRCUIT LOW
P0643	PRIMARY 5-VOLT SUPPLY CIRCUIT HIGH
P0645	A/C CLUTCH CONTROL CIRCUIT
P0652	SENSOR REFERENCE VOLTAGE 2 CIRCUIT LOW
P0653	SENSOR REFERENCE VOLTAGE 2 CIRCUIT HIGH
P0685	AUTO SHUTDOWN CONTROL CIRCUIT
P0688	AUTO SHUTDOWN SENSE CIRCUIT LOW
P0703	BRAKE SWITCH 2 PERFORMANCE
P0850	PARK/NEUTRAL SWITCH PERFORMANCE
P1004	SHORT RUNNER VALVE CONTROL PERFORMANCE
P1115	GENERAL TEMPERATURE RATIONALITY
P1128	CLOSED LOOP FUELING NOT ACHIEVED - BANK 1
P1129	CLOSED LOOP FUELING NOT ACHIEVED - BANK 2
P1239	ENGINE OIL TEMPERATURE TOO LOW
P1524	OIL PRESSURE OUT OF RANGE - CAMSHAFT ADVANCE/RETARD DISABLED
P1572	BRAKE PEDAL STUCK ON
P1573	BRAKE PEDAL STUCK OFF
P1593	SPEED CONTROL SWITCH 1 STUCK
P1607	PCM INTERNAL SHUTDOWN TIMER SLOW RATIONALITY
P1618	SENSOR REFERENCE VOLTAGE 1 CIRCUIT ERRATIC

P1628	SENSOR REFERENCE VOLTAGE 2 CIRCUIT ERRATIC
P1696	EEPROM MEMORY WRITE DENIED/INVALID
P1697	EMR (SRI) MILEAGE NOT STORED
P1718	EEPROM INTEGRITY FAILURE
P2008	SHORT RUNNER VALVE (SRV) CONTROL CIRCUIT
P2016	SHORT RUNNER VALVE (SRV) POSITION SENSOR CIRCUIT LOW
P2017	SHORT RUNNER VALVE (SRV) POSITION SENSOR CIRCUIT HIGH
P2072	ELECTRONIC THROTTLE CONTROL SYSTEM - ICE BLOCKAGE
P2096	DOWNSTREAM FUEL TRIM SYSTEM 1 LEAN
P2097	DOWNSTREAM FUEL TRIM SYSTEM 1 RICH
P2098	DOWNSTREAM FUEL TRIM SYSTEM 2 LEAN
P2099	DOWNSTREAM FUEL TRIM SYSTEM 2 RICH
P2100	ELECTRONIC THROTTLE CONTROL MOTOR CIRCUIT
P2101	ELECTRONIC THROTTLE CONTROL MOTOR PERFORMANCE
P2107	ELECTRONIC THROTTLE CONTROL MODULE PROCESSOR
P2110	ELECTRONIC THROTTLE CONTROL - FORCED LIMITED RPM
P2111	ELECTRONIC THROTTLE CONTROL - UNABLE TO CLOSE
P2112	ELECTRONIC THROTTLE CONTROL - UNABLE TO OPEN
P2115	ACCELERATOR PEDAL POSITION SENSOR 1 MINIMUM STOP PERFORMANCE
P2116	ACCELERATOR PEDAL POSITION SENSOR 2 MINIMUM STOP PERFORMANCE
P2118	ELECTRONIC THROTTLE CONTROL MOTOR CIRCUIT
P2122	ACCELERATOR PEDAL POSITION SENSOR 1 CIRCUIT LOW
P2123	ACCELERATOR PEDAL POSITION SENSOR 1 CIRCUIT HIGH
P2127	ACCELERATOR PEDAL POSITION SENSOR 2 CIRCUIT LOW
P2128	ACCELERATOR PEDAL POSITION SENSOR 2 CIRCUIT HIGH
P2135	THROTTLE POSITION SENSOR 1/2 CORRELATION
P2138	ACCELERATOR PEDAL POSITION SENSOR 1/2 CORRELATION
P2161	VEHICLE SPEED SENSOR 2 ERRATIC
P2166	ACCELERATOR PEDAL POSITION SENSOR 1 MAXIMUM STOP PERFORMANCE
P2167	ACCELERATOR PEDAL POSITION SENSOR 2 MAXIMUM STOP PERFORMANCE
P2172	HIGH AIRFLOW/VACUUM LEAK DETECTED (INSTANTANEOUS ACCUMULATION)
P2173	HIGH AIRFLOW/VACUUM LEAK DETECTED (SLOW ACCUMULATION)
P2174	LOW AIRFLOW/RESTRICTION DETECTED (INSTANTANEOUS ACCUMULATION)
P2175	LOW AIRFLOW/RESTRICTION DETECTED (SLOW ACCUMULATION)
P2181	COOLING SYSTEM PERFORMANCE
P2245	O2 SENSOR 1/1, 2/1 REFERENCE VOLTAGE CIRCUIT LOW

P2246	O2 SENSOR 1/1, 2/1 REFERENCE VOLTAGE CIRCUIT HIGH
P2271	O2 SENSOR 1/2 SIGNAL STUCK RICH
P2273	O2 SENSOR 2/2 SIGNAL STUCK RICH
P2299	BRAKE PEDAL POSITION/ACCELERATOR PEDAL POSITION INCOMPATIBLE
P2302	IGNITION COIL 1 SECONDARY CIRCUIT- INSUFFICIENT IONIZATION
P2305	IGNITION COIL 2 SECONDARY CIRCUIT- INSUFFICIENT IONIZATION
P2308	IGNITION COIL 3 SECONDARY CIRCUIT- INSUFFICIENT IONIZATION
P2311	IGNITION COIL 4 SECONDARY CIRCUIT- INSUFFICIENT IONIZATION
P2314	IGNITION COIL 5 SECONDARY CIRCUIT- INSUFFICIENT IONIZATION
P2317	IGNITION COIL 6 SECONDARY CIRCUIT- INSUFFICIENT IONIZATION
P2320	IGNITION COIL 7 SECONDARY CIRCUIT- INSUFFICIENT IONIZATION
P2323	IGNITION COIL 8 SECONDARY CIRCUIT- INSUFFICIENT IONIZATION
P2503	CHARGING SYSTEM OUTPUT LOW
P2504	CHARGING SYSTEM OUTPUT HIGH
P2610	PCM INTERNAL SHUTDOWN TIMER FAST RATIONALITY
U0001	CAN C BUS
U0002	U0002 CAN C BUS OFF PERFORMANCE
U0103	LOST COMMUNICATION WITH ELECTRIC GEAR SHIFT MODULE
U0121	LOST COMMUNICATION WITH ANTI-LOCK BRAKE MODULE
U0141	LOST COMMUNICATION WITH IPM (FCM/TIPM)
U0151	LOST COMMUNICATION WITH OCCUPANT RESTRAINT CONTROLLER (ORC)
U0168	LOST COMMUNICATION WITH VEHICLE SECURITY CONTROL MODULE (WIN)
U0300	INTERNAL CONTROL MODULE SOFTWARE INCOMPATIBILITY
U110C	NO FUEL LEVEL BUS MESSAGE RECEIVED
U110E	LOST AMBIENT TEMPERATURE MESSAGE
U1110	LOST VEHICLE SPEED MESSAGE
U1113	LOST A/C PRESSURE MESSAGE
U1120	LOST WHEEL DISTANCE MESSAGE
U1403	IMPLAUSIBLE FUEL LEVEL SIGNAL RECEIVED
U1412	IMPLAUSIBLE VEHICLE SPEED SIGNAL RECEIVED
U1417	IMPLAUSIBLE LEFT WHEEL DISTANCE SIGNAL RECEIVED
U1418	IMPLAUSIBLE RIGHT WHEEL DISTANCE SIGNAL RECEIVED

DIAGNOSIS AND TESTING

P000B-BANK 1 CAMSHAFT 2 POSITION SLOW RESPONSE

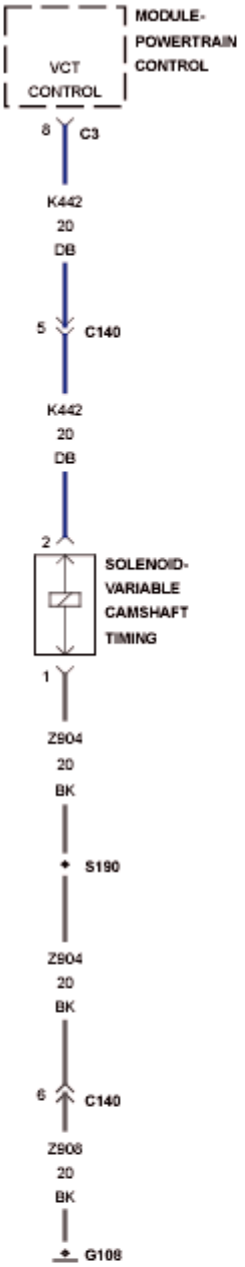

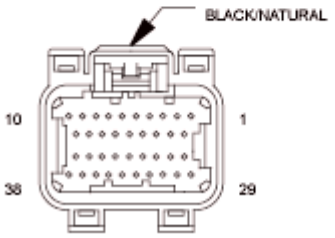

MODULE-
POWERTRAIN

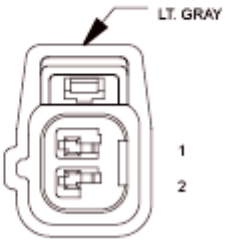

SOLENOID-
VARIABLE
CAMSHAFT

Fig. 1: Variable Cam Timing (VCT) Circuit Schematic
Courtesy of CHRYSLER GROUP, LLC

For a complete wiring diagram, **refer to appropriate SYSTEM WIRING DIAGRAMS article** .

THEORY OF OPERATION

Variable Cam Timing (VCT) allows the Powertrain Control Module (PCM) to monitor and adjust the position of the camshaft, based on desired torque levels and engine operating conditions. The camshaft design allows for the exhaust lobes to be adjusted while the intake lobes are not adjustable all on one camshaft. The PCM controls a solenoid operated control valve, that is used to direct oil pressure to hydraulic actuator mounted between the camshaft and its driving sprocket. The oil pressure alters the angular position or phasing of the camshaft relative to crankshaft rotation. A sensor is used to monitor the position of the camshaft.

WHEN MONITORED:

Variable Cam Timing (VCT) phasing accuracy is monitored under the following conditions: (1) Engine speed is at least 150 RPM; (2) No CMP sensor or CKP sensor plausibility errors. This is performed even when phasing control is not enabled, to verify the actuator is keeping the camshaft at the default (lockpin) phase.

SET CONDITION:

The actual measured camshaft phase does not match the desired camshaft phasing set point. Two Trip Fault. Three good trips to turn off the MIL.

POSSIBLE CAUSES

Possible Causes
ENGINE OIL DIRTY OR CONTAMINATED
INCORRECT ENGINE OIL VISCOSITY
INSUFFICIENT ENGINE OIL PRESSURE
(K442) CMP CONTROL CIRCUIT OPEN OR SHORTED
(Z908) SOLENOID GROUND CIRCUIT EXCESSIVE RESISTANCE OR OPEN
CAMSHAFT POSITION SOLENOID (VARIABLE CAM TIMING SOLENOID)
CAMSHAFT PHASER
IMPROPER ASSEMBLY OF CAMSHAFT/CRANKSHAFT TIMING CHAIN AND SPROCKETS
ENGINE OIL PRESSURE SENSOR OR CIRCUIT
ENGINE OIL TEMPERATURE SENSOR OR CIRCUIT
HIGH FRICTION IN CAMSHAFT OR OTHER VALVETRAIN COMPONENTS

Always perform the Pre-Diagnostic Troubleshooting procedure before proceeding. Refer to PRE-DIAGNOSTIC TROUBLESHOOTING PROCEDURE .

DIAGNOSTIC TEST

1. **DTC IS ACTIVE**

NOTE: **Diagnose and repair P0013 Bank 1 Camshaft 2 Position Actuator Circuit Open DTC before continuing.**

NOTE: **Diagnose and repair any Crankshaft-Camshaft Timing Misalignment DTCs before continuing with this test.**

NOTE: **Diagnose and repair any Oil Temperature Sensor DTCs before continuing with this test.**

NOTE: **The most likely cause for this DTC to set is high friction in the valvetrain components such as the camshaft and valve springs.**

NOTE: **If this code has set with less than 1000 miles on the odometer the cause of the code may be that the engine assembly is tight and the engine needs time to loosen up.**

NOTE: **Diagnose and repair any system voltage DTCs before continuing with this test.**

NOTE: **Diagnose and repair any CMP Sensor or CKP Sensor DTCs before continuing with this test.**

NOTE: **Diagnose and repair any oil pressure or Oil Pressure Sensor DTCs before continuing with this test.**

1. Start the engine and allow it to reach normal operating temperature.

   WARNING: **When the engine is operating, do not stand in direct line with the fan. Do not put your hands near the pulleys, belts, or fan. Do not wear loose clothing. Failure to follow these instructions can result possible serious or fatal injury.**

2. With the scan tool, view DTCs and read and record the related Freeze Frame data.
3. With the scan tool, Clear DTCs in the Powertrain Control Module (PCM).
4. Test drive the vehicle under the conditions in which the DTC is monitored, as outlined above.
5. With the scan tool, select View DTCs.

   Is the DTC Active or Pending at this time?

   Yes

   - Go To 2.

No

- Perform the INTERMITTENT CONDITION diagnostic procedure. Refer to **INTERMITTENT CONDITION** .

2. **CAMSHAFT POSITION SOLENOID CLEANING**
   1. With the scan tool perform the Exhaust Phaser 1 Cleaning function

      Did the DTC reset?

      Yes

      - Go To 3.

      No

      - Perform the INTERMITTENT CONDITION diagnostic procedure. Refer to **INTERMITTENT CONDITION** .

3. **ENGINE OIL DIRTY OR CONTAMINATED**
   1. Turn the ignition off.
   2. Inspect engine oil for signs of contamination, sludge or foreign material.

      NOTE: **If the engine oil is contaminated, inspect the Camshaft Position Solenoid for contamination, foreign material or any condition that would restrict movement of the valve. The solenoid must be replaced if it is damaged or if valve movement is restricted due to contamination.**

      Were any problems found?

      Yes

      - Clean the engine oil system, including oil passages.
      - Perform the POWERTRAIN VERIFICATION TEST. Refer to **POWERTRAIN VERIFICATION TEST** .

      No

      - Go To 4.

4. **ENGINE OIL PRESSURE**
   1. Turn the ignition off.
   2. Check the engine oil pressure in accordance with the Service Information. Refer to **CHECKING ENGINE OIL PRESSURE** .
   3. Using the scan tool, compare the engine oil pressure reading you get off of a gauge and compare that reading to what the scan tool displays with the engine running. If the pressure reading on the

scan tool is not close to what the gauge displays, perform the diagnostic procedure for **P0521-ENGINE OIL PRESSURE SENSOR PERFORMANCE** .

Is the engine oil pressure within the specifications outlined in the Service Information?

Yes

- Go To 5.

No

- Inspect and repair the cause of the low oil pressure condition.
- Perform the POWERTRAIN VERIFICATION TEST. Refer to **POWERTRAIN VERIFICATION TEST** .

5. **INCORRECT ENGINE OIL TEMPERATURE READING**
   1. Turn the ignition on.
   2. Using a scan tool monitor the engine oil temperature and compare the engine oil temperature to the Engine Coolant Temperature value.

      Does the Engine Oil Temperature seem excessively high or low as compared to the Engine Coolant Temperature?

      Yes

      - Perform the diagnostic procedure P0196 for further assistance. Refer to **P0196-ENGINE OIL TEMPERATURE SENSOR PERFORMANCE**
      - Perform the POWERTRAIN VERIFICATION TEST. Refer to **POWERTRAIN VERIFICATION TEST** .

      No

      - Go To 6.
6. **INCORRECT ENGINE OIL VISCOSITY**
   1. Review service history to determine if the correct viscosity engine oil was used.

      Were any problems found?

      Yes

      - Change the engine oil in accordance with the Service Information and retest.
      - Perform the POWERTRAIN VERIFICATION TEST. Refer to **POWERTRAIN VERIFICATION TEST** .

      No

- Go To 7.

7. **CAMSHAFT POSITION SOLENOID CONTROL ACTUATION**
   1. Turn the ignition on.

      NOTE: **The Camshaft Position Solenoid actuates whenever the ignition key is turned on for cleaning purposes. This actuation also take place when the engine stops. So if you are testing the solenoid with a test light it is possible that you will see the solenoid actuate at key on and engine stop.**

   2. With the scan tool, actuate the Camshaft Position Solenoid control to toggle on and off.
   3. Listen for the Camshaft Position Solenoid to click open and closed during the actuation.

      Does the Camshaft Position Solenoid click open and closed during the actuation?

      Yes

      - Go To 11.

      No

      - Go To 8.

8. **EXCESSIVE RESISTANCE OR SHORT TO GROUND IN THE (K442) VCT CONTROL CIRCUIT**

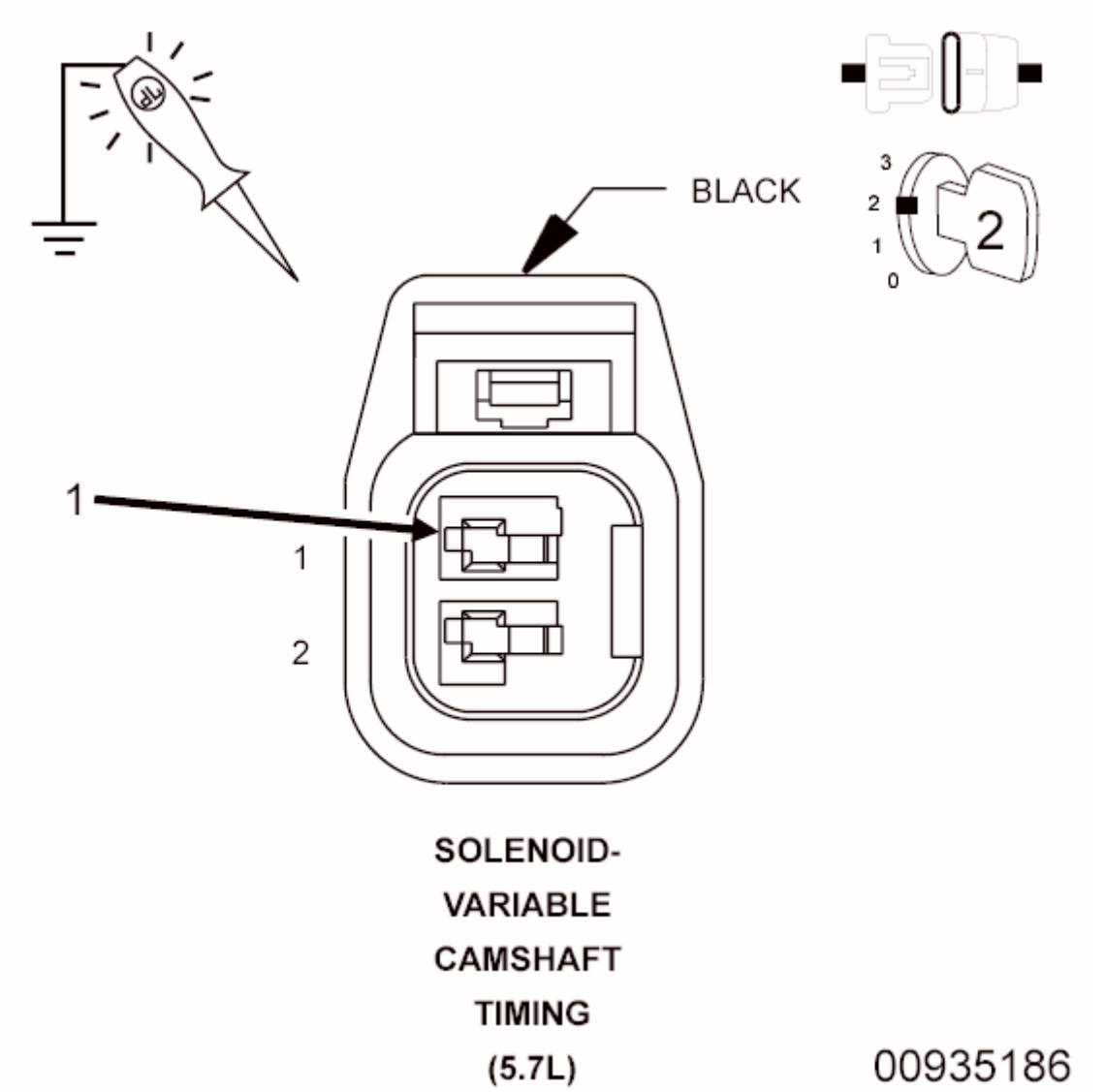

Fig. 2: Using 12-Volt Test Light Connected To Ground To Probe CMP Sensor Control Circuit In Harness Connector
Courtesy of CHRYSLER GROUP, LLC

1. Turn the ignition off
2. Disconnect the Camshaft Position Solenoid (Variable Cam Timing Solenoid) harness connector.
3. Turn the ignition on.
4. With the scan tool actuate the VCT Solenoid.
5. Using a 12-volt test light connected to ground, probe the (K442) CMP Control circuit in the Camshaft Position Solenoid harness connector.

NOTE: The test light should be off unless you have a short to ground.

6. With the scan tool, actuate the Camshaft Position Solenoid (VCT Solenoid DC) control to the ON

position.

NOTE: **The test light should be illuminated and bright. Compare the brightness to that of a direct connection to the battery.**

Is the test light illuminated and bright during the actuation and was it off when required?

Yes

- Go To 10.

No

- Repair the excessive resistance or short to ground in the (K442) CMP Control circuit.
- Perform the POWERTRAIN VERIFICATION TEST. Refer to **POWERTRAIN VERIFICATION TEST** .

9. **EXCESSIVE RESISTANCE OR OPEN (Z908) SOLENOID GROUND CIRCUIT**

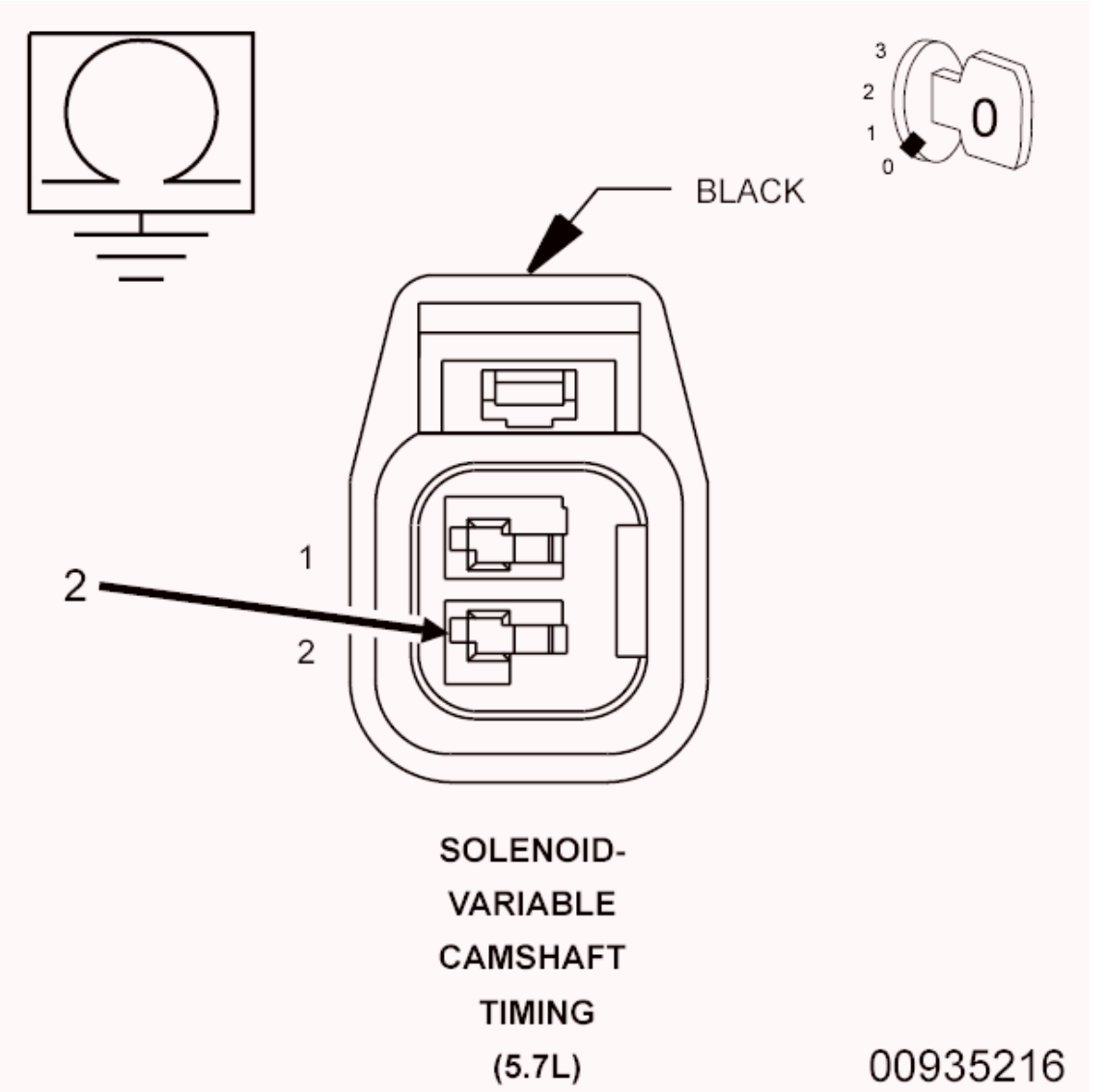

Fig. 3: Measuring Resistance Of VCT Solenoid Ground Circuit From AT Solenoid Harness Connector
Courtesy of CHRYSLER GROUP, LLC

1. Turn the ignition off
2. Measure the resistance of the (Z908) VCT Solenoid ground circuit from the VCT Solenoid harness connector.

   Is the resistance below 5.0 Ohms?

   Yes

   - Go To 8.

   No

- Repair the excessive resistance or open in the (Z908) VCT Solenoid ground circuit.
- Perform the POWERTRAIN VERIFICATION TEST. Refer to **POWERTRAIN VERIFICATION TEST** .

10. **CAMSHAFT POSITION SOLENOID**
    1. Turn the ignition off.
    2. Inspect the wiring and connectors between the Camshaft Position Solenoid (Variable Cam Timing Solenoid) and the Powertrain Control Module (PCM).
    3. Look for any chafed, pierced, pinched or partially broken wires.
    4. Look for broken, bent, pushed out or corroded terminals.
    5. Verify that there is good pin to terminal contact in the Camshaft Position Solenoid and Powertrain Control Module connectors.
    6. Remove the Camshaft Position Solenoid (VCT Solenoid) in accordance with the Service Information.
    7. Inspect the Camshaft Position Solenoid (VCT Solenoid) for contamination, foreign material or any condition that would restrict movement of the valve.

    NOTE: The solenoid must be replaced if it is damaged or if valve movement is restricted due to contamination.

    Were any problems found?

    Yes

    - Repair as necessary.
    - Perform the POWERTRAIN VERIFICATION TEST. Refer to **POWERTRAIN VERIFICATION TEST** .

    No

    - Replace the Camshaft Position Solenoid (VCT Solenoid) in accordance with the Service Information.
    - Perform the POWERTRAIN VERIFICATION TEST. Refer to **POWERTRAIN VERIFICATION TEST** .

11. **CAMSHAFT PHASER**
    1. Turn the ignition off.
    2. Remove the Camshaft Phaser in accordance with the Service information. Refer to **CHAIN AND SPROCKETS, TIMING, REMOVAL, 5.7L** .
    3. Inspect the Phaser for contamination, foreign material or any condition that would restrict operation of the Phaser.
    4. Inspect the Phaser oil passages for signs of sludge or foreign material.

    NOTE: The Phaser should not be disassembled. If the Phaser is damaged, it

must be replaced.

Were any problems found with the Camshaft Phaser?

Yes

- Replace the Camshaft Phaser in accordance with the Service Information.
- Perform the POWERTRAIN VERIFICATION TEST. Refer to **POWERTRAIN VERIFICATION TEST** .

No

- Go To 12.

12. **HIGH FRICTION IN THE VALVETRAIN COMPONENTS**
    1. Turn the ignition off.
    2. Remove the Camshaft in accordance with the Service information.
    3. While removing the components to remove the Camshaft inspect the rocker arms, valve springs and pushrods that may cause an increase in the torque to rotate the camshaft.
    4. Inspect the camshaft and camshaft bearings for any signs of excessive wear.

    Were any problems found with the camshaft or any other valvetrain components?

    Yes

    - Repair as necessary.
    - Perform the POWERTRAIN VERIFICATION TEST. Refer to **POWERTRAIN VERIFICATION TEST** .

    No

    - Replace the Powertrain Control Module (PCM) in accordance with the Service Information.
    - Perform the POWERTRAIN VERIFICATION TEST. Refer to **POWERTRAIN VERIFICATION TEST** .

P0013-BANK 1 CAMSHAFT 2 POSITION ACTUATOR CIRCUIT OPEN

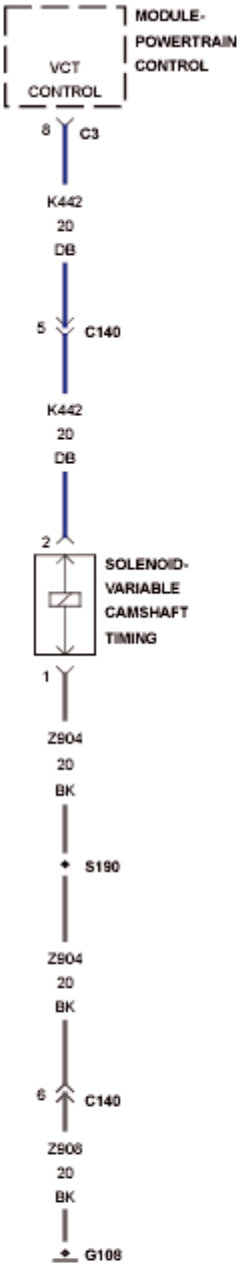

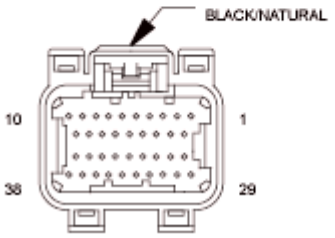

MODULE-
POWERTRAIN

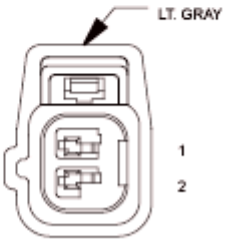

SOLENOID-
VARIABLE
CAMSHAFT

Fig. 4: Variable Cam Timing (VCT) Circuit Schematic
Courtesy of CHRYSLER GROUP, LLC

For a complete wiring diagram, **refer to appropriate SYSTEM WIRING DIAGRAMS article** .

THEORY OF OPERATION

Variable Cam Timing (VCT) allows the Powertrain Control Module (PCM) to monitor and adjust the position of the camshaft, based on desired torque levels and engine operating conditions. The camshaft design allows for the exhaust lobes to be adjusted while the intake lobes are not adjustable all on one camshaft. The PCM controls a solenoid operated control valve, that is used to direct oil pressure to hydraulic actuator mounted between the camshaft and its driving sprocket. The oil pressure alters the angular position or phasing of the camshaft relative to crankshaft rotation. A sensor is used to monitor the position of the camshaft.

WHEN MONITORED:

With the battery voltage is between 11 and 18 volts with the engine running.

SET CONDITION:

The Powertrain Control Module (PCM) detects that the actual voltage of the VCT solenoid control circuit does not match the intended state. One Trip Fault. Three good trips to turn off the MIL.

POSSIBLE CAUSES

Possible Causes
EXCESSIVE RESISTANCE IN THE (K442) VCT (VARIABLE CAM TIMING) SOLENOID CONTROL CIRCUIT
(K442) VCT CONTROL CIRCUIT OPEN OR SHORTED TO GROUND
(K442) VCT CONTROL CIRCUIT SHORTED TO VOLTAGE
EXCESSIVE RESISTANCE IN THE (Z908) VCT SOLENOID GROUND CIRCUIT
VCT SOLENOID
POWERTRAIN CONTROL MODULE (PCM)

Always perform the Pre-Diagnostic Troubleshooting procedure before proceeding. Refer to PRE-DIAGNOSTIC TROUBLESHOOTING PROCEDURE .

DIAGNOSTIC TEST

1. **DTC IS ACTIVE**
    1. Ignition on, engine not running.
    2. With the scan tool, record the related Freeze Fame Data and clear the DTCs in the Powertrain Control Module (PCM).
    3. Start the engine and allow it to reach normal operating temperature. Hold engine speed greater than 1, 000 RPM for at least one minute. The DTC will not be set unless cam phasing becomes active, which may not occur if speed never leaves idle.

WARNING: When the engine is operating, do not stand in direct line with the fan. Do not put your hands near the pulleys, belts, or fan. Do not wear loose clothing. Failure to follow these instructions can result possible serious or fatal injury.

4. With the scan tool, select View DTCs.

   Is the DTC Active or Pending at this time?

   Yes

   - Go To 2.

   No

   - Perform the INTERMITTENT CONDITION diagnostic procedure. Refer to **INTERMITTENT CONDITION** .

2. **(K442) VCT CONTROL CIRCUIT SHORTED TO VOLTAGE**

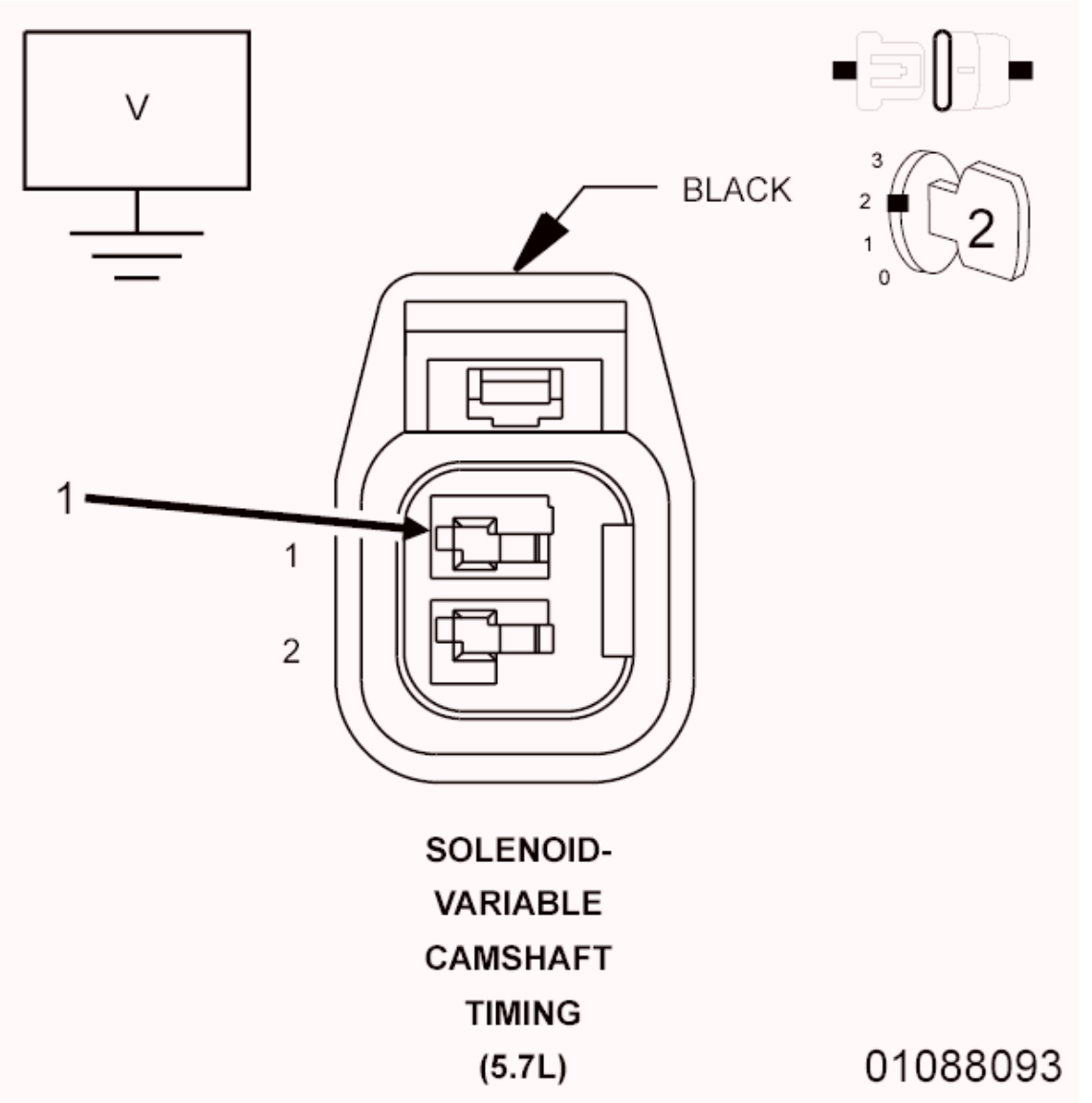

Fig. 5: Measuring Voltage On (K442) VCT Control Circuit AT VCT Solenoid Harness Connector
Courtesy of CHRYSLER GROUP, LLC

1. Turn the ignition off.
2. Disconnect the VCT Solenoid harness connector.
3. Disconnect the C3 Powertrain Control Module (PCM) harness connector.
4. Turn the ignition on.
5. Measure the voltage on the (K442) VCT Control circuit at the VCT Solenoid harness connector.

   Is the voltage greater than 1.0 volt?

   Yes

   - Repair the short to voltage in the (K442) VCT Control circuit.

- Perform the POWERTRAIN VERIFICATION TEST. Refer to **POWERTRAIN VERIFICATION TEST** .

No

- Go To 3.

3. **EXCESSIVE RESISTANCE IN THE (K442) VCT CONTROL CIRCUIT**

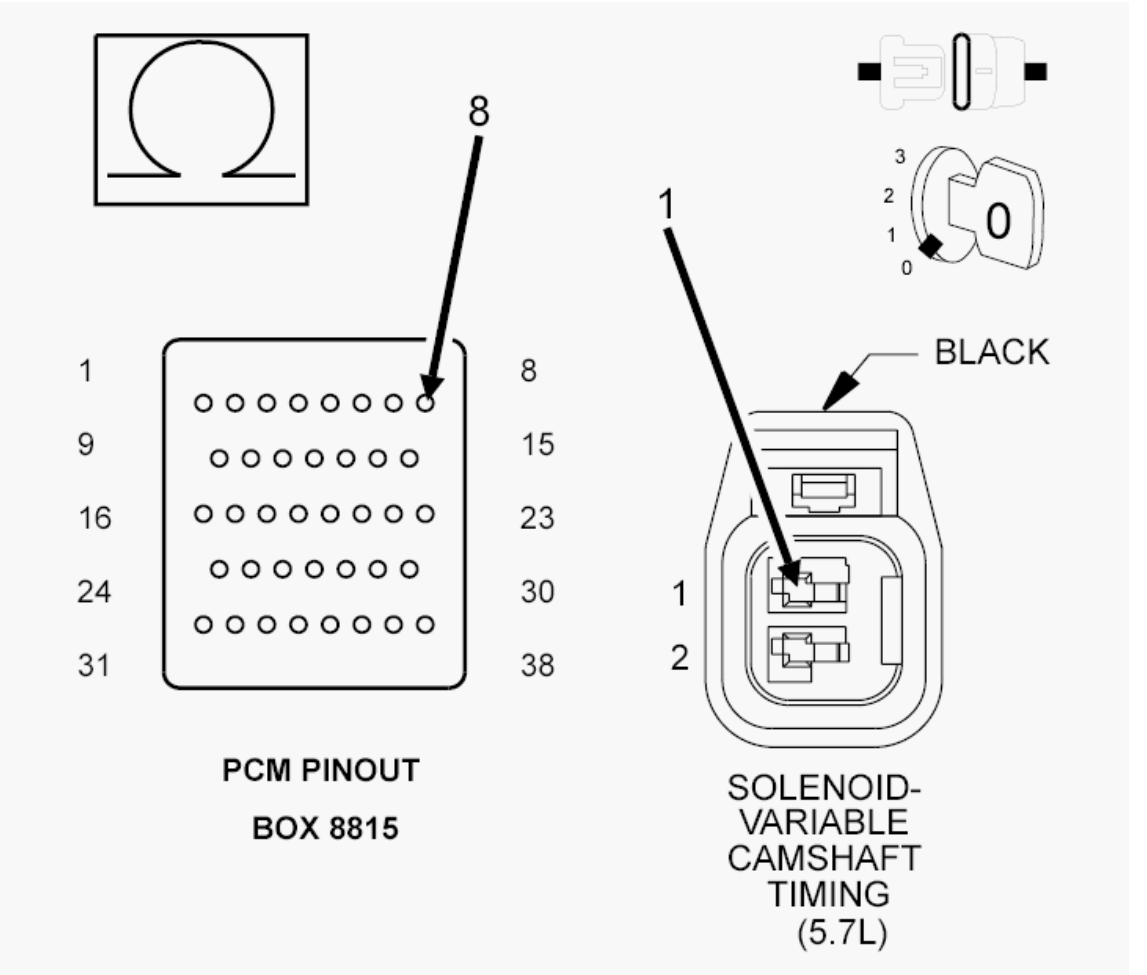

Fig. 6: Measuring Resistance Of (K442) VCT Control Circuit Between VCT Solenoid Harness Connector And Appropriate Terminal Of PCM Pinout Box 8815
Courtesy of CHRYSLER GROUP, LLC

1. Turn the ignition off.

CAUTION: Do not probe the PCM harness connectors. Probing the PCM harness connectors will damage the PCM terminals resulting in poor terminal to pin connection. Install the PCM Pinout Box (special tool #8815A, Kit, NGC, 38 Position) to perform diagnosis.

2. Measure the resistance of the (K442) VCT Control circuit between the VCT solenoid harness connector and the appropriate terminal of PCM Pinout Box (special tool #8815A, Kit, NGC, 38 Position).

   Is the resistance below 5.0 Ohms?

   Yes

   - Go To 4.

   No

   - Repair the excessive resistance in the (K442) VCT Control circuit.
   - Perform the POWERTRAIN VERIFICATION TEST. Refer to **POWERTRAIN VERIFICATION TEST** .

4. **(K442) VCT CONTROL CIRCUIT SHORTED TO GROUND**

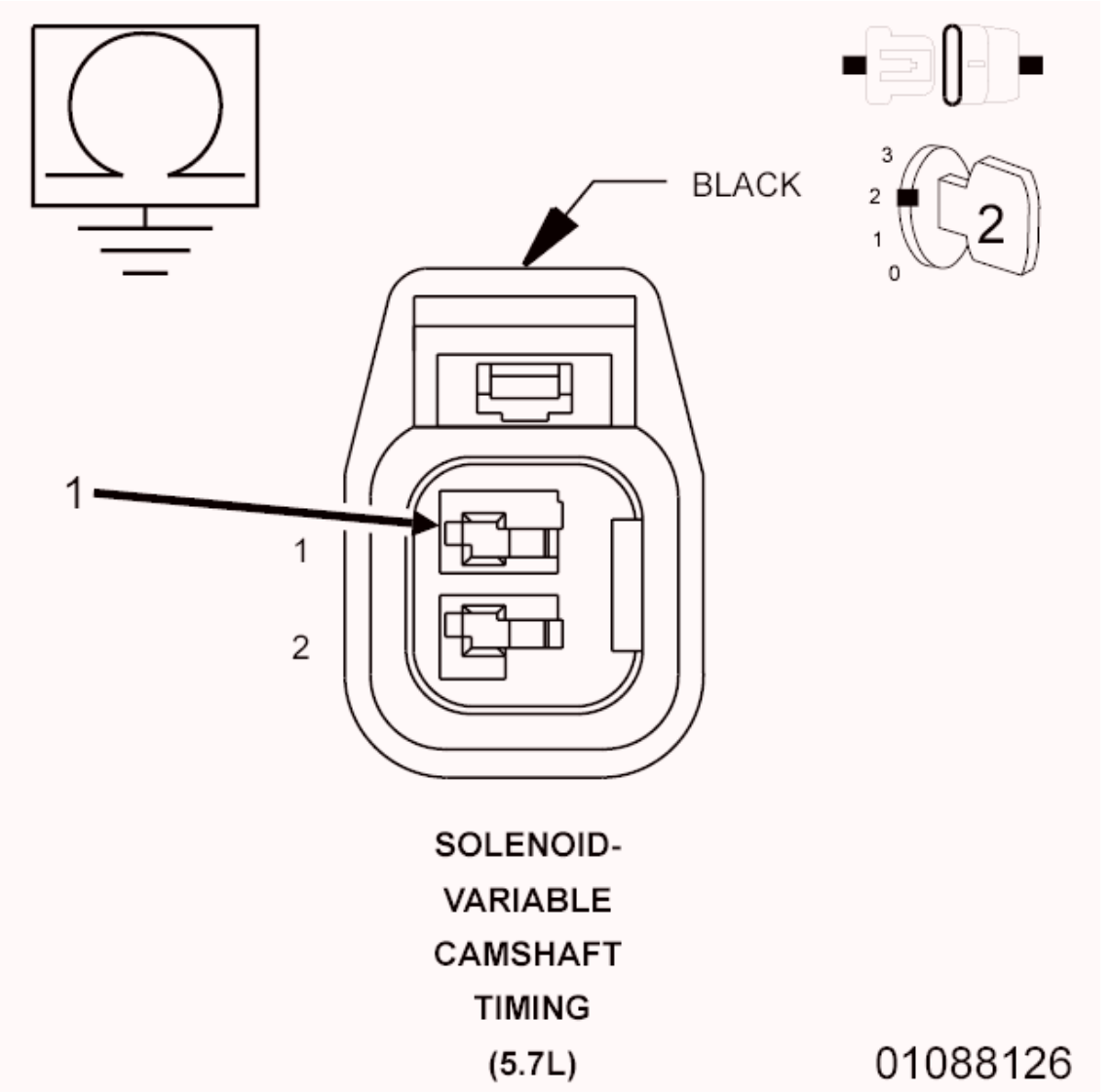

Fig. 7: Measuring Resistance Between Ground And (K442) VCT Control Circuit AT VCT Solenoid Harness Connector
Courtesy of CHRYSLER GROUP, LLC

1. Measure the resistance between ground and the (K442) VCT Control circuit at the VCT solenoid harness connector.

   Is the resistance greater than 20k Ohms?

   Yes

   - Go To 5.

   No

   - Repair the short to ground in the (K442) VCT Control circuit.

- Perform the POWERTRAIN VERIFICATION TEST. Refer to **POWERTRAIN VERIFICATION TEST** .

5. **VCT SOLENOID**

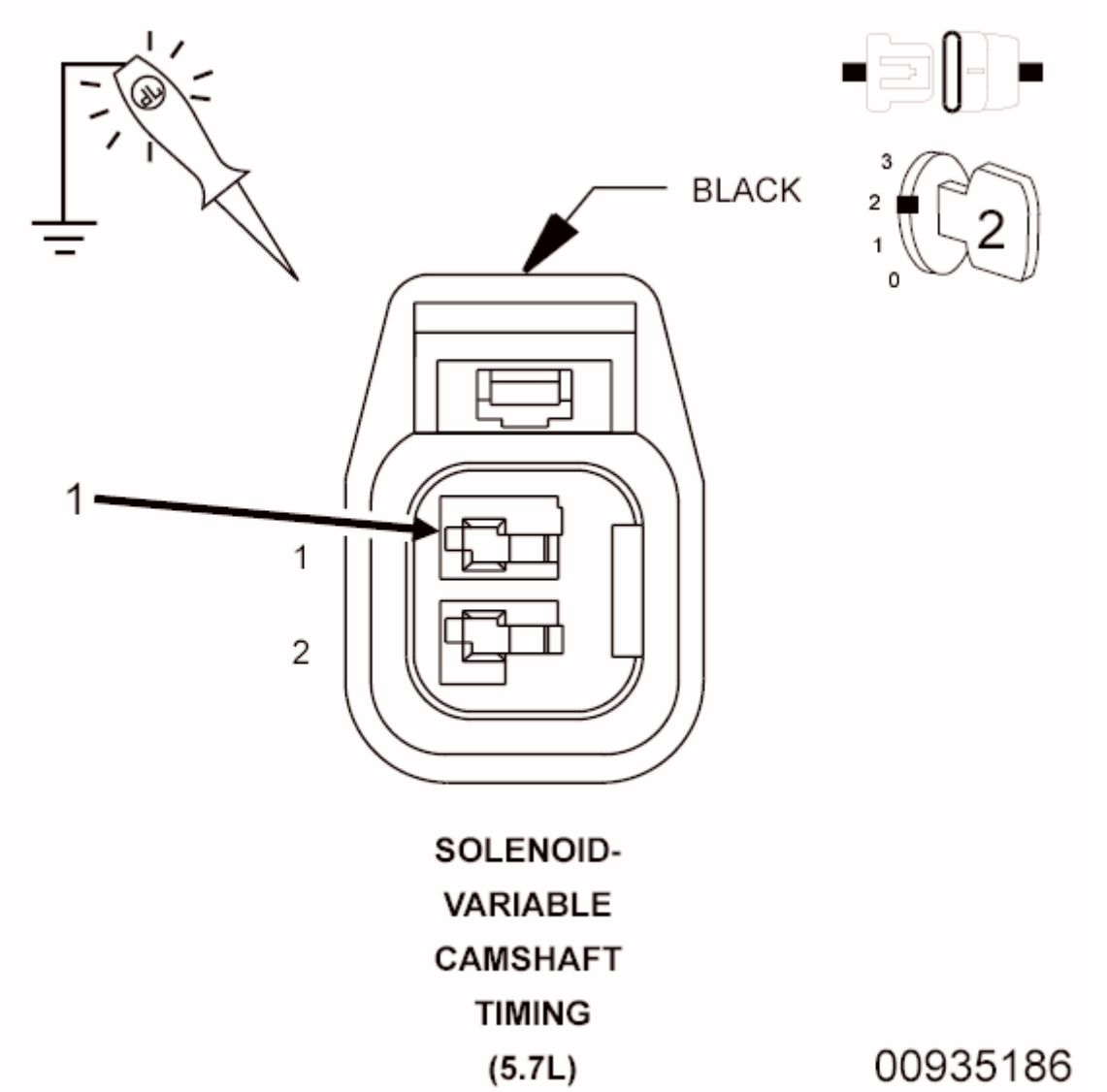

Fig. 8: Using 12-Volt Test Light Connected To Ground To Probe CMP Sensor Control Circuit In Harness Connector
Courtesy of CHRYSLER GROUP, LLC

1. Connect the C3 Powertrain Control Module (PCM) harness connector.
2. Turn the ignition on.
3. Using a 12-volt test light connected to 12 Volts probe the (K442) VCT Control circuit in the VCT solenoid harness connector.

NOTE: The test light should be off unless you have a short to ground, except

for a brief period immediately after turning ignition on.

4. With the scan tool, actuate the VCT solenoid control to the ON (100%) position.

NOTE: **The test light should be illuminated and bright. Compare the brightness to that of a direct connection to the battery.**

Is the test light illuminated and bright during the actuation and was it off when required?

Yes

- Verify that there is good pin to terminal contact in the VCT solenoid and Powertrain Control Module connectors. If OK, replace the VCT solenoid in accordance with the Service Information.
- Perform the POWERTRAIN VERIFICATION TEST. Refer to **POWERTRAIN VERIFICATION TEST** .

No

- Go To 6.

6. **EXCESSIVE RESISTANCE OR OPEN IN THE (Z908) VCT SOLENOID GROUND CIRCUIT**

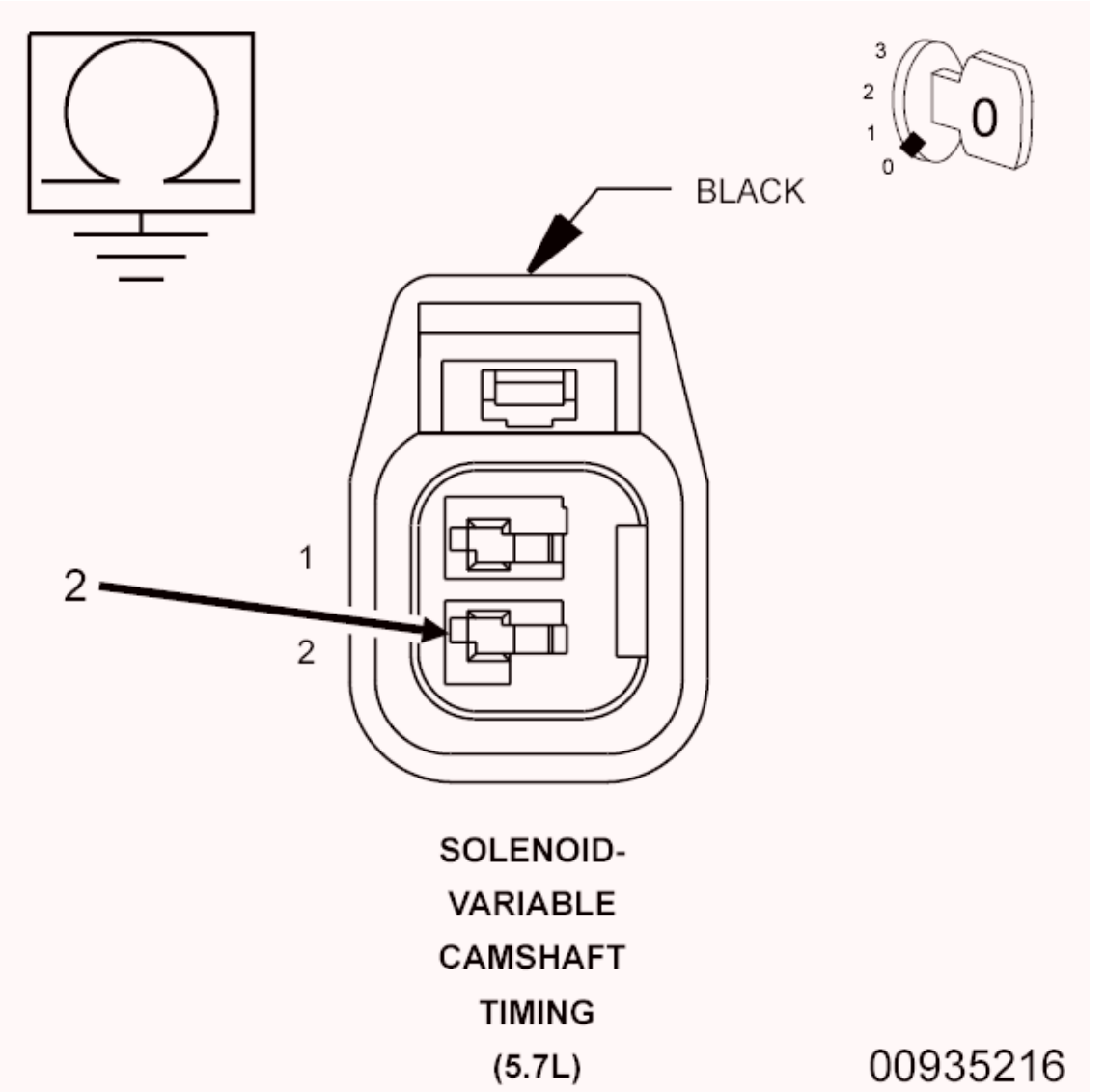

Fig. 9: Measuring Resistance Of VCT Solenoid Ground Circuit From AT Solenoid Harness Connector
Courtesy of CHRYSLER GROUP, LLC

1. Turn the ignition off.
2. Measure the resistance between ground and the (Z908) VCT solenoid ground circuit at the VCT Solenoid harness connector.

   Is the resistance below 5.0 Ohms?

   Yes

   - Go To 7.

   No

- Repair the excessive resistance in the (Z908) VCT solenoid ground control circuit.
- Perform the POWERTRAIN VERIFICATION TEST. Refer to **POWERTRAIN VERIFICATION TEST** .

7. **POWERTRAIN CONTROL MODULE (PCM)**
    1. Using the wiring diagram/schematic as a guide, inspect the wiring and connectors between the VCT solenoid and the Powertrain Control Module (PCM).
    2. Look for any chafed, pierced, pinched or partially broken wires.
    3. Look for broken, bent, pushed out or corroded terminals.
    4. Verify that there is good pin to terminal contact in the VCT solenoid and Powertrain Control Module connectors.
    5. Refer to any Technical Service Bulletins that may apply.

    Were any problems found?

    Yes

    - Repair as necessary.
    - Perform the POWERTRAIN VERIFICATION TEST. Refer to **POWERTRAIN VERIFICATION TEST** .

    No

    - Replace and program the Powertrain Control Module (PCM) in accordance with the Service Information. Refer to **MODULE, POWERTRAIN CONTROL, REMOVAL** .
    - Perform the POWERTRAIN VERIFICATION TEST. Refer to **POWERTRAIN VERIFICATION TEST** .

P0014-EXHAUST TARGET ERROR BANK 1

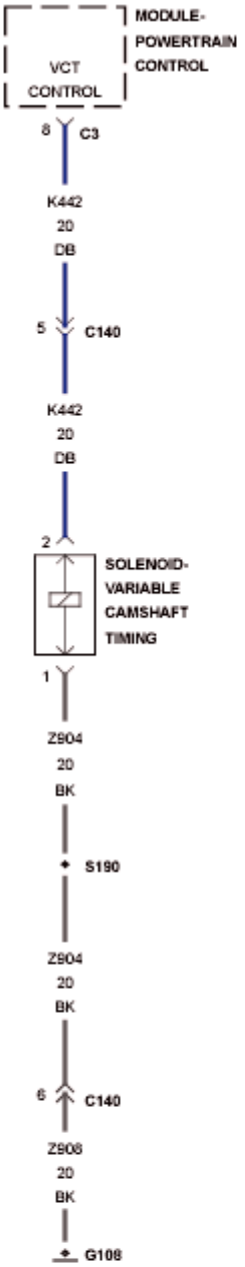

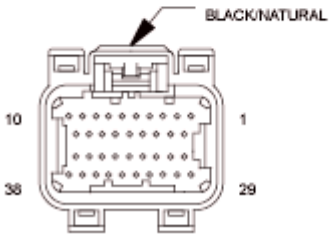

MODULE-
POWERTRAIN

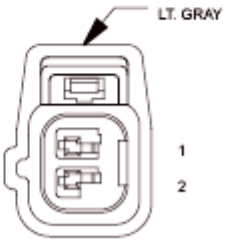

SOLENOID-
VARIABLE
CAMSHAFT

Fig. 10: Variable Cam Timing (VCT) Circuit Schematic
Courtesy of CHRYSLER GROUP, LLC

For a complete wiring diagram, **refer to appropriate SYSTEM WIRING DIAGRAMS article** .

THEORY OF OPERATION

Variable Cam Timing (VCT) allows the Powertrain Control Module (PCM) to monitor and adjust the position of the camshaft, based on desired torque levels and engine operating conditions. The camshaft design allows for the exhaust lobes to be adjusted while the intake lobes are not adjustable all on one camshaft. The PCM controls a solenoid operated control valve, that is used to direct oil pressure to hydraulic actuator mounted between the camshaft and its driving sprocket. The oil pressure alters the angular position or phasing of the camshaft relative to crankshaft rotation. A sensor is used to monitor the position of the camshaft.

WHEN MONITORED:

Variable Cam Timing (VCT) rationality is monitored under the following conditions: (1) Cam phasing is commanded off of the default (lockpin) position; (2) Oil temperature is between -12° C to 139° C (10° F to 282° F); (3) Battery voltage is greater than 10 Volts; (3) Engine speed is at least 650 to 1400 RPM, depending on oil temperature; (4) No CMP sensor, CKP sensor or OBDI plausibility errors. Before VCT can be enabled, reference adaptation must be completed.

SET CONDITION:

The actual camshaft phasing position is not moving towards the desired camshaft phasing position during steady state operation.

POSSIBLE CAUSES

Possible Causes
ENGINE OIL DIRTY OR CONTAMINATED
INCORRECT ENGINE OIL VISCOSITY
(K442) VCT CONTROL CIRCUIT OPEN OR HIGH RESISTANCE
VCT SOLENOID
CAMSHAFT PHASER
POWERTRAIN CONTROL MODULE (PCM)

Always perform the Pre-Diagnostic Troubleshooting procedure before proceeding. Refer to PRE-DIAGNOSTIC TROUBLESHOOTING PROCEDURE .

DIAGNOSTIC TEST

1. **DTC IS ACTIVE**

NOTE: **Diagnose and repair any system voltage DTCs before continuing with this test.**

NOTE: **Diagnose and repair any Camshaft Position (CMP) Sensor or Crankshaft Position (CKP) Sensor DTCs before continuing with this test.**

NOTE: **Diagnose and repair any oil pressure or oil pressure sensor DTCs before continuing with this test.**

1. Start the engine and allow it to reach normal operating temperature.

   WARNING: **When the engine is operating, do not stand in direct line with the fan. Do not put your hands near the pulleys, belts or fan. Do not wear loose clothing. Failure to follow these instructions may result in possible serious or fatal injury.**

2. With the scan tool, record and clear DTCs.
3. Test drive the vehicle under the conditions in which the DTC is monitored, as outlined above.
4. With the scan tool, select View DTCs.

   Is the status Active for this DTC?

   Yes

   - Go To 2.

   No

   - Perform the INTERMITTENT CONDITION diagnostic procedure. Refer to **INTERMITTENT CONDITION** .

2. **VCT POSITION SOLENOID CLEARING**
   1. With the scan tool perform the Exhaust Phaser 1 Cleaning function

      Did the DTC reset?

      Yes

      - Go To 3.

      No

      - Perform the INTERMITTENT CONDITION diagnostic procedure. Refer to **INTERMITTENT CONDITION** .

3. **VCT SOLENOID INSPECTION**
   1. Turn the ignition off.
   2. Remove the VCT Solenoid in accordance with the Service Information. Do not disconnect the harness connector.

3. Perform a visual inspection of the open part of the VCT Solenoid (spool valve) for the presence of any debris (metallic or non-metallic).

NOTE: **If contamination is observed, the VCT Solenoid must be replaced. After replacing the valve, verify that the engine oil has been replaced with the appropriate oil in accordance with the Service Information.**

Were any problems found?

Yes

- Replace the VCT Solenoid in accordance with the Service Information.
- Perform the POWERTRAIN VERIFICATION TEST. Refer to **POWERTRAIN VERIFICATION TEST** .

No

- Go To 4.

4. **VCT SOLENOID ACTUATION**
   1. Turn the ignition on.
   2. With the scan tool, actuate the VCT Solenoid.
   3. Perform a visual inspection of the spool valve for erratic movement or sticking during the forward and reverse stroke.

NOTE: **If sticking or erratic movement is observed, the VCT Solenoid must be replaced. After replacing the valve, verify that the engine oil has been replaced with the appropriate oil in accordance with the Service Information.**

Select the appropriate response from the choices below:

Normal operation. No sticking or erratic movement is observed

- Go To 5.

No movement is observed.

- Go To 7.

Sticking or erratic movement is observed.

- Replace the VCT Solenoid in accordance with the Service Information.
- Perform the POWERTRAIN VERIFICATION TEST. Refer to **POWERTRAIN VERIFICATION TEST** .

5. **INCORRECT ENGINE OIL VISCOSITY**

1. Review the vehicle service history to determine if the correct viscosity engine oil was used.

   Were any problems found?

   Yes

   - Change the engine oil and filter in accordance with the Service Information and retest.
   - Perform the POWERTRAIN VERIFICATION TEST. Refer to **POWERTRAIN VERIFICATION TEST** .

   No

   - Go To 6.

6. **ENGINE OIL DIRTY OR CONTAMINATED**
   1. Turn the ignition off.
   2. Inspect engine oil for signs of contamination, sludge or foreign material.

      Were any problems found?

      Yes

      - Clean the engine of oil sludge. Once the engine is cleaned of excessive sludge, replace oil and oil filter in accordance with the Service Information.
      - Perform the POWERTRAIN VERIFICATION TEST. Refer to **POWERTRAIN VERIFICATION TEST** .

      No

      - Go To 11.

7. **VCT SOLENOID WIRING AND CONNECTORS**
   1. Turn the ignition off.
   2. Inspect the wiring and connectors between the VCT Solenoid and the Powertrain Control Module (PCM).
   3. Look for any chafed, pierced, pinched or partially broken wires.
   4. Look for broken, bent, pushed out or corroded terminals.

      Were any problems found?

      Yes

      - Repair as necessary.
      - Perform the POWERTRAIN VERIFICATION TEST. Refer to **POWERTRAIN VERIFICATION TEST** .

No

- Go To 8.

8. **(K442) VCT CONTROL CIRCUIT ACTUATION**
   1. With the scan tool, actuate the VCT Solenoid to the ON (maximum) position.
   2. Using a 12-volt test light connected to ground, check the (K442) VCT control circuit in the VCT Solenoid harness connector.

      NOTE: The test light should be illuminated and bright. Compare the brightness to that of a direct connection to the battery.

      Is the test light illuminated and bright?

      Yes

      - Go To 10.

      No

      - Go To 9.

9. **(K442) VCT CONTROL CIRCUIT OPEN OR HIGH RESISTANCE**
   1. Turn the ignition off.
   2. Disconnect the Powertrain Control Module (PCM).

      NOTE: When checking circuits at the Powertrain Control Module (PCM), be careful not to damage or distort the connector terminals. Improper measurement technique could result in poor pin to terminal contact.

   3. Measure the resistance of the (K442) VCT Control circuit between the VCT Solenoid harness connector and the Powertrain Control Module (PCM) harness connector.

      Is the resistance below 5.0 Ohms?

      Yes

      - Go To 12.

      No

      - Repair the (K442) VCT Control circuit for an open circuit or high resistance.
      - Perform the POWERTRAIN VERIFICATION TEST. Refer to **POWERTRAIN VERIFICATION TEST** .

10. **VCT SOLENOID**
    1. Turn the ignition off.

2. Inspect the wiring and connectors between the VCT Solenoid and the Powertrain Control Module (PCM).
3. Look for any chafed, pierced, pinched or partially broken wires.
4. Look for broken, bent, pushed out or corroded terminals.

   Were any problems found?

   Yes

   - Repair as necessary.
   - Perform the POWERTRAIN VERIFICATION TEST. Refer to **POWERTRAIN VERIFICATION TEST** .

   No

   - Replace the VCT Solenoid in accordance with the Service Information.
   - Perform the POWERTRAIN VERIFICATION TEST. Refer to **POWERTRAIN VERIFICATION TEST** .

11. **CAMSHAFT PHASER**
    1. Turn the ignition off.
    2. Remove Camshaft Phaser in accordance with the Service information.
    3. Inspect the Phaser for contamination, foreign material or any condition that would restrict operation of the Phaser.
    4. Inspect the Phaser oil passages for signs of sludge or foreign material.

       NOTE: The Phaser should not be disassembled. If the Phaser is damaged, it must be replaced.

       Were any problems found?

       Yes

       - Repair as necessary.
       - Perform the POWERTRAIN VERIFICATION TEST. Refer to **POWERTRAIN VERIFICATION TEST** .

       No

       - Perform the INTERMITTENT CONDITION diagnostic procedure. Refer to **INTERMITTENT CONDITION** .

12. **POWERTRAIN CONTROL MODULE (PCM)**
    1. Turn the ignition off.
    2. Inspect the wiring and connectors between the VCT solenoid and the Powertrain Control Module

(PCM).

3. Look for any chafed, pierced, pinched or partially broken wires.
4. Look for broken, bent, pushed out or corroded terminals.
5. Refer to any TSBs that apply.

Were any problems found?

Yes

- Repair as necessary.
- Perform the POWERTRAIN VERIFICATION TEST. Refer to **POWERTRAIN VERIFICATION TEST** .

No

- Replace and program the Powertrain Control Module in accordance with the Service Information. Refer to **MODULE, POWERTRAIN CONTROL, REMOVAL** .
- Perform the POWERTRAIN VERIFICATION TEST. Refer to **POWERTRAIN VERIFICATION TEST** .

P0016-CRANKSHAFT/CAMSHAFT TIMING MISALIGNMENT

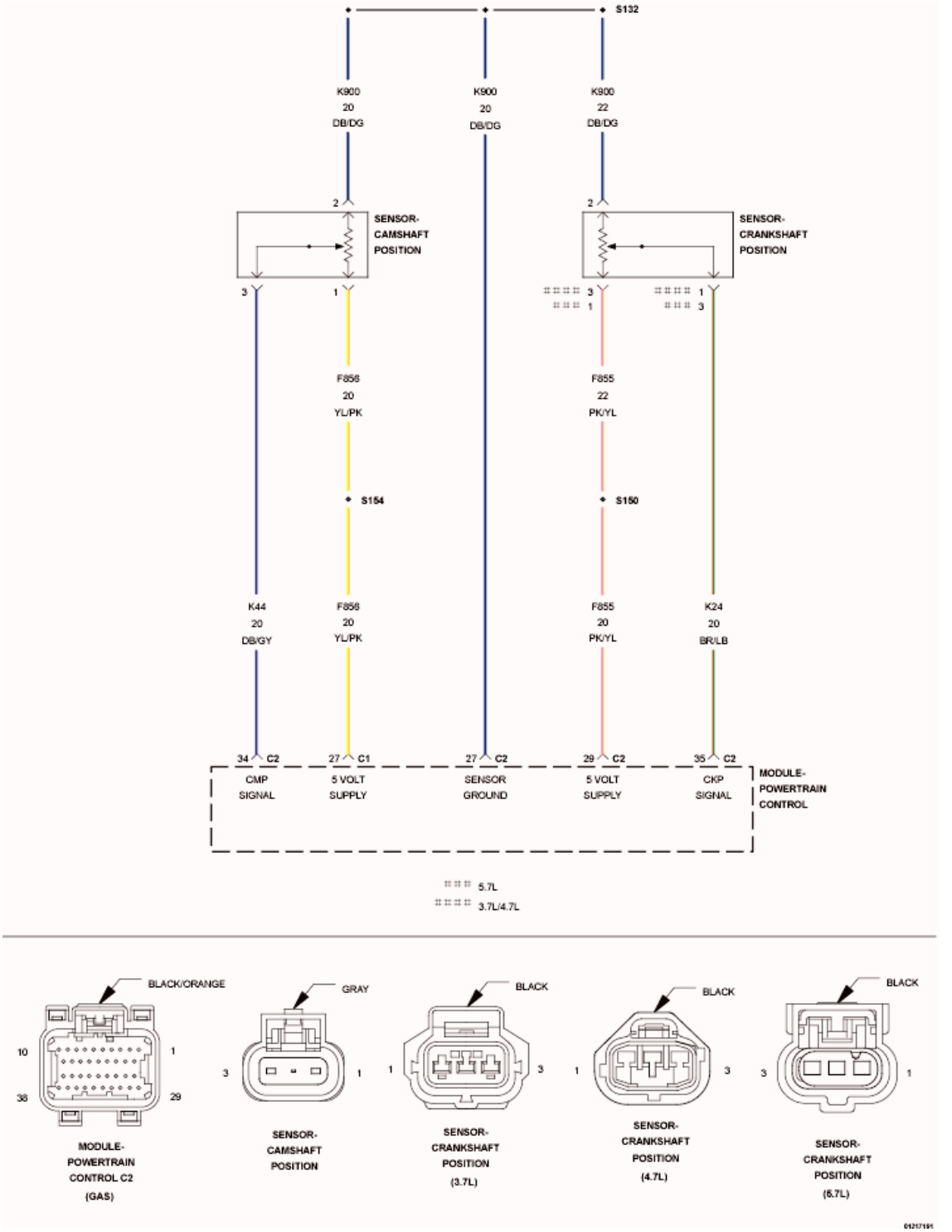

Fig. 11: Crankshaft/Camshaft Position Sensor Circuit Schematic
Courtesy of CHRYSLER GROUP, LLC

For a complete wiring diagram, **refer to appropriate SYSTEM WIRING DIAGRAMS article** .

WHEN MONITORED:

With the engine speed between 480 and 6816 RPM and no Camshaft Position (CMP) Sensor or Crankshaft Position (CKP) Sensor DTCs detected.

SET CONDITION:

Powertrain Control Module (PCM) detects an error when the camshaft position is out of phase with the crankshaft position. One Trip Fault. Three good trips to turn off the MIL.

POSSIBLE CAUSES

Possible Causes
ERRATIC CAM POSITION SENSOR SIGNAL
CAMSHAFT POSITION SENSOR TONE WHEEL/PULSE RING
ERRATIC CRANKSHAFT POSITION SENSOR SIGNAL
CRANKSHAFT POSITION SENSOR TONE WHEEL/PULSE RING
TIMING SPROCKET ALIGNMENT
CAMSHAFT POSITION SENSOR
CRANKSHAFT POSITION SENSOR

Always perform the Pre-Diagnostic Troubleshooting procedure before proceeding. Refer to PRE-DIAGNOSTIC TROUBLESHOOTING PROCEDURE .

DIAGNOSTIC TEST

1. **ACTIVE DTC**
    1. Turn the ignition on.
    2. With the scan tool select View DTCs.
    3. Record the related Freeze Frame data.
    4. With the scan tool clear DTCs.
    5. Start the engine and allow it to reach operating temperature.

    WARNING: When the engine is operating, do not stand in direct line with the fan. Do not put your hands near the pulleys, belts or fan. Do not wear loose clothing. Failure to follow these instructions may result in possible serious or fatal injury.

    6. With the scan tool select View DTCs.

    NOTE: If the DTC does not reset it may be necessary to test drive the vehicle.

    Is the DTC Active at this time?

    Yes, non Variable Camshaft Timing (VCT) vehicle

- Go To 3.

Yes, vehicles with VCT

- Go To 2.

No

- Perform the INTERMITTENT CONDITION diagnostic procedure. Refer to **INTERMITTENT CONDITION** .

2. **CAMSHAFT POSITION SOLENOID CLEANING**
   1. With the scan tool perform the Exhaust Phaser 1 Cleaning function.

      Did the DTC reset?

      Yes

      - Go To 3.

      No

      - Perform the INTERMITTENT CONDITION diagnostic procedure. Refer to **INTERMITTENT CONDITION** .
3. **CAMSHAFT POSITION SENSOR CIRCUIT WIRING OR CONNECTORS**
   1. Using the wiring diagram/schematic as a guide, inspect the wiring and connectors between the Camshaft Position (CMP) Sensor and the Powertrain Control Module (PCM).
   2. Look for any chafed, pierced, pinched or partially broken wires.
   3. Look for broken, bent, pushed out or corroded terminals.
   4. Inspect the Camshaft Position Sensor for conditions such as loose mounting screws, damage or cracks.

      Were any problems found?

      Yes

      - Repair as necessary.
      - Perform the POWERTRAIN VERIFICATION TEST. Refer to **POWERTRAIN VERIFICATION TEST** .

      No

      - Go To 4.
4. **CRANKSHAFT POSITION SENSOR CIRCUIT WIRING OR CONNECTORS**
   1. Using the wiring diagram/schematic as a guide, inspect the wiring and connectors between the

Crankshaft Position (CKP) Sensor and the PCM.

2. Verify there is good pin to terminal contact in the CKP sensor and PCM connectors.
3. Look for any chafed, pierced, pinched or partially broken wires.
4. Look for broken, bent, pushed out or corroded terminals.
5. Inspect the CKP sensor for conditions such as loose mounting screws, damage or cracks.

Were any problems found?

Yes

- Repair as necessary.
- Perform the POWERTRAIN VERIFICATION TEST. Refer to **POWERTRAIN VERIFICATION TEST** .

No

- Go To 5.

5. **CRANKSHAFT, TONE WHEEL OR FLEX PLATE**
   1. Turn the ignition off.
   2. Remove the Crankshaft Position Sensor.
   3. Inspect the Crankshaft Position Sensor and mounting area for any condition that would result in an incorrect signal, such as damage, evidence of foreign material or excessive movement.

   Were any problems found?

   Yes

   - Repair as necessary in accordance with the Service Information.
   - Perform the POWERTRAIN VERIFICATION TEST. Refer to **POWERTRAIN VERIFICATION TEST** .

   No

   - Go To 6.

6. **CAMSHAFT, TONE WHEEL OR PULSE RING**
   1. Turn the ignition off.
   2. Remove the Camshaft Position Sensor.
   3. Inspect the Camshaft Position Sensor and mounting area for any condition that would result in an incorrect signal, such as damage, evidence of foreign material or excessive movement.

   Were any problems found?

   Yes

- Repair as necessary in accordance with the Service Information.
- Perform the POWERTRAIN VERIFICATION TEST. Refer to **POWERTRAIN VERIFICATION TEST** .

No

- Go To 7.

7. **TIMING SPROCKET ALIGNMENT**
   1. Turn the ignition off.
   2. Verify proper timing sprocket alignment in accordance with the Service Information.

      Were any problems found?

      Yes

      - Repair as necessary in accordance with the Service Information.
      - Perform the POWERTRAIN VERIFICATION TEST. Refer to **POWERTRAIN VERIFICATION TEST** .

      No

      - Go To 8.

8. **CAMSHAFT POSITION SENSOR IRREGULAR SIGNAL**
   1. Turn the ignition off.
   2. Install any previously removed components. Connect all connectors.
   3. Using a lab scope and the Miller special tool (special tool #6801, Terminal Probe), back probe the (K44) CMP Signal circuit in the Camshaft Position Sensor harness connector.
   4. Turn the ignition on.
   5. Wiggle the related wire harness and lightly tap on the Camshaft Position Sensor while monitoring the lab scope screen.
   6. Start the engine.

      WARNING: **When the engine is operating, do not stand in direct line with the fan. Do not put your hands near the pulleys, belts or fan. Do not wear loose clothing. Failure to follow these instructions may result in possible serious or fatal injury.**

   7. Monitor the Camshaft Position Sensor signal on the lab scope screen.

      Were any Camshaft Position Sensor signals irregular or missing?

      Yes

      - Go To 10.

No

- Go To 9.

9. **CRANKSHAFT POSITION SENSOR IRREGULAR SIGNAL**
    1. Turn the ignition off.
    2. Using a lab scope and the Miller special tool (special tool #6801, Terminal Probe), back probe the (K24) CKP Signal circuit in the Crankshaft Position Sensor harness connector.
    3. Turn the ignition on.
    4. Wiggle the related wire harness and lightly tap on the Crankshaft Position Sensor while monitoring the lab scope screen.
    5. Start the engine.

    WARNING: **When the engine is operating, do not stand in direct line with the fan. Do not put your hands near the pulleys, belts or fan. Do not wear loose clothing. Failure to follow these instructions may result in possible serious or fatal injury.**

    6. Monitor the Crankshaft Position Sensor signal on the lab scope screen.

    Were any Crankshaft Position Sensor signals irregular or missing?

    Yes

    - Go To 11.

    No

    - Go To 12.

10. **CAMSHAFT POSITION SENSOR**
    1. Using the wiring diagram/schematic as a guide, inspect the wiring and connectors between the Camshaft Position Sensor and the Powertrain Control Module (PCM).
    2. Look for any chafed, pierced, pinched or partially broken wires.
    3. Look for broken, bent, pushed out or corroded terminals.

    Were any problems found?

    Yes

    - Repair as necessary.
    - Perform the POWERTRAIN VERIFICATION TEST. Refer to **POWERTRAIN VERIFICATION TEST** .

    No

- Replace the Camshaft Position Sensor in accordance with the Service Information.
- Perform the POWERTRAIN VERIFICATION TEST. Refer to **POWERTRAIN VERIFICATION TEST** .

11. **CRANKSHAFT POSITION SENSOR**
    1. Using the wiring diagram/schematic as a guide, inspect the wiring and connectors between the Crankshaft Position Sensor and the Powertrain Control Module (PCM).
    2. Look for any chafed, pierced, pinched or partially broken wires.
    3. Look for broken, bent, pushed out or corroded terminals.

    Were any problems found?

    Yes

    - Repair as necessary.
    - Perform the POWERTRAIN VERIFICATION TEST. Refer to **POWERTRAIN VERIFICATION TEST** .

    No

    - Replace the Crankshaft Position Sensor in accordance with the Service Information.
    - Perform the POWERTRAIN VERIFICATION TEST. Refer to **POWERTRAIN VERIFICATION TEST** .

12. **POWERTRAIN CONTROL MODULE (PCM)**
    1. Ignition on, engine not running.
    2. With the scan tool clear DTCs.
    3. Start the engine.

    WARNING: **When the engine is operating, do not stand in direct line with the fan. Do not put your hands near the pulleys, belts or fan. Do not wear loose clothing. Failure to follow these instructions may result in possible serious or fatal injury.**

    4. Monitor the scan tool data relative to this circuit and wiggle test the wiring and connectors.
    5. Turn the ignition off.
    6. Using the wiring diagram/schematic as a guide, inspect the wiring and connectors between the Camshaft Position Sensor and the Powertrain Control Module (PCM) and between the Camshaft Position Sensor and the Powertrain Control Module (PCM).
    7. Look for any chafed, pierced, pinched or partially broken wires.
    8. Look for broken, bent, pushed out or corroded terminals. Verify that there is good pin to terminal contact in the sensor and control module connectors.
    9. Look for the data to change or for the DTC to reset during the wiggle test.
    10. Perform any Technical Service Bulletins that may apply.

Were any problems found?

Yes

- Repair as necessary.
- Perform the POWERTRAIN VERIFICATION TEST. Refer to **POWERTRAIN VERIFICATION TEST** .

No

- Replace and program the Powertrain Control Module (PCM) in accordance with the Service Information. Refer to **MODULE, POWERTRAIN CONTROL, REMOVAL** .
- Perform the POWERTRAIN VERIFICATION TEST. Refer to **POWERTRAIN VERIFICATION TEST** .

P0031-O2 SENSOR 1/1 HEATER CIRCUIT LOW

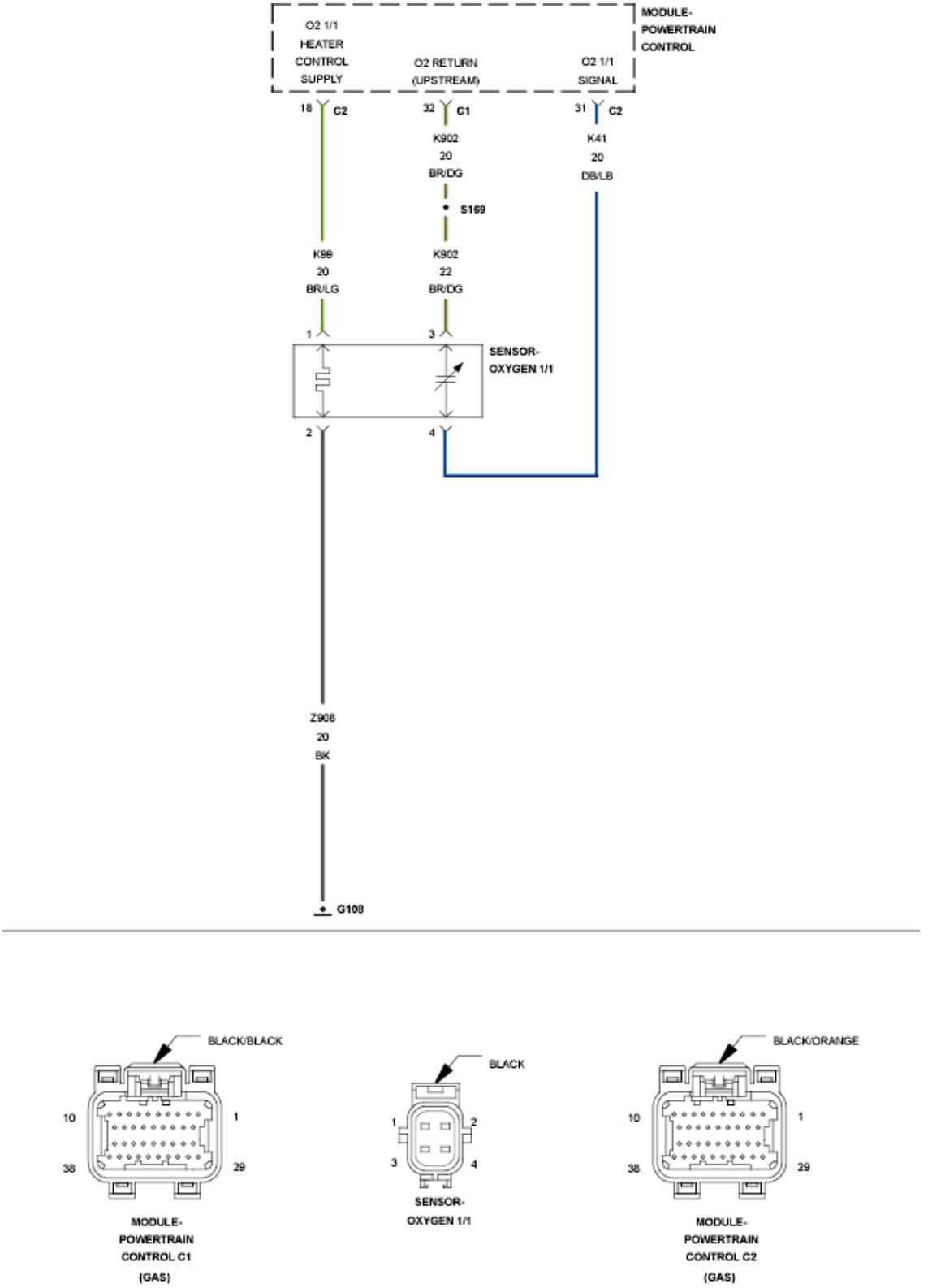

Fig. 12: O2 Sensor 1/1 Heater Circuit Schematic

Courtesy of CHRYSLER GROUP, LLC

For a complete wiring diagram, **refer to appropriate SYSTEM WIRING DIAGRAMS article** .

WHEN MONITORED:

Continuously during O2 heater operation with battery voltage between 10.4 and 15.75 volts.

SET CONDITION:

The PCM detects that the O2 sensor heater element input is below the minimum acceptable voltage. One trip fault. Three good trips to turn off the MIL.

POSSIBLE CAUSES

Possible Causes
(K99) O2 SENSOR 1/1 HEATER CONTROL CIRCUIT SHORTED TO GROUND
EXCESSIVE RESISTANCE IN THE (K99) O2 SENSOR 1/1 HEATER CONTROL CIRCUIT
O2 SENSOR
POWERTRAIN CONTROL MODULE (PCM)

Always perform the Pre-Diagnostic Troubleshooting procedure before proceeding. Refer to PRE-DIAGNOSTIC TROUBLESHOOTING PROCEDURE .

DIAGNOSTIC TEST

1. **DTC IS ACTIVE**
   1. Start the engine and allow it to idle for at least 60 seconds.

      WARNING: **When the engine is operating, do not stand in direct line with the fan. Do not put your hands near the pulleys, belts or fan. Do not wear loose clothing. Failure to follow these instructions may result in possible serious or fatal injury.**

   2. With a scan tool, select View DTCs.

      Is the DTC Active at this time?

      Yes

      - Go To 2.

      No

      - Perform the INTERMITTENT CONDITION diagnostic procedure. Refer to **INTERMITTENT CONDITION** .

2. **O2 HEATER ELEMENT**
   1. Turn the ignition off.

      NOTE: Allow the O2 Sensor to cool down to room temperature.

   2. Disconnect the 1/1 O2 Sensor harness connector.
   3. Measure the resistance across the O2 Sensor Heater element, between the Heater Control terminal and the Heater ground terminal at the component.

      NOTE: O2 Heater Element resistance values should be measured at 21.1° C (70° F). The resistance value will vary with different temperature values.

      Is the O2 Sensor Heater Element resistance between 2.0 and 30.0 Ohms?

      Yes

      - Go To 3.

      No

      - Replace the O2 Sensor.
      - Perform the POWERTRAIN VERIFICATION TEST. Refer to **POWERTRAIN VERIFICATION TEST** .
3. **(K99) O2 1/1 HEATER CONTROL CIRCUIT SHORTED TO GROUND**

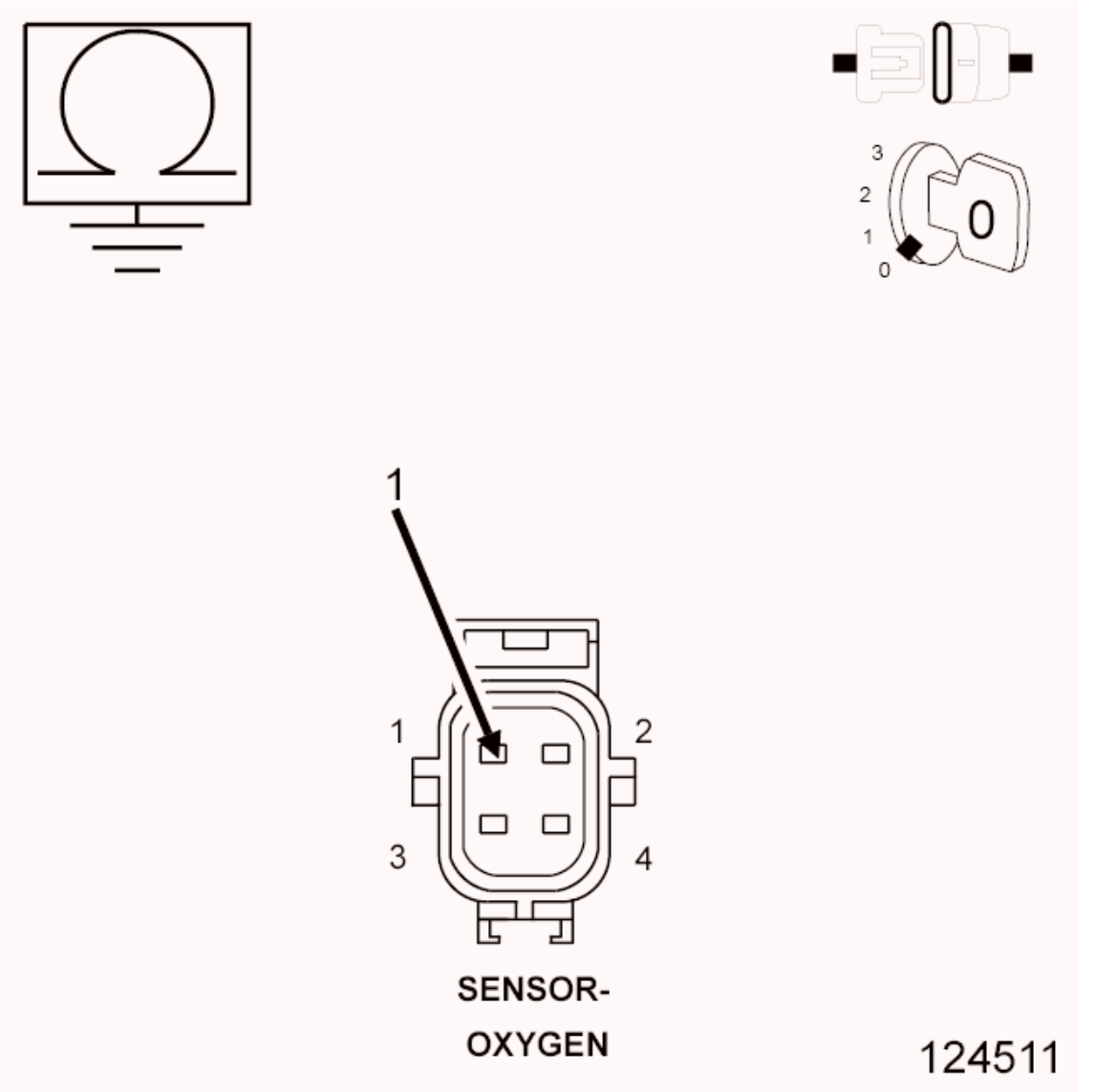

Fig. 13: Measuring Resistance Between Ground And O2 Sensor Heater Control Circuit In O2 Sensor Harness Connector
Courtesy of CHRYSLER GROUP, LLC

1. Disconnect the C2 PCM harness connector.
2. Measure the resistance between ground and the (K99) O2 1/1 Heater Control circuit in the O2 Sensor harness connector.

   Is the resistance below 5.0 Ohms?

   Yes

   - Repair the short to ground in the (K99) O2 1/1 Heater Control circuit.
   - Perform the POWERTRAIN VERIFICATION TEST. Refer to **POWERTRAIN VERIFICATION TEST** .

No

- Go To 4.

4. **EXCESSIVE RESISTANCE IN THE (K99) O2 1/1 HEATER CONTROL CIRCUIT**

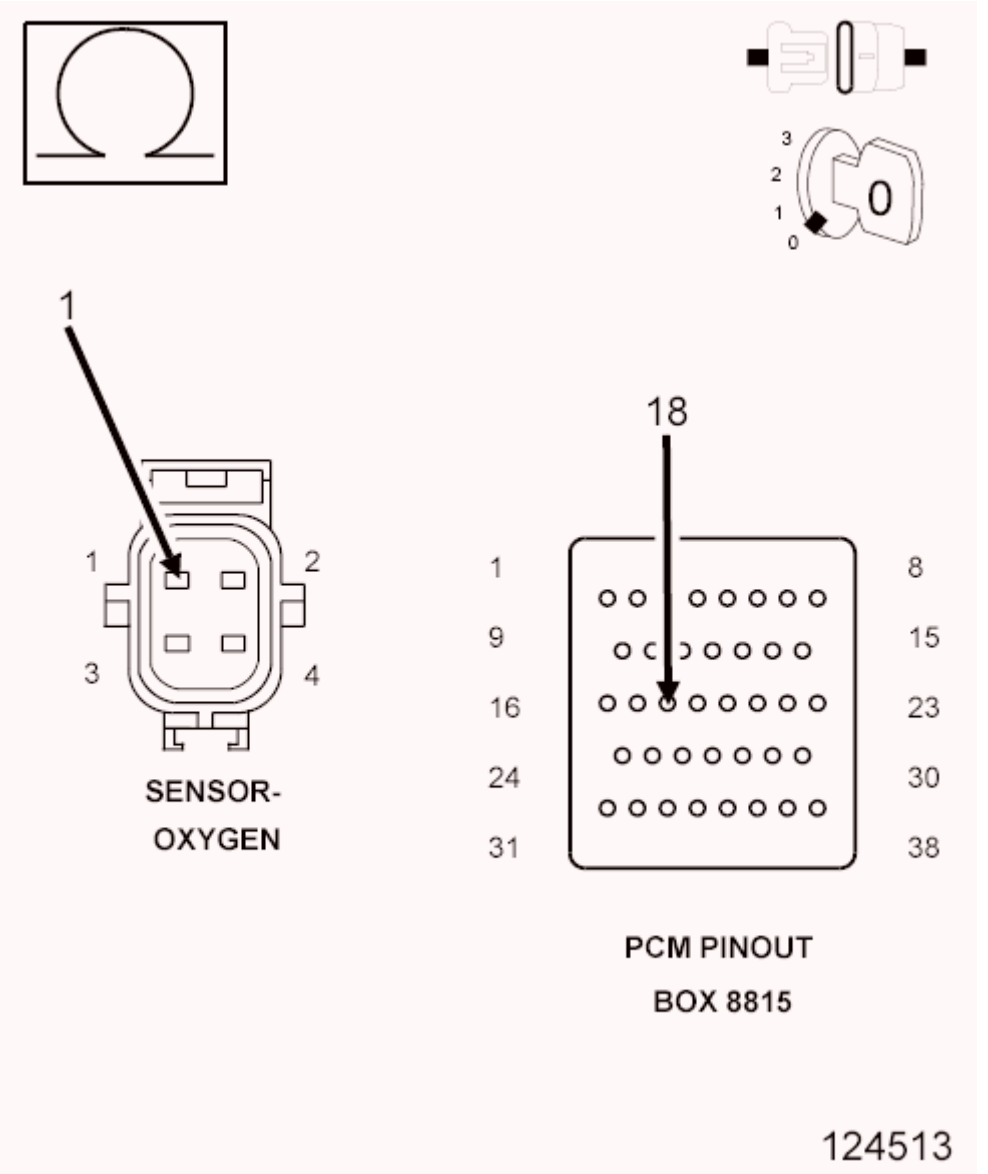

Fig. 14: Measuring Resistance Of O2 Sensor Heater Control Circuit Between Oxygen Sensor Harness Connector And Appropriate Terminal Of PCM Pinout Box 8815
Courtesy of CHRYSLER GROUP, LLC

CAUTION: Do not probe the PCM harness connectors. Probing the PCM harness connectors will damage the PCM terminals, resulting in poor terminal to pin connection. Install the PCM Pinout Box (special tool #8815A, Kit, NGC, 38 Position) to perform diagnosis.

1. Measure the resistance of the (K99) O2 1/1 Heater Control circuit between the 1/1 Oxygen Sensor harness connector and the appropriate terminal of PCM Pinout Box (special tool #8815A, Kit, NGC, 38 Position).

   Is the resistance below 0.5 of an Ohm?

   Yes

   - Go To 5.

   No

   - Repair the excessive resistance in the (K99) O2 1/1 Heater Control circuit.
   - Perform the POWERTRAIN VERIFICATION TEST. Refer to **POWERTRAIN VERIFICATION TEST** .

5. **POWERTRAIN CONTROL MODULE (PCM)**
   1. Using the wiring diagram/schematic as a guide, inspect the wiring and connectors between the Oxygen Sensor 1/1 and the Powertrain Control Module (PCM).
   2. Look for any chafed, pierced, pinched, or partially broken wires.
   3. Look for broken, bent, pushed out or corroded terminals. Verify that there is good pin to terminal contact in the Sensor and Control Module connectors.
   4. Refer to any Technical Service Bulletins that may apply.

      Were there any problems found?

      Yes

      - Repair as necessary.
      - Perform the POWERTRAIN VERIFICATION TEST. Refer to **POWERTRAIN VERIFICATION TEST** .

      No

      - Replace and program the Powertrain Control Module in accordance with the Service Information. Refer to **MODULE, POWERTRAIN CONTROL, REMOVAL** .
      - Perform the POWERTRAIN VERIFICATION TEST. Refer to **POWERTRAIN VERIFICATION TEST** .

P0032-O2 SENSOR 1/1 HEATER CIRCUIT HIGH

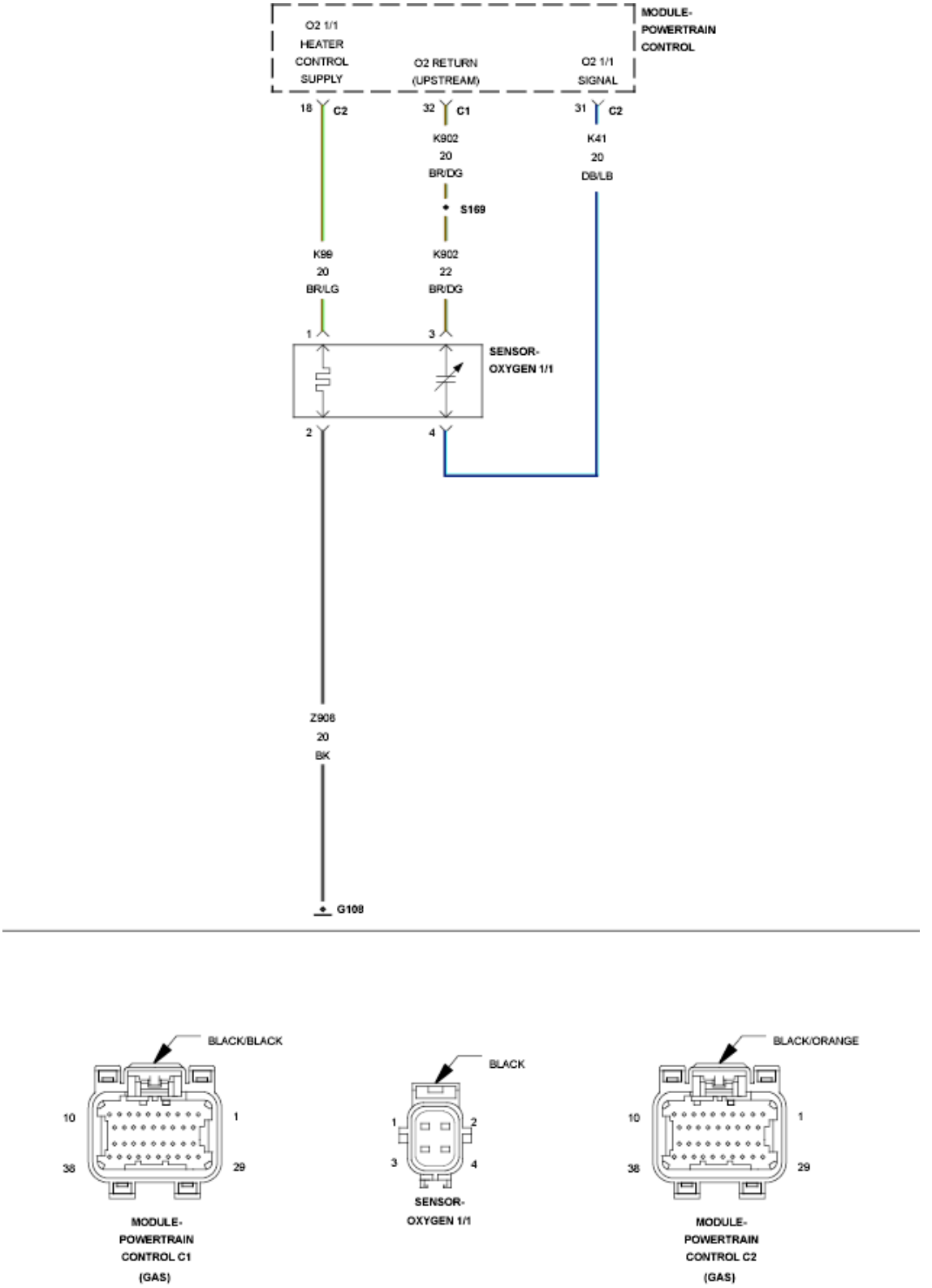

Fig. 15: O2 Sensor 1/1 Heater Circuit Schematic

Courtesy of CHRYSLER GROUP, LLC

For a complete wiring diagram, **refer to appropriate SYSTEM WIRING DIAGRAMS article** .

WHEN MONITORED:

Continuously during O2 heater operation with battery voltage between 10.4 and 15.75 volts.

SET CONDITION:

The Powertrain Control Module (PCM) detects that the O2 sensor heater element input is above the maximum acceptable voltage. One trip fault. Three good trips to turn off the MIL.

POSSIBLE CAUSES

Possible Causes
(K99) O2 1/1 HEATER CONTROL CIRCUIT OPEN
(Z908) O2 1/1 HEATER GROUND CIRCUIT OPEN
(K99) O2 1/1 HEATER CONTROL CIRCUIT SHORTED TO VOLTAGE
1/1 O2 SENSOR
POWERTRAIN CONTROL MODULE (PCM)

Always perform the Pre-Diagnostic Troubleshooting procedure before proceeding. Refer to PRE-DIAGNOSTIC TROUBLESHOOTING PROCEDURE .

DIAGNOSTIC TEST

1. **ACTIVE DTC**

WARNING: **When the engine is operating, do not stand in direct line with the fan. Do not put your hands near the pulleys, belts, or fan. Do not wear loose clothing. Failure to follow these instructions can result possible serious or fatal injury.**

NOTE: **If P0688-AUTO SHUTDOWN RELAY SENSE CIRCUIT LOW has set along with any of the O2 SENSOR HEATER CIRCUIT HIGH DTCs, all of the O2 Sensor Heater Control circuits need to be checked for a short to battery voltage.**

1. Start the engine and allow it to idle for at least 60 seconds.
2. With a scan tool, select View DTCs.

   Is the DTC Active at this time?

   Yes

- Go To 2.

No

- Perform the INTERMITTENT CONDITION diagnostic procedure. Refer to **INTERMITTENT CONDITION** .

2. **O2 HEATER ELEMENT**
   1. Turn the ignition off.

      NOTE: Allow the O2 1/1 Sensor to cool down to room temperature.

   2. Disconnect the O2 Sensor 1/1 harness connector.
   3. Measure the resistance across the O2 Sensor 1/1 Heater element between the O2 1/1 Heater Control terminal and the O2 1/1 Heater ground terminal at the component.

      NOTE: O2 Heater Element resistance values should be measured at 21.1° C (70° F). The resistance value will vary with different temperature values.

      Is the O2 Sensor Heater Element resistance between 2.0 and 30.0 Ohms?

      Yes

      - Go To 3.

      No

      - Replace the O2 Sensor 1/1.
      - Perform the POWERTRAIN VERIFICATION TEST. Refer to **POWERTRAIN VERIFICATION TEST** .

3. **(K99) O2 1/1 HEATER CONTROL CIRCUIT**

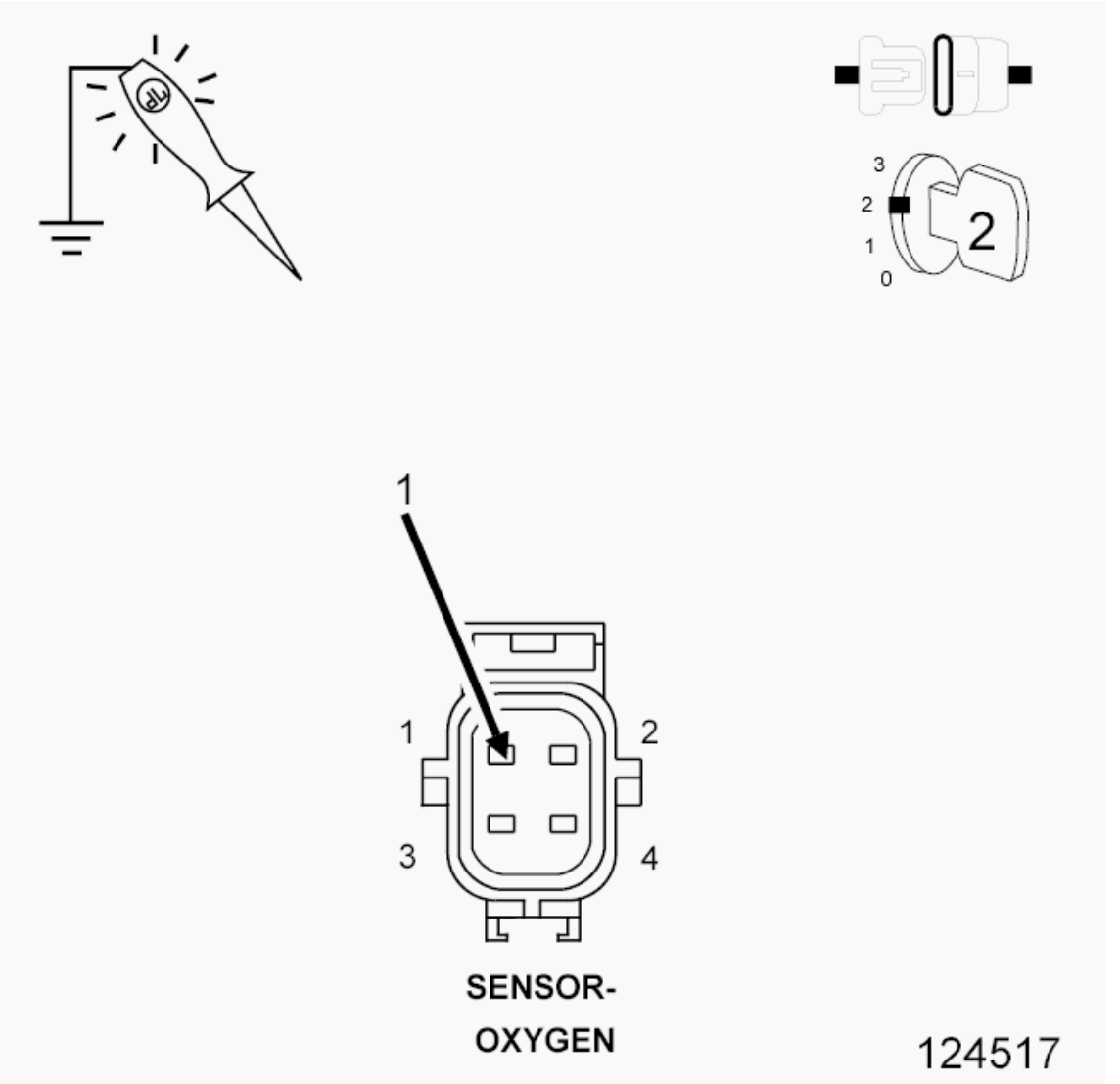

Fig. 16: Using 12-Volt Test Light Connected To Ground To Probe O2 Sensor Heater Control Circuit In O2 Sensor 1/1 Harness Connector
Courtesy of CHRYSLER GROUP, LLC

1. Ignition on, engine not running.

NOTE: **Make sure the test light is probing the circuit before actuating the Heater Test or a DTC may set and not allow the actuation.**

2. Using a 12-volt test light connected to ground, probe the (K99) O2 1/1 Heater Control circuit in the O2 Sensor 1/1 harness connector.
3. With a scan tool, actuate the O2 1/1 Heater Test with the O2 Sensor harness connector still disconnected.

NOTE: **The test light should be illuminated and bright proportional to the maximum duty cycle allowed by the scan tool. For example, if the**

scan tool allows 100% actuation, the brightness should be as bright as a direct connection to the battery. If the scan tool allows a maximum 25% actuation, the brightness should be 25% as bright as a direct connection to the battery.

Does the test light illuminate accordingly during the actuation?

Yes

- Go To 4.

No

- Go To 5.

4. **(Z908) O2 1/1 HEATER GROUND CIRCUIT OPEN**

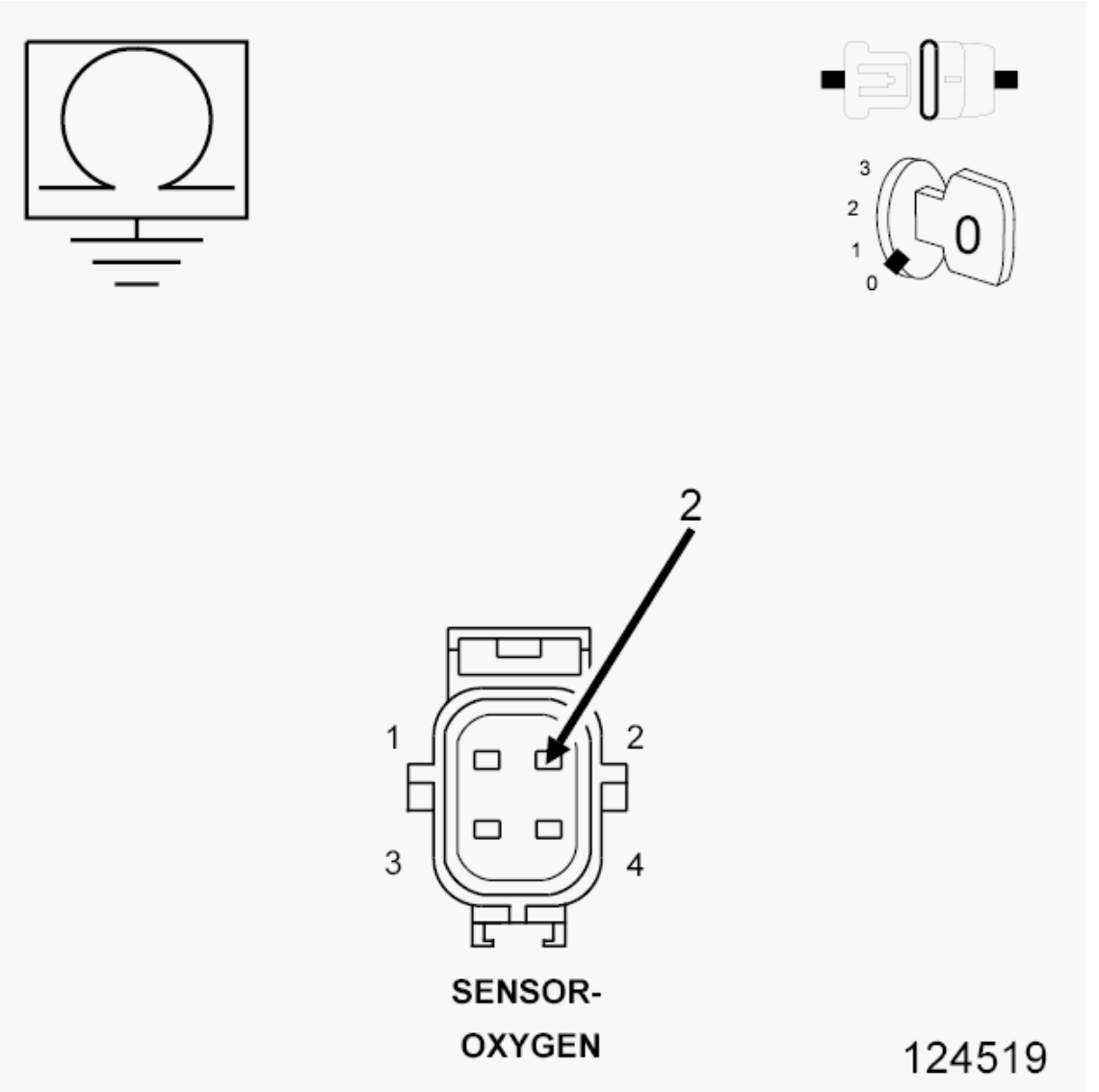

Fig. 17: Measuring Resistance Between Engine Ground And O2 Sensor Heater Ground Circuit In O2 Sensor Harness Connector
Courtesy of CHRYSLER GROUP, LLC

1. Turn the ignition off.
2. Measure the resistance between an engine ground and the (Z908) O2 1/1 Heater ground circuit in the O2 Sensor 1/1 harness connector.

   Is the resistance below 5.0 Ohms?

   Yes

   - Replace the O2 Sensor 1/1.
   - Perform the POWERTRAIN VERIFICATION TEST. Refer to **POWERTRAIN VERIFICATION TEST** .

No

- Repair the open in the (Z908) O2 1/1 Heater ground circuit.
- Perform the POWERTRAIN VERIFICATION TEST. Refer to **POWERTRAIN VERIFICATION TEST** .

5. **(K99) O2 1/1 HEATER CONTROL CIRCUIT SHORTED TO VOLTAGE**

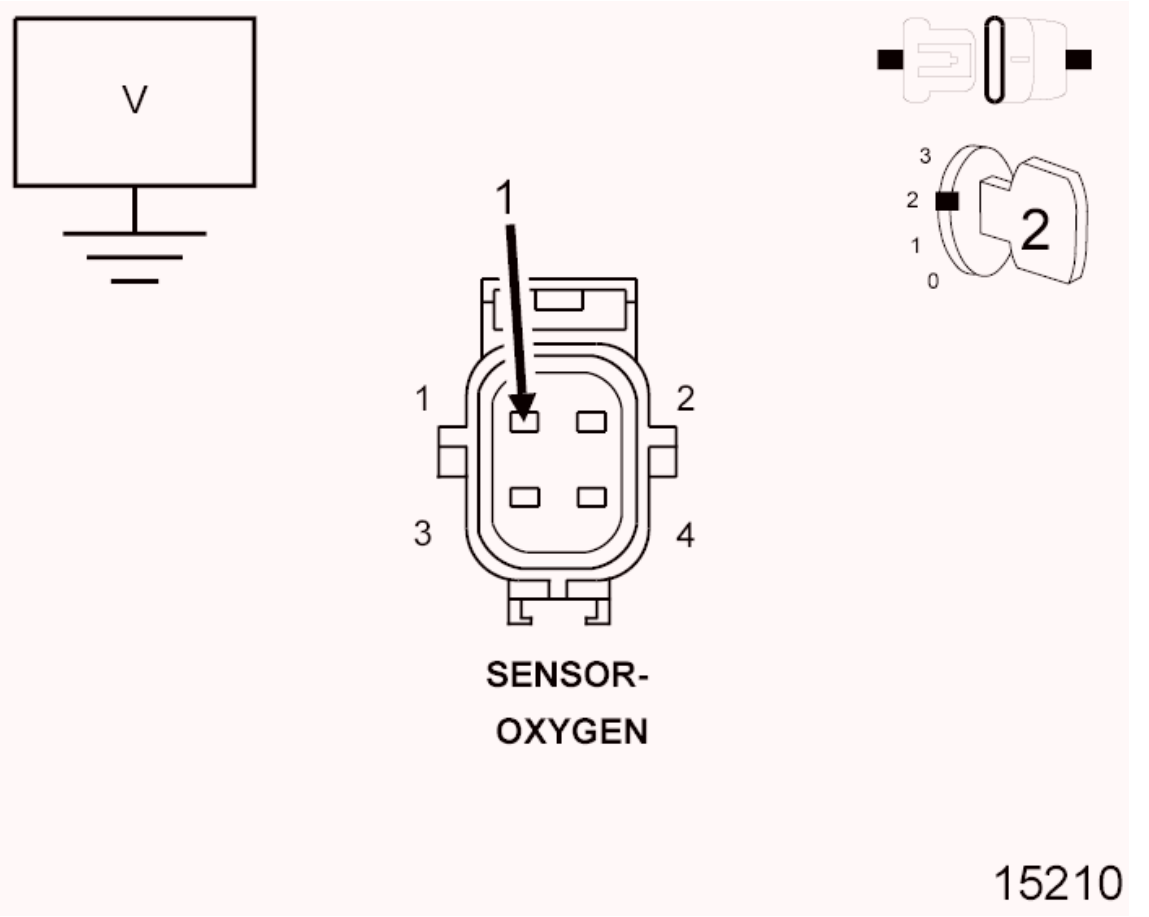

Fig. 18: Measuring Voltage Of O2 Sensor Heater Control Circuit In Sensor Harness Connector
Courtesy of CHRYSLER GROUP, LLC

1. Turn the ignition off.
2. Disconnect the C2 PCM harness connector.
3. Ignition on, engine not running.
4. Measure the voltage of the (K99) O2 1/1 Heater Control circuit in the 1/1 Oxygen Sensor harness connector.

   Is there any voltage present?

   Yes

   - Repair the short to voltage in the (K99) O2 1/1 Heater Control circuit.

- Perform the POWERTRAIN VERIFICATION TEST. Refer to **POWERTRAIN VERIFICATION TEST** .

No

- Go To 6.

6. **(K99) O2 1/1 HEATER CONTROL CIRCUIT OPEN**

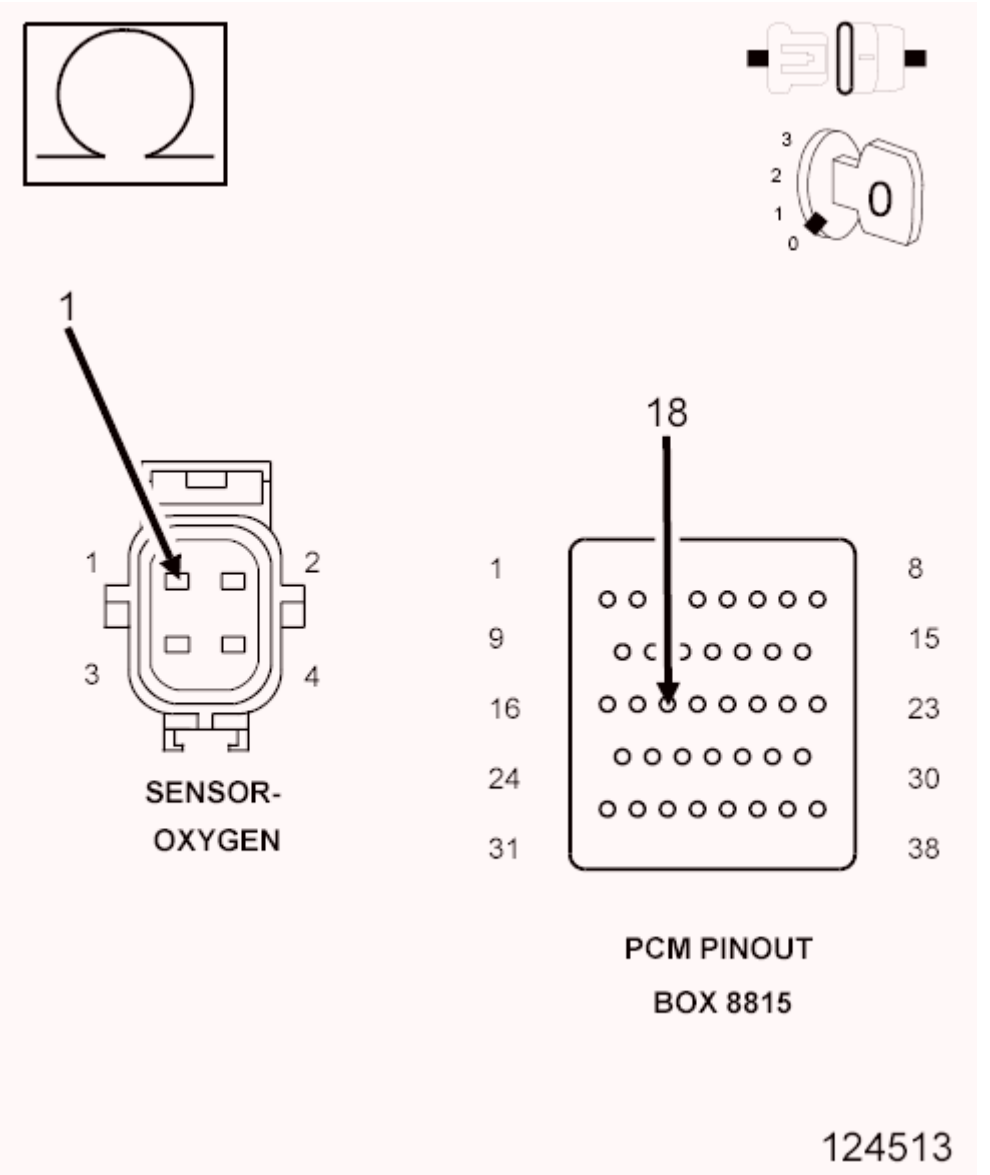

Fig. 19: Measuring Resistance Of O2 Sensor Heater Control Circuit Between Oxygen Sensor Harness Connector And Appropriate Terminal Of PCM Pinout Box 8815
Courtesy of CHRYSLER GROUP, LLC

1. Turn the ignition off.
2. Disconnect the C2 PCM harness connector.

CAUTION: Do not probe the PCM harness connectors. Probing the PCM harness connectors will damage the PCM terminals resulting in poor terminal to pin connection. Install the PCM Pinout Box (special tool #8815A, Kit, NGC, 38 Position) to perform diagnosis.

3. Measure the resistance of the (K99) O2 1/1 Heater Control circuit from the O2 Sensor 1/1 harness connector to the appropriate terminal of PCM Pinout Box (special tool #8815A, Kit, NGC, 38 Position).

   Is the resistance below 5.0 Ohms?

   Yes

   - Go To 7.

   No

   - Repair the open in the (K99) O2 1/1 Heater Control circuit.
   - Perform the POWERTRAIN VERIFICATION TEST. Refer to **POWERTRAIN VERIFICATION TEST** .

7. **POWERTRAIN CONTROL MODULE (PCM)**
   1. Using the wiring diagram/schematic as a guide, inspect the wiring and connectors between the Oxygen Sensor 1/1 and the Powertrain Control Module (PCM).
   2. Look for any chafed, pierced, pinched, or partially broken wires.
   3. Look for broken, bent, pushed out or corroded terminals. Verify that there is good pin to terminal contact in the Sensor and Control Module connectors.
   4. Refer to any Technical Service Bulletins that may apply.

      Were there any problems found?

      Yes

      - Repair as necessary.
      - Perform the POWERTRAIN VERIFICATION TEST. Refer to **POWERTRAIN VERIFICATION TEST** .

      No

      - Replace and program the Powertrain Control Module in accordance with the Service Information. Refer to **MODULE, POWERTRAIN CONTROL, REMOVAL** .
      - Perform the POWERTRAIN VERIFICATION TEST. Refer to **POWERTRAIN VERIFICATION TEST** .

P0037-O2 SENSOR 1/2 HEATER CIRCUIT LOW

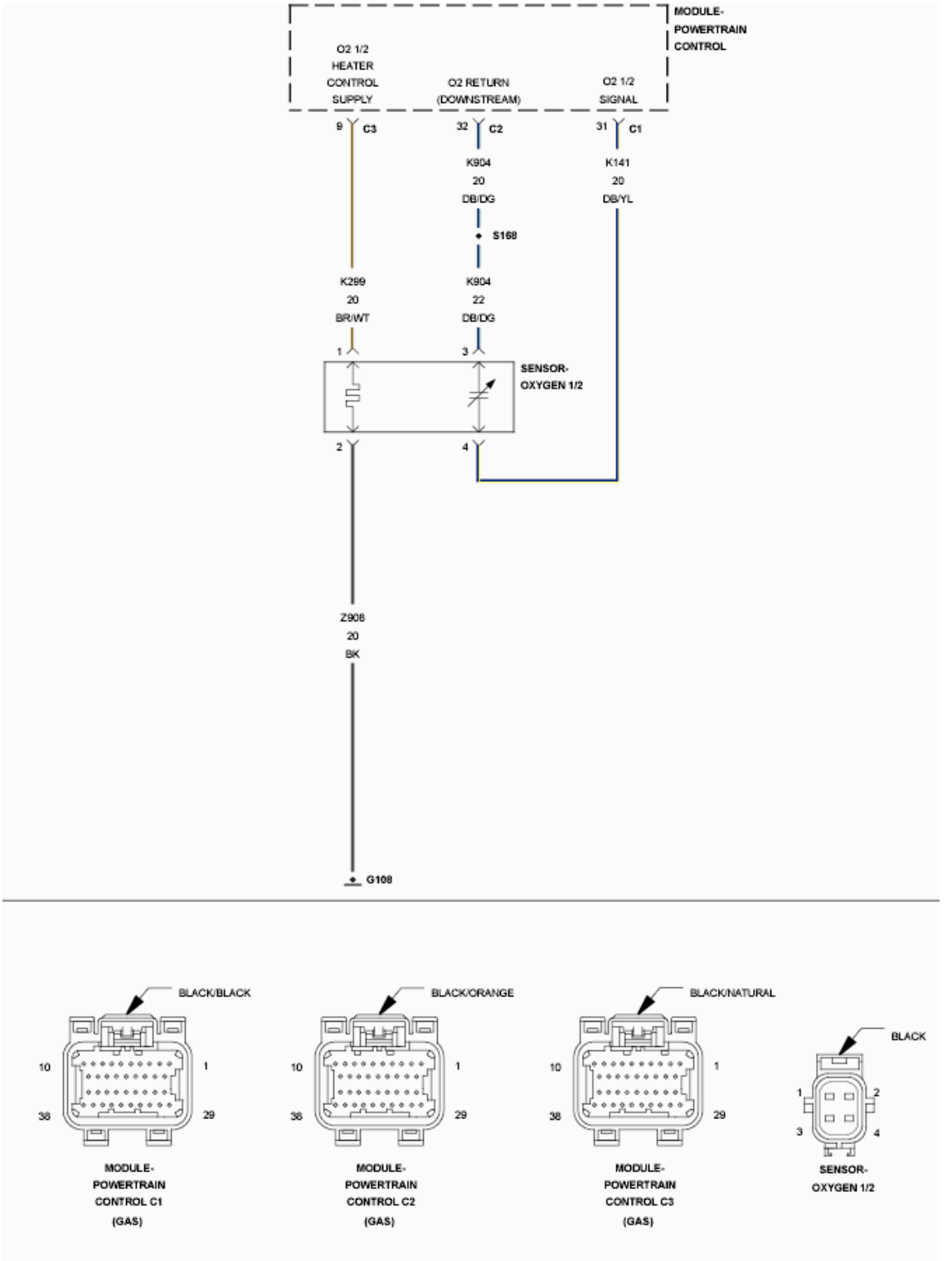

Fig. 20: O2 Sensor 1/2 Heater Circuit
Courtesy of CHRYSLER GROUP, LLC

For a complete wiring diagram, **refer to appropriate SYSTEM WIRING DIAGRAMS article** .

WHEN MONITORED:

Continuously during O2 heater operation with battery voltage between 10.4 and 15.75 volts.

SET CONDITION:

The Powertrain Control Module (PCM) detects that the O2 sensor heater element input is below the minimum acceptable voltage. One trip fault. Three good trips to turn off the MIL.

POSSIBLE CAUSES

Possible Causes
(K299) O2 1/2 HEATER CONTROL CIRCUIT SHORTED TO GROUND
EXCESSIVE RESISTANCE IN THE (K299) O2 SENSOR 1/2 HEATER CONTROL CIRCUIT
O2 SENSOR
POWERTRAIN CONTROL MODULE (PCM)

Always perform the Pre-Diagnostic Troubleshooting procedure before proceeding. Refer to PRE-DIAGNOSTIC TROUBLESHOOTING PROCEDURE .

DIAGNOSTIC TEST

1. **DTC IS ACTIVE**
   1. Start the engine and allow it to idle for at least 60 seconds.

      WARNING: **When the engine is operating, do not stand in direct line with the fan. Do not put your hands near the pulleys, belts or fan. Do not wear loose clothing. Failure to follow these instructions may result in possible serious or fatal injury.**

   2. With a scan tool, select View DTCs.

      Is the DTC Active at this time?

      Yes

      - Go To 2.

      No

      - Perform the INTERMITTENT CONDITION diagnostic procedure. Refer to **INTERMITTENT CONDITION** .
2. **O2 HEATER ELEMENT**
   1. Turn the ignition off.

NOTE: Allow the O2 Sensor to cool down to room temperature.

2. Disconnect the 1/2 O2 Sensor harness connector.
3. Measure the resistance across the O2 Sensor Heater element, between the O2 Heater Control terminal and the O2 Heater ground terminal at the component.

NOTE: O2 Heater Element resistance values should be measured at 21.1° C (70° F). The resistance value will vary with different temperature values.

Is the O2 Sensor Heater Element resistance between 2.0 and 30.0 Ohms?

Yes

- Go To 3.

No

- Replace the O2 Sensor.
- Perform the POWERTRAIN VERIFICATION TEST. Refer to **POWERTRAIN VERIFICATION TEST** .

3. **(K299) O2 1/2 HEATER CONTROL CIRCUIT SHORTED TO GROUND**

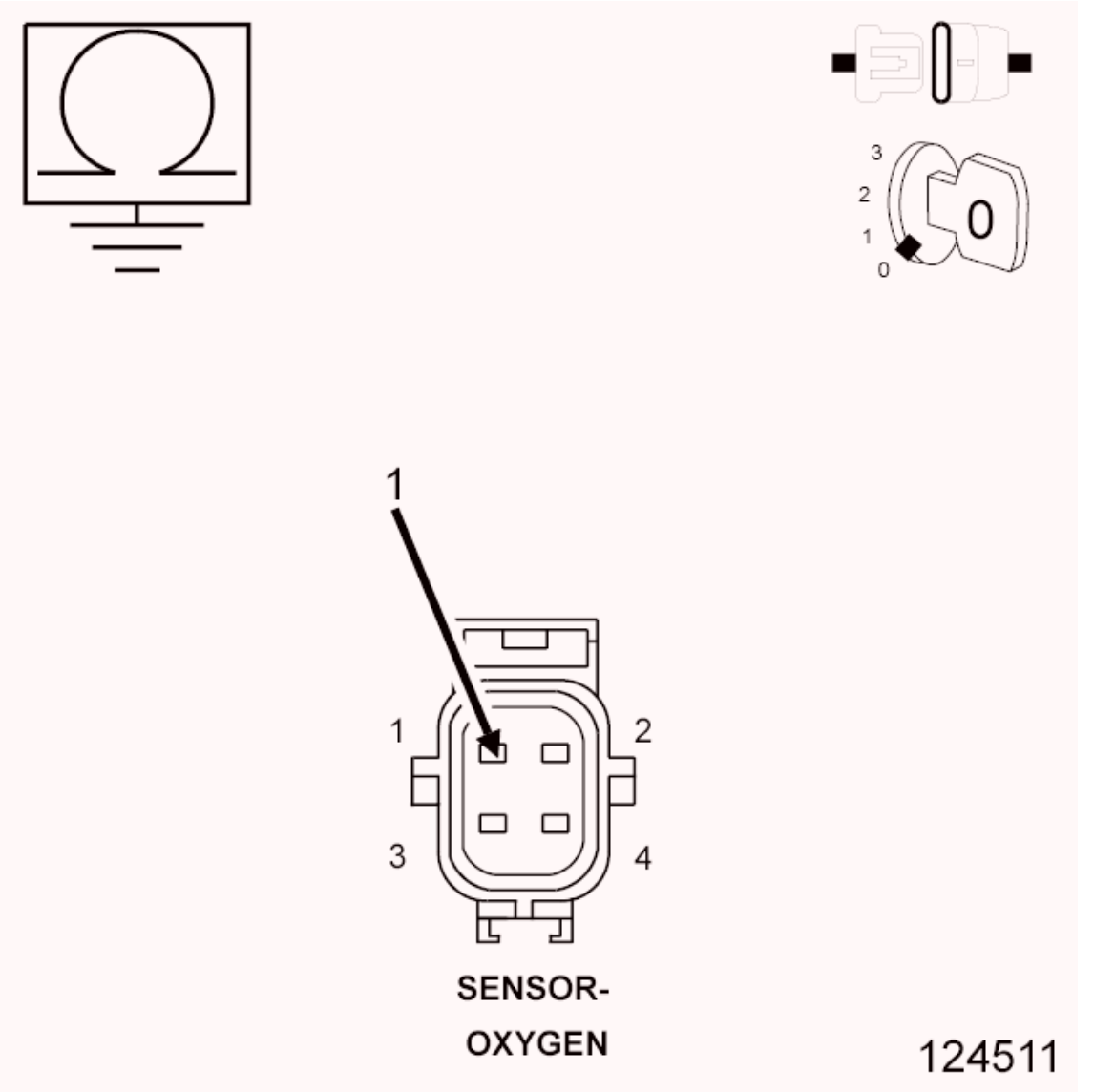

Fig. 21: Measuring Resistance Between Ground And O2 Sensor Heater Control Circuit In O2 Sensor Harness Connector
Courtesy of CHRYSLER GROUP, LLC

1. Turn the ignition off.
2. Disconnect the C3 PCM harness connector.
3. Measure the resistance between ground and the (K299) O2 1/2 Heater Control circuit in the O2 Sensor harness connector.

   Is the resistance below 5.0 Ohms?

   Yes

   - Repair the short to ground in the (K299) O2 1/2 Heater Control circuit.
   - Perform the POWERTRAIN VERIFICATION TEST. Refer to **POWERTRAIN**

VERIFICATION TEST .

No

- Go To 4.

4. **EXCESSIVE RESISTANCE IN THE (K299) O2 1/2 HEATER CONTROL CIRCUIT**

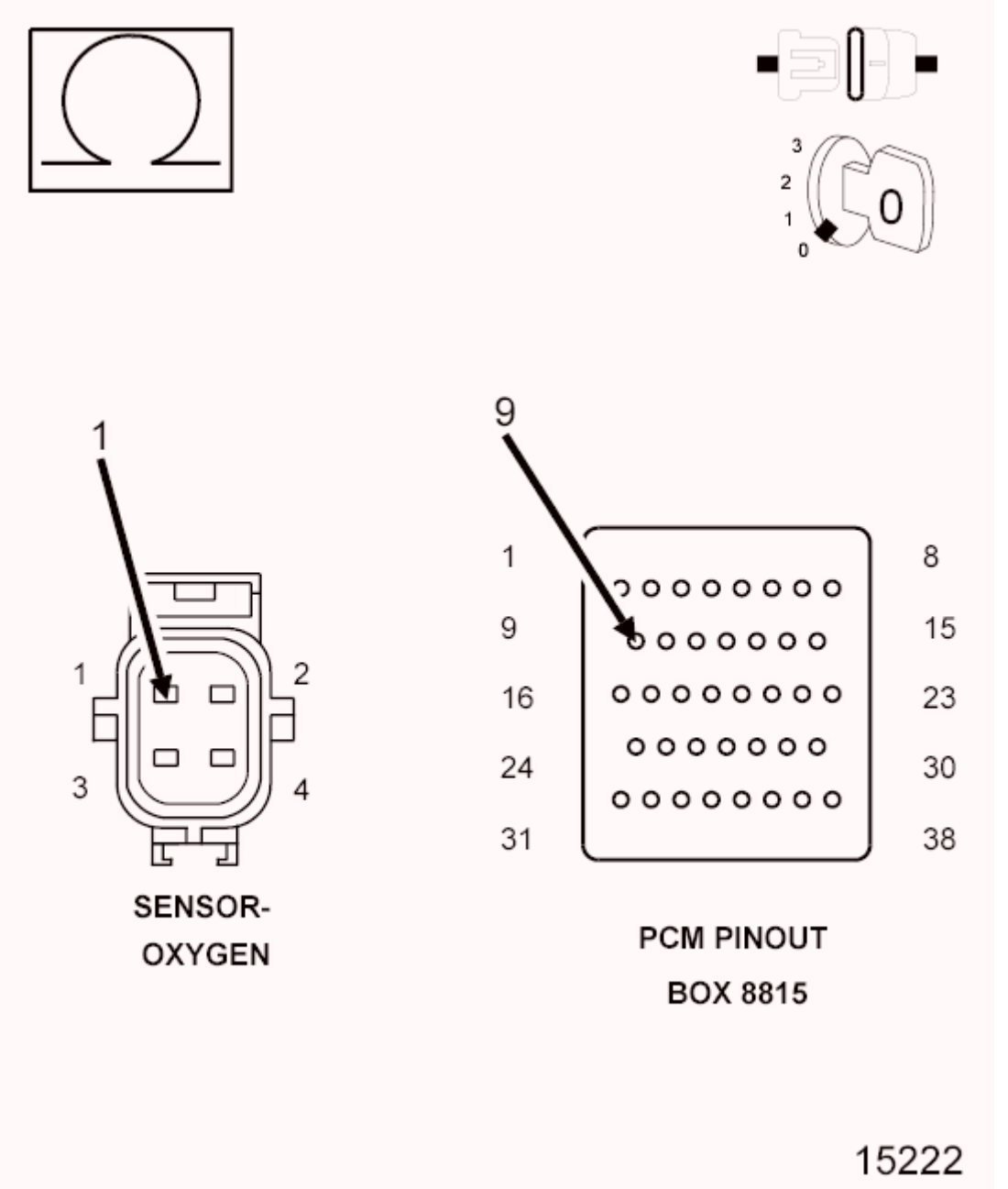

Fig. 22: Measuring Resistance Of O2 Sensor Heater Control Circuit From Harness Connector To Appropriate Terminal Of PCM Pinout Box 8815
Courtesy of CHRYSLER GROUP, LLC

CAUTION: Do not probe the PCM harness connectors. Probing the PCM harness connectors will damage the PCM terminals, resulting in poor terminal to pin connection. Install the PCM Pinout Box (special tool #8815A, Kit, NGC, 38 Position) to perform diagnosis.

1. Measure the resistance of the (K299) O2 1/2 Heater Control circuit between the 1/2 Oxygen Sensor harness connector and the appropriate terminal of PCM Pinout Box (special tool #8815A, Kit, NGC, 38 Position).

   Is the resistance below 0.5 of an Ohm?

   Yes

   - Go To 5.

   No

   - Repair the excessive resistance in the (K299) O2 1/2 Heater Control circuit.
   - Perform the POWERTRAIN VERIFICATION TEST. Refer to **POWERTRAIN VERIFICATION TEST** .

5. **POWERTRAIN CONTROL MODULE (PCM)**
   1. Using the wiring diagram/schematic as a guide, inspect the wiring and connectors between the Oxygen Sensor 1/2 and the Powertrain Control Module (PCM).
   2. Look for any chafed, pierced, pinched, or partially broken wires.
   3. Look for broken, bent, pushed out or corroded terminals. Verify that there is good pin to terminal contact in the Sensor and Control Module connectors.
   4. Refer to any Technical Service Bulletins that may apply.

      Were there any problems found?

      Yes

      - Repair as necessary.
      - Perform the POWERTRAIN VERIFICATION TEST. Refer to **POWERTRAIN VERIFICATION TEST** .

      No

      - Replace and program the Powertrain Control Module in accordance with the Service Information. Refer to **MODULE, POWERTRAIN CONTROL, REMOVAL** .
      - Perform the POWERTRAIN VERIFICATION TEST. Refer to **POWERTRAIN VERIFICATION TEST** .

P0038-O2 SENSOR 1/2 HEATER CIRCUIT HIGH

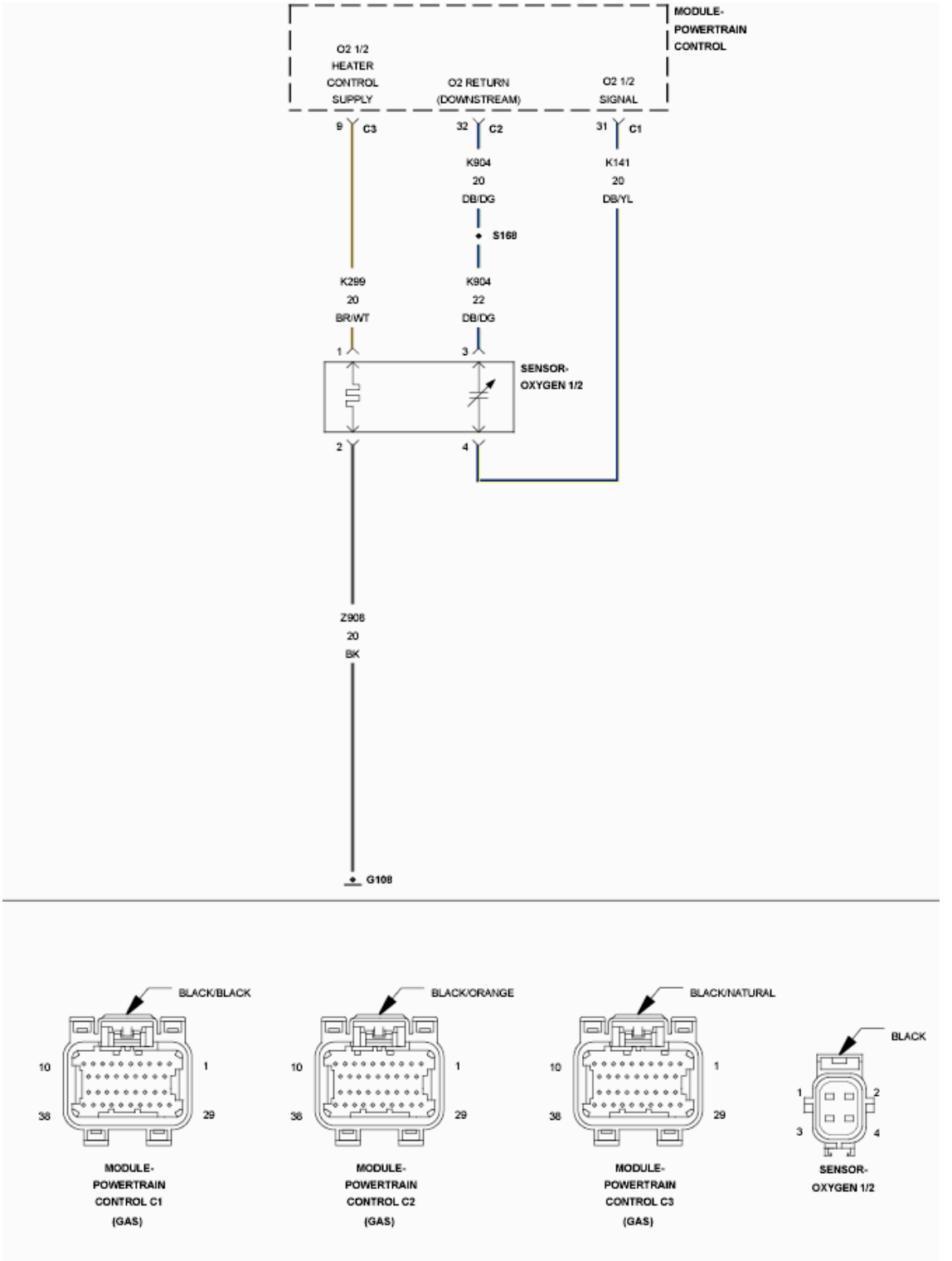

Fig. 23: O2 Sensor 1/2 Heater Circuit
Courtesy of CHRYSLER GROUP, LLC

For a complete wiring diagram, **refer to appropriate SYSTEM WIRING DIAGRAMS article** .

WHEN MONITORED:

Continuously during O2 heater operation with battery voltage between 10.4 and 15.75 volts.

SET CONDITION:

The Powertrain Control Module (PCM) detects that the O2 sensor heater element input is above the maximum acceptable voltage. One trip fault. Three good trips to turn off the MIL.

POSSIBLE CAUSES

Possible Causes
(K299) O2 1/2 HEATER CONTROL CIRCUIT OPEN
(Z908) O2 1/2 HEATER GROUND CIRCUIT OPEN
(K299) O2 SENSOR 1/2 HEATER CONTROL CIRCUIT SHORTED TO VOLTAGE
1/2 O2 SENSOR
POWERTRAIN CONTROL MODULE (PCM)

Always perform the Pre-Diagnostic Troubleshooting procedure before proceeding. Refer to PRE-DIAGNOSTIC TROUBLESHOOTING PROCEDURE .

DIAGNOSTIC TEST

1. **ACTIVE DTC**

WARNING: **When the engine is operating, do not stand in direct line with the fan. Do not put your hands near the pulleys, belts, or fan. Do not wear loose clothing. Failure to follow these instructions can result possible serious or fatal injury.**

NOTE: **If P0688-AUTO SHUTDOWN RELAY SENSE CIRCUIT LOW has set along with any of the O2 SENSOR HEATER CIRCUIT HIGH DTCs, all of the O2 Sensor Heater Control circuits need to be checked for a short to battery voltage.**

1. Start the engine and allow it to idle for at least 60 seconds.
2. With a scan tool, select View DTCs.

   Is the DTC Active at this time?

   Yes

   - Go To 2.

   No

- Perform the INTERMITTENT CONDITION diagnostic procedure. Refer to **INTERMITTENT CONDITION** .

2. **O2 HEATER ELEMENT**
   1. Turn the ignition off.

      NOTE: Allow the O2 Sensor to cool down to room temperature.

   2. Disconnect the 1/2 O2 Sensor harness connector.
   3. Measure the resistance across the O2 Sensor Heater element, between the Heater Control terminal and the Heater ground terminal at the component.

      NOTE: O2 Heater Element resistance values should be measured at 21.1° C (70° F). The resistance value will vary with different temperature values.

      Is the O2 Sensor Heater Element resistance between 2.0 and 30.0 Ohms?

      Yes

      - Go To 3.

      No

      - Verify that there is good pin to terminal contact in the Sensor and Control Module connectors. If OK, replace the O2 Sensor.
      - Perform the POWERTRAIN VERIFICATION TEST. Refer to **POWERTRAIN VERIFICATION TEST** .

3. **(K299) O2 1/2 HEATER CONTROL CIRCUIT**

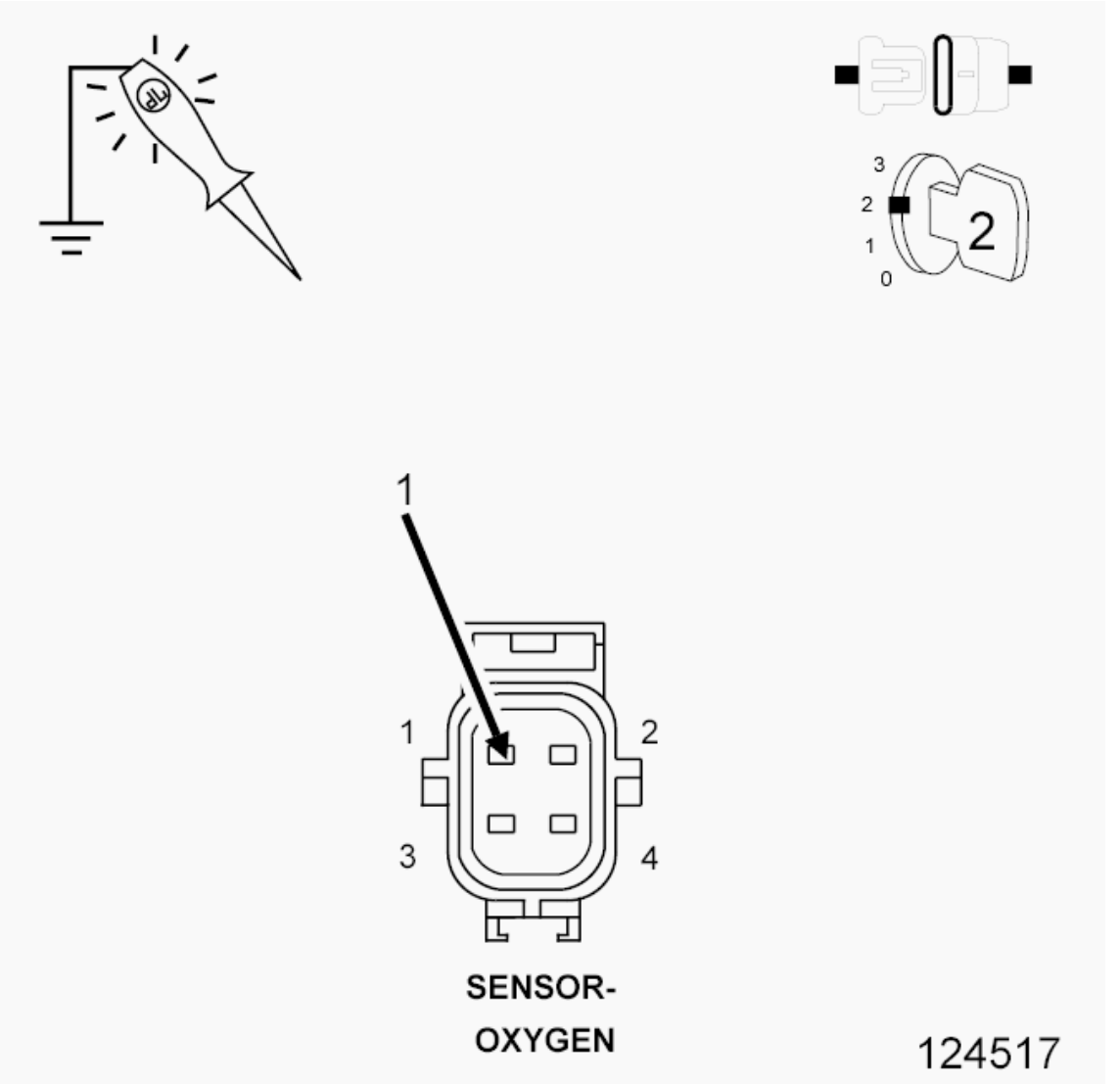

Fig. 24: Using 12-Volt Test Light Connected To Ground To Probe O2 Sensor Heater Control Circuit In O2 Sensor 1/1 Harness Connector
Courtesy of CHRYSLER GROUP, LLC

1. Ignition on, engine not running.
2. Using a 12-volt test light connected to ground, probe the (K299) O2 1/2 Heater Control circuit in the O2 Sensor harness connector.

NOTE: **Make sure the test light is probing the circuit before actuating the Heater Test or a DTC may set and not allow the actuation.**

3. With a scan tool, actuate the O2 1/2 Heater Test with the O2 Sensor harness connector still disconnected.

NOTE: **The test light should be illuminated and bright proportional to the maximum duty cycle allowed by the scan tool. For example, if the**

scan tool allows 100% actuation, the brightness should be as bright as a direct connection to the battery. If the scan tool allows a maximum 25% actuation, the brightness should be 25% as bright as a direct connection to the battery.

Does the test light illuminate accordingly during the actuation?

Yes

- Go To 4.

No

- Go To 5.

4. **(Z908) O2 HEATER GROUND CIRCUIT OPEN**

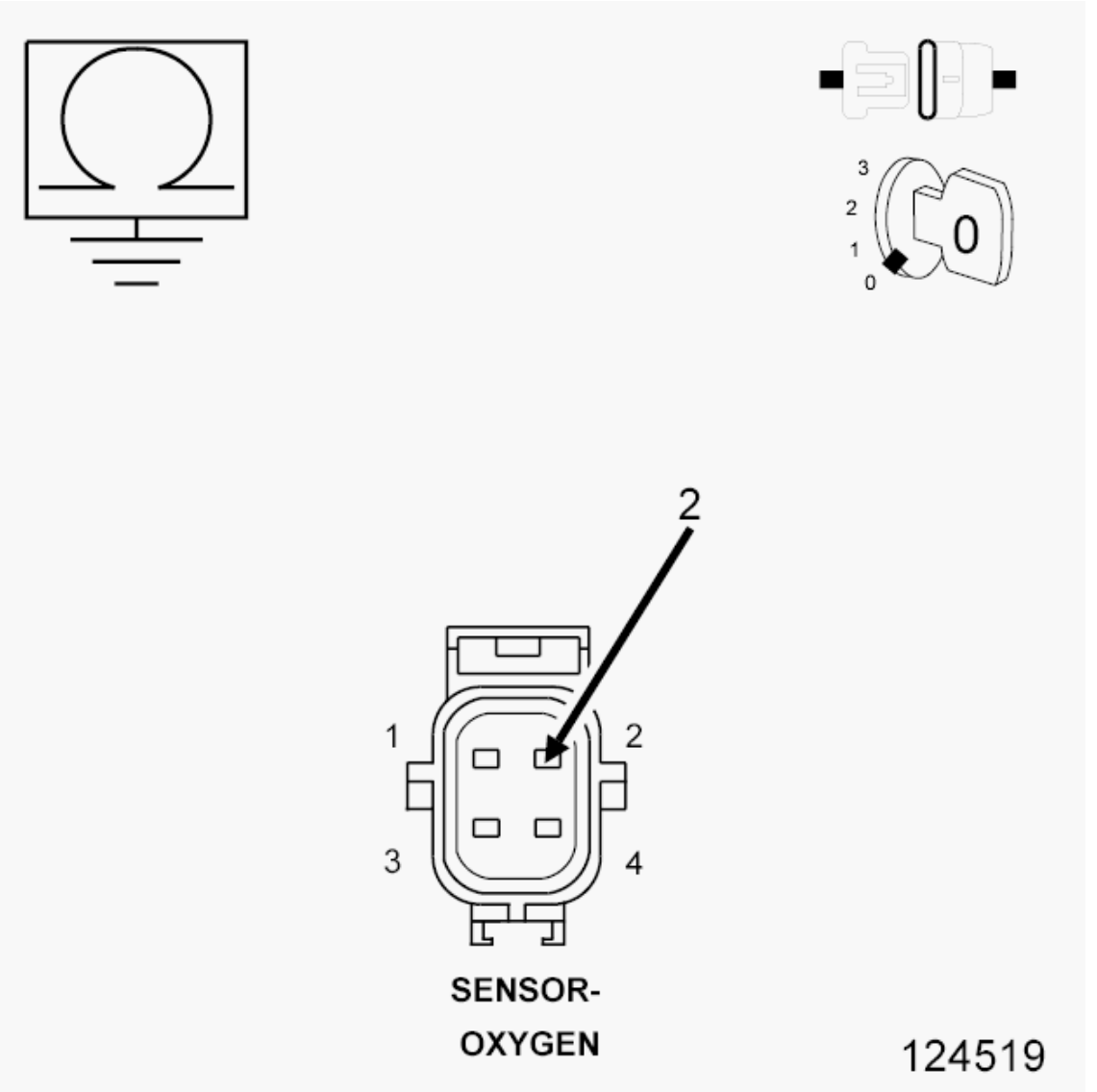

Fig. 25: Measuring Resistance Between Engine Ground And O2 Sensor Heater Ground Circuit In O2 Sensor Harness Connector
Courtesy of CHRYSLER GROUP, LLC

1. Turn the ignition off.
2. Measure the resistance between an engine ground and the (Z908) O2 1/2 Heater ground circuit in the O2 Sensor harness connector.

   Is the resistance below 5.0 Ohms?

   Yes

   - Replace the O2 Sensor.
   - Perform the POWERTRAIN VERIFICATION TEST. Refer to **POWERTRAIN VERIFICATION TEST** .

No

- Repair the open in the (Z908) O2 1/2 Heater ground circuit.
- Perform the POWERTRAIN VERIFICATION TEST. Refer to **POWERTRAIN VERIFICATION TEST** .

5. **(K299) O2 1/2 HEATER CONTROL CIRCUIT SHORTED TO VOLTAGE**

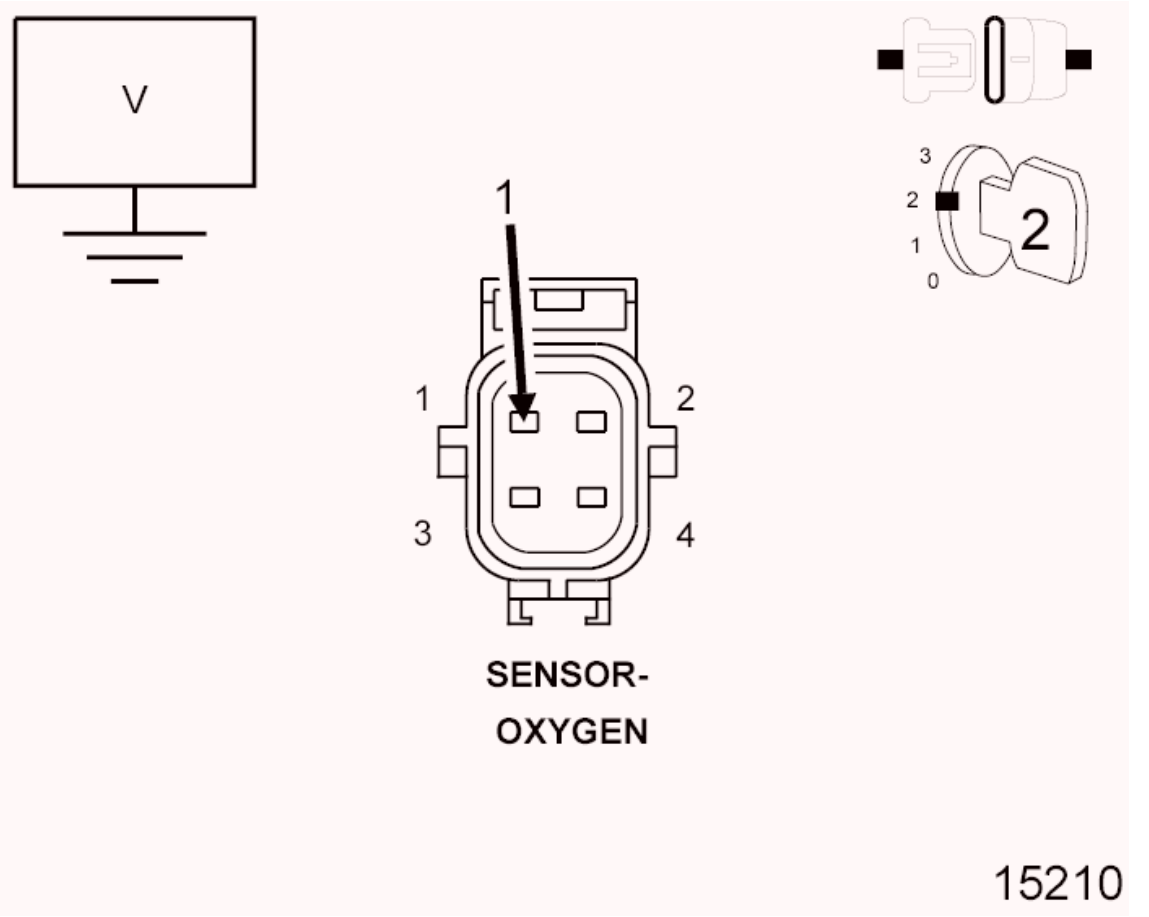

Fig. 26: Measuring Voltage Of O2 Sensor Heater Control Circuit In Sensor Harness Connector
Courtesy of CHRYSLER GROUP, LLC

1. Turn the ignition off.
2. Disconnect the C3 PCM harness connector.
3. Ignition on, engine not running.
4. Measure the voltage of the (K299) O2 1/2 Heater Control circuit in the 1/2 Oxygen Sensor harness connector.

   Is there any voltage present?

   Yes

   - Repair the short to voltage in the (K299) O2 1/2 Heater Control circuit.

- Perform the POWERTRAIN VERIFICATION TEST. Refer to **POWERTRAIN VERIFICATION TEST** .

No

- Go To 6.

6. **(K299) O2 1/2 HEATER CONTROL CIRCUIT OPEN**

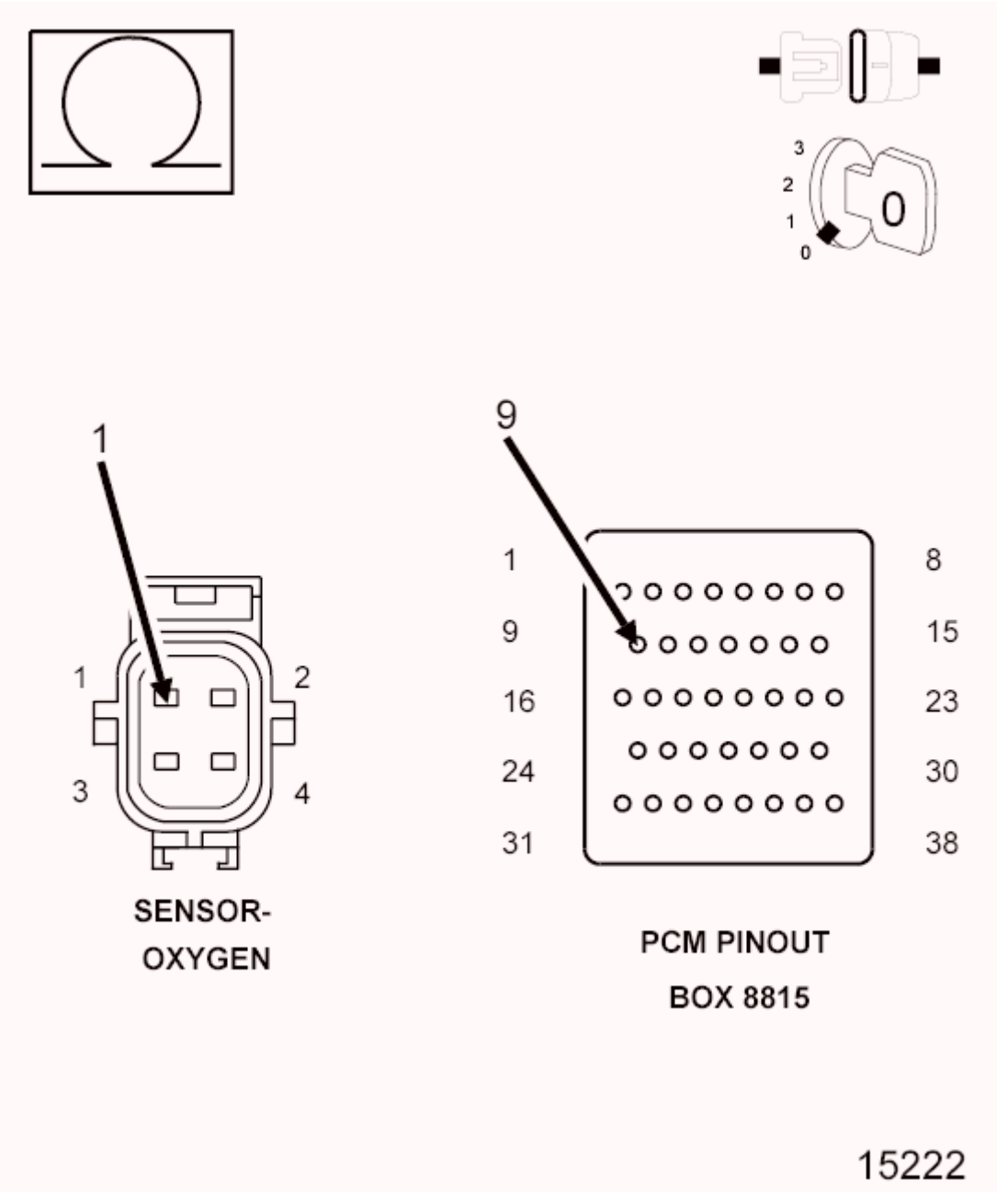

Fig. 27: Measuring Resistance Of O2 Sensor Heater Control Circuit From Harness Connector To Appropriate Terminal Of PCM Pinout Box 8815
Courtesy of CHRYSLER GROUP, LLC

1. Turn the ignition off.

CAUTION: Do not probe the PCM harness connectors. Probing the PCM harness connectors will damage the PCM terminals resulting in poor terminal to pin connection. Install the PCM Pinout Box (special tool #8815A, Kit, NGC, 38 Position) to perform diagnosis.

2. Measure the resistance of the (K299) O2 1/2 Heater Control circuit from the O2 Sensor harness connector to the appropriate terminal of PCM Pinout Box (special tool #8815A, Kit, NGC, 38 Position).

   Is the resistance below 5.0 Ohms?

   Yes

   - Go To 7.

   No

   - Repair the open in the (K299) O2 1/2 Heater Control circuit.
   - Perform the POWERTRAIN VERIFICATION TEST. Refer to **POWERTRAIN VERIFICATION TEST** .

7. **POWERTRAIN CONTROL MODULE (PCM)**
   1. Using the wiring diagram/schematic as a guide, inspect the wiring and connectors between the Oxygen Sensor 1/2 and the Powertrain Control Module (PCM).
   2. Look for any chafed, pierced, pinched, or partially broken wires.
   3. Look for broken, bent, pushed out or corroded terminals. Verify that there is good pin to terminal contact in the Sensor and Control Module connectors.
   4. Refer to any Technical Service Bulletins that may apply.

      Were there any problems found?

      Yes

      - Repair as necessary.
      - Perform the POWERTRAIN VERIFICATION TEST. Refer to **POWERTRAIN VERIFICATION TEST** .

      No

      - Replace and program the Powertrain Control Module in accordance with the Service Information. Refer to **MODULE, POWERTRAIN CONTROL, REMOVAL** .
      - Perform the POWERTRAIN VERIFICATION TEST. Refer to **POWERTRAIN VERIFICATION TEST** .

P0051-O2 SENSOR 2/1 HEATER CIRCUIT LOW

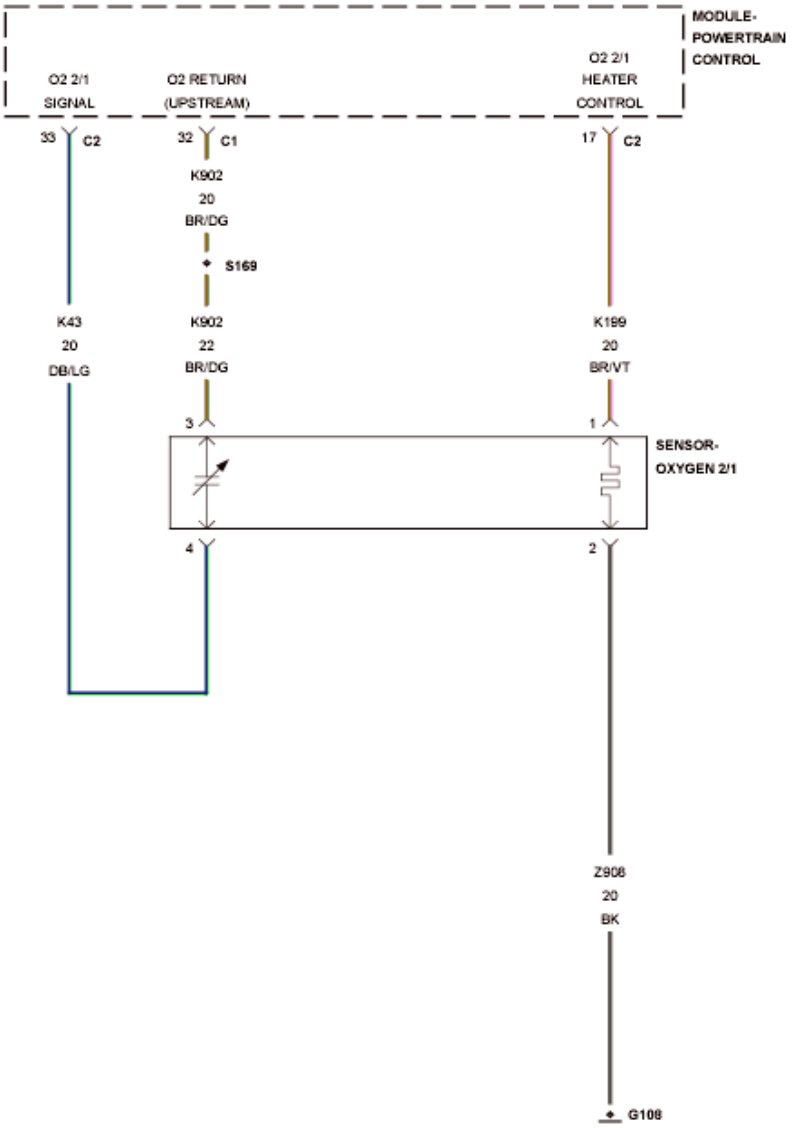

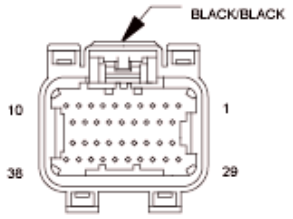

MODULE-
POWERTRAIN
CONTROL C1
(GAS)

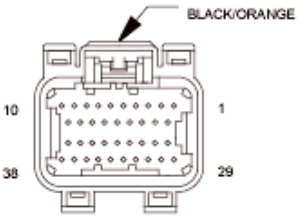

MODULE-
POWERTRAIN
CONTROL C2
(GAS)

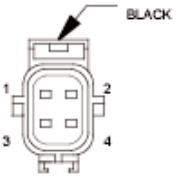

SENSOR-
OXYGEN 2/1

Fig. 28: O2 Sensor 2/1 Heater Circuit Schematic
Courtesy of CHRYSLER GROUP, LLC

For a complete wiring diagram, **refer to appropriate SYSTEM WIRING DIAGRAMS article** .

WHEN MONITORED:

Continuously during O2 heater operation with battery voltage between 10.4 and 15.75 volts.

SET CONDITION:

The Powertrain Control Module (PCM) detects that the O2 sensor heater element input is below the minimum acceptable voltage. One trip fault. Three good trips to turn off the MIL.

POSSIBLE CAUSES

Possible Causes
(K199) O2 2/1 HEATER CONTROL CIRCUIT SHORTED TO GROUND
EXCESSIVE RESISTANCE IN THE (K199) O2 2/1 HEATER CONTROL CIRCUIT
2/1 O2 SENSOR
POWERTRAIN CONTROL MODULE (PCM)

Always perform the Pre-Diagnostic Troubleshooting procedure before proceeding. Refer to PRE-DIAGNOSTIC TROUBLESHOOTING PROCEDURE .

DIAGNOSTIC TEST

1. **DTC IS ACTIVE**
    1. Start the engine and allow it to idle for at least 60 seconds.

        WARNING: **When the engine is operating, do not stand in direct line with the fan. Do not put your hands near the pulleys, belts or fan. Do not wear loose clothing. Failure to follow these instructions may result in possible serious or fatal injury.**

    2. With a scan tool, select View DTCs.

        Is the DTC Active at this time?

        Yes

        - Go To 2.

        No

        - Perform the INTERMITTENT CONDITION diagnostic procedure. Refer to

INTERMITTENT CONDITION .

2. **O2 HEATER ELEMENT**
   1. Turn the ignition off.

      NOTE: Allow the O2 Sensor to cool down to room temperature.

   2. Disconnect the 2/1 O2 Sensor harness connector.
   3. Measure the resistance across the O2 Sensor Heater element, between the Heater Control terminal and the Heater ground terminal at the component.

      NOTE: O2 Heater Element resistance values should be measured at 21.1° C (70° F). The resistance value will vary with different temperature values.

      Is the O2 Sensor Heater Element resistance between 2.0 and 30.0 Ohms?

      Yes

      - Go To 3.

      No

      - Verify that there is good pin to terminal contact in the Sensor and Control Module connectors. If OK, replace the O2 Sensor.
      - Perform the POWERTRAIN VERIFICATION TEST. Refer to **POWERTRAIN VERIFICATION TEST** .

3. **(K199) O2 2/1 HEATER CONTROL CIRCUIT SHORTED TO GROUND**

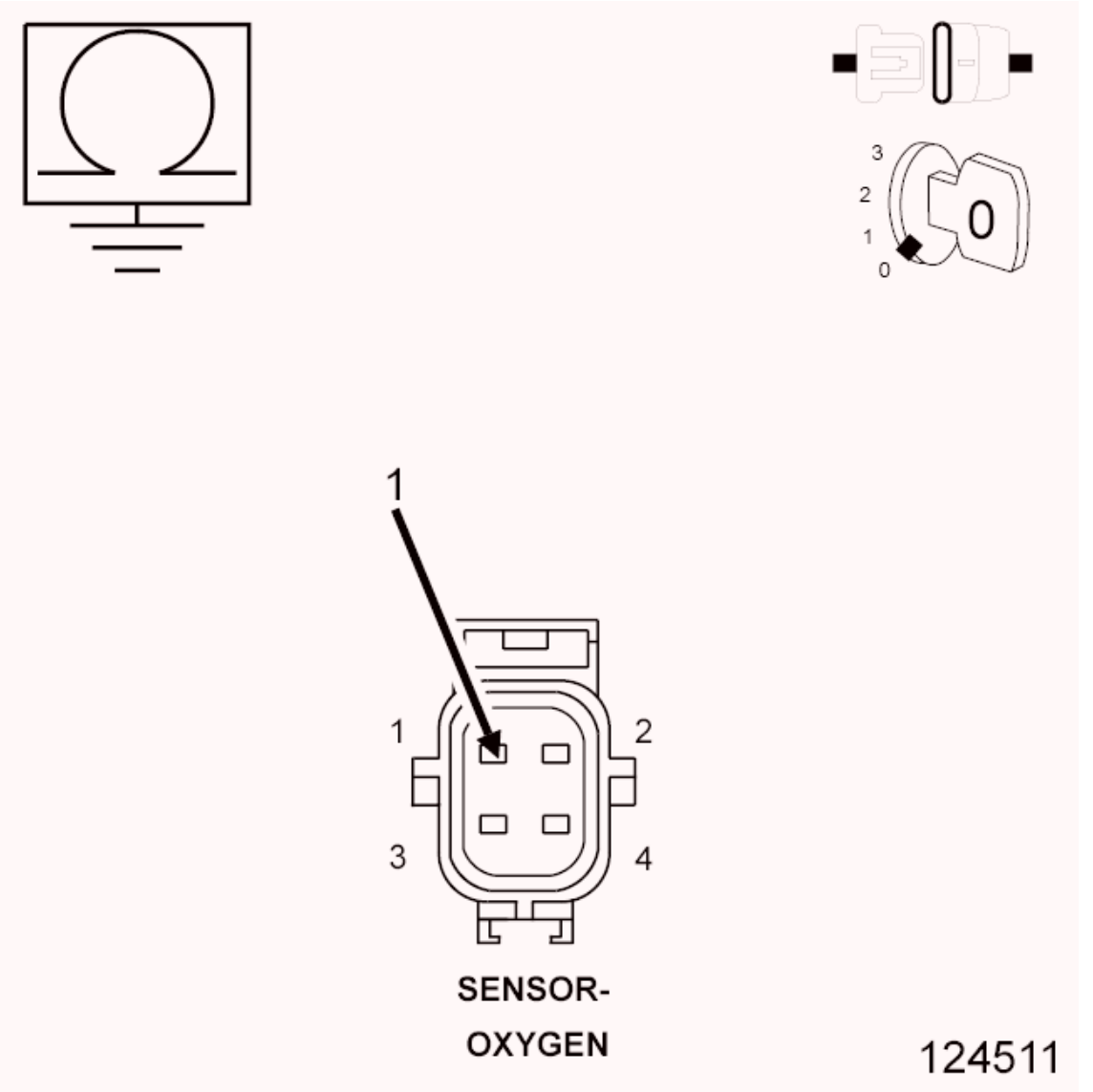

Fig. 29: Measuring Resistance Between Ground And O2 Sensor Heater Control Circuit In O2 Sensor Harness Connector
Courtesy of CHRYSLER GROUP, LLC

1. Turn the ignition off.
2. Disconnect the C2 PCM harness connector.
3. Measure the resistance between ground and the (K199) O2 2/1 Heater Control circuit in the O2 Sensor harness connector.

   Is the resistance below 5.0 Ohms?

   Yes

   - Repair the short to ground in the (K199) O2 2/1 Sensor Heater Control circuit.
   - Perform the POWERTRAIN VERIFICATION TEST. Refer to **POWERTRAIN**

VERIFICATION TEST .

No

- Go To 4.

4. **EXCESSIVE RESISTANCE IN THE (K199) O2 2/1 HEATER CONTROL CIRCUIT**

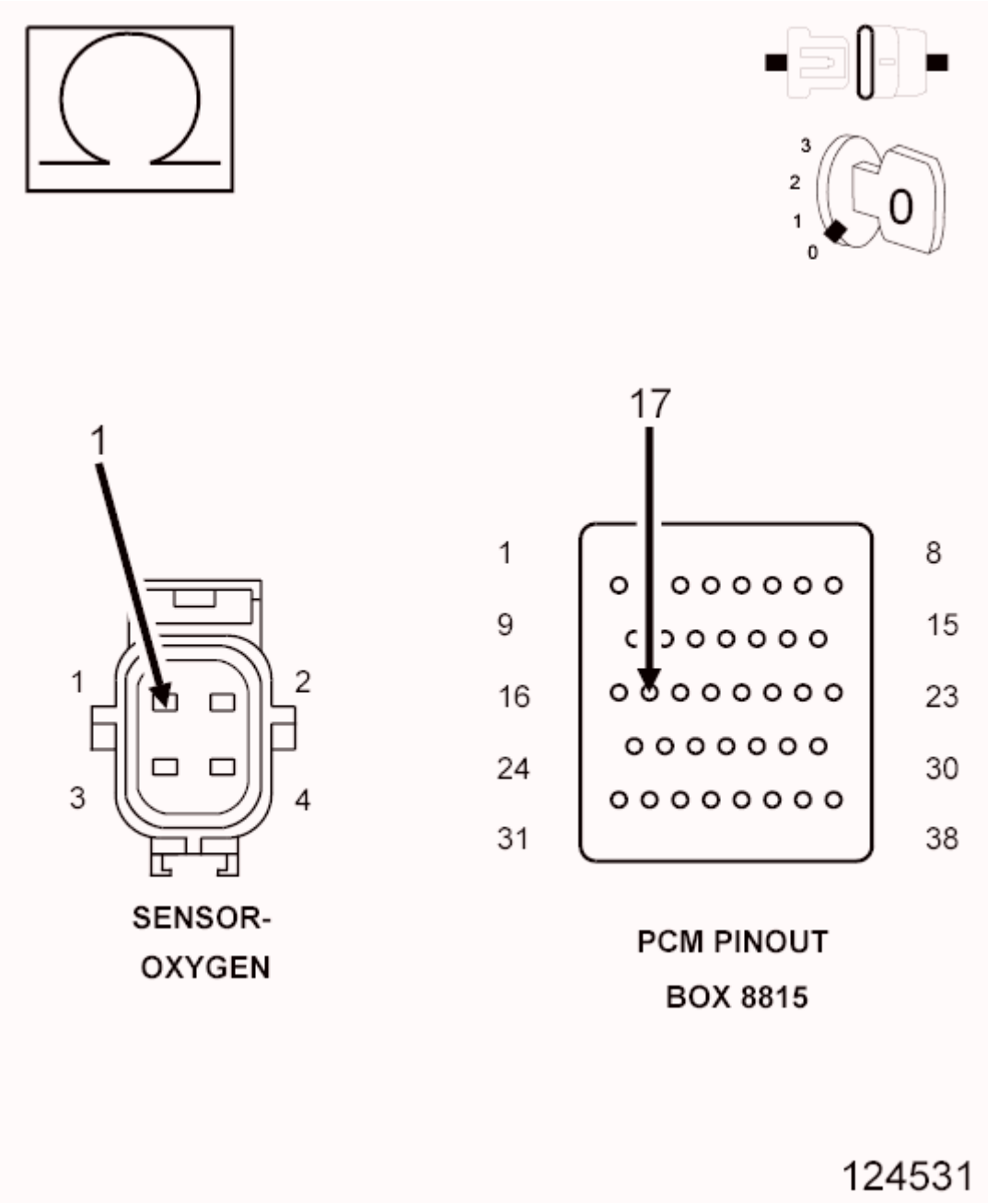

Fig. 30: Measuring Resistance Of O2 Sensor Heater Control Circuit Between Oxygen Sensor Harness Connector And Appropriate Terminal Of PCM Pinout Box 8815
Courtesy of CHRYSLER GROUP, LLC

CAUTION: Do not probe the PCM harness connectors. Probing the PCM harness connectors will damage the PCM terminals, resulting in poor terminal to pin connection. Install the PCM Pinout Box (special tool #8815A, Kit, NGC, 38 Position) to perform diagnosis.

1. Measure the resistance of the (K199) O2 2/1 Heater Control circuit between the 2/1 Oxygen Sensor harness connector and the appropriate terminal of PCM Pinout Box (special tool #8815A, Kit, NGC, 38 Position).

   Is the resistance below 0.5 of an Ohm?

   Yes

   - Go To 5.

   No

   - Repair the excessive resistance in the (K199) O2 2/1 Heater Control circuit.
   - Perform the POWERTRAIN VERIFICATION TEST. Refer to **POWERTRAIN VERIFICATION TEST** .

5. **POWERTRAIN CONTROL MODULE (PCM)**
   1. Using the wiring diagram/schematic as a guide, inspect the wiring and connectors between the Oxygen Sensor 2/1 and the Powertrain Control Module (PCM).
   2. Look for any chafed, pierced, pinched, or partially broken wires.
   3. Look for broken, bent, pushed out or corroded terminals. Verify that there is good pin to terminal contact in the Sensor and Control Module connectors.
   4. Refer to any Technical Service Bulletins that may apply.

      Were there any problems found?

      Yes

      - Repair as necessary.
      - Perform the POWERTRAIN VERIFICATION TEST. Refer to **POWERTRAIN VERIFICATION TEST** .

      No

      - Replace and program the Powertrain Control Module in accordance with the Service Information. Refer to **MODULE, POWERTRAIN CONTROL, REMOVAL** .
      - Perform the POWERTRAIN VERIFICATION TEST. Refer to **POWERTRAIN VERIFICATION TEST** .

P0052-O2 SENSOR 2/1 HEATER CIRCUIT HIGH

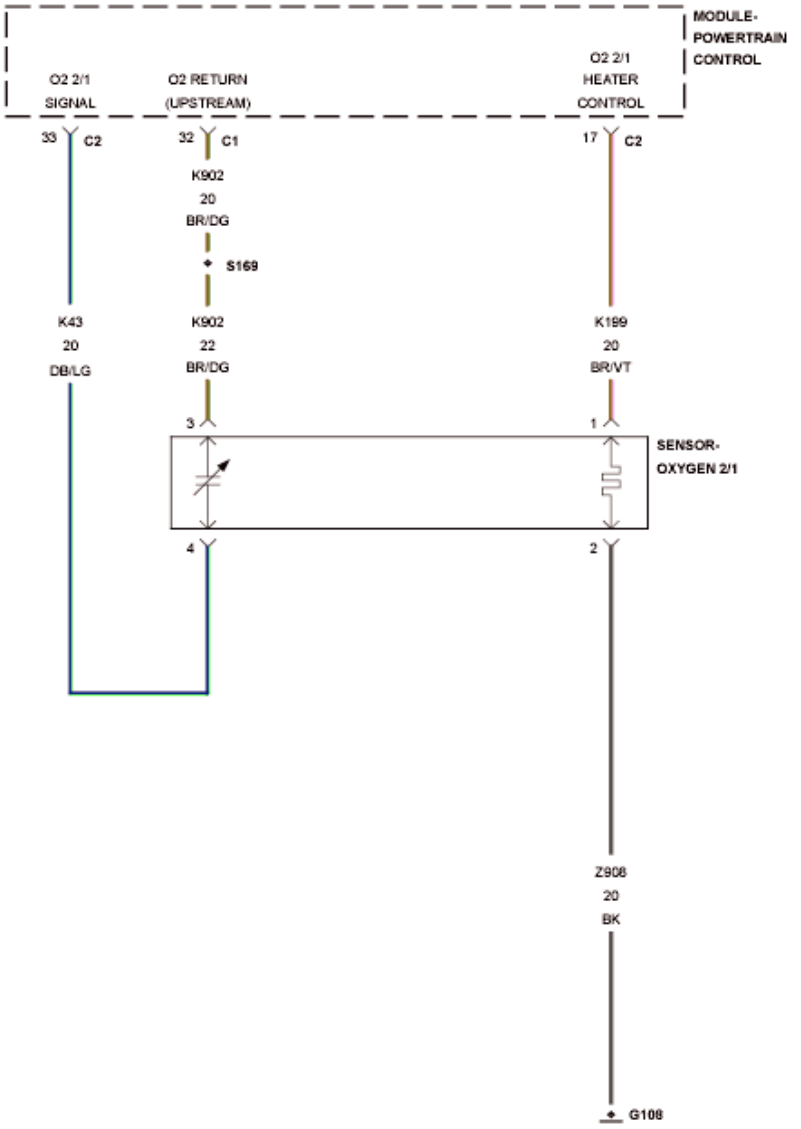

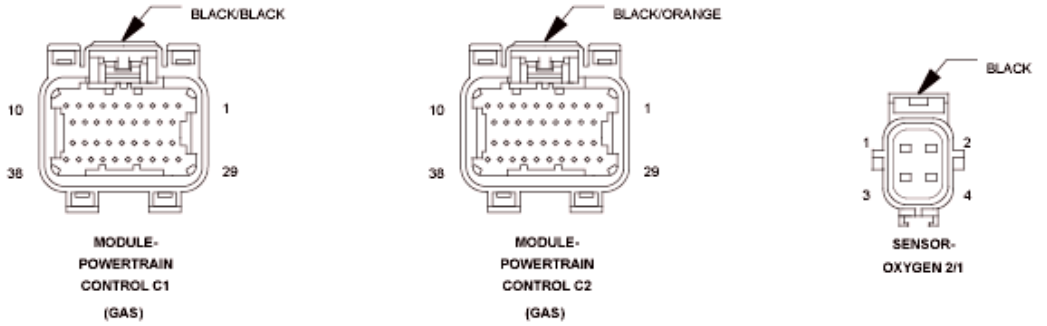

Fig. 31: O2 Sensor 2/1 Heater Circuit Schematic
Courtesy of CHRYSLER GROUP, LLC

For a complete wiring diagram, **refer to appropriate SYSTEM WIRING DIAGRAMS article** .

WHEN MONITORED:

Continuously during O2 heater operation with battery voltage between 10.4 and 15.75 volts.

SET CONDITION:

The Powertrain Control Module (PCM) detects that the O2 sensor heater element input is above the maximum acceptable voltage. One trip fault. Three good trips to turn off the MIL.

POSSIBLE CAUSES

Possible Causes
(K199) O2 2/1 HEATER CONTROL CIRCUIT OPEN
(Z908) O2 2/1 HEATER GROUND CIRCUIT OPEN
(K199) O2 2/1 HEATER CONTROL CIRCUIT SHORTED TO VOLTAGE
2/1 O2 SENSOR
POWERTRAIN CONTROL MODULE (PCM)

Always perform the Pre-Diagnostic Troubleshooting procedure before proceeding. Refer to PRE-DIAGNOSTIC TROUBLESHOOTING PROCEDURE .

DIAGNOSTIC TEST

1. **ACTIVE DTC**

WARNING: When the engine is operating, do not stand in direct line with the fan. Do not put your hands near the pulleys, belts, or fan. Do not wear loose clothing. Failure to follow these instructions can result possible serious or fatal injury.

NOTE: If P0688-AUTO SHUTDOWN RELAY SENSE CIRCUIT LOW has set along with any of the O2 SENSOR HEATER CIRCUIT HIGH DTCs, all of the O2 Sensor Heater Control circuits need to be checked for a short to battery voltage.

1. Start the engine and allow it to idle for at least 60 seconds.
2. With a scan tool, select View DTCs.

   Is the DTC Active at this time?

   Yes

   - Go To 2.

No

- Perform the INTERMITTENT CONDITION diagnostic procedure. Refer to **INTERMITTENT CONDITION** .

2. **O2 HEATER ELEMENT**
   1. Turn the ignition off.

      NOTE: Allow the O2 Sensor to cool down to room temperature.

   2. Disconnect the 2/1 O2 Sensor harness connector.
   3. Measure the resistance across the O2 Sensor Heater element, between the O2 Heater Control terminal and the Heater ground terminal at the component connector.

      NOTE: O2 Heater Element resistance values should be measured at 21.1° C (70° F). The resistance value will vary with different temperature values.

      Is the O2 Sensor Heater Element resistance between 2.0 and 30.0 Ohms?

      Yes

      - Go To 3.

      No

      - Verify that there is good pin to terminal contact in the Sensor and Control Module connectors. If OK, replace the O2 Sensor.
      - Perform the POWERTRAIN VERIFICATION TEST. Refer to **POWERTRAIN VERIFICATION TEST** .

3. **(K199) O2 2/1 HEATER CONTROL CIRCUIT**

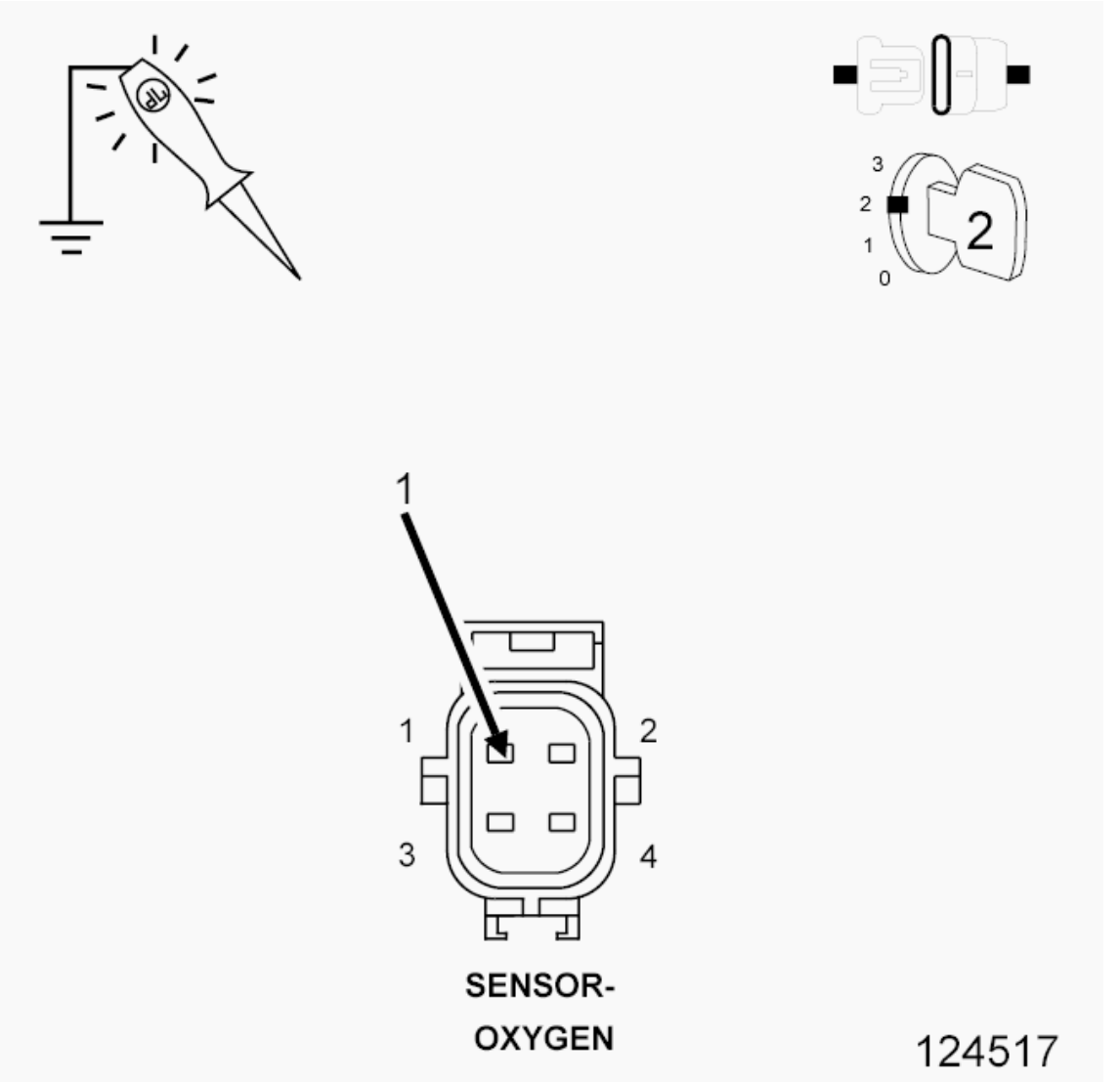

Fig. 32: Using 12-Volt Test Light Connected To Ground To Probe O2 Sensor Heater Control Circuit In O2 Sensor 1/1 Harness Connector
Courtesy of CHRYSLER GROUP, LLC

1. Ignition on, engine not running.
2. Using a 12-volt test light connected to ground, probe the (K199) O2 2/1 Heater Control circuit in the O2 Sensor harness connector.

NOTE: **Make sure the test light is probing the circuit before actuating the Heater Test or a DTC may set and not allow the actuation.**

3. With a scan tool, actuate the O2 2/1 Heater Test with the O2 Sensor harness connector still disconnected.

NOTE: **The test light should be illuminated and bright proportional to the maximum duty cycle allowed by the scan tool. For example, if the**

scan tool allows 100% actuation, the brightness should be as bright as a direct connection to the battery. If the scan tool allows a maximum 25% actuation, the brightness should be 25% as bright as a direct connection to the battery.

Does the test light illuminate accordingly during the actuation?

Yes

- Go To 4.

No

- Go To 5.

4. **(Z908) O2 2/1 HEATER GROUND CIRCUIT OPEN**

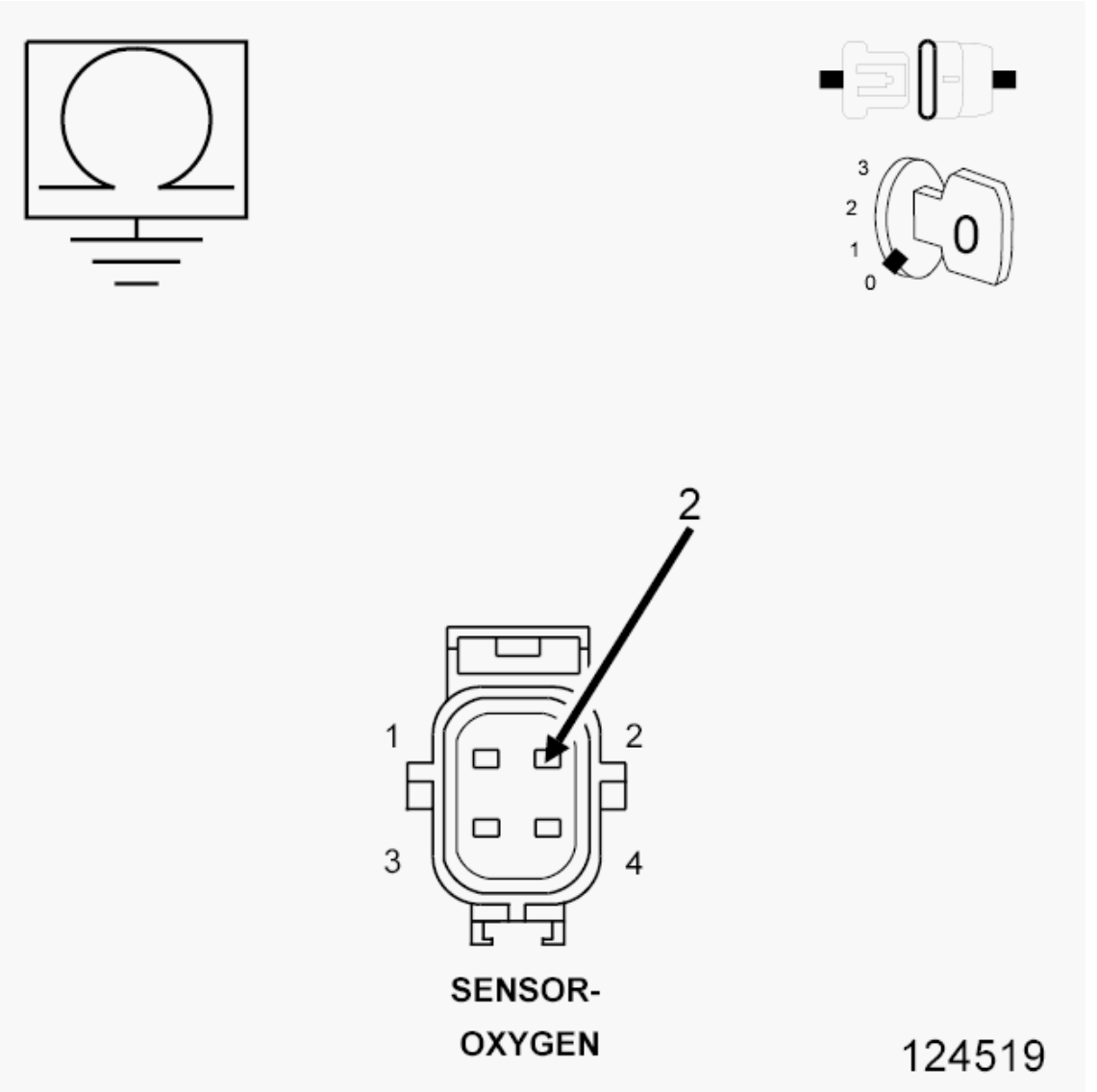

Fig. 33: Measuring Resistance Between Engine Ground And O2 Sensor Heater Ground Circuit In O2 Sensor Harness Connector
Courtesy of CHRYSLER GROUP, LLC

1. Turn the ignition off.
2. Measure the resistance between an engine ground and the (Z908) O2 2/1 Heater ground circuit in the O2 Sensor harness connector.

   Is the resistance below 5.0 Ohms?

   Yes

   - Verify that there is good pin to terminal contact in the Sensor and Control Module connectors. If OK, replace the O2 Sensor.
   - Perform the POWERTRAIN VERIFICATION TEST. Refer to **POWERTRAIN**

VERIFICATION TEST .

No

- Repair the open in the (Z908) O2 2/1 Heater ground circuit.
- Perform the POWERTRAIN VERIFICATION TEST. Refer to **POWERTRAIN VERIFICATION TEST** .

5. **(K199) O2 2/1 HEATER CONTROL CIRCUIT SHORTED TO VOLTAGE**

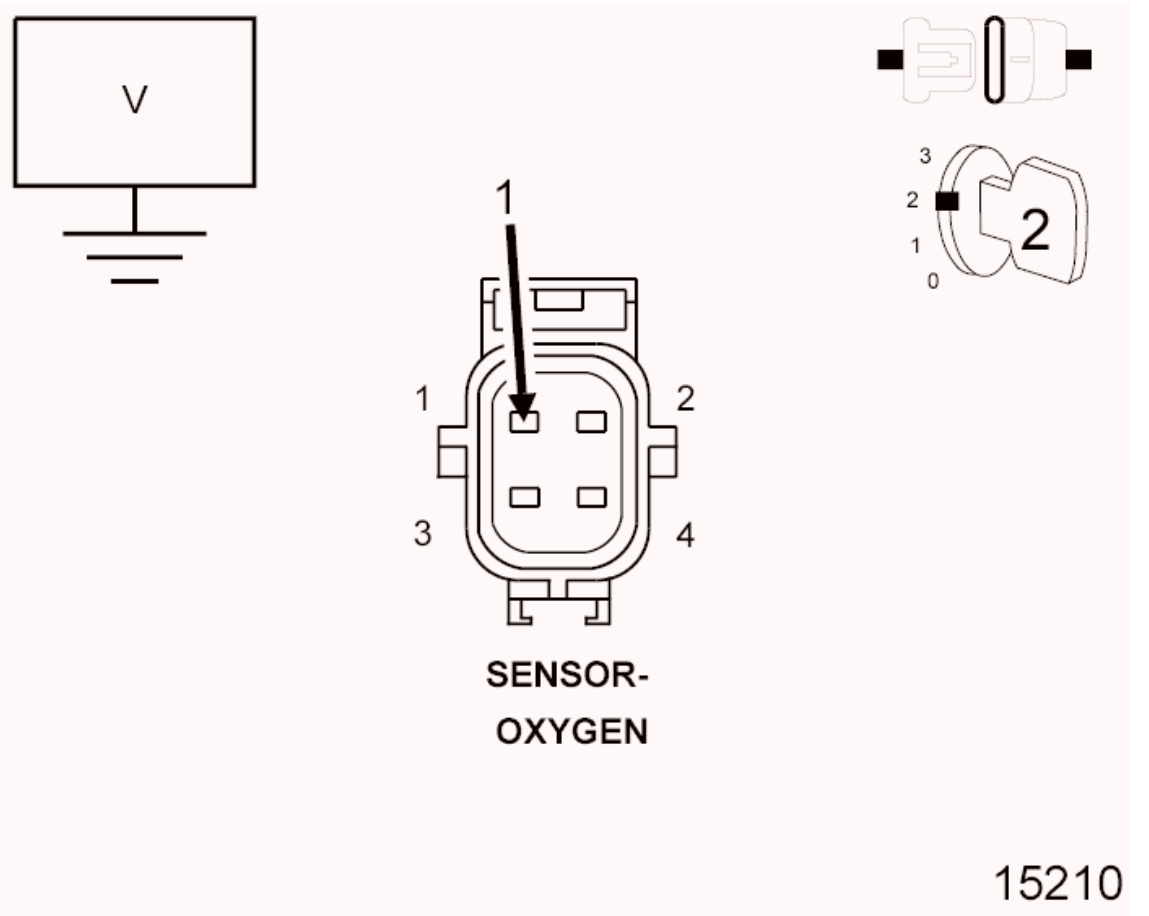

Fig. 34: Measuring Voltage Of O2 Sensor Heater Control Circuit In Sensor Harness Connector
Courtesy of CHRYSLER GROUP, LLC

1. Turn the ignition off.
2. Disconnect the C2 PCM harness connector.
3. Ignition on, engine not running.
4. Measure the voltage on the (K199) O2 2/1 Heater Control circuit at the 2/1 O2 Sensor harness connector.

   Is there any voltage present?

   Yes

- Repair the short to voltage in the (K199) O2 2/1 Heater Control circuit.
- Perform the POWERTRAIN VERIFICATION TEST. Refer to **POWERTRAIN VERIFICATION TEST** .

No

- Go To 6.

6. **(K199) O2 2/1 HEATER CONTROL CIRCUIT OPEN**

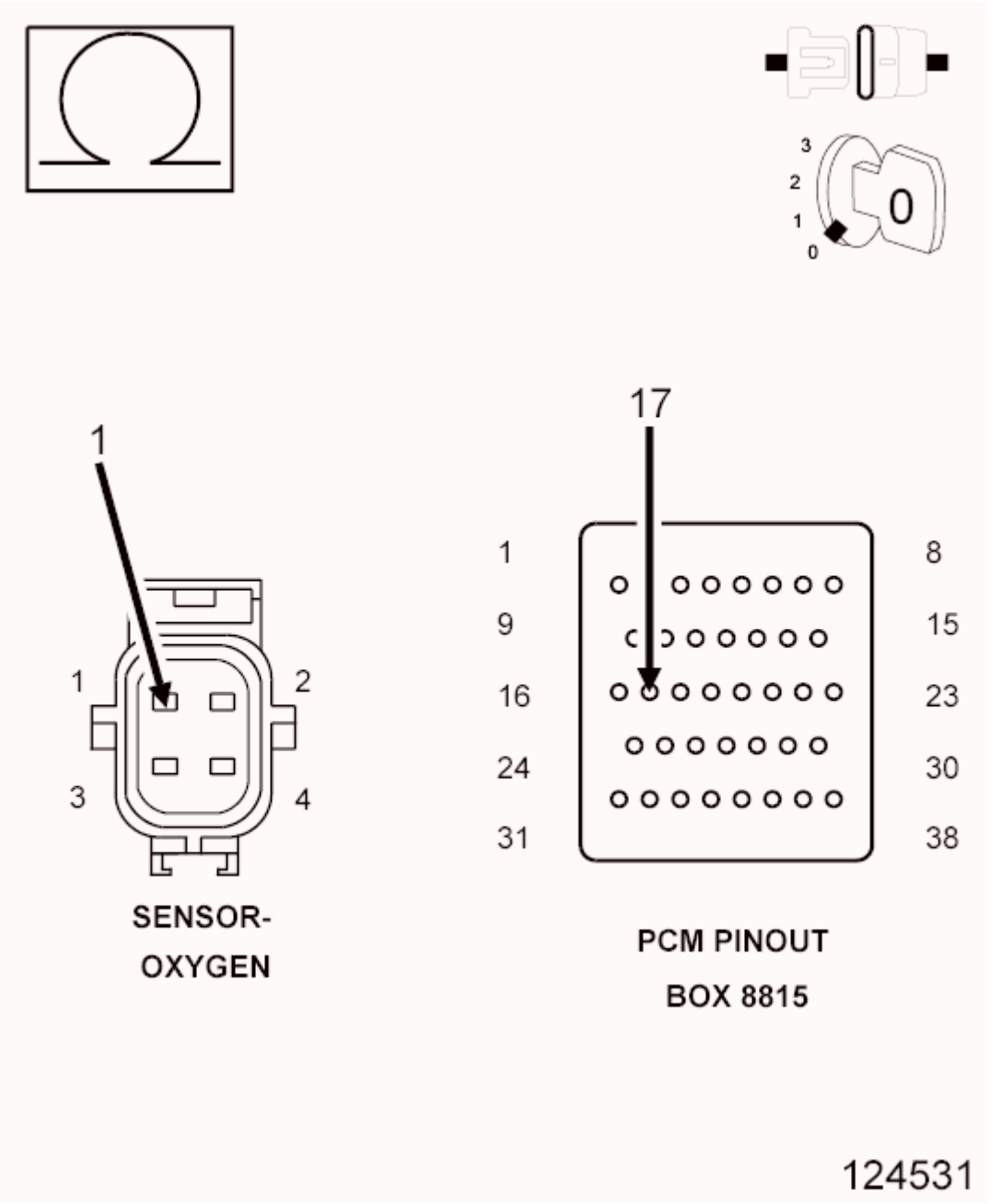

Fig. 35: Measuring Resistance Of O2 Sensor Heater Control Circuit Between Oxygen Sensor

Harness Connector And Appropriate Terminal Of PCM Pinout Box 8815
Courtesy of CHRYSLER GROUP, LLC

1. Turn the ignition off.

   CAUTION: Do not probe the PCM harness connectors. Probing the PCM harness connectors will damage the PCM terminals resulting in poor terminal to pin connection. Install the PCM Pinout Box (special tool #8815A, Kit, NGC, 38 Position) to perform diagnosis.

2. Measure the resistance of the (K199) O2 2/1 Heater Control circuit from the O2 Sensor harness connector to the appropriate terminal of PCM Pinout Box (special tool #8815A, Kit, NGC, 38 Position).

   Is the resistance below 5.0 Ohms?

   Yes

   - Go To 7.

   No

   - Repair the open in the (K199) O2 2/1 Heater Control circuit.
   - Perform the POWERTRAIN VERIFICATION TEST. Refer to **POWERTRAIN VERIFICATION TEST** .

7. **POWERTRAIN CONTROL MODULE (PCM)**
   1. Using the wiring diagram/schematic as a guide, inspect the wiring and connectors between the Oxygen Sensor 2/1 and the Powertrain Control Module (PCM).
   2. Look for any chafed, pierced, pinched, or partially broken wires.
   3. Look for broken, bent, pushed out or corroded terminals. Verify that there is good pin to terminal contact in the Sensor and Control Module connectors.
   4. Refer to any Technical Service Bulletins that may apply.

      Were there any problems found?

      Yes

      - Repair as necessary.
      - Perform the POWERTRAIN VERIFICATION TEST. Refer to **POWERTRAIN VERIFICATION TEST** .

      No

      - Replace and program the Powertrain Control Module in accordance with the Service

Information. Refer to **MODULE, POWERTRAIN CONTROL, REMOVAL** .

- Perform the POWERTRAIN VERIFICATION TEST. Refer to **POWERTRAIN VERIFICATION TEST** .

P0057-O2 SENSOR 2/2 HEATER CIRCUIT LOW

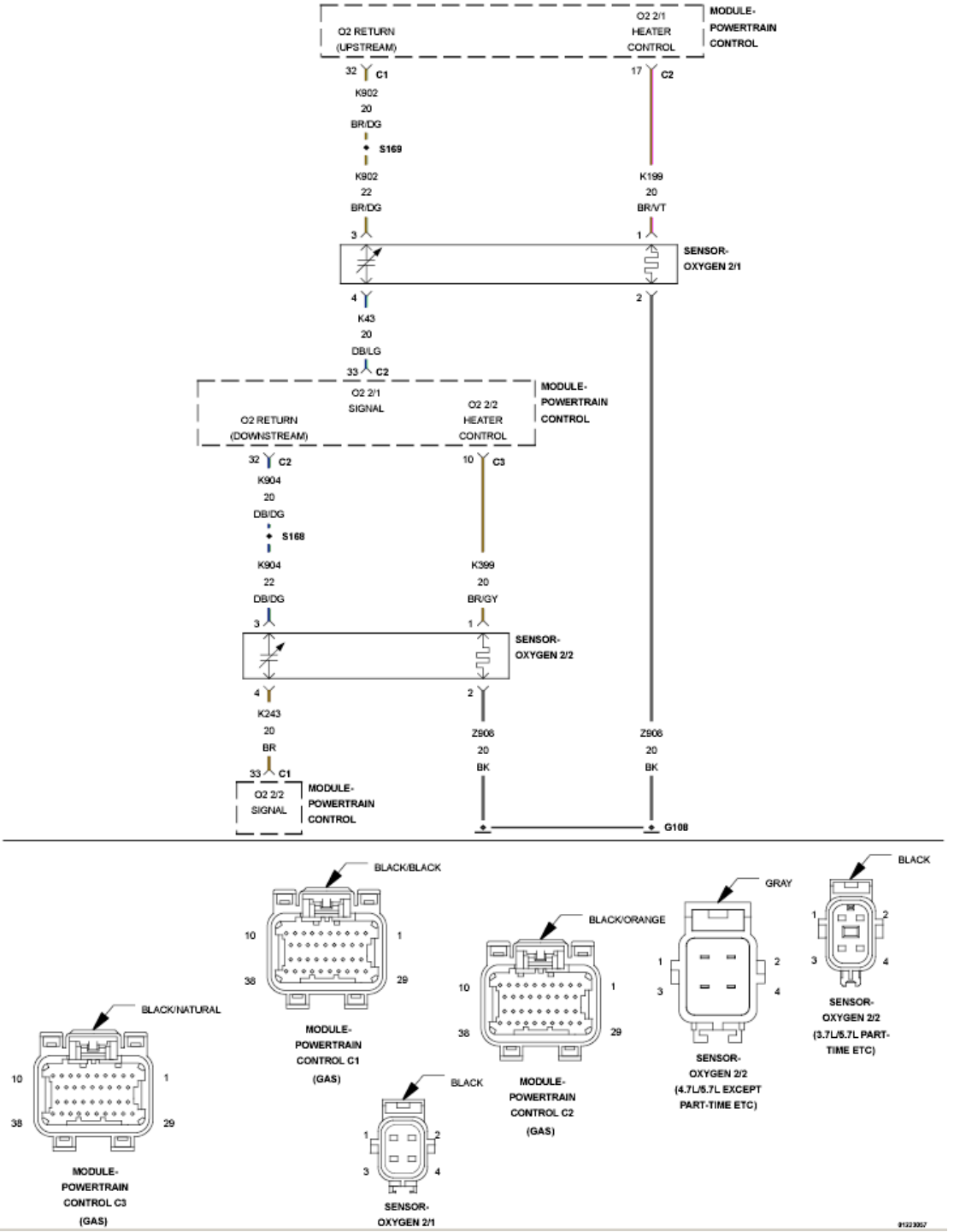

Fig. 36: O2 Sensor Circuit Schematic

Courtesy of CHRYSLER GROUP, LLC

For a complete wiring diagram, **refer to appropriate SYSTEM WIRING DIAGRAMS article** .

WHEN MONITORED:

Continuously during O2 heater operation with battery voltage between 10.4 and 15.75 volts.

SET CONDITION:

The Powertrain Control Module (PCM) detects that the O2 sensor heater element input is below the minimum acceptable voltage. One trip fault. Three good trips to turn off the MIL.

POSSIBLE CAUSES

Possible Causes
(K399) O2 SENSOR 2/2 HEATER CONTROL CIRCUIT SHORTED TO GROUND
EXCESSIVE RESISTANCE IN THE (K399) O2 SENSOR 2/2 HEATER CONTROL CIRCUIT
2/2 O2 SENSOR
POWERTRAIN CONTROL MODULE (PCM)

Always perform the Pre-Diagnostic Troubleshooting procedure before proceeding. Refer to PRE-DIAGNOSTIC TROUBLESHOOTING PROCEDURE .

DIAGNOSTIC TEST

1. **DTC IS ACTIVE**
   1. Start the engine and allow it to idle for at least 60 seconds.

      WARNING: **When the engine is operating, do not stand in direct line with the fan. Do not put your hands near the pulleys, belts or fan. Do not wear loose clothing. Failure to follow these instructions may result in possible serious or fatal injury.**

   2. With a scan tool, select View DTCs.

      Is the DTC Active at this time?

      Yes

      - Go To 2.

      No

      - Perform the INTERMITTENT CONDITION diagnostic procedure. Refer to **INTERMITTENT CONDITION** .

2. **O2 HEATER ELEMENT**
   1. Turn the ignition off.

      NOTE: Allow the O2 Sensor to cool down to room temperature.

   2. Disconnect the 2/2 O2 Sensor harness connector.
   3. Measure the resistance across the O2 Sensor Heater element, between the O2 Heater Control terminal and the O2 Heater ground terminal in the component connector.

      NOTE: O2 Heater Element resistance values should be measured at 21.1° C (70° F). The resistance value will vary with different temperature values.

      Is the O2 Sensor Heater Element resistance between 2.0 and 30.0 Ohms?

      Yes

      - Go To 3.

      No

      - Verify that there is good pin to terminal contact in the Sensor and Control Module connectors. If OK, replace the O2 Sensor.
      - Perform the POWERTRAIN VERIFICATION TEST. Refer to **POWERTRAIN VERIFICATION TEST** .

3. **(K399) O2 2/2 HEATER CONTROL CIRCUIT SHORTED TO GROUND**

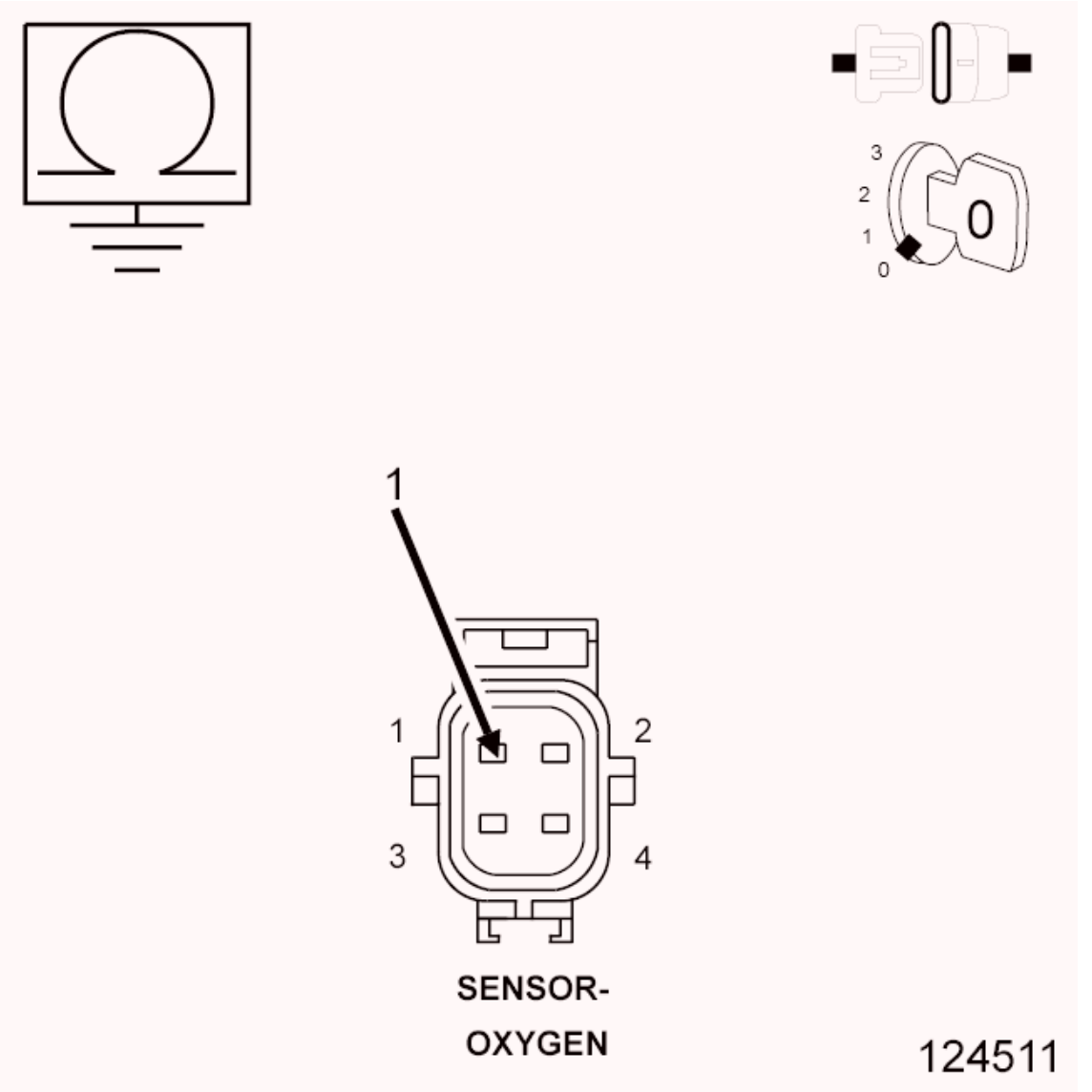

Fig. 37: Measuring Resistance Between Ground And O2 Sensor Heater Control Circuit In O2 Sensor Harness Connector
Courtesy of CHRYSLER GROUP, LLC

1. Turn the ignition off.
2. Disconnect the C3 PCM harness connector.
3. Measure the resistance between ground and the (K399) O2 2/2 Heater Control circuit in the O2 Sensor harness connector.

   Is the resistance below 5.0 Ohms?

   Yes

   - Repair the short to ground in the (K399) O2 2/2 Sensor Heater Control circuit.
   - Perform the POWERTRAIN VERIFICATION TEST. Refer to **POWERTRAIN**

VERIFICATION TEST .

No

- Go To 4.

4. **EXCESSIVE RESISTANCE IN THE (K399) O2 2/2 HEATER CONTROL CIRCUIT**

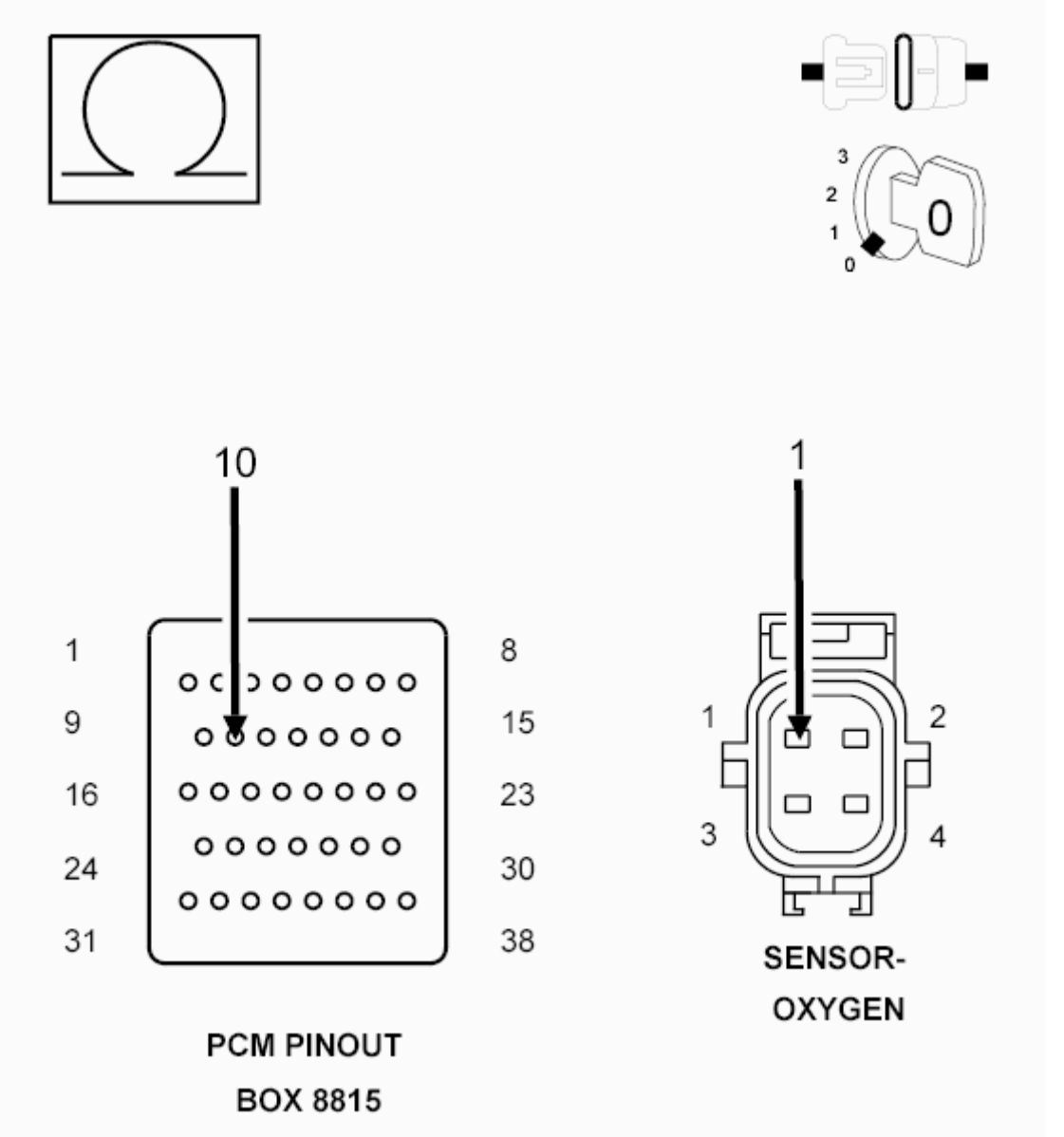

Fig. 38: Measuring Resistance Of O2 Sensor Heater Control Circuit From O2 Harness Connector To Appropriate Terminal Of PCM Pinout Box 8815
Courtesy of CHRYSLER GROUP, LLC

CAUTION: Do not probe the PCM harness connectors. Probing the PCM harness connectors will damage the PCM terminals, resulting in poor terminal

to pin connection. Install the PCM Pinout Box (special tool #8815A, Kit, NGC, 38 Position) to perform diagnosis.

1. Measure the resistance of the (K399) O2 2/2 Heater Control circuit between the 2/2 Oxygen Sensor harness connector and the appropriate terminal of PCM Pinout Box (special tool #8815A, Kit, NGC, 38 Position).

   Is the resistance below 0.5 of an ohm?

   Yes

   - Go To 5.

   No

   - Repair the excessive resistance in the (K399) O2 2/2 Heater Control circuit.
   - Perform the POWERTRAIN VERIFICATION TEST. Refer to **POWERTRAIN VERIFICATION TEST** .

5. **POWERTRAIN CONTROL MODULE (PCM)**
   1. Using the wiring diagram/schematic as a guide, inspect the wiring and connectors between the Oxygen Sensor 2/2 and the Powertrain Control Module (PCM).
   2. Look for any chafed, pierced, pinched, or partially broken wires.
   3. Look for broken, bent, pushed out or corroded terminals. Verify that there is good pin to terminal contact in the Sensor and Control Module connectors.
   4. Refer to any Technical Service Bulletins that may apply.

      Were there any problems found?

      Yes

      - Repair as necessary.
      - Perform the POWERTRAIN VERIFICATION TEST. Refer to **POWERTRAIN VERIFICATION TEST** .

      No

      - Replace and program the Powertrain Control Module in accordance with the Service Information. Refer to **MODULE, POWERTRAIN CONTROL, REMOVAL** .
      - Perform the POWERTRAIN VERIFICATION TEST. Refer to **POWERTRAIN VERIFICATION TEST** .

P0058-O2 SENSOR 2/2 HEATER CIRCUIT HIGH

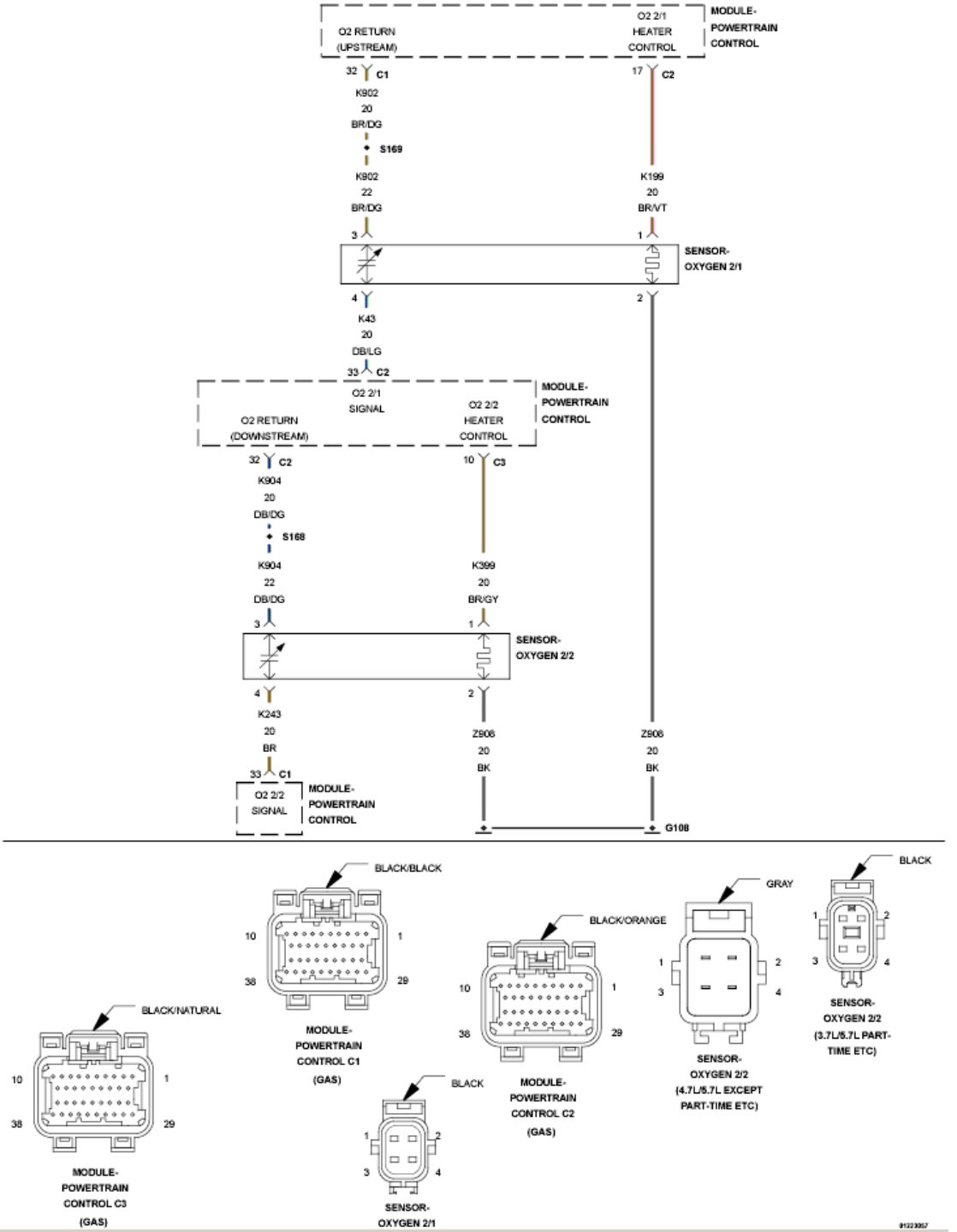

Fig. 39: O2 Sensor Circuit Schematic
Courtesy of CHRYSLER GROUP, LLC

For a complete wiring diagram, **refer to appropriate SYSTEM WIRING DIAGRAMS article** .

WHEN MONITORED:

Continuously during O2 heater operation with battery voltage between 10.4 and 15.75 volts.

SET CONDITION:

The Powertrain Control Module (PCM) detects that the O2 sensor heater element input is above the maximum acceptable voltage. One trip fault. Three good trips to turn off the MIL.

POSSIBLE CAUSES

Possible Causes
(K399) O2 2/2 HEATER CONTROL CIRCUIT OPEN
(Z908) O2 2/2 HEATER GROUND CIRCUIT OPEN
(K399) O2 2/2 HEATER CONTROL CIRCUIT SHORTED TO VOLTAGE
2/2 O2 SENSOR
POWERTRAIN CONTROL MODULE (PCM)

Always perform the Pre-Diagnostic Troubleshooting procedure before proceeding. Refer to PRE-DIAGNOSTIC TROUBLESHOOTING PROCEDURE .

DIAGNOSTIC TEST

1. **ACTIVE DTC**

WARNING: When the engine is operating, do not stand in direct line with the fan. Do not put your hands near the pulleys, belts, or fan. Do not wear loose clothing. Failure to follow these instructions can result possible serious or fatal injury.

NOTE: If P0688-AUTO SHUTDOWN RELAY SENSE CIRCUIT LOW has set along with any of the O2 SENSOR HEATER CIRCUIT HIGH DTCs, all of the O2 Sensor Heater Control circuits need to be checked for a short to battery voltage.

1. Start the engine and allow it to idle for at least 60 seconds.
2. With a scan tool, select View DTCs.

   Is the DTC Active at this time?

   Yes

   - Go To 2.

   No

   - Perform the INTERMITTENT CONDITION diagnostic procedure. Refer to **INTERMITTENT CONDITION** .

2. **O2 HEATER ELEMENT**
   1. Turn the ignition off.

      NOTE: Allow the O2 Sensor to cool down to room temperature.

   2. Disconnect the 2/2 O2 Sensor harness connector.
   3. Measure the resistance across the O2 Sensor Heater element, between the O2 Heater Control terminal and the O2 Heater ground terminal in the component connector.

      NOTE: O2 Heater Element resistance values should be measured at 21.1° C (70° F). The resistance value will vary with different temperature values.

      Is the O2 Sensor Heater Element resistance between 2.0 and 30.0 Ohms?

      Yes

      - Go To 3.

      No

      - Verify that there is good pin to terminal contact in the Sensor and Control Module connectors. If OK, replace the O2 Sensor.
      - Perform the POWERTRAIN VERIFICATION TEST. Refer to **POWERTRAIN VERIFICATION TEST** .
3. **(K399) O2 2/2 HEATER CONTROL CIRCUIT**

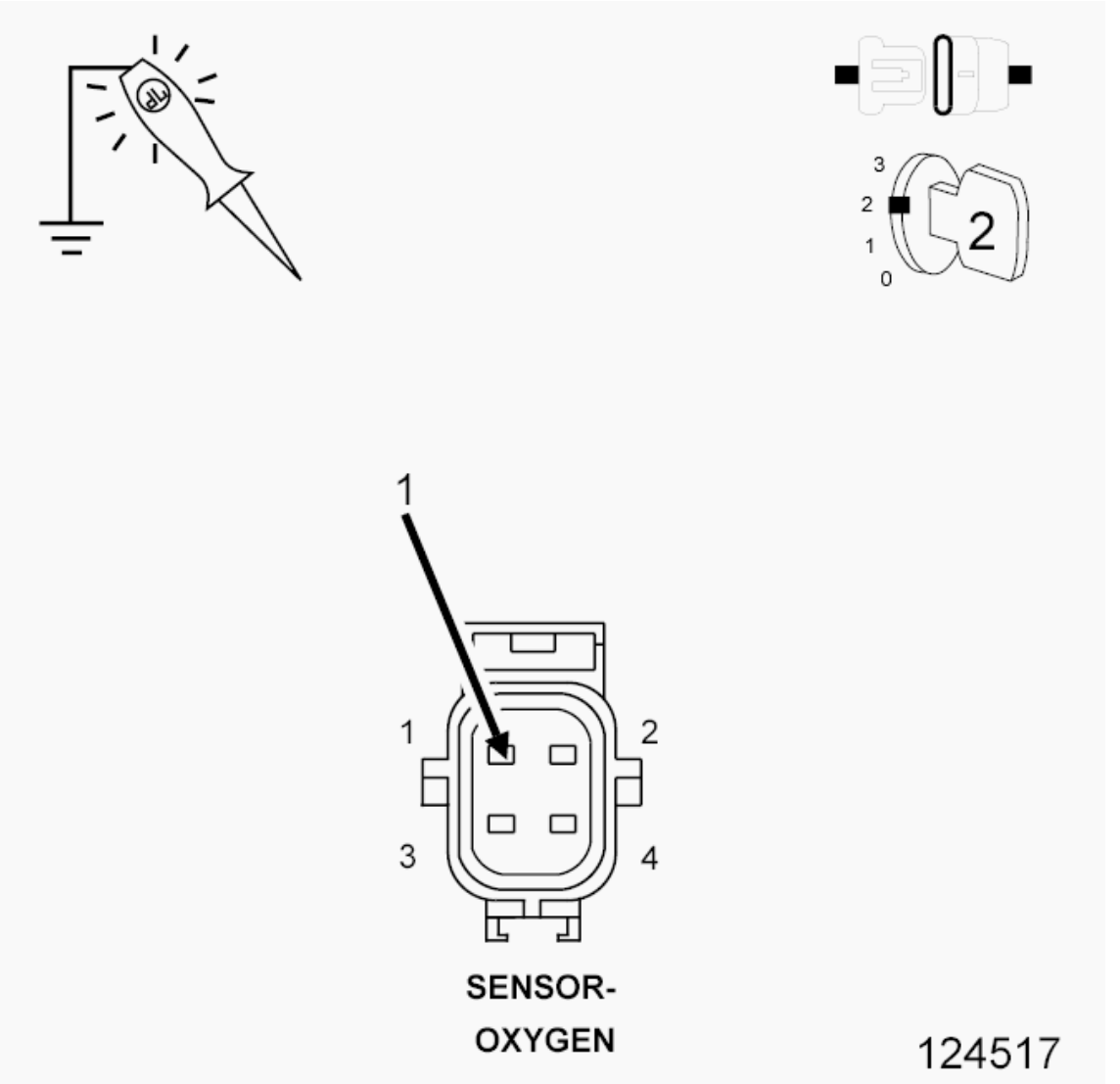

Fig. 40: Using 12-Volt Test Light Connected To Ground To Probe O2 Sensor Heater Control Circuit In O2 Sensor 1/1 Harness Connector
Courtesy of CHRYSLER GROUP, LLC

1. Ignition on, engine not running.
2. Using a 12-volt test light connected to ground, probe the (K399) O2 2/2 Heater Control circuit in the O2 Sensor harness connector.

NOTE: **Make sure the test light is probing the circuit before actuating the Heater Test or a DTC may set and not allow the actuation.**

3. With a scan tool, actuate the O2 2/2 Heater Test with the O2 Sensor harness connector still disconnected.

NOTE: **The test light should be illuminated and bright proportional to the maximum duty cycle allowed by the scan tool. For example, if the**

scan tool allows 100% actuation, the brightness should be as bright as a direct connection to the battery. If the scan tool allows a maximum 25% actuation, the brightness should be 25% as bright as a direct connection to the battery.

Does the test light illuminate accordingly during the actuation?

Yes

- Go To 4.

No

- Go To 5.

4. **(Z908) O2 HEATER GROUND CIRCUIT OPEN**

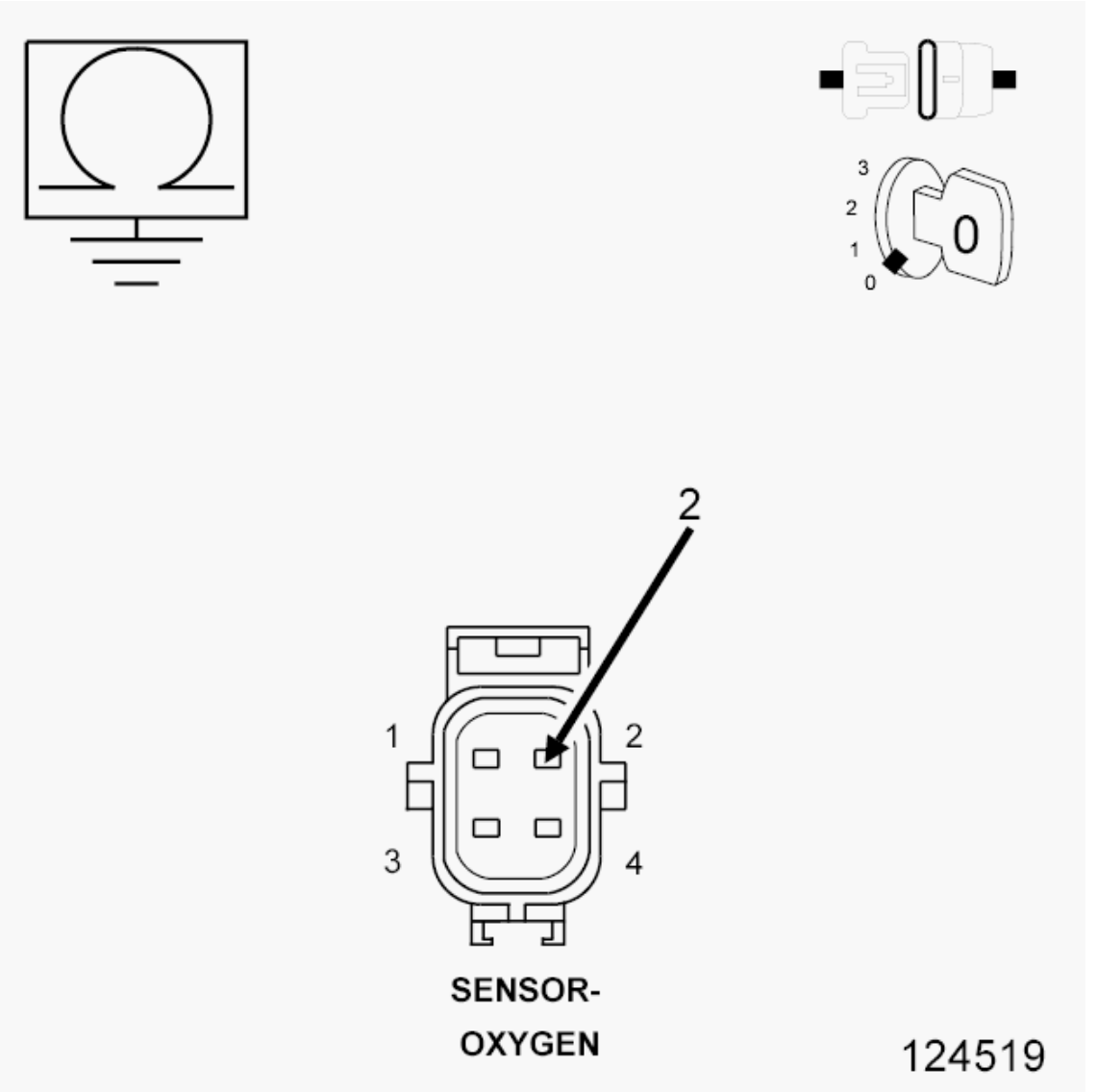

Fig. 41: Measuring Resistance Between Engine Ground And O2 Sensor Heater Ground Circuit In O2 Sensor Harness Connector
Courtesy of CHRYSLER GROUP, LLC

1. Turn the ignition off.
2. Measure the resistance between an engine ground and the (Z908) O2 2/2 Heater ground circuit in the O2 Sensor harness connector.

   Is the resistance below 5.0 Ohms?

   Yes

   - Replace the O2 Sensor.
   - Perform the POWERTRAIN VERIFICATION TEST. Refer to **POWERTRAIN VERIFICATION TEST** .

No

- Repair the open in the (Z908) O2 2/2 Heater ground circuit.
- Perform the POWERTRAIN VERIFICATION TEST. Refer to **POWERTRAIN VERIFICATION TEST** .

5. **(K399) O2 2/2 HEATER CONTROL CIRCUIT SHORTED TO VOLTAGE**

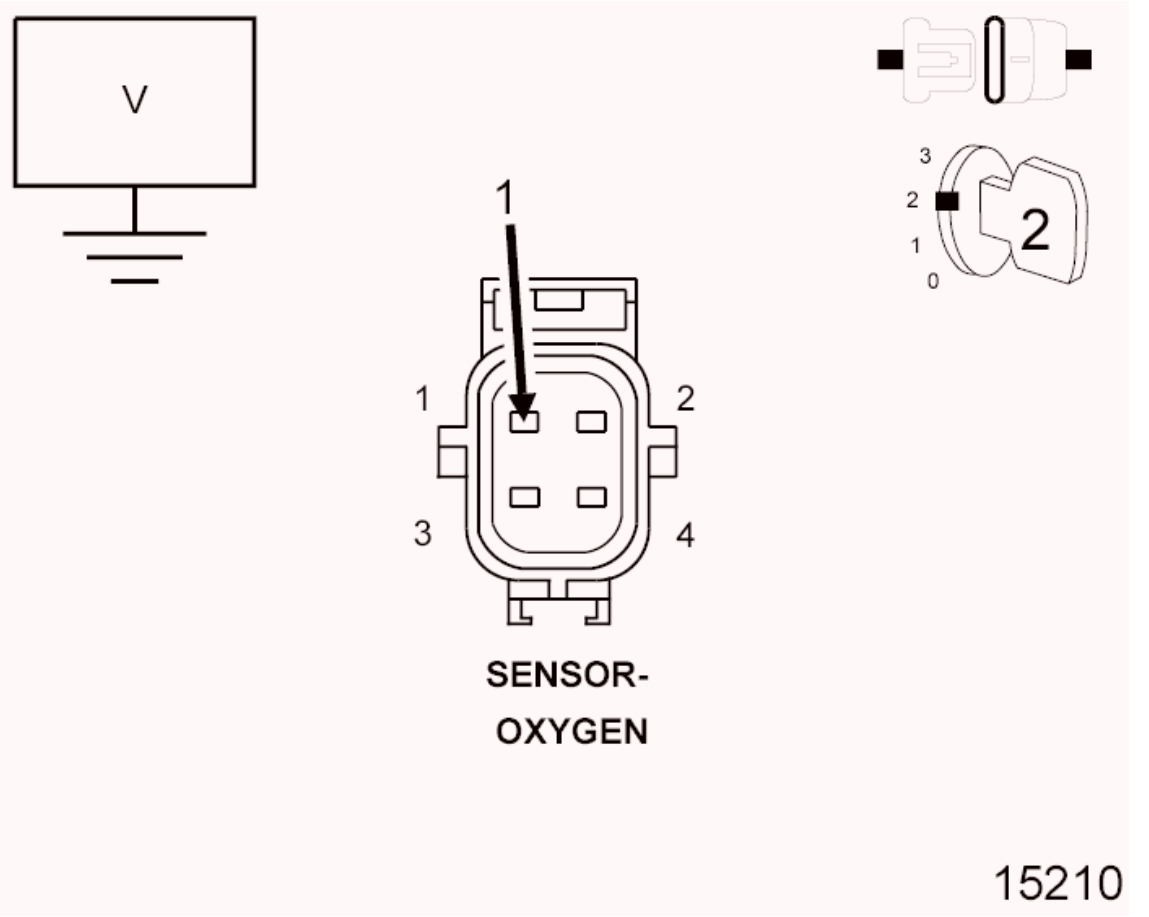

Fig. 42: Measuring Voltage Of O2 Sensor Heater Control Circuit In Sensor Harness Connector
Courtesy of CHRYSLER GROUP, LLC

1. Turn the ignition off.
2. Disconnect the C3 PCM harness connector.
3. Ignition on, engine not running.
4. Measure the voltage of the (K199) O2 2/1 Heater Control circuit in the O2 Sensor harness connector.

   Is there any voltage present?

   Yes

   - Repair the short to voltage in the (K399) O2 2/2 Heater Control circuit.

- Perform the POWERTRAIN VERIFICATION TEST. Refer to **POWERTRAIN VERIFICATION TEST** .

No

- Go To 6.

6. **(K399) O2 2/2 HEATER CONTROL CIRCUIT OPEN**

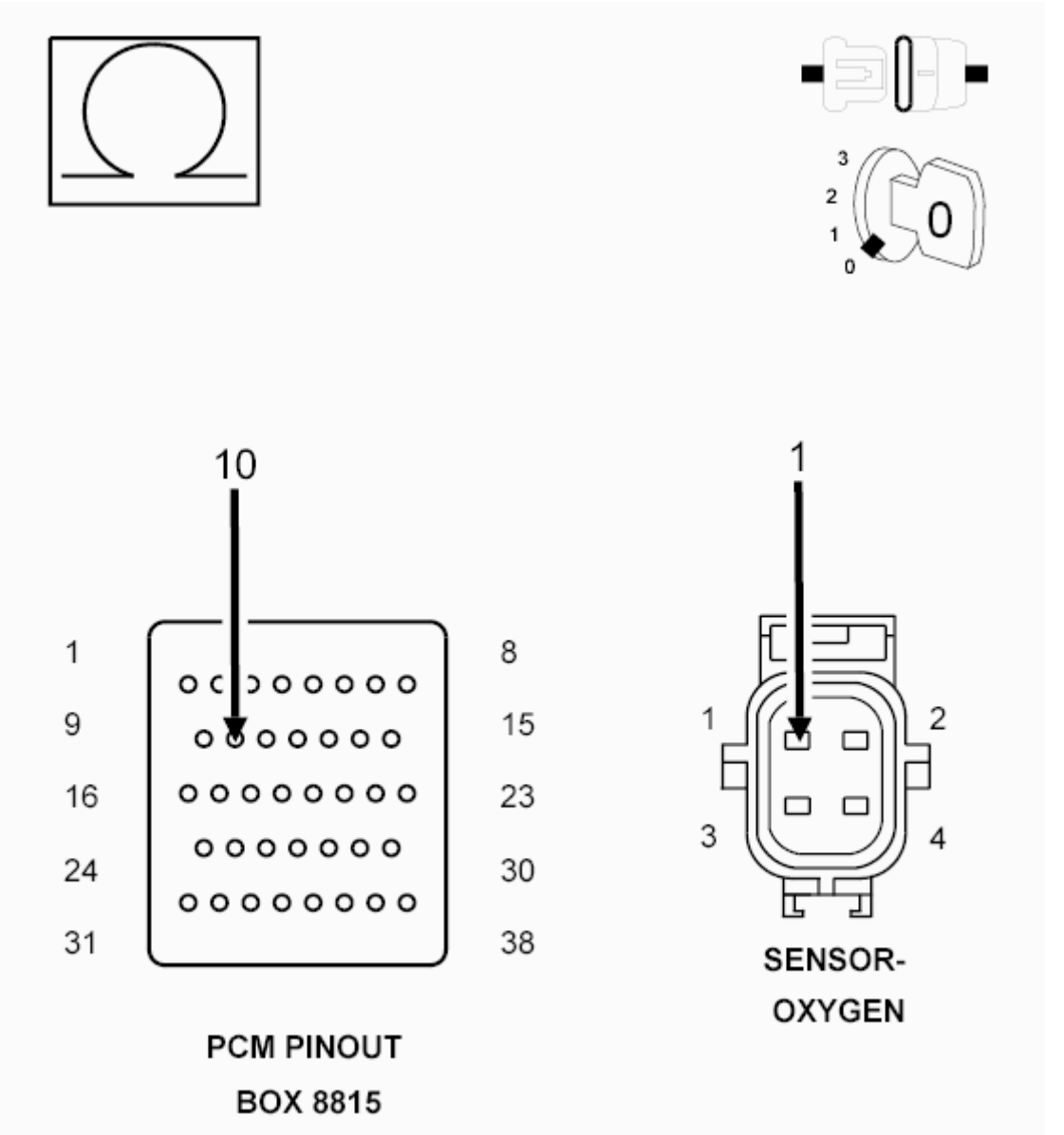

Fig. 43: Measuring Resistance Of O2 Sensor Heater Control Circuit From O2 Harness Connector To Appropriate Terminal Of PCM Pinout Box 8815
Courtesy of CHRYSLER GROUP, LLC

1. Turn the ignition off.

CAUTION: Do not probe the PCM harness connectors. Probing the PCM harness connectors will damage the PCM terminals resulting in poor terminal to pin connection. Install the PCM Pinout Box (special tool #8815A, Kit, NGC, 38 Position) to perform diagnosis.

2. Measure the resistance of the (K399) O2 2/2 Heater Control circuit from the O2 Sensor harness connector to the appropriate terminal of special tool PCM Pinout Box (special tool #8815A, Kit, NGC, 38 Position).

   Is the resistance below 5.0 Ohms?

   Yes

   - Go To 7.

   No

   - Repair the open in the (K399) O2 2/2 Heater Control circuit.
   - Perform the POWERTRAIN VERIFICATION TEST. Refer to **POWERTRAIN VERIFICATION TEST** .

7. **POWERTRAIN CONTROL MODULE (PCM)**
   1. Using the wiring diagram/schematic as a guide, inspect the wiring and connectors between the Oxygen Sensor 2/2 and the Powertrain Control Module (PCM).
   2. Look for any chafed, pierced, pinched, or partially broken wires.
   3. Look for broken, bent, pushed out or corroded terminals. Verify that there is good pin to terminal contact in the Sensor and Control Module connectors.
   4. Refer to any Technical Service Bulletins that may apply.

      Were there any problems found?

      Yes

      - Repair as necessary.
      - Perform the POWERTRAIN VERIFICATION TEST. Refer to **POWERTRAIN VERIFICATION TEST** .

      No

      - Replace and program the Powertrain Control Module in accordance with the Service Information. Refer to **MODULE, POWERTRAIN CONTROL, REMOVAL** .
      - Perform the POWERTRAIN VERIFICATION TEST. Refer to **POWERTRAIN VERIFICATION TEST** .

P0071-AMBIENT AIR TEMPERATURE SENSOR PERFORMANCE

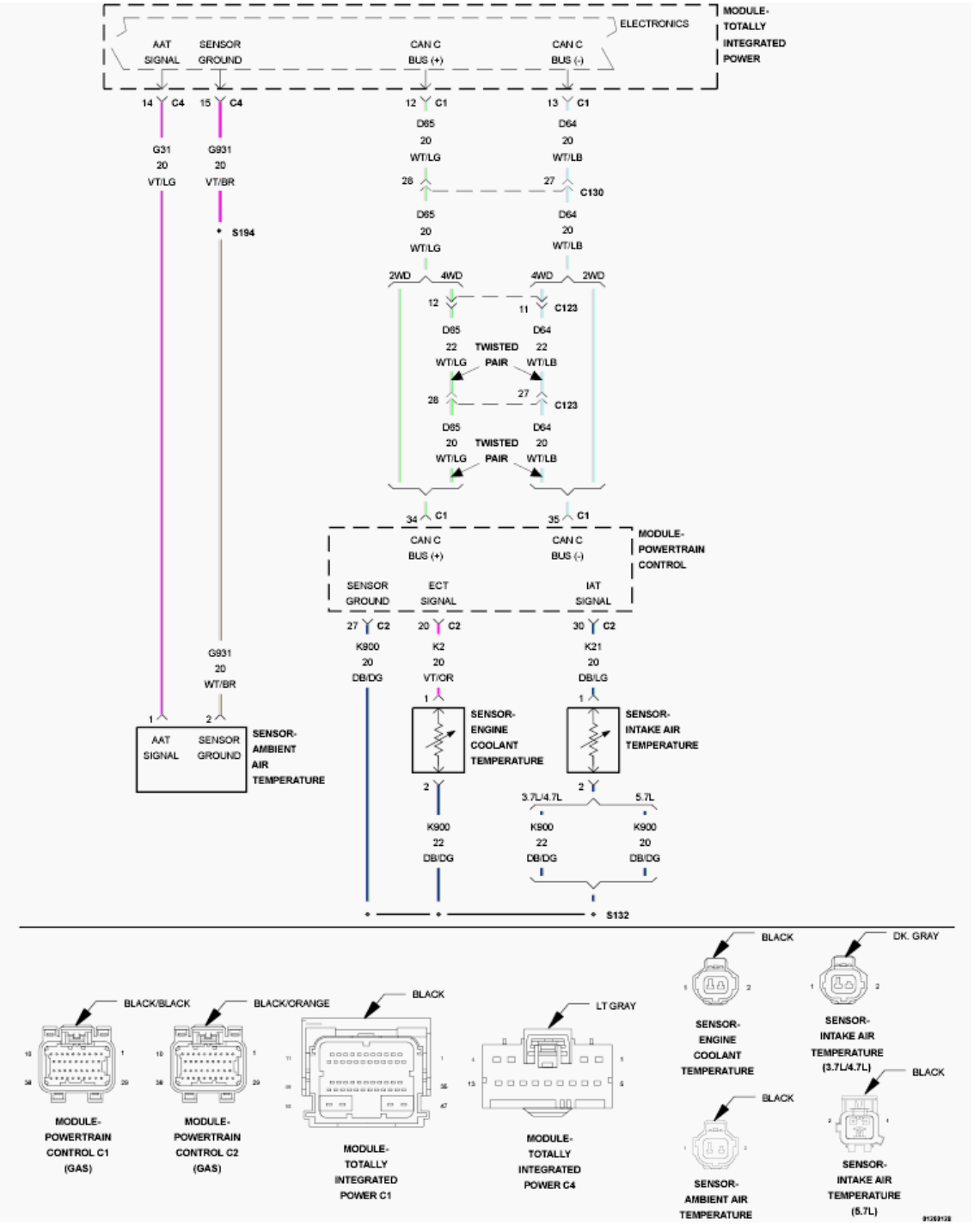

Fig. 44: ECT Sensor, IAT Sensor & AAT Sensor Circuit Schematic
Courtesy of CHRYSLER GROUP, LLC

For a complete wiring diagram, **refer to appropriate SYSTEM WIRING DIAGRAMS article** .

THEORY OF OPERATION

Ambient Air Temperature (AAT) Sensor performance looks at the outputs of three temperature sensors and

compares them under cold start conditions. Following a start to run delay time, the outputs of the ambient, engine coolant, and intake air temperature sensors will be compared. If the engine coolant and intake air temperature sensors agree and the ambient air temperature does not agree, the ambient air temperature sensor is declared as irrational. If declared irrational a second comparison will be done after a short drive cycle.

WHEN MONITORED:

Engine off time is greater than 480 minutes and the vehicle has been driven for one minute over 35 mph. Ambient temperature is greater than -64° C (-83° F).

SET CONDITION:

The Powertrain Control Module (PCM) compares the ambient, engine coolant, and intake air temperature sensor values. If engine coolant and intake air temperature sensors agree with each other but ambient air temperature does not agree with them, the ambient air temperature sensor is declared as irrational. Two Trip Fault. Three good trips to turn off the MIL.

POSSIBLE CAUSES

Possible Causes
(G31) AAT SIGNAL CIRCUIT HIGH RESISTANCE
(G31) AAT SIGNAL CIRCUIT SHORTED TO GROUND
(G31) AAT SIGNAL CIRCUIT SHORTED TO THE (G931) SENSOR GROUND CIRCUIT
(G31) AAT SIGNAL CIRCUIT SHORTED TO VOLTAGE
(G931) SENSOR GROUND HIGH RESISTANCE
AMBIENT AIR TEMPERATURE SENSOR (AAT)
CAN C BUS CIRCUITS
TOTALLY INTEGRATED POWER MODULE (TIPM)
POWERTRAIN CONTROL MODULE (PCM)

Always perform the Pre-Diagnostic Troubleshooting procedure before proceeding. Refer to PRE-DIAGNOSTIC TROUBLESHOOTING PROCEDURE .

DIAGNOSTIC TEST

1. **ACTIVE DTC**

   NOTE: Diagnose any CAN - C Communication DTCs before continuing.

   1. Turn the ignition off.
   2. If possible, allow the vehicle to sit with the ignition off for more than 480 minutes in an environment where the temperature is consistent and above -7° C (19.4° F).
   3. Test drive the vehicle. The vehicle must exceed 48 km/h (30 mph) during the test drive. Do not cycle the ignition off when the test drive is completed.
   4. With a scan tool, select View DTCs.

Is the DTC Active or Pending at this time?

Yes

- Go To 3.

No

- Go To 2.

2. **AMBIENT AIR TEMPERATURE**
   1. Turn the ignition off.
   2. Allow the vehicle to sit with the ignition off in an environment where the temperature is consistent and above -7° C (19.4° F) until the engine coolant temperature is equal to ambient temperature.
   3. Turn the ignition on.
   4. With a scan tool, compare the AAT, ECT, and IAT sensor values.

   Is the Ambient Air Temperature Sensor value within 10° C (18° F) of the other two sensor values?

   Yes

   - Perform the INTERMITTENT CONDITION diagnostic procedure. Refer to **INTERMITTENT CONDITION** .

   No

   - Go To 3.

3. **AAT SENSOR VOLTAGE**
   1. Turn the ignition off.
   2. Disconnect the AAT Sensor harness connector.
   3. Ignition on, engine not running.
   4. With a scan tool, read the AAT voltage.

   NOTE: The sensor voltage should be approximately 5.0 volts (plus or minus.1 of a volt) with the connector disconnected.

   Does the scan tool display the voltage as described above?

   Yes

   - Go To 4.

   No

   - Go To 5.

4. **AAT SENSOR**

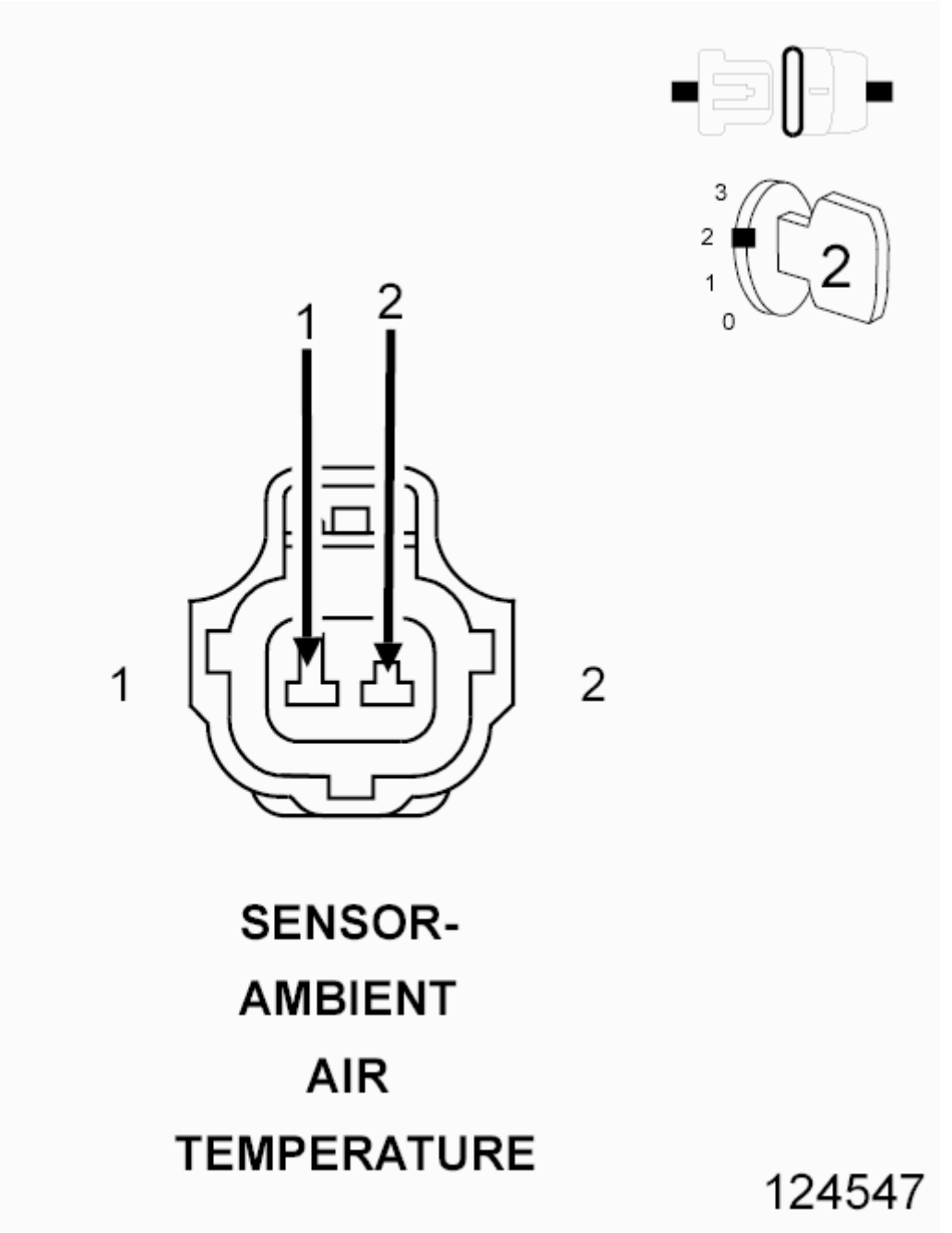

Fig. 45: Ambient Air Temperature Sensor Harness Connector
Courtesy of CHRYSLER GROUP, LLC

1. Turn the ignition off.
2. Connect a jumper wire between the (G31) AAT Signal circuit and the (G931) Sensor Ground circuit in Ambient Air Temperature Sensor harness connector.
3. Turn the ignition on.

4. With a scan tool, read the Ambient Air Temperature Sensor voltage.

NOTE: The sensor voltage should be approximately 0.0 volts (plus or minus.1 volt) with the jumper wire in place.

Does the scan tool display the voltage as described above?

Yes

- Verify that there is good pin to terminal contact in the Sensor and Control Module connectors. Replace the AAT Sensor if no problems were found in the connectors.
- Perform the POWERTRAIN VERIFICATION TEST. Refer to **POWERTRAIN VERIFICATION TEST** .

No

- Go To 5.

NOTE: Remove the jumper wire before continuing.

5. **(G31) AAT SIGNAL CIRCUIT HIGH RESISTANCE**
   1. Turn the ignition off.
   2. Reconnect the AAT Sensor harness connector.
   3. Using a voltmeter perform a voltage drop test. Backprobe the (G31) AAT Signal circuit at the AAT sensor harness connector and the C4 TIPM harness connector.
   4. Start the engine and allow it to reach normal operating temperature.
   5. Monitor the voltmeter.

   Is the voltage less than 0.5 of a volt?

   Yes

   - Go To 6.

   No

   - Repair the excessive resistance in the (G31) AAT Signal circuit.
   - Perform the POWERTRAIN VERIFICATION TEST. Refer to **POWERTRAIN VERIFICATION TEST** .
6. **(G931) SENSOR GROUND CIRCUIT HIGH RESISTANCE**
   1. Turn the ignition off.
   2. Using a voltmeter perform a voltage drop test. Backprobe the (G931) Sensor Ground circuit at the AAT sensor harness connector and the C4 TIPM harness connector.

WARNING: When the engine is operating, do not stand in direct line with the fan. Do not put your hands near the pulleys, belts or fan. Do not wear loose clothing. Failure to follow these instructions may result in possible serious or fatal injury.

3. Start the engine and allow it to reach normal operating temperature.
4. Monitor the voltmeter.

   Is the voltage less than 0.5 of a volt?

   Yes

   - Go To 7.

   No

   - Repair the excessive resistance in the (G930) AAT Return circuit.
   - Perform the POWERTRAIN VERIFICATION TEST. Refer to **POWERTRAIN VERIFICATION TEST** .

7. **(G31) AAT SIGNAL CIRCUIT SHORTED TO VOLTAGE**

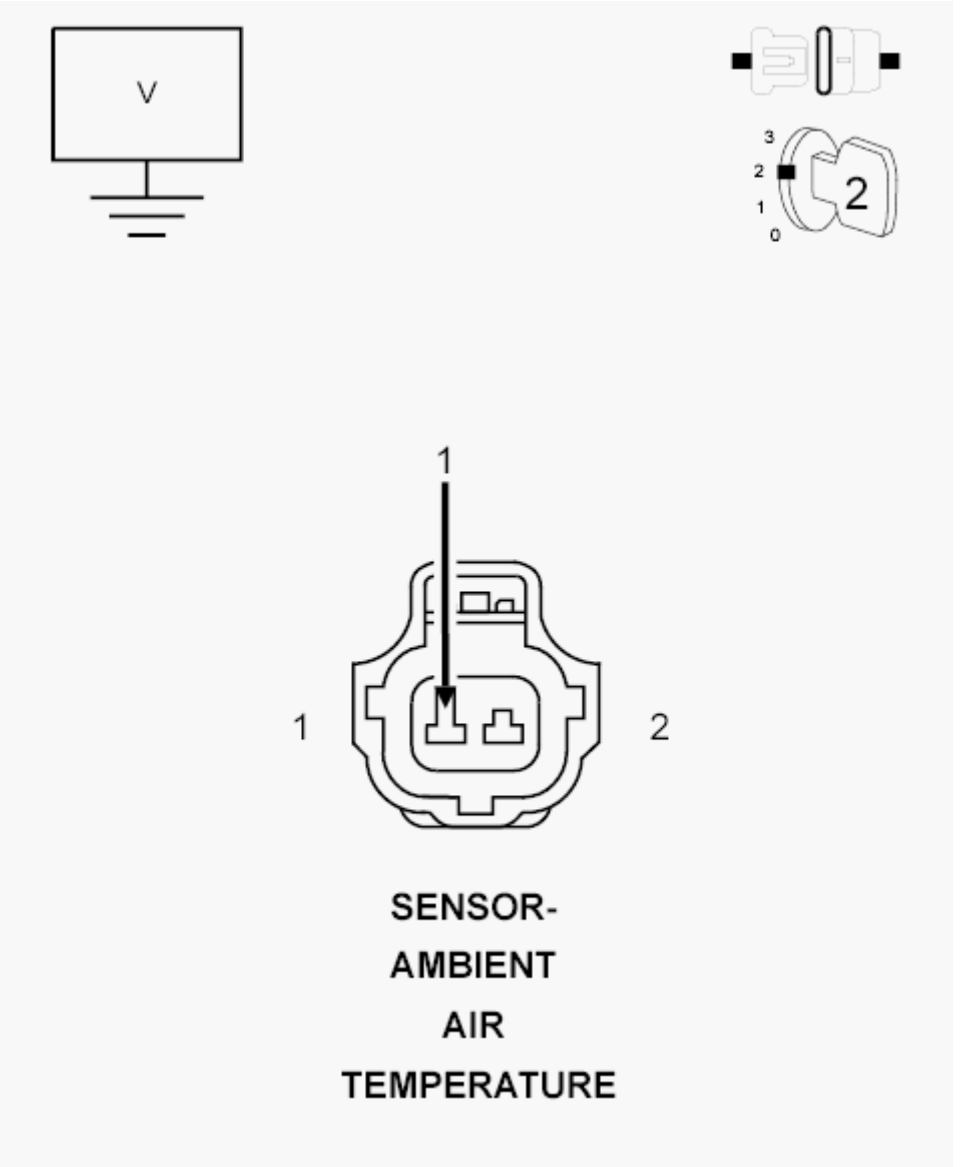

Fig. 46: Measuring Voltage On AAT Signal Circuit In AAT Sensor Harness Connector
Courtesy of CHRYSLER GROUP, LLC

1. Turn the ignition off.
2. Disconnect the C4 TIPM harness connector.
3. Ignition on, engine not running.
4. Measure the voltage on the (G31) AAT Signal circuit in the AAT Sensor harness connector.

   Is there any voltage present?

   Yes

   - Repair the short to voltage in the (G31) AAT Signal circuit.
   - Perform the POWERTRAIN VERIFICATION TEST. Refer to **POWERTRAIN**

VERIFICATION TEST .

No

- Go To 8.

8. **(G31) AAT SIGNAL CIRCUIT SHORTED TO GROUND**

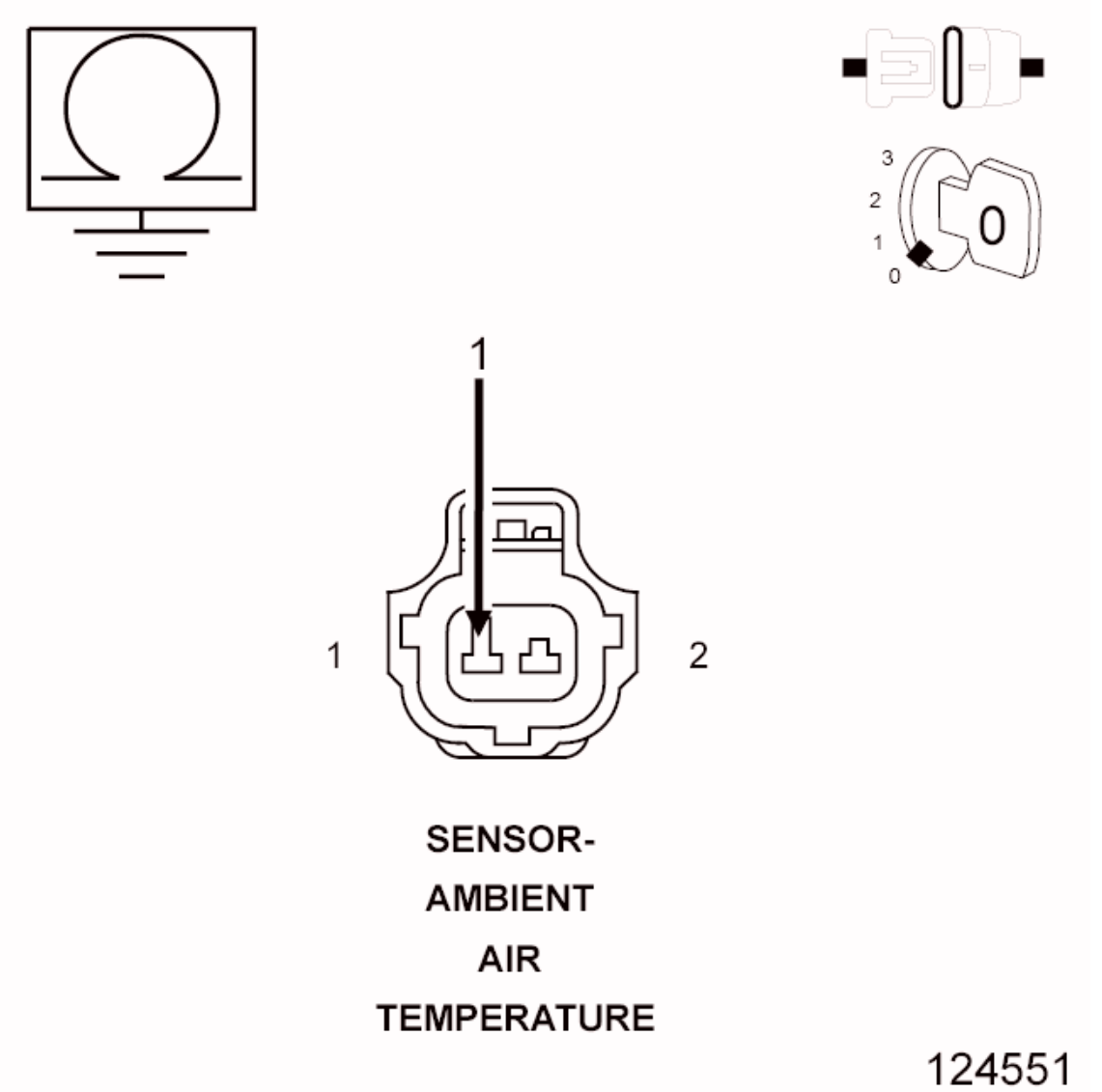

Fig. 47: Measuring Resistance Between Ground And AAT Sensor Signal Circuit In AAT Sensor Harness Connector
Courtesy of CHRYSLER GROUP, LLC

1. Turn the ignition off.
2. Measure the resistance between ground and the (G31) AAT Signal circuit in the AAT Sensor harness connector.

Is the resistance less than 100 Ohms?

Yes

- Repair the short to ground in the (G31) AAT Signal circuit.
- Perform the POWERTRAIN VERIFICATION TEST. Refer to **POWERTRAIN VERIFICATION TEST** .

No

- Go To 9.

9. **(G31) AAT SIGNAL CIRCUIT SHORTED TO THE (G931) SENSOR GROUND CIRCUIT**

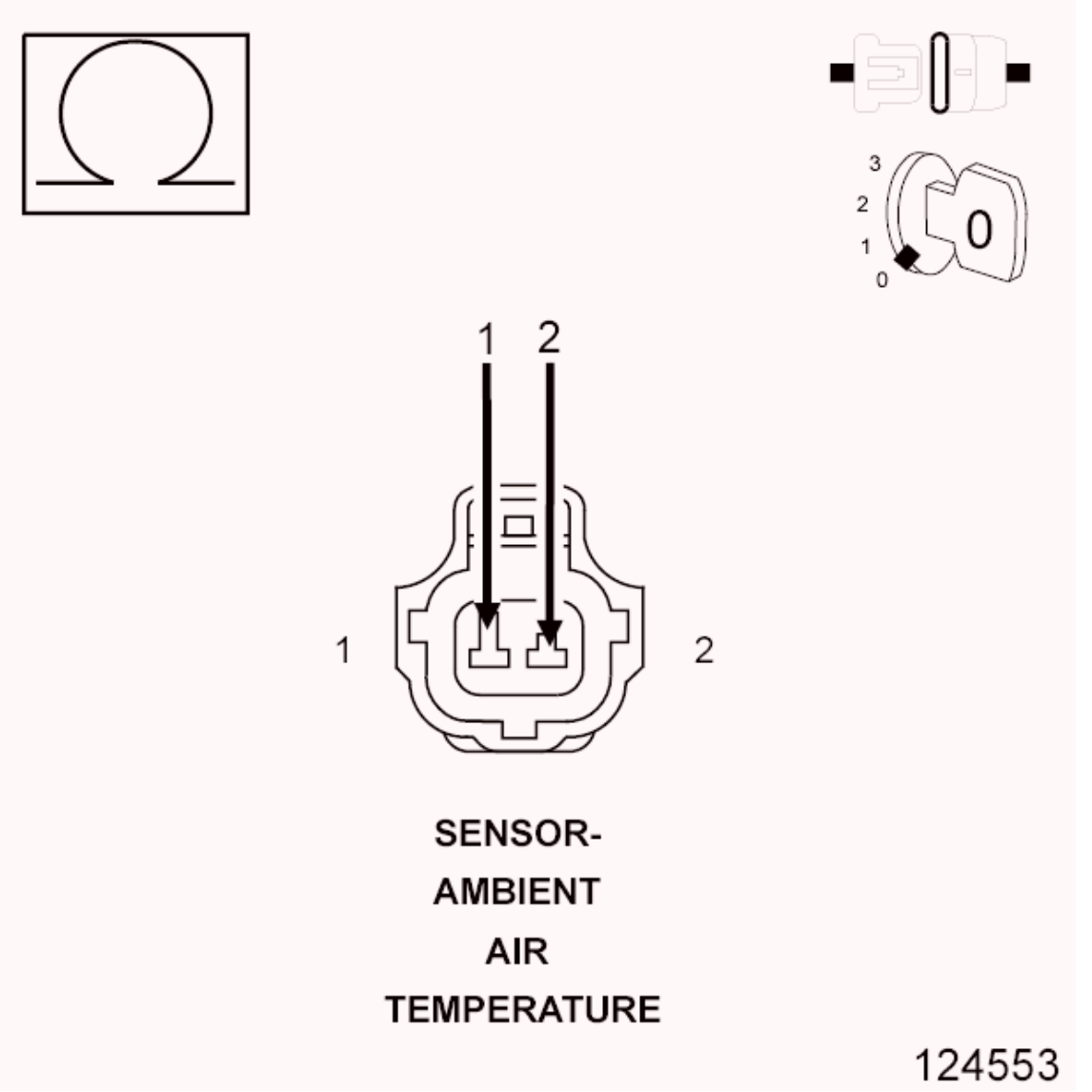

Fig. 48: Measuring Resistance Between Sensor Return Circuit And Sensor Signal Circuit In AAT Sensor Harness Connector

Courtesy of CHRYSLER GROUP, LLC

1. Measure the resistance between the (G930) AAT return circuit and the (G31) AAT Signal circuit in the AAT Sensor harness connector.

   Is the resistance less than 5.0 Ohms?

   Yes

   - Repair the short between the (G930) AAT return circuit and the (G31) AAT Signal circuit.
   - Perform the POWERTRAIN VERIFICATION TEST. Refer to **POWERTRAIN VERIFICATION TEST** .

   No

   - Go To 10.

10. **TOTALLY INTEGRATED POWER MODULE**
    1. Using the wiring diagram/schematic as a guide, inspect the wiring and connectors between the AAT Sensor and the Totally Integrated Power Module (TIPM).
    2. Look for any chafed, pierced, pinched, or partially broken wires.
    3. Look for broken, bent, pushed out or corroded terminals. Verify that there is good pin to terminal contact in the Sensor and Control Module connectors.
    4. Refer to any Technical Service Bulletins that may apply.

       Were there any problems found?

       Yes

       - Repair as necessary.
       - Perform the BODY VERIFICATION TEST. Refer to **STANDARD PROCEDURE** .

       No

       - Replace the Totally Integrated Power Module in accordance with the Service Information.
       - Perform the BODY VERIFICATION TEST. Refer to **STANDARD PROCEDURE** .

P0072-AMBIENT AIR TEMPERATURE SENSOR CIRCUIT LOW

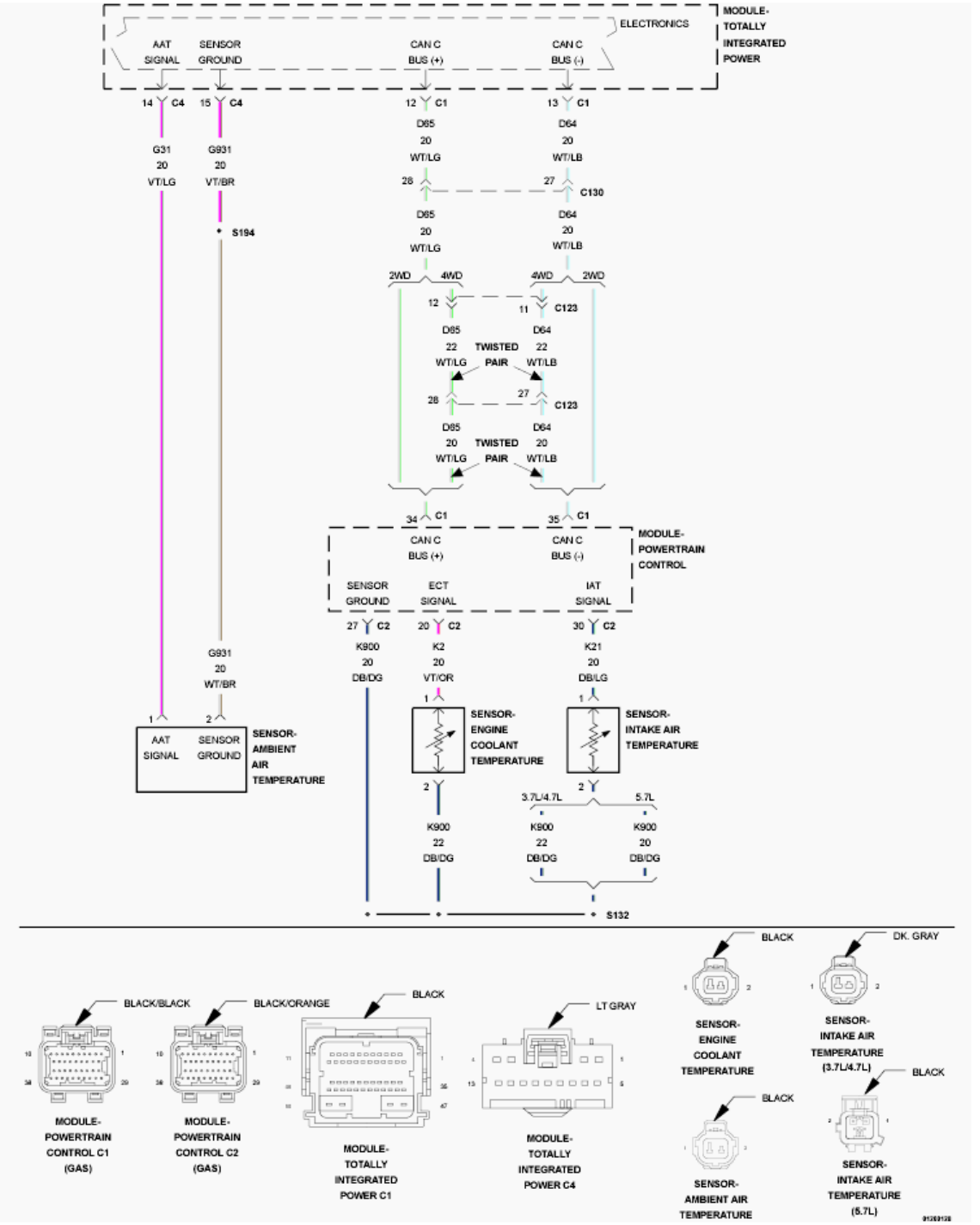

Fig. 49: ECT Sensor, IAT Sensor & AAT Sensor Circuit Schematic
Courtesy of CHRYSLER GROUP, LLC

For a complete wiring diagram, **refer to appropriate SYSTEM WIRING DIAGRAMS article** .

WHEN MONITORED:

The ignition key on.

SET CONDITION:

The Powertrain Control Module (PCM) receives an Ambient Air Temperature (AAT) Sensor signal from the Totally Integrated Power Module (TIPM) which is less than the minimum acceptable value. One Trip Fault. Three good trips to turn off the MIL.

POSSIBLE CAUSES

Possible Causes
(G31) AAT SIGNAL CIRCUIT SHORTED TO GROUND
(G31) AAT SIGNAL CIRCUIT SHORTED TO THE (G931) SENSOR GROUND CIRCUIT
EXCESSIVE RESISTANCE IN THE (G31) AAT SIGNAL CIRCUIT
AMBIENT AIR TEMPERATURE (AAT) SENSOR
TOTALLY INTEGRATED POWER MODULE (TIPM)

Always perform the Pre-Diagnostic Troubleshooting procedure before proceeding. Refer to PRE-DIAGNOSTIC TROUBLESHOOTING PROCEDURE .

DIAGNOSTIC TEST

1. **DTC IS ACTIVE**
   1. Start the engine and allow it to reach normal operating temperature.

      WARNING: When the engine is operating, do not stand in direct line with the fan. Do not put your hands near the pulleys, belts or fan. Do not wear loose clothing. Failure to follow these instructions may result in possible serious or fatal injury.

   2. With the scan tool, select View DTCs.

      NOTE: If any communication or system voltage DTCs are present diagnose those DTCs before continuing with this test

      Is the DTC Active at this time?

      Yes

      - Go To 2.

      No

      - Perform the INTERMITTENT CONDITION diagnostic procedure. Refer to **INTERMITTENT CONDITION** .
2. **CHECKING AAT SENSOR**
   1. Turn the ignition off.

2. Disconnect the Ambient Air Temperature Sensor harness connector.
3. Ignition on, engine not running.
4. With a scan tool, read the AAT Sensor voltage.

NOTE: The sensor voltage should be approximately 5.0 volts (plus or minus.1 of a volt) with the connector disconnected.

Does the scan tool display the voltage as described above?

Yes

- Verify that there is good pin to terminal contact in the Sensor and Control Module connectors. Replace the Ambient Air Temperature Sensor if no problems were found with the connectors.
- Perform the POWERTRAIN VERIFICATION TEST. Refer to **POWERTRAIN VERIFICATION TEST** .

No

- Go To 3.

3. **(G31) AAT SIGNAL CIRCUIT SHORTED TO GROUND**

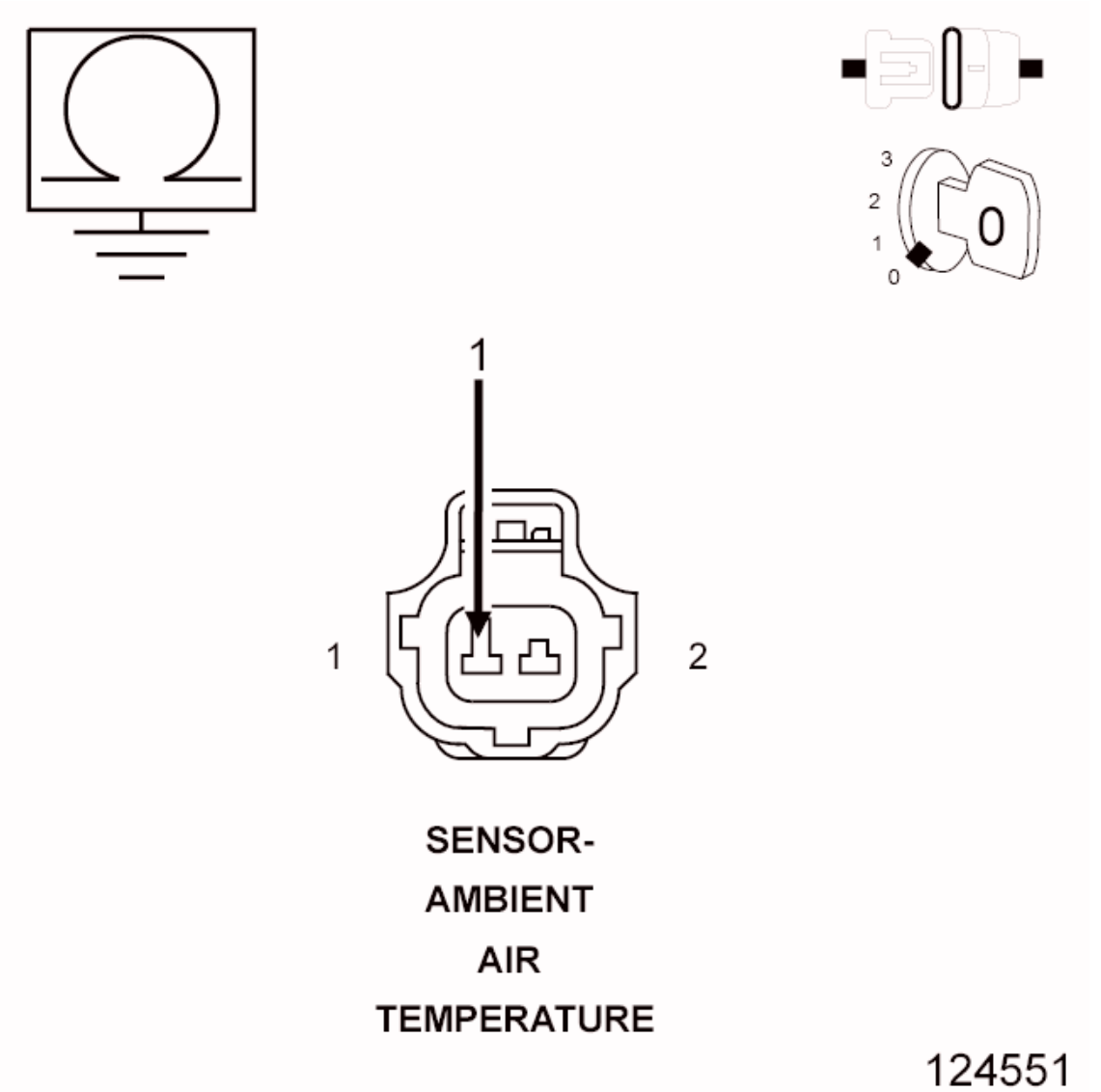

Fig. 50: Measuring Resistance Between Ground And AAT Sensor Signal Circuit In AAT Sensor Harness Connector
Courtesy of CHRYSLER GROUP, LLC

1. Turn the ignition off.
2. Disconnect the C4 Totally Integrated Power Module (TIPM) harness connector.
3. Measure the resistance between ground and the (G31) AAT Signal circuit in the AAT Sensor harness connector.

   Is the resistance below 100 Ohms?

   Yes

   - Repair the short to ground in the (G31) AAT Signal circuit.
   - Perform the POWERTRAIN VERIFICATION TEST. Refer to **POWERTRAIN**

VERIFICATION TEST .

No

- Go To 4.

4. **(G31) AAT SIGNAL CIRCUIT SHORTED TO THE (G931) SENSOR GROUND CIRCUIT**

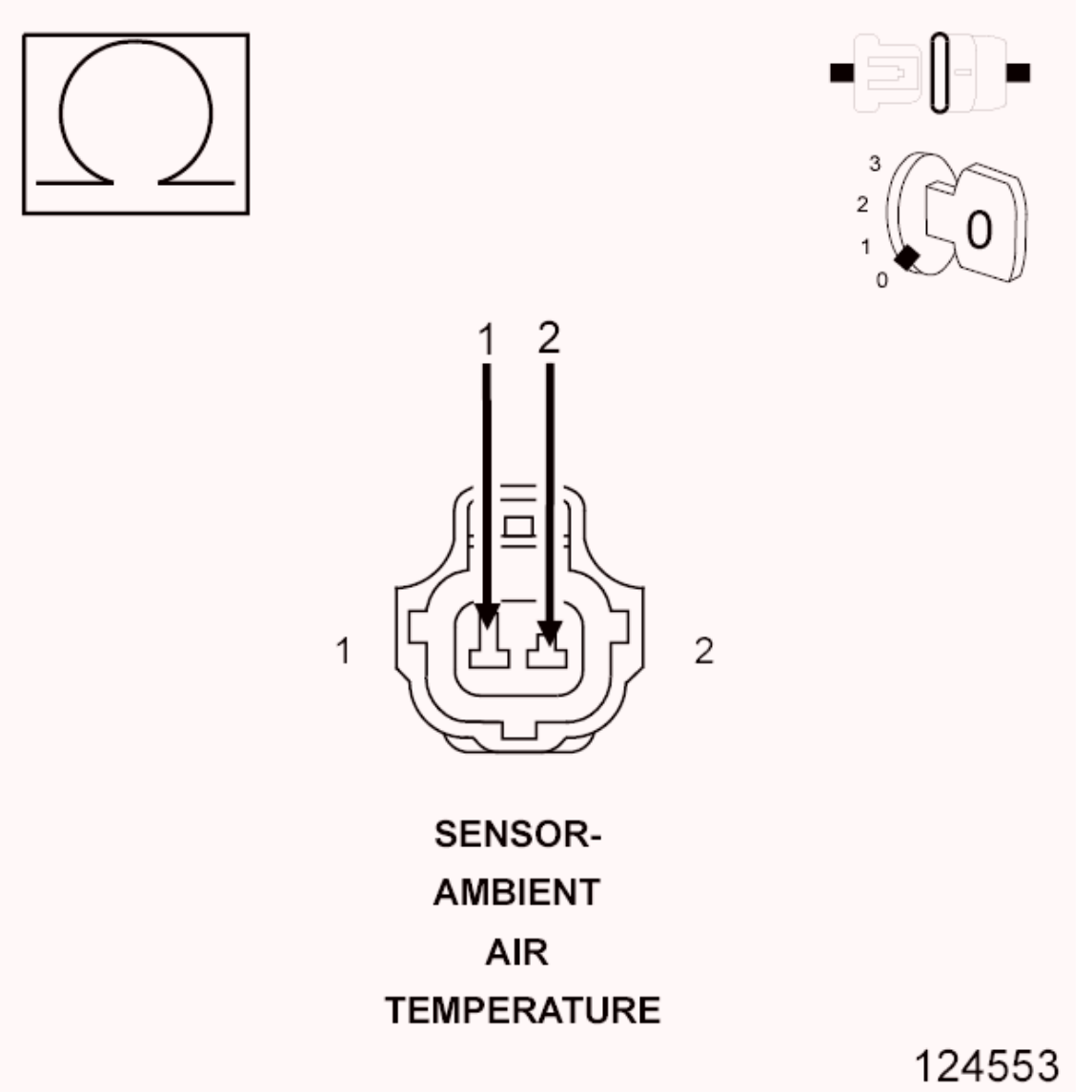

Fig. 51: Measuring Resistance Between Sensor Return Circuit And Sensor Signal Circuit In AAT Sensor Harness Connector
Courtesy of CHRYSLER GROUP, LLC

1. Measure the resistance between the (G931) Sensor Ground circuit and the (G31) AAT Signal circuit in the AAT Sensor harness connector.

   Is the resistance below 5.0 Ohms?

Yes

- Repair the short between the (G931) Sensor Ground circuit and the (G31) AAT Signal circuit.
- Perform the POWERTRAIN VERIFICATION TEST. Refer to **POWERTRAIN VERIFICATION TEST** .

No

- Go To 5.

5. **EXCESSIVE RESISTANCE IN THE (G31) AAT SIGNAL CIRCUIT**

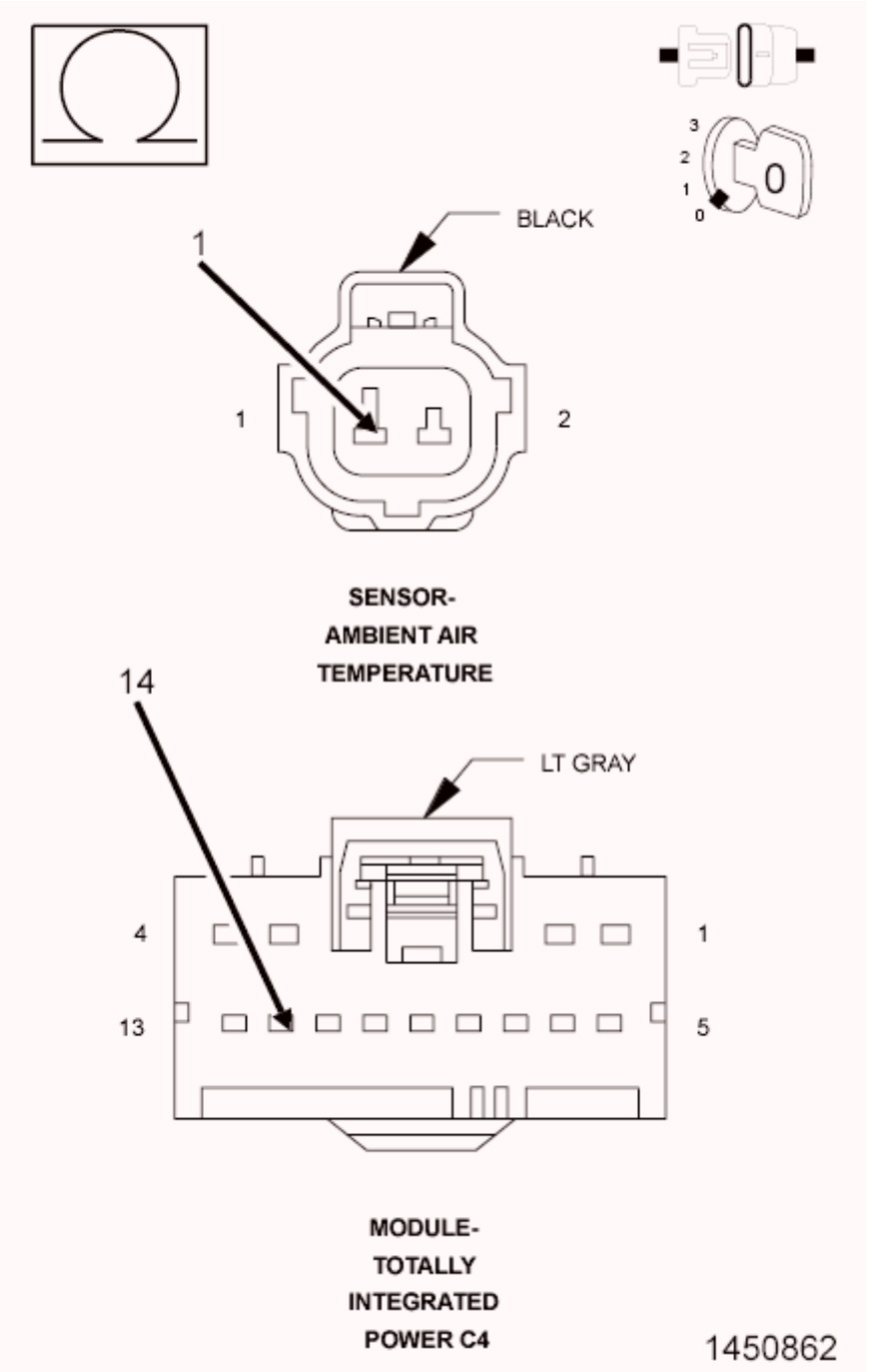

Fig. 52: Measuring Ambient Air Temperature Sensor Signal Circuit Resistance
Courtesy of CHRYSLER GROUP, LLC

1. Measure the resistance of the (G31) AAT Signal circuit between the Ambient Air Temperature Sensor harness connector and the C4 TIPM harness connector.

   Is the resistance below 5.0 Ohms?

   Yes

- Go To 6.

No

- Repair the excessive resistance in the (G31) AAT Signal circuit.
- Perform the POWERTRAIN VERIFICATION TEST. Refer to **POWERTRAIN VERIFICATION TEST** .

6. **TOTALLY INTEGRATED POWER MODULE (TIPM)**
   1. Using the wiring diagram/schematic as a guide, inspect the wiring and connectors between the AAT Sensor and the Totally Integrated Power Module (TIPM).
   2. Look for any chafed, pierced, pinched, or partially broken wires.
   3. Look for broken, bent, pushed out or corroded terminals. Verify that there is good pin to terminal contact in the Sensor and Control Module connectors.
   4. Refer to any Technical Service Bulletins that may apply.

   Were there any problems found?

   Yes

   - Repair as necessary.
   - Perform the BODY VERIFICATION TEST. Refer to **STANDARD PROCEDURE** .

   No

   - Replace and program the Totally Integrated Power Module (TIPM) in accordance with the Service Information.
   - Perform the BODY VERIFICATION TEST. Refer to **STANDARD PROCEDURE** .

P0073-AMBIENT AIR TEMPERATURE SENSOR CIRCUIT HIGH

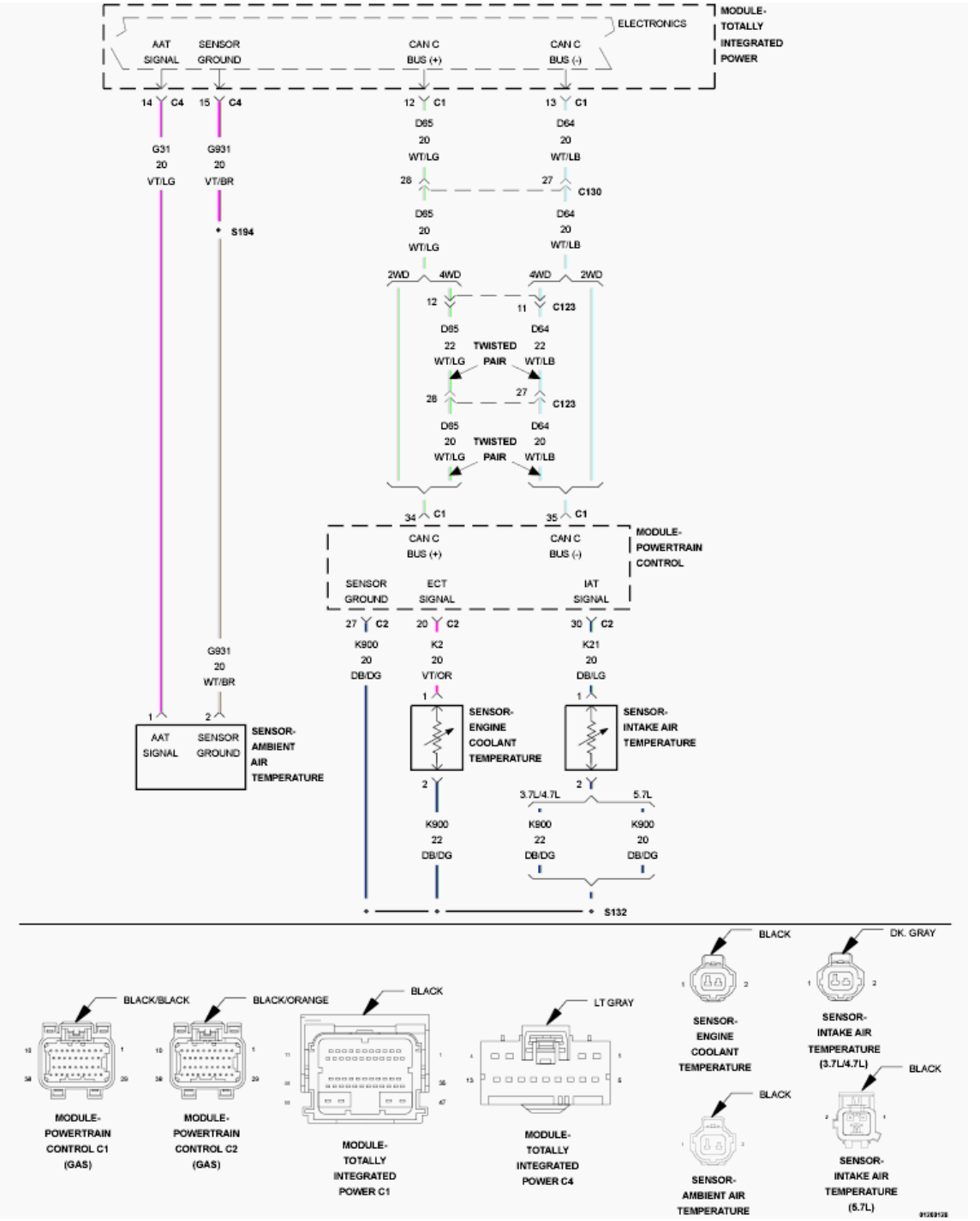

Fig. 53: ECT Sensor, IAT Sensor & AAT Sensor Circuit Schematic
Courtesy of CHRYSLER GROUP, LLC

For a complete wiring diagram, **refer to appropriate SYSTEM WIRING DIAGRAMS article** .

WHEN MONITORED:

With the ignition on. Battery voltage greater than 10 volts.

SET CONDITION:

The Powertrain Control Module (PCM) receives an Ambient Air Temperature (AAT) Sensor signal from the Totally Integrated Power Module (TIPM) that is greater than the maximum acceptable value. One Trip Fault. Three good trips to turn off the MIL.

POSSIBLE CAUSES

Possible Causes
(G31) AAT SIGNAL CIRCUIT SHORTED TO VOLTAGE
(G31) AAT SIGNAL CIRCUIT OPEN
(G931) SENSOR GROUND CIRCUIT OPEN
AMBIENT AIR TEMPERATURE SENSOR
TOTALLY INTEGRATED POWER MODULE (TIPM)

Always perform the Pre-Diagnostic Troubleshooting procedure before proceeding. Refer to PRE-DIAGNOSTIC TROUBLESHOOTING PROCEDURE .

DIAGNOSTIC TEST

1. **ACTIVE DTC**

NOTE: Diagnose any CAN - C Communication DTCs before continuing.

1. Start the engine and allow it to reach normal operating temperature.

WARNING: When the engine is operating, do not stand in direct line with the fan. Do not put your hands near the pulleys, belts or fan. Do not wear loose clothing. Failure to follow these instructions may result in possible serious or fatal injury.

NOTE: Diagnose and repair any system voltage DTCs before continuing with this test.

2. With the scan tool, select View DTCs.

Is the DTC Active at this time?

Yes

- Go To 2.

No

- Perform the INTERMITTENT CONDITION diagnostic procedure. Refer to **INTERMITTENT CONDITION** .

2. **AAT SENSOR**

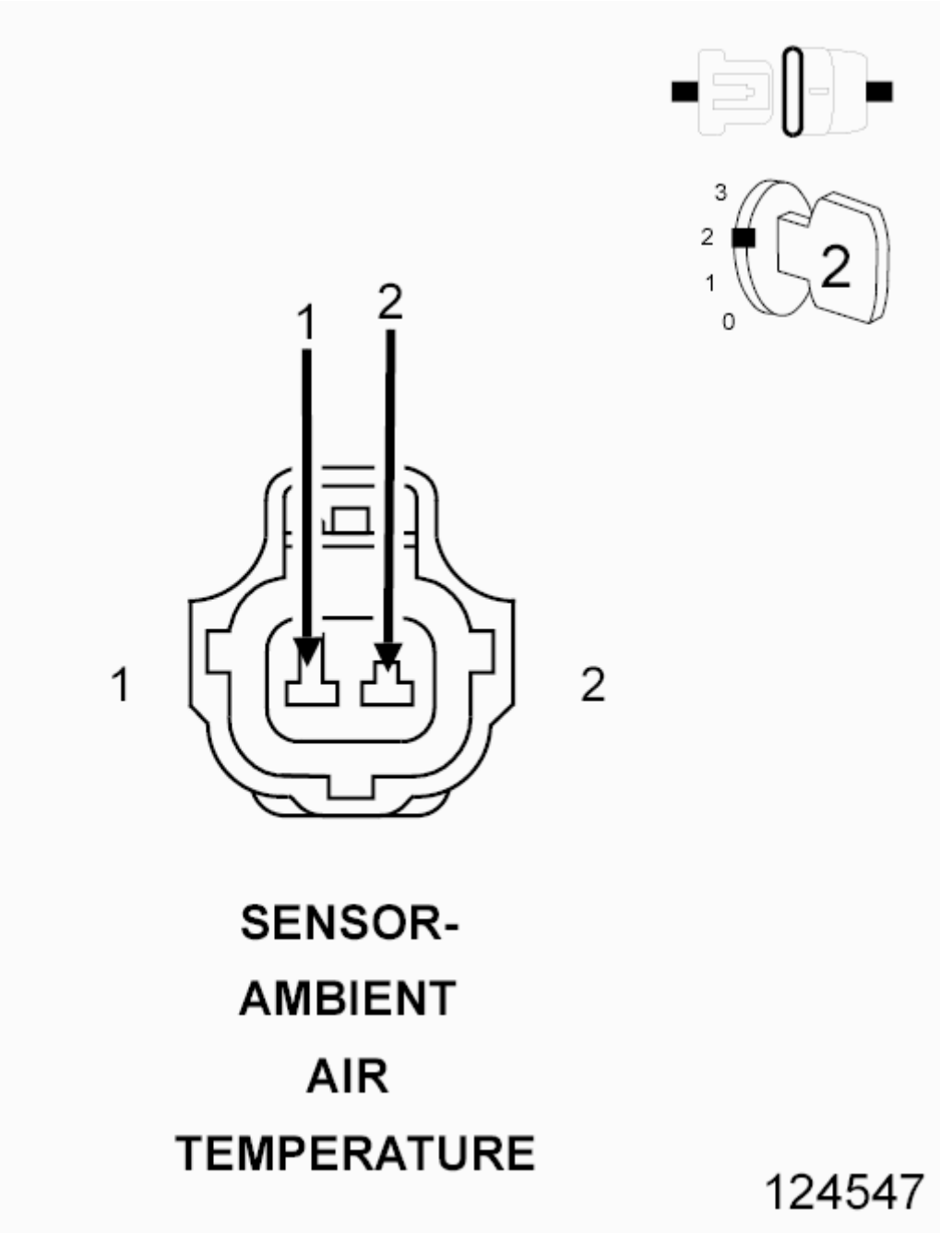

Fig. 54: Ambient Air Temperature Sensor Harness Connector
Courtesy of CHRYSLER GROUP, LLC

1. Turn the ignition off.
2. Disconnect the Ambient Air Temperature Sensor harness connector.
3. Ignition on, engine not running.
4. With a scan tool, read AAT Sensor voltage.

5. Connect a jumper wire between the (G31) AAT Signal circuit and the (G931) Sensor Ground circuit in the AAT Sensor harness connector.

NOTE: The sensor voltage should be approximately 0.0 volts (plus or minus.1 of a volt) with the jumper wire in place.

Does the scan tool display the voltage as described above?

Yes

- Verify that there is good pin to terminal contact in the Sensor and Control Module connectors. Replace the Ambient Air Temperature Sensor if no problems were found with the connectors.
- Perform the POWERTRAIN VERIFICATION TEST. Refer to **POWERTRAIN VERIFICATION TEST** .

No

- Go To 3.

NOTE: Remove the jumper wire before continuing.

3. **(G31) AAT SIGNAL CIRCUIT SHORTED TO VOLTAGE**

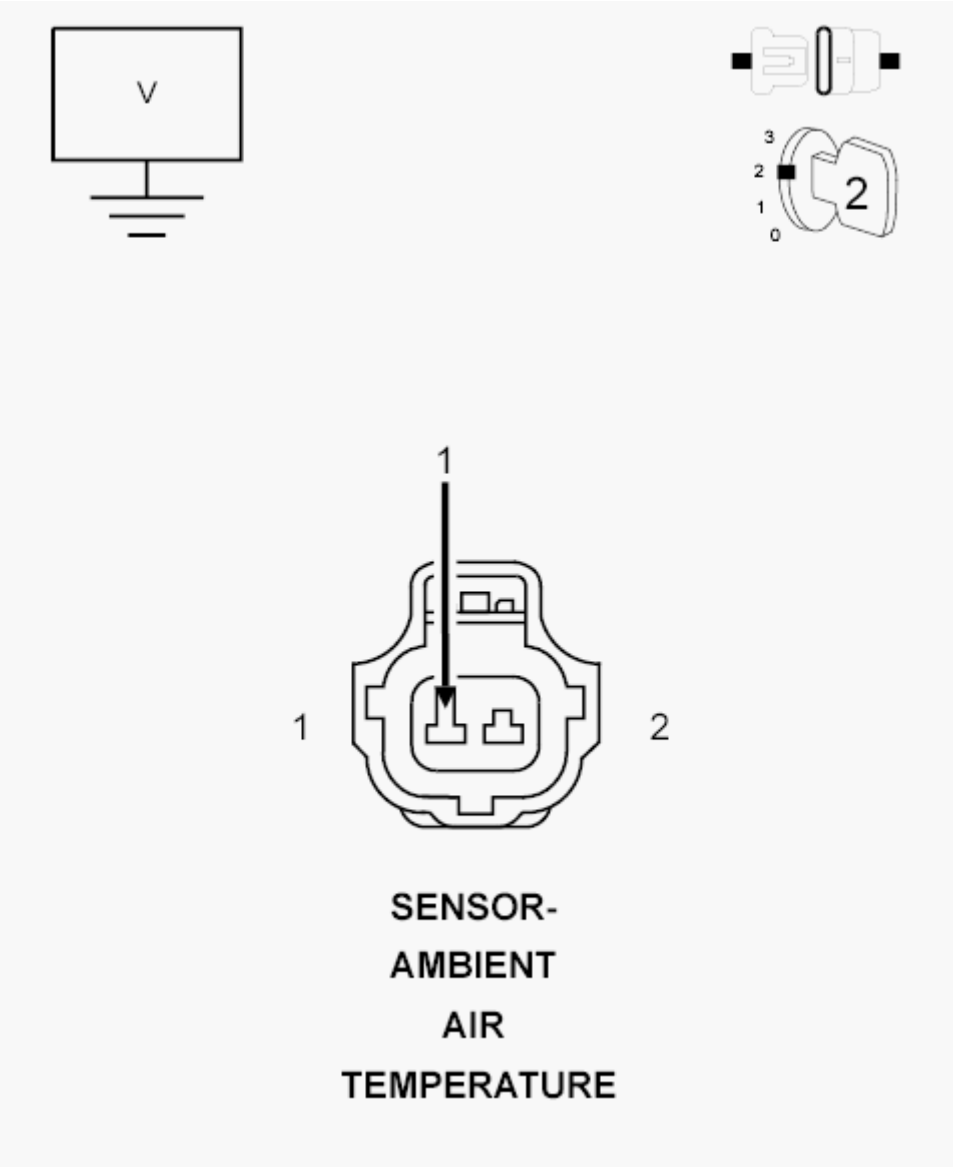

Fig. 55: Measuring Voltage On AAT Signal Circuit In AAT Sensor Harness Connector
Courtesy of CHRYSLER GROUP, LLC

1. Turn the ignition off.
2. Disconnect the TIPM C4 harness connector.
3. Ignition on, engine not running.
4. Measure the voltage on the (G31) AAT Signal circuit in the AAT Sensor harness connector.

   Is there any voltage present?

   Yes

   - Repair the short to voltage in the (G31) AAT Signal circuit.
   - Perform the POWERTRAIN VERIFICATION TEST. Refer to **POWERTRAIN**

VERIFICATION TEST .

No

- Go To 4.

4. **(G31) AAT SIGNAL CIRCUIT OPEN**

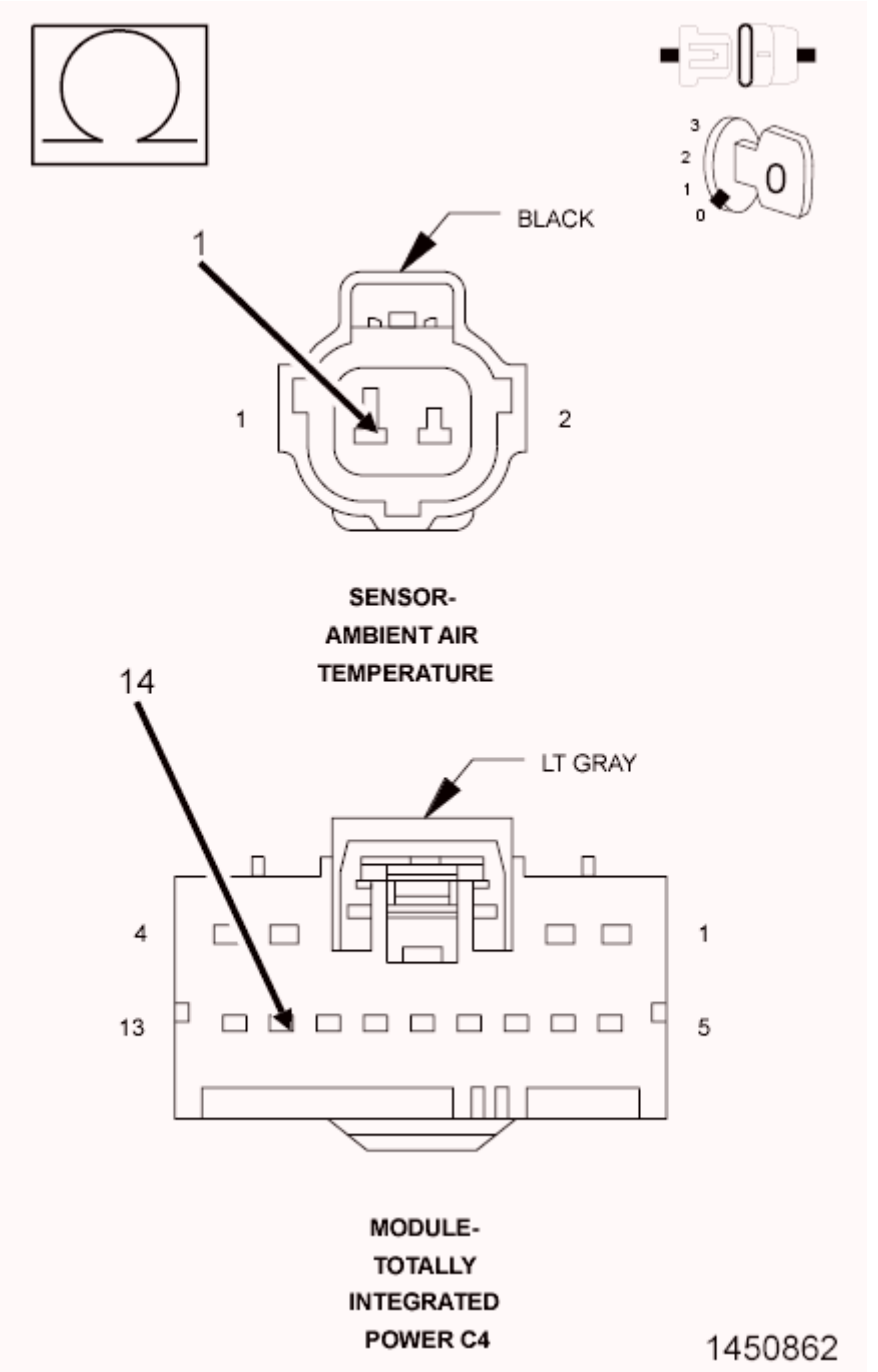

Fig. 56: Measuring Ambient Air Temperature Sensor Signal Circuit Resistance
Courtesy of CHRYSLER GROUP, LLC

1. Turn the ignition off.
2. Measure the resistance of the (G31) AAT Signal circuit from the AAT Sensor harness connector to the TIPM C4 harness connector.

   Is the resistance below 5.0 Ohms?

   Yes

   - Go To 5.

   No

   - Repair the open in the (G31) AAT Signal circuit.
   - Perform the POWERTRAIN VERIFICATION TEST. Refer to **POWERTRAIN VERIFICATION TEST** .

5. **(G931) SENSOR GROUND CIRCUIT OPEN**

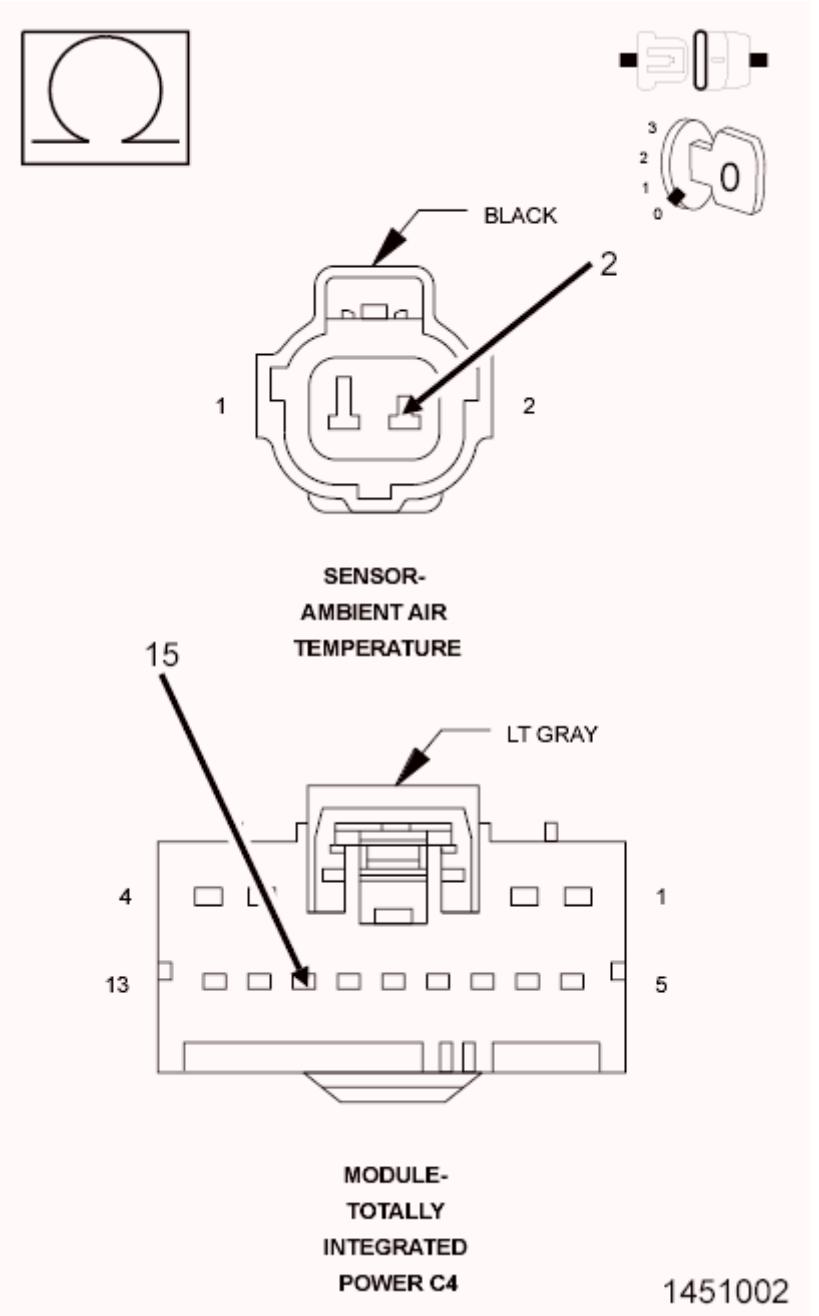

Fig. 57: Measuring Resistance Of Sensor Ground Circuit From AAT Sensor Harness Connector To TIPM Harness Connector
Courtesy of CHRYSLER GROUP, LLC

1. Measure the resistance of the (G931) Sensor Ground circuit from the AAT Sensor harness connector to the TIPM C4 harness connector.

   Is the resistance below 5.0 Ohms?

   Yes

- Go To 6.

No

- Repair the open in the (G931) Sensor Ground circuit.
- Perform the POWERTRAIN VERIFICATION TEST. Refer to **POWERTRAIN VERIFICATION TEST** .

6. **TOTALLY INTEGRATED POWER MODULE (TIPM)**
   1. Using the wiring diagram/schematic as a guide, inspect the wiring and connectors between the AAT Sensor and the Totally Integrated Power Module (TIPM).
   2. Look for any chafed, pierced, pinched, or partially broken wires.
   3. Look for broken, bent, pushed out or corroded terminals. Verify that there is good pin to terminal contact in the Sensor and Control Module connectors.
   4. Refer to any Technical Service Bulletins that may apply.

   Were there any problems found?

   Yes

   - Repair as necessary.
   - Perform the BODY VERIFICATION TEST. Refer to **STANDARD PROCEDURE** .

   No

   - Replace the Totally Integrated Module (TIPM) in accordance with the Service Information.
   - Perform the BODY VERIFICATION TEST. Refer to **STANDARD PROCEDURE** .

P0107-MANIFOLD ABSOLUTE PRESSURE SENSOR CIRCUIT LOW

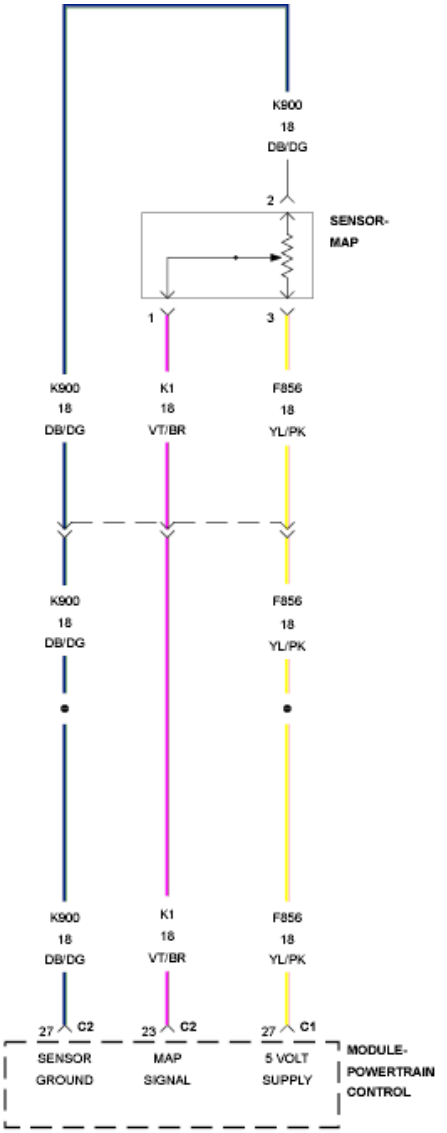

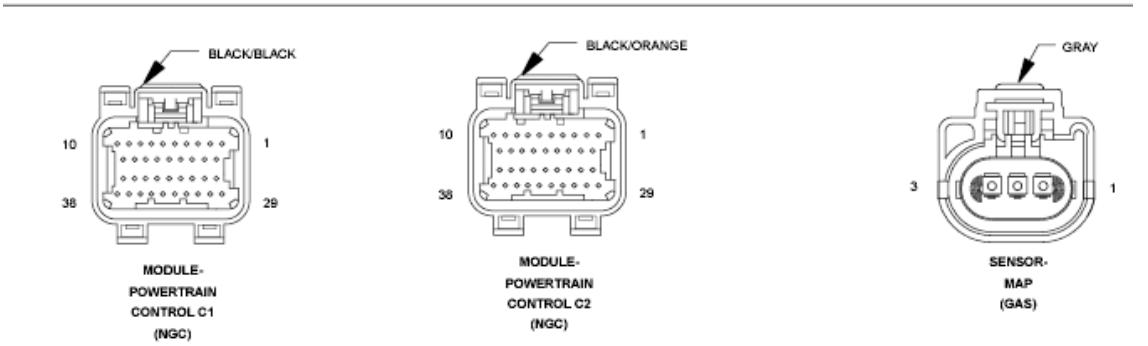

Fig. 58: MAP Sensor Circuit Schematic
Courtesy of CHRYSLER GROUP, LLC

For a complete wiring diagram, **refer to appropriate SYSTEM WIRING DIAGRAMS article** .

THEORY OF OPERATION

The Manifold Absolute Pressure (MAP) sensor is a transducer that varies resistance according to changes in altitude and atmospheric conditions. The MAP reading gives the Powertrain Control Module (PCM) an indication of the current air pressure within the intake manifold. The PCM uses this information to calculate fuel delivery. The MAP sensor has a 5 Volt reference circuit, a low reference circuit and a signal circuit. The PCM supplies 5 Volts to the MAP sensor on a 5 Volt reference circuit and provides a ground on a low reference circuit. The MAP sensor provides a voltage signal to the PCM on a signal circuit relative to the pressure changes.

WHEN MONITORED:

Engine speed between 600 to 3500 RPM. Battery voltage greater than 10 Volts.

SET CONDITION:

The MAP sensor signal voltage is below the minimum acceptable value. One Trip Fault. Three good trips to turn off the MIL, (MIL will illuminate and the ETC light will flash, if equipped.)

POSSIBLE CAUSES

Possible Causes
(F856) 5 VOLT SUPPLY CIRCUIT OPEN
(F856) 5 VOLT SUPPLY CIRCUIT SHORTED TO GROUND
(K1) MAP SIGNAL CIRCUIT SHORTED TO GROUND
(K1) MAP SIGNAL CIRCUIT SHORTED TO THE (K900) SENSOR GROUND CIRCUIT
EXCESSIVE RESISTANCE IN THE (K1) MAP SIGNAL CIRCUIT
MAP SENSOR
POWERTRAIN CONTROL MODULE (PCM)

Always perform the Pre-Diagnostic Troubleshooting procedure before proceeding. Refer to PRE-DIAGNOSTIC TROUBLESHOOTING PROCEDURE .

DIAGNOSTIC TEST

1. **ACTIVE DTC**

NOTE: Diagnose and repair any system voltage or sensor supply voltage DTCs before continuing with this test.

1. Start the engine and allow it to reach normal operating temperature.

WARNING: When the engine is operating, do not stand in direct line with the fan. Do not put your hands near the pulleys, belts or fan. Do not wear loose clothing. Failure to follow these instructions may result in possible serious or fatal injury.

2. With the scan tool, select View DTCs.

   Is the DTC Active at this time?

   Yes

   - Go To 2.

   No

   - Perform the INTERMITTENT CONDITION diagnostic procedure. Refer to **INTERMITTENT CONDITION** .

2. **(F856) 5 VOLT SUPPLY CIRCUIT**

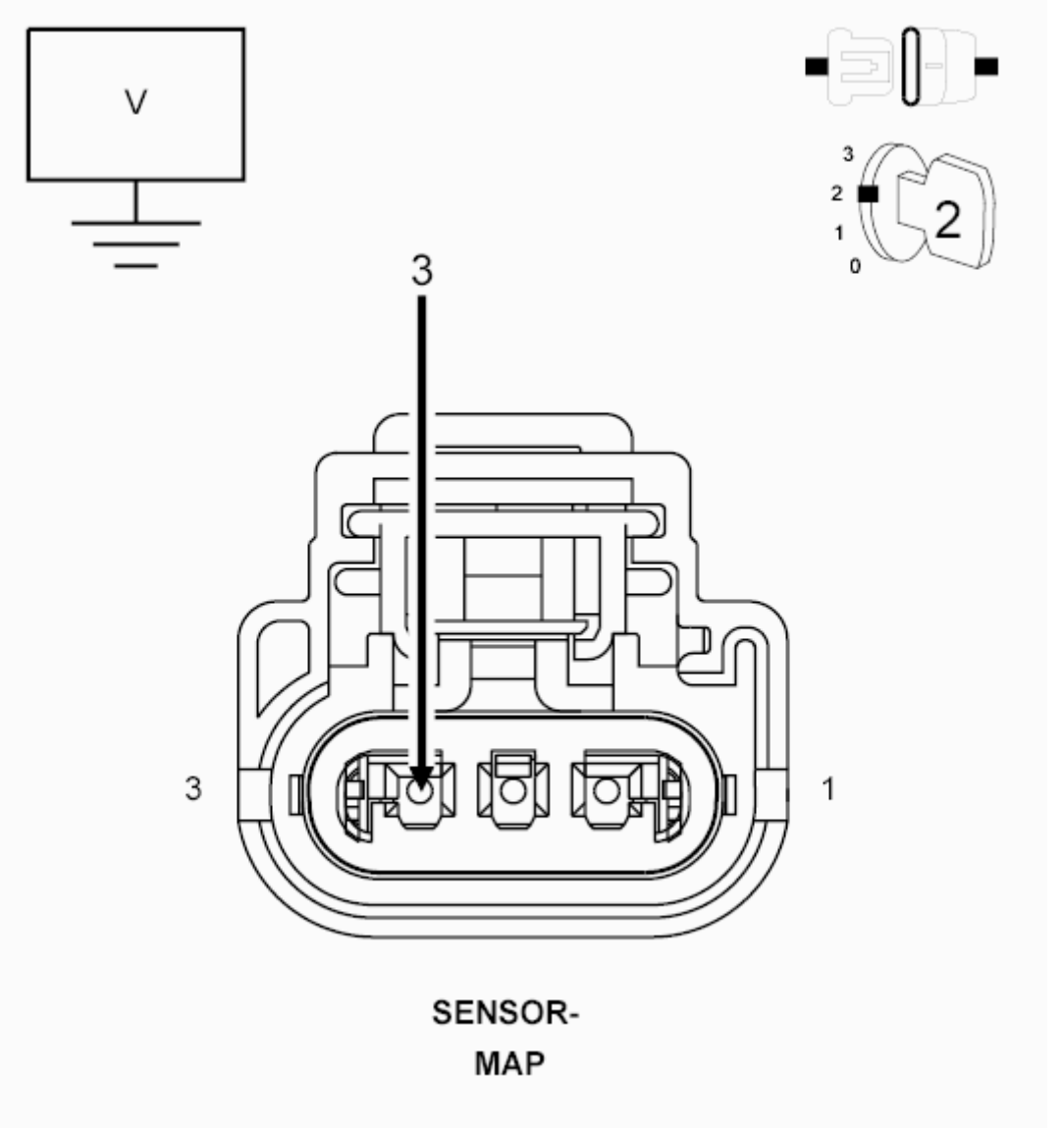

Fig. 59: Measuring Voltage On (F856) 5-Volt Supply Circuit In MAP Sensor Harness Connector

Courtesy of CHRYSLER GROUP, LLC

1. Turn the ignition off.
2. Disconnect the MAP Sensor harness connector.
3. Ignition on, engine not running.
4. Measure the voltage on the (F856) 5 Volt Supply circuit in the MAP Sensor harness connector.

   Is the voltage between 4.5 to 5.2 volts?

   Yes

   - Go To 3.

   No

   - Go To 7.

3. **MAP SENSOR**
   1. With the scan tool, monitor the MAP Sensor voltage with the Sensor harness connector disconnected.

      NOTE: The sensor voltage should be approximately 5.0 volts with the connector disconnected.

      Does the scan tool display the voltage as described above?

      Yes

      - Verify that there is good pin to terminal contact in the Sensor and Powertrain Control Module connectors. Replace the MAP Sensor if no problems were found with the connectors. Refer to **SENSOR, MANIFOLD AIR PRESSURE (MAP), REMOVAL** .
      - Perform the POWERTRAIN VERIFICATION TEST. Refer to **POWERTRAIN VERIFICATION TEST** .

      No

      - Go To 4.

4. **(K1) MAP SIGNAL CIRCUIT SHORTED TO GROUND**

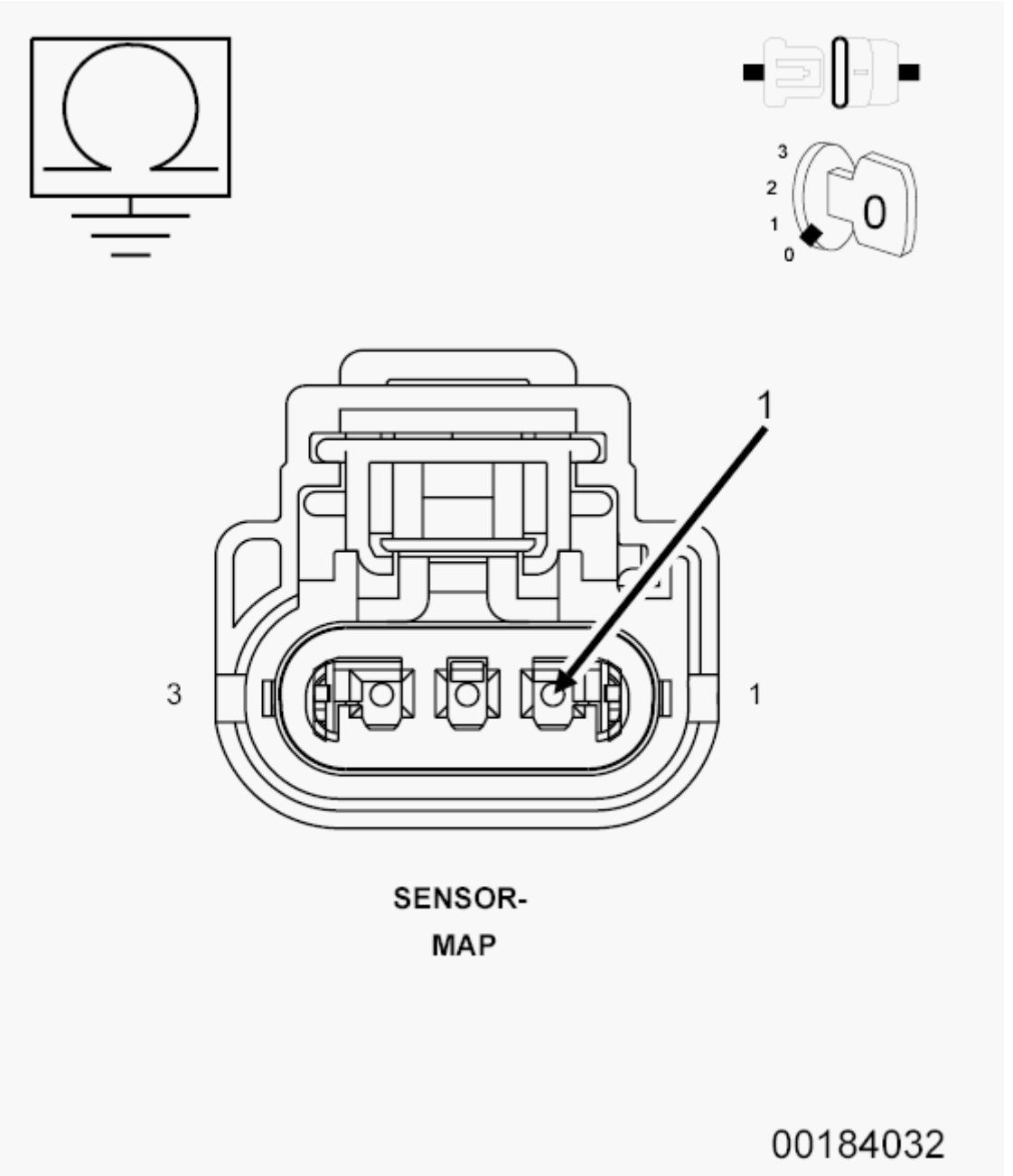

Fig. 60: Measuring Resistance Between Ground And MAP Sensor Signal Circuit AT Harness Connector
Courtesy of CHRYSLER GROUP, LLC

1. Turn the ignition off.
2. Disconnect the C2 PCM harness connector.
3. Measure the resistance between ground and the (K1) MAP Signal circuit in the MAP Sensor harness connector.

   Is the resistance below 100 Ohms?

Yes

- Repair the short to ground in the (K1) MAP Signal circuit.
- Perform the POWERTRAIN VERIFICATION TEST. Refer to **POWERTRAIN VERIFICATION TEST** .

No

- Go To 5.

5. **(K1) MAP SIGNAL CIRCUIT SHORTED TO THE (K900) SENSOR GROUND CIRCUIT**

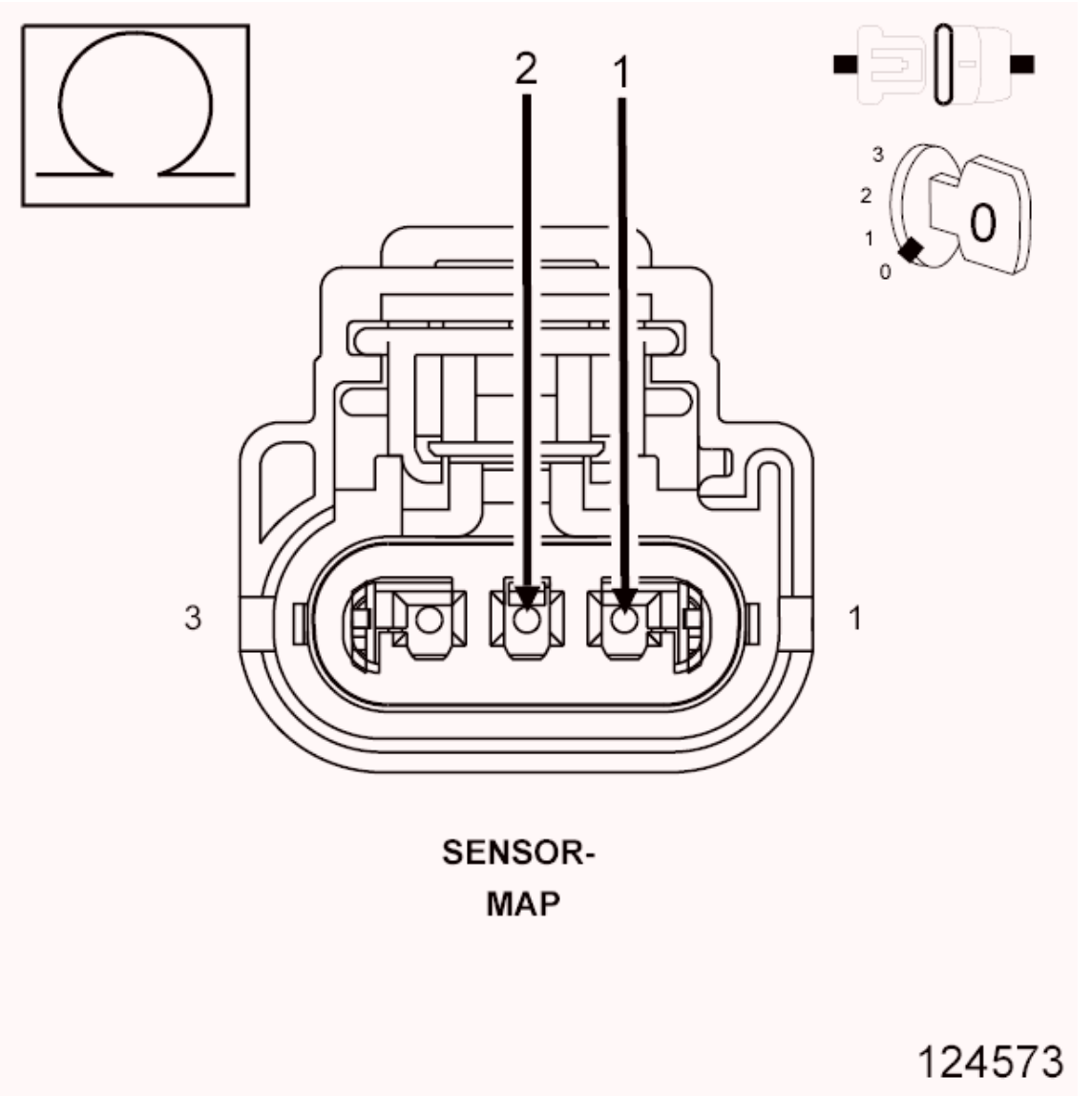

Fig. 61: Measuring Resistance Between Sensor Signal Circuit And Sensor Ground Circuit In MAP Sensor Harness Connector
Courtesy of CHRYSLER GROUP, LLC

1. Measure the resistance between the (K1) MAP Signal circuit and the (K900) Sensor ground circuit in the MAP Sensor harness connector.

   Is the resistance below 100 Ohms?

   Yes

   - Repair the short between the (K900) Sensor ground and the (K1) MAP Signal circuit.
   - Perform the POWERTRAIN VERIFICATION TEST. Refer to **POWERTRAIN VERIFICATION TEST** .

   No

   - Go To 6.

6. **EXCESSIVE RESISTANCE IN THE (K1) MAP SIGNAL CIRCUIT**

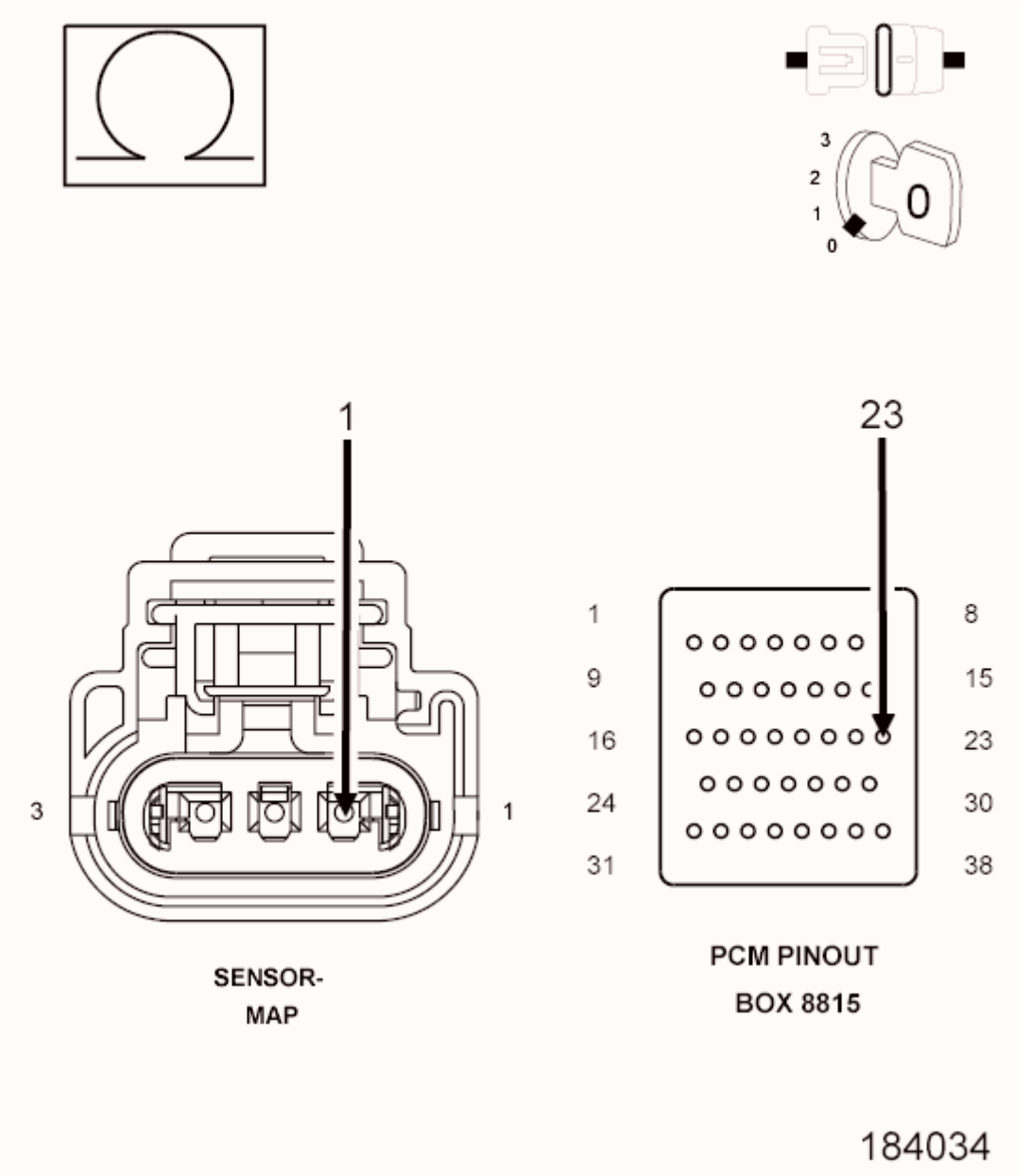

Fig. 62: Measuring Resistance Of MAP Sensor Signal Circuit Between Harness Connector And Appropriate Terminal Of Special Tool #8815
Courtesy of CHRYSLER GROUP, LLC

CAUTION: Do not probe the PCM harness connectors. Probing the PCM harness connectors will damage the PCM terminals, resulting in poor terminal to pin connection. Install the PCM Pinout Box (special tool #8815A, Kit, NGC, 38 Position) to perform diagnosis.

1. Measure the resistance of the (K1) MAP Signal circuit between the MAP Sensor harness connector and the appropriate terminal of PCM Pinout Box (special tool #8815A, Kit, NGC, 38 Position).

Is the resistance below 5.0 Ohms?

Yes

- Go To 9.

No

- Repair the excessive resistance in the (K1) MAP Signal circuit.
- Perform the POWERTRAIN VERIFICATION TEST. Refer to **POWERTRAIN VERIFICATION TEST** .

7. **(F856) 5 VOLT SUPPLY CIRCUIT OPEN**

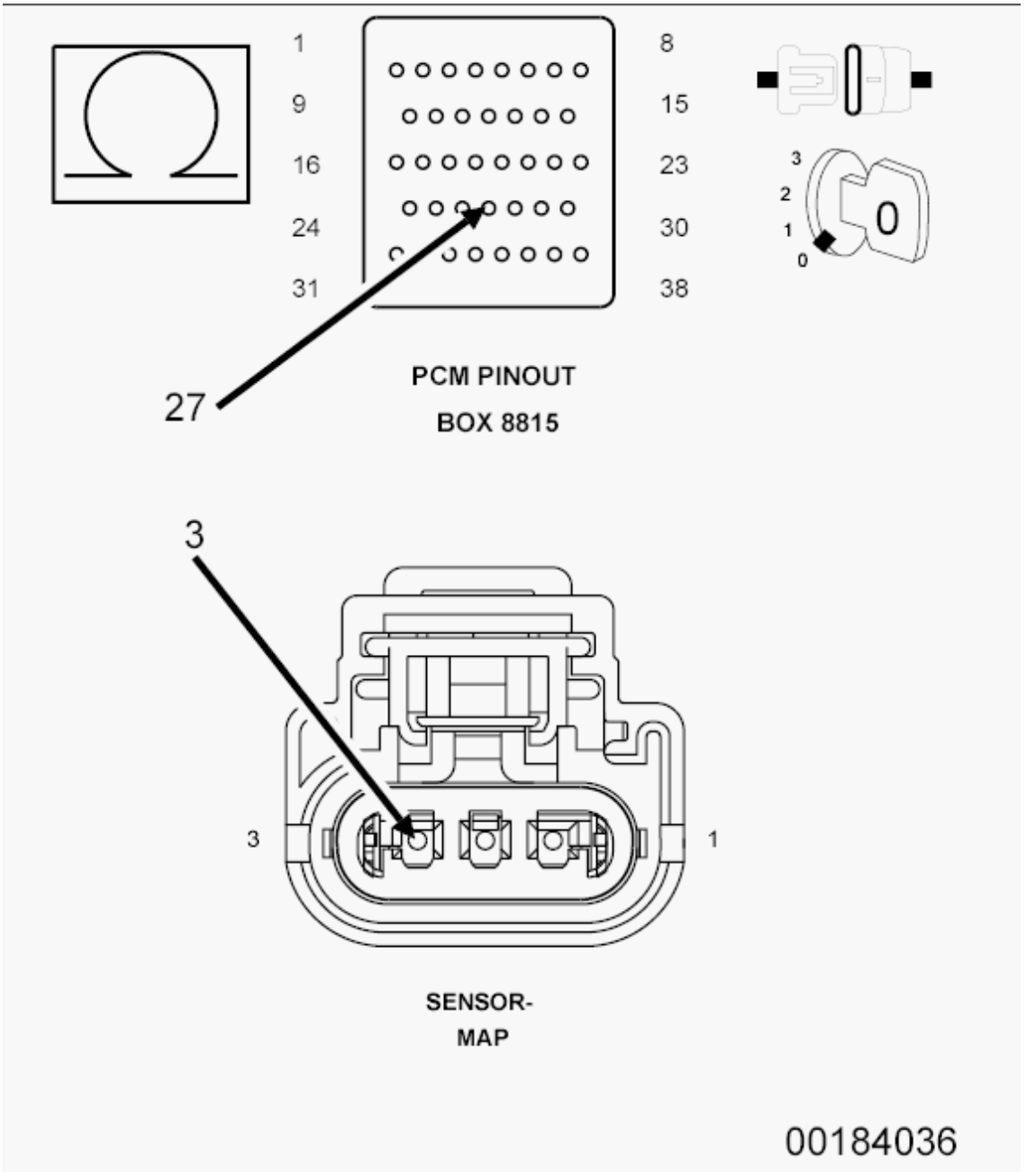

Fig. 63: Measuring Resistance Of 5-Volt Supply Circuit From MAP Sensor Harness Connector To Appropriate Terminal Of Special Tool #8815
Courtesy of CHRYSLER GROUP, LLC

1. Turn the ignition off.
2. Disconnect the C1 PCM harness connector.

CAUTION: Do not probe the PCM harness connectors. Probing the PCM harness connectors will damage the PCM terminals resulting in poor terminal to pin connection. Install the PCM Pinout Box (special tool #8815A, Kit, NGC, 38 Position) to perform

diagnosis.

3. Measure the resistance of the (F856) 5 Volt Supply circuit from the MAP Sensor harness connector to the appropriate terminal of PCM Pinout Box (special tool #8815A, Kit, NGC, 38 Position).

   Is the resistance below 5.0 Ohms?

   Yes

   - Go To 8.

   No

   - Repair the open or excessive resistance in the (F856) 5 Volt Supply circuit.
   - Perform the POWERTRAIN VERIFICATION TEST. Refer to **POWERTRAIN VERIFICATION TEST** .

8. **(F856) 5 VOLT SUPPLY CIRCUIT SHORTED TO GROUND**

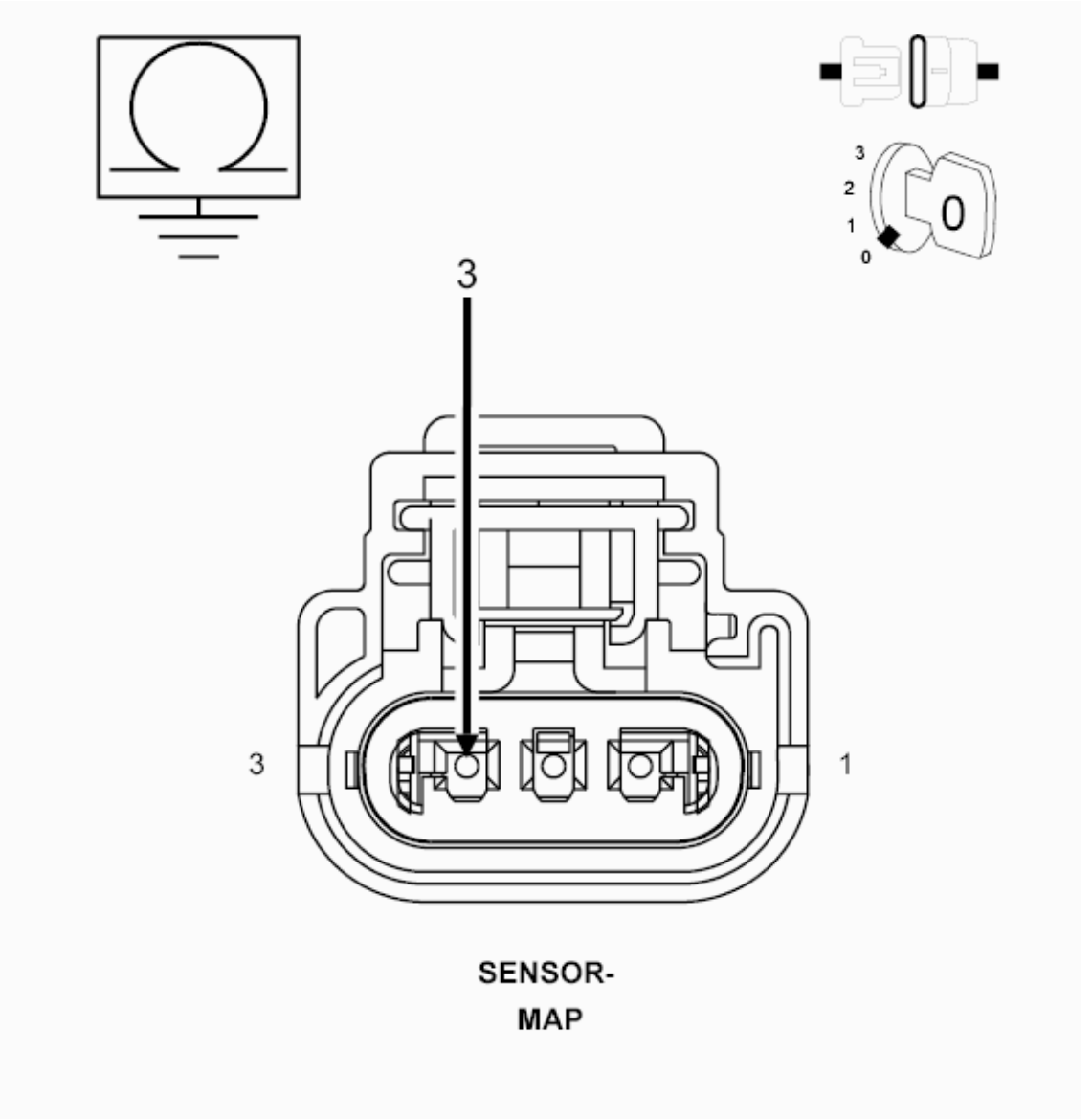

Fig. 64: Measuring Resistance Between Ground And (F856) 5-Volt Supply Circuit In MAP Sensor Harness Connector
Courtesy of CHRYSLER GROUP, LLC

1. Measure the resistance between ground and the (F856) 5 Volt Supply circuit in the MAP Sensor harness connector.

   Is the resistance below 100 Ohms?

   Yes

   - Repair the short to ground in the (F856) 5 Volt Supply circuit.
   - Perform the POWERTRAIN VERIFICATION TEST. Refer to **POWERTRAIN VERIFICATION TEST** .

No

- Go To 9.

9. **POWERTRAIN CONTROL MODULE (PCM)**
    1. Using the wiring diagram/schematic as a guide, inspect the wiring and connectors between the MAP Sensor and the Powertrain Control Module (PCM).
    2. Look for any chafed, pierced, pinched or partially broken wires.
    3. Look for broken, bent, pushed out or corroded terminals. Verify that there is good pin to terminal contact in the Sensor and Control Module connectors.
    4. Perform any Technical Service Bulletins that may apply.

    Were there any problems found?

    Yes

    - Repair as necessary.
    - Perform the POWERTRAIN VERIFICATION TEST. Refer to **POWERTRAIN VERIFICATION TEST** .

    No

    - Replace and program the Powertrain Control Module in accordance with the Service Information. Refer to **MODULE, POWERTRAIN CONTROL, REMOVAL** .
    - Perform the POWERTRAIN VERIFICATION TEST. Refer to **POWERTRAIN VERIFICATION TEST** .

P0108-MANIFOLD ABSOLUTE PRESSURE SENSOR CIRCUIT HIGH

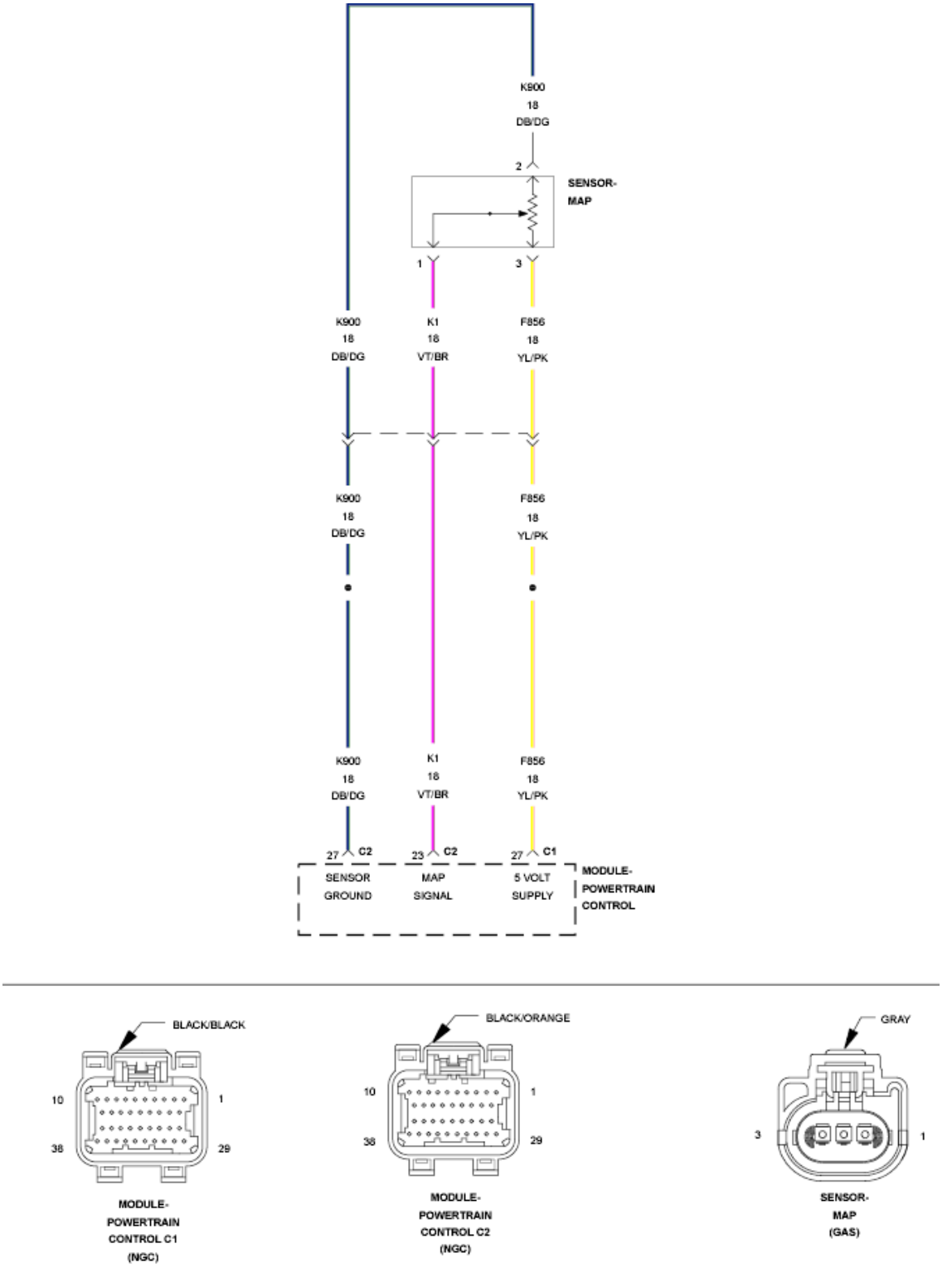

Fig. 65: MAP Sensor Circuit Schematic
Courtesy of CHRYSLER GROUP, LLC

For a complete wiring diagram, **refer to appropriate SYSTEM WIRING DIAGRAMS article** .

THEORY OF OPERATION

The Manifold Absolute Pressure (MAP) sensor is a transducer that varies resistance according to changes in altitude and atmospheric conditions. The MAP reading gives the Powertrain Control Module (PCM) an indication of the current air pressure within the intake manifold. The PCM uses this information to calculate fuel delivery. The MAP sensor has a 5 Volt reference circuit, a low reference circuit and a signal circuit. The PCM supplies 5 Volts to the MAP sensor on a 5 Volt reference circuit and provides a ground on a low reference circuit. The MAP sensor provides a voltage signal to the PCM on a signal circuit relative to the pressure changes.

WHEN MONITORED:

Engine speed between 600 to 3500 RPM. Battery voltage greater than 10.37 Volts.

SET CONDITION:

The MAP sensor signal voltage is greater than the maximum acceptable value. One trip fault. Three good trips to turn off the MIL. (MIL will illuminate and the ETC light will flash, if equipped).

POSSIBLE CAUSES

Possible Causes
(K1) MAP SIGNAL CIRCUIT SHORTED TO VOLTAGE
(K1) MAP SIGNAL CIRCUIT OPEN
(K1) MAP SIGNAL CIRCUIT SHORTED TO THE (F856) 5 VOLT SUPPLY CIRCUIT
(K900) SENSOR GROUND CIRCUIT OPEN
MAP SENSOR
POWERTRAIN CONTROL MODULE (PCM)

Always perform the Pre-Diagnostic Troubleshooting procedure before proceeding. Refer to PRE-DIAGNOSTIC TROUBLESHOOTING PROCEDURE .

DIAGNOSTIC TEST

1. **ACTIVE DTC**
    1. Start the engine and allow it to reach normal operating temperature.

WARNING: When the engine is operating, do not stand in direct line with the fan. Do not put your hands near the pulleys, belts or fan. Do not wear loose clothing. Failure to follow these instructions may result in possible serious or fatal injury.

NOTE: Diagnose and repair any system voltage or sensor supply voltage DTCs before continuing with this test.

    2. With the scan tool, select View DTCs.

Is the DTC Active at this time

Yes

- Go To 2.

No

- Perform the INTERMITTENT CONDITION diagnostic procedure. Refer to **INTERMITTENT CONDITION** .

2. **MAP SENSOR**

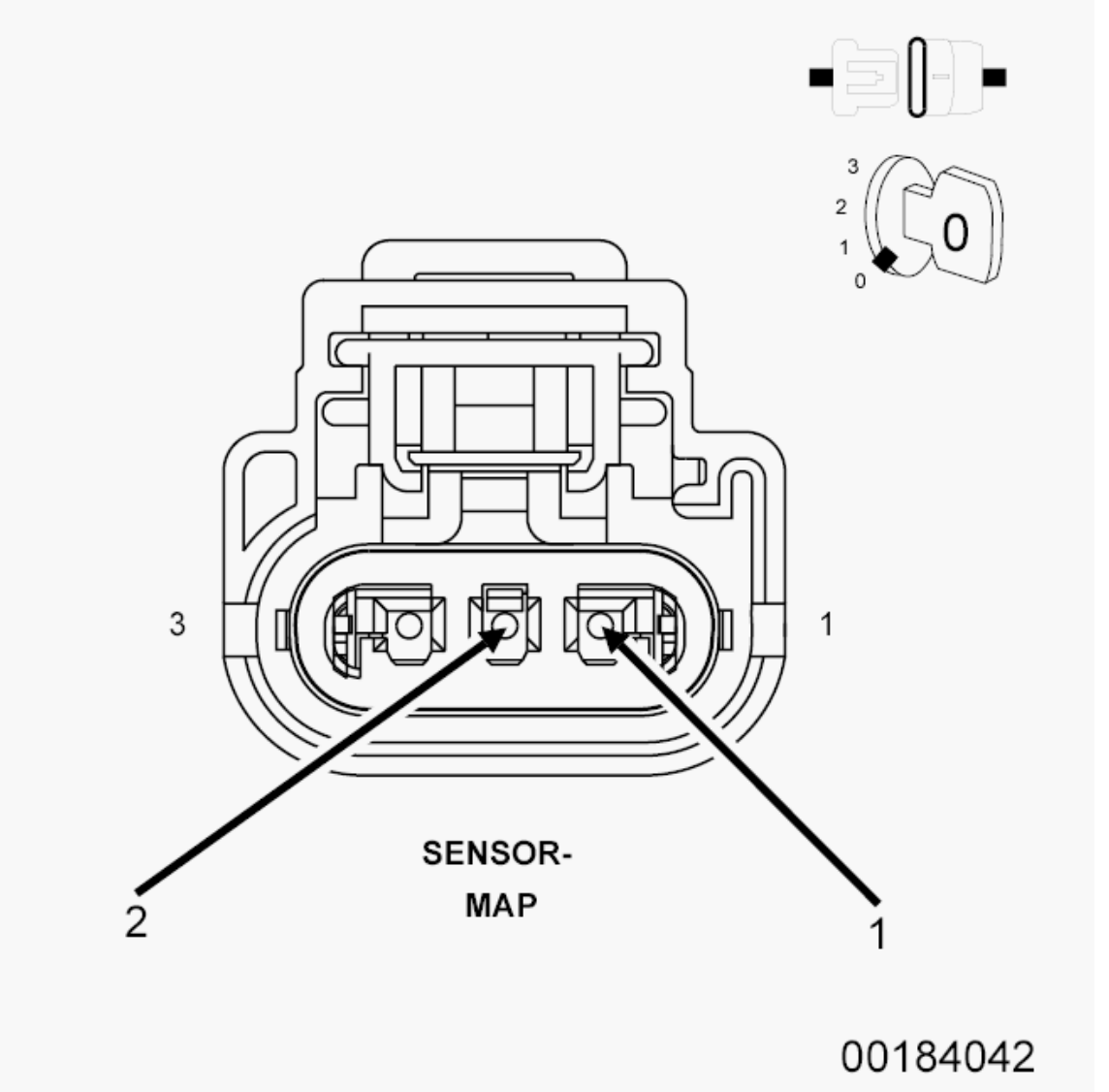

Fig. 66: MAP Sensor Harness Connector
Courtesy of CHRYSLER GROUP, LLC

1. Turn the ignition off.

2. Disconnect the MAP Sensor harness connector.
3. Connect a jumper wire between the (K1) MAP Signal circuit and the (K900) Sensor ground circuit in the Sensor harness connector.
4. Ignition on, engine not running.
5. With the scan tool, monitor the MAP Sensor voltage.

NOTE: The sensor voltage should be approximately 0 volts with the jumper wire in place.

Does the scan tool display the voltage as described above?

Yes

- Verify that there is good pin to terminal contact in the Sensor and Powertrain Control Module connectors. Replace the MAP Sensor if no issues were found with the connectors. Refer to **SENSOR, MANIFOLD AIR PRESSURE (MAP), REMOVAL** .
- Perform the POWERTRAIN VERIFICATION TEST. Refer to **POWERTRAIN VERIFICATION TEST** .

No

- Go To 3.

NOTE: Remove the jumper wire before continuing.

3. **(K1) MAP SIGNAL CIRCUIT SHORTED TO VOLTAGE**

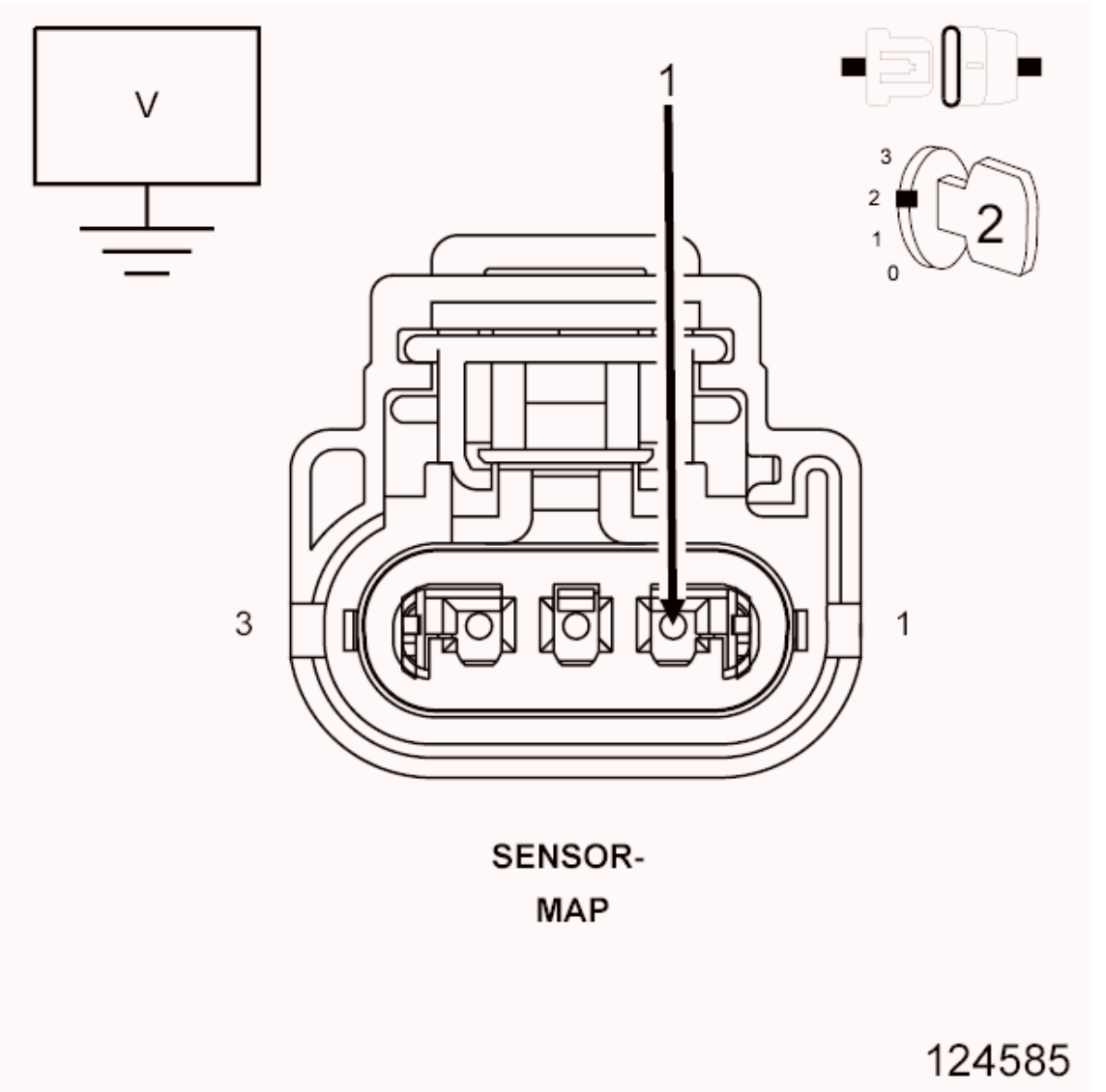

Fig. 67: Measuring Voltage On (K1) MAP Signal Circuit In MAP Sensor Harness Connector
Courtesy of CHRYSLER GROUP, LLC

1. Turn the ignition off.
2. Disconnect the C1 and C2 PCM harness connectors.
3. Ignition on, engine not running.
4. Measure the voltage on the (K1) MAP Signal circuit in the MAP Sensor harness connector.

   Is there any voltage present?

   Yes

   - Repair the short to voltage in the (K1) MAP Signal circuit.
   - Perform the POWERTRAIN VERIFICATION TEST. Refer to **POWERTRAIN VERIFICATION TEST** .

No

- Go To 4.

4. **(K1) MAP SIGNAL CIRCUIT OPEN**

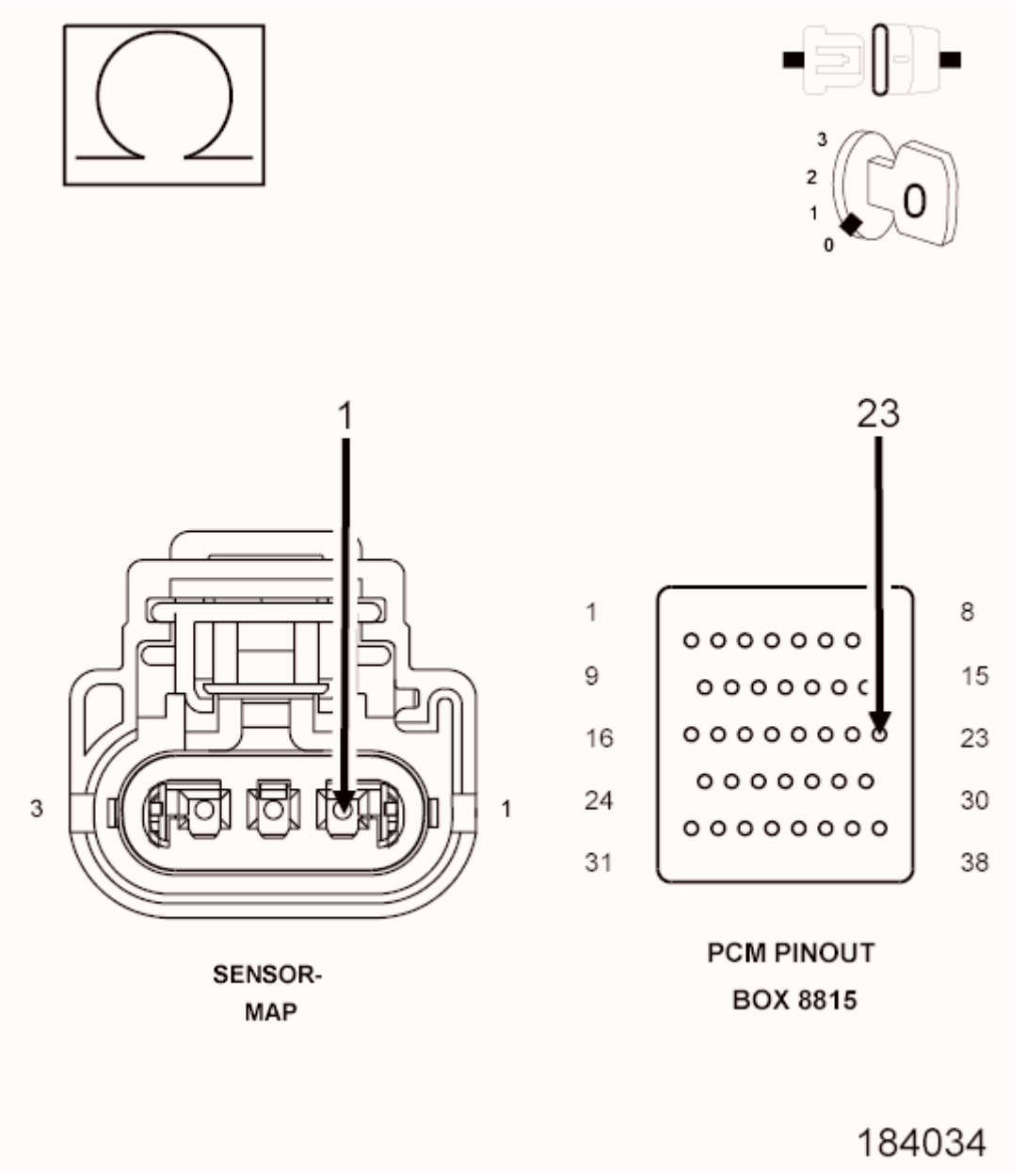

Fig. 68: Measuring Resistance Of MAP Sensor Signal Circuit Between Harness Connector And Appropriate Terminal Of Special Tool #8815
Courtesy of CHRYSLER GROUP, LLC

1. Turn the ignition off.

CAUTION: Do not probe the PCM harness connectors. Probing the PCM

harness connectors will damage the PCM terminals resulting in poor terminal to pin connection. Install the PCM Pinout Box (special tool #8815A, Kit, NGC, 38 Position) to perform diagnosis.

2. Measure the resistance of the (K1) MAP Signal circuit from the MAP Sensor harness connector to the appropriate terminal of PCM Pinout Box (special tool #8815A, Kit, NGC, 38 Position).

   Is the resistance below 5.0 Ohms?

   Yes

   - Go To 5.

   No

   - Repair the open in the (K1) MAP Signal circuit.
   - Perform the POWERTRAIN VERIFICATION TEST. Refer to **POWERTRAIN VERIFICATION TEST** .

5. **(K1) MAP SIGNAL CIRCUIT SHORTED TO THE (F856) 5 VOLT SUPPLY CIRCUIT**

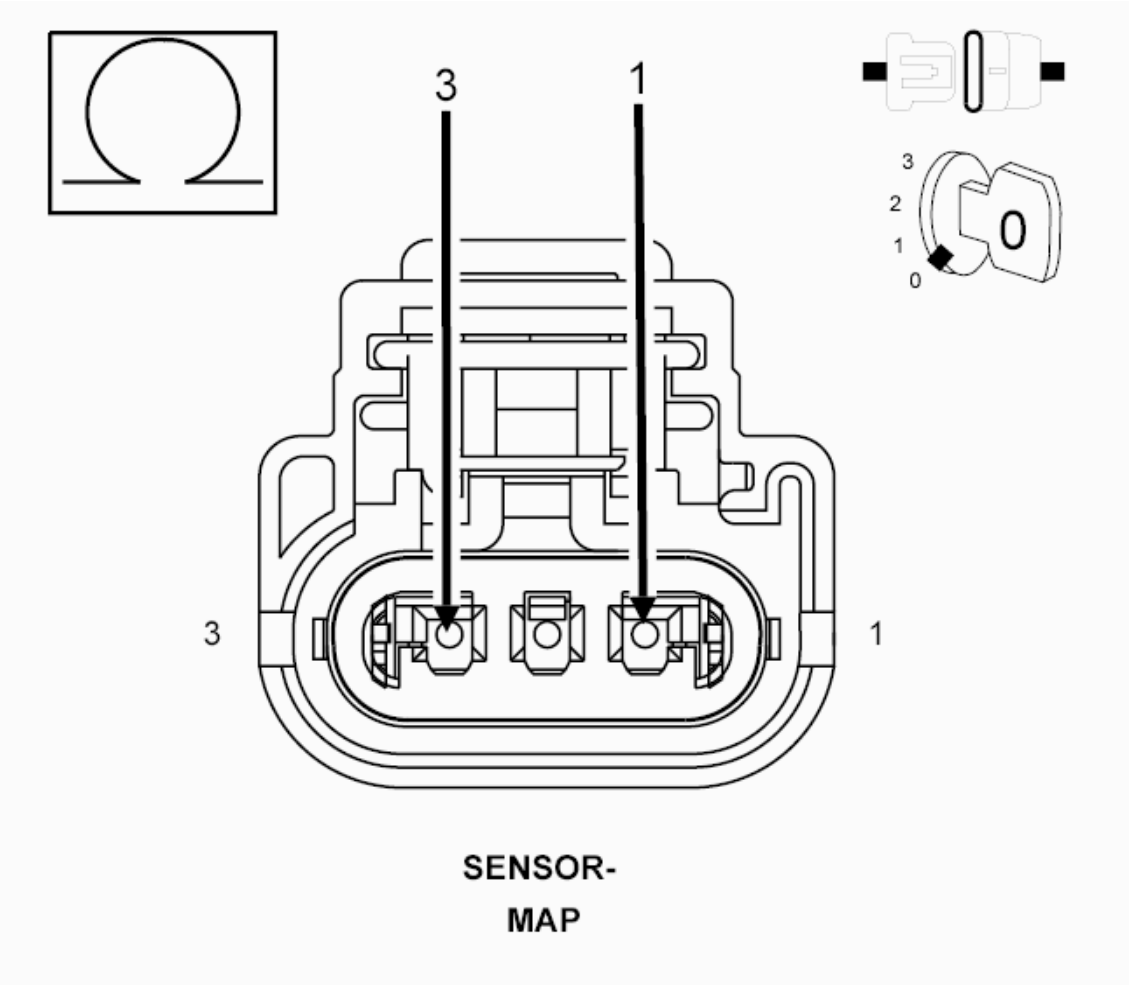

Fig. 69: Measuring Resistance Between (K1) MAP Signal Circuit And (F856) 5-Volt Supply Circuit In MAP Sensor Harness Connector
Courtesy of CHRYSLER GROUP, LLC

1. Measure the resistance between the (K1) MAP Signal circuit and the (F856) 5 Volt Supply circuit in the MAP Sensor harness connector.

   Is the resistance below 100 Ohms?

   Yes

   - Repair the short between the (F856) 5 Volt Supply circuit and the (K1) MAP Signal circuit.
   - Perform the POWERTRAIN VERIFICATION TEST. Refer to **POWERTRAIN VERIFICATION TEST** .

   No

   - Go To 6.

6. **(K900) SENSOR GROUND CIRCUIT OPEN**

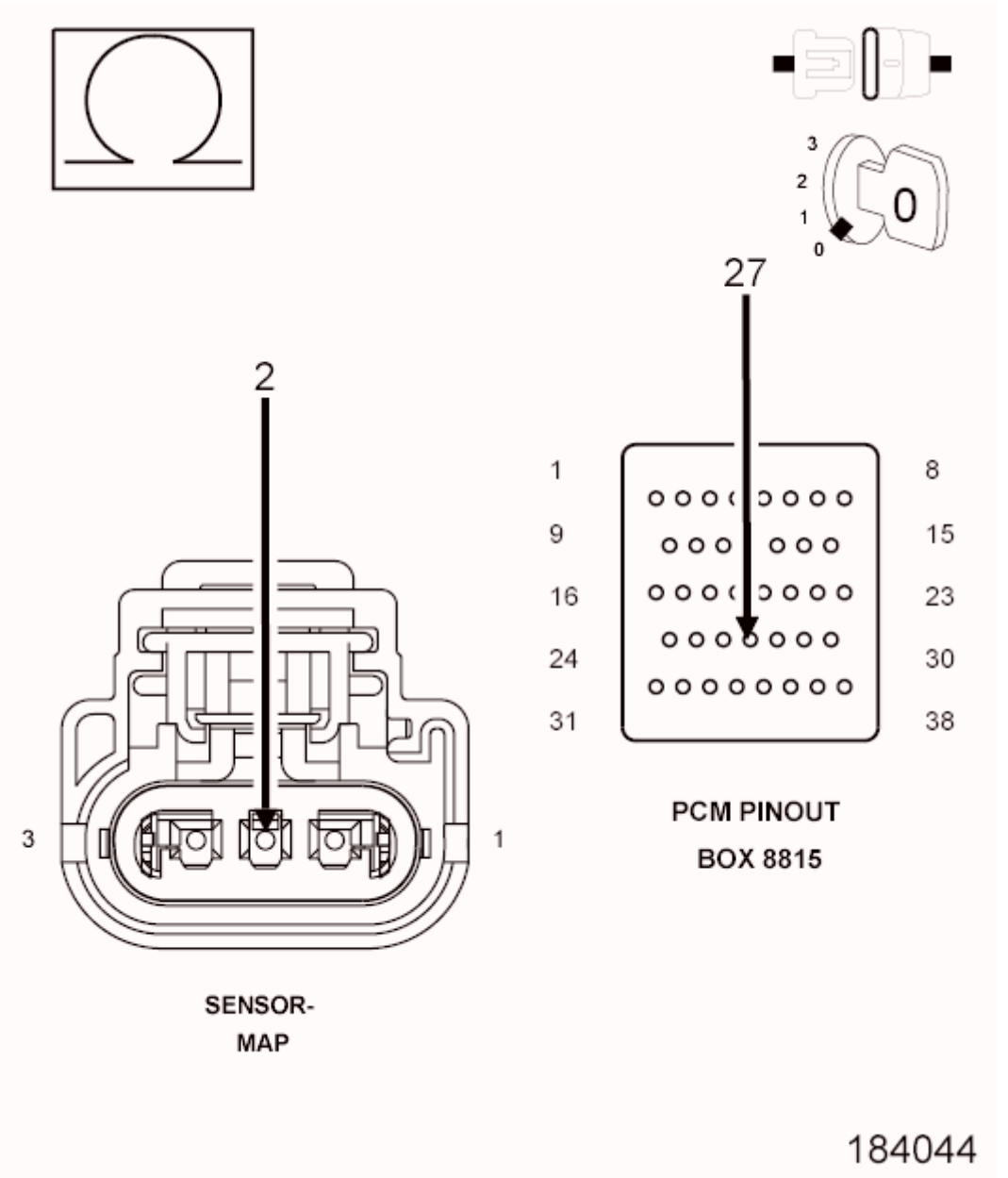

Fig. 70: Measuring Resistance Of (K900) Sensor Ground Circuit From MAP Sensor Harness Connector To Appropriate Terminal Of Special Tool #8815
Courtesy of CHRYSLER GROUP, LLC

1. Measure the resistance of the (K900) Sensor ground circuit from the MAP Sensor harness connector to the appropriate terminal of PCM Pinout Box (special tool #8815A, Kit, NGC, 38 Position).

   Is the resistance below 5.0 Ohms?

   Yes

   - Go To 7.

No

- Repair the open in the (K900) Sensor ground circuit.
- Perform the POWERTRAIN VERIFICATION TEST. Refer to **POWERTRAIN VERIFICATION TEST** .

7. **POWERTRAIN CONTROL MODULE (PCM)**
    1. Using the wiring diagram/schematic as a guide, inspect the wiring and connectors between the MAP Sensor and the Powertrain Control Module (PCM).
    2. Look for any chafed, pierced, pinched or partially broken wires.
    3. Look for broken, bent, pushed out or corroded terminals. Verify that there is good pin to terminal contact in the Sensor and Control Module connectors.
    4. Perform any Technical Service Bulletins that may apply.

    Were there any problems found?

    Yes

    - Repair as necessary.
    - Perform the POWERTRAIN VERIFICATION TEST. Refer to **POWERTRAIN VERIFICATION TEST** .

    No

    - Replace and program the Powertrain Control Module in accordance with the Service Information. Refer to **MODULE, POWERTRAIN CONTROL, REMOVAL** .
    - Perform the POWERTRAIN VERIFICATION TEST. Refer to **POWERTRAIN VERIFICATION TEST** .

P0111-INTAKE AIR TEMPERATURE SENSOR RATIONALITY

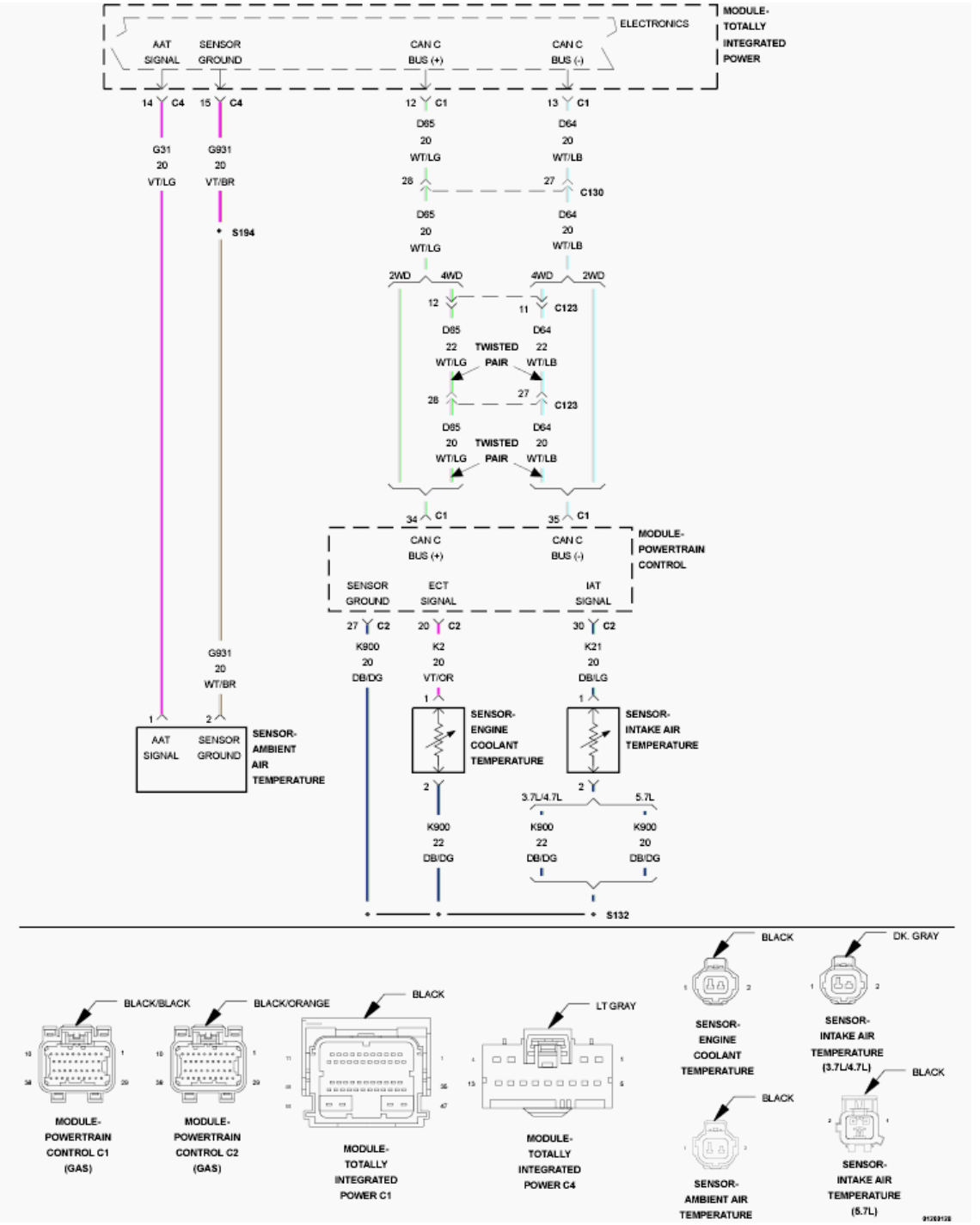

Fig. 71: ECT Sensor, IAT Sensor & AAT Sensor Circuit Schematic
Courtesy of CHRYSLER GROUP, LLC

For a complete wiring diagram, **refer to appropriate SYSTEM WIRING DIAGRAMS article** .

THEORY OF OPERATION

Intake Air Temperature Sensor performance looks at the outputs of three temperature sensors and compares

them under cold start conditions. Following a start to run delay time, the outputs of the ambient, engine coolant, and intake air temperature sensors will be compared. If the engine coolant and ambient air temperature sensors agree and the intake air temperature does not agree, the intake air temperature sensor is declared as irrational. If declared irrational a second comparison will be done after a short drive cycle.

WHEN MONITORED:

The engine off time is greater than 480 minutes. Ambient Temperature if greater than -64° C (-83° F).

SET CONDITION:

Once the vehicle is soaked for a calibrated engine off time and then driven over calibrated speed and load conditions for some calibrated time, the PCM compares the ambient, engine coolant, and intake air temperature sensor values. If engine coolant and ambient air temperature sensors agree with each other but intake air temperature does not agree with them, the intake air temperature sensor is declared as irrational. Two Trip Fault. Three good trips to turn off the MIL.

POSSIBLE CAUSES

Possible Causes
EXCESSIVE RESISTANCE IN THE (K21) IAT SIGNAL CIRCUIT
(K21) IAT SIGNAL CIRCUIT SHORTED TO VOLTAGE
(K21) IAT SIGNAL CIRCUIT SHORTED TO GROUND
(K21) IAT SIGNAL CIRCUIT SHORTED TO THE (K900) SENSOR GROUND CIRCUIT
EXCESSIVE RESISTANCE IN THE (K900) SENSOR GROUND CIRCUIT
INTAKE AIR TEMPERATURE SENSOR
POWERTRAIN CONTROL MODULE (PCM)

Always perform the Pre-Diagnostic Troubleshooting procedure before proceeding. Refer to PRE-DIAGNOSTIC TROUBLESHOOTING PROCEDURE .

DIAGNOSTIC TEST

1. **ACTIVE DTC**
    1. Turn the ignition off.
    2. If possible, allow the vehicle to sit with the ignition off for more than 480 minutes in an environment where the temperature is consistent and above -7° C (19.4° F).
    3. Test drive the vehicle. The vehicle must exceed 48 km/h (30 mph) during the test drive. Do not cycle the ignition off when the test drive is completed.
    4. With a scan tool, select View DTCs.

       Is the DTC Active or Pending at this time?

       Yes

- Go To 3.

No

- Go To 2.

2. **INTAKE AIR TEMPERATURE**
    1. Turn the ignition off.
    2. Allow the vehicle to sit with the ignition off in an environment where the temperature is consistent and above -7° C (19.4° F) until the engine coolant temperature is equal to ambient temperature.
    3. Turn the ignition on.
    4. With a scan tool, compare the AAT, ECT, and IAT sensor values.

    Is the Intake Air Temperature Sensor value within 10° C (18° F) of the other two sensor values?

    Yes

    - Perform the INTERMITTENT CONDITION diagnostic procedure. Refer to **INTERMITTENT CONDITION** .

    No

    - Go To 3.

3. **IAT SENSOR VOLTAGE**
    1. Turn the ignition off.
    2. Disconnect the Intake Air Temperature Sensor harness connector.
    3. Turn the ignition on.
    4. With a scan tool, read the Intake Air Temperature Sensor voltage.

    NOTE: The sensor voltage should be approximately 5.0 volts (plus or minus.1 of a volt) with the connector disconnected.

    Does the scan tool display the voltage as described above?

    Yes

    - Go To 4.

    No

    - Go To 5.

4. **IAT SENSOR**

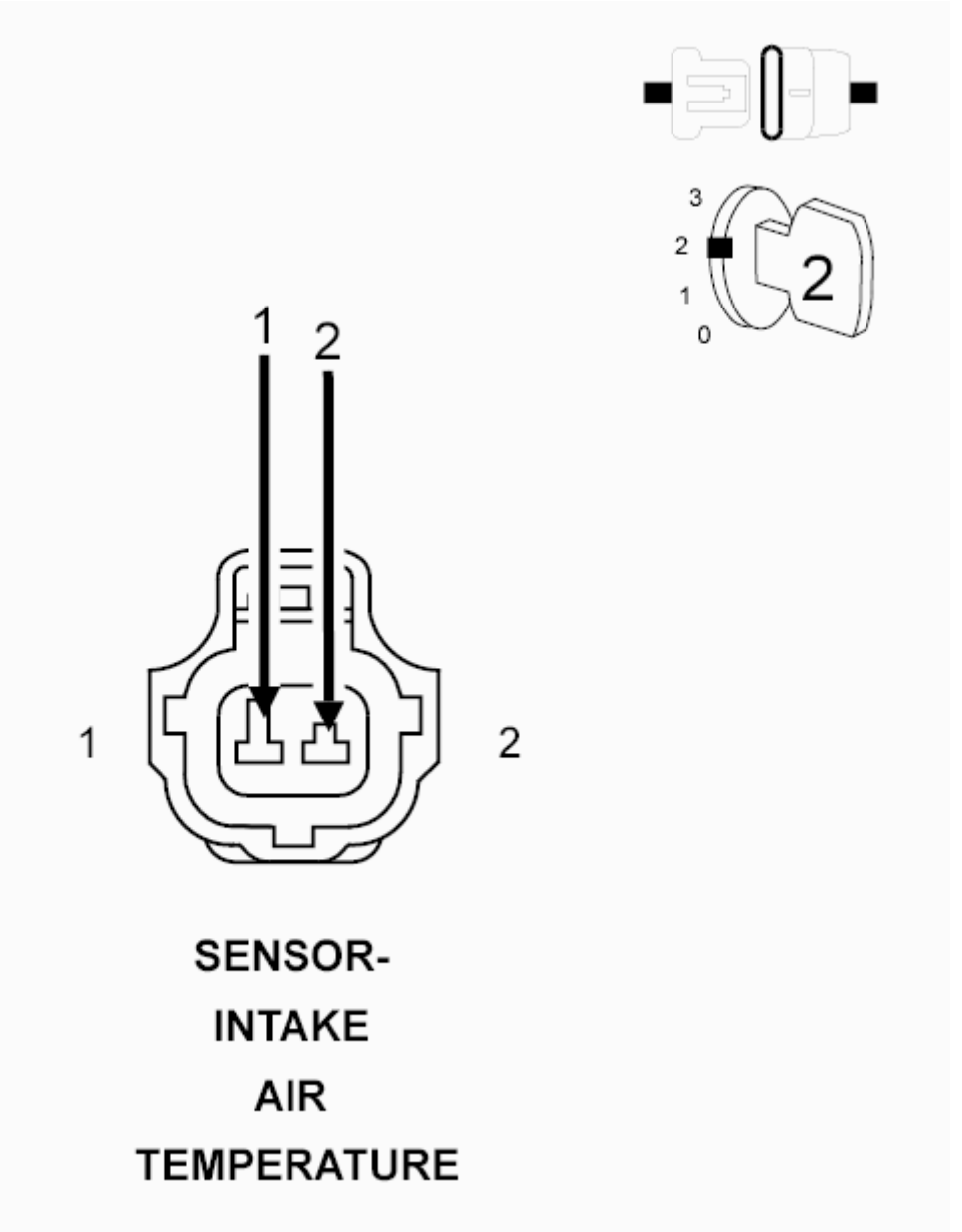

Fig. 72: IAT Sensor Harness Connector
Courtesy of CHRYSLER GROUP, LLC

1. With a scan tool, read the IAT voltage.
2. Connect a jumper wire between the (K21) IAT Signal circuit and the (K900) Sensor ground circuit in the IAT Sensor harness connector.

NOTE: **The sensor voltage should be approximately 0.0 volts (plus or minus.1 volt) with the jumper wire in place.**

Does the scan tool display the voltage as described above?

Yes

- Verify that there is good pin to terminal contact in the Sensor and Powertrain Control Module connectors. Replace the IAT Sensor if no problems were found with the connectors.
- Perform the POWERTRAIN VERIFICATION TEST. Refer to **POWERTRAIN VERIFICATION TEST** .

No

- Go To 5.

NOTE: Remove the jumper wire before continuing.

5. **EXCESSIVE RESISTANCE IN THE (K21) IAT SIGNAL CIRCUIT**
   1. Turn the ignition off.
   2. Disconnect the C2 PCM harness connector.

      CAUTION: Do not probe the PCM harness connectors. Probing the PCM harness connectors will damage the PCM terminals resulting in poor terminal to pin connection. Install the PCM Pinout Box (special tool #8815A, Kit, NGC, 38 Position) and PCM Pinout Box Adapter (special tool #8815-1, PCM Pinout Box Adapter) to perform diagnosis.

   3. Using a voltmeter perform a voltage drop test. Backprobe the (K21) IAT Signal circuit at the IAT Sensor harness connector and probe the appropriate terminal of the PCM Pinout Box (special tool #8815A, Kit, NGC, 38 Position). Make sure the voltmeter leads are connected so a positive polarity is displayed on the voltmeter.

      WARNING: When the engine is operating, do not stand in direct line with the fan. Do not put your hands near the pulleys, belts or fan. Do not wear loose clothing. Failure to follow these instructions may result in possible serious or fatal injury.

   4. Start the engine and allow it to reach normal operating temperature.
   5. Monitor the voltmeter.

      Is the voltage below 0.5 of a volt?

      Yes

      - Go To 6.

      No

- Repair the open in the (K21) IAT Signal circuit.
- Perform the POWERTRAIN VERIFICATION TEST. Refer to **POWERTRAIN VERIFICATION TEST** .

6. **EXCESSIVE RESISTANCE IN THE (K900) SENSOR GROUND CIRCUIT**
   1. Turn the ignition off.
   2. Move the voltmeter leads to backprobe the (K900) Sensor Ground circuit at the IAT Sensor harness connector and to probe the appropriate terminal of the PCM Pinout Box (special tool #8815A, Kit, NGC, 38 Position). Make sure the voltmeter leads are connected so a positive polarity is displayed on the voltmeter.

      WARNING: **When the engine is operating, do not stand in direct line with the fan. Do not put your hands near the pulleys, belts or fan. Do not wear loose clothing. Failure to follow these instructions may result in possible serious or fatal injury.**

   3. Start the engine and allow it to reach normal operating temperature.
   4. Monitor the voltmeter.

      Is the voltage below 0.5 of a volt?

      Yes

      - Go To 7.

      No

      - Repair the open in the (K900) Sensor ground circuit.
      - Perform the POWERTRAIN VERIFICATION TEST. Refer to **POWERTRAIN VERIFICATION TEST** .

7. **(K21) IAT SIGNAL CIRCUIT SHORTED TO VOLTAGE**

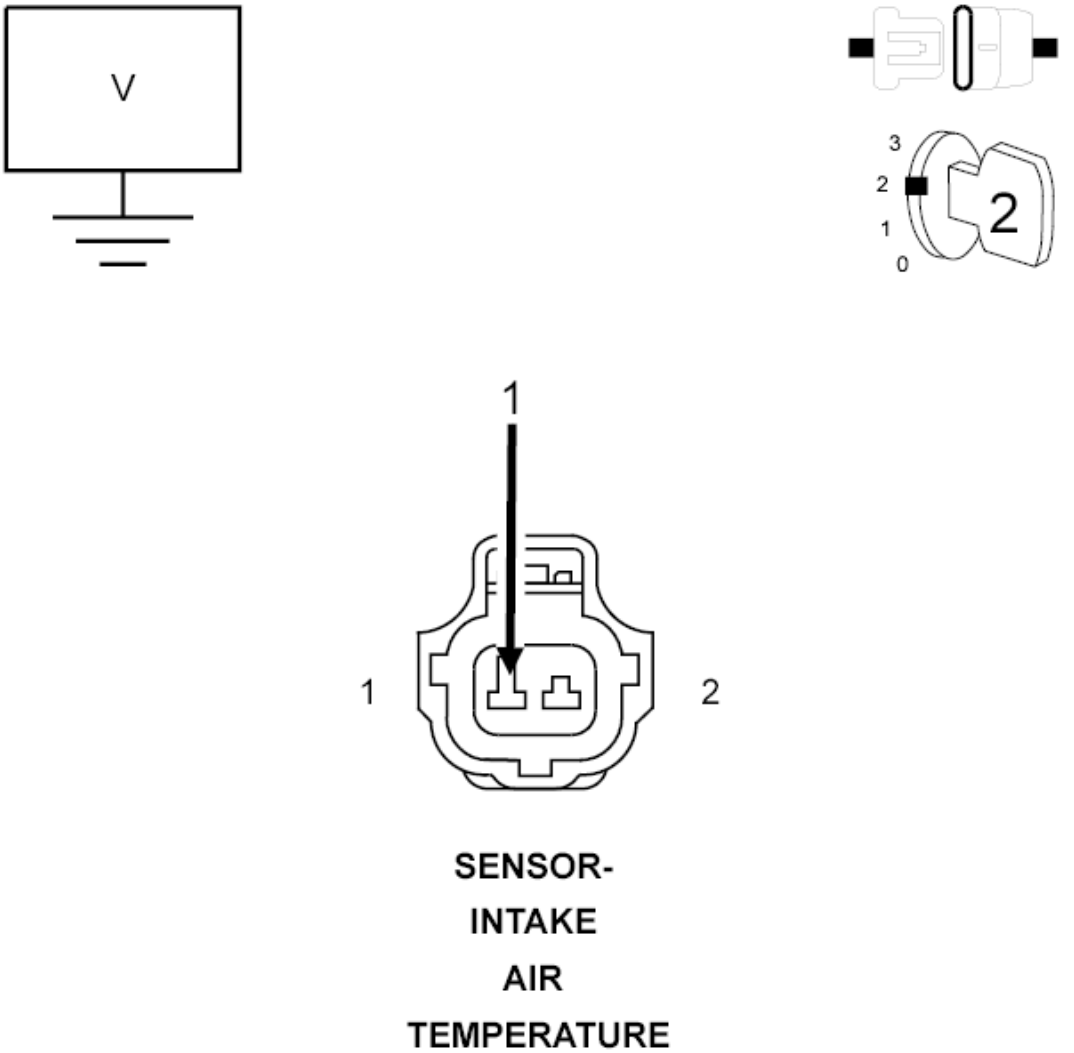

Fig. 73: Measuring Voltage Of IAT Sensor Signal Circuit AT IAT Sensor Harness Connector
Courtesy of CHRYSLER GROUP, LLC

1. Turn the ignition off.
2. Disconnect the PCM Pinout Box (special tool #8815A, Kit, NGC, 38 Position) from the C2 PCM harness connector.
3. Ignition on, engine not running.
4. Measure the voltage on the (K21) IAT Signal circuit in the IAT Sensor harness connector.

   Is there any voltage present?

   Yes

   - Repair the short to voltage in the (K21) IAT Signal circuit.
   - Perform the POWERTRAIN VERIFICATION TEST. Refer to **POWERTRAIN VERIFICATION TEST** .

No

- Go To 8.

8. **(K21) IAT SIGNAL CIRCUIT SHORTED TO GROUND**

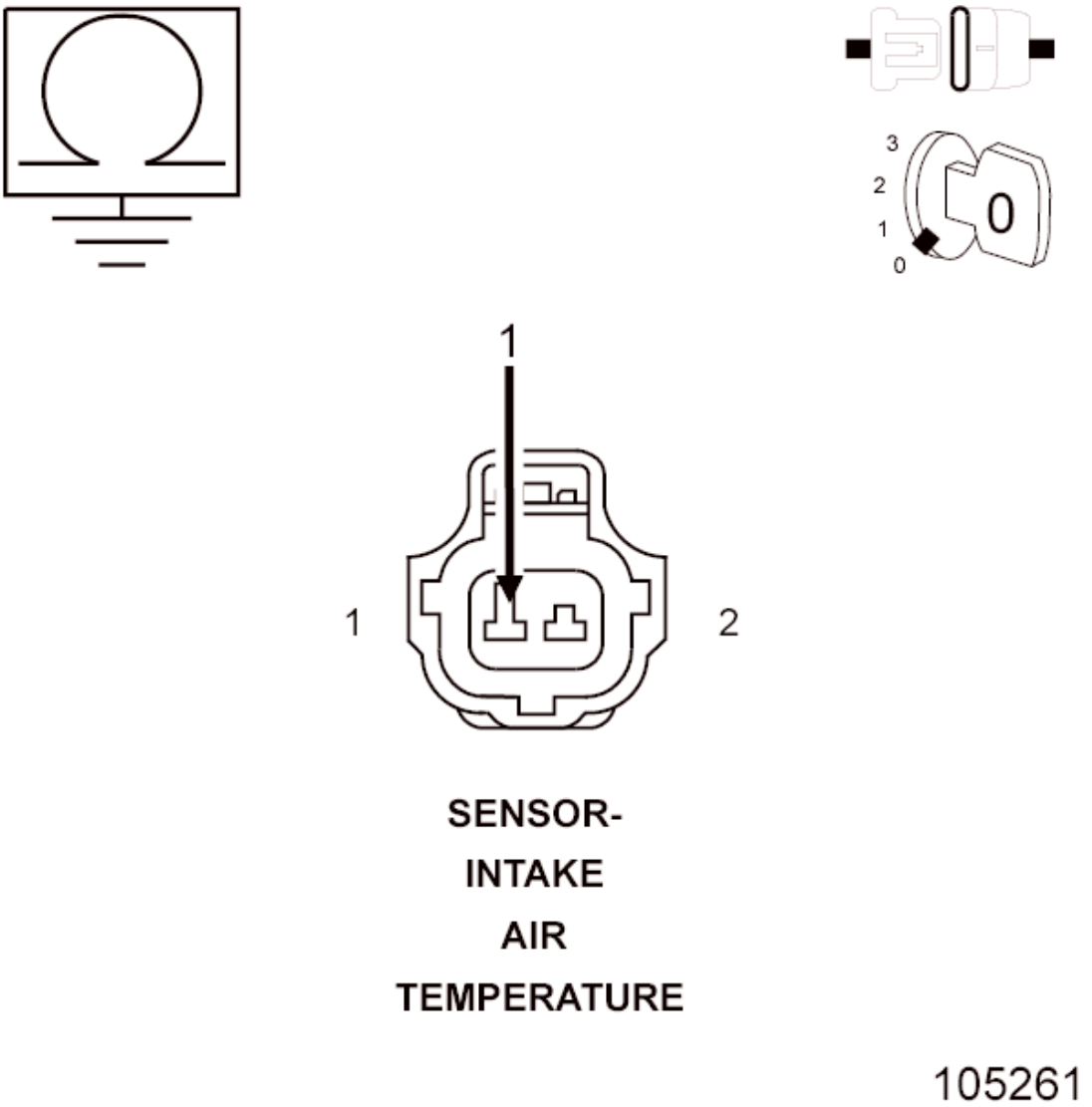

Fig. 74: Measuring Resistance Between Ground And IAT Sensor Signal Circuit AT IAT Sensor Harness Connector
Courtesy of CHRYSLER GROUP, LLC

1. Turn the ignition off.
2. Measure the resistance between ground and the (K21) IAT Signal circuit in the IAT Sensor harness connector.

   Is the resistance below 100 Ohms?

Yes

- Repair the short to ground in the (K21) IAT Signal circuit.
- Perform the POWERTRAIN VERIFICATION TEST. Refer to **POWERTRAIN VERIFICATION TEST** .

No

- Go To 9.

9. **(K21) IAT SIGNAL CIRCUIT SHORTED TO THE (K900) SENSOR GROUND CIRCUIT**

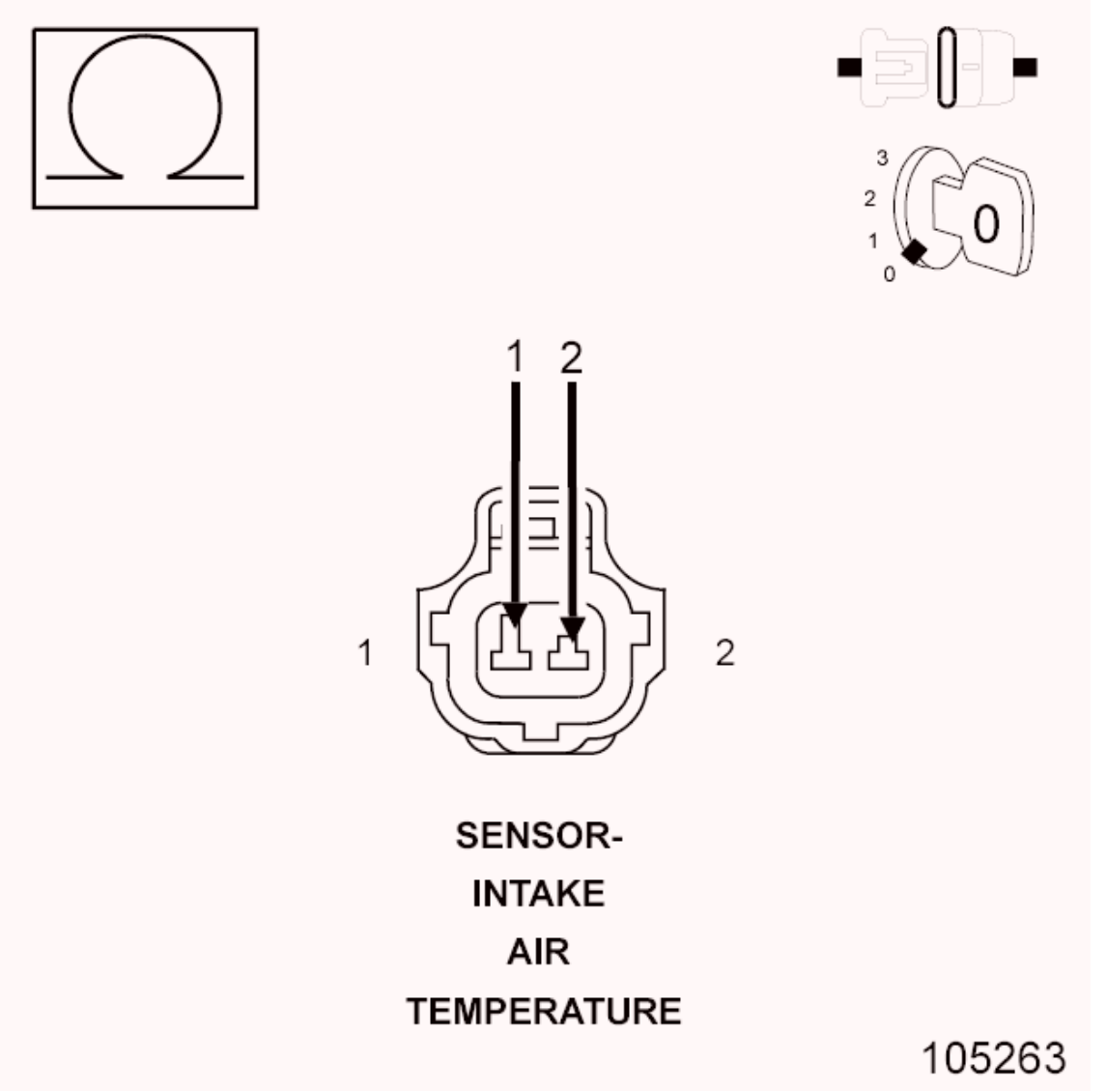

Fig. 75: Measuring Resistance Between IAT Sensor Signal Circuit And Sensor Ground Circuit AT IAT Sensor Harness Connector
Courtesy of CHRYSLER GROUP, LLC

1. Measure the resistance between the (K21) IAT Signal circuit and the (K900) Sensor ground circuit in the IAT Sensor harness connector.

   Is the resistance below 100 Ohms?

   Yes

   - Repair the short between the (K900) Sensor ground circuit and the (K21) IAT Sensor Signal circuit.
   - Perform the POWERTRAIN VERIFICATION TEST. Refer to **POWERTRAIN VERIFICATION TEST** .

   No

   - Go To 10.

10. **POWERTRAIN CONTROL MODULE (PCM)**
    1. Using the wiring diagram/schematic as a guide, inspect the wiring and connectors between the IAT Sensor and the Powertrain Control Module (PCM).
    2. Look for any chafed, pierced, pinched, or partially broken wires.
    3. Look for broken, bent, pushed out or corroded terminals. Verify that there is good pin to terminal contact in the Sensor and Control Module connectors.
    4. Refer to any Technical Service Bulletins that may apply.

       Were there any problems found?

       Yes

       - Repair as necessary.
       - Perform the POWERTRAIN VERIFICATION TEST. Refer to **POWERTRAIN VERIFICATION TEST** .

       No

       - Replace and program the Powertrain Control Module in accordance with the Service Information. Refer to **MODULE, POWERTRAIN CONTROL, REMOVAL** .
       - Perform the POWERTRAIN VERIFICATION TEST. Refer to **POWERTRAIN VERIFICATION TEST** .

P0112-INTAKE AIR TEMPERATURE SENSOR CIRCUIT LOW

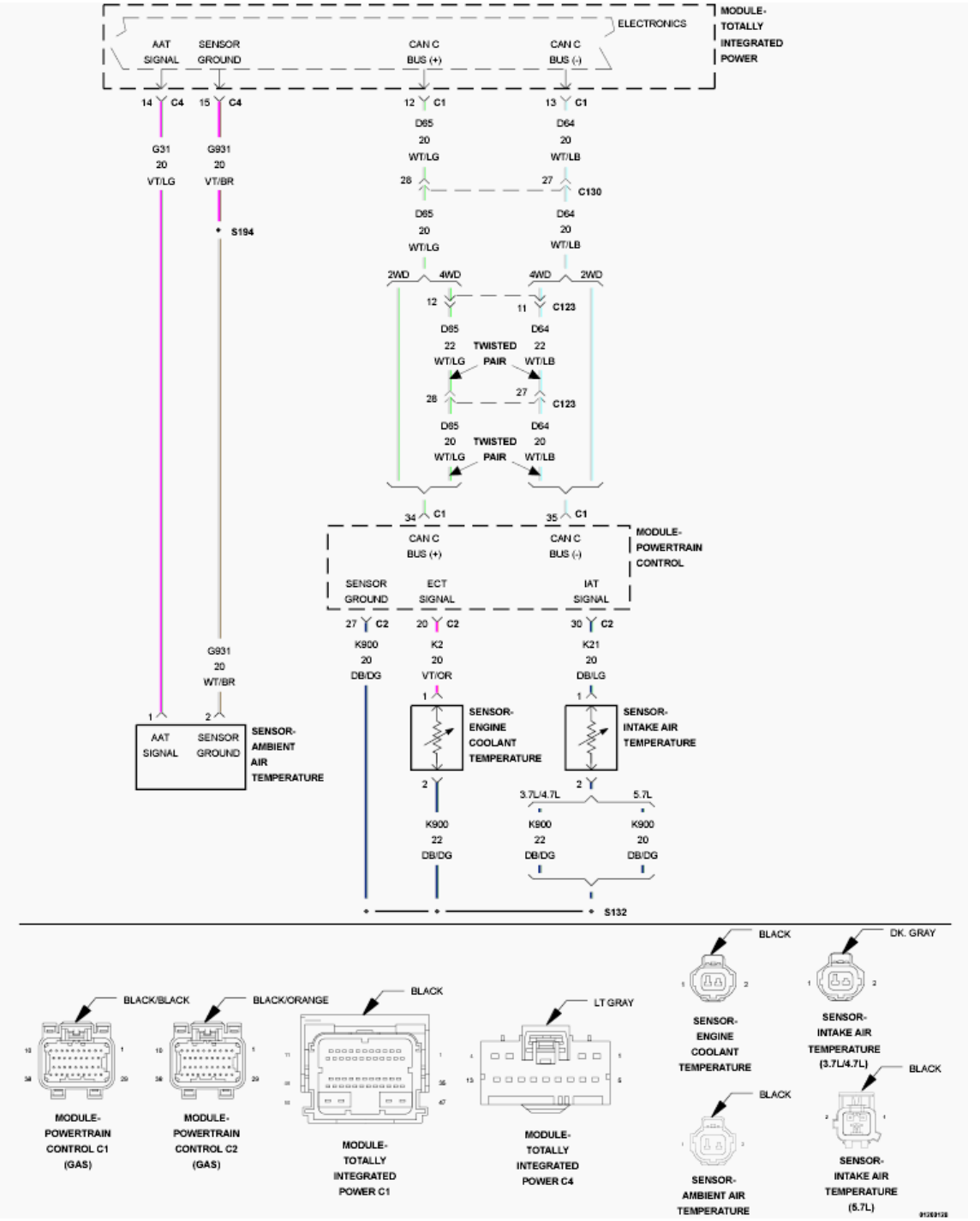

Fig. 76: ECT Sensor, IAT Sensor & AAT Sensor Circuit Schematic
Courtesy of CHRYSLER GROUP, LLC

For a complete wiring diagram, **refer to appropriate SYSTEM WIRING DIAGRAMS article** .

WHEN MONITORED:

With the ignition on and battery voltage greater than 10.4 Volts.

SET CONDITION:

When the Inlet Air Temp Sensor Signal circuit voltage is less than the minimum acceptable value. One trip failure. Three good trips to clear the MIL.

POSSIBLE CAUSES

Possible Causes
(K21) IAT SIGNAL CIRCUIT SHORTED TO GROUND
(K21) IAT SIGNAL CIRCUIT SHORTED TO THE (K900) SENSOR GROUND CIRCUIT
INTAKE AIR TEMPERATURE SENSOR
POWERTRAIN CONTROL MODULE (PCM)

Always perform the Pre-Diagnostic Troubleshooting procedure before proceeding. Refer to PRE-DIAGNOSTIC TROUBLESHOOTING PROCEDURE .

DIAGNOSTIC TEST

1. **ACTIVE DTC**
   1. Start the engine and allow it to reach normal operating temperature.

      WARNING: When the engine is operating, do not stand in direct line with the fan. Do not put your hands near the pulleys, belts or fan. Do not wear loose clothing. Failure to follow these instructions may result in possible serious or fatal injury.

      NOTE: Diagnose and repair any system voltage DTCs before continuing with this test.

   2. With the scan tool, select View DTCs.

      Is the DTC Active at this time?

      Yes

      - Go To 2.

      No

      - Perform the INTERMITTENT CONDITION diagnostic procedure. Refer to **INTERMITTENT CONDITION** .
2. **IAT SENSOR**
   1. Turn the ignition off.
   2. Disconnect the IAT Sensor harness connector.
   3. Ignition on, engine not running.

4. With a scan tool, read IAT voltage.

NOTE: The sensor voltage should be approximately 5.0 Volts (plus or minus.1 of a volt) with the connector disconnected.

Does the scan tool display the voltage as described above?

Yes

- Verify that there is good pin to terminal contact in the Sensor and Powertrain Control Module connectors. Replace the IAT Sensor if no problems were found with the connectors.
- Perform the POWERTRAIN VERIFICATION TEST. Refer to **POWERTRAIN VERIFICATION TEST** .

No

- Go To 3.

3. **(K21) IAT SIGNAL CIRCUIT SHORTED TO GROUND**

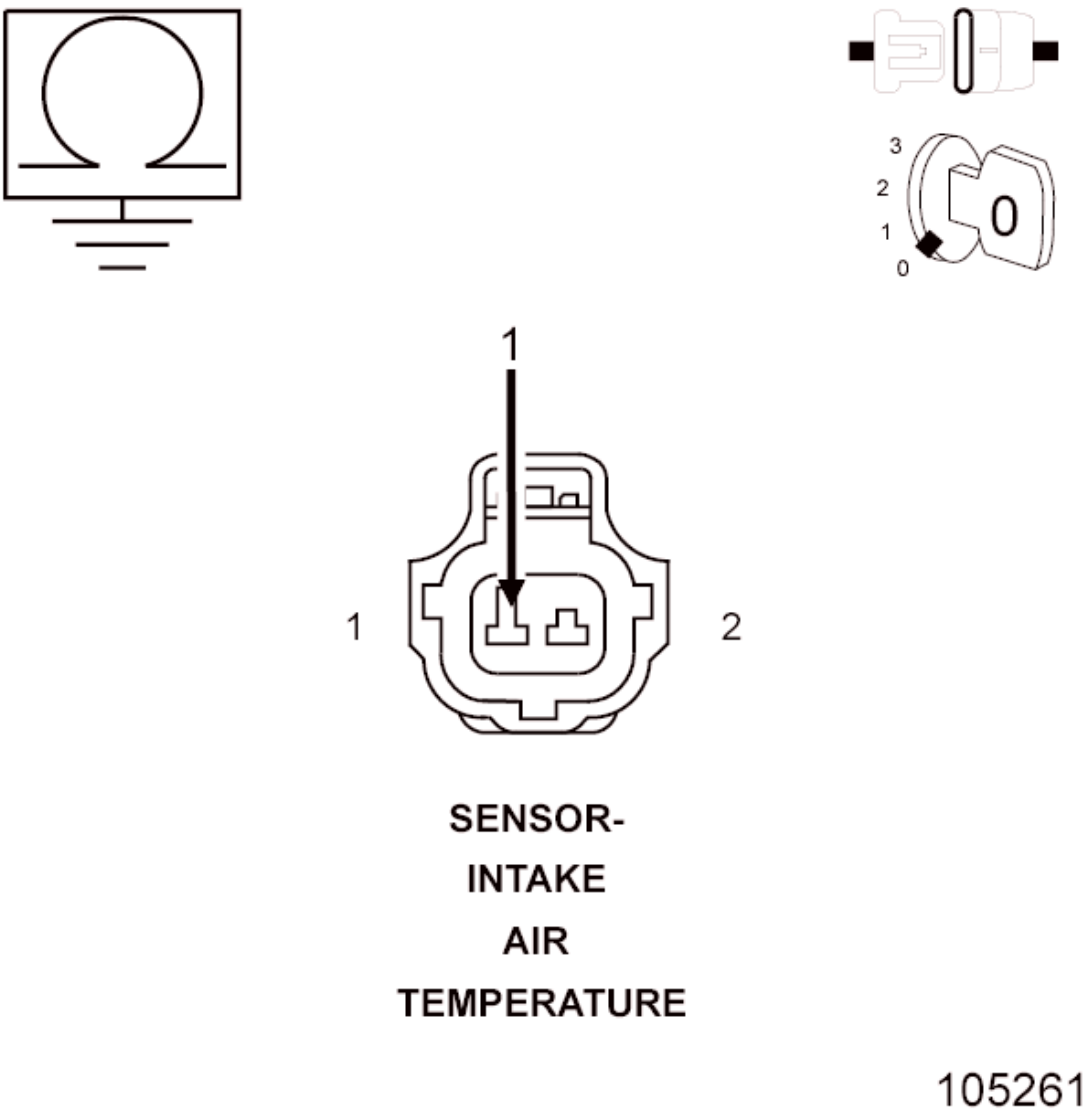

Fig. 77: Measuring Resistance Between Ground And IAT Sensor Signal Circuit AT IAT Sensor Harness Connector
Courtesy of CHRYSLER GROUP, LLC

1. Turn the ignition off.
2. Disconnect the C2 PCM harness connector.
3. Measure the resistance between ground and the (K21) IAT Signal circuit in the IAT Sensor harness connector.

   Is the resistance below 100 Ohms?

   Yes

   - Repair the short to ground in the (K21) IAT Signal circuit.
   - Perform the POWERTRAIN VERIFICATION TEST. Refer to **POWERTRAIN**

VERIFICATION TEST .

No

- Go To 4.

4. **(K21) IAT SIGNAL CIRCUIT SHORTED TO THE (K900) SENSOR GROUND CIRCUIT**

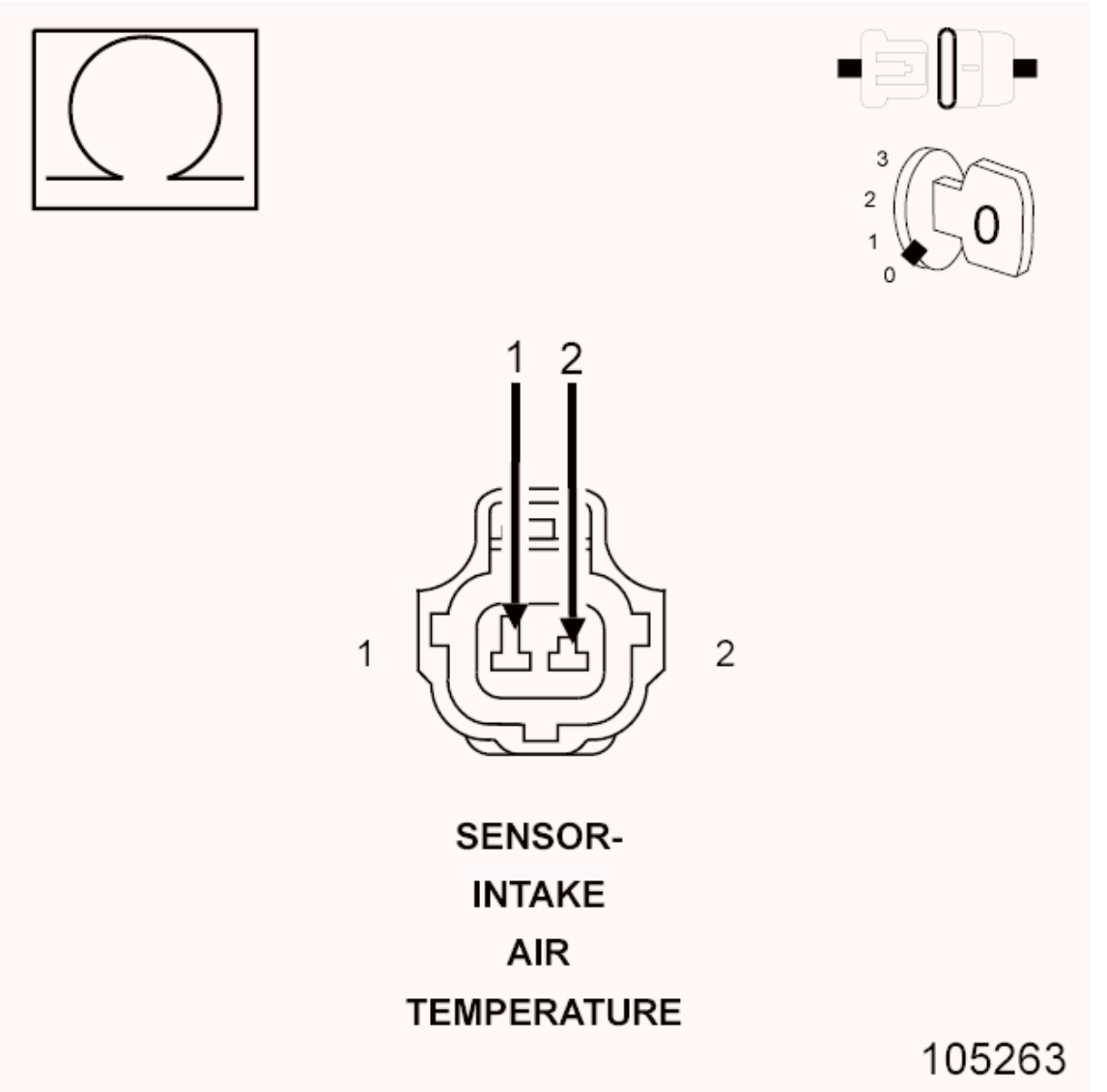

Fig. 78: Measuring Resistance Between IAT Sensor Signal Circuit And Sensor Ground Circuit AT IAT Sensor Harness Connector
Courtesy of CHRYSLER GROUP, LLC

1. Measure the resistance between the (K21) IAT Signal circuit and the (K900) Sensor ground circuit in the IAT Sensor harness connector.

   Is the resistance below 100 Ohms?

Yes

- Repair the short between the (K900) Sensor ground circuit and the (K21) IAT Sensor Signal circuit.
- Perform the POWERTRAIN VERIFICATION TEST. Refer to **POWERTRAIN VERIFICATION TEST** .

No

- Go To 5.

5. **EXCESSIVE RESISTANCE IN THE (K21) IAT SIGNAL CIRCUIT**

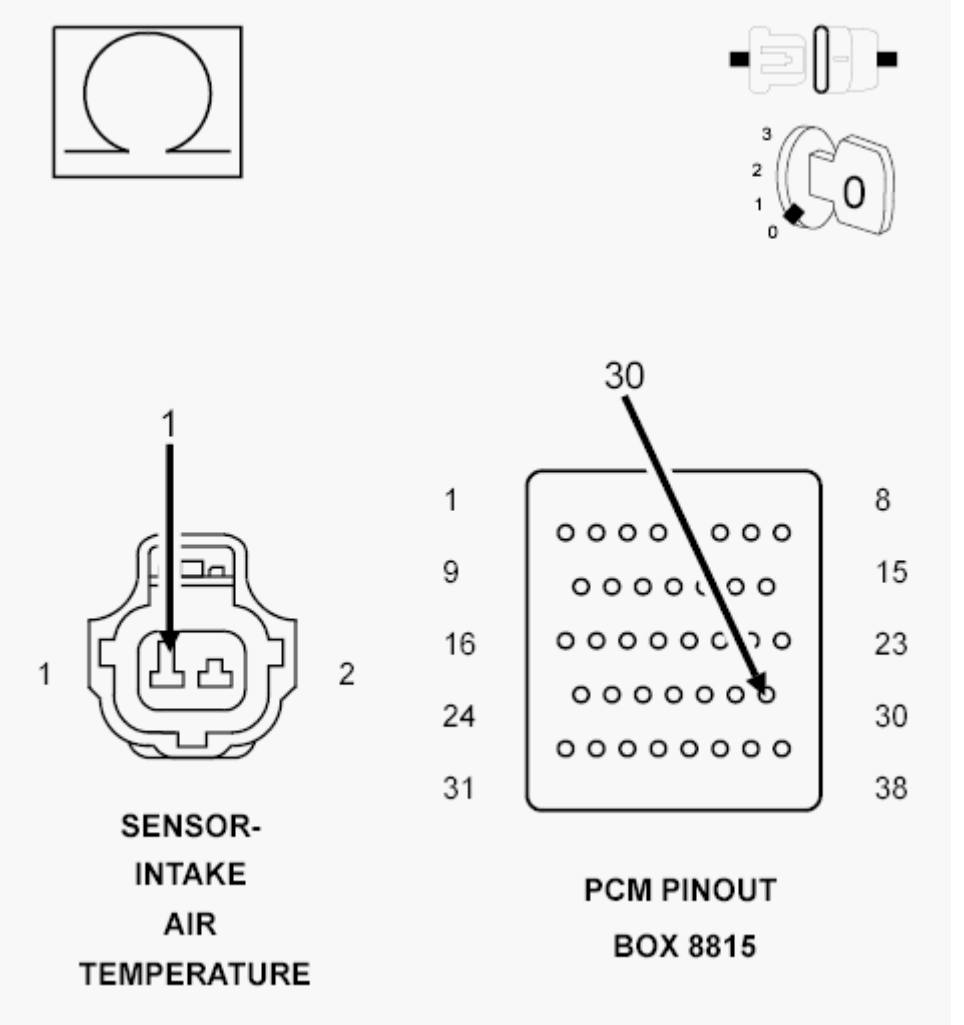

Fig. 79: Measuring Air Intake Temperature Sensor Signal Circuit Resistance
Courtesy of CHRYSLER GROUP, LLC

CAUTION: Do not probe the PCM harness connectors. Probing the PCM harness connectors will damage the PCM terminals, resulting in poor terminal to pin connection. Install the PCM Pinout Box (special tool #8815A,

Kit, NGC, 38 Position) to perform diagnosis.

1. Measure the resistance of the (K21) IAT Signal circuit between the Intake Air Temperature Sensor harness connector and the appropriate terminal of PCM Pinout Box (special tool #8815A, Kit, NGC, 38 Position).

   Is the resistance below 5.0 Ohms?

   Yes

   - Go To 6.

   No

   - Repair the excessive resistance in the (K21) IAT Signal circuit.
   - Perform the POWERTRAIN VERIFICATION TEST. Refer to **POWERTRAIN VERIFICATION TEST** .

6. **POWERTRAIN CONTROL MODULE (PCM)**
   1. Using the wiring diagram/schematic as a guide, inspect the wiring and connectors between the IAT Sensor and the Powertrain Control Module (PCM).
   2. Look for any chafed, pierced, pinched or partially broken wires.
   3. Look for broken, bent, pushed out or corroded terminals. Verify that there is good pin to terminal contact in the Sensor and Control Module connectors.
   4. Refer to any Technical Service Bulletins that may apply.

      Were there any problems found?

      Yes

      - Repair as necessary.
      - Perform the POWERTRAIN VERIFICATION TEST. Refer to **POWERTRAIN VERIFICATION TEST** .

      No

      - Replace and program the Powertrain Control Module in accordance with the Service Information. Refer to **MODULE, POWERTRAIN CONTROL, REMOVAL** .
      - Perform the POWERTRAIN VERIFICATION TEST. Refer to **POWERTRAIN VERIFICATION TEST** .

P0113-INTAKE AIR TEMPERATURE SENSOR CIRCUIT HIGH

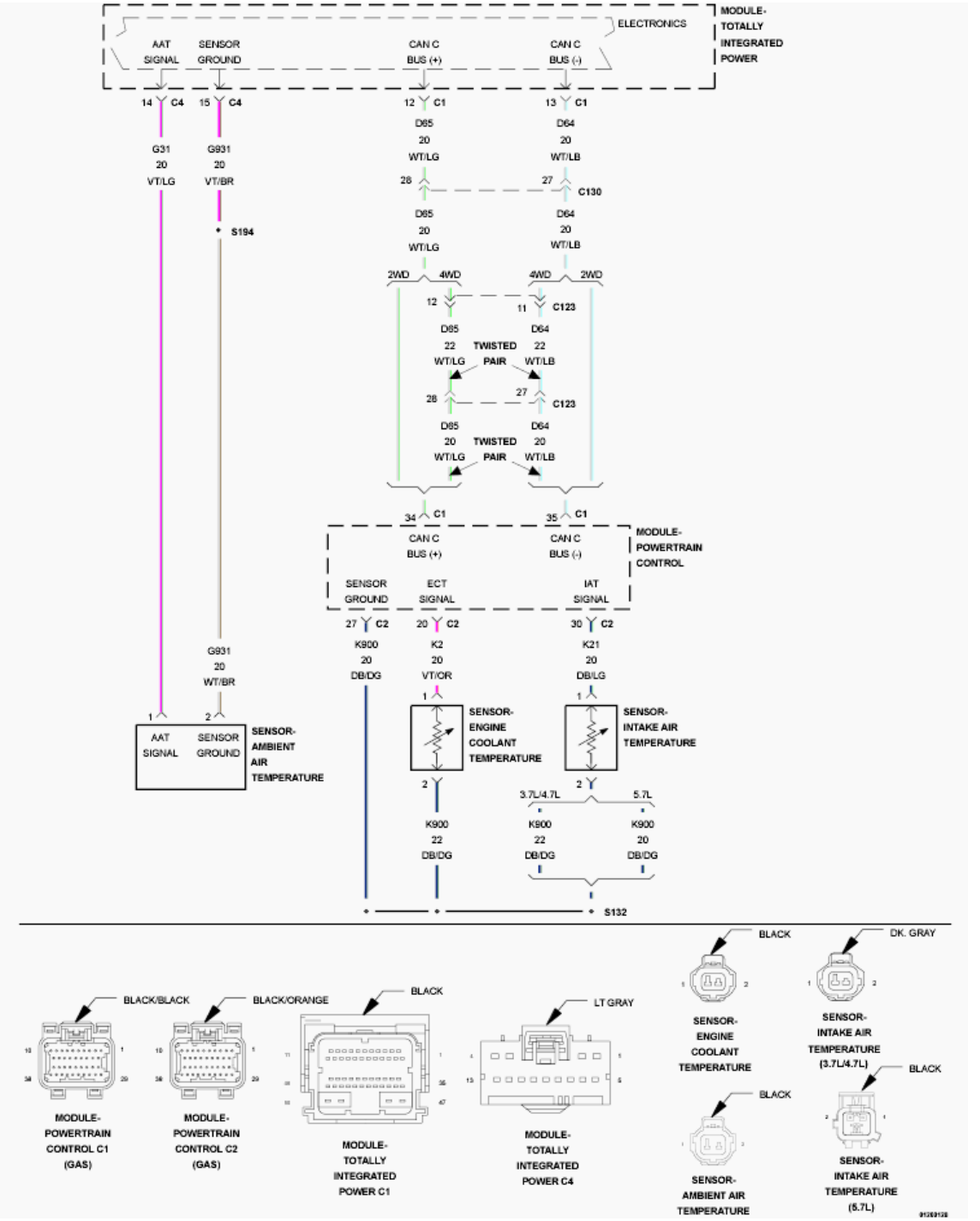

Fig. 80: ECT Sensor, IAT Sensor & AAT Sensor Circuit Schematic
Courtesy of CHRYSLER GROUP, LLC

For a complete wiring diagram, **refer to appropriate SYSTEM WIRING DIAGRAMS article** .

WHEN MONITORED:

With the ignition on. Battery voltage greater than 10.4 Volts.

SET CONDITION:

The Powertrain Control Module (PCM) detects that the Intake Air Temperature Sensor input voltage is above the maximum acceptable value.

POSSIBLE CAUSES

Possible Causes
(K21) IAT SIGNAL CIRCUIT SHORTED TO VOLTAGE
(K21) IAT SIGNAL CIRCUIT OPEN
(K900) SENSOR GROUND CIRCUIT OPEN
IAT SENSOR
POWERTRAIN CONTROL MODULE (PCM)

Always perform the Pre-Diagnostic Troubleshooting procedure before proceeding. Refer to PRE-DIAGNOSTIC TROUBLESHOOTING PROCEDURE .

DIAGNOSTIC TEST

1. **ACTIVE DTC**
   1. Start the engine and allow it to reach normal operating temperature.

      WARNING: **When the engine is operating, do not stand in direct line with the fan. Do not put your hands near the pulleys, belts or fan. Do not wear loose clothing. Failure to follow these instructions may result in possible serious or fatal injury.**

      NOTE: **Diagnose and repair any system voltage DTCs before continuing with this test.**

   2. With the scan tool, select View DTCs.

      Is the DTC Active at this time?

      Yes

      - Go To 2.

      No

      - Perform the INTERMITTENT CONDITION diagnostic procedure. Refer to **INTERMITTENT CONDITION** .
2. **IAT SENSOR**

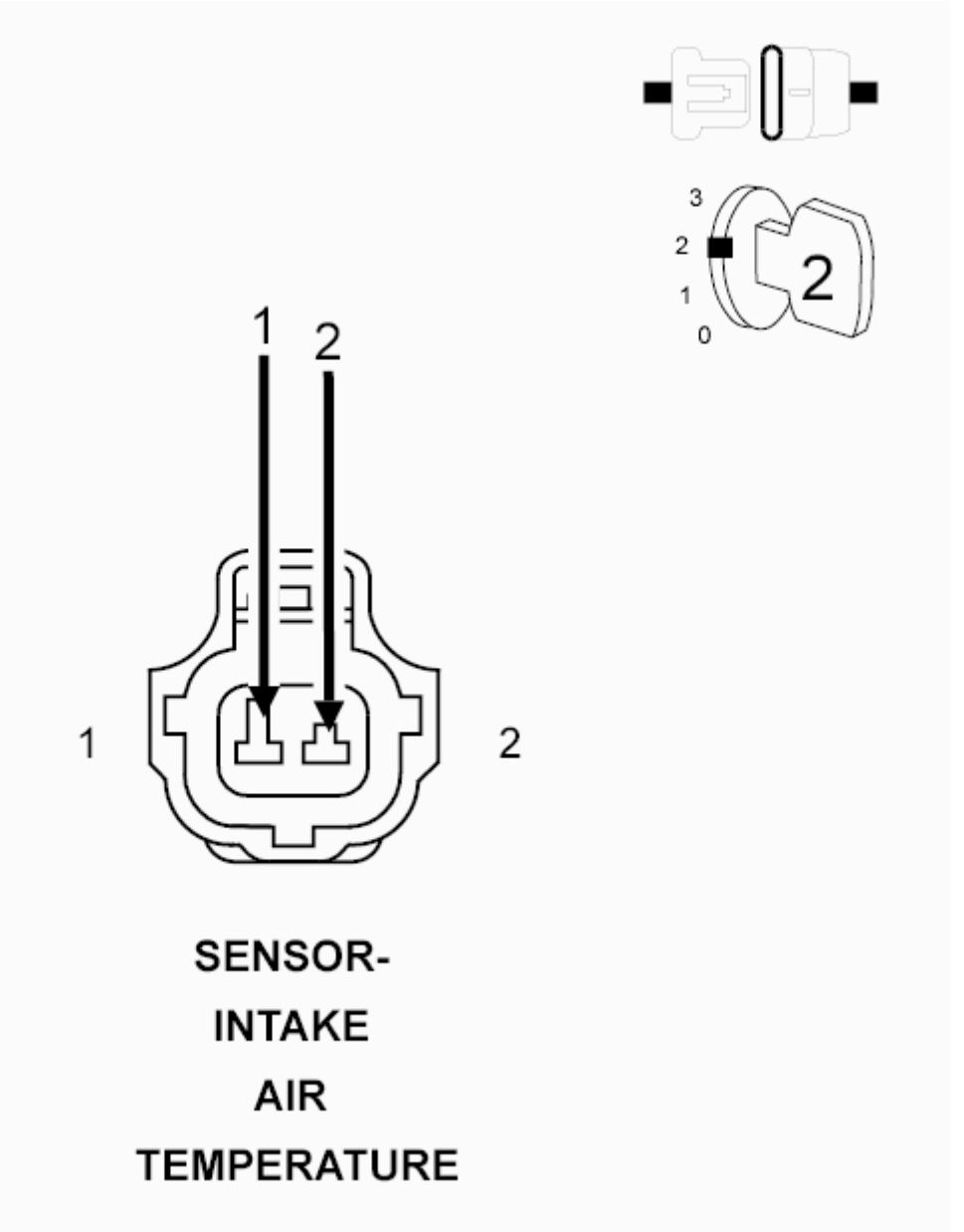

Fig. 81: IAT Sensor Harness Connector
Courtesy of CHRYSLER GROUP, LLC

1. Turn the ignition off.
2. Disconnect the Intake Air Temperature Sensor harness connector.
3. Ignition on, engine not running.
4. With a scan tool, read the IAT Sensor voltage.
5. Connect a jumper wire between the (K21) IAT Signal circuit and the (K900) Sensor ground circuit in the IAT Sensor harness connector.

NOTE: **The sensor voltage should be approximately 0.0 Volts (plus or minus.1 volt) with the jumper wire in place.**

Does the scan tool display the voltage as described above?

Yes

- Verify that there is good pin to terminal contact in the Sensor and Powertrain Control Module connectors. Replace the IAT Sensor if no problems were found with the connectors.
- Perform the POWERTRAIN VERIFICATION TEST. Refer to **POWERTRAIN VERIFICATION TEST** .

No

- Go To 3.

NOTE: Remove the jumper wire before continuing.

3. **(K21) IAT SIGNAL CIRCUIT SHORTED TO VOLTAGE**

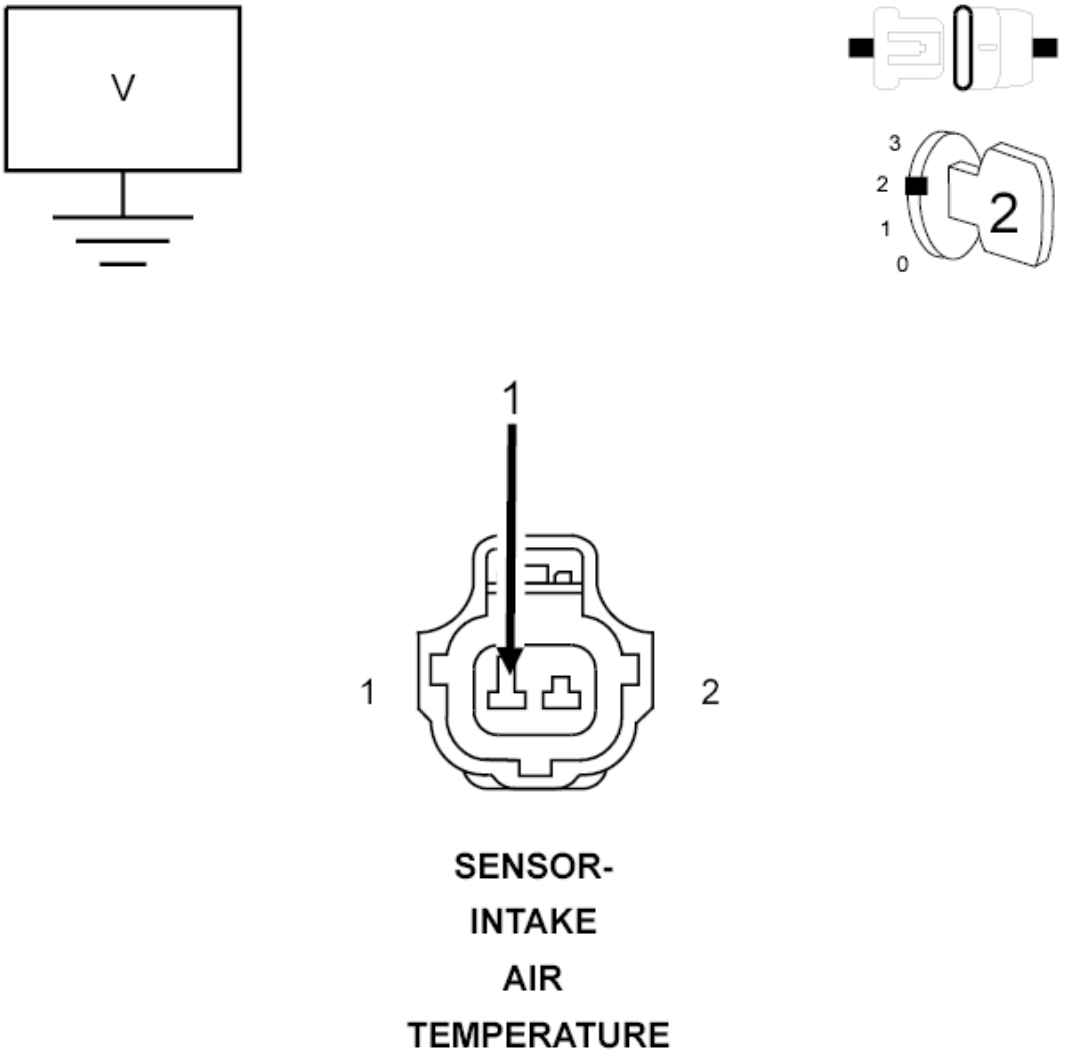

Fig. 82: Measuring Voltage Of IAT Sensor Signal Circuit AT IAT Sensor Harness Connector
Courtesy of CHRYSLER GROUP, LLC

1. Turn the ignition off.
2. Disconnect the C2 PCM harness connector.
3. Ignition on, engine not running.
4. Measure the voltage on the (K21) IAT Signal circuit in the IAT Sensor harness connector.

   Is there any voltage present?

   Yes

   - Repair the short to voltage in the (K21) IAT Signal circuit.
   - Perform the POWERTRAIN VERIFICATION TEST. Refer to **POWERTRAIN VERIFICATION TEST** .

No

- Go To 4.

4. **(K21) IAT SIGNAL CIRCUIT OPEN**

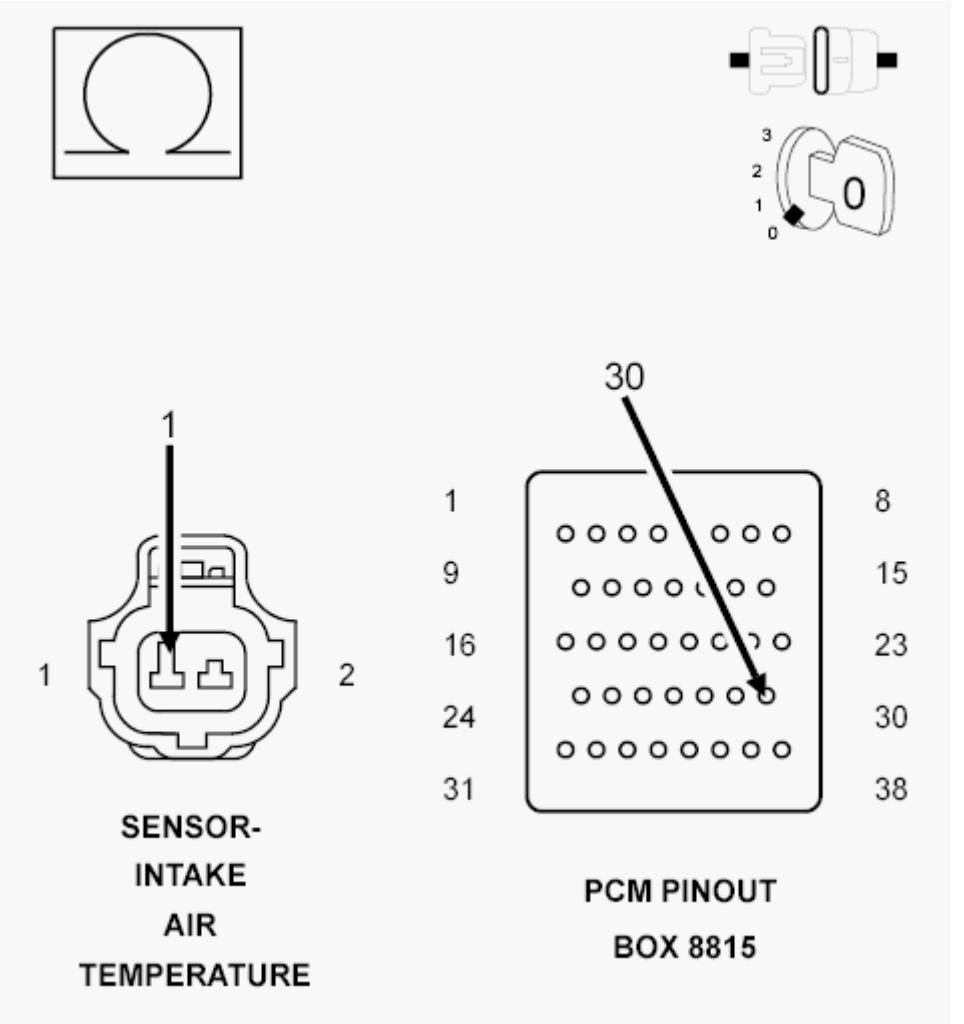

Fig. 83: Measuring Air Intake Temperature Sensor Signal Circuit Resistance
Courtesy of CHRYSLER GROUP, LLC

1. Turn the ignition off.

CAUTION: Do not probe the PCM harness connectors. Probing the PCM harness connectors will damage the PCM terminals resulting in poor terminal to pin connection. Install the PCM Pinout Box (special tool #8815A, Kit, NGC, 38 Position) to perform diagnosis.

2. Measure the resistance of the (K21) IAT Signal circuit from the IAT Sensor harness connector to the appropriate terminal of PCM Pinout Box (special tool #8815A, Kit, NGC, 38 Position).

Is the resistance below 5.0 Ohms?

Yes

- Go To 5.

No

- Repair the open in the (K21) IAT Signal circuit.
- Perform the POWERTRAIN VERIFICATION TEST. Refer to **POWERTRAIN VERIFICATION TEST** .

5. **(K900) SENSOR GROUND CIRCUIT OPEN**

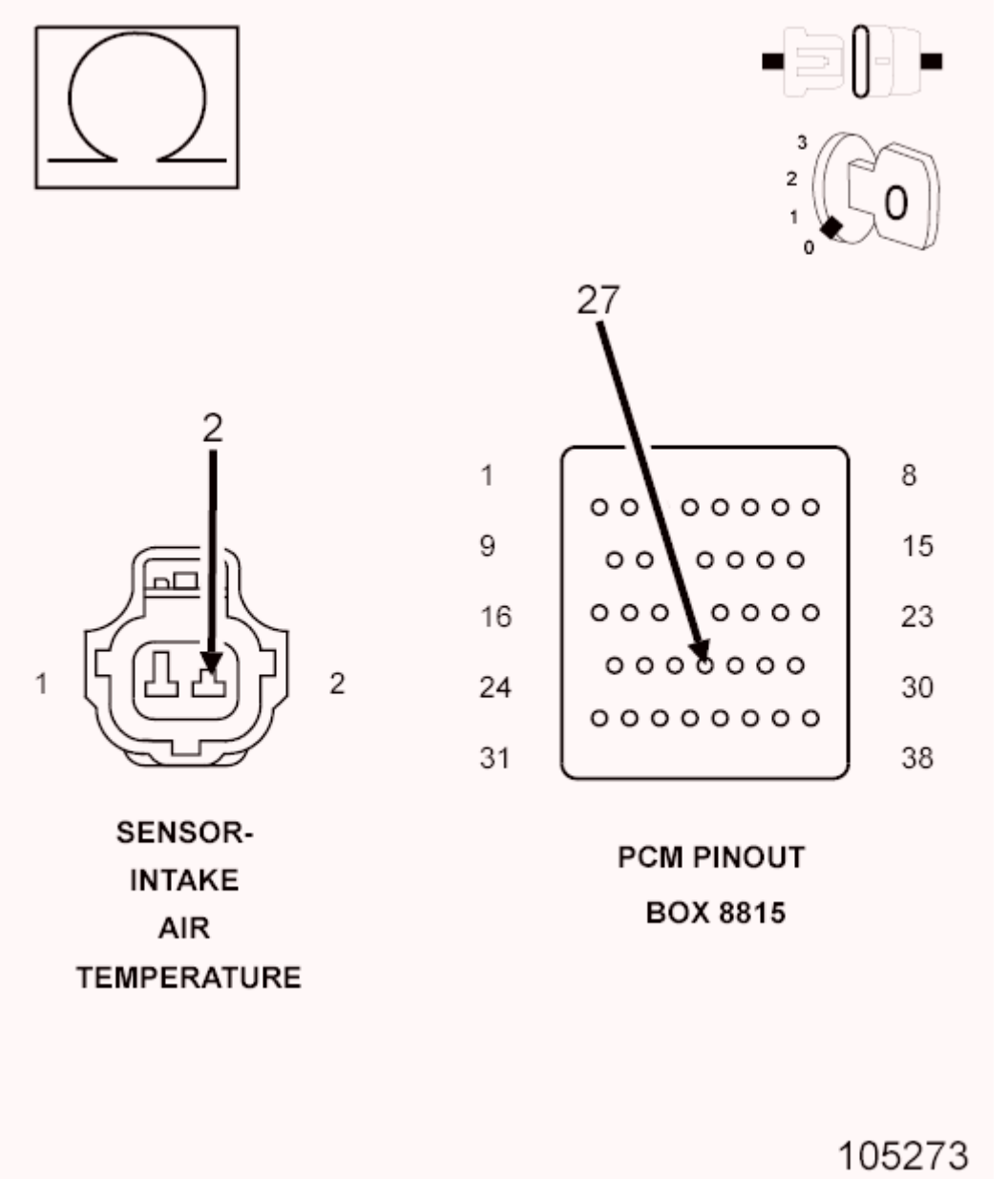

Fig. 84: Measuring Resistance Of Sensor Ground Circuit From IAT Sensor Harness Connector To Appropriate Terminal Of PCM Pinout Box 8815
Courtesy of CHRYSLER GROUP, LLC

1. Measure the resistance of the (K900) Sensor ground circuit from the IAT Sensor harness connector to the appropriate terminal of PCM Pinout Box (special tool #8815A, Kit, NGC, 38 Position).

   Is the resistance below 5.0 Ohms?

   Yes

   - Go To 6.

   No

   - Repair the open in the (K900) Sensor ground circuit.
   - Perform the POWERTRAIN VERIFICATION TEST. Refer to **POWERTRAIN VERIFICATION TEST** .

6. **POWERTRAIN CONTROL MODULE (PCM)**
   1. Using the wiring diagram/schematic as a guide, inspect the wiring and connectors between the IAT Sensor and the Powertrain Control Module (PCM).
   2. Look for any chafed, pierced, pinched or partially broken wires.
   3. Look for broken, bent, pushed out or corroded terminals. Verify that there is good pin to terminal contact in the Sensor and Control Module connectors.
   4. Refer to any Technical Service Bulletins that may apply.

      Were there any problems found?

      Yes

      - Repair as necessary.
      - Perform the POWERTRAIN VERIFICATION TEST. Refer to **POWERTRAIN VERIFICATION TEST** .

      No

      - Replace and program the Powertrain Control Module in accordance with the Service Information. Refer to **MODULE, POWERTRAIN CONTROL, REMOVAL** .
      - Perform the POWERTRAIN VERIFICATION TEST. Refer to **POWERTRAIN VERIFICATION TEST** .

P0116-ENGINE COOLANT TEMPERATURE SENSOR CIRCUIT PERFORMANCE

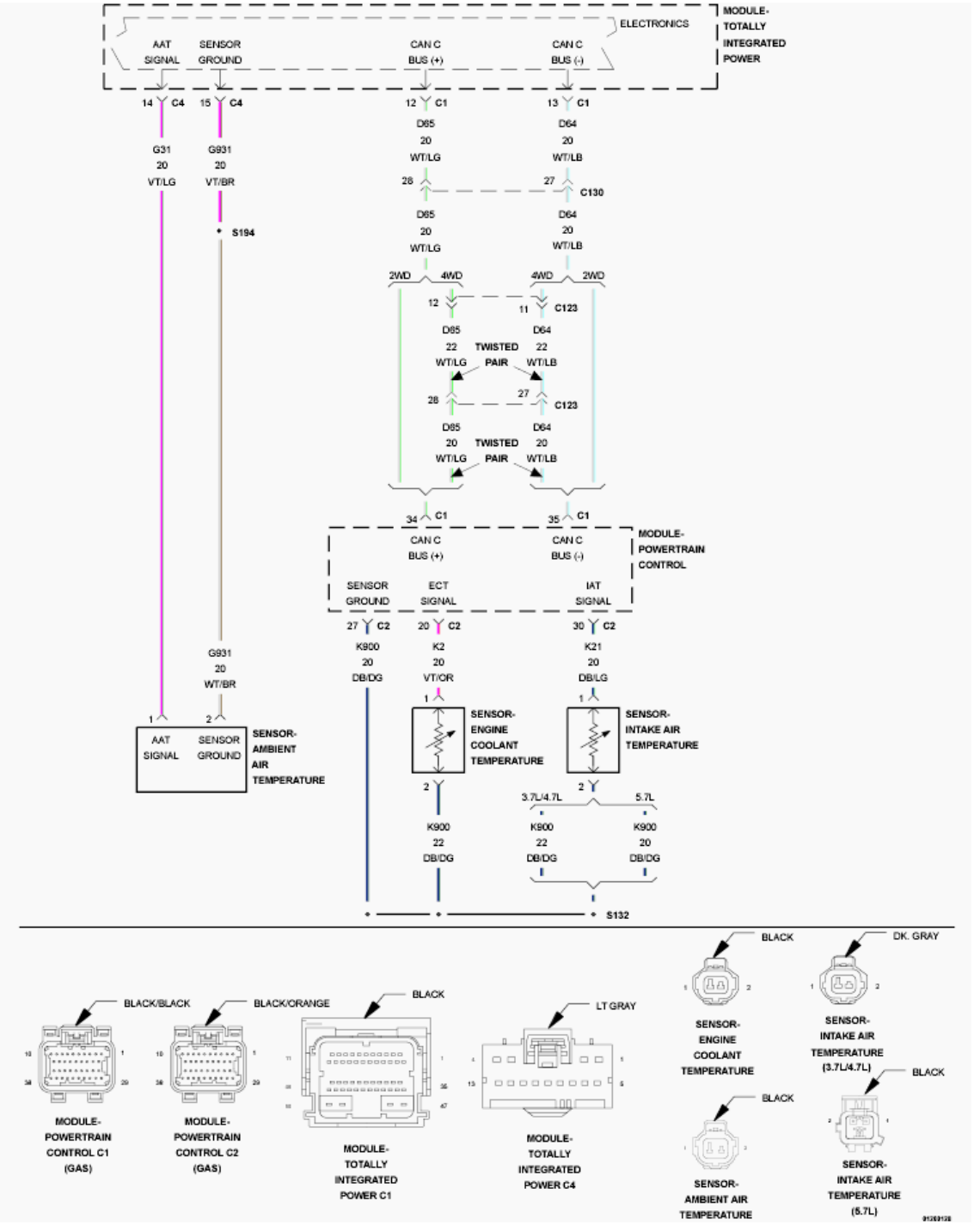

Fig. 85: ECT Sensor, IAT Sensor & AAT Sensor Circuit Schematic
Courtesy of CHRYSLER GROUP, LLC

For a complete wiring diagram, **refer to appropriate SYSTEM WIRING DIAGRAMS article** .

THEORY OF OPERATION

Engine Coolant Temperature (ECT) Sensor performance looks at the outputs of three temperature sensors and

compares them under cold start conditions. Following a start to run delay time, the outputs of the ambient, engine coolant and intake air temperature sensors will be compared. If the intake air and ambient air temperature sensors agree and the intake air temperature does not agree, the engine coolant temperature sensor is declared as irrational.

WHEN MONITORED:

Engine off time is greater than 480 minutes and the vehicle has been driven for one minute over 35 mph. Ambient temperature is greater than -64° C (-83° F).

SET CONDITION:

Once the vehicle is soaked for a calibrated engine off time and then driven over calibrated speed and load conditions for some calibrated time, the PCM compares the ambient, engine coolant and intake air temperature sensor values. If ambient air and intake air temperature sensors agree with each other but engine coolant temperature does not agree with them, the engine coolant temperature sensor is declared as irrational. Two Trip Fault. Three good trips to turn off the MIL.

POSSIBLE CAUSES

Possible Causes
EXCESSIVE RESISTANCE IN THE (K2) ECT SIGNAL CIRCUIT
(K2) ECT SIGNAL CIRCUIT SHORTED TO GROUND
(K2) ECT SIGNAL CIRCUIT SHORTED TO THE (K900) SENSOR GROUND CIRCUIT
(K2) ECT SIGNAL CIRCUIT SHORTED TO VOLTAGE
EXCESSIVE RESISTANCE IN THE (K900) SENSOR GROUND CIRCUIT
ENGINE COOLANT TEMPERATURE (ECT) SENSOR
POWERTRAIN CONTROL MODULE (PCM)

Always perform the Pre-Diagnostic Troubleshooting procedure before proceeding. Refer to PRE-DIAGNOSTIC TROUBLESHOOTING PROCEDURE .

DIAGNOSTIC TEST

1. **ACTIVE DTC**

NOTE: Diagnose any CAN - C Communication DTCs before continuing.

1. Turn the ignition off.
2. If possible, allow the vehicle to sit with the ignition off for more than 480 minutes in an environment where the temperature is consistent and above -7° C (19.4° F).
3. Test drive the vehicle. The vehicle must exceed 48 km/h (30 mph) during the test drive. Do not cycle the ignition off when the test drive is completed.
4. With the scan tool, select View DTCs.

Is the DTC Active or Pending at this time?

Yes

- Go To 3.

No

- Go To 2.

2. **ENGINE COOLANT TEMPERATURE**
   1. Turn the ignition off.
   2. Allow the vehicle to sit with the ignition off in an environment where the temperature is consistent and above -7° C (19.4° F) until the engine coolant temperature is equal to ambient temperature.
   3. Turn the ignition on.
   4. With the scan tool, compare the AAT, ECT and IAT sensor values.

   Is the Engine Coolant Temperature Sensor value within 10° C (18° F) of the other two sensor values?

   Yes

   - Perform the INTERMITTENT CONDITION diagnostic procedure. Refer to **INTERMITTENT CONDITION** .

   No

   - Go To 3.

3. **ECT SENSOR VOLTAGE**
   1. Turn the ignition off.
   2. Disconnect the Engine Coolant Temperature (ECT) Sensor harness connector.
   3. Turn the ignition on.
   4. With the scan tool, read the Engine Coolant Temperature Sensor voltage.

   NOTE: **The sensor voltage should be approximately 5.0 Volts (plus or minus.1 of a Volt) with the connector disconnected.**

   Does the scan tool display the voltage as described above?

   Yes

   - Go To 4.

   No

- Go To 5.

4. **ECT SENSOR**

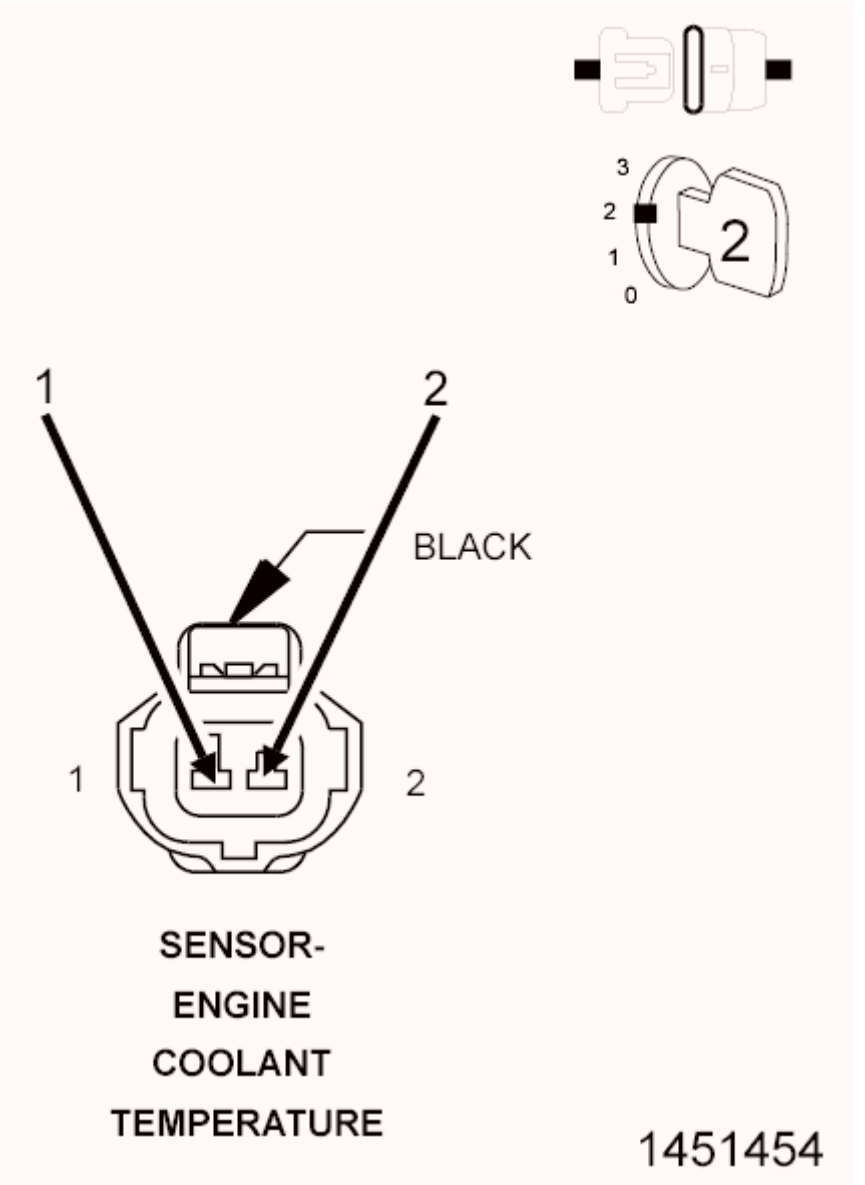

Fig. 86: Engine Coolant Temperature Sensor Harness Connector
Courtesy of CHRYSLER GROUP, LLC

1. With the scan tool, read the Engine Coolant Temperature Sensor voltage.
2. Connect a jumper wire between the (K2) ECT Signal circuit and the (K900) Sensor Ground circuit in the Engine Coolant Temperature Sensor harness connector.

NOTE: **The sensor voltage should be approximately 0.0 volts (plus or minus.1 of a volt) with the jumper wire in place.**

Does the scan tool display the voltage as described above?

Yes

- Verify that there is good pin to terminal contact in the ECT Sensor and Powertrain Control Module connectors. If OK, replace the Engine Coolant Temperature Sensor.
- Perform the POWERTRAIN VERIFICATION TEST. Refer to **POWERTRAIN VERIFICATION TEST** .

No

- Go To 5.

NOTE: Remove the jumper wire before continuing.

5. **EXCESSIVE RESISTANCE IN THE (K2) ECT SIGNAL CIRCUIT**
   1. Turn the ignition off.
   2. Disconnect the C2 PCM harness connector.

      CAUTION: Do not probe the PCM harness connectors. Probing the PCM harness connectors will damage the PCM terminals resulting in poor terminal to pin connection. Install the PCM Pinout Box (special tool #8815A, Kit, NGC, 38 Position) and PCM Pinout Box Adapter (special tool #8815-1, PCM Pinout Box Adapter) to perform diagnosis.

   3. Using a Voltmeter perform a voltage drop test. Backprobe the (K2) ECT Signal circuit at the ECT Sensor harness connector and probe the appropriate terminal of the PCM Pinout Box (special tool #8815A, Kit, NGC, 38 Position). Make sure the Voltmeter leads are connected so a positive polarity is displayed on the Voltmeter.

      WARNING: When the engine is operating, do not stand in direct line with the fan. Do not put your hands near the pulleys, belts or fan. Do not wear loose clothing. Failure to follow these instructions may result in possible serious or fatal injury.

   4. Start the engine and allow it to reach normal operating temperature.
   5. Monitor the Voltmeter.

      Is the voltage below 0.5 of a volt?

      Yes

      - Go To 6.

No

- Repair the open in the (K2) ECT Signal circuit.
- Perform the POWERTRAIN VERIFICATION TEST. Refer to **POWERTRAIN VERIFICATION TEST** .

6. **EXCESSIVE RESISTANCE IN THE (K900) SENSOR GROUND CIRCUIT**
   1. Turn the ignition off.
   2. Move the Voltmeter leads to backprobe the (K900) Sensor Ground circuit at the ECT Sensor harness connector and to probe the appropriate terminal of the PCM Pinout Box (special tool #8815A, Kit, NGC, 38 Position). Make sure the Voltmeter leads are connected so a positive polarity is indicated on the Voltmeter.

      WARNING: **When the engine is operating, do not stand in direct line with the fan. Do not put your hands near the pulleys, belts or fan. Do not wear loose clothing. Failure to follow these instructions may result in possible serious or fatal injury.**

   3. Start the engine and allow it to reach normal operating temperature.
   4. Monitor the Voltmeter.

      Is the voltage below 0.5 of a volt?

      Yes

      - Go To 7.

      No

      - Repair the open in the (K900) Sensor ground circuit.
      - Perform the POWERTRAIN VERIFICATION TEST. Refer to **POWERTRAIN VERIFICATION TEST** .

7. **(K2) ECT SIGNAL CIRCUIT SHORTED TO VOLTAGE**

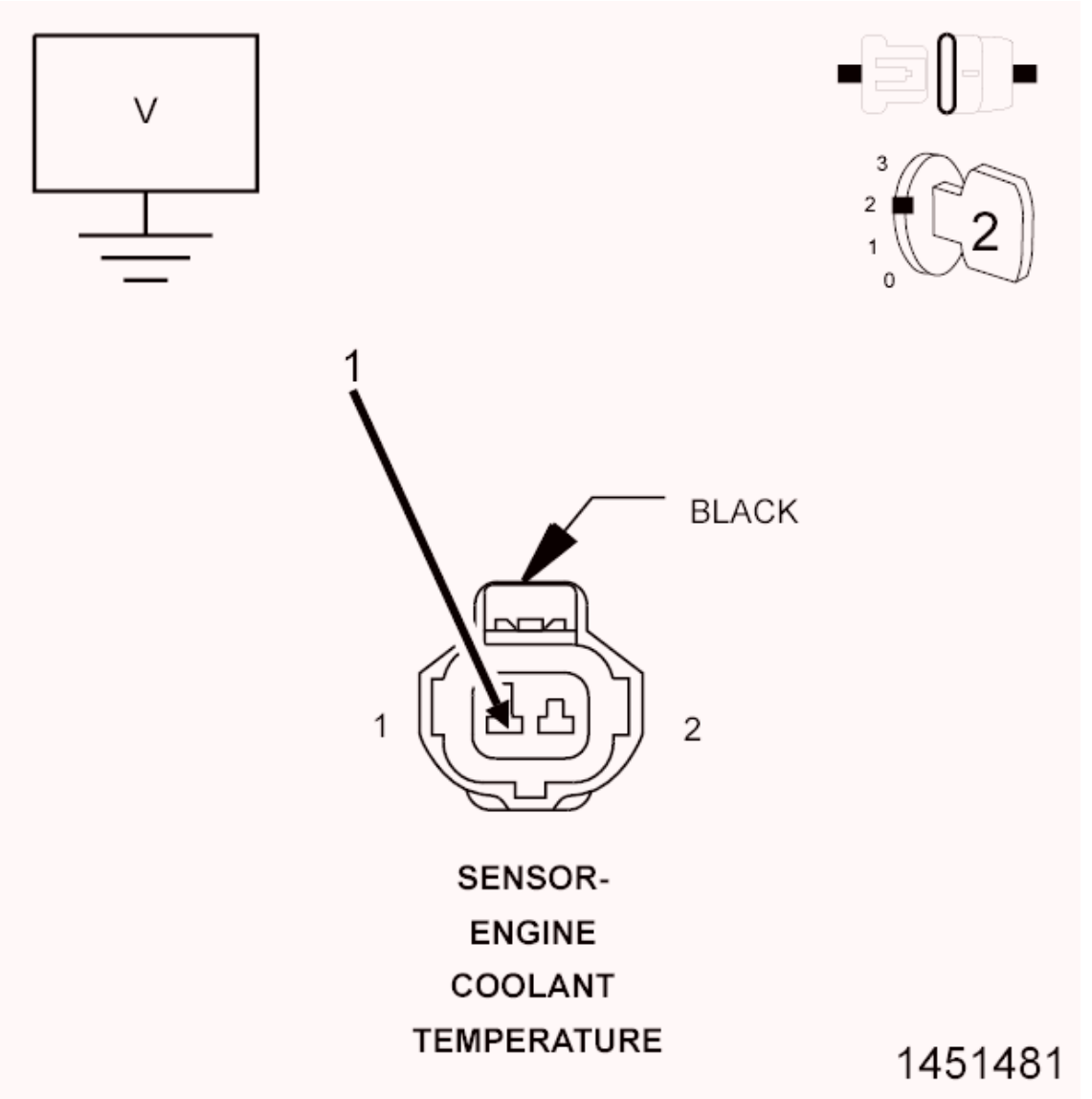

Fig. 87: Measuring Voltage On ECT Sensor Signal Circuit Harness Connector
Courtesy of CHRYSLER GROUP, LLC

1. Turn the ignition off.
2. Disconnect the PCM Pinout Box (special tool #8815A, Kit, NGC, 38 Position) from the C2 PCM harness connector.
3. Ignition on, engine not running.
4. Measure the voltage on the (K2) ECT Signal circuit in the ECT Sensor harness connector.

   Is the there any voltage present?

   Yes

   - Repair the short to voltage in the (K2) ECT Signal circuit.

- Perform the POWERTRAIN VERIFICATION TEST. Refer to **POWERTRAIN VERIFICATION TEST** .

No

- Go To 8.

8. **(K2) ECT SIGNAL CIRCUIT SHORTED GROUND**

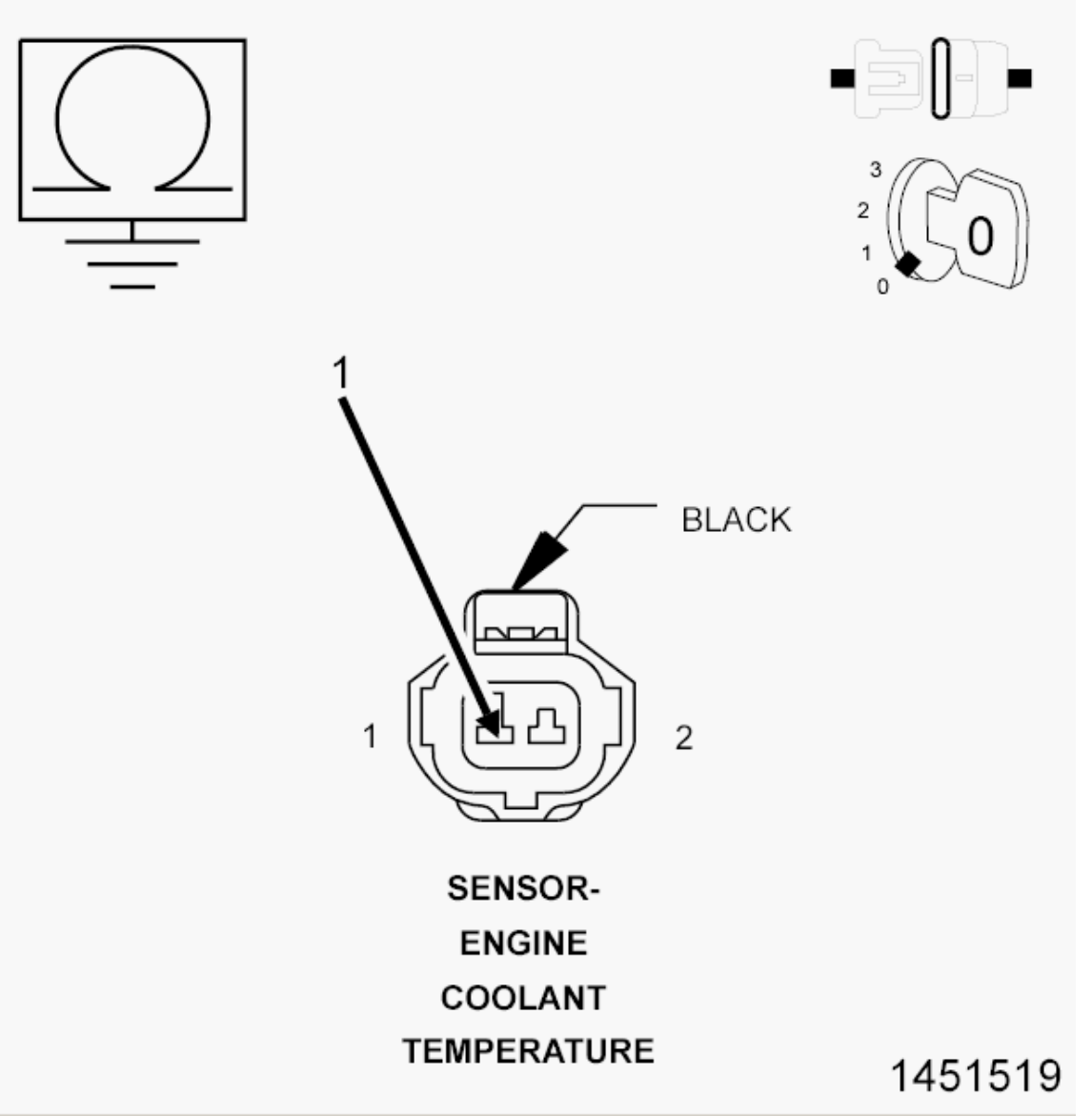

Fig. 88: Measuring Resistance Between Ground And ECT Sensor Signal Circuit In Sensor Harness Connector
Courtesy of CHRYSLER GROUP, LLC

1. Turn the ignition off.
2. Measure the resistance between ground and the (K2) ECT Signal circuit in the ECT Sensor harness

connector.

Is the resistance below 100 Ohms?

Yes

- Repair the short to ground in the (K2) ECT Signal circuit.
- Perform the POWERTRAIN VERIFICATION TEST. Refer to **POWERTRAIN VERIFICATION TEST** .

No

- Go To 9.

9. **(K2) ECT SIGNAL CIRCUIT SHORTED TO THE (K900) SENSOR GROUND CIRCUIT**

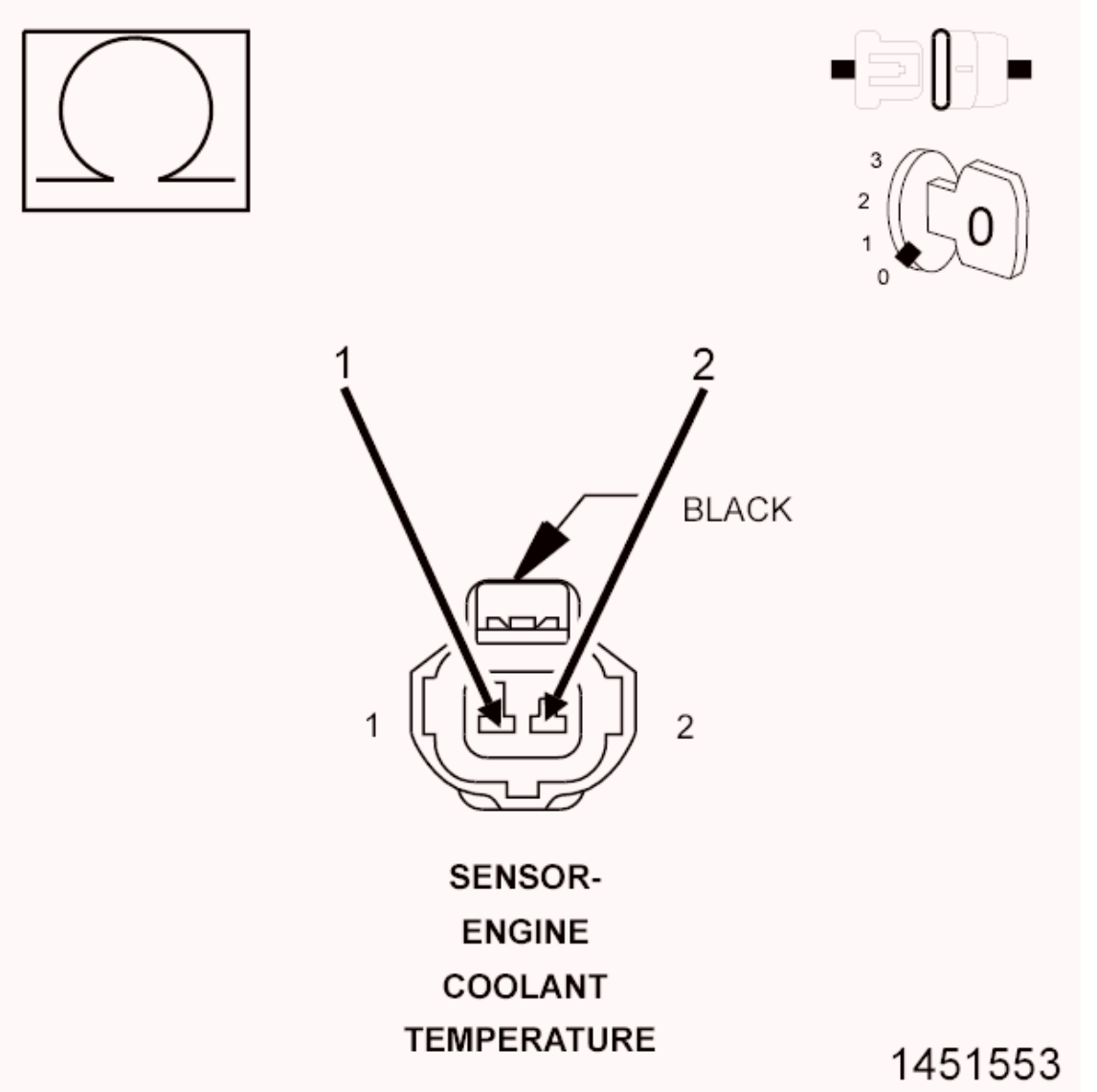

Fig. 89: Measuring Resistance Between ECT Sensor Signal Circuit And Ground Circuit In Sensor Harness Connector
Courtesy of CHRYSLER GROUP, LLC

1. Turn the ignition off.
2. Disconnect the C2 PCM harness connector.
3. Measure the resistance between the (K900) Sensor ground circuit and the (K2) ECT Signal circuit in the ECT Sensor harness connector.

   Is the resistance below 5.0 Ohms?

   Yes

   - Repair the short to between the (K900) Sensor ground circuit and the (K2) ECT Signal circuit.
   - Perform the POWERTRAIN VERIFICATION TEST. Refer to **POWERTRAIN VERIFICATION TEST** .

   No

   - Go To 10.

10. **POWERTRAIN CONTROL MODULE (PCM)**
    1. Using the wiring diagram/schematic as a guide, inspect the wiring and connectors between the ECT Sensor and the Powertrain Control Module (PCM).
    2. Look for any chafed, pierced, pinched or partially broken wires.
    3. Look for broken, bent, pushed out or corroded terminals. Verify that there is good pin to terminal contact in the ECT Sensor and Powertrain Control Module connectors.
    4. Refer to any Technical Service Bulletins that may apply.

       Were there any problems found?

       Yes

       - Repair as necessary.
       - Perform the POWERTRAIN VERIFICATION TEST. Refer to **POWERTRAIN VERIFICATION TEST** .

       No

       - Replace and program the Powertrain Control Module in accordance with the Service Information. Refer to **MODULE, POWERTRAIN CONTROL, REMOVAL** .
       - Perform the POWERTRAIN VERIFICATION TEST. Refer to **POWERTRAIN VERIFICATION TEST** .

P0117-ENGINE COOLANT TEMPERATURE SENSOR CIRCUIT LOW

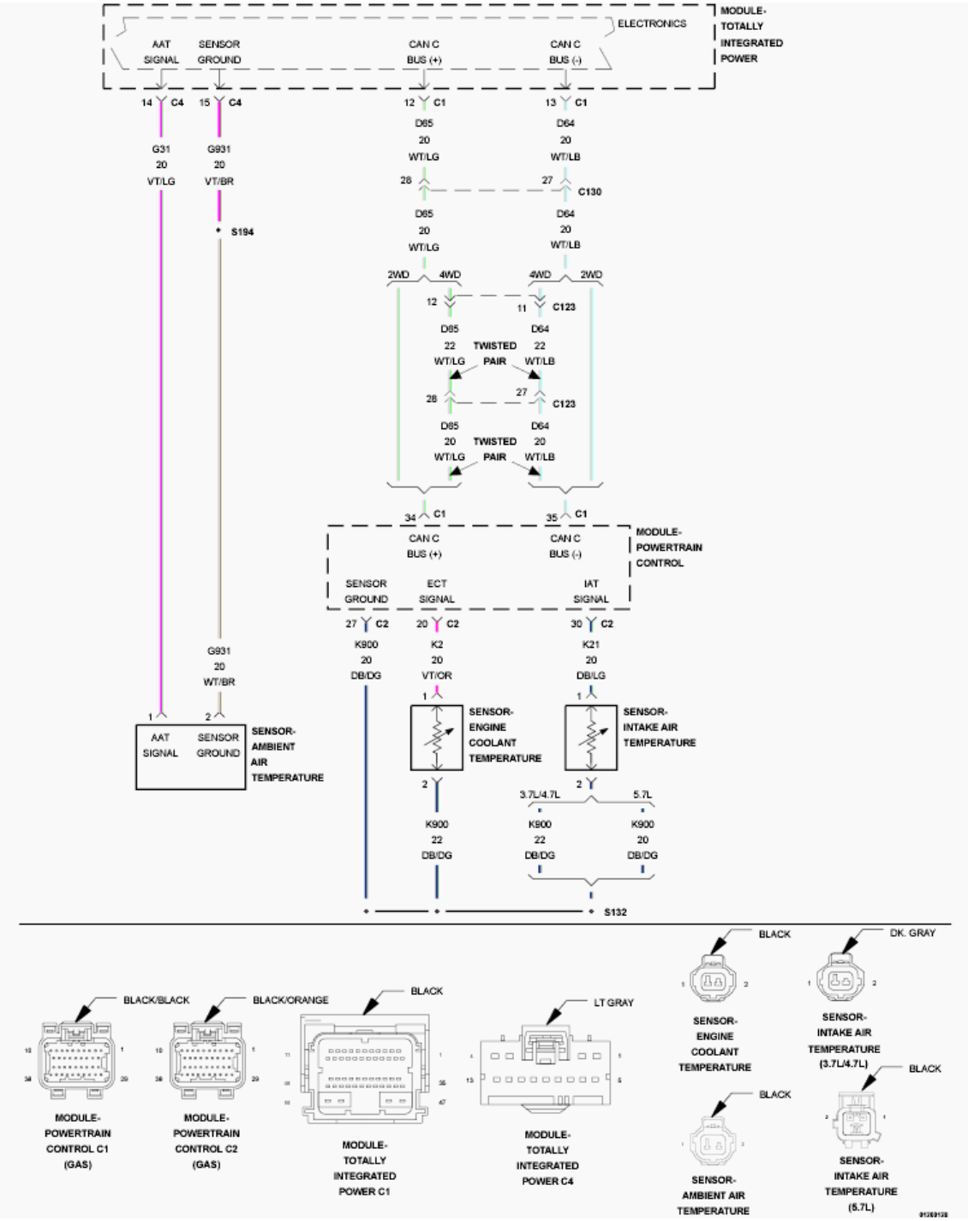

Fig. 90: ECT Sensor, IAT Sensor & AAT Sensor Circuit Schematic
Courtesy of CHRYSLER GROUP, LLC

For a complete wiring diagram, **refer to appropriate SYSTEM WIRING DIAGRAMS article** .

THEORY OF OPERATION

The engine coolant temperature sensor is a negative temperature coefficient thermistor-type sensor whose

resistance varies inversely with temperature. At cold temperatures the sensor resistance is high so the voltage is high. As the coolant temperature increases the resistance decreases and the voltage becomes low.

WHEN MONITORED:

With the ignition on. Battery voltage greater than 10.4 Volts.

SET CONDITION:

The Powertrain Control Module (PCM) detects that the Engine Coolant Temperature Sensor input voltage is below the minimum acceptable value. One Trip Fault. Three good trips to clear the MIL. The MIL and ETC light will illuminate if equipped.

POSSIBLE CAUSES

Possible Causes
(K2) ECT SIGNAL CIRCUIT SHORTED TO GROUND
(K2) ECT SIGNAL CIRCUIT SHORTED TO THE (K900) SENSOR GROUND CIRCUIT
EXCESSIVE RESISTANCE IN THE (K2) ECT SIGNAL CIRCUIT
ENGINE COOLANT TEMPERATURE SENSOR
POWERTRAIN CONTROL MODULE (PCM)

Always perform the Pre-Diagnostic Troubleshooting procedure before proceeding. Refer to PRE-DIAGNOSTIC TROUBLESHOOTING PROCEDURE .

DIAGNOSTIC TEST

1. **ACTIVE DTC**
   1. Start the engine and allow it to reach normal operating temperature.

      WARNING: **When the engine is operating, do not stand in direct line with the fan. Do not put your hands near the pulleys, belts or fan. Do not wear loose clothing. Failure to follow these instructions may result in possible serious or fatal injury.**

      NOTE: Diagnose and repair any system voltage DTCs before continuing with this test.

   2. With the scan tool, select View DTCs.

      Is the DTC Active at this time?

      Yes

      - Go To 2.

No

- Perform the INTERMITTENT CONDITION diagnostic procedure. Refer to **INTERMITTENT CONDITION** .

2. **ECT SENSOR**
   1. Turn the ignition off.
   2. Disconnect the ECT harness connector.
   3. Ignition on, engine not running.
   4. With the scan tool, read ECT voltage.

NOTE: **The sensor voltage should be approximately 5.0 Volts (plus or minus.1 of a volt) with the connector disconnected.**

Does the scan tool display the voltage as described above?

Yes

- Verify that there is good pin to terminal contact in the Sensor and Powertrain Control Module connectors. Replace the ECT Sensor if no problems were found with the connectors.
- Perform the POWERTRAIN VERIFICATION TEST. Refer to **POWERTRAIN VERIFICATION TEST** .

No

- Go To 3.

3. **(K2) ECT SIGNAL CIRCUIT SHORTED TO THE (K900) SENSOR GROUND CIRCUIT**

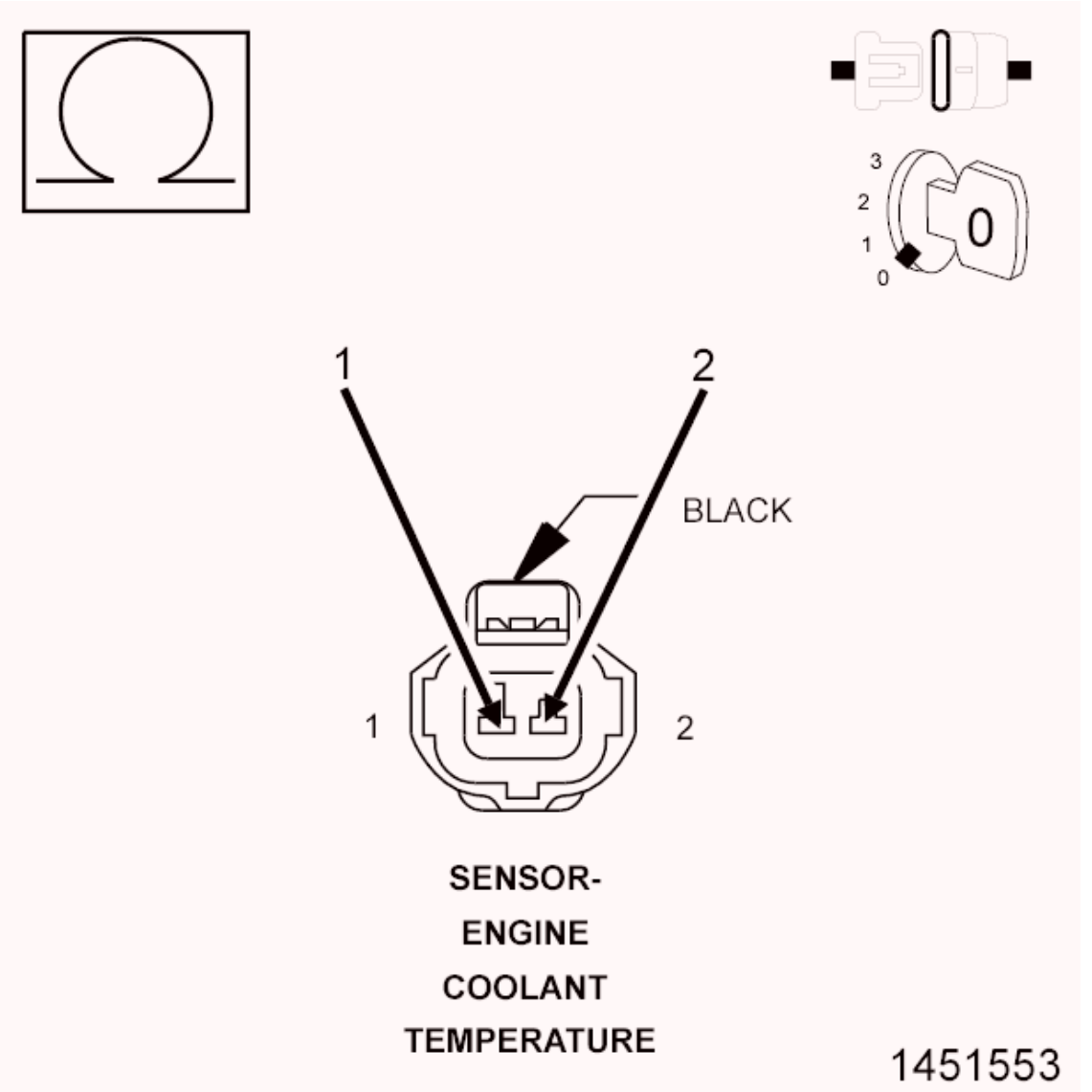

Fig. 91: Measuring Resistance Between ECT Sensor Signal Circuit And Ground Circuit In Sensor Harness Connector
Courtesy of CHRYSLER GROUP, LLC

1. Turn the ignition off.
2. Disconnect the C2 PCM harness connector.
3. Measure the resistance between the (K900) Sensor ground circuit and the (K2) ECT Signal circuit in the ECT Sensor harness connector.

   Is the resistance below 5.0 Ohms?

   Yes

   - Repair the short to between the (K900) Sensor ground circuit and the (K2) ECT Signal circuit.

- Perform the POWERTRAIN VERIFICATION TEST. Refer to **POWERTRAIN VERIFICATION TEST** .

No

- Go To 4.

4. **(K2) ECT SIGNAL CIRCUIT SHORTED GROUND**

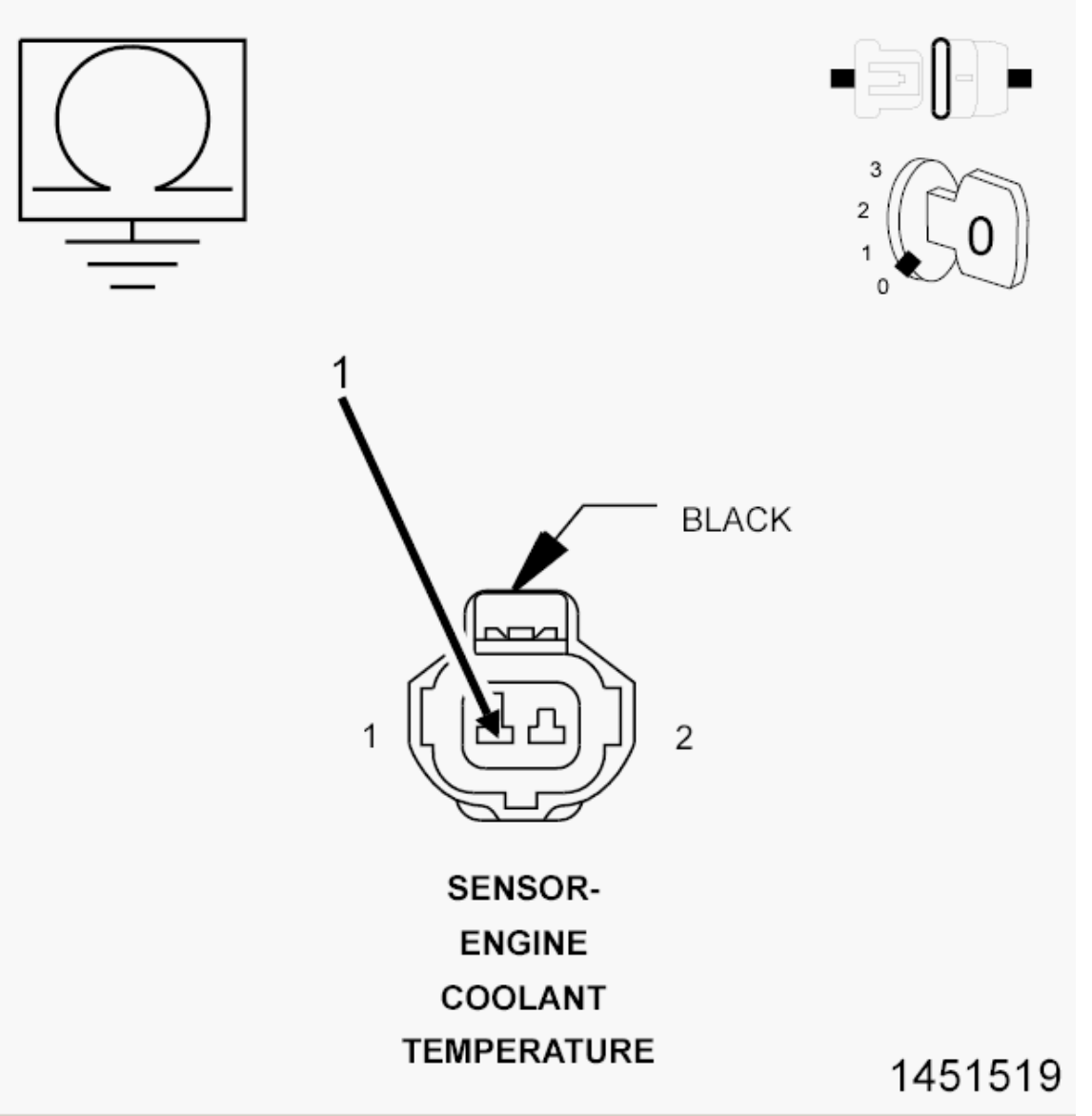

Fig. 92: Measuring Resistance Between Ground And ECT Sensor Signal Circuit In Sensor Harness Connector
Courtesy of CHRYSLER GROUP, LLC

1. Measure the resistance between ground and the (K2) ECT Signal circuit in the ECT Sensor harness connector.

Is the resistance below 100 Ohms?

Yes

- Repair the short to ground in the (K2) ECT Signal circuit.
- Perform the POWERTRAIN VERIFICATION TEST. Refer to **POWERTRAIN VERIFICATION TEST** .

No

- Go To 5.

5. **EXCESSIVE RESISTANCE IN THE (K2) ECT SIGNAL CIRCUIT**

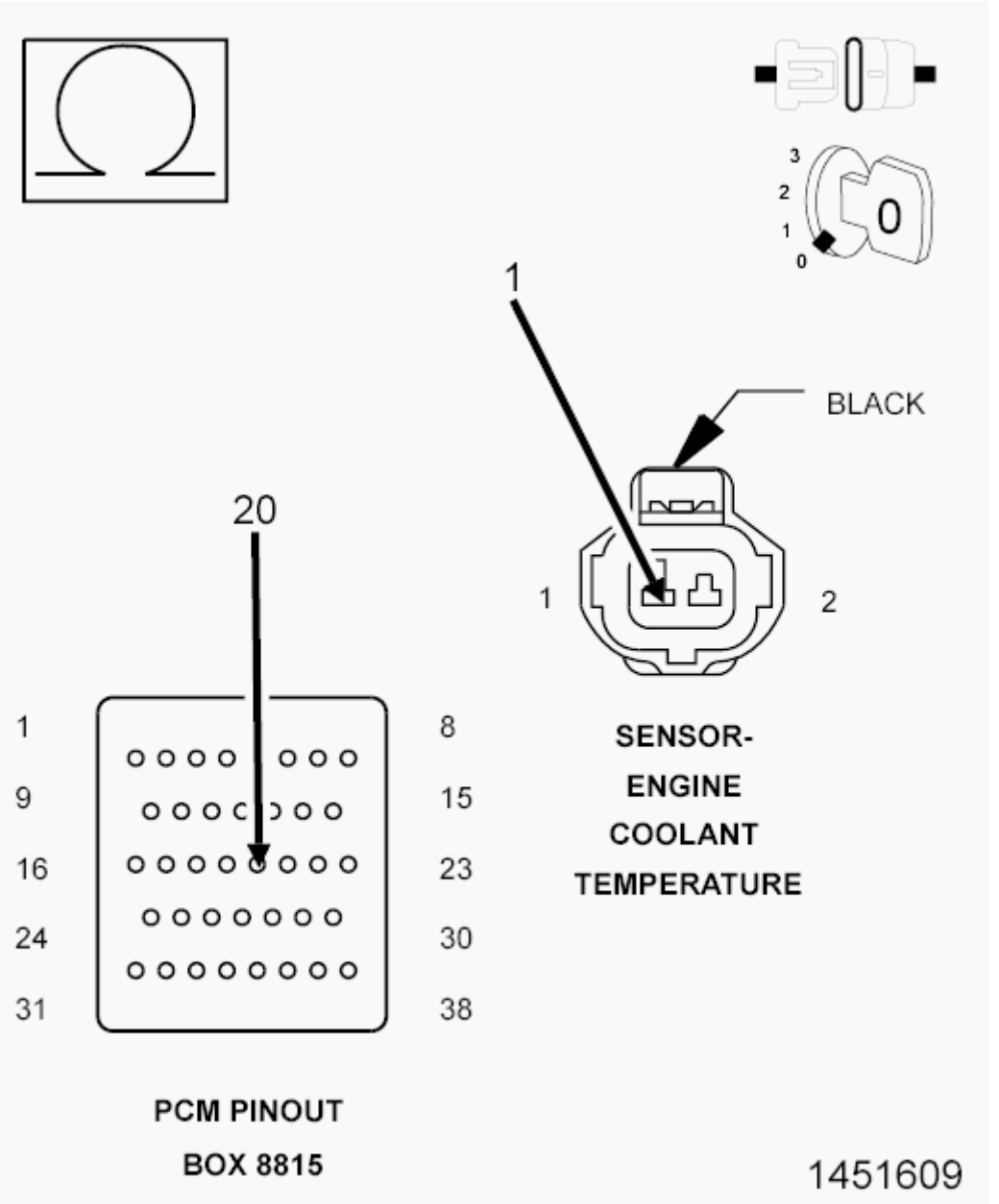

Fig. 93: Measuring Resistance Of ECT Sensor Signal Circuit From Harness Connector To Appropriate Terminal Of PCM Pinout Box 8815
Courtesy of CHRYSLER GROUP, LLC

CAUTION: Do not probe the PCM harness connectors. Probing the PCM harness connectors will damage the PCM terminals, resulting in poor terminal to pin connection. Install the PCM Pinout Box (special tool #8815A, Kit, NGC, 38 Position) to perform diagnosis.

1. Measure the resistance of the (K2) ECT Signal circuit between the Engine Coolant Temperature Sensor harness connector and the appropriate terminal of PCM Pinout Box (special tool #8815A, Kit, NGC, 38 Position).

Is the resistance below 5.0 Ohms?

Yes

- Go To 6.

No

- Repair the excessive resistance in the (K2) ECT Signal circuit.
- Perform the POWERTRAIN VERIFICATION TEST. Refer to **POWERTRAIN VERIFICATION TEST** .

6. **POWERTRAIN CONTROL MODULE (PCM)**
    1. Using the wiring diagram/schematic as a guide, inspect the wiring and connectors between the ECT Sensor and the Powertrain Control Module (PCM).
    2. Look for any chafed, pierced, pinched or partially broken wires.
    3. Look for broken, bent, pushed out or corroded terminals. Verify that there is good pin to terminal contact in the Sensor and Control Module connectors.
    4. Refer to any Technical Service Bulletins that may apply.

    Were there any problems found?

    Yes

    - Repair as necessary.
    - Perform the POWERTRAIN VERIFICATION TEST. Refer to **POWERTRAIN VERIFICATION TEST** .

    No

    - Replace and program the Powertrain Control Module in accordance with the Service Information. Refer to **MODULE, POWERTRAIN CONTROL, REMOVAL** .
    - Perform the POWERTRAIN VERIFICATION TEST. Refer to **POWERTRAIN VERIFICATION TEST** .

P0118-ENGINE COOLANT TEMPERATURE SENSOR CIRCUIT HIGH

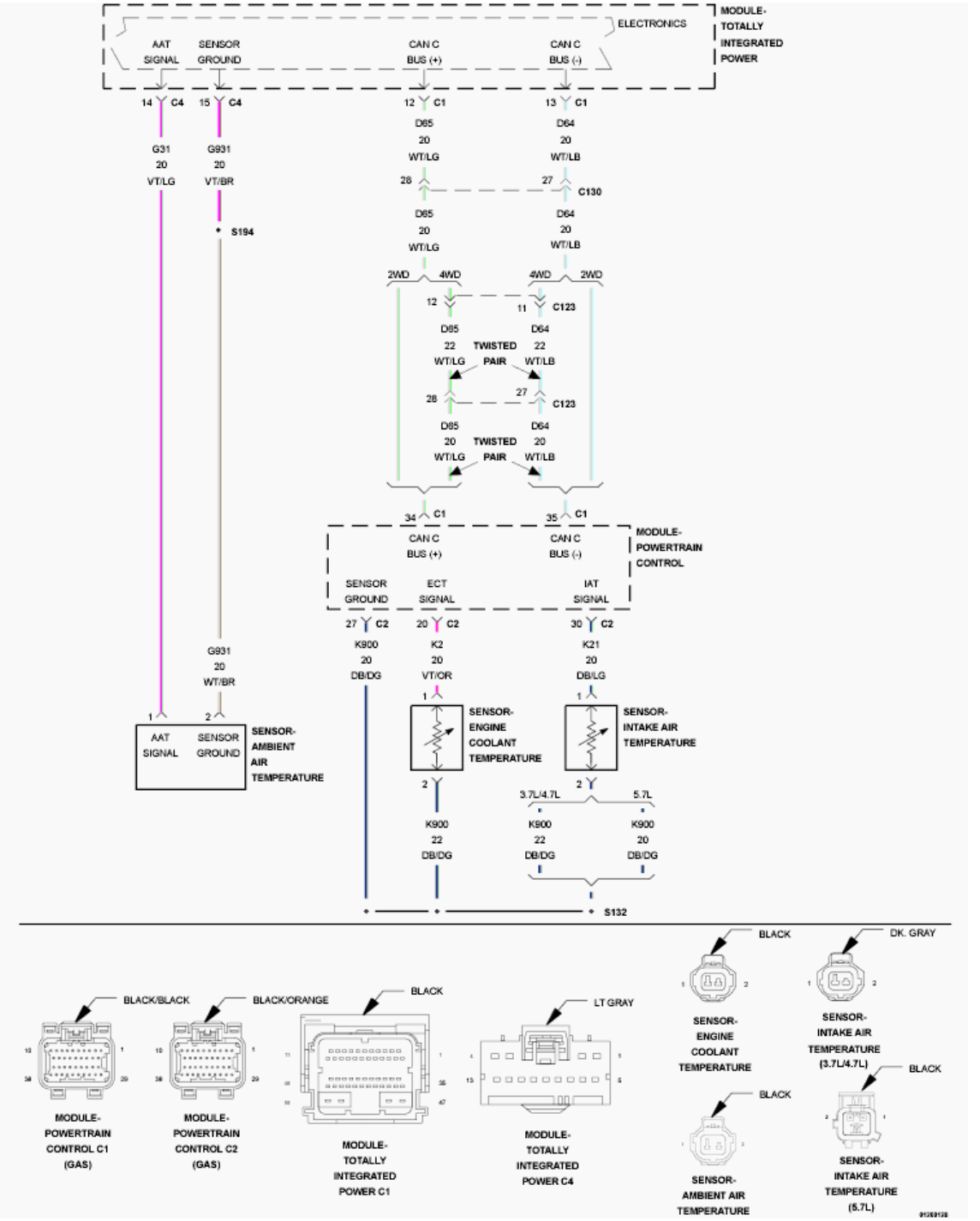

Fig. 94: ECT Sensor, IAT Sensor & AAT Sensor Circuit Schematic
Courtesy of CHRYSLER GROUP, LLC

For a complete wiring diagram, **refer to appropriate SYSTEM WIRING DIAGRAMS article** .

WHEN MONITORED:

With the ignition on. Battery voltage greater than 10.4 Volts.

SET CONDITION:

The Powertrain Control Module (PCM) detects that the Engine Coolant Temperature Sensor input voltage is above the maximum acceptable value. One Trip Fault. Three good trips to turn off the MIL. The MIL and ETC light will illuminate if equipped.

POSSIBLE CAUSES

Possible Causes
(K2) ECT SIGNAL CIRCUIT SHORTED TO VOLTAGE
(K2) ECT SIGNAL CIRCUIT OPEN
(K900) SENSOR GROUND CIRCUIT OPEN
ENGINE COOLANT TEMPERATURE SENSOR
POWERTRAIN CONTROL MODULE (PCM)

Always perform the Pre-Diagnostic Troubleshooting procedure before proceeding. Refer to PRE-DIAGNOSTIC TROUBLESHOOTING PROCEDURE .

DIAGNOSTIC TEST

1. **ACTIVE DTC**
   1. Start the engine and allow it to reach normal operating temperature.

      WARNING: **When the engine is operating, do not stand in direct line with the fan. Do not put your hands near the pulleys, belts or fan. Do not wear loose clothing. Failure to follow these instructions may result in possible serious or fatal injury.**

      NOTE: **Diagnose and repair any system voltage DTCs before continuing with this test.**

   2. With the scan tool, select View DTCs.

      Is the DTC Active at this time?

      Yes

      - Go To 2.

      No

      - Perform the INTERMITTENT CONDITION diagnostic procedure. Refer to **INTERMITTENT CONDITION** .
2. **ECT SENSOR**

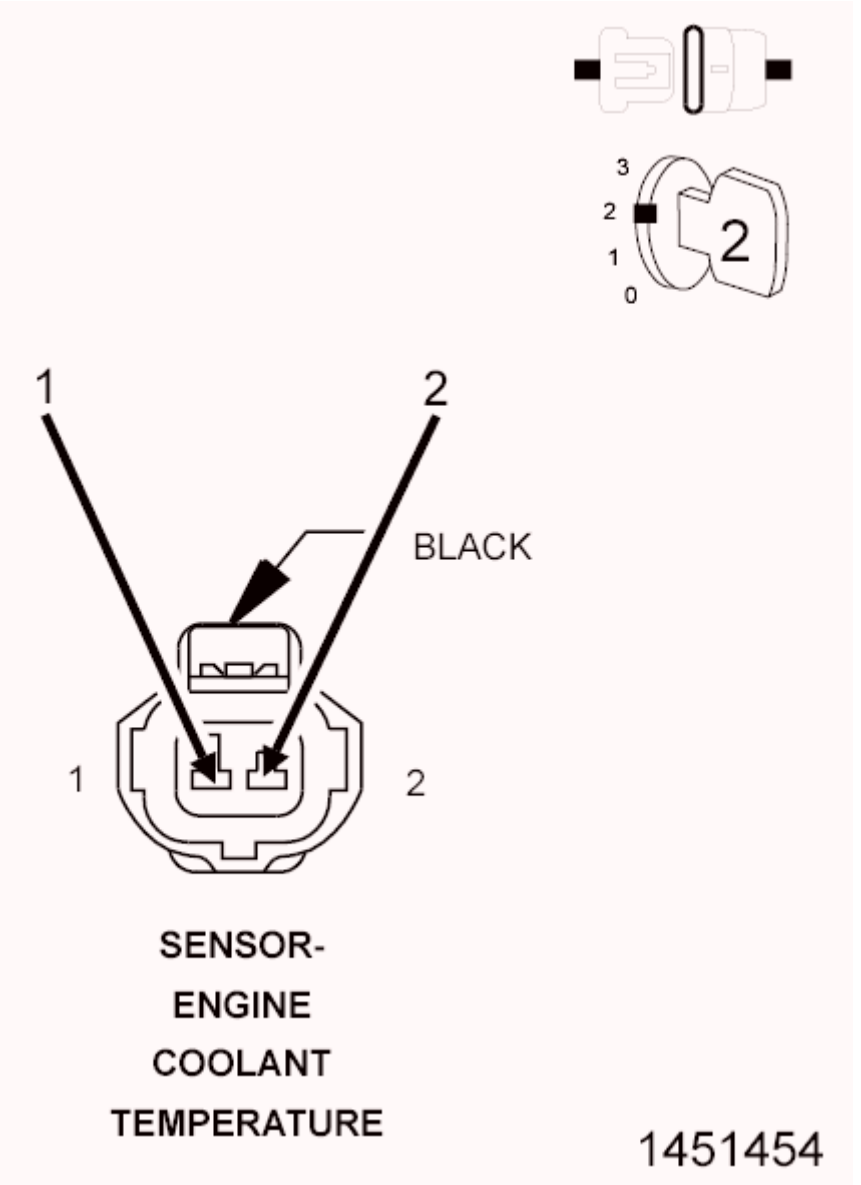

Fig. 95: Engine Coolant Temperature Sensor Harness Connector
Courtesy of CHRYSLER GROUP, LLC

1. Turn the ignition off.
2. Disconnect the ECT harness connector.
3. Ignition on, engine not running.
4. With the scan tool, read ECT voltage.
5. Connect a jumper wire between the (K2) ECT Signal circuit and the (K900) Sensor ground circuit in the ECT harness connector.

NOTE: **The sensor voltage should be approximately 0.0 volts (plus or minus.1 of a volt) with the jumper wire in place.**

Does the scan tool display the voltage as described above?

Yes

- Verify that there is good pin to terminal contact in the Sensor and Powertrain Control Module connectors. Replace the ECT Sensor if no problems were found with the connectors.
- Perform the POWERTRAIN VERIFICATION TEST. Refer to **POWERTRAIN VERIFICATION TEST** .

No

- Go To 3.

NOTE: Remove the jumper wire before continuing.

3. **(K2) ECT SIGNAL CIRCUIT SHORTED TO VOLTAGE**

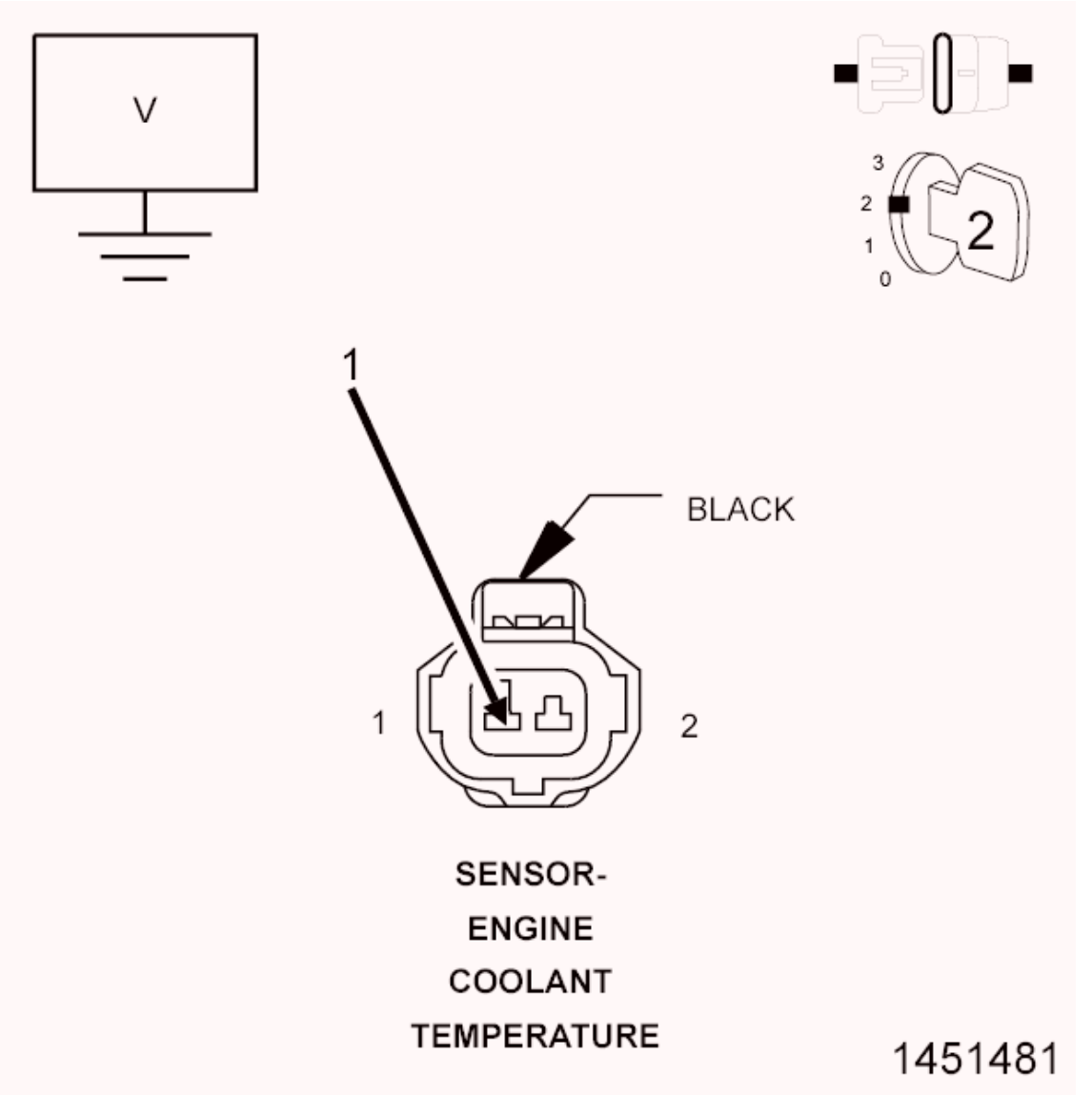

Fig. 96: Measuring Voltage On ECT Sensor Signal Circuit Harness Connector
Courtesy of CHRYSLER GROUP, LLC

1. Turn the ignition off.
2. Disconnect the C2 PCM harness connector.
3. Ignition on, engine not running.
4. Measure the voltage on the (K2) ECT Signal circuit in the ECT Sensor harness connector.

   Is the there any voltage present?

   Yes

   - Repair the short to voltage in the (K2) ECT Signal circuit.
   - Perform the POWERTRAIN VERIFICATION TEST. Refer to **POWERTRAIN**

VERIFICATION TEST .

No

- Go To 4.

4. **(K2) ECT SIGNAL CIRCUIT OPEN**

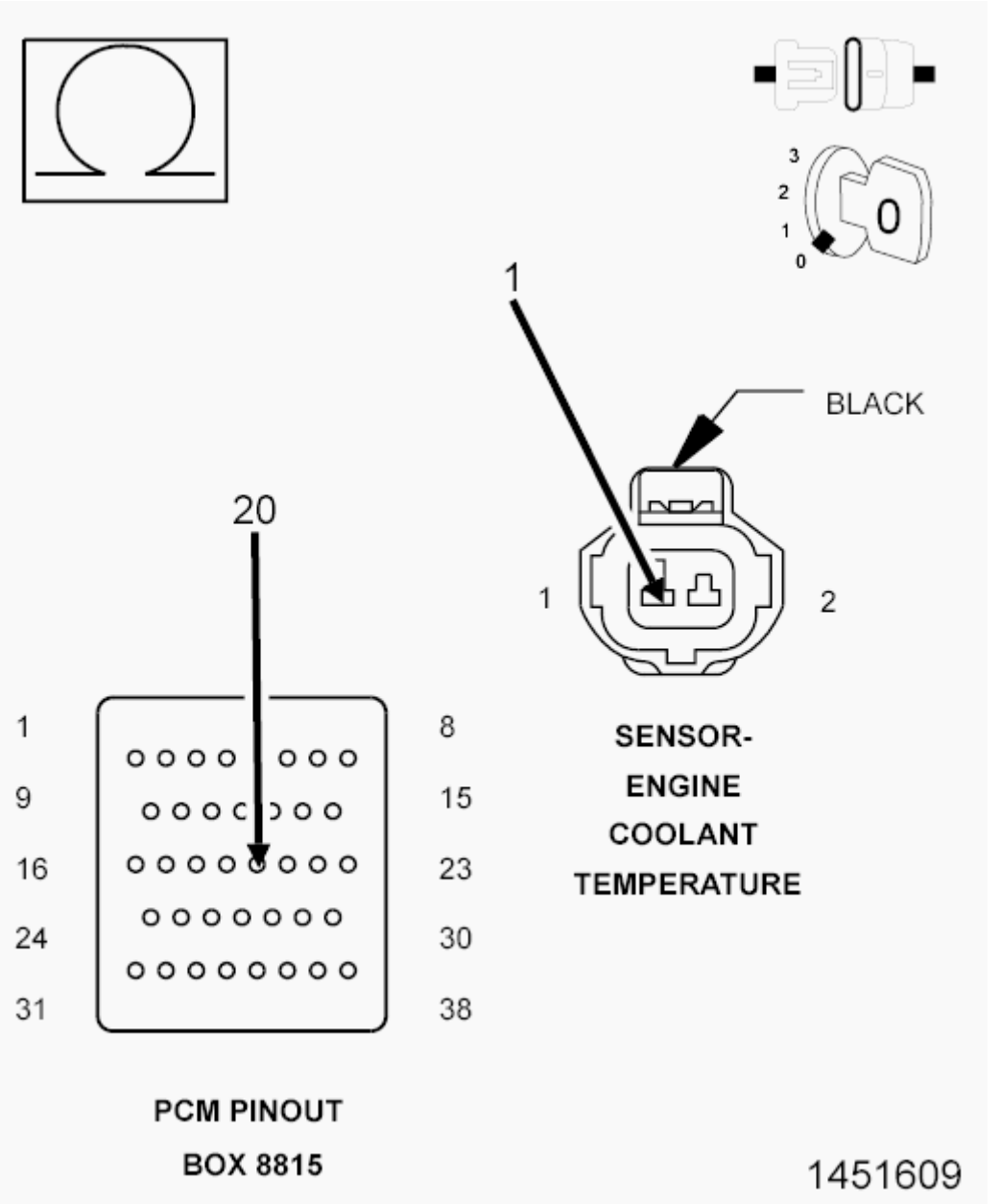

Fig. 97: Measuring Resistance Of ECT Sensor Signal Circuit From Harness Connector To Appropriate Terminal Of PCM Pinout Box 8815
Courtesy of CHRYSLER GROUP, LLC

1. Turn the ignition off.

CAUTION: Do not probe the PCM harness connectors. Probing the PCM harness connectors will damage the PCM terminals resulting in poor terminal to pin connection. Install the PCM Pinout Box (special tool #8815A, Kit, NGC, 38 Position) to perform diagnosis.

2. Measure the resistance of the (K2) ECT Signal circuit from the ECT Sensor harness connector to the appropriate terminal of PCM Pinout Box (special tool #8815A, Kit, NGC, 38 Position).

   Is the resistance below 5.0 Ohms?

   Yes

   - Go To 5.

   No

   - Repair the open in the (K2) ECT Signal circuit.
   - Perform the POWERTRAIN VERIFICATION TEST. Refer to **POWERTRAIN VERIFICATION TEST** .

5. **(K900) SENSOR GROUND CIRCUIT OPEN**

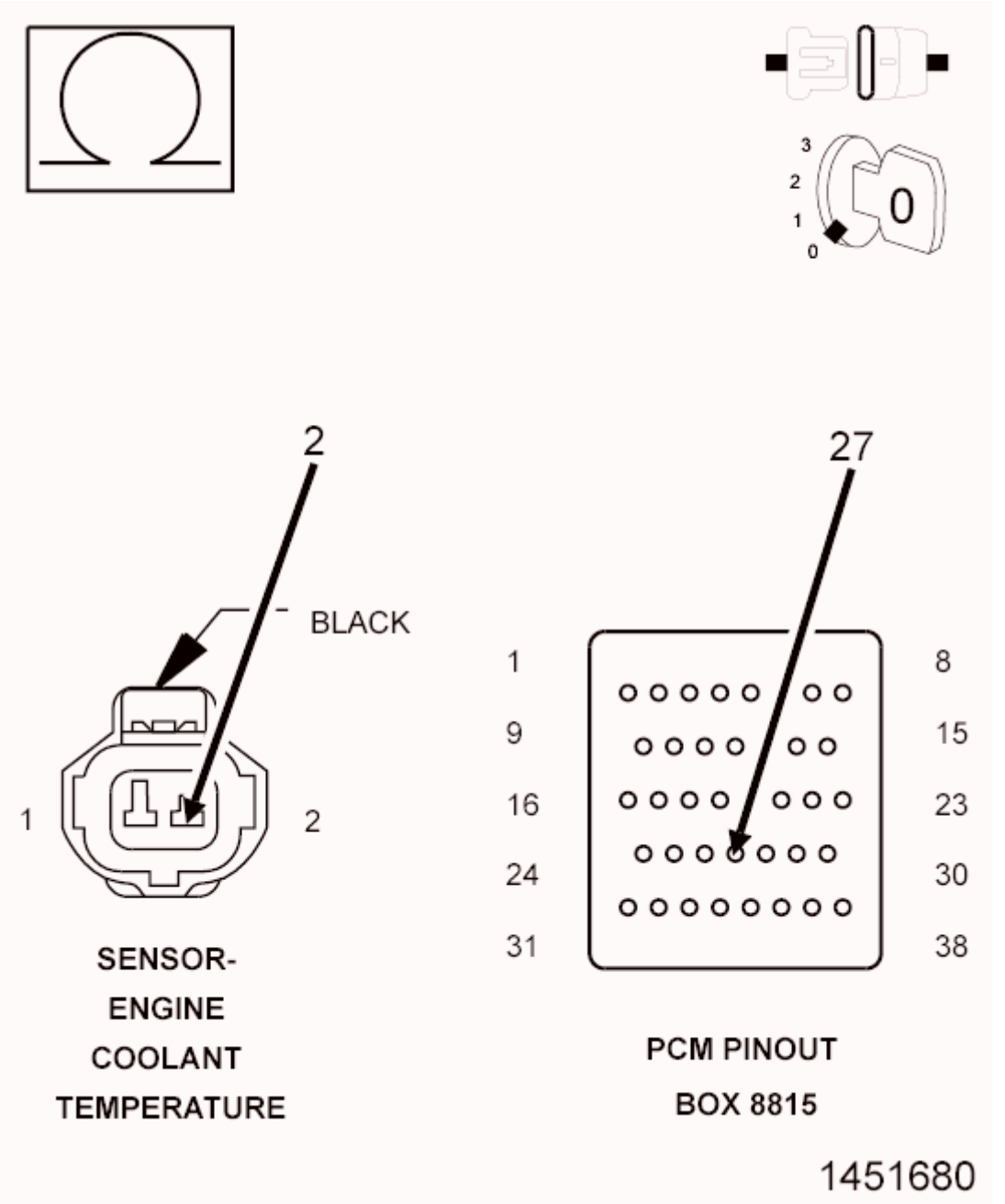

Fig. 98: Measuring Resistance Of ECT Sensor Ground Circuit From Harness Connector To Appropriate Terminal Of PCM Pinout Box 8815
Courtesy of CHRYSLER GROUP, LLC

1. Measure the resistance of the (K900) Sensor ground circuit from the ECT Sensor harness connector to the appropriate terminal of PCM Pinout Box (special tool #8815A, Kit, NGC, 38 Position).

   Is the resistance below 5.0 Ohms?

   Yes

- Go To 6.

No

- Repair the open in the (K900) Sensor ground circuit.
- Perform the POWERTRAIN VERIFICATION TEST. Refer to **POWERTRAIN VERIFICATION TEST** .

6. **POWERTRAIN CONTROL MODULE (PCM)**
    1. Using the wiring diagram/schematic as a guide, inspect the wiring and connectors between the ECT Sensor and the Powertrain Control Module (PCM).
    2. Look for any chafed, pierced, pinched or partially broken wires.
    3. Look for broken, bent, pushed out or corroded terminals. Verify that there is good pin to terminal contact in the Sensor and Control Module connectors.
    4. Refer to any Technical Service Bulletins that may apply.

    Were there any problems found?

    Yes

    - Repair as necessary.
    - Perform the POWERTRAIN VERIFICATION TEST. Refer to **POWERTRAIN VERIFICATION TEST** .

    No

    - Replace and program the Powertrain Control Module in accordance with the Service Information. Refer to **MODULE, POWERTRAIN CONTROL, REMOVAL** .
    - Perform the POWERTRAIN VERIFICATION TEST. Refer to **POWERTRAIN VERIFICATION TEST** .

P0121-THROTTLE POSITION SENSOR 1 PERFORMANCE

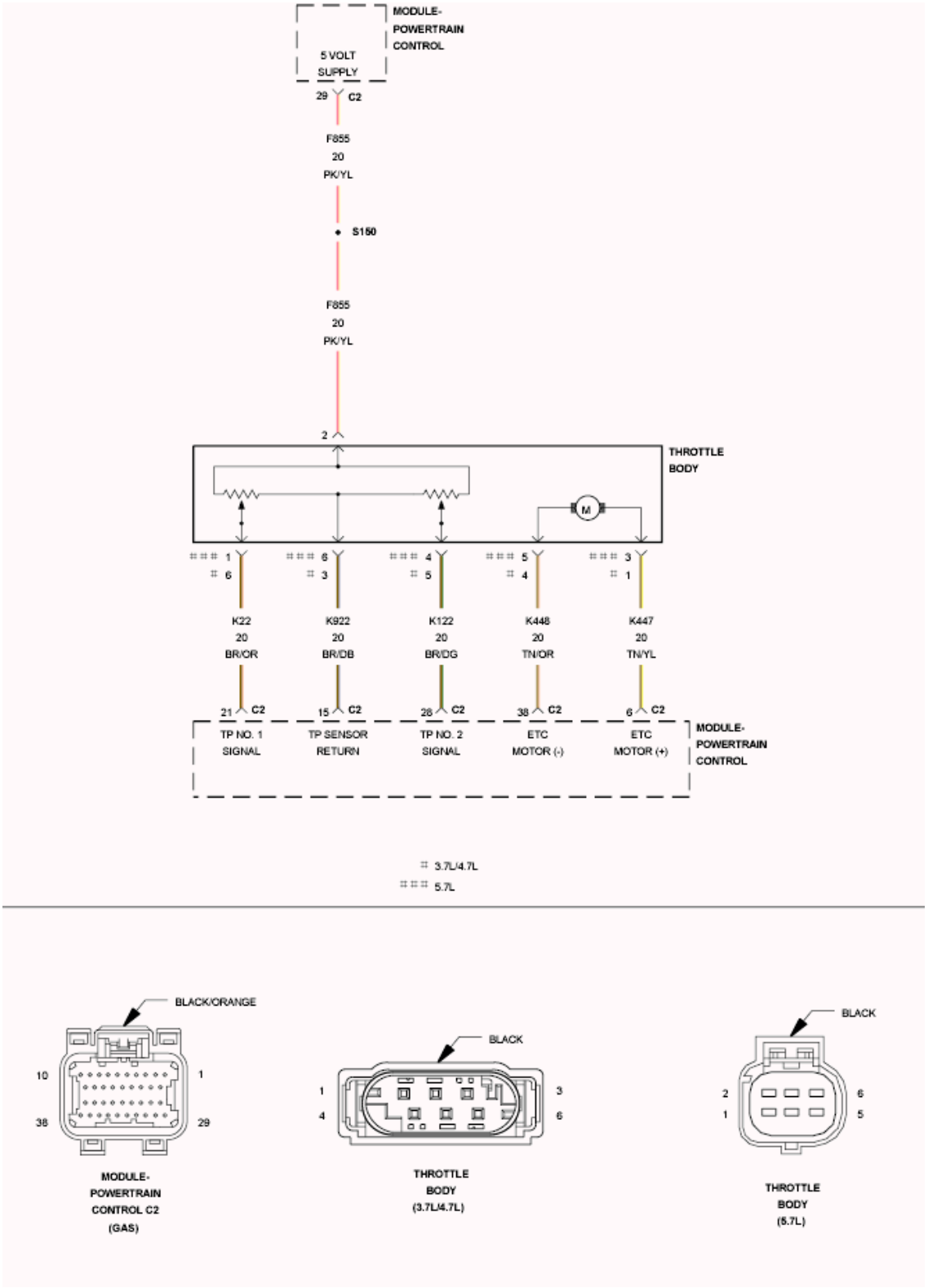

Fig. 99: Throttle Body Circuit Schematic
Courtesy of CHRYSLER GROUP, LLC

For a complete wiring diagram **refer to appropriate SYSTEM WIRING DIAGRAMS article** .

WHEN MONITORED:

Ignition on and No MAP Sensor DTCs set.

SET CONDITION:

The PCM detects that the sensor input voltage does not fall within a valid range based on engine speed and load. Two Trip Fault. ETC light will illuminate. P2135 should set with this code also.

POSSIBLE CAUSES

Possible Causes
EXCESSIVE RESISTANCE IN THE (K22) TP SENSOR NO. 1 SIGNAL CIRCUIT
EXCESSIVE RESISTANCE IN THE (K122) TP SENSOR NO. 2 SIGNAL CIRCUIT
EXCESSIVE RESISTANCE IN THE (F855) 5-VOLT SUPPLY CIRCUIT
EXCESSIVE RESISTANCE IN THE (K922) TP SENSOR RETURN CIRCUIT
(K22) TP SENSOR NO. 1 SIGNAL CIRCUIT SHORTED TO THE (K122) TP SENSOR NO. 2 SIGNAL CIRCUIT
THROTTLE POSITION SENSOR/THROTTLE BODY
POWERTRAIN CONTROL MODULE (PCM)

Always perform the Pre-Diagnostic Troubleshooting procedure before proceeding. Refer to PRE-DIAGNOSTIC TROUBLESHOOTING PROCEDURE .

DIAGNOSTIC TEST

1. **ACTIVE DTC**

NOTE: **Diagnose and repair any Throttle Body circuit, system voltage, or sensor supply voltage DTCs before continuing with this test.**

1. Start the engine and allow it to reach operating temperature.

WARNING: **When the engine is operating, do not stand in direct line with the fan. Do not put your hands near the pulleys, belts or fan. Do not wear loose clothing. Failure to follow these instructions may result in possible serious or fatal injury.**

2. With the scan tool select View DTCs.

NOTE: **If the DTC does not reset it may be necessary to test drive the vehicle.**

Is the DTC Active at this time?

Yes

- Go To 2.

No

- Go To 9.

2. **EXCESSIVE RESISTANCE IN THE (K22) TP SENSOR NO. 1 SIGNAL CIRCUIT**
   1. Turn the ignition off.
   2. Disconnect the C2 PCM harness connector.

      CAUTION: Do not probe the PCM harness connectors. Probing the PCM harness connectors will damage the PCM terminals resulting in poor terminal to pin connection. Install the PCM Pinout Box (special tool #8815A, Kit, NGC, 38 Position) along with the Adapter (special tool #8815-1, PCM Pinout Box Adapter) to perform the diagnosis.

   3. Using a voltmeter perform a voltage drop test. Backprobe the (K22) TP Sensor No. 1 Signal circuit at the Throttle Body harness connector and to probe the appropriate terminal of the special tool (special tool #8815A, Kit, NGC, 38 Position). Make sure the voltmeter leads are connected so a positive polarity is displayed on the voltmeter.

      WARNING: When the engine is operating, do not stand in direct line with the fan. Do not put your hands near the pulleys, belts or fan. Do not wear loose clothing. Failure to follow these instructions may result in possible serious or fatal injury.

   4. Start the engine and allow it to reach normal operating temperature.
   5. Monitor the voltmeter.

      Is the voltage below 0.5 of a volt?

      Yes

      - Go To 3.

      No

      - Repair the excessive resistance in the (K22) TP Sensor No. 1 Signal circuit.
      - Perform the POWERTRAIN VERIFICATION TEST. Refer to **POWERTRAIN VERIFICATION TEST** .

3. **EXCESSIVE RESISTANCE IN THE (K122) TP SENSOR NO. 2 SIGNAL CIRCUIT**
   1. Turn the ignition off.
   2. Move the voltmeter leads to backprobe the (K122) TP Sensor No. 2 Signal circuit at the Throttle

Body harness connector and to probe the appropriate terminal of the special tool (special tool #8815A, Kit, NGC, 38 Position). Make sure the voltmeter leads are connected so a positive polarity is displayed on the voltmeter.

WARNING: When the engine is operating, do not stand in direct line with the fan. Do not put your hands near the pulleys, belts or fan. Do not wear loose clothing. Failure to follow these instructions may result in possible serious or fatal injury.

3. Start the engine and allow it to reach normal operating temperature.
4. Monitor the voltmeter.

   Is the voltage below 0.5 of a volt?

   Yes

   - Go To 4.

   No

   - Repair the excessive resistance in the (K122) TP Sensor No. 2 Signal circuit.
   - Perform the POWERTRAIN VERIFICATION TEST. Refer to **POWERTRAIN VERIFICATION TEST** .

4. **EXCESSIVE RESISTANCE IN THE (F855) 5-VOLT SUPPLY CIRCUIT**
   1. Turn the ignition off.
   2. Move the voltmeter leads to backprobe the (F855) 5-volt Supply circuit at the Throttle Body harness connector and to probe the appropriate terminal of the special tool (special tool #8815A, Kit, NGC, 38 Position). Make sure the voltmeter leads are connected so a positive polarity is displayed on the voltmeter.

      WARNING: When the engine is operating, do not stand in direct line with the fan. Do not put your hands near the pulleys, belts or fan. Do not wear loose clothing. Failure to follow these instructions may result in possible serious or fatal injury.

   3. Start the engine and allow it to reach normal operating temperature.
   4. Monitor the voltmeter.

      Is the voltage below 0.5 of a volt?

      Yes

      - Go To 5.

      No

- Repair the excessive resistance in the (F855) 5-volt Supply circuit.
- Perform the POWERTRAIN VERIFICATION TEST. Refer to **POWERTRAIN VERIFICATION TEST** .

5. **EXCESSIVE RESISTANCE IN THE (K922) TP SENSOR RETURN CIRCUIT**
   1. Turn the ignition off.
   2. Move the voltmeter leads to backprobe the (K922) TP Sensor Return circuit at the Throttle Body harness connector and to probe the appropriate terminal of the special tool (special tool #8815A, Kit, NGC, 38 Position). Make sure the voltmeter leads are connected so a positive polarity is displayed on the voltmeter.

      WARNING: **When the engine is operating, do not stand in direct line with the fan. Do not put your hands near the pulleys, belts or fan. Do not wear loose clothing. Failure to follow these instructions may result in possible serious or fatal injury.**

   3. Start the engine and allow it to reach normal operating temperature.
   4. Monitor the voltmeter.

      Is the voltage below 0.5 of a volt?

      Yes

      - Go To 6.

      No

      - Repair the excessive resistance in the (K922) TP Sensor Return circuit.
      - Perform the POWERTRAIN VERIFICATION TEST. Refer to **POWERTRAIN VERIFICATION TEST** .

6. **(K22) TP SENSOR NO. 1 SIGNAL CIRCUIT SHORTED TO THE (K122) TP SENSOR NO. 2 SIGNAL CIRCUIT**

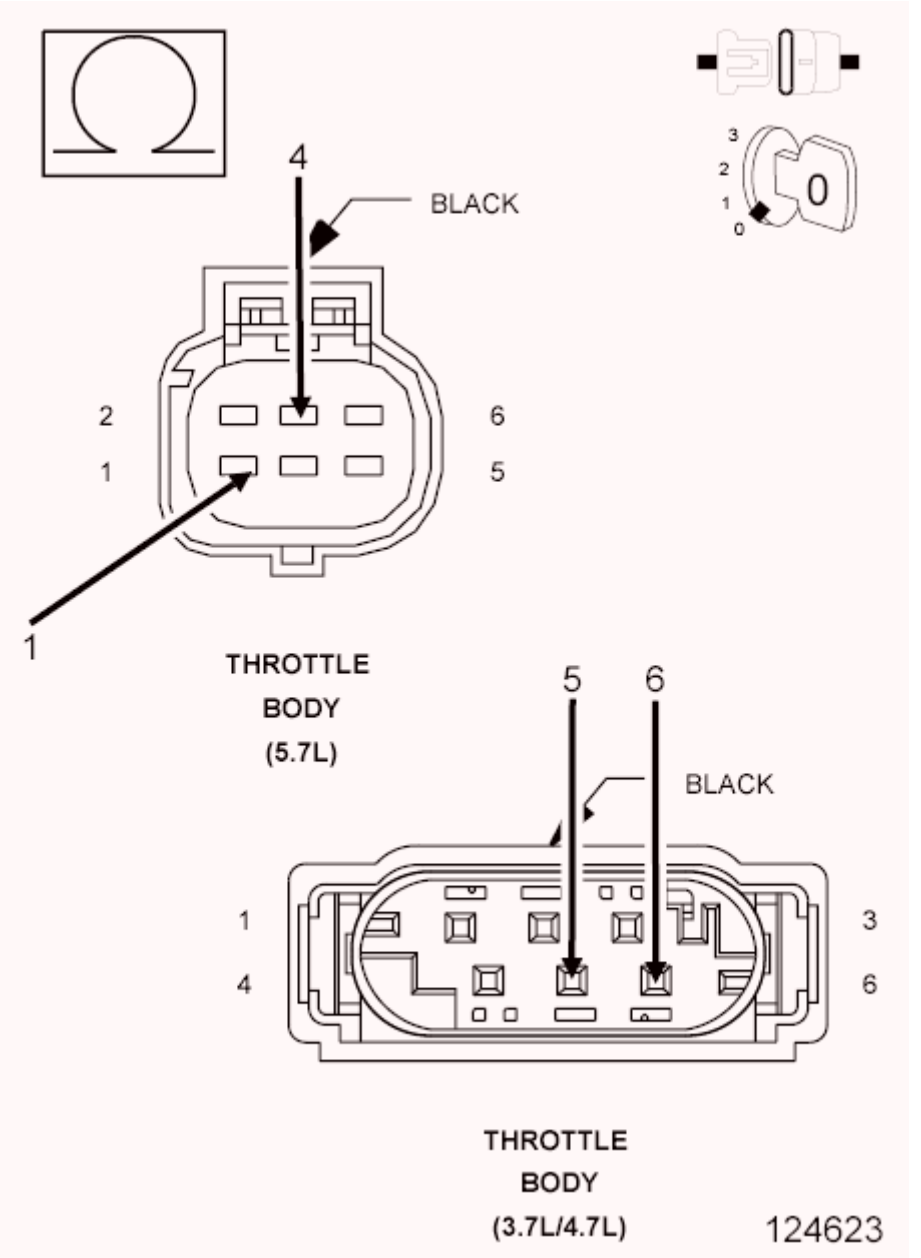

Fig. 100: Measuring Resistance Between TP Sensor No. 1 Signal Circuit And No. 2 Signal Circuit AT Throttle Body Harness Connector
Courtesy of CHRYSLER GROUP, LLC

1. Turn the ignition off.
2. Remove special tool (special tool #8815A, Kit, NGC, 38 Position) and (special tool #8815-1, PCM Pinout Box Adapter) leaving the C2 PCM harness connector disconnected.
3. Disconnect the Throttle Body harness connector.
4. Measure the resistance between the (K22) TP Sensor No. 1 Signal circuit and the (K122) TP Sensor No. 2 Signal circuit in the Throttle Body harness connector.

   Is the resistance below 5.0 ohms?

Yes

- Repair the short between the (K122) TP Sensor No. 2 Signal circuit and the (K22) TP Sensor No. 1 Signal circuit.
- Perform the POWERTRAIN VERIFICATION TEST. Refer to **POWERTRAIN VERIFICATION TEST** .

No

- Go To 7.

7. **THROTTLE POSITION SENSOR**

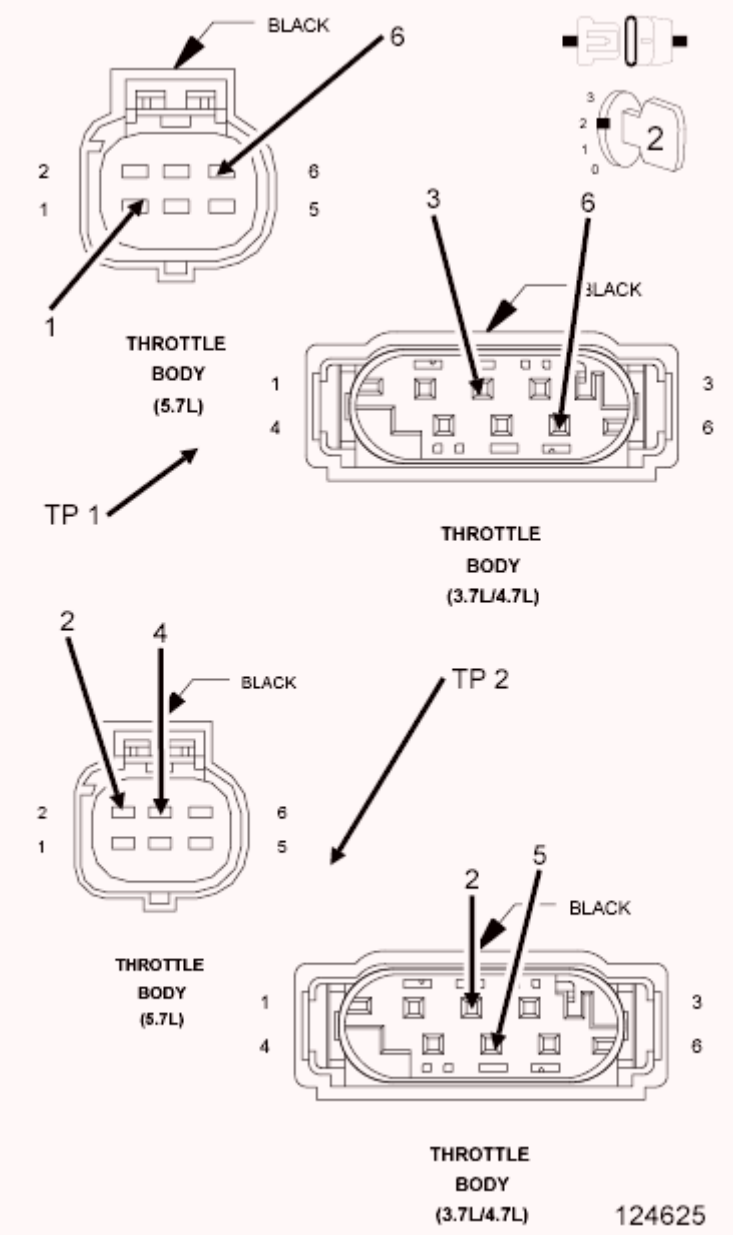

Fig. 101: TP Sensors
Courtesy of CHRYSLER GROUP, LLC

1. Connect the C2 PCM harness connector.
2. Ignition on, engine not running.
3. With a scan tool, monitor the TP Sensor No. 1 and No. 2 voltage.
4. Connect a jumper wire between the (K922) TP Sensor Return circuit and the (K22) TP Sensor No. 1 Signal circuit.

   NOTE: TP Sensor No. 1 voltage should change from approximately 4.5 volts to less than 0.5 of a volt.

5. For TP Sensor No. 2, connect a jumper wire between (F855) 5-volt supply circuit and the (K122) TP Sensor No. 2 signal circuit.

   NOTE: TP Sensor No. 2 voltage should change from approximately 0 volts to 5.0 volts?

   Is the voltage reading within the listed specification when the jumper wire is installed?

   Yes

   - Verify that there is good pin to terminal contact at the Throttle Body and the Powertrain Control Module connectors. Replace the Throttle Body Assembly if no problems were found in the connectors. Disconnect the Battery when replacing the Throttle Body Assembly. After installation is complete, use a scan tool and select the ETC RELEARN function.
   - Perform the POWERTRAIN VERIFICATION TEST. Refer to **POWERTRAIN VERIFICATION TEST** .

   No

   - Go To 8.

     NOTE: Remove the jumper wire before continuing.

8. **POWERTRAIN CONTROL MODULE (PCM)**
   1. Using the wiring diagram/schematic as a guide, inspect the wiring and connectors between the Throttle Body and the Powertrain Control Module (PCM).
   2. Look for any chafed, pierced, pinched, or partially broken wires.
   3. Look for broken, bent, pushed out or corroded terminals. Verify that there is good pin to terminal contact in the Throttle Body and Powertrain Control Module connectors.
   4. Refer to any Technical Service Bulletins that may apply.

   Were there any problems found?

Yes

- Repair as necessary.
- Perform the POWERTRAIN VERIFICATION TEST. Refer to **POWERTRAIN VERIFICATION TEST** .

No

- Replace and program the Powertrain Control Module per Service Information. Refer to **MODULE, POWERTRAIN CONTROL, REMOVAL** .
- Perform the POWERTRAIN VERIFICATION TEST. Refer to **POWERTRAIN VERIFICATION TEST** .

9. **THROTTLE FOLLOWER TEST**
    1. Ignition on, engine not running.
    2. With a scan tool, perform the ETC Throttle Follower Test and monitor the TP Sensor No. 1 or No. 2 voltage.
    3. Slowly press the throttle pedal down.
    4. The voltage for TP Sensor No. 1 should start at approximately 0.7 of a volt and increase to approximately 4.3 volts.
    5. The voltage for TP Sensor No. 2 should start at approximately 4.3 volts and decrease to approximately 0.7 of a volt.

    Is the voltage within the range of the listed specification for the appropriate Sensor?

    Yes

    - Perform the INTERMITTENT CONDITION diagnostic procedure. Refer to **INTERMITTENT CONDITION** .

    No

    - Verify that there is good pin to terminal contact at the Throttle Body and the Powertrain Control Module connectors. Replace the Throttle Body Assembly if no problems were found in the connectors. Disconnect the Battery when replacing the Throttle Body Assembly. After installation is complete, use a scan tool and select the ETC RELEARN function.
    - Perform the POWERTRAIN VERIFICATION TEST. Refer to **POWERTRAIN VERIFICATION TEST** .

P0122-THROTTLE POSITION SENSOR 1 CIRCUIT LOW

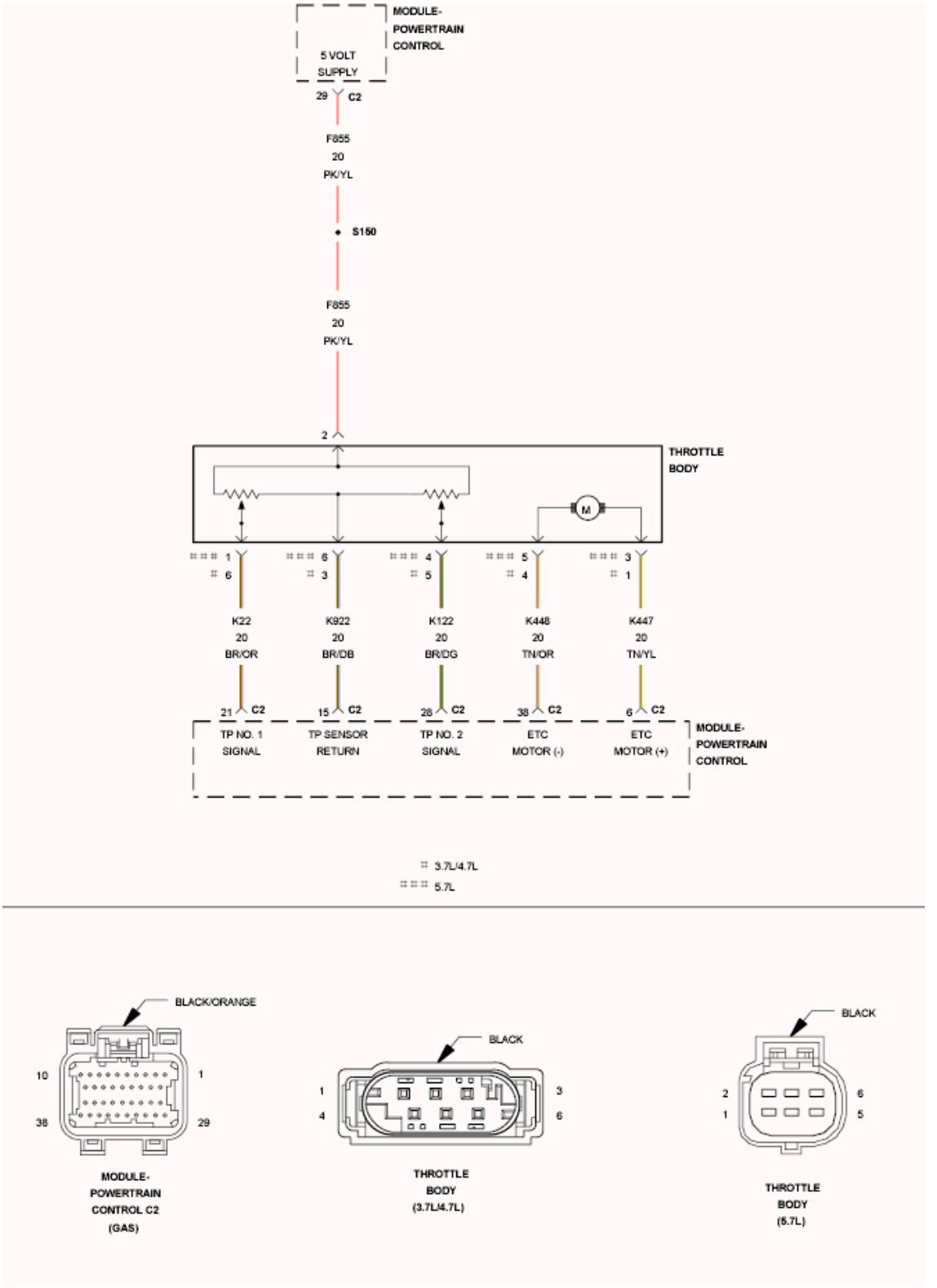

Fig. 102: Throttle Body Circuit Schematic
Courtesy of CHRYSLER GROUP, LLC

For a complete wiring diagram **refer to appropriate SYSTEM WIRING DIAGRAMS article** .

WHEN MONITORED:

With the ignition on. Battery voltage greater than 10 volts.

SET CONDITION:

Throttle Position Sensor voltage at the PCM is less than the minimum acceptable voltage. One Trip Fault. Three good trips to turn off the MIL. ETC light will illuminate.

POSSIBLE CAUSES

Possible Causes
(F855) 5-VOLT SUPPLY CIRCUIT OPEN
(F855) 5-VOLT SUPPLY CIRCUIT SHORTED TO GROUND
(K22) TP SENSOR NO. 1 SIGNAL CIRCUIT SHORTED TO GROUND
(K22) TP SENSOR NO. 1 SIGNAL CIRCUIT SHORTED TO THE (K922) TP SENSOR RETURN CIRCUIT
EXCESSIVE RESISTANCE IN THE (K22) TP SENSOR NO. 1 SIGNAL CIRCUIT
THROTTLE POSITION SENSOR/THROTTLE BODY
POWERTRAIN CONTROL MODULE (PCM)

Always perform the Pre-Diagnostic Troubleshooting procedure before proceeding. Refer to PRE-DIAGNOSTIC TROUBLESHOOTING PROCEDURE .

DIAGNOSTIC TEST

1. **ACTIVE DTC**

NOTE: **If a 5-Volt Supply DTC has also set, diagnose the 5-Volt DTC before continuing.**

1. Start the engine and allow it to reach operating temperature.

WARNING: **When the engine is operating, do not stand in direct line with the fan. Do not put your hands near the pulleys, belts or fan. Do not wear loose clothing. Failure to follow these instructions may result in possible serious or fatal injury.**

2. With the scan tool select View DTCs.

NOTE: **If the DTC does not reset it may be necessary to test drive the vehicle.**

NOTE: **If the P2122-APP Sensor 1 Circuit Low DTC is also Active, diagnose the P2122 before continuing with the P0122 diagnostic procedure.**

Is the DTC Active at this time?

Yes

- Go To 2.

No

- Go To 11.

2. **P0222 ALSO SET**

   Was the P0222-TP SENSOR NO. 2 VOLTAGE LOW DTC set along with the P0122?

   Yes

   - Go To 3.

   No

   - Go To 4.

3. **(F855) 5-VOLT SUPPLY CIRCUIT**

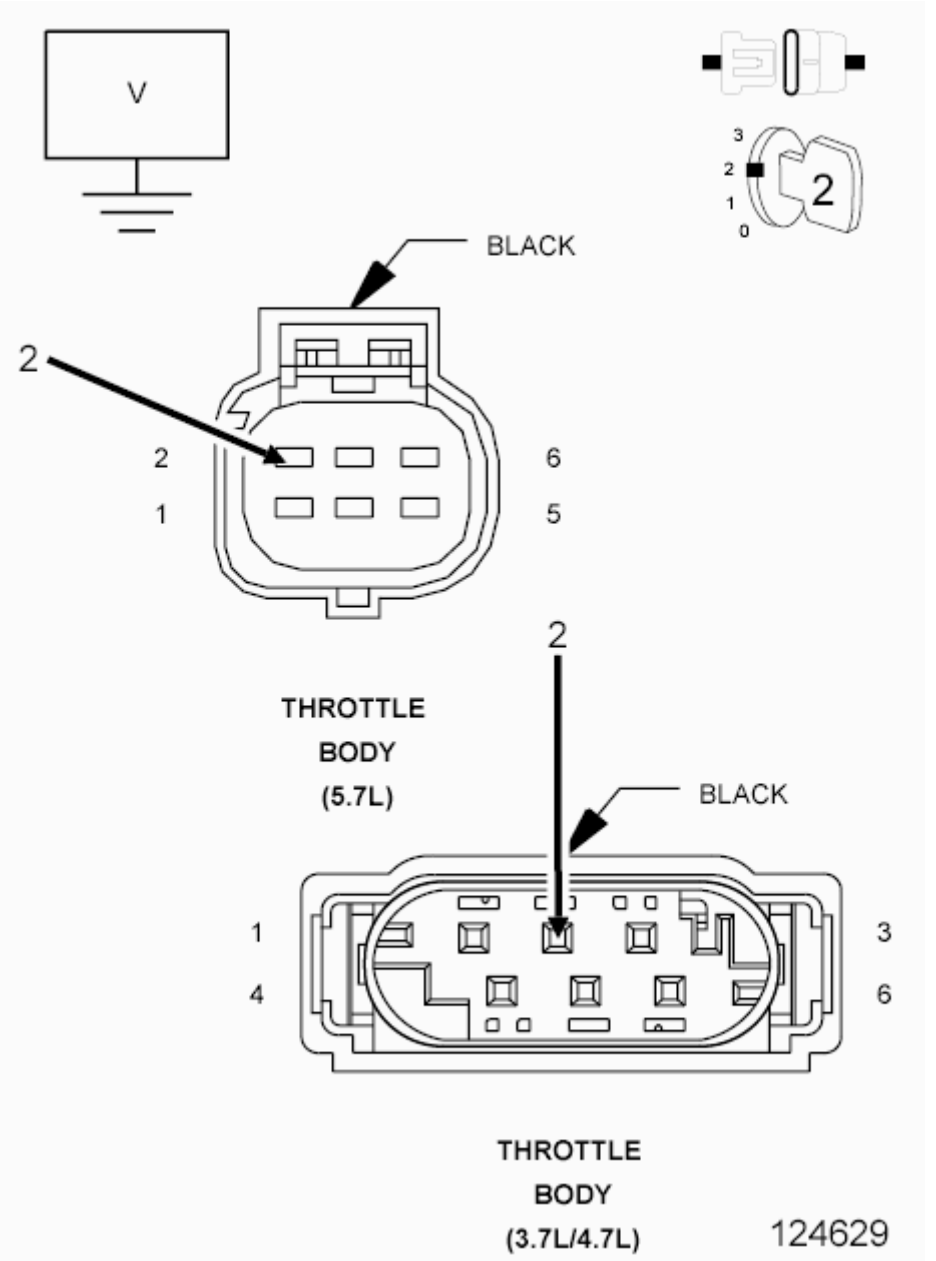

Fig. 103: Measuring Voltage On Primary 5-Volt Supply Circuit AT Throttle Body Harness Connector
Courtesy of CHRYSLER GROUP, LLC

1. Turn the ignition off.
2. Disconnect the Throttle Body harness connector.
3. Ignition on, engine not running.
4. Measure the voltage on the (F855) 5-volt Supply circuit in the Throttle Body harness connector.

   Is the voltage between 4.8 to 5.2 volts?

Yes

- Go To 4.

No

- Go To 8.

4. **THROTTLE POSITION SENSOR**
   1. With a scan tool, monitor the TP Sensor No. 1 voltage with the Throttle Body harness connector disconnected.

      NOTE: The sensor voltage should be approximately 5.0 volts (plus or minus.1 volt) with the connector disconnected.

      Does the scan tool display the voltage as described above?

      Yes

      - Verify that there is good pin to terminal contact at the Throttle Body and the Powertrain Control Module connectors. Replace the Throttle Body Assembly if no problems were found in the connectors. Disconnect the Battery when replacing the Throttle Body Assembly. After installation is complete, use a scan tool and select the ETC RELEARN function.
      - Perform the POWERTRAIN VERIFICATION TEST. Refer to **POWERTRAIN VERIFICATION TEST** .

      No

      - Go To 5.

5. **(K22) TP SENSOR NO. 1 SIGNAL CIRCUIT SHORTED TO GROUND**

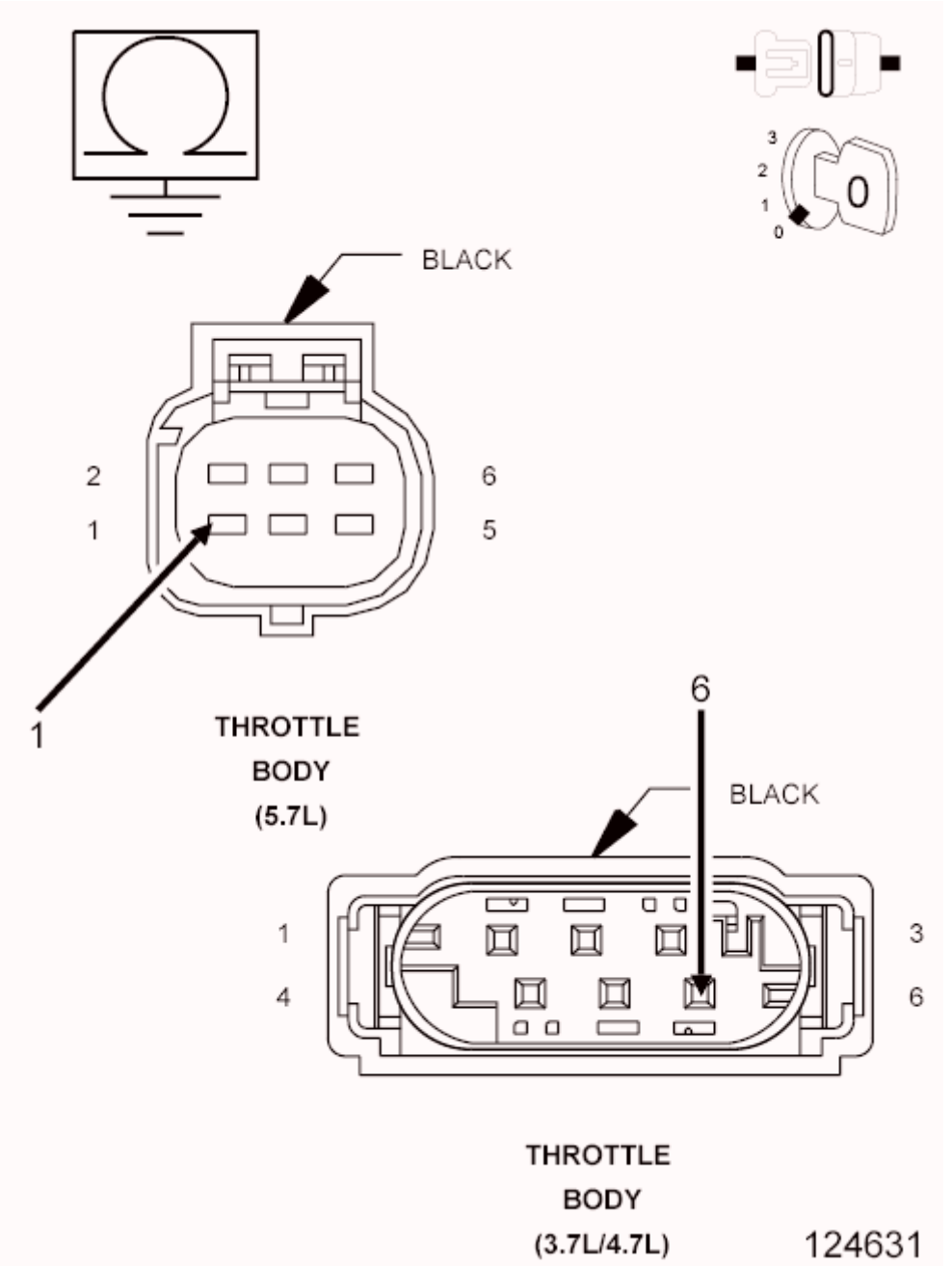

Fig. 104: Measuring Resistance Between Ground And TP Sensor No. 1 Signal Circuit AT Throttle Body Harness Connector
Courtesy of CHRYSLER GROUP, LLC

1. Turn the ignition off.
2. Disconnect the C2 PCM harness connector.
3. Measure the resistance between ground and the (K22) TP Sensor No. 1 Signal circuit in the Throttle Body harness connector.

   Is the resistance below 100 ohms?

Yes

- Repair the short to ground in the (K22) TP Sensor No. 1 Signal circuit.
- Perform the POWERTRAIN VERIFICATION TEST. Refer to **POWERTRAIN VERIFICATION TEST** .

No

- Go To 6.

6. **(K22) TP SENSOR NO. 1 SIGNAL CIRCUIT SHORTED TO THE (K922) TP SENSOR RETURN CIRCUIT**

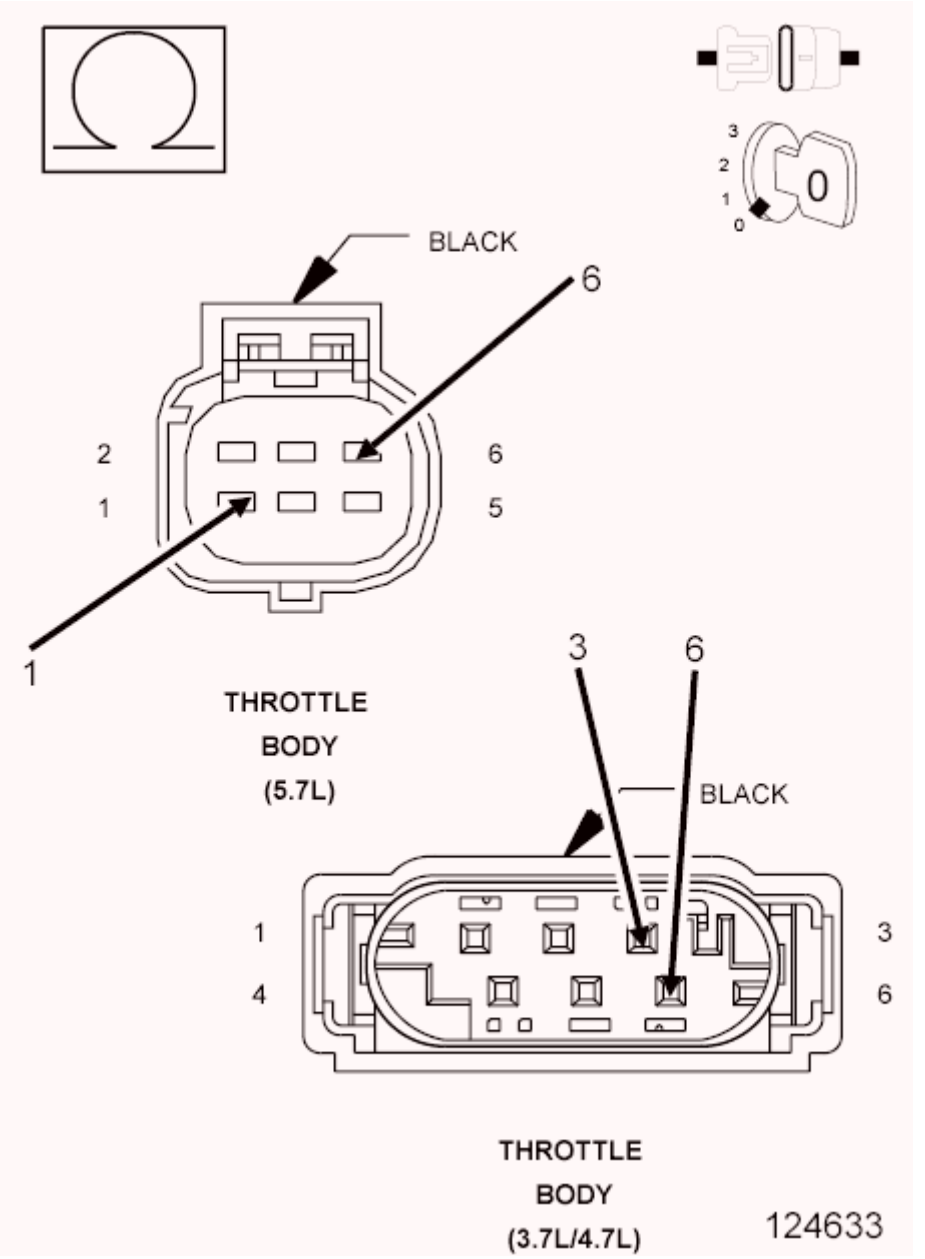

Fig. 105: Measuring Resistance Between (K22) TP Sensor No. 1 Signal Circuit And (K922) TP Sensor Return Circuit In Throttle Body Harness Connector
Courtesy of CHRYSLER GROUP, LLC

1. Measure the resistance between the (K22) TP Sensor No. 1 Signal circuit and the (K922) TP Sensor Return circuit in the Throttle Body harness connector.

   Is the resistance below 100 ohms?

   Yes

   - Repair the short between the (K922) TP Sensor Return circuit and the (K22) TP Sensor No. 1 Signal circuit.
   - Perform the POWERTRAIN VERIFICATION TEST. Refer to **POWERTRAIN VERIFICATION TEST** .

   No

   - Go To 7.

7. **EXCESSIVE RESISTANCE IN THE (K22) TP SENSOR NO. 1 SIGNAL CIRCUIT**

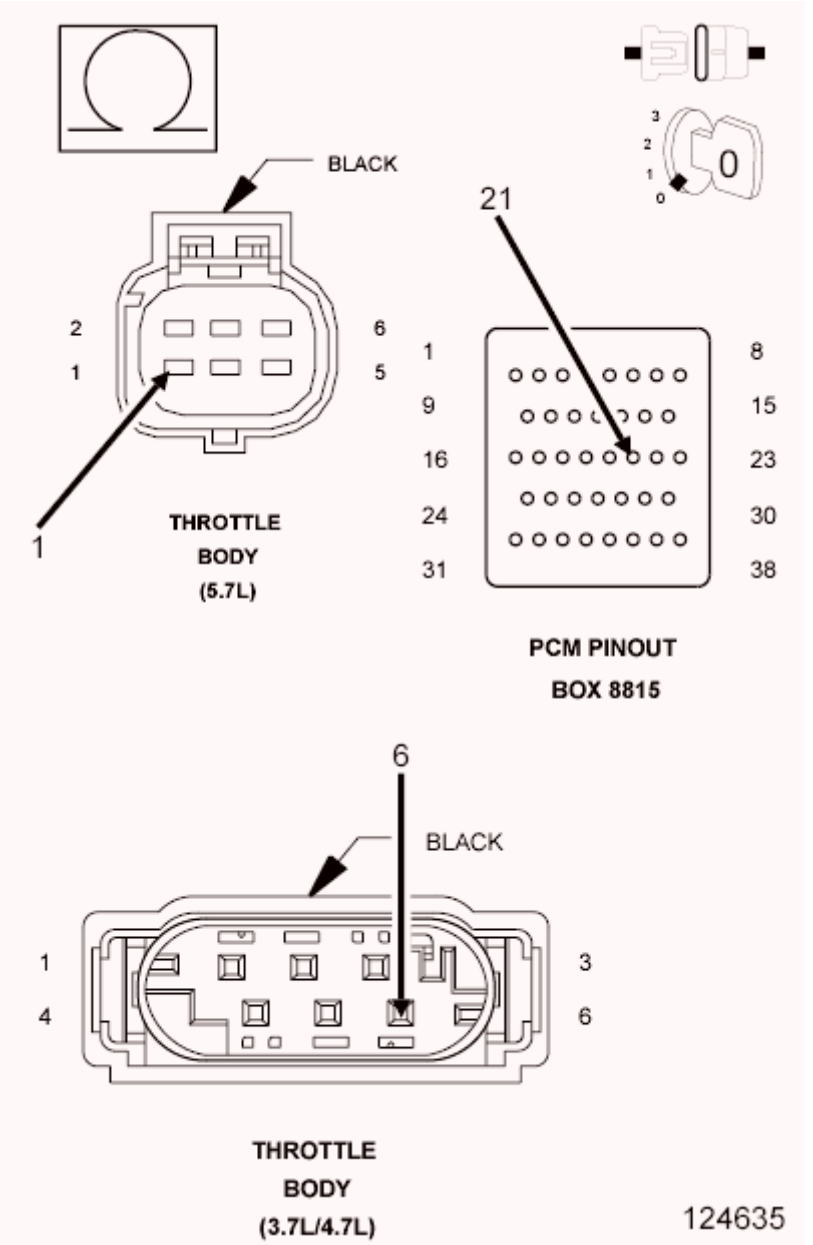

Fig. 106: Measuring Resistance Of TP Sensor No. 1 Signal Circuit Between Throttle Body Harness Connector & Appropriate Terminal Of Special Tool #8815
Courtesy of CHRYSLER GROUP, LLC

CAUTION: Do not probe the PCM harness connectors. Probing the PCM harness connectors will damage the PCM terminals resulting in poor terminal to pin connection. Install the PCM Pinout Box (special tool #8815A, Kit, NGC, 38 Position) to perform diagnosis.

1. Measure the resistance of the (K22) TP Sensor No. 1 Signal circuit between the Throttle Body harness connector and the appropriate terminal of special tool (special tool #8815A, Kit, NGC, 38 Position).

Is the resistance below 5.0 ohms?

Yes

- Go To 10.

No

- Repair the excessive resistance in the (K22) TP Sensor No. 1 Signal circuit.
- Perform the POWERTRAIN VERIFICATION TEST. Refer to **POWERTRAIN VERIFICATION TEST** .

8. **(F855) 5-VOLT SUPPLY CIRCUIT OPEN**

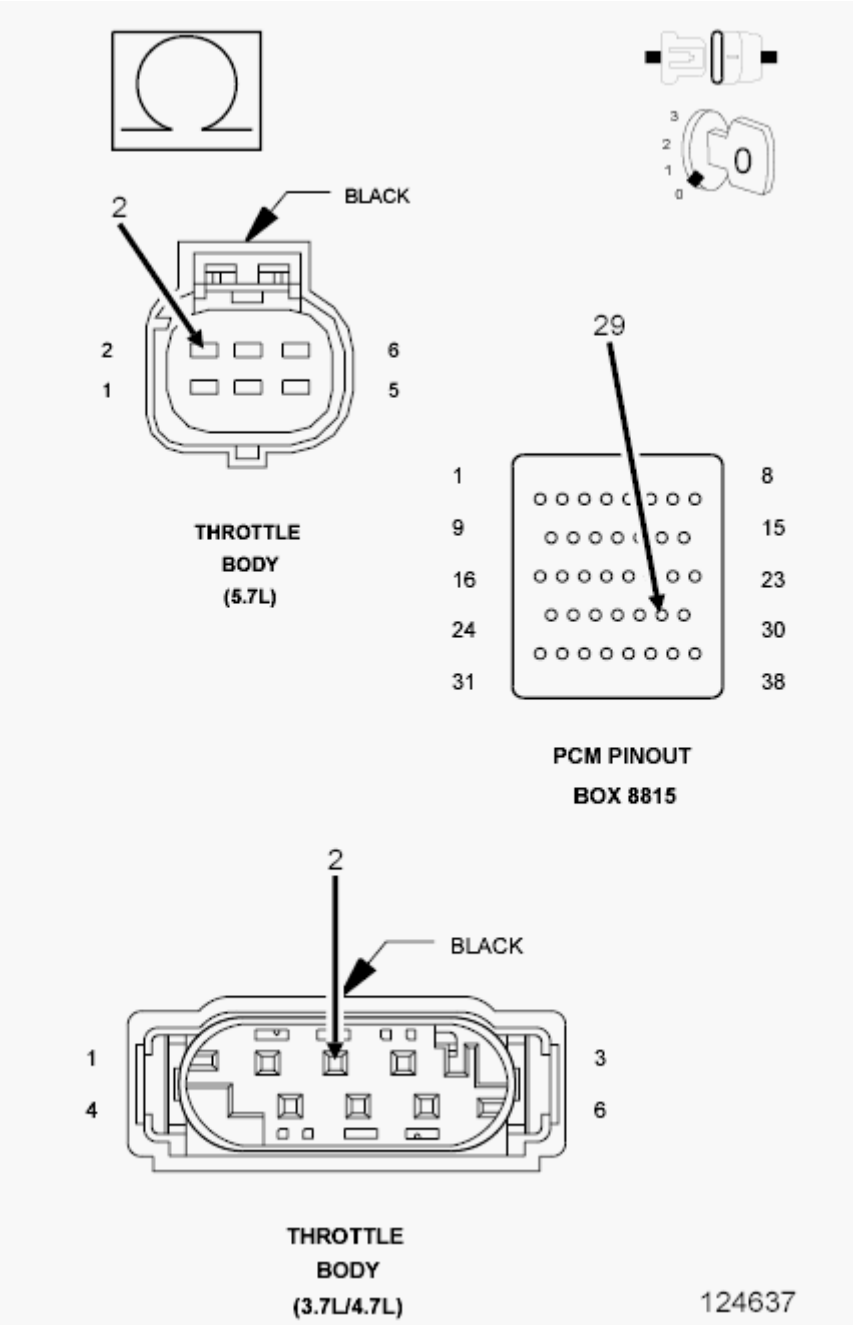

Fig. 107: Measuring Resistance Of (F855) 5-Volt Supply Circuit From Throttle Body Harness Connector To Appropriate Terminal Of Special Tool #8815
Courtesy of CHRYSLER GROUP, LLC

1. Turn the ignition off.
2. Disconnect the C2 PCM harness connector.

CAUTION: Do not probe the PCM harness connectors. Probing the PCM harness connectors will damage the PCM terminals resulting in poor terminal to pin connection. Install the PCM Pinout Box

(special tool #8815A, Kit, NGC, 38 Position) to perform diagnostics.

3. Measure the resistance of the (F855) 5-volt Supply circuit from the Throttle Body harness connector to the appropriate terminal of special tool (special tool #8815A, Kit, NGC, 38 Position).

   Is the resistance below 5.0 ohms?

   Yes

   - Go To 9.

   No

   - Repair the open in the (F855) 5-volt Supply circuit.
   - Perform the POWERTRAIN VERIFICATION TEST. Refer to **POWERTRAIN VERIFICATION TEST** .

9. **(F855) 5-VOLT SUPPLY CIRCUIT SHORTED TO GROUND**

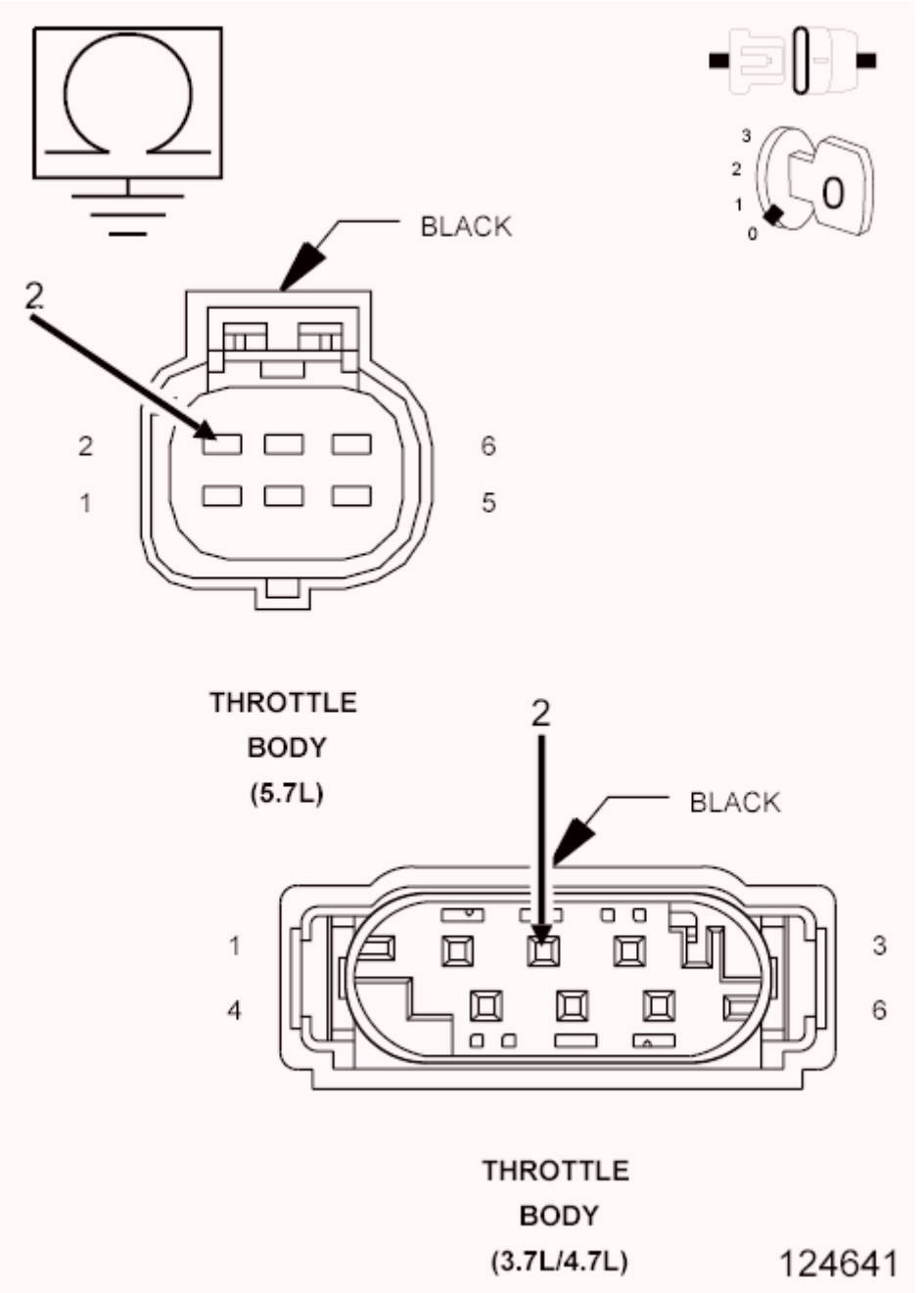

Fig. 108: Measuring Resistance Between Ground And 5-Volt Supply Circuit AT Throttle Body Harness Connector
Courtesy of CHRYSLER GROUP, LLC

1. Measure the resistance between ground and the (F855) 5-volt Supply circuit in the Throttle Body harness connector.

   Is the resistance below 100 ohms?

   Yes

- Repair the short to ground in the (F855) 5-volt Supply circuit.
- Perform the POWERTRAIN VERIFICATION TEST. Refer to **POWERTRAIN VERIFICATION TEST** .

No

- Go To 10.

10. **POWERTRAIN CONTROL MODULE (PCM)**
    1. Using the wiring diagram/schematic as a guide, inspect the wiring and connectors between the Throttle Body and the Powertrain Control Module (PCM).
    2. Look for any chafed, pierced, pinched, or partially broken wires.
    3. Look for broken, bent, pushed out or corroded terminals. Verify that there is good pin to terminal contact in the Throttle Body and Powertrain Control Module connectors.
    4. Refer to any Technical Service Bulletins that may apply.

    Were there any problems found?

    Yes

    - Repair as necessary.
    - Perform the POWERTRAIN VERIFICATION TEST. Refer to **POWERTRAIN VERIFICATION TEST** .

    No

    - Replace and program the Powertrain Control Module per Service Information. Refer to **MODULE, POWERTRAIN CONTROL, REMOVAL** .
    - Perform the POWERTRAIN VERIFICATION TEST. Refer to **POWERTRAIN VERIFICATION TEST** .
11. **THROTTLE FOLLOWER TEST**
    1. With a scan tool, perform the ETC Throttle Follower Test.
    2. Monitor the TP Sensor No. 1 voltage.

    Does voltage start at approximately 0.7 of a volt to approximately 4.3 volts with a smooth transition?

    Yes

    - Perform the INTERMITTENT CONDITION diagnostic procedure. Refer to **INTERMITTENT CONDITION** .

    No

    - Verify that there is good pin to terminal contact at the Throttle Body and the Powertrain

Control Module connectors. Replace the Throttle Body Assembly if no problems were found in the connectors. Disconnect the Battery when replacing the Throttle Body Assembly. After installation is complete, use a scan tool and select the ETC RELEARN function.

- Perform the POWERTRAIN VERIFICATION TEST. Refer to **POWERTRAIN VERIFICATION TEST** .

P0123-THROTTLE POSITION SENSOR 1 CIRCUIT HIGH

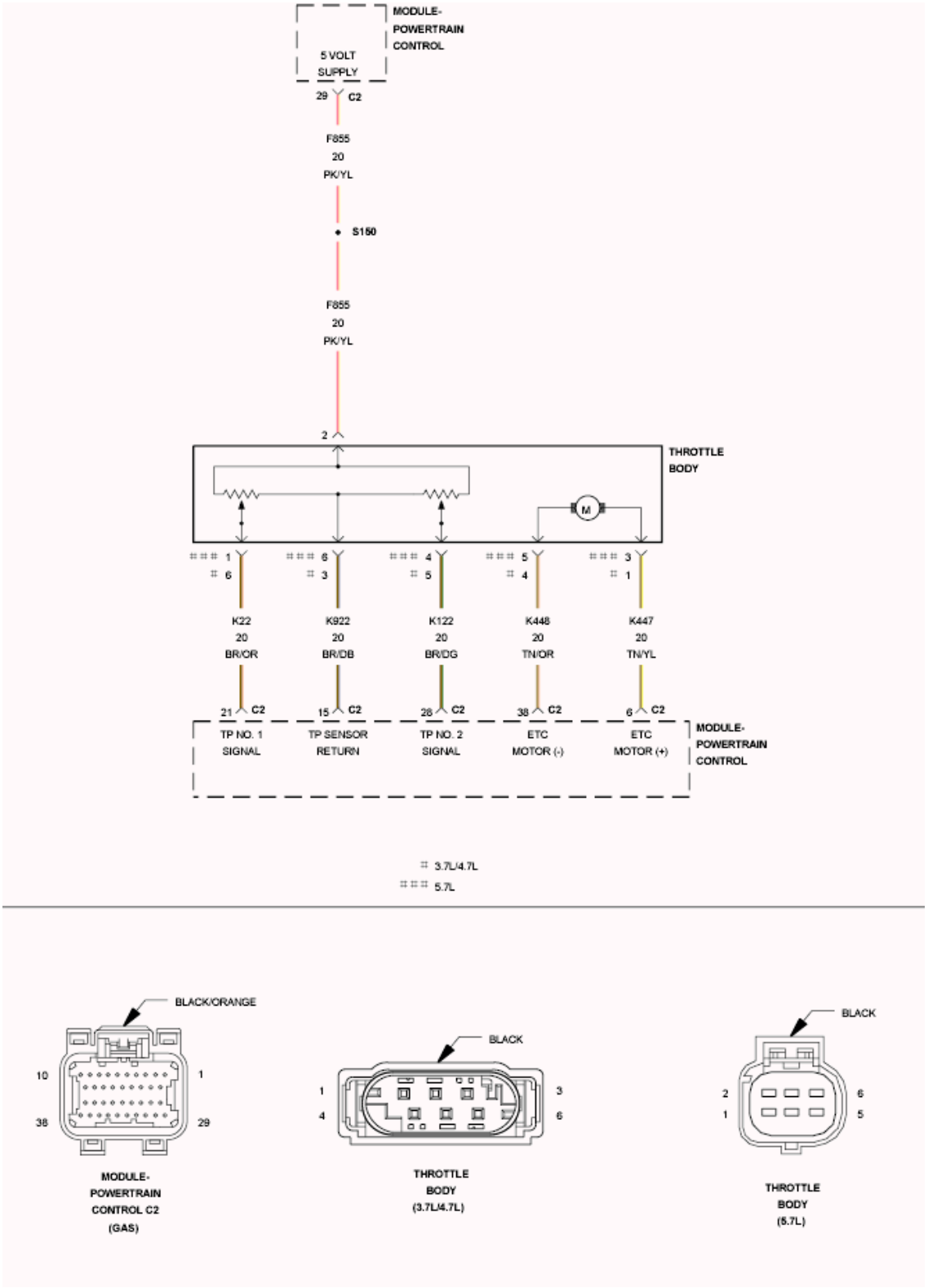

Fig. 109: Throttle Body Circuit Schematic
Courtesy of CHRYSLER GROUP, LLC

For a complete wiring diagram **refer to appropriate SYSTEM WIRING DIAGRAMS article** .

WHEN MONITORED:

With the ignition on. Battery voltage greater than 10 volts.

SET CONDITION:

Throttle Position Sensor No. 1 voltage is greater than the maximum acceptable voltage. One Trip Fault. ETC light will illuminate.

POSSIBLE CAUSES

Possible Causes
(K22) TP SENSOR NO. 1 SIGNAL CIRCUIT SHORTED TO VOLTAGE
(K22) TP SENSOR NO. 1 SIGNAL CIRCUIT OPEN
(K22) TP SENSOR NO. 1 SIGNAL CIRCUIT SHORTED TO THE (F855) 5-VOLT SUPPLY CIRCUIT
(K922) TP SENSOR RETURN CIRCUIT OPEN
THROTTLE POSITION SENSOR/THROTTLE BODY
THROTTLE PLATE JAMMED AGAINST THE MAXIMUM STOP
POWERTRAIN CONTROL MODULE (PCM)

Always perform the Pre-Diagnostic Troubleshooting procedure before proceeding. Refer to PRE-DIAGNOSTIC TROUBLESHOOTING PROCEDURE .

DIAGNOSTIC TEST

1. **ACTIVE DTC**

NOTE: **When this DTC is Active the engine speed, torque, and vehicle speed are limited to a Limp in mode.**

NOTE: **Make sure the throttle is fully closed and free from binding or carbon build up.**

NOTE: **If a 5-Volt Supply DTC has also set, diagnose the 5-Volt DTC before continuing.**

NOTE: **If P2101 is also set, then make sure that the blade moves freely and does not hang up near Wide Open Throttle before trying to repair P0123.**

1. Start the engine and allow it to reach operating temperature.
2. With the scan tool select View DTCs.

NOTE: **If the DTC does not reset it may be necessary to test drive the vehicle.**

NOTE: **If the P2123-APP Sensor 1 Circuit High DTC is also Active, diagnose the P2123 before continuing with the P0123 diagnostic procedure.**

Is the DTC Active at this time?

Yes

- Go To 2.

No

- Go To 8.

2. **THROTTLE POSITION SENSOR**

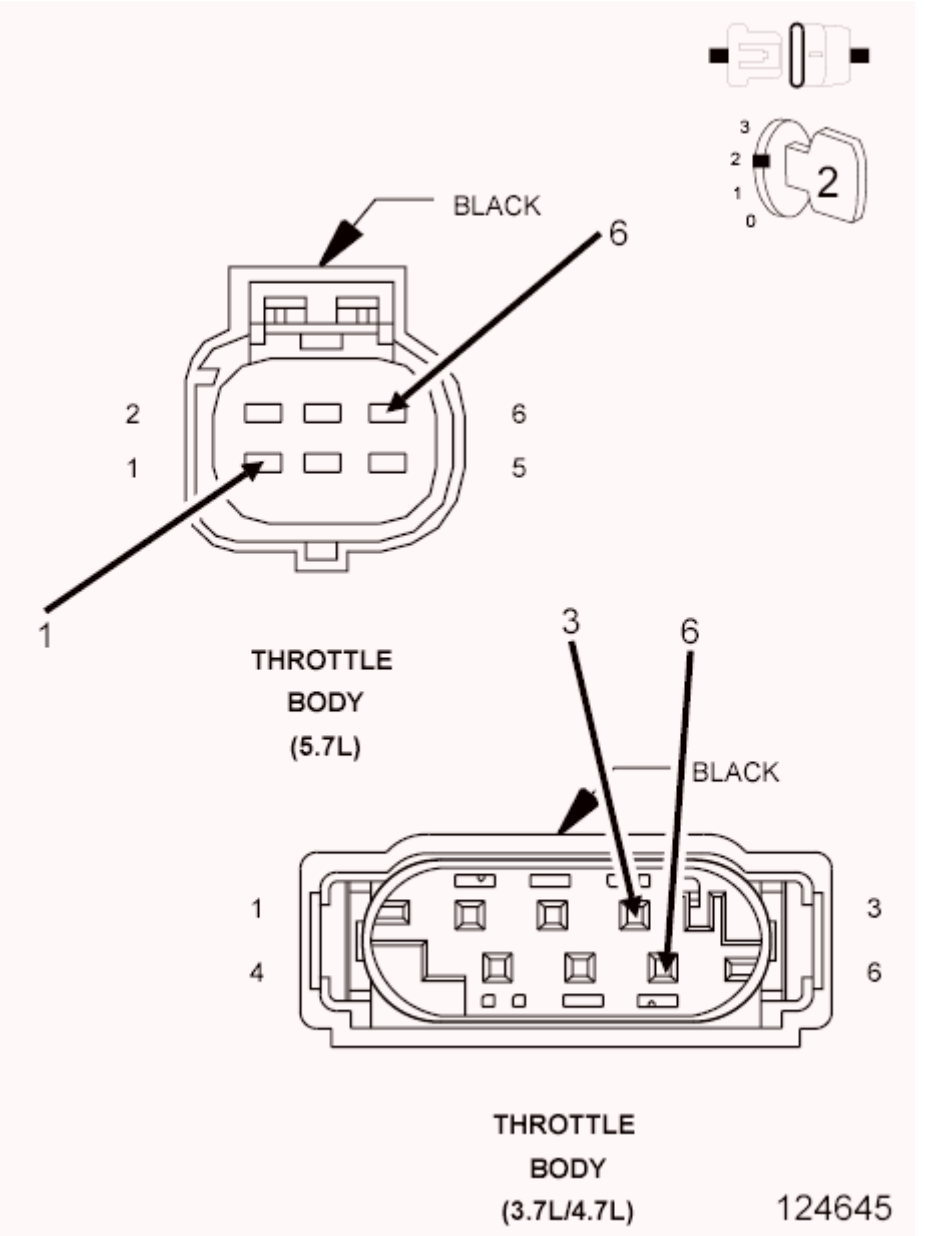

Fig. 110: Throttle Body Harness Connector
Courtesy of CHRYSLER GROUP, LLC

1. Turn the ignition off.
2. Disconnect the Throttle Body harness connector.
3. Ignition on, engine not running.
4. With a scan tool, monitor the TP Sensor No. 1 voltage.
5. Connect a jumper wire between the (K22) TP Sensor No. 1 Signal circuit and the (K922) TP Sensor Return circuit in the Throttle Body harness connector.

NOTE: **The sensor voltage should be approximately 0.0 volts (plus or minus.1 volt) with the jumper wire in place.**

Does the scan tool display the voltage as described above?

Yes

- Verify that there is good pin to terminal contact at the Throttle Body and the Powertrain Control Module connectors. Replace the Throttle Body Assembly if no problems were found in the connectors. Disconnect the Battery when replacing the Throttle Body Assembly. After installation is complete, use a scan tool and select the ETC RELEARN function.
- Perform the POWERTRAIN VERIFICATION TEST. Refer to **POWERTRAIN VERIFICATION TEST** .

No

- Go To 3.

NOTE: Remove the jumper wire before continuing.

3. **(K22) TP SENSOR NO. 1 SIGNAL CIRCUIT SHORTED TO VOLTAGE**

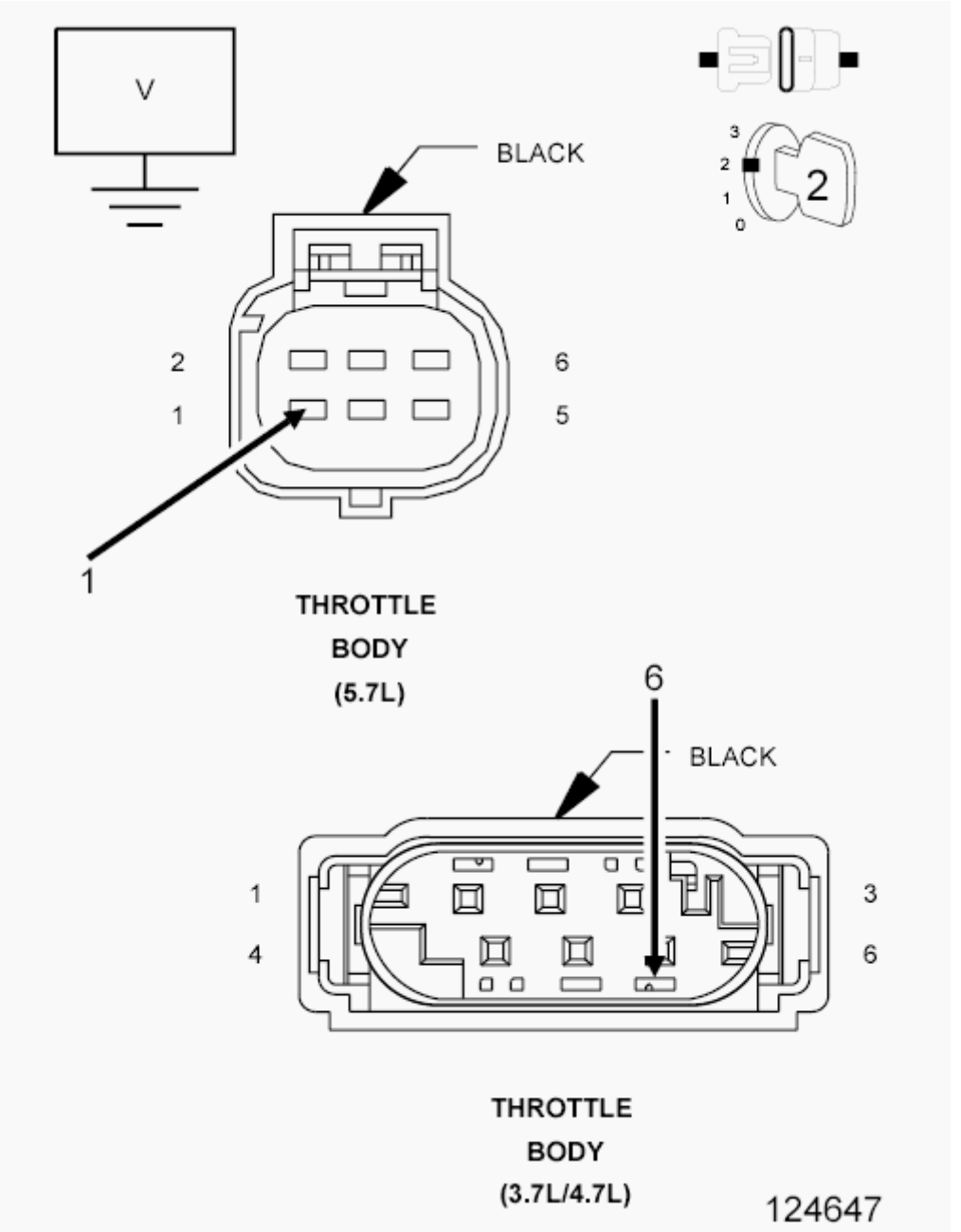

Fig. 111: Measuring Voltage On (K22) TP Sensor No. 1 Signal Circuit In Throttle Body Harness Connector
Courtesy of CHRYSLER GROUP, LLC

1. Turn the ignition off.
2. Disconnect the C2 PCM harness connector.
3. Ignition on, engine not running.
4. Measure the voltage on the (K22) TP Sensor No. 1 Signal circuit in the Throttle Body harness connector.

Is there any voltage present?

Yes

- Repair the short to voltage in the (K22) TP Sensor No. 1 Signal circuit.
- Perform the POWERTRAIN VERIFICATION TEST. Refer to **POWERTRAIN VERIFICATION TEST** .

No

- Go To 4.

4. **(K22) TP SENSOR NO. 1 SIGNAL CIRCUIT OPEN**

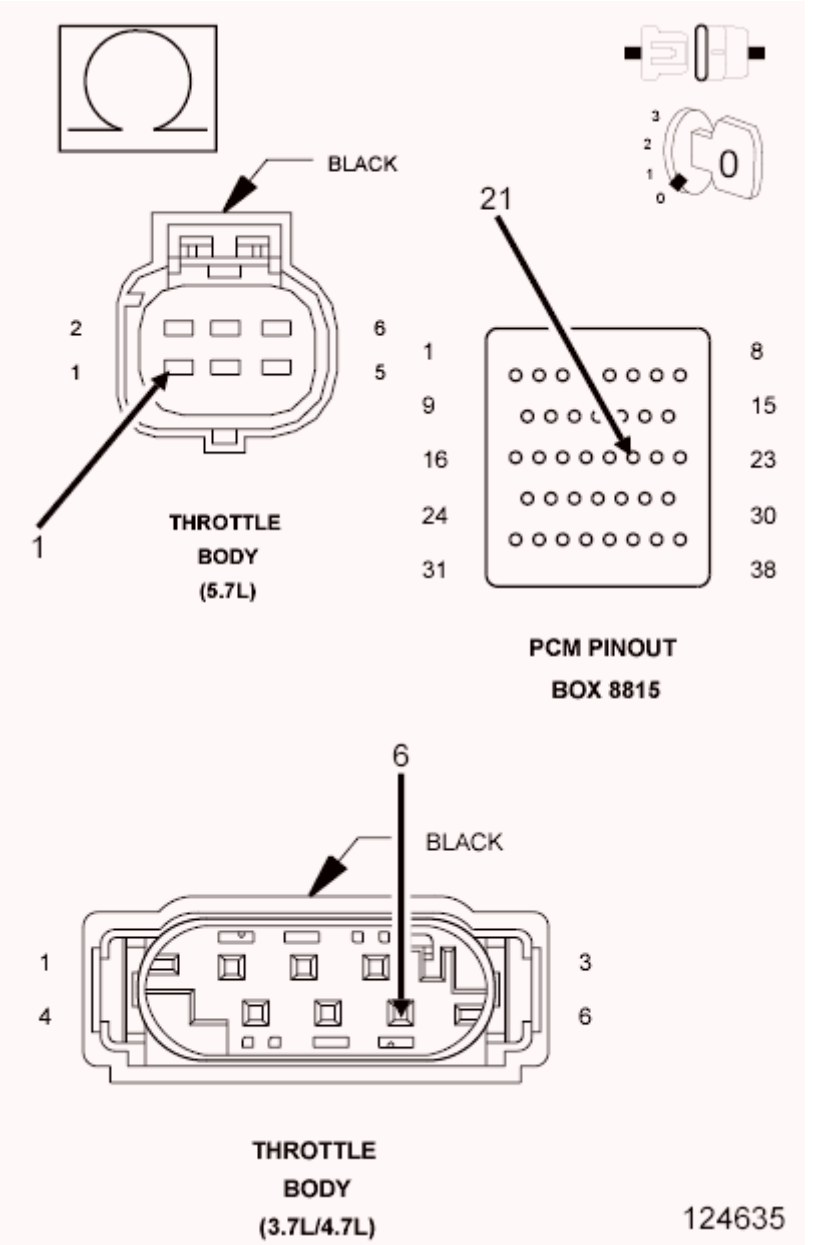

Fig. 112: Measuring Resistance Of TP Sensor No. 1 Signal Circuit Between Throttle Body Harness Connector & Appropriate Terminal Of Special Tool #8815
Courtesy of CHRYSLER GROUP, LLC

1. Turn the ignition off.

CAUTION: Do not probe the PCM harness connectors. Probing the PCM harness connectors will damage the PCM terminals resulting in poor terminal to pin connection. Install the PCM Pinout Box (special tool #8815A, Kit, NGC, 38 Position) to perform diagnosis.

2. Measure the resistance of the (K22) TP Sensor No. 1 Signal circuit from the Throttle Body harness connector to the appropriate terminal of special tool (special tool #8815A, Kit, NGC, 38 Position).

   Is the resistance below 5.0 ohms?

   Yes

   - Go To 5.

   No

   - Repair the open in the (K22) TP Sensor No. 1 Signal circuit.
   - Perform the POWERTRAIN VERIFICATION TEST. Refer to **POWERTRAIN VERIFICATION TEST** .

5. **(K22) TP SENSOR NO. 1 SIGNAL CIRCUIT SHORTED TO THE (F855) 5-VOLT SUPPLY CIRCUIT**

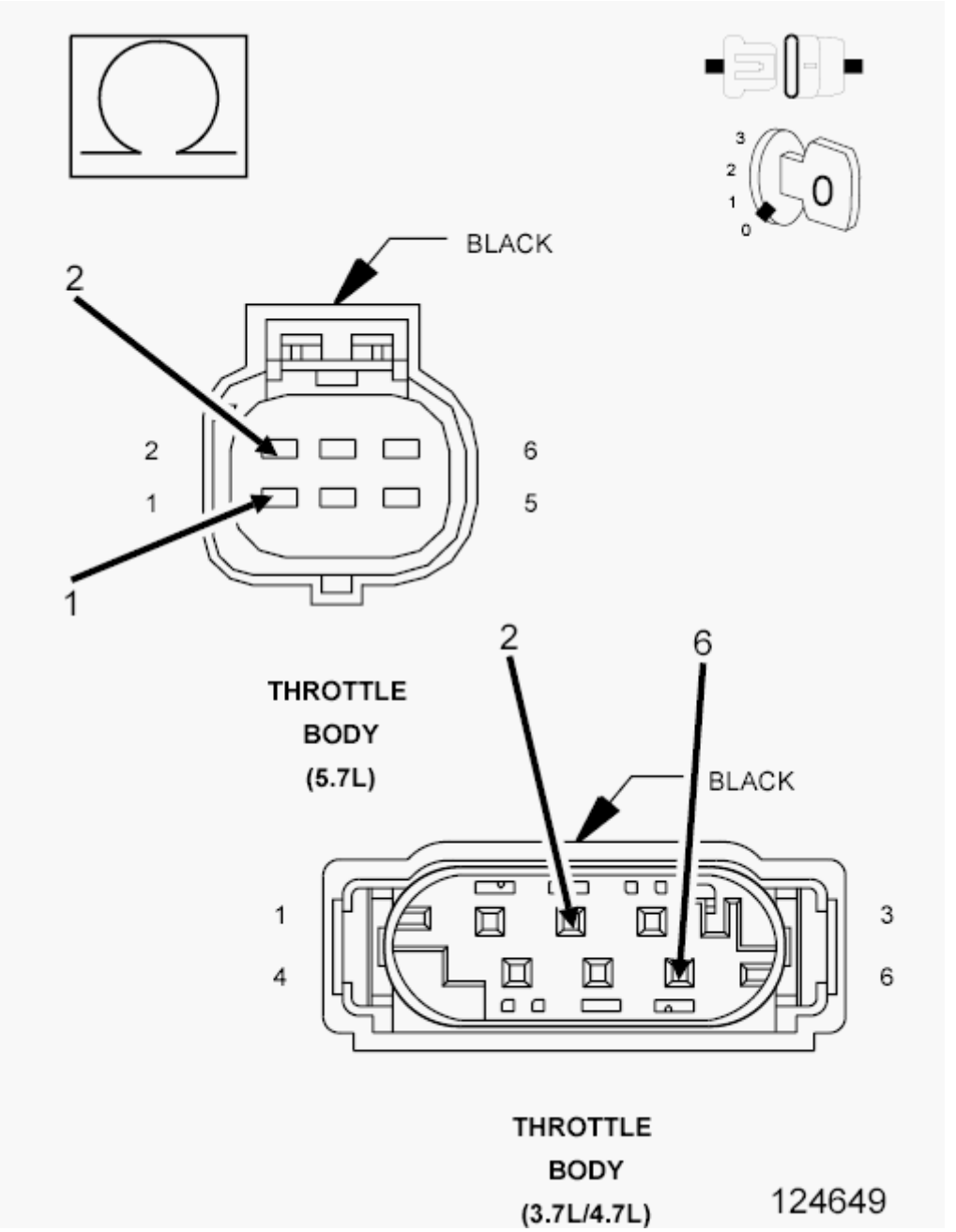

Fig. 113: Measuring Resistance Between (K22) TP Sensor No. 1 Signal Circuit And (F855) 5-Volt Supply Circuit In Throttle Body Harness Connector
Courtesy of CHRYSLER GROUP, LLC

1. Measure the resistance between the (K22) TP Sensor No. 1 Signal circuit and the (F855) 5-volt Supply circuit in the Throttle Body harness connector.

   Is the resistance below 100 ohms?

   Yes

- Repair the short between the (F855) 5-volt Supply circuit and the (K22) TP Sensor No. 1 Signal circuit.
- Perform the POWERTRAIN VERIFICATION TEST. Refer to **POWERTRAIN VERIFICATION TEST** .

No

- Go To 6.

6. **(K922) TP SENSOR RETURN CIRCUIT OPEN**

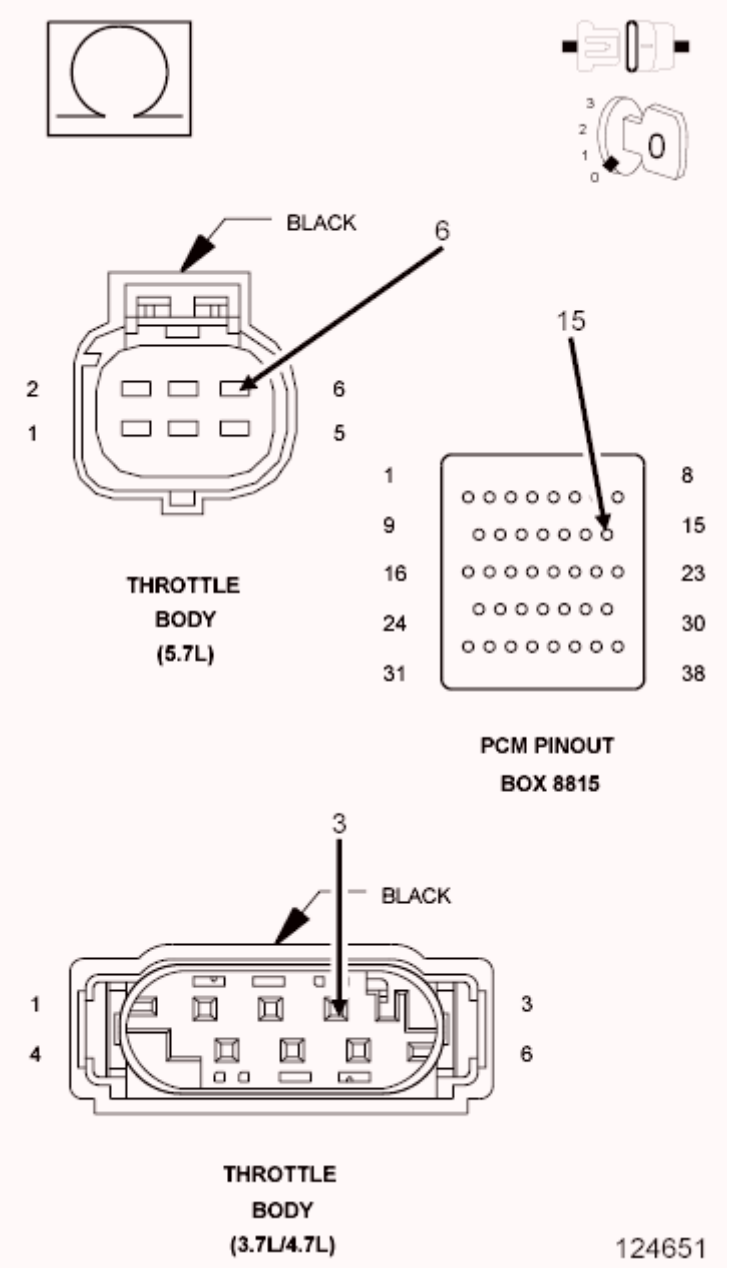

Fig. 114: Measuring Resistance Of (K922) TP Sensor Return Circuit From Throttle Body Harness

Connector To Appropriate Terminal Of Special Tool #8815
Courtesy of CHRYSLER GROUP, LLC

1. Measure the resistance of the (K922) TP Sensor Return circuit from the Throttle Body harness connector to the appropriate terminal of special tool (special tool #8815A, Kit, NGC, 38 Position).

   Is the resistance below 5.0 ohms?

   Yes

   - Go To 7.

   No

   - Repair the open in the (K922) TP Sensor Return circuit.
   - Perform the POWERTRAIN VERIFICATION TEST. Refer to **POWERTRAIN VERIFICATION TEST** .

7. **POWERTRAIN CONTROL MODULE (PCM)**
   1. Using the wiring diagram/schematic as a guide, inspect the wiring and connectors between the Throttle Body and the Powertrain Control Module (PCM).
   2. Look for any chafed, pierced, pinched, or partially broken wires.
   3. Look for broken, bent, pushed out or corroded terminals. Verify that there is good pin to terminal contact in the Throttle Body and Powertrain Control Module connectors.
   4. Refer to any Technical Service Bulletins that may apply.

      Were there any problems found?

      Yes

      - Repair as necessary.
      - Perform the POWERTRAIN VERIFICATION TEST. Refer to **POWERTRAIN VERIFICATION TEST** .

      No

      - Replace and program the Powertrain Control Module per Service Information. Refer to **MODULE, POWERTRAIN CONTROL, REMOVAL** .
      - Perform the POWERTRAIN VERIFICATION TEST. Refer to **POWERTRAIN VERIFICATION TEST** .

8. **THROTTLE FOLLOWER TEST**
   1. With a scan tool, perform the ETC Throttle Follower Test.
   2. Monitor the TP Sensor No. 1 voltage.

      Does voltage start at approximately 0.7 of a volt to approximately 4.3 volts with a smooth transition?

Yes

- Perform the INTERMITTENT CONDITION diagnostic procedure. Refer to **INTERMITTENT CONDITION** .

No

- Verify that there is good pin to terminal contact at the Throttle Body and the Powertrain Control Module connectors. Replace the Throttle Body Assembly if no problems were found in the connectors. Disconnect the Battery when replacing the Throttle Body Assembly. After installation is complete, use a scan tool and select the ETC RELEARN function.
- Perform the POWERTRAIN VERIFICATION TEST. Refer to **POWERTRAIN VERIFICATION TEST** .

P0125-INSUFFICIENT COOLANT TEMP FOR CLOSED-LOOP FUEL CONTROL

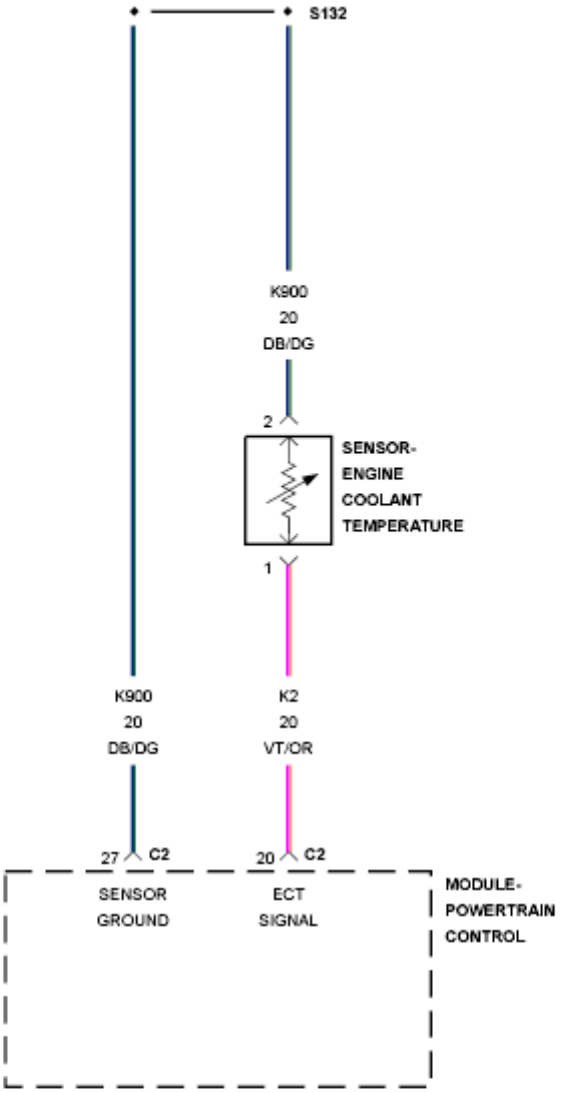

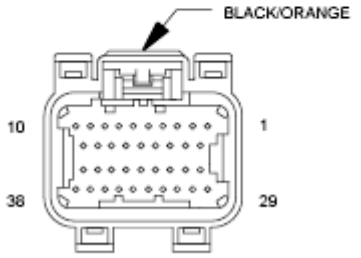

MODULE-
POWERTRAIN
CONTROL C2

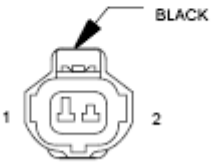

SENSOR-
ENGINE
COOLANT
TEMPERATURE
(GAS)

Fig. 115: Engine Coolant Temperature Sensor Circuit Schematic
Courtesy of CHRYSLER GROUP, LLC

For a complete wiring diagram **refer to appropriate SYSTEM WIRING DIAGRAMS article** .

THEORY OF OPERATION

The engine coolant temperature sensor is a negative temperature coefficient thermistor-type sensor whose resistance varies inversely with temperature. At cold temperatures the sensor resistance is high so the voltage is high. As the coolant temperature increases the resistance decreases and the voltage becomes low. The INSUFFICIENT COOLANT TEMP FOR CLOSED-LOOP FUEL CONTROL determines if the engine coolant temperature will reach the closed loop fueling control temperature limit in a regulated time after start.

WHEN MONITORED:

With battery voltage greater than 10.4 volts and after engine is started.

SET CONDITION:

The engine temperature does not go above -10° C (14° F). Failure time depends on start-up coolant temperature and ambient temperature. (i.e. 2 minutes for a start temp of -10° C (14° F) or up to 10 minutes for a vehicle with a start-up temp of -28° C (-18° F). Two Trip Fault. Three good trips to turn off the MIL.

POSSIBLE CAUSES

Possible Causes
LOW COOLANT LEVEL
THERMOSTAT
ECT SENSOR

Always perform the Pre-Diagnostic Troubleshooting procedure before proceeding. Refer to PRE-DIAGNOSTIC TROUBLESHOOTING PROCEDURE .

DIAGNOSTIC TEST

1. **CHECKING COOLANT LEVEL AND CONDITION**
    1. Ignition on, engine not running.
    2. With a scan tool, select View DTCs.

NOTE: **If an Engine Coolant Temperature (ECT) DTC is set along with this code, diagnose the ECT DTC first.**

NOTE: **Inspect the ECT terminals and related PCM terminals. Make sure the terminals are free from corrosion and damage.**

NOTE: **The best way to diagnose this DTC is to allow the vehicle to sit**

overnight outside in order to have a totally cold soaked engine.

NOTE: **Extremely cold outside ambient temperatures may have caused this DTC to set.**

WARNING: **Never open the cooling system when the engine is hot. The system is under pressure. Extreme burns or scalding may result. Failure to follow these instructions can result in possible serious or fatal injury. Allow the engine to cool before opening the cooling system.**

3. Inspect the coolant system for proper level and condition.

   Is the coolant level and condition OK?

   Yes

   - Go To 2.

   No

   - Inspect the vehicle for a coolant leak, make the appropriate repairs, and add the correct amount of coolant.
   - Perform the POWERTRAIN VERIFICATION TEST. Refer to **POWERTRAIN VERIFICATION TEST** .

2. **THERMOSTAT OPERATION**

NOTE: **This test works best if performed on a cold engine (cold soak)**

1. Ignition on, engine not running.
2. With a scan tool, read the Eng Coolant Tmp Deg value. If the engine was allowed to sit overnight (cold soak), the temperature value should be a sensible value that is somewhere close to the ambient temperature.

   NOTE: **If engine coolant temperature is above 82° C (180° F), allow the engine to cool until 65° C (150° F) is reached.**

3. Start the Engine.
4. During engine warm-up monitor the Eng Coolant Tmp Deg value. The temp deg value change should be a smooth transition from start up to normal operating temp 82° C (180° F). Also monitor the actual coolant temperature with a thermometer.

   NOTE: **As the engine warms up to operating temperature, the actual coolant temperature (thermometer reading) and the scan tool Eng Coolant**

Tmp Deg values should stay relatively close to each other.

5. Using the appropriate service information, determine the proper opening temperature of the thermostat.

   Did the thermostat open at the proper temperature?

   Yes

   - Go To 3.

   No

   - Replace the thermostat.
   - Perform the POWERTRAIN VERIFICATION TEST. Refer to **POWERTRAIN VERIFICATION TEST** .

3. **ECT SENSOR OPERATION**
   1. Ignition on, engine not running.
   2. With a scan tool, read the Eng Coolant Tmp Deg value. If the engine was allowed to sit overnight (cold soak), the temperature value should be a sensible value that is somewhere close to the ambient temperature.

      NOTE: If engine coolant temperature is above 82° C (180° F), allow the engine to cool until 65° C (150° F) is reached.

   3. Start the Engine.
   4. During engine warm-up monitor the Eng Coolant Tmp Deg value. The temp deg value change should be a smooth transition from start up to normal operating temp 82° C (180° F). Also monitor the actual coolant temperature with a thermometer.

      NOTE: As the engine warms up to operating temperature, the actual coolant temperature (thermometer reading) and the scan tools Eng Coolant Tmp Deg value should stay relatively close to each other.

      Is the thermometer reading relatively close to the scan tool ECT reading?

      Yes

      - The conditions that originally set this DTC are no longer present. Refer to the INTERMITTENT CONDITION Diagnostic Procedure for further assistance. Refer to **INTERMITTENT CONDITION** .

      No

      - Replace the Engine Coolant Temperature Sensor.

- Perform the POWERTRAIN VERIFICATION TEST. Refer to **POWERTRAIN VERIFICATION TEST** .

P0128-THERMOSTAT RATIONALITY

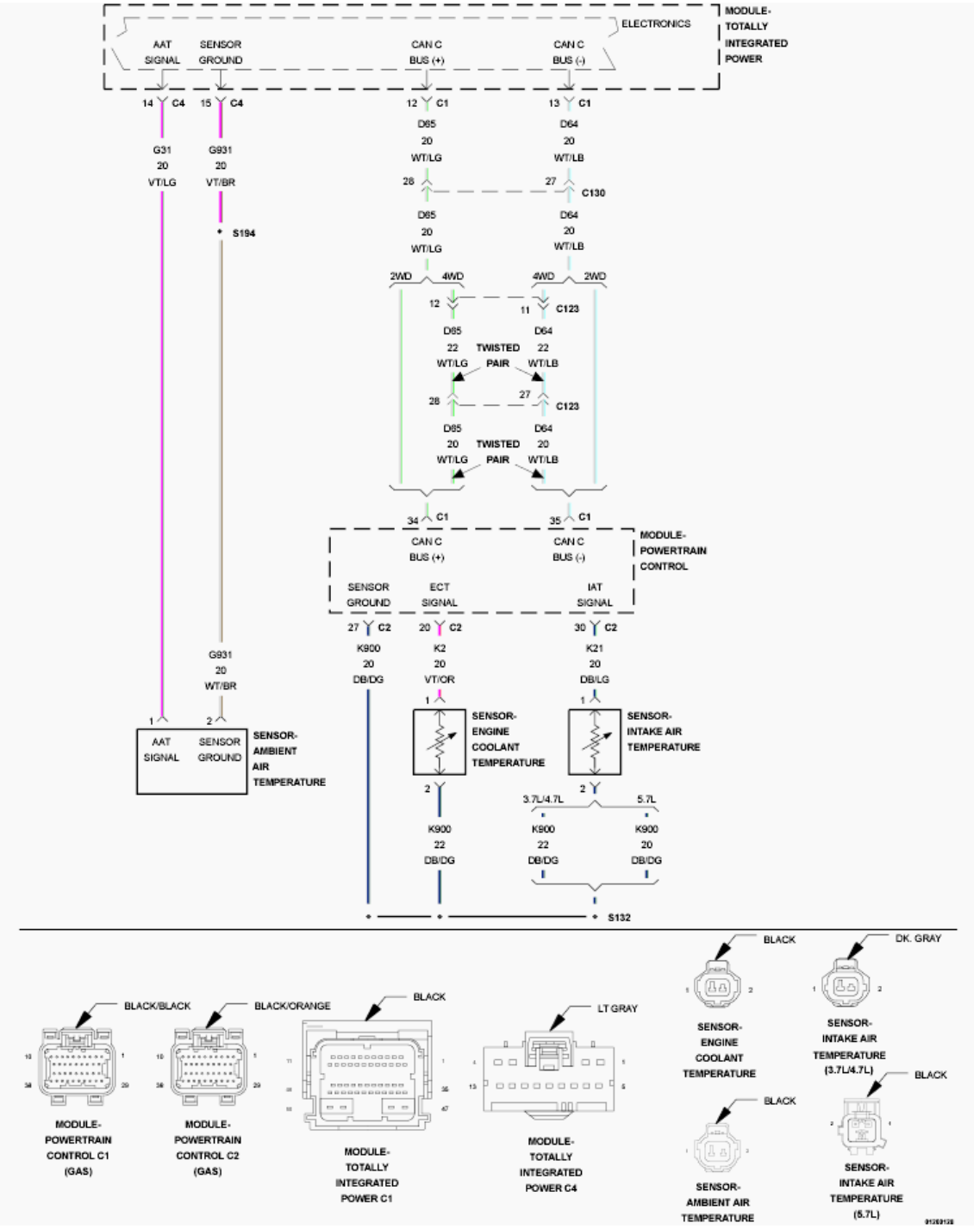

Fig. 116: ECT Sensor, IAT Sensor & AAT Sensor Circuit Schematic
Courtesy of CHRYSLER GROUP, LLC

For a complete wiring diagram, **refer to appropriate SYSTEM WIRING DIAGRAMS article** .

THEORY OF OPERATION

The PCM predicts what the engine coolant temperature should be, based on the engine coolant temperature at start-up, ambient temperature and how the vehicle is subsequently driven. The predicted engine coolant temperature is compared to the Engine Coolant Temperature Sensor reading. The error between the two is calculated and integrated with respect to time. When the Thermostat diagnostic runs, the integrated error is compared to a calibrated threshold and pass/fail is determined. Separate pass and fail thresholds are used in order to improve accuracy of the diagnostic.

WHEN MONITORED:

With the engine running, ambient temperature between -8° C (17.6° F) and 50° C (122° F), start up coolant temperature less than 50° C (122° F), and average vehicle speed greater than 16 kph (10 mph) until coolant temperature reaches 85° C (185° F).

SET CONDITION:

The PCM detects that the actual engine coolant temperature falls too far below the predicted engine coolant temperature and the predicted coolant temperature reaches the predicted target value before the actual coolant temperature reaches the actual coolant temperature target value. Two trip fault. Three good trips to turn off the MIL.

POSSIBLE CAUSES

Possible Causes
LOW COOLANT LEVEL
THERMOSTAT
SENSOR SIGNAL CIRCUIT SHORTED TO VOLTAGE
TEMPERATURE SENSOR
SIGNAL CIRCUIT OPEN
(K900) SENSOR GROUND CIRCUIT OPEN
(G931) SENSOR GROUND CIRCUIT OPEN
SIGNAL CIRCUIT SHORTED TO GROUND
(K2) ECT SIGNAL CIRCUIT SHORTED TO THE (K900) SENSOR GROUND CIRCUIT
(G31) AAT SIGNAL CIRCUIT SHORTED TO THE (G931) SENSOR GROUND CIRCUIT OPEN
OTHER POSSIBLE CAUSES
POWERTRAIN CONTROL MODULE (PCM)

Always perform the Pre-Diagnostic Troubleshooting procedure before proceeding. Refer to PRE-DIAGNOSTIC TROUBLESHOOTING PROCEDURE .

DIAGNOSTIC TEST

1. **ACTIVE DTC**

NOTE: **Diagnose any CAN - C Communication DTCs before continuing.**

NOTE: **If any ECT, AAT, CMP or CKP sensor DTCs have set along with P0128, diagnose them before continuing.**

NOTE: **Make sure that the Pinion Factor has been programmed correctly into the PCM.**

1. Start the engine.
2. Allow the engine to reach normal operating temperature.
3. With a scan tool, select View DTCs.

NOTE: **It may be necessary to drive the vehicle to meet the conditions to set this DTC, try to repeat the conditions in which the fault originally set by reviewing the Freeze Frame data.**

Is the DTC Active or Pending at this time?

Yes

- Go To 2.

No

- Perform the INTERMITTENT CONDITION diagnostic procedure. Refer to **INTERMITTENT CONDITION** .

2. **LOW COOLANT LEVEL**

NOTE: **If an Engine Coolant Temperature (ECT) DTC is set along with this code, diagnose the ECT DTC first.**

NOTE: **Inspect the ECT terminals and related PCM terminals. Make sure the terminals are free from corrosion and damage.**

NOTE: **The best way to diagnose this DTC is to allow the vehicle to sit overnight outside in order to have a totally cold soaked engine.**

NOTE: **Extremely cold outside ambient temperatures may have caused this DTC to set.**

WARNING: **Never open the cooling system when the engine is hot. The system is under pressure. Failure to follow these instructions can result in personal injury including extreme burns, scalding, or fatal injury.**

Allow the engine to cool before opening the cooling system.

1. Check the coolant system to make sure that the coolant is in good condition and at the proper level.

   Is the coolant level and condition OK?

   Yes

   - Go To 3.

   No

   - Inspect the vehicle for a coolant leak and add the necessary amount of coolant.
   - Perform the POWERTRAIN VERIFICATION TEST. Refer to **POWERTRAIN VERIFICATION TEST** .

3. **THERMOSTAT OPERATION**

NOTE: **This test works best if performed on a cold engine (cold soak).**

1. Ignition on, engine not running.
2. With a scan tool, read the ECT Deg value. If the engine was allowed to sit overnight (cold soak), the temperature value should be a sensible value that is somewhere close to the ambient temperature.

   NOTE: **If engine coolant temperature is above 82° C (180° F), allow the engine to cool until 65° C (150° F) is reached.**

3. Start the Engine.
4. During engine warm-up, monitor the ECT Deg value. The temp deg value change should be a smooth transition from start up to normal operating temp 82° C (180° F). Also monitor the actual coolant temperature with a thermometer.

   NOTE: **As the engine warms up to operating temperature, the actual coolant temperature (thermometer reading) and the scan tool, ECT Temperature value should stay relatively close to each other.**

5. Using the appropriate service information, determine the proper opening temperature of the thermostat.

   Did the thermostat open at the proper temperature?

   Yes

   - Go To 4.

No

- Replace the thermostat.
- Perform the POWERTRAIN VERIFICATION TEST. Refer to **POWERTRAIN VERIFICATION TEST** .

4. **AMBIENT AIR TEMP SENSOR OPERATION**
   1. Ignition on, engine not running.
   2. With a scan tool, read and record the AAT Sensor Temperature value.
   3. Using the DRB Temperature Probe #CH7050, or an equivalent temperature measuring tool, measure the ambient air temperature near the AAT Sensor.

      Is the AAT Sensor value with -15° C (5° F) of the temperature probe reading?

      Yes

      - Go To 5.

      No

      - Go To 7.

5. **ECT SENSOR OPERATION**

   WARNING: **Make sure the engine cooling system is cool before removing the pressure cap or any hose. The cooling system is pressurized when hot. Failure to follow these instructions can result in possible serious or fatal injury.**

   1. With a scan tool, read and record the ECT Sensor Temperature value.
   2. Use the DRB Temperature Probe #CH7050, or an equivalent temperature measuring tool, measure the engine coolant temperature.

      Is the ECT Sensor value with -15° C (5° F) of the temperature probe reading?

      Yes

      - Go To 6.

      No

      - Go To 7.

6. **OTHER POSSIBLE CAUSES**
   1. Inspect the Temperature Sensors for any physical damage.
   2. Inspect the engine coolant. Make sure the coolant is at the proper level. Refer to the Service Information COOLING.

3. Make sure the Temperature Sensors are properly installed.
4. Make sure the CMP and CKP sensors are installed properly. Check the connectors for any signs of damage.

WARNING: When the engine is operating, do not stand in direct line with the fan. Do not put your hands near the pulleys, belts or fan. Do not wear loose clothing. Failure to follow these instructions may result in possible serious or fatal injury.

5. Perform any Technical Service Bulletins (TSBs) that may apply.
6. With the engine running at normal operating temperature, monitor the Temperature sensor parameters while wiggling the wire harness. Look for parameter values to change.
7. Visually inspect the related wire harness. Look for any chafed, pierced, pinched, partially broken wires and broken, bent, pushed out, or corroded terminals.

CAUTION: Do not probe the PCM harness connectors. Probing the PCM harness connectors will damage the PCM terminals resulting in poor terminal to pin connection. Install the PCM Pinout Box (special tool #8815A, Kit, NGC, 38 Position) to perform diagnosis.

8. Inspect and clean all PCM, engine, and chassis grounds.

   Were any problems found during the above inspections?

   Yes

   - Repair as necessary.
   - Perform the POWERTRAIN VERIFICATION TEST. Refer to **POWERTRAIN VERIFICATION TEST** .

   No

   - Test Complete.

7. **(K2) ECT SIGNAL CIRCUIT SHORTED TO VOLTAGE**

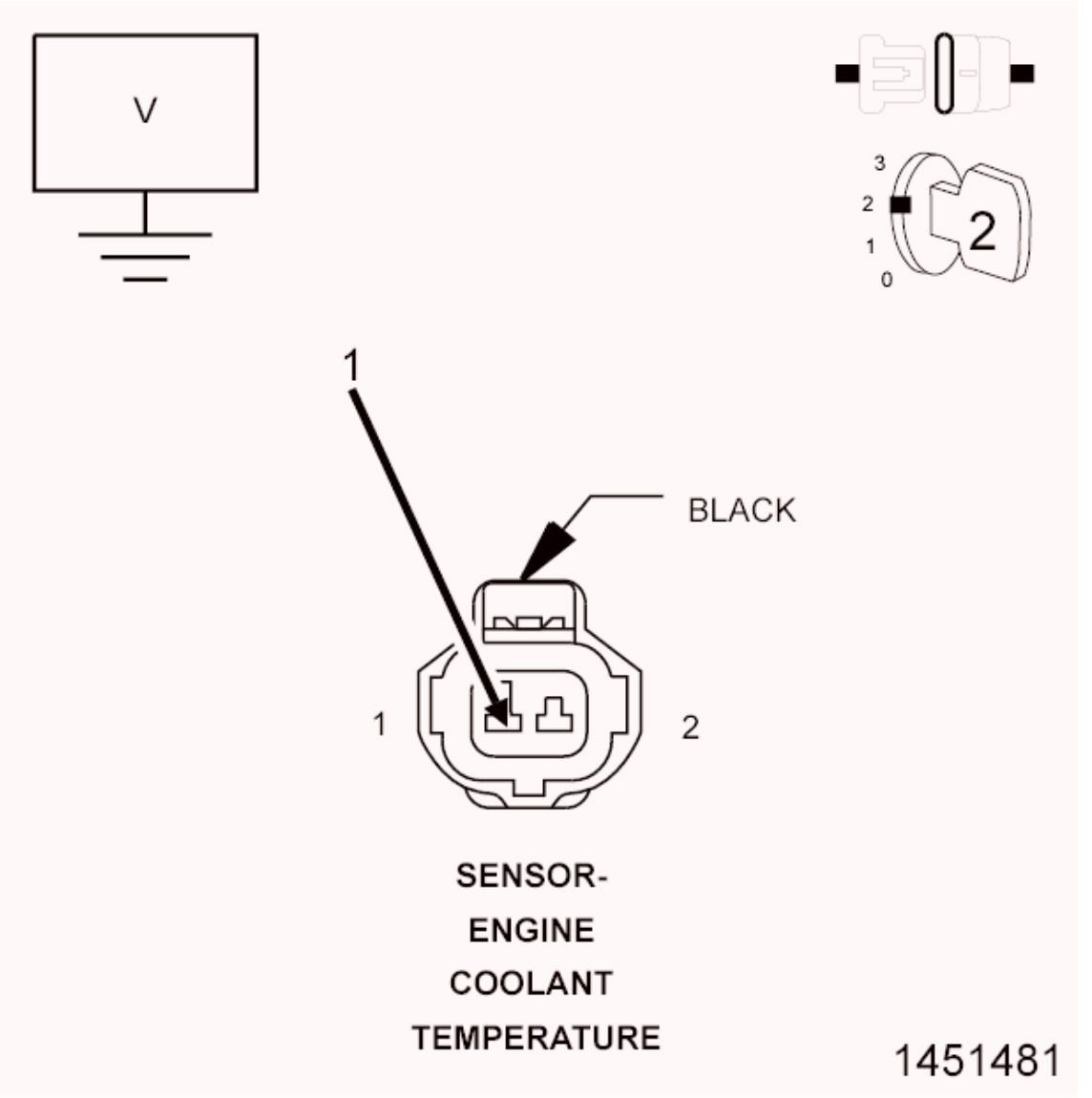

Fig. 117: Measuring Voltage On ECT Sensor Signal Circuit Harness Connector
Courtesy of CHRYSLER GROUP, LLC

NOTE: Visually inspect both the component and the PCM connectors. Look for damage, partially broken wires and backed out or corroded terminals

1. Turn the ignition off.
2. Disconnect the ECT Temperature Sensor harness connector.
3. Disconnect the C2 PCM harness connector.
4. Ignition on, engine not running.
5. Measure the voltage on the (K2) ECT Signal circuit at the ECT Sensor harness connector.

NOTE: The sensor voltage should be approximately 5.0 volts (plus or minus.1 volt) with the connector disconnected.

Does the scan tool display the voltage as described above?

Yes

- Repair the short to voltage in the (K2) ECT Signal circuit.
- Perform the POWERTRAIN VERIFICATION TEST. Refer to **POWERTRAIN VERIFICATION TEST** .

No

- Go To 8.

8. **(G31) AAT SIGNAL CIRCUIT SHORTED TO VOLTAGE**

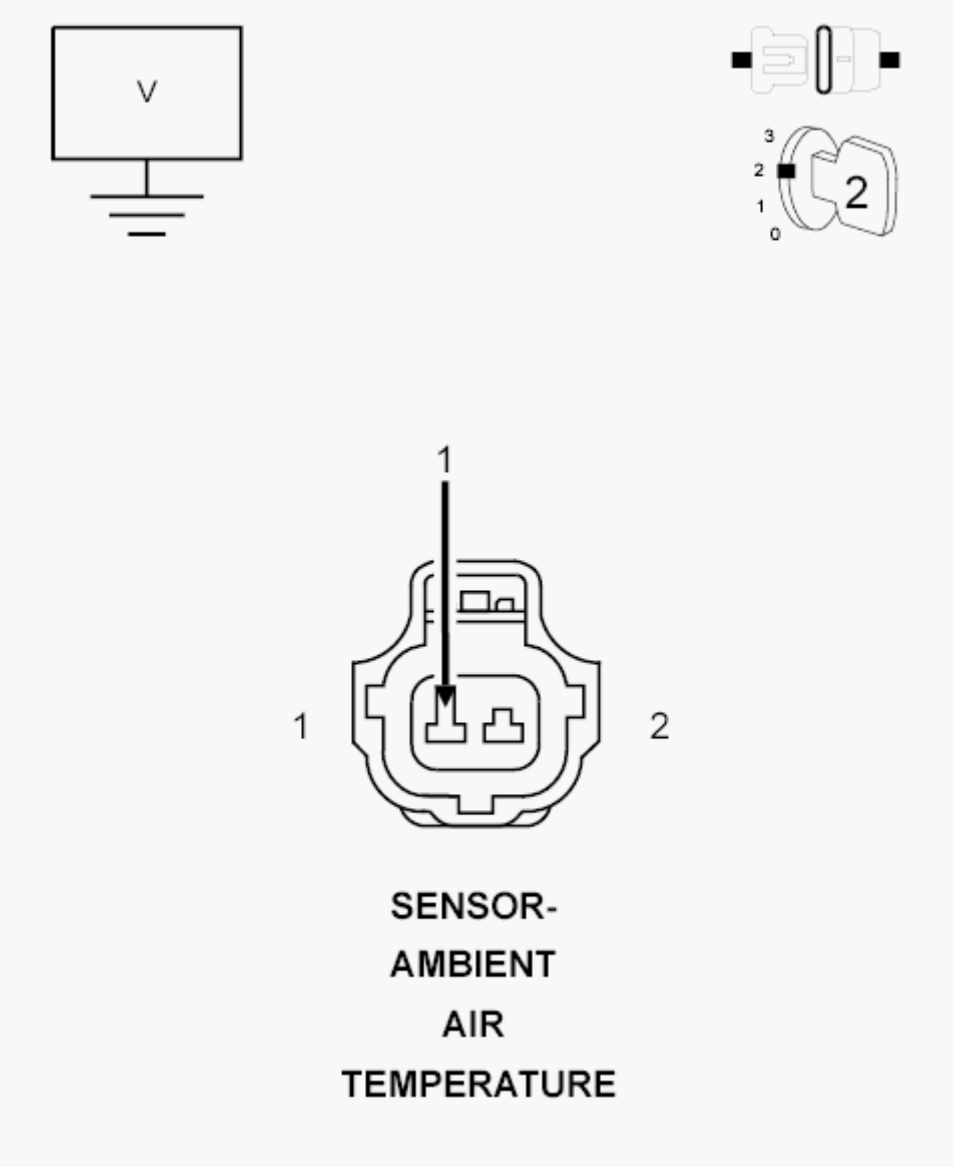

Fig. 118: Measuring Voltage On AAT Signal Circuit In AAT Sensor Harness Connector

Courtesy of CHRYSLER GROUP, LLC

1. Turn the ignition off.
2. Disconnect the C4 TIPM harness connector.
3. Disconnect the AAT Sensor harness connector.

NOTE: **Visually inspect both the component and the TIPM connectors. Look for damaged, partially broken wires, and backed out or corroded terminals.**

4. Ignition on, engine not running.
5. Measure the voltage on the (G31) AAT Signal circuit in the AAT Sensor harness connector.

NOTE: **The sensor voltage should be approximately 5.0 volts (plus or minus.1 volt) with the connector disconnected.**

Does the scan tool display the voltage as described above?

Yes

- Repair the short to voltage in the (G31) AAT Signal circuit.
- Perform the POWERTRAIN VERIFICATION TEST. Refer to **POWERTRAIN VERIFICATION TEST** .

No

- Go To 9.

9. **TEMPERATURE SENSOR**

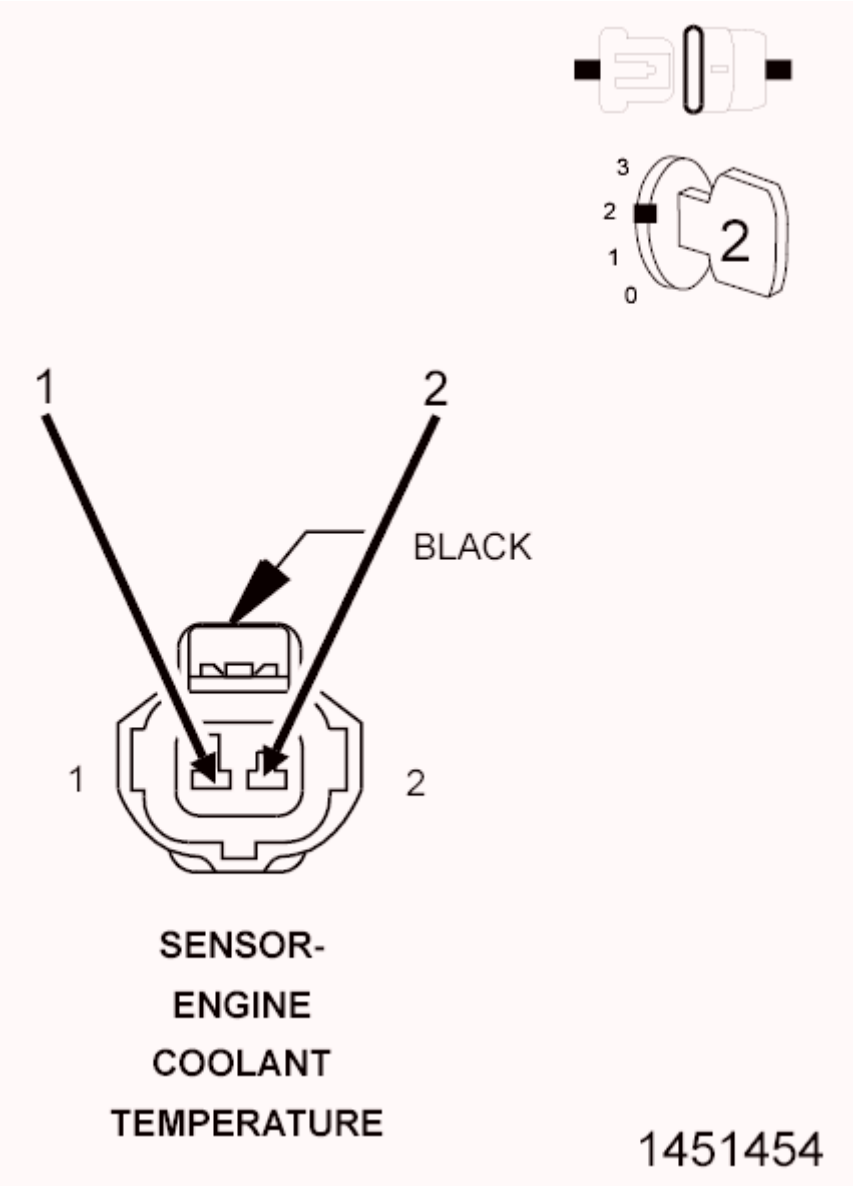

Fig. 119: Engine Coolant Temperature Sensor Harness Connector
Courtesy of CHRYSLER GROUP, LLC

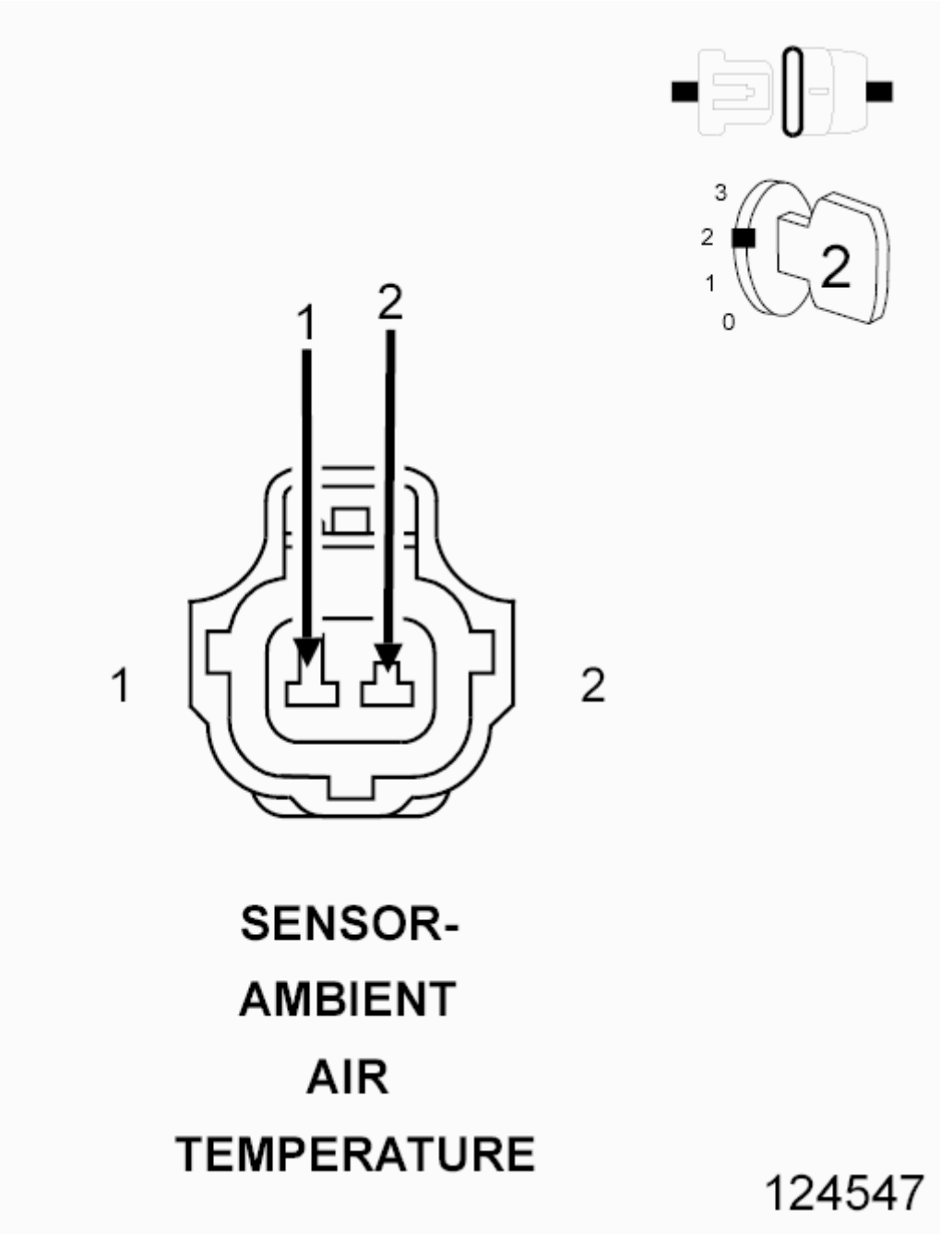

Fig. 120: Ambient Air Temperature Sensor Harness Connector
Courtesy of CHRYSLER GROUP, LLC

1. Turn the ignition off.
2. Connect the C2 PCM harness connector.
3. Connect the C4 TIPM harness connector.
4. Ignition on, engine not running.
5. With a scan tool, read the Temperature Sensor voltage.
6. Connect a jumper wire across the ECT and AAT Sensor harness connectors.

Does the voltage start at 5.0 volts when the jumper wire is not installed and drop below 1.0 volt when the jumper wire is installed?

Yes

- Verify that there is good pin to terminal contact in the Sensor and Powertrain Control Module connectors. Replace the Appropriate Sensor if no problems were found with the connectors.
- Perform the POWERTRAIN VERIFICATION TEST. Refer to **POWERTRAIN VERIFICATION TEST** .

No

- Go To 10.

NOTE: Disconnect the jumper wire before continuing.

10. **(K2) ECT SIGNAL CIRCUIT OPEN**

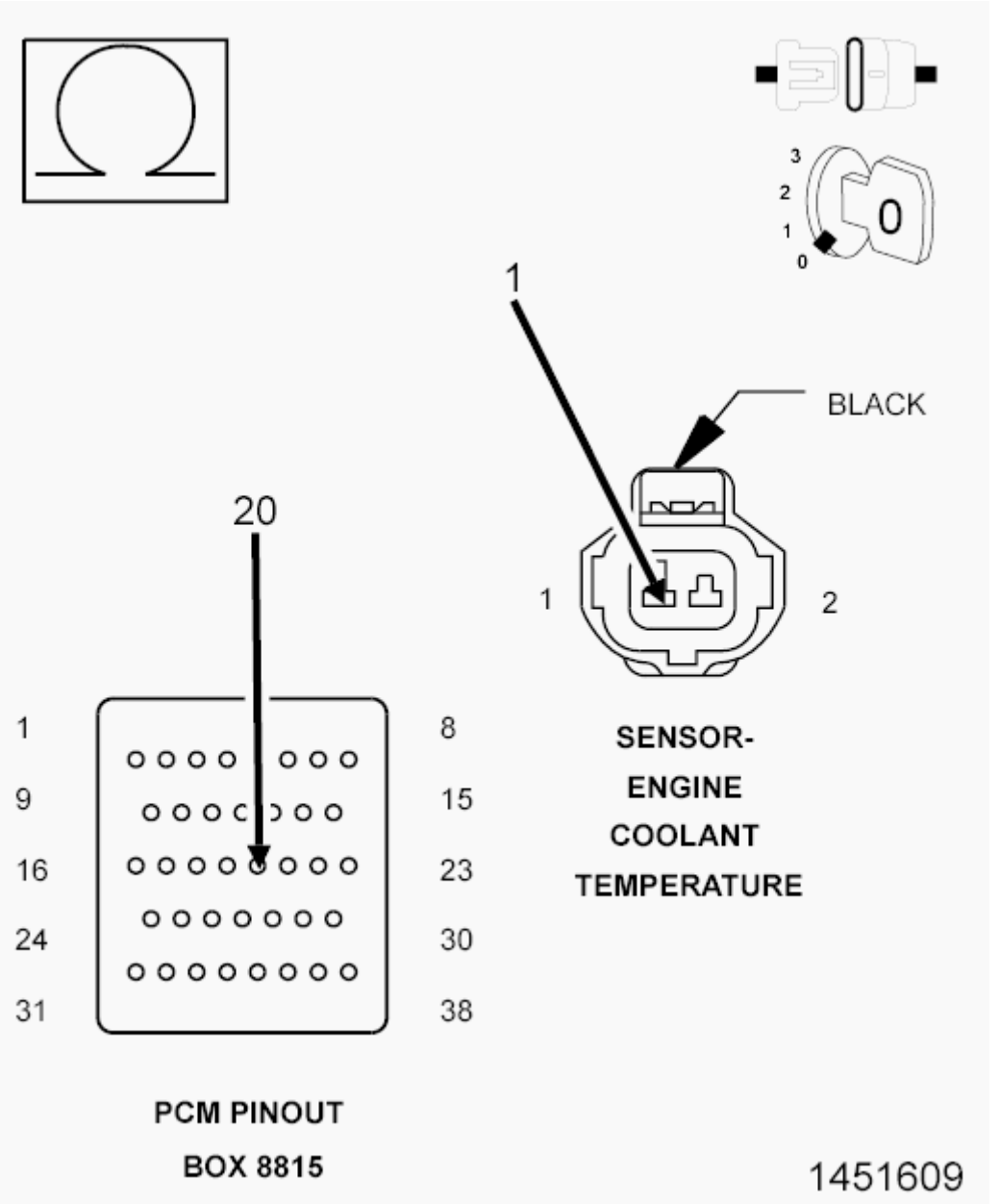

Fig. 121: Measuring Resistance Of ECT Sensor Signal Circuit From Harness Connector To Appropriate Terminal Of PCM Pinout Box 8815
Courtesy of CHRYSLER GROUP, LLC

1. Turn the ignition off.
2. Disconnect the C2 PCM harness connector.

CAUTION: Do not probe the PCM harness connectors. Probing the PCM harness connectors will damage the PCM terminals resulting in poor terminal to pin connection. Install the PCM Pinout Box (special tool #8815A, Kit, NGC, 38 Position) to perform diagnosis.

3. Measure the resistance of the (K2) ECT Sensor Signal circuit from the ECT Sensor harness connector to the appropriate terminal of the PCM Pinout Box (special tool #8815A, Kit, NGC, 38 Position).

   Is the resistance below 5.0 Ohms?

   Yes

   - Go To 11.

   No

   - Repair the open in the (K2) ECT Sensor Signal circuit.
   - Perform the POWERTRAIN VERIFICATION TEST. Refer to **POWERTRAIN VERIFICATION TEST** .

11. **(G31) AAT SIGNAL CIRCUIT OPEN**

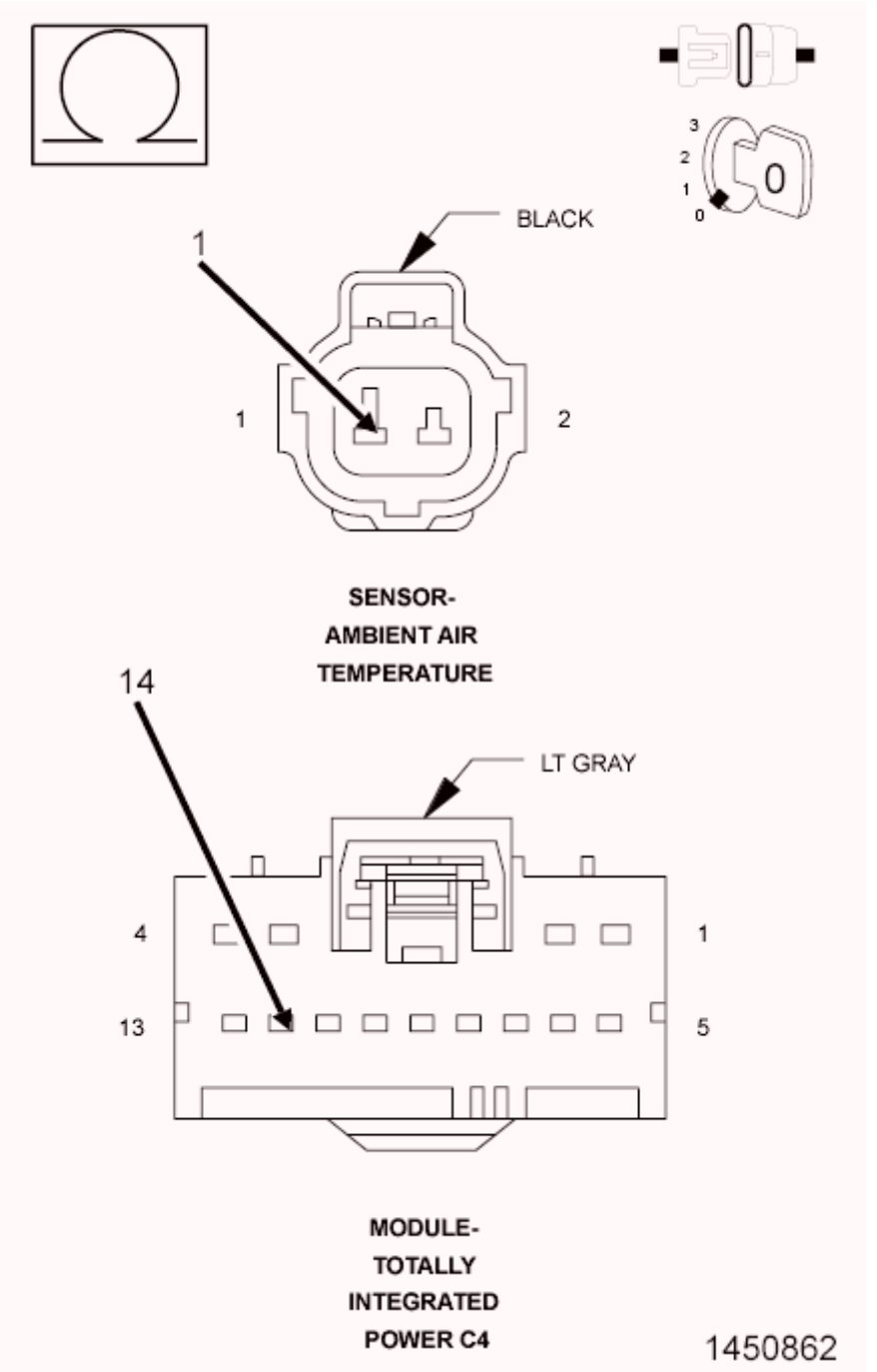

Fig. 122: Measuring Ambient Air Temperature Sensor Signal Circuit Resistance
Courtesy of CHRYSLER GROUP, LLC

1. Disconnect the C4 TIPM harness connector.
2. Measure the resistance of the (G31) AAT Signal circuit from the AAT Sensor harness connector to the C4 TIPM harness connector.

   Is the resistance below 5.0 Ohms?

Yes

- Go To 12.

No

- Repair the open in the (G31) AAT Signal circuit.
- Perform the POWERTRAIN VERIFICATION TEST. Refer to **POWERTRAIN VERIFICATION TEST** .

12. **(K900) SENSOR GROUND CIRCUIT OPEN**

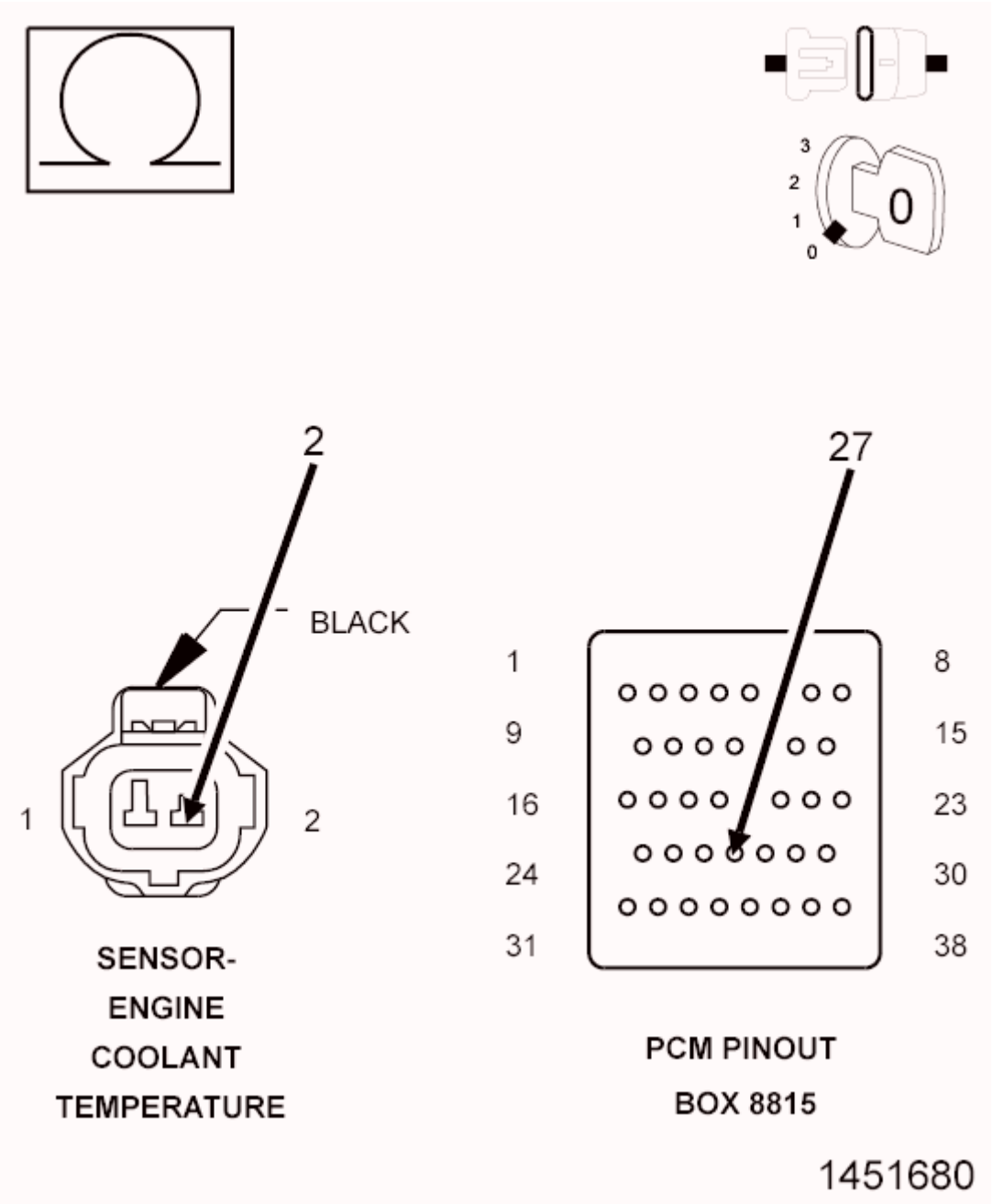

Fig. 123: Measuring Resistance Of ECT Sensor Ground Circuit From Harness Connector To Appropriate Terminal Of PCM Pinout Box 8815
Courtesy of CHRYSLER GROUP, LLC

1. For the ECT Sensor, measure the resistance of the (K900) Sensor ground circuit from the ECT Sensor harness connector to the appropriate terminal of the PCM Pinout Box (special tool #8815A, Kit, NGC, 38 Position).

   Is the resistance below 5.0 Ohms?

   Yes

   - Go To 13.

   No

   - Repair the open in the (K900) Sensor ground circuit.
   - Perform the POWERTRAIN VERIFICATION TEST. Refer to **POWERTRAIN VERIFICATION TEST** .

13. **(G931) SENSOR GROUND CIRCUIT OPEN**

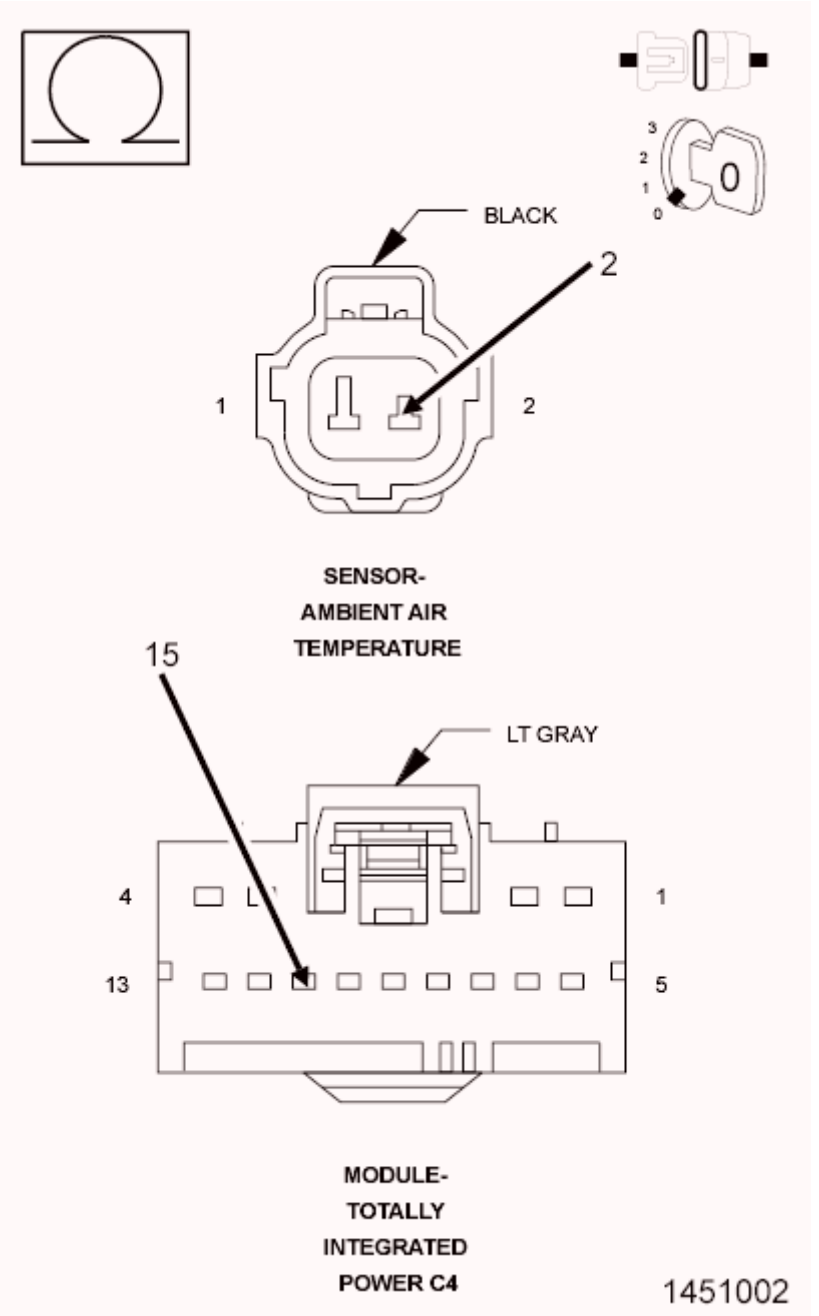

Fig. 124: Measuring Resistance Of Sensor Ground Circuit From AAT Sensor Harness Connector To TIPM Harness Connector
Courtesy of CHRYSLER GROUP, LLC

1. Measure the resistance of the (G931) Sensor Ground circuit from the AAT Sensor harness connector to the C4 TIPM harness connector.

   Is the resistance below 5.0 Ohms?

   Yes

- Go To 14.

No

- Repair the open in the (G931) Sensor Ground circuit.
- Perform the POWERTRAIN VERIFICATION TEST. Refer to **POWERTRAIN VERIFICATION TEST** .

14. **(K2) ECT SIGNAL CIRCUIT SHORTED TO GROUND**

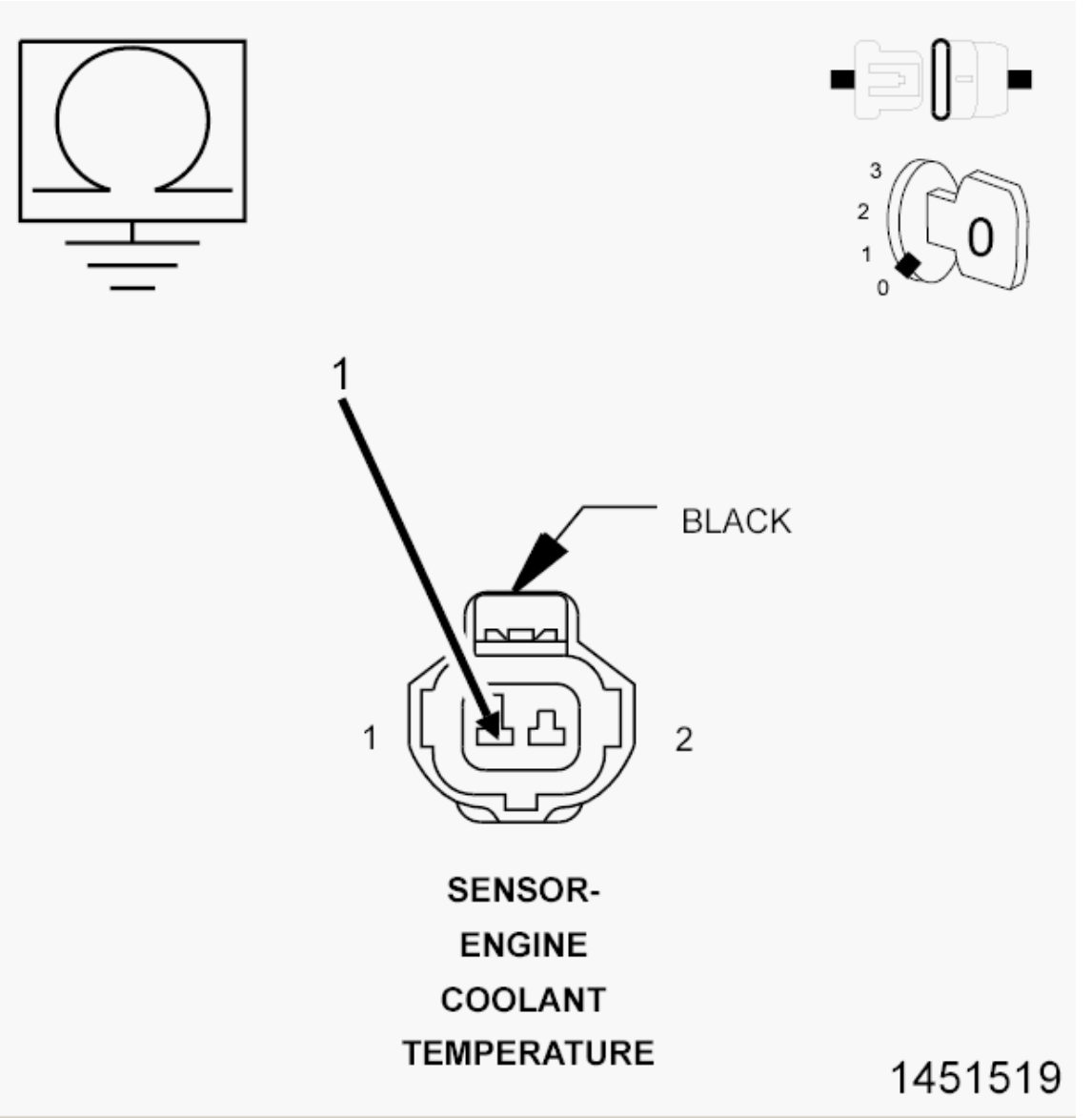

Fig. 125: Measuring Resistance Between Ground And ECT Sensor Signal Circuit In Sensor Harness Connector
Courtesy of CHRYSLER GROUP, LLC

1. Measure the resistance between ground and the (K2) ECT Sensor Signal circuit in the Temperature

Sensor harness connector.

Is the resistance below 100 Ohms?

Yes

- Repair the short to ground in the (K2) ECT Signal circuit.
- Perform the POWERTRAIN VERIFICATION TEST. Refer to **POWERTRAIN VERIFICATION TEST** .

No

- Go To 15.

15. **(G31) AAT SIGNAL CIRCUIT SHORTED TO GROUND**

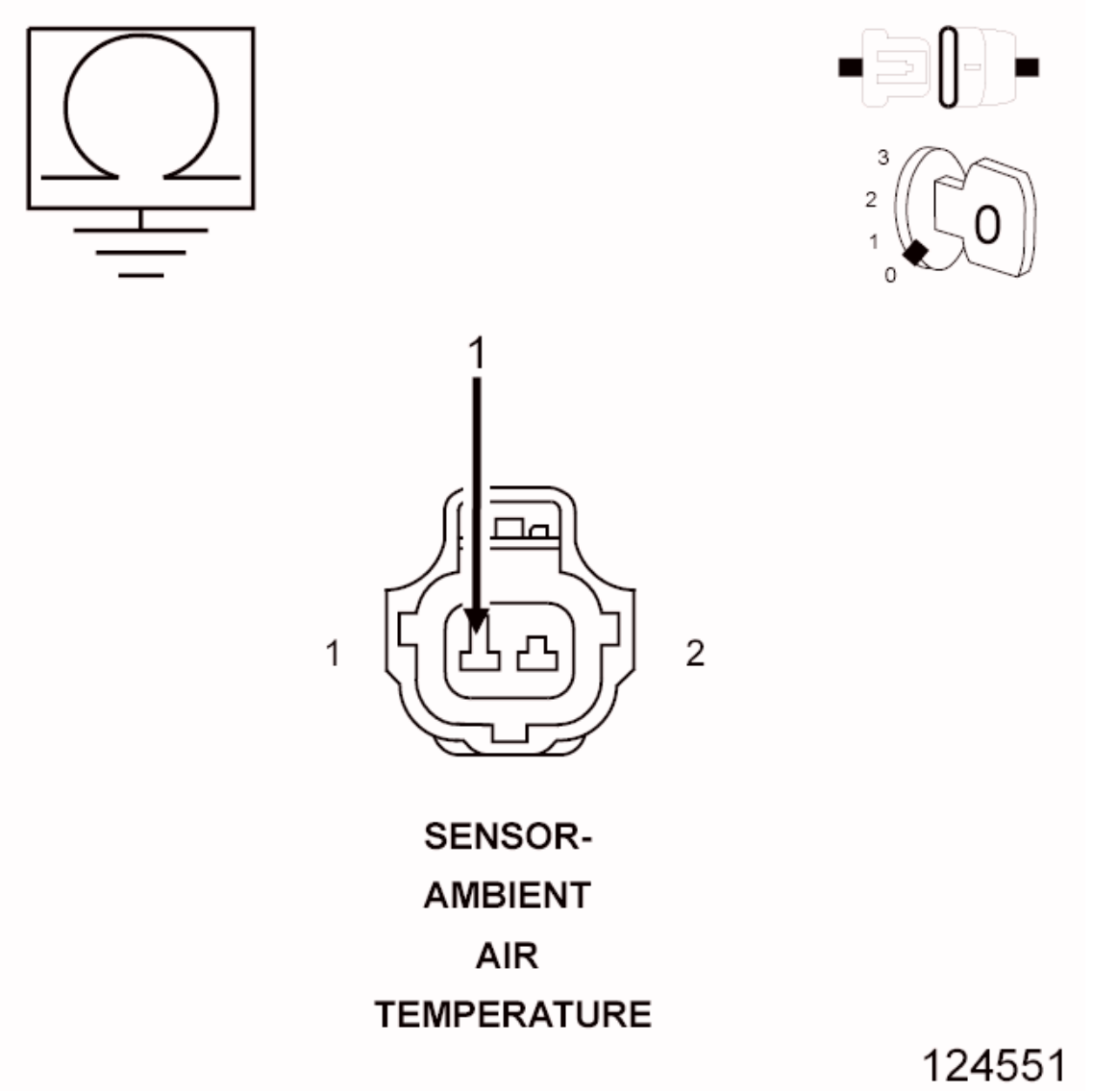

Fig. 126: Measuring Resistance Between Ground And AAT Sensor Signal Circuit In AAT Sensor Harness Connector
Courtesy of CHRYSLER GROUP, LLC

1. Measure the resistance between ground and the (G31) AAT Signal circuit in the AAT Sensor harness connector.

   Is the resistance below 100 Ohms?

   Yes

   - Repair the short to ground in the (G31) AAT Signal circuit.
   - Perform the POWERTRAIN VERIFICATION TEST. Refer to **POWERTRAIN VERIFICATION TEST** .

   No

   - Go To 16.

16. **(K2) ECT SIGNAL CIRCUIT SHORTED TO THE (K900) SENSOR GROUND CIRCUIT**

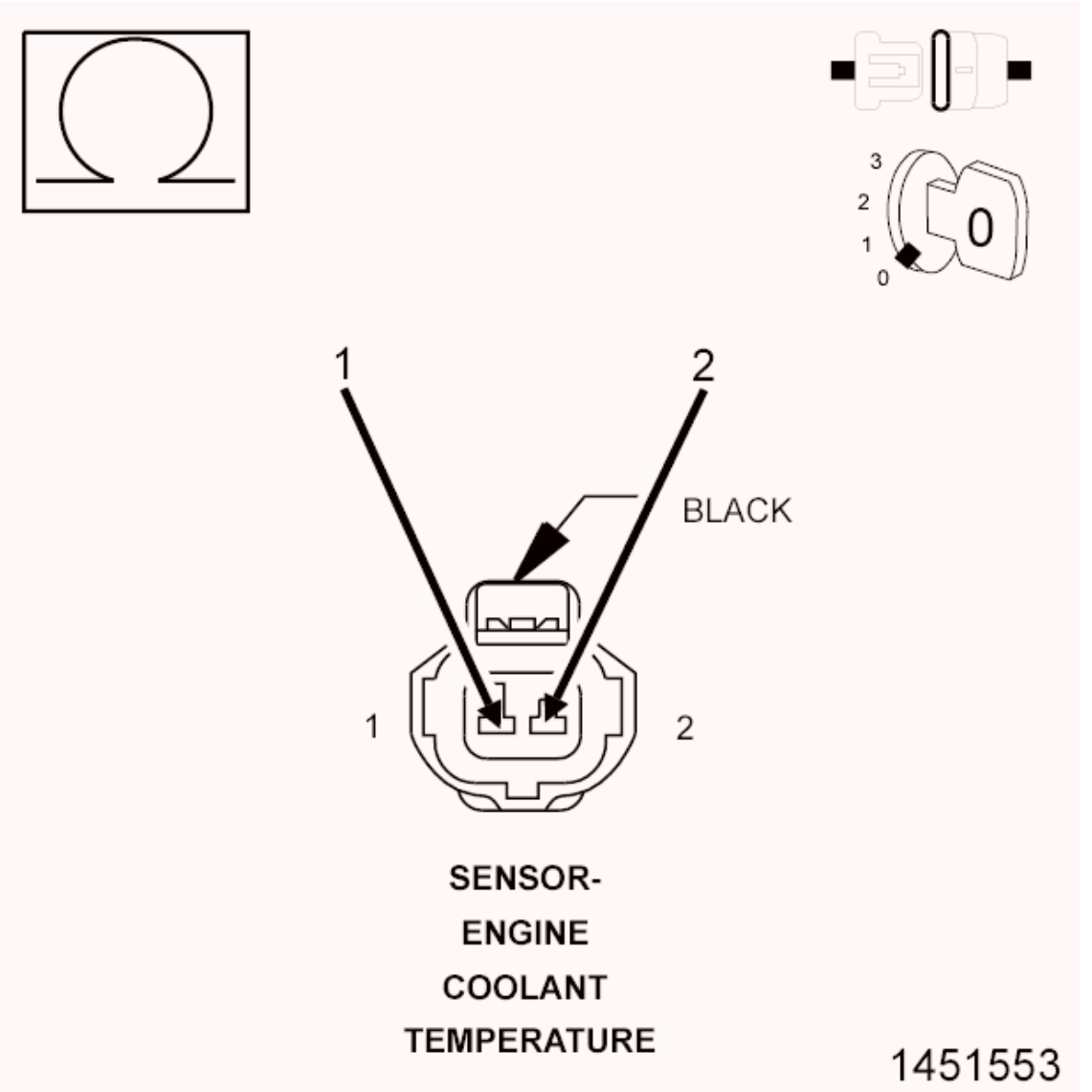

Fig. 127: Measuring Resistance Between ECT Sensor Signal Circuit And Ground Circuit In Sensor Harness Connector
Courtesy of CHRYSLER GROUP, LLC

1. Measure the resistance between the (K2) ECT Signal circuit and the (K900) Sensor ground circuit in the ECT Sensor harness connector.

   Is the resistance below 100 Ohms?

   Yes

   - Repair the short between the (K900) Sensor ground circuit and the (K2) ECT Sensor Signal circuit.
   - Perform the POWERTRAIN VERIFICATION TEST. Refer to **POWERTRAIN VERIFICATION TEST** .

No

- Go To 17.

17. **(G31) AAT SIGNAL CIRCUIT SHORTED TO THE (G931) SENSOR GROUND CIRCUIT**

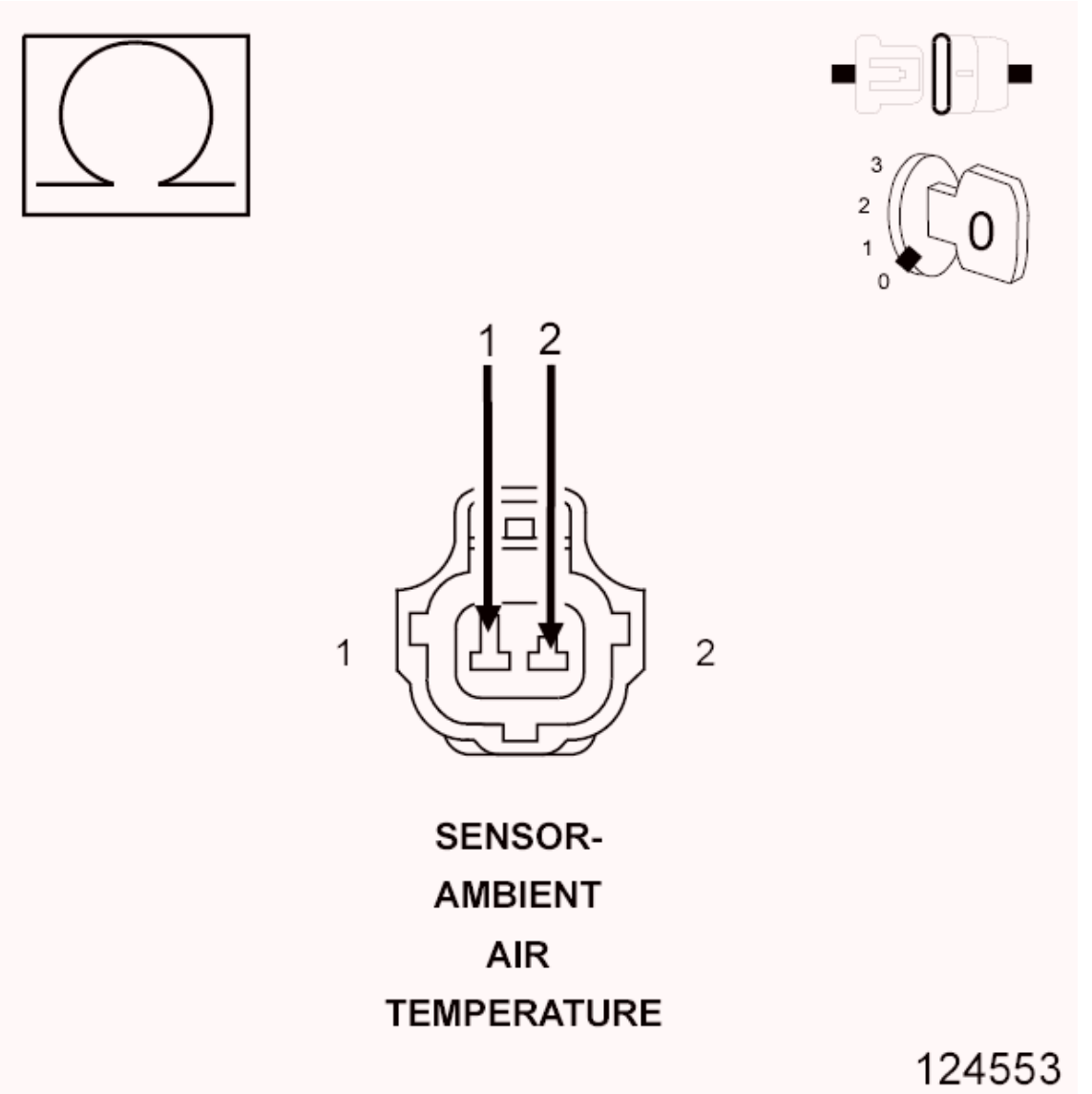

Fig. 128: Measuring Resistance Between Sensor Return Circuit And Sensor Signal Circuit In AAT Sensor Harness Connector
Courtesy of CHRYSLER GROUP, LLC

1. Measure the resistance between the (G31) AAT Signal circuit and the (G931) Sensor Ground circuit in the AAT Sensor harness connector.

   Is the resistance below 5.0 Ohms?

   Yes

- Repair the short between the (G931) Sensor Ground circuit and the (G31) AAT Signal circuit.
- Perform the POWERTRAIN VERIFICATION TEST. Refer to **POWERTRAIN VERIFICATION TEST** .

No

- Go To 18.

18. **POWERTRAIN CONTROL MODULE (PCM)**
    1. Using the wiring diagram/schematic as a guide, inspect the wiring and connectors between the Temperature Sensors and the Powertrain Control Module (PCM).
    2. Look for any chafed, pierced, pinched, or partially broken wires.
    3. Look for broken, bent, pushed out or corroded terminals. Verify that there is good pin to terminal contact in the Sensor and Control Module connectors.
    4. Refer to any Technical Service Bulletins that may apply.

    Were there any problems found?

    Yes

    - Repair as necessary.
    - Perform the POWERTRAIN VERIFICATION TEST. Refer to **POWERTRAIN VERIFICATION TEST** .

    No

    - Replace and program the Powertrain Control Module per Service Information. Refer to **MODULE, POWERTRAIN CONTROL, REMOVAL** .
    - Perform the POWERTRAIN VERIFICATION TEST. Refer to **POWERTRAIN VERIFICATION TEST** .

P0129-BAROMETRIC PRESSURE OUT-OF-RANGE LOW

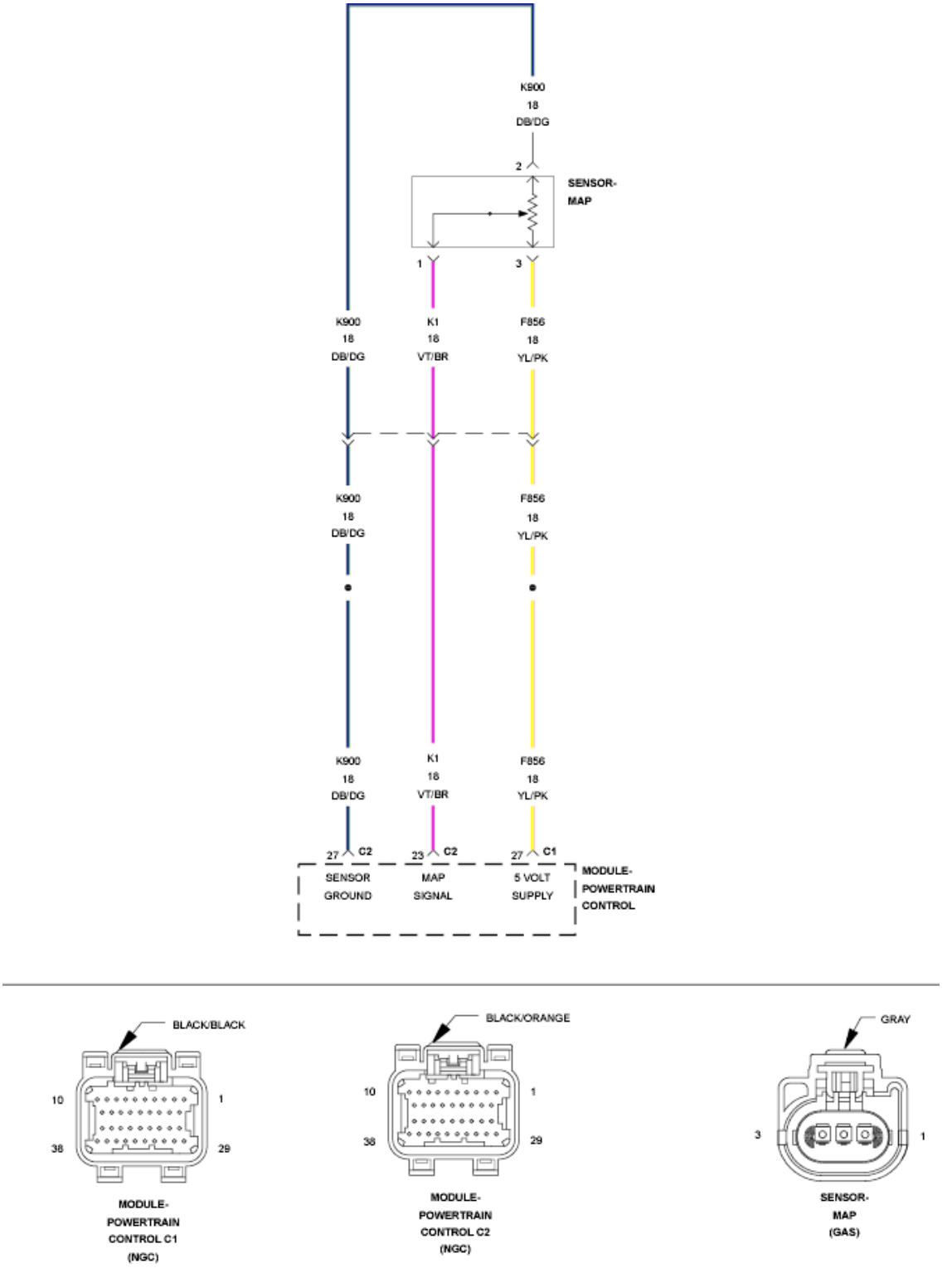

Fig. 129: MAP Sensor Circuit Schematic
Courtesy of CHRYSLER GROUP, LLC

For a complete wiring diagram, **refer to appropriate SYSTEM WIRING DIAGRAMS article** .

THEORY OF OPERATION

The barometric pressure (BARO) sensor is the Manifold Absolute Pressure (MAP) sensor which is a transducer that varies resistance according to changes in altitude and atmospheric conditions. The BARO reading, which is read the first few moments before engine cranking, gives the Powertrain Control Module (PCM) an indication of the current barometric pressure. The PCM uses this information to calculate fuel delivery. The MAP sensor has a 5 Volt reference circuit, a low reference circuit and a signal circuit. The PCM supplies 5 Volts to the MAP sensor on a 5 Volt reference circuit and provides a ground on a low reference circuit. The MAP sensor provides a voltage signal to the PCM on a signal circuit relative to the pressure changes. The PCM monitors the stability of the BARO reading output by comparing successive samples.

WHEN MONITORED:

With the ignition key on. No Cam or Crank signal within 75 ms. Engine speed less than 250 RPM.

SET CONDITION:

The Powertrain Control Module (PCM) senses the voltage from the MAP sensor to be less than 20.2 of a Volt but greater than 0.04 of a Volt for 300 milliseconds. One Trip Fault. Three good trips to turn off the MIL. (The MIL will illuminate and the ETC lamp will flash, if equipped.)

POSSIBLE CAUSES

Possible Causes
(F856) 5 VOLT SUPPLY CIRCUIT SHORTED TO BATTERY VOLTAGE
(F856) 5 VOLT SUPPLY CIRCUIT OPEN
(F856) 5 VOLT SUPPLY CIRCUIT SHORTED TO GROUND
(K1) MAP SIGNAL CIRCUIT OPEN
(K1) MAP SIGNAL CIRCUIT SHORTED TO GROUND
(K1) MAP SIGNAL CIRCUIT SHORTED TO THE (K900) SENSOR GROUND CIRCUIT
MAP SENSOR
POWERTRAIN CONTROL MODULE (PCM)

Always perform the Pre-Diagnostic Troubleshooting procedure before proceeding. Refer to PRE-DIAGNOSTIC TROUBLESHOOTING PROCEDURE .

DIAGNOSTIC TEST

1. **ACTIVE DTC**
    1. Ignition on, engine not running.
    2. With the scan tool, select View DTCs.

       Is the DTC Active at this time?

       Yes

- Go To 2.

No

- Perform the INTERMITTENT CONDITION diagnostic procedure. Refer to **INTERMITTENT CONDITION** .

2. **(F856) 5 VOLT SUPPLY CIRCUIT**

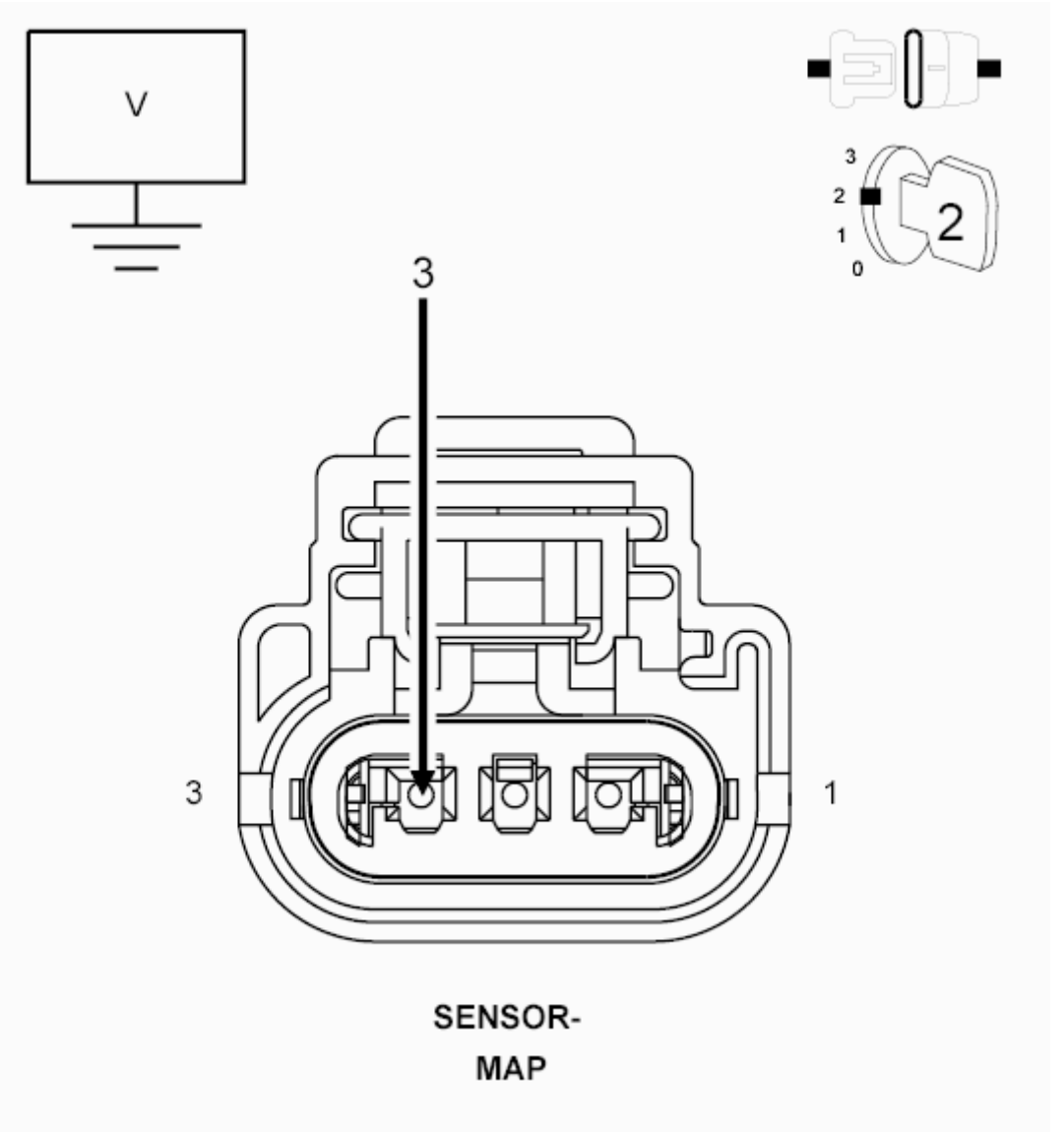

Fig. 130: Measuring Voltage On (F856) 5-Volt Supply Circuit In MAP Sensor Harness Connector
Courtesy of CHRYSLER GROUP, LLC

1. Turn the ignition off.
2. Disconnect the MAP Sensor harness connector.
3. Ignition on, engine not running.

4. Measure the voltage on the (F856) 5 Volt Supply circuit in the MAP Sensor harness connector.

   Is the voltage between 4.5 to 5.2 Volts?

   Yes

   - Go To 3.

   No

   - Go To 7.

3. **MAP SENSOR**
   1. With the scan tool, monitor the MAP Sensor voltage with the Sensor harness connector disconnected.

      Is the voltage greater than 2.2 Volts?

      Yes

      - Verify that there is good pin to terminal contact in the Sensor and Powertrain Control Module connectors. If OK, replace the MAP Sensor in accordance with the service information. Refer to **SENSOR, MANIFOLD AIR PRESSURE (MAP), REMOVAL** .
      - Perform the POWERTRAIN VERIFICATION TEST. Refer to **POWERTRAIN VERIFICATION TEST** .

      No

      - Go To 4.

4. **(K1) MAP SIGNAL CIRCUIT OPEN**

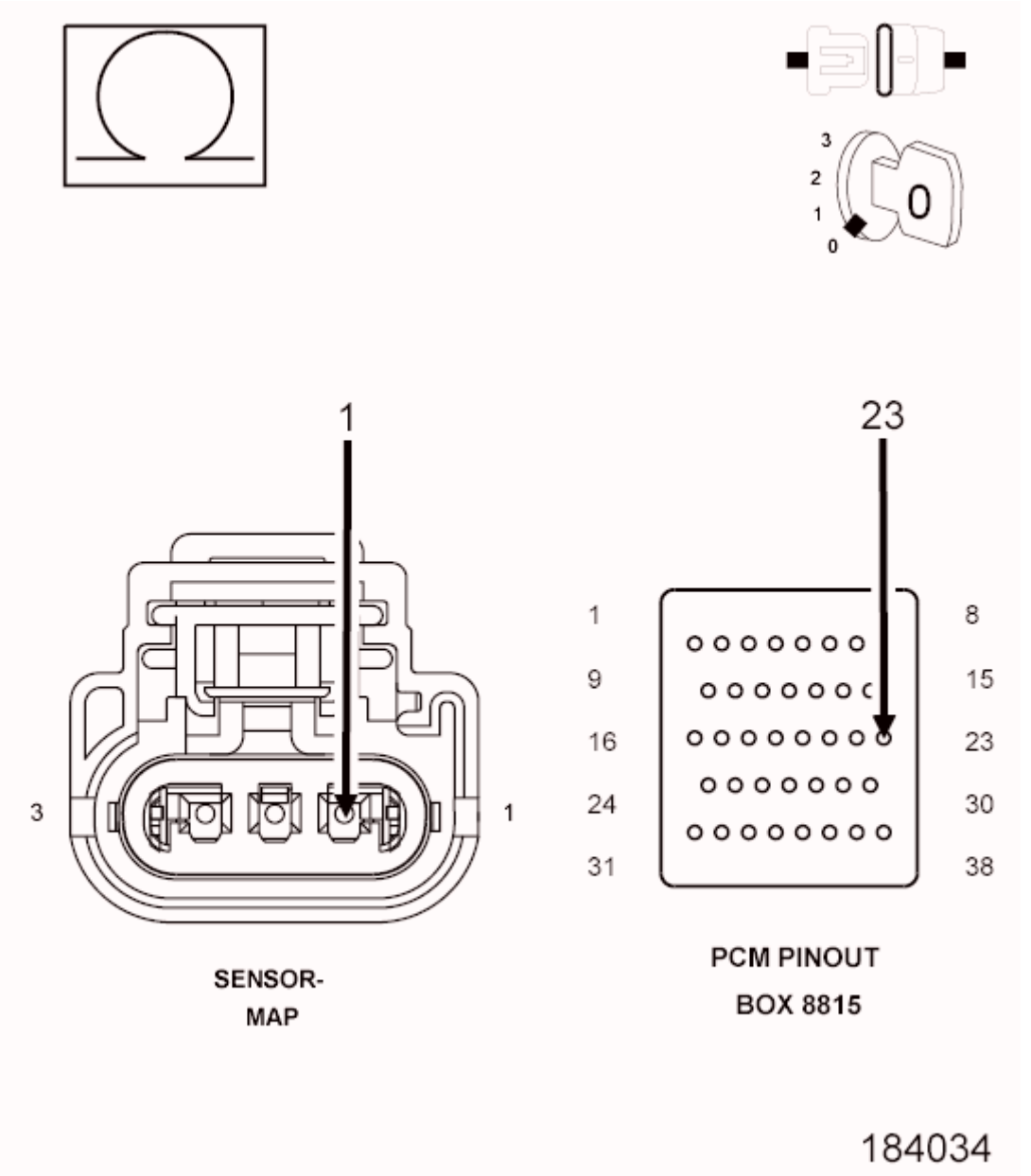

Fig. 131: Measuring Resistance Of MAP Sensor Signal Circuit Between Harness Connector And Appropriate Terminal Of Special Tool #8815
Courtesy of CHRYSLER GROUP, LLC

1. Turn the ignition off.
2. Disconnect the C2 PCM harness connector.

CAUTION: Do not probe the PCM harness connectors. Probing the PCM harness connectors will damage the PCM terminals resulting in poor terminal to pin connection. Install the PCM Pinout Box (special tool #8815A, Kit, NGC, 38 Position) to perform diagnosis.

3. Measure the resistance of the (K1) MAP Signal circuit from the MAP Sensor harness connector to the appropriate terminal of PCM Pinout Box (special tool #8815A, Kit, NGC, 38 Position).

   Is the resistance less than 5.0 Ohms?

   Yes

   - Go To 5.

   No

   - Repair the open in the (K1) MAP Signal circuit.
   - Perform the POWERTRAIN VERIFICATION TEST. Refer to **POWERTRAIN VERIFICATION TEST** .

5. **(K1) MAP SIGNAL CIRCUIT SHORTED TO THE (K900) SENSOR GROUND CIRCUIT**

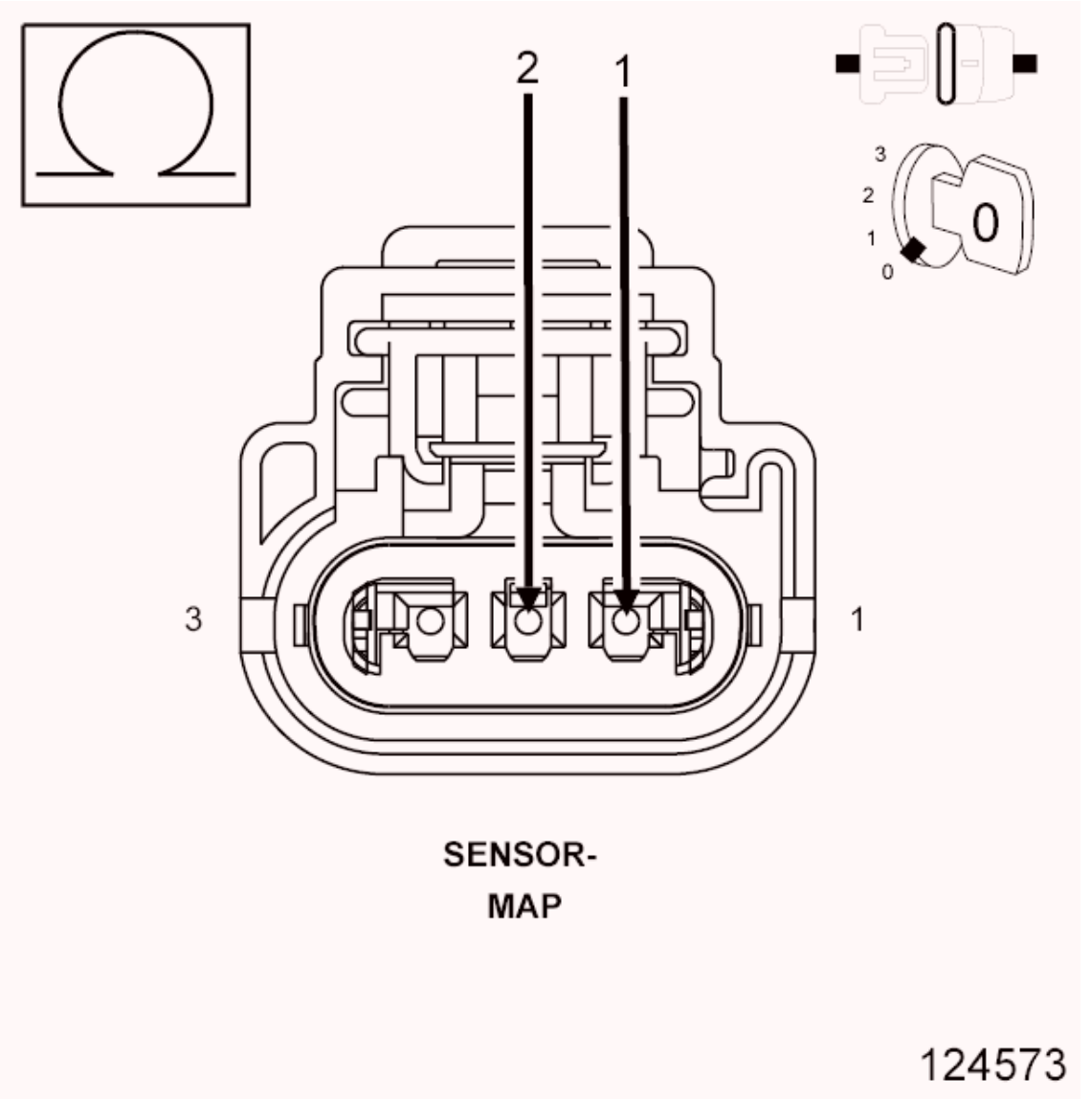

Fig. 132: Measuring Resistance Between Sensor Signal Circuit And Sensor Ground Circuit In MAP Sensor Harness Connector
Courtesy of CHRYSLER GROUP, LLC

1. Measure the resistance between the (K900) Sensor ground circuit and the (K1) MAP Signal circuit in the MAP Sensor harness connector.

   Is the resistance less than 5.0 Ohms?

   Yes

   - Repair the short between the (K900) Sensor ground circuit and the (K1) MAP Signal circuit.
   - Perform the POWERTRAIN VERIFICATION TEST. Refer to **POWERTRAIN VERIFICATION TEST** .

No

- Go To 6.

6. **(K1) MAP SIGNAL CIRCUIT SHORTED TO GROUND**

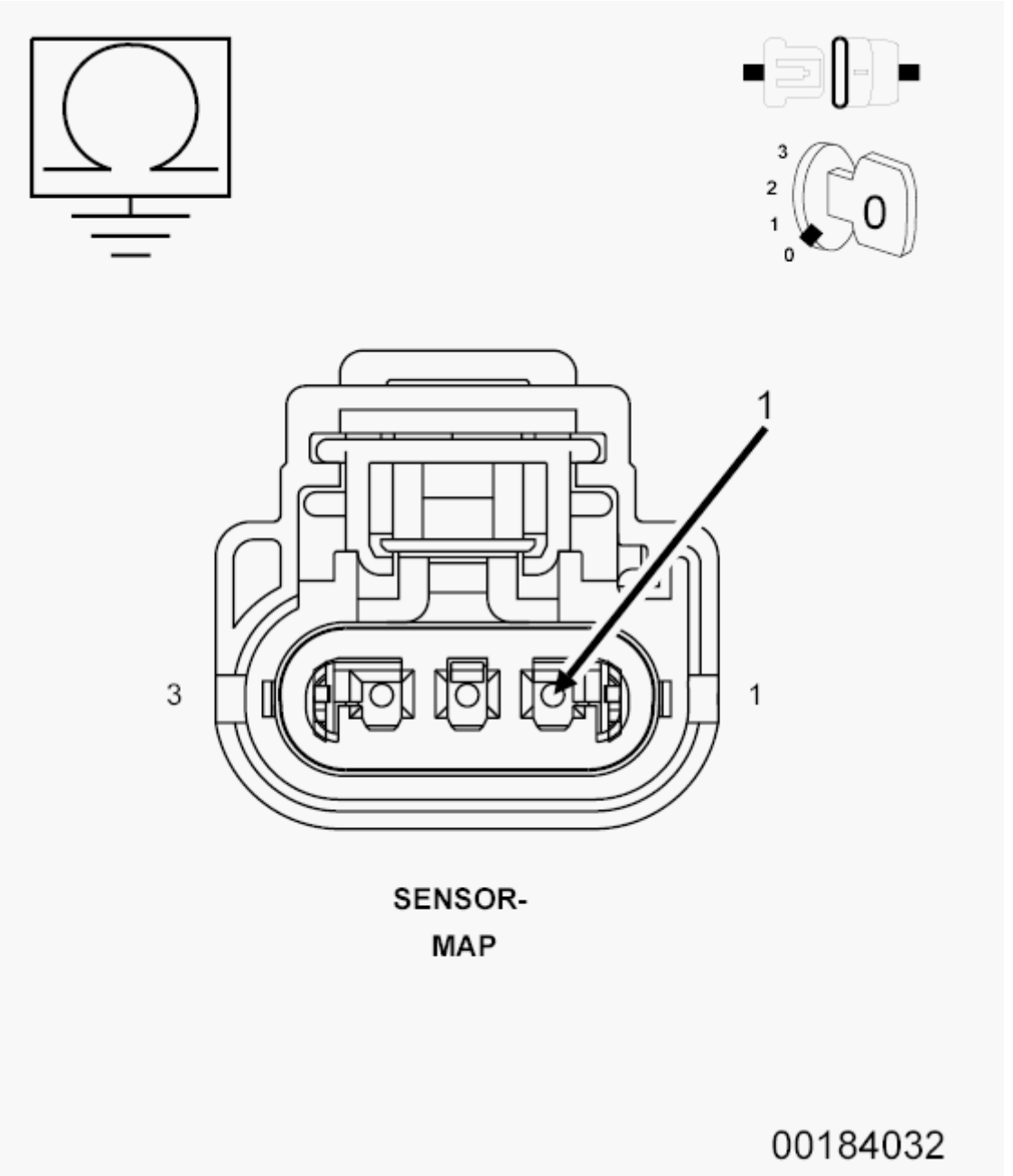

Fig. 133: Measuring Resistance Between Ground And MAP Sensor Signal Circuit AT Harness Connector
Courtesy of CHRYSLER GROUP, LLC

1. Measure the resistance between ground and the (K1) MAP Signal circuit in the MAP Sensor harness connector.

Is the resistance less than 100 Ohms?

Yes

- Repair the short to ground in the (K1) MAP Signal circuit.
- Perform the POWERTRAIN VERIFICATION TEST. Refer to **POWERTRAIN VERIFICATION TEST** .

No

- Go To 10.

7. **(F856) 5 VOLT SUPPLY CIRCUIT SHORTED TO VOLTAGE**

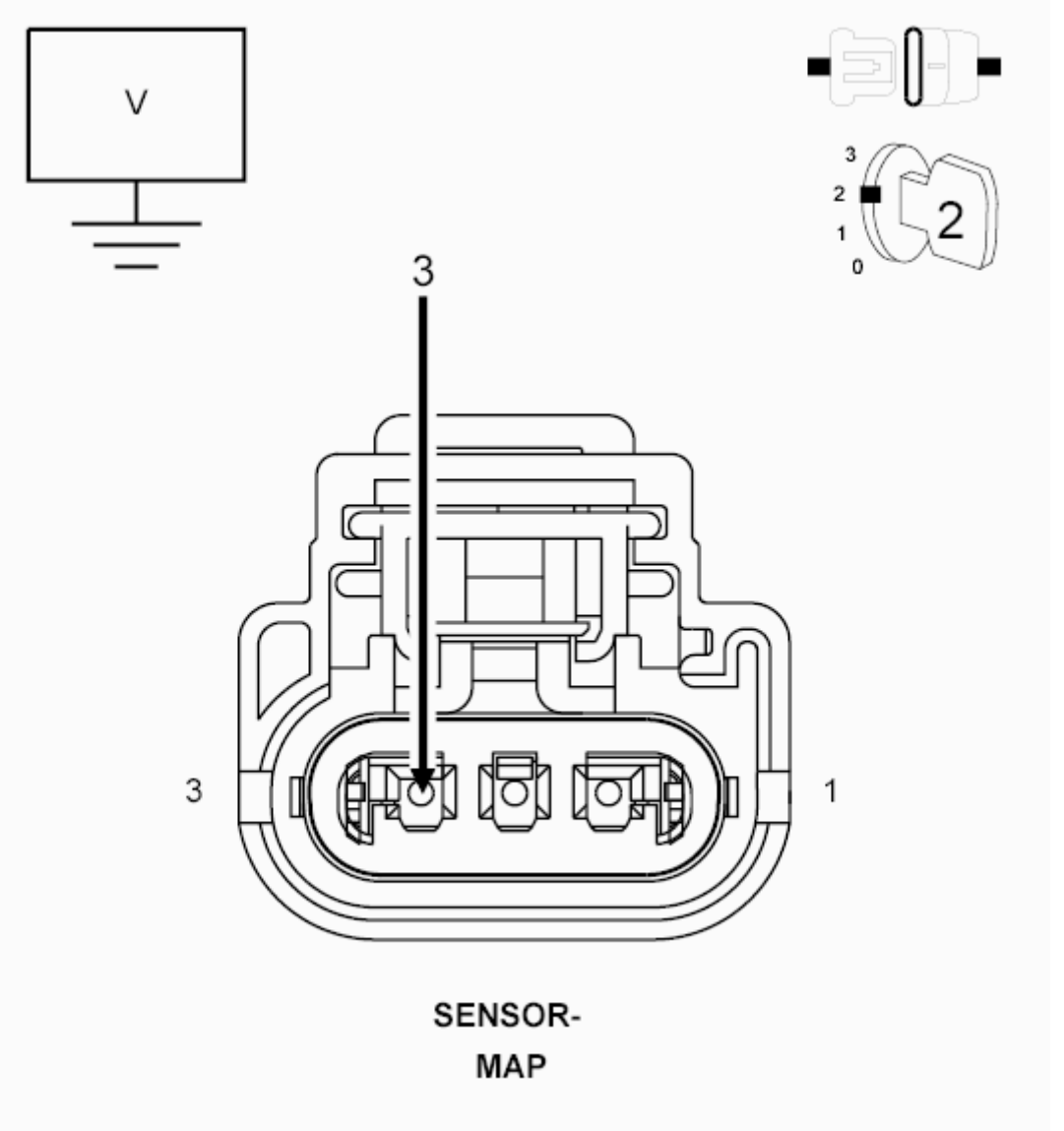

Fig. 134: Measuring Voltage On (F856) 5-Volt Supply Circuit In MAP Sensor Harness Connector
Courtesy of CHRYSLER GROUP, LLC

1. Turn the ignition off.
2. Disconnect the C1 PCM harness connector.
3. Ignition on, engine not running.
4. Measure the voltage on the (F856) 5 Volt Supply circuit in the MAP Sensor harness connector.

   Is there any voltage present?

   Yes

   - Repair the short to voltage in the (F856) 5 Volt Supply circuit.
   - Perform the POWERTRAIN VERIFICATION TEST. Refer to **POWERTRAIN VERIFICATION TEST** .

   No

   - Go To 8.

8. **(F856) 5 VOLT SUPPLY CIRCUIT OPEN**

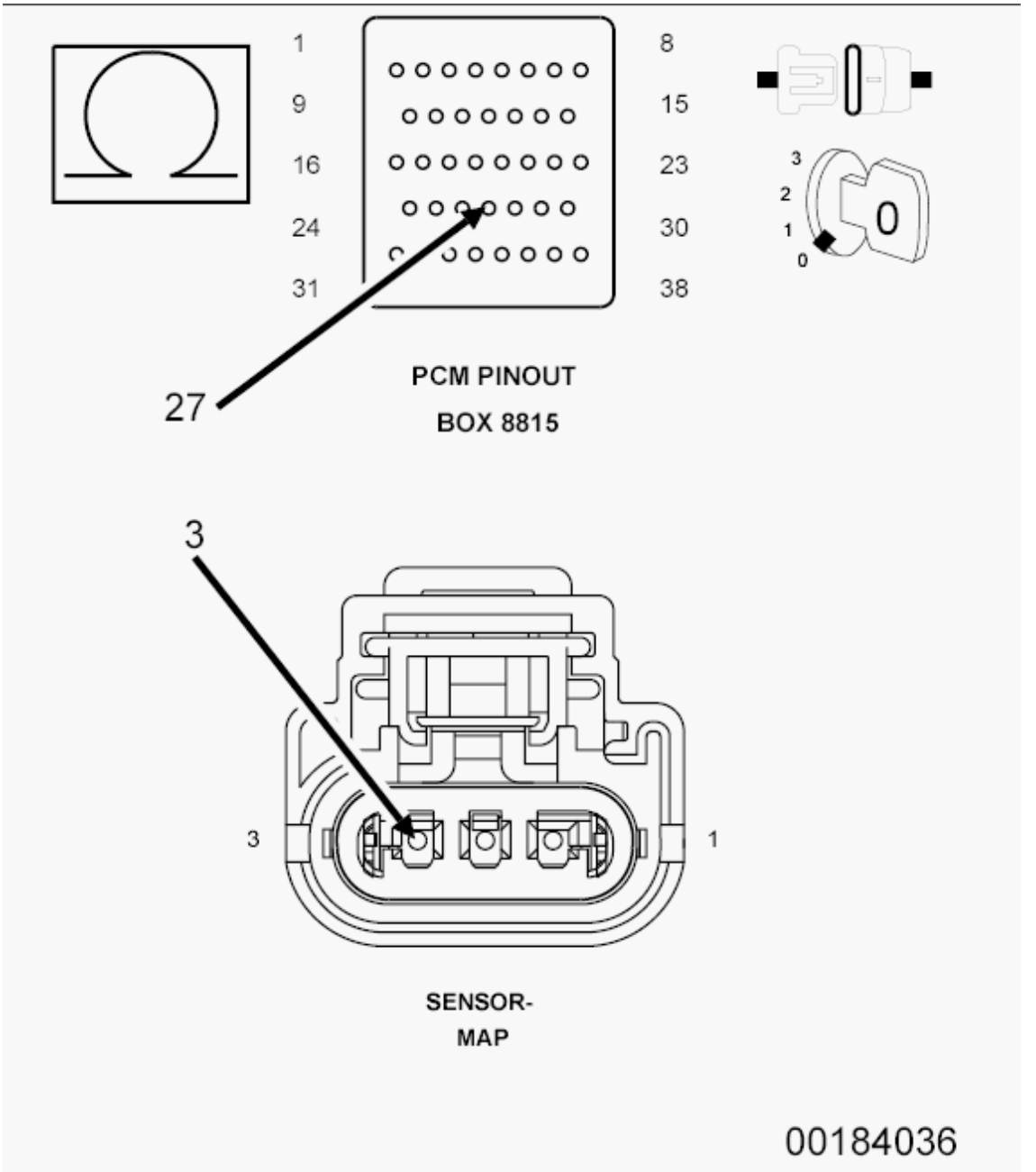

Fig. 135: Measuring Resistance Of 5-Volt Supply Circuit From MAP Sensor Harness Connector To Appropriate Terminal Of Special Tool #8815
Courtesy of CHRYSLER GROUP, LLC

1. Turn the ignition off.

CAUTION: Do not probe the PCM harness connectors. Probing the PCM harness connectors will damage the PCM terminals resulting in poor terminal to pin connection. Install the PCM Pinout Box (special tool #8815A, Kit, NGC, 38 Position) to perform diagnosis.

2. Measure the resistance of the (F856) 5 Volt Supply circuit from the MAP Sensor harness connector to the appropriate terminal of PCM Pinout Box (special tool #8815A, Kit, NGC, 38 Position).

   Is the resistance less than 5.0 Ohms?

   Yes

   - Go To 9.

   No

   - Repair the open in the (F856) 5 Volt Supply circuit.
   - Perform the POWERTRAIN VERIFICATION TEST. Refer to **POWERTRAIN VERIFICATION TEST** .

9. **(F856) 5 VOLT SUPPLY CIRCUIT SHORTED TO GROUND**

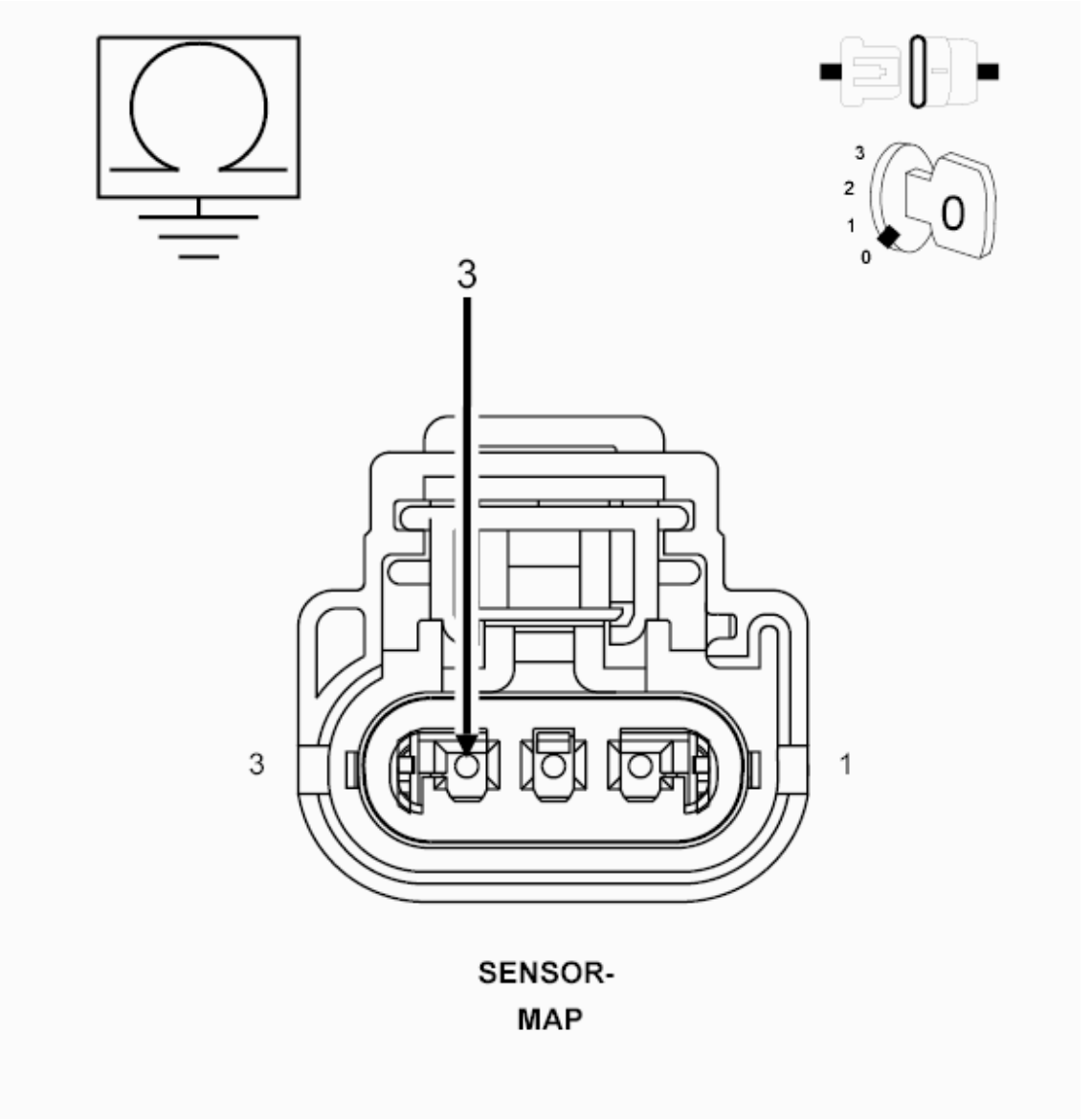

Fig. 136: Measuring Resistance Between Ground And (F856) 5-Volt Supply Circuit In MAP Sensor Harness Connector
Courtesy of CHRYSLER GROUP, LLC

1. Measure the resistance between ground and the (F856) 5 Volt Supply circuit in the MAP Sensor harness connector.

   Is the resistance less than 100 Ohms?

   Yes

   - Repair the short to ground in the (F856) 5 Volt Supply circuit.
   - Perform the POWERTRAIN VERIFICATION TEST. Refer to **POWERTRAIN VERIFICATION TEST** .

No

- Go To 10.

10. **POWERTRAIN CONTROL MODULE (PCM)**
    1. Using the wiring diagram/schematic as a guide, inspect the wiring and connectors between the MAP Sensor and the Powertrain Control Module (PCM).
    2. Look for any chafed, pierced, pinched or partially broken wires.
    3. Look for broken, bent, pushed out or corroded terminals. Verify that there is good pin to terminal contact in the Sensor and Control Module connectors.
    4. Perform any Technical Service Bulletins that may apply.

    Were there any issues found?

    Yes

    - Repair as necessary.
    - Perform the POWERTRAIN VERIFICATION TEST. Refer to **POWERTRAIN VERIFICATION TEST** .

    No

    - Replace and program the Powertrain Control Module in accordance with the Service Information. Refer to **MODULE, POWERTRAIN CONTROL, REMOVAL** .
    - Perform the POWERTRAIN VERIFICATION TEST. Refer to **POWERTRAIN VERIFICATION TEST** .

P0131-O2 SENSOR 1/1 CIRCUIT LOW

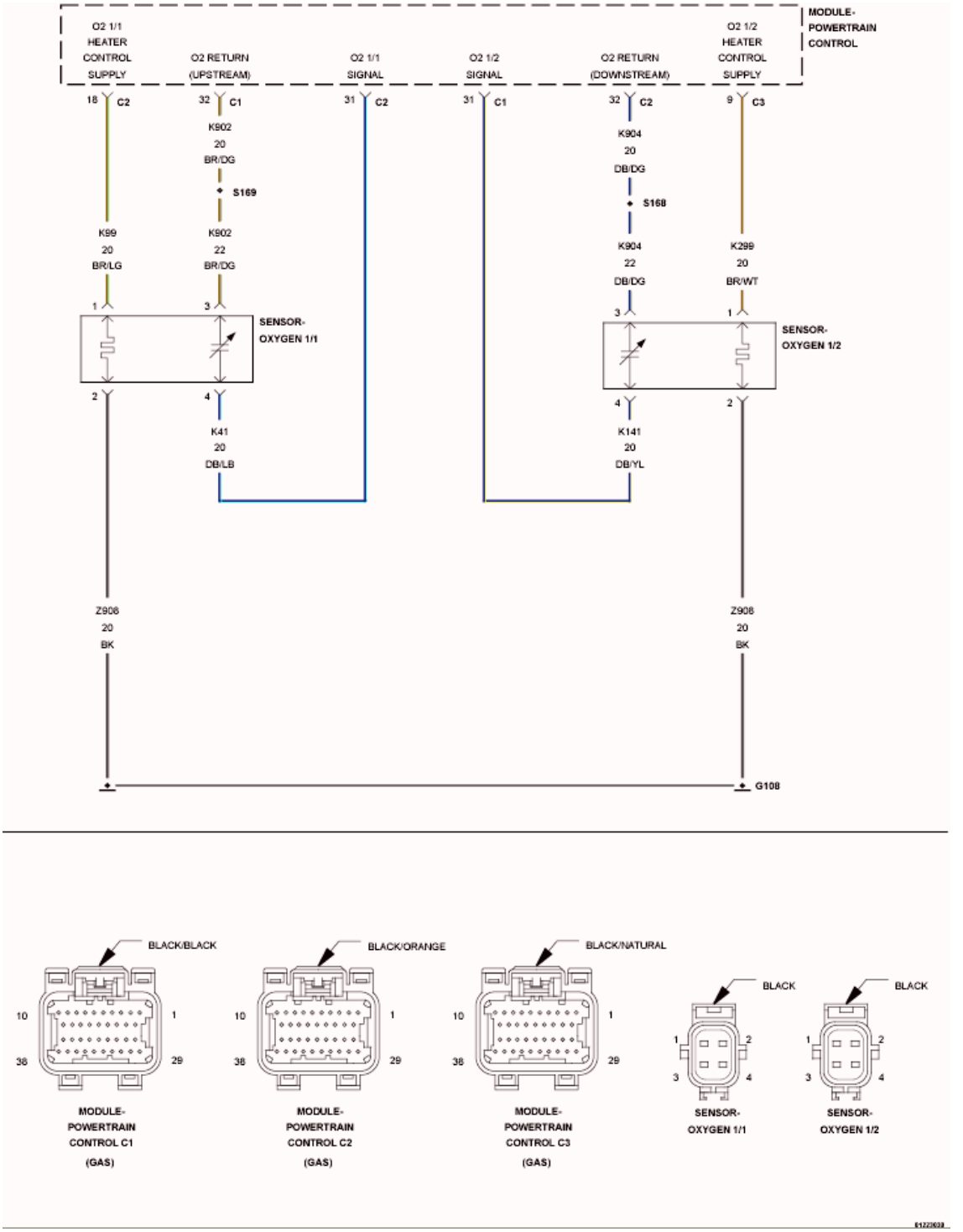

Fig. 137: O2 Sensor Circuit Schematic
Courtesy of CHRYSLER GROUP, LLC

For a complete wiring diagram, **refer to appropriate SYSTEM WIRING DIAGRAMS article** .

WHEN MONITORED:

Engine running for less than 30 seconds and the O2 Sensor Heater Temperature is less than 251° C (484° F) with battery voltage greater 10.4 Volts.

SET CONDITION:

The Powertrain Control Module (PCM) detects that the 1/1 Oxygen Sensor signal voltage is below the minimum acceptable value. The DTC will set as Pending after one trip and Active after two trips. Three good trips to turn off the MIL.

POSSIBLE CAUSES

Possible Causes
(K902) O2 RETURN UPSTREAM CIRCUIT SHORTED TO GROUND
(K41) O2 1/1 SIGNAL CIRCUIT SHORTED TO GROUND
(K41) O2 1/1 SIGNAL CIRCUIT SHORTED TO THE (K902) O2 RETURN UPSTREAM CIRCUIT
(K41) O2 1/1 SIGNAL CIRCUIT SHORTED TO THE (Z908) O2 1/1 HEATER GROUND CIRCUIT
1/1 O2 SENSOR
POWERTRAIN CONTROL MODULE (PCM)

Always perform the Pre-Diagnostic Troubleshooting procedure before proceeding. Refer to PRE-DIAGNOSTIC TROUBLESHOOTING PROCEDURE .

DIAGNOSTIC TEST

1. **ACTIVE DTC**
    1. Turn the ignition on.
    2. With the scan tool, select View DTCs. Record DTC and Freeze Frame information.
    3. Start the engine and allow it to idle for at least 60 seconds.

        WARNING: **When the engine is operating, do not stand in direct line with the fan. Do not put your hands near the pulleys, belts or fan. Do not wear loose clothing. Failure to follow these instructions may result in possible serious or fatal injury.**

    4. With the scan tool, select View DTCs.

        Is the DTC Active or Pending at this time?

        Yes

        - Go To 2.

        No

        - Perform the INTERMITTENT CONDITION diagnostic procedure. Refer to

INTERMITTENT CONDITION .

2. **(K41) O2 SENSOR 1/1 SIGNAL CIRCUIT**
    1. Turn the ignition off.
    2. Disconnect the 1/1 O2 Sensor harness connector.
    3. Ignition on, engine not running.
    4. With the scan tool, monitor the O2 Sensor voltage.

    Is the 1/1 O2 Sensor voltage between 4.1 and 5.0 Volts?

    Yes

    - Go To 3.

    No

    - Go To 5.
3. **O2 SENSOR**

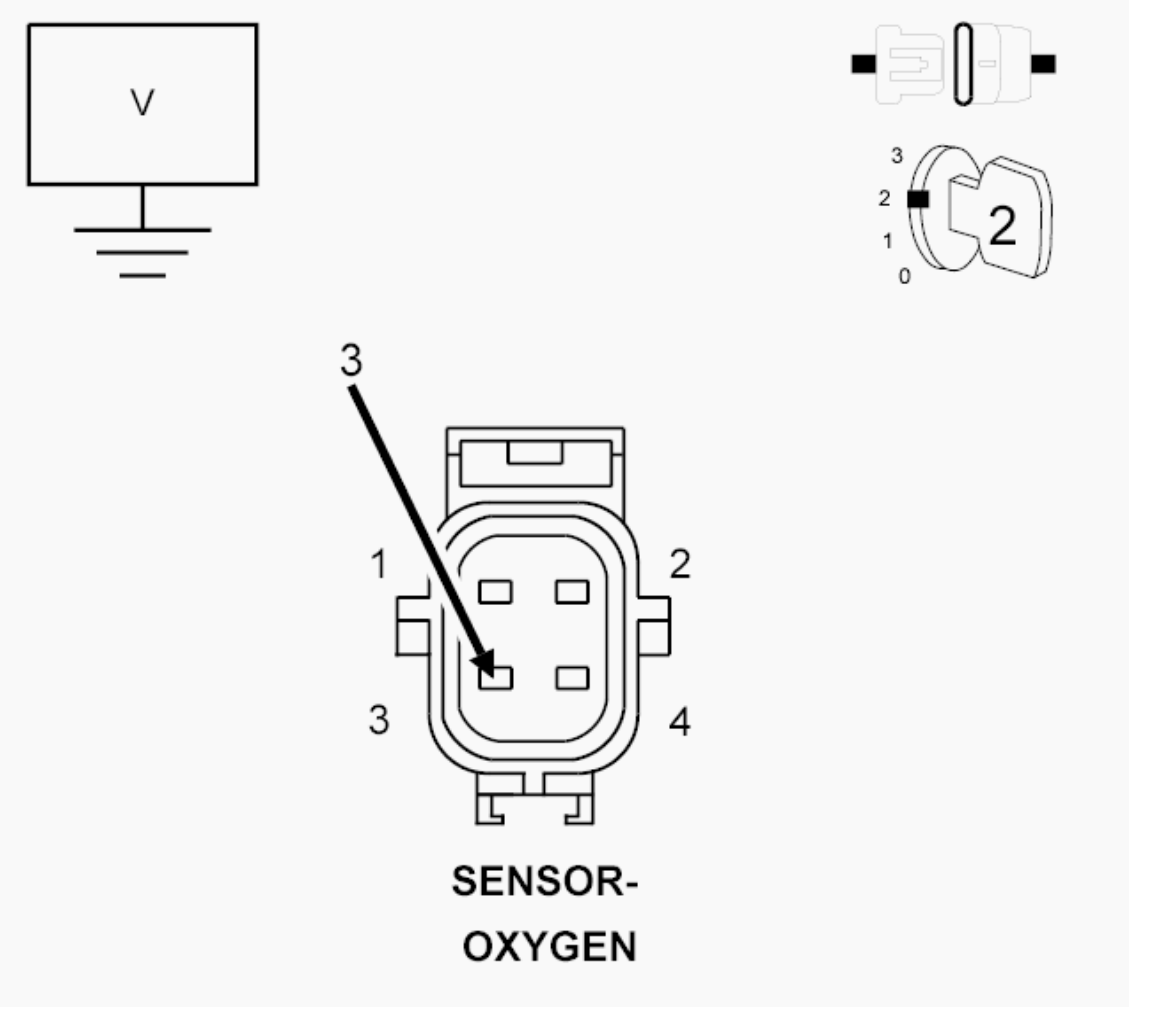

Fig. 138: Measuring Voltage On O2 Sensor Return Circuit In O2 Sensor Harness Connector
Courtesy of CHRYSLER GROUP, LLC

1. Measure the voltage on the (K902) O2 Return Upstream circuit in the O2 Sensor harness connector.

   Is the voltage at 2.5 Volts?

   Yes

   - Verify that there is good pin to terminal contact in the O2 Sensor and Powertrain Control Module connectors. Replace the 1/1 O2 Sensor if no problems were found with the connectors.
   - Perform the POWERTRAIN VERIFICATION TEST. Refer to **POWERTRAIN VERIFICATION TEST** .

   No

   - Go To 4.

4. **(K902) O2 RETURN UPSTREAM CIRCUIT SHORTED TO GROUND**

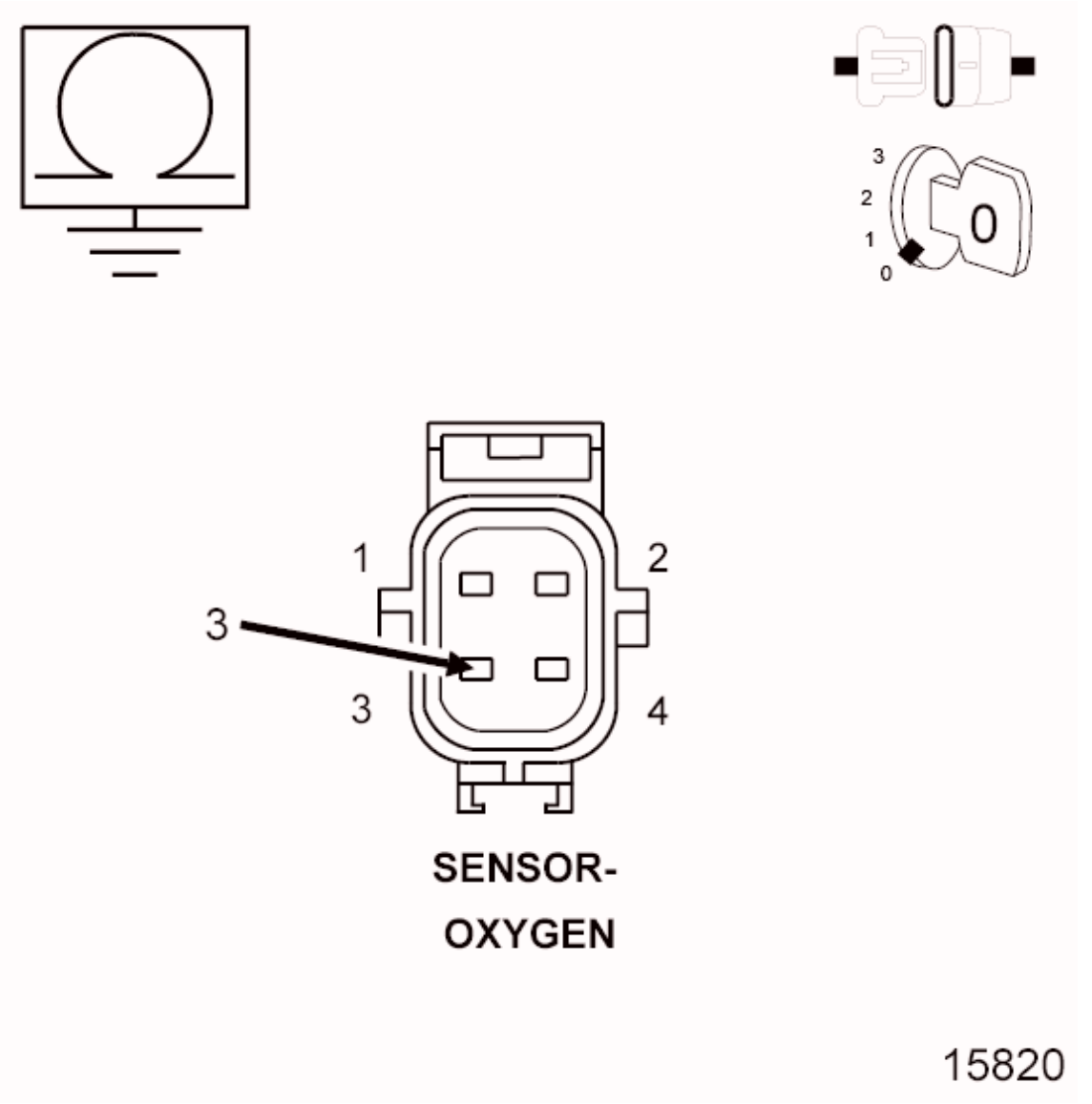

Fig. 139: Measuring Resistance Between Ground And O2 Sensor Return Circuit In O2 Sensor Harness Connector
Courtesy of CHRYSLER GROUP, LLC

1. Turn the ignition off.
2. Disconnect the C1 PCM harness connector.
3. Measure the resistance between ground and the (K902) O2 Return Upstream circuit in the O2 Sensor harness connector.

   Is the resistance below 100 Ohms?

   Yes

   - Repair the short to ground in the (K902) O2 Return Upstream circuit.

- Perform the POWERTRAIN VERIFICATION TEST. Refer to **POWERTRAIN VERIFICATION TEST** .

No

- Go To 8.

5. **(K41) O2 SENSOR 1/1 SIGNAL CIRCUIT SHORTED TO GROUND**

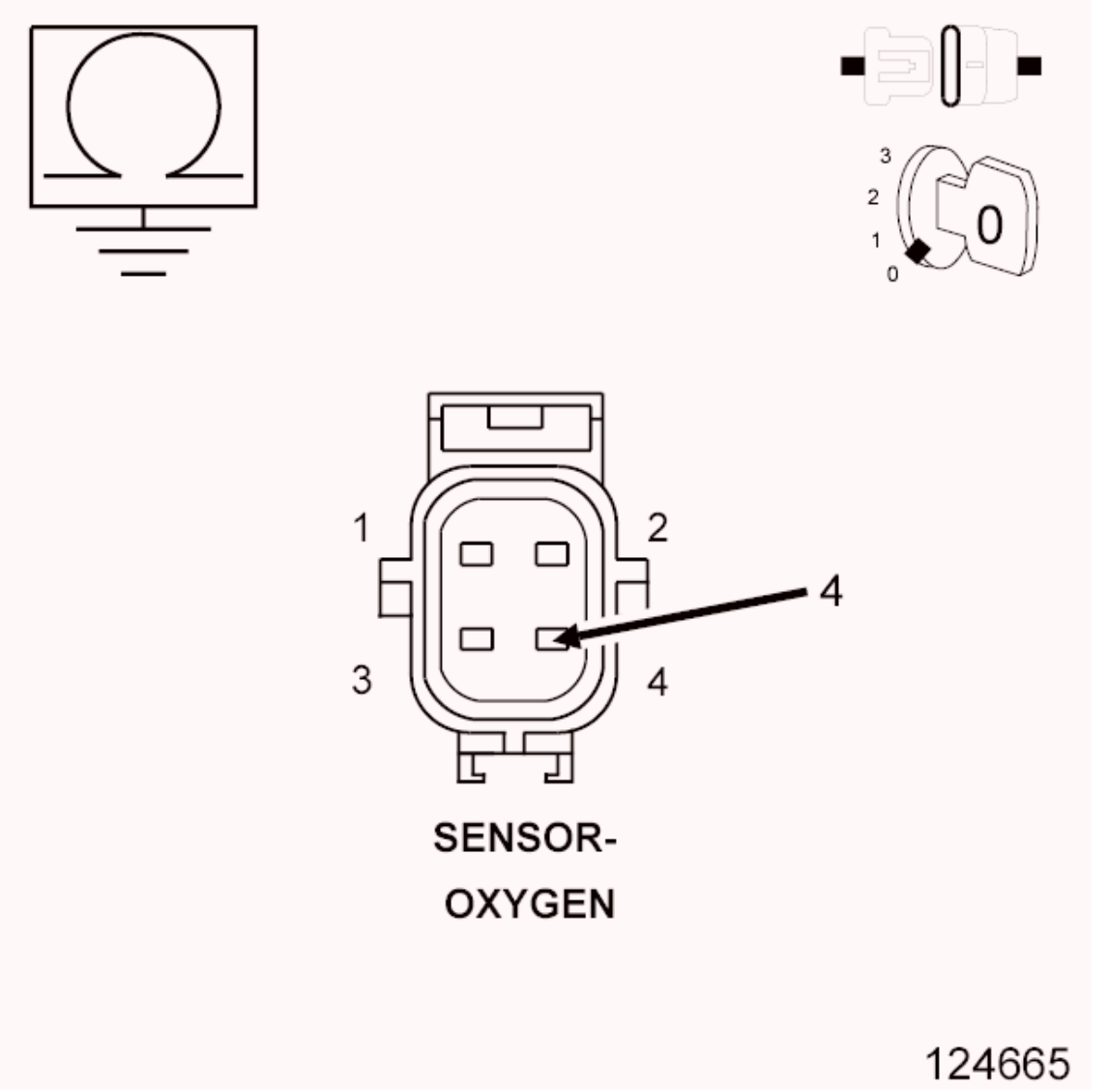

Fig. 140: Measuring Resistance Between Ground And O2 Sensor Signal Circuit In O2 Sensor Harness Connector
Courtesy of CHRYSLER GROUP, LLC

1. Turn the ignition off.
2. Disconnect the C1 and C2 PCM harness connectors.
3. Measure the resistance between ground and the (K41) O2 Sensor 1/1 Signal circuit in the O2

Sensor harness connector.

Is the resistance below 100 Ohms?

Yes

- Repair the short to ground in the (K41) O2 Sensor 1/1 Signal circuit.
- Perform the POWERTRAIN VERIFICATION TEST. Refer to **POWERTRAIN VERIFICATION TEST** .

No

- Go To 6.

6. **(K41) O2 SENSOR 1/1 SIGNAL CIRCUIT SHORTED TO THE (K902) O2 RETURN UPSTREAM CIRCUIT**

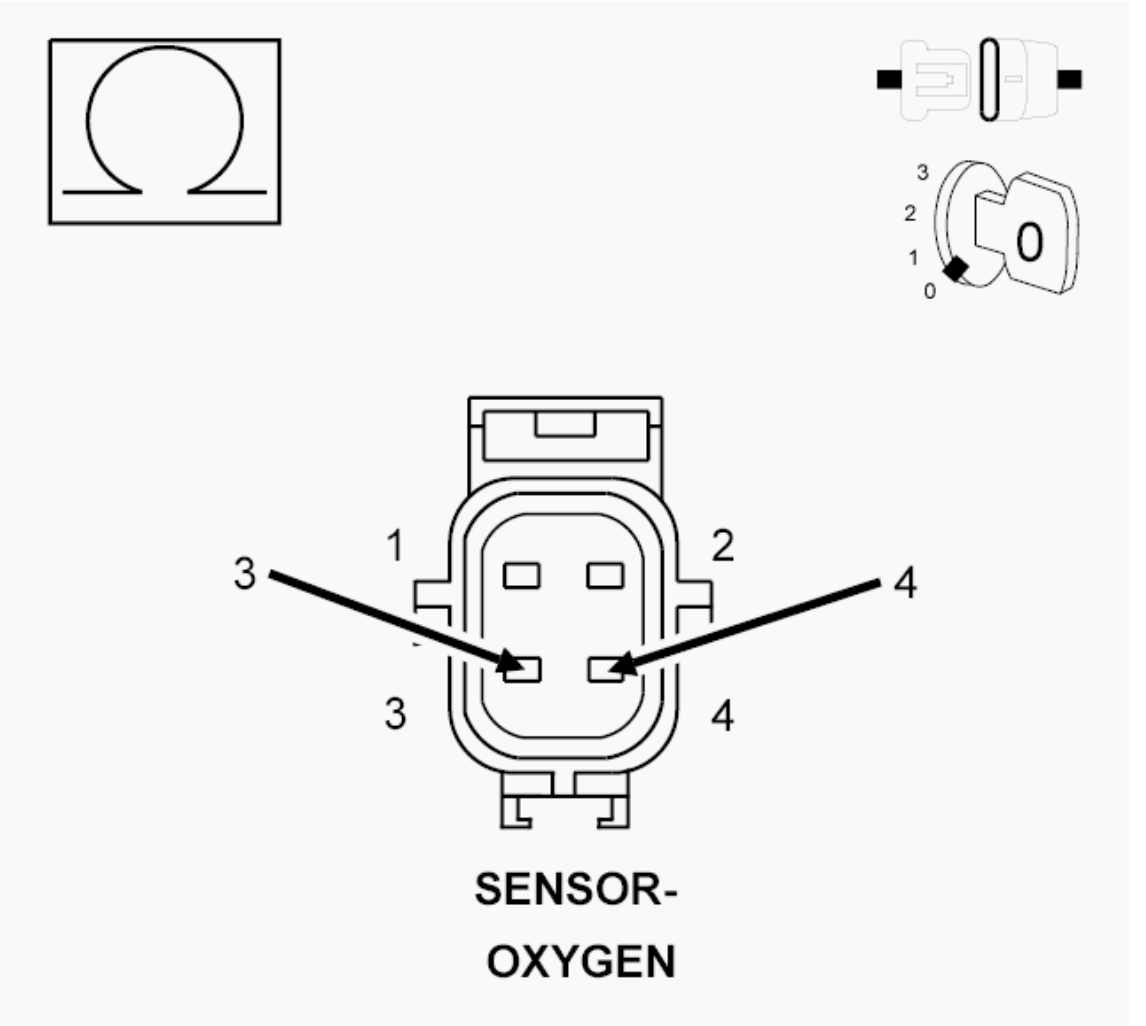

Fig. 141: Measuring Resistance Between O2 Sensor Signal Circuit And O2 Sensor Return Circuit In O2 Sensor Harness Connector

Courtesy of CHRYSLER GROUP, LLC

1. Measure the resistance between the (K41) O2 Sensor 1/1 Signal circuit and the (K902) O2 Return Upstream circuit in the O2 Sensor harness connector.

   Is the resistance below 100 Ohms?

   Yes

   - Repair the short between the (K902) O2 Return Upstream circuit and the (K41) O2 Sensor 1/1 Signal circuit.
   - Perform the POWERTRAIN VERIFICATION TEST. Refer to **POWERTRAIN VERIFICATION TEST** .

   No

   - Go To 7.

7. **(K41) O2 SENSOR 1/1 SIGNAL CIRCUIT SHORTED TO THE (Z908) O2 1/1 HEATER GROUND CIRCUIT**

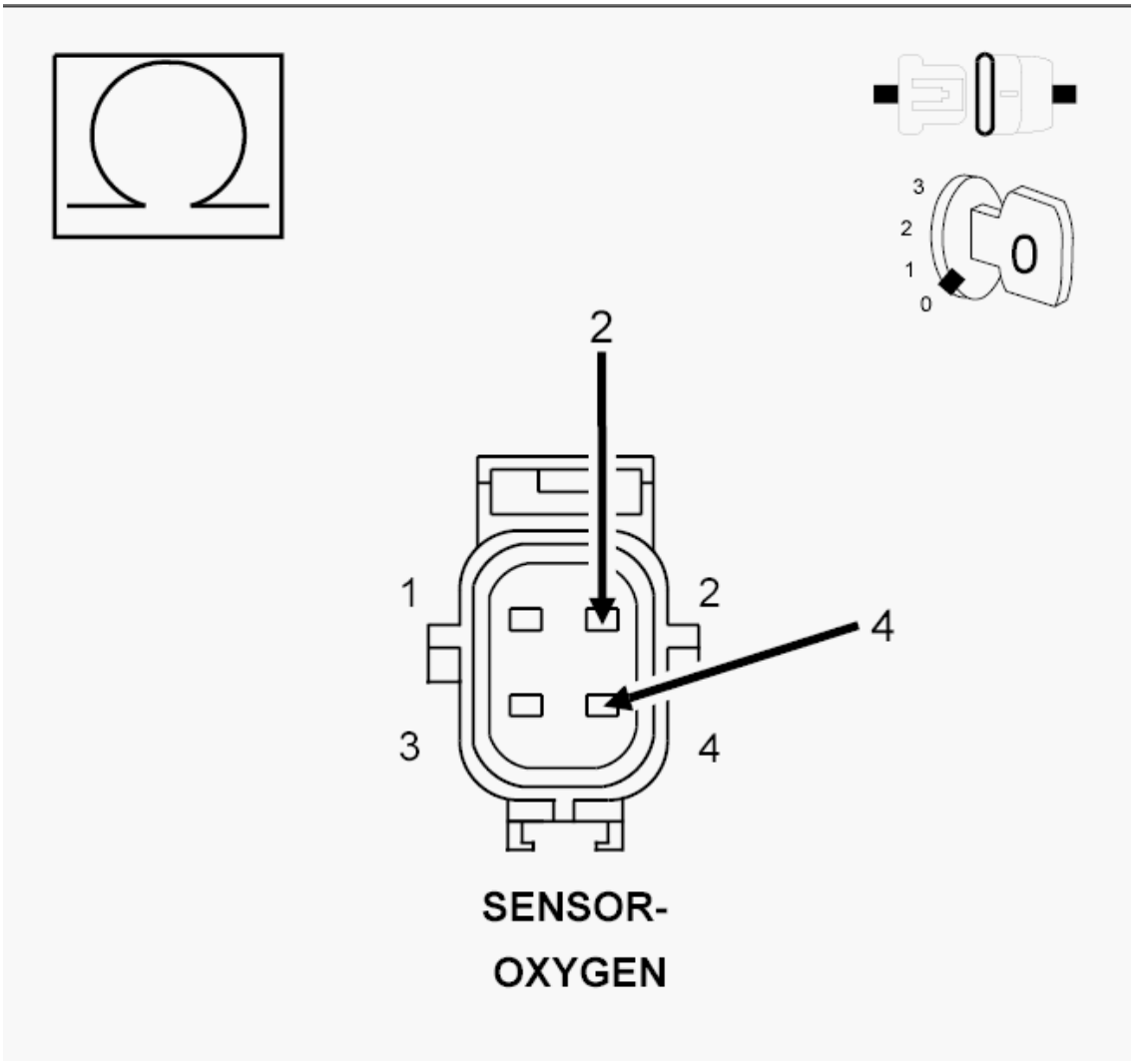

Fig. 142: Measuring Resistance Between O2 Sensor Signal Circuit And O2 Sensor Heater Ground Circuit In O2 Sensor Harness Connector
Courtesy of CHRYSLER GROUP, LLC

1. Measure the resistance between the (K41) O2 Sensor 1/1 Signal circuit and the (Z908) O2 1/1 Heater ground circuit in the O2 Sensor harness connector.

   Is the resistance below 100 Ohms?

   Yes

   - Repair the short between the (Z908) O2 1/1 Heater ground circuit and the (K41) O2 Sensor 1/1 Signal circuit.
   - Perform the POWERTRAIN VERIFICATION TEST. Refer to **POWERTRAIN VERIFICATION TEST** .

   No

- Go To 8.

8. **POWERTRAIN CONTROL MODULE (PCM)**
    1. Using the wiring diagram/schematic as a guide, inspect the wiring and connectors between the Oxygen Sensor 1/1 and the Powertrain Control Module (PCM).
    2. Look for any chafed, pierced, pinched or partially broken wires.
    3. Look for broken, bent, pushed out or corroded terminals. Verify that there is good pin to terminal contact in the Sensor and Control Module connectors.
    4. Refer to any Technical Service Bulletins that may apply.

    Were there any problems found?

    Yes

    - Repair as necessary.
    - Perform the POWERTRAIN VERIFICATION TEST. Refer to **POWERTRAIN VERIFICATION TEST** .

    No

    - Replace and program the Powertrain Control Module in accordance with the Service Information. Refer to **MODULE, POWERTRAIN CONTROL, REMOVAL** .
    - Perform the POWERTRAIN VERIFICATION TEST. Refer to **POWERTRAIN VERIFICATION TEST** .

P0132-O2 SENSOR 1/1 CIRCUIT HIGH

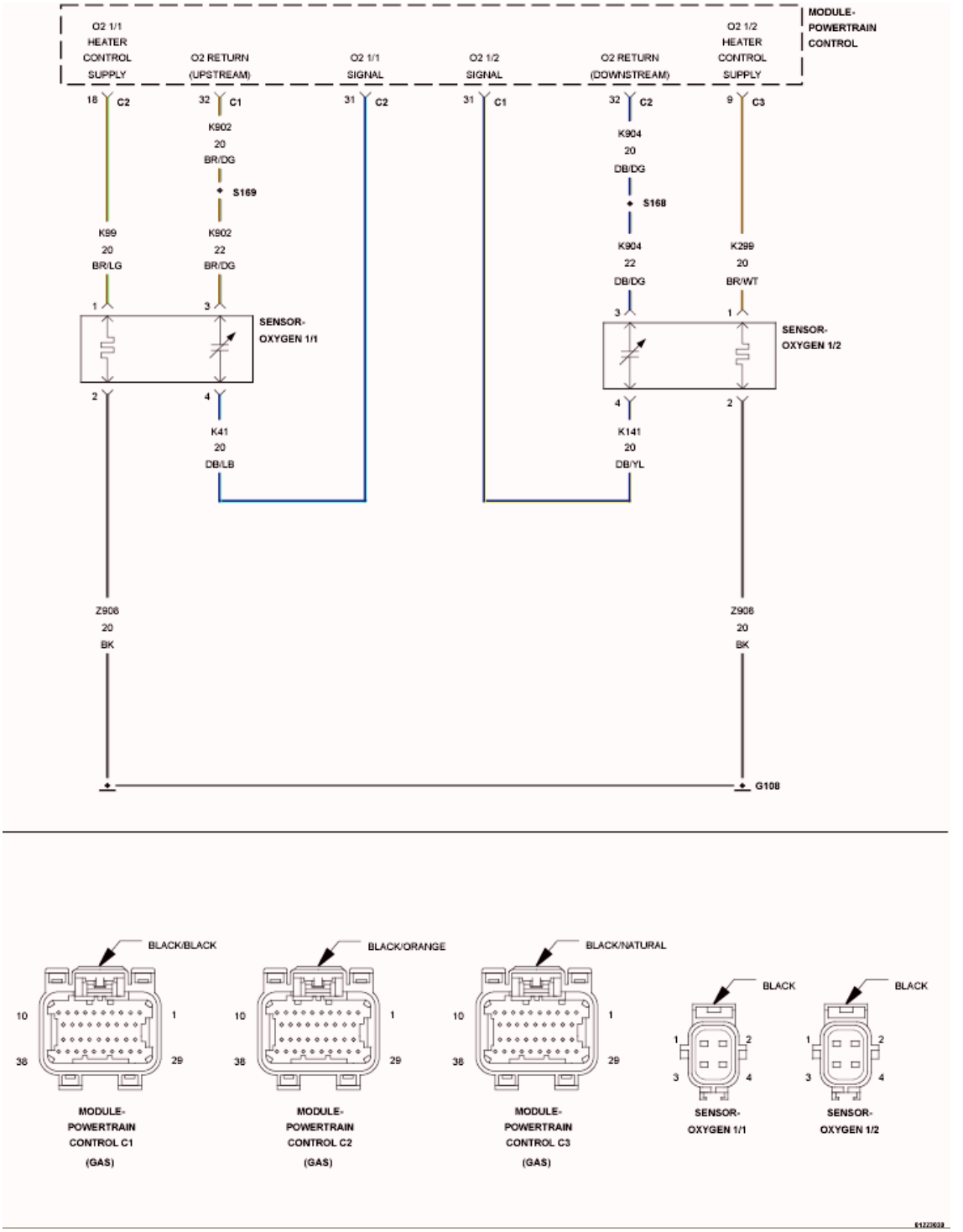

Fig. 143: O2 Sensor Circuit Schematic
Courtesy of CHRYSLER GROUP, LLC

For a complete wiring diagram, **refer to appropriate SYSTEM WIRING DIAGRAMS article** .

WHEN MONITORED:

Continuously with the engine running, no O2 sensor heater DTCs present, 1/1 Oxygen Sensor heater temperature within a specific range and battery voltage greater than 10.4 Volts.

SET CONDITION:

The Oxygen Sensor voltage is above 3.99 Volts for 40 seconds. The DTC will set as Pending after one trip and Active after two trips. Three good trips to turn off the MIL.

POSSIBLE CAUSES

Possible Causes
(K41) O2 1/1 SIGNAL CIRCUIT SHORTED TO VOLTAGE
(K902) O2 RETURN UPSTREAM CIRCUIT SHORTED TO VOLTAGE
(K41) O2 1/1 SIGNAL CIRCUIT OPEN
(K902) O2 RETURN UPSTREAM CIRCUIT OPEN
1/1 O2 SENSOR
POWERTRAIN CONTROL MODULE (PCM)

Always perform the Pre-Diagnostic Troubleshooting procedure before proceeding. Refer to PRE-DIAGNOSTIC TROUBLESHOOTING PROCEDURE .

DIAGNOSTIC TEST

1. **ACTIVE DTC**

NOTE: **If an O2 sensor signal circuit is shorted to voltage, all O2 sensor voltage readings displayed on the scan tool will be approximately 5.0 Volts. Diagnose the sensor that set the most current DTC.**

1. Start the engine and allow it to idle for at least 60 seconds.

WARNING: **When the engine is operating, do not stand in direct line with the fan. Do not put your hands near the pulleys, belts or fan. Do not wear loose clothing. Failure to follow these instructions may result in possible serious or fatal injury.**

2. With the scan tool, select View DTCs.

   Is the status Active for this DTC?

   Yes

   - Go To 2.

   No

- Perform the INTERMITTENT CONDITION diagnostic procedure. Refer to **INTERMITTENT CONDITION** .

2. **(K41) O2 1/1 SIGNAL CIRCUIT SHORTED TO VOLTAGE**

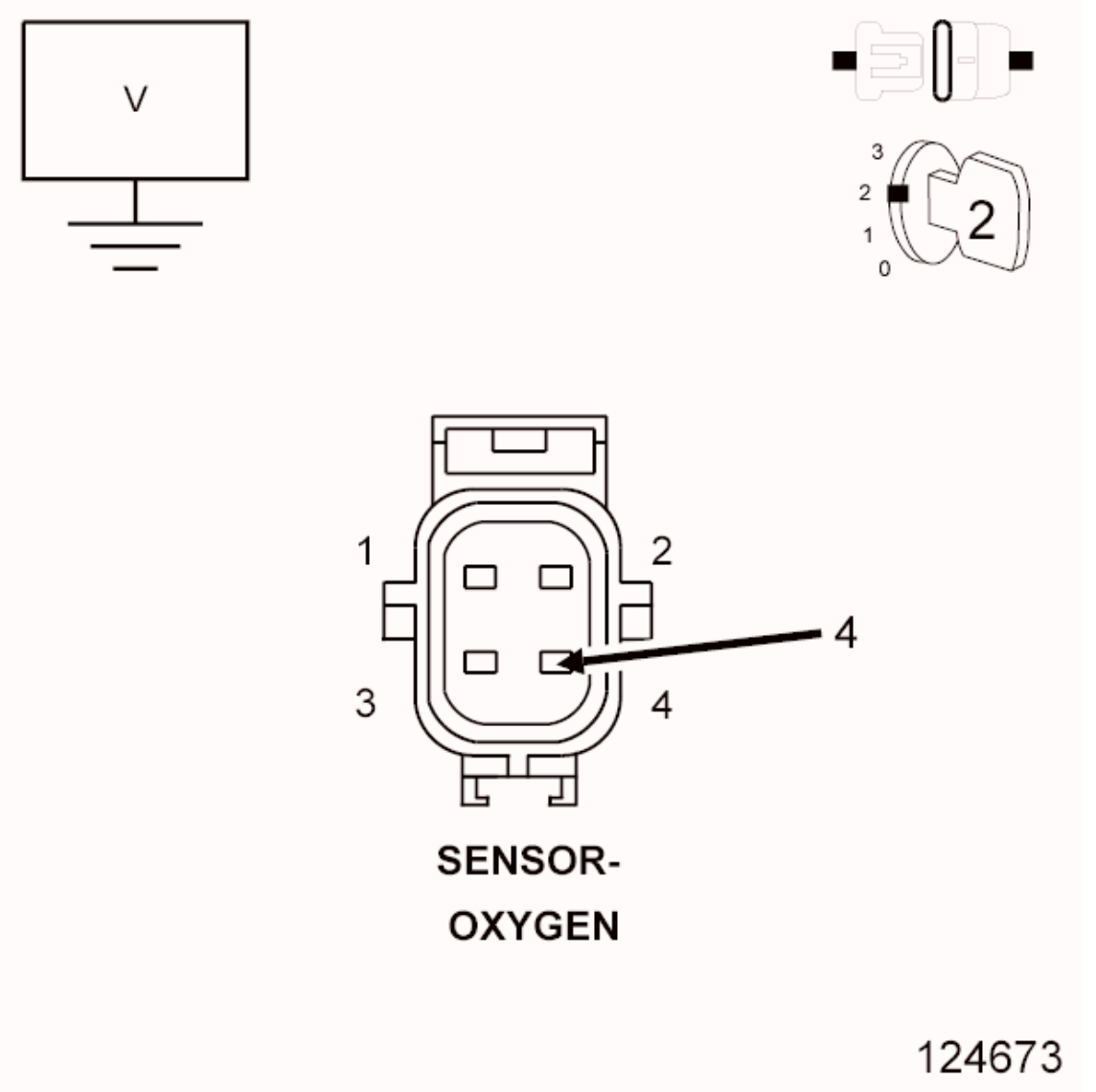

Fig. 144: Measuring Voltage Of O2 Sensor Signal Circuit In O2 Sensor Harness Connector
Courtesy of CHRYSLER GROUP, LLC

1. Turn the ignition off.
2. Disconnect the C1 and C2 PCM harness connectors.
3. Disconnect the 1/1 O2 Sensor harness connector.
4. Turn the ignition on.
5. Measure the voltage on the (K41) O2 Sensor 1/1 Signal circuit in the 1/1 O2 Sensor harness connector.

NOTE: **Measure the voltage in reference to ground, not the (K902) O2 Return Upstream circuit.**

Is there any voltage present?

Yes

- Repair the short to voltage in the (K41) O2 Sensor 1/1 Signal circuit.
- Perform the POWERTRAIN VERIFICATION TEST. Refer to **POWERTRAIN VERIFICATION TEST** .

No

- Go To 3.

3. **(K902) O2 RETURN UPSTREAM CIRCUIT SHORTED TO VOLTAGE**

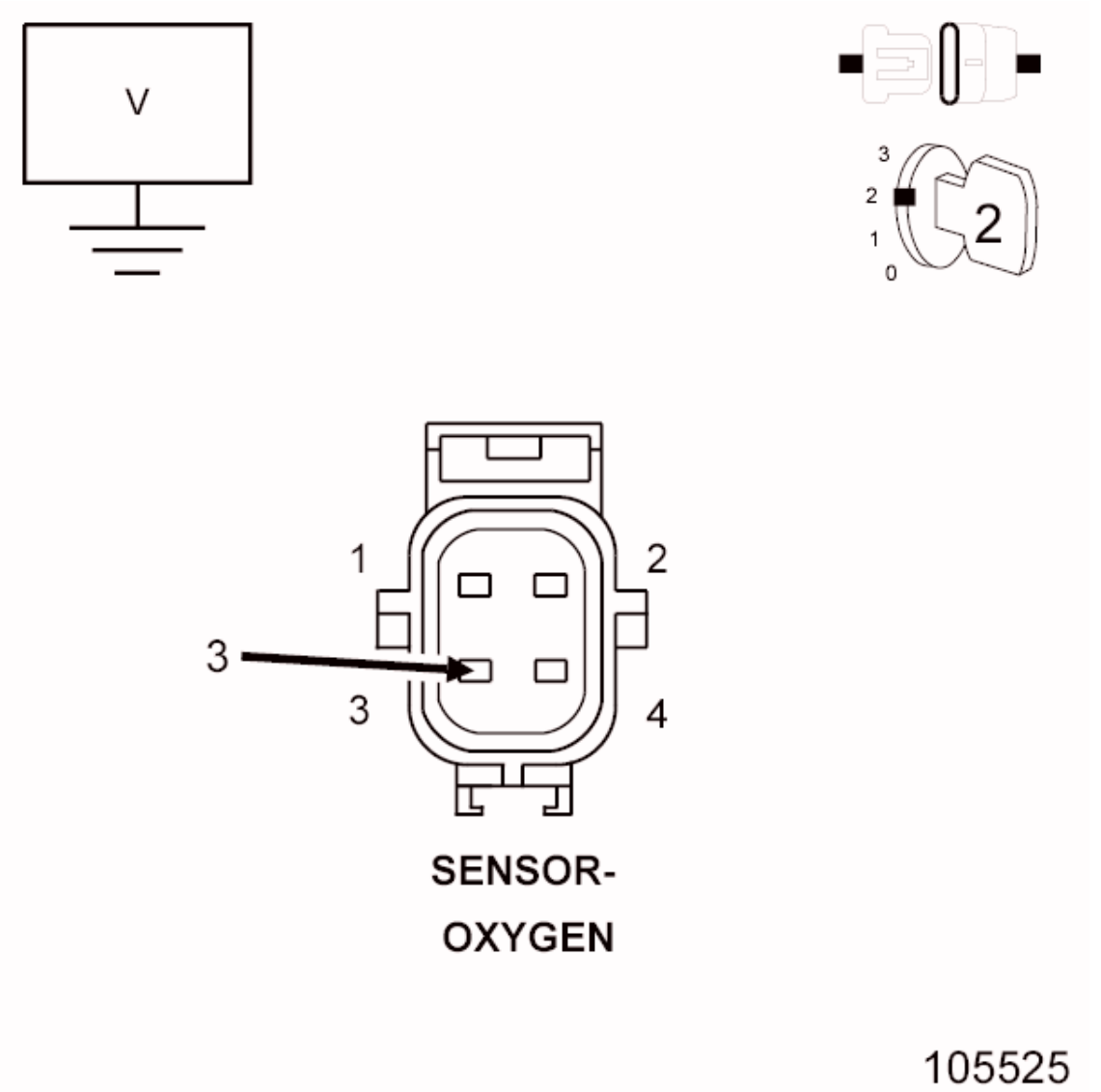

Fig. 145: Measuring Voltage On O2 Sensor Return Circuit In O2 Sensor Harness Connector
Courtesy of CHRYSLER GROUP, LLC

1. Measure the voltage on the (K902) O2 Return Upstream circuit in the 1/1 O2 Sensor harness connector.

   Is there any voltage present?

   Yes

   - Repair the short to voltage in the (K902) O2 Return Upstream circuit.
   - Perform the POWERTRAIN VERIFICATION TEST. Refer to **POWERTRAIN VERIFICATION TEST** .

   No

- Go To 4.

4. **1/1 O2 SENSOR**

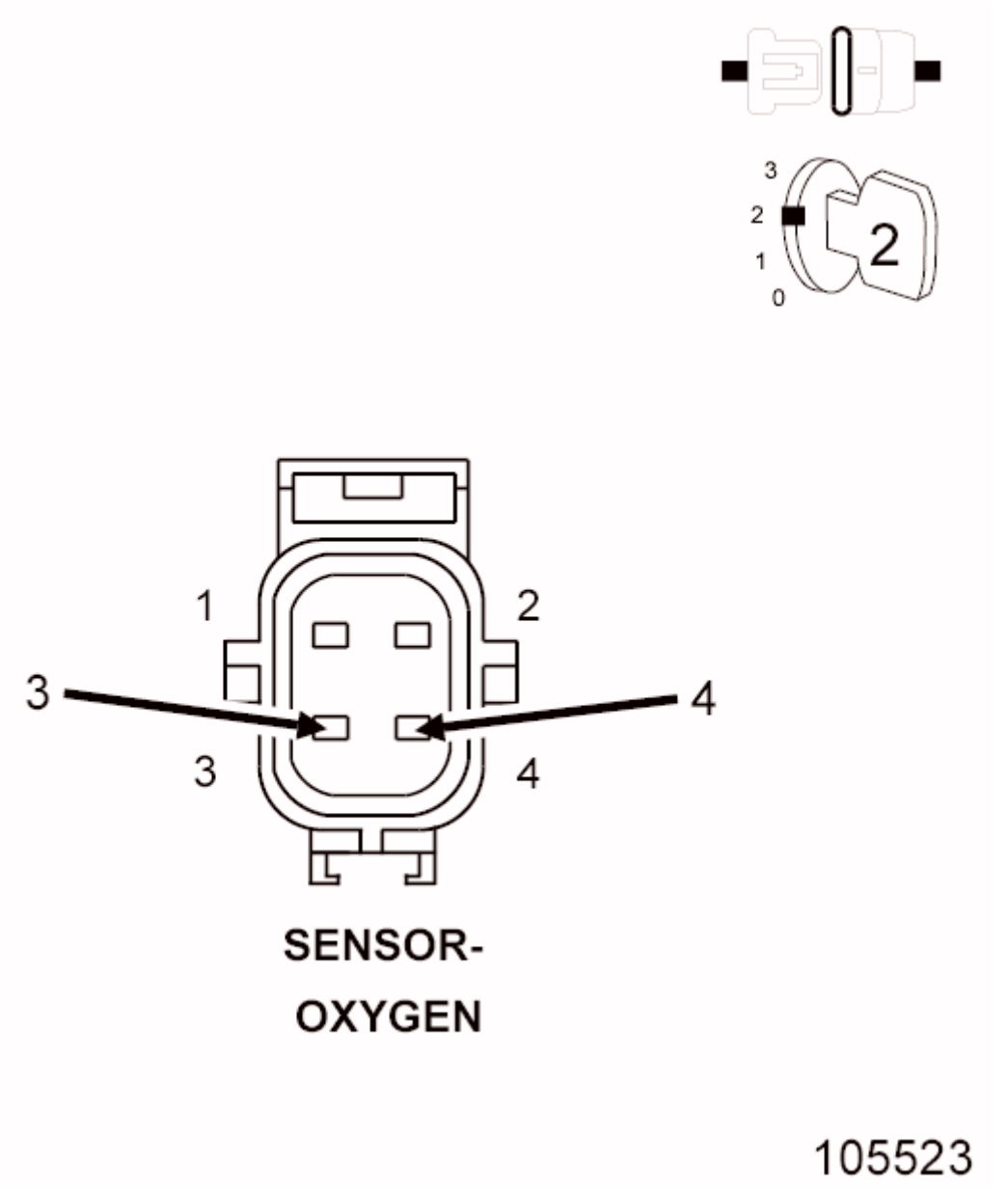

Fig. 146: O2 Sensor Harness Connector
Courtesy of CHRYSLER GROUP, LLC

1. Turn the ignition off.
2. Connect the C1 and C2 PCM harness connectors.
3. Ignition on, engine not running.
4. With the scan tool, monitor the 1/1 O2 Sensor voltage.
5. Connect a jumper wire between the (K41) O2 1/1 Signal circuit and the (K902) O2 Return Upstream circuit in the O2 Sensor harness connector.

Is the voltage between 2.3 and 2.7 Volts with the jumper wire installed?

Yes

- Verify that there is good pin to terminal contact in the O2 Sensor and Powertrain Control Module connectors. Replace the 1/1 O2 Sensor if no problems were found with the connectors.
- Perform the POWERTRAIN VERIFICATION TEST. Refer to **POWERTRAIN VERIFICATION TEST** .

No

- Go To 5.

NOTE: Remove the jumper wire before continuing.

5. **(K41) O2 1/1 SIGNAL CIRCUIT OPEN**

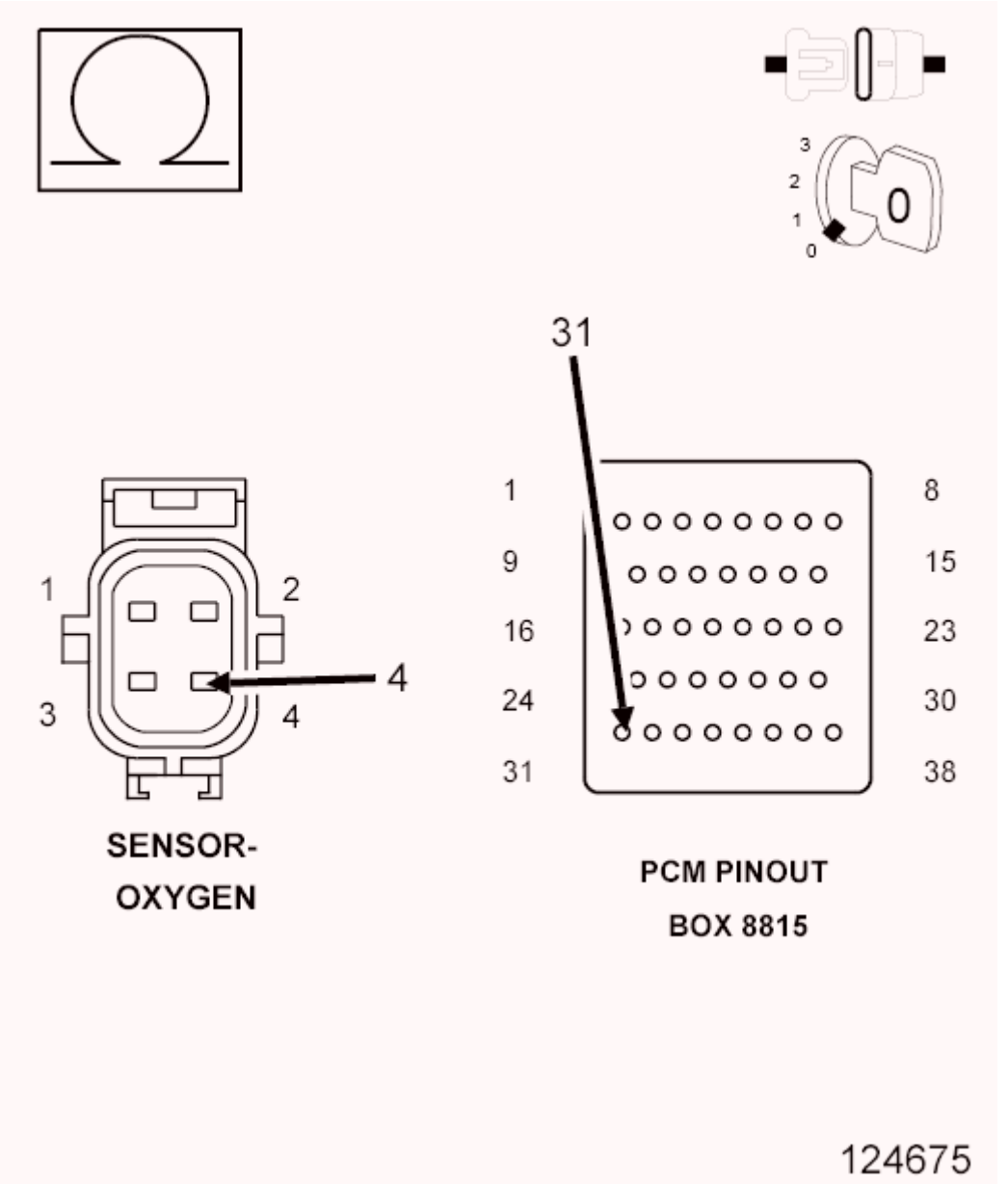

Fig. 147: Measuring Resistance Of (K41) O2 1/1 Signal Circuit From 1/1 O2 Sensor Harness Connector To Appropriate Terminal Of PCM Pinout Box 8815
Courtesy of CHRYSLER GROUP, LLC

1. Turn the ignition off.
2. Disconnect the C1 and C2 PCM harness connectors.

CAUTION: Do not probe the PCM harness connectors. Probing the PCM harness connectors will damage the PCM terminals resulting in poor terminal to pin connection. Install the PCM Pinout Box (special tool #8815A, Kit, NGC, 38 Position) to perform diagnosis.

3. Measure the resistance of the (K41) O2 1/1 Signal circuit from the 1/1 O2 Sensor harness connector to the appropriate terminal of PCM Pinout Box (special tool #8815A, Kit, NGC, 38 Position).

   Is the resistance below 5.0 Ohms?

   Yes

   - Go To 6.

   No

   - Repair the open in the (K41) O2 1/1 Signal circuit.
   - Perform the POWERTRAIN VERIFICATION TEST. Refer to **POWERTRAIN VERIFICATION TEST** .

6. **(K902) O2 RETURN UPSTREAM CIRCUIT OPEN**

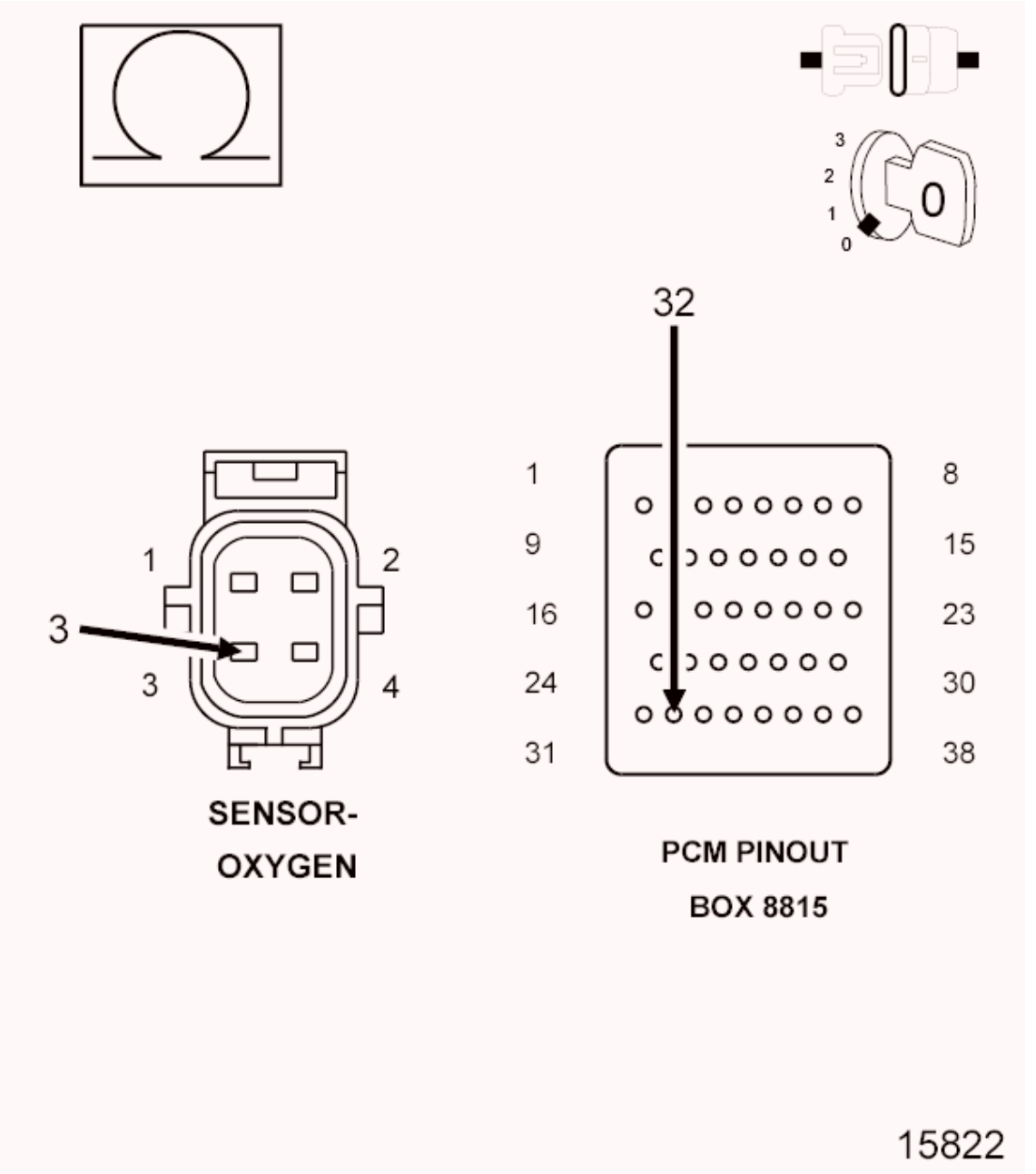

Fig. 148: Measuring Resistance Of O2 Sensor Return Circuit From O2 Sensor Harness Connector To Appropriate Terminal Of PCM Pinout Box 8815
Courtesy of CHRYSLER GROUP, LLC

1. Measure the resistance of the (K902) O2 Return Upstream circuit from the O2 Sensor harness connector to the appropriate terminal of PCM Pinout Box (special tool #8815A, Kit, NGC, 38 Position).

   Is the resistance below 5.0 Ohms?

   Yes

- Go To 7.

No

- Repair the open in the (K902) O2 Return Upstream circuit.
- Perform the POWERTRAIN VERIFICATION TEST. Refer to **POWERTRAIN VERIFICATION TEST** .

7. **POWERTRAIN CONTROL MODULE (PCM)**
    1. Using the wiring diagram/schematic as a guide, inspect the wiring and connectors between the Oxygen Sensor 1/1 and the Powertrain Control Module (PCM).
    2. Look for any chafed, pierced, pinched or partially broken wires.
    3. Look for broken, bent, pushed out or corroded terminals. Verify that there is good pin to terminal contact in the Sensor and Control Module connectors.
    4. Refer to any Technical Service Bulletins that may apply.

    Were there any problems found?

    Yes

    - Repair as necessary.
    - Perform the POWERTRAIN VERIFICATION TEST. Refer to **POWERTRAIN VERIFICATION TEST** .

    No

    - Replace and program the Powertrain Control Module in accordance with the Service Information. Refer to **MODULE, POWERTRAIN CONTROL, REMOVAL** .
    - Perform the POWERTRAIN VERIFICATION TEST. Refer to **POWERTRAIN VERIFICATION TEST** .

P0133-O2 SENSOR 1/1 SLOW RESPONSE

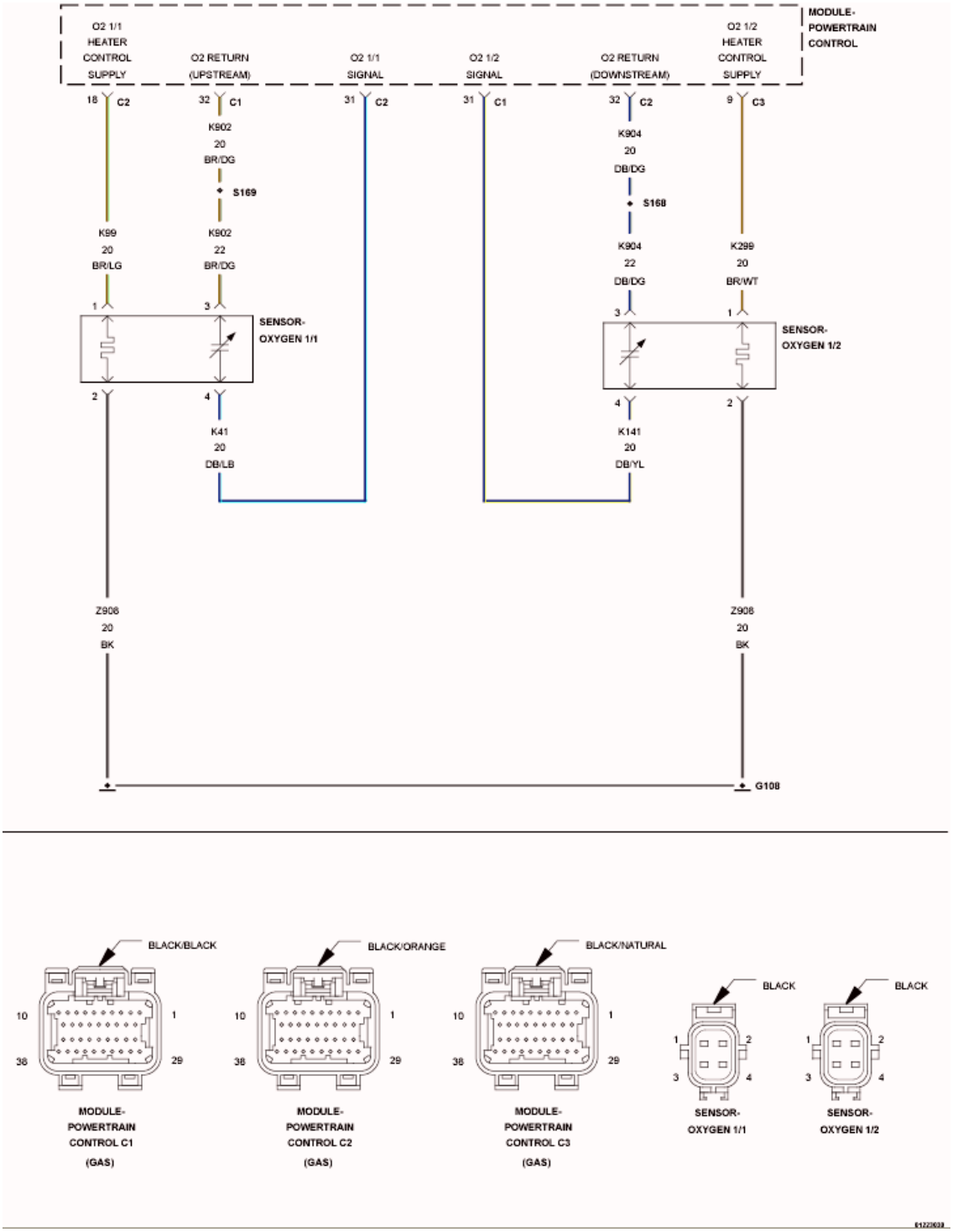

Fig. 149: O2 Sensor Circuit Schematic
Courtesy of CHRYSLER GROUP, LLC

For a complete wiring diagram, **refer to appropriate SYSTEM WIRING DIAGRAMS article** .

THEORY OF OPERATION

For an aged O2 sensor, the response rate to the air/fuel change is slower than when it was new. The O2 sensor tends to move less with the same air/fuel changes in a given time frame. Therefore by observing the activity of voltage readings from the upstream O2 sensor, the quality of the O2 sensor can be detected.

WHEN MONITORED:

With the ECT above 70° C (158° F), engine RPM between 1400 and 2300, vehicle speed between 64 and 96 kph (40 and 60 mph), and engine run time greater than three minutes.

SET CONDITION:

The Powertrain Control Module (PCM) detects that the oxygen sensor signal does not switch adequately during monitoring. Two Trip Fault. Three good trips to turn off the MIL.

POSSIBLE CAUSES

Possible Causes
EXHAUST LEAK
(K41) O2 1/1 SIGNAL CIRCUIT
(K902) O2 RETURN UPSTREAM CIRCUIT
1/1 O2 SENSOR

Always perform the Pre-Diagnostic Troubleshooting procedure before proceeding. Refer to PRE-DIAGNOSTIC TROUBLESHOOTING PROCEDURE .

DIAGNOSTIC TEST

1. **ACTIVE DTC**

NOTE: **After the repairs have been made, verify proper O2 Sensor operation. If all the O2 Sensor voltage readings have not returned to normal, follow the diagnostic procedure for the remaining O2 Sensors.**

NOTE: **Check for contaminants that may have damaged the O2 Sensor: contaminated fuel, unapproved silicone, oil and coolant.**

1. Start the engine.
2. Allow the engine to reach normal operating temperature.

WARNING: **When the engine is operating, do not stand in direct line with the fan. Do not put your hands near the pulleys, belts or fan. Do not wear loose clothing. Failure to follow these instructions may result in possible serious or fatal injury.**

3. With a scan tool, select View DTCs.

NOTE: **It may be necessary to drive the vehicle to meet the conditions to set this DTC, try to repeat the conditions in which the fault originally set by reviewing the Freeze Frame data.**

Is the DTC Active or Pending at this time?

Yes

- Go To 2.

No

- Perform the INTERMITTENT CONDITION diagnostic procedure. Refer to **INTERMITTENT CONDITION** .

2. **CHECKING THE EXHAUST SYSTEM FOR LEAKS**
   1. Turn the ignition off.
   2. Raise the vehicle in accordance with the Service Information.

      WARNING: **The normal operating temperature of the exhaust system is very high. Never work around or attempt to service any part of the exhaust system until it has cooled. Special care should be taken when working near the catalytic converter. The temperature of the converter rises to a high level after a short period of engine operating time.**

   3. Connect Exhaust Cone (special tool #8404-EC, Exhaust Cone) or (special tool #8404-EC, Exhaust Cone) to Air Pressure Regulator (with hose) W-18-MIL-1146AS.

      CAUTION: **The air pressure must not exceed 27.6 kPa (4 psi), otherwise engine damage can occur.**

   4. Attach shop air to the air pressure regulator.
   5. Adjust the Air Pressure Regulator to 27.6 kPa (4 psi).
   6. Insert the exhaust cone into the vehicle tail pipe.
   7. If the vehicle is equipped with dual exhaust. Use the (special tool #8404-ECT, Exhaust Cone, Truck) with equipped attached plug, plug one side of the dual exhaust pipe. Pressurize the other as described above.
   8. Apply Mopar® Air Leak Detector PN# 05191804AA (or an equivalent leak finder liquid) to the following areas:
      - All welded joints from the exhaust manifold to 152.4 mm (6 inches) behind the downstream O2 sensor
      - O2 sensor seal points
      - O2 sensor boss welds

- Flange/joint connection(s)
- Exhaust manifold to cylinder head connection(s)
- EGR solenoid gasket base and tube seal points (if equipped)

9. Watch for the liquid/soapy water to bubble.
10. Use the following definitions to help determine if system or component repair/replacement is necessary:

    Type 1 Leak is defined as a leak where very small foam like bubbles 1 mm (0.04 of an inch) or less appear. Any Type 1 or greater leaks found in welded joints, O2 sensor seal points or O2 sensor boss welds must be repaired or the component must be replaced.

    Type 2 Leak is defined as a leak where larger bubbles pea size, 8 mm (0.3 of an inch) or greater appear. Any Type 2 or greater leaks found in flange or joint connections, exhaust manifold to cylinder head connections, or EGR gasket and tube seal points must be repaired or the components must be replaced.

Leak Location	Repair required if results at 27.6 kPa (4 psi) reveal bubble size:
Welded joints	Type 1, 1 mm (0.04 of an inch) or greater
O2 Sensor seal points	Type 1, 1 mm (0.04 of an inch) or greater
O2 Sensor boss welds	Type 1, 1 mm (0.04 of an inch) or greater
Flange / joint connections	Type 2, 8 mm (0.3 of an inch) or greater
Exhaust Manifold to cylinder head connections	Type 2, 8 mm (0.3 of an inch) or greater
EGR gasket and tube seal points	Type 2, 8 mm (0.3 of an inch) or greater

11. If a leak is found that matches the above definition, repair or replace the component as necessary.
12. Once the repair is complete, repeat the procedure to verify that all leaks have been repaired.

    Were any exhaust leaks found?

    Yes

    - Repair or replace the leaking exhaust parts as necessary.
    - Perform the POWERTRAIN VERIFICATION TEST. Refer to **POWERTRAIN VERIFICATION TEST** .

    No

    - Go To 3.

3. **(K41) O2 1/1 SIGNAL CIRCUIT**

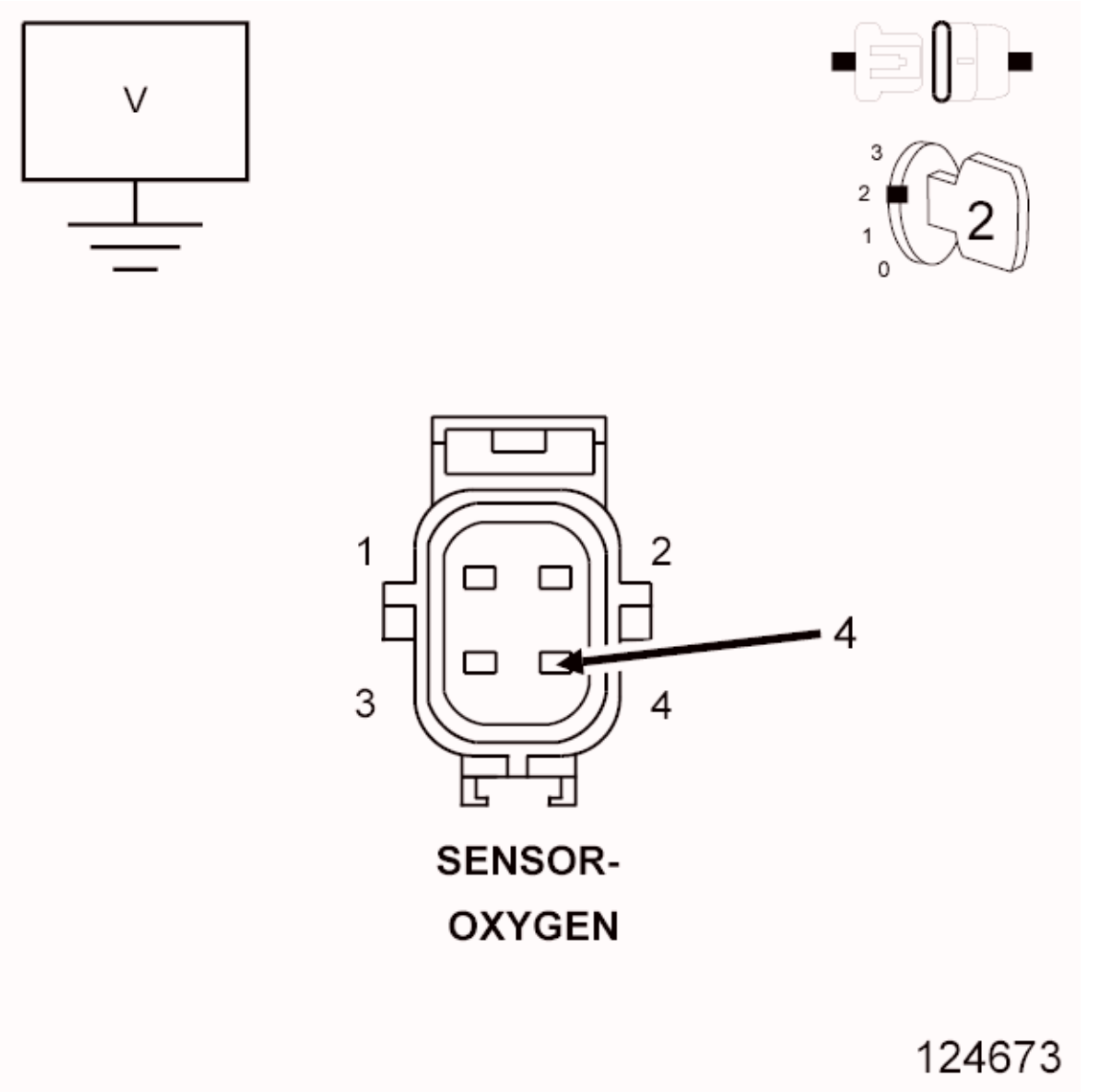

Fig. 150: Measuring Voltage Of O2 Sensor Signal Circuit In O2 Sensor Harness Connector
Courtesy of CHRYSLER GROUP, LLC

1. Turn the ignition off.
2. Disconnect the 1/1 O2 Sensor harness connector.
3. Ignition on, engine not running.
4. Measure the voltage on the (K41) O2 1/1 Signal circuit in the O2 Sensor harness connector.

   Is the voltage between 4.1 and 5.0 volts?

   Yes

   - Go To 4.

   No

- Check the (K41) O2 1/1 Signal circuit for a short to ground, open, or short to voltage. If OK, replace and program the Powertrain Control Module in accordance with the service information. Refer to **MODULE, POWERTRAIN CONTROL, REMOVAL** .
- Perform the POWERTRAIN VERIFICATION TEST. Refer to **POWERTRAIN VERIFICATION TEST** .

4. **(K902) O2 RETURN UPSTREAM CIRCUIT**

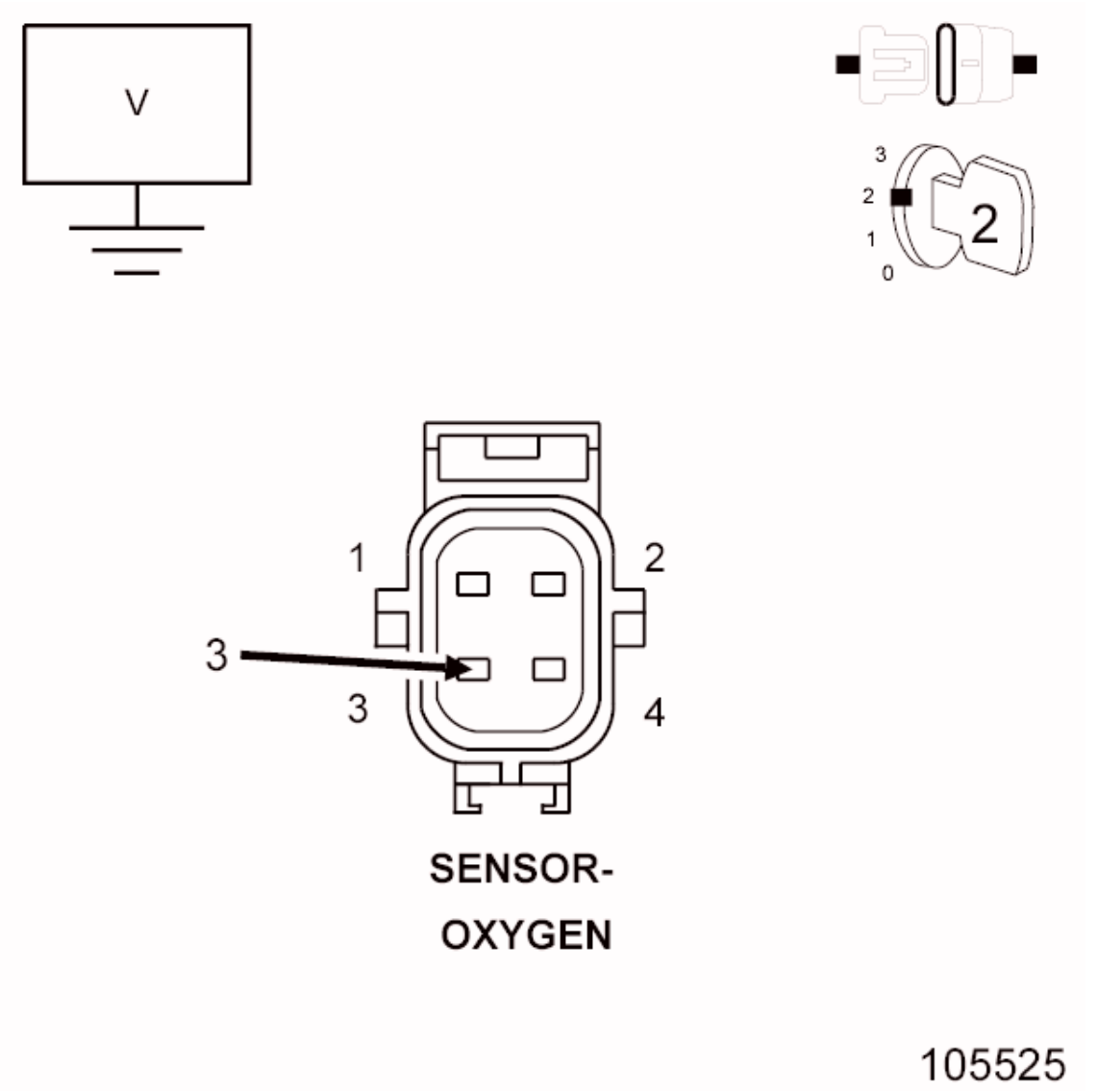

Fig. 151: Measuring Voltage On O2 Sensor Return Circuit In O2 Sensor Harness Connector
Courtesy of CHRYSLER GROUP, LLC

1. Measure the voltage on the (K902) O2 Return Upstream circuit in the O2 Sensor harness connector.

   Is the voltage at 2.5 volts?

   Yes

- Go To 5.

No

- Check the (K902) O2 Return Upstream circuit for a short to ground, open, or short to voltage. If OK, replace and program the Powertrain Control Module in accordance with the Service Information. Refer to **MODULE, POWERTRAIN CONTROL, REMOVAL** .
- Perform the POWERTRAIN VERIFICATION TEST. Refer to **POWERTRAIN VERIFICATION TEST** .

5. **OXYGEN SENSOR**

NOTE: Check for signs of contaminants that may have damaged the O2 Sensor, such as contaminated fuel, unapproved silicone, oil and coolant.

1. Using the wiring diagram/schematic as a guide, inspect the wiring and connectors between the 1/1 Oxygen Sensor and the Powertrain Control Module (PCM).
2. Look for any chafed, pierced, pinched, or partially broken wires.
3. Look for broken, bent, pushed out or corroded terminals.
4. Perform any Technical Service Bulletins that may apply.

Were any problems found?

Yes

- Repair as necessary.
- Perform the POWERTRAIN VERIFICATION TEST. Refer to **POWERTRAIN VERIFICATION TEST** .

No

- Replace the 1/1 Oxygen Sensor in accordance with the Service Information.
- Perform the POWERTRAIN VERIFICATION TEST. Refer to **POWERTRAIN VERIFICATION TEST** .

P0135-O2 SENSOR 1/1 HEATER PERFORMANCE

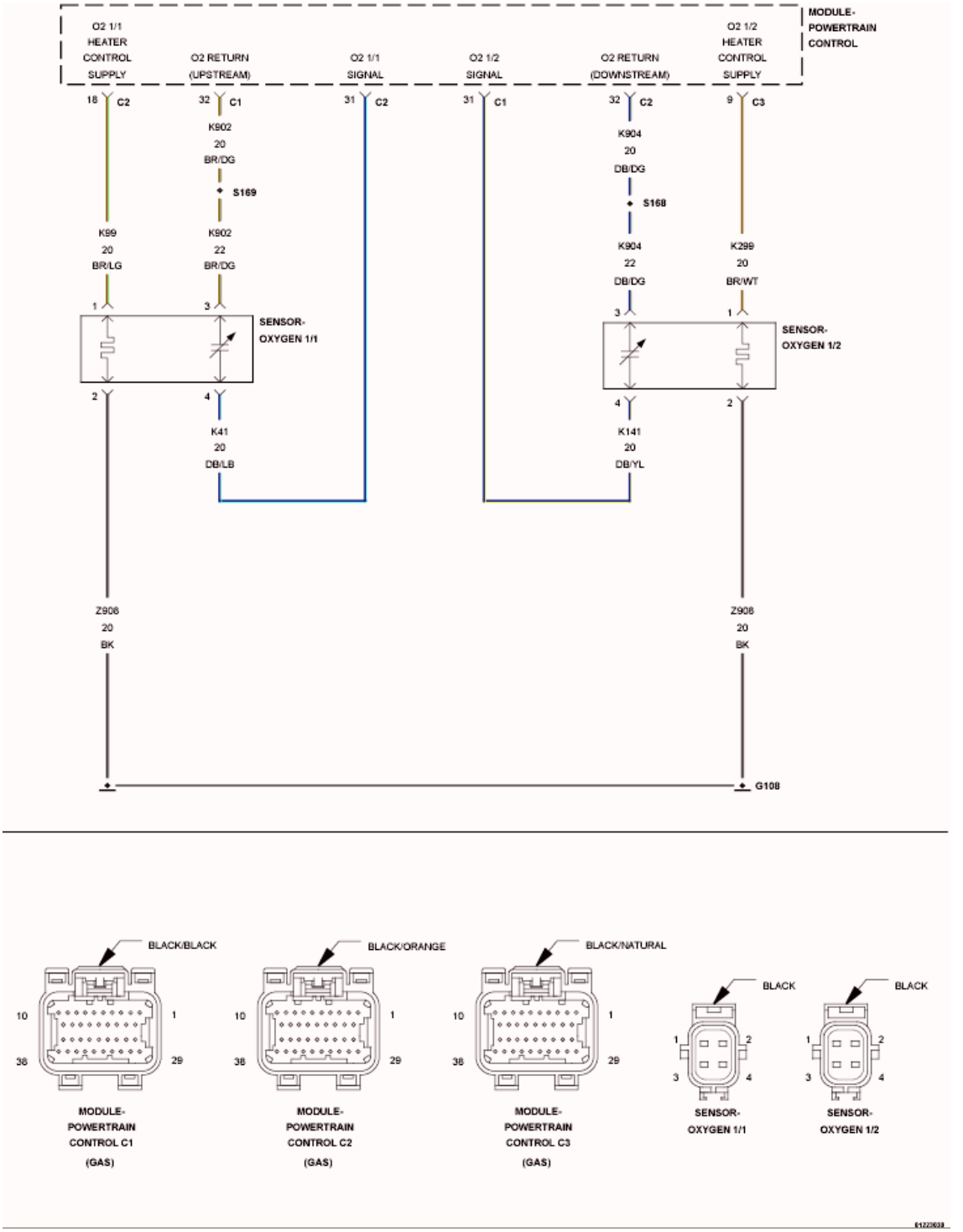

Fig. 152: O2 Sensor Circuit Schematic
Courtesy of CHRYSLER GROUP, LLC

For a complete wiring diagram, **refer to appropriate SYSTEM WIRING DIAGRAMS article** .

THEORY OF OPERATION

This diagnostic provides a continuous check of the O2 heater circuit during operation. The heater circuit is momentarily disabled to allow a resistance measurement to be taken to infer heater temperature. The current delivery to the heater is duty cycled to maintain a specific target temperature. The error from the target temperature is continuously monitored to assess heater performance.

WHEN MONITORED:

Continuously during O2 sensor heater operation with battery voltage between 10.4 and 15.75 Volts and no O2 sensor circuit DTCs present.

SET CONDITION:

The Powertrain Control Module (PCM) detects no temperature change in the O2 sensor heater element when the heater circuit is active. The heater temperature is obtained by measuring the heater resistance and calculating the heater temperature. Two trip fault. Three good trips to turn off the MIL.

POSSIBLE CAUSES

Possible Causes
(K99) O2 1/1 HEATER CONTROL CIRCUIT OPEN
(Z908) O2 1/1 HEATER GROUND CIRCUIT OPEN
1/1 O2 SENSOR
POWERTRAIN CONTROL MODULE (PCM)

Always perform the Pre-Diagnostic Troubleshooting procedure before proceeding. Refer to PRE-DIAGNOSTIC TROUBLESHOOTING PROCEDURE .

DIAGNOSTIC TEST

1. **O2 SENSOR HEATER OPERATION**
    1. Turn the ignition off.

       NOTE: Wait a minimum of eight minutes to allow the O2 Sensor to cool down before continuing the test. Allow the O2 Sensor voltage to stabilize between 4.6 and 5.0 Volts.

    2. Ignition on, engine not running.
    3. With the scan tool, actuate the O2 Heater Test.
    4. With the scan tool, monitor 1/1 O2 Sensor voltage for at least two minutes.

       Does the voltage stay above 4.5 Volts?

       Yes

       - Go To 2.

No

- Perform the INTERMITTENT CONDITION diagnostic procedure. Refer to **INTERMITTENT CONDITION** .

2. **O2 SENSOR HEATER ELEMENT**
   1. Turn the ignition off.

      NOTE: Allow the O2 sensor to cool down to room temperature.

   2. Disconnect the O2 Sensor harness connector.
   3. Measure the resistance of the O2 Heater Element across the 1/1 O2 Sensor connector between the O2 Heater Control terminal and the Heater ground terminal.

      NOTE: O2 Heater Element resistance values should be measured at 21.1° C (70° F). The resistance value will vary with different temperature values.

      Is the resistance of the O2 Sensor Heater Element between 2.0 and 30.0 Ohms?

      Yes

      - Go To 3.

      No

      - Replace the O2 Sensor.
      - Perform the POWERTRAIN VERIFICATION TEST. Refer to **POWERTRAIN VERIFICATION TEST** .

3. **(K99) O2 1/1 HEATER CONTROL CIRCUIT OPEN**

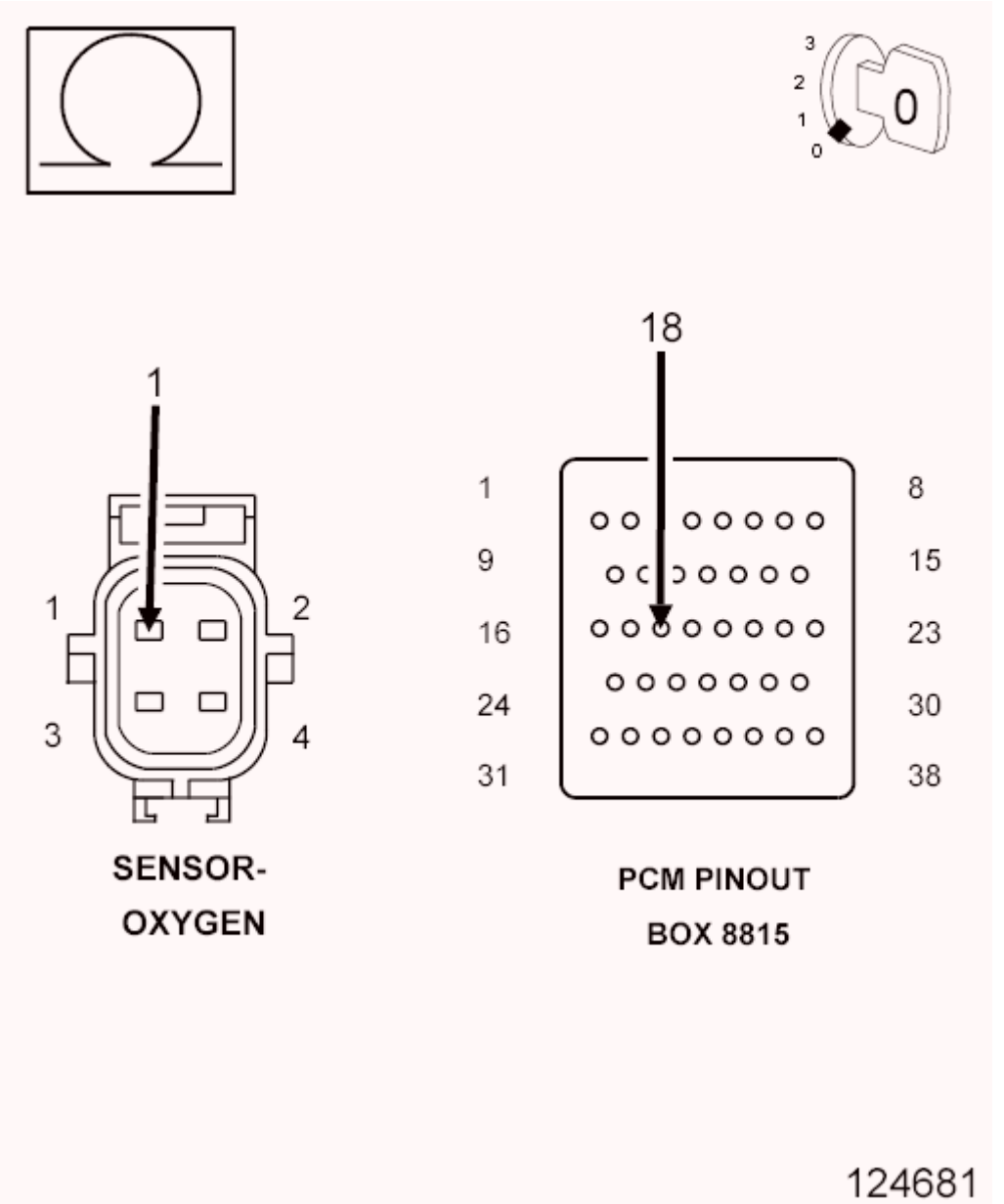

Fig. 153: Measuring Resistance Of (K99) O2 1/1 Heater Control Circuit From O2 Harness Connector To Appropriate Terminal Of PCM Pinout Box 8815
Courtesy of CHRYSLER GROUP, LLC

1. Disconnect the C2 PCM harness connector.

CAUTION: Do not probe the PCM harness connectors. Probing the PCM harness connectors will damage the PCM terminals resulting in poor terminal to pin connection. Install the PCM Pinout Box (special tool #8815A, Kit, NGC, 38 Position) to perform diagnosis.

2. Measure the resistance of the (K99) O2 1/1 Heater Control circuit from the O2 harness connector to

the appropriate terminal of PCM Pinout Box (special tool #8815A, Kit, NGC, 38 Position).

Is the resistance below 0.5 of an ohm?

Yes

- Go To 4.

No

- Repair the excessive resistance in the (K99) O2 1/1 Heater Control circuit.
- Perform the POWERTRAIN VERIFICATION TEST. Refer to **POWERTRAIN VERIFICATION TEST** .

4. **(Z908) O2 1/1 HEATER GROUND CIRCUIT OPEN**

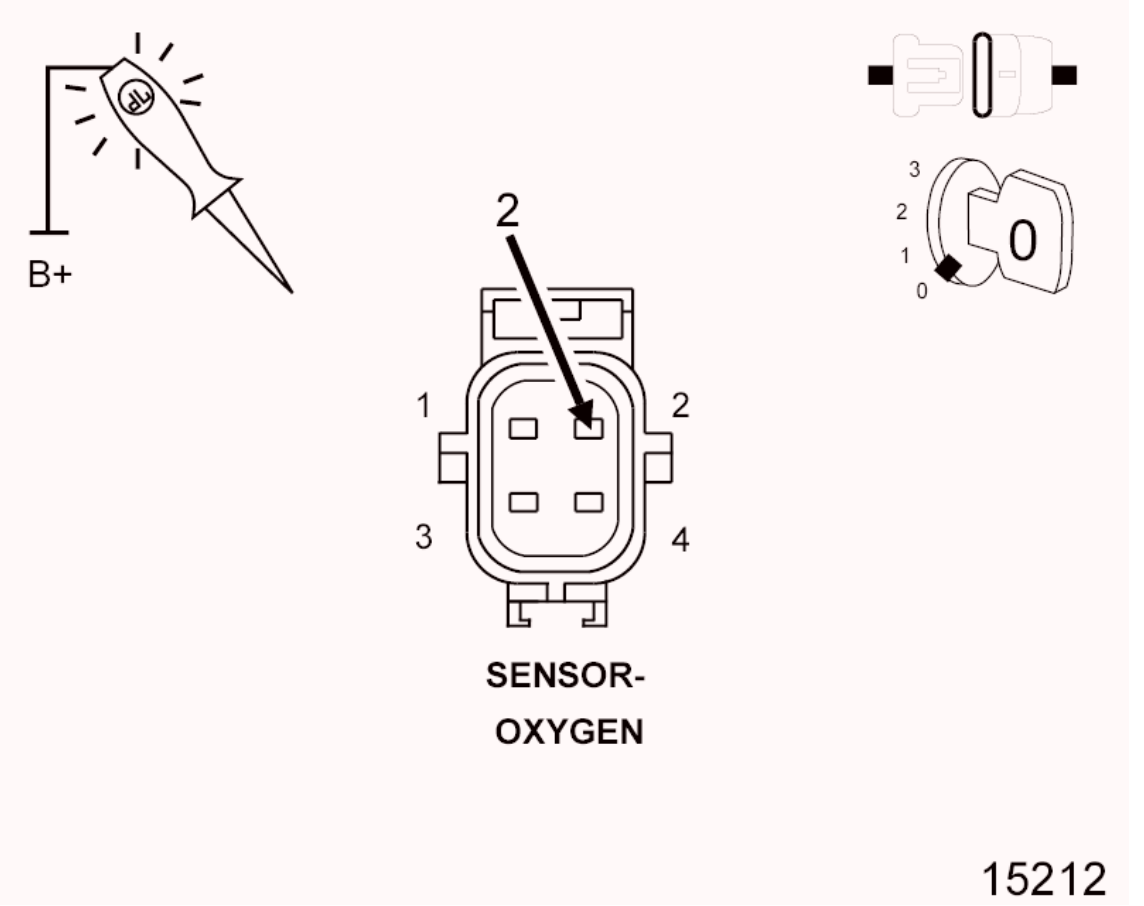

Fig. 154: Using 12-Volt Test Light Connected To 12 Volts To Check Ground Circuit In Oxygen Sensor Harness Connector
Courtesy of CHRYSLER GROUP, LLC

1. Using a 12-volt test light connected to 12 Volts, check the (Z908) Ground circuit in the 1/1 Oxygen Sensor harness connector.

NOTE: **The test light should be illuminated and bright. Compare the brightness to that of a direct connection to the battery.**

Is the test light illuminated and bright?

Yes

- Go To 5.

No

- Repair the excessive resistance in the (Z908) O2 1/1 Heater ground circuit.
- Perform the POWERTRAIN VERIFICATION TEST. Refer to **POWERTRAIN VERIFICATION TEST** .

5. **POWERTRAIN CONTROL MODULE (PCM)**
    1. Using the wiring diagram/schematic as a guide, inspect the wiring and connectors between the Oxygen Sensor 1/1 and the Powertrain Control Module (PCM).
    2. Look for any chafed, pierced, pinched or partially broken wires.
    3. Look for broken, bent, pushed out or corroded terminals. Verify that there is good pin to terminal contact in the Sensor and Control Module connectors.
    4. Refer to any Technical Service Bulletins that may apply.

    Were there any problems found?

    Yes

    - Repair as necessary.
    - Perform the POWERTRAIN VERIFICATION TEST. Refer to **POWERTRAIN VERIFICATION TEST** .

    No

    - Replace and program the Powertrain Control Module in accordance with the Service Information. Refer to **MODULE, POWERTRAIN CONTROL, REMOVAL** .
    - Perform the POWERTRAIN VERIFICATION TEST. Refer to **POWERTRAIN VERIFICATION TEST** .

P0137-O2 SENSOR 1/2 CIRCUIT LOW

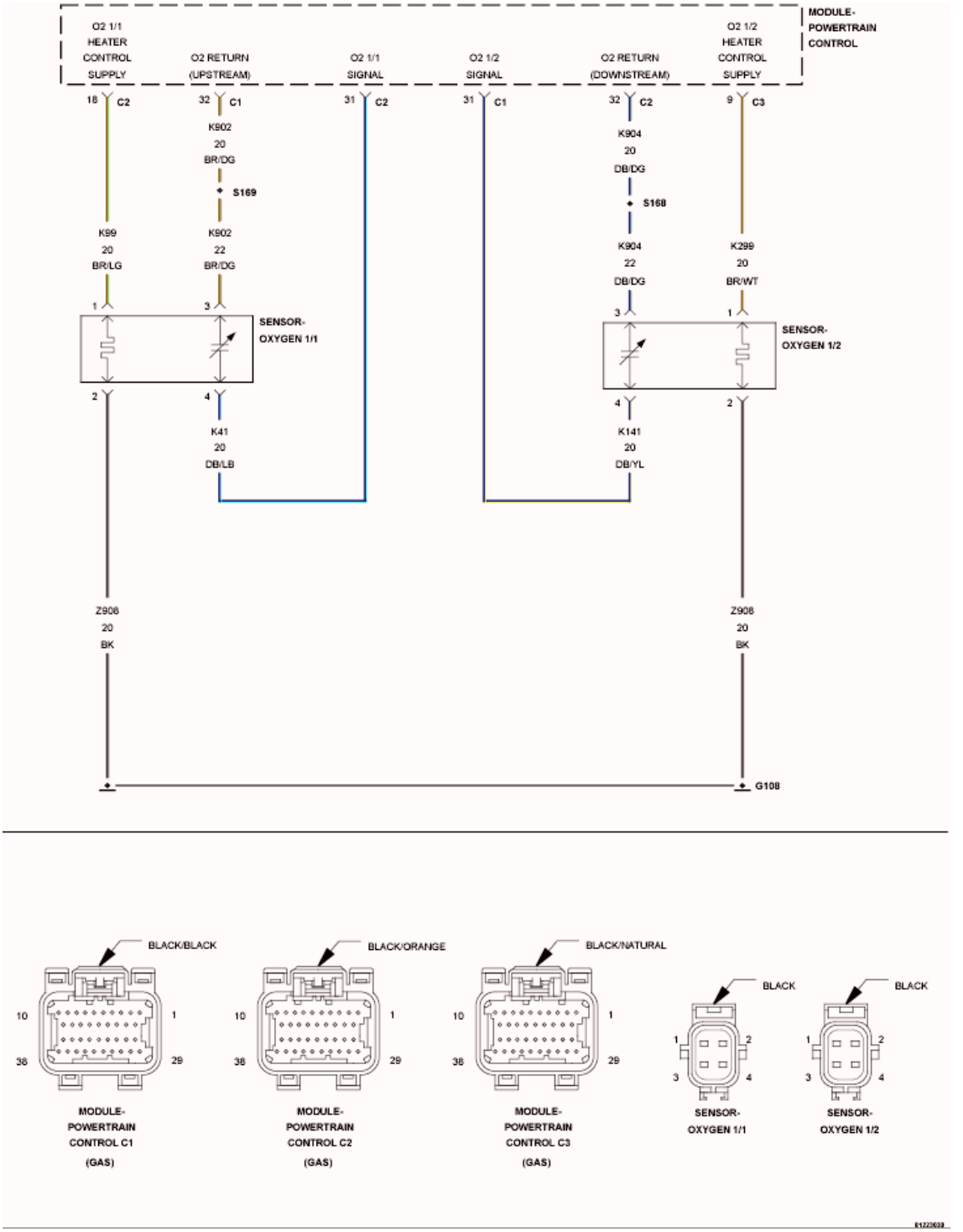

Fig. 155: O2 Sensor Circuit Schematic
Courtesy of CHRYSLER GROUP, LLC

For a complete wiring diagram, **refer to appropriate SYSTEM WIRING DIAGRAMS article** .

WHEN MONITORED:

Engine running for less than 30 seconds and the O2 Sensor Heater Temperature is less than 251° C (484° F) with battery voltage greater 10.99 Volts.

SET CONDITION:

The Powertrain Control Module (PCM) detects that the 1/2 Oxygen Sensor signal voltage is below the minimum acceptable value. The DTC will set as Pending after one trip and Active after two trips. Three good trips to turn off the MIL.

POSSIBLE CAUSES

Possible Causes
(K904) O2 RETURN DOWNSTREAM CIRCUIT SHORTED TO GROUND
(K141) O2 1/2 SIGNAL CIRCUIT SHORTED TO GROUND
(K141) O2 1/2 SIGNAL CIRCUIT SHORTED TO THE (K904) O2 RETURN DOWNSTREAM CIRCUIT
(K141) O2 1/2 SIGNAL CIRCUIT SHORTED TO THE (Z43) O2 1/2 HEATER GROUND CIRCUIT
1/2 O2 SENSOR
POWERTRAIN CONTROL MODULE (PCM)

Always perform the Pre-Diagnostic Troubleshooting procedure before proceeding. Refer to PRE-DIAGNOSTIC TROUBLESHOOTING PROCEDURE .

DIAGNOSTIC TEST

1. **ACTIVE DTC**
    1. Turn the ignition on.
    2. With the scan tool, select View DTCs. Record DTC and Freeze Frame information.
    3. Start the engine and allow it to idle for at least 60 seconds.

        WARNING: **When the engine is operating, do not stand in direct line with the fan. Do not put your hands near the pulleys, belts or fan. Do not wear loose clothing. Failure to follow these instructions may result in possible serious or fatal injury.**

    4. With the scan tool, select View DTCs.

        Is the DTC Active at this time?

        Yes

        - Go To 2.

        No

- Perform the INTERMITTENT CONDITION diagnostic procedure. Refer to **INTERMITTENT CONDITION** .

2. **(K141) O2 1/2 SIGNAL CIRCUIT**
    1. Turn the ignition off.
    2. Disconnect the 1/2 O2 Sensor harness connector.
    3. Ignition on, engine not running.
    4. With the scan tool, monitor the 1/2 O2 Sensor voltage.

    Is the O2 Sensor voltage between 4.1 and 5.0 Volts?

    Yes

    - Go To 3.

    No

    - Go To 5.
3. **O2 SENSOR**

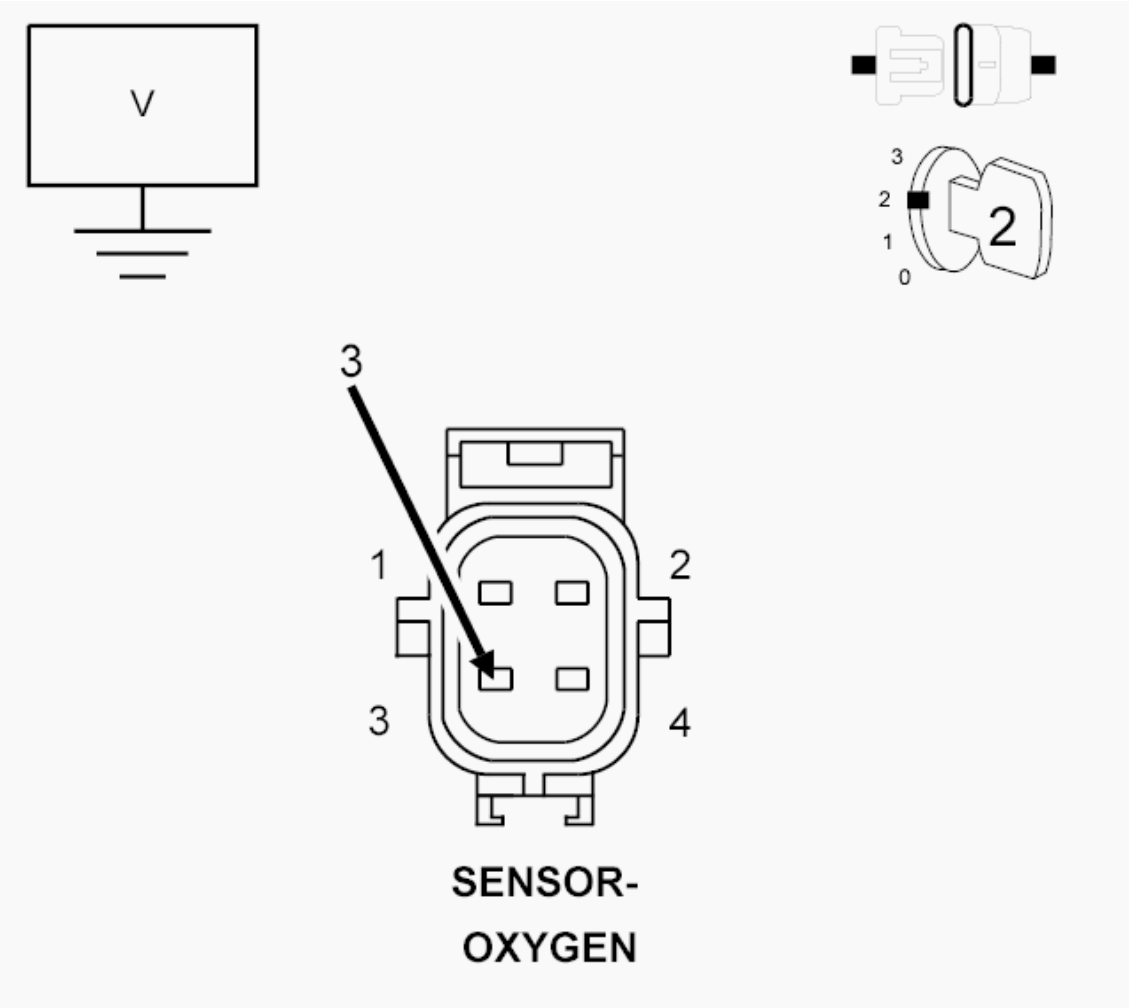

Fig. 156: Measuring Voltage On O2 Sensor Return Circuit In O2 Sensor Harness Connector
Courtesy of CHRYSLER GROUP, LLC

1. Measure the voltage on the (K904) O2 Return Downstream circuit in the O2 Sensor harness connector.

   Is the voltage at 2.5 Volts?

   Yes

   - Verify that there is good pin to terminal contact in the O2 Sensor and Powertrain Control Module connectors. Replace the 1/2 O2 Sensor if no problems were found with the connectors.
   - Perform the POWERTRAIN VERIFICATION TEST. Refer to **POWERTRAIN VERIFICATION TEST** .

   No

   - Go To 4.

4. **(K904) O2 RETURN DOWNSTREAM CIRCUIT SHORTED TO GROUND**

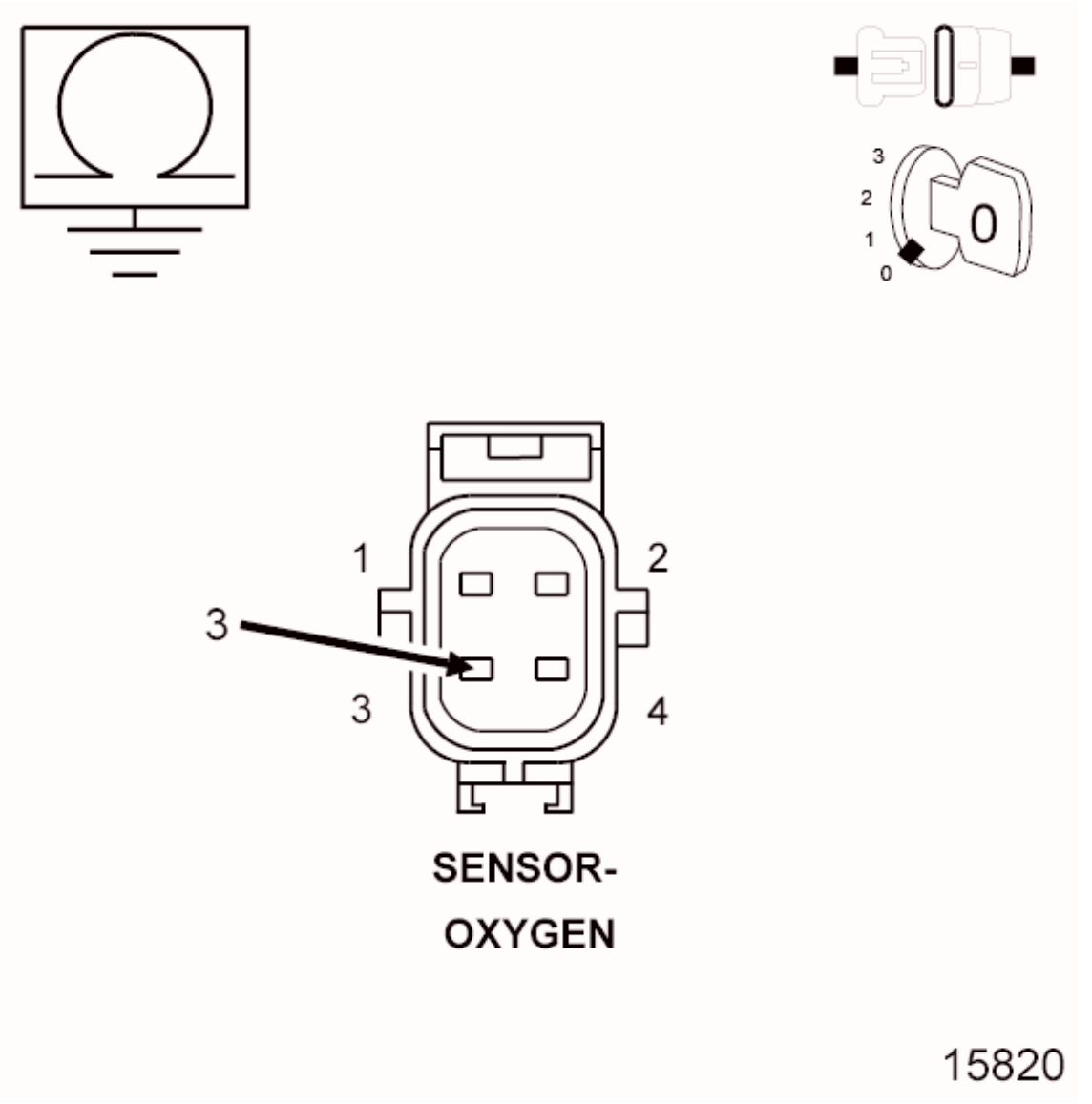

Fig. 157: Measuring Resistance Between Ground And O2 Sensor Return Circuit In O2 Sensor Harness Connector
Courtesy of CHRYSLER GROUP, LLC

1. Turn the ignition off.
2. Disconnect the C2 PCM harness connector.
3. Measure the resistance between ground and the (K904) O2 Return Downstream circuit in the O2 Sensor harness connector.

   Is the resistance below 100 Ohms?

   Yes

- Repair the short to ground in the (K904) O2 Return Downstream circuit.
- Perform the POWERTRAIN VERIFICATION TEST. Refer to **POWERTRAIN VERIFICATION TEST** .

No

- Go To 8.

5. **(K141) O2 1/2 SIGNAL CIRCUIT SHORTED TO GROUND**

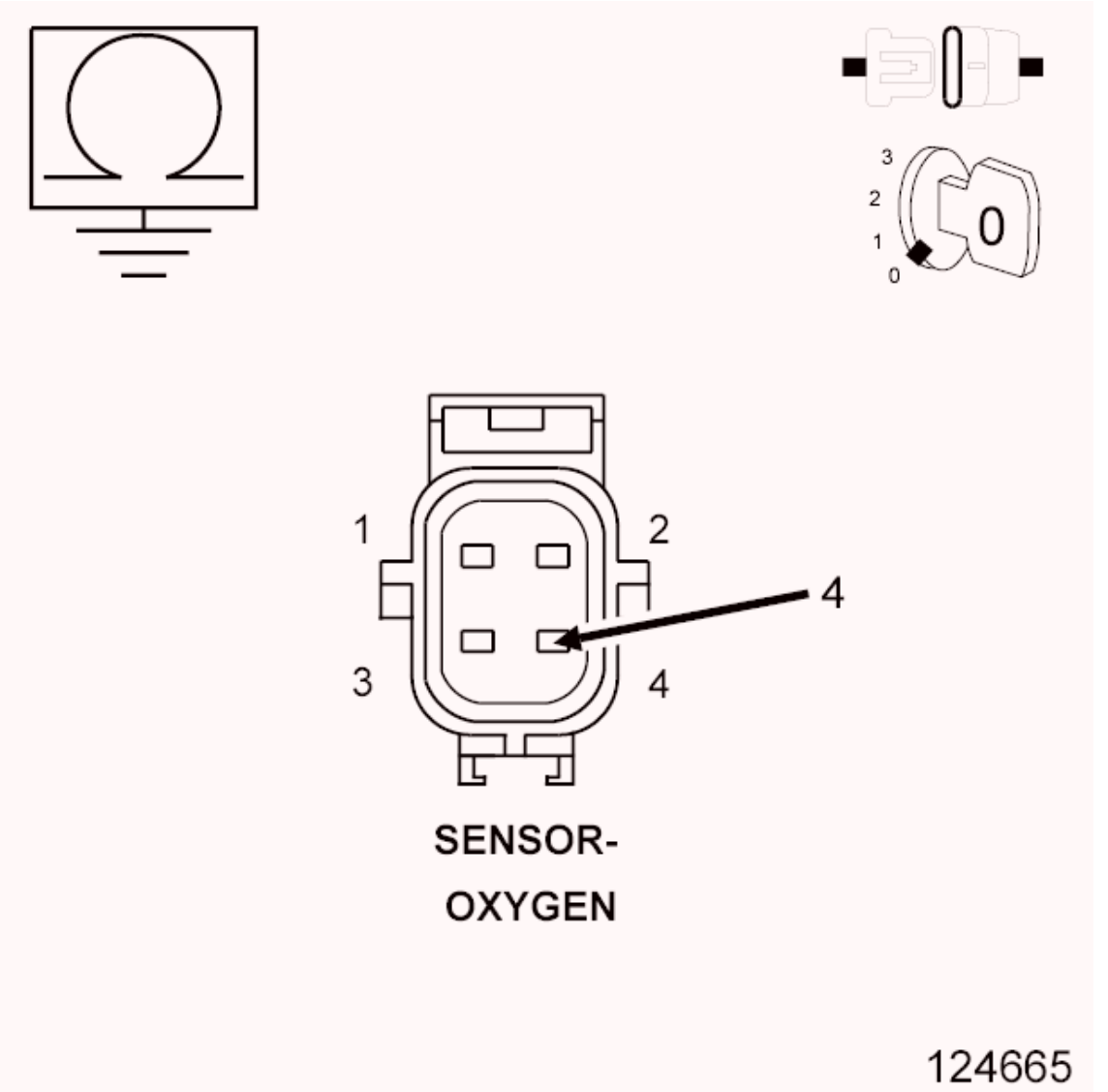

Fig. 158: Measuring Resistance Between Ground And O2 Sensor Signal Circuit In O2 Sensor Harness Connector
Courtesy of CHRYSLER GROUP, LLC

1. Turn the ignition off.
2. Disconnect the C1 and C2 PCM harness connectors.

3. Measure the resistance between ground and the (K141) O2 1/2 Signal circuit in the O2 Sensor harness connector.

   Is the resistance below 100 Ohms?

   Yes

   - Repair the short to ground in the (K141) O2 1/2 Signal circuit.
   - Perform the POWERTRAIN VERIFICATION TEST. Refer to **POWERTRAIN VERIFICATION TEST** .

   No

   - Go To 6.

6. **(K141) O2 1/2 SIGNAL CIRCUIT SHORTED TO THE (K904) O2 RETURN DOWNSTREAM CIRCUIT**

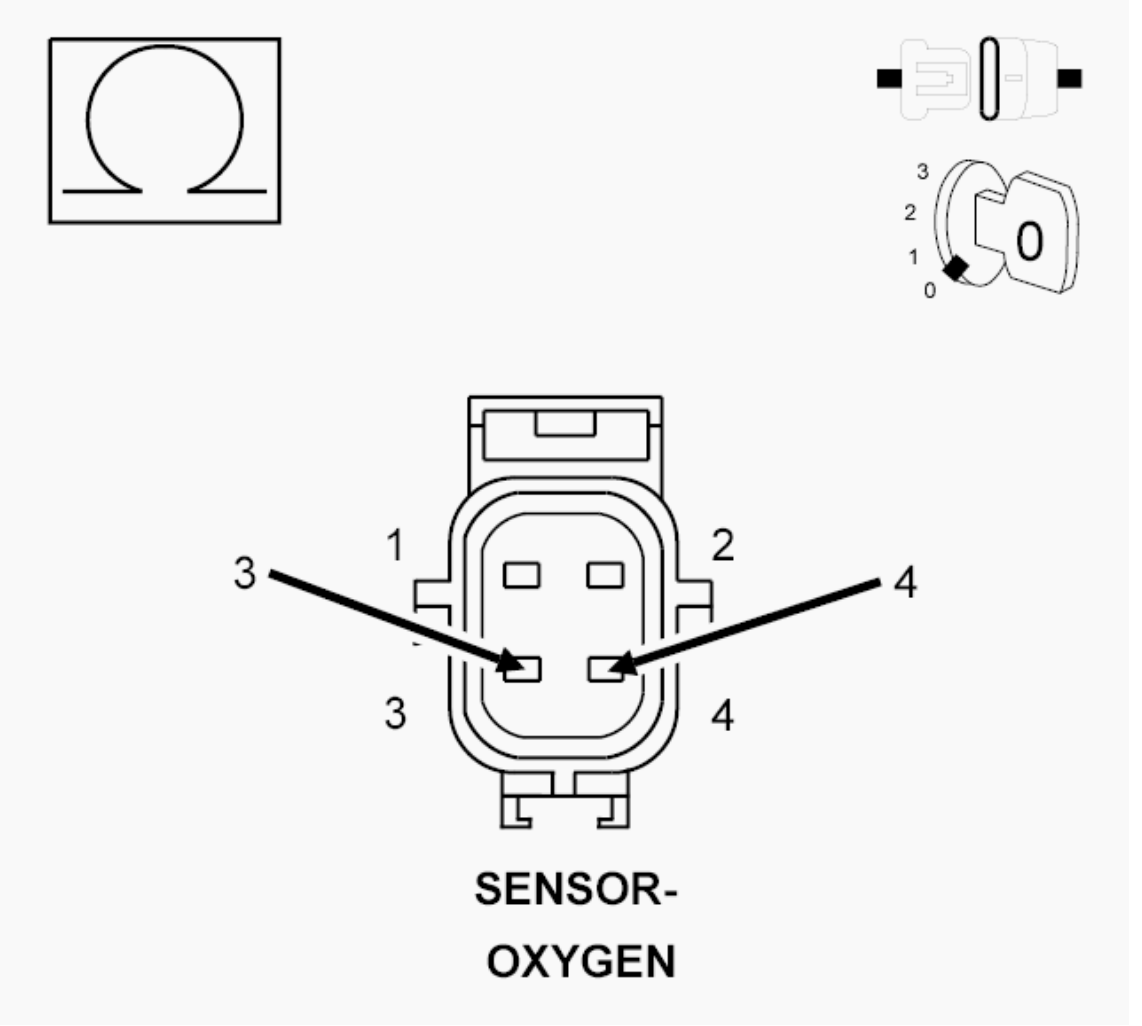

Fig. 159: Measuring Resistance Between O2 Sensor Signal Circuit And O2 Sensor Return Circuit

In O2 Sensor Harness Connector
Courtesy of CHRYSLER GROUP, LLC

1. Measure the resistance between the (K141) O2 1/2 Signal circuit and the (K904) O2 Return Downstream circuit in the O2 Sensor harness connector.

   Is the resistance below 100 Ohms?

   Yes

   - Repair the short between the (K904) O2 Return Downstream circuit and the (K141) O2 1/2 Signal circuit.
   - Perform the POWERTRAIN VERIFICATION TEST. Refer to **POWERTRAIN VERIFICATION TEST** .

   No

   - Go To 7.

7. **(K141) O2 1/2 SIGNAL CIRCUIT SHORTED TO THE (Z43) O2 1/2 HEATER GROUND CIRCUIT**

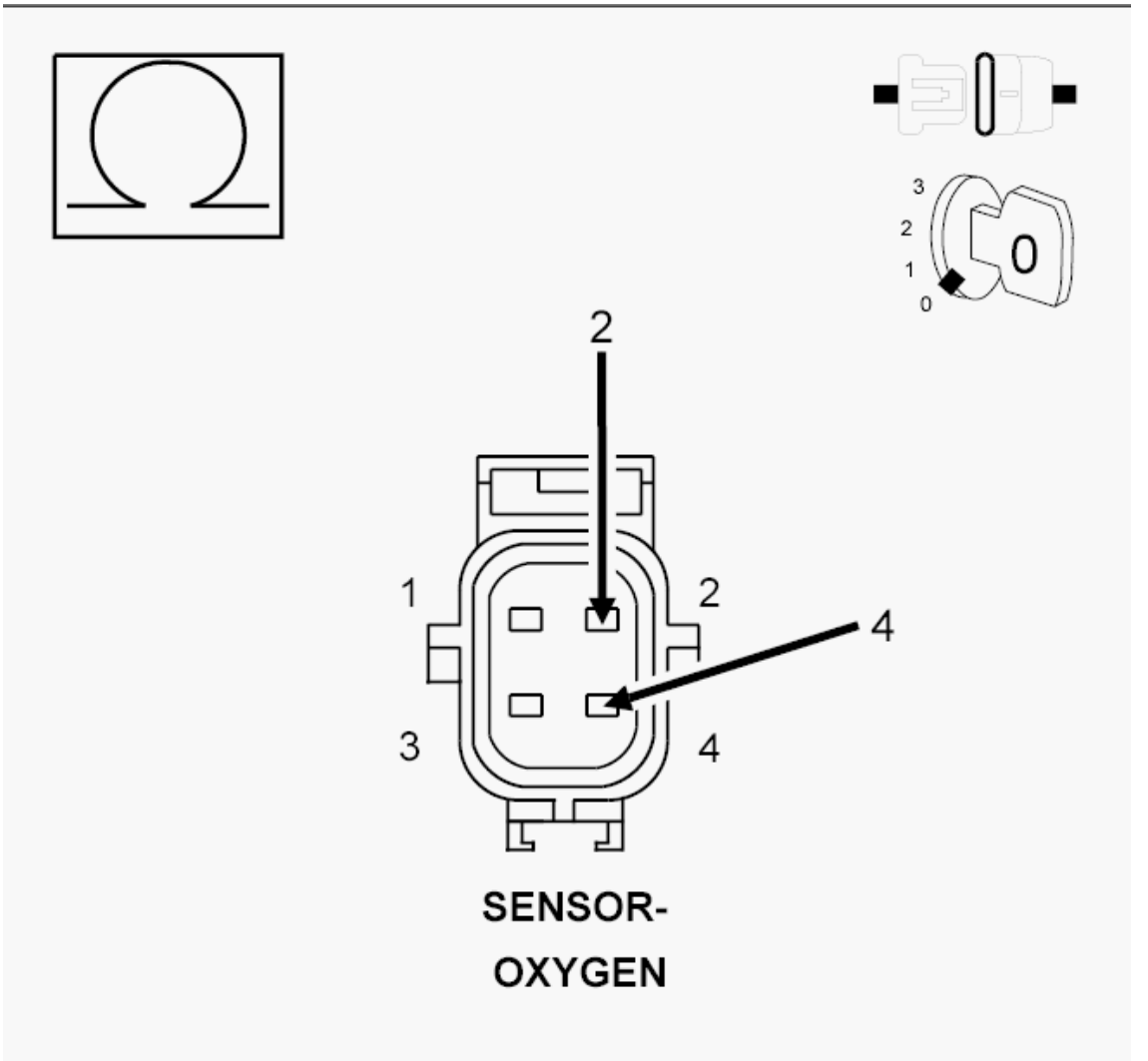

Fig. 160: Measuring Resistance Between O2 Sensor Signal Circuit And O2 Sensor Heater Ground Circuit In O2 Sensor Harness Connector
Courtesy of CHRYSLER GROUP, LLC

1. Measure the resistance between the (K141) O2 1/2 Signal circuit and the (Z43) O2 1/2 Heater ground circuit in the O2 Sensor harness connector.

   Is the resistance below 100 Ohms?

   Yes

   - Repair the short between the (Z43) O2 1/2 Heater ground circuit and the (K141) O2 1/2 Signal circuit.
   - Perform the POWERTRAIN VERIFICATION TEST. Refer to **POWERTRAIN VERIFICATION TEST** .

   No

- Go To 8.

8. **POWERTRAIN CONTROL MODULE (PCM)**
    1. Using the wiring diagram/schematic as a guide, inspect the wiring and connectors between the Oxygen Sensor 1/2 and the Powertrain Control Module (PCM).
    2. Look for any chafed, pierced, pinched or partially broken wires.
    3. Look for broken, bent, pushed out or corroded terminals. Verify that there is good pin to terminal contact in the Sensor and Control Module connectors.
    4. Refer to any Technical Service Bulletins that may apply.

    Were there any problems found?

    Yes

    - Repair as necessary.
    - Perform the POWERTRAIN VERIFICATION TEST. Refer to **POWERTRAIN VERIFICATION TEST** .

    No

    - Replace and program the Powertrain Control Module in accordance with the Service Information. Refer to **MODULE, POWERTRAIN CONTROL, REMOVAL** .
    - Perform the POWERTRAIN VERIFICATION TEST. Refer to **POWERTRAIN VERIFICATION TEST** .

P0138-O2 SENSOR 1/2 CIRCUIT HIGH

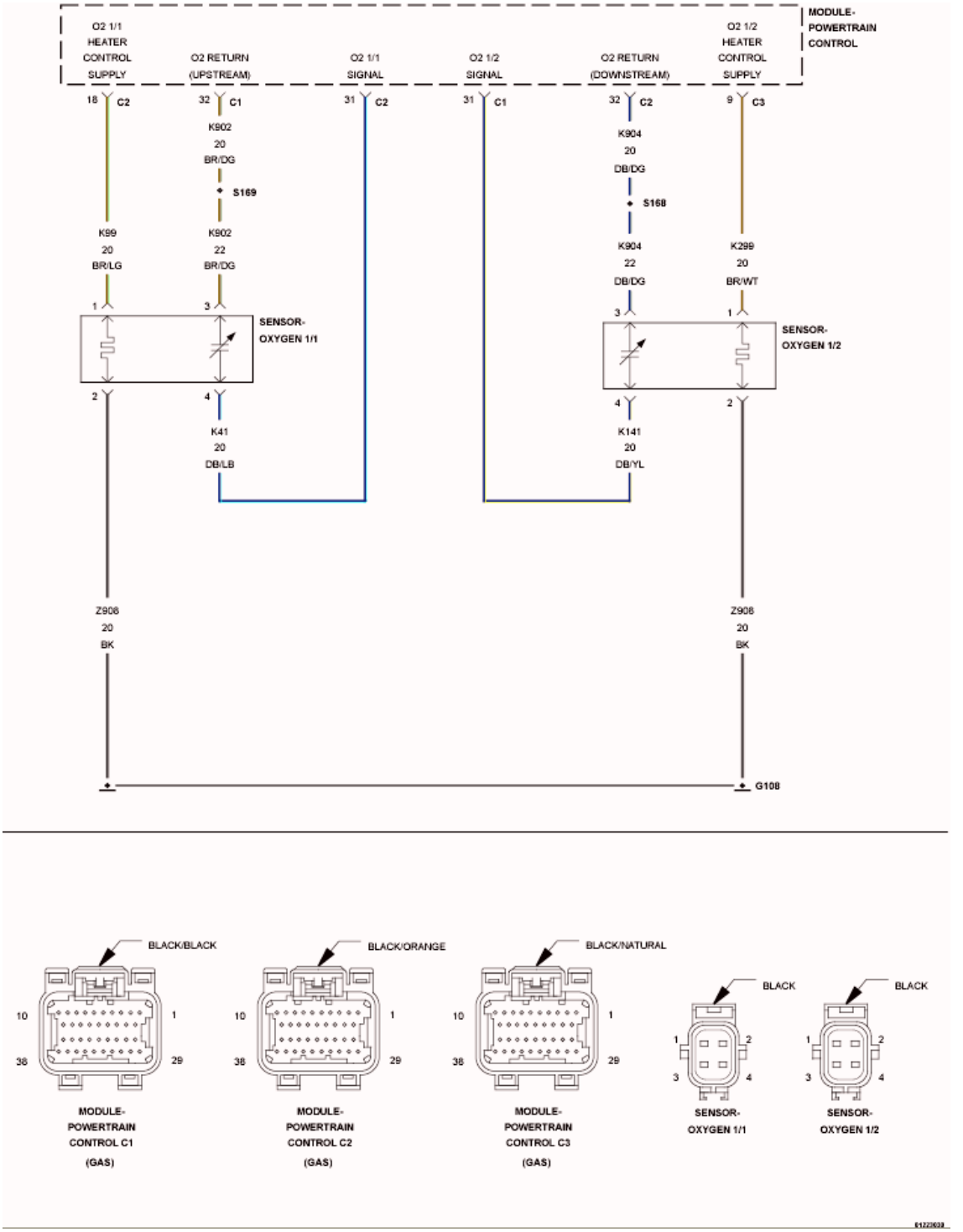

Fig. 161: O2 Sensor Circuit Schematic
Courtesy of CHRYSLER GROUP, LLC

For a complete wiring diagram, **refer to appropriate SYSTEM WIRING DIAGRAMS article** .

WHEN MONITORED:

Continuously with the engine running, no O2 sensor heater DTCs present, 1/2 Oxygen Sensor heater temperature within a specific range, and battery voltage greater than 10.4 volts.

SET CONDITION:

The Powertrain Control Module (PCM) detects that the 1/2 Oxygen Sensor voltage is greater than the maximum acceptable value for a specific amount of time, based on O2 sensor heater temperature. The DTC will set as Pending after one trip and Active after two trips. Three good trips to turn off the MIL.

POSSIBLE CAUSES

Possible Causes
(K141) O2 1/2 SIGNAL CIRCUIT SHORTED TO VOLTAGE
(K904) O2 RETURN DOWNSTREAM CIRCUIT SHORTED TO VOLTAGE
(K141) O2 1/2 SENSOR SIGNAL CIRCUIT OPEN
(K904) O2 RETURN DOWNSTREAM CIRCUIT OPEN
1/2 O2 SENSOR
POWERTRAIN CONTROL MODULE (PCM)

Always perform the Pre-Diagnostic Troubleshooting procedure before proceeding. Refer to PRE-DIAGNOSTIC TROUBLESHOOTING PROCEDURE .

DIAGNOSTIC TEST

1. **ACTIVE DTC**

   NOTE: If an O2 sensor signal circuit is shorted to voltage, all O2 sensor voltage readings displayed on the scan tool will be approximately 5.0 volts. Diagnose the sensor that set the most current DTC.

   1. Start the engine and allow it to idle for at least 60 seconds.

      WARNING: When the engine is operating, do not stand in direct line with the fan. Do not put your hands near the pulleys, belts or fan. Do not wear loose clothing. Failure to follow these instructions may result in possible serious or fatal injury.

   2. With a scan tool, select View DTCs.

      Is the status Active for this DTC?

      Yes

      - Go To 2.

      No

- Perform the INTERMITTENT CONDITION diagnostic procedure. Refer to **INTERMITTENT CONDITION** .

2. **(K141) O2 1/2 SIGNAL CIRCUIT SHORTED TO VOLTAGE**

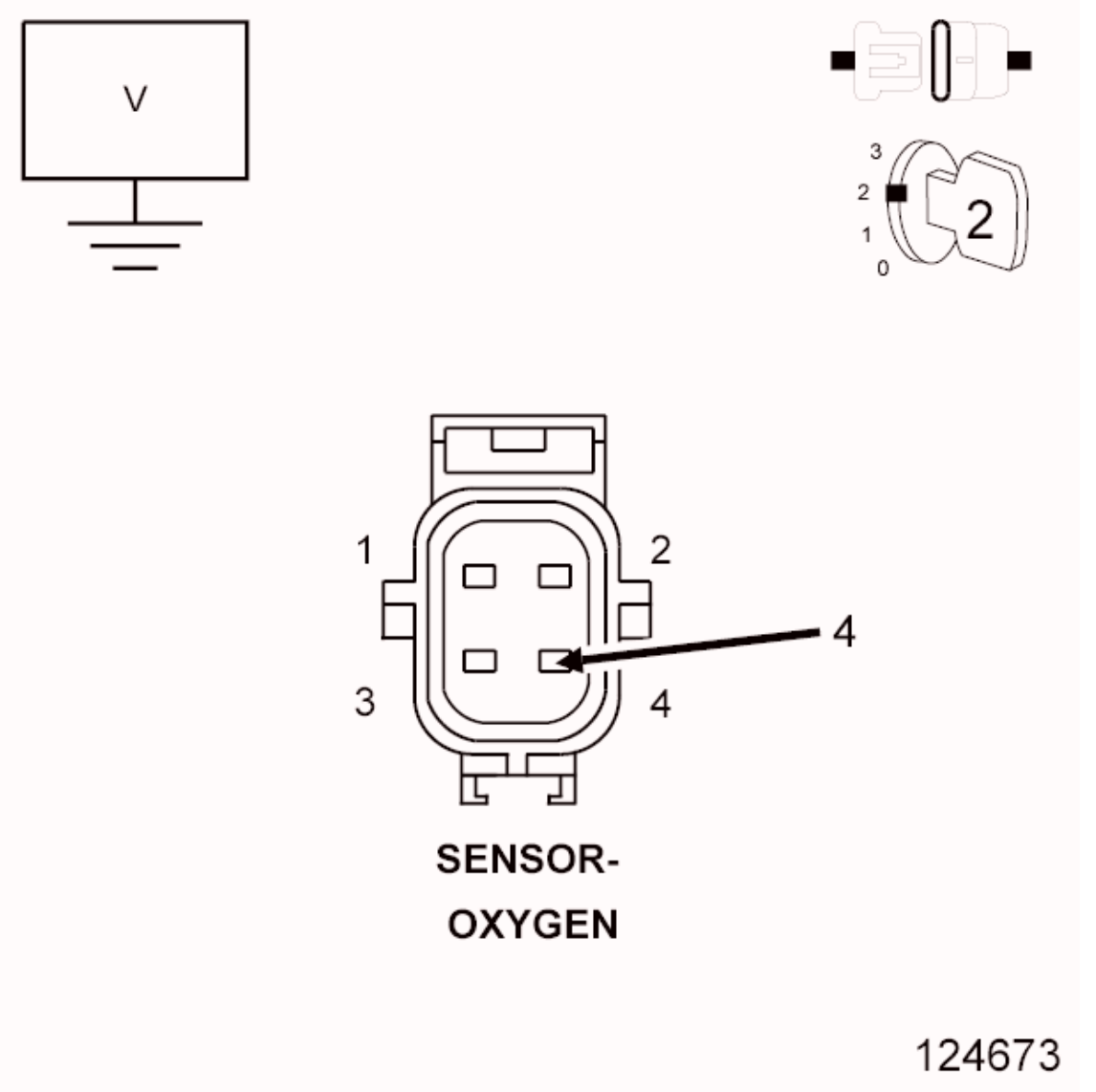

Fig. 162: Measuring Voltage Of O2 Sensor Signal Circuit In O2 Sensor Harness Connector
Courtesy of CHRYSLER GROUP, LLC

1. Turn the ignition off.
2. Disconnect the C1 and C2 PCM harness connectors.
3. Disconnect the 1/2 O2 Sensor harness connector.
4. Turn the ignition on.
5. Measure the voltage on the (K141) O2 Sensor 1/2 Signal circuit in the O2 Sensor harness connector.

NOTE: **Measure the voltage in reference to ground, not the (K904) O2 Return Downstream circuit.**

Is there any voltage present?

Yes

- Repair the short to voltage in the (K141) O2 Sensor 1/2 Signal circuit.
- Perform the POWERTRAIN VERIFICATION TEST. Refer to **POWERTRAIN VERIFICATION TEST** .

No

- Go To 3.

3. **(K904) O2 RETURN DOWNSTREAM CIRCUIT SHORTED TO VOLTAGE**

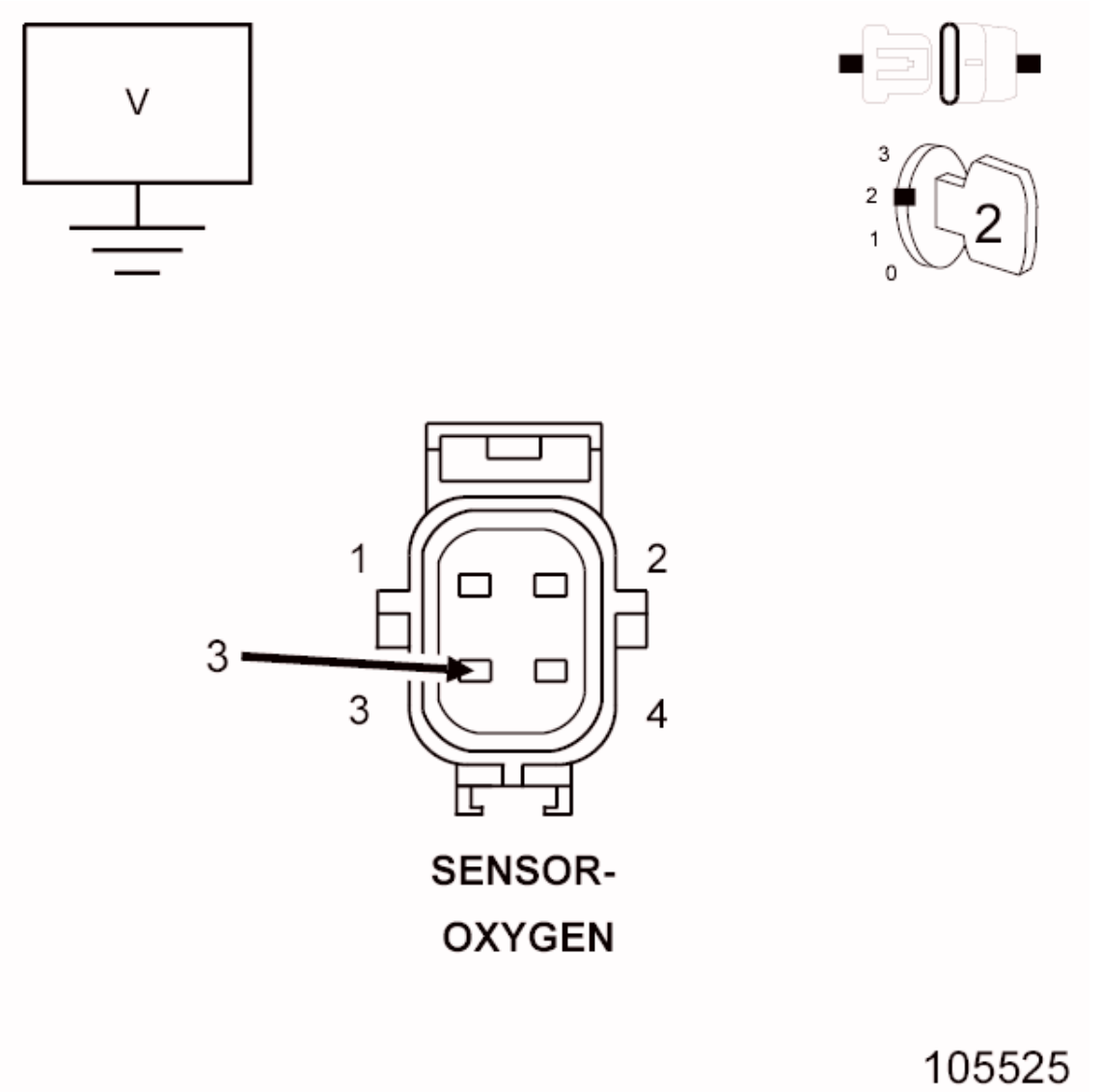

Fig. 163: Measuring Voltage On O2 Sensor Return Circuit In O2 Sensor Harness Connector
Courtesy of CHRYSLER GROUP, LLC

1. Measure the voltage on the (K904) O2 Return Downstream circuit in the O2 Sensor harness connector.

   Is there any voltage present?

   Yes

   - Repair the short to voltage in the (K904) O2 Return Downstream circuit.
   - Perform the POWERTRAIN VERIFICATION TEST. Refer to **POWERTRAIN VERIFICATION TEST** .

   No

- Go To 4.

4. **O2 SENSOR**

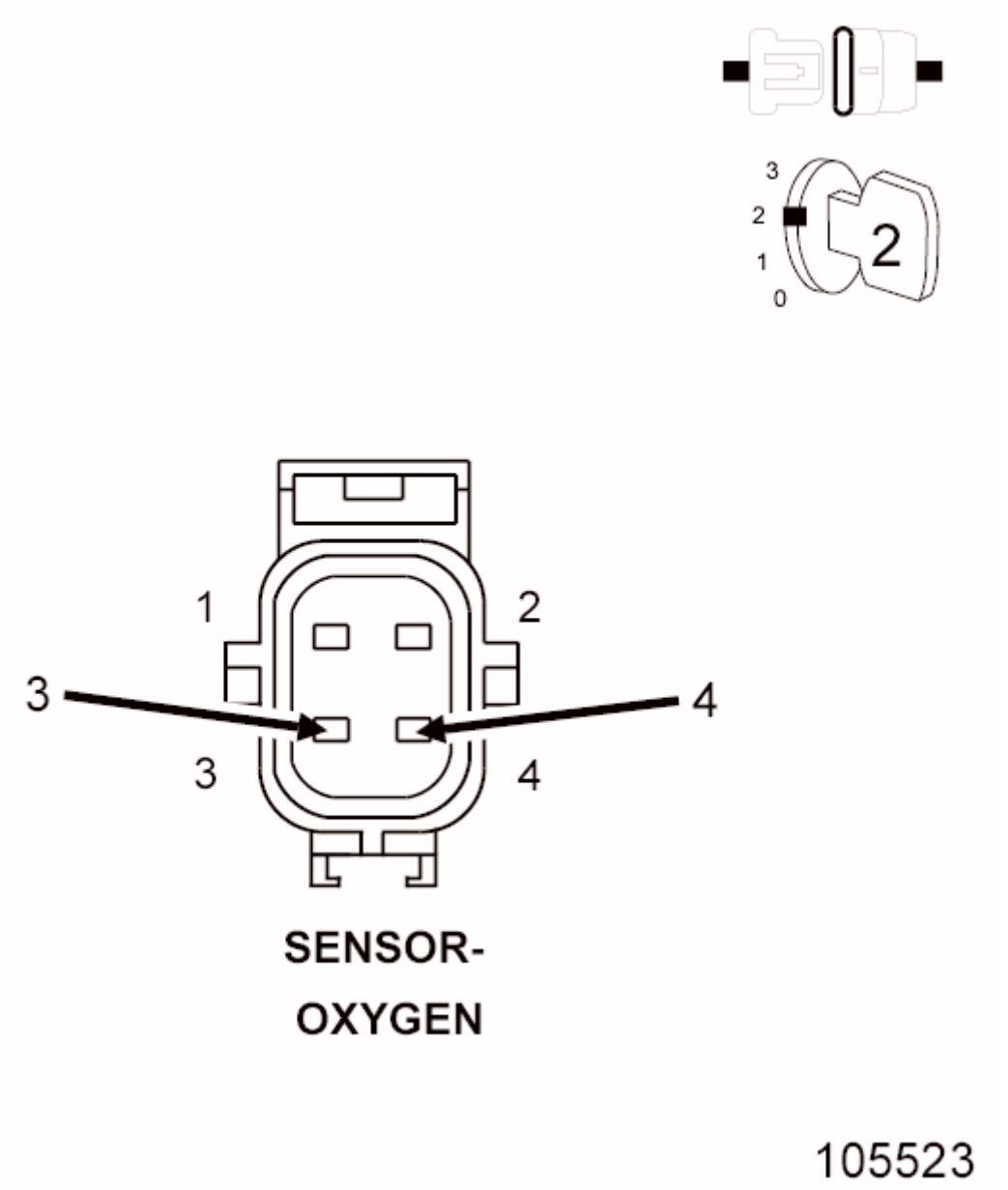

Fig. 164: O2 Sensor Harness Connector
Courtesy of CHRYSLER GROUP, LLC

1. Turn the ignition off.
2. Connect the C1 and C2 PCM harness connectors.
3. Ignition on, engine not running.
4. With a scan tool, monitor the 1/2 O2 Sensor voltage.
5. Connect a jumper wire between the (K141) O2 1/2 Signal circuit and the (K904) O2 Return Downstream circuit in the 1/2 O2 Sensor harness connector.

Is the voltage between 2.3 and 2.7 volts with the jumper wire installed?

Yes

- Verify that there is good pin to terminal contact in the O2 Sensor and Powertrain Control Module connectors. Replace the 1/2 O2 Sensor if no problems were found with the connectors.
- Perform the POWERTRAIN VERIFICATION TEST. Refer to **POWERTRAIN VERIFICATION TEST** .

No

- Go To 5.

NOTE: Remove the jumper wire before continuing.

5. **(K141) O2 1/2 SIGNAL CIRCUIT OPEN**

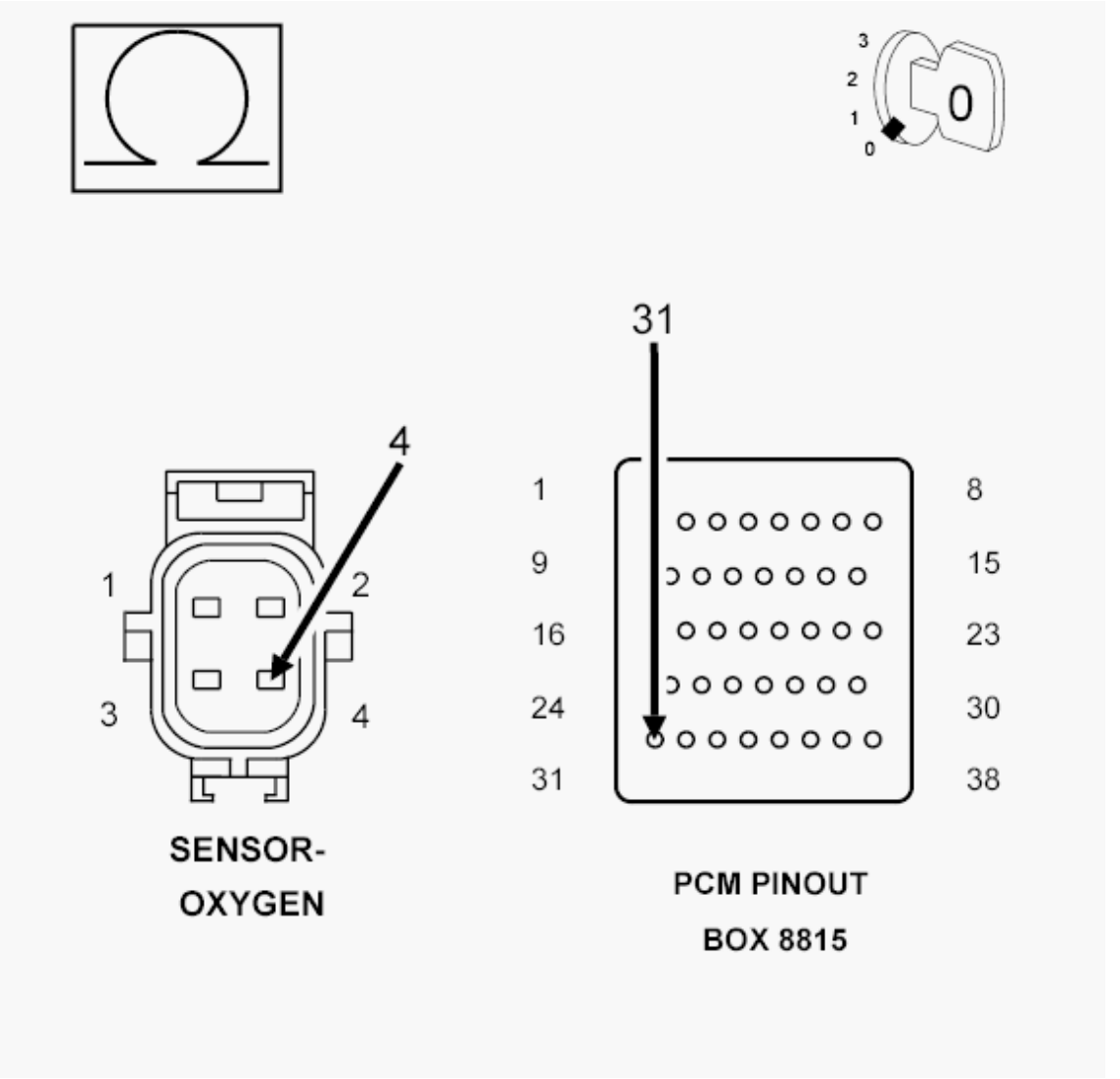

Fig. 165: Measuring Resistance Of (K141) O2 1/2 Signal Circuit From O2 Sensor Harness Connector To Appropriate Terminal Of PCM Pinout Box 8815
Courtesy of CHRYSLER GROUP, LLC

1. Turn the ignition off.
2. Disconnect the C1 and C2 PCM harness connectors.

CAUTION: Do not probe the PCM harness connectors. Probing the PCM harness connectors will damage the PCM terminals resulting in poor terminal to pin connection. Install the PCM Pinout Box (special tool #8815A, Kit, NGC, 38 Position) to perform diagnosis.

3. Measure the resistance of the (K141) O2 1/2 Signal circuit from the O2 Sensor harness connector to the appropriate terminal of PCM Pinout Box (special tool #8815A, Kit, NGC, 38 Position).

Is the resistance below 5.0 Ohms?

Yes

- Go To 6.

No

- Repair the open in the (K141) O2 1/2 Signal circuit.
- Perform the POWERTRAIN VERIFICATION TEST. Refer to **POWERTRAIN VERIFICATION TEST** .

6. **(K904) O2 RETURN DOWNSTREAM CIRCUIT OPEN**

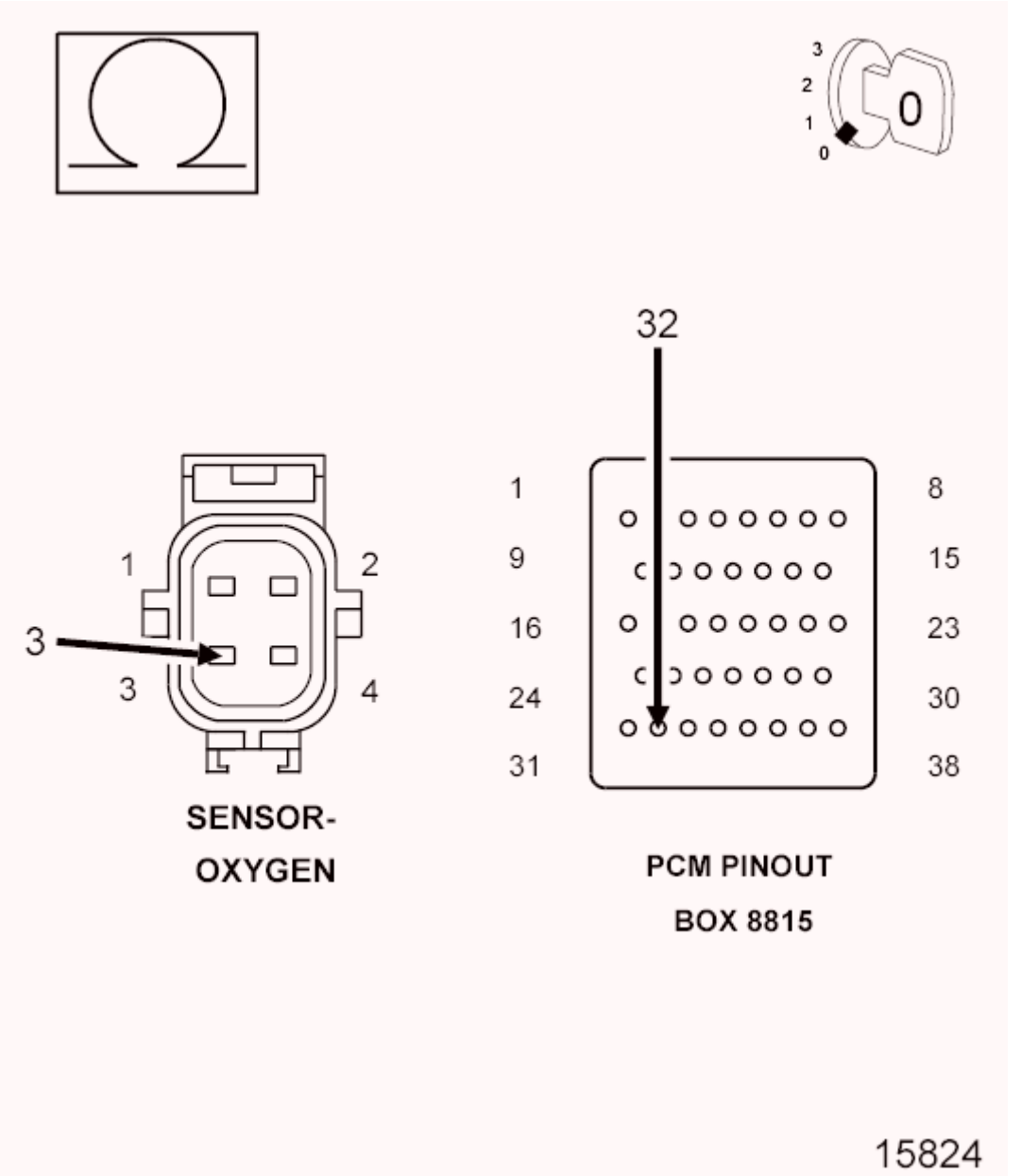

Fig. 166: Measuring Resistance Of (K904) O2 Return Downstream Circuit From O2 Sensor Harness Connector To Appropriate Terminal Of PCM Pinout Box 8815
Courtesy of CHRYSLER GROUP, LLC

1. Measure the resistance of the (K904) O2 Return Downstream circuit from the O2 Sensor harness connector to the appropriate terminal of PCM Pinout Box (special tool #8815A, Kit, NGC, 38 Position).

   Is the resistance below 5.0 Ohms?

   Yes

   - Go To 7.

No

- Repair the open in the (K904) O2 Return Downstream circuit.
- Perform the POWERTRAIN VERIFICATION TEST. Refer to **POWERTRAIN VERIFICATION TEST** .

7. **POWERTRAIN CONTROL MODULE (PCM)**
    1. Using the wiring diagram/schematic as a guide, inspect the wiring and connectors between the Oxygen Sensor 1/2 and the Powertrain Control Module (PCM).
    2. Look for any chafed, pierced, pinched, or partially broken wires.
    3. Look for broken, bent, pushed out or corroded terminals. Verify that there is good pin to terminal contact in the Sensor and Control Module connectors.
    4. Refer to any Technical Service Bulletins that may apply.

    Were there any problems found?

    Yes

    - Repair as necessary.
    - Perform the POWERTRAIN VERIFICATION TEST. Refer to **POWERTRAIN VERIFICATION TEST** .

    No

    - Replace and program the Powertrain Control Module per Service Information. Refer to **MODULE, POWERTRAIN CONTROL, REMOVAL** .
    - Perform the POWERTRAIN VERIFICATION TEST. Refer to **POWERTRAIN VERIFICATION TEST** .

P0139-O2 SENSOR 1/2 SLOW RESPONSE

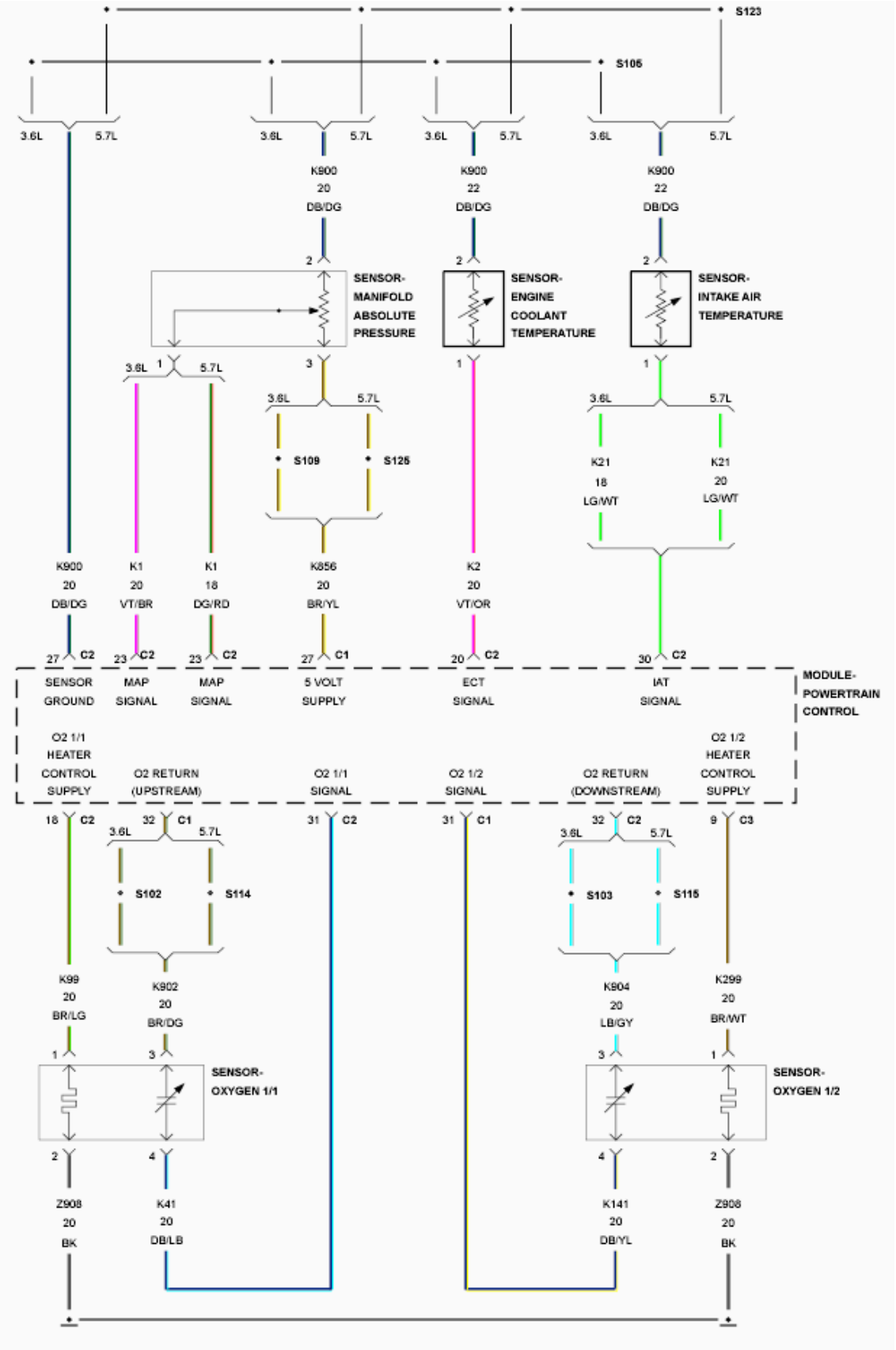
S123
S105
3.6L
5.7L
K900
20
DB/DG
K900
22
DB/DG
SENSOR-
MANIFOLD
ABSOLUTE
PRESSURE
SENSOR-
ENGINE
COOLANT
TEMPERATURE
SENSOR-
INTAKE AIR
TEMPERATURE
S109
S125
K21
18
LG/WT
K21
20
LG/WT
K900
20
DB/DG
K1
20
VT/BR
K1
18
DG/RD
K856
20
BR/YL
K2
20
VT/OR
SENSOR
GROUND
MAP
SIGNAL
5 VOLT
SUPPLY
ECT
SIGNAL
IAT
SIGNAL
MODULE-
POWERTRAIN
CONTROL
O2 1/1
HEATER
CONTROL
SUPPLY
O2 RETURN
(UPSTREAM)
O2 1/1
SIGNAL
O2 1/2
SIGNAL
O2 RETURN
(DOWNSTREAM)
O2 1/2
HEATER
CONTROL
SUPPLY
S102
S114
S103
S115
K99
20
BR/LG
K902
20
BR/DG
K904
20
LB/GY
K299
20
BR/WT
SENSOR-
OXYGEN 1/1
SENSOR-
OXYGEN 1/2
Z908
20
BK
K41
20
DB/LB
K141
20
DB/YL
Z908
20
BK

Fig. 167: O2 Sensor Circuit Schematic
Courtesy of CHRYSLER GROUP, LLC

For a complete wiring diagram, **refer to appropriate SYSTEM WIRING DIAGRAMS article** .

THEORY OF OPERATION

The downstream O2 Sensor is located in the exhaust path behind the catalytic converter, is monitored for proper response to assure optimum catalytic converter efficiency. The downstream O2 response monitor is intended to diagnose a downstream O2 sensor that is not moving or stuck in a voltage window and to insure accurate information for catalyst monitor diagnosis.

WHEN MONITORED:

With the engine running, vehicle speed above 96 kph (60 mph), throttle open for a minimum of 120 seconds, ECT greater than 70° C (158° F), catalytic converter temperature greater than 600° C (1112° F) and downstream oxygen sensor in a rich state. During a decel fuel shutoff event, the downstream oxygen sensor should switch from rich to lean within a specific time.

SET CONDITION:

The Powertrain Control Module (PCM) monitors the downstream O2 Sensor. If the PCM does not detect a rich to lean switch within a specific time during a decel fuel shutoff event, the monitor will fail. One trip fault. Three good trips to turn off the MIL.

POSSIBLE CAUSES

Possible Causes
EXHAUST LEAK
(K141) O2 1/2 SIGNAL CIRCUIT
(K904) O2 RETURN DOWNSTREAM CIRCUIT
1/2 O2 SENSOR

Always perform the Pre-Diagnostic Troubleshooting procedure before proceeding. Refer to PRE-DIAGNOSTIC TROUBLESHOOTING PROCEDURE .

DIAGNOSTIC TEST

1. **ACTIVE DIAGNOSTIC TROUBLE CODE (DTC)**

NOTE: **Check for contaminants that may have damaged the O2 Sensor: contaminated fuel, unapproved silicone, oil and coolant.**

NOTE: **After the repairs have been made, verify proper O2 Sensor operation. If all the O2 Sensor voltage readings have not returned to normal, follow the diagnostic procedure for the remaining O2 Sensors.**

1. Start the engine.
2. Allow the engine to reach normal operating temperature.

WARNING: When the engine is operating, do not stand in direct line with the fan. Do not put your hands near the pulleys, belts or fan. Do not wear loose clothing. Failure to follow these instructions may result in possible serious or fatal injury.

3. With the scan tool, select View DTCs.

NOTE: It may be necessary to drive the vehicle to meet the conditions to set this DTC, try to repeat the conditions in which the fault originally set by reviewing the Freeze Frame data.

Is the DTC Active or Pending at this time?

Yes

- Go To 2.

No

- Perform the INTERMITTENT CONDITION diagnostic procedure. Refer to **INTERMITTENT CONDITION** .

2. **CHECKING THE EXHAUST SYSTEM FOR LEAKS**
   1. Turn the ignition off.
   2. Raise the vehicle in accordance with the Service Information.

WARNING: The normal operating temperature of the exhaust system is very high. Never work around or attempt to service any part of the exhaust system until it has cooled. Special care should be taken when working near the catalytic converter. The temperature of the converter rises to a high level after a short period of engine operating time.

   3. Connect Exhaust Cone (special tool #8404-EC, Exhaust Cone) or (special tool #8404-EC, Exhaust Cone) to Air Pressure Regulator (with hose) W-18-MIL-1146AS.

CAUTION: The air pressure must not exceed 27.6 kPa (4 psi), otherwise engine damage can occur.

   4. Attach shop air to the air pressure regulator.
   5. Adjust the Air Pressure Regulator to 27.6 kPa (4 psi).
   6. Insert the exhaust cone into the vehicle tail pipe.

7. If the vehicle is equipped with dual exhaust. Use the (special tool #8404-ECT, Exhaust Cone, Truck) with equipped attached plug, plug one side of the dual exhaust pipe. Pressurize the other as described above.
8. Apply Mopar® Air Leak Detector PN# 05191804AA (or an equivalent leak finder liquid) to the following areas:
   - All welded joints from the exhaust manifold to 152.4 mm (6 inches) behind the downstream O2 sensor
   - O2 sensor seal points
   - O2 sensor boss welds
   - Flange/joint connection(s)
   - Exhaust manifold to cylinder head connection(s)
   - EGR solenoid gasket base and tube seal points (if equipped)
9. Watch for the liquid/soapy water to bubble.
10. Use the following definitions to help determine if system or component repair/replacement is necessary:

    Type 1 Leak is defined as a leak where very small foam like bubbles 1 mm (0.04 of an inch) or less appear.

    Any Type 1 or greater leaks found in welded joints, O2 sensor seal points or O2 sensor boss welds must be repaired or the component must be replaced.

    Type 2 Leak is defined as a leak where larger bubbles pea size, 8 mm (0.3 of an inch) or greater appear.

    Any Type 2 or greater leaks found in flange or joint connections, exhaust manifold to cylinder head connections or EGR gasket and tube seal points must be repaired or the components must be replaced

Leak Location	Repair required if results at 27.6 kPa (4 psi) reveal bubble size:
Welded joints	Type 1, 1 mm (0.04 of an inch) or greater
O2 Sensor seal points	Type 1, 1 mm (0.04 of an inch) or greater
O2 Sensor boss welds	Type 1, 1 mm (0.04 of an inch) or greater
Flange / joint connections	Type 2, 8 mm (0.3 of an inch) or greater
Exhaust Manifold to cylinder head connections	Type 2, 8 mm (0.3 of an inch) or greater
EGR gasket and tube seal points	Type 2, 8 mm (0.3 of an inch) or greater

11. If a leak is found that matches the above definition, repair or replace the component as necessary.
12. Once the repair is complete, repeat the procedure to verify that all leaks have been repaired.

    Were any exhaust leaks found?

Yes

- Repair or replace the leaking exhaust parts as necessary.
- Perform the POWERTRAIN VERIFICATION TEST. Refer to **POWERTRAIN VERIFICATION TEST** .

No

- Go To 3.

3. **(K141) O2 1/2 SIGNAL CIRCUIT**

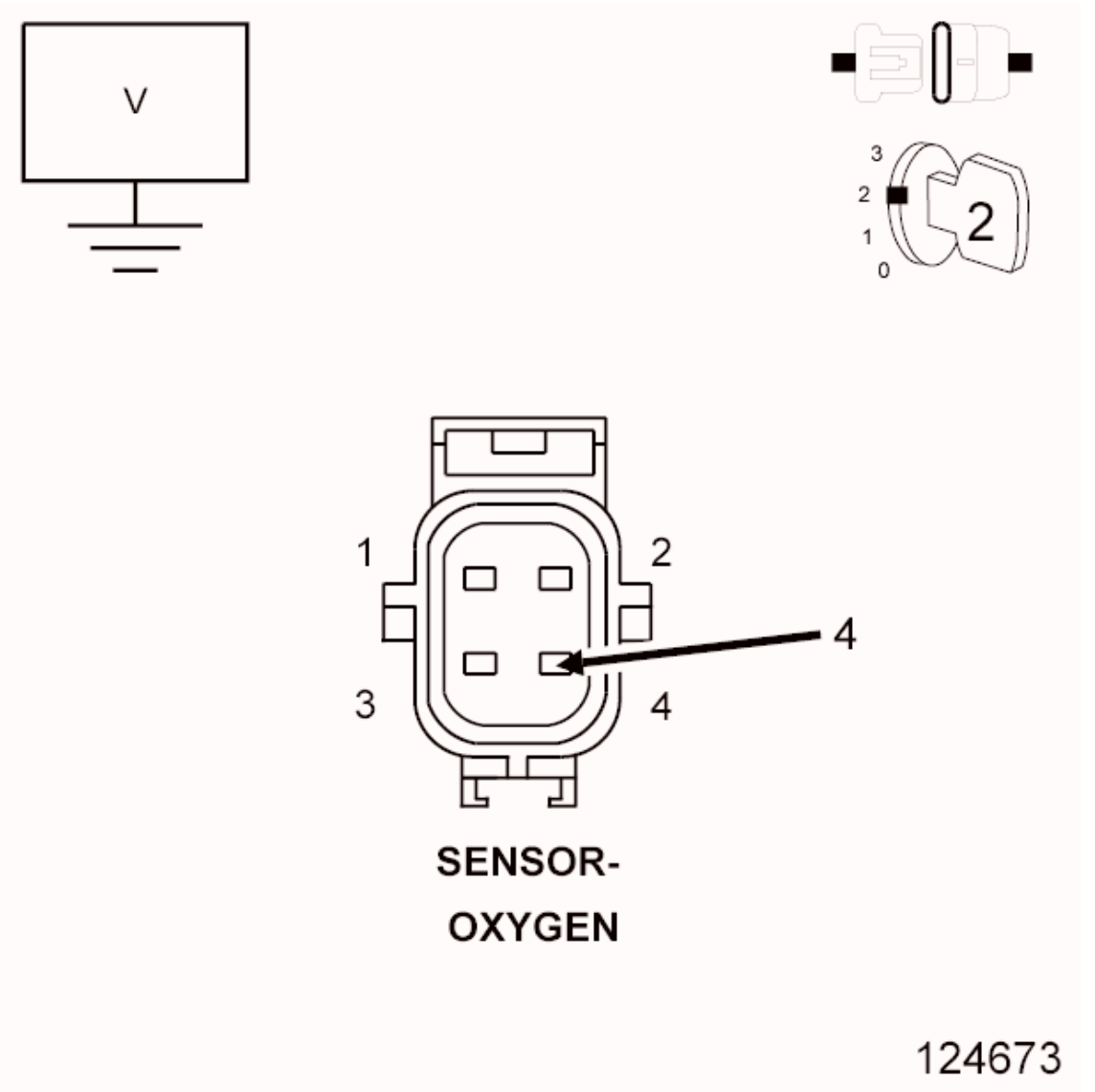

Fig. 168: Measuring Voltage Of O2 Sensor Signal Circuit In O2 Sensor Harness Connector
Courtesy of CHRYSLER GROUP, LLC

1. Turn the ignition off

2. Disconnect the 1/2 O2 Sensor harness connector.
3. Ignition on, engine not running.
4. Measure the voltage on the (K141) O2 1/2 Signal circuit in the O2 Sensor harness connector.

   Is the voltage between 4.1 and 5.0 Volts?

   Yes

   - Go To 4.

   No

   - Check the (K141) O2 1/2 Signal circuit for a short to ground, open or short to voltage. If OK, replace and program the Powertrain Control Module in accordance with the Service Information. Refer to **MODULE, POWERTRAIN CONTROL, REMOVAL** .
   - Perform the POWERTRAIN VERIFICATION TEST. Refer to **POWERTRAIN VERIFICATION TEST** .

4. **(K904) O2 RETURN DOWNSTREAM CIRCUIT**

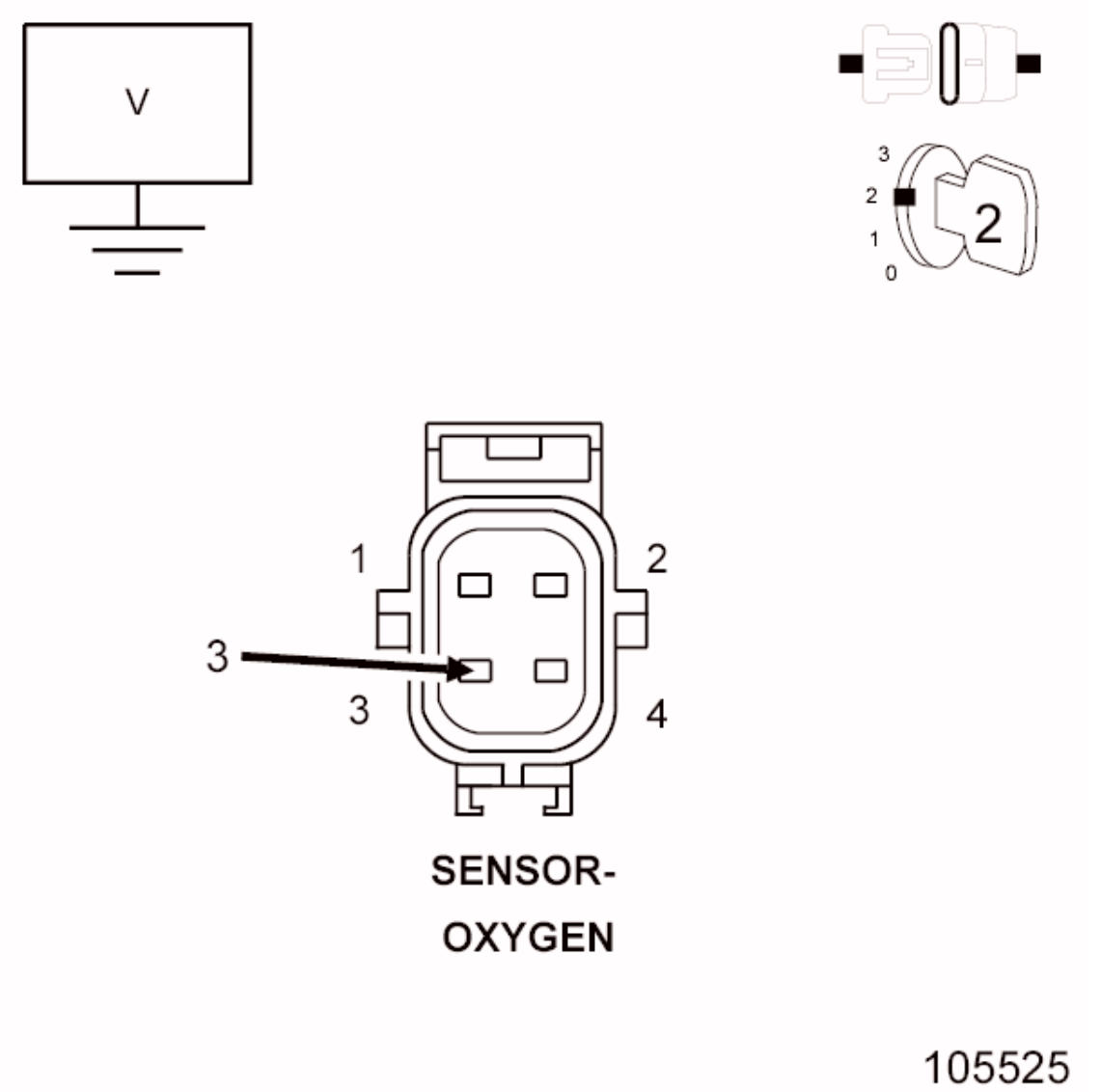

Fig. 169: Measuring Voltage On O2 Sensor Return Circuit In O2 Sensor Harness Connector
Courtesy of CHRYSLER GROUP, LLC

1. Measure the voltage on the (K904) O2 Return Downstream circuit in the 1/2 O2 Sensor harness connector.

   Is the voltage at 2.5 Volts?

   Yes

   - Go To 5.

   No

   - Check the (K904) O2 Return Downstream circuit for a short to ground, open or short to voltage. If OK, replace and program the Powertrain Control Module in accordance with the

Service Information. Refer to **MODULE, POWERTRAIN CONTROL, REMOVAL** .

- Perform the POWERTRAIN VERIFICATION TEST. Refer to **POWERTRAIN VERIFICATION TEST** .

5. **O2 SENSOR**

NOTE: Check for signs of contaminants that may have damaged the O2 Sensor, such as contaminated fuel, unapproved silicone, oil and coolant.

1. Using the wiring diagram/schematic as a guide, inspect the wiring and connectors between the 1/2 Oxygen Sensor and the Powertrain Control Module (PCM).
   - Look for any chafed, pierced, pinched or partially broken wires.
   - Look for broken, bent, pushed out or corroded terminals.
   - Verify that there is good pin to terminal contact in the 1/2 O2 Sensor and Powertrain Control Module connectors.
   - Perform any Technical Service Bulletins that may apply.

   Were any problems found?

   Yes

   - Repair as necessary.
   - Perform the POWERTRAIN VERIFICATION TEST. Refer to **POWERTRAIN VERIFICATION TEST** .

   No

   - Replace the 1/2 Oxygen Sensor in accordance with the Service Information. Refer to **SENSOR, OXYGEN, REMOVAL** .
   - Perform the POWERTRAIN VERIFICATION TEST. Refer to **POWERTRAIN VERIFICATION TEST** .

P0140-O2 SENSOR 1/2 NO ACTIVITY DETECTED

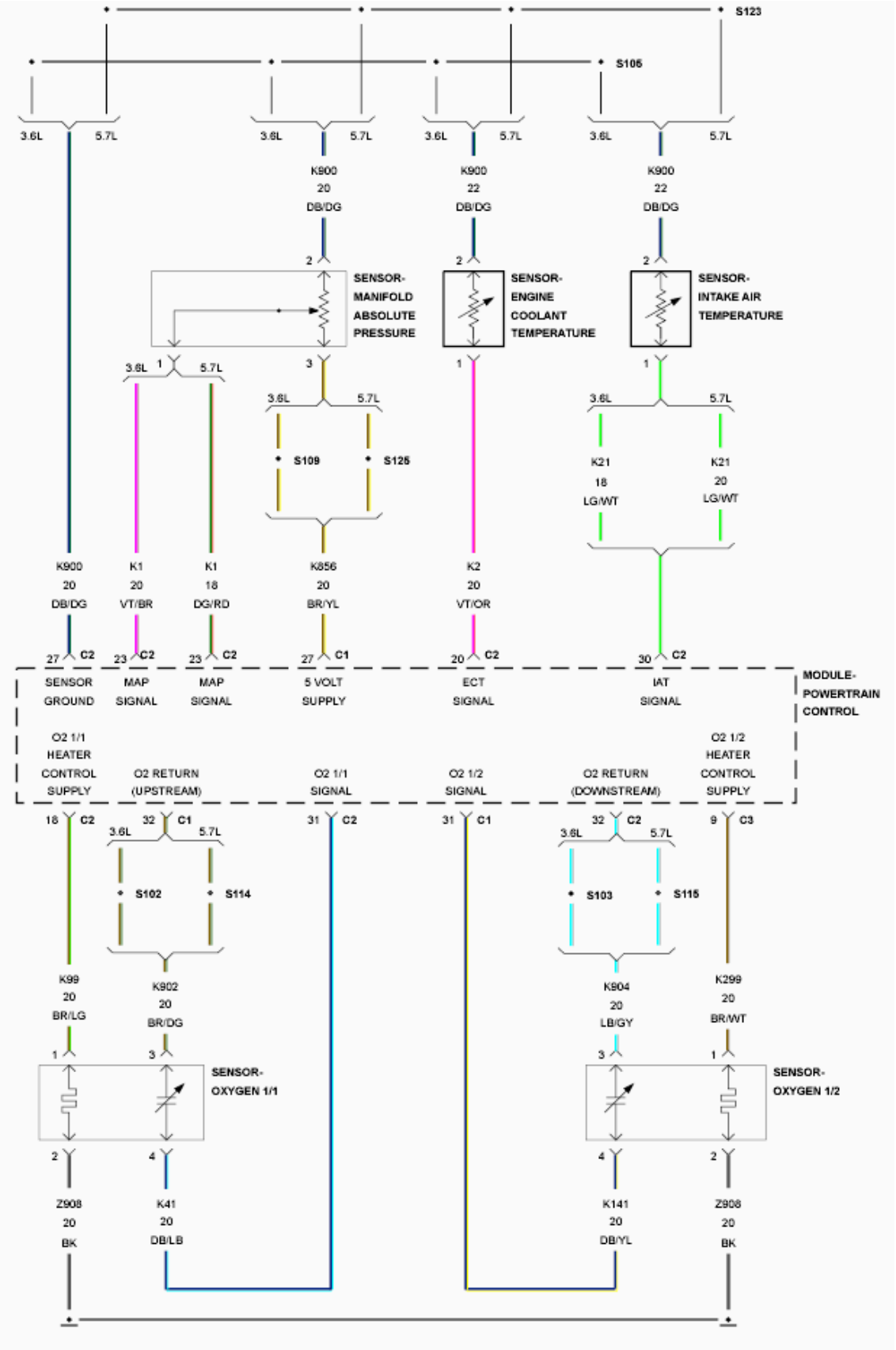
S123
S105
3.6L
5.7L
K900
20
DB/DG
K900
22
DB/DG
SENSOR-
MANIFOLD
ABSOLUTE
PRESSURE
SENSOR-
ENGINE
COOLANT
TEMPERATURE
SENSOR-
INTAKE AIR
TEMPERATURE
S109
S125
K21
18
LG/WT
K21
20
LG/WT
K900
20
DB/DG
K1
20
VT/BR
K1
18
DG/RD
K856
20
BR/YL
K2
20
VT/OR
SENSOR
GROUND
MAP
SIGNAL
5 VOLT
SUPPLY
ECT
SIGNAL
IAT
SIGNAL
MODULE-
POWERTRAIN
CONTROL
O2 1/1
HEATER
CONTROL
SUPPLY
O2 RETURN
(UPSTREAM)
O2 1/1
SIGNAL
O2 1/2
SIGNAL
O2 RETURN
(DOWNSTREAM)
O2 1/2
HEATER
CONTROL
SUPPLY
S102
S114
S103
S115
K99
20
BR/LG
K902
20
BR/DG
K904
20
LB/GY
K299
20
BR/WT
SENSOR-
OXYGEN 1/1
SENSOR-
OXYGEN 1/2
Z908
20
BK
K41
20
DB/LB
K141
20
DB/YL
Z908
20
BK

Fig. 170: O2 Sensor Circuit Schematic
Courtesy of CHRYSLER GROUP, LLC

For a complete wiring diagram, **refer to appropriate SYSTEM WIRING DIAGRAMS article** .

THEORY OF OPERATION

The downstream O2 Sensor is located in the exhaust path behind the catalytic converter, is monitored for proper response to assure optimum catalytic converter efficiency. The downstream O2 response monitor is intended to diagnose a downstream O2 sensor that is not moving or stuck in a voltage window and to insure accurate information for catalyst monitor diagnosis.

WHEN MONITORED:

With the engine running, vehicle speed between 32 and 88 kph (20 and 55 mph), throttle open for a minimum of 120 seconds, ECT greater than 70° C (158° F), Catalytic Converter Temperature greater than 600° C (1112° F) and EVAP Purge active.

SET CONDITION:

The Powertrain Control Module (PCM) detects that the oxygen sensor signal switches from lean to rich less than 16 times within 20 seconds during monitoring. Two Trip Fault. Three good trips to turn off the MIL.

POSSIBLE CAUSES

Possible Causes
EXHAUST LEAK
(K141) O2 1/2 SIGNAL CIRCUIT
(K904) O2 RETURN DOWNSTREAM CIRCUIT
1/2 O2 SENSOR

Always perform the Pre-Diagnostic Troubleshooting procedure before proceeding. Refer to PRE-DIAGNOSTIC TROUBLESHOOTING PROCEDURE .

DIAGNOSTIC TEST

1. **ACTIVE DTC**

NOTE: **After the repairs have been made, verify proper O2 Sensor operation. If all the O2 Sensor voltage readings have not returned to normal, follow the diagnostic procedure for the remaining O2 Sensors.**

NOTE: **Check for contaminants that may have damaged the O2 Sensor: contaminated fuel, unapproved silicone, oil and coolant.**

1. Start the engine.

2. Allow the engine to reach normal operating temperature.
3. With the scan tool, select View DTCs.

NOTE: **It may be necessary to drive the vehicle to meet the conditions to set this DTC, try to repeat the conditions in which the fault originally set by reviewing the Freeze Frame data.**

Is the DTC Active or Pending at this time?

Yes

- Go To 2.

No

- Perform the INTERMITTENT CONDITION diagnostic procedure. Refer to **INTERMITTENT CONDITION** .

2. **CHECKING THE EXHAUST SYSTEM FOR LEAKS**
   1. Turn the ignition off.
   2. Raise the vehicle in accordance with the Service Information.

WARNING: **The normal operating temperature of the exhaust system is very high. Never work around or attempt to service any part of the exhaust system until it has cooled. Special care should be taken when working near the catalytic converter. The temperature of the converter rises to a high level after a short period of engine operating time.**

   3. Connect Exhaust Cone (special tool #8404-EC, Exhaust Cone) or (special tool #8404-EC, Exhaust Cone) to Air Pressure Regulator (with hose) W-18-MIL-1146AS.

CAUTION: **The air pressure must not exceed 27.6 kPa (4 psi), otherwise engine damage can occur.**

   4. Attach shop air to the air pressure regulator.
   5. Adjust the Air Pressure Regulator to 27.6 kPa (4 psi).
   6. Insert the exhaust cone into the vehicle tail pipe.
   7. If the vehicle is equipped with dual exhaust. Use the (special tool #8404-ECT, Exhaust Cone, Truck) with equipped attached plug, plug one side of the dual exhaust pipe. Pressurize the other as described above.
   8. Apply Mopar® Air Leak Detector PN# 05191804AA (or an equivalent leak finder liquid) to the following areas:
      - All welded joints from the exhaust manifold to 152.4 mm (6 inches) behind the downstream

O2 sensor
- O2 sensor seal points
- O2 sensor boss welds
- Flange/joint connection(s)
- Exhaust manifold to cylinder head connection(s)
- EGR solenoid gasket base and tube seal points (if equipped)

9. Watch for the liquid/soapy water to bubble.
10. Use the following definitions to help determine if system or component repair/replacement is necessary:
    - **Type 1 Leak** is defined as a leak where very small foam like bubbles 1 mm (0.04 of an inch) or less appear. Any Type 1 or greater leaks found in welded joints, O2 sensor seal points or O2 sensor boss welds must be repaired or the component must be replaced.
    - **Type 2 Leak** is defined as a leak where larger bubbles pea size, 8 mm (0.3 of an inch) or greater appear. Any Type 2 or greater leaks found in flange or joint connections, exhaust manifold to cylinder head connections or EGR gasket and tube seal points must be repaired or the components must be replaced.

Leak Location	Repair required if results at 27.6 kPa (4 psi) reveal bubble size:
Welded joints	Type 1, 1 mm (0.04 of an inch) or greater
O2 Sensor seal points	Type 1, 1 mm (0.04 of an inch) or greater
O2 Sensor boss welds	Type 1, 1 mm (0.04 of an inch) or greater
Flange / joint connections	Type 2, 8 mm (0.3 of an inch) or greater
Exhaust Manifold to cylinder head connections	Type 2, 8 mm (0.3 of an inch) or greater
EGR gasket and tube seal points	Type 2, 8 mm (0.3 of an inch) or greater

11. If a leak is found that matches the above definition, repair or replace the component as necessary.
12. Once the repair is complete, repeat the procedure to verify that all leaks have been repaired.

Were any exhaust leaks found?

Yes

- Repair or replace the leaking exhaust parts as necessary.
- Perform the POWERTRAIN VERIFICATION TEST. Refer to **POWERTRAIN VERIFICATION TEST** .

No

- Go To 3.

3. **(K141) O2 1/2 SIGNAL CIRCUIT**

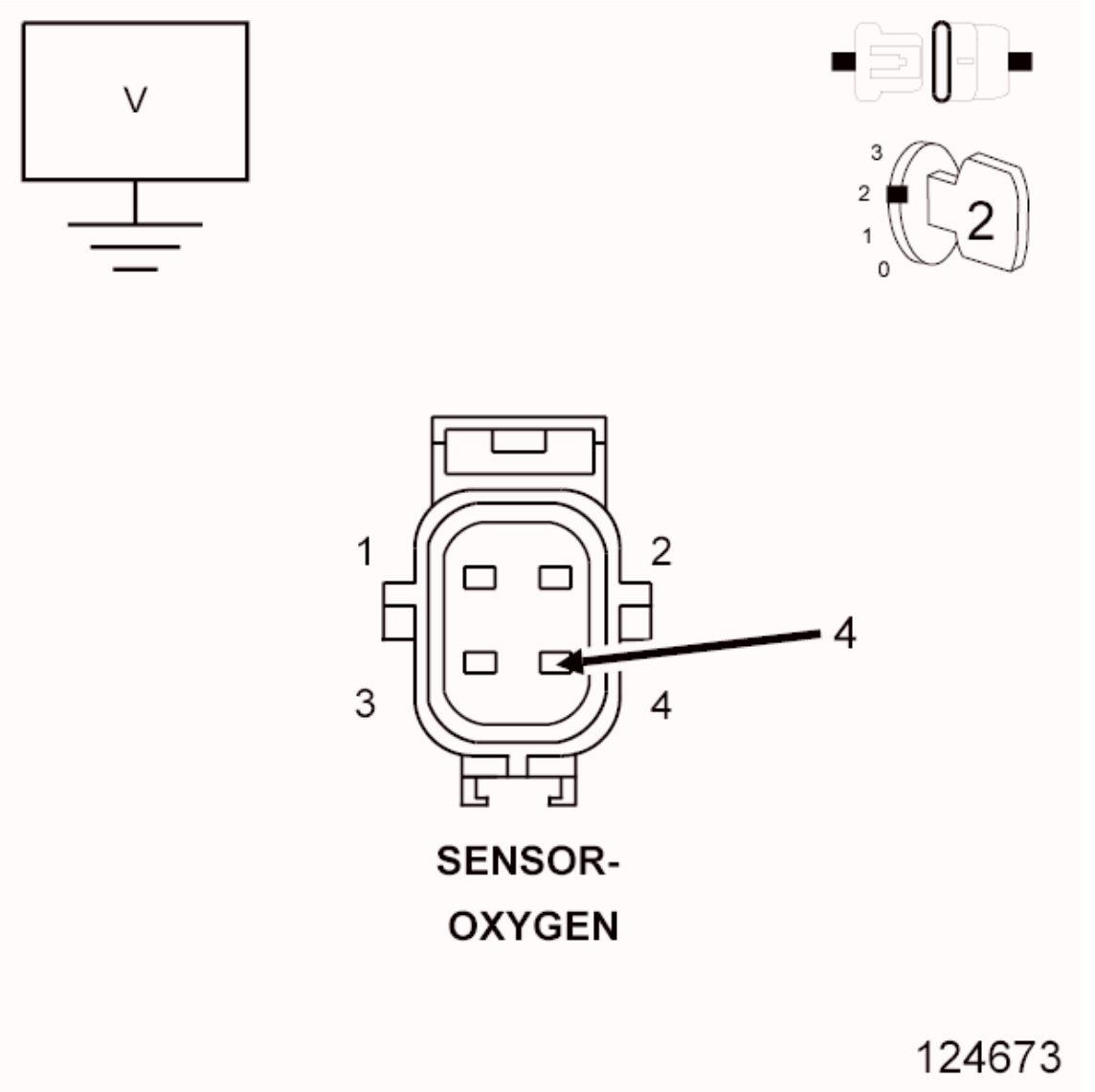

Fig. 171: Measuring Voltage Of O2 Sensor Signal Circuit In O2 Sensor Harness Connector
Courtesy of CHRYSLER GROUP, LLC

1. Turn the ignition off
2. Disconnect the 1/2 O2 Sensor harness connector.
3. Ignition on, engine not running.
4. Measure the voltage on the (K141) O2 1/2 Signal circuit in the O2 Sensor harness connector.

   Is the voltage between 4.1 and 5.0 Volts?

   Yes

   - Go To 4.

   No

- Check the (K141) O2 1/2 Signal circuit for a short to ground, open or short to voltage. If OK, replace and program the PCM in accordance with the Service Information. Refer to **MODULE, POWERTRAIN CONTROL, REMOVAL** .
- Perform the POWERTRAIN VERIFICATION TEST. Refer to **POWERTRAIN VERIFICATION TEST** .

4. **(K904) O2 RETURN DOWNSTREAM CIRCUIT**

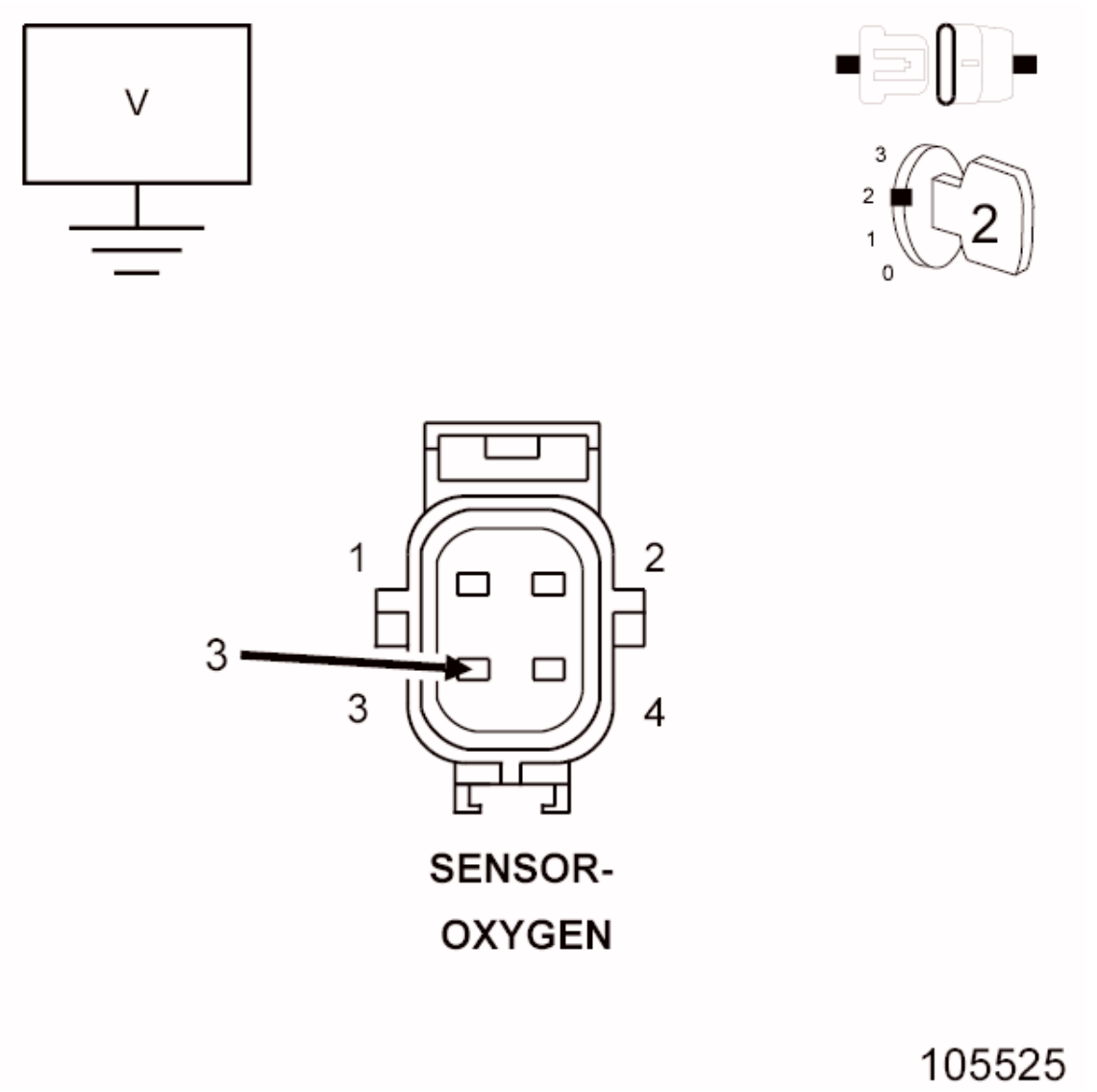

Fig. 172: Measuring Voltage On O2 Sensor Return Circuit In O2 Sensor Harness Connector
Courtesy of CHRYSLER GROUP, LLC

1. Measure the voltage on the (K904) O2 Return Downstream circuit in the 1/2 O2 Sensor harness connector.

   Is the voltage at 2.5 Volts?

Yes

- Go To 5.

No

- Check the (K904) O2 Return Downstream circuit for a short to ground, open or short to voltage. If OK, replace and program the PCM in accordance with the Service Information. Refer to **MODULE, POWERTRAIN CONTROL, REMOVAL** .
- Perform the POWERTRAIN VERIFICATION TEST. Refer to **POWERTRAIN VERIFICATION TEST** .

5. **OXYGEN SENSOR**

NOTE: Check for signs of contaminants that may have damaged the O2 Sensor, such as contaminated fuel, unapproved silicone, oil and coolant.

1. Using the wiring diagram/schematic as a guide, inspect the wiring and connectors between the 1/2 Oxygen Sensor and the Powertrain Control Module (PCM).
2. Look for any chafed, pierced, pinched or partially broken wires.
3. Look for broken, bent, pushed out or corroded terminals.
4. Perform any Technical Service Bulletins that may apply.

Were any problems found?

Yes

- Repair as necessary.
- Perform the POWERTRAIN VERIFICATION TEST. Refer to **POWERTRAIN VERIFICATION TEST** .

No

- Replace the 1/2 Oxygen Sensor in accordance with the Service Information. Refer to **SENSOR, OXYGEN, REMOVAL** .
- Perform the POWERTRAIN VERIFICATION TEST. Refer to **POWERTRAIN VERIFICATION TEST** .

P0141-O2 SENSOR 1/2 HEATER PERFORMANCE

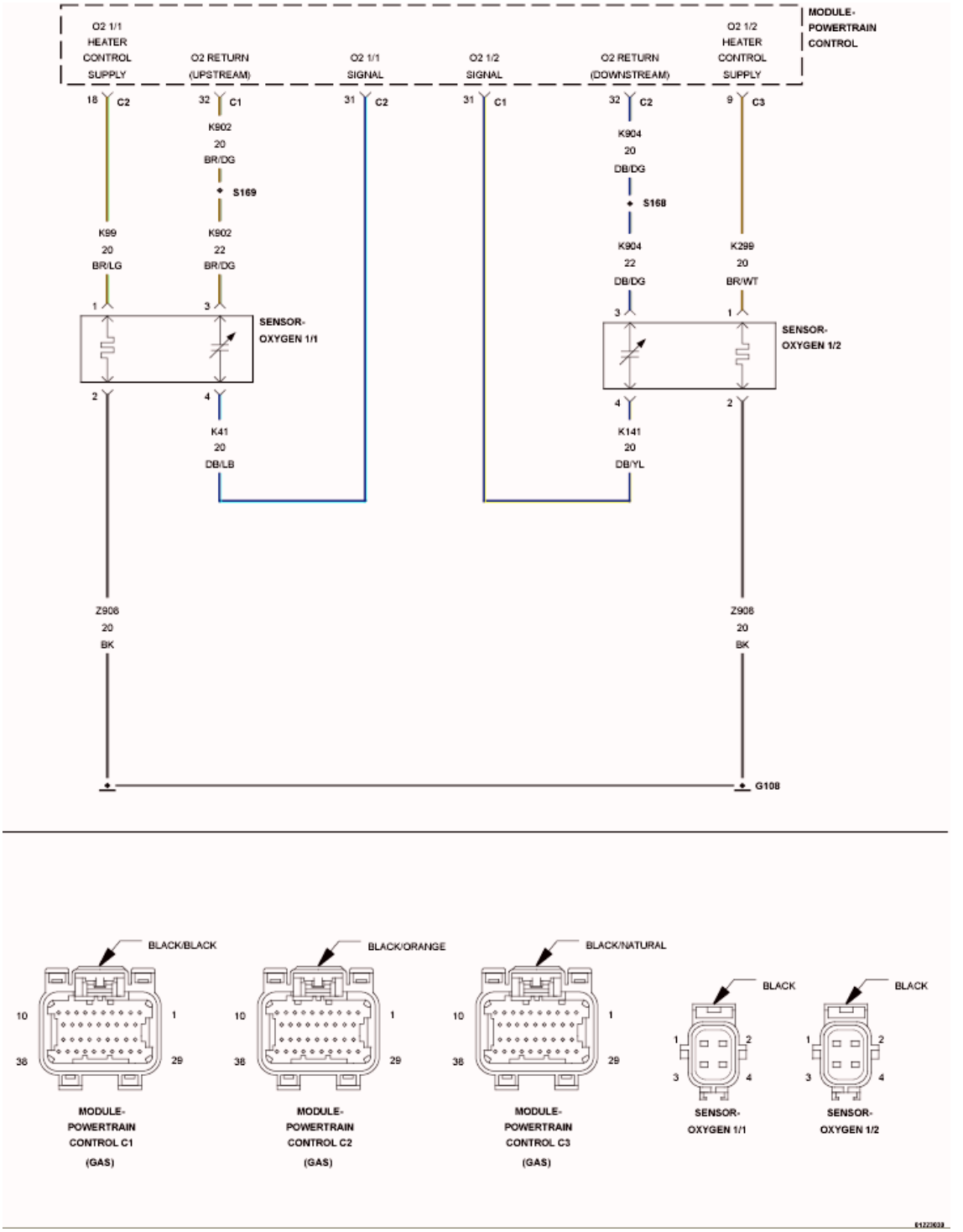

Fig. 173: O2 Sensor Circuit Schematic
Courtesy of CHRYSLER GROUP, LLC

For a complete wiring diagram, **refer to appropriate SYSTEM WIRING DIAGRAMS article** .

THEORY OF OPERATION

This diagnostic provides a continuous check of the O2 heater circuit during operation. The heater circuit is momentarily disabled to allow a resistance measurement to be taken to infer heater temperature. The current delivery to the heater is duty cycled to maintain a specific target temperature. The error from the target temperature is continuously monitored to assess heater performance.

WHEN MONITORED:

Continuously during O2 sensor heater operation with battery voltage between 10.4 and 15.75 Volts and no O2 sensor circuit DTCs present.

SET CONDITION:

The Powertrain Control Module (PCM) detects no temperature change in the O2 sensor heater element when the heater circuit is active. The heater temperature is obtained by measuring the heater resistance and calculating the heater temperature. Two trip fault. Three good trips to turn off the MIL.

POSSIBLE CAUSES

Possible Causes
(K299) O2 1/2 HEATER CONTROL CIRCUIT OPEN
(Z908) O2 HEATER GROUND CIRCUIT OPEN
1/2 O2 SENSOR
POWERTRAIN CONTROL MODULE (PCM)

Always perform the Pre-Diagnostic Troubleshooting procedure before proceeding. Refer to PRE-DIAGNOSTIC TROUBLESHOOTING PROCEDURE .

DIAGNOSTIC TEST

1. **O2 SENSOR HEATER OPERATION**
    1. Turn the ignition off.

       NOTE: Wait a minimum of eight minutes to allow the O2 Sensor to cool down before continuing the test. Allow the O2 Sensor voltage to stabilize between 4.6 and 5.0 Volts.

    2. Ignition on, engine not running.
    3. With the scan tool, actuate the O2 Heater Test.
    4. With the scan tool, monitor 1/2 O2 Sensor voltage for at least two minutes.

       Does the voltage stay above 4.5 Volts?

       Yes

       - Go To 2.

No

- Perform the INTERMITTENT CONDITION diagnostic procedure. Refer to **INTERMITTENT CONDITION** .

2. **O2 SENSOR HEATER ELEMENT**
   1. Turn the ignition off.

      NOTE: Allow the O2 sensor to cool down to room temperature.

   2. Disconnect the O2 Sensor harness connector.
   3. Measure the resistance of the O2 Heater Element across the O2 Sensor connector between the O2 Heater Control terminal and the Heater ground terminal.

      NOTE: O2 Heater Element resistance values should be measured at 21.1° C (70° F). The resistance value will vary with different temperature values.

      Is the resistance of the O2 Sensor Heater Element between 2.0 and 30.0 Ohms?

      Yes

      - Go To 3.

      No

      - Replace the O2 Sensor.
      - Perform the POWERTRAIN VERIFICATION TEST. Refer to **POWERTRAIN VERIFICATION TEST** .

3. **(K299) O2 1/2 HEATER CONTROL CIRCUIT OPEN**

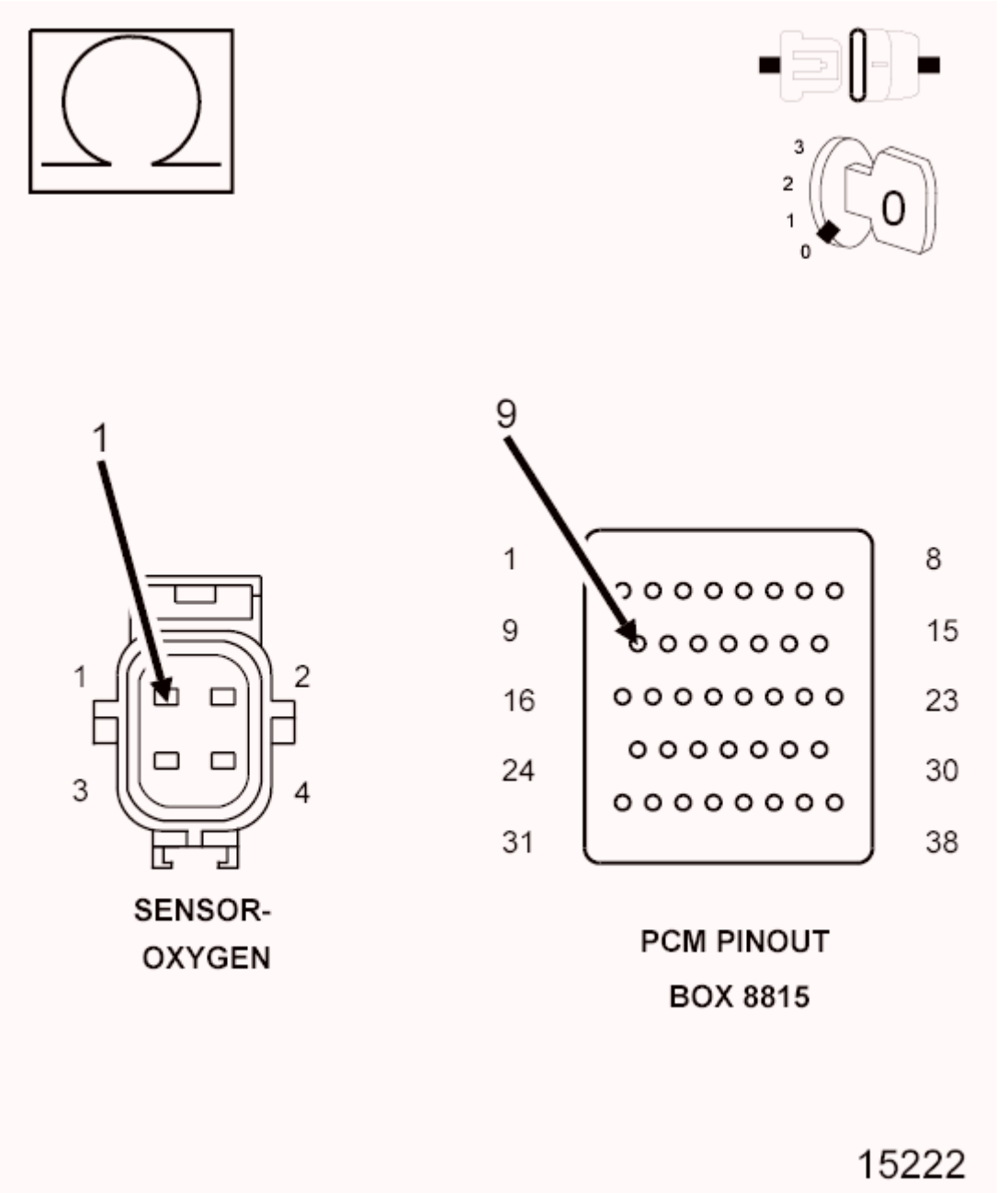

Fig. 174: Measuring Resistance Of O2 Sensor Heater Control Circuit From Harness Connector To Appropriate Terminal Of PCM Pinout Box 8815
Courtesy of CHRYSLER GROUP, LLC

1. Disconnect the C3 PCM harness connector.

CAUTION: Do not probe the PCM harness connectors. Probing the PCM harness connectors will damage the PCM terminals resulting in poor terminal to pin connection. Install the PCM Pinout Box (special tool #8815A, Kit, NGC, 38 Position) to perform diagnosis.

2. Measure the resistance of the (K299) O2 1/2 Heater Control circuit from the O2 harness connector to the appropriate terminal of PCM Pinout Box (special tool #8815A, Kit, NGC, 38 Position).

   Is the resistance below 0.5 of an Ohm?

   Yes

   - Go To 4.

   No

   - Repair the excessive resistance in the (K299) O2 1/2 Heater Control circuit.
   - Perform the POWERTRAIN VERIFICATION TEST. Refer to **POWERTRAIN VERIFICATION TEST** .

4. **(Z908) O2 1/2 HEATER GROUND CIRCUIT OPEN**

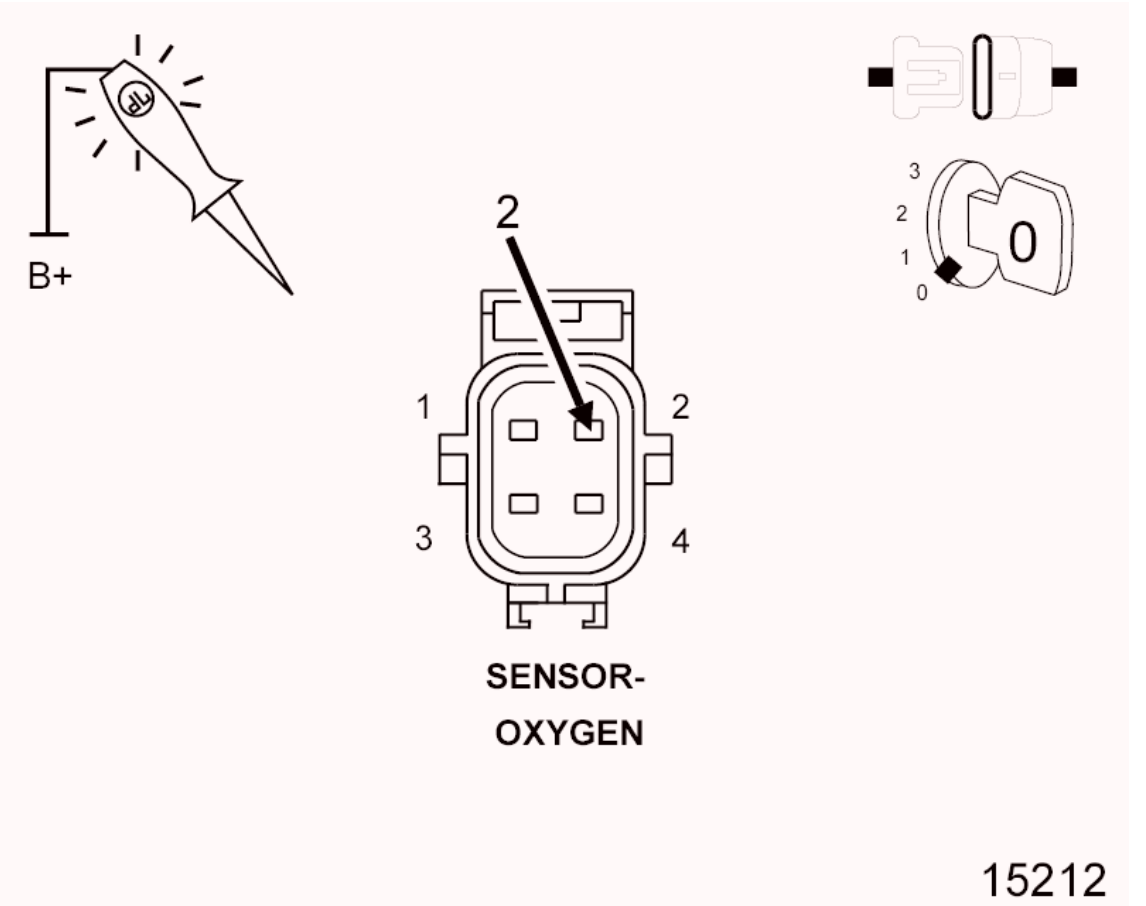

Fig. 175: Using 12-Volt Test Light Connected To 12 Volts To Check Ground Circuit In Oxygen Sensor Harness Connector
Courtesy of CHRYSLER GROUP, LLC

1. Using a 12-volt test light connected to 12 Volts, check the (Z908) Ground circuit in the 1/2 Oxygen

Sensor harness connector.

NOTE: **The test light should be illuminated and bright. Compare the brightness to that of a direct connection to the battery.**

Is the test light illuminated and bright?

Yes

- Go To 5.

No

- Repair the excessive resistance in the (Z908) O2 1/2 Heater ground circuit.
- Perform the POWERTRAIN VERIFICATION TEST. Refer to **POWERTRAIN VERIFICATION TEST** .

5. **POWERTRAIN CONTROL MODULE (PCM)**
    1. Using the wiring diagram/schematic as a guide, inspect the wiring and connectors between the Oxygen Sensor 1/2 and the Powertrain Control Module (PCM).
    2. Look for any chafed, pierced, pinched or partially broken wires.
    3. Look for broken, bent, pushed out or corroded terminals. Verify that there is good pin to terminal contact in the Sensor and Control Module connectors.
    4. Refer to any Technical Service Bulletins that may apply.

    Were there any problems found?

    Yes

    - Repair as necessary.
    - Perform the POWERTRAIN VERIFICATION TEST. Refer to **POWERTRAIN VERIFICATION TEST** .

    No

    - Replace and program the Powertrain Control Module in accordance with the Service Information. Refer to **MODULE, POWERTRAIN CONTROL, REMOVAL** .
    - Perform the POWERTRAIN VERIFICATION TEST. Refer to **POWERTRAIN VERIFICATION TEST** .

P0151-O2 SENSOR 2/1 CIRCUIT LOW

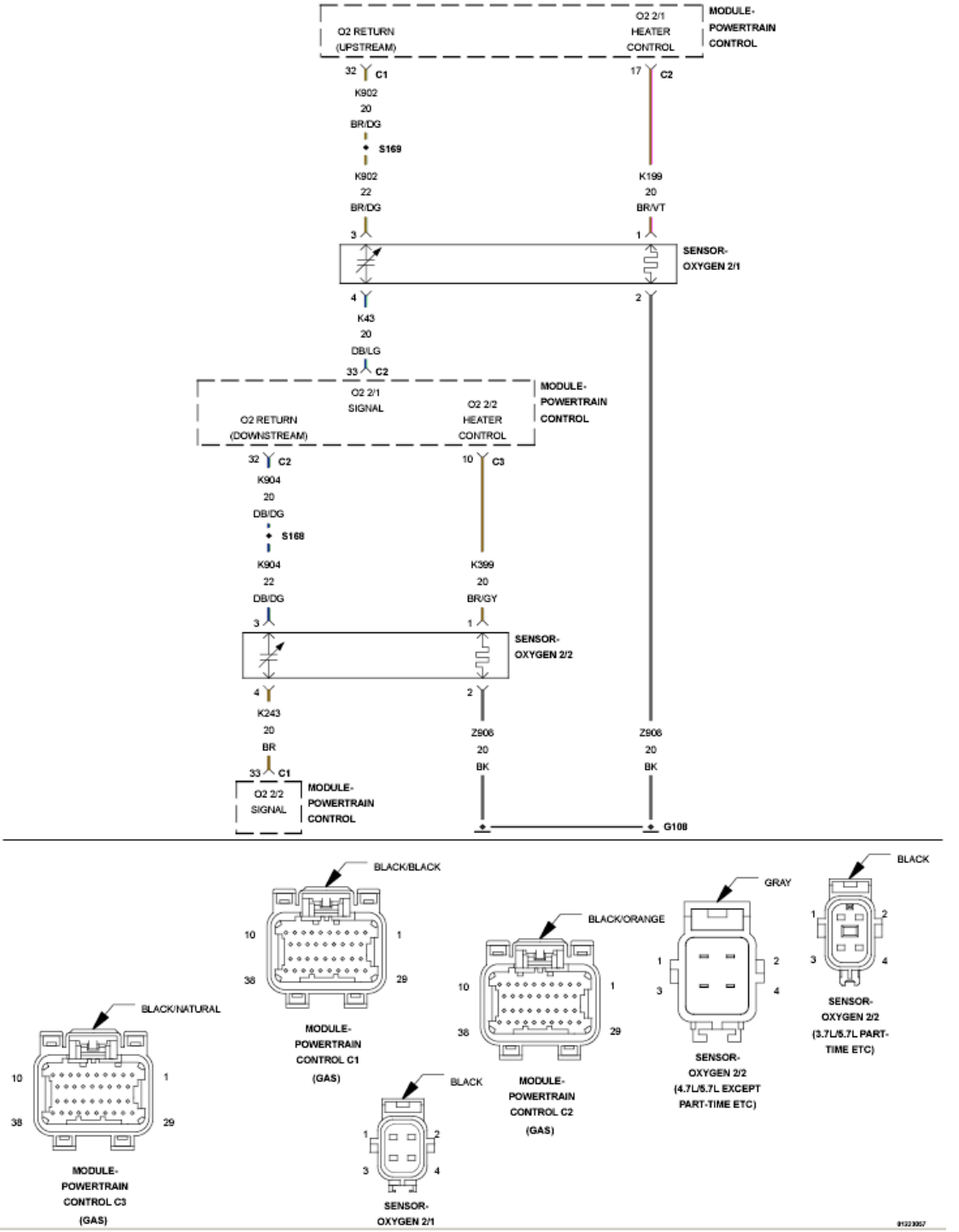

Fig. 176: O2 Sensor Circuit Schematic
Courtesy of CHRYSLER GROUP, LLC

For a complete wiring diagram, **refer to appropriate SYSTEM WIRING DIAGRAMS article** .

WHEN MONITORED:

With the engine running, battery voltage greater than 10.4 Volts and no O2 sensor heater DTCs present.

SET CONDITION:

The Powertrain Control Module (PCM) detects that the 2/1 Oxygen Sensor signal voltage is below the minimum acceptable value. The DTC will set as Pending after one trip and Active after two trips. Three good trips to turn off the MIL.

POSSIBLE CAUSES

Possible Causes
(K902) O2 RETURN UPSTREAM CIRCUIT SHORTED TO GROUND
(K43) O2 2/1 SIGNAL CIRCUIT SHORTED TO GROUND
(K43) O2 2/1 SIGNAL CIRCUIT SHORTED TO THE (K902) O2 RETURN UPSTREAM CIRCUIT
(K43) O2 2/1 SIGNAL CIRCUIT SHORTED TO THE (Z908) HEATER GROUND CIRCUIT
2/1 O2 SENSOR
POWERTRAIN CONTROL MODULE (PCM)

Always perform the Pre-Diagnostic Troubleshooting procedure before proceeding. Refer to PRE-DIAGNOSTIC TROUBLESHOOTING PROCEDURE .

DIAGNOSTIC TEST

1. **ACTIVE DTC**
    1. Turn the ignition on.
    2. With the scan tool, select View DTCs. Record DTC and Freeze Frame information.
    3. Start the engine and allow it to idle for at least 60 seconds.

        WARNING: **When the engine is operating, do not stand in direct line with the fan. Do not put your hands near the pulleys, belts or fan. Do not wear loose clothing. Failure to follow these instructions may result in possible serious or fatal injury.**

    4. With the scan tool, select View DTCs.

        Is the DTC Active at this time?

        Yes

        - Go To 2.

        No

        - Perform the INTERMITTENT CONDITION diagnostic procedure. Refer to **INTERMITTENT CONDITION** .

2. **(K43) O2 2/1 SIGNAL CIRCUIT**
    1. Turn the ignition off.
    2. Disconnect the 2/1 O2 Sensor harness connector.
    3. Ignition on, engine not running.
    4. With the scan tool, monitor the 2/1 O2 Sensor voltage.

    Is the O2 Sensor voltage between 4.1 and 5.0 Volts?

    Yes

    - Go To 3.

    No

    - Go To 5.
3. **O2 SENSOR**

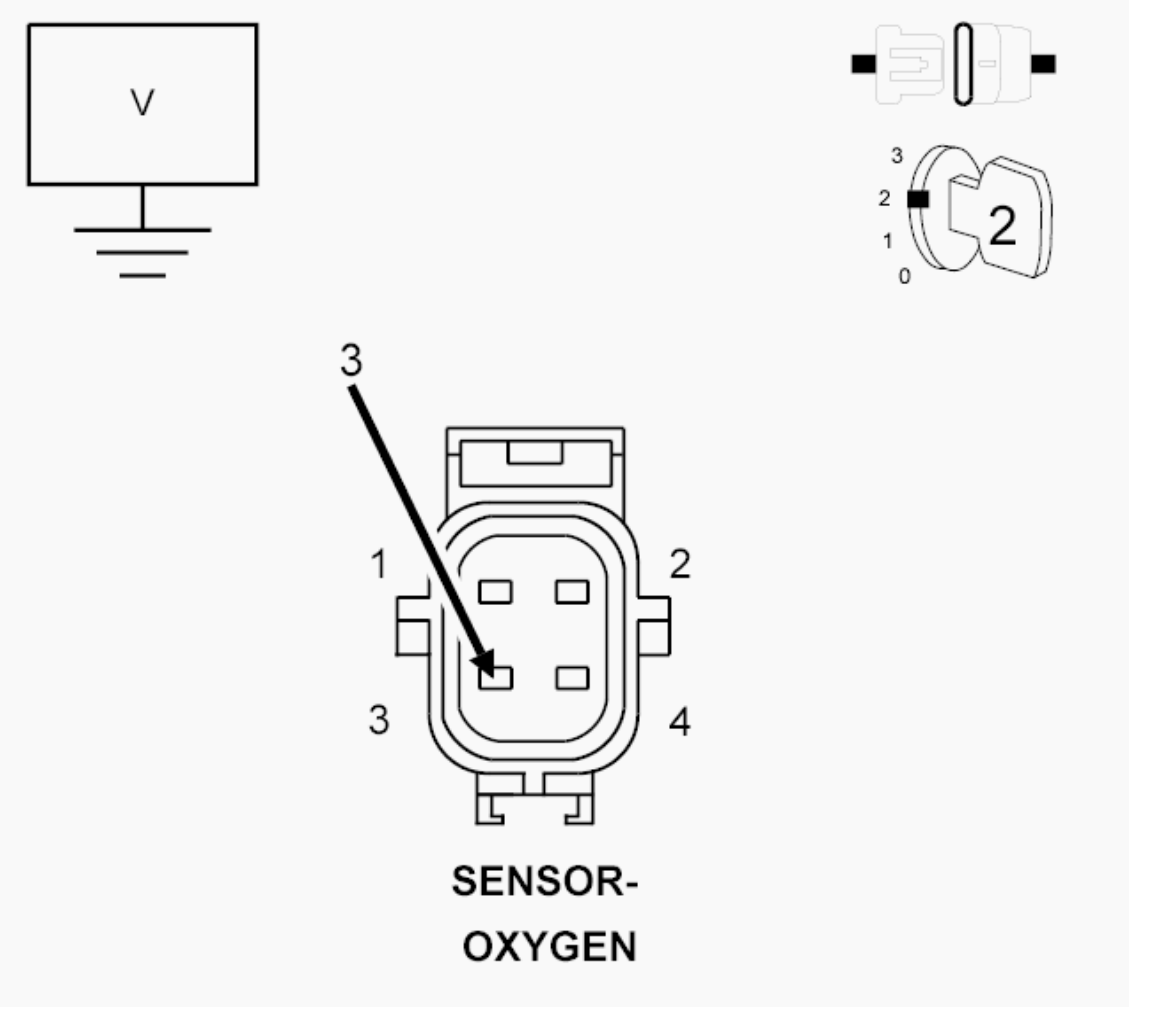

Fig. 177: Measuring Voltage On O2 Sensor Return Circuit In O2 Sensor Harness Connector

Courtesy of CHRYSLER GROUP, LLC

1. Measure the voltage on the (K902) O2 Return Upstream circuit in the O2 Sensor harness connector.

   Is the voltage at 2.5 Volts?

   Yes

   - Verify that there is good pin to terminal contact in the O2 Sensor and Powertrain Control Module connectors. Replace the 2/1 O2 Sensor if no problems were found with the connectors.
   - Perform the POWERTRAIN VERIFICATION TEST. Refer to **POWERTRAIN VERIFICATION TEST** .

   No

   - Go To 4.

4. **(K902) O2 RETURN UPSTREAM CIRCUIT SHORTED TO GROUND**

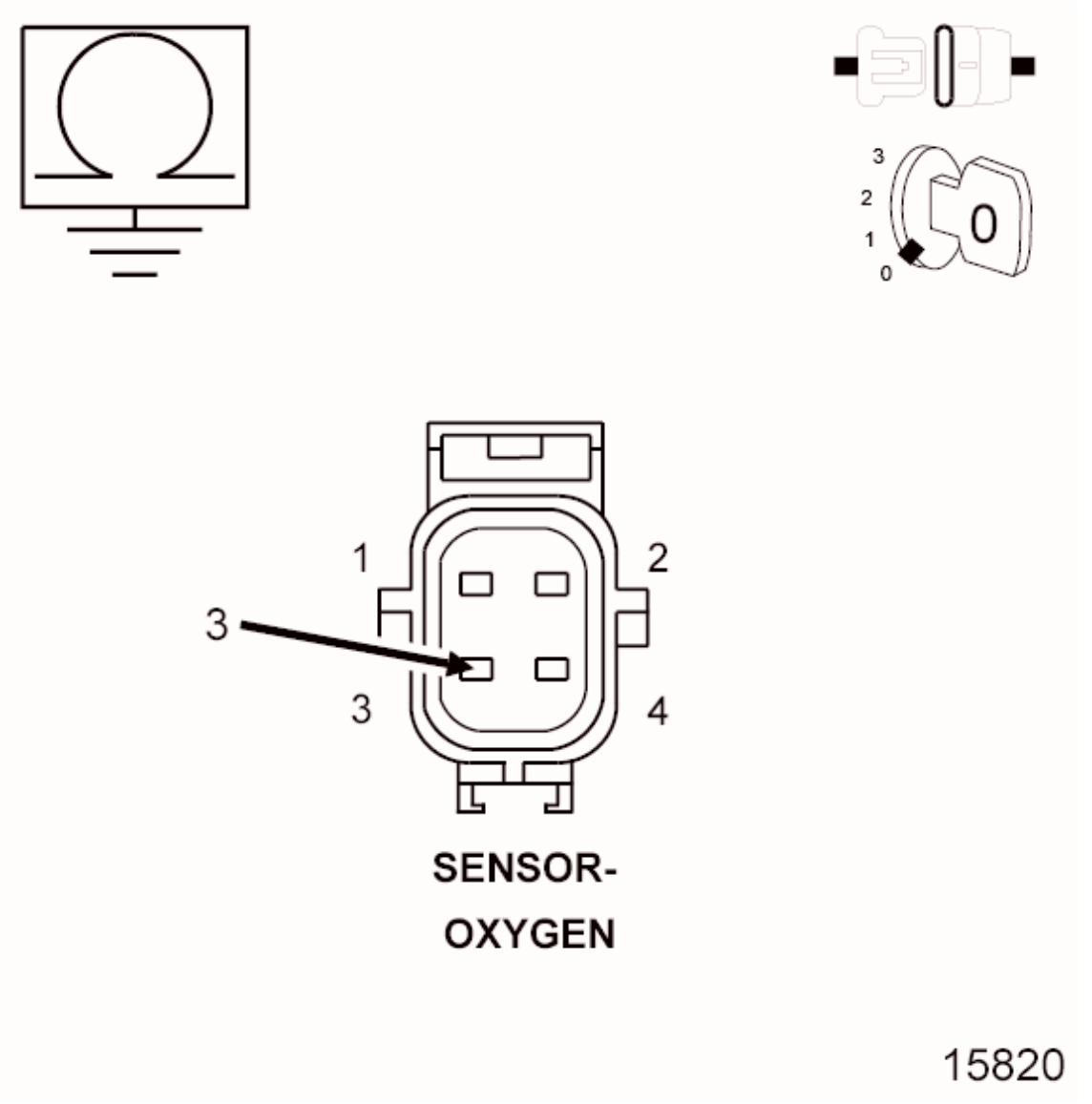

Fig. 178: Measuring Resistance Between Ground And O2 Sensor Return Circuit In O2 Sensor Harness Connector
Courtesy of CHRYSLER GROUP, LLC

1. Turn the ignition off.
2. Disconnect the C1 PCM harness connector.
3. Measure the resistance between ground and the (K902) O2 Return Upstream circuit in the O2 Sensor harness connector.

   Is the resistance below 100 Ohms?

   Yes

   - Repair the short to ground in the (K902) O2 Return Upstream circuit.

- Perform the POWERTRAIN VERIFICATION TEST. Refer to **POWERTRAIN VERIFICATION TEST** .

No

- Go To 8.

5. **(K43) O2 2/1 SIGNAL CIRCUIT SHORTED TO GROUND**

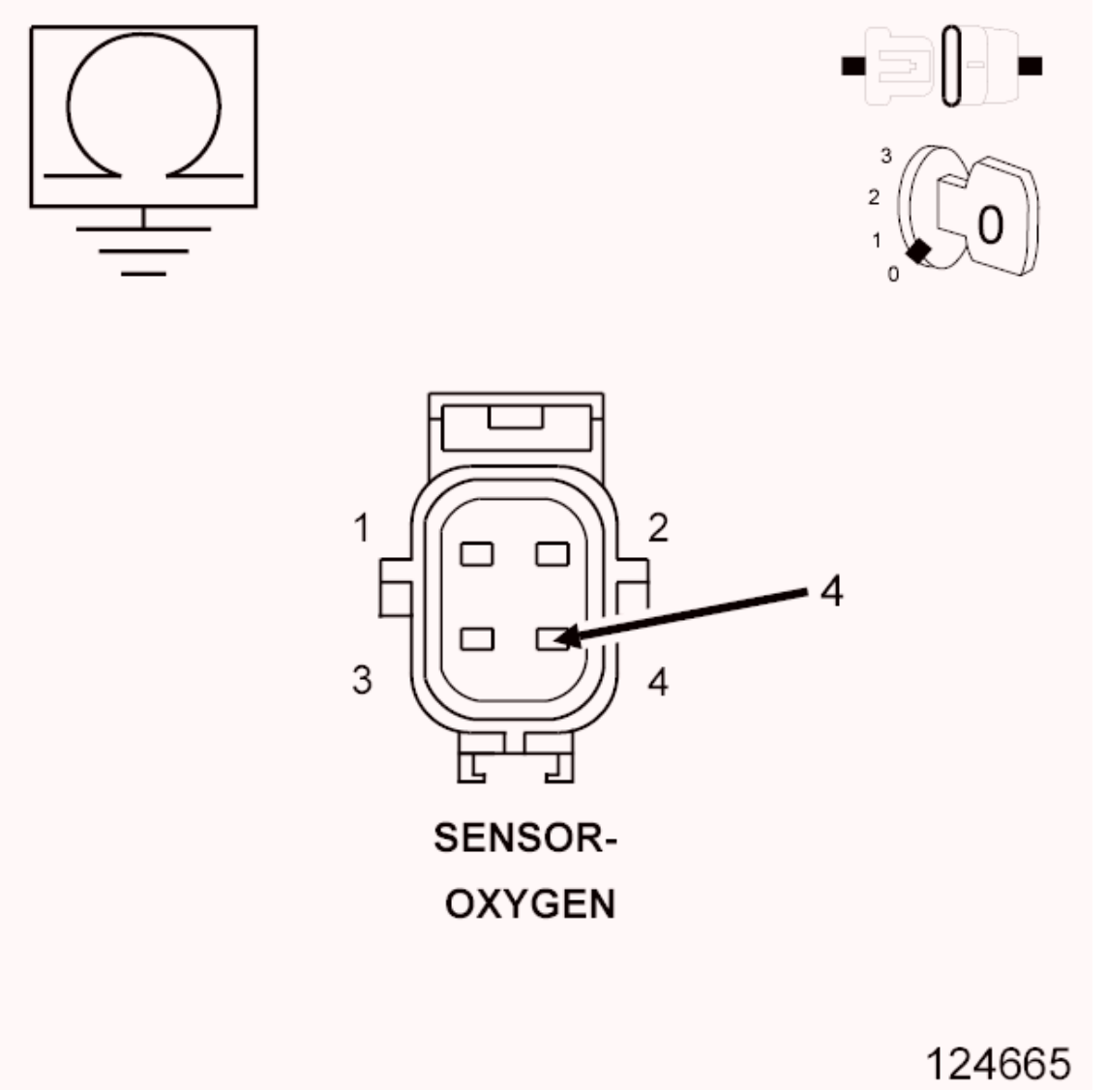

Fig. 179: Measuring Resistance Between Ground And O2 Sensor Signal Circuit In O2 Sensor Harness Connector
Courtesy of CHRYSLER GROUP, LLC

1. Turn the ignition off.
2. Disconnect the C1 and C2 PCM harness connectors.
3. Measure the resistance between ground and the (K43) O2 2/1 Signal circuit in the O2 Sensor

harness connector.

Is the resistance below 100 Ohms?

Yes

- Repair the short to ground in the (K43) O2 2/1 Signal circuit.
- Perform the POWERTRAIN VERIFICATION TEST. Refer to **POWERTRAIN VERIFICATION TEST** .

No

- Go To 6.

6. **(K43) O2 2/1 SIGNAL CIRCUIT SHORTED TO THE (K902) O2 RETURN UPSTREAM CIRCUIT**

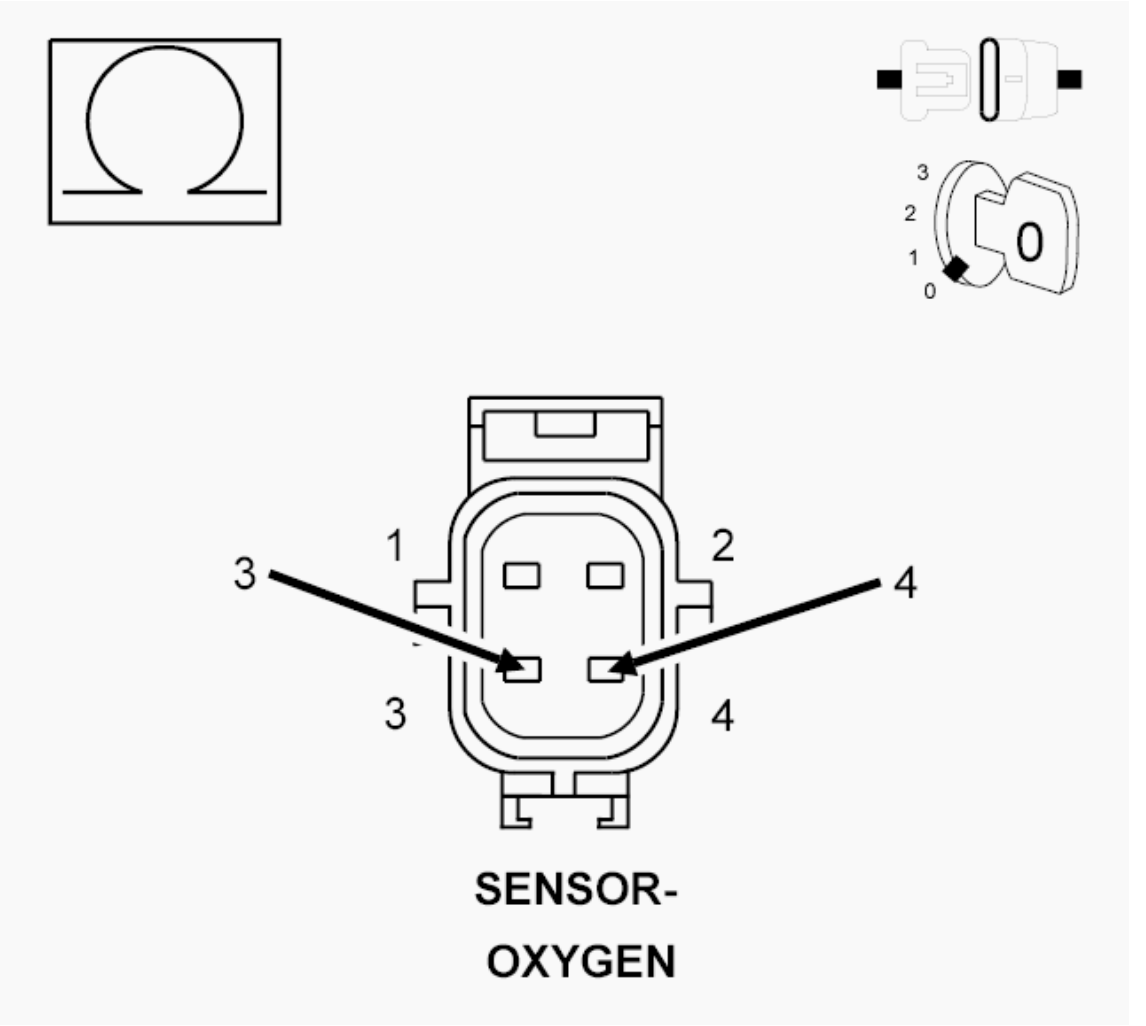

Fig. 180: Measuring Resistance Between O2 Sensor Signal Circuit And O2 Sensor Return Circuit In O2 Sensor Harness Connector

Courtesy of CHRYSLER GROUP, LLC

1. Measure the resistance between the (K43) O2 2/1 Signal circuit and the (K902) O2 Return Upstream circuit in the O2 Sensor harness connector.

   Is the resistance below 100 Ohms?

   Yes

   - Repair the short between the (K902) O2 Return Upstream circuit and the (K43) O2 2/1 Signal circuit.
   - Perform the POWERTRAIN VERIFICATION TEST. Refer to **POWERTRAIN VERIFICATION TEST** .

   No

   - Go To 7.

7. **(K43) O2 2/1 SIGNAL CIRCUIT SHORTED TO THE (Z908) HEATER GROUND CIRCUIT**

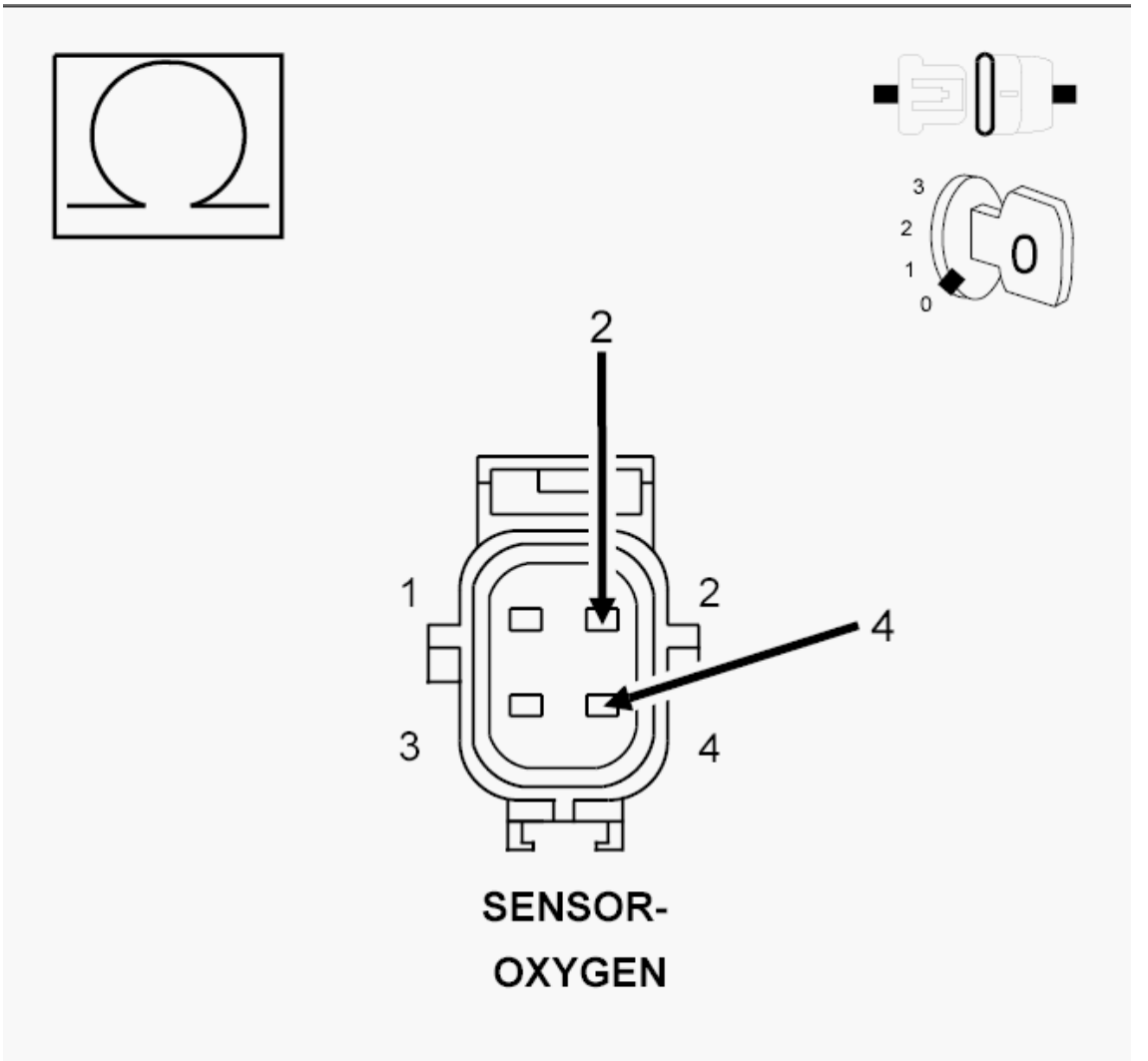

Fig. 181: Measuring Resistance Between O2 Sensor Signal Circuit And O2 Sensor Heater Ground Circuit In O2 Sensor Harness Connector
Courtesy of CHRYSLER GROUP, LLC

1. Measure the resistance between the (K43) O2 2/1 Signal circuit and the (Z908) O2 Heater ground circuit in the O2 Sensor harness connector.

   Is the resistance below 100 Ohms?

   Yes

   - Repair the short between the (Z908) O2 Heater ground circuit and the (K43) O2 2/1 Signal circuit.
   - Perform the POWERTRAIN VERIFICATION TEST. Refer to **POWERTRAIN VERIFICATION TEST** .

   No

- Go To 8.

8. **POWERTRAIN CONTROL MODULE (PCM)**
    1. Using the wiring diagram/schematic as a guide, inspect the wiring and connectors between the Oxygen Sensor 2/1 and the Powertrain Control Module (PCM).
    2. Look for any chafed, pierced, pinched or partially broken wires.
    3. Look for broken, bent, pushed out or corroded terminals. Verify that there is good pin to terminal contact in the Sensor and Control Module connectors.
    4. Refer to any Technical Service Bulletins that may apply.

    Were there any problems found?

    Yes

    - Repair as necessary.
    - Perform the POWERTRAIN VERIFICATION TEST. Refer to **POWERTRAIN VERIFICATION TEST** .

    No

    - Replace and program the Powertrain Control Module in accordance with the Service Information. Refer to **MODULE, POWERTRAIN CONTROL, REMOVAL** .
    - Perform the POWERTRAIN VERIFICATION TEST. Refer to **POWERTRAIN VERIFICATION TEST** .

P0152-O2 SENSOR 2/1 CIRCUIT HIGH

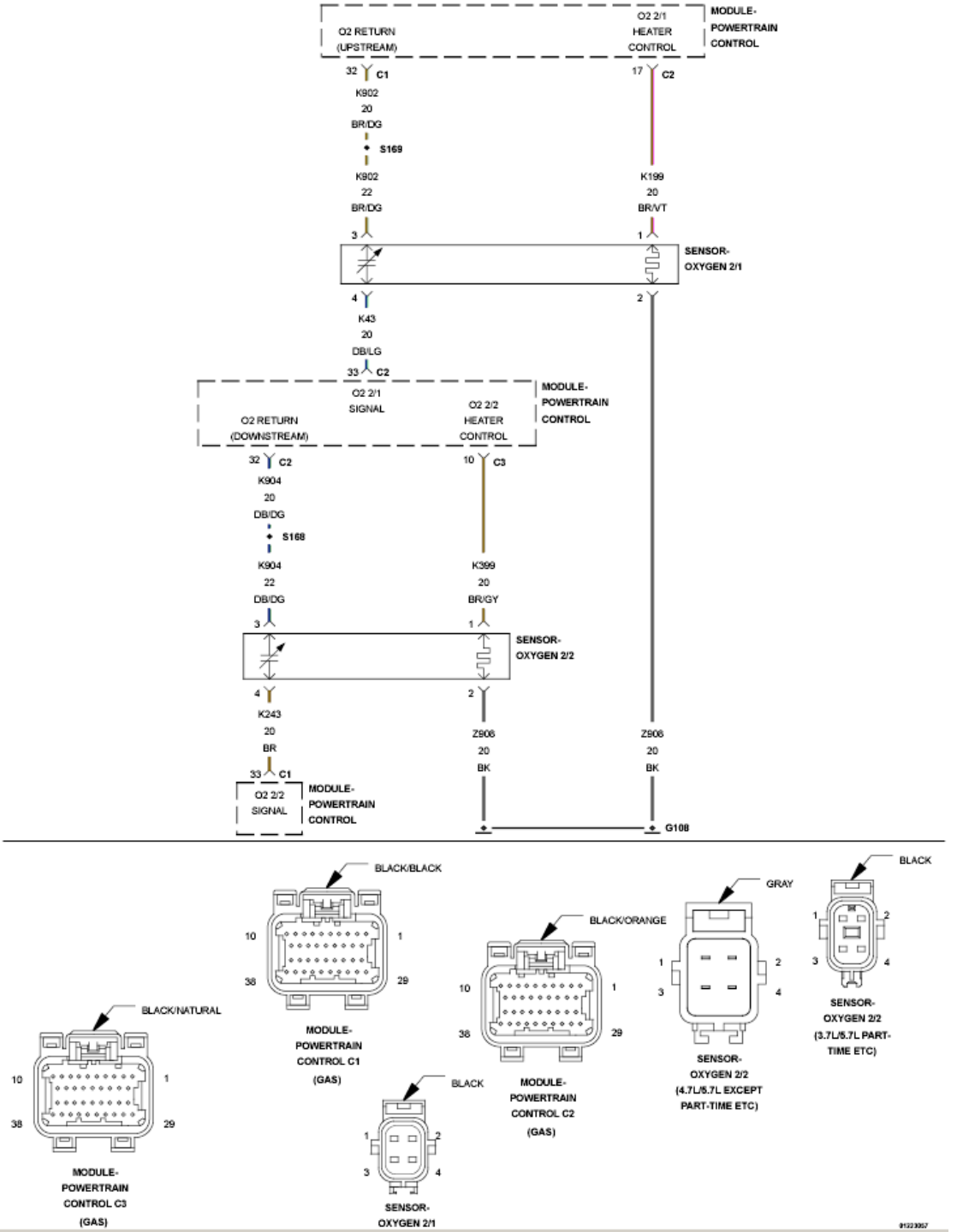

Fig. 182: O2 Sensor Circuit Schematic
Courtesy of CHRYSLER GROUP, LLC

For a complete wiring diagram, **refer to appropriate SYSTEM WIRING DIAGRAMS article** .

WHEN MONITORED:

Continuously with the engine running, no O2 sensor heater DTCs present, 2/1 Oxygen Sensor heater temperature within a specific range, and battery voltage greater than 10.4 volts.

SET CONDITION:

The Powertrain Control Module (PCM) detects that the 2/1 Oxygen Sensor voltage is greater than the maximum acceptable value for a specific amount of time, based on O2 sensor heater temperature. The DTC will set as Pending after one trip and Active after two trips. Three good trips to turn off the MIL.

POSSIBLE CAUSES

Possible Causes
(K43) O2 2/1 SIGNAL CIRCUIT SHORTED TO VOLTAGE
(K902) O2 RETURN UPSTREAM CIRCUIT SHORTED TO VOLTAGE
(K43) O2 2/1 SIGNAL CIRCUIT OPEN
(K902) O2 RETURN UPSTREAM CIRCUIT OPEN
2/1 O2 SENSOR
POWERTRAIN CONTROL MODULE (PCM)

Always perform the Pre-Diagnostic Troubleshooting procedure before proceeding. Refer to PRE-DIAGNOSTIC TROUBLESHOOTING PROCEDURE .

DIAGNOSTIC TEST

1. **ACTIVE DTC**

NOTE: **If an O2 sensor signal circuit is shorted to voltage, all O2 sensor voltage readings displayed on the scan tool will be approximately 5.0 volts. Diagnose the sensor that set the most current DTC.**

1. Start the engine and allow it to idle for at least 60 seconds.

WARNING: **When the engine is operating, do not stand in direct line with the fan. Do not put your hands near the pulleys, belts or fan. Do not wear loose clothing. Failure to follow these instructions may result in possible serious or fatal injury.**

2. With a scan tool, select View DTCs.

   Is the DTC Active at this time?

   Yes

   - Go To 2.

   No

- Perform the INTERMITTENT CONDITION diagnostic procedure. Refer to **INTERMITTENT CONDITION** .

2. **(K43) O2 2/1 SIGNAL CIRCUIT SHORTED TO VOLTAGE**

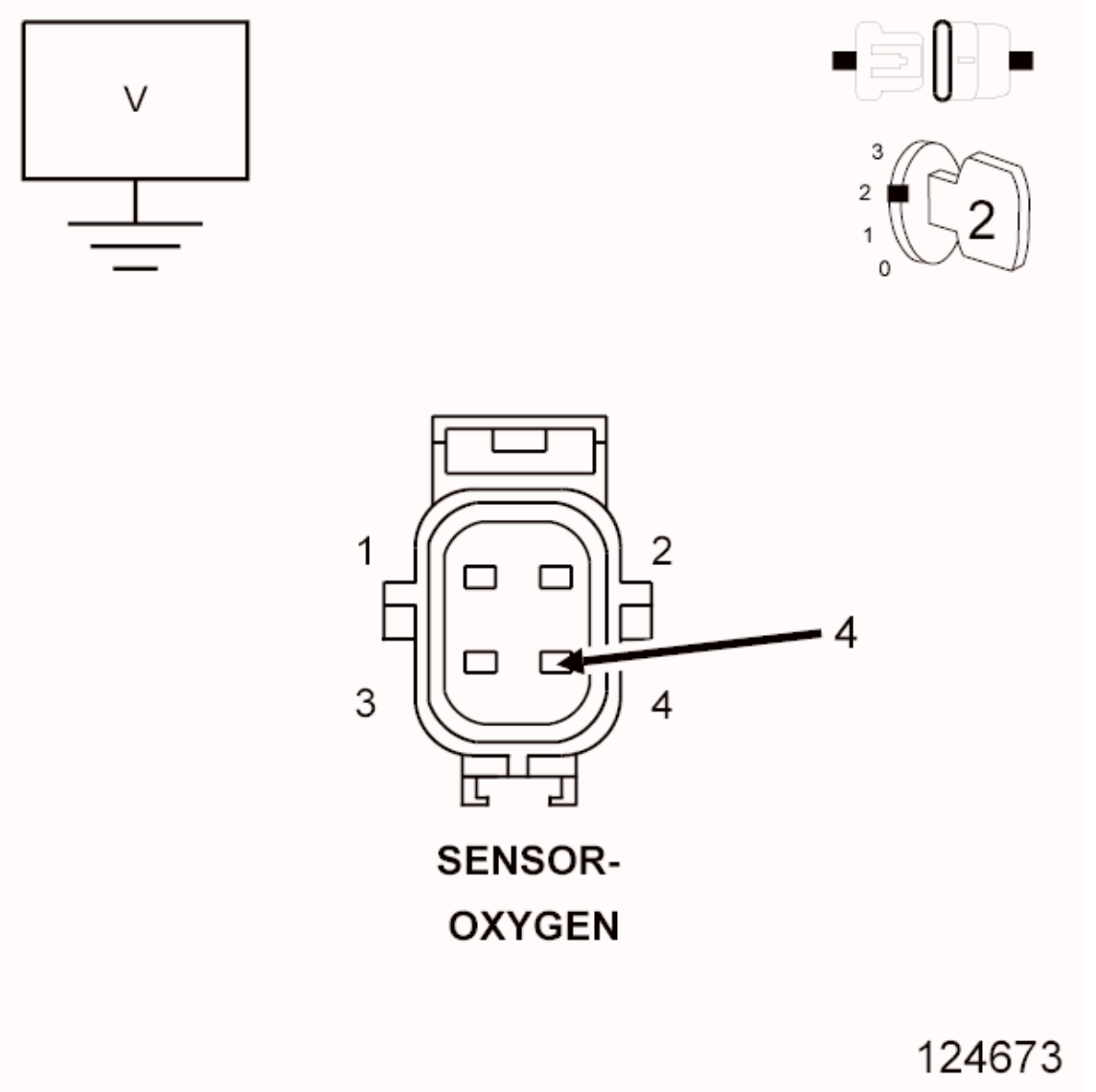

Fig. 183: Measuring Voltage Of O2 Sensor Signal Circuit In O2 Sensor Harness Connector
Courtesy of CHRYSLER GROUP, LLC

1. Turn the ignition off.
2. Disconnect the C1 and C2 PCM harness connectors.
3. Disconnect the 2/1 O2 Sensor harness connector.
4. Turn the ignition on.
5. Measure the voltage on the (K43) O2 Sensor 2/1 Signal circuit in the 2/1 O2 Sensor harness connector.

NOTE: **Measure the voltage in reference to ground, not the (K902) O2 Return Upstream circuit.**

Is there any voltage present?

Yes

- Repair the short to voltage in the (K43) O2 Sensor 2/1 Signal circuit.
- Perform the POWERTRAIN VERIFICATION TEST. Refer to **POWERTRAIN VERIFICATION TEST** .

No

- Go To 3.

3. **(K902) O2 RETURN UPSTREAM CIRCUIT SHORTED TO VOLTAGE**

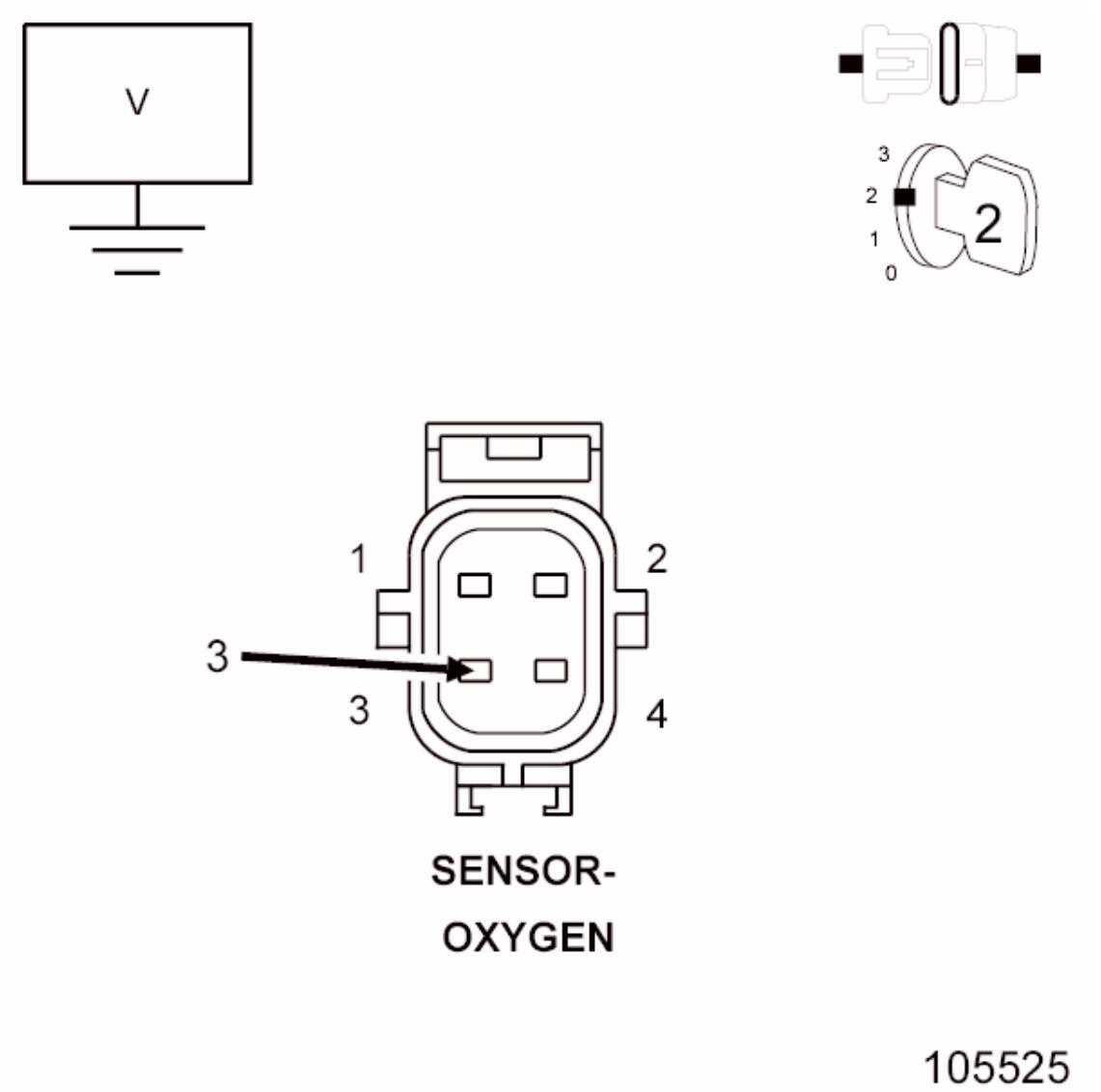

Fig. 184: Measuring Voltage On O2 Sensor Return Circuit In O2 Sensor Harness Connector
Courtesy of CHRYSLER GROUP, LLC

1. Measure the voltage on the (K902) O2 Return Upstream circuit in the 2/1 O2 Sensor harness connector.

   Is there any voltage present?

   Yes

   - Repair the short to voltage in the (K902) O2 Return Upstream circuit.
   - Perform the POWERTRAIN VERIFICATION TEST. Refer to **POWERTRAIN VERIFICATION TEST** .

   No

- Go To 4.

4. **O2 SENSOR**

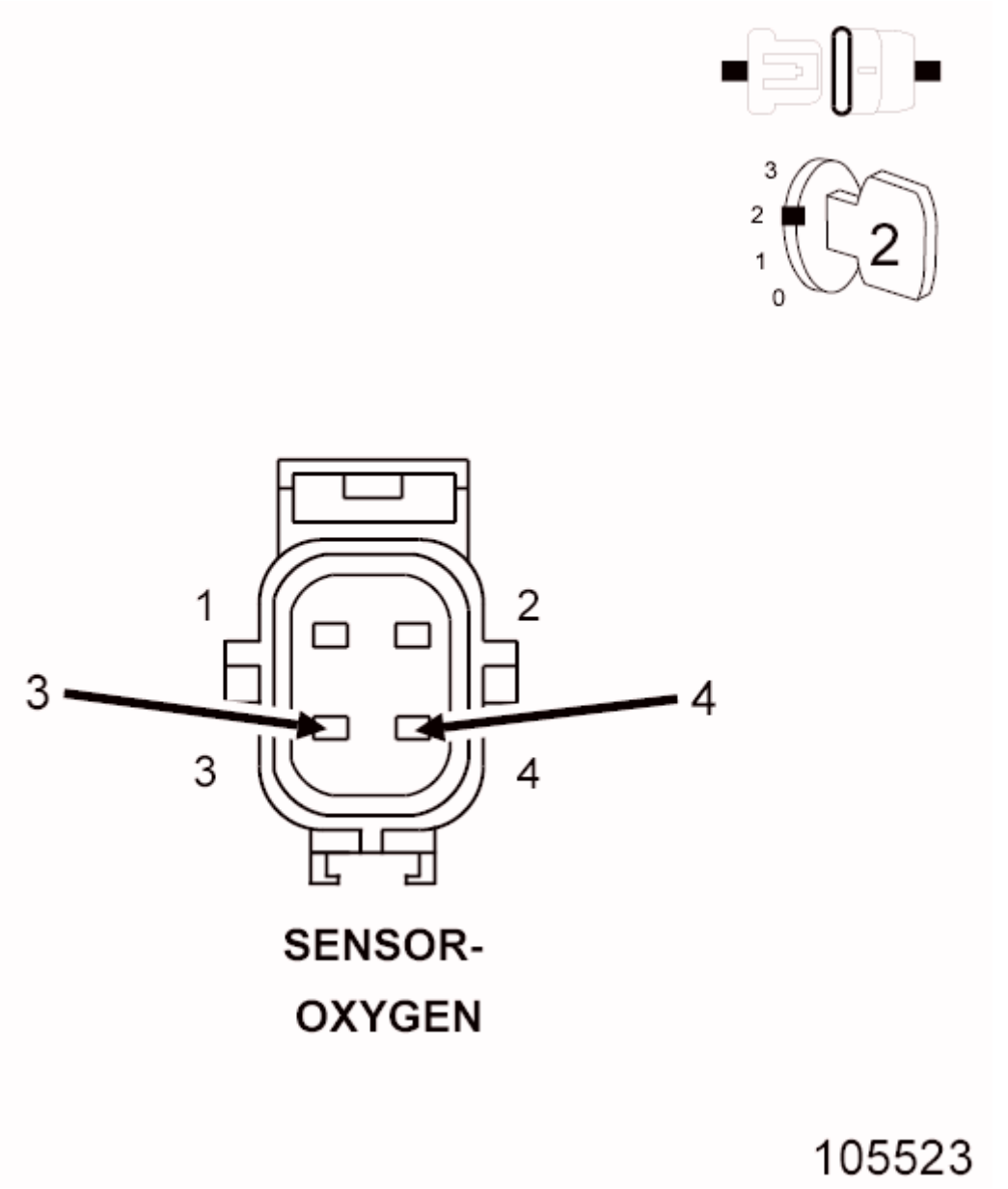

Fig. 185: O2 Sensor Harness Connector
Courtesy of CHRYSLER GROUP, LLC

1. Turn the ignition off.
2. Connect the C1 and C2 PCM harness connectors.
3. Ignition on, engine not running.
4. With a scan tool, monitor the 2/1 O2 Sensor voltage.
5. Connect a jumper wire between the (K43) O2 2/1 Signal circuit and the (K902) O2 Return Upstream circuit in the O2 Sensor harness connector.

Is the voltage between 2.3 and 2.7 volts with the jumper wire in place?

Yes

- Verify that there is good pin to terminal contact in the O2 Sensor and Powertrain Control Module connectors. Replace the 2/1 O2 Sensor if no problems were found with the connectors.
- Perform the POWERTRAIN VERIFICATION TEST. Refer to **POWERTRAIN VERIFICATION TEST** .

No

- Go To 5.

NOTE: Remove the jumper wire before continuing.

5. **(K43) O2 2/1 SIGNAL CIRCUIT OPEN**

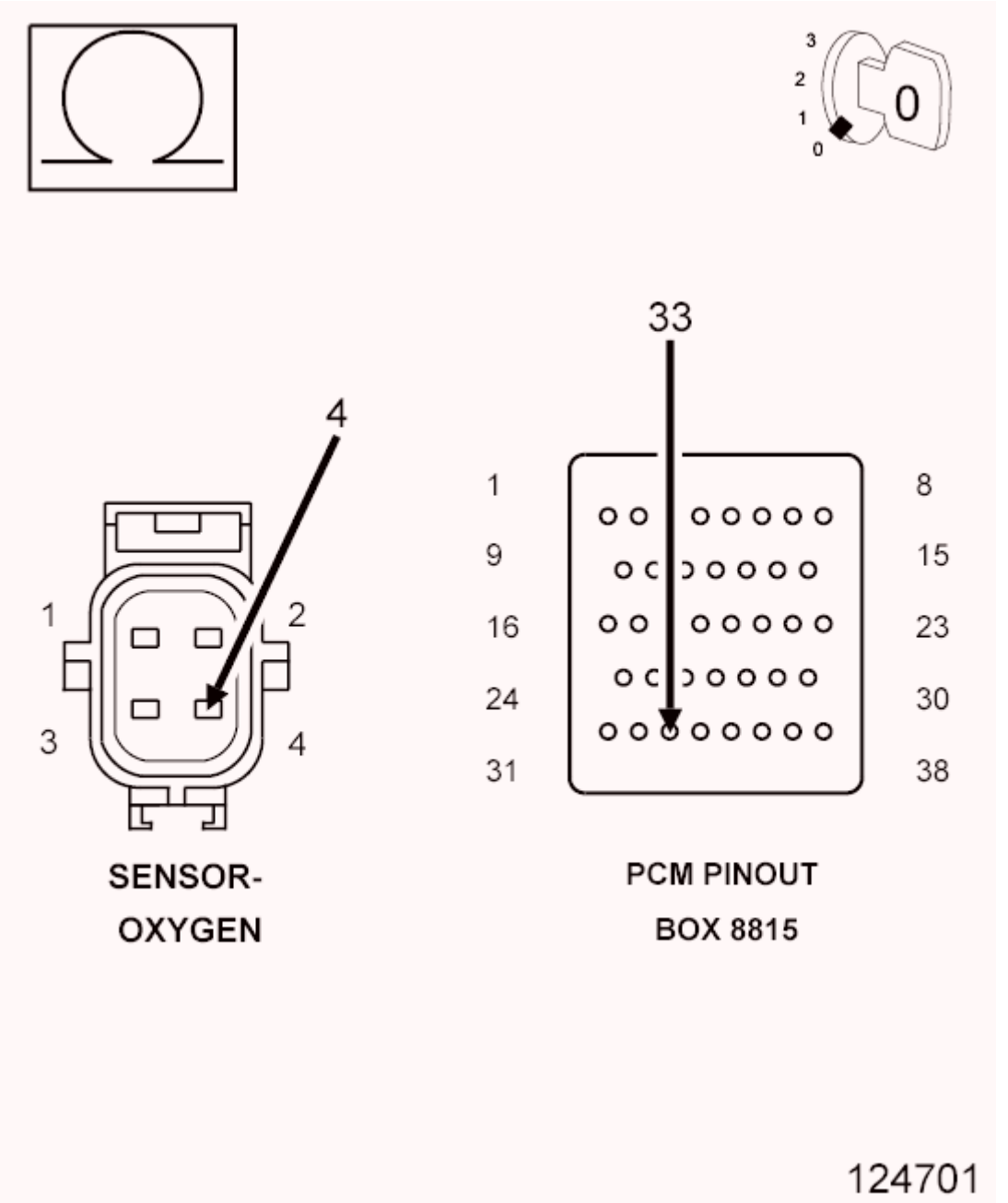

Fig. 186: Measuring Resistance Of (K43) O2 2/1 Signal Circuit From 2/1 O2 Sensor Harness Connector To Appropriate Terminal Of PCM Pinout Box 8815
Courtesy of CHRYSLER GROUP, LLC

1. Turn the ignition off.
2. Disconnect the C1 and C2 PCM harness connectors.

CAUTION: Do not probe the PCM harness connectors. Probing the PCM harness connectors will damage the PCM terminals resulting in poor terminal to pin connection. Install the PCM Pinout Box

(special tool #8815A, Kit, NGC, 38 Position) to perform diagnosis.

3. Measure the resistance of the (K43) O2 2/1 Signal circuit from the 2/1 O2 Sensor harness connector to the appropriate terminal of PCM Pinout Box (special tool #8815A, Kit, NGC, 38 Position).

   Is the resistance below 5.0 Ohms?

   Yes

   - Go To 6.

   No

   - Repair the open in the (K43) O2 2/1 Signal circuit.
   - Perform the POWERTRAIN VERIFICATION TEST. Refer to **POWERTRAIN VERIFICATION TEST** .

6. **(K902) O2 RETURN UPSTREAM CIRCUIT OPEN**

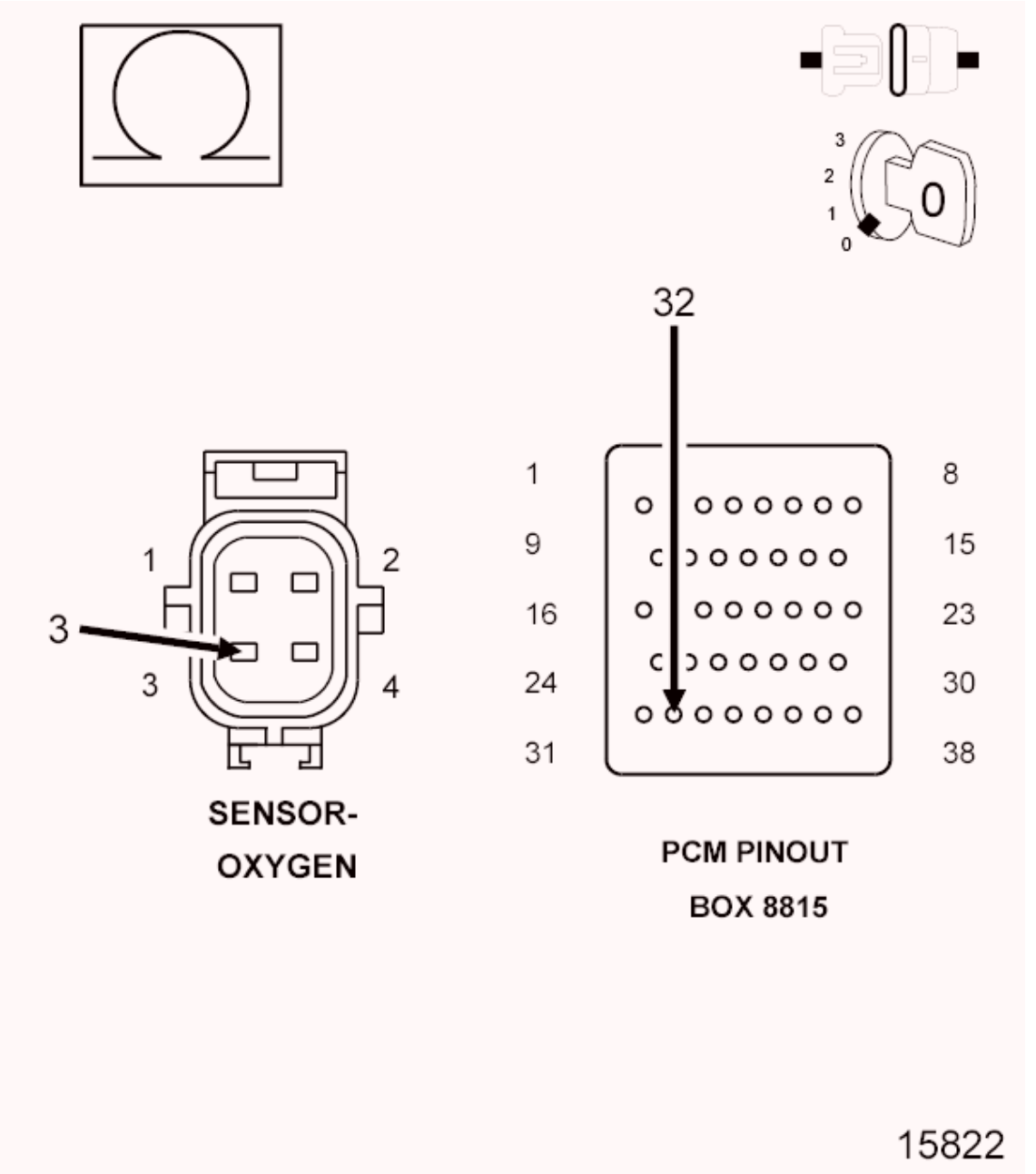

Fig. 187: Measuring Resistance Of O2 Sensor Return Circuit From O2 Sensor Harness Connector To Appropriate Terminal Of PCM Pinout Box 8815
Courtesy of CHRYSLER GROUP, LLC

1. Measure the resistance of the (K902) O2 Return Upstream circuit from the O2 Sensor harness connector to the appropriate terminal of PCM Pinout Box (special tool #8815A, Kit, NGC, 38 Position).

   Is the resistance below 5.0 Ohms?

   Yes

- Go To 7.

No

- Repair the open in the (K902) O2 Return Upstream circuit.
- Perform the POWERTRAIN VERIFICATION TEST. Refer to **POWERTRAIN VERIFICATION TEST** .

7. **POWERTRAIN CONTROL MODULE (PCM)**
    1. Using the wiring diagram/schematic as a guide, inspect the wiring and connectors between the Oxygen Sensor 2/1 and the Powertrain Control Module (PCM).
    2. Look for any chafed, pierced, pinched, or partially broken wires.
    3. Look for broken, bent, pushed out or corroded terminals. Verify that there is good pin to terminal contact in the Sensor and Control Module connectors.
    4. Refer to any Technical Service Bulletins that may apply.

    Were there any problems found?

    Yes

    - Repair as necessary.
    - Perform the POWERTRAIN VERIFICATION TEST. Refer to **POWERTRAIN VERIFICATION TEST** .

    No

    - Replace and program the Powertrain Control Module in accordance with the Service Information. Refer to **MODULE, POWERTRAIN CONTROL, REMOVAL** .
    - Perform the POWERTRAIN VERIFICATION TEST. Refer to **POWERTRAIN VERIFICATION TEST** .

P0153-O2 SENSOR 2/1 SLOW RESPONSE

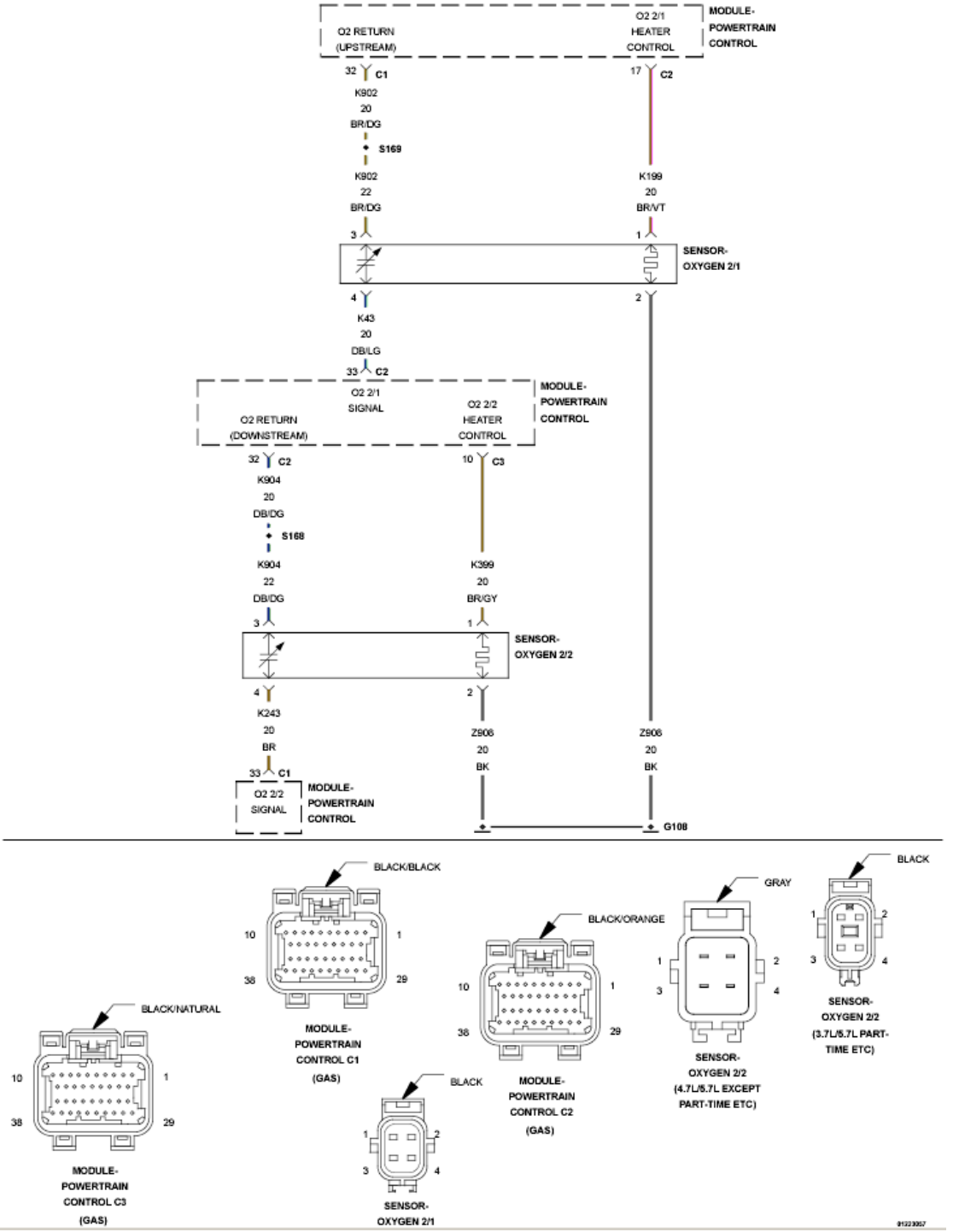

Fig. 188: O2 Sensor Circuit Schematic
Courtesy of CHRYSLER GROUP, LLC

For a complete wiring diagram, **refer to appropriate SYSTEM WIRING DIAGRAMS article** .

THEORY OF OPERATION

For an aged O2 sensor, the response rate to the air/fuel change is slower than when it was new. The O2 sensor tends to move less with the same air/fuel changes in a given time frame. Therefore by observing the activity of voltage readings from the upstream O2 sensor, the quality of the O2 sensor can be detected.

WHEN MONITORED:

With the ECT above 70 °C (158 °F), engine RPM between 1400 and 2300, vehicle speed between 64 and 96 kph (40 and 60 mph) and engine run time greater than three minutes.

SET CONDITION:

The Powertrain Control Module (PCM) detects that the oxygen sensor signal does not switch adequately during monitoring. Two Trip Fault. Three good trips to turn off the MIL.

POSSIBLE CAUSES

Possible Causes
EXHAUST LEAK
(K43) O2 2/1 SIGNAL CIRCUIT
(K902) O2 RETURN UPSTREAM CIRCUIT
2/1 O2 SENSOR

Always perform the Pre-Diagnostic Troubleshooting procedure before proceeding. Refer to PRE-DIAGNOSTIC TROUBLESHOOTING PROCEDURE .

DIAGNOSTIC TEST

1. **ACTIVE DTC**

NOTE: **After the repairs have been made, verify proper O2 Sensor operation. If all the O2 Sensor voltage readings have not returned to normal, follow the diagnostic procedure for the remaining O2 Sensors.**

NOTE: **Check for contaminants that may have damaged the O2 Sensor: contaminated fuel, unapproved silicone, oil and coolant.**

1. Start the engine.
2. Allow the engine to reach normal operating temperature.

WARNING: **When the engine is operating, do not stand in direct line with the fan. Do not put your hands near the pulleys, belts or fan. Do not wear loose clothing. Failure to follow these instructions may result in possible serious or fatal injury.**

3. With the scan tool, select View DTCs.

NOTE: **It may be necessary to drive the vehicle to meet the conditions to set this DTC, try to repeat the conditions in which the fault originally set by reviewing the Freeze Frame data.**

Is the DTC Active or Pending at this time?

Yes

- Go To 2.

No

- Perform the INTERMITTENT CONDITION diagnostic procedure. Refer to **INTERMITTENT CONDITION** .

2. **CHECKING THE EXHAUST SYSTEM FOR LEAKS**
   1. Turn the ignition off.
   2. Raise the vehicle in accordance with the Service Information.

      WARNING: **The normal operating temperature of the exhaust system is very high. Never work around or attempt to service any part of the exhaust system until it has cooled. Special care should be taken when working near the catalytic converter. The temperature of the converter rises to a high level after a short period of engine operating time.**

   3. Connect Exhaust Cone (special tool #8404-EC, Exhaust Cone) or (special tool #8404-EC, Exhaust Cone) to Air Pressure Regulator (with hose) W-18-MIL-1146AS.

      CAUTION: **The air pressure must not exceed 27.6 kPa (4 psi), otherwise engine damage can occur.**

   4. Attach shop air to the air pressure regulator.
   5. Adjust the Air Pressure Regulator to 27.6 kPa (4 psi).
   6. Insert the exhaust cone into the vehicle tail pipe.
   7. If the vehicle is equipped with dual exhaust. Use the (special tool #8404-ECT, Exhaust Cone, Truck) with equipped attached plug, plug one side of the dual exhaust pipe. Pressurize the other as described above.
   8. Apply Mopar® Air Leak Detector PN# 05191804AA (or an equivalent leak finder liquid) to the following areas:
      - All welded joints from the exhaust manifold to 152.4 mm (6 inches) behind the downstream O2 sensor
      - O2 sensor seal points
      - O2 sensor boss welds

- Flange/joint connection(s)
- Exhaust manifold to cylinder head connection(s)
- EGR solenoid gasket base and tube seal points (if equipped)

9. Watch for the liquid/soapy water to bubble.
10. Use the following definitions to help determine if system or component repair/replacement is necessary:
    - **Type 1 Leak** is defined as a leak where very small foam like bubbles 1 mm (0.04 of an inch) or less appear. Any Type 1 or greater leaks found in welded joints, O2 sensor seal points or O2 sensor boss welds must be repaired or the component must be replaced.
    - **Type 2 Leak** is defined as a leak where larger bubbles pea size, 8 mm (0.3 of an inch) or greater appear. Any Type 2 or greater leaks found in flange or joint connections, exhaust manifold to cylinder head connections or EGR gasket and tube seal points must be repaired or the components must be replaced.

Leak Location	Repair required if results at 27.6 kPa (4 psi) reveal bubble size:
Welded joints	Type 1, 1 mm (0.04 of an inch) or greater
O2 Sensor seal points	Type 1, 1 mm (0.04 of an inch) or greater
O2 Sensor boss welds	Type 1, 1 mm (0.04 of an inch) or greater
Flange / joint connections	Type 2, 8 mm (0.3 of an inch) or greater
Exhaust Manifold to cylinder head connections	Type 2, 8 mm (0.3 of an inch) or greater
EGR gasket and tube seal points	Type 2, 8 mm (0.3 of an inch) or greater

11. If a leak is found that matches the above definition, repair or replace the component as necessary.
12. Once the repair is complete, repeat the procedure to verify that all leaks have been repaired.

Were any exhaust leaks found?

Yes

- Repair or replace the leaking exhaust parts as necessary.
- Perform the POWERTRAIN VERIFICATION TEST. Refer to **POWERTRAIN VERIFICATION TEST** .

No

- Go To 3.

3. **(K43) O2 2/1 SIGNAL CIRCUIT**

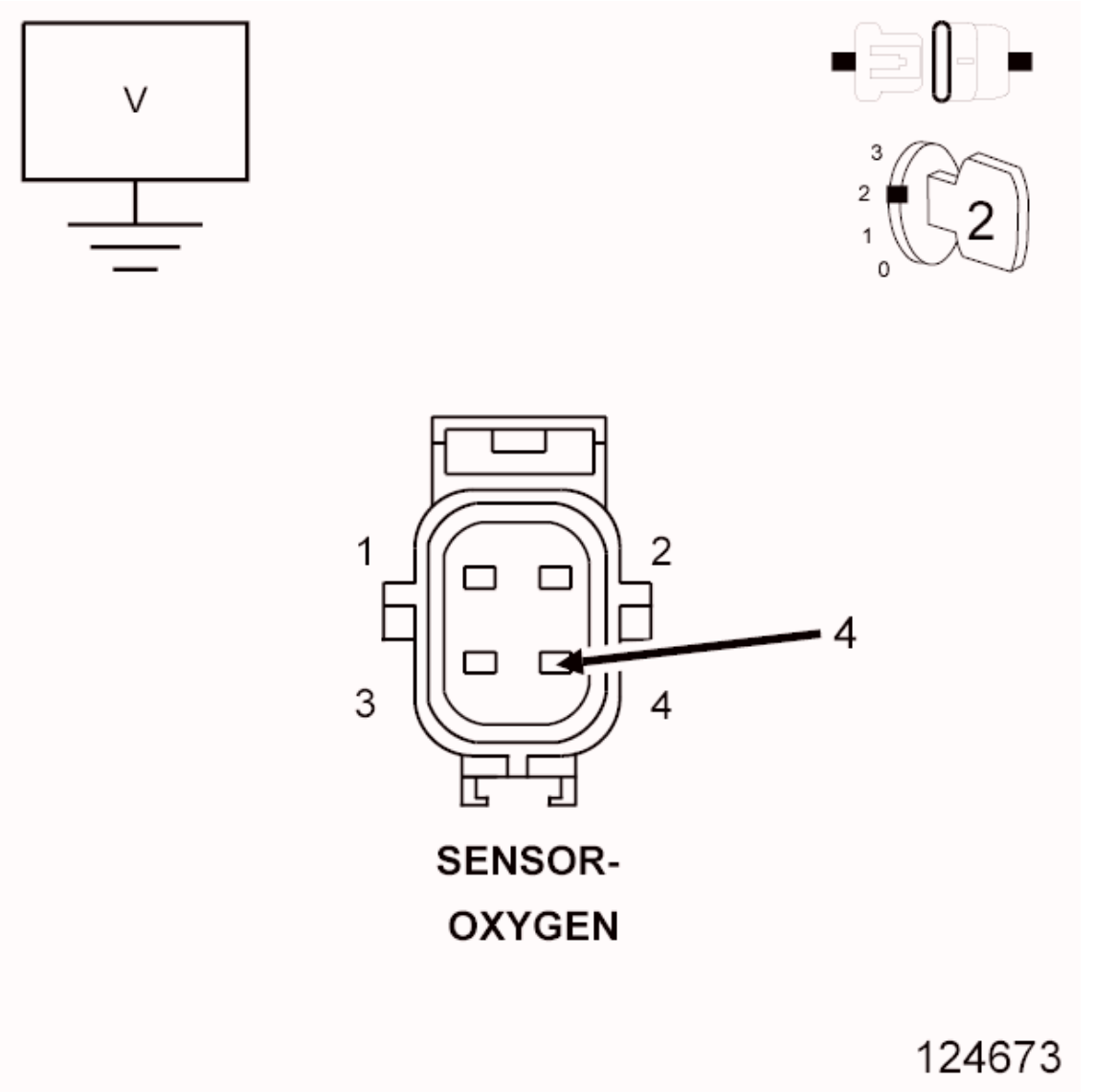

Fig. 189: Measuring Voltage Of O2 Sensor Signal Circuit In O2 Sensor Harness Connector
Courtesy of CHRYSLER GROUP, LLC

1. Turn the ignition off
2. Disconnect the 2/1 O2 Sensor harness connector.
3. Ignition on, engine not running.
4. Measure the voltage on the (K43) O2 2/1 Signal circuit in the O2 Sensor harness connector.

   Is the voltage between 4.1 and 5.0 Volts?

   Yes

   - Go To 4.

   No

- Check the (K43) O2 2/1 Signal circuit for a short to ground, open or short to voltage. If OK, replace and program the Powertrain Control Module in accordance with the Service Information.
- Perform the POWERTRAIN VERIFICATION TEST. Refer to **POWERTRAIN VERIFICATION TEST** .

4. **(K902) O2 RETURN UPSTREAM CIRCUIT**

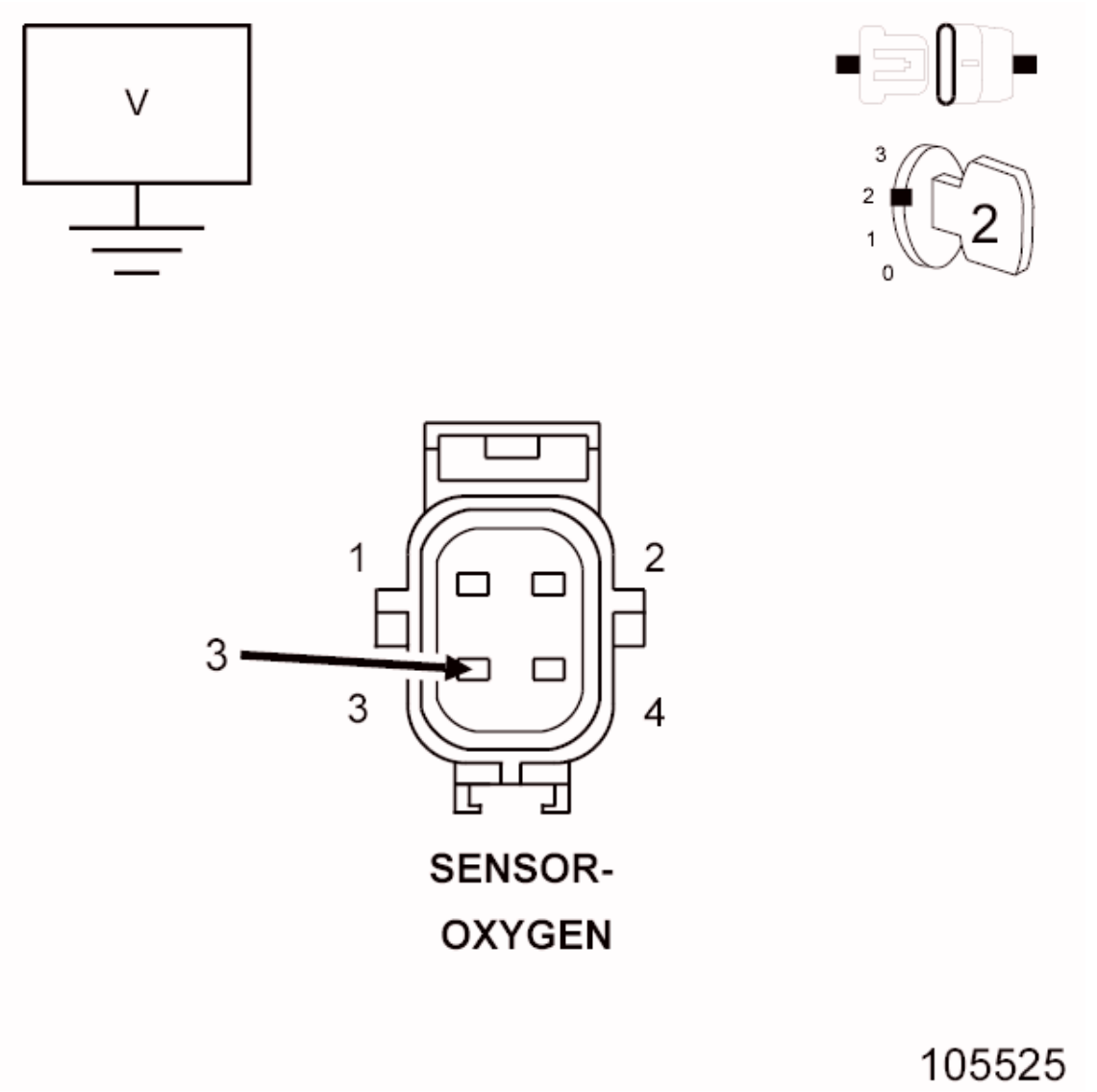

Fig. 190: Measuring Voltage On O2 Sensor Return Circuit In O2 Sensor Harness Connector
Courtesy of CHRYSLER GROUP, LLC

1. Measure the voltage on the (K902) O2 Return Upstream circuit in the O2 Sensor harness connector.

   Is the voltage at 2.5 Volts?

   Yes

- Go To 5.

No

- Check the (K902) O2 Return Upstream circuit for a short to ground, open or short to voltage. If OK, replace and program the Powertrain Control Module in accordance with the Service Information. Refer to **MODULE, POWERTRAIN CONTROL, REMOVAL** .
- Perform the POWERTRAIN VERIFICATION TEST. Refer to **POWERTRAIN VERIFICATION TEST** .

5. **OXYGEN SENSOR**

NOTE: Check for signs of contaminants that may have damaged the O2 Sensor, such as contaminated fuel, unapproved silicone, oil and coolant.

1. Using the wiring diagram/schematic as a guide, inspect the wiring and connectors between the 2/1 Oxygen Sensor and the Powertrain Control Module (PCM).
2. Look for any chafed, pierced, pinched or partially broken wires.
3. Look for broken, bent, pushed out or corroded terminals.
4. Perform any Technical Service Bulletins that may apply.

Were any problems found?

Yes

- Repair as necessary.
- Perform the POWERTRAIN VERIFICATION TEST. Refer to **POWERTRAIN VERIFICATION TEST** .

No

- Replace the 2/1 Oxygen Sensor in accordance with the Service Information.
- Perform the POWERTRAIN VERIFICATION TEST. Refer to **POWERTRAIN VERIFICATION TEST** .

P0155-O2 SENSOR 2/1 HEATER PERFORMANCE

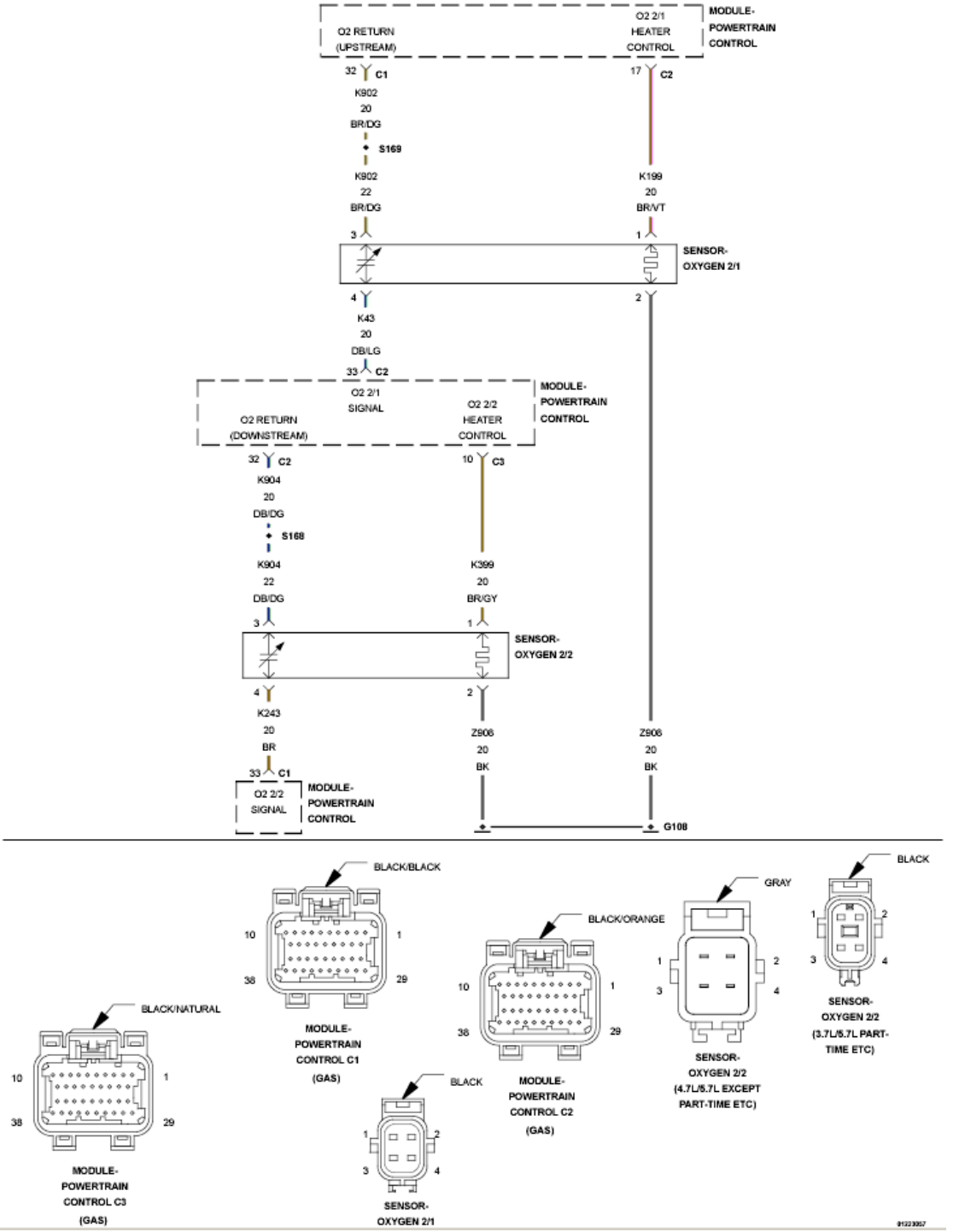

Fig. 191: O2 Sensor Circuit Schematic
Courtesy of CHRYSLER GROUP, LLC

For a complete wiring diagram, **refer to appropriate SYSTEM WIRING DIAGRAMS article** .

THEORY OF OPERATION

This diagnostic provides a continuous check of the O2 heater circuit during operation. The heater circuit is momentarily disabled to allow a resistance measurement to be taken to infer heater temperature. The current delivery to the heater is duty cycled to maintain a specific target temperature. The error from the target temperature is continuously monitored to assess heater performance.

WHEN MONITORED:

Continuously during O2 sensor heater operation with battery voltage between 10.4 and 15.75 Volts and no O2 sensor circuit DTCs present.

SET CONDITION:

The Powertrain Control Module (PCM) detects no temperature change in the O2 sensor heater element when the heater circuit is active. The heater temperature is obtained by measuring the heater resistance and calculating the heater temperature. Two trip fault. Three good trips to turn off the MIL.

POSSIBLE CAUSES

Possible Causes
(K199) O2 2/1 HEATER CONTROL CIRCUIT OPEN
(Z908) O2 HEATER GROUND CIRCUIT OPEN
2/1 O2 SENSOR
POWERTRAIN CONTROL MODULE (PCM)

Always perform the Pre-Diagnostic Troubleshooting procedure before proceeding. Refer to PRE-DIAGNOSTIC TROUBLESHOOTING PROCEDURE .

DIAGNOSTIC TEST

1. **O2 SENSOR HEATER OPERATION**
    1. Turn the ignition off.

       NOTE: Wait a minimum of eight minutes to allow the O2 Sensor to cool down before continuing the test. Allow the O2 Sensor voltage to stabilize between 4.6 and 5.0 Volts.

    2. Ignition on, engine not running.
    3. With the scan tool, actuate the O2 Heater Test.
    4. With the scan tool, monitor 2/1 O2 Sensor voltage for at least two minutes.

       Does the voltage stay above 4.5 Volts?

       Yes

       - Go To 2.

No

- Perform the INTERMITTENT CONDITION diagnostic procedure. Refer to **INTERMITTENT CONDITION** .

2. **O2 SENSOR HEATER ELEMENT**
   1. Turn the ignition off.

      NOTE: Allow the O2 sensor to cool down to room temperature.

   2. Disconnect the 2/1 O2 Sensor harness connector.
   3. Measure the resistance of the O2 Heater Element across the O2 Sensor connector between the O2 Heater Control terminal and the O2 Heater ground terminal.

      NOTE: O2 Heater Element resistance values should be measured at 21.1° C (70° F). The resistance value will vary with different temperature values.

      Is the resistance of the O2 Sensor Heater Element between 2.0 and 30.0 Ohms?

      Yes

      - Go To 3.

      No

      - Replace the O2 Sensor.
      - Perform the POWERTRAIN VERIFICATION TEST. Refer to **POWERTRAIN VERIFICATION TEST** .

3. **(K199) O2 2/1 HEATER CONTROL CIRCUIT OPEN**

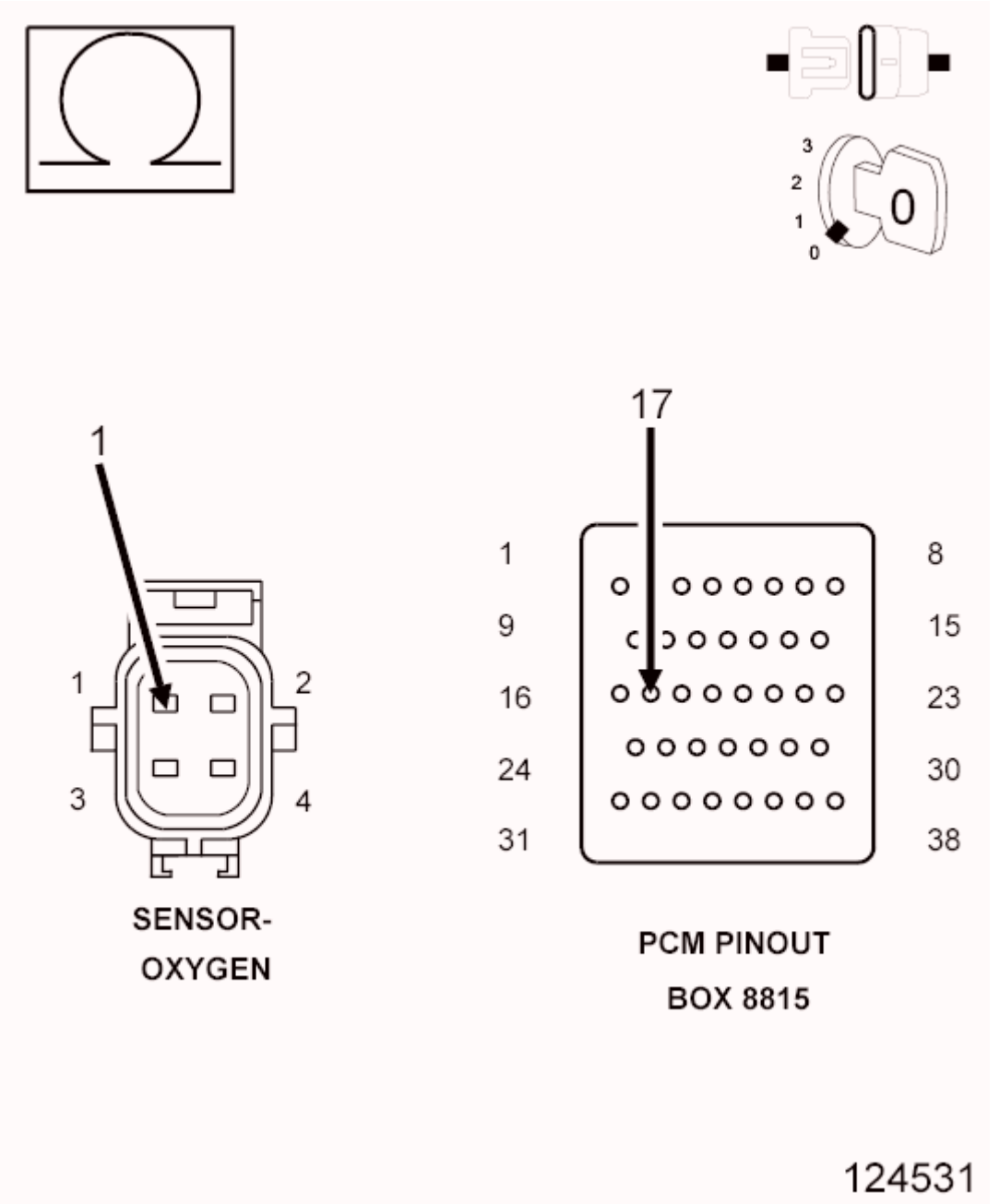

Fig. 192: Measuring Resistance Of O2 Sensor Heater Control Circuit Between Oxygen Sensor Harness Connector And Appropriate Terminal Of PCM Pinout Box 8815
Courtesy of CHRYSLER GROUP, LLC

1. Disconnect the C2 PCM harness connector.

CAUTION: Do not probe the PCM harness connectors. Probing the PCM harness connectors will damage the PCM terminals resulting in poor terminal to pin connection. Install the PCM Pinout Box (special tool #8815A, Kit, NGC, 38 Position) to perform diagnosis.

2. Measure the resistance of the (K199) O2 2/1 Heater Control circuit from the O2 harness connector to the appropriate terminal of PCM Pinout Box (special tool #8815A, Kit, NGC, 38 Position).

   Is the resistance below 0.5 of an Ohm?

   Yes

   - Go To 4.

   No

   - Repair the excessive resistance in the (K199) O2 2/1 Heater Control circuit.
   - Perform the POWERTRAIN VERIFICATION TEST. Refer to **POWERTRAIN VERIFICATION TEST** .

4. **(Z908) O2 SENSOR HEATER GROUND CIRCUIT OPEN**

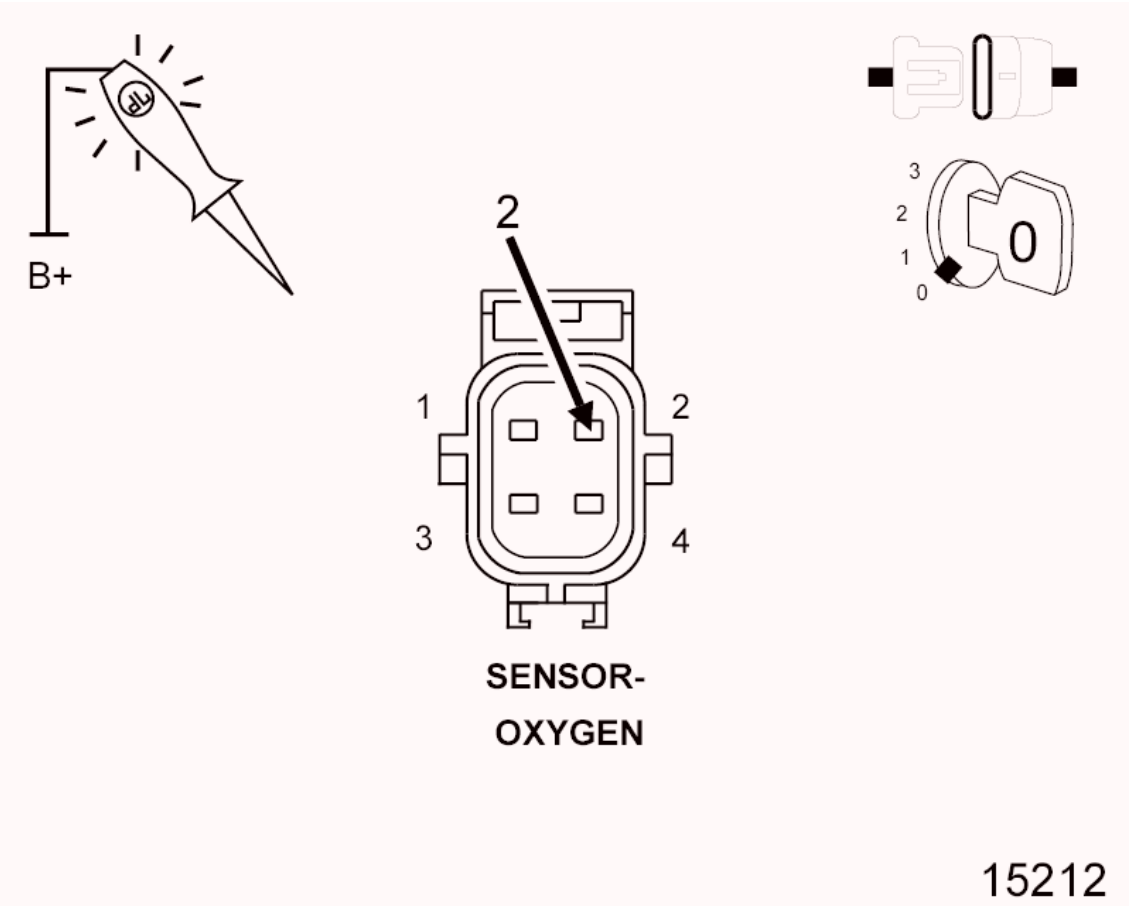

Fig. 193: Using 12-Volt Test Light Connected To 12 Volts To Check Ground Circuit In Oxygen Sensor Harness Connector
Courtesy of CHRYSLER GROUP, LLC

1. Using a 12-volt test light connected to 12 Volts, check the (Z908) Ground circuit in the 2/1 Oxygen

Sensor harness connector.

NOTE: **The test light should be illuminated and bright. Compare the brightness to that of a direct connection to the battery.**

Is the test light illuminated and bright?

Yes

- Go To 5.

No

- Repair the excessive resistance in the (Z908) O2 Heater ground circuit.
- Perform the POWERTRAIN VERIFICATION TEST. Refer to **POWERTRAIN VERIFICATION TEST** .

5. **POWERTRAIN CONTROL MODULE (PCM)**
    1. Using the wiring diagram/schematic as a guide, inspect the wiring and connectors between the Oxygen Sensor 2/1 and the Powertrain Control Module (PCM).
    2. Look for any chafed, pierced, pinched or partially broken wires.
    3. Look for broken, bent, pushed out or corroded terminals. Verify that there is good pin to terminal contact in the Sensor and Control Module connectors.
    4. Refer to any Technical Service Bulletins that may apply.

    Were there any problems found?

    Yes

    - Repair as necessary.
    - Perform the POWERTRAIN VERIFICATION TEST. Refer to **POWERTRAIN VERIFICATION TEST** .

    No

    - Replace and program the Powertrain Control Module in accordance with the Service Information. Refer to **MODULE, POWERTRAIN CONTROL, REMOVAL** .
    - Perform the POWERTRAIN VERIFICATION TEST. Refer to **POWERTRAIN VERIFICATION TEST** .

P0157-O2 SENSOR 2/2 CIRCUIT LOW

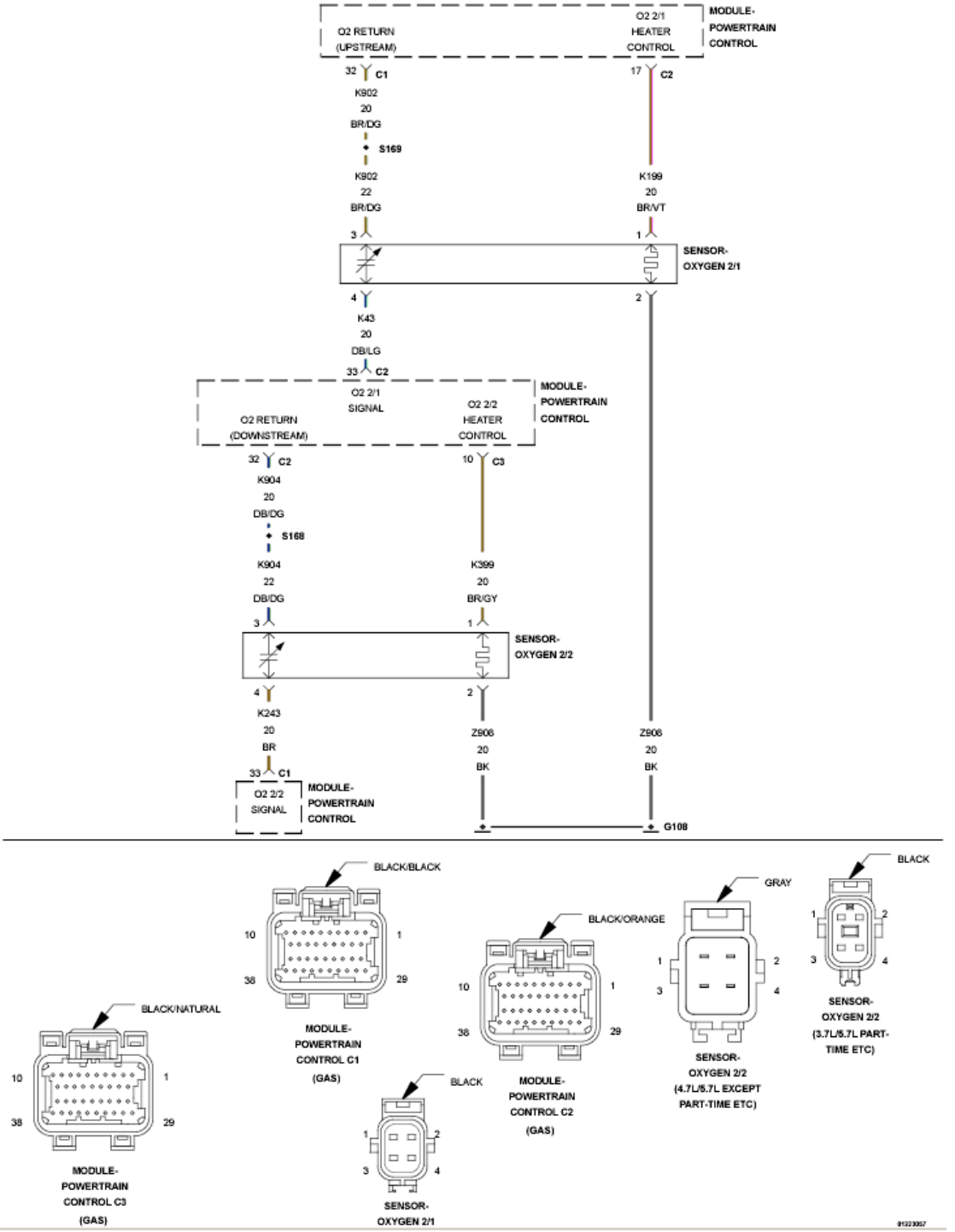

Fig. 194: O2 Sensor Circuit Schematic
Courtesy of CHRYSLER GROUP, LLC

For a complete wiring diagram, **refer to appropriate SYSTEM WIRING DIAGRAMS article** .

WHEN MONITORED:

Engine running for less than 30 seconds and the O2 Sensor Heater Temperature is less than 251° C (484° F) with battery voltage greater 10.99 Volts.

SET CONDITION:

The Powertrain Control Module (PCM) detects that the 2/2 Oxygen Sensor signal voltage is below the acceptable value. The DTC will set as Pending after one trip and Active after two trips. Three good trips to turn off the MIL.

POSSIBLE CAUSES

Possible Causes
(K904) O2 RETURN DOWNSTREAM CIRCUIT SHORTED TO GROUND
(K243) O2 2/2 SIGNAL CIRCUIT SHORTED TO GROUND
(K243) O2 SIGNAL CIRCUIT SHORTED TO THE (K904) O2 RETURN DOWNSTREAM CIRCUIT
(K243) O2 SIGNAL CIRCUIT SHORTED TO THE (Z908) O2 2/2 HEATER GROUND CIRCUIT
2/2 O2 SENSOR
POWERTRAIN CONTROL MODULE (PCM)

Always perform the Pre-Diagnostic Troubleshooting procedure before proceeding. Refer to PRE-DIAGNOSTIC TROUBLESHOOTING PROCEDURE .

DIAGNOSTIC TEST

1. **ACTIVE DTC**
    1. Turn the ignition on.
    2. With the scan tool, select View DTCs. Record DTC and Freeze Frame information.
    3. Start the engine and allow it to idle for at least 60 seconds.

        WARNING: **When the engine is operating, do not stand in direct line with the fan. Do not put your hands near the pulleys, belts or fan. Do not wear loose clothing. Failure to follow these instructions may result in possible serious or fatal injury.**

    4. With the scan tool, select View DTCs.

        Is the DTC Active at this time?

        Yes

        - Go To 2.

        No

        - Perform the INTERMITTENT CONDITION diagnostic procedure. Refer to

INTERMITTENT CONDITION .

2. **(K243) O2 2/2 SIGNAL CIRCUIT**
    1. Turn the ignition off.
    2. Disconnect the 2/2 O2 Sensor harness connector.
    3. Ignition on, engine not running.
    4. With the scan tool, monitor the 2/2 O2 Sensor voltage.

    Is the O2 Sensor voltage between 4.1 and 5.0 Volts?

    Yes

    - Go To 3.

    No

    - Go To 5.
3. **O2 SENSOR**

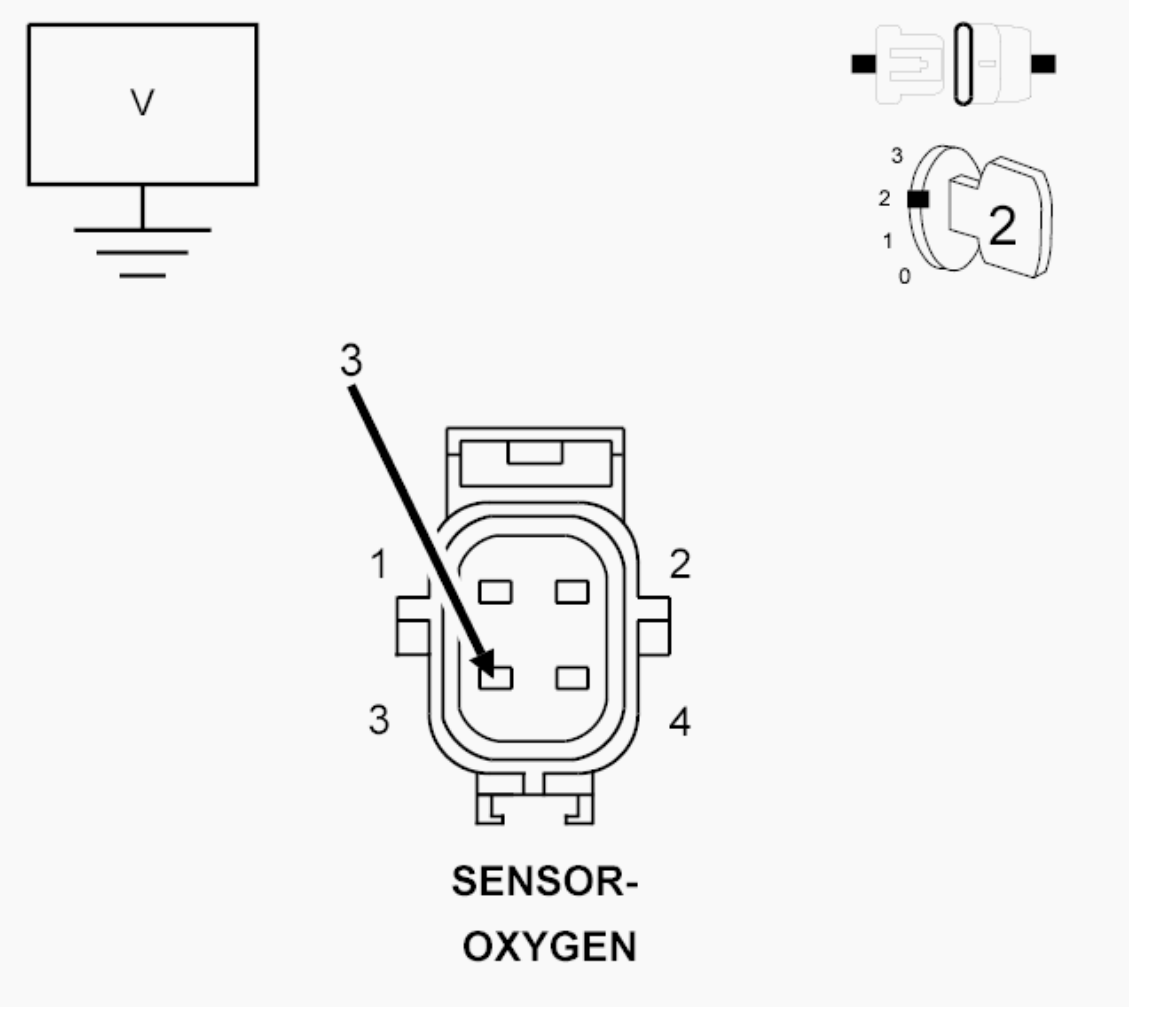

Fig. 195: Measuring Voltage On O2 Sensor Return Circuit In O2 Sensor Harness Connector
Courtesy of CHRYSLER GROUP, LLC

1. Measure the voltage on the (K904) O2 Return Downstream circuit in the O2 Sensor harness connector.

   Is the voltage at 2.5 Volts?

   Yes

   - Verify that there is good pin to terminal contact in the O2 Sensor and Powertrain Control Module connectors. Replace the 2/2 O2 Sensor if no problems were found with the connectors.
   - Perform the POWERTRAIN VERIFICATION TEST. Refer to **POWERTRAIN VERIFICATION TEST** .

   No

   - Go To 4.

4. **(K904) O2 RETURN DOWNSTREAM CIRCUIT SHORTED TO GROUND**

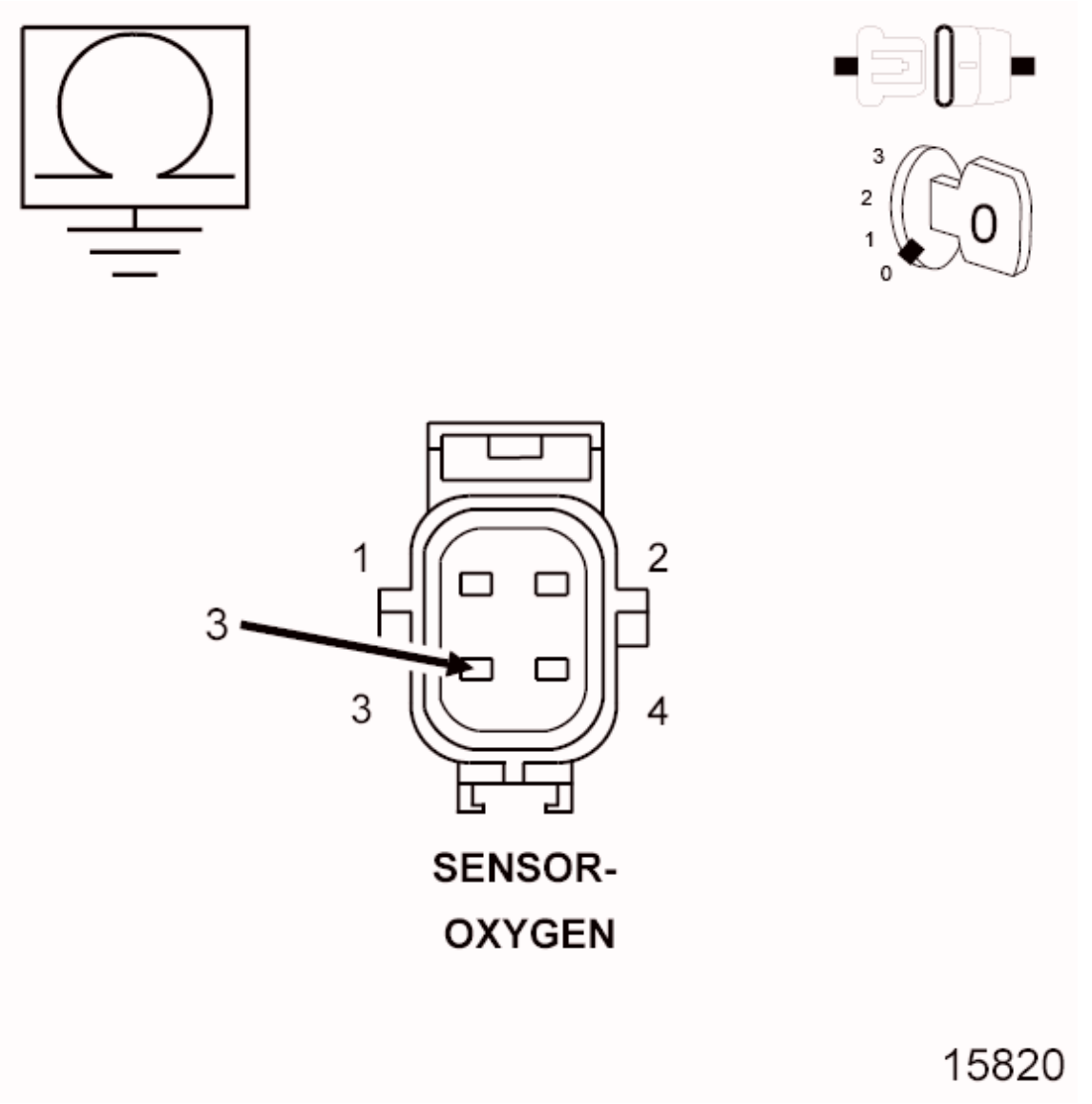

Fig. 196: Measuring Resistance Between Ground And O2 Sensor Return Circuit In O2 Sensor Harness Connector
Courtesy of CHRYSLER GROUP, LLC

1. Turn the ignition off.
2. Disconnect the C2 PCM harness connector.
3. Measure the resistance between ground and the (K904) O2 Return Downstream circuit in the O2 Sensor harness connector.

   Is the resistance below 100 Ohms?

   Yes

   - Repair the short to ground in the (K904) O2 Return Downstream circuit.

- Perform the POWERTRAIN VERIFICATION TEST. Refer to **POWERTRAIN VERIFICATION TEST** .

No

- Go To 8.

5. **(K243) O2 2/2 SIGNAL CIRCUIT SHORTED TO GROUND**

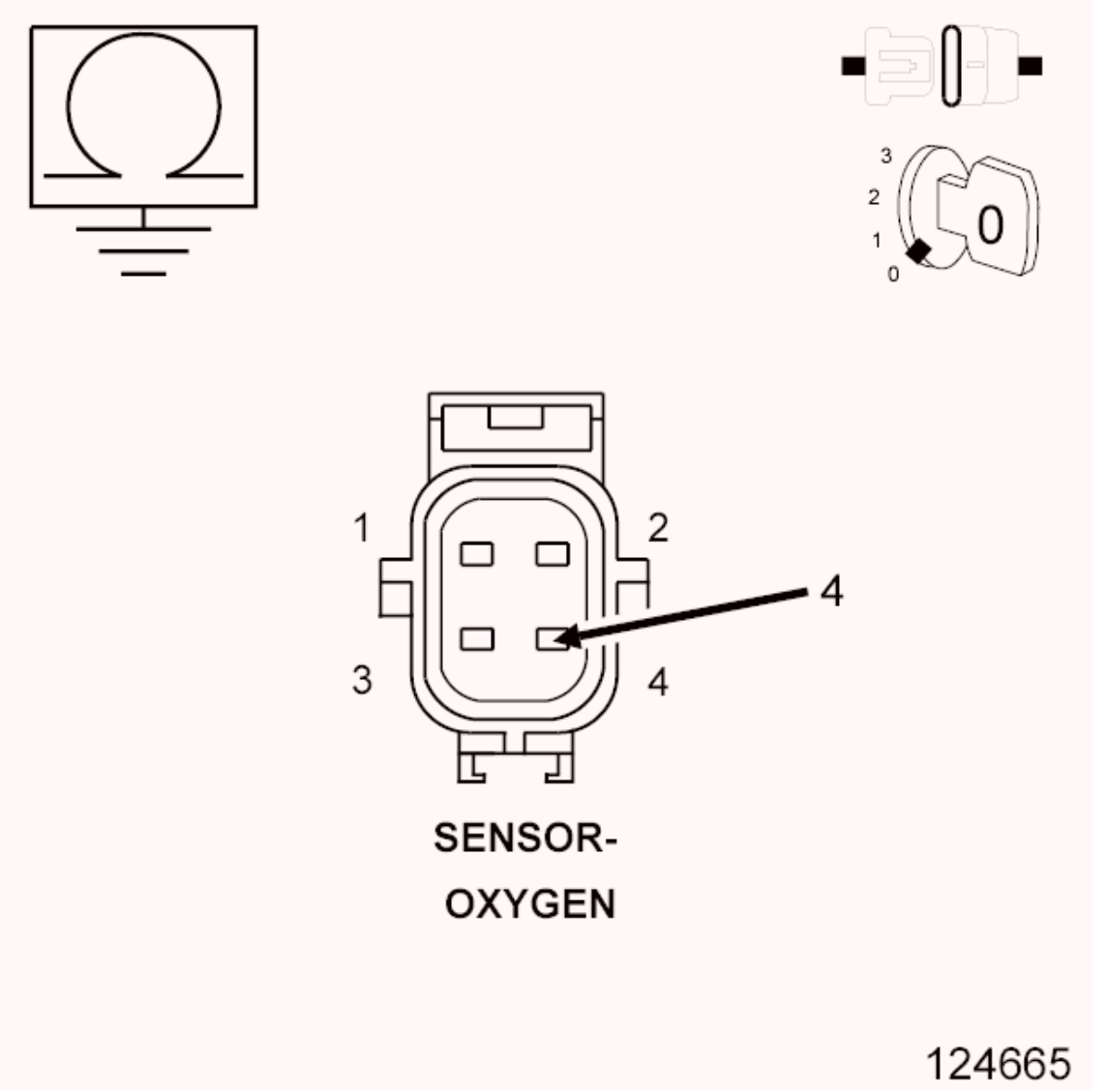

Fig. 197: Measuring Resistance Between Ground And O2 Sensor Signal Circuit In O2 Sensor Harness Connector
Courtesy of CHRYSLER GROUP, LLC

1. Turn the ignition off.
2. Disconnect the C1 and C2 PCM harness connectors.
3. Measure the resistance between ground and the (K243) O2 2/2 Signal circuit in the O2 Sensor

harness connector.

Is the resistance below 100 Ohms?

Yes

- Repair the short to ground in the (K243) O2 2/2 Signal circuit.
- Perform the POWERTRAIN VERIFICATION TEST. Refer to **POWERTRAIN VERIFICATION TEST** .

No

- Go To 6.

6. **(K243) O2 2/2 SIGNAL CIRCUIT SHORTED TO THE (K904) O2 RETURN DOWNSTREAM CIRCUIT**

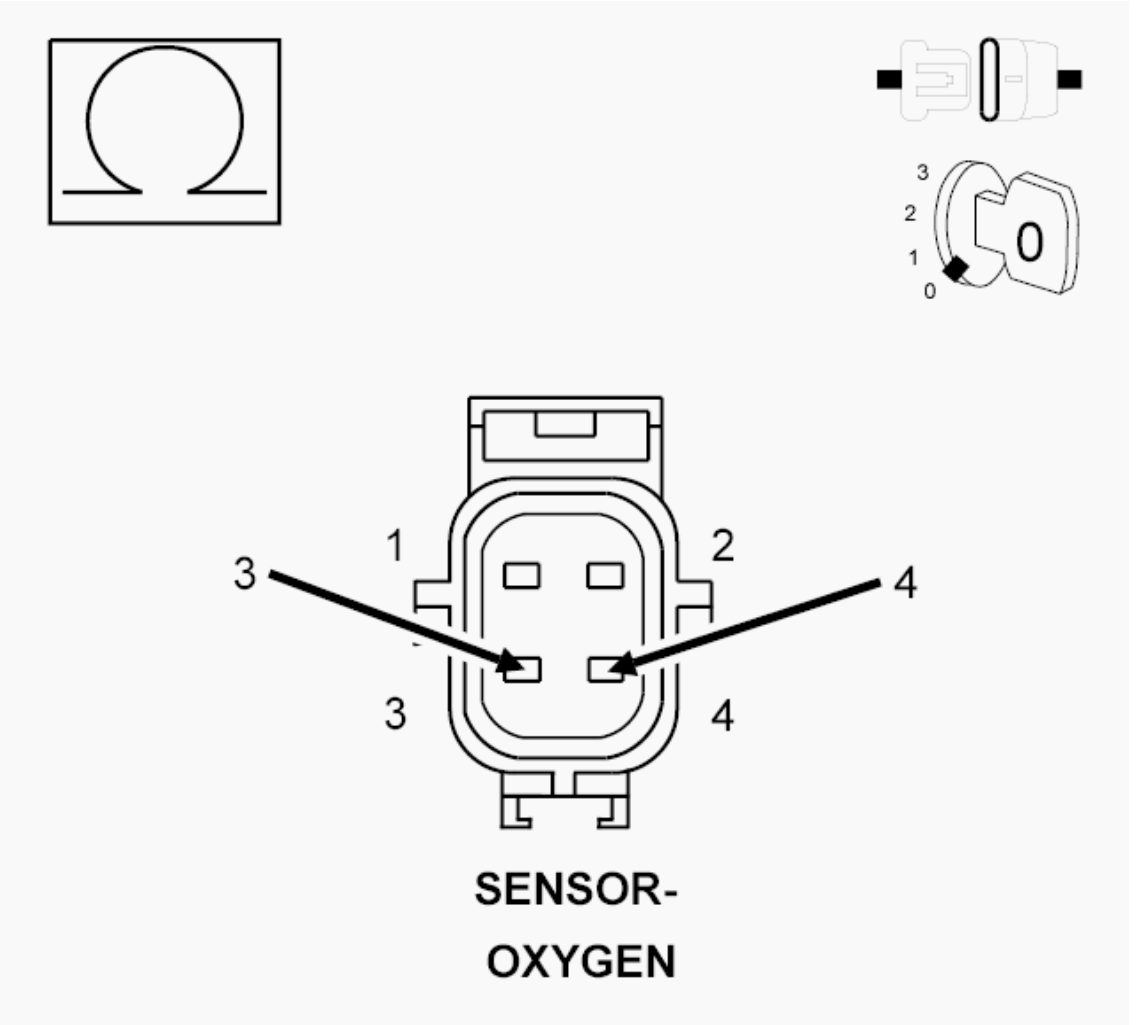

Fig. 198: Measuring Resistance Between O2 Sensor Signal Circuit And O2 Sensor Return Circuit In O2 Sensor Harness Connector

Courtesy of CHRYSLER GROUP, LLC

1. Measure the resistance between the (K243) O2 2/2 Signal circuit and the (K904) O2 Return Downstream circuit in the O2 Sensor harness connector.

   Is the resistance below 100 Ohms?

   Yes

   - Repair the short between the (K904) O2 Return Downstream circuit and the (K243) O2 2/2 Signal circuit.
   - Perform the POWERTRAIN VERIFICATION TEST. Refer to **POWERTRAIN VERIFICATION TEST** .

   No

   - Go To 7.

7. **(K243) O2 2/2 SIGNAL CIRCUIT SHORTED TO THE (Z908) O2 2/2 HEATER GROUND CIRCUIT**

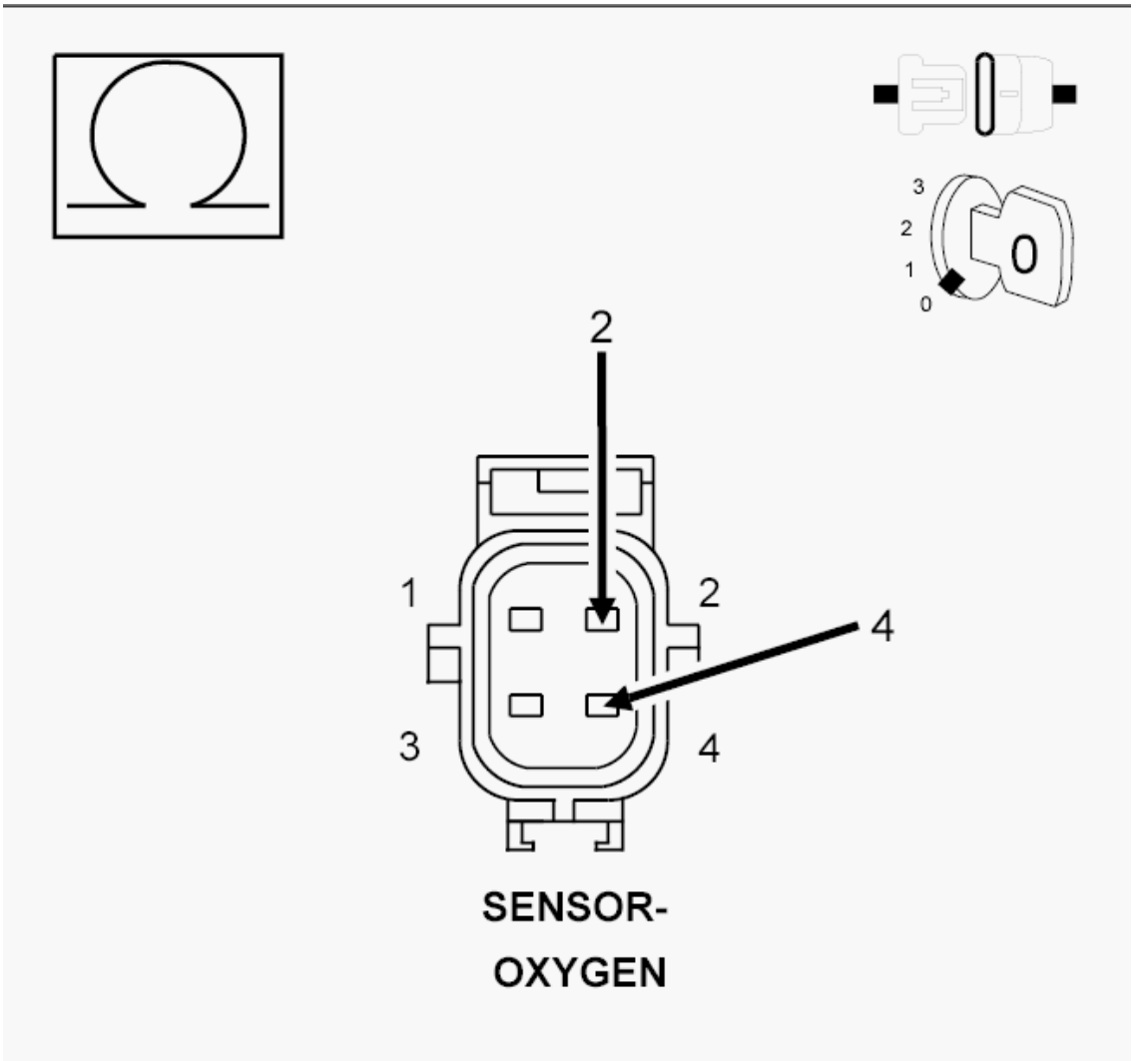

Fig. 199: Measuring Resistance Between O2 Sensor Signal Circuit And O2 Sensor Heater Ground Circuit In O2 Sensor Harness Connector
Courtesy of CHRYSLER GROUP, LLC

1. Measure the resistance between the (K243) O2 2/2 Signal circuit and the (Z908) O2 2/2 Heater ground circuit in the O2 Sensor harness connector.

   Is the resistance below 100 Ohms?

   Yes

   - Repair the short between the (Z908) O2 2/2 Heater ground circuit and the (K243) O2 2/2 Signal circuit.
   - Perform the POWERTRAIN VERIFICATION TEST. Refer to **POWERTRAIN VERIFICATION TEST** .

   No

- Go To 8.

8. **POWERTRAIN CONTROL MODULE (PCM)**
    1. Using the wiring diagram/schematic as a guide, inspect the wiring and connectors between the Oxygen Sensor 2/2 and the Powertrain Control Module (PCM).
    2. Look for any chafed, pierced, pinched or partially broken wires.
    3. Look for broken, bent, pushed out or corroded terminals. Verify that there is good pin to terminal contact in the Sensor and Control Module connectors.
    4. Refer to any Technical Service Bulletins that may apply.

    Were there any problems found?

    Yes

    - Repair as necessary.
    - Perform the POWERTRAIN VERIFICATION TEST. Refer to **POWERTRAIN VERIFICATION TEST** .

    No

    - Replace and program the Powertrain Control Module in accordance with the Service Information. Refer to **MODULE, POWERTRAIN CONTROL, REMOVAL** .
    - Perform the POWERTRAIN VERIFICATION TEST. Refer to **POWERTRAIN VERIFICATION TEST** .

P0158-O2 SENSOR 2/2 CIRCUIT HIGH

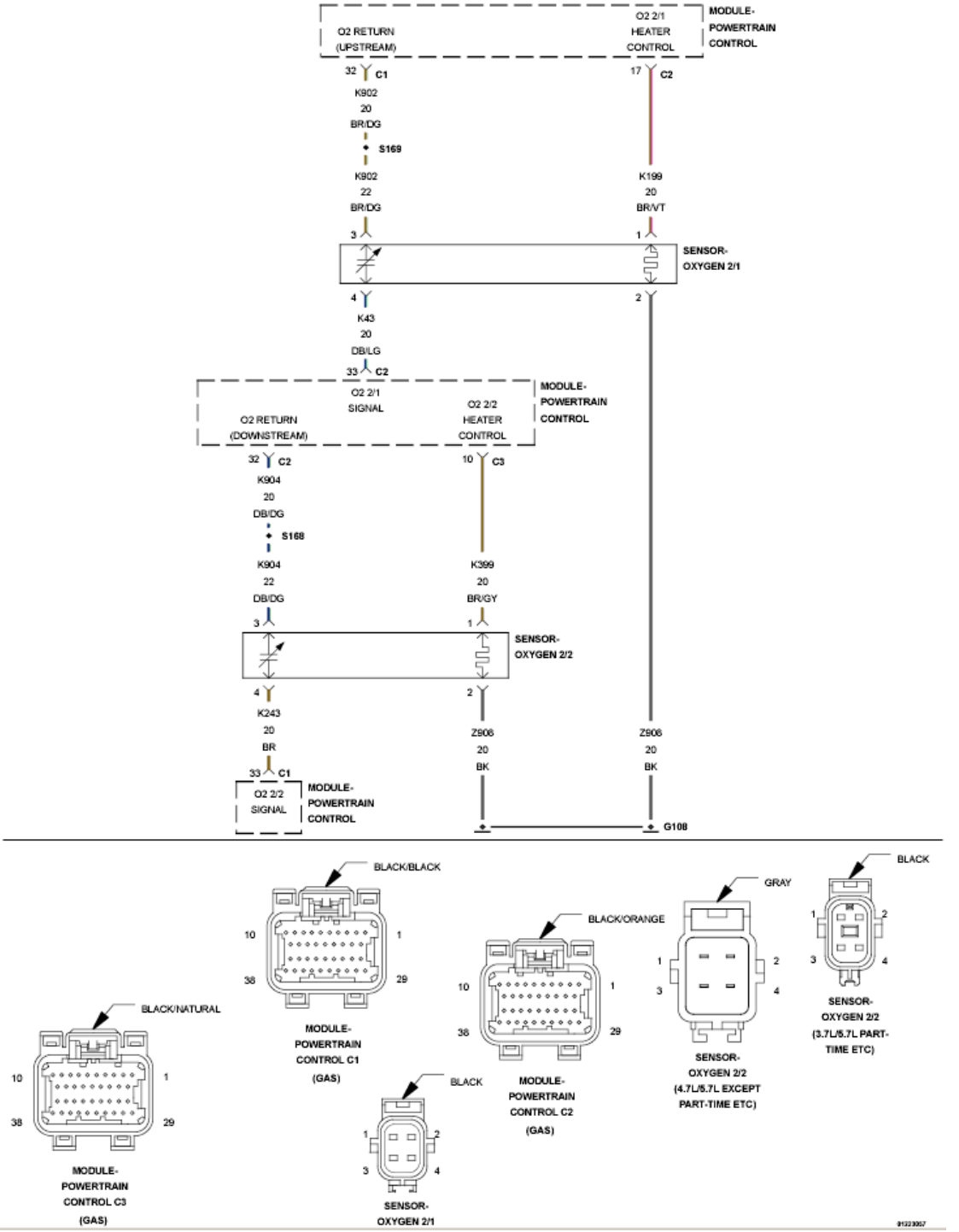

Fig. 200: O2 Sensor Circuit Schematic
Courtesy of CHRYSLER GROUP, LLC

For a complete wiring diagram, **refer to appropriate SYSTEM WIRING DIAGRAMS article** .

WHEN MONITORED:

Continuously with the engine running, no O2 sensor heater DTCs present, 2/2 Oxygen Sensor heater temperature within a specific range and battery voltage greater than 10.4 Volts.

SET CONDITION:

The Powertrain Control Module (PCM) detects that the 2/2 Oxygen Sensor voltage is greater than the maximum acceptable value for a specific amount of time, based on O2 sensor heater temperature. The DTC will set as Pending after one trip and Active after two trips. Three good trips to turn off the MIL.

POSSIBLE CAUSES

Possible Causes
(K243) O2 2/2 SIGNAL CIRCUIT SHORTED TO VOLTAGE
(K904) O2 RETURN DOWNSTREAM CIRCUIT SHORTED TO VOLTAGE
(K243) O2 2/2 SIGNAL CIRCUIT OPEN
(K904) O2 RETURN DOWNSTREAM CIRCUIT OPEN
2/2 O2 SENSOR
POWERTRAIN CONTROL MODULE (PCM)

Always perform the Pre-Diagnostic Troubleshooting procedure before proceeding. Refer to PRE-DIAGNOSTIC TROUBLESHOOTING PROCEDURE .

DIAGNOSTIC TEST

1. **ACTIVE DTC**

   NOTE: If an O2 sensor signal circuit is shorted to voltage, all O2 sensor voltage readings displayed on the scan tool will be approximately 5.0 Volts. Diagnose the sensor that set the most current DTC.

   1. Start the engine and allow it to idle for at least 60 seconds.

      WARNING: When the engine is operating, do not stand in direct line with the fan. Do not put your hands near the pulleys, belts or fan. Do not wear loose clothing. Failure to follow these instructions may result in possible serious or fatal injury.

   2. With the scan tool, select View DTCs.

      Is the DTC Active at this time?

      Yes

      - Go To 2.

      No

- Perform the INTERMITTENT CONDITION diagnostic procedure. Refer to **INTERMITTENT CONDITION** .

2. **(K243) O2 2/2 SIGNAL CIRCUIT SHORTED TO VOLTAGE**

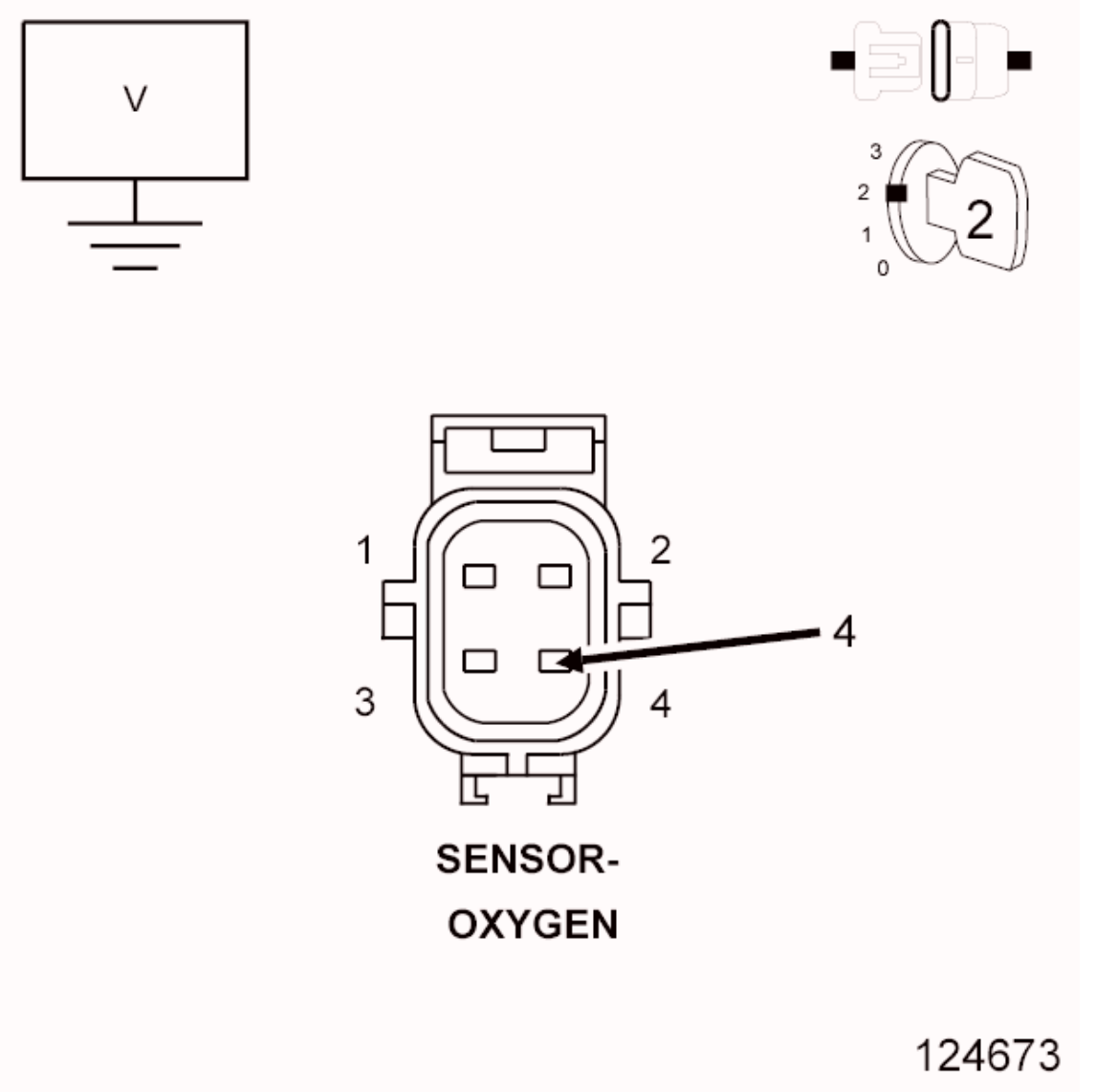

Fig. 201: Measuring Voltage Of O2 Sensor Signal Circuit In O2 Sensor Harness Connector
Courtesy of CHRYSLER GROUP, LLC

1. Turn the ignition off.
2. Disconnect the C1 and C2 PCM harness connectors.
3. Disconnect the 2/2 O2 Sensor harness connector.
4. Turn the ignition on.
5. Measure the voltage on the (K243) O2 Sensor 2/2 Signal circuit in the O2 Sensor harness connector.

NOTE: **Measure the voltage in reference to ground, not the (K904) O2 Return Downstream circuit.**

Is there any voltage present?

Yes

- Repair the short to voltage in the (K243) O2 Sensor 2/2 Signal circuit.
- Perform the POWERTRAIN VERIFICATION TEST. Refer to **POWERTRAIN VERIFICATION TEST** .

No

- Go To 3.

3. **(K904) O2 RETURN DOWNSTREAM CIRCUIT SHORTED TO VOLTAGE**

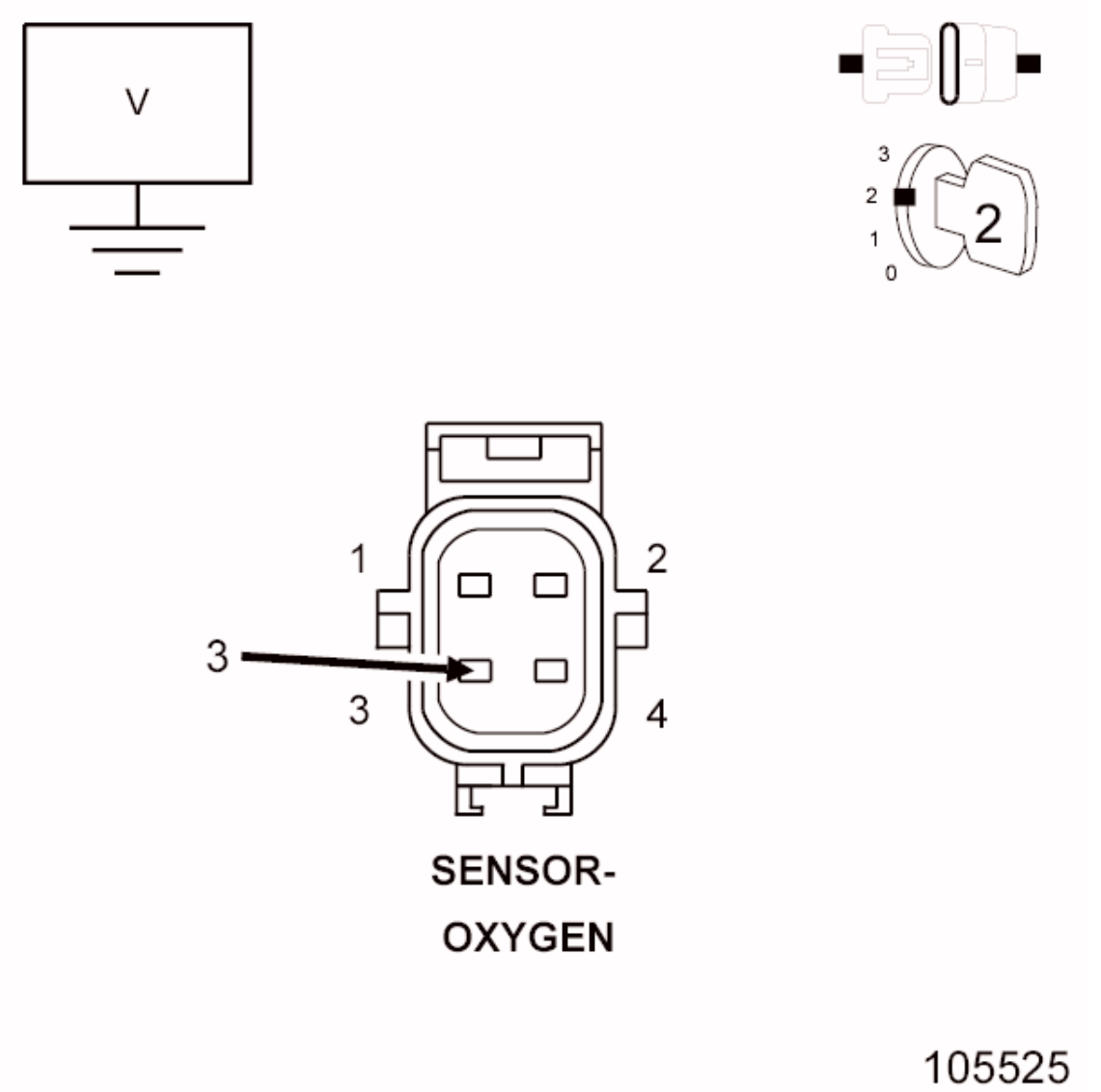

Fig. 202: Measuring Voltage On O2 Sensor Return Circuit In O2 Sensor Harness Connector
Courtesy of CHRYSLER GROUP, LLC

1. Measure the voltage on the (K904) O2 Return Downstream circuit in the 2/2 O2 Sensor harness connector.

   Is there any voltage present?

   Yes

   - Repair the short to voltage in the (K904) O2 Return Downstream circuit.
   - Perform the POWERTRAIN VERIFICATION TEST. Refer to **POWERTRAIN VERIFICATION TEST** .

   No

- Go To 4.

4. **O2 SENSOR**

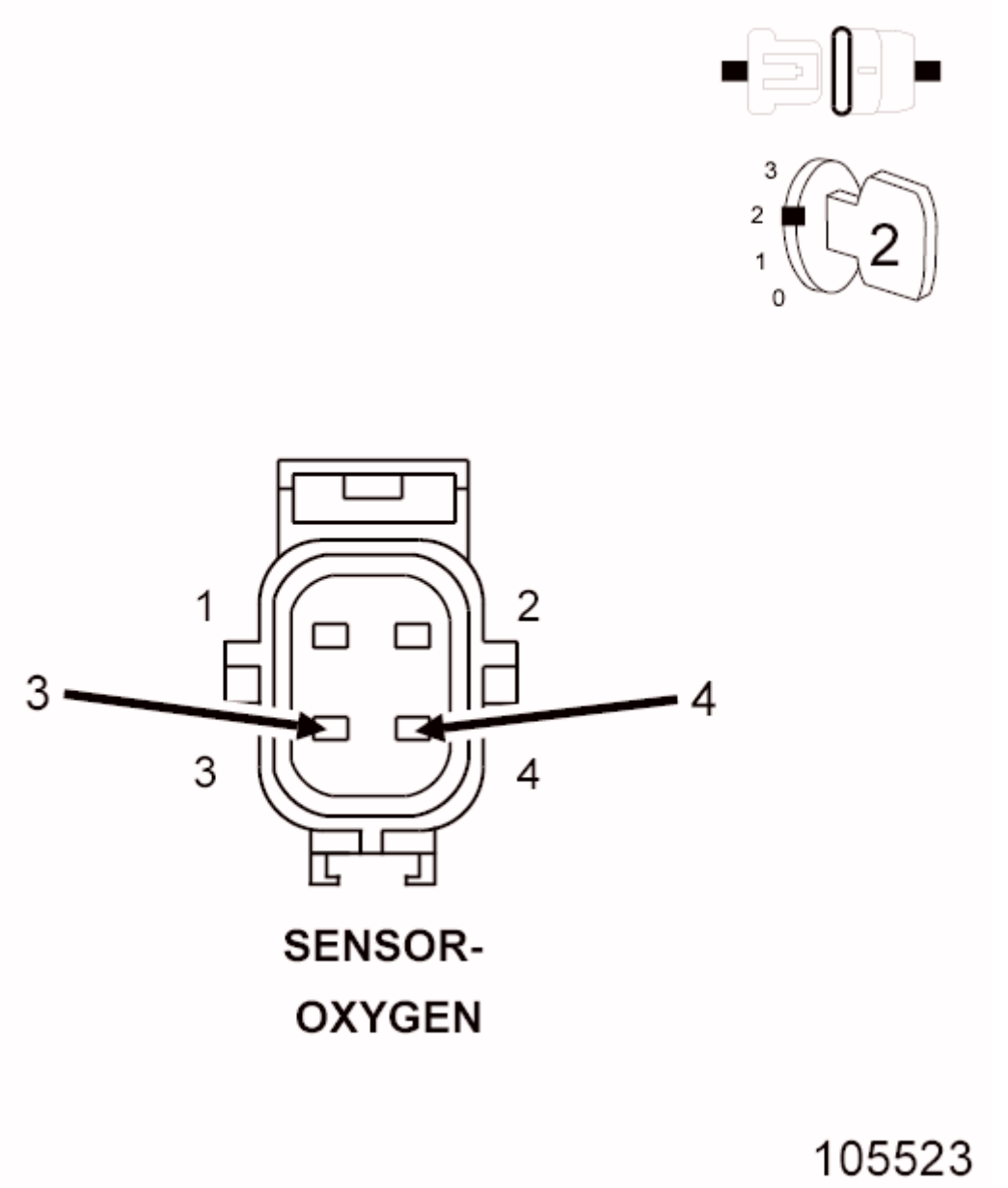

Fig. 203: O2 Sensor Harness Connector
Courtesy of CHRYSLER GROUP, LLC

1. Turn the ignition off.
2. Connect the C1 and C2 PCM harness connectors.
3. Ignition on, engine not running.
4. With the scan tool, monitor the 2/2 O2 Sensor voltage.
5. Connect a jumper wire between the (K243) O2 2/2 Signal circuit and the (K904) O2 Return Downstream circuit in the 2/2 O2 Sensor harness connector.

Is the voltage between 2.3 and 2.7 Volts with the jumper wire installed?

Yes

- Verify that there is good pin to terminal contact in the O2 Sensor and Powertrain Control Module connectors. Replace the 2/2 O2 Sensor if no problems were found with the connectors.
- Perform the POWERTRAIN VERIFICATION TEST. Refer to **POWERTRAIN VERIFICATION TEST** .

No

- Go To 5.

NOTE: Remove the jumper wire before continuing.

5. **(K243) O2 2/2 SIGNAL CIRCUIT OPEN**

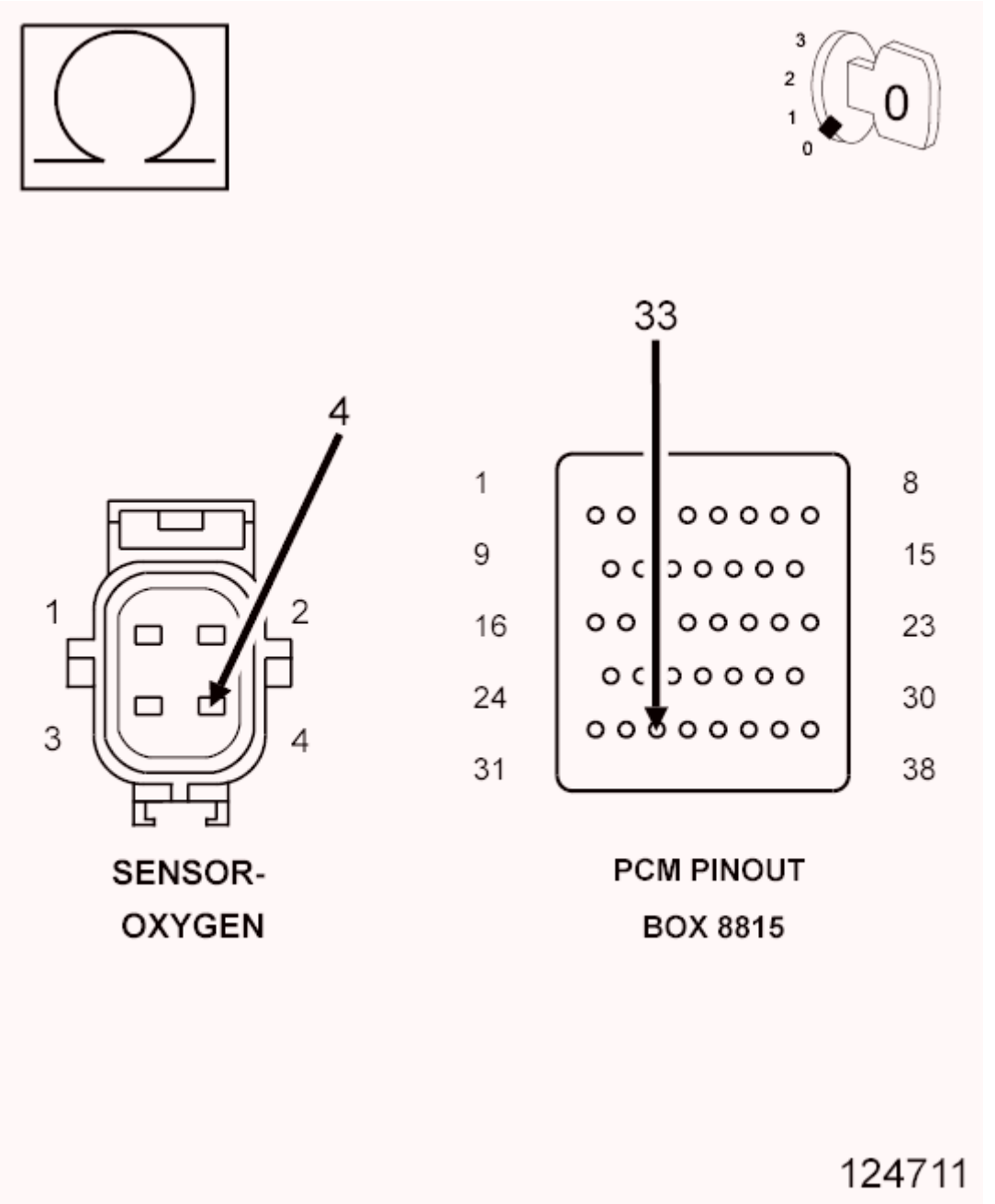

Fig. 204: Measuring Resistance Of (K243) O2 2/2 Signal Circuit From O2 Sensor Harness Connector To Appropriate Terminal Of PCM Pinout Box 8815
Courtesy of CHRYSLER GROUP, LLC

1. Turn the ignition off.
2. Disconnect the C1 and C2 PCM harness connectors.

CAUTION: Do not probe the PCM harness connectors. Probing the PCM harness connectors will damage the PCM terminals resulting in poor terminal to pin connection. Install the PCM Pinout Box

(special tool #8815A, Kit, NGC, 38 Position) to perform diagnosis.

3. Measure the resistance of the (K243) O2 2/2 Signal circuit from the O2 Sensor harness connector to the appropriate terminal of PCM Pinout Box (special tool #8815A, Kit, NGC, 38 Position).

   Is the resistance below 5.0 Ohms?

   Yes

   - Go To 6.

   No

   - Repair the open in the (K243) O2 2/2 Signal circuit.
   - Perform the POWERTRAIN VERIFICATION TEST. Refer to **POWERTRAIN VERIFICATION TEST** .

6. **(K904) O2 RETURN DOWNSTREAM CIRCUIT OPEN**

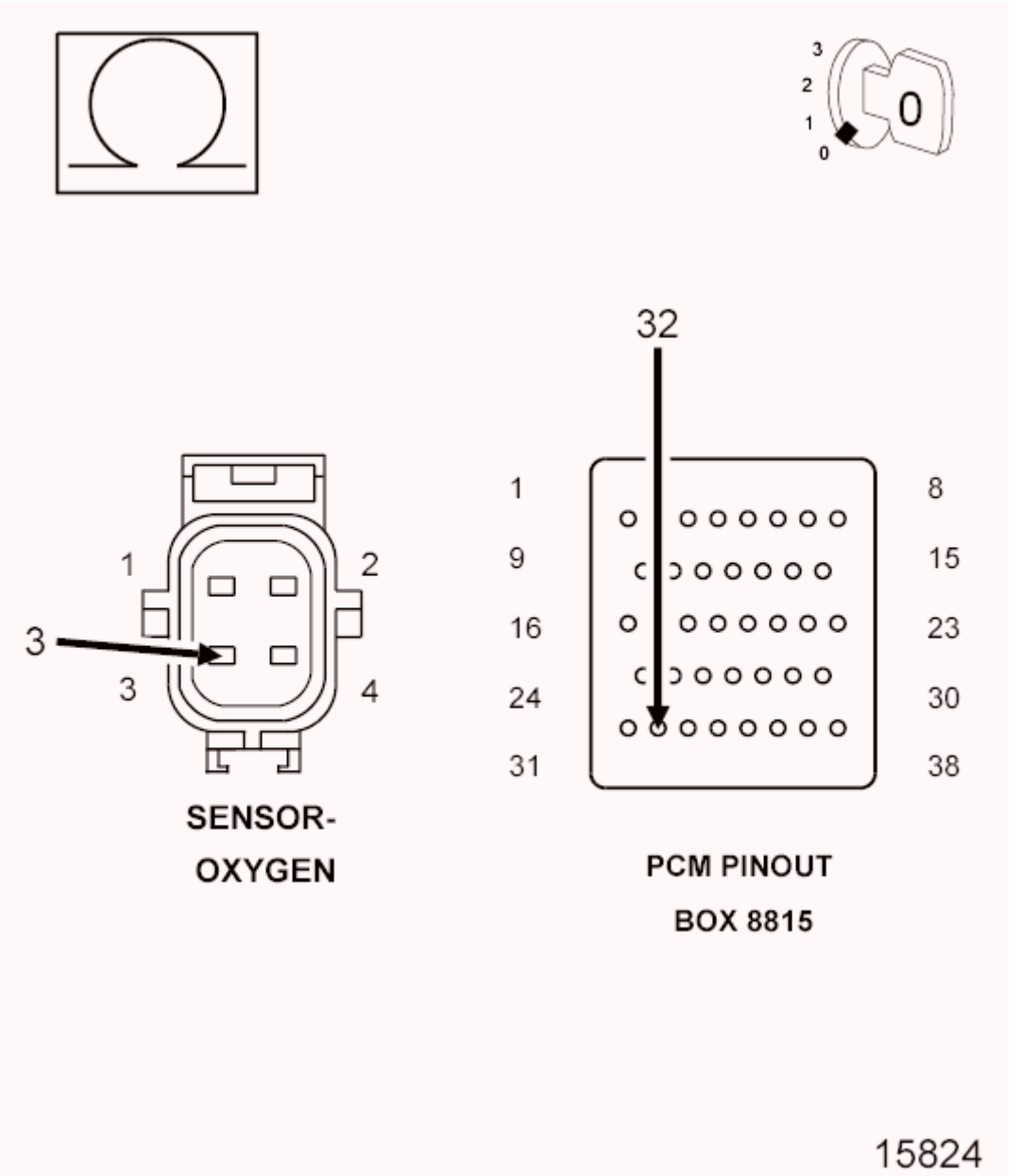

Fig. 205: Measuring Resistance Of (K904) O2 Return Downstream Circuit From O2 Sensor Harness Connector To Appropriate Terminal Of PCM Pinout Box 8815
Courtesy of CHRYSLER GROUP, LLC

1. Measure the resistance of the (K904) O2 Return Downstream circuit from the O2 Sensor harness connector to the appropriate terminal of PCM Pinout Box (special tool #8815A, Kit, NGC, 38 Position).

   Is the resistance below 5.0 Ohms?

   Yes

   - Go To 7.

No

- Repair the open in the (K904) O2 Return Downstream circuit.
- Perform the POWERTRAIN VERIFICATION TEST. Refer to **POWERTRAIN VERIFICATION TEST** .

7. **POWERTRAIN CONTROL MODULE (PCM)**
    1. Using the wiring diagram/schematic as a guide, inspect the wiring and connectors between the Oxygen Sensor 2/2 and the Powertrain Control Module (PCM).
    2. Look for any chafed, pierced, pinched or partially broken wires.
    3. Look for broken, bent, pushed out or corroded terminals. Verify that there is good pin to terminal contact in the Sensor and Control Module connectors.
    4. Refer to any Technical Service Bulletins that may apply.

    Were there any problems found?

    Yes

    - Repair as necessary.
    - Perform the POWERTRAIN VERIFICATION TEST. Refer to **POWERTRAIN VERIFICATION TEST** .

    No

    - Replace and program the Powertrain Control Module in accordance with the Service Information. Refer to **MODULE, POWERTRAIN CONTROL, REMOVAL** .
    - Perform the POWERTRAIN VERIFICATION TEST. Refer to **POWERTRAIN VERIFICATION TEST** .

P0159-O2 SENSOR 2/2 SLOW RESPONSE

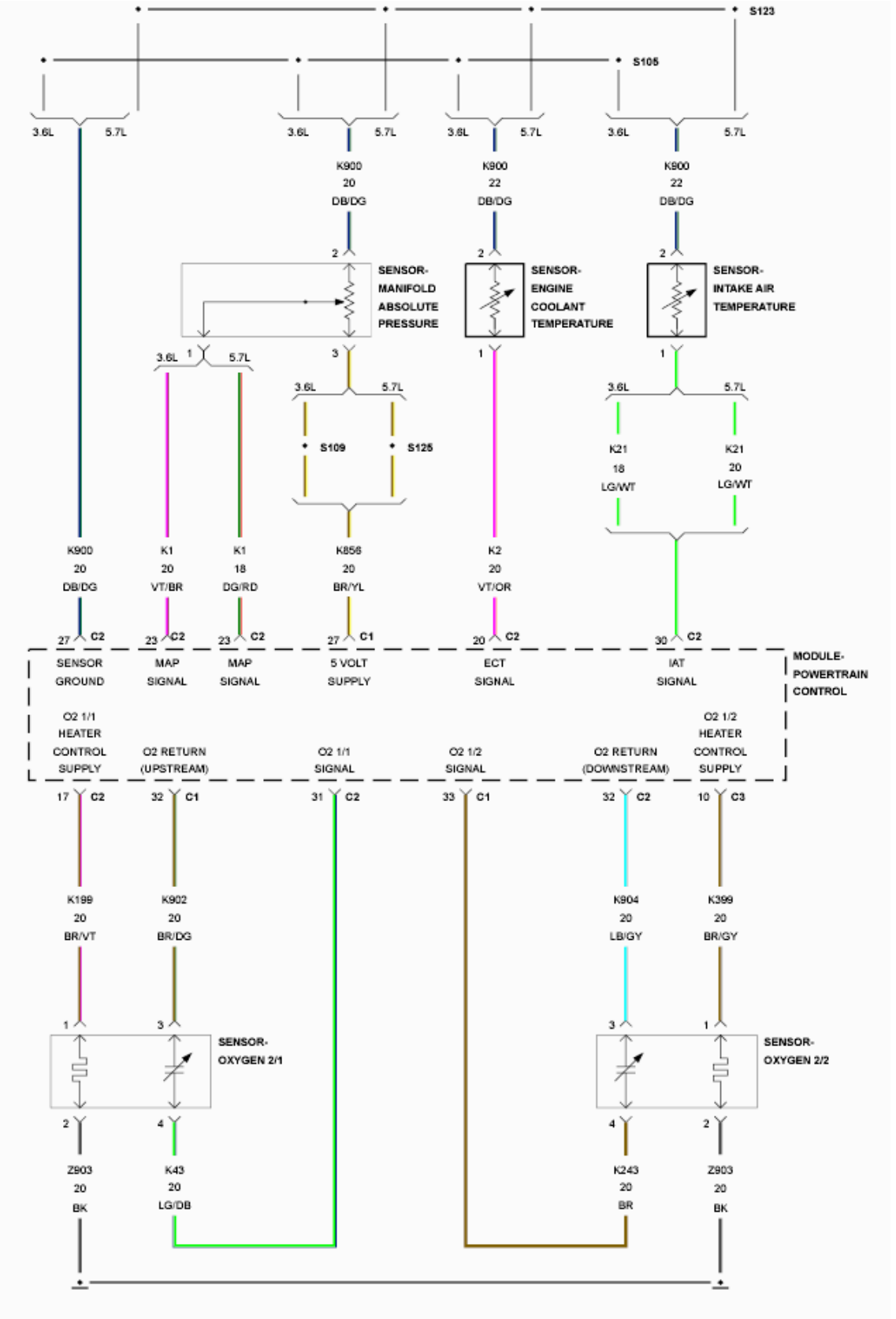

Fig. 206: O2 Sensor Circuit Schematic

Courtesy of CHRYSLER GROUP, LLC

For a complete wiring diagram, **refer to appropriate SYSTEM WIRING DIAGRAMS article** .

THEORY OF OPERATION

The downstream O2 Sensor is located in the exhaust path behind the catalytic converter, is monitored for proper response to assure optimum catalytic converter efficiency. The downstream O2 response monitor is intended to diagnose a downstream O2 sensor that is not moving or stuck in a voltage window and to insure accurate information for catalyst monitor diagnosis.

WHEN MONITORED:

With the engine running, vehicle speed above 96 kph (60 mph), throttle open for a minimum of 120 seconds, ECT greater than 70° C (158° F), catalytic converter temperature greater than 600° C (1112° F), and downstream oxygen sensor in a rich state. During a decel fuel shutoff event, the downstream oxygen sensor should switch from rich to lean within a specific time.

SET CONDITION:

The Powertrain Control Module (PCM) monitors the downstream O2 sensor. If the PCM does not detect a rich to lean switch within a specific time during a decel fuel shutoff event, the monitor will fail. One trip fault. Three good trips to turn off the MIL.

POSSIBLE CAUSES

Possible Causes
EXHAUST LEAK
(K243) O2 2/2 SIGNAL CIRCUIT
(K904) O2 RETURN DOWNSTREAM CIRCUIT
2/2 O2 SENSOR

Always perform the Pre-Diagnostic Troubleshooting procedure before proceeding. Refer to PRE-DIAGNOSTIC TROUBLESHOOTING PROCEDURE .

DIAGNOSTIC TEST

1. **ACTIVE DIAGNOSTIC TROUBLE CODE (DTC)**

NOTE: **Check for contaminants that may have damaged the O2 Sensor: contaminated fuel, unapproved silicone, oil and coolant.**

NOTE: **After the repairs have been made, verify proper O2 Sensor operation. If all the O2 Sensor voltage readings have not returned to normal, follow the diagnostic procedure for the remaining O2 Sensors.**

1. Start the engine.
2. Allow the engine to reach normal operating temperature.

WARNING: When the engine is operating, do not stand in direct line with the fan. Do not put your hands near the pulleys, belts or fan. Do not wear loose clothing. Failure to follow these instructions may result in possible serious or fatal injury.

3. With a scan tool, read DTCs.

NOTE: It may be necessary to drive the vehicle to meet the conditions to set this DTC, try to repeat the conditions in which the fault originally set by reviewing the Freeze Frame data.

Is the DTC Active or Pending at this time?

Yes

- Go To 2.

No

- Perform the INTERMITTENT CONDITION diagnostic procedure. Refer to **INTERMITTENT CONDITION** .

2. **CHECKING THE EXHAUST SYSTEM FOR LEAKS**
   1. Turn the ignition off.
   2. Raise the vehicle in accordance with the Service Information.

WARNING: The normal operating temperature of the exhaust system is very high. Never work around or attempt to service any part of the exhaust system until it has cooled. Special care should be taken when working near the catalytic converter. The temperature of the converter rises to a high level after a short period of engine operating time.

   3. Connect Exhaust Cone (special tool #8404-EC, Exhaust Cone) or (special tool #8404-EC, Exhaust Cone) to Air Pressure Regulator (with hose) W-18-MIL-1146AS.

CAUTION: The air pressure must not exceed 27.6 kPa (4 psi), otherwise engine damage can occur.

   4. Attach shop air to the air pressure regulator.
   5. Adjust the Air Pressure Regulator to 27.6 kPa (4 psi).
   6. Insert the exhaust cone into the vehicle tail pipe.

7. If the vehicle is equipped with dual exhaust. Use the (special tool #8404-ECT, Exhaust Cone, Truck) with equipped attached plug, plug one side of the dual exhaust pipe. Pressurize the other as described above.
8. Apply Mopar® Air Leak Detector PN# 05191804AA (or an equivalent leak finder liquid) to the following areas:
   - All welded joints from the exhaust manifold to 152.4 mm (6 inches) behind the downstream O2 sensor
   - O2 sensor seal points
   - O2 sensor boss welds
   - Flange/joint connection(s)
   - Exhaust manifold to cylinder head connection(s)
   - EGR solenoid gasket base and tube seal points (if equipped)
9. Watch for the liquid/soapy water to bubble.
10. Use the following definitions to help determine if system or component repair/replacement is necessary:

    Type 1 Leak is defined as a leak where very small foam like bubbles 1 mm (0.04 of an inch) or less appear.

    Any Type 1 or greater leaks found in welded joints, O2 sensor seal points or O2 sensor boss welds must be repaired or the component must be replaced.

    Type 2 Leak is defined as a leak where larger bubbles pea size, 8 mm (0.3 of an inch) or greater appear.

    Any Type 2 or greater leaks found in flange or joint connections, exhaust manifold to cylinder head connections, or EGR gasket and tube seal points must be repaired or the components must be replaced

Leak Location	Repair required if results at 27.6 kPa (4 psi) reveal bubble size:
Welded joints	Type 1, 1 mm (0.04 of an inch) or greater
O2 Sensor seal points	Type 1, 1 mm (0.04 of an inch) or greater
O2 Sensor boss welds	Type 1, 1 mm (0.04 of an inch) or greater
Flange / joint connections	Type 2, 8 mm (0.3 of an inch) or greater
Exhaust Manifold to cylinder head connections	Type 2, 8 mm (0.3 of an inch) or greater
EGR gasket and tube seal points	Type 2, 8 mm (0.3 of an inch) or greater

11. If a leak is found that matches the above definition, repair or replace the component as necessary.
12. Once the repair is complete, repeat the procedure to verify that all leaks have been repaired.

    Were any exhaust leaks found?

Yes

- Repair or replace the leaking exhaust parts as necessary.
- Perform the POWERTRAIN VERIFICATION TEST. Refer to **POWERTRAIN VERIFICATION TEST** .

No

- Go To 3.

3. **(K243) O2 2/2 SIGNAL CIRCUIT**

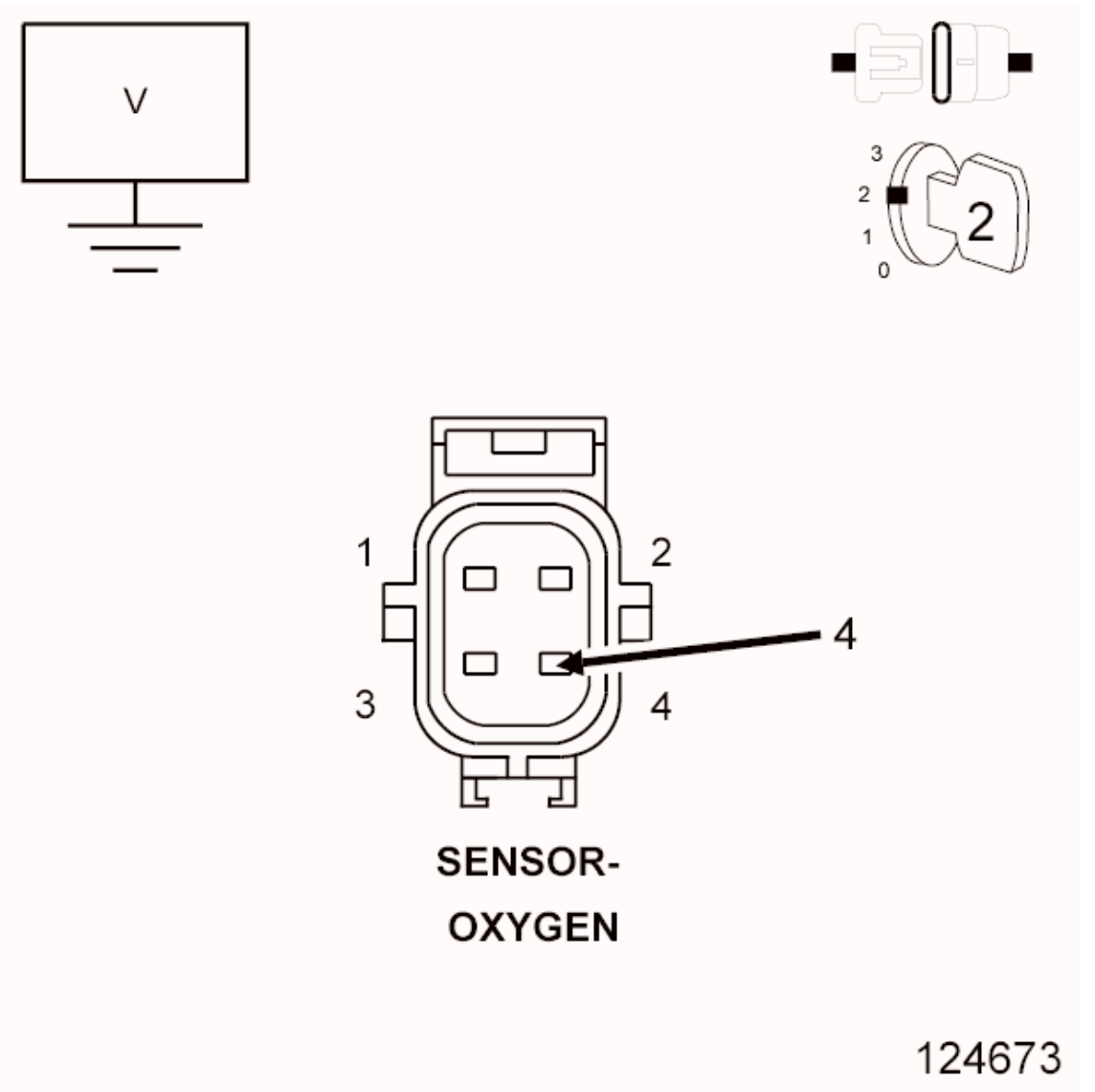

Fig. 207: Measuring Voltage Of O2 Sensor Signal Circuit In O2 Sensor Harness Connector
Courtesy of CHRYSLER GROUP, LLC

1. Turn the ignition off

2. Disconnect the 2/2 O2 Sensor harness connector.
3. Ignition on, engine not running.
4. Measure the voltage on the (K243) O2 2/2 Signal circuit in the O2 Sensor harness connector.

   Is the voltage between 4.1 and 5.0 Volts?

   Yes

   - Go To 4.

   No

   - Check the (K243) O2 2/2 Signal circuit for a short to ground, open, or short to voltage. If OK, replace and program the Powertrain Control Module in accordance with the service information. Refer to **MODULE, POWERTRAIN CONTROL, REMOVAL** .
   - Perform the POWERTRAIN VERIFICATION TEST. Refer to **POWERTRAIN VERIFICATION TEST** .

4. **(K904) O2 RETURN DOWNSTREAM CIRCUIT**

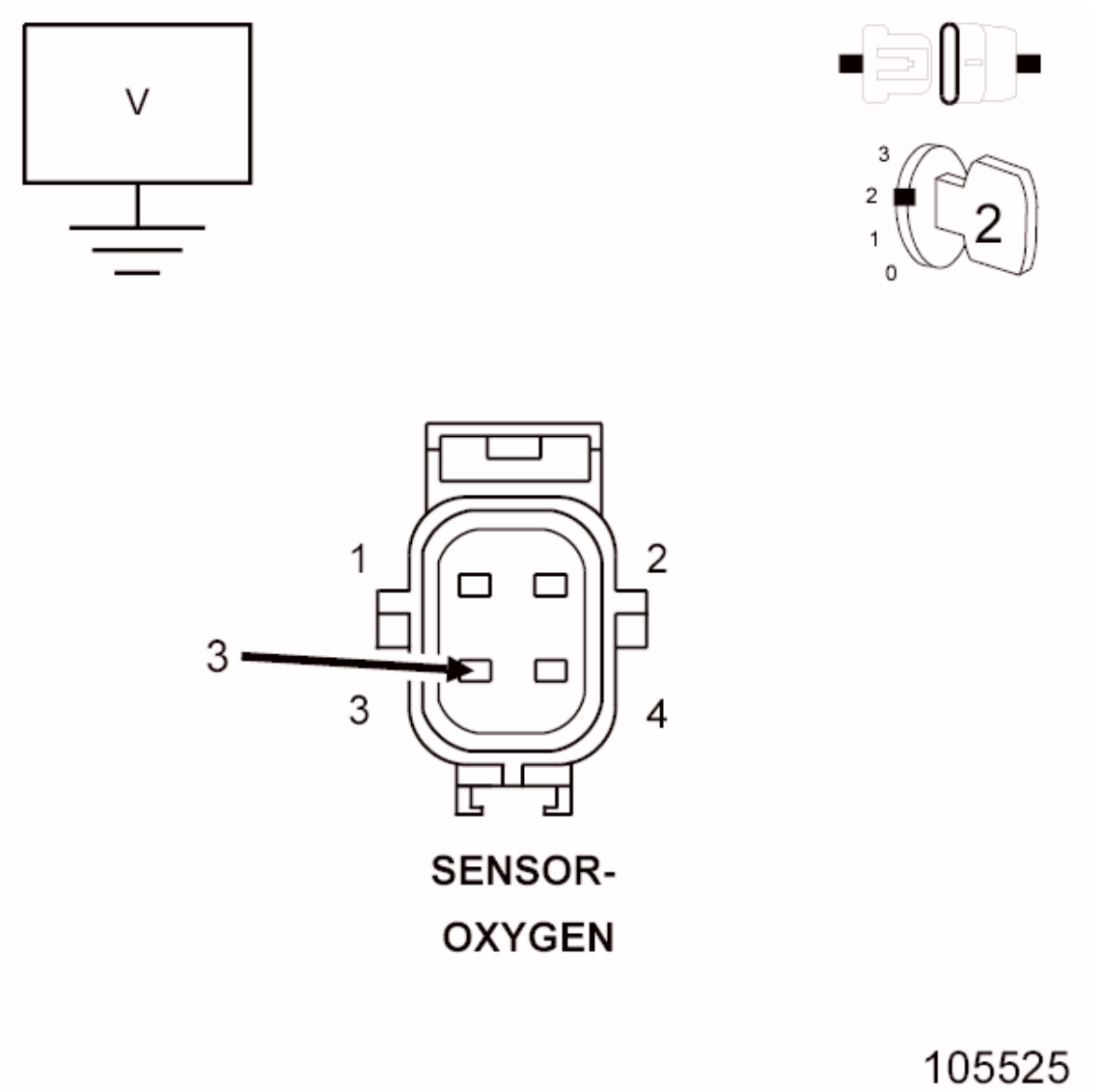

Fig. 208: Measuring Voltage On O2 Sensor Return Circuit In O2 Sensor Harness Connector
Courtesy of CHRYSLER GROUP, LLC

1. Measure the voltage on the (K904) O2 Return Downstream circuit in the 2/2 O2 Sensor harness connector.

   Is the voltage at 2.5 Volts?

   Yes

   - Go To 5.

   No

   - Check the (K904) O2 Return Downstream circuit for a short to ground, open, or short to voltage. If OK, replace and program the Powertrain Control Module in accordance with the

service information. Refer to **MODULE, POWERTRAIN CONTROL, REMOVAL** .

- Perform the POWERTRAIN VERIFICATION TEST. Refer to **POWERTRAIN VERIFICATION TEST** .

5. **O2 SENSOR**

NOTE: Check for signs of contaminants that may have damaged the O2 Sensor, such as contaminated fuel, unapproved silicone, oil and coolant.

1. Using the wiring diagram/schematic as a guide, inspect the wiring and connectors between the 2/2 Oxygen Sensor and the Powertrain Control Module (PCM).
   - Look for any chafed, pierced, pinched, or partially broken wires.
   - Look for broken, bent, pushed out or corroded terminals.
   - Verify that there is good pin to terminal contact in the 2/2 O2 Sensor and Powertrain Control Module connectors.
   - Perform any Technical Service Bulletins that may apply.

   Were any problems found?

   Yes

   - Repair as necessary.
   - Perform the POWERTRAIN VERIFICATION TEST. Refer to **POWERTRAIN VERIFICATION TEST** .

   No

   - Replace the 2/2 Oxygen Sensor in accordance with the Service Information. Refer to **SENSOR, OXYGEN, REMOVAL** .
   - Perform the POWERTRAIN VERIFICATION TEST. Refer to **POWERTRAIN VERIFICATION TEST** .

Powertrain Control Module (PCM) - Electrical Diagnostics, 5.7L - 3500 Cab & Chassis

DIAGNOSIS AND TESTING

P0160-O2 SENSOR 2/2 NO ACTIVITY DETECTED

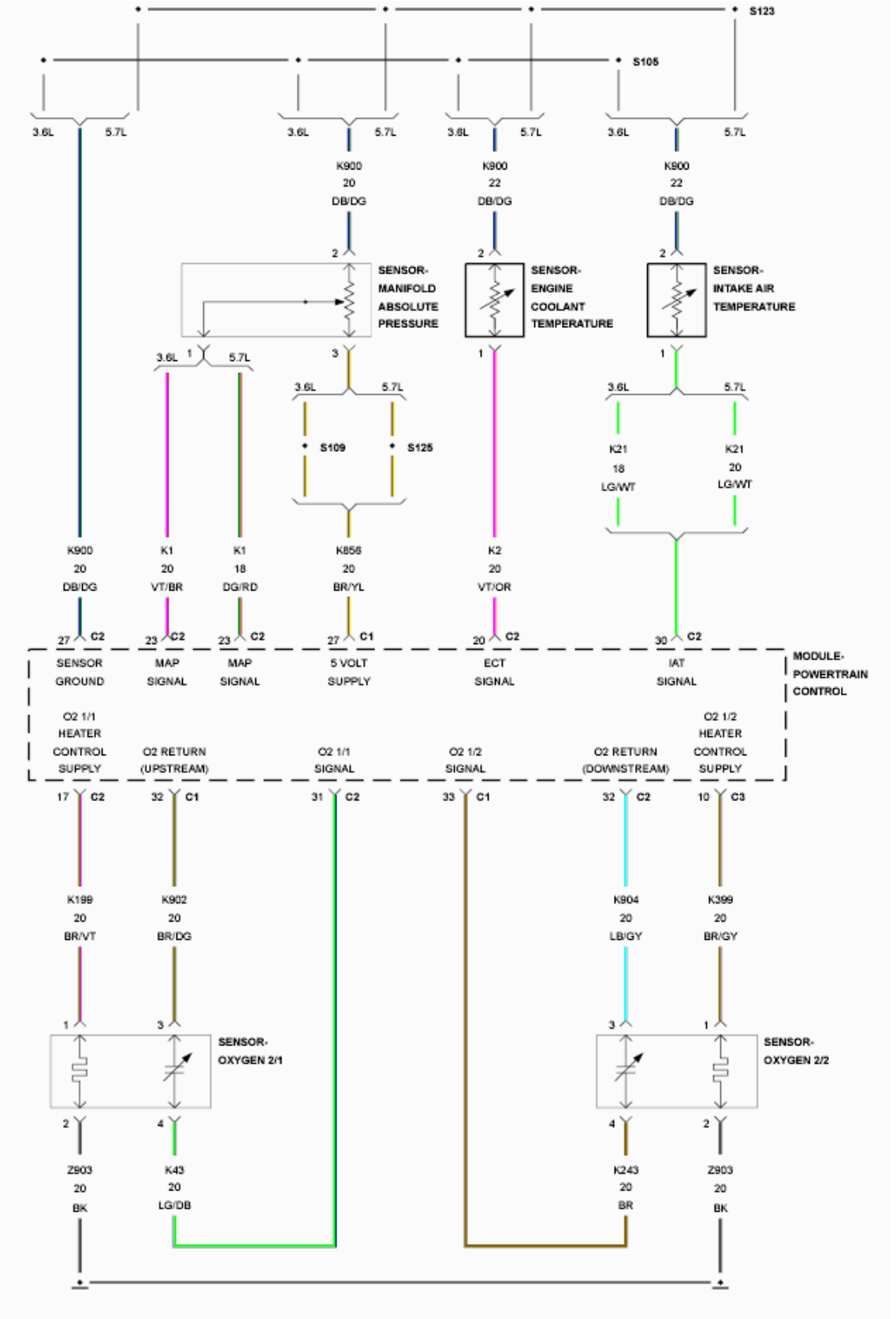

Fig. 1: O2 Sensor Circuit Schematic

Courtesy of CHRYSLER GROUP, LLC

For a complete wiring diagram, **refer to appropriate SYSTEM WIRING DIAGRAMS article** .

THEORY OF OPERATION

The downstream O2 Sensor is located in the exhaust path behind the catalytic converter, is monitored for proper response to assure optimum catalytic converter efficiency. The downstream O2 response monitor is intended to diagnose a downstream O2 sensor that is not moving or stuck in a voltage window and to insure accurate information for catalyst monitor diagnosis.

WHEN MONITORED:

Vehicle is started and driven between 32 and 88.5 km/h (20 and 55 mph) with the Throttle open for a minimum of 120 seconds. Coolant greater than 70° C (158° F). Catalytic Converter Temp greater than 600° C (1112° F) and EVAP Purge is active.

SET CONDITION:

The oxygen sensor signal voltage switches less than 16 times from lean to rich within 20 seconds during monitoring. Two Trip Fault. Three good trips to turn off the MIL.

POSSIBLE CAUSES

Possible Causes
EXHAUST LEAK
(K243) O2 2/2 SIGNAL CIRCUIT
(K904) O2 RETURN DOWNSTREAM CIRCUIT
2/2 O2 SENSOR

Always perform the Pre-Diagnostic Troubleshooting procedure before proceeding. Refer to PRE-DIAGNOSTIC TROUBLESHOOTING PROCEDURE .

DIAGNOSTIC TEST

1. **ACTIVE DTC**

NOTE: **After the repairs have been made, verify proper O2 Sensor operation. If all the O2 Sensor voltage readings have not returned to normal, follow the diagnostic procedure for the remaining O2 Sensors.**

NOTE: **Check for contaminants that may have damaged the O2 Sensor: contaminated fuel, unapproved silicone, oil and coolant.**

1. Start the engine.
2. Allow the engine to reach normal operating temperature.

3. With the scan tool, select View DTCs.

NOTE: **It may be necessary to drive the vehicle to meet the conditions to set this DTC, try to repeat the conditions in which the fault originally set by reviewing the Freeze Frame data.**

Is the DTC Active or Pending at this time?

Yes

- Go To 2.

No

- Perform the INTERMITTENT CONDITION diagnostic procedure. Refer to **INTERMITTENT CONDITION** .

2. **CHECKING THE EXHAUST SYSTEM FOR LEAKS**
   1. Turn the ignition off.
   2. Raise the vehicle in accordance with the Service Information.

      WARNING: **The normal operating temperature of the exhaust system is very high. Never work around or attempt to service any part of the exhaust system until it has cooled. Special care should be taken when working near the catalytic converter. The temperature of the converter rises to a high level after a short period of engine operating time.**

   3. Connect Exhaust Cone (special tool #8404-EC, Exhaust Cone) or (special tool #8404-EC, Exhaust Cone) to Air Pressure Regulator (with hose) W-18-MIL-1146AS.

      CAUTION: **The air pressure must not exceed 27.6 kPa (4 psi), otherwise engine damage can occur.**

   4. Attach shop air to the air pressure regulator.
   5. Adjust the Air Pressure Regulator to 27.6 kPa (4 psi).
   6. Insert the exhaust cone into the vehicle tail pipe.
   7. If the vehicle is equipped with dual exhaust. Use the (special tool #8404-ECT, Exhaust Cone, Truck) with equipped attached plug, plug one side of the dual exhaust pipe. Pressurize the other as described above.
   8. Apply Mopar® Air Leak Detector PN# 05191804AA (or an equivalent leak finder liquid) to the following areas:
      - All welded joints from the exhaust manifold to 152.4 mm (6 inches) behind the downstream O2 sensor

- O2 sensor seal points
- O2 sensor boss welds
- Flange/joint connection(s)
- Exhaust manifold to cylinder head connection(s)
- EGR solenoid gasket base and tube seal points (if equipped)

9. Watch for the liquid/soapy water to bubble.
10. Use the following definitions to help determine if system or component repair/replacement is necessary:
    - **Type 1 Leak** is defined as a leak where very small foam like bubbles 1 mm (0.04 of an inch) or less appear. Any Type 1 or greater leaks found in welded joints, O2 sensor seal points or O2 sensor boss welds must be repaired or the component must be replaced.
    - **Type 2 Leak** is defined as a leak where larger bubbles pea size, 8 mm (0.3 of an inch) or greater appear. Any Type 2 or greater leaks found in flange or joint connections, exhaust manifold to cylinder head connections or EGR gasket and tube seal points must be repaired or the components must be replaced.

Leak Location	Repair required if results at 27.6 kPa (4 psi) reveal bubble size:
Welded joints	Type 1, 1 mm (0.04 of an inch) or greater
O2 Sensor seal points	Type 1, 1 mm (0.04 of an inch) or greater
O2 Sensor boss welds	Type 1, 1 mm (0.04 of an inch) or greater
Flange / joint connections	Type 2, 8 mm (0.3 of an inch) or greater
Exhaust Manifold to cylinder head connections	Type 2, 8 mm (0.3 of an inch) or greater
EGR gasket and tube seal points	Type 2, 8 mm (0.3 of an inch) or greater

11. If a leak is found that matches the above definition, repair or replace the component as necessary.
12. Once the repair is complete, repeat the procedure to verify that all leaks have been repaired.

    Were any exhaust leaks found?

    Yes

    - Repair or replace the leaking exhaust parts as necessary.
    - Perform the POWERTRAIN VERIFICATION TEST. Refer to **POWERTRAIN VERIFICATION TEST** .

    No

    - Go To 3.

3. **(K243) O2 2/2 SIGNAL CIRCUIT**

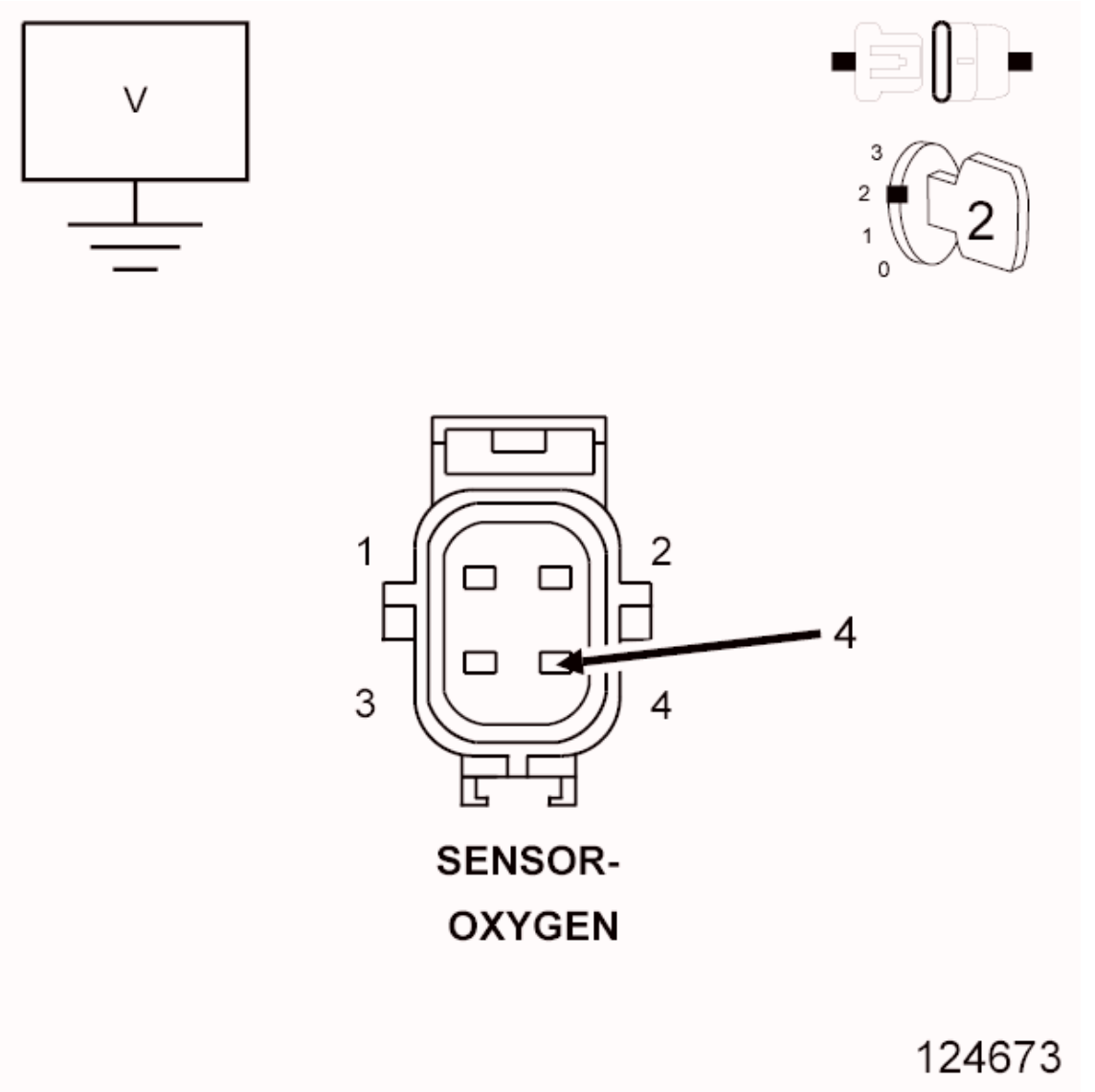

Fig. 2: Measuring Voltage Of O2 Sensor Signal Circuit In O2 Sensor Harness Connector
Courtesy of CHRYSLER GROUP, LLC

1. Turn the ignition off
2. Disconnect the 2/2 O2 Sensor harness connector.
3. Ignition on, engine not running.
4. Measure the voltage on the (K243) O2 2/2 Signal circuit in the O2 Sensor harness connector.

   Is the voltage between 4.1 and 5.0 Volts?

   Yes

   - Go To 4.

   No

- Check the (K243) O2 2/2 Signal circuit for a short to ground, open or short to voltage. If OK, replace and program the Powertrain Control Module in accordance with the Service Information. Refer to **MODULE, POWERTRAIN CONTROL, REMOVAL** .
- Perform the POWERTRAIN VERIFICATION TEST. Refer to **POWERTRAIN VERIFICATION TEST** .

4. **(K904) O2 RETURN DOWNSTREAM CIRCUIT**

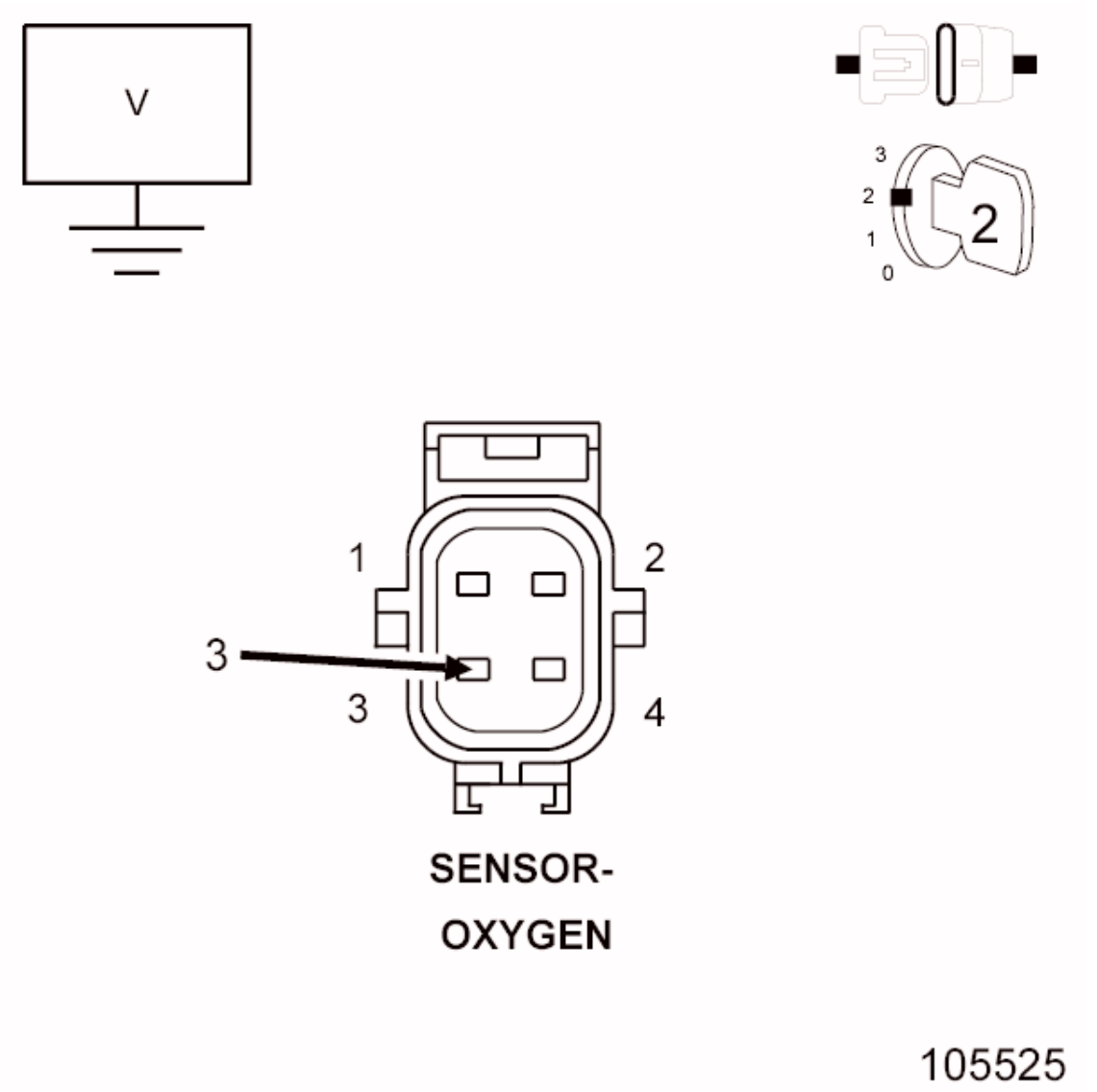

Fig. 3: Measuring Voltage On O2 Sensor Return Circuit In O2 Sensor Harness Connector
Courtesy of CHRYSLER GROUP, LLC

1. Measure the voltage on the (K904) O2 Return Downstream circuit in the O2 Sensor harness connector.

   Is the voltage at 2.5 Volts?

Yes

- Go To 5.

No

- Check the (K904) O2 Return Downstream circuit for a short to ground, open or short to voltage. If OK, replace and program the Powertrain Control Module in accordance with the Service Information. Refer to **MODULE, POWERTRAIN CONTROL, REMOVAL** .
- Perform the POWERTRAIN VERIFICATION TEST. Refer to **POWERTRAIN VERIFICATION TEST** .

5. **OXYGEN SENSOR**

NOTE: Check for signs of contaminants that may have damaged the O2 Sensor, such as contaminated fuel, unapproved silicone, oil and coolant.

1. Using the wiring diagram/schematic as a guide, inspect the wiring and connectors between the 2/2 Oxygen Sensor and the Powertrain Control Module (PCM).
2. Look for any chafed, pierced, pinched or partially broken wires.
3. Look for broken, bent, pushed out or corroded terminals.
4. Perform any Technical Service Bulletins that may apply.

Were any problems found?

Yes

- Repair as necessary.
- Perform the POWERTRAIN VERIFICATION TEST. Refer to **POWERTRAIN VERIFICATION TEST** .

No

- Replace the 2/2 Oxygen Sensor in accordance with the Service Information. Refer to **SENSOR, OXYGEN, REMOVAL** **SENSOR, OXYGEN, REMOVAL** .
- Perform the POWERTRAIN VERIFICATION TEST. Refer to **POWERTRAIN VERIFICATION TEST** .

P0161-O2 SENSOR 2/2 HEATER PERFORMANCE

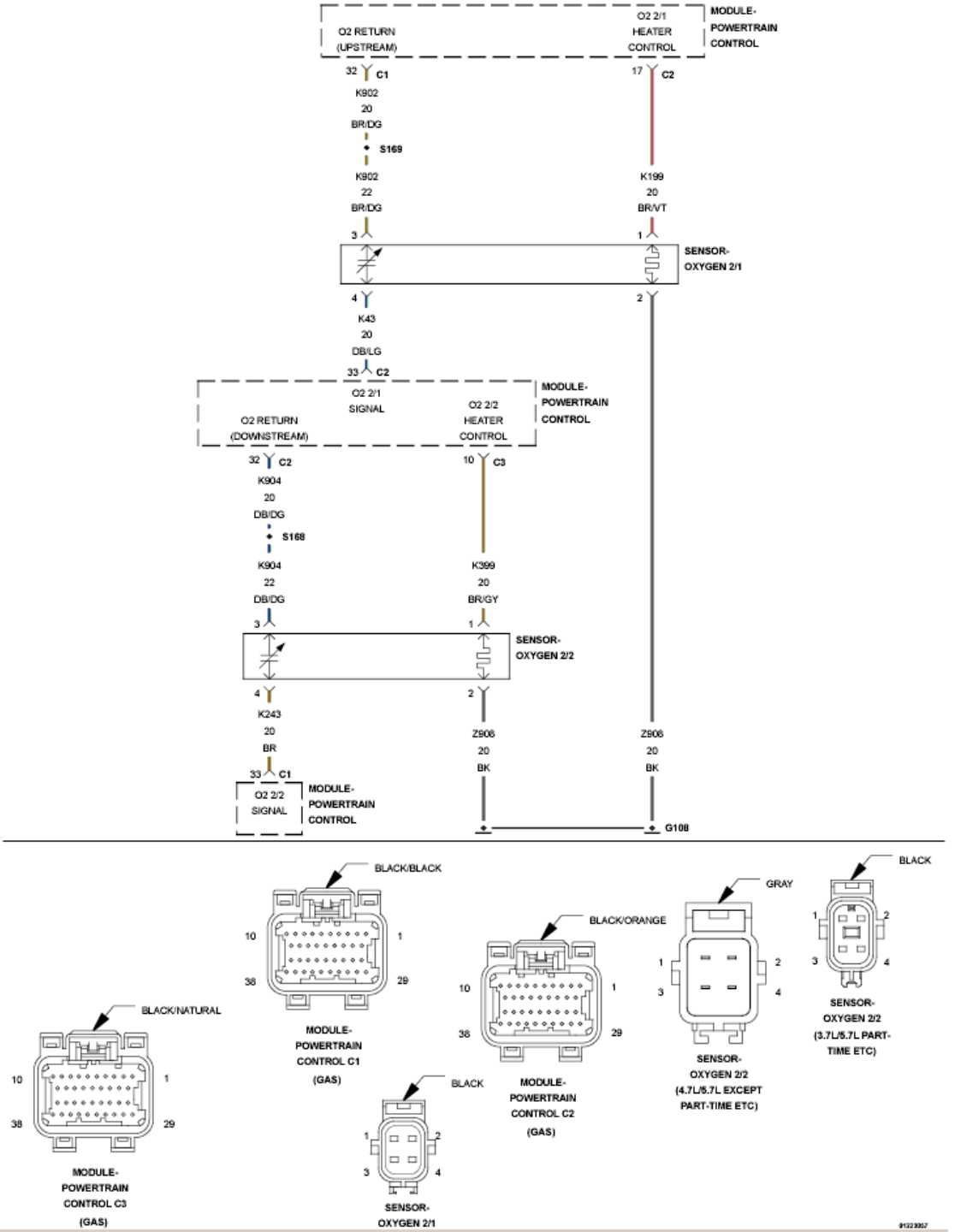

Fig. 4: O2 Sensor Circuit Schematic
Courtesy of CHRYSLER GROUP, LLC

For a complete wiring diagram, **refer to appropriate SYSTEM WIRING DIAGRAMS article** .

THEORY OF OPERATION

This diagnostic provides a continuous check of the O2 heater circuit during operation. The heater circuit is momentarily disabled to allow a resistance measurement to be taken to infer heater temperature. The current delivery to the heater is duty cycled to maintain a specific target temperature. The error from the target temperature is continuously monitored to assess heater performance.

WHEN MONITORED:

Continuously during O2 sensor heater operation with battery voltage between 10.4 and 15.75 Volts and no O2 sensor circuit DTCs present.

SET CONDITION:

The Powertrain Control Module (PCM) detects no temperature change in the O2 sensor heater element when the heater circuit is active. The heater temperature is obtained by measuring the heater resistance and calculating the heater temperature. Two trip fault. Three good trips to turn off the MIL.

POSSIBLE CAUSES

Possible Causes
(K399) O2 2/2 HEATER CONTROL CIRCUIT OPEN
(Z908) O2 2/2 HEATER GROUND CIRCUIT OPEN
2/2 O2 SENSOR
POWERTRAIN CONTROL MODULE (PCM)

Always perform the Pre-Diagnostic Troubleshooting procedure before proceeding. Refer to PRE-DIAGNOSTIC TROUBLESHOOTING PROCEDURE .

DIAGNOSTIC TEST

1. **O2 SENSOR HEATER OPERATION**
    1. Turn the ignition off.

       NOTE: Wait a minimum of 8 minutes to allow the O2 Sensor to cool down before continuing the test. Allow the O2 Sensor voltage to stabilize between 4.6 and 5.0 Volts.

    2. Ignition on, engine not running.
    3. With the scan tool, actuate the O2 Heater Test.
    4. With the scan tool, monitor 2/2 O2 Sensor voltage for at least 2 minutes.

       Does the voltage stay above 4.5 Volts?

       Yes

       - Go To 2.

No

- Perform the INTERMITTENT CONDITION diagnostic procedure. Refer to **INTERMITTENT CONDITION** .

2. **O2 SENSOR HEATER ELEMENT**
   1. Turn the ignition off.

      NOTE: Allow the O2 sensor to cool down to room temperature.

   2. Disconnect the 2/2 O2 Sensor harness connector.
   3. Measure the resistance of the 2/2 O2 Heater Element, between the O2 Heater Control terminal and the O2 Heater ground terminal in the O2 Sensor connector.

      NOTE: O2 Heater Element resistance values should be measured at 21.1° C (70° F). The resistance value will vary with different temperature values.

      Is the resistance of the O2 Sensor Heater Element between 2.0 and 30.0 Ohms?

      Yes

      - Go To 3.

      No

      - Replace the 2/2 O2 Sensor.
      - Perform the POWERTRAIN VERIFICATION TEST. Refer to **POWERTRAIN VERIFICATION TEST** .

3. **(K399) O2 2/2 HEATER CONTROL CIRCUIT OPEN**

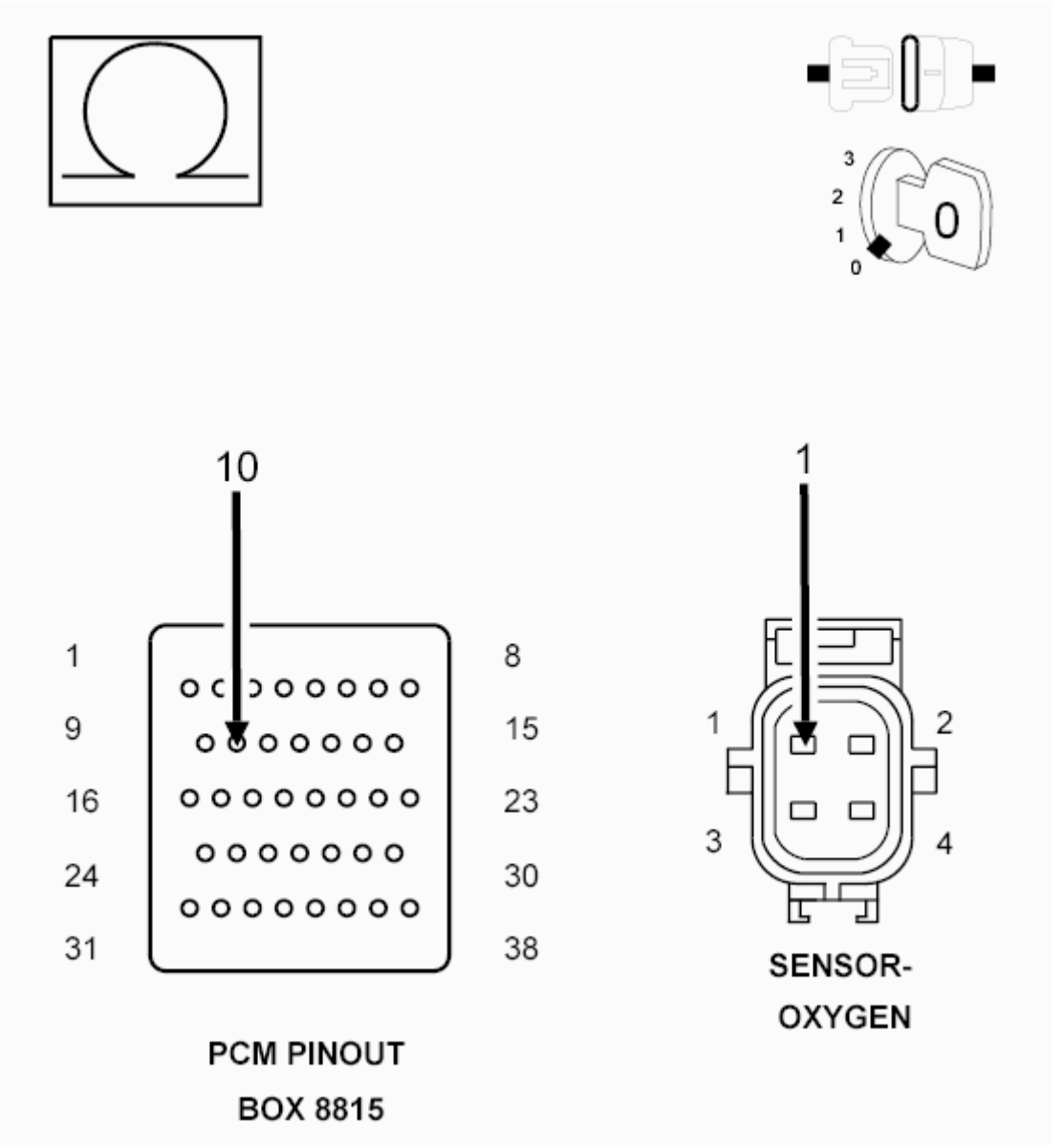

Fig. 5: Measuring Resistance Of O2 Sensor Heater Control Circuit From O2 Harness Connector To Appropriate Terminal Of PCM Pinout Box 8815
Courtesy of CHRYSLER GROUP, LLC

1. Disconnect the C3 PCM harness connector.

CAUTION: Do not probe the PCM harness connectors. Probing the PCM harness connectors will damage the PCM terminals resulting in poor terminal to pin connection. Install the PCM Pinout Box (special tool #8815A, Kit, NGC, 38 Position) to perform diagnosis.

2. Measure the resistance of the (K399) O2 2/2 Heater Control circuit from the O2 harness connector to the appropriate terminal of PCM Pinout Box (special tool #8815A, Kit, NGC, 38 Position).

Is the resistance below 0.5 of an Ohm?

Yes

- Go To 4.

No

- Repair the excessive resistance in the (K399) O2 2/2 Heater Control circuit.
- Perform the POWERTRAIN VERIFICATION TEST. Refer to **POWERTRAIN VERIFICATION TEST** .

4. **(Z908) O2 2/2 HEATER GROUND CIRCUIT OPEN**

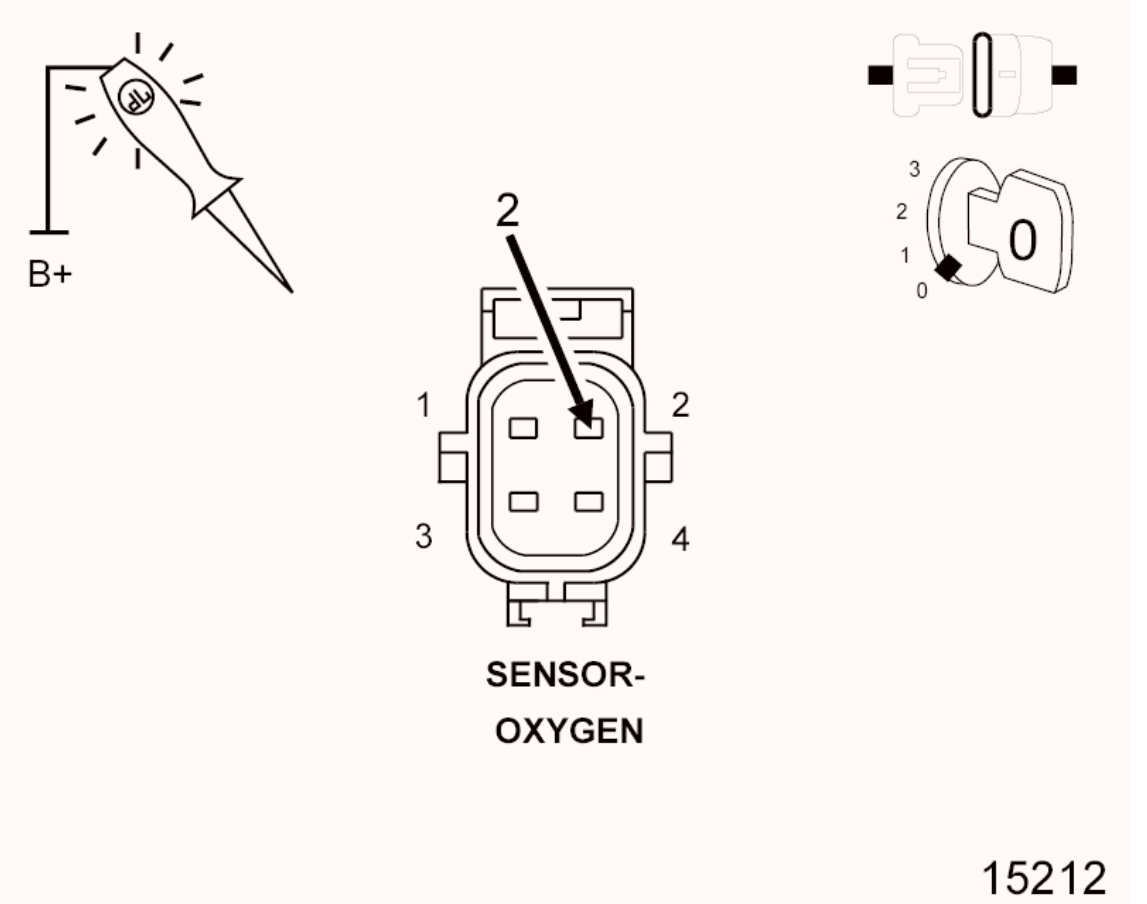

Fig. 6: Using 12-Volt Test Light Connected To 12 Volts To Check Ground Circuit In Oxygen Sensor Harness Connector
Courtesy of CHRYSLER GROUP, LLC

1. Using a 12-volt test light connected to 12 Volts, check the (Z908) Ground circuit in the 2/2 Oxygen Sensor harness connector.

NOTE: The test light should be illuminated and bright. Compare the

brightness to that of a direct connection to the battery.

Is the test light illuminated and bright?

Yes

- Go To 5.

No

- Repair the excessive resistance in the (Z908) O2 2/2 Heater ground circuit.
- Perform the POWERTRAIN VERIFICATION TEST. Refer to **POWERTRAIN VERIFICATION TEST** .

5. **POWERTRAIN CONTROL MODULE (PCM)**
    1. Using the wiring diagram/schematic as a guide, inspect the wiring and connectors between the Oxygen Sensor 2/2 and the Powertrain Control Module (PCM).
    2. Look for any chafed, pierced, pinched or partially broken wires.
    3. Look for broken, bent, pushed out or corroded terminals. Verify that there is good pin to terminal contact in the Sensor and Control Module connectors.
    4. Refer to any Technical Service Bulletins that may apply.

    Were there any problems found?

    Yes

    - Repair as necessary.
    - Perform the POWERTRAIN VERIFICATION TEST. Refer to **POWERTRAIN VERIFICATION TEST** .

    No

    - Replace and program the Powertrain Control Module in accordance with the Service Information.
    - Perform the POWERTRAIN VERIFICATION TEST. Refer to **POWERTRAIN VERIFICATION TEST** .

P0171-FUEL SYSTEM 1/1 LEAN

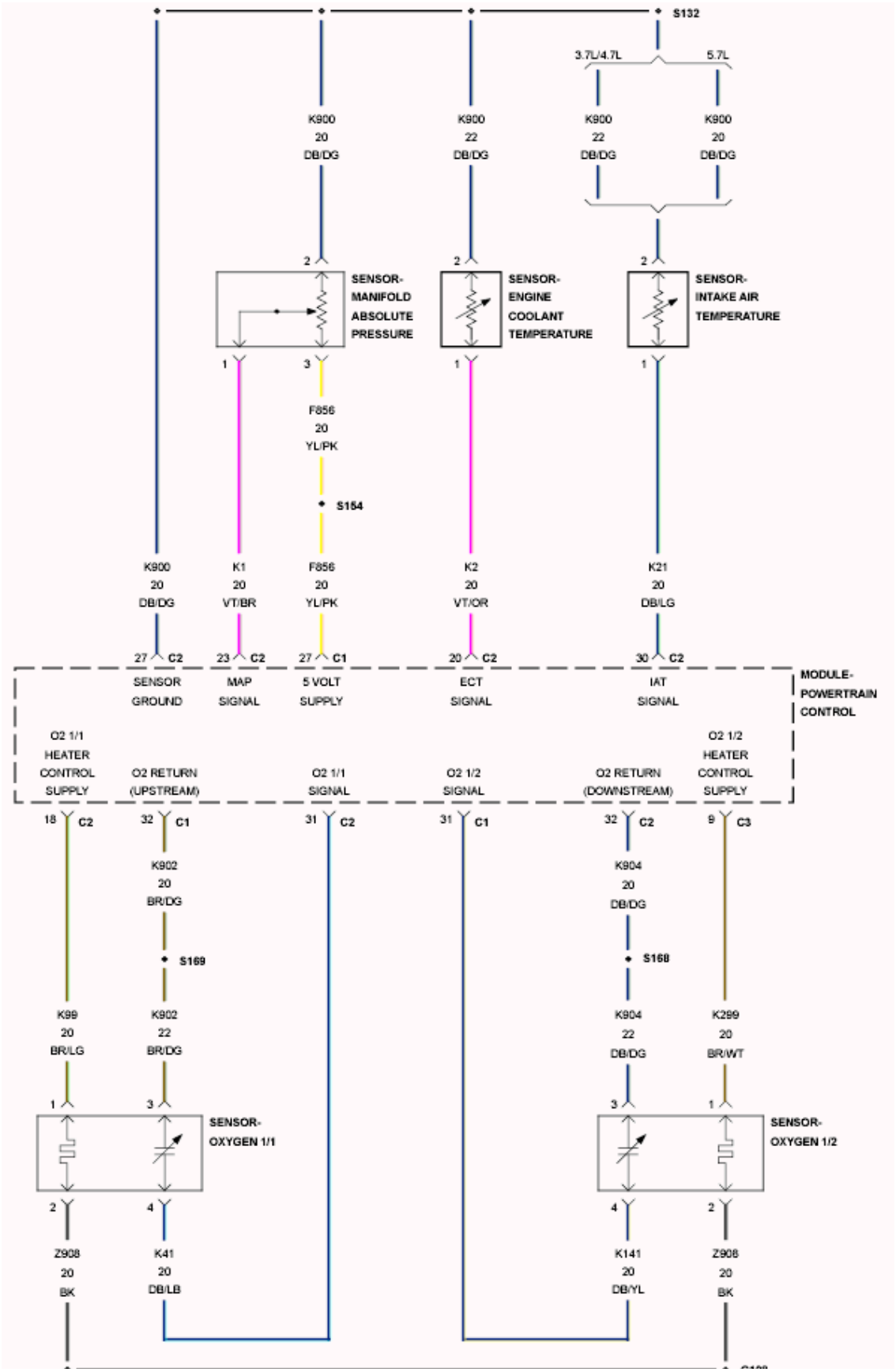
S132
3.7L/4.7L
5.7L
K900
20
DB/DG
K900
22
DB/DG
K900
22
DB/DG
K900
20
DB/DG
SENSOR-
MANIFOLD
ABSOLUTE
PRESSURE
SENSOR-
ENGINE
COOLANT
TEMPERATURE
SENSOR-
INTAKE AIR
TEMPERATURE
F856
20
YL/PK
S154
K900
20
DB/DG
K1
20
VT/BR
F856
20
YL/PK
K2
20
VT/OR
K21
20
DB/LG
SENSOR
GROUND
MAP
SIGNAL
5 VOLT
SUPPLY
ECT
SIGNAL
IAT
SIGNAL
MODULE-
POWERTRAIN
CONTROL
O2 1/1
HEATER
CONTROL
SUPPLY
O2 RETURN
(UPSTREAM)
O2 1/1
SIGNAL
O2 1/2
SIGNAL
O2 RETURN
(DOWNSTREAM)
O2 1/2
HEATER
CONTROL
SUPPLY
K902
20
BR/DG
S169
K904
20
DB/DG
S168
K99
20
BR/LG
K902
22
BR/DG
K904
22
DB/DG
K299
20
BR/WT
SENSOR-
OXYGEN 1/1
SENSOR-
OXYGEN 1/2
Z908
20
BK
K41
20
DB/LB
K141
20
DB/YL
Z908
20
BK

Fig. 7: Fuel System Circuit Schematic
Courtesy of CHRYSLER GROUP, LLC

For a complete wiring diagram, **refer to appropriate SYSTEM WIRING DIAGRAMS article** .

THEORY OF OPERATION

The fuel feedback system will maintain a stoichiometric fuel/air mixture, 14.7:1, by modifying the injector pulse width according to the oxygen content of the exhaust gas. The Powertrain Control Module (PCM) makes short term and long term fuel corrections to maintain stoichiometric fuel/air ratio for best catalytic converter efficiency. Short term fuel correction is based on upstream O2 sensor output and is designed for quick engine response. The long term fuel correction compensated for variations in the engine specifications, sensor tolerances and component aging and is designed to correct rich and lean conditions over a longer period of time.

WHEN MONITORED:

With the engine running in closed loop mode, the ambient/battery temperature above -6.7° C (20° F) and altitude below 2590.8 m (8500 ft).

SET CONDITION:

If the Powertrain Control Module (PCM) multiplies short term compensation by long term adaptive and a certain percentage is exceeded for two trips, a freeze frame is stored, the MIL illuminates and a trouble code is stored. Two Trip Fault. Three good trips to turn off the MIL

POSSIBLE CAUSES

Possible Causes
RESTRICTED FUEL SUPPLY LINE
FUEL PUMP INLET STRAINER PLUGGED
FUEL PUMP MODULE
O2 SIGNAL CIRCUIT
O2 RETURN CIRCUIT
O2 SENSOR HEATER OPERATION
O2 SENSOR
(F342) ASD CONTROL OUTPUT CIRCUIT(S) OPEN
(F342) ASD CONTROL OUTPUT CIRCUIT(S) SHORTED TO GROUND
MAP SENSOR OPERATION
ECT SENSOR OPERATION
ENGINE MECHANICAL
FUEL FILTER/PRESSURE REGULATOR (HIGH)
TOTALLY INTEGRATED POWER MODULE (TIPM)
POWERTRAIN CONTROL MODULE (PCM)

Always perform the Pre-Diagnostic Troubleshooting procedure before proceeding. Refer to PRE-

DIAGNOSTIC TROUBLESHOOTING PROCEDURE .

DIAGNOSTIC TEST

1. **ACTIVE DIAGNOSTIC TROUBLE CODE (DTC)**
   1. Diagnose all other trouble codes before continuing.

      NOTE: Check for contaminants that may have damaged an O2 Sensor: contaminated fuel, unapproved silicone, oil and coolant.

   2. Start the engine.
   3. Allow the engine to reach normal operating temperature.
   4. Using the scan tool, select View DTCs.

      NOTE: It may be necessary to drive the vehicle to meet the conditions to set this DTC, try to repeat the conditions in which the fault originally set by reviewing the Freeze Frame data.

      Is the DTC Active or Pending at this time?

      Yes

      - Go To 2.

      No

      - Perform the INTERMITTENT CONDITION diagnostic procedure. Refer to **INTERMITTENT CONDITION** .
2. **CHECKING FUEL PRESSURE**

   WARNING: The fuel system is under a constant pressure (even with the engine off). Before testing or servicing any fuel system hose, fitting or line, the fuel system pressure must be released. Failure to follow these instructions can result in possible serious or fatal injury.

   1. Install the Fuel Pressure Decay Tester (special tool #8978A, Decay Tool, Fuel) to the fuel rail.
   2. Ignition on, engine not running.
   3. Using the scan tool, actuate the ASD Fuel System test and observe the fuel pressure gauge.

      NOTE: Fuel pressure specification is 407 kPa +/- 34 kPa (59 psi +/- 5 psi).

   4. Turn the ignition off.

      Choose a conclusion that best matches your fuel pressure reading.

Within Specification

- Go To 3.

Above Specification

- Replace the fuel filter/pressure regulator.
- Perform the POWERTRAIN VERIFICATION TEST. Refer to **POWERTRAIN VERIFICATION TEST** .

Below Specification

- Go To 17.

CAUTION: Before Proceeding Stop All Actuations.

3. **CHECKING THE EXHAUST SYSTEM FOR LEAKS**
   1. Turn the ignition off.
   2. Raise the vehicle in accordance with the Service Information.

      WARNING: The normal operating temperature of the exhaust system is very high. Never work around or attempt to service any part of the exhaust system until it has cooled. Special care should be taken when working near the catalytic converter. The temperature of the converter rises to a high level after a short period of engine operating time.

   3. Connect Exhaust Cone (special tool #8404-EC, Exhaust Cone) or (special tool #8404-EC, Exhaust Cone) to Air Pressure Regulator (with hose) W-18-MIL-1146AS.

      CAUTION: Adjust the Air Pressure Regulator to 27.6 kPa (4 psi).

   4. Attach shop air to the air pressure regulator.
   5. Adjust the Air Pressure Regulator to 27.6 kPa (4 psi).
   6. Insert the exhaust cone into the vehicle tail pipe.
   7. If the vehicle is equipped with dual exhaust. Use the (special tool #8404-ECT, Exhaust Cone, Truck) with equipped attached plug, plug one side of the dual exhaust pipe. Pressurize the other as described above.
   8. Apply Mopar® Air Leak Detector PN# 05191804AA (or an equivalent leak finder liquid) to the following areas:
      - All welded joints from the exhaust manifold to 152.4 mm (6 inches) behind the downstream

O2 sensor
- O2 sensor seal points
- O2 sensor boss welds
- Flange/joint connection(s)
- Exhaust manifold to cylinder head connection(s)
- EGR solenoid gasket base and tube seal points (if equipped)

9. Watch for the liquid/soapy water to bubble.
10. Use the following definitions to help determine if system or component repair/replacement is necessary:

    Type 1 Leak is defined as a leak where very small foam like bubbles 1 mm (0.04 of an inch) or less appear.

    Any Type 1 or greater leaks found in welded joints, O2 sensor seal points or O2 sensor boss welds must be repaired or the component must be replaced.

    Type 2 Leak is defined as a leak where larger bubbles pea size, 8 mm (0.3 of an inch) or greater appear.

    Any Type 2 or greater leaks found in flange or joint connections, exhaust manifold to cylinder head connections or EGR gasket and tube seal points must be repaired or the components must be replaced.

Leak Location	Repair required if results at 27.6 kPa (4 psi) reveal bubble size:
Welded joints	Type 1, 1 mm (0.04 of an inch) or greater
O2 Sensor seal points	Type 1, 1 mm (0.04 of an inch) or greater
O2 Sensor boss welds	Type 1, 1 mm (0.04 of an inch) or greater
Flange / joint connections	Type 2, 8 mm (0.3 of an inch) or greater
Exhaust Manifold to cylinder head connections	Type 2, 8 mm (0.3 of an inch) or greater
EGR gasket and tube seal points	Type 2, 8 mm (0.3 of an inch) or greater

11. If a leak is found that matches the above definition, repair or replace the component as necessary.
12. Once the repair is complete, repeat the procedure to verify that all leaks have been repaired.

    Were any exhaust leaks found?

    Yes

    - Repair or replace the leaking exhaust parts as necessary.
    - Perform the POWERTRAIN VERIFICATION TEST. Refer to **POWERTRAIN VERIFICATION TEST** .

    No

- Go To 4.

4. **O2 SENSOR OPERATION**
   1. Start the engine.
   2. Allow the engine to reach normal operating temperature.

      NOTE: **If one of the O2 Sensor's Signal or Return circuit is shorted to ground the scan tool will display all O2 Sensor voltage readings low. The O2 Sensor that is shorted to ground will display a voltage reading near or at 0 Volts.**

      NOTE: **If one of the O2 Sensor Signal or Return circuits are shorted to voltage, the scan tool will display all O2 Sensor voltage readings high.**

      NOTE: **After the repairs have been made, verify proper O2 Sensor operation. If all the O2 Sensor voltage readings have not returned to normal, follow the diagnostic procedure for the remaining O2 Sensors.**

   3. Using the scan tool, monitor all of the O2 Sensor voltage readings.

      Is the voltage switching between 2.5 and 3.4 Volts for all the O2 Sensors?

      Yes

      - Go To 5.

      No

      - Go To 13.

5. **1/1 O2 SENSOR HEATER OPERATION**
   1. Turn the ignition off.

      NOTE: **Wait a minimum of 10 minutes to allow the O2 Sensor to cool down before continuing the test. Allow the O2 Sensor voltage to stabilize at 5.0 Volts.**

   2. Ignition on, engine not running.
   3. Using the scan tool, actuate the 1/1 O2 Heater Test.
   4. Using the scan tool, monitor 1/1 O2 Sensor voltage for at least two minutes.

      Does the voltage stay above 4.5 Volts?

      Yes

- Verify that there is good pin to terminal contact in the O2 Sensor and Powertrain Control Module connectors. Replace the 1/1 O2 Sensor if no problems were found with the connectors.
- Perform the POWERTRAIN VERIFICATION TEST. Refer to **POWERTRAIN VERIFICATION TEST** .

No

- Go To 6.

6. **ASD CONTROL OUTPUT OPERATION FROM THE TIPM**
   1. Turn the ignition off.

      CAUTION: Do not probe the PCM harness connectors. Probing the PCM harness connectors will damage the PCM terminals resulting in poor terminal to pin connection. Install PCM Pinout Box (special tool #8815A, Kit, NGC, 38 Position) along with the adapter (special tool #8815-1, PCM Pinout Box Adapter) between the PCM harness connector C3 and the PCM to perform the diagnosis.

      WARNING: When the engine is operating, do not stand in direct line with the fan. Do not put your hands near the pulleys, belts or fan. Do not wear loose clothing. Failure to follow these instructions may result in possible serious or fatal injury.

   2. Start and allow the engine to run.
   3. With a Voltmeter, probe the (F342) ASD Control Output circuits in the appropriate terminals of PCM Pinout Box (special tool #8815A, Kit, NGC, 38 Position).

      Is the voltage above 12.5 Volts?

      Yes

      - Go To 10.

      No

      - Go To 7.

7. **(F342) ASD CONTROL OUTPUT CIRCUIT(S) OPEN**

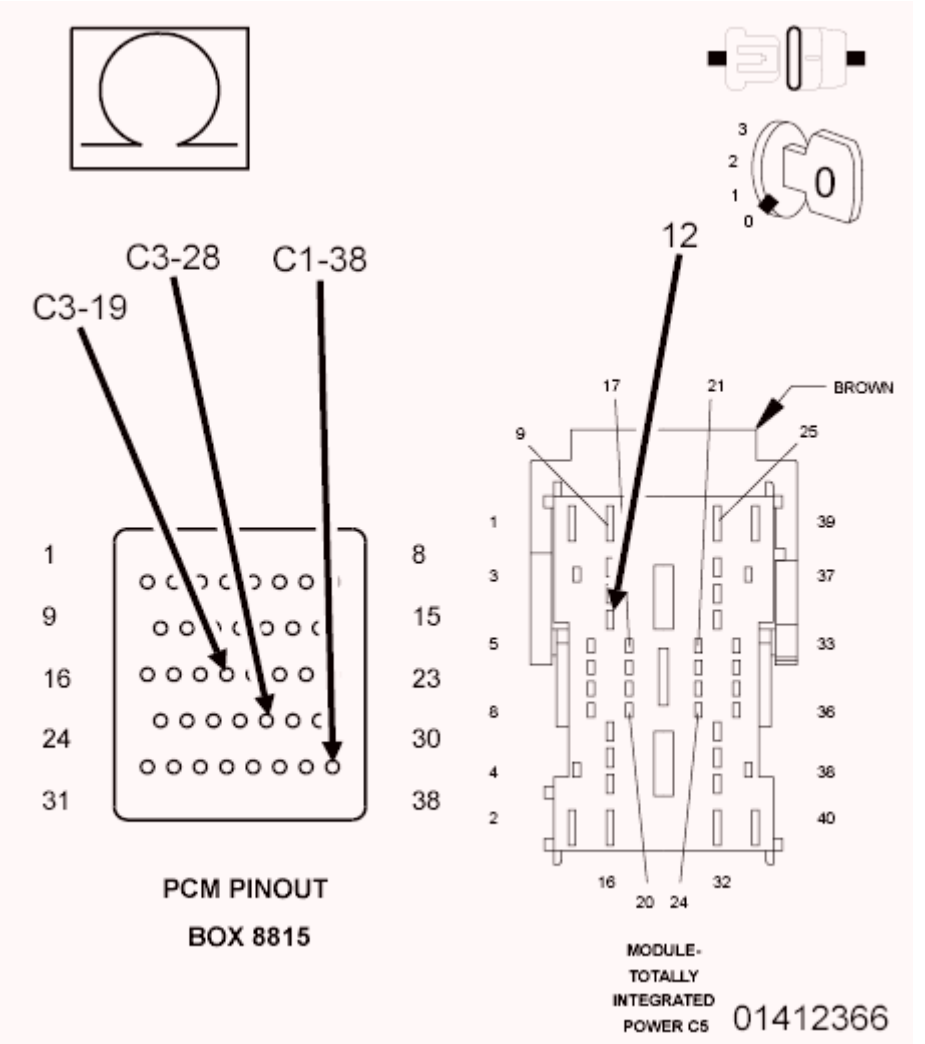

Fig. 8: Measuring Resistance Of (F342) ASD Control Output Circuits From C5 TIPM Harness Connector To Appropriate Terminals Of PCM Pinout Box 8815
Courtesy of CHRYSLER GROUP, LLC

1. Turn the ignition off.
2. Disconnect the C5 TIPM harness connector.

CAUTION: Do not probe the PCM harness connectors. Probing the PCM harness connectors will damage the PCM terminals resulting in poor terminal to pin connection. Install the PCM Pinout Box (special tool #8815A, Kit, NGC, 38 Position) to perform diagnosis.

3. Measure the resistance of the (F342) ASD Control Output circuits from the C5 TIPM harness connector to the appropriate terminals of PCM Pinout Box (special tool #8815A, Kit, NGC, 38 Position).

   Is the resistance below 5.0 Ohms?

Yes

- Go To 8.

No

- Repair the open in the (F342) ASD Control Output circuit(s).
- Perform the POWERTRAIN VERIFICATION TEST. Refer to **POWERTRAIN VERIFICATION TEST** .

8. **(F342) ASD CONTROL OUTPUT CIRCUIT(S) SHORTED TO GROUND**

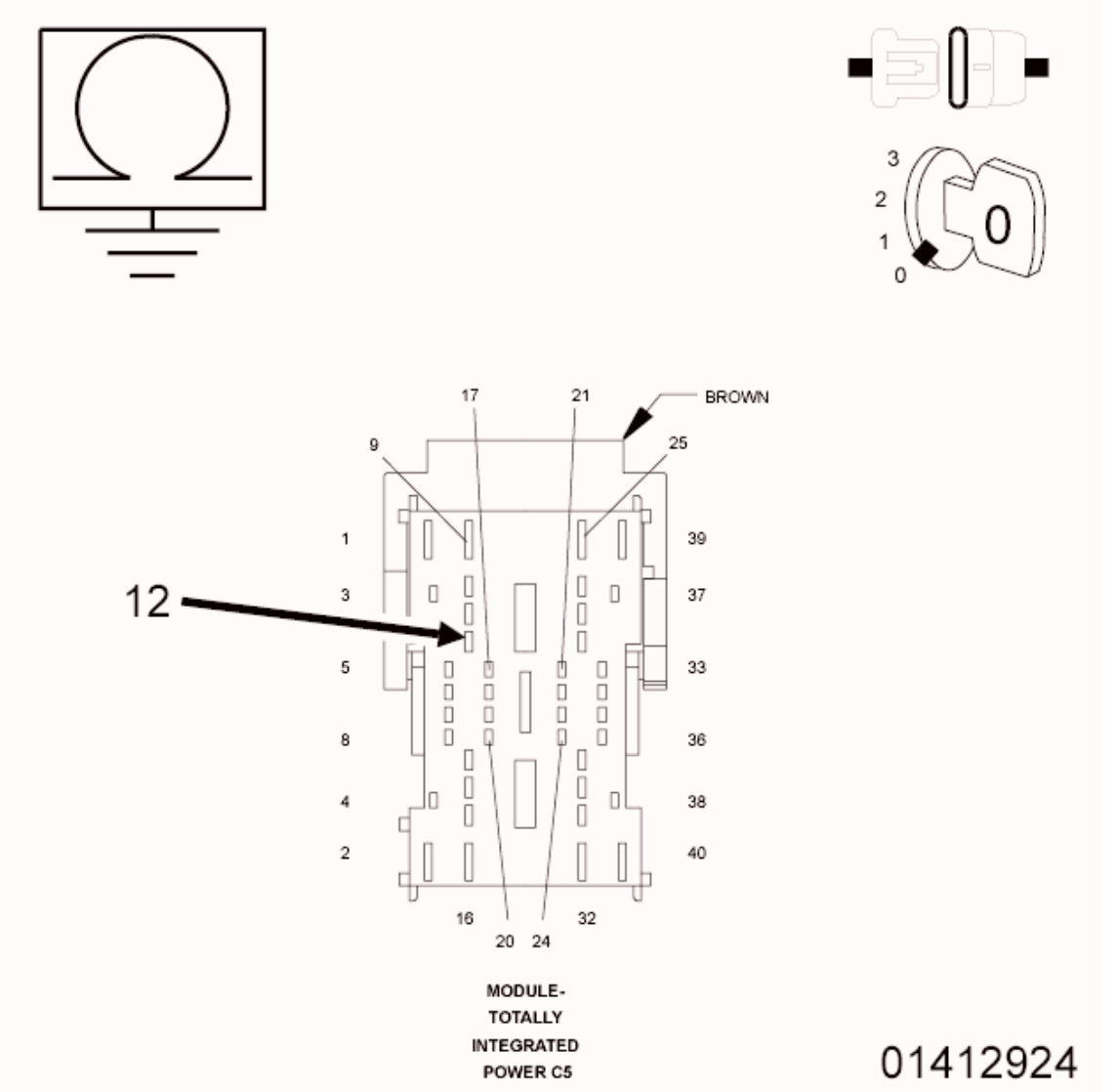

Fig. 9: Measuring Resistance Between Ground And Both Of (F342) ASD Control Output Circuits In C5 TIPM Harness Connector
Courtesy of CHRYSLER GROUP, LLC

1. Measure the resistance between ground and both of the (F342) ASD Control Output circuits in the

C5 TIPM harness connector.

Is the resistance below 100 Ohms?

Yes

- Repair the short to ground in the (F342) ASD Control Output circuit(s).
- Perform the POWERTRAIN VERIFICATION TEST. Refer to **POWERTRAIN VERIFICATION TEST** .

No

- Go To 9.

9. **TOTALLY INTEGRATED POWER MODULE**
   1. Using the wiring diagram/schematic as a guide, inspect the wiring and connectors between the related TIPM and the Powertrain Control Module (PCM).
   2. Look for any chafed, pierced, pinched or partially broken wires.
   3. Look for broken, bent, pushed out or corroded terminals. Verify that there is good pin to terminal contact in the TIPM and Powertrain Control Module connectors.
   4. Perform any Technical Service Bulletins that may apply.

   Were there any problems found?

   Yes

   - Repair as necessary.
   - Perform the BODY VERIFICATION TEST. Refer to **STANDARD PROCEDURE** .

   No

   - Replace and program the Totally Integrated Power Module in accordance with the Service Information.
   - Perform the BODY VERIFICATION TEST. Refer to **STANDARD PROCEDURE** .

10. **MAP SENSOR OPERATION**
    1. Ignition on, engine not running.
    2. Using the scan tool, read the Barometric Pressure.

    NOTE: **The Barometric Pressure should be approximately equal to the actual barometric pressure. If necessary, compare the Barometric Pressure value of this vehicle to the value of a known good vehicle of a similar make and model.**

    3. Turn the ignition off.
    4. Connect a Vacuum Gauge to a Manifold Vacuum source.

5. Start the engine.
6. Allow the engine to idle.

NOTE: If engine will not idle, maintain a constant RPM above idle.

7. Using the scan tool, read the MAP Sensor vacuum value.

   Is the scan tool reading for MAP Vacuum within 1 inch of Hg on the Vacuum Gauge reading and is the Barometric Pressure reading of the vehicle the approximately the same as actual Barometric Pressure?

   Yes

   - Go To 11.

   No

   - Verify that there is good pin to terminal contact in the MAP Sensor and Powertrain Control Module connectors. Replace the MAP Sensor if no problems were found with the connectors.
   - Perform the POWERTRAIN VERIFICATION TEST. Refer to **POWERTRAIN VERIFICATION TEST** .

11. **ECT SENSOR OPERATION**

NOTE: For this test to be valid, the thermostat must be operating correctly.

NOTE: This test works best if performed on a cold engine (cold soak)

1. Ignition on, engine not running.
2. Using the scan tool, read the Engine Coolant Temperature (ECT) Sensor value. If the engine was allowed to sit overnight (cold soak), the temperature value should be a sensible value that is somewhere close to the ambient temperature.

   NOTE: If engine coolant temperature is above 82° C (180° F), allow the engine to cool until 65° C (150° F) is reached.

3. Start the Engine.
4. During engine warm-up, monitor the ECT Sensor value. The temperature value change should be a smooth transition from start up to normal operating temperature 82° C (180° F). The value should reach at least 82° C (180° F).

   Did the ECT value increase smoothly and did it reach at least 82° C (180° F)?

   Yes

- Go To 12.

No

- Verify that there is good pin to terminal contact in the ECT Sensor and Powertrain Control Module connectors. Replace the ECT Sensor if no problems were found with the connectors.
- Perform the POWERTRAIN VERIFICATION TEST. Refer to **POWERTRAIN VERIFICATION TEST** .

12. **ENGINE MECHANICAL**
    1. Turn the ignition off.

    Check for any of the following conditions/mechanical problems:

    - AIR INDUCTION SYSTEM - must be free from leaks.
    - ENGINE VACUUM - must be at least 13 inches in neutral
    - ENGINE VALVE TIMING - must be within specifications
    - ENGINE COMPRESSION - must be within specifications
    - ENGINE EXHAUST SYSTEM - must be free of any restrictions or leaks.
    - ENGINE PCV SYSTEM - must flow freely
    - TORQUE CONVERTER STALL SPEED - must be within specifications
    - POWER BRAKE BOOSTER - no internal vacuum leaks
    - FUEL - must be free of contamination
    - FUEL INJECTOR - plugged or restricted injector; control wire not connected to correct injector

    Are there any engine mechanical problems?

    Yes

    - Repair as necessary.
    - Perform the POWERTRAIN VERIFICATION TEST. Refer to **POWERTRAIN VERIFICATION TEST** .

    No

    - Go To 16.

13. **1/1 O2 SENSOR**

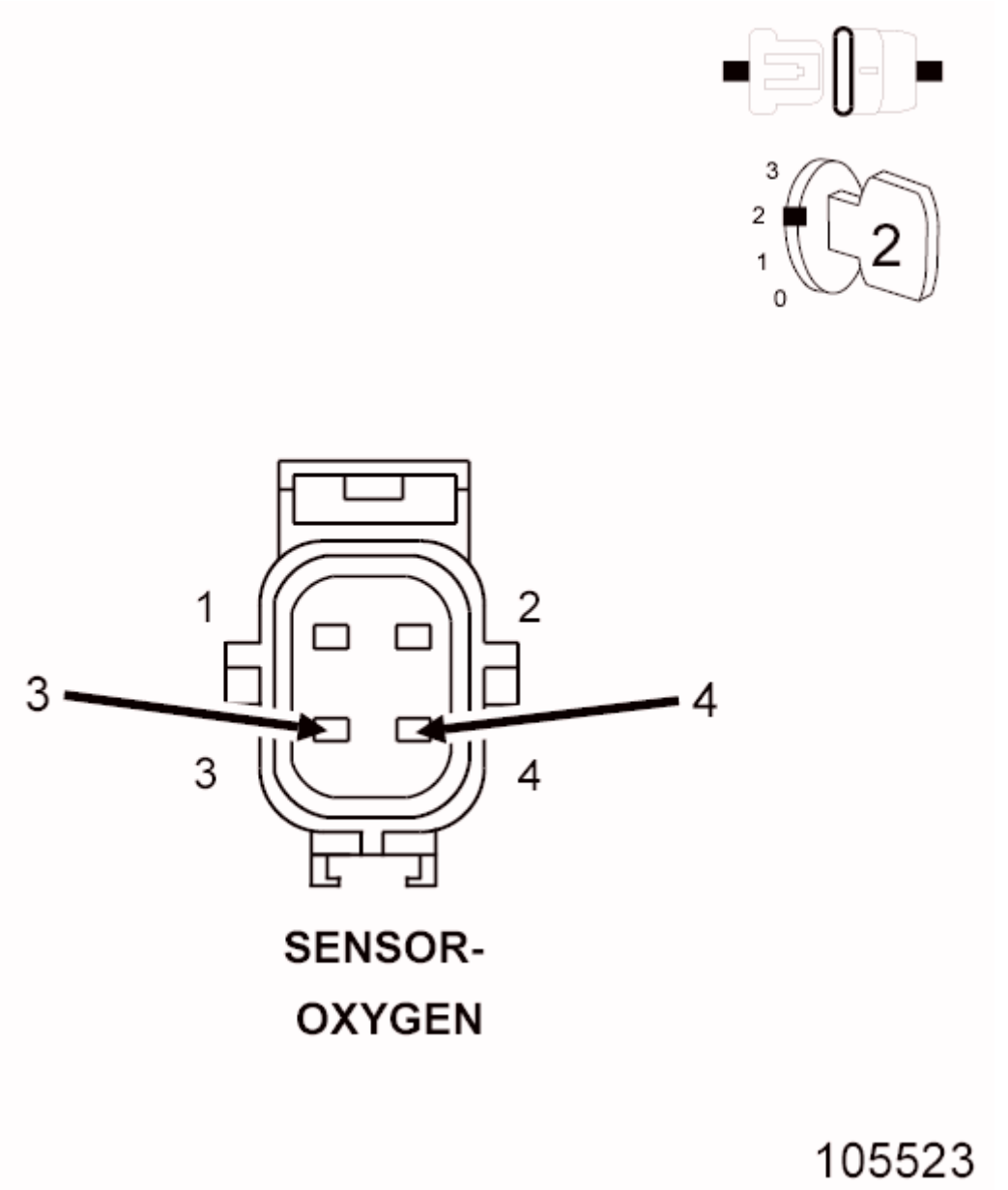

Fig. 10: O2 Sensor Harness Connector
Courtesy of CHRYSLER GROUP, LLC

1. Disconnect the 1/1 O2 Sensor harness connector.
2. Ignition on, engine not running.
3. Using the scan tool, monitor the 1/1 O2 Sensor voltage.
4. O2 Sensor voltage should read between 4.1 and 5.0 Volts on the scan tool with the connector disconnected.
5. Connect a jumper wire between the (K41) Signal circuit and the (K902) O2 Return Upstream circuit in the O2 Sensor harness connector.

NOTE: The voltage should drop from between 4.1 and 5.0 Volts to 2.5 Volts

with the jumper wire in place.

Did the O2 Sensor voltage change from between 4.1 and 5.0 Volts to 2.5 Volts with the jumper wire installed?

Yes

- Verify that there is good pin to terminal contact in the O2 Sensor and Powertrain Control Module connectors. Replace the 1/1 O2 Sensor if no problems were found with the connectors.
- Perform the POWERTRAIN VERIFICATION TEST. Refer to **POWERTRAIN VERIFICATION TEST** .

No

- Go To 14.

NOTE: Remove the jumper wire before continuing.

14. **(K41) O2 SENSOR 1/1 SIGNAL CIRCUIT**
    1. Using the scan tool, monitor the 1/1 O2 Sensor voltage reading with the jumper wire removed.

NOTE: The scan tool will display all O2 Sensor voltage readings approximately 5.0 Volts when only one O2 Sensor's Signal circuit is shorted to voltage.

NOTE: The scan tool will display one O2 Sensor voltage close to zero and the others will read lower than normal when one O2 Sensor Signal circuit contains excessive resistance.

Is the voltage between 4.1 and 5.0 Volts?

Yes

- Go To 15.

No

- Check the (K41) O2 Sensor 1/1 Signal circuit for a short to ground, open or short to voltage. Inspect the O2 Sensor connector and the PCM harness connector. If OK, replace and program the Powertrain Control Module in accordance with the Service Information.
- Perform the POWERTRAIN VERIFICATION TEST. Refer to **POWERTRAIN VERIFICATION TEST** .

15. **(K902) O2 RETURN UPSTREAM CIRCUIT**

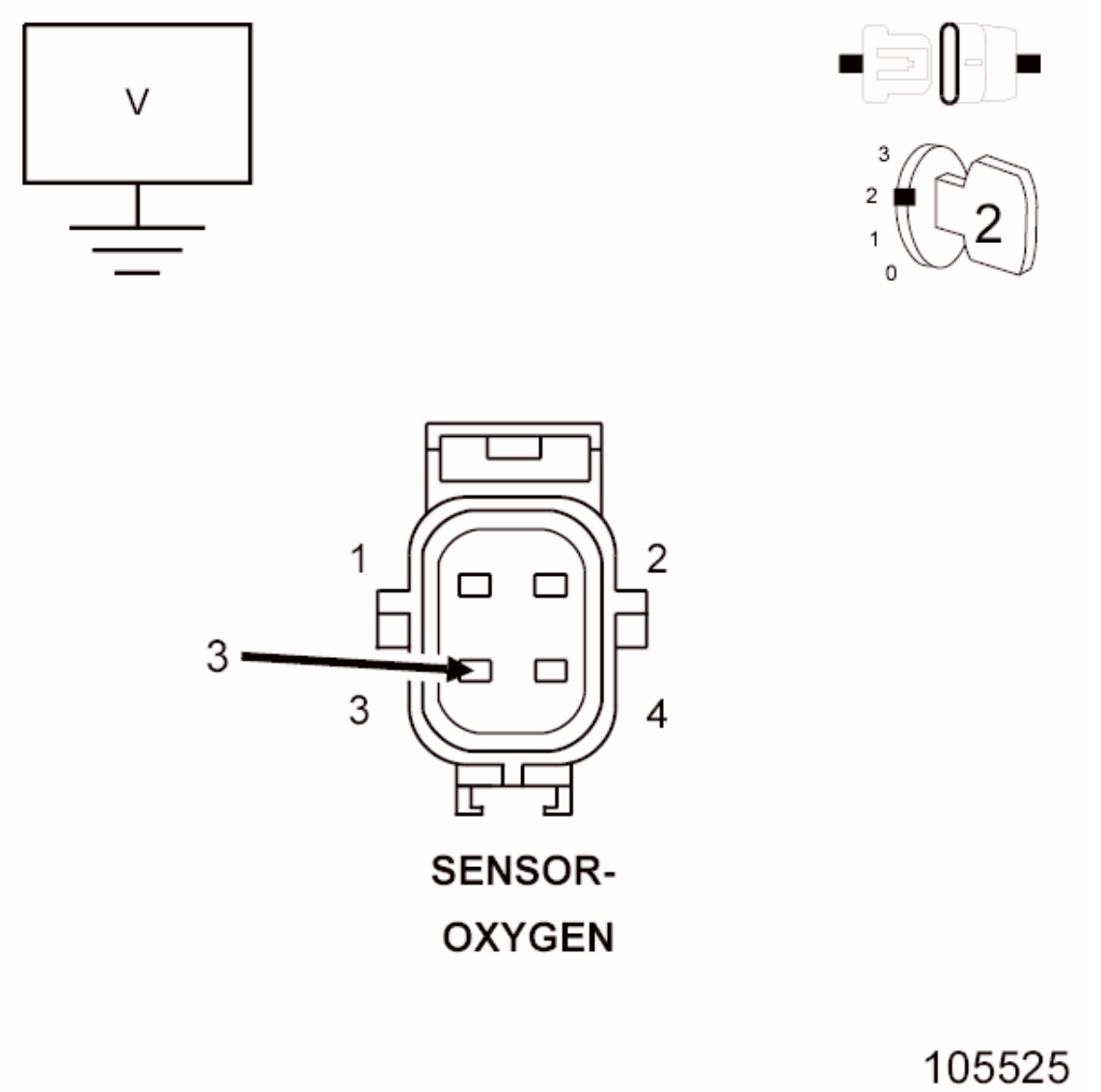

Fig. 11: Measuring Voltage On O2 Sensor Return Circuit In O2 Sensor Harness Connector
Courtesy of CHRYSLER GROUP, LLC

1. Measure the voltage on the (K902) O2 Return Upstream circuit in the O2 Sensor harness connector.

   Is the voltage at 2.5 Volts?

   Yes

   - Go To 16.

   No

   - Check the O2 Return circuit for a short to ground, open or short to voltage. Inspect the O2 Sensor connector and the PCM harness connector. If OK, replace and program the Powertrain Control Module in accordance with the Service Information.

- Perform the POWERTRAIN VERIFICATION TEST. Refer to **POWERTRAIN VERIFICATION TEST** .

16. **POWERTRAIN CONTROL MODULE (PCM)**
    1. Using the wiring diagram/schematic as a guide, inspect the wiring and connectors between the Sensors and the Powertrain Control Module (PCM).
    2. Look for any chafed, pierced, pinched or partially broken wires.
    3. Look for broken, bent, pushed out or corroded terminals. Verify that there is good pin to terminal contact in the Sensor and Control Module connectors.
    4. Perform any Technical Service Bulletins that may apply.

    Were there any problems found?

    Yes

    - Repair as necessary.
    - Perform the POWERTRAIN VERIFICATION TEST. Refer to **POWERTRAIN VERIFICATION TEST** .

    No

    - Replace and program the Powertrain Control Module in accordance with the Service Information.
    - Perform the POWERTRAIN VERIFICATION TEST. Refer to **POWERTRAIN VERIFICATION TEST** .

17. **RESTRICTED FUEL SUPPLY LINE**

    WARNING: **The fuel system is under a constant pressure (even with the engine off). Before testing or servicing any fuel system hose, fitting or line, the fuel system pressure must be released. Failure to follow these instructions can result in possible serious or fatal injury.**

    1. Turn the ignition off.
    2. Raise vehicle on hoist and disconnect the fuel pressure line at the fuel pump module.
    3. Install Fuel Pressure Decay Tester (special tool #8978A, Decay Tool, Fuel) between the fuel supply line and the fuel pump module.
    4. Ignition on, engine not running.
    5. Using the scan tool, actuate the ASD Fuel System test and observe the fuel pressure gauge.

    NOTE: Fuel pressure specification is 407 kPa +/- 34 kPa (59 psi +/- 5 psi).

    Is the fuel pressure within specification?

    Yes

- Repair or replace fuel supply line as necessary.
- Perform the POWERTRAIN VERIFICATION TEST. Refer to **POWERTRAIN VERIFICATION TEST** .

No

- Go To 18.

CAUTION: Stop All Actuations.

18. **FUEL PUMP INLET STRAINER**

WARNING: The fuel system is under a constant pressure (even with the engine off). Before testing or servicing any fuel system hose, fitting or line, the fuel system pressure must be released.

1. Turn the ignition off.
2. Remove the Fuel Pump Module and inspect the Fuel Inlet Strainer.

   Is the Fuel Inlet Strainer plugged?

   Yes

   - Replace the Fuel Pump Inlet Strainer.
   - Perform the POWERTRAIN VERIFICATION TEST. Refer to **POWERTRAIN VERIFICATION TEST** .

   No

   - Go To 19.

19. **FUEL PUMP MODULE**

Repair

- Verify that there is good pin to terminal contact in the Fuel Pump Module, TIPM and Powertrain Control Module connectors. Replace the Fuel Pump Module if no problems were found with the connectors.
- Perform the POWERTRAIN VERIFICATION TEST. Refer to **POWERTRAIN VERIFICATION TEST** .

P0172-FUEL SYSTEM 1/1 RICH

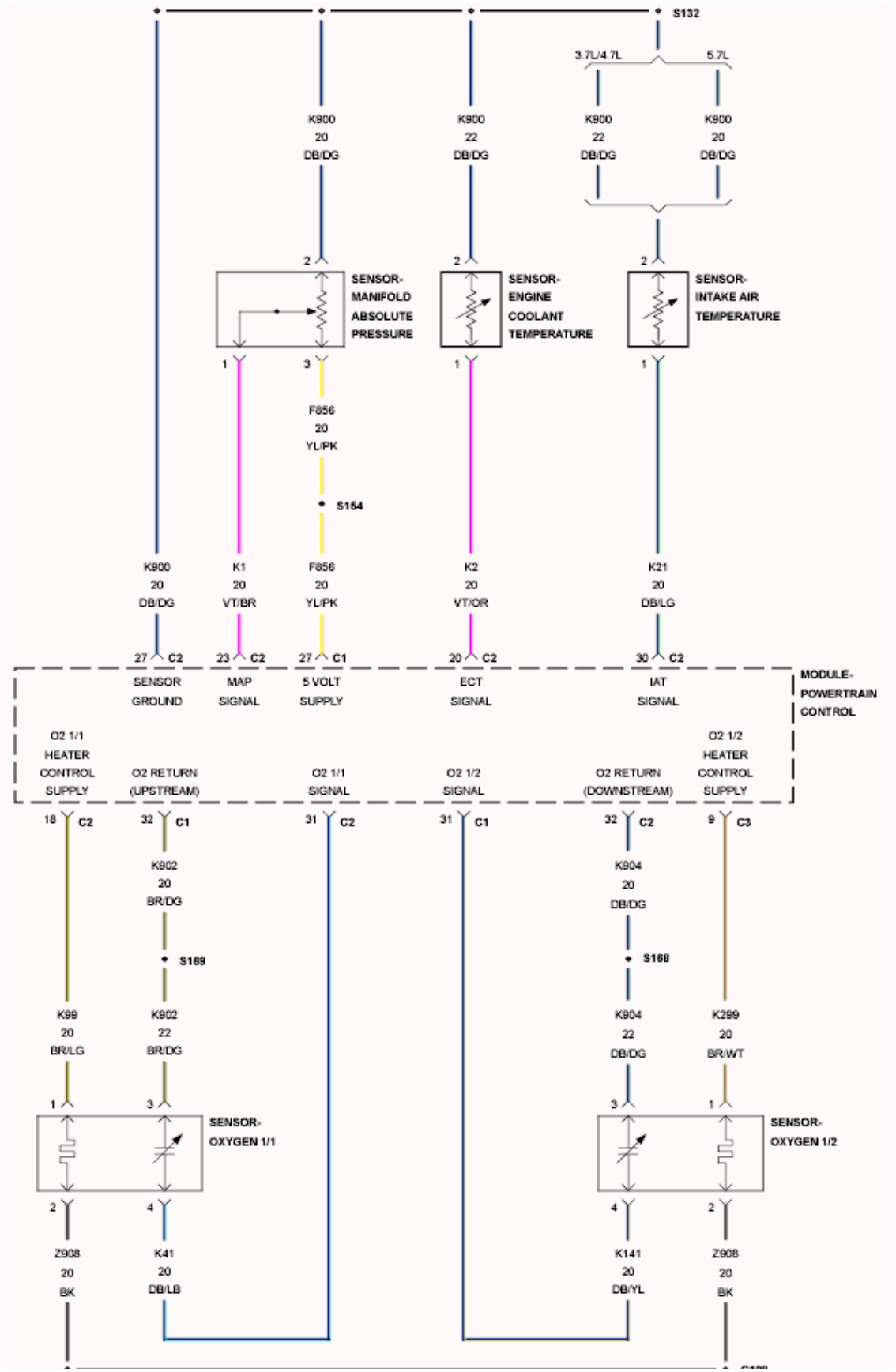
S132
3.7L/4.7L
5.7L
K900
20
DB/DG
K900
22
DB/DG
K900
22
DB/DG
K900
20
DB/DG
SENSOR-
MANIFOLD
ABSOLUTE
PRESSURE
SENSOR-
ENGINE
COOLANT
TEMPERATURE
SENSOR-
INTAKE AIR
TEMPERATURE
F856
20
YL/PK
S154
K900
20
DB/DG
K1
20
VT/BR
F856
20
YL/PK
K2
20
VT/OR
K21
20
DB/LG
SENSOR
GROUND
MAP
SIGNAL
5 VOLT
SUPPLY
ECT
SIGNAL
IAT
SIGNAL
MODULE-
POWERTRAIN
CONTROL
O2 1/1
HEATER
CONTROL
SUPPLY
O2 RETURN
(UPSTREAM)
O2 1/1
SIGNAL
O2 1/2
SIGNAL
O2 RETURN
(DOWNSTREAM)
O2 1/2
HEATER
CONTROL
SUPPLY
K902
20
BR/DG
S169
K904
20
DB/DG
S168
K99
20
BR/LG
K902
22
BR/DG
K904
22
DB/DG
K299
20
BR/WT
SENSOR-
OXYGEN 1/1
SENSOR-
OXYGEN 1/2
Z908
20
BK
K41
20
DB/LB
K141
20
DB/YL
Z908
20
BK

Fig. 12: Fuel System Circuit Schematic
Courtesy of CHRYSLER GROUP, LLC

For a complete wiring diagram, **refer to appropriate SYSTEM WIRING DIAGRAMS article** .

THEORY OF OPERATION

The fuel feedback system will maintain a stoiciometric fuel/air mixture, 14.7:1, by modifying the injector pulse width according to the oxygen content of the exhaust gas. The Powertrain Control Module (PCM) makes short term and long term fuel corrections to maintain stoiciometric fuel/air ratio for best catalytic converter efficiency. Short term fuel correction is based on upstream O2 sensor output and is designed for quick engine response. The long term fuel correction compensated for variations in the engine specifications, sensor tolerances and component aging and is designed to correct rich and lean conditions over a longer period of time.

WHEN MONITORED:

With the engine running in closed loop mode, the ambient/battery temperature above -6.7° C (20° F) and altitude below 2590.8 m (8500 ft).

SET CONDITION:

If the Powertrain Control Module (PCM) multiplies short term compensation by long term adaptive and a purge fuel multiplier and the result is below a certain value for 30 seconds over two trips, a freeze frame is stored, the MIL illuminates and a trouble code is stored. Two Trip Fault. Three good trips to turn off the MIL.

POSSIBLE CAUSES

Possible Causes
O2 SENSOR HEATER OPERATION
EVAP PURGE SOLENOID OPERATION
O2 SIGNAL CIRCUIT
O2 RETURN CIRCUIT
O2 SENSOR
MAP SENSOR
ECT SENSOR
ENGINE MECHANICAL PROBLEM
FUEL FILTER/PRESSURE REGULATOR (HIGH)
POWERTRAIN CONTROL MODULE (PCM)

Always perform the Pre-Diagnostic Troubleshooting procedure before proceeding. Refer to PRE-DIAGNOSTIC TROUBLESHOOTING PROCEDURE .

DIAGNOSTIC TEST

1. **ACTIVE DIAGNOSTIC TROUBLE CODE (DTC)**

NOTE: **Check for contaminates that may have damaged an O2 Sensor: contaminated fuel, unapproved silicone, oil and coolant.**

1. Start the engine.
2. Allow the engine to reach normal operating temperature.
3. Using the scan tool, select View DTCs.

NOTE: **It may be necessary to drive the vehicle to meet the conditions to set this DTC, try to repeat the conditions in which the fault originally set by reviewing the Freeze Frame data.**

Is the DTC Active or Pending at this time?

Yes

- Go To 2.

No

- Perform the INTERMITTENT CONDITION diagnostic procedure. Refer to **INTERMITTENT CONDITION** .

2. **CHECKING FUEL PRESSURE**

WARNING: **The fuel system is under a constant pressure (even with the engine off). Before testing or servicing any fuel system hose, fitting or line, the fuel system pressure must be released. Failure to follow these instructions can result in possible serious or fatal injury.**

1. Install the Fuel Pressure Decay Tester (special tool #8978A, Decay Tool, Fuel) to the fuel rail.
2. Ignition on, engine not running.
3. Using the scan tool, actuate the ASD Fuel System test and observe the fuel pressure gauge.

NOTE: **Fuel pressure specification is 407 kPa +/- 34 kPa (59 psi +/- 5 psi).**

4. Turn the ignition off.

Choose a conclusion that best matches your fuel pressure reading.

Within Specification

- Go To 3.

Above Specification

- Replace the fuel filter/pressure regulator.

- Perform the POWERTRAIN VERIFICATION TEST. Refer to **POWERTRAIN VERIFICATION TEST** .

CAUTION: Stop All Actuations.

3. **O2 SENSOR OPERATION**
   1. Start the engine.
   2. Allow the engine to reach normal operating temperature.

      NOTE: If one of the O2 Sensors Signal or Return circuit is shorted to ground or voltage, all the other O2 Sensor voltage readings will be affected.

      NOTE: After the repairs have been made, verify proper O2 Sensor operation. If all the O2 Sensor voltage readings have not returned to normal, follow the diagnostic procedure for the remaining O2 Sensors.

   3. Using the scan tool, monitor the 1/1 O2 Sensor voltage reading.

      Is the voltage switching between 2.5 and 3.4 Volts?

      Yes

      - Go To 4.

      No

      - Go To 9.
4. **1/1 O2 SENSOR HEATER OPERATION**
   1. Turn the ignition off.

      NOTE: Wait a minimum of 10 minutes to allow the O2 Sensor to cool down before continuing the test. Allow the O2 Sensor voltage to stabilize at 5.0 Volts.

   2. Ignition on, engine not running.
   3. Using the scan tool, perform the 1/1 O2 Heater Test.
   4. Using the scan tool, monitor the O2 Sensor voltage while performing the Heater test for at least two minutes.

      Does the voltage stay above 4.5 Volts during the Heater test?

      Yes

- Verify that there is good pin to terminal contact in the O2 Sensor and Powertrain Control Module connectors. Replace the 1/1 O2 Sensor if no problems were found with the connectors.
- Perform the POWERTRAIN VERIFICATION TEST. Refer to **POWERTRAIN VERIFICATION TEST** .

No

- Go To 5.

5. **MAP SENSOR OPERATION**
   1. Ignition on, engine not running.
   2. Using the scan tool, read the Barometric Pressure.

      NOTE: The Barometric Pressure should be approximately equal to the actual barometric pressure. If necessary, compare the Barometric Pressure value of this vehicle to the value of a known good vehicle of a similar make and model.

   3. Turn the ignition off.
   4. Connect a Vacuum Gauge to a Manifold Vacuum source.
   5. Start the engine.
   6. Allow the engine to idle.

      NOTE: If engine will not idle, maintain a constant RPM above idle.

   7. Using the scan tool, read the MAP Sensor vacuum value.

      Is the scan tool reading for MAP Vacuum within 1 inch of Hg on the Vacuum Gauge reading and is the Barometric Pressure reading of the vehicle the approximately the same as actual Barometric Pressure?

      Yes

      - Go To 6.

      No

      - Verify that there is good pin to terminal contact in the MAP Sensor and Powertrain Control Module connectors. Replace the MAP Sensor if no problems were found with the connectors.
      - Perform the POWERTRAIN VERIFICATION TEST. Refer to **POWERTRAIN VERIFICATION TEST** .

        NOTE: Remove the vacuum gauge before continuing.

6. **ECT SENSOR OPERATION**

NOTE: For this test to be valid, the thermostat must be operating correctly.

NOTE: This test works best if performed on a cold engine (cold soak)

1. Ignition on, engine not running.
2. Using the scan tool, read the Engine Coolant Temperature Sensor value. If the engine was allowed to sit overnight (cold soak), the temperature value should be a sensible value that is somewhere close to the ambient temperature.

   NOTE: If engine coolant temperature is above 82° C (180° F), allow the engine to cool until 65° C (150° F) is reached.

3. Start the Engine.
4. During engine warm-up, monitor the Engine Coolant Temperature value. The temp value change should be a smooth transition from start up to normal operating temp 82° C (180° F). The value should reach at least 82° C (180° F).

   Did the ECT value increase smoothly and reach at least 82° C (180° F)?

   Yes

   - Go To 7.

   No

   - Verify that there is good pin to terminal contact in the ECT Sensor and Powertrain Control Module connectors. Replace the Engine Coolant Temperature Sensor if no problems were found with the connectors.
   - Perform the POWERTRAIN VERIFICATION TEST. Refer to **POWERTRAIN VERIFICATION TEST** .

7. **EVAP PURGE SOLENOID OPERATION**
   1. Turn the ignition off.
   2. Disconnect the hoses at the EVAP Purge Solenoid.
   3. Using a hand vacuum pump, apply 10 inches of vacuum to the EVAP Purge Solenoid vacuum source port on the component side.

      Did the EVAP Purge Solenoid hold vacuum?

      Yes

      - Go To 8.

No

- Verify that there is good pin to terminal contact in the Solenoid and Powertrain Control Module connectors. Replace the EVAP Purge Solenoid if no problems were found with the connectors.
- Perform the POWERTRAIN VERIFICATION TEST. Refer to **POWERTRAIN VERIFICATION TEST** .

NOTE: Connect the vacuum hoses before continuing.

8. **ENGINE MECHANICAL**

Check for any of the following conditions/mechanical problems:

- AIR INDUCTION SYSTEM - must be free from leaks.
- ENGINE VACUUM - must be at least 13 inches in neutral
- ENGINE VALVE TIMING - must be within specifications
- ENGINE COMPRESSION - must be within specifications
- ENGINE EXHAUST SYSTEM - must be free of any restrictions or leaks.
- ENGINE PCV SYSTEM - must flow freely
- TORQUE CONVERTER STALL SPEED - must be within specifications
- POWER BRAKE BOOSTER - no internal vacuum leaks
- FUEL - must be free of contamination
- FUEL INJECTOR - plugged or restricted injector; control wire not connected to correct injector

Are there any engine mechanical problems?

Yes

- Repair as necessary.
- Perform the POWERTRAIN VERIFICATION TEST. Refer to **POWERTRAIN VERIFICATION TEST** .

No

- Go To 12.

9. **1/1 O2 SENSOR**

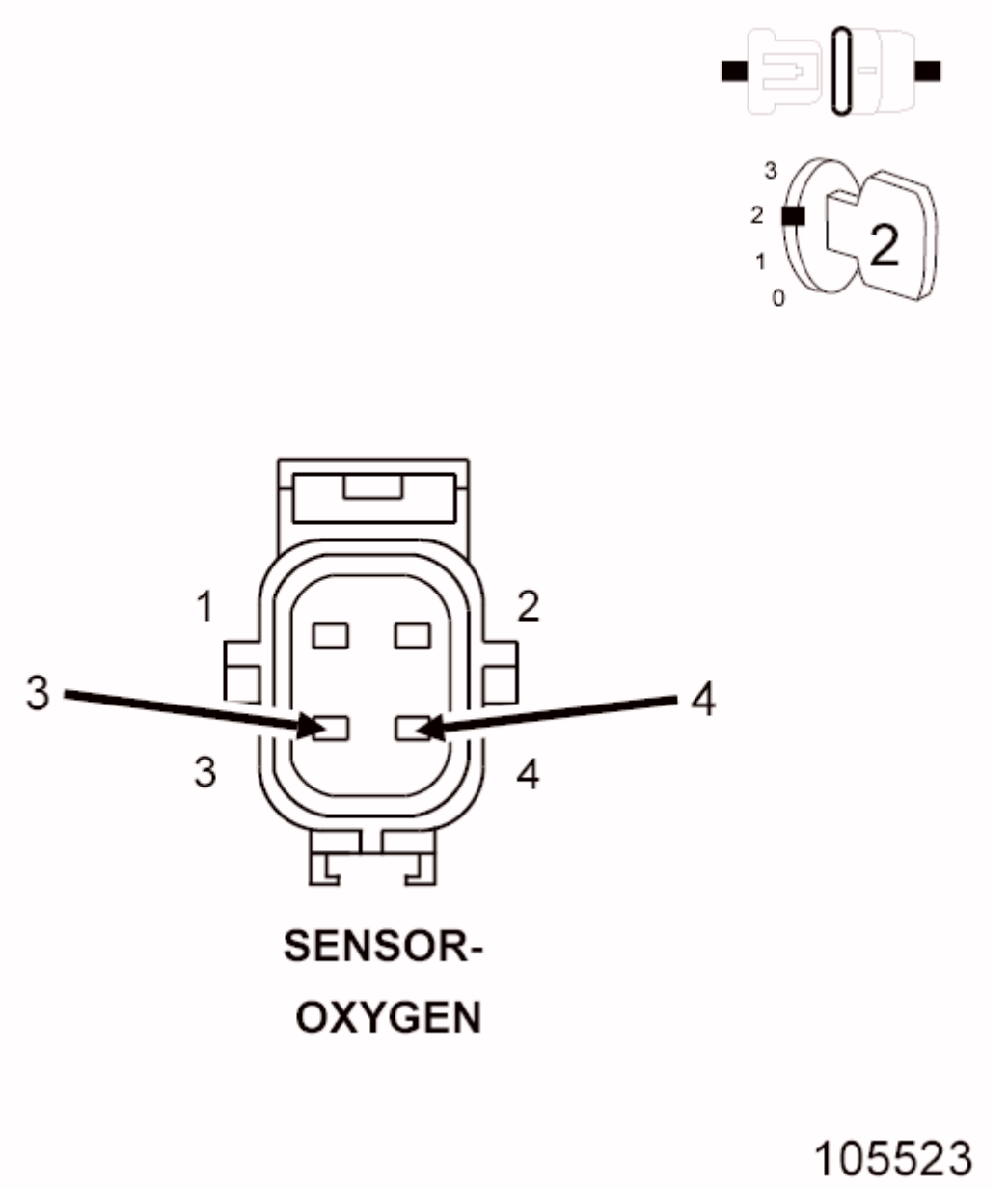

Fig. 13: O2 Sensor Harness Connector
Courtesy of CHRYSLER GROUP, LLC

NOTE: **Perform the following test on the O2 Sensors whose voltage was not switching properly in the previous step.**

1. Ignition on, engine not running.
2. Disconnect the 1/1 O2 Sensor harness connector.
3. Using the scan tool, monitor the 1/1 O2 Sensor voltage.
4. O2 Sensor voltage should read between 4.1 and 5.0 Volts on the scan tool with the connector disconnected.
5. Connect a jumper wire between the (K41) O2 Sensor 1/1 Signal circuit and the (K902) O2 Return

Upstream circuit in the O2 Sensor harness connector.

NOTE: The voltage should drop from between 4.1 and 5.0 Volts down to 2.5 Volts with the jumper wire connected.

Did the O2 Sensor voltage drop from between 4.1 and 5.0 Volts to 2.5 Volts when the jumper wire was installed?

Yes

- Verify that there is good pin to terminal contact in the O2 Sensor and Powertrain Control Module connectors. Replace the 1/1 O2 Sensor if no problems were found with the connectors.
- Perform the POWERTRAIN VERIFICATION TEST. Refer to **POWERTRAIN VERIFICATION TEST** .

No

- Go To 10.

NOTE: Remove the jumper wire before continuing.

10. **(K41) O2 SENSOR 1/1 SIGNAL CIRCUIT**

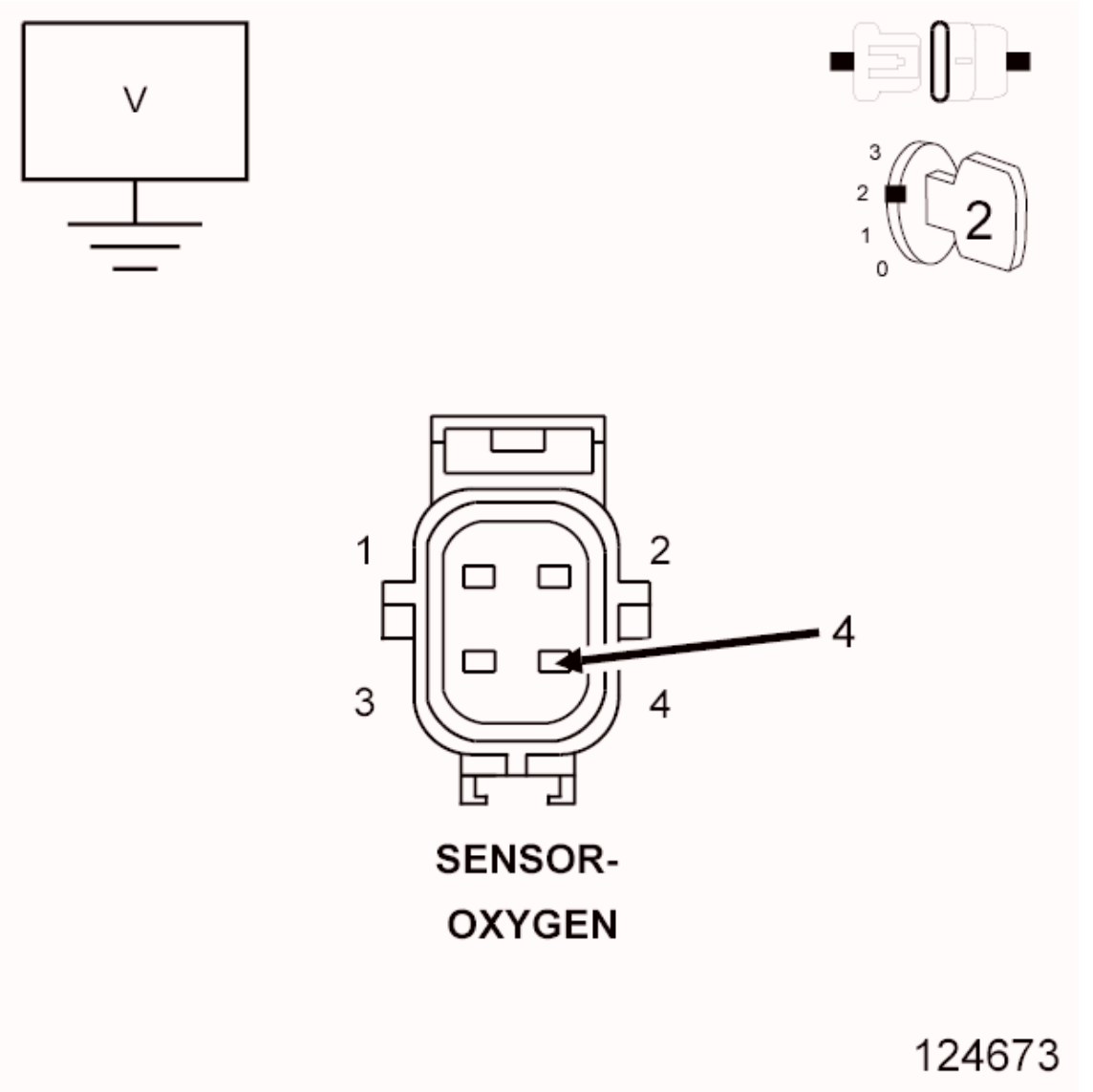

Fig. 14: Measuring Voltage Of O2 Sensor Signal Circuit In O2 Sensor Harness Connector
Courtesy of CHRYSLER GROUP, LLC

1. Using the scan tool, monitor the 1/1 O2 Sensor voltage reading with the jumper wire removed.

NOTE: **The scan tool will display all O2 Sensor voltage readings approximately 5.0 Volts when only one O2 Sensor's Signal circuit is shorted to voltage.**

NOTE: **The scan tool will display one O2 Sensor voltage close to zero and the others will read lower than normal when one O2 Sensor Signal circuit contains excessive resistance.**

Is the voltage between 4.1 and 5.0 Volts?

Yes

- Go To 11.

No

- Check the (K41) O2 Sensor 1/1 Signal circuit for damage, short to ground, open or short to voltage. Inspect the O2 Sensor connector and the PCM harness connector. If OK, replace and program the Powertrain Control Module in accordance with the Service Information.
- Perform the POWERTRAIN VERIFICATION TEST. Refer to **POWERTRAIN VERIFICATION TEST** .

11. **(K902) O2 SENSOR RETURN UPSTREAM CIRCUIT**

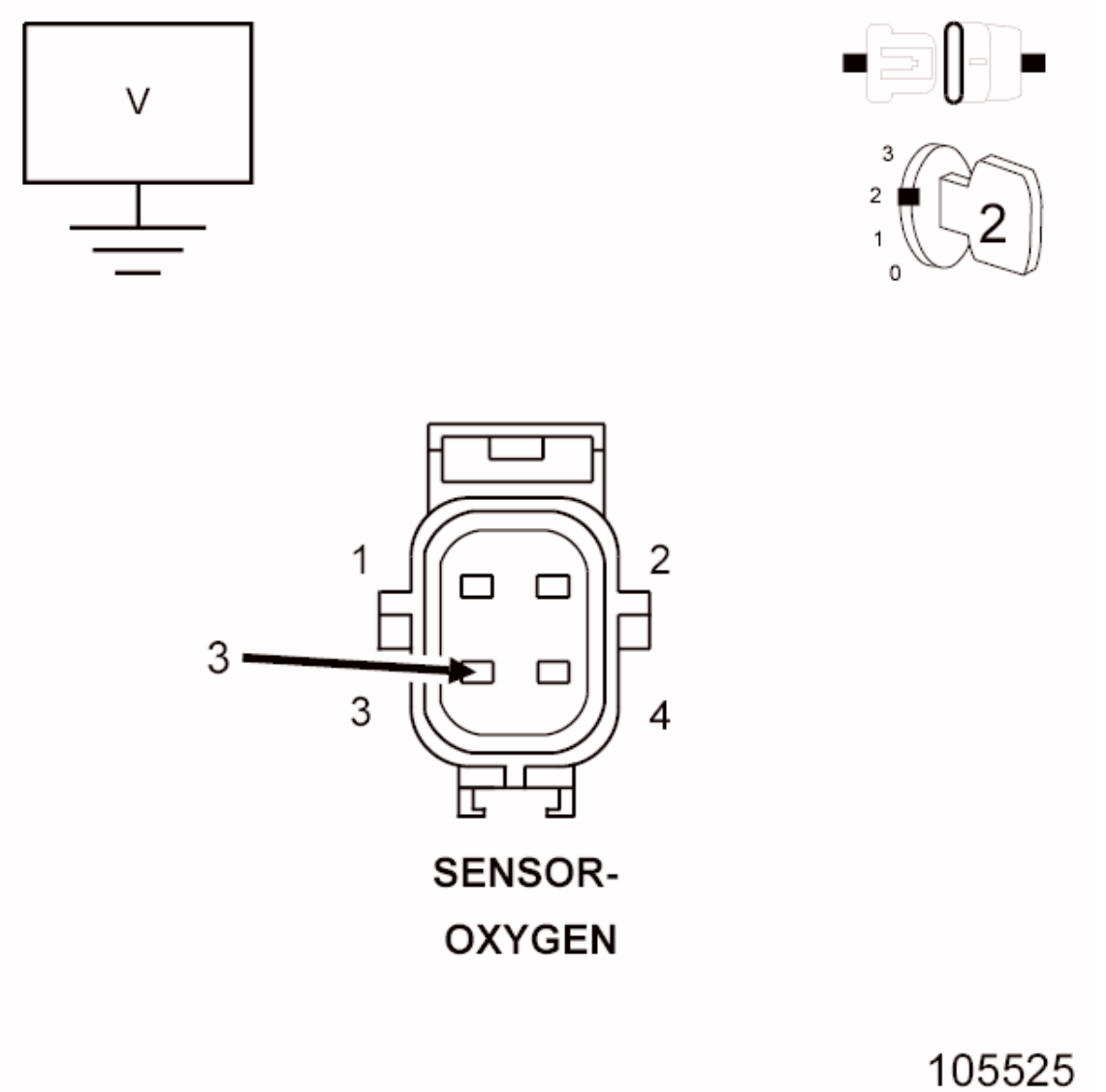

Fig. 15: Measuring Voltage On O2 Sensor Return Circuit In O2 Sensor Harness Connector
Courtesy of CHRYSLER GROUP, LLC

1. Measure the voltage on the (K902) O2 Return Upstream circuit in the 1/1 O2 Sensor harness connector.

   Is the voltage at 2.5 Volts?

   Yes

   - Go To 12.

   No

   - Check the (K902) O2 Return Upstream circuit for damage, short to ground, open or short to voltage. Inspect the O2 Sensor connector and the PCM harness connector. If OK, replace and program the Powertrain Control Module in accordance with the Service Information.
   - Perform the POWERTRAIN VERIFICATION TEST. Refer to **POWERTRAIN VERIFICATION TEST** .

   NOTE: Turn the ignition off before continuing.

12. **POWERTRAIN CONTROL MODULE (PCM)**
    1. Using the wiring diagram/schematic as a guide, inspect the wiring and connectors between the Sensors and the Powertrain Control Module (PCM).
    2. Look for any chafed, pierced, pinched or partially broken wires.
    3. Look for broken, bent, pushed out or corroded terminals. Verify that there is good pin to terminal contact in the Sensor and Control Module connectors.
    4. Perform any Technical Service Bulletins that may apply.

       Were there any problems found?

       Yes

       - Repair as necessary.
       - Perform the POWERTRAIN VERIFICATION TEST. Refer to **POWERTRAIN VERIFICATION TEST** .

       No

       - Replace and program the Powertrain Control Module in accordance with the Service Information.
       - Perform the POWERTRAIN VERIFICATION TEST. Refer to **POWERTRAIN VERIFICATION TEST** .

P0174-FUEL SYSTEM 2/1 LEAN

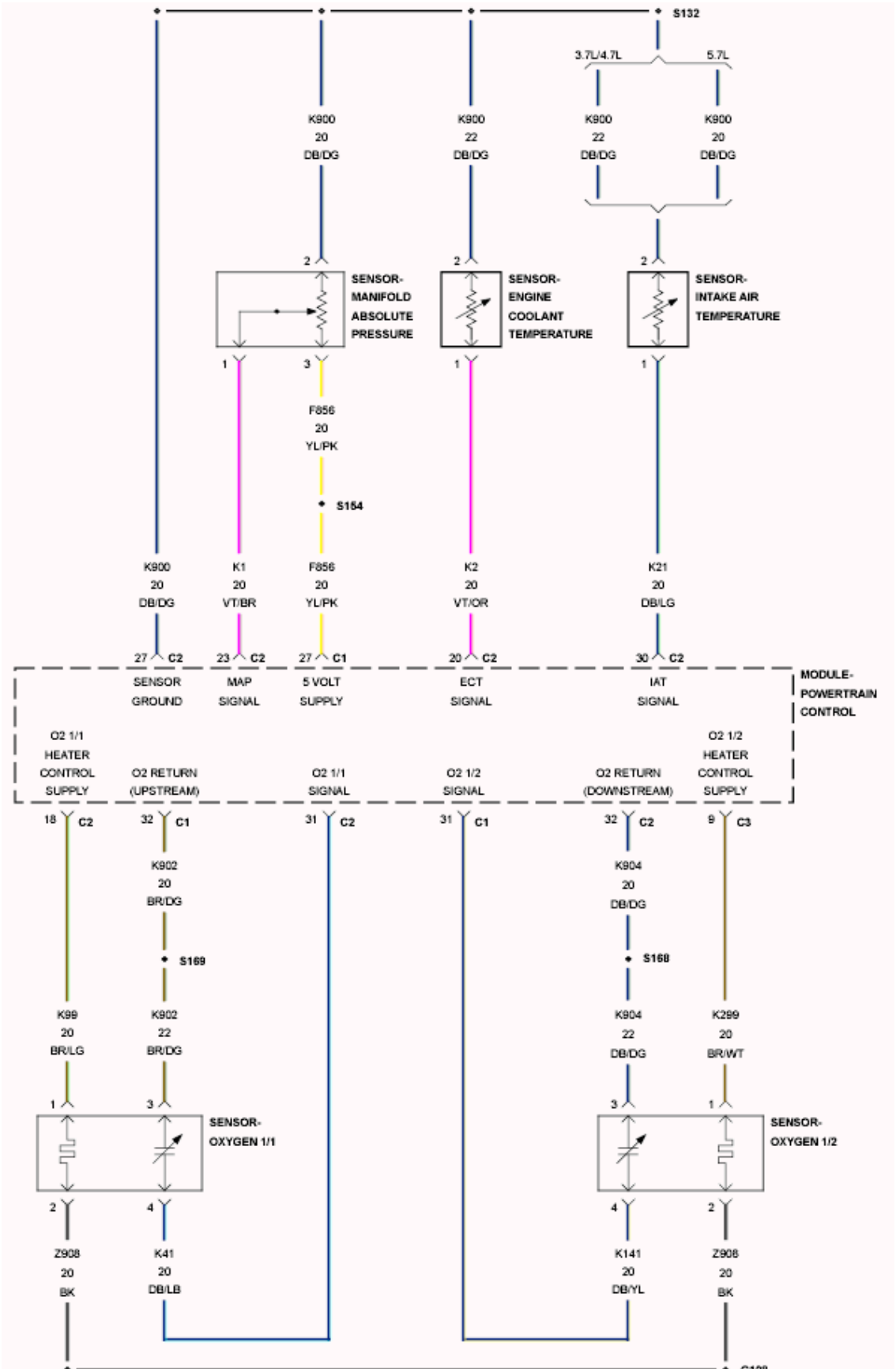
S132
3.7L/4.7L
5.7L
K900
20
DB/DG
K900
22
DB/DG
K900
22
DB/DG
K900
20
DB/DG
SENSOR-
MANIFOLD
ABSOLUTE
PRESSURE
SENSOR-
ENGINE
COOLANT
TEMPERATURE
SENSOR-
INTAKE AIR
TEMPERATURE
F856
20
YL/PK
S154
K900
20
DB/DG
K1
20
VT/BR
F856
20
YL/PK
K2
20
VT/OR
K21
20
DB/LG
SENSOR
GROUND
MAP
SIGNAL
5 VOLT
SUPPLY
ECT
SIGNAL
IAT
SIGNAL
MODULE-
POWERTRAIN
CONTROL
O2 1/1
HEATER
CONTROL
SUPPLY
O2 RETURN
(UPSTREAM)
O2 1/1
SIGNAL
O2 1/2
SIGNAL
O2 RETURN
(DOWNSTREAM)
O2 1/2
HEATER
CONTROL
SUPPLY
K902
20
BR/DG
S169
K904
20
DB/DG
S168
K99
20
BR/LG
K902
22
BR/DG
K904
22
DB/DG
K299
20
BR/WT
SENSOR-
OXYGEN 1/1
SENSOR-
OXYGEN 1/2
Z908
20
BK
K41
20
DB/LB
K141
20
DB/YL
Z908
20
BK

Fig. 16: Fuel System Circuit Schematic
Courtesy of CHRYSLER GROUP, LLC

For a complete wiring diagram, **refer to the Wiring Information** .

THEORY OF OPERATION

The fuel feedback system will maintain a stoiciometric fuel/air mixture, 14.7:1, by modifying the injector pulse width according to the oxygen content of the exhaust gas. The Powertrain Control Module (PCM) makes short term and long term fuel corrections to maintain stoiciometric fuel/air ratio for best catalytic converter efficiency. Short term fuel correction is based on upstream O2 sensor output and is designed for quick engine response. The long term fuel correction compensated for variations in the engine specifications, sensor tolerances and component aging and is designed to correct rich and lean conditions over a longer period of time.

WHEN MONITORED:

With the engine running in closed loop mode, the ambient/battery temperature above -6.7° C (20° F) and altitude below 2590.8 m (8500 ft).

SET CONDITION:

If the Powertrain Control Module (PCM) multiplies short term compensation by long term adaptive and a certain percentage is exceeded for two trips, a freeze frame is stored, the MIL illuminates and a trouble code is stored. Two Trip Fault. Three good trips to turn off the MIL.

POSSIBLE CAUSES

Possible Causes
RESTRICTED FUEL SUPPLY LINE
FUEL PUMP INLET STRAINER PLUGGED
FUEL PUMP MODULE
O2 SIGNAL CIRCUIT
O2 RETURN CIRCUIT
O2 SENSOR HEATER OPERATION
O2 SENSOR
MAP SENSOR OPERATION
ECT SENSOR OPERATION
ENGINE MECHANICAL
FUEL FILTER/PRESSURE REGULATOR (HIGH)
POWERTRAIN CONTROL MODULE (PCM)

Always perform the Pre-Diagnostic Troubleshooting procedure before proceeding. Refer to PRE-DIAGNOSTIC TROUBLESHOOTING PROCEDURE .

DIAGNOSTIC TEST

1. **ACTIVE DIAGNOSTIC TROUBLE CODE (DTC)**
    1. Diagnose all other trouble codes before continuing.

        NOTE: Check for contaminants that may have damaged an O2 Sensor: contaminated fuel, unapproved silicone, oil and coolant.

    2. Start the engine.
    3. Allow the engine to reach normal operating temperature.
    4. Using the scan tool, select View DTCs.

        NOTE: It may be necessary to drive the vehicle to meet the conditions to set this DTC, try to repeat the conditions in which the fault originally set by reviewing the Freeze Frame data.

    Is the DTC Active or Pending at this time?

    Yes

    - Go To 2.

    No

    - Perform the INTERMITTENT CONDITION diagnostic procedure. Refer to **INTERMITTENT CONDITION** .
2. **CHECKING FUEL PRESSURE**

    WARNING: The fuel system is under a constant pressure (even with the engine off). Before testing or servicing any fuel system hose, fitting or line, the fuel system pressure must be released. Failure to follow these instructions can result in possible serious or fatal injury.

    1. Install the Fuel Pressure Decay Tester (special tool #8978A, Decay Tool, Fuel) to the fuel rail.
    2. Ignition on, engine not running.
    3. Using the scan tool, actuate the ASD Fuel System test and observe the fuel pressure gauge.

        NOTE: Fuel pressure specification is 407 kPa +/- 34 kPa (59 psi +/- 5 psi).

    4. Turn the ignition off.

    Choose a conclusion that best matches your fuel pressure reading.

    Within Specification

    - Go To 3.

Above Specification

- Replace the fuel filter/pressure regulator.
- Perform the POWERTRAIN VERIFICATION TEST. Refer to **POWERTRAIN VERIFICATION TEST** .

Below Specification

- Go To 17.

CAUTION: Stop All Actuations.

3. **CHECKING THE EXHAUST SYSTEM FOR LEAKS**
   1. Turn the ignition off.
   2. Raise the vehicle in accordance with the Service Information.

      WARNING: The normal operating temperature of the exhaust system is very high. Never work around or attempt to service any part of the exhaust system until it has cooled. Special care should be taken when working near the catalytic converter. The temperature of the converter rises to a high level after a short period of engine operating time.

   3. Connect Exhaust Cone (special tool #8404-EC, Exhaust Cone) or (special tool #8404-EC, Exhaust Cone) to Air Pressure Regulator (with hose) W-18-MIL-1146AS.

      CAUTION: The air pressure must not exceed 27.6 kPa (4 psi), otherwise engine damage can occur.

   4. Attach shop air to the air pressure regulator.
   5. Adjust the Air Pressure Regulator to 27.6 kPa (4 psi).
   6. Insert the exhaust cone into the vehicle tail pipe.
   7. If the vehicle is equipped with dual exhaust. Use the (special tool #8404-ECT, Exhaust Cone, Truck) with equipped attached plug, plug one side of the dual exhaust pipe. Pressurize the other as described above.
   8. Apply Mopar® Air Leak Detector PN# 05191804AA (or an equivalent leak finder liquid) to the following areas:
      - All welded joints from the exhaust manifold to 152.4 mm (6 inches) behind the downstream O2 sensor
      - O2 sensor seal points
      - O2 sensor boss welds
      - Flange/joint connection(s)

- Exhaust manifold to cylinder head connection(s)
- EGR solenoid gasket base and tube seal points (if equipped)

9. Watch for the liquid/soapy water to bubble.
10. Use the following definitions to help determine if system or component repair/replacement is necessary:

    Type 1 Leak is defined as a leak where very small foam like bubbles 1 mm (0.04 of an inch) or less appear.

    Any Type 1 or greater leaks found in welded joints, O2 sensor seal points or O2 sensor boss welds must be repaired or the component must be replaced.

    Type 2 Leak is defined as a leak where larger bubbles pea size, 8 mm (0.3 of an inch) or greater appear.

    Any Type 2 or greater leaks found in flange or joint connections, exhaust manifold to cylinder head connections or EGR gasket and tube seal points must be repaired or the components must be replaced.

Leak Location	Repair required if results at 27.6 kPa (4 psi) reveal bubble size:
Welded joints	Type 1, 1 mm (0.04 of an inch) or greater
O2 Sensor seal points	Type 1, 1 mm (0.04 of an inch) or greater
O2 Sensor boss welds	Type 1, 1 mm (0.04 of an inch) or greater
Flange / joint connections	Type 2, 8 mm (0.3 of an inch) or greater
Exhaust Manifold to cylinder head connections	Type 2, 8 mm (0.3 of an inch) or greater
EGR gasket and tube seal points	Type 2, 8 mm (0.3 of an inch) or greater

11. If a leak is found that matches the above definition, repair or replace the component as necessary.
12. Once the repair is complete, repeat the procedure to verify that all leaks have been repaired.

    Were any exhaust leaks found?

    Yes

    - Repair or replace the leaking exhaust parts as necessary.
    - Perform the POWERTRAIN VERIFICATION TEST. Refer to **POWERTRAIN VERIFICATION TEST** .

    No

    - Go To 4.

4. **O2 SENSOR OPERATION**
    1. Start the engine.

2. Allow the engine to reach normal operating temperature.

NOTE: **If one of the O2 Sensor's Signal or Return circuit is shorted to ground the scan tool will display all O2 Sensor voltage readings low. The O2 Sensor that is shorted to ground will display a voltage reading near or at 0 Volts.**

NOTE: **If one of the O2 Sensor Signal or Return circuits are shorted to voltage, the scan tool will display all O2 Sensor voltage readings high.**

NOTE: **After the repairs have been made, verify proper O2 Sensor operation. If all the O2 Sensor voltage readings have not returned to normal, follow the diagnostic procedure for the remaining O2 Sensors.**

3. Using the scan tool, monitor the 2/1 O2 Sensor voltage reading.

   Is the voltage switching between 2.5 and 3.4 Volts?

   Yes

   - Go To 5.

   No

   - Go To 13.

5. **2/1 O2 SENSOR HEATER OPERATION**
   1. Turn the ignition off.

   NOTE: **Wait a minimum of 10 minutes to allow the O2 Sensor to cool down before continuing the test. Allow the O2 Sensor voltage to stabilize at 5.0 Volts.**

   NOTE: **Perform the following test on all O2 Sensors.**

   2. Ignition on, engine not running.
   3. Using the scan tool, actuate the 2/1 O2 Heater Test.
   4. Using the scan tool, monitor 2/1 O2 Sensor voltage for at least two minutes.

      Does the voltage stay above 4.5 Volts?

      Yes

      - Verify that there is good pin to terminal contact in the O2 Sensor and Powertrain Control

Module connectors. Replace the 2/1 O2 Sensor if no problems were found with the connectors.

- Perform the POWERTRAIN VERIFICATION TEST. Refer to **POWERTRAIN VERIFICATION TEST** .

No

- Go To 6.

6. **ASD CONTROL OUTPUT OPERATION FROM THE TIPM**
   1. Turn the ignition off.

      CAUTION: Do not probe the PCM harness connectors. Probing the PCM harness connectors will damage the PCM terminals resulting in poor terminal to pin connection. Install PCM Pinout Box (special tool #8815A, Kit, NGC, 38 Position) along with the adapter (special tool #8815-1, PCM Pinout Box Adapter) between the PCM harness connector C3 and the PCM to perform the diagnosis.

      WARNING: When the engine is operating, do not stand in direct line with the fan. Do not put your hands near the pulleys, belts or fan. Do not wear loose clothing. Failure to follow these instructions may result in possible serious or fatal injury.

   2. Start and allow the engine to run.
   3. With a Voltmeter, probe the (F342) ASD Control Output circuits in the appropriate terminals of PCM Pinout Box (special tool #8815A, Kit, NGC, 38 Position).

      Is the voltage above 12.5 Volts?

      Yes

      - Go To 10.

      No

      - Go To 7.

7. **(F342) ASD CONTROL OUTPUT CIRCUIT(S) OPEN**

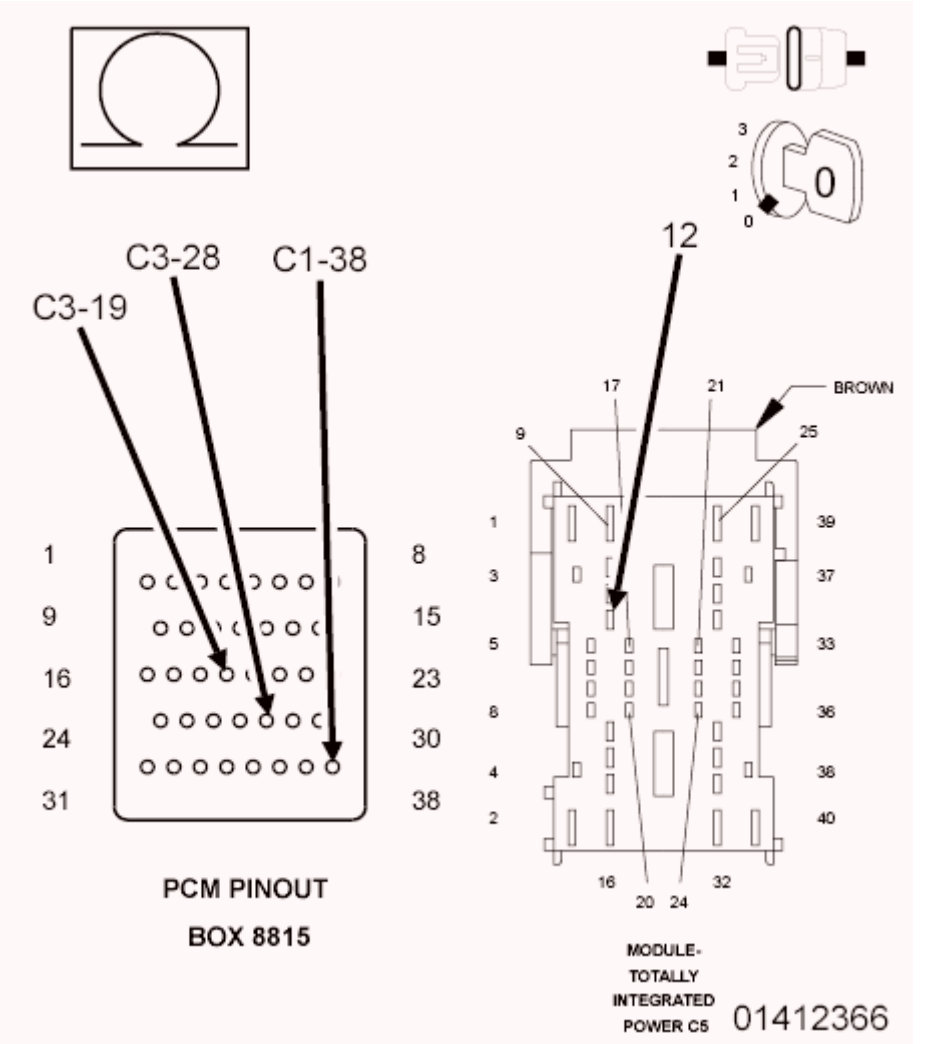

Fig. 17: Measuring Resistance Of (F342) ASD Control Output Circuits From C5 TIPM Harness Connector To Appropriate Terminals Of PCM Pinout Box 8815
Courtesy of CHRYSLER GROUP, LLC

1. Turn the ignition off.
2. Disconnect the C5 TIPM harness connector.

CAUTION: Do not probe the PCM harness connectors. Probing the PCM harness connectors will damage the PCM terminals resulting in poor terminal to pin connection. Install the PCM Pinout Box (special tool #8815A, Kit, NGC, 38 Position) to perform diagnosis.

3. Measure the resistance of the (F342) ASD Control Output circuits from the C5 TIPM harness connector to the appropriate terminals of PCM Pinout Box (special tool #8815A, Kit, NGC, 38 Position).

   Is the resistance below 5.0 Ohms?

Yes

- Go To 8.

No

- Repair the open in the (F342) ASD Control Output circuit(s).
- Perform the POWERTRAIN VERIFICATION TEST. Refer to **POWERTRAIN VERIFICATION TEST** .

8. **(F342) ASD CONTROL OUTPUT CIRCUIT(S) SHORTED TO GROUND**

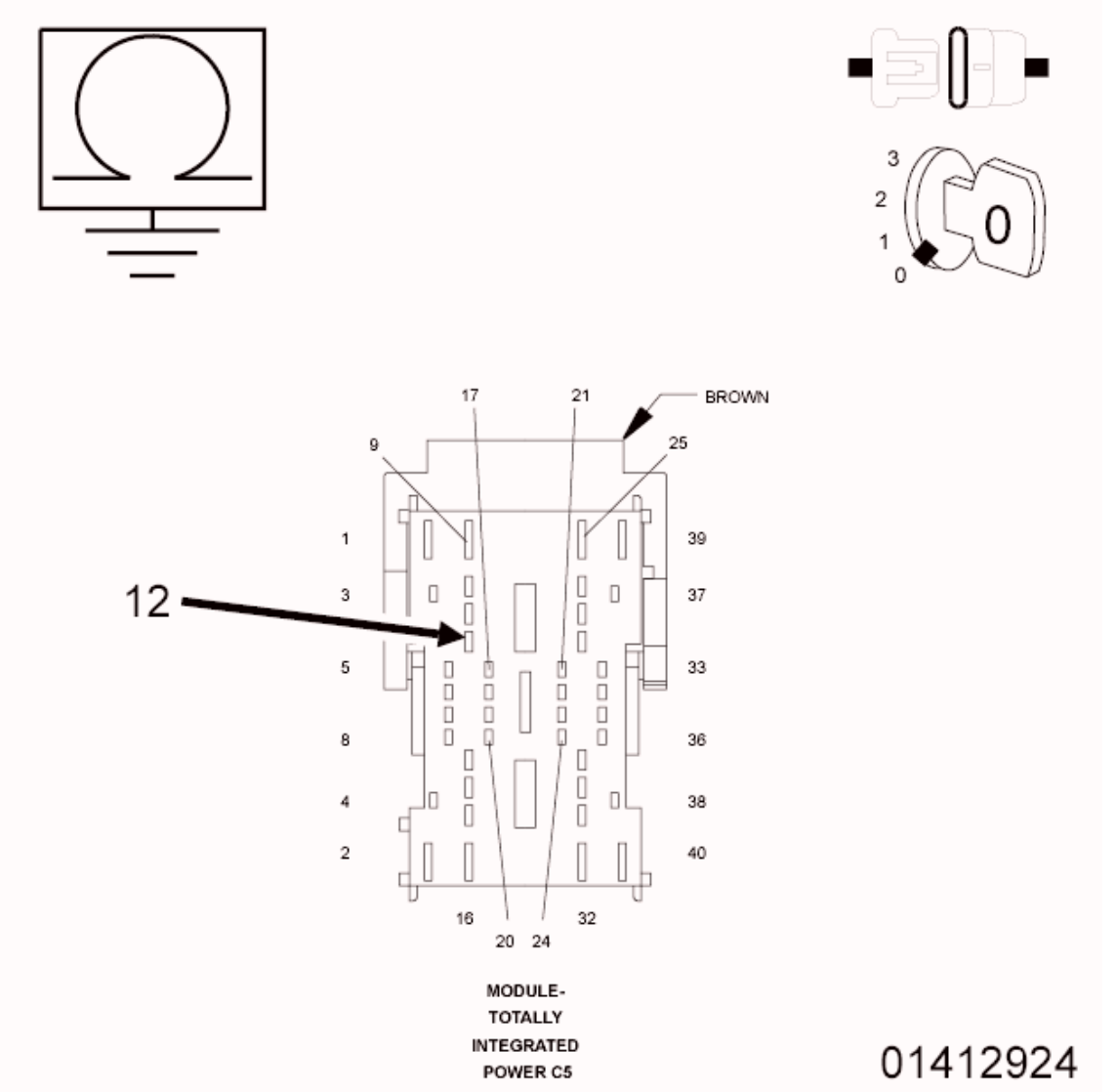

Fig. 18: Measuring Resistance Between Ground And Both Of (F342) ASD Control Output Circuits In C5 TIPM Harness Connector
Courtesy of CHRYSLER GROUP, LLC

1. Measure the resistance between ground and both of the (F342) ASD Control Output circuits in the

C5 TIPM harness connector.

Is the resistance below 100 Ohms?

Yes

- Repair the short to ground in the (F342) ASD Control Output circuit(s).
- Perform the POWERTRAIN VERIFICATION TEST. Refer to **POWERTRAIN VERIFICATION TEST** .

No

- Go To 9.

9. **TOTALLY INTEGRATED POWER MODULE (TIPM)**
   1. Using the wiring diagram/schematic as a guide, inspect the wiring and connectors between the related TIPM and the Powertrain Control Module (PCM).
   2. Look for any chafed, pierced, pinched or partially broken wires.
   3. Look for broken, bent, pushed out or corroded terminals. Verify that there is good pin to terminal contact in the TIPM and Powertrain Control Module connectors.
   4. Perform any Technical Service Bulletins that may apply.

   Were there any problems found?

   Yes

   - Repair as necessary.
   - Perform the BODY VERIFICATION TEST. Refer to **STANDARD PROCEDURE** .

   No

   - Replace and program the Totally Integrated Power Module in accordance with the Service Information.
   - Perform the BODY VERIFICATION TEST. Refer to **STANDARD PROCEDURE** .

10. **MAP SENSOR OPERATION**
    1. Ignition on, engine not running.
    2. Using the scan tool, read the Barometric Pressure.

    NOTE: **The Barometric Pressure should be approximately equal to the actual barometric pressure. If necessary, compare the Barometric Pressure value of this vehicle to the value of a known good vehicle of a similar make and model.**

    3. Turn the ignition off.
    4. Connect a Vacuum Gauge to a Manifold Vacuum source.

5. Start the engine.
6. Allow the engine to idle.

NOTE: If engine will not idle, maintain a constant RPM above idle.

7. Using the scan tool, read the MAP Sensor vacuum value.

   Is the scan tool reading for MAP Vacuum within 1 inch of Hg on the Vacuum Gauge reading and is the Barometric Pressure reading of the vehicle the approximately the same as actual Barometric Pressure?

   Yes

   - Go To 11.

   No

   - Verify that there is good pin to terminal contact in the MAP Sensor and Powertrain Control Module connectors. Replace the MAP Sensor if no problems were found with the connectors.
   - Perform the POWERTRAIN VERIFICATION TEST. Refer to **POWERTRAIN VERIFICATION TEST** .

11. **ECT SENSOR OPERATION**

NOTE: For this test to be valid, the thermostat must be operating correctly.

NOTE: This test works best if performed on a cold engine (cold soak).

1. Ignition on, engine not running.
2. Using the scan tool, read the Engine Coolant Temperature (ECT) Sensor value. If the engine was allowed to sit overnight (cold soak), the temperature value should be a sensible value that is somewhere close to the ambient temperature.

   NOTE: If engine coolant temperature is above 82° C (180° F), allow the engine to cool until 65° C (150° F) is reached.

3. Start the Engine.
4. During engine warm-up, monitor the ECT Sensor value. The temperature value change should be a smooth transition from start up to normal operating temperature 82° C (180° F). The value should reach at least 82° C (180° F).

   Did the ECT value increase smoothly and did it reach at least 82° C (180° F)?

   Yes

- Go To 12.

No

- Verify that there is good pin to terminal contact in the ECT Sensor and Powertrain Control Module connectors. Replace the Engine Coolant Temperature Sensor if no problems were found with the connectors.
- Perform the POWERTRAIN VERIFICATION TEST. Refer to **POWERTRAIN VERIFICATION TEST** .

12. **ENGINE MECHANICAL**
    1. Turn the ignition off.

    Check for any of the following conditions/mechanical problems:

    - AIR INDUCTION SYSTEM - must be free from leaks.
    - ENGINE VACUUM - must be at least 13 inches in neutral
    - ENGINE VALVE TIMING - must be within specifications
    - ENGINE COMPRESSION - must be within specifications
    - ENGINE EXHAUST SYSTEM - must be free of any restrictions or leaks.
    - ENGINE PCV SYSTEM - must flow freely
    - TORQUE CONVERTER STALL SPEED - must be within specifications
    - POWER BRAKE BOOSTER - no internal vacuum leaks
    - FUEL - must be free of contamination
    - FUEL INJECTOR - plugged or restricted injector; control wire not connected to correct injector

    Are there any engine mechanical problems?

    Yes

    - Repair as necessary.
    - Perform the POWERTRAIN VERIFICATION TEST. Refer to **POWERTRAIN VERIFICATION TEST** .

    No

    - Go To 16.

13. **O2 SENSOR**

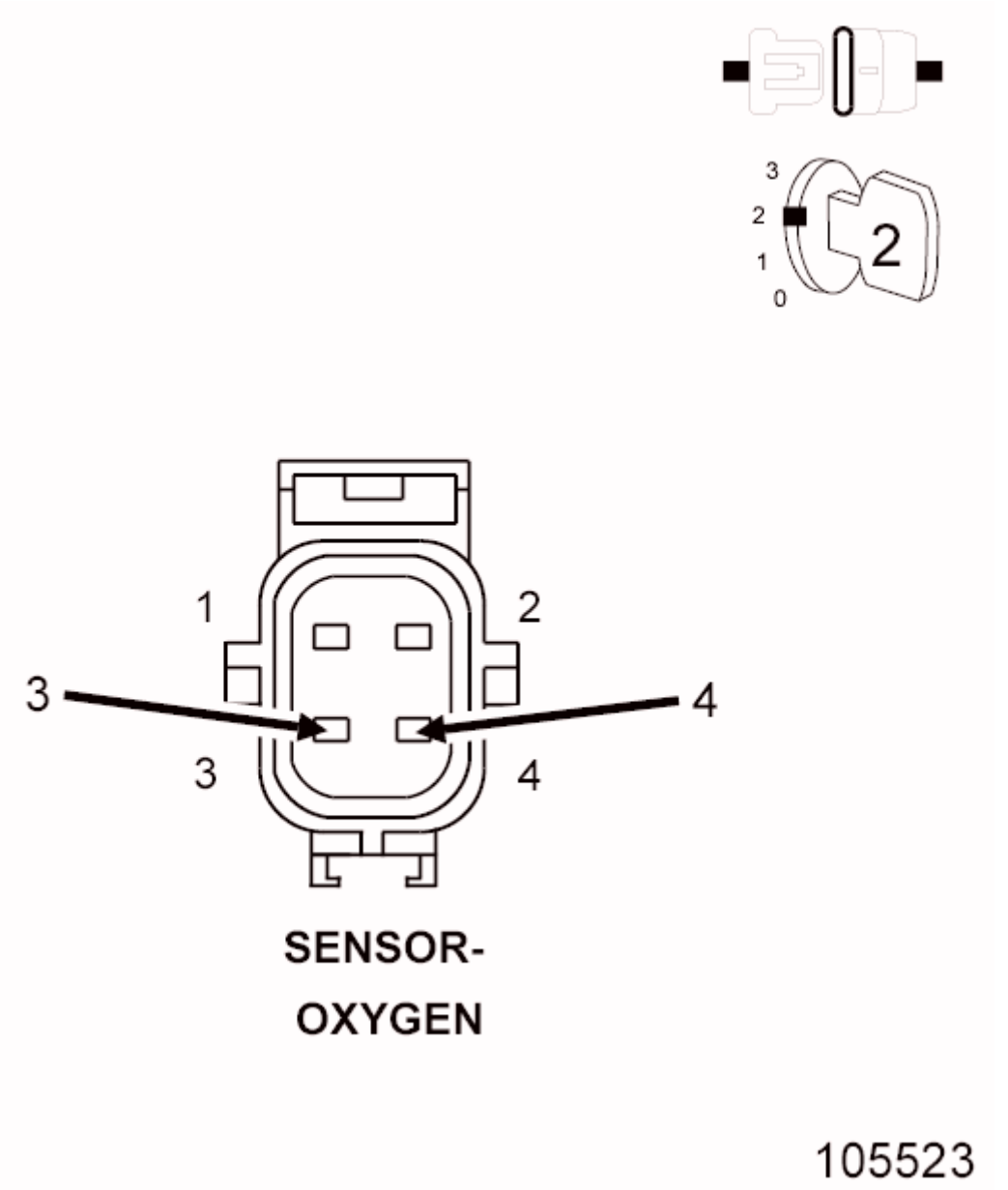

Fig. 19: O2 Sensor Harness Connector
Courtesy of CHRYSLER GROUP, LLC

1. Disconnect the 2/1 O2 Sensor harness connector.
2. Ignition on, engine not running.
3. Using the scan tool, monitor the 2/1 O2 Sensor voltage.
4. O2 Sensor voltage should read between 4.1 and 5.0 Volts on the scan tool with the connector disconnected.
5. Connect a jumper wire between the (K43) O2 Sensor 2/1 Signal circuit and the (K902) O2 Return Upstream circuit in the O2 Sensor harness connector.

NOTE: The voltage should drop from between 4.1 and 5.0 Volts to 2.5 Volts

with the jumper wire in place.

Did the O2 Sensor voltage change from between 4.1 and 5.0 Volts to 2.5 Volts when the jumper wire was installed?

Yes

- Verify that there is good pin to terminal contact in the O2 Sensor and Powertrain Control Module connectors. Replace the 2/1 O2 Sensor if no problems were found with the connectors.
- Perform the POWERTRAIN VERIFICATION TEST. Refer to **POWERTRAIN VERIFICATION TEST** .

No

- Go To 14.

NOTE: Remove the jumper wire before continuing.

14. **O2 SENSOR SIGNAL CIRCUIT**
    1. Using the scan tool, monitor all the O2 Sensor voltage reading with the jumper wire removed.

NOTE: The scan tool will display all O2 Sensor voltage readings approximately 5.0 Volts when only one O2 Sensor's Signal circuit is shorted to voltage.

NOTE: The scan tool will display one O2 Sensor voltage close to zero and the others will read lower than normal when one O2 Sensor Signal circuit contains excessive resistance.

Is the voltage between 4.1 and 5.0 Volts?

Yes

- Go To 15.

No

- Check all the O2 Signal circuits for a short to ground, open or short to voltage. Inspect the O2 Sensor connector and the PCM harness connector. If OK, replace and program the Powertrain Control Module in accordance with the Service Information.
- Perform the POWERTRAIN VERIFICATION TEST. Refer to **POWERTRAIN VERIFICATION TEST** .

15. **(K902) O2 RETURN UPSTREAM CIRCUIT**

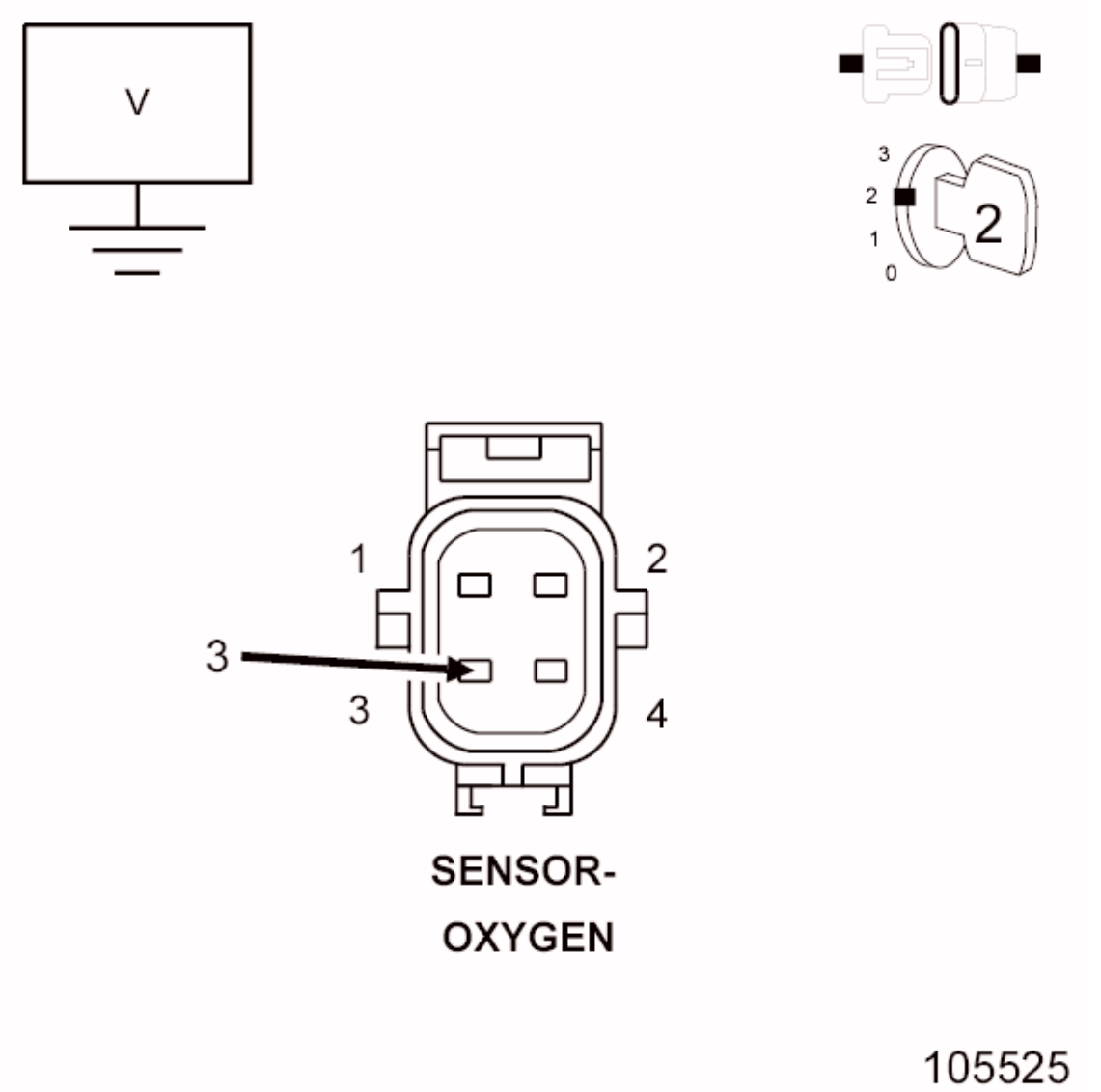

Fig. 20: Measuring Voltage On O2 Sensor Return Circuit In O2 Sensor Harness Connector
Courtesy of CHRYSLER GROUP, LLC

1. Measure the voltage on the (K902) O2 Return Upstream circuit in the O2 Sensor harness connector.

   Is the voltage at 2.5 Volts?

   Yes

   - Go To 16.

   No

   - Check the (K902) O2 Return Upstream circuit for a short to ground, open or short to voltage. Inspect the O2 Sensor connector and the PCM harness connector. If OK, replace and program the Powertrain Control Module in accordance with the Service Information.

- Perform the POWERTRAIN VERIFICATION TEST. Refer to **POWERTRAIN VERIFICATION TEST** .

16. **POWERTRAIN CONTROL MODULE (PCM)**
    1. Using the wiring diagram/schematic as a guide, inspect the wiring and connectors between the Sensors and the Powertrain Control Module (PCM).
    2. Look for any chafed, pierced, pinched or partially broken wires.
    3. Look for broken, bent, pushed out or corroded terminals. Verify that there is good pin to terminal contact in the Sensor and Control Module connectors.
    4. Perform any Technical Service Bulletins that may apply.

    Were there any problems found?

    Yes

    - Repair as necessary.
    - Perform the POWERTRAIN VERIFICATION TEST. Refer to **POWERTRAIN VERIFICATION TEST** .

    No

    - Replace and program the Powertrain Control Module in accordance with the Service Information.
    - Perform the POWERTRAIN VERIFICATION TEST. Refer to **POWERTRAIN VERIFICATION TEST** .

17. **RESTRICTED FUEL SUPPLY LINE**

    WARNING: **The fuel system is under a constant pressure (even with the engine off). Before testing or servicing any fuel system hose, fitting or line, the fuel system pressure must be released. Failure to follow these instructions can result in possible serious or fatal injury.**

    1. Turn the ignition off.
    2. Raise vehicle on hoist and disconnect the fuel pressure line at the fuel pump module.
    3. Install Fuel Pressure Decay Tester (special tool #8978A, Decay Tool, Fuel) between the fuel supply line and the fuel pump module.
    4. Ignition on, engine not running.
    5. Using the scan tool, actuate the ASD Fuel System test and observe the fuel pressure gauge.

    NOTE: Fuel pressure specification is 407 kPa +/- 34 kPa (59 psi +/- 5 psi).

    Is the fuel pressure within specification?

    Yes

- Repair or replace fuel supply line as necessary.
- Perform the POWERTRAIN VERIFICATION TEST. Refer to **POWERTRAIN VERIFICATION TEST** .

No

- Go To 18.

CAUTION: Stop All Actuations.

18. **FUEL PUMP INLET STRAINER**

WARNING: The fuel system is under a constant pressure (even with the engine off). Before testing or servicing any fuel system hose, fitting or line, the fuel system pressure must be released.

1. Turn the ignition off.
2. Remove the Fuel Pump Module and inspect the Fuel Inlet Strainer.

   Is the Fuel Inlet Strainer plugged?

   Yes

   - Replace the Fuel Pump Inlet Strainer.
   - Perform the POWERTRAIN VERIFICATION TEST. Refer to **POWERTRAIN VERIFICATION TEST** .

   No

   - Go To 19.

19. **FUEL PUMP MODULE**

Repair

- Verify that there is good pin to terminal contact in the Fuel Pump Module, TIPM and Powertrain Control Module connectors. Replace the Fuel Pump Module if no problems were found with the connectors.
- Perform the POWERTRAIN VERIFICATION TEST. Refer to **POWERTRAIN VERIFICATION TEST** .

P0175-FUEL SYSTEM 2/1 RICH

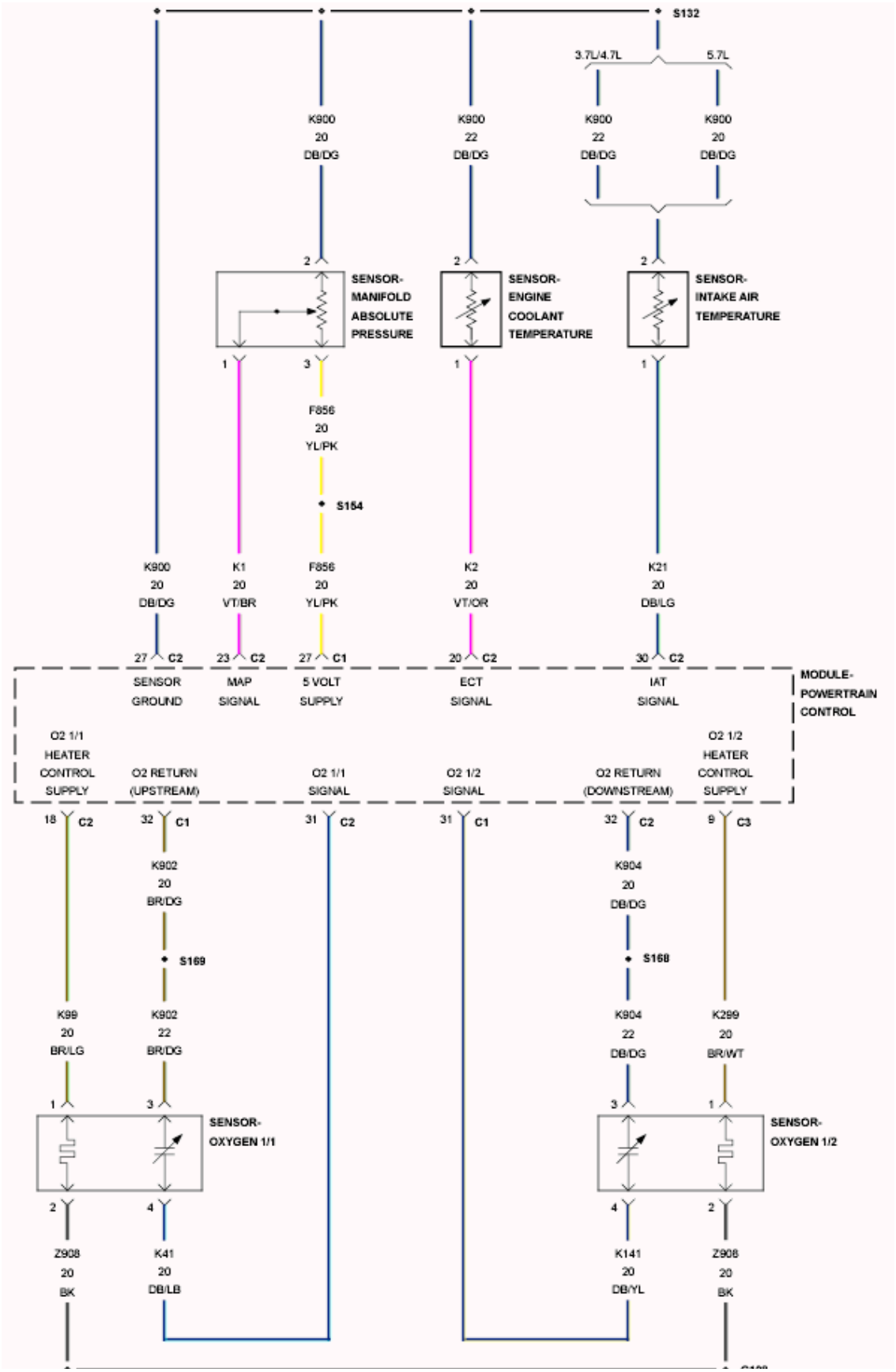
S132
3.7L/4.7L
5.7L
K900
20
DB/DG
K900
22
DB/DG
K900
22
DB/DG
K900
20
DB/DG
SENSOR-
MANIFOLD
ABSOLUTE
PRESSURE
SENSOR-
ENGINE
COOLANT
TEMPERATURE
SENSOR-
INTAKE AIR
TEMPERATURE
F856
20
YL/PK
S154
K900
20
DB/DG
K1
20
VT/BR
F856
20
YL/PK
K2
20
VT/OR
K21
20
DB/LG
SENSOR
GROUND
MAP
SIGNAL
5 VOLT
SUPPLY
ECT
SIGNAL
IAT
SIGNAL
MODULE-
POWERTRAIN
CONTROL
O2 1/1
HEATER
CONTROL
SUPPLY
O2 RETURN
(UPSTREAM)
O2 1/1
SIGNAL
O2 1/2
SIGNAL
O2 RETURN
(DOWNSTREAM)
O2 1/2
HEATER
CONTROL
SUPPLY
K902
20
BR/DG
S169
K904
20
DB/DG
S168
K99
20
BR/LG
K902
22
BR/DG
K904
22
DB/DG
K299
20
BR/WT
SENSOR-
OXYGEN 1/1
SENSOR-
OXYGEN 1/2
Z908
20
BK
K41
20
DB/LB
K141
20
DB/YL
Z908
20
BK

Fig. 21: Fuel System Circuit Schematic
Courtesy of CHRYSLER GROUP, LLC

For a complete wiring diagram, **refer to appropriate SYSTEM WIRING DIAGRAMS article** .

THEORY OF OPERATION

The fuel feedback system will maintain a stoiciometric fuel/air mixture, 14.7:1, by modifying the injector pulse width according to the oxygen content of the exhaust gas. The Powertrain Control Module (PCM) makes short term and long term fuel corrections to maintain stoiciometric fuel/air ratio for best catalytic converter efficiency. Short term fuel correction is based on upstream O2 sensor output and is designed for quick engine response. The long term fuel correction compensated for variations in the engine specifications, sensor tolerances and component aging and is designed to correct rich and lean conditions over a longer period of time.

WHEN MONITORED:

With the engine running in closed loop mode, the ambient/battery temperature above -6.7° C (20° F) and altitude below 2590.8 m (8500 ft).

SET CONDITION:

If the Powertrain Control Module (PCM) multiplies short term compensation by long term adaptive and a purge fuel multiplier and the result is below a certain value for 30 seconds over two trips, a freeze frame is stored, the MIL illuminates and a trouble code is stored. Two Trip Fault. Three good trips to turn off the MIL.

POSSIBLE CAUSES

Possible Causes
O2 SENSOR HEATER OPERATION
EVAP PURGE SOLENOID OPERATION
O2 SIGNAL CIRCUIT
O2 RETURN CIRCUIT
O2 SENSOR
MAP SENSOR
ECT SENSOR
ENGINE MECHANICAL
FUEL FILTER/PRESSURE REGULATOR (HIGH)
POWERTRAIN CONTROL MODULE (PCM)

Always perform the Pre-Diagnostic Troubleshooting procedure before proceeding. Refer to PRE-DIAGNOSTIC TROUBLESHOOTING PROCEDURE .

DIAGNOSTIC TEST

1. **ACTIVE DIAGNOSTIC TROUBLE CODE (DTC)**

NOTE: **Check for contaminates that may have damaged an O2 Sensor: contaminated fuel, unapproved silicone, oil and coolant.**

1. Start the engine.
2. Allow the engine to reach normal operating temperature.
3. Using the scan tool, select View DTCs.

NOTE: **It may be necessary to drive the vehicle to meet the conditions to set this DTC, try to repeat the conditions in which the fault originally set by reviewing the Freeze Frame data.**

Is the DTC Active or Pending at this time?

Yes

- Go To 2.

No

- Perform the INTERMITTENT CONDITION diagnostic procedure. Refer to **INTERMITTENT CONDITION** .

2. **CHECKING FUEL PRESSURE**

WARNING: **The fuel system is under a constant pressure (even with the engine off). Before testing or servicing any fuel system hose, fitting or line, the fuel system pressure must be released. Failure to follow these instructions can result in possible serious or fatal injury.**

1. Install the Fuel Pressure Decay Tester (special tool #8978A, Decay Tool, Fuel) to the fuel rail.
2. Ignition on, engine not running.
3. Using the scan tool, actuate the ASD Fuel System test and observe the fuel pressure gauge.

NOTE: **Fuel pressure specification is 407 kPa +/- 34 kPa (59 psi +/- 5 psi).**

4. Turn the ignition off.

Choose a conclusion that best matches your fuel pressure reading.

Within Specification

- Go To 3.

Above Specification

- Replace the fuel filter/pressure regulator.

- Perform the POWERTRAIN VERIFICATION TEST. Refer to **POWERTRAIN VERIFICATION TEST** .

CAUTION: Stop All Actuations.

3. **O2 SENSOR OPERATION**
   1. Start the engine.
   2. Allow the engine to reach normal operating temperature.

      NOTE: If one of the O2 Sensor's Signal or Return circuit is shorted to ground or voltage, all the other O2 Sensor voltage readings will be affected.

      NOTE: After the repairs have been made, verify proper O2 Sensor operation. If all the O2 Sensor voltage readings have not returned to normal, follow the diagnostic procedure for the remaining O2 Sensors.

   3. Using the scan tool, monitor the 2/1 O2 Sensor voltage reading.

      Is the voltage switching between 2.5 and 3.4 Volts?

      Yes

      - Go To 4.

      No

      - Go To 9.
4. **2/1 O2 SENSOR HEATER OPERATION**
   1. Turn the ignition off.

      NOTE: Wait a minimum of 10 minutes to allow the O2 Sensor to cool down before continuing the test. Allow the O2 Sensor voltage to stabilize at 5.0 Volts.

   2. Ignition on, engine not running.
   3. Using the scan tool, perform the 2/1 O2 Heater Test for each O2 Sensor.
   4. Using the scan tool, monitor the 2/1 O2 Sensor voltage while performing the Heater test for at least two minutes.

      Does the voltage stay above 4.5 Volts for each Sensor?

      Yes

- Verify that there is good pin to terminal contact in the O2 Sensor and Powertrain Control Module connectors. Replace the 2/1 O2 Sensor if no problems were found with the connectors.
- Perform the POWERTRAIN VERIFICATION TEST. Refer to **POWERTRAIN VERIFICATION TEST** .

No

- Go To 5.

5. **MAP SENSOR OPERATION**
   1. Ignition on, engine not running.
   2. Using the scan tool, read the Barometric Pressure.

      NOTE: The Barometric Pressure should be approximately equal to the actual barometric pressure. If necessary, compare the Barometric Pressure value of this vehicle to the value of a known good vehicle of a similar make and model.

   3. Turn the ignition off.
   4. Connect a Vacuum Gauge to a Manifold Vacuum source.
   5. Start the engine.
   6. Allow the engine to idle.

      NOTE: If engine will not idle, maintain a constant RPM above idle.

   7. Using the scan tool, read the MAP Sensor vacuum value.

      Is the scan tool reading for MAP Vacuum within 1 inch of Hg on the Vacuum Gauge reading and is the Barometric Pressure reading of the vehicle the approximately the same as actual Barometric Pressure?

      Yes

      - Go To 6.

      No

      - Verify that there is good pin to terminal contact in the MAP Sensor and Powertrain Control Module connectors. Replace the MAP Sensor if no problems were found with the connectors.
      - Perform the POWERTRAIN VERIFICATION TEST. Refer to **POWERTRAIN VERIFICATION TEST** .

        NOTE: Remove the vacuum gauge before continuing.

6. **ECT SENSOR OPERATION**

NOTE: For this test to be valid, the thermostat must be operating correctly.

NOTE: This test works best if performed on a cold engine (cold soak).

1. Ignition on, engine not running.
2. Using the scan tool, read the Engine Coolant Temperature Sensor value. If the engine was allowed to sit overnight (cold soak), the temperature value should be a sensible value that is somewhere close to the ambient temperature.

   NOTE: If engine coolant temperature is above 82° C (180° F), allow the engine to cool until 65° C (150° F) is reached.

3. Start the Engine.
4. During engine warm-up, monitor the Engine Coolant Temperature value. The temp value change should be a smooth transition from start up to normal operating temp 82° C (180° F). The value should reach at least 82° C (180° F).

   Did the ECT value increase smoothly and reach at least 82° C (180° F)?

   Yes

   - Go To 7.

   No

   - Verify that there is good pin to terminal contact in the ECT Sensor and Powertrain Control Module connectors. Replace the Engine Coolant Temperature Sensor if no problems were found with the connectors.
   - Perform the POWERTRAIN VERIFICATION TEST. Refer to **POWERTRAIN VERIFICATION TEST** .

7. **EVAP PURGE SOLENOID OPERATION**
   1. Turn the ignition off.
   2. Disconnect the hoses at the EVAP Purge Solenoid.
   3. Using a hand vacuum pump, apply 10 inches of vacuum to the EVAP Purge Solenoid vacuum source port on the component side.

      Did the EVAP Purge Solenoid hold vacuum?

      Yes

      - Go To 8.

No

- Verify that there is good pin to terminal contact in the EVAP Purge Solenoid and Powertrain Control Module connectors. Replace the EVAP Purge Solenoid if no problems were found with the connectors.
- Perform the POWERTRAIN VERIFICATION TEST. Refer to **POWERTRAIN VERIFICATION TEST** .

NOTE: Connect the vacuum hoses before continuing.

8. **ENGINE MECHANICAL**

Check for any of the following conditions/mechanical problems:

- AIR INDUCTION SYSTEM - must be free from restrictions.
- ENGINE VACUUM - must be at least 13 inches in neutral
- ENGINE VALVE TIMING - must be within specifications
- ENGINE COMPRESSION - must be within specifications
- ENGINE EXHAUST SYSTEM - must be free of any restrictions or leaks.
- ENGINE PCV SYSTEM - must flow freely
- TORQUE CONVERTER STALL SPEED - must be within specifications
- POWER BRAKE BOOSTER - no internal vacuum leaks
- FUEL - must be free of contamination
- FUEL INJECTOR - plugged or restricted injector; control wire not connected to correct injector

Are there any engine mechanical problems?

Yes

- Repair as necessary.
- Perform the POWERTRAIN VERIFICATION TEST. Refer to **POWERTRAIN VERIFICATION TEST** .

No

- Go To 12.

9. **2/1 O2 SENSOR**

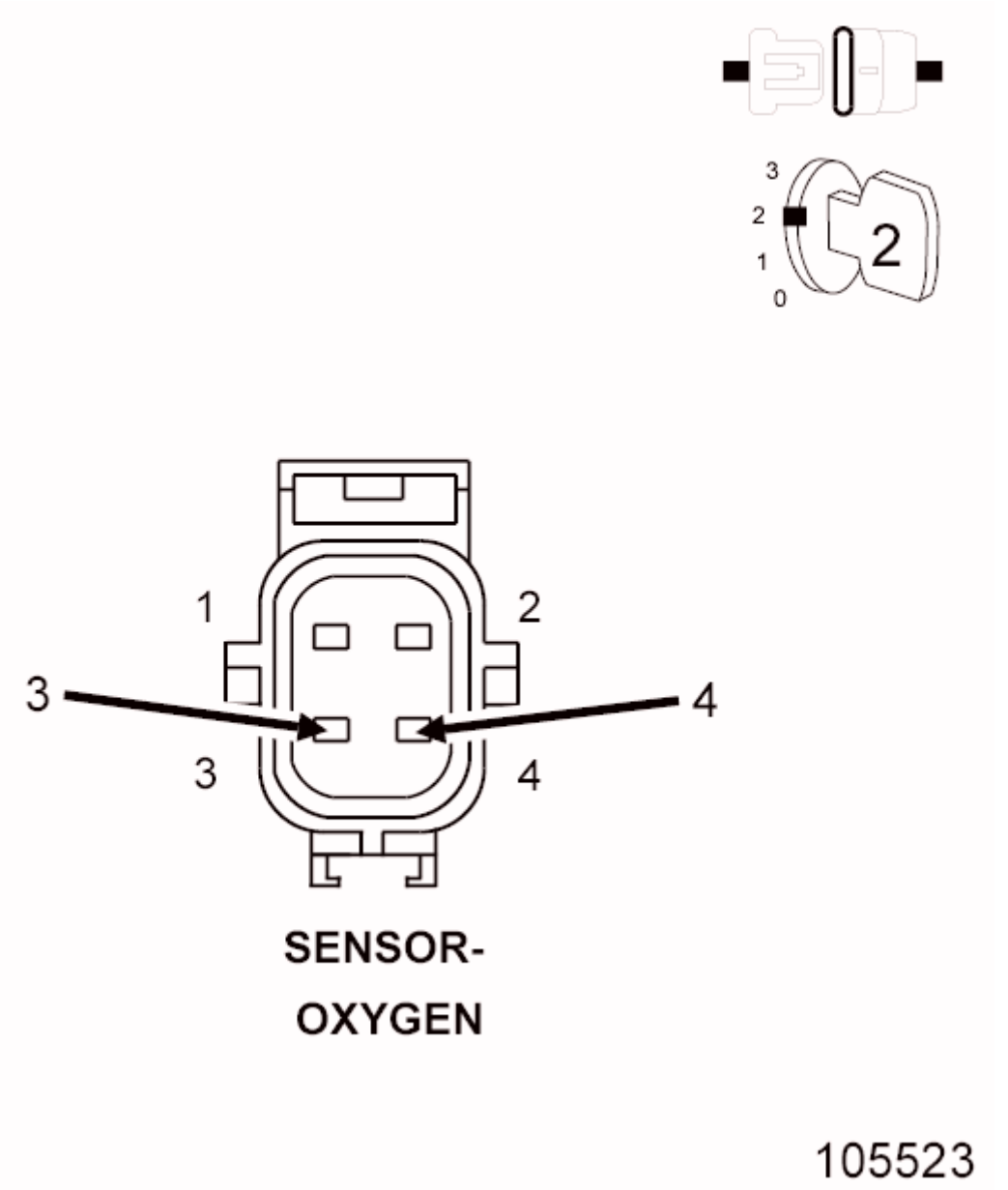

Fig. 22: O2 Sensor Harness Connector
Courtesy of CHRYSLER GROUP, LLC

1. Ignition on, engine not running.
2. Disconnect the 2/1 O2 Sensor harness connector.
3. Using the scan tool, monitor the 2/1 O2 Sensor voltage.
4. O2 Sensor voltage should read between 4.1 and 5.0 Volts on the scan tool with the connector disconnected.
5. Connect a jumper wire between the (K43) O2 Sensor 2/1 Signal circuit and the (K902) O2 Return Upstream circuit in the O2 Sensor harness connector.

NOTE: The voltage should drop from between 4.1 and 5.0 Volts down to 2.5

Volts with the jumper wire connected.

Did the O2 Sensor voltage drop from between 4.1 and 5.0 Volts to 2.5 Volts when the jumper wire was installed?

Yes

- Verify that there is good pin to terminal contact in the O2 Sensor and Powertrain Control Module connectors. Replace the 2/1 O2 Sensor if no problems were found with the connectors.
- Perform the POWERTRAIN VERIFICATION TEST. Refer to **POWERTRAIN VERIFICATION TEST** .

No

- Go To 10.

NOTE: Remove the jumper wire before continuing.

10. **O2 SENSOR SIGNAL CIRCUIT**

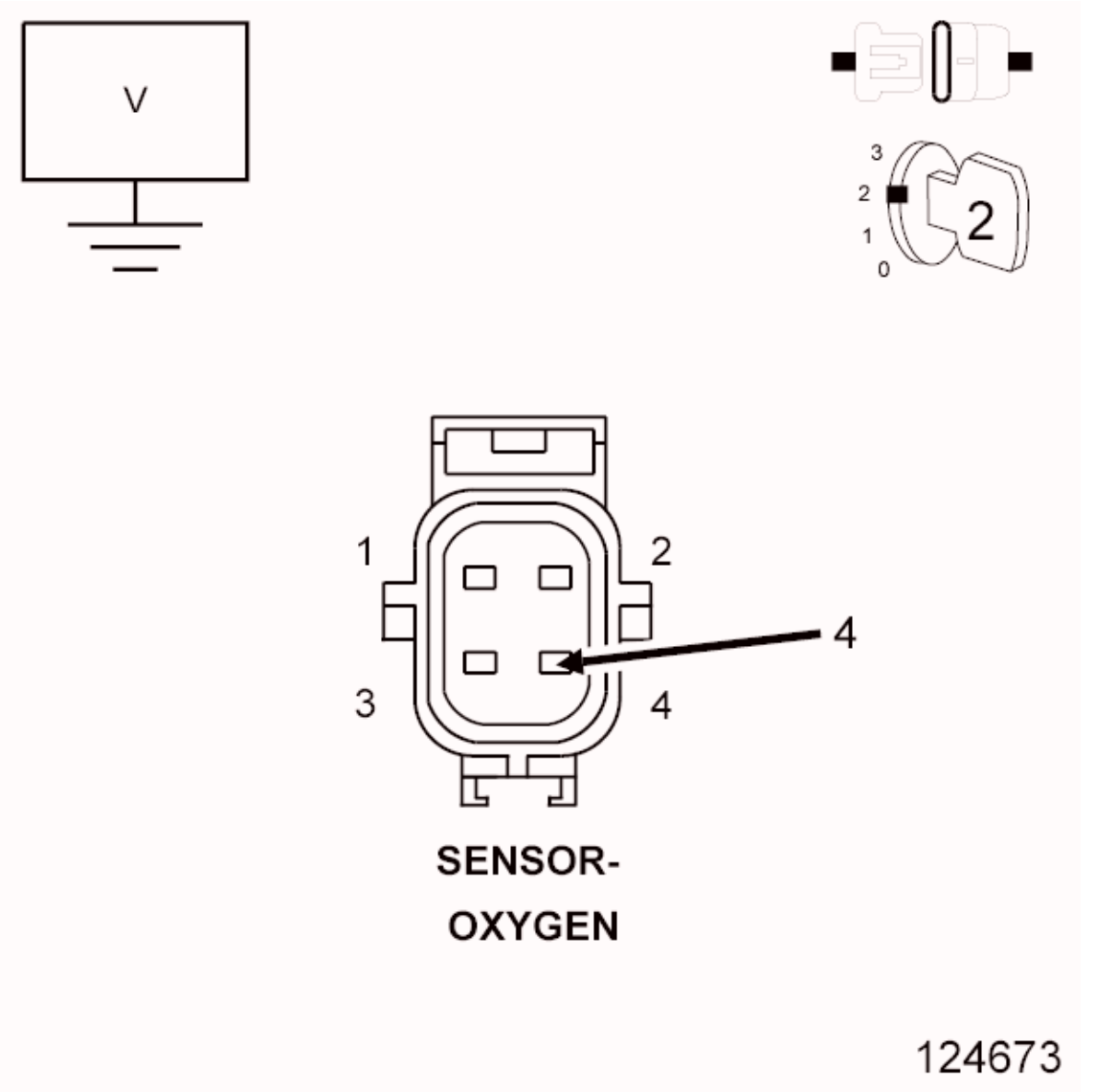

Fig. 23: Measuring Voltage Of O2 Sensor Signal Circuit In O2 Sensor Harness Connector
Courtesy of CHRYSLER GROUP, LLC

1. Measure the voltage on the (K43) O2 Sensor 2/1 Signal circuit in the O2 Sensor harness connector.

   Is the voltage between 4.1 and 5.0 Volts?

   Yes

   - Go To 11.

   No

   - Check the (K43) O2 Sensor 2/1 Signal circuit for damage, short to ground, open or short to voltage. Inspect the O2 Sensor connector and the PCM harness connector. If OK, replace and program the Powertrain Control Module in accordance with the Service Information.

- Perform the POWERTRAIN VERIFICATION TEST. Refer to **POWERTRAIN VERIFICATION TEST** .

11. **(K902) O2 SENSOR RETURN UPSTREAM CIRCUIT**

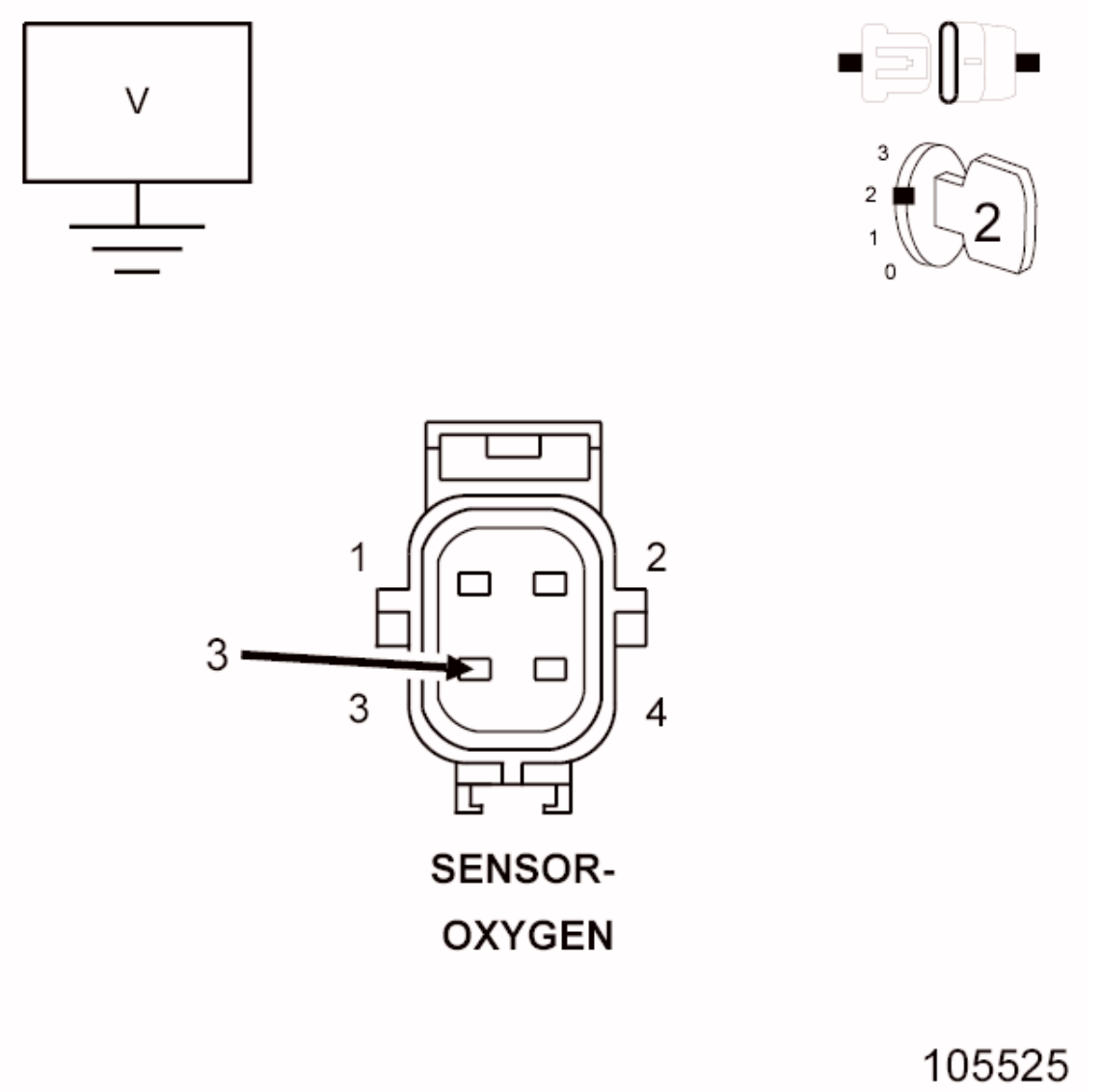

Fig. 24: Measuring Voltage On O2 Sensor Return Circuit In O2 Sensor Harness Connector
Courtesy of CHRYSLER GROUP, LLC

1. Measure the voltage on the (K902) O2 Return Upstream circuit in the O2 Sensor harness connector.

   Is the voltage at 2.5 Volts?

   Yes

   - Go To 12.

No

- Check the (K902) O2 Return Upstream circuit for damage, short to ground, open or short to voltage. Inspect the O2 Sensor connector and the PCM harness connector. If OK, replace and program the Powertrain Control Module in accordance with the Service Information.
- Perform the POWERTRAIN VERIFICATION TEST. Refer to **POWERTRAIN VERIFICATION TEST** .

NOTE: Turn the ignition off before continuing.

12. **POWERTRAIN CONTROL MODULE (PCM)**
    1. Using the wiring diagram/schematic as a guide, inspect the wiring and connectors between the Sensors and the Powertrain Control Module (PCM).
    2. Look for any chafed, pierced, pinched or partially broken wires.
    3. Look for broken, bent, pushed out or corroded terminals. Verify that there is good pin to terminal contact in the Sensor and Control Module connectors.
    4. Perform any Technical Service Bulletins that may apply.

    Were there any problems found?

    Yes

    - Repair as necessary.
    - Perform the POWERTRAIN VERIFICATION TEST. Refer to **POWERTRAIN VERIFICATION TEST** .

    No

    - Replace and program the Powertrain Control Module in accordance with the Service Information.
    - Perform the POWERTRAIN VERIFICATION TEST. Refer to **POWERTRAIN VERIFICATION TEST** .

P0196-ENGINE OIL TEMPERATURE SENSOR PERFORMANCE

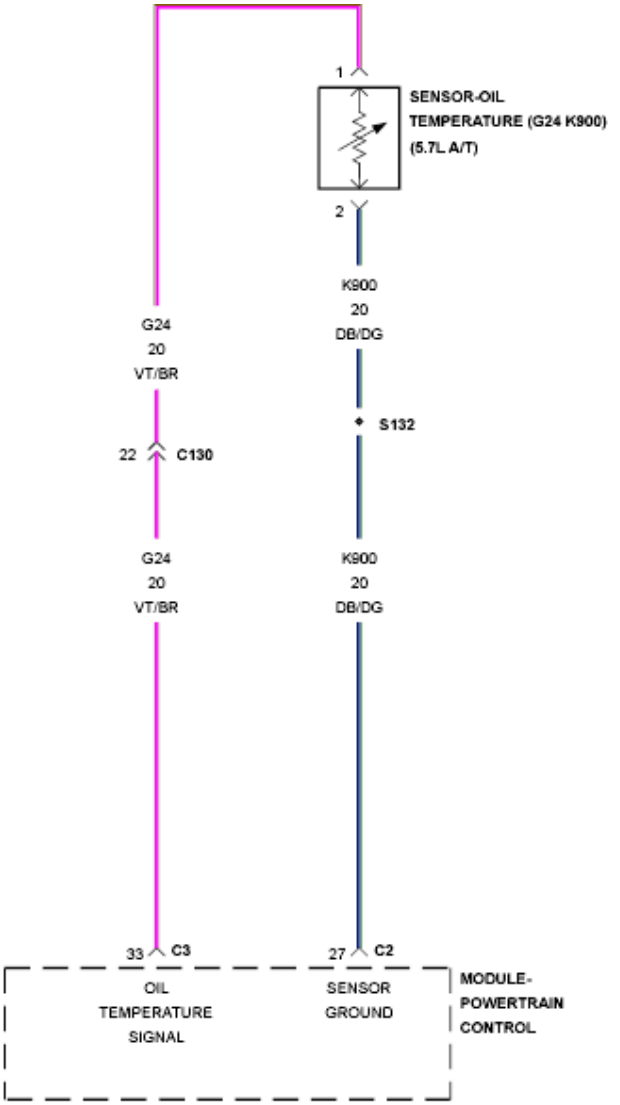

SENSOR-OIL
TEMPERATURE
(5.7L A/T)

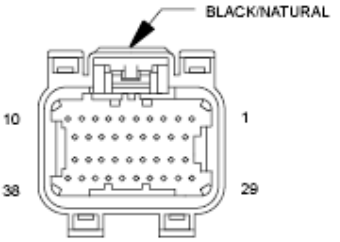

MODULE-
POWERTRAIN
CONTROL C3
(GAS)

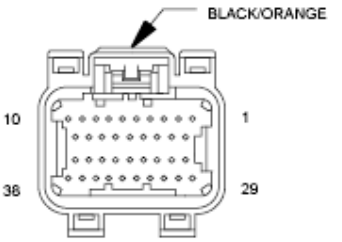

MODULE-
POWERTRAIN
CONTROL C2
(GAS)

Fig. 25: Engine Oil Temperature Sensor Circuit Schematic
Courtesy of CHRYSLER GROUP, LLC

For a complete wiring diagram **refer to appropriate SYSTEM WIRING DIAGRAMS article** .

THEORY OF OPERATION

The PCM compares engine coolant temperature (ECT), intake air temperature (IAT), and ambient air temperature (AAT) under cold start conditions. Following a start to run delay time, the sensor values are compared. If the one sensor value is not within a specified range of the other two sensors, the value is determined to be irrational. Once the general temperature rationality is passed, the PCM determines that the general temperature sensor values are correct. The PCM compares the Oil Temperature Sensor value to a threshold based on the other temp sensor values. If the difference is greater than a calibrated value, the diagnostic fails.

WHEN MONITORED:

Engine off time is greater than 480 minutes and the vehicle has been driven for one minute over 35 mph. Engine Oil temperature is greater than -64° C (-83° F).

SET CONDITION:

After a calibrated amount of cool down time, the PCM compares the AAT, ECT, and IAT Sensor values. If the general temperature rationality passes, the PCM compares the Oil Temperature Sensor value to a threshold based on the other temp sensor values. If the difference is greater than a calibrated value, the diagnostic fails.

POSSIBLE CAUSES

Possible Causes
(G24) EOT SIGNAL CIRCUIT HIGH RESISTANCE
(G24) EOT SIGNAL CIRCUIT SHORTED TO THE (K900) SENSOR GROUND CIRCUIT
(G24) EOT SIGNAL CIRCUIT SHORTED TO GROUND
(G24) EOT SIGNAL CIRCUIT SHORTED TO VOLTAGE
(K900) SENSOR GROUND CIRCUIT HIGH RESISTANCE
ENGINE OIL TEMPERATURE SENSOR
POWERTRAIN CONTROL MODULE (PCM)

Always perform the Pre-Diagnostic Troubleshooting procedure before proceeding. Refer to PRE-DIAGNOSTIC TROUBLESHOOTING PROCEDURE .

DIAGNOSTIC TEST

1. **ACTIVE DTC**

NOTE: Diagnose any CAN - C Communication DTCs before continuing.

1. Turn the ignition off.
2. If possible, allow the vehicle to sit with the ignition off for more than 480 minutes in an environment where the temperature is consistent and above -7° C (19.4° F).
3. Test drive the vehicle. The vehicle must exceed 48 km/h (30 mph) during the test drive. Do not cycle the ignition off when the test drive is completed.
4. With a scan tool, select View DTCs.

   Is the status Active or Pending for this DTC?

   Yes

   - Go To 3.

   No

   - Go To 2.

2. **ENGINE OIL TEMPERATURE**
   1. Turn the ignition off.
   2. Allow the vehicle to sit with the ignition off in an environment where the temperature is consistent and above -7° C (19.4° F) until the engine coolant temperature is equal to ambient temperature.
   3. Turn the ignition on.
   4. With a scan tool, compare the Engine Oil Temperature Sensor value to the AAT, ECT, and IAT sensor values.

      Is the Engine Oil Temperature Sensor value within 10° C (18° F) of the other sensor values?

      Yes

      - Perform the INTERMITTENT CONDITION diagnostic procedure. Refer to **INTERMITTENT CONDITION** .

      No

      - Go To 3.

3. **ENGINE OIL TEMPERATURE SENSOR VOLTAGE**
   1. Turn the ignition off.
   2. Disconnect the Engine Oil Temperature Sensor harness connector.
   3. Turn the ignition on.
   4. With a scan tool, read the Engine Oil Temperature Sensor voltage.

      NOTE: The sensor voltage should be approximately 5.0 volts (plus or minus.1 volt) with the connector disconnected.

Does the scan tool display the voltage as described above?

Yes

- Go To 4.

No

- Go To 5.

4. **ENGINE OIL TEMPERATURE SENSOR**

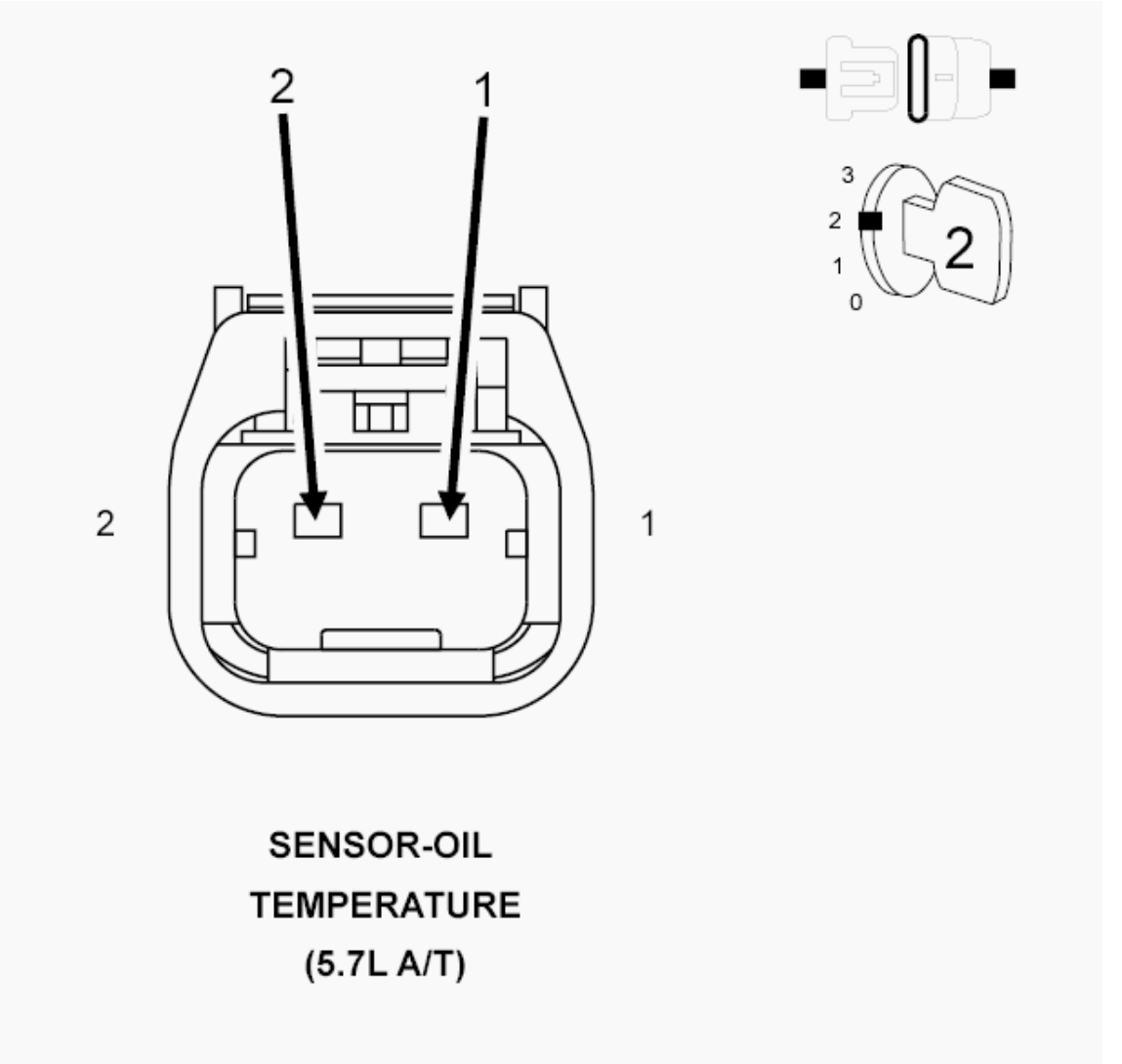

Fig. 26: Engine Oil Temperature Sensor Harness Connector
Courtesy of CHRYSLER GROUP, LLC

1. Connect a jumper wire between the (G24) EOT Signal circuit and the (K900) Sensor Ground circuit in the Engine Oil Temperature Sensor harness connector.

2. With a scan tool, read the Engine Oil Temperature Sensor voltage.

NOTE: **The sensor voltage should be approximately 0.0 volts (plus or minus.1 volt) with the jumper wire in place.**

Does the scan tool display the voltage as described above?

Yes

- Verify that there is good pin to terminal contact in the Engine Oil Temperature Sensor and Powertrain Control Module connectors. Replace the Engine Oil Temperature Sensor if no problems were found with the connectors.
- Perform the POWERTRAIN VERIFICATION TEST. Refer to **POWERTRAIN VERIFICATION TEST** .

No

- Go To 5.

5. **(G24) EOT SIGNAL CIRCUIT HIGH RESISTANCE**

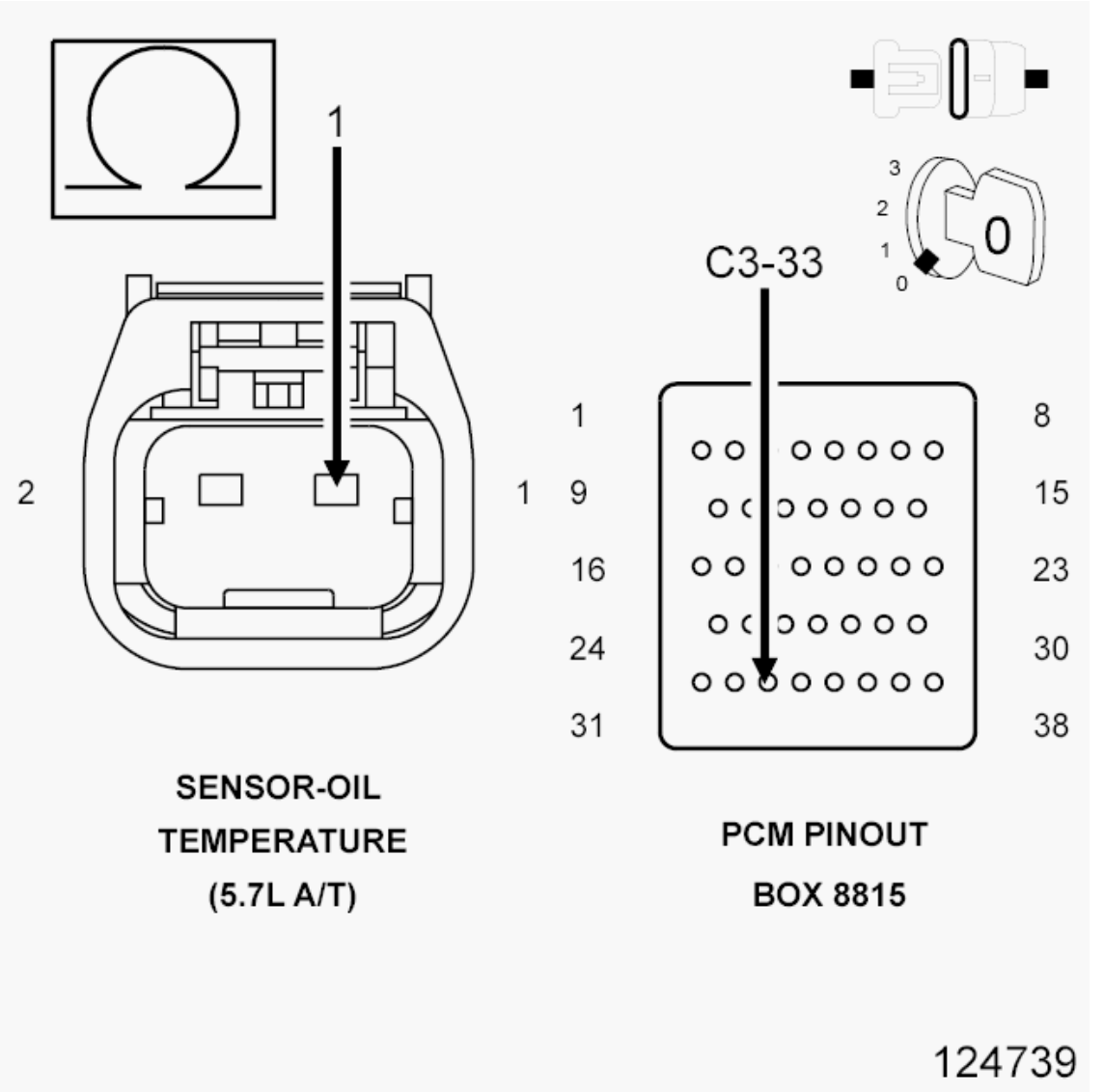

Fig. 27: Checking EOT Sensor Signal Circuit For High Resistance
Courtesy of CHRYSLER GROUP, LLC

1. Turn the ignition off.
2. Connect the Engine Oil Temperature Sensor harness connector.

CAUTION: Do not probe the PCM harness connectors. Probing the PCM harness connectors will damage the PCM terminals resulting in poor terminal to pin connection. Install the PCM Pinout Box (special tool #8815A, Kit, NGC, 38 Position) along with the Adapter (special tool #8815-1, PCM Pinout Box Adapter) to perform the diagnosis.

3. Using a voltmeter, perform a voltage drop test by backprobing the (G24) EOT Signal circuit at the Engine Oil Temperature Sensor harness connector and probing the appropriate terminal of the

special tool (special tool #8815A, Kit, NGC, 38 Position). Make sure the voltmeter leads are connected so that positive polarity is displayed on the voltmeter.

WARNING: When the engine is operating, do not stand in direct line with the fan. Do not put your hands near the pulleys, belts or fan. Do not wear loose clothing. Failure to follow these instructions may result in possible serious or fatal injury.

4. Start the engine.

   Is the voltage below 0.5 volts?

   Yes

   - Go To 6.

   No

   - Repair the (G24) EOT Signal circuit for high resistance.
   - Perform the POWERTRAIN VERIFICATION TEST. Refer to **POWERTRAIN VERIFICATION TEST** .

6. **(K900) SENSOR GROUND CIRCUIT HIGH RESISTANCE**

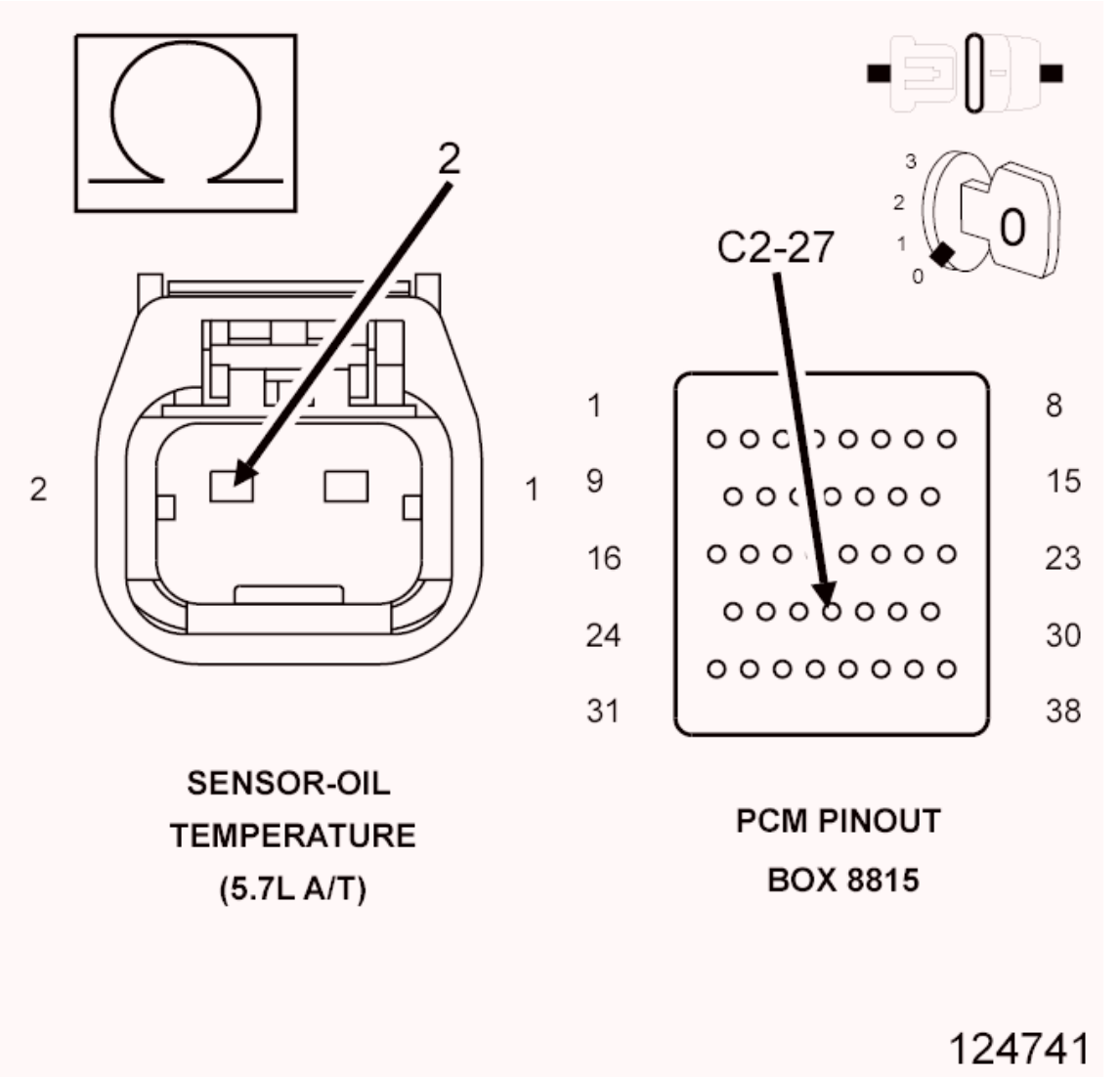

Fig. 28: Checking EOT Sensor Ground Circuit For High Resistance
Courtesy of CHRYSLER GROUP, LLC

1. Turn the ignition off.

CAUTION: Do not probe the PCM harness connectors. Probing the PCM harness connectors will damage the PCM terminals resulting in poor terminal to pin connection. Install the PCM Pinout Box (special tool #8815A, Kit, NGC, 38 Position) along with the Adapter (special tool #8815-1, PCM Pinout Box Adapter) to perform the diagnosis.

2. Using a voltmeter, perform a voltage drop test by backprobing the (K900) Sensor Ground circuit at the Engine Oil Temperature Sensor harness connector and probing the appropriate terminal of the special tool (special tool #8815A, Kit, NGC, 38 Position). Make sure the voltmeter leads are connected so that positive polarity is displayed on the voltmeter.

WARNING: When the engine is operating, do not stand in direct line with the fan. Do not put your hands near the pulleys, belts or fan. Do not wear loose clothing. Failure to follow these instructions may result in possible serious or fatal injury.

3. Start the engine.

   Is the voltage below 0.5 volts?

   Yes

   - Go To 7.

   No

   - Repair the (K900) Sensor Ground circuit for high resistance.
   - Perform the POWERTRAIN VERIFICATION TEST. Refer to **POWERTRAIN VERIFICATION TEST** .

7. **(G24) ENGINE OIL TEMP SIGNAL CIRCUIT SHORTED TO VOLTAGE**

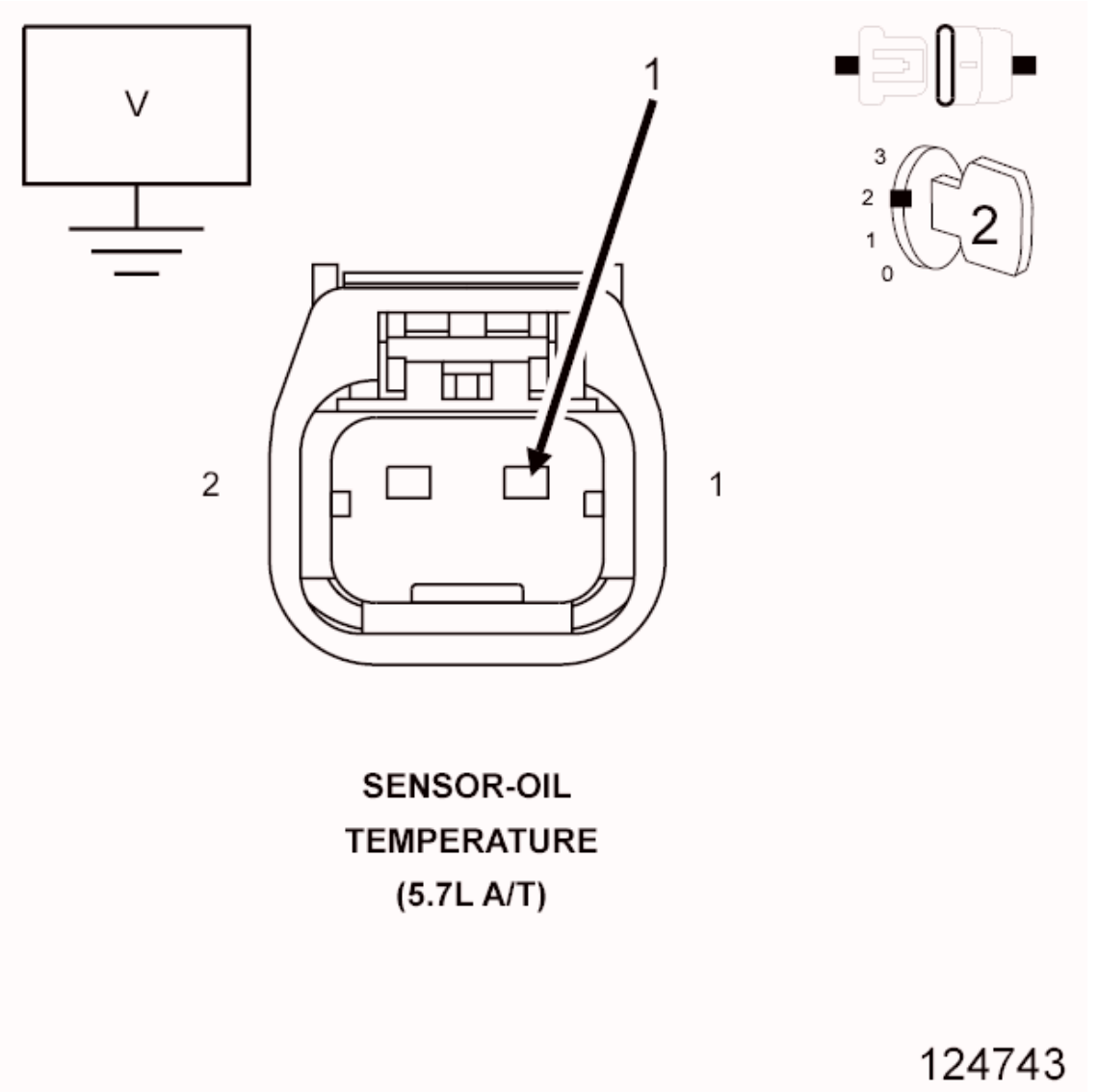

Fig. 29: Measuring Voltage On (G24) Engine Oil Temp Signal Circuit In Engine Oil Temp Sensor Harness Connector
Courtesy of CHRYSLER GROUP, LLC

1. Turn the ignition off.
2. Disconnect the C2 and C3 PCM harness connectors and remove Miller special tool (special tool #8815A, Kit, NGC, 38 Position).
3. Ignition on, engine not running.
4. Measure the voltage on the (G24) Engine Oil Temp Signal circuit in the Engine Oil Temp Sensor harness connector.

   Is there any voltage present?

   Yes

- Repair the short to voltage in the (G24) Engine Oil Temp Signal circuit.
- Perform the POWERTRAIN VERIFICATION TEST. Refer to **POWERTRAIN VERIFICATION TEST** .

No

- Go To 8.

8. **(G24) ENGINE OIL TEMP SIGNAL CIRCUIT SHORTED TO THE (K900) SENSOR GROUND CIRCUIT**

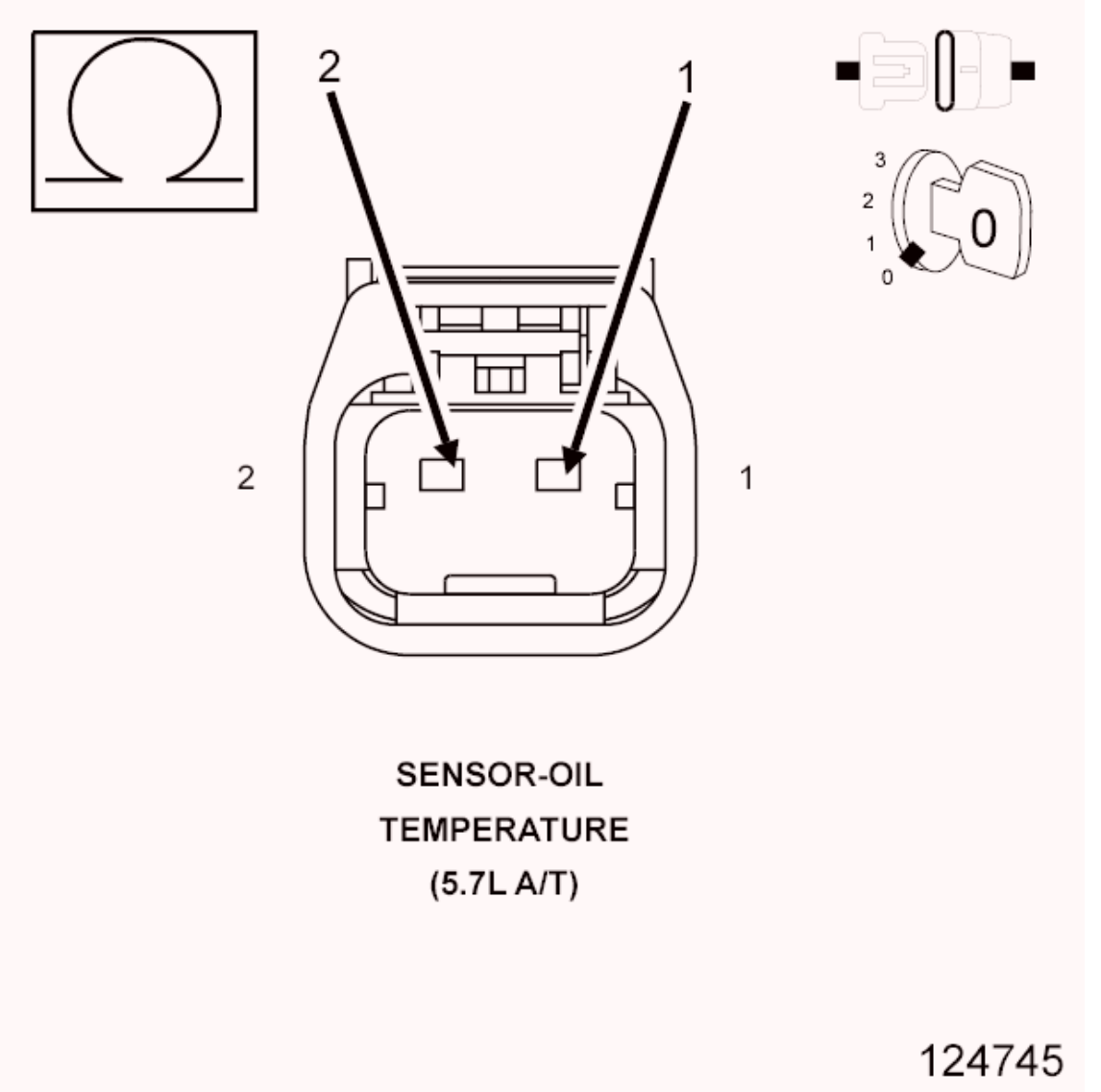

Fig. 30: Measuring Resistance Between (K900) Sensor Ground Circuit And (G24) Engine Oil Temp Signal Circuit In Engine Oil Temp Sensor Harness Connector
Courtesy of CHRYSLER GROUP, LLC

1. Turn the ignition off.

2. Measure the resistance between the (K900) Sensor ground circuit and the (G24) Engine Oil Temp Signal circuit in the Engine Oil Temp Sensor harness connector.

   Is the resistance below 5.0 ohms?

   Yes

   - Repair the short to between the (K900) Sensor ground circuit and the (G24) Engine Oil Temp Signal circuit.
   - Perform the POWERTRAIN VERIFICATION TEST. Refer to **POWERTRAIN VERIFICATION TEST** .

   No

   - Go To 9.

9. **(G24) ENGINE OIL TEMP SIGNAL CIRCUIT SHORTED GROUND**

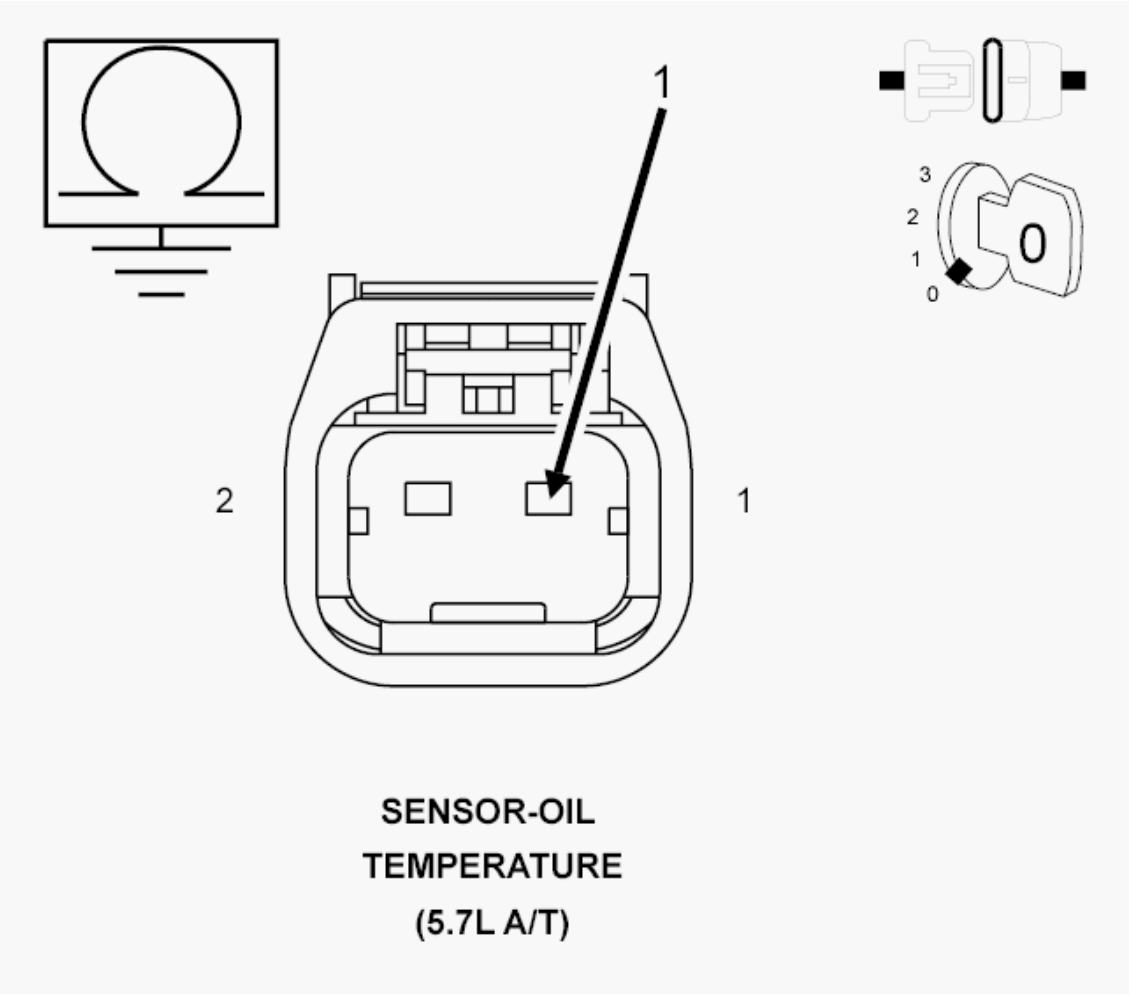

Fig. 31: Measuring Resistance Between Ground And (G24) Engine Oil Temp Signal Circuit In Engine Oil Temp Sensor Harness Connector

Courtesy of CHRYSLER GROUP, LLC

1. Measure the resistance between ground and the (G24) Engine Oil Temp Signal circuit in the Engine Oil Temp Sensor harness connector.

   Is the resistance below 100 ohms?

   Yes

   - Repair the short to ground in the (G24) Engine Oil Temp Signal circuit.
   - Perform the POWERTRAIN VERIFICATION TEST. Refer to **POWERTRAIN VERIFICATION TEST** .

   No

   - Go To 10.

10. **POWERTRAIN CONTROL MODULE (PCM)**
    1. Using the wiring diagram/schematic as a guide, inspect the wiring and connectors between the Engine Oil Temperature Sensor and the Powertrain Control Module (PCM).
    2. Look for any chafed, pierced, pinched, or partially broken wires.
    3. Look for broken, bent, pushed out or corroded terminals. Verify that there is good pin to terminal contact in the EOT Sensor and Control Module connectors.
    4. Refer to any Technical Service Bulletins that may apply.

       Were there any problems found?

       Yes

       - Repair as necessary.
       - Perform the POWERTRAIN VERIFICATION TEST. Refer to **POWERTRAIN VERIFICATION TEST** .

       No

       - Replace the Powertrain Control Module (PCM) in accordance with the Service Information.
       - Perform the POWERTRAIN VERIFICATION TEST. Refer to **POWERTRAIN VERIFICATION TEST** .

P0197-ENGINE OIL TEMPERATURE SENSOR CIRCUIT LOW

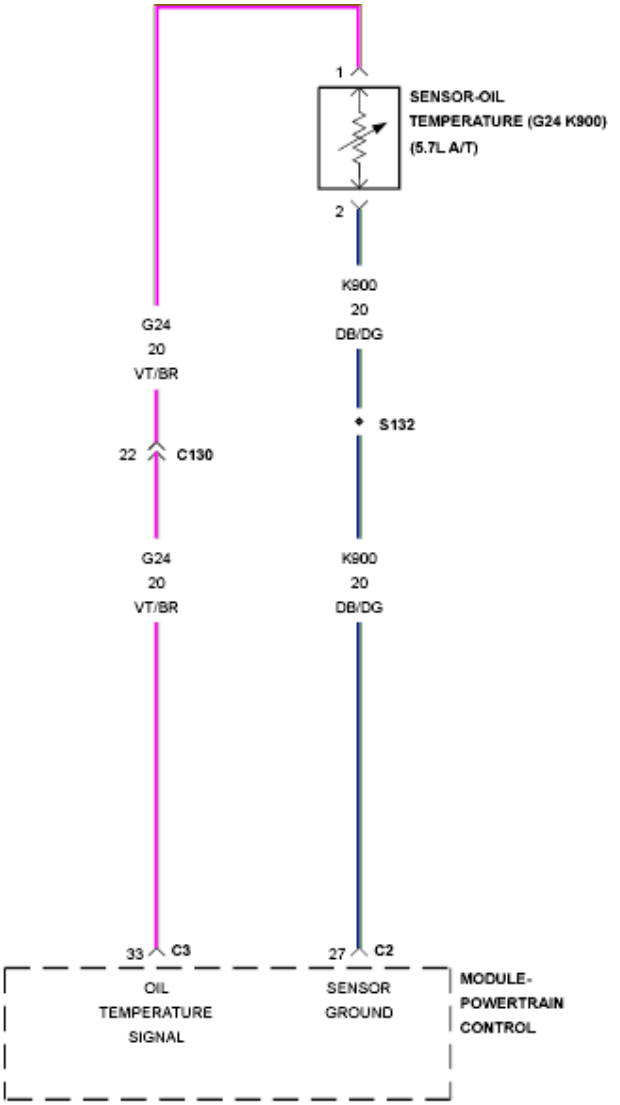

SENSOR-OIL
TEMPERATURE
(5.7L A/T)

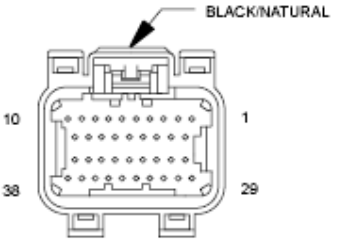

MODULE-
POWERTRAIN
CONTROL C3
(GAS)

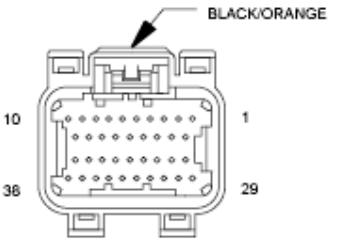

MODULE-
POWERTRAIN
CONTROL C2
(GAS)

Fig. 32: Engine Oil Temperature Sensor Circuit Schematic
Courtesy of CHRYSLER GROUP, LLC

For a complete wiring diagram **refer to appropriate SYSTEM WIRING DIAGRAMS article** .

WHEN MONITORED:

With the ignition on. Battery voltage greater than 10.4 volts.

SET CONDITION:

The Engine Oil Temperature sensor circuit voltage at the PCM is less than the calibrated amount. One Trip Fault. Three good trips to clear the MIL.

POSSIBLE CAUSES

Possible Causes
(G24) ENGINE OIL TEMP SIGNAL CIRCUIT SHORTED TO GROUND
(G24) ENGINE OIL TEMP SIGNAL CIRCUIT SHORTED TO THE (K900) SENSOR GROUND CIRCUIT
EXCESSIVE RESISTANCE IN THE (G24) ENGINE OIL TEMP SIGNAL CIRCUIT
ENGINE OIL TEMPERATURE SENSOR
POWERTRAIN CONTROL MODULE (PCM)

Always perform the Pre-Diagnostic Troubleshooting procedure before proceeding. Refer to PRE-DIAGNOSTIC TROUBLESHOOTING PROCEDURE .

DIAGNOSTIC TEST

1. **ACTIVE DTC**
    1. Start the engine and allow it to reach normal operating temperature.

        WARNING: **When the engine is operating, do not stand in direct line with the fan. Do not put your hands near the pulleys, belts or fan. Do not wear loose clothing. Failure to follow these instructions may result in possible serious or fatal injury.**

        NOTE: **Diagnose and repair any system voltage DTCs before continuing with this test.**

    2. With the scan tool, select View DTCs.

        Is the DTC Active at this time?

        Yes

- Go To 2.

No

- Perform the INTERMITTENT CONDITION Diagnostic Procedure. Refer to **INTERMITTENT CONDITION** .

2. **ENGINE OIL TEMPERATURE SENSOR**
   1. Turn the ignition off.
   2. Disconnect the Engine Oil Temp Sensor harness connector.
   3. Ignition on, engine not running.
   4. With a scan tool, read Engine Oil Temp voltage.

NOTE: **The sensor voltage should be approximately 5.0 volts (plus or minus.1 volt) with the connector disconnected.**

Does the scan tool display the voltage as described above?

Yes

- Verify that there is good pin to terminal contact in the Engine Oil Temperature Sensor and Powertrain Control Module connectors. Replace the Engine Oil Temperature Sensor if no problems were found with the connectors.
- Perform the POWERTRAIN VERIFICATION TEST. Refer to **POWERTRAIN VERIFICATION TEST** .

No

- Go To 3.

3. **(G24) ENGINE OIL TEMP SIGNAL CIRCUIT SHORTED TO THE (K900) SENSOR GROUND CIRCUIT**

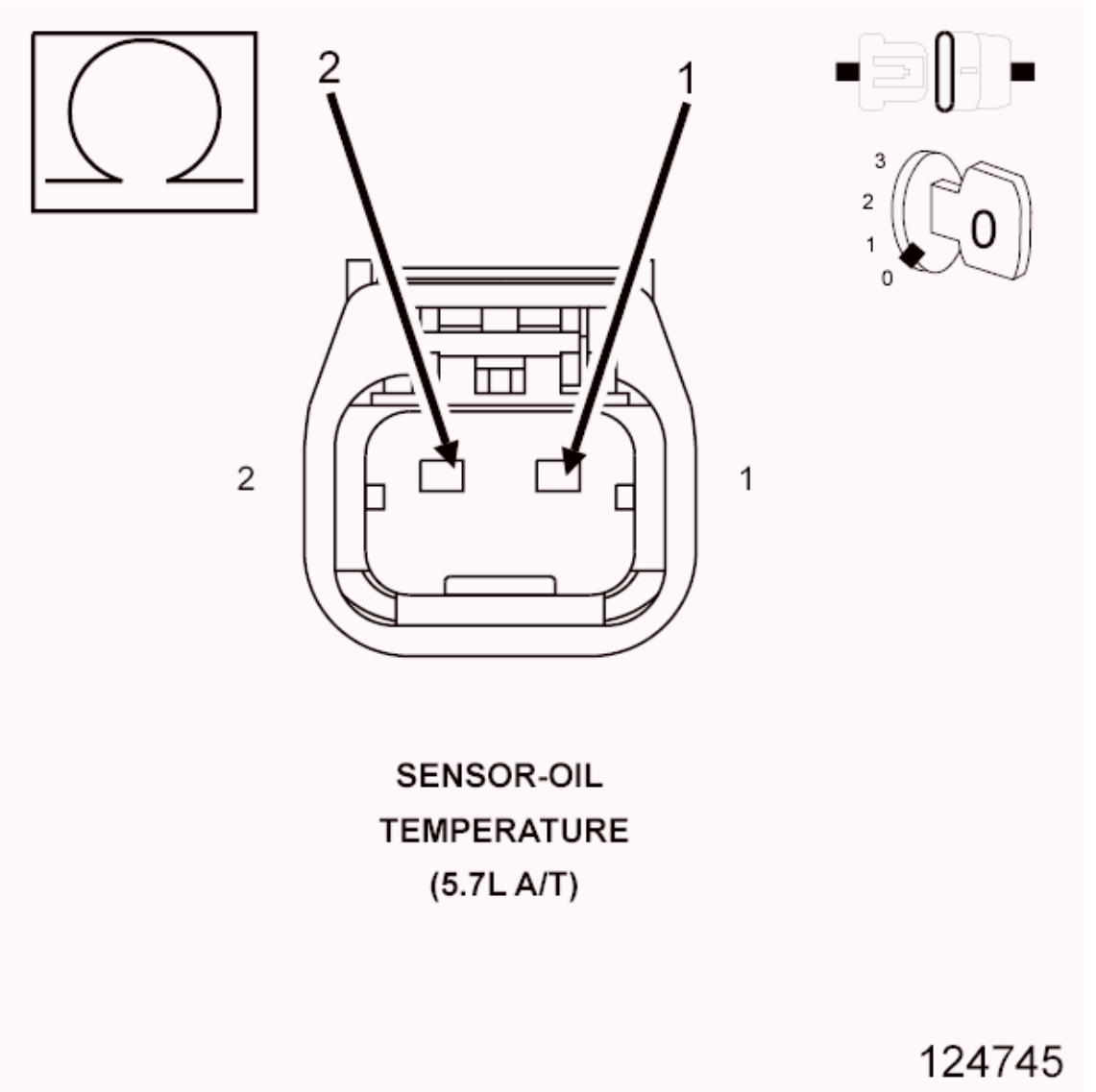

Fig. 33: Measuring Resistance Between (K900) Sensor Ground Circuit And (G24) Engine Oil Temp Signal Circuit In Engine Oil Temp Sensor Harness Connector
Courtesy of CHRYSLER GROUP, LLC

1. Turn the ignition off.
2. Disconnect the C2 and C3 PCM harness connectors.
3. Measure the resistance between the (K900) Sensor ground circuit and the (G24) Engine Oil Temp Signal circuit in the Engine Oil Temp Sensor harness connector.

   Is the resistance below 5.0 ohms?

   Yes

   - Repair the short to between the (K900) Sensor ground circuit and the (G24) Engine Oil Temp Signal circuit.

- Perform the POWERTRAIN VERIFICATION TEST. Refer to **POWERTRAIN VERIFICATION TEST** .

No

- Go To 4.

4. **(G24) ENGINE OIL TEMP SIGNAL CIRCUIT SHORTED GROUND**

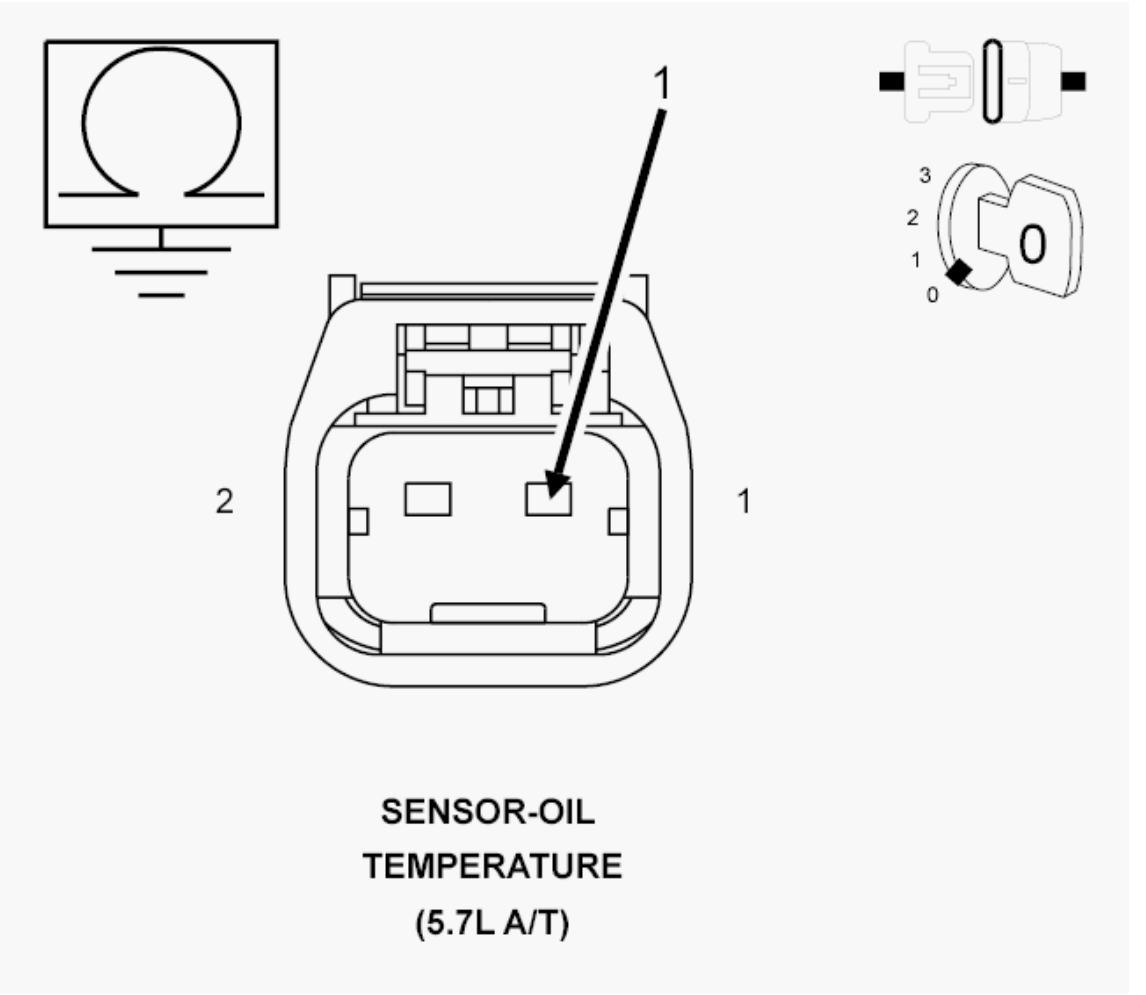

Fig. 34: Measuring Resistance Between Ground And (G24) Engine Oil Temp Signal Circuit In Engine Oil Temp Sensor Harness Connector
Courtesy of CHRYSLER GROUP, LLC

1. Measure the resistance between ground and the (G24) Engine Oil Temp Signal circuit in the Engine Oil Temp Sensor harness connector.

   Is the resistance below 100 ohms?

   Yes

- Repair the short to ground in the (G24) Engine Oil Temp Signal circuit.
- Perform the POWERTRAIN VERIFICATION TEST. Refer to **POWERTRAIN VERIFICATION TEST** .

No

- Go To 5.

5. **EXCESSIVE RESISTANCE IN THE (G24) ENGINE OIL TEMP SIGNAL CIRCUIT**

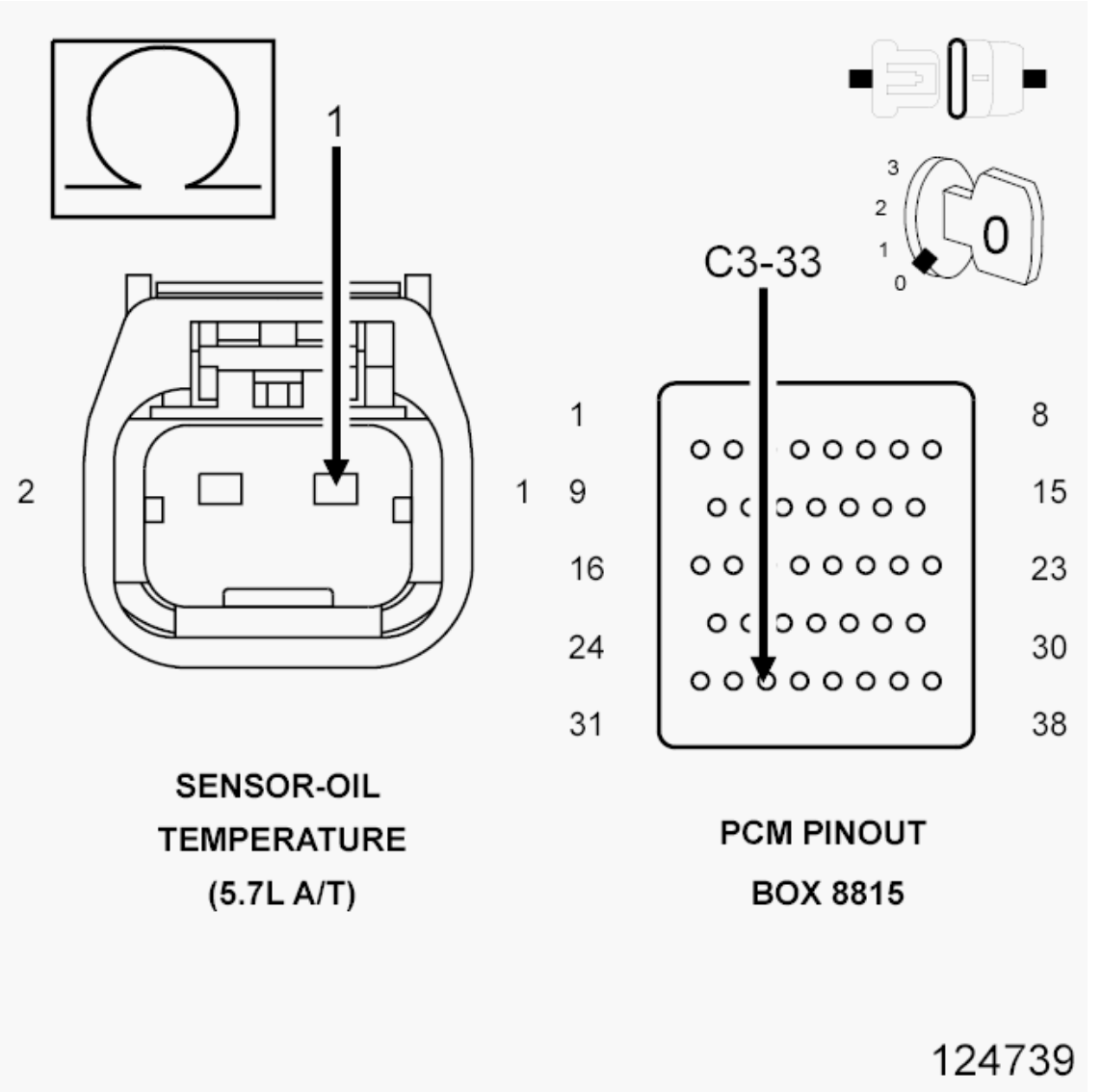

Fig. 35: Checking EOT Sensor Signal Circuit For High Resistance
Courtesy of CHRYSLER GROUP, LLC

CAUTION: Do not probe the PCM harness connectors. Probing the PCM harness connectors will damage the PCM terminals, resulting in poor terminal to pin connection. Install the PCM Pinout Box (special tool #8815A,

Kit, NGC, 38 Position) to perform diagnosis.

1. Measure the resistance of the (G24) Engine Oil Temp Signal circuit between the Engine Oil Temperature Sensor harness connector and the appropriate terminal of special tool (special tool #8815A, Kit, NGC, 38 Position).

   Is the resistance below 5.0 ohms?

   Yes

   - Go To 6.

   No

   - Repair the excessive resistance in the (G24) Engine Oil Temp Signal circuit.
   - Perform the POWERTRAIN VERIFICATION TEST. Refer to **POWERTRAIN VERIFICATION TEST** .

6. **POWERTRAIN CONTROL MODULE (PCM)**
   1. Using the wiring diagram/schematic as a guide, inspect the wiring and connectors between the Engine Oil Temperature Sensor and the Powertrain Control Module (PCM).
   2. Look for any chafed, pierced, pinched, or partially broken wires.
   3. Look for broken, bent, pushed out or corroded terminals. Verify that there is good pin to terminal contact in the Sensor and Control Module connectors.
   4. Refer to any Technical Service Bulletins that may apply.

      Were there any problems found?

      Yes

      - Repair as necessary.
      - Perform the POWERTRAIN VERIFICATION TEST. Refer to **POWERTRAIN VERIFICATION TEST** .

      No

      - Replace and program the Powertrain Control Module per Service Information.
      - Perform the POWERTRAIN VERIFICATION TEST. Refer to **POWERTRAIN VERIFICATION TEST** .

P0198-ENGINE OIL TEMPERATURE SENSOR CIRCUIT HIGH

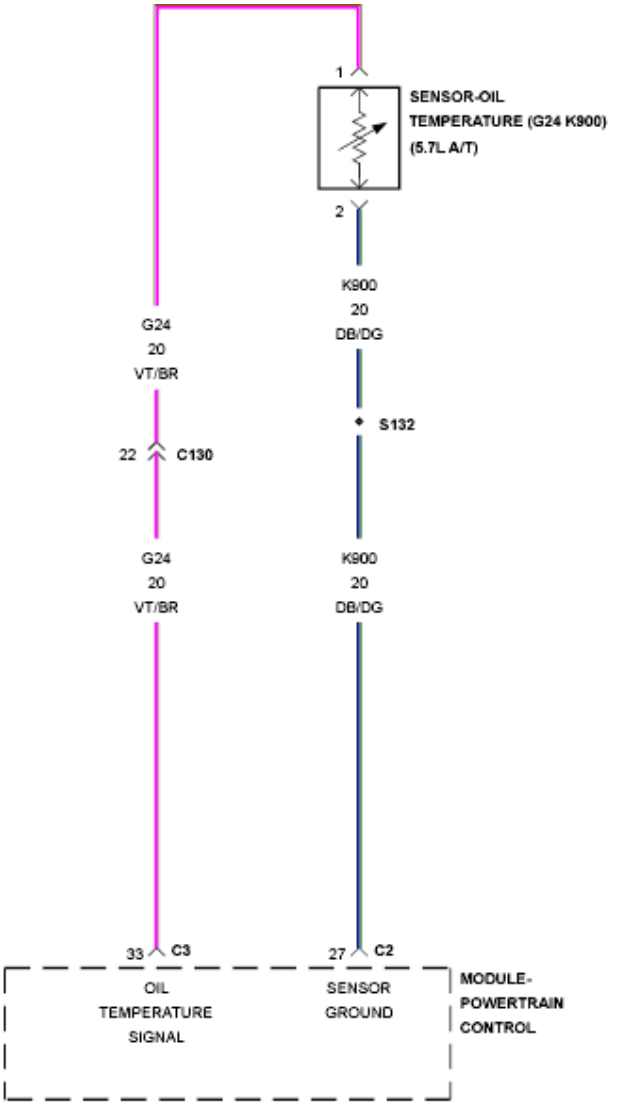

SENSOR-OIL
TEMPERATURE
(5.7L A/T)

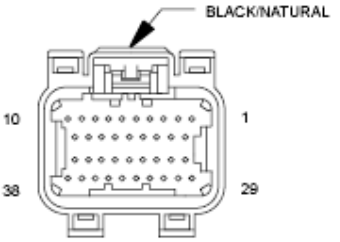

MODULE-
POWERTRAIN
CONTROL C3
(GAS)

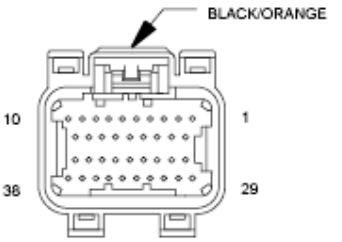

MODULE-
POWERTRAIN
CONTROL C2
(GAS)

Fig. 36: Engine Oil Temperature Sensor Circuit Schematic
Courtesy of CHRYSLER GROUP, LLC

For a complete wiring diagram **refer to appropriate SYSTEM WIRING DIAGRAMS article** .

WHEN MONITORED:

With the ignition on. Battery voltage greater than 10.4 volts.

SET CONDITION:

The Engine Oil Temperature sensor circuit voltage at the PCM is greater than the calibrated amount. One Trip Fault. Three good trips to turn off the MIL.

POSSIBLE CAUSES

Possible Causes
(G24) ENGINE OIL TEMP SIGNAL CIRCUIT SHORTED TO VOLTAGE
(G24) ENGINE OIL TEMP SIGNAL CIRCUIT OPEN
(K900) SENSOR GROUND CIRCUIT OPEN
ENGINE OIL TEMPERATURE SENSOR
POWERTRAIN CONTROL MODULE (PCM)

Always perform the Pre-Diagnostic Troubleshooting procedure before proceeding. Refer to PRE-DIAGNOSTIC TROUBLESHOOTING PROCEDURE .

DIAGNOSTIC TEST

1. **ACTIVE DTC**
    1. Start the engine and allow it to reach normal operating temperature.

        WARNING: **When the engine is operating, do not stand in direct line with the fan. Do not put your hands near the pulleys, belts or fan. Do not wear loose clothing. Failure to follow these instructions may result in possible serious or fatal injury.**

        NOTE: **Diagnose and repair any system voltage DTCs before continuing with this test.**

    2. With the scan tool, select View DTCs.

        Is the DTC Active at this time?

        Yes

        - Go To 2.

No

- Perform the INTERMITTENT CONDITION Diagnostic Procedure. Refer to **INTERMITTENT CONDITION** .

2. **ENGINE OIL TEMP SENSOR**

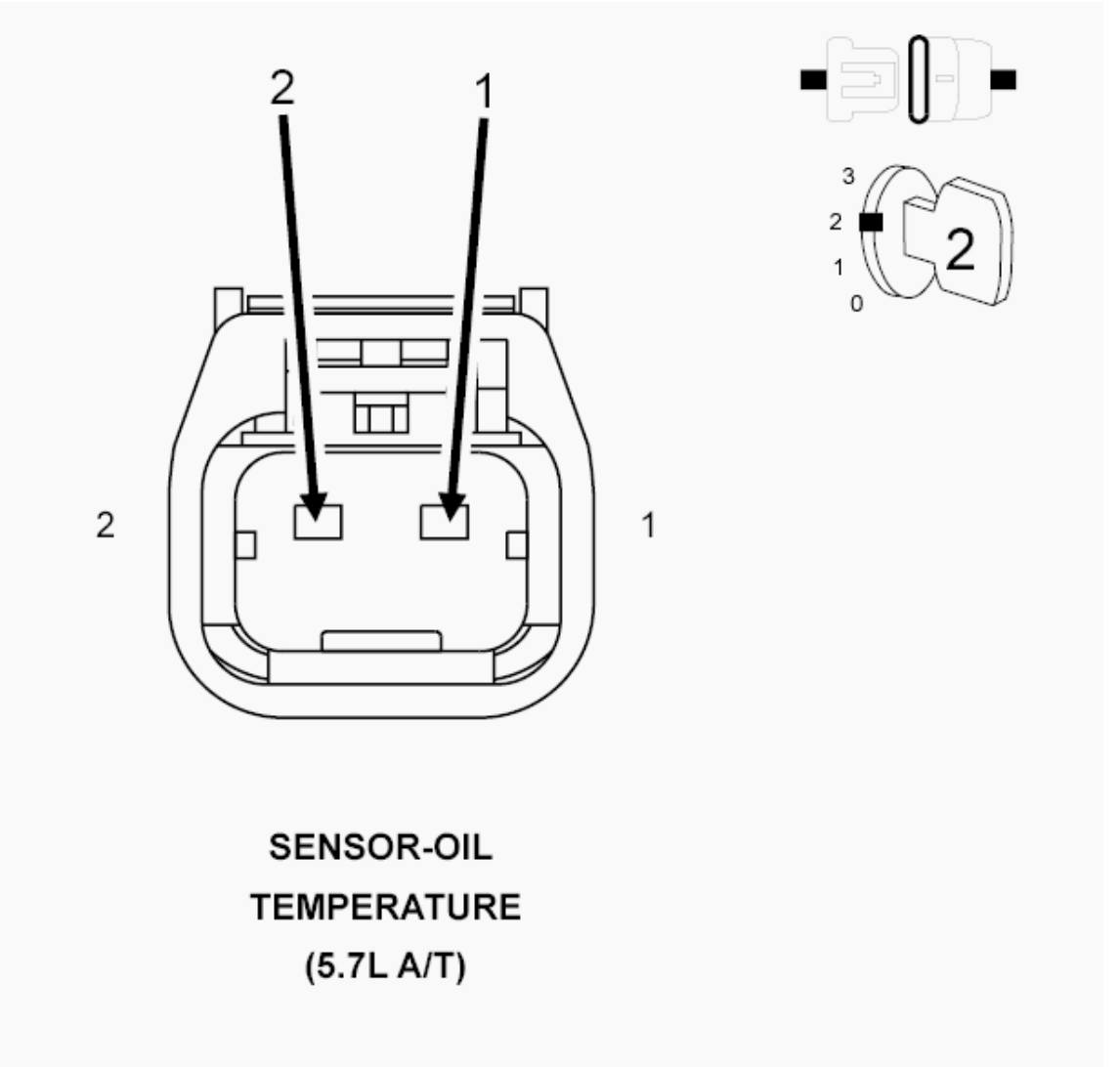

Fig. 37: Engine Oil Temperature Sensor Harness Connector
Courtesy of CHRYSLER GROUP, LLC

1. Turn the ignition off.
2. Disconnect the Engine Oil Temp Sensor harness connector.
3. Ignition on, engine not running.
4. With a scan tool, read Engine Oil Temp voltage.
5. Connect a jumper wire between the (G24) Engine Oil Temp Signal circuit and the (K900) Sensor ground circuit in the Engine Oil Temp Sensor harness connector.

NOTE: The sensor voltage should be approximately 0.0 volts (plus or minus.1 volt) with the jumper wire in place.

Does the scan tool display the voltage as described above?

Yes

- Verify that there is good pin to terminal contact in the EOT Sensor and Control Module connectors. Replace the Engine Oil Temperature Sensor if no problems were found with the connectors.
- Perform the POWERTRAIN VERIFICATION TEST. Refer to **POWERTRAIN VERIFICATION TEST** .

No

- Go To 3.

NOTE: Remove the jumper wire before continuing.

3. **(G24) ENGINE OIL TEMP SIGNAL CIRCUIT SHORTED TO VOLTAGE**

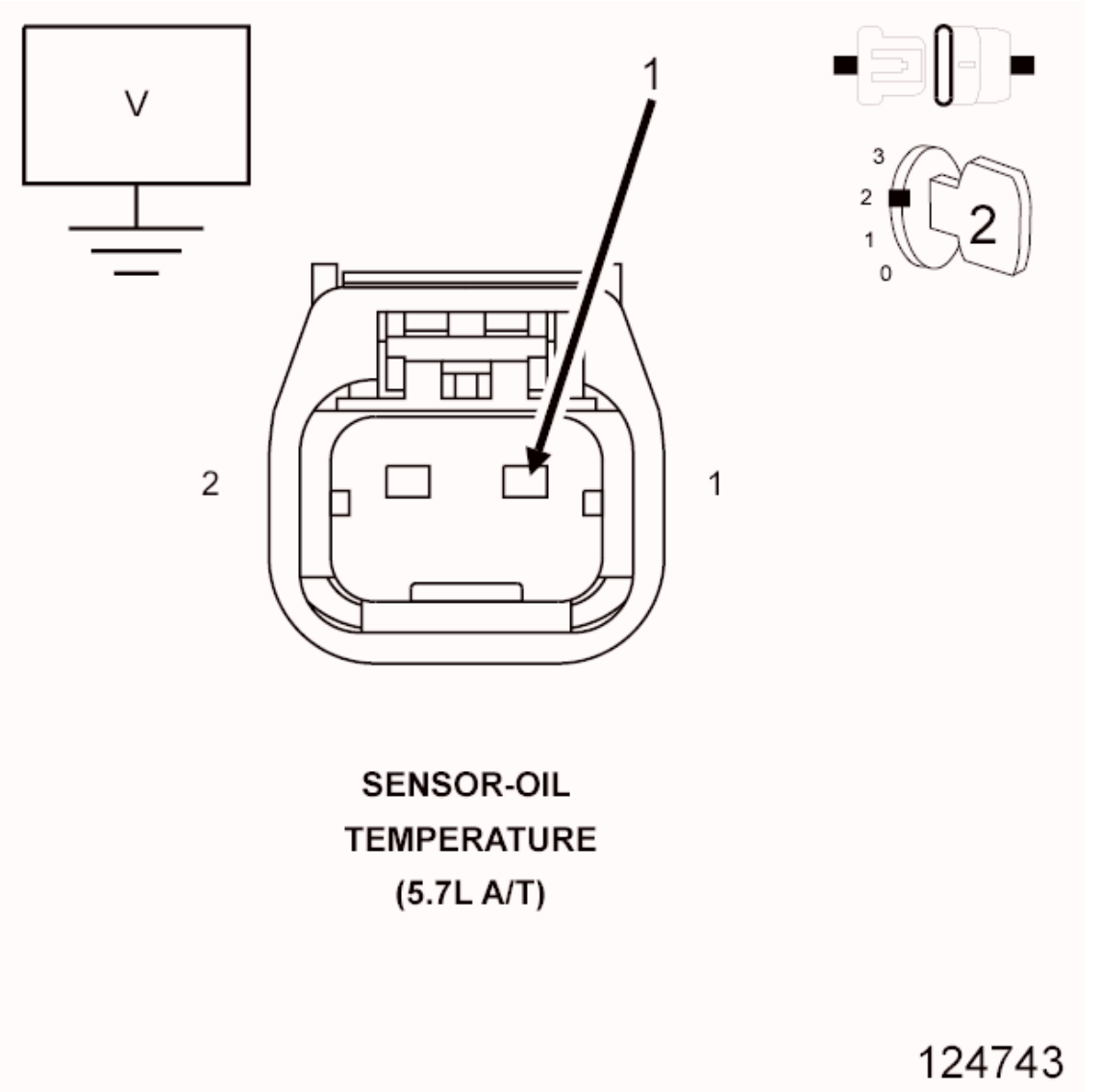

Fig. 38: Measuring Voltage On (G24) Engine Oil Temp Signal Circuit In Engine Oil Temp Sensor Harness Connector
Courtesy of CHRYSLER GROUP, LLC

1. Turn the ignition off.
2. Disconnect the C2 and C3 PCM harness connectors.
3. Ignition on, engine not running.
4. Measure the voltage on the (G24) Engine Oil Temp Signal circuit in the Engine Oil Temp Sensor harness connector.

   Is there any voltage present?

   Yes

   - Repair the short to voltage in the (G24) Engine Oil Temp Signal circuit.

- Perform the POWERTRAIN VERIFICATION TEST. Refer to **POWERTRAIN VERIFICATION TEST** .

No

- Go To 4.

4. **(G24) ENGINE OIL TEMP SIGNAL CIRCUIT OPEN**

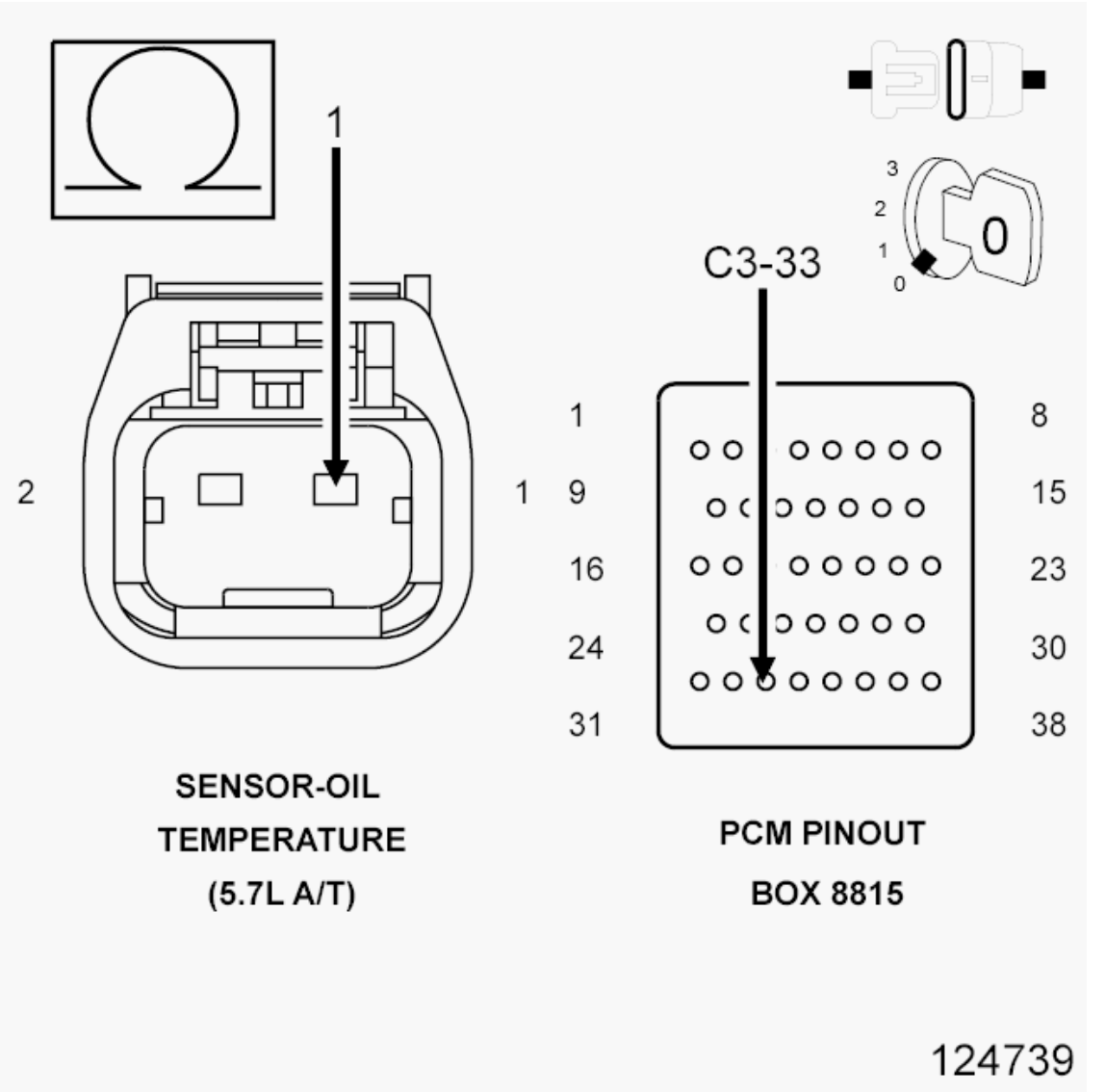

Fig. 39: Checking EOT Sensor Signal Circuit For High Resistance
Courtesy of CHRYSLER GROUP, LLC

1. Turn the ignition off.

CAUTION: Do not probe the PCM harness connectors. Probing the PCM harness connectors will damage the PCM terminals resulting in

poor terminal to pin connection. Install the PCM Pinout Box (special tool #8815A, Kit, NGC, 38 Position) to perform diagnosis.

2. Measure the resistance of the (G24) Engine Oil Temp Signal circuit from the Engine Oil Temp Sensor harness connector to the appropriate terminal of special tool (special tool #8815A, Kit, NGC, 38 Position).

   Is the resistance below 5.0 ohms?

   Yes

   - Go To 5.

   No

   - Repair the open in the (G24) Engine Oil Temp Signal circuit.
   - Perform the POWERTRAIN VERIFICATION TEST. Refer to **POWERTRAIN VERIFICATION TEST** .

5. **(K900) SENSOR GROUND CIRCUIT OPEN**

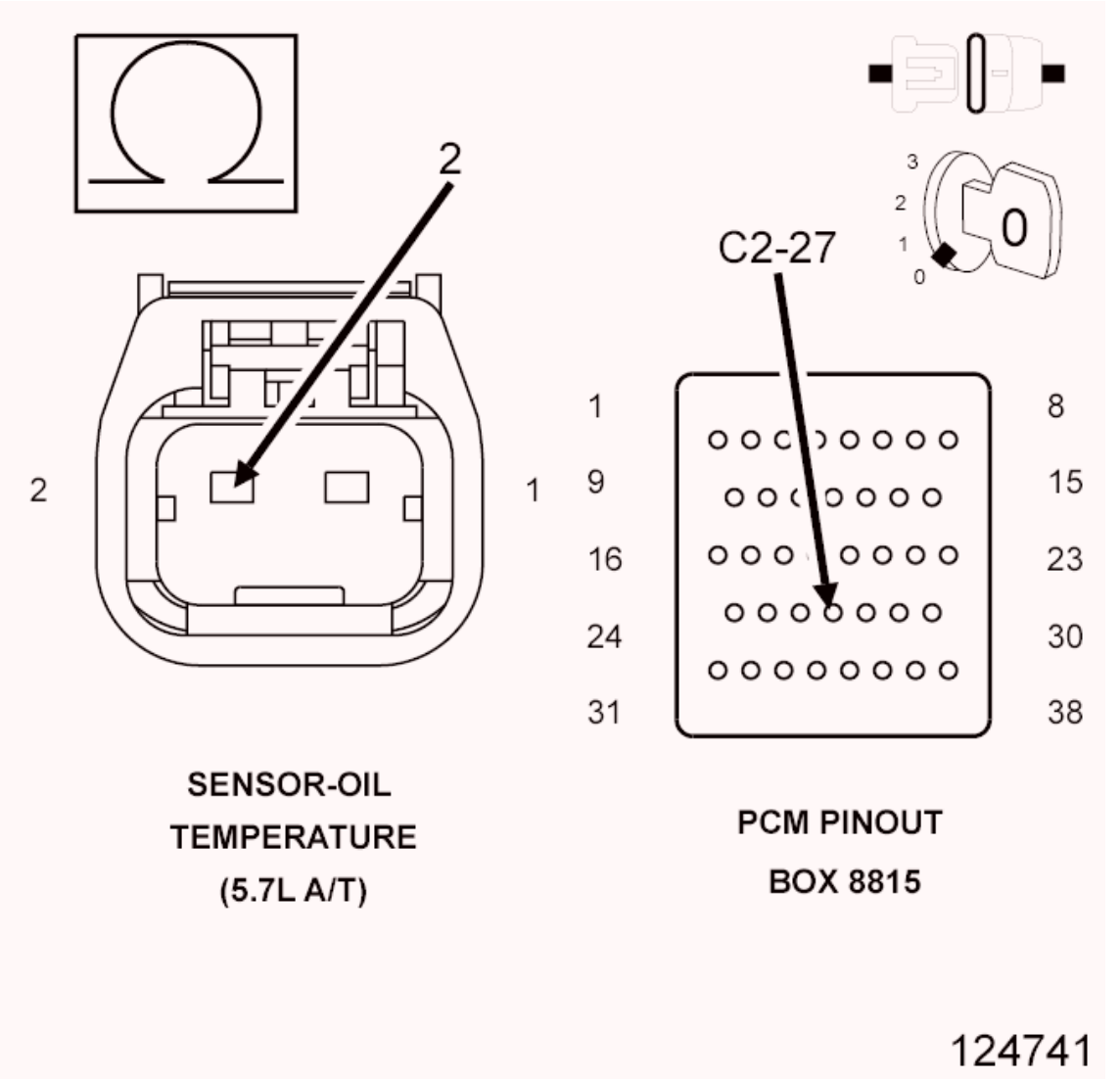

Fig. 40: Checking EOT Sensor Ground Circuit For High Resistance
Courtesy of CHRYSLER GROUP, LLC

1. Measure the resistance of the (K900) Sensor ground circuit from the Engine Oil Temp Sensor harness connector to the appropriate terminal of special tool (special tool #8815A, Kit, NGC, 38 Position).

   Is the resistance below 5.0 ohms?

   Yes

   - Go To 6.

   No

   - Repair the open in the (K900) Sensor ground circuit.

- Perform the POWERTRAIN VERIFICATION TEST. Refer to **POWERTRAIN VERIFICATION TEST** .

6. **POWERTRAIN CONTROL MODULE (PCM)**
    1. Using the wiring diagram/schematic as a guide, inspect the wiring and connectors between the Engine Oil Temperature Sensor and the Powertrain Control Module (PCM).
    2. Look for any chafed, pierced, pinched, or partially broken wires.
    3. Look for broken, bent, pushed out or corroded terminals. Verify that there is good pin to terminal contact in the Sensor and Control Module connectors.
    4. Refer to any Technical Service Bulletins that may apply.

    Were there any problems found?

    Yes

    - Repair as necessary.
    - Perform the POWERTRAIN VERIFICATION TEST. Refer to **POWERTRAIN VERIFICATION TEST** .

    No

    - Replace and program the Powertrain Control Module per Service Information.
    - Perform the POWERTRAIN VERIFICATION TEST. Refer to **POWERTRAIN VERIFICATION TEST** .

P0201-FUEL INJECTOR 1 CIRCUIT

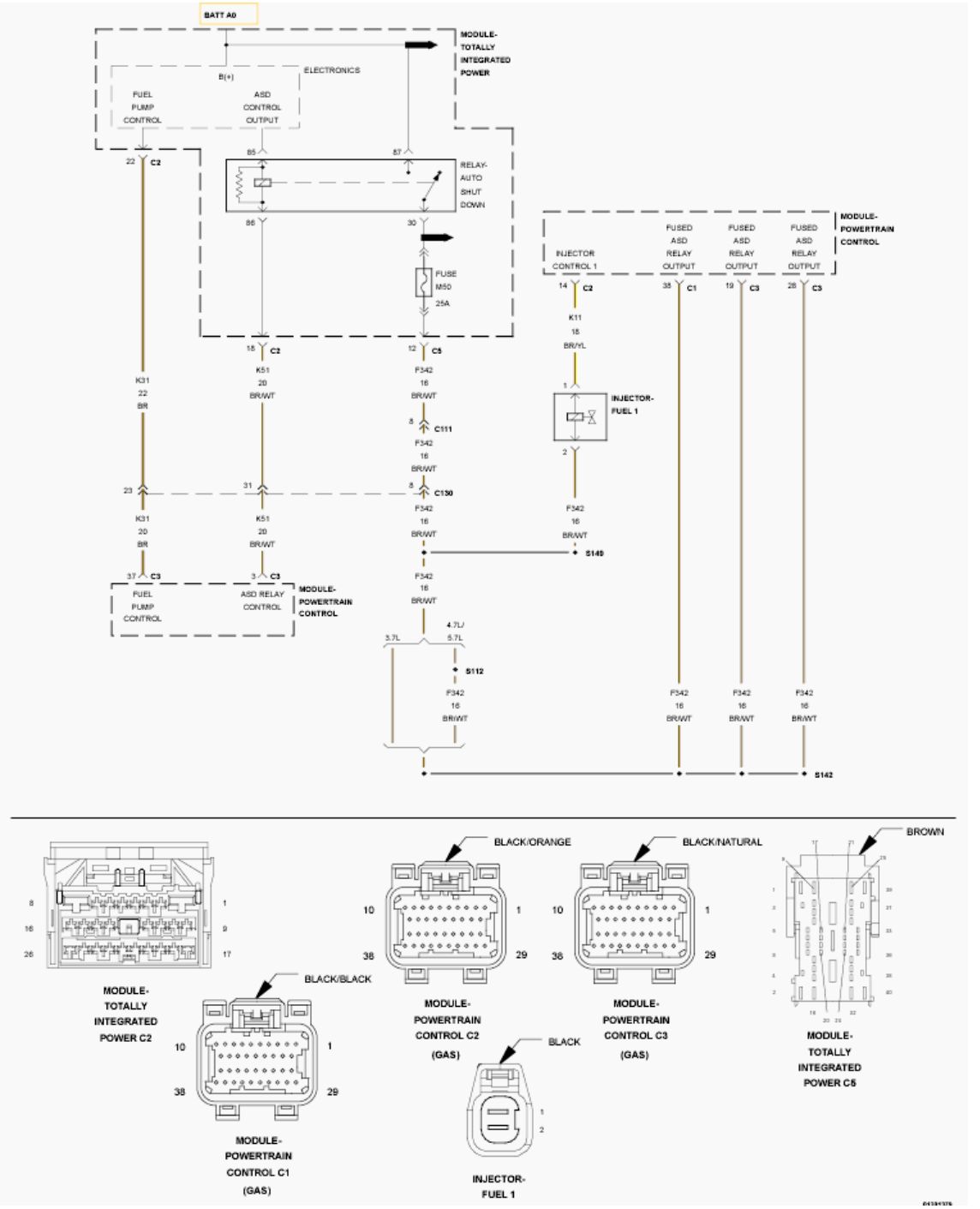

Fig. 41: Fuel Injector 1 Circuit Schematic
Courtesy of CHRYSLER GROUP, LLC

For a complete wiring diagram, **refer to appropriate SYSTEM WIRING DIAGRAMS article** .

WHEN MONITORED:

With the engine running and battery voltage greater than 10 volts. ASD is energized. Engine speed less than

3000 RPM.

SET CONDITION:

The Powertrain Control Module (PCM) monitors the continuity of the injector circuits as well as the voltage spike created by the collapse of the magnetic field in the injector coil. Any condition that reduces the maximum current flow or the magnitude of the voltage spike can cause this DTC to set.

POSSIBLE CAUSES

Possible Causes
(F342) ASD CONTROL OUTPUT CIRCUIT
(K11) INJECTOR CONTROL NO. 1 CIRCUIT OPEN
(K11) INJECTOR CONTROL NO. 1 CIRCUIT SHORTED TO GROUND
FUEL INJECTOR
POWERTRAIN CONTROL MODULE (PCM)

Always perform the Pre-Diagnostic Troubleshooting procedure before proceeding. Refer to PRE-DIAGNOSTIC TROUBLESHOOTING PROCEDURE .

DIAGNOSTIC TEST

1. **DTC IS ACTIVE**
    1. Turn the ignition on.
    2. With the scan tool, select View DTCs. Record DTC and Freeze Frame information.
    3. Start the engine and allow it to reach operating temperature.

    WARNING: When the engine is operating, do not stand in direct line with the fan. Do not put your hands near the pulleys, belts or fan. Do not wear loose clothing. Failure to follow these instructions may result in possible serious or fatal injury.

    NOTE: Review Freeze Frame information. Operate the vehicle under conditions similar to which the DTC was set.

    4. With a scan tool, select View DTCs.

    Is the status Active for this DTC?

    Yes

    - Go To 2.

    No

- Perform the INTERMITTENT CONDITION diagnostic procedure. Refer to **INTERMITTENT CONDITION** .

2. **FUEL INJECTOR 1 CIRCUIT RESISTANCE**

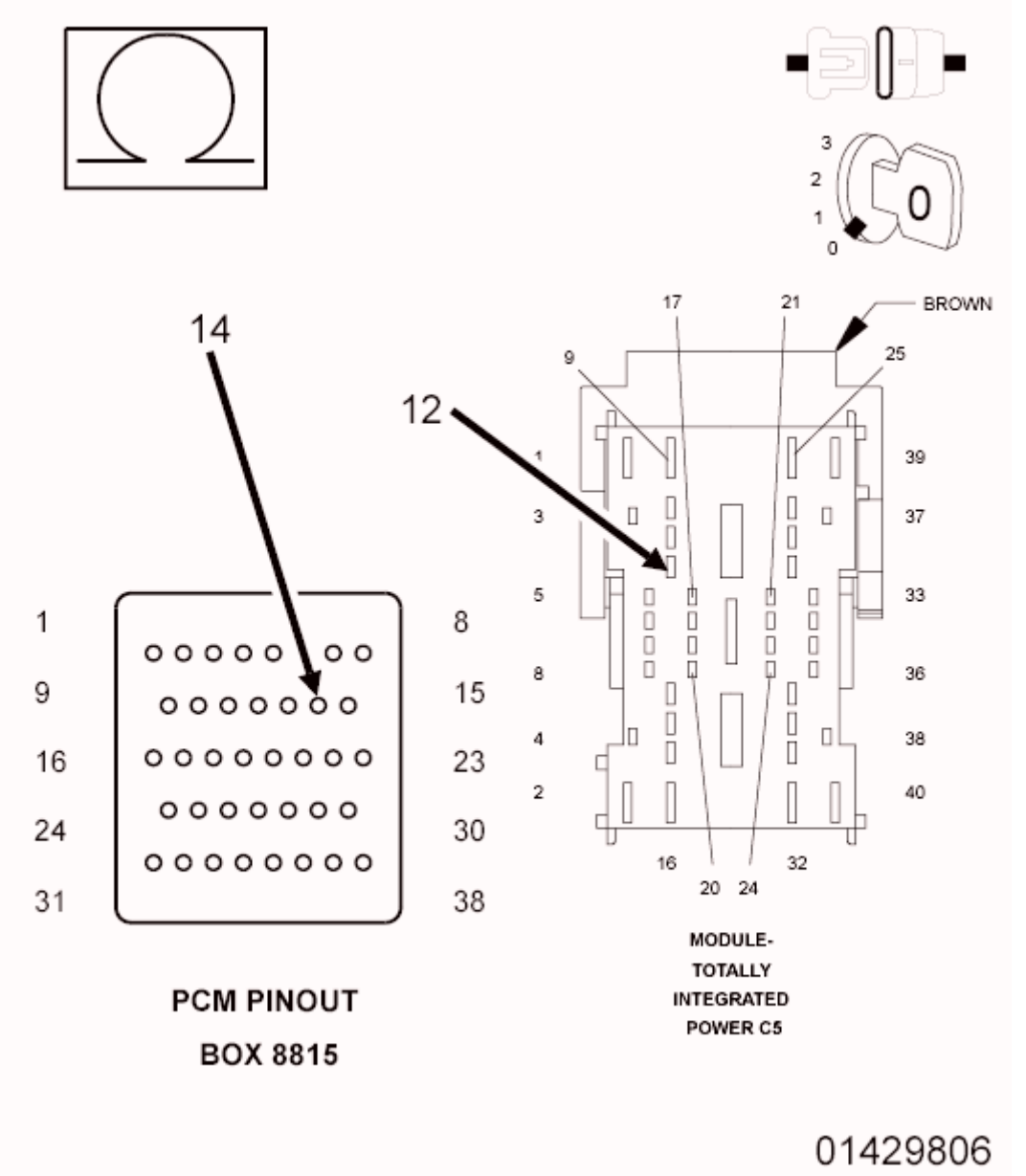

Fig. 42: Measuring Resistance Of Fuel Injector 1 Circuit From Appropriate Terminal Of PCM Pinout Box 8815 And C5 TIPM Harness Connector
Courtesy of CHRYSLER GROUP, LLC

1. Turn the ignition off.
2. Disconnect the C2 PCM harness connector.
3. Disconnect the C5 TIPM harness connector.

NOTE: **The resistance of the circuit will vary according to the temperature of the injector coil. Use the table below to determine the resistance range of the injector.**

CAUTION: Do not probe the PCM harness connectors. Probing the PCM harness connectors will damage the PCM terminals, resulting in poor terminal to pin connection. Install the PCM Pinout Box (special tool #8815A, Kit, NGC, 38 Position) to perform diagnosis.

4. Measure the resistance of the Fuel Injector 1 circuit from the appropriate terminal of the PCM Pinout Box (special tool #8815A, Kit, NGC, 38 Position) and the C5 TIPM harness connector.

Fuel Injector Coil Resistance Based on Engine Temperature	
Temperature	**Resistance**
-20° C (-4° F)	10 Ohms (+/-.6 of an Ohm)
20° C (68° F)	12 Ohms (+/-.6 of an Ohm)
60° C (140° F)	14 Ohms (+/-.6 of an Ohm)
100° C (212° F)	16 Ohms (+/-.6 of an Ohm)

Is the resistance of the injector within the specified range?

Yes

- Go To 7.

No

- Go To 3.

3. **FUEL INJECTOR 1 WIRING AND CONNECTOR INSPECTION**
   1. Turn the ignition off.
   2. Verify that the Fuel Injector 1 is properly connected to the injector. Disconnect the Fuel Injector 1 connector and Inspect the terminals for any condition that would result in a poor connection.
   3. Using the wiring diagram/schematic as a guide, inspect the Fuel Injector 1 wiring and connector.
   4. Look for any chafed, pierced, pinched, or partially broken wires.
   5. Look for broken, bent, pushed out or corroded terminals.
   6. Verify that there is good pin to terminal contact in the Injector and Powertrain Control Module connectors.

   Were any problems found?

   Yes

   - Repair as necessary.

- Perform the POWERTRAIN VERIFICATION TEST. Refer to **POWERTRAIN VERIFICATION TEST** .

No

- Go To 4.

4. **(F342) ASD CONTROL OUTPUT CIRCUIT OPEN OR HIGH RESISTANCE**

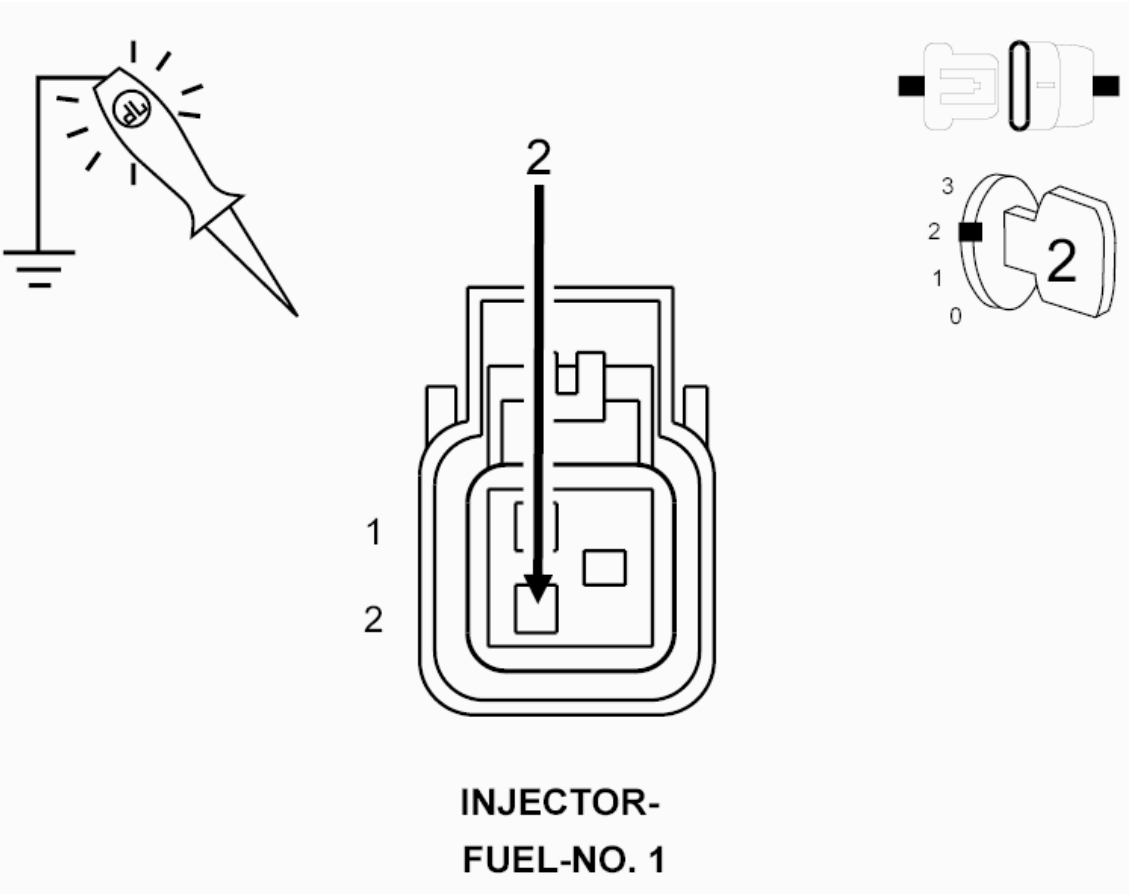

Fig. 43: Using 12-Volt Test Light Connected To Ground To Check ASD Control Output Circuit In Fuel Injector 1 Harness Connector
Courtesy of CHRYSLER GROUP, LLC

1. Turn the ignition on.
2. With the scan tool, actuate the Auto Shutdown (ASD) Control State.
3. Using a 12-volt test light connected to ground, check the (F342) ASD Control Output circuit in the Fuel Injector 1 harness connector.

NOTE: **The test light should be illuminated and bright. Compare the brightness to that of a direct connection to the battery.**

Is the test light illuminated and bright?

Yes

- Go To 5.

No

- Repair the excessive resistance or short to ground in the (F342) ASD Control Output circuit.
- Perform the POWERTRAIN VERIFICATION TEST. Refer to **POWERTRAIN VERIFICATION TEST** .

5. **(K11) INJECTOR 1 CONTROL CIRCUIT OPEN OR HIGH RESISTANCE**

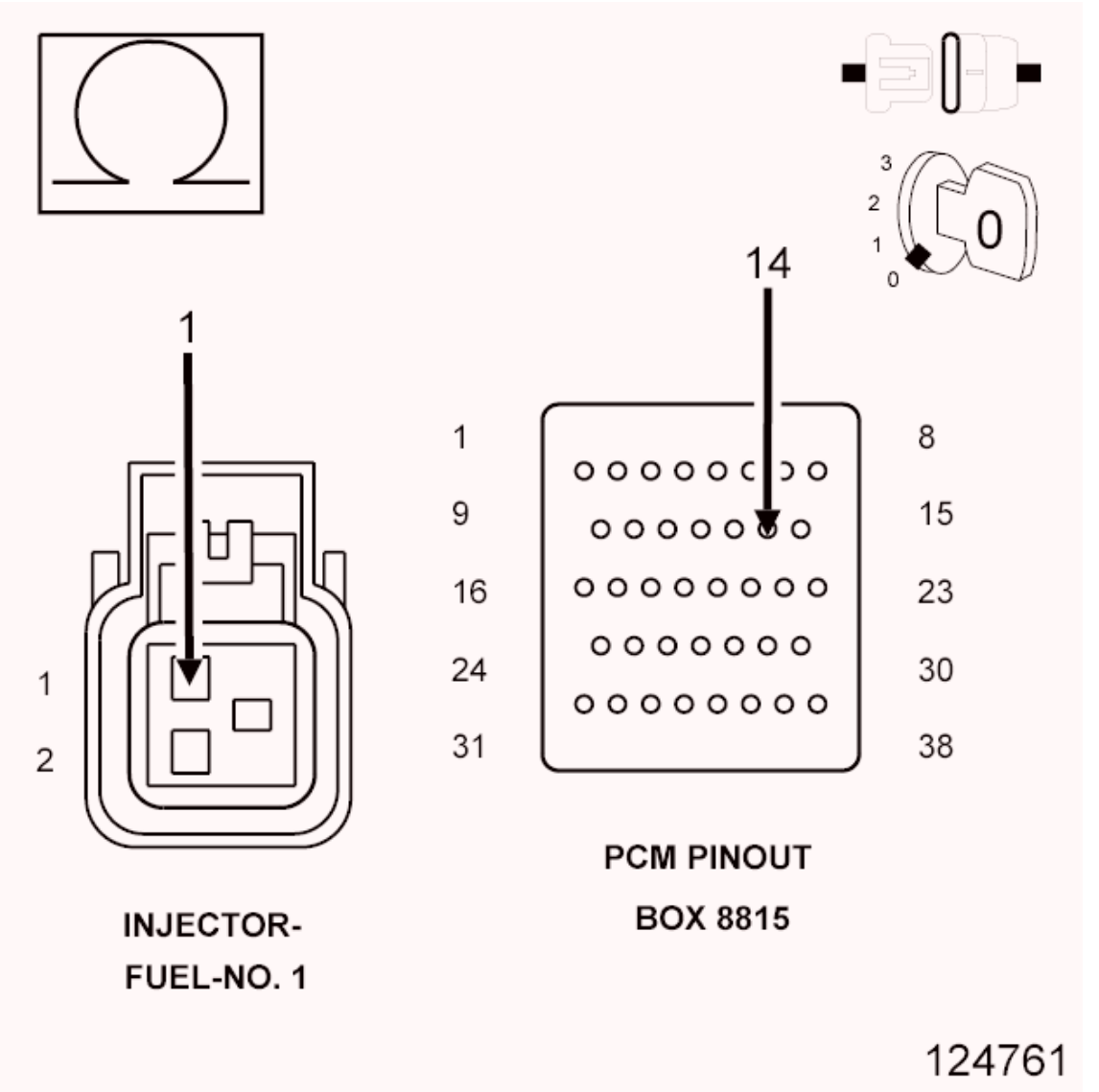

Fig. 44: Measuring Resistance Of (K11) Injector 1 Control Circuit Between Fuel Injector 1 Harness Connector And Appropriate Terminal Of PCM Pinout Box 8815
Courtesy of CHRYSLER GROUP, LLC

CAUTION: Do not probe the PCM harness connectors. Probing the PCM harness connectors will damage the PCM terminals, resulting in poor terminal to pin connection. Install the PCM Pinout Box (special tool #8815A, Kit, NGC, 38 Position) to perform diagnosis.

1. Turn the ignition off.
2. Disconnect the C2 PCM harness connector.
3. Measure the resistance of the (K11) Injector 1 Control circuit between the Fuel Injector 1 harness connector and the appropriate terminal of the PCM Pinout Box (special tool #8815A, Kit, NGC, 38 Position).

   Is the resistance below 5.0 Ohms?

   Yes

   - Go To 6.

   No

   - Repair the excessive resistance in the (K11) Injector 1 Control circuit.
   - Perform the POWERTRAIN VERIFICATION TEST. Refer to **POWERTRAIN VERIFICATION TEST** .

6. **FUEL INJECTOR 1**
   1. Using the wiring diagram/schematic as a guide, inspect the wiring and connectors between the Fuel Injector 1 and the Powertrain Control Module (PCM).
   2. Look for any chafed, pierced, pinched, or partially broken wires.
   3. Look for broken, bent, pushed out or corroded terminals.
   4. Refer to any Technical Service Bulletins that may apply.
   5. Verify that there is good pin to terminal contact in the Injector and Powertrain Control Module connectors.

      Were any problems found?

      Yes

      - Repair as necessary.
      - Perform the POWERTRAIN VERIFICATION TEST. Refer to **POWERTRAIN VERIFICATION TEST** .

      No

      - Replace the Fuel Injector 1 in accordance with the Service Information.
      - Perform the POWERTRAIN VERIFICATION TEST. Refer to **POWERTRAIN VERIFICATION TEST** .

7. **(K11) INJECTOR 1 CONTROL CIRCUIT SHORTED TO GROUND**

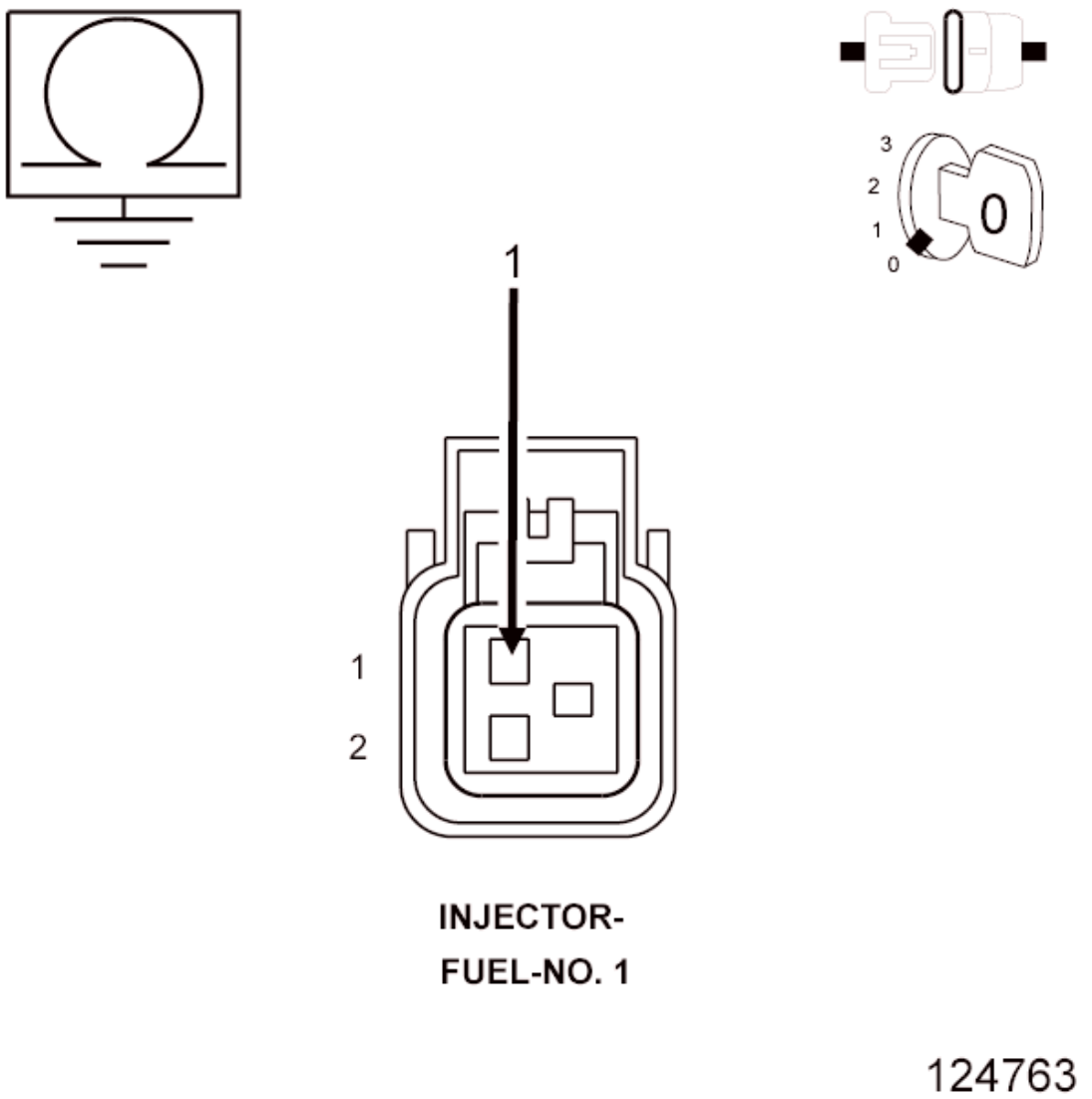

Fig. 45: Measuring Resistance Between Ground And (K11) Injector 1 Control Circuit In Fuel Injector 1 Harness Connector
Courtesy of CHRYSLER GROUP, LLC

1. Turn the ignition off.
2. Measure the resistance between ground and the (K11) Injector 1 Control circuit in the Fuel Injector 1 harness connector.

   Is the resistance above 100 Ohms?

   Yes

   - Go To 8.

No

- Repair the (K11) Injector 1 Control circuit for a short to ground.
- Perform the POWERTRAIN VERIFICATION TEST. Refer to **POWERTRAIN VERIFICATION TEST** .

8. **POWERTRAIN CONTROL MODULE (PCM)**
    1. Using the wiring diagram/schematic as a guide, inspect the wiring and connectors between the Fuel Injector 1 and the Powertrain Control Module (PCM).
    2. Look for any chafed, pierced, pinched, or partially broken wires.
    3. Look for broken, bent, pushed out or corroded terminals. Verify that there is good pin to terminal contact in the Injector and Control Module connectors.
    4. Refer to any Technical Service Bulletins that may apply.

    Were there any problems found?

    Yes

    - Repair as necessary.
    - Perform the POWERTRAIN VERIFICATION TEST. Refer to **POWERTRAIN VERIFICATION TEST** .

    No

    - Replace and program the Powertrain Control Module (PCM) in accordance with the Service Information.
    - Perform the POWERTRAIN VERIFICATION TEST. Refer to **POWERTRAIN VERIFICATION TEST** .

P0202-FUEL INJECTOR 2 CIRCUIT

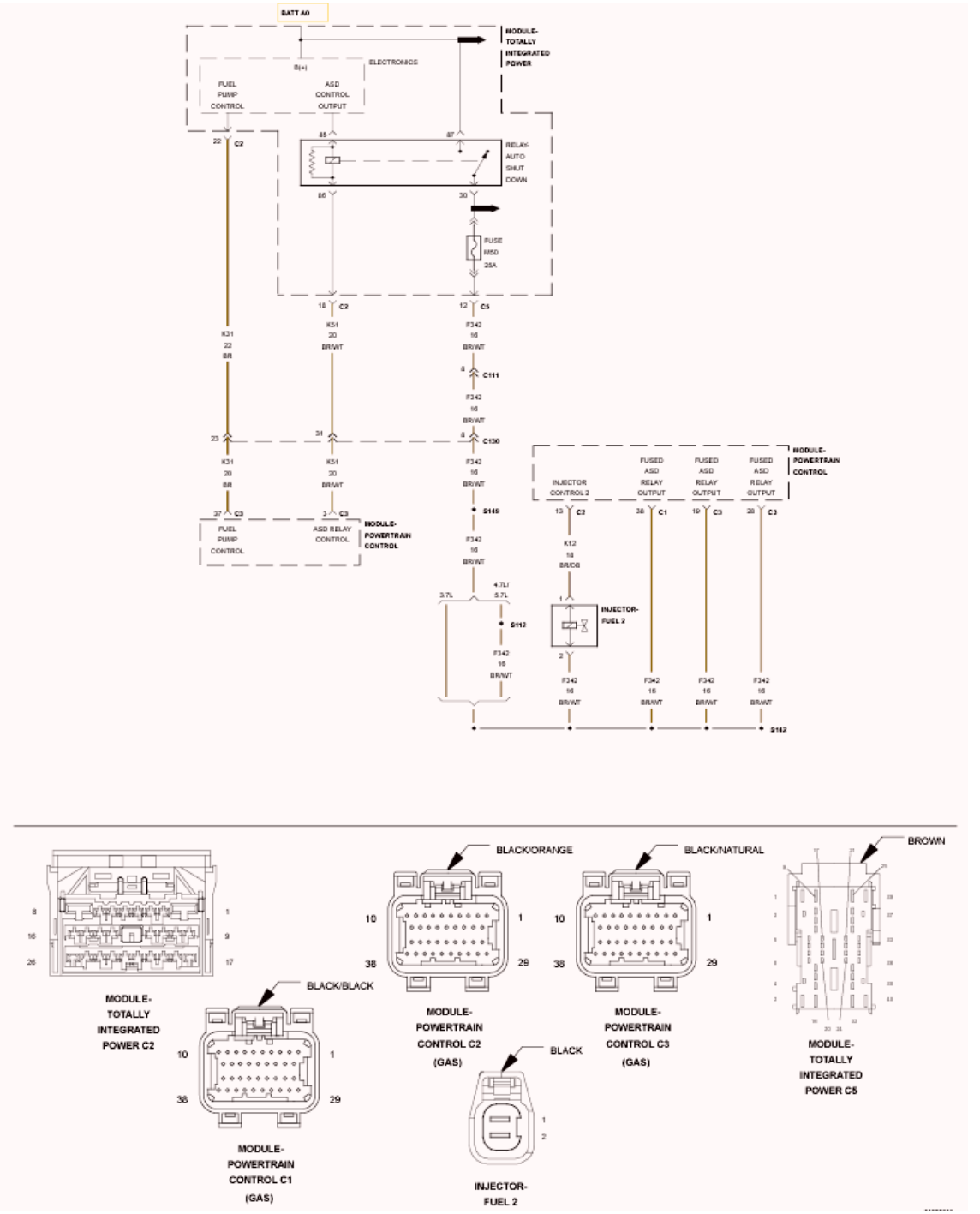

Fig. 46: Fuel Injector 2 Circuit Schematic
Courtesy of CHRYSLER GROUP, LLC

For a complete wiring diagram, **refer to appropriate SYSTEM WIRING DIAGRAMS article** .

WHEN MONITORED:

With battery voltage greater than 10 Volts. ASD is energized. Engine speed less than 3000 RPM.

SET CONDITION:

The Powertrain Control Module (PCM) monitors the continuity of the injector circuits as well as the voltage spike created by the collapse of the magnetic field in the injector coil. Any condition that reduces the maximum current flow or the magnitude of the voltage spike can cause this DTC to set.

POSSIBLE CAUSES

Possible Causes
(F342) ASD CONTROL OUTPUT CIRCUIT
(K12) INJECTOR CONTROL NO. 2 CIRCUIT OPEN
(K12) INJECTOR CONTROL NO. 2 CIRCUIT SHORTED TO GROUND
FUEL INJECTOR
POWERTRAIN CONTROL MODULE (PCM)

Always perform the Pre-Diagnostic Troubleshooting procedure before proceeding. Refer to PRE-DIAGNOSTIC TROUBLESHOOTING PROCEDURE .

DIAGNOSTIC TEST

1. **ACTIVE DTC**
    1. Turn the ignition on.
    2. With the scan tool, select View DTCs. Record DTC and Freeze Frame information.
    3. Start the engine and allow it to reach operating temperature.

WARNING: When the engine is operating, do not stand in direct line with the fan. Do not put your hands near the pulleys, belts or fan. Do not wear loose clothing. Failure to follow these instructions may result in possible serious or fatal injury.

NOTE: Review Freeze Frame information. Operate the vehicle under conditions similar to which the DTC was set.

4. With the scan tool, select View DTCs.

    Is the DTC Active at this time?

    Yes

    - Go To 2.

    No

    - Perform the INTERMITTENT CONDITION diagnostic procedure. Refer to **INTERMITTENT CONDITION** .

2. **FUEL INJECTOR 2 CIRCUIT RESISTANCE**

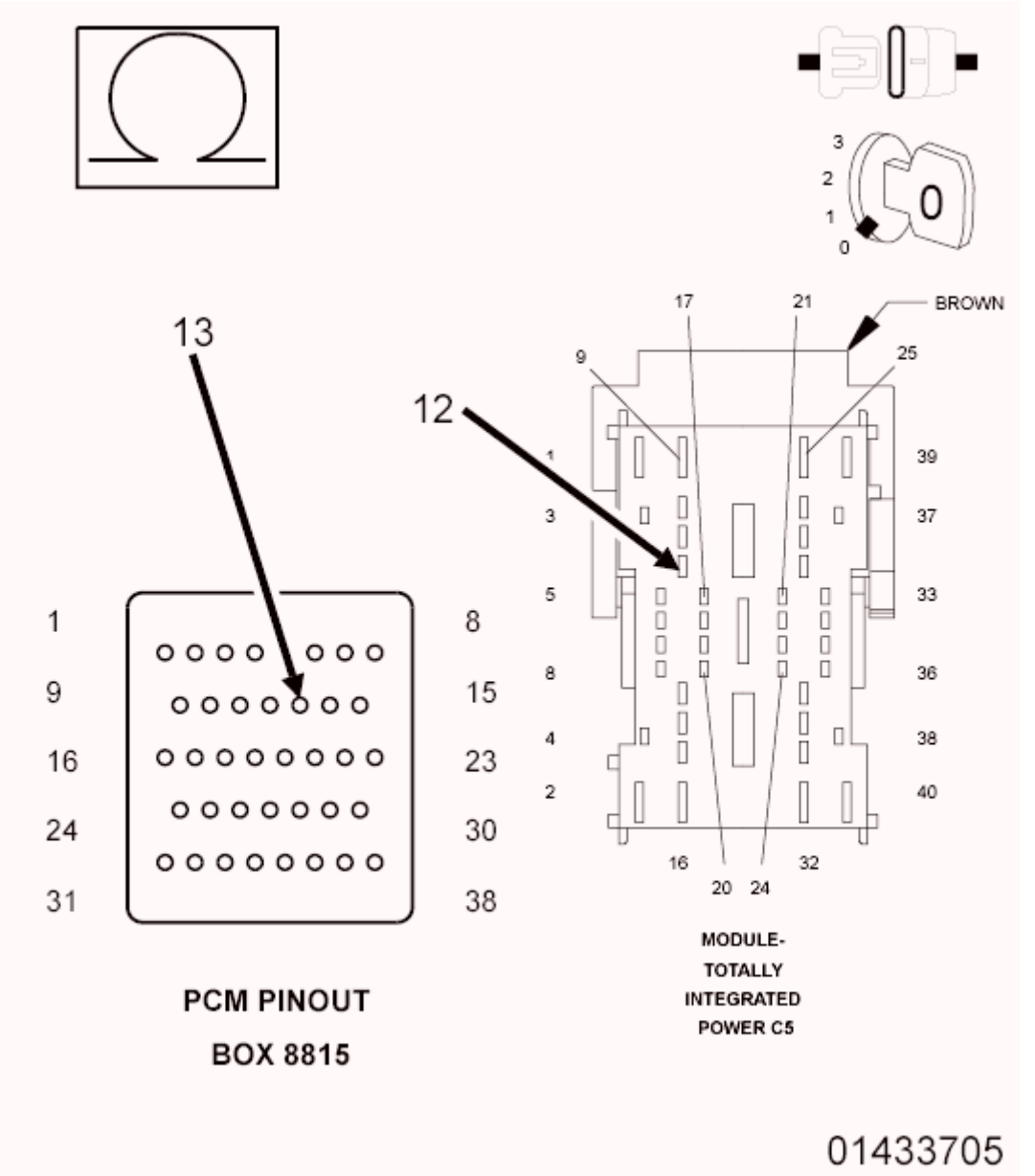

Fig. 47: Measuring Resistance Of Fuel Injector 2 Circuit From Appropriate Terminal Of PCM Pinout Box 8815 And C5 TIPM Harness Connector
Courtesy of CHRYSLER GROUP, LLC

1. Turn the ignition off.
2. Disconnect the C2 PCM harness connector.
3. Disconnect the C5 TIPM harness connector.

NOTE: **The resistance of the circuit will vary according to the temperature of the injector coil. Use the table below to determine the resistance**

range of the injector.

CAUTION: Do not probe the PCM harness connectors. Probing the PCM harness connectors will damage the PCM terminals resulting in poor terminal to pin connection. Install the PCM Pinout Box (special tool #8815A, Kit, NGC, 38 Position) to perform diagnosis.

4. Measure the resistance of the Fuel Injector 2 circuit from the appropriate terminal of the PCM Pinout Box (special tool #8815A, Kit, NGC, 38 Position) and the C5 TIPM harness connector.

Fuel Injector Coil Resistance Based on Engine Temperature	
Temperature	**Resistance**
-20° C (-4° F)	10 Ohms (+/-.6 of an Ohm)
20° C (68° F)	12 Ohms (+/-.6 of an Ohm)
60° C (140° F)	14 Ohms (+/-.6 of an Ohm)
100° C (212° F)	16 Ohms (+/-.6 of an Ohm)

Is the resistance of the injector within the specified range?

Yes

- Go To 7.

No

- Go To 3.

3. **FUEL INJECTOR 2 WIRING AND CONNECTOR INSPECTION**
   1. Turn the ignition off.
   2. Verify that the Fuel Injector 2 is properly connected to the injector. Disconnect the Fuel Injector 2 connector and Inspect the terminals for any condition that would result in a poor connection.
   3. Using the wiring diagram/schematic as a guide, inspect the Fuel Injector 2 wiring and connector.
   4. Look for any chafed, pierced, pinched or partially broken wires.
   5. Look for broken, bent, pushed out or corroded terminals.
   6. Verify that there is good pin to terminal contact in the Injector and Powertrain Control Module connectors.

   Were any problems found?

   Yes

   - Repair as necessary.
   - Perform the POWERTRAIN VERIFICATION TEST. Refer to **POWERTRAIN VERIFICATION TEST** .

No

- Go To 4.

4. **(F342) ASD CONTROL OUTPUT CIRCUIT OPEN OR HIGH RESISTANCE**

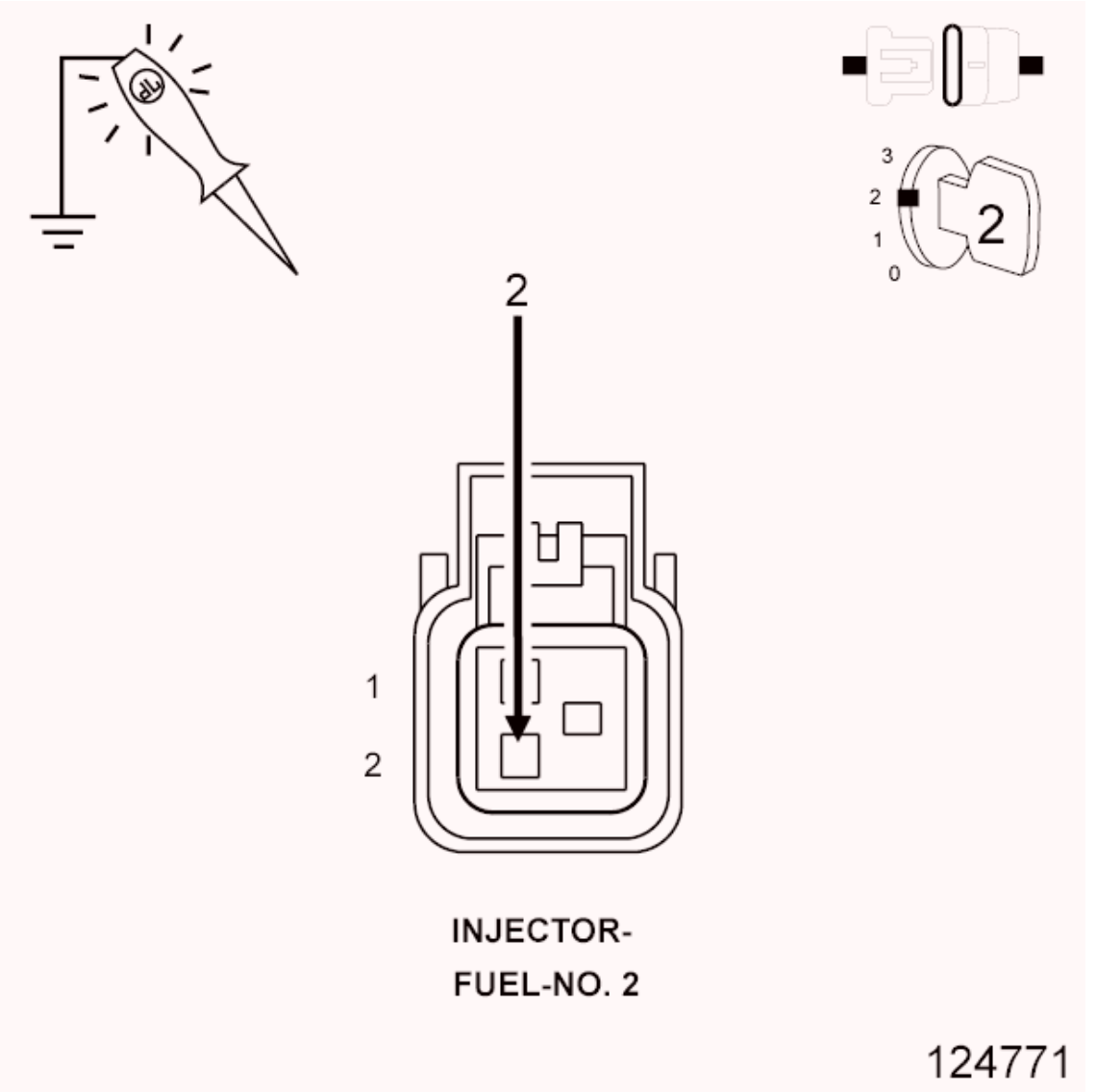

Fig. 48: Using 12-Volt Test Light Connected To Ground To Check (F342) ASD Control Output Circuit In Fuel Injector 2 Harness Connector
Courtesy of CHRYSLER GROUP, LLC

1. Turn the ignition on.
2. With the scan tool, actuate the Auto Shutdown (ASD) Control State.
3. Using a 12-volt test light connected to ground, check the (F342) ASD Control Output circuit in the Fuel Injector 2 harness connector.

NOTE: The test light should be illuminated and bright. Compare the

brightness to that of a direct connection to the battery.

Is the test light illuminated and bright?

Yes.

- Go To 5.

No.

- Repair the excessive resistance or short to ground in the (F342) ASD Control Output circuit.
- Perform the POWERTRAIN VERIFICATION TEST. Refer to **POWERTRAIN VERIFICATION TEST** .

5. **(K12) INJECTOR CONTROL NO. 2 CIRCUIT OPEN**

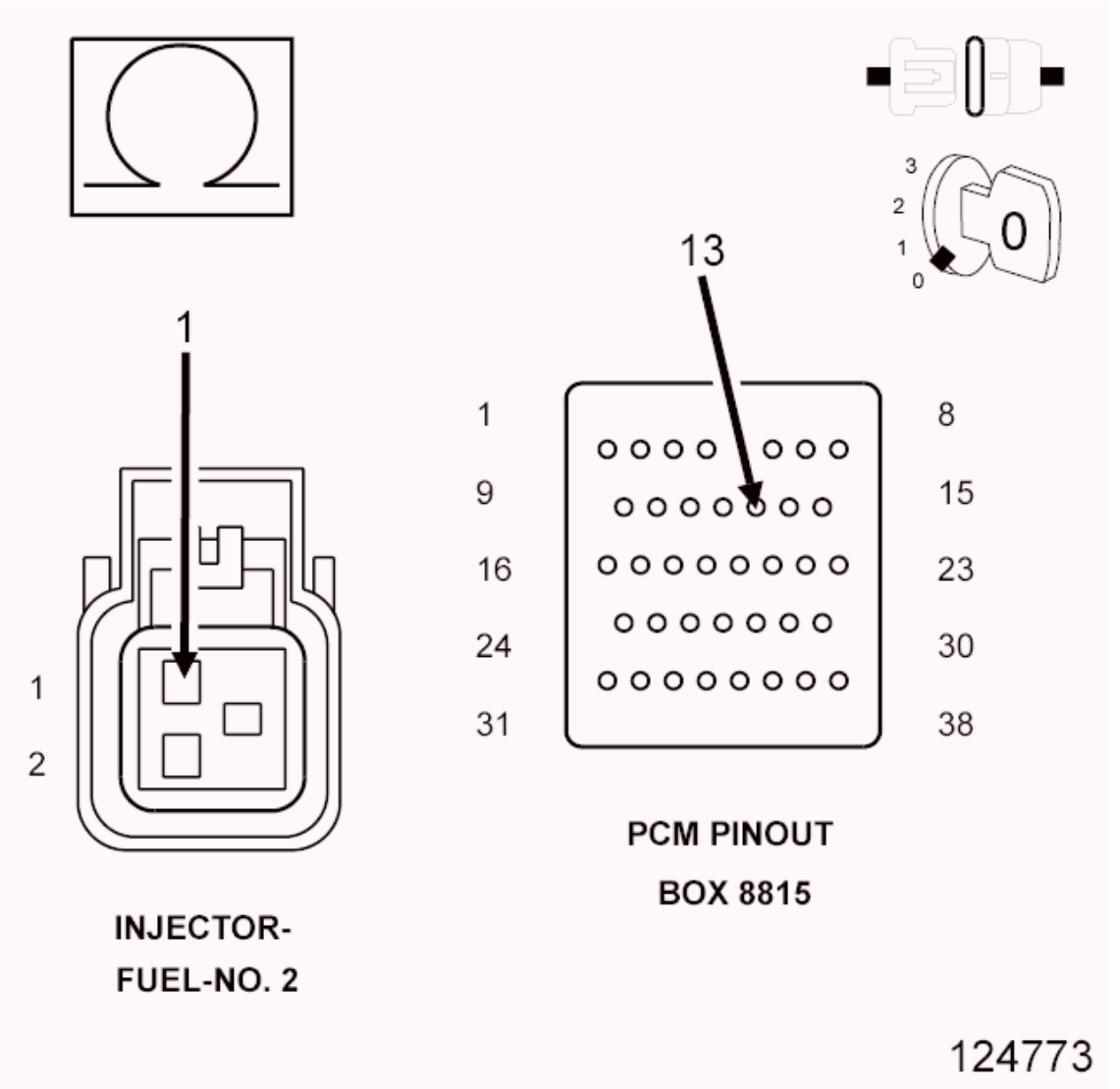

Fig. 49: Measuring Resistance Of (K12) Injector Control No. 2 Circuit From Fuel Injector Harness

Connector To Appropriate Terminal Of PCM Pinout Box 8815
Courtesy of CHRYSLER GROUP, LLC

CAUTION: Do not probe the PCM harness connectors. Probing the PCM harness connectors will damage the PCM terminals resulting in poor terminal to pin connection. Install the PCM Pinout Box (special tool #8815A, Kit, NGC, 38 Position) to perform diagnosis.

1. Turn the ignition off.
2. Disconnect the C2 PCM harness connector.
3. Measure the resistance of the (K12) Injector Control No. 2 circuit from the Fuel Injector harness connector to the appropriate terminal of the PCM Pinout Box (special tool #8815A, Kit, NGC, 38 Position).

   Is the resistance below 5.0 Ohms?

   Yes

   - Go To 6.

   No

   - Repair the open in the (K12) Injector Control No. 2 circuit.
   - Perform the POWERTRAIN VERIFICATION TEST. Refer to **POWERTRAIN VERIFICATION TEST** .

6. **FUEL INJECTOR 2**
   1. Using the wiring diagram/schematic as a guide, inspect the wiring and connectors between the Fuel Injector 2 and the Powertrain Control Module (PCM).
   2. Look for any chafed, pierced, pinched or partially broken wires.
   3. Look for broken, bent, pushed out or corroded terminals.
   4. Refer to any Technical Service Bulletins that may apply.
   5. Verify that there is good pin to terminal contact in the Injector and Powertrain Control Module connectors.

      Were any problems found?

      Yes

      - Repair as necessary.
      - Perform the POWERTRAIN VERIFICATION TEST. Refer to **POWERTRAIN VERIFICATION TEST** .

      No

- Replace the Fuel Injector 2 in accordance with the Service Information.
- Perform the POWERTRAIN VERIFICATION TEST. Refer to **POWERTRAIN VERIFICATION TEST** .

7. **(K12) INJECTOR CONTROL NO. 2 CIRCUIT SHORTED TO GROUND**

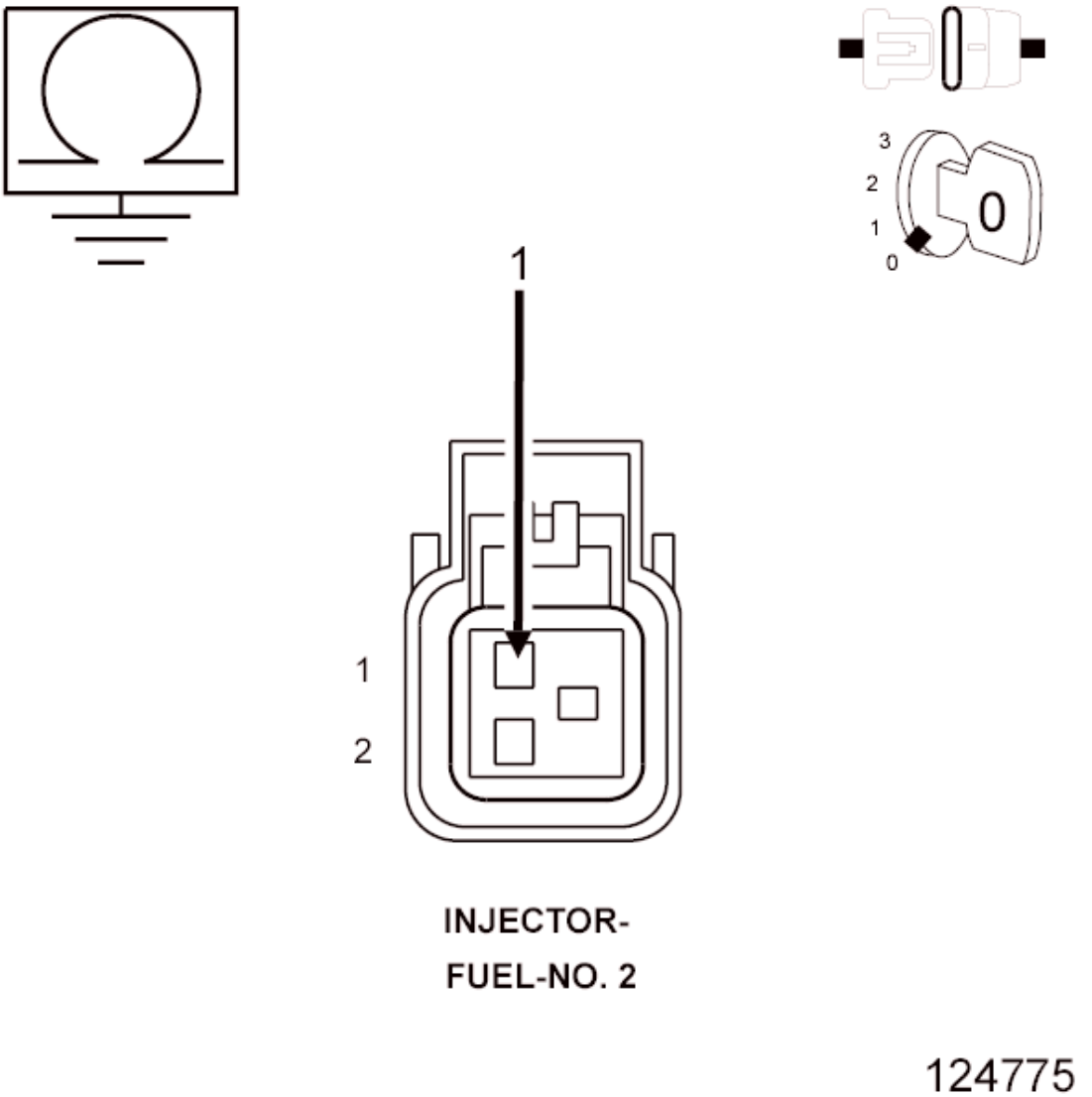

Fig. 50: Measuring Resistance Between Ground And (K12) Injector Control No. 2 Circuit In Injector Harness Connector
Courtesy of CHRYSLER GROUP, LLC

1. Turn the ignition off.
2. Measure the resistance between ground and the (K12) Injector Control No. 2 circuit in the Injector harness connector.

   Is the resistance below 100 Ohms?

Yes

- Repair the short to ground in the (K12) Injector Control No. 2 circuit.
- Perform the POWERTRAIN VERIFICATION TEST. Refer to **POWERTRAIN VERIFICATION TEST** .

No

- Go To 8.

8. **POWERTRAIN CONTROL MODULE (PCM)**
    1. Using the wiring diagram/schematic as a guide, inspect the wiring and connectors between the Fuel Injector 2 and the Powertrain Control Module (PCM).
    2. Look for any chafed, pierced, pinched or partially broken wires.
    3. Look for broken, bent, pushed out or corroded terminals. Verify that there is good pin to terminal contact in the Injector and Control Module connectors.
    4. Refer to any Technical Service Bulletins that may apply.

    Were there any problems found?

    Yes

    - Repair as necessary.
    - Perform the POWERTRAIN VERIFICATION TEST. Refer to **POWERTRAIN VERIFICATION TEST** .

    No

    - Replace and program the Powertrain Control Module in accordance with the Service Information.
    - Perform the POWERTRAIN VERIFICATION TEST. Refer to **POWERTRAIN VERIFICATION TEST** .

P0203-FUEL INJECTOR 3 CIRCUIT

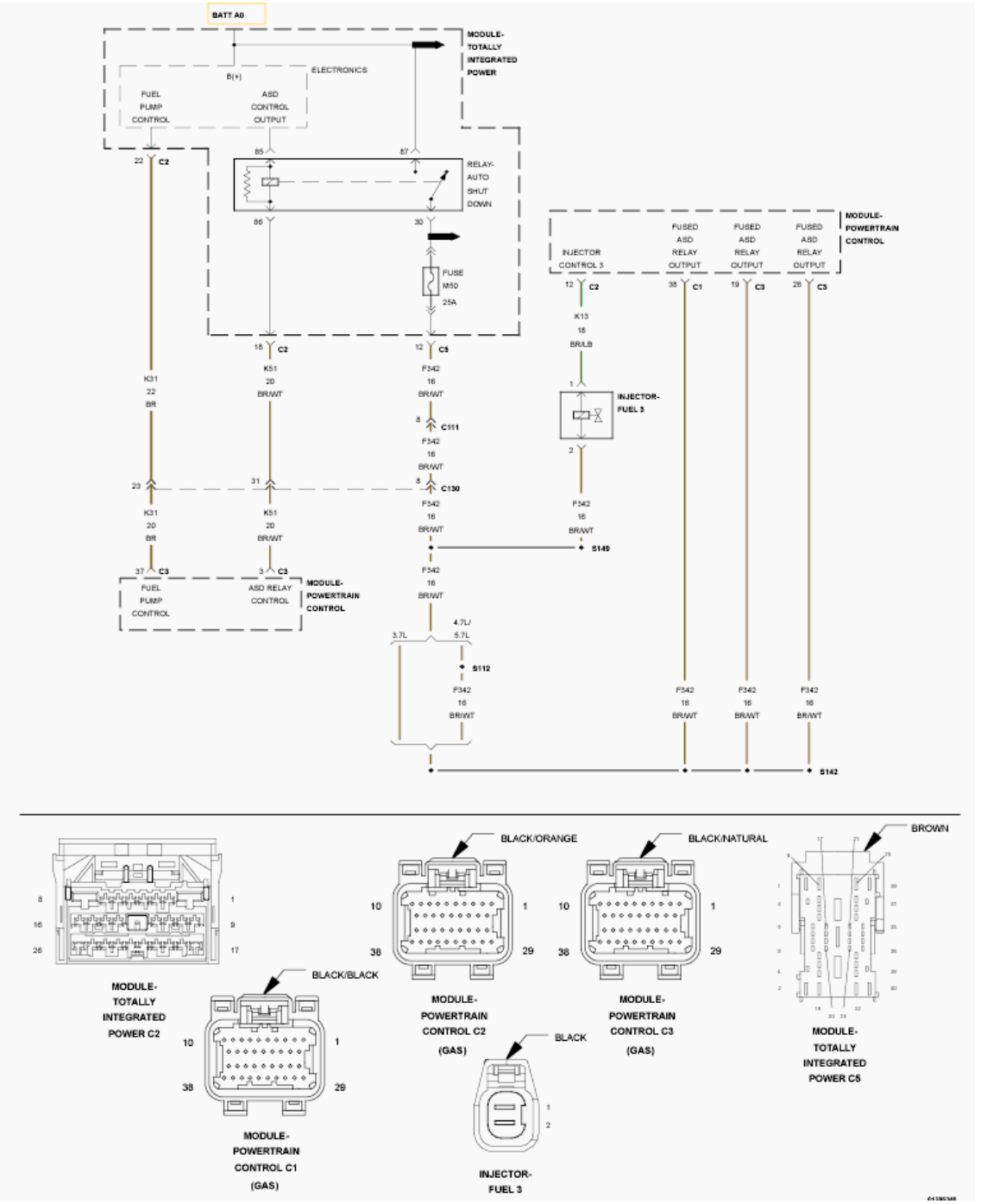

Fig. 51: Fuel Injector 3 Circuit Schematic
Courtesy of CHRYSLER GROUP, LLC

For a complete wiring diagram, **refer to appropriate SYSTEM WIRING DIAGRAMS article** .

WHEN MONITORED:

With battery voltage greater than 10 Volts. ASD is energized. Engine speed less than 3000 RPM.

SET CONDITION:

The Powertrain Control Module (PCM) monitors the continuity of the injector circuits as well as the voltage spike created by the collapse of the magnetic field in the injector coil. Any condition that reduces the maximum current flow or the magnitude of the voltage spike can cause this DTC to set.

POSSIBLE CAUSES

Possible Causes
(F342) ASD CONTROL OUTPUT CIRCUIT
(K13) INJECTOR CONTROL NO. 3 CIRCUIT OPEN
(K13) INJECTOR CONTROL NO. 3 CIRCUIT SHORTED TO GROUND
FUEL INJECTOR
POWERTRAIN CONTROL MODULE (PCM)

Always perform the Pre-Diagnostic Troubleshooting procedure before proceeding. Refer to PRE-DIAGNOSTIC TROUBLESHOOTING PROCEDURE .

DIAGNOSTIC TEST

1. **ACTIVE DTC**
    1. Turn the ignition on.
    2. With the scan tool, select View DTCs. Record DTC and Freeze Frame information.
    3. Start the engine and allow it to reach operating temperature.

WARNING: When the engine is operating, do not stand in direct line with the fan. Do not put your hands near the pulleys, belts or fan. Do not wear loose clothing. Failure to follow these instructions may result in possible serious or fatal injury.

NOTE: Review Freeze Frame information. Operate the vehicle under conditions similar to which the DTC was set.

4. With the scan tool, select View DTCs.

    Is the DTC Active at this time?

    Yes

    - Go To 2.

    No

    - Perform the INTERMITTENT CONDITION diagnostic procedure. Refer to **INTERMITTENT CONDITION** .

2. **FUEL INJECTOR 3 CIRCUIT RESISTANCE**

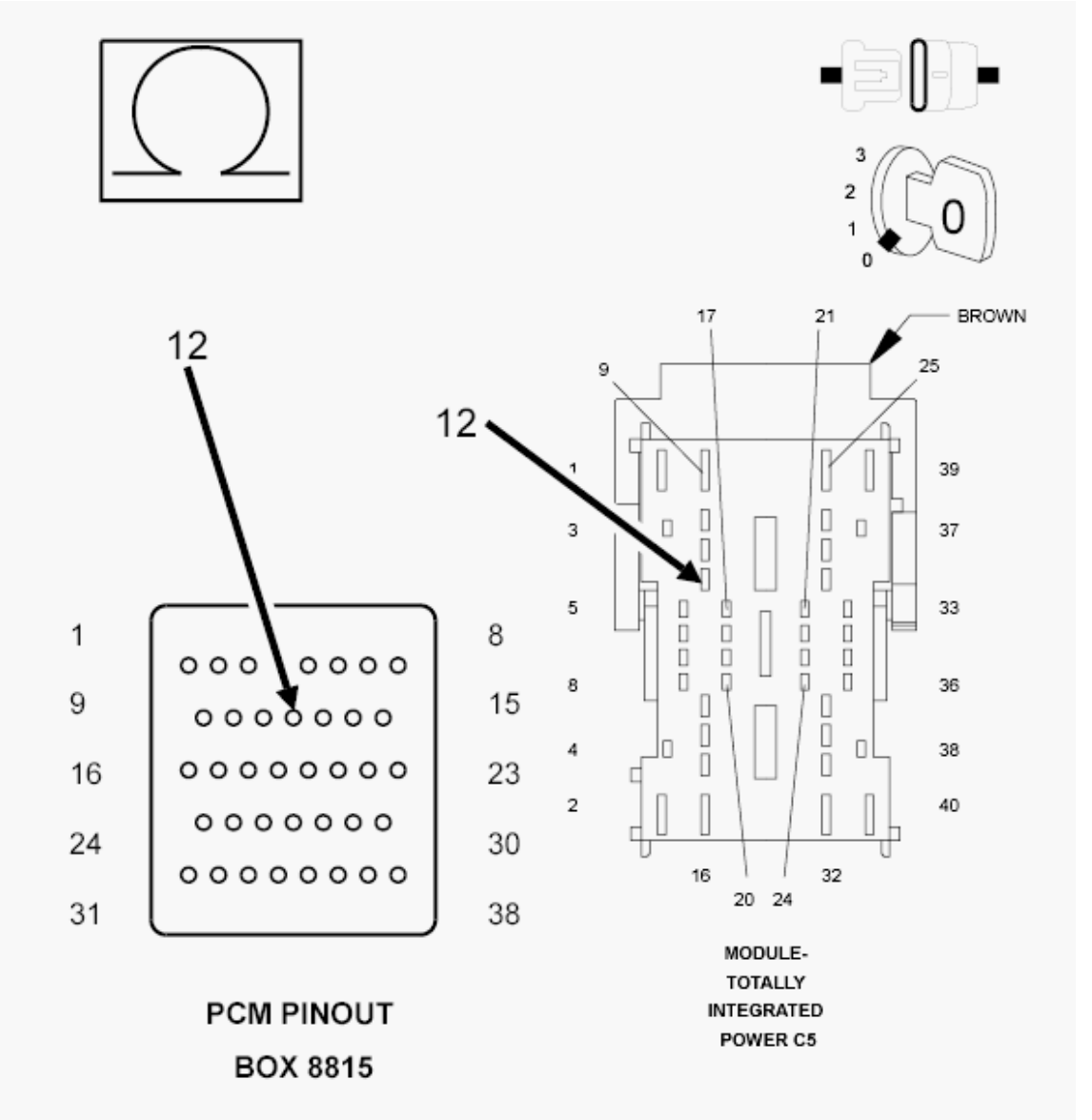

Fig. 52: Measuring Resistance Of Fuel Injector 3 Circuit From Appropriate Terminal Of PCM Pinout Box 8815 And C5 TIPM Harness Connector
Courtesy of CHRYSLER GROUP, LLC

1. Turn the ignition off.
2. Disconnect the C2 PCM harness connector.
3. Disconnect the C5 TIPM harness connector.

NOTE: **The resistance of the circuit will vary according to the temperature of the injector coil. Use the table less than to determine the resistance range of the injector.**

CAUTION: Do not probe the PCM harness connectors. Probing the PCM harness connectors will damage the PCM terminals resulting in poor terminal to pin connection. Install the PCM Pinout Box (special tool #8815A, Kit, NGC, 38 Position) to perform diagnosis.

4. Measure the resistance of the Fuel Injector 3 circuit from the appropriate terminal of the PCM Pinout Box (special tool #8815A, Kit, NGC, 38 Position) and the C5 TIPM harness connector.

Fuel Injector Coil Resistance Based on Engine Temperature	
Temperature	**Resistance**
-20° C (-4° F)	10 Ohms (+/-.6 of an Ohm)
20° C (68° F)	12 Ohms (+/-.6 of an Ohm)
60° C (140° F)	14 Ohms (+/-.6 of an Ohm)
100° C (212° F)	16 Ohms (+/-.6 of an Ohm)

Is the resistance of the injector within the specified range?

Yes

- Go To 7.

No

- Go To 3.

3. **FUEL INJECTOR 3 WIRING AND CONNECTOR INSPECTION**
   1. Turn the ignition off.
   2. Verify that the Fuel Injector 3 is properly connected to the injector. Disconnect the Fuel Injector 3 connector and Inspect the terminals for any condition that would result in a poor connection.
   3. Using the wiring diagram/schematic as a guide, inspect the Fuel Injector 3 wiring and connector.
   4. Look for any chafed, pierced, pinched or partially broken wires.
   5. Look for broken, bent, pushed out or corroded terminals.
   6. Verify that there is good pin to terminal contact in the Injector and Powertrain Control Module connectors.

   Were any problems found?

   Yes

   - Repair as necessary.
   - Perform the POWERTRAIN VERIFICATION TEST. Refer to **POWERTRAIN VERIFICATION TEST** .

   No

- Go To 4.

4. **(F342) ASD CONTROL OUTPUT CIRCUIT OPEN OR HIGH RESISTANCE**

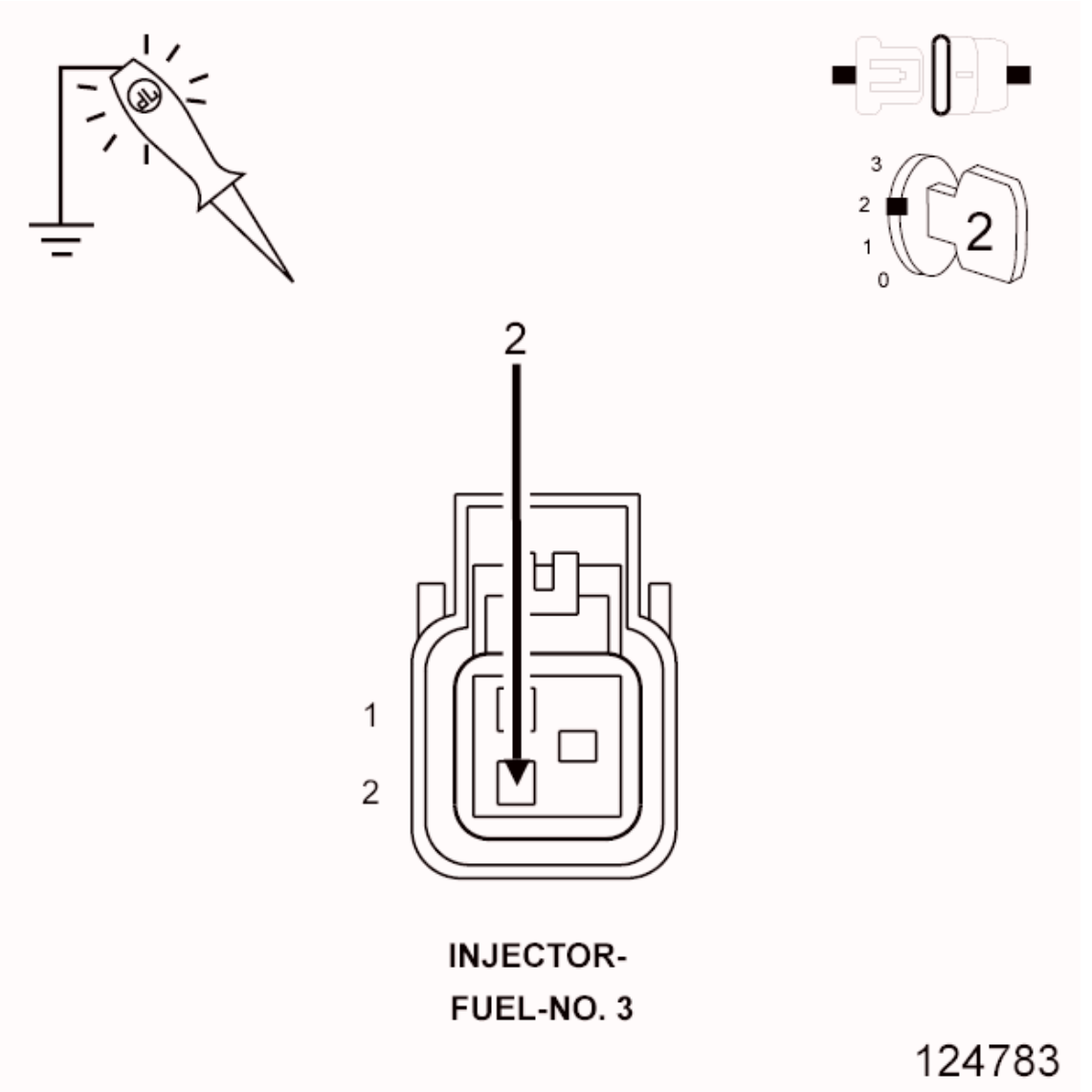

Fig. 53: Using 12-Volt Test Light Connected To Ground To Check ASD Control Output Circuit In Fuel Injector 3 Harness Connector
Courtesy of CHRYSLER GROUP, LLC

1. Turn the ignition on.
2. With the scan tool, actuate the Auto Shutdown (ASD) Control State.
3. Using a 12-volt test light connected to ground, check the (F342) ASD Control Output circuit in the Fuel Injector 3 harness connector.

NOTE: **The test light should be illuminated and bright. Compare the brightness to that of a direct connection to the battery.**

Is the test light illuminated and bright?

Yes.

- Go To 5.

No.

- Repair the excessive resistance or short to ground in the (F342) ASD Control Output circuit.
- Perform the POWERTRAIN VERIFICATION TEST. Refer to **POWERTRAIN VERIFICATION TEST** .

5. **(K13) INJECTOR CONTROL NO. 3 CIRCUIT OPEN**

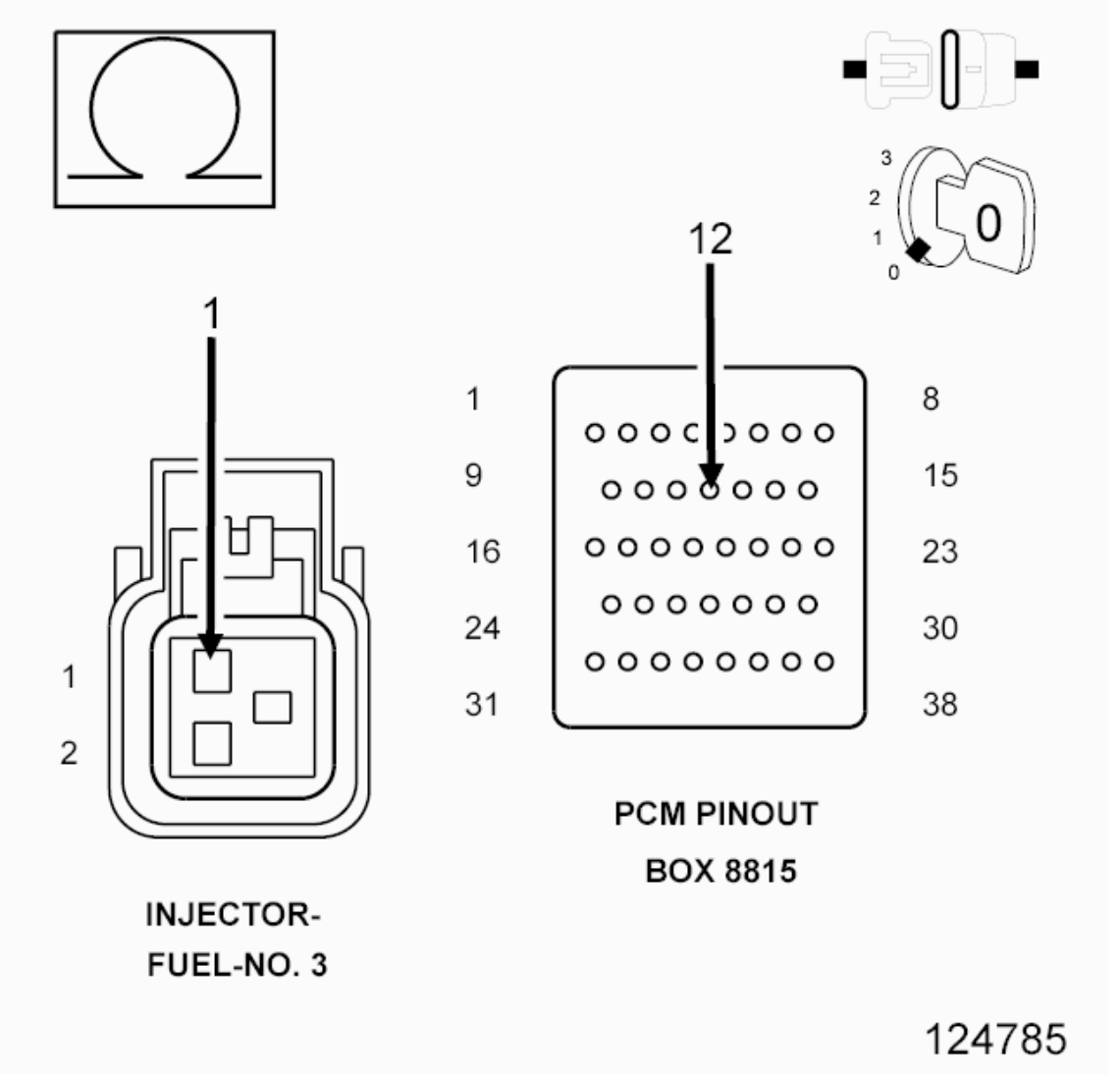

Fig. 54: Checking Injector Control No. 3 Circuit For An Open, Short To Ground, And Short To Voltage
Courtesy of CHRYSLER GROUP, LLC

CAUTION: Do not probe the PCM harness connectors. Probing the PCM harness connectors will damage the PCM terminals resulting in poor terminal to pin connection. Install the PCM Pinout Box (special tool #8815A, Kit, NGC, 38 Position) to perform diagnosis.

1. Turn the ignition off.
2. Disconnect the C2 PCM harness connector.
3. Measure the resistance of the (K13) Injector Control No. 3 circuit from the Fuel Injector harness connector to the appropriate terminal of the PCM Pinout Box (special tool #8815A, Kit, NGC, 38 Position).

   Is the resistance less than 5.0 Ohms?

   Yes

   - Go To 6.

   No

   - Repair the open in the (K13) Injector Control No. 3 circuit.
   - Perform the POWERTRAIN VERIFICATION TEST. Refer to **POWERTRAIN VERIFICATION TEST** .

6. **FUEL INJECTOR 3**
   1. Using the wiring diagram/schematic as a guide, inspect the wiring and connectors between the Fuel Injector 3 and the Powertrain Control Module (PCM).
   2. Look for any chafed, pierced, pinched or partially broken wires.
   3. Look for broken, bent, pushed out or corroded terminals.
   4. Refer to any Technical Service Bulletins that may apply.
   5. Verify that there is good pin to terminal contact in the Injector and Powertrain Control Module connectors.

      Were any problems found?

      Yes

      - Repair as necessary.
      - Perform the POWERTRAIN VERIFICATION TEST. Refer to **POWERTRAIN VERIFICATION TEST** .

      No

      - Replace the Fuel Injector 3 in accordance with the Service Information.
      - Perform the POWERTRAIN VERIFICATION TEST. Refer to **POWERTRAIN VERIFICATION TEST** .

7. **(K13) INJECTOR CONTROL NO. 3 CIRCUIT SHORTED TO GROUND**

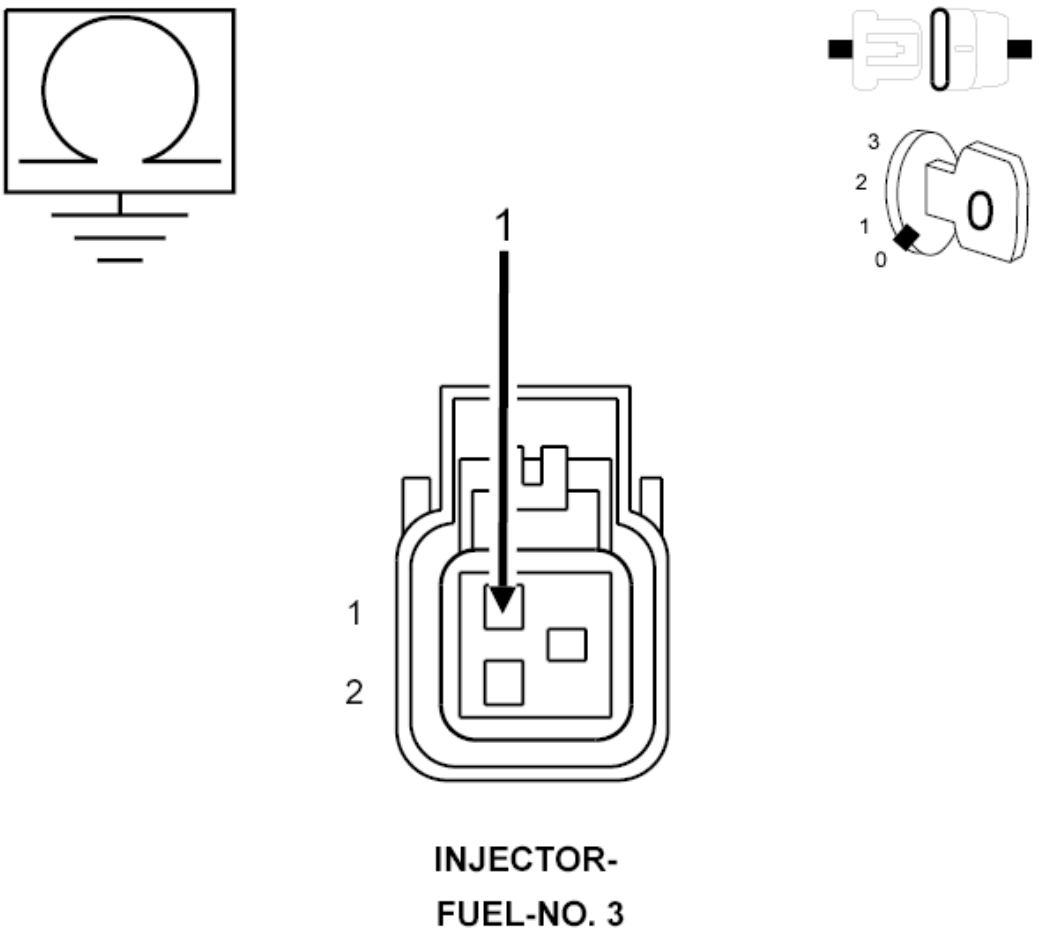

Fig. 55: Measuring Resistance Between Ground And (K13) Injector Control No. 3 Circuit In Injector Harness Connector
Courtesy of CHRYSLER GROUP, LLC

1. Turn the ignition off.
2. Measure the resistance between ground and the (K13) Injector Control No. 3 circuit in the Injector harness connector.

   Is the resistance less than 100 Ohms?

   Yes

   - Repair the short to ground in the (K13) Injector Control No. 3 circuit.
   - Perform the POWERTRAIN VERIFICATION TEST. Refer to **POWERTRAIN VERIFICATION TEST** .

   No

- Go To 8.

8. **POWERTRAIN CONTROL MODULE (PCM)**
    1. Using the wiring diagram/schematic as a guide, inspect the wiring and connectors between the Fuel Injector 3 and the Powertrain Control Module (PCM).
    2. Look for any chafed, pierced, pinched or partially broken wires.
    3. Look for broken, bent, pushed out or corroded terminals. Verify that there is good pin to terminal contact in the Injector and Control Module connectors.
    4. Refer to any Technical Service Bulletins that may apply.

    Were there any problems found?

    Yes

    - Repair as necessary.
    - Perform the POWERTRAIN VERIFICATION TEST. Refer to **POWERTRAIN VERIFICATION TEST** .

    No

    - Replace and program the Powertrain Control Module in accordance with the Service Information.
    - Perform the POWERTRAIN VERIFICATION TEST. Refer to **POWERTRAIN VERIFICATION TEST** .

P0204-FUEL INJECTOR 4 CIRCUIT

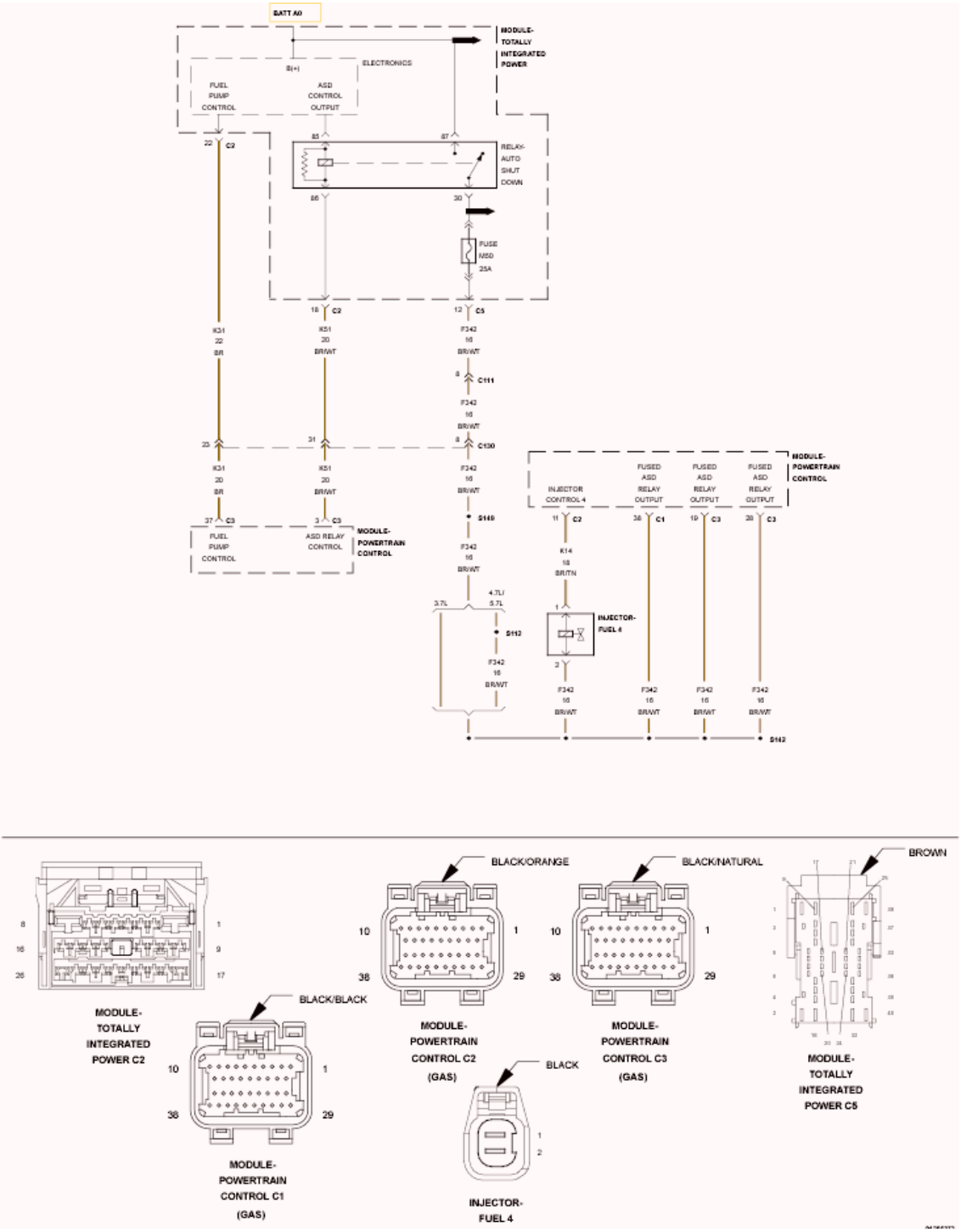

Fig. 56: Fuel Injector 4 Circuit Schematic
Courtesy of CHRYSLER GROUP, LLC

For a complete wiring diagram, **refer to appropriate SYSTEM WIRING DIAGRAMS article** .

WHEN MONITORED:

With battery voltage greater than 10 Volts. ASD is energized. Engine speed less than 4000 RPM.

SET CONDITION:

The Powertrain Control Module (PCM) monitors the continuity of the injector circuits as well as the voltage spike created by the collapse of the magnetic field in the injector coil. Any condition that reduces the maximum current flow or the magnitude of the voltage spike can cause this DTC to set.

POSSIBLE CAUSES

Possible Causes
(F342) ASD CONTROL OUTPUT CIRCUIT
(K14) INJECTOR CONTROL NO. 4 CIRCUIT OPEN
(K14) INJECTOR CONTROL NO. 4 CIRCUIT SHORTED TO GROUND
FUEL INJECTOR
POWERTRAIN CONTROL MODULE (PCM)

Always perform the Pre-Diagnostic Troubleshooting procedure before proceeding. Refer to PRE-DIAGNOSTIC TROUBLESHOOTING PROCEDURE .

DIAGNOSTIC TEST

1. **ACTIVE DTC**
    1. Turn the ignition on.
    2. With the scan tool, select View DTCs. Record DTC and Freeze Frame information.
    3. Start the engine and allow it to reach operating temperature.

WARNING: When the engine is operating, do not stand in direct line with the fan. Do not put your hands near the pulleys, belts or fan. Do not wear loose clothing. Failure to follow these instructions may result in possible serious or fatal injury.

NOTE: Review Freeze Frame information. Operate the vehicle under conditions similar to which the DTC was set.

4. With the scan tool, select View DTCs.

    Is the DTC Active at this time?

    Yes

    - Go To 2.

    No

- Perform the INTERMITTENT CONDITION diagnostic procedure. Refer to **INTERMITTENT CONDITION** .

2. **FUEL INJECTOR 4 CIRCUIT RESISTANCE**

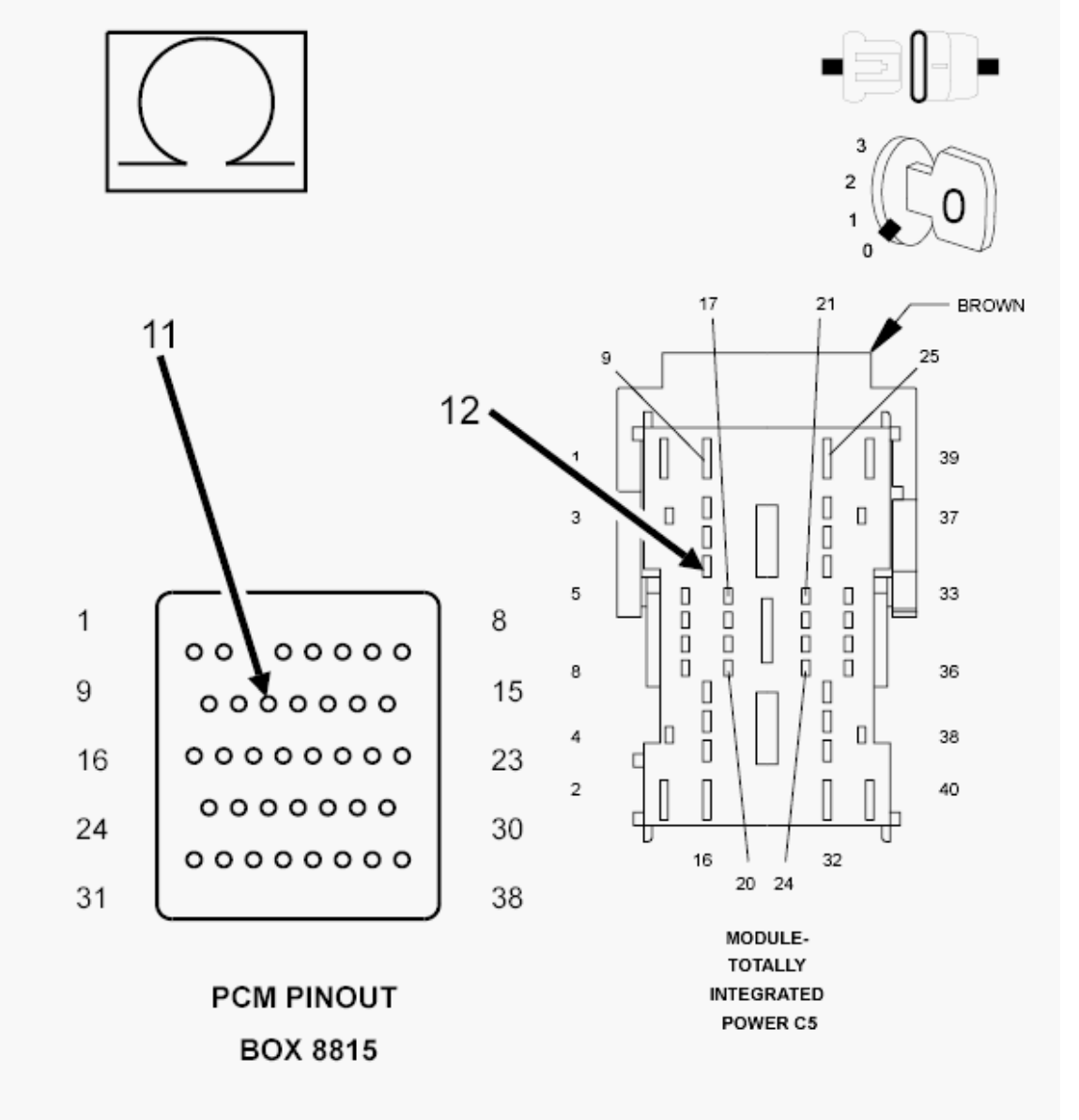

Fig. 57: Measuring Resistance Of Fuel Injector 4 Circuit From Appropriate Terminal Of PCM Pinout Box 8815 And C5 TIPM Harness Connector
Courtesy of CHRYSLER GROUP, LLC

1. Turn the ignition off.
2. Disconnect the C2 PCM harness connector.
3. Disconnect the C5 TIPM harness connector.

NOTE: **The resistance of the circuit will vary according to the temperature of**

the injector coil. Use the table below to determine the resistance range of the injector.

CAUTION: Do not probe the PCM harness connectors. Probing the PCM harness connectors will damage the PCM terminals resulting in poor terminal to pin connection. Install the PCM Pinout Box (special tool #8815A, Kit, NGC, 38 Position) to perform diagnosis.

4. Measure the resistance of the Fuel Injector 4 circuit from the appropriate terminal of the PCM Pinout Box (special tool #8815A, Kit, NGC, 38 Position) and the C5 TIPM harness connector.

Fuel Injector Coil Resistance Based on Engine Temperature	
Temperature	**Resistance**
-20° C (-4° F)	10 Ohms (+/-.6 of an Ohm)
20° C (68° F)	12 Ohms (+/-.6 of an Ohm)
60° C (140° F)	14 Ohms (+/-.6 of an Ohm)
100° C (212° F)	16 Ohms (+/-.6 of an Ohm)

Is the resistance of the injector within the specified range?

Yes

- Go To 7.

No

- Go To 3.

3. **FUEL INJECTOR 4 WIRING AND CONNECTOR INSPECTION**
   1. Turn the ignition off.
   2. Verify that the Fuel Injector 4 is properly connected to the injector. Disconnect the Fuel Injector 4 connector and Inspect the terminals for any condition that would result in a poor connection.
   3. Using the wiring diagram/schematic as a guide, inspect the Fuel Injector 4 wiring and connector.
   4. Look for any chafed, pierced, pinched or partially broken wires.
   5. Look for broken, bent, pushed out or corroded terminals.
   6. Verify that there is good pin to terminal contact in the Injector and Powertrain Control Module connectors.

   Were any problems found?

   Yes

   - Repair as necessary.
   - Perform the POWERTRAIN VERIFICATION TEST. Refer to **POWERTRAIN**

VERIFICATION TEST .

No

- Go To 4.

4. **(F342) ASD CONTROL OUTPUT CIRCUIT OPEN OR HIGH RESISTANCE**

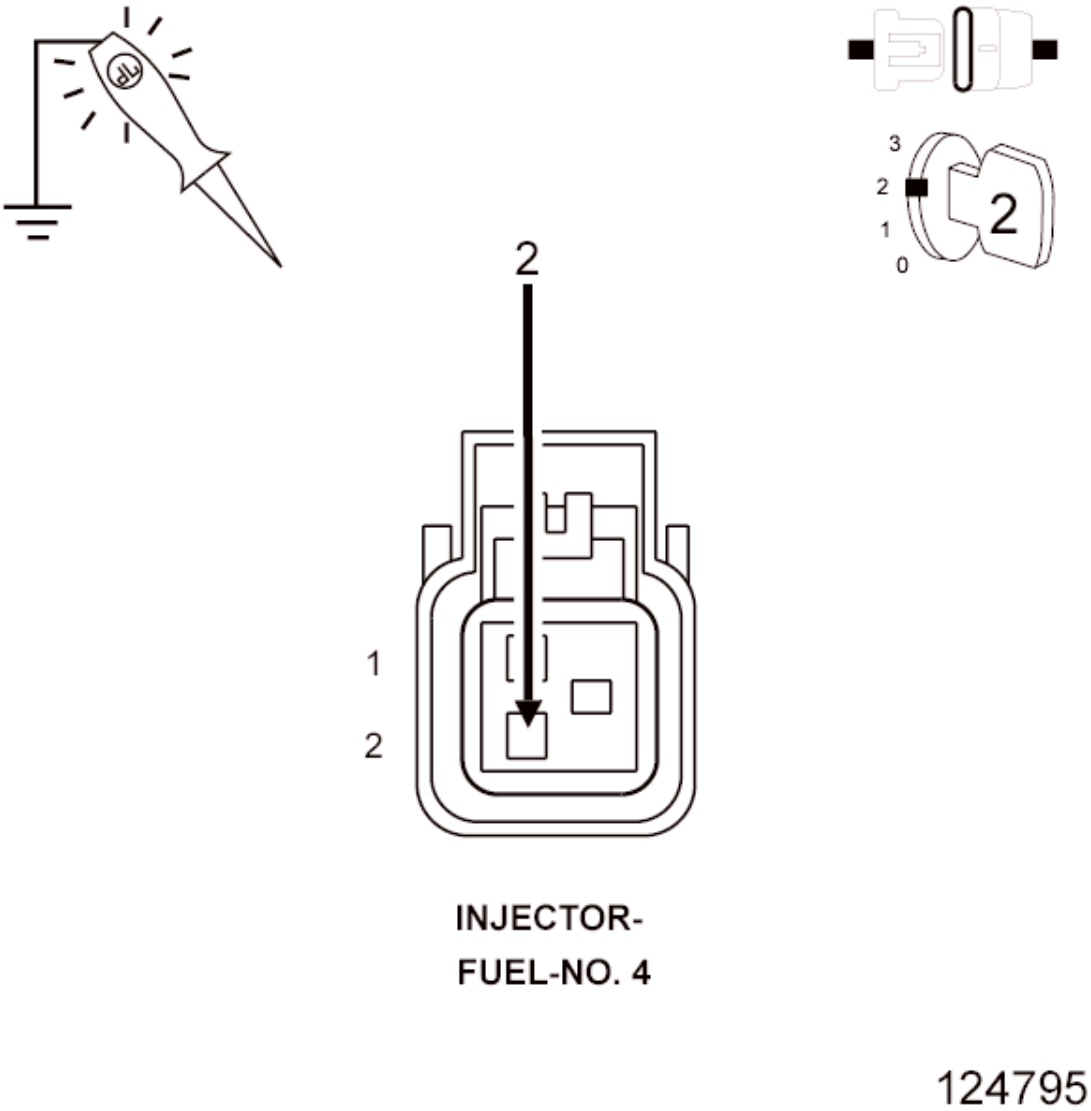

Fig. 58: Using 12-Volt Test Light Connected To Ground To Check ASD Control Output Circuit In Fuel Injector 4 Harness Connector
Courtesy of CHRYSLER GROUP, LLC

1. Turn the ignition on.
2. With the scan tool, actuate the Auto Shutdown (ASD) Control State.
3. Using a 12-volt test light connected to ground, check the (F342) ASD Control Output circuit in the Fuel Injector 4 harness connector.

NOTE: **The test light should be illuminated and bright. Compare the brightness to that of a direct connection to the battery.**

Is the test light illuminated and bright?

Yes.

- Go To 5.

No.

- Repair the excessive resistance or short to ground in the (F342) ASD Control Output circuit.
- Perform the POWERTRAIN VERIFICATION TEST. Refer to **POWERTRAIN VERIFICATION TEST** .

5. **(K14) INJECTOR CONTROL NO. 4 CIRCUIT OPEN**

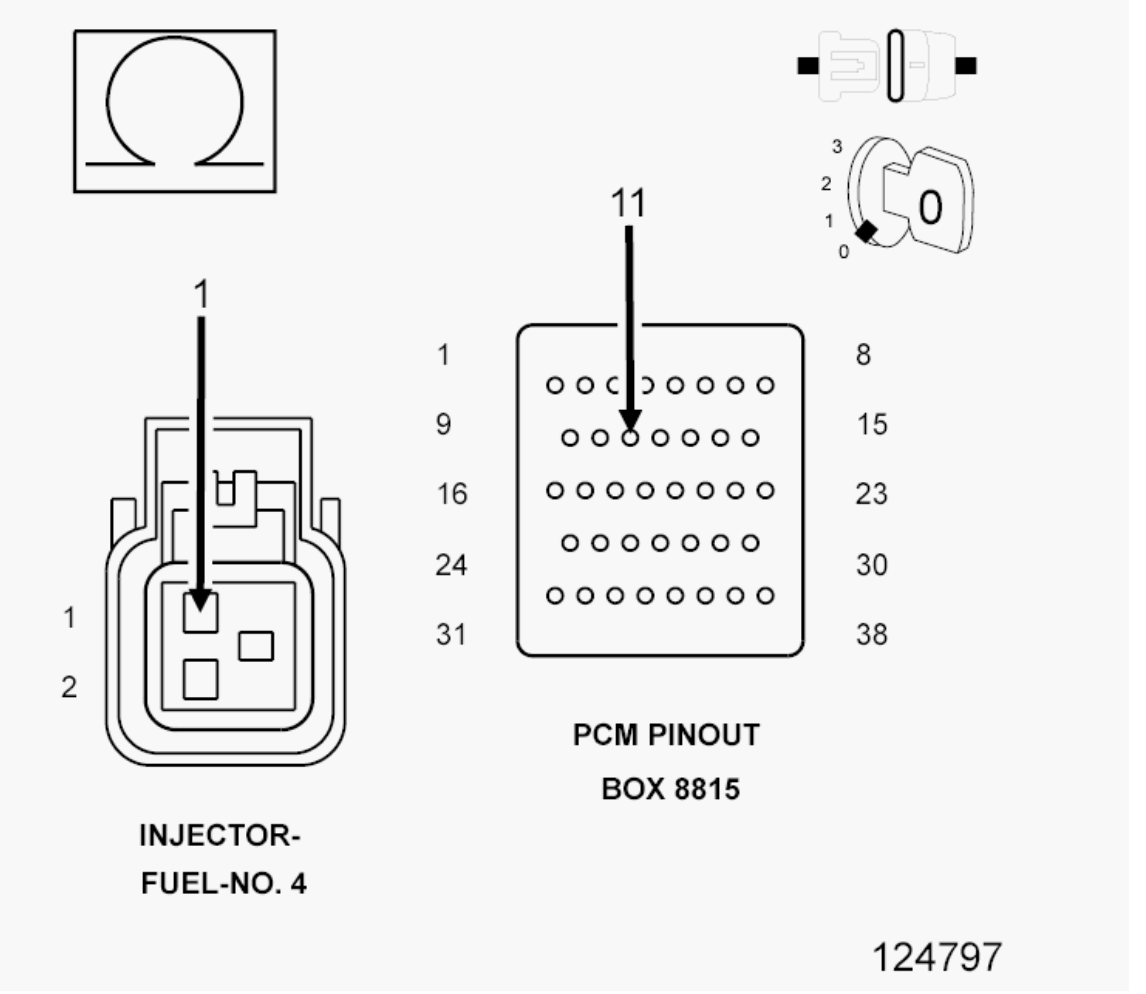

Fig. 59: Checking Injector Control No. 4 Circuit For An Open, Short To Ground, And Short To Voltage
Courtesy of CHRYSLER GROUP, LLC

CAUTION: Do not probe the PCM harness connectors. Probing the PCM harness connectors will damage the PCM terminals resulting in poor terminal to pin connection. Install the PCM Pinout Box (special tool #8815A, Kit, NGC, 38 Position) to perform diagnosis.

1. Turn the ignition off.
2. Disconnect the C2 PCM harness connector.
3. Measure the resistance of the (K14) Injector Control No. 4 circuit from the Fuel Injector harness connector to the appropriate terminal of the PCM Pinout Box (special tool #8815A, Kit, NGC, 38 Position).

   Is the resistance below 5.0 Ohms?

   Yes

   - Go To 6.

   No

   - Repair the open in the (K14) Injector Control No. 4 circuit.
   - Perform the POWERTRAIN VERIFICATION TEST. Refer to **POWERTRAIN VERIFICATION TEST** .

6. **FUEL INJECTOR 4**
   1. Using the wiring diagram/schematic as a guide, inspect the wiring and connectors between the Fuel Injector 4 and the Powertrain Control Module (PCM).
   2. Look for any chafed, pierced, pinched or partially broken wires.
   3. Look for broken, bent, pushed out or corroded terminals.
   4. Refer to any Technical Service Bulletins that may apply.
   5. Verify that there is good pin to terminal contact in the Injector and Powertrain Control Module connectors.

      Were any problems found?

      Yes

      - Repair as necessary.
      - Perform the POWERTRAIN VERIFICATION TEST. Refer to **POWERTRAIN VERIFICATION TEST** .

      No

      - Replace the Fuel Injector 4 in accordance with the Service Information.
      - Perform the POWERTRAIN VERIFICATION TEST. Refer to **POWERTRAIN VERIFICATION TEST** .

7. **(K14) INJECTOR CONTROL NO. 4 CIRCUIT SHORTED TO GROUND**

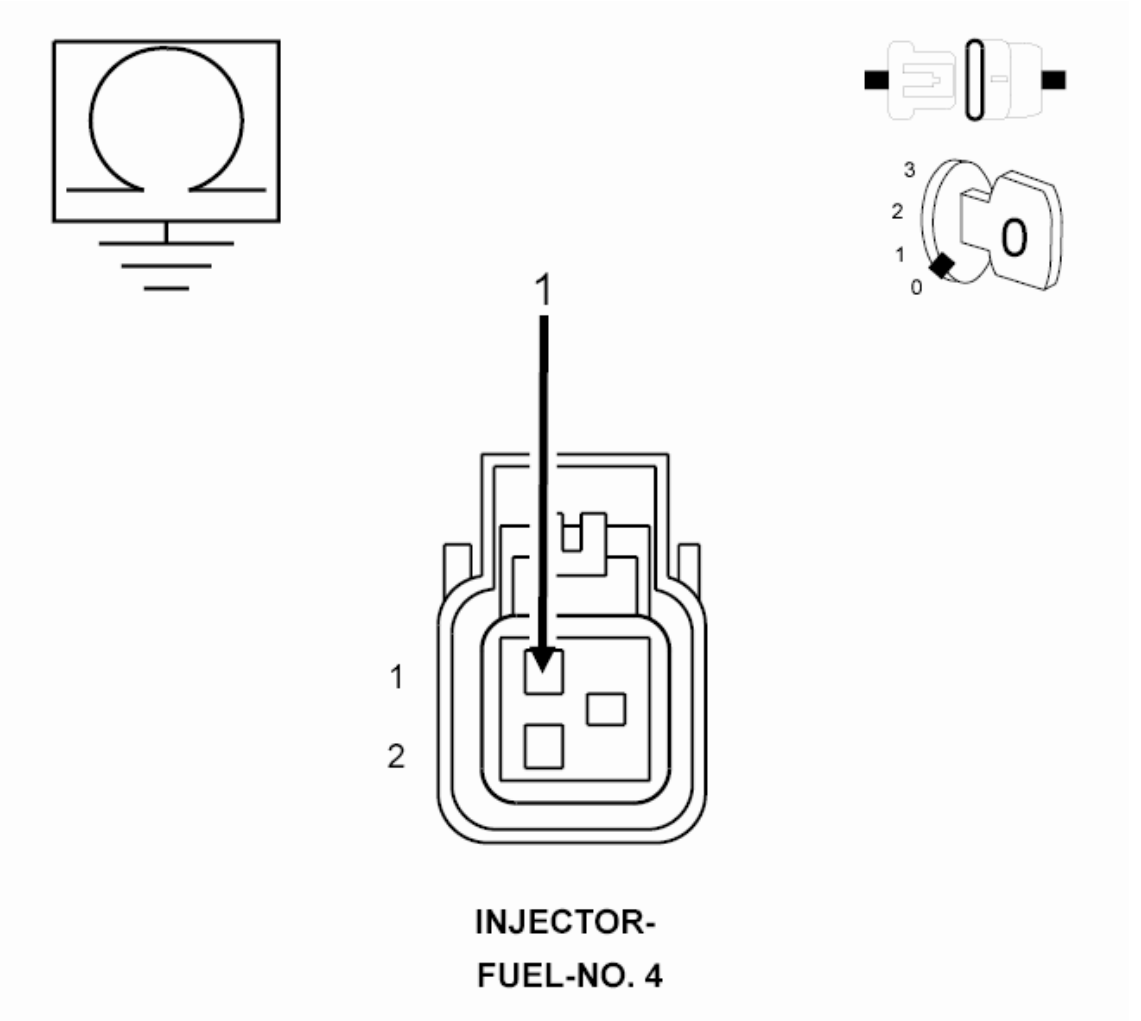

Fig. 60: Measuring Resistance Between Ground And (K14) Injector Control No. 4 Circuit In Injector Harness Connector
Courtesy of CHRYSLER GROUP, LLC

1. Turn the ignition off.
2. Measure the resistance between ground and the (K14) Injector Control No. 4 circuit in the Injector harness connector.

   Is the resistance below 100 Ohms?

   Yes

   - Repair the short to ground in the (K14) Injector Control No. 4 circuit.
   - Perform the POWERTRAIN VERIFICATION TEST. Refer to **POWERTRAIN VERIFICATION TEST** .

No

- Go To 8.

8. **POWERTRAIN CONTROL MODULE (PCM)**
    1. Using the wiring diagram/schematic as a guide, inspect the wiring and connectors between the Fuel Injector 4 and the Powertrain Control Module (PCM).
    2. Look for any chafed, pierced, pinched or partially broken wires.
    3. Look for broken, bent, pushed out or corroded terminals. Verify that there is good pin to terminal contact in the Injector and Control Module connectors.
    4. Refer to any Technical Service Bulletins that may apply.

    Were there any problems found?

    Yes

    - Repair as necessary.
    - Perform the POWERTRAIN VERIFICATION TEST. Refer to **POWERTRAIN VERIFICATION TEST** .

    No

    - Replace and program the Powertrain Control Module in accordance with the Service Information.
    - Perform the POWERTRAIN VERIFICATION TEST. Refer to **POWERTRAIN VERIFICATION TEST** .

P0205-FUEL INJECTOR 5 CIRCUIT

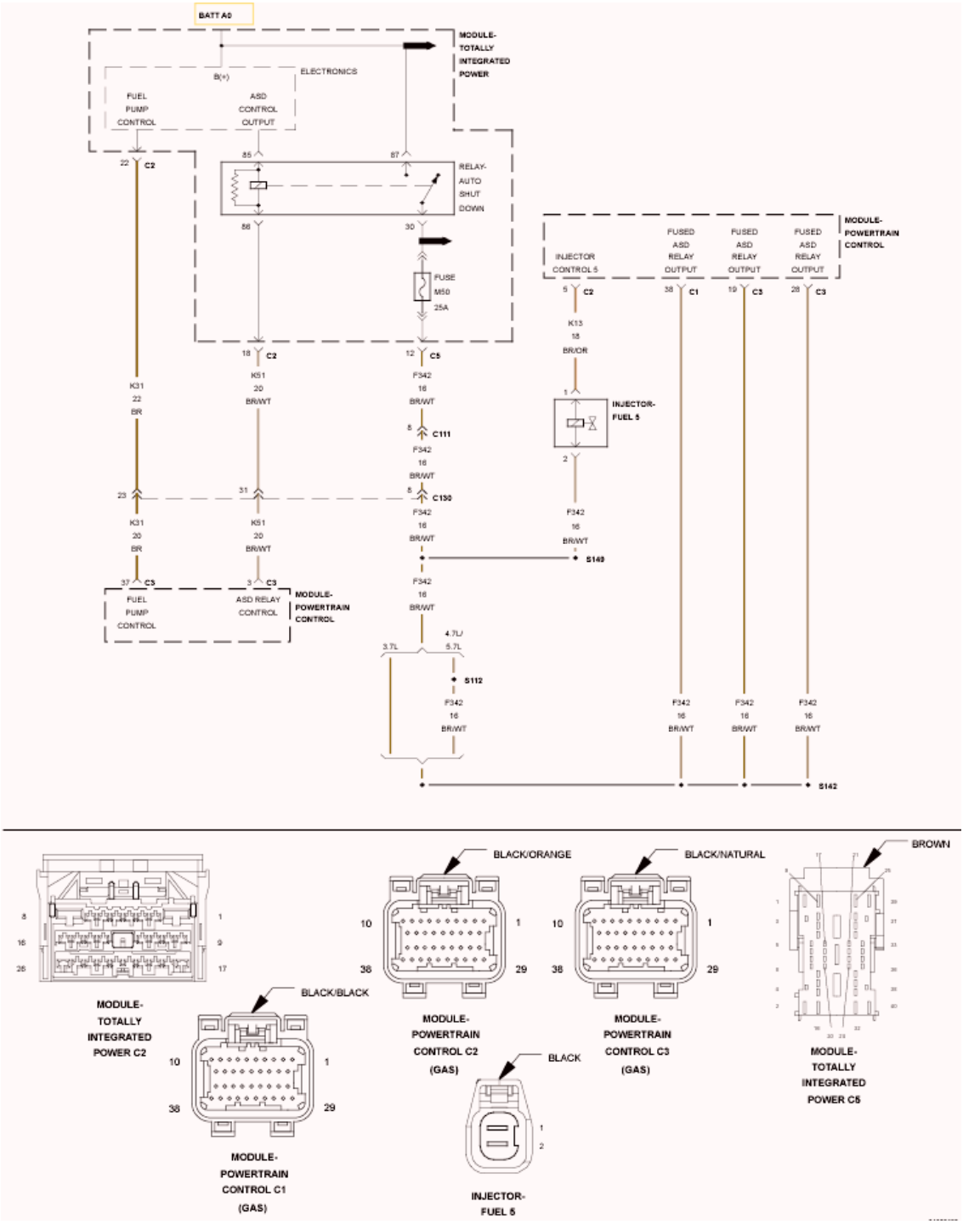

Fig. 61: Fuel Injector 5 Circuit Schematic
Courtesy of CHRYSLER GROUP, LLC

For a complete wiring diagram, **refer to appropriate SYSTEM WIRING DIAGRAMS article** .

WHEN MONITORED:

With battery voltage greater than 10 Volts. ASD is energized. Engine speed less than 3000 RPM.

SET CONDITION:

The Powertrain Control Module (PCM) monitors the continuity of the injector circuits as well as the voltage spike created by the collapse of the magnetic field in the injector coil. Any condition that reduces the maximum current flow or the magnitude of the voltage spike can cause this DTC to set.

POSSIBLE CAUSES

Possible Causes
(F342) ASD CONTROL OUTPUT CIRCUIT
(K38) INJECTOR CONTROL NO. 5 CIRCUIT OPEN
(K38) INJECTOR CONTROL NO. 5 CIRCUIT SHORTED TO GROUND
FUEL INJECTOR
POWERTRAIN CONTROL MODULE (PCM)

Always perform the Pre-Diagnostic Troubleshooting procedure before proceeding. Refer to PRE-DIAGNOSTIC TROUBLESHOOTING PROCEDURE .

DIAGNOSTIC TEST

1. **ACTIVE DTC**
    1. Turn the ignition on.
    2. With the scan tool, select View DTCs. Record DTC and Freeze Frame information.
    3. Start the engine and allow it to reach operating temperature.

WARNING: When the engine is operating, do not stand in direct line with the fan. Do not put your hands near the pulleys, belts or fan. Do not wear loose clothing. Failure to follow these instructions may result in possible serious or fatal injury.

NOTE: Review Freeze Frame information. Operate the vehicle under conditions similar to which the DTC was set.

4. With the scan tool, select View DTCs.

    Is the DTC Active at this time?

    Yes

    - Go To 2.

    No

    - Perform the INTERMITTENT CONDITION diagnostic procedure. Refer to **INTERMITTENT CONDITION** .

2. **FUEL INJECTOR 5 CIRCUIT RESISTANCE**

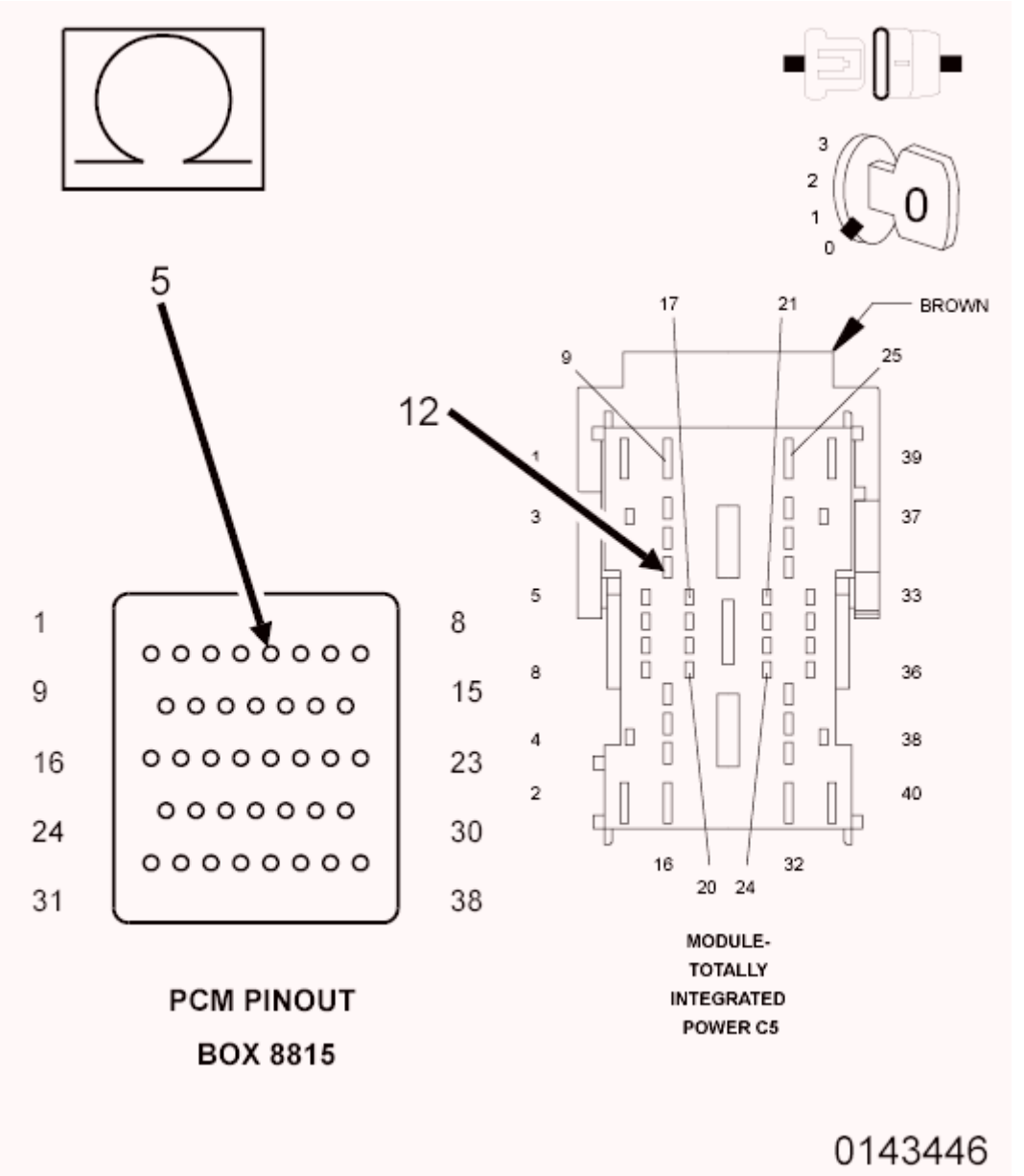

Fig. 62: Measuring Resistance Of Fuel Injector 5 Circuit From Appropriate Terminal Of PCM Pinout Box 8815 And C5 TIPM Harness Connector
Courtesy of CHRYSLER GROUP, LLC

1. Turn the ignition off.
2. Disconnect the C2 PCM harness connector.
3. Disconnect the C5 TIPM harness connector.

NOTE: **The resistance of the circuit will vary according to the temperature of the injector coil. Use the table below to determine the resistance**

range of the injector.

CAUTION: Do not probe the PCM harness connectors. Probing the PCM harness connectors will damage the PCM terminals resulting in poor terminal to pin connection. Install the PCM Pinout Box (special tool #8815A, Kit, NGC, 38 Position) to perform diagnosis.

4. Measure the resistance of the Fuel Injector 5 circuit from the appropriate terminal of PCM Pinout Box (special tool #8815A, Kit, NGC, 38 Position) and the C5 TIPM harness connector.

Fuel Injector Coil Resistance Based on Engine Temperature	
Temperature	**Resistance**
-20° C (-4° F)	10 Ohms (+/-.6 of an Ohm)
20° C (68° F)	12 Ohms (+/-.6 of an Ohm)
60° C (140° F)	14 Ohms (+/-.6 of an Ohm)
100° C (212° F)	16 Ohms (+/-.6 of an Ohm)

Is the resistance of the injector within the specified range?

Yes

- Go To 7.

No

- Go To 3.

3. **FUEL INJECTOR 5 WIRING AND CONNECTOR INSPECTION**
   1. Turn the ignition off.
   2. Verify that the Fuel Injector 5 is properly connected to the injector. Disconnect the Fuel Injector 5 connector and Inspect the terminals for any condition that would result in a poor connection.
   3. Using the wiring diagram/schematic as a guide, inspect the Fuel Injector 5 wiring and connector.
   4. Look for any chafed, pierced, pinched or partially broken wires.
   5. Look for broken, bent, pushed out or corroded terminals.
   6. Verify that there is good pin to terminal contact in the Injector and Powertrain Control Module connectors.

   Were any problems found?

   Yes

   - Repair as necessary.
   - Perform the POWERTRAIN VERIFICATION TEST. Refer to **POWERTRAIN VERIFICATION TEST** .

No

- Go To 4.

4. **(F342) ASD CONTROL OUTPUT CIRCUIT OPEN OR HIGH RESISTANCE**

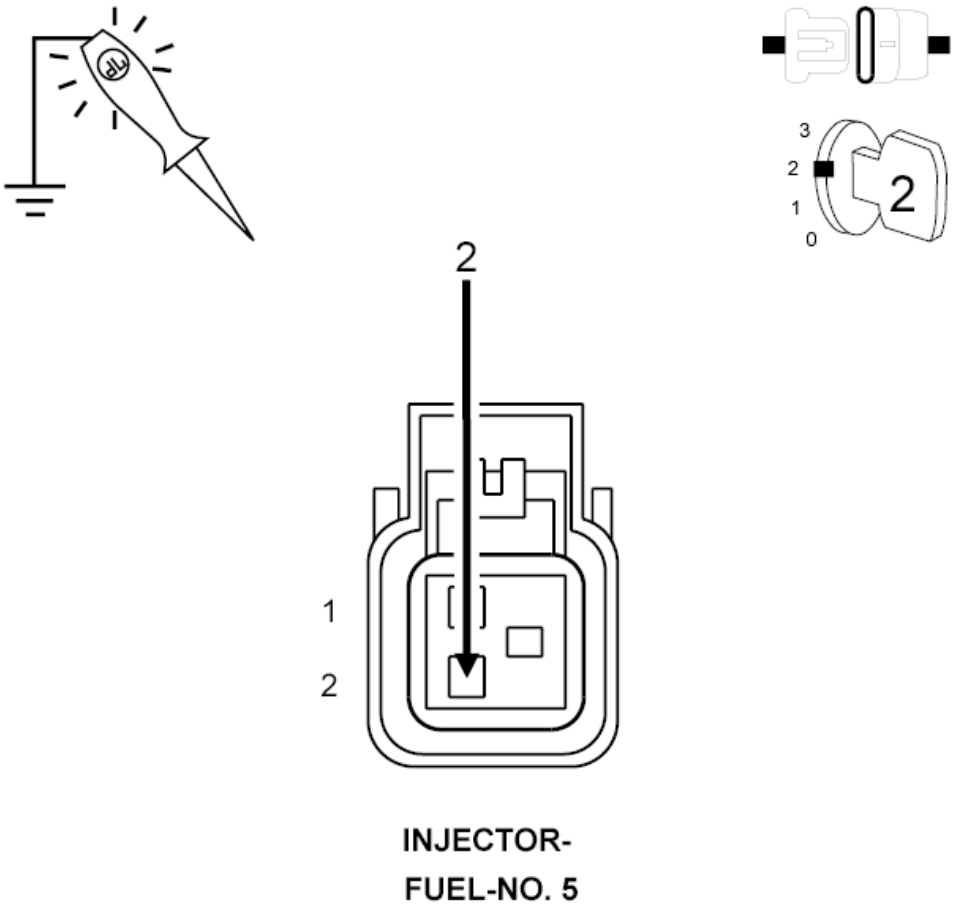

Fig. 63: Using 12-Volt Test Light Connected To Ground To Check (F342) ASD Control Output Circuit In Fuel Injector 5 Harness Connector
Courtesy of CHRYSLER GROUP, LLC

1. Turn the ignition on.
2. With the scan tool, actuate the Auto Shutdown (ASD) Control State.
3. Using a 12-volt test light connected to ground, check the (F342) ASD Control Output circuit in the Fuel Injector 5 harness connector.

NOTE: **The test light should be illuminated and bright. Compare the brightness to that of a direct connection to the battery.**

Is the test light illuminated and bright?

Yes.

- Go To 5.

No.

- Repair the excessive resistance or short to ground in the (F342) ASD Control Output circuit.
- Perform the POWERTRAIN VERIFICATION TEST. Refer to **POWERTRAIN VERIFICATION TEST** .

5. **(K38) INJECTOR CONTROL NO. 5 CIRCUIT OPEN**

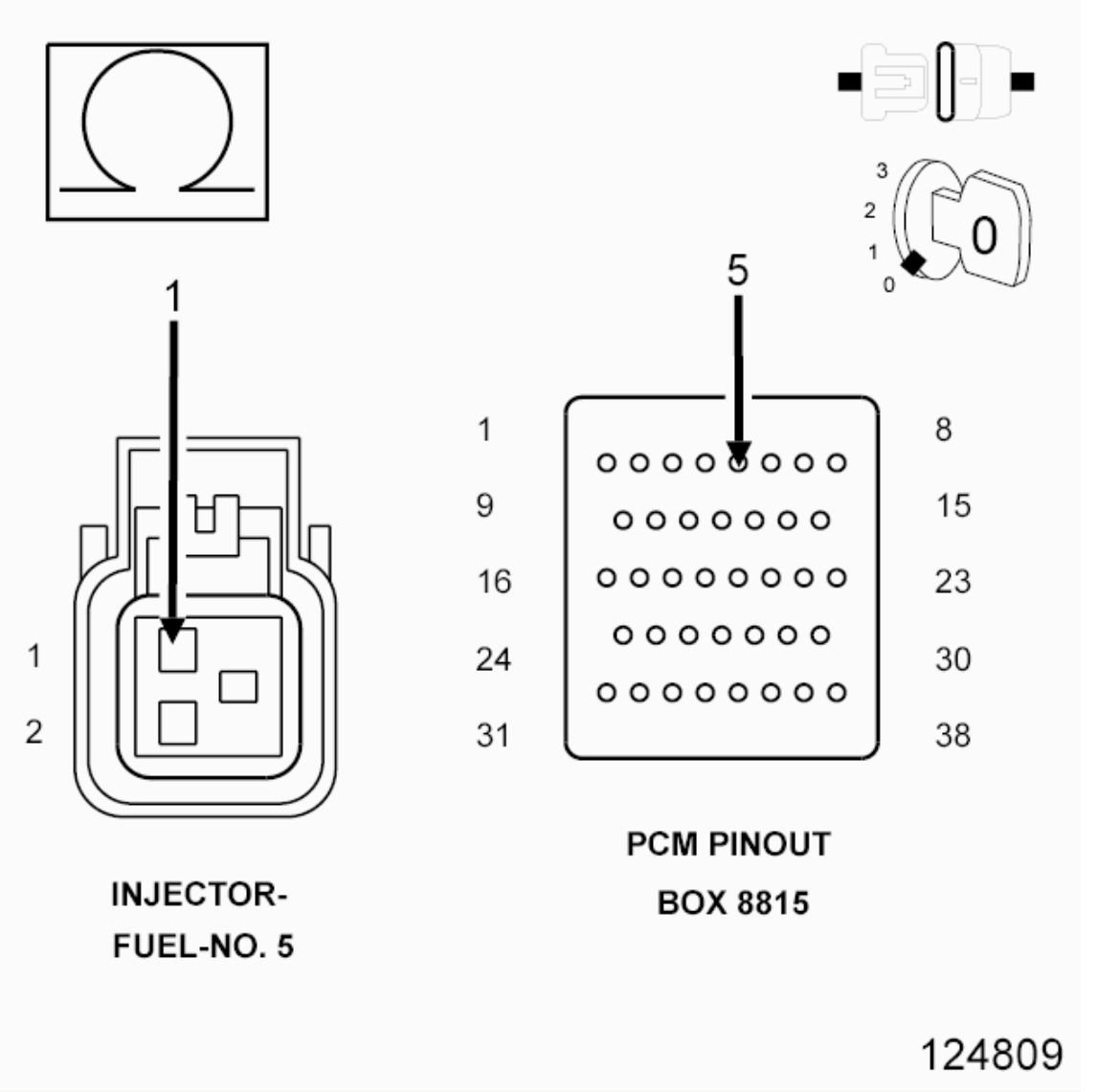

Fig. 64: Checking Injector Control No. 5 Circuit For An Open, Short To Ground, And Short To Voltage
Courtesy of CHRYSLER GROUP, LLC

CAUTION: Do not probe the PCM harness connectors. Probing the PCM harness connectors will damage the PCM terminals resulting in poor terminal to pin connection. Install the PCM Pinout Box (special tool #8815A, Kit, NGC, 38 Position) to perform diagnosis.

1. Turn the ignition off.
2. Disconnect the C2 PCM harness connector.
3. Measure the resistance of the (K38) Injector Control No. 5 circuit from the Fuel Injector harness connector to the appropriate terminal of the PCM Pinout Box (special tool #8815A, Kit, NGC, 38 Position).

   Is the resistance below 5.0 Ohms?

   Yes

   - Go To 6.

   No

   - Repair the open in the (K38) Injector Control No. 5 circuit.
   - Perform the POWERTRAIN VERIFICATION TEST. Refer to **POWERTRAIN VERIFICATION TEST** .

6. **FUEL INJECTOR 5**
   1. Using the wiring diagram/schematic as a guide, inspect the wiring and connectors between the Fuel Injector 5 and the Powertrain Control Module (PCM).
   2. Look for any chafed, pierced, pinched or partially broken wires.
   3. Look for broken, bent, pushed out or corroded terminals.
   4. Refer to any Technical Service Bulletins that may apply.
   5. Verify that there is good pin to terminal contact in the Injector and Powertrain Control Module connectors.

      Were any problems found?

      Yes

      - Repair as necessary.
      - Perform the POWERTRAIN VERIFICATION TEST. Refer to **POWERTRAIN VERIFICATION TEST** .

      No

      - Replace the Fuel Injector 5 in accordance with the Service Information.
      - Perform the POWERTRAIN VERIFICATION TEST. Refer to **POWERTRAIN VERIFICATION TEST** .

7. **(K38) INJECTOR CONTROL NO. 5 CIRCUIT SHORTED TO GROUND**

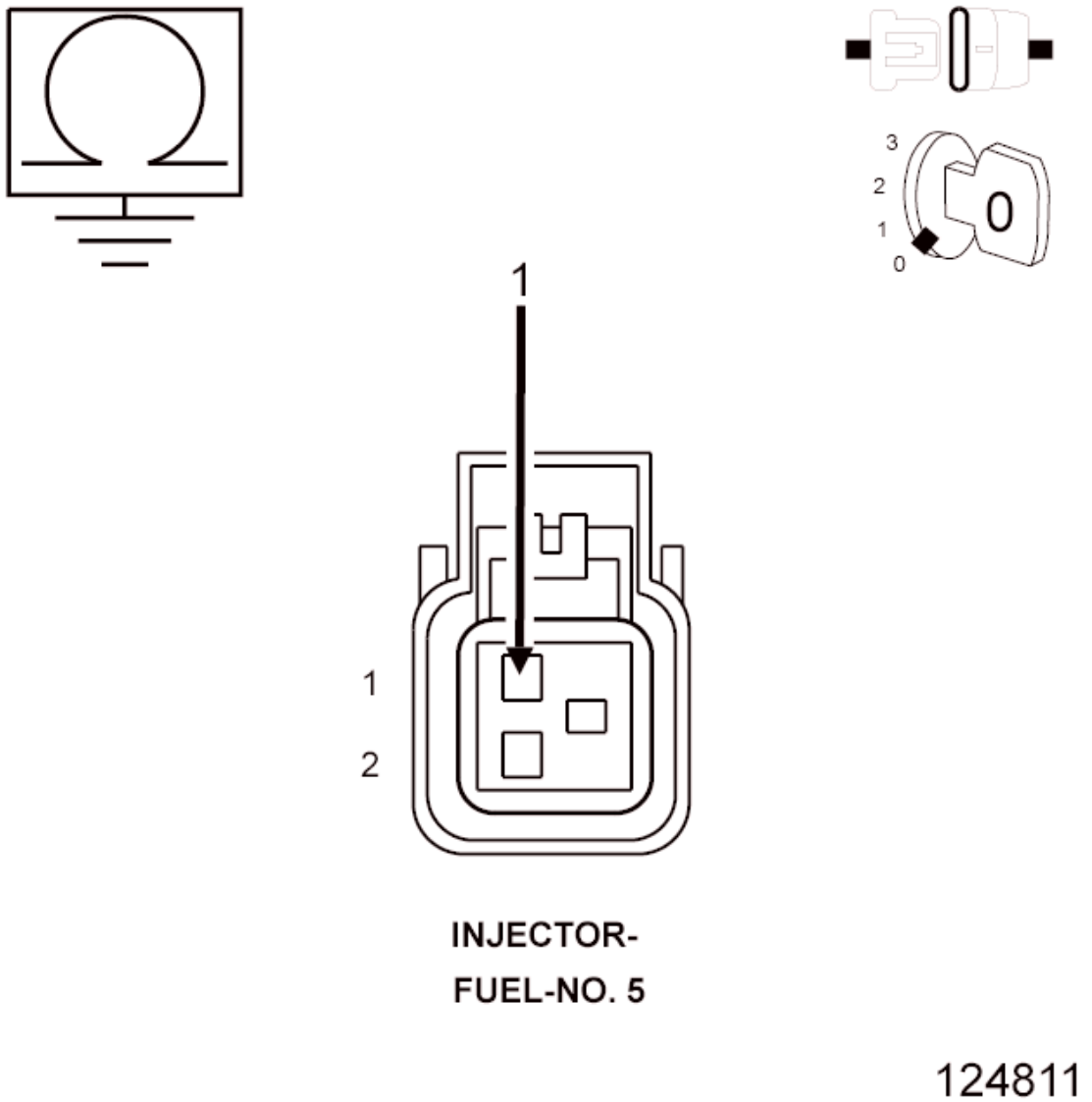

Fig. 65: Measuring Resistance Between Ground And (K38) Injector Control No. 5 Circuit In Injector Harness Connector
Courtesy of CHRYSLER GROUP, LLC

1. Turn the ignition off.
2. Measure the resistance between ground and the (K38) Injector Control No. 5 circuit in the Injector harness connector.

   Is the resistance below 100 Ohms?

   Yes

   - Repair the short to ground in the (K38) Injector Control No. 5 circuit.

- Perform the POWERTRAIN VERIFICATION TEST. Refer to **POWERTRAIN VERIFICATION TEST** .

No

- Go To 8.

8. **POWERTRAIN CONTROL MODULE (PCM)**
    1. Using the wiring diagram/schematic as a guide, inspect the wiring and connectors between the Fuel Injector 5 and the Powertrain Control Module (PCM).
    2. Look for any chafed, pierced, pinched or partially broken wires.
    3. Look for broken, bent, pushed out or corroded terminals. Verify that there is good pin to terminal contact in the Injector and Control Module connectors.
    4. Refer to any Technical Service Bulletins that may apply.

    Were there any problems found?

    Yes

    - Repair as necessary.
    - Perform the POWERTRAIN VERIFICATION TEST. Refer to **POWERTRAIN VERIFICATION TEST** .

    No

    - Replace and program the Powertrain Control Module in accordance with the Service Information.
    - Perform the POWERTRAIN VERIFICATION TEST. Refer to **POWERTRAIN VERIFICATION TEST** .

P0206-FUEL INJECTOR 6 CIRCUIT

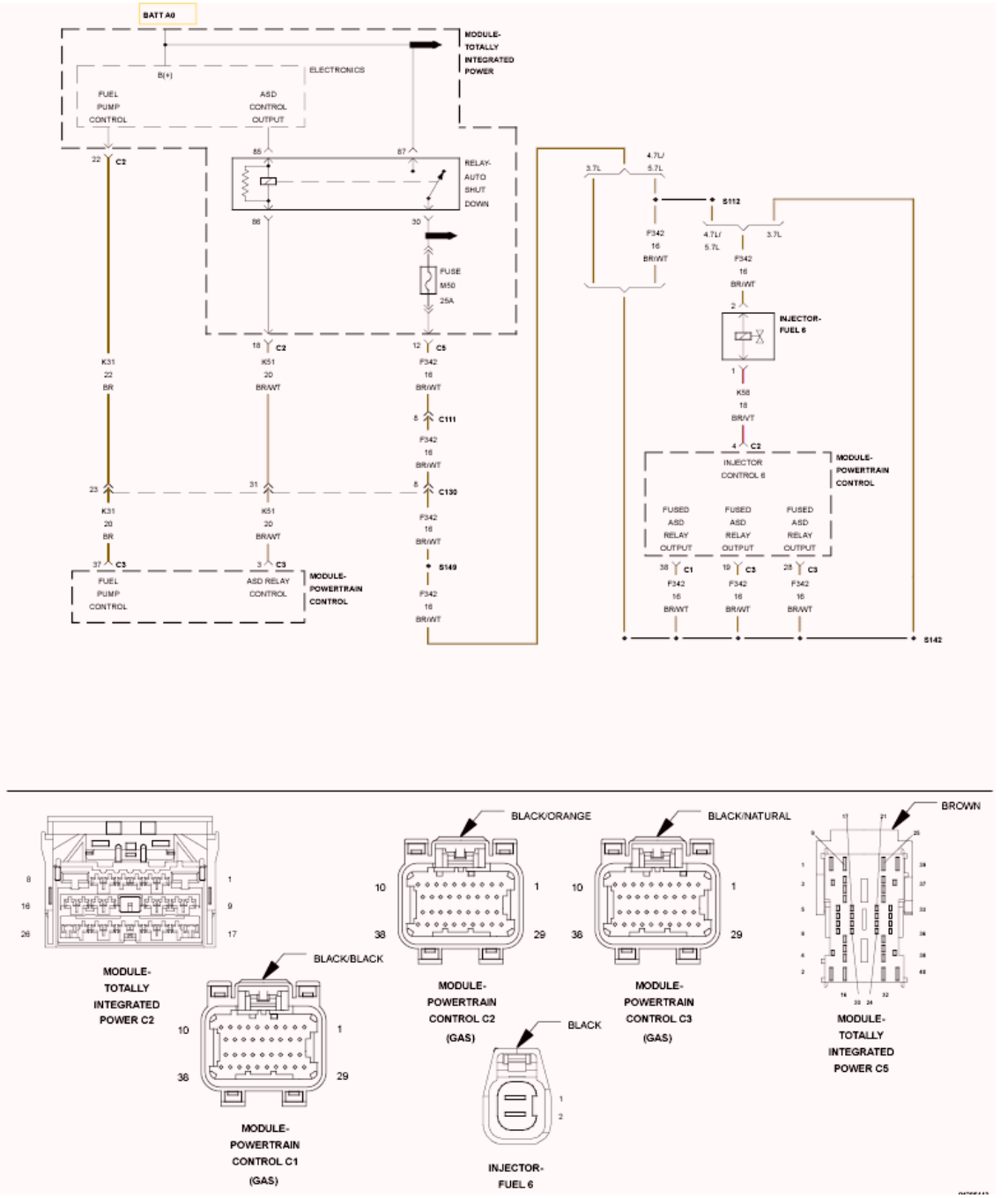

Fig. 66: Fuel Injector 6 Circuit Schematic
Courtesy of CHRYSLER GROUP, LLC

For a complete wiring diagram, **refer to appropriate SYSTEM WIRING DIAGRAMS article** .

WHEN MONITORED:

With battery voltage greater than 10 Volts. ASD is energized. Engine speed less than 3000 RPM.

SET CONDITION:

The Powertrain Control Module (PCM) monitors the continuity of the injector circuits as well as the voltage spike created by the collapse of the magnetic field in the injector coil. Any condition that reduces the maximum current flow or the magnitude of the voltage spike can cause this DTC to set.

POSSIBLE CAUSES

Possible Causes
(F324) ASD CONTROL OUTPUT CIRCUIT
(K68) INJECTOR CONTROL NO. 6 CIRCUIT OPEN
(K68) INJECTOR CONTROL NO. 6 CIRCUIT SHORTED TO GROUND
FUEL INJECTOR
POWERTRAIN CONTROL MODULE (PCM)

Always perform the Pre-Diagnostic Troubleshooting procedure before proceeding. Refer to PRE-DIAGNOSTIC TROUBLESHOOTING PROCEDURE .

DIAGNOSTIC TEST

1. **ACTIVE DTC**
    1. Turn the ignition on.
    2. With the scan tool, select View DTCs. Record DTC and Freeze Frame information.
    3. Start the engine and allow it to reach operating temperature.

    WARNING: When the engine is operating, do not stand in direct line with the fan. Do not put your hands near the pulleys, belts or fan. Do not wear loose clothing. Failure to follow these instructions may result in possible serious or fatal injury.

    NOTE: Review Freeze Frame information. Operate the vehicle under conditions similar to which the DTC was set.

    4. With a scan tool, select View DTCs.

    Is the DTC Active at this time?

    Yes

    - Go To 2.

    No

    - Perform the INTERMITTENT CONDITION diagnostic procedure. Refer to **INTERMITTENT CONDITION** .
2. **FUEL INJECTOR 6 CIRCUIT RESISTANCE**

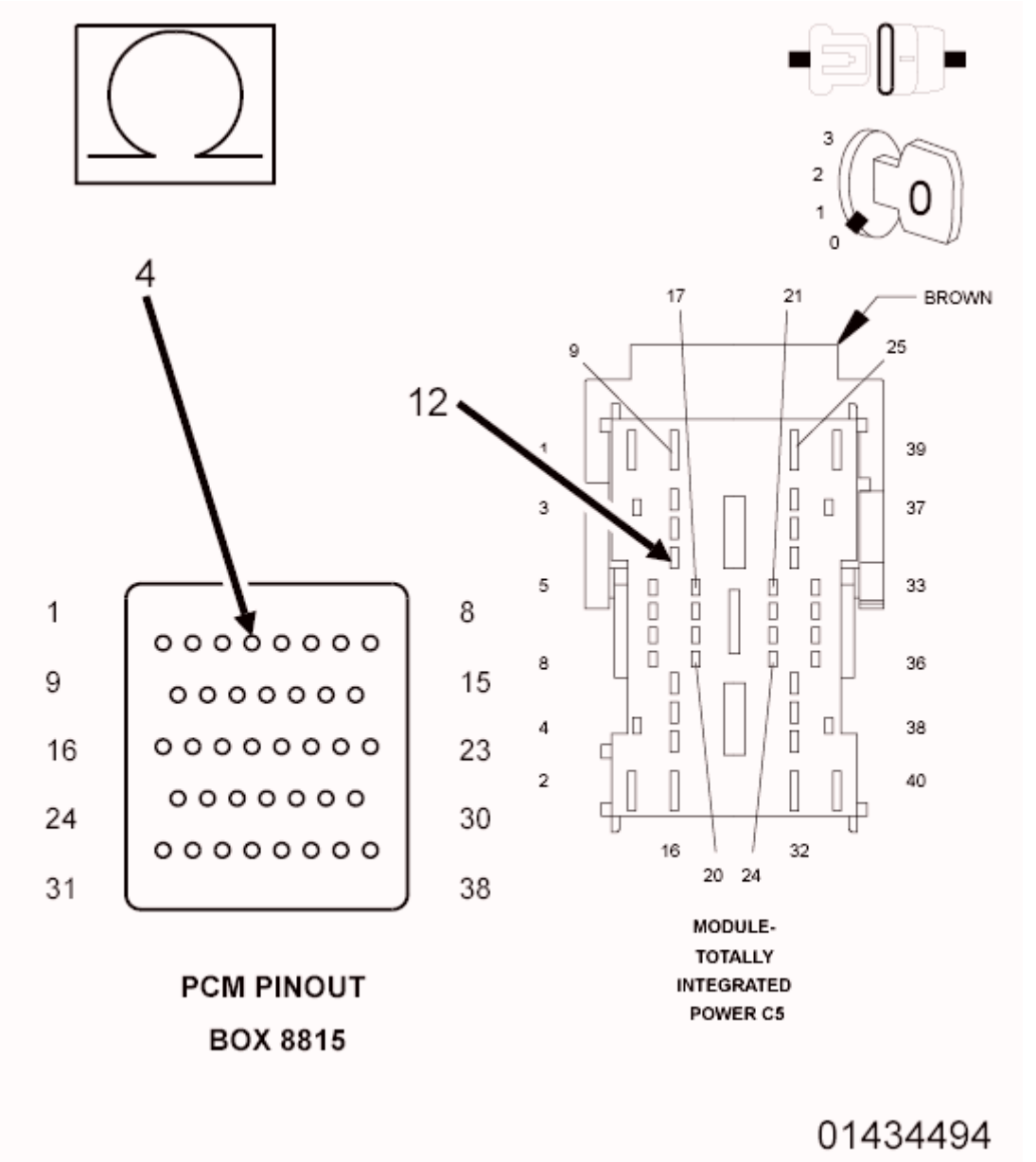

Fig. 67: Measuring Resistance Of Fuel Injector Circuit From Appropriate Terminal Of PCM Pinout Box 8815 And TIPM Harness Connector
Courtesy of CHRYSLER GROUP, LLC

1. Turn the ignition off.
2. Disconnect the C2 PCM harness connector.
3. Disconnect the C5 TIPM harness connector.

NOTE: **The resistance of the circuit will vary according to the temperature of the injector coil. Use the table below to determine the resistance range of the injector.**

CAUTION: Do not probe the PCM harness connectors. Probing the PCM harness connectors will damage the PCM terminals resulting in poor terminal to pin connection. Install the PCM Pinout Box (special tool #8815A, Kit, NGC, 38 Position) to perform diagnosis.

4. Measure the resistance of the Fuel Injector 6 circuit from the appropriate terminal of PCM Pinout Box (special tool #8815A, Kit, NGC, 38 Position) and the C5 TIPM harness connector.

Fuel Injector Coil Resistance Based on Engine Temperature	
Temperature	**Resistance**
-20° C (-4° F)	10 Ohms (+/-.6 of an Ohm)
20° C (68° F)	12 Ohms (+/-.6 of an Ohm)
60° C (140° F)	14 Ohms (+/-.6 of an Ohm)
100° C (212° F)	16 Ohms (+/-.6 of an Ohm)

Is the resistance of the injector within the specified range?

Yes

- Go To 7.

No

- Go To 3.

3. **FUEL INJECTOR 6 WIRING AND CONNECTOR INSPECTION**
   1. Turn the ignition off.
   2. Verify that the Fuel Injector 6 is properly connected to the injector. Disconnect the Fuel Injector 6 connector and Inspect the terminals for any condition that would result in a poor connection.
   3. Using the wiring diagram/schematic as a guide, inspect the Fuel Injector 6 wiring and connector.
   4. Look for any chafed, pierced, pinched or partially broken wires.
   5. Look for broken, bent, pushed out or corroded terminals.
   6. Verify that there is good pin to terminal contact in the Injector and Powertrain Control Module connectors.

   Were any problems found?

   Yes

   - Repair as necessary.
   - Perform the POWERTRAIN VERIFICATION TEST. Refer to **POWERTRAIN VERIFICATION TEST** .

   No

- Go To 4.

4. **(F324) ASD CONTROL OUTPUT CIRCUIT OPEN OR HIGH RESISTANCE**

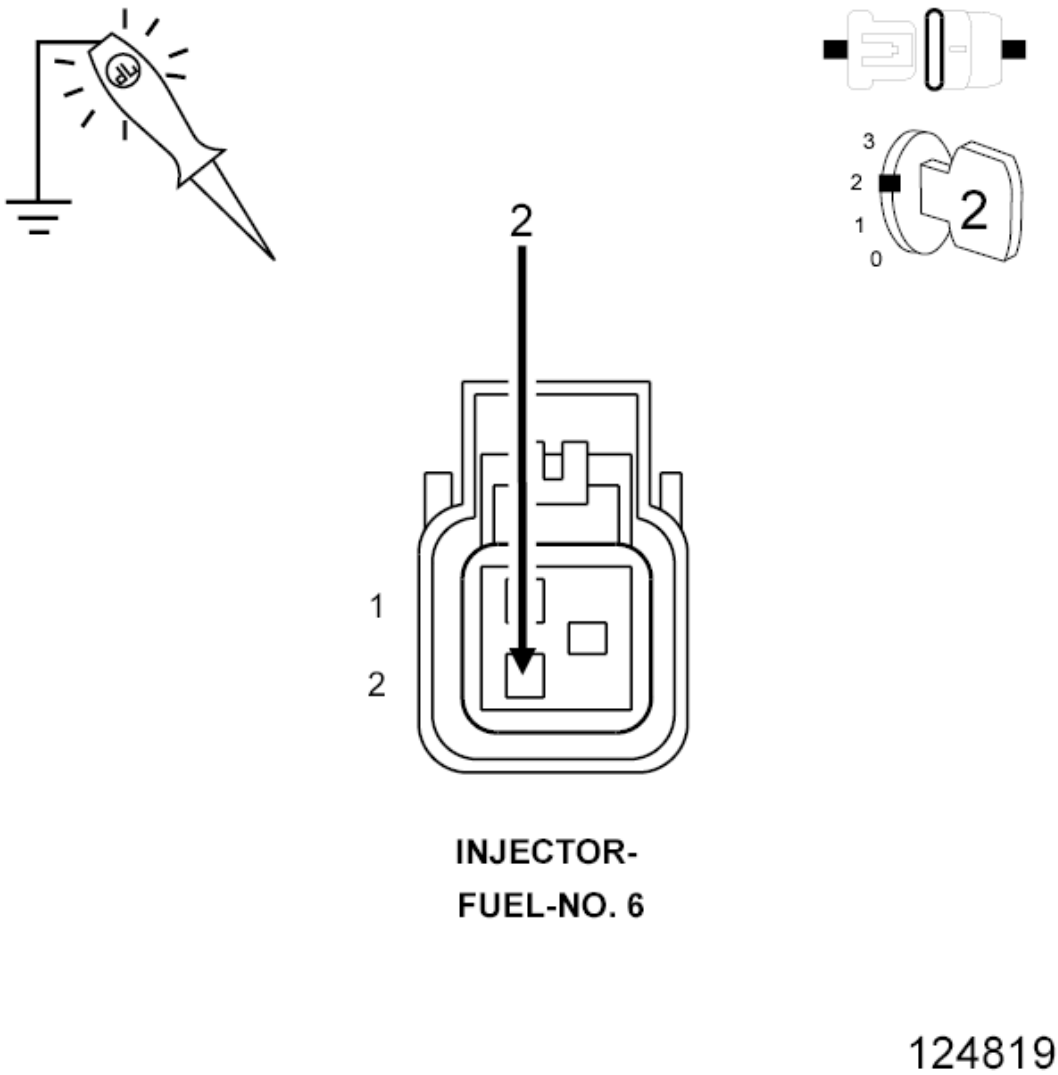

Fig. 68: Using 12-Volt Test Light Connected To Ground To Check ASD Control Output Circuit In Fuel Injector 6 Harness Connector
Courtesy of CHRYSLER GROUP, LLC

1. Turn the ignition on.
2. With the scan tool, actuate the Auto Shutdown (ASD) Control State.
3. Using a 12-volt test light connected to ground, check the (F324) ASD Control Output circuit in the Fuel Injector 6 harness connector.

NOTE: **The test light should be illuminated and bright. Compare the brightness to that of a direct connection to the battery.**

Is the test light illuminated and bright?

Yes

- Go To 5.

No

- Repair the excessive resistance or short to ground in the (F324) ASD Control Output circuit.
- Perform the POWERTRAIN VERIFICATION TEST. Refer to **POWERTRAIN VERIFICATION TEST** .

5. **(K58) INJECTOR CONTROL NO. 6 CIRCUIT OPEN**

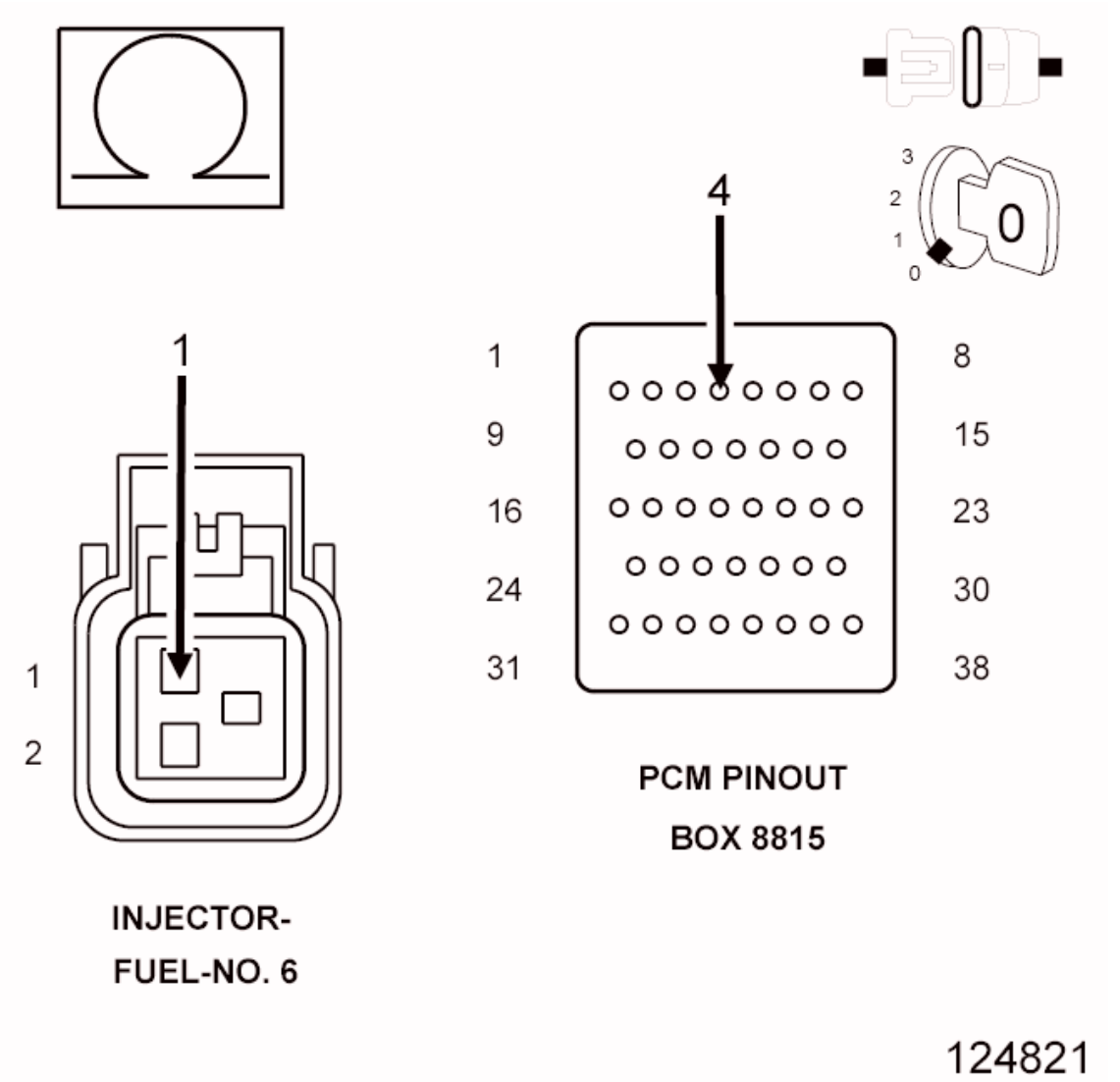

Fig. 69: Checking Injector Control No. 6 Circuit For An Open, Short To Ground, And Short To Voltage
Courtesy of CHRYSLER GROUP, LLC

CAUTION: Do not probe the PCM harness connectors. Probing the PCM harness connectors will damage the PCM terminals resulting in poor terminal to pin connection. Install the PCM Pinout Box (special tool #8815A, Kit, NGC, 38 Position) to perform diagnosis.

1. Turn the ignition off.
2. Disconnect the C2 PCM harness connector.
3. Measure the resistance of the (K58) Injector Control No. 6 circuit from the Fuel Injector harness connector to the appropriate terminal of the PCM Pinout Box (special tool #8815A, Kit, NGC, 38 Position).

   Is the resistance below 6.0 Ohms?

   Yes

   - Go To 6.

   No

   - Repair the open in the (K58) Injector Control No. 6 circuit.
   - Perform the POWERTRAIN VERIFICATION TEST. Refer to **POWERTRAIN VERIFICATION TEST** .

6. **FUEL INJECTOR 6**
   1. Using the wiring diagram/schematic as a guide, inspect the wiring and connectors between the Fuel Injector 6 and the Powertrain Control Module (PCM).
   2. Look for any chafed, pierced, pinched, or partially broken wires.
   3. Look for broken, bent, pushed out or corroded terminals.
   4. Refer to any Technical Service Bulletins that may apply.
   5. Verify that there is good pin to terminal contact in the Injector and Powertrain Control Module connectors.

      Were any problems found?

      Yes

      - Repair as necessary.
      - Perform the POWERTRAIN VERIFICATION TEST. Refer to **POWERTRAIN VERIFICATION TEST** .

      No

      - Replace the Fuel Injector 6 in accordance with the Service Information.
      - Perform the POWERTRAIN VERIFICATION TEST. Refer to **POWERTRAIN VERIFICATION TEST** .

7. **(K58) INJECTOR CONTROL NO. 6 CIRCUIT SHORTED TO GROUND**

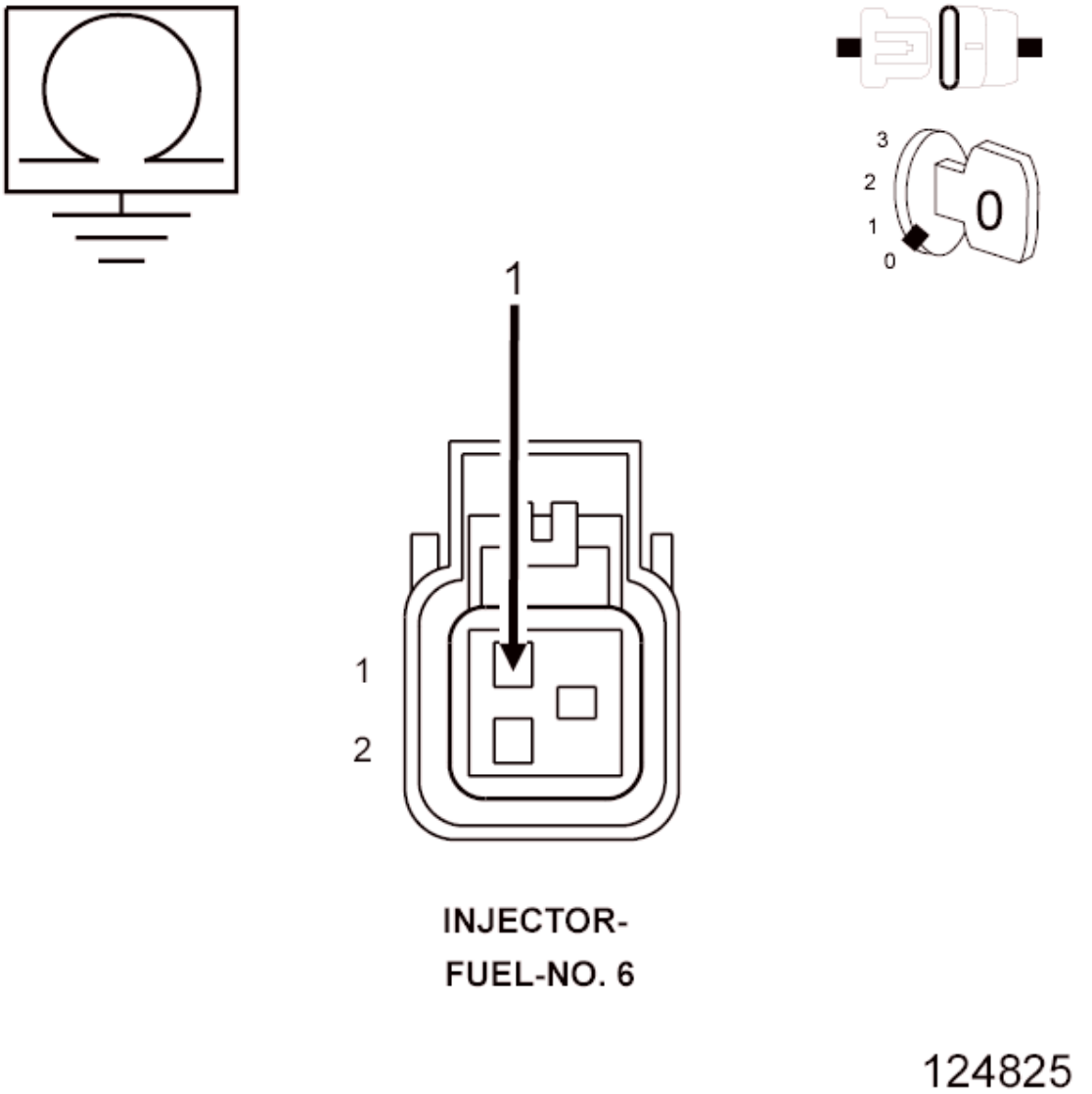

Fig. 70: Measuring Resistance Between Ground And (K58) Injector Control No. 6 Circuit In Injector Harness Connector
Courtesy of CHRYSLER GROUP, LLC

1. Turn the ignition off.
2. Measure the resistance between ground and the (K58) Injector Control No. 6 circuit in the Injector harness connector.

   Is the resistance below 100 Ohms?

   Yes

   - Repair the short to ground in the (K58) Injector Control No. 6 circuit.

- Perform the POWERTRAIN VERIFICATION TEST. Refer to **POWERTRAIN VERIFICATION TEST** .

No

- Go To 8.

8. **POWERTRAIN CONTROL MODULE (PCM)**
    1. Using the wiring diagram/schematic as a guide, inspect the wiring and connectors between the Fuel Injector 6 and the Powertrain Control Module (PCM).
    2. Look for any chafed, pierced, pinched, or partially broken wires.
    3. Look for broken, bent, pushed out or corroded terminals. Verify that there is good pin to terminal contact in the Injector and Control Module connectors.
    4. Refer to any Technical Service Bulletins that may apply.

    Were there any problems found?

    Yes

    - Repair as necessary.
    - Perform the POWERTRAIN VERIFICATION TEST. Refer to **POWERTRAIN VERIFICATION TEST** .

    No

    - Replace and program the Powertrain Control Module in accordance with the Service Information.
    - Perform the POWERTRAIN VERIFICATION TEST. Refer to **POWERTRAIN VERIFICATION TEST** .

P0207-FUEL INJECTOR 7 CIRCUIT

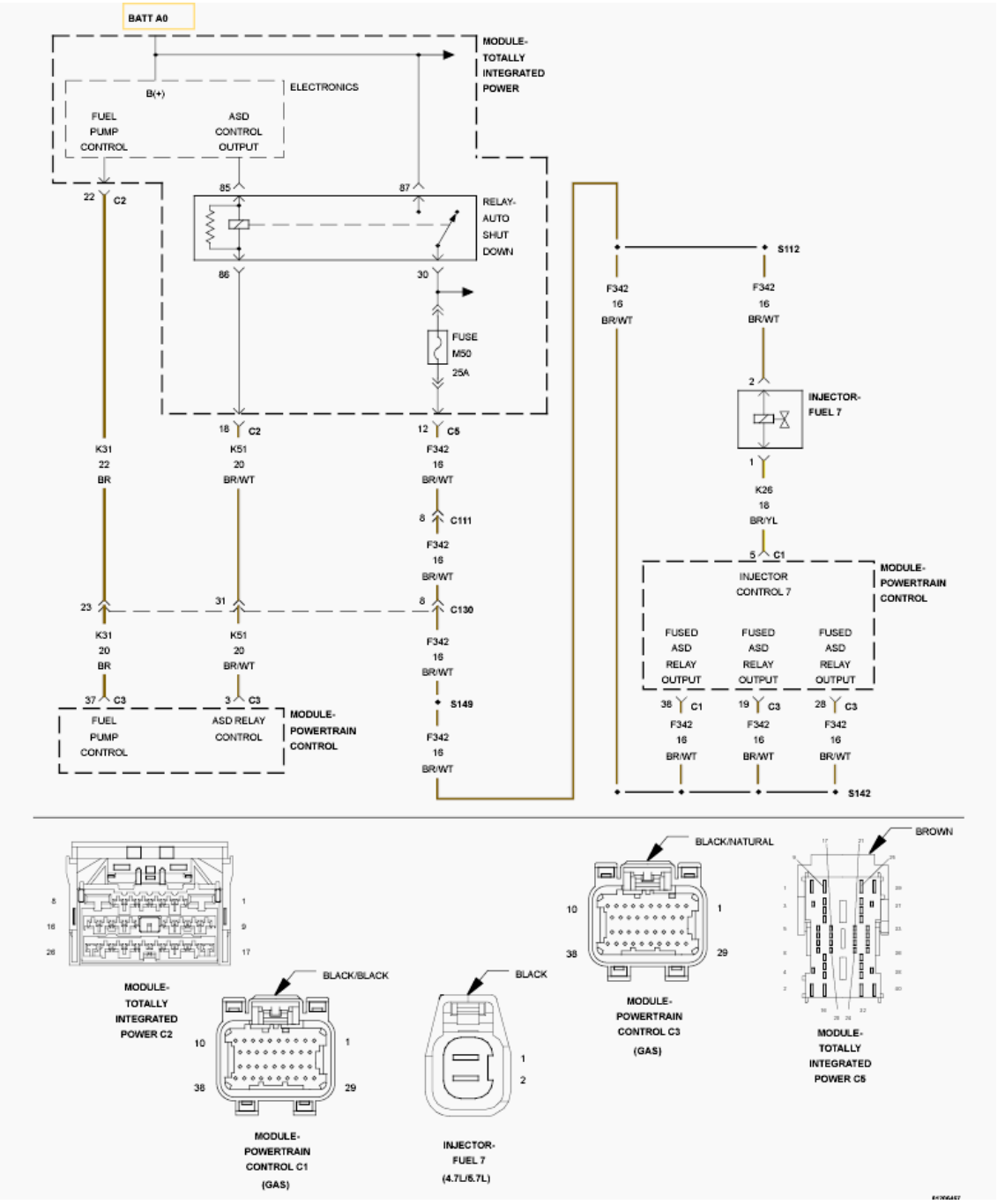

Fig. 71: Fuel Injector 7 Circuit Schematic
Courtesy of CHRYSLER GROUP, LLC

For a complete wiring diagram, **refer to appropriate SYSTEM WIRING DIAGRAMS article** .

WHEN MONITORED:

With battery voltage greater than 10 Volts. ASD is energized. Engine speed less than 3000 RPM.

SET CONDITION:

The Powertrain Control Module (PCM) monitors the continuity of the injector circuits as well as the voltage spike created by the collapse of the magnetic field in the injector coil. Any condition that reduces the maximum current flow or the magnitude of the voltage spike can cause this DTC to set.

POSSIBLE CAUSES

Possible Causes
(K342) ASD OUTPUT CIRCUIT
(K27) INJECTOR CONTROL NO. 7 CIRCUIT OPEN
(K27) INJECTOR CONTROL NO. 7 CIRCUIT SHORTED TO GROUND
FUEL INJECTOR
POWERTRAIN CONTROL MODULE (PCM)

Always perform the Pre-Diagnostic Troubleshooting procedure before proceeding. Refer to PRE-DIAGNOSTIC TROUBLESHOOTING PROCEDURE .

DIAGNOSTIC TEST

1. **ACTIVE DTC**
    1. Turn the ignition on.
    2. With the scan tool, select View DTCs. Record DTC and Freeze Frame information.
    3. Start the engine and allow it to reach operating temperature.

    WARNING: When the engine is operating, do not stand in direct line with the fan. Do not put your hands near the pulleys, belts or fan. Do not wear loose clothing. Failure to follow these instructions may result in possible serious or fatal injury.

    NOTE: Review Freeze Frame information. Operate the vehicle under conditions similar to which the DTC was set.

    4. With the scan tool, select View DTCs.

    Is the DTC Active at this time?

    Yes

    - Go To 2.

    No

    - Perform the INTERMITTENT CONDITION diagnostic procedure. Refer to **INTERMITTENT CONDITION** .
2. **FUEL INJECTOR 7 CIRCUIT RESISTANCE**

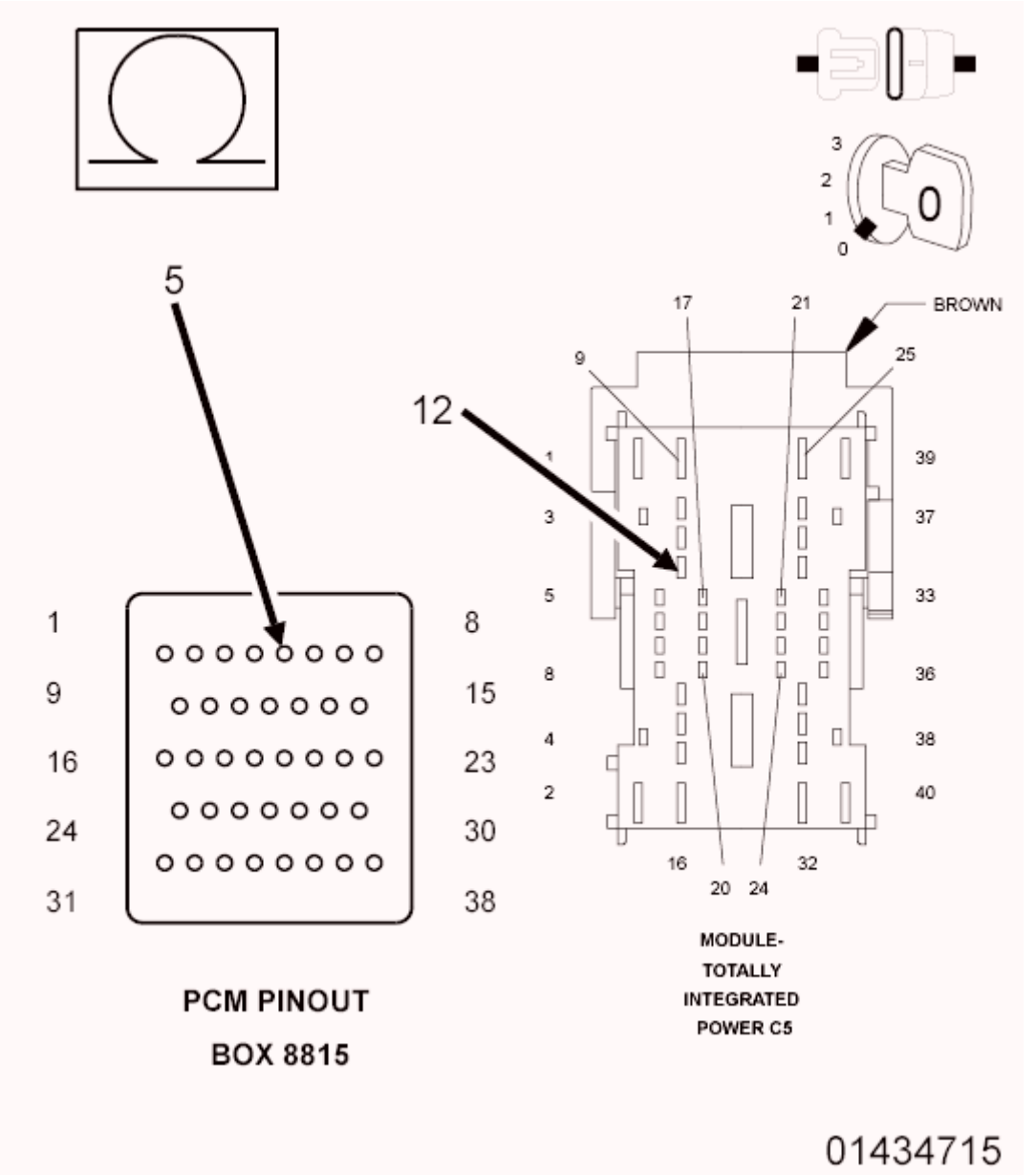

Fig. 72: Measuring Resistance Of Fuel Injector 7 Circuit From Appropriate Terminal Of PCM Pinout Box 8815 And C10 TIPM Harness Connector
Courtesy of CHRYSLER GROUP, LLC

1. Turn the ignition off.
2. Disconnect the C1 PCM harness connector.
3. Disconnect the C10 TIPM harness connector.

NOTE: **The resistance of the circuit will vary according to the temperature of the injector coil. Use the table below to determine the resistance range of the injector.**

CAUTION: Do not probe the PCM harness connectors. Probing the PCM harness connectors will damage the PCM terminals resulting in poor terminal to pin connection. Install the PCM Pinout Box (special tool #8815A, Kit, NGC, 38 Position) to perform diagnosis.

4. Measure the resistance of the Fuel Injector 7 circuit from the appropriate terminal of the PCM Pinout Box (special tool #8815A, Kit, NGC, 38 Position) and the C10 TIPM harness connector.

Fuel Injector Coil Resistance Based on Engine Temperature	
Temperature	**Resistance**
-20° C (-4° F)	10 Ohms (+/-.6 of an Ohm)
20° C (68° F)	12 Ohms (+/-.6 of an Ohm)
60° C (140° F)	14 Ohms (+/-.6 of an Ohm)
100° C (212° F)	16 Ohms (+/-.6 of an Ohm)

Is the resistance of the injector within the specified range?

Yes

- Go To 7.

No

- Go To 3.

3. **FUEL INJECTOR 7 WIRING AND CONNECTOR INSPECTION**
   1. Turn the ignition off.
   2. Verify that the Fuel Injector 7 is properly connected to the injector. Disconnect the Fuel Injector 7 connector and Inspect the terminals for any condition that would result in a poor connection.
   3. Using the wiring diagram/schematic as a guide, inspect the Fuel Injector 7 wiring and connector.
   4. Look for any chafed, pierced, pinched or partially broken wires.
   5. Look for broken, bent, pushed out or corroded terminals.
   6. Verify that there is good pin to terminal contact in the Injector and Powertrain Control Module connectors.

   Were any problems found?

   Yes

   - Repair as necessary.
   - Perform the POWERTRAIN VERIFICATION TEST. Refer to **POWERTRAIN VERIFICATION TEST** .

   No

- Go To 4.

4. **(K342) ASD CONTROL OUTPUT CIRCUIT OPEN OR HIGH RESISTANCE**

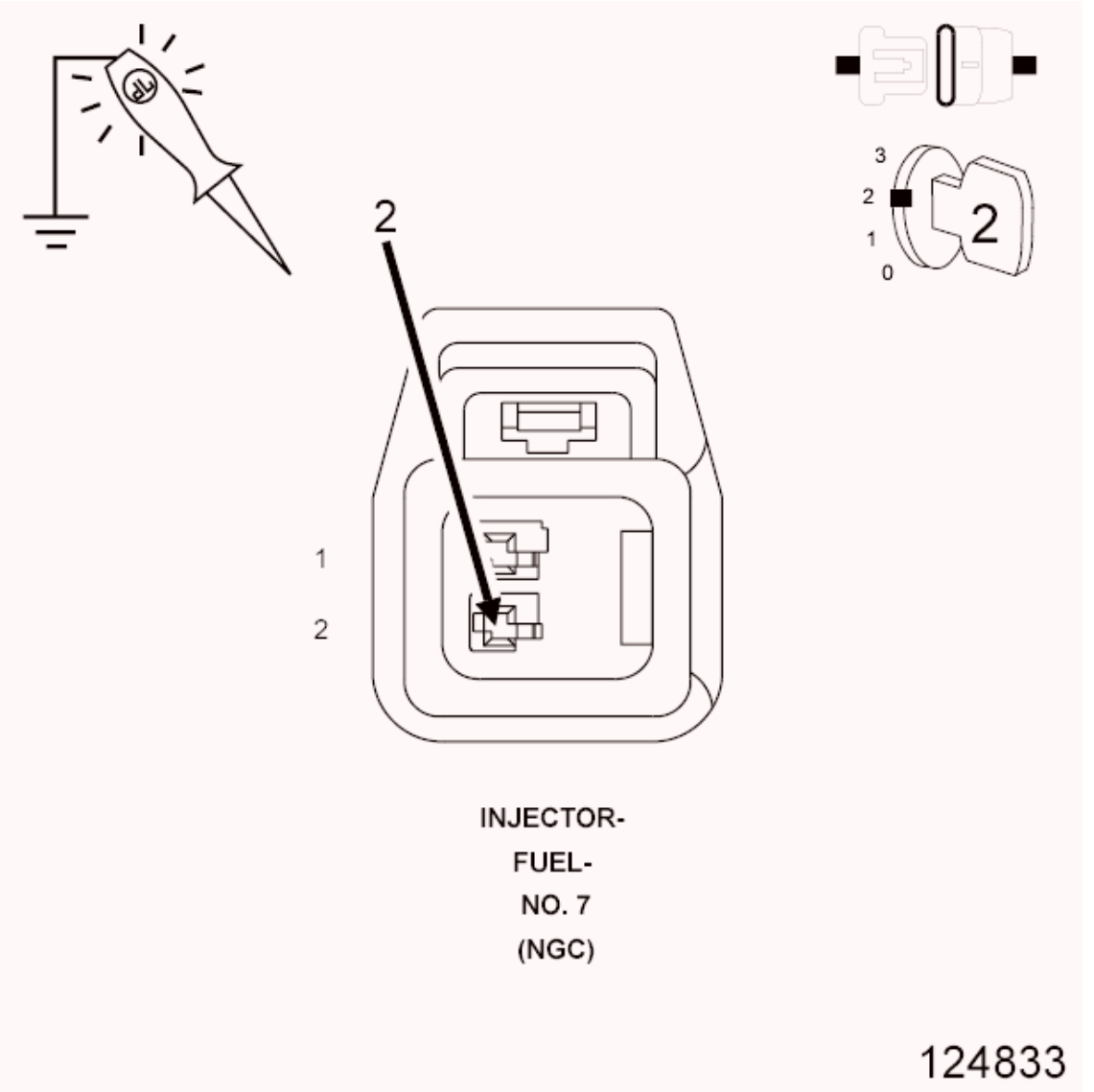

Fig. 73: Using 12-Volt Test Light Connected To Ground To Check (K342) ASD Control Output Circuit In Fuel Injector 7 Harness Connector
Courtesy of CHRYSLER GROUP, LLC

1. Turn the ignition on.
2. With the scan tool, actuate the Auto Shutdown (ASD) Control State.
3. Using a 12-volt test light connected to ground, check the (K342) ASD Control Output circuit in the Fuel Injector 7 harness connector.

NOTE: **The test light should be illuminated and bright. Compare the brightness to that of a direct connection to the battery.**

Is the test light illuminated and bright?

Yes.

- Go To 5.

No.

- Repair the excessive resistance or short to ground in the (K342) ASD Control Output circuit.
- Perform the POWERTRAIN VERIFICATION TEST. Refer to **POWERTRAIN VERIFICATION TEST** .

5. **(K26) INJECTOR CONTROL NO. 7 CIRCUIT OPEN**

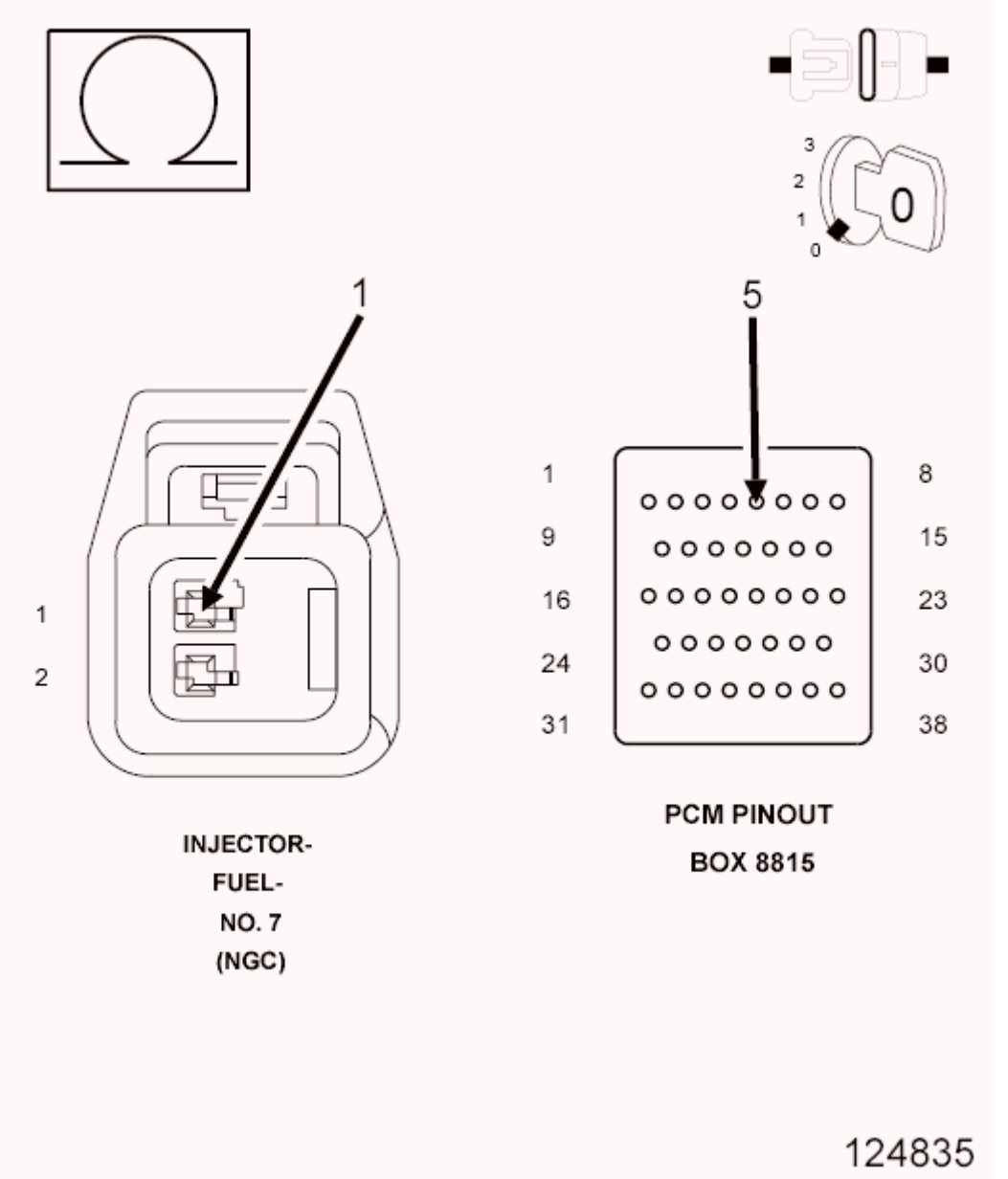

Fig. 74: Measuring Resistance Of (K26) Injector Control No. 7 Circuit From Fuel Injector Harness Connector To Appropriate Terminal Of PCM Pinout Box 8815
Courtesy of CHRYSLER GROUP, LLC

CAUTION: Do not probe the PCM harness connectors. Probing the PCM harness connectors will damage the PCM terminals resulting in poor terminal to pin connection. Install the PCM Pinout Box (special tool #8815A, Kit, NGC, 38 Position) to perform diagnosis.

1. Turn the ignition off.
2. Disconnect the C1 PCM harness connector.
3. Measure the resistance of the (K26) Injector Control No. 7 circuit from the Fuel Injector harness connector to the appropriate terminal of PCM Pinout Box (special tool #8815A, Kit, NGC, 38 Position).

   Is the resistance below 7.0 Ohms?

   Yes

   - Go To 6.

   No

   - Repair the open in the (K26) Injector Control No. 7 circuit.
   - Perform the POWERTRAIN VERIFICATION TEST. Refer to **POWERTRAIN VERIFICATION TEST** .

6. **FUEL INJECTOR 7**
   1. Using the wiring diagram/schematic as a guide, inspect the wiring and connectors between the Fuel Injector 7 and the Powertrain Control Module (PCM).
   2. Look for any chafed, pierced, pinched or partially broken wires.
   3. Look for broken, bent, pushed out or corroded terminals.
   4. Refer to any Technical Service Bulletins that may apply.
   5. Verify that there is good pin to terminal contact in the Injector and Powertrain Control Module connectors.

      Were any problems found?

      Yes

      - Repair as necessary.
      - Perform the POWERTRAIN VERIFICATION TEST. Refer to **POWERTRAIN VERIFICATION TEST** .

      No

- Replace the Fuel Injector 7 in accordance with the Service Information.
- Perform the POWERTRAIN VERIFICATION TEST. Refer to **POWERTRAIN VERIFICATION TEST** .

7. **(K26) INJECTOR CONTROL NO. 7 CIRCUIT SHORTED TO GROUND**

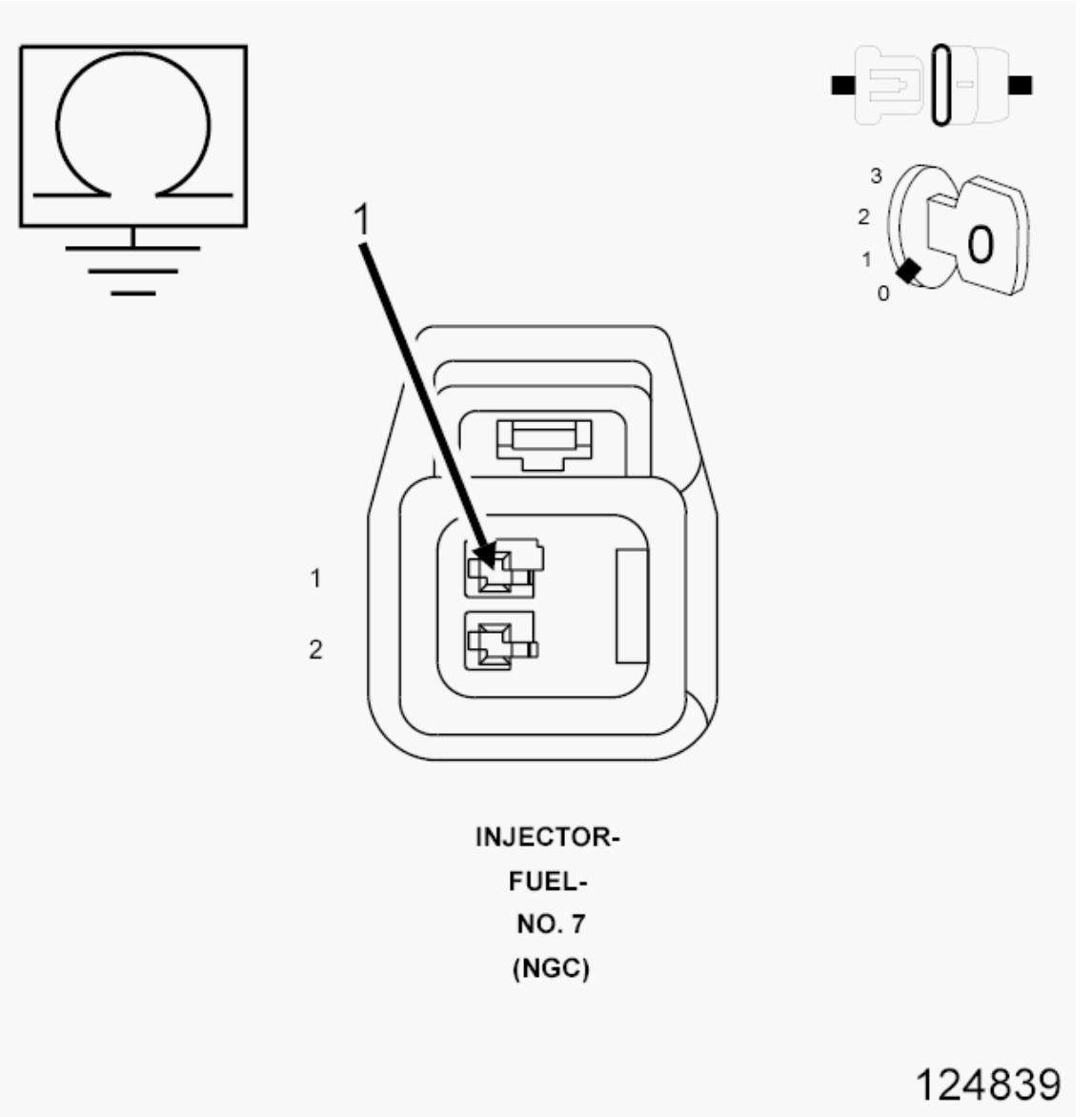

Fig. 75: Measuring Resistance Between Ground And (K26) Injector Control No. 7 Circuit In Injector Harness Connector
Courtesy of CHRYSLER GROUP, LLC

1. Turn the ignition off.
2. Measure the resistance between ground and the (K26) Injector Control No. 7 circuit in the Injector harness connector.

   Is the resistance below 100 Ohms?

Yes

- Repair the short to ground in the (K26) Injector Control No. 7 circuit.
- Perform the POWERTRAIN VERIFICATION TEST. Refer to **POWERTRAIN VERIFICATION TEST** .

No

- Go To 8.

8. **POWERTRAIN CONTROL MODULE (PCM)**
    1. Using the wiring diagram/schematic as a guide, inspect the wiring and connectors between the Fuel Injector 7 and the Powertrain Control Module (PCM).
    2. Look for any chafed, pierced, pinched or partially broken wires.
    3. Look for broken, bent, pushed out or corroded terminals. Verify that there is good pin to terminal contact in the Injector and Control Module connectors.
    4. Refer to any Technical Service Bulletins that may apply.

    Were there any problems found?

    Yes

    - Repair as necessary.
    - Perform the POWERTRAIN VERIFICATION TEST. Refer to **POWERTRAIN VERIFICATION TEST** .

    No

    - Replace and program the Powertrain Control Module in accordance with the Service Information.
    - Perform the POWERTRAIN VERIFICATION TEST. Refer to **POWERTRAIN VERIFICATION TEST** .

P0208-FUEL INJECTOR 8 CIRCUIT

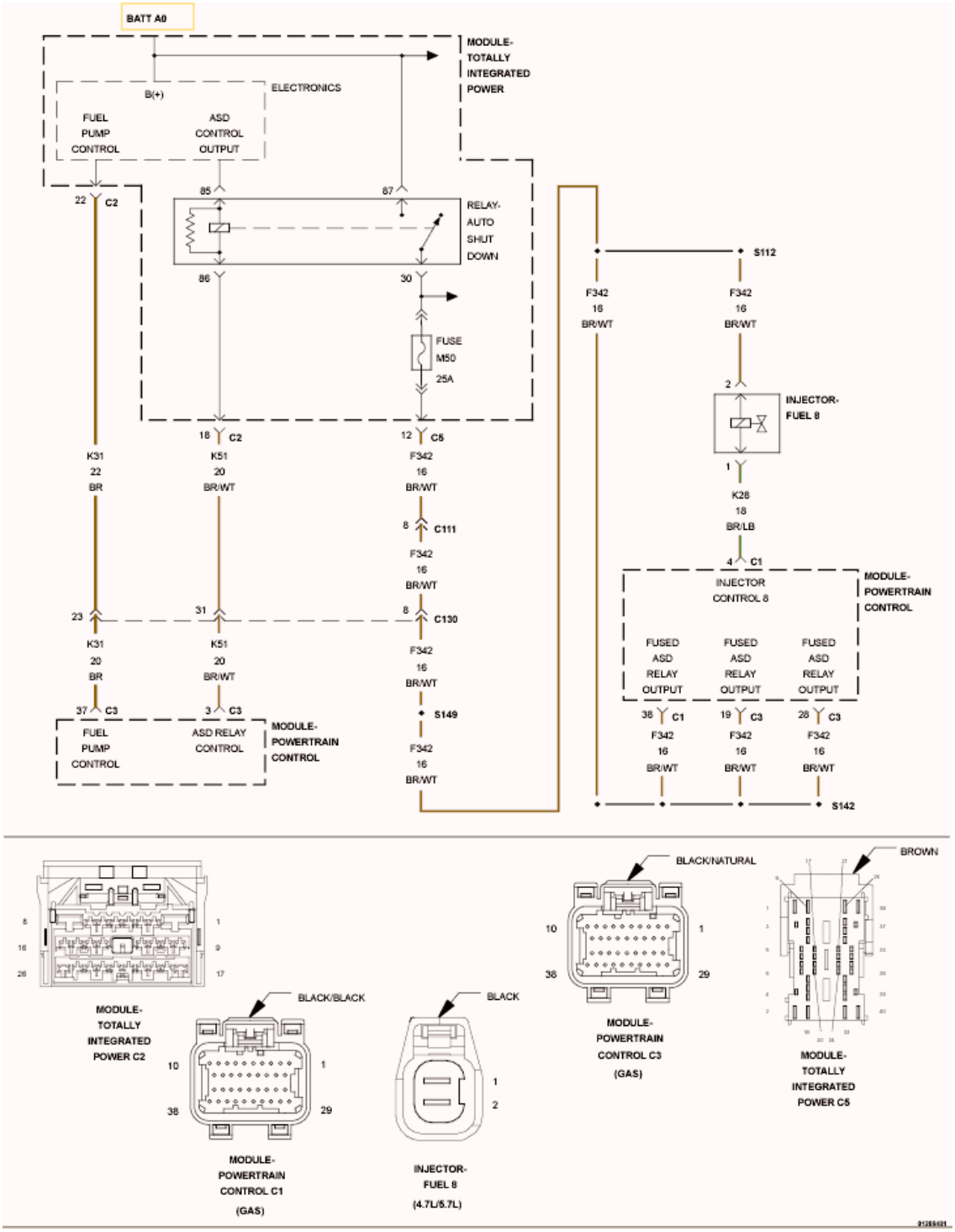

Fig. 76: Fuel Injector 8 Circuit Schematic
Courtesy of CHRYSLER GROUP, LLC

For a complete wiring diagram, **refer to appropriate SYSTEM WIRING DIAGRAMS article** .

WHEN MONITORED:

With battery voltage greater than 10 Volts. ASD is energized. Engine speed less than 3000 RPM.

SET CONDITION:

The Powertrain Control Module (PCM) monitors the continuity of the injector circuits as well as the voltage spike created by the collapse of the magnetic field in the injector coil. Any condition that reduces the maximum current flow or the magnitude of the voltage spike can cause this DTC to set.

POSSIBLE CAUSES

Possible Causes
(F342) ASD CONTROL OUTPUT CIRCUIT
(K28) INJECTOR CONTROL NO. 8 CIRCUIT OPEN
(K28) INJECTOR CONTROL NO. 8 CIRCUIT SHORTED TO GROUND
FUEL INJECTOR
POWERTRAIN CONTROL MODULE (PCM)

Always perform the Pre-Diagnostic Troubleshooting procedure before proceeding. Refer to PRE-DIAGNOSTIC TROUBLESHOOTING PROCEDURE .

DIAGNOSTIC TEST

1. **ACTIVE DTC**
    1. Turn the ignition on.
    2. With the scan tool, select View DTCs. Record DTC and Freeze Frame information.
    3. Start the engine and allow it to reach operating temperature.

WARNING: When the engine is operating, do not stand in direct line with the fan. Do not put your hands near the pulleys, belts or fan. Do not wear loose clothing. Failure to follow these instructions may result in possible serious or fatal injury.

NOTE: Review Freeze Frame information. Operate the vehicle under conditions similar to which the DTC was set.

4. With the scan tool, select View DTCs.

    Is the DTC Active at this time?

    Yes

    - Go To 2.

    No

- Perform the INTERMITTENT CONDITION diagnostic procedure. Refer to **INTERMITTENT CONDITION** .

2. **FUEL INJECTOR 8 CIRCUIT RESISTANCE**

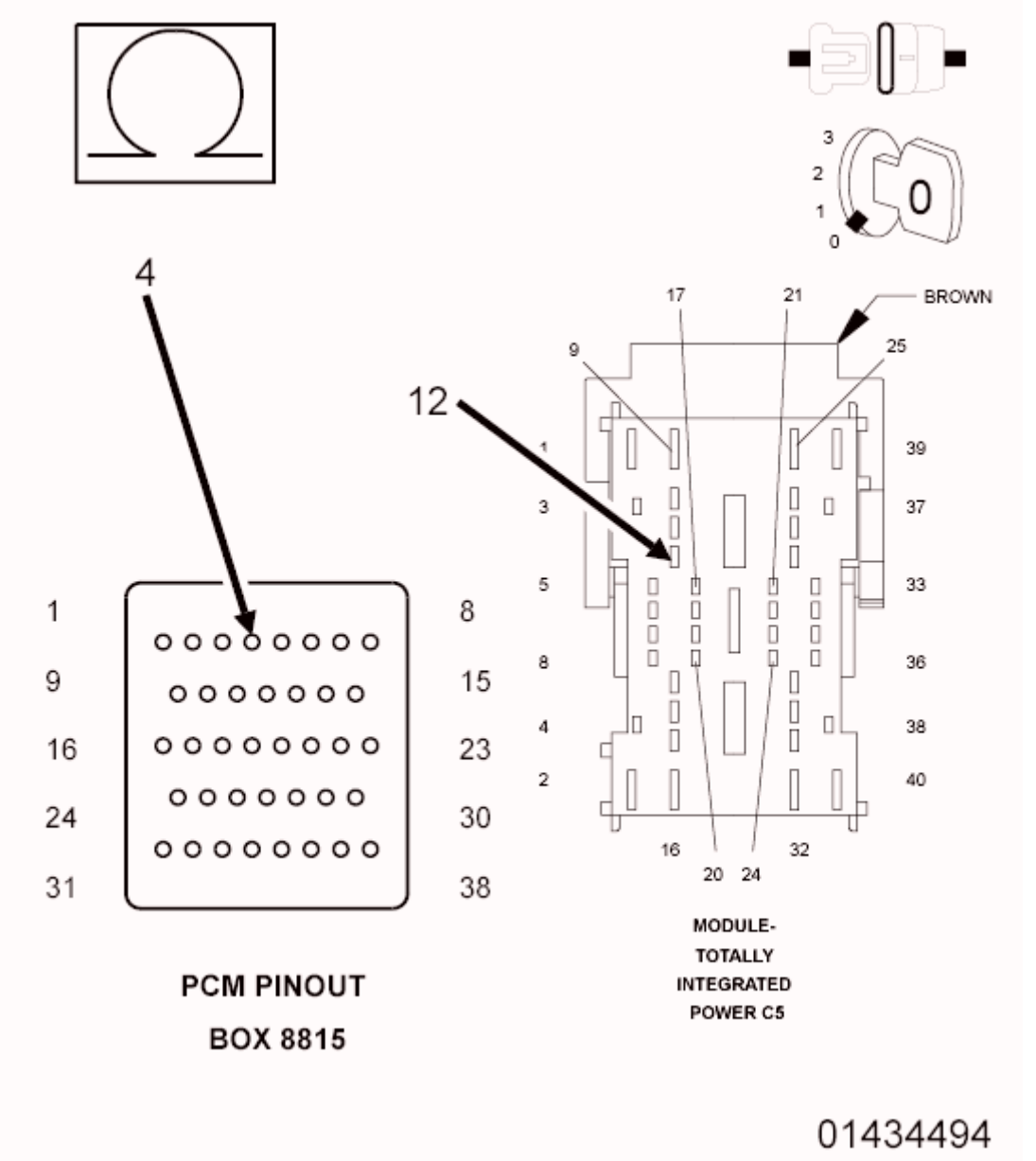

Fig. 77: Measuring Resistance Of Fuel Injector Circuit From Appropriate Terminal Of PCM Pinout Box 8815 And TIPM Harness Connector
Courtesy of CHRYSLER GROUP, LLC

1. Turn the ignition off.
2. Disconnect the C1 PCM harness connector.
3. Disconnect the C5 TIPM harness connector.

NOTE: **The resistance of the circuit will vary according to the temperature of the injector coil. Use the table below to determine the resistance range of the injector.**

CAUTION: Do not probe the PCM harness connectors. Probing the PCM harness connectors will damage the PCM terminals resulting in poor terminal to pin connection. Install the PCM Pinout Box (special tool #8815A, Kit, NGC, 38 Position) to perform diagnosis.

4. Measure the resistance of the Fuel Injector 8 circuit from the appropriate terminal of the PCM Pinout Box (special tool #8815A, Kit, NGC, 38 Position) and the C5 TIPM harness connector.

Fuel Injector Coil Resistance Based on Engine Temperature	
Temperature	**Resistance**
-20° C (-4° F)	10 Ohms (+/-.6 of an Ohm)
20° C (68° F)	12 Ohms (+/-.6 of an Ohm)
60° C (140° F)	14 Ohms (+/-.6 of an Ohm)
100° C (212° F)	16 Ohms (+/-.6 of an Ohm)

Is the resistance of the injector within the specified range?

Yes

- Go To 7.

No

- Go To 3.

3. **FUEL INJECTOR 8 WIRING AND CONNECTOR INSPECTION**
   1. Turn the ignition off.
   2. Verify that the Fuel Injector 8 is properly connected to the injector. Disconnect the Fuel Injector 8 connector and Inspect the terminals for any condition that would result in a poor connection.
   3. Using the wiring diagram/schematic as a guide, inspect the Fuel Injector 8 wiring and connector.
   4. Look for any chafed, pierced, pinched or partially broken wires.
   5. Look for broken, bent, pushed out or corroded terminals.
   6. Verify that there is good pin to terminal contact in the Injector and Powertrain Control Module connectors.

   Were any problems found?

   Yes

   - Repair as necessary.

- Perform the POWERTRAIN VERIFICATION TEST. Refer to **POWERTRAIN VERIFICATION TEST** .

No

- Go To 4.

4. **(F342) ASD CONTROL OUTPUT CIRCUIT OPEN OR HIGH RESISTANCE**

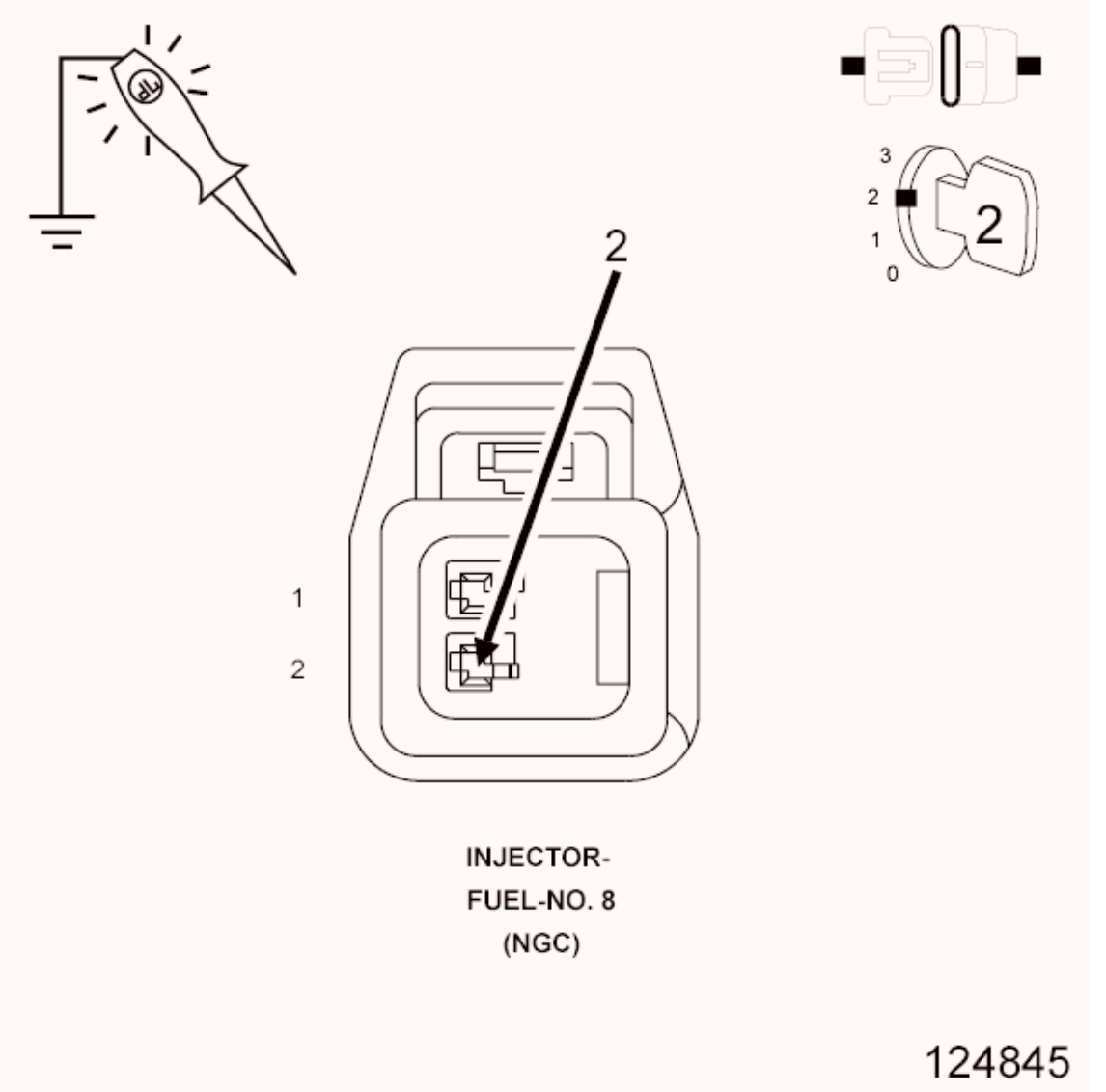

Fig. 78: Using 12-Volt Test Light Connected To Ground To Check (F342) ASD Control Output Circuit In Fuel Injector 8 Harness Connector
Courtesy of CHRYSLER GROUP, LLC

1. Turn the ignition on.
2. With the scan tool, actuate the Auto Shutdown (ASD) Control State.
3. Using a 12-volt test light connected to ground, check the (F342) ASD Control Output circuit in the

Fuel Injector 8 harness connector.

NOTE: **The test light should be illuminated and bright. Compare the brightness to that of a direct connection to the battery.**

Is the test light illuminated and bright?

Yes

- Go To 5.

No

- Repair the excessive resistance or short to ground in the (F342) ASD Control Output circuit.
- Perform the POWERTRAIN VERIFICATION TEST. Refer to **POWERTRAIN VERIFICATION TEST** .

5. **(K28) INJECTOR CONTROL NO. 8 CIRCUIT OPEN**

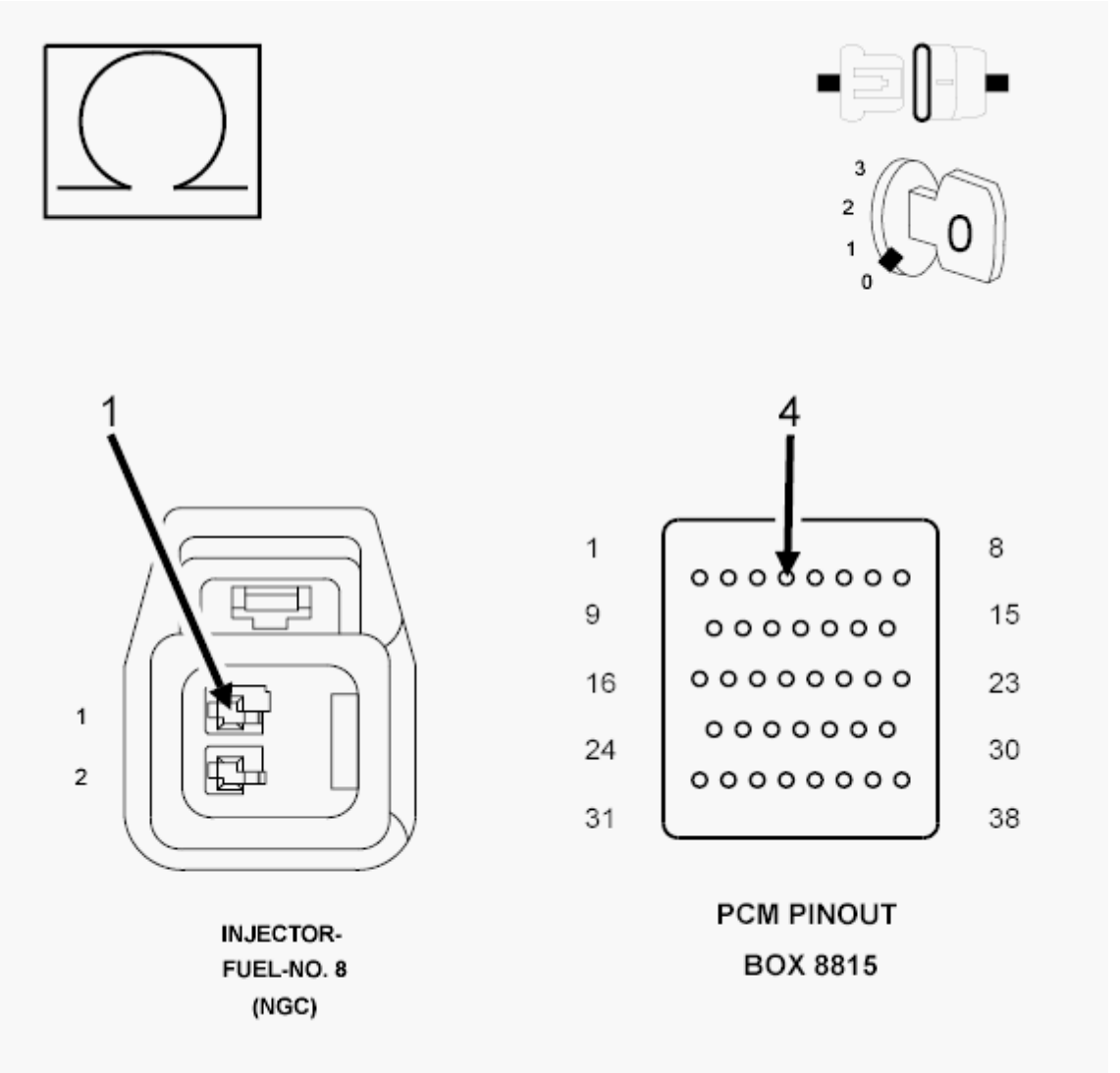

Fig. 79: Measuring Resistance Of (K28) Injector Control No. 8 Circuit From Fuel Injector Harness Connector To Appropriate Terminal Of PCM Pinout Box 8815
Courtesy of CHRYSLER GROUP, LLC

CAUTION: Do not probe the PCM harness connectors. Probing the PCM harness connectors will damage the PCM terminals resulting in poor terminal to pin connection. Install the PCM Pinout Box (special tool #8815A, Kit, NGC, 38 Position) to perform diagnosis.

1. Turn the ignition off.
2. Disconnect the C1 PCM harness connector.
3. Measure the resistance of the (K28) Injector Control No. 8 circuit from the Fuel Injector harness connector to the appropriate terminal of the PCM Pinout Box (special tool #8815A, Kit, NGC, 38 Position).

   Is the resistance below 8.0 Ohms?

Yes

- Go To 6.

No

- Repair the open in the (K28) Injector Control No. 8 circuit.
- Perform the POWERTRAIN VERIFICATION TEST. Refer to **POWERTRAIN VERIFICATION TEST** .

6. **FUEL INJECTOR 8**
   1. Using the wiring diagram/schematic as a guide, inspect the wiring and connectors between the Fuel Injector 8 and the Powertrain Control Module (PCM).
   2. Look for any chafed, pierced, pinched or partially broken wires.
   3. Look for broken, bent, pushed out or corroded terminals.
   4. Refer to any Technical Service Bulletins that may apply.
   5. Verify that there is good pin to terminal contact in the Injector and Powertrain Control Module connectors.

   Were any problems found?

   Yes

   - Repair as necessary.
   - Perform the POWERTRAIN VERIFICATION TEST. Refer to **POWERTRAIN VERIFICATION TEST** .

   No

   - Replace the Fuel Injector 8 in accordance with the Service Information.
   - Perform the POWERTRAIN VERIFICATION TEST. Refer to **POWERTRAIN VERIFICATION TEST** .

7. **(K28) INJECTOR CONTROL NO. 8 CIRCUIT SHORTED TO GROUND**

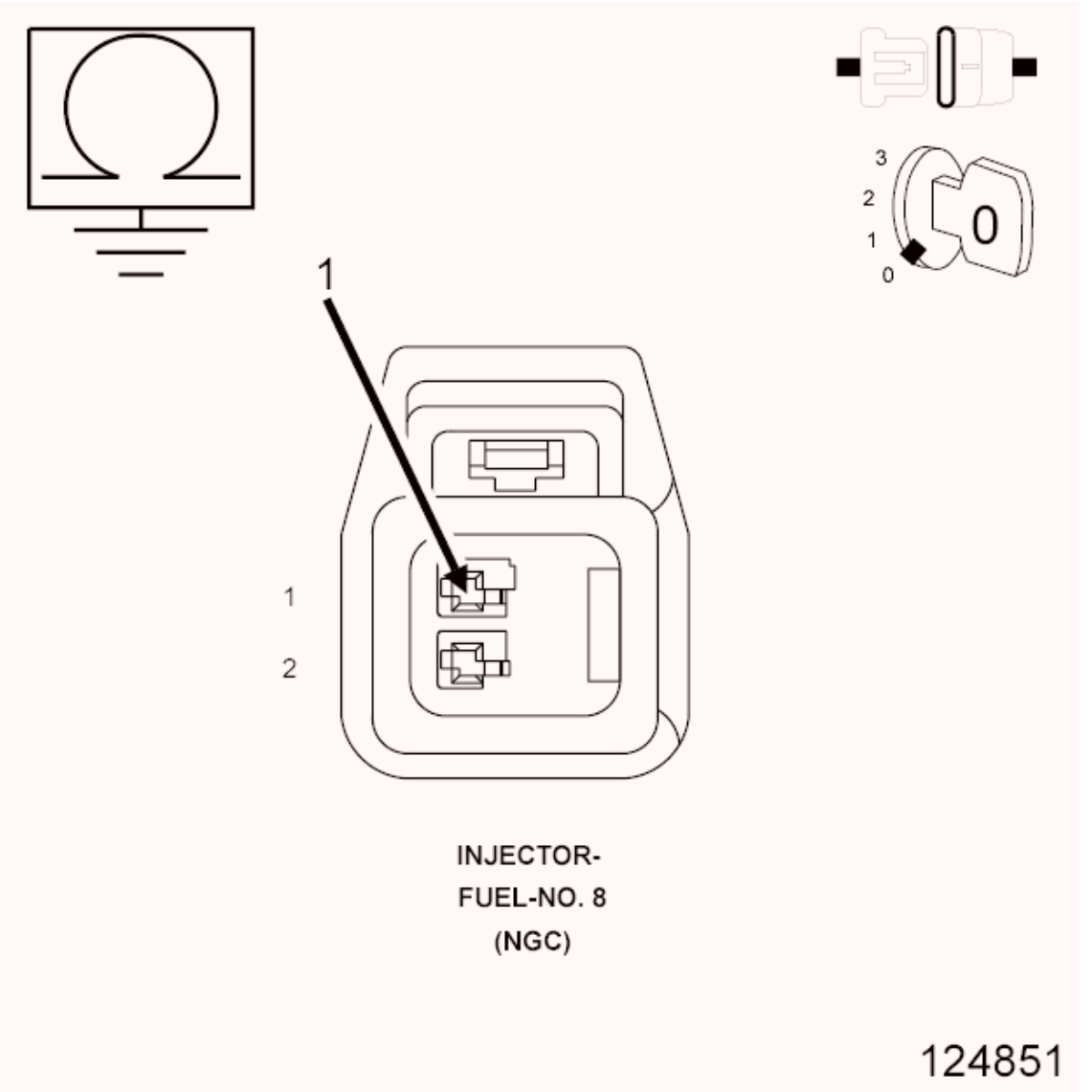

Fig. 80: Measuring Resistance Between Ground And (K28) Injector Control No. 8 Circuit In Injector Harness Connector
Courtesy of CHRYSLER GROUP, LLC

1. Turn the ignition off.
2. Measure the resistance between ground and the (K28) Injector Control No. 8 circuit in the Injector harness connector.

   Is the resistance below 100 Ohms?

   Yes

   - Repair the short to ground in the (K28) Injector Control No. 8 circuit.
   - Perform the POWERTRAIN VERIFICATION TEST. Refer to **POWERTRAIN VERIFICATION TEST** .

No

- Go To 8.

8. **POWERTRAIN CONTROL MODULE (PCM)**
    1. Using the wiring diagram/schematic as a guide, inspect the wiring and connectors between the Fuel Injector 8 and the Powertrain Control Module (PCM).
    2. Look for any chafed, pierced, pinched or partially broken wires.
    3. Look for broken, bent, pushed out or corroded terminals. Verify that there is good pin to terminal contact in the Injector and Control Module connectors.
    4. Refer to any Technical Service Bulletins that may apply.

    Were there any problems found?

    Yes

    - Repair as necessary.
    - Perform the POWERTRAIN VERIFICATION TEST. Refer to **POWERTRAIN VERIFICATION TEST** .

    No

    - Replace and program the Powertrain Control Module in accordance with the Service Information.
    - Perform the POWERTRAIN VERIFICATION TEST. Refer to **POWERTRAIN VERIFICATION TEST** .

P0221-THROTTLE POSITION SENSOR 2 PERFORMANCE

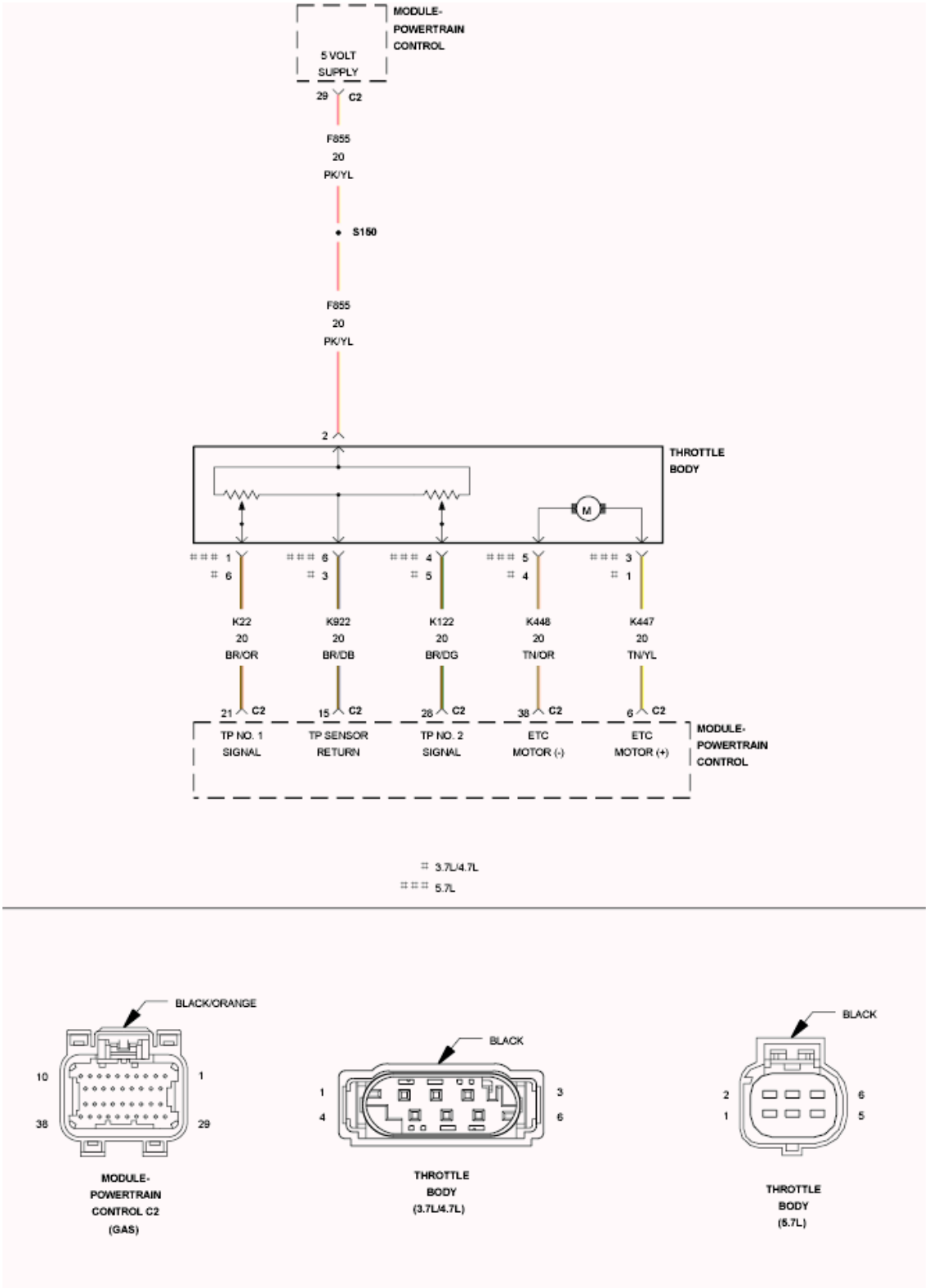

Fig. 81: Throttle Body Circuit Schematic
Courtesy of CHRYSLER GROUP, LLC

For a complete wiring diagram **refer to appropriate SYSTEM WIRING DIAGRAMS article** .

WHEN MONITORED:

Ignition on and No MAP Sensor DTCs set.

SET CONDITION:

The PCM detects that the sensor input voltage does not fall within a valid range based on engine speed and load. Two Trip Fault. ETC light will illuminate. P2135 should set with this code also.

POSSIBLE CAUSES

Possible Causes
EXCESSIVE RESISTANCE IN THE (K22) TP SENSOR CIRCUIT
EXCESSIVE RESISTANCE IN THE (K122) TP SENSOR NO. 2 SIGNAL CIRCUIT
EXCESSIVE RESISTANCE IN THE (F855) 5-VOLT SUPPLY CIRCUIT
EXCESSIVE RESISTANCE IN THE (K922) TP SENSOR RETURN CIRCUIT
(K22) TP SENSOR NO. 1 SIGNAL CIRCUIT SHORTED TO THE (K122) TP SENSOR NO. 2 SIGNAL CIRCUIT
THROTTLE POSITION SENSOR/THROTTLE BODY
POWERTRAIN CONTROL MODULE (PCM)

Always perform the Pre-Diagnostic Troubleshooting procedure before proceeding. Refer to PRE-DIAGNOSTIC TROUBLESHOOTING PROCEDURE .

DIAGNOSTIC TEST

1. **ACTIVE DTC**

NOTE: **Diagnose and repair any Throttle Body circuit, system voltage, or sensor supply voltage DTCs before continuing with this test.**

1. Start the engine and allow it to reach operating temperature.

WARNING: **When the engine is operating, do not stand in direct line with the fan. Do not put your hands near the pulleys, belts or fan. Do not wear loose clothing. Failure to follow these instructions may result in possible serious or fatal injury.**

2. With the scan tool select View DTCs.

NOTE: **If the DTC does not reset it may be necessary to test drive the vehicle.**

Is the DTC Active at this time?

Yes

- Go To 2.

No

- Go To 9.

2. **EXCESSIVE RESISTANCE IN THE (K122) TP SENSOR NO. 2 SIGNAL CIRCUIT**
   1. Turn the ignition off.
   2. Disconnect the C2 PCM harness connector.

      CAUTION: Do not probe the PCM harness connectors. Probing the PCM harness connectors will damage the PCM terminals resulting in poor terminal to pin connection. Install the PCM Pinout Box (special tool #8815A, Kit, NGC, 38 Position) along with the Adapter (special tool #8815-1, PCM Pinout Box Adapter) to perform the diagnosis.

   3. Using a voltmeter perform a voltage drop test. Backprobe the (K122) TP Sensor No. 2 Signal circuit at the Throttle Body harness connector and probe the appropriate terminal of the special tool (special tool #8815A, Kit, NGC, 38 Position). Make sure the voltmeter leads are connected so a positive polarity is displayed on the voltmeter.

      WARNING: When the engine is operating, do not stand in direct line with the fan. Do not put your hands near the pulleys, belts or fan. Do not wear loose clothing. Failure to follow these instructions may result in possible serious or fatal injury.

   4. Start the engine and allow it to reach normal operating temperature.
   5. Monitor the voltmeter.

      Is the voltage below 0.5 of a volt?

      Yes

      - Go To 3.

      No

      - Repair the excessive resistance in the (K122) TP Sensor No. 2 Signal circuit.
      - Perform the POWERTRAIN VERIFICATION TEST. Refer to **POWERTRAIN VERIFICATION TEST** .

3. **EXCESSIVE RESISTANCE IN THE (K22) TP SENSOR NO. 1 SIGNAL CIRCUIT**
   1. Turn the ignition off.
   2. Move the voltmeter leads to backprobe the (K22) TP Sensor No. 1 Signal circuit at the Throttle

Body harness connector and to probe the appropriate terminal of the special tool (special tool #8815A, Kit, NGC, 38 Position). Make sure the voltmeter leads are connected so a positive polarity is displayed on the voltmeter.

WARNING: When the engine is operating, do not stand in direct line with the fan. Do not put your hands near the pulleys, belts or fan. Do not wear loose clothing. Failure to follow these instructions may result in possible serious or fatal injury.

3. Start the engine and allow it to reach normal operating temperature.
4. Monitor the voltmeter.

   Is the voltage below 0.5 of a volt?

   Yes

   - Go To 4.

   No

   - Repair the excessive resistance in the (K22) TP Sensor No. 1 Signal circuit.
   - Perform the POWERTRAIN VERIFICATION TEST. Refer to **POWERTRAIN VERIFICATION TEST** .

4. **EXCESSIVE RESISTANCE IN THE (F855) 5-VOLT SUPPLY CIRCUIT**
   1. Turn the ignition off.
   2. Move the voltmeter leads to backprobe the (F855) 5-volt Supply circuit at the Throttle Body harness connector and to probe the appropriate terminal of the special tool (special tool #8815A, Kit, NGC, 38 Position). Make sure the voltmeter leads are connected so a positive polarity is displayed on the voltmeter.

      WARNING: When the engine is operating, do not stand in direct line with the fan. Do not put your hands near the pulleys, belts or fan. Do not wear loose clothing. Failure to follow these instructions may result in possible serious or fatal injury.

   3. Start the engine and allow it to reach normal operating temperature.
   4. Monitor the voltmeter.

      Is the voltage below 0.5 of a volt?

      Yes

      - Go To 5.

      No

- Repair the excessive resistance in the (F855) 5-volt Supply circuit.
- Perform the POWERTRAIN VERIFICATION TEST. Refer to **POWERTRAIN VERIFICATION TEST** .

5. **EXCESSIVE RESISTANCE IN THE (K922) TP SENSOR RETURN CIRCUIT**
   1. Turn the ignition off.
   2. Move the voltmeter leads to backprobe the (K922) TP Sensor Return circuit at the Throttle Body harness connector and to probe the appropriate terminal of the special tool (special tool #8815A, Kit, NGC, 38 Position). Make sure the voltmeter leads are connected so a positive polarity is displayed on the voltmeter.

      WARNING: **When the engine is operating, do not stand in direct line with the fan. Do not put your hands near the pulleys, belts or fan. Do not wear loose clothing. Failure to follow these instructions may result in possible serious or fatal injury.**

   3. Start the engine and allow it to reach normal operating temperature.
   4. Monitor the voltmeter.

      Is the voltage below 0.5 of a volt?

      Yes

      - Go To 6.

      No

      - Repair the excessive resistance in the (K922) TP Sensor Return circuit.
      - Perform the POWERTRAIN VERIFICATION TEST. Refer to **POWERTRAIN VERIFICATION TEST** .

6. **(K22) TP SENSOR NO. 1 SIGNAL SHORTED TO THE (K122) TP SENSOR NO. 2 SIGNAL**

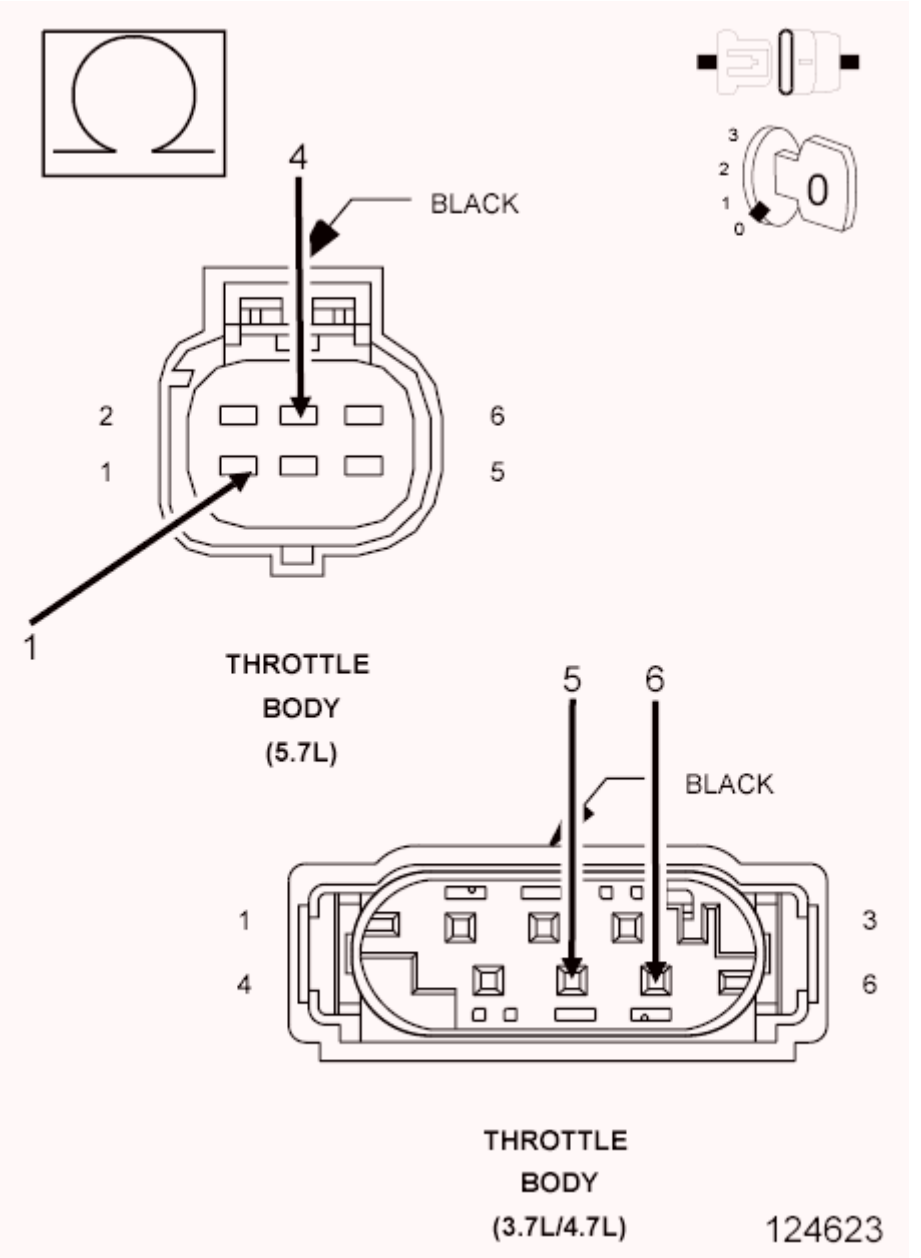

Fig. 82: Measuring Resistance Between TP Sensor No. 1 Signal Circuit And No. 2 Signal Circuit AT Throttle Body Harness Connector
Courtesy of CHRYSLER GROUP, LLC

1. Turn the ignition off.
2. Remove special tool (special tool #8815A, Kit, NGC, 38 Position) and (special tool #8815-1, PCM Pinout Box Adapter), leaving the C2 PCM harness connector disconnected.
3. Disconnect the Throttle Body harness connector.
4. Measure the resistance between the (K22) TP Sensor No. 1 Signal circuit and the (K122) TP Sensor No. 2 Signal circuit at the Throttle Body harness connector.

   Is the resistance below 5.0 ohms?

Yes

- Repair the short between the (K122) TP Sensor No. 2 Signal circuit and the (K22) TP Sensor No. 1 Signal circuit.
- Perform the POWERTRAIN VERIFICATION TEST. Refer to **POWERTRAIN VERIFICATION TEST** .

No

- Go To 7.

7. **THROTTLE POSITION SENSOR**

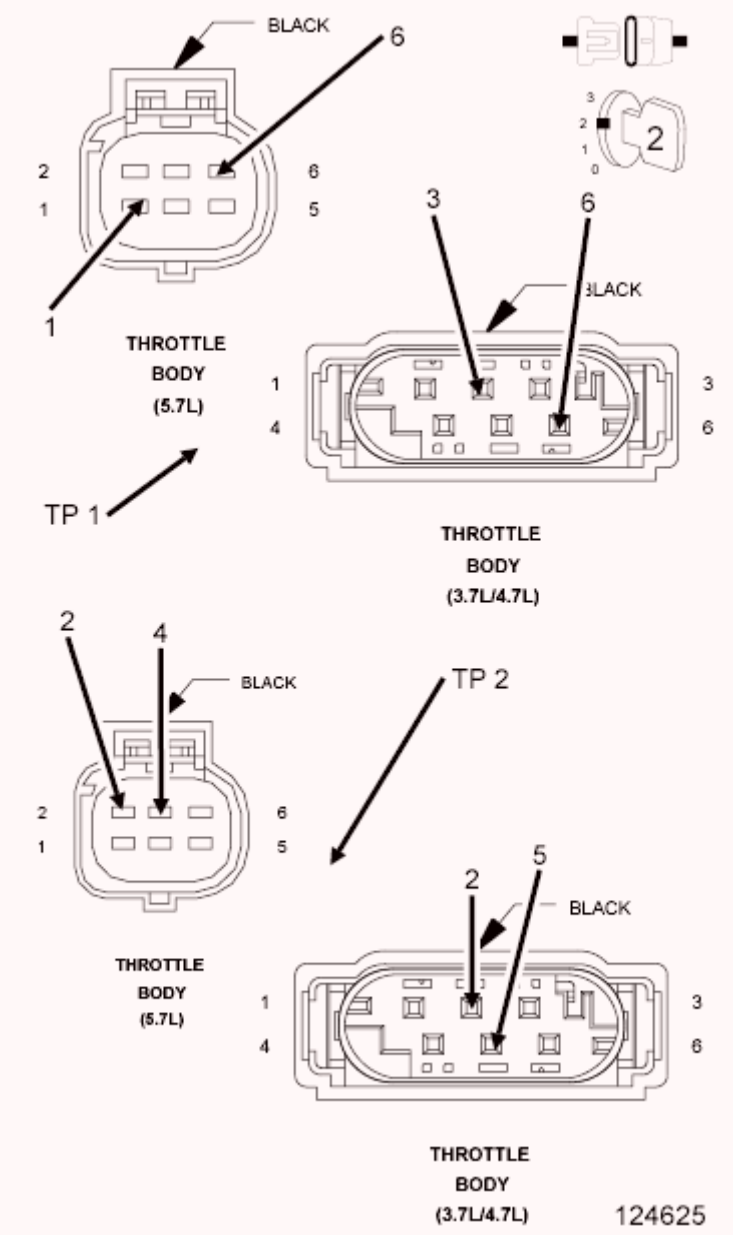

Fig. 83: TP Sensors
Courtesy of CHRYSLER GROUP, LLC

1. Connect the C2 PCM harness connector.
2. Ignition on, engine not running.
3. With the scan tool, monitor the TP Sensor No. 1 and No. 2 voltage.
4. Connect a jumper wire between the (K922) TP Sensor Return circuit and the (K22) TP Sensor No. 1 Signal circuit.

   NOTE: TP Sensor No. 1 voltage should change from approximately 4.7 volts to 0.3 of a volt.

5. For TP Sensor No. 2, connect a jumper wire between (F855) 5-volt supply circuit and the (K122) TP Sensor No. 2 Signal circuit.

   NOTE: TP Sensor No. 2 voltage should change from approximately 0 volts to 5.0 volts.

   Is the voltage reading within the listed specification with the jumper wire installed?

   Yes

   - Verify that there is good pin to terminal contact at the Throttle Body and the Powertrain Control Module connectors. Replace the Throttle Body Assembly if no problems were found in the connectors. Disconnect the Battery when replacing the Throttle Body Assembly. After installation is complete, use a scan tool and select the ETC RELEARN function.
   - Perform the POWERTRAIN VERIFICATION TEST. Refer to **POWERTRAIN VERIFICATION TEST** .

   No

   - Go To 8.

     NOTE: Remove the jumper wire before continuing.

8. **POWERTRAIN CONTROL MODULE (PCM)**
   1. Using the wiring diagram/schematic as a guide, inspect the wiring and connectors between the Throttle Body and the Powertrain Control Module (PCM).
   2. Look for any chafed, pierced, pinched, or partially broken wires.
   3. Look for broken, bent, pushed out or corroded terminals. Verify that there is good pin to terminal contact in the Throttle Body and Control Module connectors.
   4. Refer to any Technical Service Bulletins that may apply.

   Were there any problems found?

Yes

- Repair as necessary.
- Perform the POWERTRAIN VERIFICATION TEST. Refer to **POWERTRAIN VERIFICATION TEST** .

No

- Replace and program the Powertrain Control Module per Service Information.
- Perform the POWERTRAIN VERIFICATION TEST. Refer to **POWERTRAIN VERIFICATION TEST** .

9. **THROTTLE FOLLOWER TEST**
    1. Ignition on, engine not running.
    2. With the scan tool, perform the ETC Throttle Follower Test and monitor the TP Sensor No. 1 or No. 2 voltage.
    3. Slowly press the throttle pedal down.
    4. The voltage for TP Sensor No. 1 should start at approximately 0.7 of a volt and increase to approximately 4.3 volts.
    5. The voltage for TP Sensor No. 2 should start at approximately 4.3 volts and decrease to approximately 0.7 of a volt.

    Is the voltage within the range of the listed specification for the appropriate Sensor?

    Yes

    - Perform the INTERMITTENT CONDITION diagnostic procedure. Refer to **INTERMITTENT CONDITION** .

    No

    - Verify that there is good pin to terminal contact at the Throttle Body and the Powertrain Control Module connectors. Replace the Throttle Body Assembly if no problems were found in the connectors. Disconnect the Battery when replacing the Throttle Body Assembly. After installation is complete, use a scan tool and select the ETC RELEARN function.
    - Perform the POWERTRAIN VERIFICATION TEST. Refer to **POWERTRAIN VERIFICATION TEST** .

P0222-THROTTLE POSITION SENSOR 2 CIRCUIT LOW

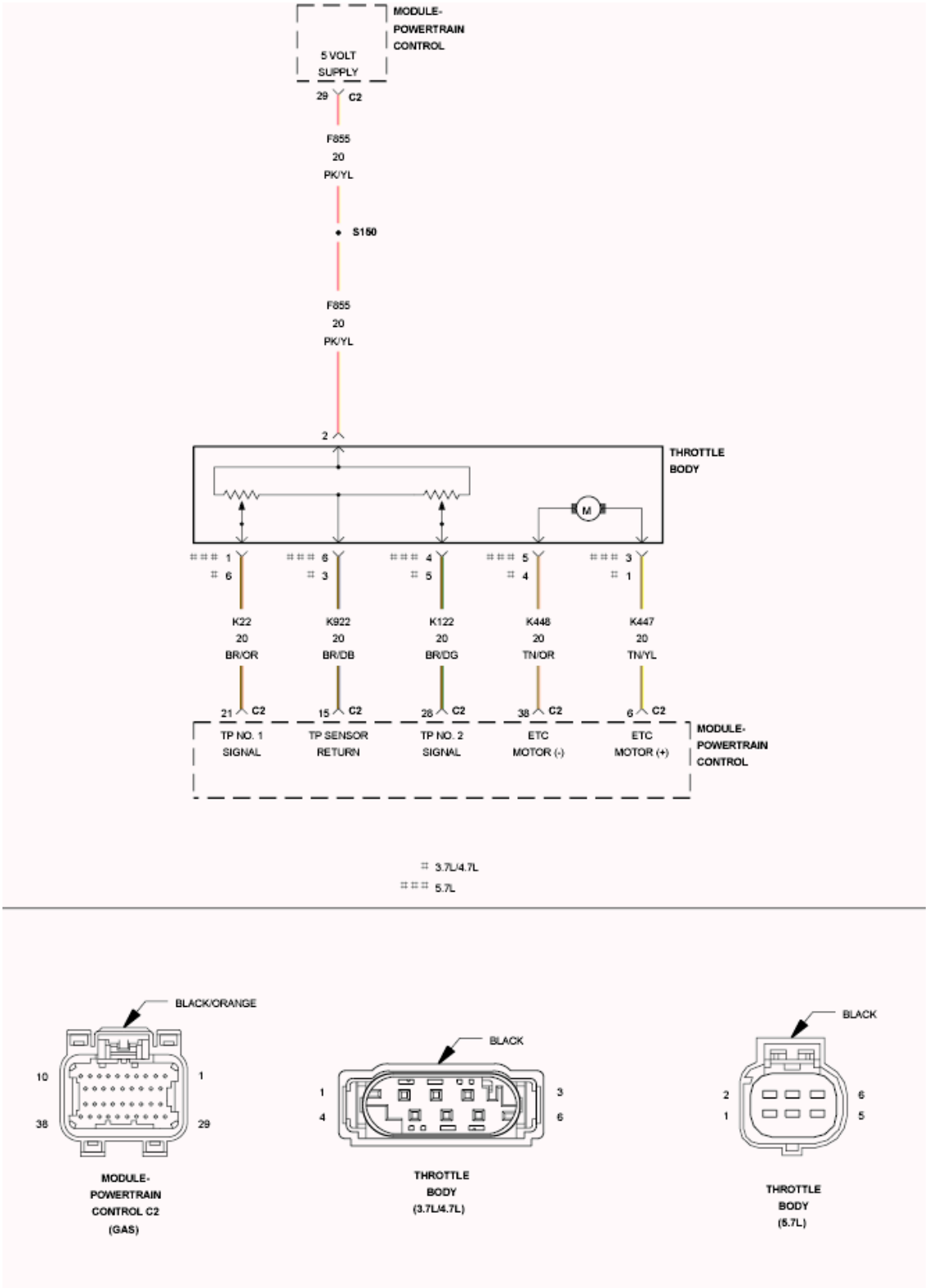

Fig. 84: Throttle Body Circuit Schematic
Courtesy of CHRYSLER GROUP, LLC

For a complete Engine wiring diagram **refer to appropriate SYSTEM WIRING DIAGRAMS article** .

WHEN MONITORED:

With the ignition on. Battery voltage greater than 10 volts.

SET CONDITION:

The PCM detects that the Throttle Body input voltage is below the minimum acceptable value. One Trip Fault. Three good trips to turn off the MIL. The ETC light will illuminate.

POSSIBLE CAUSES

Possible Causes
(F855) 5-VOLT SUPPLY CIRCUIT OPEN
(F855) 5-VOLT SUPPLY CIRCUIT SHORTED TO GROUND
(K122) TP SENSOR NO. 2 SIGNAL CIRCUIT SHORTED TO GROUND
(K122) TP SENSOR NO. 2 SIGNAL CIRCUIT SHORTED TO THE (K922) TP SENSOR RETURN CIRCUIT
EXCESSIVE RESISTANCE IN THE (K122) TP SENSOR NO. 2 SIGNAL CIRCUIT
THROTTLE POSITION SENSOR/THROTTLE BODY
THROTTLE PLATE JAMMED AGAINST THE MAXIMUM STOP
POWERTRAIN CONTROL MODULE (PCM)

Always perform the Pre-Diagnostic Troubleshooting procedure before proceeding. Refer to PRE-DIAGNOSTIC TROUBLESHOOTING PROCEDURE .

DIAGNOSTIC TEST

1. **DTC IS ACTIVE**

NOTE: **Diagnose and repair any Throttle Body circuit, system voltage, or sensor supply voltage DTCs before continuing with this test.**

1. Start the engine and allow it to reach operating temperature.

WARNING: **When the engine is operating, do not stand in direct line with the fan. Do not put your hands near the pulleys, belts or fan. Do not wear loose clothing. Failure to follow these instructions may result in possible serious or fatal injury.**

2. With the scan tool select View DTCs.

NOTE: **If the DTC does not reset it may be necessary to test drive the vehicle.**

Is the status Active for this DTC?

Yes

- Go To 2.

No

- Go To 11.

2. **P0122 ALSO SET**

   Was the P0122-TP SENSOR NO. 1 VOLTAGE LOW DTC set along with the P0222?

   Yes

   - Go To 3.

   No

   - Go To 4.

3. **(F855) 5-VOLT SUPPLY CIRCUIT**

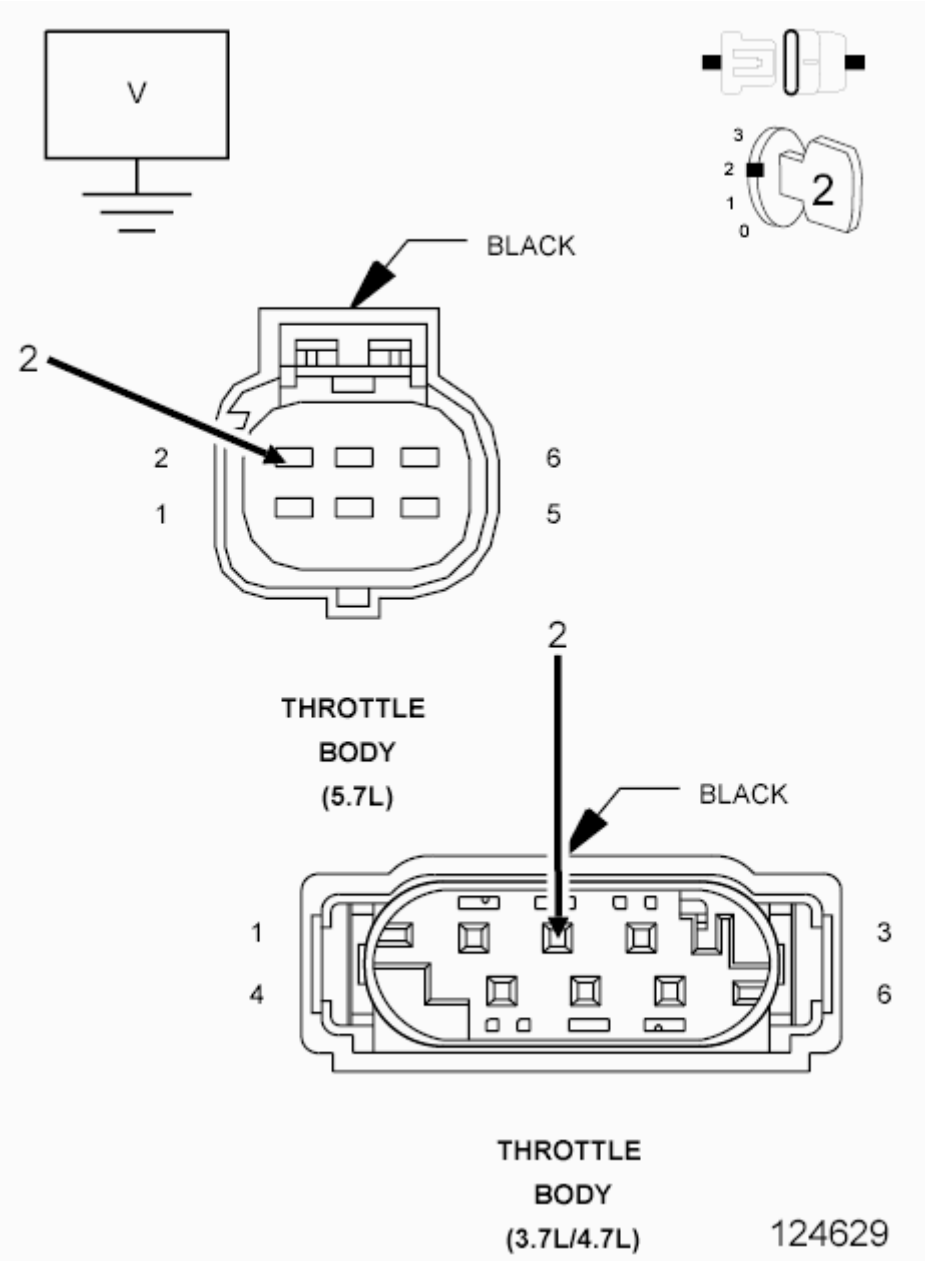

Fig. 85: Measuring Voltage On Primary 5-Volt Supply Circuit AT Throttle Body Harness Connector
Courtesy of CHRYSLER GROUP, LLC

1. Turn the ignition off.
2. Disconnect the Throttle Body harness connector.
3. Ignition on, engine not running.
4. Measure the voltage on the (F855) 5-volt Supply circuit in the Throttle Body harness connector.

   Is the voltage between 4.5 to 5.2 volts?

Yes

- Go To 4.

No

- Go To 8.

4. **THROTTLE POSITION SENSOR**

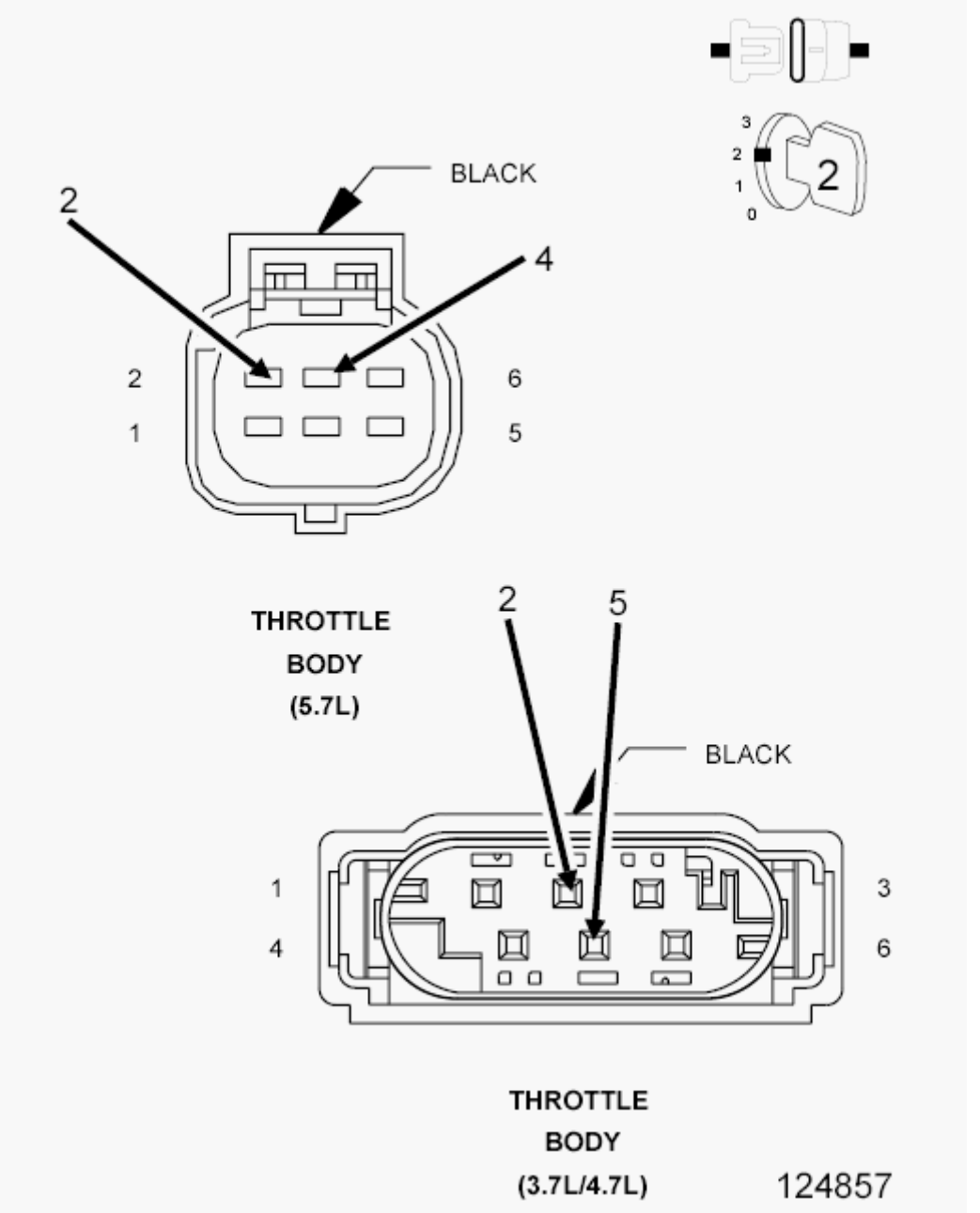

Fig. 86: Throttle Body Harness Connector
Courtesy of CHRYSLER GROUP, LLC

1. With the scan tool, monitor the TP Sensor No. 2 voltage.
2. Connect a jumper wire between the (F855) 5-volt Supply circuit and the (K122) TP Sensor No. 2 Signal circuit in the Throttle Body harness connector.

   Is the voltage between 4.8 and 5.2 volts with the jumper wire installed?

   Yes

   - Verify that there is good pin to terminal contact at the Throttle Body and the Powertrain Control Module connectors. Replace the Throttle Body Assembly if no problems were found in the connectors. Disconnect the Battery when replacing the Throttle Body Assembly. After installation is complete, use a scan tool and select the ETC RELEARN function.
   - Perform the POWERTRAIN VERIFICATION TEST. Refer to **POWERTRAIN VERIFICATION TEST** .

   No

   - Go To 5.

   NOTE: Remove the jumper wire before continuing.

5. **EXCESSIVE RESISTANCE IN THE (K122) TP SENSOR NO. 2 SIGNAL CIRCUIT**

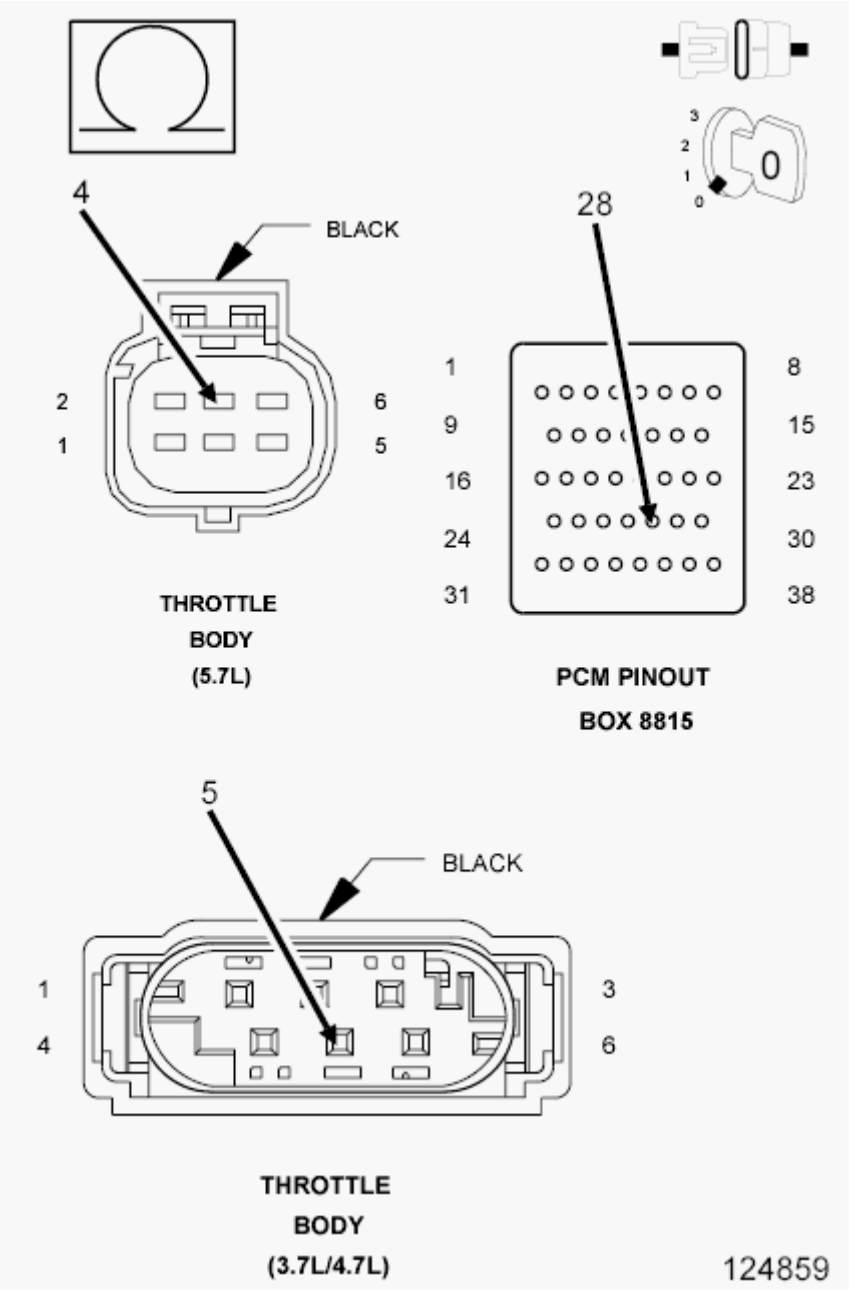

Fig. 87: Measuring Resistance Of (K122) TP Sensor No. 2 Signal Circuit From Throttle Body Harness Connector To Appropriate Terminal Of Special Tool #8815
Courtesy of CHRYSLER GROUP, LLC

1. Turn the ignition off.
2. Disconnect the C2 PCM harness connector.

CAUTION: Do not probe the PCM harness connectors. Probing the PCM harness connectors will damage the PCM terminals resulting in poor terminal to pin connection. Install the PCM Pinout Box (special tool #8815A, Kit, NGC, 38 Position) to perform

diagnosis.

3. Measure the resistance of the (K122) TP Sensor No. 2 Signal circuit from the Throttle Body harness connector to the appropriate terminal of special tool (special tool #8815A, Kit, NGC, 38 Position).

   Is the resistance below 5.0 ohms?

   Yes

   - Go To 6.

   No

   - Repair the excessive resistance in the (K122) TP Sensor No. 2 Signal circuit.
   - Perform the POWERTRAIN VERIFICATION TEST. Refer to **POWERTRAIN VERIFICATION TEST** .

6. **(K122) TP SENSOR NO. 2 SIGNAL CIRCUIT SHORTED TO GROUND**

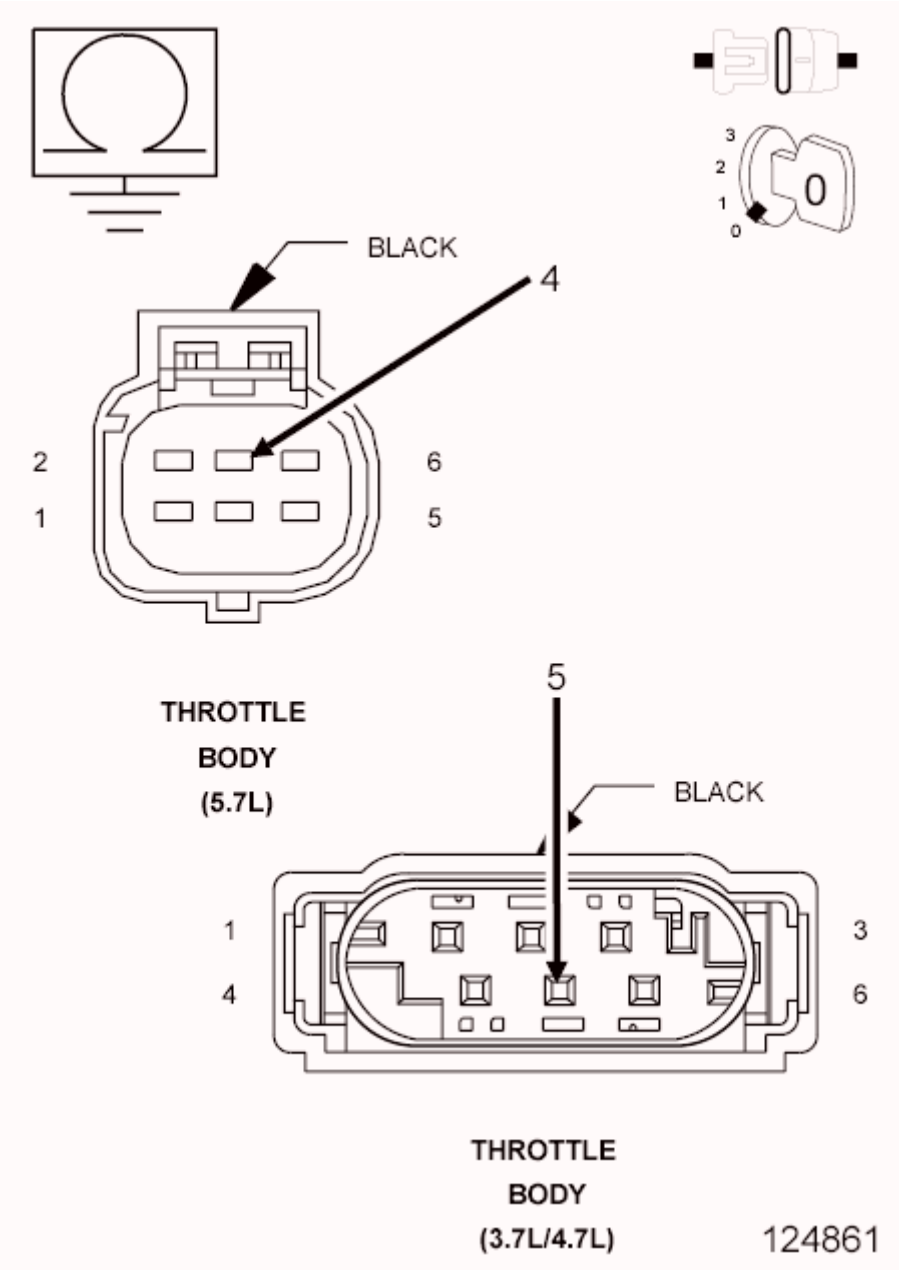

Fig. 88: Measuring Resistance Between Ground And (K122) TP Sensor No. 2 Signal Circuit AT Throttle Body Harness Connector
Courtesy of CHRYSLER GROUP, LLC

1. Measure the resistance between ground and the (K122) TP Sensor No. 2 Signal circuit at the Throttle Body harness connector.

   Is the resistance below 100 ohms?

   Yes

   - Repair the short to ground in the (K122) TP Sensor No. 2 Signal.

- Perform the POWERTRAIN VERIFICATION TEST. Refer to **POWERTRAIN VERIFICATION TEST** .

No

- Go To 7.

7. **(K122) TP SENSOR NO. 2 SIGNAL CIRCUIT SHORTED TO (K922) TP SENSOR RETURN CIRCUIT**

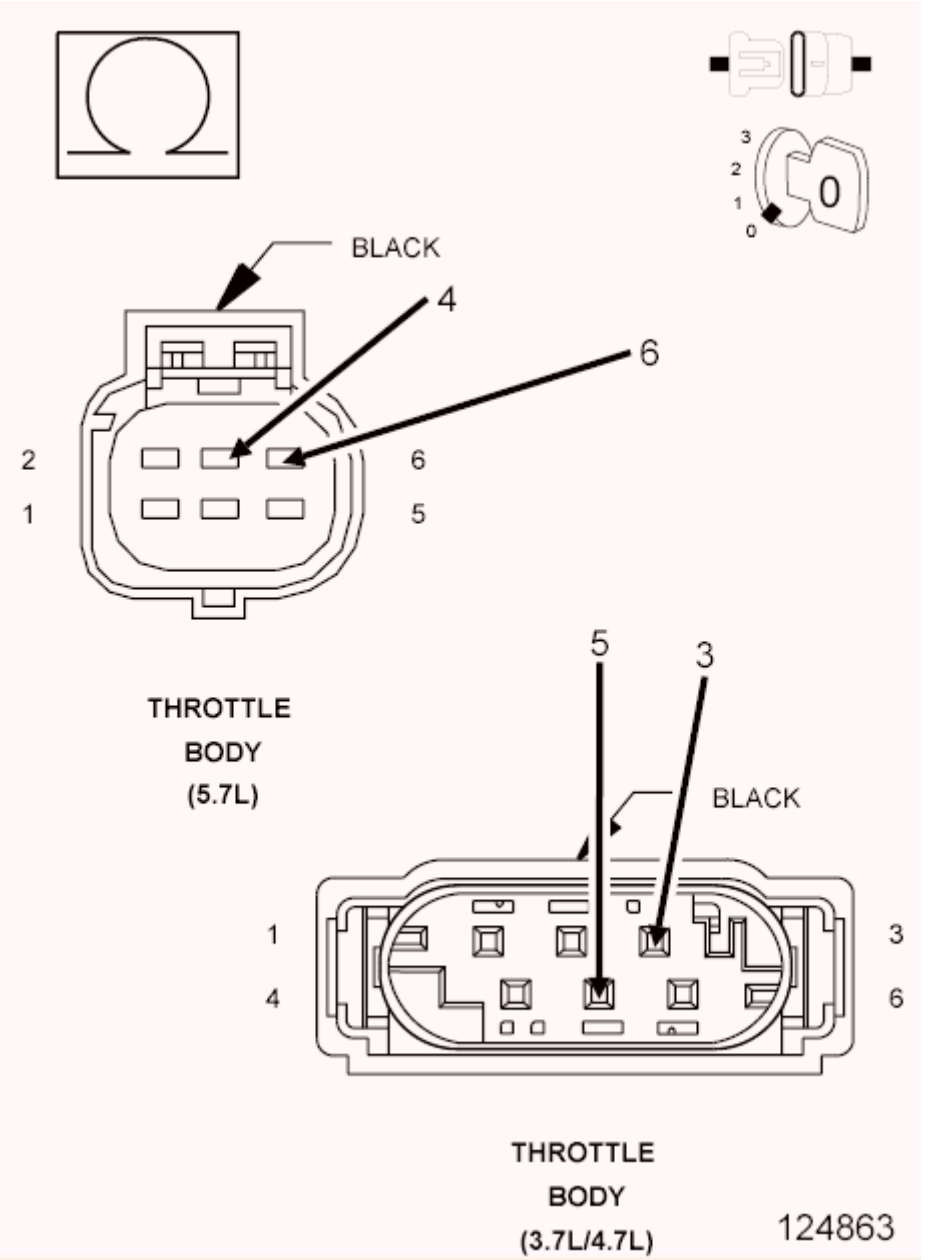

Fig. 89: Measuring Resistance Between (K122) TP Sensor No. 2 Signal Circuit And (K922) TP Sensor Return Circuit AT Throttle Body Harness Connector
Courtesy of CHRYSLER GROUP, LLC

1. Measure the resistance between the (K122) TP Sensor No. 2 Signal circuit and the (K922) TP Sensor Return circuit at the Throttle Body harness connector.

   Is the resistance below 100 ohms?

   Yes

   - Repair the short between the (K922) TP Sensor Return circuit and the (K122) TP Sensor No. 2 Signal circuit.
   - Perform the POWERTRAIN VERIFICATION TEST. Refer to **POWERTRAIN VERIFICATION TEST** .

   No

   - Go To 10.

8. **(F855) 5-VOLT SUPPLY CIRCUIT OPEN**

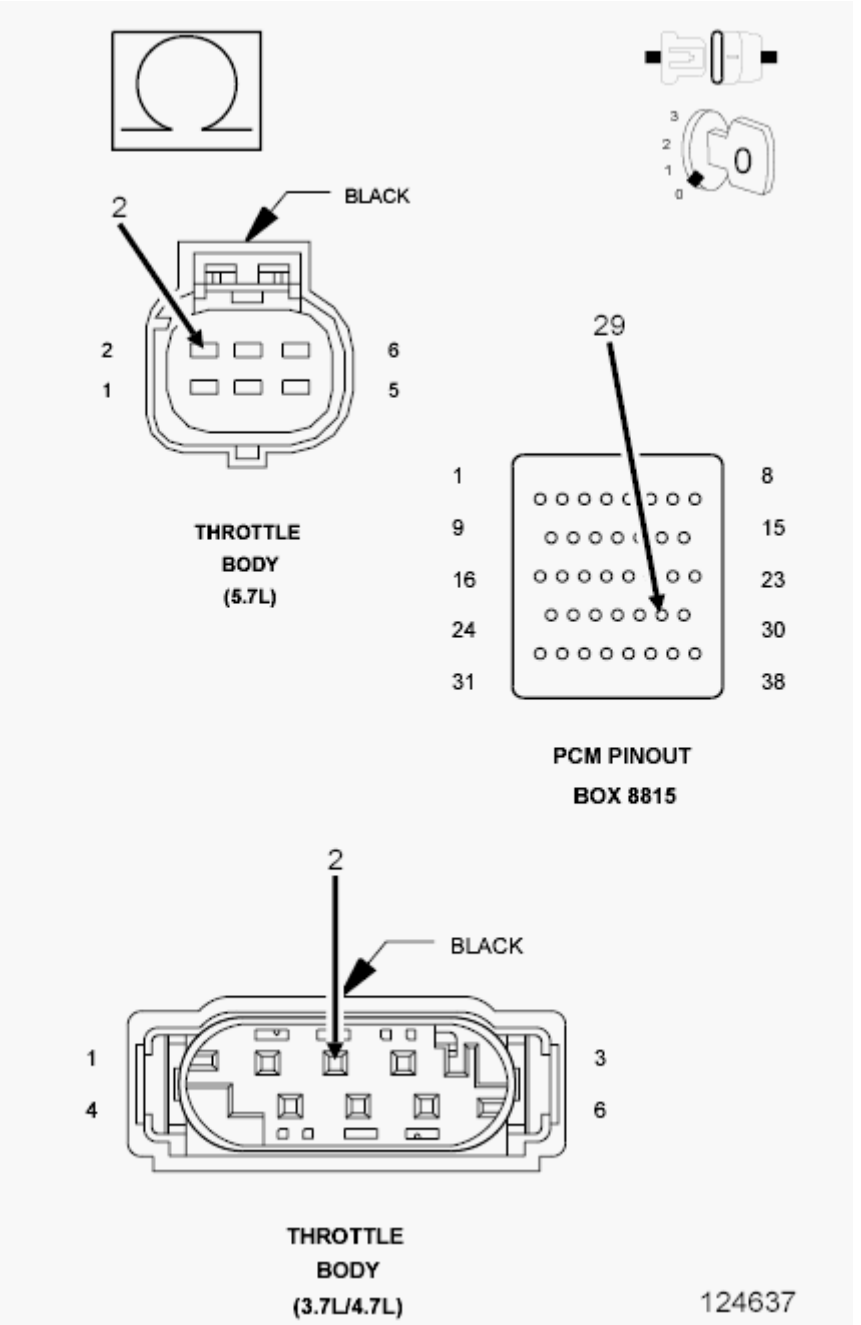

Fig. 90: Measuring Resistance Of (F855) 5-Volt Supply Circuit From Throttle Body Harness Connector To Appropriate Terminal Of Special Tool #8815
Courtesy of CHRYSLER GROUP, LLC

1. Turn the ignition off.
2. Disconnect the C2 PCM harness connector.

CAUTION: Do not probe the PCM harness connectors. Probing the PCM harness connectors will damage the PCM terminals resulting in poor terminal to pin connection. Install the PCM Pinout Box

(special tool #8815A, Kit, NGC, 38 Position) to perform diagnosis.

3. Measure the resistance of the (F855) 5-volt Supply circuit from the Throttle Body harness connector to the appropriate terminal of special tool (special tool #8815A, Kit, NGC, 38 Position).

   Is the resistance below 5.0 ohms?

   Yes

   - Go To 9.

   No

   - Repair the open in the (F855) 5-volt Supply circuit.
   - Perform the POWERTRAIN VERIFICATION TEST. Refer to **POWERTRAIN VERIFICATION TEST** .

9. **(F855) 5-VOLT SUPPLY CIRCUIT SHORTED TO GROUND**

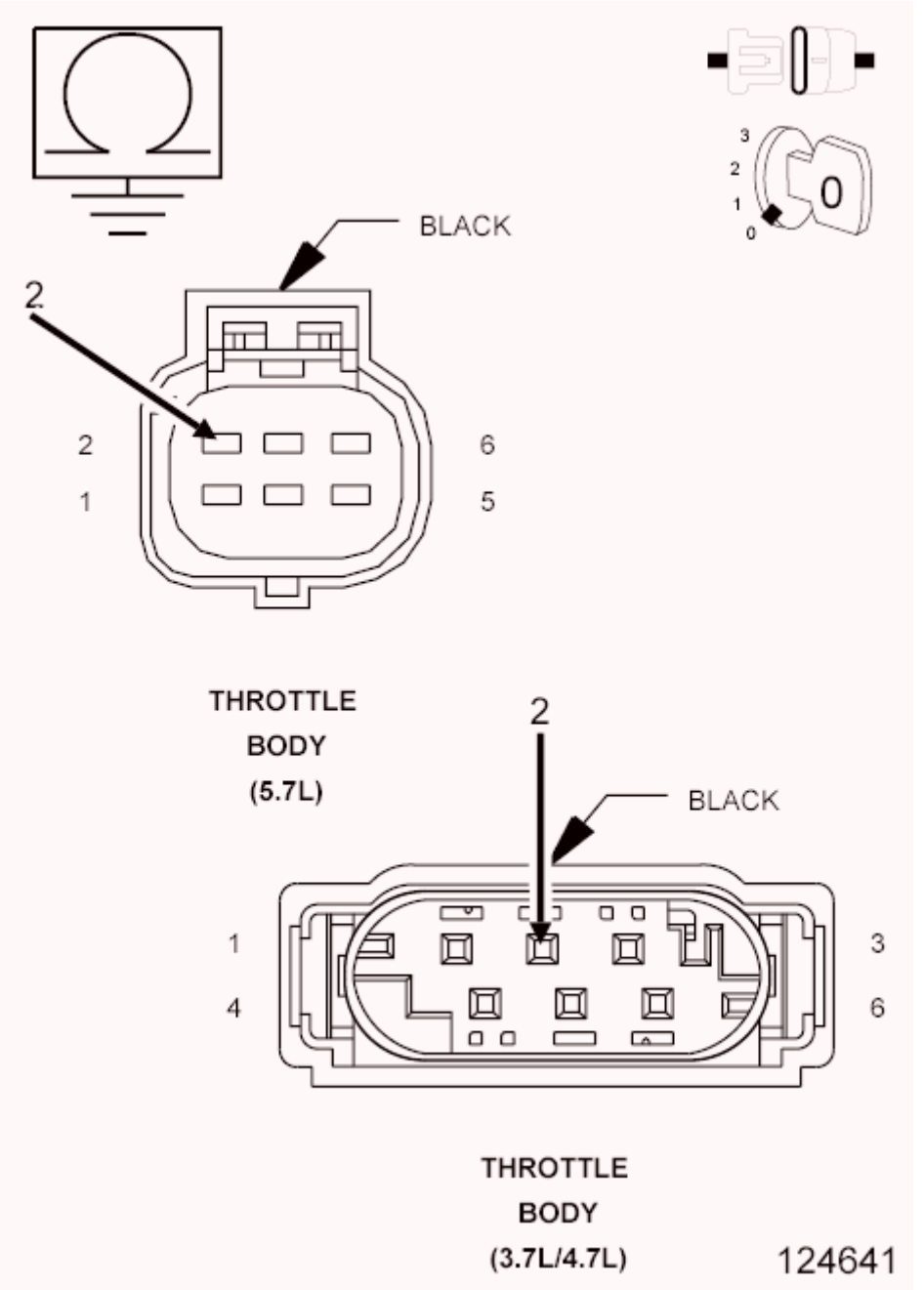

Fig. 91: Measuring Resistance Between Ground And 5-Volt Supply Circuit AT Throttle Body Harness Connector
Courtesy of CHRYSLER GROUP, LLC

1. Measure the resistance between ground and the (F855) 5-volt Supply circuit at the Throttle Body harness connector.

   Is the resistance below 100 ohms?

   Yes

- Repair the short to ground in the (F855) 5-volt Supply circuit.
- Perform the POWERTRAIN VERIFICATION TEST. Refer to **POWERTRAIN VERIFICATION TEST** .

No

- Go To 10.

10. **POWERTRAIN CONTROL MODULE (PCM)**
    1. Using the wiring diagram/schematic as a guide, inspect the wiring and connectors between the Throttle Body and the Powertrain Control Module (PCM).
    2. Look for any chafed, pierced, pinched, or partially broken wires.
    3. Look for broken, bent, pushed out or corroded terminals. Verify that there is good pin to terminal contact in the Throttle Body and Control Module connectors.
    4. Refer to any Technical Service Bulletins that may apply.

    Were there any problems found?

    Yes

    - Repair as necessary.
    - Perform the POWERTRAIN VERIFICATION TEST. Refer to **POWERTRAIN VERIFICATION TEST** .

    No

    - Replace and program the Powertrain Control Module per Service Information.
    - Perform the POWERTRAIN VERIFICATION TEST. Refer to **POWERTRAIN VERIFICATION TEST** .

11. **THROTTLE FOLLOWER TEST**
    1. Ignition on, engine not running.
    2. With the scan tool, perform the ETC Throttle Follower Test.
    3. Monitor the TP Sensor No. 2 voltage while slowly pressing the Throttle pedal down.

    Is there a smooth voltage change from approximately 4.3 volts down to approximately 0.7 of a volt?

    Yes

    - Perform the INTERMITTENT CONDITION Diagnostic Procedure. Refer to **INTERMITTENT CONDITION** .

    No

    - Verify that there is good pin to terminal contact at the Throttle Body and the Powertrain

Control Module connectors. Replace the Throttle Body Assembly if no problems were found in the connectors. Disconnect the Battery when replacing the Throttle Body Assembly. After installation is complete, use a scan tool and select the ETC RELEARN function.

- Perform the POWERTRAIN VERIFICATION TEST. Refer to **POWERTRAIN VERIFICATION TEST** .

P0223-THROTTLE POSITION SENSOR 2 CIRCUIT HIGH

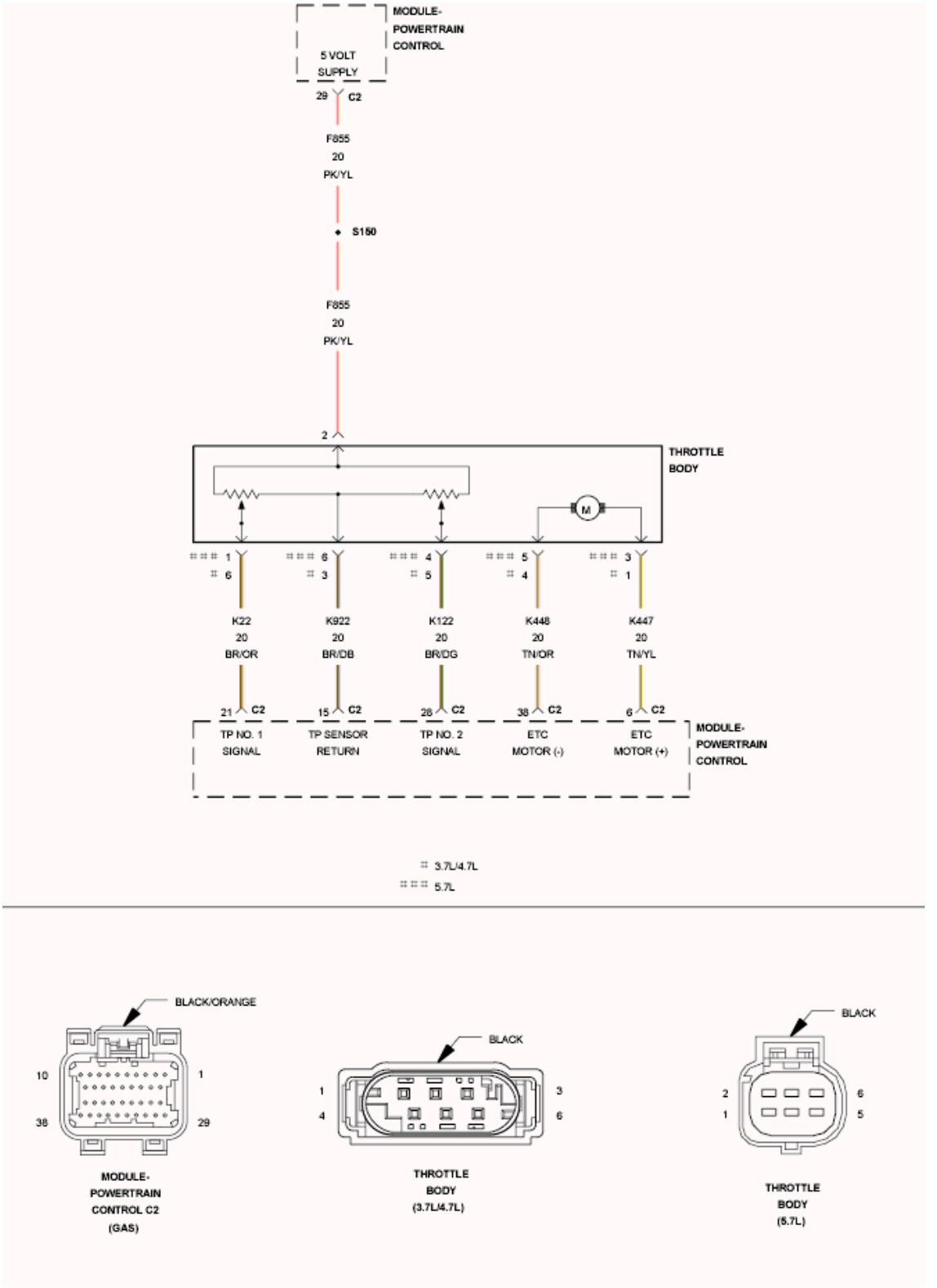

Fig. 92: Throttle Body Circuit Schematic
Courtesy of CHRYSLER GROUP, LLC

For a complete wiring diagram **refer to appropriate SYSTEM WIRING DIAGRAMS article** .

WHEN MONITORED:

With the ignition on.

SET CONDITION:

The PCM detects that the Throttle Body input voltage is above the maximum acceptable value. One Trip Fault. ETC light will illuminate.

POSSIBLE CAUSES

Possible Causes
(K122) TP SENSOR NO. 2 SIGNAL CIRCUIT SHORTED TO VOLTAGE
(K122) TP SENSOR NO. 2 SIGNAL CIRCUIT SHORTED TO THE (F855) 5-VOLT SUPPLY CIRCUIT
(K922) TP SENSOR RETURN CIRCUIT OPEN
THROTTLE POSITION SENSOR/THROTTLE BODY
POWERTRAIN CONTROL MODULE (PCM)

Always perform the Pre-Diagnostic Troubleshooting procedure before proceeding. Refer to PRE-DIAGNOSTIC TROUBLESHOOTING PROCEDURE .

DIAGNOSTIC TEST

1. **ACTIVE DTC**

NOTE: **Diagnose and repair any Throttle Body circuit, system voltage, or sensor supply voltage DTCs before continuing with this test.**

1. Start the engine and allow it to reach operating temperature.

WARNING: **When the engine is operating, do not stand in direct line with the fan. Do not put your hands near the pulleys, belts or fan. Do not wear loose clothing. Failure to follow these instructions may result in possible serious or fatal injury.**

2. With the scan tool select View DTCs.

NOTE: **If the DTC does not reset it may be necessary to test drive the vehicle.**

Is the DTC Active at this time?

Yes

- Go To 2.

No

- Go To 7.

2. **THROTTLE POSITION SENSOR**
    1. Turn the ignition off.
    2. Disconnect the Throttle Body Assembly harness connector.
    3. Ignition on, engine not running.
    4. With the scan tool monitor the TP Sensor No. 2 voltage.

    NOTE: The sensor voltage should be approximately 0.0 volts (plus or minus.1 volt) with the connector disconnected.

    Does the scan tool display the voltage as described above?

    Yes

    - Verify that there is good pin to terminal contact at the Throttle Body and the Powertrain Control Module connectors. Replace the Throttle Body Assembly if no problems were found in the connectors. Disconnect the Battery when replacing the Throttle Body Assembly. After installation is complete, use a scan tool and select the ETC RELEARN function.
    - Perform the POWERTRAIN VERIFICATION TEST. Refer to **POWERTRAIN VERIFICATION TEST** .

    No

    - Go To 3.

3. **(K122) TP SENSOR NO. 2 SIGNAL CIRCUIT SHORTED TO VOLTAGE**

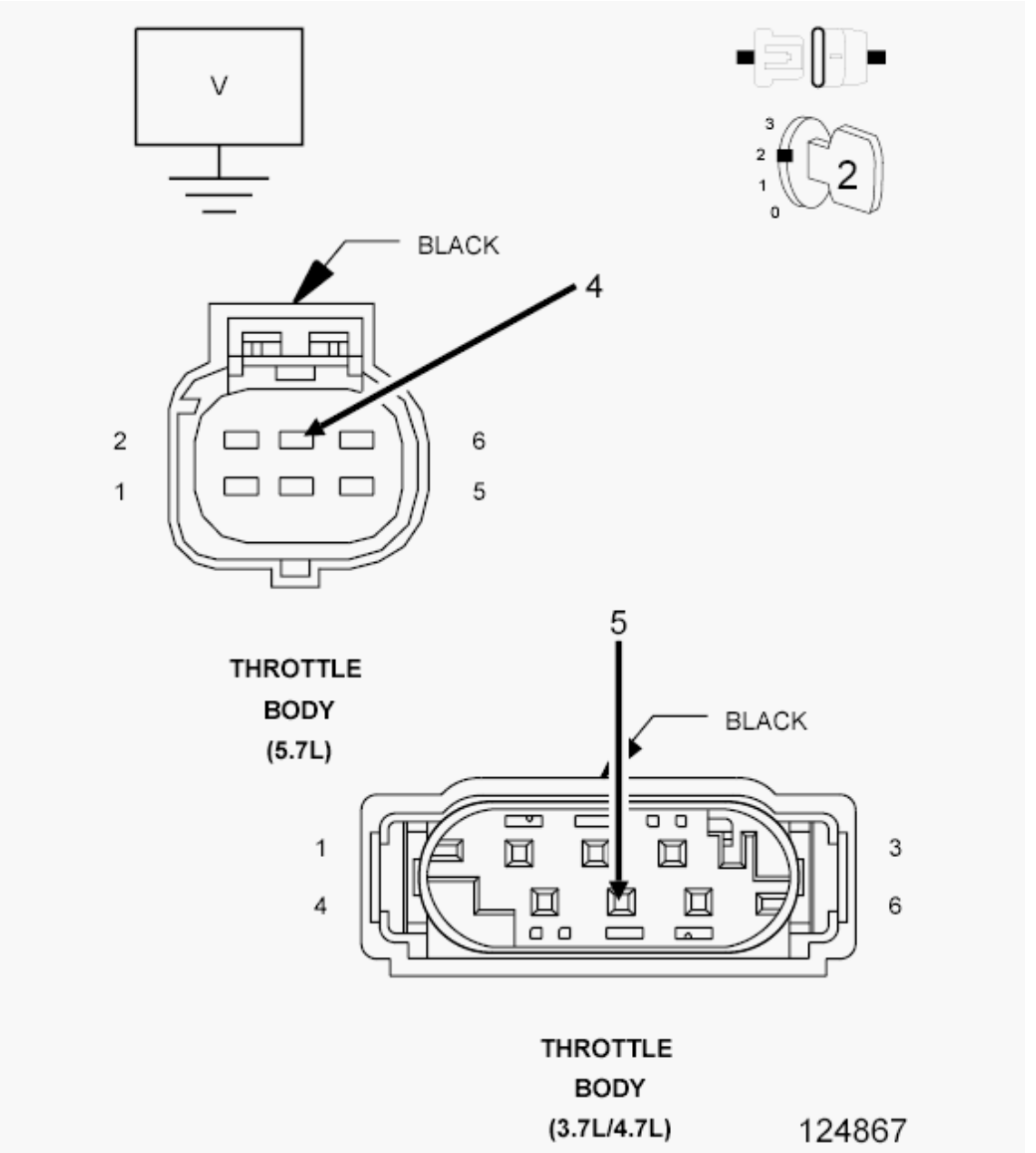

Fig. 93: Measuring Voltage On (K122) TP Sensor No. 2 Signal Circuit AT Throttle Body Harness Connector
Courtesy of CHRYSLER GROUP, LLC

1. Turn the ignition off.
2. Disconnect the C2 PCM harness connector.
3. Ignition on, engine not running.
4. Measure the voltage on the (K122) TP Sensor No. 2 Signal circuit at the Throttle Body harness connector.

   Is there any voltage present?

Yes

- Repair the short to voltage in the (K122) TP Sensor No. 2 Signal circuit.
- Perform the POWERTRAIN VERIFICATION TEST. Refer to **POWERTRAIN VERIFICATION TEST** .

No

- Go To 4.

4. **(K122) TP SENSOR NO. 2 SIGNAL CIRCUIT SHORTED TO (F855) 5-VOLT SUPPLY CIRCUIT**

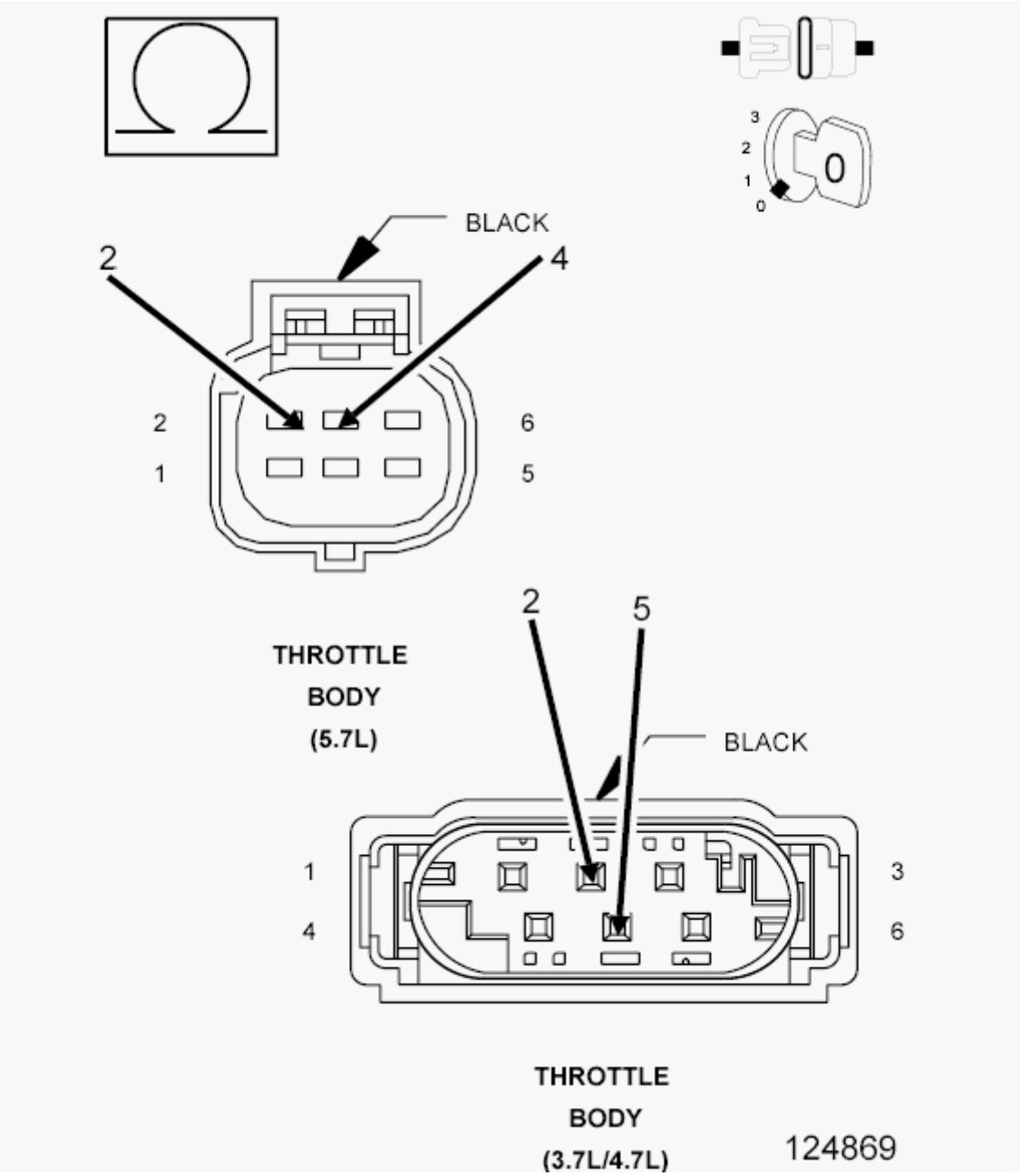

Fig. 94: Measuring Resistance Between (K122) TP Sensor No. 2 Signal Circuit And (F855) 5-Volt Supply Circuit AT Throttle Body Harness Connector
Courtesy of CHRYSLER GROUP, LLC

1. Measure the resistance between the (K122) TP Sensor No. 2 Signal circuit and the (F855) 5-volt Supply circuit at the Throttle Body harness connector.

   Is the resistance below 100 ohms?

   Yes

- Repair the short between the (K122) TP Sensor No. 2 Signal circuit and the (F855) 5-volt Supply circuit.
- Perform the POWERTRAIN VERIFICATION TEST. Refer to **POWERTRAIN VERIFICATION TEST** .

No

- Go To 5.

5. **(K922) TP SENSOR RETURN CIRCUIT OPEN**

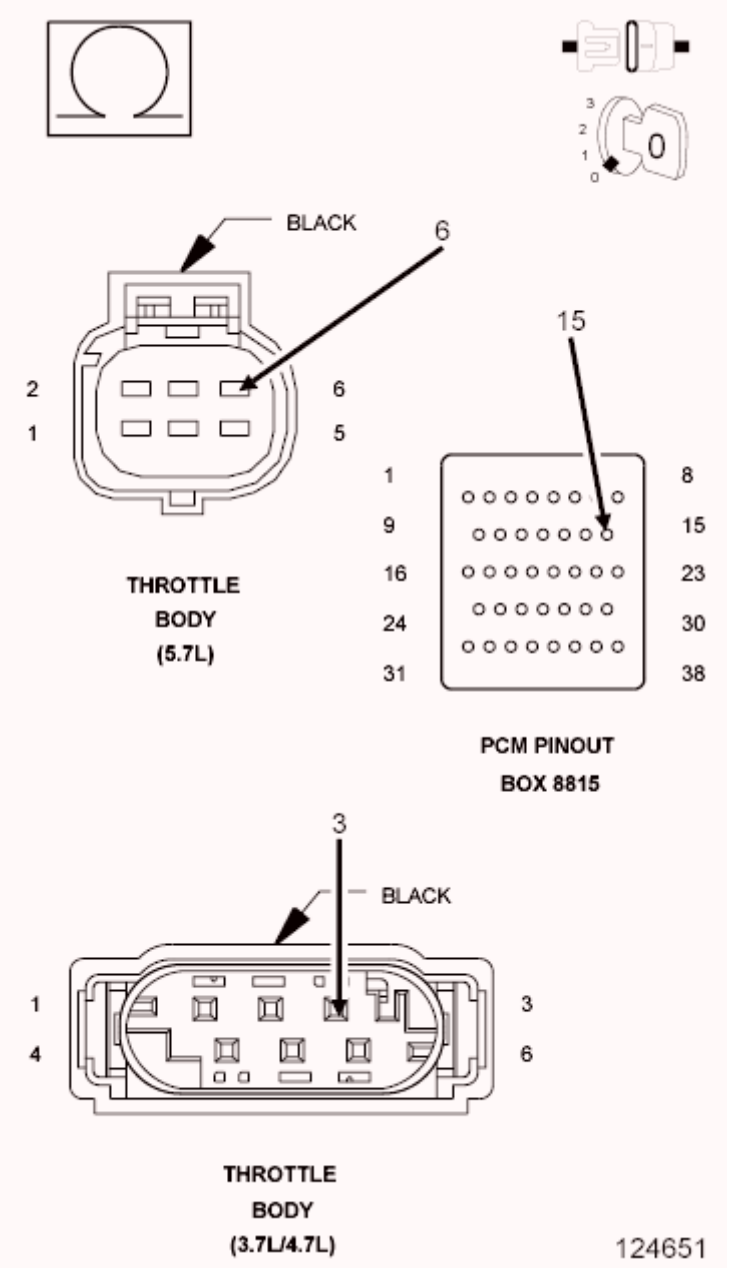

Fig. 95: Measuring Resistance Of (K922) TP Sensor Return Circuit From Throttle Body Harness

Connector To Appropriate Terminal Of Special Tool #8815
Courtesy of CHRYSLER GROUP, LLC

CAUTION: Do not probe the PCM harness connectors. Probing the PCM harness connectors will damage the PCM terminals resulting in poor terminal to pin connection. Install the PCM Pinout Box (special tool #8815A, Kit, NGC, 38 Position) to perform diagnosis.

1. Measure the resistance of the (K922) TP Sensor Return circuit from the Throttle Body harness connector to the appropriate terminal of special tool (special tool #8815A, Kit, NGC, 38 Position).

   Is the resistance below 5.0 ohms?

   Yes

   - Go To 6.

   No

   - Repair the open in the (K922) TP Sensor Return circuit.
   - Perform the POWERTRAIN VERIFICATION TEST. Refer to **POWERTRAIN VERIFICATION TEST** .

6. **POWERTRAIN CONTROL MODULE (PCM)**
   1. Using the wiring diagram/schematic as a guide, inspect the wiring and connectors between the Throttle Body and the Powertrain Control Module (PCM).
   2. Look for any chafed, pierced, pinched, or partially broken wires.
   3. Look for broken, bent, pushed out or corroded terminals. Verify that there is good pin to terminal contact in the Throttle Body and Control Module connectors.
   4. Refer to any Technical Service Bulletins that may apply.

   Were there any problems found?

   Yes

   - Repair as necessary.
   - Perform the POWERTRAIN VERIFICATION TEST. Refer to **POWERTRAIN VERIFICATION TEST** .

   No

   - Replace and program the Powertrain Control Module per Service Information.
   - Perform the POWERTRAIN VERIFICATION TEST. Refer to **POWERTRAIN VERIFICATION TEST** .

7. **THROTTLE FOLLOWER TEST**

1. With the scan tool, perform the ETC Throttle Follower Test.
2. Monitor the TP Sensor No. 2 voltage while slowly pressing the Throttle pedal down.

   Is there a smooth voltage change from approximately 4.3 volts down to approximately 0.7 of a volt?

   Yes

   - Perform the INTERMITTENT CONDITION Diagnostic Procedure. Refer to **INTERMITTENT CONDITION** .

   No

   - Verify that there is good pin to terminal contact at the Throttle Body and the Powertrain Control Module connectors. Replace the Throttle Body Assembly if no problems were found in the connectors. Disconnect the Battery when replacing the Throttle Body Assembly. After installation is complete, use a scan tool and select the ETC RELEARN function.
   - Perform the POWERTRAIN VERIFICATION TEST. Refer to **POWERTRAIN VERIFICATION TEST** .

P0298-ENGINE OIL TEMPERATURE TOO HIGH

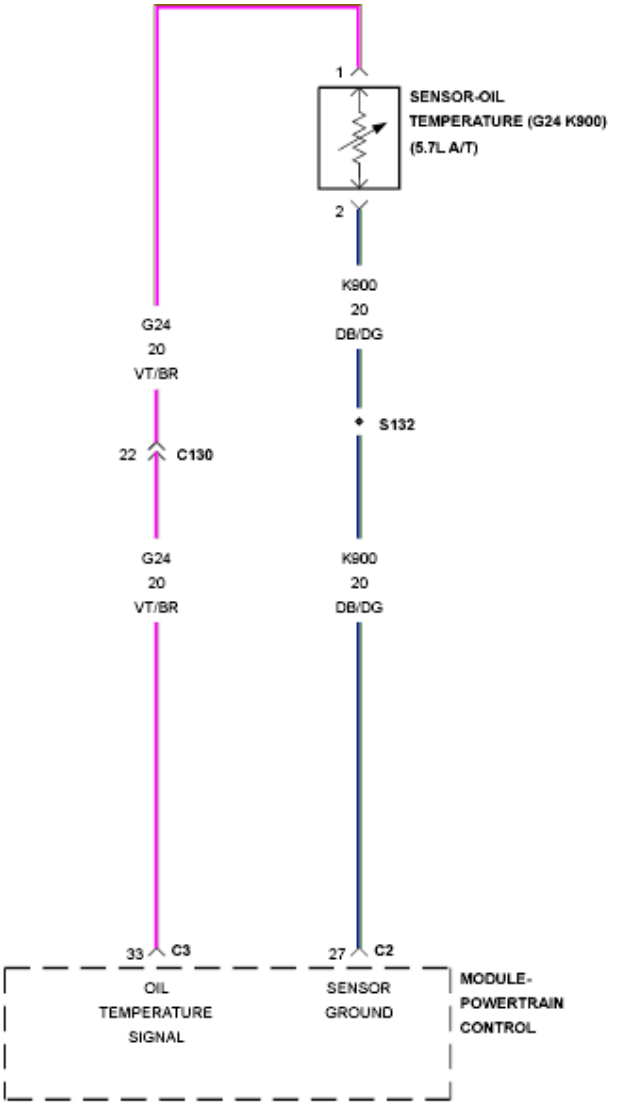

SENSOR-OIL
TEMPERATURE
(5.7L A/T)

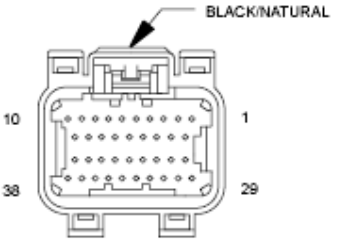

MODULE-
POWERTRAIN
CONTROL C3
(GAS)

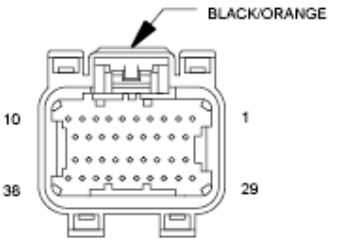

MODULE-
POWERTRAIN
CONTROL C2
(GAS)

Fig. 96: Engine Oil Temperature Sensor Circuit Schematic
Courtesy of CHRYSLER GROUP, LLC

For a complete wiring diagram **refer to appropriate SYSTEM WIRING DIAGRAMS article** .

WHEN MONITORED:

The engine oil temperature has dropped below a calibrated value. Engine start up.

SET CONDITION:

The Engine Oil temperature rises faster than a calibrated modeled temperature. When the actual oil temperature exceeds the calibrated modeled temperature for 3 minutes the fault is set.

POSSIBLE CAUSES

Possible Causes
ENGINE OIL
(G24) ENGINE OIL TEMPERATURE SIGNAL CIRCUIT HIGH RESISTANCE
(K900) SENSOR GROUND CIRCUIT HIGH RESISTANCE
ENGINE OIL TEMPERATURE SENSOR
POWERTRAIN CONTROL MODULE (PCM)

Always perform the Pre-Diagnostic Troubleshooting procedure before proceeding. Refer to PRE-DIAGNOSTIC TROUBLESHOOTING PROCEDURE .

DIAGNOSTIC TEST

1. **ACTIVE DTC**

NOTE: Diagnose any CAN - C Communication DTCs before continuing.

1. Turn the ignition off.
2. If possible, allow the vehicle to sit with the ignition off for more than 60 minutes in an environment where the temperature will allow the oil temperature to cool down.
3. Start the engine and allow it to reach normal operating conditions.
4. With a scan tool, select View DTCs.

   Is the status Active or Pending for this DTC?

   Yes

   - Go To 2.

   No

- Perform the INTERMITTENT CONDITION Diagnostic Procedure. Refer to **INTERMITTENT CONDITION** .

2. **ENGINE OIL**
    1. The following conditions must be checked.
        - OEM recommended oil viscosity is being used.
        - Customer is following the oil change schedule.
        - Check the engine oil for contamination. (i.e., fuel and/or engine coolant)
        - Internal engine condition that may effect oil pressure.

    Were any of the above conditions found?

    Yes

        - Repair as necessary.
        - Perform the POWERTRAIN VERIFICATION TEST. Refer to **POWERTRAIN VERIFICATION TEST** .

    No

        - Go To 3.

3. **ENGINE OIL TEMPERATURE SENSOR VOLTAGE**
    1. Turn the ignition off.
    2. Disconnect the Engine Oil Temperature Sensor harness connector.
    3. Turn the ignition on.
    4. With a scan tool, read the Engine Oil Temperature Sensor voltage.

    NOTE: **The sensor voltage should be approximately 5.0 volts (plus or minus.1 volt) with the connector disconnected.**

    Does the scan tool display the voltage as described above?

    Yes

        - Go To 4.

    No

        - Go To 5.

4. **ENGINE OIL TEMPERATURE SENSOR**

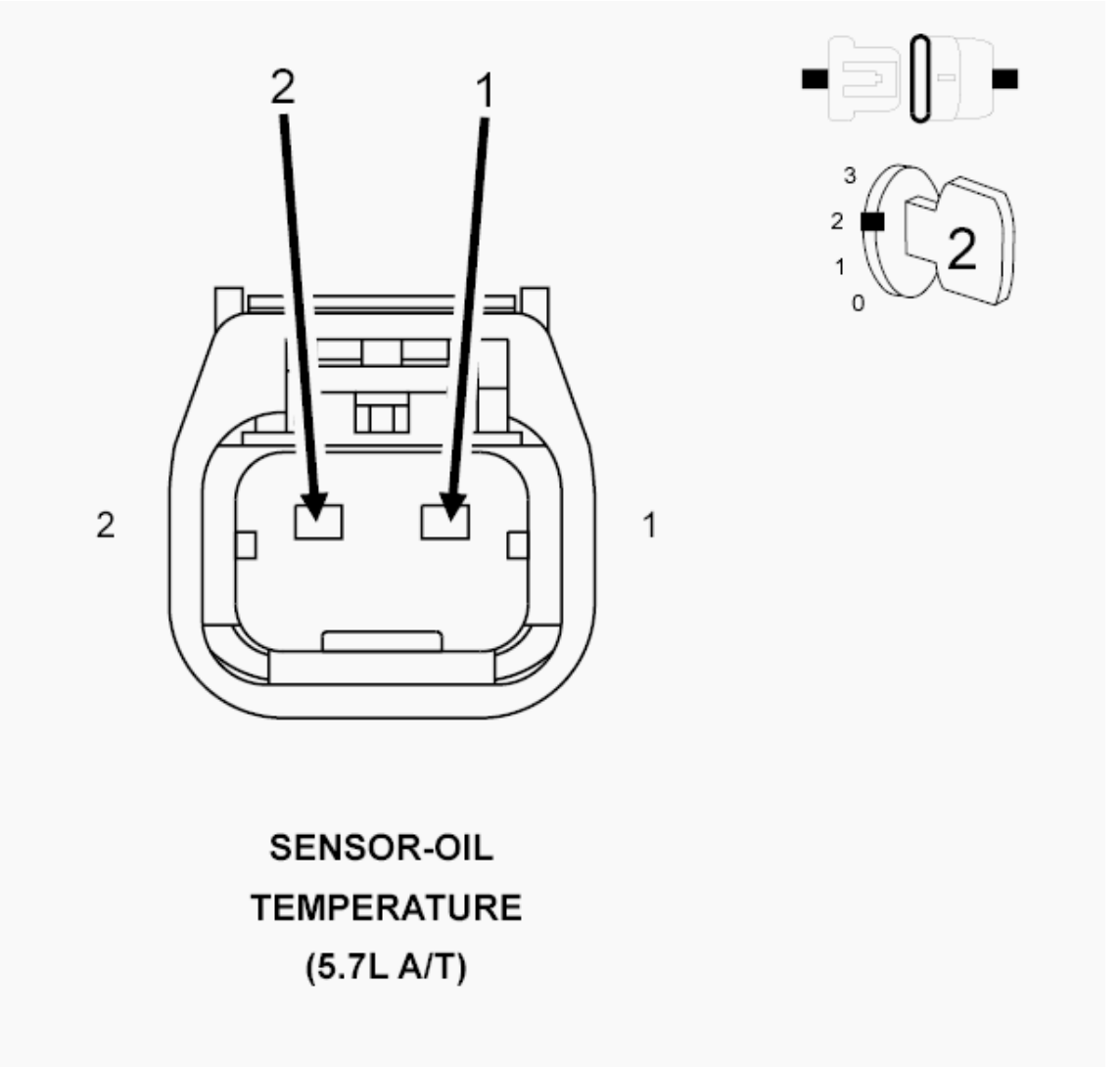

Fig. 97: Engine Oil Temperature Sensor Harness Connector
Courtesy of CHRYSLER GROUP, LLC

1. With a scan tool, read the Engine Oil Temperature Sensor voltage.
2. Connect a jumper wire between the (G24) EOT Signal circuit and the (K900) Sensor Ground circuit in the Engine Oil Temperature Sensor harness connector.

NOTE: **The sensor voltage should be approximately 0.0 volts (plus or minus.1 volt) with the jumper wire in place.**

Does the scan tool display the voltage as described above?

Yes

- Verify that there is good pin to terminal contact in the Sensor and Powertrain Control Module connectors. Replace the Engine Oil Temperature Sensor if no problems were found

with the connectors.

- Perform the POWERTRAIN VERIFICATION TEST. Refer to **POWERTRAIN VERIFICATION TEST** .

No

- Go To 5.

5. **(G24) EOT SIGNAL CIRCUIT HIGH RESISTANCE**

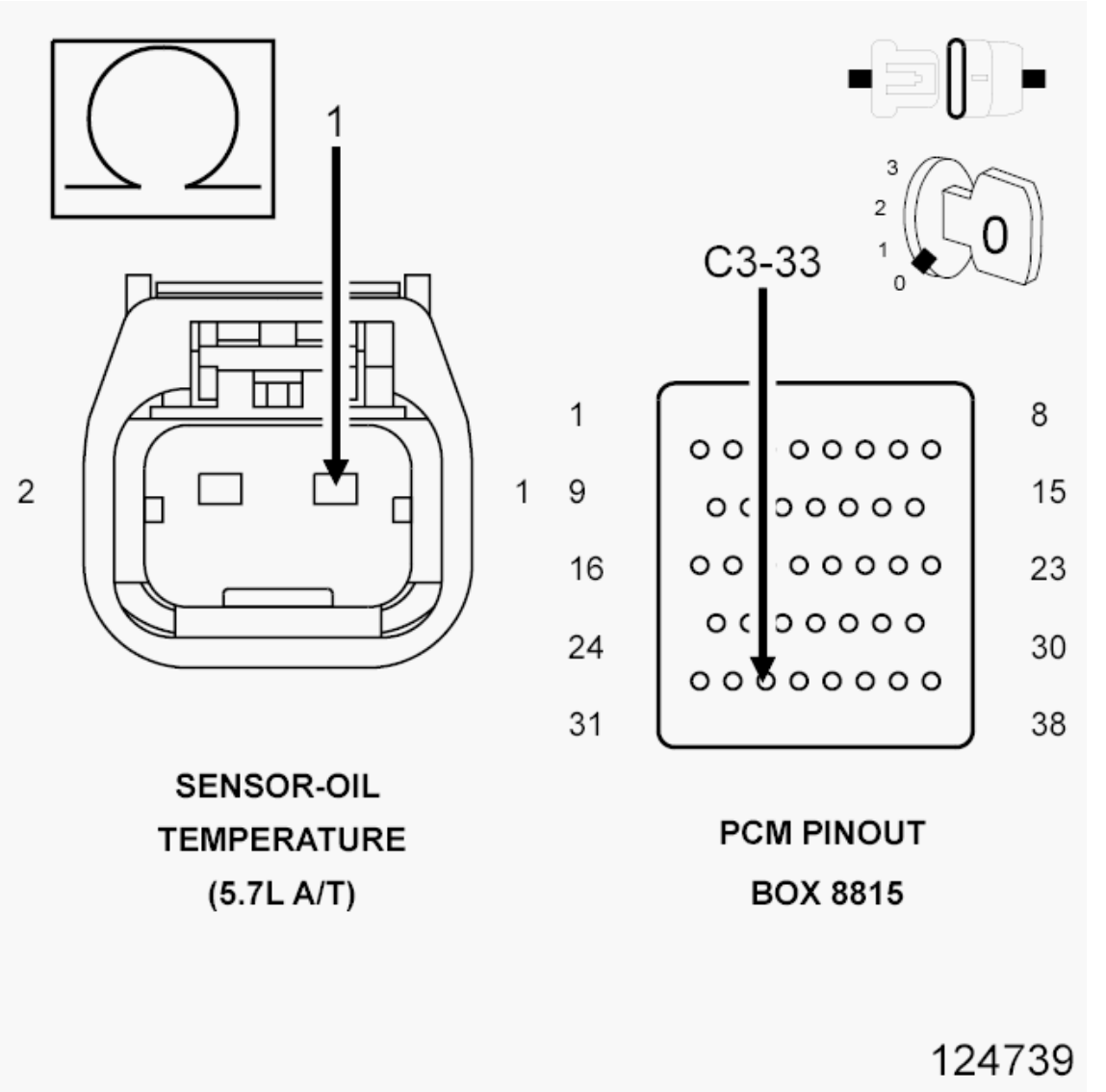

Fig. 98: Checking EOT Sensor Signal Circuit For High Resistance
Courtesy of CHRYSLER GROUP, LLC

1. Turn the ignition off.
2. Connect the Engine Oil Temperature Sensor harness connector.

CAUTION: Do not probe the PCM harness connectors. Probing the PCM harness connectors will damage the PCM terminals resulting in poor terminal to pin connection. Install the PCM Pinout Box (special tool #8815A, Kit, NGC, 38 Position) along with the Adapter (special tool #8815-1, PCM Pinout Box Adapter) to perform the diagnosis.

3. Using a voltmeter, perform a voltage drop test by backprobing the (G24) EOT Signal circuit at the Engine Oil Temperature Sensor harness connector and probing the appropriate terminal of the special tool (special tool #8815A, Kit, NGC, 38 Position). Make sure the voltmeter leads are connected so that positive polarity is displayed on the voltmeter.

WARNING: When the engine is operating, do not stand in direct line with the fan. Do not put your hands near the pulleys, belts or fan. Do not wear loose clothing. Failure to follow these instructions may result in possible serious or fatal injury.

4. Start the engine.

   Is the voltage below 0.5 volts?

   Yes

   - Go To 6.

   No

   - Repair the (G24) EOT Signal circuit for high resistance.
   - Perform the POWERTRAIN VERIFICATION TEST. Refer to **POWERTRAIN VERIFICATION TEST** .

6. **(K900) SENSOR GROUND CIRCUIT HIGH RESISTANCE**

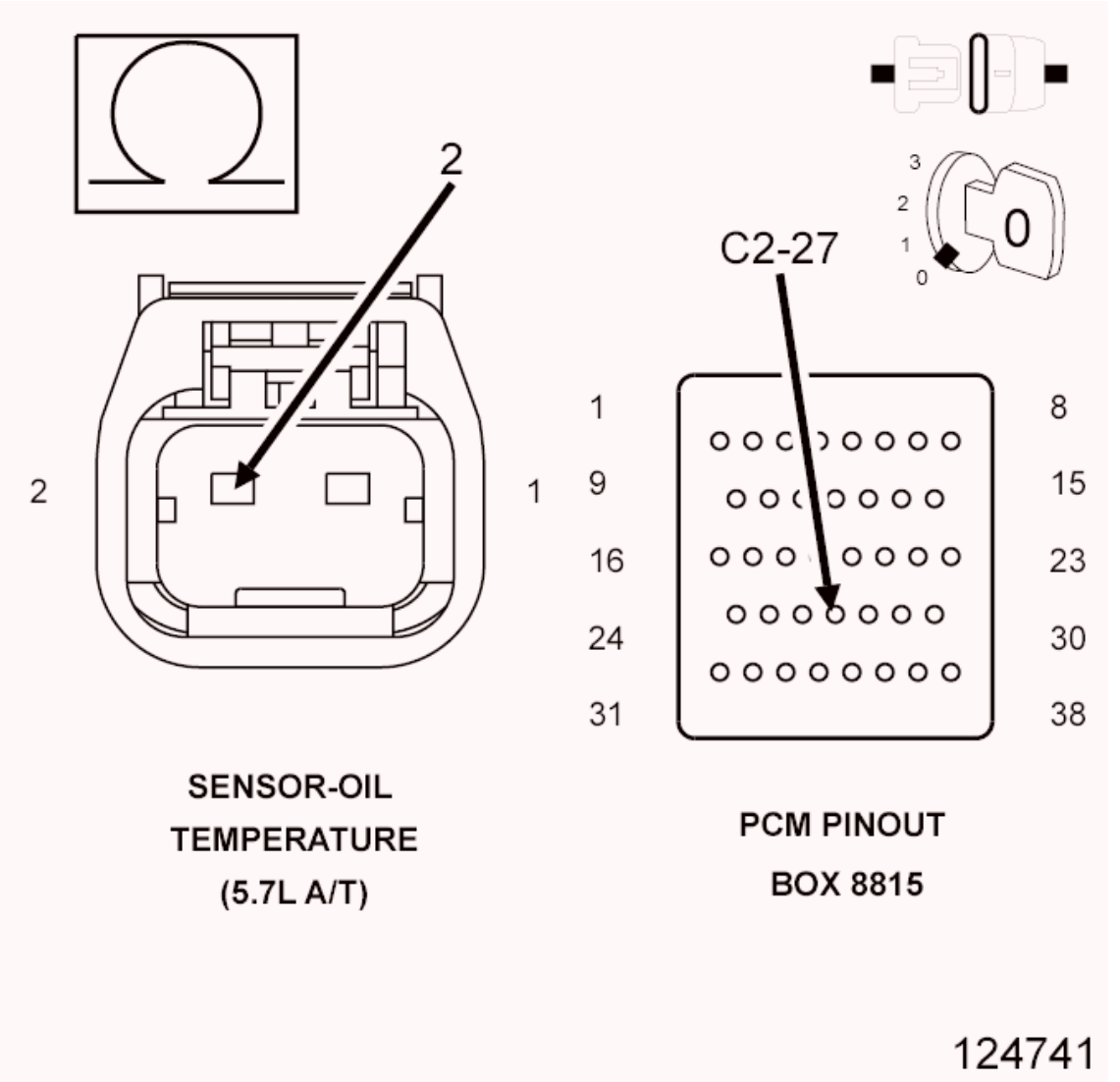

Fig. 99: Checking EOT Sensor Ground Circuit For High Resistance
Courtesy of CHRYSLER GROUP, LLC

1. Turn the ignition off.

CAUTION: Do not probe the PCM harness connectors. Probing the PCM harness connectors will damage the PCM terminals resulting in poor terminal to pin connection. Install the PCM Pinout Box (special tool #8815A, Kit, NGC, 38 Position) along with the Adapter (special tool #8815-1, PCM Pinout Box Adapter) to perform the diagnosis.

2. Using a voltmeter, perform a voltage drop test by backprobing the (K900) Sensor Ground circuit at the Engine Oil Temperature Sensor harness connector and probing the appropriate terminal of the special tool (special tool #8815A, Kit, NGC, 38 Position). Make sure the voltmeter leads are connected so that positive polarity is displayed on the voltmeter.

WARNING: When the engine is operating, do not stand in direct line with the fan. Do not put your hands near the pulleys, belts or fan. Do not wear loose clothing. Failure to follow these instructions may result in possible serious or fatal injury.

3. Start the engine.

   Is the voltage below 0.5 volts?

   Yes

   - Go To 7.

   No

   - Repair the (K900) Sensor Ground circuit for high resistance.
   - Perform the POWERTRAIN VERIFICATION TEST. Refer to **POWERTRAIN VERIFICATION TEST** .

7. **POWERTRAIN CONTROL MODULE (PCM)**
   1. Using the wiring diagram/schematic as a guide, inspect the wiring and connectors between the Engine Oil Temp Sensor and the Powertrain Control Module (PCM).
   2. Look for any chafed, pierced, pinched, or partially broken wires.
   3. Look for broken, bent, pushed out or corroded terminals. Verify that there is good pin to terminal contact in the Sensor and Control Module connectors.
   4. Refer to any Technical Service Bulletins that may apply.

      Were there any problems found?

      Yes

      - Repair as necessary.
      - Perform the POWERTRAIN VERIFICATION TEST. Refer to **POWERTRAIN VERIFICATION TEST** .

      No

      - Replace the Powertrain Control Module (PCM) in accordance with the Service Information.
      - Perform the POWERTRAIN VERIFICATION TEST. Refer to **POWERTRAIN VERIFICATION TEST** .

P0300-MULTIPLE CYLINDER MISFIRE

For a complete wiring diagram, **refer to appropriate SYSTEM WIRING DIAGRAMS article** .

WHEN MONITORED:

Any time the engine is running, and the adaptive numerator has been successfully updated.

SET CONDITION:

The threshold to set the fault is application specific; it is tied to the level of misfire that will cause emissions to increase to 1.5 times the standard or in some cases 1%. It is always a two trip fault above the calibrated RPM. It takes one fail to set a Pending Fault and two trips to set the MIL. Three good trips to turn off the MIL.

POSSIBLE CAUSES

Possible Causes
(F342) ASD OUTPUT CIRCUIT
INJECTOR CONTROL CIRCUIT
COIL CONTROL CIRCUIT
IGNITION WIRE
SPARK PLUG
IGNITION COIL
FUEL PUMP INLET STRAINER PLUGGED
RESTRICTED FUEL SUPPLY LINE
FUEL PUMP MODULE
FUEL PRESSURE LEAK DOWN
FUEL INJECTOR
ENGINE MECHANICAL
POWERTRAIN CONTROL MODULE (PCM)

Always perform the Pre-Diagnostic Troubleshooting procedure before proceeding. Refer to PRE-DIAGNOSTIC TROUBLESHOOTING PROCEDURE .

DIAGNOSTIC TEST

1. **ACTIVE DTC**
    1. Diagnose and repair any other active component or circuit DTCs before continuing with this procedure.
    2. Turn the ignition on.
    3. With the scan tool, select View DTCs. Copy DTC and Freeze Frame information.
    4. Start the engine and allow it to reach operating temperature.

WARNING: When the engine is operating, do not stand in direct line with the fan. Do not put your hands near the pulleys, belts or fan. Do not wear loose clothing. Failure to follow these instructions may result in possible serious or fatal injury.

NOTE: Attempt to operate the vehicle under conditions similar to which the DTC was set.

NOTE: **It may be necessary to test drive the vehicle within the DTC monitoring conditions in order for this DTC to set.**

5. With a scan tool, select View DTCs.

   Is the DTC Active at this time?

   Yes

   - Go To 2.

   No

   - Perform the INTERMITTENT CONDITION diagnostic procedure. Refer to **INTERMITTENT CONDITION** .

2. **VISUAL INSPECTION**

NOTE: **Anything that affects the speed of the crankshaft can cause a misfire DTC.**

NOTE: **When a Misfire is detected for a particular cylinder, the PCM will shut down that cylinder's Injector Control circuit.**

Visually inspect the engine for any of the following conditions:

- Worn serpentine belt
- Binding Engine-Driven accessories: A/C Compressor, P/S Pump, Water pump.
- Misalignment of the Water pump, P/S Pump and A/C Compressor pulleys
- Corroded PCM power and ground circuits.
- Misalignment of the Water pump, P/S Pump and A/C Compressor pulleys
- Corroded PCM power and ground circuits.
- Improper CKP, CMP, MAP, and TP Sensor mounting
- Poor connector/terminal to component connection for CKP sensor, CMP sensor, MAP sensor, TP sensor, fuel injector, ignition coil, etc.
- Vacuum leaks
- Restricted Air Induction system or Exhaust system.
- Internal engine component failures.

Were any of the above conditions present?

Yes

- Repair as necessary.
- Perform the POWERTRAIN VERIFICATION TEST. Refer to **POWERTRAIN**

VERIFICATION TEST .

No

- Go To 3.

3. **(F342) ASD OUTPUT CIRCUIT**
   1. Turn the ignition off.
   2. Disconnect the Ignition Coil harness connector of the misfiring cylinders.
   3. Disconnect the Fuel Injector harness connector of the misfiring cylinders.
   4. Ignition on, engine not running.
   5. With a scan tool, actuate the ASD.
   6. Using a 12-volt test light connected to ground, probe the (F342) ASD Output circuit in the Ignition Coil harness connector and Fuel Injector harness connector during the actuation.

      NOTE: Make sure the test light is probing the circuit before actuating the Relay or a DTC may set and not allow the actuation.

      Does the test light illuminate brightly?

      Yes

      - Go To 4.

      No

      - Repair the excessive resistance or short to ground in the (F342) ASD Output circuit.
      - Perform the POWERTRAIN VERIFICATION TEST. Refer to **POWERTRAIN VERIFICATION TEST** .

4. **IGNITION SYSTEM OPERATION**

   WARNING: When the engine is operating, do not stand in direct line with the fan. Do not put your hands near the pulleys, belts or fan. Do not wear loose clothing. Failure to follow these instructions may result in possible serious or fatal injury.

   1. Turn the ignition off.
   2. Connect the Ignition Coil harness connectors.
   3. Remove the Ignition Coils.
   4. Leave the Fuel Injector harness connector of the cylinder being tested disconnected.
   5. Install a spark tester on the Ignition Coil.
   6. While cranking the engine observe the spark coming from the spark tester.
   7. Perform the same test on the ignition wire side of the Ignition coil.

NOTE: **A crisp blue spark that is able to jump the gap of the spark tester should be generated at the coil on plug and at the end of the ignition wire.**

Is good spark present?

Yes

- Go To 5.

No

- Go To 14.

NOTE: **Connect the Fuel Injector harness connector before continuing.**

5. **SPARK PLUG**

CAUTION: **The 4.7L engine uses TWO DIFFERENT types of spark plugs. A total of 16 plugs are used. The plugs are mounted in two rows (banks). The upper row is used on the intake valve side of the cylinder head. The lower row is used on the exhaust valve side of the cylinder head. The upper row uses Nickel Yttrium plugs. The lower row uses Iridium plugs. DO NOT INTERCHANGE THESE PLUGS.**

1. Turn the ignition off.
2. Remove the Spark Plug(s) in accordance with the Service Information.
3. Inspect the Spark Plug(s) for the following conditions:
   - Cracks
   - Carbon Tracking
   - Foreign Material
   - Gap size out of specifications
   - Loose or broken electrode

NOTE: **Lightly tap the bottom of the spark plug on a solid surface. The electrode in the spark plug should not move.**

Were any of the above conditions present?

Yes

- Replace the Spark Plug in accordance with the Service Information. Refer to **SPARK PLUG, REMOVAL** .
- Perform the POWERTRAIN VERIFICATION TEST. Refer to **POWERTRAIN**

VERIFICATION TEST .

No

- Go To 6.

6. **FUEL PRESSURE CHECK**

WARNING: The fuel system is under a constant pressure (even with the engine off). Before testing or servicing any fuel system hose, fitting or line, the fuel system pressure must be released. Failure to follow these instructions can result in possible serious or fatal injury.

WARNING: When the engine is operating, do not stand in direct line with the fan. Do not put your hands near the pulleys, belts or fan. Do not wear loose clothing. Failure to follow these instructions may result in possible serious or fatal injury.

1. Install the Fuel Pressure Decay Tester (special tool #8978A, Decay Tool, Fuel) to the fuel rail.
2. Start the engine and observe the fuel pressure reading.

NOTE: Fuel pressure specification is 407 kPa +/- 34 kPa (59 psi +/- 5 psi).

Choose a conclusion that best matches your fuel pressure reading.

Within Specification

- Go To 7.

Below Specification

- Go To 12.

Above Specification

- Replace the fuel filter/pressure regulator.
- Perform the POWERTRAIN VERIFICATION TEST. Refer to **POWERTRAIN VERIFICATION TEST** .

7. **FUEL PRESSURE LEAK DOWN**

NOTE: Before continuing visually and physically inspect the fuel delivery system for external leaks or damage. Repair/replace as necessary.

WARNING: The fuel system is under a constant pressure (even with the engine off). Before testing or servicing any fuel system hose, fitting or line, the fuel system pressure must be released. Failure to follow these

instructions can result in possible serious or fatal injury.

1. Turn the ignition off.
2. Install the Fuel Pressure Decay Tester (special tool #8978A, Decay Tool, Fuel).
3. Start the engine and allow the fuel system to reach maximum pressure.
4. Turn the ignition off.

NOTE: Fuel specification is 407 kPa +/- 34 kPa (59 psi +/- 5 psi).

5. Close the Fuel System Isolation Valve and then wait five minutes before proceeding.
6. Read the Fuel Inlet and Fuel Outlet Pressure Gauges. The pressure should not drop more than 10 psi on either gauge.
7. Monitor the fuel pressure gauge for a minimum of five minutes.

NOTE: The pressure should not decrease by greater than 69 kPa (10 psi).

Does the pressure fall below the listed specification?

Yes - On Fuel Inlet Gauge

- Replace the fuel pump module.
- Perform the POWERTRAIN VERIFICATION TEST. Refer to **POWERTRAIN VERIFICATION TEST** .

Yes - On Fuel Outlet Gauge

- Replace the leaking fuel injector(s).
- Perform the POWERTRAIN VERIFICATION TEST. Refer to **POWERTRAIN VERIFICATION TEST** .

No

- Go To 8.

8. **FUEL INJECTOR OPERATION**

WARNING: The fuel system is under a constant pressure (even with the engine off). Before testing or servicing any fuel system hose, fitting or line, the fuel system pressure must be released. Failure to follow these instructions can result in possible serious or fatal injury.

CAUTION: After each Fuel Injector actuation, start the engine to clean the cylinder of fuel. Failure to do so could cause engine damage.

1. Open the Fuel System Isolation Valve.
2. Start the engine and allow the fuel pressure to reach maximum pressure.
3. Turn the ignition off.
4. Ignition on, engine not running.
5. Using the scan tool, actuate the Fuel Injector for the cylinder that indicated the misfire.
6. Monitor the fuel pressure gauge.

   Does the fuel pressure gauge indicate a drop in fuel pressure?

   Yes

   - Go To 9.

   No

   - Go To 10.

   NOTE: Turn the ignition off, remove the Fuel Pressure gauge, and connect the fuel lines before continuing.

9. **ENGINE MECHANICAL**

   Check for any of the following conditions/mechanical problems:

   - ENGINE VACUUM - must be at least 13 inches in neutral
   - ENGINE VALVE TIMING - must be within specifications
   - ENGINE COMPRESSION - must be within specifications
   - ENGINE EXHAUST SYSTEM - must be free of any restrictions or leaks.
   - ENGINE PCV SYSTEM - must flow freely
   - TORQUE CONVERTER STALL SPEED - must be within specifications
   - POWER BRAKE BOOSTER - no internal vacuum leaks
   - FUEL - must be free of contamination
   - CAM LOBES - must not be worn excessively
   - CYLINDER LEAKAGE TEST - must be within specifications
   - VALVE SPRINGS - cannot be weak or broken

   Are there any engine mechanical problems?

   Yes

   - Repair as necessary.
   - Perform the POWERTRAIN VERIFICATION TEST. Refer to **POWERTRAIN**

VERIFICATION TEST .

No

- Go To 17.

10. **FUEL INJECTOR**
    1. Turn the ignition off.
    2. Disconnect the Fuel Injector harness connector of the misfiring cylinder.
    3. Ignition on, engine not running.

    NOTE: When a Misfire is detected for a particular cylinder, the PCM will shut down that cylinder's Injector Control circuit.

    4. Install an Injector Noid light.
    5. With the scan tool, actuate the Fuel Injector.

    Does the Noid light blink/flicker during the actuation?

    Yes

    - Verify that there is good pin to terminal contact in the related Injector and the Powertrain Control Module connectors. Replace the Fuel Injector.
    - Perform the POWERTRAIN VERIFICATION TEST. Refer to **POWERTRAIN VERIFICATION TEST** .

    No

    - Go To 11.

11. **INJECTOR CONTROL CIRCUIT**
    1. Turn the ignition off.
    2. Disconnect the Fuel Injector harness connector.
    3. Disconnect the PCM harness connectors.

    CAUTION: Do not probe the PCM harness connectors. Probing the PCM harness connectors will damage the PCM terminals resulting in poor terminal to pin connection. Install the PCM Pinout Box (special tool #8815A, Kit, NGC, 38 Position) to perform diagnosis.

    4. Check the Injector Control circuit for an open, short to ground, and short to voltage.

    Was a problem found with the Injector Control circuit?

    Yes

- Repair the excessive resistance or short in the Injector Control circuit.
- Perform the POWERTRAIN VERIFICATION TEST. Refer to **POWERTRAIN VERIFICATION TEST** .

No

- Go To 17.

12. **FUEL SUPPLY LINE RESTRICTED**

WARNING: The fuel system is under a constant pressure (even with the engine off). Before testing or servicing any fuel system hose, fitting or line, the fuel system pressure must be released. Failure to follow these instructions can result in possible serious or fatal injury.

1. Turn the ignition off.
2. Raise the vehicle on a hoist, and disconnect the fuel pressure line at the fuel pump module.
3. Install the Fuel Pressure Decay Tester (special tool #8978A, Decay Tool, Fuel) between the fuel supply line and the fuel pump module.
4. Ignition on, engine not running.
5. With the scan tool, actuate the ASD Fuel System test and observe the fuel pressure gauge.

NOTE: Fuel pressure specification is 407 kPa +/- 34 kPa (59 psi +/- 5 psi).

Is the fuel pressure within specification?

Yes

- Repair or replace fuel supply line as necessary.
- Perform the POWERTRAIN VERIFICATION TEST. Refer to **POWERTRAIN VERIFICATION TEST** .

No

- Go To 13.

13. **FUEL PUMP INLET STRAINER**

WARNING: The fuel system is under a constant pressure (even with the engine off). Before testing or servicing any fuel system hose, fitting or line, the fuel system pressure must be released. Failure to follow these instructions can result in possible serious or fatal injury.

1. Turn the ignition off.
2. Remove the Fuel Pump Module and inspect the Fuel Inlet Strainer.

Is the Fuel Inlet Strainer plugged?

Yes

- Replace the Fuel Pump Inlet Strainer.
- Perform the POWERTRAIN VERIFICATION TEST. Refer to **POWERTRAIN VERIFICATION TEST** .

No

- Before continuing, check the Fuel Pump Module harness connector terminals for corrosion, damage, or terminal push out. Make sure the ground circuit is functional. Repair as necessary. Replace the Fuel Pump Module.
- Perform the POWERTRAIN VERIFICATION TEST. Refer to **POWERTRAIN VERIFICATION TEST** .

14. **IGNITION WIRE**

NOTE: **If the vehicle or cylinder being tested does not have an ignition wire answer YES to this test and continue.**

1. Turn the ignition off.
2. Remove the ignition wire.
3. Measure the resistance of the ignition wire.

Is the resistance below 10K Ohms?

Yes

- Go To 15.

No

- Replace the Ignition Wire.
- Perform the POWERTRAIN VERIFICATION TEST. Refer to **POWERTRAIN VERIFICATION TEST** .

15. **IGNITION COIL**

WARNING: **When the engine is operating, do not stand in direct line with the fan. Do not put your hands near the pulleys, belts or fan. Do not wear loose clothing. Failure to follow these instructions may result in possible serious or fatal injury.**

1. Disconnect the Ignition Coil harness connector.
2. Using a 12-volt test light connected to 12-volts, probe the Ignition Coil Control circuit.

3. Crank the engine for five seconds while observing the test light.

NOTE: The primary resistance of the 3.7L and 4.7L Ignition coil is 0.6 to 0.9 of an ohm and the resistance of a 5.7L Ignition coil is 0.558 to 0.682 of an ohm at 25° C (77° F).

Does the test light brightly blink/flicker?

Yes

- Verify that there is good pin to terminal contact in the related Coil and the Powertrain Control Module connectors. If OK, replace the Ignition Coil in accordance with the Service Information.
- Perform the POWERTRAIN VERIFICATION TEST. Refer to **POWERTRAIN VERIFICATION TEST** .

No

- Go To 16.

16. **COIL CONTROL CIRCUIT**
    1. Turn the ignition off.
    2. Disconnect the Ignition Coil harness connector.
    3. Disconnect the PCM harness connectors.

CAUTION: Do not probe the PCM harness connectors. Probing the PCM harness connectors will damage the PCM terminals resulting in poor terminal to pin connection. Install the PCM Pinout Box (special tool #8815A, Kit, NGC, 38 Position) to perform diagnosis.

4. Check the Coil Control circuit for an open, short to ground, and short to voltage.

Was a problem found with the Coil Control circuit?

Yes

- Repair the Coil Control circuit.
- Perform the POWERTRAIN VERIFICATION TEST. Refer to **POWERTRAIN VERIFICATION TEST** .

No

- Go To 17.

17. **POWERTRAIN CONTROL MODULE (PCM)**

1. Using the wiring diagram/schematic as a guide, inspect the wiring and connectors between the related Sensor, Coil, Injector, and the Powertrain Control Module (PCM).
2. Look for any chafed, pierced, pinched, or partially broken wires.
3. Look for broken, bent, pushed out or corroded terminals. Verify that there is good pin to terminal contact in the related Sensors, Coils, Injectors, and the Powertrain Control Module connectors.
4. Perform any Technical Service Bulletins that may apply.

   Were there any problems found?

   Yes

   - Repair as necessary.
   - Perform the POWERTRAIN VERIFICATION TEST. Refer to **POWERTRAIN VERIFICATION TEST** .

   No

   - Replace and program the Powertrain Control Module per Service Information.
   - Perform the POWERTRAIN VERIFICATION TEST. Refer to **POWERTRAIN VERIFICATION TEST** .

P0301-CYLINDER 1 MISFIRE

For a complete wiring diagram, **refer to appropriate SYSTEM WIRING DIAGRAMS article** .

WHEN MONITORED:

Any time the engine is running, and the adaptive numerator has been successfully updated.

SET CONDITION:

The threshold to set the fault is application specific; it is tied to the level of misfire that will cause emissions to increase to 1.5 times the standard or in some cases 1%. It is always a two trip fault above the calibrated RPM. It takes one fail to set a Pending Fault and two trips to set the MIL. Three good trips to turn off the MIL.

POSSIBLE CAUSES

Possible Causes
(F342) ASD OUTPUT CIRCUIT
(K11) INJECTOR CONTROL NO. 1 CIRCUIT
(K19) COIL CONTROL NO. 1 CIRCUIT
SPARK PLUG
IGNITION WIRE
IGNITION COIL
FUEL PUMP INLET STRAINER PLUGGED

RESTRICTED FUEL SUPPLY LINE
FUEL PUMP MODULE
FUEL PRESSURE LEAK DOWN
FUEL INJECTOR
ENGINE MECHANICAL
POWERTRAIN CONTROL MODULE (PCM)

Always perform the Pre-Diagnostic Troubleshooting procedure before proceeding. Refer to PRE-DIAGNOSTIC TROUBLESHOOTING PROCEDURE .

DIAGNOSTIC TEST

1. **ACTIVE DTC**
   1. Diagnose and repair any other active component or circuit DTCs before continuing with this procedure.
   2. Turn the ignition on.
   3. With the scan tool, select View DTCs. Copy DTC and Freeze Frame information.
   4. Start the engine and allow it to reach operating temperature.

      WARNING: **When the engine is operating, do not stand in direct line with the fan. Do not put your hands near the pulleys, belts or fan. Do not wear loose clothing. Failure to follow these instructions may result in possible serious or fatal injury.**

      NOTE: **Attempt to operate the vehicle under conditions similar to which the DTC was set.**

      NOTE: **It may be necessary to test drive the vehicle within the DTC monitoring conditions in order for this DTC to set.**

   5. With a scan tool, select View DTCs.

      Is the DTC Active at this time?

      Yes

      - Go To 2.

      No

      - Perform the INTERMITTENT CONDITION diagnostic procedure. Refer to **INTERMITTENT CONDITION** .
2. **VISUAL INSPECTION**

NOTE: **Anything that affects the speed of the crankshaft can cause a misfire DTC.**

NOTE: **When a Misfire is detected for a particular cylinder, the PCM will shut down that cylinder's Injector Control circuit.**

Visually inspect the engine for any of the following conditions:

- Worn serpentine belt
- Binding Engine-Driven accessories: A/C Compressor, P/S Pump, Water pump.
- Misalignment of the Water pump, P/S Pump and A/C Compressor pulleys
- Corroded PCM power and ground circuits.
- Misalignment of the Water pump, P/S Pump and A/C Compressor pulleys
- Corroded PCM power and ground circuits.
- Improper CKP, CMP, MAP, and TP Sensor mounting
- Poor connector/terminal to component connection for CKP sensor, CMP sensor, MAP sensor, TP sensor, fuel injector, ignition coil, etc.
- Vacuum leaks
- Restricted Air Induction system or Exhaust system.
- Internal engine component failures.

Were any of the above conditions present?

Yes

- Repair as necessary.
- Perform the POWERTRAIN VERIFICATION TEST. Refer to **POWERTRAIN VERIFICATION TEST** .

No

- Go To 3.

3. **(F342) ASD OUTPUT CIRCUIT**

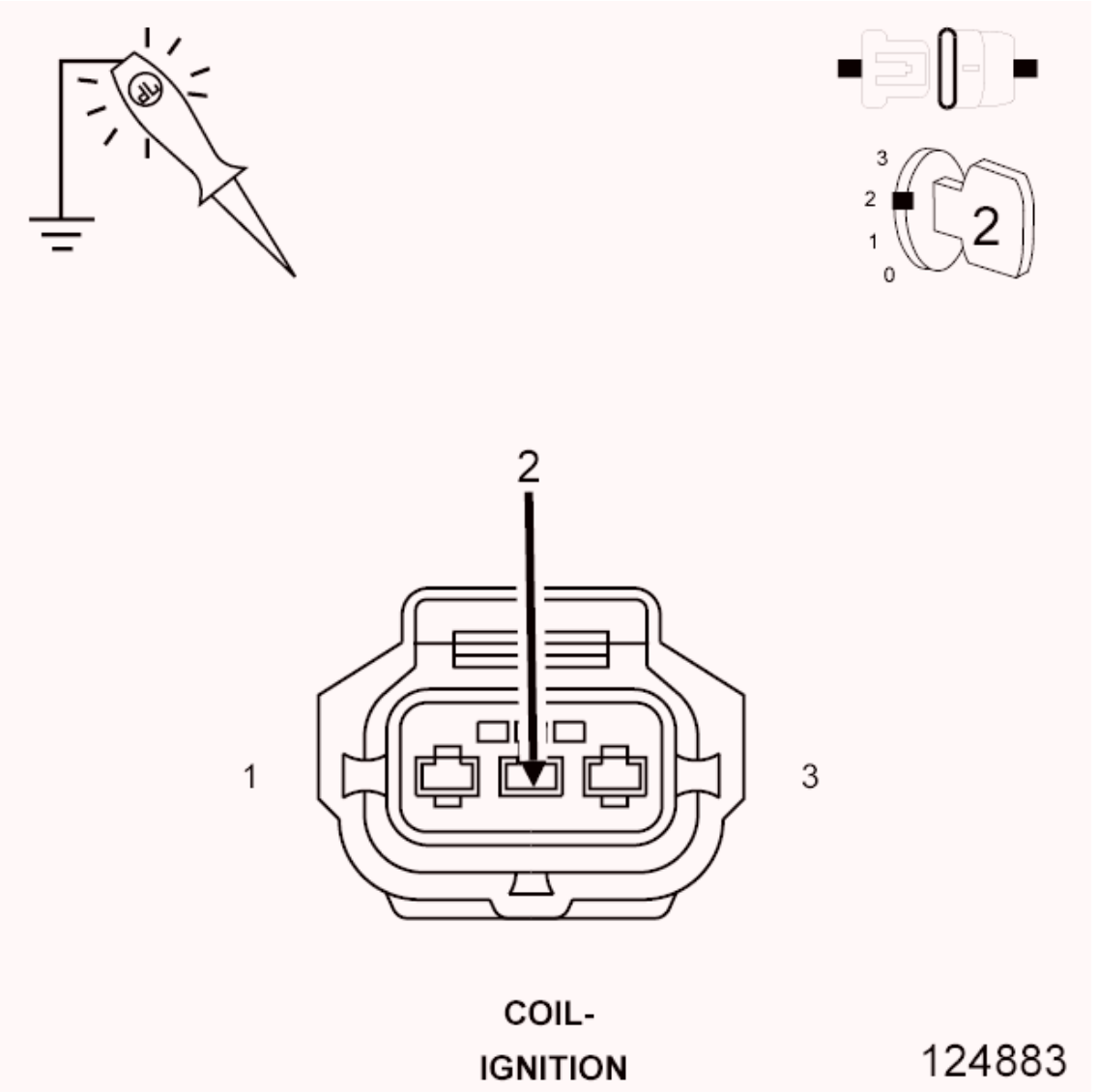

Fig. 100: Using 12-Volt Test Light Connected To Ground To Probe ASD Control Output Circuit In Ignition Coil Harness Connector
Courtesy of CHRYSLER GROUP, LLC

NOTE: Diagnose any ASD related DTCs before continuing.

1. Turn the ignition off.
2. Disconnect the Ignition Coil No. 1 harness connector.

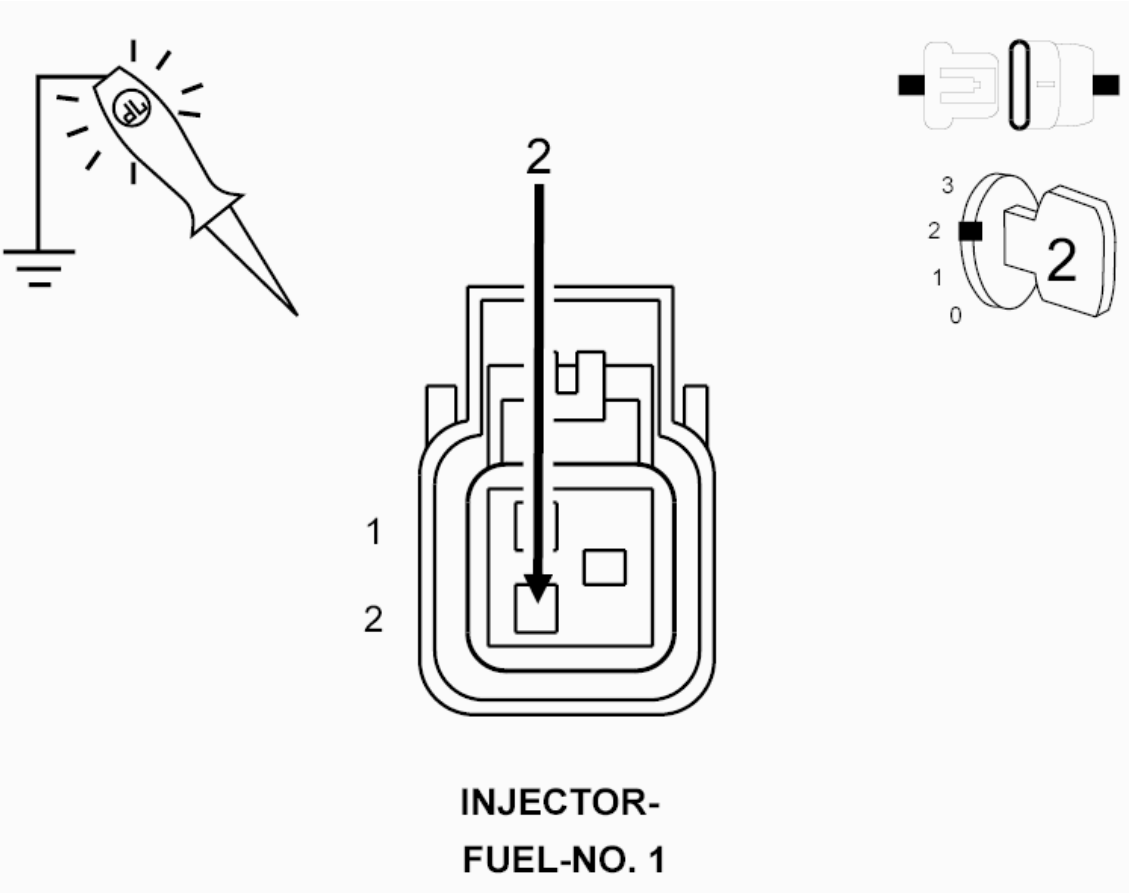

Fig. 101: Using 12-Volt Test Light Connected To Ground To Check ASD Control Output Circuit In Fuel Injector 1 Harness Connector
Courtesy of CHRYSLER GROUP, LLC

3. Disconnect the Fuel Injector No. 1 harness connector.
4. Ignition on, engine not running.
5. Using a 12-volt test light connected to ground, probe the (F342) ASD Output circuit in the Ignition Coil harness connector and Fuel Injector harness connector before the actuation.

NOTE: **Make sure the test light is probing the circuit before actuating the Relay or a DTC may set and not allow the actuation.**

6. With the scan tool, actuate the ASD.

   Does the test light illuminate brightly?

   Yes

   - Go To 4.

   No

- Repair the excessive resistance or short to ground in the (F342) ASD Output circuit.
- Perform the POWERTRAIN VERIFICATION TEST. Refer to **POWERTRAIN VERIFICATION TEST** .

4. **IGNITION SYSTEM OPERATION**

WARNING: When the engine is operating, do not stand in direct line with the fan. Do not put your hands near the pulleys, belts or fan. Do not wear loose clothing. Failure to follow these instructions may result in possible serious or fatal injury.

1. Turn the ignition off.
2. Connect the Ignition Coil No. 1 harness connector.
3. Remove the Ignition Coil.
4. Leave the Fuel Injector harness connector of the cylinder being tested disconnected.
5. Install a spark tester on the Ignition Coil.
6. While cranking the engine observe the spark coming from the spark tester.
7. Perform the same test on the ignition wire side of the Ignition coil.

NOTE: A crisp blue spark that is able to jump the gap of the spark tester should be generated at the coil on plug and at the end of the ignition wire.

Is good spark present?

Yes

- Go To 5.

No

- Go To 14.

NOTE: Connect the Fuel Injector harness connector before continuing.

5. **SPARK PLUG**

CAUTION: The 4.7L engine uses TWO DIFFERENT types of spark plugs. A total of 16 plugs are used. The plugs are mounted in two rows (banks). The upper row is used on the intake valve side of the cylinder head. The lower row is used on the exhaust valve side of the cylinder head. The upper row uses Nickel Yttrium plugs. The lower row uses Iridium plugs. DO NOT INTERCHANGE THESE PLUGS.

1. Turn the ignition off.

2. Remove the Spark Plug(s) in accordance with the Service Information.
3. Inspect the Spark Plug(s) for the following conditions:
   - Cracks
   - Carbon Tracking
   - Foreign Material
   - Gap size out of specifications
   - Loose or broken electrode

NOTE: **Lightly tap the bottom of the spark plug on a solid surface. The electrode in the spark plug should not move.**

Were any of the above conditions present?

Yes

- Replace the Spark Plug in accordance with the Service Information. Refer to **SPARK PLUG, REMOVAL** .
- Perform the POWERTRAIN VERIFICATION TEST. Refer to **POWERTRAIN VERIFICATION TEST** .

No

- Go To 6.

6. **FUEL PRESSURE CHECK**

WARNING: **The fuel system is under a constant pressure (even with the engine off). Before testing or servicing any fuel system hose, fitting or line, the fuel system pressure must be released. Failure to follow these instructions can result in possible serious or fatal injury.**

1. Install Fuel Pressure Decay Tester (special tool #8978A, Decay Tool, Fuel) to the fuel rail.
2. Start the engine and observe the fuel pressure reading.

NOTE: **Fuel pressure specification is 407 kPa +/- 34 kPa (59 psi +/- 5 psi).**

Choose a conclusion that best matches your fuel pressure reading.

Within Specification

- Go To 7.

Below Specification

- Go To 12.

Above Specification

- Replace the fuel filter/pressure regulator.
- Perform the POWERTRAIN VERIFICATION TEST. Refer to **POWERTRAIN VERIFICATION TEST** .

7. **FUEL PRESSURE LEAK DOWN**

NOTE: Before continuing visually and physically inspect the fuel delivery system for external leaks or damage. Repair/replace as necessary.

WARNING: The fuel system is under a constant pressure (even with the engine off). Before testing or servicing any fuel system hose, fitting or line, the fuel system pressure must be released. Failure to follow these instructions can result in possible serious or fatal injury.

1. Turn the ignition off.
2. Install the Fuel Pressure Decay Tester (special tool #8978A, Decay Tool, Fuel).
3. Start the engine and allow the fuel system to reach maximum pressure.
4. Turn the ignition off.

NOTE: Fuel specification is 407 kPa +/- 34 kPa (59 psi +/- 5 psi).

5. Close the Fuel System Isolation Valve and then wait five minutes before proceeding.
6. Read the Fuel Inlet and Fuel Outlet Pressure Gauges. The pressure should not drop more than 10 psi on either gauge.
7. Monitor the fuel pressure gauge for a minimum of five minutes.

NOTE: The pressure should not decrease by greater than 69 kPa (10 psi)

Does the pressure fall below the listed specification?

Yes - On Fuel Inlet Gauge

- Replace the fuel pump module.
- Perform the POWERTRAIN VERIFICATION TEST. Refer to **POWERTRAIN VERIFICATION TEST** .

Yes - On Fuel Outlet Gauge

- Replace the leaking fuel injector(s).
- Perform the POWERTRAIN VERIFICATION TEST. Refer to **POWERTRAIN VERIFICATION TEST** .

No

- Go To 8.

8. **FUEL INJECTOR OPERATION**

WARNING: The fuel system is under a constant pressure (even with the engine off). Before testing or servicing any fuel system hose, fitting or line, the fuel system pressure must be released. Failure to follow these instructions can result in possible serious or fatal injury.

CAUTION: After each Fuel Injector actuation, start the engine to clean the cylinder of fuel. Failure to do so could cause engine damage.

1. Open the Fuel System Isolation Valve.
2. Start the engine and allow the fuel pressure to reach maximum pressure.
3. Turn the ignition off.
4. Ignition on, engine not running.
5. Using the scan tool, actuate the No. 1 Fuel Injector.
6. Monitor the fuel pressure gauge.

Does the fuel pressure gauge indicate a drop in fuel pressure?

Yes

- Go To 9.

No

- Go To 10.

NOTE: Turn the ignition off, remove the Fuel Pressure gauge, and connect the fuel lines before continuing.

9. **ENGINE MECHANICAL**

Check for any of the following conditions/mechanical problems:

- ENGINE VACUUM - must be at least 13 inches in neutral
- ENGINE VALVE TIMING - must be within specifications
- ENGINE COMPRESSION - must be within specifications
- ENGINE EXHAUST SYSTEM - must be free of any restrictions or leaks.
- ENGINE PCV SYSTEM - must flow freely
- TORQUE CONVERTER STALL SPEED - must be within specifications
- POWER BRAKE BOOSTER - no internal vacuum leaks

- FUEL - must be free of contamination
- CAM LOBES - must not be worn excessively
- CYLINDER LEAKAGE TEST - must be within specifications
- VALVE SPRINGS - cannot be weak or broken

Are there any engine mechanical problems?

Yes

- Repair as necessary.
- Perform the POWERTRAIN VERIFICATION TEST. Refer to **POWERTRAIN VERIFICATION TEST** .

No

- Go To 17.

10. **FUEL INJECTOR**
    1. Turn the ignition off.
    2. Disconnect the No. 1 Fuel Injector harness connector.
    3. Ignition on, engine not running.

    NOTE: **When a Misfire is detected for a particular cylinder, the PCM will shut down that cylinders Injector Control circuit.**

    4. With the scan tool, erase DTCs.
    5. Install an Injector Noid light.
    6. With the scan tool, actuate the Fuel Injector.

    Does the Noid light blink/flicker during the actuation?

    Yes

    - Verify that there is good pin to terminal contact in the Fuel Injector and the Powertrain Control Module connectors. If OK, replace the Fuel Injector.
    - Perform the POWERTRAIN VERIFICATION TEST. Refer to **POWERTRAIN VERIFICATION TEST** .

    No

    - Go To 11.

11. **(K11) INJECTOR CONTROL NO. 1 CIRCUIT**

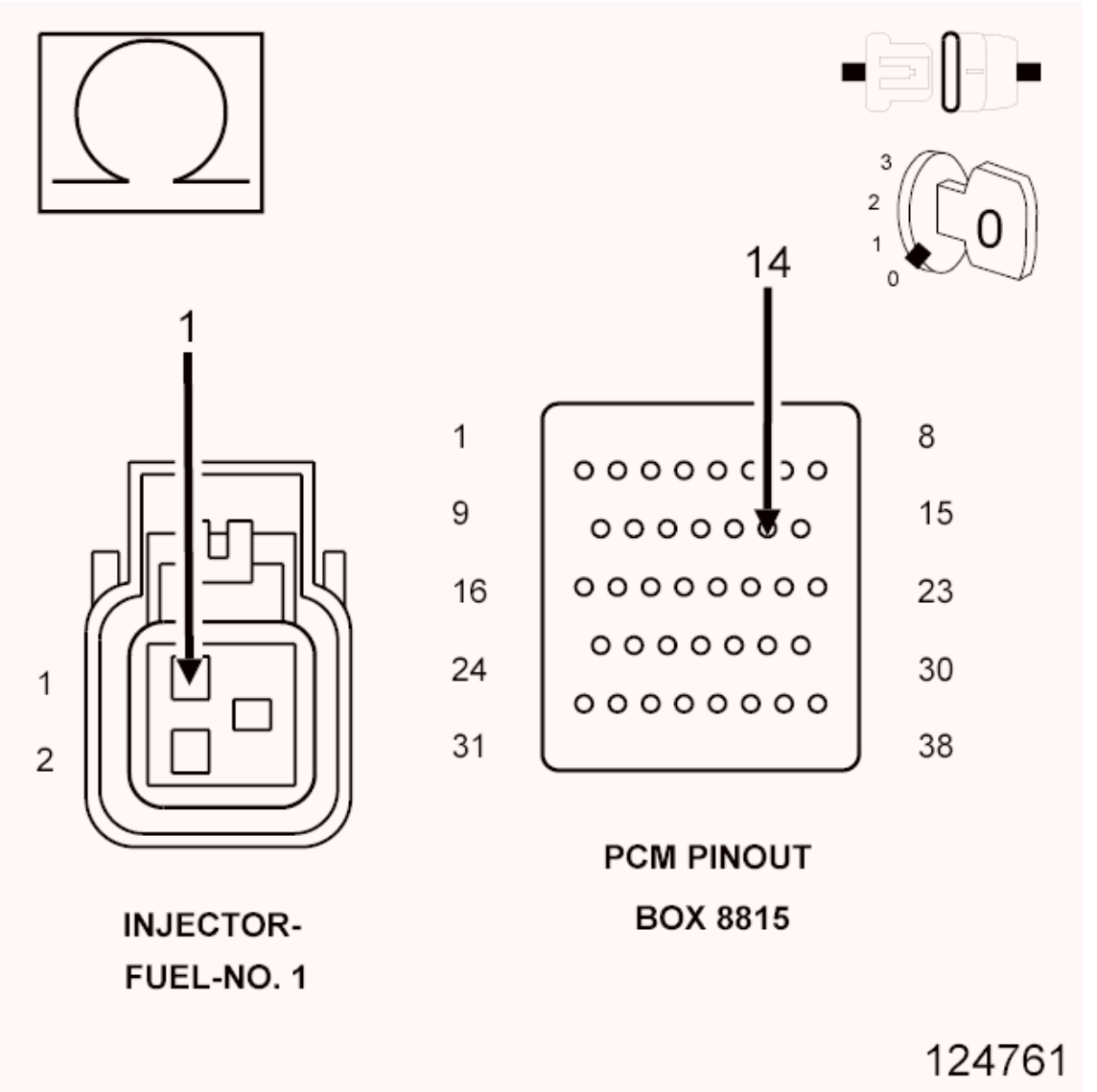

Fig. 102: Measuring Resistance Of (K11) Injector 1 Control Circuit Between Fuel Injector 1 Harness Connector And Appropriate Terminal Of PCM Pinout Box 8815
Courtesy of CHRYSLER GROUP, LLC

1. Turn the ignition off.
2. Disconnect the C2 PCM harness connector.

CAUTION: Do not probe the PCM harness connectors. Probing the PCM harness connectors will damage the PCM terminals resulting in poor terminal to pin connection. Install the PCM Pinout Box (special tool #8815A, Kit, NGC, 38 Position) to perform diagnosis.

3. Check the (K11) Injector Control No. 1 circuit for an open, short to ground, and short to voltage.

Was a problem found with the (K11) Injector Control No. 1 circuit?

Yes

- Repair the excessive resistance or short in the (K11) Injector Control No. 1 circuit.
- Perform the POWERTRAIN VERIFICATION TEST. Refer to **POWERTRAIN VERIFICATION TEST** .

No

- Go To 17.

12. **FUEL SUPPLY LINE RESTRICTED**

WARNING: **The fuel system is under a constant pressure (even with the engine off). Before testing or servicing any fuel system hose, fitting or line, the fuel system pressure must be released. Failure to follow these instructions can result in possible serious or fatal injury.**

1. Turn the ignition off.
2. Raise the vehicle on a hoist, and disconnect the fuel pressure line at the fuel pump module.
3. Install the Fuel Pressure Decay Tester (special tool #8978A, Decay Tool, Fuel) between the fuel supply line and the fuel pump module.
4. Ignition on, engine not running.
5. With the scan tool, actuate the ASD Fuel System test and observe the fuel pressure gauge.

NOTE: Fuel pressure specification is 407 kPa +/- 34 kPa (59 psi +/- 5 psi).

Is the fuel pressure within specification?

Yes

- Repair or replace fuel supply line as necessary.
- Perform the POWERTRAIN VERIFICATION TEST. Refer to **POWERTRAIN VERIFICATION TEST** .

No

- Go To 13.

13. **FUEL PUMP INLET STRAINER**

WARNING: **The fuel system is under a constant pressure (even with the engine off). Before testing or servicing any fuel system hose, fitting or line, the fuel system pressure must be released. Failure to follow these instructions can result in possible serious or fatal injury.**

1. Turn the ignition off.
2. Remove the Fuel Pump Module and inspect the Fuel Inlet Strainer.

   Is the Fuel Inlet Strainer plugged?

   Yes

   - Replace the Fuel Pump Inlet Strainer.
   - Perform the POWERTRAIN VERIFICATION TEST. Refer to **POWERTRAIN VERIFICATION TEST** .

   No

   - Before continuing, check the Fuel Pump Module harness connector terminals for corrosion, damage, or terminal push out. Make sure the ground circuit is functional. Repair as necessary. Replace the Fuel Pump Module.
   - Perform the POWERTRAIN VERIFICATION TEST. Refer to **POWERTRAIN VERIFICATION TEST** .

14. **IGNITION WIRE**

NOTE: **If the vehicle being tested does not have an ignition wire answer YES to this test and continue.**

1. Turn the ignition off.
2. Remove the ignition wire.
3. Measure the resistance of the ignition wire.

   Is the resistance below 10K Ohms?

   Yes

   - Go To 15.

   No

   - Replace the Ignition Wire.
   - Perform the POWERTRAIN VERIFICATION TEST. Refer to **POWERTRAIN VERIFICATION TEST** .

15. **IGNITION COIL**

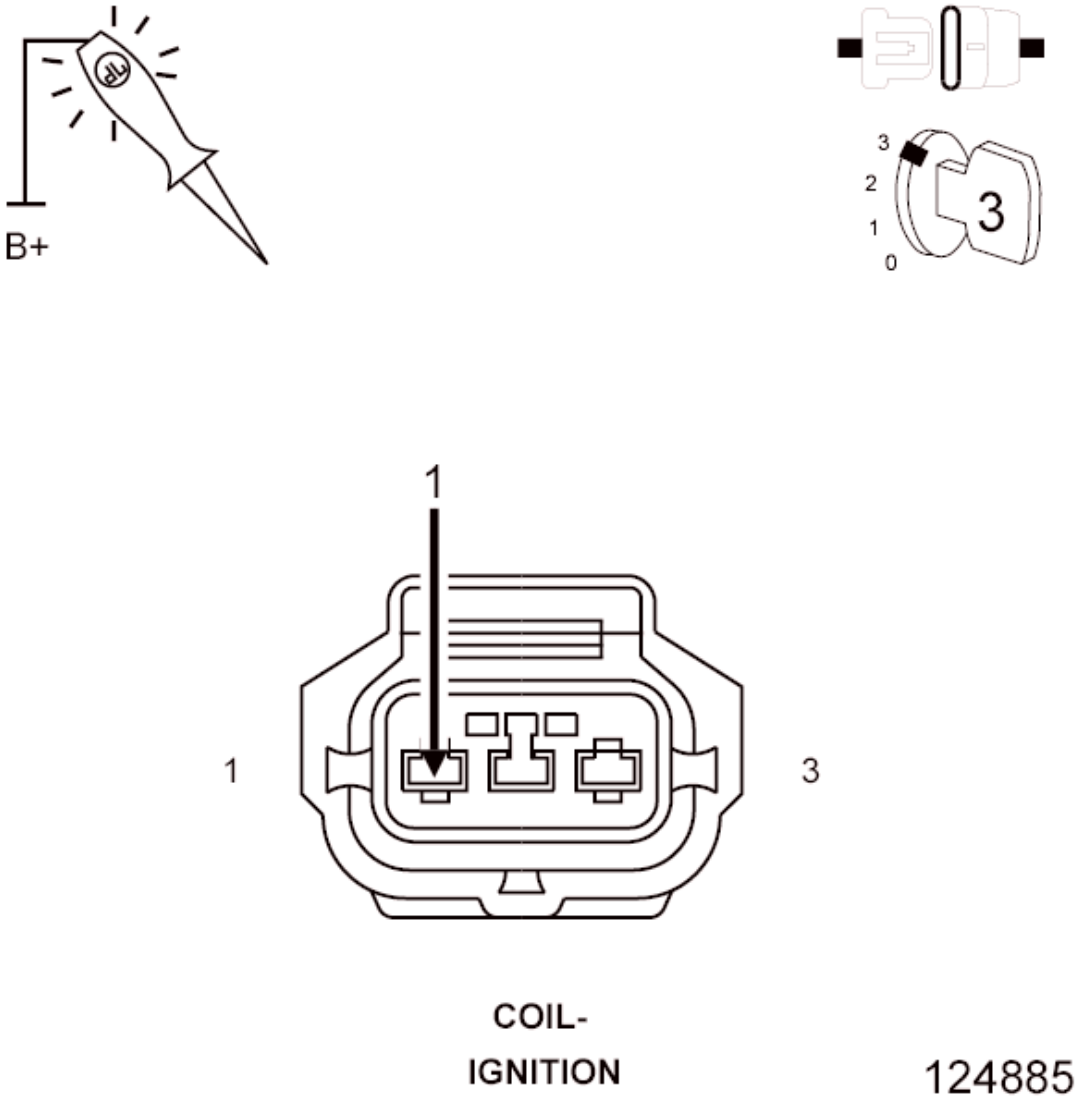

Fig. 103: Using 12-Volt Test Light Connected To 12-Volt Source To Probe Coil Control Circuit
Courtesy of CHRYSLER GROUP, LLC

WARNING: **When the engine is operating, do not stand in direct line with the fan. Do not put your hands near the pulleys, belts or fan. Do not wear loose clothing. Failure to follow these instructions may result in possible serious or fatal injury.**

1. Disconnect the Ignition Coil harness connector.
2. Using a 12-volt test light connected to 12-volts, probe the (K19) Coil Control No. 1 circuit.
3. Crank the engine for five seconds while observing the test light.

NOTE: **The primary resistance of the 3.7L and 4.7L Ignition coil is 0.6 to 0.9 of an ohm and the resistance of a 5.7L Ignition coil is 0.558 to 0.682 of an ohm at 25° C (77° F).**

Does the test light brightly blink/flicker?

Yes

- Verify that there is good pin to terminal contact in the Ignition Coil and the Powertrain Control Module connectors. If OK, replace the Ignition Coil in accordance with the Service Information.
- Perform the POWERTRAIN VERIFICATION TEST. Refer to **POWERTRAIN VERIFICATION TEST** .

No

- Go To 16.

16. **(K19) COIL CONTROL NO. 1 CIRCUIT**

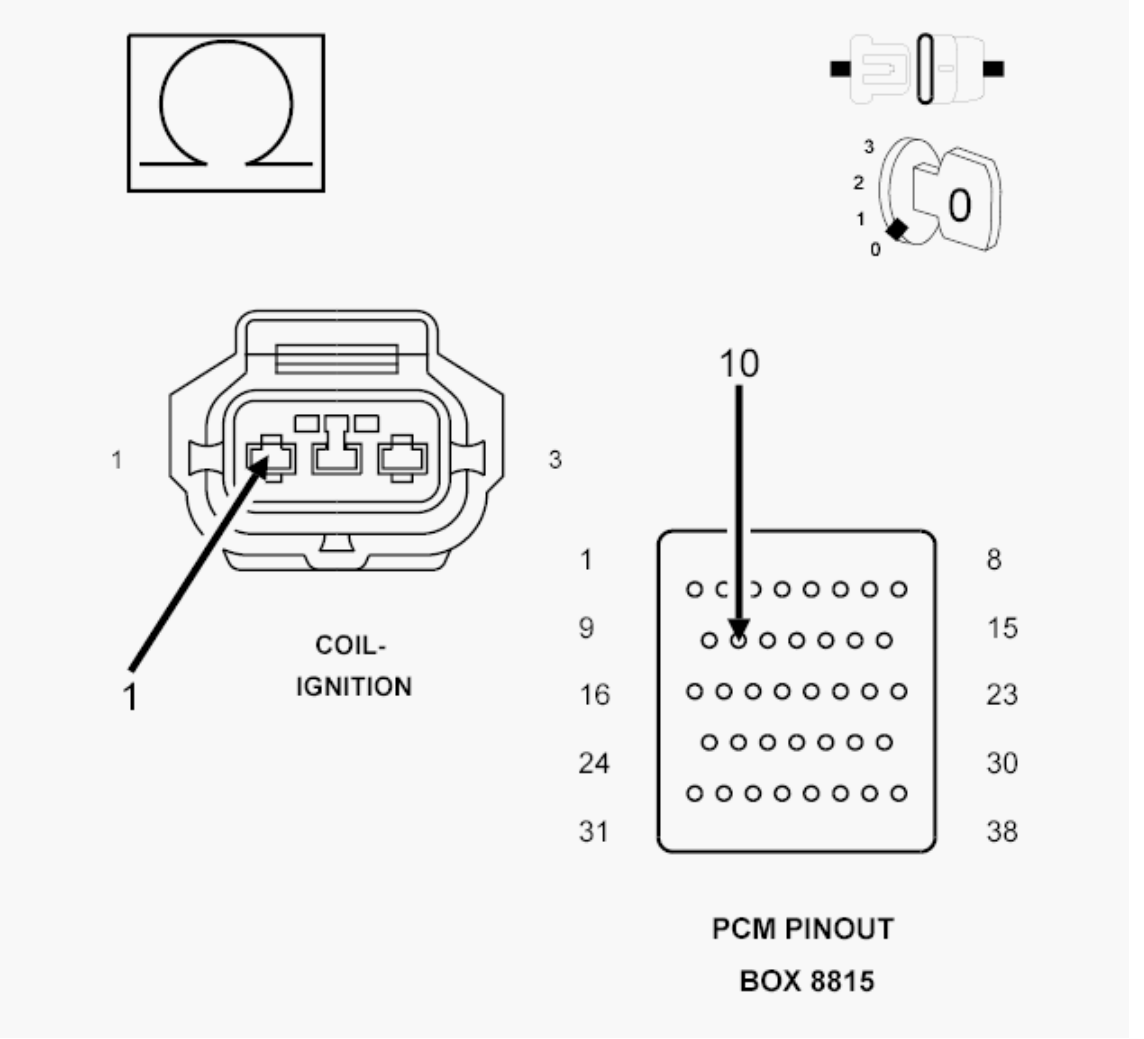

Fig. 104: Checking Coil Control No. 1 Circuit For An Open, Short To Ground, And Short To Voltage
Courtesy of CHRYSLER GROUP, LLC

1. Turn the ignition off.
2. Disconnect the C2 PCM harness connector.

CAUTION: Do not probe the PCM harness connectors. Probing the PCM harness connectors will damage the PCM terminals resulting in poor terminal to pin connection. Install the PCM Pinout Box (special tool #8815A, Kit, NGC, 38 Position) to perform diagnosis.

3. Check the (K19) Coil Control No. 1 circuit for an open, short to ground, and short to voltage.

   Was a problem found with the (K19) Coil Control No. 1 circuit?

   Yes

   - Repair the (K19) Coil Control No. 1 circuit.
   - Perform the POWERTRAIN VERIFICATION TEST. Refer to **POWERTRAIN VERIFICATION TEST** .

   No

   - Go To 17.

17. **POWERTRAIN CONTROL MODULE (PCM)**
    1. Using the wiring diagram/schematic as a guide, inspect the wiring and connectors between the related Sensor, Coil, Injector, and the Powertrain Control Module (PCM).
    2. Look for any chafed, pierced, pinched, or partially broken wires.
    3. Look for broken, bent, pushed out or corroded terminals. Verify that there is good pin to terminal contact in the related Sensors, Coils, Injectors, and the Powertrain Control Module connectors.
    4. Perform any Technical Service Bulletins that may apply.

       Were there any problems found?

       Yes

       - Repair as necessary.
       - Perform the POWERTRAIN VERIFICATION TEST. Refer to **POWERTRAIN VERIFICATION TEST** .

       No

       - Replace and program the Powertrain Control Module per Service Information.
       - Perform the POWERTRAIN VERIFICATION TEST. Refer to **POWERTRAIN VERIFICATION TEST** .

P0302-CYLINDER 2 MISFIRE

For a complete wiring diagram, **refer to appropriate SYSTEM WIRING DIAGRAMS article** .

WHEN MONITORED:

Any time the engine is running, and the adaptive numerator has been successfully updated.

SET CONDITION:

The threshold to set the fault is application specific; it is tied to the level of misfire that will cause emissions to increase to 1.5 times the standard or in some cases 1%. It is always a two trip fault above the calibrated RPM. It takes one failure to set a Pending Fault and two trips to set the MIL. Three good trips to turn off the MIL.

POSSIBLE CAUSES

Possible Causes
(F342) ASD CONTROL OUTPUT CIRCUIT
(K12) INJECTOR CONTROL NO. 2 CIRCUIT
(K17) COIL CONTROL CIRCUIT
SPARK PLUG
IGNITION WIRE
IGNITION COIL
FUEL PUMP INLET STRAINER PLUGGED
RESTRICTED FUEL SUPPLY LINE
FUEL PUMP MODULE
FUEL PRESSURE LEAK DOWN
FUEL INJECTOR
ENGINE MECHANICAL
POWERTRAIN CONTROL MODULE (PCM)

Always perform the Pre-Diagnostic Troubleshooting procedure before proceeding. Refer to PRE-DIAGNOSTIC TROUBLESHOOTING PROCEDURE .

DIAGNOSTIC TEST

1. **ACTIVE DTC**
    1. Diagnose and repair any other active component or circuit DTCs before continuing with this procedure.
    2. Turn the ignition on.
    3. With the scan tool, select View DTCs. Copy DTC and Freeze Frame information.
    4. Start the engine and allow it to reach operating temperature.

WARNING: When the engine is operating, do not stand in direct line with

the fan. Do not put your hands near the pulleys, belts or fan. Do not wear loose clothing. Failure to follow these instructions may result in possible serious or fatal injury.

NOTE: **Attempt to operate the vehicle under conditions similar to which the DTC was set.**

NOTE: **It may be necessary to test drive the vehicle within the DTC monitoring conditions in order for this DTC to set.**

5. With a scan tool, select View DTCs.

   Is the DTC Active at this time?

   Yes

   - Go To 2.

   No

   - Perform the INTERMITTENT CONDITION diagnostic procedure. Refer to **INTERMITTENT CONDITION** .

2. **VISUAL INSPECTION**

NOTE: **Anything that affects the speed of the crankshaft can cause a misfire DTC.**

NOTE: **When a Misfire is detected for a particular cylinder, the PCM will shut down that cylinder's Injector Control circuit.**

Visually inspect the engine for any of the following conditions:

- Worn serpentine belt
- Binding Engine-Driven accessories: A/C Compressor, P/S Pump, Water pump.
- Misalignment of the Water pump, P/S Pump and A/C Compressor pulleys
- Corroded PCM power and ground circuits.
- Misalignment of the Water pump, P/S Pump and A/C Compressor pulleys
- Corroded PCM power and ground circuits.
- Improper CKP, CMP, MAP, and TP Sensor mounting
- Poor connector/terminal to component connection for CKP sensor, CMP sensor, MAP sensor, TP sensor, fuel injector, ignition coil, etc.
- Vacuum leaks
- Restricted Air Induction system or Exhaust system.
- Internal engine component failures.

Were any of the above conditions present?

Yes

- Repair as necessary.
- Perform the POWERTRAIN VERIFICATION TEST. Refer to **POWERTRAIN VERIFICATION TEST** .

No

- Go To 3.

3. **(F342) ASD CONTROL OUTPUT CIRCUIT**

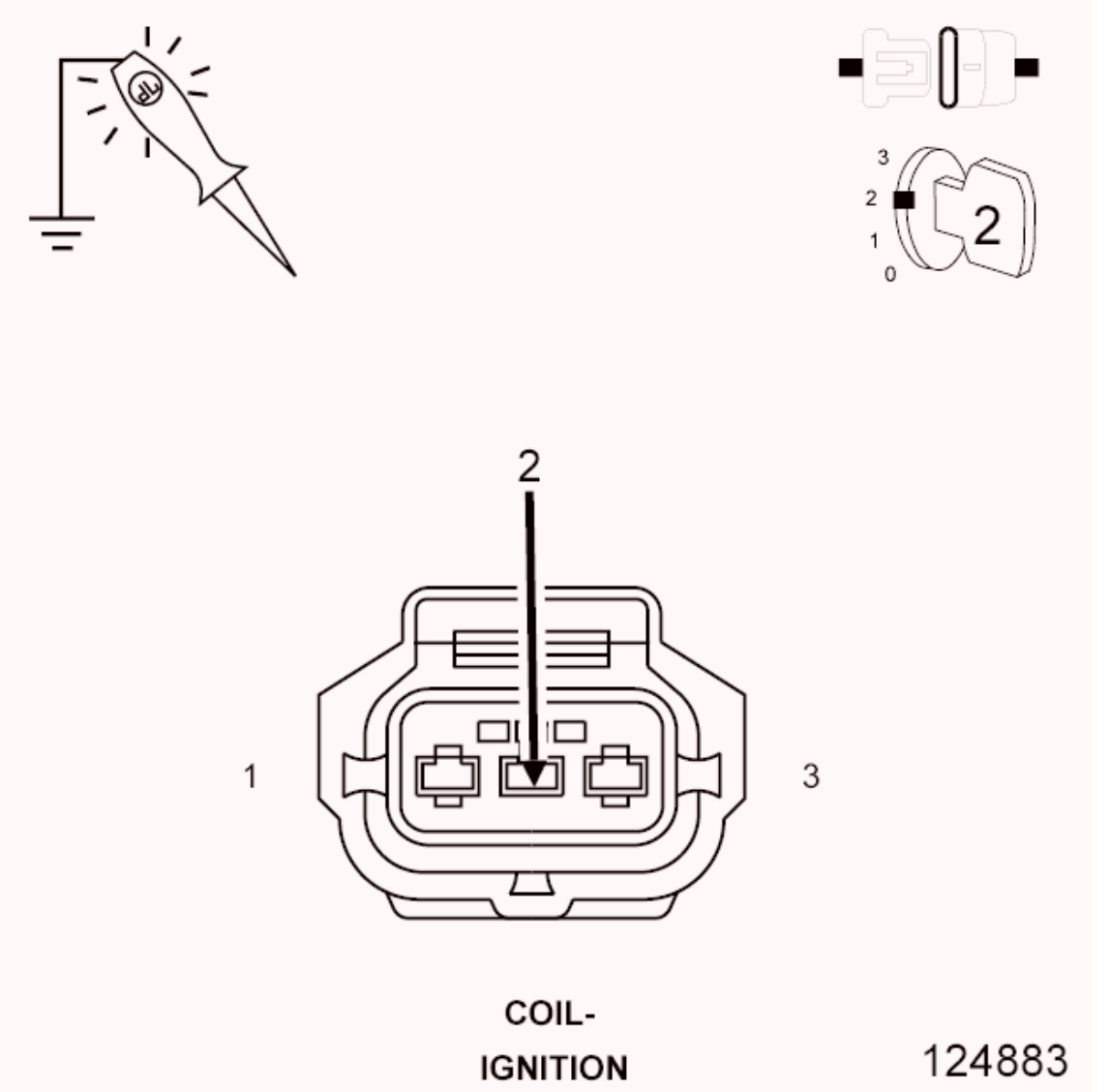

Fig. 105: Using 12-Volt Test Light Connected To Ground To Probe ASD Control Output Circuit In Ignition Coil Harness Connector

NOTE: Diagnose any ASD related DTCs before continuing.

1. Turn the ignition off.

   NOTE: The 3.7L V6 engine uses a modified Distributorless Ignition System (DIS) with coil consolidation on the left side engine bank.

2. Disconnect the Ignition Coil No. 2 or No. 5 harness connector.
3. Disconnect the Fuel Injector No. 2 harness connector.
4. Ignition on, engine not running.
5. Using a 12-volt test light connected to ground, probe the (F342) ASD Control Output circuit in the Ignition Coil harness connector and Fuel Injector harness connector before the actuation.

   NOTE: Make sure the test light is probing the circuit before actuating the Relay or a DTC may set and not allow the actuation.

6. With the scan tool, actuate the ASD.

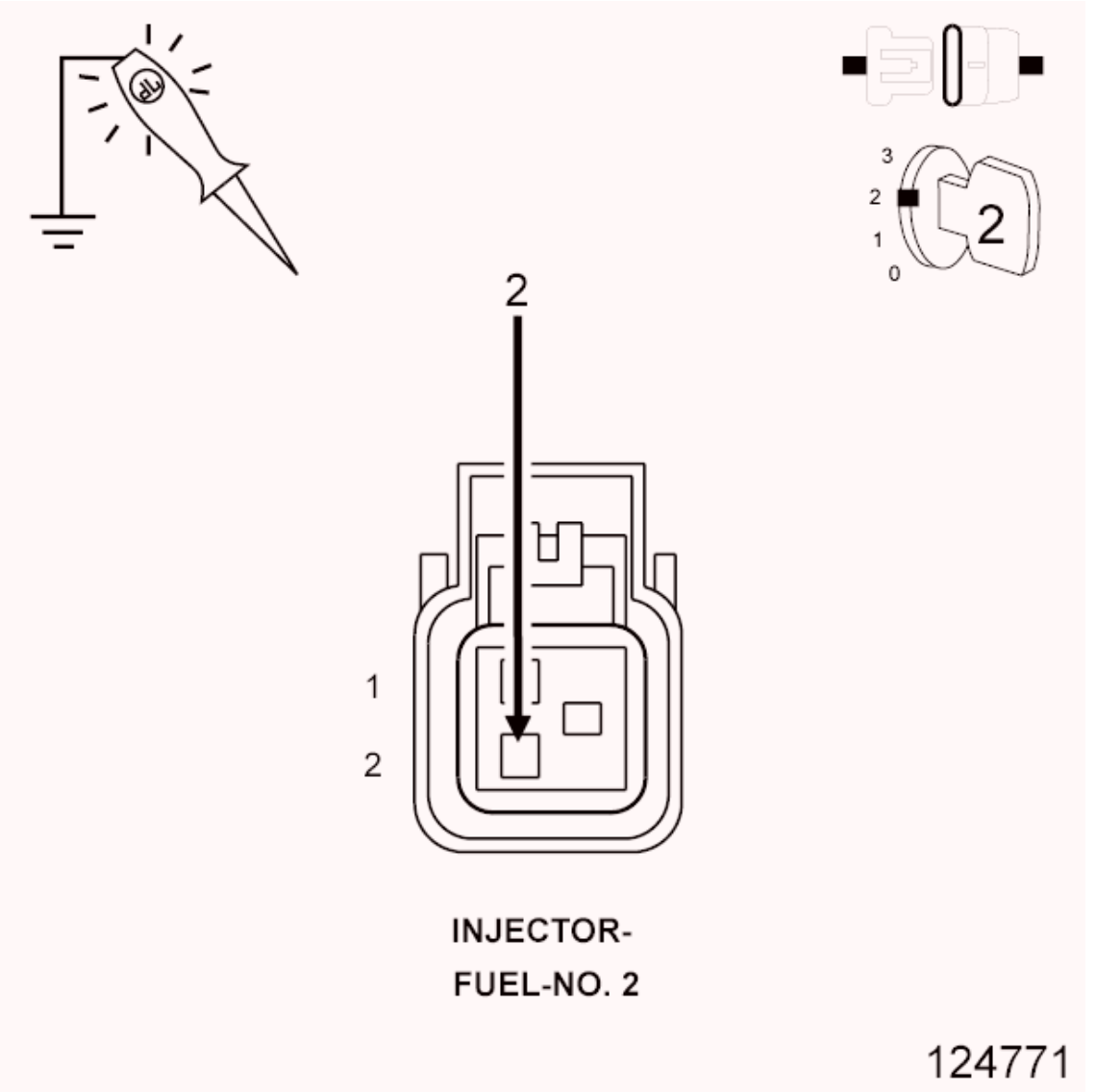

Fig. 106: Using 12-Volt Test Light Connected To Ground To Check (F342) ASD Control Output Circuit In Fuel Injector 2 Harness Connector
Courtesy of CHRYSLER GROUP, LLC

Does the test light illuminate brightly?

Yes

- Go To 4.

No

- Repair the excessive resistance or short to ground in the (F342) ASD Control Output circuit.
- Perform the POWERTRAIN VERIFICATION TEST. Refer to **POWERTRAIN VERIFICATION TEST** .

4. **IGNITION SYSTEM OPERATION**

WARNING: When the engine is operating, do not stand in direct line with the fan. Do not put your hands near the pulleys, belts or fan. Do not wear loose clothing. Failure to follow these instructions may result in possible serious or fatal injury.

1. Turn the ignition off.
2. Connect the Ignition Coil No. 2 or No. 5 harness connector.
3. Remove the Ignition Coil.
4. Leave the Fuel Injector harness connector of the cylinder being tested disconnected.
5. Install a spark tester on the Ignition Coil.
6. While cranking the engine observe the spark coming from the spark tester.
7. Perform the same test on the ignition wire side of the Ignition coil.

NOTE: A crisp blue spark that is able to jump the gap of the spark tester should be generated at the coil on plug and at the end of the ignition wire.

Is good spark present?

Yes

- Go To 5.

No

- Go To 13.

NOTE: Connect the Fuel Injector harness connector before continuing.

5. **SPARK PLUG**

CAUTION: The 4.7L engine uses TWO DIFFERENT types of spark plugs. A total of 16 plugs are used. The plugs are mounted in two rows (banks). The upper row is used on the intake valve side of the cylinder head. The lower row is used on the exhaust valve side of the cylinder head. The upper row uses Nickel Yttrium plugs. The lower row uses Iridium plugs. DO NOT INTERCHANGE THESE PLUGS.

1. Turn the ignition off.
2. Remove the Spark Plug(s) in accordance with the Service Information.
3. Inspect the Spark Plug(s) for the following conditions:

- Cracks
- Carbon Tracking
- Foreign Material
- Gap size out of specifications
- Loose or broken electrode

NOTE: **Lightly tap the bottom of the spark plug on a solid surface. The electrode in the spark plug should not move.**

Were any of the above conditions present?

Yes

- Replace the Spark Plug in accordance with the Service Information. Refer to **SPARK PLUG, REMOVAL** .
- Perform the POWERTRAIN VERIFICATION TEST. Refer to **POWERTRAIN VERIFICATION TEST** .

No

- Go To 6.

6. **FUEL PRESSURE CHECK**

WARNING: **The fuel system is under a constant pressure (even with the engine off). Before testing or servicing any fuel system hose, fitting or line, the fuel system pressure must be released. Failure to follow these instructions can result in possible serious or fatal injury.**

1. Install Fuel Pressure Decay Tester (special tool #8978A, Decay Tool, Fuel) to the fuel rail.
2. Start the engine and observe the fuel pressure reading.

NOTE: **Fuel pressure specification is 407 kPa +/- 34 kPa (59 psi +/- 5 psi).**

Choose a conclusion that best matches your fuel pressure reading.

Within Specification

- Go To 7.

Below Specification

- Go To 11.

Above Specification

- Replace the fuel filter/pressure regulator.
- Perform the POWERTRAIN VERIFICATION TEST. Refer to **POWERTRAIN VERIFICATION TEST** .

7. **FUEL PRESSURE LEAK DOWN**
   1. Perform the Fuel Pressure Leak Down Test. Refer to **DIAGNOSIS AND TESTING** .

      Were any repairs made after performing the leak down test?

      Yes

      - Testing complete.
      - Perform the POWERTRAIN VERIFICATION TEST. Refer to **POWERTRAIN VERIFICATION TEST** .

      No

      - Go To 8.

8. **ENGINE MECHANICAL**

   Check for any of the following conditions/mechanical problems:

   - ENGINE VACUUM - must be at least 13 inches in neutral
   - ENGINE VALVE TIMING - must be within specifications
   - ENGINE COMPRESSION - must be within specifications
   - ENGINE EXHAUST SYSTEM - must be free of any restrictions or leaks.
   - ENGINE PCV SYSTEM - must flow freely
   - TORQUE CONVERTER STALL SPEED - must be within specifications
   - POWER BRAKE BOOSTER - no internal vacuum leaks
   - FUEL - must be free of contamination
   - CAM LOBES - must not be worn excessively
   - CYLINDER LEAKAGE TEST - must be within specifications
   - VALVE SPRINGS - cannot be weak or broken

   Are there any engine mechanical problems?

   Yes

   - Repair as necessary.
   - Perform the POWERTRAIN VERIFICATION TEST. Refer to **POWERTRAIN VERIFICATION TEST** .

   No

- Go To 16.

9. **FUEL INJECTOR**
    1. Turn the ignition off.
    2. Disconnect the No. 2 Fuel Injector harness connector.
    3. Ignition on, engine not running.

    NOTE: When a Misfire is detected for a particular cylinder, the PCM will shut down that cylinder's Injector Control circuit.

    4. With the scan tool, erase DTCs.
    5. Install an Injector Noid light.
    6. With the scan tool, actuate the Fuel Injector.

    Does the Noid light blink/flicker during the actuation?

    Yes

    - Verify that there is good pin to terminal contact in the Fuel Injector and the Powertrain Control Module connectors. If OK, replace the Fuel Injector.
    - Perform the POWERTRAIN VERIFICATION TEST. Refer to **POWERTRAIN VERIFICATION TEST** .

    No

    - Go To 10.

10. **(K12) INJECTOR CONTROL NO. 2 CIRCUIT**

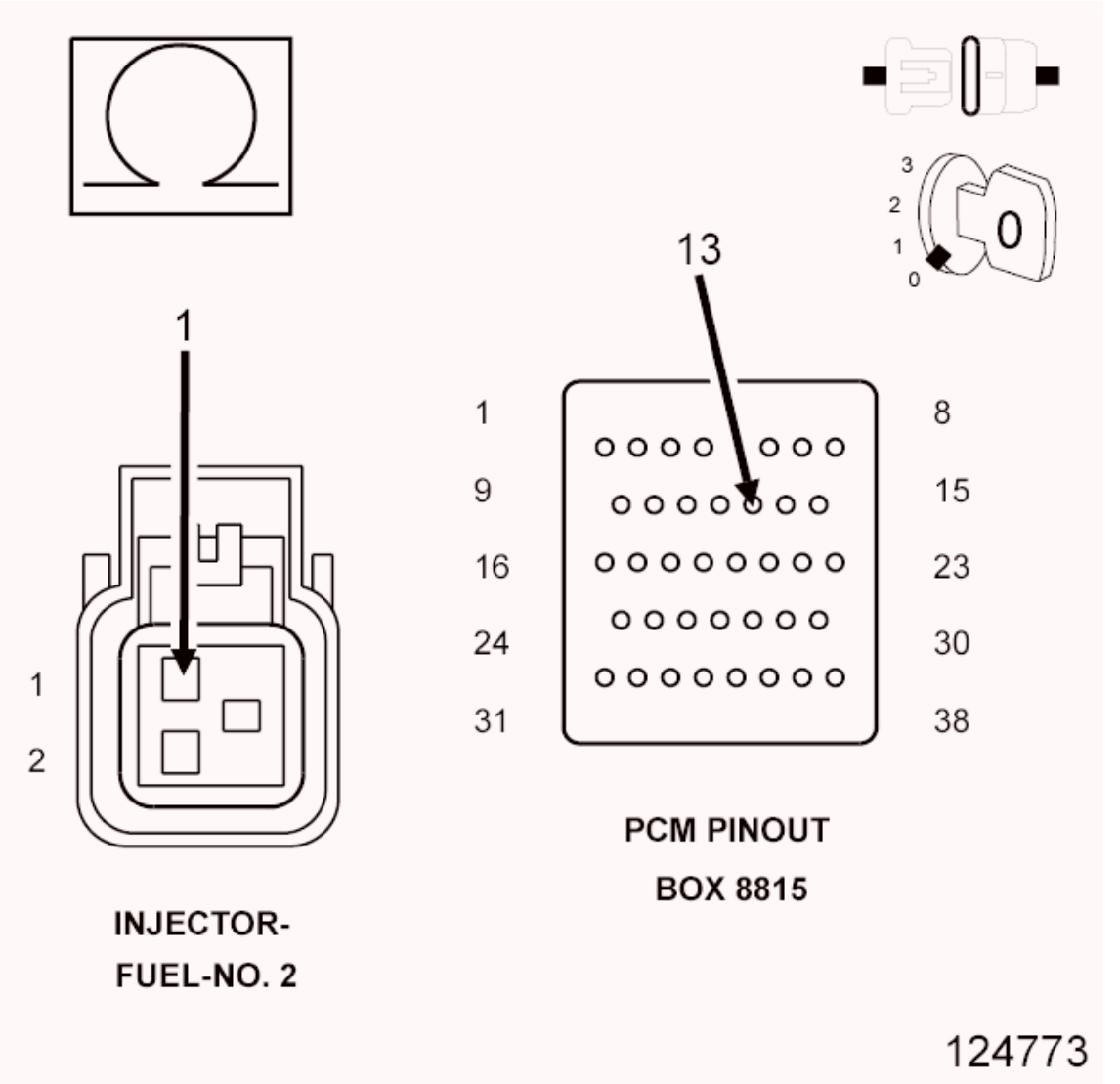

Fig. 107: Measuring Resistance Of (K12) Injector Control No. 2 Circuit From Fuel Injector Harness Connector To Appropriate Terminal Of PCM Pinout Box 8815
Courtesy of CHRYSLER GROUP, LLC

1. Turn the ignition off.
2. Disconnect the C2 PCM harness connector.

CAUTION: Do not probe the PCM harness connectors. Probing the PCM harness connectors will damage the PCM terminals resulting in poor terminal to pin connection. Install the PCM Pinout Box (special tool #8815A, Kit, NGC, 38 Position) to perform diagnosis.

3. Check the (K12) Injector Control No. 2 circuit for an open, short to ground, and short to voltage.

   Was a problem found with the (K12) Injector Control No. 2 circuit?

Yes

- Repair the excessive resistance or short in the (K12) Injector Control No. 2 circuit.
- Perform the POWERTRAIN VERIFICATION TEST. Refer to **POWERTRAIN VERIFICATION TEST** .

No

- Go To 16.

11. **FUEL SUPPLY LINE RESTRICTED**

WARNING: The fuel system is under a constant pressure (even with the engine off). Before testing or servicing any fuel system hose, fitting or line, the fuel system pressure must be released. Failure to follow these instructions can result in possible serious or fatal injury.

1. Turn the ignition off.
2. Raise the vehicle on a hoist, and disconnect the fuel pressure line at the fuel pump module.
3. Install the Fuel Pressure Decay Tester (special tool #8978A, Decay Tool, Fuel) between the fuel supply line and the fuel pump module.
4. Ignition on, engine not running.
5. With the scan tool, actuate the ASD Fuel System test and observe the fuel pressure gauge.

NOTE: Fuel pressure specification is 407 kPa +/- 34 kPa (59 psi +/- 5 psi).

Is the fuel pressure within specification?

Yes

- Repair or replace fuel supply line as necessary.
- Perform the POWERTRAIN VERIFICATION TEST. Refer to **POWERTRAIN VERIFICATION TEST** .

No

- Go To 12.

12. **FUEL PUMP INLET STRAINER**

WARNING: The fuel system is under a constant pressure (even with the engine off). Before testing or servicing any fuel system hose, fitting or line, the fuel system pressure must be released. Failure to follow these instructions can result in possible serious or fatal injury.

1. Turn the ignition off.

2. Remove the Fuel Pump Module and inspect the Fuel Inlet Strainer.

   Is the Fuel Inlet Strainer plugged?

   Yes

   - Replace the Fuel Pump Inlet Strainer.
   - Perform the POWERTRAIN VERIFICATION TEST. Refer to **POWERTRAIN VERIFICATION TEST** .

   No

   - Before continuing, check the Fuel Pump Module harness connector terminals for corrosion, damage, or terminal push out. Make sure the ground circuit is functional. Repair as necessary. Replace the Fuel Pump Module.
   - Perform the POWERTRAIN VERIFICATION TEST. Refer to **POWERTRAIN VERIFICATION TEST** .

13. **IGNITION WIRE**

NOTE: **If the vehicle or the cylinder being tested does not have an ignition wire answer YES to this test and continue.**

1. Turn the ignition off.
2. Remove the ignition wire.
3. Measure the resistance of the ignition wire.

   Is the resistance below 10K Ohms?

   Yes

   - Go To 14.

   No

   - Replace the Ignition Wire.
   - Perform the POWERTRAIN VERIFICATION TEST. Refer to **POWERTRAIN VERIFICATION TEST** .

14. **IGNITION COIL**

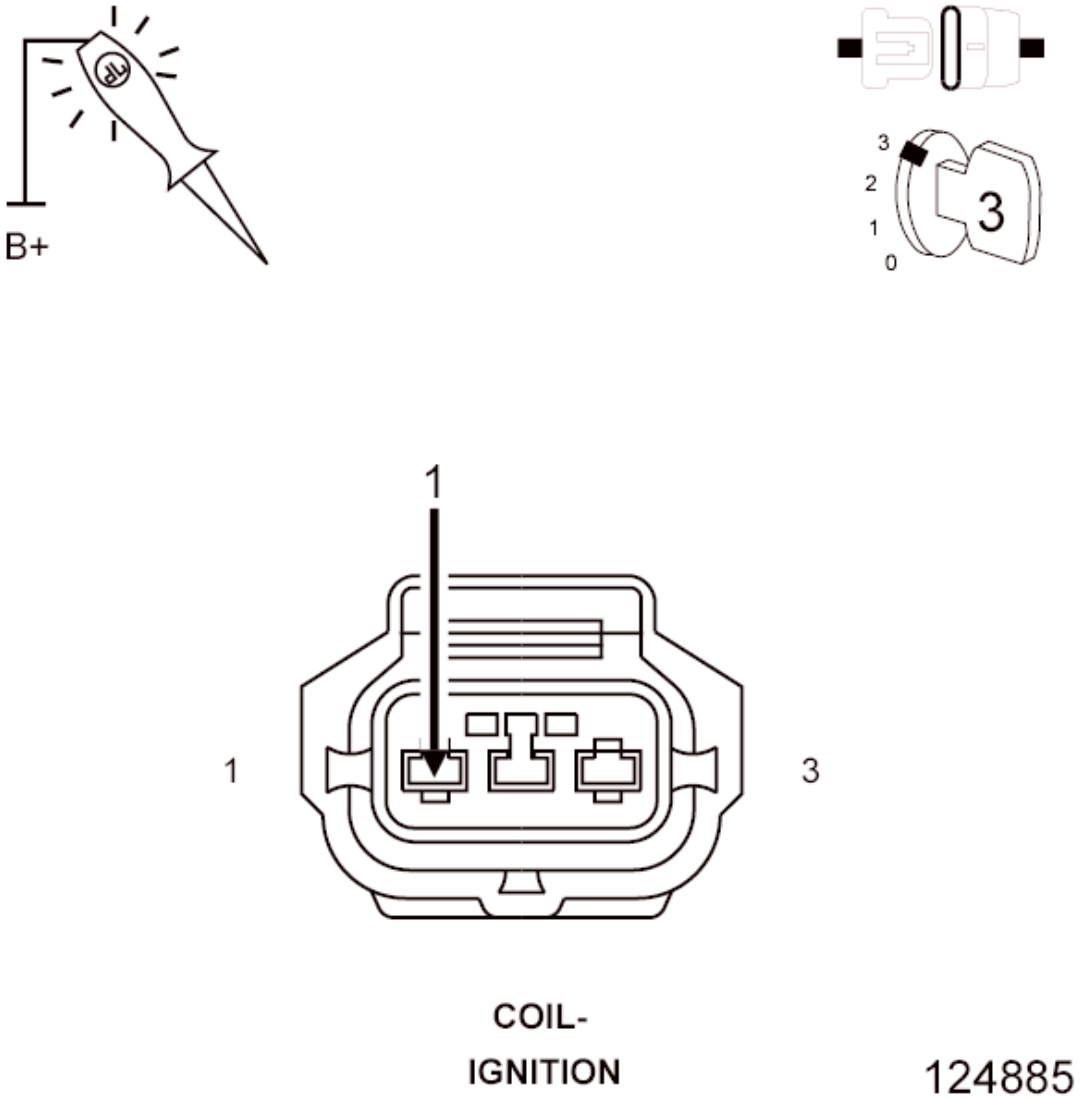

Fig. 108: Using 12-Volt Test Light Connected To 12-Volt Source To Probe Coil Control Circuit
Courtesy of CHRYSLER GROUP, LLC

WARNING: **When the engine is operating, do not stand in direct line with the fan. Do not put your hands near the pulleys, belts or fan. Do not wear loose clothing. Failure to follow these instructions may result in possible serious or fatal injury.**

NOTE: **The 3.7L V6 engine uses a modified Distributorless Ignition System (DIS) with coil consolidation on the left side engine bank.**

1. Disconnect the Ignition Coil harness connector.
2. Using a 12-volt test light connected to 12-volts, probe the (K17) Coil Control circuit.
3. Crank the engine for five seconds while observing the test light.

NOTE: **The primary resistance of the 3.7L and 4.7L Ignition coil is 0.6 to 0.9 of an ohm and the resistance of a 5.7L Ignition coil is 0.558 to 0.682 of an ohm at 25° C (77° F).**

Does the test light brightly blink/flicker during the actuation?

Yes

- Verify that there is good pin to terminal contact in the Ignition Coil and the Powertrain Control Module connectors. If OK, replace the Ignition Coil in accordance with the Service Information.
- Perform the POWERTRAIN VERIFICATION TEST. Refer to **POWERTRAIN VERIFICATION TEST** .

No

- Go To 15.

15. **(K17) COIL CONTROL CIRCUIT**

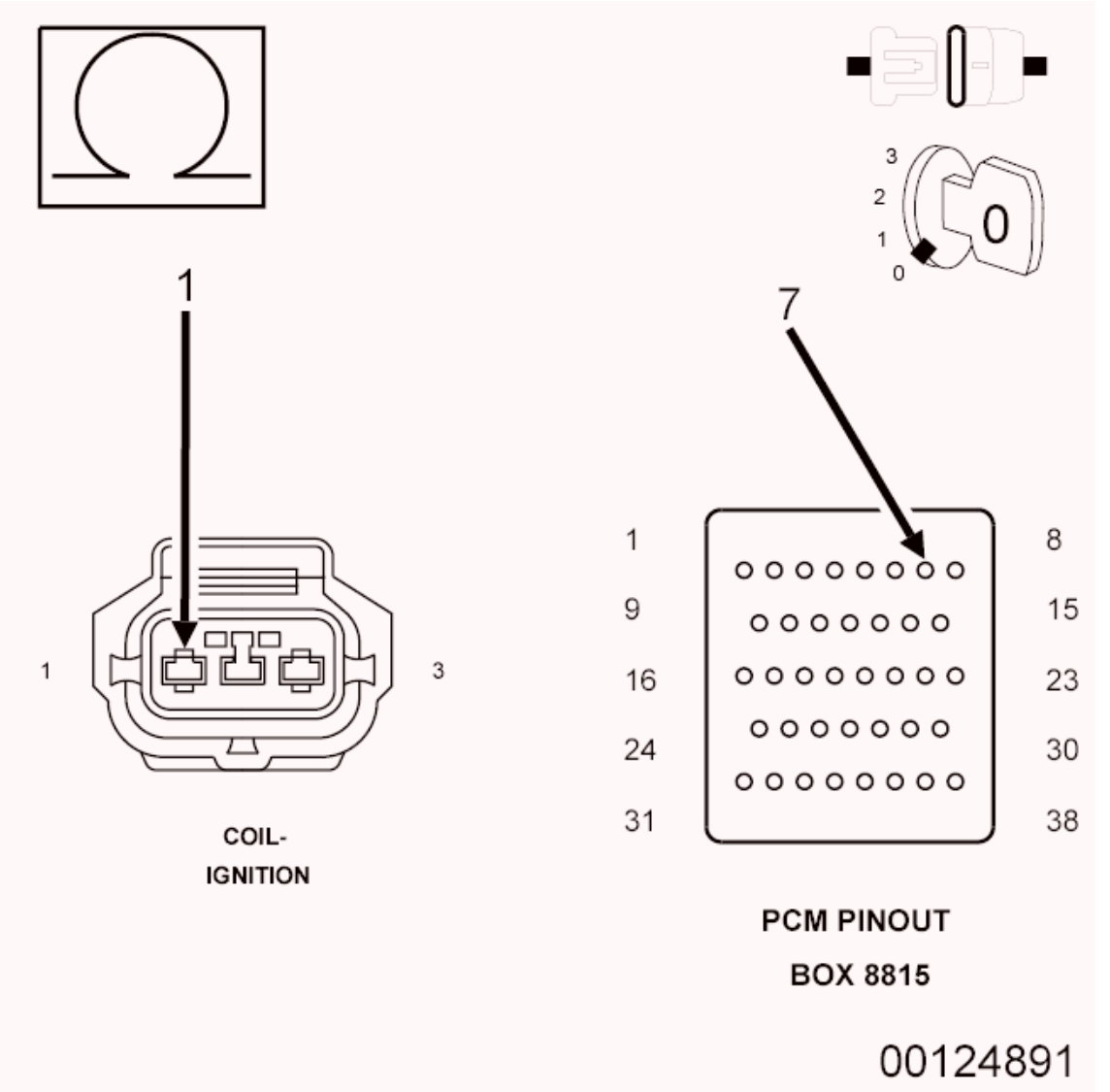

Fig. 109: Checking Coil Control Circuit For An Open, Short To Ground, And Short To Voltage
Courtesy of CHRYSLER GROUP, LLC

1. Turn the ignition off.
2. Disconnect the C2 PCM harness connector.

CAUTION: Do not probe the PCM harness connectors. Probing the PCM harness connectors will damage the PCM terminals resulting in poor terminal to pin connection. Install the PCM Pinout Box (special tool #8815A, Kit, NGC, 38 Position) to perform diagnosis.

3. Check the (K17) Coil Control circuit for an open, short to ground, and short to voltage.

   Was a problem found with the (K17) Coil Control circuit?

Yes

- Repair the (K17) Coil Control circuit.
- Perform the POWERTRAIN VERIFICATION TEST. Refer to **POWERTRAIN VERIFICATION TEST** .

No

- Go To 16.

16. **POWERTRAIN CONTROL MODULE (PCM)**
    1. Using the wiring diagram/schematic as a guide, inspect the wiring and connectors between the related Sensor, Coil, Injector, and the Powertrain Control Module (PCM).
    2. Look for any chafed, pierced, pinched, or partially broken wires.
    3. Look for broken, bent, pushed out or corroded terminals. Verify that there is good pin to terminal contact in the related Sensors, Coils, Injectors, and the Powertrain Control Module connectors.
    4. Refer to any Technical Service Bulletins that may apply.

    Were there any problems found?

    Yes

    - Repair as necessary.
    - Perform the POWERTRAIN VERIFICATION TEST. Refer to **POWERTRAIN VERIFICATION TEST** .

    No

    - Replace and program the Powertrain Control Module per Service Information.
    - Perform the POWERTRAIN VERIFICATION TEST. Refer to **POWERTRAIN VERIFICATION TEST** .

P0303-CYLINDER 3 MISFIRE

For a complete wiring diagram, **refer to appropriate SYSTEM WIRING DIAGRAMS article** .

WHEN MONITORED:

Any time the engine is running, and the adaptive numerator has been successfully updated.

SET CONDITION:

The threshold to set the fault is application specific; it is tied to the level of misfire that will cause emissions to increase to 1.5 times the standard or in some cases 1%. It is always a two trip fault above the calibrated RPM. It takes one fail to set a Pending Fault and two trips to set the MIL. Three good trips to turn off the MIL.

POSSIBLE CAUSES

Possible Causes
(F342) ASD CONTROL OUTPUT CIRCUIT
(K13) INJECTOR CONTROL NO. 3 CIRCUIT
(K18) COIL CONTROL NO. 3 CIRCUIT
SPARK PLUG
IGNITION WIRE
IGNITION COIL
FUEL PUMP INLET STRAINER PLUGGED
RESTRICTED FUEL SUPPLY LINE
FUEL PUMP MODULE
FUEL PRESSURE LEAK DOWN
FUEL INJECTOR
ENGINE MECHANICAL
POWERTRAIN CONTROL MODULE (PCM)

Always perform the Pre-Diagnostic Troubleshooting procedure before proceeding. Refer to PRE-DIAGNOSTIC TROUBLESHOOTING PROCEDURE .

DIAGNOSTIC TEST

1. **ACTIVE DTC**
    1. Diagnose and repair any other active component or circuit DTCs before continuing with this procedure.
    2. Turn the ignition on.
    3. With the scan tool, select View DTCs. Copy DTC and Freeze Frame information.
    4. Start the engine and allow it to reach operating temperature.

WARNING: When the engine is operating, do not stand in direct line with the fan. Do not put your hands near the pulleys, belts or fan. Do not wear loose clothing. Failure to follow these instructions may result in possible serious or fatal injury.

NOTE: Attempt to operate the vehicle under conditions similar to which the DTC was set.

NOTE: It may be necessary to test drive the vehicle within the DTC monitoring conditions in order for this DTC to set.

5. With a scan tool, select View DTCs.

    Is the DTC Active at this time?

    Yes

- Go To 2.

No

- Perform the INTERMITTENT CONDITION diagnostic procedure. Refer to **INTERMITTENT CONDITION** .

2. **VISUAL INSPECTION**

NOTE: Anything that affects the speed of the crankshaft can cause a misfire DTC.

NOTE: When a Misfire is detected for a particular cylinder, the PCM will shut down that cylinder's Injector Control circuit.

Visually inspect the engine for any of the following conditions:

- Worn serpentine belt
- Binding Engine-Driven accessories: A/C Compressor, P/S Pump, Water pump.
- Misalignment of the Water pump, P/S Pump and A/C Compressor pulleys
- Corroded PCM power and ground circuits.
- Misalignment of the Water pump, P/S Pump and A/C Compressor pulleys
- Corroded PCM power and ground circuits.
- Improper CKP, CMP, MAP, and TP Sensor mounting
- Poor connector/terminal to component connection for CKP sensor, CMP sensor, MAP sensor, TP sensor, fuel injector, ignition coil, etc.
- Vacuum leaks
- Restricted Air Induction system or Exhaust system.
- Internal engine component failures.

Were any of the above conditions present?

Yes

- Repair as necessary.
- Perform the POWERTRAIN VERIFICATION TEST. Refer to **POWERTRAIN VERIFICATION TEST** .

No

- Go To 3.

3. **(F342) ASD CONTROL OUTPUT CIRCUIT**

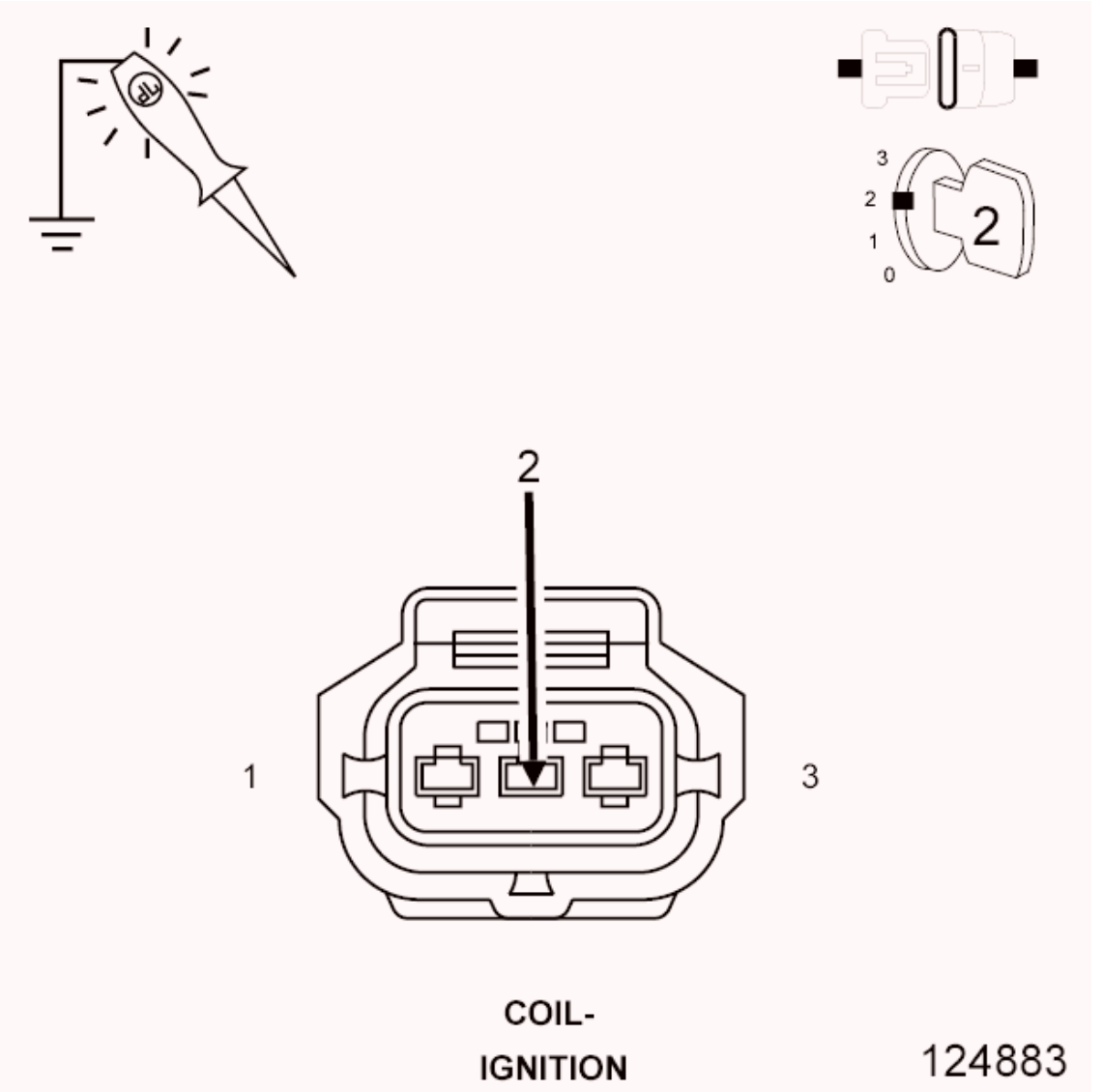

Fig. 110: Using 12-Volt Test Light Connected To Ground To Probe ASD Control Output Circuit In Ignition Coil Harness Connector
Courtesy of CHRYSLER GROUP, LLC

NOTE: Diagnose any ASD related DTCs before continuing.

1. Turn the ignition off.
2. Disconnect the No. 3 Ignition Coil harness connector.

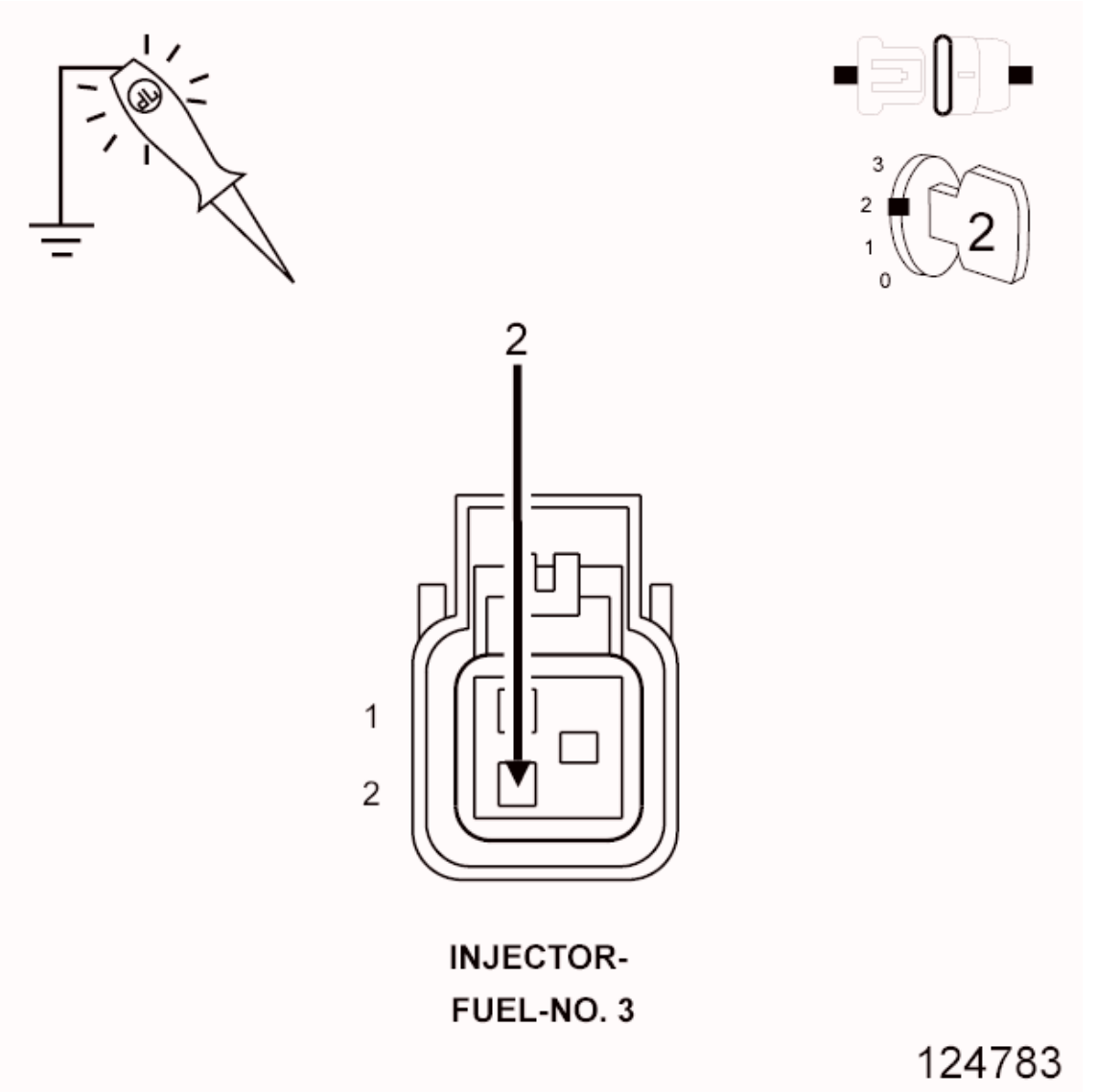

Fig. 111: Using 12-Volt Test Light Connected To Ground To Check ASD Control Output Circuit In Fuel Injector 3 Harness Connector
Courtesy of CHRYSLER GROUP, LLC

3. Disconnect the No. 3 Fuel Injector harness connector.
4. Ignition on, engine not running.
5. Using a 12-volt test light connected to ground, probe the (F342) ASD Control Output circuit in the Ignition Coil harness connector and Fuel Injector harness connector before the actuation.

NOTE: **Make sure the test light is probing the circuit before actuating the Relay or a DTC may set and not allow the actuation.**

6. With a scan tool, actuate the ASD.

   Does the test light illuminate brightly?

Yes

- Go To 4.

No

- Repair the excessive resistance or short to ground in the (F342) ASD Control Output circuit.
- Perform the POWERTRAIN VERIFICATION TEST. Refer to **POWERTRAIN VERIFICATION TEST** .

4. **IGNITION SYSTEM OPERATION**

WARNING: When the engine is operating, do not stand in direct line with the fan. Do not put your hands near the pulleys, belts or fan. Do not wear loose clothing. Failure to follow these instructions may result in possible serious or fatal injury.

1. Turn the ignition off.
2. Connect the Ignition Coil No. 3 harness connector.
3. Remove the Ignition Coil.
4. Leave the Fuel Injector harness connector of the cylinder being tested disconnected.
5. Install a spark tester on the Ignition Coil.
6. While cranking the engine observe the spark coming from the spark tester.
7. Perform the same test on the ignition wire side of the Ignition coil.

NOTE: A crisp blue spark that is able to jump the gap of the spark tester should be generated at the coil on plug and at the end of the ignition wire.

Is good spark present?

Yes

- Go To 5.

No

- Go To 14.

NOTE: Connect the Fuel Injector harness connector before continuing.

5. **SPARK PLUG**

CAUTION: The 4.7L engine uses TWO DIFFERENT types of spark plugs. A total of 16 plugs are used. The plugs are mounted in two rows (banks).

The upper row is used on the intake valve side of the cylinder head. The lower row is used on the exhaust valve side of the cylinder head. The upper row uses Nickel Yttrium plugs. The lower row uses Iridium plugs. DO NOT INTERCHANGE THESE PLUGS.

1. Turn the ignition off.
2. Remove the Spark Plug(s) in accordance with the Service Information.
3. Inspect the Spark Plug(s) for the following conditions:
   - Cracks
   - Carbon Tracking
   - Foreign Material
   - Gap size out of specifications
   - Loose or broken electrode

NOTE: **Lightly tap the bottom of the spark plug on a solid surface. The electrode in the spark plug should not move.**

Were any of the above conditions present?

Yes

- Replace the Spark Plug in accordance with the Service Information. Refer to **SPARK PLUG, REMOVAL** .
- Perform the POWERTRAIN VERIFICATION TEST. Refer to **POWERTRAIN VERIFICATION TEST** .

No

- Go To 6.

6. **FUEL PRESSURE CHECK**

WARNING: **The fuel system is under a constant pressure (even with the engine off). Before testing or servicing any fuel system hose, fitting or line, the fuel system pressure must be released. Failure to follow these instructions can result in possible serious or fatal injury.**

WARNING: **When the engine is operating, do not stand in direct line with the fan. Do not put your hands near the pulleys, belts or fan. Do not wear loose clothing. Failure to follow these instructions may result in possible serious or fatal injury.**

1. Install the Fuel Pressure Decay Tester (special tool #8978A, Decay Tool, Fuel) to the fuel rail.
2. Start the engine and observe the fuel pressure reading.

NOTE: **Fuel pressure specification is 407 kPa +/- 34 kPa (59 psi +/- 5 psi).**

Choose a conclusion that best matches your fuel pressure reading.

Within Specification

- Go To 7.

Below Specification

- Go To 12.

Above Specification

- Replace the fuel filter/pressure regulator.
- Perform the POWERTRAIN VERIFICATION TEST. Refer to **POWERTRAIN VERIFICATION TEST** .

7. **FUEL PRESSURE LEAK DOWN**

NOTE: **Before continuing visually and physically inspect the fuel delivery system for external leaks or damage. Repair/replace as necessary.**

WARNING: **The fuel system is under a constant pressure (even with the engine off). Before testing or servicing any fuel system hose, fitting or line, the fuel system pressure must be released. Failure to follow these instructions can result in possible serious or fatal injury.**

1. Turn the ignition off.
2. Install the Fuel Pressure Decay Tester (special tool #8978A, Decay Tool, Fuel).
3. Start the engine and allow the fuel system to reach maximum pressure.
4. Turn the ignition off.

NOTE: **Fuel specification is 407 kPa +/- 34 kPa (59 psi +/- 5 psi).**

5. Close the Fuel System Isolation Valve and then wait five minutes before proceeding.
6. Read the Fuel Inlet and Fuel Outlet Pressure Gauges. The pressure should not drop more than 10 psi on either gauge.
7. Monitor the fuel pressure gauge for a minimum of five minutes.

NOTE: **The pressure should not decrease by greater than 69 kPa (10 psi)**

Does the pressure fall below the listed specification?

Yes - On Fuel Inlet Gauge

- Replace the fuel pump module.
- Perform the POWERTRAIN VERIFICATION TEST. Refer to **POWERTRAIN VERIFICATION TEST** .

Yes - On Fuel Outlet Gauge

- Replace the leaking fuel injector(s).
- Perform the POWERTRAIN VERIFICATION TEST. Refer to **POWERTRAIN VERIFICATION TEST** .

No

- Go To 8.

8. **FUEL INJECTOR OPERATION**

WARNING: The fuel system is under a constant pressure (even with the engine off). Before testing or servicing any fuel system hose, fitting or line, the fuel system pressure must be released. Failure to follow these instructions can result in possible serious or fatal injury.

CAUTION: After each Fuel Injector actuation, start the engine to clean the cylinder of fuel. Failure to do so could cause engine damage.

1. Open the Fuel System Isolation Valve.
2. Start the engine and allow the fuel pressure to reach maximum pressure.
3. Turn the ignition off.
4. Ignition on, engine not running.
5. Using a scan tool, actuate the No. 3 Fuel Injector.
6. Monitor the fuel pressure gauge.

Does the fuel pressure gauge indicate a drop in fuel pressure?

Yes

- Go To 9.

No

- Go To 10.

NOTE: Turn the ignition off, remove the Fuel Pressure gauge, and connect the fuel lines before continuing.

9. **ENGINE MECHANICAL**

Check for any of the following conditions/mechanical problems:

- ENGINE VACUUM - must be at least 13 inches in neutral
- ENGINE VALVE TIMING - must be within specifications
- ENGINE COMPRESSION - must be within specifications
- ENGINE EXHAUST SYSTEM - must be free of any restrictions or leaks.
- ENGINE PCV SYSTEM - must flow freely
- TORQUE CONVERTER STALL SPEED - must be within specifications
- POWER BRAKE BOOSTER - no internal vacuum leaks
- FUEL - must be free of contamination
- CAM LOBES - must not be worn excessively
- CYLINDER LEAKAGE TEST - must be within specifications
- VALVE SPRINGS - cannot be weak or broken

Are there any engine mechanical problems?

Yes

- Repair as necessary.
- Perform the POWERTRAIN VERIFICATION TEST. Refer to **POWERTRAIN VERIFICATION TEST** .

No

- Go To 17.

10. **FUEL INJECTOR**
    1. Turn the ignition off.
    2. Disconnect the No. 3 Fuel Injector harness connector.
    3. Ignition on, engine not running.

    NOTE: **When a Misfire is detected for a particular cylinder, the PCM will shut down that cylinder's Injector Control circuit.**

    4. With the scan tool, erase DTCs.
    5. Install an Injector Noid light.
    6. With the scan tool, actuate the Fuel Injector.

    Does the Noid light blink/flicker during the actuation?

    Yes

- Verify that there is good pin to terminal contact in the Fuel Injector and the Powertrain Control Module connectors. If OK, replace the Fuel Injector.
- Perform the POWERTRAIN VERIFICATION TEST. Refer to **POWERTRAIN VERIFICATION TEST** .

No

- Go To 11.

11. **(K13) INJECTOR CONTROL NO. 3 CIRCUIT**

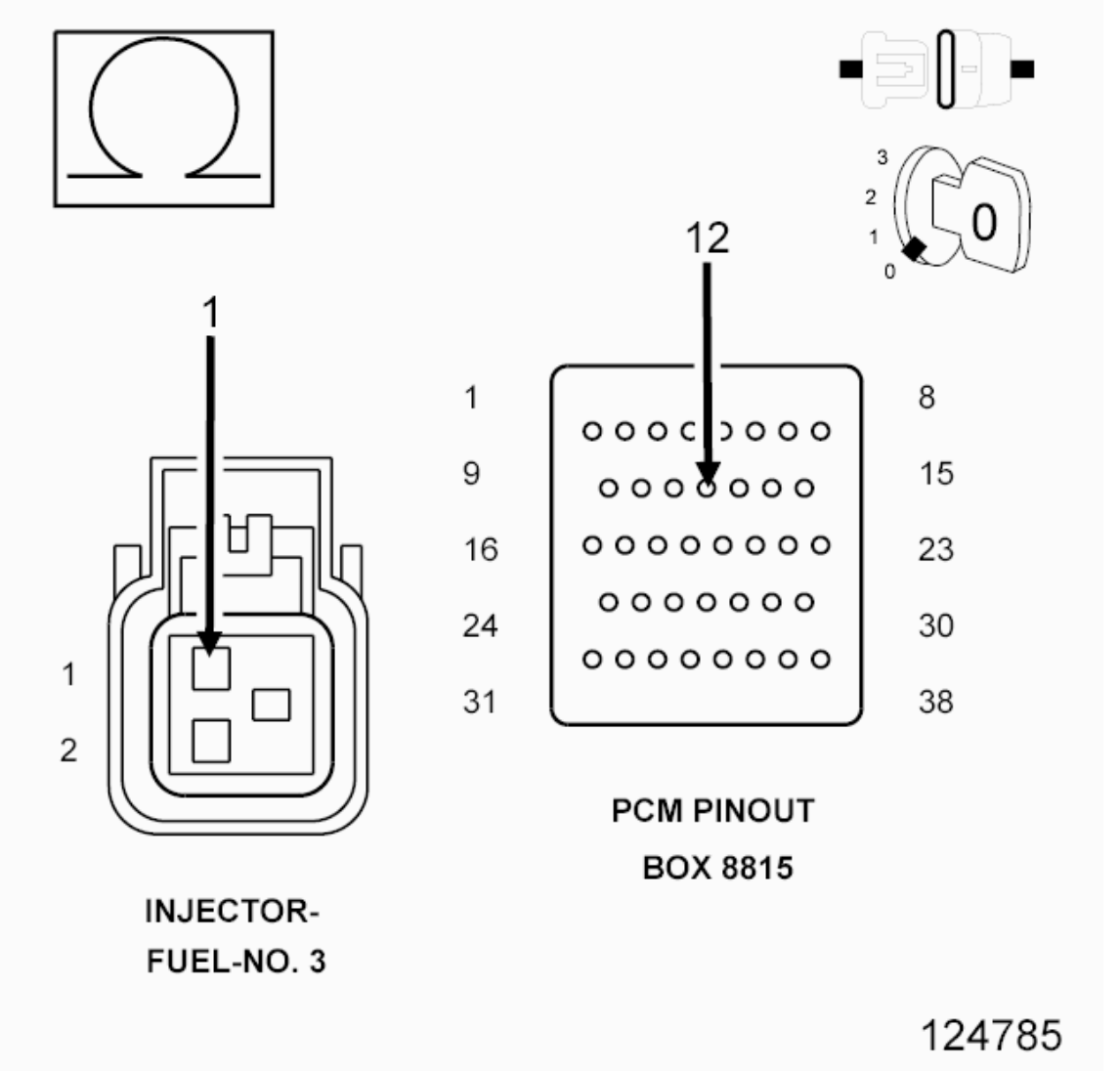

Fig. 112: Checking Injector Control No. 3 Circuit For An Open, Short To Ground, And Short To Voltage
Courtesy of CHRYSLER GROUP, LLC

1. Turn the ignition off.
2. Disconnect the C2 PCM harness connector.

CAUTION: Do not probe the PCM harness connectors. Probing the PCM harness connectors will damage the PCM terminals resulting in poor terminal to pin connection. Install the PCM Pinout Box (special tool #8815A, Kit, NGC, 38 Position) to perform diagnosis.

3. Check the (K13) Injector Control No. 3 circuit for an open, short to ground, and short to voltage.

   Was a problem found with the (K13) Injector Control No. 3 circuit?

   Yes

   - Repair the excessive resistance or short in the (K13) Injector Control No. 3 circuit.
   - Perform the POWERTRAIN VERIFICATION TEST. Refer to **POWERTRAIN VERIFICATION TEST** .

   No

   - Go To 17.

12. **FUEL SUPPLY LINE RESTRICTED**

WARNING: The fuel system is under a constant pressure (even with the engine off). Before testing or servicing any fuel system hose, fitting or line, the fuel system pressure must be released. Failure to follow these instructions can result in possible serious or fatal injury.

1. Turn the ignition off.
2. Raise the vehicle on a hoist, and disconnect the fuel pressure line at the fuel pump module.
3. Install the Fuel Pressure Decay Tester (special tool #8978A, Decay Tool, Fuel) between the fuel supply line and the fuel pump module.
4. Ignition on, engine not running.
5. With a scan tool, actuate the ASD Fuel System test and observe the fuel pressure gauge.

NOTE: Fuel pressure specification is 407 kPa +/- 34 kPa (59 psi +/- 5 psi).

Is the fuel pressure within specification?

Yes

- Repair or replace fuel supply line as necessary.
- Perform the POWERTRAIN VERIFICATION TEST. Refer to **POWERTRAIN VERIFICATION TEST** .

No

- Go To 13.

13. **FUEL PUMP INLET STRAINER**

WARNING: The fuel system is under a constant pressure (even with the engine off). Before testing or servicing any fuel system hose, fitting or line, the fuel system pressure must be released. Failure to follow these instructions can result in possible serious or fatal injury.

1. Turn the ignition off.
2. Remove the Fuel Pump Module and inspect the Fuel Inlet Strainer.

Is the Fuel Inlet Strainer plugged?

Yes

- Replace the Fuel Pump Inlet Strainer.
- Perform the POWERTRAIN VERIFICATION TEST. Refer to **POWERTRAIN VERIFICATION TEST** .

No

- Before continuing, check the Fuel Pump Module harness connector terminals for corrosion, damage, or terminal push out. Make sure the ground circuit is functional. Repair as necessary. Replace the Fuel Pump Module.
- Perform the POWERTRAIN VERIFICATION TEST. Refer to **POWERTRAIN VERIFICATION TEST** .

14. **IGNITION WIRE**

NOTE: If the vehicle being tested does not have an ignition wire answer YES to this test and continue.

1. Turn the ignition off.
2. Remove the ignition wire.
3. Measure the resistance of the ignition wire.

Is the resistance below 10K Ohms?

Yes

- Go To 15.

No

- Replace the Ignition Wire.

- Perform the POWERTRAIN VERIFICATION TEST. Refer to **POWERTRAIN VERIFICATION TEST** .

15. **IGNITION COIL**

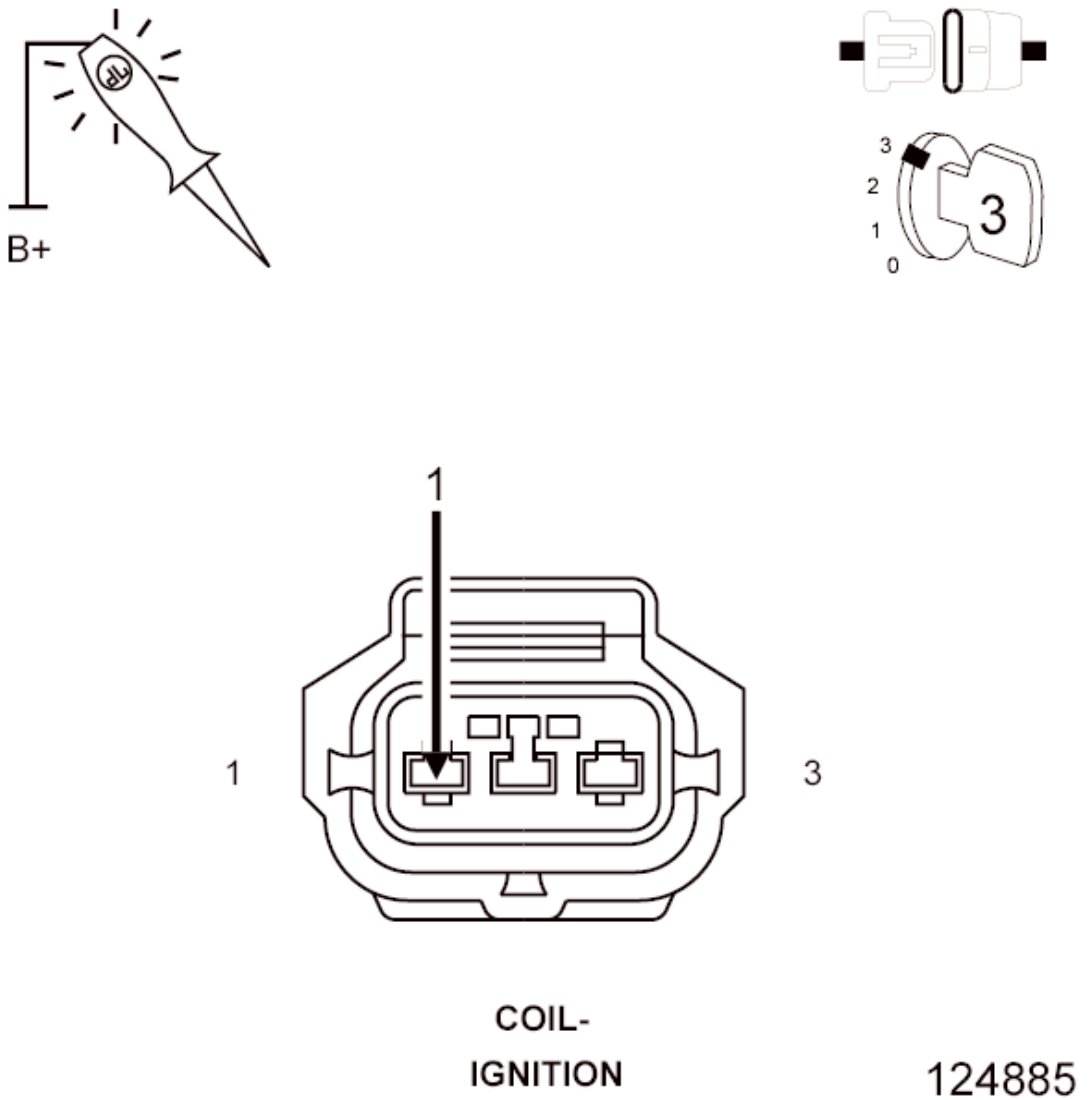

Fig. 113: Using 12-Volt Test Light Connected To 12-Volt Source To Probe Coil Control Circuit
Courtesy of CHRYSLER GROUP, LLC

WARNING: **When the engine is operating, do not stand in direct line with the fan. Do not put your hands near the pulleys, belts or fan. Do not wear loose clothing. Failure to follow these instructions may result in possible serious or fatal injury.**

1. Disconnect the No. 3 Ignition Coil harness connector.
2. Using a 12-volt test light connected to 12-volts, probe the (K18) Coil Control No. 3 circuit.
3. Crank the engine for five seconds while observing the test light.

NOTE: **The primary resistance of the 3.7L and 4.7L Ignition coil is 0.6 to 0.9 of an ohm and the resistance of a 5.7L Ignition coil is 0.558 to 0.682 of an ohm at 25° C (77° F).**

Does the test light brightly blink/flicker?

Yes

- Verify that there is good pin to terminal contact in the Ignition Coil and the Powertrain Control Module connectors. If OK, replace the Ignition Coil in accordance with the Service Information.
- Perform the POWERTRAIN VERIFICATION TEST. Refer to **POWERTRAIN VERIFICATION TEST** .

No

- Go To 16.

16. **(K18) COIL CONTROL NO. 3 CIRCUIT**

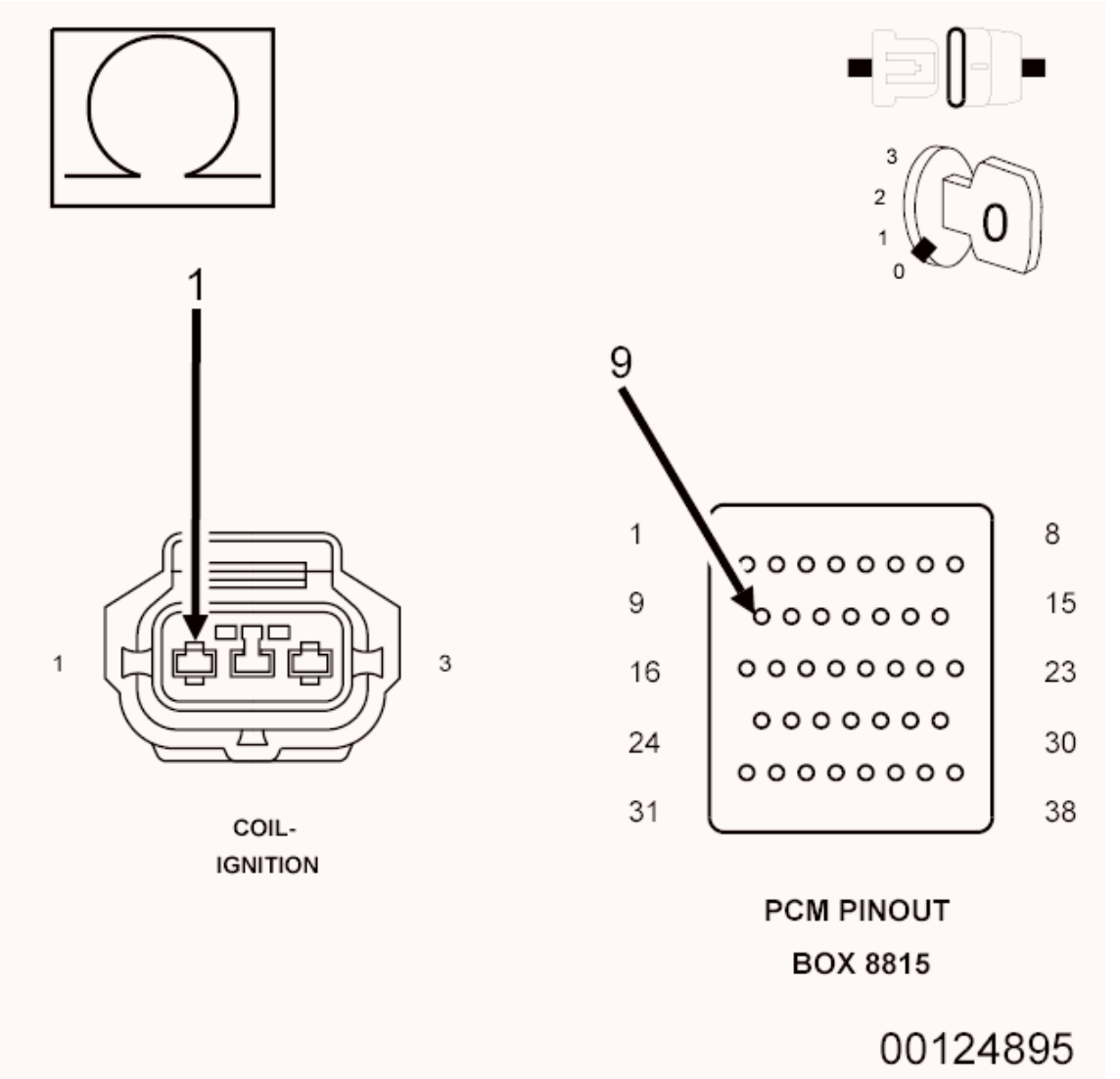

Fig. 114: Checking Coil Control No. 3 Circuit For An Open, Short To Ground, And Short To Voltage
Courtesy of CHRYSLER GROUP, LLC

1. Turn the ignition off.
2. Disconnect the C2 PCM harness connector.

CAUTION: Do not probe the PCM harness connectors. Probing the PCM harness connectors will damage the PCM terminals resulting in poor terminal to pin connection. Install the PCM Pinout Box (special tool #8815A, Kit, NGC, 38 Position) to perform diagnosis.

3. Check the (K18) Coil Control No. 3 circuit for an open, short to ground, and short to voltage.

   Was a problem found with the (K18) Coil Control No. 3 circuit?

Yes

- Repair the (K18) Coil Control No. 3 circuit.
- Perform the POWERTRAIN VERIFICATION TEST. Refer to **POWERTRAIN VERIFICATION TEST** .

No

- Go To 17.

17. **POWERTRAIN CONTROL MODULE (PCM)**
    1. Using the wiring diagram/schematic as a guide, inspect the wiring and connectors between the related Sensor, Coil, Injector, and the Powertrain Control Module (PCM).
    2. Look for any chafed, pierced, pinched, or partially broken wires.
    3. Look for broken, bent, pushed out or corroded terminals. Verify that there is good pin to terminal contact in the related Sensors, Coils, Injectors, and the Powertrain Control Module connectors.
    4. Perform any Technical Service Bulletins that may apply.

    Were there any problems found?

    Yes

    - Repair as necessary.
    - Perform the POWERTRAIN VERIFICATION TEST. Refer to **POWERTRAIN VERIFICATION TEST** .

    No

    - Replace and program the Powertrain Control Module per Service Information.
    - Perform the POWERTRAIN VERIFICATION TEST. Refer to **POWERTRAIN VERIFICATION TEST** .

P0304-CYLINDER 4 MISFIRE

For a complete wiring diagram, **refer to appropriate SYSTEM WIRING DIAGRAMS article** .

WHEN MONITORED:

Any time the engine is running, and the adaptive numerator has been successfully updated.

SET CONDITION:

The threshold to set the fault is application specific; it is tied to the level of misfire that will cause emissions to increase to 1.5 times the standard or in some cases 1%. It is always a two trip fault above the calibrated RPM. It takes one failure to set a Pending Fault and two trips to set the MIL. Three good trips to turn off the MIL.

POSSIBLE CAUSES

Possible Causes
(F342) ASD CONTROL OUTPUT CIRCUIT
(K14) INJECTOR CONTROL NO. 4 CIRCUIT
(K15) COIL CONTROL NO. 4 CIRCUIT
(K19) COIL CONTROL NO. 1 CIRCUIT FOR 3.7
SPARK PLUG
IGNITION WIRE
IGNITION COIL
FUEL PUMP INLET STRAINER PLUGGED
RESTRICTED FUEL SUPPLY LINE
FUEL PUMP MODULE
FUEL PRESSURE LEAK DOWN
FUEL INJECTOR
ENGINE MECHANICAL
POWERTRAIN CONTROL MODULE (PCM)

Always perform the Pre-Diagnostic Troubleshooting procedure before proceeding. Refer to PRE-DIAGNOSTIC TROUBLESHOOTING PROCEDURE .

DIAGNOSTIC TEST

1. **ACTIVE DTC**
    1. Diagnose and repair any other active component or circuit DTCs before continuing with this procedure.
    2. Turn the ignition on.
    3. With the scan tool, select View DTCs. Copy DTC and Freeze Frame information.
    4. Start the engine and allow it to reach operating temperature.

WARNING: **When the engine is operating, do not stand in direct line with the fan. Do not put your hands near the pulleys, belts or fan. Do not wear loose clothing. Failure to follow these instructions may result in possible serious or fatal injury.**

NOTE: **Attempt to operate the vehicle under conditions similar to which the DTC was set.**

NOTE: **It may be necessary to test drive the vehicle within the DTC monitoring conditions in order for this DTC to set.**

5. With a scan tool, select View DTCs.

   Is the DTC Active at this time?

Yes

- Go To 2.

No

- Perform the INTERMITTENT CONDITION diagnostic procedure. Refer to **INTERMITTENT CONDITION** .

2. **VISUAL INSPECTION**

NOTE: Anything that affects the speed of the crankshaft can cause a misfire DTC.

NOTE: When a Misfire is detected for a particular cylinder, the PCM will shut down that cylinder's Injector Control circuit.

Visually inspect the engine for any of the following conditions:

- Worn serpentine belt
- Binding Engine-Driven accessories: A/C Compressor, P/S Pump, Water pump.
- Misalignment of the Water pump, P/S Pump and A/C Compressor pulleys
- Corroded PCM power and ground circuits.
- Misalignment of the Water pump, P/S Pump and A/C Compressor pulleys
- Corroded PCM power and ground circuits.
- Improper CKP, CMP, MAP, and TP Sensor mounting
- Poor connector/terminal to component connection for CKP sensor, CMP sensor, MAP sensor, TP sensor, fuel injector, ignition coil, etc.
- Vacuum leaks
- Restricted Air Induction system or Exhaust system.
- Internal engine component failures.

Were any of the above conditions present?

Yes

- Repair as necessary.
- Perform the POWERTRAIN VERIFICATION TEST. Refer to **POWERTRAIN VERIFICATION TEST** .

No

- Go To 3.

3. **(F342) ASD CONTROL OUTPUT CIRCUIT**

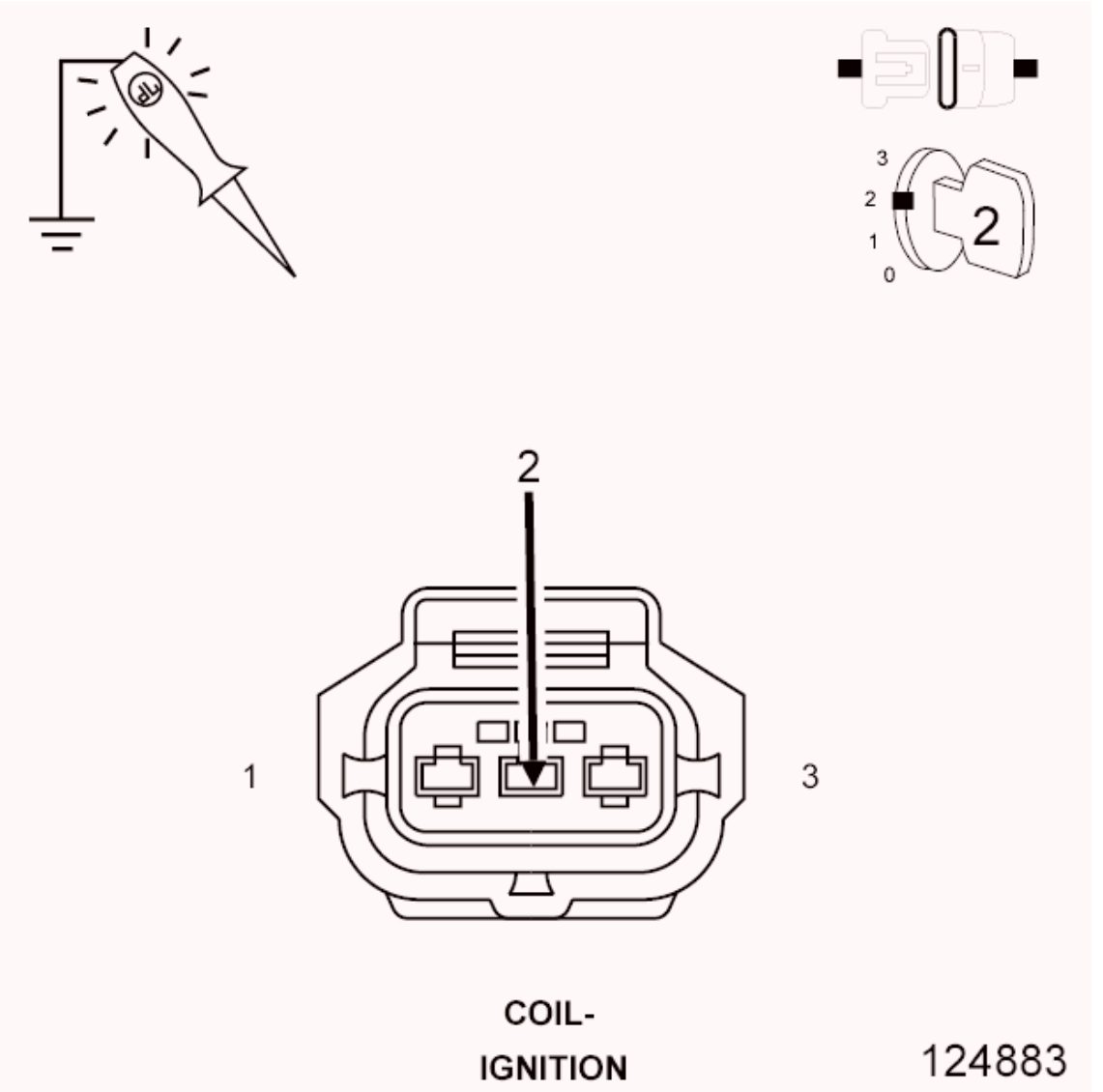

Fig. 115: Using 12-Volt Test Light Connected To Ground To Probe ASD Control Output Circuit In Ignition Coil Harness Connector
Courtesy of CHRYSLER GROUP, LLC

1. Turn the ignition off.

NOTE: **The 3.7L V6 engine uses a modified Distributorless Ignition System (DIS) with coil consolidation on the left side engine bank.**

2. Disconnect the No. 4 or No. 1 Ignition Coil harness connector.
3. Disconnect the No. 4 Fuel Injector harness connector.
4. Ignition on, engine not running.

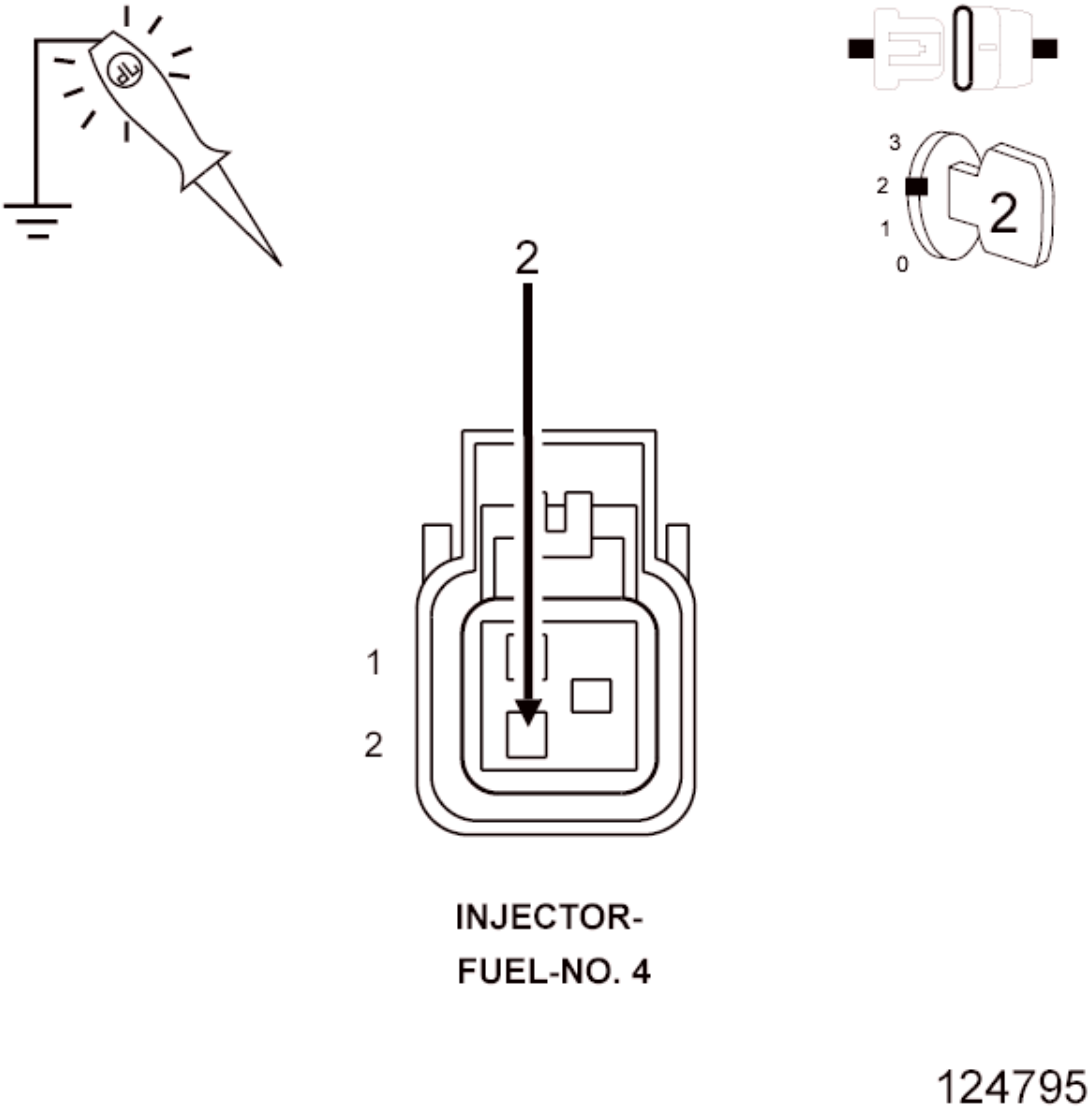

Fig. 116: Using 12-Volt Test Light Connected To Ground To Check ASD Control Output Circuit In Fuel Injector 4 Harness Connector
Courtesy of CHRYSLER GROUP, LLC

5. Using a 12-volt test light connected to ground, probe the (F342) ASD Control Output circuit in the Ignition Coil harness connector and Fuel Injector harness connector before the actuation.

   NOTE: Make sure the test light is probing the circuit before actuating the Relay or a DTC may set and not allow the actuation.

6. With the scan tool, actuate the ASD.

   Does the test light illuminate brightly?

   Yes

- Go To 4.

No

- Repair the excessive resistance or short to ground in the (F342) ASD Control Output circuit.
- Perform the POWERTRAIN VERIFICATION TEST. Refer to **POWERTRAIN VERIFICATION TEST** .

4. **IGNITION SYSTEM OPERATION**

WARNING: When the engine is operating, do not stand in direct line with the fan. Do not put your hands near the pulleys, belts or fan. Do not wear loose clothing. Failure to follow these instructions may result in possible serious or fatal injury.

1. Turn the ignition off.
2. Connect the No. 4 or No. 1 Ignition Coil harness connector.
3. Remove the Ignition Coil.
4. Leave the Fuel Injector harness connector of the cylinder being tested disconnected.
5. Install a spark tester on the Ignition Coil.
6. While cranking the engine observe the spark coming from the spark tester.
7. Perform the same test on the ignition wire side of the Ignition coil.

NOTE: A crisp blue spark that is able to jump the gap of the spark tester should be generated at the coil on plug and at the end of the ignition wire.

Is good spark present?

Yes

- Go To 5.

No

- Go To 13.

NOTE: Connect the Fuel Injector harness connector before continuing.

5. **SPARK PLUG**

CAUTION: The 4.7L engine uses TWO DIFFERENT types of spark plugs. A total of 16 plugs are used. The plugs are mounted in two rows (banks). The upper row is used on the intake valve side of the cylinder head. The lower row is used on the exhaust valve side of the cylinder head.

The upper row uses Nickel Yttrium plugs. The lower row uses Iridium plugs. DO NOT INTERCHANGE THESE PLUGS.

1. Turn the ignition off.
2. Remove the Spark Plug(s) in accordance with the Service Information.
3. Inspect the Spark Plug(s) for the following conditions.
   - Cracks
   - Carbon Tracking
   - Foreign Material
   - Gap size out of specifications
   - Loose or broken electrode

NOTE: **Lightly tap the bottom of the spark plug on a solid surface. The electrode in the spark plug should not move.**

Were any of the above conditions present?

Yes

- Replace the Spark Plug in accordance with the Service Information. Refer to **SPARK PLUG, REMOVAL** .
- Perform the POWERTRAIN VERIFICATION TEST. Refer to **POWERTRAIN VERIFICATION TEST** .

No

- Go To 6.

6. **FUEL PRESSURE CHECK**

WARNING: **The fuel system is under a constant pressure (even with the engine off). Before testing or servicing any fuel system hose, fitting or line, the fuel system pressure must be released. Failure to follow these instructions can result in possible serious or fatal injury.**

WARNING: **When the engine is operating, do not stand in direct line with the fan. Do not put your hands near the pulleys, belts or fan. Do not wear loose clothing. Failure to follow these instructions may result in possible serious or fatal injury.**

1. Install the Fuel Pressure Decay Tester (special tool #8978A, Decay Tool, Fuel) to the fuel rail.
2. Start the engine and observe the fuel pressure reading.

NOTE: **Fuel pressure specification is 407 kPa +/- 34 kPa (59 psi +/- 5 psi).**

Choose a conclusion that best matches your fuel pressure reading.

Within Specification

- Go To 7.

Below Specification

- Go To 11.

Above Specification

- Replace the fuel filter/pressure regulator.
- Perform the POWERTRAIN VERIFICATION TEST. Refer to **POWERTRAIN VERIFICATION TEST** .

7. **FUEL PRESSURE LEAK DOWN**
   1. Perform the Fuel Pressure Leak Down Test. Refer to **DIAGNOSIS AND TESTING** .

      Were any repairs made after performing the leak down test?

      Yes

      - Testing complete.
      - Perform the POWERTRAIN VERIFICATION TEST. Refer to **POWERTRAIN VERIFICATION TEST** .

      No

      - Go To 8.
8. **ENGINE MECHANICAL**

   Check for any of the following conditions/mechanical problems:

   - ENGINE VACUUM - must be at least 13 inches in neutral
   - ENGINE VALVE TIMING - must be within specifications
   - ENGINE COMPRESSION - must be within specifications
   - ENGINE EXHAUST SYSTEM - must be free of any restrictions or leaks.
   - ENGINE PCV SYSTEM - must flow freely
   - TORQUE CONVERTER STALL SPEED - must be within specifications
   - POWER BRAKE BOOSTER - no internal vacuum leaks
   - FUEL - must be free of contamination
   - CAM LOBES - must not be worn excessively
   - CYLINDER LEAKAGE TEST - must be within specifications

- VALVE SPRINGS - cannot be weak or broken

Are there any engine mechanical problems?

Yes

- Repair as necessary.
- Perform the POWERTRAIN VERIFICATION TEST. Refer to **POWERTRAIN VERIFICATION TEST** .

No

- Go To 16.

9. **FUEL INJECTOR**
   1. Turn the ignition off.
   2. Disconnect the No. 4 Fuel Injector harness connector.
   3. Ignition on, engine not running.

      NOTE: When a Misfire is detected for a particular cylinder, the PCM will shut down that cylinder's Injector Control circuit.

   4. With the scan tool, erase DTCs.
   5. Install an Injector Noid light.
   6. With the scan tool, actuate the Fuel Injector.

      Does the Noid light blink/flicker during the actuation?

      Yes

      - Verify that there is good pin to terminal contact in the Fuel Injector and the Powertrain Control Module connectors. If OK, replace the Fuel Injector.
      - Perform the POWERTRAIN VERIFICATION TEST. Refer to **POWERTRAIN VERIFICATION TEST** .

      No

      - Go To 10.

10. **(K14) INJECTOR CONTROL NO. 4 CIRCUIT**

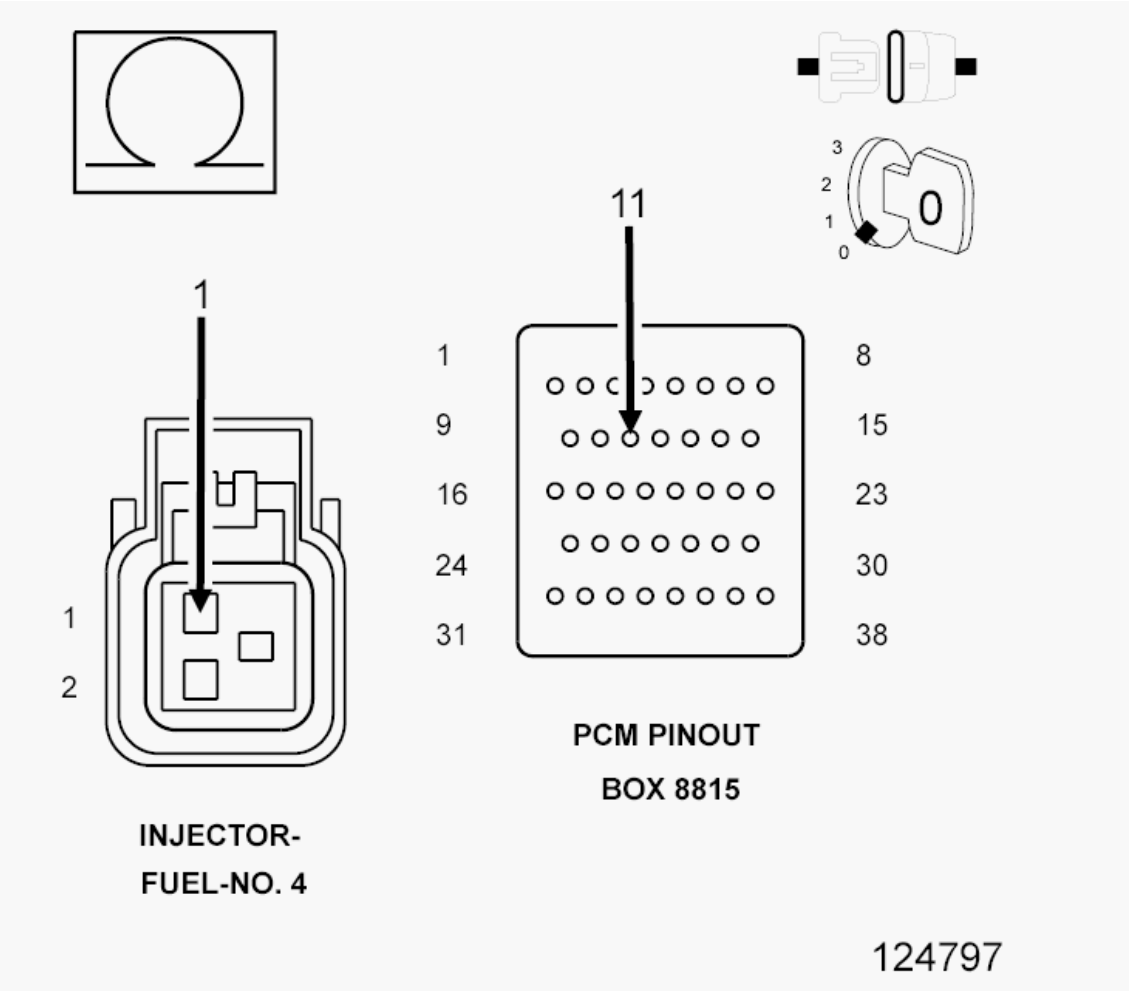

Fig. 117: Checking Injector Control No. 4 Circuit For An Open, Short To Ground, And Short To Voltage
Courtesy of CHRYSLER GROUP, LLC

1. Turn the ignition off.
2. Disconnect the C2 PCM harness connector.

CAUTION: Do not probe the PCM harness connectors. Probing the PCM harness connectors will damage the PCM terminals resulting in poor terminal to pin connection. Install the PCM Pinout Box (special tool #8815A, Kit, NGC, 38 Position) to perform diagnosis.

3. Check the (K14) Injector Control No. 4 circuit for an open, short to ground, and short to voltage.

   Was a problem found with the (K14) Injector Control No. 4 circuit?

   Yes

- Repair the excessive resistance or short in the (K14) Injector Control No. 4 circuit.
- Perform the POWERTRAIN VERIFICATION TEST. Refer to **POWERTRAIN VERIFICATION TEST** .

No

- Go To 16.

11. **FUEL SUPPLY LINE RESTRICTED**

WARNING: **The fuel system is under a constant pressure (even with the engine off). Before testing or servicing any fuel system hose, fitting or line, the fuel system pressure must be released. Failure to follow these instructions can result in possible serious or fatal injury.**

1. Turn the ignition off.
2. Raise vehicle on hoist, and disconnect the fuel pressure line at the fuel pump module.
3. Install the Fuel Pressure Decay Tester (special tool #8978A, Decay Tool, Fuel) between the fuel supply line and the fuel pump module.
4. Ignition on, engine not running.
5. With the scan tool, actuate the ASD Fuel System test and observe the fuel pressure gauge.

NOTE: Fuel pressure specification is 407 kPa +/- 34 kPa (59 psi +/- 5 psi).

Is the fuel pressure within specification?

Yes

- Repair or replace fuel supply line as necessary.
- Perform the POWERTRAIN VERIFICATION TEST. Refer to **POWERTRAIN VERIFICATION TEST** .

No

- Go To 12.

12. **FUEL PUMP INLET STRAINER**

WARNING: **The fuel system is under a constant pressure (even with the engine off). Before testing or servicing any fuel system hose, fitting or line, the fuel system pressure must be released. Failure to follow these instructions can result in possible serious or fatal injury.**

1. Turn the ignition off.
2. Remove the Fuel Pump Module and inspect the Fuel Inlet Strainer.

Is the Fuel Inlet Strainer plugged?

Yes

- Replace the Fuel Pump Inlet Strainer.
- Perform the POWERTRAIN VERIFICATION TEST. Refer to **POWERTRAIN VERIFICATION TEST** .

No

- Before continuing, check the Fuel Pump Module harness connector terminals for corrosion, damage, or terminal push out. Make sure the ground circuit is functional. Repair as necessary. Replace the Fuel Pump Module.
- Perform the POWERTRAIN VERIFICATION TEST. Refer to **POWERTRAIN VERIFICATION TEST** .

13. **IGNITION WIRE**

NOTE: **If the vehicle or cylinder being tested does not have an ignition wire answer YES to this test and continue.**

1. Turn the ignition off.
2. Remove the ignition wire.
3. Measure the resistance of the ignition wire.

Is the resistance below 10K Ohms?

Yes

- Go To 14.

No

- Replace the Ignition Wire.
- Perform the POWERTRAIN VERIFICATION TEST. Refer to **POWERTRAIN VERIFICATION TEST** .

14. **IGNITION COIL**

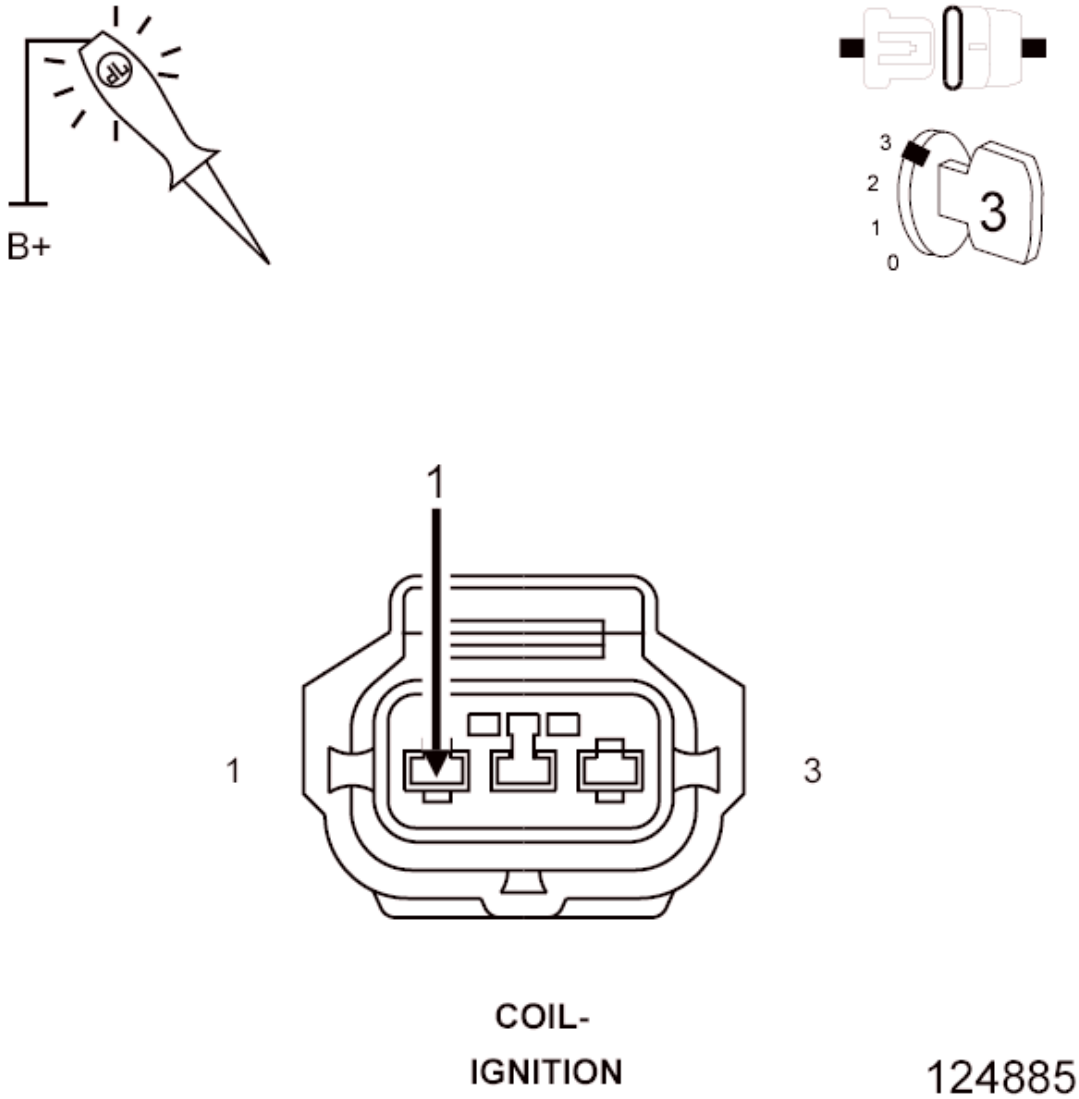

Fig. 118: Using 12-Volt Test Light Connected To 12-Volt Source To Probe Coil Control Circuit
Courtesy of CHRYSLER GROUP, LLC

WARNING: **When the engine is operating, do not stand in direct line with the fan. Do not put your hands near the pulleys, belts or fan. Do not wear loose clothing. Failure to follow these instructions may result in possible serious or fatal injury.**

NOTE: **The 3.7L V6 engine uses a modified Distributorless Ignition System (DIS) with coil consolidation on the left side engine bank.**

1. Disconnect the No. 4 or No. 1 Ignition Coil harness connector.
2. Using a 12-volt test light connected to 12-volts, probe the (K15) or the (K19) Coil Control circuit.
3. Crank the engine for five seconds while observing the test light.

NOTE: **The primary resistance of the 3.7L and 4.7L Ignition coil is 0.6 to 0.9 of an ohm and the resistance of a 5.7L Ignition coil is 0.558 to 0.682 of an ohm at 25° C (77° F).**

Does the test light brightly blink/flicker?

Yes

- Verify that there is good pin to terminal contact in the Ignition Coil and the Powertrain Control Module connectors. If OK, replace the Ignition Coil in accordance with the Service Information.
- Perform the POWERTRAIN VERIFICATION TEST. Refer to **POWERTRAIN VERIFICATION TEST** .

No

- Go To 15.

15. **COIL CONTROL CIRCUIT**

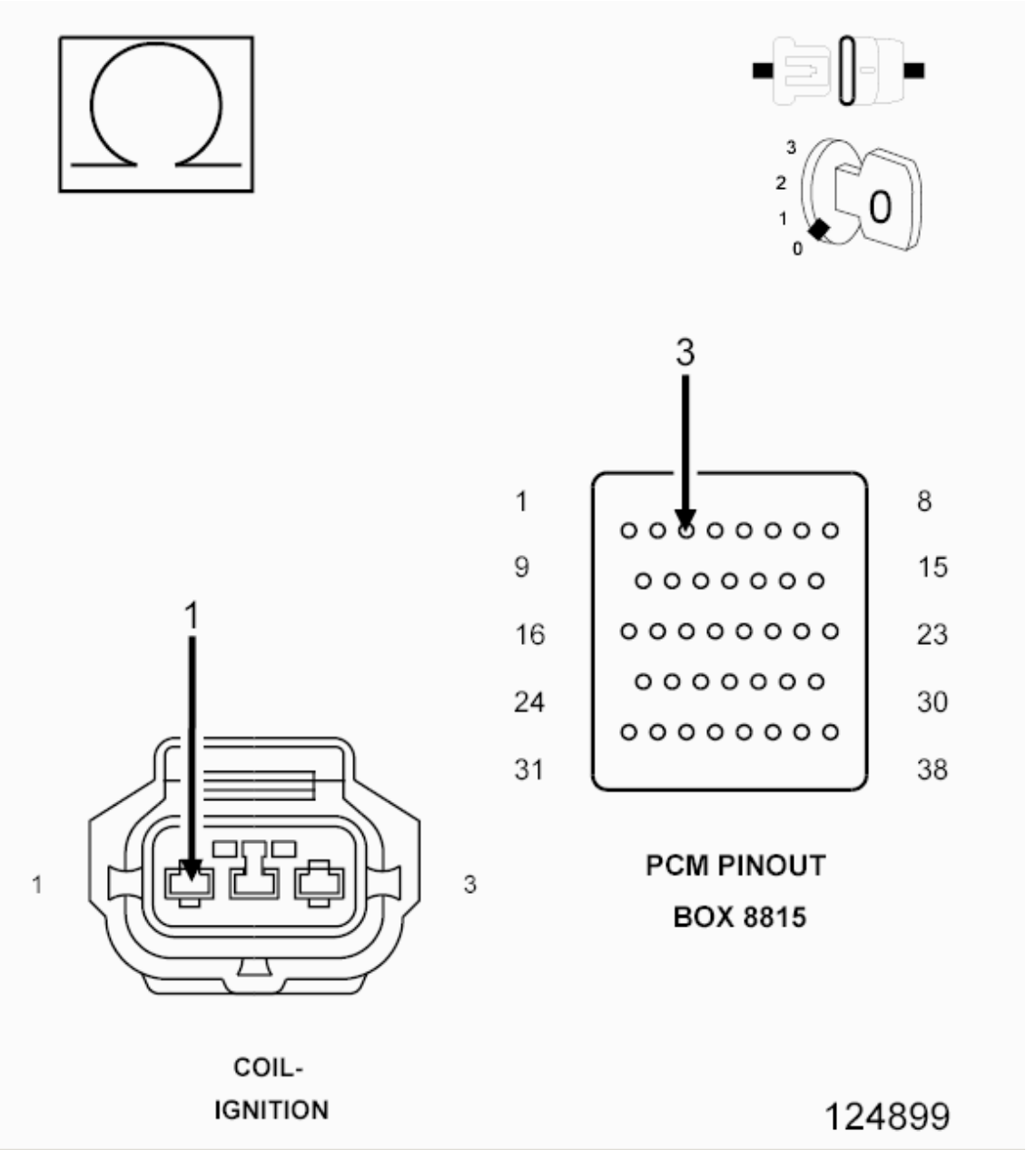

Fig. 119: Checking Coil Control Circuit For An Open, Short To Ground, And Short To Voltage
Courtesy of CHRYSLER GROUP, LLC

1. Turn the ignition off.
2. Disconnect the C2 PCM harness connector.

CAUTION: Do not probe the PCM harness connectors. Probing the PCM harness connectors will damage the PCM terminals resulting in poor terminal to pin connection. Install the PCM Pinout Box (special tool #8815A, Kit, NGC, 38 Position) to perform diagnosis.

3. Check the (K15) or the (K19) Coil Control circuit for an open, short to ground, and short to voltage.

   Was a problem found with the Coil Control circuit?

   Yes

   - Repair the (K15) or the (K19) Coil Control circuit.
   - Perform the POWERTRAIN VERIFICATION TEST. Refer to **POWERTRAIN VERIFICATION TEST** .

   No

   - Go To 16.

16. **POWERTRAIN CONTROL MODULE (PCM)**
    1. Using the wiring diagram/schematic as a guide, inspect the wiring and connectors between the related Sensor, Coil, Injector, and the Powertrain Control Module (PCM).
    2. Look for any chafed, pierced, pinched, or partially broken wires.
    3. Look for broken, bent, pushed out or corroded terminals. Verify that there is good pin to terminal contact in the related Sensors, Coils, Injectors, and the Powertrain Control Module connectors.
    4. Refer to any Technical Service Bulletins that may apply.

       Were there any problems found?

       Yes

       - Repair as necessary.
       - Perform the POWERTRAIN VERIFICATION TEST. Refer to **POWERTRAIN VERIFICATION TEST** .

       No

       - Replace and program the Powertrain Control Module per Service Information.
       - Perform the POWERTRAIN VERIFICATION TEST. Refer to **POWERTRAIN VERIFICATION TEST** .

P0305-CYLINDER 5 MISFIRE

For a complete wiring diagram, **refer to appropriate SYSTEM WIRING DIAGRAMS article** .

WHEN MONITORED:

Any time the engine is running, and the adaptive numerator has been successfully updated.

SET CONDITION:

The threshold to set the fault is application specific; it is tied to the level of misfire that will cause emissions to increase to 1.5 times the standard or in some cases 1%. It is always a two trip fault above the calibrated RPM. It takes one fail to set a Pending Fault and two trips to set the MIL. Three good trips to turn off the MIL.

POSSIBLE CAUSES

Possible Causes
(F342) ASD CONTROL OUTPUT CIRCUIT
(K38) INJECTOR CONTROL NO. 5 CIRCUIT
(K16) COIL CONTROL NO. 5 CIRCUIT
SPARK PLUG
IGNITION WIRE
IGNITION COIL
FUEL PUMP INLET STRAINER PLUGGED
RESTRICTED FUEL SUPPLY LINE
FUEL PUMP MODULE
FUEL PRESSURE LEAK DOWN
FUEL INJECTOR
ENGINE MECHANICAL
POWERTRAIN CONTROL MODULE (PCM)

Always perform the Pre-Diagnostic Troubleshooting procedure before proceeding. Refer to PRE-DIAGNOSTIC TROUBLESHOOTING PROCEDURE .

DIAGNOSTIC TEST

1. **ACTIVE DIAGNOSTIC TROUBLE CODE (DTC)**
    1. Diagnose and repair any other active component or circuit DTCs before continuing with this procedure.
    2. Turn the ignition on.
    3. Using the scan tool, select View DTCs. Copy DTC and Freeze Frame information.
    4. Start the engine and allow it to reach operating temperature.

WARNING: When the engine is operating, do not stand in direct line with the fan. Do not put your hands near the pulleys, belts or fan. Do not wear loose clothing. Failure to follow these instructions may result in possible serious or fatal injury.

NOTE: Attempt to operate the vehicle under conditions similar to which the DTC was set.

NOTE: It may be necessary to test drive the vehicle within the DTC monitoring conditions in order for this DTC to set.

5. With a scan tool, select View DTCs.

   Is the DTC Active at this time?

   Yes

   - Go To 2.

   No

   - Perform the INTERMITTENT CONDITION diagnostic procedure. Refer to **INTERMITTENT CONDITION** .

2. **VISUAL INSPECTION**

   NOTE: Anything that affects the speed of the crankshaft can cause a misfire DTC.

   NOTE: When a Misfire is detected for a particular cylinder, the PCM will shut down that cylinder's Injector Control circuit.

   Visually inspect the engine for any of the following conditions:

   - Worn serpentine belt
   - Binding Engine-Driven accessories: A/C Compressor, P/S Pump, Water pump.
   - Misalignment of the Water pump, P/S Pump and A/C Compressor pulleys
   - Corroded PCM power and ground circuits.
   - Misalignment of the Water pump, P/S Pump and A/C Compressor pulleys
   - Corroded PCM power and ground circuits.
   - Improper CKP, CMP, MAP, and TP Sensor mounting
   - Poor connector/terminal to component connection for CKP sensor, CMP sensor, MAP sensor, TP sensor, fuel injector, ignition coil, etc.
   - Vacuum leaks
   - Restricted Air Induction system or Exhaust system.
   - Internal engine component failures.

   Were any of the above conditions present?

   Yes

   - Repair as necessary.
   - Perform the POWERTRAIN VERIFICATION TEST. Refer to **POWERTRAIN VERIFICATION TEST** .

   No

- Go To 3.

3. **(F342) ASD CONTROL OUTPUT CIRCUIT**

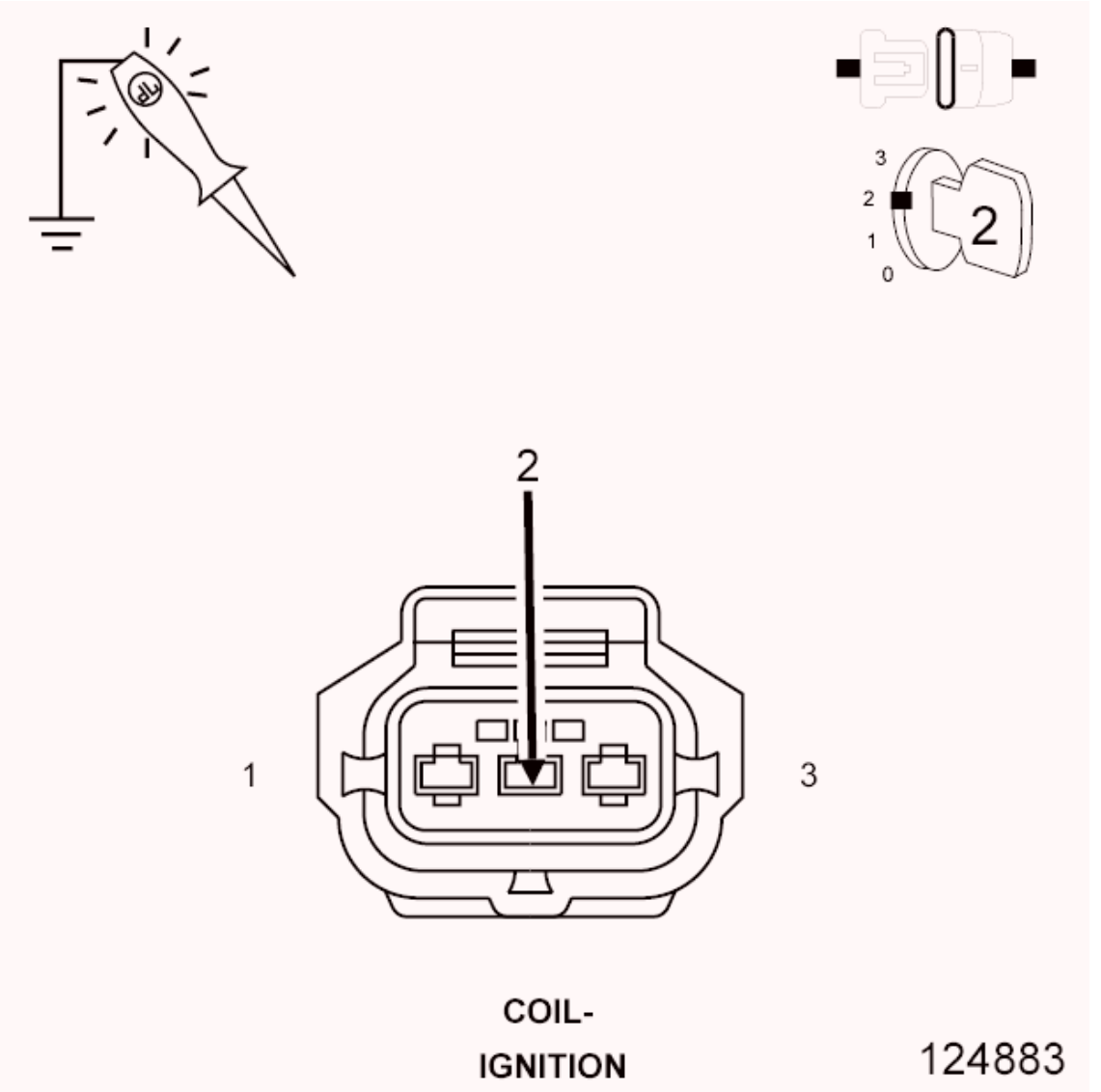

Fig. 120: Using 12-Volt Test Light Connected To Ground To Probe ASD Control Output Circuit In Ignition Coil Harness Connector
Courtesy of CHRYSLER GROUP, LLC

1. Turn the ignition off.
2. Disconnect the No. 5 Ignition Coil harness connector.
3. Disconnect the No. 5 Fuel Injector harness connector.
4. Ignition on, engine not running.

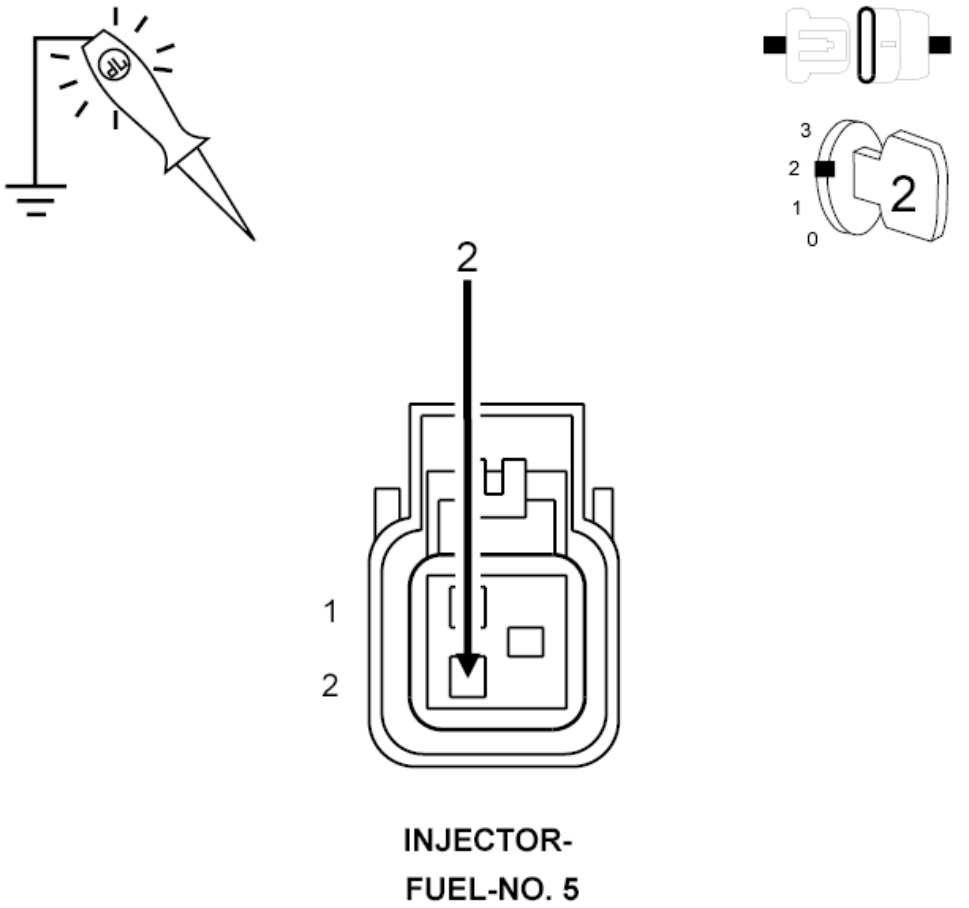

Fig. 121: Using 12-Volt Test Light Connected To Ground To Check (F342) ASD Control Output Circuit In Fuel Injector 5 Harness Connector
Courtesy of CHRYSLER GROUP, LLC

5. Using a 12-volt test light connected to ground, probe the (F342) ASD Control Output circuit in the Ignition Coil harness connector and Fuel Injector harness connector before the actuation.

   NOTE: Make sure the test light is probing the circuit before actuating the Relay or a DTC may set and not allow the actuation.

6. Using the scan tool, actuate the ASD.

   Does the test light illuminate brightly?

   Yes

   - Go To 4.

   No

- Repair the excessive resistance or short to ground in the (F342) ASD Control Output circuit.
- Perform the POWERTRAIN VERIFICATION TEST. Refer to **POWERTRAIN VERIFICATION TEST** .

4. **IGNITION SYSTEM OPERATION**

WARNING: When the engine is operating, do not stand in direct line with the fan. Do not put your hands near the pulleys, belts or fan. Do not wear loose clothing. Failure to follow these instructions may result in possible serious or fatal injury.

1. Turn the ignition off.
2. Connect the Ignition Coil No. 5 harness connector.
3. Remove the Ignition Coil.
4. Leave the Fuel Injector harness connector of the cylinder being tested disconnected.
5. Install a spark tester on the Ignition Coil.
6. While cranking the engine observe the spark coming from the spark tester.
7. Perform the same test on the ignition wire side of the Ignition coil.

NOTE: A crisp blue spark that is able to jump the gap of the spark tester should be generated at the coil on plug and at the end of the ignition wire.

Is good spark present?

Yes

- Go To 5.

No

- Go To 14.

NOTE: Connect the Fuel Injector harness connector before continuing.

5. **SPARK PLUG**

CAUTION: The 4.7L engine uses TWO DIFFERENT types of spark plugs. A total of 16 plugs are used. The plugs are mounted in two rows (banks). The upper row is used on the intake valve side of the cylinder head. The lower row is used on the exhaust valve side of the cylinder head. The upper row uses Nickel Yttrium plugs. The lower row uses Iridium plugs. DO NOT INTERCHANGE THESE PLUGS.

1. Turn the ignition off.

2. Remove the Spark Plug(s) in accordance with the Service Information.
3. Inspect the Spark Plug(s) for the following conditions.
   - Cracks
   - Carbon Tracking
   - Foreign Material
   - Gap size out of specifications
   - Loose or broken electrode

NOTE: **Lightly tap the bottom of the spark plug on a solid surface. The electrode in the spark plug should not move.**

Were any of the above conditions present?

Yes

- Replace the Spark Plug in accordance with the Service Information. Refer to **SPARK PLUG, REMOVAL** .
- Perform the POWERTRAIN VERIFICATION TEST. Refer to **POWERTRAIN VERIFICATION TEST** .

No

- Go To 6.

6. **FUEL PRESSURE CHECK**

WARNING: **The fuel system is under a constant pressure (even with the engine off). Before testing or servicing any fuel system hose, fitting or line, the fuel system pressure must be released. Failure to follow these instructions can result in possible serious or fatal injury.**

WARNING: **When the engine is operating, do not stand in direct line with the fan. Do not put your hands near the pulleys, belts or fan. Do not wear loose clothing. Failure to follow these instructions may result in possible serious or fatal injury.**

1. Install Fuel Pressure Decay Tester (special tool #8978A, Decay Tool, Fuel) to the fuel rail.
2. Start the engine and observe the fuel pressure reading.

NOTE: **Fuel pressure specification is 407 kPa +/- 34 kPa (59 psi +/- 5 psi).**

Choose a conclusion that best matches your fuel pressure reading.

Within Specification

- Go To 7.

Below Specification

- Go To 12.

Above Specification

- Replace the fuel filter/pressure regulator.
- Perform the POWERTRAIN VERIFICATION TEST. Refer to **POWERTRAIN VERIFICATION TEST** .

7. **FUEL PRESSURE LEAK DOWN**

NOTE: Before continuing visually and physically inspect the fuel delivery system for external leaks or damage. Repair/replace as necessary.

WARNING: The fuel system is under a constant pressure (even with the engine off). Before testing or servicing any fuel system hose, fitting or line, the fuel system pressure must be released. Failure to follow these instructions can result in possible serious or fatal injury.

1. Turn the ignition off.
2. Install the Fuel Pressure Decay Tester (special tool #8978A, Decay Tool, Fuel).
3. Start the engine and allow the fuel system to reach maximum pressure.
4. Turn the ignition off.

NOTE: Fuel specification is 407 kPa +/- 34 kPa (59 psi +/- 5 psi).

5. Close the Fuel System Isolation Valve and then wait five minutes before proceeding.
6. Read the Fuel Inlet and Fuel Outlet Pressure Gauges. The pressure should not drop more than 10 psi on either gauge.
7. Monitor the fuel pressure gauge for a minimum of five minutes.

NOTE: The pressure should not decrease by greater than 69 kPa (10 psi).

Does the pressure fall below the listed specification?

Yes - On Fuel Inlet Gauge

- Replace the fuel pump module.
- Perform the POWERTRAIN VERIFICATION TEST. Refer to **POWERTRAIN VERIFICATION TEST** .

Yes - On Fuel Outlet Gauge

- Replace the leaking fuel injector(s).
- Perform the POWERTRAIN VERIFICATION TEST. Refer to **POWERTRAIN VERIFICATION TEST** .

No

- Go To 8.

8. **FUEL INJECTOR OPERATION**

WARNING: The fuel system is under a constant pressure (even with the engine off). Before testing or servicing any fuel system hose, fitting or line, the fuel system pressure must be released. Failure to follow these instructions can result in possible serious or fatal injury.

CAUTION: After each Fuel Injector actuation, start the engine to clean the cylinder of fuel. Failure to do so could cause engine damage.

1. Open the Fuel System Isolation Valve.
2. Start the engine and allow the fuel pressure to reach maximum pressure.
3. Turn the ignition off.
4. Ignition on, engine not running.
5. Using the scan tool, actuate the No. 5 Fuel Injector.
6. Monitor the fuel pressure gauge.

Does the fuel pressure gauge indicate a drop in fuel pressure?

Yes

- Go To 9.

No

- Go To 10.

NOTE: Turn the ignition off, remove the Fuel Pressure gauge, and connect the fuel lines before continuing.

9. **ENGINE MECHANICAL**

Check for any of the following conditions/mechanical problems:

- ENGINE VACUUM - must be at least 13 inches in neutral
- ENGINE VALVE TIMING - must be within specifications

- ENGINE COMPRESSION - must be within specifications
- ENGINE EXHAUST SYSTEM - must be free of any restrictions or leaks.
- ENGINE PCV SYSTEM - must flow freely
- TORQUE CONVERTER STALL SPEED - must be within specifications
- POWER BRAKE BOOSTER - no internal vacuum leaks
- FUEL - must be free of contamination
- CAM LOBES - must not be worn excessively
- CYLINDER LEAKAGE TEST - must be within specifications
- VALVE SPRINGS - cannot be weak or broken

Are there any engine mechanical problems?

Yes

- Repair as necessary.
- Perform the POWERTRAIN VERIFICATION TEST. Refer to **POWERTRAIN VERIFICATION TEST** .

No

- Go To 17.

10. **FUEL INJECTOR**
    1. Turn the ignition off.
    2. Disconnect the No. 5 Fuel Injector harness connector.
    3. Ignition on, engine not running.

    NOTE: When a Misfire is detected for a particular cylinder, the PCM will shut down that cylinder's Injector Control circuit.

    4. Using the scan tool, erase DTCs.
    5. Install an Injector Noid light.
    6. Using the scan tool, actuate the Fuel Injector.

    Does the Noid light blink/flicker during the actuation?

    Yes

    - Verify that there is good pin to terminal contact in the Fuel Injector and the Powertrain Control Module connectors. If OK, replace the Fuel Injector.
    - Perform the POWERTRAIN VERIFICATION TEST. Refer to **POWERTRAIN VERIFICATION TEST** .

    No

- Go To 11.

11. **(K38) INJECTOR CONTROL NO. 5 CIRCUIT**

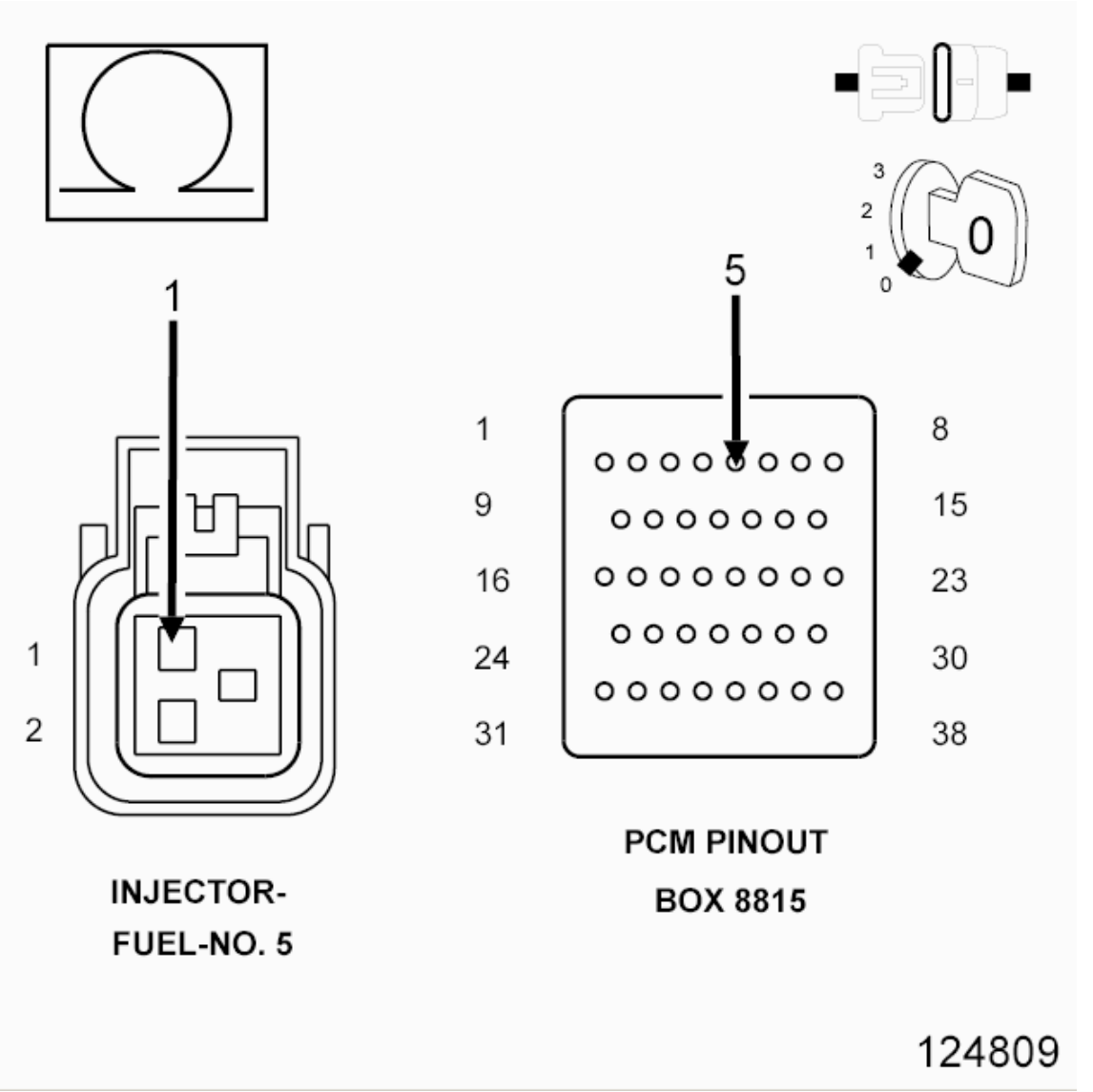

Fig. 122: Checking Injector Control No. 5 Circuit For An Open, Short To Ground, And Short To Voltage
Courtesy of CHRYSLER GROUP, LLC

1. Turn the ignition off.
2. Disconnect the C2 PCM harness connector.

CAUTION: Do not probe the PCM harness connectors. Probing the PCM harness connectors will damage the PCM terminals resulting in poor terminal to pin connection. Install the PCM Pinout Box (special tool #8815A, Kit, NGC, 38 Position) to perform

diagnosis.

3. Check the (K38) Injector Control No. 5 circuit for an open, short to ground, and short to voltage.

   Was a problem found with the (K38) Injector Control No. 5 circuit?

   Yes

   - Repair the excessive resistance or short in the (K38) Injector Control No. 5 circuit.
   - Perform the POWERTRAIN VERIFICATION TEST. Refer to **POWERTRAIN VERIFICATION TEST** .

   No

   - Go To 17.

12. **FUEL SUPPLY LINE RESTRICTED**

    WARNING: **The fuel system is under a constant pressure (even with the engine off). Before testing or servicing any fuel system hose, fitting or line, the fuel system pressure must be released. Failure to follow these instructions can result in possible serious or fatal injury.**

    1. Turn the ignition off.
    2. Raise the vehicle on a hoist, and disconnect the fuel pressure line at the fuel pump module.
    3. Install the Fuel Pressure Decay Tester (special tool #8978A, Decay Tool, Fuel) between the fuel supply line and the fuel pump module.
    4. Ignition on, engine not running.
    5. Using the scan tool, actuate the ASD Fuel System test and observe the fuel pressure gauge.

       NOTE: Fuel pressure specification is 407 kPa +/- 34 kPa (59 psi +/- 5 psi).

       Is the fuel pressure within specification?

       Yes

       - Repair or replace fuel supply line as necessary.
       - Perform the POWERTRAIN VERIFICATION TEST. Refer to **POWERTRAIN VERIFICATION TEST** .

       No

       - Go To 13.

13. **FUEL PUMP INLET STRAINER**

WARNING: The fuel system is under a constant pressure (even with the engine off). Before testing or servicing any fuel system hose, fitting or line, the fuel system pressure must be released. Failure to follow these instructions can result in possible serious or fatal injury.

1. Turn the ignition off.
2. Remove the Fuel Pump Module and inspect the Fuel Inlet Strainer.

   Is the Fuel Inlet Strainer plugged?

   Yes

   - Replace the Fuel Pump Inlet Strainer.
   - Perform the POWERTRAIN VERIFICATION TEST. Refer to **POWERTRAIN VERIFICATION TEST** .

   No

   - Before continuing, check the Fuel Pump Module harness connector terminals for corrosion, damage, or terminal push out. Make sure the ground circuit is functional. Repair as necessary. Replace the Fuel Pump Module.
   - Perform the POWERTRAIN VERIFICATION TEST. Refer to **POWERTRAIN VERIFICATION TEST** .

14. **IGNITION WIRE**

NOTE: If the vehicle being tested does not have an ignition wire answer YES to this test and continue.

1. Turn the ignition off.
2. Remove the ignition wire.
3. Measure the resistance of the ignition wire.

   Is the resistance below 10K Ohms?

   Yes

   - Go To 15.

   No

   - Replace the Ignition Wire.
   - Perform the POWERTRAIN VERIFICATION TEST. Refer to **POWERTRAIN VERIFICATION TEST** .

15. **IGNITION COIL**

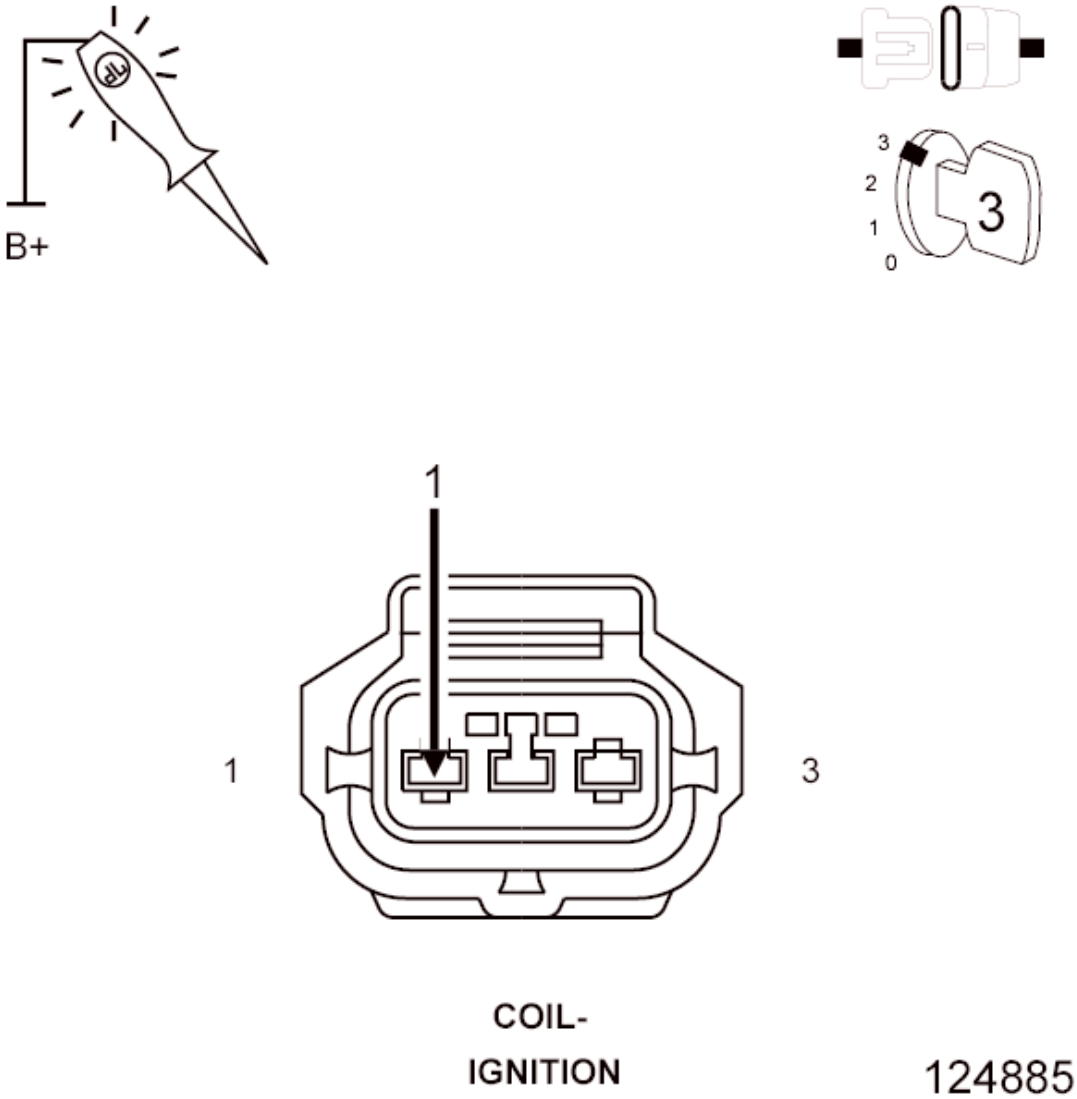

Fig. 123: Using 12-Volt Test Light Connected To 12-Volt Source To Probe Coil Control Circuit
Courtesy of CHRYSLER GROUP, LLC

WARNING: **When the engine is operating, do not stand in direct line with the fan. Do not put your hands near the pulleys, belts or fan. Do not wear loose clothing. Failure to follow these instructions may result in possible serious or fatal injury.**

1. Disconnect the No. 5 Ignition Coil harness connector.
2. Using a 12-volt test light connected to 12-volts, probe the (K16) Coil Control No. 5 circuit.
3. Using the scan tool, actuate the ASD.
4. Crank the engine for 5 seconds while observing the test light.

NOTE: **The primary resistance of the 3.7L and 4.7L Ignition coil is 0.6 to 0.9 of an Ohm and the resistance of a 5.7L Ignition coil is 0.558 to 0.682**

of an Ohm at 25° C (77° F).

Does the test light brightly blink/flicker?

Yes

- Verify that there is good pin to terminal contact in the Ignition Coil and the Powertrain Control Module connectors. If OK, replace the Ignition Coil in accordance with the Service Information.
- Perform the POWERTRAIN VERIFICATION TEST. Refer to **POWERTRAIN VERIFICATION TEST** .

No

- Go To 16.

16. **(K16) COIL CONTROL NO. 5 CIRCUIT**

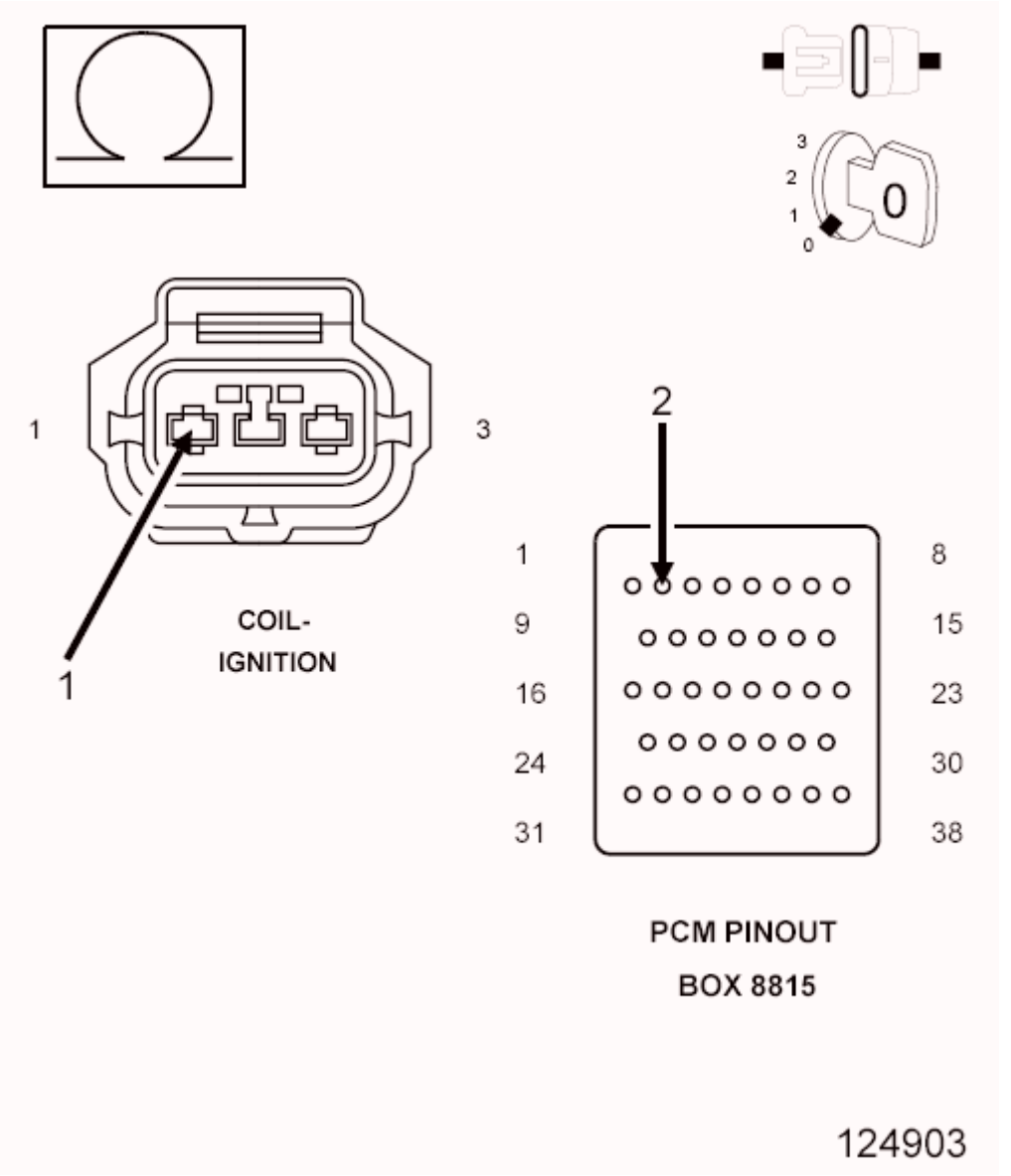

Fig. 124: Checking Coil Control No. 5 Circuit For An Open, Short To Ground, And Short To Voltage
Courtesy of CHRYSLER GROUP, LLC

1. Turn the ignition off.
2. Disconnect the C2 PCM harness connectors.

CAUTION: Do not probe the PCM harness connectors. Probing the PCM harness connectors will damage the PCM terminals resulting in poor terminal to pin connection. Install the PCM Pinout Box (special tool #8815A, Kit, NGC, 38 Position) to perform diagnosis.

3. Check the (K16) Coil Control No. 5 circuit for an open, short to ground, and short to voltage.

Was a problem found with the (K16) Coil Control No. 5 circuit?

Yes

- Repair the (K16) Coil Control No. 5 circuit.
- Perform the POWERTRAIN VERIFICATION TEST. Refer to **POWERTRAIN VERIFICATION TEST** .

No

- Go To 17.

17. **POWERTRAIN CONTROL MODULE (PCM)**
    1. Using the wiring diagram/schematic as a guide, inspect the wiring and connectors between the related Sensors, Coils, Injectors, and the Powertrain Control Module (PCM).
    2. Look for any chafed, pierced, pinched, or partially broken wires.
    3. Look for broken, bent, pushed out or corroded terminals. Verify that there is good pin to terminal contact in the related Sensor, Coil, Injector, and the Powertrain Control Module connectors.
    4. Perform any Technical Service Bulletins that may apply.

    Were there any problems found?

    Yes

    - Repair as necessary.
    - Perform the POWERTRAIN VERIFICATION TEST. Refer to **POWERTRAIN VERIFICATION TEST** .

    No

    - Replace and program the Powertrain Control Module in accordance with the service information.
    - Perform the POWERTRAIN VERIFICATION TEST. Refer to **POWERTRAIN VERIFICATION TEST** .

P0306-CYLINDER 6 MISFIRE

For a complete wiring diagram, **refer to appropriate SYSTEM WIRING DIAGRAMS article** .

WHEN MONITORED:

Any time the engine is running, and the adaptive numerator has been successfully updated.

SET CONDITION:

The threshold to set the fault is application specific; it is tied to the level of misfire that will cause emissions to

increase to 1.5 times the standard or in some cases 1%. It is always a two trip fault above the calibrated RPM. It takes one fail to set a Pending Fault and two trips to set the MIL. Three good trips to turn off the MIL.

POSSIBLE CAUSES

Possible Causes
(F342) ASD CONTROL OUTPUT CIRCUIT
(K58) INJECTOR CONTROL NO. 6 CIRCUIT
(K10) COIL CONTROL NO. 6 CIRCUIT
(K18) COIL CONTROL NO. 3 CIRCUIT FOR 3.7L
SPARK PLUG
IGNITION WIRE
IGNITION COIL
FUEL PUMP INLET STRAINER PLUGGED
RESTRICTED FUEL SUPPLY LINE
FUEL PUMP MODULE
FUEL PRESSURE LEAK DOWN
FUEL INJECTOR
ENGINE MECHANICAL
POWERTRAIN CONTROL MODULE (PCM)

Always perform the Pre-Diagnostic Troubleshooting procedure before proceeding. Refer to PRE-DIAGNOSTIC TROUBLESHOOTING PROCEDURE .

DIAGNOSTIC TEST

1. **ACTIVE DTC**
    1. Diagnose and repair any other active component or circuit DTCs before continuing with this procedure.
    2. Turn the ignition on.
    3. With the scan tool, select View DTCs. Copy DTC and Freeze Frame information.
    4. Start the engine and allow it to reach operating temperature.

WARNING: When the engine is operating, do not stand in direct line with the fan. Do not put your hands near the pulleys, belts or fan. Do not wear loose clothing. Failure to follow these instructions may result in possible serious or fatal injury.

NOTE: Attempt to operate the vehicle under conditions similar to which the DTC was set.

NOTE: It may be necessary to test drive the vehicle within the DTC monitoring conditions in order for this DTC to set.

5. With a scan tool, select View DTCs.

   Is the DTC Active at this time?

   Yes

   - Go To 2.

   No

   - Perform the INTERMITTENT CONDITION diagnostic procedure. Refer to **INTERMITTENT CONDITION** .

2. **VISUAL INSPECTION**

   NOTE: Anything that affects the speed of the crankshaft can cause a misfire DTC.

   NOTE: When a Misfire is detected for a particular cylinder, the PCM will shut down that cylinder's Injector Control circuit.

   Visually inspect the engine for any of the following conditions:

   - Worn serpentine belt
   - Binding Engine-Driven accessories: A/C Compressor, P/S Pump, Water pump.
   - Misalignment of the Water pump, P/S Pump and A/C Compressor pulleys
   - Corroded PCM power and ground circuits.
   - Misalignment of the Water pump, P/S Pump and A/C Compressor pulleys
   - Corroded PCM power and ground circuits.
   - Improper CKP, CMP, MAP, and TP Sensor mounting
   - Poor connector/terminal to component connection for CKP sensor, CMP sensor, MAP sensor, TP sensor, fuel injector, ignition coil, etc.
   - Vacuum leaks
   - Restricted Air Induction system or Exhaust system.
   - Internal engine component failures.

   Were any of the above conditions present?

   Yes

   - Repair as necessary.
   - Perform the POWERTRAIN VERIFICATION TEST. Refer to **POWERTRAIN VERIFICATION TEST** .

   No

- Go To 3.

3. **(F342) ASD CONTROL OUTPUT CIRCUIT**

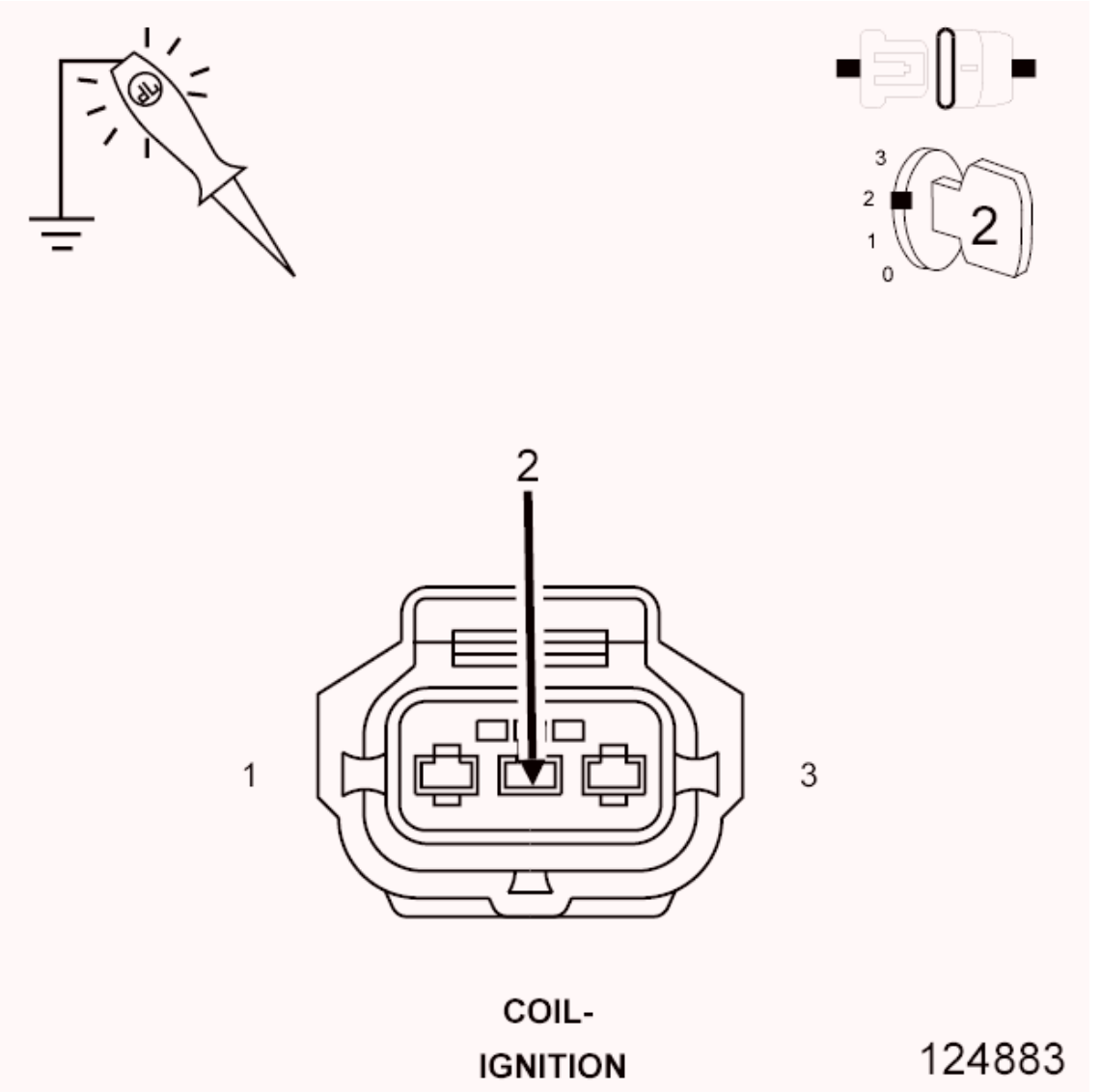

Fig. 125: Using 12-Volt Test Light Connected To Ground To Probe ASD Control Output Circuit In Ignition Coil Harness Connector
Courtesy of CHRYSLER GROUP, LLC

1. Turn the ignition off.

NOTE: **The 3.7L V6 engine uses a modified Distributorless Ignition System (DIS) with coil consolidation on the left side engine bank.**

2. Disconnect the No. 6 or the No. 3 Ignition Coil harness connector.
3. Disconnect the No. 6 Fuel Injector harness connector.

4. Ignition on, engine not running.

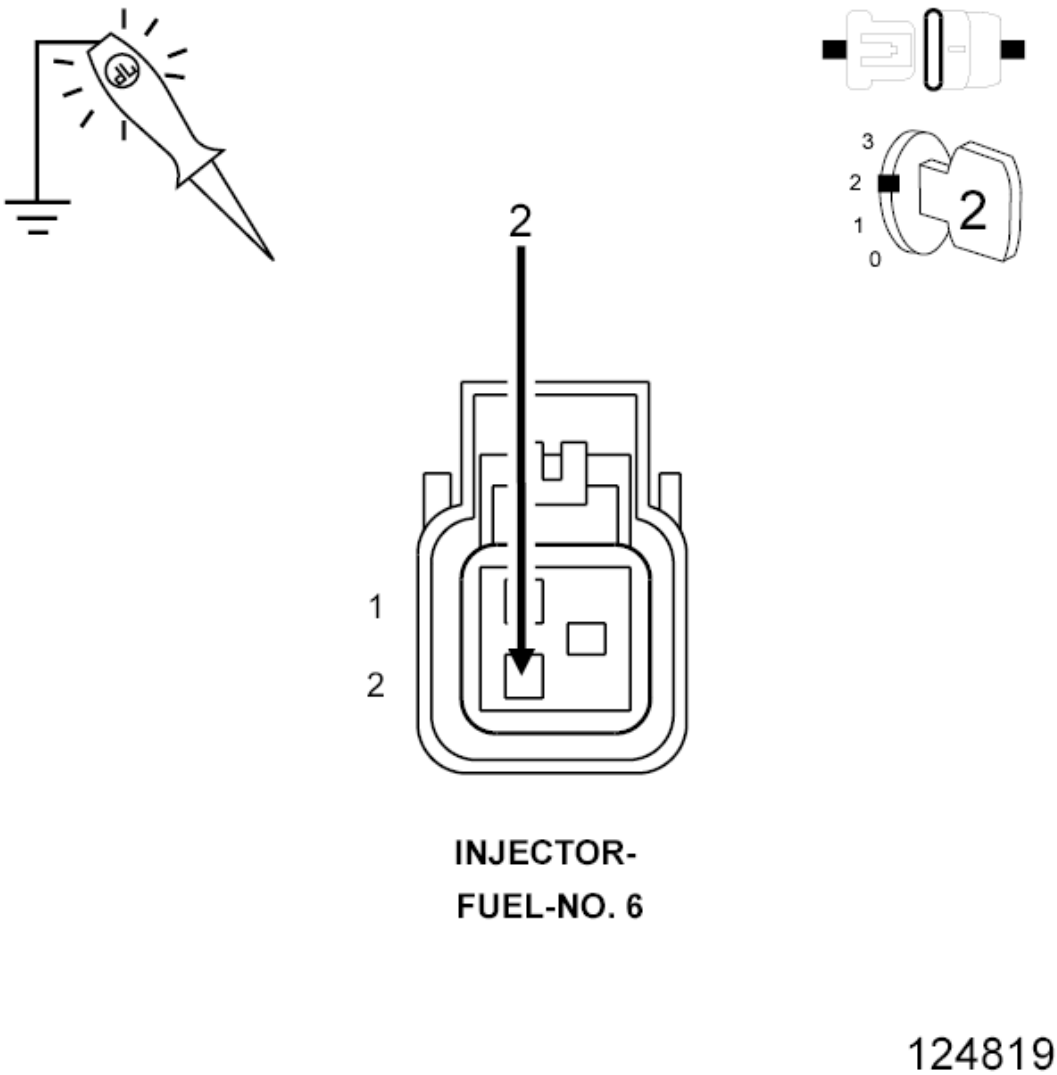

Fig. 126: Using 12-Volt Test Light Connected To Ground To Check ASD Control Output Circuit In Fuel Injector 6 Harness Connector
Courtesy of CHRYSLER GROUP, LLC

5. Using a 12-volt test light connected to ground, probe the (F342) ASD Control Output circuit in the Ignition Coil harness connector and Fuel Injector harness connector before the actuation.

NOTE: **Make sure the test light is probing the circuit before actuating the Relay or a DTC may set and not allow the actuation.**

6. With the scan tool, actuate the ASD.

   Does the test light illuminate brightly?

Yes

- Go To 4.

No

- Repair the excessive resistance or short to ground in the (F342) ASD Control Output circuit.
- Perform the POWERTRAIN VERIFICATION TEST. Refer to **POWERTRAIN VERIFICATION TEST** .

4. **IGNITION SYSTEM OPERATION**

WARNING: When the engine is operating, do not stand in direct line with the fan. Do not put your hands near the pulleys, belts or fan. Do not wear loose clothing. Failure to follow these instructions may result in possible serious or fatal injury.

1. Turn the ignition off.
2. Connect the Ignition Coil No. 6 or the No. 3 harness connector.
3. Remove the Ignition Coil.
4. Leave the Fuel Injector harness connector of the cylinder being tested disconnected.
5. Install a spark tester on the Ignition Coil.
6. While cranking the engine observe the spark coming from the spark tester.
7. Perform the same test on the ignition wire side of the Ignition coil.

NOTE: A crisp blue spark that is able to jump the gap of the spark tester should be generated at the coil on plug and at the end of the ignition wire.

Is good spark present?

Yes

- Go To 5.

No

- Go To 13.

NOTE: Connect the Fuel Injector harness connector before continuing.

5. **SPARK PLUG**

CAUTION: The 4.7L engine uses TWO DIFFERENT types of spark plugs. A total of 16 plugs are used. The plugs are mounted in two rows (banks).

The upper row is used on the intake valve side of the cylinder head. The lower row is used on the exhaust valve side of the cylinder head. The upper row uses Nickel Yttrium plugs. The lower row uses Iridium plugs. DO NOT INTERCHANGE THESE PLUGS.

1. Turn the ignition off.
2. Remove the Spark Plug(s) in accordance with the Service Information.
3. Inspect the Spark Plug(s) for the following conditions:
   - Cracks
   - Carbon Tracking
   - Foreign Material
   - Gap size out of specifications
   - Loose or broken electrode

NOTE: **Lightly tap the bottom of the spark plug on a solid surface. The electrode in the spark plug should not move.**

Were any of the above conditions present?

Yes

- Replace the Spark Plug in accordance with the Service Information. Refer to **SPARK PLUG, REMOVAL** .
- Perform the POWERTRAIN VERIFICATION TEST. Refer to **POWERTRAIN VERIFICATION TEST** .

No

- Go To 6.

6. **FUEL PRESSURE CHECK**

WARNING: **The fuel system is under a constant pressure (even with the engine off). Before testing or servicing any fuel system hose, fitting or line, the fuel system pressure must be released. Failure to follow these instructions can result in possible serious or fatal injury.**

WARNING: **When the engine is operating, do not stand in direct line with the fan. Do not put your hands near the pulleys, belts or fan. Do not wear loose clothing. Failure to follow these instructions may result in possible serious or fatal injury.**

1. Install Fuel Pressure Decay Tester (special tool #8978A, Decay Tool, Fuel) to the fuel rail.
2. Start the engine and observe the fuel pressure reading.

Choose a conclusion that best matches your fuel pressure reading.

Within Specification

- Go To 7.

Below Specification

- Go To 11.

Above Specification

- Replace the fuel filter/pressure regulator.
- Perform the POWERTRAIN VERIFICATION TEST. Refer to **POWERTRAIN VERIFICATION TEST** .

NOTE: **Fuel pressure specification is 407 kPa +/- 34 kPa (59 psi +/- 5 psi).**

7. **FUEL PRESSURE LEAK DOWN**
   1. Perform the Fuel Pressure Leak Down Test. Refer to **DIAGNOSIS AND TESTING** .

      Were any repairs made after performing the leak down test?

      Yes

      - Testing complete.
      - Perform the POWERTRAIN VERIFICATION TEST. Refer to **POWERTRAIN VERIFICATION TEST** .

      No

      - Go To 8.
8. **ENGINE MECHANICAL**

   Check for any of the following conditions/mechanical problems:

   - ENGINE VACUUM - must be at least 13 inches in neutral
   - ENGINE VALVE TIMING - must be within specifications
   - ENGINE COMPRESSION - must be within specifications
   - ENGINE EXHAUST SYSTEM - must be free of any restrictions or leaks.
   - ENGINE PCV SYSTEM - must flow freely
   - TORQUE CONVERTER STALL SPEED - must be within specifications
   - POWER BRAKE BOOSTER - no internal vacuum leaks

- FUEL - must be free of contamination
- CAM LOBES - must not be worn excessively
- CYLINDER LEAKAGE TEST - must be within specifications
- VALVE SPRINGS - cannot be weak or broken

Are there any engine mechanical problems?

Yes

- Repair as necessary.
- Perform the POWERTRAIN VERIFICATION TEST. Refer to **POWERTRAIN VERIFICATION TEST** .

No

- Go To 16.

9. **FUEL INJECTOR**
   1. Turn the ignition off.
   2. Disconnect the No. 6 Fuel Injector harness connector.
   3. Ignition on, engine not running.

      NOTE: When a Misfire is detected for a particular cylinder, the PCM will shut down that cylinder's Injector Control circuit.

   4. With the scan tool, erase DTCs.
   5. Install an Injector Noid light.
   6. With the scan tool, actuate the Fuel Injector.

      Does the Noid light blink/flicker during the actuation?

      Yes

      - Verify that there is good pin to terminal contact in the Fuel Injector and the Powertrain Control Module connectors. If OK, replace the Fuel Injector.
      - Perform the POWERTRAIN VERIFICATION TEST. Refer to **POWERTRAIN VERIFICATION TEST** .

      No

      - Go To 10.

10. **(K58) INJECTOR CONTROL NO. 6 CIRCUIT**

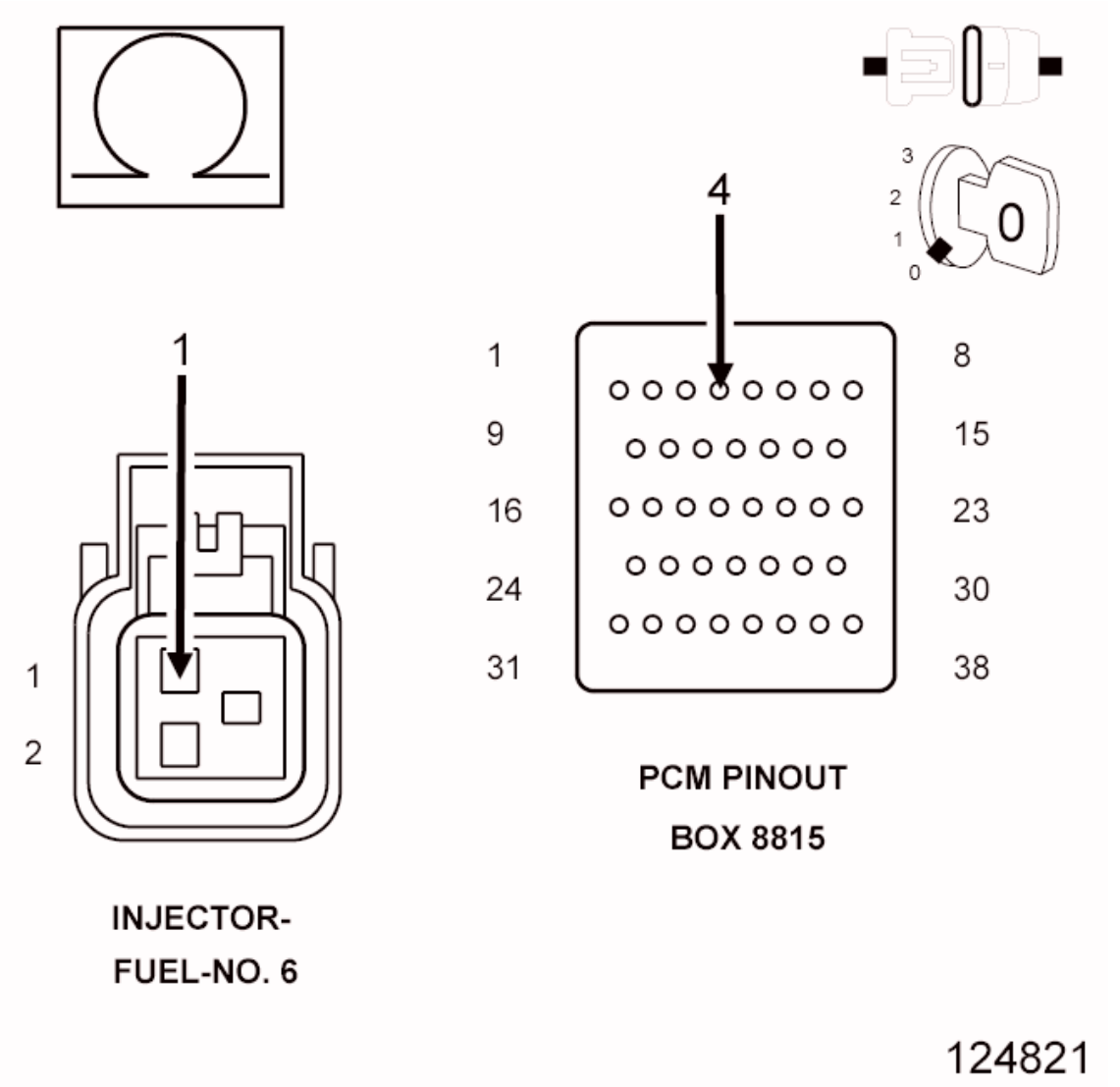

Fig. 127: Checking Injector Control No. 6 Circuit For An Open, Short To Ground, And Short To Voltage
Courtesy of CHRYSLER GROUP, LLC

1. Turn the ignition off.
2. Disconnect the C2 PCM harness connector.

CAUTION: Do not probe the PCM harness connectors. Probing the PCM harness connectors will damage the PCM terminals resulting in poor terminal to pin connection. Install the PCM Pinout Box (special tool #8815A, Kit, NGC, 38 Position) to perform diagnosis.

3. Check the (K58) Injector Control No. 6 circuit for an open, short to ground, and short to voltage.

   Was a problem found with the (K58) Injector Control No. 6 circuit?

Yes

- Repair the excessive resistance or short in the (K58) Injector Control No. 6 circuit.
- Perform the POWERTRAIN VERIFICATION TEST. Refer to **POWERTRAIN VERIFICATION TEST** .

No

- Go To 16.

11. **FUEL SUPPLY LINE RESTRICTED**

WARNING: The fuel system is under a constant pressure (even with the engine off). Before testing or servicing any fuel system hose, fitting or line, the fuel system pressure must be released. Failure to follow these instructions can result in possible serious or fatal injury.

1. Turn the ignition off.
2. Raise vehicle on hoist, and disconnect the fuel pressure line at the fuel pump module.
3. Install Fuel Pressure Decay Tester (special tool #8978A, Decay Tool, Fuel) between the fuel supply line and the fuel pump module.
4. Ignition on, engine not running.
5. With the scan tool, actuate the ASD Fuel System test and observe the fuel pressure gauge.

NOTE: Fuel pressure specification is 407 kPa +/- 34 kPa (59 psi +/- 5 psi).

Is the fuel pressure within specification?

Yes

- Repair or replace fuel supply line as necessary.
- Perform the POWERTRAIN VERIFICATION TEST. Refer to **POWERTRAIN VERIFICATION TEST** .

No

- Go To 12.

12. **FUEL PUMP INLET STRAINER**

WARNING: The fuel system is under a constant pressure (even with the engine off). Before testing or servicing any fuel system hose, fitting or line, the fuel system pressure must be released. Failure to follow these instructions can result in possible serious or fatal injury.

1. Turn the ignition off.

2. Remove the Fuel Pump Module and inspect the Fuel Inlet Strainer.

   Is the Fuel Inlet Strainer plugged?

   Yes

   - Replace the Fuel Pump Inlet Strainer.
   - Perform the POWERTRAIN VERIFICATION TEST. Refer to **POWERTRAIN VERIFICATION TEST** .

   No

   - Before continuing, check the Fuel Pump Module harness connector terminals for corrosion, damage, or terminal push out. Make sure the ground circuit is functional. Repair as necessary. Replace the Fuel Pump Module.
   - Perform the POWERTRAIN VERIFICATION TEST. Refer to **POWERTRAIN VERIFICATION TEST** .

13. **IGNITION WIRE**

NOTE: **If the vehicle or cylinder being tested does not have an ignition wire answer YES to this test and continue.**

1. Turn the ignition off.
2. Remove the ignition wire.
3. Measure the resistance of the ignition wire.

   Is the resistance below 10K Ohms?

   Yes

   - Go To 14.

   No

   - Replace the Ignition Wire.
   - Perform the POWERTRAIN VERIFICATION TEST. Refer to **POWERTRAIN VERIFICATION TEST** .

14. **IGNITION COIL**

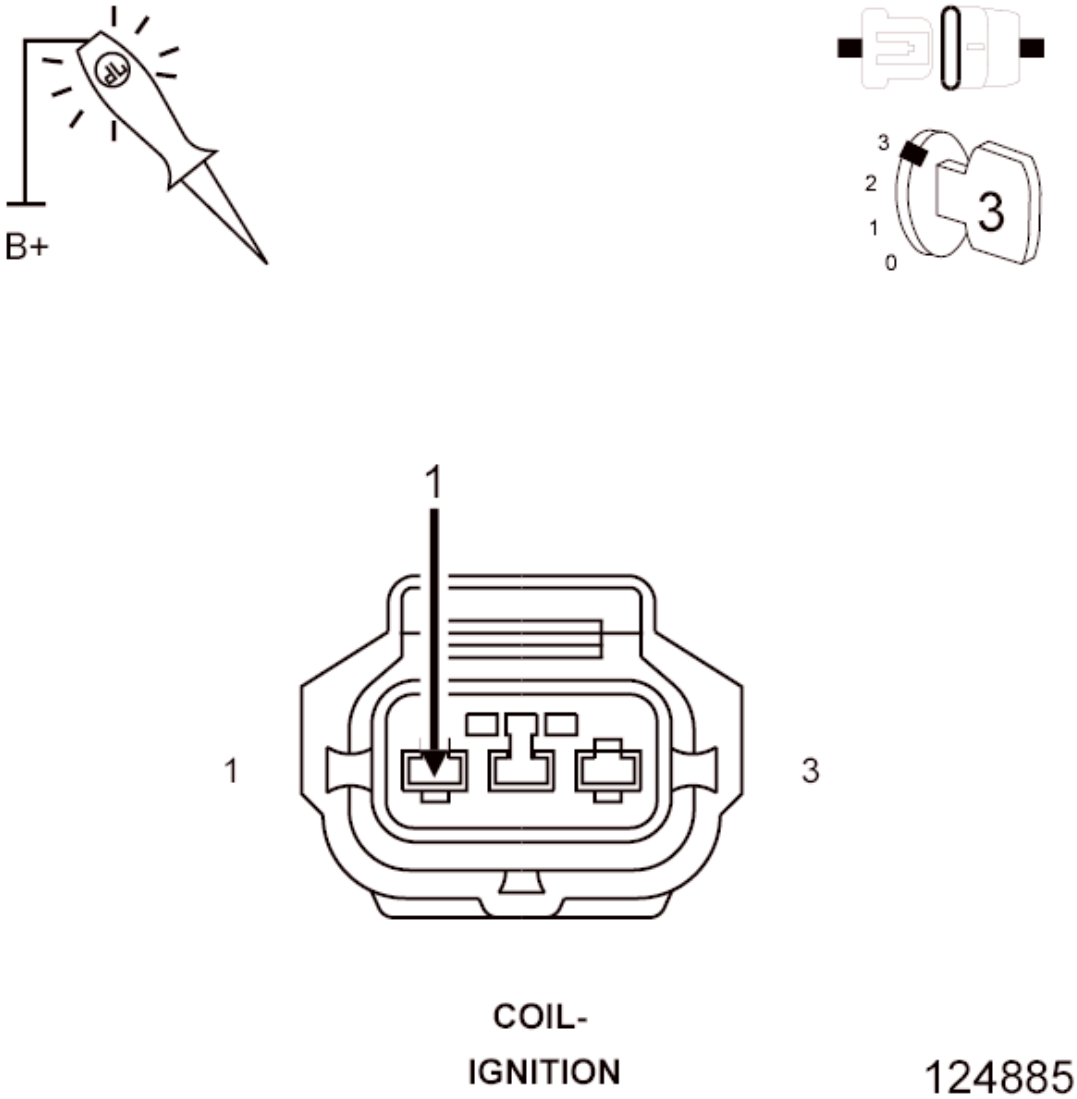

Fig. 128: Using 12-Volt Test Light Connected To 12-Volt Source To Probe Coil Control Circuit
Courtesy of CHRYSLER GROUP, LLC

WARNING: **When the engine is operating, do not stand in direct line with the fan. Do not put your hands near the pulleys, belts or fan. Do not wear loose clothing. Failure to follow these instructions may result in possible serious or fatal injury.**

NOTE: **The 3.7L V6 engine uses a modified Distributorless Ignition System (DIS) with coil consolidation on the left side engine bank.**

1. Disconnect the No. 6 or the No. 3 Ignition Coil harness connector.
2. Using a 12-volt test light connected to 12-volts, probe the (K10) Coil Control No. 6 circuit.
3. Crank the engine for five seconds while observing the test light.

NOTE: **The primary resistance of the 3.7L and 4.7L Ignition coil is 0.6 to 0.9 of an ohm and the resistance of a 5.7L Ignition coil is 0.558 to 0.682 of an ohm at 25° C (77° F).**

Does the test light brightly blink/flicker?

Yes

- Verify that there is good pin to terminal contact in the Ignition Coil and the Powertrain Control Module connectors. If OK, replace the Ignition Coil in accordance with the Service Information.
- Perform the POWERTRAIN VERIFICATION TEST. Refer to **POWERTRAIN VERIFICATION TEST** .

No

- Go To 15.

15. **COIL CONTROL CIRCUIT**

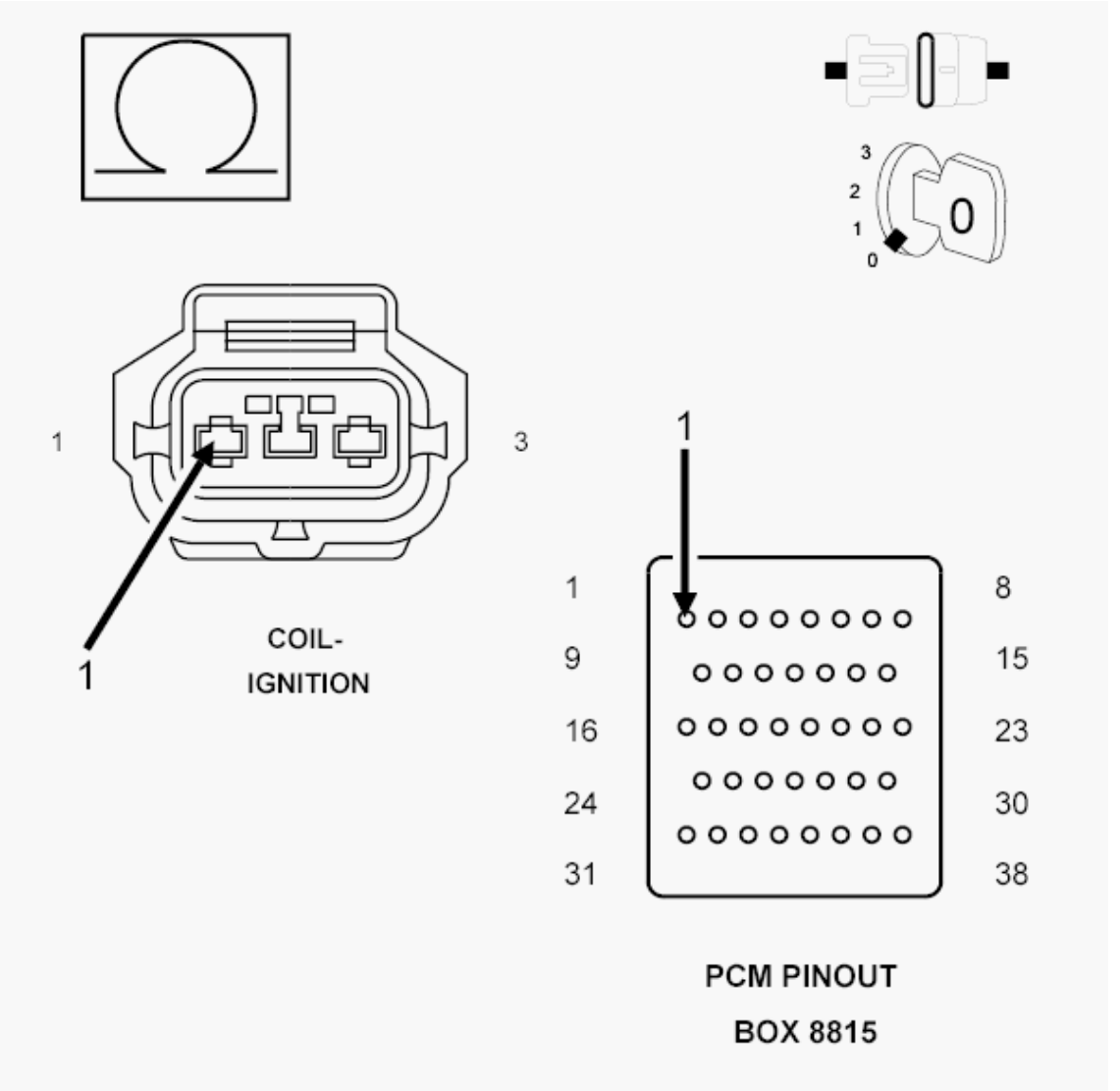

Fig. 129: Checking Coil Control Circuit For An Open, Short To Ground, And Short To Voltage
Courtesy of CHRYSLER GROUP, LLC

1. Turn the ignition off.
2. Disconnect the C2 PCM harness connector.
3. Check the (K10) or the (K18) Coil Control circuit for an open, short to ground, and short to voltage.

   Was a problem found with the Coil Control circuit?

   Yes

   - Repair the (K10) or the (K18) Coil Control circuit.
   - Perform the POWERTRAIN VERIFICATION TEST. Refer to **POWERTRAIN VERIFICATION TEST** .

No

- Go To 16.

16. **POWERTRAIN CONTROL MODULE (PCM)**
    1. Using the wiring diagram/schematic as a guide, inspect the wiring and connectors between the related Sensor, Coil, Injector, and the Powertrain Control Module (PCM).
    2. Look for any chafed, pierced, pinched, or partially broken wires.
    3. Look for broken, bent, pushed out or corroded terminals. Verify that there is good pin to terminal contact in the related Sensors, Coils, Injectors, and the Powertrain Control Module connectors.
    4. Perform any Technical Service Bulletins that may apply.

    Were there any problems found?

    Yes

    - Repair as necessary.
    - Perform the POWERTRAIN VERIFICATION TEST. Refer to **POWERTRAIN VERIFICATION TEST** .

    No

    - Replace and program the Powertrain Control Module per Service Information.
    - Perform the POWERTRAIN VERIFICATION TEST. Refer to **POWERTRAIN VERIFICATION TEST** .

P0307-CYLINDER 7 MISFIRE

For a complete wiring diagram, **refer to appropriate SYSTEM WIRING DIAGRAMS article** .

WHEN MONITORED:

Any time the engine is running, and the adaptive numerator has been successfully updated.

SET CONDITION:

The threshold to set the fault is application specific; it is tied to the level of misfire that will cause emissions to increase to 1.5 times the standard or in some cases 1%. It is always a two trip fault above the calibrated RPM. It takes 1 fail to set a Pending Fault and two trips to set the MIL. Three good trips to turn off the MIL.

POSSIBLE CAUSES

Possible Causes
(F342) ASD CONTROL OUTPUT CIRCUIT
(K26) INJECTOR CONTROL NO. 7 CIRCUIT
(K97) COIL CONTROL NO. 7 CIRCUIT

SPARK PLUG
IGNITION WIRE
IGNITION COIL
FUEL PUMP INLET STRAINER PLUGGED
RESTRICTED FUEL SUPPLY LINE
FUEL PUMP MODULE
FUEL PRESSURE LEAK DOWN
FUEL INJECTOR
ENGINE MECHANICAL
POWERTRAIN CONTROL MODULE (PCM)

Always perform the Pre-Diagnostic Troubleshooting procedure before proceeding. Refer to PRE-DIAGNOSTIC TROUBLESHOOTING PROCEDURE .

DIAGNOSTIC TEST

1. **ACTIVE DIAGNOSTIC TROUBLE CODE (DTC)**
    1. Diagnose and repair any other active component or circuit DTCs before continuing with this procedure.
    2. Turn the ignition on.
    3. Using the scan tool, select View DTCs. Copy DTC and Freeze Frame information.
    4. Start the engine and allow it to reach operating temperature.

    WARNING: When the engine is operating, do not stand in direct line with the fan. Do not put your hands near the pulleys, belts or fan. Do not wear loose clothing. Failure to follow these instructions may result in possible serious or fatal injury.

    NOTE: Attempt to operate the vehicle under conditions similar to which the DTC was set.

    NOTE: It may be necessary to test drive the vehicle within the DTC monitoring conditions in order for this DTC to set.

    5. With a scan tool, select View DTCs.

    Is the DTC Active at this time?

    Yes

    - Go To 2.

    No

- Perform the INTERMITTENT CONDITION diagnostic procedure. Refer to **INTERMITTENT CONDITION** .

2. **VISUAL INSPECTION**

NOTE: Anything that affects the speed of the crankshaft can cause a misfire DTC.

NOTE: When a Misfire is detected for a particular cylinder, the PCM will shut down that cylinder's Injector Control circuit.

Visually inspect the engine for any of the following conditions:

- Worn serpentine belt
- Binding Engine-Driven accessories: A/C Compressor, P/S Pump, Water pump.
- Misalignment of the Water pump, P/S Pump and A/C Compressor pulleys
- Corroded PCM power and ground circuits.
- Misalignment of the Water pump, P/S Pump and A/C Compressor pulleys
- Corroded PCM power and ground circuits.
- Improper CKP, CMP, MAP, and TP Sensor mounting
- Poor connector/terminal to component connection for CKP sensor, CMP sensor, MAP sensor, TP sensor, fuel injector, ignition coil, etc.
- Vacuum leaks
- Restricted Air Induction system or Exhaust system.
- Internal engine component failures.

Were any of the above conditions present?

Yes

- Repair as necessary.
- Perform the POWERTRAIN VERIFICATION TEST. Refer to **POWERTRAIN VERIFICATION TEST** .

No

- Go To 3.

3. **(F342) ASD CONTROL OUTPUT CIRCUIT**

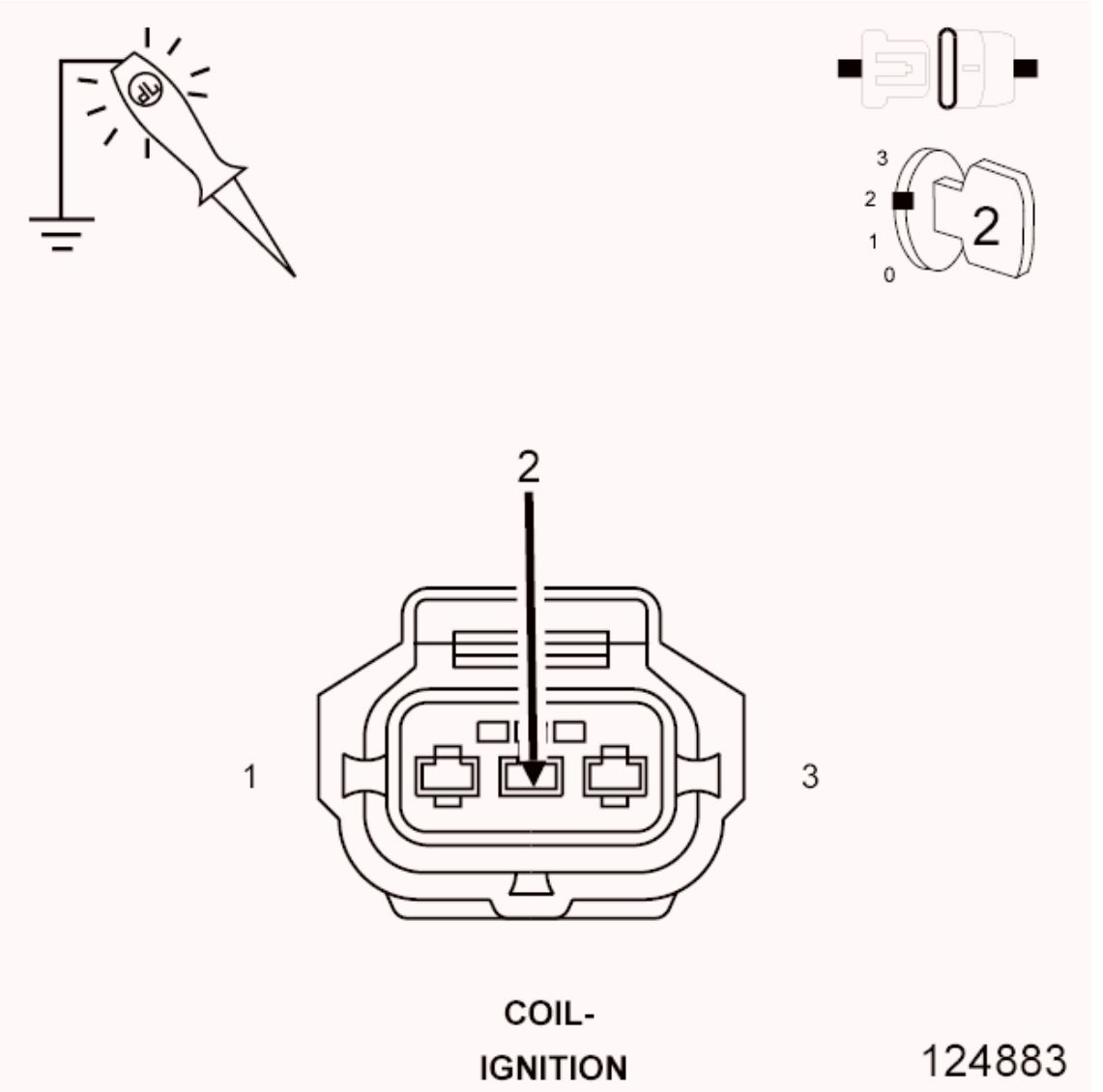

Fig. 130: Using 12-Volt Test Light Connected To Ground To Probe ASD Control Output Circuit In Ignition Coil Harness Connector
Courtesy of CHRYSLER GROUP, LLC

1. Turn the ignition off.
2. Disconnect the No. 7 Ignition Coil harness connector.
3. Disconnect the No. 7 Fuel Injector harness connector.

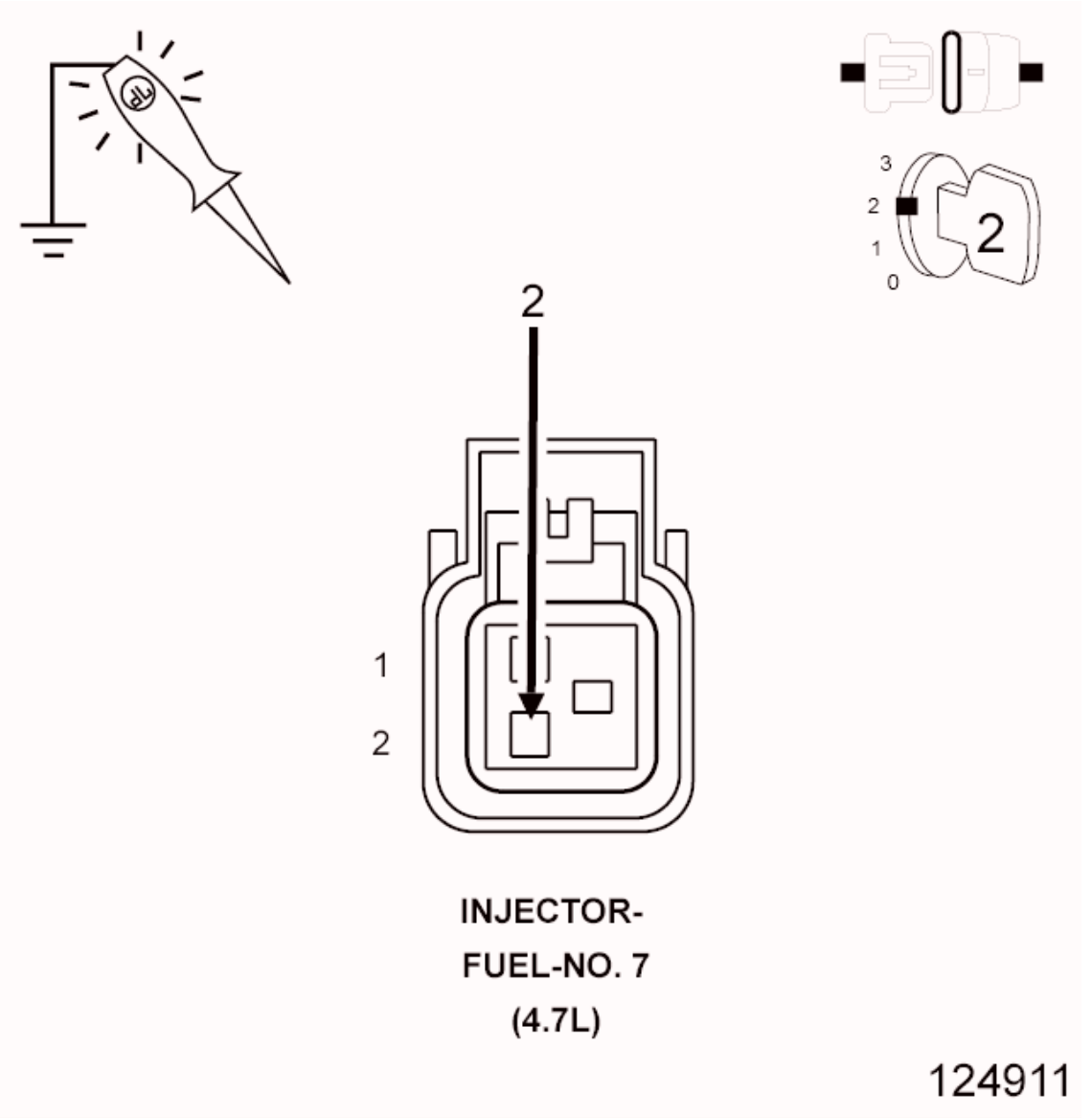

Fig. 131: Using 12-Volt Test Light Connected To Ground To Probe (F342) ASD Control Output Circuit In Ignition Coil Harness Connector And Fuel Injector Harness Connector
Courtesy of CHRYSLER GROUP, LLC

NOTE: 4.7L injector shown in illustration, 5.7L similar.

4. Ignition on, engine not running.
5. Using a 12-volt test light connected to ground, probe the (F342) ASD Control Output circuit in the Ignition Coil harness connector and Fuel Injector harness connector before the actuation.

NOTE: Make sure the test light is probing the circuit before actuating the Relay or a DTC may set and not allow the actuation.

6. Using the scan tool, actuate the ASD.

Does the test light illuminate brightly?

Yes

- Go To 4.

No

- Repair the excessive resistance or short to ground in the (F342) ASD Control Output circuit.
- Perform the POWERTRAIN VERIFICATION TEST. Refer to **POWERTRAIN VERIFICATION TEST** .

4. **IGNITION SYSTEM OPERATION**

WARNING: When the engine is operating, do not stand in direct line with the fan. Do not put your hands near the pulleys, belts or fan. Do not wear loose clothing. Failure to follow these instructions may result in possible serious or fatal injury.

1. Turn the ignition off.
2. Connect the Ignition Coil No. 7 harness connector.
3. Remove the Ignition Coil.
4. Leave the Fuel Injector harness connector of the cylinder being tested disconnected.
5. Install a spark tester on the Ignition Coil.
6. While cranking the engine observe the spark coming from the spark tester.
7. Perform the same test on the ignition wire side of the Ignition coil.

NOTE: A crisp blue spark that is able to jump the gap of the spark tester should be generated at the coil on plug and at the end of the ignition wire.

Is good spark present?

Yes

- Go To 5.

No

- Go To 14.

NOTE: Connect the Fuel Injector harness connector before continuing.

5. **SPARK PLUG**

CAUTION: The 4.7L engine uses TWO DIFFERENT types of spark plugs. A total of 16 plugs are used. The plugs are mounted in two rows (banks). The upper row is used on the intake valve side of the cylinder head. The lower row is used on the exhaust valve side of the cylinder head. The upper row uses Nickel Yttrium plugs. The lower row uses Iridium plugs. DO NOT INTERCHANGE THESE PLUGS.

1. Turn the ignition off.
2. Remove the Spark Plug(s) in accordance with the Service Information.
3. Inspect the Spark Plug(s) for the following conditions:
   - Cracks
   - Carbon Tracking
   - Foreign Material
   - Gap size out of specifications
   - Loose or broken electrode

NOTE: Lightly tap the bottom of the spark plug on a solid surface. The electrode in the spark plug should not move.

Were any of the above conditions present?

Yes

- Replace the Spark Plug in accordance with the Service Information. Refer to **SPARK PLUG, REMOVAL** .
- Perform the POWERTRAIN VERIFICATION TEST. Refer to **POWERTRAIN VERIFICATION TEST** .

No

- Go To 6.

6. **FUEL PRESSURE CHECK**

WARNING: The fuel system is under a constant pressure (even with the engine off). Before testing or servicing any fuel system hose, fitting or line, the fuel system pressure must be released. Failure to follow these instructions can result in possible serious or fatal injury.

WARNING: When the engine is operating, do not stand in direct line with the fan. Do not put your hands near the pulleys, belts or fan. Do not wear loose clothing. Failure to follow these instructions may result in possible serious or fatal injury.

1. Install Fuel Pressure Decay Tester (special tool #8978A, Decay Tool, Fuel) to the fuel rail.

2. Start the engine and observe the fuel pressure reading.

NOTE: Fuel pressure specification is 407 kPa +/- 34 kPa (59 psi +/- 5 psi).

Choose a conclusion that best matches your fuel pressure reading.

Within Specification

- Go To 7.

Below Specification

- Go To 12.

Above Specification

- Replace the fuel filter/pressure regulator.
- Perform the POWERTRAIN VERIFICATION TEST. Refer to **POWERTRAIN VERIFICATION TEST** .

7. **FUEL PRESSURE LEAK DOWN**

NOTE: Before continuing visually and physically inspect the fuel delivery system for external leaks or damage. Repair/replace as necessary.

WARNING: The fuel system is under a constant pressure (even with the engine off). Before testing or servicing any fuel system hose, fitting or line, the fuel system pressure must be released. Failure to follow these instructions can result in possible serious or fatal injury.

1. Turn the ignition off.
2. Install the Fuel Pressure Decay Tester (special tool #8978A, Decay Tool, Fuel).
3. Start the engine and allow the fuel system to reach maximum pressure.
4. Turn the ignition off.

NOTE: Fuel specification is 407 kPa +/- 34 kPa (59 psi +/- 5 psi).

5. Close the Fuel System Isolation Valve and then wait five minutes before proceeding.
6. Read the Fuel Inlet and Fuel Outlet Pressure Gauges. The pressure should not drop more than 10 psi on either gauge.
7. Monitor the fuel pressure gauge for a minimum of five minutes.

NOTE: The pressure should not decrease by greater than 69 kPa (10 psi).

Does the pressure fall below the listed specification?

Yes - On Fuel Outlet Gauge

- Replace the leaking fuel injector(s).
- Perform the POWERTRAIN VERIFICATION TEST. Refer to **POWERTRAIN VERIFICATION TEST** .

Yes - On Fuel Outlet Gauge

- Replace the leaking fuel injector(s).
- Perform the POWERTRAIN VERIFICATION TEST. Refer to **POWERTRAIN VERIFICATION TEST** .

No

- Go To 8.

8. **FUEL INJECTOR OPERATION**

WARNING: The fuel system is under a constant pressure (even with the engine off). Before testing or servicing any fuel system hose, fitting or line, the fuel system pressure must be released. Failure to follow these instructions can result in possible serious or fatal injury.

CAUTION: After each Fuel Injector actuation, start the engine to clean the cylinder of fuel. Failure to do so could cause engine damage.

1. Open the Fuel System Isolation Valve
2. Start the engine and allow the fuel pressure to reach maximum pressure.
3. Turn the ignition off.
4. Ignition on, engine not running.
5. Using the scan tool, actuate the No. 7 Fuel Injector.
6. Monitor the fuel pressure gauge.

Does the fuel pressure gauge indicate a drop in fuel pressure?

Yes

- Go To 9.

No

- Go To 10.

NOTE: **Turn the ignition off, remove the Fuel Pressure gauge, and connect the fuel lines before continuing.**

9. **ENGINE MECHANICAL**

Check for any of the following conditions/mechanical problems:

- ENGINE VACUUM - must be at least 13 inches in neutral
- ENGINE VALVE TIMING - must be within specifications
- ENGINE COMPRESSION - must be within specifications
- ENGINE EXHAUST SYSTEM - must be free of any restrictions or leaks.
- ENGINE PCV SYSTEM - must flow freely
- TORQUE CONVERTER STALL SPEED - must be within specifications
- POWER BRAKE BOOSTER - no internal vacuum leaks
- FUEL - must be free of contamination
- CAM LOBES - must not be worn excessively
- CYLINDER LEAKAGE TEST - must be within specifications
- VALVE SPRINGS - cannot be weak or broken

Are there any engine mechanical problems?

Yes

- Repair as necessary.
- Perform the POWERTRAIN VERIFICATION TEST. Refer to **POWERTRAIN VERIFICATION TEST** .

No

- Go To 17.

10. **FUEL INJECTOR**
    1. Turn the ignition off.
    2. Disconnect the No. 7 Fuel Injector harness connector.
    3. Ignition on, engine not running.

NOTE: **When a Misfire is detected for a particular cylinder, the PCM will shut down that cylinder's Injector Control circuit.**

    4. Using the scan tool, erase DTCs.
    5. Install an Injector Noid light.
    6. Using the scan tool, actuate the Fuel Injector.

Does the Noid light blink/flicker during the actuation?

Yes

- Verify that there is good pin to terminal contact in the Fuel Injector and the Powertrain Control Module connectors. If OK, replace the Fuel Injector.
- Perform the POWERTRAIN VERIFICATION TEST. Refer to **POWERTRAIN VERIFICATION TEST** .

No

- Go To 11.

11. **(K26) INJECTOR CONTROL NO. 7 CIRCUIT**

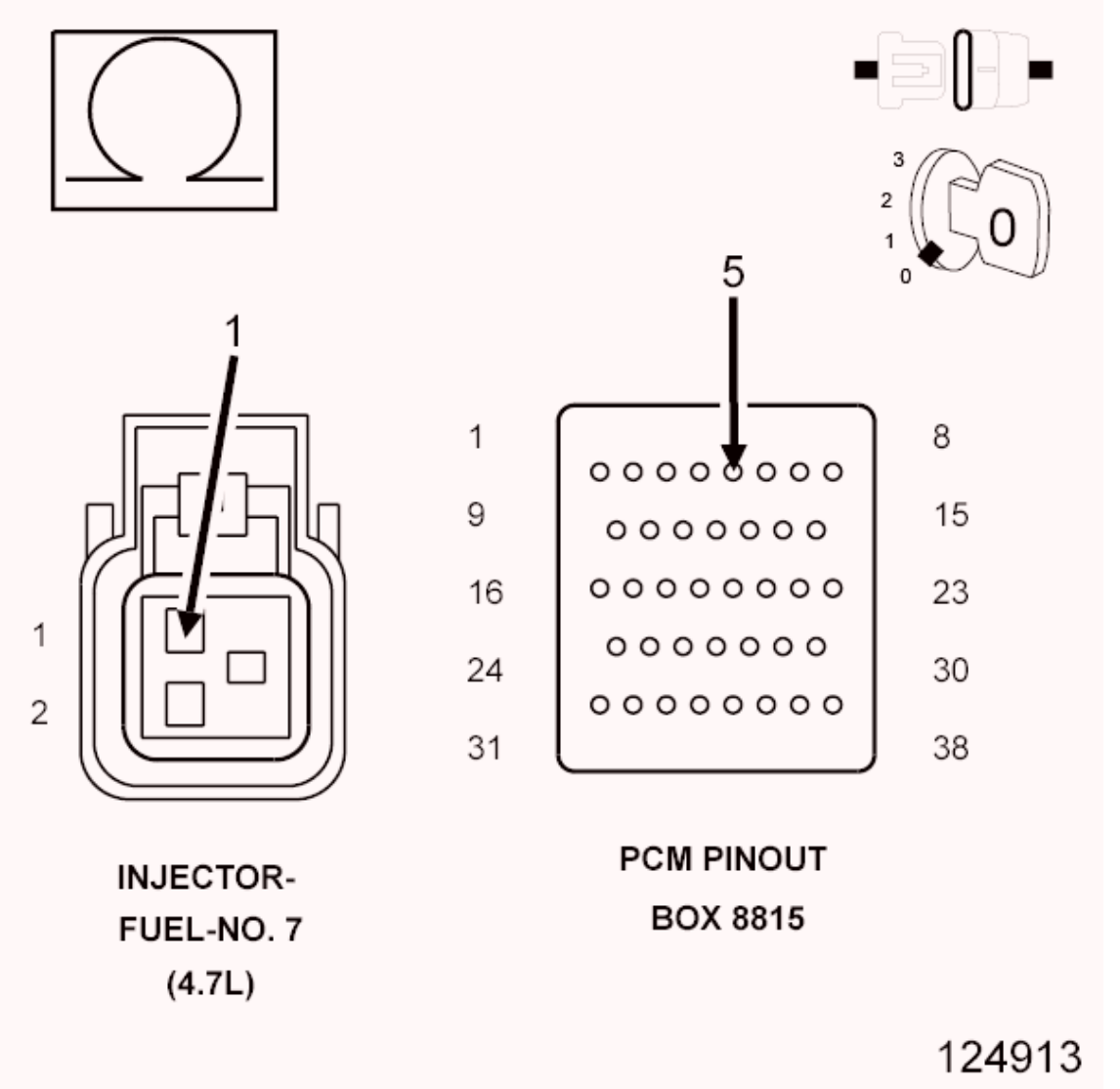

Fig. 132: Checking (K26) Injector Control No. 7 Circuit For An Open, Short To Ground, And Short To Voltage

Courtesy of CHRYSLER GROUP, LLC

1. Turn the ignition off.
2. Disconnect the C1 PCM harness connector.

CAUTION: Do not probe the PCM harness connectors. Probing the PCM harness connectors will damage the PCM terminals resulting in poor terminal to pin connection. Install the PCM Pinout Box (special tool #8815A, Kit, NGC, 38 Position) to perform diagnosis.

NOTE: 4.7L injector shown in illustration, 5.7L similar.

3. Check the (K26) Injector Control No. 7 circuit for an open, short to ground, and short to voltage.

Was a problem found with the (K26) Injector Control No. 7 circuit?

Yes

- Repair the excessive resistance or short in the (K26) Injector Control No. 7 circuit.
- Perform the POWERTRAIN VERIFICATION TEST. Refer to **POWERTRAIN VERIFICATION TEST** .

No

- Go To 17.

12. **FUEL SUPPLY LINE RESTRICTED**

WARNING: The fuel system is under a constant pressure (even with the engine off). Before testing or servicing any fuel system hose, fitting or line, the fuel system pressure must be released. Failure to follow these instructions can result in possible serious or fatal injury.

1. Turn the ignition off.
2. Raise vehicle on hoist, and disconnect the fuel pressure line at the fuel pump module.
3. Install Fuel Pressure Decay Tester (special tool #8978A, Decay Tool, Fuel) between the fuel supply line and the fuel pump module.
4. Ignition on, engine not running.
5. Using the scan tool, actuate the ASD Fuel System test and observe the fuel pressure gauge.

NOTE: Fuel pressure specification is 407 kPa +/- 34 kPa (59 psi +/- 5 psi).

Is the fuel pressure within specification?

Yes

- Repair or replace fuel supply line as necessary.
- Perform the POWERTRAIN VERIFICATION TEST. Refer to **POWERTRAIN VERIFICATION TEST** .

No

- Go To 13.

13. **FUEL PUMP INLET STRAINER**

WARNING: The fuel system is under a constant pressure (even with the engine off). Before testing or servicing any fuel system hose, fitting or line, the fuel system pressure must be released. Failure to follow these instructions can result in possible serious or fatal injury.

1. Turn the ignition off.
2. Remove the Fuel Pump Module and inspect the Fuel Inlet Strainer.

Is the Fuel Inlet Strainer plugged?

Yes

- Replace the Fuel Pump Inlet Strainer.
- Perform the POWERTRAIN VERIFICATION TEST. Refer to **POWERTRAIN VERIFICATION TEST** .

No

- Before continuing, check the Fuel Pump Module harness connector terminals for corrosion, damage, or terminal push out. Make sure the ground circuit is functional. Repair as necessary. Replace the Fuel Pump Module.
- Perform the POWERTRAIN VERIFICATION TEST. Refer to **POWERTRAIN VERIFICATION TEST** .

14. **IGNITION WIRE**

NOTE: If the vehicle being tested does not have an ignition wire answer YES to this test and continue.

1. Turn the ignition off.
2. Remove the ignition wire.
3. Measure the resistance of the ignition wire.

Is the resistance below 10K Ohms?

Yes

- Go To 15.

No

- Replace the Ignition Wire.
- Perform the POWERTRAIN VERIFICATION TEST. Refer to **POWERTRAIN VERIFICATION TEST** .

15. **IGNITION COIL**

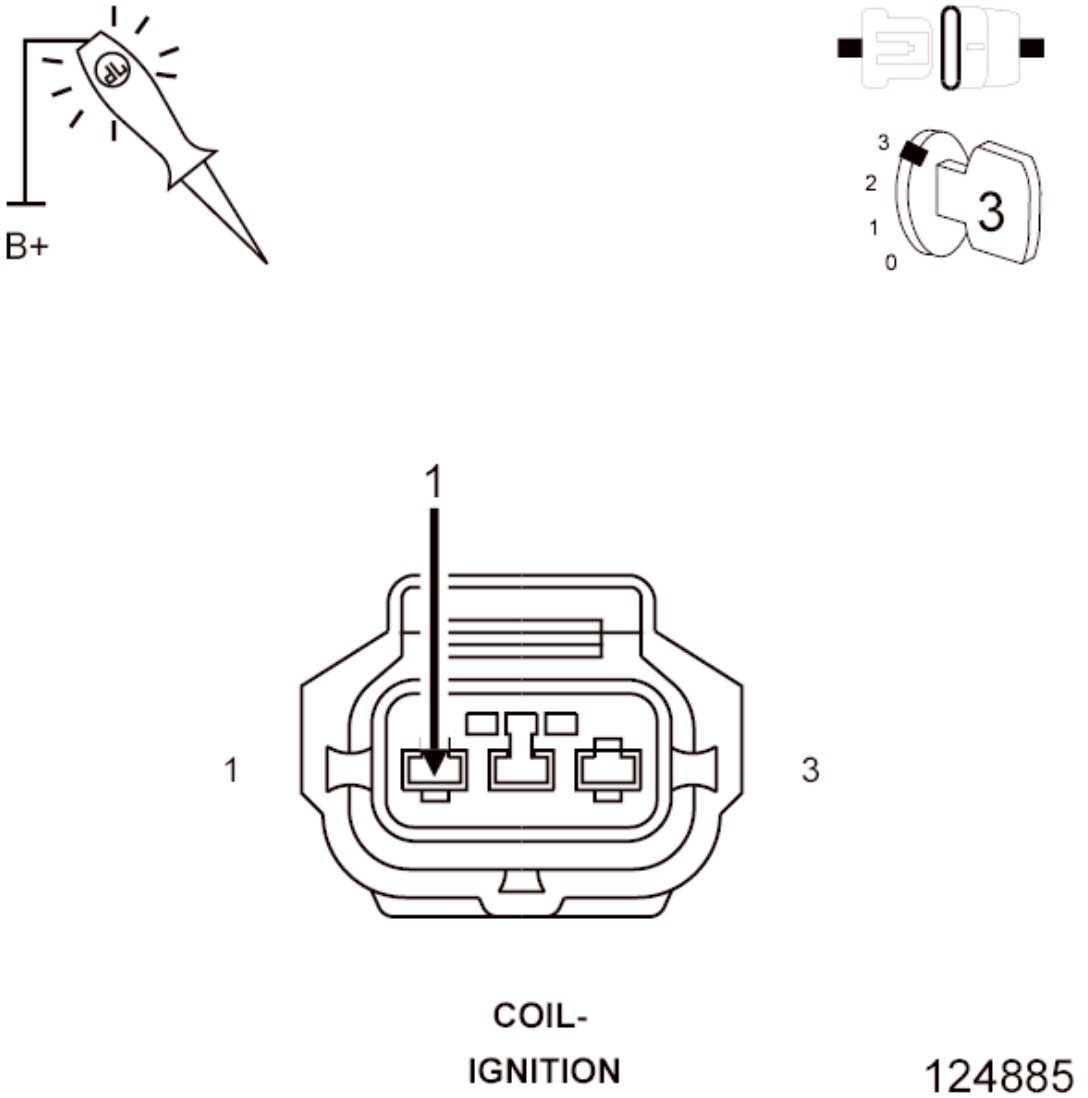

Fig. 133: Using 12-Volt Test Light Connected To 12-Volt Source To Probe Coil Control Circuit
Courtesy of CHRYSLER GROUP, LLC

WARNING: **When the engine is operating, do not stand in direct line with the fan.**

Do not put your hands near the pulleys, belts or fan. Do not wear loose clothing. Failure to follow these instructions may result in possible serious or fatal injury.

1. Disconnect the No. 7 Ignition Coil harness connector.
2. Using a 12-volt test light connected to 12-volts, probe the (K97) Coil Control No. 7 circuit.
3. Crank the engine for 5 seconds while observing the test light.

NOTE: **The primary resistance of the 4.7L Ignition coil is 0.6 to 0.9 of an Ohm and the resistance of a 5.7L Ignition coil is 0.558 to 0.682 of an Ohm at 25° C (77° F).**

Does the test light brightly blink/flicker?

Yes

- Verify that there is good pin to terminal contact in the Ignition Coil and the Powertrain Control Module connectors. If OK, replace the Ignition Coil in accordance with the Service Information.
- Perform the POWERTRAIN VERIFICATION TEST. Refer to **POWERTRAIN VERIFICATION TEST** .

No

- Go To 16.

16. **(K97) COIL CONTROL NO. 7 CIRCUIT**

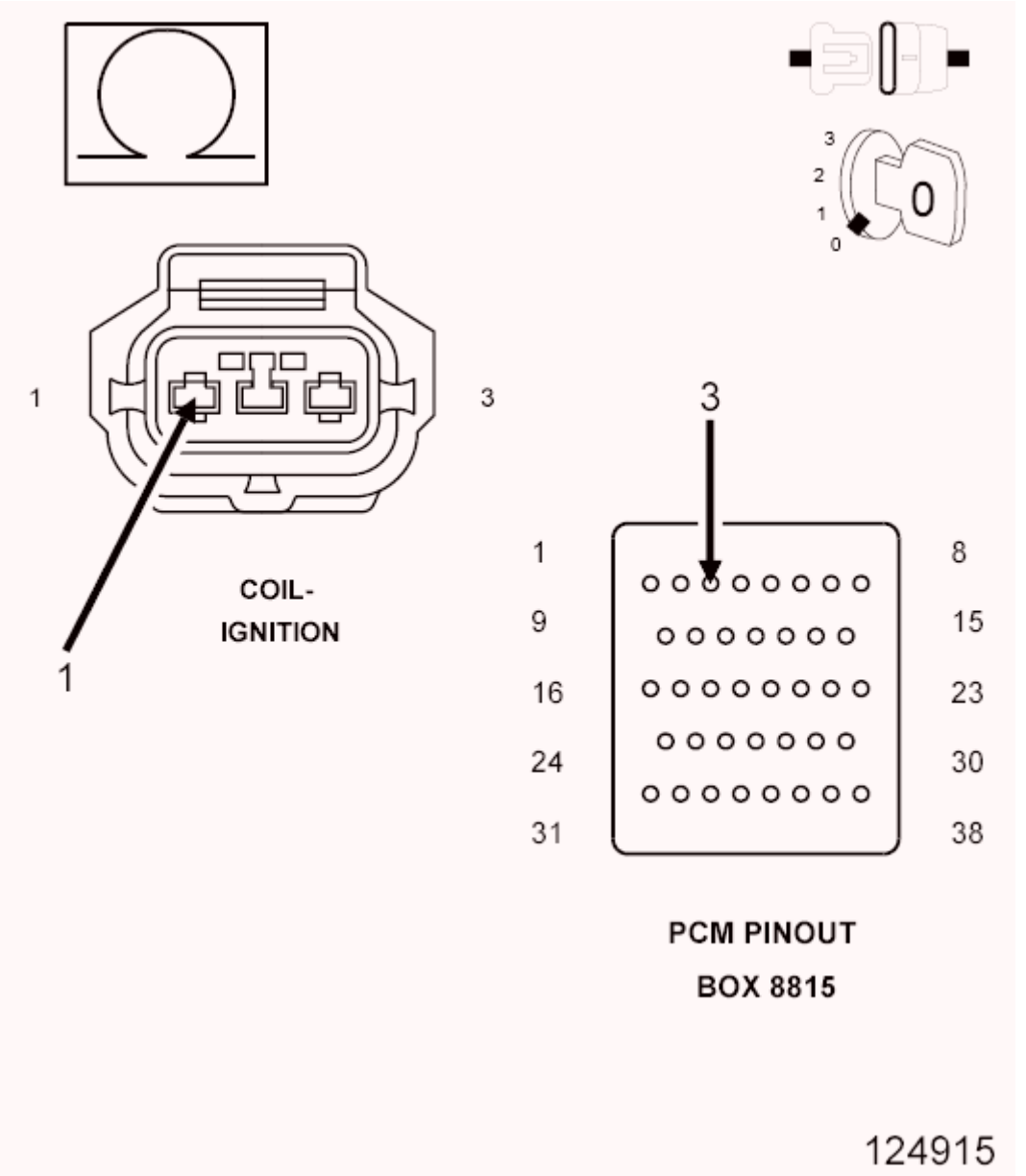

Fig. 134: Checking Coil Control No. 7 Circuit For An Open, Short To Ground, And Short To Voltage
Courtesy of CHRYSLER GROUP, LLC

1. Turn the ignition off.
2. Disconnect the C1 PCM harness connector.

CAUTION: Do not probe the PCM harness connectors. Probing the PCM harness connectors will damage the PCM terminals resulting in poor terminal to pin connection. Install the PCM Pinout Box (special tool #8815A, Kit, NGC, 38 Position) to perform diagnosis.

3. Check the (K97) Coil Control No. 7 circuit for an open, short to ground, and short to voltage.

   Was a problem found with the (K97) Coil Control No. 7 circuit?

   Yes

   - Repair the (K97) Coil Control No. 7 circuit.
   - Perform the POWERTRAIN VERIFICATION TEST. Refer to **POWERTRAIN VERIFICATION TEST** .

   No

   - Go To 17.

17. **POWERTRAIN CONTROL MODULE (PCM)**
    1. Using the wiring diagram/schematic as a guide, inspect the wiring and connectors between the related Sensor, Coil, Injector, and the Powertrain Control Module (PCM).
    2. Look for any chafed, pierced, pinched, or partially broken wires.
    3. Look for broken, bent, pushed out or corroded terminals. Verify that there is good pin to terminal contact in the related Sensors, Coils, Injectors, and the Powertrain Control Module connectors.
    4. Perform any Technical Service Bulletins that may apply.

       Were there any problems found?

       Yes

       - Repair as necessary.
       - Perform the POWERTRAIN VERIFICATION TEST. Refer to **POWERTRAIN VERIFICATION TEST** .

       No

       - Replace and program the Powertrain Control Module in accordance with the service information.
       - Perform the POWERTRAIN VERIFICATION TEST. Refer to **POWERTRAIN VERIFICATION TEST** .

P0308-CYLINDER 8 MISFIRE

For a complete wiring diagram, **refer to appropriate SYSTEM WIRING DIAGRAMS article** .

WHEN MONITORED:

Any time the engine is running, and the adaptive numerator has been successfully updated.

SET CONDITION:

The threshold to set the fault is application specific; it is tied to the level of misfire that will cause emissions to increase to 1.5 times the standard or in some cases 1%. It is always a two trip fault above the calibrated RPM. It takes one fail to set a Pending Fault and two trips to set the MIL. Three good trips to turn off the MIL.

POSSIBLE CAUSES

Possible Causes
(F342) ASD CONTROL OUTPUT CIRCUIT
(K28) INJECTOR CONTROL NO. 8 CIRCUIT
(K98) COIL CONTROL NO. 8 CIRCUIT
SPARK PLUG
IGNITION WIRE
IGNITION COIL
FUEL PUMP INLET STRAINER PLUGGED
RESTRICTED FUEL SUPPLY LINE
FUEL PUMP MODULE
FUEL PRESSURE LEAK DOWN
FUEL INJECTOR
ENGINE MECHANICAL
POWERTRAIN CONTROL MODULE (PCM)

Always perform the Pre-Diagnostic Troubleshooting procedure before proceeding. Refer to PRE-DIAGNOSTIC TROUBLESHOOTING PROCEDURE .

DIAGNOSTIC TEST

1. **ACTIVE DIAGNOSTIC TROUBLE CODE (DTC)**
    1. Diagnose and repair any other active component or circuit DTCs before continuing with this procedure.
    2. Turn the ignition on.
    3. Using the scan tool, select View DTCs. Copy DTC and Freeze Frame information.
    4. Start the engine and allow it to reach operating temperature.

WARNING: When the engine is operating, do not stand in direct line with the fan. Do not put your hands near the pulleys, belts or fan. Do not wear loose clothing. Failure to follow these instructions may result in possible serious or fatal injury.

NOTE: Attempt to operate the vehicle under conditions similar to which the DTC was set.

NOTE: It may be necessary to test drive the vehicle within the DTC monitoring conditions in order for this DTC to set.

5. With a scan tool, select View DTCs.

   Is the DTC Active at this time?

   Yes

   - Go To 2.

   No

   - Perform the INTERMITTENT CONDITION diagnostic procedure. Refer to **INTERMITTENT CONDITION** .

2. **VISUAL INSPECTION**

   NOTE: Anything that affects the speed of the crankshaft can cause a misfire DTC.

   NOTE: When a Misfire is detected for a particular cylinder, the PCM will shut down that cylinder's Injector Control circuit.

   Visually inspect the engine for any of the following conditions:

   - Worn serpentine belt
   - Binding Engine-Driven accessories: A/C Compressor, P/S Pump, Water pump.
   - Misalignment of the Water pump, P/S Pump and A/C Compressor pulleys
   - Corroded PCM power and ground circuits.
   - Misalignment of the Water pump, P/S Pump and A/C Compressor pulleys
   - Corroded PCM power and ground circuits.
   - Improper CKP, CMP, MAP, and TP Sensor mounting
   - Poor connector/terminal to component connection for CKP sensor, CMP sensor, MAP sensor, TP sensor, fuel injector, ignition coil, etc.
   - Vacuum leaks
   - Restricted Air Induction system or Exhaust system.
   - Internal engine component failures.

   Were any of the above conditions present?

   Yes

   - Repair as necessary.
   - Perform the POWERTRAIN VERIFICATION TEST. Refer to **POWERTRAIN VERIFICATION TEST** .

   No

- Go To 3.

3. **(F342) ASD CONTROL OUTPUT CIRCUIT**

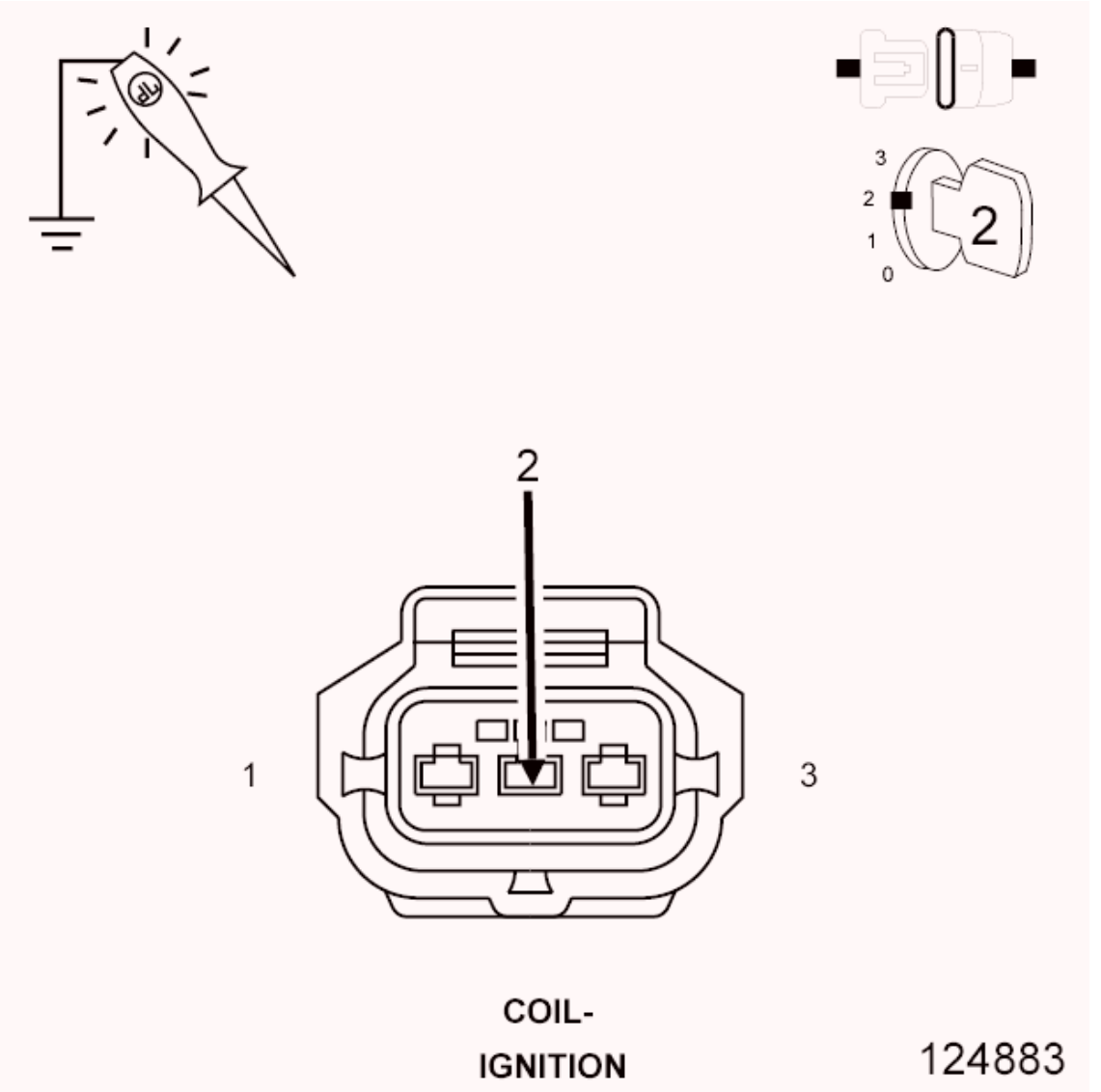

Fig. 135: Using 12-Volt Test Light Connected To Ground To Probe ASD Control Output Circuit In Ignition Coil Harness Connector
Courtesy of CHRYSLER GROUP, LLC

1. Turn the ignition off.
2. Disconnect the No. 8 Ignition Coil harness connector.
3. Disconnect the No. 8 Fuel Injector harness connector.

NOTE: 4.7L Injector shown in illustration, 5.7L similar.

4. Ignition on, engine not running.

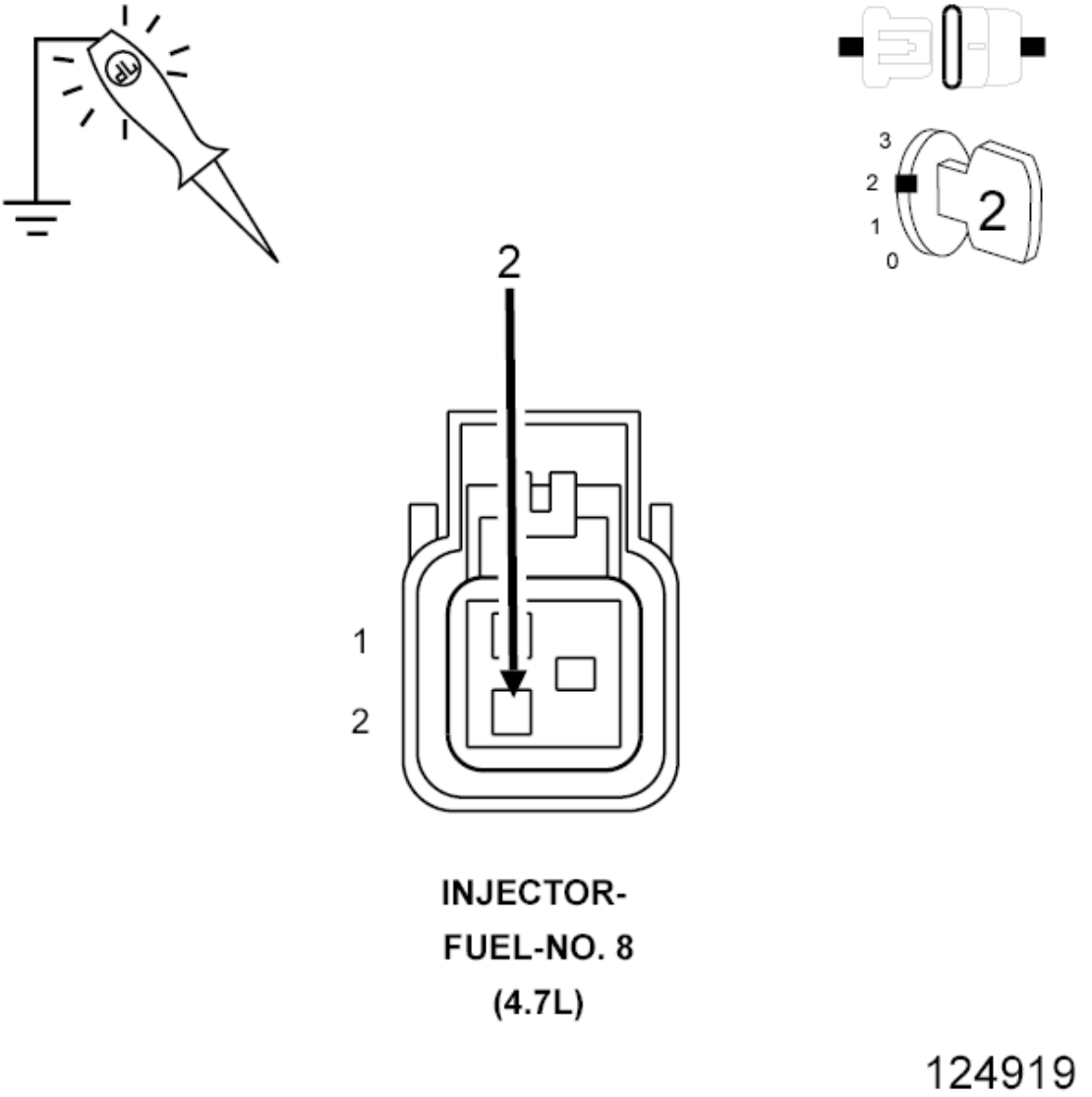

Fig. 136: Using 12-Volt Test Light Connected To Ground To Probe (F342) ASD Control Output Circuit In Fuel Injector Harness Connector
Courtesy of CHRYSLER GROUP, LLC

5. Using a 12-volt test light connected to ground, probe the (F342) ASD Control Output circuit in the Ignition Coil harness connector and Fuel Injector harness connector before the actuation.

   NOTE: Make sure the test light is probing the circuit before actuating the Relay or a DTC may set and not allow the actuation.

6. Using the scan tool, actuate the ASD.

   Does the test light illuminate brightly?

Yes

- Go To 4.

No

- Repair the excessive resistance or short to ground in the (F342) ASD Control Output circuit.
- Perform the POWERTRAIN VERIFICATION TEST. Refer to **POWERTRAIN VERIFICATION TEST** .

4. **IGNITION SYSTEM OPERATION**

WARNING: When the engine is operating, do not stand in direct line with the fan. Do not put your hands near the pulleys, belts or fan. Do not wear loose clothing. Failure to follow these instructions may result in possible serious or fatal injury.

1. Turn the ignition off.
2. Connect the Ignition Coil No. 8 harness connector.
3. Remove the Ignition Coil.
4. Leave the Fuel Injector harness connector of the cylinder being tested disconnected.
5. Install a spark tester on the Ignition Coil.
6. While cranking the engine observe the spark coming from the spark tester.
7. Perform the same test on the ignition wire side of the Ignition coil.

NOTE: A crisp blue spark that is able to jump the gap of the spark tester should be generated at the coil on plug and at the end of the ignition wire.

Is good spark present?

Yes

- Go To 5.

No

- Go To 14.

NOTE: Connect the Fuel Injector harness connector before continuing.

5. **SPARK PLUG**

CAUTION: The 4.7L engine uses TWO DIFFERENT types of spark plugs. A total of 16 plugs are used. The plugs are mounted in two rows (banks).

The upper row is used on the intake valve side of the cylinder head. The lower row is used on the exhaust valve side of the cylinder head. The upper row uses Nickel Yttrium plugs. The lower row uses Iridium plugs. DO NOT INTERCHANGE THESE PLUGS.

1. Turn the ignition off.
2. Remove the Spark Plug(s) in accordance with the Service Information.
3. Inspect the Spark Plug(s) for the following conditions:
   - Cracks
   - Carbon Tracking
   - Foreign Material
   - Gap size out of specifications
   - Loose or broken electrode

NOTE: **Lightly tap the bottom of the spark plug on a solid surface. The electrode in the spark plug should not move.**

Were any of the above conditions present?

Yes

- Replace the Spark Plug in accordance with the Service Information. Refer to **SPARK PLUG, REMOVAL** .
- Perform the POWERTRAIN VERIFICATION TEST. Refer to **POWERTRAIN VERIFICATION TEST** .

No

- Go To 6.

6. **FUEL PRESSURE CHECK**

WARNING: **The fuel system is under a constant pressure (even with the engine off). Before testing or servicing any fuel system hose, fitting or line, the fuel system pressure must be released. Failure to follow these instructions can result in possible serious or fatal injury.**

WARNING: **When the engine is operating, do not stand in direct line with the fan. Do not put your hands near the pulleys, belts or fan. Do not wear loose clothing. Failure to follow these instructions may result in possible serious or fatal injury.**

1. Install Fuel Pressure Decay Tester to the fuel rail.
2. Start the engine and observe the fuel pressure reading.

NOTE: **Fuel pressure specification is 407 kPa +/- 34 kPa (59 psi +/- 5 psi).**

Choose a conclusion that best matches your fuel pressure reading.

Within Specification

- Go To 7.

Below Specification

- Go To 12.

Above Specification

- Replace the fuel filter/pressure regulator.
- Perform the POWERTRAIN VERIFICATION TEST. Refer to **POWERTRAIN VERIFICATION TEST** .

7. **FUEL PRESSURE LEAK DOWN**

NOTE: **Before continuing visually and physically inspect the fuel delivery system for external leaks or damage. Repair/replace as necessary.**

WARNING: **The fuel system is under a constant pressure (even with the engine off). Before testing or servicing any fuel system hose, fitting or line, the fuel system pressure must be released. Failure to follow these instructions can result in possible serious or fatal injury.**

1. Turn the ignition off.
2. Install the Fuel Pressure Decay Tester (special tool #8978A, Decay Tool, Fuel).
3. Start the engine and allow the fuel system to reach maximum pressure.
4. Turn the ignition off.

NOTE: **Fuel specification is 407 kPa +/- 34 kPa (59 psi +/- 5 psi).**

5. Close the Fuel System Isolation Valve and then wait five minutes before proceeding.
6. Read the Fuel Inlet and Fuel Outlet Pressure Gauges. The pressure should not drop more than 10 psi on either gauge.
7. Monitor the fuel pressure gauge for a minimum of five minutes.

NOTE: **The pressure should not decrease by greater than 69 kPa (10 psi).**

Does the pressure fall below the listed specification?

Yes - On Fuel Inlet Gauge

- Replace the fuel pump module.
- Perform the POWERTRAIN VERIFICATION TEST. Refer to **POWERTRAIN VERIFICATION TEST** .

Yes - On Fuel Outlet Gauge

- Replace the leaking fuel injector(s).
- Perform the POWERTRAIN VERIFICATION TEST. Refer to **POWERTRAIN VERIFICATION TEST** .

No

- Go To 8.

8. **FUEL INJECTOR OPERATION**

WARNING: The fuel system is under a constant pressure (even with the engine off). Before testing or servicing any fuel system hose, fitting or line, the fuel system pressure must be released. Failure to follow these instructions can result in possible serious or fatal injury.

CAUTION: After each Fuel Injector actuation, start the engine to clean the cylinder of fuel. Failure to do so could cause engine damage.

1. Open the Fuel System Isolation Valve.
2. Start the engine and allow the fuel pressure to reach maximum pressure.
3. Turn the ignition off.
4. Ignition on, engine not running.
5. Using the scan tool, actuate the No. 8 Fuel Injector.
6. Monitor the fuel pressure gauge.

Does the fuel pressure gauge indicate a drop in fuel pressure?

Yes

- Go To 9.

No

- Go To 10.

NOTE: Turn the ignition off, remove the Fuel Pressure gauge, and connect the fuel lines before continuing.

9. **ENGINE MECHANICAL**

Check for any of the following conditions/mechanical problems:

- ENGINE VACUUM - must be at least 13 inches in neutral
- ENGINE VALVE TIMING - must be within specifications
- ENGINE COMPRESSION - must be within specifications
- ENGINE EXHAUST SYSTEM - must be free of any restrictions or leaks.
- ENGINE PCV SYSTEM - must flow freely
- TORQUE CONVERTER STALL SPEED - must be within specifications
- POWER BRAKE BOOSTER - no internal vacuum leaks
- FUEL - must be free of contamination
- CAM LOBES - must not be worn excessively
- CYLINDER LEAKAGE TEST - must be within specifications
- VALVE SPRINGS - cannot be weak or broken

Are there any engine mechanical problems?

Yes

- Repair as necessary.
- Perform the POWERTRAIN VERIFICATION TEST. Refer to **POWERTRAIN VERIFICATION TEST** .

No

- Go To 17.

10. **FUEL INJECTOR**
    1. Turn the ignition off.
    2. Disconnect the No. 8 Fuel Injector harness connector.
    3. Ignition on, engine not running.

    NOTE: **When a Misfire is detected for a particular cylinder, the PCM will shut down that cylinder's Injector Control circuit.**

    4. Using the scan tool, erase DTCs.
    5. Install an Injector Noid light.
    6. Using the scan tool, actuate the Fuel Injector.

    Does the Noid light blink/flicker during the actuation?

    Yes

- Verify that there is good pin to terminal contact in the Fuel Injector and the Powertrain Control Module connectors. If OK, replace the Fuel Injector.
- Perform the POWERTRAIN VERIFICATION TEST. Refer to **POWERTRAIN VERIFICATION TEST** .

No

- Go To 11.

11. **(K28) INJECTOR CONTROL NO. 8 CIRCUIT**

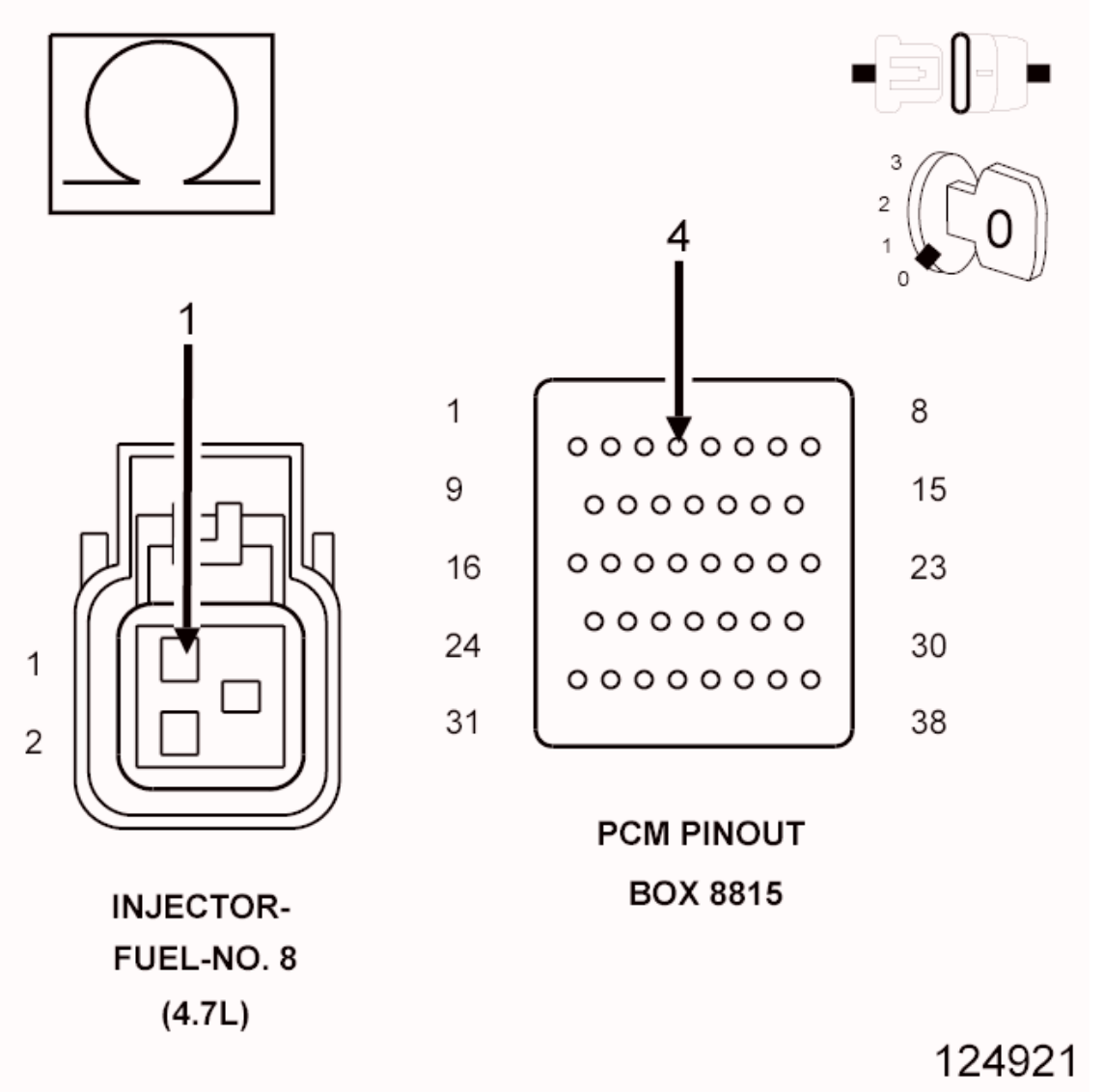

Fig. 137: Checking (K28) Injector Control No. 8 Circuit For An Open, Short To Ground, And Short To Voltage
Courtesy of CHRYSLER GROUP, LLC

1. Turn the ignition off.

2. Disconnect the C1 PCM harness connector.

CAUTION: Do not probe the PCM harness connectors. Probing the PCM harness connectors will damage the PCM terminals resulting in poor terminal to pin connection. Install the PCM Pinout Box (special tool #8815A, Kit, NGC, 38 Position) to perform diagnosis.

NOTE: 4.7L injector shown in illustration, 5.7L similar.

3. Check the (K28) Injector Control No. 8 circuit for an open, short to ground, and short to voltage.

Was a problem found with the (K28) Injector Control No. 8 circuit?

Yes

- Repair the excessive resistance or short in the (K28) Injector Control No. 8 circuit.
- Perform the POWERTRAIN VERIFICATION TEST. Refer to **POWERTRAIN VERIFICATION TEST** .

No

- Go To 17.

12. **FUEL SUPPLY LINE RESTRICTED**

WARNING: The fuel system is under a constant pressure (even with the engine off). Before testing or servicing any fuel system hose, fitting or line, the fuel system pressure must be released. Failure to follow these instructions can result in possible serious or fatal injury.

1. Turn the ignition off.
2. Raise the vehicle on a hoist, and disconnect the fuel pressure line at the fuel pump module.
3. Install the Fuel Pressure Decay Tester (special tool #8978A, Decay Tool, Fuel) between the fuel supply line and the fuel pump module.
4. Ignition on, engine not running.
5. Using the scan tool, actuate the ASD Fuel System test and observe the fuel pressure gauge.

NOTE: Fuel pressure specification is 407 kPa +/- 34 kPa (59 psi +/- 5 psi).

Is the fuel pressure within specification?

Yes

- Repair or replace fuel supply line as necessary.

- Perform the POWERTRAIN VERIFICATION TEST. Refer to **POWERTRAIN VERIFICATION TEST** .

No

- Go To 13.

13. **FUEL PUMP INLET STRAINER**

WARNING: The fuel system is under a constant pressure (even with the engine off). Before testing or servicing any fuel system hose, fitting or line, the fuel system pressure must be released. Failure to follow these instructions can result in possible serious or fatal injury.

1. Turn the ignition off.
2. Remove the Fuel Pump Module and inspect the Fuel Inlet Strainer.

Is the Fuel Inlet Strainer plugged?

Yes

- Replace the Fuel Pump Inlet Strainer.
- Perform the POWERTRAIN VERIFICATION TEST. Refer to **POWERTRAIN VERIFICATION TEST** .

No

- Before continuing, check the Fuel Pump Module harness connector terminals for corrosion, damage, or terminal push out. Make sure the ground circuit is functional. Repair as necessary. Replace the Fuel Pump Module.
- Perform the POWERTRAIN VERIFICATION TEST. Refer to **POWERTRAIN VERIFICATION TEST** .

14. **IGNITION WIRE**

NOTE: If the vehicle being tested does not have an ignition wire answer YES to this test and continue.

1. Turn the ignition off.
2. Remove the ignition wire.
3. Measure the resistance of the ignition wire.

Is the resistance below 10K Ohms?

Yes

- Go To 15.

No

- Replace the Ignition Wire.
- Perform the POWERTRAIN VERIFICATION TEST. Refer to **POWERTRAIN VERIFICATION TEST** .

15. **IGNITION COIL**

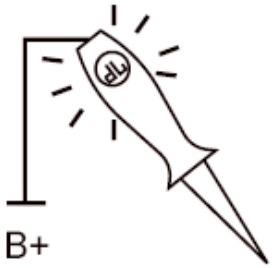

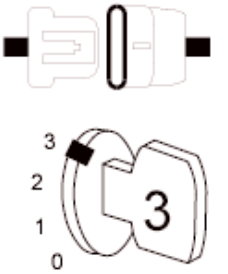

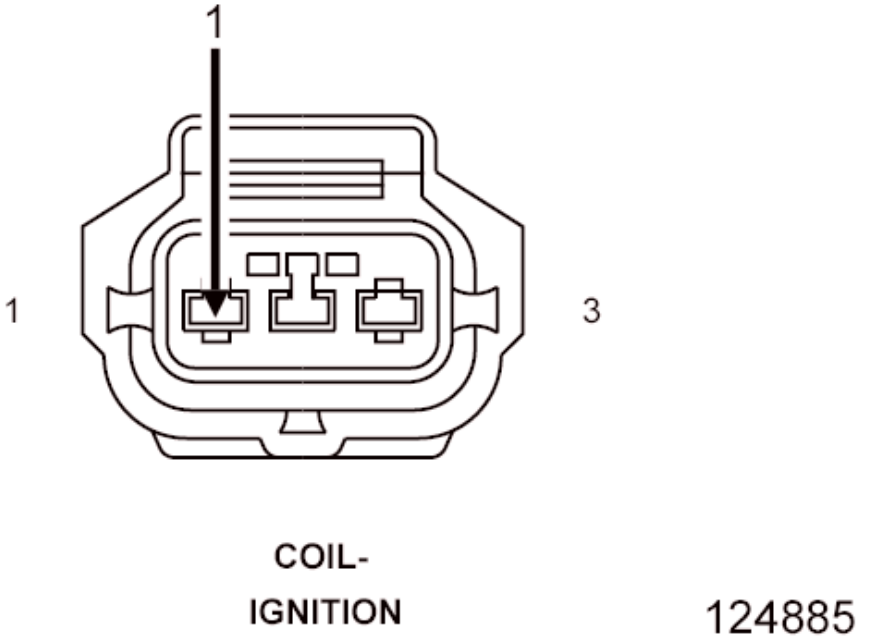

Fig. 138: Using 12-Volt Test Light Connected To 12-Volt Source To Probe Coil Control Circuit
Courtesy of CHRYSLER GROUP, LLC

WARNING: **When the engine is operating, do not stand in direct line with the fan. Do not put your hands near the pulleys, belts or fan. Do not wear loose clothing. Failure to follow these instructions may result in possible serious or fatal injury.**

1. Disconnect the No. 8 Ignition Coil harness connector.
2. Using a 12-volt test light connected to 12-volts, probe the (K98) Coil Control No. 8 circuit.
3. Crank the engine for 5 seconds while observing the test light.

NOTE: **The primary resistance of the 4.7L Ignition coil is 0.6 to 0.9 of an Ohm and the resistance of a 5.7L Ignition coil is 0.558 to 0.682 of an Ohm at 25° C (77° F).**

Does the test light brightly blink/flicker?

Yes

- Verify that there is good pin to terminal contact in the Ignition Coil and the Powertrain Control Module connectors. If OK, replace the Ignition Coil in accordance with the Service Information.
- Perform the POWERTRAIN VERIFICATION TEST. Refer to **POWERTRAIN VERIFICATION TEST** .

No

- Go To 16.

16. **(K98) COIL CONTROL NO. 8 CIRCUIT**

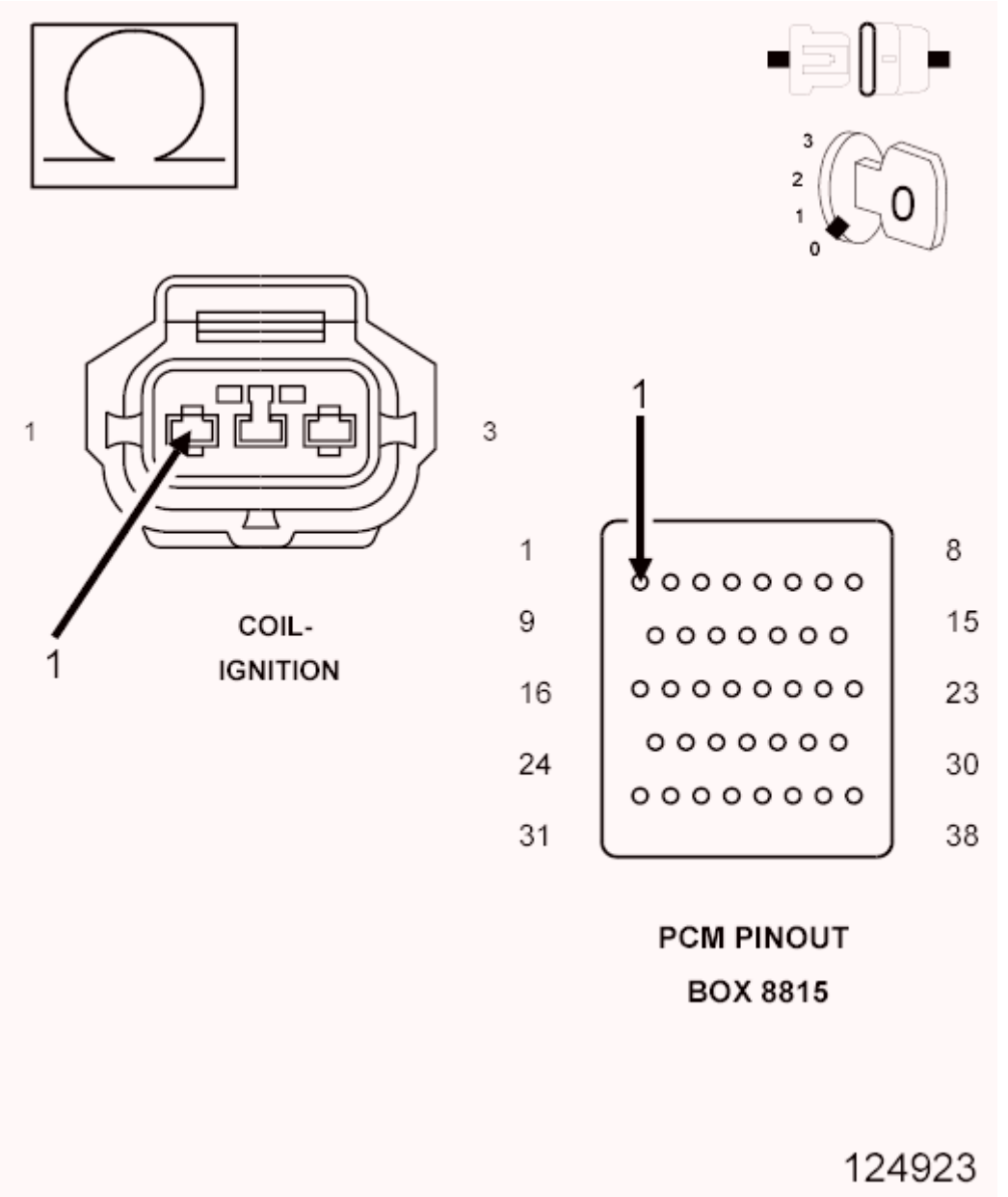

Fig. 139: Checking Coil Control No. 8 Circuit For An Open, Short To Ground, And Short To Voltage
Courtesy of CHRYSLER GROUP, LLC

1. Turn the ignition off.
2. Disconnect the C1 PCM harness connector.

CAUTION: Do not probe the PCM harness connectors. Probing the PCM harness connectors will damage the PCM terminals resulting in poor terminal to pin connection. Install the PCM Pinout Box (special tool #8815A, Kit, NGC, 38 Position) to perform diagnosis.

3. Check the (K98) Coil Control No. 8 circuit for an open, short to ground, and short to voltage.

   Was a problem found with the (K98) Coil Control No. 8 circuit?

   Yes

   - Repair the (K98) Coil Control No. 8 circuit.
   - Perform the POWERTRAIN VERIFICATION TEST. Refer to **POWERTRAIN VERIFICATION TEST** .

   No

   - Go To 17.

17. **POWERTRAIN CONTROL MODULE (PCM)**
    1. Using the wiring diagram/schematic as a guide, inspect the wiring and connectors between the related Sensor, Coil, Injector, and the Powertrain Control Module (PCM).
    2. Look for any chafed, pierced, pinched, or partially broken wires.
    3. Look for broken, bent, pushed out or corroded terminals. Verify that there is good pin to terminal contact in the related Sensors, Coils, Injectors, and the Powertrain Control Module connectors.
    4. Perform any Technical Service Bulletins that may apply.

       Were there any problems found?

       Yes

       - Repair as necessary.
       - Perform the POWERTRAIN VERIFICATION TEST. Refer to **POWERTRAIN VERIFICATION TEST** .

       No

       - Replace and program the Powertrain Control Module in accordance with the service information.
       - Perform the POWERTRAIN VERIFICATION TEST. Refer to **POWERTRAIN VERIFICATION TEST** .

P0315-NO CRANK SENSOR LEARNED

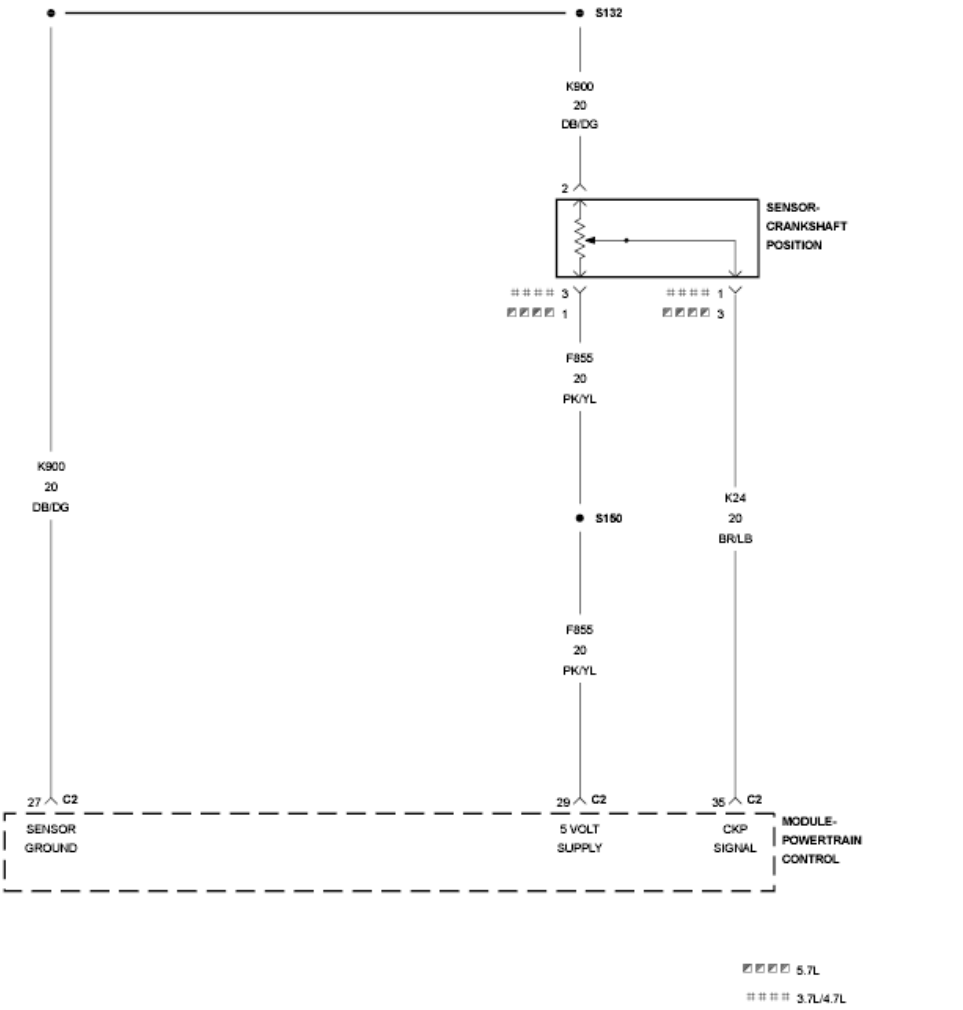

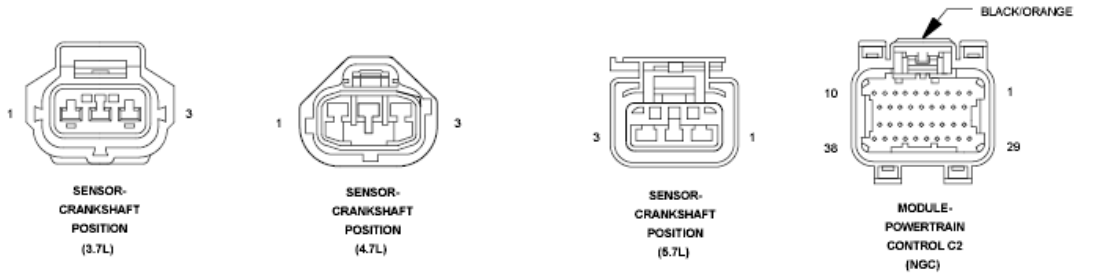

Fig. 140: Crankshaft Position Sensor Circuit Schematic
Courtesy of CHRYSLER GROUP, LLC

For a complete wiring diagram **refer to appropriate SYSTEM WIRING DIAGRAMS article** .

WHEN MONITORED:

Under closed throttle decel and A/C off. ECT above 75° C (167° F). Engine start time is greater than 50 seconds.

SET CONDITION:

The PCM measures the variation between crankshaft position reference points. The measurements are compared to an ideal reference that is stored in the PCM. If the variation exceeds a calibrated percentage, a fault is stored. One Trip Fault. Three good trips to turn off the MIL.

POSSIBLE CAUSES

Possible Causes
TONE WHEEL/PULSE RING
WIRE HARNESS
CRANKSHAFT POSITION SENSOR

Always perform the Pre-Diagnostic Troubleshooting procedure before proceeding. Refer to PRE-DIAGNOSTIC TROUBLESHOOTING PROCEDURE .

DIAGNOSTIC TEST

1. **ACTIVE DTC**
    1. Turn the ignition on.
    2. With the scan tool select View DTCs.
    3. Record the related DTC and Freeze Frame data.
    4. With the scan tool clear DTCs.
    5. Start the engine and allow it to reach operating temperature.

    WARNING: **When the engine is operating, do not stand in direct line with the fan. Do not put your hands near the pulleys, belts or fan. Do not wear loose clothing. Failure to follow these instructions may result in possible serious or fatal injury.**

    6. With the scan tool select View DTCs.

    NOTE: **If the DTC does not reset it may be necessary to test drive the vehicle.**

    Is the DTC Active at this time?

    Yes

    - Go To 2.

    No

- Perform the INTERMITTENT CONDITION Diagnostic Procedure. Refer to **INTERMITTENT CONDITION** .

2. **WIRE HARNESS INSPECTION**
    1. Turn the ignition off.
    2. Visually inspect the CKP wire harness. Look for any chafed, pierced, pinched, or partially broken wires.
    3. Verify that there is good pin to terminal contact in the Sensor and Powertrain Control Module connectors.
    4. Visually inspect the CKP wire harness connectors. Look for broken, bent, pushed out, or corroded terminals.
    5. Make sure the Crankshaft Position Sensor is properly installed and the mounting bolt(s) are torqued to the proper specification.

    Were any of the above conditions present?

    Yes

    - Repair as necessary
    - Perform the POWERTRAIN VERIFICATION TEST. Refer to **POWERTRAIN VERIFICATION TEST** .

    No

    - Go To 3.

3. **TONE WHEEL/FLEX PLATE INSPECTION**
    1. Remove the Crankshaft Position Sensor.
    2. Inspect the Tone Wheel/Flex Plate slots for damage, foreign material, or excessive movement.

    Were any problems found?

    Yes

    - Repair or replace the Tone Wheel/Flex Plate as necessary.
    - Perform the POWERTRAIN VERIFICATION TEST. Refer to **POWERTRAIN VERIFICATION TEST** .

    No

    - Go To 4.

4. **CRANKSHAFT POSITION SENSOR**

If there are no possible causes remaining, view repair.

Repair

- Verify that there is good pin to terminal contact in the Sensor and Powertrain Control Module connectors. Replace the Crank Position Sensor if no problems were found with the connectors.
- Perform the POWERTRAIN VERIFICATION TEST. Refer to **POWERTRAIN VERIFICATION TEST** .

P0325-KNOCK SENSOR 1 CIRCUIT

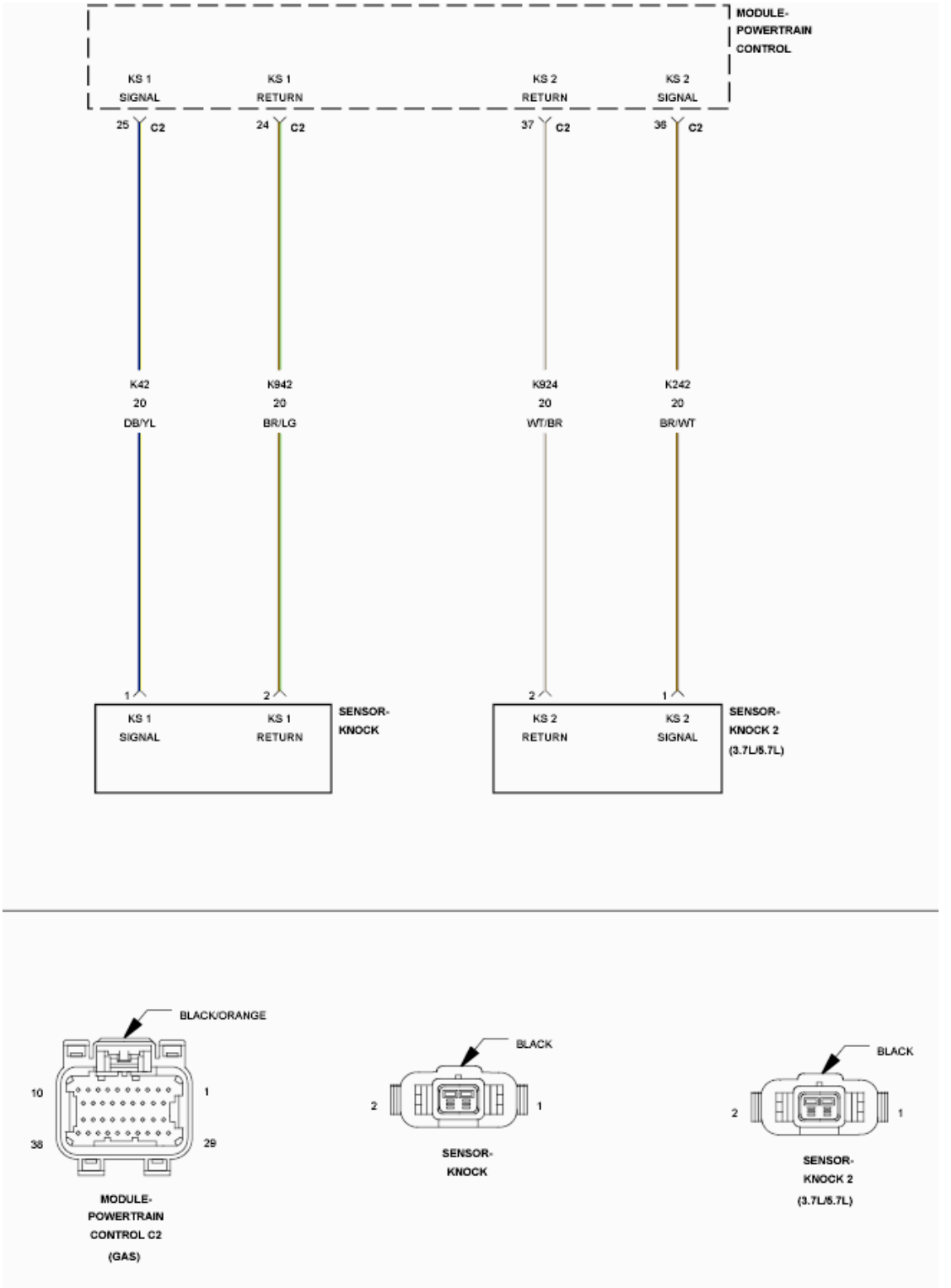

Fig. 141: Knock Sensor Circuit Schematic
Courtesy of CHRYSLER GROUP, LLC

For a complete wiring diagram, **refer to appropriate SYSTEM WIRING DIAGRAMS article** .

THEORY OF OPERATION

Knock is the spontaneous auto-ignition of the remaining fuel/air mixture in the engine combustion chamber that occurs after normal combustion has started. It can occur under extreme vehicle operating conditions such as high engine temperature, high MAP, low humidity and heavy loads to the engine. Knock is caused by excessive spark advance for the given engine operating conditions. Severe, continuous knock may be caused by carbon deposits, bad gasoline and/or low octane fuel. Avoiding light audible knock is important for customer satisfaction while preventing excessive knock is important to protect engine components. The output voltage from the knock circuit represents the strength of the engine knock and is read by the engine controller. The knock system output voltage is not zero due to engine background noise, even when knock is not present. This background noise varies from engine to engine depending on the engine age, engine temperature, engine speed, engine load and other engine operating conditions. When the engine is operated under high load conditions where knock is possible, the knock voltage is tested to decide if it exceeds the knock voltage threshold. Knock has occurred when the knock voltage is at or above this knock threshold. When knock is detected a calibrated short term knock spark retard to be subtracted from the spark advance is calculated. The amount of retarded spark advance is based off a calibrated severity of the knock event. Severity is the amount of knock voltage that is greater than the knock threshold voltage level. This retarded spark advance is used in the next ignition event to prevent further knock events. If knock continues, an additional amount of short term spark advance retard is added. The additional amount of short term spark advance retard is based off a second calibrated severity amount. When short term knock spark retard compensation continues for a calibrated length of time and exceeds a retard threshold, long term knock spark retard compensation is initiated. If knock persists, additional short term knock spark retard is used besides the long term knock spark retard. When knock stops, short term knock spark retard is eliminated, the long term knock spark retard is reduced by a calibrated amount to recover some previously retarded spark advance. This decreases spark retard to improve engine performance.

WHEN MONITORED:

This monitor runs above 2000 RPM, under open throttle conditions. The Knock diagnostic does not run at idle or during decelerations. The high voltage test runs all the times the engine is running.

SET CONDITION:

The Powertrain Control Module (PCM) detects the Knock sensor signal is above the maximum acceptable voltage. Two Trip Fault. Three good trips to turn off the MIL.

POSSIBLE CAUSES

Possible Causes
(K42) KNOCK SENSOR NO. 1 SIGNAL CIRCUIT SHORTED TO VOLTAGE
(K42) KNOCK SENSOR NO. 1 SIGNAL CIRCUIT OPEN
(K942) KNOCK SENSOR NO. 1 RETURN CIRCUIT OPEN
(K42) KNOCK SENSOR NO. 1 SIGNAL CIRCUIT SHORTED TO THE (K942) KNOCK SENSOR NO. 1 RETURN CIRCUIT
(K42) KNOCK SENSOR NO. 1 SIGNAL CIRCUIT SHORTED TO GROUND
KNOCK SENSOR
POWERTRAIN CONTROL MODULE (PCM)

Always perform the Pre-Diagnostic Troubleshooting procedure before proceeding. Refer to PRE-DIAGNOSTIC TROUBLESHOOTING PROCEDURE .

DIAGNOSTIC TEST

1. **ACTIVE DTC**
   1. Start the engine and allow it to reach normal operating temperature.

      WARNING: When the engine is operating, do not stand in direct line with the fan. Do not put your hands near the pulleys, belts or fan. Do not wear loose clothing. Failure to follow these instructions may result in possible serious or fatal injury.

      NOTE: It may be necessary to test drive the vehicle within the DTC monitoring conditions in order for this DTC to reset.

   2. With the scan tool, select View DTCs.

      Is the DTC Active or Pending at this time?

      Yes

      - Go To 2.

      No

      - Perform the INTERMITTENT CONDITION diagnostic procedure. Refer to **INTERMITTENT CONDITION** .
2. **(K42) KNOCK SENSOR NO. 1 SIGNAL SHORTED TO VOLTAGE**

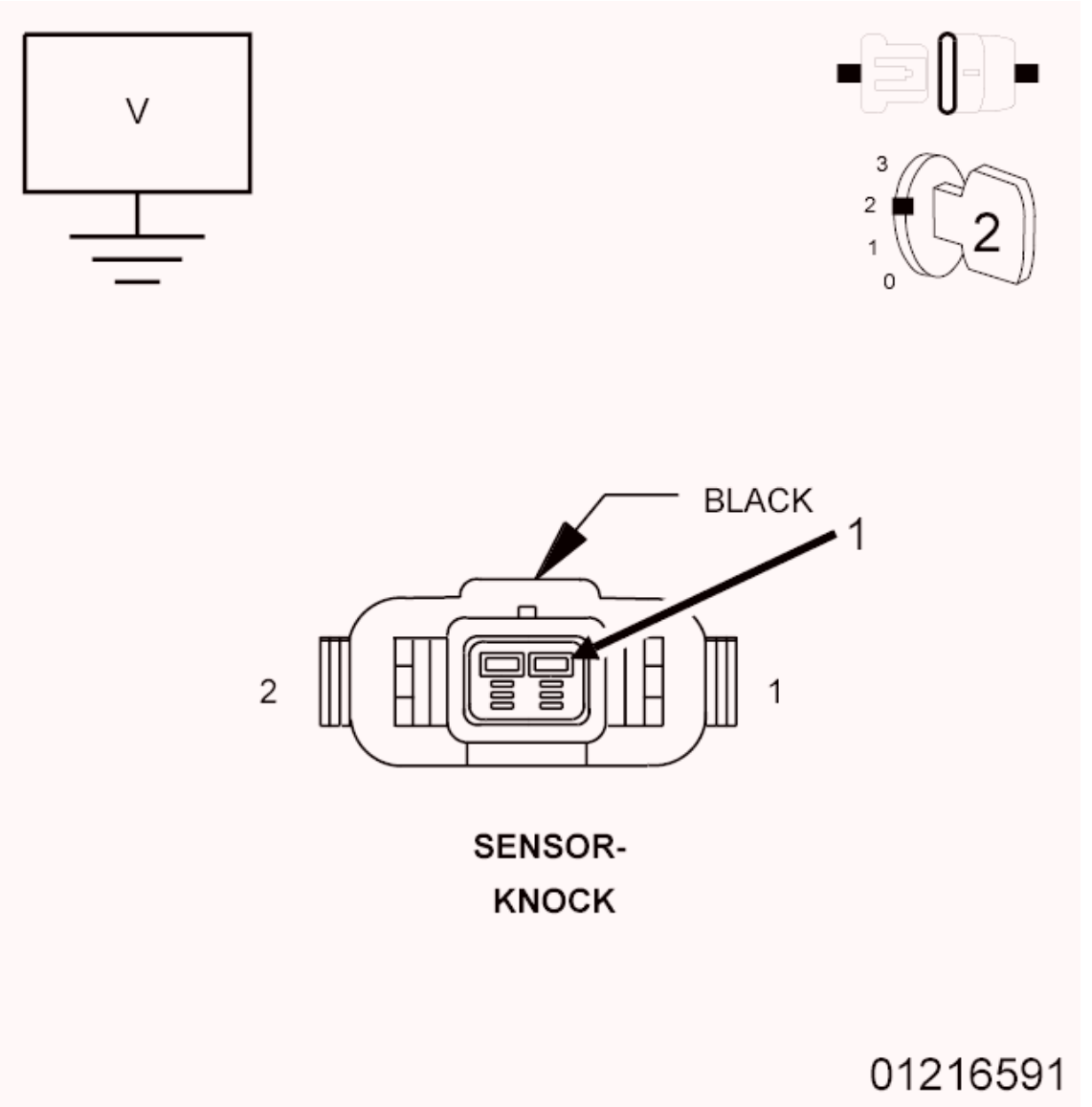

Fig. 142: Measuring Voltage On Knock Sensor Signal Circuit In Knock Sensor Harness Connector
Courtesy of CHRYSLER GROUP, LLC

1. Turn the ignition off.
2. Disconnect the Knock Sensor harness connector.
3. Disconnect the C2 PCM harness connector.
4. Ignition on, engine not running.
5. Measure the voltage on the (K42) Knock Sensor No. 1 Signal circuit in the Knock Sensor harness connector.

   Is there any voltage present?

   Yes

- Repair the short to voltage in the (K42) Knock Sensor No. 1 Signal circuit.
- Perform the POWERTRAIN VERIFICATION TEST. Refer to **POWERTRAIN VERIFICATION TEST** .

No

- Go To 3.

3. **(K42) KNOCK SENSOR NO. 1 SIGNAL CIRCUIT OPEN**

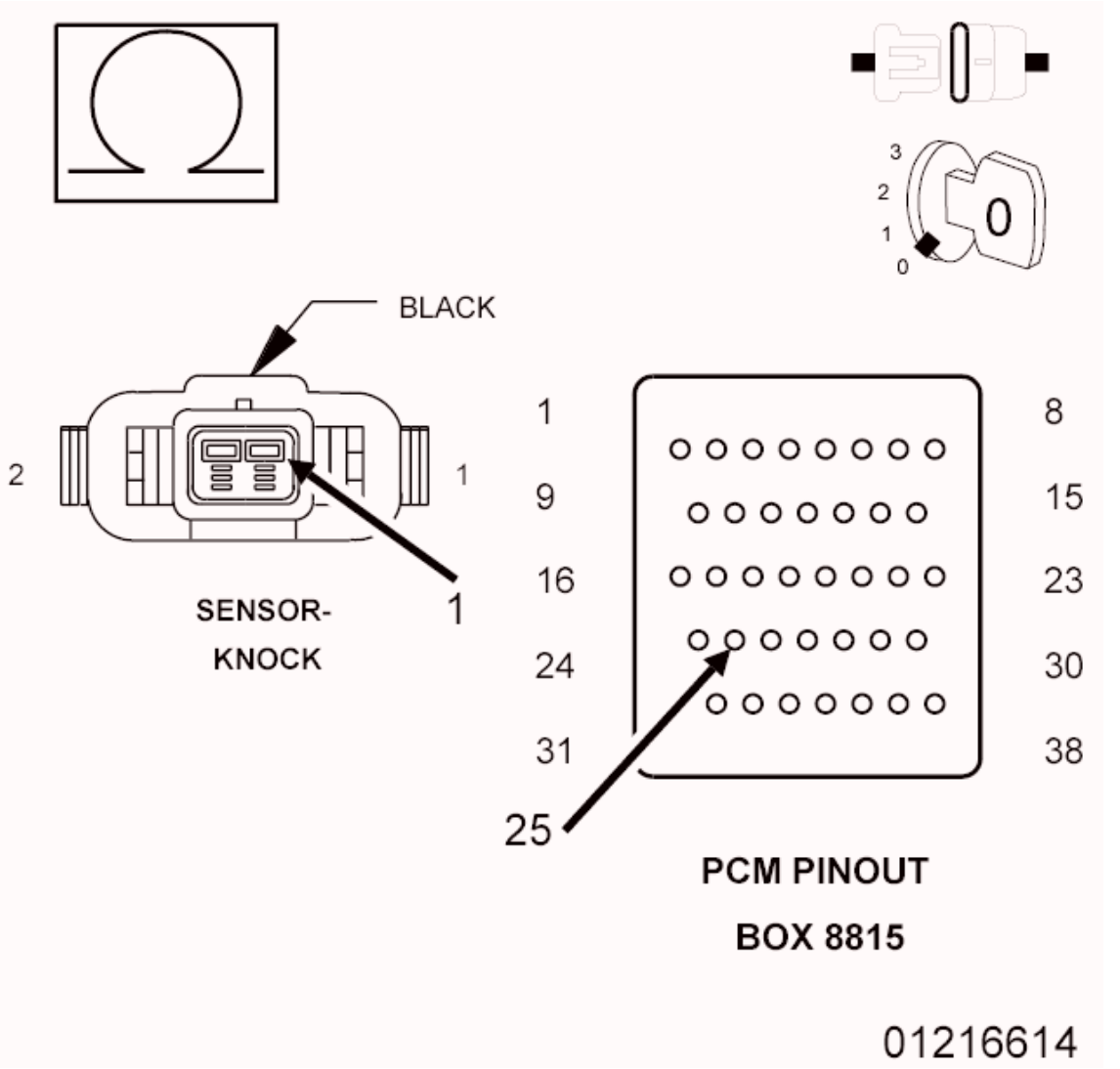

Fig. 143: Measuring Resistance Of (K42) Knock Sensor No. 1 Signal Circuit From Knock Sensor Harness Connector To Appropriate Terminal Of PCM Pinout Box 8815
Courtesy of CHRYSLER GROUP, LLC

1. Turn the ignition off.

CAUTION: Do not probe the PCM harness connectors. Probing the PCM

harness connectors will damage the PCM terminals resulting in poor terminal to pin connection. Install the PCM Pinout Box (special tool #8815A, Kit, NGC, 38 Position) to perform diagnosis.

2. Measure the resistance of the (K42) Knock Sensor No. 1 Signal circuit from the Knock Sensor harness connector to the appropriate terminal of PCM Pinout Box (special tool #8815A, Kit, NGC, 38 Position).

   Is the resistance below 5.0 Ohms?

   Yes

   - Go To 4.

   No

   - Repair the open in the (K42) Knock Sensor No. 1 Signal circuit.
   - Perform the POWERTRAIN VERIFICATION TEST. Refer to **POWERTRAIN VERIFICATION TEST** .

4. **(K942) KNOCK SENSOR NO. 1 RETURN CIRCUIT OPEN**

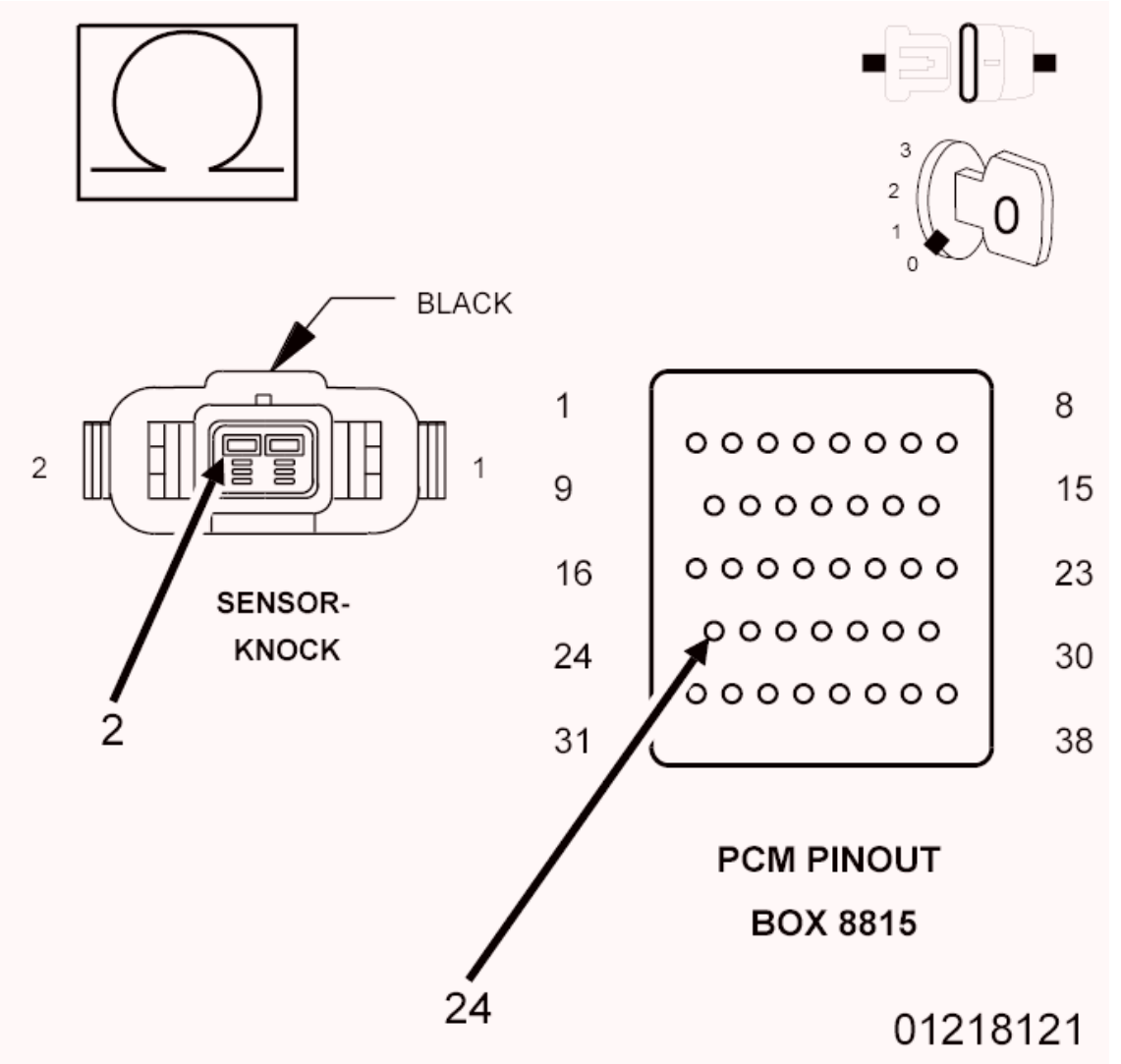

Fig. 144: Measuring Resistance Of (K942) Knock Sensor No. 1 Return Circuit From Knock Sensor Harness Connector To Appropriate Terminal Of PCM Pinout Box 8815
Courtesy of CHRYSLER GROUP, LLC

1. Measure the resistance of the (K942) Knock Sensor No. 1 Return circuit from the Knock Sensor harness connector to the appropriate terminal of PCM Pinout Box (special tool #8815A, Kit, NGC, 38 Position).

   Is the resistance below 5.0 Ohms?

   Yes

   - Go To 5.

   No

   - Repair the open in the (K942) Knock Sensor No. 1 Return circuit.

- Perform the POWERTRAIN VERIFICATION TEST. Refer to **POWERTRAIN VERIFICATION TEST** .

5. **(K42) KNOCK SENSOR NO. 1 SIGNAL SHORTED TO THE (K942) KNOCK SENSOR NO. 1 RETURN CIRCUIT**

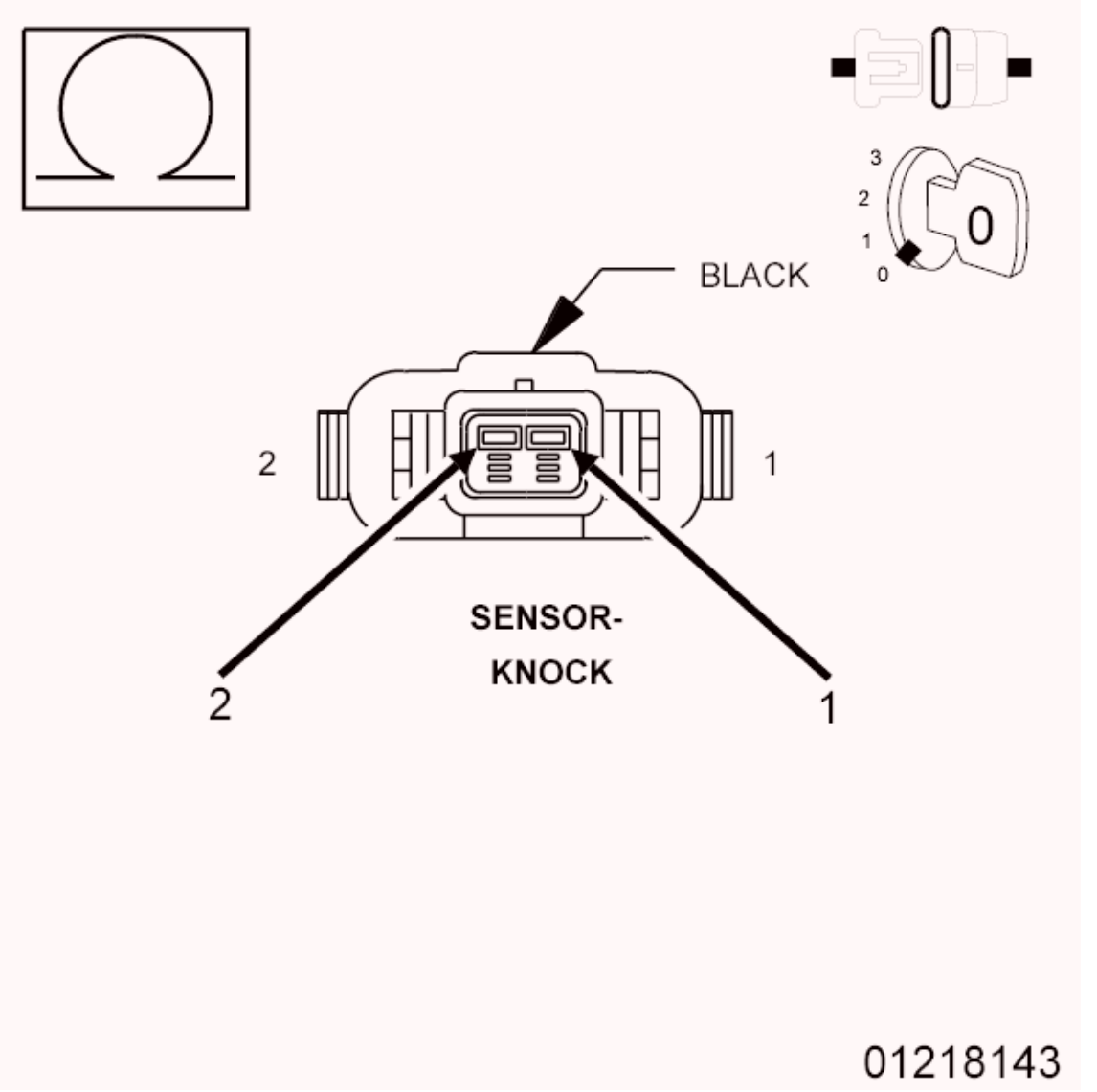

Fig. 145: Measuring Resistance Between Knock Sensor Signal Circuit And Return Circuit In Knock Sensor Harness Connector
Courtesy of CHRYSLER GROUP, LLC

1. Measure the resistance between the (K42) Knock Sensor No. 1 Signal circuit and the (K942) Knock Sensor No. 1 Return circuit in the Knock Sensor harness connector.

   Is the resistance below 100 Ohms?

   Yes

- Repair the short between the (K42) Knock Sensor No. 1 Signal circuit and the (K942) Knock Sensor No. 1 Return circuit.
- Perform the POWERTRAIN VERIFICATION TEST. Refer to **POWERTRAIN VERIFICATION TEST** .

No

- Go To 6.

6. **(K42) KNOCK SENSOR NO. 1 SIGNAL SHORTED TO GROUND**

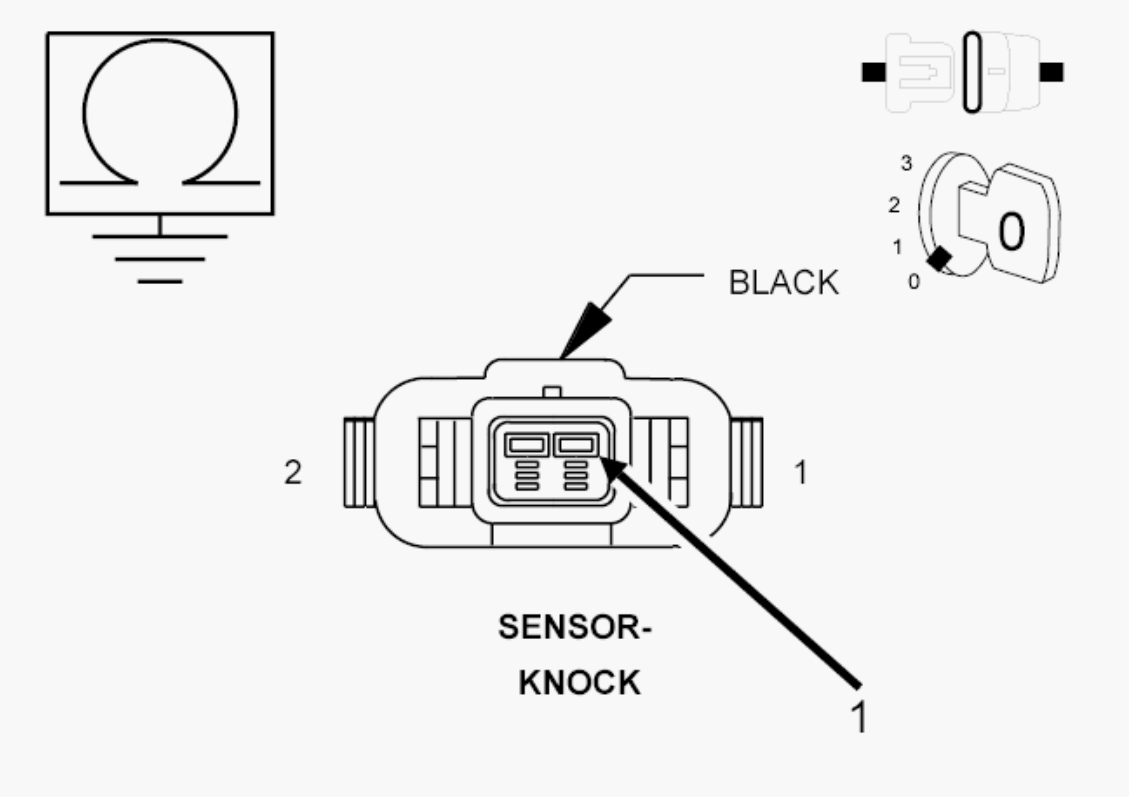

Fig. 146: Measuring Resistance Between Ground And Knock Sensor Signal Circuit In Knock Sensor Harness Connector
Courtesy of CHRYSLER GROUP, LLC

1. Measure the resistance between ground and the (K42) Knock Sensor No. 1 Signal circuit in the Knock Sensor harness connector.

   Is the resistance below 100 Ohms?

   Yes

   - Repair the short to ground in the (K42) Knock Sensor No. 1 Signal circuit.
   - Perform the POWERTRAIN VERIFICATION TEST. Refer to **POWERTRAIN VERIFICATION TEST** .

No

- Go To 7.

7. **KNOCK SENSOR 1**
    1. Turn the ignition off.
    2. Verify that there is good pin to terminal contact at the Knock Sensor and the Powertrain Control Module connectors.
    3. If no problems were found in the connectors, replace the Knock Sensor 1.
    4. Connect the Powertrain Control Module (PCM) harness connector.
    5. Turn the ignition on.
    6. With the scan tool, clear DTCs.
    7. Start the engine and allow it to reach normal operating temperature.

WARNING: When the engine is operating, do not stand in direct line with the fan. Do not put your hands near the pulleys, belts or fan. Do not wear loose clothing. Failure to follow these instructions may result in possible serious or fatal injury.

NOTE: It may be necessary to test drive the vehicle within the DTC monitoring conditions in order for this DTC to reset.

8. With the scan tool, select View DTCs.

    Did the status of this DTC change to Active?

    Yes

    - Go To 8.

    No

    - Test complete.
    - Perform the POWERTRAIN VERIFICATION TEST. Refer to **POWERTRAIN VERIFICATION TEST** .

8. **POWERTRAIN CONTROL MODULE (PCM)**
    1. Using the wiring diagram/schematic as a guide, inspect the wiring and connectors between the Knock Sensor 1 and the Powertrain Control Module (PCM).
    2. Look for any chafed, pierced, pinched or partially broken wires.
    3. Look for broken, bent, pushed out or corroded terminals.
    4. Refer to any Technical Service Bulletins that may apply.

    Were any problems found?

Yes

- Repair as necessary.
- Perform the POWERTRAIN VERIFICATION TEST. Refer to **POWERTRAIN VERIFICATION TEST** .

No

- Replace and program the Powertrain Control Module (PCM) in accordance with the Service Information.
- Perform the POWERTRAIN VERIFICATION TEST. Refer to **POWERTRAIN VERIFICATION TEST** .

P0330-KNOCK SENSOR 2 CIRCUIT

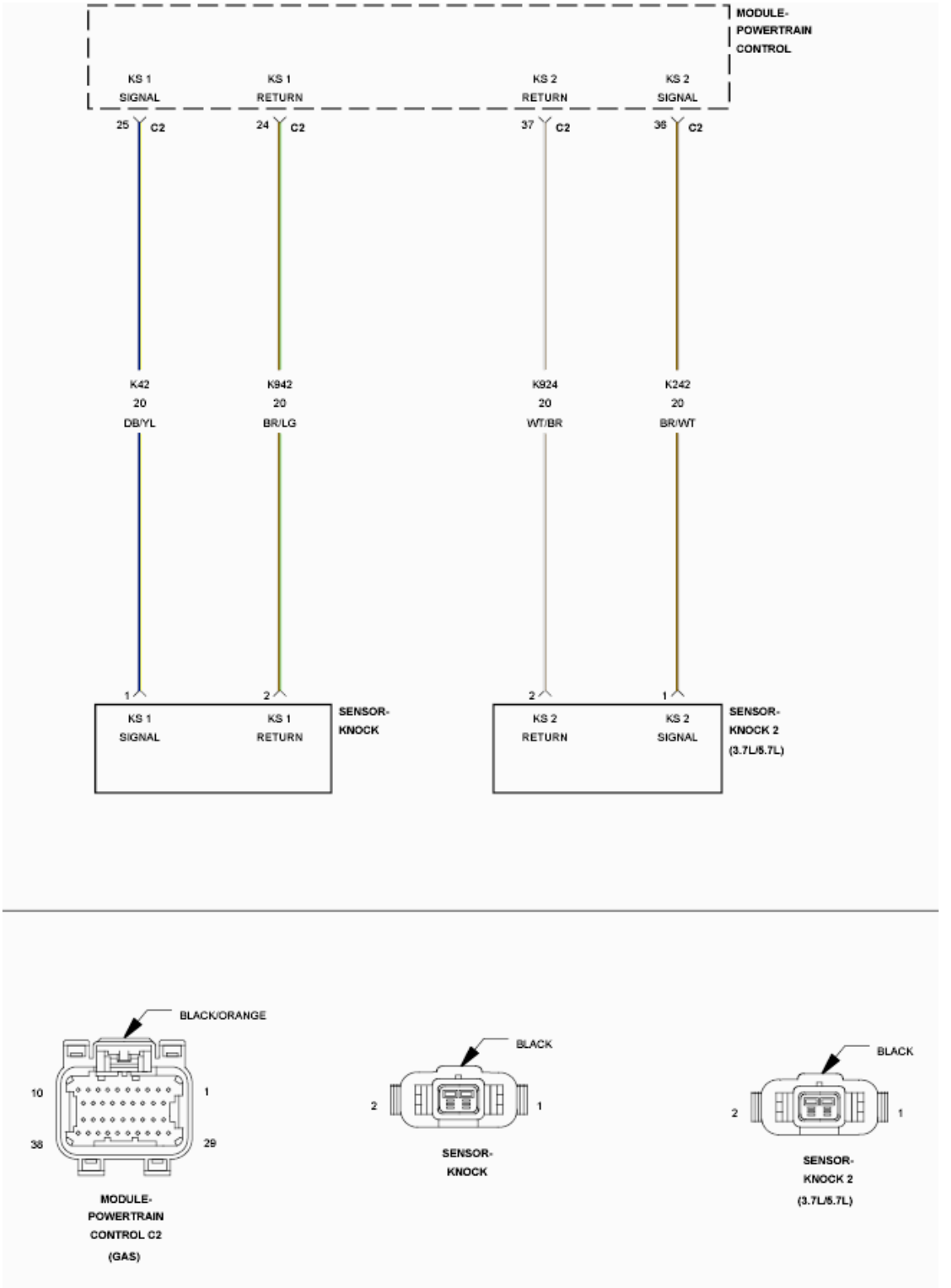

Fig. 147: Knock Sensor Circuit Schematic
Courtesy of CHRYSLER GROUP, LLC

For a complete wiring diagram, **refer to appropriate SYSTEM WIRING DIAGRAMS article** .

THEORY OF OPERATION

Knock is the spontaneous auto-ignition of the remaining fuel/air mixture in the engine combustion chamber that occurs after normal combustion has started. It can occur under extreme vehicle operating conditions such as high engine temperature, high MAP, low humidity and heavy loads to the engine. Knock is caused by excessive spark advance for the given engine operating conditions. Severe, continuous knock may be caused by carbon deposits, bad gasoline and/or low octane fuel. Avoiding light audible knock is important for customer satisfaction while preventing excessive knock is important to protect engine components. The output voltage from the knock circuit represents the strength of the engine knock and is read by the engine controller. The knock system output voltage is not zero due to engine background noise, even when knock is not present. This background noise varies from engine to engine depending on the engine age, engine temperature, engine speed, engine load and other engine operating conditions. When the engine is operated under high load conditions where knock is possible, the knock voltage is tested to decide if it exceeds the knock voltage threshold. Knock has occurred when the knock voltage is at or above this knock threshold. When knock is detected a calibrated short term knock spark retard to be subtracted from the spark advance is calculated. The amount of retarded spark advance is based off a calibrated severity of the knock event. Severity is the amount of knock voltage that is greater than the knock threshold voltage level. This retarded spark advance is used in the next ignition event to prevent further knock events. If knock continues, an additional amount of short term spark advance retard is added. The additional amount of short term spark advance retard is based off a second calibrated severity amount. When short term knock spark retard compensation continues for a calibrated length of time and exceeds a retard threshold, long term knock spark retard compensation is initiated. If knock persists, additional short term knock spark retard is used besides the long term knock spark retard. When knock stops, short term knock spark retard is eliminated, the long term knock spark retard is reduced by a calibrated amount to recover some previously retarded spark advance. This decreases spark retard to improve engine performance.

WHEN MONITORED:

This monitor runs above 2000 RPM, under open throttle conditions. The Knock diagnostic does not run at idle or during decelerations. The high voltage test runs all the times the engine is running.

SET CONDITION:

The Powertrain Control Module (PCM) detects the Knock Sensor voltage is not within the calibrated value. Two Trip Fault. Three good trips to turn off the MIL.

POSSIBLE CAUSES

Possible Causes
(K242) KNOCK SENSOR NO. 2 SIGNAL CIRCUIT SHORTED TO VOLTAGE
(K242) KNOCK SENSOR NO. 2 SIGNAL CIRCUIT OPEN
(K924) KNOCK SENSOR NO. 2 RETURN CIRCUIT OPEN
(K242) KNOCK SENSOR NO. 2 SIGNAL CIRCUIT SHORTED TO THE (K924) KNOCK SENSOR NO. 2 RETURN CIRCUIT
(K242) KNOCK SENSOR NO. 2 SIGNAL CIRCUIT SHORTED TO GROUND
KNOCK SENSOR
POWERTRAIN CONTROL MODULE (PCM)

Always perform the Pre-Diagnostic Troubleshooting procedure before proceeding. Refer to PRE-DIAGNOSTIC TROUBLESHOOTING PROCEDURE .

DIAGNOSTIC TEST

1. **ACTIVE DTC**
   1. Start the engine and allow it to reach normal operating temperature.

      WARNING: When the engine is operating, do not stand in direct line with the fan. Do not put your hands near the pulleys, belts or fan. Do not wear loose clothing. Failure to follow these instructions may result in possible serious or fatal injury.

      NOTE: It may be necessary to test drive the vehicle within the DTC monitoring conditions in order for this DTC to reset.

   2. With the scan tool, select View DTCs.

      Is the DTC Active or Pending at this time?

      Yes

      - Go To 2.

      No

      - Perform the INTERMITTENT CONDITION diagnostic procedure. Refer to **INTERMITTENT CONDITION** .
2. **(K242) KNOCK SENSOR NO. 2 SIGNAL SHORTED TO VOLTAGE**

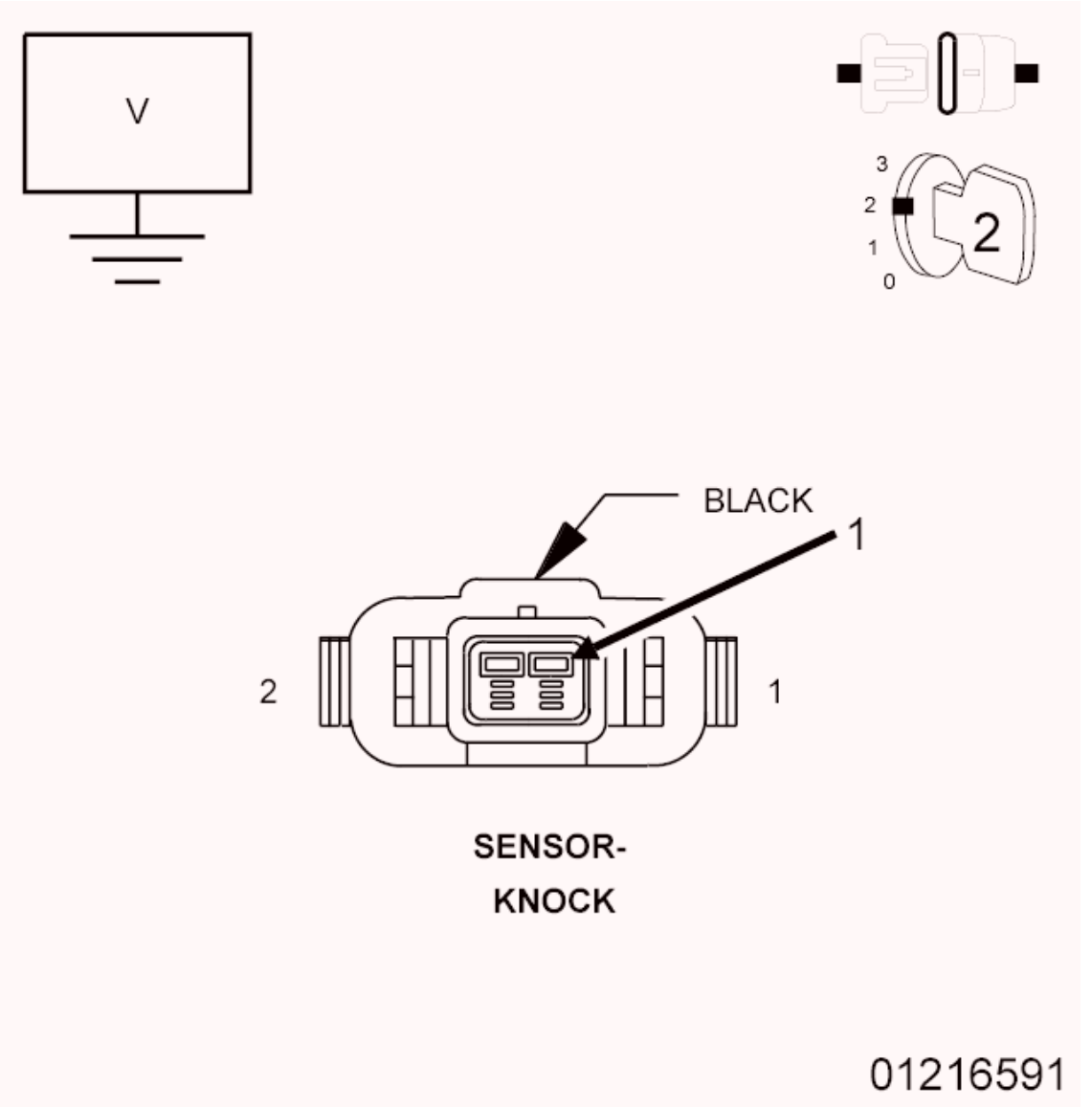

Fig. 148: Measuring Voltage On Knock Sensor Signal Circuit In Knock Sensor Harness Connector
Courtesy of CHRYSLER GROUP, LLC

1. Turn the ignition off.
2. Disconnect the No. 2 Knock Sensor harness connector.
3. Disconnect the C2 PCM harness connector.
4. Ignition on, engine not running.
5. Measure the voltage on the (K242) Knock Sensor No. 2 Signal circuit in the Knock Sensor harness connector.

   Is there any voltage present?

   Yes

- Repair the short to voltage in the (K242) Knock Sensor No. 2 Signal circuit.
- Perform the POWERTRAIN VERIFICATION TEST. Refer to **POWERTRAIN VERIFICATION TEST** .

No

- Go To 3.

3. **(K242) KNOCK SENSOR NO. 2 SIGNAL CIRCUIT OPEN**

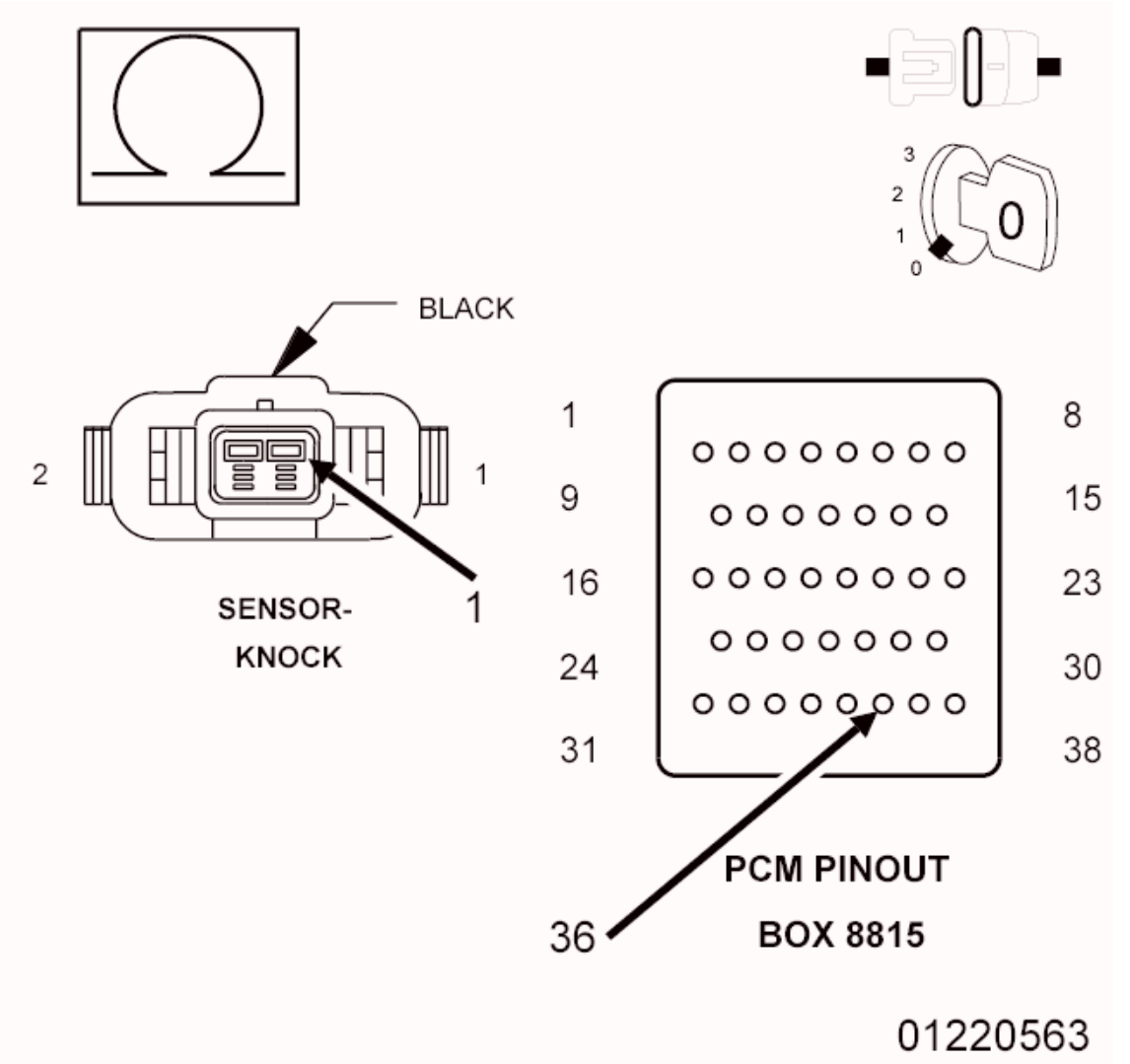

Fig. 149: Measuring Resistance Of (K242) Knock Sensor No. 2 Signal Circuit From Knock Sensor Harness Connector To Appropriate Terminal Of PCM Pinout Box 8815
Courtesy of CHRYSLER GROUP, LLC

1. Turn the ignition off.

CAUTION: Do not probe the PCM harness connectors. Probing the PCM

harness connectors will damage the PCM terminals resulting in poor terminal to pin connection. Install the PCM Pinout Box (special tool #8815A, Kit, NGC, 38 Position) to perform diagnosis.

2. Measure the resistance of the (K242) Knock Sensor No. 2 Signal circuit from the Knock Sensor harness connector to the appropriate terminal of PCM Pinout Box (special tool #8815A, Kit, NGC, 38 Position).

   Is the resistance below 5.0 Ohms?

   Yes

   - Go To 4.

   No

   - Repair the open in the (K242) Knock Sensor No. 2 Signal circuit.
   - Perform the POWERTRAIN VERIFICATION TEST. Refer to **POWERTRAIN VERIFICATION TEST** .

4. **(K924) KNOCK SENSOR NO. 2 RETURN CIRCUIT OPEN**

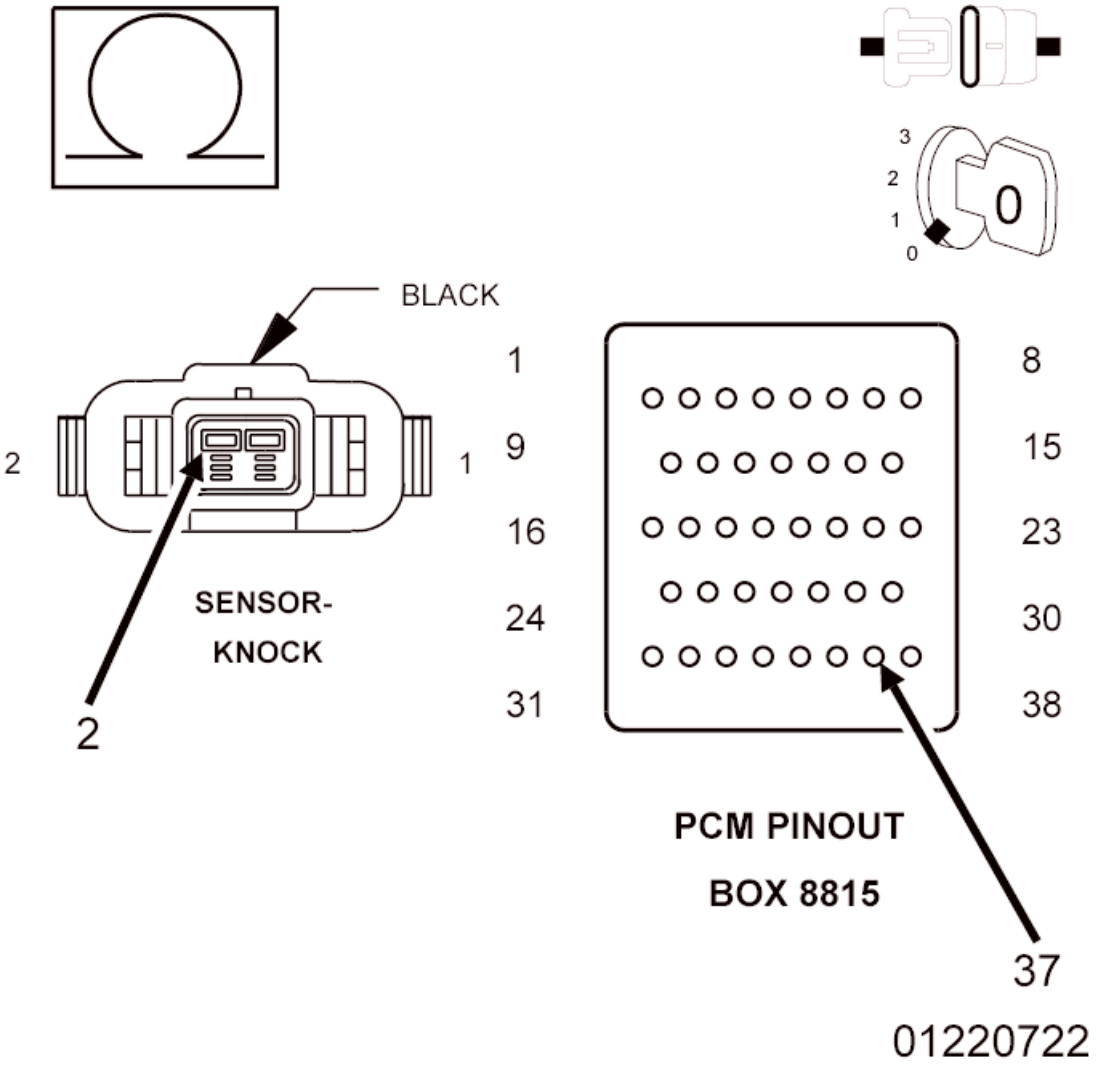

Fig. 150: Measuring Resistance Of (K924) Knock Sensor No. 2 Return Circuit From Knock Sensor Harness Connector To Appropriate Terminal Of PCM Pinout Box 8815
Courtesy of CHRYSLER GROUP, LLC

1. Measure the resistance of the (K924) Knock Sensor No. 2 Return circuit from the Knock Sensor harness connector to the appropriate terminal of PCM Pinout Box (special tool #8815A, Kit, NGC, 38 Position).

   Is the resistance below 5.0 Ohms?

   Yes

   - Go To 5.

   No

   - Repair the open in the (K924) Knock Sensor No. 2 Return circuit.

- Perform the POWERTRAIN VERIFICATION TEST. Refer to **POWERTRAIN VERIFICATION TEST** .

5. **(K242) KNOCK SENSOR NO. 2 SIGNAL SHORTED TO THE (K924) KNOCK SENSOR NO. 2 RETURN CIRCUIT**

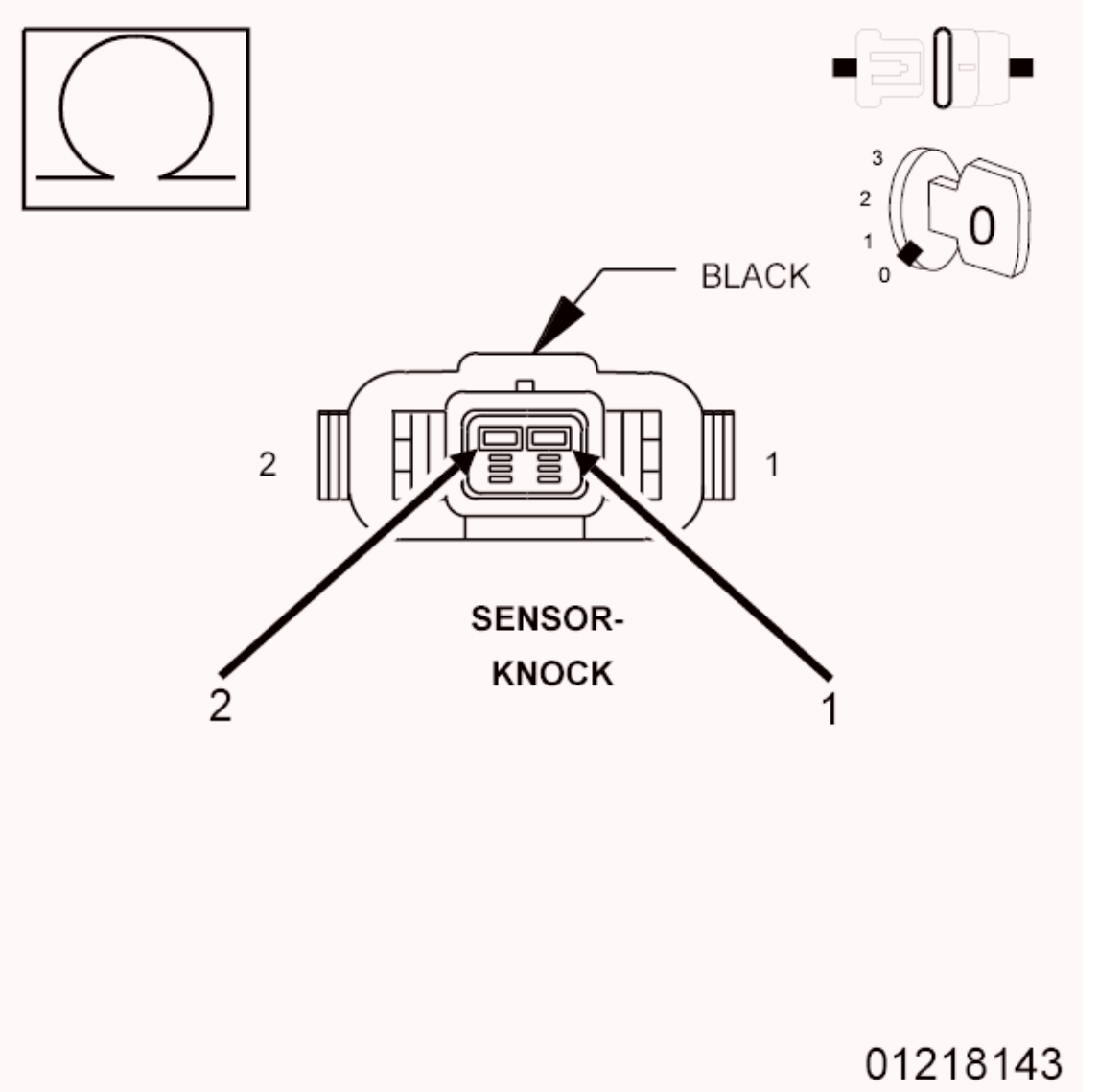

Fig. 151: Measuring Resistance Between Knock Sensor Signal Circuit And Return Circuit In Knock Sensor Harness Connector
Courtesy of CHRYSLER GROUP, LLC

1. Measure the resistance between the (K242) Knock Sensor No. 2 Signal circuit and the (K924) Knock Sensor No. 2 Return circuit in the Knock Sensor harness connector.

   Is the resistance below 100 Ohms?

   Yes

- Repair the short between the (K242) Knock Sensor No. 2 Signal circuit and the (K924) Knock Sensor No. 2 Return circuit.
- Perform the POWERTRAIN VERIFICATION TEST. Refer to **POWERTRAIN VERIFICATION TEST** .

No

- Go To 6.

6. **(K242) KNOCK SENSOR NO. 2 SIGNAL SHORTED TO GROUND**

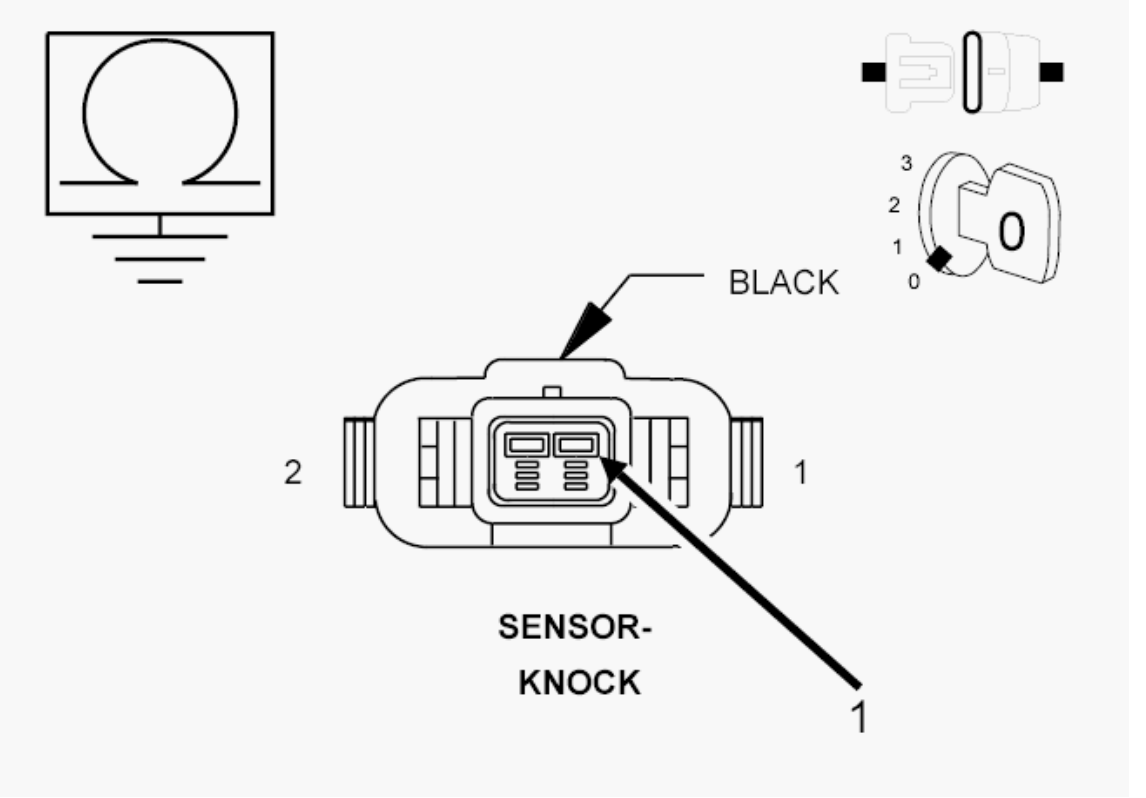

Fig. 152: Measuring Resistance Between Ground And Knock Sensor Signal Circuit In Knock Sensor Harness Connector
Courtesy of CHRYSLER GROUP, LLC

1. Measure the resistance between ground and the (K242) Knock Sensor No. 2 Signal circuit in the Knock Sensor harness connector.

   Is the resistance below 100 Ohms?

   Yes

   - Repair the short to ground in the (K242) Knock Sensor No. 2 Signal circuit.
   - Perform the POWERTRAIN VERIFICATION TEST. Refer to **POWERTRAIN VERIFICATION TEST** .

No

- Go To 7.

7. **KNOCK SENSOR 2**
    1. Turn the ignition off.
    2. Verify that there is good pin to terminal contact at the Knock Sensor and the Powertrain Control Module connectors.
    3. If no problems were found in the connectors, replace the Knock Sensor 2.
    4. Connect the Powertrain Control Module (PCM) harness connector.
    5. Turn the ignition on.
    6. With the scan tool, clear DTCs.
    7. Start the engine and allow it to reach normal operating temperature.

    WARNING: When the engine is operating, do not stand in direct line with the fan. Do not put your hands near the pulleys, belts or fan. Do not wear loose clothing. Failure to follow these instructions may result in possible serious or fatal injury.

    NOTE: It may be necessary to test drive the vehicle within the DTC monitoring conditions in order for this DTC to reset.

    8. With the scan tool, select View DTCs.

    Is the status of this DTC Active?

    Yes

    - Go To 8.

    No

    - Test complete.
    - Perform the POWERTRAIN VERIFICATION TEST. Refer to **POWERTRAIN VERIFICATION TEST** .

8. **POWERTRAIN CONTROL MODULE (PCM)**
    1. Using the wiring diagram/schematic as a guide, inspect the wiring and connectors between the Knock Sensor 2 and the Powertrain Control Module (PCM).
    2. Look for any chafed, pierced, pinched or partially broken wires.
    3. Look for broken, bent, pushed out or corroded terminals.
    4. Refer to any Technical Service Bulletins that may apply.

    Were any problems found?

Yes

- Repair as necessary.
- Perform the POWERTRAIN VERIFICATION TEST. Refer to **POWERTRAIN VERIFICATION TEST** .

No

- Replace and program the Powertrain Control Module (PCM) in accordance with the Service Information.
- Perform the POWERTRAIN VERIFICATION TEST. Refer to **POWERTRAIN VERIFICATION TEST** .

P0335-CRANKSHAFT POSITION SENSOR CIRCUIT

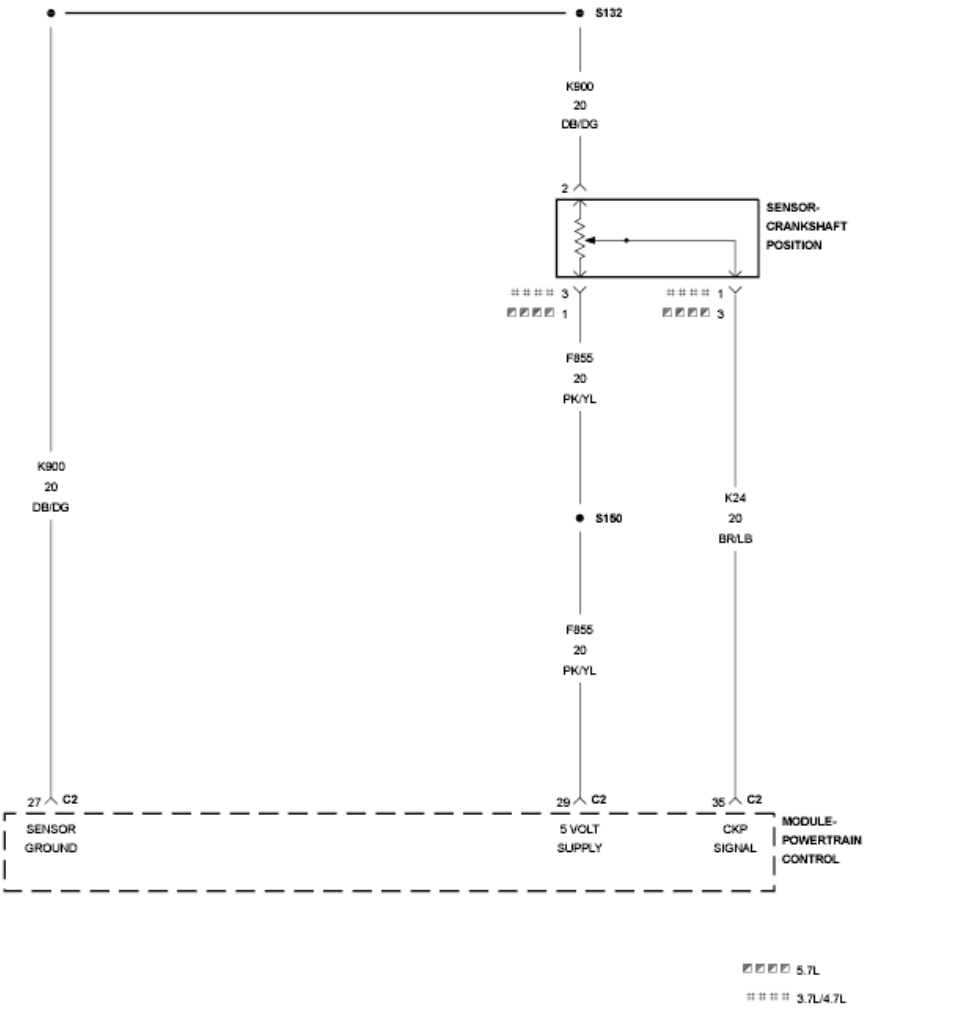

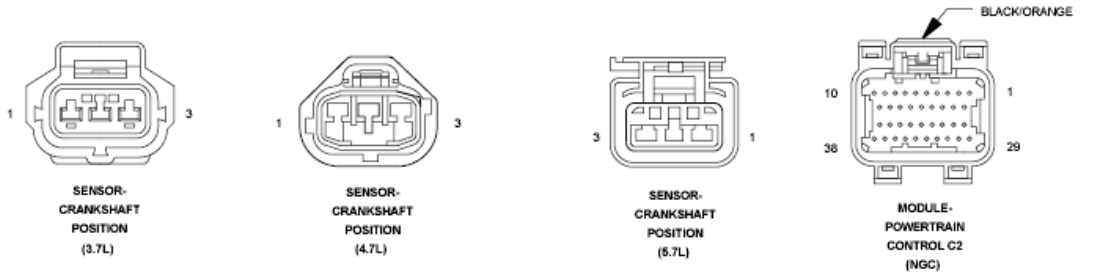

Fig. 153: Crankshaft Position Sensor Circuit Schematic
Courtesy of CHRYSLER GROUP, LLC

For a complete wiring diagram **refer to appropriate SYSTEM WIRING DIAGRAMS article** .

WHEN MONITORED:

Engine cranking.

SET CONDITION:

No CKP signal is present during engine cranking, and at least 8 camshaft position sensor signals have occurred. One Trip Fault. Three good trips to turn off the MIL.

POSSIBLE CAUSES

Possible Causes
(F855) 5-VOLT SUPPLY CIRCUIT SHORTED TO VOLTAGE
(F855) 5-VOLT SUPPLY CIRCUIT OPEN
(F855) 5-VOLT SUPPLY CIRCUIT SHORTED TO GROUND
(K24) CKP SIGNAL CIRCUIT OPEN
(K24) CKP SIGNAL CIRCUIT SHORTED TO VOLTAGE
(K24) CKP SIGNAL CIRCUIT SHORTED GROUND
(K24) CKP SIGNAL CIRCUIT SHORTED TO THE (F855) 5-VOLT SUPPLY CIRCUIT
(K900) SENSOR GROUND CIRCUIT OPEN
CRANKSHAFT POSITION SENSOR
CAMSHAFT POSITION SENSOR
POWERTRAIN CONTROL MODULE (PCM)

Always perform the Pre-Diagnostic Troubleshooting procedure before proceeding. Refer to PRE-DIAGNOSTIC TROUBLESHOOTING PROCEDURE .

DIAGNOSTIC TEST

1. **ACTIVE DTC**
    1. Turn the ignition on.
    2. With the scan tool, select View DTCs. Copy DTC and Freeze Frame information.
    3. Start the engine and allow it to reach operating temperature.

WARNING: When the engine is operating, do not stand in direct line with the fan. Do not put your hands near the pulleys, belts or fan. Do not wear loose clothing. Failure to follow these instructions may result in possible serious or fatal injury.

NOTE: Attempt to operate the vehicle under conditions similar to which the DTC was set.

NOTE: It may be necessary to test drive the vehicle within the DTC monitoring conditions in order for this DTC to set.

4. With a scan tool, select View DTCs.

Is the DTC Active at this time?

Yes

- Go To 2.

No

- Go To 14.

2. **(F855) 5-VOLT SUPPLY CIRCUIT**

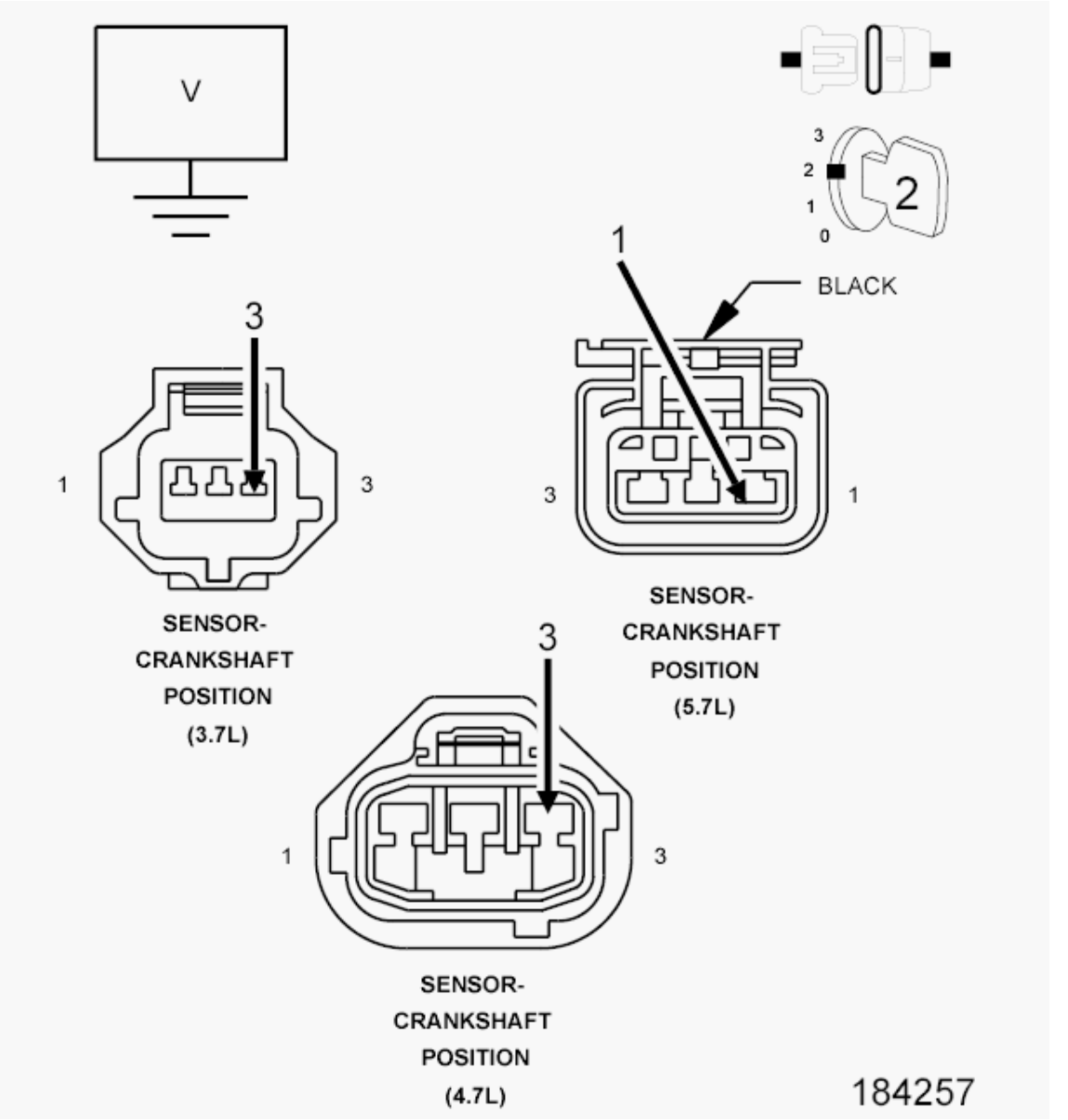

Fig. 154: Measuring Voltage On 5-Volt Supply Circuit In CKP Sensor Harness Connector
Courtesy of CHRYSLER GROUP, LLC

1. Turn the ignition off.
2. Disconnect the CKP Sensor harness connector.
3. Ignition on, engine not running.
4. Measure the voltage on the (F855) 5-volt Supply circuit in the CKP Sensor harness connector.

   Is the voltage between 4.5 and 5.2 volts?

   Yes

   - Go To 3.

   No

   - Go To 10.

3. **(K24) CKP SIGNAL CIRCUIT**

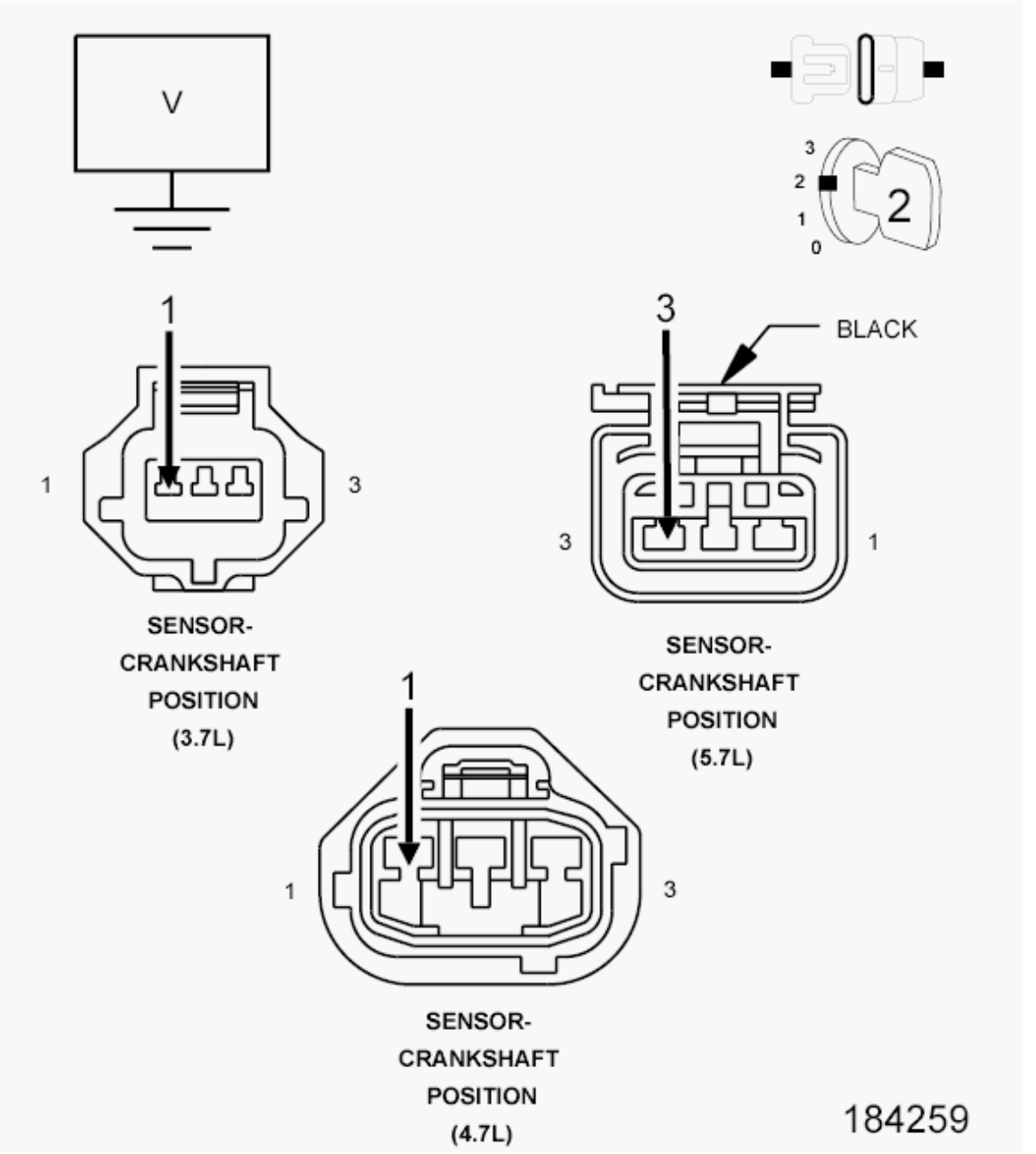

Fig. 155: Measuring Voltage On CKP Sensor Signal Circuit In Sensor Harness Connector
Courtesy of CHRYSLER GROUP, LLC

1. Measure the voltage on the (K24) CKP Signal circuit in the CKP Sensor harness connector.

NOTE: **The sensor voltage should be approximately 5.0 volts (plus or minus.1 volt) with the connector disconnected.**

Does the scan tool display the voltage as described above?

Yes

- Go To 4.

No

- Go To 7.

4. **(K900) SENSOR GROUND CIRCUIT OPEN**

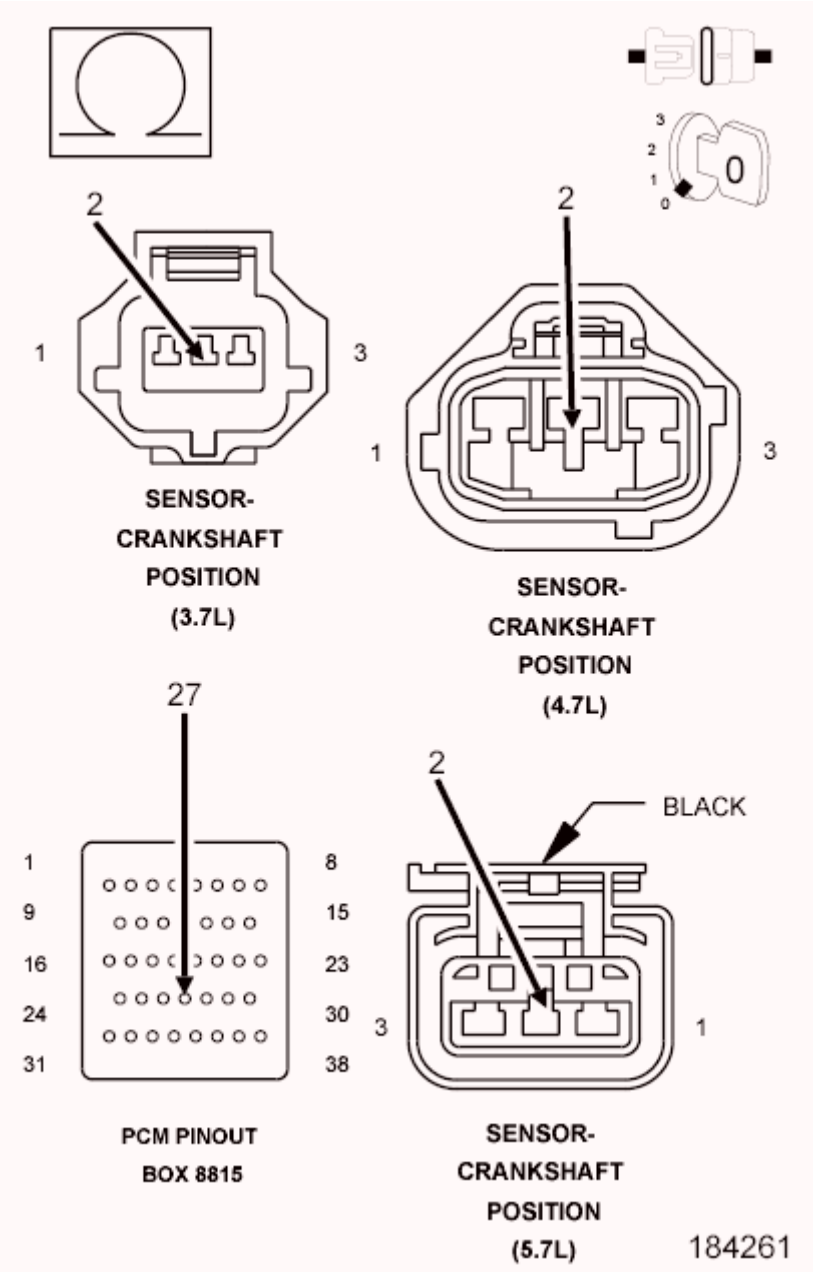

Fig. 156: Measuring Resistance Of (K900) Sensor Ground Circuit From CKP Sensor Harness Connector To Appropriate Terminal Of Special Tool #8815
Courtesy of CHRYSLER GROUP, LLC

1. Turn the ignition off.
2. Disconnect the C2 PCM harness connector.

CAUTION: Do not probe the PCM harness connectors. Probing the PCM harness connectors will damage the PCM terminals resulting in poor terminal to pin connection. Install the PCM Pinout Box (special tool #8815A, Kit, NGC, 38 Position) to perform diagnosis.

3. Measure the resistance of the (K900) Sensor ground circuit from the CKP Sensor harness connector to the appropriate terminal of special tool (special tool #8815A, Kit, NGC, 38 Position).

   Is the resistance below 5.0 ohms?

   Yes

   - Go To 5.

   No

   - Repair the open in the (K900) Sensor ground circuit.
   - Perform the POWERTRAIN VERIFICATION TEST. Refer to **POWERTRAIN VERIFICATION TEST** .

5. **(K24) CKP SIGNAL CIRCUIT SHORTED TO THE (F855) 5-VOLT SUPPLY CIRCUIT**

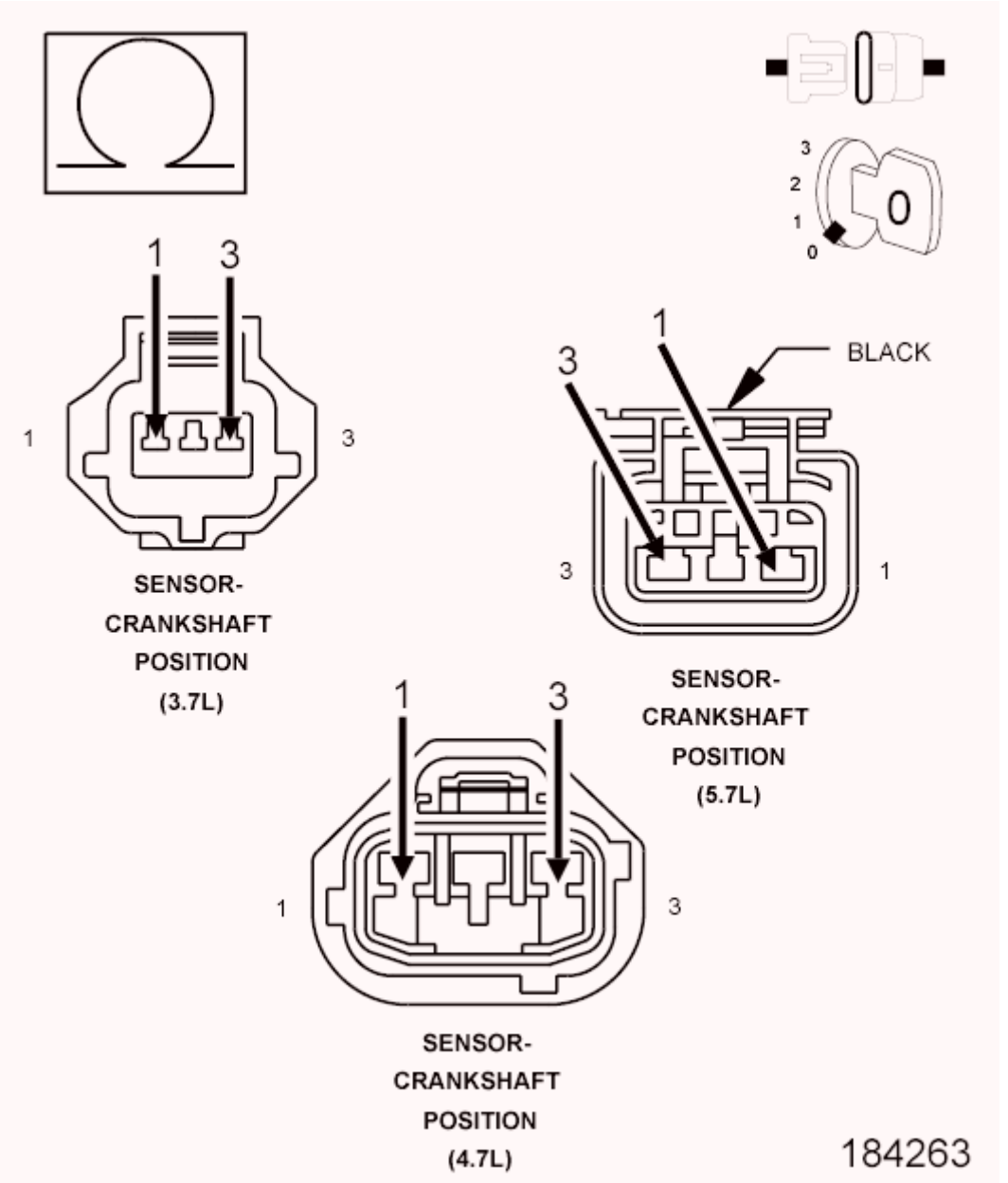

Fig. 157: Measuring Resistance Between 5-Volt Supply Circuit And Signal Circuit In CKP Sensor Harness Connector
Courtesy of CHRYSLER GROUP, LLC

1. Measure the resistance between the (K24) CKP Signal circuit and the (F855) 5-volt Supply circuit in the CKP Sensor harness connector.

   Is the resistance below 5.0 ohms?

   Yes

   - Repair the short between the (K24) CKP Signal circuit and the (F855) 5-volt Supply circuit.

- Perform the POWERTRAIN VERIFICATION TEST. Refer to **POWERTRAIN VERIFICATION TEST** .

No

- Go To 6.

6. **CRANKSHAFT POSITION SENSOR**

NOTE: **Inspect the slots on the flywheel for damage. If a problem is found repair as necessary.**

If there are no possible causes remaining, view repair.

Repair

- Verify that there is good pin to terminal contact in the Crank Position Sensor and Powertrain Control Module connectors. Replace the Crank Position Sensor if no problems were found with the connectors.
- Perform the POWERTRAIN VERIFICATION TEST. Refer to **POWERTRAIN VERIFICATION TEST** .

7. **(K24) CKP SIGNAL CIRCUIT SHORTED TO VOLTAGE**

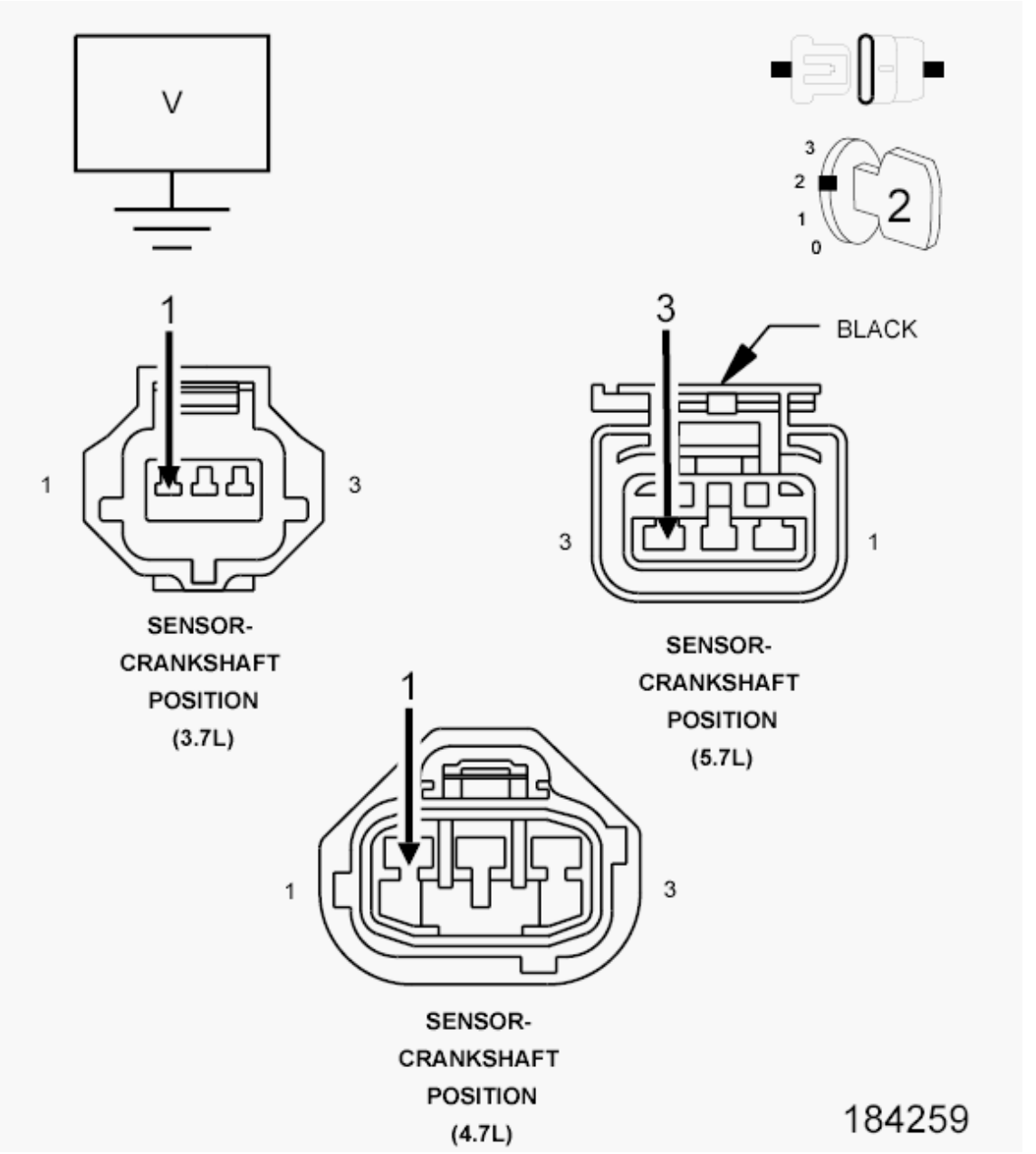

Fig. 158: Measuring Voltage On CKP Sensor Signal Circuit In Sensor Harness Connector
Courtesy of CHRYSLER GROUP, LLC

1. Turn the ignition off.
2. Disconnect the C2 PCM harness connector.
3. Ignition on, engine not running.
4. Measure the voltage on the (K24) CKP Signal circuit in the CKP Sensor harness connector.

   Is there any voltage present?

   Yes

- Repair the short to voltage in the (K24) CKP Signal circuit.
- Perform the POWERTRAIN VERIFICATION TEST. Refer to **POWERTRAIN VERIFICATION TEST** .

No

- Go To 8.

8. **(K24) CKP SIGNAL CIRCUIT OPEN**

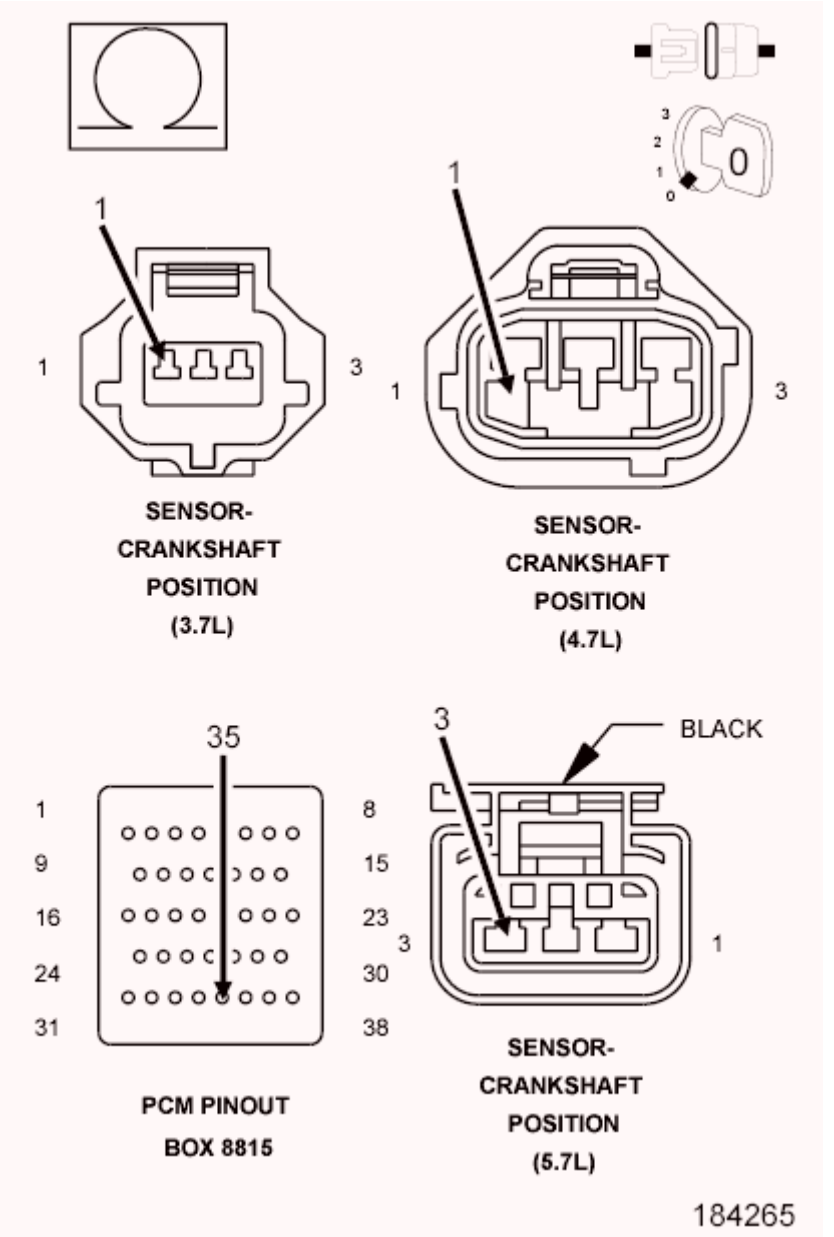

Fig. 159: Measuring Resistance In CKP Sensor Signal Circuit From Harness Connector To Appropriate Terminal Of Special Tool #8815
Courtesy of CHRYSLER GROUP, LLC

1. Turn the ignition off.

CAUTION: Do not probe the PCM harness connectors. Probing the PCM harness connectors will damage the PCM terminals resulting in poor terminal to pin connection. Install the PCM Pinout Box (special tool #8815A, Kit, NGC, 38 Position) to perform diagnosis.

2. Measure the resistance of the (K24) CKP Signal circuit from the CKP Sensor harness connector to the appropriate terminal of special tool (special tool #8815A, Kit, NGC, 38 Position).

   Is the resistance below 5.0 ohms?

   Yes

   - Go To 9.

   No

   - Repair the open in the (K24) CKP Signal circuit.
   - Perform the POWERTRAIN VERIFICATION TEST. Refer to **POWERTRAIN VERIFICATION TEST** .

9. **(K24) CKP SIGNAL CIRCUIT SHORTED TO GROUND**

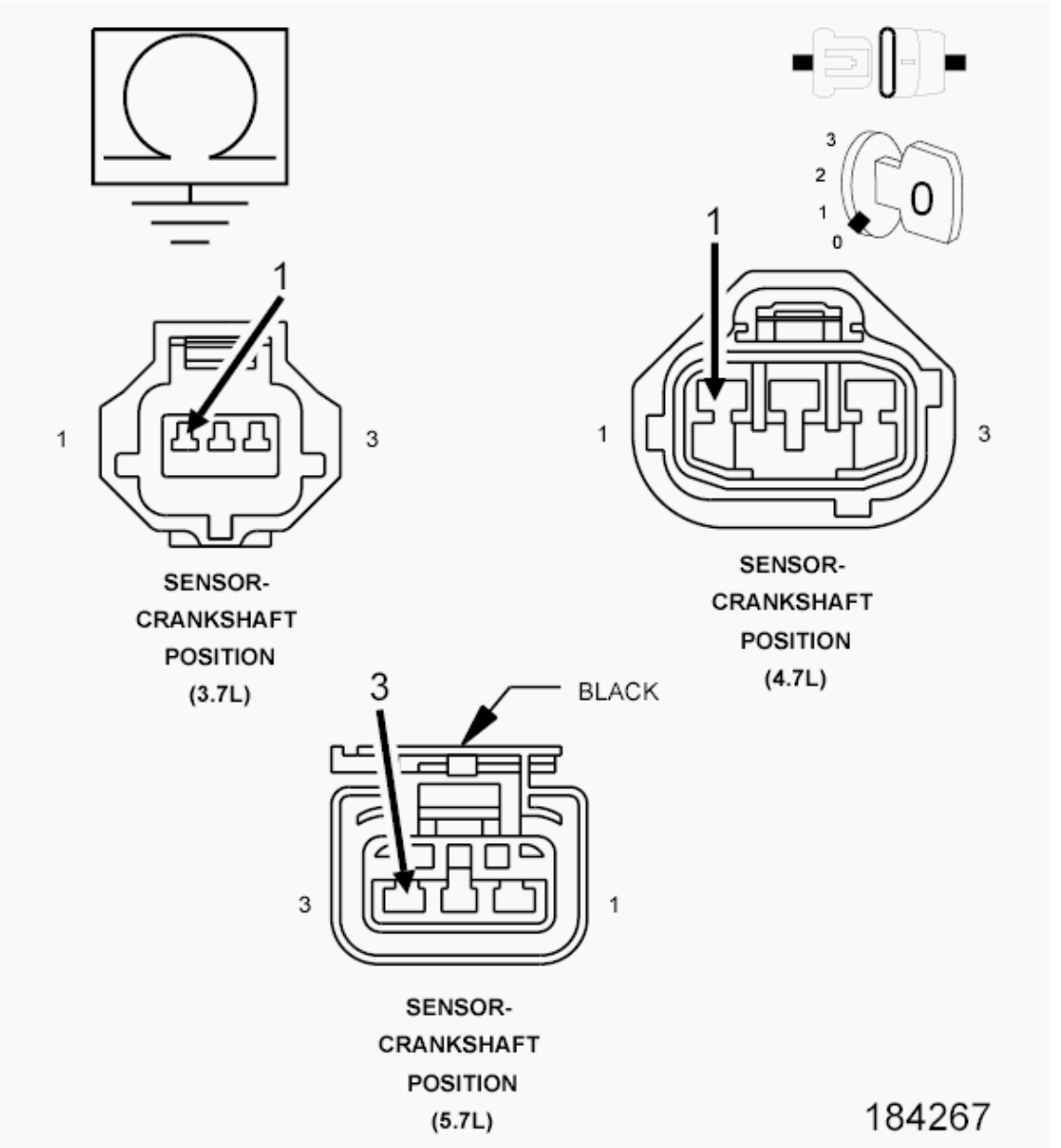

Fig. 160: Measuring Resistance Between Ground And (K24) CKP Signal Circuit In CKP Sensor Harness Connector
Courtesy of CHRYSLER GROUP, LLC

1. Measure the resistance between ground and the (K24) CKP Signal circuit in the CKP Sensor harness connector.

   Is the resistance below 5.0 ohms?

   Yes

   - Repair the short to ground in the (K24) CKP Signal circuit.
   - Perform the POWERTRAIN VERIFICATION TEST. Refer to **POWERTRAIN**

VERIFICATION TEST .

No

- Go To 13.

10. **(F855) 5-VOLT SUPPLY CIRCUIT SHORTED TO VOLTAGE**

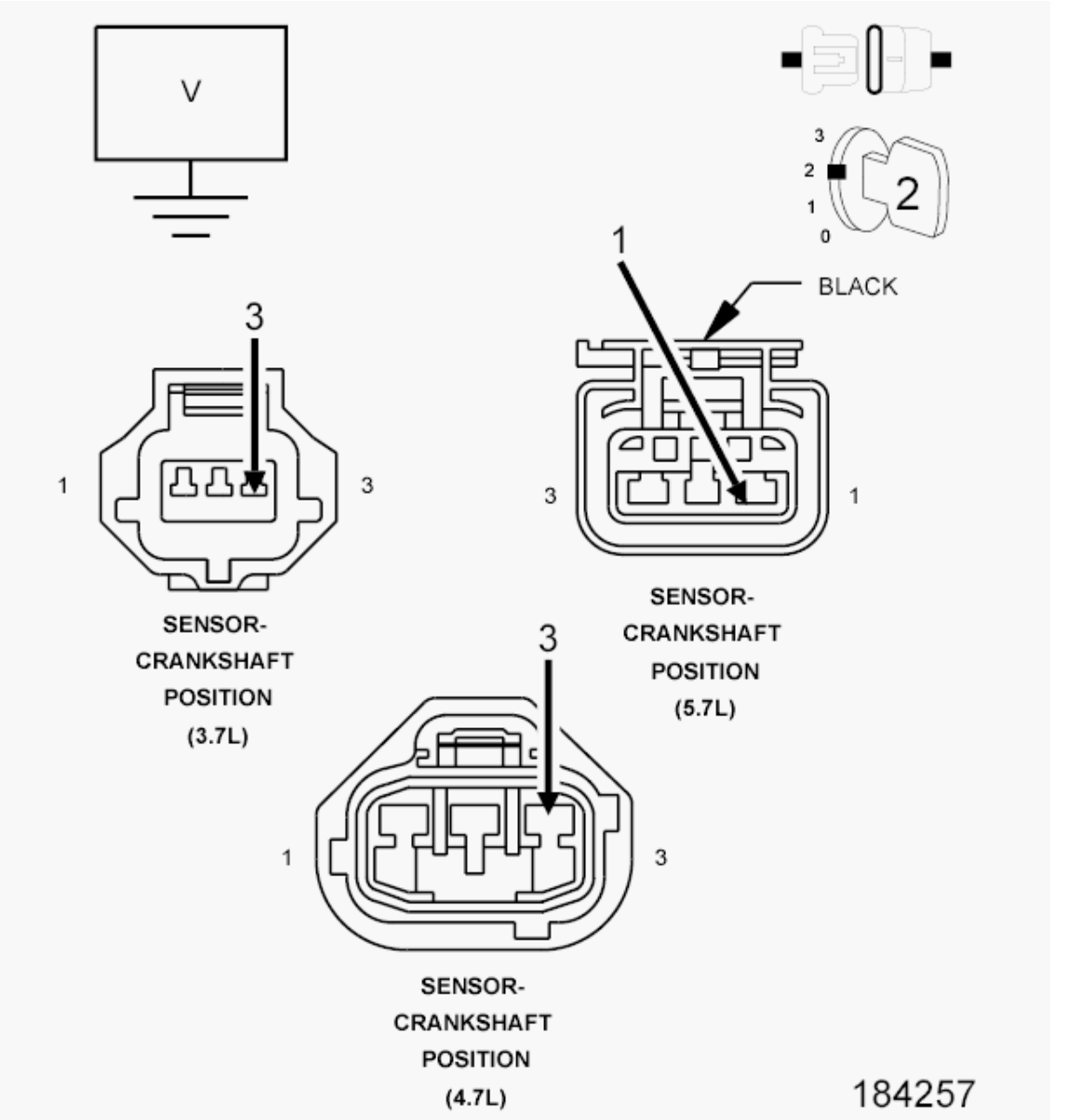

Fig. 161: Measuring Voltage On 5-Volt Supply Circuit In CKP Sensor Harness Connector
Courtesy of CHRYSLER GROUP, LLC

1. Turn the ignition off.
2. Disconnect the C2 PCM harness connector.
3. Ignition on, engine not running.

4. Measure the voltage on the (F855) 5-volt Supply circuit in the CKP Sensor harness connector.

   Is there any voltage present?

   Yes

   - Repair the short to voltage in the (F855) 5-volt Supply circuit.
   - Perform the POWERTRAIN VERIFICATION TEST. Refer to **POWERTRAIN VERIFICATION TEST** .

   No

   - Go To 11.

11. **(F855) 5-VOLT SUPPLY CIRCUIT OPEN**

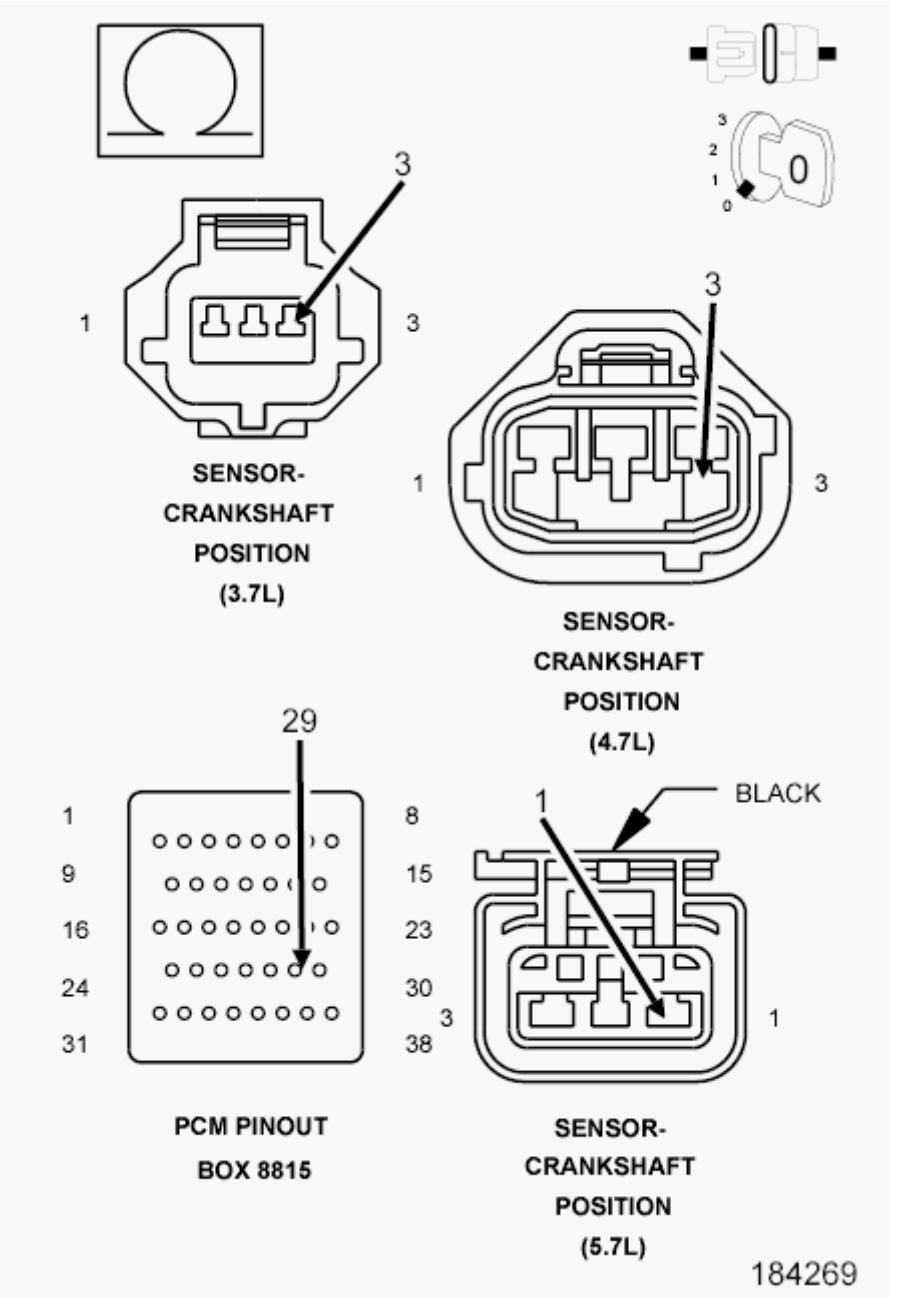

Fig. 162: Measuring Resistance Of (F855) 5-Volt Supply Circuit From CKP Sensor Harness Connector To Appropriate Terminal Of Special Tool #8815
Courtesy of CHRYSLER GROUP, LLC

1. Turn the ignition off.

CAUTION: Do not probe the PCM harness connectors. Probing the PCM harness connectors will damage the PCM terminals resulting in poor terminal to pin connection. Install the PCM Pinout Box (special tool #8815A, Kit, NGC, 38 Position) to perform diagnosis.

2. Measure the resistance of the (F855) 5-volt Supply circuit from the CKP Sensor harness connector to the appropriate terminal of special tool (special tool #8815A, Kit, NGC, 38 Position).

   Is the resistance below 5.0 ohms?

   Yes

   - Go To 12.

   No

   - Repair the open in the (F855) 5-volt Supply circuit.
   - Perform the POWERTRAIN VERIFICATION TEST. Refer to **POWERTRAIN VERIFICATION TEST** .

12. **(F855) 5-VOLT SUPPLY CIRCUIT SHORTED TO GROUND**

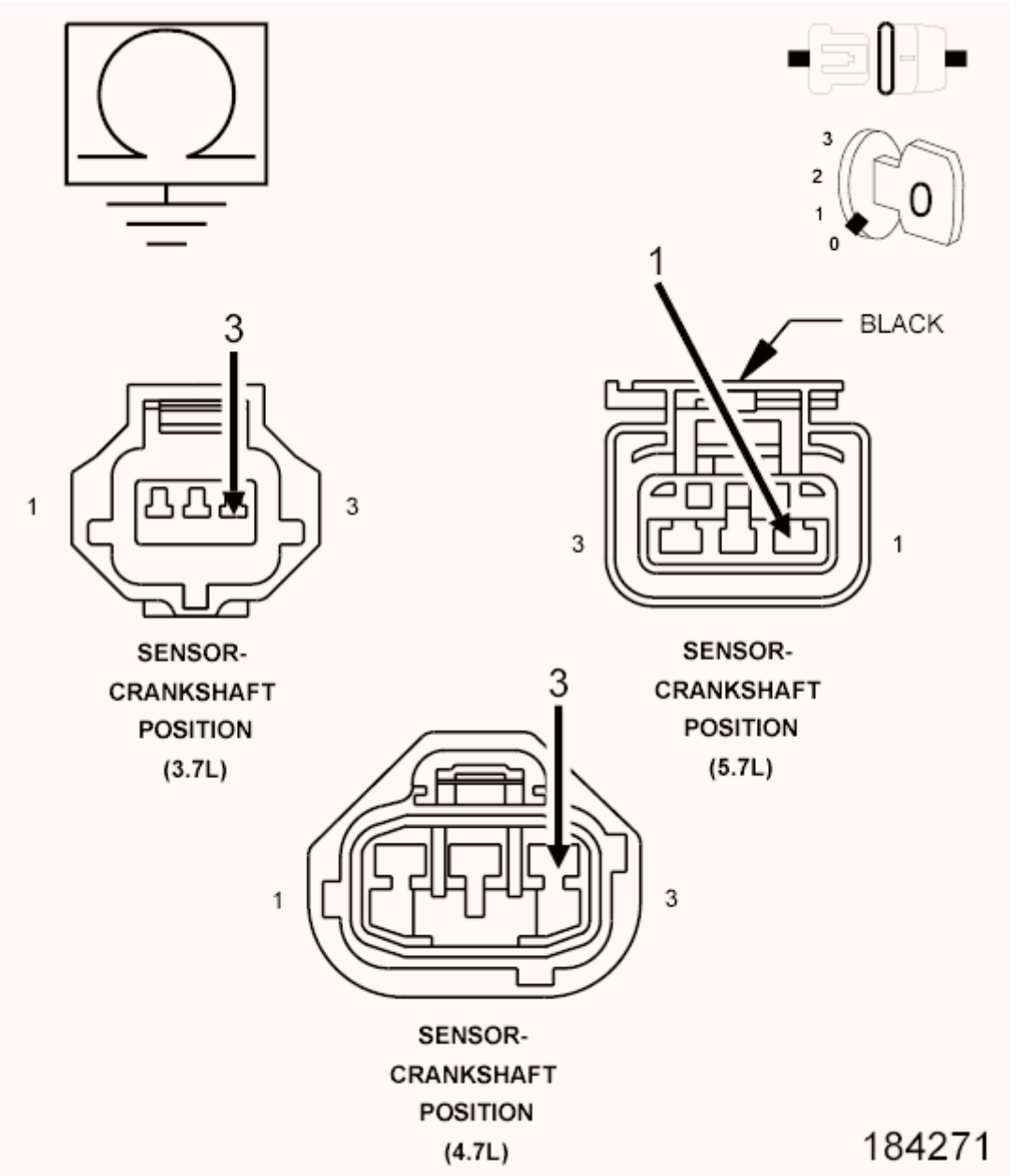

Fig. 163: Measuring Resistance Between Ground And (F855) 5-Volt Supply Circuit In CKP Sensor Harness Connector
Courtesy of CHRYSLER GROUP, LLC

1. Measure the resistance between ground and the (F855) 5-volt Supply circuit in the CKP Sensor harness connector.

   Is the resistance below 100 ohms?

   Yes

   - Repair the short to ground in the (F855) 5-volt Supply circuit.

- Perform the POWERTRAIN VERIFICATION TEST. Refer to **POWERTRAIN VERIFICATION TEST** .

No

- Go To 13.

13. **POWERTRAIN CONTROL MODULE (PCM)**
    1. Using the wiring diagram/schematic as a guide, inspect the wiring and connectors between the related Sensor and the Powertrain Control Module (PCM).
    2. Look for any chafed, pierced, pinched, or partially broken wires.
    3. Look for broken, bent, pushed out or corroded terminals. Verify that there is good pin to terminal contact in the related Sensor and the Powertrain Control Module connectors.
    4. Refer to any Technical Service Bulletins that may apply.

    Were there any problems found?

    Yes

    - Repair as necessary.
    - Perform the POWERTRAIN VERIFICATION TEST. Refer to **POWERTRAIN VERIFICATION TEST** .

    No

    - Replace and program the Powertrain Control Module per Service Information.
    - Perform the POWERTRAIN VERIFICATION TEST. Refer to **POWERTRAIN VERIFICATION TEST** .

14. **ERRATIC CKP SENSOR SIGNAL**
    1. Turn the ignition off.
    2. With a lab scope probe and the Miller special tool (special tool #6801, Terminal Probe), backprobe the (K24) CKP Signal circuit in the CKP harness connector.

    WARNING: **When the engine is operating, do not stand in direct line with the fan. Do not put your hands near the pulleys, belts or fan. Do not wear loose clothing. Failure to follow these instructions may result in possible serious or fatal injury.**

    3. Ignition on, engine not running.
    4. Wiggle the related wire harness and lightly tap on the Crank Position Sensor.
    5. Observe the lab scope screen.
    6. Look for any pulses generated by the CKP Sensor.
    7. Allow the engine to idle.
    8. Observe the lab scope screen.

Did the CKP Sensor generate any erratic pulses?

Yes

- Verify that there is good pin to terminal contact in the Crank Position Sensor and Powertrain Control Module connectors. Replace the Crank Position Sensor if no problems were found with the connectors.
- Perform the POWERTRAIN VERIFICATION TEST. Refer to **POWERTRAIN VERIFICATION TEST** .

No

- Go To 15.

15. **ERRATIC CMP SIGNAL**
    1. Turn the ignition off.
    2. With a lab scope probe and the Miller special tool (special tool #6801, Terminal Probe), backprobe the (K44) CMP Signal circuit in the CMP harness connector.

       WARNING: **When the engine is operating, do not stand in direct line with the fan. Do not put your hands near the pulleys, belts or fan. Do not wear loose clothing. Failure to follow these instructions may result in possible serious or fatal injury.**

    3. Ignition on, engine not running.
    4. Wiggle the related wire harness and lightly tap on the Cam Position Sensor.
    5. Observe the lab scope screen.
    6. Look for any pulses generated by the CMP Sensor.
    7. Allow the engine to idle.
    8. Observe the lab scope screen.

    Did the CMP Sensor generate any pulses?

    Yes

    - Verify that there is good pin to terminal contact in the CMP Sensor and Powertrain Control Module connectors. Replace the Camshaft Position Sensor if no problems were found with the connectors.
    - Perform the POWERTRAIN VERIFICATION TEST. Refer to **POWERTRAIN VERIFICATION TEST** .

    No

    - Test complete, the conditions that set this DTC are not present at this time. Perform the INTERMITTENT CONDITION Diagnostic Procedure for further assistance. Refer to

INTERMITTENT CONDITION .

P0339-CRANKSHAFT POSITION SENSOR INTERMITTENT

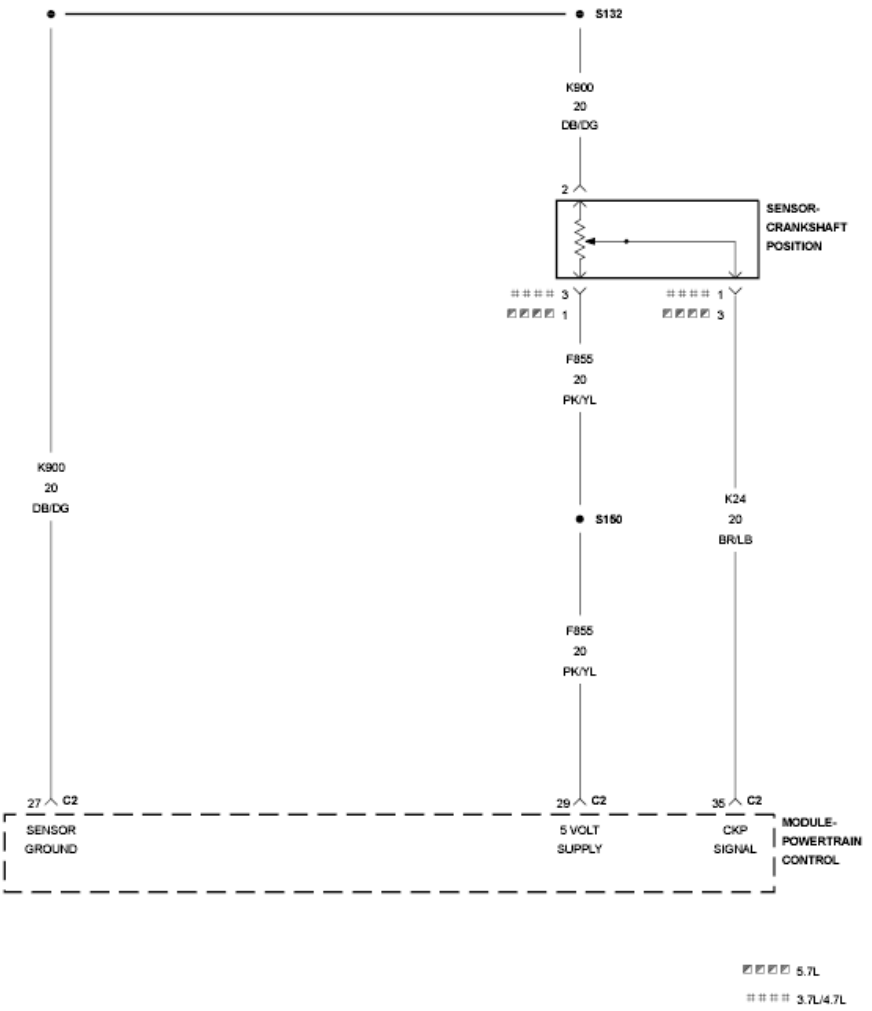

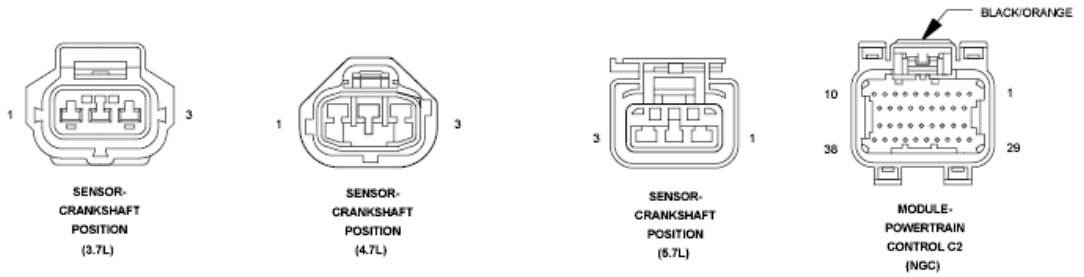

Fig. 164: Crankshaft Position Sensor Circuit Schematic
Courtesy of CHRYSLER GROUP, LLC

For a complete wiring diagram **refer to appropriate SYSTEM WIRING DIAGRAMS article** .

WHEN MONITORED:

While cranking the engine and with the engine running.

SET CONDITION:

When the CKP Sensor failure counter reaches 20. One Trip Fault. Three good trips to turn off the MIL.

POSSIBLE CAUSES

Possible Causes
(F855) 5-VOLT SUPPLY CIRCUIT OPEN
(F855) 5-VOLT SUPPLY CIRCUIT SHORTED TO GROUND
(K24) CKP SIGNAL CIRCUIT SHORTED TO VOLTAGE
(K24) CKP SIGNAL CIRCUIT OPEN
(K24) CKP SIGNAL CIRCUIT SHORTED TO GROUND
(K24) CKP SIGNAL CIRCUIT SHORTED TO THE (F855) 5-VOLT SUPPLY CIRCUIT
CRANKSHAFT POSITION SENSOR
TONE WHEEL/PULSE RING
POWERTRAIN CONTROL MODULE (PCM)

Always perform the Pre-Diagnostic Troubleshooting procedure before proceeding. Refer to PRE-DIAGNOSTIC TROUBLESHOOTING PROCEDURE .

DIAGNOSTIC TEST

1. **ACTIVE DTC**
    1. Turn the ignition on.
    2. With the scan tool, select View DTCs. Copy DTC and Freeze Frame information.
    3. Start the engine and allow it to reach operating temperature.

WARNING: When the engine is operating, do not stand in direct line with the fan. Do not put your hands near the pulleys, belts or fan. Do not wear loose clothing. Failure to follow these instructions may result in possible serious or fatal injury.

NOTE: Attempt to operate the vehicle under conditions similar to which the DTC was set.

NOTE: It may be necessary to test drive the vehicle within the DTC monitoring conditions in order for this DTC to set.

4. With a scan tool, select View DTCs.

   Is the DTC Active at this time?

   Yes

   - Go To 2.

   No

   - Perform the INTERMITTENT CONDITION Diagnostic Procedure. Refer to **INTERMITTENT CONDITION** .

2. **CHECKING CRANKSHAFT POSITION SENSOR SIGNAL WITH A LAB SCOPE**
   1. Turn the ignition off.
   2. With a lab scope probe and the Miller special tool (special tool #6801, Terminal Probe), backprobe the (K24) CKP Signal circuit in the Sensor harness connector.

      WARNING: **When the engine is operating, do not stand in direct line with the fan. Do not put your hands near the pulleys, belts or fan. Do not wear loose clothing. Failure to follow these instructions may result in possible serious or fatal injury.**

   3. Ignition on, engine not running.
   4. Observe the lab scope screen.
   5. Start the engine.
   6. Observe the lab scope screen.

      Are there any irregular or missing signals?

      Yes

      - Go To 3.

      No

      - Go To 8.

3. **WIRE HARNESS INSPECTION**
   1. Turn the ignition off.
   2. Visually inspect the related wire harness including the ground circuit. Look for any chafed, pierced, pinched, or partially broken wires.
   3. Visually inspect the related wire harness connectors. Look for broken, bent, pushed out, or corroded terminals.
   4. Verify that there is good pin to terminal contact in the Crankshaft Position Sensor and the Powertrain Control Module connectors.

5. Make sure the Crankshaft Position Sensor and the Camshaft Position Sensor are properly installed and the mounting bolt(s) are torqued to the proper specification.
6. Refer to any TSBs that may apply.

   Were any of the above conditions present?

   Yes

   - Repair as necessary.
   - Perform the POWERTRAIN VERIFICATION TEST. Refer to **POWERTRAIN VERIFICATION TEST** .

   No

   - Go To 4.

4. **(F855) 5-VOLT SUPPLY CIRCUIT OPEN OR SHORTED TO GROUND**

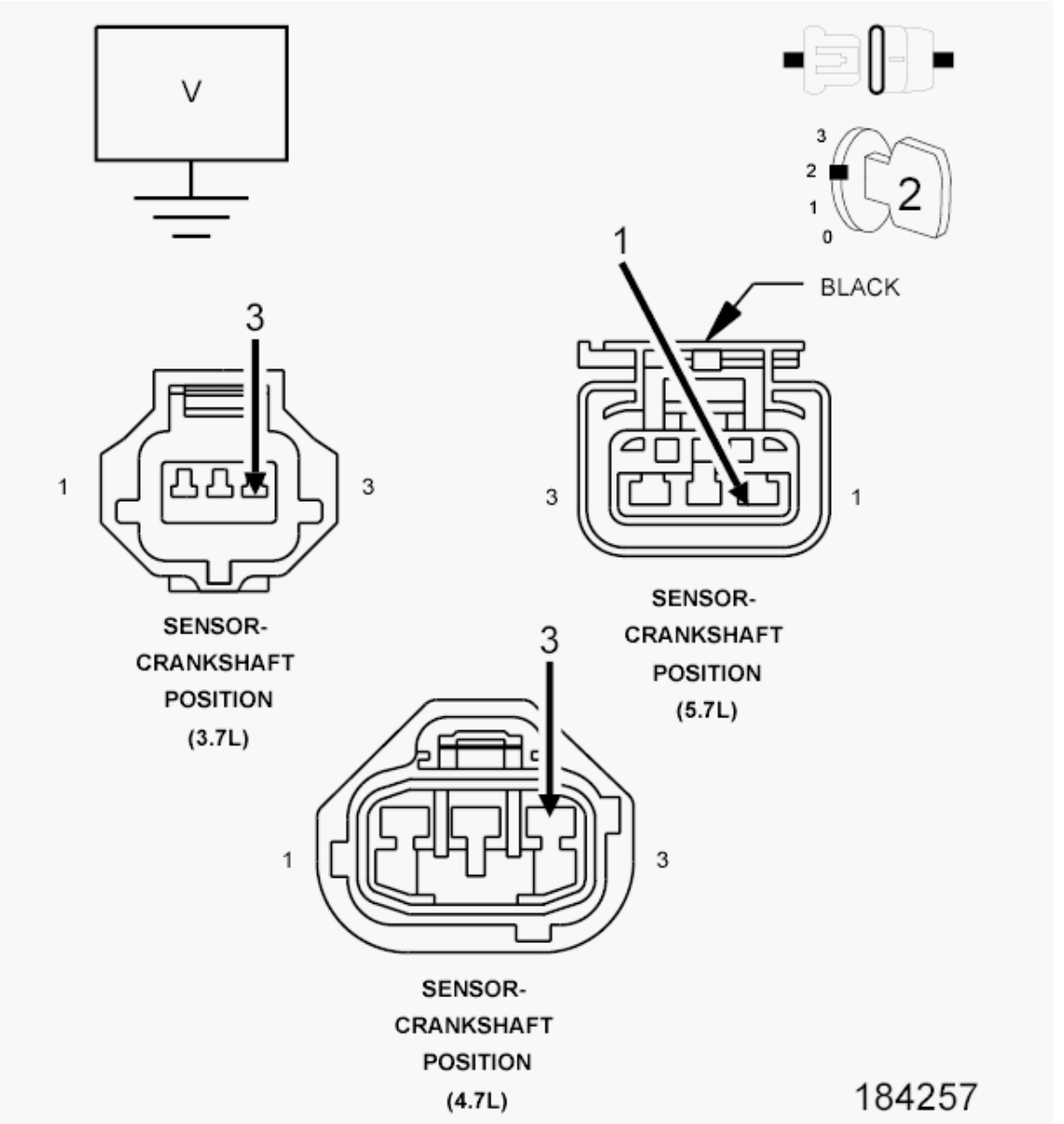

Fig. 165: Measuring Voltage On 5-Volt Supply Circuit In CKP Sensor Harness Connector
Courtesy of CHRYSLER GROUP, LLC

1. Disconnect the CKP Sensor connector.
2. Ignition on, engine not running.
3. Measure the voltage on the (F855) 5-volt Supply circuit in the Sensor harness connector.

   Is the voltage between 4.5 and 5.2 volts?

   Yes

   - Go To 5.

No

- Repair the open or short to ground in the (F855) 5-volt Supply circuit. Use Miller special tool (special tool #8815A, Kit, NGC, 38 Position) when checking for an open circuit to prevent PCM harness connector terminal damage.
- Perform the POWERTRAIN VERIFICATION TEST. Refer to **POWERTRAIN VERIFICATION TEST** .

5. **TONE WHEEL/FLEX PLATE INSPECTION**
   1. Turn the ignition off.
   2. Carefully disconnect the Negative Battery (Ground) cable.
   3. Remove the Crankshaft Position Sensor.
   4. Inspect the Tone Wheel/Flex Plate slots for damage, foreign material, or excessive movement.

      Were any problems found?

      Yes

      - Repair or replace the Tone Wheel/Flex Plate as necessary.
      - Perform the POWERTRAIN VERIFICATION TEST. Refer to **POWERTRAIN VERIFICATION TEST** .

      No

      - Go To 6.

6. **CHECKING CAMSHAFT POSITION SENSOR SIGNAL WITH A LAB SCOPE**
   1. Install the CKP Sensor and connect the battery cable.

      NOTE: An intermittent condition in the Cam Position Sensor can cause the P0339 to set.

   2. With the a lab scope probe and the Miller special tool (special tool #6801, Terminal Probe), backprobe the (K44) CMP Signal circuit in the Sensor harness connector.

      WARNING: When the engine is operating, do not stand in direct line with the fan. Do not put your hands near the pulleys, belts or fan. Do not wear loose clothing. Failure to follow these instructions may result in possible serious or fatal injury.

   3. Ignition on, engine not running.
   4. Wiggle the related wire harness and lightly tap on the Cam Position Sensor.
   5. Observe the lab scope screen.
   6. Start the engine.
   7. Observe the lab scope screen.

Are there any irregular or missing signals?

Yes

- Verify that there is good pin to terminal contact in the CMP Sensor and Powertrain Control Module connectors. Replace the Camshaft Position Sensor if no problems were found with the connectors.
- Perform the POWERTRAIN VERIFICATION TEST. Refer to **POWERTRAIN VERIFICATION TEST** .

No

- Go To 7.

7. **CRANKSHAFT POSITION SENSOR**

   If there are no possible causes remaining, view repair.

   Repair

   - Verify that there is good pin to terminal contact in the CKP Sensor and Powertrain Control Module connectors. Replace the Crankshaft Position Sensor if no problems were found with the connectors.
   - Perform the POWERTRAIN VERIFICATION TEST. Refer to **POWERTRAIN VERIFICATION TEST** .

8. **(K24) CKP SIGNAL CIRCUIT SHORTED TO VOLTAGE**

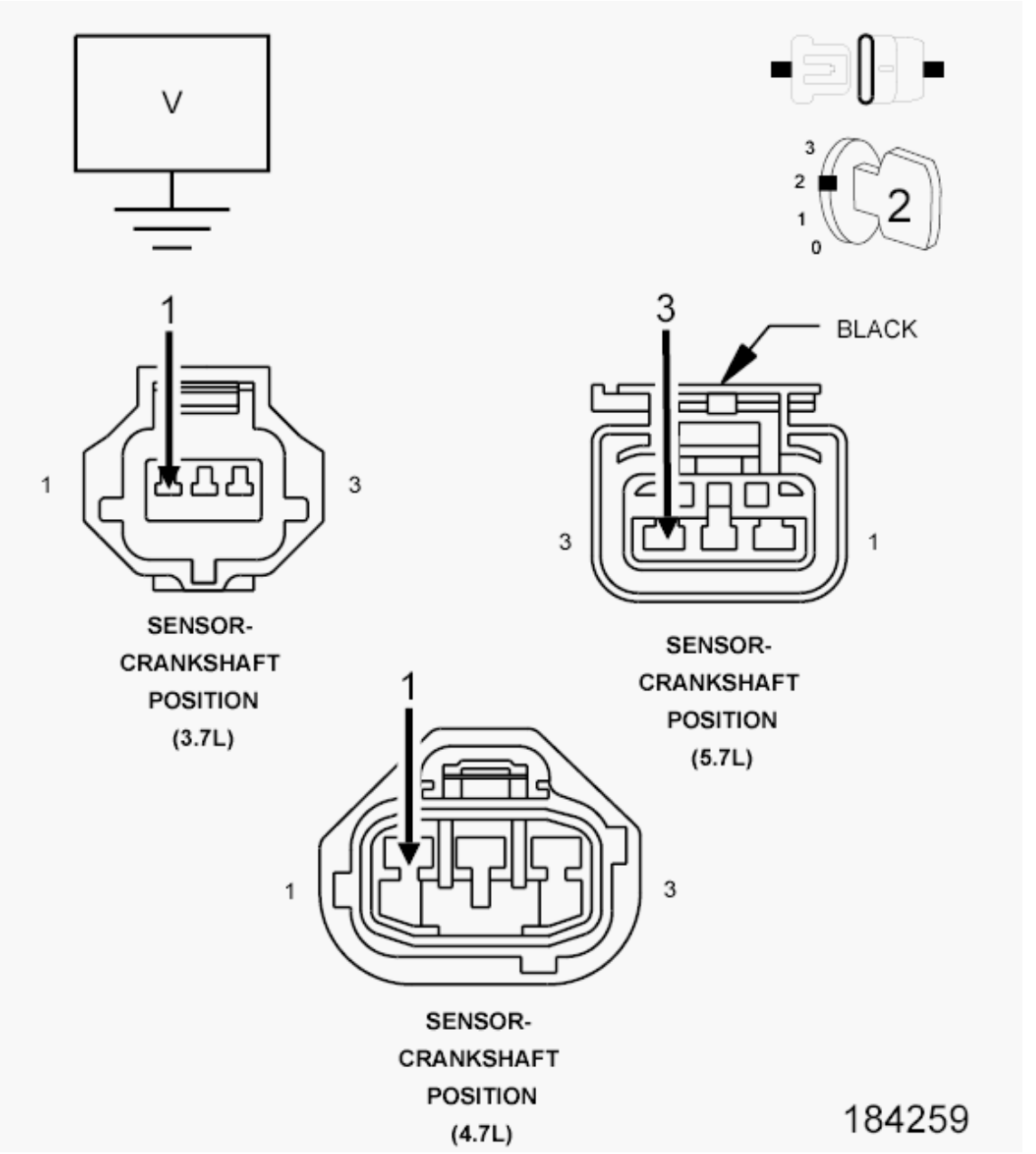

Fig. 166: Measuring Voltage On CKP Sensor Signal Circuit In Sensor Harness Connector
Courtesy of CHRYSLER GROUP, LLC

1. Turn the ignition off.
2. Disconnect the C2 PCM harness connector.
3. Disconnect the CKP Sensor harness connector.
4. Ignition on, engine not running.
5. Measure the voltage on the (K24) CKP Signal circuit in the Sensor harness connector.
6. Wiggle the related wire harness while taking this measurement.

   Is there any voltage present?

Yes

- Repair the short to voltage in the (K24) CKP Signal circuit.
- Perform the POWERTRAIN VERIFICATION TEST. Refer to **POWERTRAIN VERIFICATION TEST** .

No

- Go To 9.

9. **(K24) CKP SIGNAL CIRCUIT OPEN**

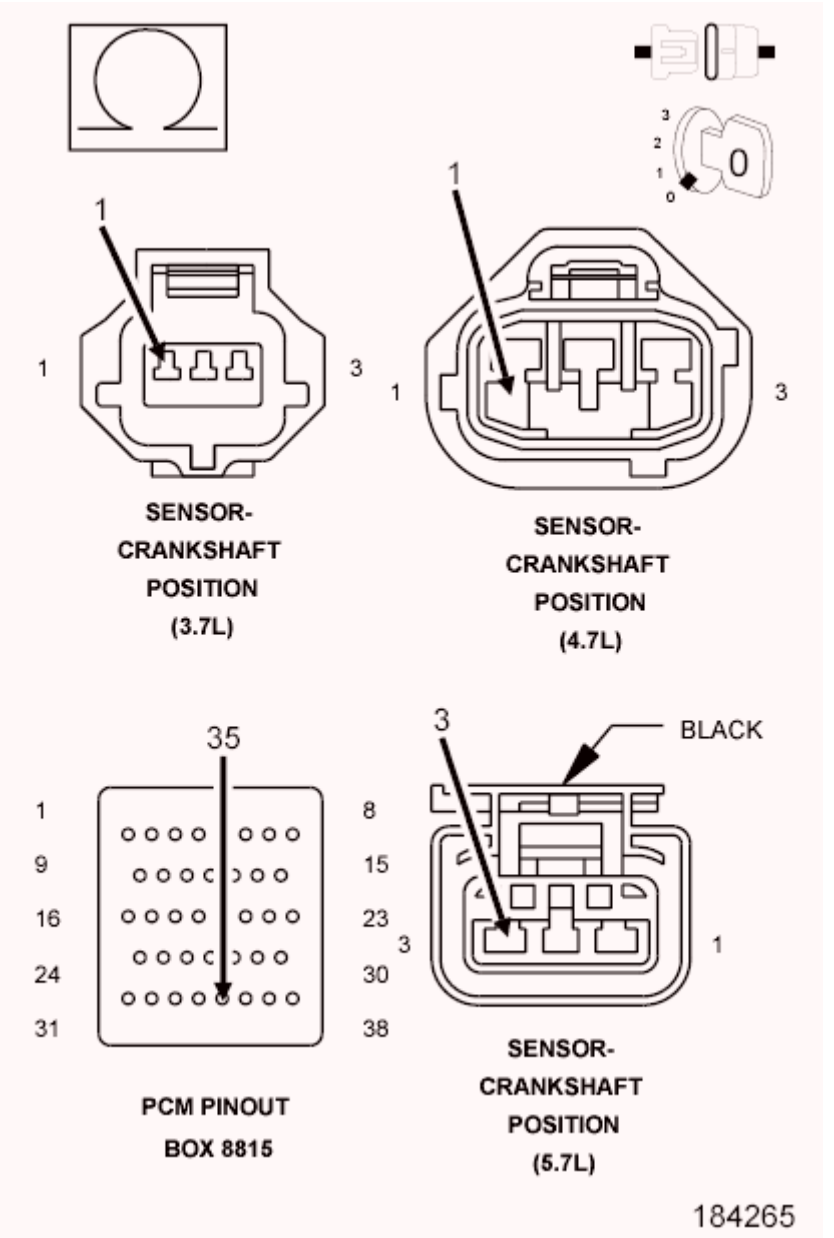

Fig. 167: Measuring Resistance In CKP Sensor Signal Circuit From Harness Connector To

Appropriate Terminal Of Special Tool #8815
Courtesy of CHRYSLER GROUP, LLC

1. Turn the ignition off.

CAUTION: Do not probe the PCM harness connectors. Probing the PCM harness connectors will damage the PCM terminals resulting in poor terminal to pin connection. Install the PCM Pinout Box (special tool #8815A, Kit, NGC, 38 Position) to perform diagnosis.

2. Measure the resistance in the (K24) CKP Signal circuit from the CKP harness connector to the appropriate terminal of special tool (special tool #8815A, Kit, NGC, 38 Position).
3. Wiggle the wire harness while taking this measurement.

   Is the resistance below 1.0 ohm?

   Yes

   - Go To 10.

   No

   - Repair the excessive resistance in the (K24) CKP Signal circuit.
   - Perform the POWERTRAIN VERIFICATION TEST. Refer to **POWERTRAIN VERIFICATION TEST** .

10. **(K24) CKP SIGNAL CIRCUIT SHORTED TO GROUND**

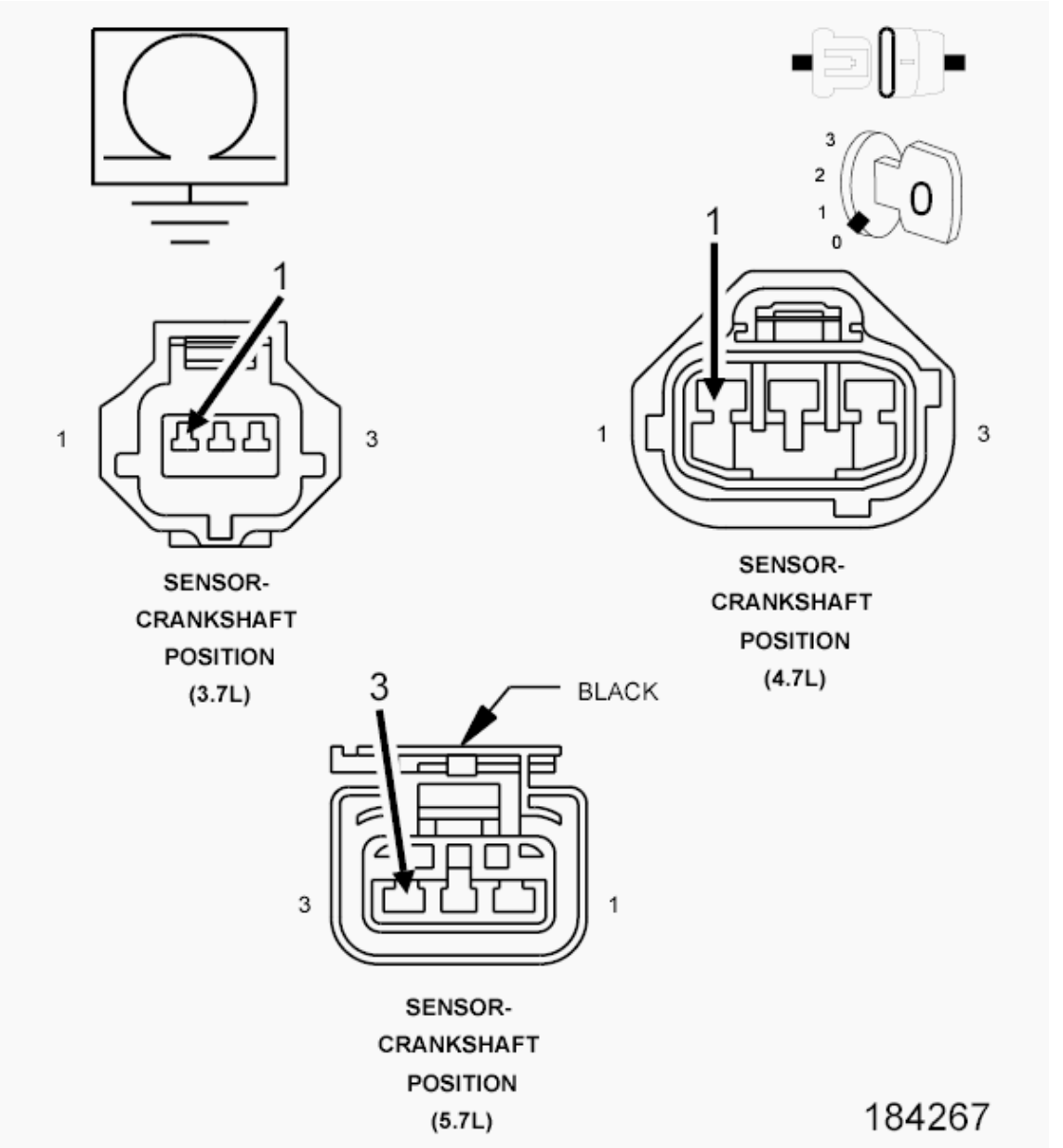

Fig. 168: Measuring Resistance Between Ground And (K24) CKP Signal Circuit In CKP Sensor Harness Connector
Courtesy of CHRYSLER GROUP, LLC

1. Measure the resistance between ground and the (K24) CKP Signal circuit in the CKP Sensor harness connector.
2. Wiggle the related wire harness while monitoring the resistance value.

   Does the resistance ever go below 100 ohms?

   Yes

   - Repair the short to ground in the (K24) Signal circuit.

- Perform the POWERTRAIN VERIFICATION TEST. Refer to **POWERTRAIN VERIFICATION TEST** .

No

- Go To 11.

11. **(K24) CKP SIGNAL CIRCUIT SHORTED TO THE (F855) 5-VOLT SUPPLY CIRCUIT**

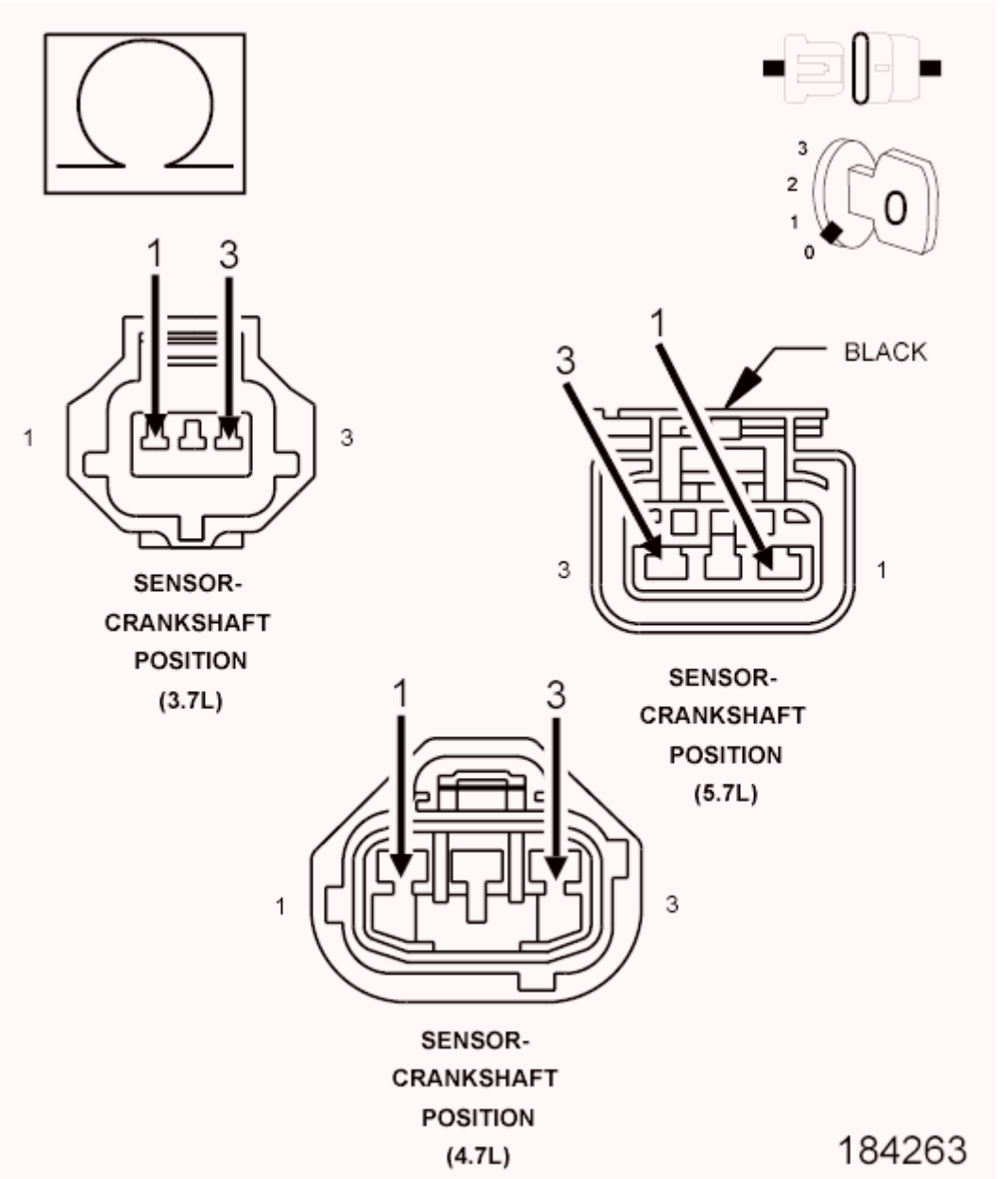

Fig. 169: Measuring Resistance Between 5-Volt Supply Circuit And Signal Circuit In CKP Sensor Harness Connector
Courtesy of CHRYSLER GROUP, LLC

1. Measure the resistance between the (F855) 5-volt Supply circuit and the (K24) CKP Signal circuit in the CKP harness connector.
2. Wiggle the related wire harness while taking this measurement.

   Is the resistance below 5.0 ohms?

   Yes

   - Repair the short between the (F855) 5-volt Supply circuit and the (K24) CKP Signal circuit.
   - Perform the POWERTRAIN VERIFICATION TEST. Refer to **POWERTRAIN VERIFICATION TEST** .

   No

   - Go To 12.

12. **POWERTRAIN CONTROL MODULE (PCM)**
    1. Using the wiring diagram/schematic as a guide, inspect the wiring and connectors between the related Sensor and the Powertrain Control Module (PCM).
    2. Look for any chafed, pierced, pinched, or partially broken wires.
    3. Look for broken, bent, pushed out or corroded terminals. Verify that there is good pin to terminal contact in the Crankshaft Position Sensor and the Powertrain Control Module connectors.
    4. Refer to any Technical Service Bulletins that may apply.

       Were there any problems found?

       Yes

       - Repair as necessary.
       - Perform the POWERTRAIN VERIFICATION TEST. Refer to **POWERTRAIN VERIFICATION TEST** .

       No

       - Replace and program the Powertrain Control Module per Service Information.
       - Perform the POWERTRAIN VERIFICATION TEST. Refer to **POWERTRAIN VERIFICATION TEST** .

P0340-CAMSHAFT POSITION SENSOR CIRCUIT

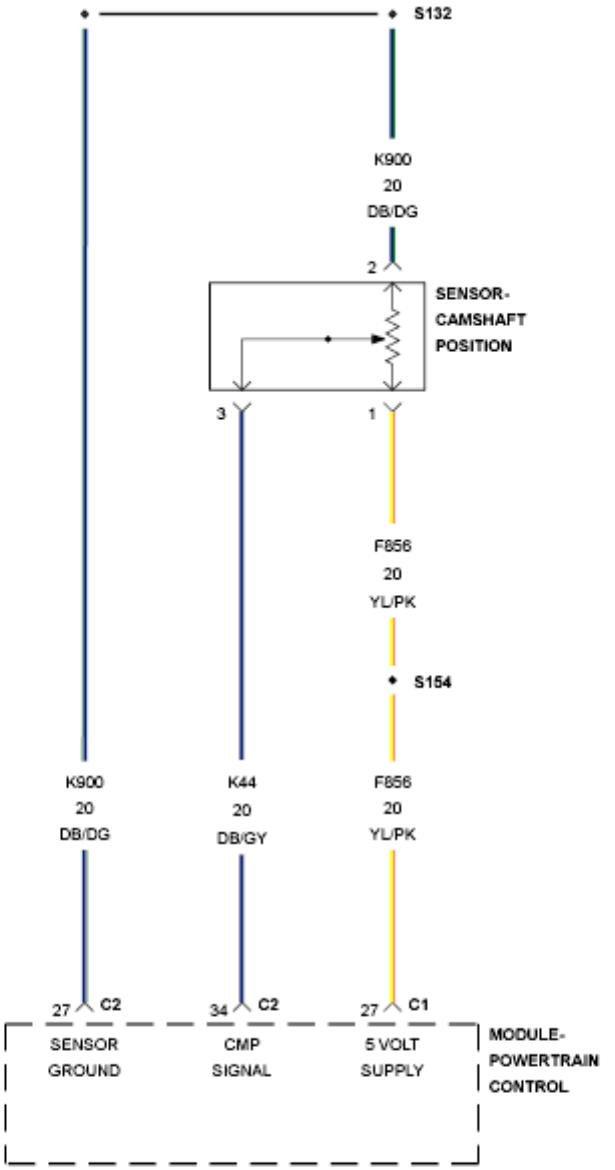
S132
K900
20
DB/DG
2
SENSOR-
CAMSHAFT
POSITION
3
1
F856
20
YL/PK
S154
K900
20
DB/DG
K44
20
DB/GY
F856
20
YL/PK
27
C2
34
C2
27
C1
SENSOR
GROUND
CMP
SIGNAL
5 VOLT
SUPPLY
MODULE-
POWERTRAIN
CONTROL

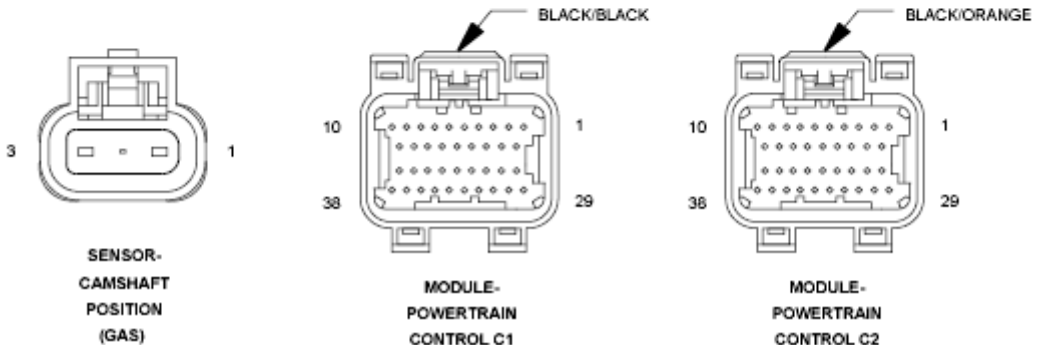
BLACK/BLACK
BLACK/ORANGE
3
1
10
1
38
29
10
1
38
29
SENSOR-
CAMSHAFT
POSITION
(GAS)
MODULE-
POWERTRAIN
CONTROL C1
MODULE-
POWERTRAIN
CONTROL C2

Fig. 170: Camshaft Position Sensor Circuit Schematic
Courtesy of CHRYSLER GROUP, LLC

For a complete wiring diagram **refer to appropriate SYSTEM WIRING DIAGRAMS article** .

WHEN MONITORED:

During engine cranking and with the engine running. Battery voltage greater than 10 volts.

SET CONDITION:

At least 5 seconds or 2.5 engine revolutions have elapsed with crankshaft position sensor signals present but no camshaft position sensor signal. One Trip Fault. Three good trips to turn off the MIL.

POSSIBLE CAUSES

Possible Causes
(F856) 5-VOLT SUPPLY CIRCUIT SHORTED TO VOLTAGE
(F856) 5-VOLT SUPPLY CIRCUIT OPEN
(F856) 5-VOLT SUPPLY CIRCUIT SHORTED TO GROUND
(K44) CMP SIGNAL CIRCUIT SHORTED TO VOLTAGE
(K44) CMP SIGNAL CIRCUIT OPEN
(K44) CMP SIGNAL CIRCUIT SHORTED GROUND
(K44) CMP SIGNAL SHORTED TO THE (F856) 5-VOLT SUPPLY CIRCUIT
(K900) SENSOR GROUND CIRCUIT OPEN
CAMSHAFT POSITION SENSOR
CRANKSHAFT POSITION SENSOR
POWERTRAIN CONTROL MODULE (PCM)

Always perform the Pre-Diagnostic Troubleshooting procedure before proceeding. Refer to PRE-DIAGNOSTIC TROUBLESHOOTING PROCEDURE .

DIAGNOSTIC TEST

1. **ACTIVE DTC**
    1. Turn the ignition on.
    2. With the scan tool, select View DTCs. Copy DTC and Freeze Frame information.
    3. Start the engine and allow it to reach operating temperature.

WARNING: **When the engine is operating, do not stand in direct line with the fan. Do not put your hands near the pulleys, belts or fan. Do not wear loose clothing. Failure to follow these instructions may result in possible serious or fatal injury.**

NOTE: **Attempt to operate the vehicle under conditions similar to which the DTC was set.**

NOTE: **It may be necessary to test drive the vehicle within the DTC monitoring conditions in order for this DTC to set.**

4. With a scan tool, select View DTCs.

   Is the DTC Active at this time?

   Yes

   - Go To 2.

   No

   - Go To 14.

2. **(F856) 5-VOLT SUPPLY CIRCUIT**

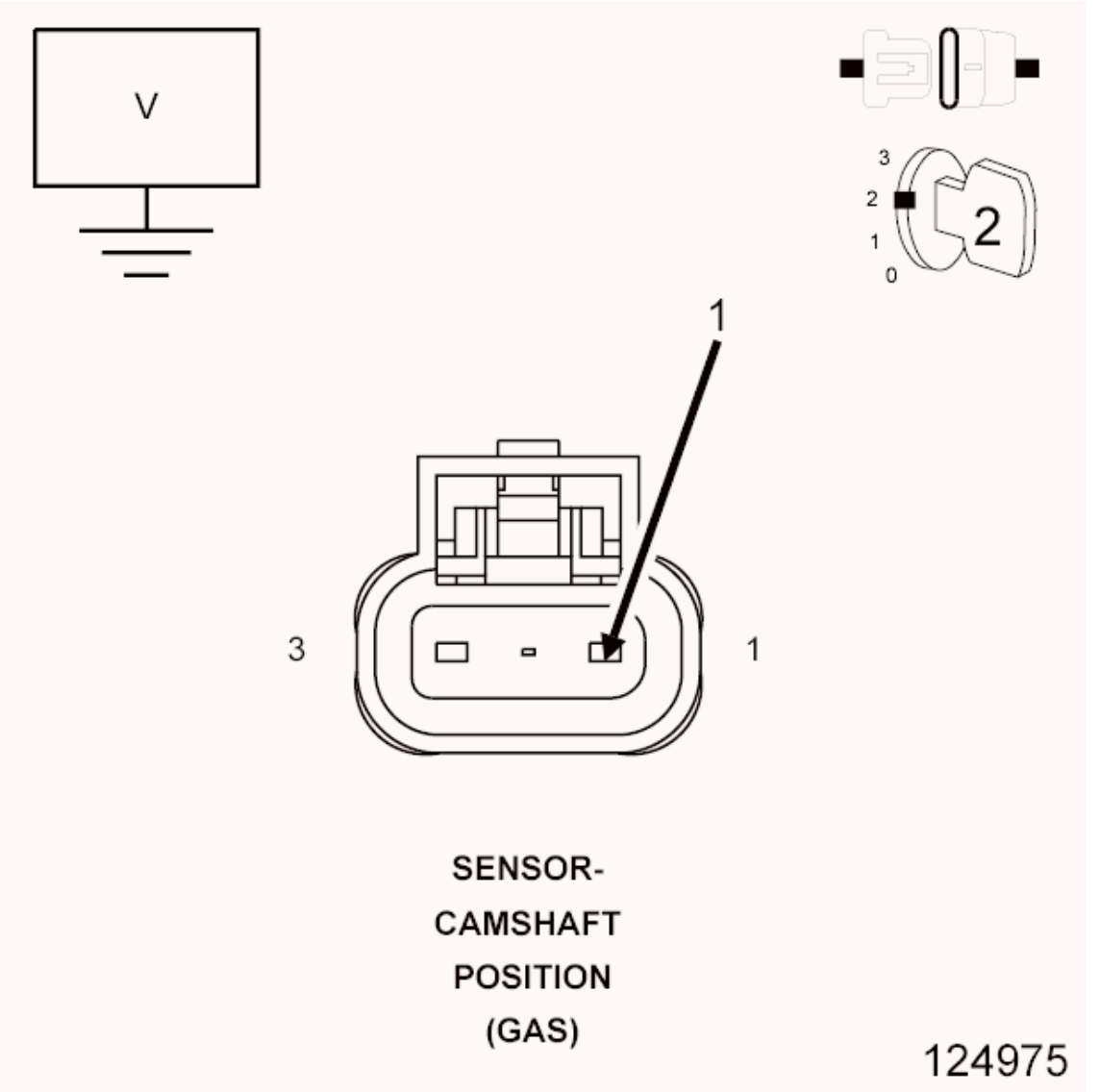

Fig. 171: Measuring Voltage On CMP Sensor 5-Volt Supply Circuit
Courtesy of CHRYSLER GROUP, LLC

1. Turn the ignition off.
2. Disconnect the CMP Sensor harness connector.
3. Ignition on, engine not running.
4. Measure the voltage on the (F856) 5-volt Supply circuit in the CMP Sensor harness connector.

   Is the voltage between 4.5 and 5.2 volts?

   Yes

   - Go To 3.

   No

- Go To 10.

3. **(K44) CMP SIGNAL CIRCUIT**

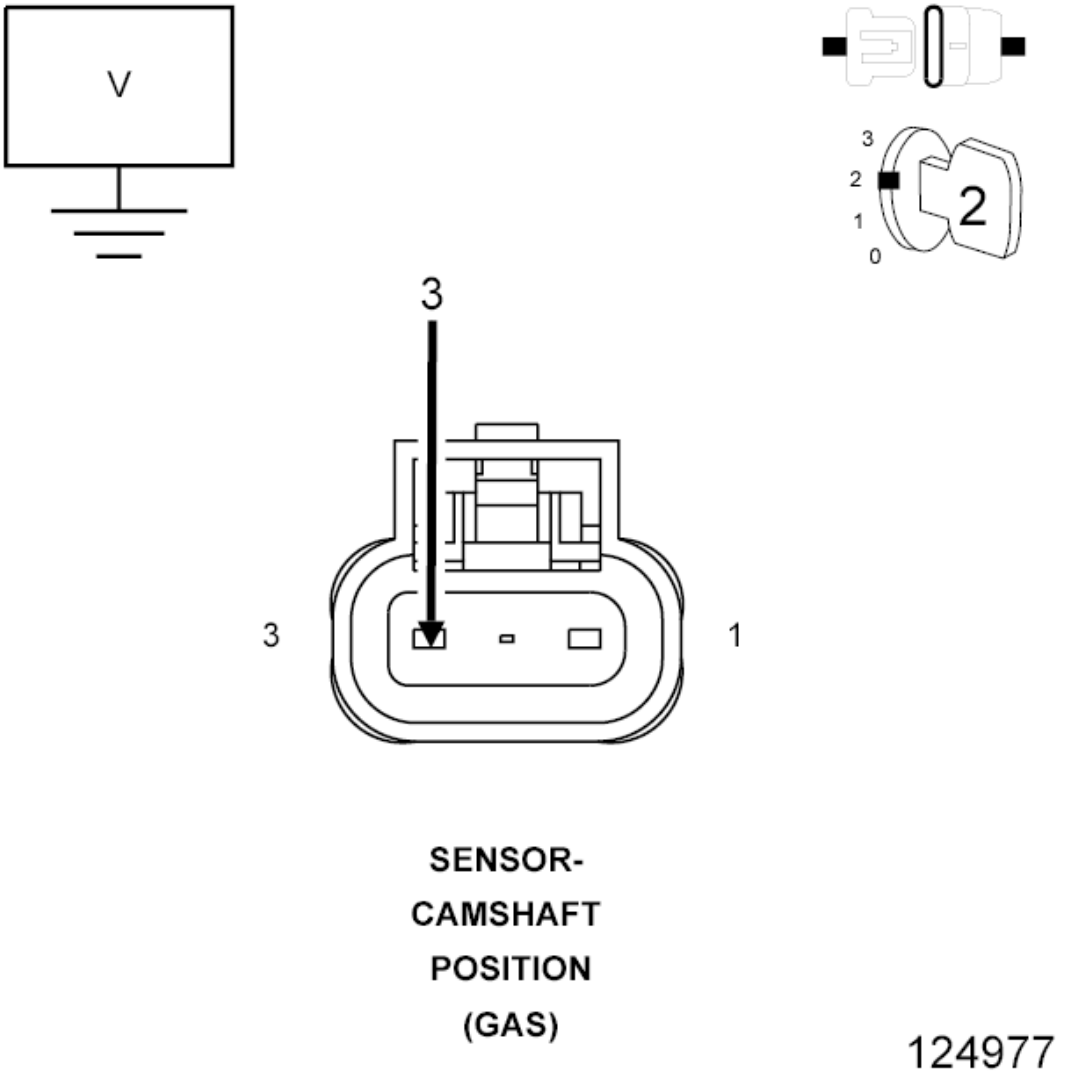

Fig. 172: Measuring Voltage On (K44) CMP Sensor Signal Circuit
Courtesy of CHRYSLER GROUP, LLC

1. Measure the voltage on the (K44) CMP Signal circuit in the CMP Sensor harness connector.

   Is the voltage between 4.5 and 5.0 volts?

   Yes

   - Go To 4.

   No

- Go To 7.

4. **(K900) SENSOR GROUND CIRCUIT OPEN**

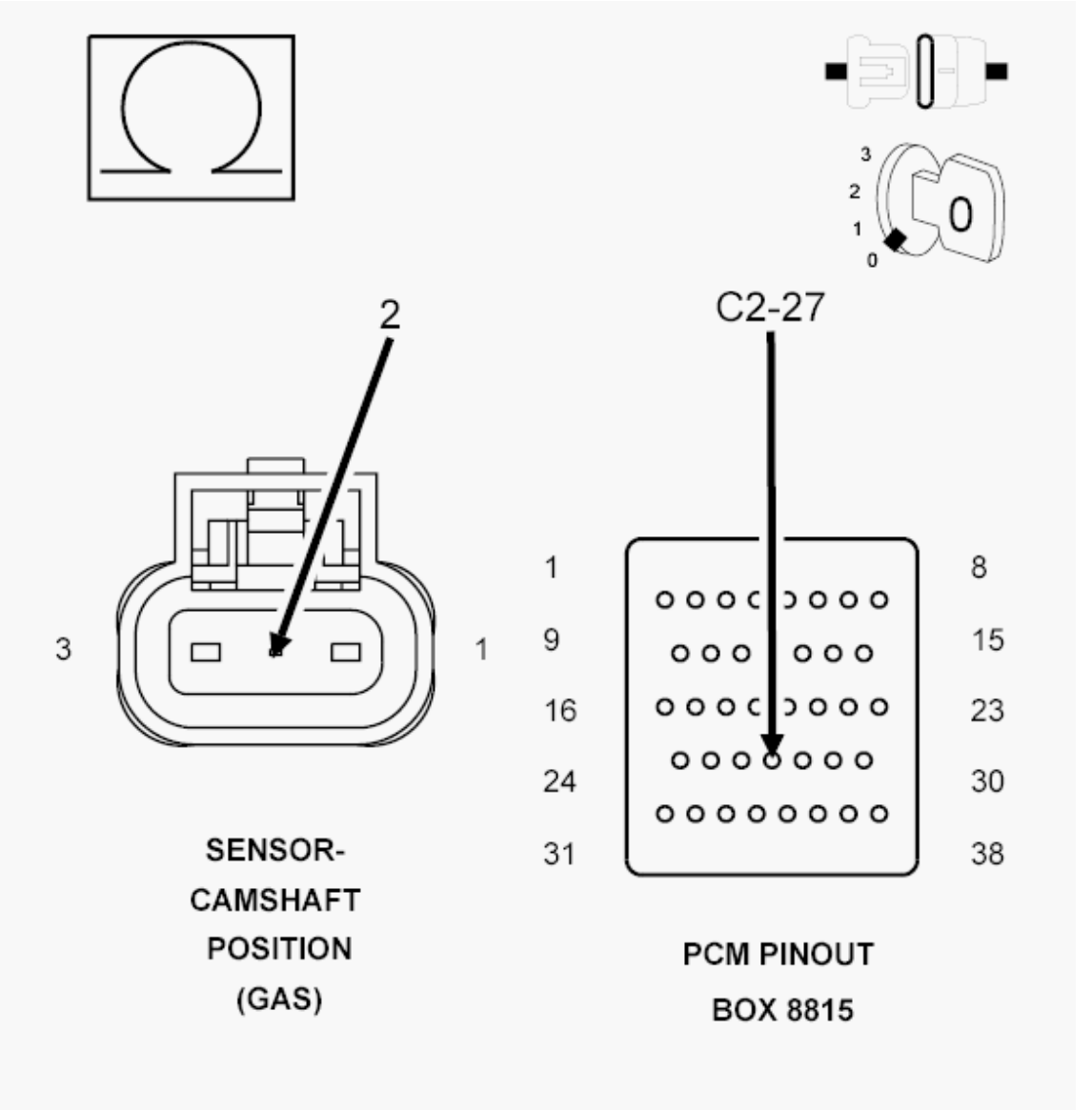

Fig. 173: Measuring Resistance Of (K900) Sensor Ground Circuit From CMP Sensor Harness Connector To Appropriate Terminal Of Special Tool #8815
Courtesy of CHRYSLER GROUP, LLC

1. Turn the ignition off.
2. Disconnect the C2 PCM harness connector.

CAUTION: Do not probe the PCM harness connectors. Probing the PCM harness connectors will damage the PCM terminals resulting in poor terminal to pin connection. Install the PCM Pinout Box (special tool #8815A, Kit, NGC, 38 Position) to perform

diagnosis.

3. Measure the resistance of the (K900) Sensor ground circuit from the CMP Sensor harness connector to the appropriate terminal of special tool (special tool #8815A, Kit, NGC, 38 Position).

   Is the resistance below 5.0 ohms?

   Yes

   - Go To 5.

   No

   - Repair the open in the (K900) Sensor ground circuit.
   - Perform the POWERTRAIN VERIFICATION TEST. Refer to **POWERTRAIN VERIFICATION TEST** .

5. **(K44) CMP SIGNAL SHORTED TO THE (F856) 5-VOLT SUPPLY CIRCUIT**

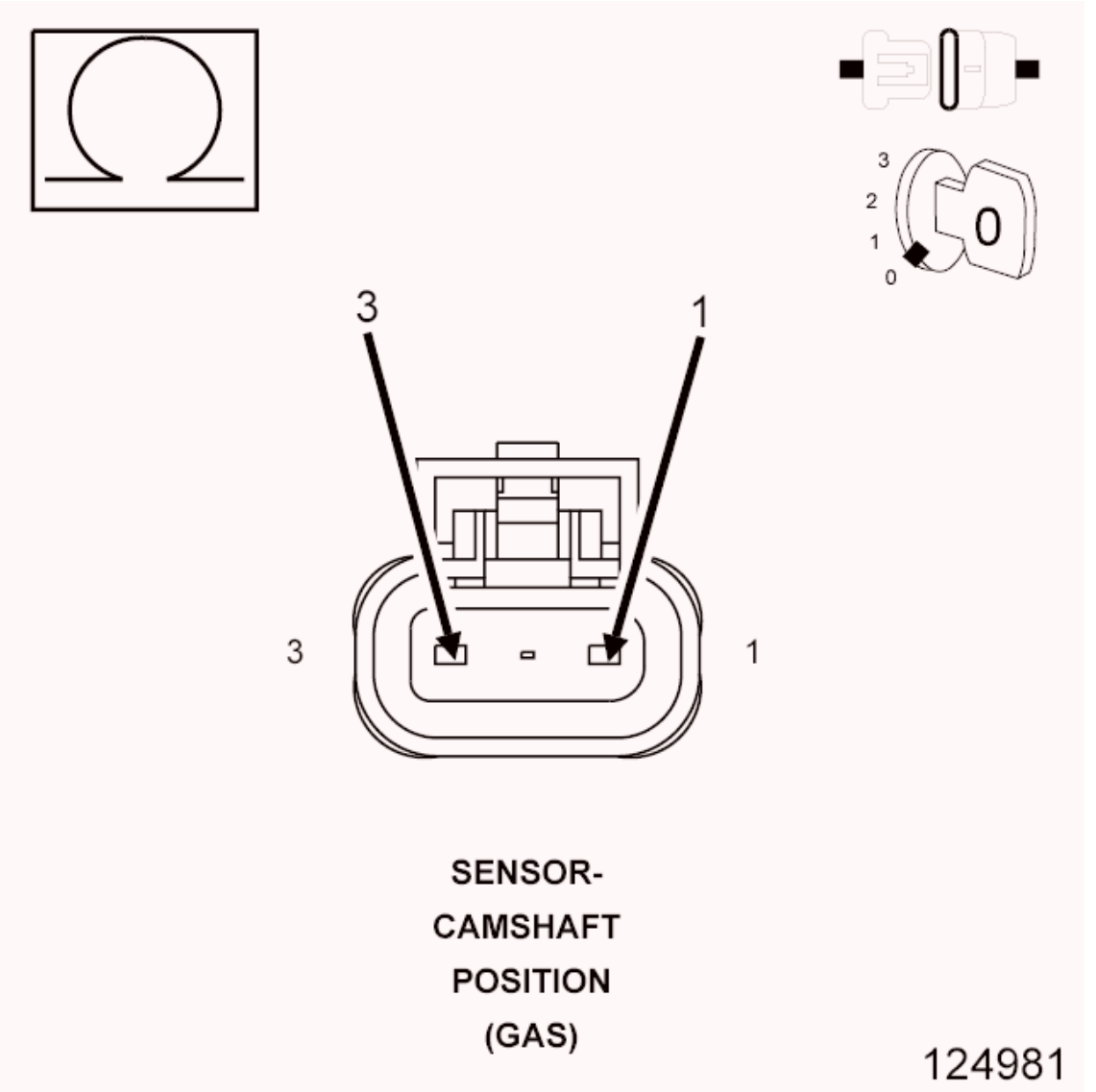

Fig. 174: Measuring Resistance Between 5-Volt Supply Circuit And Signal Circuit In CMP Sensor Harness Connector
Courtesy of CHRYSLER GROUP, LLC

1. Measure the resistance between the (K44) CMP Signal circuit and the (F856) 5-volt Supply circuit in the CMP Sensor harness connector.

   Is the resistance below 5.0 ohms?

   Yes

   - Repair the short between the (K44) CMP Signal circuit and the (F856) 5-volt Supply circuit.
   - Perform the POWERTRAIN VERIFICATION TEST. Refer to **POWERTRAIN VERIFICATION TEST** .

No

- Go To 6.

6. **CAMSHAFT POSITION SENSOR**

NOTE: **Inspect the Camshaft sprocket for damage per the Service Information. If a problem is found repair as necessary.**

If there are no possible causes remaining, view repair.

Repair

- Verify that there is good pin to terminal contact in the CMP Sensor and Powertrain Control Module connectors. Replace the Camshaft Position Sensor if no problems were found with the connectors.
- Perform the POWERTRAIN VERIFICATION TEST. Refer to **POWERTRAIN VERIFICATION TEST** .

7. **(K44) CMP SIGNAL CIRCUIT SHORTED TO VOLTAGE**

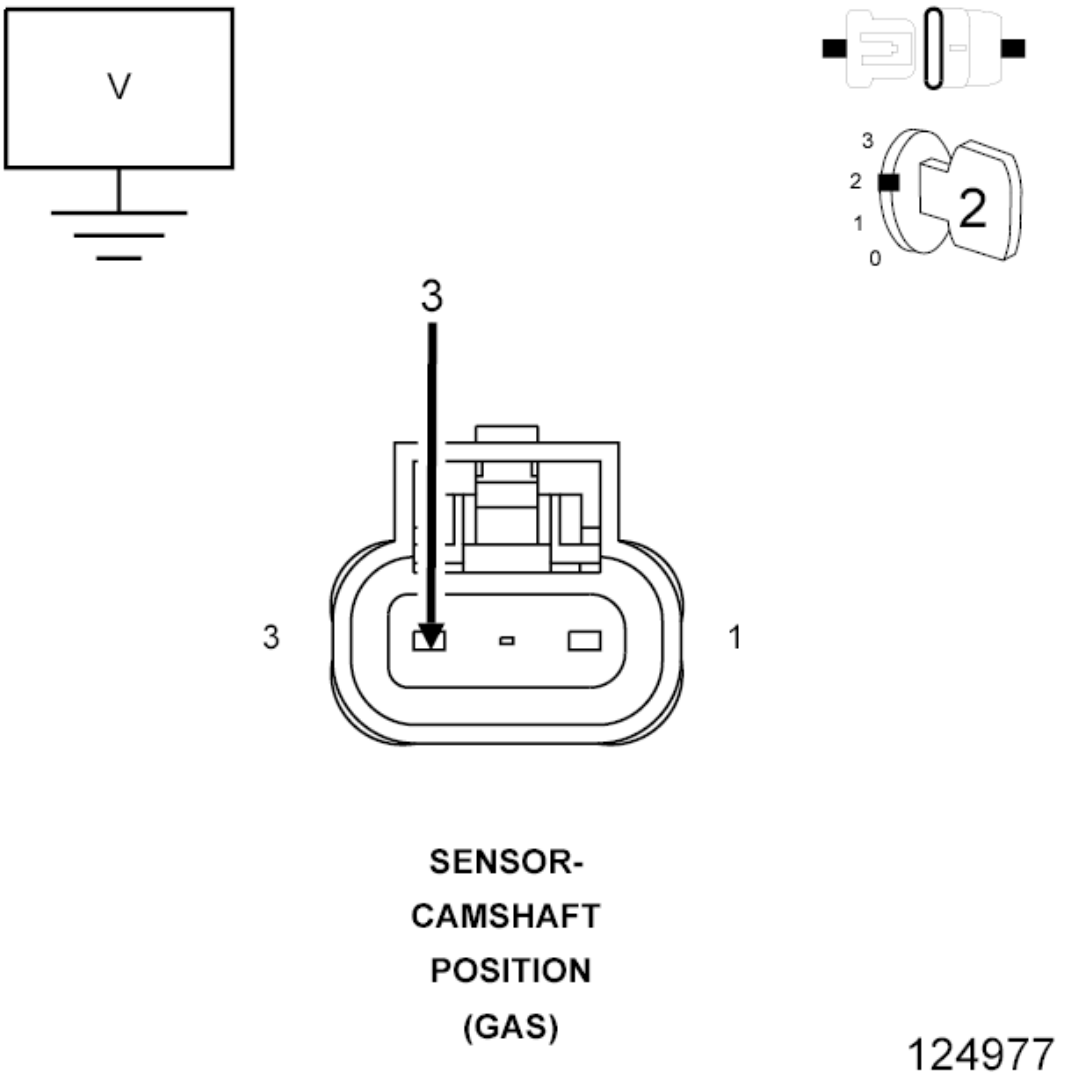

Fig. 175: Measuring Voltage On (K44) CMP Sensor Signal Circuit
Courtesy of CHRYSLER GROUP, LLC

1. Turn the ignition off.
2. Disconnect the C2 PCM harness connector.
3. Ignition on, engine not running.
4. Measure the voltage on the (K44) CMP Signal circuit in the CMP Sensor harness connector.

   Is there any voltage present?

   Yes

   - Repair the short to voltage in the (K44) CMP Signal circuit.
   - Perform the POWERTRAIN VERIFICATION TEST. Refer to **POWERTRAIN VERIFICATION TEST** .

No

- Go To 8.

8. **(K44) CMP SIGNAL CIRCUIT OPEN**

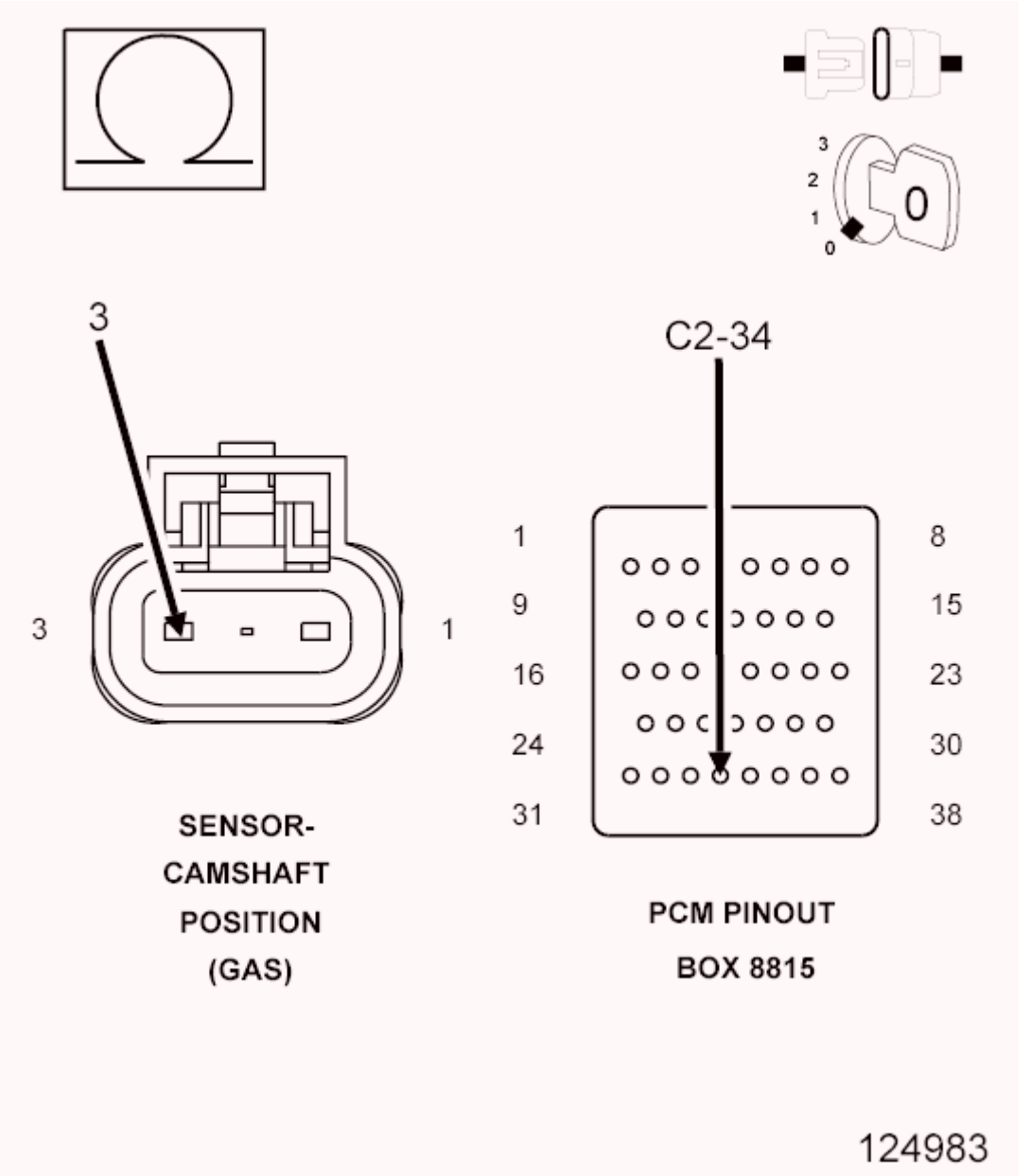

Fig. 176: Measuring Resistance Of CMP Signal Circuit From Sensor Harness Connector To Appropriate Terminal Of Special Tool #8815
Courtesy of CHRYSLER GROUP, LLC

1. Turn the ignition off.

CAUTION: Do not probe the PCM harness connectors. Probing the PCM

harness connectors will damage the PCM terminals resulting in poor terminal to pin connection. Install the PCM Pinout Box (special tool #8815A, Kit, NGC, 38 Position) to perform diagnosis.

2. Measure the resistance of the (K44) CMP Signal circuit from the CMP Sensor harness connector to the appropriate terminal of special tool (special tool #8815A, Kit, NGC, 38 Position).

   Is the resistance below 5.0 ohms?

   Yes

   - Go To 9.

   No

   - Repair the open in the (K44) CMP Signal circuit.
   - Perform the POWERTRAIN VERIFICATION TEST. Refer to **POWERTRAIN VERIFICATION TEST** .

9. **(K44) CMP SIGNAL CIRCUIT SHORTED TO GROUND**

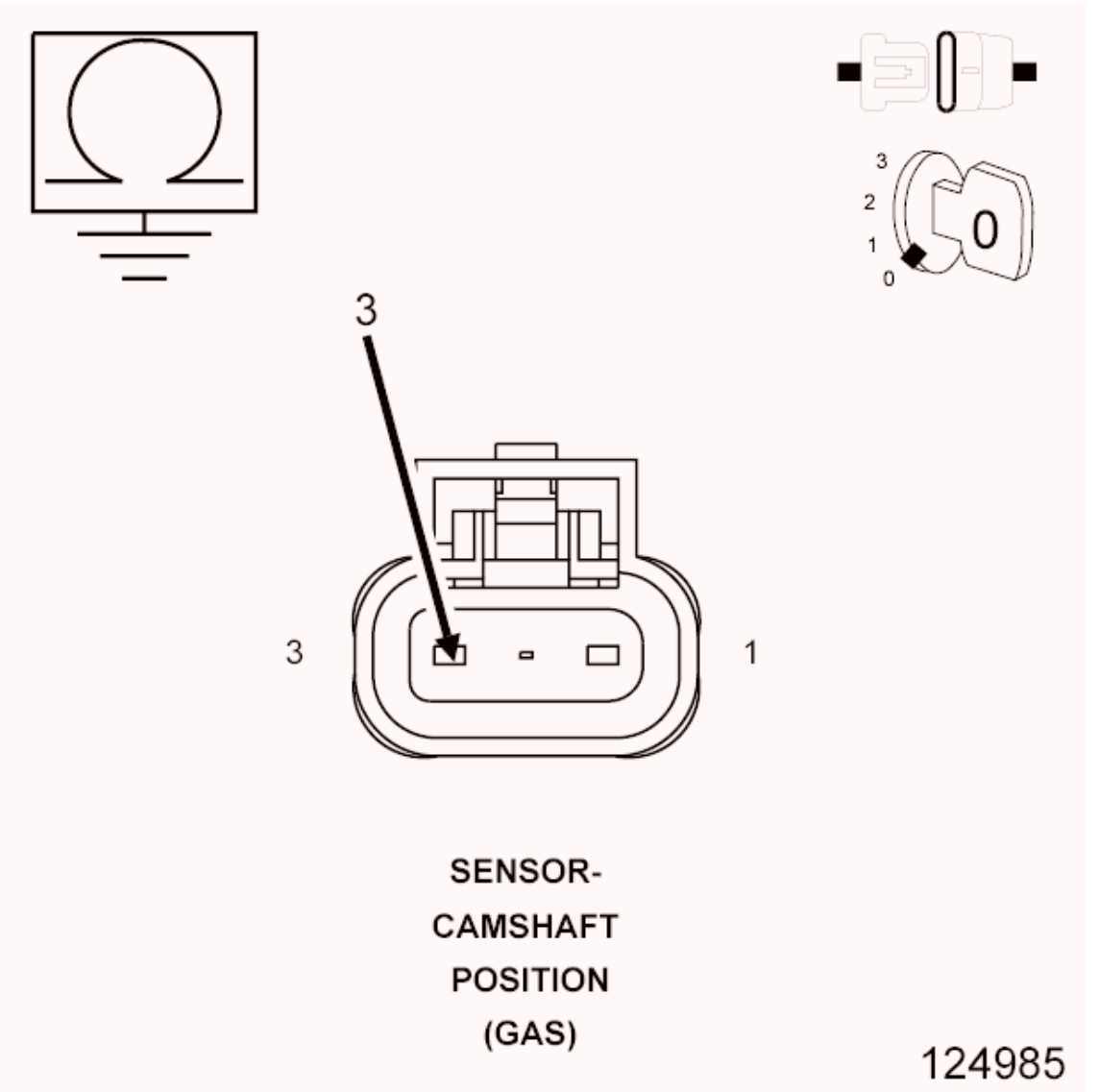

Fig. 177: Measuring Resistance Between Ground And (K44) CMP Signal Circuit In CMP Sensor Harness Connector
Courtesy of CHRYSLER GROUP, LLC

1. Measure the resistance between ground and the (K44) CMP Signal circuit in the CMP Sensor harness connector.

   Is the resistance below 100 ohms?

   Yes

   - Repair the short to ground in the (K44) CMP Signal circuit
   - Perform the POWERTRAIN VERIFICATION TEST. Refer to **POWERTRAIN VERIFICATION TEST** .

No

- Go To 10.

10. **(F856) 5-VOLT SUPPLY CIRCUIT SHORTED TO VOLTAGE**

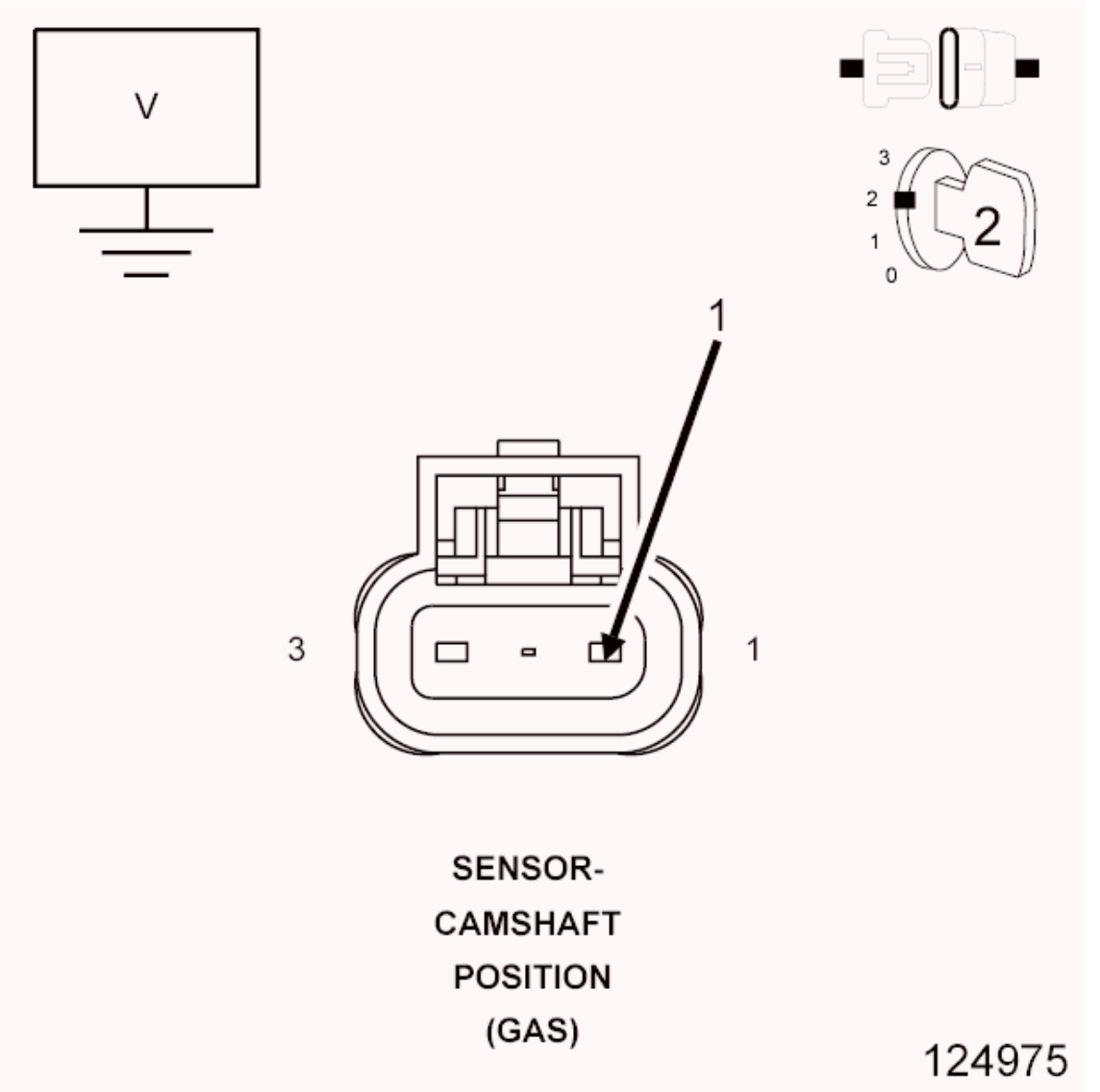

Fig. 178: Measuring Voltage On CMP Sensor 5-Volt Supply Circuit
Courtesy of CHRYSLER GROUP, LLC

1. Turn the ignition off.
2. Disconnect the C1 PCM harness connector.
3. Ignition on, engine not running.
4. Measure the voltage on the (F856) 5-volt Supply circuit in the CMP Sensor harness connector.

   Is there any voltage present?

Yes

- Repair the short to voltage in the (F856) 5-volt Supply circuit.
- Perform the POWERTRAIN VERIFICATION TEST. Refer to **POWERTRAIN VERIFICATION TEST** .

No

- Go To 11.

11. **(F856) 5-VOLT SUPPLY CIRCUIT OPEN**

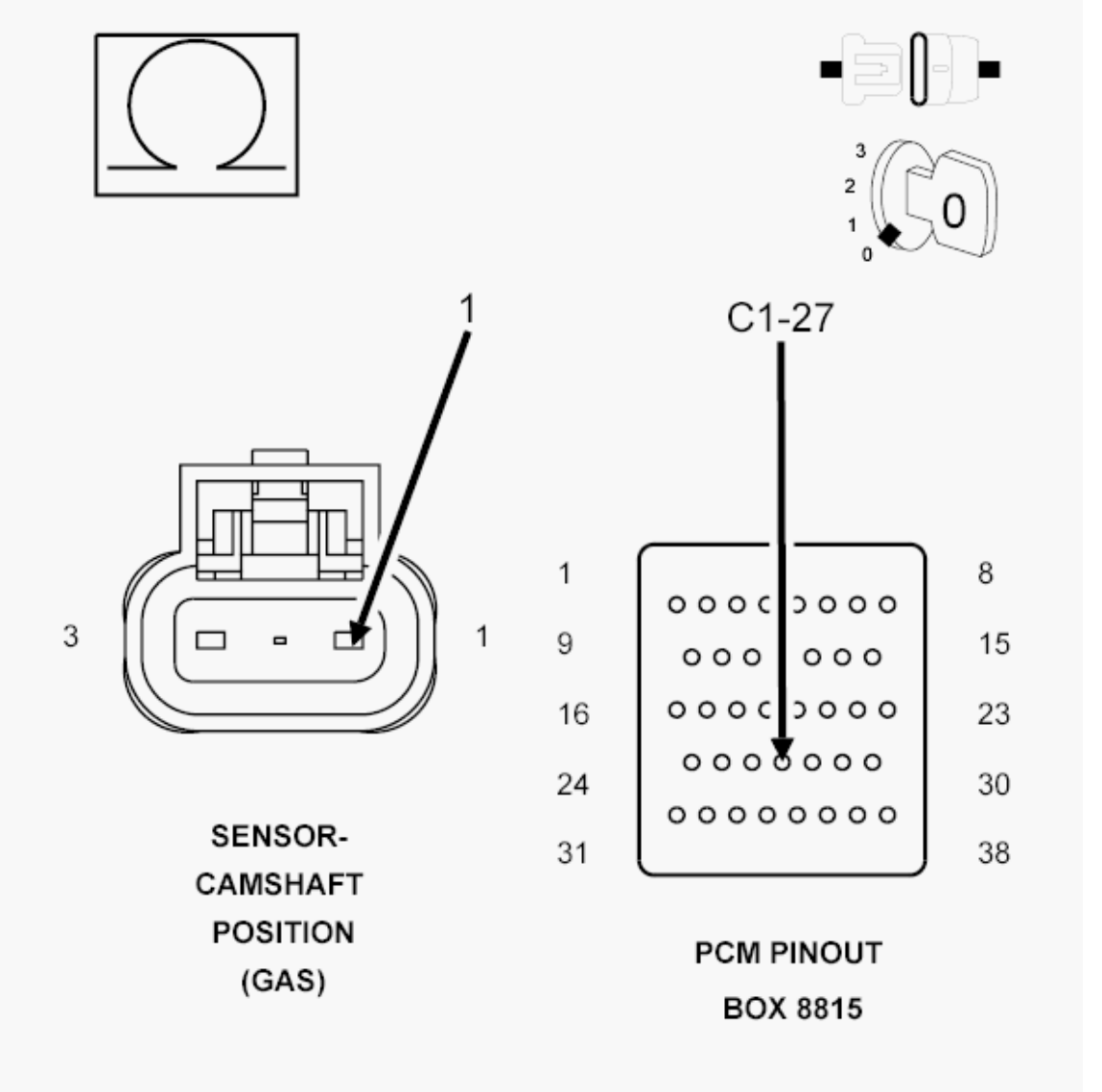

Fig. 179: Measuring Resistance Of 5-Volt Supply Circuit Between CMP Sensor Harness Connector & Appropriate Terminal Of Special Tool #8815
Courtesy of CHRYSLER GROUP, LLC

1. Turn the ignition off.

CAUTION: Do not probe the PCM harness connectors. Probing the PCM harness connectors will damage the PCM terminals resulting in poor terminal to pin connection. Install the PCM Pinout Box (special tool #8815A, Kit, NGC, 38 Position) to perform diagnosis.

2. Measure the resistance of the (F856) 5-volt Supply circuit between the CMP Sensor harness connector to the appropriate terminal of special tool (special tool #8815A, Kit, NGC, 38 Position).

   Is the resistance below 5.0 ohms?

   Yes

   - Go To 12.

   No

   - Repair the open in the (F856) 5-volt Supply circuit.
   - Perform the POWERTRAIN VERIFICATION TEST. Refer to **POWERTRAIN VERIFICATION TEST** .

12. **(F856) 5-VOLT SUPPLY CIRCUIT SHORTED TO GROUND**

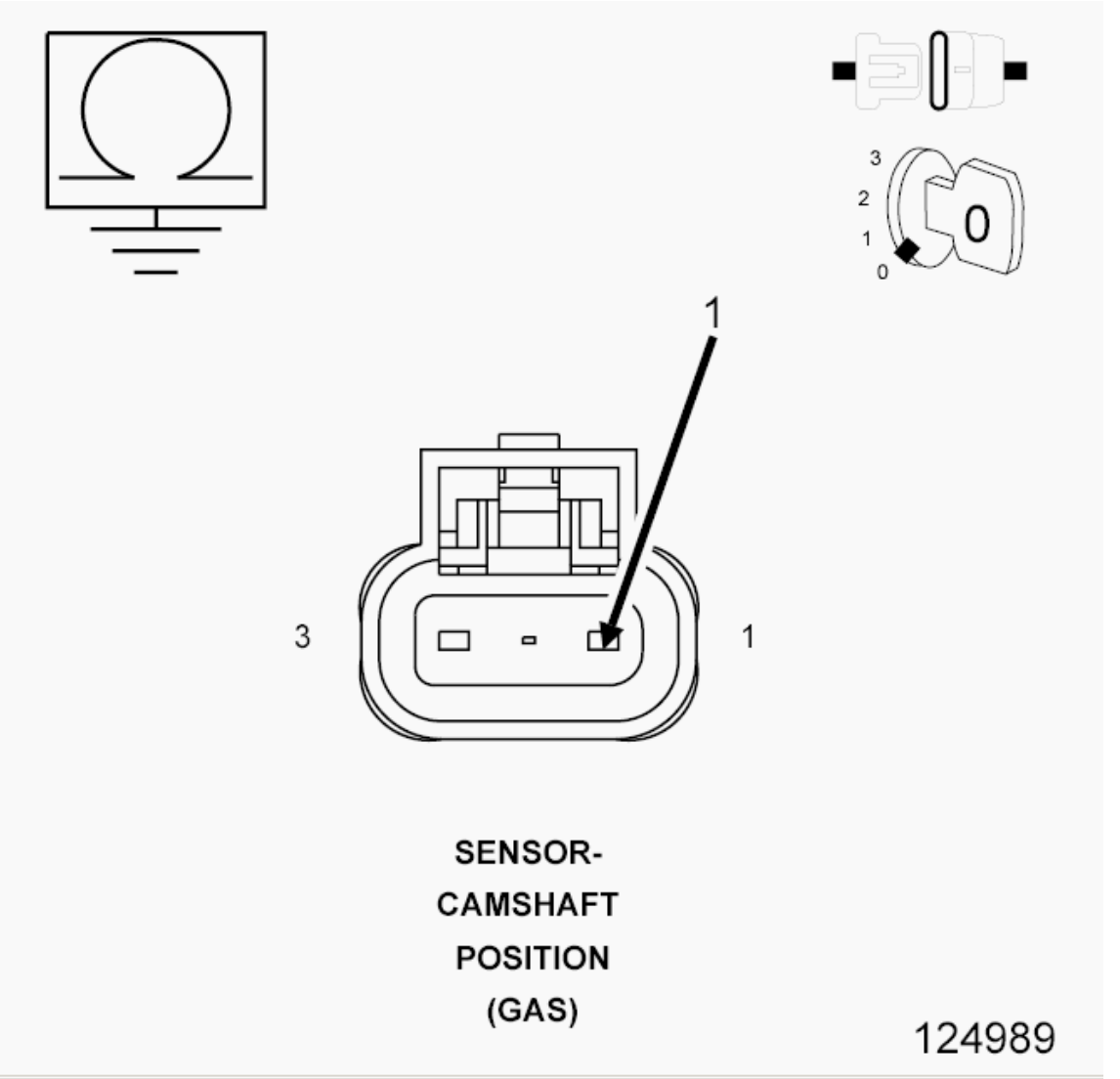

Fig. 180: Measuring Resistance Between Ground And 5-Volt Supply Circuit In CMP Sensor Harness Connector
Courtesy of CHRYSLER GROUP, LLC

1. Measure the resistance between ground and the (F856) 5-volt Supply circuit in the CMP Sensor harness connector.

   Is the resistance below 100 ohms?

   Yes

   - Repair the short to ground in the (F856) 5-volt Supply circuit.
   - Perform the POWERTRAIN VERIFICATION TEST. Refer to **POWERTRAIN VERIFICATION TEST** .

   No

- Go To 13.

13. **POWERTRAIN CONTROL MODULE (PCM)**
    1. Using the wiring diagram/schematic as a guide, inspect the wiring and connectors between the related Sensor and the Powertrain Control Module (PCM).
    2. Look for any chafed, pierced, pinched, or partially broken wires.
    3. Look for broken, bent, pushed out or corroded terminals. Verify that there is good pin to terminal contact in the related Sensor and the Powertrain Control Module connectors.
    4. Refer to any Technical Service Bulletins that may apply.

    Were there any problems found?

    Yes

    - Repair as necessary.
    - Perform the POWERTRAIN VERIFICATION TEST. Refer to **POWERTRAIN VERIFICATION TEST** .

    No

    - Replace and program the Powertrain Control Module per Service Information.
    - Perform the POWERTRAIN VERIFICATION TEST. Refer to **POWERTRAIN VERIFICATION TEST** .

14. **ERRATIC CMP SIGNAL**
    1. With a lab scope probe and the Miller special tool (special tool #6801, Terminal Probe), back probe the (K44) CMP Signal circuit in the CMP harness connector.

    WARNING: **When the engine is operating, do not stand in direct line with the fan. Do not put your hands near the pulleys, belts or fan. Do not wear loose clothing. Failure to follow these instructions may result in possible serious or fatal injury.**

    2. Ignition on, engine not running.
    3. Wiggle the related wire harness and lightly tap the Camshaft Position Sensor.
    4. Observe the lab scope screen.
    5. Allow the engine to idle.
    6. Observe the lab scope screen.

    Did the CMP Sensor generate any erratic pulses?

    Yes

    - Replace the Camshaft Position Sensor.
    - Perform the POWERTRAIN VERIFICATION TEST. Refer to **POWERTRAIN**

VERIFICATION TEST .

No

- Go To 15.

15. **ERRATIC CKP SIGNAL**
    1. Turn the ignition off.
    2. With a lab scope probe and the Miller special tool (special tool #6801, Terminal Probe), backprobe the (K24) CKP Signal circuit in the CKP harness connector.

       WARNING: **When the engine is operating, do not stand in direct line with the fan. Do not put your hands near the pulleys, belts or fan. Do not wear loose clothing. Failure to follow these instructions may result in possible serious or fatal injury.**

    3. Ignition on, engine not running.
    4. Wiggle the related wire harness and lightly tap on the Crankshaft Position Sensor.
    5. Observe the lab scope screen.
    6. Allow the engine to idle.
    7. Observe the lab scope screen.

    Did the CKP Sensor generate any erratic pulses?

    Yes

    - Replace the Crankshaft Position Sensor.
    - Perform the POWERTRAIN VERIFICATION TEST. Refer to **POWERTRAIN VERIFICATION TEST** .

    No

    - Test complete, the conditions that set this DTC are not present at this time. Perform the INTERMITTENT CONDITION diagnostic procedure for further assistance. Refer to **INTERMITTENT CONDITION** .

P0344-CAMSHAFT POSITION SENSOR INTERMITTENT

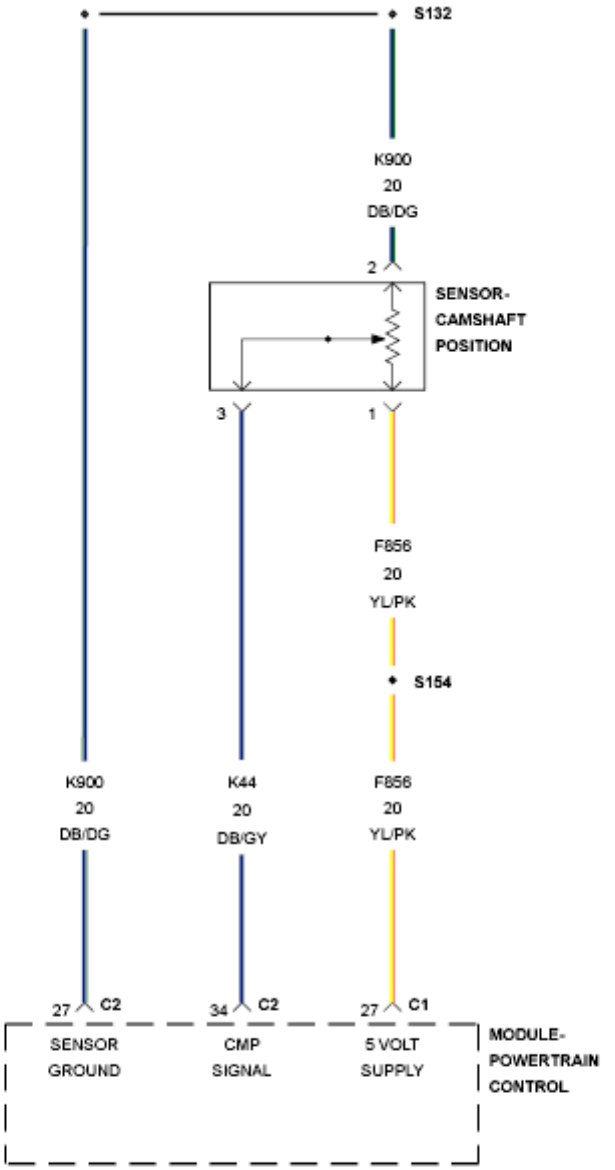
S132
K900
20
DB/DG
2
SENSOR-
CAMSHAFT
POSITION
3
1
F856
20
YL/PK
S154
K900
20
DB/DG
K44
20
DB/GY
F856
20
YL/PK
27
C2
34
C2
27
C1
SENSOR
GROUND
CMP
SIGNAL
5 VOLT
SUPPLY
MODULE-
POWERTRAIN
CONTROL

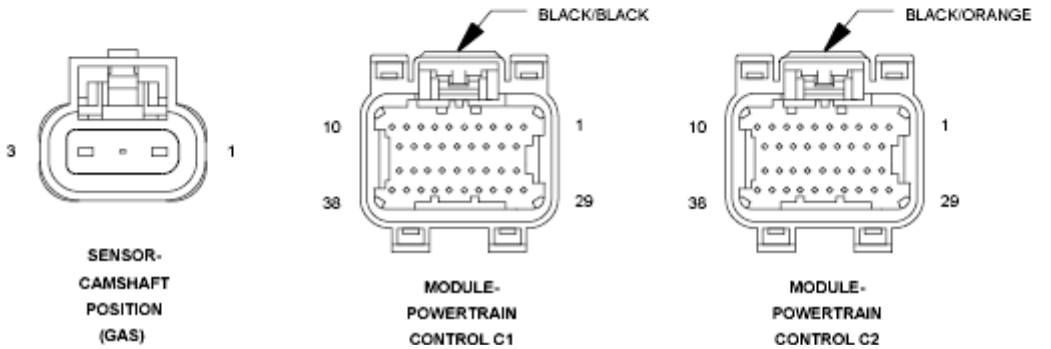
BLACK/BLACK
BLACK/ORANGE
3
1
10
1
38
29
10
1
38
29
SENSOR-
CAMSHAFT
POSITION
(GAS)
MODULE-
POWERTRAIN
CONTROL C1
MODULE-
POWERTRAIN
CONTROL C2

Fig. 181: Camshaft Position Sensor Circuit Schematic
Courtesy of CHRYSLER GROUP, LLC

For a complete wiring diagram **refer to appropriate SYSTEM WIRING DIAGRAMS article** .

WHEN MONITORED:

While cranking the engine and engine running.

SET CONDITION:

When the failure counter reaches 20. One Trip Fault. Three good trips to turn off the MIL.

POSSIBLE CAUSES

Possible Causes
(F856) 5-VOLT SUPPLY CIRCUIT OPEN
(F856) 5-VOLT SUPPLY CIRCUIT SHORTED TO GROUND
(K44) CMP SIGNAL CIRCUIT SHORTED TO VOLTAGE
(K44) CMP SIGNAL CIRCUIT OPEN
(K44) CMP SIGNAL CIRCUIT SHORTED TO GROUND
(K44) CMP SIGNAL CIRCUIT SHORTED TO THE (F856) 5-VOLT SUPPLY
TONE WHEEL/PULSE RING
CAMSHAFT POSITION SENSOR
POWERTRAIN CONTROL MODULE (PCM)

Always perform the Pre-Diagnostic Troubleshooting procedure before proceeding. Refer to PRE-DIAGNOSTIC TROUBLESHOOTING PROCEDURE .

DIAGNOSTIC TEST

1. **ACTIVE DTC**
    1. Turn the ignition on.
    2. With the scan tool, select View DTCs. Copy DTC and Freeze Frame information.
    3. Start the engine and allow it to reach operating temperature.

WARNING: When the engine is operating, do not stand in direct line with the fan. Do not put your hands near the pulleys, belts or fan. Do not wear loose clothing. Failure to follow these instructions may result in possible serious or fatal injury.

NOTE: Attempt to operate the vehicle under conditions similar to which the DTC was set.

NOTE: **It may be necessary to test drive the vehicle within the DTC monitoring conditions in order for this DTC to set.**

4. With a scan tool, select View DTCs.

   Is the DTC Active at this time?

   Yes

   - Go To 2.

   No

   - Perform the INTERMITTENT CONDITION Diagnostic Procedure. Refer to **INTERMITTENT CONDITION** .

2. **CHECKING CAMSHAFT POSITION SENSOR SIGNAL WITH A LAB SCOPE**
   1. Turn the ignition off.
   2. With a lab scope probe and the Miller special tool (special tool #6801, Terminal Probe), backprobe the (K44) CMP Signal circuit in the CMP harness connector.

      WARNING: **When the engine is operating, do not stand in direct line with the fan. Do not put your hands near the pulleys, belts or fan. Do not wear loose clothing. Failure to follow these instructions may result in possible serious or fatal injury.**

   3. Ignition on, engine not running.
   4. Observe the lab scope screen.
   5. Start the engine.
   6. Observe the lab scope screen.

      Are there any irregular or missing signals?

      Yes

      - Go To 3.

      No

      - Go To 8.

3. **WIRE HARNESS INSPECTION**
   1. Turn the ignition off.
   2. Verify that there is good pin to terminal contact in the CMP Sensor and the Powertrain Control Module connectors.
   3. Visually inspect the related wire harness including the ground circuit. Look for any chafed, pierced,

pinched, or partially broken wires.

4. Visually inspect the related wire harness connectors. Look for broken, bent, pushed out, or corroded terminals.
5. Make sure the Crankshaft Position Sensor and the Camshaft Position Sensor are properly installed and the mounting bolt(s) are torqued to the proper specification.
6. Refer to any TSBs that may apply.

Were any of the above conditions present?

Yes

- Repair as necessary.
- Perform the POWERTRAIN VERIFICATION TEST. Refer to **POWERTRAIN VERIFICATION TEST** .

No

- Go To 4.

4. **(F856) 5-VOLT SUPPLY CIRCUIT OPEN OR SHORTED TO GROUND**

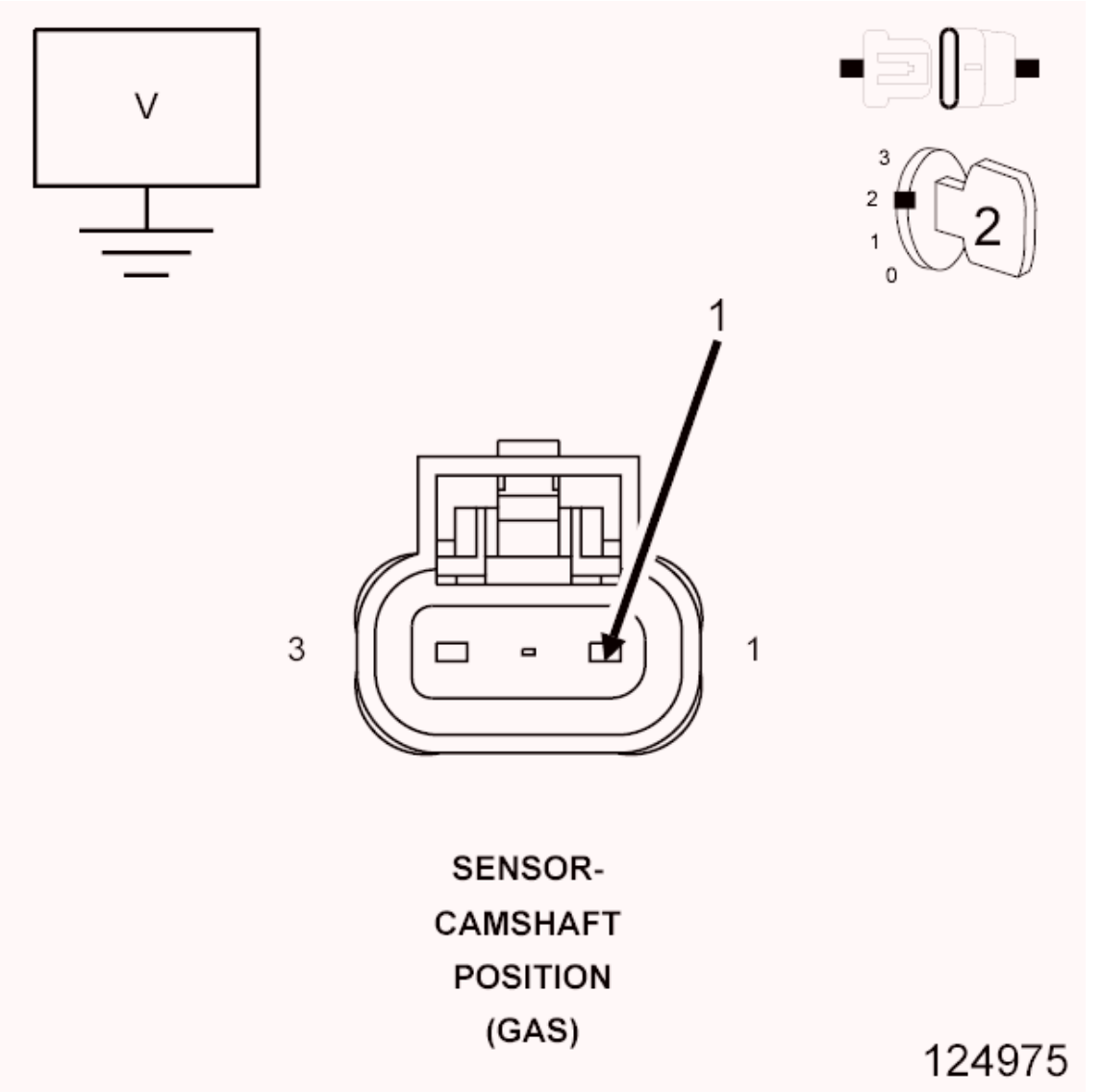

Fig. 182: Measuring Voltage On CMP Sensor 5-Volt Supply Circuit
Courtesy of CHRYSLER GROUP, LLC

1. Disconnect the CMP Sensor connector.
2. Ignition on, engine not running.
3. Measure the voltage on the (F856) 5-volt Supply circuit in the CMP harness connector.

   Is the voltage between 4.5 and 5.2 volts?

   Yes

   - Go To 5.

   No

- Repair the open or short to ground in the (F856) 5-volt Supply circuit. Use Miller special tool (special tool #8815A, Kit, NGC, 38 Position) when checking for an open circuit to prevent PCM harness connector terminal damage.
- Perform the POWERTRAIN VERIFICATION TEST. Refer to **POWERTRAIN VERIFICATION TEST** .

5. **TONE WHEEL/PULSE RING INSPECTION**
   1. Turn the ignition off.
   2. Carefully disconnect the Battery Ground cable.
   3. Remove the Camshaft Position Sensor.
   4. Inspect the Tone Wheel/Pulse Ring for damage, foreign material, or excessive movement.

      Were any problems found?

      Yes

      - Repair or replace the Tone Wheel/Pulse Ring as necessary.
      - Perform the POWERTRAIN VERIFICATION TEST. Refer to **POWERTRAIN VERIFICATION TEST** .

      No

      - Go To 6.

6. **CHECKING CRANKSHAFT POSITION SENSOR SIGNAL WITH A LAB SCOPE**

   NOTE: An intermittent condition in the Crank Position Sensor can cause the P0344 to set.

   1. Install the CMP Sensor and connect the Battery cable.
   2. With a lab scope probe and the Miller special tool (special tool #6801, Terminal Probe), backprobe the (K24) CKP Signal circuit in the CKP harness connector.

      WARNING: When the engine is operating, do not stand in direct line with the fan. Do not put your hands near the pulleys, belts or fan. Do not wear loose clothing. Failure to follow these instructions may result in possible serious or fatal injury.

   3. Ignition on, engine not running.
   4. Wiggle the related wire harness and lightly tap on the Crank Position Sensor.
   5. Observe the lab scope screen.
   6. Start the engine.
   7. Observe the lab scope screen.

      Are there any irregular or missing signals?

Yes

- Verify that there is good pin to terminal contact in the CKP Sensor and Powertrain Control Module connectors. Replace the Crankshaft Position Sensor if no problems were found with the connectors.
- Perform the POWERTRAIN VERIFICATION TEST. Refer to **POWERTRAIN VERIFICATION TEST** .

No

- Go To 7.

7. **CAMSHAFT POSITION SENSOR**

   If there are no possible causes remaining, view repair.

   Repair

   - Verify that there is good pin to terminal contact in the CMP Sensor and Powertrain Control Module connectors. Replace the Camshaft Position Sensor if no problems were found with the connectors.
   - Perform the POWERTRAIN VERIFICATION TEST. Refer to **POWERTRAIN VERIFICATION TEST** .

8. **(K44) CMP SIGNAL CIRCUIT SHORTED TO VOLTAGE**

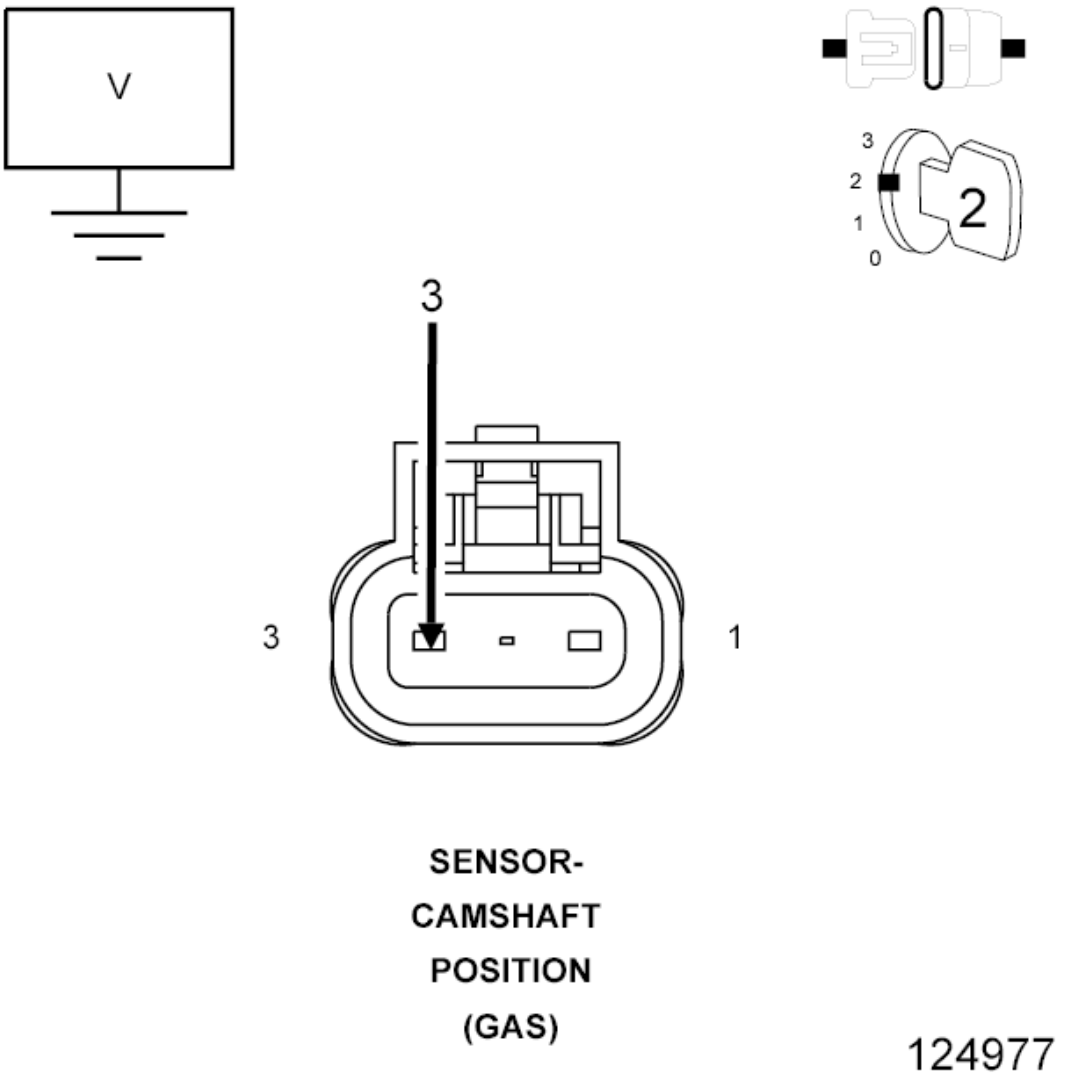

Fig. 183: Measuring Voltage On (K44) CMP Sensor Signal Circuit
Courtesy of CHRYSLER GROUP, LLC

1. Turn the ignition off.
2. Disconnect the CMP Sensor connector.
3. Disconnect the C2 PCM harness connector.
4. Ignition on, engine not running.
5. Measure the voltage on the (K44) CMP Signal circuit.
6. Wiggle the related wire harness while taking this measurement.

   Is there any voltage present?

   Yes

   - Repair the short to voltage in the (K44) CMP Signal circuit.

- Perform the POWERTRAIN VERIFICATION TEST. Refer to **POWERTRAIN VERIFICATION TEST** .

No

- Go To 9.

9. **(K44) CMP SIGNAL CIRCUIT OPEN**

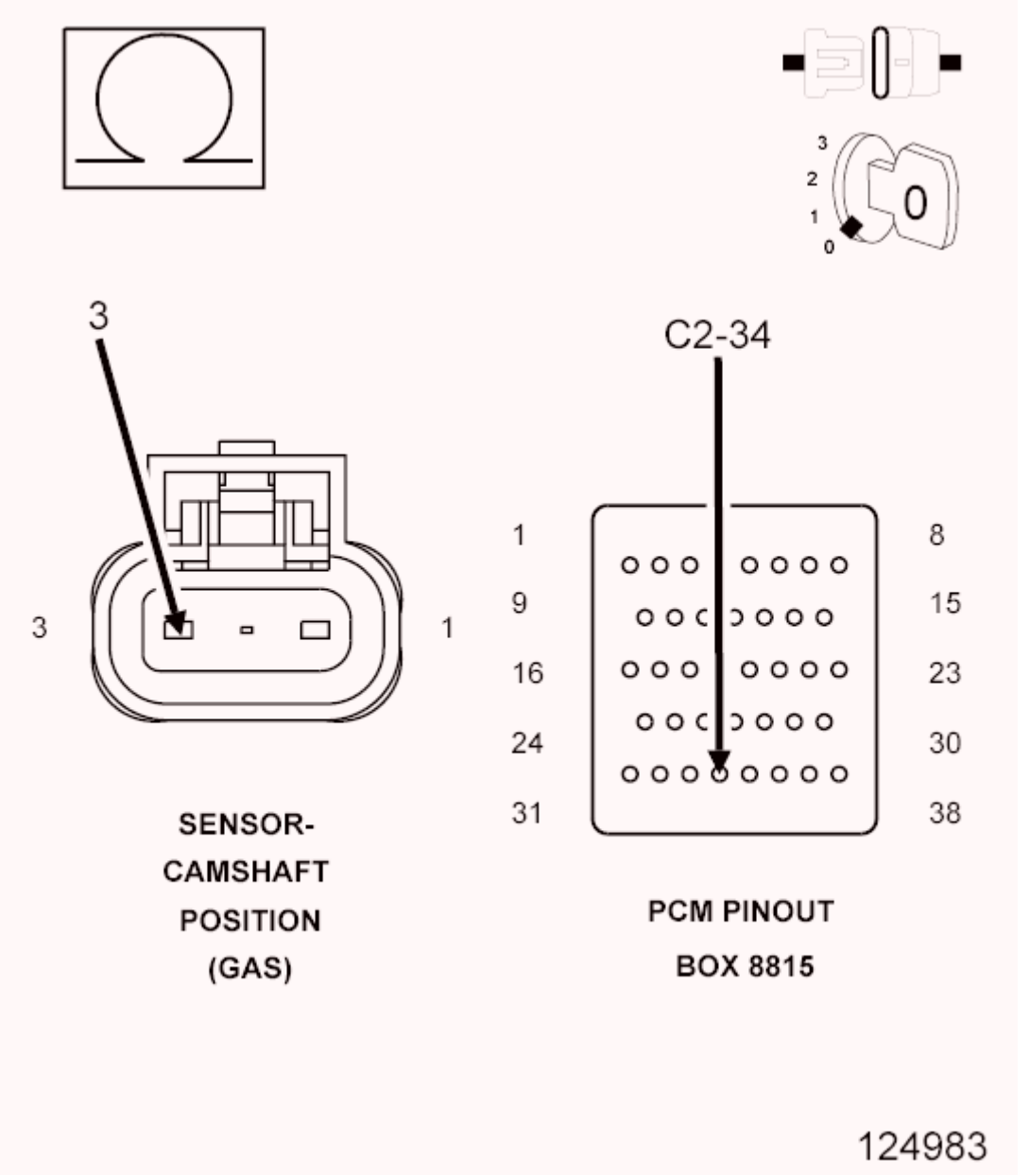

Fig. 184: Measuring Resistance Of CMP Signal Circuit From Sensor Harness Connector To Appropriate Terminal Of Special Tool #8815
Courtesy of CHRYSLER GROUP, LLC

1. Turn the ignition off.

CAUTION: Do not probe the PCM harness connectors. Probing the PCM harness connectors will damage the PCM terminals resulting in poor terminal to pin connection. Install the PCM Pinout Box (special tool #8815A, Kit, NGC, 38 Position) to perform diagnosis.

2. Measure the resistance in the (K44) CMP Signal circuit from the CMP harness connector to the appropriate terminal of special tool (special tool #8815A, Kit, NGC, 38 Position).
3. Wiggle the related wire harness while taking this measurement.

   Is the resistance below 5.0 ohms?

   Yes

   - Go To 10.

   No

   - Repair the excessive resistance in the (K44) CMP Signal circuit.
   - Perform the POWERTRAIN VERIFICATION TEST. Refer to **POWERTRAIN VERIFICATION TEST** .

10. **(K44) CMP SIGNAL CIRCUIT SHORTED TO GROUND**

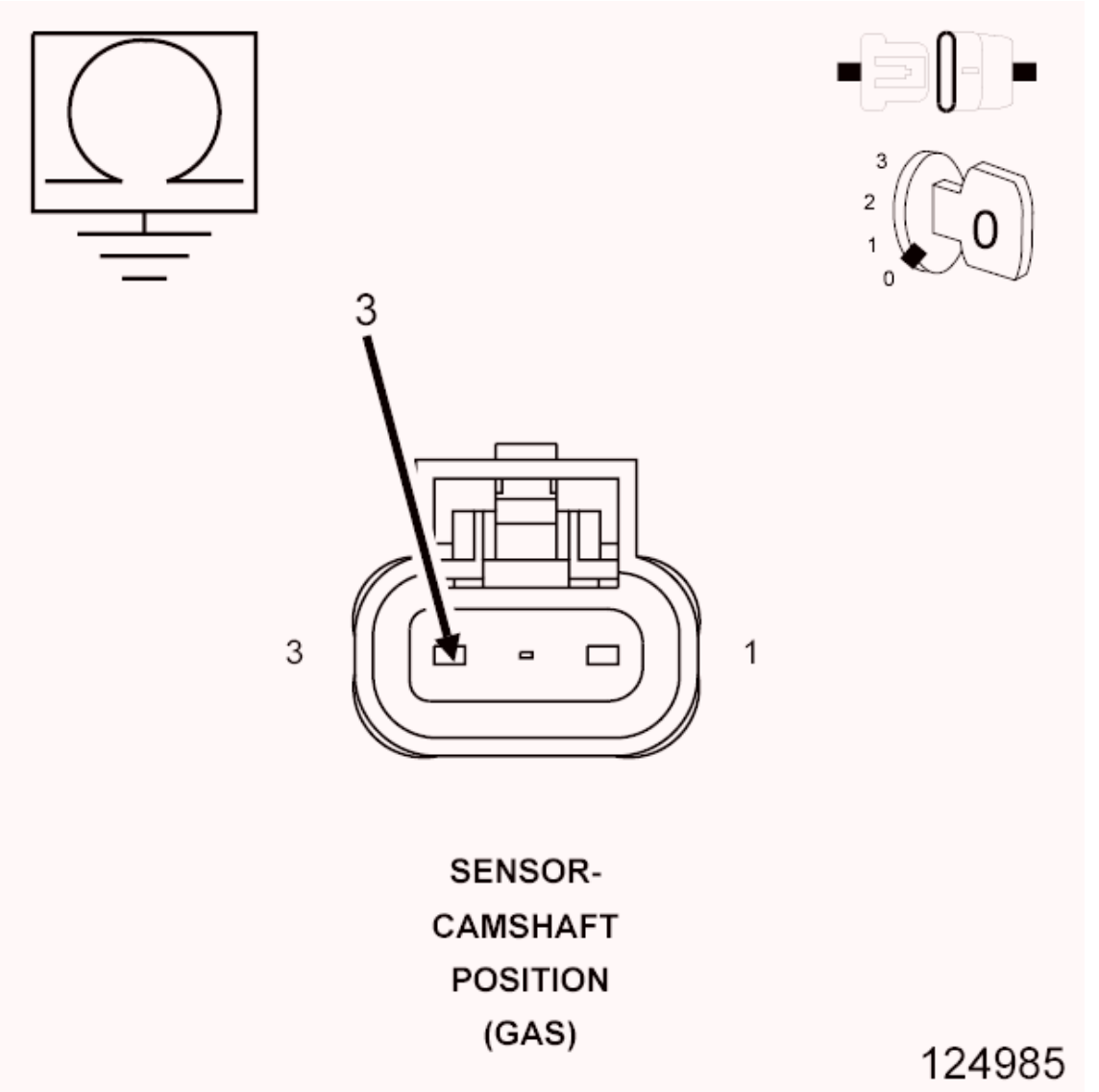

Fig. 185: Measuring Resistance Between Ground And (K44) CMP Signal Circuit In CMP Sensor Harness Connector
Courtesy of CHRYSLER GROUP, LLC

1. Measure the resistance between ground and the (K44) CMP Signal circuit in the CMP Sensor harness connector.
2. Wiggle the related wire harness while monitoring the resistance value.

   Does the resistance ever go below 100 ohms?

   Yes

   - Repair the short to ground in the (K44) CMP Signal circuit.
   - Perform the POWERTRAIN VERIFICATION TEST. Refer to **POWERTRAIN VERIFICATION TEST** .

No

- Go To 11.

11. **(K44) CMP SIGNAL CIRCUIT SHORTED TO THE (F856) 5-VOLT SUPPLY CIRCUIT**

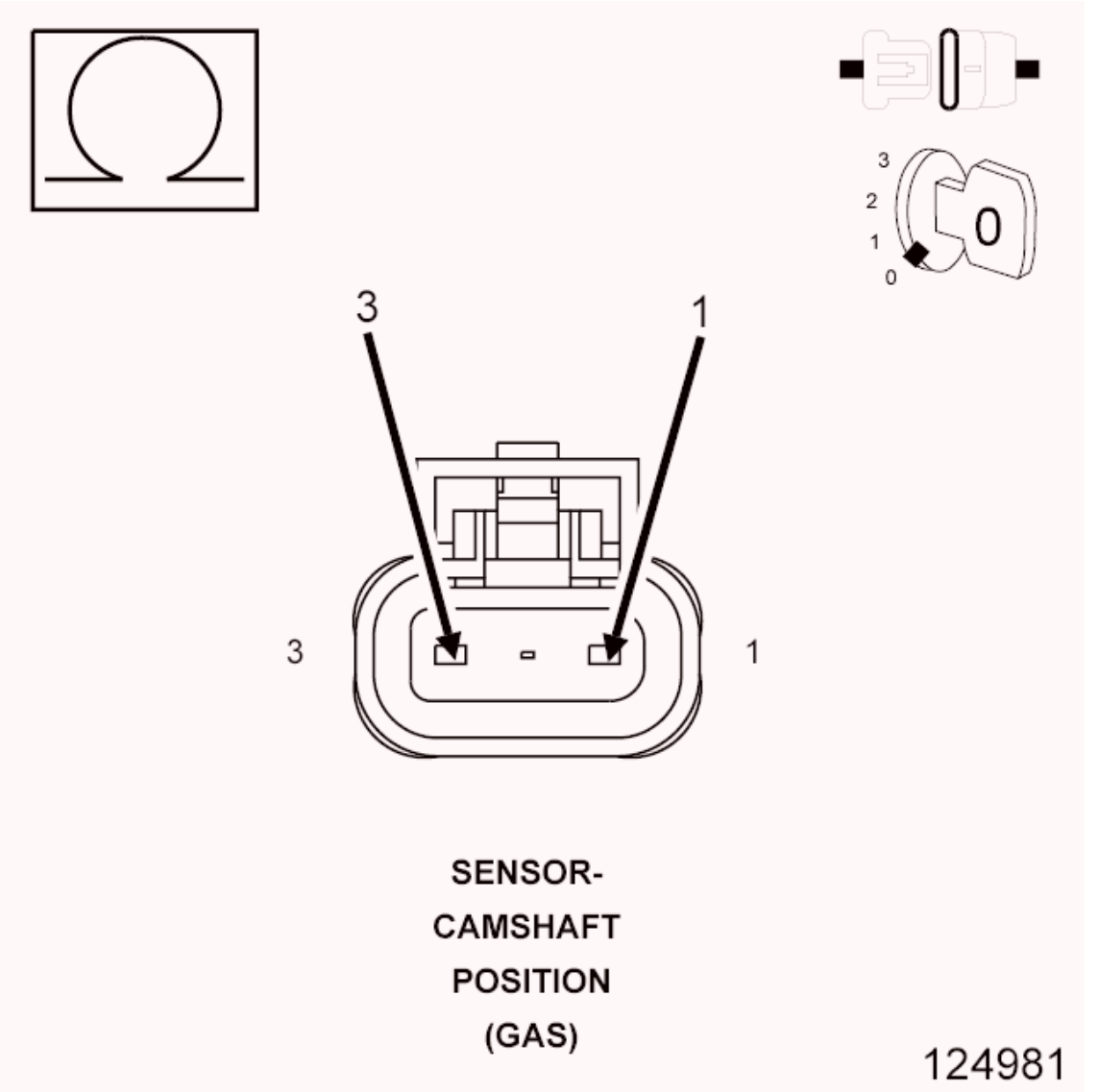

Fig. 186: Measuring Resistance Between 5-Volt Supply Circuit And Signal Circuit In CMP Sensor Harness Connector
Courtesy of CHRYSLER GROUP, LLC

1. Measure the resistance between the (F856) 5-volt Supply circuit and the (K44) CMP Signal circuit in the CMP harness connector.
2. Wiggle the related wire harness while taking this measurement.

   Is the resistance below 5.0 ohms?

Yes

- Repair the short between the (F856) 5-volt Supply circuit and the (K44) CMP Signal circuit.
- Perform the POWERTRAIN VERIFICATION TEST. Refer to **POWERTRAIN VERIFICATION TEST** .

No

- Go To 12.

12. **POWERTRAIN CONTROL MODULE (PCM)**
    1. Using the wiring diagram/schematic as a guide, inspect the wiring and connectors between the related Sensor and the Powertrain Control Module (PCM).
    2. Look for any chafed, pierced, pinched, or partially broken wires.
    3. Look for broken, bent, pushed out or corroded terminals. Verify that there is good pin to terminal contact in the CMP Sensor and the Powertrain Control Module connectors.
    4. Refer to any Technical Service Bulletins that may apply.

    Were there any problems found?

    Yes

    - Repair as necessary.
    - Perform the POWERTRAIN VERIFICATION TEST. Refer to **POWERTRAIN VERIFICATION TEST** .

    No

    - Replace and program the Powertrain Control Module per Service Information.
    - Perform the POWERTRAIN VERIFICATION TEST. Refer to **POWERTRAIN VERIFICATION TEST** .

P0420-CATALYST EFFICIENCY (BANK 1)

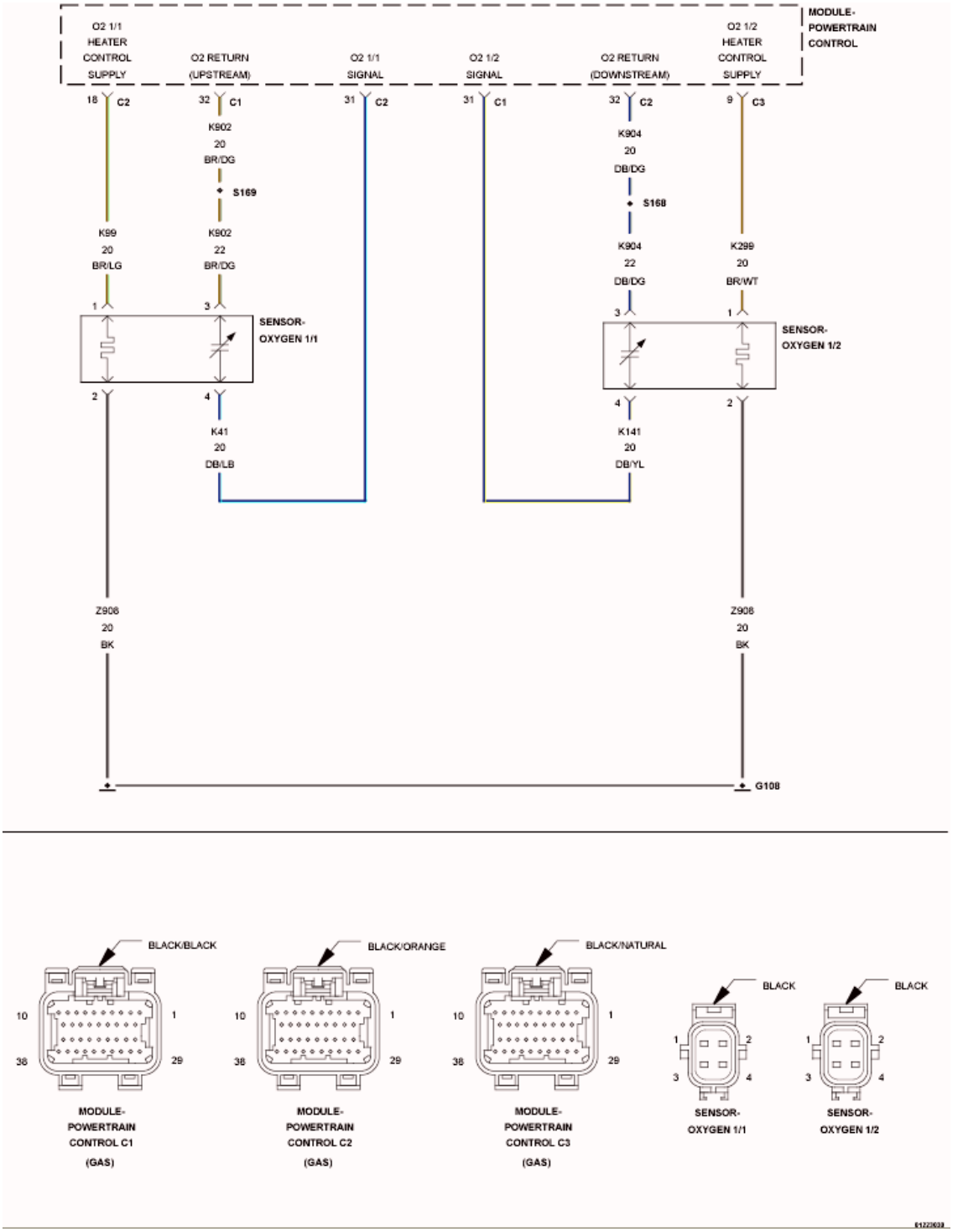

Fig. 187: O2 Sensor Circuit Schematic
Courtesy of CHRYSLER GROUP, LLC

For a complete wiring diagram, **refer to appropriate SYSTEM WIRING DIAGRAMS article** .

THEORY OF OPERATION

The State of Change (SOC) catalyst monitor uses the signals from both the upstream and downstream O2 sensors to detect aging of the catalyst. Based on the fact that when a catalyst ages, it loses some of its Oxygen Storage Capacity (OSC). As a result, part of the untreated exhaust gases can breakthrough the catalyst and causes the downstream O2 sensor to deviate from its neutral (Stoichiometric) position. By observing the activities in the downstream O2 signal, the degradation level of catalyst can be detected. In general, the higher the downstream O2 sensor SOC value, the more exhaust gas breakthrough and the lower the OSC of the catalytic converter.

WHEN MONITORED:

Engine Coolant Temperature (ECT) above 70° C (158° F), engine RPM between 1400 and 2300, vehicle speed between 64 and 96 kph (40 and 60 mph) and engine run time greater than three minutes.

SET CONDITION:

If the final State of Change index is within the calibrated fail threshold. Two trip fault. Three good trips to turn off the MIL.

POSSIBLE CAUSES

Possible Causes
(K902) O2 RETURN UPSTREAM CIRCUIT SHORTED TO GROUND
(K904) O2 RETURN DOWNSTREAM CIRCUIT SHORTED TO GROUND
(K902) O2 RETURN UPSTREAM CIRCUIT OPEN
(K904) O2 RETURN DOWNSTREAM CIRCUIT OPEN
EXHAUST LEAK
ENGINE MECHANICAL CONDITION
AGING O2 SENSOR
CATALYTIC CONVERTER

Always perform the Pre-Diagnostic Troubleshooting procedure before proceeding. Refer to PRE-DIAGNOSTIC TROUBLESHOOTING PROCEDURE .

DIAGNOSTIC TEST

1. **ACTIVE DTC**

NOTE: **A new rear O2 Sensor along with an aging front O2 Sensor may cause the DTC to set. Review the repair history of the vehicle before continuing.**

NOTE: **If an O2 Sensor DTC set along with the Catalytic Converter Efficiency DTC diagnose the O2 Sensor DTCs before continuing.**

NOTE: **Check for contaminants that may have damaged the O2 Sensor and Catalytic Converter: contaminated fuel, unapproved silicone, oil and**

coolant, repair necessary.

1. Start the engine.
2. Allow the engine to reach normal operating temperature.
3. With the scan tool, select View DTCs.

NOTE: **It may be necessary to drive the vehicle to meet the conditions to set this DTC, try to repeat the conditions in which the fault originally set by reviewing the Freeze Frame data.**

Is the DTC Active or Pending at this time?

Yes

- Go To 2.

No

- Perform the INTERMITTENT CONDITION diagnostic procedure. Refer to **INTERMITTENT CONDITION** .

2. **VISUALLY INSPECT CATALYTIC CONVERTER**

Inspect the Catalytic Converter for the following damage:

- Damage Catalytic Converter, dents or holes.
- Severe discoloration caused by overheating the Catalytic Converter.
- Catalytic Converter broke internally.
- Inspect both ends of the converter, inlet and outlet.
- Leaking Catalytic Converter.

Were any problems found?

Yes

- Replace the Catalytic Converter. Repair the condition that may have caused the failure.
- Perform the POWERTRAIN VERIFICATION TEST. Refer to **POWERTRAIN VERIFICATION TEST** .

No

- Go To 3.

3. **(K902) O2 RETURN UPSTREAM CIRCUIT VOLTAGE CHECK**

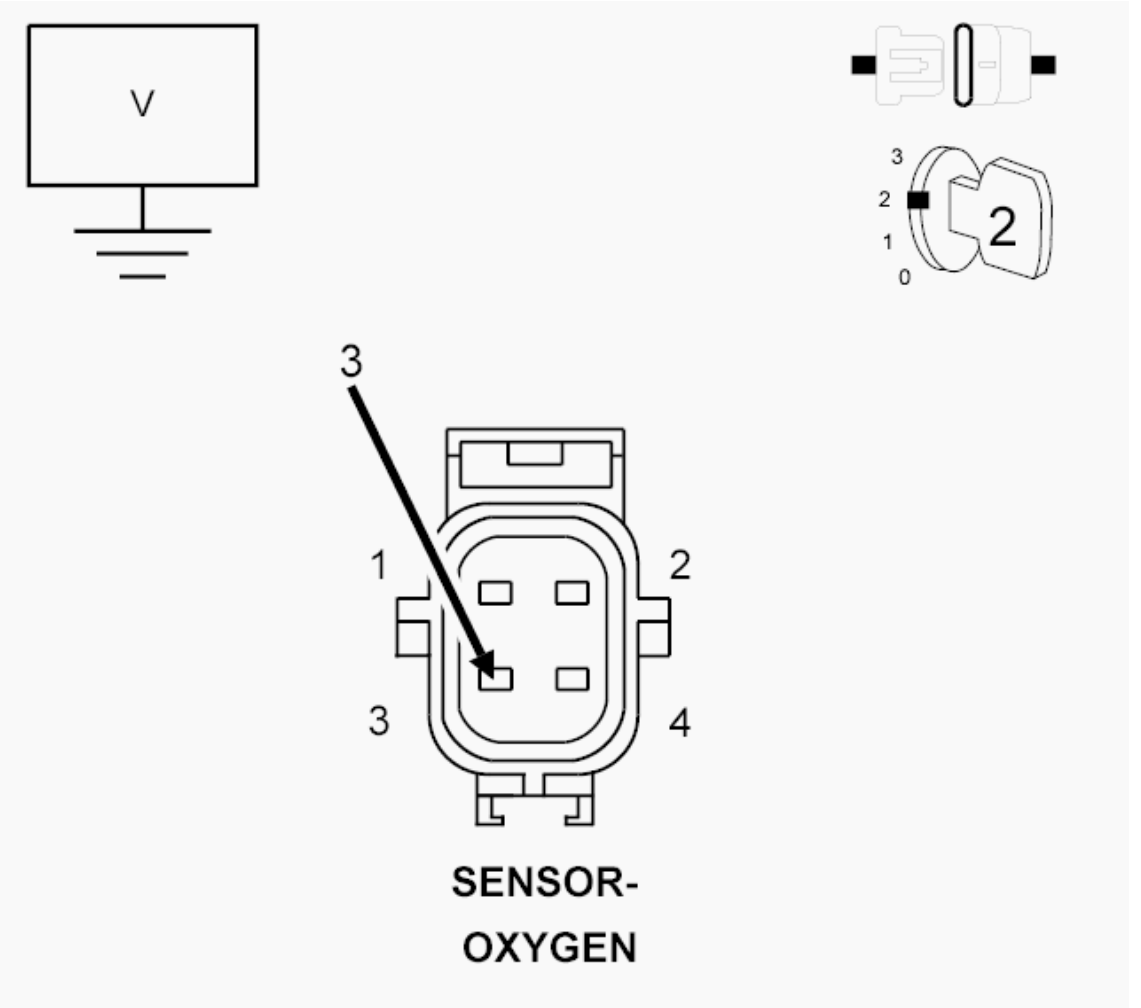

Fig. 188: Measuring Voltage On O2 Sensor Return Circuit In O2 Sensor Harness Connector
Courtesy of CHRYSLER GROUP, LLC

1. Turn the ignition off.
2. Disconnect the 1/1 O2 Sensor harness connector.
3. Turn the ignition on.
4. Measure the voltage on the (K902) O2 Return Upstream circuit in the O2 Sensor harness connector.

   Is the voltage at 2.5 Volts?

   Yes

   - Go To 4.

   No

   - Go To 5.

4. **(K904) O2 RETURN DOWNSTREAM CIRCUIT VOLTAGE CHECK**

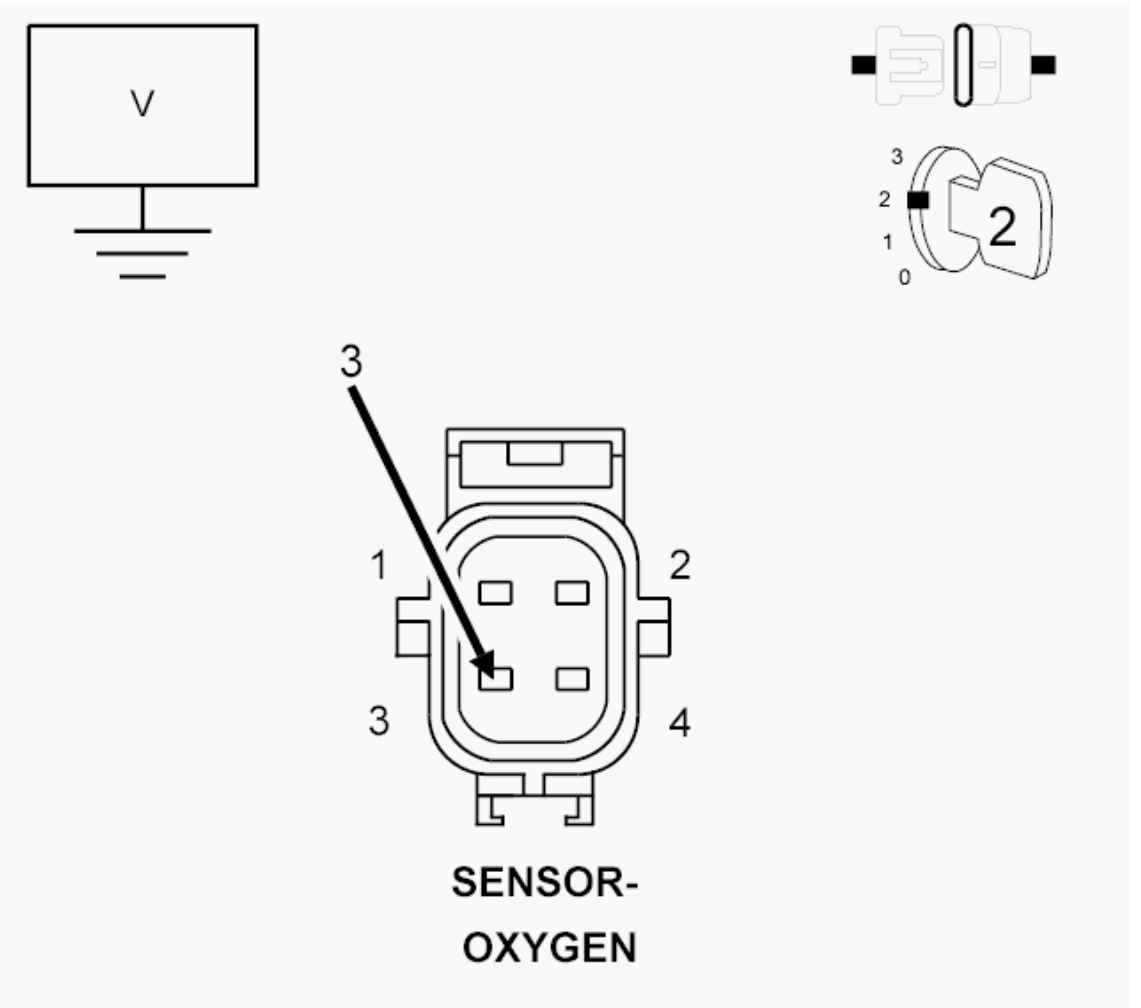

Fig. 189: Measuring Voltage On O2 Sensor Return Circuit In O2 Sensor Harness Connector
Courtesy of CHRYSLER GROUP, LLC

1. Turn the ignition off.
2. Disconnect the 1/2 O2 Sensor harness connector.
3. Turn the ignition on.
4. Measure the voltage on the (K904) O2 Return Downstream circuit in the O2 Sensor harness connector.

   Is the voltage at 2.5 Volts?

   Yes

   - Go To 10.

   No

   - Go To 7.

5. **(K902) O2 RETURN UPSTREAM CIRCUIT SHORTED TO GROUND**

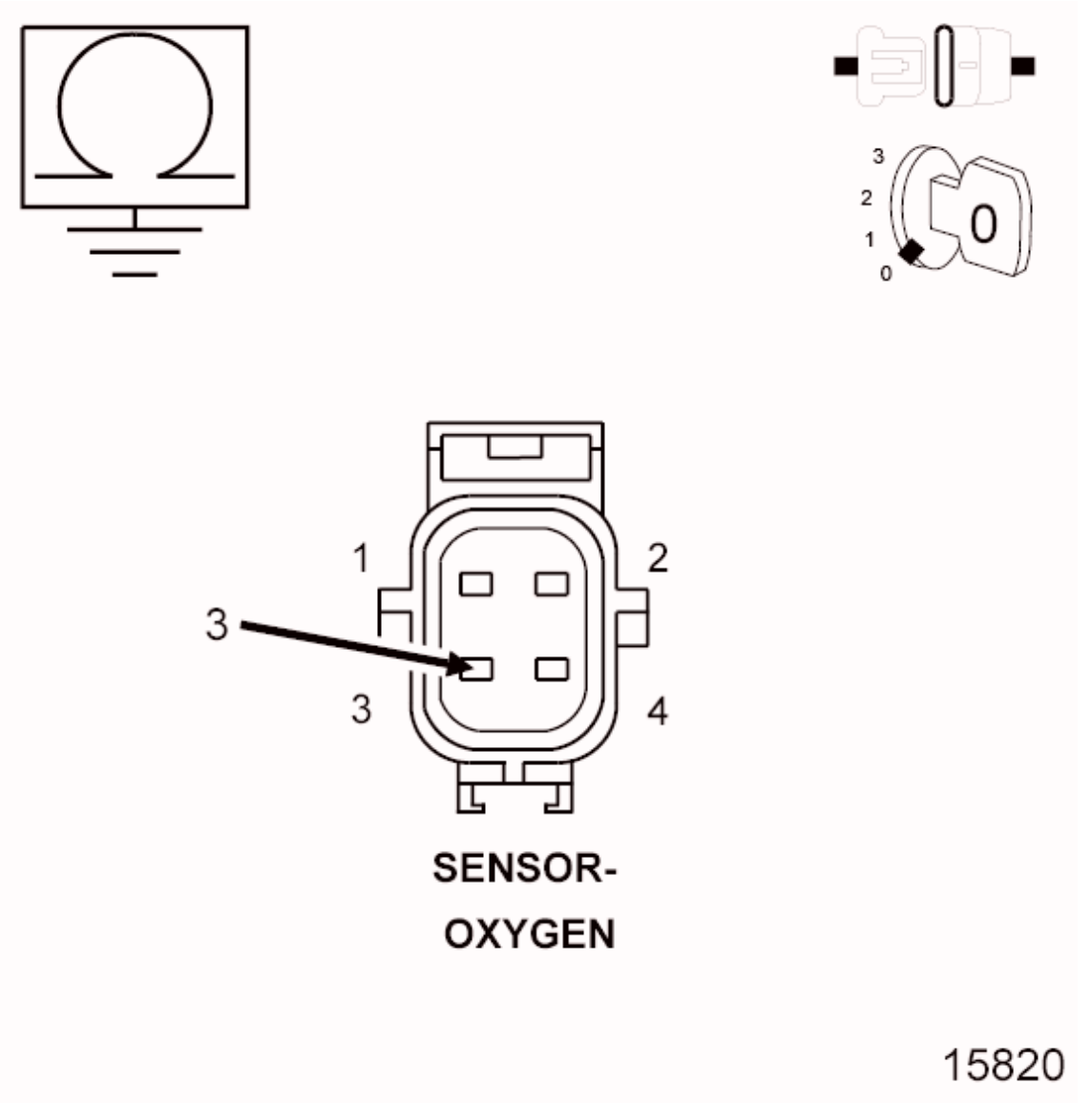

Fig. 190: Measuring Resistance Between Ground And O2 Sensor Return Circuit In O2 Sensor Harness Connector
Courtesy of CHRYSLER GROUP, LLC

1. Turn the ignition off.
2. Disconnect the C1 and C2 PCM harness connectors.
3. Measure the resistance between ground and the (K902) O2 Return Upstream circuit in the 1/1 O2 Sensor harness connector.

   Is the resistance below 100 Ohms?

   Yes

- Repair the short to ground in the (K902) O2 Return Upstream circuit.
- Perform the POWERTRAIN VERIFICATION TEST. Refer to **POWERTRAIN VERIFICATION TEST** .

No

- Go To 6.

6. **(K902) O2 RETURN UPSTREAM CIRCUIT OPEN**

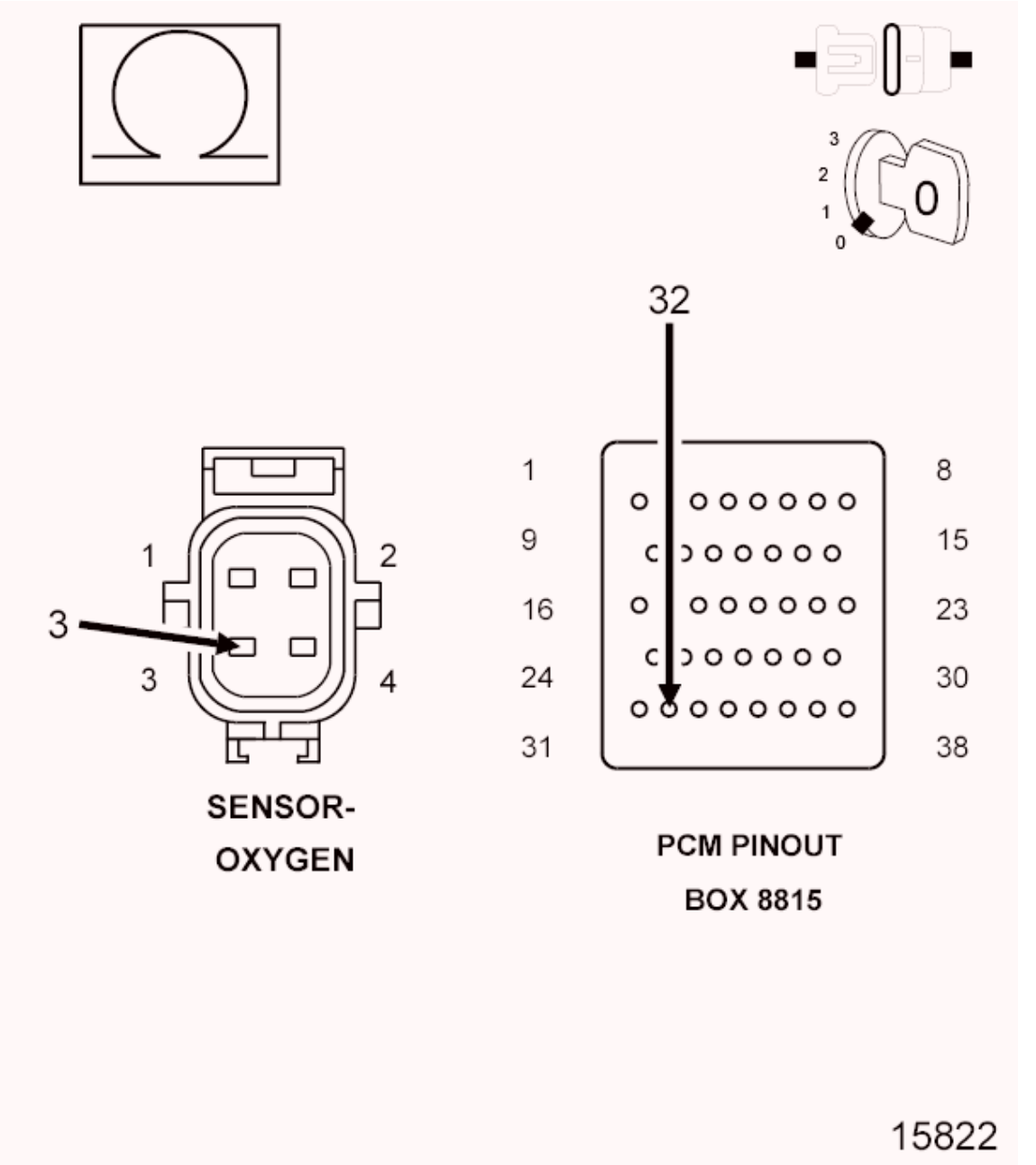

Fig. 191: Measuring Resistance Of O2 Sensor Return Circuit From O2 Sensor Harness Connector To Appropriate Terminal Of PCM Pinout Box 8815

CAUTION: Do not probe the PCM harness connectors. Probing the PCM harness connectors will damage the PCM terminals resulting in poor terminal to pin connection. Install the PCM Pinout Box (special tool #8815A, Kit, NGC, 38 Position) to perform diagnosis.

1. Measure the resistance of the (K902) O2 Return Upstream circuit from the 1/1 O2 Sensor harness connector to the appropriate terminal of PCM Pinout Box (special tool #8815A, Kit, NGC, 38 Position).

   Is the resistance below 5.0 Ohms?

   Yes

   - Go To 9.

   No

   - Repair the open in the (K902) O2 Return Upstream circuit.
   - Perform the POWERTRAIN VERIFICATION TEST. Refer to **POWERTRAIN VERIFICATION TEST** .

7. **(K904) O2 RETURN DOWNSTREAM CIRCUIT SHORTED TO GROUND**

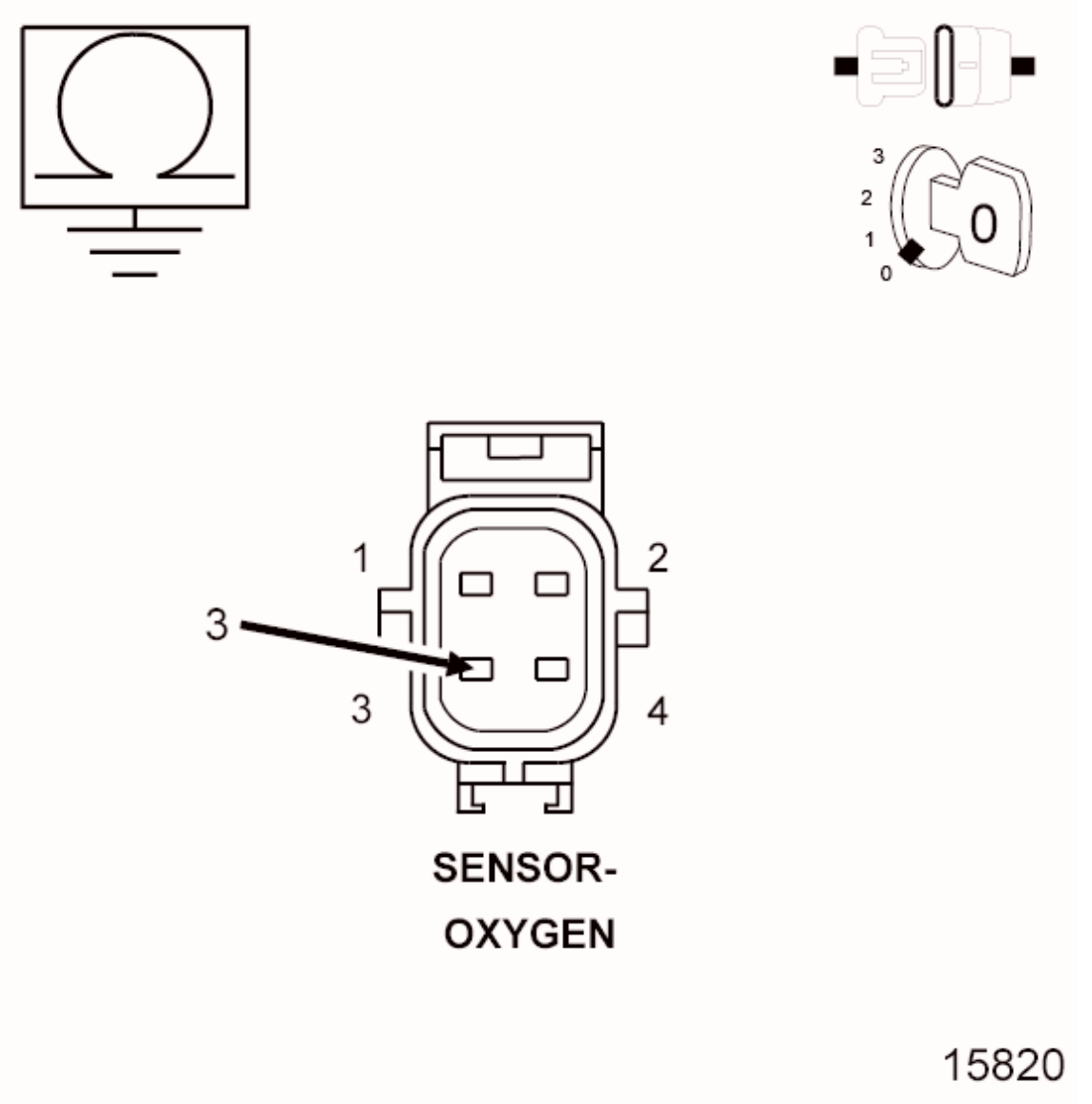

Fig. 192: Measuring Resistance Between Ground And O2 Sensor Return Circuit In O2 Sensor Harness Connector
Courtesy of CHRYSLER GROUP, LLC

1. Turn the ignition off.
2. Disconnect the 1/2 O2 harness connector.
3. Measure the resistance between ground and the (K904) O2 Return Downstream circuit in the 1/2 O2 Sensor harness connector.

   Is the resistance below 100 Ohms?

   Yes

   - Repair the short to ground in the (K904) O2 Return Downstream circuit.

- Perform the POWERTRAIN VERIFICATION TEST. Refer to **POWERTRAIN VERIFICATION TEST** .

No

- Go To 8.

8. **(K904) O2 RETURN DOWNSTREAM CIRCUIT OPEN**

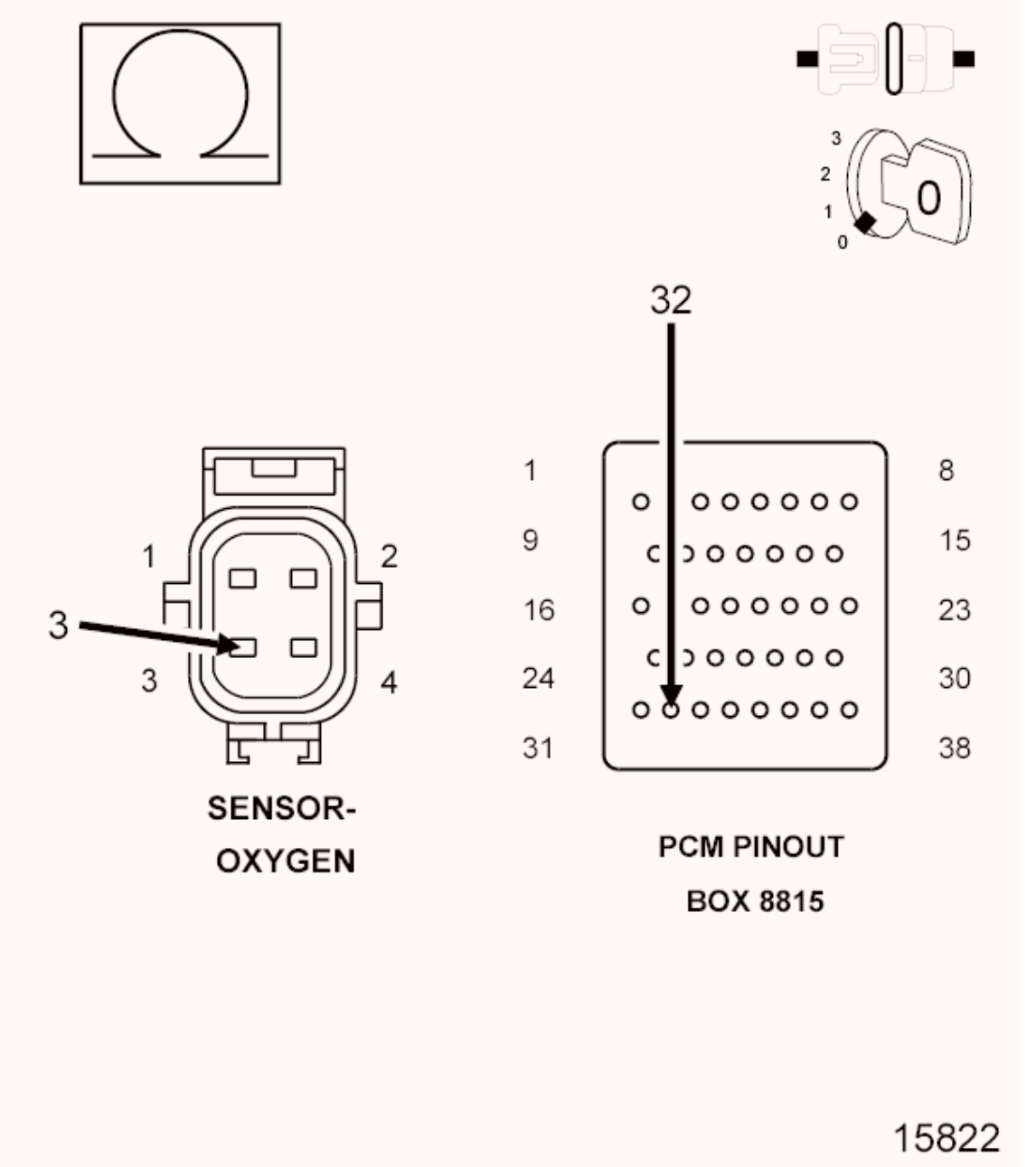

Fig. 193: Measuring Resistance Of O2 Sensor Return Circuit From O2 Sensor Harness Connector To Appropriate Terminal Of PCM Pinout Box 8815
Courtesy of CHRYSLER GROUP, LLC

CAUTION: Do not probe the PCM harness connectors. Probing the PCM harness connectors will damage the PCM terminals resulting in poor terminal to pin connection. Install the PCM Pinout Box (special tool #8815A, Kit, NGC, 38 Position) to perform diagnosis.

1. Measure the resistance of the (K904) O2 Return Downstream circuit from the 1/2 O2 Sensor harness connector to the appropriate terminal of PCM Pinout Box (special tool #8815A, Kit, NGC, 38 Position).

   Is the resistance below 5.0 Ohms?

   Yes

   - Go To 9.

   No

   - Repair the open in the (K904) O2 Return Downstream circuit.
   - Perform the POWERTRAIN VERIFICATION TEST. Refer to **POWERTRAIN VERIFICATION TEST** .

9. **POWERTRAIN CONTROL MODULE (PCM)**
   1. Using the wiring diagram/schematic as a guide, inspect the wiring and connectors between the Sensor and the Powertrain Control Module (PCM).
   2. Look for any chafed, pierced, pinched or partially broken wires.
   3. Look for broken, bent, pushed out or corroded terminals. Verify that there is good pin to terminal contact in the Sensor and the Powertrain Control Module connectors.
   4. Perform any Technical Service Bulletins that may apply.

   Were there any problems found?

   Yes

   - Repair as necessary.
   - Perform the POWERTRAIN VERIFICATION TEST. Refer to **POWERTRAIN VERIFICATION TEST** .

   No

   - Replace and program the Powertrain Control Module in accordance with the Service Information.
   - Perform the POWERTRAIN VERIFICATION TEST. Refer to **POWERTRAIN VERIFICATION TEST** .

10. **CHECKING THE EXHAUST SYSTEM FOR LEAKS**
    1. Turn the ignition off.

2. Raise the vehicle in accordance with the Service Information.

WARNING: The normal operating temperature of the exhaust system is very high. Never work around or attempt to service any part of the exhaust system until it has cooled. Special care should be taken when working near the catalytic converter. The temperature of the converter rises to a high level after a short period of engine operating time.

3. Connect Exhaust Cone (special tool #8404-EC, Exhaust Cone) or (special tool #8404-EC, Exhaust Cone) to Air Pressure Regulator (with hose) W-18-MIL-1146AS.

CAUTION: The air pressure must not exceed 27.6 kPa (4 psi), otherwise engine damage can occur.

4. Attach shop air to the air pressure regulator.
5. Adjust the Air Pressure Regulator to 27.6 kPa (4 psi).
6. Insert the exhaust cone into the vehicle tail pipe.
7. If the vehicle is equipped with dual exhaust. Use the (special tool #8404-ECT, Exhaust Cone, Truck) with equipped attached plug, plug one side of the dual exhaust pipe. Pressurize the other as described above.
8. Apply Mopar® Air Leak Detector PN# 05191804AA (or an equivalent leak finder liquid) to the following areas:
   - All welded joints from the exhaust manifold to 152.4 mm (6 inches) behind the downstream O2 sensor
   - O2 sensor seal points
   - O2 sensor boss welds
   - Flange/joint connection(s)
   - Exhaust manifold to cylinder head connection(s)
   - EGR solenoid gasket base and tube seal points (if equipped)
9. Watch for the liquid/soapy water to bubble.
10. Use the following definitions to help determine if system or component repair/replacement is necessary:

    Type 1 Leak is defined as a leak where very small foam like bubbles 1 mm (0.04 of an inch) or less appear.

    Any Type 1 or greater leaks found in welded joints, O2 sensor seal points or O2 sensor boss welds must be repaired or the component must be replaced.

    Type 2 Leak is defined as a leak where larger bubbles pea size, 8 mm (0.3 of an inch) or greater appear.

Any Type 2 or greater leaks found in flange or joint connections, exhaust manifold to cylinder head connections or EGR gasket and tube seal points must be repaired or the components must be replaced.

Leak Location	Repair required if results at 4 psi reveal bubble size:
Welded joints	Type 1, 1 mm (0.04 of an inch) or greater
O2 Sensor seal points	Type 1, 1 mm (0.04 of an inch) or greater
O2 Sensor boss welds	Type 1, 1 mm (0.04 of an inch) or greater
Flange / joint connections	Type 2, 8 mm (0.3 of an inch) or greater
Exhaust Manifold to cylinder head connections	Type 2, 8 mm (0.3 of an inch) or greater
EGR gasket and tube seal points	Type 2, 8 mm (0.3 of an inch) or greater

11. If a leak is found that matches the above definition, repair or replace the component as necessary.
12. Once the repair is complete, repeat the procedure to verify that all leaks have been repaired.

Were any exhaust leaks found?

Yes

- Repair or replace the leaking exhaust parts as necessary.
- Perform the POWERTRAIN VERIFICATION TEST. Refer to **POWERTRAIN VERIFICATION TEST** .

No

- Go To 11.

11. **ENGINE MECHANICAL CONDITION**
    1. Check the exhaust for excessive smoke caused by an internal problem in the engine.

    Is an engine mechanical condition present?

    Yes

    - Repair the engine mechanical condition as necessary.
    - Perform the POWERTRAIN VERIFICATION TEST. Refer to **POWERTRAIN VERIFICATION TEST** .

    No

    - Go To 12.

12. **AGING O2 SENSOR**
    1. A new rear O2 Sensor along with an aging front O2 Sensor may cause the DTC to set.
    2. Review the vehicles repair history.

Has the rear O2 Sensor been replaced without replacing the front O2 Sensor?

Yes

- Replace the Front O2 Sensor as necessary.
- Perform the POWERTRAIN VERIFICATION TEST. Refer to **POWERTRAIN VERIFICATION TEST** .

No

- Go To 13.

13. **CATALYTIC CONVERTER**

If there are no possible cause remaining, view repair.

Repair

- Replace the Catalytic Converter.
- Perform the POWERTRAIN VERIFICATION TEST. Refer to **POWERTRAIN VERIFICATION TEST** .

P0430-CATALYST EFFICIENCY (BANK 2)

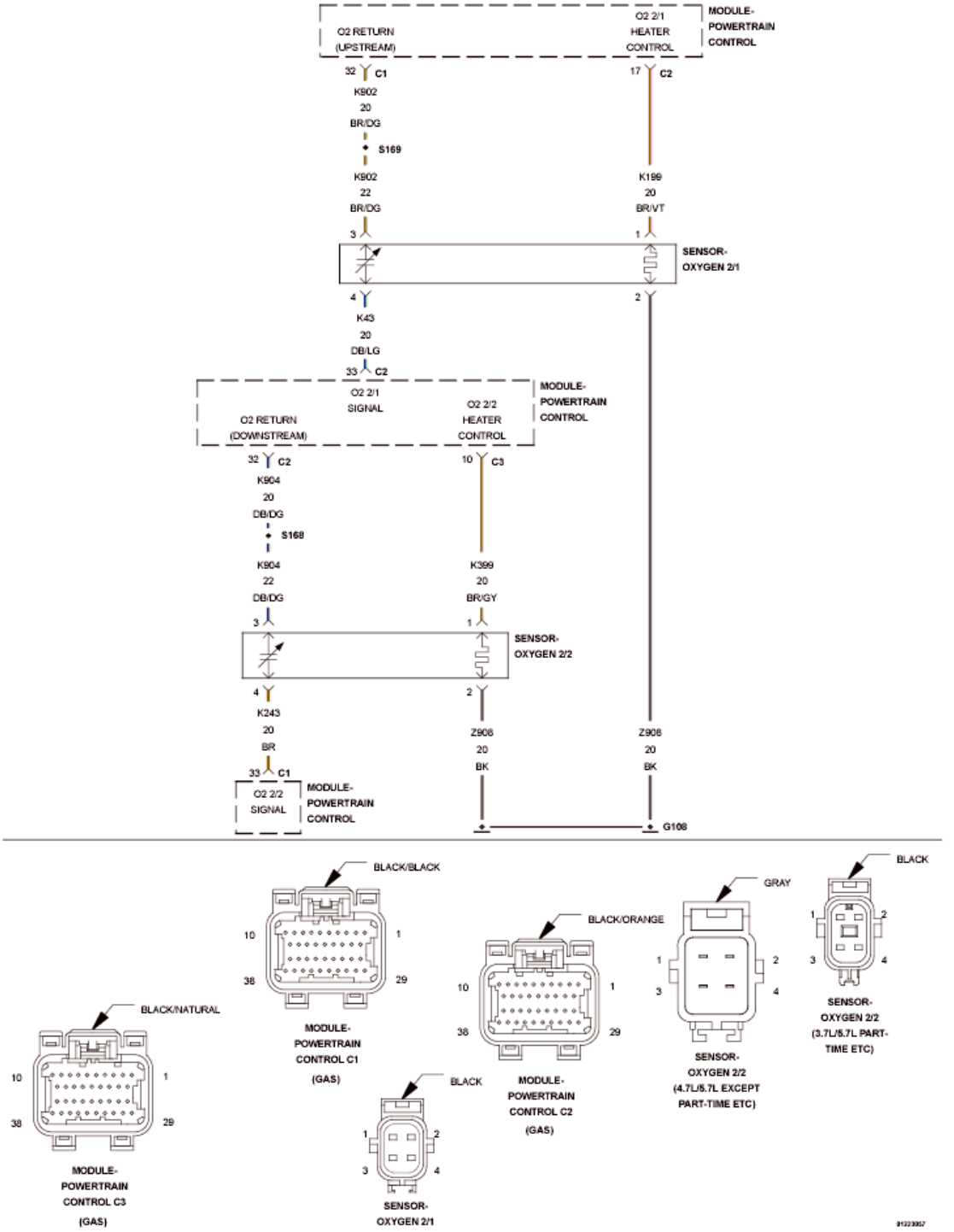

Fig. 194: O2 Return Circuit Schematic (Bank 2)
Courtesy of CHRYSLER GROUP, LLC

For a complete wiring diagram, **refer to appropriate SYSTEM WIRING DIAGRAMS article** .

THEORY OF OPERATION

The State of Change (SOC) catalyst monitor uses the signals from both the upstream and downstream O2

sensors to detect aging of the catalyst. Based on the fact that when a catalyst ages, it loses some of its Oxygen Storage Capacity (OSC). As a result, part of the untreated exhaust gases can breakthrough the catalyst and causes the downstream O2 sensor to deviate from its neutral (Stoichiometric) position. By observing the activities in the downstream O2 signal, the degradation level of catalyst can be detected. In general, the higher the downstream O2 sensor SOC value, the more exhaust gas breakthrough and the lower the OSC of the catalytic converter.

WHEN MONITORED:

Engine Coolant Temperaute (ECT) above 70° C (158° F), engine RPM between 1400 and 2300, vehicle speed between 64 and 96 kph (40 and 60 mph) and engine run time greater than 3 minutes.

SET CONDITION:

If the final State of Change index is within the calibrated fail threshold. Two trip fault. Three good trips to turn off the MIL.

POSSIBLE CAUSES

Possible Causes
(K902) O2 RETURN UPSTREAM CIRCUIT SHORTED TO GROUND
(K904) O2 RETURN DOWNSTREAM CIRCUIT SHORTED TO GROUND
(K902) O2 RETURN UPSTREAM CIRCUIT OPEN
(K904) O2 RETURN DOWNSTREAM CIRCUIT OPEN
EXHAUST LEAK
ENGINE MECHANICAL CONDITION
AGING O2 SENSOR
CATALYTIC CONVERTER

Always perform the Pre-Diagnostic Troubleshooting procedure before proceeding. Refer to PRE-DIAGNOSTIC TROUBLESHOOTING PROCEDURE .

DIAGNOSTIC TEST

1. **ACTIVE DTC**

NOTE: **A new rear O2 Sensor along with an aging front O2 Sensor may cause the DTC to set. Review the repair history of the vehicle before continuing.**

NOTE: **If an O2 Sensor DTC set along with the Catalytic Converter Efficiency DTC diagnose the O2 Sensor DTCs before continuing.**

NOTE: **Check for contaminants that may have damaged the O2 Sensor and Catalytic Converter: contaminated fuel, unapproved silicone, oil and coolant, repair necessary.**

1. Start the engine.
2. Allow the engine to reach normal operating temperature.
3. With the scan tool, select View DTCs.

NOTE: **It may be necessary to drive the vehicle to meet the conditions to set this DTC, try to repeat the conditions in which the fault originally set by reviewing the Freeze Frame data.**

Is the DTC Active or Pending at this time?

Yes

- Go To 2.

No

- Perform the INTERMITTENT CONDITION diagnostic procedure. Refer to **INTERMITTENT CONDITION** .

2. **VISUALLY INSPECT CATALYTIC CONVERTER**

Inspect the Catalytic Converter for the following damage.

- Damage Catalytic Converter, dents or holes.
- Severe discoloration caused by overheating the Catalytic Converter.
- Catalytic Converter broke internally.
- Inspect both ends of the converter, inlet and outlet.
- Leaking Catalytic Converter.

Were any problems found?

Yes

- Replace the Catalytic Converter. Repair the condition that may have caused the failure.
- Perform the POWERTRAIN VERIFICATION TEST. Refer to **POWERTRAIN VERIFICATION TEST** .

No

- Go To 3.

3. **(K902) O2 RETURN UPSTREAM CIRCUIT VOLTAGE CHECK**

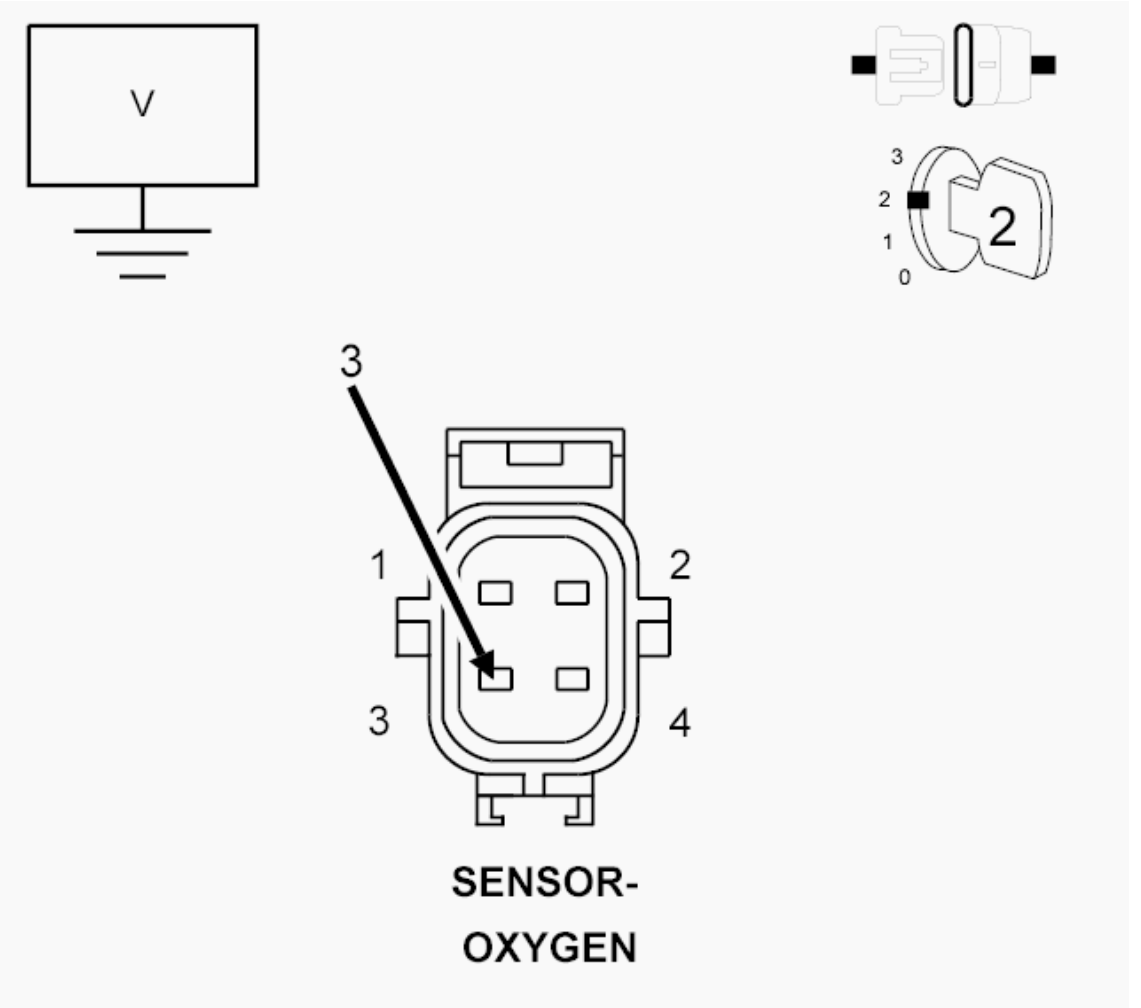

Fig. 195: Measuring Voltage On O2 Sensor Return Circuit In O2 Sensor Harness Connector
Courtesy of CHRYSLER GROUP, LLC

1. Turn the ignition off.
2. Disconnect the 2/1 O2 Sensor harness connector.
3. Turn the ignition on.
4. Measure the voltage on the (K902) O2 Return Upstream circuit in the O2 Sensor harness connector.

   Is the voltage at 2.5 Volts?

   Yes

   - Go To 4.

   No

   - Go To 5.

4. **(K904) O2 RETURN DOWNSTREAM CIRCUIT VOLTAGE CHECK**

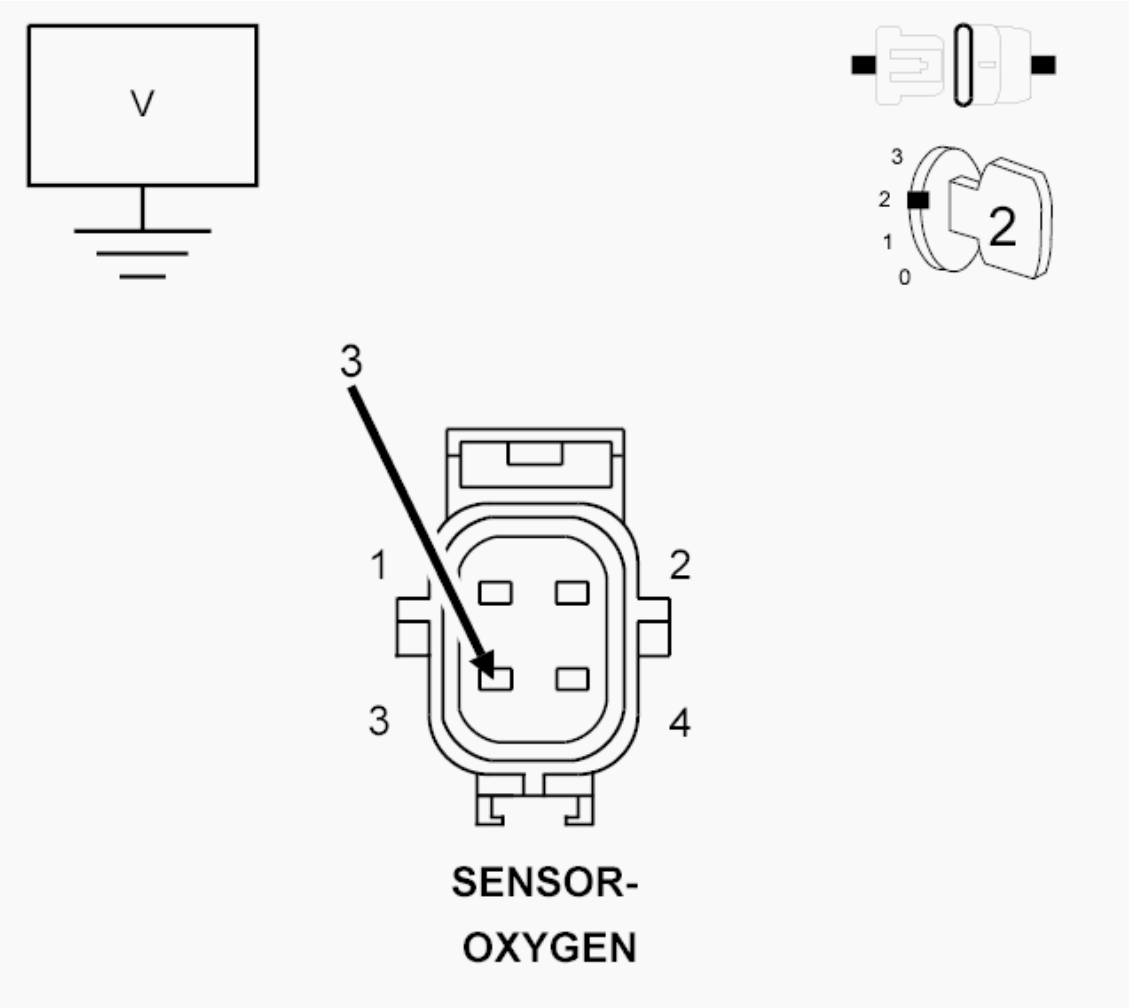

Fig. 196: Measuring Voltage On O2 Sensor Return Circuit In O2 Sensor Harness Connector
Courtesy of CHRYSLER GROUP, LLC

1. Turn the ignition off.
2. Disconnect the 2/2 O2 Sensor harness connector.
3. Turn the ignition on.
4. Measure the voltage on the (K904) O2 Return Downstream circuit in the O2 Sensor harness connector.

   Is the voltage at 2.5 Volts?

   Yes

   - Go To 10.

   No

   - Go To 7.

5. **(K902) O2 RETURN UPSTREAM CIRCUIT SHORTED TO GROUND**

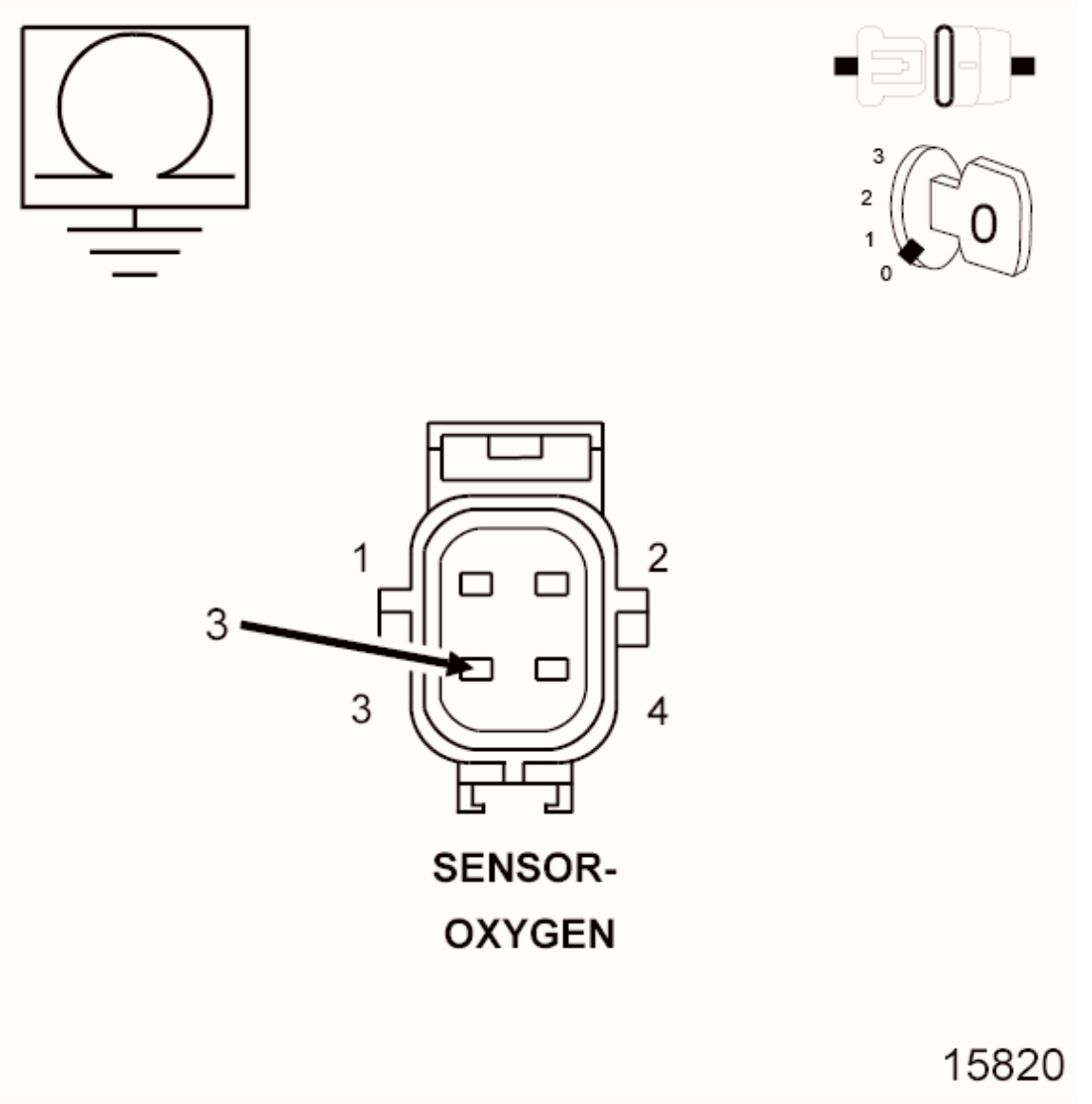

Fig. 197: Measuring Resistance Between Ground And O2 Sensor Return Circuit In O2 Sensor Harness Connector
Courtesy of CHRYSLER GROUP, LLC

1. Turn the ignition off.
2. Disconnect the C1 and C2 PCM harness connectors.
3. Measure the resistance between ground and the (K902) O2 Return Upstream circuit in the 2/1 O2 Sensor harness connector.

   Is the resistance below 100 Ohms?

   Yes

- Repair the short to ground in the (K902) O2 Return Upstream circuit.
- Perform the POWERTRAIN VERIFICATION TEST. Refer to **POWERTRAIN VERIFICATION TEST** .

No

- Go To 6.

6. **(K902) O2 RETURN UPSTREAM CIRCUIT OPEN**

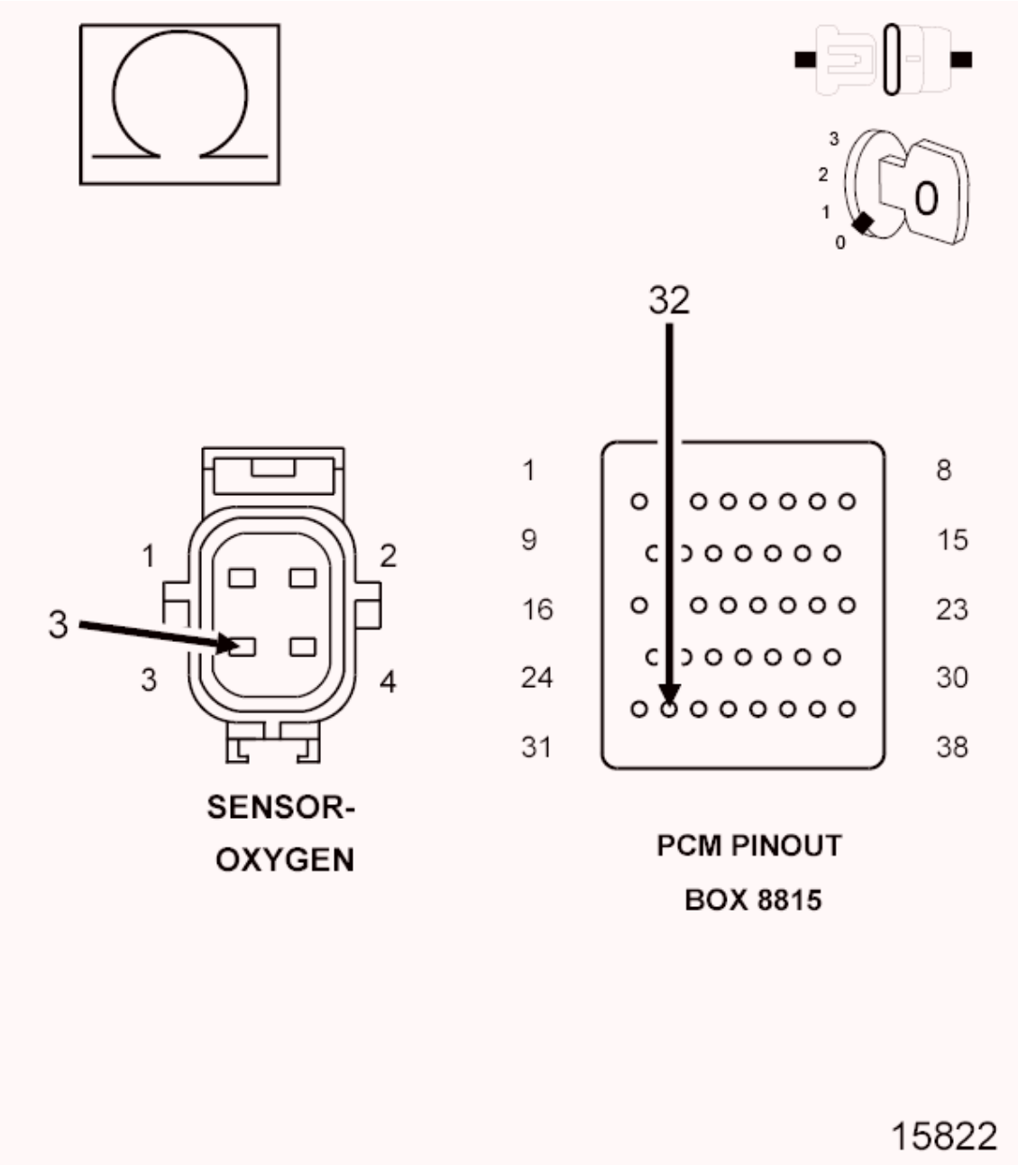

Fig. 198: Measuring Resistance Of O2 Sensor Return Circuit From O2 Sensor Harness Connector To Appropriate Terminal Of PCM Pinout Box 8815

CAUTION: Do not probe the PCM harness connectors. Probing the PCM harness connectors will damage the PCM terminals resulting in poor terminal to pin connection. Install the PCM Pinout Box (special tool #8815A, Kit, NGC, 38 Position) to perform diagnosis.

1. Measure the resistance of the (K902) O2 Return Upstream circuit from the 2/1 O2 Sensor harness connector to the appropriate terminal of PCM Pinout Box (special tool #8815A, Kit, NGC, 38 Position).

   Is the resistance below 5.0 Ohms?

   Yes

   - Go To 9.

   No

   - Repair the open in the (K902) O2 Return Upstream circuit.
   - Perform the POWERTRAIN VERIFICATION TEST. Refer to **POWERTRAIN VERIFICATION TEST** .

7. **(K904) O2 RETURN DOWNSTREAM CIRCUIT SHORTED TO GROUND**

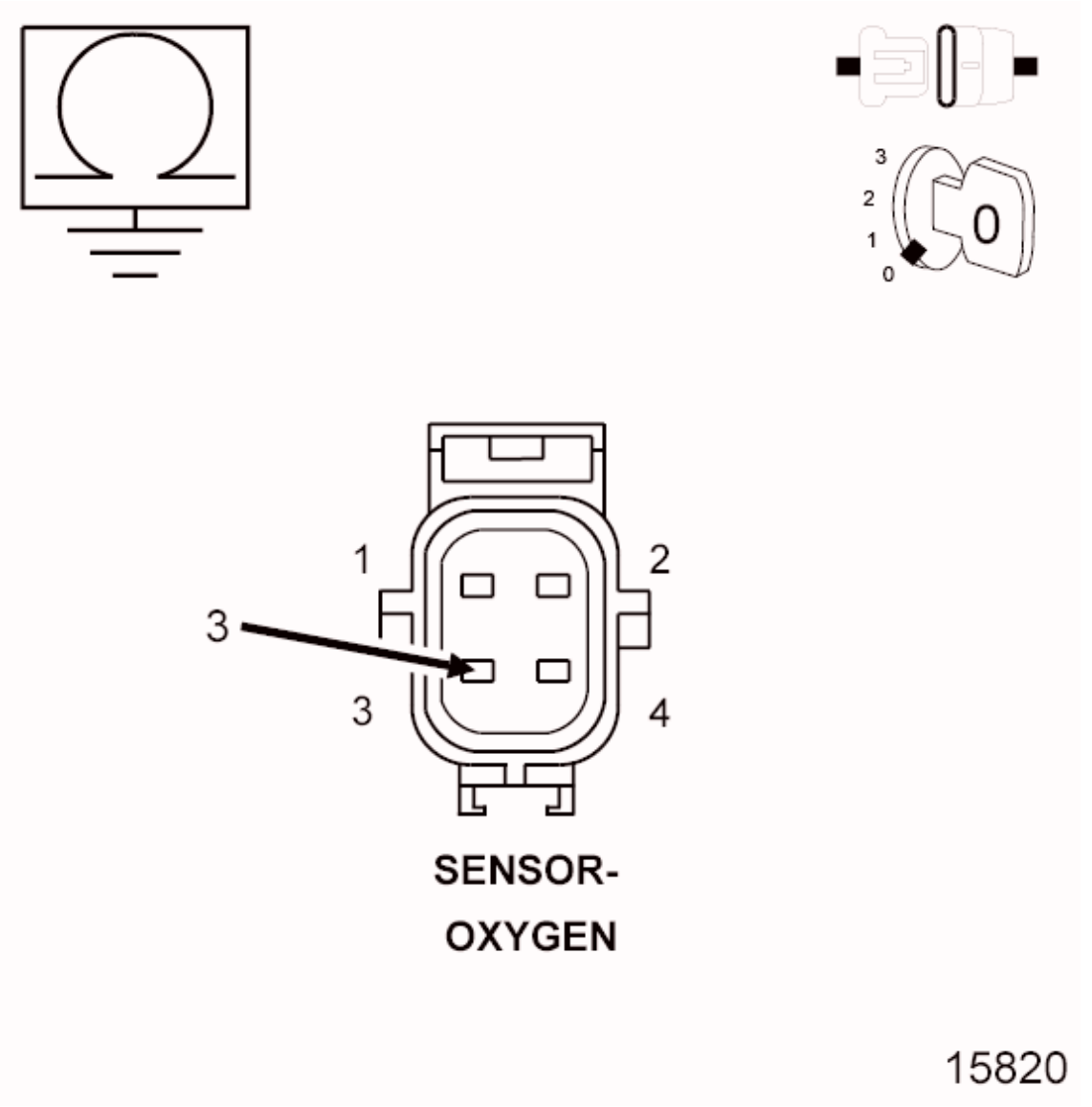

Fig. 199: Measuring Resistance Between Ground And O2 Sensor Return Circuit In O2 Sensor Harness Connector
Courtesy of CHRYSLER GROUP, LLC

1. Turn the ignition off.
2. Disconnect the 2/2 O2 harness connector.
3. Measure the resistance between ground and the (K904) O2 Return Downstream circuit in the 2/2 O2 Sensor harness connector.

   Is the resistance below 100 Ohms?

   Yes

   - Repair the short to ground in the (K904) O2 Return Downstream circuit.

- Perform the POWERTRAIN VERIFICATION TEST. Refer to **POWERTRAIN VERIFICATION TEST** .

No

- Go To 8.

8. **(K904) O2 RETURN DOWNSTREAM CIRCUIT OPEN**

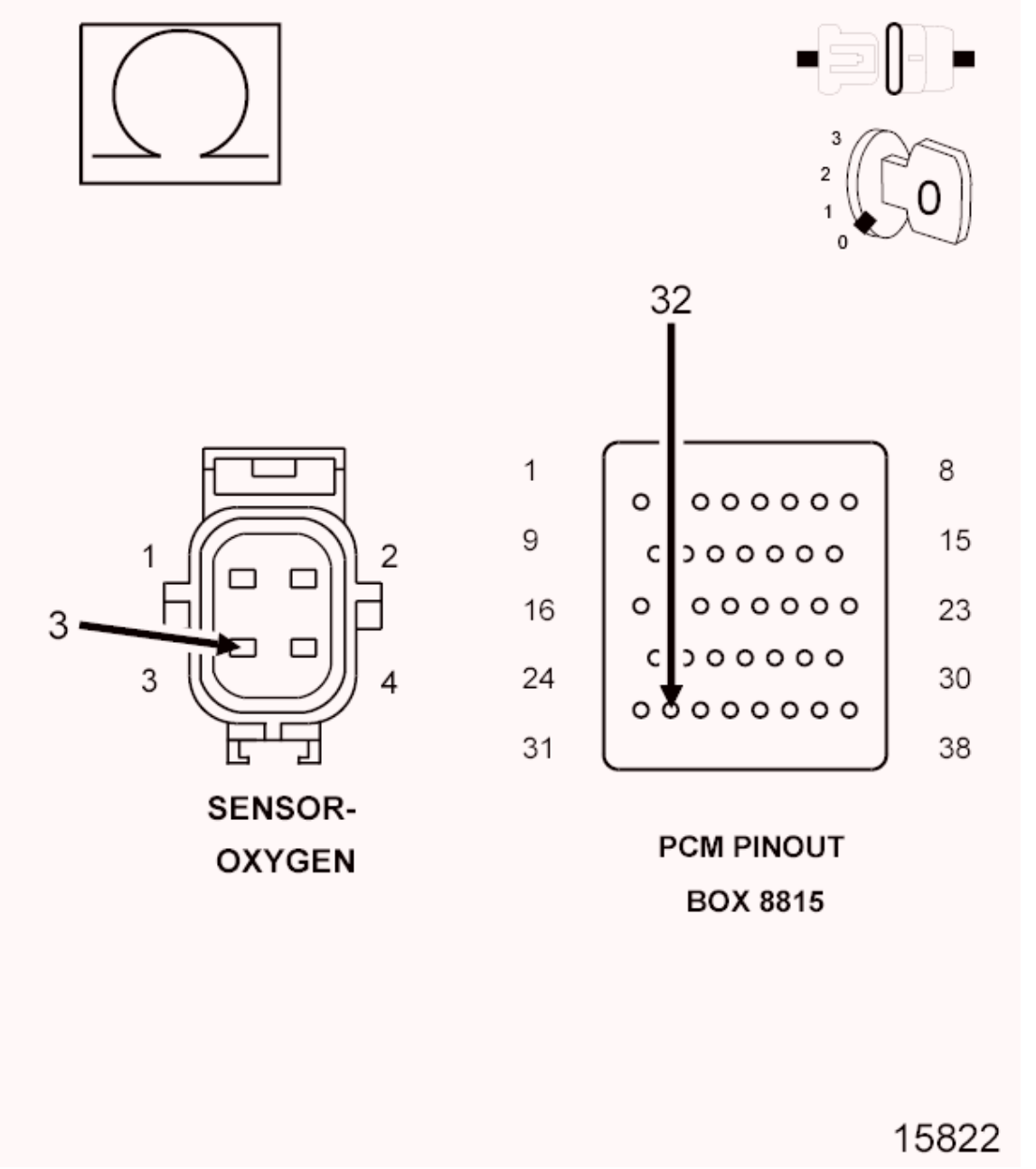

Fig. 200: Measuring Resistance Of O2 Sensor Return Circuit From O2 Sensor Harness Connector To Appropriate Terminal Of PCM Pinout Box 8815
Courtesy of CHRYSLER GROUP, LLC

1. Measure the resistance of the (K904) O2 Return Downstream circuit from the 2/2 O2 Sensor harness connector to the appropriate terminal of PCM Pinout Box (special tool #8815A, Kit, NGC, 38 Position).

   Is the resistance below 5.0 Ohms?

   Yes

   - Go To 9.

   No

   - Repair the open in the (K904) O2 Return Downstream circuit.
   - Perform the POWERTRAIN VERIFICATION TEST. Refer to **POWERTRAIN VERIFICATION TEST** .

9. **POWERTRAIN CONTROL MODULE (PCM)**
   1. Using the wiring diagram/schematic as a guide, inspect the wiring and connectors between the Sensor and the Powertrain Control Module (PCM).
   2. Look for any chafed, pierced, pinched or partially broken wires.
   3. Look for broken, bent, pushed out or corroded terminals. Verify that there is good pin to terminal contact in the Sensor and the Powertrain Control Module connectors.
   4. Perform any Technical Service Bulletins that may apply.

      Were there any problems found?

      Yes

      - Repair as necessary.
      - Perform the POWERTRAIN VERIFICATION TEST. Refer to **POWERTRAIN VERIFICATION TEST** .

      No

      - Replace and program the Powertrain Control Module in accordance with the Service Information.
      - Perform the POWERTRAIN VERIFICATION TEST. Refer to **POWERTRAIN VERIFICATION TEST** .

10. **CHECKING THE EXHAUST SYSTEM FOR LEAKS**
    1. Turn the ignition off.
    2. Raise the vehicle in accordance with the Service Information.

       WARNING: **The normal operating temperature of the exhaust system is very high. Never work around or attempt to service any part of the exhaust system until it has cooled. Special care should be**

taken when working near the catalytic converter. The temperature of the converter rises to a high level after a short period of engine operating time.

3. Connect Exhaust Cone (special tool #8404-EC, Exhaust Cone) or (special tool #8404-EC, Exhaust Cone) to Air Pressure Regulator (with hose) W-18-MIL-1146AS.

CAUTION: The air pressure must not exceed 27.6 kPa (4 psi), otherwise engine damage can occur.

4. Attach shop air to the air pressure regulator.
5. Adjust the Air Pressure Regulator to 27.6 kPa (4 psi).
6. Insert the exhaust cone into the vehicle tail pipe.
7. If the vehicle is equipped with dual exhaust. Use the (special tool #8404-ECT, Exhaust Cone, Truck) with equipped attached plug, plug one side of the dual exhaust pipe. Pressurize the other as described above.
8. Apply Mopar® Air Leak Detector PN# 05191804AA (or an equivalent leak finder liquid) to the following areas:
   - All welded joints from the exhaust manifold to 152.4 mm (6 inches) behind the downstream O2 sensor
   - O2 sensor seal points
   - O2 sensor boss welds
   - Flange/joint connection(s)
   - Exhaust manifold to cylinder head connection(s)
   - EGR solenoid gasket base and tube seal points (if equipped)
9. Watch for the liquid/soapy water to bubble.
10. Use the following definitions to help determine if system or component repair/replacement is necessary:

    Type 1 Leak is defined as a leak where very small foam like bubbles 1 mm (0.04 of an inch) or less appear.

    Any Type 1 or greater leaks found in welded joints, O2 sensor seal points or O2 sensor boss welds must be repaired or the component must be replaced.

    Type 2 Leak is defined as a leak where larger bubbles pea size, 8 mm (0.3 of an inch) or greater appear.

    Any Type 2 or greater leaks found in flange or joint connections, exhaust manifold to cylinder head connections or EGR gasket and tube seal points must be repaired or the components must be replaced

	Repair required if results at 4 psi reveal

Leak Location	bubble size:
Welded joints	Type 1, 1 mm (0.04 of an inch) or greater
O2 Sensor seal points	Type 1, 1 mm (0.04 of an inch) or greater
O2 Sensor boss welds	Type 1, 1 mm (0.04 of an inch) or greater
Flange / joint connections	Type 2, 8 mm (0.3 of an inch) or greater
Exhaust Manifold to cylinder head connections	Type 2, 8 mm (0.3 of an inch) or greater
EGR gasket and tube seal points	Type 2, 8 mm (0.3 of an inch) or greater

11. If a leak is found that matches the above definition, repair or replace the component as necessary.
12. Once the repair is complete, repeat the procedure to verify that all leaks have been repaired.

    Were any exhaust leaks found?

    Yes

    - Repair or replace the leaking exhaust parts as necessary.
    - Perform the POWERTRAIN VERIFICATION TEST. Refer to **POWERTRAIN VERIFICATION TEST** .

    No

    - Go To 11.

11. **ENGINE MECHANICAL CONDITION**
    1. Check the exhaust for excessive smoke caused by an internal problem in the engine.

       Is an engine mechanical condition present?

       Yes

       - Repair the engine mechanical condition as necessary.
       - Perform the POWERTRAIN VERIFICATION TEST. Refer to **POWERTRAIN VERIFICATION TEST** .

       No

       - Go To 12.

12. **AGING O2 SENSOR**
    1. A new rear O2 Sensor along with an aging front O2 Sensor may cause the DTC to set.
    2. Review the vehicles repair history.

       Has the rear O2 Sensor been replaced without replacing the front O2 Sensor?

       Yes

- Replace the Front O2 Sensor as necessary.
- Perform the POWERTRAIN VERIFICATION TEST. Refer to **POWERTRAIN VERIFICATION TEST** .

No

- Go To 13.

13. **CATALYTIC CONVERTER**

If there are no possible cause remaining, view repair.

Repair

- Replace the Catalytic Converter.
- Perform the POWERTRAIN VERIFICATION TEST. Refer to **POWERTRAIN VERIFICATION TEST** .

P0440-GENERAL EVAP SYSTEM FAILURE

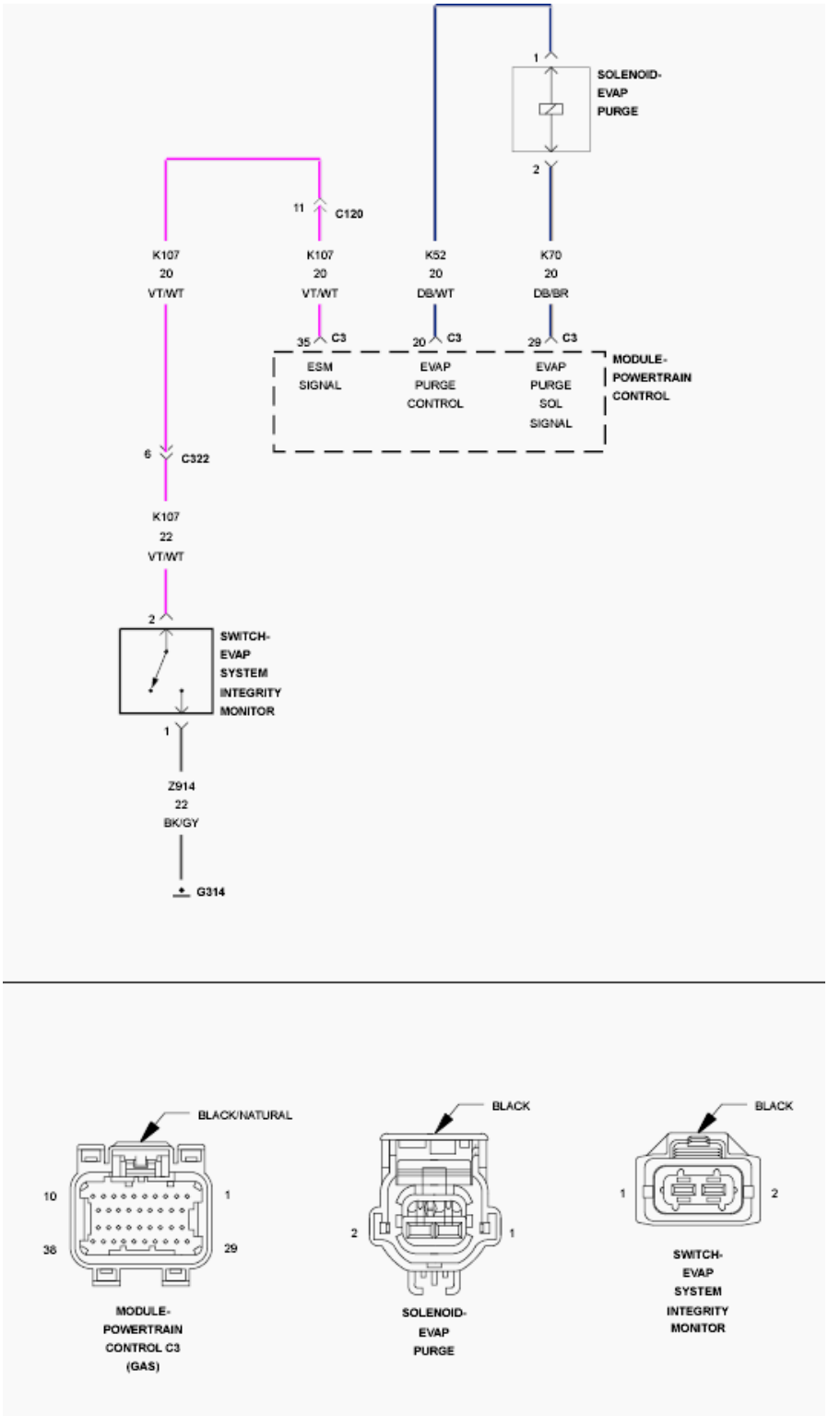

Fig. 201: Evaporative System Integrity Monitor (Esim) Switch Circuit Schematic
Courtesy of CHRYSLER GROUP, LLC

For a complete wiring diagram, **refer to appropriate SYSTEM WIRING DIAGRAMS article** .

THEORY OF OPERATION

The EVAP Purge Monitor tests the integrity of the hoses/tube between the throttle body/intake and the fuel tank. The monitor is a two stage test and runs only after the EVAP system passes the small leak test. Stage one is non-intrusive. The Powertrain Control Module (PCM) monitors the purge vapor ratio and the EVAP System Integrity Monitor (ESIM) switch closed ratio. If the purge vapor ratio is above a calculated value, the monitor passes. If the ESIM switch closed ratio is greater than calculated value when purge flow is greater than a minimum value, the monitor passes. Stage two is an intrusive test and runs only if stage one does not pass. The PCM commands the purge solenoid to flow at a specified rate to force the purge vapor ratio to update. The ratio is compared to a calibrated specification. If it is less than specified, a one trip failure is recorded. This test can detect if the purge hose is off, obstructed or the purge valve is not operational.

WHEN MONITORED:

Engine running after a cold start with the difference between ECT and AAT is less than 10° C (19° F). Fuel Level between 12% and 88% full. Manifold vacuum greater than a calculated minimum value. Ambient Temperature between 4° C and 32° C (39° F and 89° F).

SET CONDITION:

When the monitor conditions are met, the PCM will ramp in purge flow. If the PCM does not sense an ESIM switch closure after a calculated amount of purge flow accumulation, an error is detected. Two Trip Fault. Three good trips to turn off the MIL.

POSSIBLE CAUSES

Possible Causes
EVAP PURGE SOLENOID VACUUM SUPPLY
EVAP PURGE HOSE/TUBE AND FRESH AIR FILTER OBSTRUCTION
(Z914) GROUND CIRCUIT OPEN
(K107) ESIM SIGNAL CIRCUIT OPEN
EVAPORATIVE EMISSION LEAK
EVAPORATIVE SYSTEM INTEGRITY MONITOR SWITCH
EVAP PURGE SOLENOID
POWERTRAIN CONTROL MODULE (PCM)

Always perform the Pre-Diagnostic Troubleshooting procedure before proceeding. Refer to PRE-DIAGNOSTIC TROUBLESHOOTING PROCEDURE .

DIAGNOSTIC TEST

1. **VEHICLE HISTORY AND SERVICE BULLETIN INVESTIGATION**
    1. Ignition on, engine not running.
    2. With the scan tool, select View DTCs. Record the related Freeze Frame data if any DTCs are present.
    3. Whether or not any DTCs are active you will want to check the following items which may assist in

repairing the customer's complaint successfully.

4. Check the vehicle's repair history.
5. If the vehicle has a repair history that pertains to the customer's current complaint, review the repair.
6. Inspect the vehicle for any aftermarket accessories that may have been installed incorrectly.
7. Check for any service bulletin(s) related to the customer's complaint or DTCs.
8. If a service bulletin applies, follow the instructions per the service bulletin.

Choose the following scenario that best applies.

The service bulletin repaired the customer's complaint.

- Testing complete.

A DTC is present, no service bulletins apply or the service bulletin didn't repair the customer's complaint.

- Go To 2.

2. **ACTIVE DTC**

NOTE: **It maybe necessary to drive the vehicle to meet the conditions to set this DTC, try to repeat the conditions in which the fault originally set by reviewing the Freeze Frame data.**

NOTE: **Allow the vehicle to reach ambient temperature before continuing with this procedure.**

NOTE: **A loose gas cap could have caused this DTC to set. Make sure the gas cap is tight and in good condition.**

NOTE: **If the customer is experiencing an early fuel shut off during the fuel filling process along with P0440, P0441 and P0452 setting, you need to check for restrictions in the EVAP Purge tubes/hoses as well as the Fresh Air Filter before continuing.**

1. Start the engine.
2. Allow the engine to reach normal operating temperature.
3. Using the scan tool, perform the ESIM Forced Monitor test. Allow the test to complete.
4. With the scan tool, select View DTCs.

Is the DTC Active or Pending at this time?

Yes

- Go To 3.

No

- Perform the INTERMITTENT CONDITION diagnostic procedure. Refer to **INTERMITTENT CONDITION** .

3. **VISUAL AND PHYSICAL INSPECTION**

Inspect the EVAP System for any of the following conditions:

- Holes or cracks
- Loose seal points
- Damaged or missing components
- Incorrect routing of hoses and tubes
- Loose or missing Fuel Cap
- Damaged or missing Fuel Cap seal
- Improper installation of the Fuel Cap
- Damaged Locking tabs on the Fuel Cap and/or filler tube
- Damaged seal points on the Fuel Cap and/or filler tube

Were any of the above conditions found?

Yes

- Repair as necessary.
- Perform the POWERTRAIN VERIFICATION TEST. Refer to **POWERTRAIN VERIFICATION TEST** .

No

- Go To 4.

4. **EVAP VACUUM SUPPLY HOSE INSPECTION**
   1. Carefully inspect the EVAP Purge Solenoid vacuum supply hose for proper routing.
   2. Check for a pinched or plugged hose from the throttle body or intake manifold to the Purge Solenoid.
   3. Make sure the vacuum port at the throttle body or intake manifold is free from any blockage.

      Were any problems found?

      Yes

      - Repair the vacuum supply, hose/tube as necessary.
      - Perform the POWERTRAIN VERIFICATION TEST. Refer to **POWERTRAIN**

VERIFICATION TEST .

No

- Go To 5.

5. **EVAP PURGE SOLENOID**

NOTE: After disconnecting the EVAP Purge Solenoid vacuum connections, inspect the lines and solenoid for signs of contamination.

1. Using a hand vacuum pump, apply 10 in Hg to the "CAN" side of the EVAP Purge Solenoid.

NOTE: The solenoid should hold vacuum for a minimum of 15 seconds.

2. Ignition on, engine not running.
3. With the scan tool, actuate the EVAP Purge Solenoid to the ON position.

NOTE: The vacuum should drop when the solenoid is actuated.

Does the solenoid function as described above?

Yes

- Go To 6.

No

- Verify that there is good pin to terminal contact in the Solenoid and the Powertrain Control Module connectors. Replace the EVAP Purge Solenoid if no problems were found in the connectors.
- Perform the POWERTRAIN VERIFICATION TEST. Refer to **POWERTRAIN VERIFICATION TEST** .

6. **ESIM SWITCH STATE**

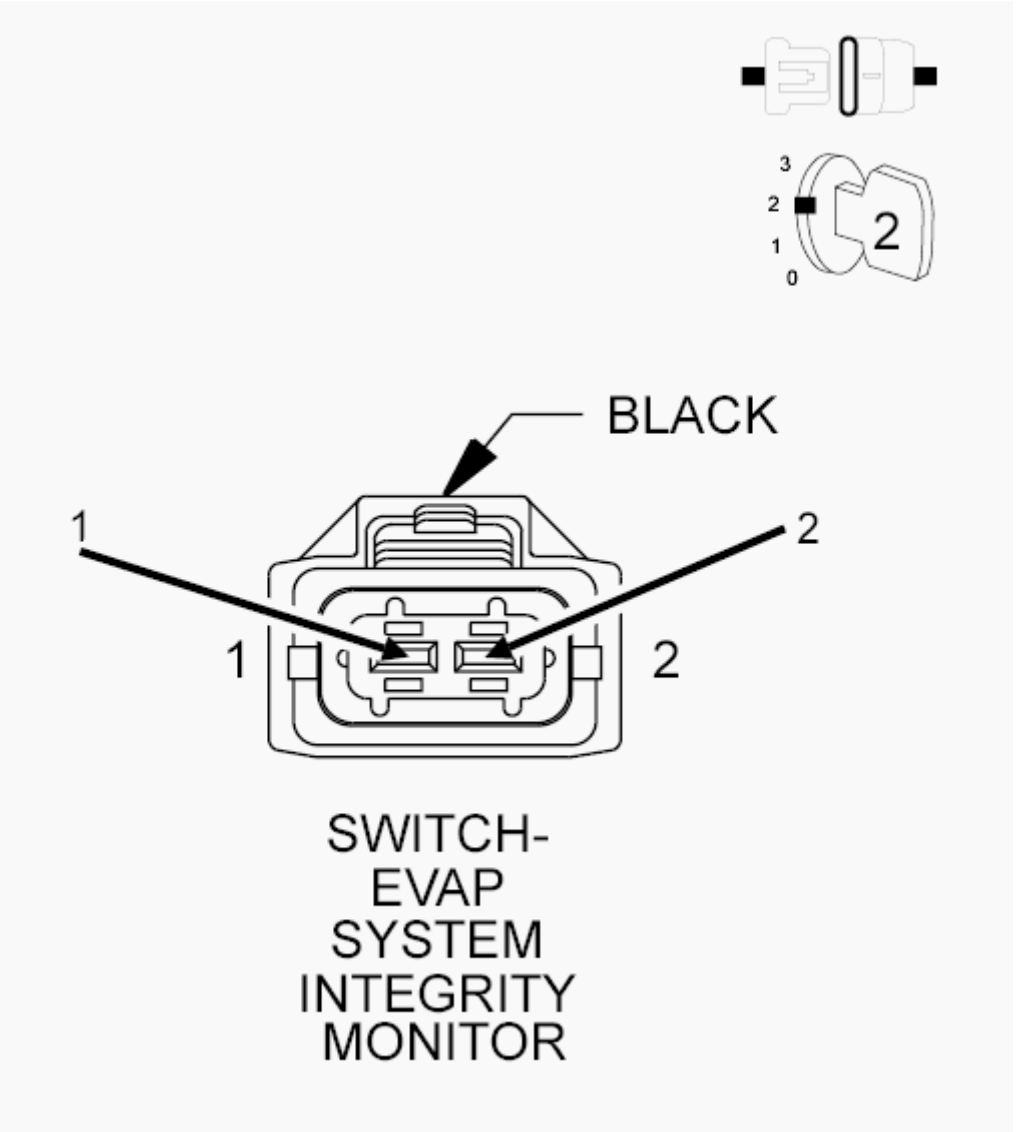

Fig. 202: Esim Switch Harness Connector
Courtesy of CHRYSLER GROUP, LLC

1. Turn the ignition off.
2. Connect the previously disconnected vacuum hose.
3. Disconnect the ESIM switch harness connector.
4. Ignition on, engine not running.
5. Monitor the ESIM switch state on the scan tool.
6. Carefully connect a jumper wire between the (K107) ESIM Signal circuit and the (Z914) Ground circuit in the ESIM switch harness connector.
7. Monitor the ESIM switch state on the scan tool.

   Did the switch change from OPEN to CLOSED when the jumper wire was installed?

Yes

- Go To 9.

No

- Go To 7.

NOTE: Remove the jumper wire before continuing.

7. **EXCESSIVE RESISTANCE IN THE (K107) ESIM SIGNAL CIRCUIT**

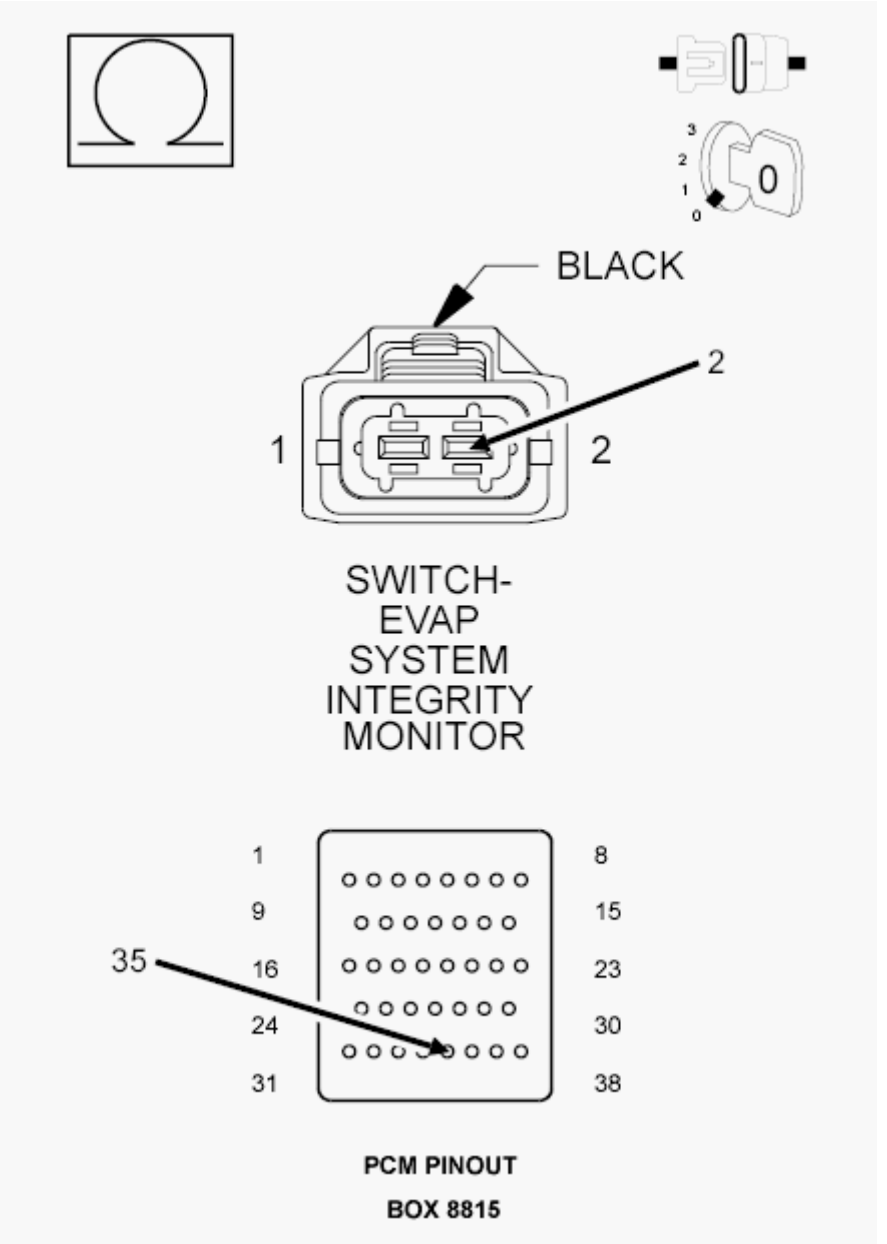

Fig. 203: Measuring Resistance Of (K107) Esim Signal Circuit From Esim Switch Harness Connector To Appropriate Terminal Of PCM Pinout Box 8815
Courtesy of CHRYSLER GROUP, LLC

1. Turn the ignition off.
2. Disconnect the C3 PCM harness connector.

CAUTION: Do not probe the PCM harness connectors. Probing the PCM harness connectors will damage the PCM terminals resulting in poor terminal to pin connection. Install the PCM Pinout Box (special tool #8815A, Kit, NGC, 38 Position) to perform diagnosis.

3. Measure the resistance of the (K107) ESIM Signal circuit from the ESIM switch harness connector to the appropriate terminal of PCM Pinout Box (special tool #8815A, Kit, NGC, 38 Position).

   Is the resistance below 5.0 Ohms?

   Yes

   - Go To 8.

   No

   - Repair the excessive resistance in the (K107) ESIM Signal circuit.
   - Perform the POWERTRAIN VERIFICATION TEST. Refer to **POWERTRAIN VERIFICATION TEST** .

8. **EXCESSIVE RESISTANCE IN THE (Z914) GROUND CIRCUIT**

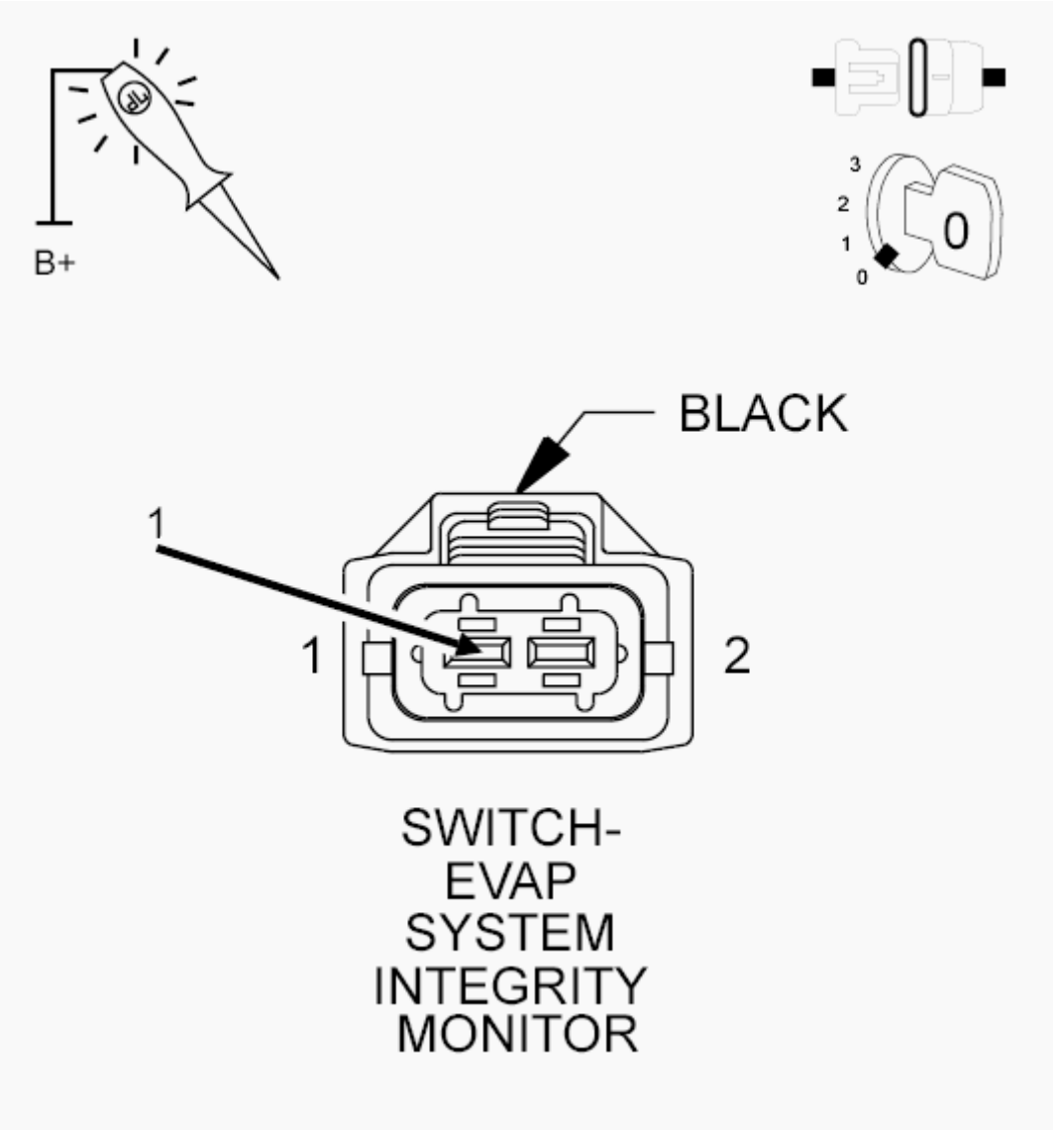

Fig. 204: Using 12-Volt Test Light Connected To B+ To Probe (Z914) Ground Circuit In Esim Switch Harness Connector
Courtesy of CHRYSLER GROUP, LLC

1. Using a 12-volt test light connected to B+, probe the (Z914) Ground circuit in the ESIM switch harness connector.

   NOTE: The test light should illuminate brightly. Compare the brightness to that of a direct connection to B- (ground).

   Does the test light illuminate brightly?

   Yes

   - Go To 13.

No

- Repair the excessive resistance in the (Z914) Ground circuit.
- Perform the POWERTRAIN VERIFICATION TEST. Refer to **POWERTRAIN VERIFICATION TEST** .

9. **VERIFY EVAPORATIVE EMISSION LEAK**

WARNING: Keep lit cigarettes, sparks, flames, and other ignition sources away from the test area to prevent the ignition of explosive gases. Keep the test area well ventilated. Failure to do so may result in possible serious or fatal injury.

1. Turn the ignition off.
2. To continue testing you will need EVAP Emission Leak Detector (EELD) (special tool #8404B, Kit, EELD And Accessory).

NOTE: The fuel tank should have between 20% and 80% of fuel tank capacity to properly test the EVAP system.

3. Connect the red power lead of EELD to the battery positive terminal and the black ground lead to battery negative terminal.
4. Block the vent hose of the EVAP Canister.
5. Connect shop air to the EELD.
6. Set the smoke/air control switch to AIR.
7. Insert the tester's AIR supply tip (clear hose) into the.040 orifice on the tester's control panel.
8. Press the remote smoke/air start button.
9. Position the red flag on the air flow meter so it is aligned with the indicator ball.
10. When the calibration is complete, release the remote button. The EELD flow meter is now calibrated in liters per minute.
11. Install the service port adapter (special tool #8404-14, Adapter, Evaporative Service Port) on the vehicle's service port (if equipped) or install the adapter (special tool #8404-ADP, Smoke Machine Adapters) into the filter line.
12. Connect the Air supply hose from the EELD to the service port (if equipped) or to the adapter (special tool #8404-ADP, Smoke Machine Adapters).
13. Press the remote button to activate AIR flow.
14. Compare the flow meter indicator ball reading to the red flag.
15. ABOVE the red flag indicates a leak present.
16. BELOW the red flag indicates a sealed system.

Is the indicator ball above the red flag?

Yes

- Go To 10.

No

- Go To 11.

10. **EVAPORATIVE EMISSION LEAK DETECTION**

NOTE: **A thorough visual inspection of the EVAP system hoses, tubes and connections may save time in your diagnosis. Look for any physical damage or signs of wetness at connections. The strong smell of fuel vapors may aid diagnosis also.**

1. Remove the Air supply hose from the service port or the adapter (special tool #8404-ADP, Smoke Machine Adapters).
2. Connect the SMOKE supply tip (black hose) to the service port (if equipped) or to the adapter (special tool #8404-ADP, Smoke Machine Adapters).
3. Set the smoke/air control switch to SMOKE.

NOTE: **The flow meter indicator ball will not move at this point.**

4. Press the remote smoke/air start button.

NOTE: **Make sure that smoke has filled the EVAP system by continuing to press the remote smoke/air start button, remove the vehicle fuel cap and wait for the smoke to exit. Once smoke is indicated reinstall the fuel cap.**

NOTE: **For optimal performance, introduce smoke into the system for an additional 60 seconds; continue introducing smoke at 15 second intervals, as necessary.**

5. While still holding the remote smoke/air start button, use the white light (special tool #8404-CLL, Light, White) to follow the EVAP System path and look for the source of the leak indicated by exiting smoke.
6. If a leak is concealed from view (i.e., top of fuel tank), release the remote smoke/air start button and use the ultraviolet (UV) black light (special tool #8404-UVL, Light, UV) and the yellow goggles (special tool #8404-20, Goggles, Yellow) to look for residual traces of dye that are left behind by the smoke.
7. The exiting smoke deposits a residual fluid that is either bright green or bright yellow in color when viewed with a UV light.

NOTE: **The EVAP System is divided into three zones. A leak from any of these zones can cause this DTC to set. The lists below specify the possible leak points in that specific zone. For further assistance see**

the Zone Identification Charts below.

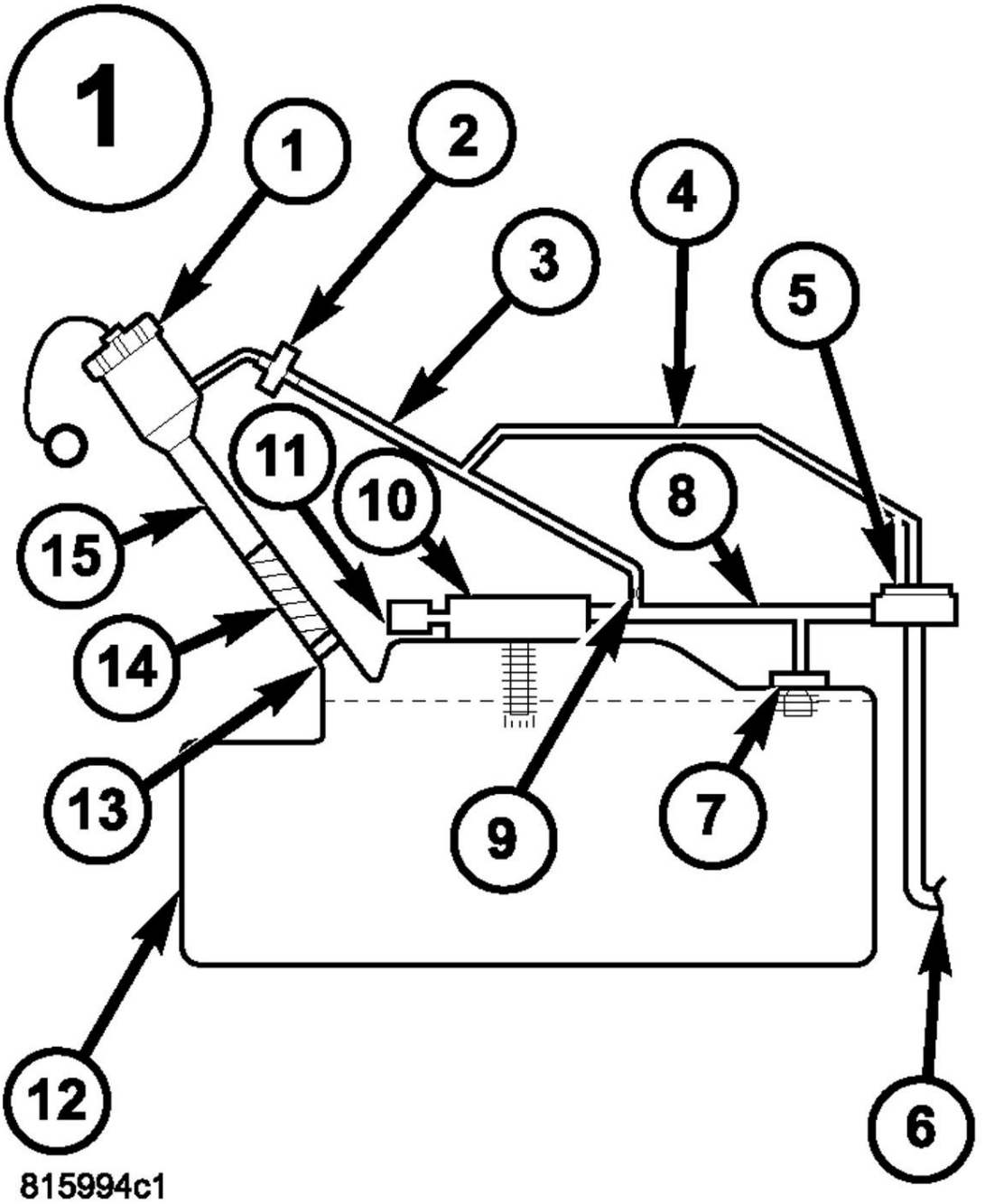

Fig. 205: Identifying EVAP System Zone 1
Courtesy of CHRYSLER GROUP, LLC

ZONE 1

1. Fuel Cap
2. Recirculation Check Valve

3. Vapor Recirculation Line
4. Signal Vapor Line for FVM
5. Flow Management Valve
6. Fuel Tank to Canister Vapor Line
7. Fuel Tank Vent (Check Valve)
8. Vapor Line to Canister
9. Flow Control Orifice
10. Control Valve
11. Liquid Trap
12. Fuel Tank
13. Check valve
14. Fuel Fill Tube to Tank connector
15. Fuel Fill Tube

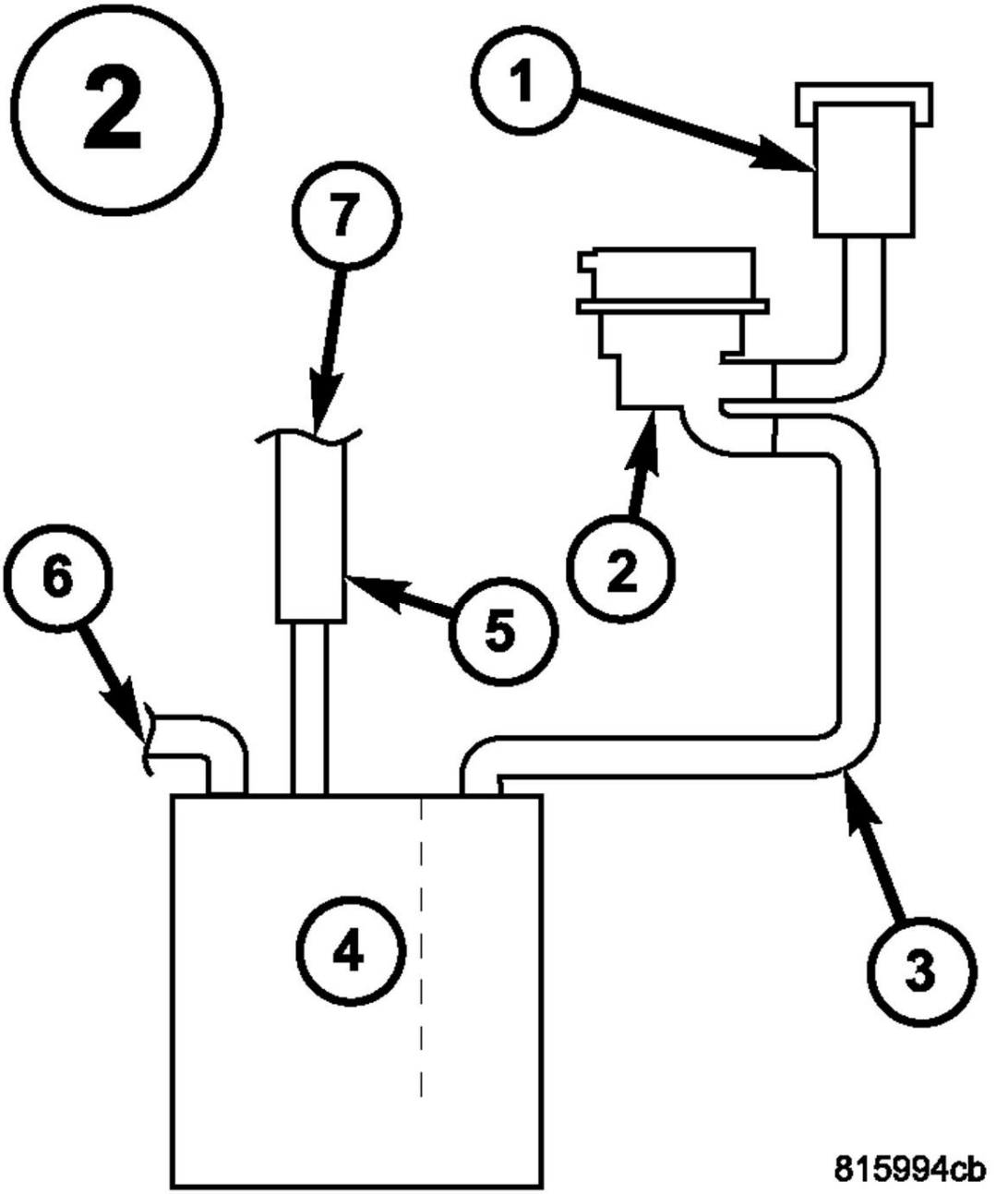

Fig. 206: Identifying EVAP System Zone 2
Courtesy of CHRYSLER GROUP, LLC

ZONE 2

1. Filter
2. EVAP System Integrity Monitor (ESIM) switch
3. Canister Vent Line
4. EVAP Canister

5. Chassis Purge Valve
6. Fuel Tank to Canister Vapor Line connection
7. EVAP Purge connection

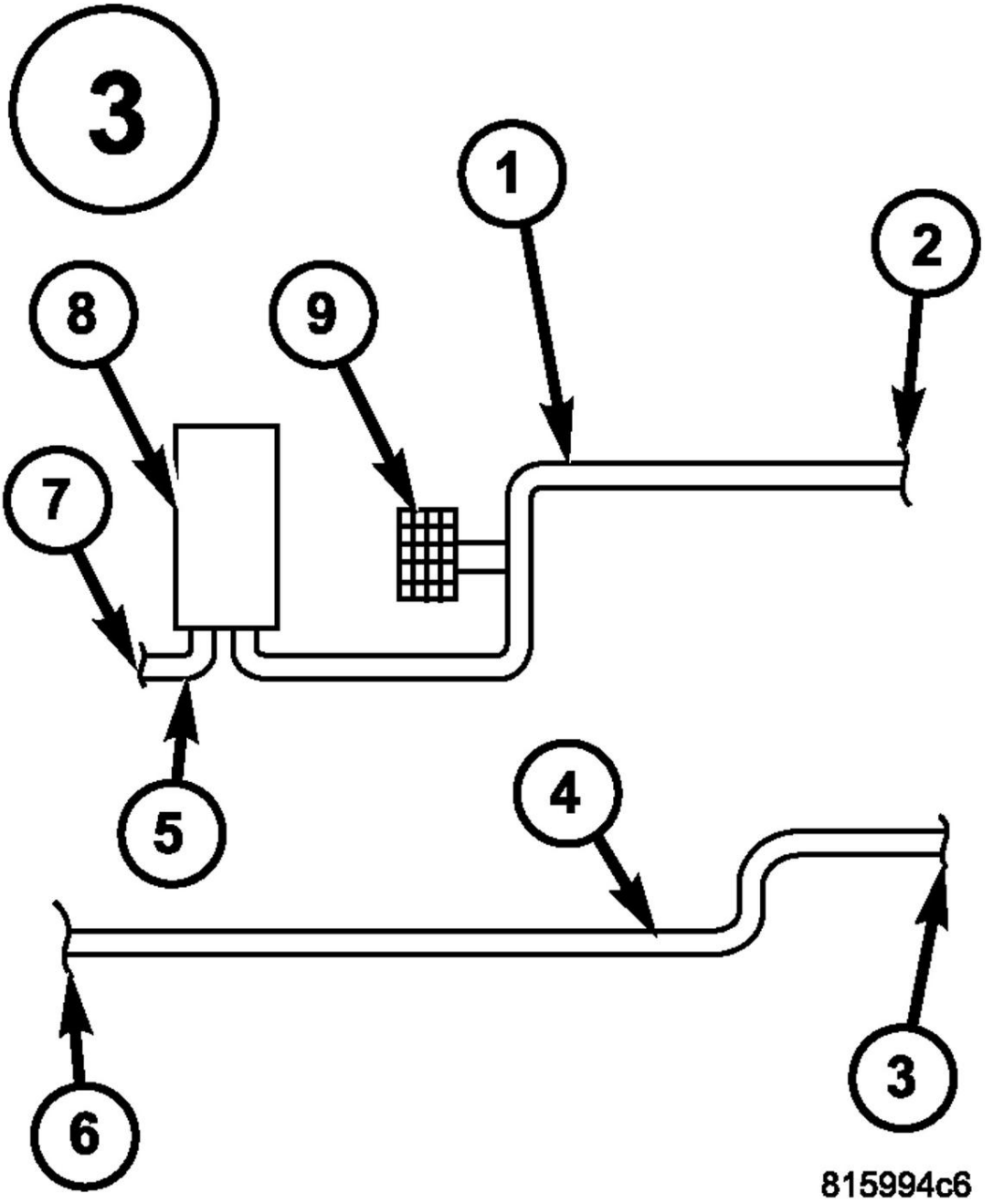

Fig. 207: Identifying EVAP System Zone 3
Courtesy of CHRYSLER GROUP, LLC

ZONE 3

1. EVAP Purge Vacuum Line
2. Connection to Chassis Line
3. Connection to Canister
4. Chassis Purge Line
5. EVAP Purge Vacuum Line
6. Connection to EVAP Purge Harness
7. Chassis EVAP Purge Line connection to Engine Vacuum
8. EVAP Purge Valve
9. Service Port

NOTE: **Carefully inspect the vent side of the EVAP Canister. Due to the filtering system in the canister the smoke or dye may or may not be visible. Introducing smoke into the filtered side of the canister may assist in locating the leak.**

Was a leak found?

Yes

- Repair or replace the leaking component as necessary.
- Perform the POWERTRAIN VERIFICATION TEST. Refer to **POWERTRAIN VERIFICATION TEST** .

No

- Go To 11.

11. **EVAPORATIVE PURGE HOSE/TUBE OBSTRUCTION**
    1. Inspect the EVAP Purge hose/tube for proper routing and installation between the EVAP Purge Solenoid and the Fuel Tank and between the Fuel Tank and the EVAP Purge Canister.
    2. Make sure the hose/tube is not damaged or kinked and is free from any obstructions or blockage.

    Were any problems found?

    Yes

    - Repair or replace as necessary.
    - Perform the POWERTRAIN VERIFICATION TEST. Refer to **POWERTRAIN VERIFICATION TEST** .

    No

    - Go To 12.

12. **ESIM SWITCH**

1. Using the wiring diagram/schematic as a guide, inspect the wiring and connectors between the ESIM switch and the Powertrain Control Module (PCM).
2. Look for any chafed, pierced, pinched or partially broken wires.
3. Look for broken, bent, pushed out or corroded terminals.
4. Perform any Technical Service Bulletins that may apply.

   Were any problems found?

   Yes

   - Repair as necessary.
   - Perform the POWERTRAIN VERIFICATION TEST. Refer to **POWERTRAIN VERIFICATION TEST** .

   No

   - Replace the ESIM switch in accordance with the Service Information.
   - Perform the POWERTRAIN VERIFICATION TEST. Refer to **POWERTRAIN VERIFICATION TEST** .

13. **POWERTRAIN CONTROL MODULE (PCM)**
    1. Using the wiring diagram/schematic as a guide, inspect the wiring and connectors between the ESIM switch and the Powertrain Control Module (PCM).
    2. Look for any chafed, pierced, pinched or partially broken wires.
    3. Look for broken, bent, pushed out or corroded terminals.
    4. Perform any Technical Service Bulletins that may apply.

       Were any problems found?

       Yes

       - Repair as necessary.
       - Perform the POWERTRAIN VERIFICATION TEST. Refer to **POWERTRAIN VERIFICATION TEST** .

       No

       - Replace and program the Powertrain Control Module (PCM) in accordance with the Service Information.
       - Perform the POWERTRAIN VERIFICATION TEST. Refer to **POWERTRAIN VERIFICATION TEST** .

P0441-EVAP PURGE SYSTEM PERFORMANCE

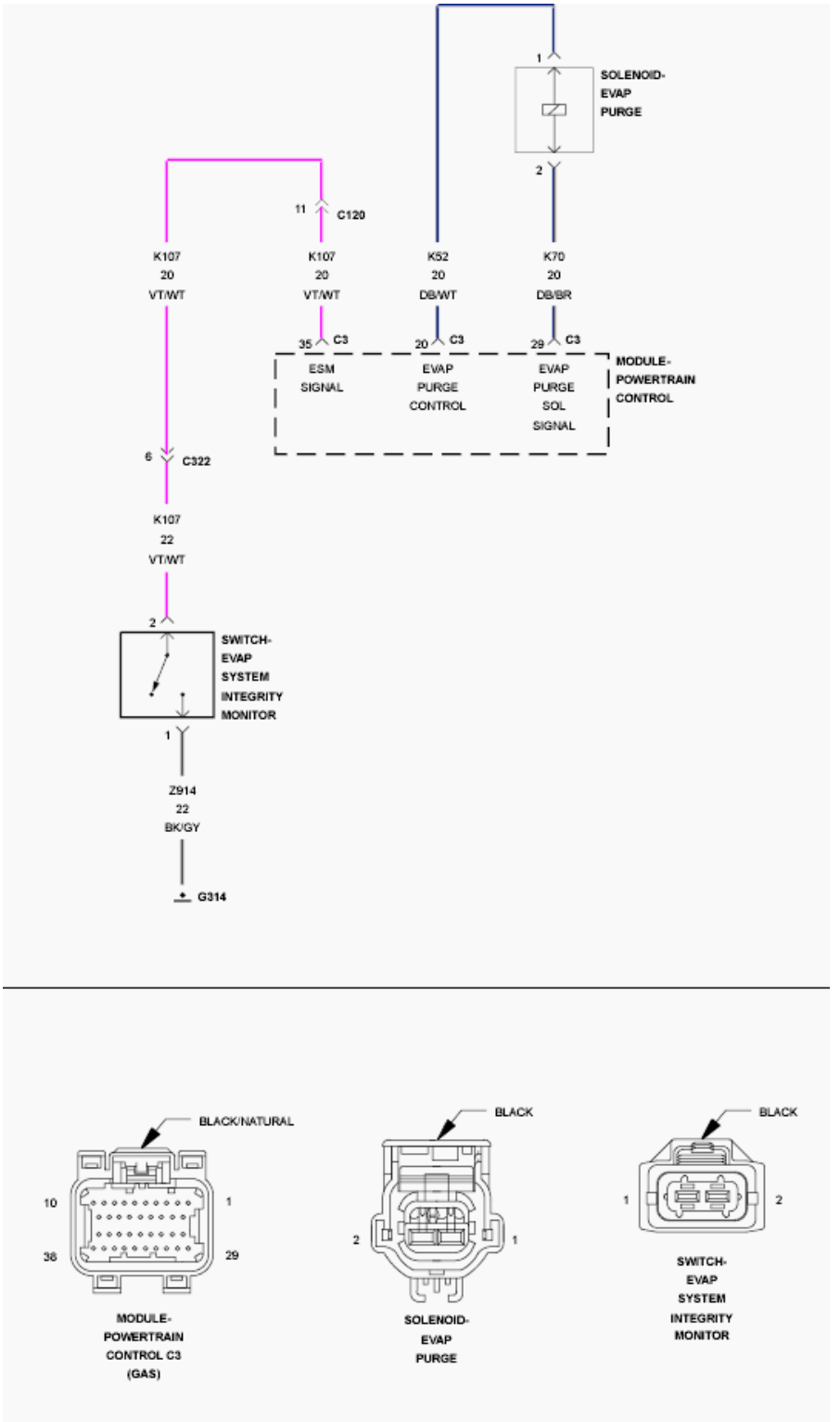

Fig. 208: Evaporative System Integrity Monitor (Esim) Switch Circuit Schematic
Courtesy of CHRYSLER GROUP, LLC

For a complete wiring diagram, **refer to appropriate SYSTEM WIRING DIAGRAMS article** .

THEORY OF OPERATION

The Evaporative Purge Monitor tests the integrity of the hoses/tube between the throttle body/intake and the fuel tank. The monitor is a two stage test and runs only after the Evaporative system passes the small leak test. Stage one is non-intrusive. The Powertrain Control Module (PCM) monitors the purge vapor ratio and the Evaporative System Integrity Monitor (ESIM) switch closed ratio. If the purge vapor ratio is above a calculated value, the monitor passes. If the ESIM switch closed ratio is greater than calculated value when purge flow is greater than a minimum value, the monitor passes. Stage two is an intrusive test and runs only if stage one does not pass. The PCM commands the purge solenoid to flow at a specified rate to force the purge vapor ratio to update. The ratio is compared to a calibrated specification. If it is less than specified, a one trip failure is recorded. This test can detect if the purge hose is off, obstructed or the purge valve is not operational.

WHEN MONITORED:

After the Evaporative System small leak test has passed, with the engine running, ambient temperature between 4° C (39° F) and 35° (95° F), with the engine at idle after a calibrated amount of drive time has accumulated.

SET CONDITION:

If the Powertrain Control Module (PCM) detects that the purge vapor ratio and the ESIM switch closed ratio are below a calculated value, the PCM commands the purge solenoid to flow at a specified rate to update the purge vapor ratio. If the ratio remains below a specified value, a one trip failure is recorded. Two Trip Fault. Three good trips to turn off the MIL.

POSSIBLE CAUSES

Possible Causes
EVAP PURGE SOLENOID VACUUM SUPPLY
EVAPORATIVE PURGE HOSE/TUBE AND FRESH AIR FILTER OBSTRUCTION
EVAP PURGE SOLENOID
POWERTRAIN CONTROL MODULE (PCM)

Always perform the Pre-Diagnostic Troubleshooting procedure before proceeding. Refer to PRE-DIAGNOSTIC TROUBLESHOOTING PROCEDURE .

DIAGNOSTIC TEST

1. **VEHICLE HISTORY AND SERVICE BULLETIN INVESTIGATION**
    1. Ignition on, engine not running.
    2. With the scan tool, select View DTCs. Record the Freeze Frame data if any DTCs are present.
    3. Whether or not any DTCs are Active you will want to check the following items which may assist in repairing the customer's complaint successfully.
    4. Check the vehicle's repair history.
    5. If the vehicle has a repair history that pertains to the customer's current complaint, review the repair.
    6. Inspect the vehicle for any aftermarket accessories that may have been installed incorrectly.

7. Check for any service bulletin(s) related to the customer's complaint or DTCs.
8. If a service bulletin applies, follow the instructions per the service bulletin.

   Choose the following scenario that best applies.

   The service bulletin repaired the customer's complaint.

   - Testing complete.

   A DTC is present, no service bulletins apply or the service bulletin didn't repair the customer's complaint.

   - Go To 2.

2. **ACTIVE DTC**

   NOTE: If P0443 is set along with this DTC, perform the diagnostic procedure for P0443 before continuing with this test.

   NOTE: If the customer is experiencing an early fuel shut off during the fuel filling process along with P0440, P0441 and P0452 setting, you need to check for restrictions in the Evaporative Purge tubes/hoses as well as the Fresh Air Filter before continuing.

   1. Start the engine.
   2. Allow the engine to idle.
   3. Using the scan tool, perform the ESIM FORCED MONITOR TEST. Allow the test to complete.
   4. With the scan tool, select View DTCs.

      NOTE: If any other DTC sets, active or pending, perform the diagnostic procedure for that DTC before proceeding with this test.

      Is the DTC Active or Pending at this time?

      Yes

      - Go To 3.

      No

      - Perform the INTERMITTENT CONDITION diagnostic procedure. Refer to **INTERMITTENT CONDITION** .

3. **VISUAL INSPECTION**

   Inspect the Evaporative System for any of the following conditions:

- Holes or cracks
- Loose seal points
- Damaged or missing components
- Incorrect routing of hoses and tubes
- Loose or missing Fuel Cap
- Damaged or missing Fuel Cap seal
- Improper installation of the Fuel Cap
- Damaged Locking tabs on the Fuel Cap and/or filler tube
- Damaged seal points on the Fuel Cap and/or filler tube

Were any problems found?

Yes

- Repair as necessary.
- Perform the POWERTRAIN VERIFICATION TEST. Refer to **POWERTRAIN VERIFICATION TEST** .

No

- Go To 4.

4. **INSUFFICIENT VACUUM SUPPLY TO THE EVAP PURGE SOLENOID**
   1. Turn the ignition off.
   2. Carefully inspect the EVAP Purge Solenoid vacuum supply hose for proper routing.
   3. Check for a pinched or plugged hose from the throttle body or intake manifold to the Purge Solenoid.
   4. Inspect the vacuum port at the throttle body or intake manifold for any damage or obstructions.

      Were any problems found?

      Yes

      - Repair the vacuum supply hose/tube as necessary.
      - Perform the POWERTRAIN VERIFICATION TEST. Refer to **POWERTRAIN VERIFICATION TEST** .

      No

      - Go To 5.

5. **EVAP PURGE HOSE/TUBE AND FRESH AIR FILTER OBSTRUCTION**
   1. Inspect the Evaporative Purge hose/tube for proper routing and installation between the EVAP Purge Solenoid and the Fuel Tank and between the Fuel Tank and the EVAP Purge Canister.

2. Make sure the hose/tube and fresh air filter are not damaged, kinked and free from any obstructions.

   Were any problems found?

   Yes

   - Repair or replace as necessary.
   - Perform the POWERTRAIN VERIFICATION TEST. Refer to **POWERTRAIN VERIFICATION TEST** .

   No

   - Go To 6.

6. **EVAP PURGE SOLENOID**

   NOTE: After disconnecting the EVAP Purge Solenoid vacuum connections, inspect the lines and solenoid for signs of contamination.

   1. Using a hand vacuum pump, apply 10 in Hg to the "CAN" side of the EVAP Purge Solenoid.

      NOTE: The solenoid should hold vacuum for a minimum of 15 seconds.

   2. Ignition on, engine not running.
   3. With the scan tool, actuate the EVAP Purge Solenoid to the ON position.

      NOTE: The vacuum should drop when the solenoid is actuated.

      Does the solenoid function as described above?

      Yes

      - Go To 7.

      No

      - Verify that there is good pin to terminal contact in the Solenoid and the Powertrain Control Module connectors. Replace the EVAP Purge Solenoid if no problems were found in the connectors.
      - Perform the POWERTRAIN VERIFICATION TEST. Refer to **POWERTRAIN VERIFICATION TEST** .

7. **POWERTRAIN CONTROL MODULE (PCM)**
   1. Using the wiring diagram/schematic as a guide, inspect the wiring and connectors between the EVAP Purge Solenoid Assembly, ESIM switch and the Powertrain Control Module (PCM).

2. Look for any chafed, pierced, pinched or partially broken wires.
3. Look for broken, bent, pushed out or corroded terminals. Verify that there is good pin to terminal contact in the switch, Solenoid and the Powertrain Control Module connectors.
4. Perform any Technical Service Bulletins that may apply.

   Were there any problems found?

   Yes

   - Repair as necessary.
   - Perform the POWERTRAIN VERIFICATION TEST. Refer to **POWERTRAIN VERIFICATION TEST** .

   No

   - Replace and program the Powertrain Control Module in accordance with the Service Information.
   - Perform the POWERTRAIN VERIFICATION TEST. Refer to **POWERTRAIN VERIFICATION TEST** .

P0443-EVAP PURGE SOLENOID CIRCUIT

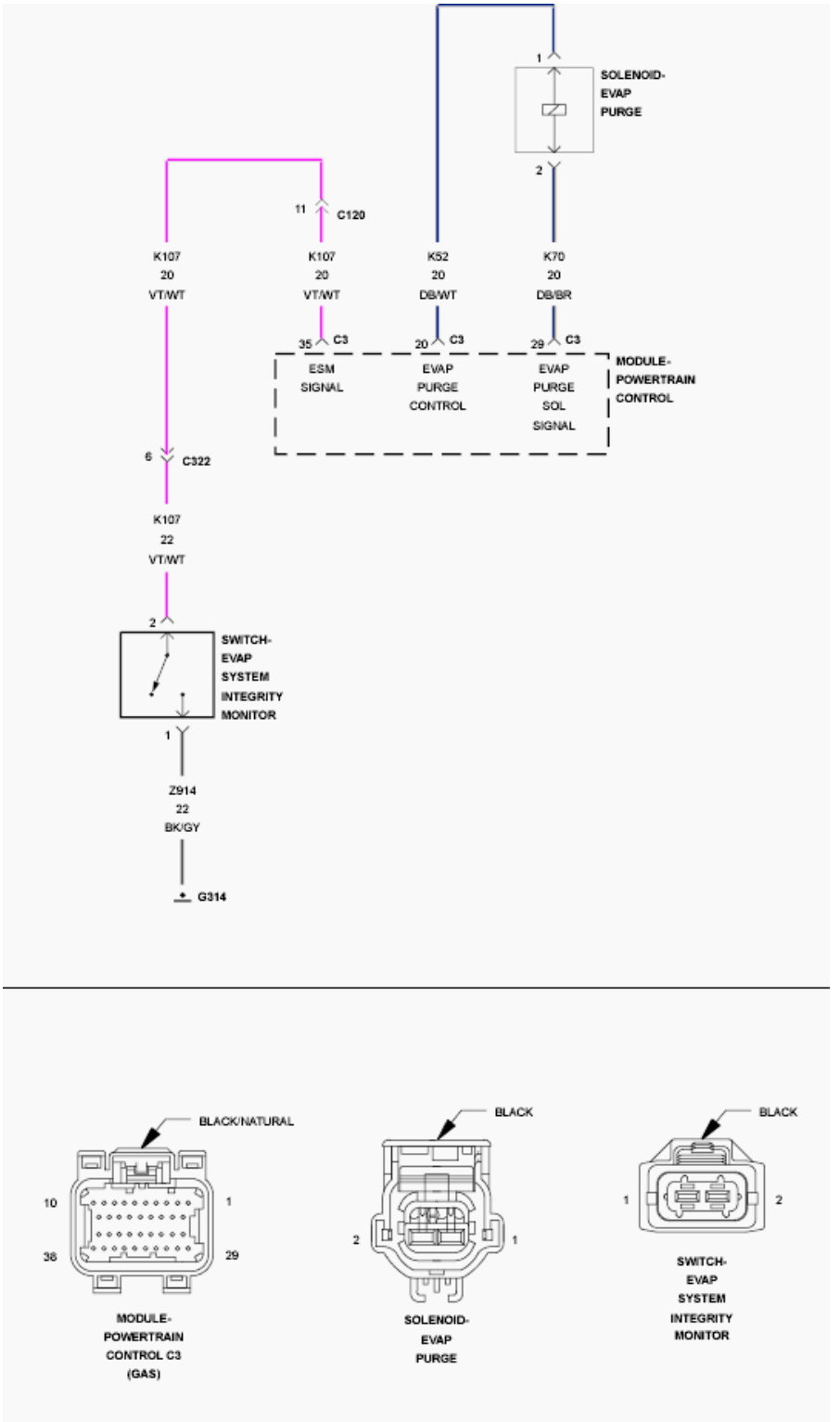

Fig. 209: Evaporative System Integrity Monitor (Esim) Switch Circuit Schematic
Courtesy of CHRYSLER GROUP, LLC

For a complete wiring diagram, **refer to appropriate SYSTEM WIRING DIAGRAMS article** .

WHEN MONITORED:

The ignition on or engine running. Battery voltage greater than 10 Volts.

SET CONDITION:

The Powertrain Control Module (PCM) will set a trouble code if the actual state of the solenoid does not match the intended state. One Trip Fault. Three good trips to turn off the MIL.

POSSIBLE CAUSES

Possible Causes
(K52) EVAP PURGE CONTROL CIRCUIT SHORTED TO VOLTAGE
(K70) EVAP PURGE SOLENOID SIGNAL CIRCUIT SHORTED TO VOLTAGE
(K52) EVAP PURGE SOLENOID CONTROL CIRCUIT SHORTED TO GROUND
EXCESSIVE RESISTANCE IN THE (K52) EVAP PURGE CONTROL CIRCUIT
EXCESSIVE RESISTANCE IN THE (K70) EVAP PURGE SOLENOID SIGNAL CIRCUIT
EVAP PURGE SOLENOID
POWERTRAIN CONTROL MODULE (PCM)

Always perform the Pre-Diagnostic Troubleshooting procedure before proceeding. Refer to PRE-DIAGNOSTIC TROUBLESHOOTING PROCEDURE .

DIAGNOSTIC TEST

1. **VEHICLE HISTORY AND SERVICE BULLETIN INVESTIGATION**
    1. Ignition on, engine not running.
    2. With the scan tool, select View DTCs and record the related Freeze Frame data if any DTCs are present.
    3. Whether or not any DTCs are Active you will want to check the following items which may assist in repairing the customer's complaint successfully.
    4. Check the vehicle's repair history.
    5. If the vehicle has a repair history that pertains to the customer's current complaint, review the repair.
    6. Inspect the vehicle for any aftermarket accessories that may have been installed incorrectly.
    7. Check for any service bulletin(s) related to the customer's complaint or DTCs.
    8. If a service bulletin applies, follow the instructions per the service bulletin.

    Choose the following scenario that best applies.

    The service bulletin repaired the customer's complaint.

    - Testing complete.

A DTC is present, no service bulletins apply or the service bulletin didn't repair the customer's complaint.

- Go To 2.

2. **ACTIVE DTC**
   1. Ignition on, engine not running.
   2. With the scan tool, Select View DTCs.

   Is the DTC Active at this time?

   Yes

   - Go To 3.

   No

   - Perform the INTERMITTENT CONDITION diagnostic procedure. Refer to **INTERMITTENT CONDITION** .

3. **(K52) EVAP PURGE CONTROL CIRCUIT SHORTED TO VOLTAGE**

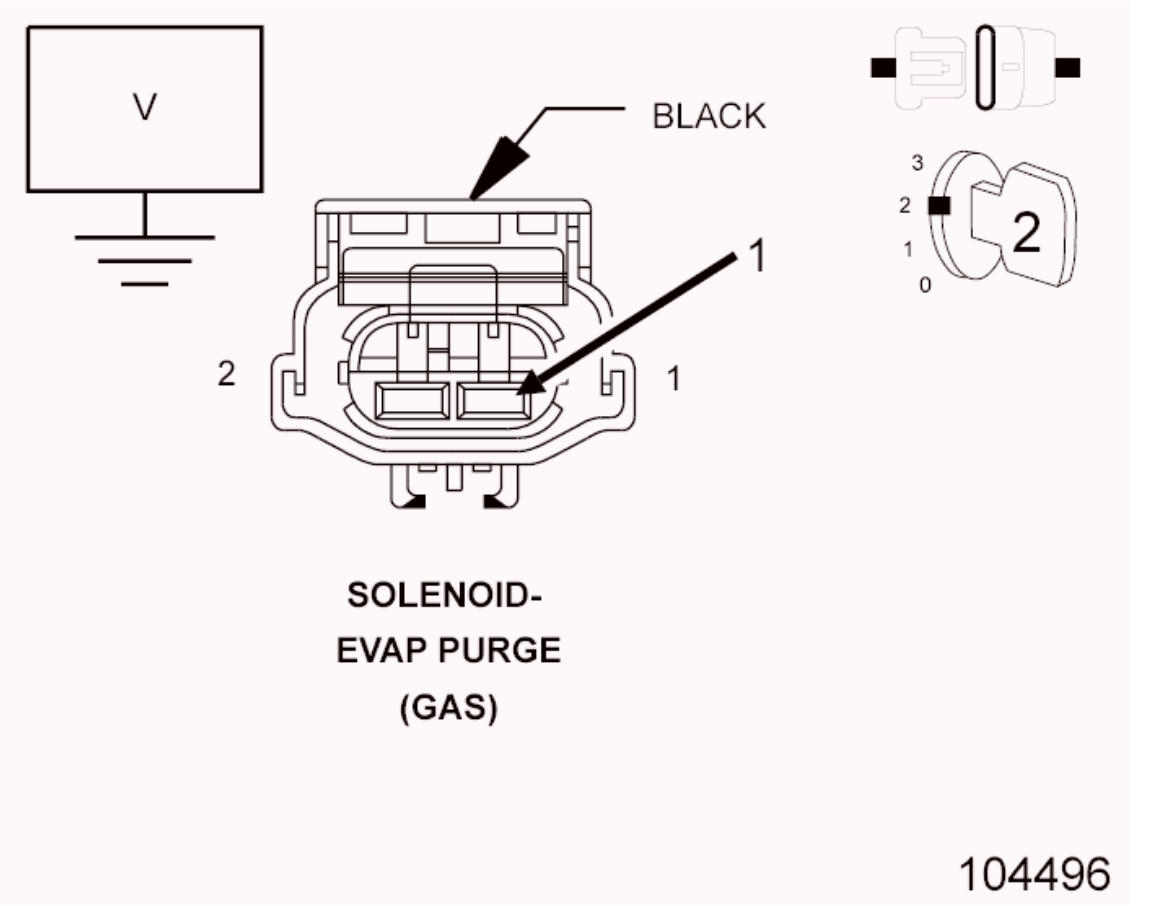

Fig. 210: Measuring Voltage Of (K52) EVAP Purge Control Circuit In EVAP Purge Solenoid

Harness Connector
Courtesy of CHRYSLER GROUP, LLC

1. Turn the ignition off.
2. Disconnect the EVAP Purge Solenoid harness connector.
3. Disconnect the C3 PCM harness connector.
4. Ignition on, engine not running.
5. Measure the voltage of the (K52) EVAP Purge Control circuit in the EVAP Purge Solenoid harness connector.

   Is there any voltage present?

   Yes

   - Repair the short to voltage in the (K52) EVAP Purge Control circuit.
   - Perform the POWERTRAIN VERIFICATION TEST. Refer to **POWERTRAIN VERIFICATION TEST** .

   No

   - Go To 4.

4. **(K70) EVAP PURGE RETURN CIRCUIT SHORTED TO VOLTAGE**

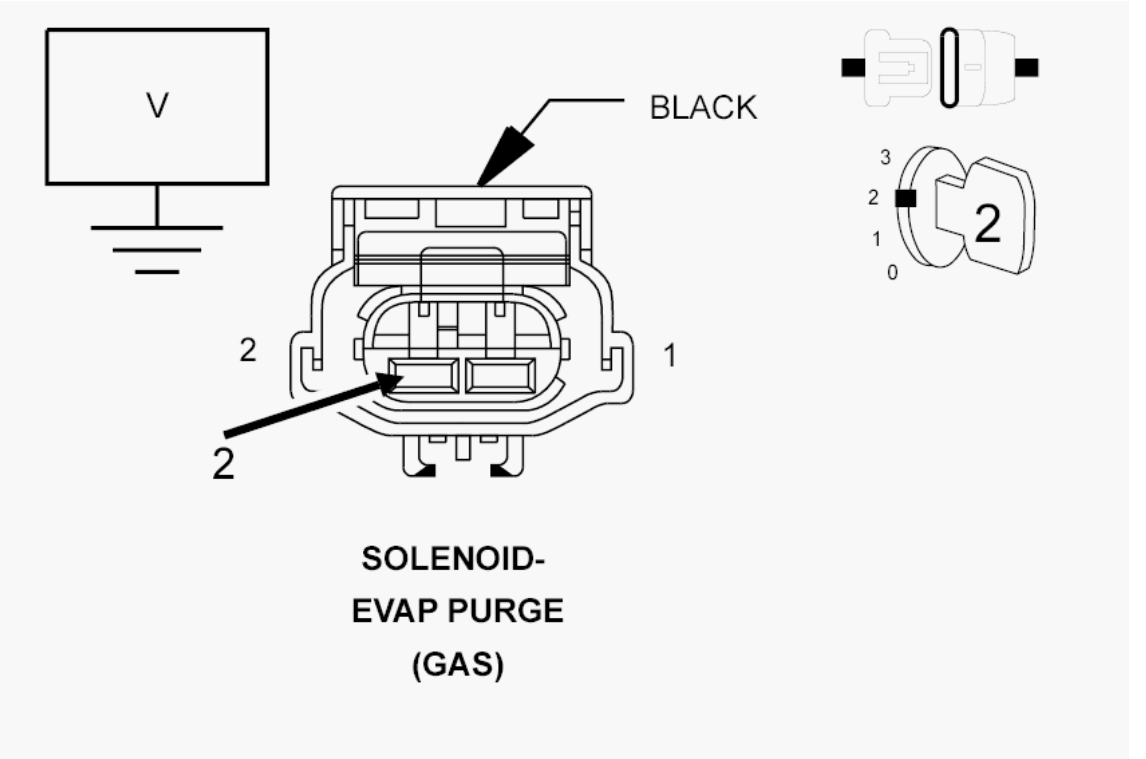

Fig. 211: Measuring Voltage Of (K70) EVAP Purge Return Circuit In EVAP Purge Solenoid Harness Connector

Courtesy of CHRYSLER GROUP, LLC

1. Measure the voltage of the (K70) EVAP Purge Return circuit in the EVAP Purge Solenoid harness connector.

   Is there any voltage present?

   Yes

   - Repair the short to voltage in the (K70) EVAP Purge Return circuit.
   - Perform the POWERTRAIN VERIFICATION TEST. Refer to **POWERTRAIN VERIFICATION TEST** .

   No

   - Go To 5.

5. **(K52) EVAP PURGE CONTROL CIRCUIT SHORTED TO GROUND**

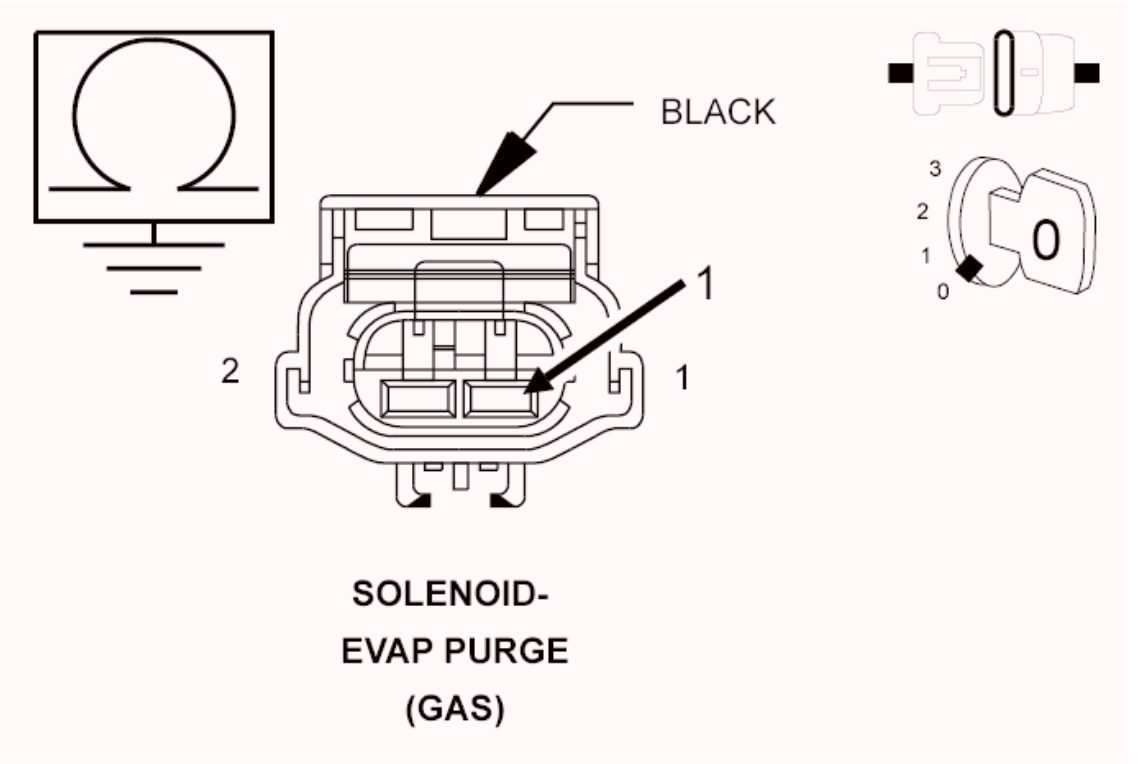

Fig. 212: Measuring Resistance Between Ground And (K52) EVAP Purge Control Circuit In EVAP Purge Solenoid Harness Connector
Courtesy of CHRYSLER GROUP, LLC

1. Turn the ignition off.
2. Measure the resistance between ground and the (K52) EVAP Purge Control circuit in the EVAP Purge Solenoid harness connector.

Is the resistance below 100 Ohms?

Yes

- Repair the (K52) EVAP Purge Control circuit for a short to ground.
- Perform the POWERTRAIN VERIFICATION TEST. Refer to **POWERTRAIN VERIFICATION TEST** .

No

- Go To 6.

6. **(K52) EVAP PURGE SOLENOID CONTROL CIRCUIT OPEN**

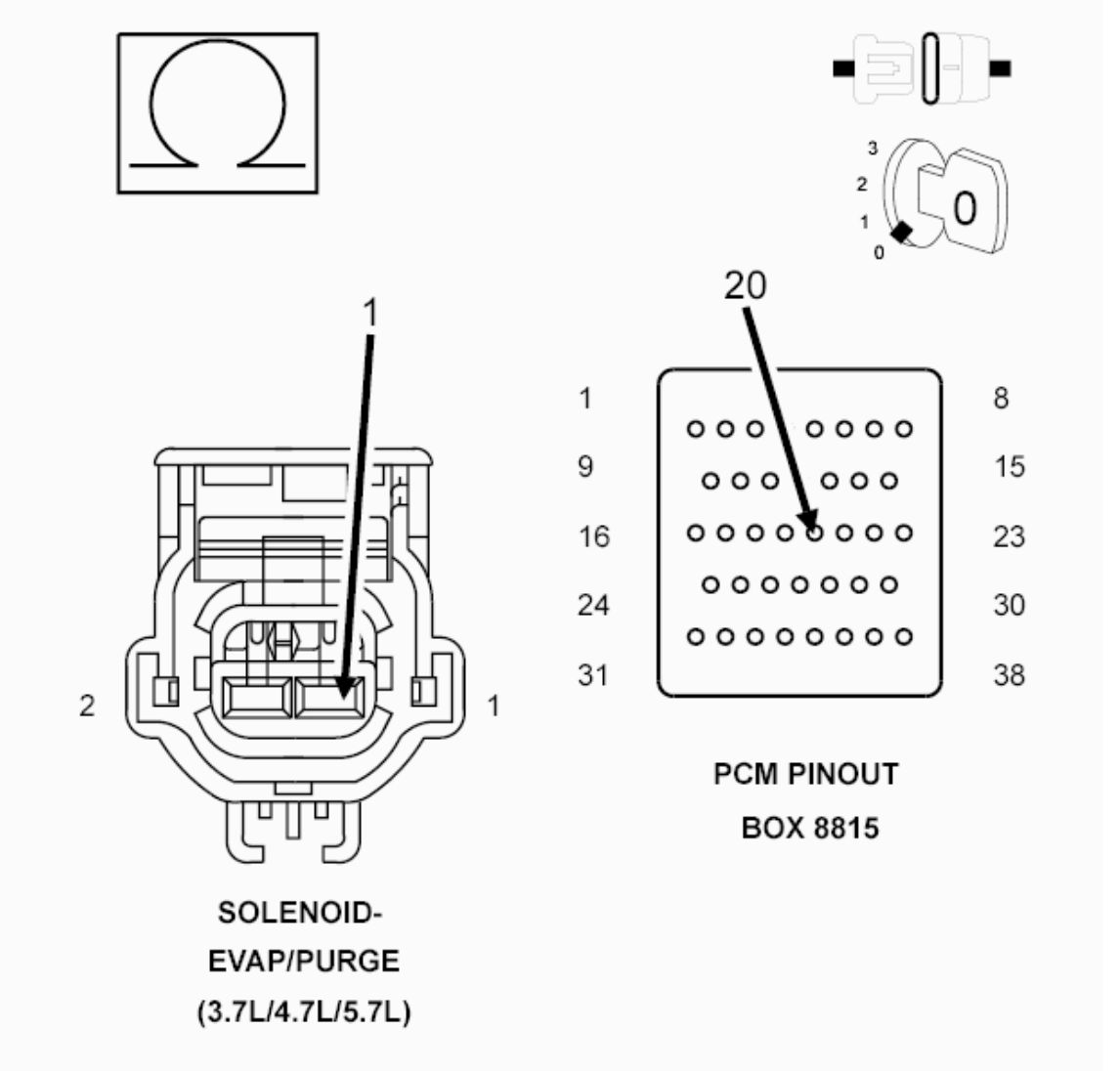

Fig. 213: Measuring Resistance Of (K52) EVAP Purge Solenoid Control Circuit From EVAP Purge Solenoid Harness Connector To Appropriate Terminal Of PCM Pinout Box 8815
Courtesy of CHRYSLER GROUP, LLC

CAUTION: Do not probe the PCM harness connectors. Probing the PCM harness connectors will damage the PCM terminals resulting in poor terminal to pin connection. Install the PCM Pinout Box (special tool #8815A, Kit, NGC, 38 Position) to perform diagnosis.

1. Measure the resistance of the (K52) EVAP Purge Solenoid Control circuit from the EVAP Purge Solenoid harness connector to the appropriate terminal of PCM Pinout Box (special tool #8815A, Kit, NGC, 38 Position).

   Is the resistance below 5.0 Ohms?

   Yes

   - Go To 7.

   No

   - Repair the open in the (K52) EVAP Purge Solenoid Control circuit.
   - Perform the POWERTRAIN VERIFICATION TEST. Refer to **POWERTRAIN VERIFICATION TEST** .

7. **(K70) EVAP PURGE SOLENOID SIGNAL CIRCUIT OPEN**

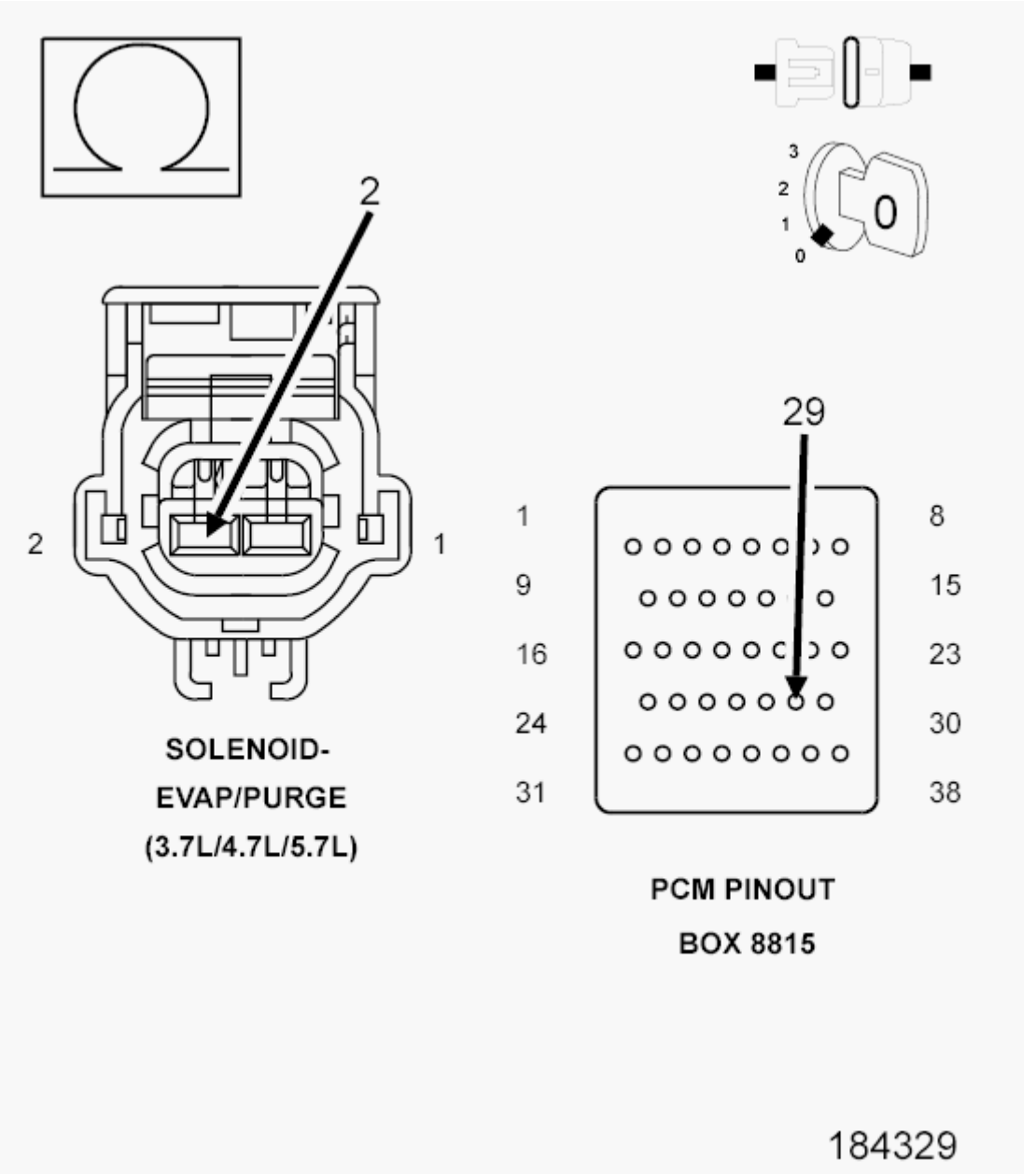

Fig. 214: Measuring Resistance Of (K70) EVAP Purge Solenoid Signal Circuit From EVAP Purge Solenoid Harness Connector To Appropriate Terminal Of PCM Pinout Box 8815
Courtesy of CHRYSLER GROUP, LLC

CAUTION: Do not probe the PCM harness connectors. Probing the PCM harness connectors will damage the PCM terminals resulting in poor terminal to pin connection. Install the PCM Pinout Box (special tool #8815A, Kit, NGC, 38 Position) to perform diagnosis.

1. Measure the resistance of the (K70) EVAP Purge Solenoid Signal circuit from the EVAP Purge Solenoid harness connector to the appropriate terminal of PCM Pinout Box (special tool #8815A, Kit, NGC, 38 Position).

Is the resistance below 5.0 Ohms?

Yes

- Go To 8.

No

- Repair the open in the (K70) EVAP Purge Solenoid Signal circuit.
- Perform the POWERTRAIN VERIFICATION TEST. Refer to **POWERTRAIN VERIFICATION TEST** .

8. **EVAP PURGE SOLENOID**

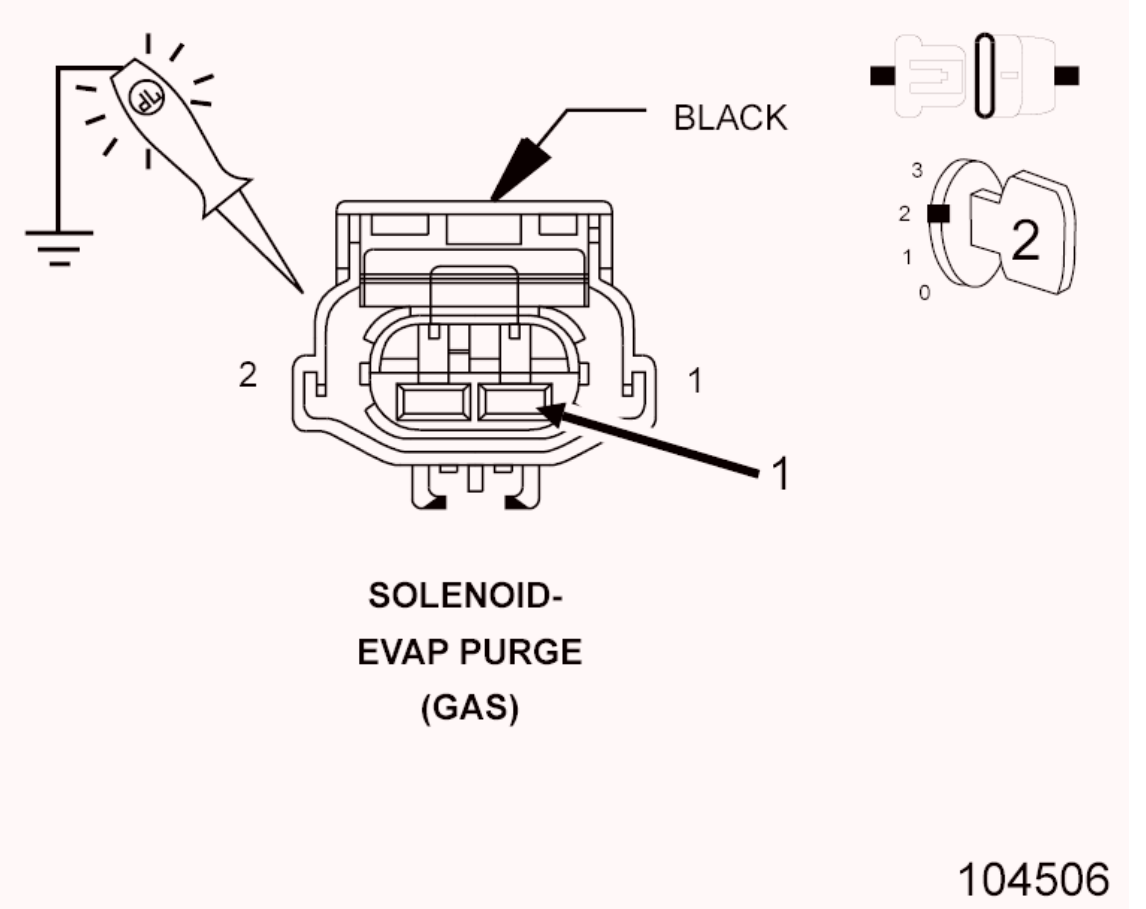

Fig. 215: Using 12-Volt Test Light Connected To Ground To Check (K52) EVAP Purge Control Circuit In EVAP Purge Solenoid Harness Connector
Courtesy of CHRYSLER GROUP, LLC

1. Connect the C3 PCM harness connector.
2. Ignition on, engine not running.
3. Using a 12-volt test light connected to ground, check the (K52) EVAP Purge Control circuit in the EVAP Purge Solenoid harness connector.

4. With the scan tool, actuate the EVAP Purge Solenoid control to the ON (100%) position.

NOTE: **The DTC needs to be cleared before actuating the Purge Solenoid, if the DTC is not cleared, the Solenoid may not be allowed to actuate.**

NOTE: **The test light should be illuminated and bright proportional to the maximum duty cycle allowed by the scan tool. For example, if the scan tool allows 100% actuation, the brightness should be as bright as a direct connection to the battery. If the scan tool allows a maximum 25% actuation, the brightness should be 25% as bright as a direct connection to the battery.**

Does the test light illuminate accordingly during the actuation?

Yes

- Verify that there is good pin to terminal contact in the Solenoid and the Powertrain Control Module connectors. Replace the EVAP Purge Solenoid if no problems were found in the connectors.
- Perform the POWERTRAIN VERIFICATION TEST. Refer to **POWERTRAIN VERIFICATION TEST** .

No

- Go To 9.

9. **POWERTRAIN CONTROL MODULE (PCM)**
   1. Using the wiring diagram/schematic as a guide, inspect the wiring and connectors between the EVAP Purge Solenoid Assembly, ESIM switch and the Powertrain Control Module (PCM).
   2. Look for any chafed, pierced, pinched or partially broken wires.
   3. Look for broken, bent, pushed out or corroded terminals. Verify that there is good pin to terminal contact in the Switch, Solenoid and the Powertrain Control Module connectors.
   4. Perform any Technical Service Bulletins that may apply.

   Were there any problems found?

   Yes

   - Repair as necessary.
   - Perform the POWERTRAIN VERIFICATION TEST. Refer to **POWERTRAIN VERIFICATION TEST** .

   No

   - Replace and program the Powertrain Control Module in accordance with the Service Information.

- Perform the POWERTRAIN VERIFICATION TEST. Refer to **POWERTRAIN VERIFICATION TEST** .

P0452-EVAP PRESSURE SWITCH STUCK CLOSED

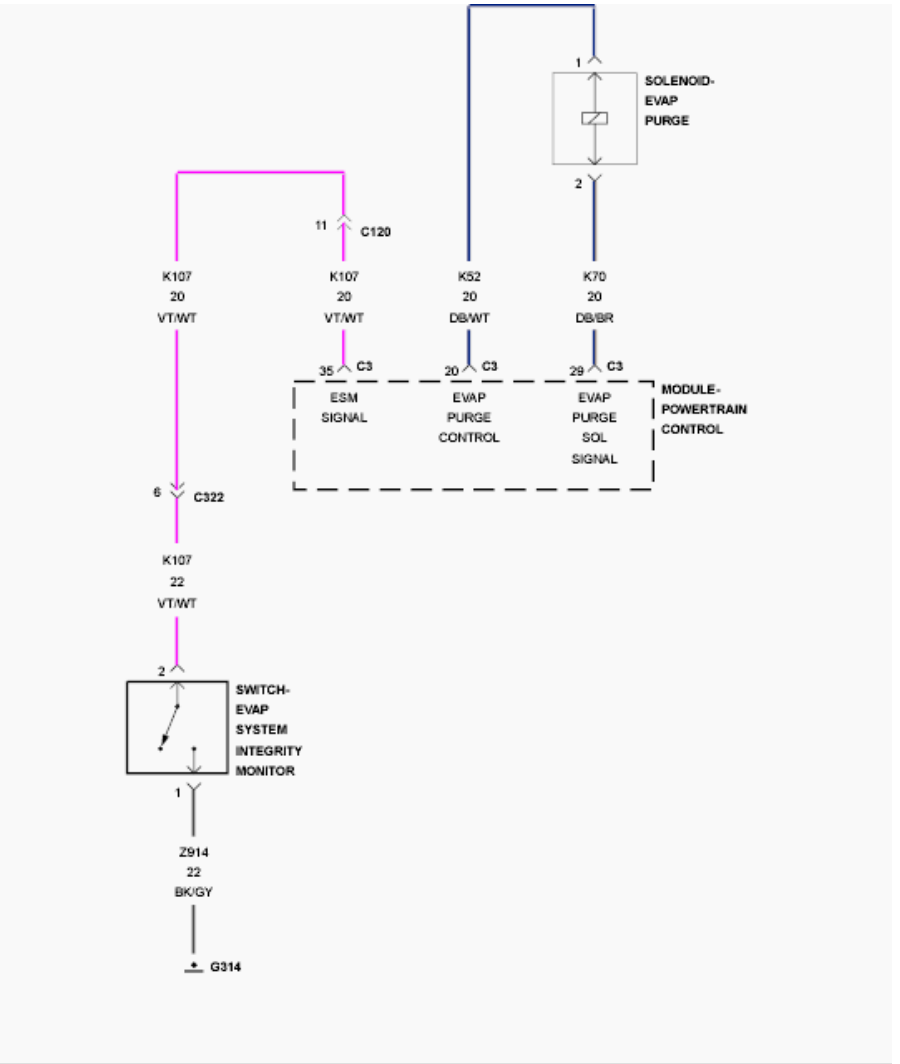

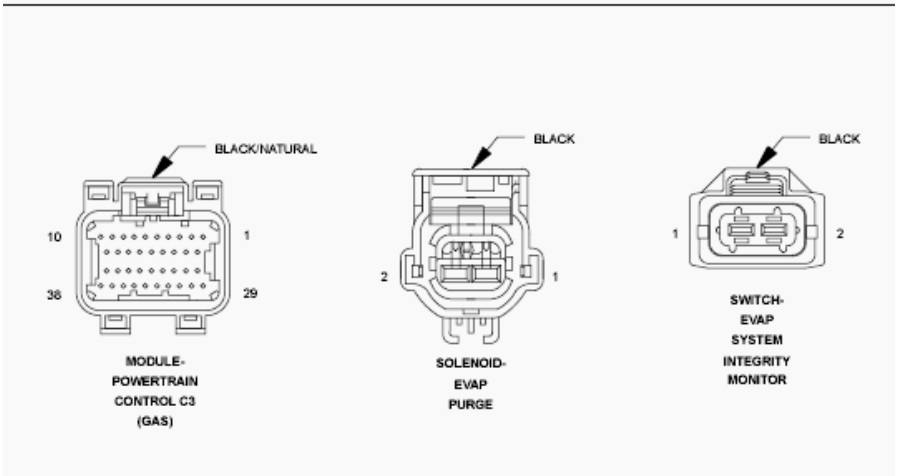

Fig. 216: Evaporative System Integrity Monitor (Esim) Switch Circuit Schematic
Courtesy of CHRYSLER GROUP, LLC

For a complete wiring diagram, **refer to appropriate SYSTEM WIRING DIAGRAMS article** .

WHEN MONITORED:

Immediately after the ignition has been turned off.

SET CONDITION:

At key off, the Powertrain Control Module (PCM) energizes the Purge Solenoid for a calibrated amount of time (30 seconds maximum) and stores the state of the ESIM Switch. The state is evaluated again at the next key on. If the PCM does not detect that the ESIM Switch is open, an error is detected. Two Trip Fault. Three good trips to turn off the MIL.

POSSIBLE CAUSES

Possible Causes
EVAPORATIVE PURGE HOSE/TUBE AND FRESH AIR FILTER OBSTRUCTION
(K52) EVAP PURGE SOLENOID CONTROL CIRCUIT SHORTED TO GROUND
(K107) ESIM SWITCH SIGNAL CIRCUIT SHORTED TO GROUND
ESIM SWITCH
EVAP PURGE SOLENOID
POWERTRAIN CONTROL MODULE (PCM)

Always perform the Pre-Diagnostic Troubleshooting procedure before proceeding. Refer to PRE-DIAGNOSTIC TROUBLESHOOTING PROCEDURE .

DIAGNOSTIC TEST

1. **VEHICLE HISTORY AND SERVICE BULLETIN INVESTIGATION**
    1. Ignition on, engine not running.
    2. Using the scan tool, select View DTCs and record the related Freeze Frame data if any DTCs are present.
    3. Whether or not any DTCs are Active you will want to check the following items which may assist in repairing the customer's complaint successfully.
    4. Check the vehicle's repair history.
    5. If the vehicle has a repair history that pertains to the customer's current complaint, review the repair.
    6. Inspect the vehicle for any aftermarket accessories that may have been installed incorrectly.
    7. Check for any service bulletin(s) related to the customer's complaint or DTCs.
    8. If a service bulletin applies, follow the instructions of the service bulletin.

    Choose the following scenario that best applies.

The service bulletin repaired the customer's complaint.

- Testing complete.

A DTC is present, no service bulletins apply or the service bulletin didn't repair the customer's complaint.

- Go To 2.

2. **ACTIVE DIAGNOSTIC TROUBLE CODE (DTC)**

NOTE: **If the customer is experiencing an early fuel shut off during the fuel filling process along with P0440, P0441 and P0452 setting, you need to check for restrictions in the Evaporative Purge tubes/hoses as well as the Fresh Air Filter before continuing.**

1. Ignition on, engine not running.
2. Using the scan tool, select View DTCs.

   Is the DTC Active or Pending at this time?

   Yes

   - Go To 3.

   No

   - Perform the INTERMITTENT CONDITION diagnostic procedure. Refer to **INTERMITTENT CONDITION** .

3. **ESIM SWITCH STATE**
   1. Using the scan tool, select Data Display and view the ESIM Switch state.
   2. Disconnect the purge hose from the EVAP Canister.

   Is the ESIM Switch state change from 'Closed' to 'Open' when the purge hose was disconnected?

   Yes

   - Go To 4.

   No

   - Go To 7.

4. **EVAP PURGE HOSE/TUBE AND FRESH AIR FILTER OBSTRUCTION**
   1. Turn the ignition off.
   2. Inspect the Evaporative Purge hose/tube for proper routing and installation between the EVAP Purge Solenoid and the Fuel Tank and between the Fuel Tank and the Evaporative Purge Canister.

3. Make sure the hose/tube and fresh air filter are not damaged, kinked and free from any obstructions.
4. Check for any kink in the purge line connecting the LPV (Linear Purge Valve) to intake manifold.

   Were any problems found?

   Yes

   - Repair as necessary.
   - Perform the POWERTRAIN VERIFICATION TEST. Refer to **POWERTRAIN VERIFICATION TEST** .

   No

   - Go To 5.

5. **(K52) EVAP PURGE CONTROL CIRCUIT SHORTED TO GROUND**

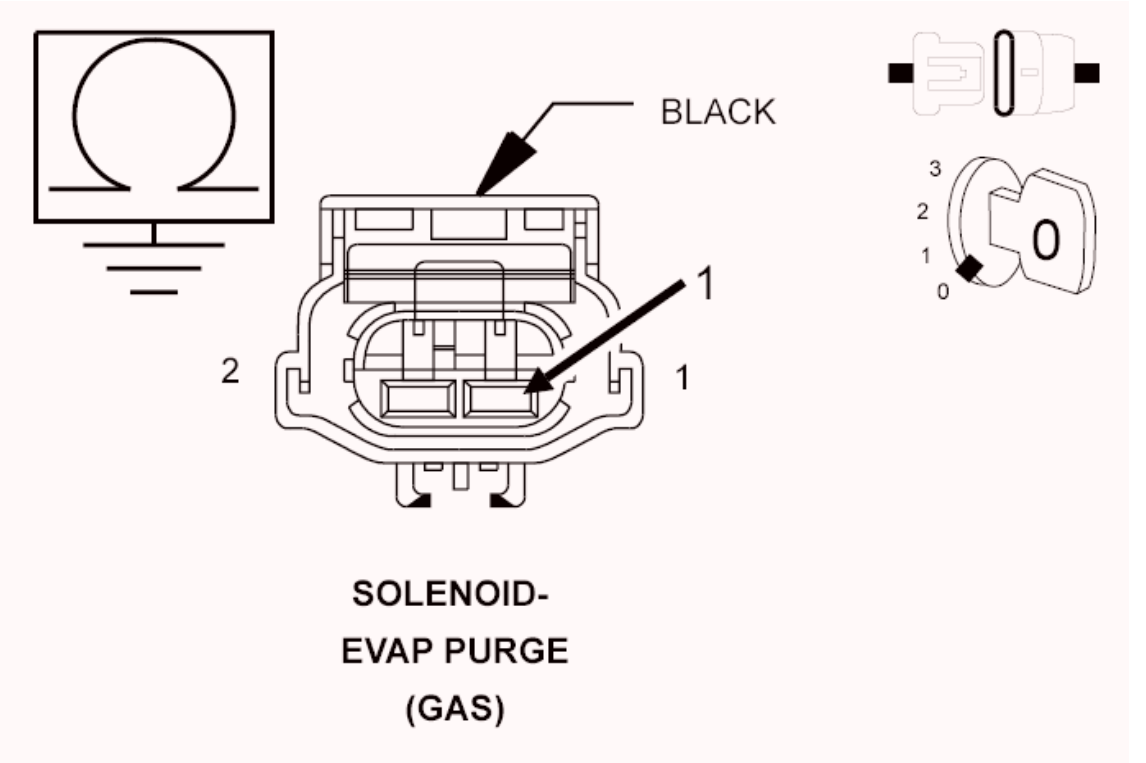

Fig. 217: Measuring Resistance Between Ground And (K52) EVAP Purge Control Circuit In EVAP Purge Solenoid Harness Connector
Courtesy of CHRYSLER GROUP, LLC

1. Disconnect the C3 PCM harness connector.
2. Measure the resistance between ground and the (K52) EVAP Purge Control circuit in the EVAP Purge Solenoid harness connector.

Is the resistance below 100 Ohms?

Yes

- Repair the short to ground in the (K52) EVAP Purge Control circuit.
- Perform the POWERTRAIN VERIFICATION TEST. Refer to **POWERTRAIN VERIFICATION TEST** .

No

- Go To 6.

6. **EVAP PURGE SOLENOID**
   1. Using the wiring diagram/schematic as a guide, inspect the wiring and connectors between the EVAP Purge Solenoid and the Powertrain Control Module (PCM).
   2. Look for any chafed, pierced, pinched or partially broken wires.
   3. Look for broken, bent, pushed out or corroded terminals. Verify that there is good pin to terminal contact in the EVAP Solenoid and the Powertrain Control Module connectors.
   4. Perform any Technical Service Bulletins that may apply.

   Were any problems found?

   Yes

   - Repair as necessary.
   - Perform the POWERTRAIN VERIFICATION TEST. Refer to **POWERTRAIN VERIFICATION TEST** .

   No

   - Replace the EVAP Purge Solenoid if no problems were found with the connectors.
   - Perform the POWERTRAIN VERIFICATION TEST. Refer to **POWERTRAIN VERIFICATION TEST** .

7. **ESIM SWITCH**
   1. Using the scan tool, select Data Display and view the ESIM Switch state.
   2. Disconnect the ESIM Switch electrical connector.

   Does the ESIM Switch state change from CLOSED to OPEN when the switch is disconnected?

   Yes

   - Verify that there is good pin to terminal contact in the switch and the Powertrain Control Module connectors. Replace the ESIM Switch if no problems were found with the connectors.
   - Perform the POWERTRAIN VERIFICATION TEST. Refer to **POWERTRAIN**

VERIFICATION TEST .

No

- Go To 8.

8. **(K107) ESIM SWITCH SIGNAL CIRCUIT SHORTED TO GROUND**

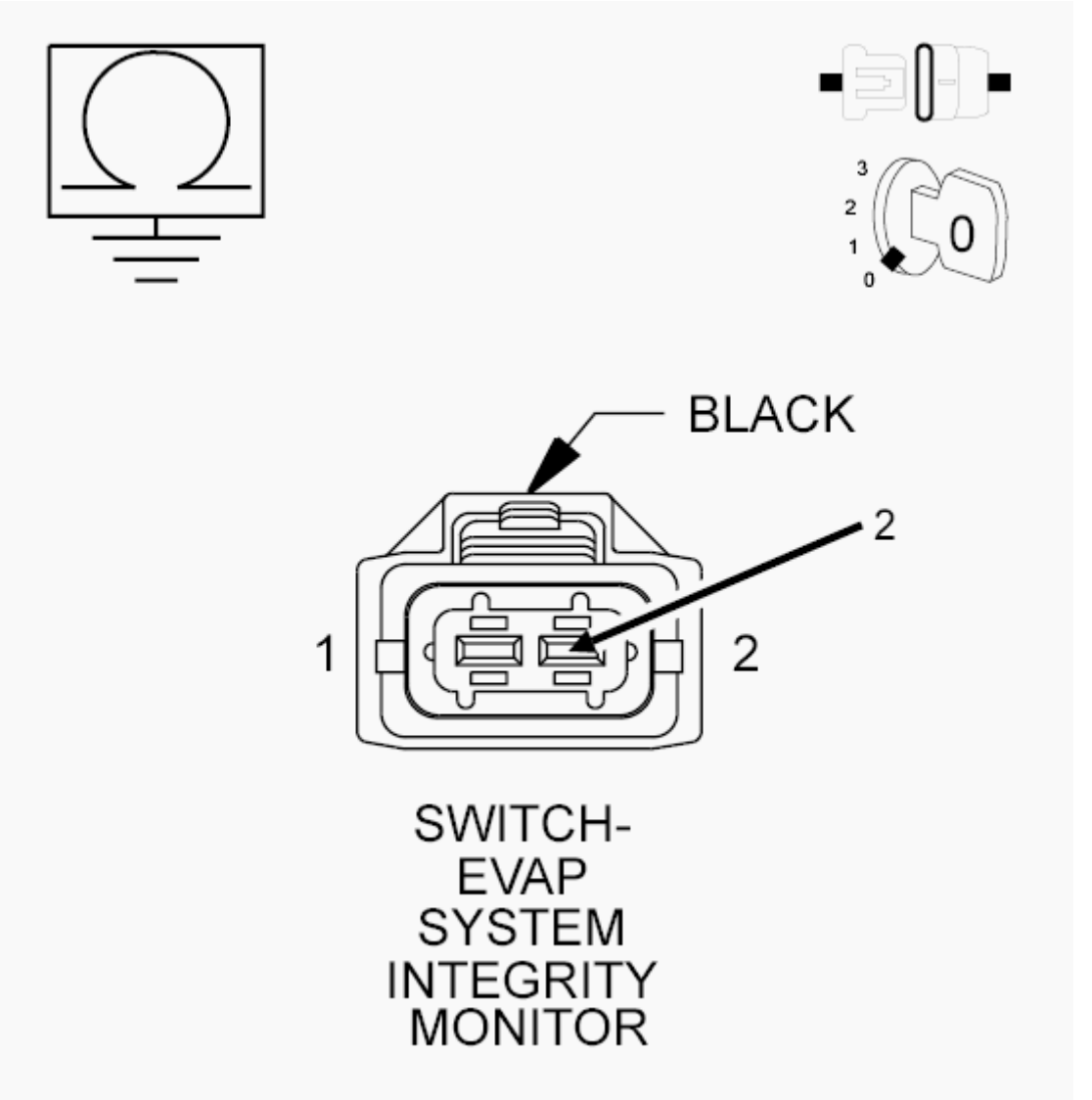

Fig. 218: Measuring Resistance Between Ground And (K107) Esim Switch Signal Circuit In Esim Switch Harness Connector
Courtesy of CHRYSLER GROUP, LLC

1. Turn the ignition off.
2. Disconnect the C3 PCM harness connector.
3. Measure the resistance between ground and the (K107) ESIM Switch Signal circuit in the ESIM Switch harness connector.

Is the resistance below 100 Ohms?

Yes

- Repair the short to ground in the (K107) ESIM Switch Signal circuit.
- Perform the POWERTRAIN VERIFICATION TEST. Refer to **POWERTRAIN VERIFICATION TEST** .

No

- Go To 9.

9. **POWERTRAIN CONTROL MODULE (PCM)**
    1. Using the wiring diagram/schematic as a guide, inspect the wiring and connectors between the EVAP Purge Solenoid Assembly, ESIM Switch and the Powertrain Control Module (PCM).
    2. Look for any chafed, pierced, pinched or partially broken wires.
    3. Look for broken, bent, pushed out or corroded terminals. Verify that there is good pin to terminal contact in the ESIM, EVAP Purge Solenoid and the Powertrain Control Module connectors.
    4. Perform any Technical Service Bulletins that may apply.

    Were there any problems found?

    Yes

    - Repair as necessary.
    - Perform the POWERTRAIN VERIFICATION TEST. Refer to **POWERTRAIN VERIFICATION TEST** .

    No

    - Replace and program the Powertrain Control Module in accordance with the Service Information.
    - Perform the POWERTRAIN VERIFICATION TEST. Refer to **POWERTRAIN VERIFICATION TEST** .

P0455-EVAP PURGE SYSTEM LARGE LEAK

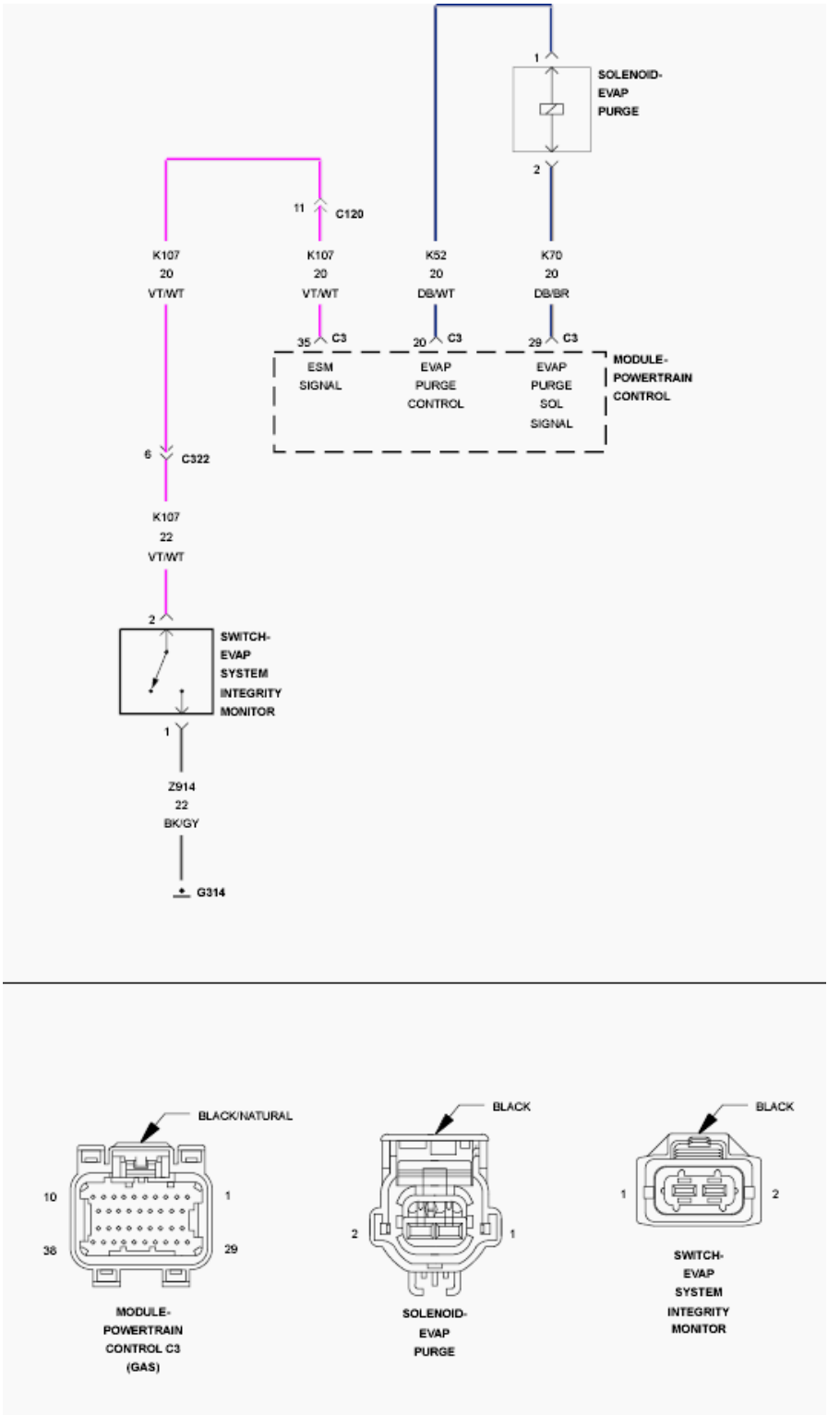

Fig. 219: Evaporative System Integrity Monitor (Esim) Switch Circuit Schematic
Courtesy of CHRYSLER GROUP, LLC

For a complete wiring diagram, **refer to appropriate SYSTEM WIRING DIAGRAMS article** .

THEORY OF OPERATION

The Evaporative Purge Monitor tests the integrity of the hoses/tube between the throttle body/intake and the fuel tank. The monitor is a two stage test and runs only after the Evaporative system passes the small leak test. Stage one is non-intrusive. The Powertrain Control Module (PCM) monitors the purge vapor ratio and the Evaporative System Integrity Monitor (ESIM) switch closed ratio. If the purge vapor ratio is above a calculated value, the monitor passes. If the ESIM switch closed ratio is greater than calculated value when purge flow is greater than a minimum value, the monitor passes. Stage two is an intrusive test and runs only if stage one does not pass. The PCM commands the purge solenoid to flow at a specified rate to force the purge vapor ratio to update. The ratio is compared to a calibrated specification. If it is less than specified, a one trip failure is recorded. This test can detect if the purge hose is off, obstructed or the purge valve is not operational.

WHEN MONITORED:

With the engine running, during a cold start test with the fuel level above 12%, ambient temperature between 4° C and 32° C (39° F and 89° F) and the fuel system in closed loop. The test runs when the small leak test is maturing.

SET CONDITION:

The Powertrain Control Module (PCM) activates the EVAP Purge Solenoid to pull the Evaporative system into a vacuum to close the Evaporative System Integrity Monitor (ESIM) switch. Once the ESIM switch is closed, the PCM turns the EVAP Purge solenoid off to seal the Evaporative System. If the ESIM switch reopens before the calibrated amount of time, a large leak error is detected. Two Trip Fault. Three good trips to turn off the MIL.

POSSIBLE CAUSES

Possible Causes
EVAPORATIVE PURGE SYSTEM LEAK
EVAP PURGE SOLENOID
EVAPORATIVE SYSTEM INTEGRITY MONITOR SWITCH

Always perform the Pre-Diagnostic Troubleshooting procedure before proceeding. Refer to PRE-DIAGNOSTIC TROUBLESHOOTING PROCEDURE .

DIAGNOSTIC TEST

1. **VEHICLE HISTORY AND SERVICE BULLETIN INVESTIGATION**
    1. Ignition on, engine not running.
    2. With the scan tool, select View DTCs and record the related Freeze Frame data if any DTCs are present.
    3. Whether or not any DTCs are Active you will want to check the following items which may assist in repairing the customer's complaint successfully.
    4. Check the vehicle's repair history.
    5. If the vehicle has a repair history that pertains to the customer's current complaint, review the

repair.

6. Inspect the vehicle for any aftermarket accessories that may have been installed incorrectly.
7. Check for any service bulletin(s) related to the customer's complaint or DTCs.
8. If a service bulletin applies, follow the instructions of the service bulletin.

   Choose the following scenario that best applies.

   The service bulletin repaired the customer's complaint.

   - Testing complete.

   A DTC is present, no service bulletins apply or the service bulletin didn't repair the customer's complaint.

   - Go To 2.

2. **ACTIVE DTC**

   NOTE: Since a hot vehicle can conceal a leak, it is best to perform this test at room temperature.

   NOTE: A loose gas cap could have caused this DTC to set. Make sure gas cap is tight and in good condition. Make sure the gas cap meets OEM specifications.

   1. Start the engine.
   2. Allow the engine to idle.
   3. Using the scan tool, perform the ESIM FORCED MONITOR TEST. Allow the test to complete.
   4. With the scan tool, select View DTCs.

      Is the DTC Active or Pending at this time?

      Yes

      - Go To 3.

      No

      - Perform the INTERMITTENT CONDITION diagnostic procedure. Refer to **INTERMITTENT CONDITION** .

3. **EVAPORATIVE SYSTEM INSPECTION**
   1. Perform a visual and physical inspection of the entire Evaporative Emission system.
   2. Check for the following conditions:
      - Holes or cracks

- Loose seal points
- Evidence of damaged components
- Incorrect routing of hoses and tubes
- Loose or missing Fuel Filler Cap
- Improper installation of the Fuel Fill Cap
- Damaged Locking tabs on Cap and/or fill tube
- Damaged seal points on Cap and/or fill tube
- Fuel cap gasket seal

Were any of the above conditions found?

Yes

- Repair as necessary.
- Perform the POWERTRAIN VERIFICATION TEST. Refer to **POWERTRAIN VERIFICATION TEST** .

No

- Go To 4.

4. **VERIFY EVAPORATIVE EMISSION LEAK**

WARNING: Keep lit cigarettes, sparks, flames, and other ignition sources away from the test area to prevent the ignition of explosive gases. Keep the test area well ventilated. Failure to do so may result in possible serious or fatal injury.

1. To continue testing you will need Evaporative Emission Leak Detector (EELD) (special tool #8404B, Kit, EELD And Accessory).

NOTE: The fuel tank should have between 20% and 80% of fuel tank capacity to properly test the Evaporative system.

2. Connect the red power lead of the EELD to the battery positive terminal and the black ground lead to battery negative terminal.
3. Block the vent hose of the canister if using the service port.
4. Connect shop air to the EELD.
5. Set the smoke/air control switch to AIR.
6. Insert the tester's AIR supply tip (clear hose) into the appropriate calibration orifice on the tester's control panel (based on DTC leak size).
7. Press the remote smoke/air start button.
8. Position the red flag on the air flow meter so it is aligned with the indicator ball.

9. When the calibration is complete, release the remote button. The EELD flow meter is now calibrated in liters per minute to the size leak indicated by the DTC set in the PCM.
10. Install the Service Port Adapter (special tool #8404-14, Adapter, Evaporative Service Port) on the vehicle's service port and block the vent hose of the Evaporative Canister (if equipped) or install the service adapter (special tool #8404-ADP, Smoke Machine Adapters) into the filter line.
11. Connect the Air supply hose from the EELD to the service port (if equipped) or to the adapter (special tool #8404-ADP, Smoke Machine Adapters).
12. Press the remote button to activate AIR flow.

NOTE: Larger volume fuel tanks, lower fuel levels or if the vehicle is equipped with a Flow Management Valve may indicate high flow and will require four to five minutes to fill.

13. Compare the flow meter indicator ball reading to the red flag.
14. ABOVE the red flag indicates a leak present.
15. BELOW the red flag indicates a sealed system.

Is the indicator ball above the red flag?

Yes

- Go To 5.

No

- Refer to the Freeze Frame data recorded in step 1. If the data indicates that the vehicle was in motion when the DTC was set, verify that all hoses are properly connected.
- Perform the POWERTRAIN VERIFICATION TEST. Refer to **POWERTRAIN VERIFICATION TEST** .

5. **EVAPORATIVE EMISSION LEAK DETECTION**

NOTE: A thorough visual inspection of the Evaporative system hoses, tubes and connections may save time in your diagnosis. Look for any physical damage or signs of wetness at connections. The strong smell of fuel vapors may aid diagnosis also.

1. To continue testing, you will need Evaporative Emissions Leak Detector (EELD) (special tool #8404B, Kit, EELD And Accessory).
2. Remove the Air supply hose from the service port (if equipped) or from the adapter (special tool #8404-ADP, Smoke Machine Adapters).
3. Connect the SMOKE supply tip (black hose) to the service port (if equipped) or to the adapter (special tool #8404-ADP, Smoke Machine Adapters).
4. Set the smoke/air control switch to SMOKE.

NOTE: **The flow meter indicator ball will not move in the smoke mode.**

5. Press the remote smoke/air start button.

NOTE: **Make sure that smoke has filled the Evaporative System by continuing to press the remote smoke/air start button, remove the vehicle fuel cap and wait for the smoke to exit. Once smoke is indicated reinstall the fuel cap.**

NOTE: **For optimal performance, introduce smoke into the system for an additional 60 seconds; continue introducing smoke at 15 second intervals, as necessary.**

6. While still holding the remote smoke/air start button, use the white light (special tool #8404-CLL, Light, White) to follow the Evaporative System path and look for the source of the leak indicated by exiting smoke.
7. If a leak is concealed from view (i.e., top of fuel tank), release the remote smoke/air start button and use the ultraviolet (UV) black light (special tool #8404-UVL, Light, UV) and the yellow goggles (special tool #8404-20, Goggles, Yellow) to look for residual traces of dye that is left behind by the smoke.
8. The exiting smoke deposits a residual fluid that is either bright green or bright yellow in color when viewed with a UV light.

NOTE: **The Evaporative System is divided into three zones. A leak from any of these zones can cause this DTC to set. The lists below specify the possible leak points in that specific zone. For further assistance see the Zone Identification Charts below.**

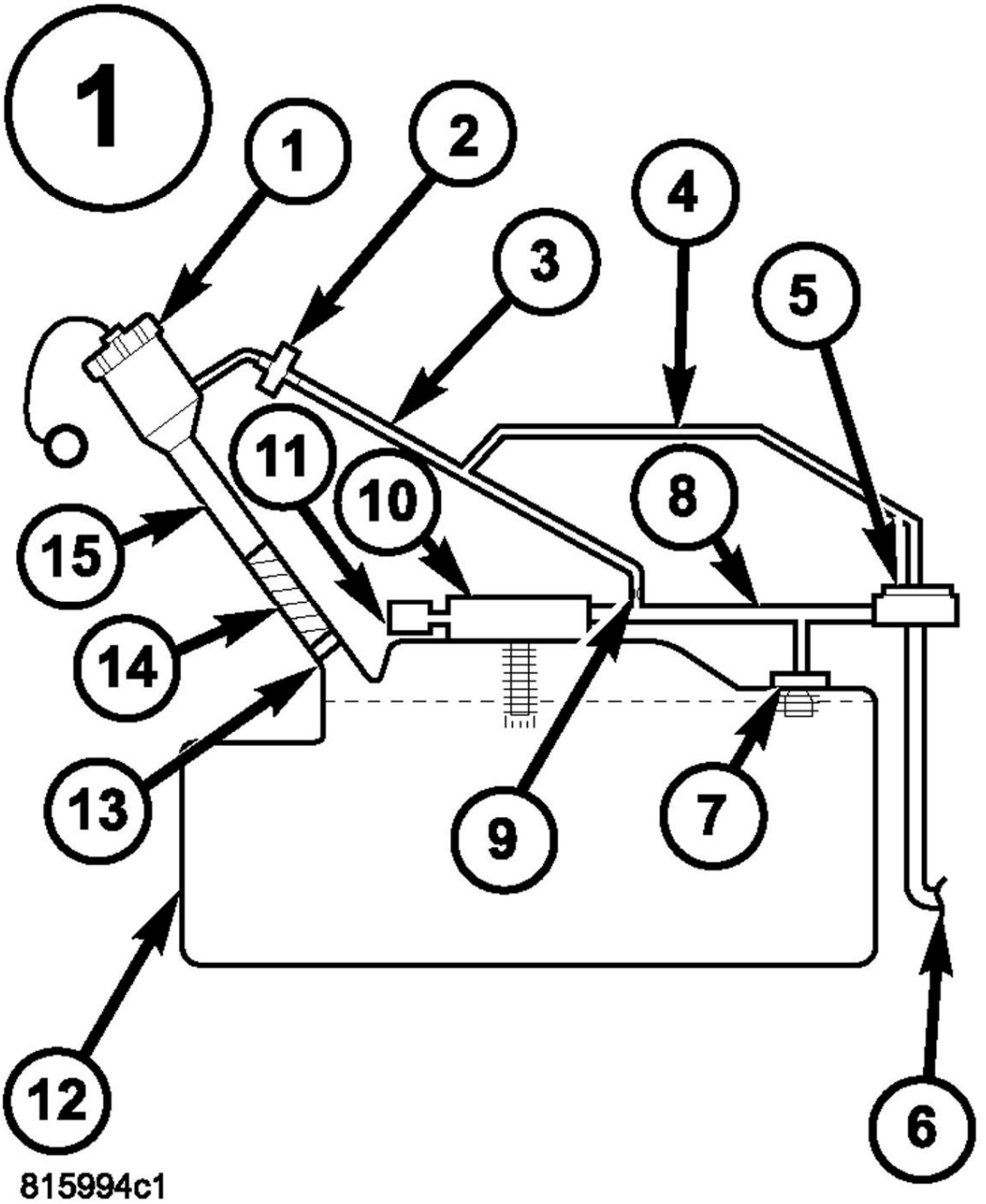

Fig. 220: Identifying EVAP System Zone 1
Courtesy of CHRYSLER GROUP, LLC

ZONE 1

1. Fuel Cap
2. Recirculation Check Valve
3. Vapor Recirculation Line
4. Signal Vapor Line for FVM

5. Flow Management Valve
6. Fuel Tank to Canister Vapor Line
7. Fuel Tank Vent (Check Valve)
8. Vapor Line to Canister
9. Flow Control Orifice
10. Control Valve
11. Liquid Trap
12. Fuel Tank
13. Check valve
14. Fuel Fill Tube to Tank connector
15. Fuel Fill Tube

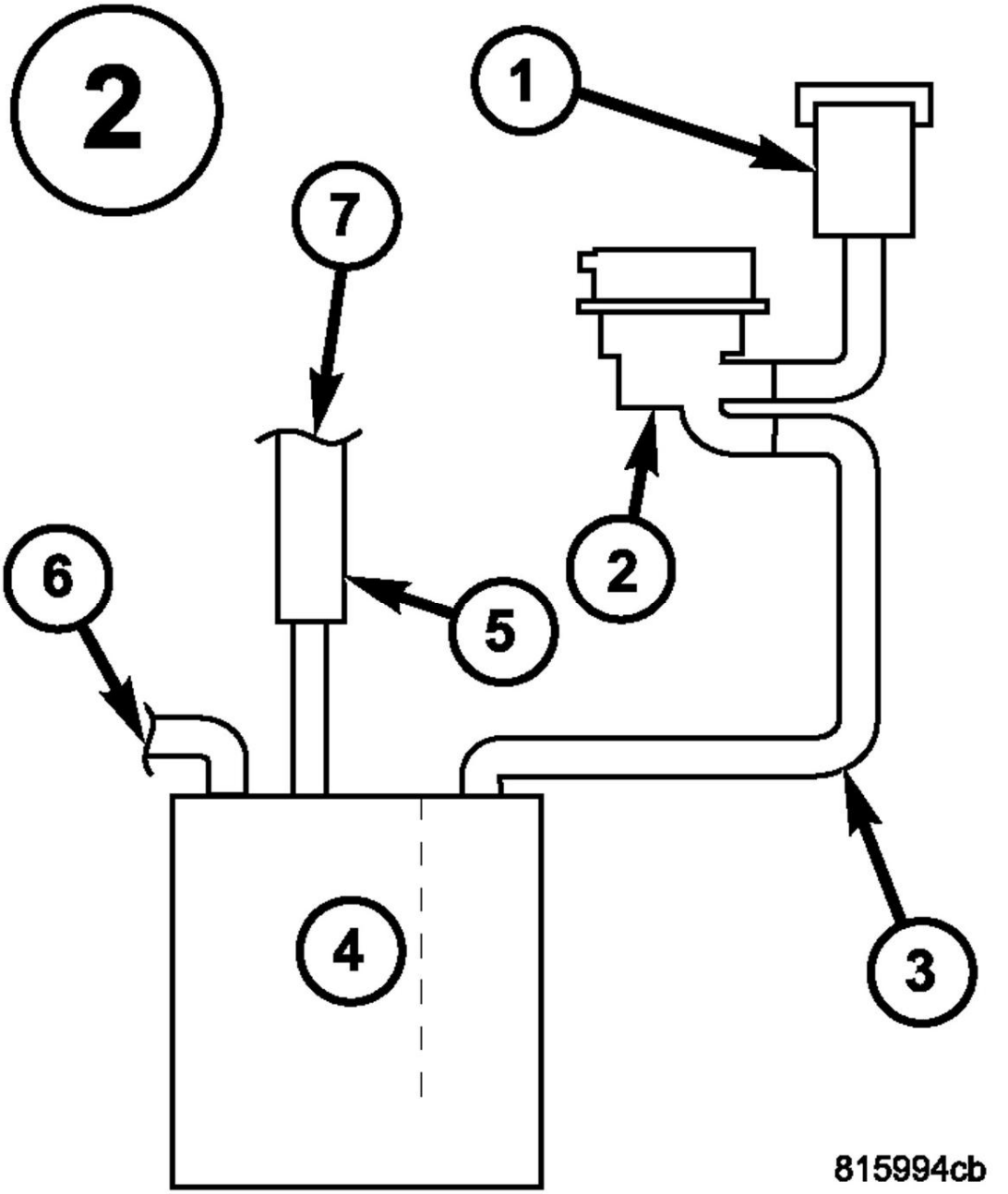

Fig. 221: Identifying EVAP System Zone 2
Courtesy of CHRYSLER GROUP, LLC

ZONE 2

1. Filter
2. ESIM switch
3. Canister Vent Line
4. Evaporative Canister

5. Chassis Purge Valve
6. Fuel Tank to Canister Vapor Line connection
7. Evaporative Purge connection

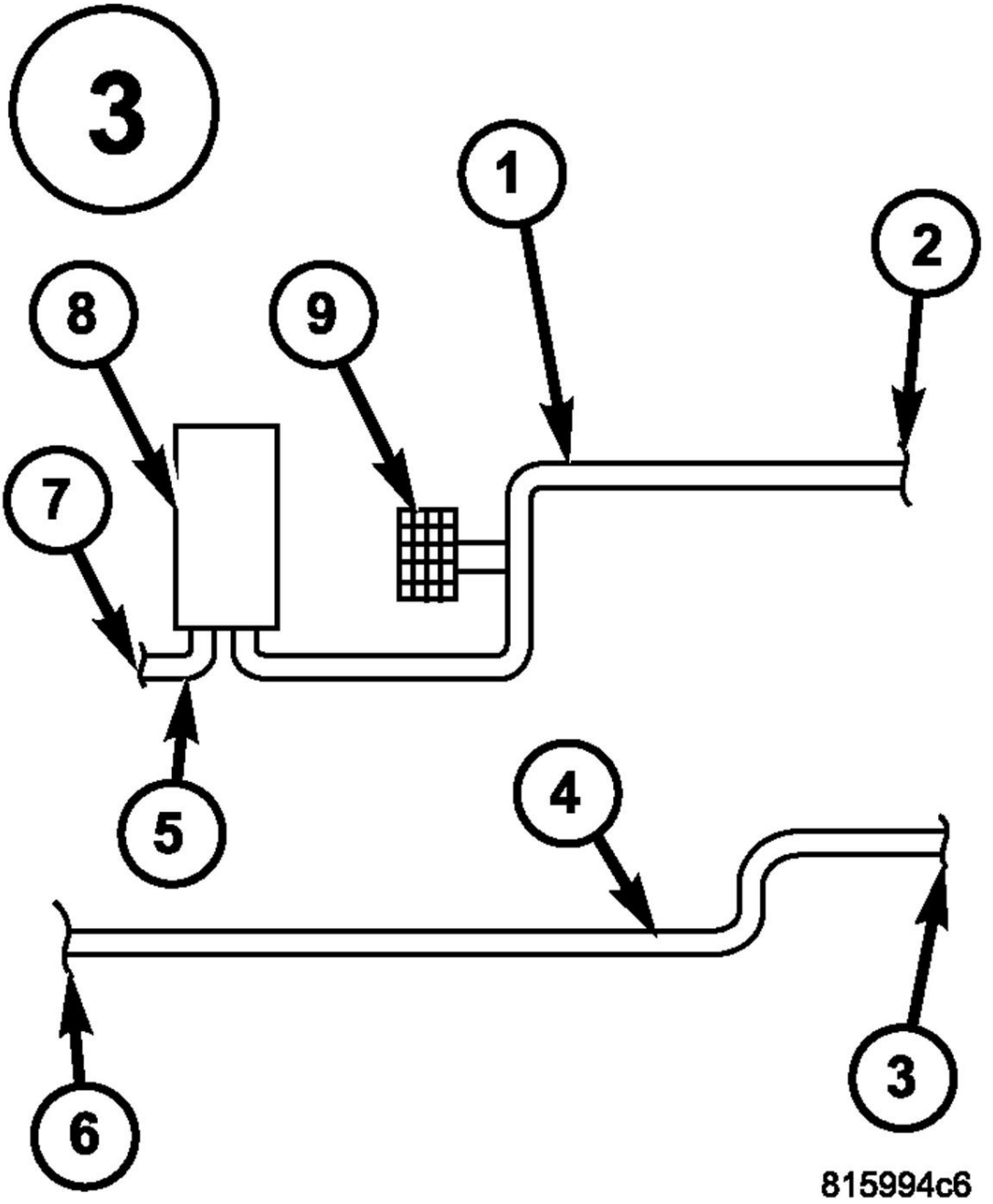

Fig. 222: Identifying EVAP System Zone 3
Courtesy of CHRYSLER GROUP, LLC

ZONE 3

1. Evaporative Purge Vacuum Line
2. Connection to Chassis Line
3. Connection to Canister
4. Chassis Purge Line
5. Evaporative Purge Vacuum Line
6. Connection to Evaporative Purge Harness
7. Chassis Evaporative Purge Line connection to Engine Vacuum
8. EVAP Purge Valve
9. Service Port

NOTE: Carefully inspect the vent side of the EVAP Canister. Due to the filtering system in the canister the smoke may not be as thick. Introducing smoke into the filtered side of the canister may assist in locating the leak.

Select the appropriate response from the list below:

A leak was found at the gas cap or fuel filler tube

- Go To 6.

A leak was found in one or more of the Evaporative System zones

- If the leak is at a hose connection, remove the hose then reconnect the hose and check for a leak again. All other leaks repair as necessary.
- Perform the POWERTRAIN VERIFICATION TEST. Refer to **POWERTRAIN VERIFICATION TEST** .

No leaks were detected

- Go To 7.

6. **LEAK AT GAS CAP**
   1. Remove the SMOKE supply tip (black hose) from the service port (if equipped) or to the adapter (special tool #8404-ADP, Smoke Machine Adapters).
   2. Install Leak Check Adapter (special tool #8382, Adapter, Leak Check) (1/4 turn cap) or Fuel Tank Adapter (special tool #6922, Adapter, Fuel Tank) (screw on cap) and Leak Check Adapter (special tool #8399, Adapter, Leak Check) (secondary seal depressor) and repeat step 5.

NOTE: The gas cap adapter is being used as a known good cap.

Was a leak found at the gas cap adapter?

Yes

- Replace the Fuel Filler tube assembly.
- Perform the POWERTRAIN VERIFICATION TEST. Refer to **POWERTRAIN VERIFICATION TEST** .

No

- Replace the gas cap.
- Perform the POWERTRAIN VERIFICATION TEST. Refer to **POWERTRAIN VERIFICATION TEST** .

7. **EVAP PURGE SOLENOID**

NOTE: After disconnecting the EVAP Purge Solenoid vacuum connections, inspect the lines and solenoid for signs of contamination.

1. Disconnect the vacuum hoses at the EVAP Purge Solenoid.
2. Using a hand vacuum pump, apply 10 in. Hg. to the "CAN" side of the EVAP Purge Solenoid.

NOTE: The solenoid should hold vacuum for a minimum of 15 seconds.

3. Turn the ignition on.
4. Using the scan tool, actuate the EVAP Purge Solenoid to the ON position.

NOTE: The vacuum should drop when the solenoid is actuated.

Does the solenoid function as described above?

Yes

- Go To 8.

No

- Verify that there is good pin to terminal contact in the Solenoid and PCM harness connectors. Replace the EVAP Purge Solenoid in accordance with the Service Information if no problems were found in the connectors.
- Perform the POWERTRAIN VERIFICATION TEST. Refer to **POWERTRAIN VERIFICATION TEST** .

8. **EVAPORATIVE SYSTEM INTEGRITY MONITOR SWITCH**

1. Using the wiring diagram/schematic as a guide, inspect the wiring and connectors between the ESIM switch and the Powertrain Control Module (PCM).
2. Look for any chafed, pierced, pinched or partially broken wires.
3. Look for broken, bent, pushed out or corroded terminals. Verify that there is good pin to terminal contact in the Switch, Solenoid and the Powertrain Control Module connectors.

4. Perform any Technical Service Bulletins that may apply.

   Were any problems found?

   Yes

   - Repair as necessary.
   - Perform the POWERTRAIN VERIFICATION TEST. Refer to **POWERTRAIN VERIFICATION TEST** .

   No

   - Verify that there is good pin to terminal contact in the Switch and the Powertrain Control Module connectors. Replace the ESIM switch Assembly if no problems were found with the connectors.
   - Perform the POWERTRAIN VERIFICATION TEST. Refer to **POWERTRAIN VERIFICATION TEST** .

P0456-EVAP PURGE SYSTEM SMALL LEAK

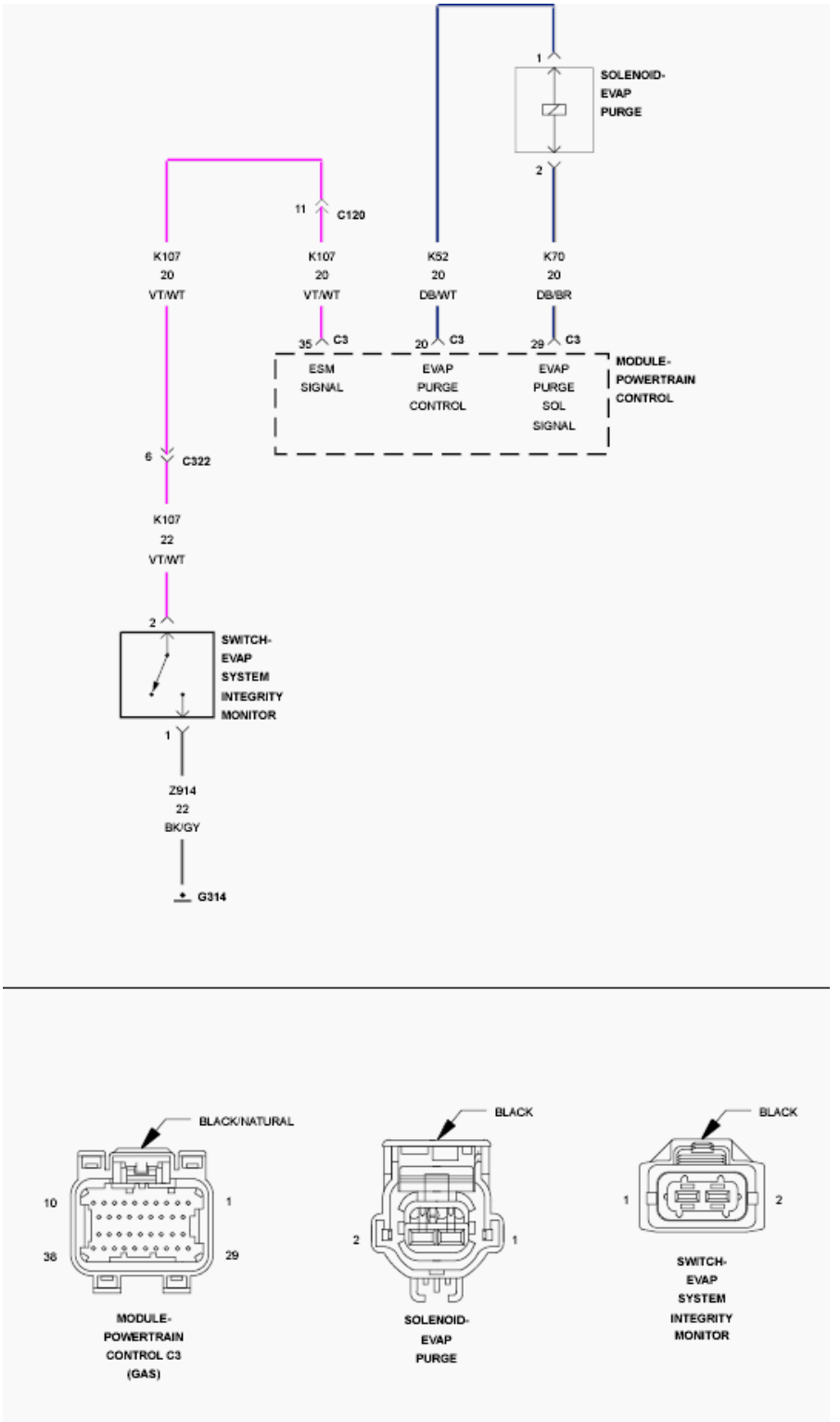

Fig. 223: Evaporative System Integrity Monitor (Esim) Switch Circuit Schematic
Courtesy of CHRYSLER GROUP, LLC

For a complete wiring diagram, **refer to appropriate SYSTEM WIRING DIAGRAMS article** .

THEORY OF OPERATION

The Evaporative Purge Monitor tests the integrity of the hoses/tube between the throttle body/intake and the fuel tank. The monitor is a two stage test and runs only after the Evaporative system passes the small leak test. Stage one is non-intrusive. The Powertrain Control Module (PCM) monitors the purge vapor ratio and the Evaporative System Integrity Monitor (ESIM) switch closed ratio. If the purge vapor ratio is above a calculated value, the monitor passes. If the ESIM switch closed ratio is greater than calculated value when purge flow is greater than a minimum value, the monitor passes. Stage two is an intrusive test and runs only if stage one does not pass. The PCM commands the purge solenoid to flow at a specified rate to force the purge vapor ratio to update. The ratio is compared to a calibrated specification. If it is less than specified, a one trip failure is recorded. This test can detect if the purge hose is off, obstructed or the purge valve is not operational.

WHEN MONITORED:

With the ignition off, fuel level less than 88%, ambient temperature between 4° C and 43° C (39° F and 109° F) and the fuel system in closed loop.

SET CONDITION:

As temperatures change, a vacuum is created in the fuel tank and Evaporative System. With the Evaporative System sealed, the Powertrain Control Module (PCM) monitors the Evaporative System Integrity Monitor (ESIM) Switch. If the ESIM switch does not close within a calibrated time, an error is detected by the PCM. One Trip Fault. Three good trips to turn off the MIL.

POSSIBLE CAUSES

Possible Causes
EVAPORATIVE PURGE SYSTEM LEAK
EVAP PURGE SOLENOID
ESIM SWITCH

Always perform the Pre-Diagnostic Troubleshooting procedure before proceeding. Refer to PRE-DIAGNOSTIC TROUBLESHOOTING PROCEDURE .

DIAGNOSTIC TEST

1. **VEHICLE HISTORY AND SERVICE BULLETIN INVESTIGATION**
    1. Ignition on, engine not running.
    2. With the scan tool, select View DTCs and record the related Freeze Frame data if any DTCs are present.
    3. Whether or not any DTCs are Active you will want to check the following items which may assist in repairing the customer's complaint successfully.
    4. Check the vehicle's repair history.
    5. If the vehicle has a repair history that pertains to the customer's current complaint, review the repair.
    6. Inspect the vehicle for any aftermarket accessories that may have been installed incorrectly.

7. Check for any service bulletin(s) related to the customer's complaint or DTCs.
8. If a service bulletin applies, follow the instructions of the service bulletin.

   Choose the following scenario that best applies.

   The service bulletin repaired the customer's complaint.

   - Testing complete.

   A DTC is present, no service bulletins apply or the service bulletin didn't repair the customer's complaint.

   - Go To 2.

2. **ACTIVE DTC**

   NOTE: Since a hot vehicle can conceal a leak, it is best to perform this test at room temperature.

   NOTE: A loose gas cap could have caused this DTC to set. Make sure gas cap is tight and in good condition. Make sure the gas cap meets OEM specifications.

   1. Ignition on, engine not running.
   2. With the scan tool, select View DTCs.

      Is the DTC Active at this time?

      Yes

      - Go To 3.

      No

      - Perform the INTERMITTENT CONDITION diagnostic procedure. Refer to **INTERMITTENT CONDITION** .

3. **VISUAL AND PHYSICAL INSPECTION**
   1. Perform a visual and physical inspection of the entire Evaporative Emission system.
   2. Check for the following conditions:
      - Holes or cracks
      - Loose seal points
      - Evidence of damaged components
      - Incorrect routing of hoses and tubes
      - Loose or missing Fuel Filler Cap

- Improper installation of the Fuel Fill Cap
- Damaged Locking tabs on Cap and/or fill tube
- Damaged seal points on Cap and/or fill tube
- Fuel cap gasket seal

Were any of the above conditions found?

Yes

- Repair as necessary.
- Perform the POWERTRAIN VERIFICATION TEST. Refer to **POWERTRAIN VERIFICATION TEST** .

No

- Go To 4.

4. **VERIFY EVAPORATIVE EMISSION LEAK**

WARNING: Keep lit cigarettes, sparks, flames, and other ignition sources away from the test area to prevent the ignition of explosive gases. Keep the test area well ventilated. Failure to do so may result in possible serious or fatal injury.

1. To continue testing you will need Evaporative Emission Leak Detector (EELD) (special tool #8404B, Kit, EELD And Accessory).

NOTE: The fuel tank should have between 20% and 80% of fuel tank capacity to properly test the Evaporative system.

2. Connect the red power lead of the EELD to the battery positive terminal and the black ground lead to battery negative terminal.
3. Block the vent hose of the canister if using the service port.
4. Connect shop air to the EELD.
5. Set the smoke/air control switch to AIR.
6. Insert the tester's AIR supply tip (clear hose) into the appropriate calibration orifice on the tester's control panel (based on DTC leak size).
7. Press the remote smoke/air start button.
8. Position the red flag on the air flow meter so it is aligned with the indicator ball.
9. When the calibration is complete, release the remote button. The EELD flow meter is now calibrated in liters per minute to the size leak indicated by the DTC set in the PCM.
10. Install the Service Port Adapter (special tool #8404-14, Adapter, Evaporative Service Port) on the vehicle's service port and block the vent hose of the Evaporative Canister (if equipped) or install the adapter (special tool #8404-ADP, Smoke Machine Adapters) into the filter line.

11. Connect the Air supply hose from the EELD to the service port (if equipped) or to the adapter (special tool #8404-ADP, Smoke Machine Adapters).
12. Press the remote button to activate AIR flow.

NOTE: **Larger volume fuel tanks, lower fuel levels or if the vehicle is equipped with a Flow Management Valve may indicate high flow and will require four to five minutes to fill.**

13. Compare the flow meter indicator ball reading to the red flag.
14. ABOVE the red flag indicates a leak present.
15. BELOW the red flag indicates a sealed system.

Is the indicator ball above the red flag?

Yes

- Go To 5.

No

- Perform the INTERMITTENT CONDITION diagnostic procedure. Refer to **INTERMITTENT CONDITION** .

5. **EVAPORATIVE EMISSION LEAK DETECTION**

NOTE: **A thorough visual inspection of the Evaporative System hoses, tubes and connections may save time in your diagnosis. Look for any physical damage or signs of wetness at connections. The strong smell of fuel vapors may also aid diagnosis.**

1. To continue testing, you will need Evaporative Emissions Leak Detector (EELD) (special tool #8404B, Kit, EELD And Accessory).
2. Remove the Air supply hose from the service port (if equipped) or from the adapter (special tool #8404-ADP, Smoke Machine Adapters).
3. Connect the SMOKE supply tip (black hose) to the service port (if equipped) or to the adapter (special tool #8404-ADP, Smoke Machine Adapters).
4. Set the smoke/air control switch to SMOKE.

NOTE: **The flow meter indicator ball will not move in the smoke mode.**

5. Press the remote smoke/air start button.

NOTE: **Make sure that smoke has filled the Evaporative System by continuing to press the remote smoke/air start button, remove the vehicle fuel cap and wait for the smoke to exit. Once smoke is**

indicated reinstall the fuel cap.

NOTE: **For optimal performance, introduce smoke into the system for an additional 60 seconds; continue introducing smoke at 15 second intervals, as necessary.**

6. While still holding the remote smoke/air start button, use the white light (special tool #8404-CLL, Light, White) to follow the Evaporative System path and look for the source of the leak indicated by exiting smoke.
7. If a leak is concealed from view (i.e., top of fuel tank), release the remote smoke/air start button and use the ultraviolet (UV) black light (special tool #8404-UVL, Light, UV) and the yellow goggles (special tool #8404-20, Goggles, Yellow) to look for residual traces of dye that is left behind by the smoke.
8. The exiting smoke deposits a residual fluid that is either bright green or bright yellow in color when viewed with a UV light.

NOTE: **The Evaporative System is divided into three zones. A leak from any of these zones can cause this DTC to set. The lists below specify the possible leak points in that specific zone. For further assistance see the Zone Identification Charts below.**

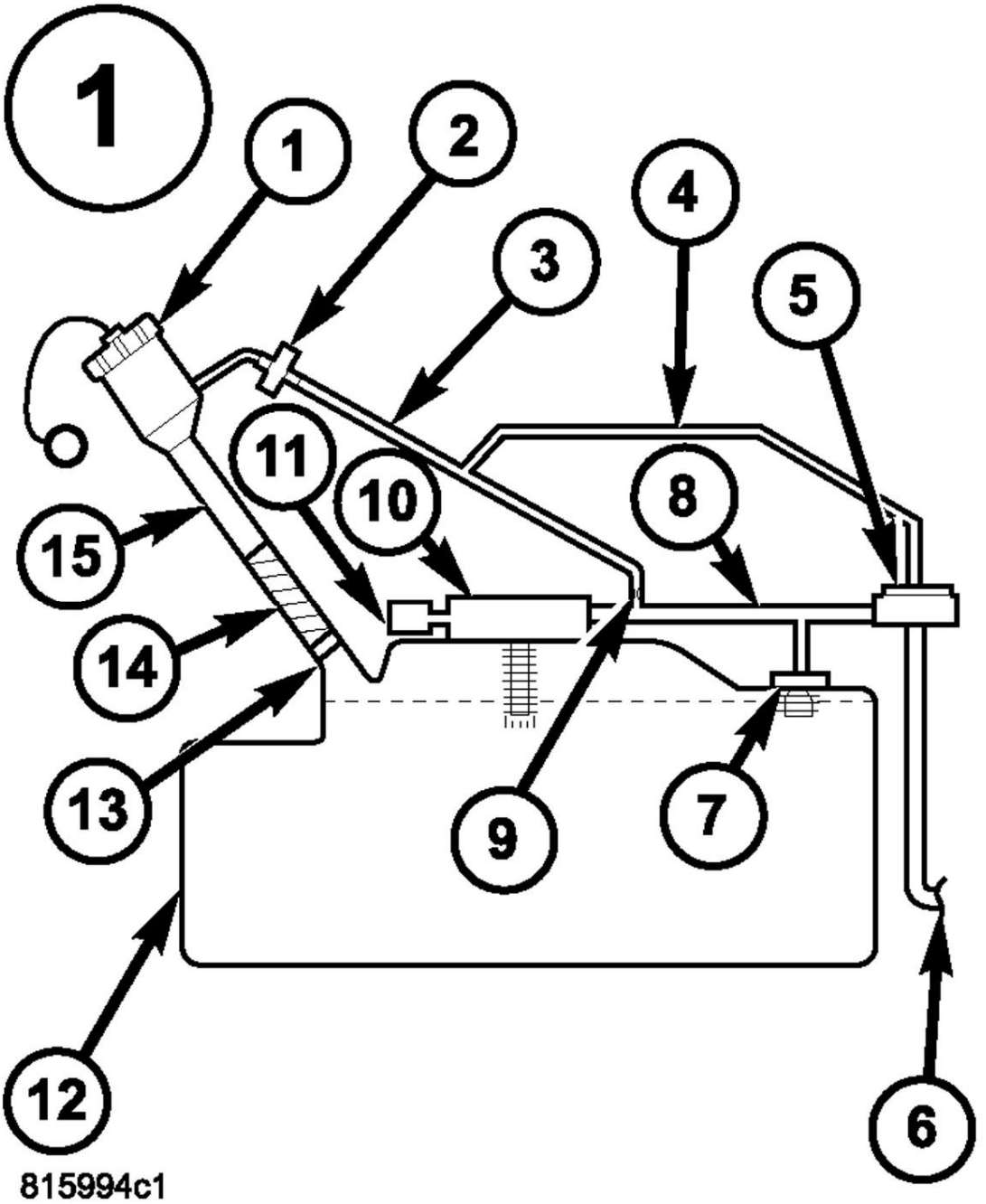

Fig. 224: Identifying EVAP System Zone 1
Courtesy of CHRYSLER GROUP, LLC

ZONE 1

1. Fuel Cap
2. Recirculation Check Valve
3. Vapor Recirculation Line
4. Signal Vapor Line for FVM

5. Flow Management Valve
6. Fuel Tank to Canister Vapor Line
7. Fuel Tank Vent (Check Valve)
8. Vapor Line to Canister
9. Flow Control Orifice
10. Control Valve
11. Liquid Trap
12. Fuel Tank
13. Check valve
14. Fuel Fill Tube to Tank connector
15. Fuel Fill Tube

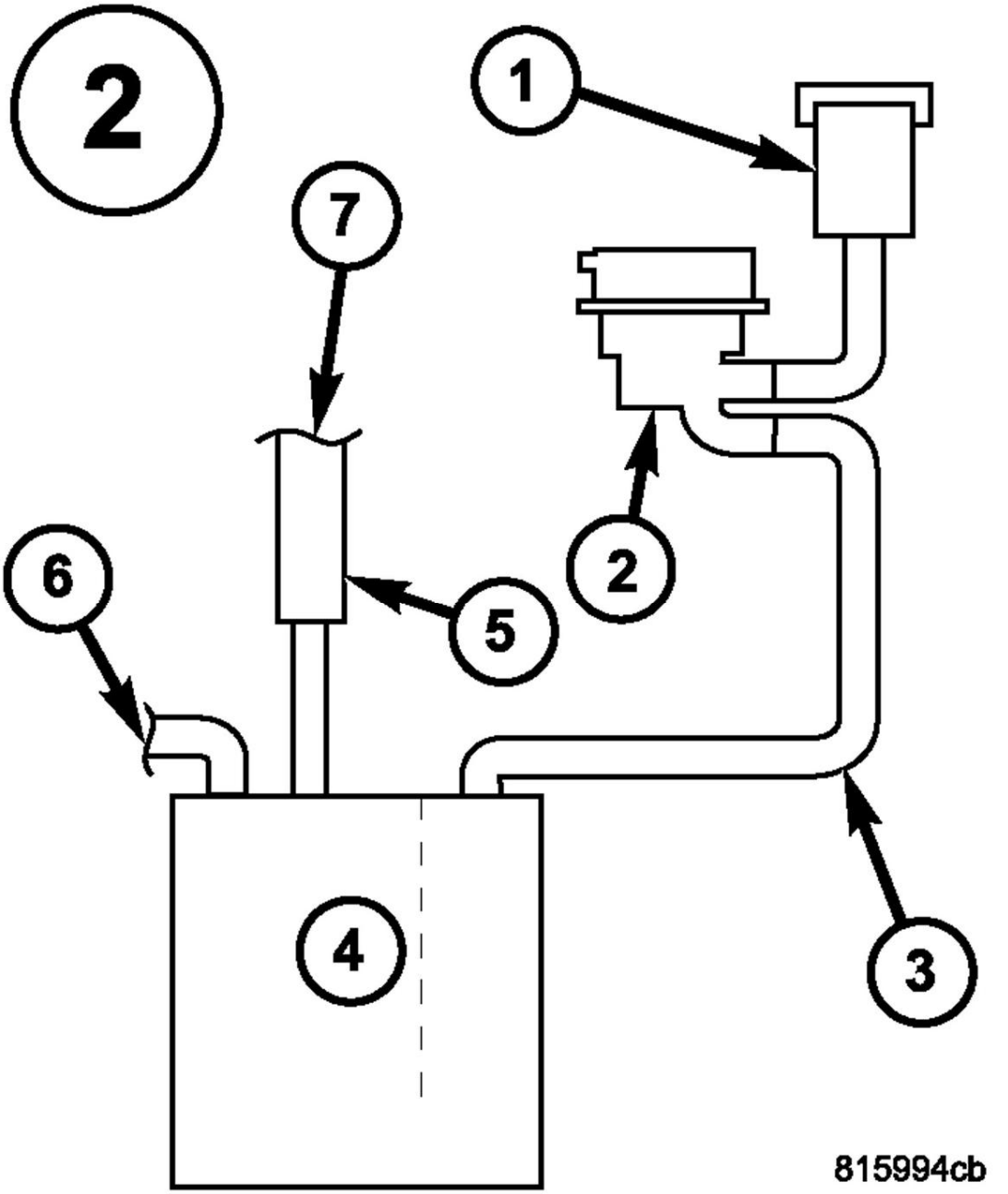

Fig. 225: Identifying EVAP System Zone 2
Courtesy of CHRYSLER GROUP, LLC

ZONE 2

1. Filter
2. ESIM switch
3. Canister Vent Line
4. Evaporative Canister

5. Chassis Purge Valve
6. Fuel Tank to Canister Vapor Line connection
7. Evaporative Purge connection

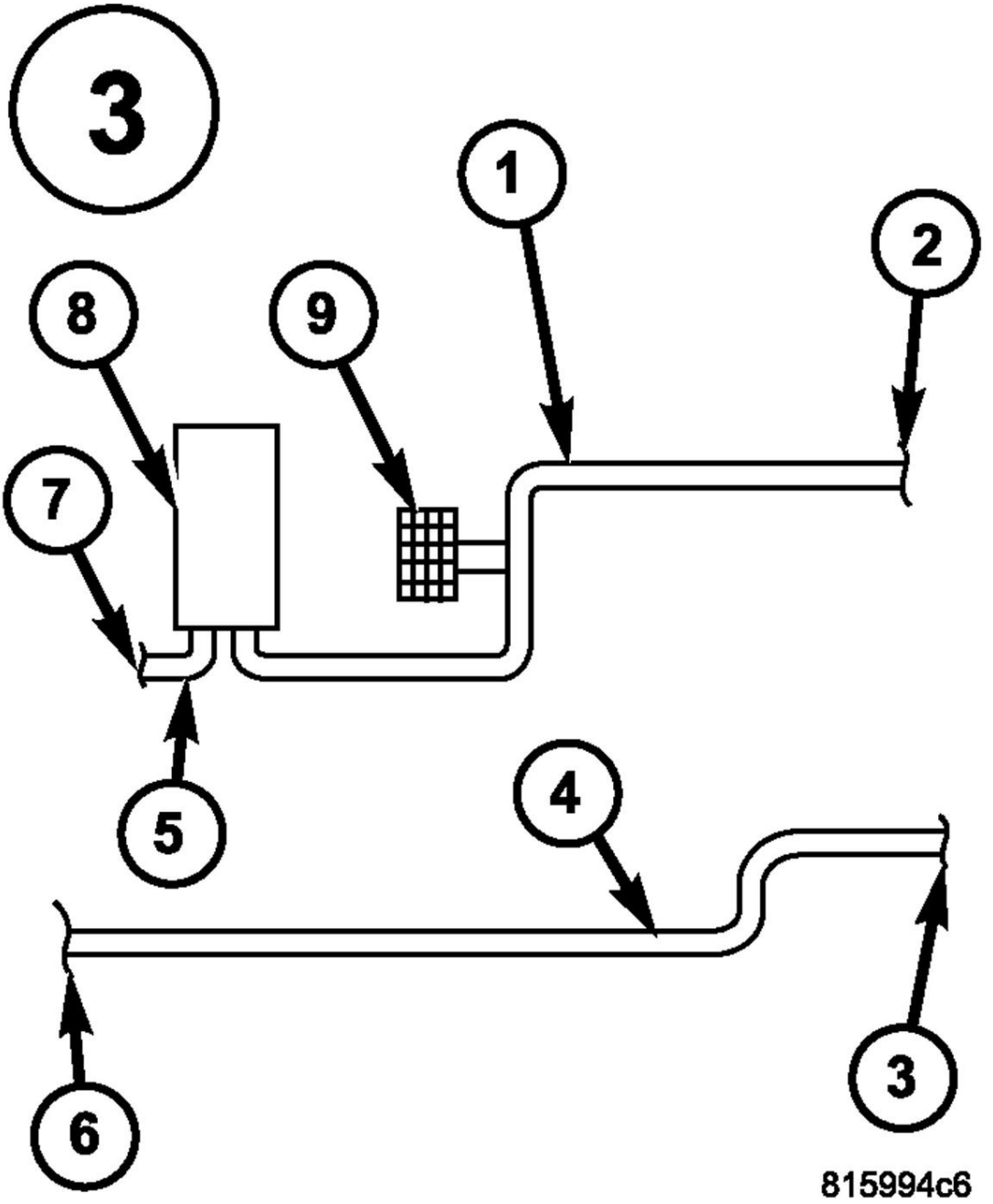

Fig. 226: Identifying EVAP System Zone 3
Courtesy of CHRYSLER GROUP, LLC

ZONE 3

1. Evaporative Purge Vacuum Line
2. Connection to Chassis Line
3. Connection to Canister
4. Chassis Purge Line
5. Evaporative Purge Vacuum Line
6. Connection to Evaporative Purge Harness
7. Chassis Evaporative Purge Line connection to Engine Vacuum
8. EVAP Purge Valve
9. Service Port

NOTE: Carefully inspect the vent side of the EVAP Canister. Due to the filtering system in the canister the smoke may not be as thick. Introducing smoke into the filtered side of the canister may assist in locating the leak.

Select the appropriate response from the list below:

A leak was found at the gas cap or fuel filler tube

- Go To 6.

A leak was found in one or more of the Evaporative System zones

- If the leak is at a hose connection, remove the hose then reconnect the hose and check for a leak again. All other leaks repair as necessary.
- Perform the POWERTRAIN VERIFICATION TEST. Refer to **POWERTRAIN VERIFICATION TEST** .

No leaks were detected

- Go To 7.

6. **LEAK AT GAS CAP**
   1. Remove the SMOKE supply tip (black hose) from the service port (if equipped) or to the adapter (special tool #8404-ADP, Smoke Machine Adapters).
   2. Install Leak Check Adapter (special tool #8382, Adapter, Leak Check) (1/4 turn cap) or Fuel Tank Adapter (special tool #6922, Adapter, Fuel Tank) (screw on cap) and Leak Check Adapter (special tool #8399, Adapter, Leak Check) (secondary seal depressor) and repeat step 5.

NOTE: The gas cap adapter is being used as a known good cap.

Was a leak found at the gas cap adapter?

Yes

- Replace the Fuel Filler tube assembly.
- Perform the POWERTRAIN VERIFICATION TEST. Refer to **POWERTRAIN VERIFICATION TEST** .

No

- Replace the gas cap.
- Perform the POWERTRAIN VERIFICATION TEST. Refer to **POWERTRAIN VERIFICATION TEST** .

7. **EVAP PURGE SOLENOID**

NOTE: After disconnecting the EVAP Purge Solenoid vacuum connections, inspect the lines and solenoid for signs of contamination.

1. Disconnect the vacuum hoses at the EVAP Purge Solenoid.
2. Using a hand vacuum pump, apply 10 in. Hg. to the "CAN" side of the EVAP Purge Solenoid.

NOTE: The solenoid should hold vacuum for a minimum of 15 seconds.

3. Turn the ignition on.
4. Using the scan tool, actuate the EVAP Purge Solenoid to the ON position.

NOTE: The vacuum should drop when the solenoid is actuated.

Does the solenoid function as described above?

Yes

- Go To 8.

No

- Verify that there is good pin to terminal contact in the Solenoid and PCM harness connectors. Replace the EVAP Purge Solenoid in accordance with the Service Information if no problems were found in the connectors.
- Perform the POWERTRAIN VERIFICATION TEST. Refer to **POWERTRAIN VERIFICATION TEST** .

8. **EVAPORATIVE SYSTEM INTEGRITY MONITOR SWITCH**

1. Using the wiring diagram/schematic as a guide, inspect the wiring and connectors between the ESIM switch and the Powertrain Control Module (PCM).
2. Look for any chafed, pierced, pinched or partially broken wires.
3. Look for broken, bent, pushed out or corroded terminals. Verify that there is good pin to terminal contact in the Switch, Solenoid and the Powertrain Control Module connectors.

4. Perform any Technical Service Bulletins that may apply.

   Were any problems found?

   Yes

   - Repair as necessary.
   - Perform the POWERTRAIN VERIFICATION TEST. Refer to **POWERTRAIN VERIFICATION TEST** .

   No

   - Replace the ESIM switch in accordance with the Service Information.
   - Perform the POWERTRAIN VERIFICATION TEST. Refer to **POWERTRAIN VERIFICATION TEST** .

Powertrain Control Module (PCM) - Electrical Diagnostics, 5.7L - 3500 Cab & Chassis

DIAGNOSIS AND TESTING

P0457-LOOSE FUEL CAP

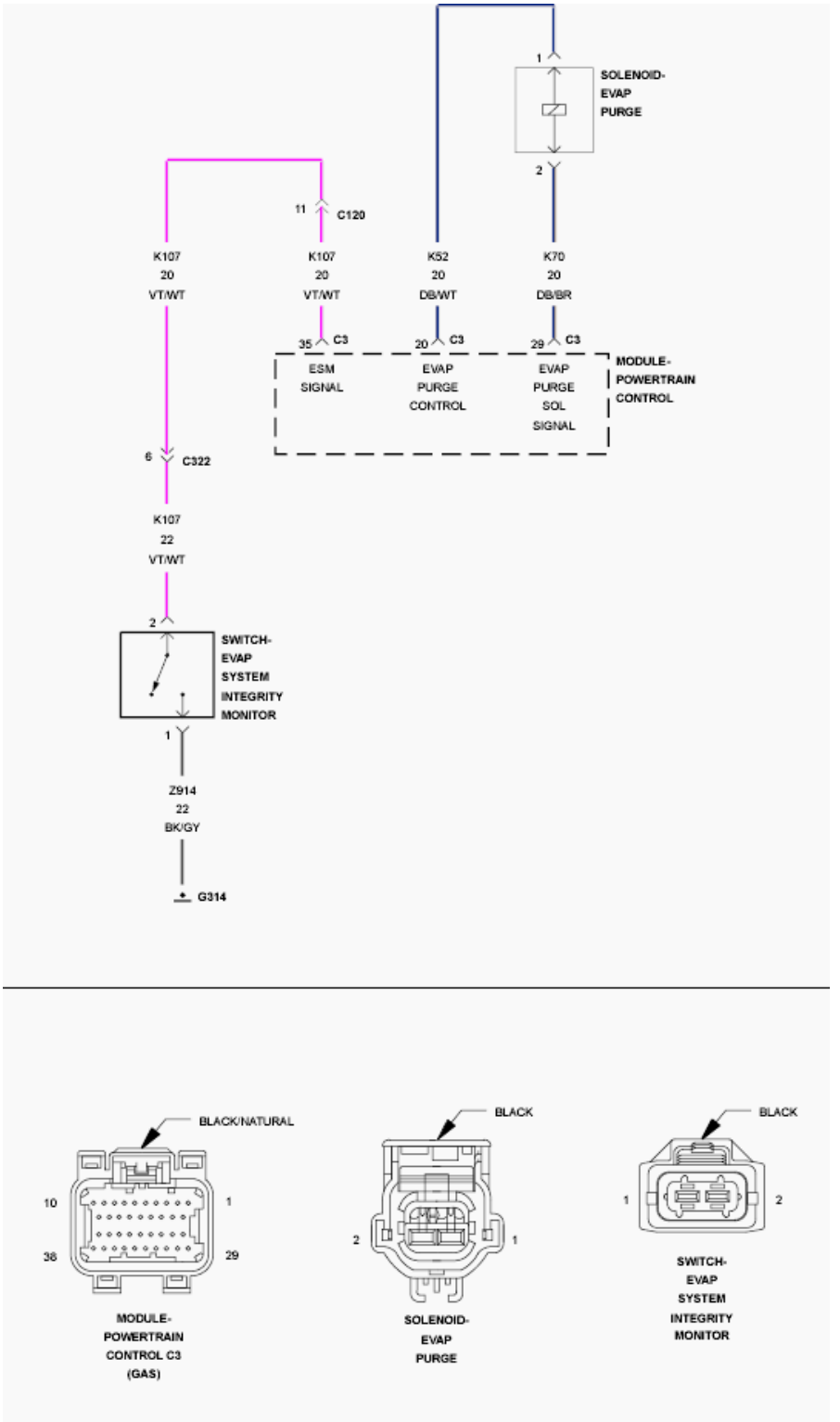

Fig. 1: Evaporative System Integrity Monitor (ESIM) Switch Circuit Schematic
Courtesy of CHRYSLER GROUP, LLC

For a complete wiring diagram, **refer to appropriate SYSTEM WIRING DIAGRAMS article** .

THEORY OF OPERATION

Fuel level is recorded when the ignition key is turned off and is compared to the fuel level when the ignition key is turned back on. The Powertrain Control Module (PCM) recognizes an increase in fuel level and will fail the Medium leak test because the fuel cap is broken or not installed properly. GAS CAP will be displayed in odometer to inform the owner that the cap is off of loose.

WHEN MONITORED:

Engine running. Ambient Temperature between 4° C and 32° C (39° F and 89° F) Close Loop fuel system. Test runs after the medium leak test is inconclusive and the PCM has senses a fuel increase.

SET CONDITION:

If a leak greater than.090" is detected by the Powertrain Control Module (PCM) for two consecutive cold start trips after a significant fuel level change, this DTC will set. One good trip turns off the MIL.

POSSIBLE CAUSES

Possible Causes
LOOSE OR MISSING FUEL CAP

Always perform the Pre-Diagnostic Troubleshooting procedure before proceeding. Refer to PRE-DIAGNOSTIC TROUBLESHOOTING PROCEDURE .

DIAGNOSTIC TEST

1. **ACTIVE DTC**

   NOTE: If DTC P0455 is set along with this DTC, perform the DTC P0455 diagnostic procedure before continuing with this test. Refer to P0455-EVAP PURGE SYSTEM LARGE LEAK .

   1. Start the engine.
   2. Allow the engine to idle.
   3. Using the scan tool, perform the ESIM FORCED MONITOR TEST. Allow the test to complete.
   4. Using the scan tool, read DTCs.

   Is the DTC Active or Pending at this time?

   Yes

   - Go To 2.

   No

- Test complete, the condition or conditions that originally set this DTC are not present at this time. Using the wiring diagrams as a guide, check all related splices and connectors for signs of water intrusion, corrosion, pushed out or bent terminals and correct pin tension.
- Perform the CHECKING FOR AN INTERMITTENT DTC diagnostic procedure. Refer to **INTERMITTENT CONDITION** .

2. **FUEL FILLER CAP VISUAL INSPECTION**

   Remove the Fuel Filler Cap and visually inspect for the following:

   - Loose or missing Fuel Filler Cap or seal
   - Damaged locking tabs on the Fuel Filler Cap and/or filler tube
   - Damaged seal points on the Fuel Filler Cap and/or filler tube

   Were any problems found?

   Yes

   - Repair as necessary.
   - Perform the POWERTRAIN VERIFICATION TEST. Refer to **POWERTRAIN VERIFICATION TEST** .

   No

   - Go To 3.

3. **FUEL FILLER CAP**
   1. Reinstall the Fuel Filler Cap.
   2. Start the engine.
   3. Allow the engine to idle.
   4. Using the scan tool, perform the ESIM FORCED MONITOR TEST. Allow the test to complete.
   5. Using the scan tool, read DTCs.

      Is the DTC Active or Pending at this time?

      Yes

      - Replace the Fuel Filler Cap in accordance with the Service Information.
      - Perform the POWERTRAIN VERIFICATION TEST. Refer to **POWERTRAIN VERIFICATION TEST** .

      No

      - Test complete, the condition or conditions that originally set this DTC are not present at this time. Using the wiring diagrams as a guide, check all related splices and connectors for signs of water intrusion, corrosion, pushed out or bent terminals and correct pin tension.

- Perform the CHECKING FOR AN INTERMITTENT DTC diagnostic procedure. Refer to **INTERMITTENT CONDITION** .

P0461-FUEL LEVEL SENSOR 1 PERFORMANCE

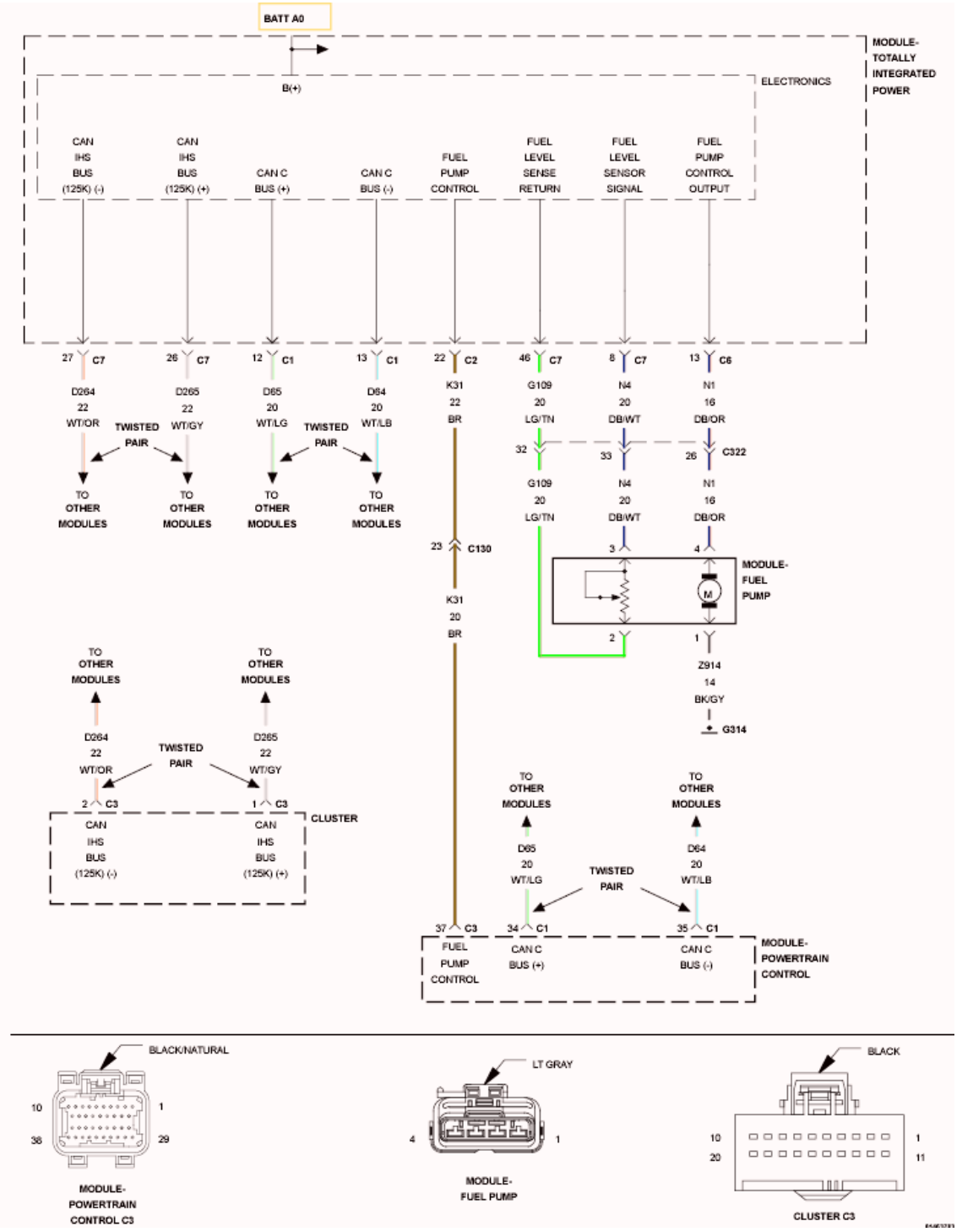

Fig. 2: Fuel Pump Module Circuit Schematic
Courtesy of CHRYSLER GROUP, LLC

For a complete wiring diagram, **refer to appropriate SYSTEM WIRING DIAGRAMS article** .

THEORY OF OPERATION

The fuel level rationality will set a fault for a fuel level reading that does not change over an accumulated mileage threshold to keep stuck high or stuck low fuel levels from disabling OBD monitors. If the vehicle is fitted with a saddle tank fuel system this feature includes diagnostics for both of the sending units and diagnostics for a siphon tube that has become disconnected or plugged. The power up test looks to see a large enough fuel level voltage change from the last key-off to the following engine run. The engine run test looks to see a fuel level voltage change over an accumulated mileage.

WHEN MONITORED:

TEST No. 1: With the ignition on, the fuel level is compared to the previous key down after a 20 second delay. TEST No. 2: The PCM monitors the fuel level at ignition on.

SET CONDITION:

TEST No. 1: If the PCM does not see a difference in fuel level of greater than 0.1 volt the test will fail. TEST No. 2: If the PCM does not see a change in the fuel level of.1765 over a set amount of miles the test will fail. Two trip failure. Three good trips to turn off the MIL.

POSSIBLE CAUSES

Possible Causes
(N4) FUEL LEVEL SIGNAL CIRCUIT OPEN
(N4) FUEL LEVEL SIGNAL CIRCUIT SHORTED TO GROUND
(G109) GROUND CIRCUIT OPEN
FUEL TANK
FUEL LEVEL SENSOR

Always perform the Pre-Diagnostic Troubleshooting procedure before proceeding. Refer to PRE-DIAGNOSTIC TROUBLESHOOTING PROCEDURE .

DIAGNOSTIC TEST

1. **ACTIVE DTC**

NOTE: Diagnose and repair any communication DTCs before continuing with this test.

NOTE: Diagnose P0462 or P0463 first, if set along with P0461.

1. Start the engine.
2. Allow the engine to reach normal operating temperature.
3. With the scan tool, select View DTCs.

NOTE: **It may be necessary to drive the vehicle to meet the conditions to set this DTC, try to repeat the conditions in which the fault originally set by reviewing the Freeze Frame data.**

Is the DTC Active or Pending at this time?

Yes

- Go To 2.

No

- Perform the INTERMITTENT CONDITION diagnostic procedure. Refer to **INTERMITTENT CONDITION** .

2. **VISUALLY INSPECT FUEL TANK**
   1. Visually inspect the Fuel Tank for damage that may restrict the Fuel Sending Unit float from moving.

      Is the Fuel Tank OK?

      Yes

      - Go To 3.

      No

      - Replace the Fuel Tank as necessary.
      - Perform the POWERTRAIN VERIFICATION TEST. Refer to **POWERTRAIN VERIFICATION TEST** .

3. **(N4) FUEL LEVEL SIGNAL CIRCUIT OPEN**

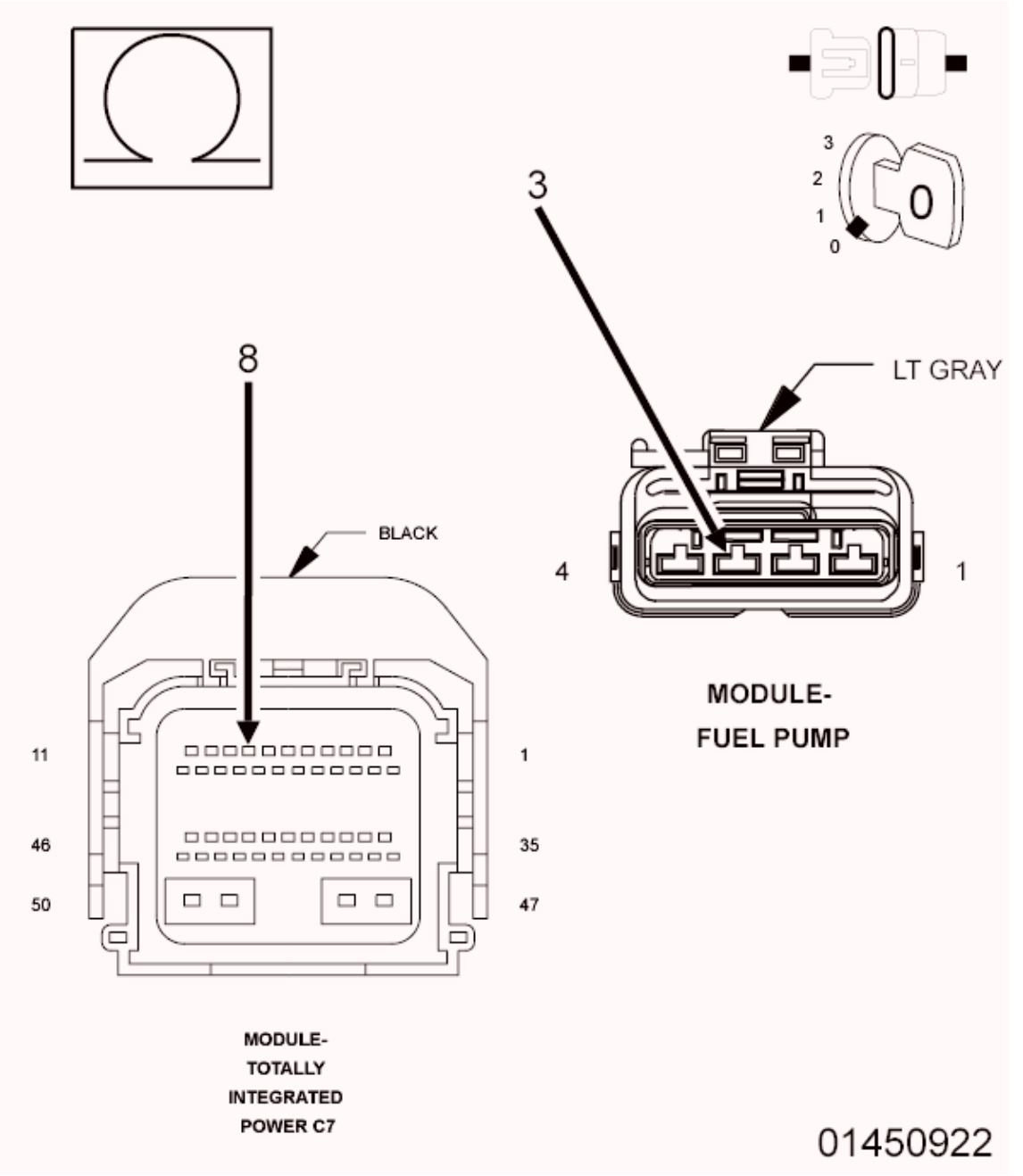

Fig. 3: Measuring Resistance Of Fuel Level Signal Circuit
Courtesy of CHRYSLER GROUP, LLC

1. Turn the ignition off.
2. Disconnect the Fuel Pump Module harness connector.
3. Disconnect the C7 Totally Integrated Power Module (TIPM) harness connector.
4. Measure the resistance of the (N4) Fuel Level Signal circuit from the Fuel Pump Module harness connector to the C7 TIPM harness connector.

   Is the resistance below 5.0 Ohms?

Yes

- Go To 4.

No

- Repair the open in the (N4) Fuel Level Signal circuit.
- Perform the POWERTRAIN VERIFICATION TEST. Refer to **POWERTRAIN VERIFICATION TEST** .

4. **(N4) FUEL LEVEL SIGNAL CIRCUIT SHORTED TO GROUND**

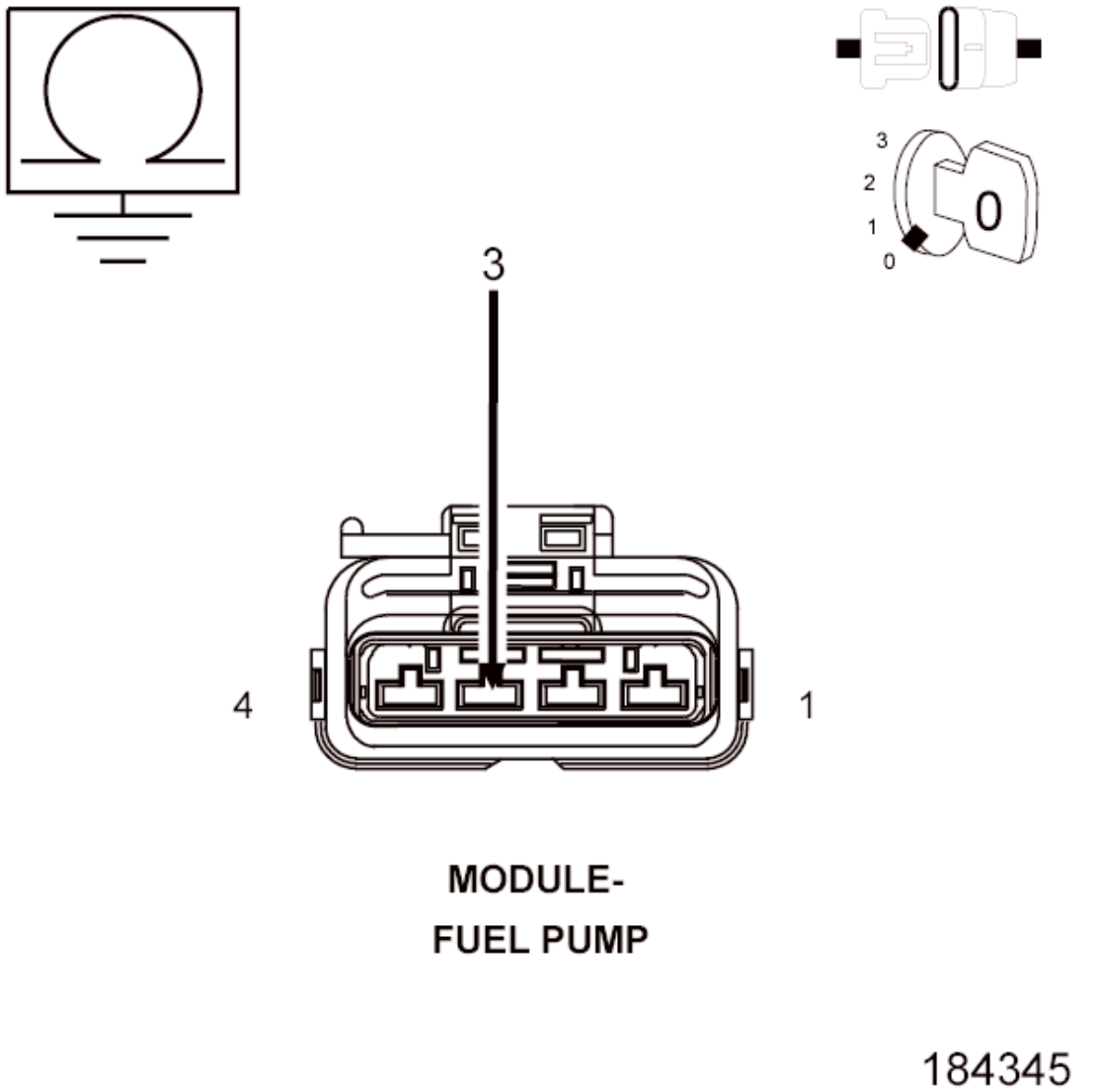

Fig. 4: Measuring Resistance Between Ground And Fuel Level Signal Circuit In Fuel Pump Module Harness Connector
Courtesy of CHRYSLER GROUP, LLC

1. Measure the resistance between ground and the (N4) Fuel Level Signal circuit in the Fuel Pump Module harness connector.

   Is the resistance below 100 Ohms?

   Yes

   - Repair the short to ground in the (N4) Fuel Level Signal circuit.
   - Perform the POWERTRAIN VERIFICATION TEST. Refer to **POWERTRAIN VERIFICATION TEST** .

   No

   - Go To 5.

5. **(G109) GROUND CIRCUIT OPEN**

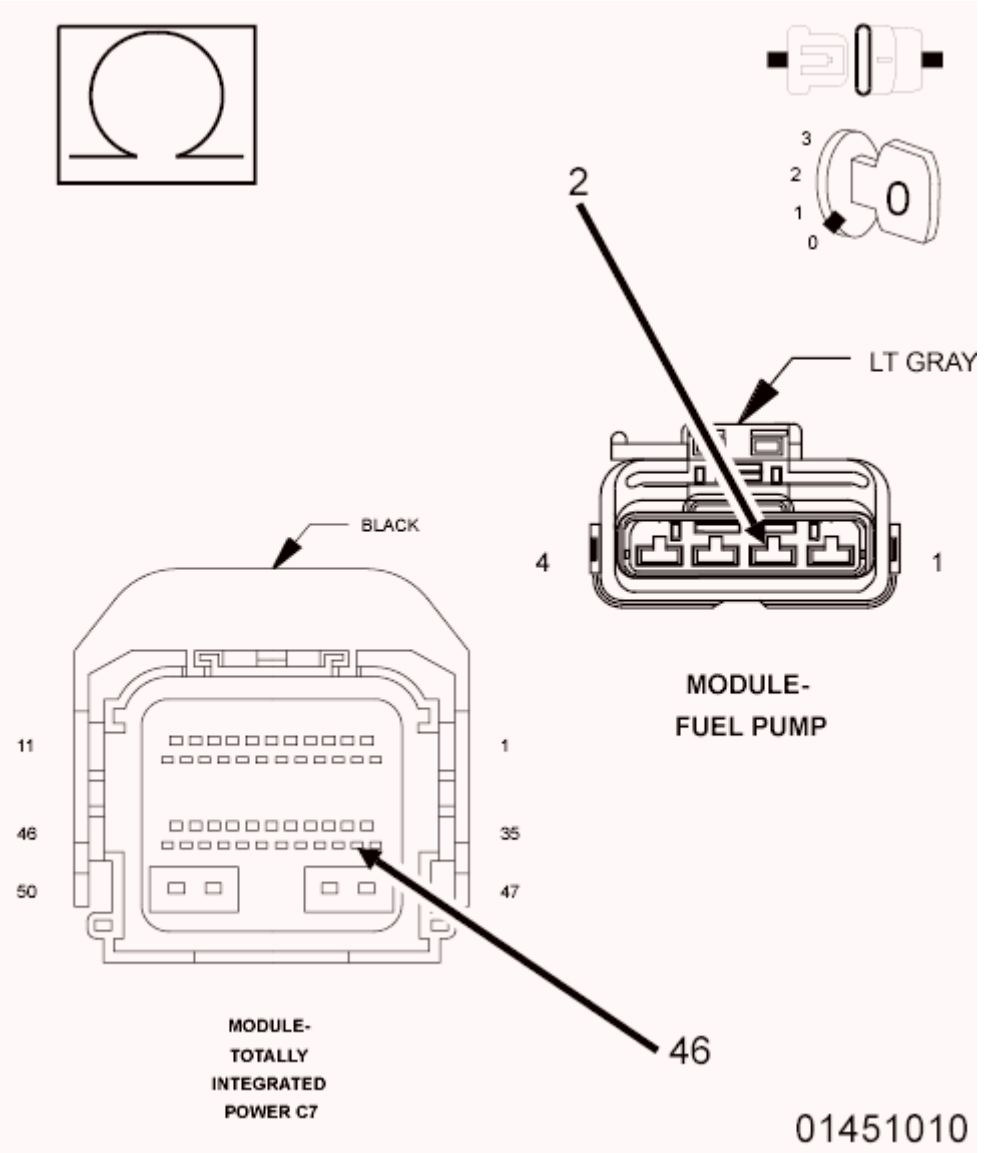

Fig. 5: Measuring Resistance Of Ground Circuit From Fuel Pump Module Harness Connector To TIPM Harness Connector
Courtesy of CHRYSLER GROUP, LLC

1. Measure the resistance of the (G109) Ground circuit from the Fuel Pump Module harness connector to the C7 TIPM harness connector.

   Is the resistance below 5.0 Ohms?

   Yes

   - Go To 6.

   No

- Repair the open in the (G109) Ground circuit.
- Perform the POWERTRAIN VERIFICATION TEST. Refer to **POWERTRAIN VERIFICATION TEST** .

6. **INTERNAL INSPECTION OF THE FUEL TANK**

WARNING: The fuel system is under a constant pressure (even with the engine off). Before testing or servicing any fuel system hose, fitting or line, the fuel system pressure must be released. Failure to follow these instructions can result in possible serious or fatal injury.

1. Remove the Fuel Tank in accordance with the Service Information.
2. Remove the Fuel Pump Module.
3. Visually inspect the inside of the Fuel Tank for any obstructions or deformities.
4. Inspect the Fuel Pump Module Float arm for damage.

Were any problems found?

Yes

- Repair or replace as necessary.
- Perform the POWERTRAIN VERIFICATION TEST. Refer to **POWERTRAIN VERIFICATION TEST** .

No

- Go To 7.

7. **FUEL LEVEL SENSOR**

If there are no possible causes remaining, view repair.

Repair

- Verify that there is good pin to terminal contact at the Fuel Pump Module and the Powertrain Control Module connectors. Replace the Fuel Level Sensor if no problems were found at the connectors.
- Perform the POWERTRAIN VERIFICATION TEST. Refer to **POWERTRAIN VERIFICATION TEST** .

P0462-FUEL LEVEL SENSOR 1 CIRCUIT LOW

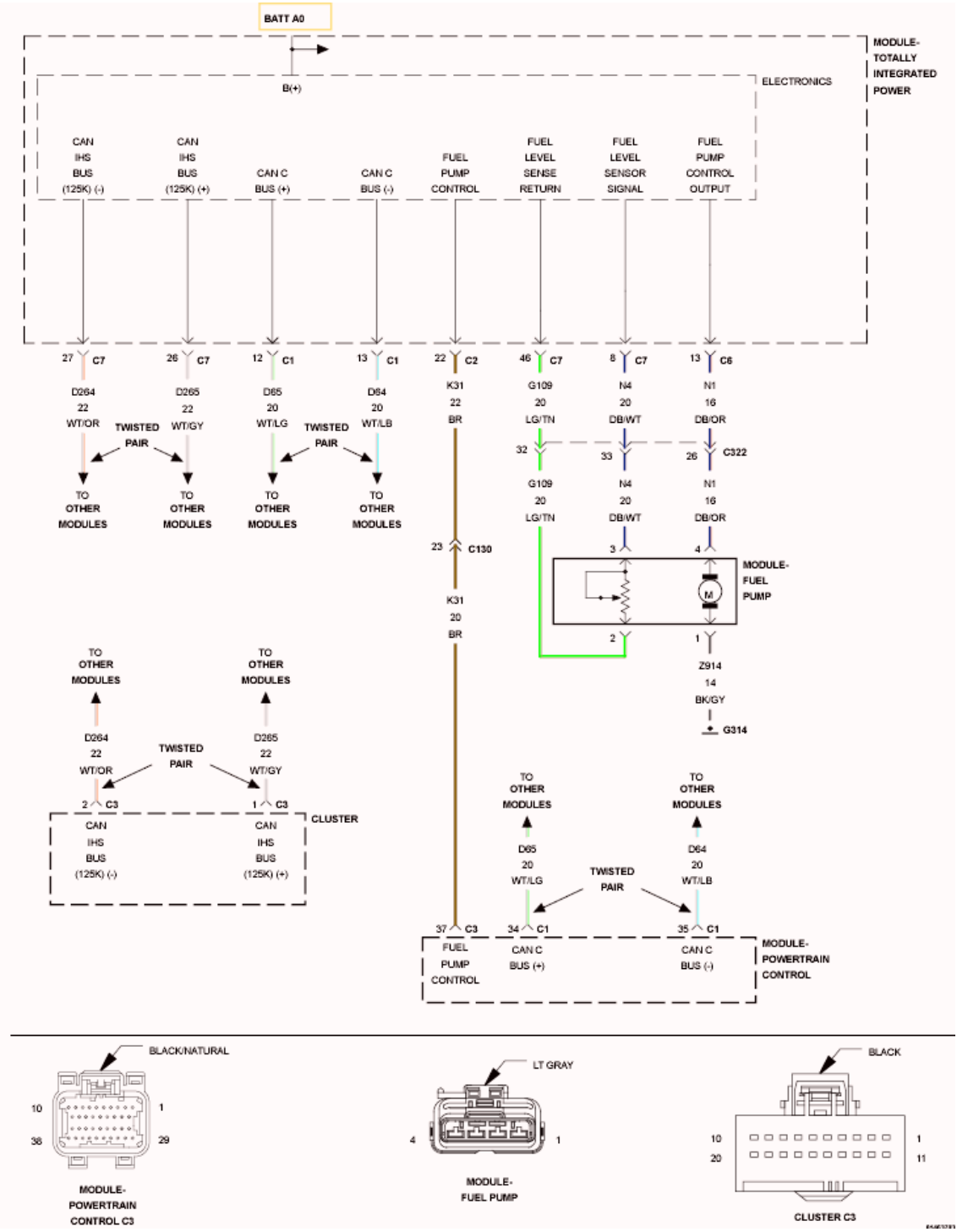

Fig. 6: Fuel Pump Module Circuit Schematic
Courtesy of CHRYSLER GROUP, LLC

For a complete wiring diagram, **refer to appropriate SYSTEM WIRING DIAGRAMS article** .

THEORY OF OPERATION

The fuel level rationality will set a fault for a fuel level reading that does not change over an accumulated mileage threshold to keep stuck high or stuck low fuel levels from disabling OBD monitors. If the vehicle is fitted with a saddle tank fuel system this feature includes diagnostics for both of the sending units and diagnostics for a siphon tube that has become disconnected or plugged. The power up test looks to see a large enough fuel level voltage change from the last key-off to the following engine run. The engine run test looks to see a fuel level voltage change over an accumulated mileage.

WHEN MONITORED:

Ignition on and battery voltage above 10.4 Volts.

SET CONDITION:

The Fuel Level Sensor 1 input voltage is below the minimum acceptable value. One Trip Fault. Three good trips to turn off the MIL.

POSSIBLE CAUSES

Possible Causes
(N4) FUEL LEVEL SIGNAL CIRCUIT SHORTED TO GROUND
EXCESSIVE RESISTANCE IN THE (N4) FUEL LEVEL SIGNAL CIRCUIT
FUEL LEVEL SENSOR
TOTALLY INTEGRATED POWER MODULE (TIMP)

Always perform the Pre-Diagnostic Troubleshooting procedure before proceeding. Refer to PRE-DIAGNOSTIC TROUBLESHOOTING PROCEDURE .

DIAGNOSTIC TEST

1. **ACTIVE DTC**

NOTE: **Diagnose and repair any system voltage DTCs before continuing with this test.**

NOTE: **Diagnose and repair any communication DTCs before continuing with this test.**

1. Start the engine and allow it to reach operating temperature.

WARNING: **When the engine is operating, do not stand in direct line with the fan. Do not put your hands near the pulleys, belts or fan. Do not wear loose clothing. Failure to follow these instructions may result in possible serious or fatal injury.**

2. With the scan tool, select View DTCs.

Is the DTC Active at this time?

Yes

- Go To 2.

No

- Perform the INTERMITTENT CONDITION diagnostic procedure. Refer to **INTERMITTENT CONDITION** .

2. **FUEL LEVEL SENSOR**
    1. Turn the ignition off.
    2. Disconnect the Fuel Pump Module harness connector.
    3. Ignition on, engine not running.
    4. With the scan tool, read the Fuel Level Sensor voltage.

    Did the Fuel Level Sensor voltage change from below 0.4 of a volt to above 4.0 Volts?

    Yes

    - Verify that there is good pin to terminal contact at the Fuel Pump Module and the Powertrain Control Module connectors. Replace the Fuel Level Sensor if no problems were found at the connectors.
    - Perform the POWERTRAIN VERIFICATION TEST. Refer to **POWERTRAIN VERIFICATION TEST** .

    No

    - Go To 3.
3. **(N4) FUEL LEVEL SIGNAL CIRCUIT SHORTED TO GROUND**

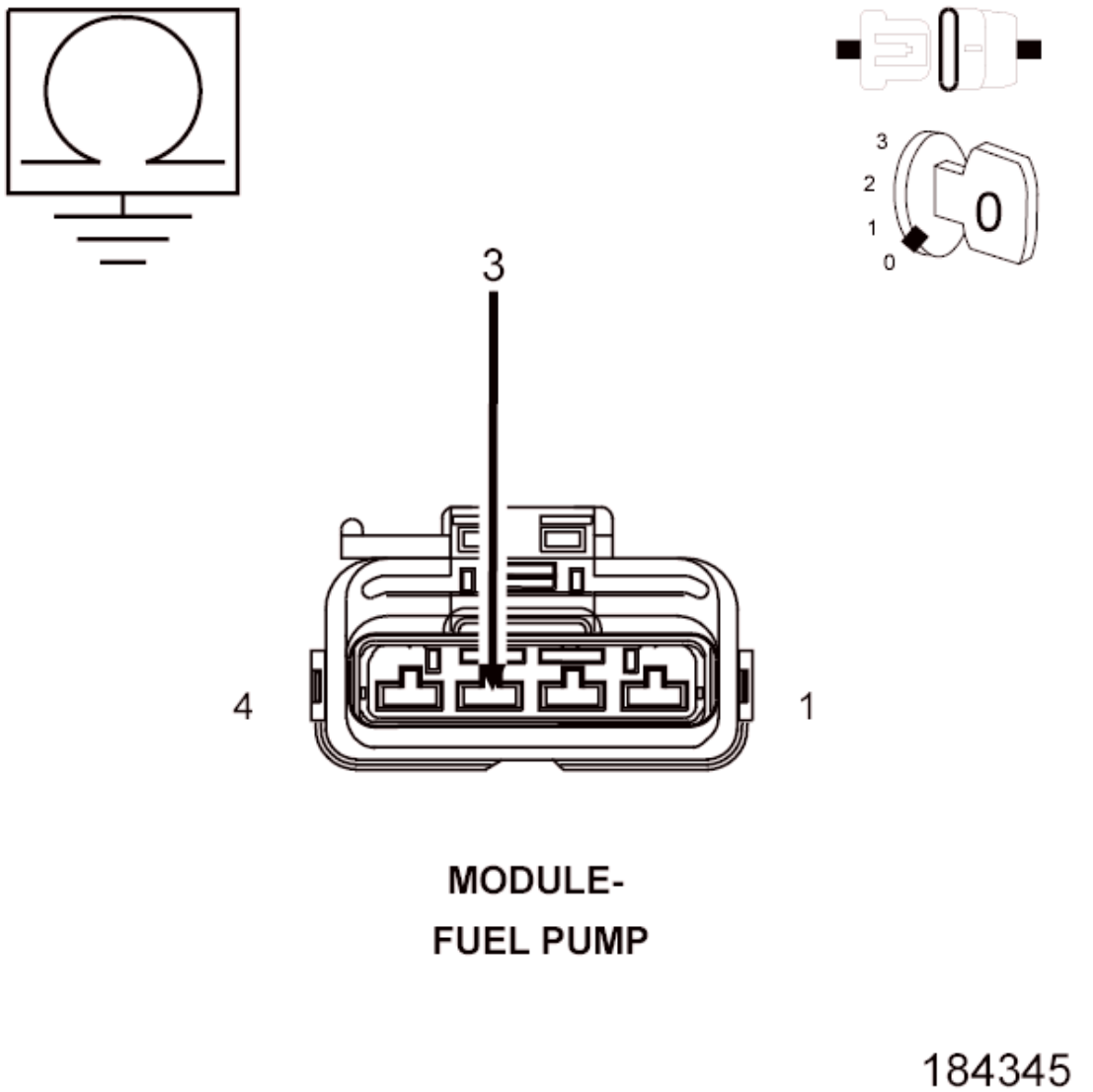

Fig. 7: Measuring Resistance Between Ground And Fuel Level Signal Circuit In Fuel Pump Module Harness Connector
Courtesy of CHRYSLER GROUP, LLC

1. Turn the ignition off.
2. Disconnect the C7 TIPM harness connector.
3. Measure the resistance between ground and the (N4) Fuel Level Signal circuit in the Fuel Pump Module harness connector.

   Is the resistance below 100 Ohms?

   Yes

   - Repair the short to ground in the (N4) Fuel Level Signal circuit.
   - Perform the POWERTRAIN VERIFICATION TEST. Refer to **POWERTRAIN**

VERIFICATION TEST .

No

- Go To 4.

4. **EXCESSIVE RESISTANCE IN THE (N4) FUEL LEVEL SIGNAL CIRCUIT**

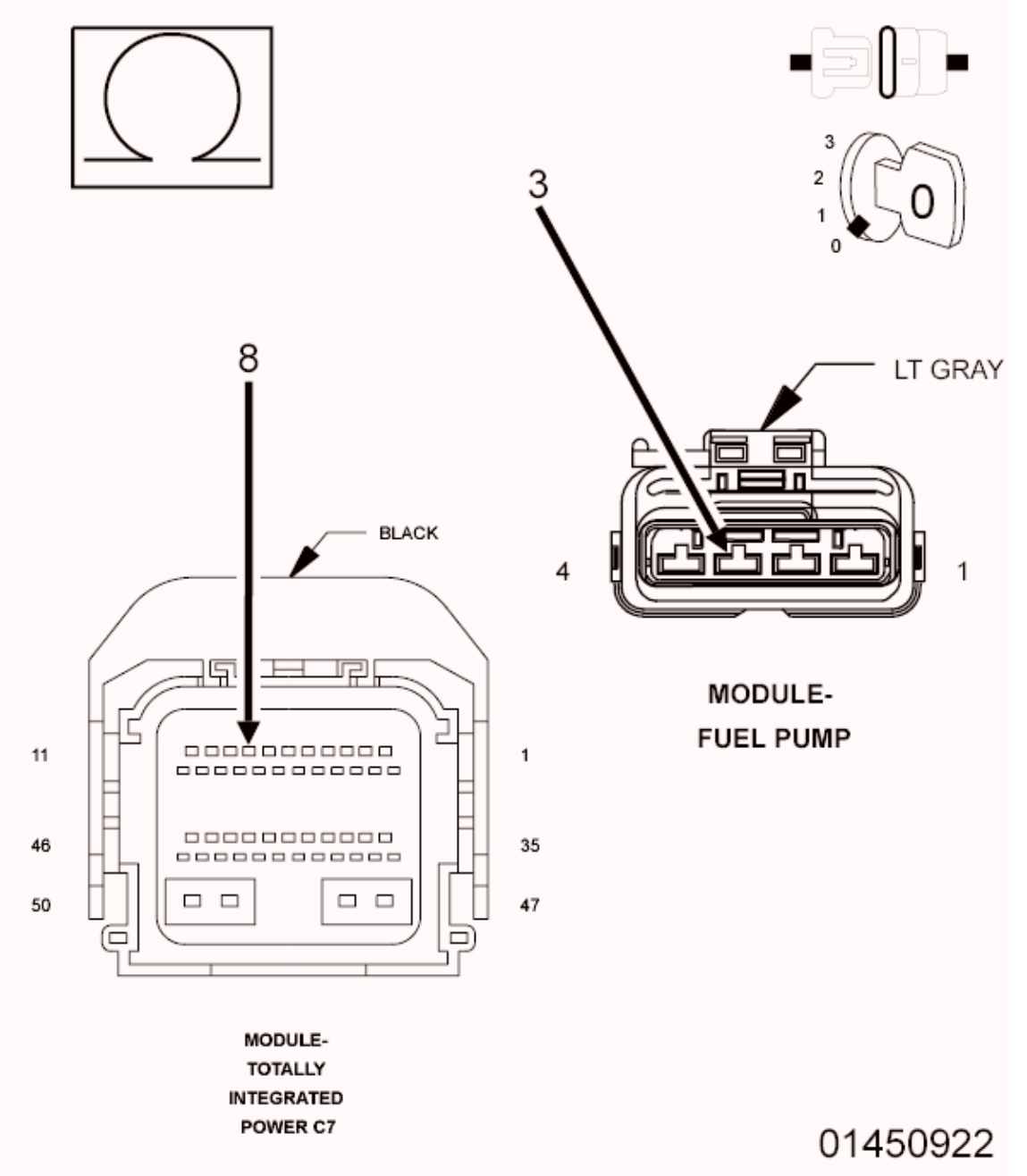

Fig. 8: Measuring Resistance Of Fuel Level Signal Circuit
Courtesy of CHRYSLER GROUP, LLC

1. Measure the resistance of the (N4) Fuel Level Signal circuit from the Fuel Pump Module harness connector to the C7 TIPM harness connector.

   Is the resistance below 5.0 Ohms?

   Yes

   - Go To 5.

   No

   - Repair the excessive resistance in the (N4) Fuel Level Signal circuit.
   - Perform the POWERTRAIN VERIFICATION TEST. Refer to **POWERTRAIN VERIFICATION TEST** .

5. **TOTALLY INTEGRATED POWER MODULE**
   1. Using the wiring diagram/schematic as a guide, inspect the wiring and connectors between the Fuel Pump Module and the TIPM.
   2. Look for any chafed, pierced, pinched or partially broken wires.
   3. Look for broken, bent, pushed out or corroded terminals. Verify that there is good pin to terminal contact in the Fuel Pump Module and the TIPM connectors.
   4. Refer to any Technical Service Bulletins that may apply.

      Were there any problems found?

      Yes

      - Repair as necessary.
      - Perform the BODY VERIFICATION TEST. Refer to **STANDARD PROCEDURE** .

      No

      - Replace and program the TIPM in accordance with the Service Information.
      - Perform the BODY VERIFICATION TEST. Refer to **STANDARD PROCEDURE** .

P0463-FUEL LEVEL SENSOR 1 CIRCUIT HIGH

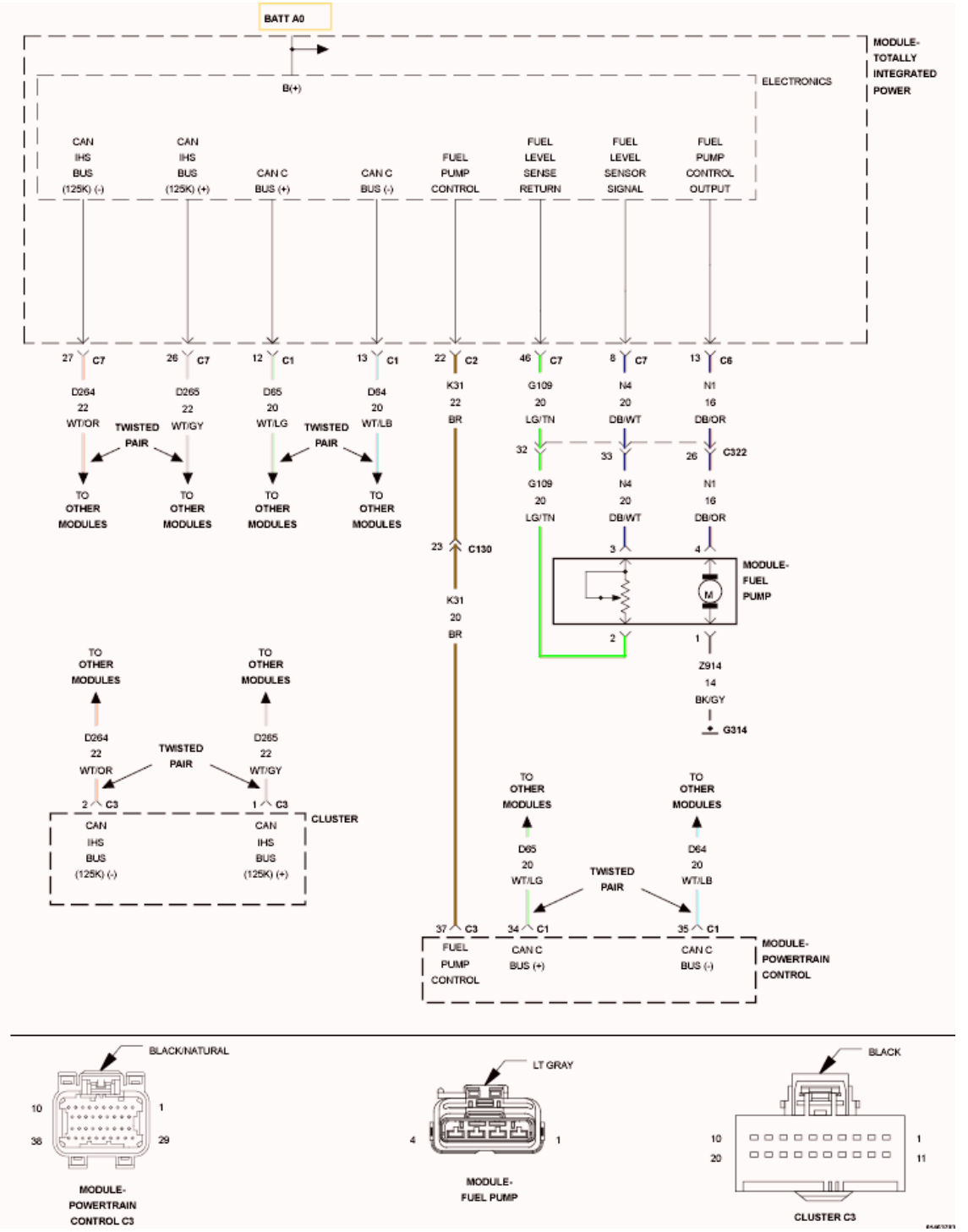

Fig. 9: Fuel Pump Module Circuit Schematic
Courtesy of CHRYSLER GROUP, LLC

For a complete wiring diagram, **refer to appropriate SYSTEM WIRING DIAGRAMS article** .

WHEN MONITORED:

Ignition on and battery voltage above 10.4 Volts.

SET CONDITION:

The fuel level sensor signal voltage is greater than the maximum acceptable value. One Trip Fault. Three good trips to turn off the MIL.

POSSIBLE CAUSES

Possible Causes
(N4) FUEL LEVEL SIGNAL CIRCUIT SHORTED TO VOLTAGE
(N4) FUEL LEVEL SIGNAL CIRCUIT OPEN
(G109) GROUND CIRCUIT OPEN
FUEL LEVEL SENSOR
TOTALLY INTEGRATED POWER MODULE (TIPM)
POWERTRAIN CONTROL MODULE (PCM)

Always perform the Pre-Diagnostic Troubleshooting procedure before proceeding. Refer to PRE-DIAGNOSTIC TROUBLESHOOTING PROCEDURE .

DIAGNOSTIC TEST

1. **ACTIVE DTC**

NOTE: **Diagnose and repair any system voltage DTCs before continuing with this test.**

NOTE: **Diagnose and repair any communication DTCs before continuing with this test.**

1. Start the engine and allow it to reach operating temperature.

WARNING: **When the engine is operating, do not stand in direct line with the fan. Do not put your hands near the pulleys, belts or fan. Do not wear loose clothing. Failure to follow these instructions may result in possible serious or fatal injury.**

2. With the scan tool, select View DTCs.

   Is the DTC Active at this time?

   Yes

   - Go To 2.

No

- Perform the INTERMITTENT CONDITION diagnostic procedure. Refer to **INTERMITTENT CONDITION** .

2. **FUEL LEVEL SENSOR**

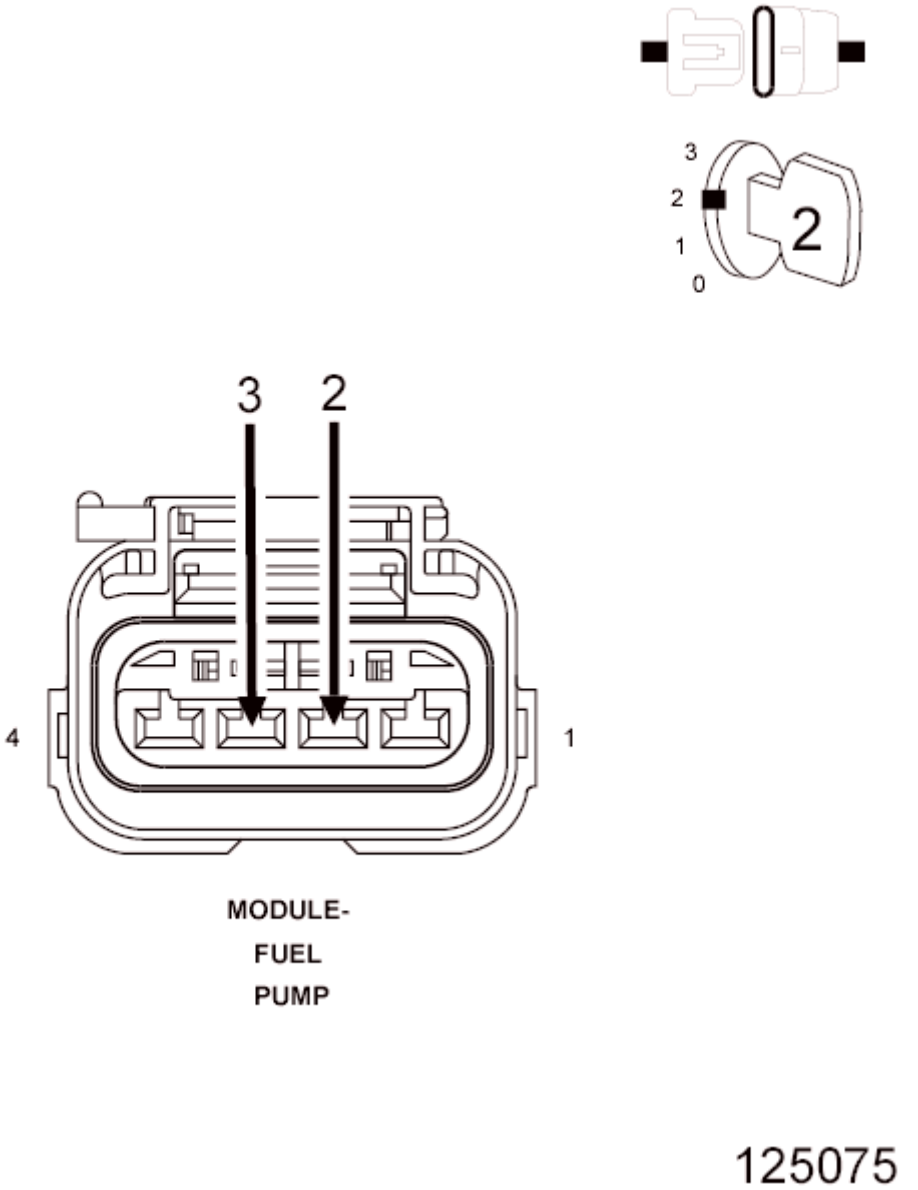

Fig. 10: Fuel Pump Module Electrical Harness Connector
Courtesy of CHRYSLER GROUP, LLC

1. Turn the ignition off.
2. Disconnect the Fuel Pump Module electrical harness connector.
3. Ignition on, engine not running.
4. Connect a jumper wire between the (N4) Fuel Level Signal circuit and the (G109) Ground circuit in

the Fuel Pump Module harness connector.

5. With the scan tool, read the Fuel Level Sensor voltage.

   Did the Fuel Level Sensor voltage change from above 4.8 Volts to below 0.4 of a volt with the jumper wire installed?

   Yes

   - Verify that there is good pin to terminal contact at the Fuel Pump Module and the Totally Integrated Power Module (TIPM) connectors. Replace the Fuel Level Sensor if no problems were found at the connectors.
   - Perform the POWERTRAIN VERIFICATION TEST. Refer to **POWERTRAIN VERIFICATION TEST** .

   No

   - Go To 3.

   NOTE: Remove the jumper wire before continuing.

3. **(N4) FUEL LEVEL SIGNAL CIRCUIT SHORTED TO VOLTAGE**

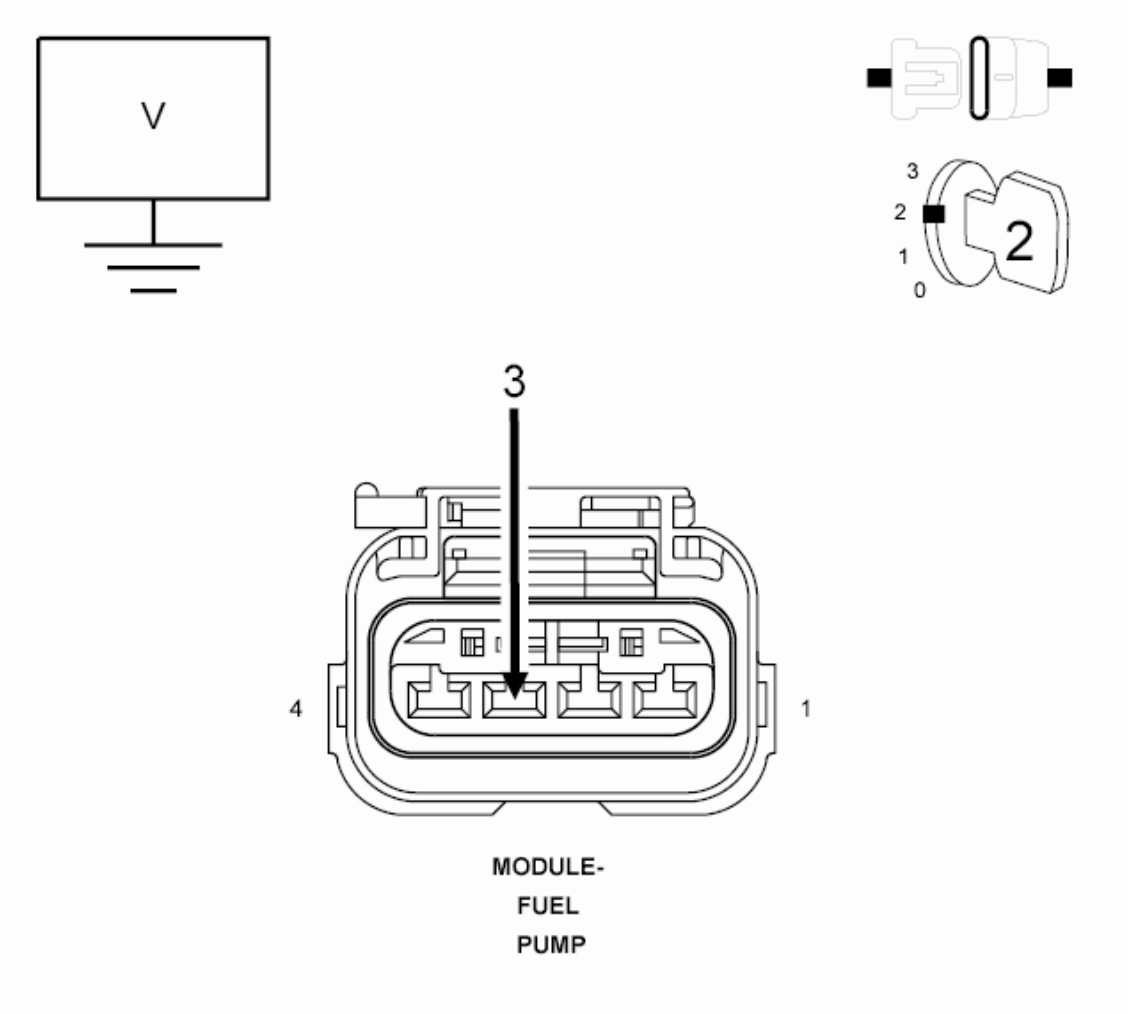

Fig. 11: Measuring Voltage On Fuel Level Signal Circuit In Fuel Pump Module Harness Connector
Courtesy of CHRYSLER GROUP, LLC

1. Turn the ignition off.
2. Disconnect the C7 TIPM harness connector.
3. Ignition on, engine not running.
4. Measure the voltage on the (N4) Fuel Level Signal circuit in the Fuel Pump Module harness connector.

   Is there any voltage present?

   Yes

   - Repair the short to voltage in the (N4) Fuel Level Signal circuit.
   - Perform the POWERTRAIN VERIFICATION TEST. Refer to **POWERTRAIN VERIFICATION TEST** .

   No

- Go To 4.

4. **(N4) FUEL LEVEL SIGNAL CIRCUIT OPEN**

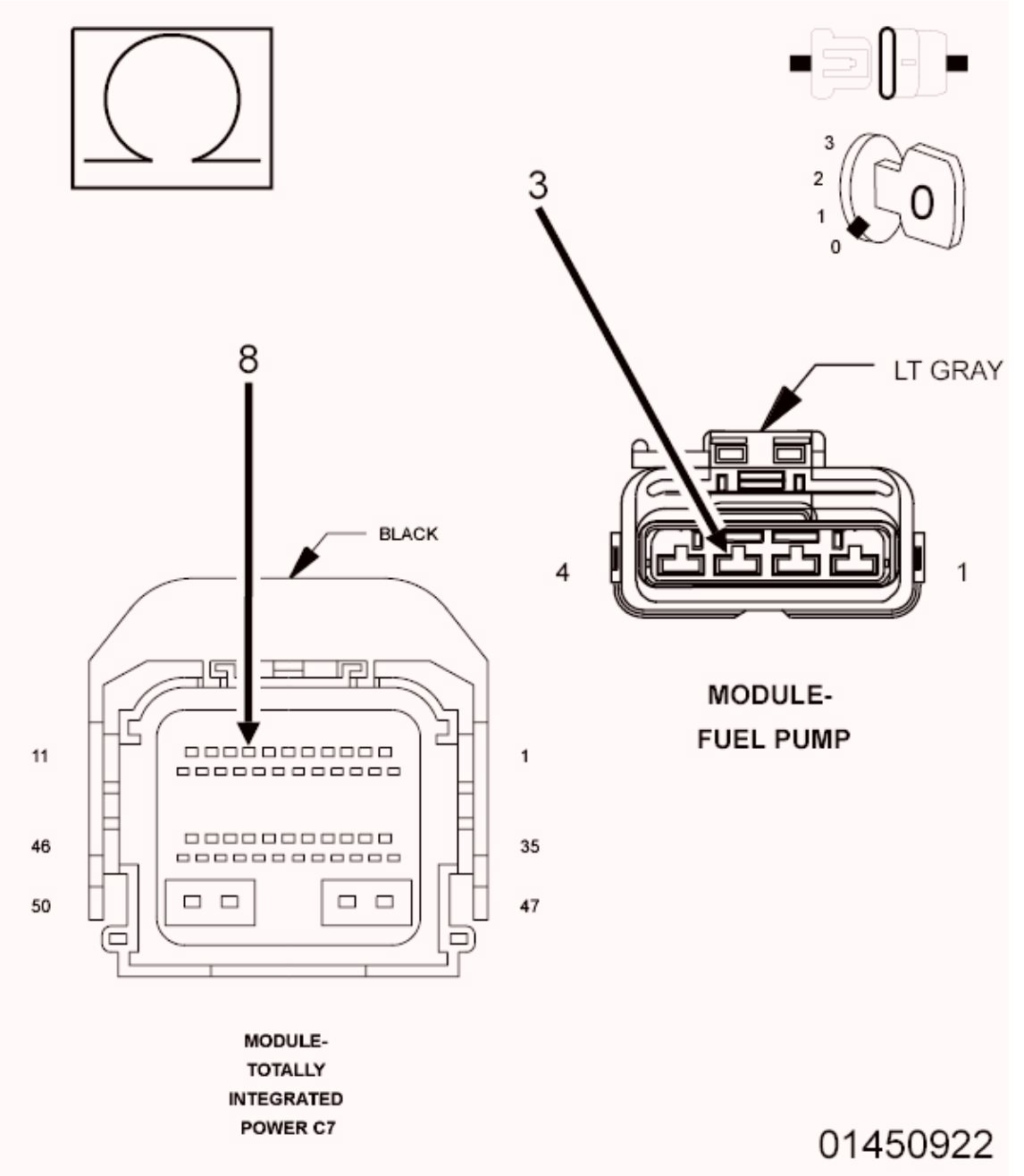

Fig. 12: Measuring Resistance Of Fuel Level Signal Circuit
Courtesy of CHRYSLER GROUP, LLC

1. Turn the ignition off.
2. Disconnect the C7 TIPM harness connector.
3. Measure the resistance of the (N4) Fuel Level Signal circuit from the Fuel Pump Module harness connector to the C7 TIPM harness connector.

Is the resistance below 5.0 Ohms?

Yes

- Go To 5.

No

- Repair the open in the (N4) Fuel Level Signal circuit.
- Perform the POWERTRAIN VERIFICATION TEST. Refer to **POWERTRAIN VERIFICATION TEST** .

5. **(G109) GROUND CIRCUIT OPEN**

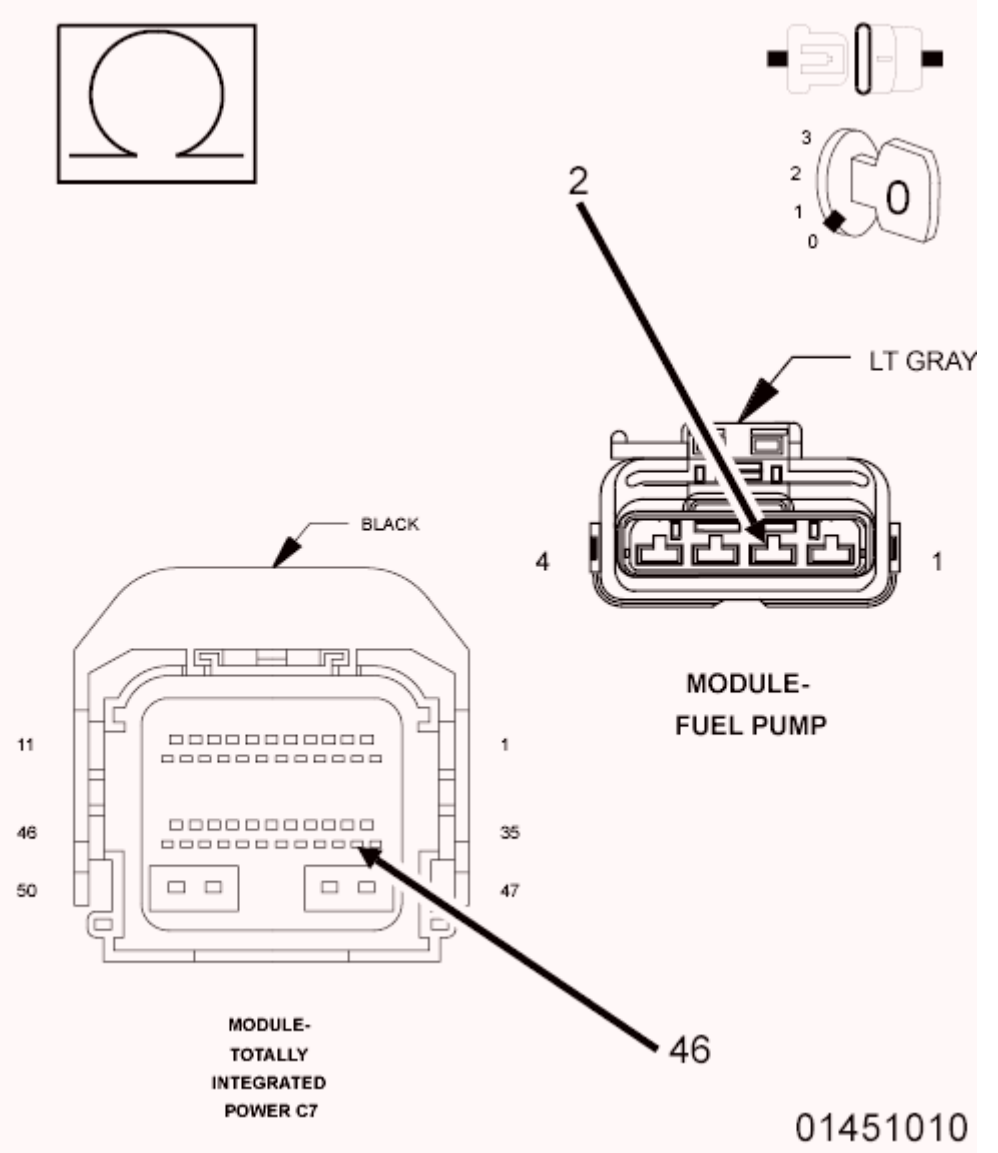

Fig. 13: Measuring Resistance Of Ground Circuit From Fuel Pump Module Harness Connector To TIPM Harness Connector

1. Disconnect the C7 TIPM harness connector.
2. Measure the resistance of the (G109) Ground circuit from the Fuel Pump Module harness connector to the C7 TIPM harness connector.

   Is the resistance below 5.0 Ohms?

   Yes

   - Go To 6.

   No

   - Repair the open in the (G109) Ground circuit.
   - Perform the POWERTRAIN VERIFICATION TEST. Refer to **POWERTRAIN VERIFICATION TEST** .

6. **TOTALLY INTEGRATED POWER MODULE**
   1. Using the wiring diagram/schematic as a guide, inspect the wiring and connectors between the Fuel Pump Module and the Totally Integrated Power Module.
   2. Look for any chafed, pierced, pinched or partially broken wires.
   3. Look for broken, bent, pushed out or corroded terminals. Verify that there is good pin to terminal contact in the Fuel Pump Module and the Totally Integrated Power Module connectors.
   4. Refer to any Technical Service Bulletins that may apply.

      Were there any problems found?

      Yes

      - Repair as necessary.
      - Perform the BODY VERIFICATION TEST. Refer to **STANDARD PROCEDURE** .

      No

      - Replace and program the Totally Integrated Power Module in accordance with the Service Information.
      - Perform the BODY VERIFICATION TEST. Refer to **STANDARD PROCEDURE** .

P0480-COOLING FAN 1 CONTROL CIRCUIT

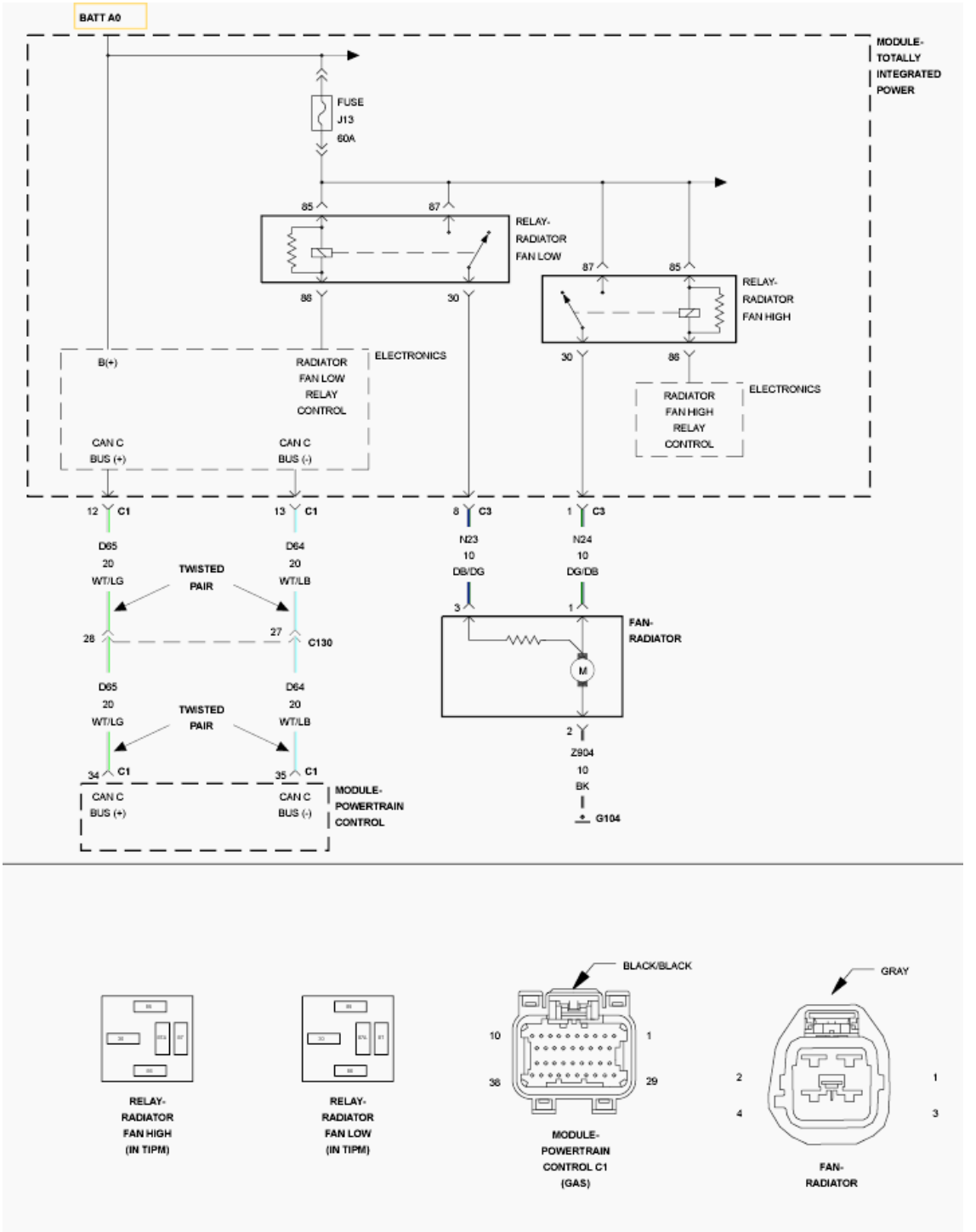

Fig. 14: Radiator Fan High & Low Relay Circuit Schematic
Courtesy of CHRYSLER GROUP, LLC

For a complete wiring diagram, **refer to appropriate SYSTEM WIRING DIAGRAMS article** .

WHEN MONITORED:

With the ignition on. Battery voltage greater than 10 Volts.

SET CONDITION:

The Powertrain Control Module (PCM) is requesting the Totally Integrated Power Module (TIPM) to turn on the Condenser Fan On and it is not operating. One Trip Fault. Three good trips to turn off the MIL.

POSSIBLE CAUSES

Possible Causes
CAN C BUS FAILURE
ENGINE COOLANT TEMP SENSOR DTCS SET
CONDENSER FAN CONTROL CIRCUIT DTCS SET IN THE HVAC MODULE
POWERTRAIN CONTROL MODULE (PCM)

Always perform the Pre-Diagnostic Troubleshooting procedure before proceeding. Refer to PRE-DIAGNOSTIC TROUBLESHOOTING PROCEDURE .

DIAGNOSTIC TEST

1. **COOLING FAN RELAY OPERATION**
    1. Ignition on, engine not running.
    2. With the scan tool, actuate the Cooling Fan Relay.

    Is the Cooling Fan Relay operating?

    Yes

    - Perform the INTERMITTENT CONDITION diagnostic procedure. Refer to **INTERMITTENT CONDITION** .

    No

    - Go To 2.
2. **ECT SENSOR DTCS CURRENTLY ACTIVE**

    Are any CAN C or ECT Sensor DTCs active at this time?

    Yes

    - Perform the appropriate diagnostics for the ECT Sensor or CAN C Bus DTCs. Refer to **DIAGNOSTIC CODE INDEX** .

    No

    - Go To 3.

3. **CONDENSER FAN CONTROL CIRCUIT DTCS SET IN THE TIPM**

   Are any Condenser Fan Control Circuit DTCs set in the TIPM?

   Yes

   - Diagnose the appropriate Condenser Fan Control Circuits in the TIPM. Refer to **DIAGNOSIS AND TESTING** .

   No

   - Go To 4.

4. **POWERTRAIN CONTROL MODULE (PCM)**
   1. Using the wiring diagram/schematic as a guide, inspect the wiring and connectors between the Cooling Fan and the Totally Integrated Power Module (TIPM).
   2. Look for any chafed, pierced, pinched or partially broken wires.
   3. Look for broken, bent, pushed out or corroded terminals. Verify that there is good pin to terminal contact in the Cooling Fan Module and the Totally Integrated Power Module connectors.
   4. Refer to any Technical Service Bulletins that may apply.

      Were there any problems found?

      Yes

      - Repair as necessary.
      - Perform the POWERTRAIN VERIFICATION TEST. Refer to **POWERTRAIN VERIFICATION TEST** .

      No

      - Replace and program the Powertrain Control Module in accordance with the Service Information. Refer to **MODULE, POWERTRAIN CONTROL, REMOVAL** .
      - Perform the POWERTRAIN VERIFICATION TEST. Refer to **POWERTRAIN VERIFICATION TEST** .

P0501-VEHICLE SPEED SENSOR 1 PERFORMANCE

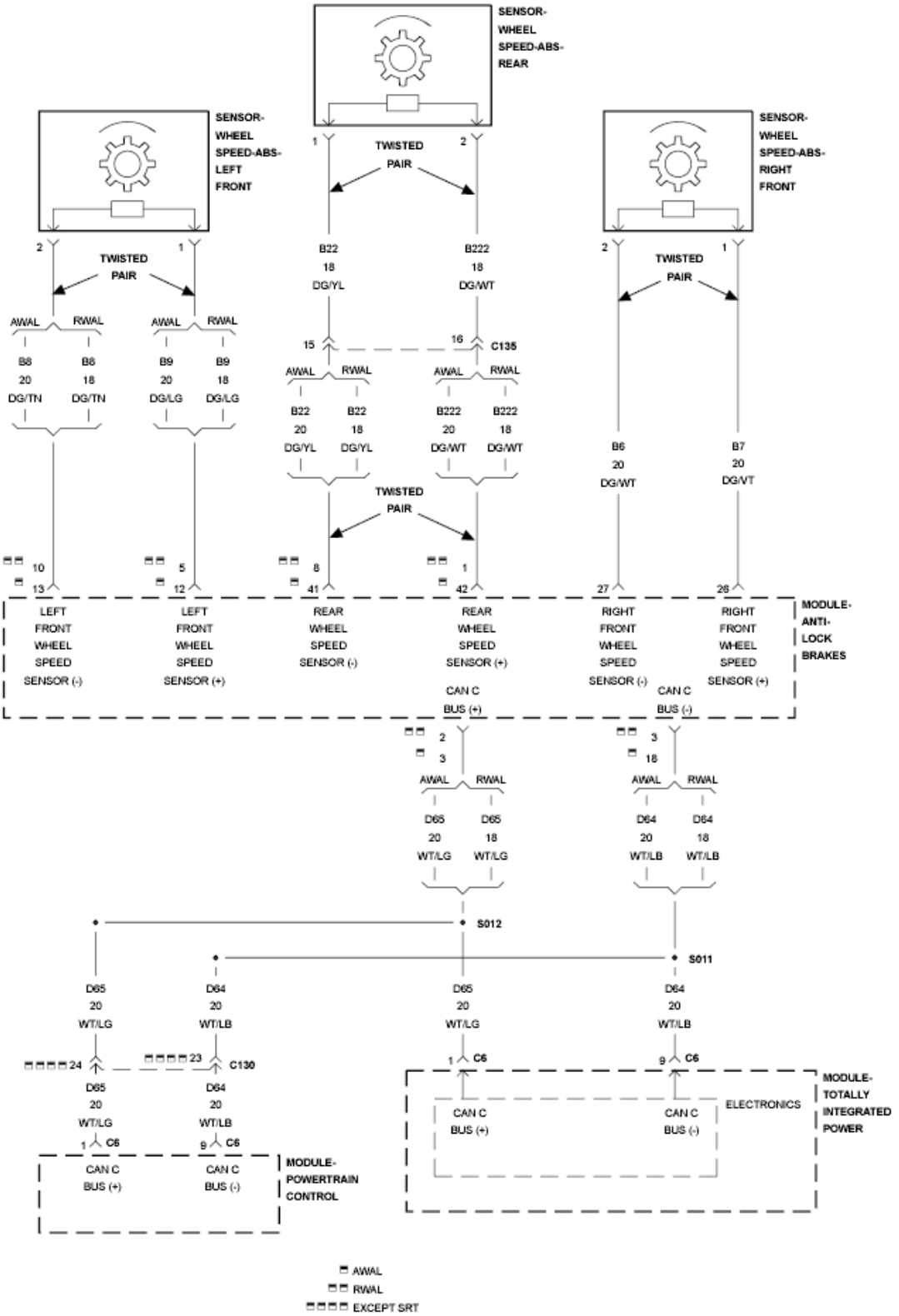

Fig. 15: Anti-Lock Brake Module Circuit Schematic
Courtesy of CHRYSLER GROUP, LLC

For a complete wiring diagram **refer to appropriate SYSTEM WIRING DIAGRAMS article** .

THEORY OF OPERATION

The vehicle speed sensor rationality is a continuous test that monitors the vehicle speed sensor for lack of activity. The rationality will not run if a limp-in exists for MAP, Throttle Position, and Engine Coolant Temperature. If vehicle speed sensor is below a minimum threshold for a period of time after the vehicle is operated at a sufficient load, a failure will be indicated.

WHEN MONITORED:

With ECT above -8° C (17.6° F), transmission not in park or neutral, brakes not applied, engine speed greater than 1500 RPM, MAP around 45 kPa (moderate engine load), and no ECT, MAP, TPS, ETC, or brake switch stuck DTCs present.

SET CONDITION:

The PCM receives no vehicle speed signal for 1 minute. Two Trip Fault. Three good trips to turn off the MIL.

POSSIBLE CAUSES

Possible Causes
ACTIVE BUS OR COMMUNICATION DTCS
TIRE CIRCUMFERENCE
POWERTRAIN CONTROL MODULE (PCM)

Always perform the Pre-Diagnostic Troubleshooting procedure before proceeding. Refer to PRE-DIAGNOSTIC TROUBLESHOOTING PROCEDURE .

DIAGNOSTIC TEST

1. **ACTIVE DTC**
    1. Ignition on, engine not running.
    2. With a scan tool, select View DTCs.

    NOTE: **Check for any Bus Communication DTCs. If no Bus or Communication DTCs are set, check for active DTCs stored in the Anti-Lock Brake Module. Any bus or communication DTCs or VSS DTCs in the Anti-Lock Brake Module must be properly diagnosed before continuing.**

    3. Start the engine.
    4. Allow the engine to reach normal operating temperature.
    5. With a scan tool, select View DTCs.

NOTE: **It may be necessary to drive the vehicle to meet the conditions to set this DTC, try to repeat the conditions in which the fault originally set by reviewing the Freeze Frame data.**

Is the DTC Active or Pending at this time?

Yes

- Go To 2.

No

- Perform the INTERMITTENT CONDITION diagnostic procedure. Refer to **INTERMITTENT CONDITION** .

2. **VISUAL INSPECTION**

NOTE: **This code can set due to tire circumference differences and from the front or rear wheels being on a slippery surface while the opposite tires are not.**

1. This code may also set on a hard acceleration on loose gravel or during other off road driving conditions.
2. Check tire pressure of all the tires.
3. Check tire wear on all the tires.
4. Ask the customer what the road and driving conditions were like when the fault set.

Were any problems found?

Yes

- Repair as necessary. If the code set during a front OR rear wheel spin condition, no repair is necessary.
- Perform the POWERTRAIN VERIFICATION TEST. Refer to **POWERTRAIN VERIFICATION TEST** .

No

- Go To 3.

3. **POWERTRAIN CONTROL MODULE (PCM)**

1. Using the wiring diagram/schematic as a guide, inspect the wiring and connectors between the Wheel Speed Sensors and the Powertrain Control Module (PCM).
2. Look for any chafed, pierced, pinched, or partially broken wires.
3. Look for broken, bent, pushed out or corroded terminals. Verify that there is good pin to terminal contact in the Wheel Speed Sensor and the Powertrain Control Module connectors.
4. Refer to any Technical Service Bulletins that may apply.

Were there any problems found?

Yes

- Repair as necessary.
- Perform the POWERTRAIN VERIFICATION TEST. Refer to **POWERTRAIN VERIFICATION TEST** .

No

- Replace and program the Powertrain Control Module per Service Information. Refer to **MODULE, POWERTRAIN CONTROL, REMOVAL** .
- Perform the POWERTRAIN VERIFICATION TEST. Refer to **POWERTRAIN VERIFICATION TEST** .

P0503-VEHICLE SPEED SENSOR 1 ERRATIC

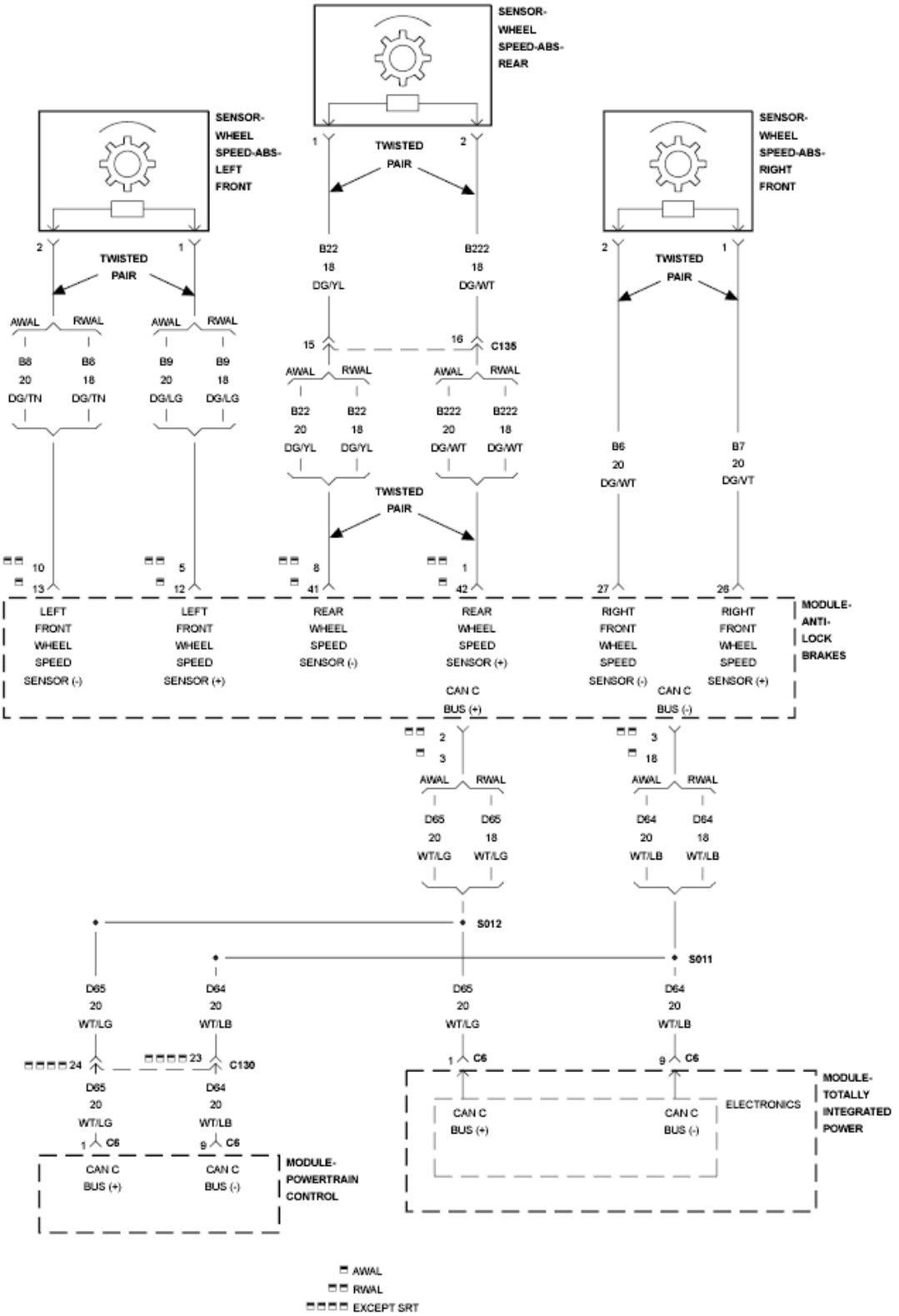

Fig. 16: Anti-Lock Brake Module Circuit Schematic
Courtesy of CHRYSLER GROUP, LLC

For a complete wiring diagram **refer to appropriate SYSTEM WIRING DIAGRAMS article** .

THEORY OF OPERATION

The vehicle speed sensor rationality is a continuous test that monitors the vehicle speed sensor for lack of activity. The rationality will not run if a limp-in exists for MAP, Throttle Position, and Engine Coolant Temperature. If vehicle speed sensor is below a minimum threshold for a period of time after the vehicle is operated at a sufficient load, a failure will be indicated.

WHEN MONITORED:

Ignition on and battery voltage greater than 10 volts. Transmission in Drive or Reverse.

SET CONDITION:

This code will set if no vehicle speed signal is received from the ABS Module up to 120 seconds for 2 consecutive trips. One Trip Fault. Three good trips to turn off the MIL.

POSSIBLE CAUSES

Possible Causes
ACTIVE BUS OR COMMUNICATION DTCS
TIRE CIRCUMFERENCE
POWERTRAIN CONTROL MODULE (PCM)

Always perform the Pre-Diagnostic Troubleshooting procedure before proceeding. Refer to PRE-DIAGNOSTIC TROUBLESHOOTING PROCEDURE .

DIAGNOSTIC TEST

1. **ACTIVE DTC**
    1. Ignition on, engine not running.
    2. With a scan tool, select View DTCs and record the related Freeze Frame data.

    NOTE: **Check for any Bus Communication DTCs. If no Bus or Communication DTCs are set, check for active DTCs stored in the Anti-Lock Brake Module. Any bus or communication DTCs or VSS DTCs in the Anti-Lock Brake Module must be properly diagnosed before continuing.**

    3. Start the engine.
    4. Allow the engine to idle.
    5. With a scan tool, select View DTCs.

    Is the status Active or Pending for this DTC?

Yes

- Go To 2.

No

- Perform the INTERMITTENT CONDITION diagnostic procedure. Refer to **INTERMITTENT CONDITION** .

2. **VISUAL INSPECTION**

NOTE: This code can set due to tire circumference differences and from the front or rear wheels being on a slippery surface while the opposite tires are not.

1. This code may also set on a hard acceleration on loose gravel or during other off road driving conditions.
2. Check tire pressure of all the tires.
3. Check tire wear on all the tires.
4. Ask the customer what the road and driving conditions were like when the fault set.

Were any problems found?

Yes

- Repair as necessary. If the code set during a front OR rear wheel spin condition, no repair is necessary.
- Perform the POWERTRAIN VERIFICATION TEST. Refer to **POWERTRAIN VERIFICATION TEST** .

No

- Go To 3.

3. **POWERTRAIN CONTROL MODULE (PCM)**

1. Using the wiring diagram/schematic as a guide, inspect the wiring and connectors between the Wheel Speed Sensors and the Powertrain Control Module (PCM).
2. Look for any chafed, pierced, pinched, or partially broken wires.
3. Look for broken, bent, pushed out or corroded terminals. Verify that there is good pin to terminal contact in the Wheel Speed Sensor and the Powertrain Control Module connectors.
4. Refer to any Technical Service Bulletins that may apply.

Were there any problems found?

Yes

- Repair as necessary.

- Perform the POWERTRAIN VERIFICATION TEST. Refer to **POWERTRAIN VERIFICATION TEST** .

No

- Replace and program the Powertrain Control Module per Service Information. Refer to **MODULE, POWERTRAIN CONTROL, REMOVAL** .
- Perform the POWERTRAIN VERIFICATION TEST. Refer to **POWERTRAIN VERIFICATION TEST** .

P0506-IDLE SPEED PERFORMANCE LOWER THAN EXCEPTED

For a complete wiring diagram, **refer to appropriate SYSTEM WIRING DIAGRAMS article** .

THEORY OF OPERATION

The objective of the Idle Speed Rationality is to monitor the ability to achieve and maintain a steady idle condition. The monitor will judge the functionality of the idle speed control system by monitoring RPM during idle. If RPM does not come within a calibrated deadband of target idle speed, a timer is started. If the timer reaches its maximum threshold without any sign of the RPM trending towards control, a soft failure is generated.

WHEN MONITORED:

With the engine idling in drive, the brake applied, engine run time above a minimum calibrated value, and no VSS, MAF/MAP, ECT, TPS, ETC, CKP Sensor, fuel system, or injector DTCs present.

SET CONDITION:

Engine speed is 100 RPM or more below target idle speed for 30 seconds. Two Trip Fault. Three good trips to turn off the MIL.

POSSIBLE CAUSES

Possible Causes
AIR INDUCTION SYSTEM RESTRICTIONS
PCV SYSTEM RESTRICTIONS
THROTTLE BODY
POWERTRAIN CONTROL MODULE (PCM)

Always perform the Pre-Diagnostic Troubleshooting procedure before proceeding. Refer to PRE-DIAGNOSTIC TROUBLESHOOTING PROCEDURE .

DIAGNOSTIC TEST

1. **ACTIVE DTC**

NOTE: **If any other Throttle Body DTCs are present, they must be diagnosed and repaired before continuing this test.**

1. Start the engine.
2. Allow the engine to reach normal operating temperature.

WARNING: **When the engine is operating, do not stand in direct line with the fan. Do not put your hands near the pulleys, belts or fan. Do not wear loose clothing. Failure to follow these instructions may result in possible serious or fatal injury.**

3. With a scan tool, select View DTCs.

NOTE: **It may be necessary to drive the vehicle to meet the conditions to set this DTC, try to repeat the conditions in which the fault originally set by reviewing the Freeze Frame data.**

Is the DTC Active or Pending at this time?

Yes

- Go To 2.

No

- Perform the INTERMITTENT CONDITION diagnostic procedure. Refer to **INTERMITTENT CONDITION** .

2. **AIR INDUCTION SYSTEM**
   1. Inspect the Air Induction System for the following problems:
   2. Restrictions: Dirty Air Cleaner, Foreign material trapped in the air intake tube, etc.

   Were any problems found?

   Yes

   - Repair or replace as necessary.
   - Perform the POWERTRAIN VERIFICATION TEST. Refer to **POWERTRAIN VERIFICATION TEST** .

   No

   - Go To 3.

3. **PCV SYSTEM**
   1. Inspect the PCV system for the following problems:

2. Restrictions - sticking valve, collapsed hoses or tubes, obstructed passages or ports, etc.

   Were any problems found?

   Yes

   - Repair as necessary.
   - Perform the POWERTRAIN VERIFICATION TEST. Refer to **POWERTRAIN VERIFICATION TEST** .

   No

   - Go To 4.

4. **THROTTLE BODY OPERATION**
   1. Inspect the throttle body for carbon build up, other restrictions, and a bent throttle plate using a straight edge.

      WARNING: **When the engine is operating, do not stand in direct line with the fan. Do not put your hands near the pulleys, belts or fan. Do not wear loose clothing. Failure to follow these instructions may result in possible serious or fatal injury.**

   2. While the vehicle is running, lightly tap on ETC Motor with your hand and listen for idle to raise.

      Were any problems found or did the idle fluctuate while tapping on the ETC Motor?

      Yes

      - Verify that there is good pin to terminal contact at the Throttle Body and the Powertrain Control Module connectors. Replace the Throttle Body Assembly if no problems were found in the connectors. Disconnect the Battery when replacing the Throttle Body Assembly. After installation is complete, use a scan tool and select the ETC RELEARN function.
      - Perform the POWERTRAIN VERIFICATION TEST. Refer to **POWERTRAIN VERIFICATION TEST** .

      No

      - Go To 5.

5. **POWERTRAIN CONTROL MODULE (PCM)**
   1. Using the wiring diagram/schematic as a guide, inspect the wiring and connectors between the Throttle Body and the Powertrain Control Module (PCM).
   2. Look for any chafed, pierced, pinched, or partially broken wires.
   3. Look for broken, bent, pushed out or corroded terminals. Verify that there is good pin to terminal contact in the Throttle Body and Powertrain Control Module connectors.

4. Refer to any Technical Service Bulletins that may apply.

   Were there any problems found?

   Yes

   - Repair as necessary.
   - Perform the POWERTRAIN VERIFICATION TEST. Refer to **POWERTRAIN VERIFICATION TEST** .

   No

   - Replace and program the Powertrain Control Module per Service Information. Refer to **MODULE, POWERTRAIN CONTROL, REMOVAL** .
   - Perform the POWERTRAIN VERIFICATION TEST. Refer to **POWERTRAIN VERIFICATION TEST** .

P0507-IDLE SPEED PERFORMANCE HIGHER THAN EXCEPTED

For a complete wiring diagram **refer to appropriate SYSTEM WIRING DIAGRAMS article** .

THEORY OF OPERATION

The objective of the Idle Speed Rationality is to monitor the ability to achieve and maintain a steady idle condition. The monitor will judge the functionality of the idle speed control system by monitoring RPM during idle. If RPM does not come within a calibrated deadband of target idle speed, a timer is started. If the timer reaches its maximum threshold without any sign of the RPM trending towards control, a soft failure is generated.

WHEN MONITORED:

With the engine idling in drive, the brake applied, engine run time above a minimum calibrated value, and no VSS, MAF/MAP, ECT, TPS, ETC, CKP Sensor, fuel system, or injector DTCs present.

SET CONDITION:

Engine speed is 200 RPM or more above target idle speed for 30 seconds. Two Trip Fault. Three good trips to turn off the MIL.

POSSIBLE CAUSES

Possible Causes
AIR INDUCTION SYSTEM LEAKS
PCV SYSTEM LEAKS
ENGINE VACUUM LEAKS
THROTTLE BODY

Always perform the Pre-Diagnostic Troubleshooting procedure before proceeding. Refer to PRE-DIAGNOSTIC TROUBLESHOOTING PROCEDURE .

DIAGNOSTIC TEST

1. **ACTIVE DTC**

   NOTE: If any other Throttle Body DTCs are present, they must be diagnosed and repaired before continuing this test.

   1. Start the engine.

      WARNING: When the engine is operating, do not stand in direct line with the fan. Do not put your hands near the pulleys, belts or fan. Do not wear loose clothing. Failure to follow these instructions may result in possible serious or fatal injury.

   2. Allow the engine to reach normal operating temperature.
   3. With a scan tool, select View DTCs.

      NOTE: It may be necessary to drive the vehicle to meet the conditions to set this DTC, try to repeat the conditions in which the fault originally set by reviewing the Freeze Frame data.

      Is the DTC Active or Pending at this time?

      Yes

      - Go To 2.

      No

      - Perform the INTERMITTENT CONDITION diagnostic procedure. Refer to **INTERMITTENT CONDITION** .

2. **AIR INDUCTION SYSTEM**
   1. Inspect the Air Induction System for the following problems:
   2. Leaks: Air Intake tube connection, Air Cleaner housing, etc.

      Were any problems found?

      Yes

      - Repair or replace as necessary.

- Perform the POWERTRAIN VERIFICATION TEST. Refer to **POWERTRAIN VERIFICATION TEST** .

No

- Go To 3.

3. **PCV SYSTEM**
   1. Inspect the PCV system for the following problems:
   2. Leaks - cracked or damaged hoses or tubes, poor hose or tube connections, PCV valve stuck open, etc.

   Were any problems found?

   Yes

   - Repair as necessary.
   - Perform the POWERTRAIN VERIFICATION TEST. Refer to **POWERTRAIN VERIFICATION TEST** .

   No

   - Go To 4.

4. **ENGINE VACUUM LEAKS**

   WARNING: **When the engine is operating, do not stand in direct line with the fan. Do not put your hands near the pulleys, belts or fan. Do not wear loose clothing. Failure to follow these instructions may result in possible serious or fatal injury.**

   1. Start the engine.
   2. Inspect the vehicle for external vacuum leaks.
   3. Inspect the engine for internal leaks.

   Were any vacuum leaks found?

   Yes

   - Repair the vacuum leak as necessary.
   - Perform the POWERTRAIN VERIFICATION TEST. Refer to **POWERTRAIN VERIFICATION TEST** .

   No

   - Go To 5.

5. **THROTTLE BODY OPERATION**
    1. Inspect the throttle body for carbon build up, other restrictions, and a bent throttle plate using a straight edge.

        WARNING: **When the engine is operating, do not stand in direct line with the fan. Do not put your hands near the pulleys, belts or fan. Do not wear loose clothing. Failure to follow these instructions may result in possible serious or fatal injury.**

    2. While the vehicle is running, lightly tap on ETC Motor with your hand and listen for idle to raise.

        Were any problems found or did the idle fluctuate while tapping on the ETC Motor?

        Yes

        - Verify that there is good pin to terminal contact at the Throttle Body and the Powertrain Control Module connectors. Replace the Throttle Body Assembly if no problems were found in the connectors. Disconnect the Battery when replacing the Throttle Body Assembly. After installation is complete, use a scan tool and select the ETC RELEARN function.
        - Perform the POWERTRAIN VERIFICATION TEST. Refer to **POWERTRAIN VERIFICATION TEST** .

        No

        - Go To 6.
6. **POWERTRAIN CONTROL MODULE (PCM)**
    1. Using the wiring diagram/schematic as a guide, inspect the wiring and connectors between the Throttle Body and the Powertrain Control Module (PCM).
    2. Look for any chafed, pierced, pinched, or partially broken wires.
    3. Look for broken, bent, pushed out or corroded terminals. Verify that there is good pin to terminal contact in the Throttle Body and Powertrain Control Module connectors.
    4. Refer to any Technical Service Bulletins that may apply.

        Were there any problems found?

        Yes

        - Repair as necessary.
        - Perform the POWERTRAIN VERIFICATION TEST. Refer to **POWERTRAIN VERIFICATION TEST** .

        No

        - Replace and program the Powertrain Control Module per Service Information. Refer to **MODULE, POWERTRAIN CONTROL, REMOVAL** .

- Perform the POWERTRAIN VERIFICATION TEST. Refer to **POWERTRAIN VERIFICATION TEST** .

P050B-COLD START IGNITION TIMING PERFORMANCE

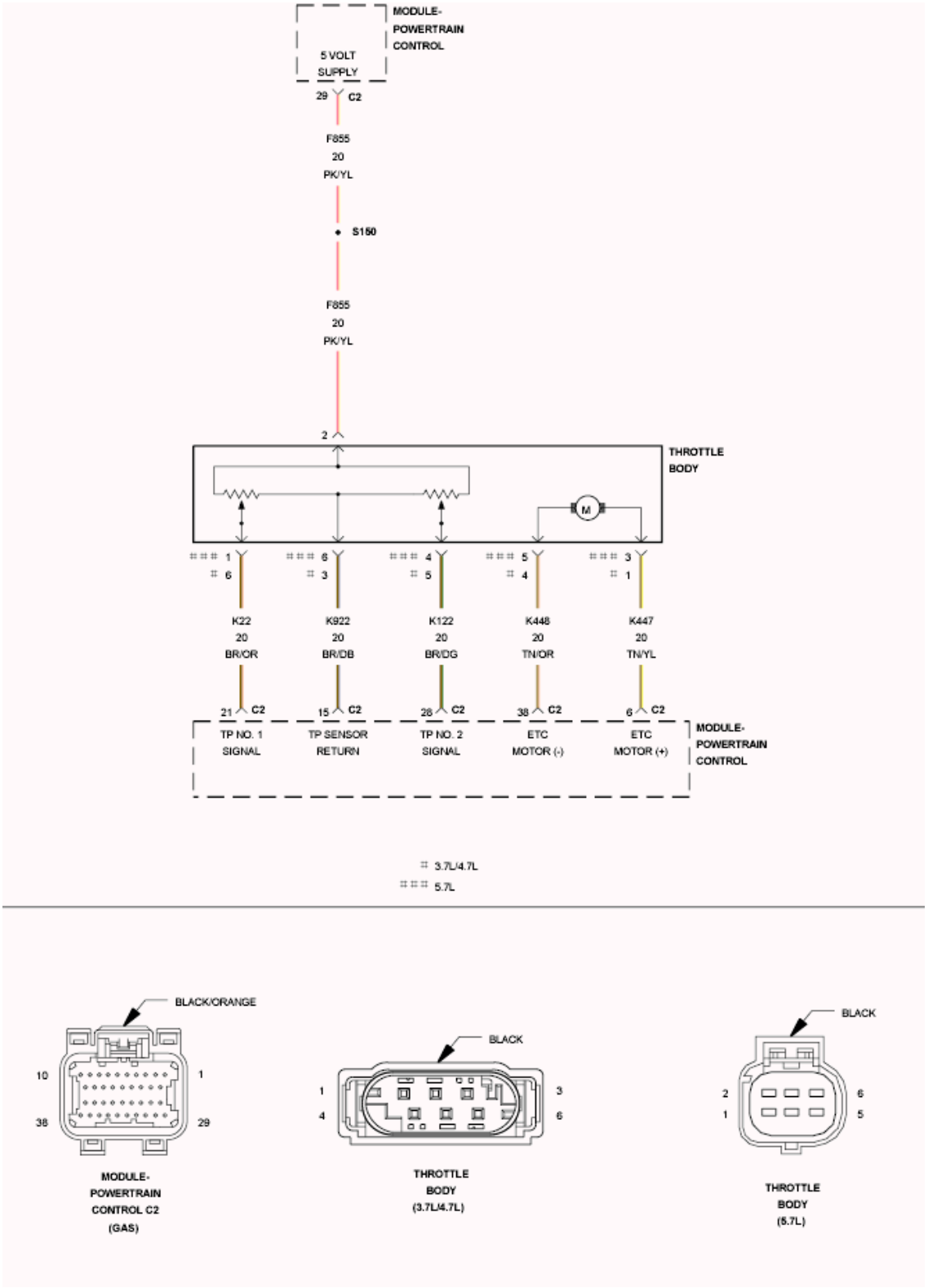

Fig. 17: Throttle Body Circuit Schematic
Courtesy of CHRYSLER GROUP, LLC

For a complete wiring diagram **refer to appropriate SYSTEM WIRING DIAGRAMS article** .

THEORY OF OPERATION

Spark adjustment during a cold start is intended to provide quick response to idle speed variations. The spark adjust diagnostics monitors spark advance on a cold start over a period of time, then compares the average spark advance to a threshold.

WHEN MONITORED:

Cold start condition. Ambient Air temperature between -7° C and 50° C (19.4° F and 122° F). Engine Coolant temperature between -7° C and 50° C (19.4° F and 122° F). The difference between the Ambient Air temp and ECT temp at Start is equal to or less than 10° C (50° F). Engine running at idle only.

SET CONDITION:

Engine RPM is 50 RPM or more (depending on vehicle specifications), below idle speed for at least 3 seconds and the average spark advance is above the threshold, too much spark advance, for a specified time limit. Two trip fault. Three good trips to turn off the MIL.

POSSIBLE CAUSES

Possible Causes
RESTRICTED INTAKE AIR SYSTEM
LOW BATTERY VOLTAGE
FUEL CONTAMINATION
EXCESSIVE RESISTANCE IN THE (K447) ETC POSITIVE CIRCUIT
EXCESSIVE RESISTANCE IN THE (K448) ETC NEGATIVE CIRCUIT
ETC MOTOR/THROTTLE BODY
POWERTRAIN CONTROL MODULE (PCM)

Always perform the Pre-Diagnostic Troubleshooting procedure before proceeding. Refer to PRE-DIAGNOSTIC TROUBLESHOOTING PROCEDURE .

DIAGNOSTIC TEST

1. **ACTIVE DTC**
    1. Ignition on, engine not running.

        NOTE: Low battery voltage can also cause excessive current draw, in very hot and very cold ambient temperatures. Make sure the battery can pass a load test before continuing.

    2. Start the engine.
    3. Allow the engine to reach normal operating temperature.
    4. With a scan tool, select View DTCs.

NOTE: **It may be necessary to drive the vehicle to meet the conditions to set this DTC, try to repeat the conditions in which the fault originally set by reviewing the Freeze Frame data.**

Is the DTC Active or Pending at this time?

Yes

- Go To 2.

No

- Perform the INTERMITTENT CONDITION diagnostic procedure. Refer to **INTERMITTENT CONDITION** .

2. **THROTTLE PLATE INSPECTION**
   1. Turn the ignition off.
   2. Remove the Air Cleaner Assembly from the Throttle Body.
   3. Check for any signs of a foreign material (ice, dirt, or excessive carbon build up) on the Throttle Plate or in the bore causing the Throttle Plate to stick.

   Were any signs of foreign material or scoring of the throttle plate or bore found?

   Yes

   - Remove the debris if possible or replace the Throttle Body Assembly. Disconnect the Battery when replacing the Throttle Body Assembly. After installation is complete, use a scan tool and select the ETC RELEARN function.
   - Perform the POWERTRAIN VERIFICATION TEST. Refer to **POWERTRAIN VERIFICATION TEST** .

   No

   - Go To 3.

3. **DIRTY AIR FILTER**
   1. Remove and inspect the Air Filter.

   Is the Air Filter dirty?

   Yes

   - Replace the Air Filter.
   - Perform the POWERTRAIN VERIFICATION TEST. Refer to **POWERTRAIN VERIFICATION TEST** .

   No

- Go To 4.

4. **CONTAMINATED FUEL**
    1. Inspect the Fuel for contamination. (Dirt, water, or other foreign material)

       Is the fuel contaminated?

       Yes

       - Drain the Fuel from the fuel tank into an approved gas holding tank and add clean fuel. Refer to **STANDARD PROCEDURE** .

       No

       - Go To 5.

5. **EXCESSIVE RESISTANCE IN THE (K447) ETC POSITIVE CIRCUIT**
    1. Turn the ignition off.
    2. Disconnect the C2 harness connector.

       CAUTION: Do not probe the PCM harness connectors. Probing the PCM harness connectors will damage the PCM terminals resulting in poor terminal to pin connection. Install the PCM Pinout Box (special tool #8815A, Kit, NGC, 38 Position) along with the Adapter (special tool #8815-1, PCM Pinout Box Adapter) to perform the diagnosis.

    3. Using a voltmeter perform a voltage drop test. Backprobe the (K447) ETC Positive circuit at the Throttle Body harness connector and probe the appropriate terminal of the special tool (special tool #8815A, Kit, NGC, 38 Position). Make sure the voltmeter leads are connected so a positive polarity is displayed on the voltmeter.

       WARNING: When the engine is operating, do not stand in direct line with the fan. Do not put your hands near the pulleys, belts or fan. Do not wear loose clothing. Failure to follow these instructions may result in possible serious or fatal injury.

    4. Start the engine and allow it to reach normal operating temperature.
    5. Monitor the voltmeter.

       Is the voltage below 0.5 of a volt?

       Yes

       - Go To 6.

       No

- Repair the excessive resistance in the (K447) ETC Positive circuit.
- Perform the POWERTRAIN VERIFICATION TEST. Refer to **POWERTRAIN VERIFICATION TEST** .

6. **EXCESSIVE RESISTANCE IN THE (K448) ETC NEGATIVE CIRCUIT**
   1. Turn the ignition off.
   2. Move the voltmeter leads to backprobe the (K448) ETC Negative circuit at the Throttle Body harness connector and to probe the appropriate terminal of the special tool (special tool #8815A, Kit, NGC, 38 Position). Make sure the voltmeter leads are connected so a positive polarity is displayed on the voltmeter.

      WARNING: **When the engine is operating, do not stand in direct line with the fan. Do not put your hands near the pulleys, belts or fan. Do not wear loose clothing. Failure to follow these instructions may result in possible serious or fatal injury.**

   3. Start the engine and allow it to reach normal operating temperature.
   4. Monitor the voltmeter.

      Is the voltage below 0.5 of a volt?

      Yes

      - Go To 7.

      No

      - Repair the excessive resistance in the (K448) ETC Negative circuit.
      - Perform the POWERTRAIN VERIFICATION TEST. Refer to **POWERTRAIN VERIFICATION TEST** .

7. **ETC MOTOR**

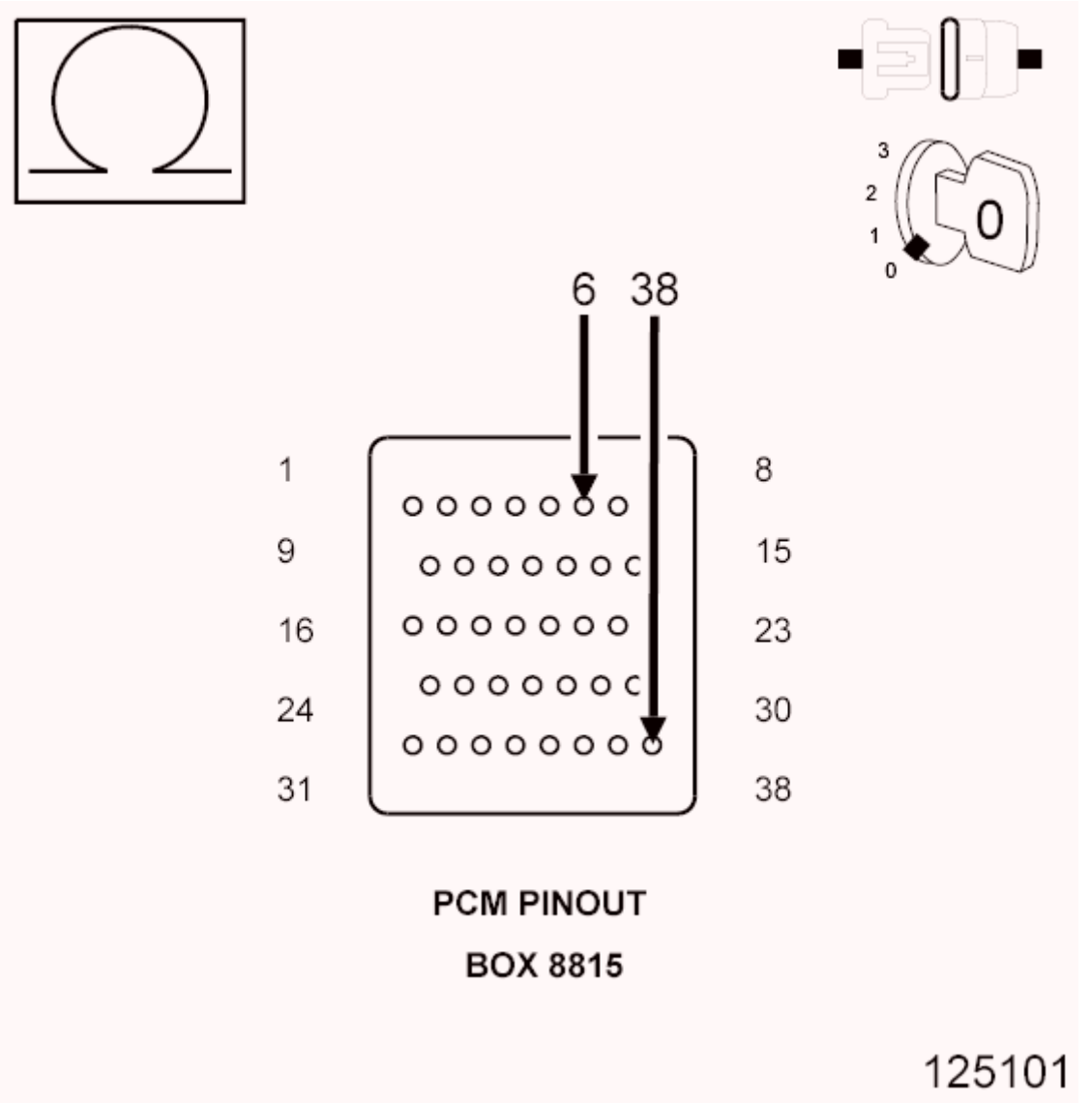

Fig. 18: Measuring Resistance Between ETC Motor Positive Circuit And Negative Circuit AT Appropriate Terminals Of Special Tool #8815
Courtesy of CHRYSLER GROUP, LLC

1. Turn the ignition off.

NOTE: **Take the following measurement using special tool (special tool #8815A, Kit, NGC, 38 Position) to avoid possible damage to the Throttle Body harness connector.**

2. Connect the Throttle Body harness connector.
3. Disconnect special tool (special tool #8815-1, PCM Pinout Box Adapter) from the C2 PCM harness connector.
4. Measure the resistance of the ETC Motor by probing the appropriate terminals of special tool (special tool #8815A, Kit, NGC, 38 Position) for the (K447) ETC Positive circuit and the (K448)

ETC Negative circuit.

Is the resistance between 2.5 and 25 ohms at closed throttle?

Yes

- Go To 8.

No

- Verify that there is good pin to terminal contact at the Throttle Body and the Powertrain Control Module connectors. Replace the Throttle Body Assembly if no problems were found in the connectors. Disconnect the Battery when replacing the Throttle Body Assembly. After installation is complete, use a scan tool and select the ETC RELEARN function.
- Perform the POWERTRAIN VERIFICATION TEST. Refer to **POWERTRAIN VERIFICATION TEST** .

8. **POWERTRAIN CONTROL MODULE (PCM)**
    1. Using the wiring diagram/schematic as a guide, inspect the wiring and connectors between the Throttle Body and the Powertrain Control Module (PCM).
    2. Look for any chafed, pierced, pinched, or partially broken wires.
    3. Look for broken, bent, pushed out or corroded terminals. Verify that there is good pin to terminal contact in the Throttle Body and the Powertrain Control Module connectors.
    4. Refer to any Technical Service Bulletins that may apply.

    Were there any problems found?

    Yes

    - Repair as necessary.
    - Perform the POWERTRAIN VERIFICATION TEST. Refer to **POWERTRAIN VERIFICATION TEST** .

    No

    - Replace and program the Powertrain Control Module per Service Information. Refer to **MODULE, POWERTRAIN CONTROL, REMOVAL** .
    - Perform the POWERTRAIN VERIFICATION TEST. Refer to **POWERTRAIN VERIFICATION TEST** .

P0513-INVALID SKIM KEY

For a complete wiring diagram, **refer to appropriate SYSTEM WIRING DIAGRAMS article** .

WHEN MONITORED:

Ignition on.

SET CONDITION:

The Powertrain Control Module (PCM) detects an invalid ignition key. One Trip Fault.

POSSIBLE CAUSES

Possible Causes
INCORRECT VIN PROGRAMMED IN THE PCM
NO COMMUNICATION WITH WIRELESS IGNITION NODE (WIN)
INCORRECT VIN PROGRAMMED IN THE PCM
IGNITION KEY
WIRELESS IGNITION NODE (WIN)
POWERTRAIN CONTROL MODULE (PCM)

Always perform the Pre-Diagnostic Troubleshooting procedure before proceeding. Refer to PRE-DIAGNOSTIC TROUBLESHOOTING PROCEDURE .

DIAGNOSTIC TEST

1. **ACTIVE DTC**
   1. Attempt to start the vehicle.

      WARNING: **When the engine is operating, do not stand in direct line with the fan. Do not put your hand near the pulleys, belts, or fan. Do not wear loose clothing. Failure to follow these instructions can result in possible serious or fatal injury.**

   2. Using the scan tool, select View DTCs.

      Is the status Active for this DTC?

      Yes

      - Go To 2.

      No

      - Go To 7.
2. **NO COMMUNICATION WITH WIN**

   NOTE: **For vehicle communication problems, use the scan tool to refer to the Network Review Screen. The screen depicts a high level view of the vehicle network. Fault and problem areas appear in red. Selecting any of**

the network components allows access to the source of the problem.

1. Using the scan tool, attempt to communicate with the WIN.

   Can the scan tool communicate with the WIN?

   Yes

   - Go To 3.

   No

   - and perform the No Response from WIN diagnostic procedure. Refer to **DIAGNOSIS AND TESTING** .

3. **TROUBLE CODES SET IN THE WIN**
   1. Using the scan tool, check for WIN DTCs.

      Are any DTCs present in the WIN ?

      Yes

      - and perform the appropriate diagnostic procedure. Refer to **DIAGNOSIS AND TESTING** .
      - Perform the POWERTRAIN VERIFICATION TEST. Refer to **POWERTRAIN VERIFICATION TEST** .

      No

      - Go To 4.

4. **VIN PROGRAMMED INTO PCM**
   1. Using the scan tool, display the VIN that is programmed in the PCM.

      Has the correct VIN been programmed into the PCM?

      Yes

      - Go To 5.

      No

      - Program the correct VIN into the PCM and retest.
      - Perform the POWERTRAIN VERIFICATION TEST. Refer to **POWERTRAIN VERIFICATION TEST** .

5. **WIRELESS IGNITION NODE (WIN)**
   1. Turn the ignition off.
   2. Replace and program the WIN in accordance with the Service Information.

3. Turn the ignition on.
4. Using the scan tool, erase all WIN and PCM DTCs.
5. Attempt to start the engine.
6. Using the scan tool, select View DTCs.

   Is the status Active for this DTC?

   Yes

   - Go To 6.

   No

   - Test complete.

6. **POWERTRAIN CONTROL MODULE (PCM)**
   1. Using the wiring diagram/schematic as a guide, inspect the wiring and connectors between the WIN and the PCM.
   2. Look for any chafed, pierced, pinched or partially broken wires.
   3. Look for broken, bent, pushed out or corroded terminals.
   4. Refer to any Technical Service Bulletins that may apply.

      Were any problems found?

      Yes

      - Repair as necessary.
      - Perform the POWERTRAIN VERIFICATION TEST. Refer to **POWERTRAIN VERIFICATION TEST** .

      No

      - Replace and program the Powertrain Control Module (PCM) in accordance with the Service Information. Refer to **MODULE, POWERTRAIN CONTROL, REMOVAL** .
      - Perform the POWERTRAIN VERIFICATION TEST. Refer to **POWERTRAIN VERIFICATION TEST** .

7. **IGNITION KEY**

NOTE: **This DTC could have been set if the WIN harness connector was disconnected or if the WIN was replaced recently.**

NOTE: **All of the ignition keys for this vehicle must be tested to verify proper operation.**

NOTE: If this DTC does not reset, it may have been an actual theft attempt.

1. Turn the ignition on.
2. Verify that the correct VIN is programmed into the PCM and WIN.
3. Turn the ignition off.
4. Using each vehicle key, turn the ignition on and start the engine.
5. Using the scan tool, View DTCs for each key.

   Is the status Active for this DTC?

   Yes

   - Replace the ignition key.
   - Perform the POWERTRAIN VERIFICATION TEST. Refer to **POWERTRAIN VERIFICATION TEST** .

   No

   - Test Complete.

P0520-ENGINE OIL PRESSURE SENSOR CIRCUIT

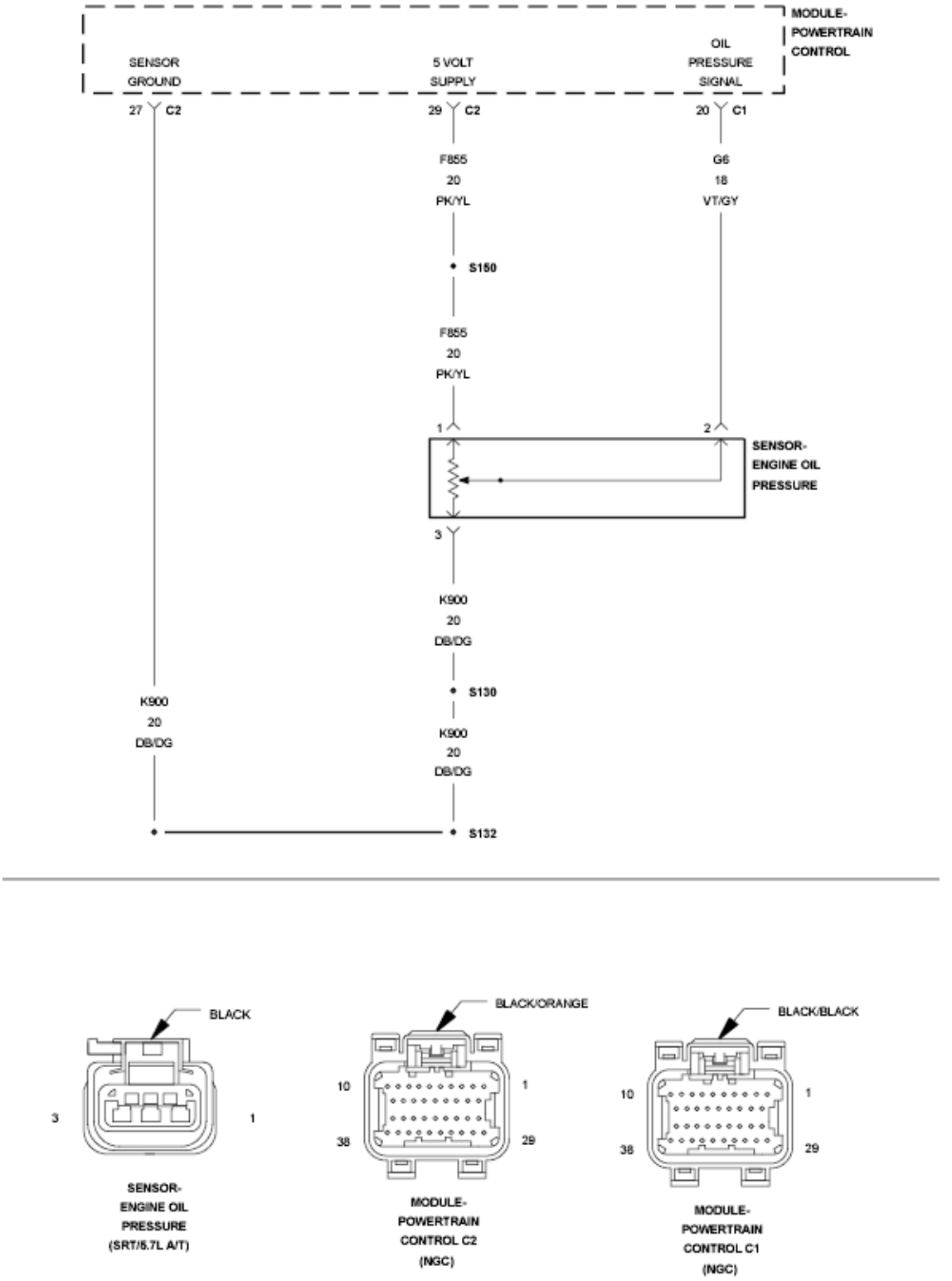

Fig. 19: Engine Oil Pressure Sensor Circuit Schematic
Courtesy of CHRYSLER GROUP, LLC

For a complete wiring diagram, **refer to appropriate SYSTEM WIRING DIAGRAMS article** .

WHEN MONITORED:

Ignition on, engine not running.

SET CONDITION:

The Powertrain Control Module (PCM) senses the oil pressure is out of the calibrated range. One Trip fault.

POSSIBLE CAUSES

Possible Causes
(G6) ENGINE OIL PRESSURE SENSOR SIGNAL CIRCUIT SHORTED TO VOLTAGE
RESISTANCE IN THE (G6) ENGINE OIL PRESSURE SENSOR SIGNAL CIRCUIT
(G6) ENGINE OIL PRESSURE SENSOR SIGNAL CIRCUIT SHORTED TO GROUND
RESISTANCE IN THE (F855) 5-VOLT SUPPLY CIRCUIT
(F855) 5-VOLT SUPPLY CIRCUIT SHORTED TO GROUND
RESISTANCE IN THE (K900) SENSOR GROUND CIRCUIT
ENGINE OIL PRESSURE SENSOR
POWERTRAIN CONTROL MODULE (PCM)

Always perform the Pre-Diagnostic Troubleshooting procedure before proceeding. Refer to PRE-DIAGNOSTIC TROUBLESHOOTING PROCEDURE .

DIAGNOSTIC TEST

1. **ACTIVE DTC**

NOTE: **Verify that the engine oil is at the proper level. Review oil change history to verify that the oil is changed at the correct intervals and that the proper oil viscosity is used.**

NOTE: **Diagnose and repair any Engine Oil Pressure Sensor circuit, system voltage or sensor supply voltage DTCs before continuing with this test.**

1. Start the engine and allow it to reach operating temperature.

WARNING: **When the engine is operating, do not stand in direct line with the fan. Do not put your hands near the pulleys, belts or fan. Do not wear loose clothing. Failure to follow these instructions may result in possible serious or fatal injury.**

2. With the scan tool select View DTCs.

Is the DTC Active at this time?

Yes

- Go To 2.

No

- Perform the INTERMITTENT CONDITION diagnostic procedure. Refer to **INTERMITTENT CONDITION** .

2. **(G6) ENGINE OIL PRESSURE SENSOR SIGNAL CIRCUIT SHORTED TO VOLTAGE**

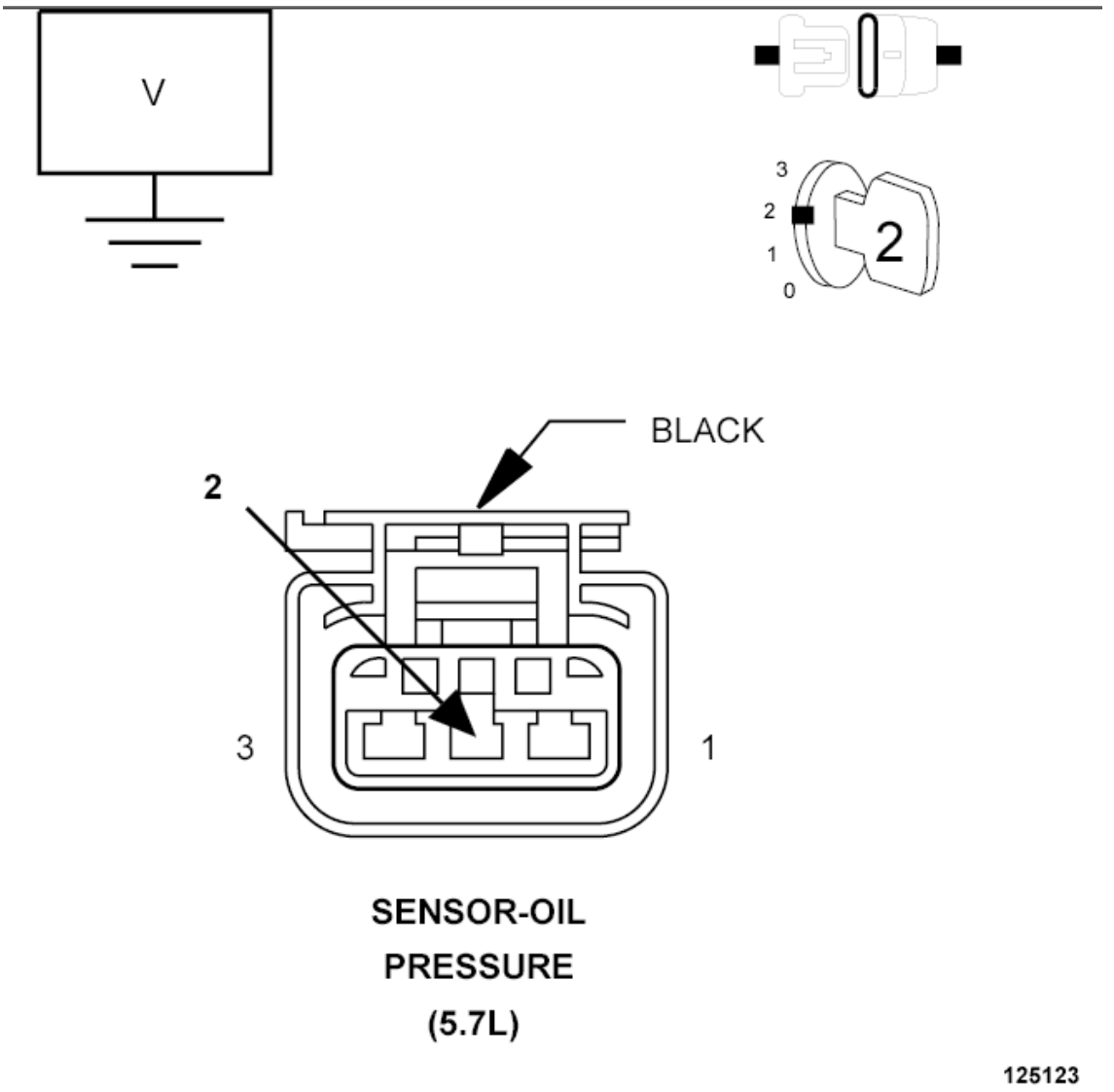

Fig. 20: Measuring Voltage On (G6) Engine Oil Pressure Signal Circuit In EOP Sensor Harness Connector
Courtesy of CHRYSLER GROUP, LLC

1. Turn the ignition off.
2. Disconnect the C1 and C2 PCM harness connectors.
3. Disconnect the Engine Oil Pressure Sensor harness connector.
4. Ignition on, engine not running.
5. Measure the voltage on the (G6) Engine Oil Pressure Signal circuit in the Engine Oil Pressure Sensor harness connector.

   Is there any voltage present?

   Yes

   - Repair the short to voltage in the (G6) Engine Oil Pressure Signal circuit.
   - Perform the POWERTRAIN VERIFICATION TEST. Refer to **POWERTRAIN VERIFICATION TEST** .

   No

   - Go To 3.

3. **ENGINE OIL PRESSURE SENSOR**

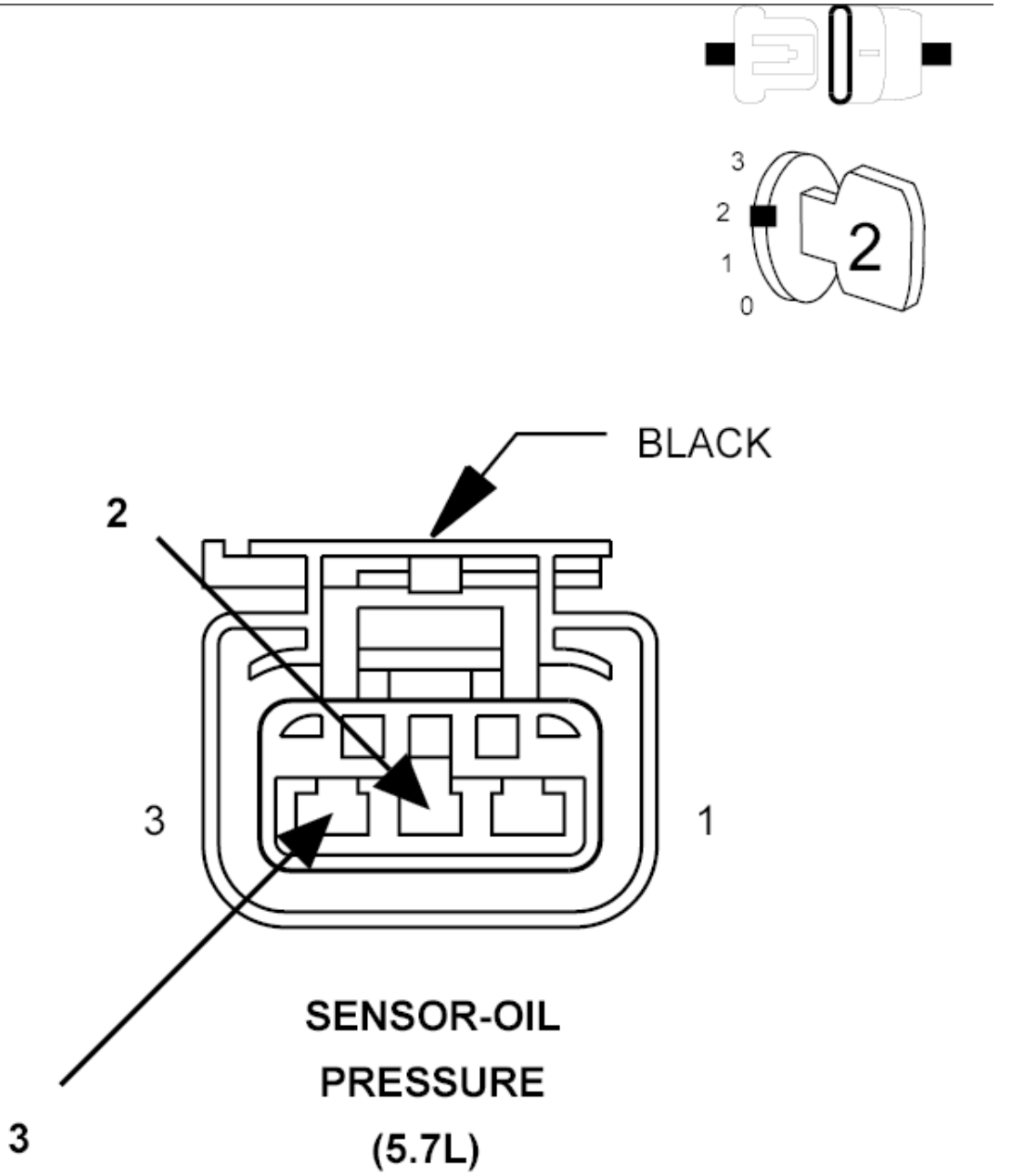

Fig. 21: Engine Oil Pressure Sensor Harness Connector
Courtesy of CHRYSLER GROUP, LLC

1. Turn the ignition off.
2. Connect the PCM harness connectors.
3. Connect a jumper wire between the (K900) Sensor Ground circuit and the (G6) Engine Oil Pressure Signal circuit.
4. Ignition on, engine not running.
5. With the scan tool, monitor the Engine Oil Pressure Sensor voltage.

NOTE: **The circuit voltage should change from approximately 5.0 Volts (plus or minus.1 of a volt) with the connector disconnected to 0.0 Volts (plus or minus.1 of a volt) with the jumper wire in place.**

Does the scan tool display the voltage as described above?

Yes

- Verify that there is good pin to terminal contact in the Oil Pressure Sensor and the Powertrain Control Module connectors. Replace the Engine Oil Pressure Sensor if no problems were found with the connectors.
- Perform the POWERTRAIN VERIFICATION TEST. Refer to **POWERTRAIN VERIFICATION TEST** .

No

- Go To 4.

  NOTE: **Remove the jumper wire before continuing.**

-

4. **EXCESSIVE RESISTANCE IN THE (G6) ENGINE OIL PRESSURE SIGNAL CIRCUIT**

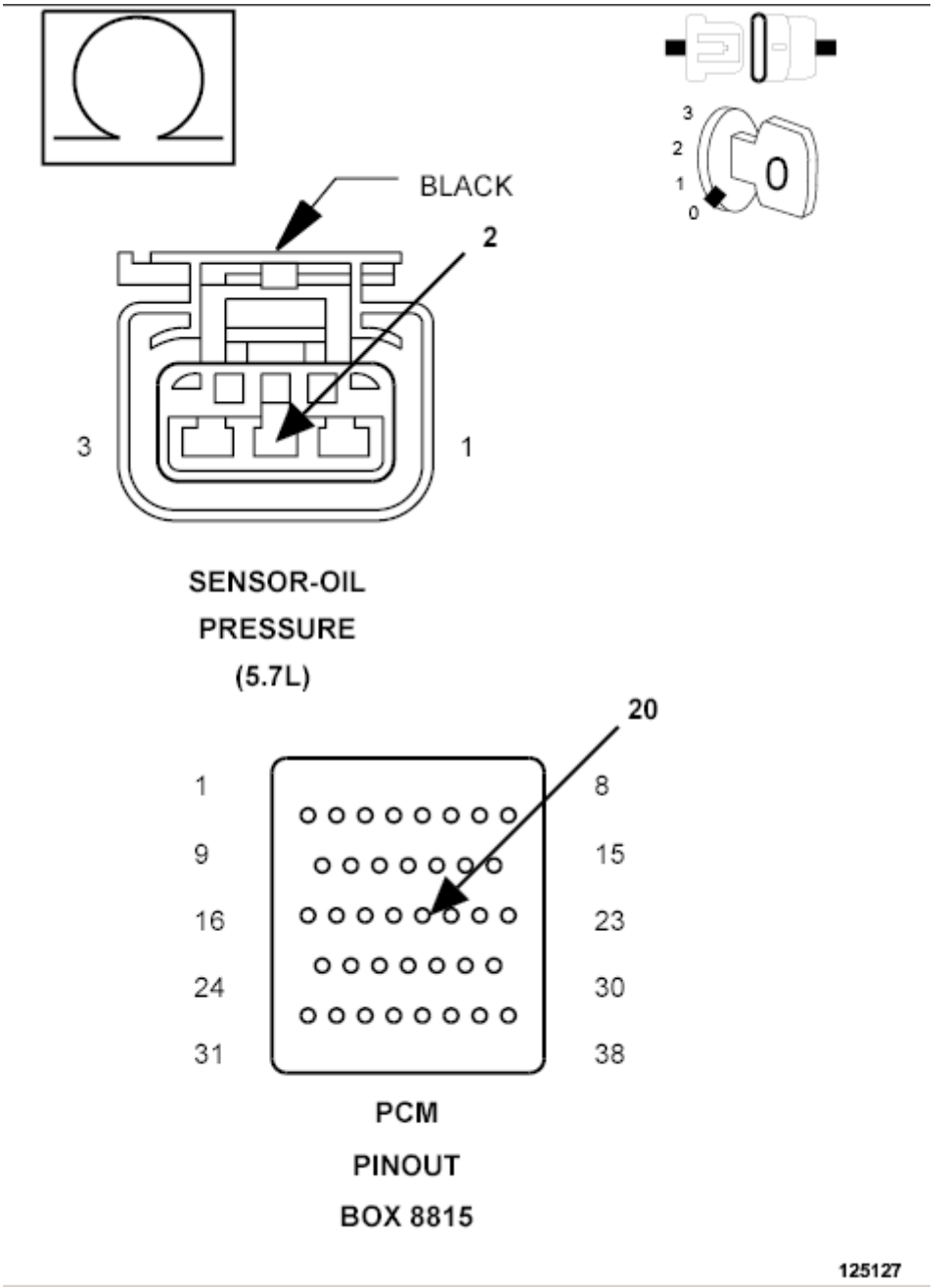

Fig. 22: Measuring Resistance Of (G6) Engine Oil Pressure Signal Circuit From Engine Oil Pressure Sensor Harness Connector To Appropriate Terminal Of PCM Pinout Box 8815
Courtesy of CHRYSLER GROUP, LLC

1. Turn the ignition off.
2. Disconnect the C1 and C2 PCM harness connectors.

CAUTION: Do not probe the PCM harness connectors. Probing the PCM harness connectors will damage the PCM terminals resulting in poor terminal to pin connection. Install the PCM Pinout Box

(special tool #8815A, Kit, NGC, 38 Position) to perform diagnosis.

3. Measure the resistance of the (G6) Engine Oil Pressure Signal circuit from the Engine Oil Pressure Sensor harness connector to the appropriate terminal of PCM Pinout Box (special tool #8815A, Kit, NGC, 38 Position).

   Is the resistance below 5.0 Ohms for each circuit?

   Yes

   - Go To 5.

   No

   - Repair the excessive resistance in the (G6) Engine Oil Pressure Signal circuit.
   - Perform the POWERTRAIN VERIFICATION TEST. Refer to **POWERTRAIN VERIFICATION TEST** .

5. **(G6) ENGINE OIL PRESSURE SIGNAL CIRCUIT SHORTED TO GROUND**

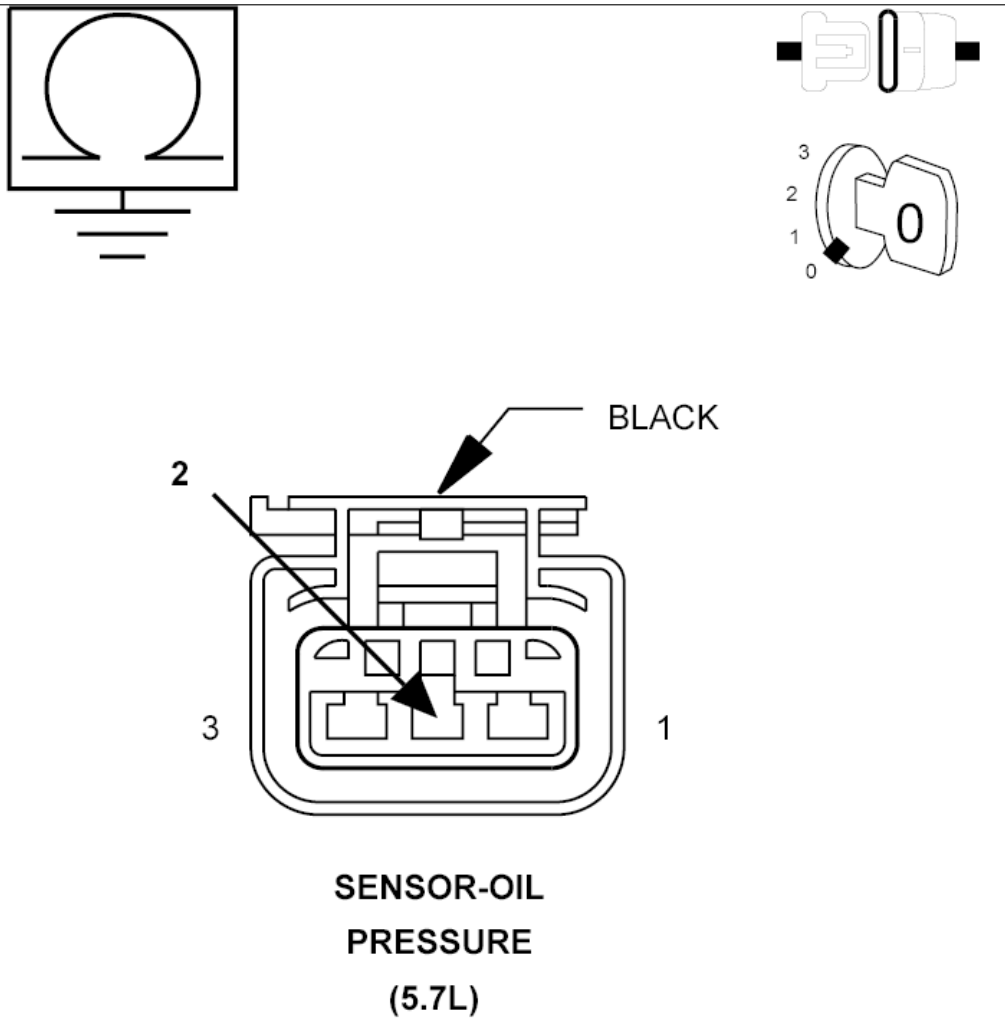

Fig. 23: Measuring Resistance Between Ground And Engine Oil Pressure Signal Circuit In Sensor Harness Connector
Courtesy of CHRYSLER GROUP, LLC

1. Measure the resistance between ground and the (G6) Engine Oil Pressure Signal circuit Engine Oil Pressure Sensor harness connector.

   Is the resistance below 100 Ohms?

   Yes

   - Repair the short to ground in the (G6) Engine Oil Pressure Signal circuit.
   - Perform the POWERTRAIN VERIFICATION TEST. Refer to **POWERTRAIN VERIFICATION TEST** .

   No

   - Go To 6.

6. **EXCESSIVE RESISTANCE IN THE (F855) 5-VOLT SUPPLY CIRCUIT**

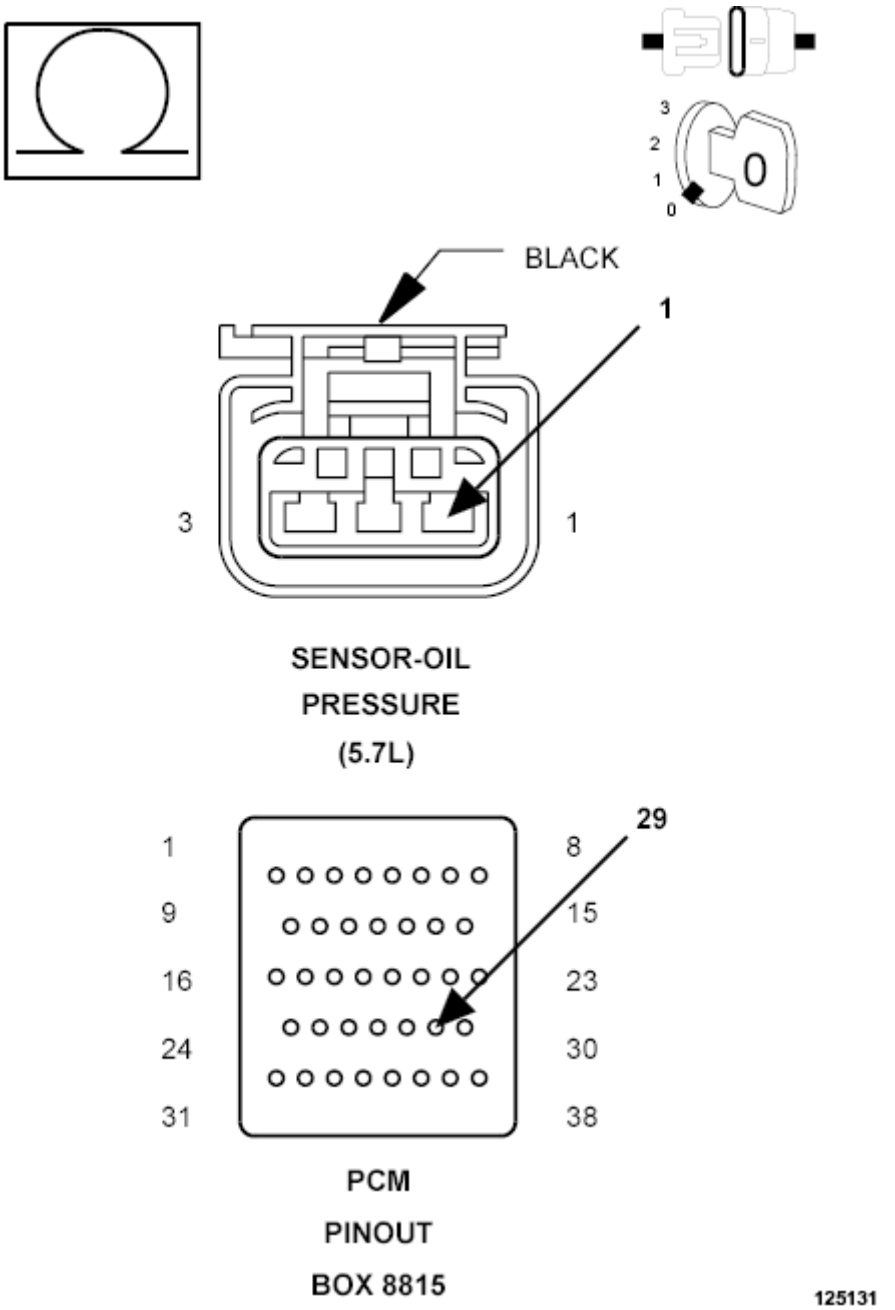

Fig. 24: Measuring Resistance Of (F855) 5-Volt Supply Circuit From Engine Oil Pressure Sensor Harness Connector To Appropriate Terminal Of PCM Pinout Box 8815
Courtesy of CHRYSLER GROUP, LLC

1. Measure the resistance of the (F855) 5-volt Supply circuit from the Engine Oil Pressure Sensor harness connector to the appropriate terminal of PCM Pinout Box (special tool #8815A, Kit, NGC, 38 Position).

   Is the resistance below 5.0 Ohms?

Yes

- Go To 7.

No

- Repair the excessive resistance in the (F855) 5-volt Supply circuit.
- Perform the POWERTRAIN VERIFICATION TEST. Refer to **POWERTRAIN VERIFICATION TEST** .

7. **(F855) 5-VOLT SUPPLY SHORTED TO GROUND**

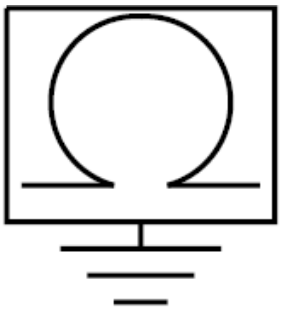

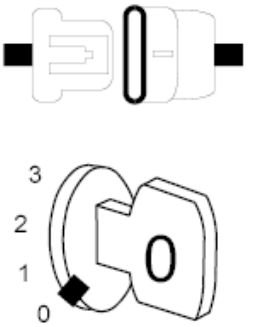

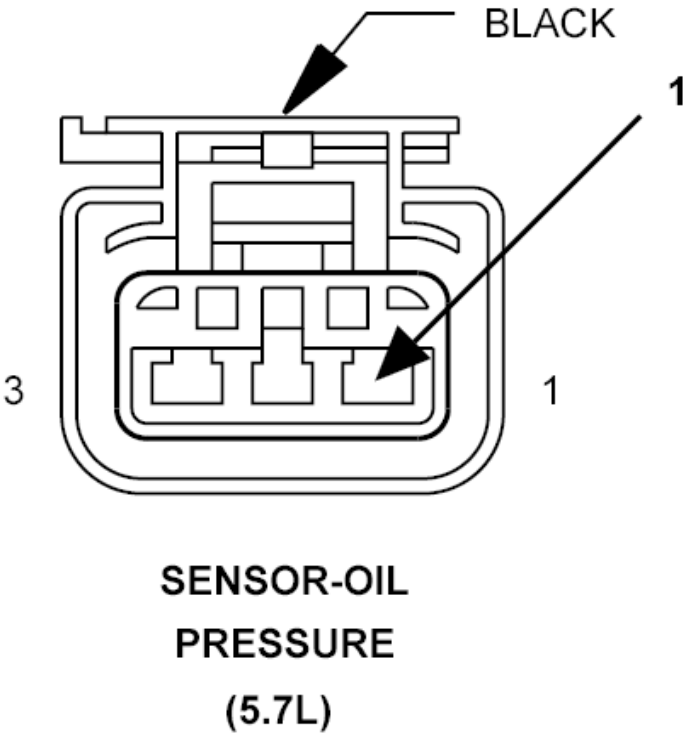

Fig. 25: Measuring Resistance Between Ground And (F855) 5-Volt Supply Circuit In Engine Oil Pressure Sensor Harness Connector

Courtesy of CHRYSLER GROUP, LLC

1. Measure the resistance between ground and the (F855) 5-volt Supply circuit in the Engine Oil Pressure Sensor harness connector.

   Is the resistance below 100 Ohms?

   Yes

   - Repair the short to ground in the (F855) 5-volt Supply circuit.
   - Perform the POWERTRAIN VERIFICATION TEST. Refer to **POWERTRAIN VERIFICATION TEST** .

   No

   - Go To 8.

8. **EXCESSIVE RESISTANCE IN THE (K900) SENSOR GROUND CIRCUIT**

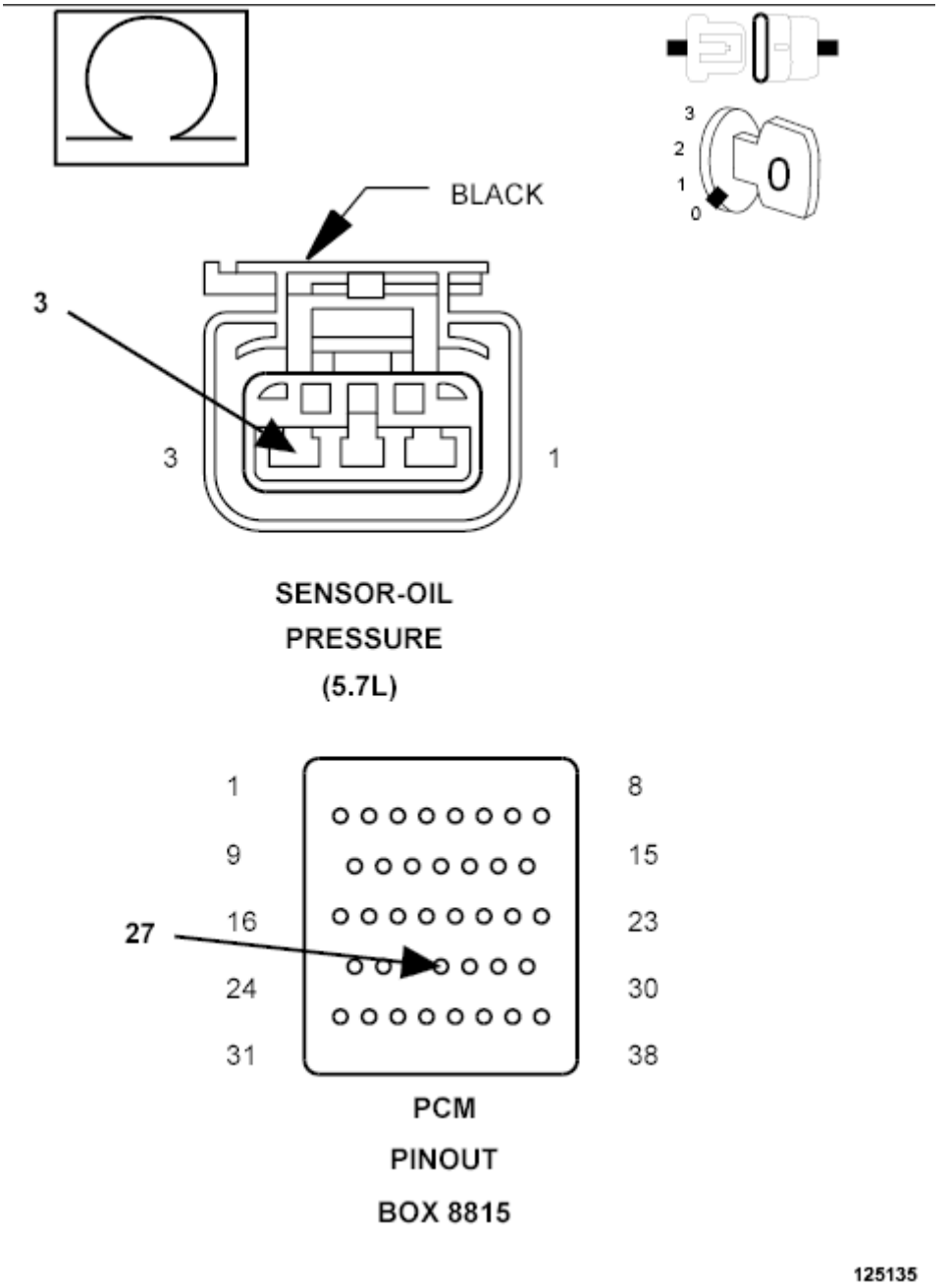

Fig. 26: Measuring Resistance Of (K900) Sensor Ground Circuit From Engine Oil Pressure Sensor Harness Connector To Appropriate Terminal Of PCM Pinout Box 8815
Courtesy of CHRYSLER GROUP, LLC

1. Measure the resistance of the (K900) Sensor Ground circuit from the Engine Oil Pressure Sensor harness connector to the appropriate terminal of PCM Pinout Box (special tool #8815A, Kit, NGC, 38 Position).

   Is the resistance below 5.0 Ohms?

   Yes

- Go To 9.

No

- Repair the excessive resistance in the (K900) Sensor Ground circuit.
- Perform the POWERTRAIN VERIFICATION TEST. Refer to **POWERTRAIN VERIFICATION TEST** .

9. **POWERTRAIN CONTROL MODULE (PCM)**
    1. Using the wiring diagram/schematic as a guide, inspect the wiring and connectors between the related Oil Pressure Sensor and the Powertrain Control Module (PCM).
    2. Look for any chafed, pierced, pinched or partially broken wires.
    3. Look for broken, bent, pushed out or corroded terminals. Verify that there is good pin to terminal contact in the Oil Pressure Sensor and the Powertrain Control Module connectors.
    4. Refer to any Technical Service Bulletins that may apply.

    Were there any problems found?

    Yes

    - Repair as necessary.
    - Perform the POWERTRAIN VERIFICATION TEST. Refer to **POWERTRAIN VERIFICATION TEST** .

    No

    - Replace and program the Powertrain Control Module in accordance with the Service Information. Refer to **MODULE, POWERTRAIN CONTROL, REMOVAL** .
    - Perform the POWERTRAIN VERIFICATION TEST. Refer to **POWERTRAIN VERIFICATION TEST** .

P0521-ENGINE OIL PRESSURE SENSOR PERFORMANCE

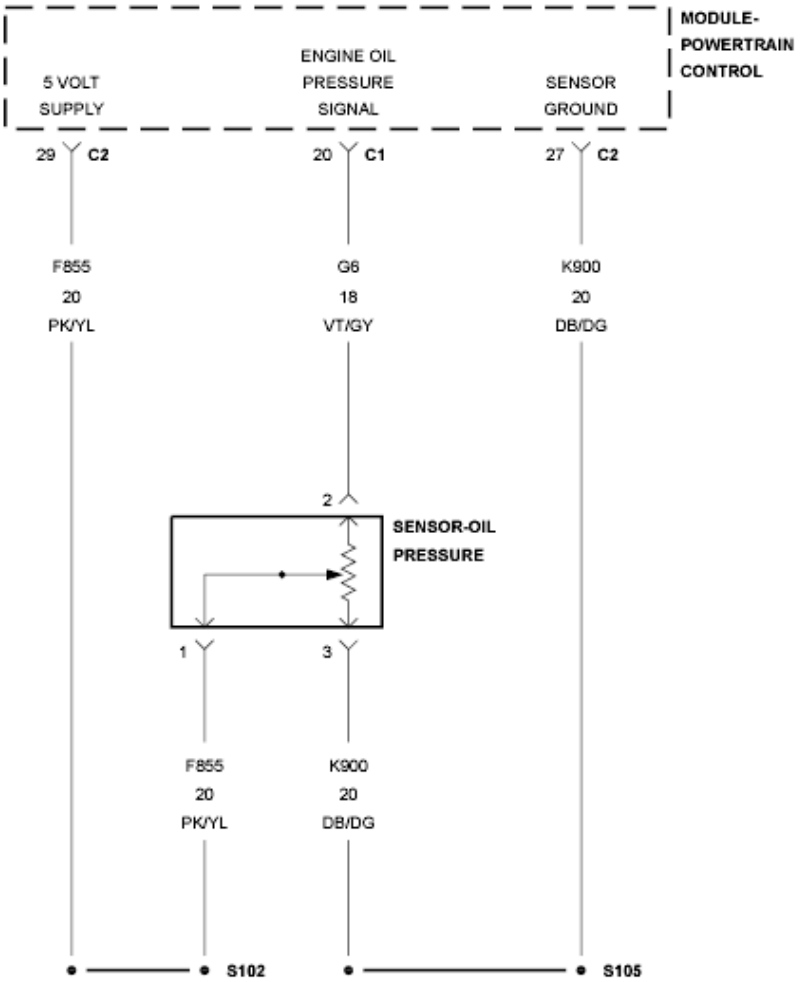
MODULE-
POWERTRAIN
CONTROL
5 VOLT
SUPPLY
ENGINE OIL
PRESSURE
SIGNAL
SENSOR
GROUND
29
C2
20
C1
27
C2
F855
20
PK/YL
G6
18
VT/GY
K900
20
DB/DG
2
SENSOR-OIL
PRESSURE
1
3
F855
20
PK/YL
K900
20
DB/DG
S102
S105

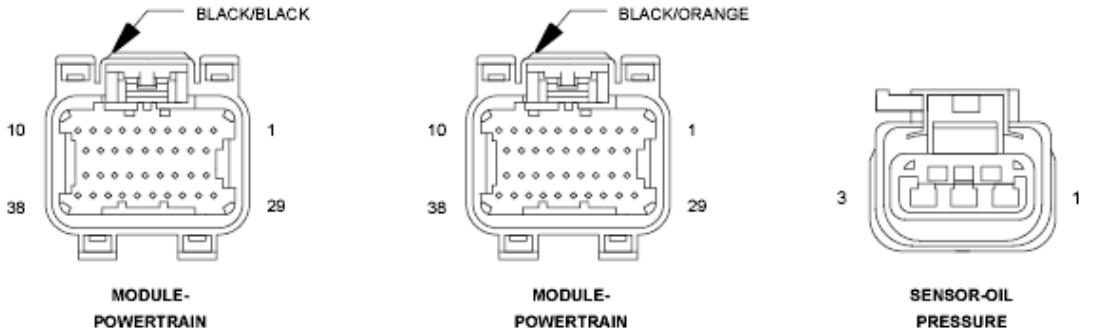
BLACK/BLACK
10
1
38
29
MODULE-
POWERTRAIN
BLACK/ORANGE
10
1
38
29
MODULE-
POWERTRAIN
3
1
SENSOR-OIL
PRESSURE

Fig. 27: Oil Pressure Sensor Circuit Schematic
Courtesy of CHRYSLER GROUP, LLC

For a complete wiring diagram, **refer to appropriate SYSTEM WIRING DIAGRAMS article** .

WHEN MONITORED:

Engine running.

SET CONDITION:

The engine oil pressure never reaches the calibrated specification with the engine RPM at 1250. One trip fault.

POSSIBLE CAUSES

Possible Causes
ENGINE OIL/ENGINE MECHANICAL
EXCESSIVE RESISTANCE IN THE (G6) ENGINE OIL PRESSURE SENSOR SIGNAL CIRCUIT
EXCESSIVE RESISTANCE IN THE (F855) 5-VOLT SUPPLY CIRCUIT
EXCESSIVE RESISTANCE IN THE (K900) SENSOR GROUND CIRCUIT
ENGINE OIL PRESSURE SENSOR
POWERTRAIN CONTROL MODULE (PCM)

Always perform the Pre-Diagnostic Troubleshooting procedure before proceeding. Refer to PRE-DIAGNOSTIC TROUBLESHOOTING PROCEDURE .

DIAGNOSTIC TEST

1. **ACTIVE DTC**

NOTE: **Make sure that the engine oil is at the proper level. Also, check the customers oil change history to ensure that the oil is being changed at the correct intervals and that the proper oil viscosity is being used.**

1. Ignition on, engine not running.
2. With the scan tool, select View DTCs.

Is the DTC Active at this time?

Yes

- Go To 2.

No

- Perform the INTERMITTENT CONDITION diagnostic procedure. Refer to

INTERMITTENT CONDITION .

2. **ENGINE OIL/ENGINE MECHANICAL**

NOTE: **The following items must be considered before determining the cause of this DTC. Failure to do so may lead to misdiagnosis.**

- **ENGINE MECHANICAL TOLERANCES OUT OF SPECIFICATION**
- **ENGINE OIL PRESSURE OUT OF SPECIFICATION**
- **LOW ENGINE OIL**
- **OIL DIRTY OR DETERIORATED (Lack of scheduled oil changes)**
- **ENGINE OIL CONTAMINATED (i.e., coolant and/or fuel)**

1. If any of the above conditions are found, repair as necessary.

   Were any of the above conditions present?

   Yes

   - Repair as necessary.
   - Perform the POWERTRAIN VERIFICATION TEST. Refer to **POWERTRAIN VERIFICATION TEST** .

   No

   - Go To 3.

3. **ENGINE OIL PRESSURE SENSOR**

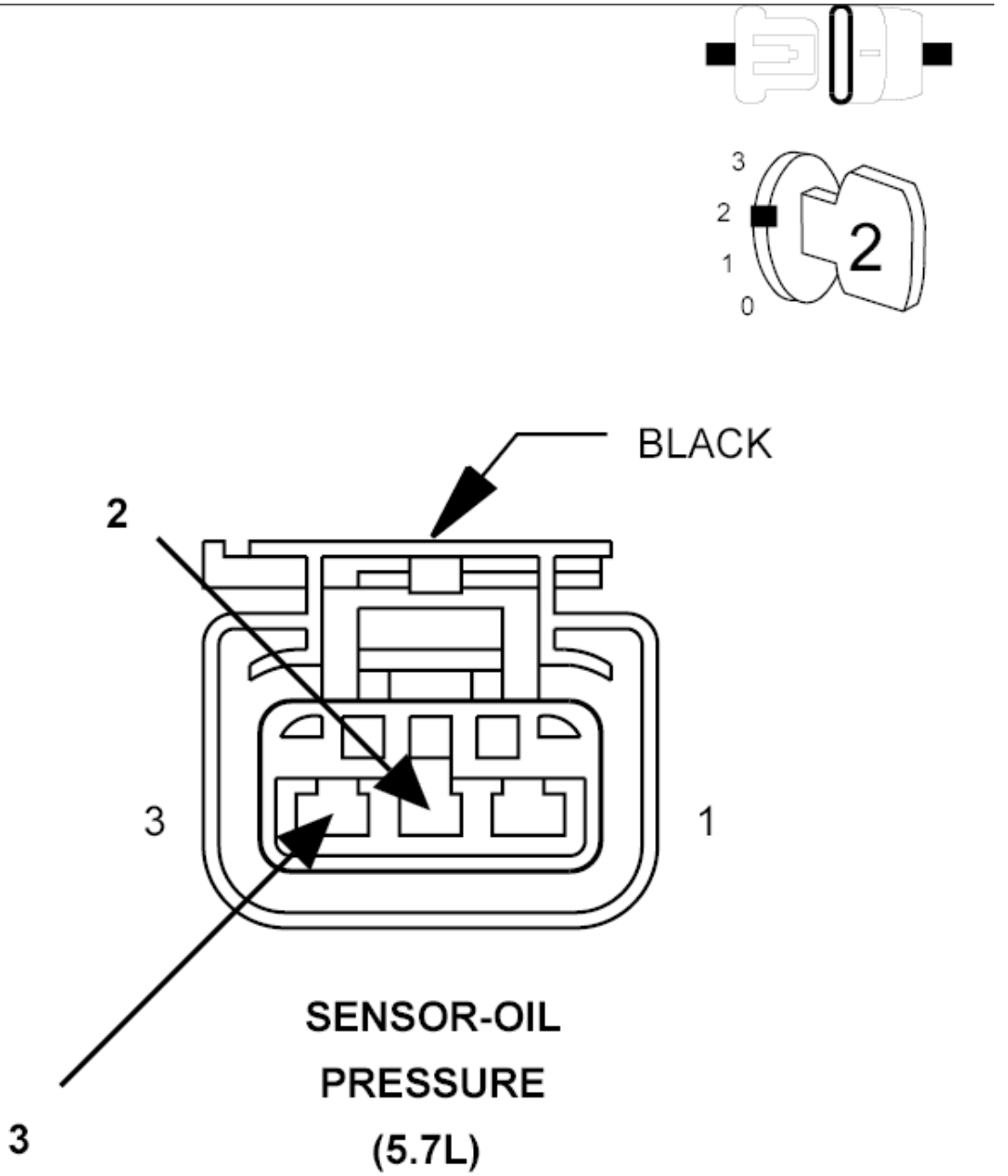

Fig. 28: Engine Oil Pressure Sensor Harness Connector
Courtesy of CHRYSLER GROUP, LLC

1. Turn the ignition off.
2. Disconnect the Engine Oil Pressure Sensor harness connector.
3. Ignition on, engine not running.
4. With the scan tool, monitor the Engine Oil Pressure Sensor voltage.
5. Connect a jumper wire between the (K900) Sensor Ground circuit and the (G6) Engine Oil Pressure Signal circuit.

NOTE: **Engine Oil Pressure voltage should change from approximately 4.5 to less than 0.5 of a volt.**

Is the voltage reading within the listed specification when the jumper wire is installed?

Yes

- Verify that there is good pin to terminal contact in the Sensor and Powertrain Control Module connectors. Remove the Engine Oil Pressure sensor and ensure the oil passage/port is free from any blockage. If OK, replace the Engine Oil Pressure Sensor.
- Perform the POWERTRAIN VERIFICATION TEST. Refer to **POWERTRAIN VERIFICATION TEST** .

No

- Go To 4.

  NOTE: **Remove the jumper wire before continuing.**

-

4. **EXCESSIVE RESISTANCE IN THE (G6) ENGINE OIL PRESSURE SIGNAL CIRCUIT**
   1. Turn the ignition off.
   2. Connect the Engine Oil Pressure Sensor connector.
   3. Disconnect the C1 PCM harness connector.

      CAUTION: **Do not probe the PCM harness connectors. Probing the PCM harness connectors will damage the PCM terminals resulting in poor terminal to pin connection. Install the PCM Pinout Box (special tool #8815A, Kit, NGC, 38 Position) along with the Adapter (special tool #8815-1, PCM Pinout Box Adapter) to perform the diagnosis.**

   4. Using a voltmeter perform a voltage drop test. Backprobe the (G6) Engine Oil Pressure Signal circuit at the Throttle Body harness connector and probe the appropriate terminal of the PCM Pinout Box (special tool #8815A, Kit, NGC, 38 Position). Make sure the voltmeter leads are connected so a positive polarity is displayed on the voltmeter.

      WARNING: **When the engine is operating, do not stand in direct line with the fan. Do not put your hands near the pulleys, belts or fan. Do not wear loose clothing. Failure to follow these instructions may result in possible serious or fatal injury.**

   5. Start the engine and allow it to reach normal operating temperature.
   6. Monitor the voltmeter.

Is the voltage less than 0.5 of a volt?

Yes

- Go To 5.

No

- Repair the excessive resistance in the (G6) Engine Oil Pressure Signal circuit.
- Perform the POWERTRAIN VERIFICATION TEST. Refer to **POWERTRAIN VERIFICATION TEST** .

5. **EXCESSIVE RESISTANCE IN THE (F855) 5-VOLT SUPPLY CIRCUIT**
   1. Turn the Ignition off.
   2. Remove PCM Pinout Box (special tool #8815A, Kit, NGC, 38 Position) from the C1 PCM harness connector and Re-Connect the C1 PCM harness connector to the PCM.
   3. Disconnect the C2 PCM harness connector to install PCM Pinout Box (special tool #8815A, Kit, NGC, 38 Position) and Adapter (special tool #8815-1, PCM Pinout Box Adapter).
   4. Using a voltmeter perform a voltage drop test. Backprobe the (F855) 5-volt Supply circuit at the Throttle Body harness connector and probe the appropriate terminal of the PCM Pinout Box (special tool #8815A, Kit, NGC, 38 Position). Make sure the voltmeter leads are connected so a positive polarity is displayed on the voltmeter.

      WARNING: **When the engine is operating, do not stand in direct line with the fan. Do not put your hands near the pulleys, belts or fan. Do not wear loose clothing. Failure to follow these instructions may result in possible serious or fatal injury.**

   5. Start the engine and allow it to reach normal operating temperature.
   6. Monitor the voltmeter.

      Is the voltage less than 0.5 of a volt?

      Yes

      - Go To 6.

      No

      - Repair the excessive resistance in the (F855) 5-volt Supply circuit.
      - Perform the POWERTRAIN VERIFICATION TEST. Refer to **POWERTRAIN VERIFICATION TEST** .

6. **EXCESSIVE RESISTANCE IN THE (K900) SENSOR GROUND CIRCUIT**
   1. Turn the Ignition off.
   2. Move your volt meter leads to backprobe the (K900) Sensor Ground circuit at the Throttle Body

harness connector and to probe the appropriate terminal of the PCM Pinout Box (special tool #8815A, Kit, NGC, 38 Position). Make sure the voltmeter leads are connected so a positive polarity is displayed on the voltmeter.

> WARNING: **When the engine is operating, do not stand in direct line with the fan. Do not put your hands near the pulleys, belts or fan. Do not wear loose clothing. Failure to follow these instructions may result in possible serious or fatal injury.**

3. Start the engine and allow it to reach normal operating temperature.
4. Monitor the voltmeter.

   Is the voltage less than 0.5 of a volt?

   Yes

   - Go To 7.

   No

   - Repair the excessive resistance in the (K900) Sensor Ground circuit.
   - Perform the POWERTRAIN VERIFICATION TEST. Refer to **POWERTRAIN VERIFICATION TEST** .

7. **POWERTRAIN CONTROL MODULE (PCM)**
   1. Using the wiring diagram/schematic as a guide, inspect the wiring and connectors between the Engine Oil Pressure Sensor and the Powertrain Control Module (PCM).
   2. Look for any chafed, pierced, pinched or partially broken wires.
   3. Look for broken, bent, pushed out or corroded terminals. Verify that there is good pin to terminal contact in the Sensor and Powertrain Control Module connectors.
   4. Refer to any Technical Service Bulletins that may apply.

      Were there any problems found?

      Yes

      - Repair as necessary.
      - Perform the POWERTRAIN VERIFICATION TEST. Refer to **POWERTRAIN VERIFICATION TEST** .

      No

      - Replace and program the Powertrain Control Module in accordance with the Service Information. Refer to **MODULE, POWERTRAIN CONTROL, REMOVAL** .
      - Perform the POWERTRAIN VERIFICATION TEST. Refer to **POWERTRAIN VERIFICATION TEST** .

P0522-ENGINE OIL PRESSURE SENSOR CIRCUIT LOW 5.7L

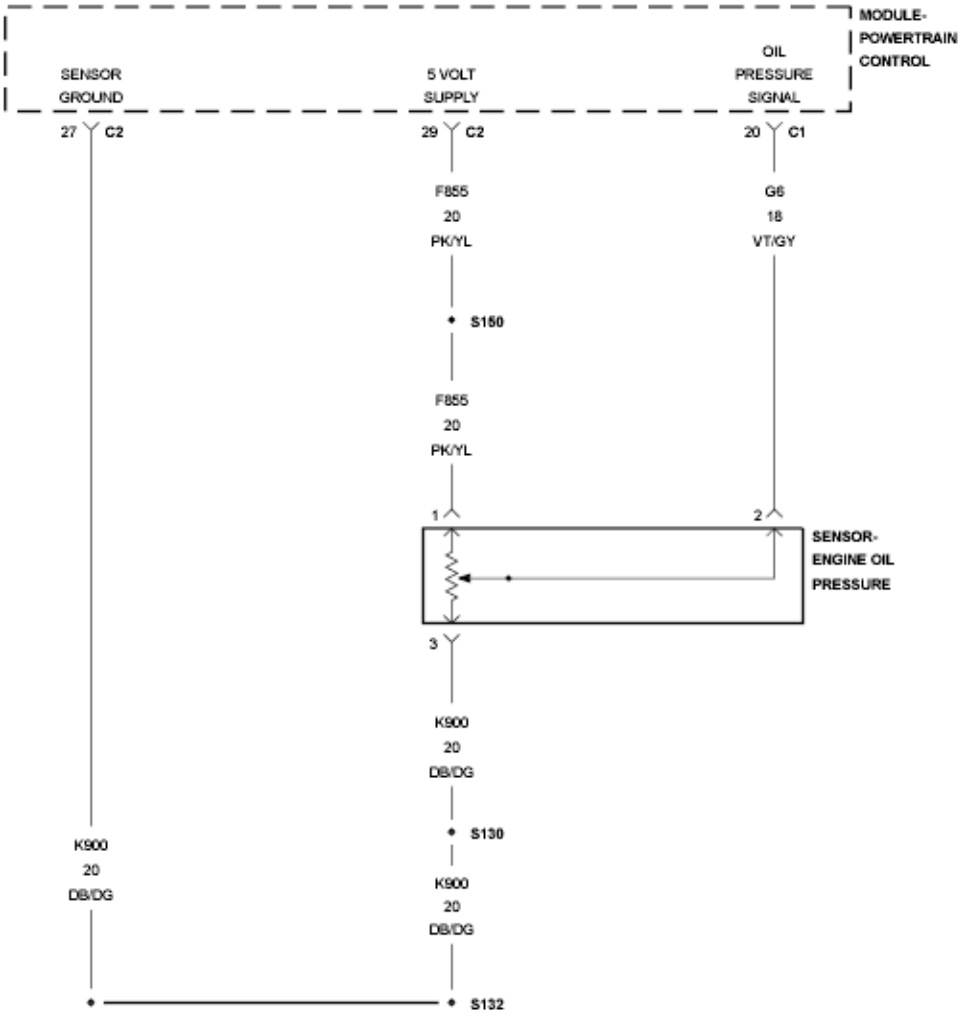

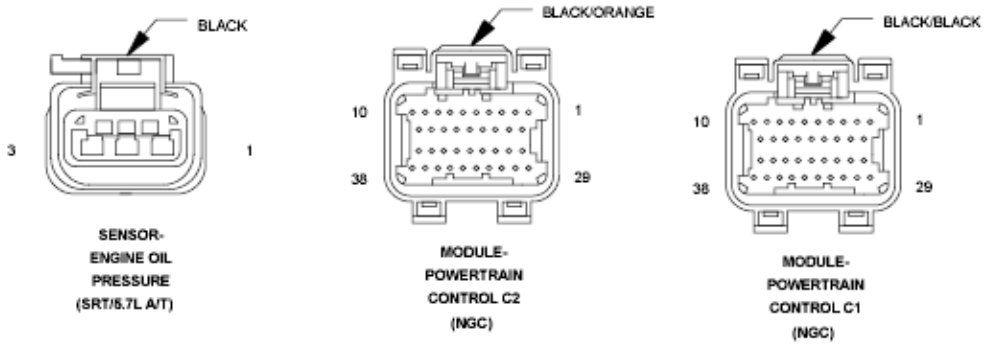

Fig. 29: Engine Oil Pressure Sensor Circuit Schematic
Courtesy of CHRYSLER GROUP, LLC

For a complete wiring diagram, **refer to appropriate SYSTEM WIRING DIAGRAMS article** .

WHEN MONITORED:

With the ignition on. Battery voltage greater than 10 Volts.

SET CONDITION:

The Oil pressure signal is below the calibrated amount. One Trip Fault. Three good trips to turn off the MIL. ETC light will illuminate.

POSSIBLE CAUSES

Possible Causes
(F855) 5-VOLT SUPPLY CIRCUIT OPEN
(F855) 5-VOLT SUPPLY CIRCUIT SHORTED TO GROUND
(G6) ENGINE OIL PRESSURE SIGNAL CIRCUIT SHORTED TO GROUND
(G6) ENGINE OIL PRESSURE SIGNAL CIRCUIT SHORTED TO THE (K900) SENSOR GROUND CIRCUIT
EXCESSIVE RESISTANCE IN THE (G6) ENGINE OIL PRESSURE SIGNAL CIRCUIT
ENGINE OIL PRESSURE SENSOR
POWERTRAIN CONTROL MODULE (PCM)

Always perform the Pre-Diagnostic Troubleshooting procedure before proceeding. Refer to PRE-DIAGNOSTIC TROUBLESHOOTING PROCEDURE .

DIAGNOSTIC TEST

1. **ACTIVE DTC**

NOTE: **Make sure that the engine oil is at the proper level. Also, check the customers oil change history to ensure that the oil is being changed at the correct intervals and that the proper oil viscosity is being used.**

1. Start the engine and allow it to reach normal operating temperature.

WARNING: **When the engine is operating, do not stand in direct line with the fan. Do not put your hands near the pulleys, belts or fan. Do not wear loose clothing. Failure to follow these instructions may result in possible serious or fatal injury.**

NOTE: **Diagnose and repair any system voltage or sensor supply voltage**

DTCs before continuing with this test.

Is the DTC Active at this time?

Yes

- Go To 2.

No

- Perform the INTERMITTENT CONDITION diagnostic procedure. Refer to **INTERMITTENT CONDITION** .

2. **(F855) 5-VOLT SUPPLY CIRCUIT**

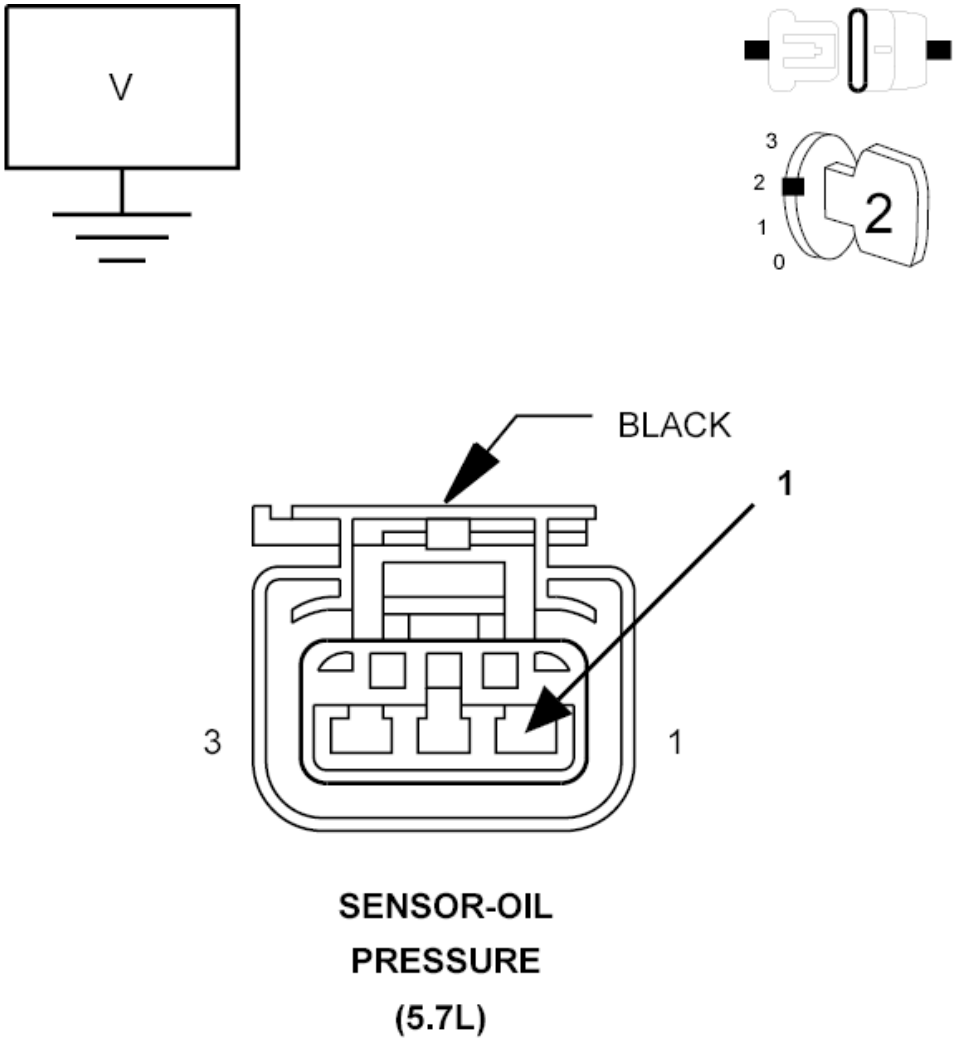

Fig. 30: Measuring Voltage On (F855) 5-Volt Supply Circuit In Engine Oil Pressure Sensor Harness Connector
Courtesy of CHRYSLER GROUP, LLC

1. Turn the ignition off.
2. Disconnect the Engine Oil Pressure Sensor harness connector.
3. Ignition on, engine not running.
4. Measure the voltage on the (F855) 5-volt Supply circuit in the Engine Oil Pressure Sensor harness connector.

   Is the voltage between 4.8 to 5.2 Volts?

   Yes

   - Go To 3.

   No

   - Go To 7.

3. **ENGINE OIL PRESSURE SENSOR**
   1. With the scan tool, read the Engine Oil Pressure Sensor signal voltage.

      NOTE: The sensor voltage should be approximately 5.0 Volts (plus or minus.1 of a volt) with the connector disconnected.

      Does the scan tool display the voltage as described above?

      Yes

      - Verify that there is good pin to terminal contact in the Oil Pressure Sensor and the Powertrain Control Module connectors. Replace the Engine Oil Pressure Sensor if no problems were found with the connectors.
      - Perform the POWERTRAIN VERIFICATION TEST. Refer to **POWERTRAIN VERIFICATION TEST** .

      No

      - Go To 4.

4. **(G6) ENGINE OIL PRESSURE SIGNAL CIRCUIT SHORTED TO GROUND**

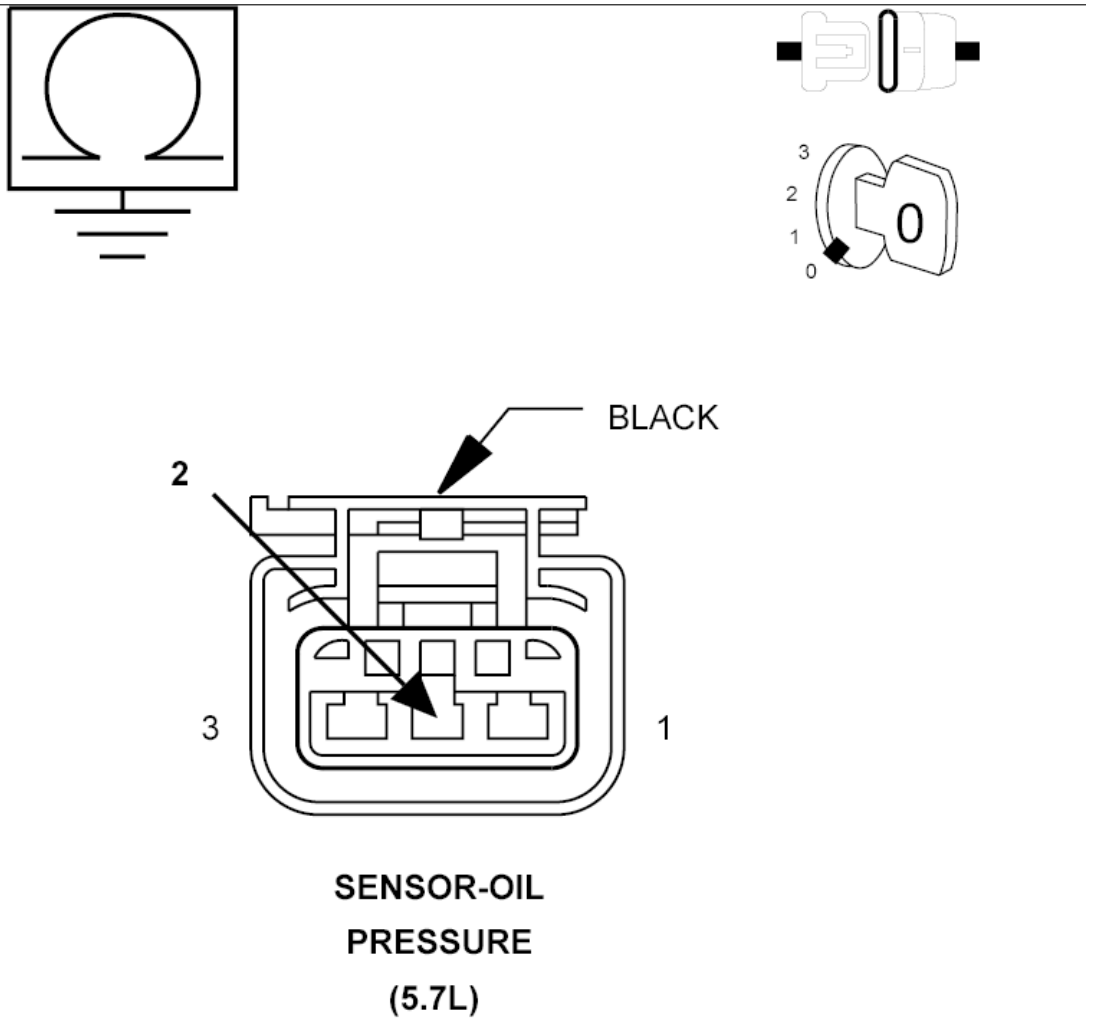

Fig. 31: Measuring Resistance Between Ground And Engine Oil Pressure Signal Circuit In Sensor Harness Connector
Courtesy of CHRYSLER GROUP, LLC

1. Turn the ignition off.
2. Disconnect the C1 and C2 PCM harness connectors.
3. Measure the resistance between ground and the (G6) Engine Oil Pressure Signal circuit in the Engine Oil Pressure Sensor harness connector.

   Is the resistance below 100 Ohms?

   Yes

   - Repair the short to ground in the (G6) Engine Oil Pressure Signal circuit.
   - Perform the POWERTRAIN VERIFICATION TEST. Refer to **POWERTRAIN VERIFICATION TEST** .

No

- Go To 5.

5. **(G6) ENGINE OIL PRESSURE SIGNAL CIRCUIT SHORTED TO THE (K900) SENSOR GROUND CIRCUIT**

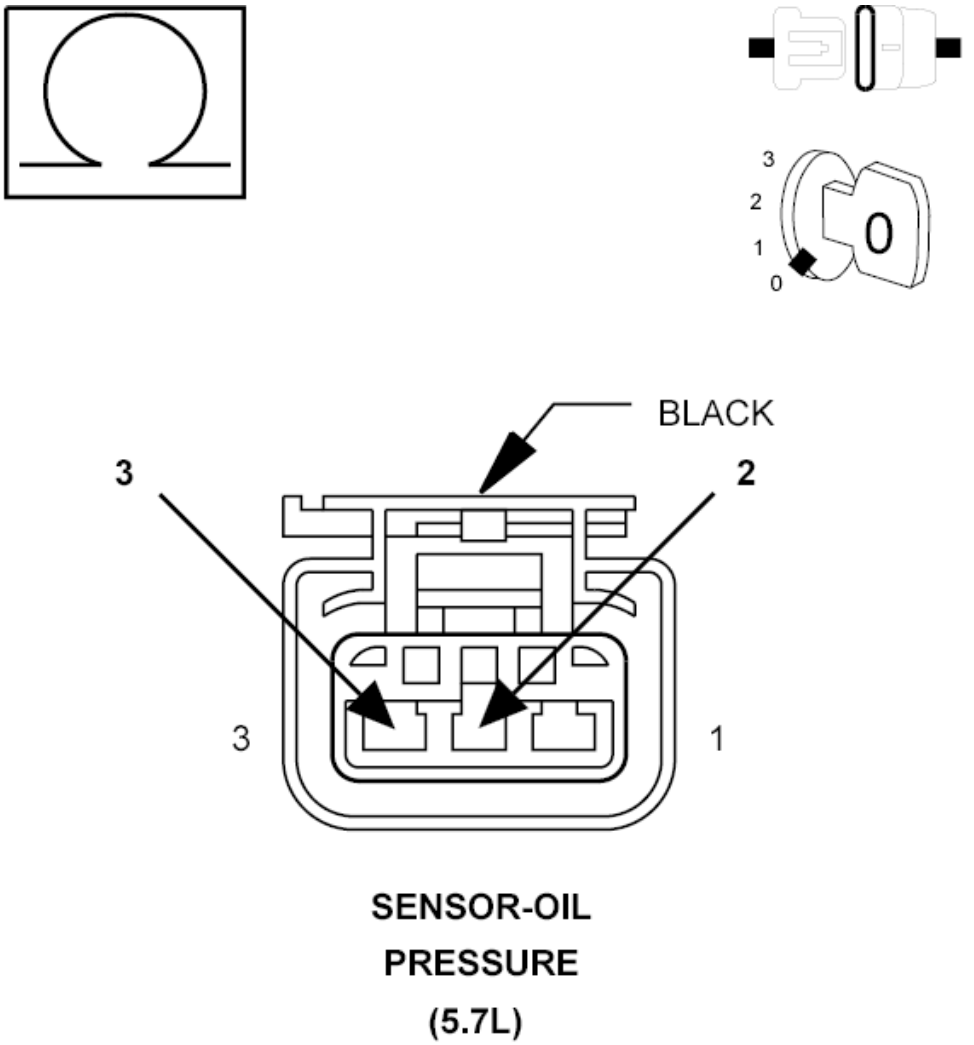

Fig. 32: Measuring Resistance Between (G6) Engine Oil Pressure Sensor Signal Circuit And (K900) Sensor Ground Circuit In Engine Oil Pressure Sensor Harness Connector
Courtesy of CHRYSLER GROUP, LLC

1. Measure the resistance between the (G6) Engine Oil Pressure Sensor Signal circuit and the (K900) Sensor Ground circuit in the Engine Oil Pressure Sensor harness connector.

   Is the resistance below 100 Ohms?

   Yes

- Repair the short between the (K900) Sensor Ground circuit and the (G6) Engine Oil Pressure Signal circuit.
- Perform the POWERTRAIN VERIFICATION TEST. Refer to **POWERTRAIN VERIFICATION TEST** .

No

- Go To 6.

6. **EXCESSIVE RESISTANCE IN THE (G6) ENGINE OIL PRESSURE SIGNAL CIRCUIT**

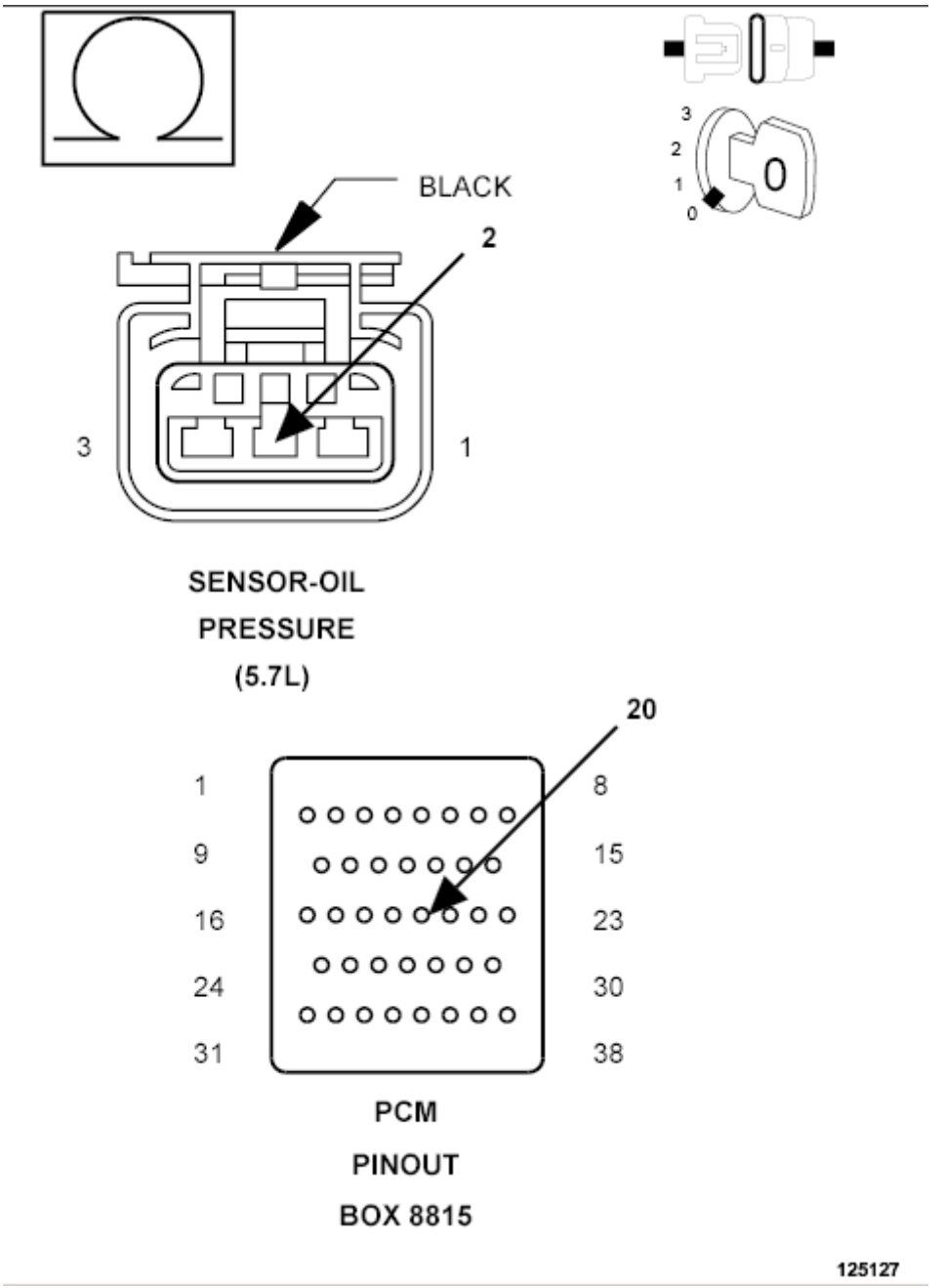

Fig. 33: Measuring Resistance Of (G6) Engine Oil Pressure Signal Circuit From Engine Oil Pressure Sensor Harness Connector To Appropriate Terminal Of PCM Pinout Box 8815
Courtesy of CHRYSLER GROUP, LLC

CAUTION: Do not probe the PCM harness connectors. Probing the PCM harness connectors will damage the PCM terminals resulting in poor terminal to pin connection. Install the PCM Pinout Box (special tool #8815A, Kit, NGC, 38 Position) to perform diagnosis.

1. Measure the resistance of the (G6) Engine Oil Pressure Signal circuit from the Engine Oil Pressure Sensor harness connector to the appropriate terminal of PCM Pinout Box (special tool #8815A, Kit, NGC, 38 Position).

   Is the resistance below 5.0 Ohms?

   Yes

   - Go To 9.

   No

   - Repair the excessive resistance in the (G6) Engine Oil Pressure Signal circuit.
   - Perform the POWERTRAIN VERIFICATION TEST. Refer to **POWERTRAIN VERIFICATION TEST** .

7. **(F855) 5-VOLT SUPPLY CIRCUIT OPEN**

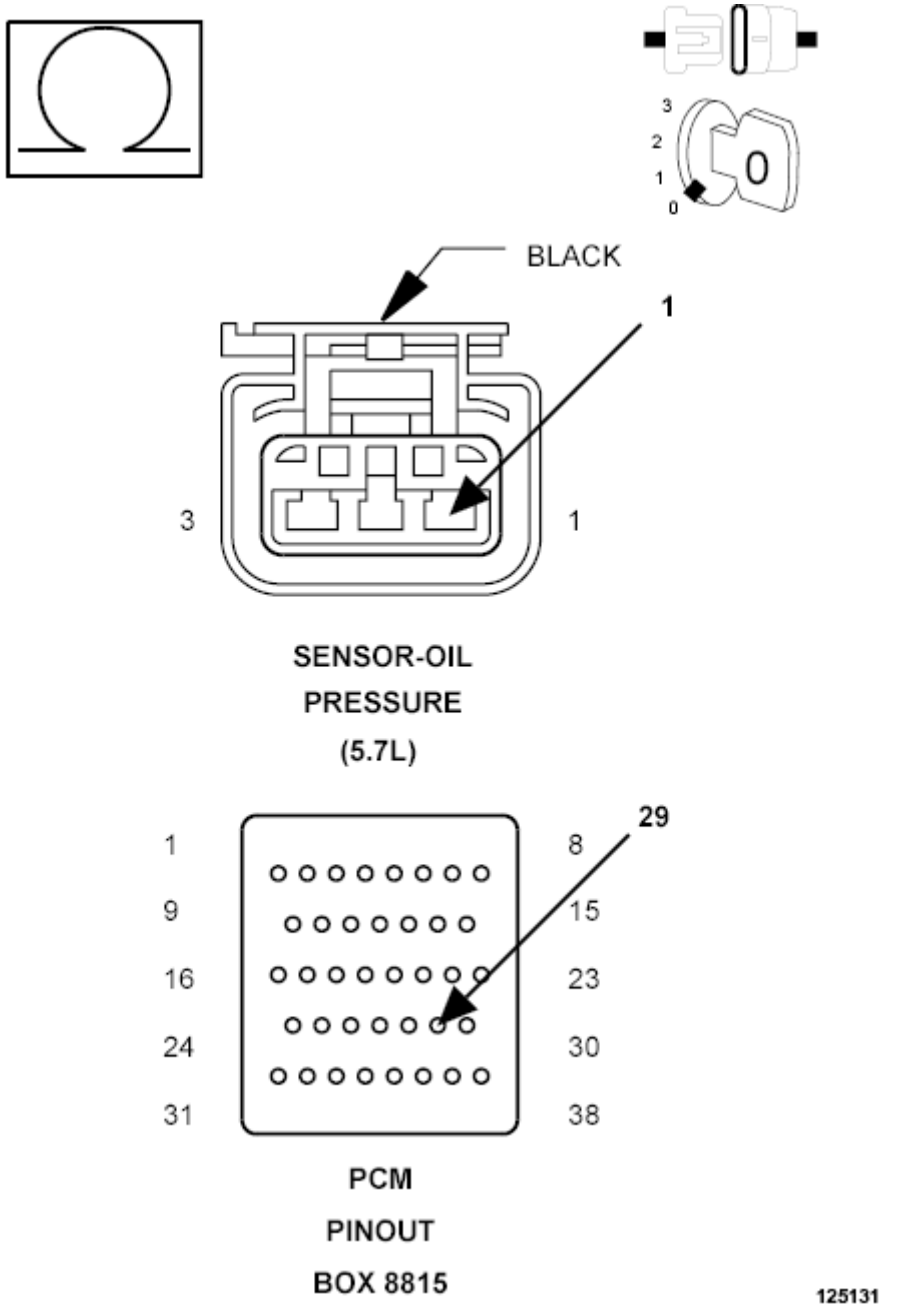

Fig. 34: Measuring Resistance Of (F855) 5-Volt Supply Circuit From Engine Oil Pressure Sensor Harness Connector To Appropriate Terminal Of PCM Pinout Box 8815
Courtesy of CHRYSLER GROUP, LLC

1. Turn the ignition off.
2. Disconnect the C2 PCM harness connector.

CAUTION: Do not probe the PCM harness connectors. Probing the PCM harness connectors will damage the PCM terminals resulting in poor terminal to pin connection. Install the PCM Pinout Box

(special tool #8815A, Kit, NGC, 38 Position) to perform diagnostics.

3. Measure the resistance of the (F855) 5-volt Supply circuit from the Engine Oil Pressure Sensor harness connector to the appropriate terminal of PCM Pinout Box (special tool #8815A, Kit, NGC, 38 Position).

   Is the resistance below 5.0 Ohms?

   Yes

   - Go To 8.

   No

   - Repair the open in the (F855) 5-volt Supply circuit.
   - Perform the POWERTRAIN VERIFICATION TEST. Refer to **POWERTRAIN VERIFICATION TEST** .

8. **(F855) 5-VOLT SUPPLY CIRCUIT SHORTED TO GROUND**

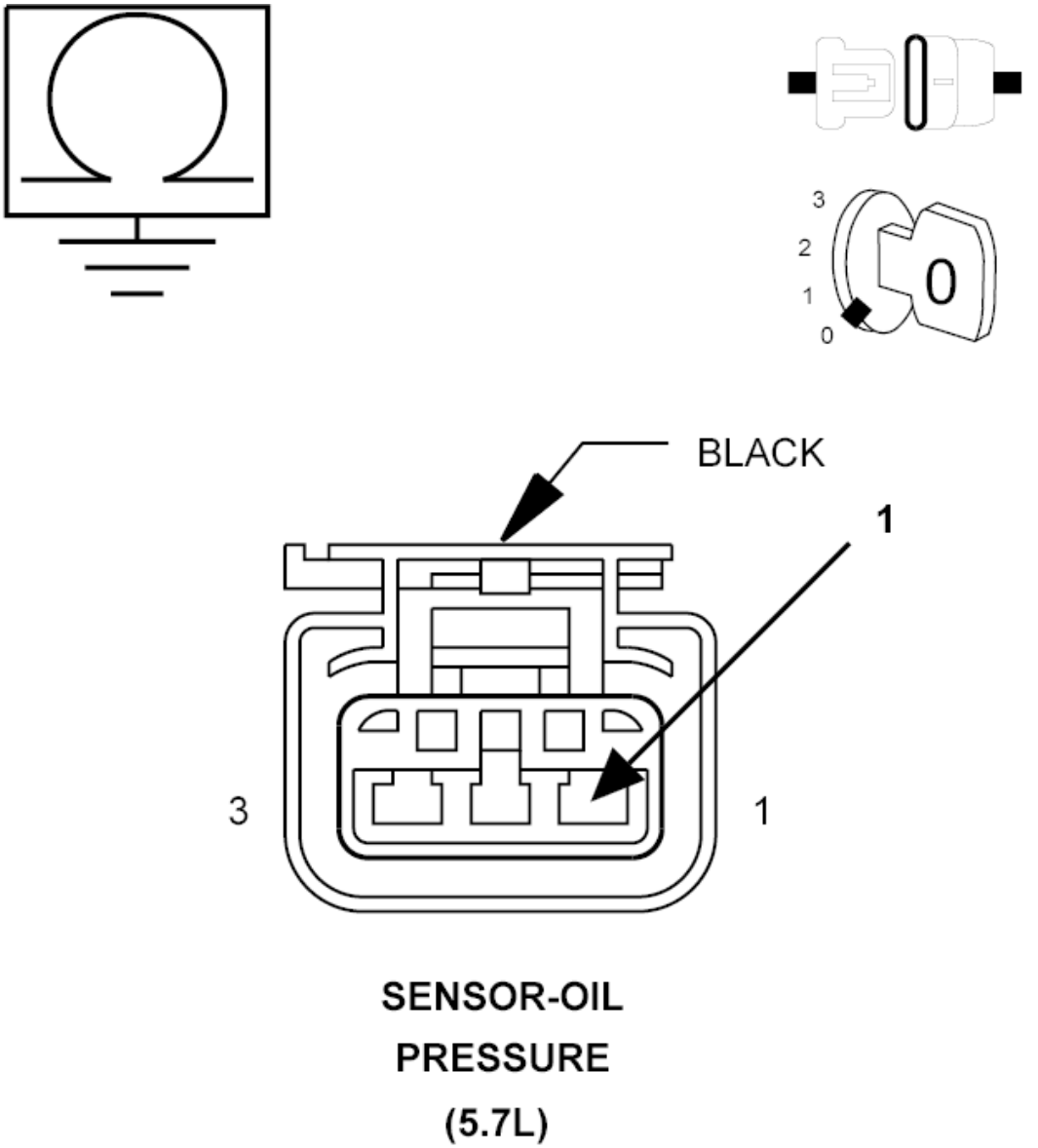

Fig. 35: Measuring Resistance Between Ground And (F855) 5-Volt Supply Circuit In Engine Oil Pressure Sensor Harness Connector
Courtesy of CHRYSLER GROUP, LLC

1. Measure the resistance between ground and the (F855) 5-volt Supply circuit in the Engine Oil Pressure Sensor harness connector.

   Is the resistance below 100 Ohms?

   Yes

   - Repair the short to ground in the (F855) 5-volt Supply circuit.
   - Perform the POWERTRAIN VERIFICATION TEST. Refer to **POWERTRAIN VERIFICATION TEST** .

No

- Go To 9.

9. **POWERTRAIN CONTROL MODULE (PCM)**
    1. Using the wiring diagram/schematic as a guide, inspect the wiring and connectors between the related Oil Pressure Sensor and the Powertrain Control Module (PCM).
    2. Look for any chafed, pierced, pinched or partially broken wires.
    3. Look for broken, bent, pushed out or corroded terminals. Verify that there is good pin to terminal contact in the Oil Pressure Sensor and the Powertrain Control Module connectors.
    4. Refer to any Technical Service Bulletins that may apply.

    Were there any problems found?

    Yes

    - Repair as necessary.
    - Perform the POWERTRAIN VERIFICATION TEST. Refer to **POWERTRAIN VERIFICATION TEST** .

    No

    - Replace and program the Powertrain Control Module in accordance with the Service Information. Refer to **MODULE, POWERTRAIN CONTROL, REMOVAL** .
    - Perform the POWERTRAIN VERIFICATION TEST. Refer to **POWERTRAIN VERIFICATION TEST** .

P0523-ENGINE OIL PRESSURE SENSOR CIRCUIT HIGH

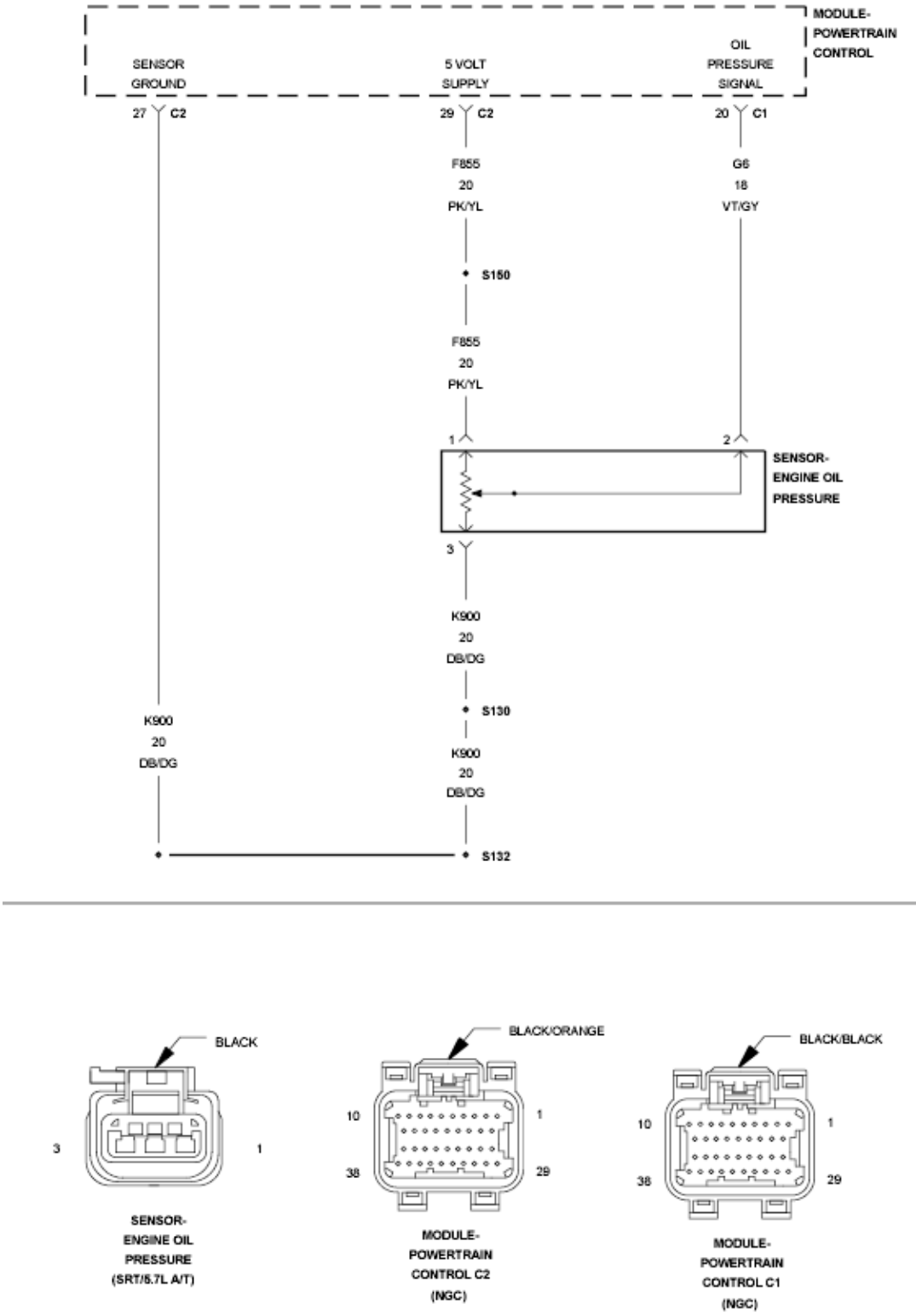

Fig. 36: Engine Oil Pressure Sensor Circuit Schematic
Courtesy of CHRYSLER GROUP, LLC

For a complete wiring diagram, **refer to appropriate SYSTEM WIRING DIAGRAMS article** .

WHEN MONITORED:

With the ignition on. Battery voltage greater than 10 Volts.

SET CONDITION:

The Engine Oil pressure signal is greater than the calibrated amount. One Trip Fault. Three good trips to clear the MIL.

POSSIBLE CAUSES

Possible Causes
(G6) ENGINE OIL PRESSURE SIGNAL CIRCUIT SHORTED TO VOLTAGE
(G6) ENGINE OIL PRESSURE SIGNAL CIRCUIT OPEN
(G6) ENGINE OIL PRESSURE SIGNAL CIRCUIT SHORTED TO THE (F855) 5-VOLT SUPPLY CIRCUIT
(K900) SENSOR GROUND CIRCUIT OPEN
ENGINE OIL PRESSURE SENSOR
POWERTRAIN CONTROL MODULE (PCM)

Always perform the Pre-Diagnostic Troubleshooting procedure before proceeding. Refer to PRE-DIAGNOSTIC TROUBLESHOOTING PROCEDURE .

DIAGNOSTIC TEST

1. **ACTIVE DTC**

NOTE: **Make sure that the engine oil is at the proper level. Also, check the customers oil change history to make sure that the oil is being changed at the correct intervals and that the proper oil viscosity is being used.**

1. Start the engine and allow it to reach normal operating temperature.

WARNING: **When the engine is operating, do not stand in direct line with the fan. Do not put your hands near the pulleys, belts or fan. Do not wear loose clothing. Failure to follow these instructions may result in possible serious or fatal injury.**

NOTE: **Diagnose and repair any system voltage or sensor supply voltage DTCs before continuing with this test.**

2. With the scan tool, select View DTCs.

   Is the DTC Active at this time?

Yes

- Go To 2.

No

- Perform the INTERMITTENT CONDITION diagnostic procedure. Refer to **INTERMITTENT CONDITION** .

2. **ENGINE OIL PRESSURE SENSOR**

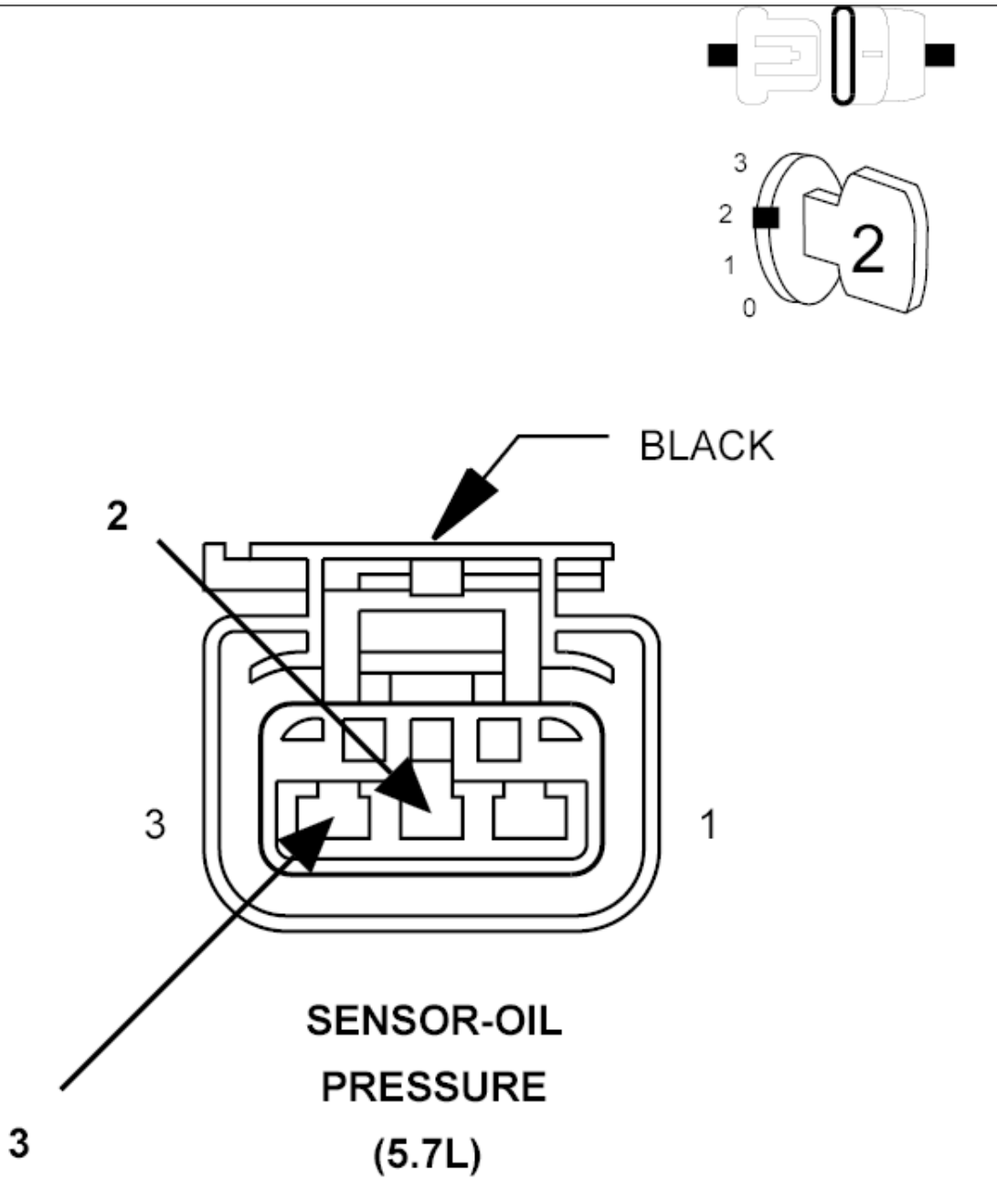

Fig. 37: Engine Oil Pressure Sensor Harness Connector
Courtesy of CHRYSLER GROUP, LLC

1. Turn the ignition off.
2. Disconnect the Engine Oil Pressure Sensor harness connector.
3. Ignition on, engine not running.
4. With the scan tool, monitor the Engine Oil Pressure Sensor voltage.
5. Connect a jumper wire between the (G6) Engine Oil Pressure Signal circuit and the (K900) Sensor Ground circuit in the Engine Oil Pressure Sensor harness connector.

NOTE: The sensor voltage should be approximately 0.0 Volts (plus or minus.1 of a volt) with the jumper wire in place.

Does the scan tool display the voltage as described above?

Yes

- Verify that there is good pin to terminal contact in the Oil Pressure Sensor and the Powertrain Control Module connectors. Replace the Engine Oil Pressure Sensor if no problems were found with the connectors.
- Perform the POWERTRAIN VERIFICATION TEST. Refer to **POWERTRAIN VERIFICATION TEST** .

No

- Go To 3.

NOTE: Remove the jumper wire before continuing.

3. **(G6) ENGINE OIL PRESSURE SIGNAL CIRCUIT SHORTED TO VOLTAGE**

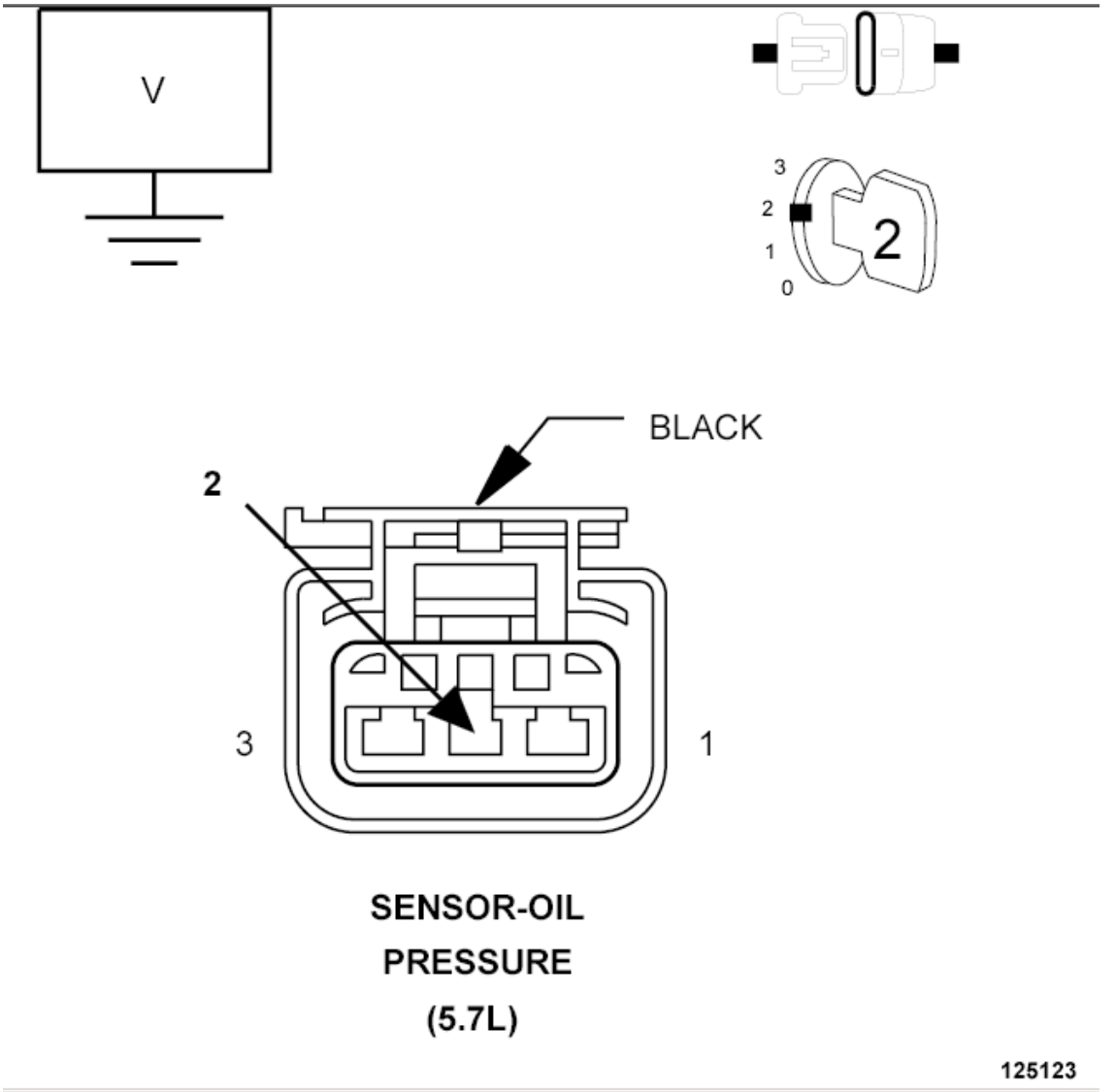

Fig. 38: Measuring Voltage On (G6) Engine Oil Pressure Signal Circuit In EOP Sensor Harness Connector
Courtesy of CHRYSLER GROUP, LLC

1. Turn the ignition off.
2. Disconnect the C1 and C2 PCM harness connectors.
3. Ignition on, engine not running.
4. Measure the voltage on the (G6) Engine Oil Pressure Signal circuit in the Engine Oil Pressure Sensor harness connector.

   Is there any voltage present?

   Yes

   - Repair the short to voltage in the (G6) Engine Oil Pressure Signal circuit.

- Perform the POWERTRAIN VERIFICATION TEST. Refer to **POWERTRAIN VERIFICATION TEST** .

No

- Go To 4.

4. **(G6) ENGINE OIL PRESSURE SIGNAL CIRCUIT OPEN**

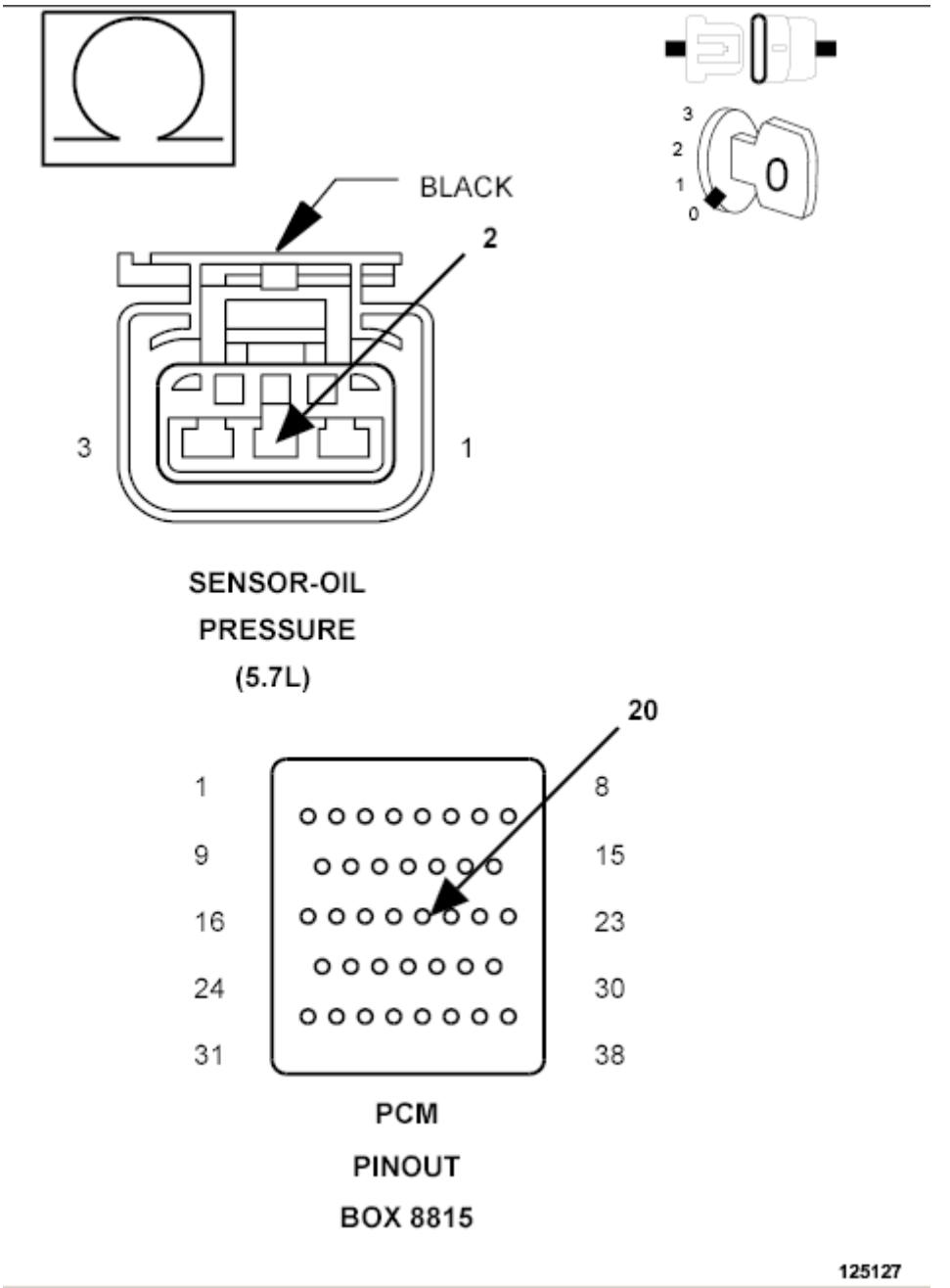

Fig. 39: Measuring Resistance Of (G6) Engine Oil Pressure Signal Circuit From Engine Oil Pressure Sensor Harness Connector To Appropriate Terminal Of PCM Pinout Box 8815

1. Turn the ignition off.

CAUTION: Do not probe the PCM harness connectors. Probing the PCM harness connectors will damage the PCM terminals resulting in poor terminal to pin connection. Install the PCM Pinout Box (special tool #8815A, Kit, NGC, 38 Position) to perform diagnosis.

2. Measure the resistance of the (G6) Engine Oil Pressure Signal circuit from the Engine Oil Pressure Sensor harness connector to the appropriate terminal of PCM Pinout Box (special tool #8815A, Kit, NGC, 38 Position).

   Is the resistance below 5.0 Ohms?

   Yes

   - Go To 5.

   No

   - Repair the open in the (G6) Engine Oil Pressure Signal circuit.
   - Perform the POWERTRAIN VERIFICATION TEST. Refer to **POWERTRAIN VERIFICATION TEST** .

5. **(G6) ENGINE OIL PRESSURE SIGNAL CIRCUIT SHORTED TO THE (F855) 5-VOLT SUPPLY CIRCUIT**

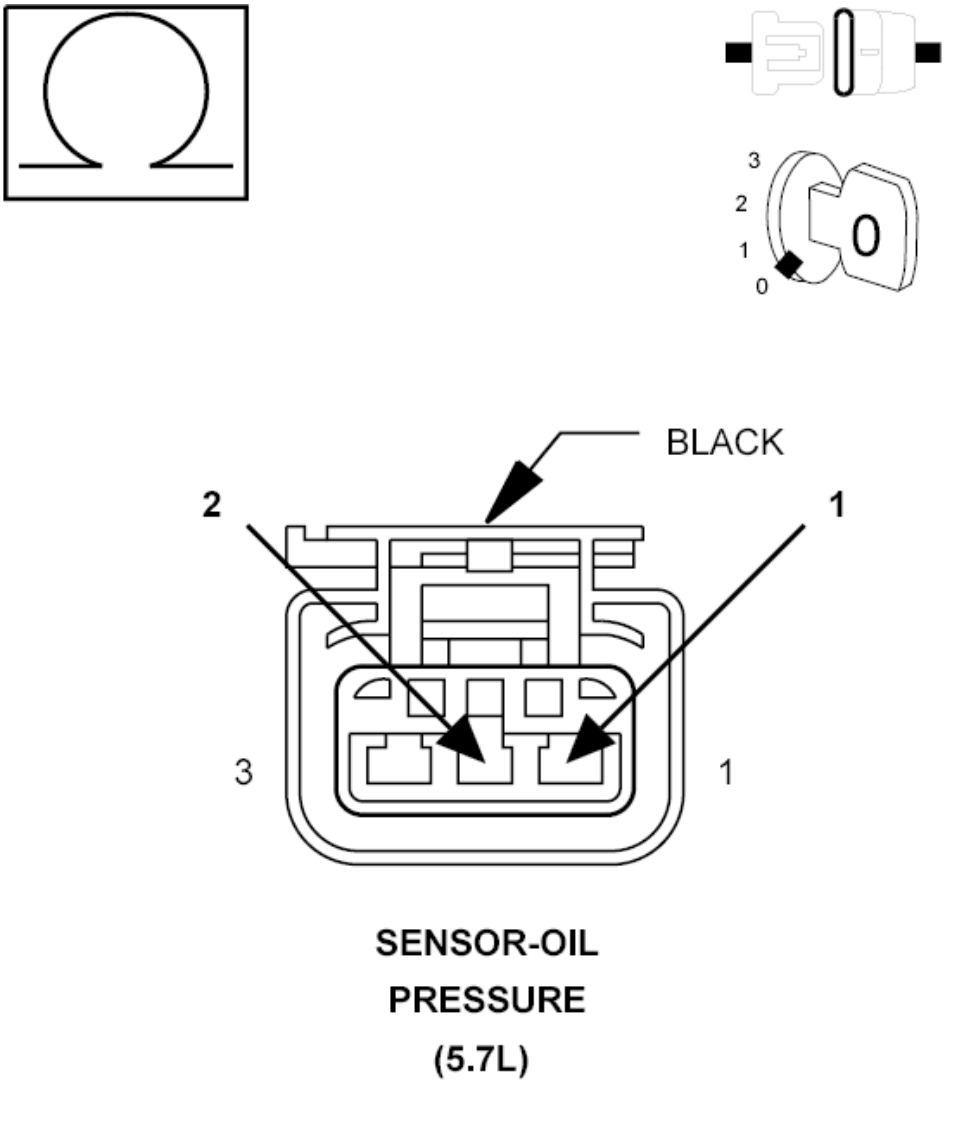

Fig. 40: Measuring Resistance Between (G6) Engine Oil Pressure Signal Circuit And (F855) 5-Volt Supply Circuit In Engine Oil Pressure Sensor Harness Connector
Courtesy of CHRYSLER GROUP, LLC

1. Measure the resistance between the (G6) Engine Oil Pressure Signal circuit and the (F855) 5-volt Supply circuit in the Engine Oil Pressure Sensor harness connector.

   Is the resistance below 100 Ohms?

   Yes

   - Repair the short between the (F855) 5-volt Supply circuit and the (G6) Engine Oil Pressure Signal circuit.
   - Perform the POWERTRAIN VERIFICATION TEST. Refer to **POWERTRAIN VERIFICATION TEST** .

No

- Go To 6.

6. **(K900) SENSOR GROUND CIRCUIT OPEN**

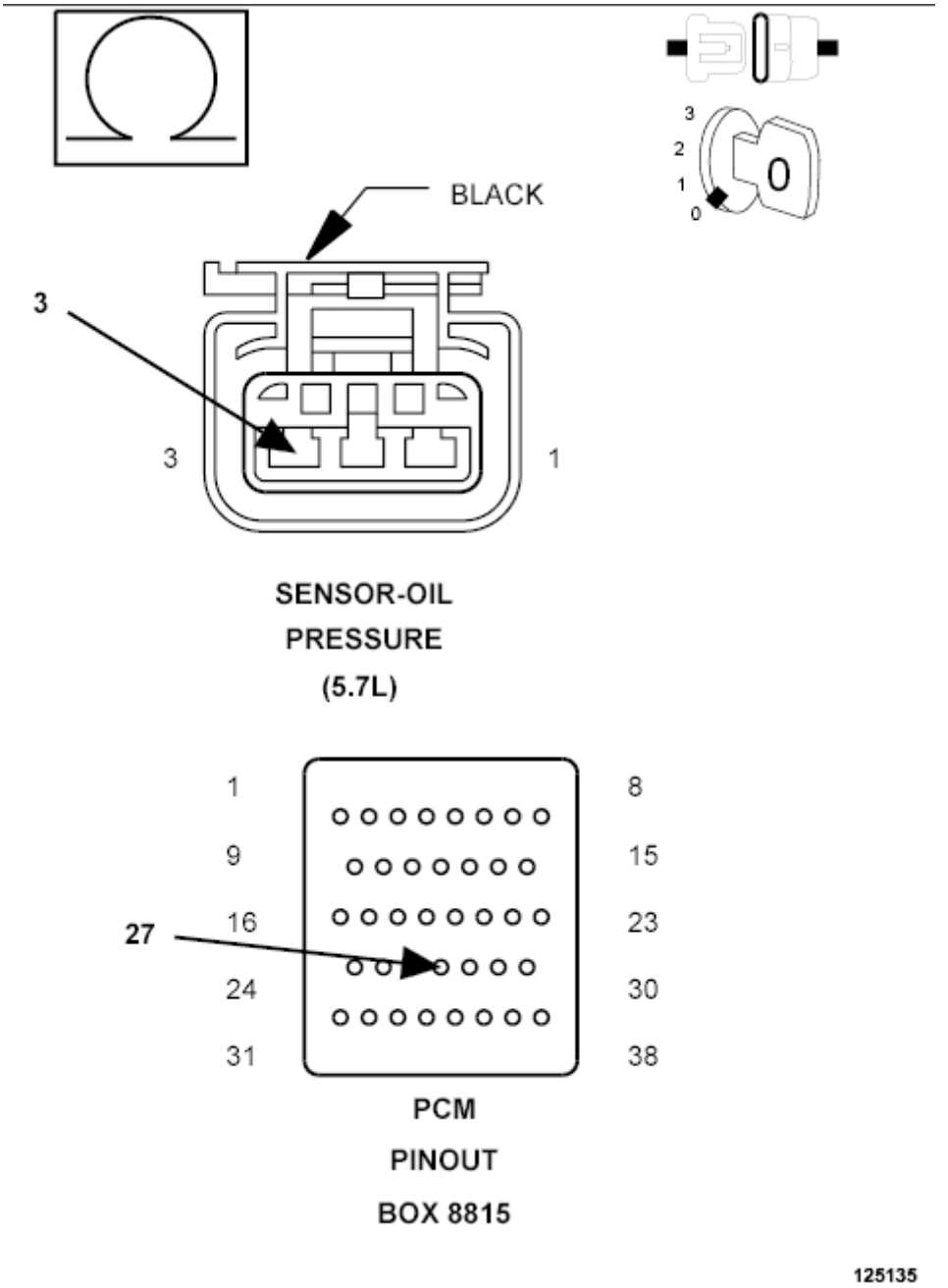

Fig. 41: Measuring Resistance Of (K900) Sensor Ground Circuit From Engine Oil Pressure Sensor Harness Connector To Appropriate Terminal Of PCM Pinout Box 8815
Courtesy of CHRYSLER GROUP, LLC

1. Measure the resistance of the (K900) Sensor Ground circuit from the Engine Oil Pressure Sensor harness connector to the appropriate terminal of PCM Pinout Box (special tool #8815A, Kit, NGC,

38 Position).

Is the resistance below 5.0 Ohms?

Yes

- Go To 7.

No

- Repair the open in the (K900) Sensor Ground circuit.
- Perform the POWERTRAIN VERIFICATION TEST. Refer to **POWERTRAIN VERIFICATION TEST** .

7. **POWERTRAIN CONTROL MODULE (PCM)**
    1. Using the wiring diagram/schematic as a guide, inspect the wiring and connectors between the related Oil Pressure Sensor and the Powertrain Control Module (PCM).
    2. Look for any chafed, pierced, pinched or partially broken wires.
    3. Look for broken, bent, pushed out or corroded terminals. Verify that there is good pin to terminal contact in the Oil Pressure Sensor and the Powertrain Control Module connectors.
    4. Refer to any Technical Service Bulletins that may apply.

    Were there any problems found?

    Yes

    - Repair as necessary.
    - Perform the POWERTRAIN VERIFICATION TEST. Refer to **POWERTRAIN VERIFICATION TEST** .

    No

    - Replace and program the Powertrain Control Module in accordance with the Service Information. Refer to **MODULE, POWERTRAIN CONTROL, REMOVAL** .
    - Perform the POWERTRAIN VERIFICATION TEST. Refer to **POWERTRAIN VERIFICATION TEST** .

P0532-A/C PRESSURE SENSOR CIRCUIT LOW

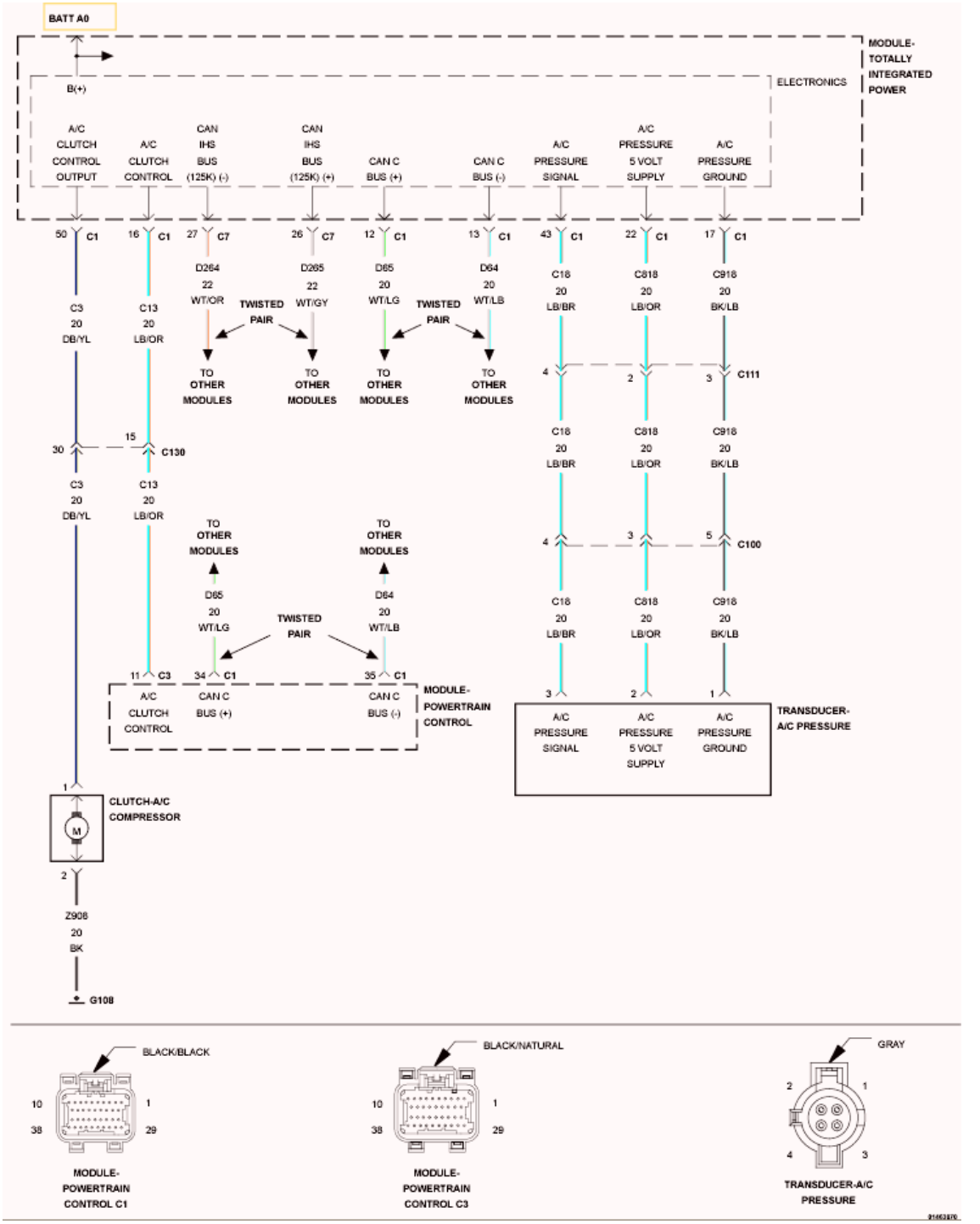

Fig. 42: A/C Pressure Transducer Circuit Schematic
Courtesy of CHRYSLER GROUP, LLC

For a complete wiring diagram, **refer to appropriate SYSTEM WIRING DIAGRAMS article** .

WHEN MONITORED:

Engine running, AC is learned and AC Clutch Relay energized.

SET CONDITION:

The A/C pressure transducer signal voltage at the PCM goes below the minimum acceptable voltage. One Trip Fault. Three good trips to turn off the MIL.

POSSIBLE CAUSES

Possible Causes
(C818) 5-VOLT SUPPLY CIRCUIT OPEN
(C818) 5-VOLT SUPPLY CIRCUIT SHORTED TO GROUND
A/C PRESSURE TRANSDUCER
(C18) A/C PRESSURE SIGNAL CIRCUIT SHORTED TO GROUND
(C18) A/C PRESSURE SIGNAL CIRCUIT SHORTED TO THE (C918) A/C PRESSURE TRANSDUCER GROUND CIRCUIT
EXCESSIVE RESISTANCE IN THE (C18) A/C PRESSURE SIGNAL CIRCUIT
TOTALLY INTEGRATED POWER MODULE (TIPM)
POWERTRAIN CONTROL MODULE (PCM)

Always perform the Pre-Diagnostic Troubleshooting procedure before proceeding. Refer to PRE-DIAGNOSTIC TROUBLESHOOTING PROCEDURE .

DIAGNOSTIC TEST

1. **ACTIVE DTC**

NOTE: Diagnose and repair any communication DTCs before continuing.

NOTE: Make sure the A/C refrigerant System is properly charged in accordance with the Service Information.

1. Start the engine and allow it to reach normal operating temperature.

WARNING: When the engine is operating, do not stand in direct line with the fan. Do not put your hands near the pulleys, belts or fan. Do not wear loose clothing. Failure to follow these instructions may result in possible serious or fatal injury.

NOTE: Diagnose and repair any system voltage or sensor supply voltage DTCs before continuing with this test.

2. With the scan tool, select View DTCs.

   Is the DTC Active at this time?

   Yes

- Go To 2.

No

- Perform the INTERMITTENT CONDITION diagnostic procedure. Refer to **INTERMITTENT CONDITION** .

2. **(C818) 5-VOLT SUPPLY CIRCUIT**

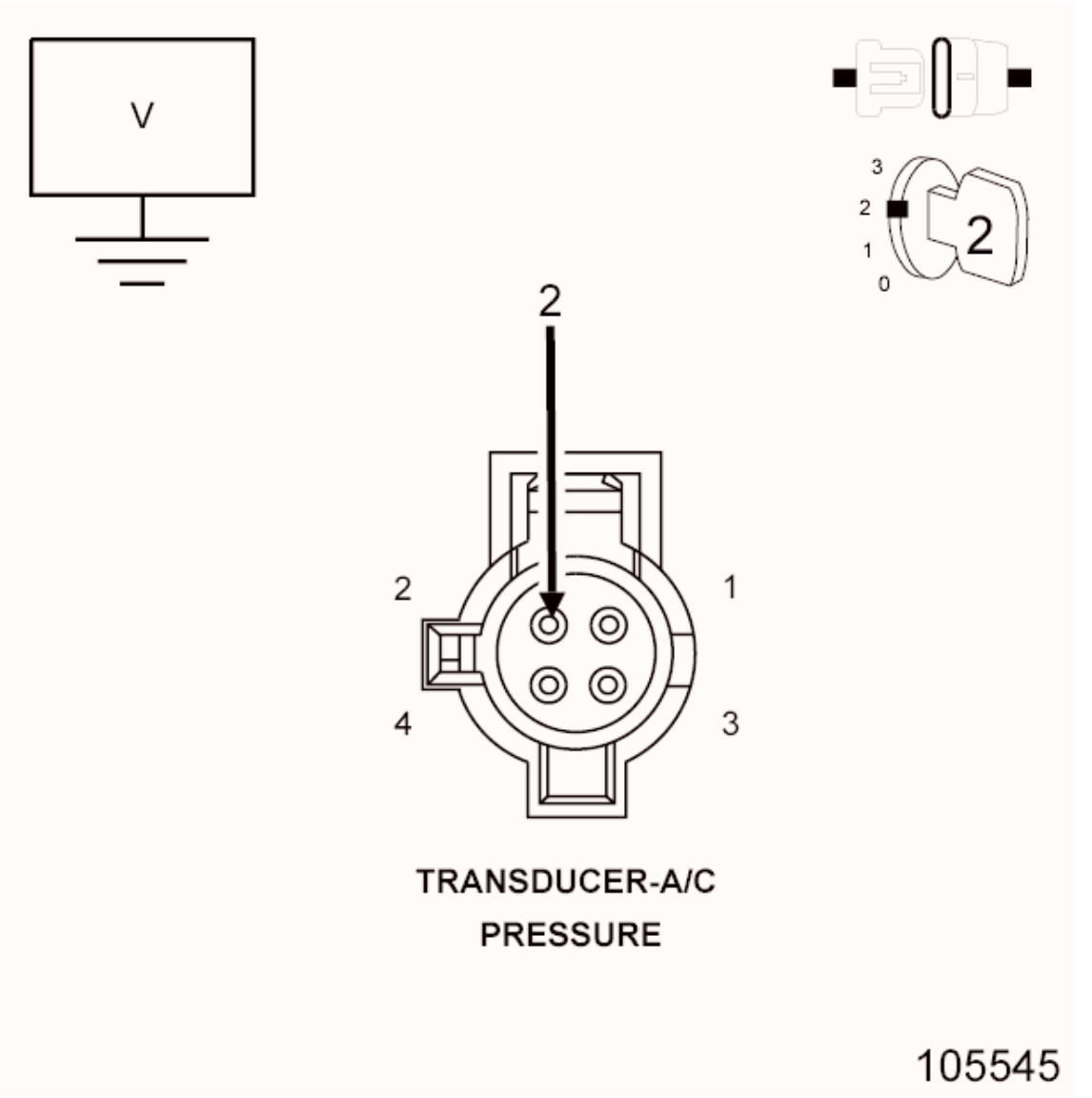

Fig. 43: Measuring Voltage On (C818) 5-Volt Supply Circuit In A/C Pressure Transducer Harness Connector
Courtesy of CHRYSLER GROUP, LLC

1. Turn the ignition off.
2. Disconnect the A/C Pressure Transducer harness connector.

3. Ignition on, engine not running.
4. Measure the voltage on the (C818) 5-volt Supply circuit in the A/C Pressure Transducer harness connector.

   Is the voltage between 4.5 to 5.2 Volts?

   Yes

   - Go To 3.

   No

   - Go To 7.

3. **A/C PRESSURE TRANSDUCER**
   1. With the scan tool, monitor the A/C Pressure Transducer voltage.

      NOTE: The sensor voltage should be approximately 5.0 Volts (plus or minus.1 volt) with the connector disconnected.

      Does the scan tool display the voltage as described above?

      Yes

      - Verify that there is good pin to terminal contact in the A/C Pressure Transducer and the Powertrain Control Module connectors. Replace the A/C Pressure Transducer if no problems were found with the connectors.
      - Perform the POWERTRAIN VERIFICATION TEST. Refer to **POWERTRAIN VERIFICATION TEST** .

      No

      - Go To 4.

4. **(C18) A/C PRESSURE SIGNAL CIRCUIT SHORTED TO GROUND**

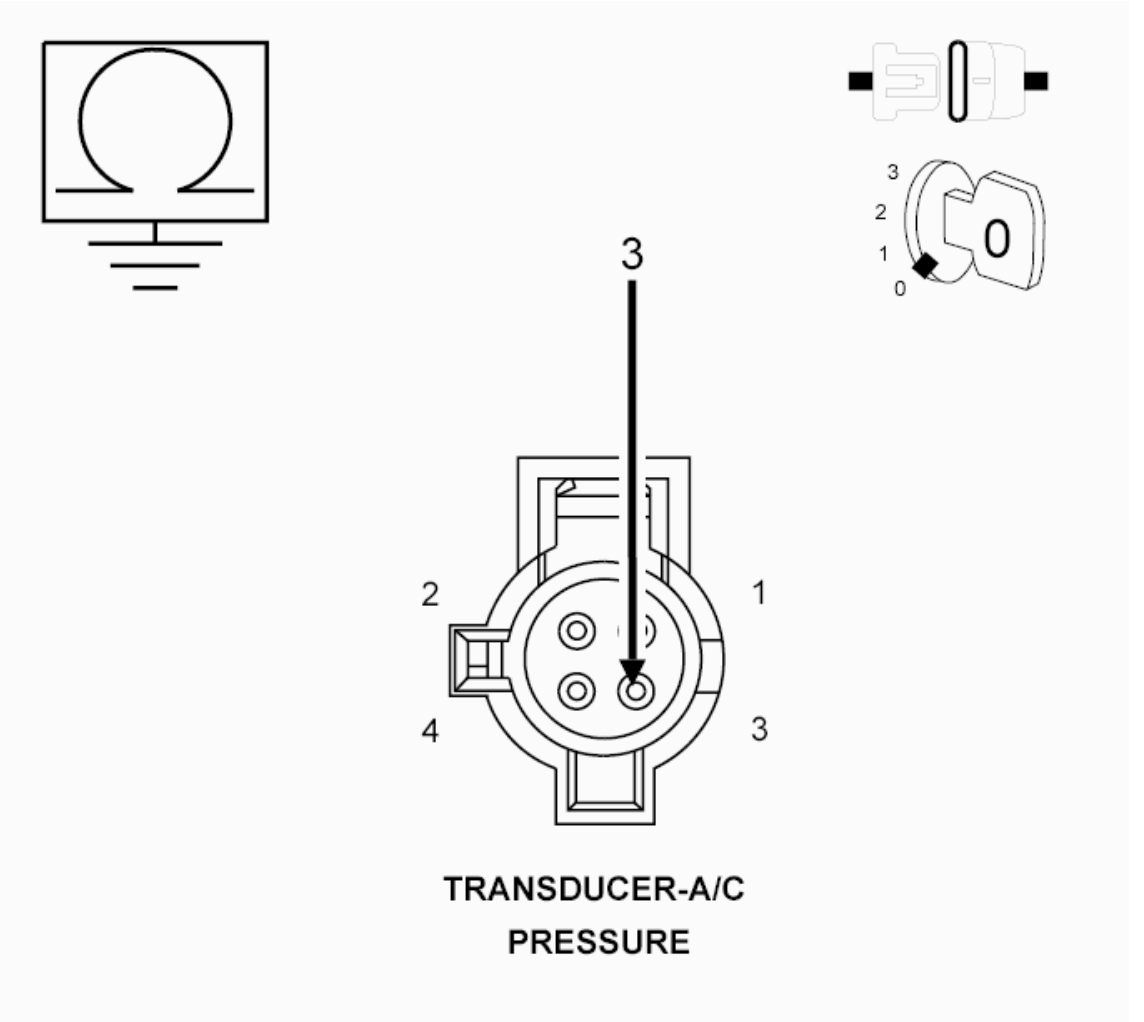

Fig. 44: Measuring Resistance Between Ground And (C18) A/C Pressure Signal Circuit In A/C Pressure Transducer Harness Connector
Courtesy of CHRYSLER GROUP, LLC

1. Turn the ignition off.
2. Disconnect the C1 TIPM harness connector.
3. Measure the resistance between ground and the (C18) A/C Pressure Signal circuit in the A/C Pressure Transducer harness connector.

   Is the resistance below 100 Ohms?

   Yes

   - Repair the short to ground in the (C18) A/C Pressure Signal circuit.
   - Perform the POWERTRAIN VERIFICATION TEST. Refer to **POWERTRAIN VERIFICATION TEST** .

   No

- Go To 5.

5. **(C18) A/C PRESSURE SIGNAL CIRCUIT SHORTED TO THE (C918) SENSOR GROUND CIRCUIT**

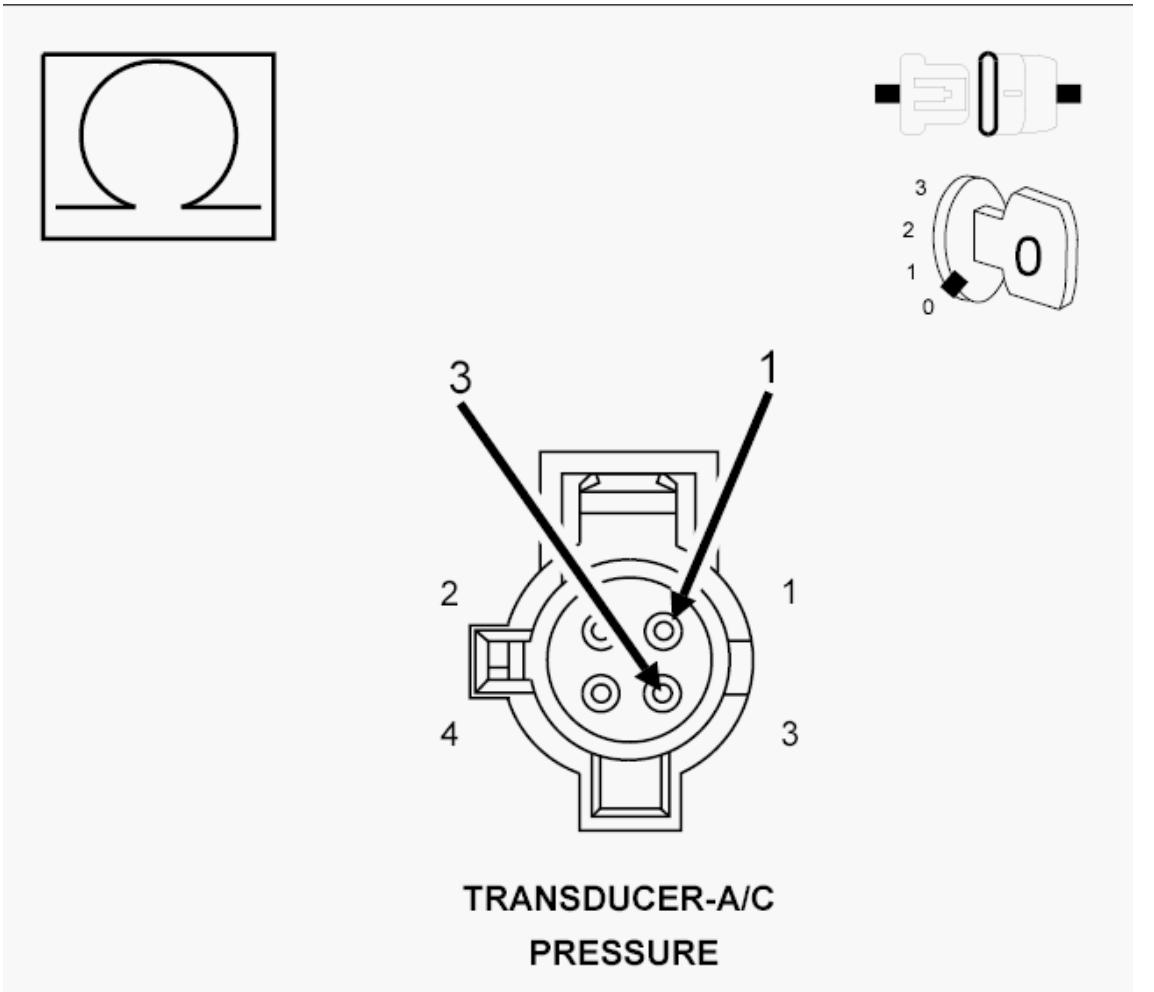

Fig. 45: Measuring Resistance Between (C18) A/C Pressure Signal Circuit And (C918) Sensor Ground Circuit In A/C Pressure Transducer Harness Connector
Courtesy of CHRYSLER GROUP, LLC

1. Disconnect the C1 TIPM harness connector.
2. Measure the resistance between the (C18) A/C Pressure Signal circuit and the (C918) Sensor Ground circuit in the A/C Pressure Transducer harness connector.

   Is the resistance below 100 Ohms?

   Yes

   - Repair the short between the (C918) Sensor Ground circuit and the (C18) A/C Pressure Signal circuit.
   - Perform the POWERTRAIN VERIFICATION TEST. Refer to **POWERTRAIN**

VERIFICATION TEST .

No

- Go To 6.

6. **EXCESSIVE RESISTANCE IN THE (C18) A/C PRESSURE SIGNAL CIRCUIT**

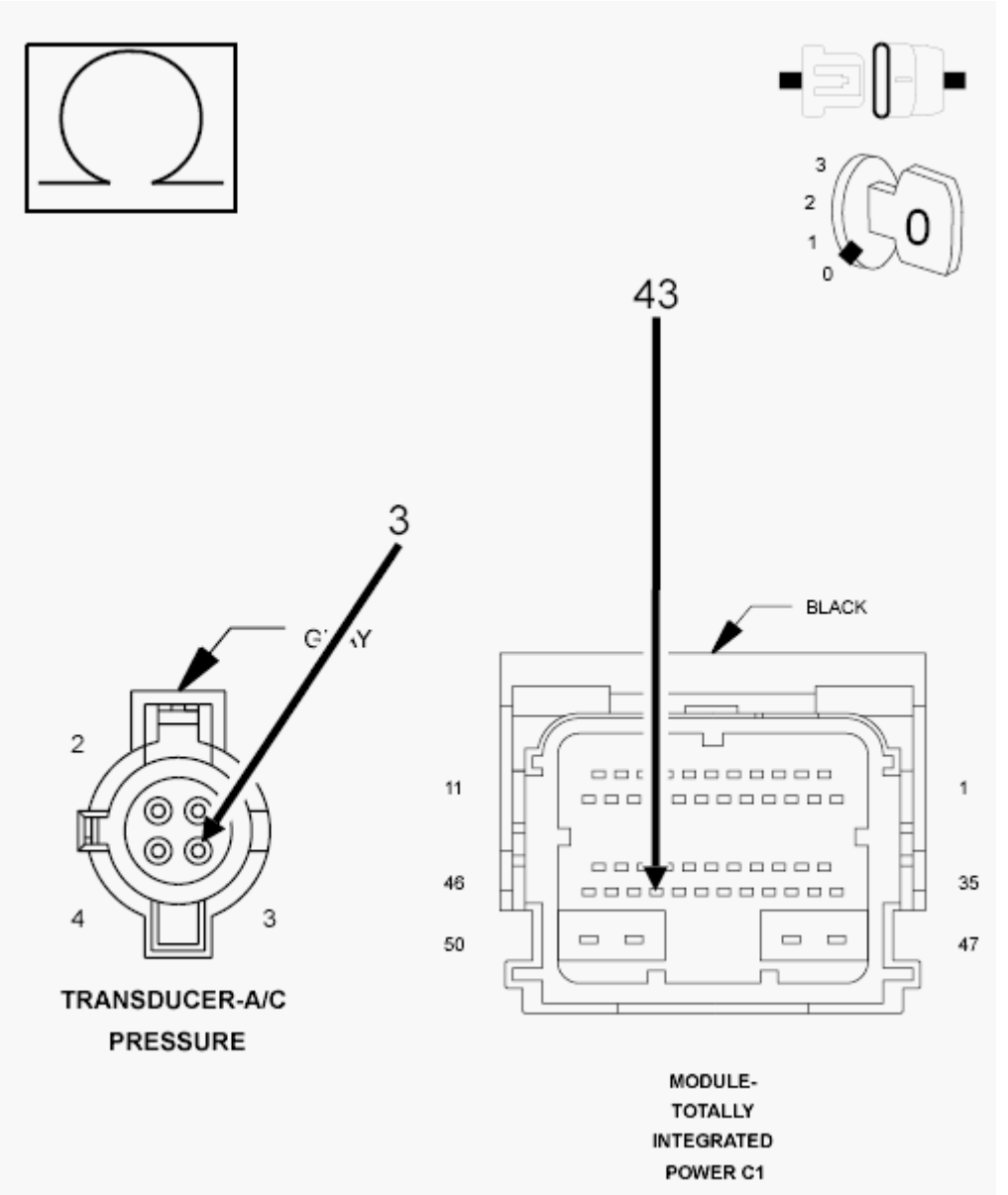

Fig. 46: Measuring Resistance Of (C18) A/C Pressure Signal Circuit From A/C Pressure Transducer Harness Connector To C1 TIPM Harness Connector
Courtesy of CHRYSLER GROUP, LLC

1. Measure the resistance of the (C18) A/C Pressure Signal circuit from the A/C Pressure Transducer harness connector to C1 TIPM harness connector.

Is the resistance below 5.0 Ohms?

Yes

- Go To 9.

No

- Repair the excessive resistance in the (C18) A/C Pressure Signal circuit.
- Perform the POWERTRAIN VERIFICATION TEST. Refer to **POWERTRAIN VERIFICATION TEST** .

7. **(C818) 5-VOLT SUPPLY CIRCUIT OPEN**

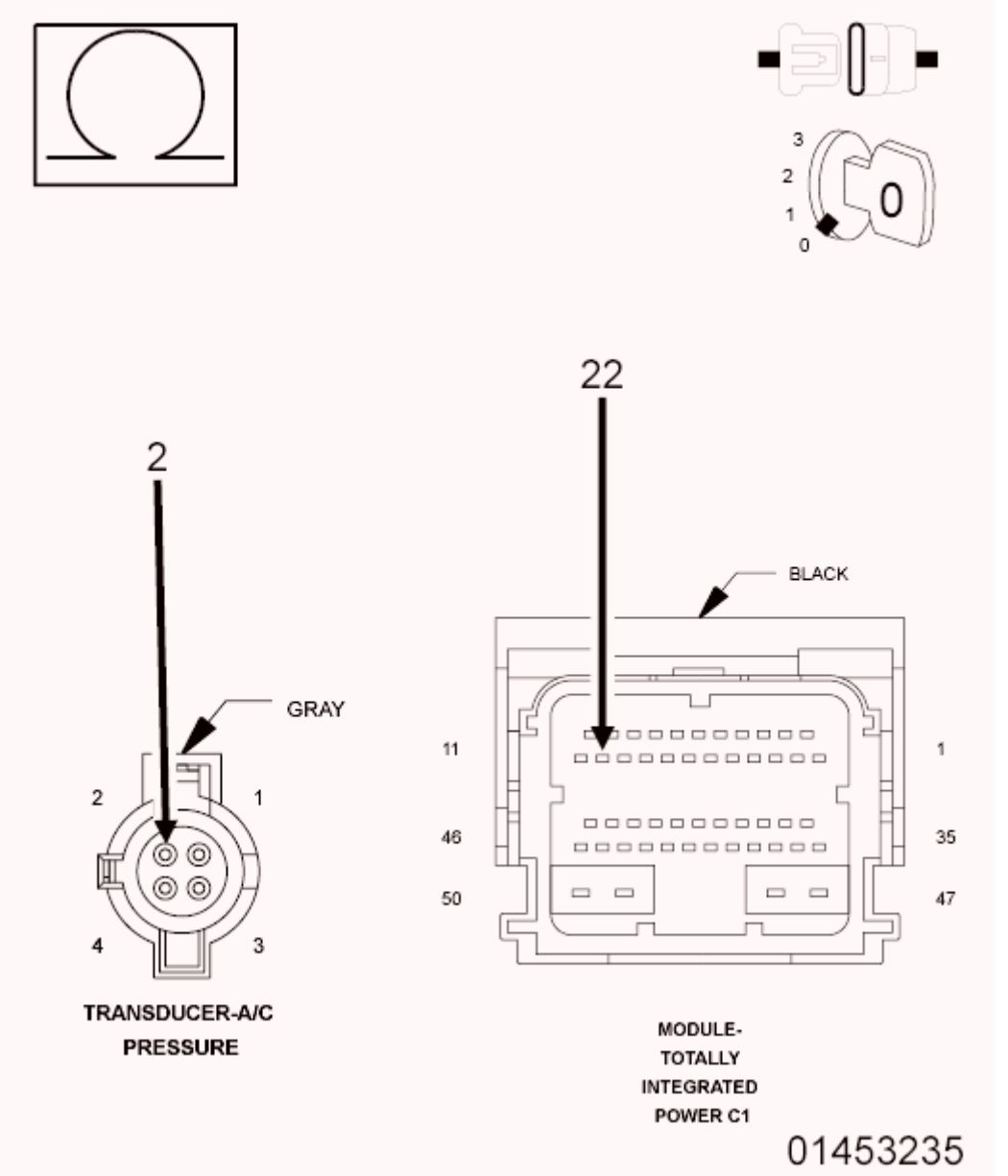

Fig. 47: Measuring Resistance Of (C818) 5-Volt Supply Circuit From A/C Pressure Transducer Harness Connector To C1 TIPM Harness Connector
Courtesy of CHRYSLER GROUP, LLC

1. Turn the ignition off.
2. Disconnect the C1 TIPM harness connector.
3. Measure the resistance of the (C818) 5-volt Supply circuit from the A/C Pressure Transducer harness connector to the C1 TIPM harness connector.

   Is the resistance below 5.0 Ohms?

   Yes

   - Go To 8.

   No

   - Repair the open in the (C818) 5-volt Supply circuit.
   - Perform the POWERTRAIN VERIFICATION TEST. Refer to **POWERTRAIN VERIFICATION TEST** .

8. **(C818) 5-VOLT SUPPLY CIRCUIT SHORTED TO GROUND**

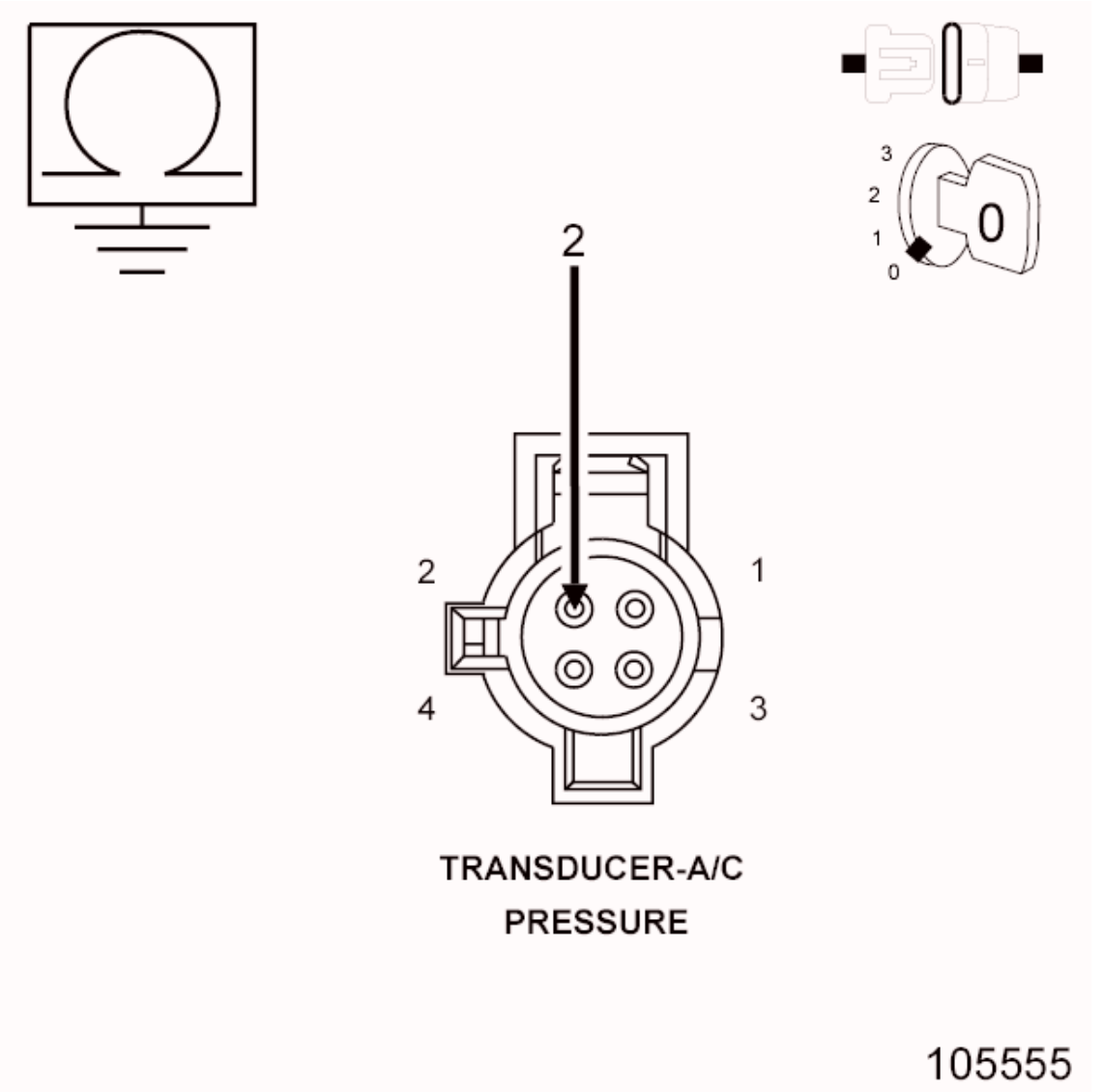

Fig. 48: Measuring Resistance Between Ground And (C818) 5-Volt Supply Circuit In A/C Pressure Transducer Harness Connector
Courtesy of CHRYSLER GROUP, LLC

1. Measure the resistance between ground and the (C818) 5-volt Supply circuit in the A/C Pressure Transducer harness connector.

   Is the resistance below 100 Ohms?

   Yes

   - Repair the short to ground in the (C818) 5-volt Supply circuit.
   - Perform the POWERTRAIN VERIFICATION TEST. Refer to **POWERTRAIN VERIFICATION TEST** .

   No

- Go To 9.

9. **TOTALLY INTEGRATED POWER MODULE (TIPM)**
    1. Using the wiring diagram/schematic as a guide, inspect the wiring and connectors between the related A/C Pressure Transducer and the Totally Integrated Power Module (TIPM).
    2. Look for any chafed, pierced, pinched or partially broken wires.
    3. Look for broken, bent, pushed out or corroded terminals. Verify that there is good pin to terminal contact in the A/C Pressure Transducer and the Totally Integrated Power Module connectors.
    4. Refer to any Technical Service Bulletins that may apply.

    Were there any problems found?

    Yes

    - Repair as necessary.
    - Perform the POWERTRAIN VERIFICATION TEST. Refer to **POWERTRAIN VERIFICATION TEST** .

    No

    - Replace and program the Powertrain Control Module in accordance with the Service Information. Refer to **MODULE, POWERTRAIN CONTROL, REMOVAL** .
    - Perform the POWERTRAIN VERIFICATION TEST. Refer to **POWERTRAIN VERIFICATION TEST** .

P0533-A/C PRESSURE SENSOR CIRCUIT HIGH

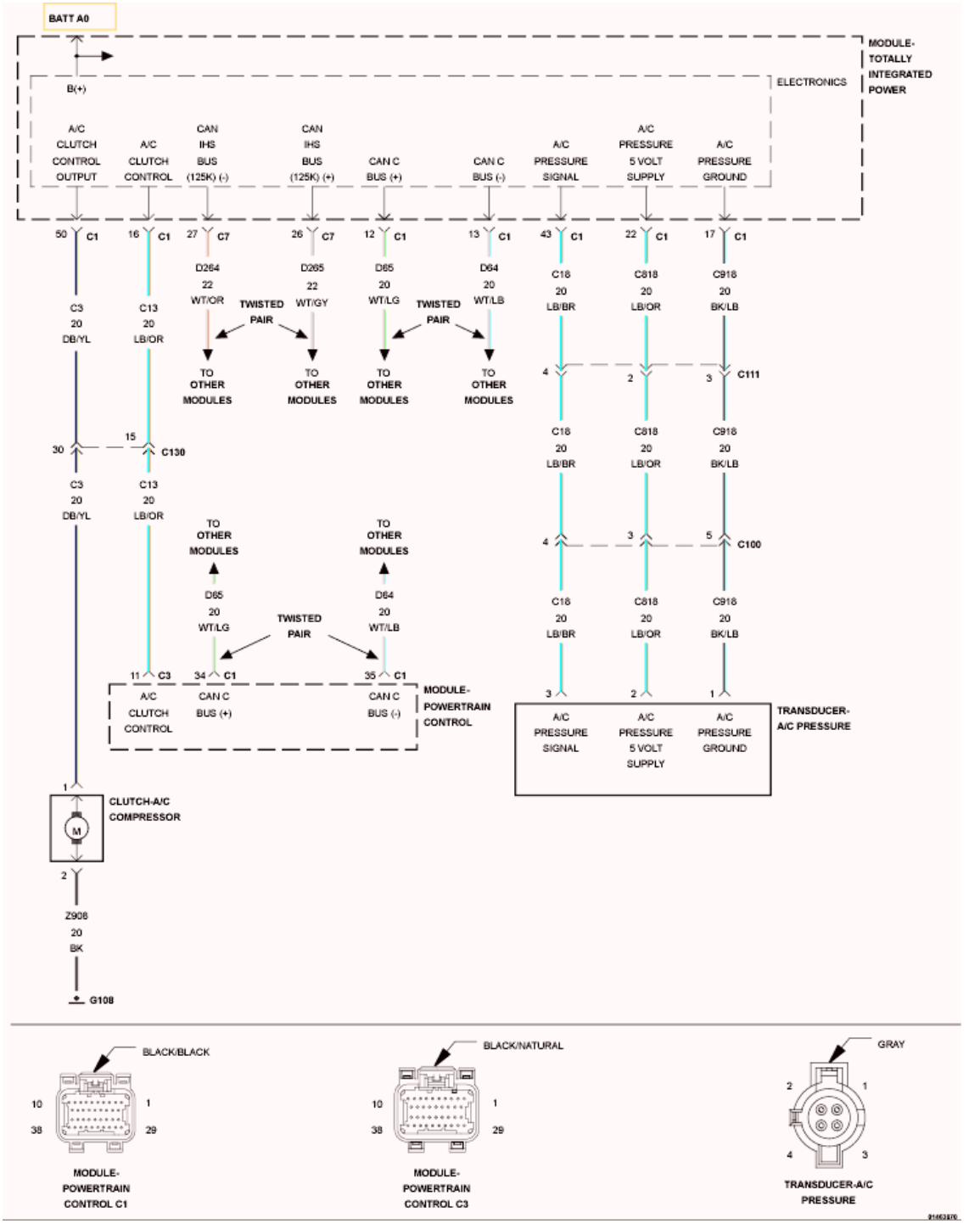

Fig. 49: A/C Pressure Transducer Circuit Schematic
Courtesy of CHRYSLER GROUP, LLC

For a complete wiring diagram, **refer to appropriate SYSTEM WIRING DIAGRAMS article** .

WHEN MONITORED:

Engine running and the A/C Clutch Relay energized.

SET CONDITION:

The A/C pressure transducer signal at the PCM goes above the maximum acceptable voltage. One trip Fault. Three good trips to turn off the MIL.

POSSIBLE CAUSES

Possible Causes
(C18) A/C PRESSURE SIGNAL CIRCUIT SHORTED TO VOLTAGE
(C18) A/C PRESSURE SIGNAL CIRCUIT OPEN
(C18) A/C PRESSURE SIGNAL CIRCUIT SHORTED TO THE (C818) 5-VOLT SUPPLY CIRCUIT
(C918) A/C PRESSURE GROUND CIRCUIT OPEN
A/C PRESSURE TRANSDUCER
TOTALLY INTEGRATED POWER MODULE (TIPM)
POWERTRAIN CONTROL MODULE (PCM)

Always perform the Pre-Diagnostic Troubleshooting procedure before proceeding. Refer to PRE-DIAGNOSTIC TROUBLESHOOTING PROCEDURE .

DIAGNOSTIC TEST

1. **ACTIVE DTC**

NOTE: **Diagnose and repair any communication DTCs before continuing.**

NOTE: **Make sure the A/C refrigerant System is properly charged in accordance with the Service Information.**

1. Start the engine and allow it to reach normal operating temperature.

WARNING: **When the engine is operating, do not stand in direct line with the fan. Do not put your hands near the pulleys, belts or fan. Do not wear loose clothing. Failure to follow these instructions may result in possible serious or fatal injury.**

NOTE: **Diagnose and repair any system voltage or sensor supply voltage DTCs before continuing with this test.**

2. With the scan tool, select View DTCs.

   Is the DTC Active at this time?

   Yes

   - Go To 2.

No

- Perform the INTERMITTENT CONDITION diagnostic procedure. Refer to **INTERMITTENT CONDITION** .

2. **A/C PRESSURE TRANSDUCER**

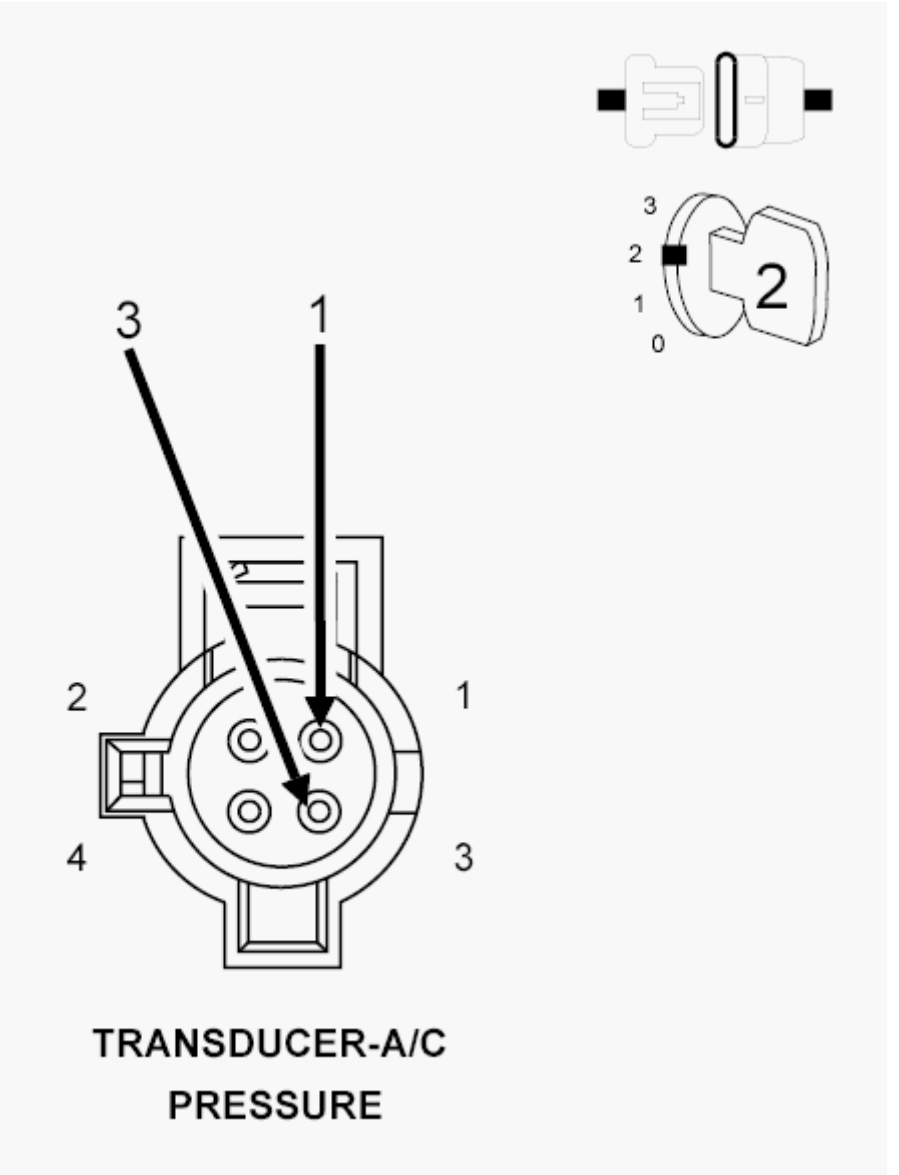

Fig. 50: A/C Pressure Transducer Harness Connector
Courtesy of CHRYSLER GROUP, LLC

1. Turn the ignition off.
2. Disconnect the A/C Pressure Transducer harness connector.
3. Ignition on, engine not running.
4. With the scan tool, monitor the A/C Pressure Transducer voltage.

5. Connect a jumper wire between the (C18) A/C Pressure Signal circuit and the (C918) Sensor Ground circuit in the Transducer harness connector.

NOTE: The sensor voltage should be approximately 0.0 Volts (plus or minus.1 volt) with the jumper wire in place.

Does the scan tool display the voltage as described above?

Yes

- Verify that there is good pin to terminal contact in the A/C Pressure Transducer and the Powertrain Control Module connectors. Replace the A/C Pressure Transducer if no problems were found with the connectors.
- Perform the POWERTRAIN VERIFICATION TEST. Refer to **POWERTRAIN VERIFICATION TEST** .

No

- Go To 3.

NOTE: Remove the jumper wire before continuing.

3. **(C18) A/C PRESSURE SIGNAL CIRCUIT SHORTED TO VOLTAGE**

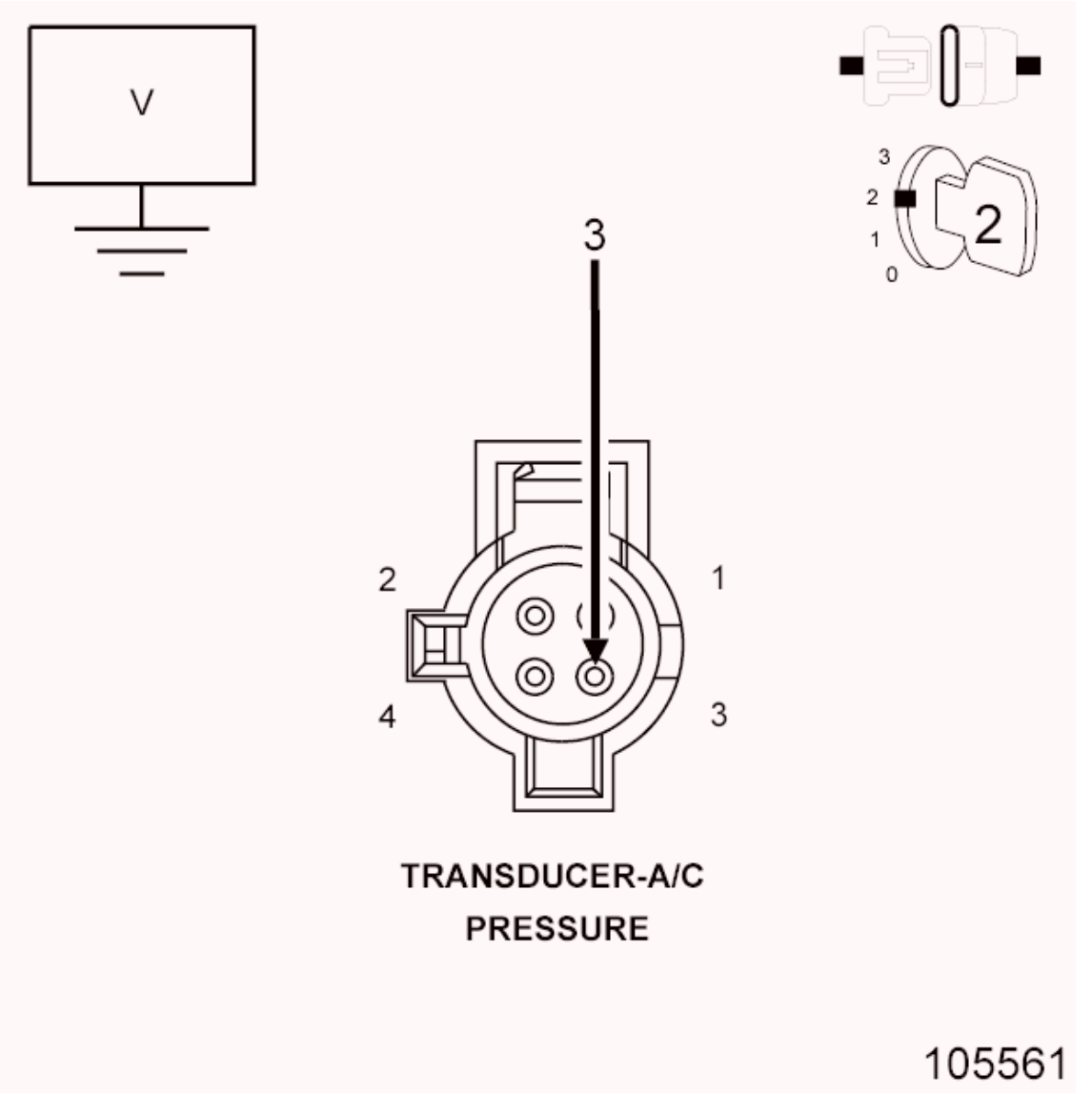

Fig. 51: Measuring Voltage On (C18) A/C Pressure Signal Circuit In A/C Pressure Transducer Harness Connector
Courtesy of CHRYSLER GROUP, LLC

1. Turn the ignition off.
2. Disconnect the C1 TIPM harness connector.
3. Ignition on, engine not running.
4. Measure the voltage on the (C18) A/C Pressure Signal circuit in the A/C Pressure Transducer harness connector.

   Is there any voltage present?

   Yes

   - Repair the short to voltage in the (C18) A/C Pressure Signal circuit.

- Perform the POWERTRAIN VERIFICATION TEST. Refer to **POWERTRAIN VERIFICATION TEST** .

No

- Go To 4.

4. **(C18) A/C PRESSURE SIGNAL CIRCUIT OPEN**

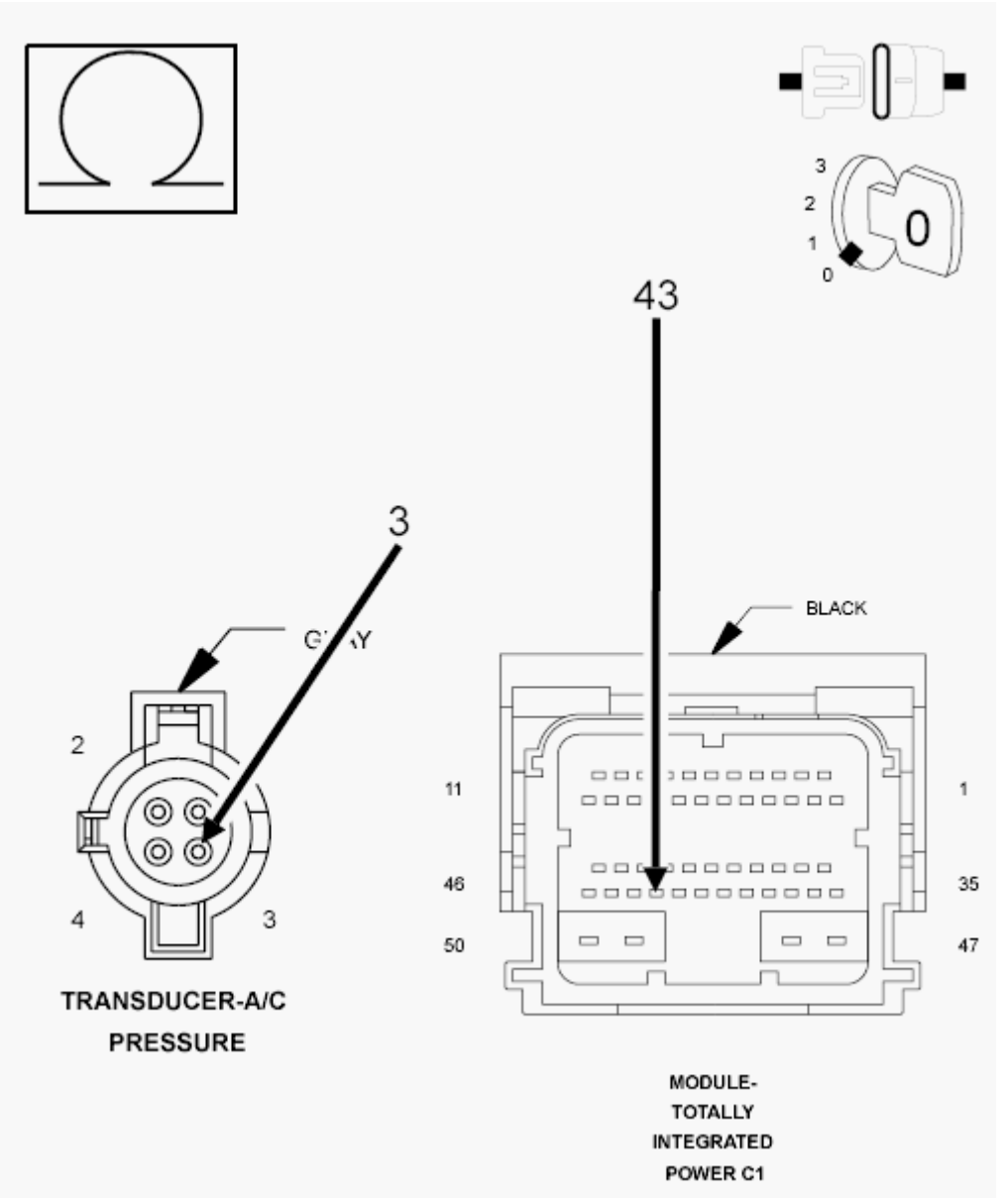

Fig. 52: Measuring Resistance Of (C18) A/C Pressure Signal Circuit From A/C Pressure Transducer Harness Connector To C1 TIPM Harness Connector
Courtesy of CHRYSLER GROUP, LLC

1. Turn the ignition off.

2. Measure the resistance of the (C18) A/C Pressure Signal circuit from the A/C Pressure Transducer harness connector to C1 TIPM harness connector.

   Is the resistance below 5.0 Ohms?

   Yes

   - Go To 5.

   No

   - Repair the open in the (C18) A/C Pressure Signal circuit.
   - Perform the POWERTRAIN VERIFICATION TEST. Refer to **POWERTRAIN VERIFICATION TEST** .

5. **(C18) A/C PRESSURE SIGNAL CIRCUIT SHORTED TO THE (C818) 5-VOLT SUPPLY CIRCUIT**

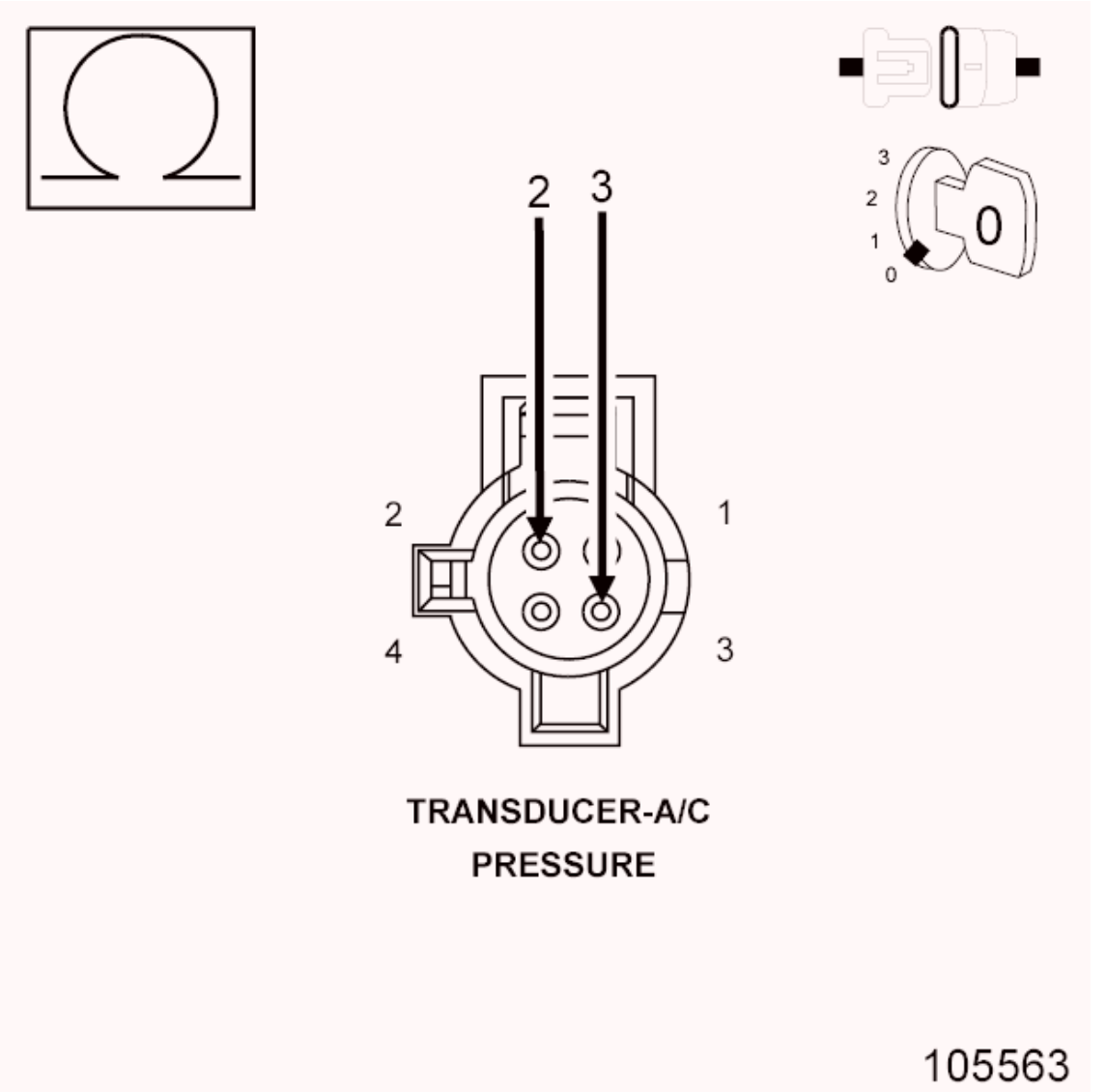

Fig. 53: Measuring Resistance Between (C18) A/C Pressure Signal Circuit And (C818) 5-Volt Supply Circuit In A/C Pressure Transducer Harness Connector
Courtesy of CHRYSLER GROUP, LLC

1. Measure the resistance between the (C18) A/C Pressure Signal circuit and the (C818) 5-volt Supply circuit in the A/C Pressure Transducer harness connector.

   Is the resistance below 5.0 Ohms?

   Yes

   - Repair the short between the (C818) 5-volt Supply circuit and the (C18) A/C Pressure Signal circuit.
   - Perform the POWERTRAIN VERIFICATION TEST. Refer to **POWERTRAIN VERIFICATION TEST** .

No

- Go To 6.

6. **(C918) SENSOR GROUND CIRCUIT OPEN**

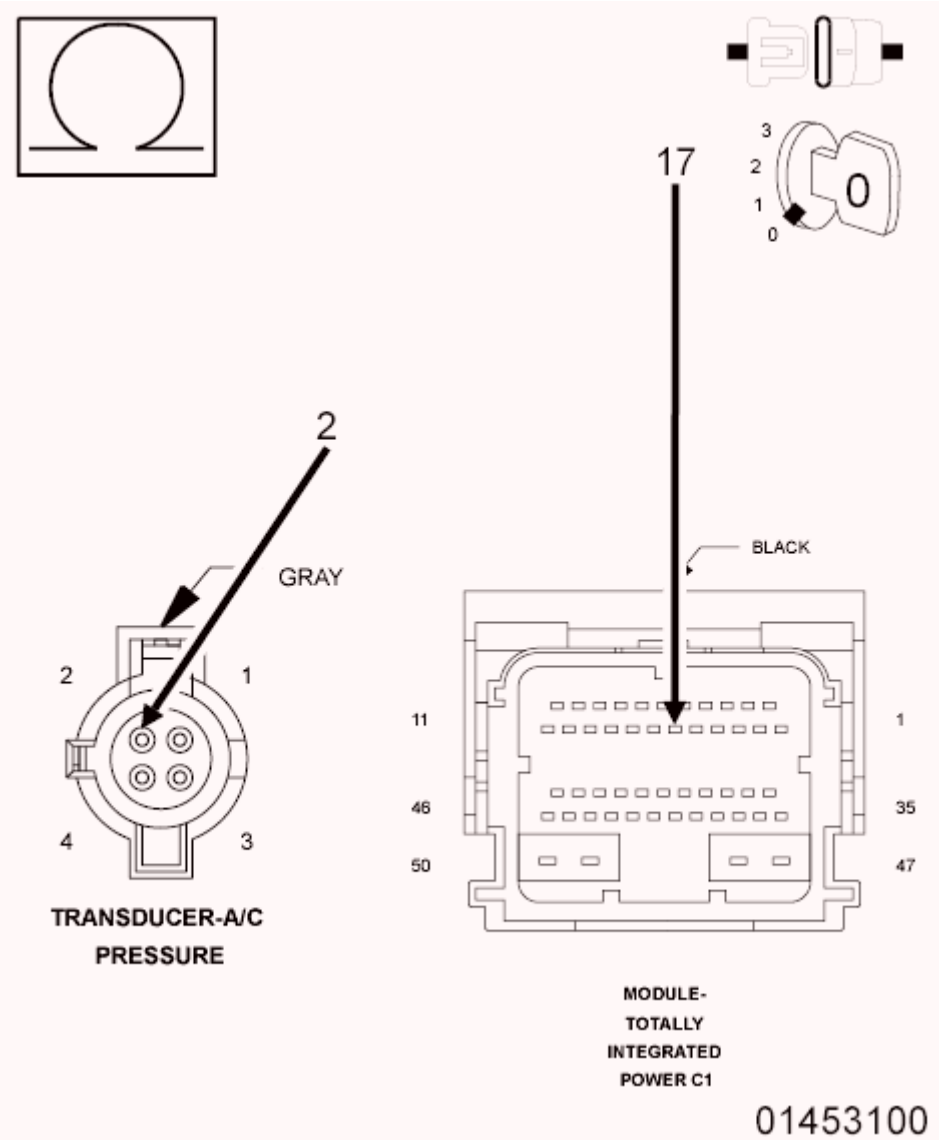

Fig. 54: Measuring Resistance Of (C918) Sensor Ground Circuit From A/C Pressure Sensor Harness Connector To C1 TIPM Harness Connector
Courtesy of CHRYSLER GROUP, LLC

1. Disconnect the C1 TIPM harness connector.
2. Measure the resistance of the (C918) Sensor Ground circuit from the A/C Pressure Sensor harness connector to the C1 TIPM harness connector.

   Is the resistance below 5.0 Ohms?

Yes

- Go To 7.

No

- Repair the open in the (C918) Sensor Ground circuit.
- Perform the POWERTRAIN VERIFICATION TEST. Refer to **POWERTRAIN VERIFICATION TEST** .

7. **TOTALLY INTEGRATED POWER MODULE (TIPM)**
    1. Using the wiring diagram/schematic as a guide, inspect the wiring and connectors between the related A/C Pressure Transducer and the Totally Integrated Power Module (TIPM).
    2. Look for any chafed, pierced, pinched or partially broken wires.
    3. Look for broken, bent, pushed out or corroded terminals. Verify that there is good pin to terminal contact in the A/C Pressure Transducer and the Totally Integrated Power Module connectors.
    4. Refer to any Technical Service Bulletins that may apply.

    Were there any problems found?

    Yes

    - Repair as necessary.
    - Perform the POWERTRAIN VERIFICATION TEST. Refer to **POWERTRAIN VERIFICATION TEST** .

    No

    - Replace and program the Powertrain Control Module in accordance with the Service Information. Refer to **MODULE, POWERTRAIN CONTROL, REMOVAL** .
    - Perform the POWERTRAIN VERIFICATION TEST. Refer to **POWERTRAIN VERIFICATION TEST** .

P0562-BATTERY VOLTAGE LOW

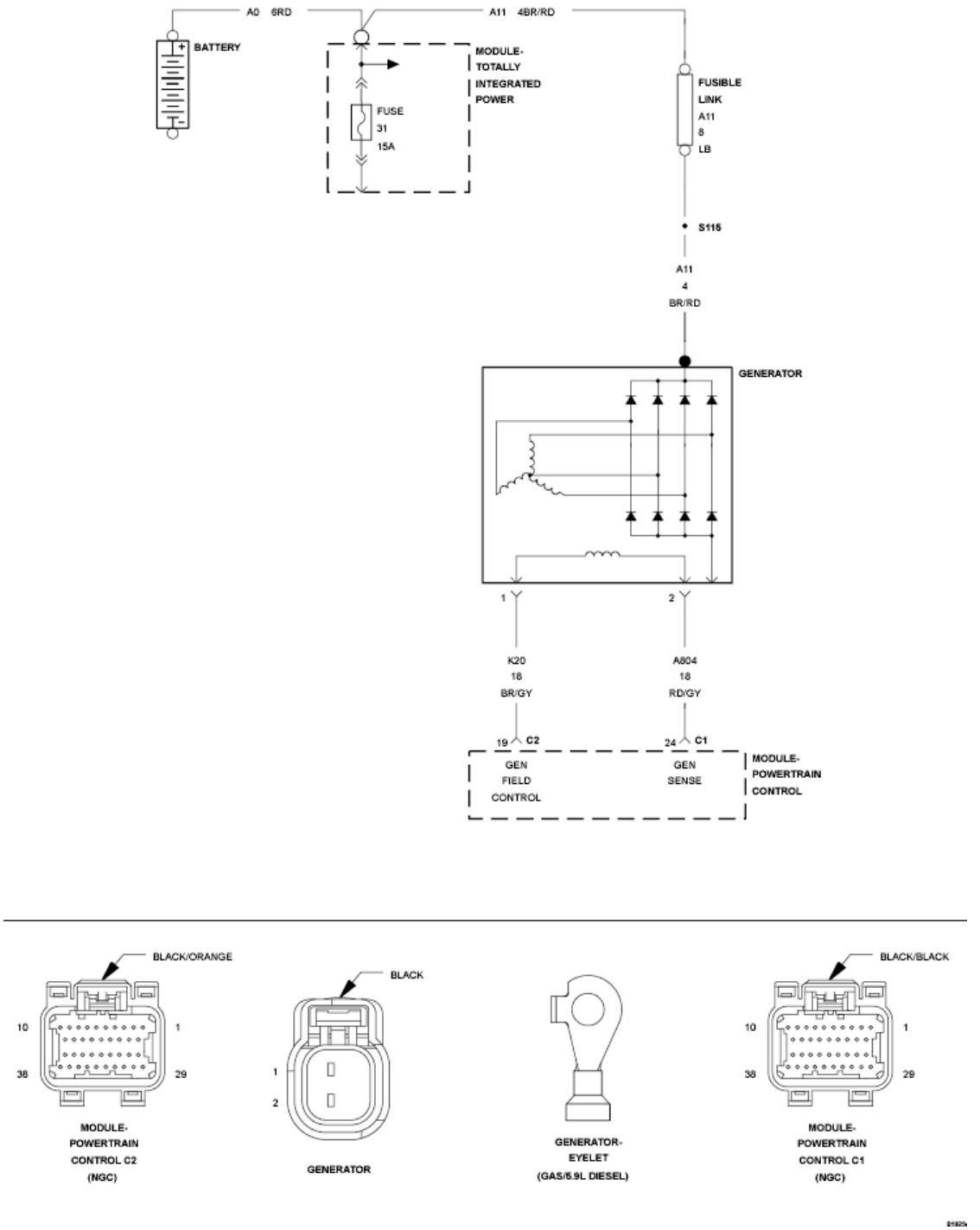

Fig. 55: Generator Circuit Schematic
Courtesy of CHRYSLER GROUP, LLC

For a complete wiring diagram **refer to appropriate SYSTEM WIRING DIAGRAMS article** .

WHEN MONITORED:

The engine running. The engine speed greater than 1000 RPM.

SET CONDITION:

Battery voltage is below 6 volts. Two Trip Fault.

POSSIBLE CAUSES

Possible Causes
RESISTANCE IN THE (A11) BATTERY POSITIVE CIRCUIT
GENERATOR OPERATION
(K20) GENERATOR FIELD CONTROL CIRCUIT OPEN
(K20) GENERATOR FIELD CONTROL CIRCUIT SHORTED TO GROUND
POWERTRAIN CONTROL MODULE (PCM)

Always perform the Pre-Diagnostic Troubleshooting procedure before proceeding. Refer to PRE-DIAGNOSTIC TROUBLESHOOTING PROCEDURE .

DIAGNOSTIC TEST

1. **ACTIVE DTC**

NOTE: **Make sure the Battery is in good condition. Using the Midtronics Battery Tester, test the Battery before continuing.**

NOTE: **Inspect the vehicle for after market accessories that may exceed the Generator System output.**

NOTE: **Make sure the generator drive belt is in good operating condition.**

NOTE: **Inspect the fuses in the TIPM. If an open fuse is found, use the wire diagram/schematic as a guide, inspect the wiring and connectors for damage.**

1. Start the engine.
2. Allow the engine to reach normal operating temperature.
3. With a scan tool, select View DTCs.

NOTE: **It may be necessary to drive the vehicle to meet the conditions to set this DTC, try to repeat the conditions in which the fault originally set by reviewing the Freeze Frame data.**

Is the DTC Active or Pending at this time?

Yes

- Go To 2.

No

- Perform the INTERMITTENT CONDITION diagnostic procedure. Refer to **INTERMITTENT CONDITION** .

2. **(A11) B+ CIRCUIT HIGH RESISTANCE**

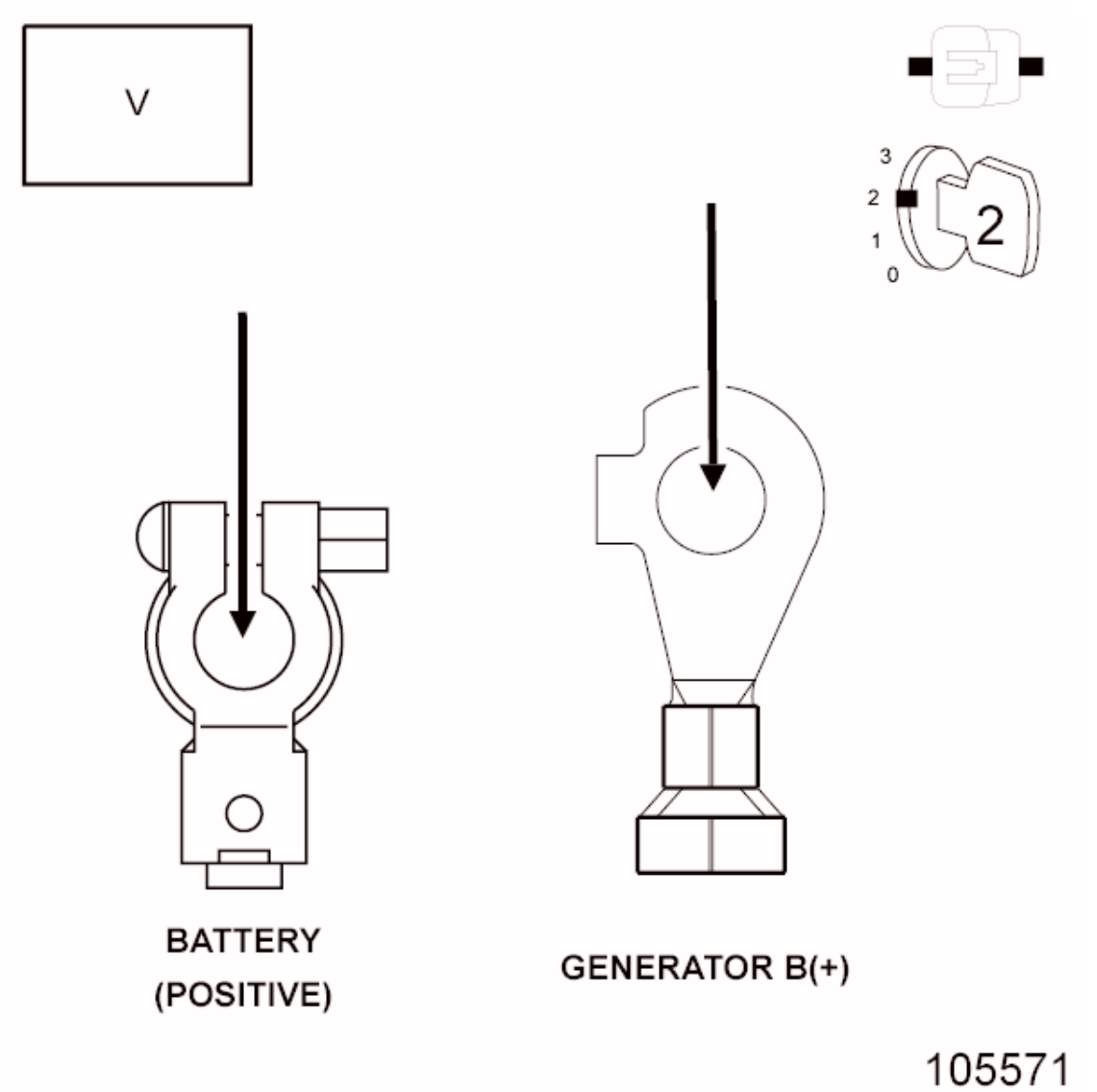

Fig. 56: Measuring Voltage Between (A11) B+ Terminal AT Generator And Battery + Post
Courtesy of CHRYSLER GROUP, LLC

WARNING: **When the engine is operating, do not stand in direct line with the fan. Do not put your hands near the pulleys, belts or fan. Do not wear loose clothing. Failure to follow these instructions may result in possible serious or fatal injury.**

NOTE: Make sure all wires are clear of the engine's moving parts.

1. Measure the voltage between the (A11) B+ Terminal at the Generator and the Battery + Post.
2. Start the engine.

Is the voltage above 0.4 of a volt?

Yes

- Repair the excessive resistance in the (A11) B+ circuit between the Generator and Battery.
- Perform the POWERTRAIN VERIFICATION TEST. Refer to **POWERTRAIN VERIFICATION TEST** .

No

- Go To 3.

3. **GENERATOR CASE GROUND HIGH RESISTANCE**

WARNING: When the engine is operating, do not stand in direct line with the fan. Do not put your hands near the pulleys, belts or fan. Do not wear loose clothing. Failure to follow these instructions may result in possible serious or fatal injury.

1. Ignition on, engine not running.
2. Start the engine.
3. Allow the engine to reach normal operating temperature.
4. Measure the voltage between the Generator case and Battery ground post.

Is the voltage above 0.1 of a volt?

Yes

- Repair excessive resistance in the Generator Ground between the Generator Case and Battery ground side.
- Perform the POWERTRAIN VERIFICATION TEST. Refer to **POWERTRAIN VERIFICATION TEST** .

No

- Go To 4.

4. **GENERATOR OPERATION**

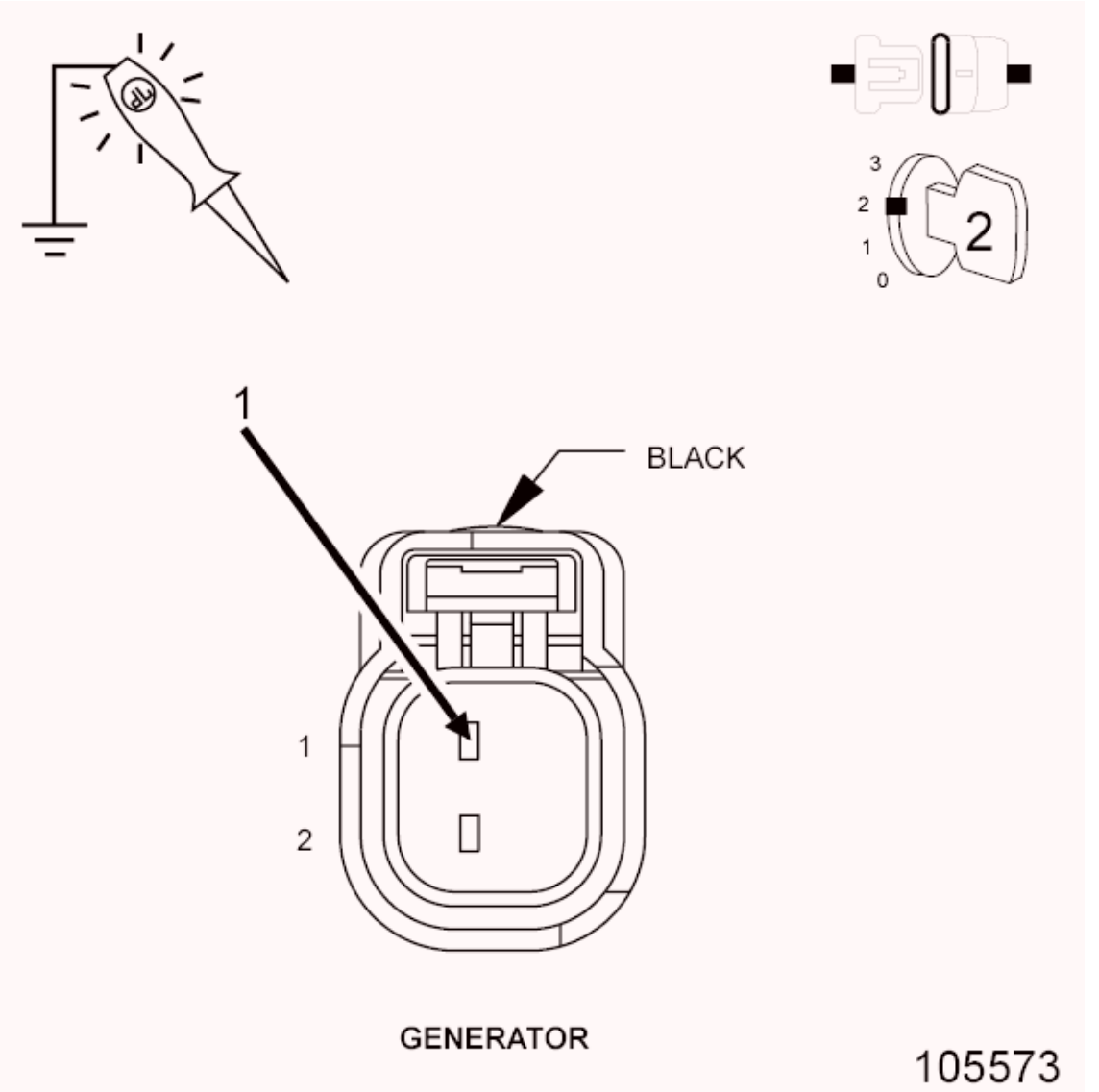

Fig. 57: Using 12-Volt Test Light Connected To Ground To Probe (K20) Generator Field Control Circuit In Generator Field Harness Connector
Courtesy of CHRYSLER GROUP, LLC

1. Turn the ignition off.
2. Disconnect the Generator Field harness connector.
3. Using a 12-volt test light connected to ground, probe the (K20) Generator Field Control circuit in the Generator Field harness connector.

NOTE: **Make sure the test light is probing the circuit before actuating the Test or a DTC may set and not allow the actuation.**

4. With a scan tool, actuate the Generator Field Driver.

NOTE: **The test light should be illuminated and bright proportional to the**

maximum duty cycle allowed by the scan tool. For example, if the scan tool allows 100% actuation, the brightness should be as bright as a direct connection to the battery. If the scan tool allows a maximum 25% actuation, the brightness should be 25% as bright as a direct connection to the battery.

Does the test light illuminate accordingly during the actuation?

Yes

- Verify that there is good pin to terminal contact in the Generator and Powertrain Control Module connectors. Replace the Generator if no problems were found with the connectors.
- Perform the POWERTRAIN VERIFICATION TEST. Refer to **POWERTRAIN VERIFICATION TEST** .

No

- Go To 5.

5. **(K20) GENERATOR FIELD CONTROL CIRCUIT OPEN**

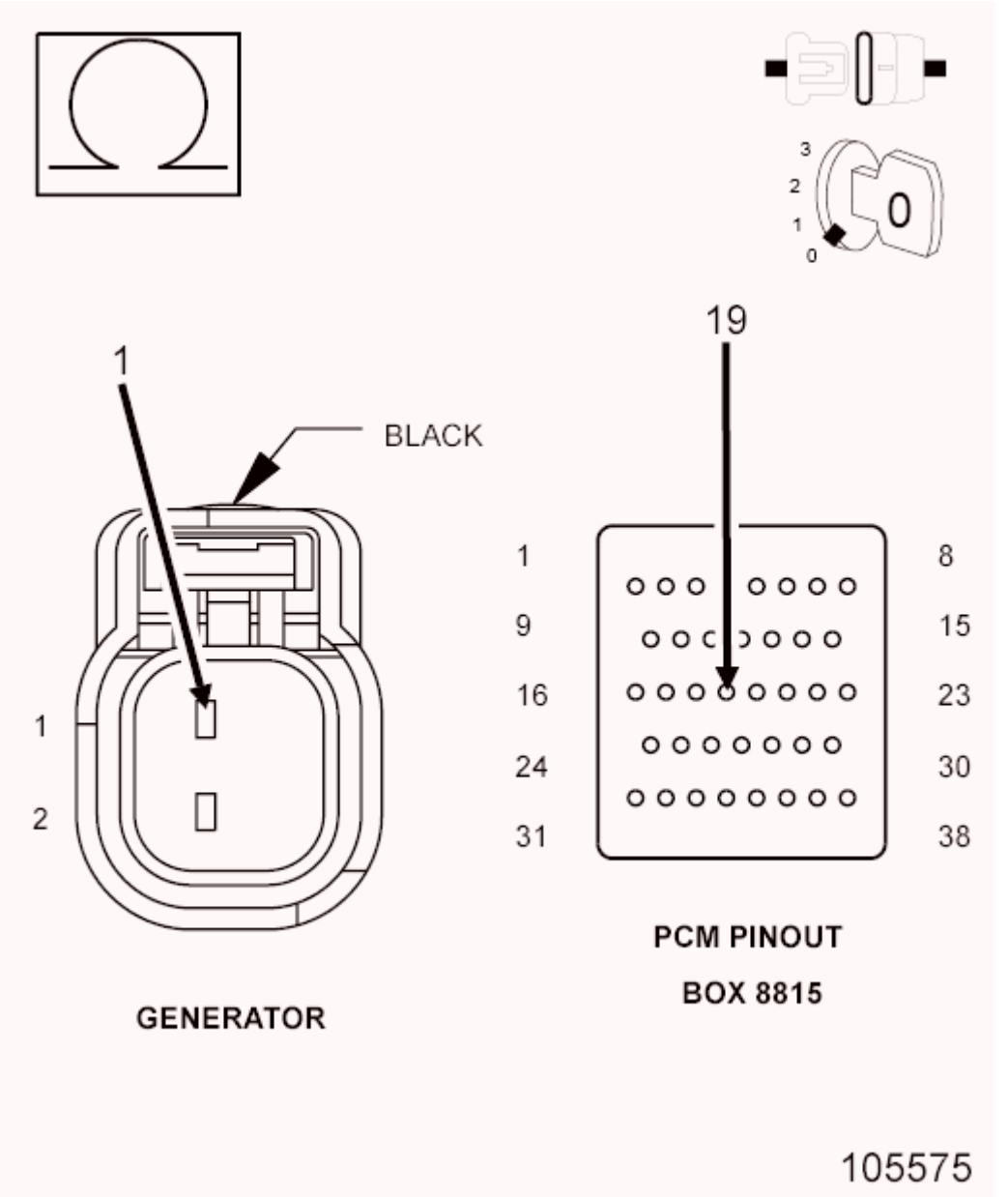

Fig. 58: Measuring Resistance Of GEN Field Control Circuit From Generator Field Harness Connector To Appropriate Terminal Of Special Tool #8815
Courtesy of CHRYSLER GROUP, LLC

1. Turn the ignition off.
2. Disconnect the C2 PCM harness connector.

CAUTION: Do not probe the PCM harness connectors. Probing the PCM harness connectors will damage the PCM terminals resulting in poor terminal to pin connection. Install the PCM Pinout Box (special tool #8815A, Kit, NGC, 38 Position) to perform diagnosis.

3. Measure the resistance of the (K20) Gen Field Control circuit from the Generator harness connector to the appropriate terminal of the special tool (special tool #8815A, Kit, NGC, 38 Position).

   Is the resistance below 5.0 ohms?

   Yes

   - Go To 6.

   No

   - Repair the open in the (K20) Gen Field Control circuit.
   - Perform the POWERTRAIN VERIFICATION TEST. Refer to **POWERTRAIN VERIFICATION TEST** .

6. **(K20) GENERATOR FIELD CONTROL CIRCUIT SHORTED TO GROUND**

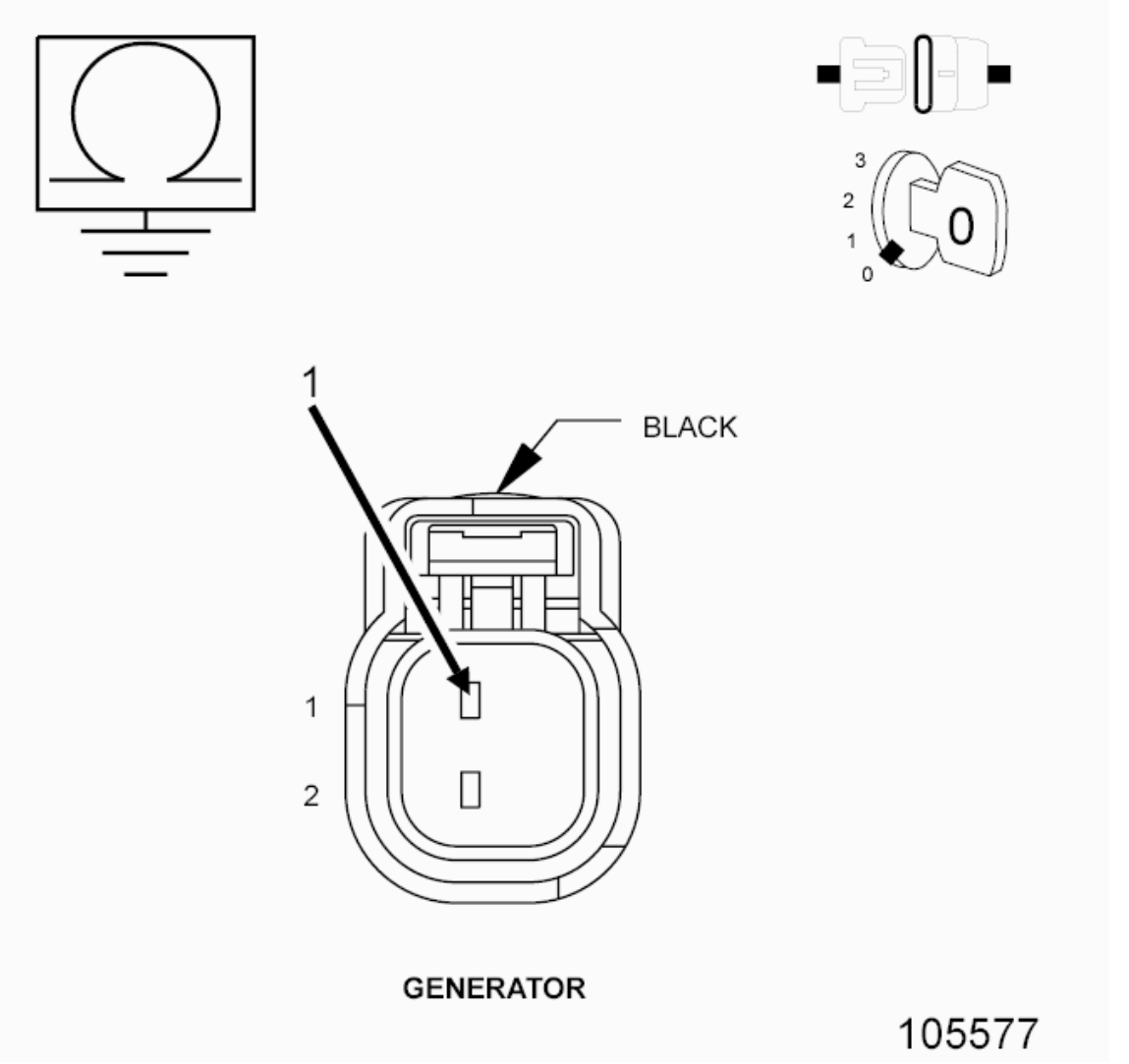

Fig. 59: Measuring Resistance Between Ground And (K20) GEN Field Control Circuit In Generator Field Harness Connector
Courtesy of CHRYSLER GROUP, LLC

1. Measure the resistance between ground and the (K20) Gen Field Control circuit in the Generator Field harness connector.

   Is the resistance below 100 ohms?

   Yes

   - Repair the short to ground in the (K20) Gen Field Control circuit.
   - Perform the POWERTRAIN VERIFICATION TEST. Refer to **POWERTRAIN VERIFICATION TEST** .

   No

   - Go To 7.

7. **POWERTRAIN CONTROL MODULE (PCM)**
   1. Using the wiring diagram/schematic as a guide, inspect the wiring and connectors between the Generator and the Powertrain Control Module (PCM).
   2. Look for any chafed, pierced, pinched, or partially broken wires.
   3. Look for broken, bent, pushed out or corroded terminals. Verify that there is good pin to terminal contact in the Generator and Control Module connectors.
   4. Refer to any Technical Service Bulletins that may apply.

      Were there any problems found?

      Yes

      - Repair as necessary.
      - Perform the POWERTRAIN VERIFICATION TEST. Refer to **POWERTRAIN VERIFICATION TEST** .

      No

      - Replace and program the Powertrain Control Module per Service Information. Refer to **MODULE, POWERTRAIN CONTROL, REMOVAL** .
      - Perform the POWERTRAIN VERIFICATION TEST. Refer to **POWERTRAIN VERIFICATION TEST** .

P0563-BATTERY VOLTAGE HIGH

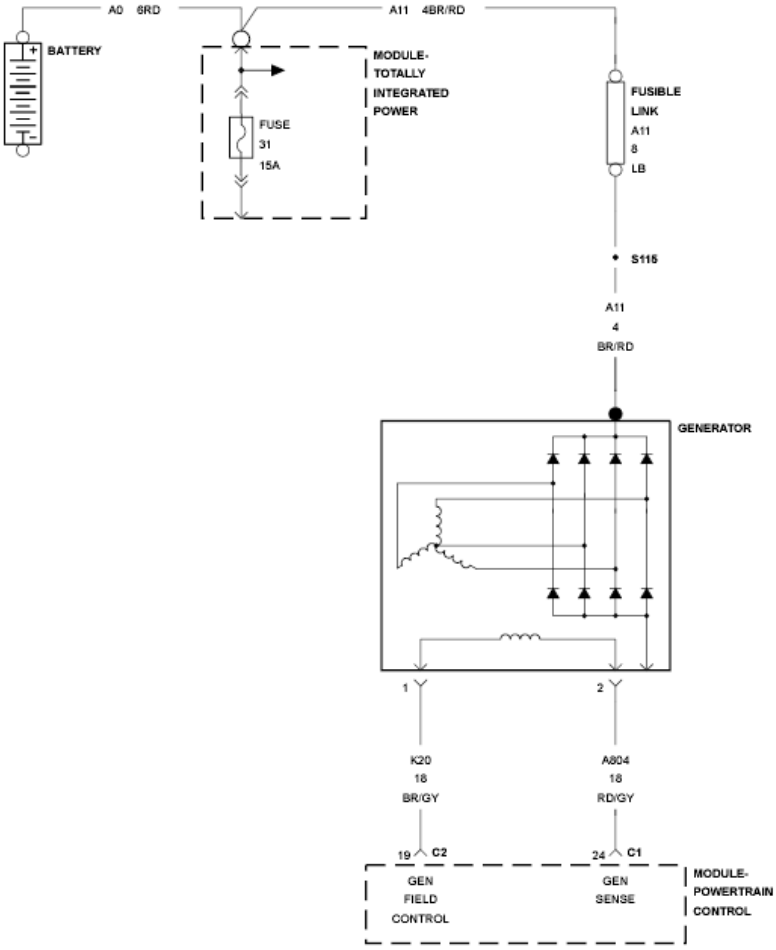

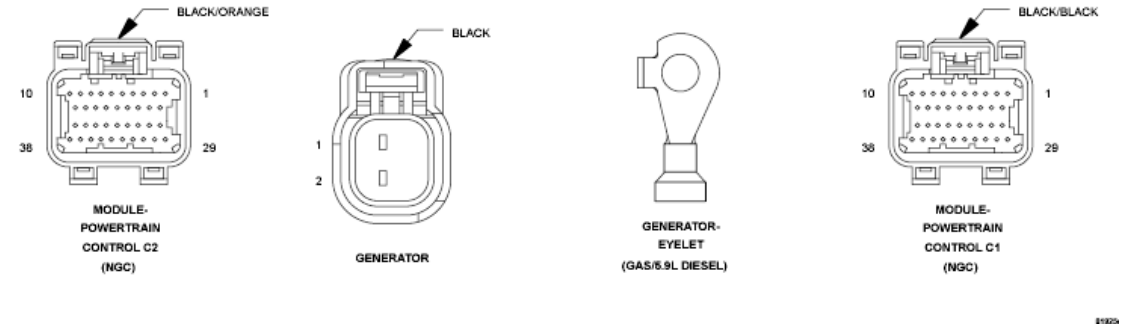

Fig. 60: Generator Circuit Schematic
Courtesy of CHRYSLER GROUP, LLC

For a complete wiring diagram **refer to appropriate SYSTEM WIRING DIAGRAMS article** .

WHEN MONITORED:

With the ignition on. Engine RPM greater than 1000 RPM. With no other charging system codes set.

SET CONDITION:

Battery voltage is 1 volt greater than desired voltage for more than 10 seconds. Battery voltage greater than 15.75 volts. One Trip Fault. Three good trips to turn off the MIL.

POSSIBLE CAUSES

Possible Causes
(K20) GENERATOR FIELD CONTROL CIRCUIT SHORTED TO VOLTAGE
GENERATOR
POWERTRAIN CONTROL MODULE (PCM)

Always perform the Pre-Diagnostic Troubleshooting procedure before proceeding. Refer to PRE-DIAGNOSTIC TROUBLESHOOTING PROCEDURE .

DIAGNOSTIC TEST

1. **ACTIVE DTC**

NOTE: **Make sure the Battery is in good condition. Using the Midtronics Battery Tester, test the Battery before continuing.**

NOTE: **Inspect the vehicle for after market accessories that may exceed the Generator System output.**

NOTE: **Make sure the generator drive belt is in good operating condition.**

NOTE: **Inspect the fuses in the IPM. If an open fuse is found, use the wire diagram/schematic as a guide, inspect the wiring and connectors for damage.**

1. Start the engine.
2. Allow the engine to reach normal operating temperature.
3. With a scan tool, select View DTCs.

NOTE: **It may be necessary to drive the vehicle to meet the conditions to set this DTC, try to repeat the conditions in which the fault originally set by reviewing the Freeze Frame data.**

Is the DTC Active at this time?

Yes

- Go To 2.

No

- Perform the INTERMITTENT CONDITION diagnostic procedure. Refer to **INTERMITTENT CONDITION** .

2. **GENERATOR OPERATION**

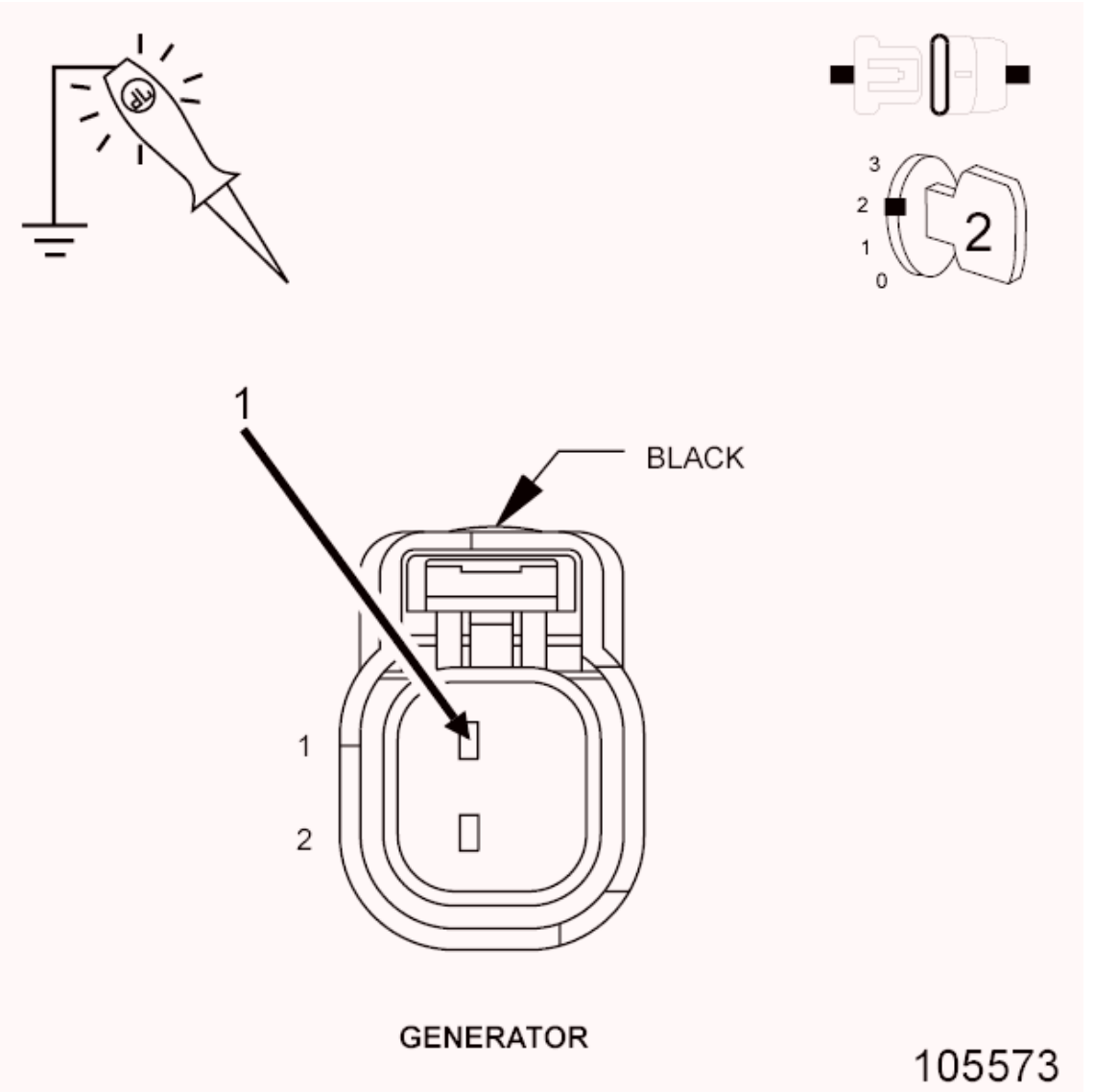

Fig. 61: Using 12-Volt Test Light Connected To Ground To Probe (K20) Generator Field Control Circuit In Generator Field Harness Connector
Courtesy of CHRYSLER GROUP, LLC

1. Turn the ignition off.
2. Disconnect the Generator Field harness connector.
3. Using a 12-volt test light connected to ground, probe the (K20) Generator Field Control circuit in the Generator Field harness connector.

NOTE: **Make sure the test light is probing the circuit before actuating the Relay or a DTC may set and not allow the actuation.**

4. Ignition on, engine not running.
5. With the scan tool, actuate the Gen Field Control circuit.

   Does the test light illuminate brightly and flash on and off?

   Yes

   - Replace the Generator.
   - Perform the POWERTRAIN VERIFICATION TEST. Refer to **POWERTRAIN VERIFICATION TEST** .

   No

   - Go To 3.

3. **(K20) FIELD CIRCUIT SHORTED VOLTAGE**

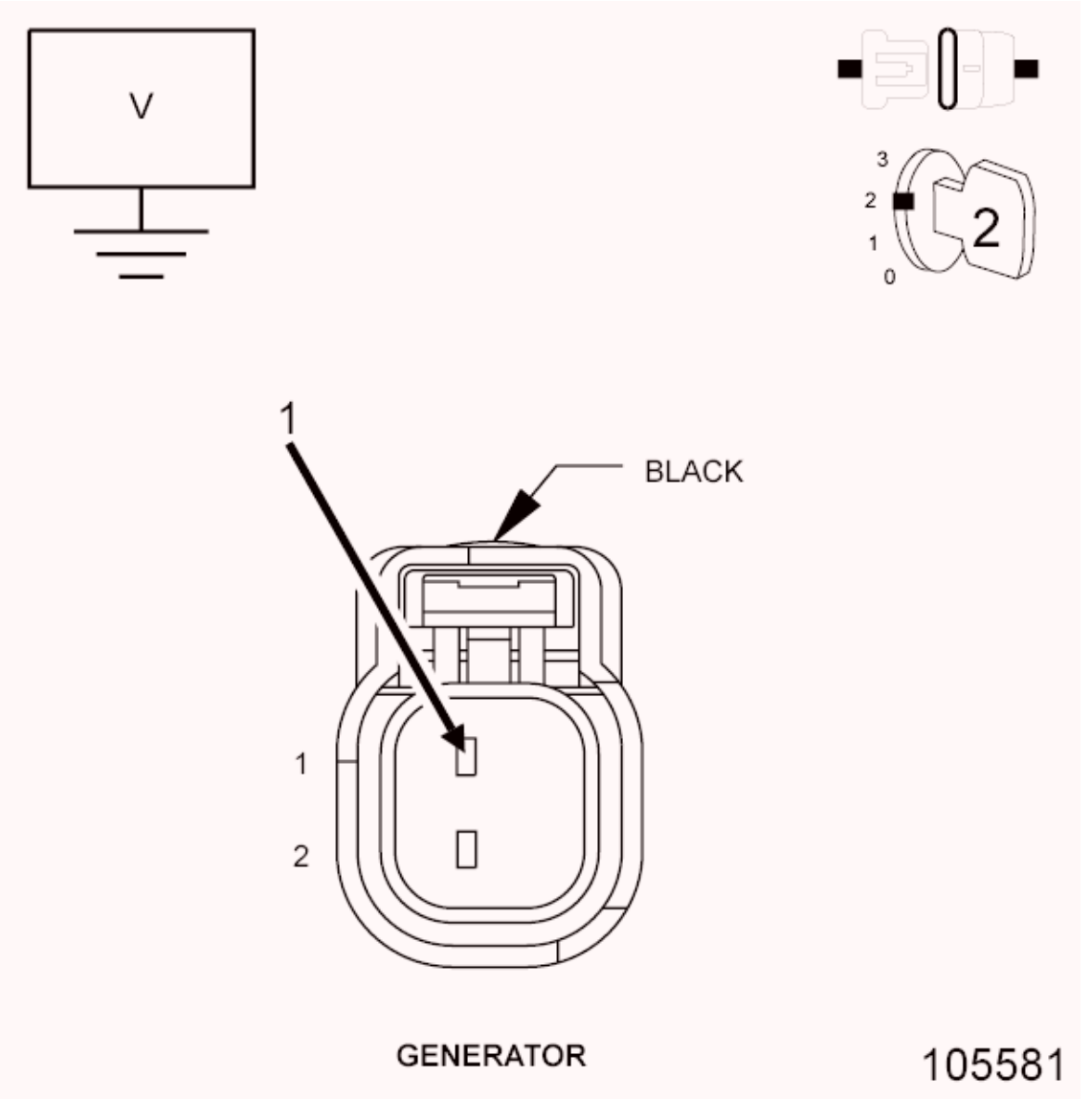

Fig. 62: Measuring Voltage On GEN Field Control Circuit AT Generator Field Harness Connector
Courtesy of CHRYSLER GROUP, LLC

1. Turn the ignition off.
2. Disconnect the C2 PCM harness connector.
3. Ignition on, engine not running.
4. Measure the voltage on the (K20) Gen Field Control circuit at the Generator Field harness connector.

   Is there any voltage present?

   Yes

   - Repair the short to voltage in the (K20) Gen Field Control circuit.

- Perform the POWERTRAIN VERIFICATION TEST. Refer to **POWERTRAIN VERIFICATION TEST** .

No

- Go To 4.

4. **POWERTRAIN CONTROL MODULE (PCM)**
   1. Using the wiring diagram/schematic as a guide, inspect the wiring and connectors between the Generator and the Powertrain Control Module (PCM).
   2. Look for any chafed, pierced, pinched, or partially broken wires.
   3. Look for broken, bent, pushed out or corroded terminals. Verify that there is good pin to terminal contact in the Generator and Control Module connectors.
   4. Refer to any Technical Service Bulletins that may apply.

   Were there any problems found?

   Yes

   - Repair as necessary.
   - Perform the POWERTRAIN VERIFICATION TEST. Refer to **POWERTRAIN VERIFICATION TEST** .

   No

   - Replace and program the Powertrain Control Module per Service Information. Refer to **MODULE, POWERTRAIN CONTROL, REMOVAL** .
   - Perform the POWERTRAIN VERIFICATION TEST. Refer to **POWERTRAIN VERIFICATION TEST** .

P0571-BRAKE SWITCH 1 PERFORMANCE

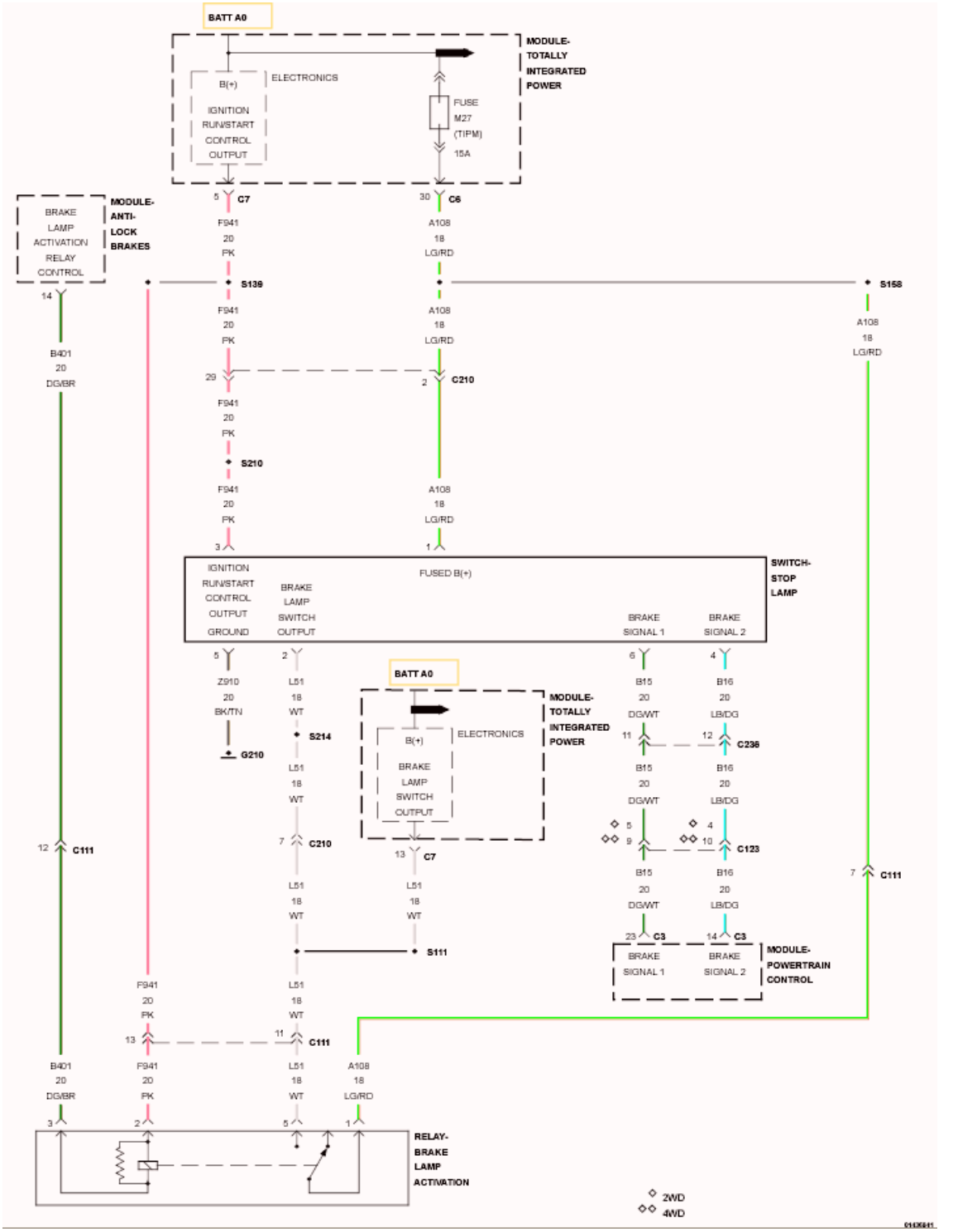

Fig. 63: Brake Lamp Switch Circuit Schematic
Courtesy of CHRYSLER GROUP, LLC

For a complete wiring diagram, **refer to appropriate SYSTEM WIRING DIAGRAMS article** .

THEORY OF OPERATION

The brake switch rationality checks both failure modes of the brake switch. The brake switch stuck on test checks for a high vehicle speed condition where the brake switch is unexpectedly depressed. The brake switch stuck off test checks for repeated vehicle stop maneuvers without the brake switch depressed.

WHEN MONITORED:

Ignition on.

SET CONDITION:

If the output of Brake Switch No. 1 to the Powertrain Control Module (PCM) looks like it is not applied, while Brake Lamp Switch Output circuit is applied the fault will mature in 60ms. One Trip Fault.

POSSIBLE CAUSES

Possible Causes
(B15) BRAKE SWITCH NO. 1 SIGNAL SHORTED TO GROUND
(B16) BRAKE SWITCH NO. 2 SIGNAL CIRCUIT OPEN
(B16) BRAKE SWITCH NO. 2 SIGNAL CIRCUIT SHORTED TO GROUND
(G210) GROUND CIRCUIT OPEN
STOP LAMP SWITCH
POWERTRAIN CONTROL MODULE (PCM)

Always perform the Pre-Diagnostic Troubleshooting procedure before proceeding. Refer to PRE-DIAGNOSTIC TROUBLESHOOTING PROCEDURE .

DIAGNOSTIC TEST

1. **ACTIVE DTC**

   NOTE: Make sure the Stop Lamp Switch is properly adjusted before continuing.

   NOTE: Make sure the Stop Lamp Switch is properly wired, such as (B15) Brake Switch No. 1 and (B16) Brake Switch No. 2 circuit are not switched at the harness connector.

   1. Ignition on, engine not running.
   2. With the scan tool, select View DTCs.

      Is the DTC Active at this time?

      Yes

      - Go To 2.

      No

- Perform the INTERMITTENT CONDITION diagnostic procedure. Refer to **INTERMITTENT CONDITION** .

2. **(B15) BRAKE SWITCH NO. 1 SIGNAL SHORTED TO GROUND**

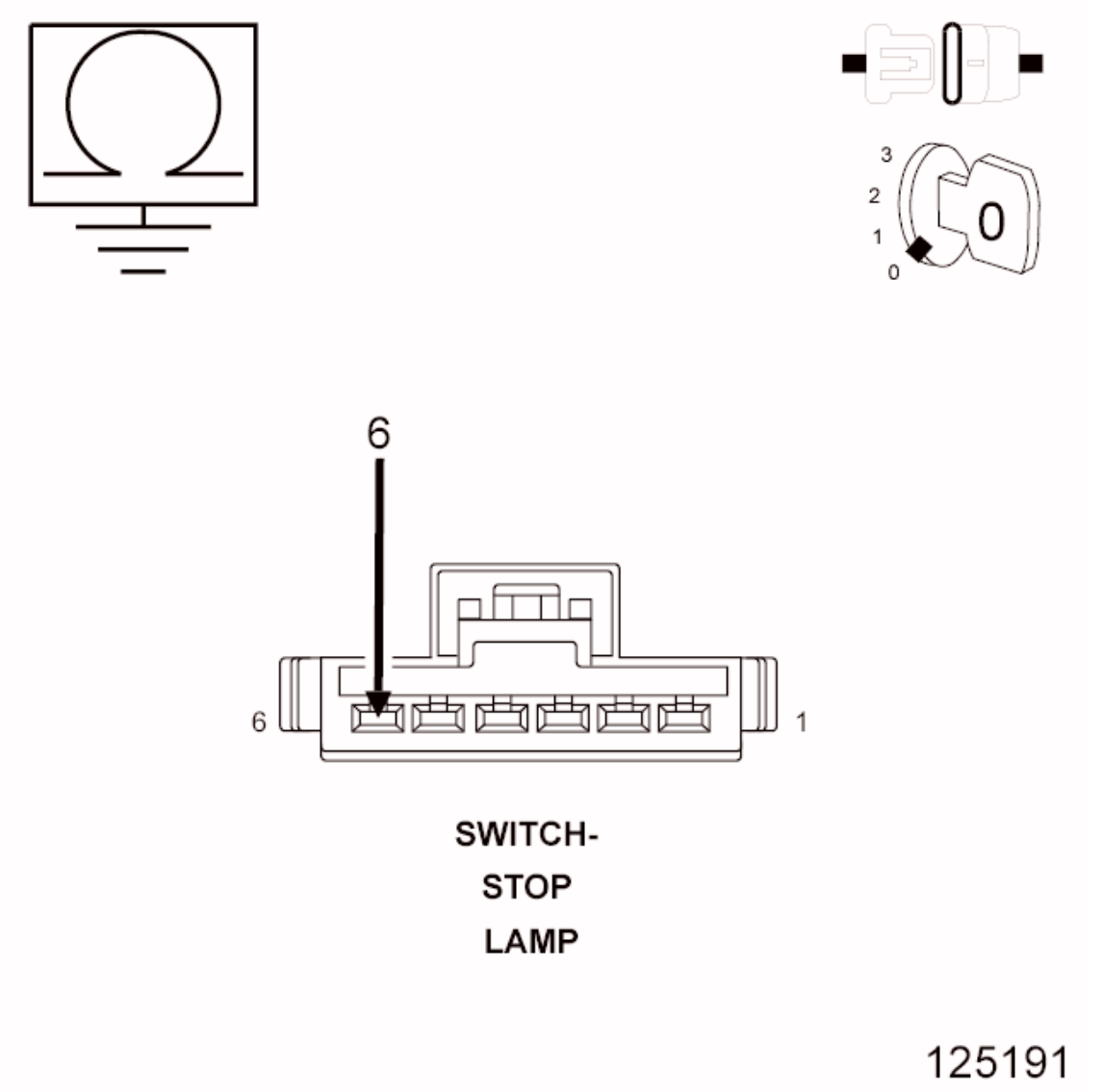

Fig. 64: Measuring Resistance Between Ground And (B15) Brake Switch No. 1 Signal Circuit In Stop Lamp Switch Harness Connector
Courtesy of CHRYSLER GROUP, LLC

1. Turn the ignition off.
2. Disconnect the Stop Lamp Switch harness connector.
3. Disconnect the C3 PCM harness connector.
4. Measure the resistance between ground and the (B15) Brake Switch No. 1 Signal circuit in the Stop Lamp Switch harness connector.

Is the resistance below 100 Ohms?

Yes

- Repair the short to ground in the (B15) Brake Switch No. 1 Signal circuit.
- Perform the POWERTRAIN VERIFICATION TEST. Refer to **POWERTRAIN VERIFICATION TEST** .

No

- Go To 3.

3. **(B16) BRAKE SWITCH NO. 2 SIGNAL CIRCUIT OPEN**

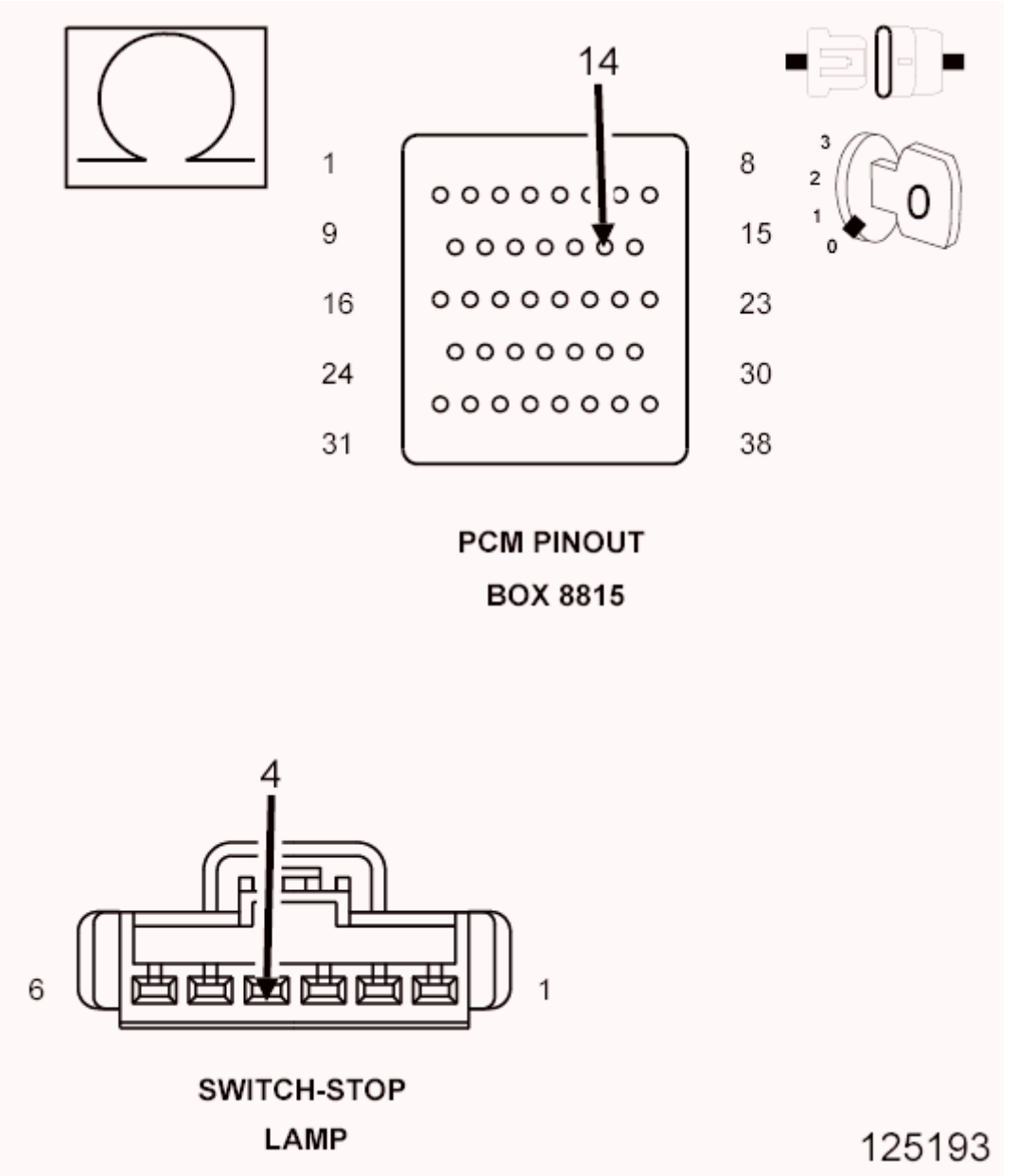

Fig. 65: Measuring Resistance Of Brake Switch No. 2 Signal Circuit From Stop Lamp Switch Harness Connector To Appropriate Terminal Of PCM Pinout Box 8815
Courtesy of CHRYSLER GROUP, LLC

CAUTION: Do not probe the PCM harness connectors. Probing the PCM harness connectors will damage the PCM terminals resulting in poor terminal to pin connection. Install the PCM Pinout Box (special tool #8815A, Kit, NGC, 38 Position) to perform diagnosis.

1. Measure the resistance of the (B16) Brake Switch No. 2 Signal circuit from the Stop Lamp Switch harness connector to the appropriate terminal of PCM Pinout Box (special tool #8815A, Kit, NGC, 38 Position).

Is the resistance below 5.0 Ohms?

Yes

- Go To 4.

No

- Repair the open in the (B16) Brake Switch No. 2 Signal circuit.
- Perform the POWERTRAIN VERIFICATION TEST. Refer to **POWERTRAIN VERIFICATION TEST** .

4. **(B16) BRAKE SWITCH NO. 2 SIGNAL CIRCUIT SHORTED TO GROUND**

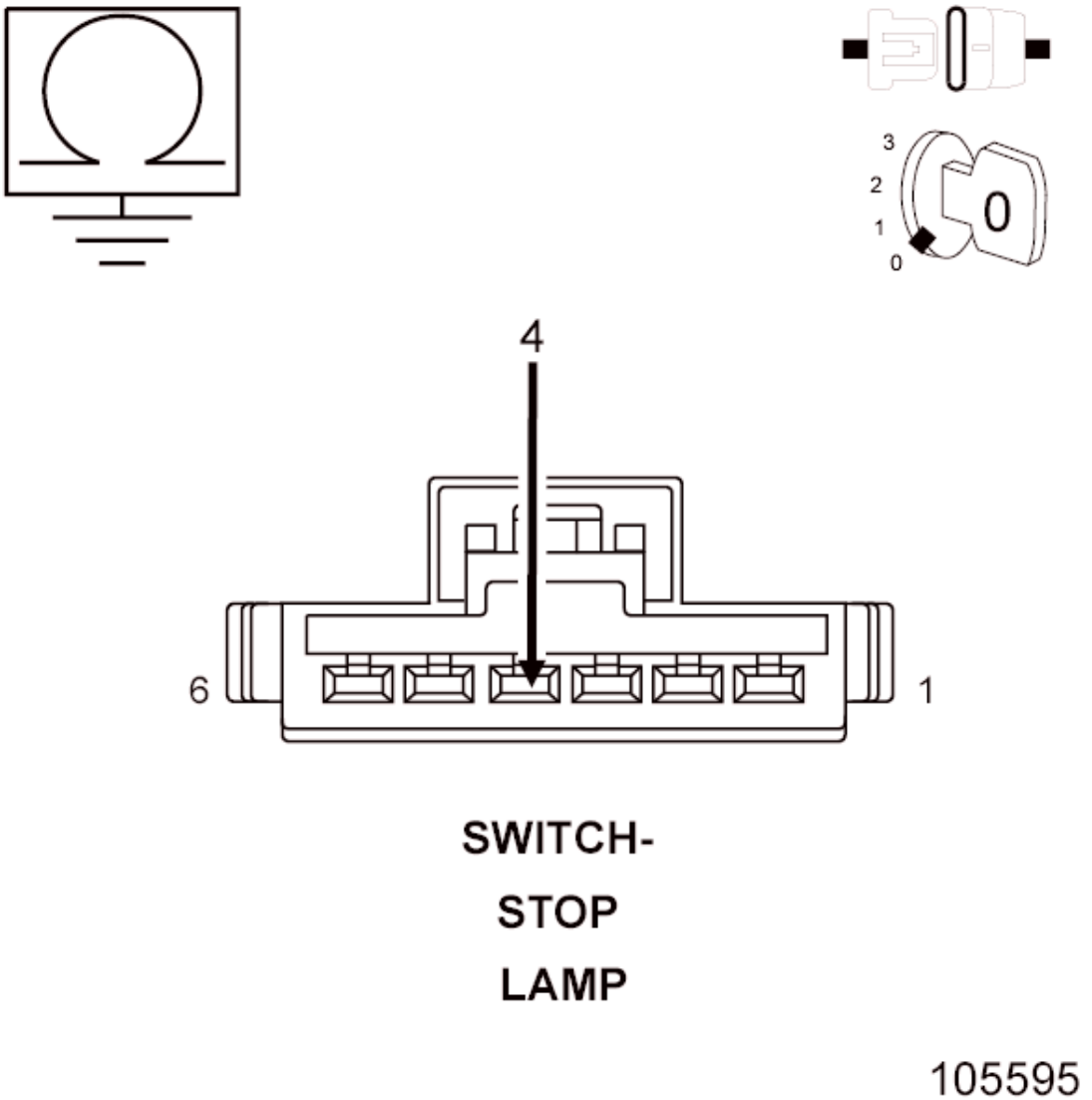

Fig. 66: Measuring Resistance Between Ground And (B16) Brake Switch No. 2 Signal Circuit In Stop Lamp Switch Harness Connector

Courtesy of CHRYSLER GROUP, LLC

1. Measure the resistance between ground and the (B16) Brake Switch No. 2 Signal circuit in the Stop Lamp Switch harness connector.

   Is the resistance below 100 Ohms?

   Yes

   - Repair the short to ground in the (B16) Brake Switch No. 2 Signal circuit.
   - Perform the POWERTRAIN VERIFICATION TEST. Refer to **POWERTRAIN VERIFICATION TEST** .

   No

   - Go To 5.

5. **(G210) GROUND CIRCUIT OPEN**

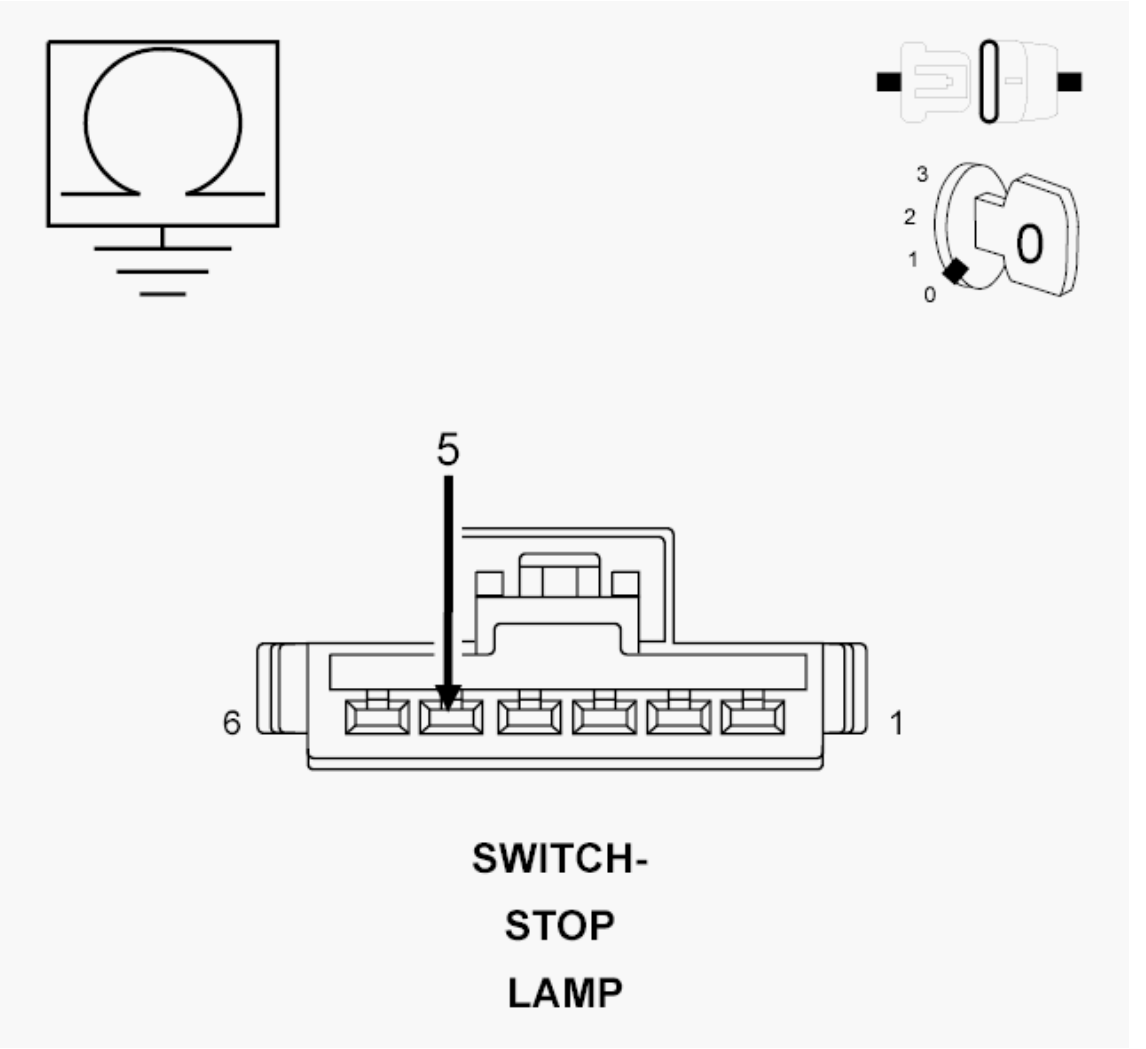

Fig. 67: Measuring Resistance Between Ground And Ground Circuit In Stop Lamp Switch Harness Connector
Courtesy of CHRYSLER GROUP, LLC

1. Measure the resistance between ground and the (G210) Ground circuit in the Stop Lamp Switch harness connector.

   Is the resistance below 5.0 Ohms?

   Yes

   - Go To 6.

   No

   - Repair the open in the (G210) Ground circuit.
   - Perform the POWERTRAIN VERIFICATION TEST. Refer to **POWERTRAIN VERIFICATION TEST** .

6. **STOP LAMP SWITCH**
   1. Measure the resistance between the (G210) Ground circuit terminal and the (B15) Brake Switch No. 1 Signal terminal in the Stop Lamp Switch.
   2. Apply and release the brake pedal while monitoring the ohmmeter.
   3. Next, measure the resistance between the (A108) Fused Ignition Switch circuit terminal and the (B16) Brake Switch No. 2 Signal circuit terminal in the Stop Lamp Switch.
   4. Apply and release the brake pedal while monitoring the ohmmeter.

      Does the resistance change from below 5.0 Ohms to an open circuit for one or both of the measurements taken?

      Yes

      - Go To 7.

      No

      - Verify that there is good pin to terminal contact in the Switch and Control Module connectors. Replace the Stop Lamp Switch if no problems were found in the connectors.
      - Perform the POWERTRAIN VERIFICATION TEST. Refer to **POWERTRAIN VERIFICATION TEST** .

7. **POWERTRAIN CONTROL MODULE (PCM)**
   1. Using the wiring diagram/schematic as a guide, inspect the wiring and connectors between the Stop Lamp Switch and the Powertrain Control Module (PCM).
   2. Look for any chafed, pierced, pinched or partially broken wires.
   3. Look for broken, bent, pushed out or corroded terminals. Verify that there is good pin to terminal contact in the Switch and Control Module connectors.

4. Perform any Technical Service Bulletins that may apply.

   Were there any problems found?

   Yes

   - Repair as necessary.
   - Perform the POWERTRAIN VERIFICATION TEST. Refer to **POWERTRAIN VERIFICATION TEST** .

   No

   - Replace and program the Powertrain Control Module in accordance with the Service Information. Refer to **MODULE, POWERTRAIN CONTROL, REMOVAL** .
   - Perform the POWERTRAIN VERIFICATION TEST. Refer to **POWERTRAIN VERIFICATION TEST** .

P0572-BRAKE SWITCH 1 STUCK ON

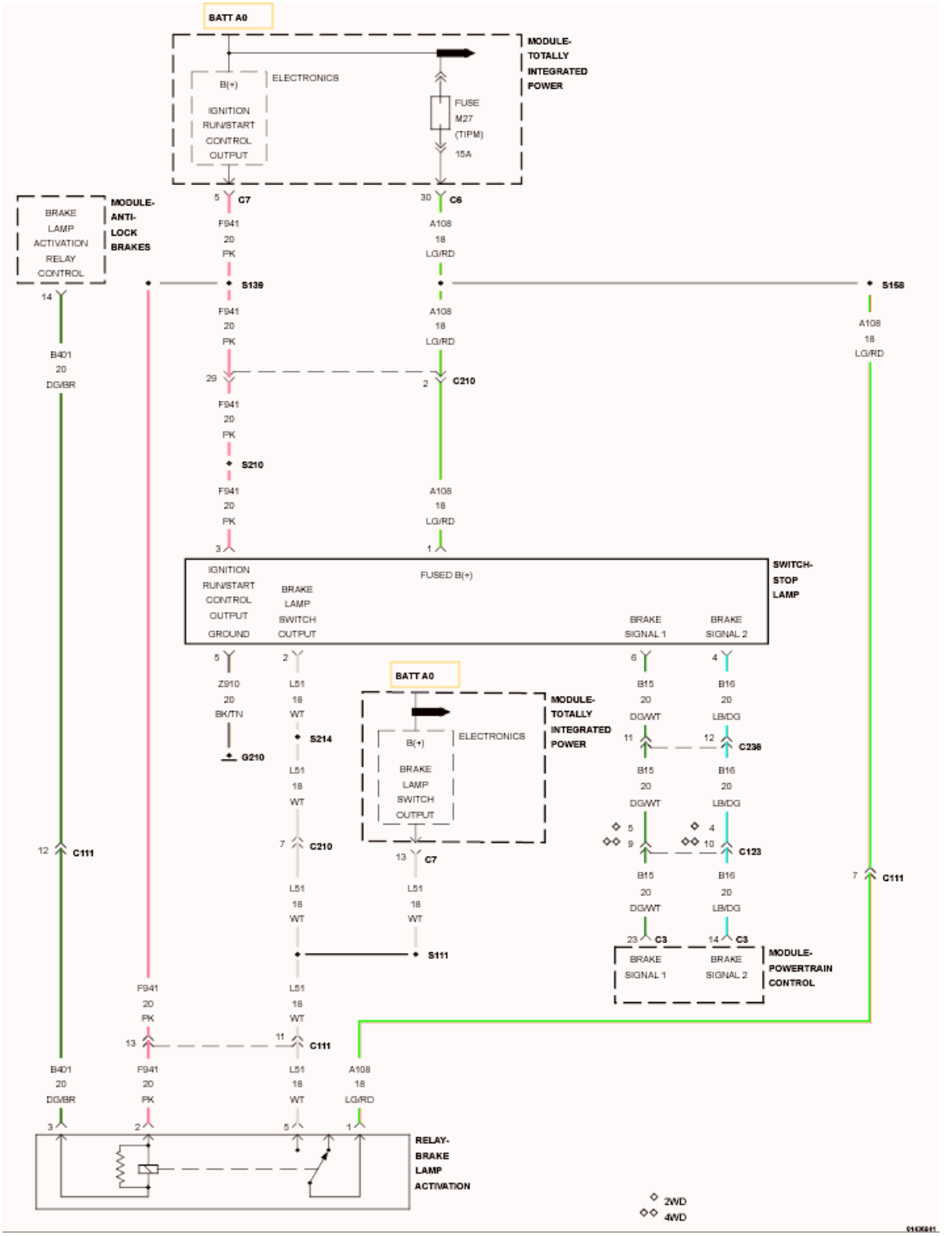

Fig. 68: Brake Lamp Switch Circuit Schematic
Courtesy of CHRYSLER GROUP, LLC

For a complete wiring diagram, **refer to appropriate SYSTEM WIRING DIAGRAMS article** .

WHEN MONITORED:

When vehicle speed cycles from 0 kph to 48 kph (30 mph) at least 10 times.

SET CONDITION:

When the Powertrain Control Module (PCM) recognizes Brake Switch No. 1 is mechanically stuck in the low/on position. Two Trip Fault. Three Global Good Trips to Clear.

POSSIBLE CAUSES

Possible Causes
(B15) BRAKE SWITCH NO. 1 SIGNAL CIRCUIT SHORTED TO GROUND
(B16) BRAKE SWITCH NO. 2 SIGNAL CIRCUIT OPEN
STOP LAMP SWITCH
POWERTRAIN CONTROL MODULE (PCM)

Always perform the Pre-Diagnostic Troubleshooting procedure before proceeding. Refer to PRE-DIAGNOSTIC TROUBLESHOOTING PROCEDURE .

DIAGNOSTIC TEST

1. **ACTIVE DTC**

   NOTE: Verify battery voltage is greater than 10 Volts.

   NOTE: Make sure the Stop Lamp Switch is properly adjusted before continuing.

   1. Start the engine.
   2. Allow the engine to reach normal operating temperature.
   3. With the scan tool, select View DTCs.

      NOTE: It may be necessary to drive the vehicle to meet the conditions to set this DTC, try to repeat the conditions in which the fault originally set by reviewing the Freeze Frame data.

      Is the DTC Active or Pending at this time?

      Yes

      - Go To 2.

      No

      - Perform the INTERMITTENT CONDITION diagnostic procedure. Refer to **INTERMITTENT CONDITION** .

2. **STOP LAMP SWITCH**

1. Turn the ignition off.
2. Disconnect the Stop Lamp Switch harness connector.
3. Measure the resistance between the (G210) Ground circuit terminal and the (B15) Brake Switch No. 1 Signal terminal in the Stop Lamp Switch.
4. Measure the resistance between the (A108) Fused Ignition Switch circuit terminal and the (B16) Brake Switch No. 2 Signal terminal in the Stop Lamp Switch.
5. Apply and release the stop lamp switch plunger while monitoring the Ohmmeter.

   Does the resistance change from below 5.0 Ohms to an open circuit?

   Yes

   - Go To 3.

   No

   - Verify that there is good pin to terminal contact in the Switch and Control Module connectors. Replace the Stop Lamp Switch if no problems were found in the connectors.
   - Perform the POWERTRAIN VERIFICATION TEST. Refer to **POWERTRAIN VERIFICATION TEST** .

3. **(B15) BRAKE SWITCH NO. 1 SIGNAL CIRCUIT SHORTED TO GROUND**

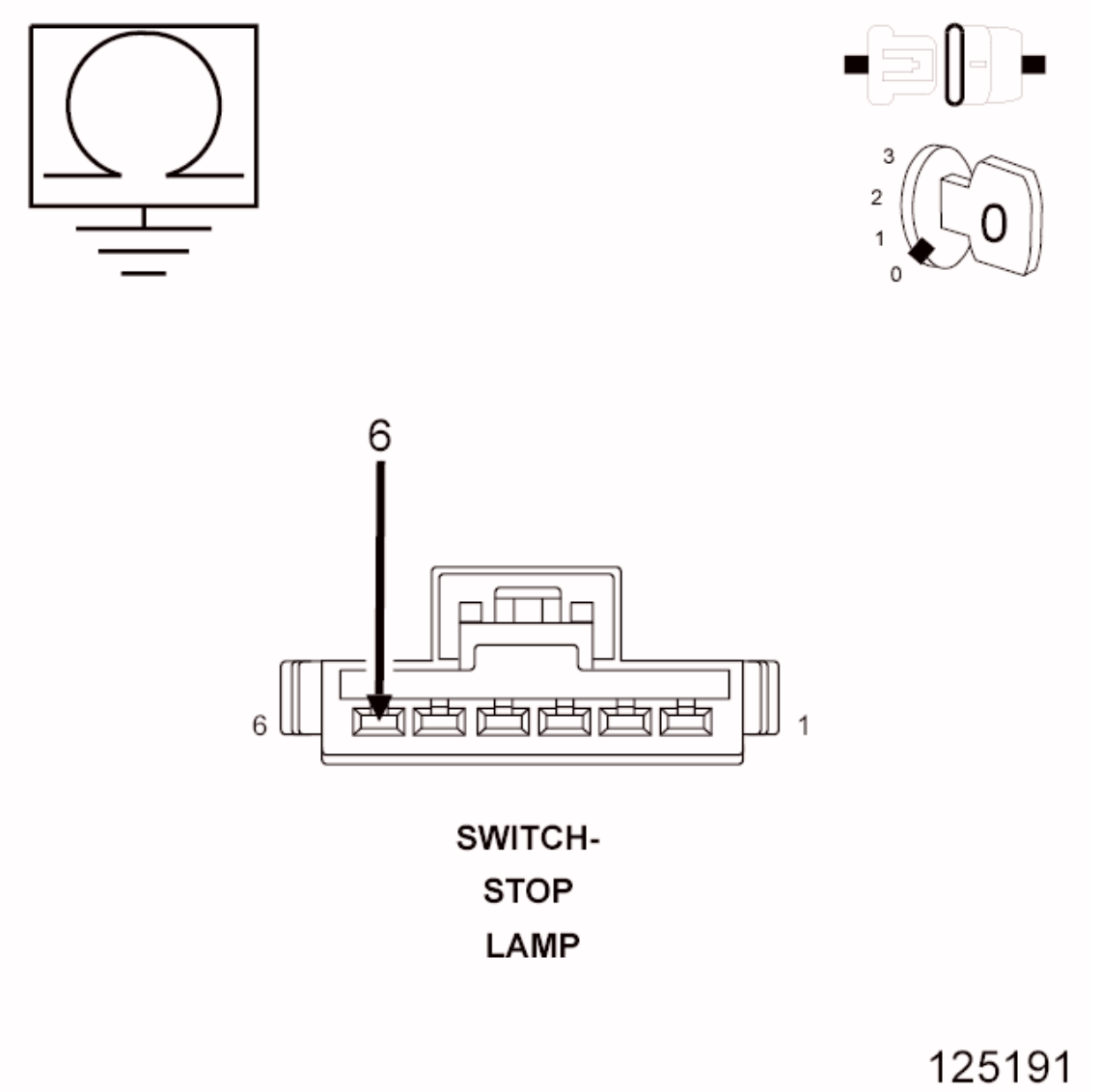

Fig. 69: Measuring Resistance Between Ground And (B15) Brake Switch No. 1 Signal Circuit In Stop Lamp Switch Harness Connector
Courtesy of CHRYSLER GROUP, LLC

1. Turn the ignition off.
2. Disconnect the C3 PCM harness connector.
3. Measure the resistance between ground and the (B15) Brake Switch No. 1 Signal circuit in the Stop Lamp Switch harness connector.

   Is the resistance below 100 Ohms?

   Yes

   - Repair the short to ground in the (B15) Brake Switch No. 1 Signal circuit.
   - Perform the POWERTRAIN VERIFICATION TEST. Refer to **POWERTRAIN**

VERIFICATION TEST .

No

- Go To 4.

4. **(B16) BRAKE SWITCH NO. 2 SIGNAL CIRCUIT OPEN**

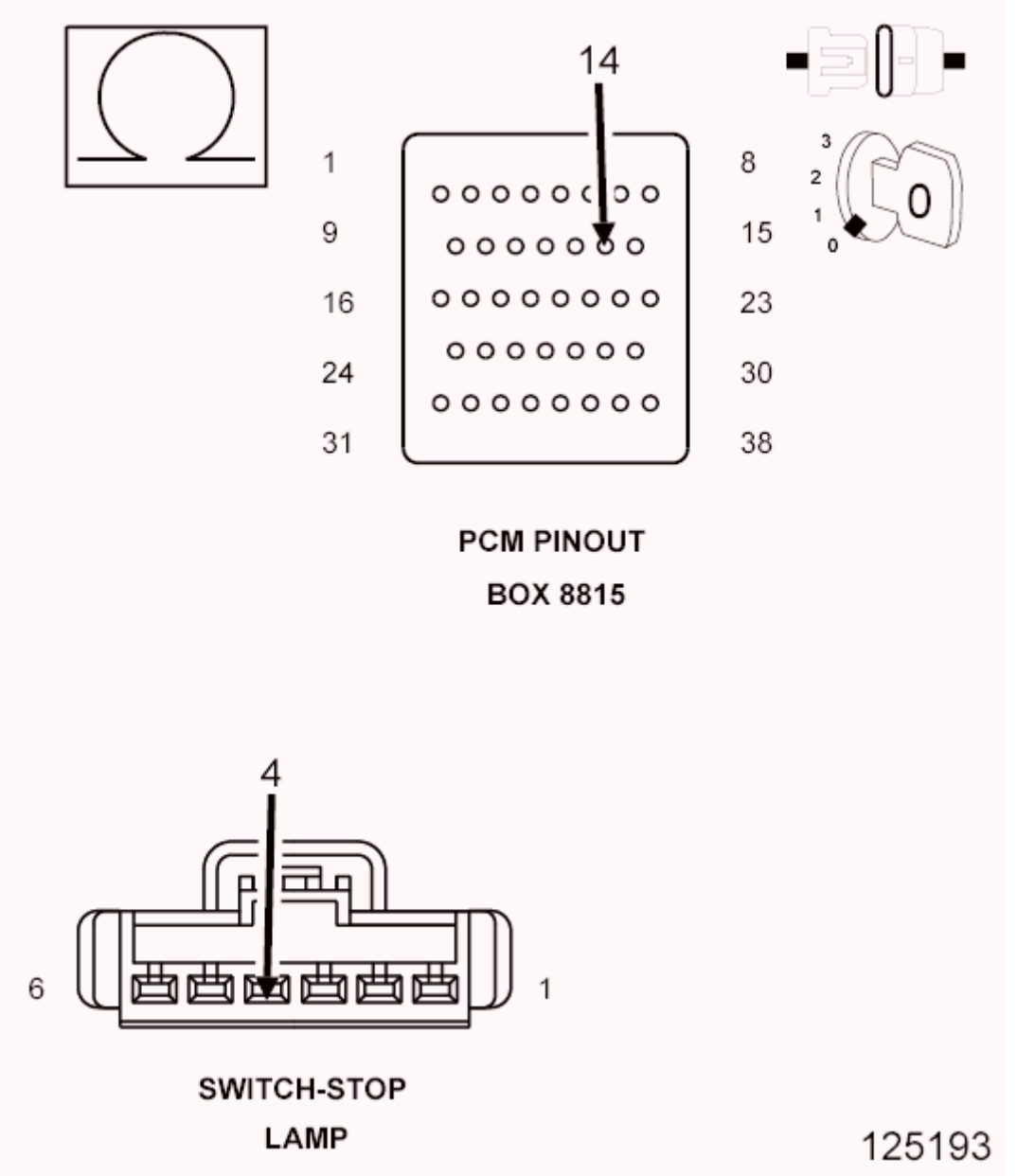

Fig. 70: Measuring Resistance Of Brake Switch No. 2 Signal Circuit From Stop Lamp Switch Harness Connector To Appropriate Terminal Of PCM Pinout Box 8815
Courtesy of CHRYSLER GROUP, LLC

CAUTION: Do not probe the PCM harness connectors. Probing the PCM harness

connectors will damage the PCM terminals resulting in poor terminal to pin connection. Install the PCM Pinout Box (special tool #8815A, Kit, NGC, 38 Position) to perform diagnosis.

1. Measure the resistance of the (B16) Brake Switch No. 2 Signal Output circuit from the Stop Lamp Switch harness connector to the appropriate terminal of PCM Pinout Box (special tool #8815A, Kit, NGC, 38 Position).

   Is the resistance below 5.0 Ohms?

   Yes

   - Go To 5.

   No

   - Repair the open in the (B16) Brake Switch No. 2 Signal circuit.
   - Perform the POWERTRAIN VERIFICATION TEST. Refer to **POWERTRAIN VERIFICATION TEST** .

5. **POWERTRAIN CONTROL MODULE (PCM)**
   1. Using the wiring diagram/schematic as a guide, inspect the wiring and connectors between the Stop Lamp Switch and the Powertrain Control Module (PCM).
   2. Look for any chafed, pierced, pinched or partially broken wires.
   3. Look for broken, bent, pushed out or corroded terminals. Verify that there is good pin to terminal contact in the Switch and Control Module connectors.
   4. Perform any Technical Service Bulletins that may apply.

      Were there any problems found?

      Yes

      - Repair as necessary.
      - Perform the POWERTRAIN VERIFICATION TEST. Refer to **POWERTRAIN VERIFICATION TEST** .

      No

      - Replace and program the Powertrain Control Module in accordance with the Service Information. Refer to **MODULE, POWERTRAIN CONTROL, REMOVAL** .
      - Perform the POWERTRAIN VERIFICATION TEST. Refer to **POWERTRAIN VERIFICATION TEST** .

P0573-BRAKE SWITCH 1 STUCK OFF

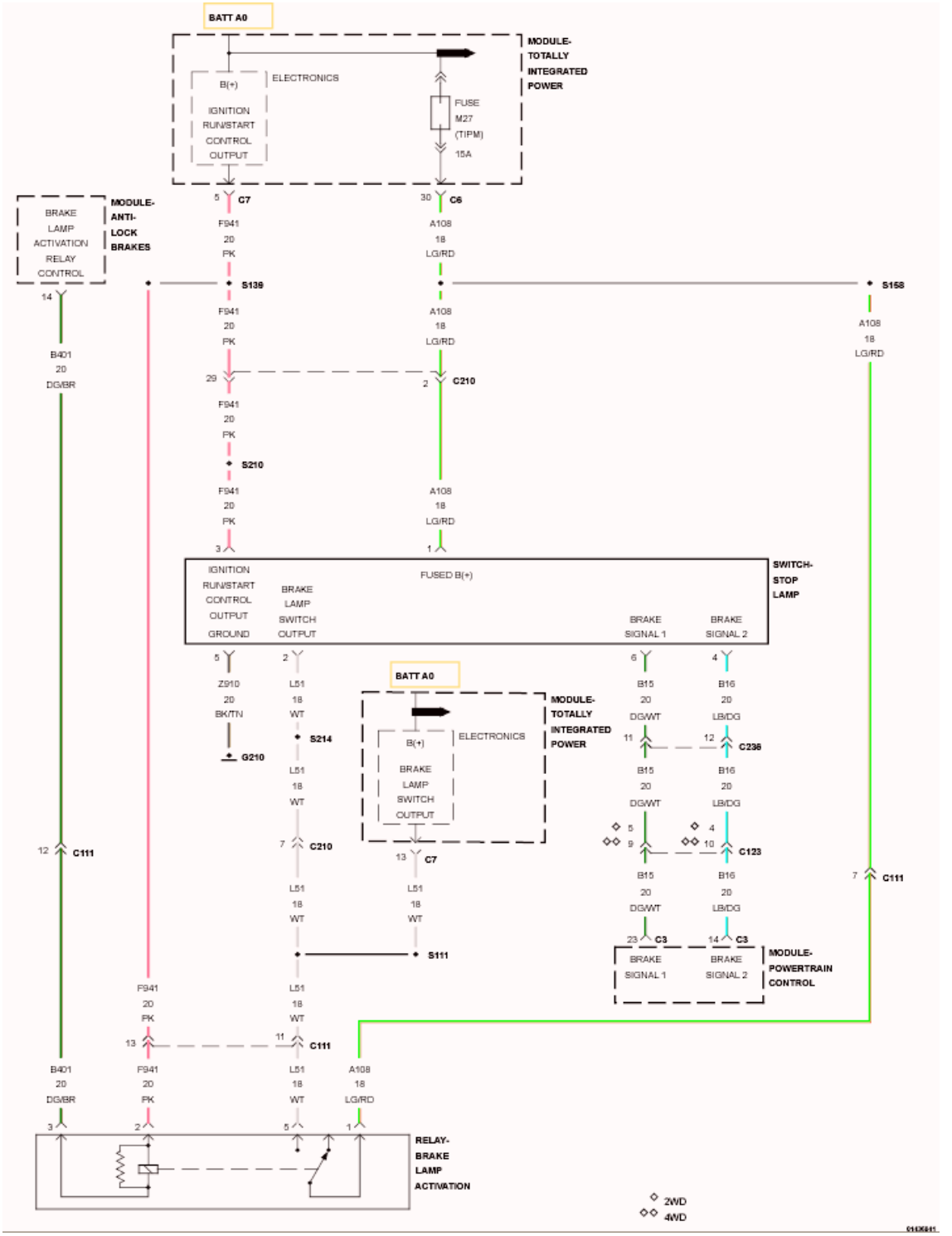

Fig. 71: Brake Lamp Switch Circuit Schematic
Courtesy of CHRYSLER GROUP, LLC

For a complete wiring diagram, **refer to appropriate SYSTEM WIRING DIAGRAMS article** .

WHEN MONITORED:

When vehicle speed cycles from 0 kph to 48 kph (30 mph) at least 10 times.

SET CONDITION:

When the Powertrain Control Module (PCM) recognizes Brake Switch No. 1 is stuck in the high/off position. Two Trip Fault. Three good trips to turn off the MIL.

POSSIBLE CAUSES

Possible Causes
(B15) BRAKE SWITCH NO. 1 SIGNAL CIRCUIT OPEN
(B16) BRAKE SWITCH NO. 2 SIGNAL CIRCUIT SHORTED TO GROUND
(G210) GROUND CIRCUIT OPEN
STOP LAMP SWITCH
POWERTRAIN CONTROL MODULE (PCM)

Always perform the Pre-Diagnostic Troubleshooting procedure before proceeding. Refer to PRE-DIAGNOSTIC TROUBLESHOOTING PROCEDURE .

DIAGNOSTIC TEST

1. **ACTIVE DTC**
    1. Start the engine.
    2. Allow the engine to reach normal operating temperature.
    3. With the scan tool, select View DTCs.

    NOTE: **It may be necessary to drive the vehicle to meet the conditions to set this DTC, try to repeat the conditions in which the fault originally set by reviewing the Freeze Frame data.**

    Is the DTC Active or Pending at this time?

    Yes

    - Go To 2.

    No

    - Perform the INTERMITTENT CONDITION diagnostic procedure. Refer to **INTERMITTENT CONDITION** .
2. **STOP LAMP SWITCH**
    1. Turn the ignition off.
    2. Disconnect the Stop Lamp Switch harness connector.
    3. Measure the resistance between the (G210) Ground circuit terminal and the (B15) Brake Switch

No. 1 Signal circuit terminal in the Stop Lamp Switch.

4. Apply and release the Stop Lamp Switch while monitoring the Ohmmeter.

   Does the resistance change from below 5.0 Ohms to an open circuit?

   Yes

   - Go To 3.

   No

   - Verify that there is good pin to terminal contact in the Switch and Control Module connectors. Replace the Stop Lamp Switch if no problems were found in the connectors.
   - Perform the POWERTRAIN VERIFICATION TEST. Refer to **POWERTRAIN VERIFICATION TEST** .

3. **(B15) BRAKE SWITCH NO. 1 SIGNAL CIRCUIT OPEN**

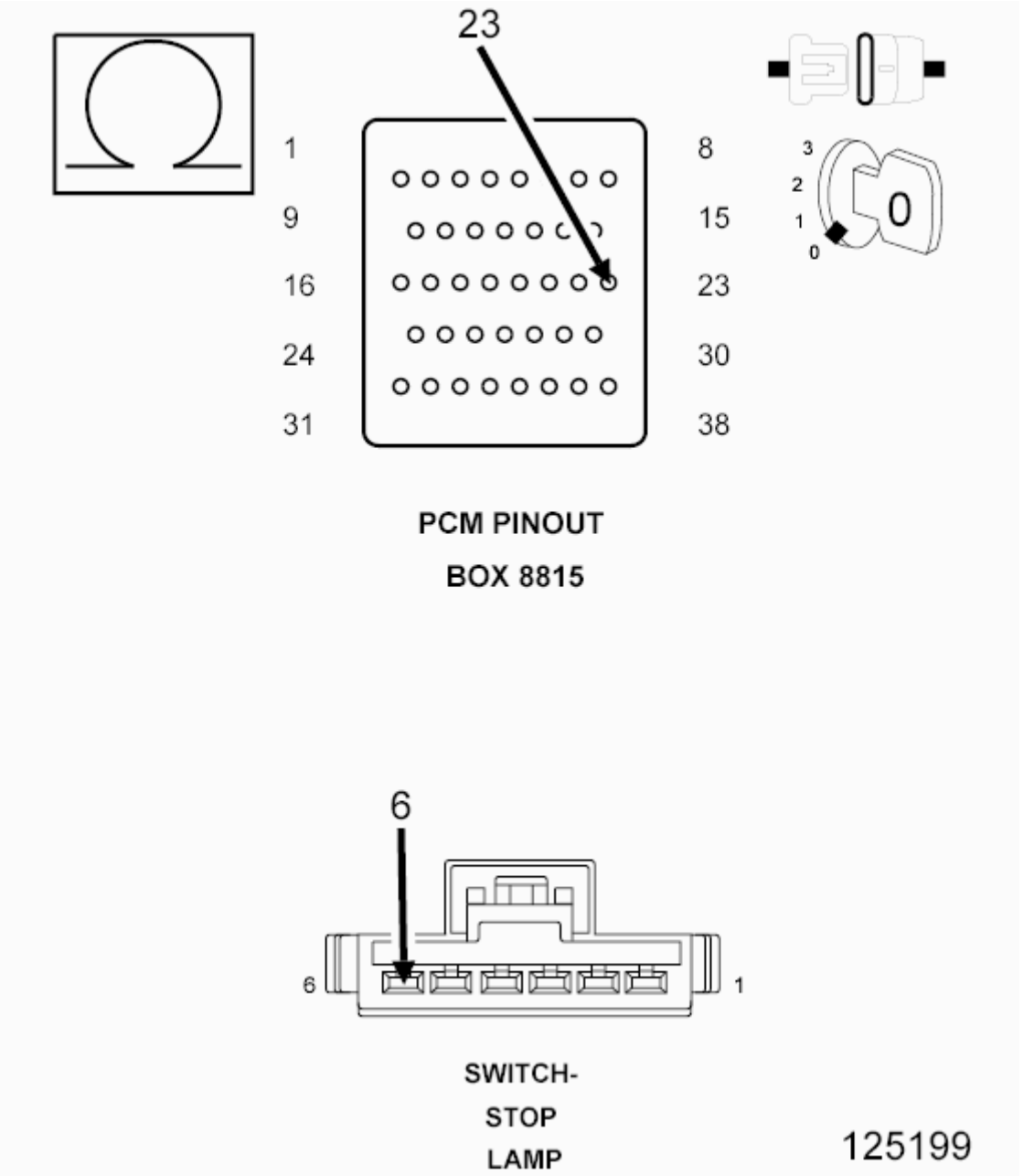

Fig. 72: Measuring Resistance Of (B15) Brake Switch No. 1 Signal Circuit From Stop Lamp Switch Harness Connector To Appropriate Terminal Of PCM Pinout Box 8815
Courtesy of CHRYSLER GROUP, LLC

1. Turn the ignition off.
2. Disconnect the C3 PCM harness connector.

CAUTION: Do not probe the PCM harness connectors. Probing the PCM harness connectors will damage the PCM terminals resulting in poor terminal to pin connection. Install the PCM Pinout Box (special tool #8815A, Kit, NGC, 38 Position) to perform

diagnosis.

3. Measure the resistance of the (B15) Brake Switch No. 1 Signal circuit from the Stop Lamp Switch harness connector to the appropriate terminal of PCM Pinout Box (special tool #8815A, Kit, NGC, 38 Position).

   Is the resistance below 5.0 Ohms?

   Yes

   - Go To 4.

   No

   - Repair the open in the (B15) Brake Switch No. 1 Signal circuit.
   - Perform the POWERTRAIN VERIFICATION TEST. Refer to **POWERTRAIN VERIFICATION TEST** .

4. **(B16) BRAKE SWITCH NO. 2 SIGNAL CIRCUIT SHORTED TO GROUND**

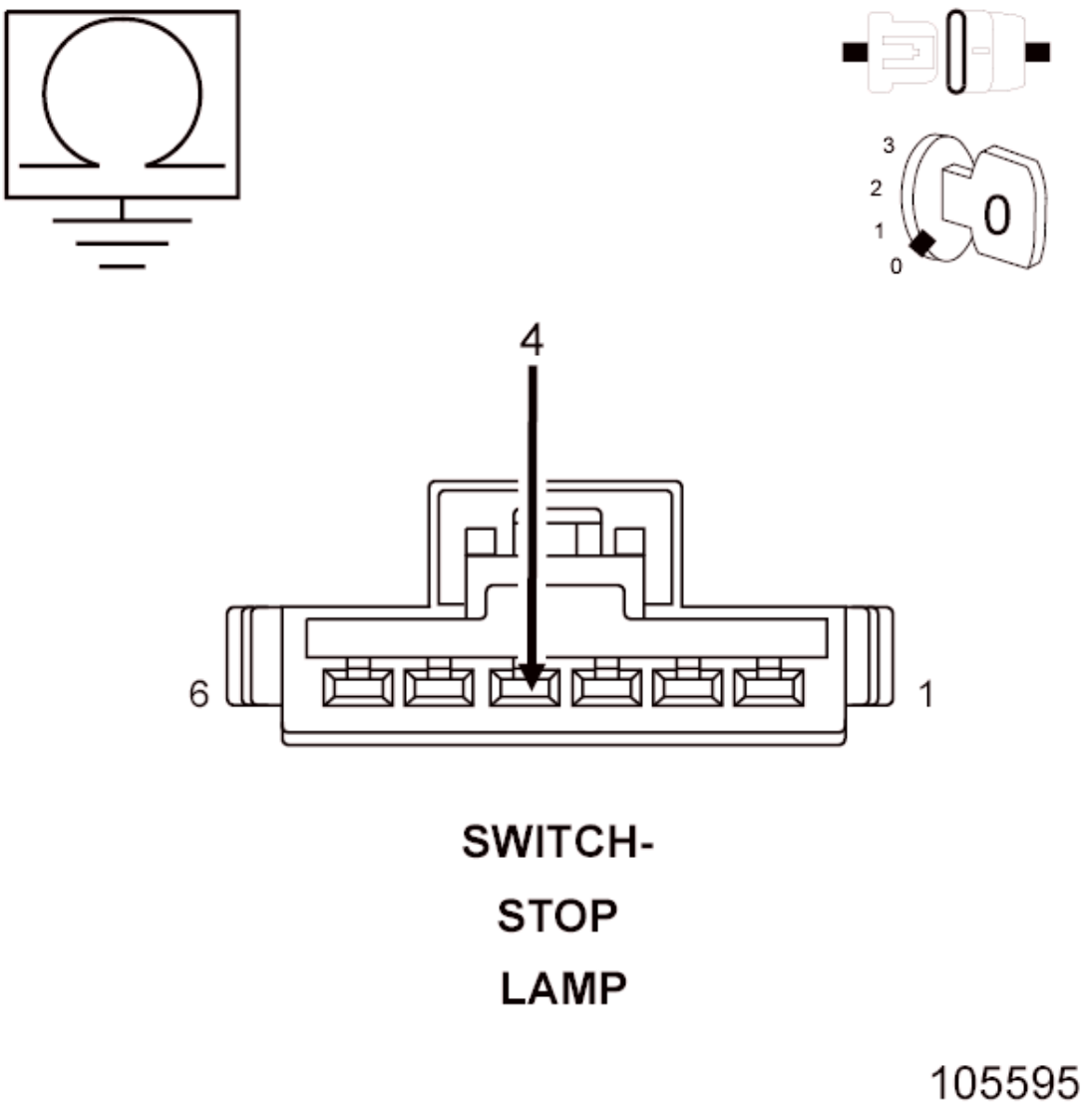

Fig. 73: Measuring Resistance Between Ground And (B16) Brake Switch No. 2 Signal Circuit In Stop Lamp Switch Harness Connector
Courtesy of CHRYSLER GROUP, LLC

1. Measure the resistance between ground and the (B16) Brake Switch No. 2 Signal circuit in the Stop Lamp Switch harness connector.

   Is the resistance below 100 Ohms?

   Yes

   - Repair the short to ground in the (B16) Brake Switch No. 2 Signal circuit.
   - Perform the POWERTRAIN VERIFICATION TEST. Refer to **POWERTRAIN VERIFICATION TEST** .

No

- Go To 5.

5. **(G210) GROUND CIRCUIT OPEN**

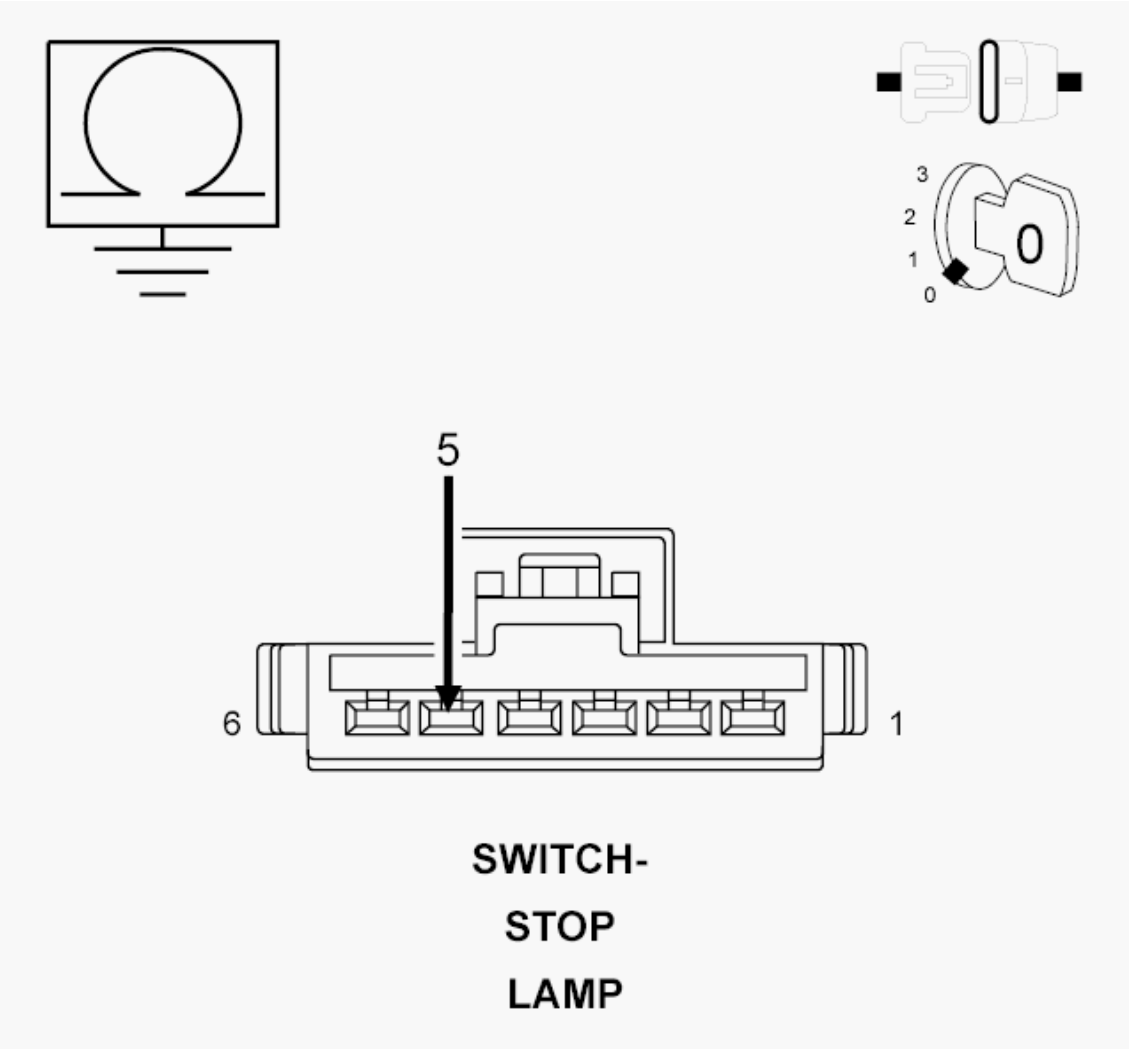

Fig. 74: Measuring Resistance Between Ground And Ground Circuit In Stop Lamp Switch Harness Connector
Courtesy of CHRYSLER GROUP, LLC

1. Measure the resistance between the (G210) Ground circuit and ground in the Stop Lamp Switch harness connector.

   Is the resistance below 5.0 Ohms?

   Yes

   - Go To 6.

No

- Repair the open in the (G210) Ground circuit.
- Perform the POWERTRAIN VERIFICATION TEST. Refer to **POWERTRAIN VERIFICATION TEST** .

6. **POWERTRAIN CONTROL MODULE (PCM)**
    1. Using the wiring diagram/schematic as a guide, inspect the wiring and connectors between the Stop Lamp Switch and the Powertrain Control Module (PCM).
    2. Look for any chafed, pierced, pinched or partially broken wires.
    3. Look for broken, bent, pushed out or corroded terminals. Verify that there is good pin to terminal contact in the Switch and Control Module connectors.
    4. Perform any Technical Service Bulletins that may apply.

    Were there any problems found?

    Yes

    - Repair as necessary.
    - Perform the POWERTRAIN VERIFICATION TEST. Refer to **POWERTRAIN VERIFICATION TEST** .

    No

    - Replace and program the Powertrain Control Module in accordance with the Service Information. Refer to **MODULE, POWERTRAIN CONTROL, REMOVAL** .
    - Perform the POWERTRAIN VERIFICATION TEST. Refer to **POWERTRAIN VERIFICATION TEST** .

P0579-SPEED CONTROL SWITCH 1 PERFORMANCE

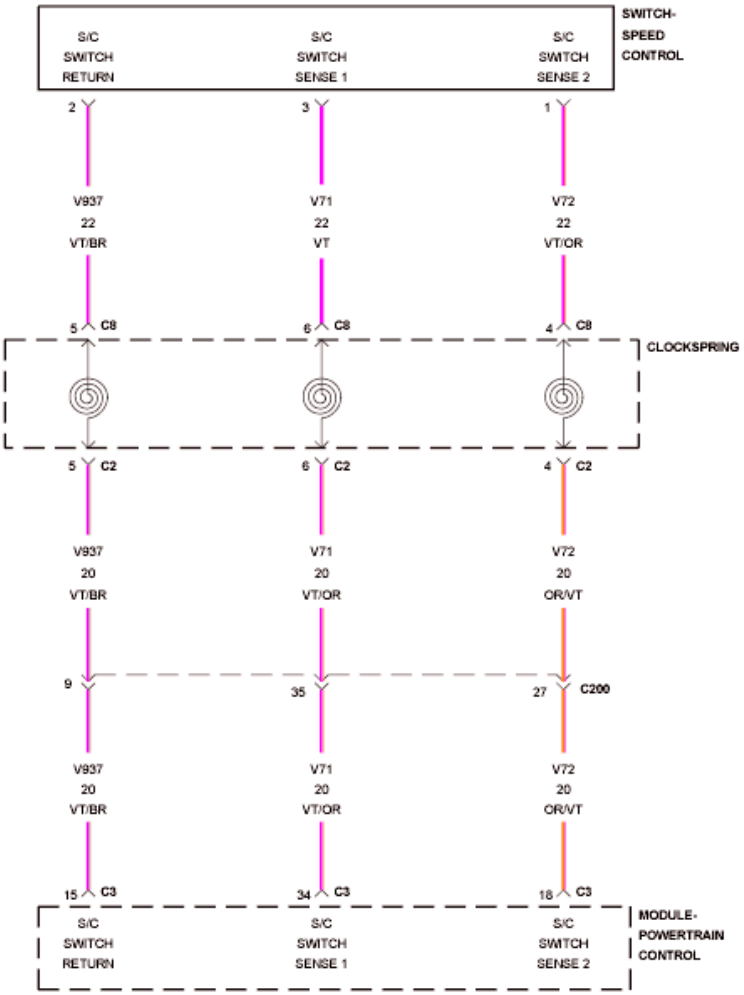

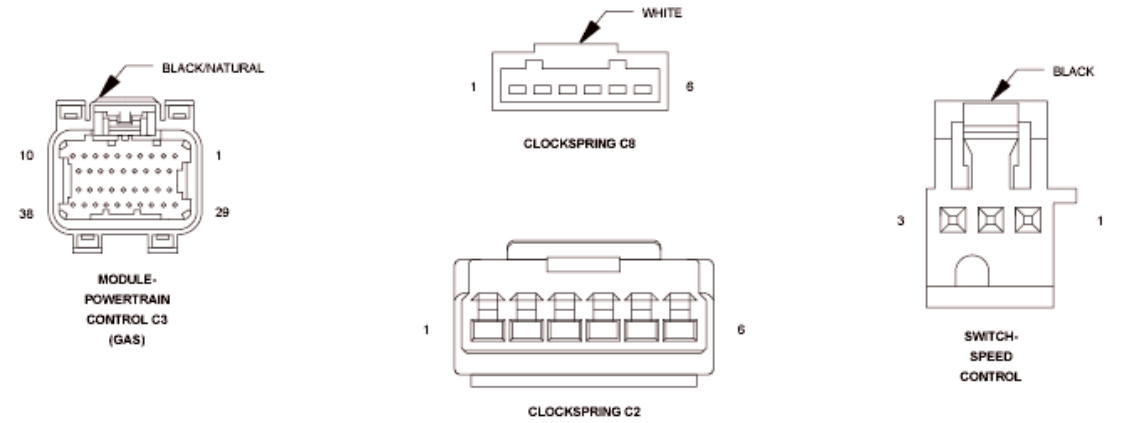

Fig. 75: Speed Control Switch Circuit Schematic
Courtesy of CHRYSLER GROUP, LLC

For a complete wiring diagram, **refer to appropriate SYSTEM WIRING DIAGRAMS article** .

WHEN MONITORED:

With the ignition key on.

SET CONDITION:

Speed Control (S/C) switch voltage output is not out of range but it does not equal any of the values for any of the button positions. One trip fault.

POSSIBLE CAUSES

Possible Causes
(V71) S/C SWITCH SENSE 1 CIRCUIT SHORTED TO VOLTAGE
(V71) S/C SWITCH SENSE 1 CIRCUIT OPEN
(V937) SWITCH RETURN CIRCUIT OPEN
(V71) S/C SWITCH SENSE 1 CIRCUIT SHORTED TO GROUND
(V71) S/C SWITCH SENSE 1 CIRCUIT SHORTED TO THE (V937) SWITCH RETURN CIRCUIT
CLOCKSPRING
STEERING WHEEL JUMPER HARNESS
SPEED CONTROL SWITCH
POWERTRAIN CONTROL MODULE (PCM)

Always perform the Pre-Diagnostic Troubleshooting procedure before proceeding. Refer to PRE-DIAGNOSTIC TROUBLESHOOTING PROCEDURE .

DIAGNOSTIC TEST

1. **ACTIVE DIAGNOSTIC TROUBLE CODE (DTC)**
   1. Start the engine and allow it to idle for at least 60 seconds.

      WARNING: **When the engine is operating, do not stand in direct line with the fan. Do not put your hands near the pulleys, belts, or fan. Do not wear loose clothing. Failure to follow these instructions can result in possible serious or fatal injury.**

      NOTE: **It may be necessary to test drive the vehicle and operate the speed control in order for this DTC to set.**

   2. Using the scan tool, select View DTCs.

      Is the DTC Active at this time?

      Yes

      - Go To 2.

No

- Perform the INTERMITTENT CONDITION diagnostic procedure. Refer to **INTERMITTENT CONDITION** .

2. **SPEED CONTROL SWITCH**
    1. Turn the ignition off.
    2. Disconnect the Speed Control Switch harness connector in accordance with the Service Information.
    3. Measure the resistance between (V71) S/C Switch Sense 1 circuit and the (V937) Switch Return circuit.
    4. Monitor the Ohmmeter while pressing each function button on each switch.
    5. The following resistance specs are taken between terminals (V71) S/C Switch Sense 1 circuit and the (V937) Switch Return circuit of the switch when holding the switch button in the following position:
        - Not pressing any switch - 20.5k Ohms
        - On/Off - 0.47k Ohms
        - Set/Decel - 4.34k Ohms
        - Cancel - 1.24k Ohms
        - Resume/Accel - 8.80k Ohms

    Does the function on the Speed Control Switch have the correct resistance value +/- 0.2 of an Ohm?

    Yes

    - Go To 3.

    No

    - Replace the Speed Control Switch.
    - Perform the POWERTRAIN VERIFICATION TEST. Refer to **POWERTRAIN VERIFICATION TEST** .

3. **(V71) S/C SWITCH SENSE 1 CIRCUIT SHORTED TO VOLTAGE**

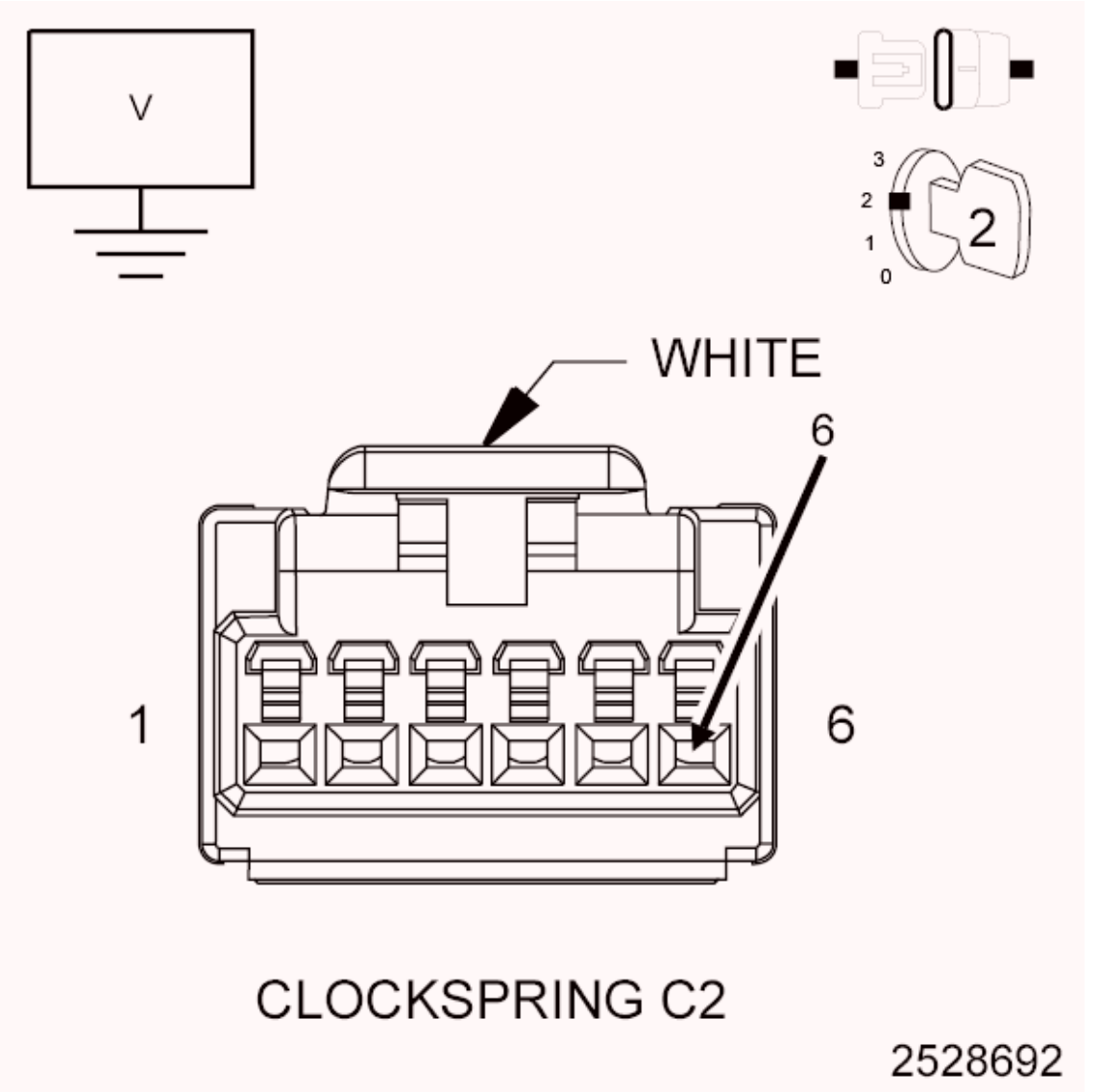

Fig. 76: Measuring Voltage On S/C Switch Sense Circuits In Clockspring Harness Connector
Courtesy of CHRYSLER GROUP, LLC

1. Disconnect the C3 PCM harness connector.
2. Disconnect the C2 Clockspring harness connector in accordance with the Service Information.
3. Ignition on, engine not running.
4. Measure the voltage on the (V71) S/C Switch Sense 1 circuit in the C2 Clockspring harness connector.

   Is there any voltage present?

   Yes

   - Repair the short to voltage in the (V71) S/C Switch Sense 1 circuit.
   - Perform the POWERTRAIN VERIFICATION TEST. Refer to **POWERTRAIN**

VERIFICATION TEST .

No

- Go To 4.

4. **(V71) S/C NO. 1 SWITCH SIGNAL CIRCUIT SHORTED TO GROUND**

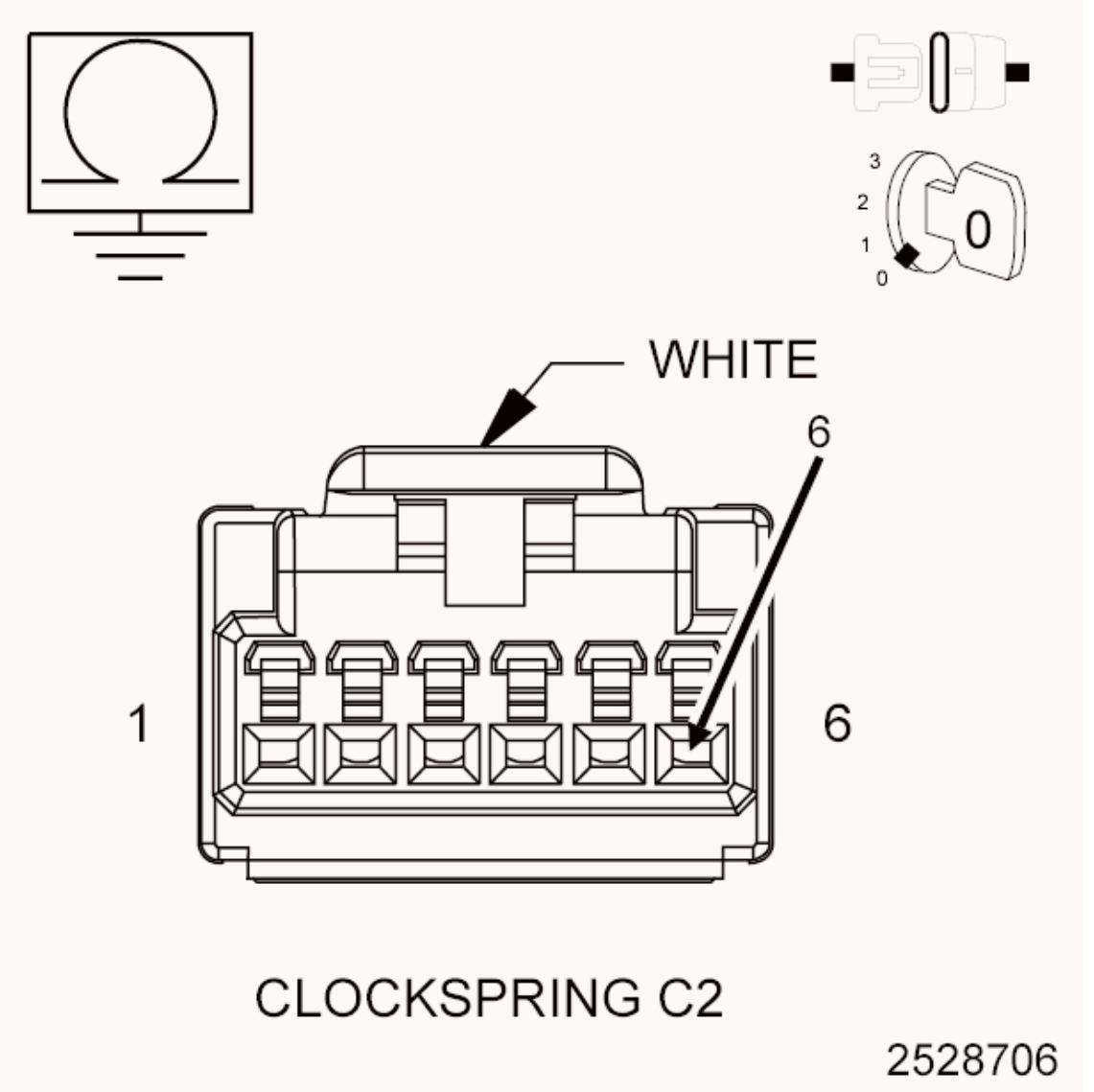

Fig. 77: Measuring Resistance Between Ground And S/C Switch Sense Circuit In SCM Harness Connector
Courtesy of CHRYSLER GROUP, LLC

1. Turn the ignition off.
2. Measure the resistance between ground and the (V71) S/C Switch Sense 1 circuit in the C2 SCM harness connector.

Is the resistance below 100 Ohms?

Yes

- Repair the short to ground in the (V71) S/C Switch Sense 1 circuit.
- Perform the POWERTRAIN VERIFICATION TEST. Refer to **POWERTRAIN VERIFICATION TEST** .

No

- Go To 5.

5. **(V71) S/C SWITCH SENSE 1 CIRCUIT SHORTED TO THE (V937) S/C SWITCH RETURN CIRCUIT**

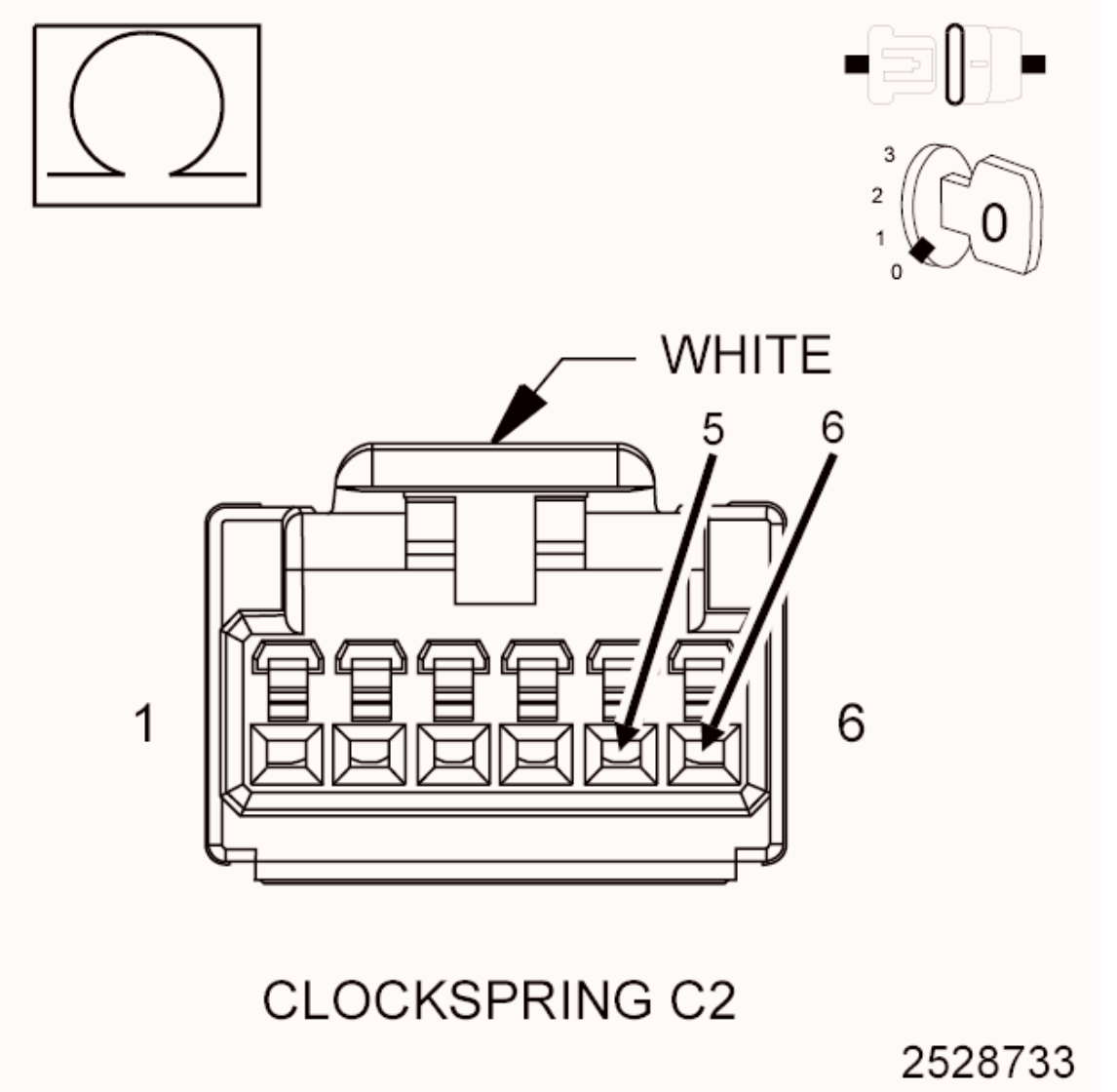

Fig. 78: Measuring Resistance Between S/C Switch Sense Circuit And S/C Switch Return Circuit In Clockspring C2 Harness Connector

Courtesy of CHRYSLER GROUP, LLC

1. Measure the resistance between the (V71) S/C Switch Sense 1 circuit and the (V937) S/C Switch Return circuit in the C2 SCM harness connector.

   Is the resistance below 5.0 Ohms?

   Yes

   - Repair the short between the (V71) S/C Switch Sense 1 circuit and the (V937) Switch Return circuit.
   - Perform the POWERTRAIN VERIFICATION TEST. Refer to **POWERTRAIN VERIFICATION TEST** .

   No

   - Go To 6.

6. **CLOCKSPRING**
   1. Measure the resistance of the (V71) S/C Switch Sense 1 circuit between the C2 and C8 SCM connections.
   2. Measure the resistance of the (V937) Switch Return circuit between the C2 and C8 SCM connections.

      Is the resistance above 5.0 Ohms for either reading?

      Yes

      - Replace the Clockspring in accordance with the Service Information.
      - Perform the POWERTRAIN VERIFICATION TEST. Refer to **POWERTRAIN VERIFICATION TEST** .

      No

      - Go To 7.

7. **STEERING WHEEL JUMPER HARNESS**

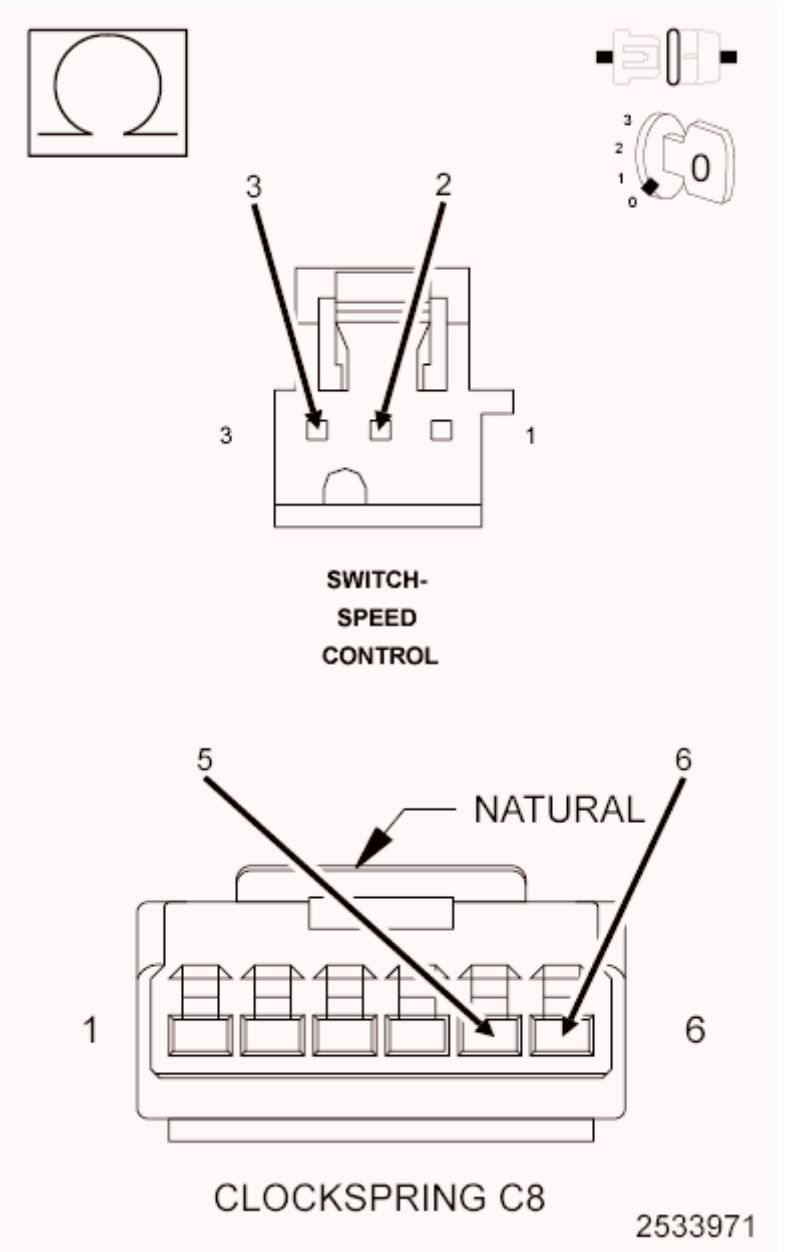

Fig. 79: Measuring Resistance Of S/C Switch Sense 1 Circuit Switch Return Circuit Between Clockspring Harness Connector And S/C Switch Harness Connector
Courtesy of CHRYSLER GROUP, LLC

1. Turn the ignition off.
2. Measure the resistance of the (V71) S/C Switch Sense 1 circuit between the C8 Clockspring harness connector and S/C Switch harness connector.
3. Measure the resistance of the (V937) Switch Return circuit between the C8 Clockspring harness connector and S/C Switch harness connector.

   Is the resistance above 5.0 Ohms for either reading?

Yes

- Replace the Steering Wheel Jumper harness in accordance with the Service Information.
- Perform the POWERTRAIN VERIFICATION TEST. Refer to **POWERTRAIN VERIFICATION TEST** .

No

- Go To 8.

8. **(V71) S/C SWITCH SENSE 1 CIRCUIT OPEN**

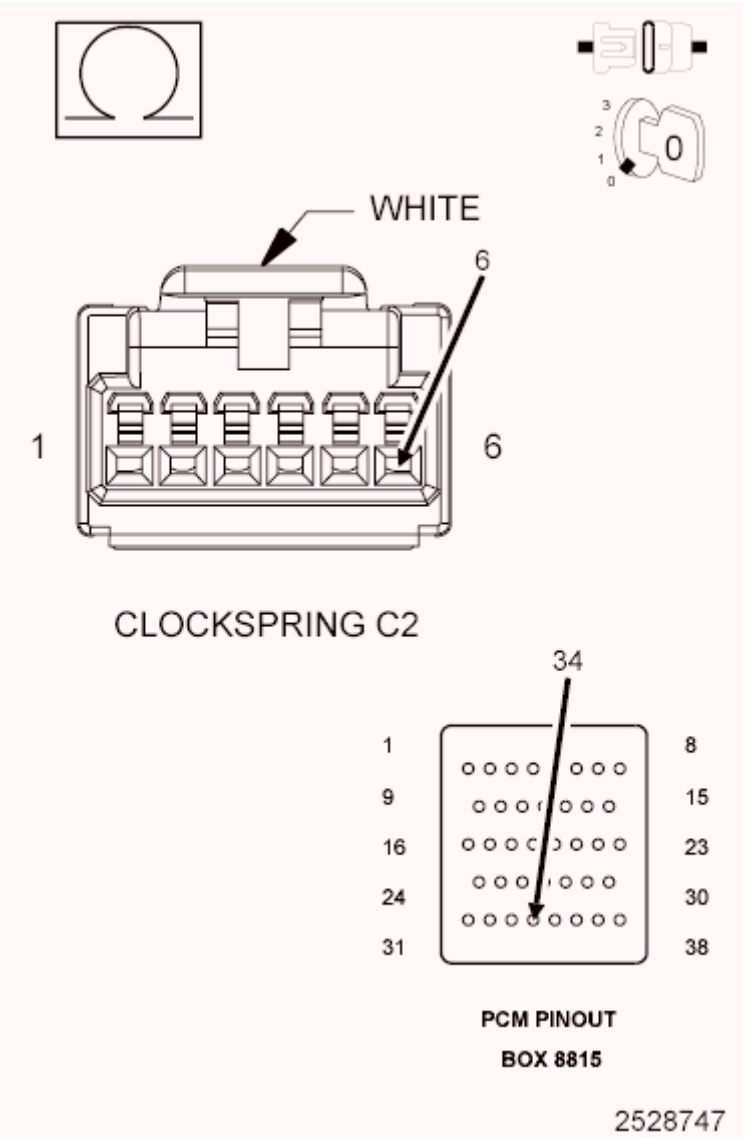

Fig. 80: Measuring Resistance Of S/C Switch Sense Circuit From C2 Clockspring Harness Connector To Appropriate Terminal Of PCM Pinout Box 8815
Courtesy of CHRYSLER GROUP, LLC

CAUTION: Do not probe the PCM harness connectors. Probing the PCM harness connectors will damage the PCM terminals resulting in poor terminal to pin connection. Install the PCM Pinout Box (special tool #8815A, Kit, NGC, 38 Position) to perform diagnosis.

1. Measure the resistance of the (V71) S/C Switch Sense 1 circuit from the C2 Clockspring harness connector to the appropriate terminal of PCM Pinout Box (special tool #8815A, Kit, NGC, 38 Position).

   Is the resistance below 5.0 Ohms for both measurements?

   Yes

   - Go To 9.

   No

   - Repair the open in the (V71) S/C Switch Sense 1 circuit.
   - Perform the POWERTRAIN VERIFICATION TEST. Refer to **POWERTRAIN VERIFICATION TEST** .

9. **(V937) SWITCH RETURN CIRCUIT OPEN**

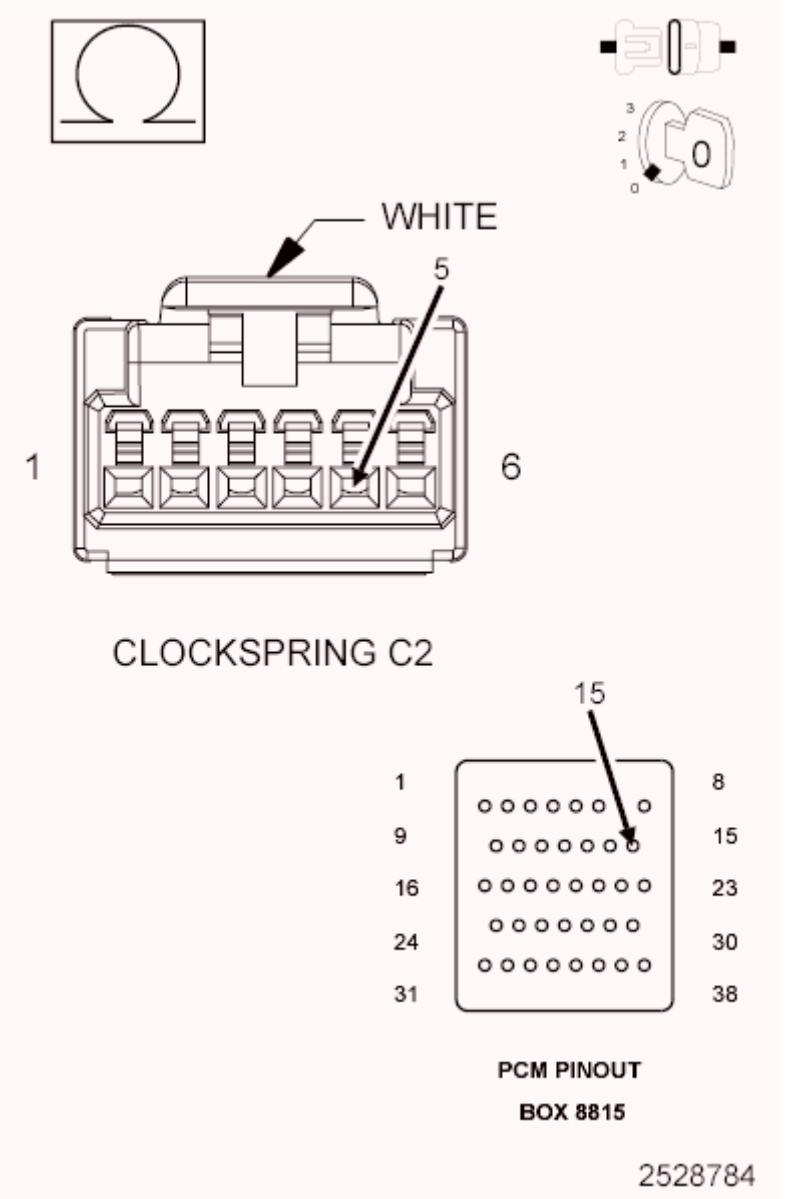

Fig. 81: Measuring Resistance Of S/C Switch Return Circuit From Clockspring C2 Harness Connector To Appropriate Terminal Of PCM Pinout Box 8815
Courtesy of CHRYSLER GROUP, LLC

1. Measure the resistance of the (V937) Switch Return circuit from the C2 Clockspring harness connector to the appropriate terminal of PCM Pinout Box (special tool #8815A, Kit, NGC, 38 Position).

   Is the resistance below 5.0 Ohms for both measurements?

   Yes

   - Go To 10.

No

- Repair the open in the (V937) Switch Return circuit.
- Perform the POWERTRAIN VERIFICATION TEST. Refer to **POWERTRAIN VERIFICATION TEST** .

10. **SPEED CONTROL SWITCH VOLTAGE VALUES**

CAUTION: Do not probe the PCM harness connectors. Probing the PCM harness connectors will damage the PCM terminals resulting in poor terminal to pin connection. Install the PCM Pinout Box (special tool #8815A, Kit, NGC, 38 Position) and PCM Pinout Box Adapter (special tool #8815-1, PCM Pinout Box Adapter) to perform diagnosis.

1. Install the PCM Pinout Box (special tool #8815-1, PCM Pinout Box Adapter) on the C3 PCM harness connector.
2. Connect the S/C Switch harness connectors.
3. Connect the Clockspring harness connectors.
4. Turn the ignition on.
5. Using the scan tool, monitor the S/C Switch voltage readings.
6. Using a Voltmeter check the voltage on the (V71) S/C Switch Sense 1 circuit and the (V72) S/C Switch Sense 2 circuit at the appropriate terminals of the PCM Pinout Box (special tool #8815A, Kit, NGC, 38 Position).
7. Monitor the Voltmeter.
8. Using the scan tool, monitor the S/C Switch voltage readings.

SWITCH POSITION	SWITCH No. 1 VOLTAGE VALUE	SWITCH No. 2 VOLTAGE VALUE
NO SWITCHES PRESSED	4.31 to 4.78 Volts	4.31 to 4.78 Volts
ON/OFF PRESSED	0.59 to 1.13 Volts	3.53 to 3.92 Volts
RES/ACCEL PRESSED	3.88 to 4.17 Volts	2.04 to 2.47 Volts
SET/DECEL PRESSED	3.16 to 3.56 Volts	1.17 to 1.56 Volts
CANCEL PRESSED	1.59 to 1.99 Volts	2.84 to 3.25 Volts

9. Compare the voltage readings on the Voltmeter to what the scan tool displayed.

   Are the voltage readings out of the listed specification and is there less than a 0.2 of a Volt difference between the Voltmeter switch values and the scan tool switch value?

   Yes

   - Replace the Speed Control Switch.
   - Perform the POWERTRAIN VERIFICATION TEST. Refer to **POWERTRAIN VERIFICATION TEST** .

No

- Go To 11.

11. **POWERTRAIN CONTROL MODULE (PCM)**
    1. Using the wiring diagram/schematic as a guide, inspect the wiring and connectors between the Speed Control Switch and the Powertrain Control Module (PCM).
    2. Look for any chafed, pierced, pinched or partially broken wires.
    3. Look for broken, bent, pushed out or corroded terminals. Verify that there is good pin to terminal contact in the Switch and Powertrain Control Module connectors.
    4. Perform any Technical Service Bulletins that may apply.

    Were there any problems found?

    Yes

    - Repair as necessary.
    - Perform the POWERTRAIN VERIFICATION TEST. Refer to **POWERTRAIN VERIFICATION TEST** .

    No

    - Replace and program the Powertrain Control Module in accordance with the Service Information. Refer to **MODULE, POWERTRAIN CONTROL, REMOVAL** .
    - Perform the POWERTRAIN VERIFICATION TEST. Refer to **POWERTRAIN VERIFICATION TEST** .

P0580-SPEED CONTROL SWITCH 1 CIRCUIT LOW

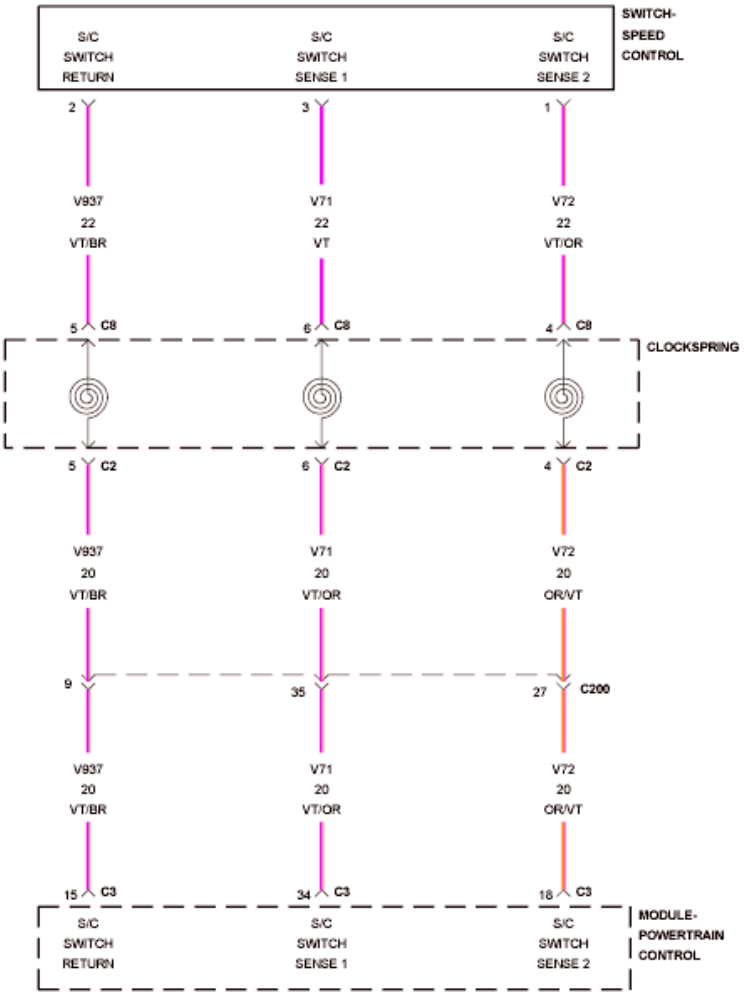

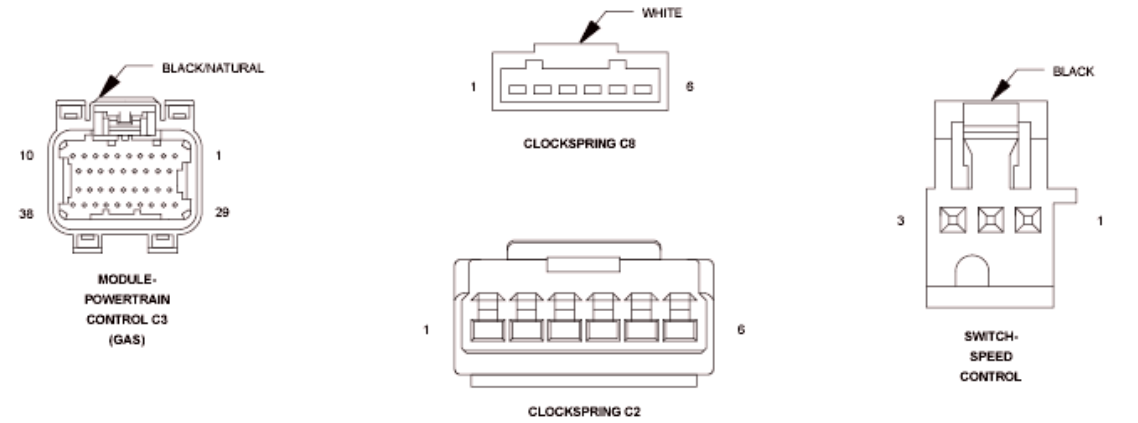

Fig. 82: Speed Control Switch Circuit Schematic
Courtesy of CHRYSLER GROUP, LLC

For a complete wiring diagram, **refer to appropriate SYSTEM WIRING DIAGRAMS article** .

WHEN MONITORED:

With the ignition key on.

SET CONDITION:

Speed Control (S/C) switch input No. 1 is below the minimum acceptable voltage at the Powertrain Control Module (PCM). One trip fault.

POSSIBLE CAUSES

Possible Causes
(V71) S/C SWITCH SENSE 1 CIRCUIT SHORTED TO THE (V937) S/C SWITCH RETURN CIRCUIT
(V71) S/C SWITCH SENSE 1 CIRCUIT SHORTED TO GROUND
CLOCKSPRING
SPEED CONTROL SWITCH
POWERTRAIN CONTROL MODULE (PCM)

Always perform the Pre-Diagnostic Troubleshooting procedure before proceeding. Refer to PRE-DIAGNOSTIC TROUBLESHOOTING PROCEDURE .

DIAGNOSTIC TEST

1. **ACTIVE DIAGNOSTIC TROUBLE CODE (DTC)**
    1. Start the engine and allow it to idle for at least 60 seconds.

        WARNING: When the engine is operating, do not stand in direct line with the fan. Do not put your hands near the pulleys, belts, or fan. Do not wear loose clothing. Failure to follow these instructions can result in possible serious or fatal injury.

        NOTE: It may be necessary to test drive the vehicle and operate the speed control in order for this DTC to set.

    2. Using the scan tool, select View DTCs.

        Is the DTC Active at this time?

        Yes

        - Go To 2.

        No

        - Perform the INTERMITTENT CONDITION diagnostic procedure. Refer to

INTERMITTENT CONDITION .

2. **SPEED CONTROL SWITCHES**
    1. Turn the ignition off.
    2. Disconnect the Speed Control Switch harness connector in accordance with the Service Information.
    3. Measure the resistance between (V71) S/C Switch Sense 1 circuit and the (V937) Switch Return circuit.
    4. Monitor the Ohmmeter while pressing each function button on each switch.
    5. The following resistance specs are taken between terminals (V71) S/C Switch Sense 1 circuit and the (V937) Switch Return circuit of the switch when holding the switch button in the following position:
        - Not pressing any switch - 20.5 kOhms
        - On/Off - 0.47 kOhms
        - Set/Decel - 4.34 kOhms
        - Cancel - 1.24 kOhms
        - Resume/Accel - 8.80 kOhms

    Does the function on the Speed Control Switch have the correct resistance value +/- 0.2 of an Ohm?

    Yes

    - Go To 3.

    No

    - Replace the Speed Control Switch.
    - Perform the POWERTRAIN VERIFICATION TEST. Refer to **POWERTRAIN VERIFICATION TEST** .

3. **CLOCKSPRING**
    1. Disconnect the C3 PCM harness connector.
    2. Disconnect the C2 Clockspring harness connector in accordance with the Service Information.
    3. Disconnect the C8 Clockspring harness connector.
    4. Measure the resistance of the (V71) S/C Switch Sense 1 circuit between the C2 and C8 SCM connections.
    5. Measure the resistance of the (V937) Switch Return circuit between the C2 and C8 SCM connections.

    Is the resistance above 5.0 Ohms for either reading?

    Yes

    - Replace the Clockspring in accordance with the Service Information.

- Perform the POWERTRAIN VERIFICATION TEST. Refer to **POWERTRAIN VERIFICATION TEST** .

No

- Go To 4.

4. **STEERING WHEEL JUMPER HARNESS**

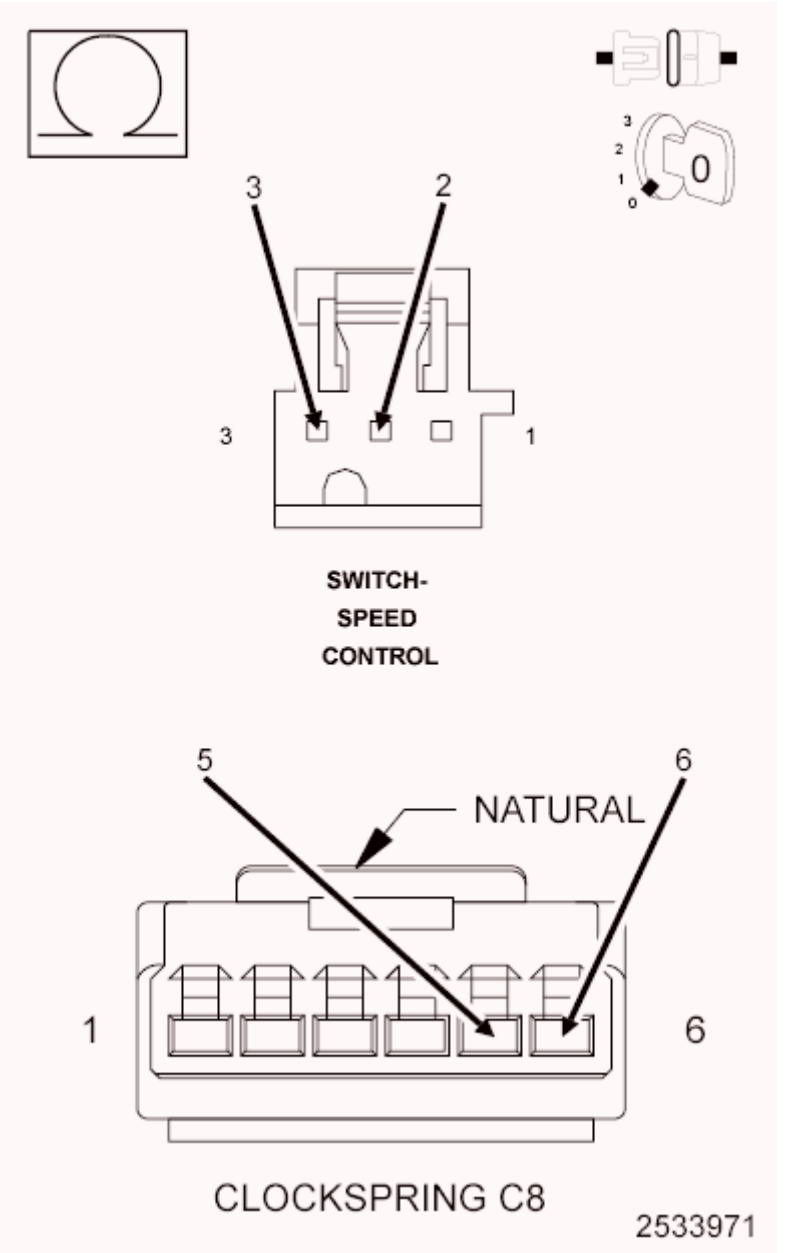

Fig. 83: Measuring Resistance Of S/C Switch Sense 1 Circuit Switch Return Circuit Between Clockspring Harness Connector And S/C Switch Harness Connector
Courtesy of CHRYSLER GROUP, LLC

1. Turn the ignition off.
2. Measure the resistance of the (V71) S/C Switch Sense 1 circuit between the Clockspring C8 harness connector and S/C Switch harness connector.
3. Measure the resistance of the (V937) Switch Return circuit between the Clockspring C8 harness connector and S/C Switch harness connector.

   Is the resistance above 5.0 Ohms for either reading?

   Yes

   - Replace the Steering Wheel Jumper harness in accordance with the Service Information.
   - Perform the POWERTRAIN VERIFICATION TEST. Refer to **POWERTRAIN VERIFICATION TEST** .

   No

   - Go To 5.

5. **(V71) S/C SWITCH SENSE 1 CIRCUIT SHORTED TO THE (V937) S/C SWITCH RETURN CIRCUIT**

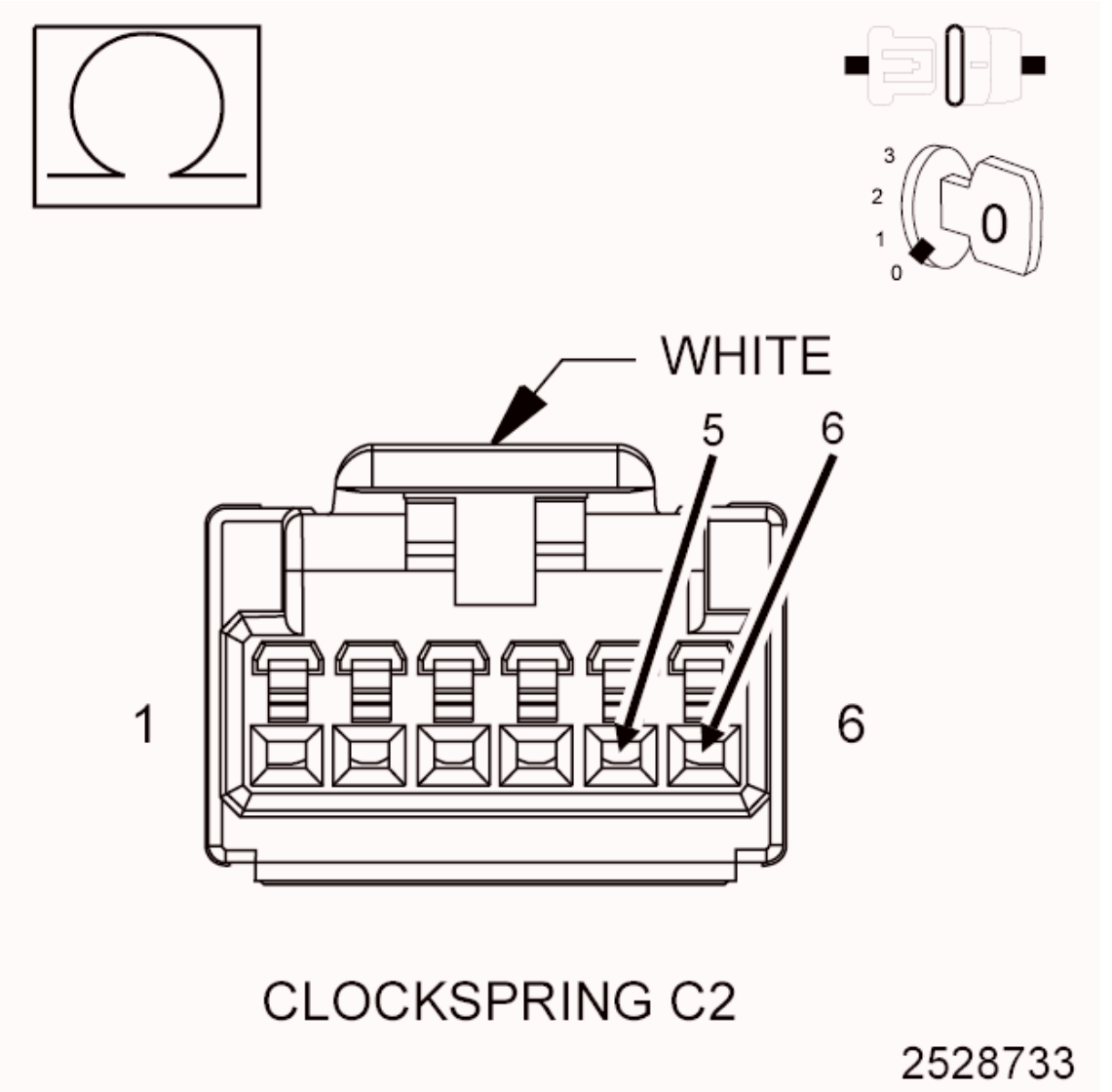

Fig. 84: Measuring Resistance Between S/C Switch Sense Circuit And S/C Switch Return Circuit In Clockspring C2 Harness Connector
Courtesy of CHRYSLER GROUP, LLC

1. Measure the resistance between the (V71) S/C Switch Sense 1 circuit and the (V937) S/C Switch Return circuit in the Clockspring C2 harness connector.

   Is the resistance below 5.0 Ohms?

   Yes

   - Repair the short between the (V71) S/C Switch Sense 1 circuit and the (V937) Switch Return circuit.
   - Perform the POWERTRAIN VERIFICATION TEST. Refer to **POWERTRAIN VERIFICATION TEST** .

No

- Go To 6.

6. **(V71) S/C NO. 1 SWITCH SIGNAL CIRCUIT SHORTED TO GROUND**

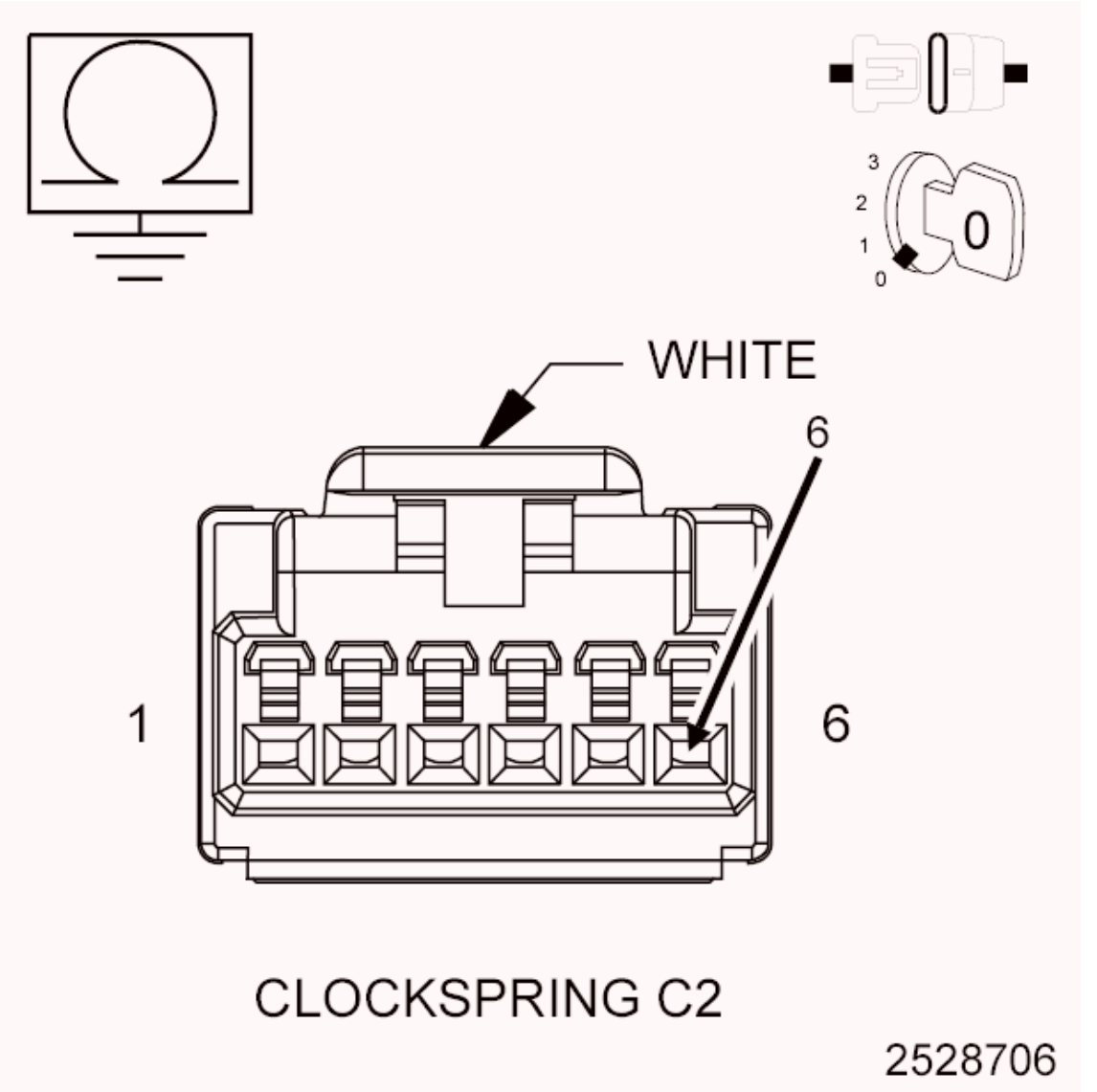

Fig. 85: Measuring Resistance Between Ground And S/C Switch Sense Circuit In SCM Harness Connector
Courtesy of CHRYSLER GROUP, LLC

1. Measure the resistance between ground and the (V71) S/C Switch Sense 1 circuit in the Clockspring C2 harness connector.

   Is the resistance below 100 Ohms?

   Yes

- Repair the short to ground in the (V71) S/C Switch Sense 1 circuit.
- Perform the POWERTRAIN VERIFICATION TEST. Refer to **POWERTRAIN VERIFICATION TEST** .

No

- Go To 7.

7. **SPEED CONTROL SWITCH VOLTAGE VALUES**

CAUTION: Do not probe the PCM harness connectors. Probing the PCM harness connectors will damage the PCM terminals resulting in poor terminal to pin connection. Install the PCM Pinout Box (special tool #8815A, Kit, NGC, 38 Position) and PCM Pinout Box Adapter (special tool #8815-1, PCM Pinout Box Adapter) to perform diagnosis.

1. Install the PCM Pinout Box (special tool #8815-1, PCM Pinout Box Adapter) on the C3 PCM harness connector.
2. Connect the S/C Switch harness connectors.
3. Connect the Clockspring harness connectors.
4. Turn the ignition on.
5. Using the scan tool, monitor the S/C Switch voltage readings.
6. Using a Voltmeter check the voltage on the (V71) S/C Switch Sense 1 circuit and the (V72) S/C Switch Sense 2 circuit at the appropriate terminals of the PCM Pinout Box (special tool #8815A, Kit, NGC, 38 Position).
7. Monitor the Voltmeter.
8. Using the scan tool, monitor the S/C Switch voltage readings.

SWITCH POSITION	SWITCH No. 1 VOLTAGE VALUE	SWITCH No. 2 VOLTAGE VALUE
NO SWITCHES PRESSED	4.31 to 4.78 Volts	4.31 to 4.78 Volts
ON/OFF PRESSED	0.59 to 1.13 Volts	3.53 to 3.92 Volts
RES/ACCEL PRESSED	3.88 to 4.17 Volts	2.04 to 2.47 Volts
SET/DECEL PRESSED	3.16 to 3.56 Volts	1.17 to 1.56 Volts
CANCEL PRESSED	1.59 to 1.99 Volts	2.84 to 3.25 Volts

9. Compare the voltage readings on the Voltmeter to what the scan tool displayed.

   Are the voltage readings out of the listed specification and is there less than a 0.2 of a Volt difference between the Voltmeter switch values and the scan tool switch value?

   Yes

   - Replace the Speed Control Switch.

- Perform the POWERTRAIN VERIFICATION TEST. Refer to **POWERTRAIN VERIFICATION TEST** .

No

- Go To 8.

8. **POWERTRAIN CONTROL MODULE (PCM)**
   1. Using the wiring diagram/schematic as a guide, inspect the wiring and connectors between the Speed Control Switch and the Powertrain Control Module (PCM).
   2. Look for any chafed, pierced, pinched or partially broken wires.
   3. Look for broken, bent, pushed out or corroded terminals. Verify that there is good pin to terminal contact in the Switch and Powertrain Control Module connectors.
   4. Perform any Technical Service Bulletins that may apply.

   Were there any problems found?

   Yes

   - Repair as necessary.
   - Perform the POWERTRAIN VERIFICATION TEST. Refer to **POWERTRAIN VERIFICATION TEST** .

   No

   - Replace and program the Powertrain Control Module in accordance with the Service Information. Refer to **MODULE, POWERTRAIN CONTROL, REMOVAL** .
   - Perform the POWERTRAIN VERIFICATION TEST. Refer to **POWERTRAIN VERIFICATION TEST** .

P0581-SPEED CONTROL SWITCH 1 CIRCUIT HIGH

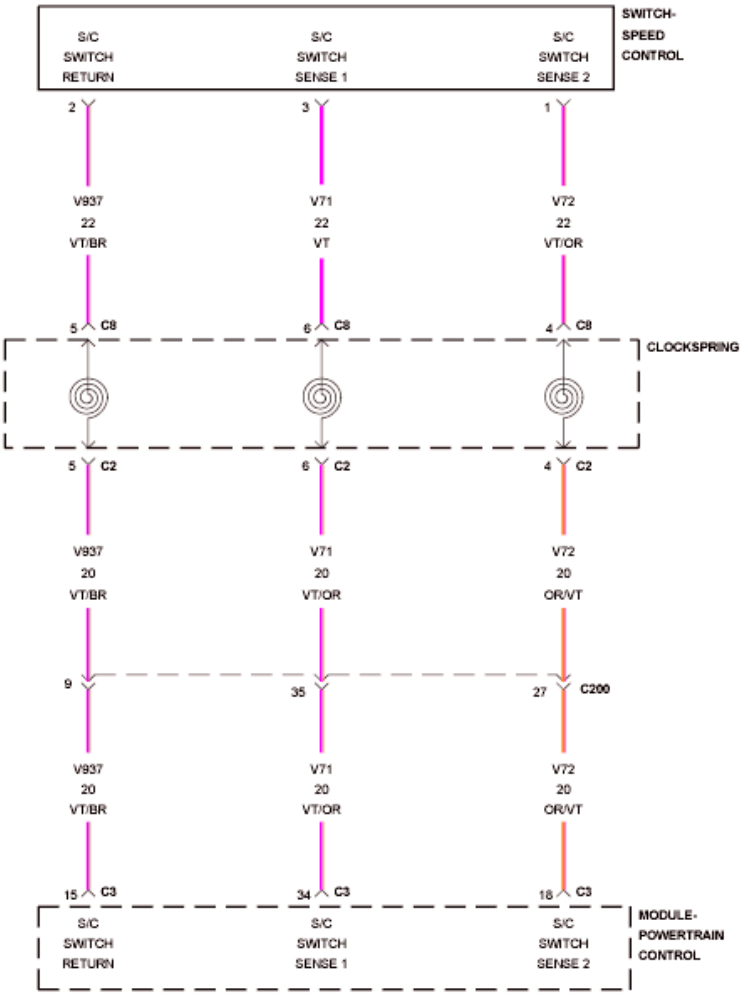

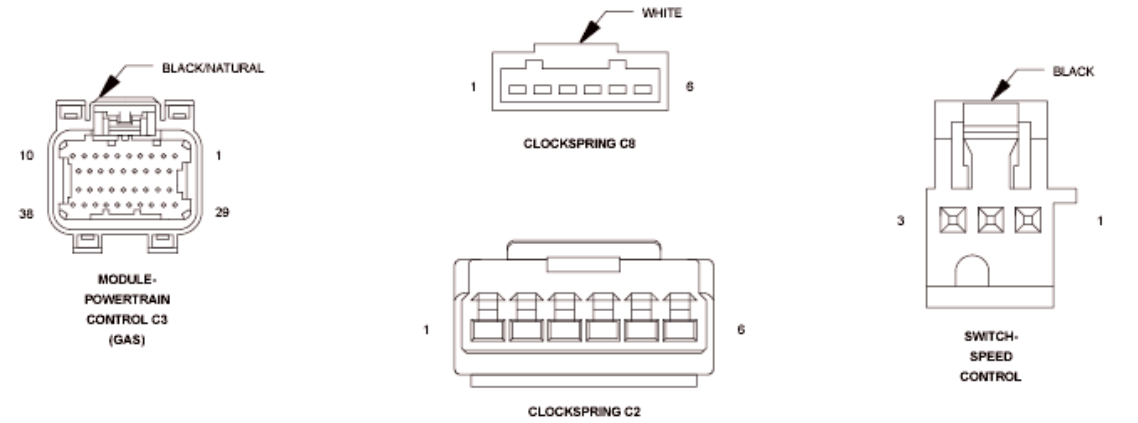

Fig. 86: Speed Control Switch Circuit Schematic
Courtesy of CHRYSLER GROUP, LLC

For a complete wiring diagram, **refer to appropriate SYSTEM WIRING DIAGRAMS article** .

WHEN MONITORED:

With the ignition key on.

SET CONDITION:

Speed Control (S/C) switch input above the maximum acceptable voltage at the Powertrain Control Module (PCM). One trip fault.

POSSIBLE CAUSES

Possible Causes
(V71) S/C SWITCH SENSE 1 CIRCUIT SHORTED TO VOLTAGE
(V71) S/C SWITCH SENSE 1 CIRCUIT OPEN
(V937) S/C SWITCH RETURN CIRCUIT OPEN
CLOCKSPRING
SPEED CONTROL SWITCH
POWERTRAIN CONTROL MODULE (PCM)

Always perform the Pre-Diagnostic Troubleshooting procedure before proceeding. Refer to PRE-DIAGNOSTIC TROUBLESHOOTING PROCEDURE .

DIAGNOSTIC TEST

1. **ACTIVE DIAGNOSTIC TROUBLE CODE (DTC)**
    1. Start the engine and allow it to idle for at least 60 seconds.

        WARNING: When the engine is operating, do not stand in direct line with the fan. Do not put your hands near the pulleys, belts, or fan. Do not wear loose clothing. Failure to follow these instructions can result in possible serious or fatal injury.

        NOTE: It may be necessary to test drive the vehicle and operate the speed control in order for this DTC to set.

    2. Using the scan tool, select View DTCs.

        Is the DTC Active at this time?

        Yes

        - Go To 2.

        No

        - Perform the INTERMITTENT CONDITION diagnostic procedure. Refer to

INTERMITTENT CONDITION .

2. **SPEED CONTROL SWITCHES**
    1. Turn the ignition off.
    2. Disconnect the Speed Control Switch harness connector in accordance with the Service Information.
    3. Measure the resistance between (V71) S/C Switch Sense 1 circuit and the (V937) Switch Return circuit.
    4. Monitor the Ohmmeter while pressing each function button on each switch.
    5. The following resistance specs are taken between terminals (V71) S/C Switch Sense 1 circuit and the (V937) Switch Return circuit of the switch when holding the switch button in the following position:
        - Not pressing any switch - 20.5 kOhms
        - On/Off - 0.47 kOhms
        - Set/Decel - 4.34 kOhms
        - Cancel - 1.24 kOhms
        - Resume/Accel - 8.80 kOhms

    Does the function on the Speed Control Switches have the correct resistance value?

    Yes

    - Go To 3.

    No

    - Replace the Speed Control Switch that had the incorrect resistance value.
    - Perform the POWERTRAIN VERIFICATION TEST. Refer to **POWERTRAIN VERIFICATION TEST** .

3. **Clockspring**
    1. Disconnect the PCM C3 harness connector.
    2. Disconnect the Clockspring C2 harness connector in accordance with the Service Information.
    3. Disconnect the Clockspring C8 harness connector.
    4. Measure the resistance of the (V71) S/C Switch Sense 1 circuit between the C2 and C8 SCM connections.
    5. Measure the resistance of the (V937) Switch Return circuit between the C2 and C8 SCM connections.

    Is the resistance above 5.0 Ohms for either reading?

    Yes

    - Replace the Clockspring in accordance with the Service Information.

- Perform the POWERTRAIN VERIFICATION TEST. Refer to **POWERTRAIN VERIFICATION TEST** .

No

- Go To 4.

4. **STEERING WHEEL JUMPER HARNESS**

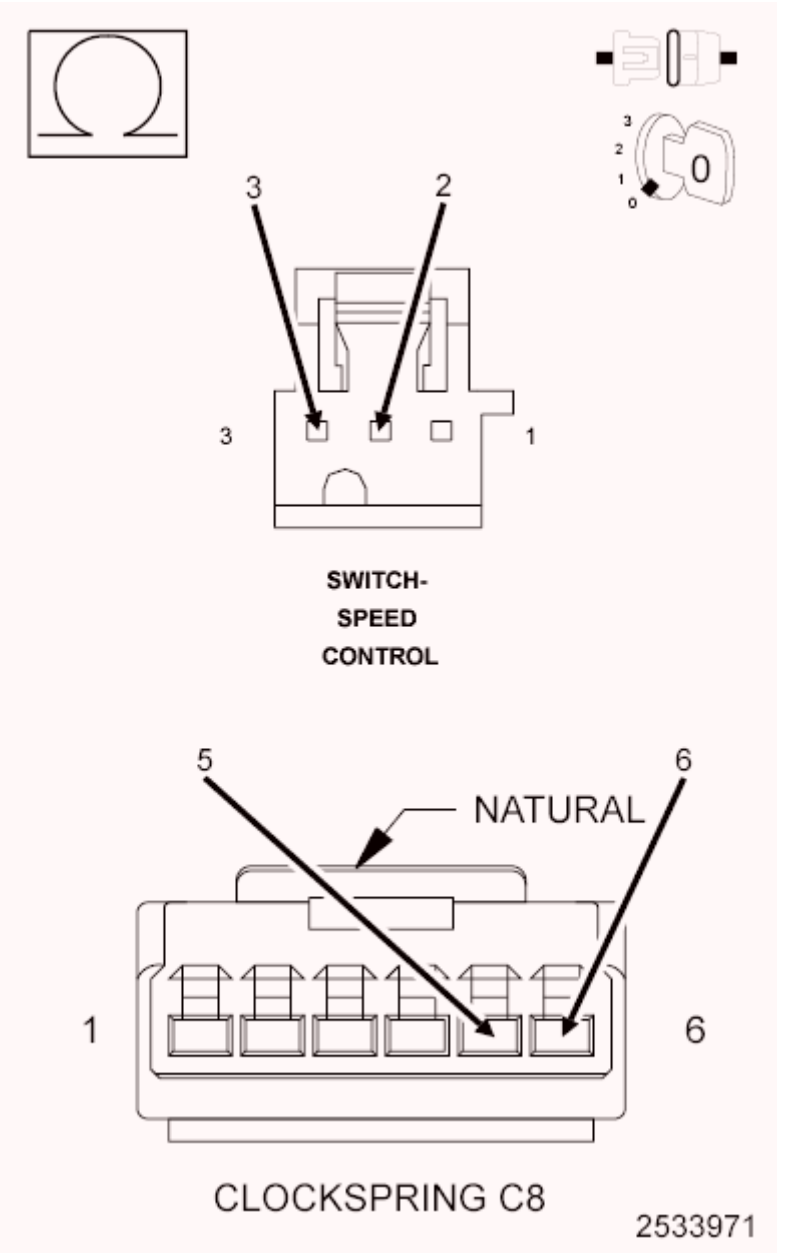

Fig. 87: Measuring Resistance Of S/C Switch Sense 1 Circuit Switch Return Circuit Between Clockspring Harness Connector And S/C Switch Harness Connector
Courtesy of CHRYSLER GROUP, LLC

1. Turn the ignition off.
2. Measure the resistance of the (V71) S/C Switch Sense 1 circuit between the v Clockspring C8 harness connector and S/C Switch harness connector.
3. Measure the resistance of the (V937) Switch Return circuit between the Clockspring C8 harness connector and S/C Switch harness connector.

   Is the resistance above 5.0 Ohms for either reading?

   Yes

   - Replace the Steering Wheel Jumper harness in accordance with the Service Information.
   - Perform the POWERTRAIN VERIFICATION TEST. Refer to **POWERTRAIN VERIFICATION TEST** .

   No

   - Go To 5.

5. **(V71) S/C SWITCH NO. 1 SIGNAL CIRCUIT SHORTED TO VOLTAGE**

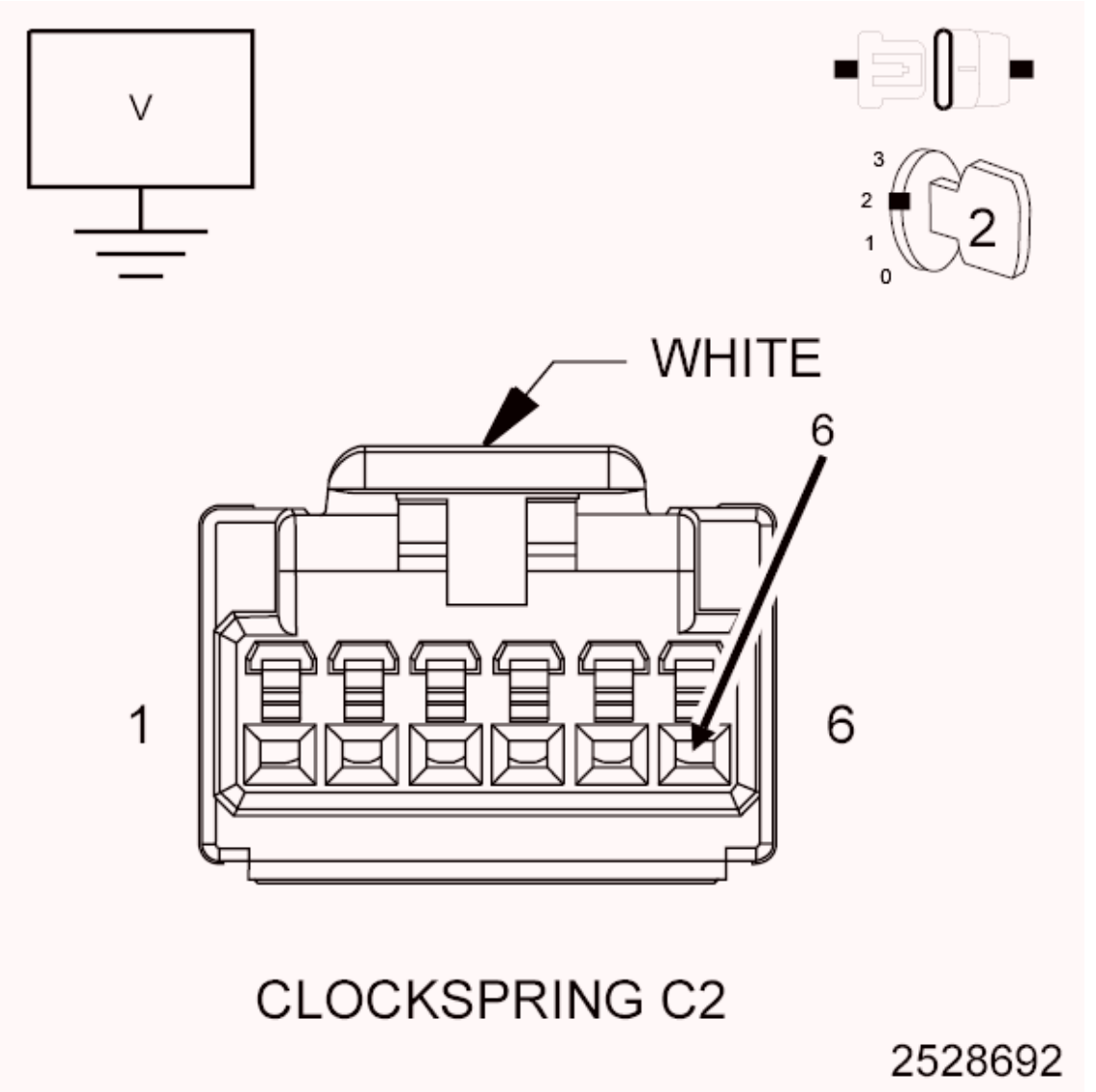

Fig. 88: Measuring Voltage On S/C Switch Sense Circuits In Clockspring Harness Connector
Courtesy of CHRYSLER GROUP, LLC

1. Ignition on, engine not running.
2. Measure the voltage of the (V71) S/C Switch Sense 1 circuit in the Clockspring C2 harness connector.

   Is there any voltage present?

   Yes

   - Repair the short to voltage in the (V71) S/C Switch Sense 1 circuit.
   - Perform the POWERTRAIN VERIFICATION TEST. Refer to **POWERTRAIN VERIFICATION TEST** .

No

- Go To 6.

6. **(V71) S/C SWITCH SENSE 1 CIRCUIT OPEN**

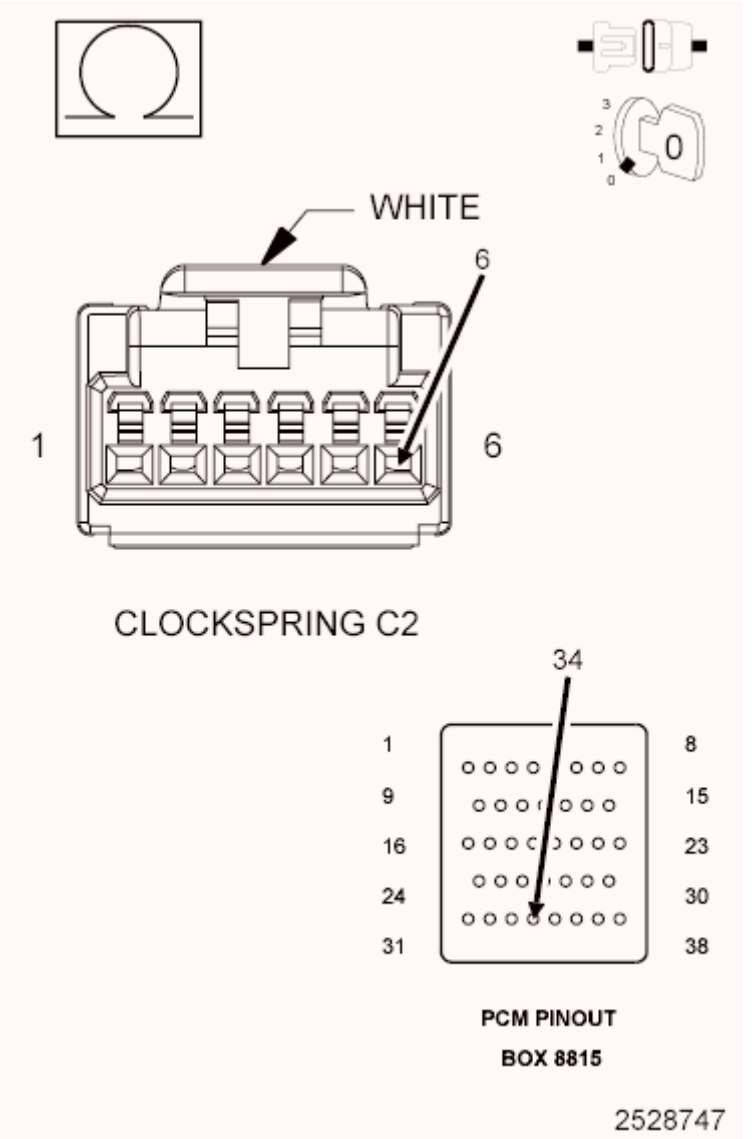

Fig. 89: Measuring Resistance Of S/C Switch Sense Circuit From C2 Clockspring Harness Connector To Appropriate Terminal Of PCM Pinout Box 8815
Courtesy of CHRYSLER GROUP, LLC

CAUTION: Do not probe the PCM harness connectors. Probing the PCM harness connectors will damage the PCM terminals resulting in poor terminal to pin connection. Install the PCM Pinout Box (special tool #8815A, Kit, NGC, 38 Position) to perform diagnosis.

1. Measure the resistance of the (V71) S/C Switch Sense 1 circuit from the Clockspring C2 harness

connector to the appropriate terminal of PCM Pinout Box (special tool #8815A, Kit, NGC, 38 Position).

Is the resistance below 5.0 Ohms?

Yes

- Go To 7.

No

- Repair the open in the (V71) S/C Switch Sense 1 circuit.
- Perform the POWERTRAIN VERIFICATION TEST. Refer to **POWERTRAIN VERIFICATION TEST** .

7. **(V937) S/C SWITCH RETURN CIRCUIT OPEN**

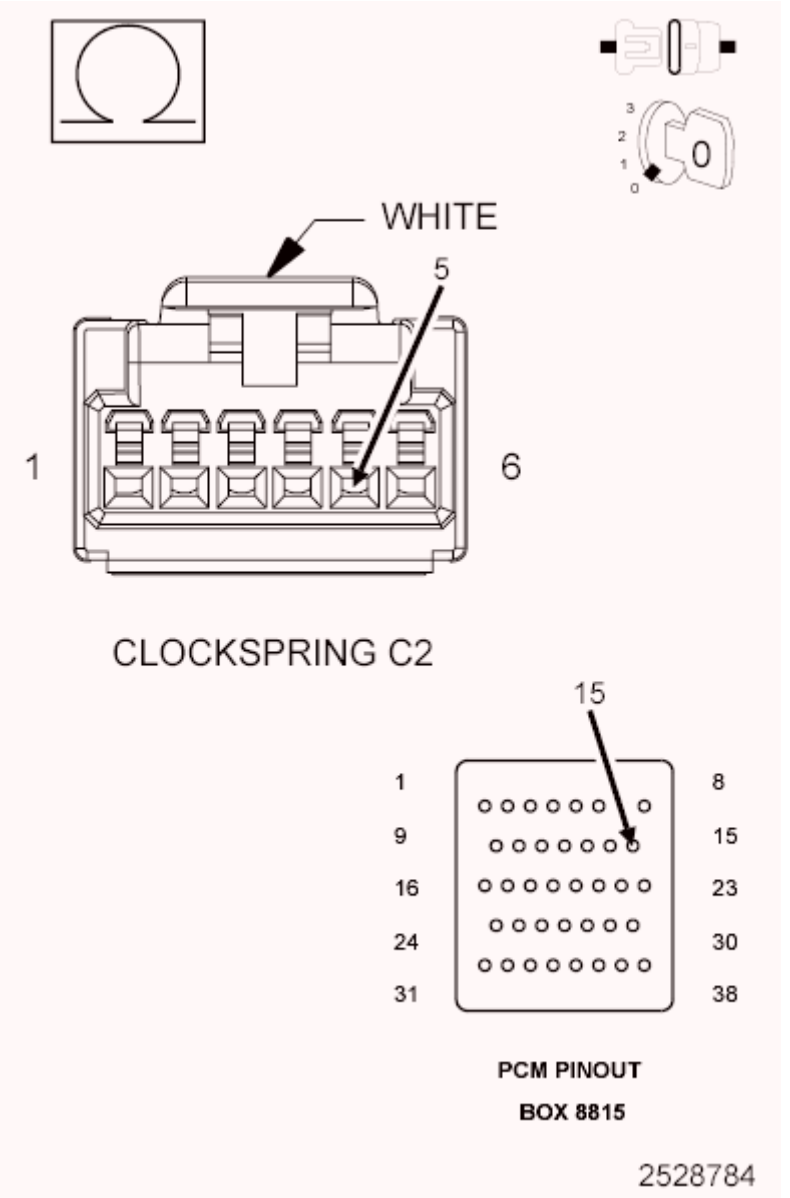

Fig. 90: Measuring Resistance Of S/C Switch Return Circuit From Clockspring C2 Harness Connector To Appropriate Terminal Of PCM Pinout Box 8815
Courtesy of CHRYSLER GROUP, LLC

1. Measure the resistance of the (V937) Switch Return circuit from the Clockspring C2 harness connector to the appropriate terminal of PCM Pinout Box (special tool #8815A, Kit, NGC, 38 Position).

   Is the resistance below 5.0 Ohms for both measurements?

   Yes

   - Go To 8.

No

- Repair the open in the (V937) S/C Switch Return circuit.
- Perform the POWERTRAIN VERIFICATION TEST. Refer to **POWERTRAIN VERIFICATION TEST** .

8. **SPEED CONTROL SWITCH VOLTAGE VALUES**

CAUTION: Do not probe the PCM harness connectors. Probing the PCM harness connectors will damage the PCM terminals resulting in poor terminal to pin connection. Install the PCM Pinout Box (special tool #8815A, Kit, NGC, 38 Position) and PCM Pinout Box Adapter (special tool #8815-1, PCM Pinout Box Adapter) to perform diagnosis.

1. Install the PCM Pinout Box (special tool #8815-1, PCM Pinout Box Adapter) on the PCM C3 harness connector.
2. Connect the S/C Switch harness connectors.
3. Connect the Clockspring harness connectors.
4. Turn the ignition on.
5. Using the scan tool, monitor the S/C Switch voltage readings.
6. Using a Voltmeter check the voltage on the (V71) S/C Switch Sense 1 circuit and the (V72) S/C Switch Sense 2 circuit at the appropriate terminals of the PCM Pinout Box (special tool #8815A, Kit, NGC, 38 Position).
7. Monitor the Voltmeter.
8. Using the scan tool, monitor the S/C Switch voltage readings.

SWITCH POSITION	SWITCH No. 1 VOLTAGE VALUE	SWITCH No. 2 VOLTAGE VALUE
NO SWITCHES PRESSED	4.31 to 4.78 Volts	4.31 to 4.78 Volts
ON/OFF PRESSED	0.59 to 1.13 Volts	3.53 to 3.92 Volts
RES/ACCEL PRESSED	3.88 to 4.17 Volts	2.04 to 2.47 Volts
SET/DECEL PRESSED	3.16 to 3.56 Volts	1.17 to 1.56 Volts
CANCEL PRESSED	1.59 to 1.99 Volts	2.84 to 3.25 Volts

9. Compare the voltage readings on the Voltmeter to what the scan tool displayed.

   Are the voltage readings out of the listed specification and is there less than a 0.2 of a Volt difference between the Voltmeter switch values and the scan tool switch value?

Yes

- Replace the Speed Control Switch.
- Perform the POWERTRAIN VERIFICATION TEST. Refer to **POWERTRAIN VERIFICATION TEST** .

No

- Go To 9.

9. **POWERTRAIN CONTROL MODULE (PCM)**
    1. Using the wiring diagram/schematic as a guide, inspect the wiring and connectors between the Speed Control Switch and the Powertrain Control Module (PCM).
    2. Look for any chafed, pierced, pinched or partially broken wires.
    3. Look for broken, bent, pushed out or corroded terminals. Verify that there is good pin to terminal contact in the Switch and Powertrain Control Module connectors.
    4. Perform any Technical Service Bulletins that may apply.

    Were there any problems found?

    Yes

    - Repair as necessary.
    - Perform the POWERTRAIN VERIFICATION TEST. Refer to **POWERTRAIN VERIFICATION TEST** .

    No

    - Replace and program the Powertrain Control Module in accordance with the Service Information. Refer to **MODULE, POWERTRAIN CONTROL, REMOVAL** .
    - Perform the POWERTRAIN VERIFICATION TEST. Refer to **POWERTRAIN VERIFICATION TEST** .

P0585-SPEED CONTROL SWITCH 1/2 CORRELATION

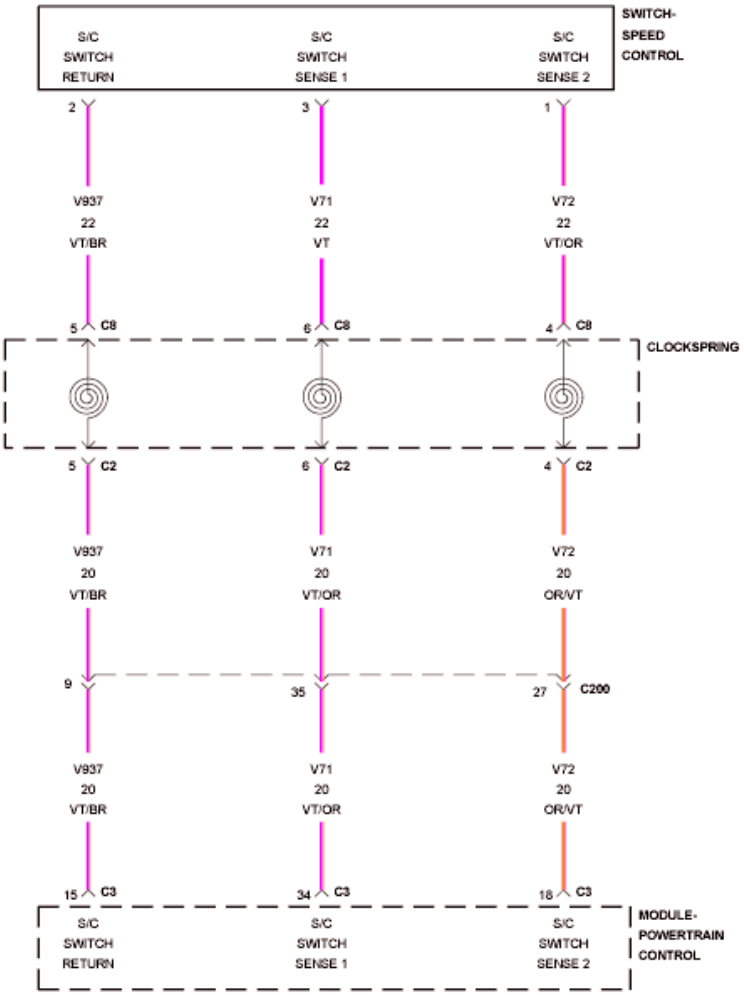

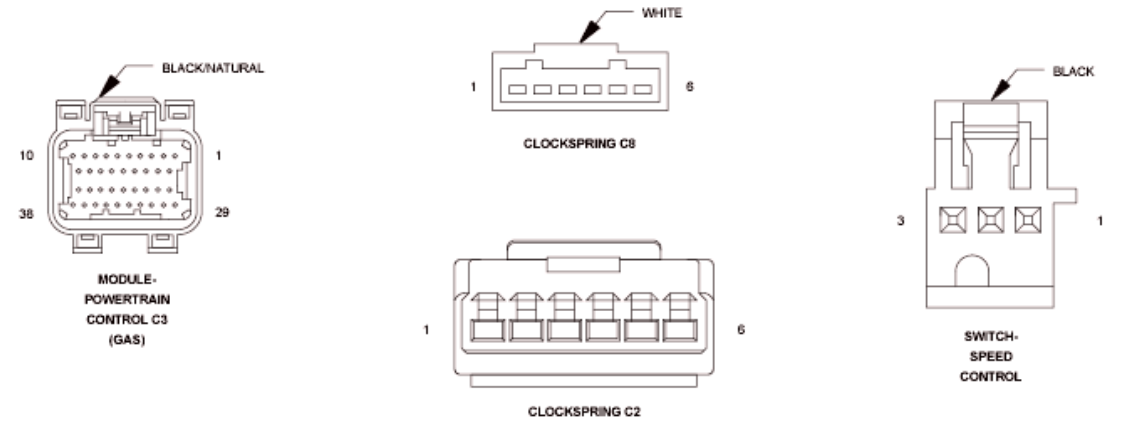

Fig. 91: Speed Control Switch Circuit Schematic
Courtesy of CHRYSLER GROUP, LLC

For a complete wiring diagram, **refer to appropriate SYSTEM WIRING DIAGRAMS article** .

WHEN MONITORED:

Ignition on.

SET CONDITION:

Speed Control (S/C) switch inputs are not coherent with each other. Example: Powertrain Control Module (PCM) is reading Switch No. 1 as Accel and Switch No. 2 as Coast at the same time. One trip fault.

POSSIBLE CAUSES

Possible Causes
S/C SWITCH SENSE CIRCUIT SHORTED TO VOLTAGE
RESISTANCE IN THE S/C SWITCH SENSE CIRCUITS
RESISTANCE IN THE (V937) S/C SWITCH RETURN CIRCUIT
S/C SWITCH SENSE CIRCUITS SHORTED TO THE (V937) S/C SWITCH RETURN CIRCUIT
S/C SWITCH SENSE CIRCUITS SHORTED TO GROUND
CLOCKSPRING
SPEED CONTROL SWITCH
POWERTRAIN CONTROL MODULE (PCM)

Always perform the Pre-Diagnostic Troubleshooting procedure before proceeding. Refer to PRE-DIAGNOSTIC TROUBLESHOOTING PROCEDURE .

DIAGNOSTIC TEST

1. **ACTIVE DIAGNOSTIC TROUBLE CODE (DTC)**
    1. Start the engine.
    2. Allow the engine to reach normal operating temperature.
    3. Using the scan tool, select View DTCs.

    NOTE: **It may be necessary to drive the vehicle to meet the conditions to set this DTC, try to repeat the conditions in which the fault originally set by reviewing the Freeze Frame data.**

    Is the DTC Active or Pending at this time?

    Yes

    - Go To 2.

    No

    - Perform the INTERMITTENT CONDITION diagnostic procedure. Refer to **INTERMITTENT CONDITION** .

2. **SPEED CONTROL SWITCHES**
    1. Turn the ignition off.
    2. Disconnect the Speed Control Switch harness connector in accordance with the Service Information.
    3. Measure the resistance across each Speed Control Switch sense circuit.
    4. Monitor the Ohmmeter while pressing each function button.
    5. The following resistance specs are taken between terminals (V71) S/C Switch Sense 1 circuit and the (V937) Switch Return circuit of the switch when holding the switch button in the following position:
        - Not pressing any switch - 20.5 kOhms
        - On/Off - 0.47 kOhms
        - Set/Decel - 4.34 kOhms
        - Cancel - 1.24 kOhms
        - Resume/Accel - 8.80 kOhms
    6. The following resistance specs are taken between terminals (V72) S/C Switch Sense 2 circuit and the (V937) Switch Return circuit of the switch when holding the switch button in the following position:
        - Not pressing any switch - 20.5 kOhms
        - On/Off - 6.2 kOhms
        - Set/Decel - 0.79 kOhms
        - Cancel - 3.2 kOhms
        - Resume/Accel - 1.7 kOhms

    Does the function on the Speed Control Switch have the correct resistance value +/- 0.2 of an Ohm?

    Yes

    - Go To 3.

    No

    - Replace the Speed Control Switch.
    - Perform the POWERTRAIN VERIFICATION TEST. Refer to **POWERTRAIN VERIFICATION TEST** .
3. **SPEED CONTROL SWITCH VOLTAGE VALUES**

    CAUTION: Do not probe the PCM harness connectors. Probing the PCM harness connectors will damage the PCM terminals resulting in poor terminal to pin connection. Install the PCM Pinout Box (special tool #8815A, Kit, NGC, 38 Position) and PCM Pinout Box Adapter (special tool #8815-1, PCM Pinout Box Adapter) to perform diagnosis.

1. Install the PCM Pinout Box (special tool #8815-1, PCM Pinout Box Adapter) on the C3 PCM harness connector.
2. Connect the S/C Switch harness connectors.
3. Turn the ignition on.
4. Using the scan tool, monitor the S/C Switch voltage readings.
5. Using a Voltmeter check the voltage on the (V71) S/C Switch Sense 1 circuit and the (V72) S/C Switch Sense 2 circuit at the appropriate terminals of the PCM Pinout Box (special tool #8815A, Kit, NGC, 38 Position).
6. Monitor the Voltmeter.
7. Using the scan tool, monitor the S/C Switch voltage readings.

SWITCH POSITION	SWITCH No. 1 VOLTAGE VALUE	SWITCH No. 2 VOLTAGE VALUE
NO SWITCHES PRESSED	4.31 to 4.78 Volts	4.31 to 4.78 Volts
ON/OFF PRESSED	0.59 to 1.13 Volts	3.53 to 3.92 Volts
RES/ACCEL PRESSED	3.88 to 4.17 Volts	2.04 to 2.47 Volts
SET/DECEL PRESSED	3.16 to 3.56 Volts	1.17 to 1.56 Volts
CANCEL PRESSED	1.59 to 1.99 Volts	2.84 to 3.25 Volts

8. Compare the voltage readings on the Voltmeter to what the scan tool displayed.

   Are the voltage readings out of the listed specification and is there less than a 0.2 of a Volt difference between the Voltmeter switch values and the scan tool switch value?

   Yes

   - Replace the Speed Control Switch.
   - Perform the POWERTRAIN VERIFICATION TEST. Refer to **POWERTRAIN VERIFICATION TEST** .

   No

   - Go To 4.

4. **CLOCKSPRING**
   1. Disconnect the PCM C3 harness connector.
   2. Disconnect the Clockspring C2 harness connector in accordance with the Service Information.
   3. Disconnect the Clockspring C8 harness connector.
   4. Measure the resistance of the (V71) S/C Switch Sense 1circuit between the C2 and C8 Clockspring connections.
   5. Measure the resistance of the (V72) S/C Switch Sense 2 circuit between the C2 and C8 Clockspring connections.
   6. Measure the resistance of the (V937) Switch Return circuit between the C2 and C8 Clockspring

connections.

Is the resistance above 5.0 Ohms for either reading?

Yes

- Replace the Steering Column Module in accordance with the Service Information.
- Perform the POWERTRAIN VERIFICATION TEST. Refer to **POWERTRAIN VERIFICATION TEST** .

No

- Go To 5.

5. **STEERING WHEEL JUMPER HARNESS**

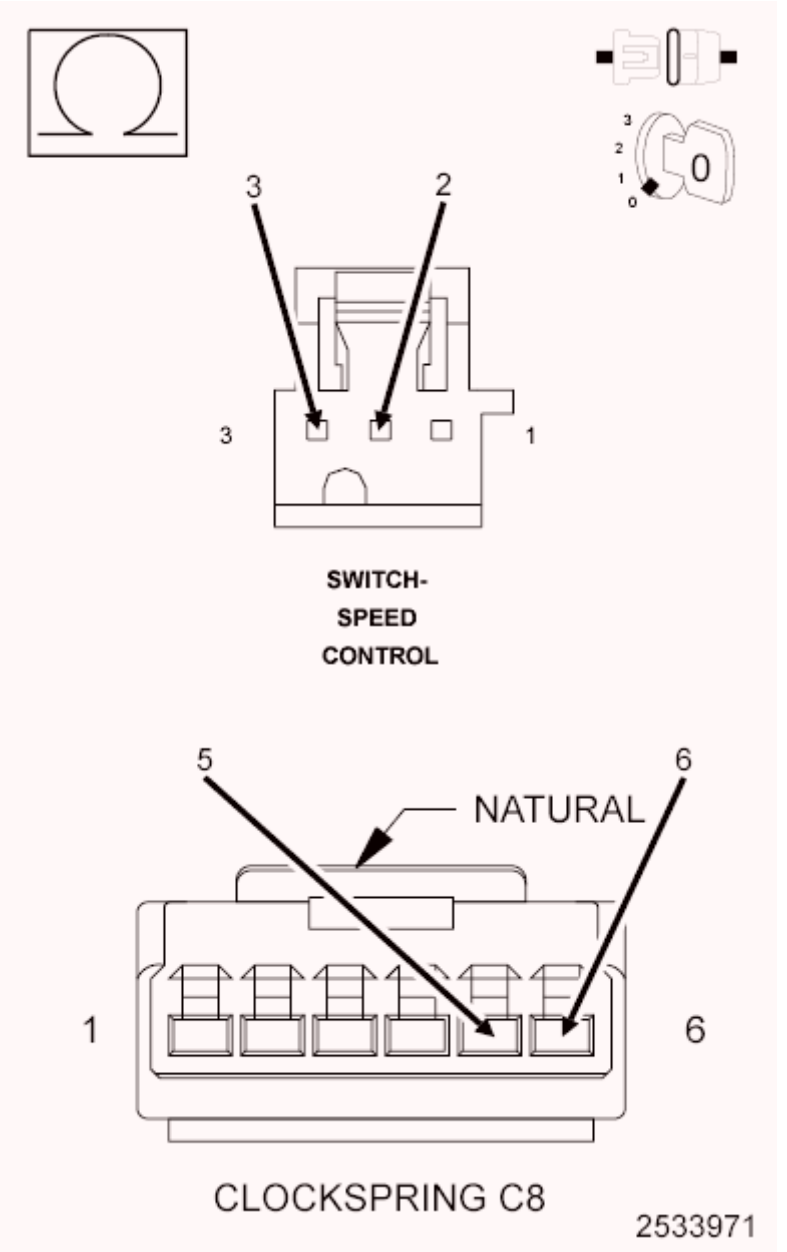

Fig. 92: Measuring Resistance Of S/C Switch Sense 1 Circuit Switch Return Circuit Between Clockspring Harness Connector And S/C Switch Harness Connector
Courtesy of CHRYSLER GROUP, LLC

1. Measure the resistance of the (V71) S/C Switch Sense 1 circuit between the Clockspring C8 harness connector and S/C Switch harness connector.
2. Measure the resistance of the (V72) S/C Switch Sense 2 circuit between the Clockspring C8 harness connector and S/C Switch harness connector.

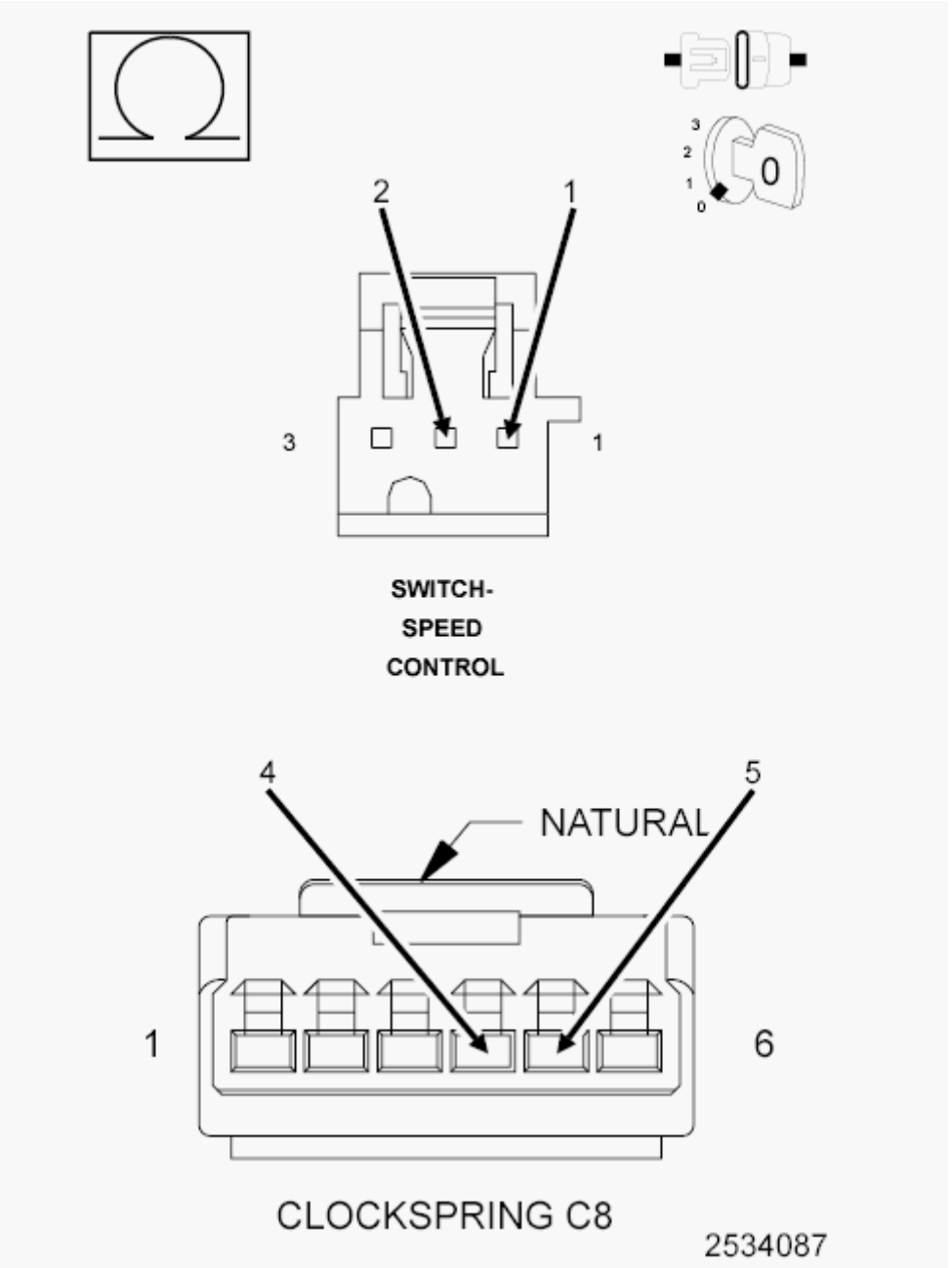

Fig. 93: Measuring Resistance Of S/C Switch Sense 2 Circuit Switch Return Circuit Between Clockspring Harness Connector And S/C Switch Harness Connector
Courtesy of CHRYSLER GROUP, LLC

3. Measure the resistance of the (V937) Switch Return circuit between the Clockspring C8 harness connector and S/C Switch harness connector.

   Is the resistance above 5.0 Ohms for either reading?

   Yes

- Replace the Steering Wheel Jumper harness in accordance with the Service Information.
- Perform the POWERTRAIN VERIFICATION TEST. Refer to **POWERTRAIN VERIFICATION TEST** .

No

- Go To 6.

6. **S/C SWITCH SIGNAL CIRCUIT SHORTED TO VOLTAGE**

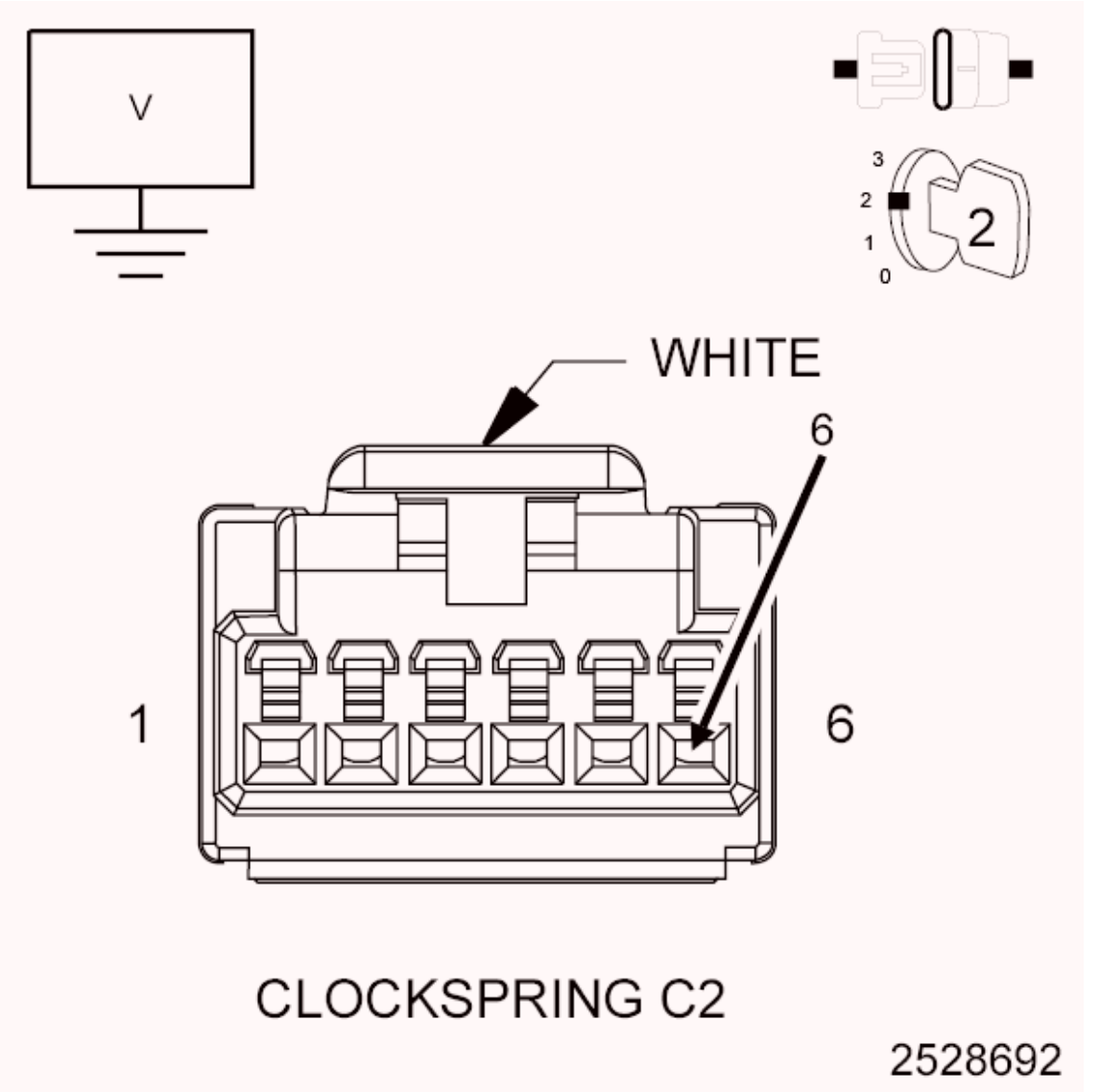

Fig. 94: Measuring Voltage On S/C Switch Sense Circuits In Clockspring Harness Connector
Courtesy of CHRYSLER GROUP, LLC

1. Turn the ignition on.
2. Measure the voltage on the (V71) and (V72) S/C switch sense circuits in the Clockspring C2 harness connector.

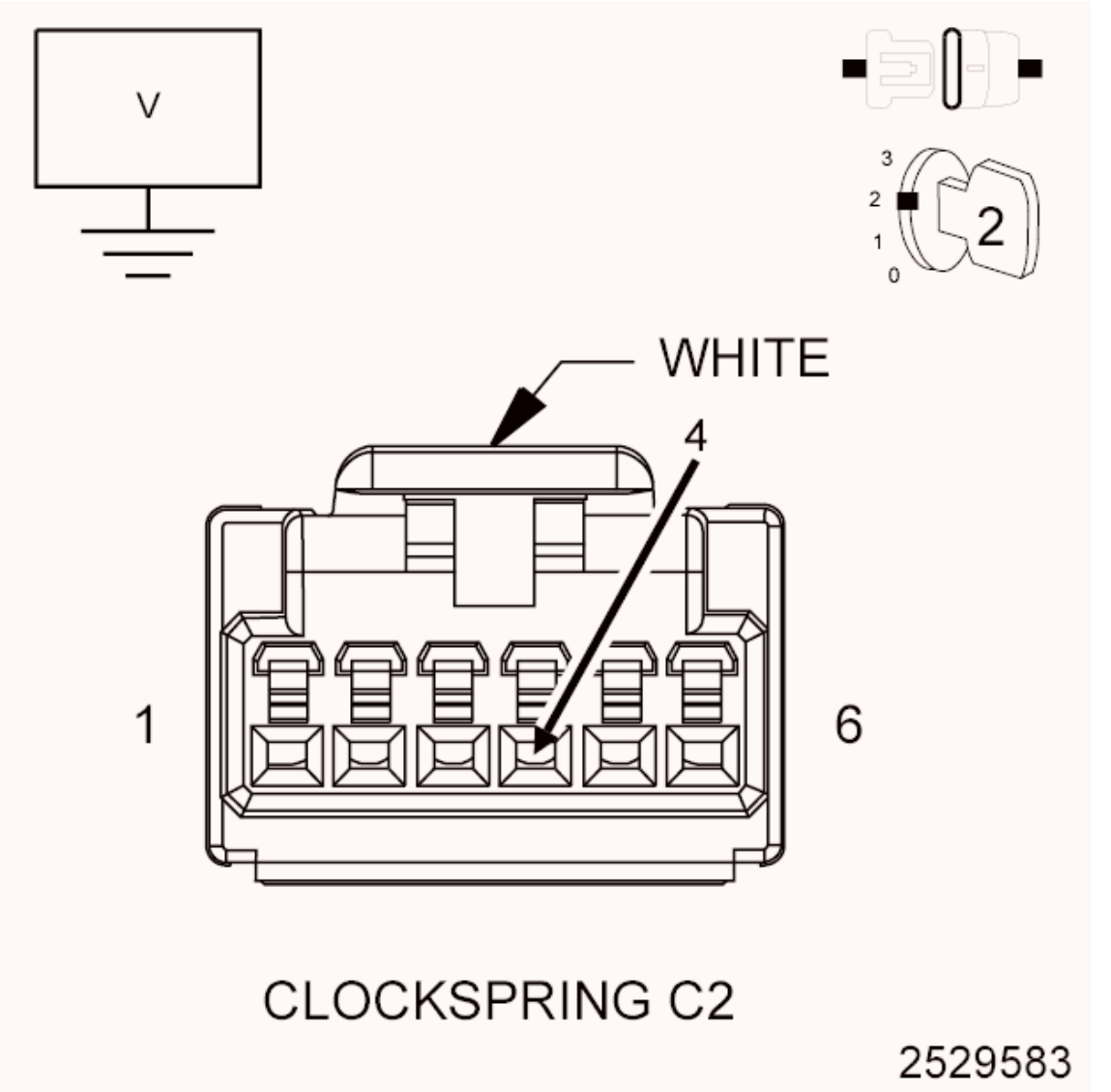

Fig. 95: Measuring Voltage On S/C Switch Sense Circuit In Clockspring C2 Harness Connector
Courtesy of CHRYSLER GROUP, LLC

Is there any voltage present?

Yes

- Repair the short to voltage in the (V71) or (V72) S/C switch sense circuit.
- Perform the POWERTRAIN VERIFICATION TEST. Refer to **POWERTRAIN VERIFICATION TEST** .

No

- Go To 7.

7. **S/C SWITCH SENSE CIRCUIT SHORTED TO GROUND**

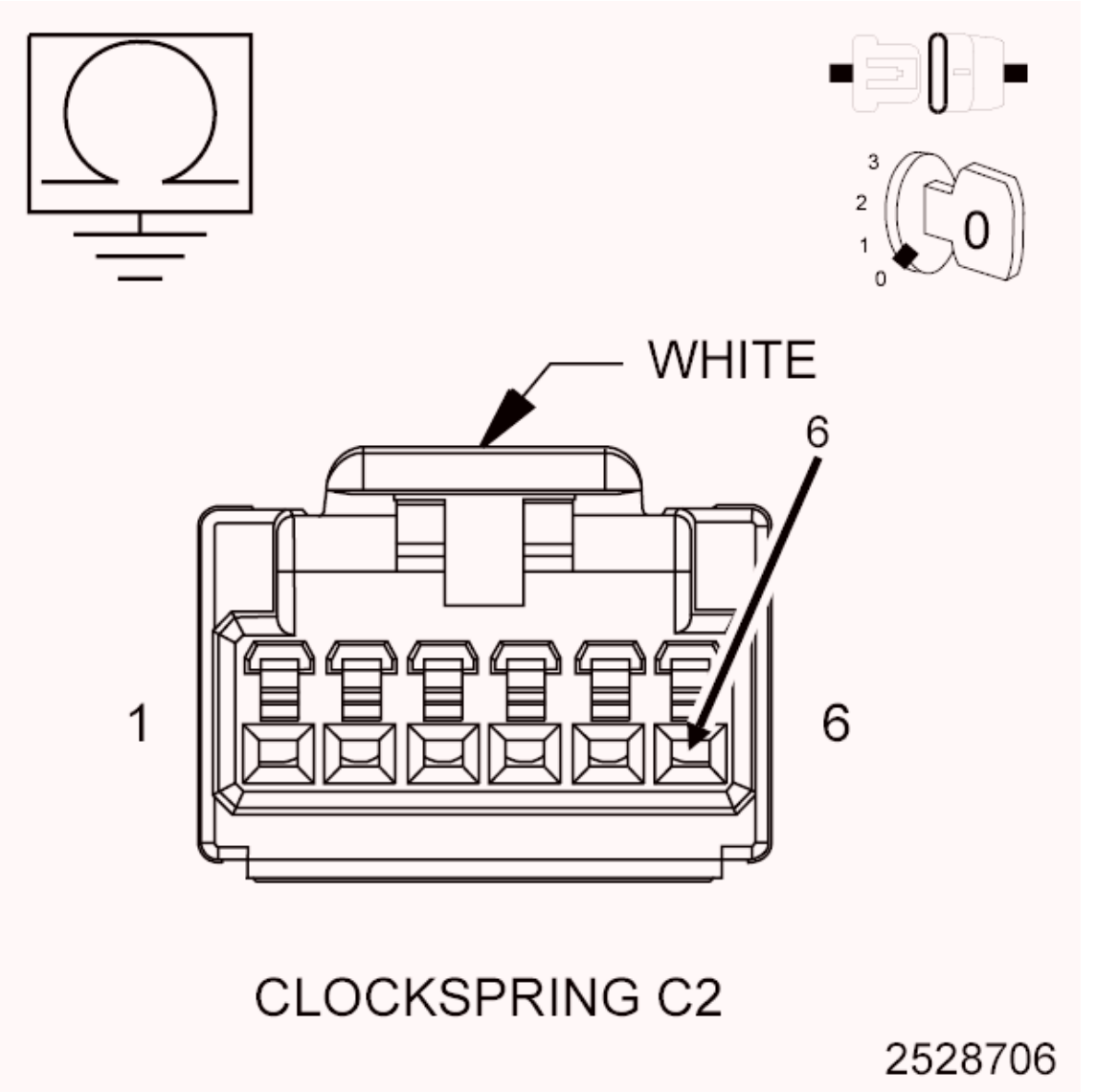

Fig. 96: Measuring Resistance Between Ground And S/C Switch Sense Circuit In SCM Harness Connector
Courtesy of CHRYSLER GROUP, LLC

1. Turn the ignition off.
2. Measure the resistance between ground and the (V71) S/C Switch Sense 1 circuit in the Clockspring C2 harness connector.

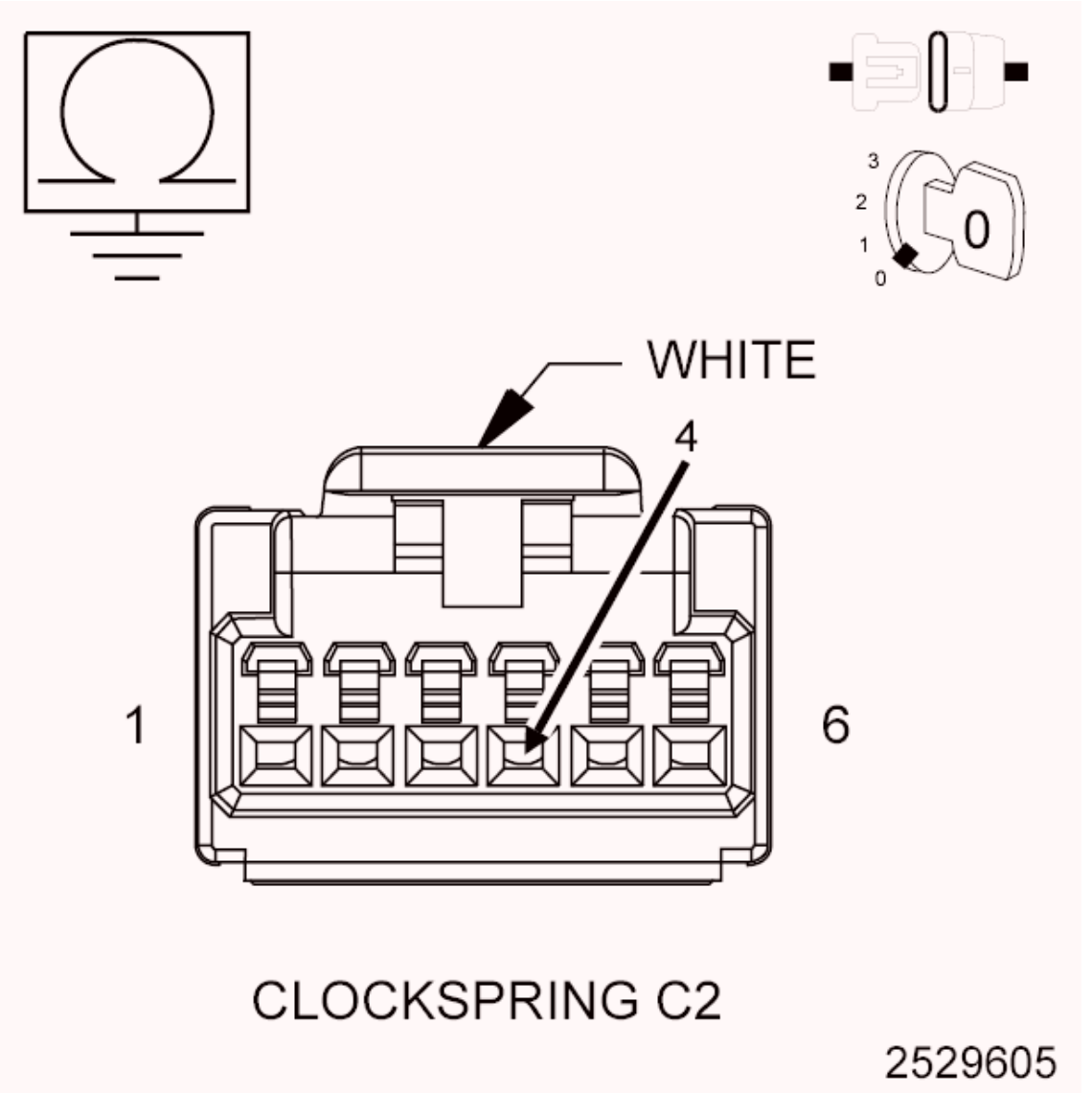

Fig. 97: Measuring Resistance Between Ground And (V72) S/C Switch Sense 2 Circuit In Clockspring C2 Harness Connector
Courtesy of CHRYSLER GROUP, LLC

3. Measure the resistance between ground and the (V72) S/C Switch Sense 2 circuit in the Clockspring C2 harness connector.

   Is the resistance below 100 Ohms?

   Yes

   - Repair the short to ground in the (V71) or (V72) S/C switch sense circuit.
   - Perform the POWERTRAIN VERIFICATION TEST. Refer to **POWERTRAIN VERIFICATION TEST** .

No

- Go To 8.

8. **S/C SWITCH SENSE CIRCUIT SHORTED TO THE (V937) S/C SWITCH RETURN CIRCUIT**

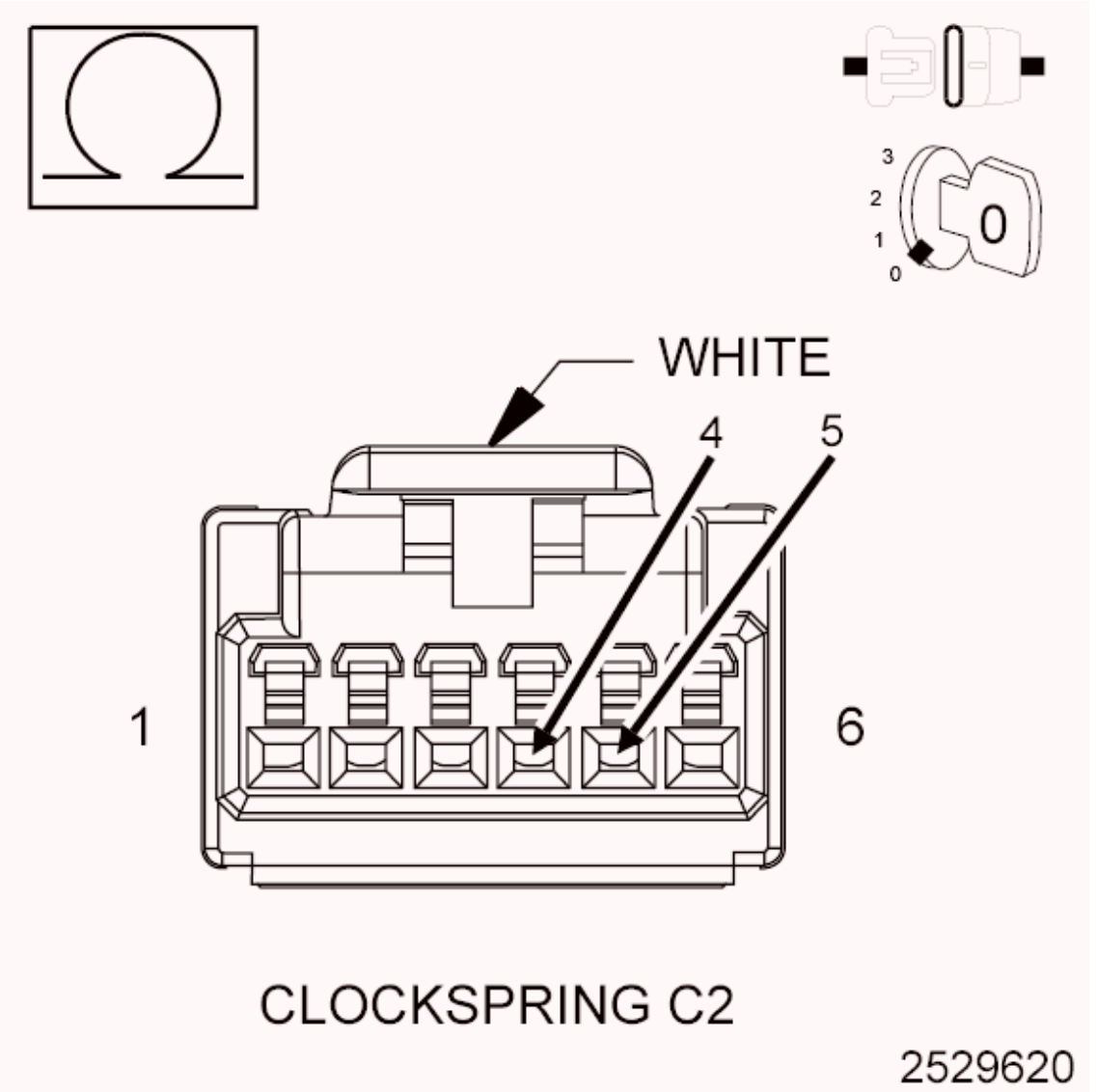

Fig. 98: Measuring Resistance Between S/C Switch Sense Circuit And S/C Switch Return Circuit In Clockspring C2 Harness Connector
Courtesy of CHRYSLER GROUP, LLC

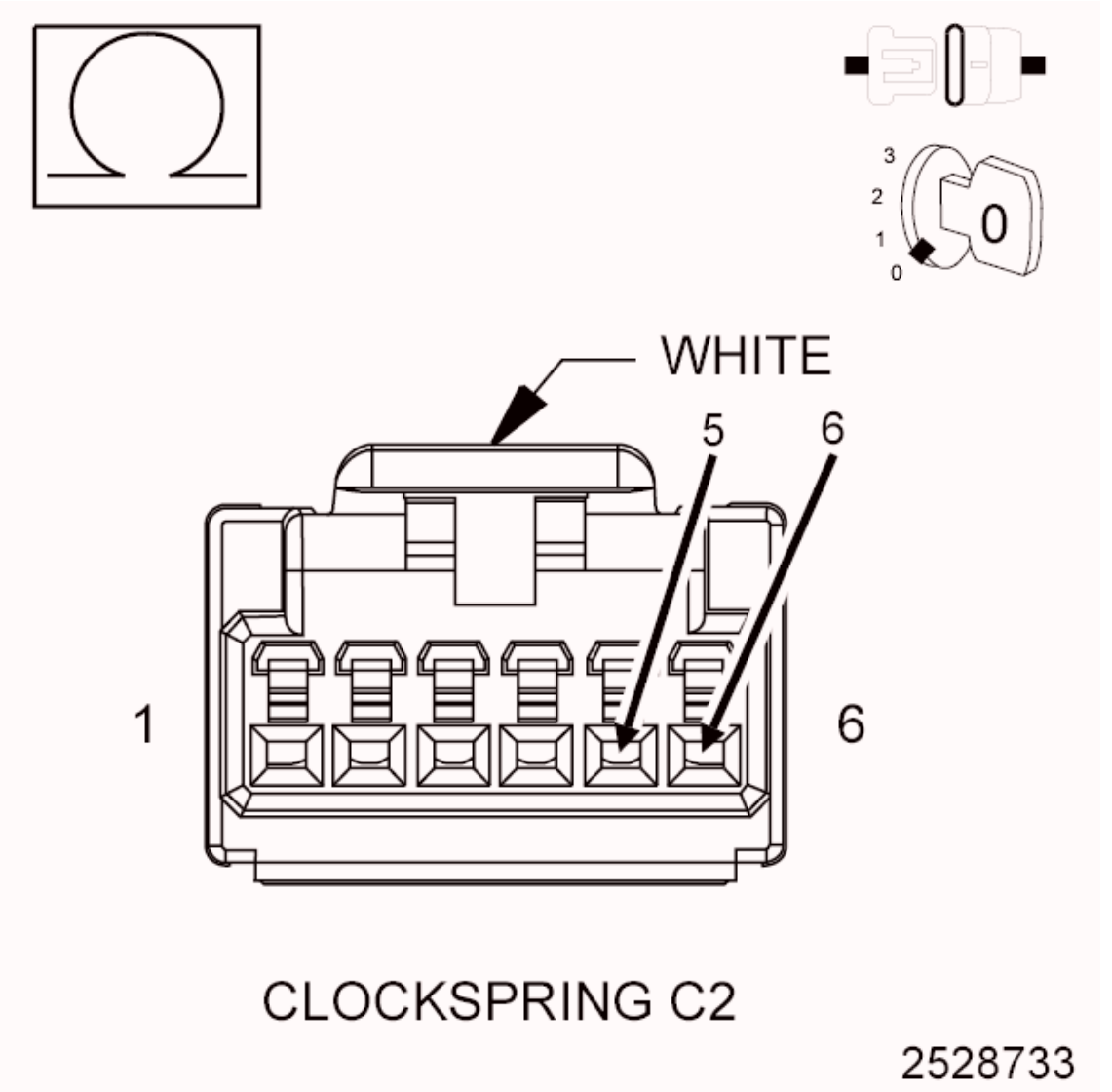

Fig. 99: Measuring Resistance Between S/C Switch Sense Circuit And S/C Switch Return Circuit In Clockspring C2 Harness Connector
Courtesy of CHRYSLER GROUP, LLC

1. Measure the resistance between the (V71) and (V72) S/C Switch Sense circuit and the (V937) S/C Switch Return circuit in the Clockspring C2 harness connector.

   Is the resistance below 5.0 Ohms?

   Yes

   - Repair the short between the (V71) or (V72) S/C Switch Sense circuit and the (V937) Switch Return circuit.
   - Perform the POWERTRAIN VERIFICATION TEST. Refer to **POWERTRAIN VERIFICATION TEST** .

No

- Go To 9.

9. **S/C SWITCH SENSE CIRCUIT OPEN**

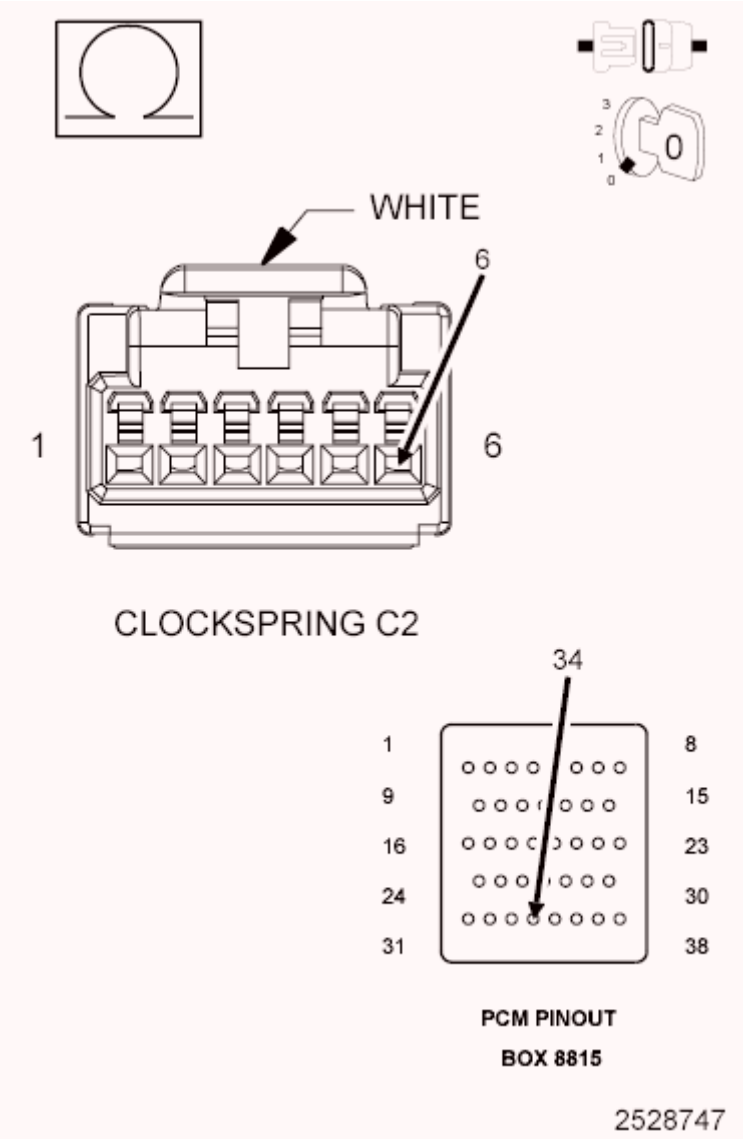

Fig. 100: Measuring Resistance Of S/C Switch Sense Circuit From C2 Clockspring Harness Connector To Appropriate Terminal Of PCM Pinout Box 8815
Courtesy of CHRYSLER GROUP, LLC

1. Connect the C3 PCM harness connector.
2. Measure the resistance of the (V71) and (V72) S/C Switch Sense circuit in the C2 Clockspring harness connector to the appropriate terminals of PCM Pinout Box (special tool #8815A, Kit, NGC, 38 Position).

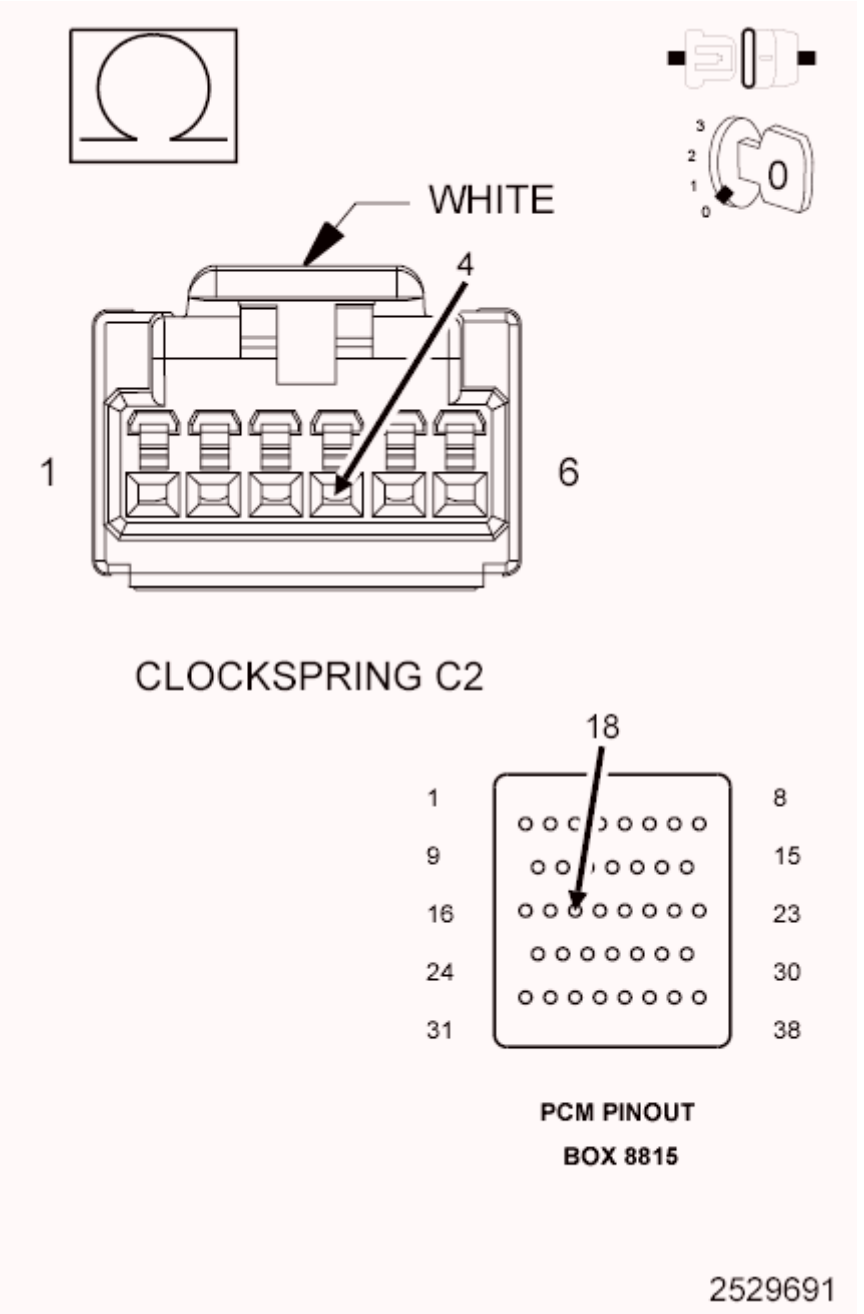

Fig. 101: Measuring Resistance Of S/C Switch Sense 2 Circuit From Clockspring Harness Connector To Appropriate Terminal Of PCM Pinout Box 8815
Courtesy of CHRYSLER GROUP, LLC

Is the resistance below 5.0 Ohms for each measurement?

Yes

- Go To 10.

No

- Repair the excessive resistance in the (V71) or (V72) S/C Switch Sense circuit.
- Perform the POWERTRAIN VERIFICATION TEST. Refer to **POWERTRAIN VERIFICATION TEST** .

10. **(V937) S/C SWITCH RETURN CIRCUIT OPEN**

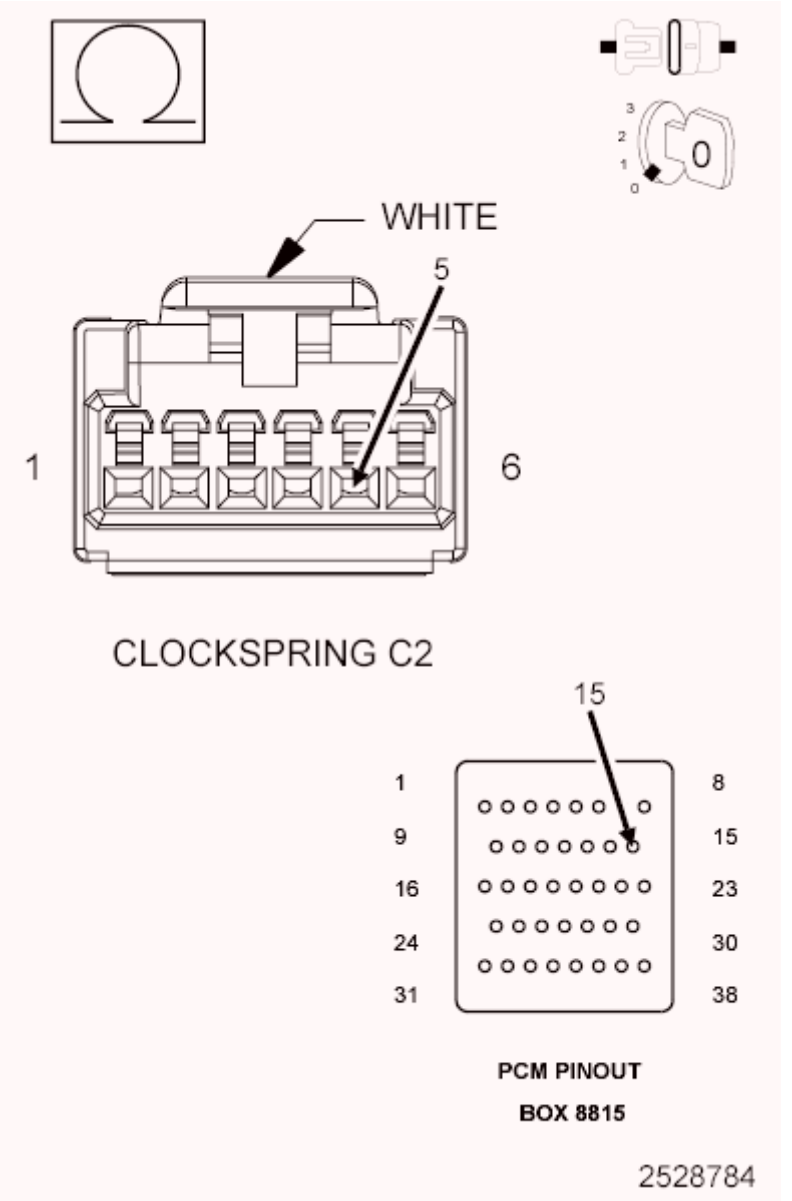

Fig. 102: Measuring Resistance Of S/C Switch Return Circuit From Clockspring C2 Harness Connector To Appropriate Terminal Of PCM Pinout Box 8815
Courtesy of CHRYSLER GROUP, LLC

1. Measure the resistance of the (V937) S/C Switch Return circuit from the Clockspring C2 harness connector to the appropriate terminal of PCM Pinout Box (special tool #8815A, Kit, NGC, 38 Position).

Is the resistance below 5.0 Ohms for both measurements?

Yes

- Go To 11.

No

- Repair the excessive resistance in the (V937) S/C Switch Return circuit.
- Perform the POWERTRAIN VERIFICATION TEST. Refer to **POWERTRAIN VERIFICATION TEST** .

11. **POWERTRAIN CONTROL MODULE (PCM)**
    1. Using the wiring diagram/schematic as a guide, inspect the wiring and connectors between the Speed Control Switch and the Powertrain Control Module (PCM).
    2. Look for any chafed, pierced, pinched or partially broken wires.
    3. Look for broken, bent, pushed out or corroded terminals. Verify that there is good pin to terminal contact in the Switch and Powertrain Control Module connectors.
    4. Perform any Technical Service Bulletins that may apply.

    Were there any problems found?

    Yes

    - Repair as necessary.
    - Perform the POWERTRAIN VERIFICATION TEST. Refer to **POWERTRAIN VERIFICATION TEST** .

    No

    - Replace and program the Powertrain Control Module in accordance with the Service Information. Refer to **MODULE, POWERTRAIN CONTROL, REMOVAL** .
    - Perform the POWERTRAIN VERIFICATION TEST. Refer to **POWERTRAIN VERIFICATION TEST** .

P0591-SPEED CONTROL SWITCH 2 PERFORMANCE

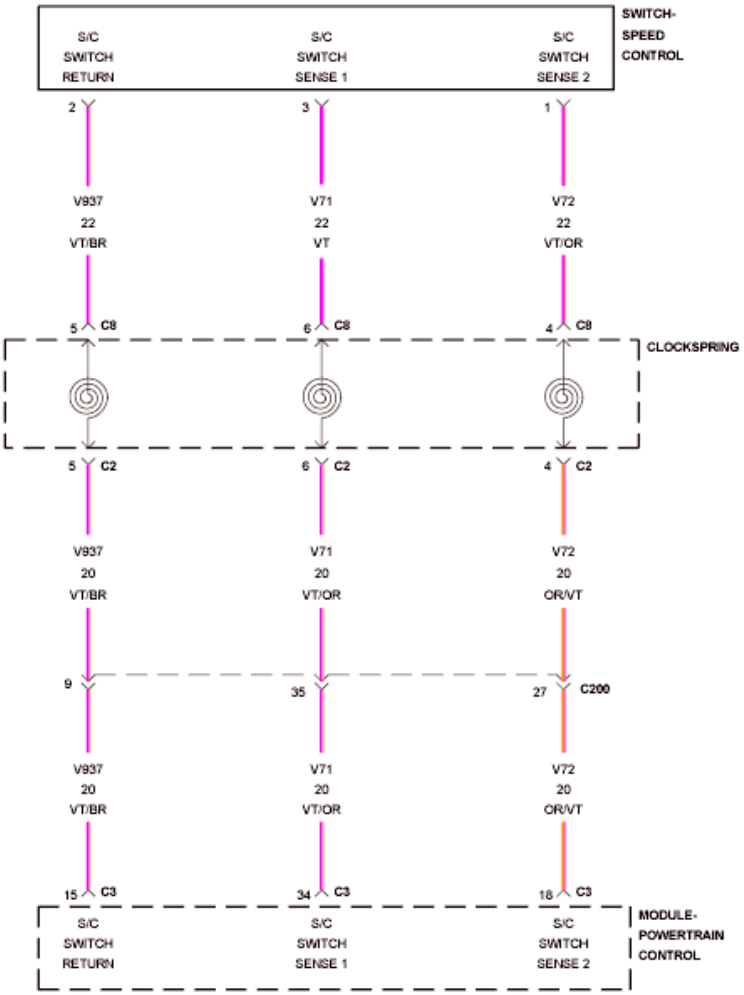

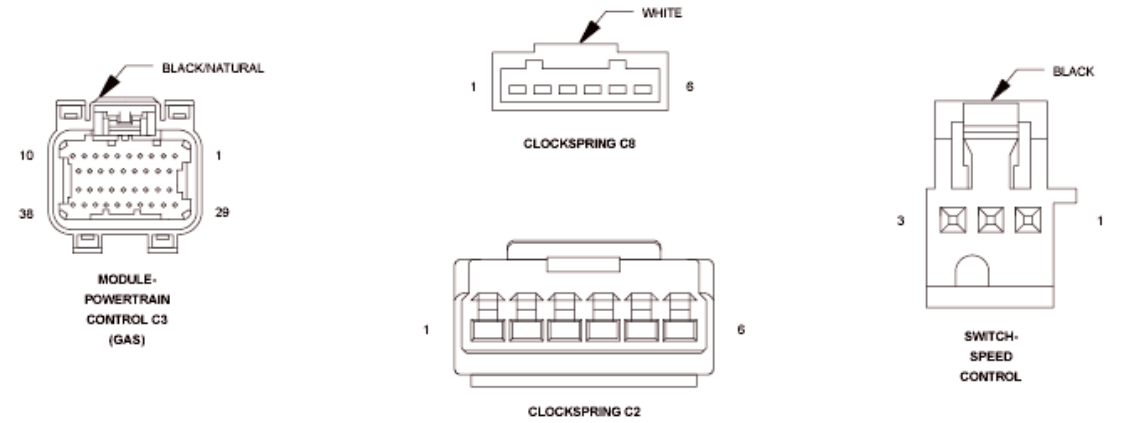

Fig. 103: Speed Control Switch Circuit Schematic
Courtesy of CHRYSLER GROUP, LLC

For a complete wiring diagram, **refer to appropriate SYSTEM WIRING DIAGRAMS article** .

WHEN MONITORED:

With the ignition key on.

SET CONDITION:

Speed Control (S/C) switch voltage output is not out of range but it does not equal any of the values for any of the button positions. One trip fault.

POSSIBLE CAUSES

Possible Causes
(V72) S/C SWITCH SENSE 2 CIRCUIT OPEN
(V72) S/C SWITCH SENSE 2 CIRCUIT SHORTED TO VOLTAGE
(V937) S/C SWITCH RETURN CIRCUIT OPEN
(V72) S/C SWITCH SENSE 2 CIRCUIT SHORTED TO GROUND
(V72) S/C SWITCH SENSE 2 CIRCUIT SHORTED TO THE (V937) S/C SWITCH RETURN CIRCUIT
SPEED CONTROL SWITCH
CLOCKSPRING
POWERTRAIN CONTROL MODULE (PCM)

Always perform the Pre-Diagnostic Troubleshooting procedure before proceeding. Refer to PRE-DIAGNOSTIC TROUBLESHOOTING PROCEDURE .

DIAGNOSTIC TEST

1. **ACTIVE DIAGNOSTIC TROUBLE CODE (DTC)**
   1. Start the engine and allow it to idle for at least 60 seconds.

      WARNING: **When the engine is operating, do not stand in direct line with the fan. Do not put your hands near the pulleys, belts, or fan. Do not wear loose clothing. Failure to follow these instructions can result in possible serious or fatal injury.**

      NOTE: **It may be necessary to test drive the vehicle and operate the speed control in order for this DTC to set.**

   2. Using the scan tool, select View DTCs.

      Is the DTC Active at this time?

      Yes

      - Go To 2.

No

- Perform the INTERMITTENT CONDITION diagnostic procedure. Refer to **INTERMITTENT CONDITION** .

2. **SPEED CONTROL SWITCH**
    1. Turn the ignition off.
    2. Disconnect the Speed Control Switch harness connector in accordance with the Service Information.
    3. Measure the resistance between (V72) S/C Switch Sense 2 circuit and the (V937) Switch Return circuit.
    4. Monitor the Ohmmeter while pressing each function button on each switch.
    5. The following resistance specs are taken between terminals (V72) S/C Switch Sense 2 circuit and the (V937) Switch Return circuit of the switch when holding the switch button in the following position:
        - Not pressing any switch - 20.5 kOhms
        - On/Off - 6.2 kOhms
        - Set/Decel - 0.79 kOhms
        - Cancel - 3.2 kOhms
        - Resume/Accel - 1.7 kOhms

    Does the function on the Speed Control Switch have the correct resistance value +/- 0.2 of an Ohm?

    Yes

    - Go To 3.

    No

    - Replace the Speed Control Switch.
    - Perform the POWERTRAIN VERIFICATION TEST. Refer to **POWERTRAIN VERIFICATION TEST** .

3. **CLOCKSPRING**
    1. Disconnect the PCM C3 harness connector.
    2. Disconnect the Clockspring C2 harness connector in accordance with the Service Information.
    3. Disconnect the Clockspring C8 harness connector.
    4. Measure the resistance of the (V72) S/C Switch Sense 2 circuit between the C2 and C8 Clockspring connections.
    5. Measure the resistance of the (V937) Switch Return circuit between the C2 and C8 Clockspring connections.

    Is the resistance above 5.0 Ohms for either reading?

    Yes

- Replace the Steering Column Module in accordance with the Service Information.
- Perform the POWERTRAIN VERIFICATION TEST. Refer to **POWERTRAIN VERIFICATION TEST** .

No

- Go To 4.

4. **STEERING WHEEL JUMPER HARNESS**

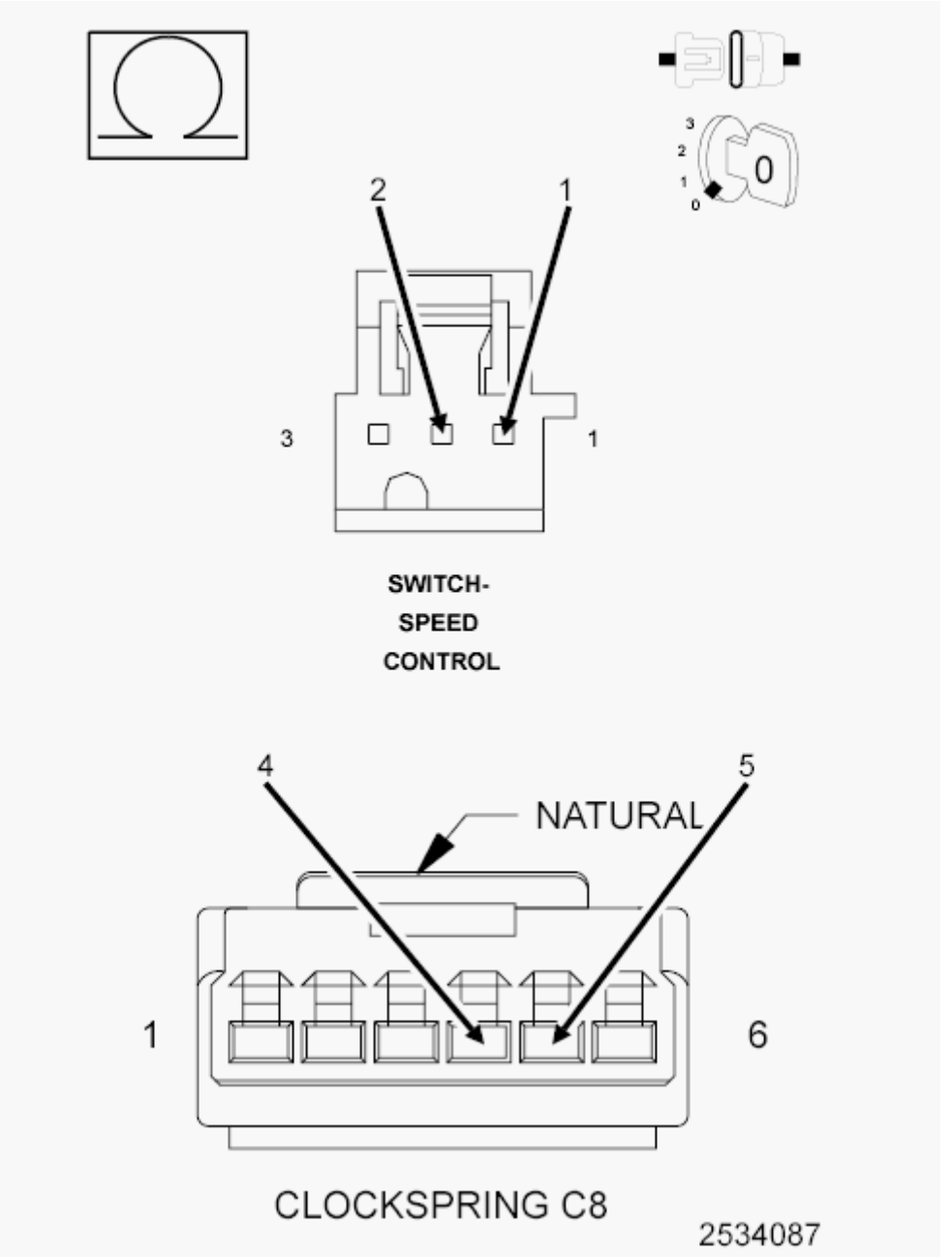

Fig. 104: Measuring Resistance Of S/C Switch Sense 2 Circuit Switch Return Circuit Between

Clockspring Harness Connector And S/C Switch Harness Connector
Courtesy of CHRYSLER GROUP, LLC

1. Measure the resistance of the (V72) S/C Switch Sense 2 circuit between the Clockspring C8 harness connector and S/C Switch harness connector.
2. Measure the resistance of the (V937) Switch Return circuit between the Clockspring C8 harness connector and S/C Switch harness connector.

   Is the resistance above 5.0 Ohms for either reading?

   Yes

   - Replace the Steering Wheel Jumper harness in accordance with the Service Information.
   - Perform the POWERTRAIN VERIFICATION TEST. Refer to **POWERTRAIN VERIFICATION TEST** .

   No

   - Go To 5.

5. **(V72) S/C SWITCH SENSE 2 CIRCUIT SHORTED TO VOLTAGE**

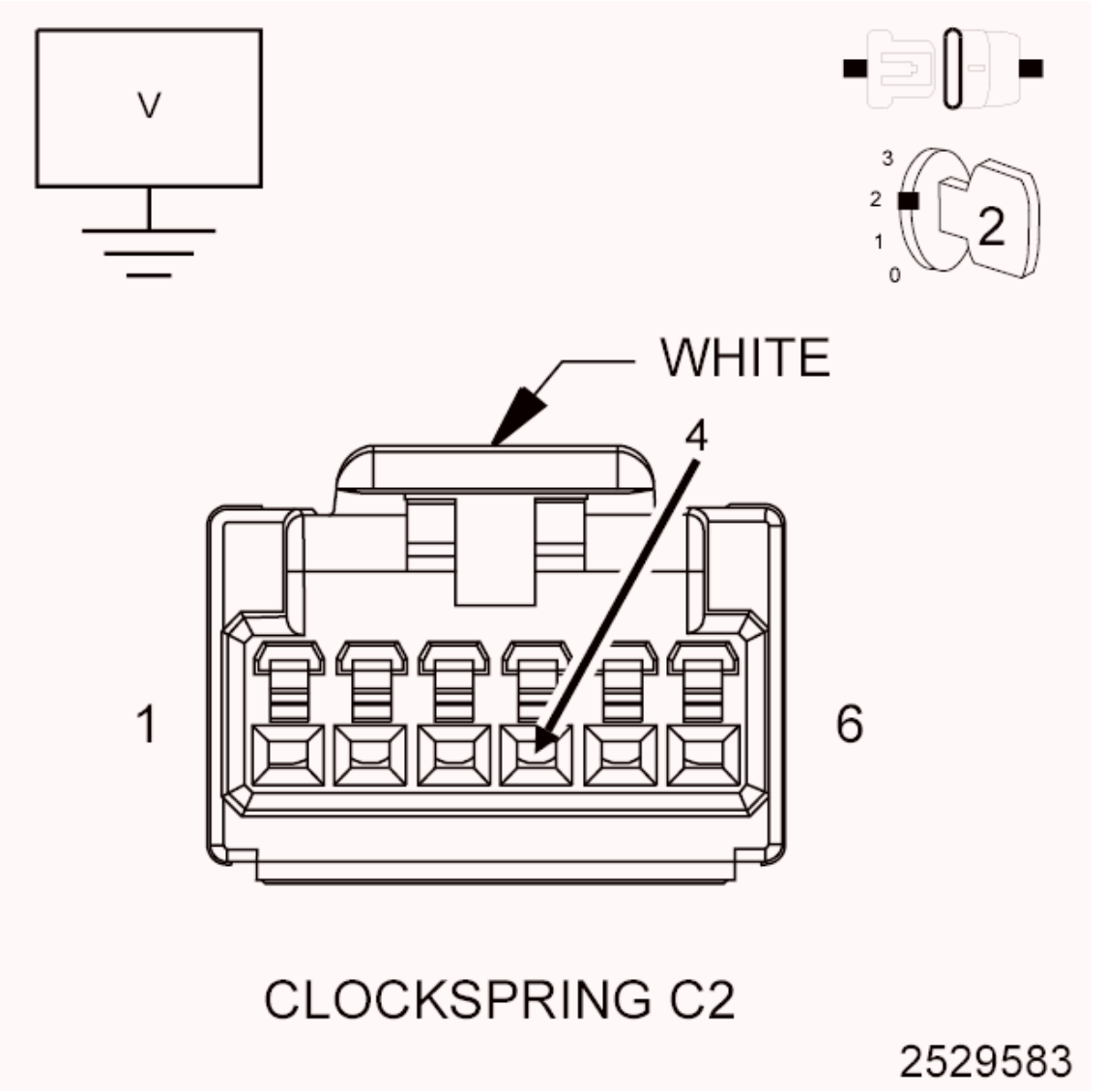

Fig. 105: Measuring Voltage On S/C Switch Sense Circuit In Clockspring C2 Harness Connector
Courtesy of CHRYSLER GROUP, LLC

1. Ignition on, engine not running.
2. Measure the voltage on the (V72) S/C Switch Sense 2 circuit in the Clockspring C2 harness connector.

   Is there any voltage present?

   Yes

   - Repair the short to voltage in the (V72) S/C Switch Sense 2 circuit.
   - Perform the POWERTRAIN VERIFICATION TEST. Refer to **POWERTRAIN VERIFICATION TEST** .

No

- Go To 6.

6. **(V72) S/C SWITCH SENSE 2 CIRCUIT SHORTED TO GROUND**

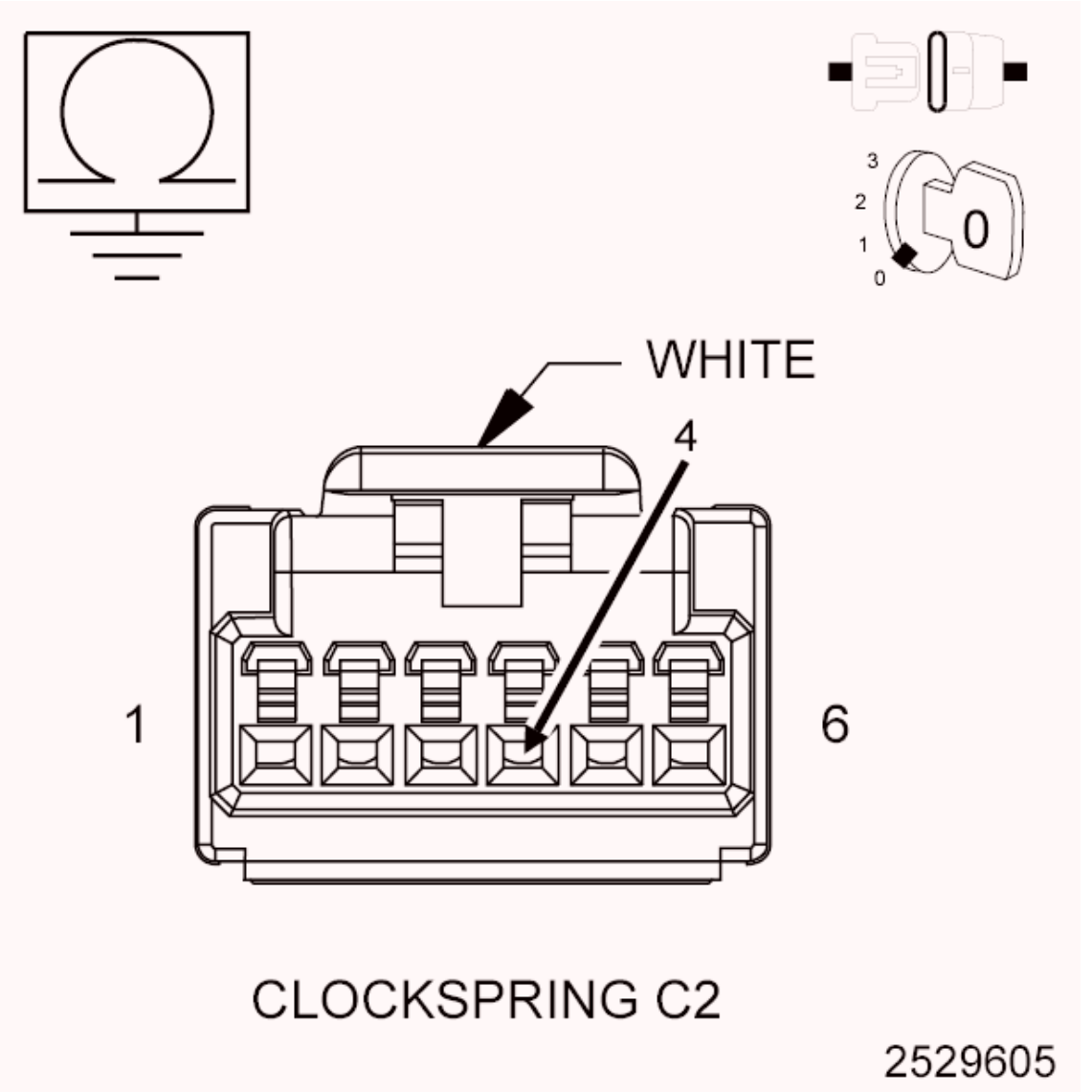

Fig. 106: Measuring Resistance Between Ground And (V72) S/C Switch Sense 2 Circuit In Clockspring C2 Harness Connector
Courtesy of CHRYSLER GROUP, LLC

1. Turn the ignition off.
2. Measure the resistance between ground and the (V72) S/C Switch Sense 2 circuit in the Clockspring C2 harness connector.

   Is the resistance below 100 Ohms?

Yes

- Repair the short to ground in the (V72) S/C Switch Sense 2 circuit.
- Perform the POWERTRAIN VERIFICATION TEST. Refer to **POWERTRAIN VERIFICATION TEST** .

No

- Go To 7.

7. **(V72) S/C SWITCH SENSE 2 CIRCUIT SHORTED TO THE (V937) S/C SWITCH RETURN CIRCUIT**

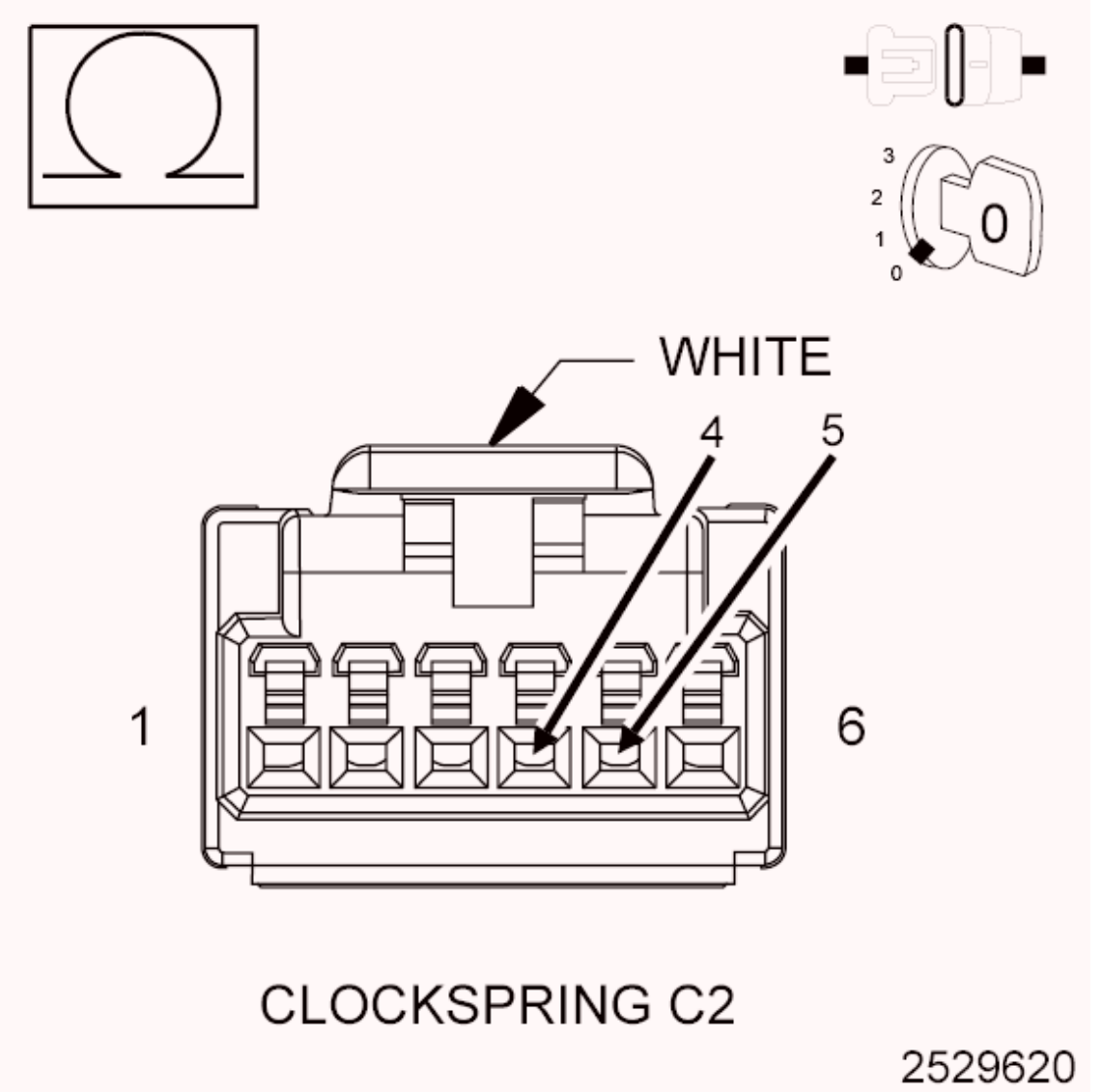

Fig. 107: Measuring Resistance Between S/C Switch Sense Circuit And S/C Switch Return Circuit In Clockspring C2 Harness Connector
Courtesy of CHRYSLER GROUP, LLC

1. Measure the resistance between the (V72) S/C Switch Sense 2 circuit and the (V937) S/C Switch Return circuit in the Clockspring C2 harness connector.

   Is the resistance below 5.0 Ohms?

   Yes

   - Repair the short between the (V72) S/C Switch Sense 2 circuit and the (V937) Switch Return circuit.
   - Perform the POWERTRAIN VERIFICATION TEST. Refer to **POWERTRAIN VERIFICATION TEST** .

   No

   - Go To 8.

8. **(V937) S/C SWITCH RETURN OPEN**

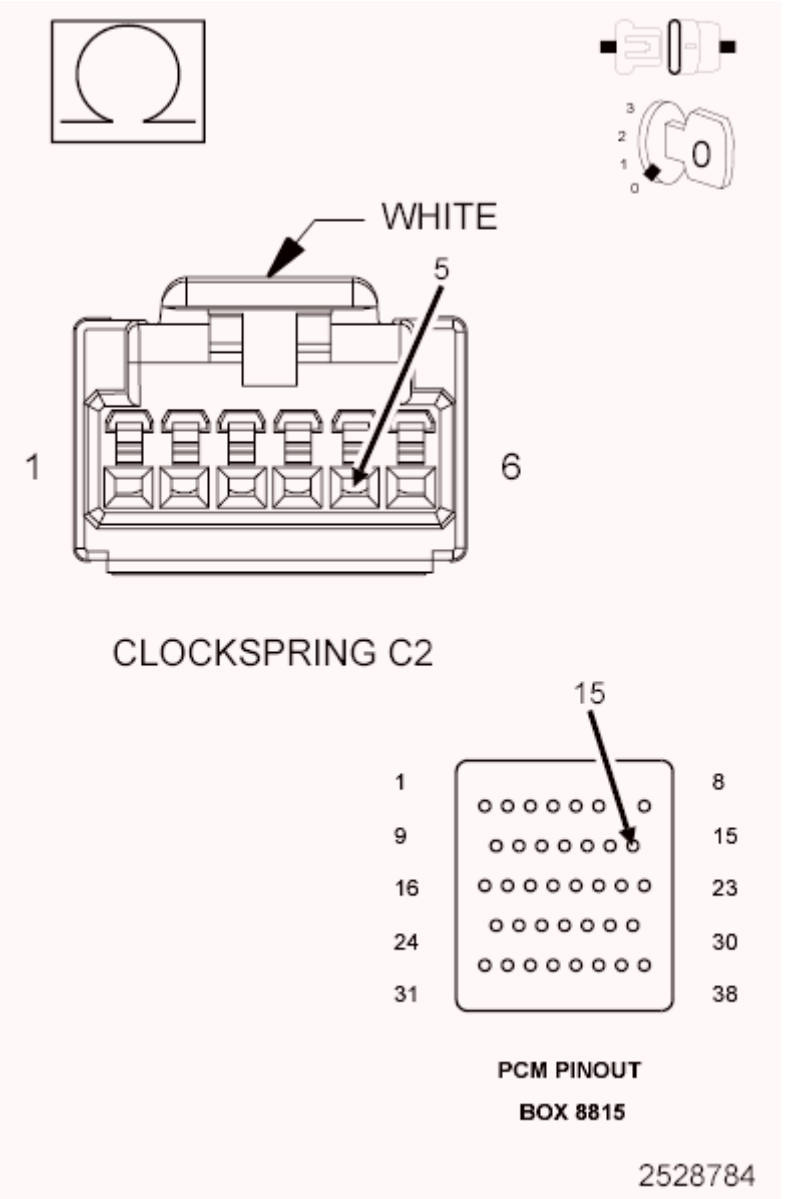

Fig. 108: Measuring Resistance Of S/C Switch Return Circuit From Clockspring C2 Harness Connector To Appropriate Terminal Of PCM Pinout Box 8815
Courtesy of CHRYSLER GROUP, LLC

CAUTION: Do not probe the PCM harness connectors. Probing the PCM harness connectors will damage the PCM terminals resulting in poor terminal to pin connection. Install the PCM Pinout Box (special tool #8815A, Kit, NGC, 38 Position) to perform diagnosis.

1. Measure the resistance of the (V937) S/C Switch Return circuit from the Clockspring C2 harness connector to the appropriate terminal of PCM Pinout Box (special tool #8815A, Kit, NGC, 38 Position).

   Is the resistance below 5.0 Ohms for both measurement?

Yes

- Go To 9.

No

- Repair the open in the (V937) S/C Switch Return circuit.
- Perform the POWERTRAIN VERIFICATION TEST. Refer to **POWERTRAIN VERIFICATION TEST** .

9. **(V72) S/C SWITCH SENSE 2 CIRCUIT OPEN**

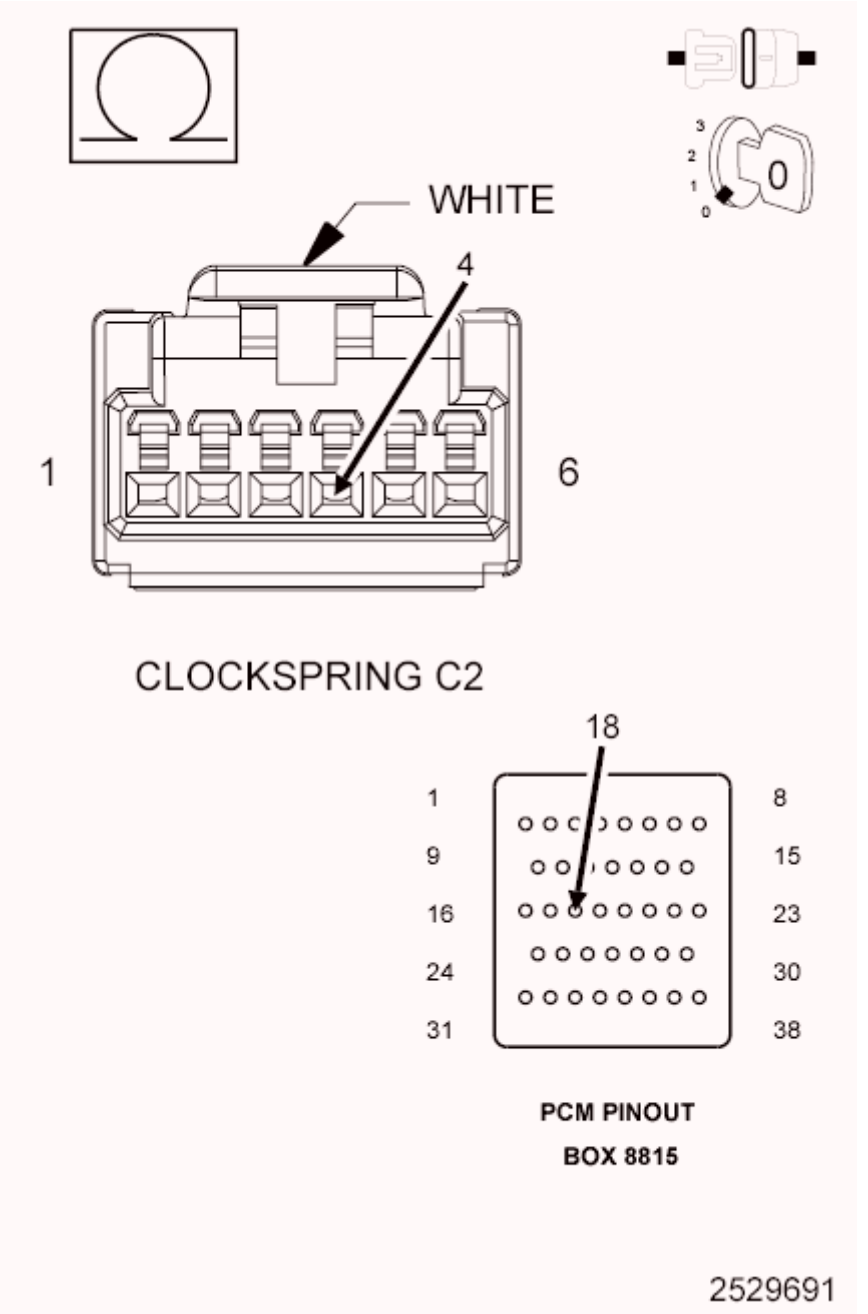

Fig. 109: Measuring Resistance Of S/C Switch Sense 2 Circuit From Clockspring Harness Connector To Appropriate Terminal Of PCM Pinout Box 8815
Courtesy of CHRYSLER GROUP, LLC

CAUTION: Do not probe the PCM harness connectors. Probing the PCM harness connectors will damage the PCM terminals resulting in poor terminal to pin connection. Install the PCM Pinout Box (special tool #8815A, Kit, NGC, 38 Position) to perform diagnosis.

1. Measure the resistance of the (V72) S/C Switch Sense 2 circuit from the Clockspring C1 harness

connector to the appropriate terminal of PCM Pinout Box (special tool #8815A, Kit, NGC, 38 Position).

Is the resistance below 5.0 Ohms for both measurements?

Yes

- Go To 10.

No

- Repair the open in the (V72) S/C Switch Sense 2 circuit.
- Perform the POWERTRAIN VERIFICATION TEST. Refer to **POWERTRAIN VERIFICATION TEST** .

10. **SPEED CONTROL SWITCH VOLTAGE VALUES**

CAUTION: Do not probe the PCM harness connectors. Probing the PCM harness connectors will damage the PCM terminals resulting in poor terminal to pin connection. Install the PCM Pinout Box (special tool #8815A, Kit, NGC, 38 Position) and PCM Pinout Box Adapter (special tool #8815-1, PCM Pinout Box Adapter) to perform diagnosis.

1. Install the PCM Pinout Box (special tool #8815-1, PCM Pinout Box Adapter) on the PCM C3 harness connector.
2. Connect the S/C Switch harness connectors.
3. Connect the Clockspring harness connectors.
4. Turn the ignition on.
5. Using the scan tool, monitor the S/C Switch voltage readings.
6. Using a Voltmeter check the voltage on the (V71) S/C Switch Sense 1 circuit and the (V72) S/C Switch Sense 2 circuit at the appropriate terminals of the PCM Pinout Box (special tool #8815A, Kit, NGC, 38 Position).
7. Monitor the Voltmeter.
8. Using the scan tool, monitor the S/C Switch voltage readings.

SWITCH POSITION	SWITCH No. 1 VOLTAGE VALUE	SWITCH No. 2 VOLTAGE VALUE
NO SWITCHES PRESSED	4.31 to 4.78 Volts	4.31 to 4.78 Volts
ON/OFF PRESSED	0.59 to 1.13 Volts	3.53 to 3.92 Volts
RES/ACCEL PRESSED	3.88 to 4.17 Volts	2.04 to 2.47 Volts
SET/DECEL PRESSED	3.16 to 3.56 Volts	1.17 to 1.56 Volts
CANCEL PRESSED	1.59 to 1.99 Volts	2.84 to 3.25 Volts

9. Compare the voltage readings on the Voltmeter to what the scan tool displayed.

Are the voltage readings out of the listed specification and is there less than a 0.2 of a Volt difference between the Voltmeter switch values and the scan tool switch values?

Yes

- Replace the Speed Control Switch.
- Perform the POWERTRAIN VERIFICATION TEST. Refer to **POWERTRAIN VERIFICATION TEST** .

No

- Go To 11.

11. **POWERTRAIN CONTROL MODULE (PCM)**
    1. Using the wiring diagram/schematic as a guide, inspect the wiring and connectors between the Speed Control Switch and the Powertrain Control Module (PCM).
    2. Look for any chafed, pierced, pinched or partially broken wires.
    3. Look for broken, bent, pushed out or corroded terminals. Verify that there is good pin to terminal contact in the Switch and Powertrain Control Module connectors.
    4. Perform any Technical Service Bulletins that may apply.

    Were there any problems found?

    Yes

    - Repair as necessary.
    - Perform the POWERTRAIN VERIFICATION TEST. Refer to **POWERTRAIN VERIFICATION TEST** .

    No

    - Replace and program the Powertrain Control Module in accordance with the Service Information. Refer to **MODULE, POWERTRAIN CONTROL, REMOVAL** .
    - Perform the POWERTRAIN VERIFICATION TEST. Refer to **POWERTRAIN VERIFICATION TEST** .

P0592-SPEED CONTROL SWITCH 2 CIRCUIT LOW

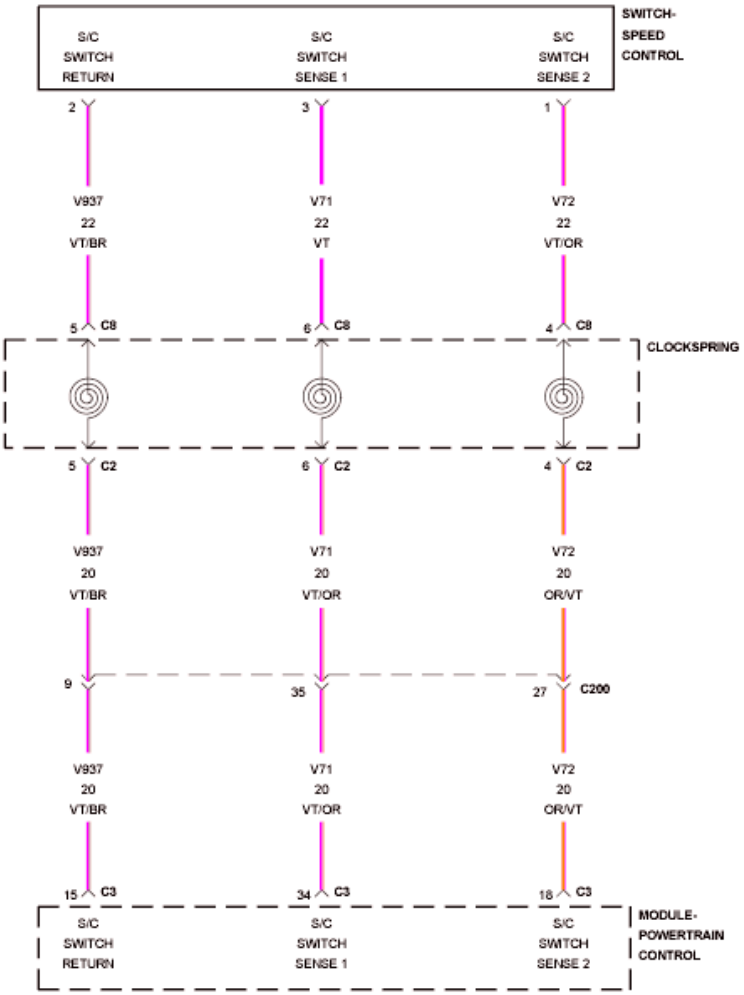

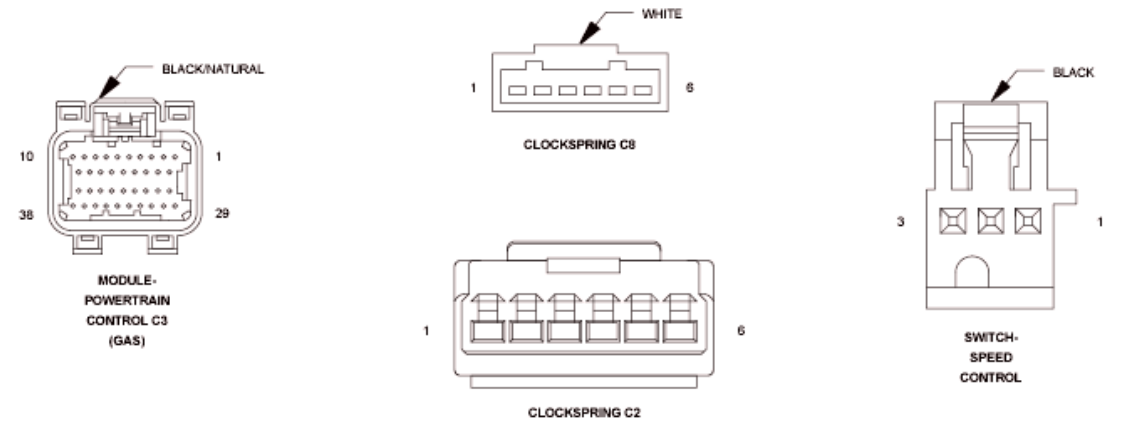

Fig. 110: Speed Control Switch Circuit Schematic
Courtesy of CHRYSLER GROUP, LLC

For a complete wiring diagram, **refer to appropriate SYSTEM WIRING DIAGRAMS article** .

WHEN MONITORED:

With the ignition key on.

SET CONDITION:

Speed Control (S/C) switch input No. 2 is below the minimum acceptable voltage at the Powertrain Control Module (PCM). One trip fault.

POSSIBLE CAUSES

Possible Causes
(V72) S/C SWITCH SENSE 2 CIRCUIT SHORTED TO GROUND
(V72) S/C SWITCH SENSE 2 CIRCUIT SHORTED TO THE (V937) S/C SWITCH RETURN CIRCUIT
CLOCKSPRING
SPEED CONTROL SWITCH
POWERTRAIN CONTROL MODULE (PCM)

Always perform the Pre-Diagnostic Troubleshooting procedure before proceeding. Refer to PRE-DIAGNOSTIC TROUBLESHOOTING PROCEDURE .

DIAGNOSTIC TEST

1. **ACTIVE DIAGNOSTIC TROUBLE CODE (DTC)**
    1. Start the engine and allow it to idle for at least 60 seconds.

        WARNING: When the engine is operating, do not stand in direct line with the fan. Do not put your hands near the pulleys, belts, or fan. Do not wear loose clothing. Failure to follow these instructions can result in possible serious or fatal injury.

        NOTE: It may be necessary to test drive the vehicle and operate the speed control in order for this DTC to set.

    2. Using the scan tool, select View DTCs.

        Is the DTC Active at this time?

        Yes

        - Go To 2.

        No

        - Perform the INTERMITTENT CONDITION diagnostic procedure. Refer to

INTERMITTENT CONDITION .

2. **SPEED CONTROL SWITCH**
    1. Turn the ignition off.
    2. Disconnect the Speed Control Switch harness connector in accordance with the Service Information.
    3. Measure the resistance between (V72) S/C Switch Sense 2 circuit and the (V937) Switch Return circuit.
    4. Monitor the Ohmmeter while pressing each function button on each switch.
    5. The following resistance specs are taken between terminals (V72) S/C Switch Sense 2 circuit and the (V937) Switch Return circuit of the switch when holding the switch button in the following position:
        - Not pressing any switch - 20.5 kOhms
        - On/Off - 6.2 kOhms
        - Set/Decel - 0.79 kOhms
        - Cancel - 3.2 kOhms
        - Resume/Accel - 1.7 kOhms

    Does the function on the Speed Control Switch have the correct resistance value +/- 0.2 of an Ohm?

    Yes

    - Go To 3.

    No

    - Replace the Speed Control Switch.
    - Perform the POWERTRAIN VERIFICATION TEST. Refer to **POWERTRAIN VERIFICATION TEST** .

3. **STEERING COLUMN MODULE**
    1. Disconnect the PCM C3 harness connector.
    2. Disconnect the Clockspring C2 harness connector in accordance with the Service Information.
    3. Disconnect the Clockspring C8 harness connector.
    4. Measure the resistance of the (V72) S/C Switch Sense 2 circuit between the C2 and C8 Clockspring connections.
    5. Measure the resistance of the (V937) Switch Return circuit between the C2 and C8 Clockspring connections.

    Is the resistance above 5.0 Ohms for either reading?

    Yes

    - Replace the Steering Column Module in accordance with the Service Information.

- Perform the POWERTRAIN VERIFICATION TEST. Refer to **POWERTRAIN VERIFICATION TEST** .

No

- Go To 4.

4. **STEERING WHEEL JUMPER HARNESS**

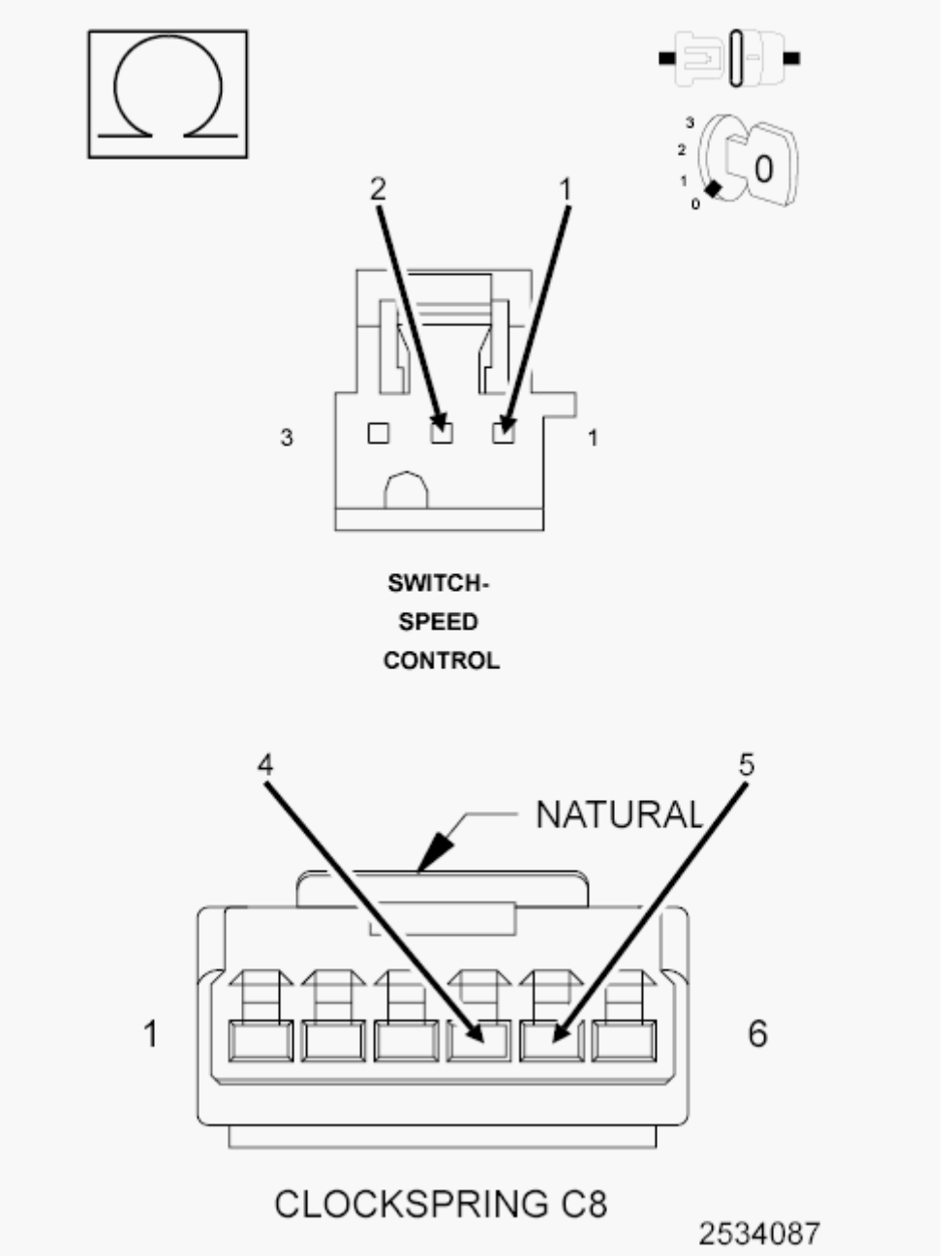

Fig. 111: Measuring Resistance Of S/C Switch Sense 2 Circuit Switch Return Circuit Between Clockspring Harness Connector And S/C Switch Harness Connector
Courtesy of CHRYSLER GROUP, LLC

1. Turn the ignition off.
2. Measure the resistance of the (V72) S/C Switch Sense 2 circuit between the Clockspring C8 harness connector and S/C Switch harness connector.
3. Measure the resistance of the (V937) Switch Return circuit between the Clockspring C8 harness connector and S/C Switch harness connector.

   Is the resistance above 5.0 Ohms for either reading?

   Yes

   - Replace the Steering Wheel Jumper harness in accordance with the Service Information.
   - Perform the POWERTRAIN VERIFICATION TEST. Refer to **POWERTRAIN VERIFICATION TEST** .

   No

   - Go To 5.

5. **(V72) S/C SWITCH SENSE 2 CIRCUIT SHORTED TO THE (V937) S/C SWITCH RETURN CIRCUIT**

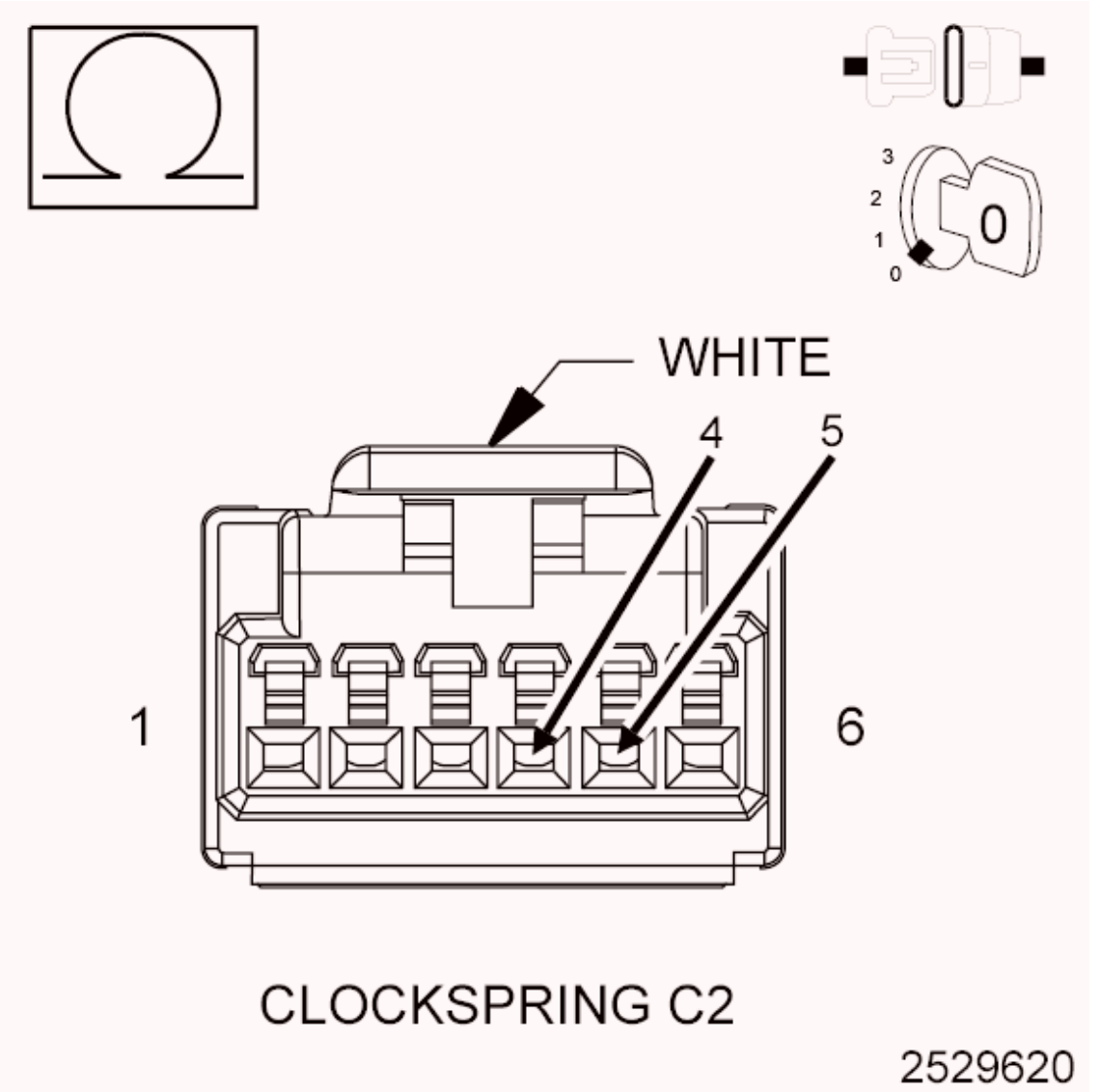

Fig. 112: Measuring Resistance Between S/C Switch Sense Circuit And S/C Switch Return Circuit In Clockspring C2 Harness Connector
Courtesy of CHRYSLER GROUP, LLC

1. Measure the resistance between the (V72) S/C Switch Sense 2 circuit and the (V937) S/C Switch Return circuit in the Clockspring C2 harness connector.

   Is the resistance below 5.0 Ohms?

   Yes

   - Repair the short between the (V72) S/C Switch Sense 2 circuit and the (V937) Switch Return circuit.
   - Perform the POWERTRAIN VERIFICATION TEST. Refer to **POWERTRAIN VERIFICATION TEST** .

No

- Go To 6.

6. **(V72) S/C NO. 2 SWITCH SIGNAL CIRCUIT SHORTED TO GROUND**

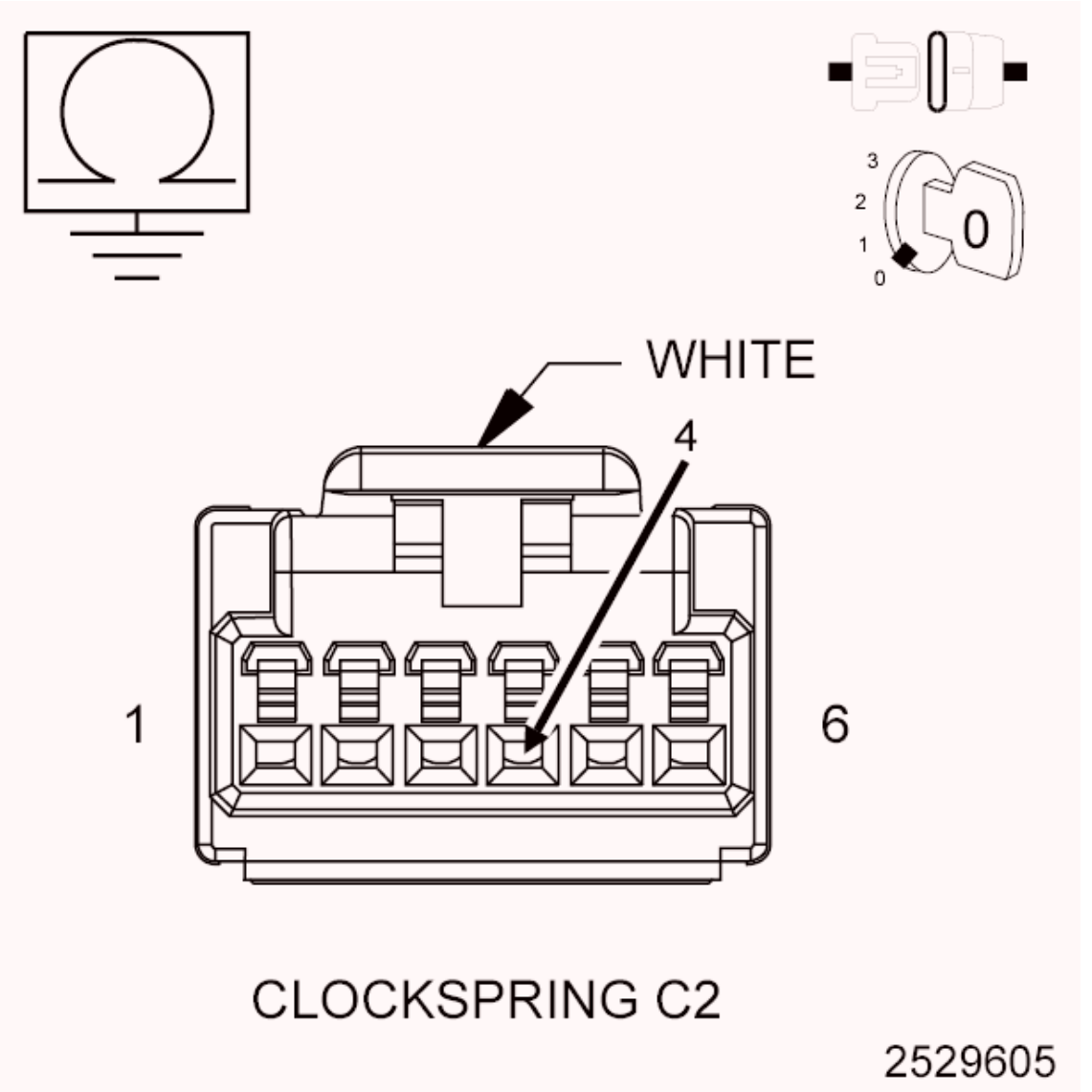

Fig. 113: Measuring Resistance Between Ground And (V72) S/C Switch Sense 2 Circuit In Clockspring C2 Harness Connector
Courtesy of CHRYSLER GROUP, LLC

1. Measure the resistance between ground and the (V72) S/C Switch Sense 2 circuit in the Clockspring C2 harness connector.

   Is the resistance below 100 Ohms?

   Yes

- Repair the short to ground in the (V72) S/C Switch Sense 1 circuit.
- Perform the POWERTRAIN VERIFICATION TEST. Refer to **POWERTRAIN VERIFICATION TEST** .

No

- Go To 7.

7. **SPEED CONTROL SWITCH VOLTAGE VALUES**

CAUTION: Do not probe the PCM harness connectors. Probing the PCM harness connectors will damage the PCM terminals resulting in poor terminal to pin connection. Install the PCM Pinout Box (special tool #8815A, Kit, NGC, 38 Position) and PCM Pinout Box Adapter (special tool #8815-1, PCM Pinout Box Adapter) to perform diagnosis.

1. Install the PCM Pinout Box (special tool #8815-1, PCM Pinout Box Adapter) on the PCM C3 harness connector.
2. Connect the S/C Switch harness connectors.
3. Connect the Clockspring harness connectors.
4. Turn the ignition on.
5. Using the scan tool, monitor the S/C Switch voltage readings.
6. Using a Voltmeter check the voltage on the (V72) S/C Switch Sense 1 circuit and the (V72) S/C Switch Sense 2 circuit at the appropriate terminals of the PCM Pinout Box (special tool #8815A, Kit, NGC, 38 Position).
7. Monitor the Voltmeter.
8. Using the scan tool, monitor the S/C Switch voltage readings.

SWITCH POSITION	SWITCH No. 1 VOLTAGE VALUE	SWITCH No. 2 VOLTAGE VALUE
NO SWITCHES PRESSED	4.31 to 4.78 Volts	4.31 to 4.78 Volts
ON/OFF PRESSED	0.59 to 1.13 Volts	3.53 to 3.92 Volts
RES/ACCEL PRESSED	3.88 to 4.17 Volts	2.04 to 2.47 Volts
SET/DECEL PRESSED	3.16 to 3.56 Volts	1.17 to 1.56 Volts
CANCEL PRESSED	1.59 to 1.99 Volts	2.84 to 3.25 Volts

9. Compare the voltage readings on the Voltmeter to what the scan tool displayed.

   Are the voltage readings out of the listed specification and is there less than a 0.2 of a Volt difference between the Voltmeter switch values and the scan tool switch value?

   Yes

   - Replace the Speed Control Switch.

- Perform the POWERTRAIN VERIFICATION TEST. Refer to **POWERTRAIN VERIFICATION TEST** .

No

- Go To 8.

8. **POWERTRAIN CONTROL MODULE (PCM)**
    1. Using the wiring diagram/schematic as a guide, inspect the wiring and connectors between the Speed Control Switch and the Powertrain Control Module (PCM).
    2. Look for any chafed, pierced, pinched or partially broken wires.
    3. Look for broken, bent, pushed out or corroded terminals. Verify that there is good pin to terminal contact in the Switch and Powertrain Control Module connectors.
    4. Perform any Technical Service Bulletins that may apply.

    Were there any problems found?

    Yes

    - Repair as necessary.
    - Perform the POWERTRAIN VERIFICATION TEST. Refer to **POWERTRAIN VERIFICATION TEST** .

    No

    - Replace and program the Powertrain Control Module in accordance with the Service Information. Refer to **MODULE, POWERTRAIN CONTROL, REMOVAL** .
    - Perform the POWERTRAIN VERIFICATION TEST. Refer to **POWERTRAIN VERIFICATION TEST** .

P0593-SPEED CONTROL SWITCH 2 CIRCUIT HIGH

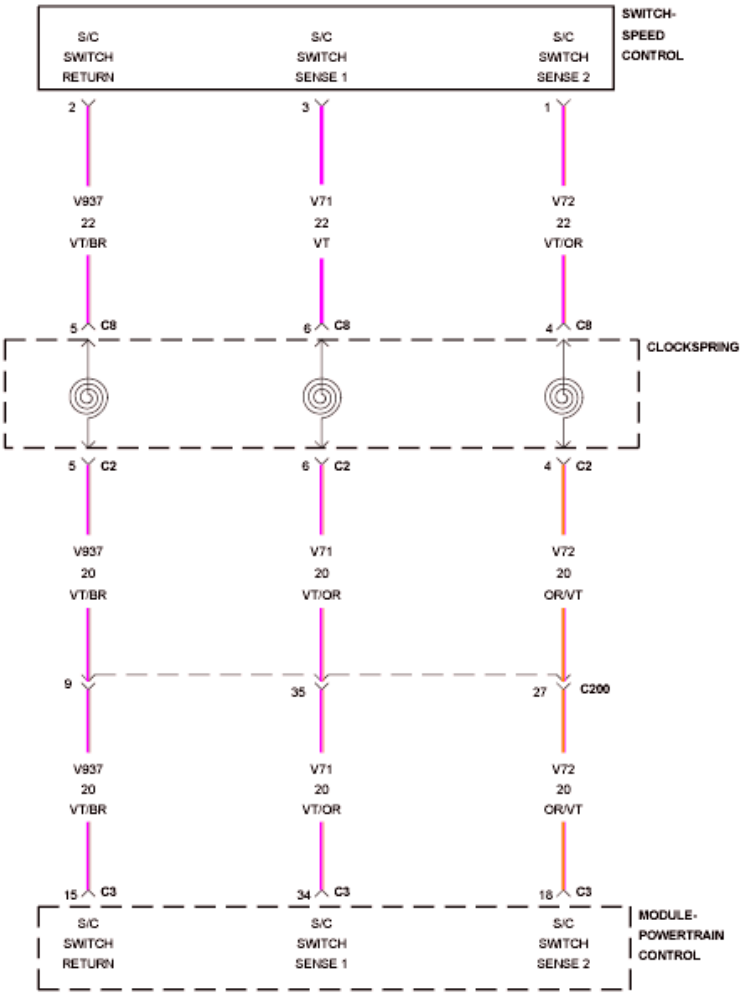

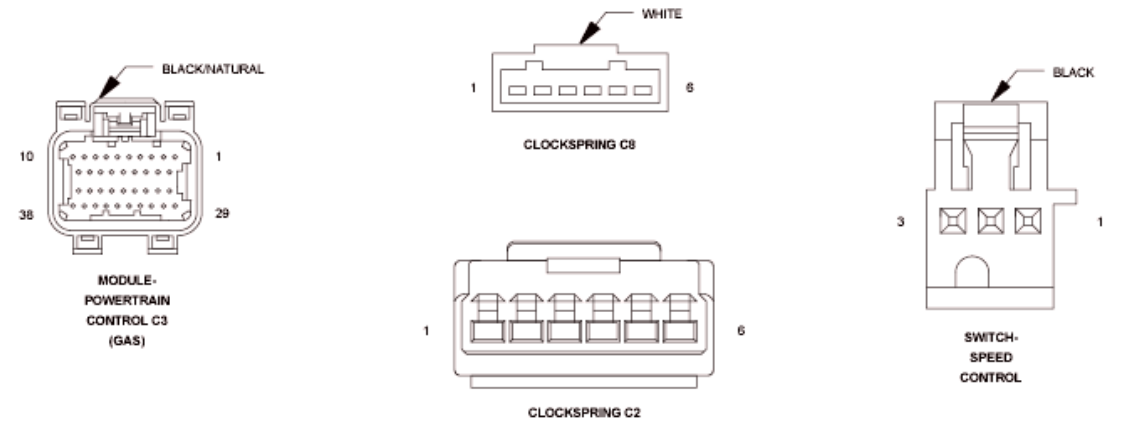

Fig. 114: Speed Control Switch Circuit Schematic
Courtesy of CHRYSLER GROUP, LLC

For a complete wiring diagram, **refer to appropriate SYSTEM WIRING DIAGRAMS article** .

WHEN MONITORED:

With the ignition key on.

SET CONDITION:

Speed Control (S/C) Switch No. 2 input above the maximum acceptable voltage at the Powertrain Control Module (PCM). One trip fault.

POSSIBLE CAUSES

Possible Causes
(V72) S/C SWITCH SENSE 2 CIRCUIT SHORTED TO VOLTAGE
(V72) S/C SWITCH SENSE 2 CIRCUIT OPEN
(V937) S/C SWITCH RETURN CIRCUIT OPEN
CLOCKSPRING
SPEED CONTROL SWITCH
POWERTRAIN CONTROL MODULE (PCM)

Always perform the Pre-Diagnostic Troubleshooting procedure before proceeding. Refer to PRE-DIAGNOSTIC TROUBLESHOOTING PROCEDURE .

DIAGNOSTIC TEST

1. **ACTIVE DIAGNOSTIC TROUBLE CODE (DTC)**
    1. Start the engine and allow it to idle for at least 60 seconds.

        WARNING: When the engine is operating, do not stand in direct line with the fan. Do not put your hands near the pulleys, belts, or fan. Do not wear loose clothing. Failure to follow these instructions can result in possible serious or fatal injury.

        NOTE: It may be necessary to test drive the vehicle and operate the speed control in order for this DTC to set.

    2. Using the scan tool, select View DTCs.

        Is the DTC Active at this time?

        Yes

        - Go To 2.

        No

        - Perform the INTERMITTENT CONDITION diagnostic procedure. Refer to

INTERMITTENT CONDITION .

2. **SPEED CONTROL SWITCH**
    1. Turn the ignition off.
    2. Disconnect the Speed Control Switch harness connector in accordance with the Service Information.
    3. Measure the resistance between (V72) S/C Switch Sense 2 circuit and the (V937) Switch Return circuit.
    4. Monitor the Ohmmeter while pressing each function button on each switch.
    5. The following resistance specs are taken between terminals (V72) S/C Switch Sense 2 circuit and the (V937) Switch Return circuit of the switch when holding the switch button in the following position:
        - Not pressing any switch - 20.5 kOhms
        - On/Off - 6.2 kOhms
        - Set/Decel - 0.79 kOhms
        - Cancel - 3.2 kOhms
        - Resume/Accel - 1.7 kOhms

    Does the function on the Speed Control Switch have the correct resistance value +/- 0.2 of an Ohm?

    Yes

    - Go To 3.

    No

    - Replace the Speed Control Switch.
    - Perform the POWERTRAIN VERIFICATION TEST. Refer to **POWERTRAIN VERIFICATION TEST** .

3. **CLOCKSPRING**
    1. Disconnect the PCM C3 harness connector.
    2. Disconnect the Clockspring C2 harness connector in accordance with the Service Information.
    3. Disconnect the Clockspring C8 harness connector.
    4. Measure the resistance of the (V72) S/C Switch Sense 2 circuit between the C2 and C8 Clockspring connections.
    5. Measure the resistance of the (V937) Switch Return circuit between the C2 and C8 Clockspring connections.

    Is the resistance above 5.0 Ohms for either reading?

    Yes

    - Replace the Clockspring in accordance with the Service Information.

- Perform the POWERTRAIN VERIFICATION TEST. Refer to **POWERTRAIN VERIFICATION TEST** .

No

- Go To 4.

4. **STEERING WHEEL JUMPER HARNESS**

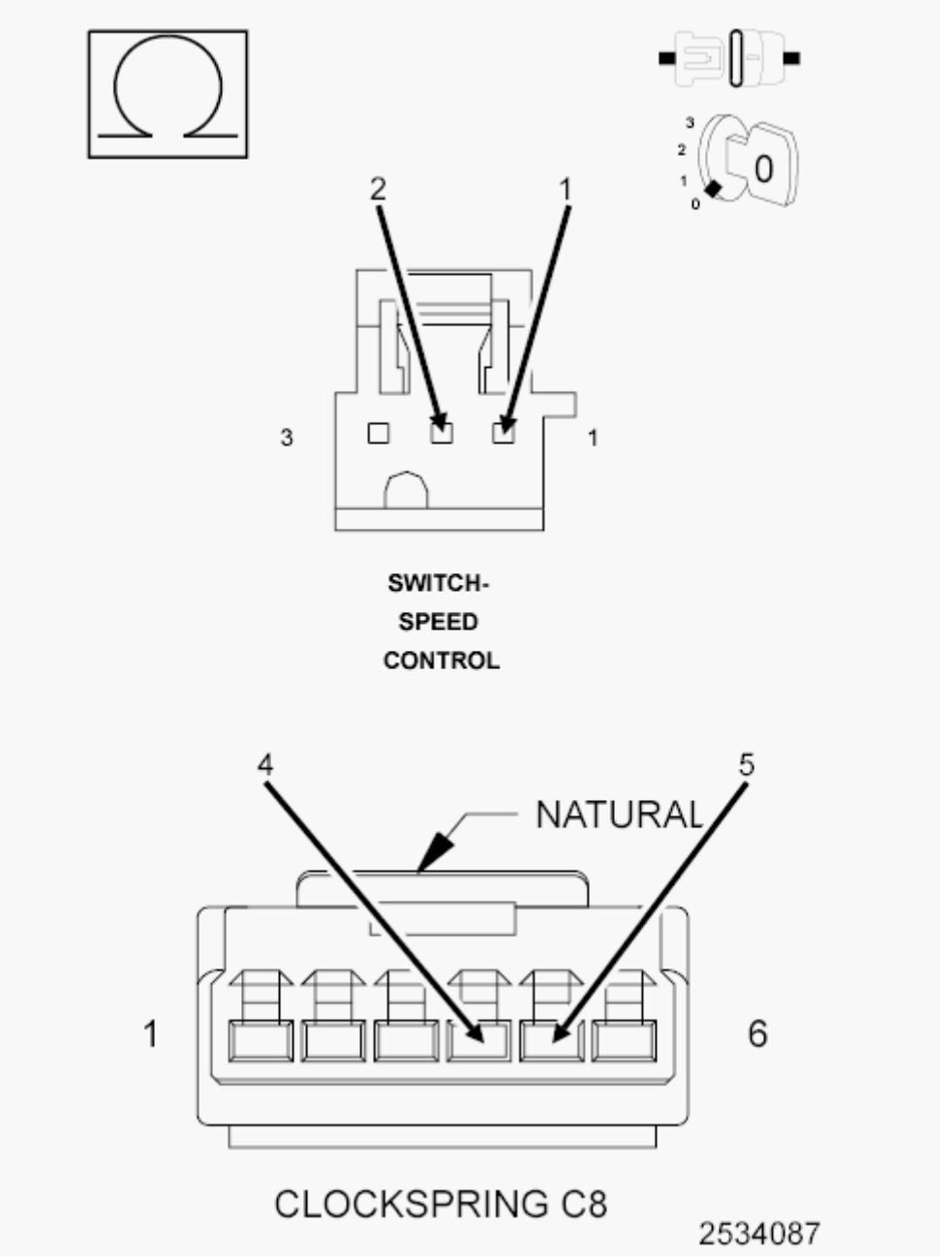

Fig. 115: Measuring Resistance Of S/C Switch Sense 2 Circuit Switch Return Circuit Between Clockspring Harness Connector And S/C Switch Harness Connector
Courtesy of CHRYSLER GROUP, LLC

1. Measure the resistance of the (V72) S/C Switch Sense 2 circuit between the Clockspring C8 harness connector and S/C Switch harness connector.
2. Measure the resistance of the (V937) Switch Return circuit between the Clockspring C8 harness connector and S/C Switch harness connector.

   Is the resistance above 5.0 Ohms for either reading?

   Yes

   - Replace the Steering Wheel Jumper harness in accordance with the Service Information.
   - Perform the POWERTRAIN VERIFICATION TEST. Refer to **POWERTRAIN VERIFICATION TEST** .

   No

   - Go To 5.

5. **(V72) S/C SWITCH SENSE 2 CIRCUIT SHORTED TO VOLTAGE**

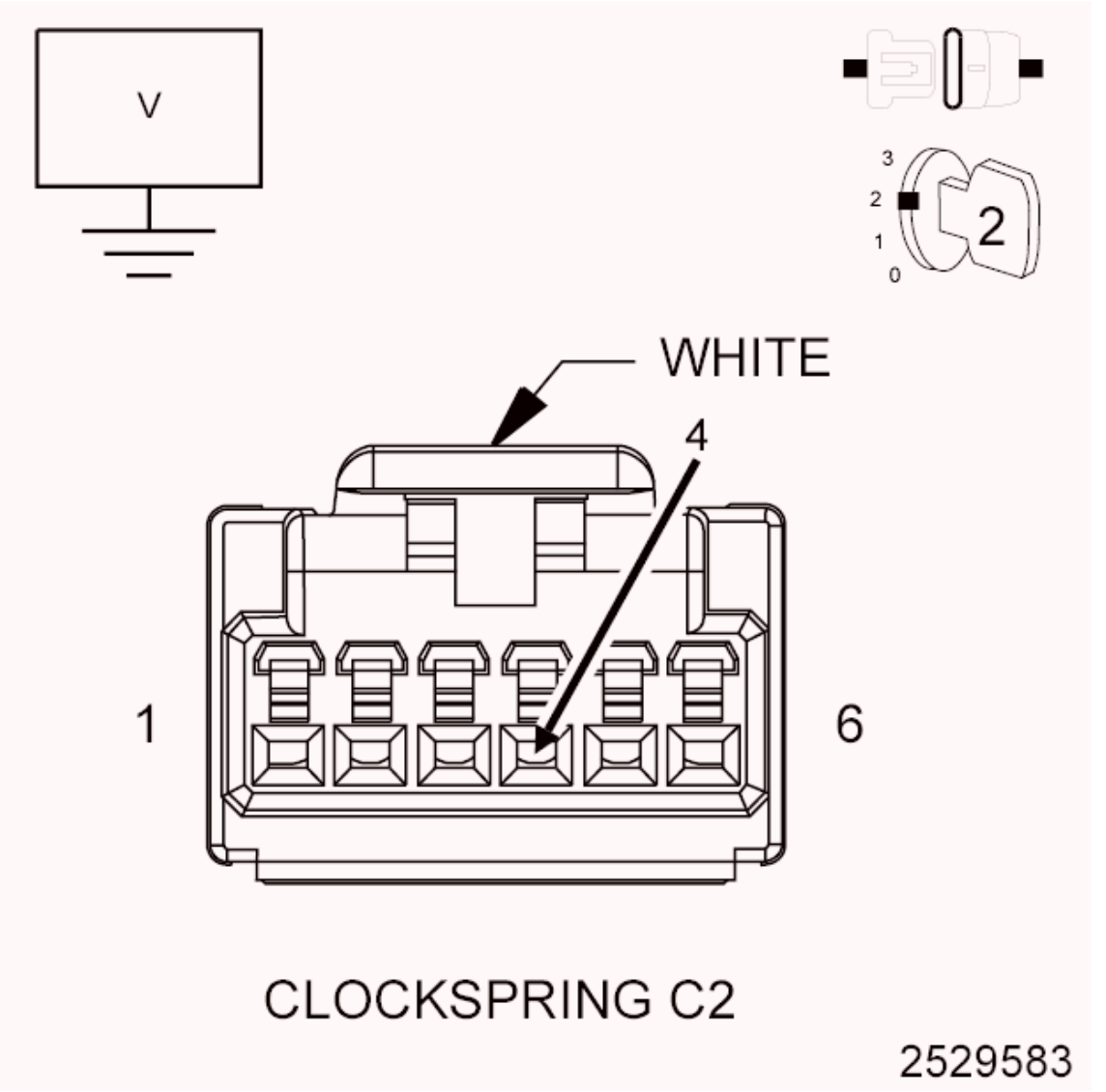

Fig. 116: Measuring Voltage On S/C Switch Sense Circuit In Clockspring C2 Harness Connector
Courtesy of CHRYSLER GROUP, LLC

1. Ignition on, engine not running.
2. Measure the voltage on the (V72) S/C Switch Sense 2 circuit in the Clockspring C2 harness connector.

   Is there any voltage present?

   Yes

   - Repair the short to voltage in the (V72) S/C Switch Sense 2 circuit.
   - Perform the POWERTRAIN VERIFICATION TEST. Refer to **POWERTRAIN VERIFICATION TEST** .

No

- Go To 6.

6. **(V72) S/C SWITCH SENSE 2 CIRCUIT OPEN**

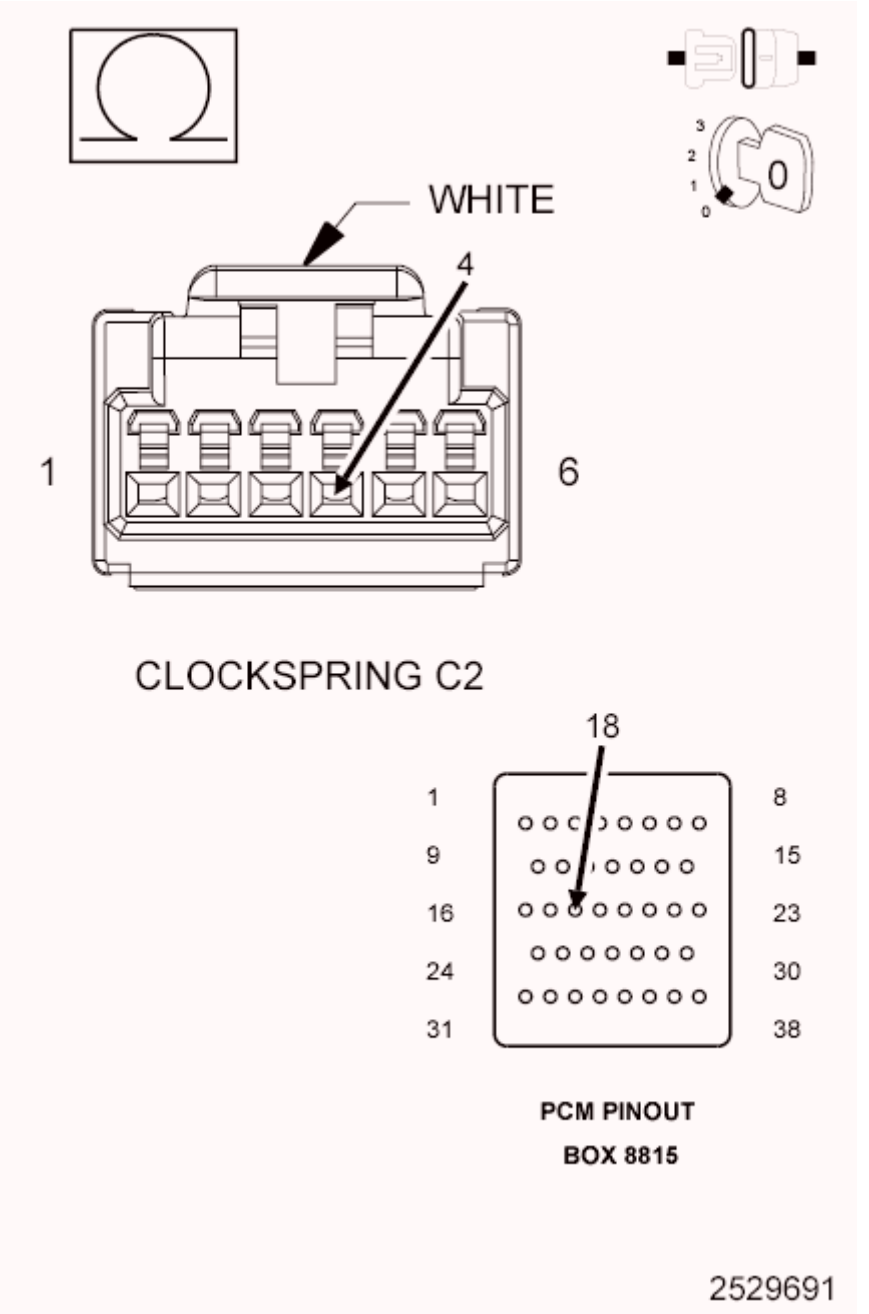

Fig. 117: Measuring Resistance Of S/C Switch Sense 2 Circuit From Clockspring Harness Connector To Appropriate Terminal Of PCM Pinout Box 8815
Courtesy of CHRYSLER GROUP, LLC

1. Turn the ignition off.

CAUTION: Do not probe the PCM harness connectors. Probing the PCM harness connectors will damage the PCM terminals resulting in poor terminal to pin connection. Install the PCM Pinout Box (special tool #8815A, Kit, NGC, 38 Position) to perform diagnosis.

2. Measure the resistance of the (V72) S/C Switch Sense 2 circuit from the Clockspring C2 harness connector to the appropriate terminal of PCM Pinout Box (special tool #8815A, Kit, NGC, 38 Position).

   Is the resistance below 5.0 Ohms for both measurements?

   Yes

   - Go To 7.

   No

   - Repair the open in the (V72) S/C Switch Sense 2 circuit.
   - Perform the POWERTRAIN VERIFICATION TEST. Refer to **POWERTRAIN VERIFICATION TEST** .

7. **(V937) S/C SWITCH RETURN CIRCUIT OPEN**

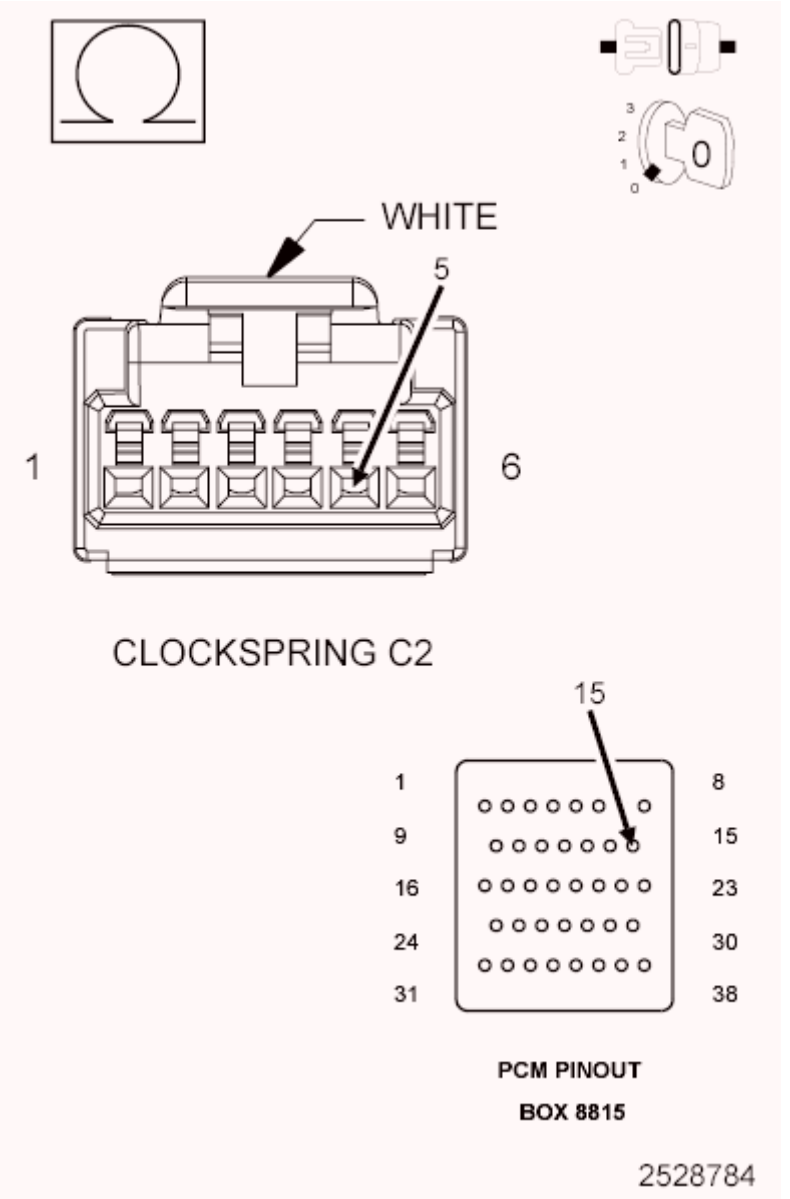

Fig. 118: Measuring Resistance Of S/C Switch Return Circuit From Clockspring C2 Harness Connector To Appropriate Terminal Of PCM Pinout Box 8815
Courtesy of CHRYSLER GROUP, LLC

1. Measure the resistance of the (V937) S/C Switch Return circuit from the Clockspring C2 harness connector to the appropriate terminal of PCM Pinout Box (special tool #8815A, Kit, NGC, 38 Position).

   Is the resistance below 5.0 Ohms for both measurements?

   Yes

   - Go To 8.

No

- Repair the open in the (V937) S/C Switch Return circuit.
- Perform the POWERTRAIN VERIFICATION TEST. Refer to **POWERTRAIN VERIFICATION TEST** .

8. **SPEED CONTROL SWITCH VOLTAGE VALUES**

CAUTION: Do not probe the PCM harness connectors. Probing the PCM harness connectors will damage the PCM terminals resulting in poor terminal to pin connection. Install the PCM Pinout Box (special tool #8815A, Kit, NGC, 38 Position) and PCM Pinout Box Adapter (special tool #8815-1, PCM Pinout Box Adapter) to perform diagnosis.

1. Install the PCM Pinout Box (special tool #8815-1, PCM Pinout Box Adapter) on the PCM C3 harness connector.
2. Connect the S/C Switch harness connectors.
3. Connect the Clockspring harness connectors.
4. Turn the ignition on.
5. Using the scan tool, monitor the S/C Switch voltage readings.
6. Using a Voltmeter check the voltage on the (V71) S/C Switch Sense 1 circuit and the (V72) S/C Switch Sense 2 circuit at the appropriate terminals of the PCM Pinout Box (special tool #8815A, Kit, NGC, 38 Position).
7. Monitor the Voltmeter.
8. Using the scan tool, monitor the S/C Switch voltage readings.

SWITCH POSITION	SWITCH No. 1 VOLTAGE VALUE	SWITCH No. 2 VOLTAGE VALUE
NO SWITCHES PRESSED	4.31 to 4.78 Volts	4.31 to 4.78 Volts
ON/OFF PRESSED	0.59 to 1.13 Volts	3.53 to 3.92 Volts
RES/ACCEL PRESSED	3.88 to 4.17 Volts	2.04 to 2.47 Volts
SET/DECEL PRESSED	3.16 to 3.56 Volts	1.17 to 1.56 Volts
CANCEL PRESSED	1.59 to 1.99 Volts	2.84 to 3.25 Volts

9. Compare the voltage readings on the Voltmeter to what the scan tool displayed.

   Are the voltage readings out of the listed specification and is there less than a 0.2 of a Volt difference between the Voltmeter switch values and the scan tool switch value?

Yes

- Replace the Speed Control Switch.
- Perform the POWERTRAIN VERIFICATION TEST. Refer to **POWERTRAIN VERIFICATION TEST** .

No

- Go To 9.

9. **POWERTRAIN CONTROL MODULE (PCM)**
    1. Using the wiring diagram/schematic as a guide, inspect the wiring and connectors between the Speed Control Switch and the Powertrain Control Module (PCM).
        - Look for any chafed, pierced, pinched or partially broken wires.
        - Look for broken, bent, pushed out or corroded terminals. Verify that there is good pin to terminal contact in the Switch and Powertrain Control Module connectors.
        - Perform any Technical Service Bulletins that may apply.

    Were there any problems found?

    Yes

    - Repair as necessary.
    - Perform the POWERTRAIN VERIFICATION TEST. Refer to **POWERTRAIN VERIFICATION TEST** .

    No

    - Replace and program the Powertrain Control Module in accordance with the Service Information. Refer to **MODULE, POWERTRAIN CONTROL, REMOVAL** .
    - Perform the POWERTRAIN VERIFICATION TEST. Refer to **POWERTRAIN VERIFICATION TEST** .

P0600-SERIAL COMMUNICATION LINK

For a complete wiring diagram **refer to appropriate SYSTEM WIRING DIAGRAMS article** .

WHEN MONITORED:

With the ignition on.

SET CONDITION:

Internal Bus communication failure between processors. One Trip Fault. Three Global Good Trips to Clear.

POSSIBLE CAUSES

Possible Causes
POWERTRAIN CONTROL MODULE (PCM)

Always perform the Pre-Diagnostic Troubleshooting procedure before proceeding. Refer to PRE-DIAGNOSTIC TROUBLESHOOTING PROCEDURE .

DIAGNOSTIC TEST

1. **POWERTRAIN CONTROL MODULE (PCM)**

   NOTE: Diagnose any CMP or CKP Sensor faults before continuing. Check for intermittent loose CMP or CKP connections.

   The Powertrain Control Module is reporting internal errors, view repair to continue.

   Repair

   - Replace and program the Powertrain Control Module per Service Information. Refer to **MODULE, POWERTRAIN CONTROL, REMOVAL** .
   - Perform the POWERTRAIN VERIFICATION TEST. Refer to **POWERTRAIN VERIFICATION TEST** .

P0601-INTERNAL MEMORY CHECKSUM INVALID

For a complete wiring diagram **refer to appropriate SYSTEM WIRING DIAGRAMS article** .

WHEN MONITORED:

With the ignition on.

SET CONDITION:

Internal checksum for software failed, does not match calculated value. One Trip Fault, Three Good Trips to clear. The ETC light will flash if equipped.

POSSIBLE CAUSES

Possible Causes
POWERTRAIN CONTROL MODULE (PCM)

Always perform the Pre-Diagnostic Troubleshooting procedure before proceeding. Refer to PRE-DIAGNOSTIC TROUBLESHOOTING PROCEDURE .

DIAGNOSTIC TEST

1. **POWERTRAIN CONTROL MODULE (PCM)**

   NOTE: Diagnose any CMP or CKP Sensor faults before continuing. Check for intermittent loose CMP or CKP connections.

   The Powertrain Control Module is reporting internal errors, view repair to continue.

Repair

- Replace and program the Powertrain Control Module per Service Information. Refer to **MODULE, POWERTRAIN CONTROL, REMOVAL** .
- Perform the POWERTRAIN VERIFICATION TEST. Refer to **POWERTRAIN VERIFICATION TEST** .

P0602-CONTROL MODULE PROGRAMMING ERROR/NOT PROGRAMMED

For a complete wiring diagram, **refer to appropriate SYSTEM WIRING DIAGRAMS article** .

THEORY OF OPERATION

The controller is programmed during manufacturing with generic software to facilitate testing. However, generic software does not have the proper calibrations to control a transmission in a vehicle. The check for generic software is made at power-up. If generic software is found, the MIL will light immediately and the MIL will stay on even if the fault is cleared, until the proper software is installed. Note: Transmission will be placed in limp-in mode.

WHEN MONITORED:

Check for generic software is made at power-up

SET CONDITION:

If generic software is found, the MIL will light immediately. This DTC is designed to inform the technician that the controller still has generic software installed.

POSSIBLE CAUSES

Possible Causes
PCM - PROGRAMMING ERROR

Always perform the Pre-Diagnostic Troubleshooting procedure before proceeding. Refer to PRE-DIAGNOSTIC TROUBLESHOOTING PROCEDURE .

DIAGNOSTIC TEST

1. **CONTROL MODULE PROGRAMMING ERROR**

NOTE: **Controller is programmed with generic software and will not allow the correct vehicle Powertrain management.**

1. With the scan tool.
2. Record the vehicles controller part number.
3. Select Use Controller Part Number under the Flash Tab.

4. Flash the controller with the correct software.

   Verify the controller flashed successfully.

   Test Complete

   - Perform the 68RFE TRANSMISSION VERIFICATION TEST. Refer to **68RFE TRANSMISSION VERIFICATION TEST** .

P0606-INTERNAL ECM PROCESSOR

For a complete wiring diagram, **refer to appropriate SYSTEM WIRING DIAGRAMS article** .

WHEN MONITORED:

Engine running.

SET CONDITION:

When the Powertrain Control Module (PCM) recognizes an internal failure to communicate with the Camshaft Position Sensor (CMP) and Crankshaft Position Sensor (CKP) Sensor count periods are too short. One trip fault. ETC light is flashing.

POSSIBLE CAUSES

Possible Causes
POWERTRAIN CONTROL MODULE (PCM)

Always perform the Pre-Diagnostic Troubleshooting procedure before proceeding. Refer to PRE-DIAGNOSTIC TROUBLESHOOTING PROCEDURE .

DIAGNOSTIC TEST

1. **POWERTRAIN CONTROL MODULE (PCM)**

   NOTE: Diagnose any CMP or CKP Sensor faults before continuing. Check for intermittent loose CMP or CKP connections.

   The Powertrain Control Module is reporting internal errors, view repair to continue.

   Repair

   - Replace and program the Powertrain Control Module in accordance with the Service Information. Refer to **MODULE, POWERTRAIN CONTROL, REMOVAL** .
   - Perform the POWERTRAIN VERIFICATION TEST. Refer to **POWERTRAIN VERIFICATION TEST** .

P060B-ETC A/D GROUND PERFORMANCE

For a complete wiring diagram, **refer to appropriate SYSTEM WIRING DIAGRAMS article** .

WHEN MONITORED:

When the Throttle Motor is powered.

SET CONDITION:

When A2D reading does not return to ground within a set period of time of test activation, this fault sets. The test typically runs a couple of times per second, and is the reason why APP2 signal spikes to ground a couple of times per second in normal running. Reprogramming the module may not always fix this fault. One trip failure. ETC lamp will flash.

POSSIBLE CAUSES

Possible Causes
PCM NEEDS TO BE PROGRAMMED
POWERTRAIN CONTROL MODULE (PCM)

Always perform the Pre-Diagnostic Troubleshooting procedure before proceeding. Refer to PRE-DIAGNOSTIC TROUBLESHOOTING PROCEDURE .

DIAGNOSTIC TEST

1. **PROGRAM THE POWERTRAIN CONTROL MODULE**
    1. Verify the PCM is at the latest calibration (flash level).

        NOTE: An intermittent loss of power to the PCM without performing an ETC Relearn procedure may cause this DTC to set.

        NOTE: Diagnose any other DTCs that may have set with the P060B.

    2. Flash the Powertrain Control Module in accordance with the Service Information if any updates are available.
    3. Start the engine.
    4. Allow the engine to reach normal operating temperature.
    5. Operate the accelerator pedal. (do not exceed 3500 RPM)
    6. With a scan tool, select View DTCs.

        Does this DTC reset by itself?

        Yes

- Replace and reprogram the Powertrain Control Module in accordance with the Service Information.
- Perform the POWERTRAIN VERIFICATION TEST. Refer to **POWERTRAIN VERIFICATION TEST** .

No

- Test Complete.

P060D-ETC LEVEL 2 APP PERFORMANCE

For a complete wiring diagram, **refer to appropriate SYSTEM WIRING DIAGRAMS article** .

WHEN MONITORED:

Throttle motor is powered and no matured faults related to APP Sensors.

SET CONDITION:

When secondary software determines that APPS 1 and APPS 2 signals do not match for a period of time. One trip failure. ETC lamp will flash

POSSIBLE CAUSES

Possible Causes
PCM NEEDS TO BE PROGRAMMED POWERTRAIN CONTROL MODULE (PCM)

Always perform the Pre-Diagnostic Troubleshooting procedure before proceeding. Refer to PRE-DIAGNOSTIC TROUBLESHOOTING PROCEDURE .

DIAGNOSTIC TEST

1. **PROGRAM THE POWERTRAIN CONTROL MODULE**
   1. Verify the PCM is at the latest calibration (flash level).

      NOTE: An intermittent loss of power to the PCM without performing an ETC Relearn procedure may cause this DTC to set.

   2. Flash the Powertrain Control Module in accordance with the Service Information if any updates are available.
   3. Start the engine.
   4. Allow the engine to reach normal operating temperature.
   5. Operate the accelerator pedal. (do not exceed 3500 RPM)
   6. With a scan tool, select View DTCs.

NOTE: Diagnose any other DTCs that may have set with the P060D.

Does this DTC reset by itself?

Yes

- Replace and reprogram the Powertrain Control Module in accordance with the Service Information.
- Perform the POWERTRAIN VERIFICATION TEST. Refer to **POWERTRAIN VERIFICATION TEST** .

No

- Test Complete.

P060E-ETC LEVEL 2 TPS PERFORMANCE

For a complete wiring diagram, **refer to appropriate SYSTEM WIRING DIAGRAMS article** .

WHEN MONITORED:

Throttle motor is powered and no matured faults related to TP Sensors.

SET CONDITION:

When secondary software determines that TPS 1 and TPS 2 signals do not match for a period of time. One trip failure. ETC lamp will flash.

POSSIBLE CAUSES

Possible Causes
PCM NEEDS TO BE PROGRAMMED POWERTRAIN CONTROL MODULE (PCM)

Always perform the Pre-Diagnostic Troubleshooting procedure before proceeding. Refer to PRE-DIAGNOSTIC TROUBLESHOOTING PROCEDURE .

DIAGNOSTIC TEST

1. **PROGRAM THE POWERTRAIN CONTROL MODULE**
    1. Verify the PCM is at the latest calibration (flash level).

        NOTE: An intermittent loss of power to the PCM without performing an ETC Relearn procedure may cause this DTC to set.

    2. Flash the Powertrain Control Module in accordance with the Service Information if any updates are

available.

3. Start the engine.
4. Allow the engine to reach normal operating temperature.
5. Operate the accelerator pedal. (do not exceed 3500 RPM)
6. With a scan tool, select View DTCs.

NOTE: Diagnose any other DTCs that may have set with the P060E.

Does this DTC reset by itself?

Yes

- Replace and reprogram the Powertrain Control Module in accordance with the Service Information.
- Perform the POWERTRAIN VERIFICATION TEST. Refer to **POWERTRAIN VERIFICATION TEST** .

No

- Test Complete.

P060F-ETC LEVEL 2 ECT PERFORMANCE

For a complete wiring diagram, **refer to appropriate SYSTEM WIRING DIAGRAMS article** .

WHEN MONITORED:

Throttle motor is powered and no matured faults related to the Engine Coolant Temp Sensor.

SET CONDITION:

When secondary software determines that the Coolant Temperature is implausible for a period of time. One trip failure. ETC lamp will flash.

POSSIBLE CAUSES

Possible Causes
PCM NEEDS TO BE PROGRAMMED
POWERTRAIN CONTROL MODULE (PCM)

Always perform the Pre-Diagnostic Troubleshooting procedure before proceeding. Refer to PRE-DIAGNOSTIC TROUBLESHOOTING PROCEDURE .

DIAGNOSTIC TEST

1. **PROGRAM THE POWERTRAIN CONTROL MODULE**

NOTE: Diagnose any Engine Coolant Temperature Sensor DTCs before continuing.

1. Verify the PCM is at the latest calibration (flash level).

NOTE: An intermittent loss of power to the PCM without performing an ETC Relearn procedure may cause this DTC to set.

2. Flash the Powertrain Control Module in accordance with the Service Information if any updates are available.
3. Start the engine.
4. Allow the engine to reach normal operating temperature.
5. Operate the accelerator pedal. (do not exceed 3500 RPM)
6. With a scan tool, select View DTCs.

NOTE: Diagnose any other DTCs that may have set with the P060F.

Does this DTC reset by itself?

Yes

- Replace and reprogram the Powertrain Control Module in accordance with the Service Information.
- Perform the POWERTRAIN VERIFICATION TEST. Refer to **POWERTRAIN VERIFICATION TEST** .

No

- Test Complete.

P061A-ETC LEVEL 2 TORQUE PERFORMANCE

For a complete wiring diagram, **refer to appropriate SYSTEM WIRING DIAGRAMS article** .

WHEN MONITORED:

Throttle motor is powered.

SET CONDITION:

When secondary software determines that the customer requested output is not being achieved by the engine for a period of time. One trip failure. ETC lamp will flash.

POSSIBLE CAUSES

Possible Causes
PCM NEEDS TO BE PROGRAMMED POWERTRAIN CONTROL MODULE (PCM)

Always perform the Pre-Diagnostic Troubleshooting procedure before proceeding. Refer to PRE-DIAGNOSTIC TROUBLESHOOTING PROCEDURE .

DIAGNOSTIC TEST

1. **PROGRAM THE POWERTRAIN CONTROL MODULE**

   NOTE: Check the engine for air/vacuum leaks and diagnose any Fuel System Lean/Rich as well as MAP Sensor DTCs before continuing.

   1. Verify the PCM is at the latest calibration (flash level).

      NOTE: An intermittent loss of power to the PCM without performing an ETC Relearn procedure may cause this DTC to set.

   2. Flash the Powertrain Control Module in accordance with the Service Information if any updates are available.
   3. Start the engine.
   4. Allow the engine to reach normal operating temperature.
   5. Operate the accelerator pedal. (do not exceed 3500 RPM)
   6. With a scan tool, select View DTCS.

      NOTE: Diagnose any other DTCs that may have set with the P061A.

      Does this DTC reset by itself?

      Yes

      - Replace and reprogram the Powertrain Control Module in accordance with the Service Information.
      - Perform the POWERTRAIN VERIFICATION TEST. Refer to **POWERTRAIN VERIFICATION TEST** .

      No

      - Test Complete.

P061C-ETC LEVEL 2 RPM PERFORMANCE

For a complete wiring diagram, **refer to appropriate SYSTEM WIRING DIAGRAMS article** .

WHEN MONITORED:

Throttle motor is powered and no camshaft or crankshaft electrical signal related DTCs are set.

SET CONDITION:

When secondary software determines that the engine speed is implausible for a period of time. One trip failure. ETC lamp will flash.

POSSIBLE CAUSES

Possible Causes
PCM NEEDS TO BE PROGRAMMED POWERTRAIN CONTROL MODULE (PCM)

Always perform the Pre-Diagnostic Troubleshooting procedure before proceeding. Refer to PRE-DIAGNOSTIC TROUBLESHOOTING PROCEDURE .

DIAGNOSTIC TEST

1. **PROGRAM THE POWERTRAIN CONTROL MODULE**

   NOTE: Diagnose any Camshaft Position and Crankshaft Position Sensor DTCs before continuing.

   1. Verify the PCM is at the latest calibration (flash level).

      NOTE: An intermittent loss of power to the PCM without performing an ETC Relearn procedure may cause this DTC to set.

   2. Flash the Powertrain Control Module in accordance with the Service Information if any updates are available.
   3. Start the engine.
   4. Allow the engine to reach normal operating temperature.
   5. Operate the accelerator pedal. (do not exceed 3500 RPM)
   6. With a scan tool, select View DTCs.

      NOTE: Diagnose any other DTCs that may have set with the P061C.

      Does this DTC reset by itself?

      Yes

- Replace and reprogram the Powertrain Control Module in accordance with the Service Information.
- Perform the POWERTRAIN VERIFICATION TEST. Refer to **POWERTRAIN VERIFICATION TEST** .

No

- Test Complete.

P0622-GENERATOR FIELD CONTROL CIRCUIT

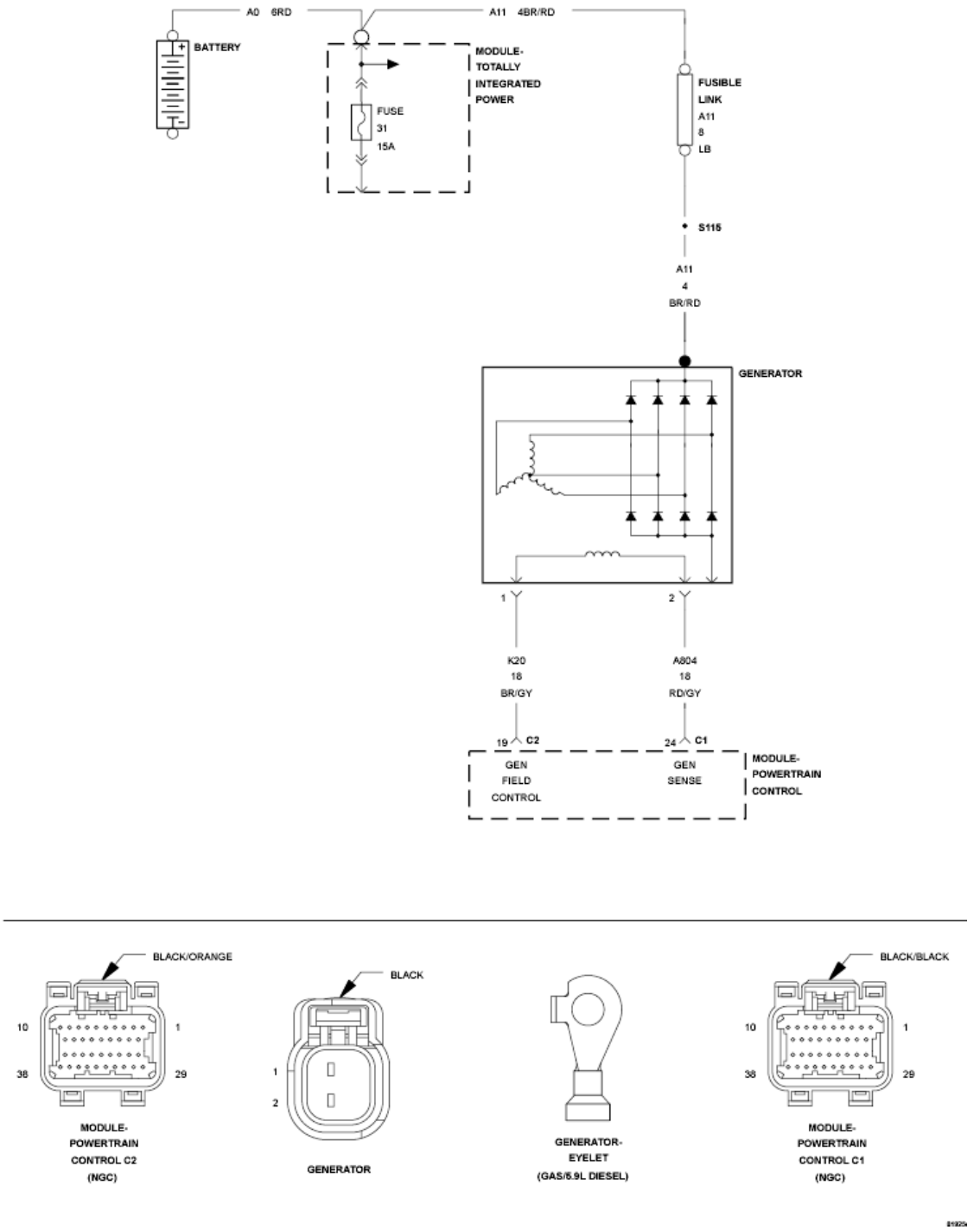

Fig. 119: Generator Circuit Schematic
Courtesy of CHRYSLER GROUP, LLC

For a complete wiring diagram **refer to appropriate SYSTEM WIRING DIAGRAMS article** .

WHEN MONITORED:

With the ignition on. Engine running.

SET CONDITION:

When the PCM tries to regulate the generator field with no result during monitoring. One Trip Fault. Three good trips to turn off the MIL.

POSSIBLE CAUSES

Possible Causes
(K20) GEN FIELD CONTROL CIRCUIT SHORTED TO VOLTAGE
(K20) GEN FIELD CONTROL CIRCUIT OPEN
(K20) GEN FIELD CONTROL CIRCUIT SHORTED TO GROUND
GENERATOR
POWERTRAIN CONTROL MODULE (PCM)

Always perform the Pre-Diagnostic Troubleshooting procedure before proceeding. Refer to PRE-DIAGNOSTIC TROUBLESHOOTING PROCEDURE .

DIAGNOSTIC TEST

1. **ACTIVE DTC**
    1. Start the engine and allow it to reach operating temperature.

        WARNING: **When the engine is operating, do not stand in direct line with the fan. Do not put your hands near the pulleys, belts or fan. Do not wear loose clothing. Failure to follow these instructions may result in possible serious or fatal injury.**

    2. Increase engine speed by pressing the accelerator pedal. Do not exceed 3500 RPM.
    3. With the scan tool, select View DTCs.

        Is the DTC Active at this time?

        Yes

        - Go To 2.

        No

        - Perform the INTERMITTENT CONDITION diagnostic procedure. Refer to **INTERMITTENT CONDITION** .
2. **GENERATOR OPERATION**

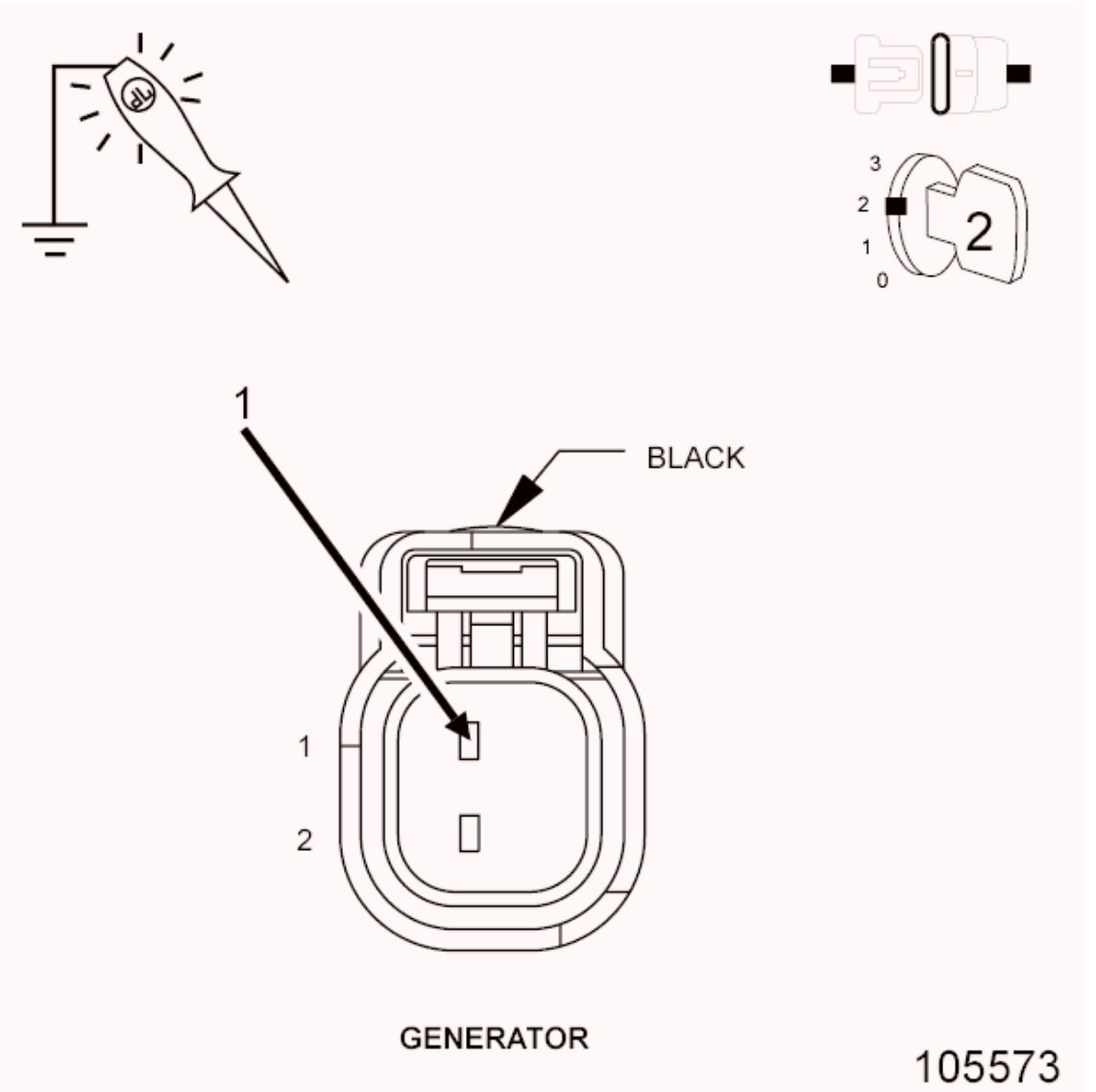

Fig. 120: Using 12-Volt Test Light Connected To Ground To Probe (K20) Generator Field Control Circuit In Generator Field Harness Connector
Courtesy of CHRYSLER GROUP, LLC

1. Ignition on, engine not running.

NOTE: **The DTC needs to be cleared before actuating the Generator Field, if the DTC is not cleared, the Generator Field may not be allowed to actuate.**

2. Using a 12-volt test light connected to ground, probe the (K20) Generator Field Control circuit in the Generator Field harness connector.
3. With a scan tool, actuate the Generator Field Driver.

NOTE: **The test light should be illuminated and bright proportional to the**

maximum duty cycle allowed by the scan tool. For example, if the scan tool allows 100% actuation, the brightness should be as bright as a direct connection to the battery. If the scan tool allows a maximum 25% actuation, the brightness should be 25% as bright as a direct connection to the battery.

Does the test light illuminate accordingly during the actuation?

Yes

- Verify that there is good pin to terminal contact in the Generator and Powertrain Control Module connectors. Replace the Generator if no problems were found with the connectors.
- Perform the POWERTRAIN VERIFICATION TEST. Refer to **POWERTRAIN VERIFICATION TEST** .

No

- Go To 3.

3. **(K20) GEN FIELD CIRCUIT SHORTED VOLTAGE**

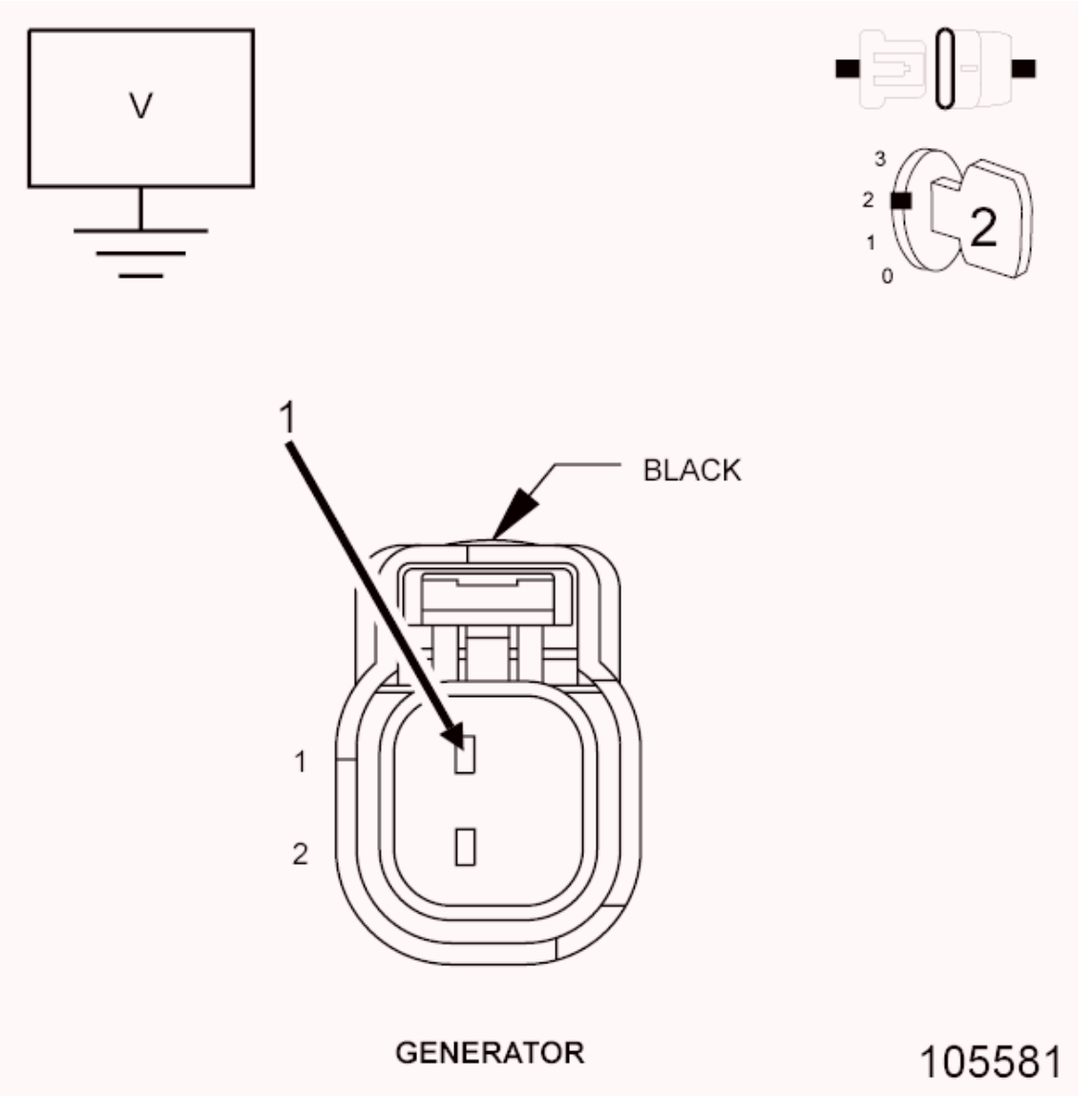

Fig. 121: Measuring Voltage On GEN Field Control Circuit AT Generator Field Harness Connector
Courtesy of CHRYSLER GROUP, LLC

1. Turn the ignition off.
2. Disconnect the C2 PCM harness connector.
3. Ignition on, engine not running.
4. Measure the voltage on the (K20) Gen Field Control circuit in the Generator Field harness connector.

   Is there any voltage present?

   Yes

   - Repair the short to voltage in the (K20) Gen Field Control circuit.

- Perform the POWERTRAIN VERIFICATION TEST. Refer to **POWERTRAIN VERIFICATION TEST** .

No

- Go To 4.

4. **(K20) GEN FIELD CIRCUIT OPEN**

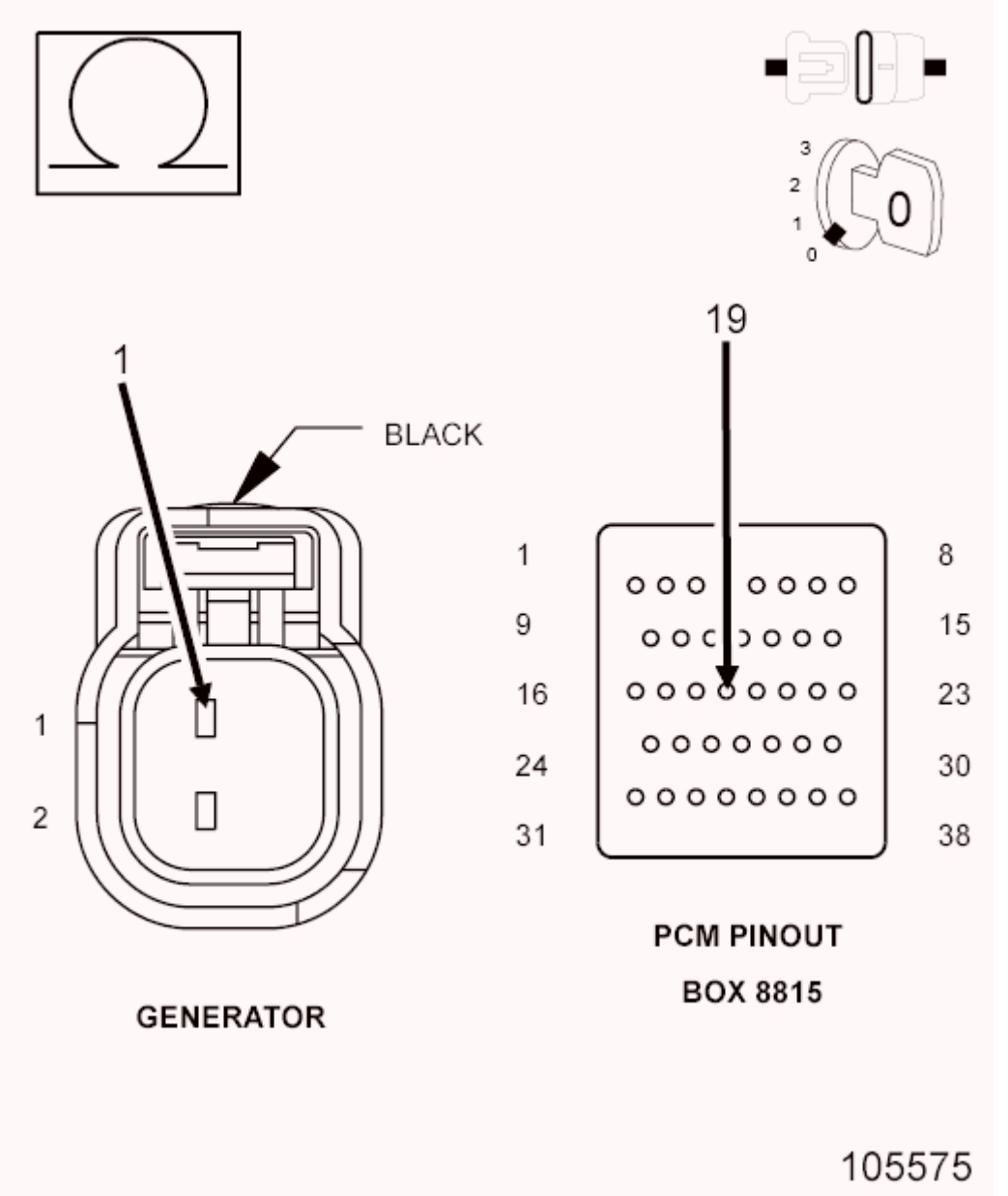

Fig. 122: Measuring Resistance Of GEN Field Control Circuit From Generator Field Harness Connector To Appropriate Terminal Of Special Tool #8815
Courtesy of CHRYSLER GROUP, LLC

1. Turn the ignition off.

CAUTION: Do not probe the PCM harness connectors. Probing the PCM harness connectors will damage the PCM terminals resulting in poor terminal to pin connection. Install the PCM Pinout Box (special tool #8815A, Kit, NGC, 38 Position) to perform diagnosis.

2. Measure the resistance of the (K20) Gen Field Control circuit from the Generator Field harness connector to appropriate terminal of the special tool (special tool #8815A, Kit, NGC, 38 Position).

   Is the resistance below 5.0 ohms?

   Yes

   - Go To 5.

   No

   - Repair the open in the (K20) Gen Field Control circuit.
   - Perform the POWERTRAIN VERIFICATION TEST. Refer to **POWERTRAIN VERIFICATION TEST** .

5. **(K20) GEN FIELD CIRCUIT SHORTED TO GROUND**

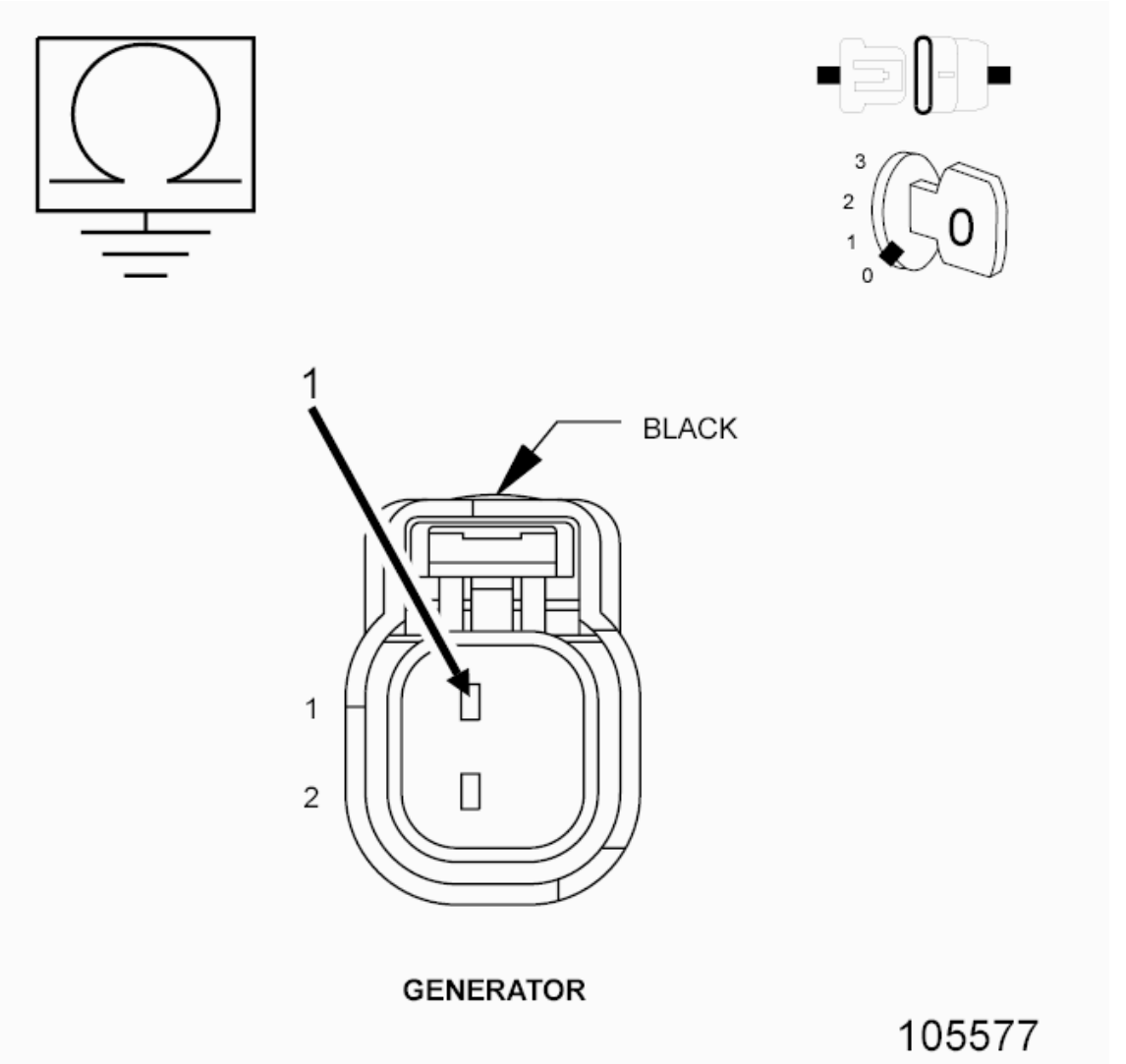

Fig. 123: Measuring Resistance Between Ground And (K20) GEN Field Control Circuit In Generator Field Harness Connector
Courtesy of CHRYSLER GROUP, LLC

1. Measure the resistance between ground and the (K20) Gen Field Control circuit in the Generator Field harness connector.

   Is the resistance below 100 ohms?

   Yes

   - Repair the short to ground in the (K20) Gen Field Control circuit.
   - Perform the POWERTRAIN VERIFICATION TEST. Refer to **POWERTRAIN VERIFICATION TEST** .

   No

- Go To 6.

6. **POWERTRAIN CONTROL MODULE (PCM)**
    1. Using the wiring diagram/schematic as a guide, inspect the wiring and connectors between the Generator and the Powertrain Control Module (PCM).
    2. Look for any chafed, pierced, pinched, or partially broken wires.
    3. Look for broken, bent, pushed out or corroded terminals. Verify that there is good pin to terminal contact in the Generator and Powertrain Control Module connectors.
    4. Refer to any Technical Service Bulletins that may apply.

    Were there any problems found?

    Yes

    - Repair as necessary.
    - Perform the POWERTRAIN VERIFICATION TEST. Refer to **POWERTRAIN VERIFICATION TEST** .

    No

    - Replace and program the Powertrain Control Module per Service Information. Refer to **MODULE, POWERTRAIN CONTROL, REMOVAL** .
    - Perform the POWERTRAIN VERIFICATION TEST. Refer to **POWERTRAIN VERIFICATION TEST** .

P0627-FUEL PUMP CONTROL CIRCUIT

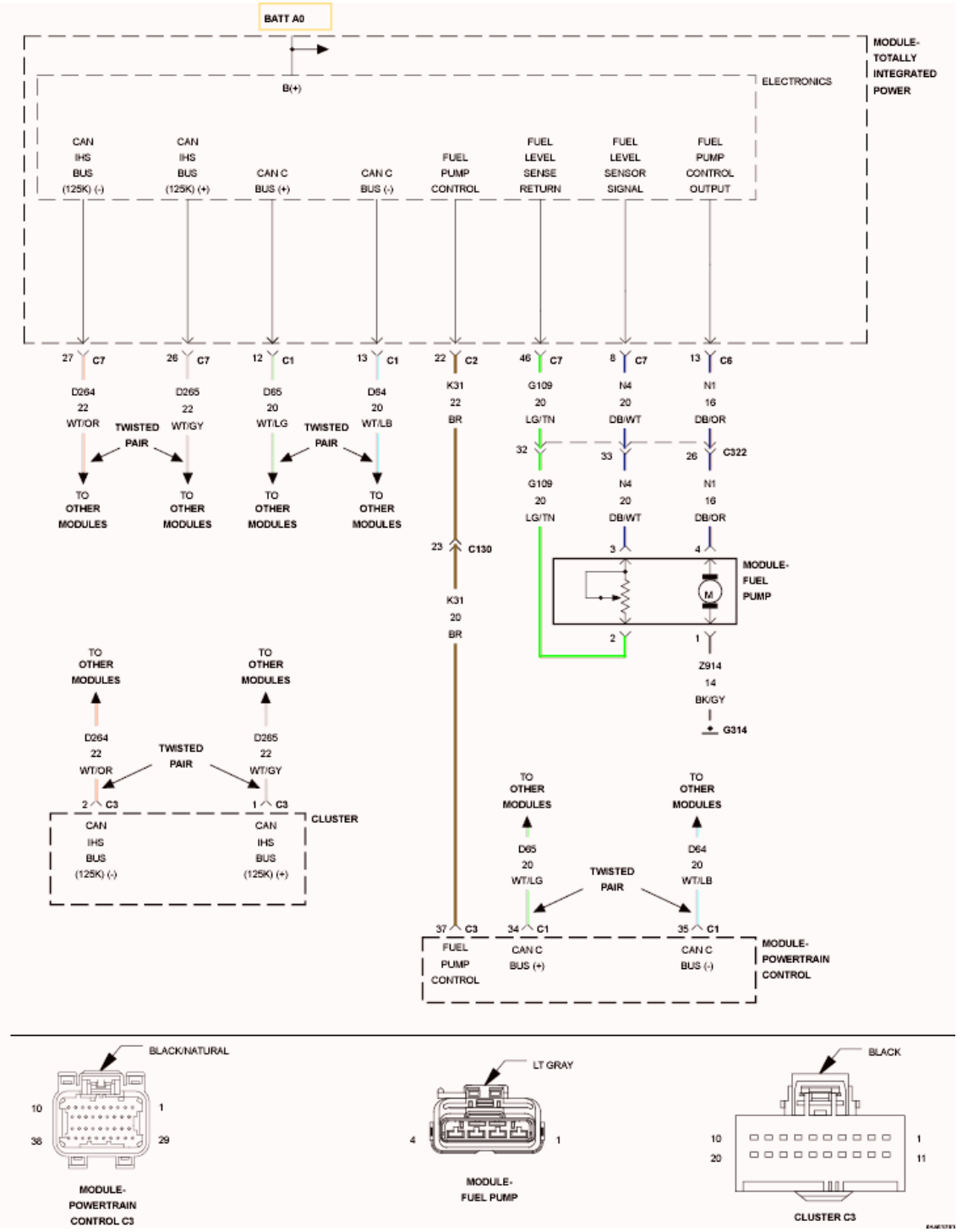

Fig. 124: Fuel Pump Module Circuit Schematic
Courtesy of CHRYSLER GROUP, LLC

For a complete wiring diagram, **refer to appropriate SYSTEM WIRING DIAGRAMS article** .

WHEN MONITORED:

With the ignition on. Battery voltage greater than 10.4 Volts and the ASD sense switch is on.

SET CONDITION:

Actual Fuel Pump state is not equal to desired state. One Trip Fault. Three good trips to turn off the MIL.

POSSIBLE CAUSES

Possible Causes
(K31) FUEL PUMP CONTROL CIRCUIT SHORTED TO VOLTAGE
(K31) FUEL PUMP CONTROL CIRCUIT SHORTED TO GROUND
(K31) FUEL PUMP CONTROL CIRCUIT OPEN
TOTALLY INTEGRATED POWER MODULE (TIPM)
POWERTRAIN CONTROL MODULE (PCM)

Always perform the Pre-Diagnostic Troubleshooting procedure before proceeding. Refer to PRE-DIAGNOSTIC TROUBLESHOOTING PROCEDURE .

DIAGNOSTIC TEST

1. **ACTIVE DTC**
    1. Ignition on, engine not running.
    2. With the scan tool, select View DTCs.

       Is the DTC Active at this time?

       Yes

       - Go To 2.

       No

       - Perform the INTERMITTENT CONDITION diagnostic procedure. Refer to **INTERMITTENT CONDITION** .
2. **(K31) FUEL PUMP CONTROL CIRCUIT SHORTED TO VOLTAGE**

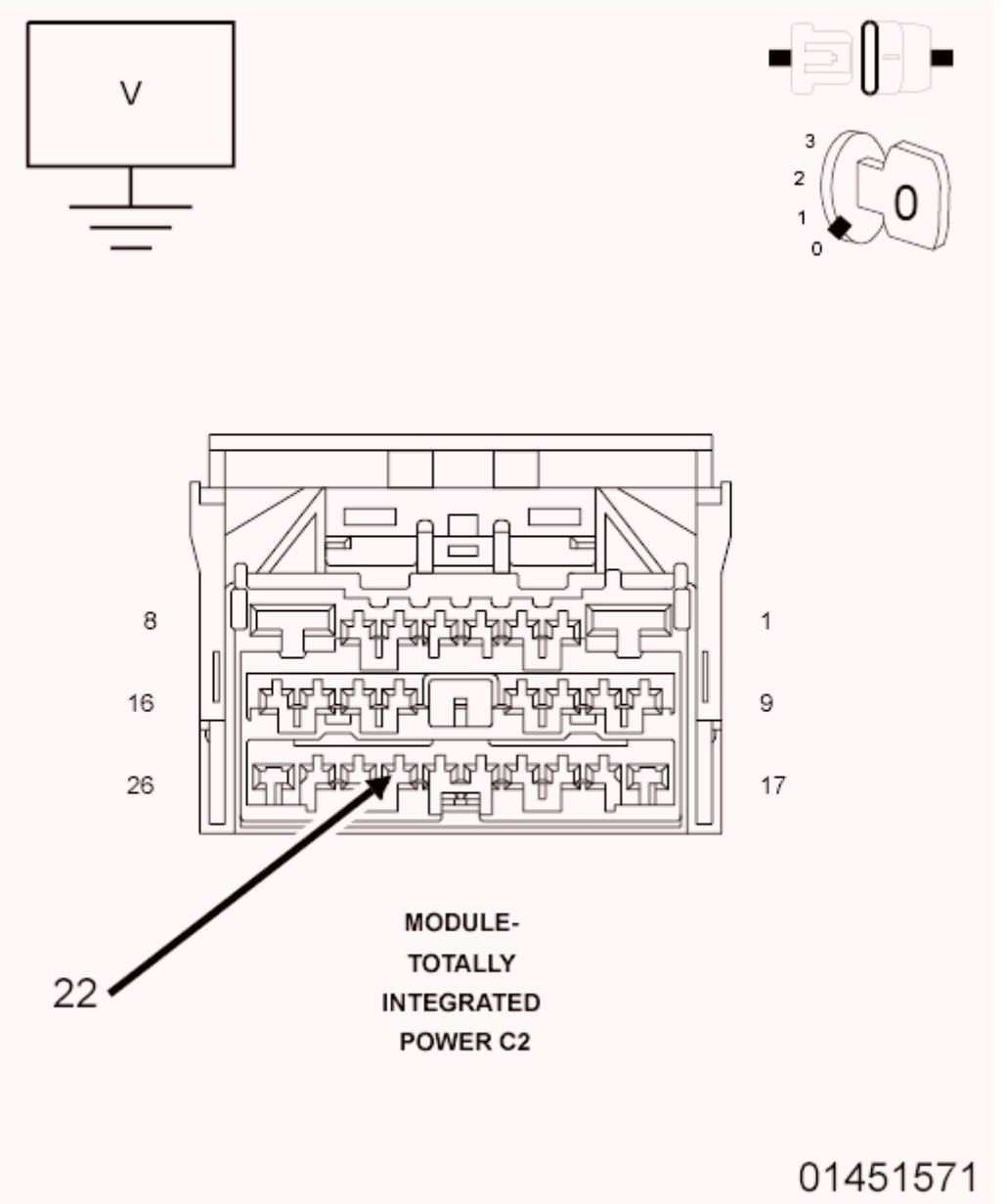

Fig. 125: Measuring Voltage On (K31) Fuel Pump Control Circuit AT C2 TIPM Harness Connector
Courtesy of CHRYSLER GROUP, LLC

1. Turn the ignition off.
2. Disconnect the C3 PCM harness connector.
3. Disconnect the C2 TIPM harness connector.
4. Ignition on, engine not running.
5. Measure the voltage on the (K31) Fuel Pump Control circuit at the C2 TIPM harness connector.

   Does the voltmeter indicate voltage present?

Yes

- Repair the short to voltage in the (K31) Fuel Pump Control circuit.
- Perform the POWERTRAIN VERIFICATION TEST. Refer to **POWERTRAIN VERIFICATION TEST** .

No

- Go To 3.

3. **(K31) FUEL PUMP CONTROL CIRCUIT OPEN**

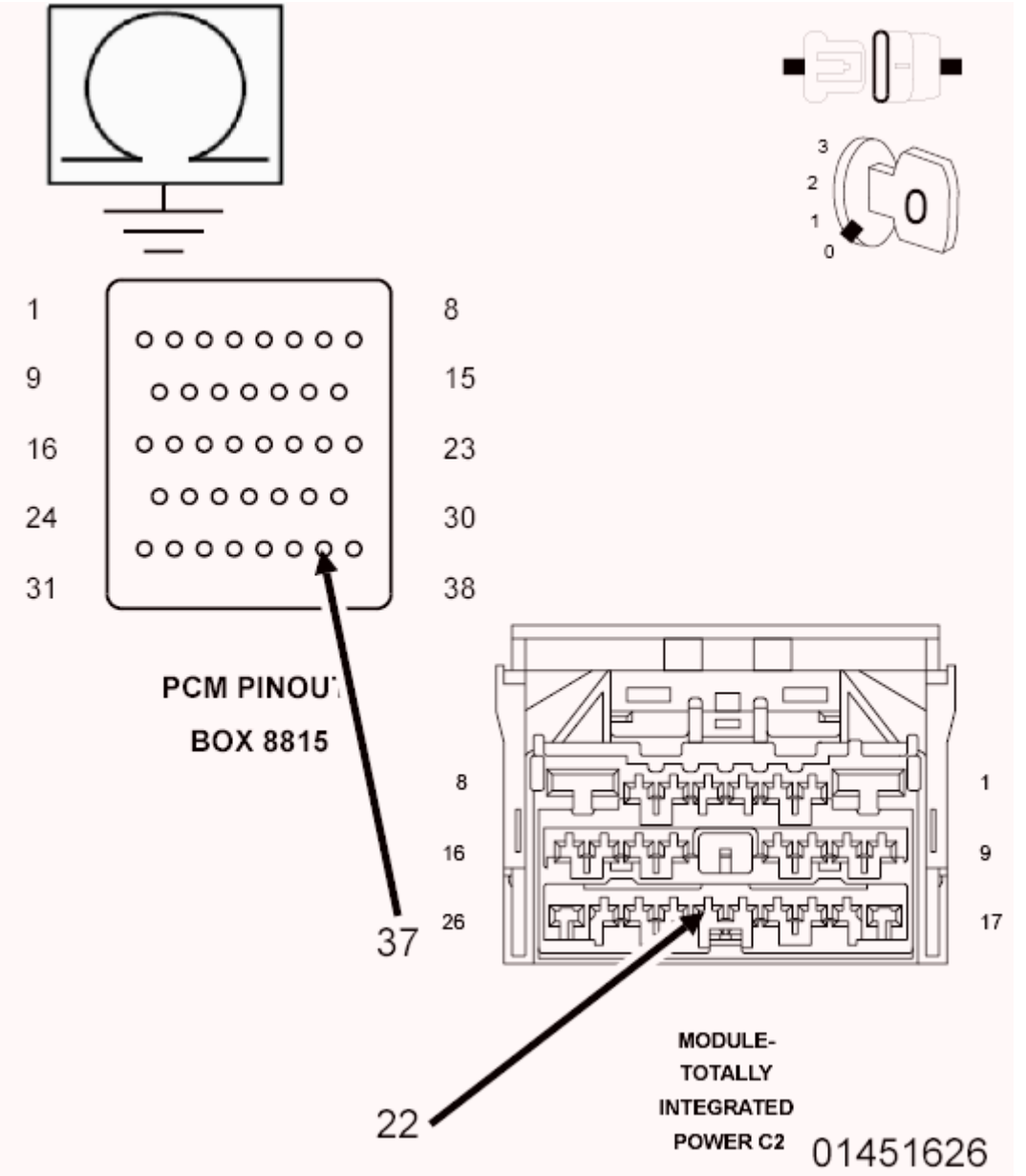

Fig. 126: Measuring Resistance Of (K31) Fuel Pump Control Circuit From C2 TIPM Harness Connector To Appropriate Terminal Of PCM Pinout Box 8815

1. Turn the ignition off.

CAUTION: Do not probe the PCM harness connectors. Probing the PCM harness connectors will damage the PCM terminals resulting in poor terminal to pin connection. Install the PCM Pinout Box (special tool #8815A, Kit, NGC, 38 Position) to perform diagnosis.

2. Measure the resistance of the (K31) Fuel Pump Control circuit from the C2 TIPM harness connector to the appropriate terminal of PCM Pinout Box (special tool #8815A, Kit, NGC, 38 Position).

   Is the resistance below 5.0 Ohms?

   Yes

   - Go To 4.

   No

   - Repair the open in the (K31) Fuel Pump Control circuit.
   - Perform the POWERTRAIN VERIFICATION TEST. Refer to **POWERTRAIN VERIFICATION TEST** .

4. **(K31) FUEL PUMP CONTROL CIRCUIT SHORTED TO GROUND**

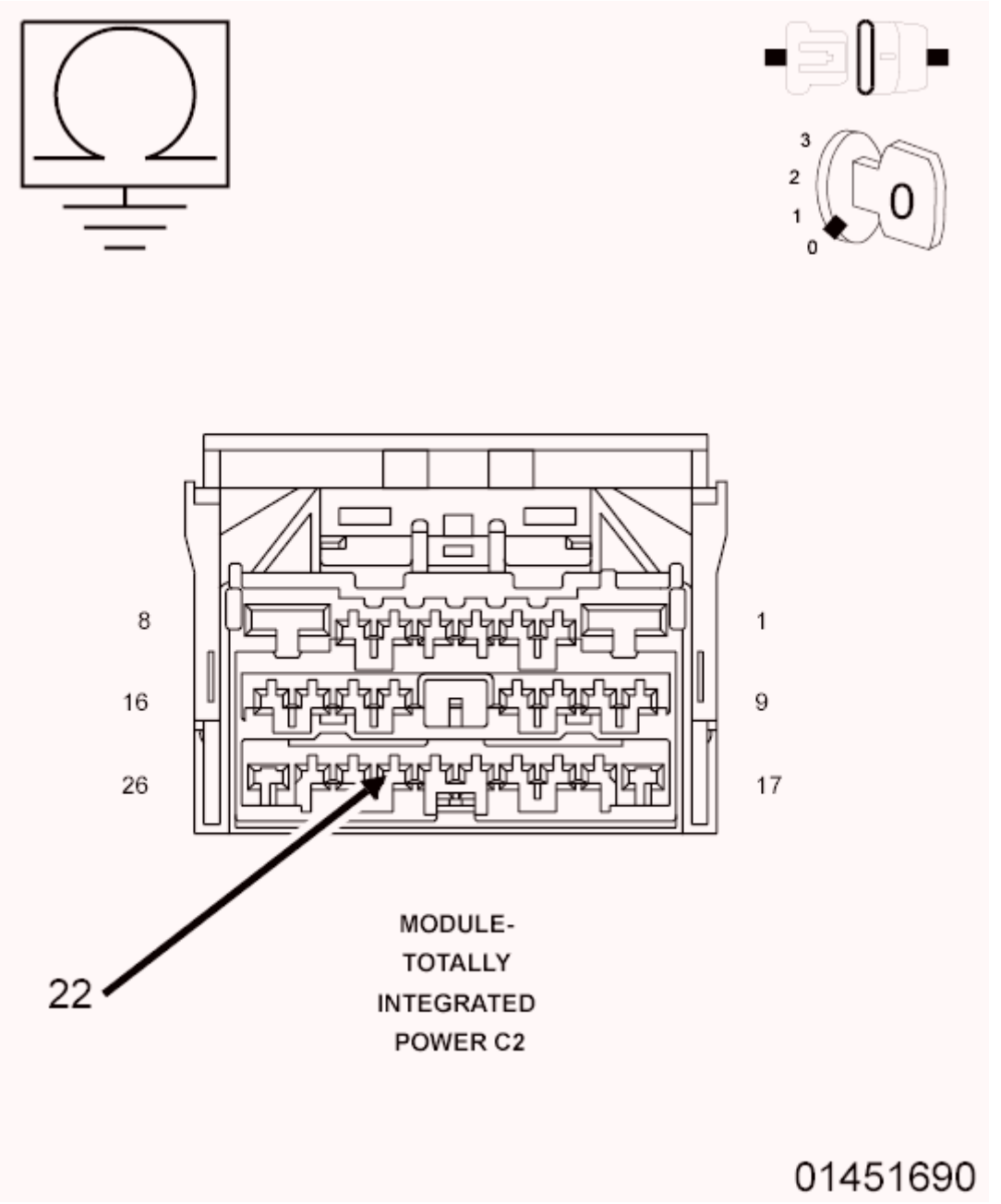

Fig. 127: Measuring Resistance Between Ground And (K31) Fuel Pump Control Circuit In TIPM C2 Harness Connector
Courtesy of CHRYSLER GROUP, LLC

1. Measure the resistance between ground and the (K31) Fuel Pump Control circuit in the TIPM C2 harness connector.

   Is the resistance below 100 Ohms?

   Yes

- Repair the short to ground in the (K31) Fuel Pump Control circuit.
- Perform the POWERTRAIN VERIFICATION TEST. Refer to **POWERTRAIN VERIFICATION TEST** .

No

- Go To 5.

5. **FUEL PUMP CONTROL OPERATION FROM THE PCM**

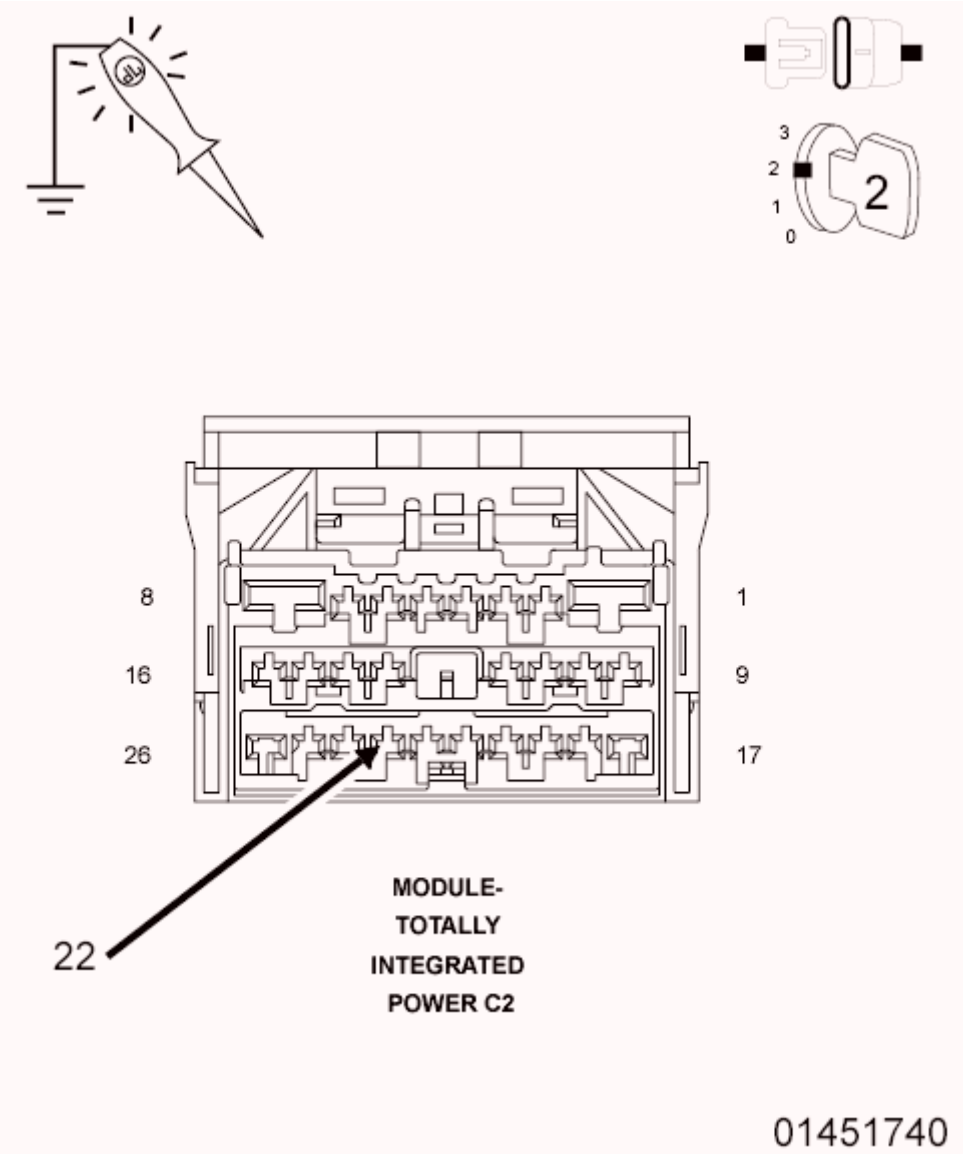

Fig. 128: Using 12-Volt Test Light Connected To Ground To Probe (K31) Fuel Pump Control Circuit In TIPM C2 Harness Connector
Courtesy of CHRYSLER GROUP, LLC

1. Turn the ignition off.

2. Connect the C3 PCM harness connector.
3. Ignition on, engine not running.
4. With a 12-volt test light connected to ground, probe the (K31) Fuel Pump Control circuit in the TIPM C2 harness connector.
5. Using the scan tool in the PCM, actuate the Fuel Pump.

NOTE: **The test light should be illuminated and bright proportional to the maximum duty cycle allowed by the scan tool. For example, if the scan tool allows 100% actuation, the brightness should be as bright as a direct connection to the battery. If the scan tool allows a maximum 25% actuation, the brightness should be 25% as bright as a direct connection to the battery.**

Does the test light illuminate accordingly during the actuation?

Yes

NOTE: **Before continuing, check the TIPM harness connector terminals for corrosion, damage or terminal push out. Repair as necessary.**

- If OK, replace the TIPM in accordance with the Service Information.
- Perform the POWERTRAIN VERIFICATION TEST. Refer to **POWERTRAIN VERIFICATION TEST** .

No

- Go To 6.

6. **POWERTRAIN CONTROL MODULE (PCM)**
   1. Using the wiring diagram/schematic as a guide, inspect the wiring and connectors between the Fuel Pump Module and the Powertrain Control Module (PCM).
   2. Look for any chafed, pierced, pinched or partially broken wires.
   3. Look for broken, bent, pushed out or corroded terminals. Verify that there is good pin to terminal contact in the Fuel Pump and Control Module connectors.
   4. Refer to any Technical Service Bulletins that may apply.

   Were there any problems found?

   Yes

   - Repair as necessary.
   - Perform the POWERTRAIN VERIFICATION TEST. Refer to **POWERTRAIN VERIFICATION TEST** .

No

- Replace and program the Powertrain Control Module in accordance with the Service Information. Refer to **MODULE, POWERTRAIN CONTROL, REMOVAL** .
- Perform the POWERTRAIN VERIFICATION TEST. Refer to **POWERTRAIN VERIFICATION TEST** .

P062C-ETC LEVEL 2 MPH PERFORMANCE

For a complete wiring diagram, **refer to appropriate SYSTEM WIRING DIAGRAMS article** .

WHEN MONITORED:

Throttle motor is powered and no vehicle speed related DTCs have matured.

SET CONDITION:

When secondary software determines that the vehicle speed is implausible for a period of time. ETC lamp will flash.

POSSIBLE CAUSES

Possible Causes
PCM NEEDS TO BE PROGRAMMED POWERTRAIN CONTROL MODULE (PCM)

Always perform the Pre-Diagnostic Troubleshooting procedure before proceeding. Refer to PRE-DIAGNOSTIC TROUBLESHOOTING PROCEDURE .

DIAGNOSTIC TEST

1. **PROGRAM THE POWERTRAIN CONTROL MODULE**
   1. Verify the PCM is at the latest calibration (flash level).

      NOTE: An intermittent loss of power to the PCM without performing an ETC Relearn procedure may cause this DTC to set.

   2. Flash the Powertrain Control Module in accordance with the Service Information if any updates are available.
   3. Start the engine.
   4. Allow the engine to reach normal operating temperature.
   5. Operate the accelerator pedal. (do not exceed 3500 RPM)
   6. With a scan tool, select View DTCs.

      NOTE: Diagnose any other DTCs that may have set with the P062C.

Does this DTC reset by itself?

Yes

- Replace and reprogram the Powertrain Control Module in accordance with the Service Information.
- Perform the POWERTRAIN VERIFICATION TEST. Refer to **POWERTRAIN VERIFICATION TEST** .

No

- Test Complete.

P0630-VIN NOT PROGRAMMED IN PCM

For a complete wiring diagram **refer to appropriate SYSTEM WIRING DIAGRAMS article** .

WHEN MONITORED:

At initialization.

SET CONDITION:

The VIN has not been programmed into the PCM. One Trip Fault. Three good trips to turn off the MIL.

POSSIBLE CAUSES

Possible Causes
PROGRAMMING VIN INTO PCM POWERTRAIN CONTROL MODULE (PCM)

Always perform the Pre-Diagnostic Troubleshooting procedure before proceeding. Refer to PRE-DIAGNOSTIC TROUBLESHOOTING PROCEDURE .

DIAGNOSTIC TEST

1. **PROGRAMMING VIN INTO THE PCM**
    1. Ignition on, engine not running.
    2. Using the scan tool, program VIN into the PCM.
    3. Start the engine.

    NOTE: **If the engine will not start, crank the engine over for 15 seconds. Crank at least 2 times with the ignition switch returning to the off position each time.**

    4. Allow the engine to reach normal operating temperature.

5. With the scan tool, select View DTCs.

   Does the DTC reset?

   Yes

   - Replace and program the Powertrain Control Module per Service Information. Refer to **MODULE, POWERTRAIN CONTROL, REMOVAL** .
   - Perform the POWERTRAIN VERIFICATION TEST. Refer to **POWERTRAIN VERIFICATION TEST** .

   No

   - The VIN has been successfully programmed into the PCM. Test is complete.
   - Perform the POWERTRAIN VERIFICATION TEST. Refer to **POWERTRAIN VERIFICATION TEST** .

P0632-ODOMETER NOT PROGRAMMED IN PCM

For a complete wiring diagram **refer to appropriate SYSTEM WIRING DIAGRAMS article** .

WHEN MONITORED:

Ignition on.

SET CONDITION:

Odometer is not programed into the PCM. One Trip Fault. Three good trips to turn off the MIL.

POSSIBLE CAUSES

Possible Causes
PROGRAMMING MILEAGE INTO THE PCM POWERTRAIN CONTROL MODULE (PCM)

Always perform the Pre-Diagnostic Troubleshooting procedure before proceeding. Refer to PRE-DIAGNOSTIC TROUBLESHOOTING PROCEDURE .

DIAGNOSTIC TEST

1. **PROGRAMMING MILEAGE INTO THE PCM**
   1. Ignition on, engine not running.
   2. With the scan tool, erase DTCs.
   3. Using a scan tool, program the mileage into the PCM.
   4. Start the engine.

5. Allow the engine to reach normal operating temperature.
6. With a scan tool, select View DTCs.

   Does the DTC reset?

   Yes

   - Replace and program the Powertrain Control Module per Service Information. Refer to **MODULE, POWERTRAIN CONTROL, REMOVAL** .
   - Perform the POWERTRAIN VERIFICATION TEST. Refer to **POWERTRAIN VERIFICATION TEST** .

   No

   - The mileage has been successfully programmed into the PCM. Test is complete.
   - Perform the POWERTRAIN VERIFICATION TEST. Refer to **POWERTRAIN VERIFICATION TEST** .

P0633-SKIM KEY NOT PROGRAMMED IN PCM

For a complete wiring diagram **refer to appropriate SYSTEM WIRING DIAGRAMS article** .

WHEN MONITORED:

Ignition on.

SET CONDITION:

The SKIM Key information has not been programmed into the PCM. One Trip Fault. Three good trips to turn off the MIL.

POSSIBLE CAUSES

Possible Causes
PROGRAMMING SKIM KEY INTO THE PCM POWERTRAIN CONTROL MODULE (PCM)

Always perform the Pre-Diagnostic Troubleshooting procedure before proceeding. Refer to PRE-DIAGNOSTIC TROUBLESHOOTING PROCEDURE .

DIAGNOSTIC TEST

1. **PROGRAMMING SKIM KEY INTO THE PCM**
   1. Ignition on, engine not running.
   2. With a scan tool, erase DTCs.

3. Using the scan tool, program the SKIM Key information into the PCM.
4. Start the engine.

NOTE: **If the engine will not start, crank the engine over for 15 seconds. Crank at least 2 times with the ignition switch returning to the off position each time.**

5. Allow the engine to reach normal operating temperature.
6. With the scan tool, select View DTCs.

Does the DTC reset?

Yes

- Replace and program the Powertrain Control Module per Service Information. Refer to **MODULE, POWERTRAIN CONTROL, REMOVAL** .
- Perform the POWERTRAIN VERIFICATION TEST. Refer to **POWERTRAIN VERIFICATION TEST** .

No

- The SKIM KEY information has been successfully programmed into the PCM. Test is complete.
- Perform the POWERTRAIN VERIFICATION TEST. Refer to **POWERTRAIN VERIFICATION TEST** .

DIAGNOSIS AND TESTING

P063A-GENERATOR VOLTAGE SENSE CIRCUIT

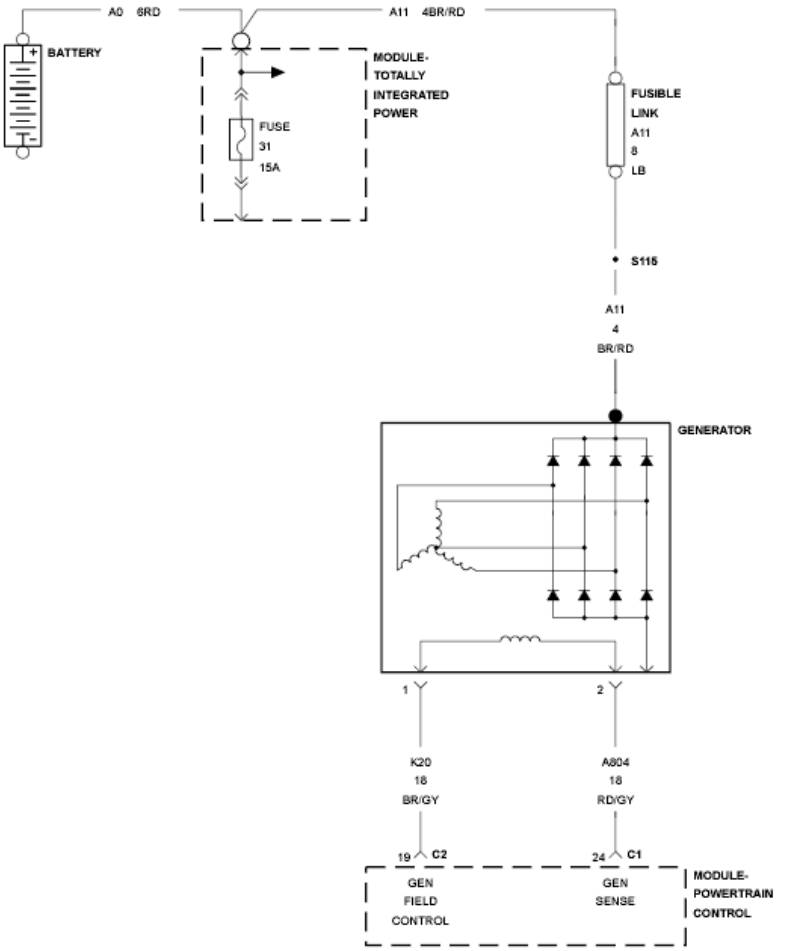

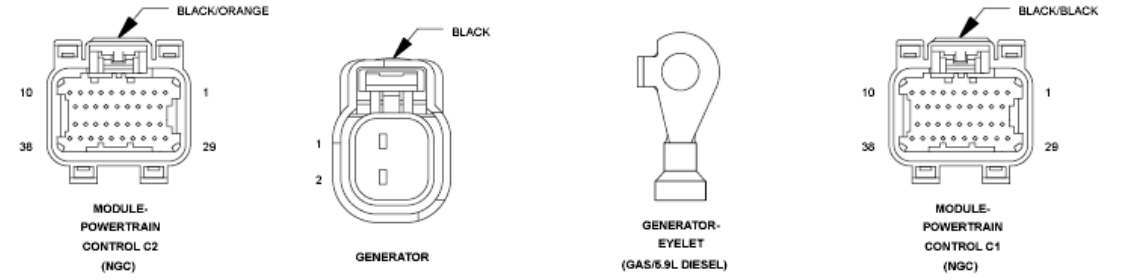

Fig. 1: Generator Circuit Schematic
Courtesy of CHRYSLER GROUP, LLC

For a complete wiring diagram **refer to appropriate SYSTEM WIRING DIAGRAMS article** .

WHEN MONITORED:

The engine running. The engine speed greater than 1157 RPM.

SET CONDITION:

The PCM recognizes the alternator output voltage is less than the Battery feed circuit voltage. One trip failure. The Generator light will illuminate. The fault will be checked again on the next key cycle.

POSSIBLE CAUSES

Possible Causes
EXCESSIVE RESISTANCE IN THE (A803) GENERATOR SENSE CIRCUIT
(A803) GENERATOR SENSE CIRCUIT SHORTED TO GROUND
GENERATOR
POWERTRAIN CONTROL MODULE (PCM)

Always perform the Pre-Diagnostic Troubleshooting procedure before proceeding. Refer to PRE-DIAGNOSTIC TROUBLESHOOTING PROCEDURE .

DIAGNOSTIC TEST

1. **ACTIVE DTC**

NOTE: **Inspect the vehicle for aftermarket accessories that may exceed the Generator System output.**

NOTE: **The battery must be fully charged.**

NOTE: **The Generator belt tension and condition must be checked before continuing.**

1. Ignition on, engine not running.
2. With a scan tool, select View DTCs.
3. Start the engine.
4. Allow the idle to stabilize.
5. With the scan tool, View DTCs.

Is the DTC Active at this time?

Yes

- Go To 2.

No

- Perform the INTERMITTENT CONDITION diagnostic procedure. Refer to **INTERMITTENT CONDITION** .

2. **EXCESSIVE RESISTANCE IN THE (A803) GENERATOR SENSE CIRCUIT**

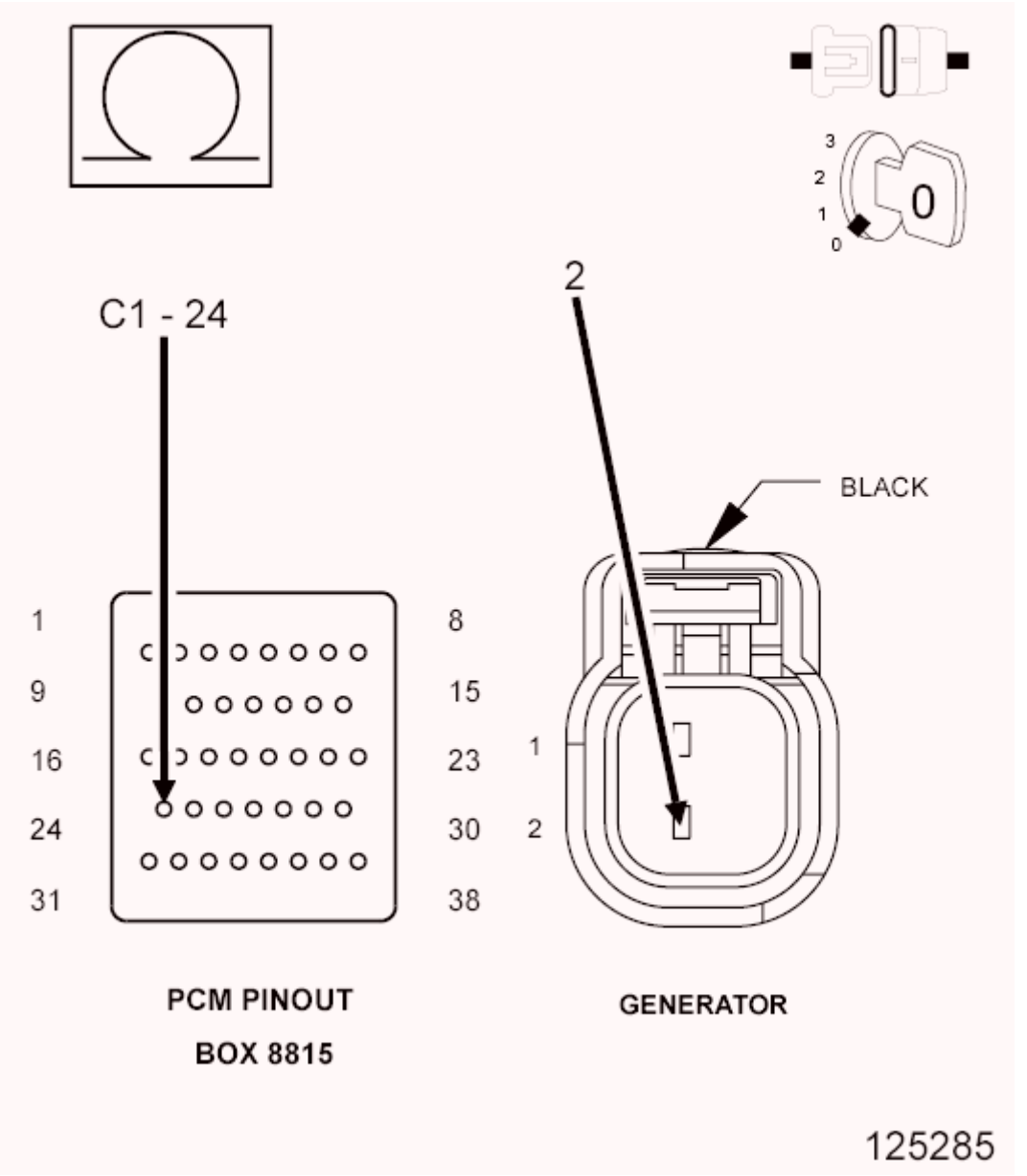

Fig. 2: Measuring Resistance Of (A803) Generator Sense Circuit From Generator Harness Connector To Appropriate Terminal Of Special Tool #8815
Courtesy of CHRYSLER GROUP, LLC

1. Turn the ignition off.
2. Disconnect the Generator harness connector.
3. Disconnect the C1 PCM harness connector.

CAUTION: Do not probe the PCM harness connectors. Probing the PCM harness connectors will damage the PCM terminals resulting in poor terminal to pin connection. Install the PCM Pinout Box (special tool #8815A, Kit, NGC, 38 Position) to perform diagnosis.

4. Measure the resistance of the (A803) Generator Sense circuit from the Generator harness connector to the appropriate terminal of special tool (special tool #8815A, Kit, NGC, 38 Position).

   Is the resistance below 5.0 ohms?

   Yes

   - Go To 3.

   No

   - Repair the excessive resistance in the (A803) Generator Sense circuit.
   - Perform the POWERTRAIN VERIFICATION TEST. Refer to **POWERTRAIN VERIFICATION TEST** .

3. **(A803) GENERATOR SENSE CIRCUIT SHORTED TO GROUND**

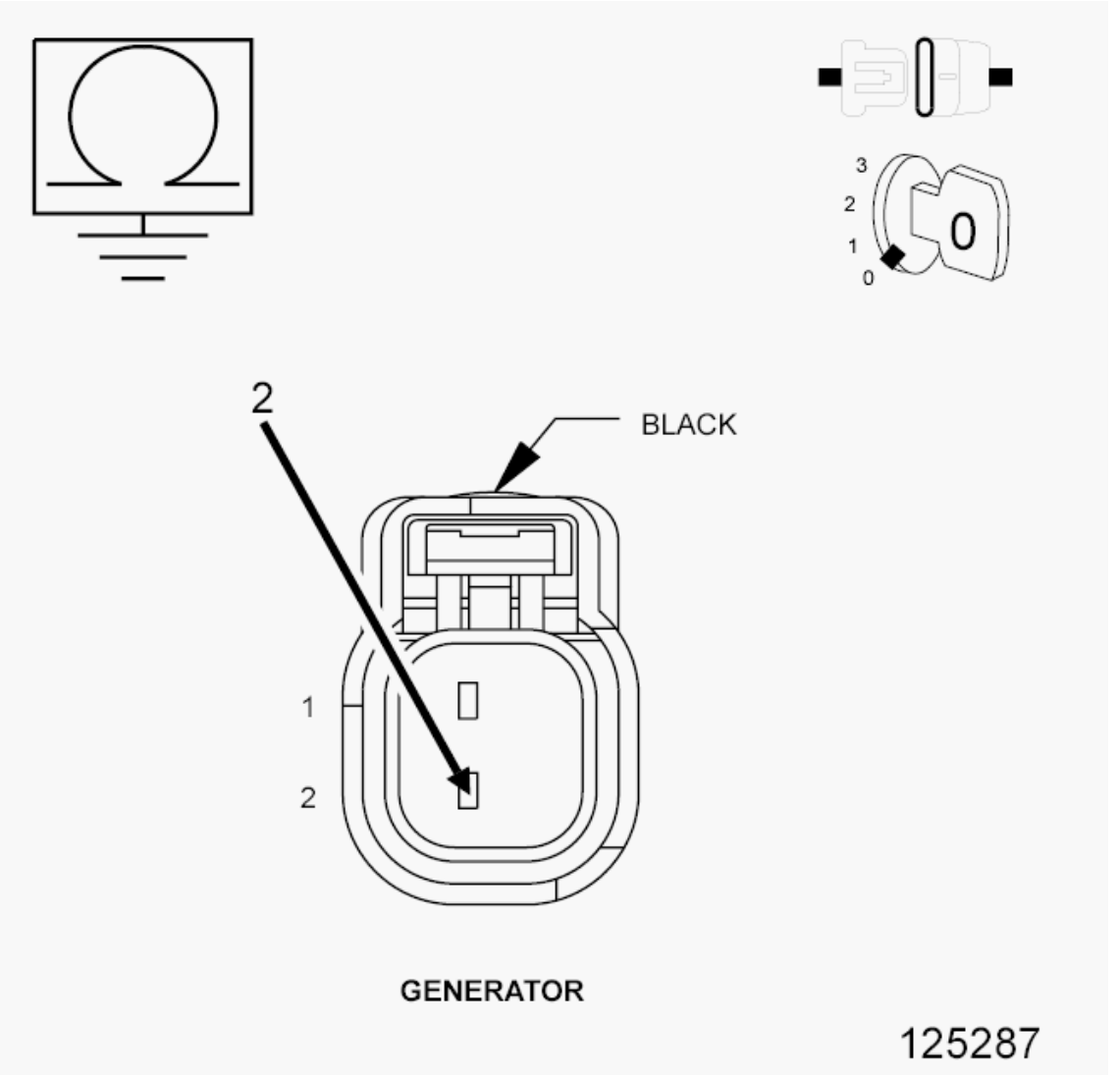

Fig. 3: Measuring Resistance Between Ground And (A803) Generator Sense Circuit AT Generator Harness Connector
Courtesy of CHRYSLER GROUP, LLC

1. Measure the resistance between ground and the (A803) Generator Sense circuit at the Generator harness connector.

   Is the resistance below 100 ohms?

   Yes

   - Repair the short to ground in the (A803) Generator Sense circuit.
   - Perform the POWERTRAIN VERIFICATION TEST. Refer to **POWERTRAIN VERIFICATION TEST** .

   No

- Go To 4.

4. **GENERATOR OPERATION**

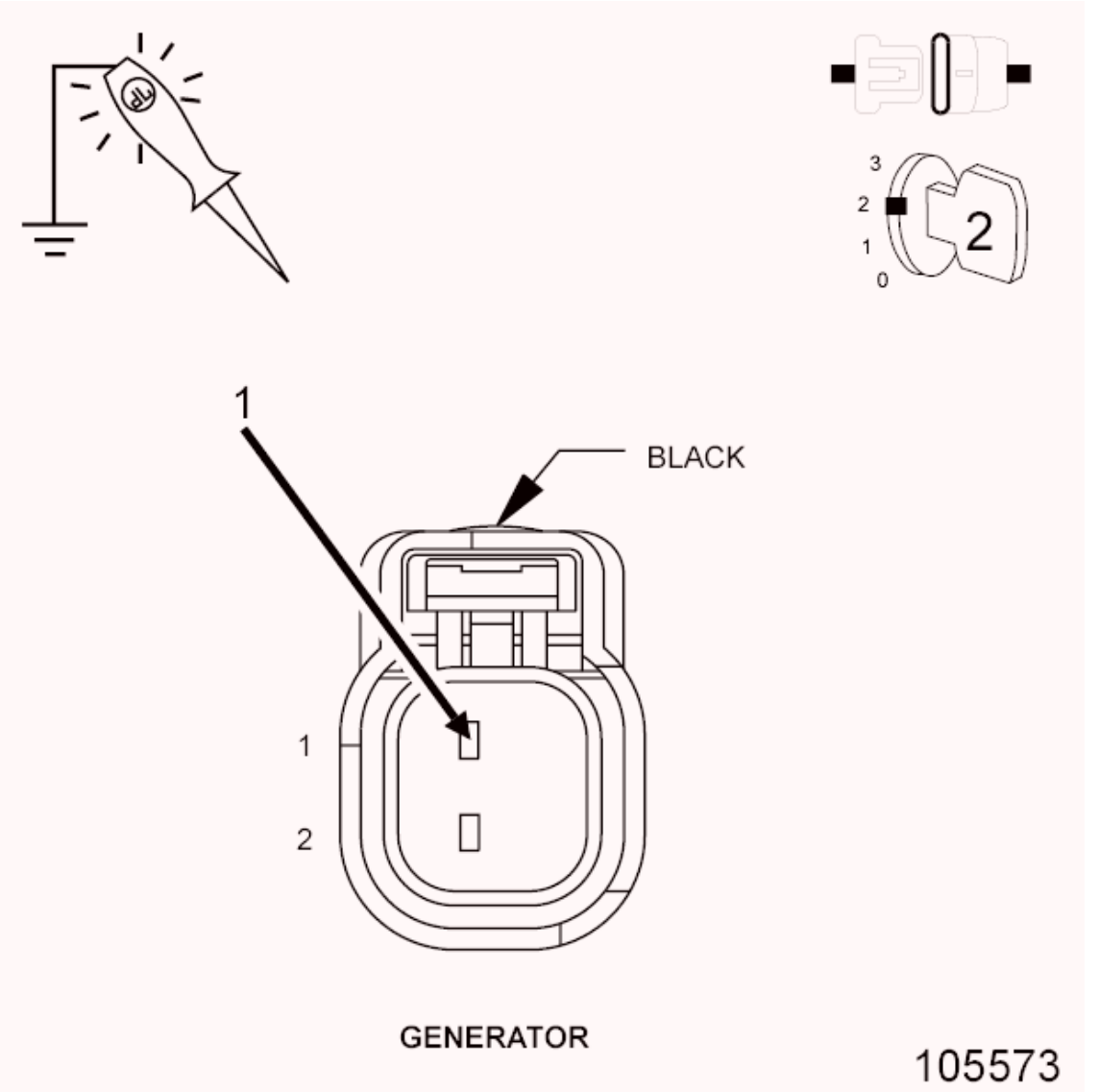

Fig. 4: Using 12-Volt Test Light Connected To Ground To Probe (K20) Generator Field Control Circuit In Generator Field Harness Connector
Courtesy of CHRYSLER GROUP, LLC

1. Connect the C1 PCM harness connector.
2. Using a 12-volt test light connected to ground, probe the (K20) Generator Field Control circuit in the Generator Field harness connector.
3. Ignition on, engine not running.
4. With a scan tool, actuate the Generator Field Driver.

NOTE: The DTC needs to be cleared before actuating the Solenoid, if the

DTC is not cleared, the Solenoid may not be allowed to actuate.

NOTE: **The test light should be illuminated and bright proportional to the maximum duty cycle allowed by the scan tool. For example, if the scan tool allows 100% actuation, the brightness should be as bright as a direct connection to the battery. If the scan tool allows a maximum 25% actuation, the brightness should be 25% as bright as a direct connection to the battery.**

Does the test light illuminate accordingly during the actuation?

Yes

- Verify that there is good pin to terminal contact in the Generator and Powertrain Control Module connectors. Replace the Generator if no problems were found with the connectors.
- Perform the POWERTRAIN VERIFICATION TEST. Refer to **POWERTRAIN VERIFICATION TEST** .

No

- Go To 5.

5. **POWERTRAIN CONTROL MODULE (PCM)**
   1. Using the wiring diagram/schematic as a guide, inspect the wiring and connectors between the Generator and the Powertrain Control Module (PCM).
   2. Look for any chafed, pierced, pinched, or partially broken wires.
   3. Look for broken, bent, pushed out or corroded terminals. Verify that there is good pin to terminal contact in the Generator and Powertrain Control Module connectors.
   4. Refer to any Technical Service Bulletins that may apply.

   Were there any problems found?

   Yes

   - Repair as necessary.
   - Perform the POWERTRAIN VERIFICATION TEST. Refer to **POWERTRAIN VERIFICATION TEST** .

   No

   - Replace and program the Powertrain Control Module per Service Information. Refer to **MODULE, POWERTRAIN CONTROL, REMOVAL** .
   - Perform the POWERTRAIN VERIFICATION TEST. Refer to **POWERTRAIN VERIFICATION TEST** .

P0642-SENSOR REFERENCE VOLTAGE 1 CIRCUIT LOW

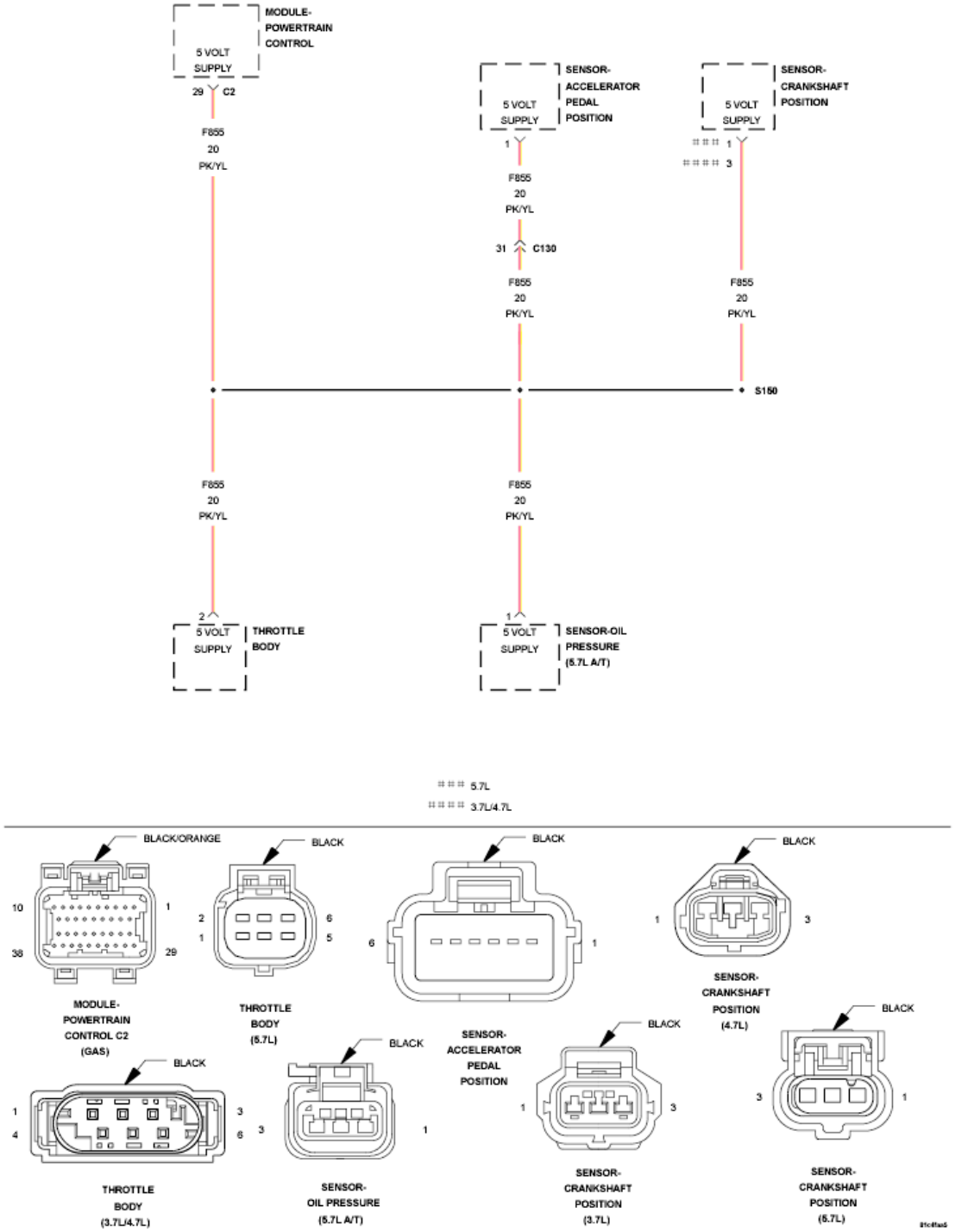

Fig. 5: APP Sensor, CKP Sensor, PCM, Throttle Body & Oil Pressure Sensor 5-Volt Supply Circuit Schematic
Courtesy of CHRYSLER GROUP, LLC

For a complete wiring diagram **refer to appropriate SYSTEM WIRING DIAGRAMS article** .

WHEN MONITORED:

Ignition on.

SET CONDITION:

When the PCM recognizes the Primary 5-volt Supply circuit voltage is too low. One Trip Fault. ETC light is flashing.

POSSIBLE CAUSES

Possible Causes
(F855) PRIMARY 5-VOLT SUPPLY SHORTED TO GROUND
SENSOR SHORTED TO GROUND
5-VOLT SENSOR
POWERTRAIN CONTROL MODULE (PCM)

Always perform the Pre-Diagnostic Troubleshooting procedure before proceeding. Refer to PRE-DIAGNOSTIC TROUBLESHOOTING PROCEDURE .

DIAGNOSTIC TEST

1. **ACTIVE DTC**

   NOTE: Improperly installed aftermarket accessories can cause this DTC to set. Check for any improperly installed aftermarket accessories before continuing with this test.

   1. Start the engine and allow it to idle for at least 60 seconds.

      WARNING: When the engine is operating, do not stand in direct line with the fan. Do not put your hands near the pulleys, belts or fan. Do not wear loose clothing. Failure to follow these instructions may result in possible serious or fatal injury.

   2. With a scan tool, select View DTCs.

      Is the DTC Active at this time?

      Yes

      - Go To 2.

      No

      - Perform the INTERMITTENT CONDITION diagnostic procedure. Refer to **INTERMITTENT CONDITION** .

2. **(F855) PRIMARY 5-VOLT SUPPLY CIRCUIT SHORTED TO GROUND**

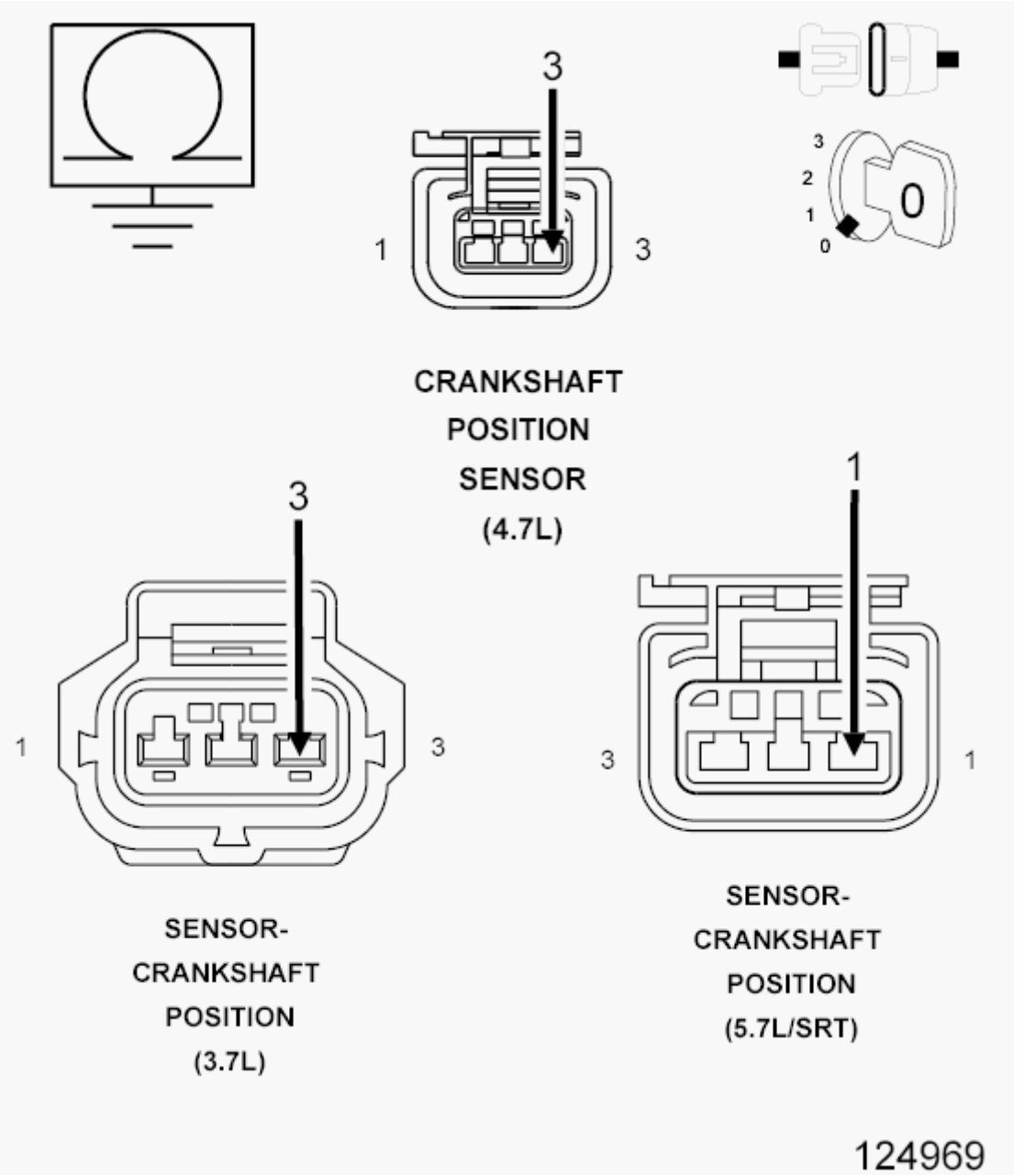

Fig. 6: Measuring Resistance Between Ground And (F855) Primary 5-Volt Supply Circuit In CKP Sensor Harness Connector
Courtesy of CHRYSLER GROUP, LLC

1. Turn the ignition off.
2. Disconnect the C2 PCM harness connector.
3. Disconnect all the Sensors that share the (F855) Primary 5-volt Supply circuit.
4. Measure the resistance between ground and the (F855) Primary 5-volt Supply circuit in the CKP Sensor harness connector.

   Is the resistance below 100 ohms?

Yes

- Repair the short to ground in the (F855) Primary 5-volt Supply circuit.
- Perform the POWERTRAIN VERIFICATION TEST. Refer to **POWERTRAIN VERIFICATION TEST** .

No

- Go To 3.

3. **5-VOLT SENSOR**

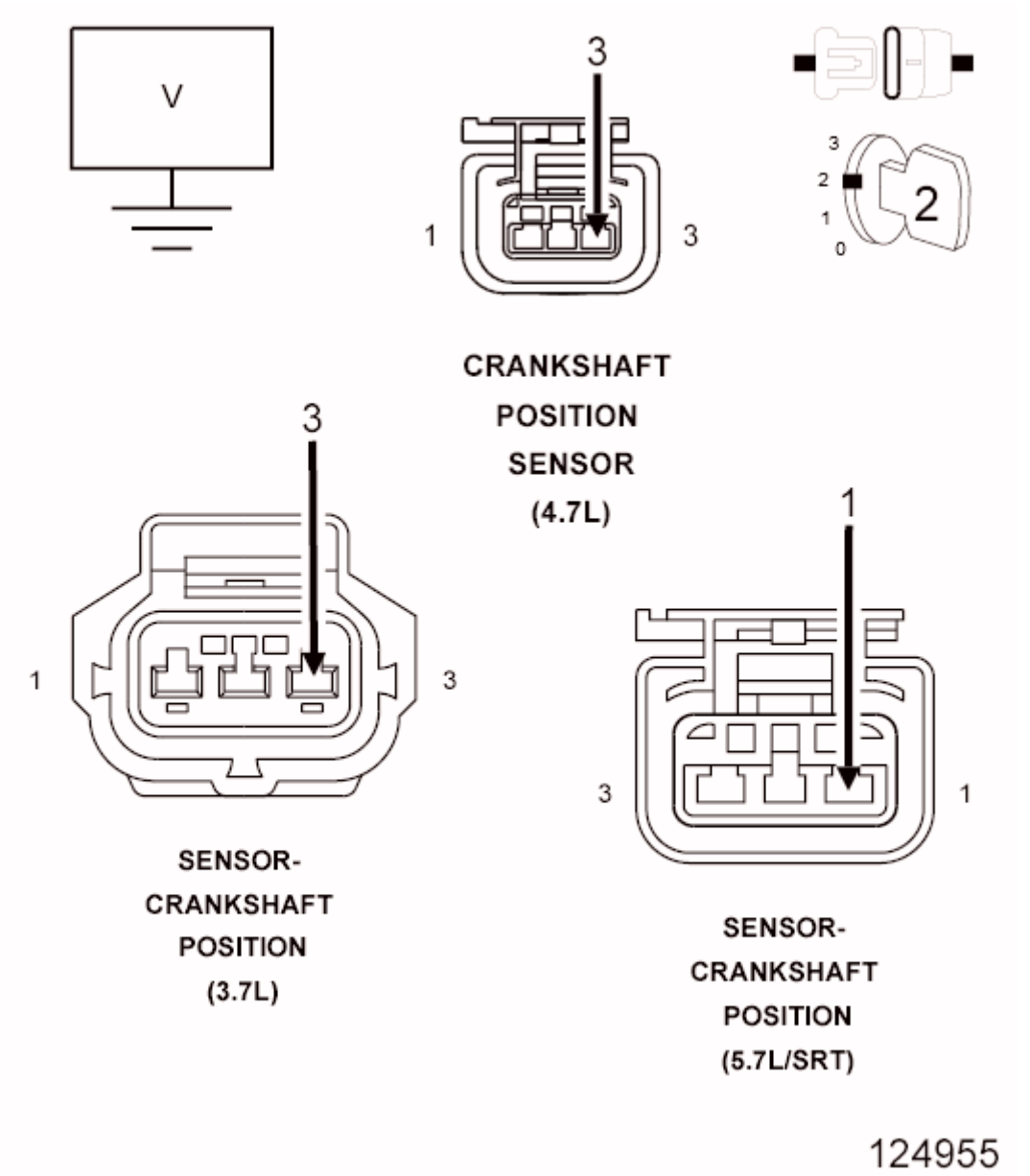

Fig. 7: Measuring Voltage On CKP Sensor 5-Volt Supply Circuit
Courtesy of CHRYSLER GROUP, LLC

1. Turn the ignition off.
2. Reconnect all the previously disconnected Sensors except for the CKP Sensor harness connector.
3. Ignition on, engine not running.
4. Measure the voltage on the (F855) Primary 5-volt Supply circuit in the CKP Sensor harness connector.

   Is the voltage below 4.5 volts?

   Yes

   - Go To 4.

   No

   - Replace the CKP Sensor.
   - Perform the POWERTRAIN VERIFICATION TEST. Refer to **POWERTRAIN VERIFICATION TEST** .

4. **5-VOLT SENSOR SHORTED TO GROUND**

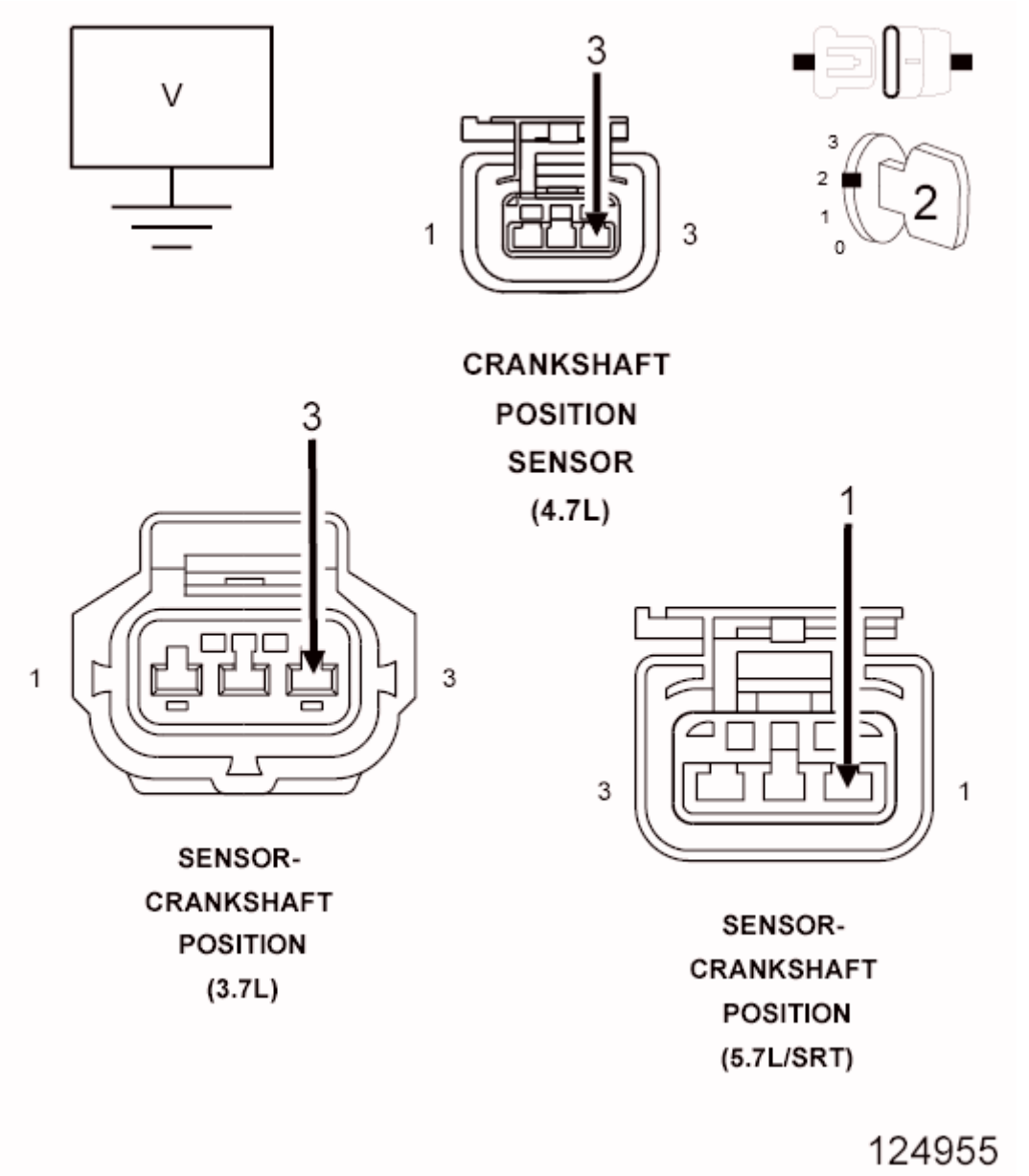

Fig. 8: Measuring Voltage On CKP Sensor 5-Volt Supply Circuit
Courtesy of CHRYSLER GROUP, LLC

1. Measure the voltage on the (F855) Primary 5-volt Supply circuit at the CKP Sensor harness connector.

CAUTION: You must Turn the Ignition OFF when disconnecting any of the Sensor harness connectors and Turn the Ignition On to check the voltage readings.

2. While monitoring the voltage, disconnect each Sensor harness connector that shares the (F855) Primary 5-volt Supply circuit, one at a time.

Does the voltage increase above 4.5 volts when disconnecting any of the remaining Sensors?

Yes

- Replace the Sensor that causes the (F855) Primary 5-volt Supply circuit voltage to increase when disconnected.
- Perform the POWERTRAIN VERIFICATION TEST. Refer to **POWERTRAIN VERIFICATION TEST** .

No

- Go To 5.

NOTE: Reconnect all the Sensors and clear all trouble codes before continuing.

5. **POWERTRAIN CONTROL MODULE (PCM)**
   1. Using the wiring diagram/schematic as a guide, inspect the wiring and connectors between the related Sensors and the Powertrain Control Module (PCM).
   2. Look for any chafed, pierced, pinched, or partially broken wires.
   3. Look for broken, bent, pushed out or corroded terminals. Verify that there is good pin to terminal contact in the related Sensor and Control Module connectors.
   4. Refer to any Technical Service Bulletins that may apply.

   Were there any problems found?

   Yes

   - Repair as necessary.
   - Perform the POWERTRAIN VERIFICATION TEST. Refer to **POWERTRAIN VERIFICATION TEST** .

   No

   - Replace and program the Powertrain Control Module per Service Information. Refer to **MODULE, POWERTRAIN CONTROL, REMOVAL** .
   - Perform the POWERTRAIN VERIFICATION TEST. Refer to **POWERTRAIN VERIFICATION TEST** .

P0643-PRIMARY 5-VOLT SUPPLY CIRCUIT HIGH

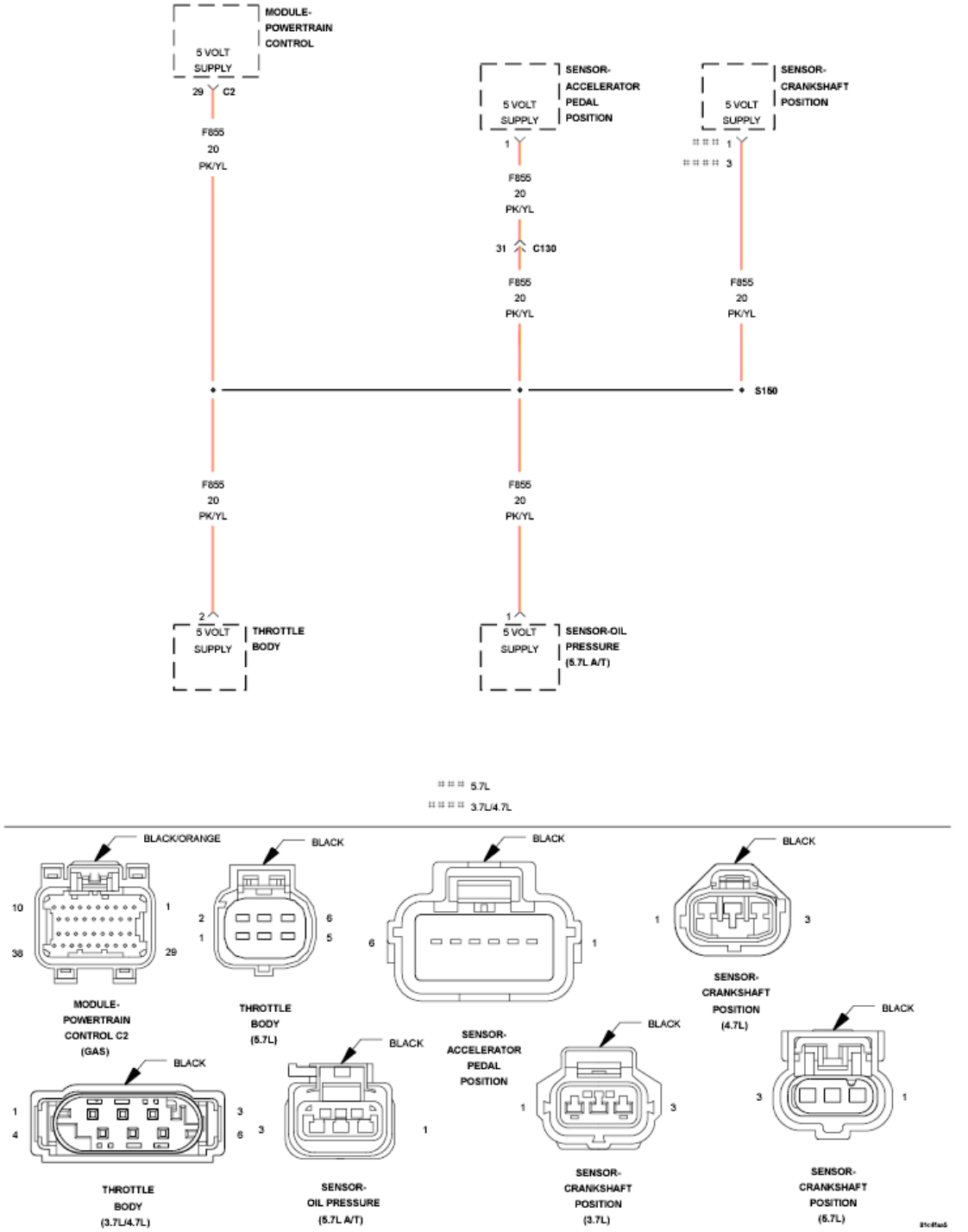

Fig. 9: APP Sensor, CKP Sensor, PCM, Throttle Body & Oil Pressure Sensor 5-Volt Supply Circuit Schematic
Courtesy of CHRYSLER GROUP, LLC

For a complete wiring diagram **refer to appropriate SYSTEM WIRING DIAGRAMS article** .

WHEN MONITORED:

Ignition on.

SET CONDITION:

When the PCM recognizes the Primary 5-volt Supply circuit voltage is too high. One Trip Fault. ETC light is flashing.

POSSIBLE CAUSES

Possible Causes
(F855) PRIMARY 5-VOLT SUPPLY SHORTED TO VOLTAGE POWERTRAIN CONTROL MODULE (PCM)

Always perform the Pre-Diagnostic Troubleshooting procedure before proceeding. Refer to PRE-DIAGNOSTIC TROUBLESHOOTING PROCEDURE .

DIAGNOSTIC TEST

1. **ACTIVE DTC**

   NOTE: Improperly installed aftermarket accessories can cause this DTC to set. Check for any improperly installed aftermarket accessories before continuing with this test.

   1. Start the engine and allow it to idle for at least 60 seconds.

      WARNING: When the engine is operating, do not stand in direct line with the fan. Do not put your hands near the pulleys, belts or fan. Do not wear loose clothing. Failure to follow these instructions may result in possible serious or fatal injury.

   2. With a scan tool, select View DTCs.

      Is the DTC Active at this time?

      Yes

      - Go To 2.

      No

      - Perform the INTERMITTENT CONDITION diagnostic procedure. Refer to **INTERMITTENT CONDITION** .

2. **(F855) PRIMARY 5-VOLT SUPPLY SHORTED TO VOLTAGE**

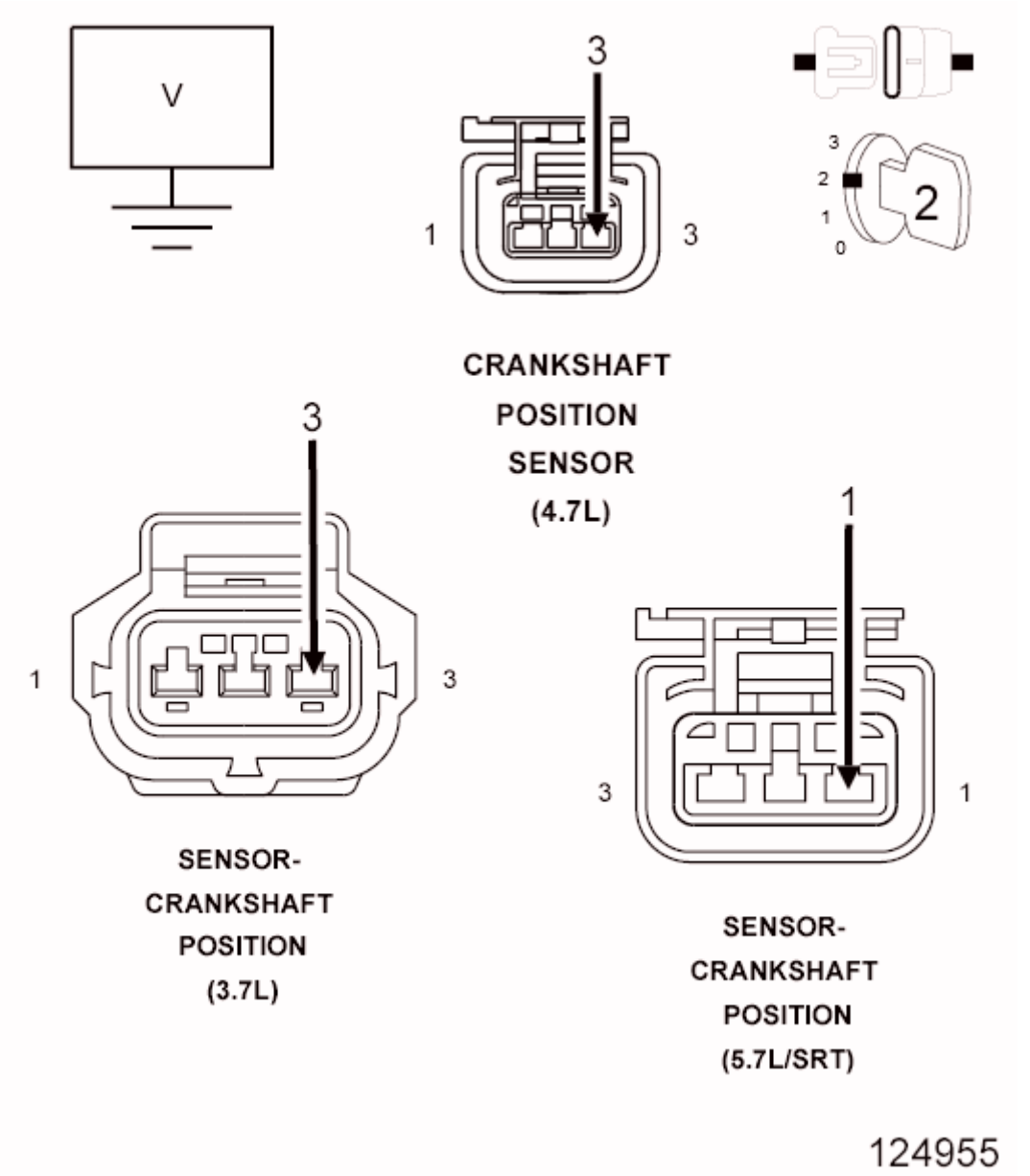

Fig. 10: Measuring Voltage On CKP Sensor 5-Volt Supply Circuit
Courtesy of CHRYSLER GROUP, LLC

NOTE: **Improperly installed aftermarket accessories can cause this DTC to set. Check for wiring added by customer.**

1. Turn the ignition off.
2. Disconnect the C2 PCM harness connector.
3. Disconnect all the Sensors that share the (F855) Primary 5-volt Supply circuit.
4. Ignition on, engine not running.
5. Measure the voltage on the (F855) Primary 5-volt Supply circuit at the CKP Sensor harness connector.

Is there any voltage present?

Yes

- Repair the short to voltage in the (F855) Primary 5-volt Supply circuit.
- Perform the POWERTRAIN VERIFICATION TEST. Refer to **POWERTRAIN VERIFICATION TEST** .

No

- Go To 3.

3. **POWERTRAIN CONTROL MODULE (PCM)**
    1. Using the wiring diagram/schematic as a guide, inspect the wiring and connectors between the related Sensors and the Powertrain Control Module (PCM).
    2. Look for any chafed, pierced, pinched, or partially broken wires.
    3. Look for broken, bent, pushed out or corroded terminals. Verify that there is good pin to terminal contact in the related Sensor and Control Module connectors.
    4. Refer to any Technical Service Bulletins that may apply.

    Were there any problems found?

    Yes

    - Repair as necessary.
    - Perform the POWERTRAIN VERIFICATION TEST. Refer to **POWERTRAIN VERIFICATION TEST** .

    No

    - Replace and program the Powertrain Control Module per Service Information. Refer to **MODULE, POWERTRAIN CONTROL, REMOVAL** .
    - Perform the POWERTRAIN VERIFICATION TEST. Refer to **POWERTRAIN VERIFICATION TEST** .

P0645-A/C CLUTCH CONTROL CIRCUIT

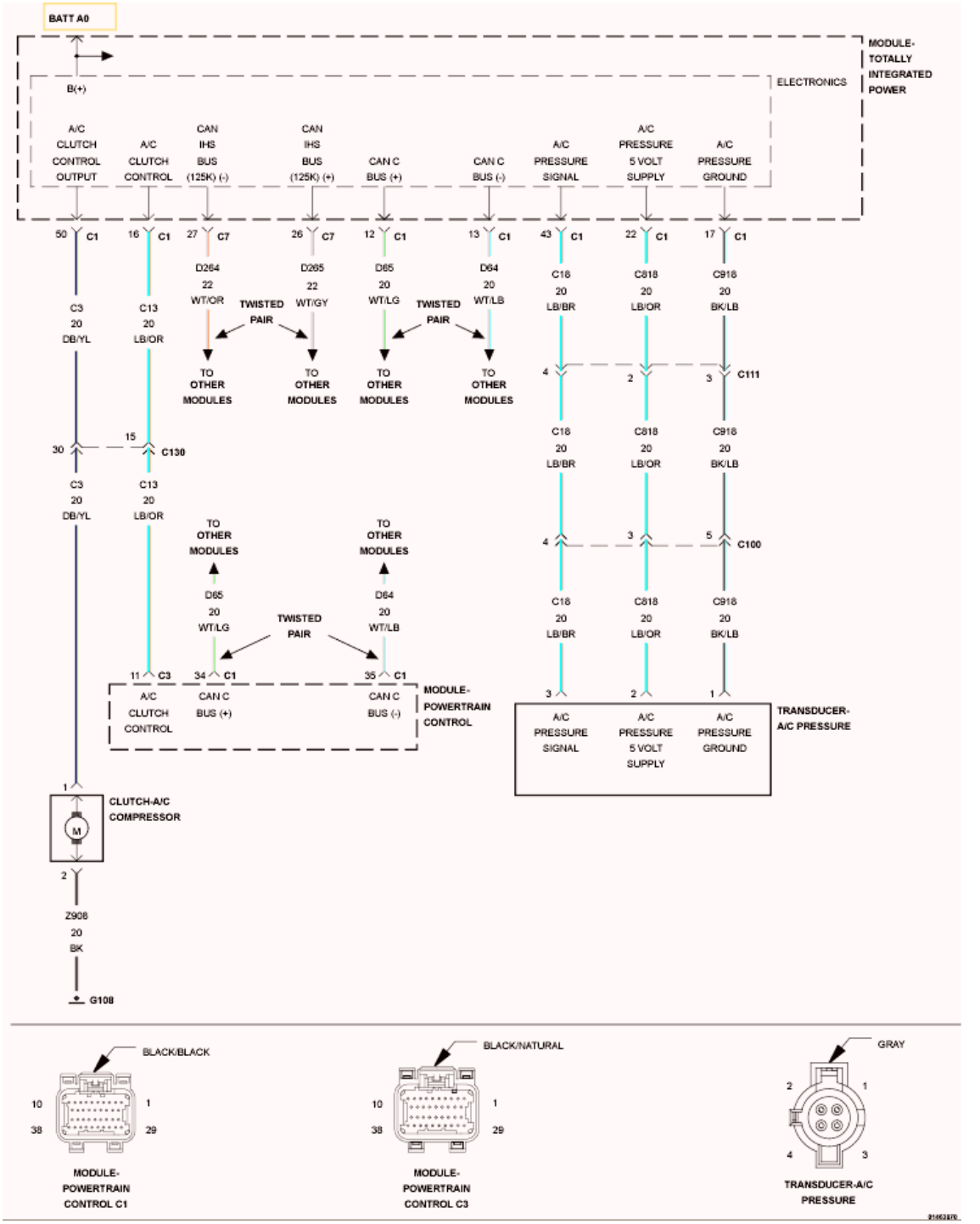

Fig. 11: A/C Pressure Transducer Circuit Schematic
Courtesy of CHRYSLER GROUP, LLC

For a complete wiring diagram, **refer to appropriate SYSTEM WIRING DIAGRAMS article** .

WHEN MONITORED:

With the ignition on. Battery voltage greater than 10 Volts. A/C Switch on.

SET CONDITION:

An open or shorted condition is detected in the A/C clutch control circuit. One Trip Fault. Three good trips to turn off the MIL.

POSSIBLE CAUSES

Possible Causes
(C13) A/C CLUTCH CONTROL CIRCUIT SHORTED TO VOLTAGE
(C13) A/C CLUTCH CONTROL CIRCUIT OPEN
(C13) A/C CLUTCH CONTROL CIRCUIT SHORTED TO GROUND
TOTALLY INTEGRATED POWER MODULE (TIPM)
POWERTRAIN CONTROL MODULE (PCM)

Always perform the Pre-Diagnostic Troubleshooting procedure before proceeding. Refer to PRE-DIAGNOSTIC TROUBLESHOOTING PROCEDURE .

DIAGNOSTIC TEST

1. **ACTIVE DTC**
    1. Start the engine.
    2. Allow the engine to reach normal operating temperature.
    3. Turn the A/C on.
    4. With the scan tool, select View DTCs.

    Is the DTC Active at this time?

    Yes

    - Go To 2.

    No

    - Perform the INTERMITTENT CONDITION diagnostic procedure. Refer to **INTERMITTENT CONDITION** .
2. **(C13) A/C CLUTCH CONTROL CIRCUIT SHORTED TO VOLTAGE**

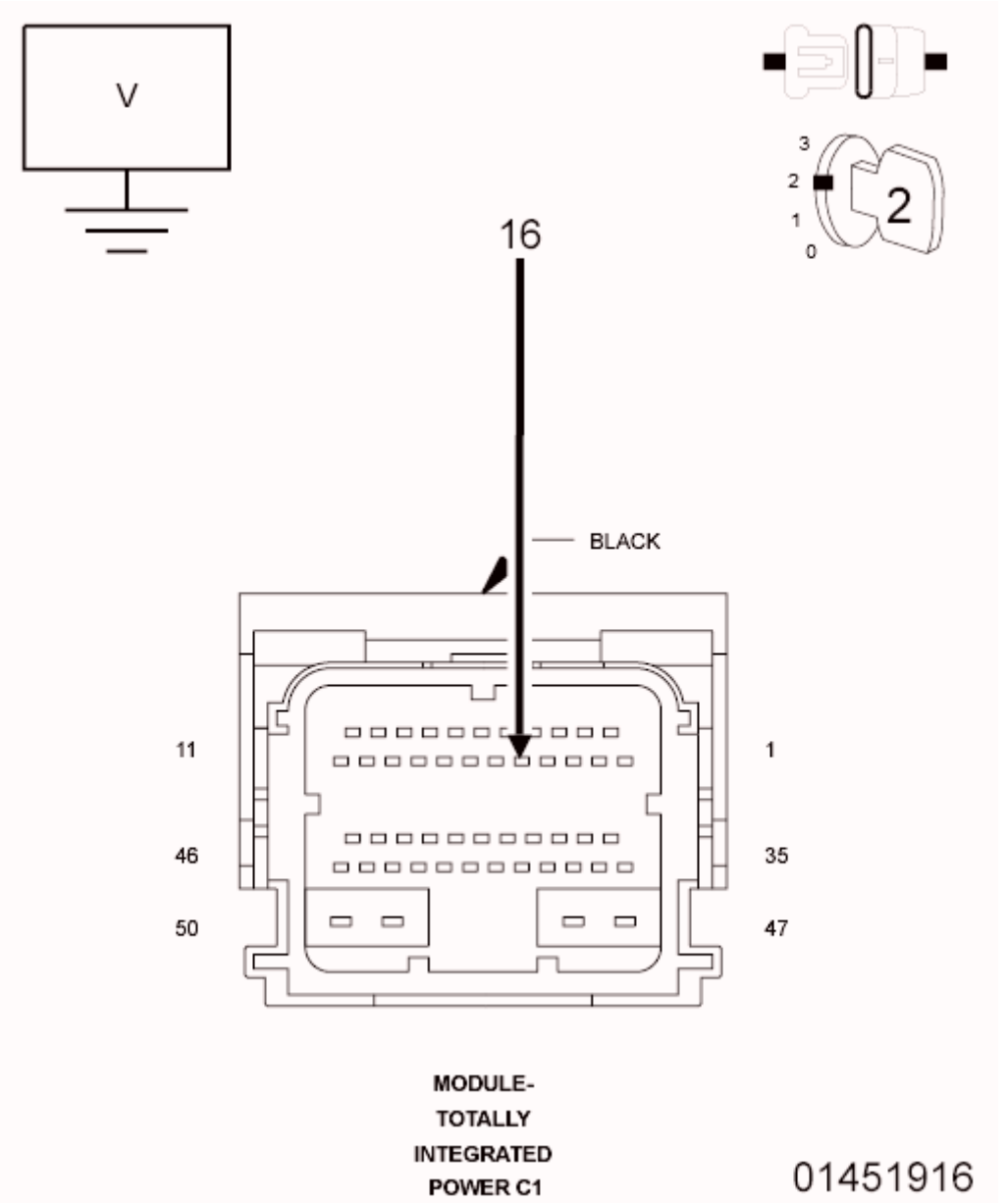

Fig. 12: Measuring Voltage On (C13) A/C Clutch Control Circuit AT C1 TIPM Harness Connector
Courtesy of CHRYSLER GROUP, LLC

1. Turn the ignition off.
2. Disconnect the C3 PCM harness connector.
3. Disconnect the C1 TIPM harness connector.
4. Ignition on, engine not running.
5. Measure the voltage on the (C13) A/C Clutch Control circuit at the C1 TIPM harness connector.

   Is there any voltage present?

   Yes

- Repair the short to voltage in the (C13) A/C Clutch Control circuit.
- Perform the POWERTRAIN VERIFICATION TEST. Refer to **POWERTRAIN VERIFICATION TEST** .

No

- Go To 3.

3. **(C13) A/C CLUTCH CONTROL CIRCUIT OPEN**

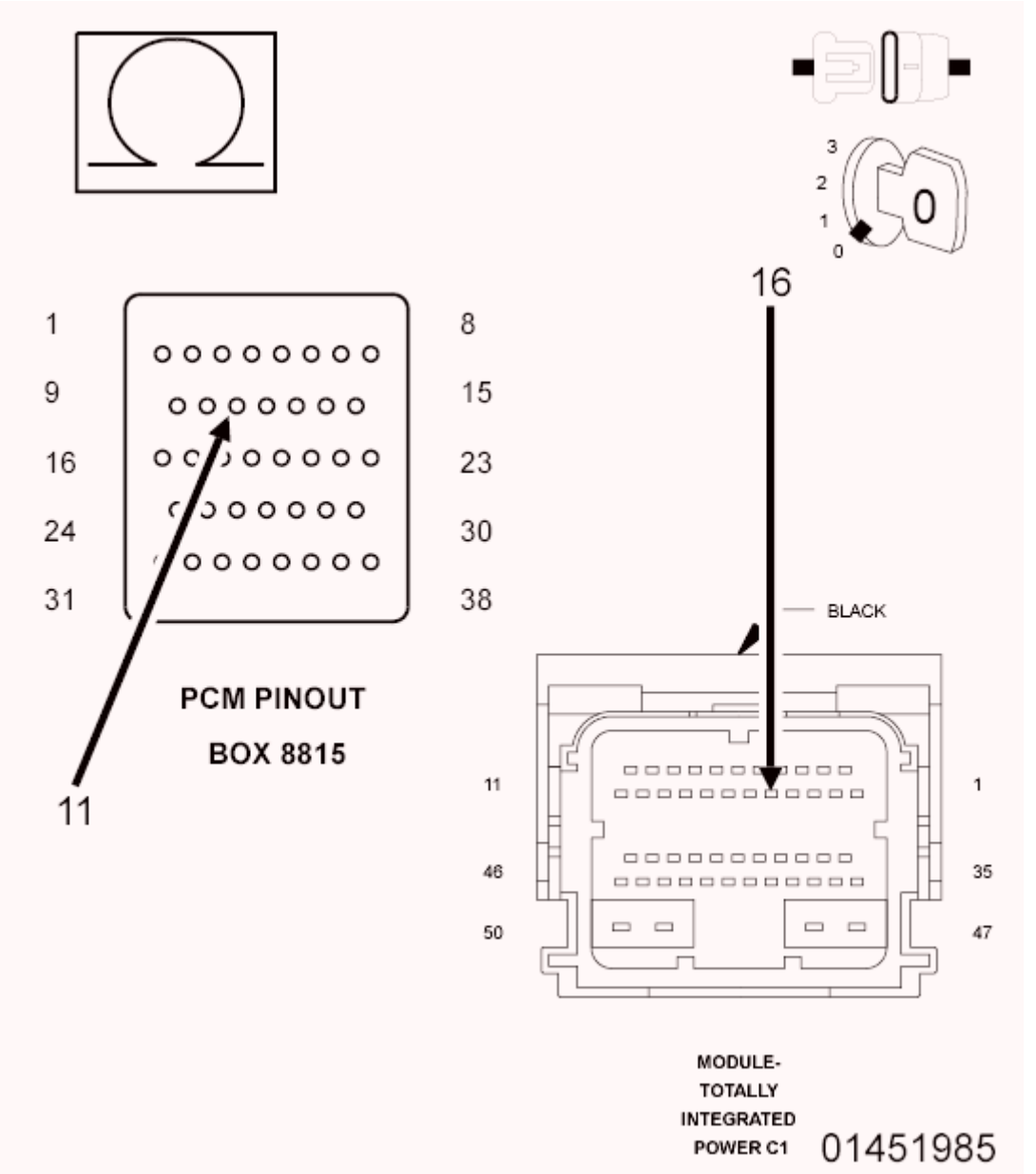

Fig. 13: Measuring Resistance Of (C13) A/C Clutch Control Circuit From C1 TIPM Harness Connector To Appropriate Terminal Of PCM Pinout Box 8815
Courtesy of CHRYSLER GROUP, LLC

1. Turn the ignition off.

CAUTION: Do not probe the PCM harness connectors. Probing the PCM harness connectors will damage the PCM terminals resulting in poor terminal to pin connection. Install the PCM Pinout Box (special tool #8815A, Kit, NGC, 38 Position) to perform diagnosis.

2. Measure the resistance of the (C13) A/C Clutch Control circuit from the C1 TIPM harness connector to the appropriate terminal of PCM Pinout Box (special tool #8815A, Kit, NGC, 38 Position).

   Is the resistance below 5.0 Ohms?

   Yes

   - Go To 4.

   No

   - Repair the open in the (C13) A/C Clutch Control circuit.
   - Perform the POWERTRAIN VERIFICATION TEST. Refer to **POWERTRAIN VERIFICATION TEST** .

4. **(C13) A/C CLUTCH CONTROL CIRCUIT SHORTED TO GROUND**

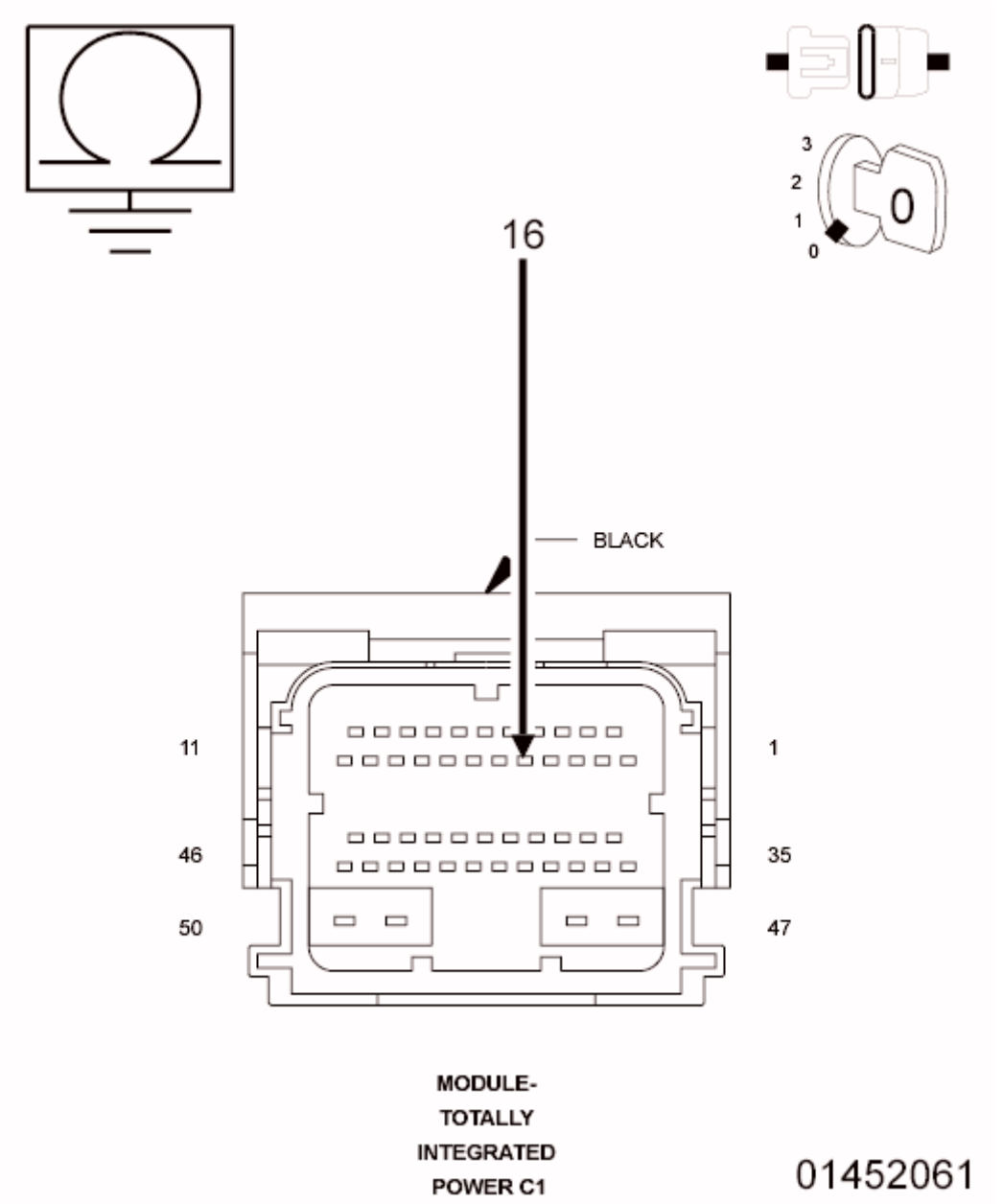

Fig. 14: Measuring Resistance Between Ground And (C13) A/C Clutch Control Circuit AT C1 TIPM Harness Connector
Courtesy of CHRYSLER GROUP, LLC

1. Measure the resistance between ground and the (C13) A/C Clutch Control circuit at the C1 TIPM harness connector.

   Is the resistance below 5.0 Ohms?

   Yes

   - Repair the short to ground in the (C13) A/C Clutch Control circuit.

- Perform the POWERTRAIN VERIFICATION TEST. Refer to **POWERTRAIN VERIFICATION TEST** .

No

- Go To 5.

5. **A/C CLUTCH CONTROL OPERATION FROM THE PCM**

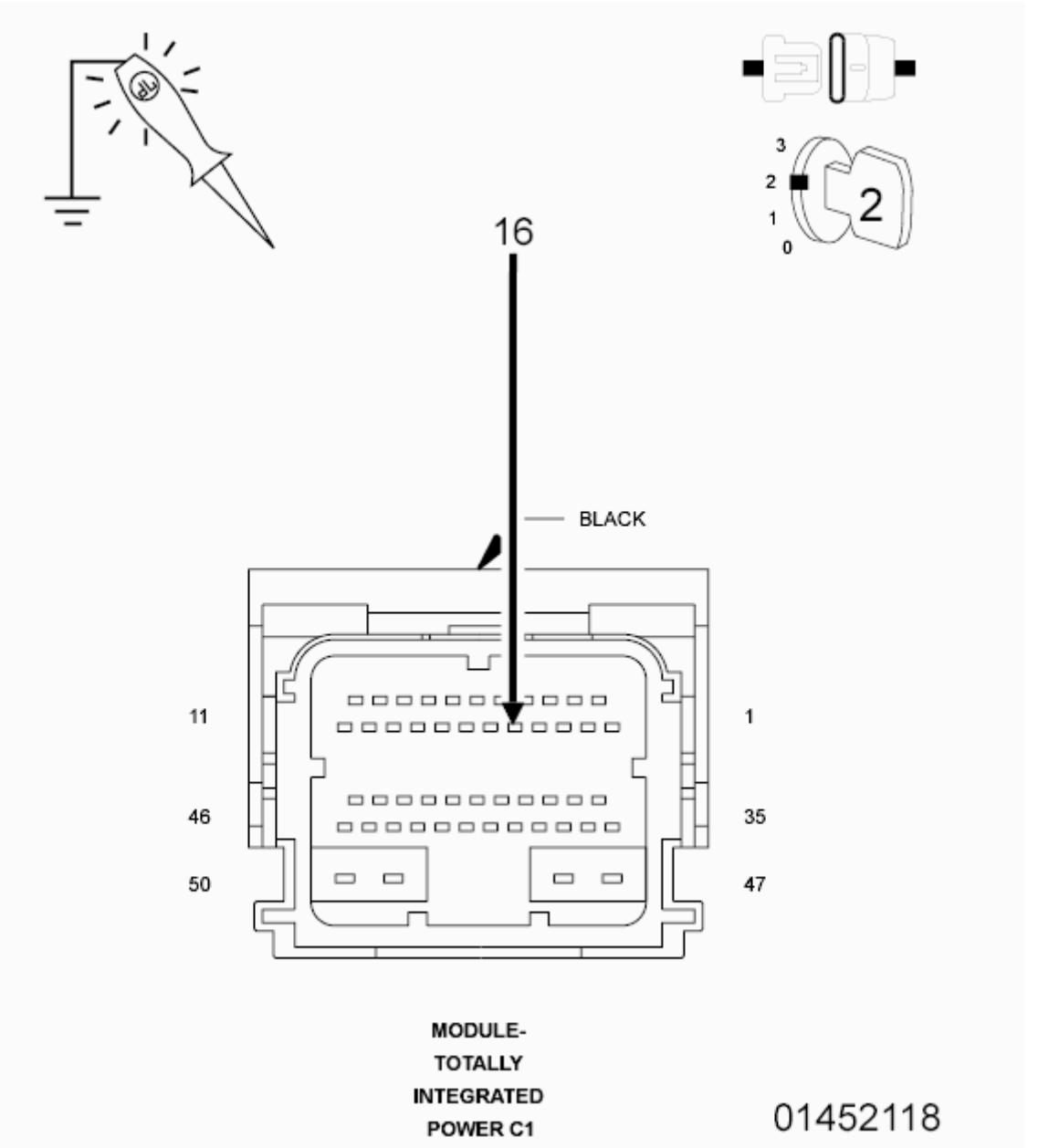

Fig. 15: Using 12-Volt Test Light Connected To Ground To Probe (C13) A/C Clutch Control Circuit In TIPM C1 Harness Connector
Courtesy of CHRYSLER GROUP, LLC

1. Turn the ignition off.
2. Connect the C3 PCM harness connector.
3. Ignition on, engine not running.
4. Using the scan tool in the PCM, actuate the A/C Clutch.
5. With a 12-volt test light connected to ground, probe the (C13) A/C Clutch Control circuit in the TIPM C1 harness connector.

   Does the test light illuminate brightly and flash on an off?

   Yes

   NOTE: Before continuing, check the TIPM harness connector terminals for corrosion, damage or terminal push out. Repair as necessary.

   - If OK, replace the TIPM in accordance with the Service Information.

   No

   - Go To 6.

6. **POWERTRAIN CONTROL MODULE (PCM)**
   1. Using the wiring diagram/schematic as a guide, inspect the wiring and connectors between the related A/C Clutch and the Powertrain Control Module (PCM).
   2. Look for any chafed, pierced, pinched or partially broken wires.
   3. Look for broken, bent, pushed out or corroded terminals. Verify that there is good pin to terminal contact in the A/C Clutch and Control Module connectors.
   4. Refer to any Technical Service Bulletins that may apply.

      Were there any problems found?

      Yes

      - Repair as necessary.
      - Perform the POWERTRAIN VERIFICATION TEST. Refer to **POWERTRAIN VERIFICATION TEST** .

      No

      - Replace and program the Powertrain Control Module in accordance with the Service Information. Refer to **MODULE, POWERTRAIN CONTROL, REMOVAL** .
      - Perform the POWERTRAIN VERIFICATION TEST. Refer to **POWERTRAIN VERIFICATION TEST** .

P0652-SENSOR REFERENCE VOLTAGE 2 CIRCUIT LOW

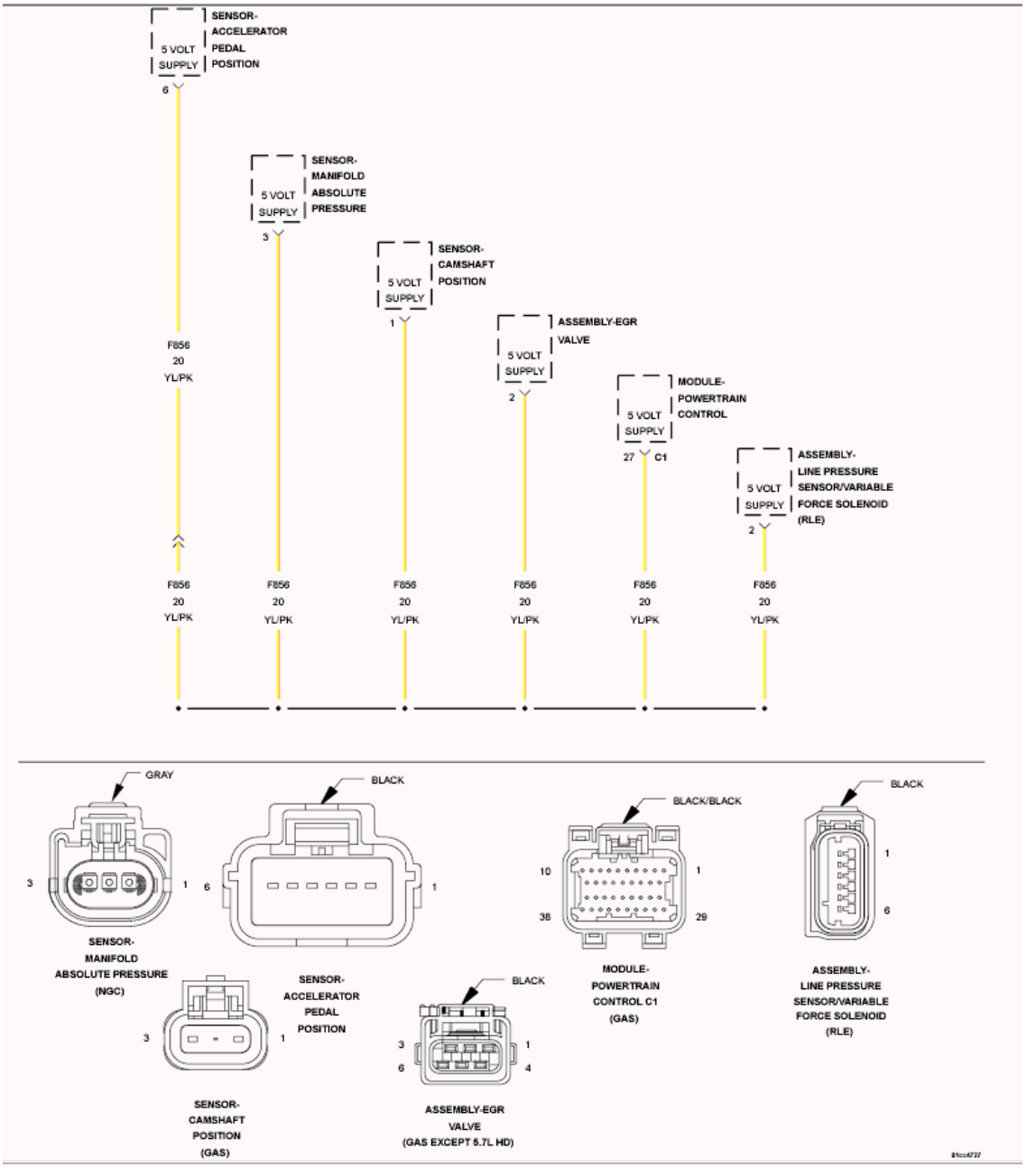

Fig. 16: Auxiliary 5-Volt Supply Circuit Schematic
Courtesy of CHRYSLER GROUP, LLC

For a complete wiring diagram **refer to appropriate SYSTEM WIRING DIAGRAMS article** .

WHEN MONITORED:

Ignition on.

SET CONDITION:

When the PCM recognizes the Auxiliary 5-volt Supply circuit voltage is too low. One Trip Fault. ETC light is

flashing.

POSSIBLE CAUSES

Possible Causes
(F856) AUXILIARY 5-VOLT SUPPLY SHORTED TO GROUND
SENSOR SHORTED TO GROUND
CAM POSITION SENSOR
POWERTRAIN CONTROL MODULE (PCM)

Always perform the Pre-Diagnostic Troubleshooting procedure before proceeding. Refer to PRE-DIAGNOSTIC TROUBLESHOOTING PROCEDURE .

DIAGNOSTIC TEST

1. **ACTIVE DTC**

   NOTE: Improperly installed aftermarket accessories can cause this DTC to set. Check for any improperly installed aftermarket accessories before continuing with this test.

   1. Start the engine and allow it to idle for at least 60 seconds.

      WARNING: When the engine is operating, do not stand in direct line with the fan. Do not put your hands near the pulleys, belts or fan. Do not wear loose clothing. Failure to follow these instructions may result in possible serious or fatal injury.

   2. With a scan tool, select View DTCs.

      Is the DTC Active at this time?

      Yes

      - Go To 2.

      No

      - Perform the INTERMITTENT CONDITION diagnostic procedure. Refer to **INTERMITTENT CONDITION** .

2. **(F856) AUXILIARY 5-VOLT SUPPLY SHORTED TO GROUND**

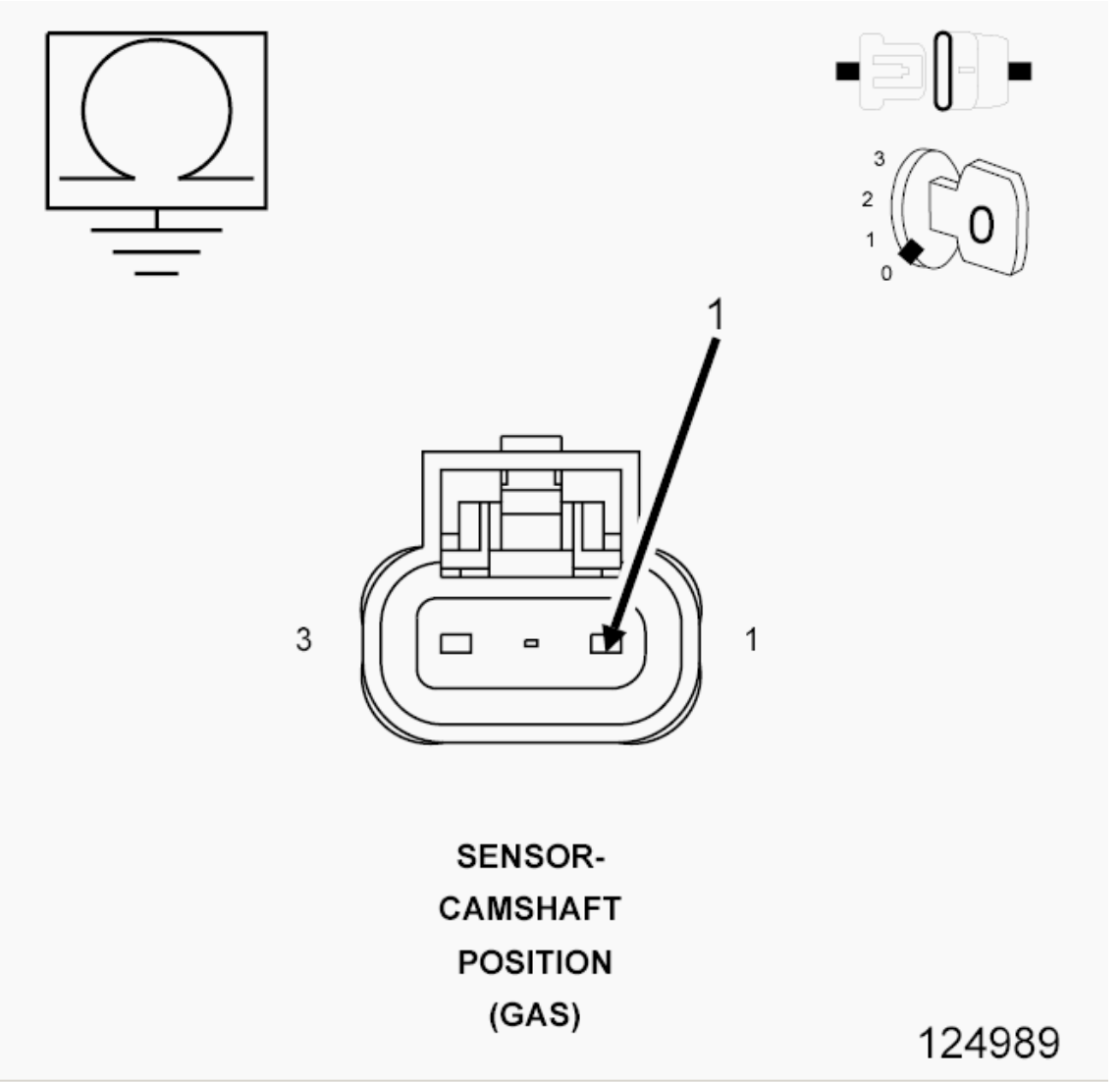

Fig. 17: Measuring Resistance Between Ground And 5-Volt Supply Circuit In CMP Sensor Harness Connector
Courtesy of CHRYSLER GROUP, LLC

1. Turn the ignition off.
2. Disconnect the C1 PCM harness connector.
3. Disconnect all the Sensors that share the (F856) Auxiliary 5-volt Supply circuit.
4. Measure the resistance between ground and the (F856) Auxiliary 5-volt Supply circuit in the CMP Sensor harness connector.

   Is the resistance below 100 ohms?

   Yes

   - Repair the short to ground in the (F856) Auxiliary 5-volt Supply circuit.
   - Perform the POWERTRAIN VERIFICATION TEST. Refer to **POWERTRAIN**

VERIFICATION TEST .

No

- Go To 3.

3. **CMP SENSOR**

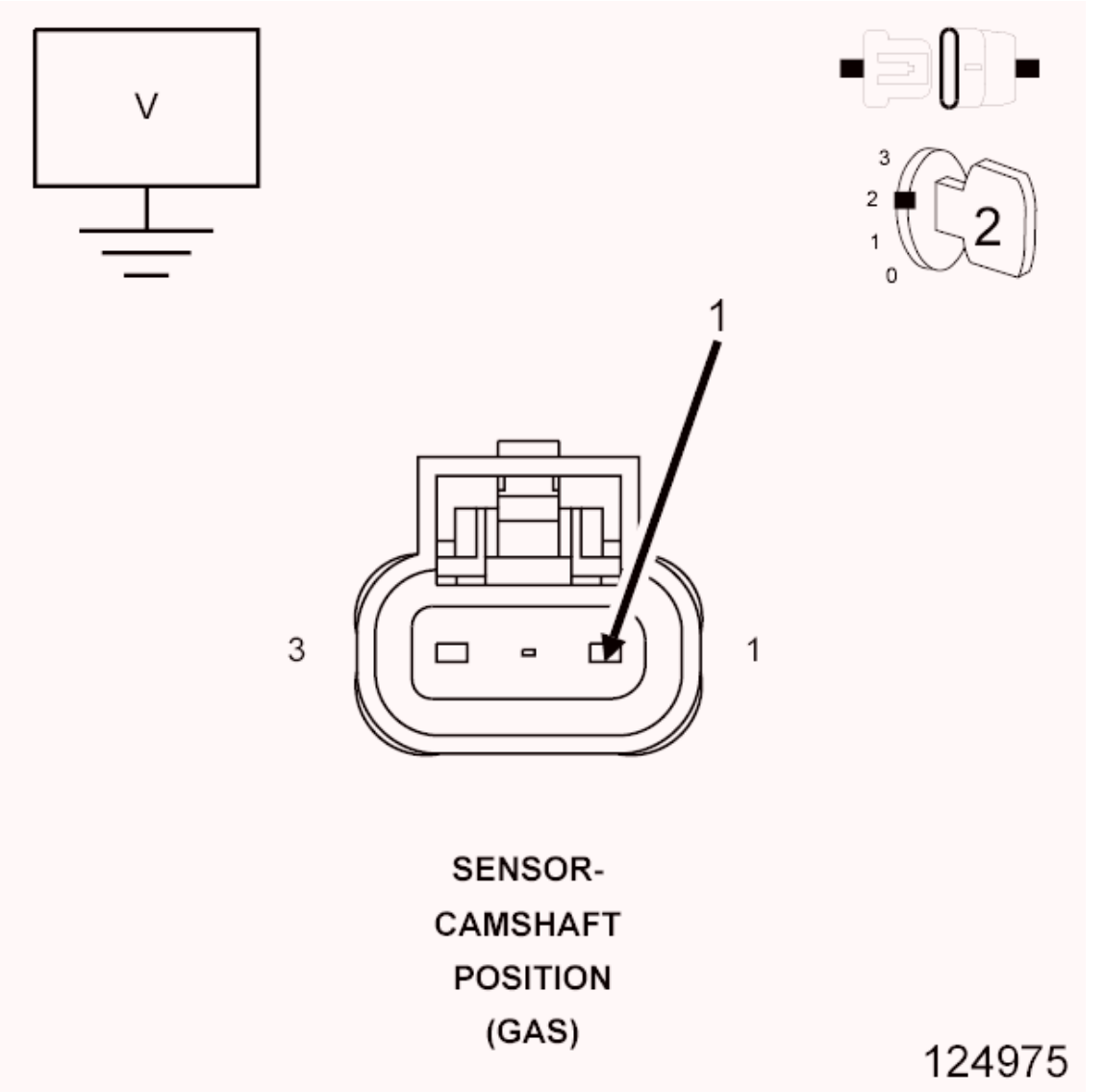

Fig. 18: Measuring Voltage On CMP Sensor 5-Volt Supply Circuit
Courtesy of CHRYSLER GROUP, LLC

1. Turn the ignition off.
2. Reconnect all the previously disconnected Sensors except for the CMP Sensor harness connector.
3. Ignition on, engine not running.
4. Measure the voltage on the (F856) Auxiliary 5-volt Supply circuit in the CMP Sensor harness connector.

Is the voltage below 4.5 volts?

Yes

- Go To 4.

No

- Replace the Cam Position Sensor.
- Perform the POWERTRAIN VERIFICATION TEST. Refer to **POWERTRAIN VERIFICATION TEST** .

4. **5-VOLT SENSOR SHORTED TO GROUND**

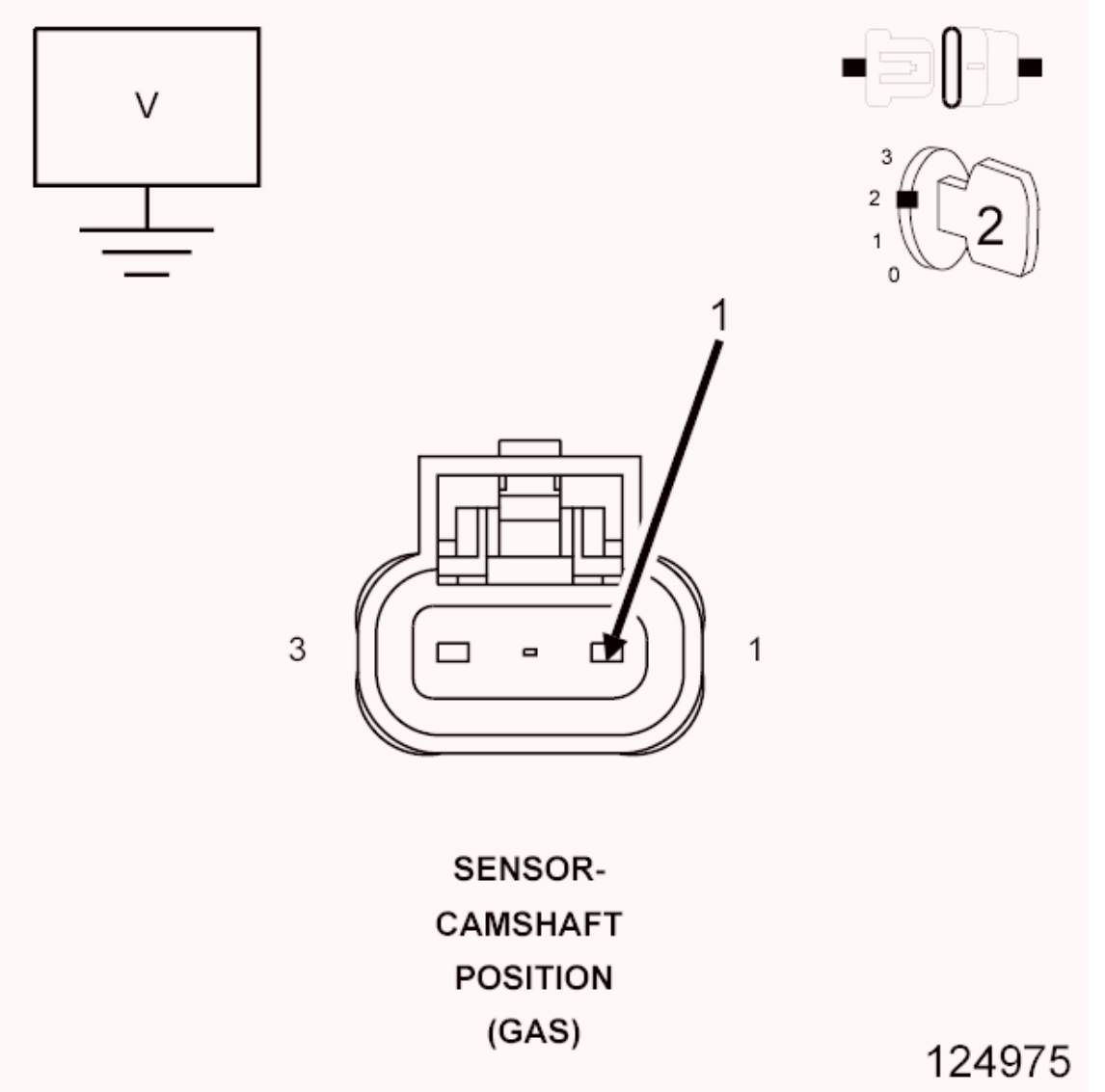

Fig. 19: Measuring Voltage On CMP Sensor 5-Volt Supply Circuit
Courtesy of CHRYSLER GROUP, LLC

1. Measure the voltage on the (F856) Auxiliary 5-volt Supply circuit at the CMP Sensor harness connector.

   CAUTION: You must Turn the Ignition OFF when disconnecting any of the Sensor harness connectors and Turn the Ignition On to check the voltage readings.

2. While monitoring the voltage, disconnect each Sensor harness connector that shares the (F856) Auxiliary 5-volt Supply circuit, one at a time.

   Does the voltage increase above 4.5 volts when disconnecting any of the Sensor harness connectors?

   Yes

   - Replace the Sensor that causes the (F856) Auxiliary 5-volt Supply circuit voltage to increase when disconnected.
   - Perform the POWERTRAIN VERIFICATION TEST. Refer to **POWERTRAIN VERIFICATION TEST** .

   No

   - Go To 5.

5. **POWERTRAIN CONTROL MODULE (PCM)**
   1. Using the wiring diagram/schematic as a guide, inspect the wiring and connectors between the related Sensors and the Powertrain Control Module (PCM).
   2. Look for any chafed, pierced, pinched, or partially broken wires.
   3. Look for broken, bent, pushed out or corroded terminals. Verify that there is good pin to terminal contact in the related Sensor and Control Module connectors.
   4. Refer to any Technical Service Bulletins that may apply.

   Were there any problems found?

   Yes

   - Repair as necessary.
   - Perform the POWERTRAIN VERIFICATION TEST. Refer to **POWERTRAIN VERIFICATION TEST** .

   No

   - Replace and program the Powertrain Control Module per Service Information. Refer to **MODULE, POWERTRAIN CONTROL, REMOVAL** .
   - Perform the POWERTRAIN VERIFICATION TEST. Refer to **POWERTRAIN VERIFICATION TEST** .

P0653-SENSOR REFERENCE VOLTAGE 2 CIRCUIT HIGH

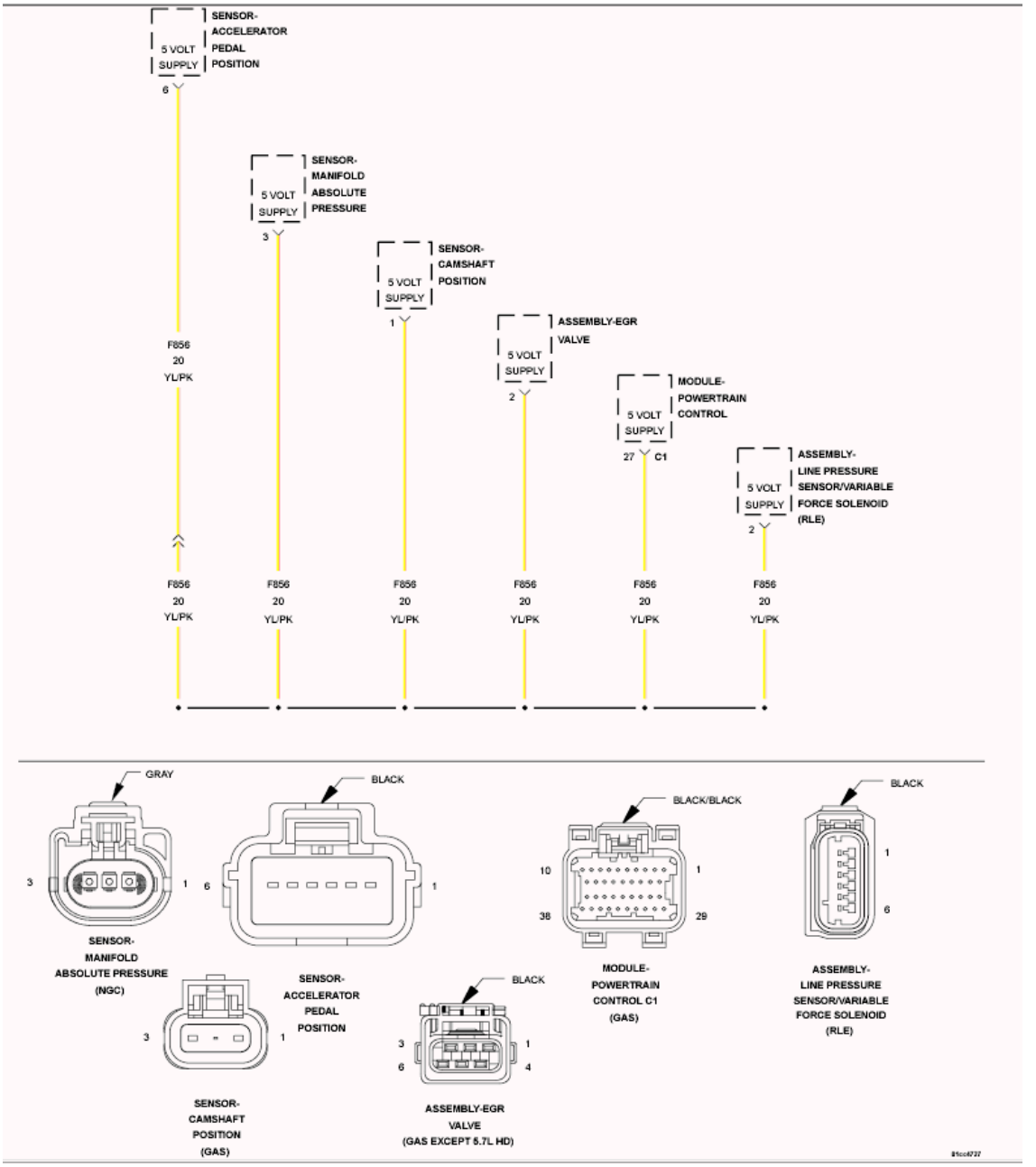

Fig. 20: Auxiliary 5-Volt Supply Circuit Schematic
Courtesy of CHRYSLER GROUP, LLC

For a complete wiring diagram, **refer to appropriate SYSTEM WIRING DIAGRAMS article** .

WHEN MONITORED:

Ignition on.

SET CONDITION:

When the Powertrain Control Module (PCM) recognizes the Auxiliary 5-volt Supply circuit voltage is too high. One Trip Fault. ETC light is flashing.

POSSIBLE CAUSES

Possible Causes
(F856) AUXILIARY 5-VOLT SUPPLY SHORTED TO VOLTAGE POWERTRAIN CONTROL MODULE (PCM)

Always perform the Pre-Diagnostic Troubleshooting procedure before proceeding. Refer to PRE-DIAGNOSTIC TROUBLESHOOTING PROCEDURE .

DIAGNOSTIC TEST

1. **ACTIVE DTC**

   NOTE: Improperly installed aftermarket accessories can cause this DTC to set. Check for any improperly installed aftermarket accessories before continuing with this test.

   1. Start the engine and allow it to idle for at least 60 seconds.

      WARNING: When the engine is operating, do not stand in direct line with the fan. Do not put your hands near the pulleys, belts or fan. Do not wear loose clothing. Failure to follow these instructions may result in possible serious or fatal injury.

   2. With a scan tool, select View DTCs.

      Is the DTC Active at this time?

      Yes

      - Go To 2.

      No

      - Perform the INTERMITTENT CONDITION diagnostic procedure. Refer to **INTERMITTENT CONDITION** .

2. **(F856) AUXILIARY 5-VOLT SUPPLY SHORTED TO VOLTAGE**

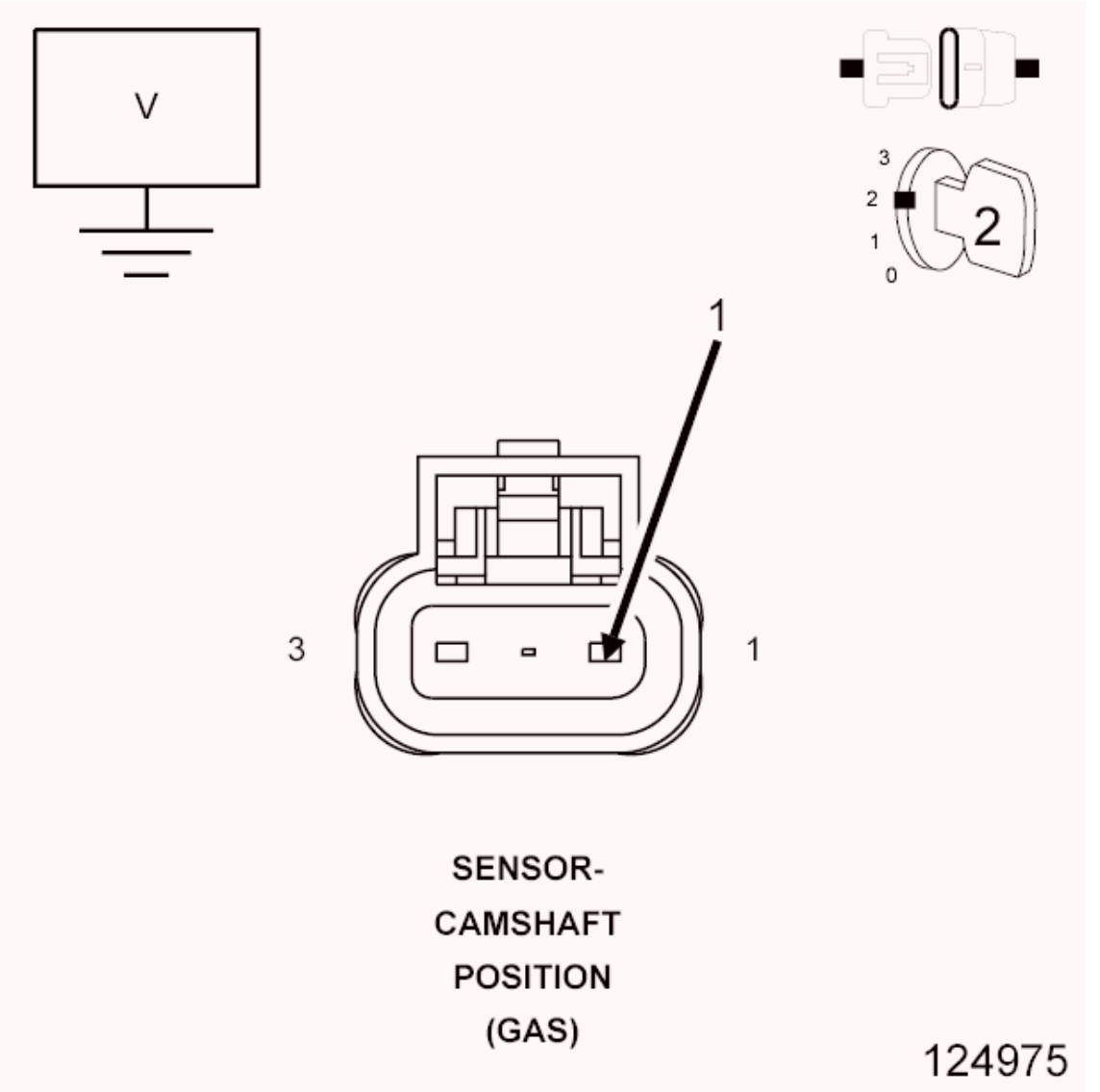

Fig. 21: Measuring Voltage On CMP Sensor 5-Volt Supply Circuit
Courtesy of CHRYSLER GROUP, LLC

1. Turn the ignition off.
2. Disconnect the PCM C1 harness connector.
3. Disconnect all the Sensors that share the (F856) Auxiliary 5-volt Supply circuit.

NOTE: **Improperly installed aftermarket accessories can cause this DTC to set. Check for wiring added by customer.**

4. Ignition on, engine not running.
5. Measure the voltage on the (F856) Auxiliary 5-volt Supply circuit at the CMP Sensor harness connector.

   Is there any voltage present?

Yes

- Repair the short to voltage in the (F856) Auxiliary 5-volt Supply circuit.
- Perform the POWERTRAIN VERIFICATION TEST. Refer to **POWERTRAIN VERIFICATION TEST** .

No

- Go To 3.

3. **POWERTRAIN CONTROL MODULE (PCM)**
   1. Using the wiring diagram/schematic as a guide, inspect the wiring and connectors between the related Sensors and the Powertrain Control Module (PCM).
   2. Look for any chafed, pierced, pinched, or partially broken wires.
   3. Look for broken, bent, pushed out or corroded terminals. Verify that there is good pin to terminal contact in the related Sensor and Control Module connectors.
   4. Perform any Technical Service Bulletins that may apply.

   Were there any problems found?

   Yes

   - Repair as necessary.
   - Perform the POWERTRAIN VERIFICATION TEST. Refer to **POWERTRAIN VERIFICATION TEST** .

   No

   - Replace and program the Powertrain Control Module in accordance with the service information. Refer to **MODULE, POWERTRAIN CONTROL, REMOVAL** .
   - Perform the POWERTRAIN VERIFICATION TEST. Refer to **POWERTRAIN VERIFICATION TEST** .

P0685-AUTO SHUTDOWN CONTROL CIRCUIT

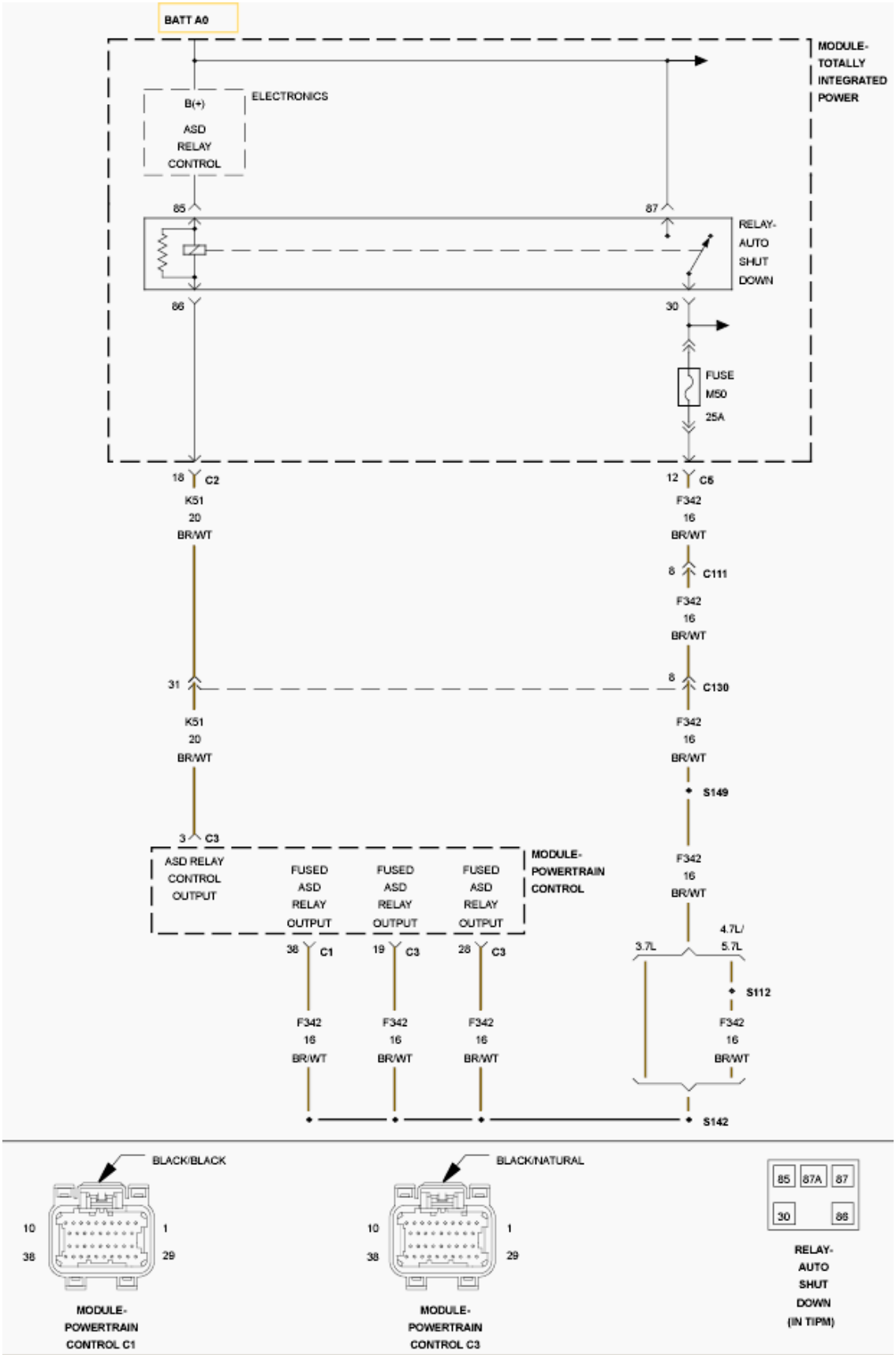
BATT A0
MODULE-
TOTALLY
INTEGRATED
POWER
ELECTRONICS
B(+)
ASD
RELAY
CONTROL
85
87
RELAY-
AUTO
SHUT
DOWN
86
30
FUSE
M50
25A
18
C2
K51
20
BR/WT
12
C6
F342
16
BR/WT
8
C111
F342
16
BR/WT
31
8
C130
K51
20
BR/WT
F342
16
BR/WT
S149
3
C3
ASD RELAY
CONTROL
OUTPUT
FUSED
ASD
RELAY
OUTPUT
FUSED
ASD
RELAY
OUTPUT
FUSED
ASD
RELAY
OUTPUT
MODULE-
POWERTRAIN
CONTROL
F342
16
BR/WT
3.7L
4.7L/
5.7L
38
C1
19
C3
28
C3
S112
F342
16
BR/WT
F342
16
BR/WT
F342
16
BR/WT
F342
16
BR/WT
S142
BLACK/BLACK
10
1
38
29
MODULE-
POWERTRAIN
CONTROL C1
BLACK/NATURAL
10
1
38
29
MODULE-
POWERTRAIN
CONTROL C3
85
87A
87
30
86
RELAY-
AUTO
SHUT
DOWN
(IN TIPM)

Fig. 22: Auto Shutdown Control Circuit Schematic
Courtesy of CHRYSLER GROUP, LLC

For a complete wiring diagram, **refer to appropriate SYSTEM WIRING DIAGRAMS article** .

WHEN MONITORED:

With the ignition on. Battery voltage greater than 10.4 Volts.

SET CONDITION:

The actual ASD state is not equal to the desired ASD state. One Trip Fault. Three good trips to turn off the MIL.

POSSIBLE CAUSES

Possible Causes
(K51) ASD CONTROL CIRCUIT SHORTED TO VOLTAGE
(K51) ASD CONTROL CIRCUIT SHORTED TO GROUND
(K51) ASD CONTROL CIRCUIT OPEN
TOTALLY INTEGRATED POWER MODULE (TIPM)
POWERTRAIN CONTROL MODULE (PCM)

Always perform the Pre-Diagnostic Troubleshooting procedure before proceeding. Refer to PRE-DIAGNOSTIC TROUBLESHOOTING PROCEDURE .

DIAGNOSTIC TEST

1. **ACTIVE DTC**
    1. Ignition on, engine not running.
    2. With the scan tool, select View DTCs.

       Is the DTC Active at this time?

       Yes

       - Go To 2.

       No

       - Perform the INTERMITTENT CONDITION diagnostic procedure. Refer to **INTERMITTENT CONDITION** .
2. **ASD CONTROL OPERATION FROM THE PCM**

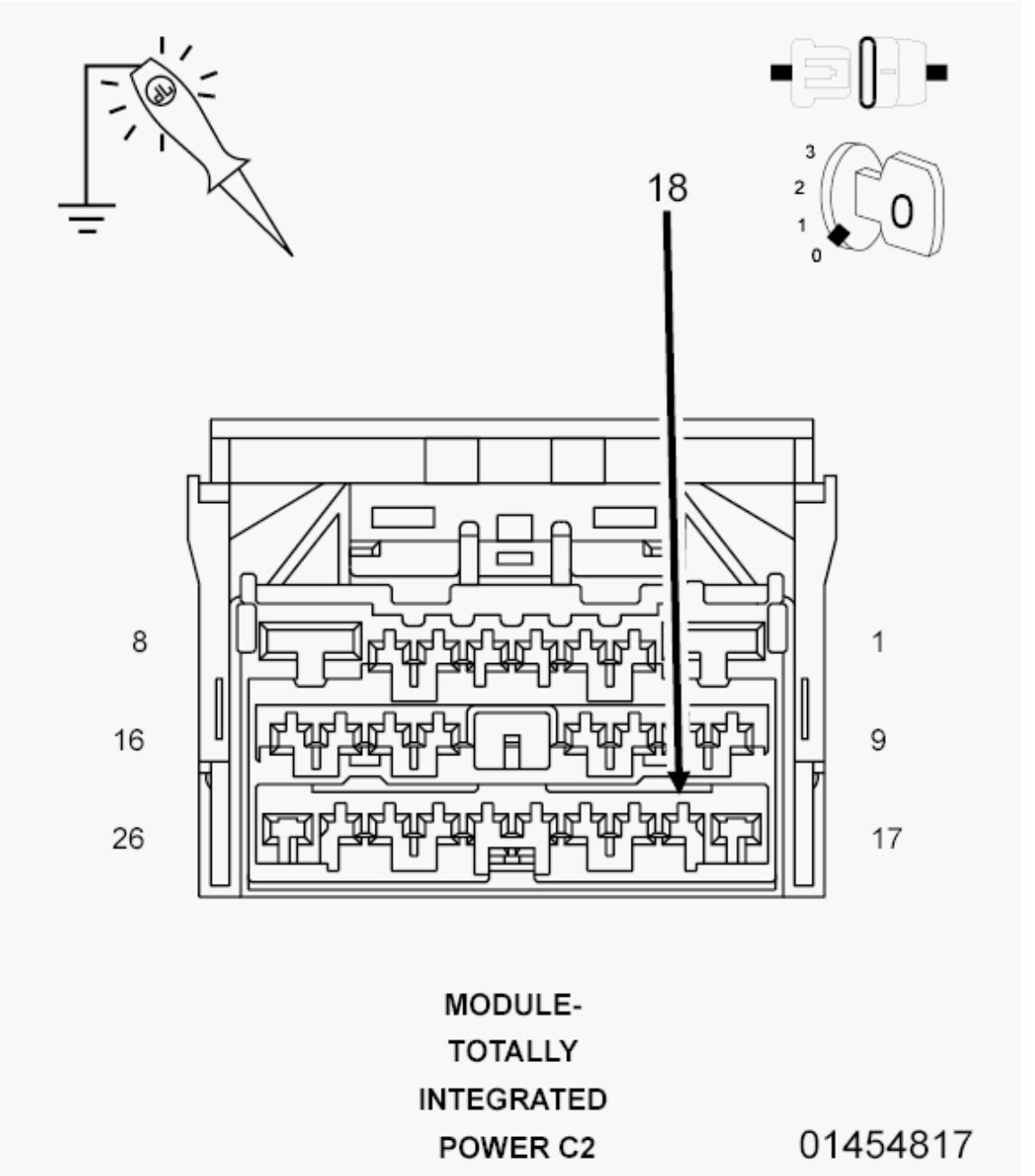

Fig. 23: Using 12-Volt Test Light Connected To Battery Voltage To Probe (K51) ASD Control Circuit In C2 TIPM Harness Connector
Courtesy of CHRYSLER GROUP, LLC

1. Turn the ignition off.
2. Disconnect the C2 TIPM harness connector.
3. With a 12-volt test light connected to battery voltage, probe the (K51) ASD Control circuit in the C2 TIPM harness connector.
4. Ignition on, engine not running.
5. Using the scan tool in the PCM, actuate the ASD.

Does the test light illuminate brightly and flash on an off?

Yes

NOTE: **Before continuing, check the TIPM harness connector terminals for corrosion, damage or terminal push out. Repair as necessary.**

- If OK, replace the TIPM in accordance with the Service Information.
- Perform the POWERTRAIN VERIFICATION TEST. Refer to **POWERTRAIN VERIFICATION TEST** .

No

- Go To 3.

3. **(K51) ASD CONTROL CIRCUIT SHORTED TO VOLTAGE**

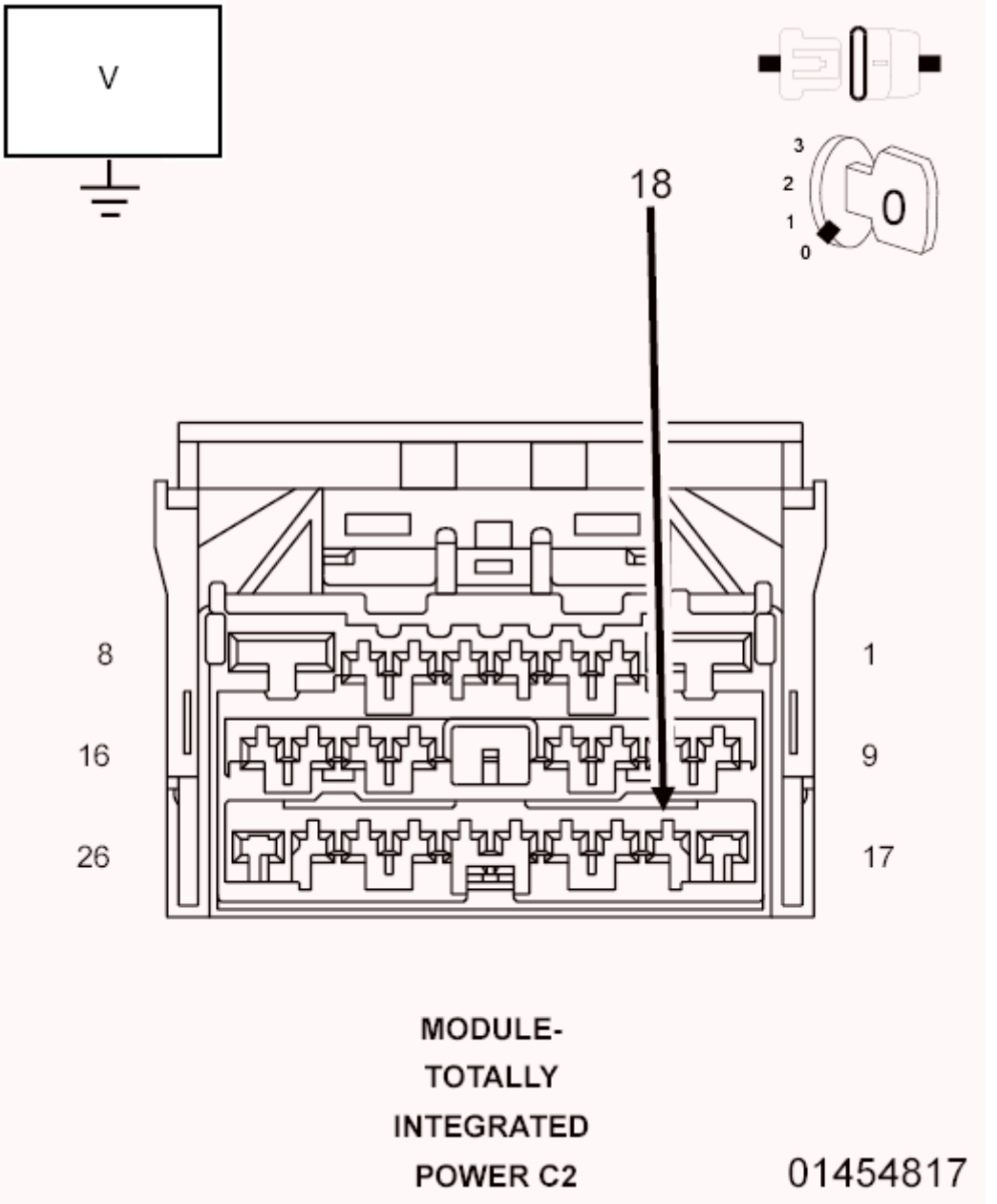

Fig. 24: Measuring Voltage On (K51) ASD Control Circuit AT C2 TIPM Harness Connector
Courtesy of CHRYSLER GROUP, LLC

1. Stop the ASD actuation.
2. Turn the ignition off.
3. Disconnect the C3 PCM harness connector.
4. Ignition on, engine not running.
5. Measure the voltage on the (K51) ASD Control circuit at the C2 TIPM harness connector.

   Is there any voltage present?

Yes

- Repair the short to voltage in the (K51) ASD Control circuit.
- Perform the POWERTRAIN VERIFICATION TEST. Refer to **POWERTRAIN VERIFICATION TEST** .

No

- Go To 4.

4. **(K51) ASD CONTROL CIRCUIT OPEN**

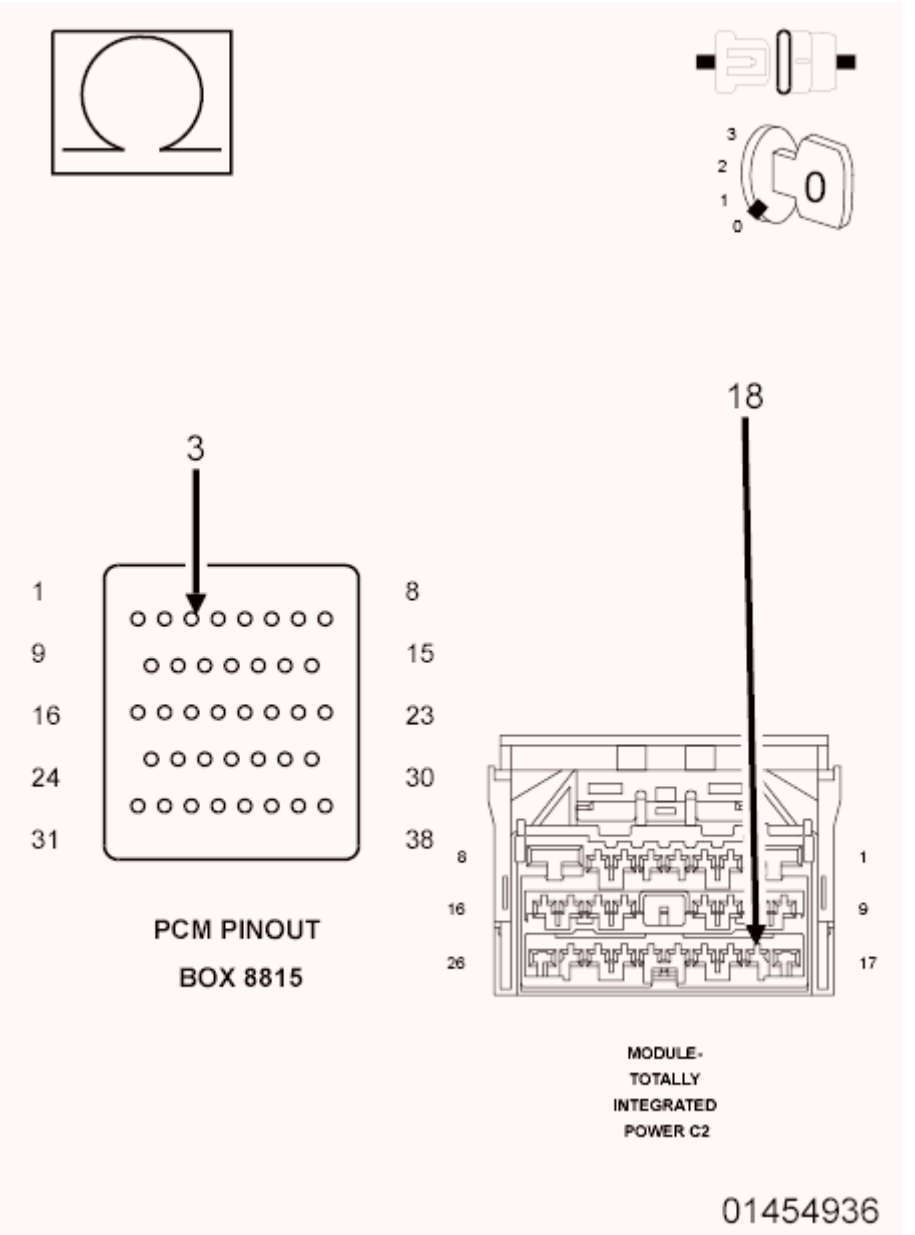

Fig. 25: Measuring Resistance Of (K51) ASD Control Circuit From C2 TIPM Harness Connector

To Appropriate Terminal Of PCM Pinout Box 8815
Courtesy of CHRYSLER GROUP, LLC

1. Turn the ignition off.

CAUTION: Do not probe the PCM harness connectors. Probing the PCM harness connectors will damage the PCM terminals resulting in poor terminal to pin connection. Install the PCM Pinout Box (special tool #8815A, Kit, NGC, 38 Position) to perform diagnosis.

2. Measure the resistance of the (K51) ASD Control circuit from the C2 TIPM harness connector to the appropriate terminal of PCM Pinout Box (special tool #8815A, Kit, NGC, 38 Position).

   Is the resistance below 5.0 Ohms?

   Yes

   - Go To 5.

   No

   - Repair the open in the (K51) ASD Control circuit.
   - Perform the POWERTRAIN VERIFICATION TEST. Refer to **POWERTRAIN VERIFICATION TEST** .

5. **(K51) ASD CONTROL CIRCUIT SHORTED TO GROUND**

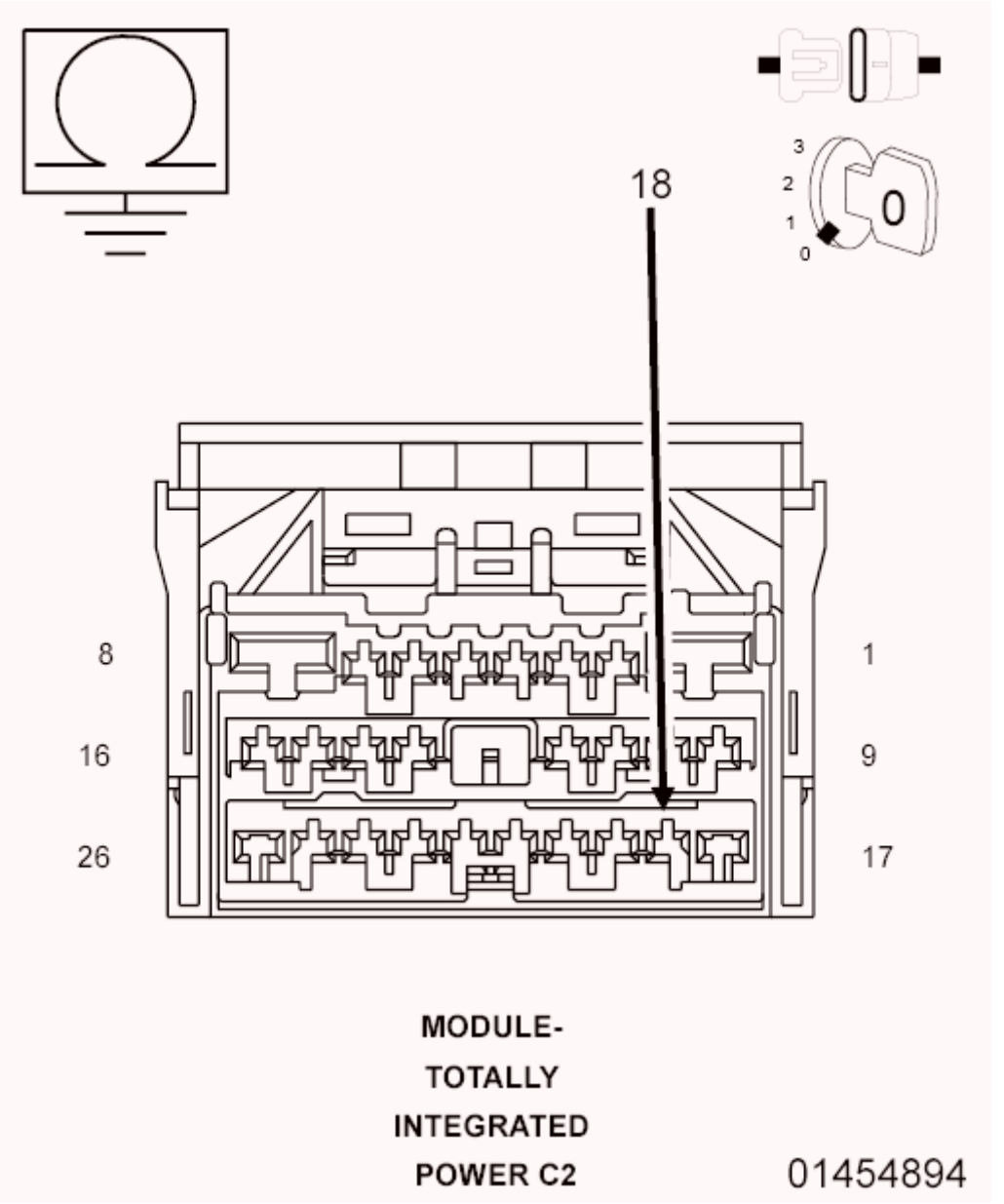

Fig. 26: Measuring Resistance Between Ground And (K51) ASD Control Circuit In C2 TIPM Harness Connector
Courtesy of CHRYSLER GROUP, LLC

1. Measure the resistance between ground and the (K51) ASD Control circuit in the C2 TIPM harness connector.

   Is the resistance below 100 Ohms?

   Yes

   - Repair the short to ground in the (K51) ASD Control circuit.
   - Perform the POWERTRAIN VERIFICATION TEST. Refer to **POWERTRAIN**

VERIFICATION TEST .

No

- Go To 6.

6. **POWERTRAIN CONTROL MODULE (PCM)**
   1. Using the wiring diagram/schematic as a guide, inspect the wiring and connectors between the related TIPM and the Powertrain Control Module (PCM).
   2. Look for any chafed, pierced, pinched or partially broken wires.
   3. Look for broken, bent, pushed out or corroded terminals. Verify that there is good pin to terminal contact in the TIPM and Powertrain Control Module connectors.
   4. Refer to any Technical Service Bulletins that may apply.

   Were there any problems found?

   Yes

   - Repair as necessary.
   - Perform the POWERTRAIN VERIFICATION TEST. Refer to **POWERTRAIN VERIFICATION TEST** .

   No

   - Replace and program the Powertrain Control Module in accordance with the Service Information. Refer to **MODULE, POWERTRAIN CONTROL, REMOVAL** .
   - Perform the POWERTRAIN VERIFICATION TEST. Refer to **POWERTRAIN VERIFICATION TEST** .

P0688-AUTO SHUTDOWN SENSE CIRCUIT LOW

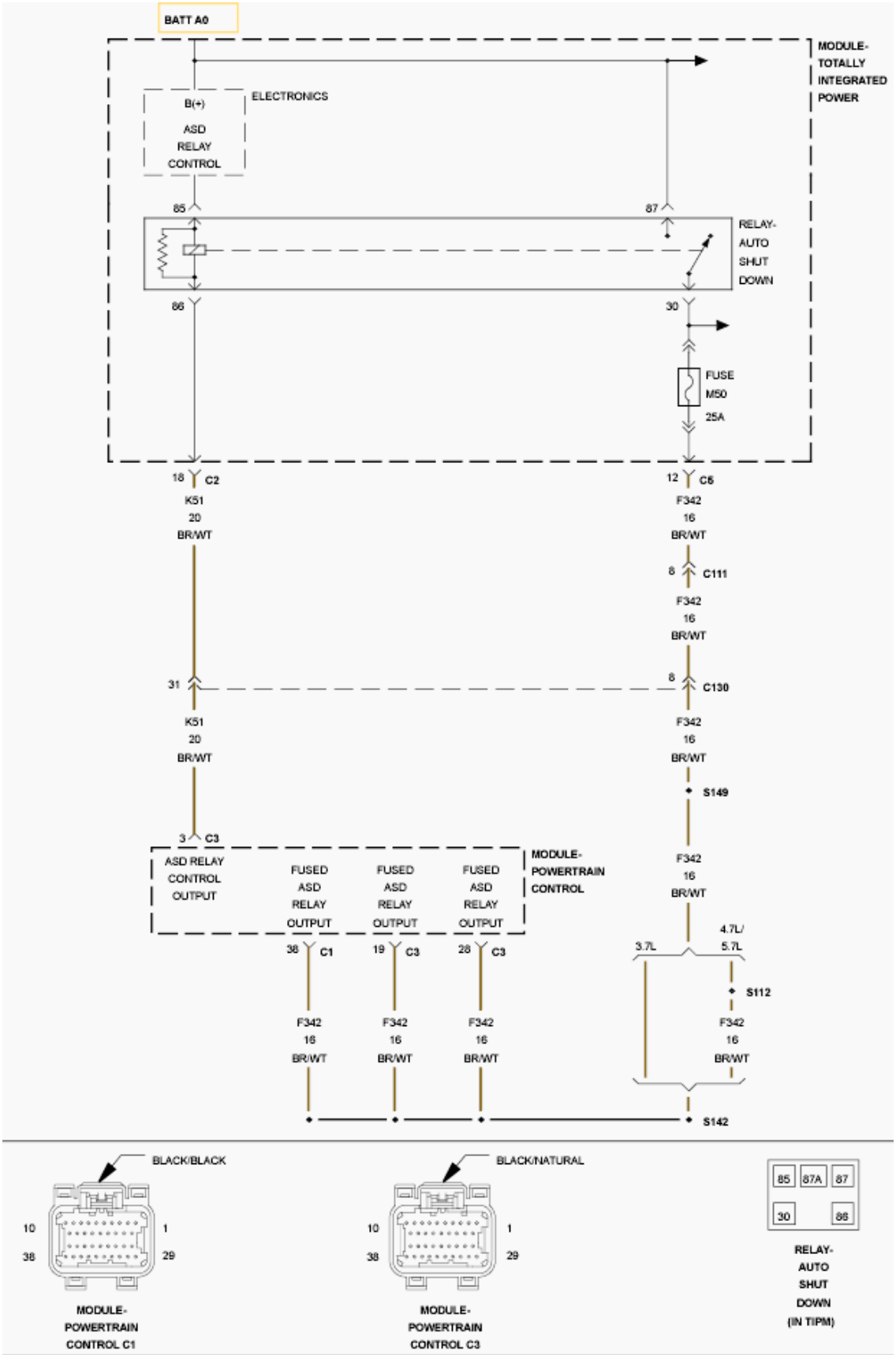
BATT A0
MODULE-
TOTALLY
INTEGRATED
POWER
ELECTRONICS
B(+)
ASD
RELAY
CONTROL
85
87
RELAY-
AUTO
SHUT
DOWN
86
30
FUSE
M50
25A
18
C2
K51
20
BR/WT
12
C6
F342
16
BR/WT
8
C111
F342
16
BR/WT
31
8
C130
K51
20
BR/WT
F342
16
BR/WT
S149
3
C3
ASD RELAY
CONTROL
OUTPUT
FUSED
ASD
RELAY
OUTPUT
FUSED
ASD
RELAY
OUTPUT
FUSED
ASD
RELAY
OUTPUT
MODULE-
POWERTRAIN
CONTROL
F342
16
BR/WT
3.7L
4.7L/
5.7L
38
C1
19
C3
28
C3
S112
F342
16
BR/WT
F342
16
BR/WT
F342
16
BR/WT
F342
16
BR/WT
S142
BLACK/BLACK
10
1
38
29
MODULE-
POWERTRAIN
CONTROL C1
BLACK/NATURAL
10
1
38
29
MODULE-
POWERTRAIN
CONTROL C3
85
87A
87
30
86
RELAY-
AUTO
SHUT
DOWN
(IN TIPM)

Fig. 27: Auto Shutdown Control Circuit Schematic
Courtesy of CHRYSLER GROUP, LLC

For a complete wiring diagram, **refer to appropriate SYSTEM WIRING DIAGRAMS article** .

WHEN MONITORED:

With ignition key on. Battery voltage greater than 10 Volts.

SET CONDITION:

No voltage sensed at the PCM when the ASD relay is energized. One Trip Fault. Three good trips to turn off the MIL.

POSSIBLE CAUSES

Possible Causes
(F342) ASD RELAY OUTPUT CIRCUIT OPEN
(F342) ASD RELAY OUTPUT CIRCUIT SHORTED TO GROUND
TOTALLY INTEGRATED POWER MODULE (TIPM)
POWERTRAIN CONTROL MODULE (PCM)

Always perform the Pre-Diagnostic Troubleshooting procedure before proceeding. Refer to PRE-DIAGNOSTIC TROUBLESHOOTING PROCEDURE .

DIAGNOSTIC TEST

1. **ACTIVE DTC**

NOTE: **If any O2 SENSOR HEATER CIRCUIT HIGH DTCs set along with P0688-AUTO SHUTDOWN RELAY SENSE CIRCUIT LOW, all of the O2 Sensor Heater Control circuits need to be checked for a short to battery voltage.**

NOTE: **If any of the following component DTCs have set along with P0688, diagnose them first before continuing.**

Ignition Coil(s)

Fuel Injector(s)

ASD Control

ASD Control Output (TIPM DTC)

1. Ignition on, engine not running.
2. With the scan tool, select View DTCs.

Is the DTC Active at this time?

Yes

- Go To 2.

No

- Perform the INTERMITTENT CONDITION diagnostic procedure. Refer to **INTERMITTENT CONDITION** .

2. **ASD RELAY**
    1. Turn the ignition off.
    2. Install a known good relay in place of the existing ASD Relay.
    3. Attempt to start the engine.

    Does the engine start with no codes?

    Yes

    - Replace the ASD Relay.
    - Perform the POWERTRAIN VERIFICATION TEST. Refer to **POWERTRAIN VERIFICATION TEST** .

    No

    - Go To 3.

3. **(F342) ASD RELAY CONTROL CIRCUIT(S) OPEN**

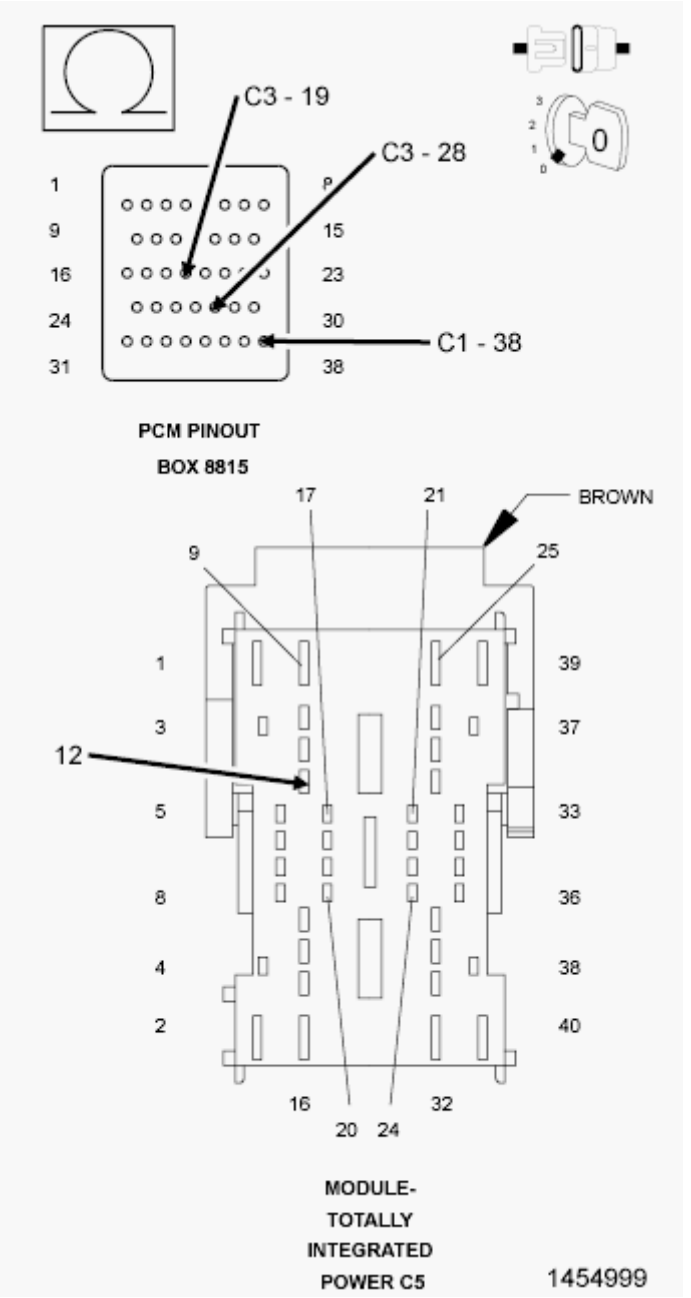

Fig. 28: Measuring Resistance Of Both (F342) ASD Relay Output Circuits From C1 TIPM Harness Connector To Appropriate Terminals Of PCM Pinout Box 8815
Courtesy of CHRYSLER GROUP, LLC

1. Turn the ignition off.
2. Disconnect the C1 TIPM harness connector.

CAUTION: Do not probe the PCM harness connectors. Probing the PCM harness connectors will damage the PCM terminals resulting in poor terminal to pin connection. Install the PCM Pinout Box (special tool #8815A, Kit, NGC, 38 Position) to perform

diagnosis.

3. Measure the resistance of both the (F342) ASD Relay Output circuits from the C1 TIPM harness connector to the appropriate terminals of PCM Pinout Box (special tool #8815A, Kit, NGC, 38 Position).

   Is the resistance below 5.0 Ohms?

   Yes

   - Go To 4.

   No

   - Repair the open in the (F342) ASD Relay Output circuit(s).
   - Perform the POWERTRAIN VERIFICATION TEST. Refer to **POWERTRAIN VERIFICATION TEST** .

4. **(F342) ASD RELAY OUTPUT CIRCUIT(S) SHORTED TO GROUND**

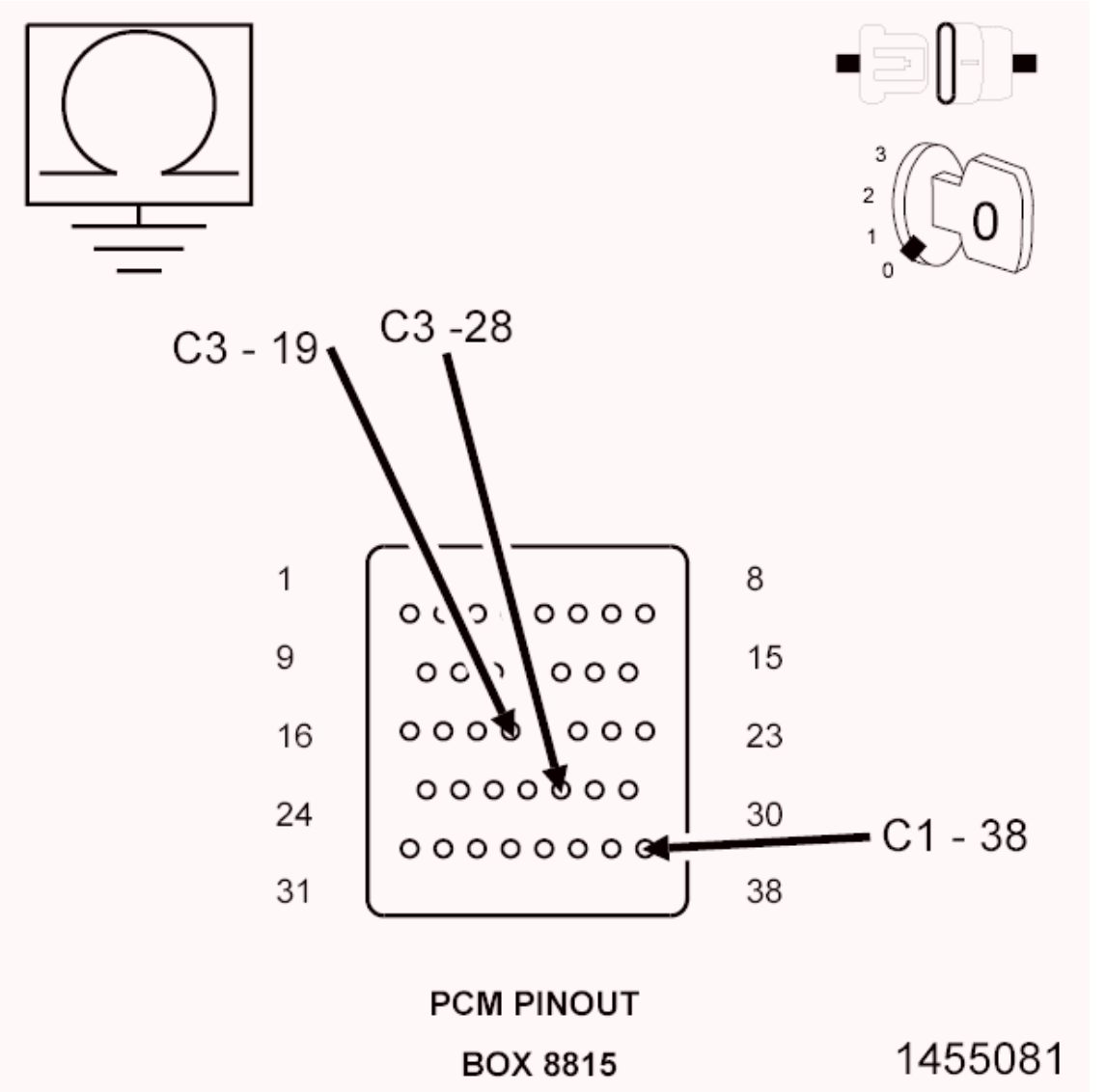

Fig. 29: Measuring Resistance Between Ground And Any Of (F342) ASD Relay Output Circuits AT Appropriate Terminal Of PCM Pinout Box 8815
Courtesy of CHRYSLER GROUP, LLC

1. Measure the resistance between ground and any of the (F342) ASD Relay Output circuits at the appropriate terminal of the PCM Pinout Box (special tool #8815A, Kit, NGC, 38 Position).

   Is the resistance below 10k Ohms?

   Yes

   - Repair the short to ground in the (F342) ASD Relay Output circuit(s).
   - Perform the POWERTRAIN VERIFICATION TEST. Refer to **POWERTRAIN VERIFICATION TEST** .

   No

- Go To 5.

5. **POWERTRAIN CONTROL MODULE (PCM)**
    1. Using the wiring diagram/schematic as a guide, inspect the wiring and connectors between the related TIPM and the Powertrain Control Module (PCM).
    2. Look for any chafed, pierced, pinched or partially broken wires.
    3. Look for broken, bent, pushed out or corroded terminals. Verify that there is good pin to terminal contact in the TIPM and Powertrain Control Module connectors.
    4. Refer to any Technical Service Bulletins that may apply.

    Were there any problems found?

    Yes

    - Repair as necessary.
    - Perform the POWERTRAIN VERIFICATION TEST. Refer to **POWERTRAIN VERIFICATION TEST** .

    No

    - Replace and program the Powertrain Control Module (PCM) in accordance with the Service Information. Refer to **MODULE, POWERTRAIN CONTROL, REMOVAL** .
    - Perform the POWERTRAIN VERIFICATION TEST. Refer to **POWERTRAIN VERIFICATION TEST** .

P0703-BRAKE SWITCH 2 PERFORMANCE

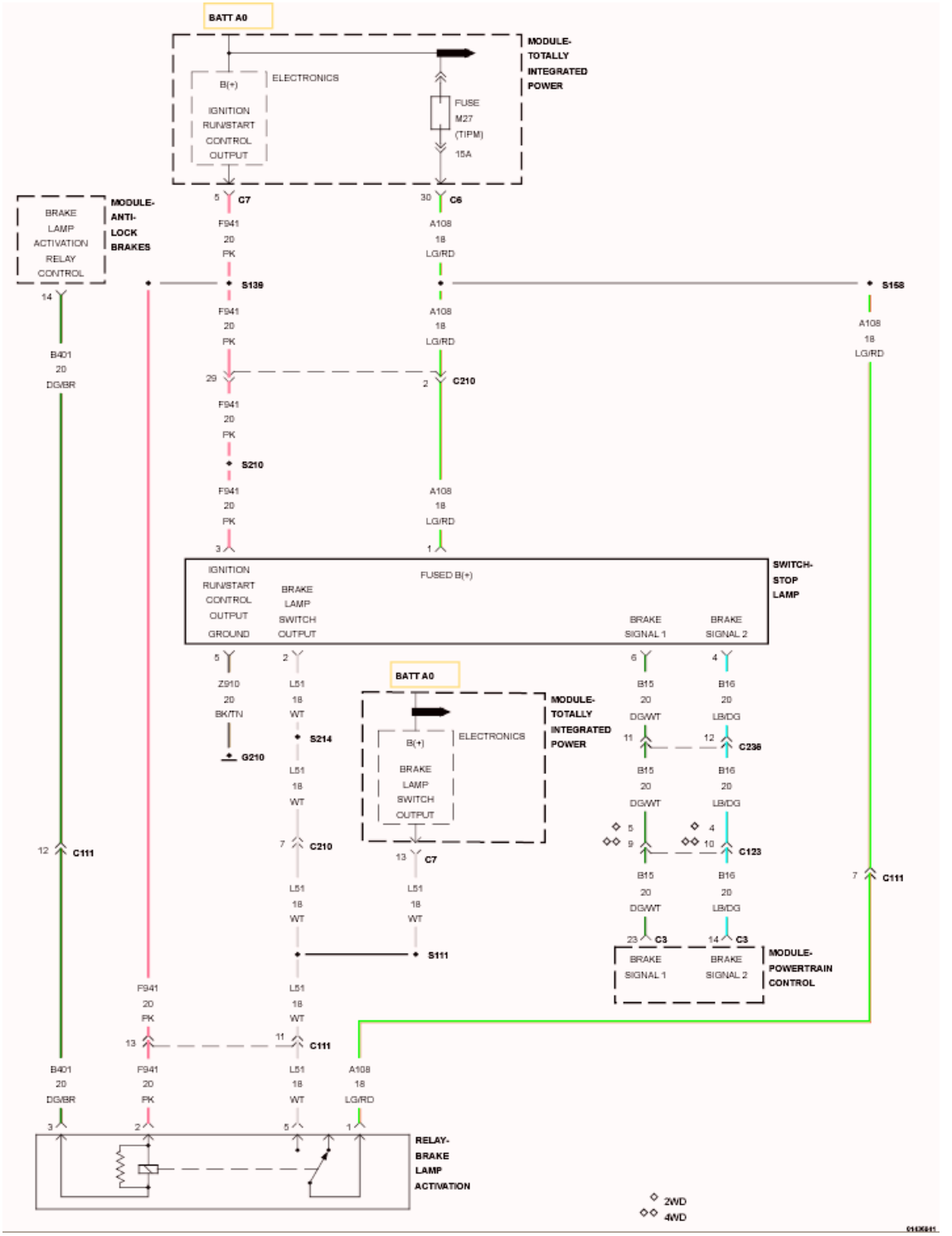

Fig. 30: Brake Lamp Switch Circuit Schematic
Courtesy of CHRYSLER GROUP, LLC

For a complete wiring diagram, **refer to appropriate SYSTEM WIRING DIAGRAMS article** .

WHEN MONITORED:

Ignition on.

SET CONDITION:

When the PCM recognizes Brake Switch No. 2 voltage is not equal to the applied value at the PCM when Brake Switch No. 1 is applied. This could be a normal condition. If this condition is seen repeatedly by the PCM the fault is set. Cruise will not work for the rest of the key cycle.

POSSIBLE CAUSES

Possible Causes
(A108) FUSED IGNITION SWITCH OUTPUT CIRCUIT
(B16) BRAKE SWITCH NO. 2 SIGNAL CIRCUIT OPEN
(B16) BRAKE SWITCH NO. 2 SIGNAL CIRCUIT SHORTED TO VOLTAGE
(B16) BRAKE SWITCH NO. 2 SIGNAL CIRCUIT SHORTED TO GROUND
(B15) BRAKE SWITCH NO. 1 SIGNAL CIRCUIT OPEN
STOP LAMP SWITCH
POWERTRAIN CONTROL MODULE (PCM)

Always perform the Pre-Diagnostic Troubleshooting procedure before proceeding. Refer to PRE-DIAGNOSTIC TROUBLESHOOTING PROCEDURE .

DIAGNOSTIC TEST

1. **ACTIVE DTC**

NOTE: Make sure the Stop Lamp Switch is adjusted properly before continuing.

NOTE: Make sure the Stop Lamp Switch is properly wired, such as (B15) Brake Switch No. 1 and (L51) Brake Lamp Switch Output are not switched at the harness connector.

1. Ignition on, engine not running.
2. With the scan tool, select View DTCs.

   Is the DTC Active at this time?

   Yes

   - Go To 2.

   No

   - Perform the INTERMITTENT CONDITION diagnostic procedure. Refer to **INTERMITTENT CONDITION** .

2. **(A108) FUSED IGNITION SWITCH OUTPUT CIRCUIT**

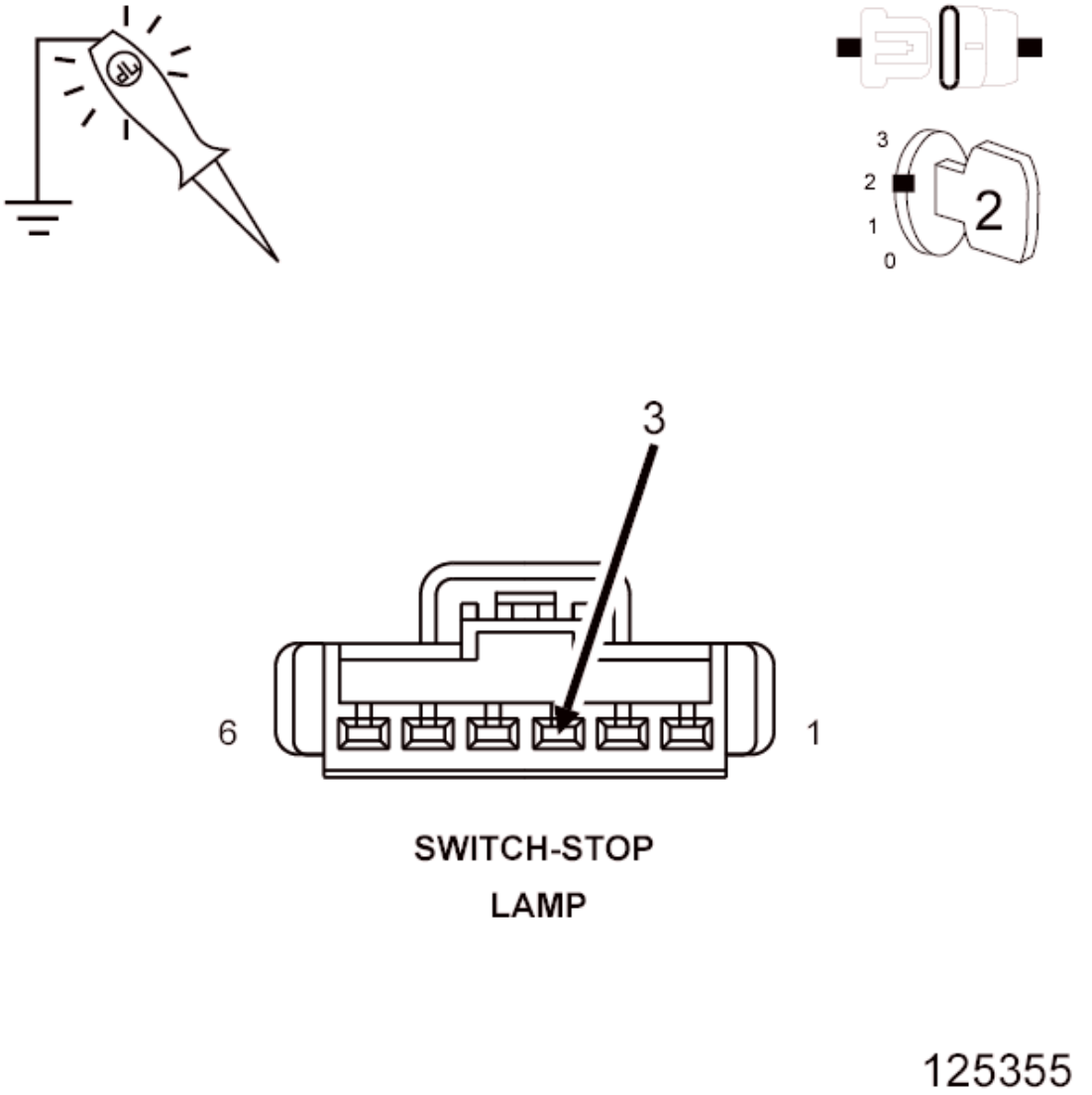

Fig. 31: Using 12-Volt Test Light Connected To Ground To Probe (A108) Fused Ignition Switch Output Circuit In Stop Lamp Switch Harness Connector
Courtesy of CHRYSLER GROUP, LLC

1. Turn the ignition off.
2. Disconnect the Stop Lamp Switch harness connector.
3. Using a 12-volt test light connected to ground, probe the (A108) Fused Ignition Switch Output circuit in the Stop Lamp Switch harness connector.
4. Turn the ignition on.

   Does the test light illuminate brightly?

   Yes

- Go To 3.

No

- Repair the open or short to ground in the (A108) Fused Ignition Switch Output circuit. Inspect the related fuse and repair as necessary.
- Perform the POWERTRAIN VERIFICATION TEST. Refer to **POWERTRAIN VERIFICATION TEST** .

3. **STOP LAMP SWITCH**
   1. Turn the ignition off.
   2. Measure the resistance between the (A108) Fused Ignition Switch circuit terminal and the (B16) Brake Switch No. 2 Signal terminal in the Stop Lamp Switch.
   3. Measure the resistance between the (G210) Ground circuit terminal and the (B15) Brake Switch No. 1 Signal terminal in the Stop Lamp Switch.
   4. Apply and release the Stop Lamp Switch while monitoring the Ohmmeter.

   Does the resistance change from below 5.0 Ohms to open circuit for each circuit check?

   Yes

   - Go To 4.

   No

   - Replace the Stop Lamp Switch.
   - Perform the POWERTRAIN VERIFICATION TEST. Refer to **POWERTRAIN VERIFICATION TEST** .
4. **(B16) BRAKE SWITCH NO. 2 SIGNAL CIRCUIT SHORTED TO VOLTAGE**

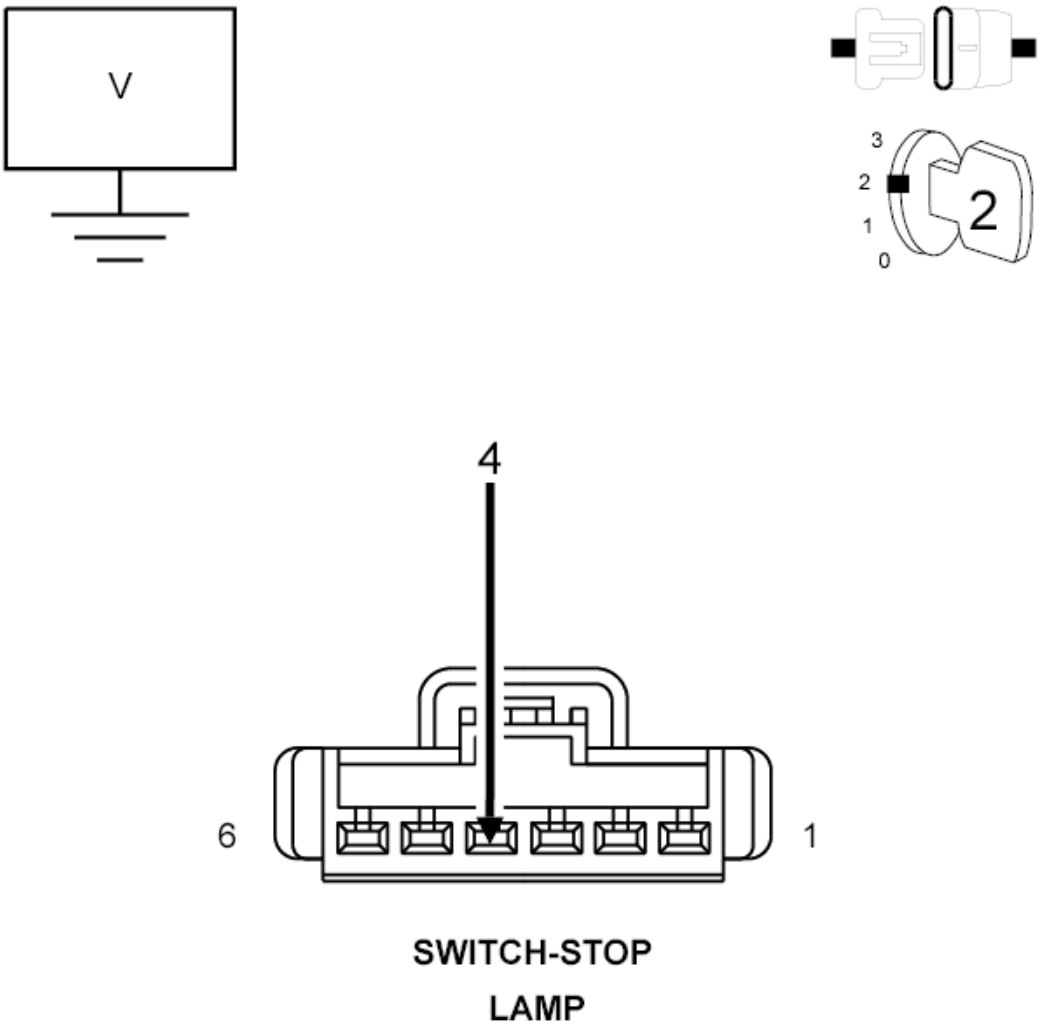

Fig. 32: Measuring Voltage On (B16) Brake Switch No. 2 Signal Circuit In Stop Lamp Switch Harness Connector
Courtesy of CHRYSLER GROUP, LLC

1. Disconnect the C3 PCM harness connector.
2. Ignition on, engine not running.
3. Measure the voltage on the (B16) Brake Switch No. 2 Signal circuit in the Stop Lamp Switch harness connector.

   Is there any voltage present?

   Yes

   - Repair the short to voltage in the (B16) Brake Switch No. 2 Signal circuit.
   - Perform the POWERTRAIN VERIFICATION TEST. Refer to **POWERTRAIN VERIFICATION TEST** .

No

- Go To 5.

5. **(B16) BRAKE SWITCH NO. 2 SIGNAL CIRCUIT OPEN**

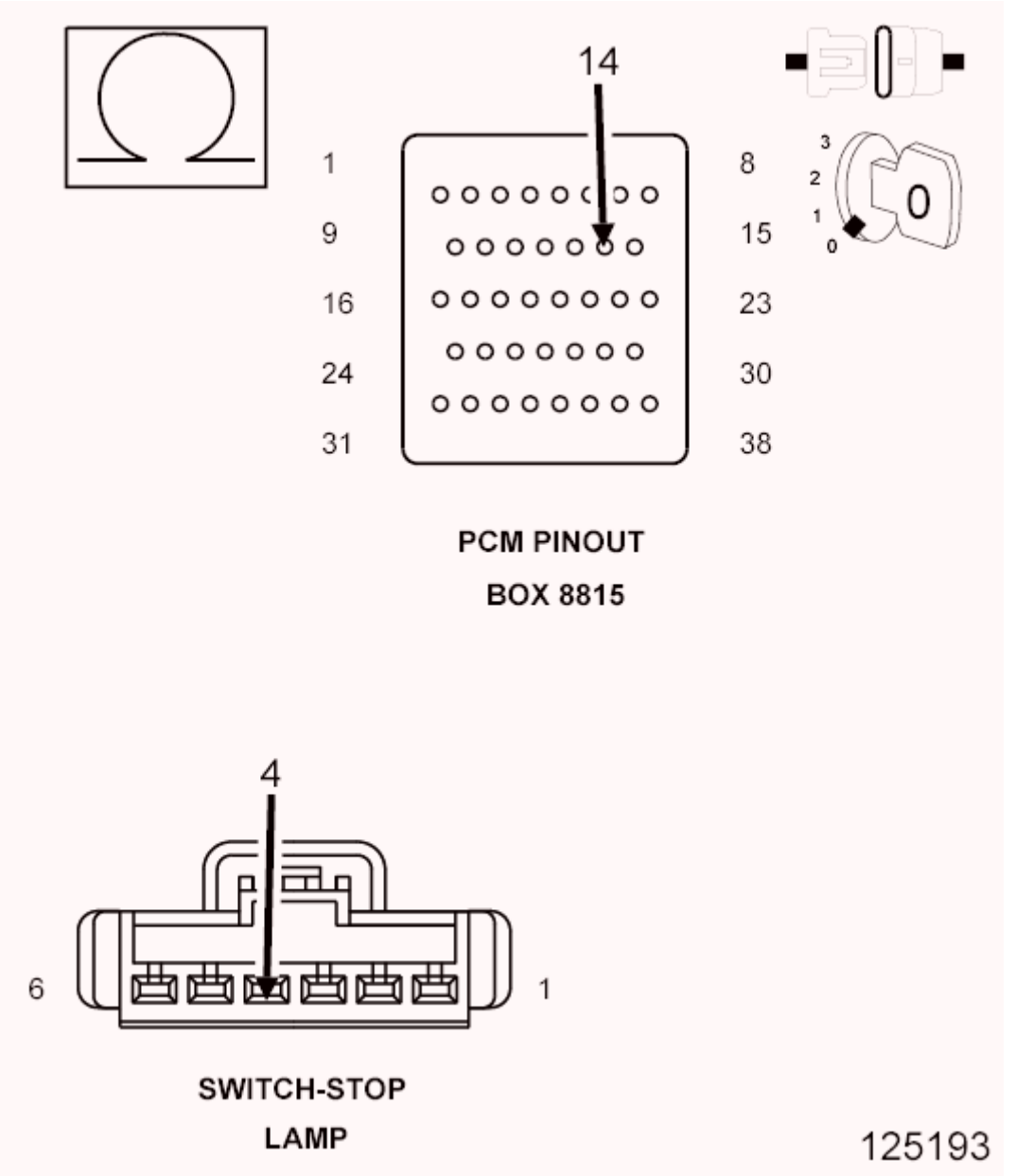

Fig. 33: Measuring Resistance Of Brake Switch No. 2 Signal Circuit From Stop Lamp Switch Harness Connector To Appropriate Terminal Of PCM Pinout Box 8815
Courtesy of CHRYSLER GROUP, LLC

1. Turn the ignition off.

CAUTION: Do not probe the PCM harness connectors. Probing the PCM

harness connectors will damage the PCM terminals resulting in poor terminal to pin connection. Install the PCM Pinout Box (special tool #8815A, Kit, NGC, 38 Position) to perform diagnosis.

2. Measure the resistance of the (B16) Brake Switch No. 2 Signal circuit from the Stop Lamp Switch harness connector to the appropriate terminal of PCM Pinout Box (special tool #8815A, Kit, NGC, 38 Position).

   Is the resistance below 5.0 Ohms?

   Yes

   - Go To 6.

   No

   - Repair the open in the (B16) Brake Switch No. 2 Signal circuit.
   - Perform the POWERTRAIN VERIFICATION TEST. Refer to **POWERTRAIN VERIFICATION TEST** .

6. **(B16) BRAKE SWITCH NO. 2 SIGNAL CIRCUIT SHORTED TO GROUND**

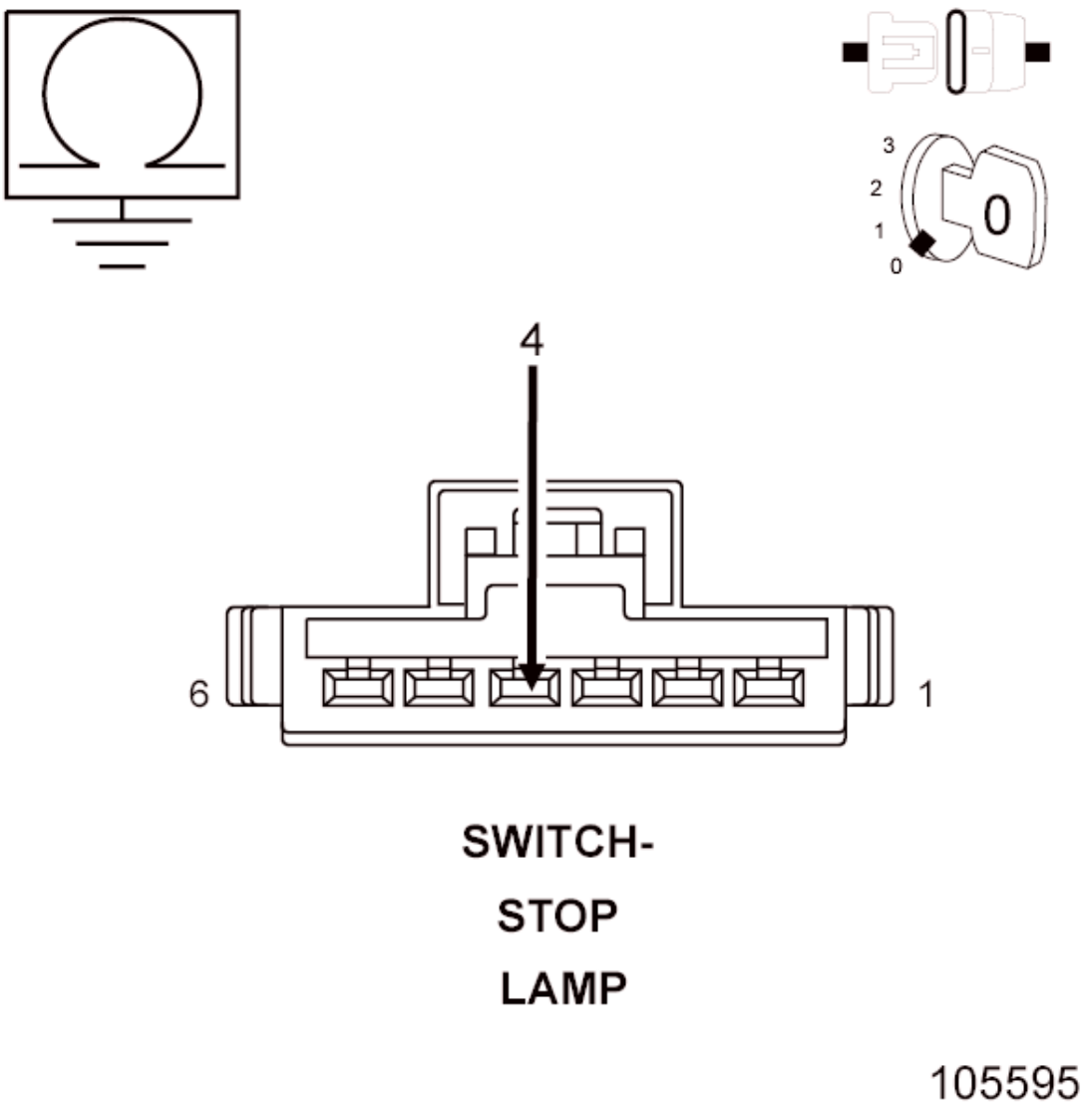

Fig. 34: Measuring Resistance Between Ground And (B16) Brake Switch No. 2 Signal Circuit In Stop Lamp Switch Harness Connector
Courtesy of CHRYSLER GROUP, LLC

1. Measure the resistance between ground and the (B16) Brake Switch No. 2 Signal circuit in the Stop Lamp Switch harness connector.

   Is the resistance below 5.0 Ohms?

   Yes

   - Repair the short to ground in the (B16) Brake Switch No. 2 Signal circuit.
   - Perform the POWERTRAIN VERIFICATION TEST. Refer to **POWERTRAIN VERIFICATION TEST** .

No

- Go To 7.

7. **(B15) BRAKE SWITCH NO. 1 SIGNAL CIRCUIT OPEN**

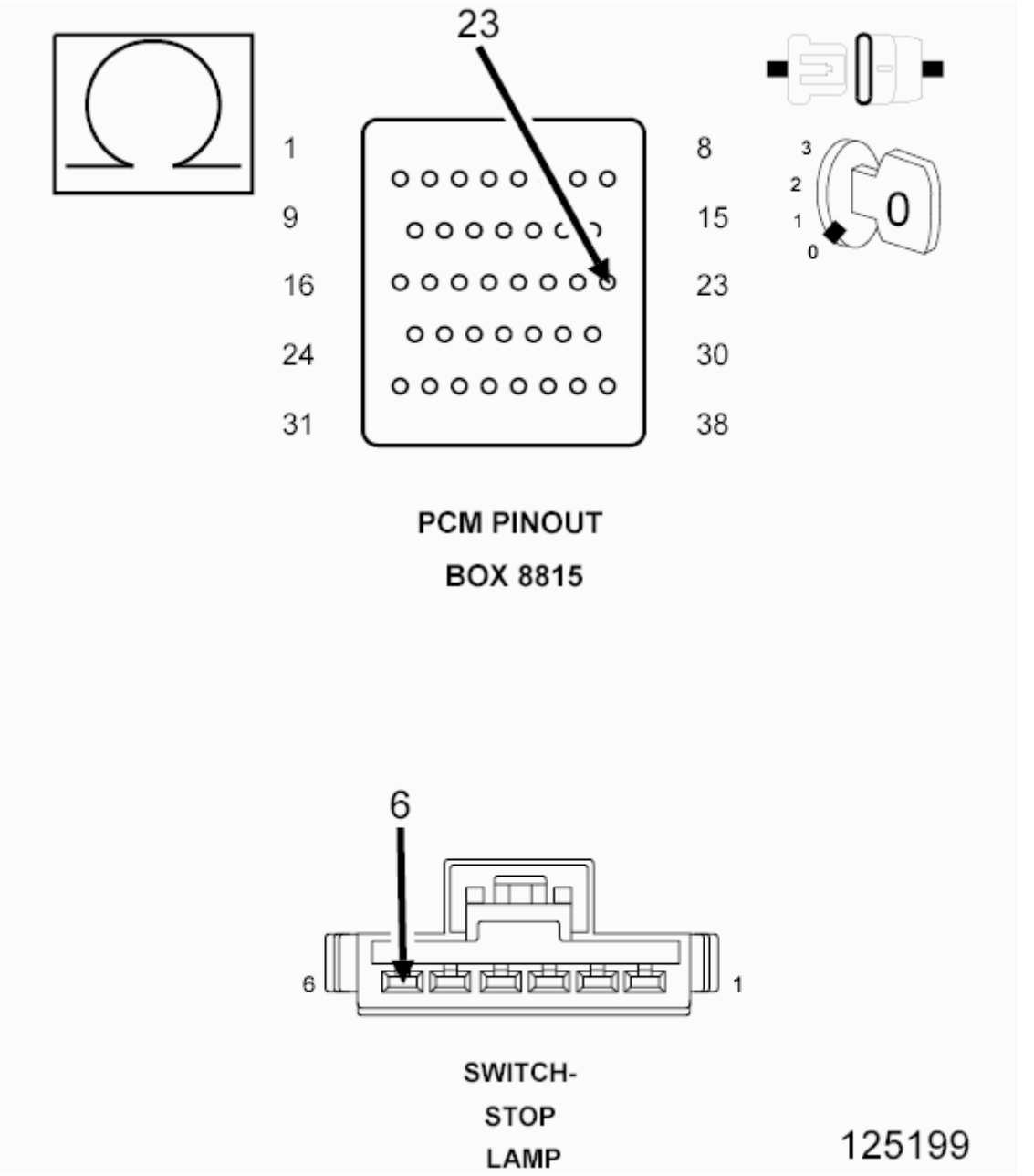

Fig. 35: Measuring Resistance Of (B15) Brake Switch No. 1 Signal Circuit From Stop Lamp Switch Harness Connector To Appropriate Terminal Of PCM Pinout Box 8815
Courtesy of CHRYSLER GROUP, LLC

1. Measure the resistance of the (B15) Brake Switch No. 1 Signal circuit from the Stop Lamp Switch harness connector to the appropriate terminal of PCM Pinout Box (special tool #8815A, Kit, NGC,

38 Position).

Is the resistance below 5.0 Ohms?

Yes

- Go To 8.

No

- Repair the open in the (B15) Brake Switch No. 1 Signal circuit.
- Perform the POWERTRAIN VERIFICATION TEST. Refer to **POWERTRAIN VERIFICATION TEST** .

8. **POWERTRAIN CONTROL MODULE (PCM)**
   1. Using the wiring diagram/schematic as a guide, inspect the wiring and connectors between the Stop Lamp Switch and the Powertrain Control Module (PCM).
   2. Look for any chafed, pierced, pinched or partially broken wires.
   3. Look for broken, bent, pushed out or corroded terminals. Verify that there is good pin to terminal contact in the Switch and Powertrain Control Module connectors.
   4. Perform any Technical Service Bulletins that may apply.

   Were there any problems found?

   Yes

   - Repair as necessary.
   - Perform the POWERTRAIN VERIFICATION TEST. Refer to **POWERTRAIN VERIFICATION TEST** .

   No

   - Replace and program the Powertrain Control Module in accordance with the Service Information. Refer to **MODULE, POWERTRAIN CONTROL, REMOVAL** .
   - Perform the POWERTRAIN VERIFICATION TEST. Refer to **POWERTRAIN VERIFICATION TEST** .

P0850-PARK/NEUTRAL SWITCH PERFORMANCE

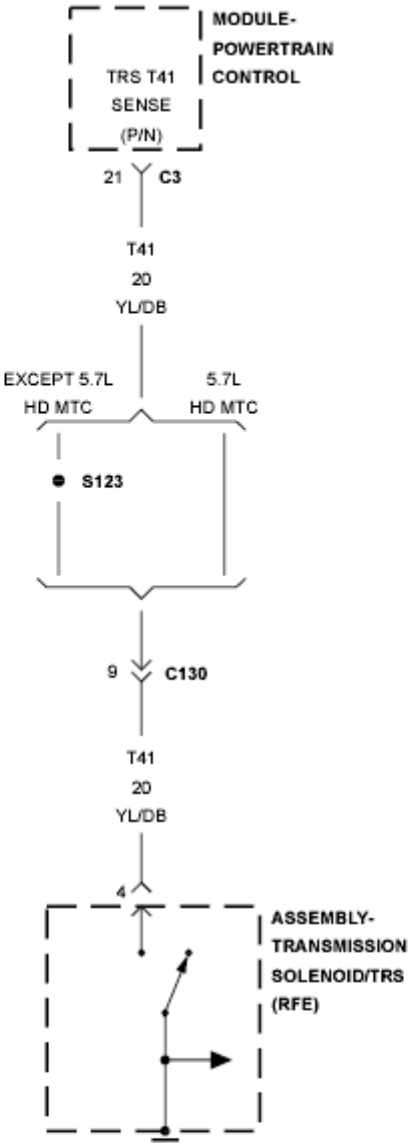

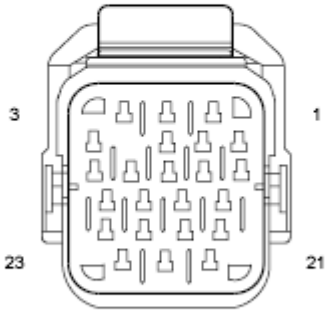

ASSEMBLY-
TRANSMISSION
SOLENOID/TRS
(RFE)

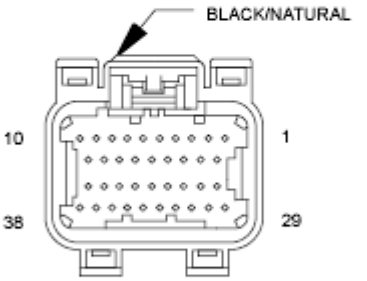

MODULE-
POWERTRAIN
CONTROL C3
(NGC)

Fig. 36: Park/Neutral Switch Circuit Schematic
Courtesy of CHRYSLER GROUP, LLC

For a complete wiring diagram **refer to appropriate SYSTEM WIRING DIAGRAMS article** .

THEORY OF OPERATION

The Park Neutral switch rationality test is enabled only for vehicles equipped with a 4/5 speed automatic transmission. This diagnostic checks if the park/neutral switch is incorrectly stuck in the neutral position during driving conditions by comparing Vehicle Speed, Engine Speed, Throttle Position, and Pressure Ratio to the fail thresholds and by looking at the state of the Park/Neutral Switch. The stuck in drive condition is not explicitly checked as the starter relay does not energize and therefore render the vehicle inoperable.

WHEN MONITORED:

Continuously with the transmission in Park, Neutral, or Drive and NOT in Limp-in mode.

SET CONDITION:

This code will set if the PCM detects an irrational Park/Neutral switch state for at least one minute. Two trip fault. Three good trips to turn off the MIL.

POSSIBLE CAUSES

Possible Causes
TRS (T41) SENSE (P/N SENSE) CIRCUIT OPEN
TRS (T41) SENSE (P/N SENSE) CIRCUIT SHORTED TO GROUND
TRANSMISSION RANGE SENSOR
POWERTRAIN CONTROL MODULE (PCM)

Always perform the Pre-Diagnostic Troubleshooting procedure before proceeding. Refer to PRE-DIAGNOSTIC TROUBLESHOOTING PROCEDURE .

DIAGNOSTIC TEST

1. **P/N AND D/R NOT IN CORRECT POSITION**

NOTE: **Check the TCM for DTCs, if P0706 is set in the TCM diagnose the TCM code before continuing.**

1. Ignition on, engine not running.
2. With the scan tool, read the Park/Neutral Position Switch input state.
3. While moving the gear selector through all gear positions (Park to 1 and back to Park), monitor the scan tool display.

   Did the scan tool display show P/N and D/R in the correct gear positions?

Yes

- Perform the INTERMITTENT CONDITION diagnostic procedure. Refer to **INTERMITTENT CONDITION** .

No

- Go To 2.

2. **TRS (T41) SENSE (P/N SENSE) CIRCUIT OPEN**

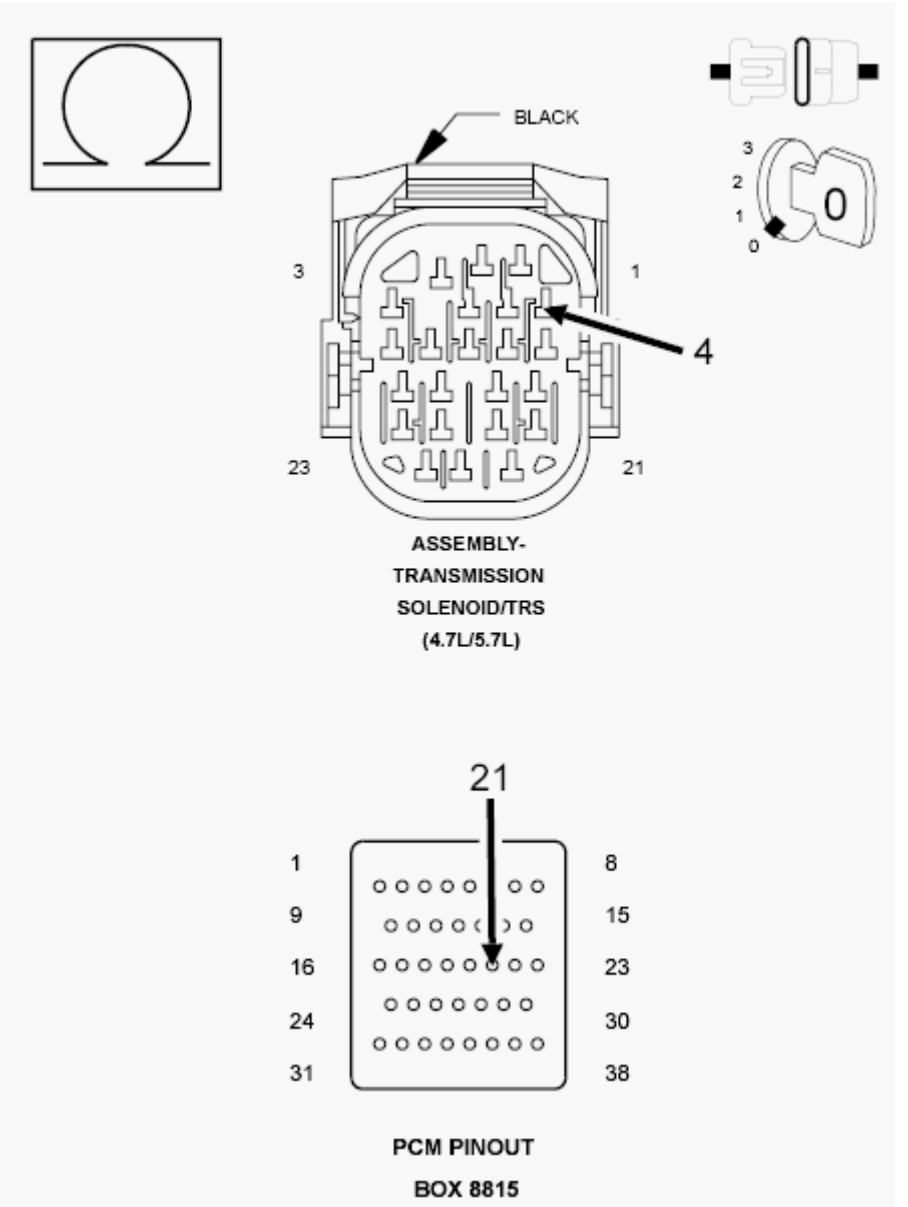

Fig. 37: Measuring Resistance Of TRS (T41) Sense (P/N Sense) Circuit From TRS Harness Connector To Appropriate Terminal Of Special Tool #8815
Courtesy of CHRYSLER GROUP, LLC

1. Turn the ignition off.
2. Disconnect the C3 PCM harness connector.
3. Disconnect the Transmission Range Sensor harness connector.

CAUTION: Do not probe the PCM harness connectors. Probing the PCM harness connectors will damage the PCM terminals resulting in poor terminal to pin connection. Install the PCM Pinout Box (special tool #8815A, Kit, NGC, 38 Position) to perform diagnosis.

4. Measure the resistance of the TRS (T41) Sense (P/N Sense) circuit from the TRS harness connector to the appropriate terminal of special tool (special tool #8815A, Kit, NGC, 38 Position).

   Is the resistance below 5.0 ohms?

   Yes

   - Go To 3.

   No

   - Repair the open in the TRS (T41) Sense (P/N Sense) circuit.
   - Perform the POWERTRAIN VERIFICATION TEST. Refer to **POWERTRAIN VERIFICATION TEST** .

3. **TRS (T41) SIGNAL CIRCUIT SHORTED TO GROUND**

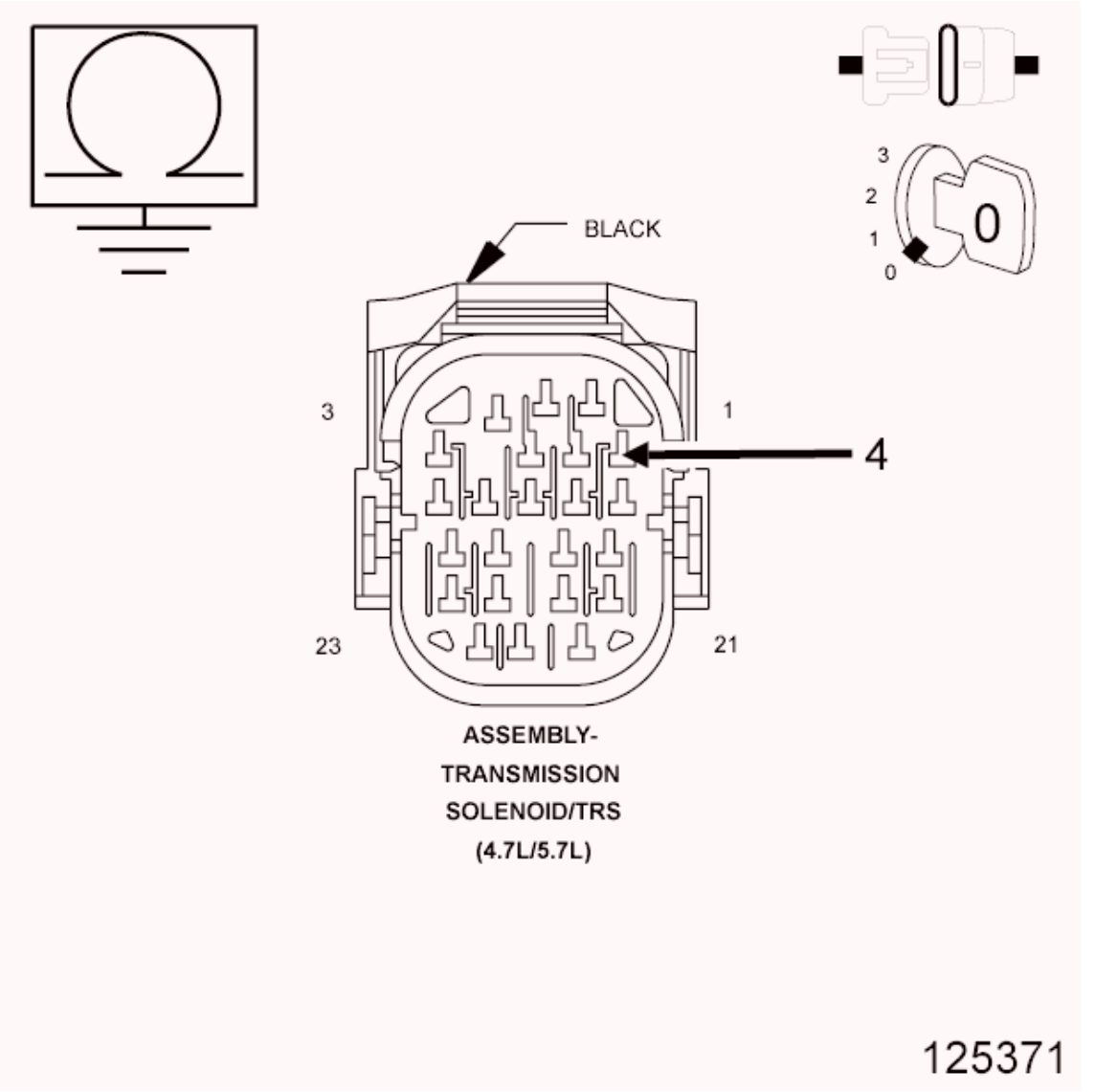

Fig. 38: Measuring Resistance Between Ground And TRS Sense (P/N Sense) Circuit AT TRS Harness Connector
Courtesy of CHRYSLER GROUP, LLC

1. Measure the resistance between ground and the TRS (T41) Sense (P/N Sense) circuit at the TRS harness connector.

   Is the resistance above 100k ohms?

   Yes

   - Go To 4.

   No

   - Repair the short to ground in the TRS (T41) Sense (P/N Sense) circuit.

- Perform the POWERTRAIN VERIFICATION TEST. Refer to **POWERTRAIN VERIFICATION TEST** .

4. **TRANSMISSION RANGE SENSOR**

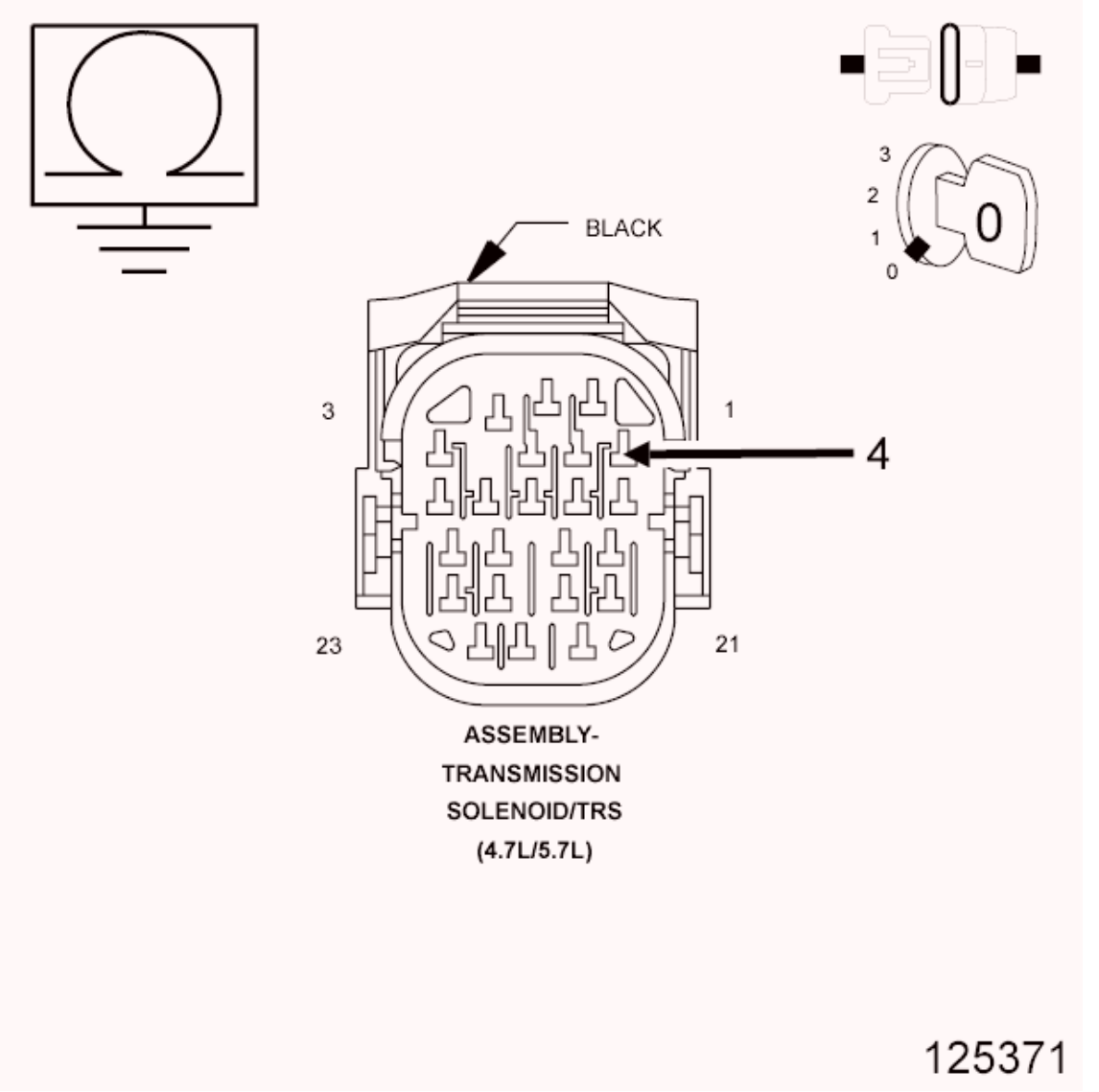

Fig. 39: Measuring Resistance Between Ground And TRS Sense (P/N Sense) Circuit AT TRS Harness Connector
Courtesy of CHRYSLER GROUP, LLC

1. Measure the resistance between ground and the (T41) TRS Sense (P/N Sense) circuit while moving the gear selector through each gear in the TRS connector.

NOTE: **The circuit is grounded in Park and Neutral and open in the other positions.**

Did the resistance change from above 100 kohms (open) to below 10.0 ohms (grounded)?

Yes

- Go To 5.

No

- Replace the Transmission Range Sensor.
- Perform the POWERTRAIN VERIFICATION TEST. Refer to **POWERTRAIN VERIFICATION TEST** .

5. **POWERTRAIN CONTROL MODULE (PCM)**
    1. Using the wiring diagram/schematic as a guide, inspect the wiring and connectors between the Transmission Solenoid and the Powertrain Control Module (PCM).
    2. Look for any chafed, pierced, pinched, or partially broken wires.
    3. Look for broken, bent, pushed out or corroded terminals. Verify that there is good pin to terminal contact in the Solenoid and Powertrain Control Module connectors.
    4. Refer to any Technical Service Bulletins that may apply.

    Were there any problems found?

    Yes

    - Repair as necessary.
    - Perform the POWERTRAIN VERIFICATION TEST. Refer to **POWERTRAIN VERIFICATION TEST** .

    No

    - Replace and program the Powertrain Control Module per Service Information. Refer to **MODULE, POWERTRAIN CONTROL, REMOVAL** .
    - Perform the POWERTRAIN VERIFICATION TEST. Refer to **POWERTRAIN VERIFICATION TEST** .

P1004-SHORT RUNNER VALVE CONTROL PERFORMANCE

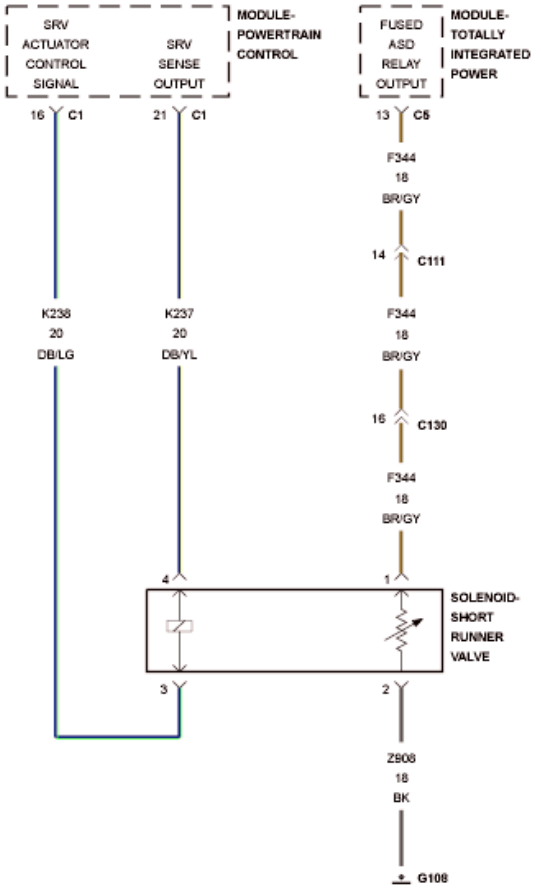

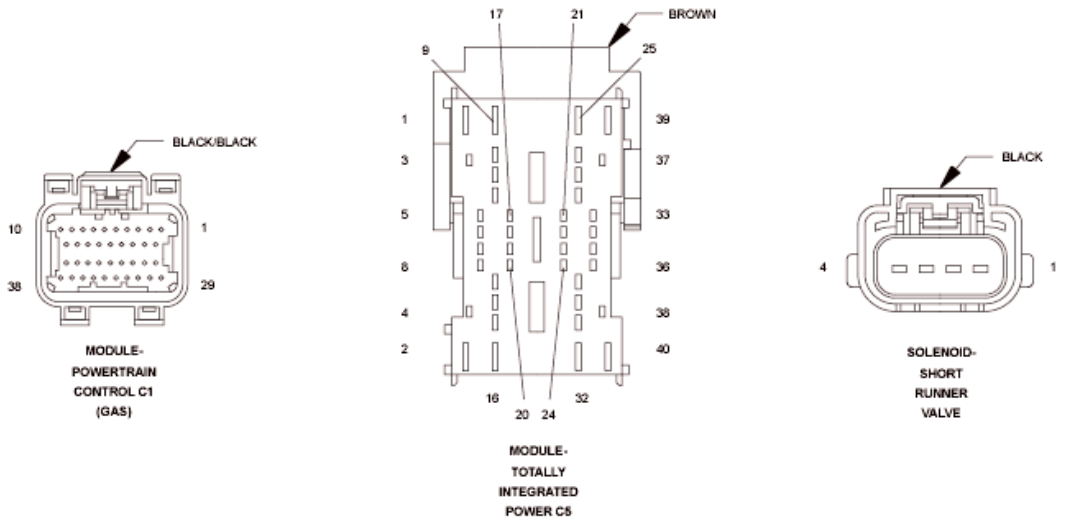

Fig. 40: Short Runner Valve (SRV) Solenoid Circuit Schematic
Courtesy of CHRYSLER GROUP, LLC

For a complete wiring diagram, **refer to appropriate SYSTEM WIRING DIAGRAMS article** .

THEORY OF OPERATION

The engine performance and power output is enhanced through the use of the "short runner valve" (SRV) system. The SRV system allows the intake charge air to bypass the long intake manifold runners between the intake manifold plenum and the intake manifold interface to the cylinder heads by providing a shorter runner directly between the plenum and the cylinder head interface The SRV position is controlled by a pneumatic/spring actuator and electronic solenoid valve. When the solenoid is not energized (the "rest" position), the SRV is held in the closed position. When the solenoid is energized the SRV is moved and held in its opened position. There is a set of enable conditions including a minimum engine coolant and ambient temperature, SRV enable and Powertrain Coordinator load enable condition. If any of these conditions are not met, then the SRV valve is de-energized (closed).

WHEN MONITORED:

With the engine run time above a calibrated value, battery voltage greater than 10.4 Volts, ECT within a specific range and the Short Runner Valve Assembly (SRV) control active.

SET CONDITION:

The Powertrain Control Module (PCM) compares the circuit feedback to a calibrated closed range, between 75% & 85% Pulse Width Modulated (PWM) duty cycle, when the circuit is de-energized or to a calibrated open range, between 35% & 55% PWM duty cycle, when the circuit is energized. If the value is determined to be out of the calibrated range in either the de-energized, greater than 85% duty cycle or less than 75% duty cycle or energized, greater than 55% duty cycle or less than 35% duty cycle, state for more than a calibrated amount of time, this DTC will set.

POSSIBLE CAUSES

Possible Causes
(F344) ASD RELAY OUTPUT CIRCUIT OPEN OR HIGH RESISTANCE
(K237) SHORT RUNNER VALVE (SRV) SIGNAL CIRCUIT SHORTED TO GROUND
(K237) SHORT RUNNER VALVE (SRV) SIGNAL CIRCUIT OPEN OR HIGH RESISTANCE
(K238) SHORT RUNNER VALVE (SRV) CONTROL CIRCUIT SHORTED TO GROUND
(K238) SHORT RUNNER VALVE (SRV) CONTROL CIRCUIT OPEN OR HIGH RESISTANCE
SHORT RUNNER VALVE (SRV) ASSEMBLY
(Z903) SHORT RUNNER VALVE (SRV) GROUND CIRCUIT OPEN CIRCUIT OR HIGH RESISTANCE
POWERTRAIN CONTROL MODULE (PCM)

Always perform the Pre-Diagnostic Troubleshooting procedure before proceeding. Refer to PRE-DIAGNOSTIC TROUBLESHOOTING PROCEDURE .

DIAGNOSTIC TEST

1. **DTC IS ACTIVE**
    1. Turn the ignition on.

2. With the scan tool, Clear DTCs in the Powertrain Control Module (PCM).
3. With the scan tool, actuate the SRV Solenoid Control State.
4. With the scan tool, select View DTCs.

   Is the status Active for this DTC?

   Yes

   - Go To 2.

   No

   - Perform the INTERMITTENT CONDITION diagnostic procedure. Refer to **INTERMITTENT CONDITION** .

2. **(F344) ASD RELAY OUTPUT CIRCUIT OPEN OR HIGH RESISTANCE**

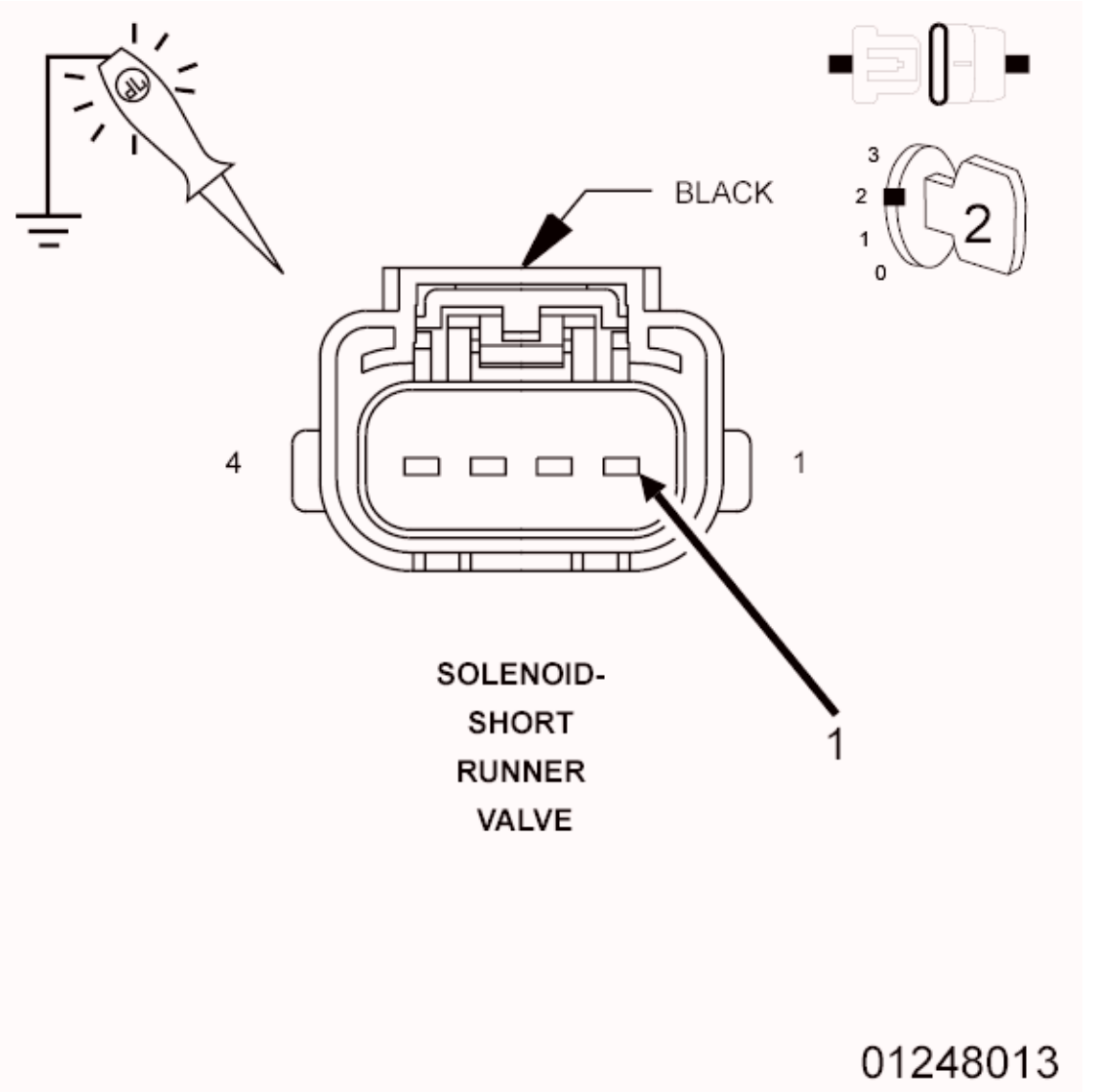

Fig. 41: Using 12-Volt Test Light Connected To Ground To Check (F344) ASD Relay Output Circuit In Short Runner Valve Assembly Harness Connector
Courtesy of CHRYSLER GROUP, LLC

1. Turn the ignition off.
2. Disconnect the Short Runner Valve Assembly harness connector.
3. Turn the ignition on.
4. With the scan tool, actuate the Auto Shutdown (ASD) Relay Control State.
5. Using a 12-volt test light connected to ground, check the (F344) ASD Relay Output circuit in the Short Runner Valve Assembly harness connector.

NOTE: **The test light should be illuminated and bright. Compare the brightness to that of a direct connection to the battery.**

Is the test light illuminated and bright?

Yes

- Go To 3.

No

- Repair the open or high resistance in the (F344) ASD Relay Output circuit.
- Perform the POWERTRAIN VERIFICATION TEST. Refer to **POWERTRAIN VERIFICATION TEST** .

3. **(K238) SRV CONTROL CIRCUIT SHORTED TO GROUND**

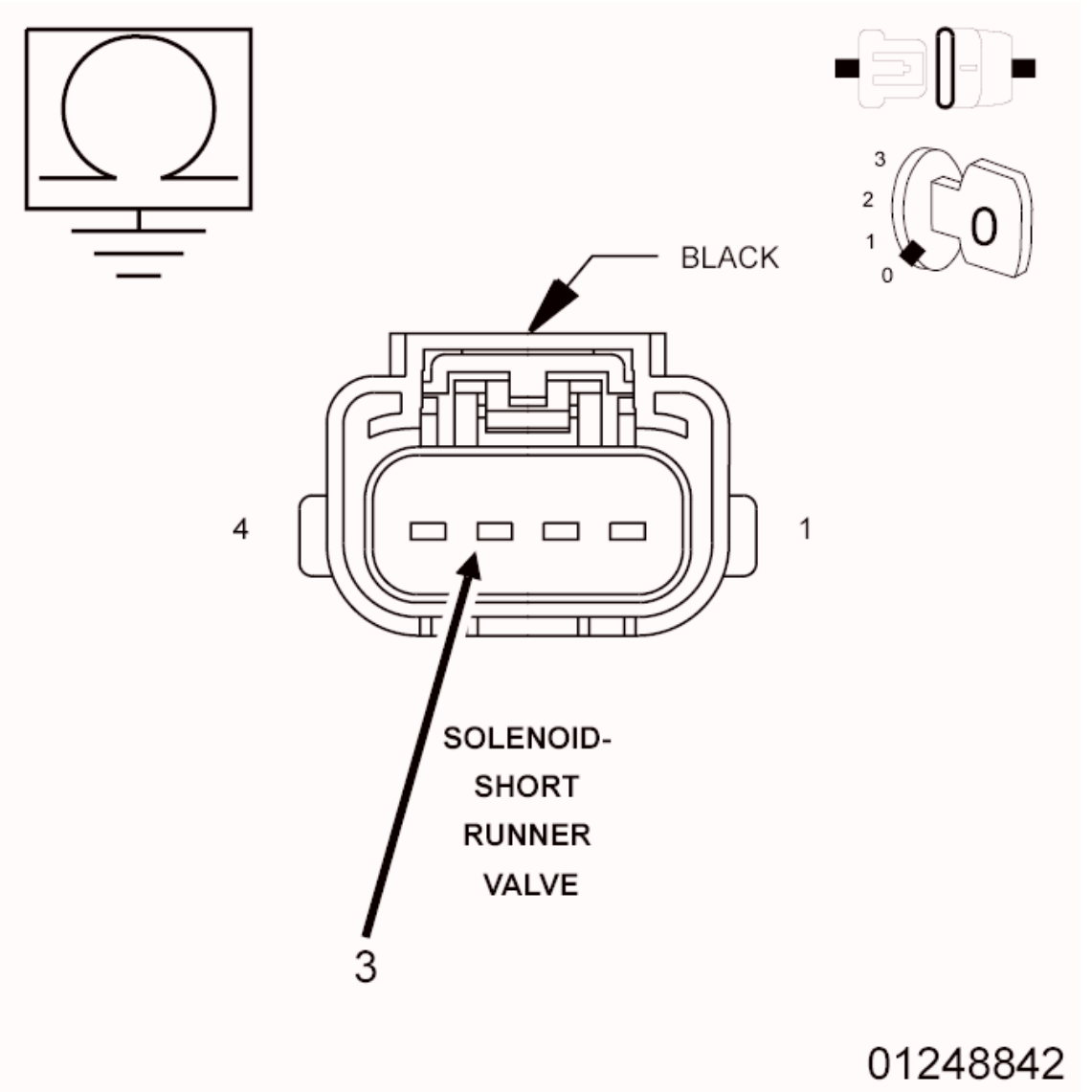

Fig. 42: Measuring Resistance Between Ground And (K238) SRV Control Circuit In Short Runner Valve Assembly Harness Connector

Courtesy of CHRYSLER GROUP, LLC

1. Turn the ignition off.
2. Disconnect the Powertrain Control Module (PCM) C1 harness connector.
3. Measure the resistance between ground and the (K238) SRV control circuit in the Short Runner Valve Assembly harness connector.

   Is the resistance above 100 Ohms?

   Yes

   - Go To 4.

   No

   - Repair the short to ground in the (K238) SRV control circuit.
   - Perform the POWERTRAIN VERIFICATION TEST. Refer to **POWERTRAIN VERIFICATION TEST** .

4. **(K238) SRV CONTROL CIRCUIT OPEN OR HIGH RESISTANCE**

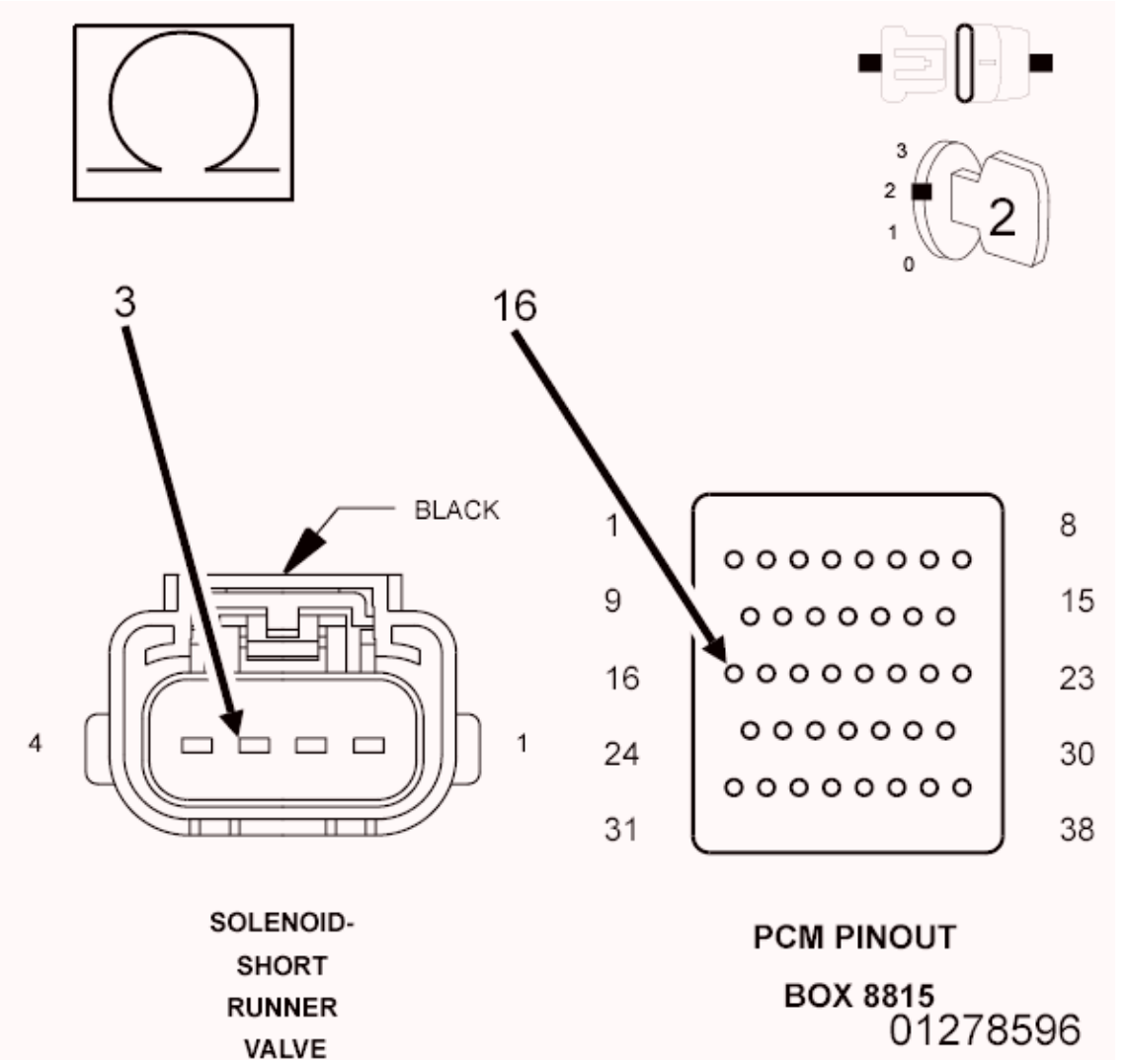

Fig. 43: Measuring Resistance Of (K238) SRV Control Circuit Between Short Runner Valve Assembly Harness Connector And Appropriate Terminal Of PCM Pinout Box 8815
Courtesy of CHRYSLER GROUP, LLC

CAUTION: Do not probe the PCM harness connectors. Probing the PCM harness connectors will damage the PCM terminals, resulting in poor terminal to pin connection. Install the PCM Pinout Box (special tool #8815A, Kit, NGC, 38 Position) to perform diagnosis.

1. Measure the resistance of the (K238) SRV control circuit between the Short Runner Valve Assembly harness connector and the appropriate terminal of PCM Pinout Box (special tool #8815A, Kit, NGC, 38 Position).

   Is the resistance below 5.0 Ohms?

   Yes

- Go To 5.

No

- Repair the open or high resistance in the (K238) SRV Control circuit.
- Perform the POWERTRAIN VERIFICATION TEST. Refer to **POWERTRAIN VERIFICATION TEST** .

5. **(K237) SRV SIGNAL CIRCUIT SHORTED TO GROUND**

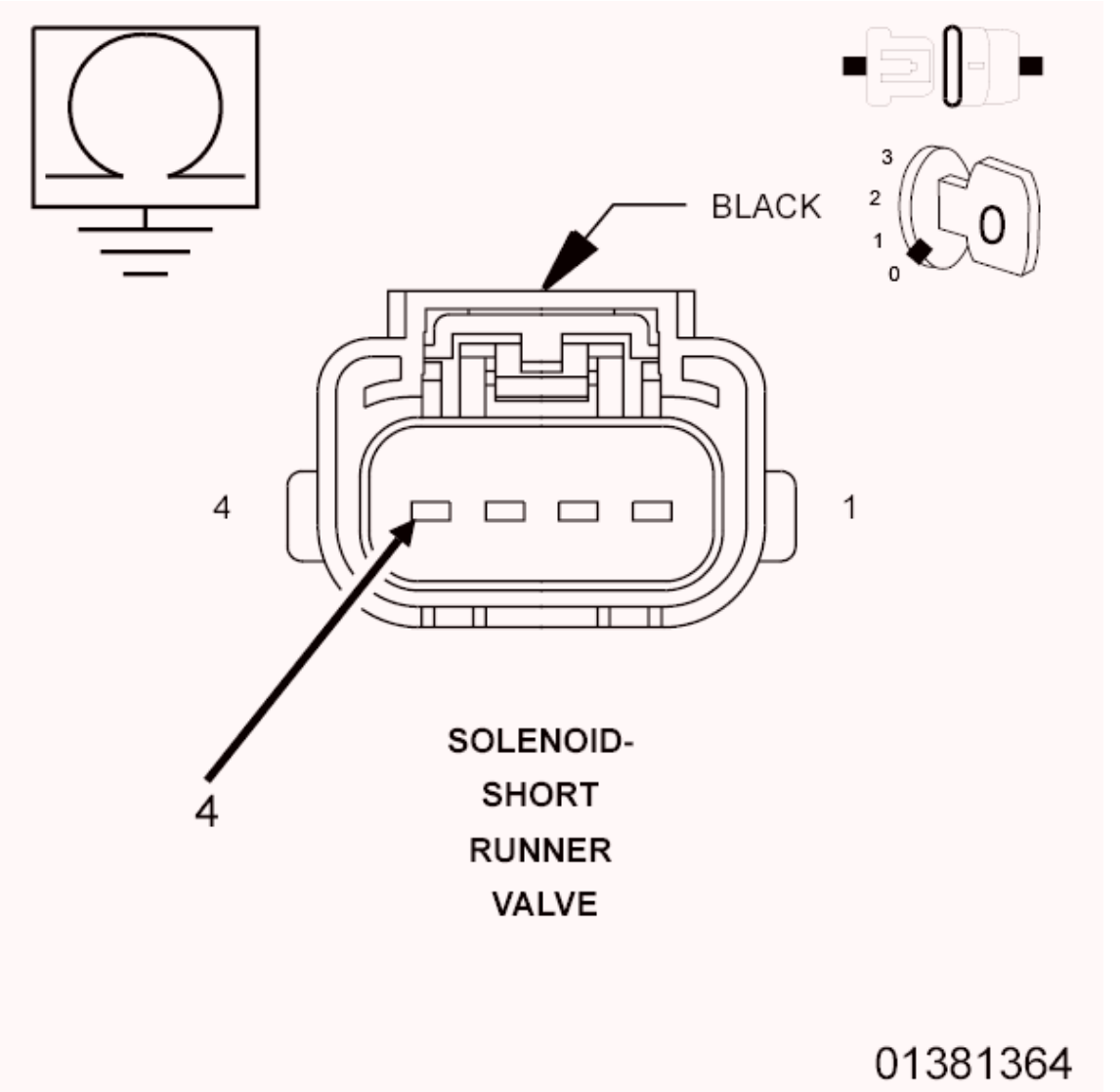

Fig. 44: Measuring Resistance Between Ground And (K237) SRV Signal Circuit In Short Runner Valve Assembly Harness Connector
Courtesy of CHRYSLER GROUP, LLC

1. Measure the resistance between ground and the (K237) SRV Signal circuit in the Short Runner Valve Assembly harness connector.

Is the resistance above 100 Ohms?

Yes

- Go To 6.

No

- Repair the short to ground in the (K237) SRV Signal circuit.
- Perform the POWERTRAIN VERIFICATION TEST. Refer to **POWERTRAIN VERIFICATION TEST** .

6. **(K237) SRV SIGNAL CIRCUIT OPEN OR HIGH RESISTANCE**

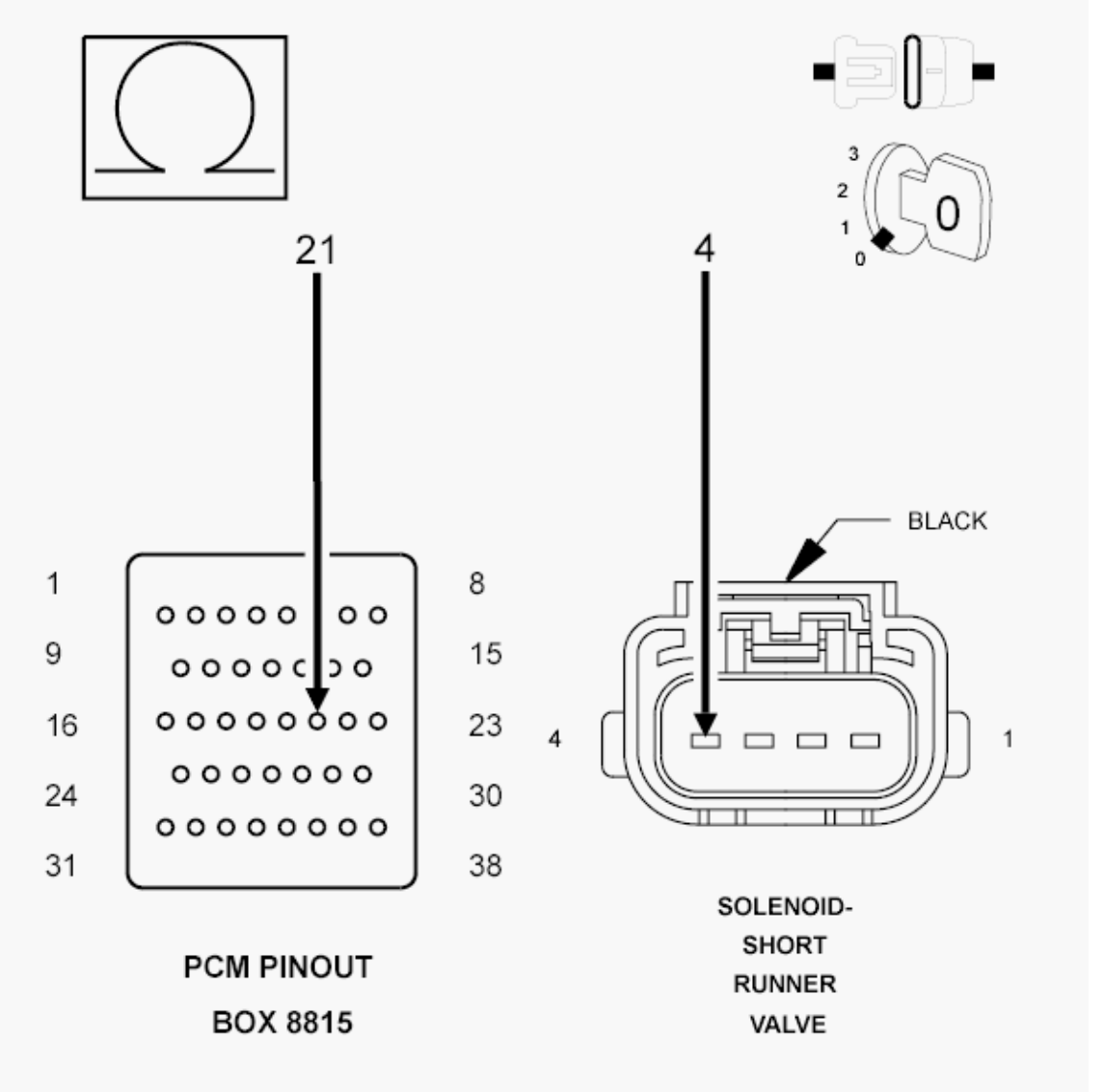

Fig. 45: Measuring Resistance Of SRV Signal Circuit Between Assembly Harness Connector And Appropriate Terminal Of PCM Pinout Box 8815

CAUTION: Do not probe the PCM harness connectors. Probing the PCM harness connectors will damage the PCM terminals, resulting in poor terminal to pin connection. Install the PCM Pinout Box (special tool #8815A, Kit, NGC, 38 Position) to perform diagnosis.

1. Measure the resistance of the (K237) SRV signal circuit between the Short Runner Valve Assembly harness connector and the appropriate terminal of PCM Pinout Box (special tool #8815A, Kit, NGC, 38 Position).

   Is the resistance below 5.0 Ohms?

   Yes

   - Go To 7.

   No

   - Repair the open or high resistance in the (K237) SRV signal circuit for.
   - Perform the POWERTRAIN VERIFICATION TEST. Refer to **POWERTRAIN VERIFICATION TEST** .

7. **SHORT RUNNER VALVE ASSEMBLY**

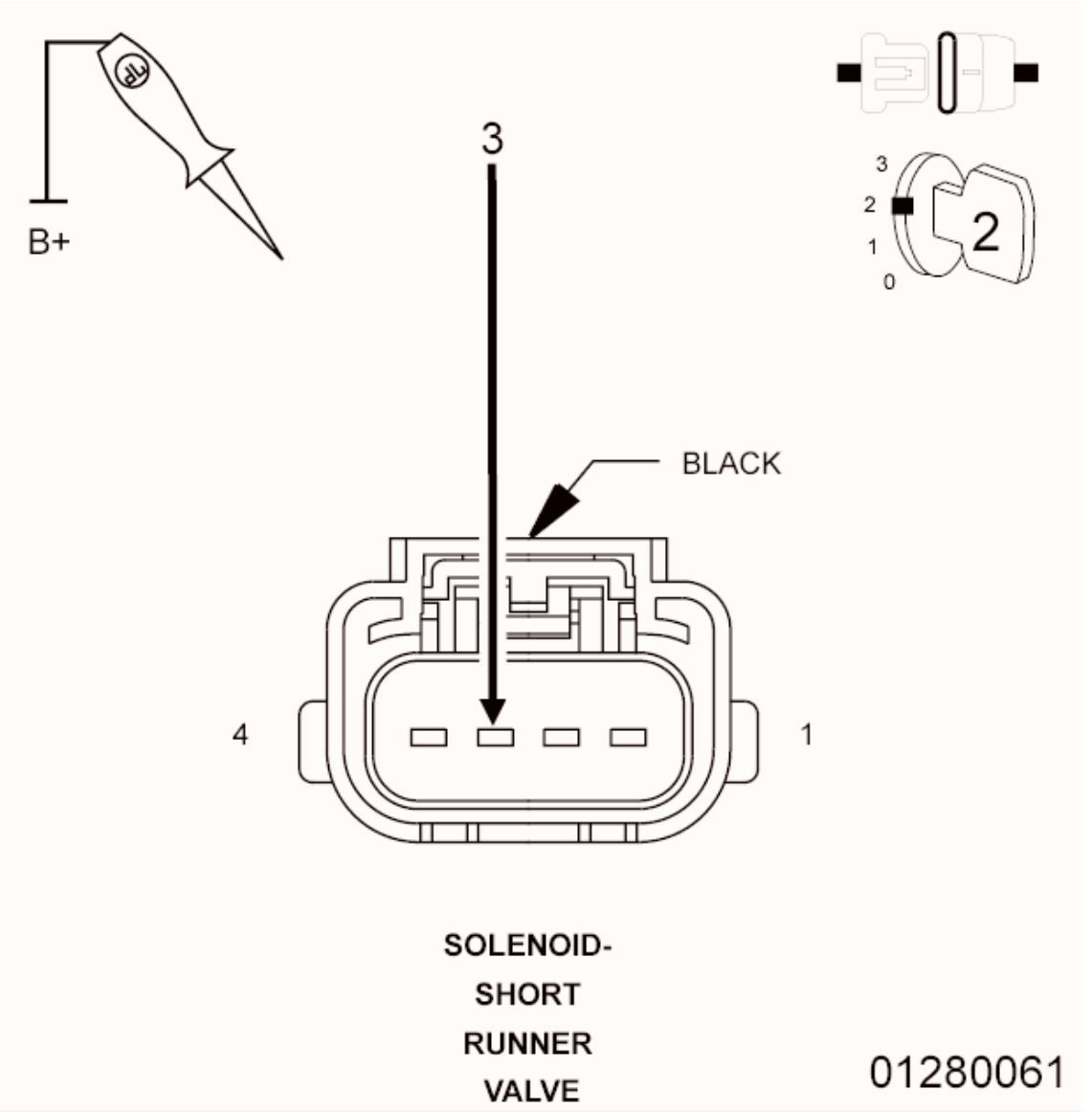

Fig. 46: Using 12-Volt Test Light Connected To 12 Volts To Check (K238) SRV Control Circuit In Short Runner Valve Assembly Harness Connector
Courtesy of CHRYSLER GROUP, LLC

1. Connect the Powertrain Control Module (PCM) C1 harness connector.
2. Turn the ignition on.
3. With the scan tool, actuate the SRV Solenoid Control State to toggle.
4. Using a 12-volt test light connected to 12 Volts, check the (K238) SRV control circuit in the Short Runner Valve Assembly harness connector.

NOTE: **If the DTC is active, the actuation test may not be allowed by the PCM. It may be necessary to clear the DTCs before starting the actuation.**

NOTE: **The test light should illuminate on and off with the actuation.**

Does the test light illuminate on and off with the actuation?

Yes

- Replace the Short Runner Valve Assembly in accordance with the Service Information.
- Perform the POWERTRAIN VERIFICATION TEST. Refer to **POWERTRAIN VERIFICATION TEST** .

No

- Go To 8.

8. **(Z903) SRV GROUND CIRCUIT OPEN CIRCUIT OR HIGH RESISTANCE**

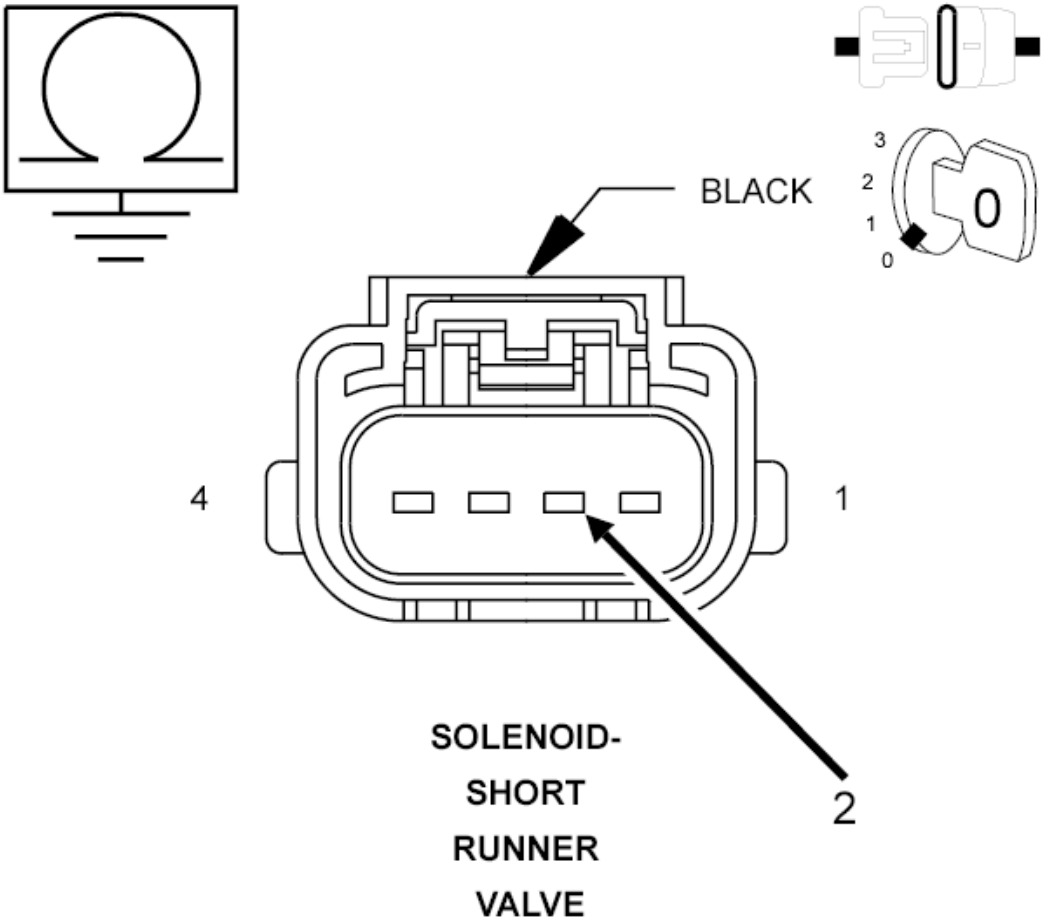

Fig. 47: Measuring Resistance Of SRV Solenoid Ground Circuit Between Ground And Harness Connector
Courtesy of CHRYSLER GROUP, LLC

1. Turn the ignition off.
2. Disconnect the Powertrain Control Module (PCM) C1 harness connector.
3. Measure the resistance of the (Z903) SRV ground circuit in the Short Runner Valve Assembly harness connector to ground.

   Is the resistance less than 5.0 Ohms?

   Yes

   - Go To 9.

   No

   - Repair the open or high resistance in the (Z903) SRV ground circuit.
   - Perform the POWERTRAIN VERIFICATION TEST. Refer to **POWERTRAIN VERIFICATION TEST** .

9. **POWERTRAIN CONTROL MODULE (PCM)**
   1. Using the wiring diagram/schematic as a guide, inspect the wiring and connectors between the Short Runner Valve Assembly and the Powertrain Control Module (PCM).
   2. Look for any chafed, pierced, pinched or partially broken wires.
   3. Look for broken, bent, pushed out or corroded terminals.
   4. Perform any Technical Service Bulletins that may apply.

      Were any problems found?

      Yes

      - Repair as necessary.
      - Perform the POWERTRAIN VERIFICATION TEST. Refer to **POWERTRAIN VERIFICATION TEST** .

      No

      - Replace and program the Powertrain Control Module (PCM) in accordance with the Service Information. Refer to **MODULE, POWERTRAIN CONTROL, REMOVAL** .
      - Perform the POWERTRAIN VERIFICATION TEST. Refer to **POWERTRAIN VERIFICATION TEST** .

P1115-GENERAL TEMPERATURE RATIONALITY

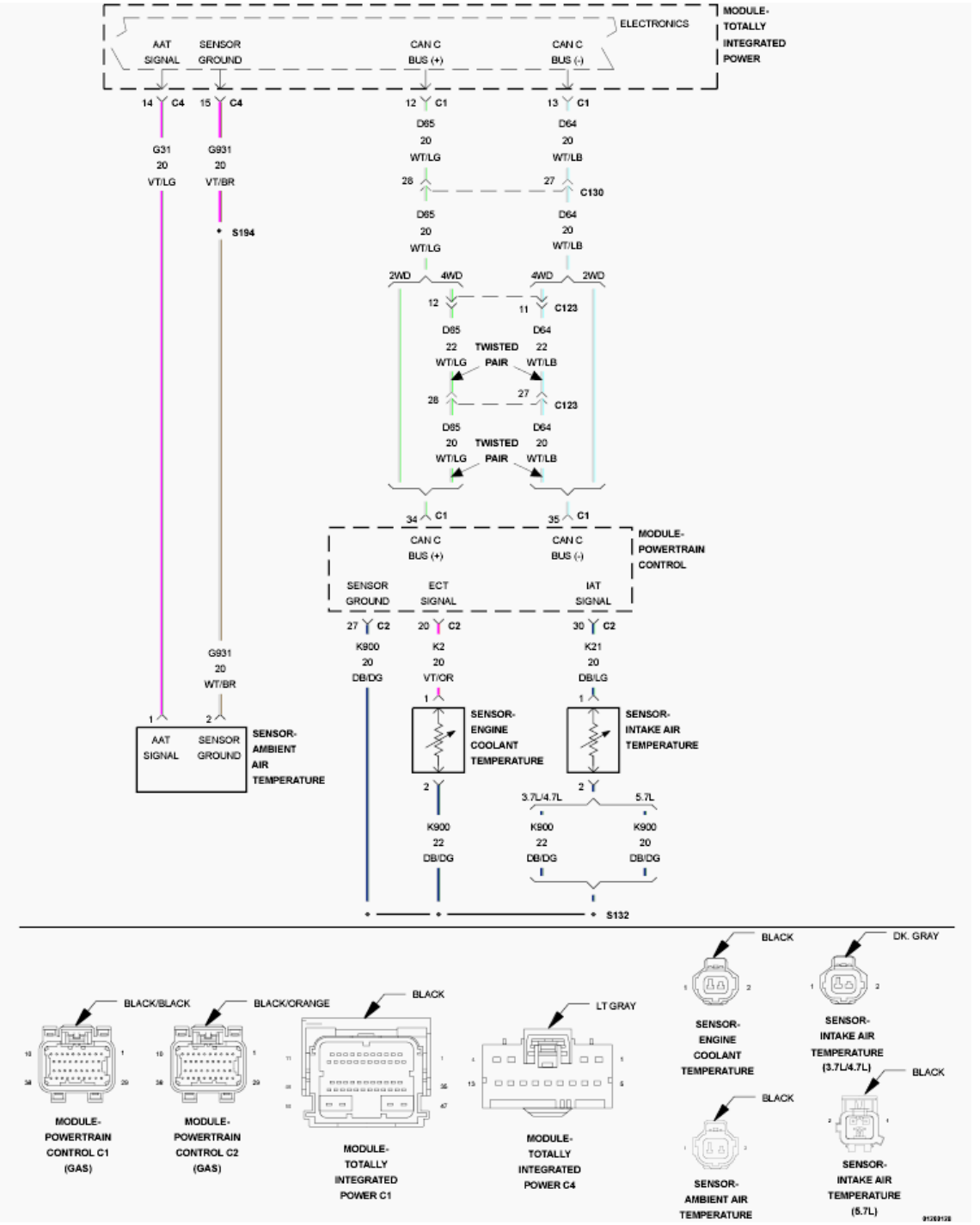

Fig. 48: ECT Sensor, IAT Sensor & AAT Sensor Circuit Schematic
Courtesy of CHRYSLER GROUP, LLC

For a complete wiring diagram, **refer to appropriate SYSTEM WIRING DIAGRAMS article** .

THEORY OF OPERATION

The General Temperature Rationality looks at the outputs of the three temperature sensors and compare them

under cold start conditions. Following a start to run delay time, the outputs of the ambient, engine coolant, and intake air temperature sensors will be compared. If two sensors agree but not the third, the third sensor is declared as irrational. If all three sensors are irrational the General Temperature Sensor Rationality is failed.

WHEN MONITORED:

Engine off time is greater than 480 minutes and the vehicle has been driven for one minute over 35 mph. Ambient temperature is greater than -64° C (-83° F).

SET CONDITION:

Once the vehicle is soaked for a calibrated engine off time and then driven over calibrated speed and load conditions for some calibrated time, the Powertrain Control Module (PCM) compares the ambient air, engine coolant, and intake air temperature sensor values. If the values of all the three sensors disagree with one another, a general temperature sensor irrationality is declared. Two Trip Fault. Three good trips to turn off the MIL.

POSSIBLE CAUSES

Possible Causes
EXCESSIVE RESISTANCE IN THE SENSOR SIGNAL CIRCUIT
EXCESSIVE RESISTANCE IN THE SENSOR GROUND CIRCUIT
SENSOR SIGNAL CIRCUIT SHORTED TO GROUND
SENSOR SIGNAL CIRCUIT SHORTED TO VOLTAGE
SENSOR SIGNAL CIRCUIT SHORTED TO THE SENSOR GROUND CIRCUIT
TEMPERATURE SENSOR
POWERTRAIN CONTROL MODULE (PCM)

Always perform the Pre-Diagnostic Troubleshooting procedure before proceeding. Refer to PRE-DIAGNOSTIC TROUBLESHOOTING PROCEDURE .

DIAGNOSTIC TEST

1. **ACTIVE DTC**
    1. Turn the ignition off.
    2. If possible, allow the vehicle to sit with the ignition off for more than 480 minutes in an environment where the temperature is consistent and above -7° C (19.4° F).
    3. Test drive the vehicle. The vehicle must exceed 48 km/h (30 mph) during the test drive. Do not cycle the ignition off when the test drive is completed.
    4. With a scan tool, select View the DTCs.

NOTE: **All ECT, Intake Air, and Ambient Air Temperature Sensor codes must be diagnosed and repaired before continuing.**

NOTE: **In cold weather, this DTC could be set by a high powered block**

heater and no repair would be required.

Is the DTC Active or Pending at this time?

Yes

- Go To 2.

No

- Perform the INTERMITTENT CONDITION diagnostic procedure. Refer to **INTERMITTENT CONDITION** .

2. **TEMPERATURE SENSOR READINGS**
   1. Turn the ignition off.
   2. Allow the vehicle to sit with the ignition off in an environment where the temperature is consistent and above -7° C (19.4° F) until the engine coolant temperature is equal to ambient temperature.
   3. Turn the ignition on.
   4. With a scan tool, compare the AAT, ECT, and IAT sensor values.

      Are all of the temperature sensor values within a range of 10° C (18° F)?

      Yes

      - Perform the INTERMITTENT CONDITION diagnostic procedure. Refer to **INTERMITTENT CONDITION** .

      No

      - Go To 3.

3. **TEMPERATURE SENSOR**
   1. Ignition on, engine not running.
   2. Disconnect the suspected faulty sensor.
   3. Connect a jumper wire between the Sensor Signal circuit and the Sensor ground circuit.
   4. With the scan tool, read the voltage of the suspected Sensor.

      Did the voltage reading start at 4.8 to 5.0 volts and decrease to 0 volts when the jumper wire was installed?

      Yes

      - Verify that there is good pin to terminal contact in the related Sensor and Powertrain Control Module connectors. Replace the Sensor if no problems were found in the connectors.
      - Perform the POWERTRAIN VERIFICATION TEST. Refer to **POWERTRAIN VERIFICATION TEST** .

No

- Go To 4.

NOTE: Remove the jumper wire before continuing.

4. **EXCESSIVE RESISTANCE IN THE TEMPERATURE SENSOR SIGNAL CIRCUIT**

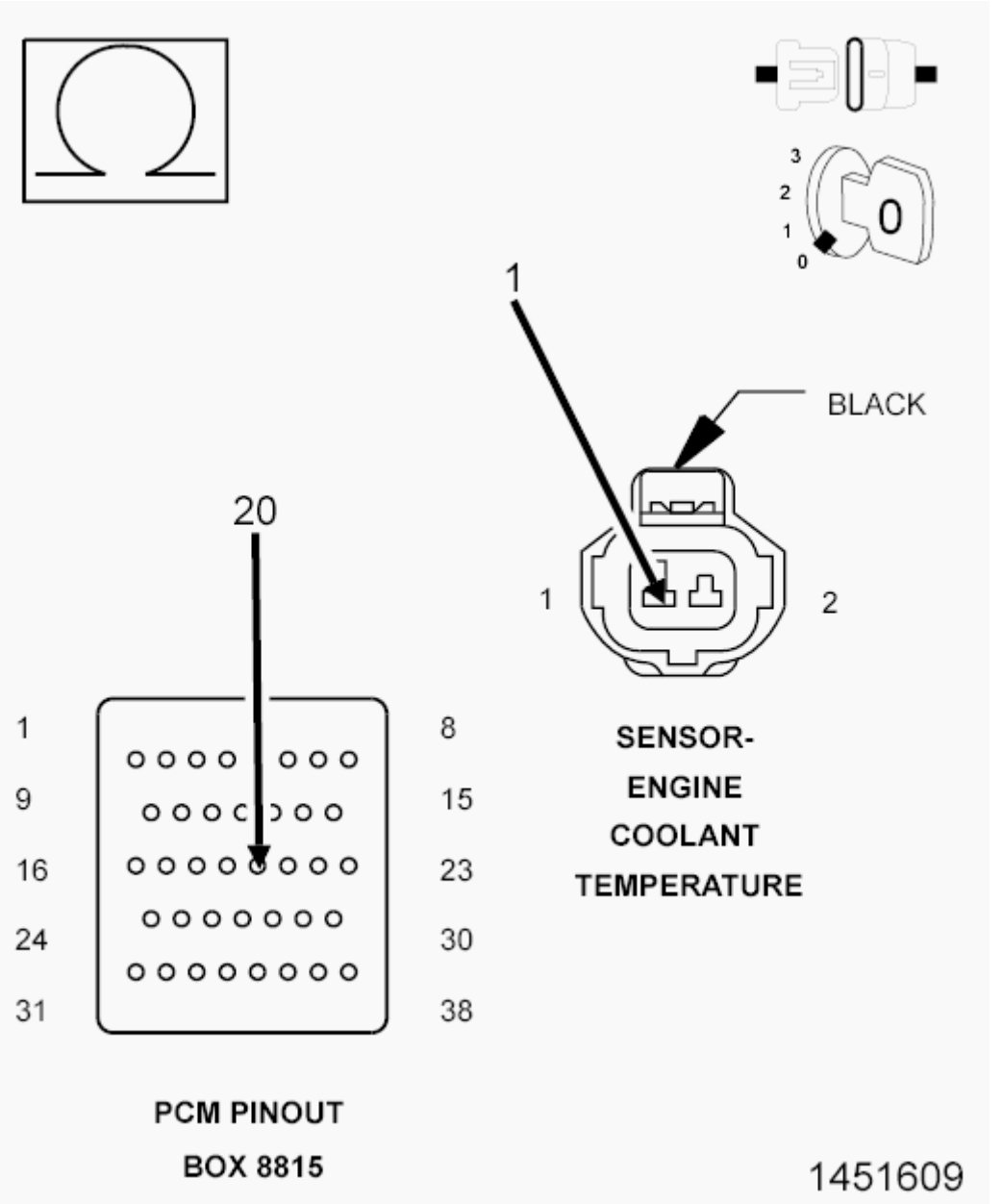

Fig. 49: Measuring Resistance Of ECT Sensor Signal Circuit From Harness Connector To Appropriate Terminal Of PCM Pinout Box 8815
Courtesy of CHRYSLER GROUP, LLC

1. Turn the ignition off.
2. Disconnect the C1 and C2 PCM harness connectors.

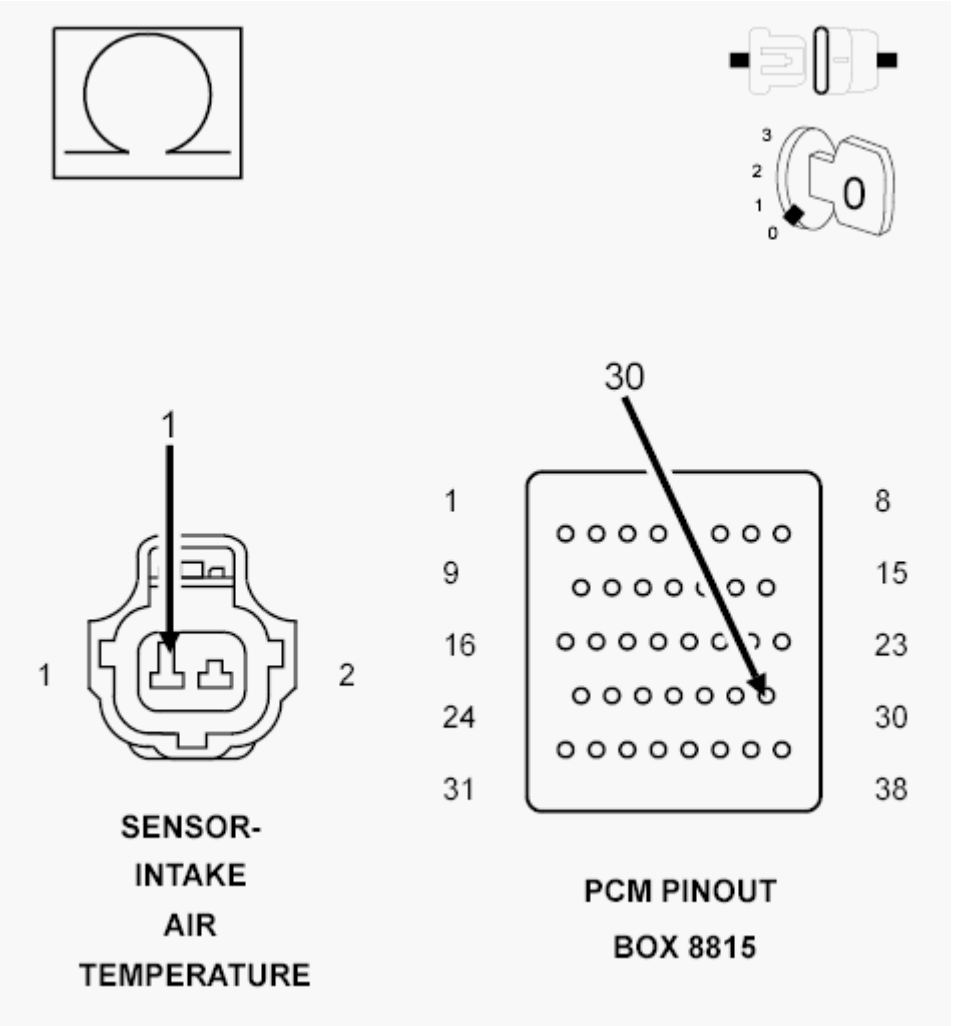

Fig. 50: Measuring Air Intake Temperature Sensor Signal Circuit Resistance
Courtesy of CHRYSLER GROUP, LLC

3. Disconnect the C4 TIPM harness connector.

CAUTION: Do not probe the PCM harness connectors. Probing the PCM harness connectors will damage the PCM terminals resulting in poor terminal to pin connection. Install the PCM Pinout Box (special tool #8815A, Kit, NGC, 38 Position) to perform diagnosis.

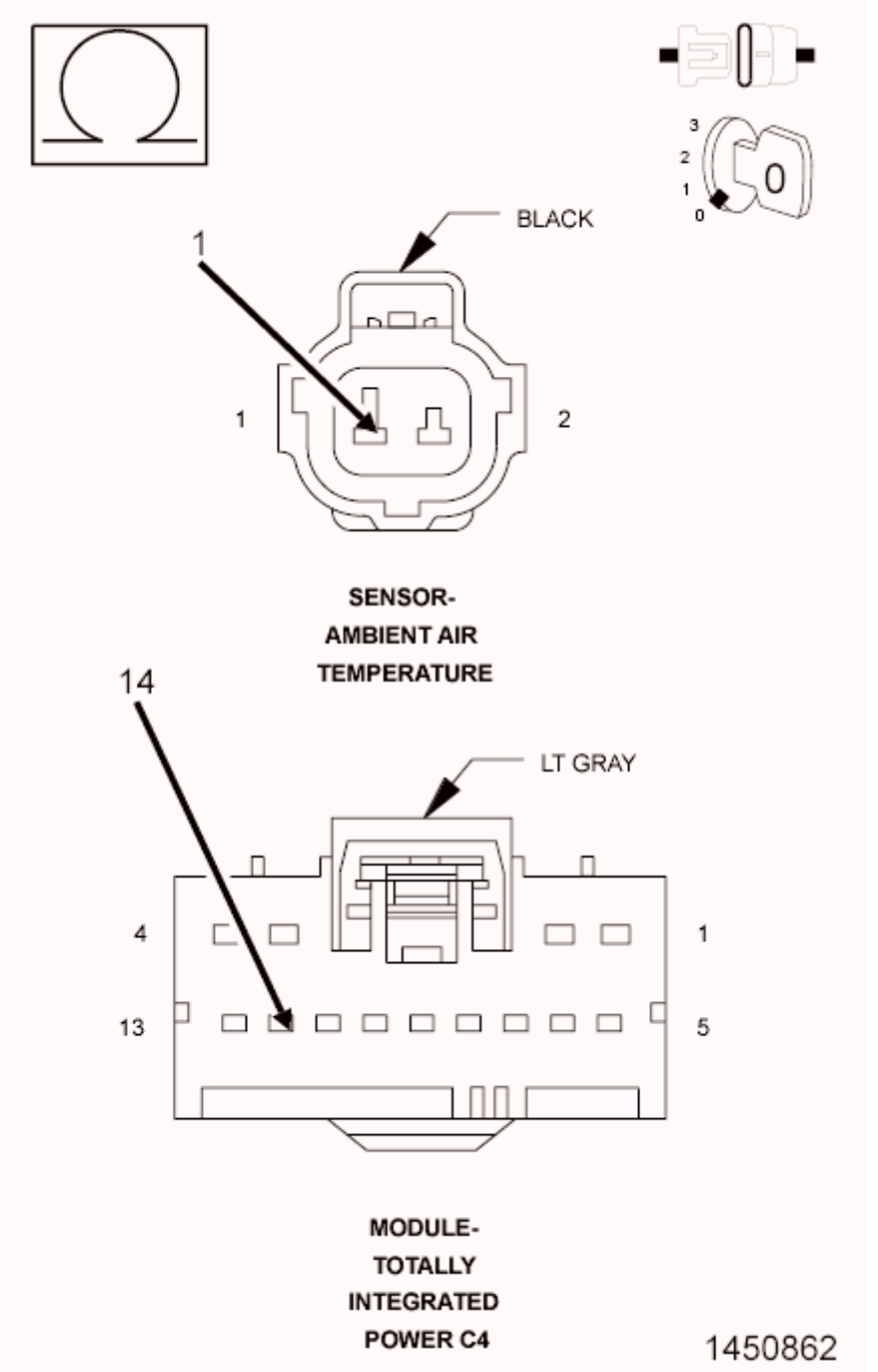

Fig. 51: Measuring Ambient Air Temperature Sensor Signal Circuit Resistance
Courtesy of CHRYSLER GROUP, LLC

4. Measure the resistance of the Sensor Signal circuit from the Sensor harness connector to the appropriate terminal of the PCM Pinout Box (special tool #8815A, Kit, NGC, 38 Position) or the C4 TIPM harness connector.

   Is the resistance above 5.0 Ohms?

Yes

- Repair the excessive resistance in the Temperature Sensor Signal circuit.
- Perform the POWERTRAIN VERIFICATION TEST. Refer to **POWERTRAIN VERIFICATION TEST** .

No

- Go To 5.

5. **EXCESSIVE RESISTANCE IN THE SENSOR GROUND CIRCUIT**

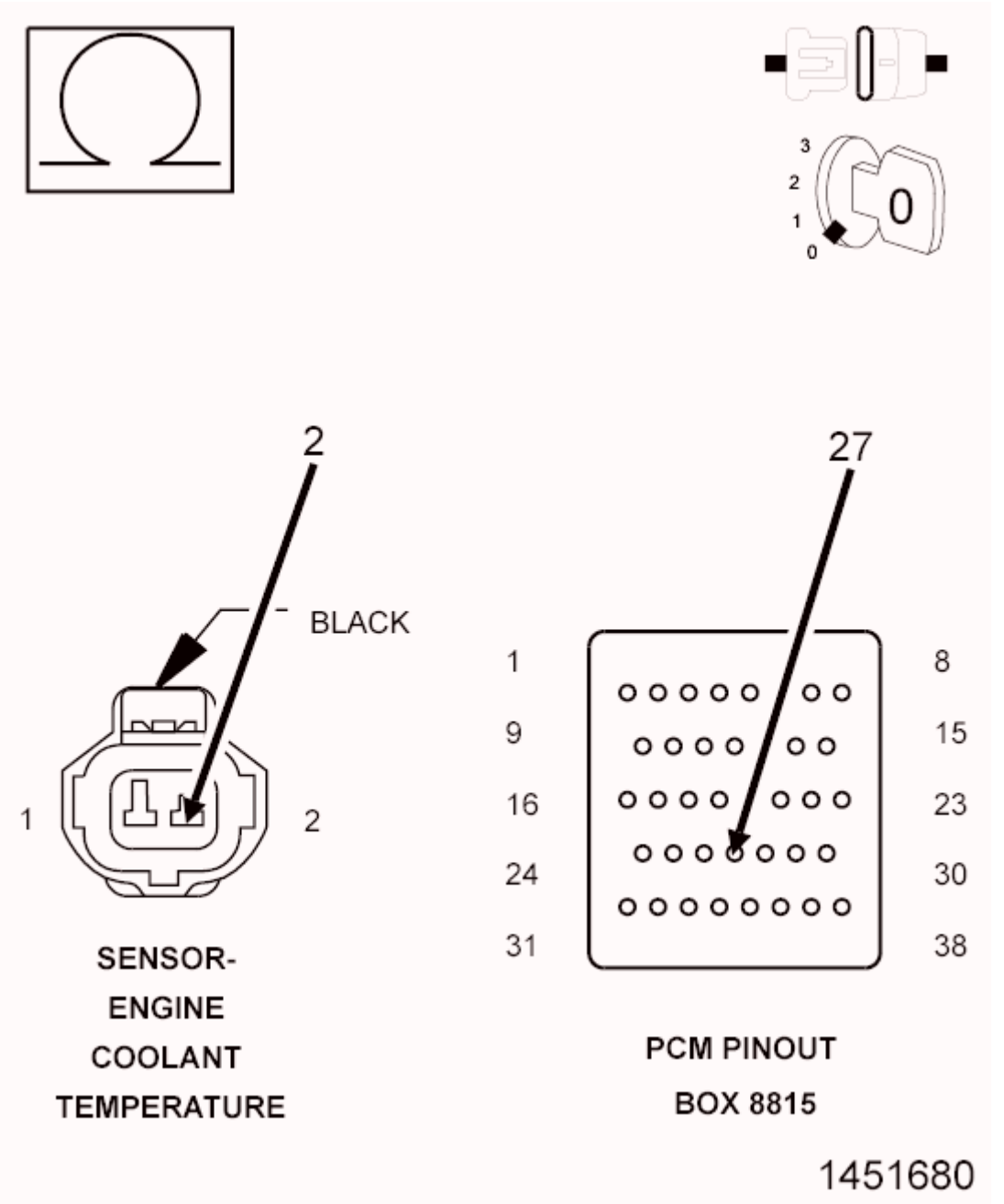

Fig. 52: Measuring Resistance Of ECT Sensor Ground Circuit From Harness Connector To Appropriate Terminal Of PCM Pinout Box 8815
Courtesy of CHRYSLER GROUP, LLC

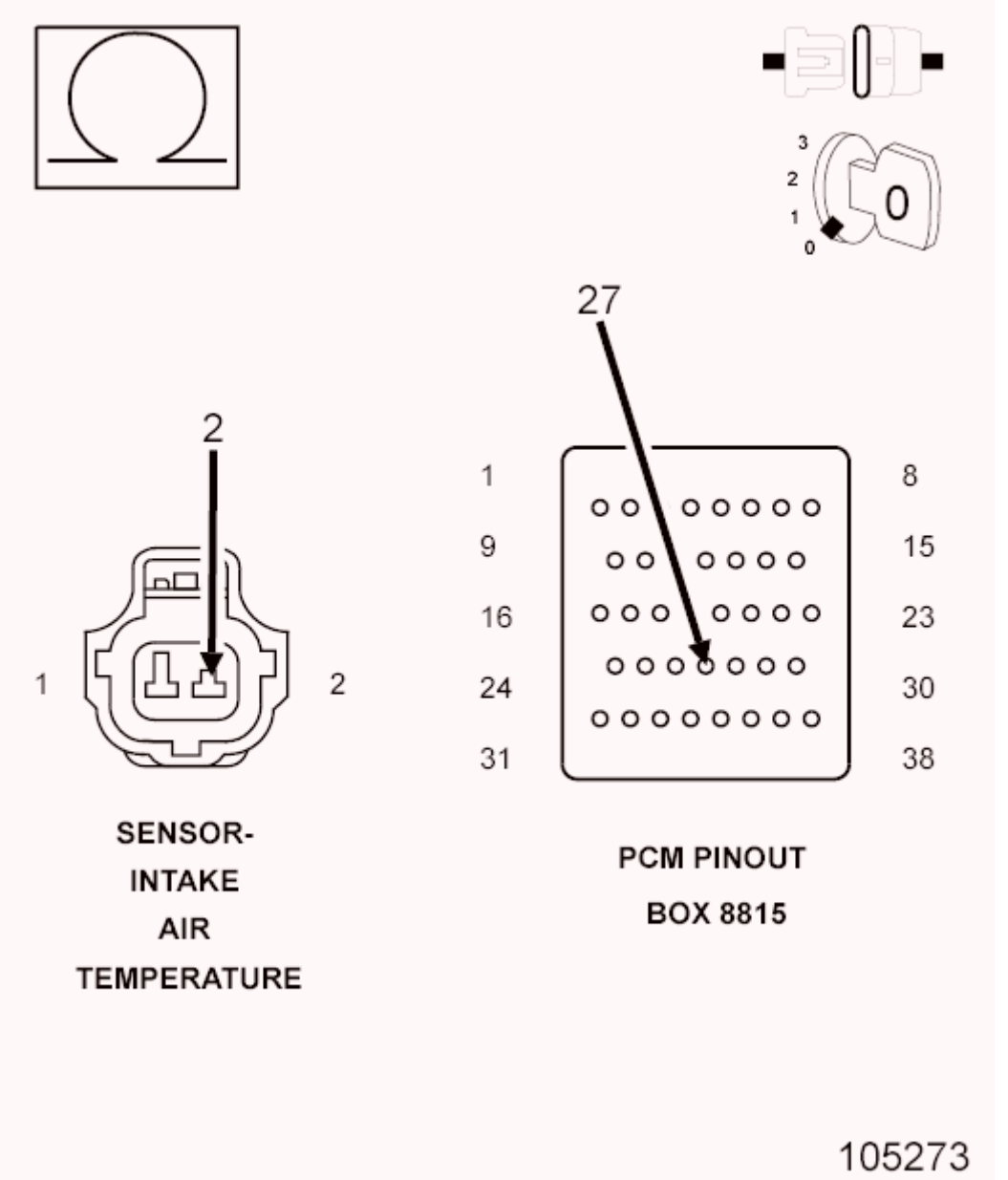

Fig. 53: Measuring Resistance Of Sensor Ground Circuit From IAT Sensor Harness Connector To Appropriate Terminal Of PCM Pinout Box 8815
Courtesy of CHRYSLER GROUP, LLC

1. Measure the resistance of the Sensor ground circuit from the Sensor harness connector to the PCM Pinout Box (special tool #8815A, Kit, NGC, 38 Position) or the C4 TIPM harness connector.

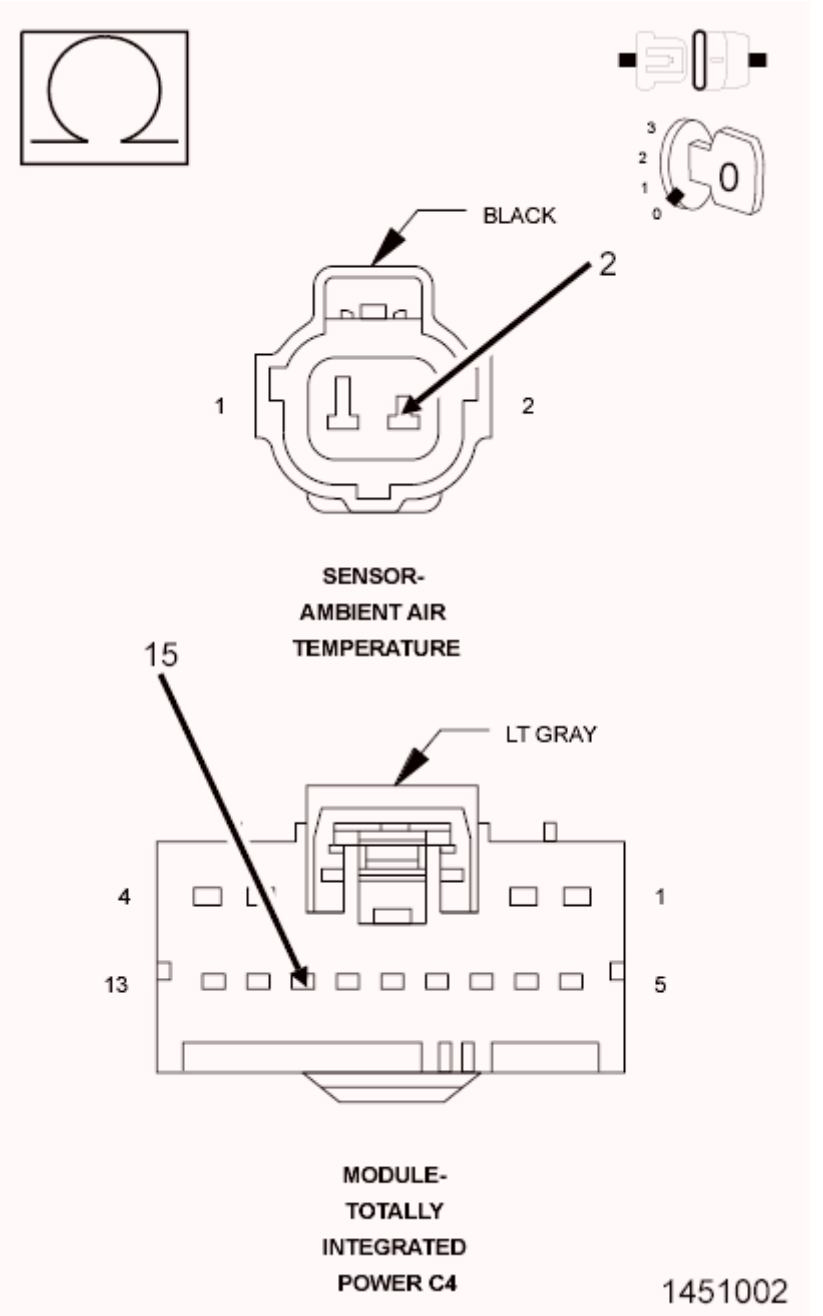

Fig. 54: Measuring Resistance Of Sensor Ground Circuit From AAT Sensor Harness Connector To TIPM Harness Connector
Courtesy of CHRYSLER GROUP, LLC

Is the resistance above 5.0 Ohms?

Yes

- Repair the excessive resistance in the Sensor ground circuit.
- Perform the POWERTRAIN VERIFICATION TEST. Refer to **POWERTRAIN VERIFICATION TEST** .

No

- Go To 6.

6. **SENSOR SIGNAL CIRCUIT SHORTED TO GROUND**

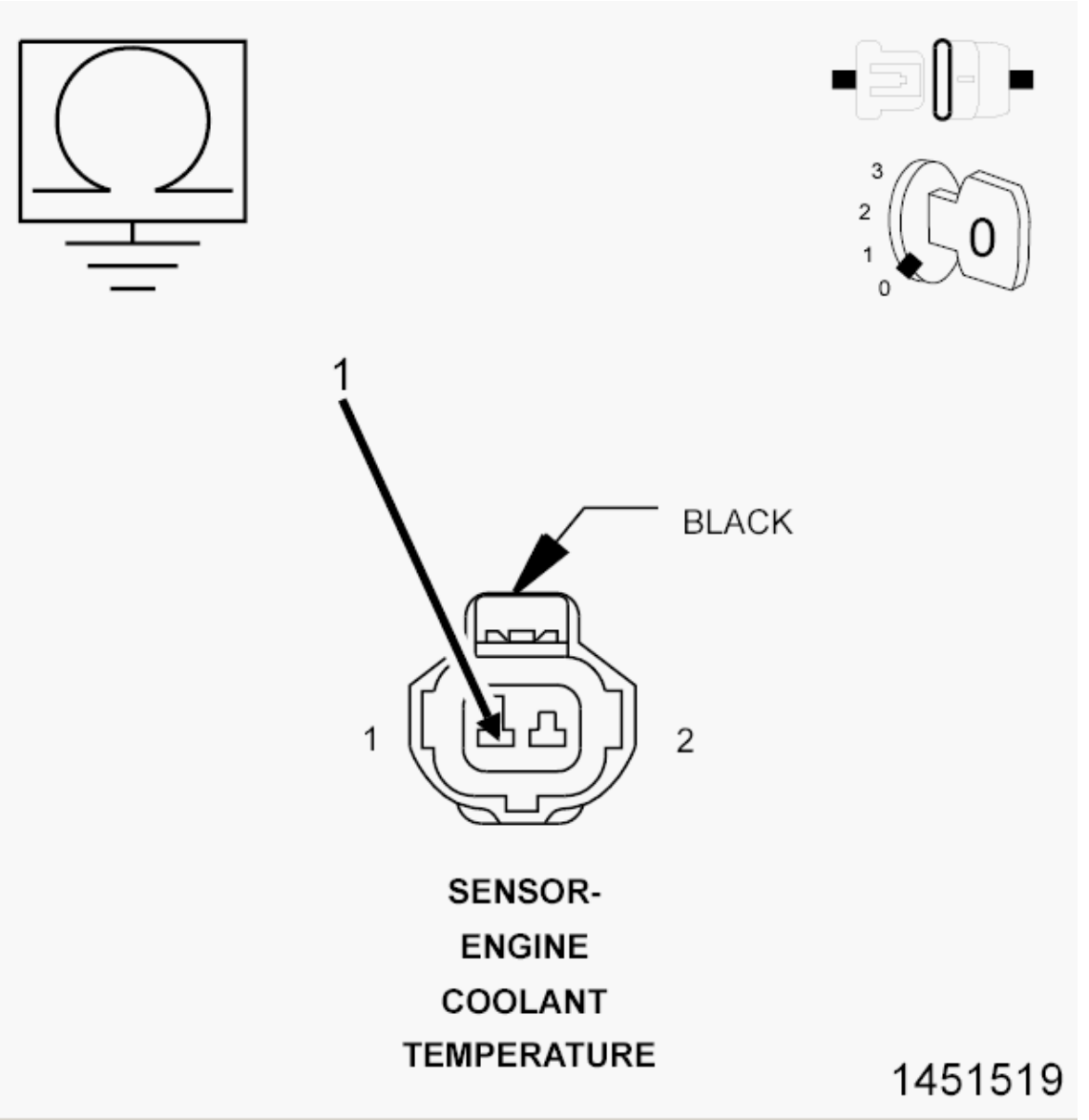

Fig. 55: Measuring Resistance Between Ground And ECT Sensor Signal Circuit In Sensor Harness Connector
Courtesy of CHRYSLER GROUP, LLC

1. Measure the resistance between ground and the Sensor Signal circuit at the Sensor harness connector.

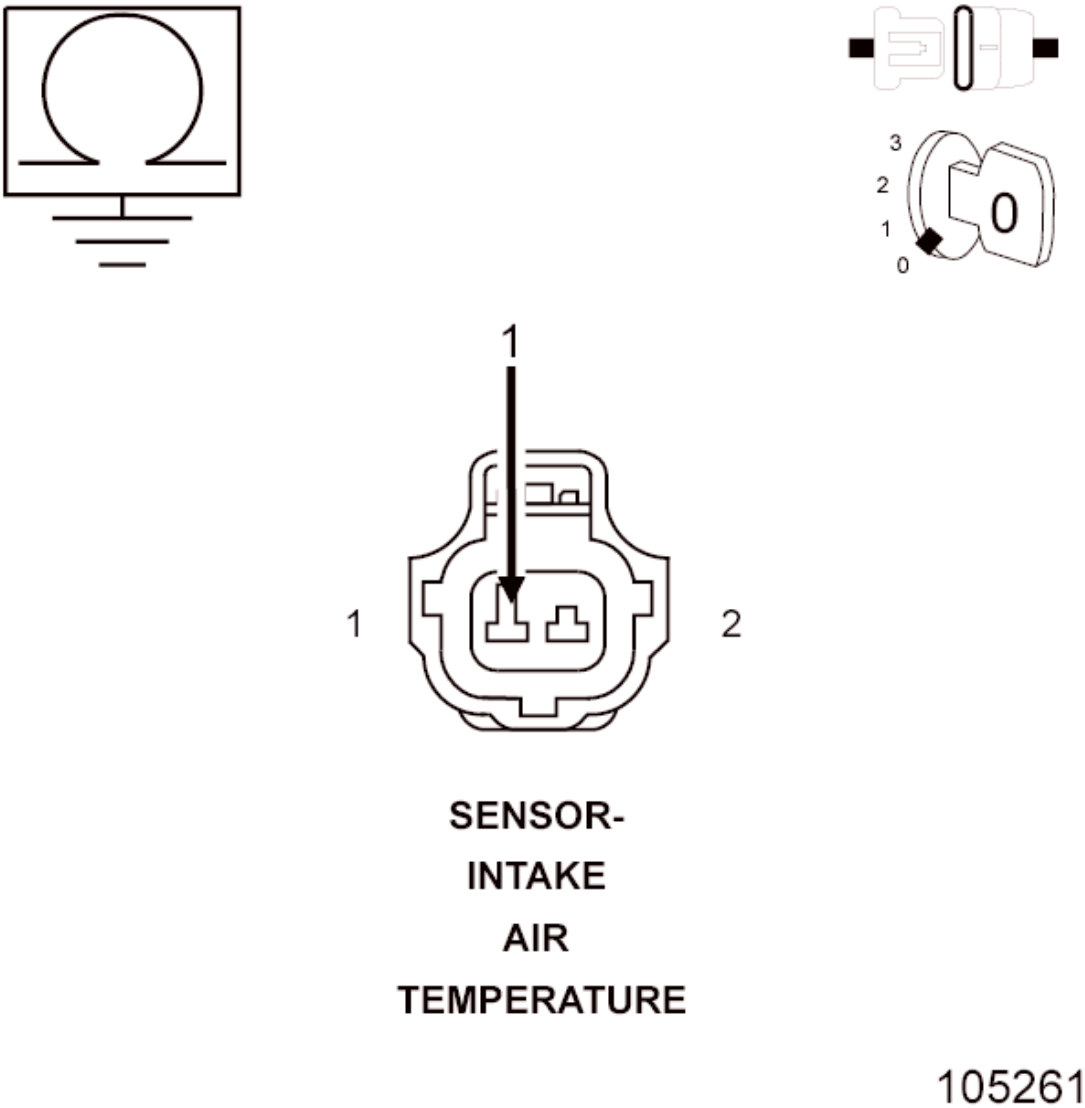

Fig. 56: Measuring Resistance Between Ground And IAT Sensor Signal Circuit AT IAT Sensor Harness Connector
Courtesy of CHRYSLER GROUP, LLC

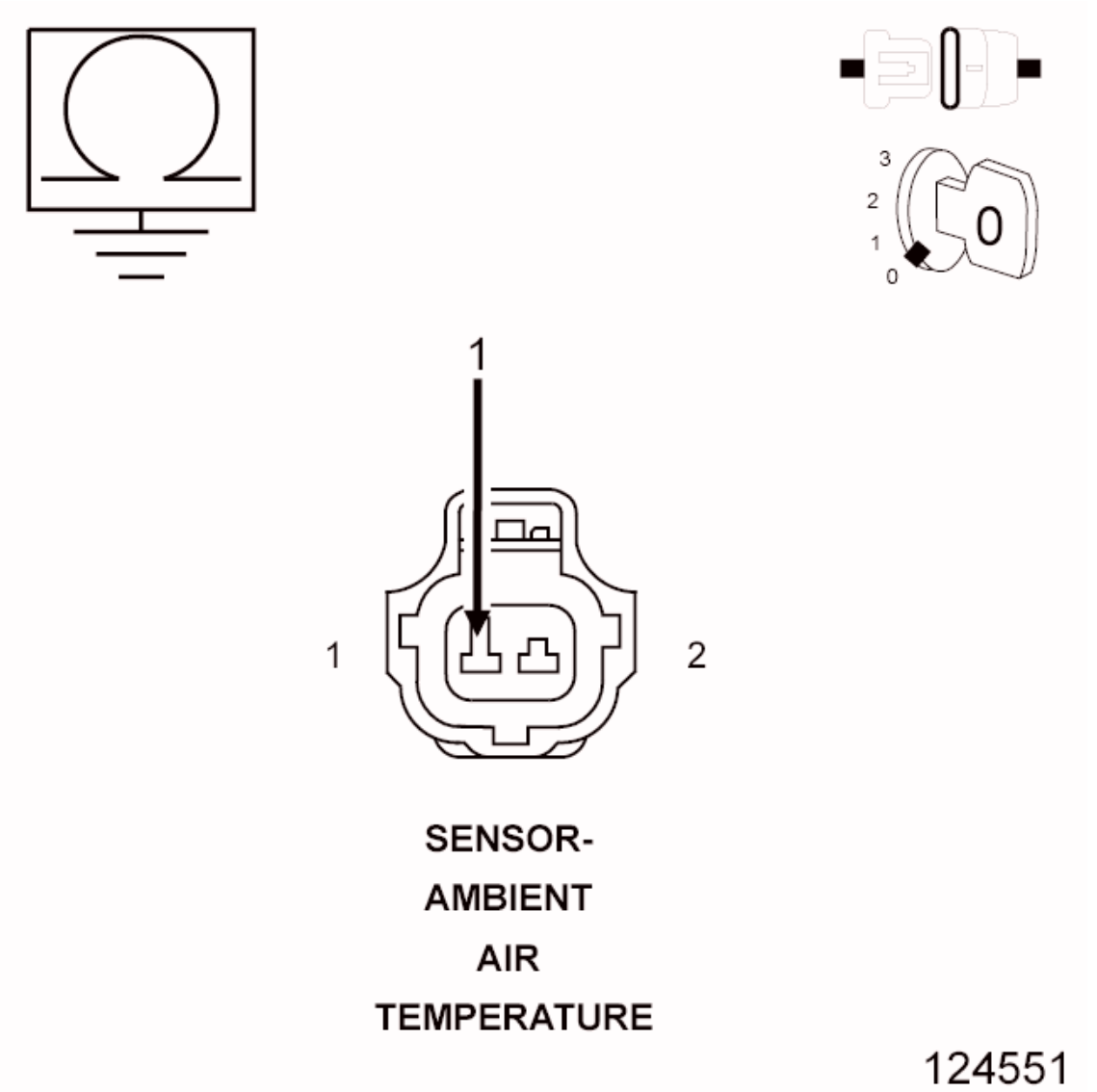

Fig. 57: Measuring Resistance Between Ground And AAT Sensor Signal Circuit In AAT Sensor Harness Connector
Courtesy of CHRYSLER GROUP, LLC

Is the resistance below 100 Ohms?

Yes

- Repair the short to ground in the Sensor Signal circuit.
- Perform the POWERTRAIN VERIFICATION TEST. Refer to **POWERTRAIN VERIFICATION TEST** .

No

- Go To 7.

7. **SENSOR SIGNAL CIRCUIT SHORTED TO THE SENSOR GROUND CIRCUIT**

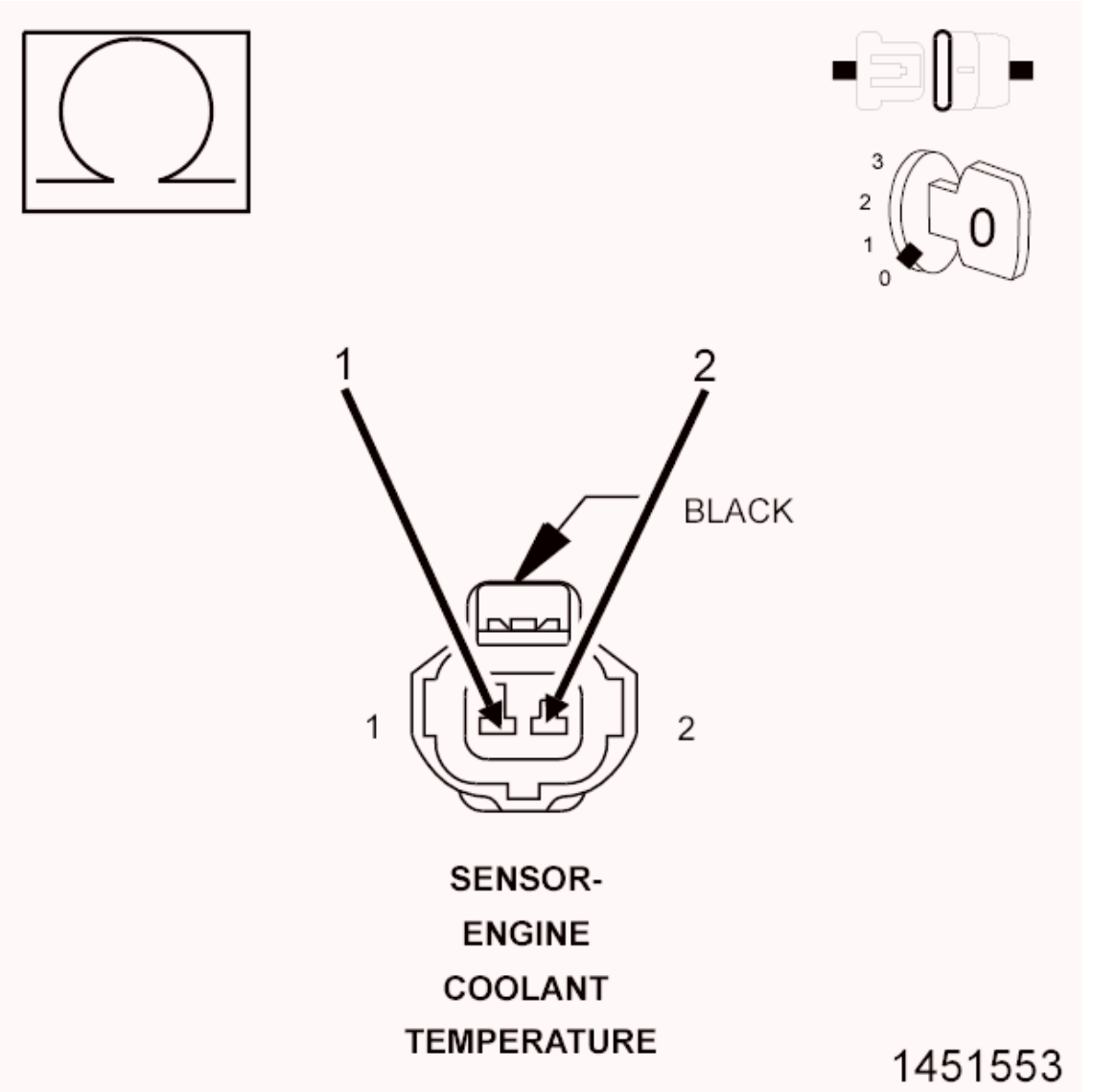

Fig. 58: Measuring Resistance Between ECT Sensor Signal Circuit And Ground Circuit In Sensor Harness Connector
Courtesy of CHRYSLER GROUP, LLC

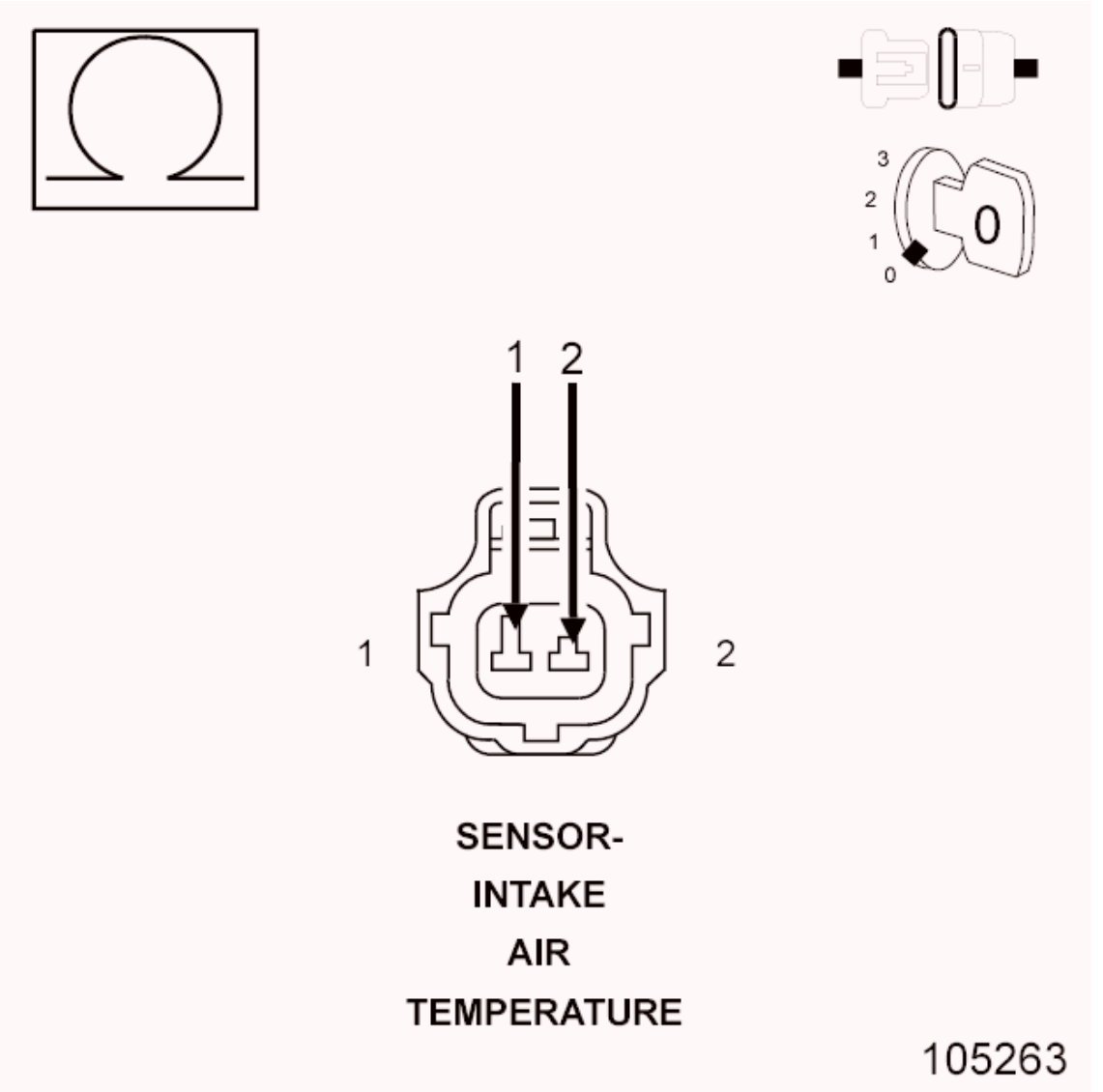

Fig. 59: Measuring Resistance Between IAT Sensor Signal Circuit And Sensor Ground Circuit AT IAT Sensor Harness Connector
Courtesy of CHRYSLER GROUP, LLC

1. Measure the resistance between ground and the Sensor Signal circuit at the Sensor harness connector.

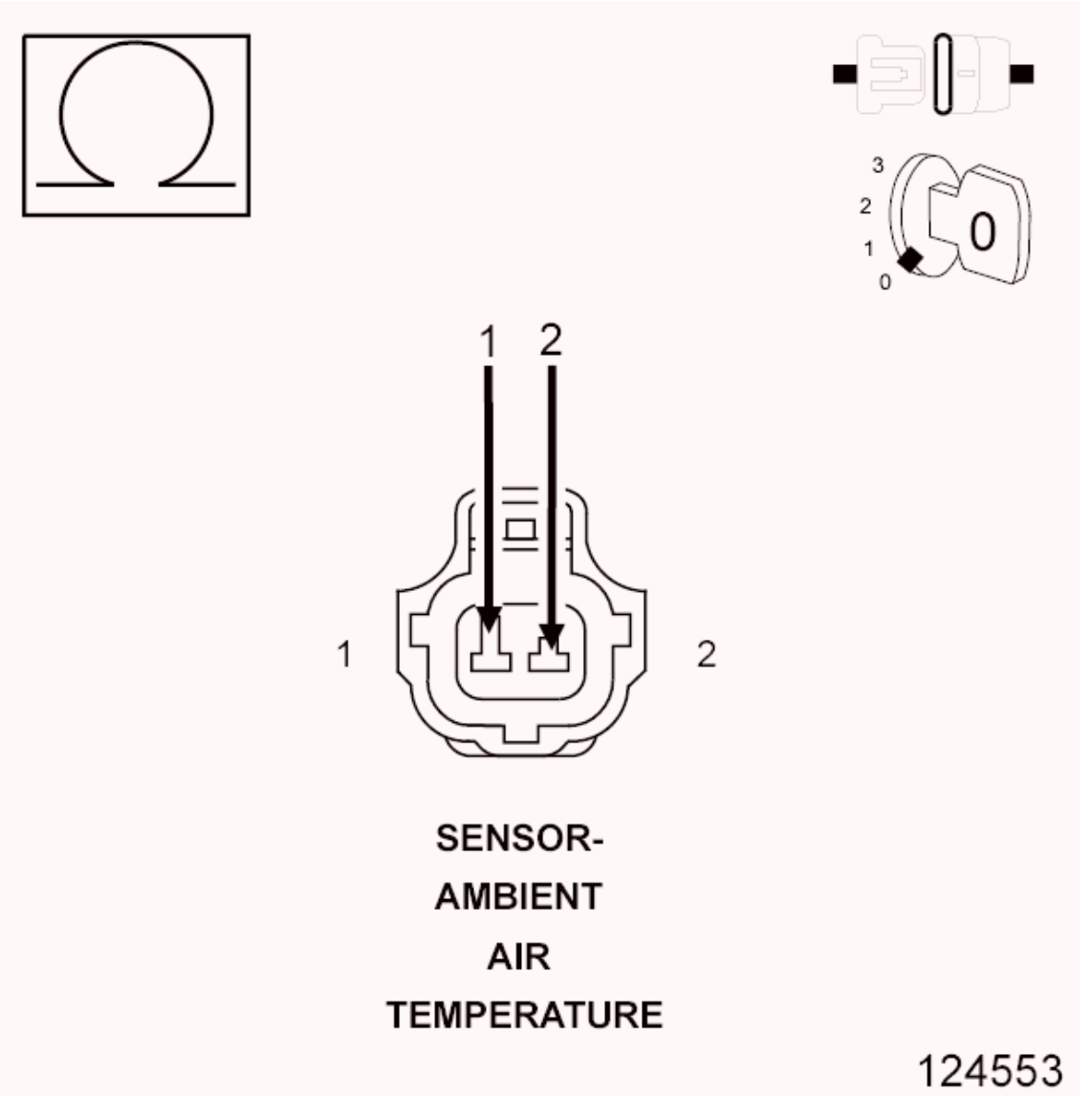

Fig. 60: Measuring Resistance Between Sensor Return Circuit And Sensor Signal Circuit In AAT Sensor Harness Connector
Courtesy of CHRYSLER GROUP, LLC

Is the resistance below 100 Ohms?

Yes

- Repair the short between the Sensor ground circuit and the Sensor Signal circuit.
- Perform the POWERTRAIN VERIFICATION TEST. Refer to **POWERTRAIN VERIFICATION TEST** .

No

- Go To 8.

8. **SENSOR SIGNAL CIRCUIT SHORTED TO VOLTAGE**

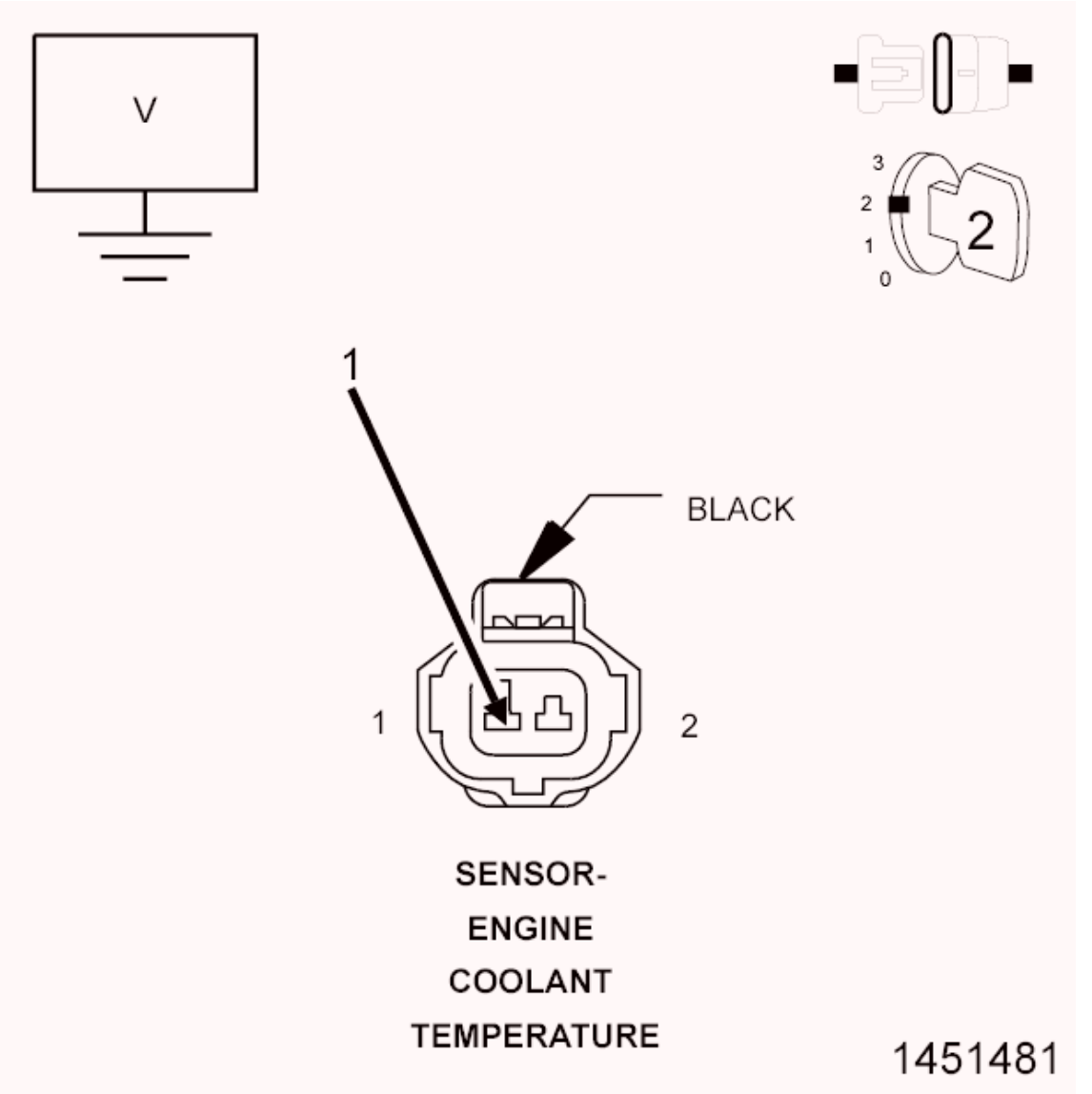

Fig. 61: Measuring Voltage On ECT Sensor Signal Circuit Harness Connector
Courtesy of CHRYSLER GROUP, LLC

1. Turn the ignition on.
2. Measure the voltage on the Sensor Signal circuit at the Sensor harness connector.

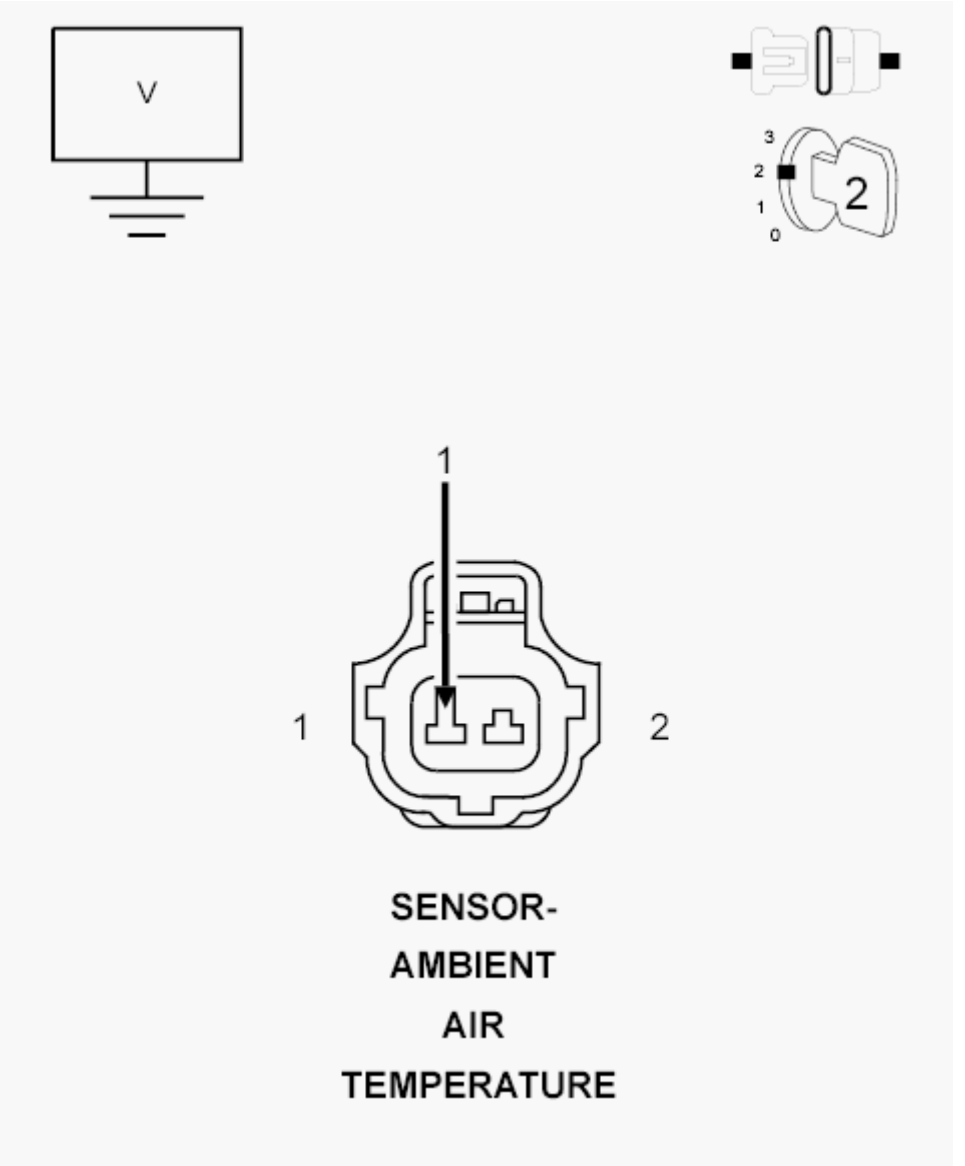

Fig. 62: Measuring Voltage On AAT Signal Circuit In AAT Sensor Harness Connector
Courtesy of CHRYSLER GROUP, LLC

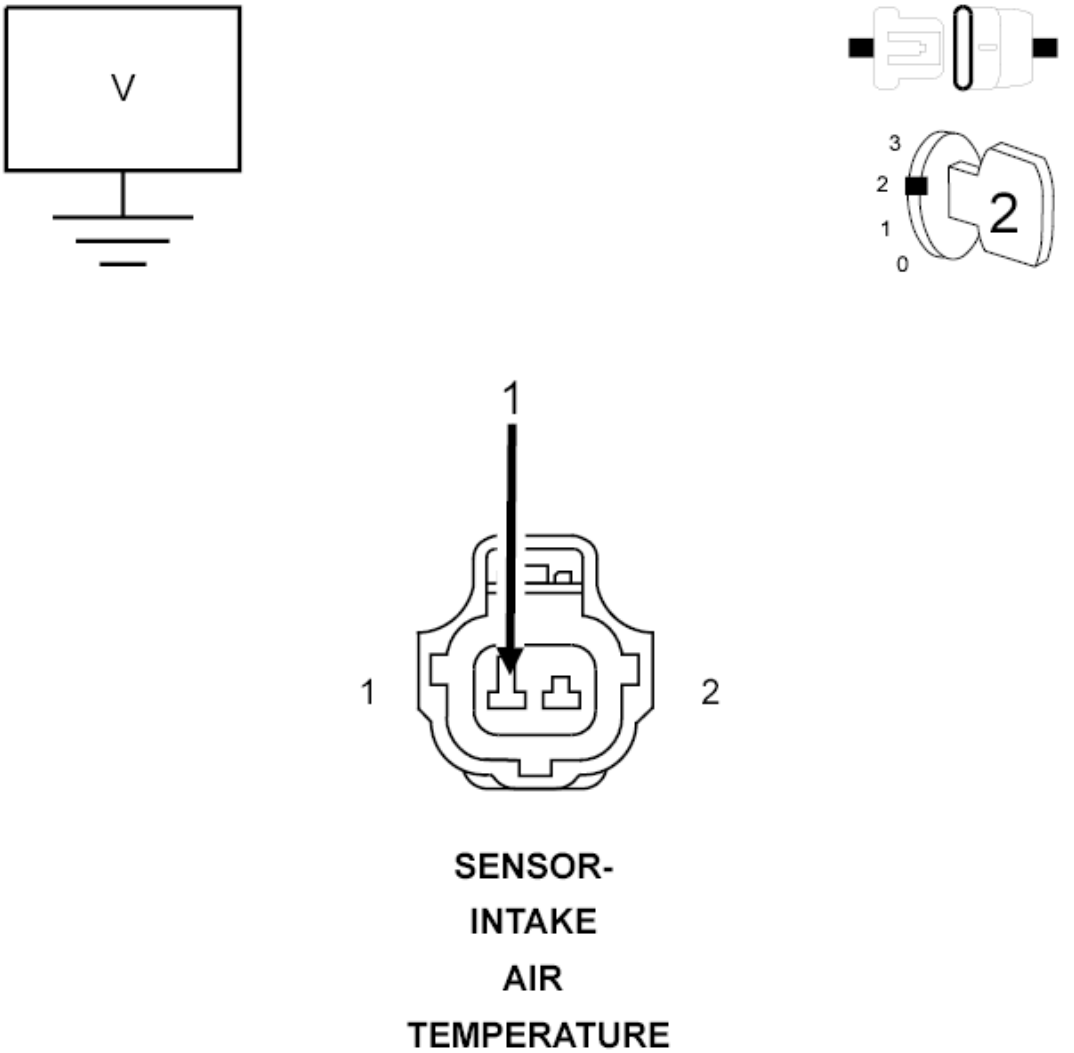

Fig. 63: Measuring Voltage Of IAT Sensor Signal Circuit AT IAT Sensor Harness Connector
Courtesy of CHRYSLER GROUP, LLC

Is there any voltage present?

Yes

- Repair the short to voltage in the Sensor Signal circuit.
- Perform the POWERTRAIN VERIFICATION TEST. Refer to **POWERTRAIN VERIFICATION TEST** .

No

- Go To 9.

9. **POWERTRAIN CONTROL MODULE (PCM)**
    1. Using the wiring diagram/schematic as a guide, inspect the wiring and connectors between the

related Sensor and the Powertrain Control Module (PCM).

2. Look for any chafed, pierced, pinched, or partially broken wires.
3. Look for broken, bent, pushed out or corroded terminals. Verify that there is good pin to terminal contact in the related Sensor and Powertrain Control Module connectors.
4. Perform any Technical Service Bulletins that may apply.

Were there any problems found?

Yes

- Repair as necessary.
- Perform the POWERTRAIN VERIFICATION TEST. Refer to **POWERTRAIN VERIFICATION TEST** .

No

- Replace and program the Powertrain Control Module in accordance with the Service Information. Refer to **MODULE, POWERTRAIN CONTROL, REMOVAL** .
- Perform the POWERTRAIN VERIFICATION TEST. Refer to **POWERTRAIN VERIFICATION TEST** .

P1128-CLOSED LOOP FUELING NOT ACHIEVED - BANK 1

For a complete wiring diagram, **refer to appropriate SYSTEM WIRING DIAGRAMS article** .

WHEN MONITORED:

Engine running in closed loop mode.

SET CONDITION:

Enable conditions are met and the 02 sensor has not been in closed loop control at least once on each of the two consecutive trips, the MIL illuminates and the DTC is set. Two Trip Fault. Three good trips to turn off the MIL

POSSIBLE CAUSES

Possible Causes
RESTRICTED FUEL SUPPLY LINE
FUEL PUMP INLET STRAINER PLUGGED
FUEL PUMP MODULE
O2 SIGNAL CIRCUIT
O2 RETURN CIRCUIT
1/1 O2 SENSOR
MAP SENSOR
ECT SENSOR

ENGINE MECHANICAL PROBLEM
FUEL FILTER/PRESSURE REGULATOR
POWERTRAIN CONTROL MODULE (PCM)

Always perform the Pre-Diagnostic Troubleshooting procedure before proceeding. Refer to PRE-DIAGNOSTIC TROUBLESHOOTING PROCEDURE .

DIAGNOSTIC TEST

1. **ACTIVE DTC**
    1. Diagnose all other trouble codes before continuing.
    2. Start the engine.
    3. Allow the engine to reach normal operating temperature.
    4. With a scan tool, select View DTCs.

    NOTE: It may be necessary to drive the vehicle to meet the conditions to set this DTC, try to repeat the conditions in which the fault originally set by reviewing the Freeze Frame data.

    Is the DTC Active or Pending at this time?

    Yes

    - Go To 2.

    No

    - Perform the INTERMITTENT CONDITION diagnostic procedure. Refer to **INTERMITTENT CONDITION** .
2. **CHECKING FUEL PRESSURE**

    WARNING: The fuel system is under a constant pressure (even with the engine off). Before testing or servicing any fuel system hose, fitting or line, the fuel system pressure must be released. Failure to follow these instructions can result in possible serious or fatal injury.

    1. Turn the ignition off.
    2. Install Fuel Pressure Decay Tester (special tool #8978A, Decay Tool, Fuel) to the fuel rail.
    3. Ignition on, engine not running.
    4. With a scan tool, actuate the ASD Fuel System test and observe the fuel pressure gauge.

    NOTE: Fuel pressure specification is 407 kPa +/- 34 kPa (59 psi +/- 5 psi).

    5. Turn the ignition off.

Choose a conclusion that best matches your fuel pressure reading.

Within Specification

- Go To 3.

Above Specification

- Replace the fuel filter/pressure regulator.
- Perform the POWERTRAIN VERIFICATION TEST. Refer to **POWERTRAIN VERIFICATION TEST** .

Below Specification

- Go To 12.

CAUTION: Stop All Actuations.

3. **O2 SENSOR OPERATION**
   1. Start the engine.
   2. Allow the engine to reach normal operating temperature.

      NOTE: **If one of the O2 Sensor's Signal or Return circuit is shorted to ground the scan tool will display all O2 Sensor voltage readings low. The O2 Sensor that is shorted to ground will display a voltage reading near or at 0 volts.**

      NOTE: **If one of the O2 Sensor Signal or Return circuits are shorted to voltage, the scan tool will display all O2 Sensor voltage readings high.**

      NOTE: **After the repairs have been made, verify proper O2 Sensor operation. If all the O2 Sensor voltage readings have not returned to normal, follow the diagnostic procedure for the remaining O2 Sensors.**

   3. With a scan tool, monitor all of the O2 Sensor voltage readings.

      Is the voltage switching between 2.5 and 3.4 volts for all the O2 Sensors?

      Yes

      - Go To 4.

      No

- Go To 8.

4. **1/1 O2 SENSOR HEATER OPERATION**
   1. Turn the ignition off.

      NOTE: Wait a minimum of 10 minutes to allow the O2 Sensor to cool down before continuing the test. Allow the O2 Sensor voltage to stabilize at 5.0 volts.

   2. Ignition on, engine not running.
   3. With a scan tool, actuate the 1/1 O2 Heater Test.
   4. With the scan tool, monitor 1/1 O2 Sensor voltage for at least 2 minutes.

      Does the voltage stay above 4.5 volts?

      Yes

      - Verify that there is good pin to terminal contact in the 1/1 O2 Sensor and Powertrain Control Module connectors. If OK, replace the 1/1 O2 Sensor.
      - Perform the POWERTRAIN VERIFICATION TEST. Refer to **POWERTRAIN VERIFICATION TEST** .

      No

      - Go To 5.

5. **MAP SENSOR OPERATION**
   1. Turn the ignition off.
   2. Connect a Vacuum Gauge to a Manifold Vacuum source.
   3. Start the engine.
   4. Allow the engine to idle.

      NOTE: If engine will not idle, maintain a constant RPM above idle.

   5. With the scan tool, read the MAP Sensor vacuum value.

      Is the scan tool reading within 1 inch of Hg on the Vacuum Gauge reading?

      Yes

      - Go To 6.

      No

      - Verify that there is good pin to terminal contact in the MAP Sensor and Powertrain Control Module connectors. If OK, replace the MAP Sensor.

- Perform the POWERTRAIN VERIFICATION TEST. Refer to **POWERTRAIN VERIFICATION TEST** .

6. **ECT SENSOR OPERATION**

NOTE: For this test to be valid, the thermostat must be operating correctly.

NOTE: This test works best if performed on a cold engine (cold soak)

1. Ignition on, engine not running.
2. With a scan tool, read the Engine Coolant Temperature (ECT) Sensor value. If the engine was allowed to sit overnight (cold soak), the temperature value should be a sensible value that is somewhere close to the ambient temperature.

   NOTE: If engine coolant temperature is above 82° C (180° F), allow the engine to cool until 65° C (150° F) is reached.

3. Start the Engine.
4. During engine warm-up, monitor the ECT Sensor value. The temperature value change should be a smooth transition from start up to normal operating temperature 82° C (180° F). The value should reach at least 82° C (180° F).

   Did the ECT value increase smoothly and did it reach at least 82° C (180° F)?

   Yes

   - Go To 7.

   No

   - Verify that there is good pin to terminal contact in the ECT Sensor and Powertrain Control Module connectors. If OK, replace the Engine Coolant Temperature Sensor.
   - Perform the POWERTRAIN VERIFICATION TEST. Refer to **POWERTRAIN VERIFICATION TEST** .

7. **ENGINE MECHANICAL PROBLEM**
   1. Turn the ignition off.
   2. Check for any of the following conditions/mechanical problems:
      - AIR INDUCTION SYSTEM - must be free from leaks.
      - ENGINE VACUUM - must be at least 13 inches in neutral
      - ENGINE VALVE TIMING - must be within specifications
      - ENGINE COMPRESSION - must be within specifications
      - ENGINE EXHAUST SYSTEM - must be free of any restrictions or leaks
      - ENGINE PCV SYSTEM - must flow freely

- TORQUE CONVERTER STALL SPEED - must be within specifications
- POWER BRAKE BOOSTER - no internal vacuum leaks
- FUEL - must be free of contamination
- FUEL INJECTOR - plugged or restricted injector; control wire not connected to correct injector

Are there any engine mechanical problems?

Yes

- Repair as necessary.
- Perform the POWERTRAIN VERIFICATION TEST. Refer to **POWERTRAIN VERIFICATION TEST** .

No

- Go To 11.

8. **1/1 O2 SENSOR**

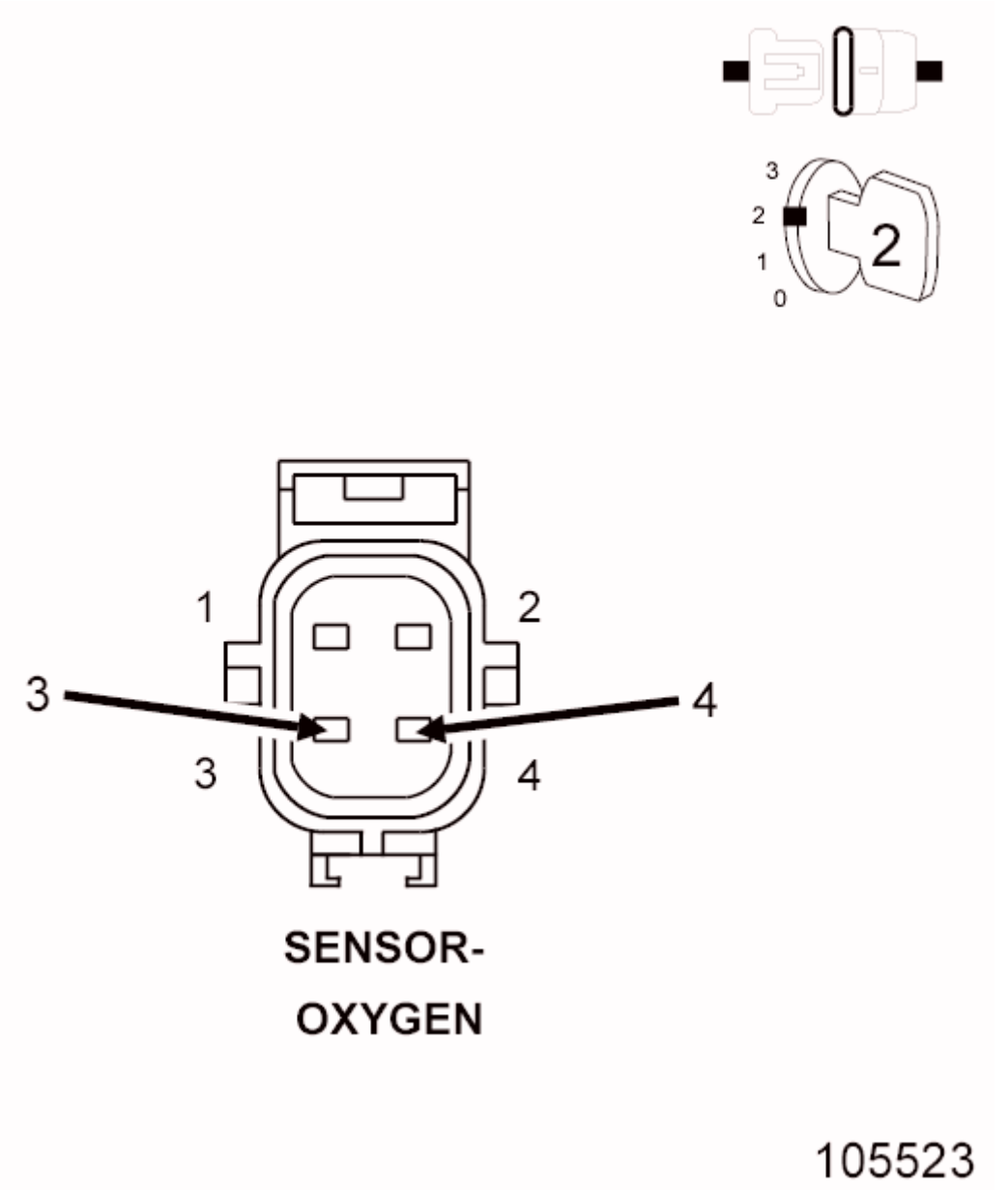

Fig. 64: O2 Sensor Harness Connector
Courtesy of CHRYSLER GROUP, LLC

1. Ignition on, engine not running.
2. Disconnect the 1/1 O2 Sensor harness connector.
3. With a scan tool, monitor the 1/1 O2 Sensor voltage.
4. O2 Sensor voltage should read between 4.1 and 5.0 volts on the scan tool with the connector disconnected.
5. Connect a jumper wire between the (K41) Signal circuit and the (K902) O2 Return Upstream circuit in the O2 Sensor harness connector.

NOTE: **The voltage should drop from between 4.1 and 5.0 volts to 2.5 volts**

with the jumper wire in place.

Did the O2 Sensor voltage change from between 4.1 and 5.0 volts to 2.5 volts with the jumper wire installed?

Yes

- Verify that there is good pin to terminal contact in the 1/1 O2 Sensor and Powertrain Control Module connectors. If OK, replace the 1/1 O2 Sensor.
- Perform the POWERTRAIN VERIFICATION TEST. Refer to **POWERTRAIN VERIFICATION TEST** .

No

- Go To 9.

NOTE: Remove the jumper wire before continuing.

9. **(K41) O2 SENSOR 1/1 SIGNAL CIRCUIT**
   1. With a scan tool, monitor the 1/1 O2 Sensor voltage reading with the jumper wire removed.

NOTE: The scan tool will display all O2 Sensor voltage readings approximately 5.0 volts when only one O2 Sensor's Signal circuit is shorted to voltage.

NOTE: The scan tool will display one O2 Sensor voltage close to zero and the others will read lower than normal when one O2 Sensor Signal circuit contains excessive resistance.

Is the voltage between 4.1 and 5.0 volts?

Yes

- Go To 10.

No

- Check the (K41) O2 Sensor 1/1 Signal circuit for a short to ground, open, or short to voltage. Inspect the O2 Sensor connector and the PCM harness connector. If OK, replace and program the Powertrain Control Module per Service Information. Refer to **MODULE, POWERTRAIN CONTROL, REMOVAL** .
- Perform the POWERTRAIN VERIFICATION TEST. Refer to **POWERTRAIN VERIFICATION TEST** .

10. **(K902) O2 RETURN UPSTREAM CIRCUIT**

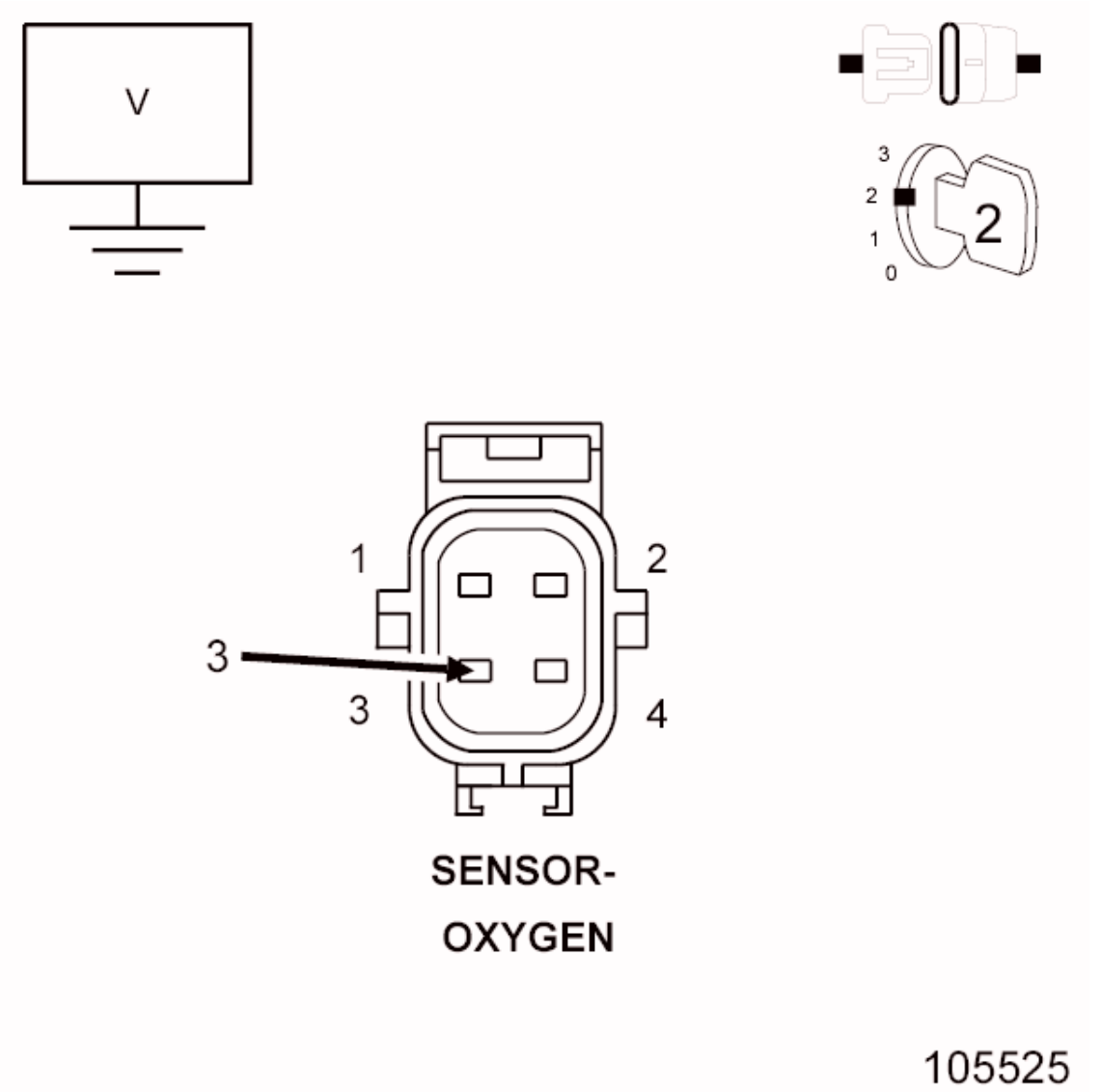

Fig. 65: Measuring Voltage On O2 Sensor Return Circuit In O2 Sensor Harness Connector
Courtesy of CHRYSLER GROUP, LLC

1. Disconnect the 1/1 O2 Sensor harness connector.
2. Measure the voltage on the (K902) O2 Return Upstream circuit in the O2 Sensor harness connector.

   Is the voltage at 2.5 volts?

   Yes

   - Go To 11.

   No

   - Check the O2 Return circuit for a short to ground, open, or short to voltage. Inspect the O2

Sensor connector and the PCM harness connector. If OK, replace and program the Powertrain Control Module per Service Information. Refer to **MODULE, POWERTRAIN CONTROL, REMOVAL** .

- Perform the POWERTRAIN VERIFICATION TEST. Refer to **POWERTRAIN VERIFICATION TEST** .

11. **POWERTRAIN CONTROL MODULE (PCM)**
    1. Using the wiring diagram/schematic as a guide, inspect the wiring and connectors between the related Sensor and the Powertrain Control Module (PCM).
    2. Look for any chafed, pierced, pinched, or partially broken wires.
    3. Look for broken, bent, pushed out or corroded terminals. Verify that there is good pin to terminal contact in the related Sensor and Powertrain Control Module connectors.
    4. Perform any Technical Service Bulletins that may apply.

    Were there any problems found?

    Yes

    - Repair as necessary.
    - Perform the POWERTRAIN VERIFICATION TEST. Refer to **POWERTRAIN VERIFICATION TEST** .

    No

    - Replace and program the Powertrain Control Module per Service Information. Refer to **MODULE, POWERTRAIN CONTROL, REMOVAL** .
    - Perform the POWERTRAIN VERIFICATION TEST. Refer to **POWERTRAIN VERIFICATION TEST** .

12. **RESTRICTED FUEL SUPPLY LINE**

    WARNING: **The fuel system is under a constant pressure (even with the engine off). Before testing or servicing any fuel system hose, fitting or line, the fuel system pressure must be released. Failure to follow these instructions can result in possible serious or fatal injury.**

    1. Turn the ignition off.
    2. Raise vehicle on hoist, and disconnect the fuel pressure line at the fuel pump module.
    3. Install Fuel Pressure Decay Tester (special tool #8978A, Decay Tool, Fuel) between the fuel supply line and the fuel pump module.
    4. Ignition on, engine not running.
    5. With a scan tool, actuate the ASD Fuel System test and observe the fuel pressure gauge.

    NOTE: Fuel pressure specification is 407 kPa +/- 34 kPa (59 psi +/- 5 psi).

Is the fuel pressure within specification?

Yes

- Repair or replace fuel supply line as necessary.
- Perform the POWERTRAIN VERIFICATION TEST. Refer to **POWERTRAIN VERIFICATION TEST** .

No

- Go To 13.

CAUTION: Stop All Actuations.

13. **FUEL PUMP INLET STRAINER**

WARNING: The fuel system is under a constant pressure (even with the engine off). Before testing or servicing any fuel system hose, fitting or line, the fuel system pressure must be released. Failure to follow these instructions can result in possible serious or fatal injury.

1. Turn the ignition off.
2. Remove the Fuel Pump Module and inspect the Fuel Inlet Strainer.

Is the Fuel Inlet Strainer plugged?

Yes

- Replace the Fuel Pump Inlet Strainer.
- Perform the POWERTRAIN VERIFICATION TEST. Refer to **POWERTRAIN VERIFICATION TEST** .

No

- Go To 14.

14. **FUEL PUMP MODULE**

If there are no possible causes remaining, view repair.

Repair

- Verify that there is good pin to terminal contact in the Fuel Pump Module, Relay, and Powertrain Control Module connectors. If OK, replace the Fuel Pump Module.
- Perform the POWERTRAIN VERIFICATION TEST. Refer to **POWERTRAIN**

VERIFICATION TEST .

P1129-CLOSED LOOP FUELING NOT ACHIEVED - BANK 2

For a complete wiring diagram, **refer to appropriate SYSTEM WIRING DIAGRAMS article** .

WHEN MONITORED:

Engine running in closed loop mode.

SET CONDITION:

Enable conditions are met and the 02 sensor has not been in closed loop control at least once on each of the two consecutive trips, the MIL illuminates and the DTC is set. Two Trip Fault. Three good trips to turn off the MIL

POSSIBLE CAUSES

Possible Causes
RESTRICTED FUEL SUPPLY LINE
FUEL PUMP INLET STRAINER PLUGGED
FUEL PUMP MODULE
O2 SIGNAL CIRCUIT
O2 RETURN CIRCUIT
O2 SENSOR
MAP SENSOR
ECT SENSOR
ENGINE MECHANICAL PROBLEM
FUEL FILTER/PRESSURE REGULATOR
POWERTRAIN CONTROL MODULE (PCM)

Always perform the Pre-Diagnostic Troubleshooting procedure before proceeding. Refer to PRE-DIAGNOSTIC TROUBLESHOOTING PROCEDURE .

DIAGNOSTIC TEST

1. **ACTIVE DTC**
    1. Diagnose all other trouble codes before continuing.

        NOTE: Check for contaminants that may have damaged an O2 Sensor: contaminated fuel, unapproved silicone, oil and coolant.

    2. Start the engine.
    3. Allow the engine to reach normal operating temperature.
    4. With a scan tool, select View DTCs.

NOTE: **It may be necessary to drive the vehicle to meet the conditions to set this DTC, try to repeat the conditions in which the fault originally set by reviewing the Freeze Frame data.**

Is the DTC Active or Pending at this time?

Yes

- Go To 2.

No

- Perform the INTERMITTENT CONDITION diagnostic procedure. Refer to **INTERMITTENT CONDITION** .

2. **CHECKING FUEL PRESSURE**

WARNING: **The fuel system is under a constant pressure (even with the engine off). Before testing or servicing any fuel system hose, fitting or line, the fuel system pressure must be released. Failure to follow these instructions can result in possible serious or fatal injury.**

1. Turn the ignition off.
2. Install Fuel Pressure Decay Tester (special tool #8978A, Decay Tool, Fuel) to the fuel rail.
3. Ignition on, engine not running.
4. With the scan tool, actuate the ASD Fuel System test and observe the fuel pressure gauge.

NOTE: **Fuel pressure specification is 407 kPa +/- 34 kPa (59 psi +/- 5 psi).**

5. Turn the ignition off.

Choose a conclusion that best matches your fuel pressure reading.

Within Specification

- Go To 3.

Above Specification

- Replace the fuel filter/pressure regulator.
- Perform the POWERTRAIN VERIFICATION TEST. Refer to **POWERTRAIN VERIFICATION TEST** .

Below Specification

- Go To 12.

CAUTION: Stop All Actuations.

3. **O2 SENSOR OPERATION**
   1. Start the engine.
   2. Allow the engine to reach normal operating temperature.

      NOTE: **If one of the O2 Sensor's Signal or Return circuit is shorted to ground the scan tool will display all O2 Sensor voltage readings low. The O2 Sensor that is shorted to ground will display a voltage reading near or at 0 volts.**

      NOTE: **If one of the O2 Sensor Signal or Return circuits are shorted to voltage, the scan tool will display all O2 Sensor voltage readings high.**

      NOTE: **After the repairs have been made, verify proper O2 Sensor operation. If all the O2 Sensor voltage readings have not returned to normal, follow the diagnostic procedure for the remaining O2 Sensors.**

   3. With the scan tool, monitor the 2/1 O2 Sensor voltage reading.

      Is the voltage switching between 2.5 and 3.4 volts?

      Yes

      - Go To 4.

      No

      - Go To 8.
4. **2/1 O2 SENSOR HEATER OPERATION**
   1. Turn the ignition off.

      NOTE: **Wait a minimum of 10 minutes to allow the O2 Sensor to cool down before continuing the test. Allow the O2 Sensor voltage to stabilize at 5.0 volts.**

      NOTE: **Perform the following test on all O2 Sensors.**

   2. Ignition on, engine not running.
   3. With a scan tool, actuate the 2/1 O2 Heater Test.
   4. With the scan tool, monitor 2/1 O2 Sensor voltage for at least 2 minutes.

Does the voltage stay above 4.5 volts?

Yes

- Verify that there is good pin to terminal contact in the 2/1 O2 Sensor and Powertrain Control Module connectors. If OK, replace the 2/1 O2 Sensor.
- Perform the POWERTRAIN VERIFICATION TEST. Refer to **POWERTRAIN VERIFICATION TEST** .

No

- Go To 5.

5. **MAP SENSOR OPERATION**
   1. Turn the ignition off.
   2. Connect a Vacuum Gauge to a Manifold Vacuum source.
   3. Start the engine.
   4. Allow the engine to idle.

      NOTE: If engine will not idle, maintain a constant RPM above idle.

   5. With the scan tool, read the MAP Sensor vacuum value.

      Is the scan tool reading within 1 inch of Hg on the Vacuum Gauge reading?

      Yes

      - Go To 6.

      No

      - Verify that there is good pin to terminal contact in the MAP Sensor and Powertrain Control Module connectors. If OK, replace the MAP Sensor.
      - Perform the POWERTRAIN VERIFICATION TEST. Refer to **POWERTRAIN VERIFICATION TEST** .

6. **ECT SENSOR OPERATION**

   NOTE: For this test to be valid, the thermostat must be operating correctly.

   NOTE: This test works best if performed on a cold engine (cold soak).

   1. Ignition on, engine not running.
   2. With the scan tool, read the Engine Coolant Temperature (ECT) Sensor value. If the engine was allowed to sit overnight (cold soak), the temperature value should be a sensible value that is somewhere close to the ambient temperature.

NOTE: **If engine coolant temperature is above 82° C (180° F), allow the engine to cool until 65° C (150° F) is reached.**

3. Start the Engine.
4. During engine warm-up, monitor the ECT Sensor value. The temperature value change should be a smooth transition from start up to normal operating temperature 82° C (180° F). The value should reach at least 82° C (180° F).

   Did the ECT value increase smoothly and did it reach at least 82° C (180° F)?

   Yes

   - Go To 7.

   No

   - Verify that there is good pin to terminal contact in the ECT Sensor and Powertrain Control Module connectors. If OK, replace the Engine Coolant Temperature Sensor.
   - Perform the POWERTRAIN VERIFICATION TEST. Refer to **POWERTRAIN VERIFICATION TEST** .

7. **ENGINE MECHANICAL PROBLEM**
   1. Turn the ignition off.
   2. Check for any of the following conditions/mechanical problems:
      - AIR INDUCTION SYSTEM - must be free from leaks.
      - ENGINE VACUUM - must be at least 13 inches in neutral
      - ENGINE VALVE TIMING - must be within specifications
      - ENGINE COMPRESSION - must be within specifications
      - ENGINE EXHAUST SYSTEM - must be free of any restrictions or leaks
      - ENGINE PCV SYSTEM - must flow freely
      - TORQUE CONVERTER STALL SPEED - must be within specifications
      - POWER BRAKE BOOSTER - no internal vacuum leaks
      - FUEL - must be free of contamination
      - FUEL INJECTOR - plugged or restricted injector; control wire not connected to correct injector

      Are there any engine mechanical problems?

      Yes

      - Repair as necessary.
      - Perform the POWERTRAIN VERIFICATION TEST. Refer to **POWERTRAIN VERIFICATION TEST** .

No

- Go To 11.

8. **O2 SENSOR**

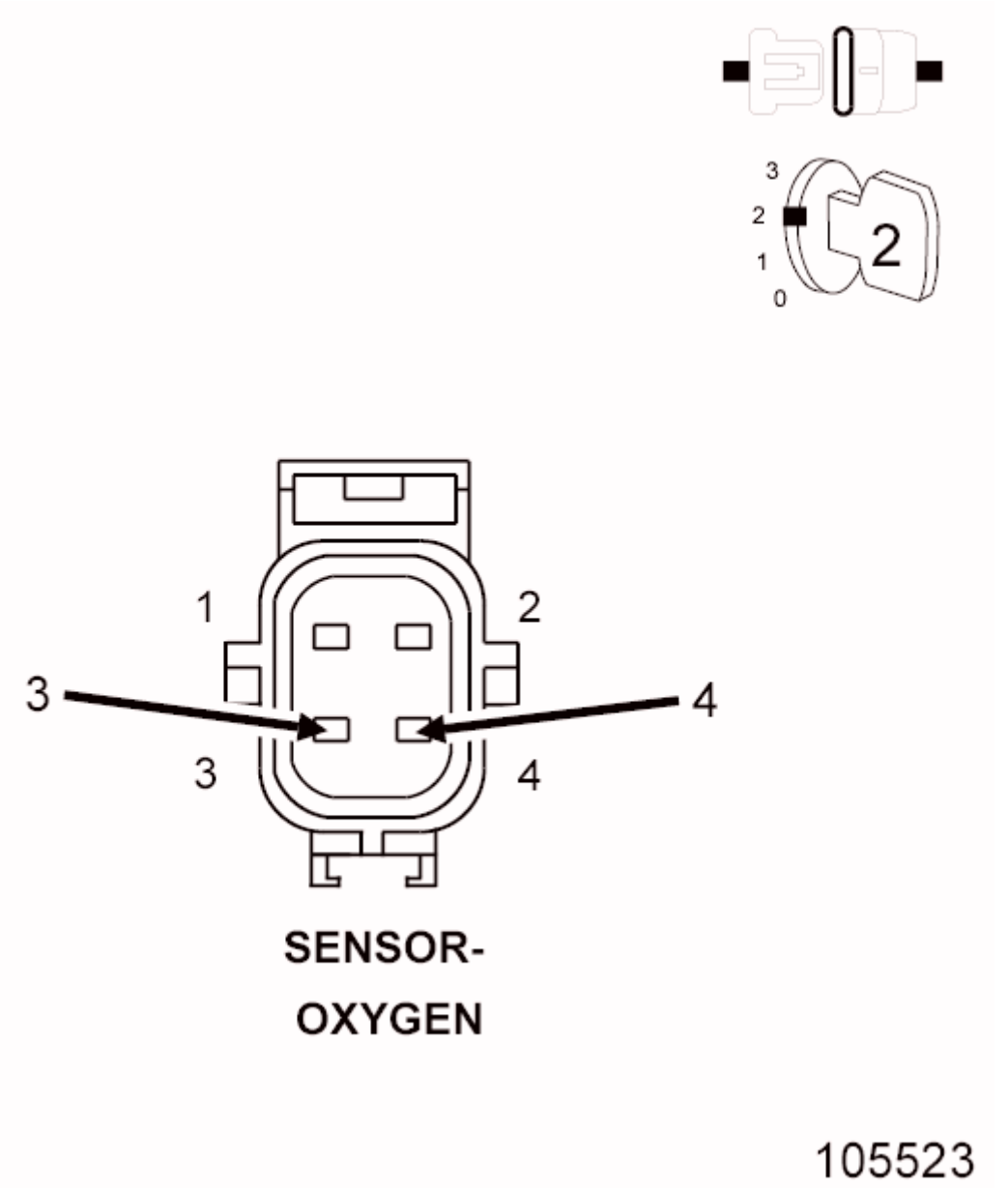

Fig. 66: O2 Sensor Harness Connector
Courtesy of CHRYSLER GROUP, LLC

1. Ignition on, engine not running.
2. Disconnect the 2/1 O2 Sensor harness connector.
3. With the scan tool, monitor the 2/1 O2 Sensor voltage.
4. O2 Sensor voltage should read between 4.1 and 5.0 volts on the scan tool with the connector

disconnected.

5. Connect a jumper wire between the (K43) O2 Sensor 2/1 Signal circuit and the (K902) O2 Return Upstream circuit in the O2 Sensor harness connector.

NOTE: The voltage should drop from between 4.1 and 5.0 volts to 2.5 volts with the jumper wire in place.

Did the O2 Sensor voltage change from between 4.1 and 5.0 volts to 2.5 volts when the jumper wire was installed?

Yes

- Verify that there is good pin to terminal contact in the 2/1 O2 Sensor and Powertrain Control Module connectors. If OK, replace the 2/1 O2 Sensor.
- Perform the POWERTRAIN VERIFICATION TEST. Refer to **POWERTRAIN VERIFICATION TEST** .

No

- Go To 9.

NOTE: Remove the jumper wire before continuing.

9. **O2 SENSOR SIGNAL CIRCUIT**
   1. With the scan tool, monitor all the O2 Sensor voltage reading with the jumper wire removed.

NOTE: The scan tool will display all O2 Sensor voltage readings approximately 5.0 volts when only one O2 Sensor's Signal circuit is shorted to voltage.

NOTE: The scan tool will display one O2 Sensor voltage close to zero and the others will read lower than normal when one O2 Sensor Signal circuit contains excessive resistance.

Is the voltage between 4.1 and 5.0 volts?

Yes

- Go To 10.

No

- Check all the O2 Signal circuits for a short to ground, open, or short to voltage. Inspect the O2 Sensor connector and the PCM harness connector. If OK, replace and program the Powertrain Control Module per Service Information. Refer to **MODULE, POWERTRAIN**

CONTROL, REMOVAL .

- Perform the POWERTRAIN VERIFICATION TEST. Refer to **POWERTRAIN VERIFICATION TEST** .

10. **(K902) O2 RETURN UPSTREAM CIRCUIT**

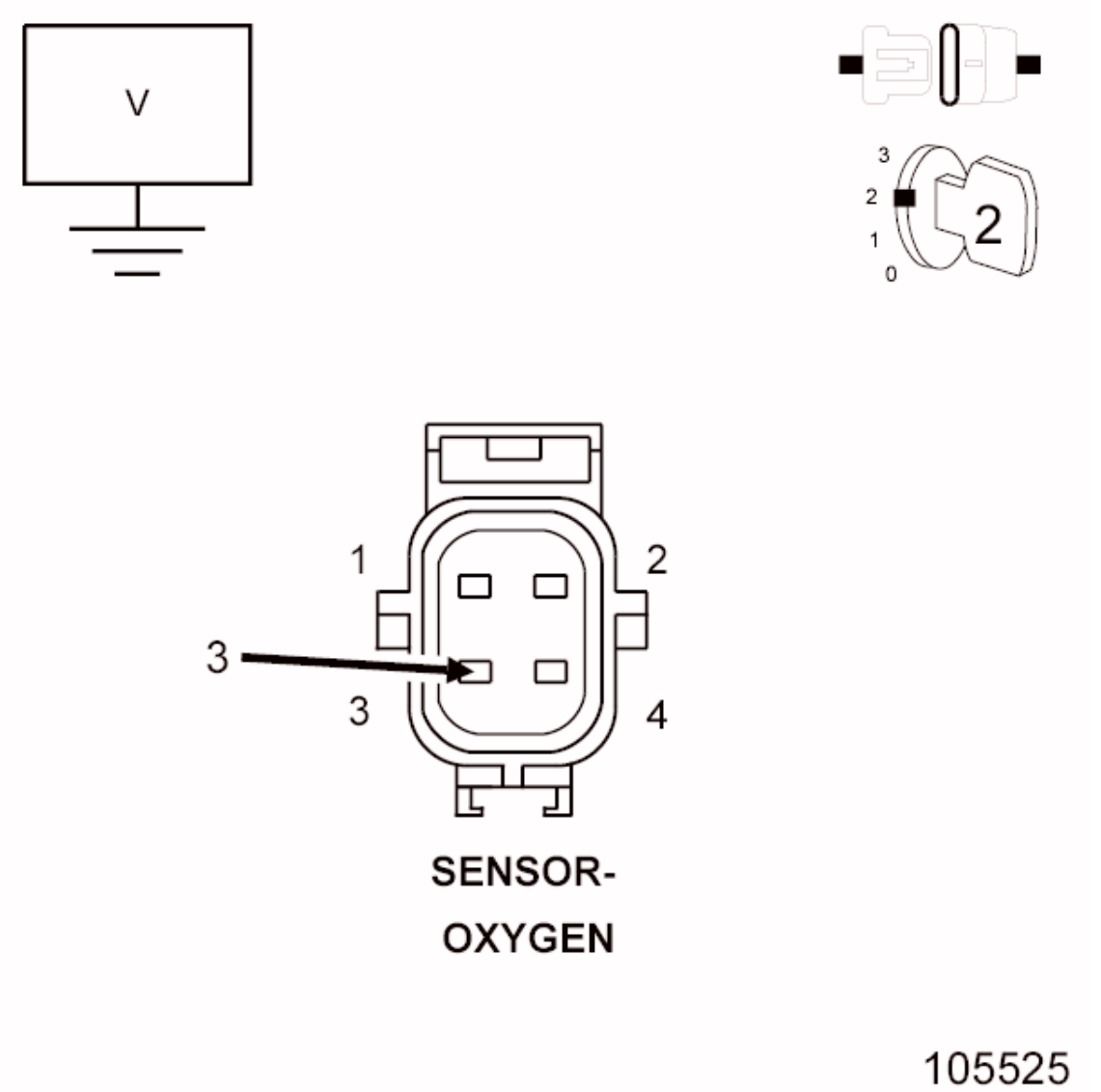

Fig. 67: Measuring Voltage On O2 Sensor Return Circuit In O2 Sensor Harness Connector
Courtesy of CHRYSLER GROUP, LLC

1. Measure the voltage on the (K902) O2 Return Upstream circuit in the O2 Sensor harness connector.

   Is the voltage at 2.5 volts?

   Yes

   - Go To 11.

No

- Check the (K902) O2 Return Upstream circuit for a short to ground, open, or short to voltage. Inspect the O2 Sensor connector and the PCM harness connector. If OK, replace and program the Powertrain Control Module per Service Information. Refer to **MODULE, POWERTRAIN CONTROL, REMOVAL** .
- Perform the POWERTRAIN VERIFICATION TEST. Refer to **POWERTRAIN VERIFICATION TEST** .

11. **POWERTRAIN CONTROL MODULE (PCM)**
    1. Using the wiring diagram/schematic as a guide, inspect the wiring and connectors between the related Sensor and the Powertrain Control Module (PCM).
    2. Look for any chafed, pierced, pinched, or partially broken wires.
    3. Look for broken, bent, pushed out or corroded terminals. Verify that there is good pin to terminal contact in the related Sensor and Powertrain Control Module connectors.
    4. Refer to any Technical Service Bulletins that may apply.

    Were there any problems found?

    Yes

    - Repair as necessary.
    - Perform the POWERTRAIN VERIFICATION TEST. Refer to **POWERTRAIN VERIFICATION TEST** .

    No

    - Replace and program the Powertrain Control Module per Service Information. Refer to **MODULE, POWERTRAIN CONTROL, REMOVAL** .
    - Perform the POWERTRAIN VERIFICATION TEST. Refer to **POWERTRAIN VERIFICATION TEST** .

12. **RESTRICTED FUEL SUPPLY LINE**

    WARNING: **The fuel system is under a constant pressure (even with the engine off). Before testing or servicing any fuel system hose, fitting or line, the fuel system pressure must be released. Failure to follow these instructions can result in possible serious or fatal injury.**

    1. Turn the ignition off.
    2. Raise vehicle on hoist, and disconnect the fuel pressure line at the fuel pump module.
    3. Install Fuel Pressure Decay Tester (special tool #8978A, Decay Tool, Fuel) between the fuel supply line and the fuel pump module.
    4. Ignition on, engine not running.
    5. With the scan tool, actuate the ASD Fuel System test and observe the fuel pressure gauge.

NOTE: Fuel pressure specification is 407 kPa +/- 34 kPa (59 psi +/- 5 psi).

Is the fuel pressure within specification?

Yes

- Repair or replace fuel supply line as necessary.
- Perform the POWERTRAIN VERIFICATION TEST. Refer to **POWERTRAIN VERIFICATION TEST** .

No

- Go To 13.

CAUTION: Stop All Actuations.

13. **FUEL PUMP INLET STRAINER**

WARNING: The fuel system is under a constant pressure (even with the engine off). Before testing or servicing any fuel system hose, fitting or line, the fuel system pressure must be released.

1. Turn the ignition off.
2. Remove the Fuel Pump Module and inspect the Fuel Inlet Strainer.

Is the Fuel Inlet Strainer plugged?

Yes

- Replace the Fuel Pump Inlet Strainer.
- Perform the POWERTRAIN VERIFICATION TEST. Refer to **POWERTRAIN VERIFICATION TEST** .

No

- Go To 14.

14. **FUEL PUMP MODULE**

If there are no possible causes remaining, view repair.

Repair

- Verify that there is good pin to terminal contact in the Fuel Pump Module, Relay, and Powertrain Control Module connectors. If OK, replace the Fuel Pump Module.

- Perform the POWERTRAIN VERIFICATION TEST. Refer to **POWERTRAIN VERIFICATION TEST** .

P1239-ENGINE OIL TEMPERATURE TOO LOW

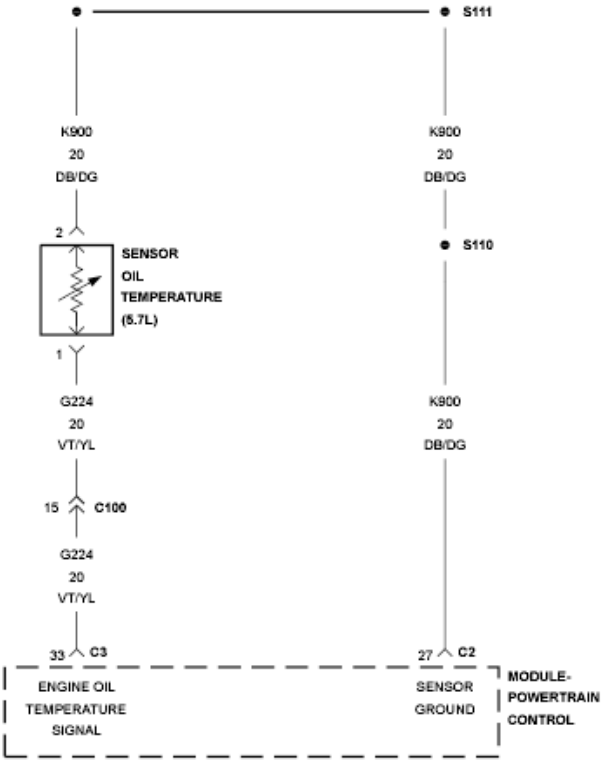

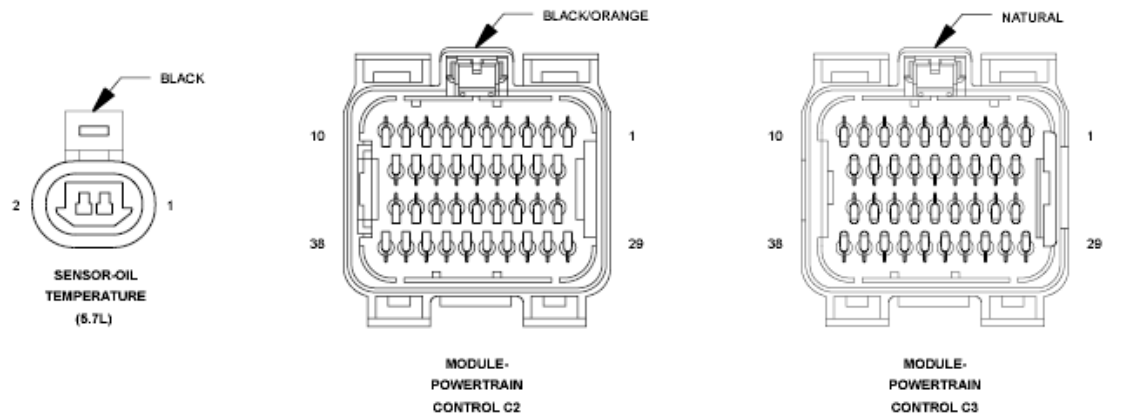

Fig. 68: Engine Oil Temperature Sensor Circuit Schematic
Courtesy of CHRYSLER GROUP, LLC

For a complete wiring diagram **refer to appropriate SYSTEM WIRING DIAGRAMS article** .

WHEN MONITORED:

The engine oil temperature has dropped below a calibrated temperature value. Engine start up.

SET CONDITION:

The Engine Oil temperature rises slower than a calibrated modeled temperature. When the actual oil temperature falls below the low boundary of the calibrated modeled temperature for 3 minutes the fault is set. Two trip fault. Three good trips to turn off the MIL.

POSSIBLE CAUSES

Possible Causes
INTERMITTENT DTC
ENGINE OIL
(G224) EOT SIGNAL CIRCUIT HIGH RESISTANCE
(K900) SENSOR GROUND CIRCUIT HIGH RESISTANCE
ENGINE OIL TEMPERATURE SENSOR
POWERTRAIN CONTROL MODULE (PCM)

Always perform the Pre-Diagnostic Troubleshooting procedure before proceeding. Refer to PRE-DIAGNOSTIC TROUBLESHOOTING PROCEDURE .

DIAGNOSTIC TEST

1. **DTC IS ACTIVE**

   NOTE: Diagnose any CAN - C Communication DTCs before continuing.

   1. Turn the ignition off.
   2. If possible, allow the vehicle to sit with the ignition off for more than 60 minutes in an environment where the temperature will allow the oil temperature to cool down.
   3. Start the engine and allow it to reach normal operating conditions.
   4. With a scan tool, select View DTCs.

      Is the status Active or Pending for this DTC?

      Yes

      - Go To 2.

      No

      - Refer to the *CHECKING FOR AN INTERMITTENT DTC Diagnostic Procedure. Refer to **INTERMITTENT CONDITION** .

2. **ENGINE OIL**

   The following conditions must be checked:

   - OEM recommended oil viscosity is being used.
   - Customer is following the oil change schedule.
   - Check the engine oil for contamination. (i.e., fuel and/or engine coolant)
   - Internal engine condition that may effect oil pressure.

   Were any of the above conditions found?

   Yes

   - Repair as necessary.
   - Perform the POWERTRAIN VERIFICATION TEST. Refer to **POWERTRAIN VERIFICATION TEST** .

   No

   - Go To 3.

3. **ENGINE OIL TEMPERATURE SENSOR VOLTAGE**
   1. Turn the ignition off.
   2. Disconnect the Engine Oil Temperature Sensor harness connector.
   3. Turn the ignition on.
   4. With a scan tool, read the Engine Oil Temperature Sensor voltage.

      NOTE: The sensor voltage should be approximately 5.0 volts (plus or minus .1 volt) with the connector disconnected.

      Does the scan tool display the voltage as described above?

      Yes

      - Go To 4.

      No

      - Go To 5.

4. **ENGINE OIL TEMPERATURE SENSOR**

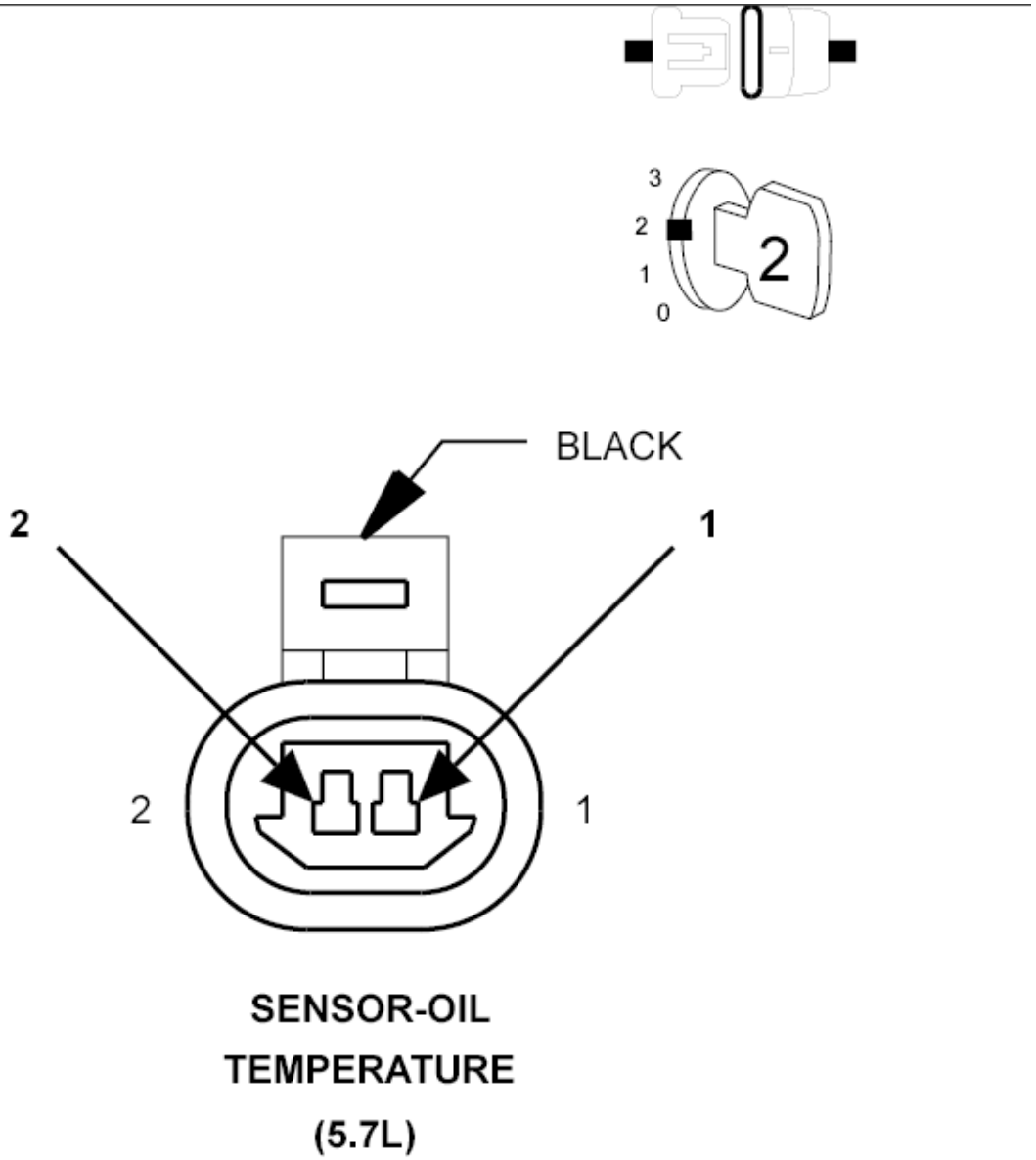

Fig. 69: Engine Oil Temperature Sensor
Courtesy of CHRYSLER GROUP, LLC

1. Turn the ignition off.
2. Connect a jumper wire between the (G224) EOT Signal circuit and the (K900) Sensor Ground circuit in the Engine Oil Temperature Sensor harness connector.
3. Turn the ignition on.
4. With a scan tool, read the Engine Oil Temperature Sensor voltage.

NOTE: **The sensor voltage should be approximately 0.0 volts (plus or minus .1 volt) with the jumper wire in place.**

Does the scan tool display the voltage as described above?

Yes

- Replace the Engine Oil Temperature Sensor.
- Perform the POWERTRAIN VERIFICATION TEST. Refer to **POWERTRAIN VERIFICATION TEST** .

No

- Go To 5.

5. **(G224) EOT SIGNAL CIRCUIT HIGH RESISTANCE**

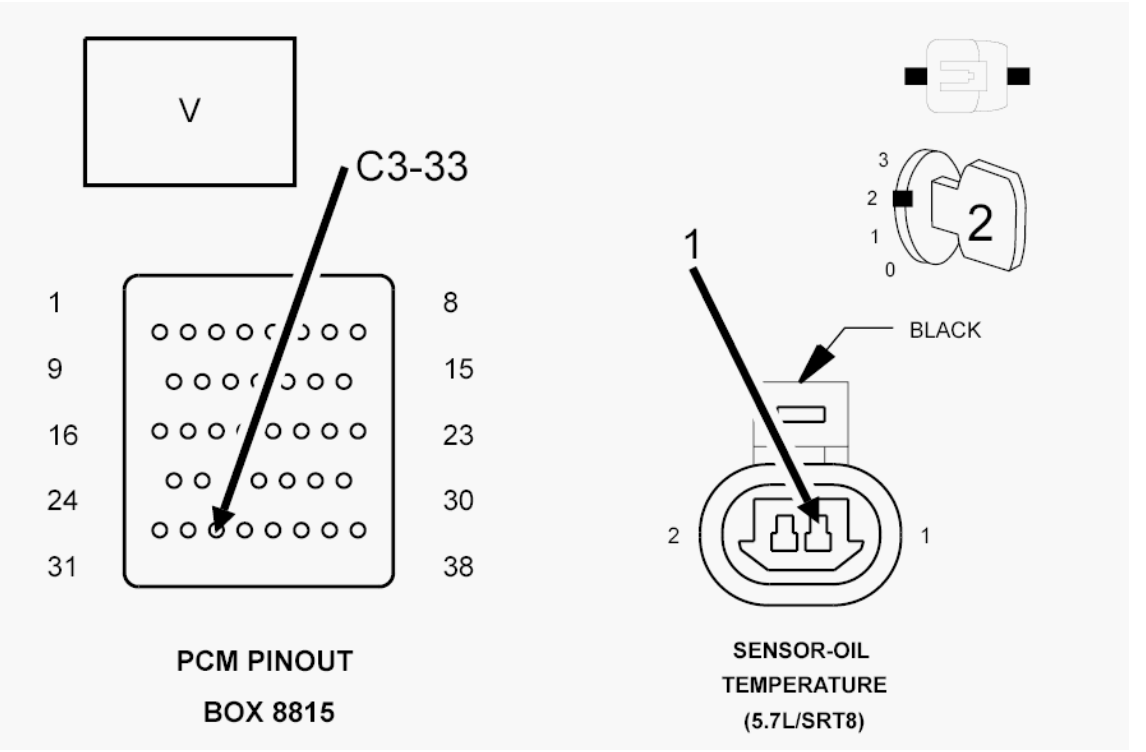

Fig. 70: Performing Voltage Drop Test ((G224) EOT Signal Circuit)
Courtesy of CHRYSLER GROUP, LLC

1. Turn the ignition off.
2. Connect the Engine Oil Temperature Sensor harness connector.

CAUTION: Do not probe the PCM harness connectors. Probing the PCM harness connectors will damage the PCM terminals resulting in poor terminal to pin connection. Install the PCM Pinout Box (special tool #8815A, Kit, NGC, 38 Position) along with the (special tool #8815-1, PCM Pinout Box Adapter) to perform the diagnosis.

3. Using a voltmeter, perform a voltage drop test by backprobing the (G224) EOT Signal circuit at the Engine Oil Temperature Sensor harness connector and probing the appropriate terminal of the special tool (special tool #8815A, Kit, NGC, 38 Position). Make sure the voltmeter leads are connected so that positive polarity is displayed on the voltmeter.

   WARNING: When the engine is operating, do not stand in direct line with the fan. Do not put your hands near the pulleys, belts, or fan. Do not wear loose clothing. Failure to follow these instructions can result in possible serious or fatal injury.

4. Start the engine.

   Is the voltage below 0.5 volts?

   Yes

   - Go To 6.

   No

   - Repair the (G224) EOT Signal circuit for high resistance.
   - Perform the POWERTRAIN VERIFICATION TEST. Refer to **POWERTRAIN VERIFICATION TEST** .

6. **(K900) SENSOR GROUND CIRCUIT HIGH RESISTANCE**

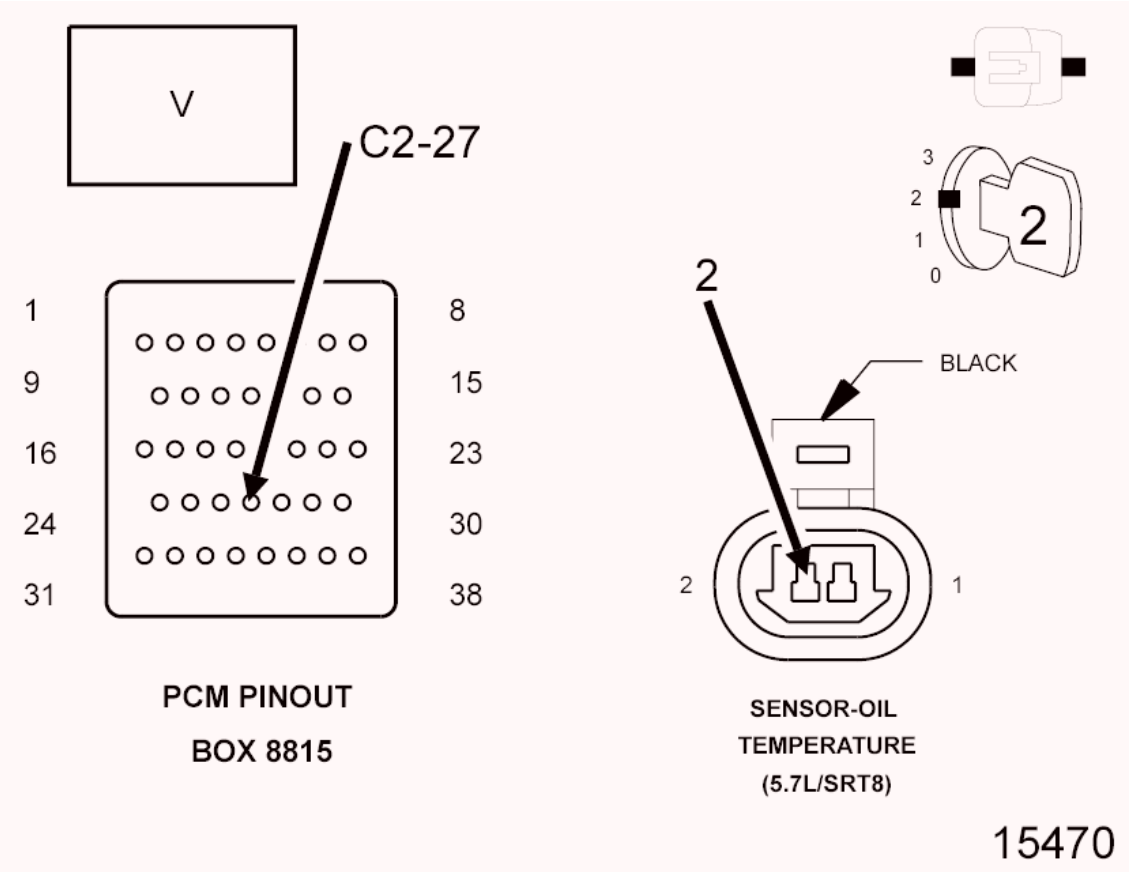

Fig. 71: Performing A Voltage Drop Test ((K900) Sensor Ground Circuit)
Courtesy of CHRYSLER GROUP, LLC

1. Turn the ignition off.

CAUTION: Do not probe the PCM harness connectors. Probing the PCM harness connectors will damage the PCM terminals resulting in poor terminal to pin connection. Install the PCM Pinout Box (special tool #8815A, Kit, NGC, 38 Position) along with the (special tool #8815-1, PCM Pinout Box Adapter) to perform the diagnosis.

2. Using a voltmeter, perform a voltage drop test by backprobing the (K900) Sensor Ground circuit at the Engine Oil Temperature Sensor harness connector and probing the appropriate terminal of the special tool (special tool #8815A, Kit, NGC, 38 Position). Make sure the voltmeter leads are connected so that positive polarity is displayed on the voltmeter.

WARNING: When the engine is operating, do not stand in direct line with the fan. Do not put your hands near the pulleys, belts, or fan. Do not wear loose clothing. Failure to follow these instructions can result in personal injury or death.

3. Start the engine.

   Is the voltage below 0.5 volts?

   Yes

   - Go To 7.

   No

   - Repair the (K900) Sensor Ground circuit for high resistance.
   - Perform the POWERTRAIN VERIFICATION TEST. Refer to **POWERTRAIN VERIFICATION TEST** .

7. **POWERTRAIN CONTROL MODULE (PCM)**
   1. Using the wiring diagram/schematic as a guide, inspect the wiring and connectors between the Engine Oil Temperature Sensor and the Powertrain Control Module (PCM).
   2. Look for any chafed, pierced, pinched, or partially broken wires.
   3. Look for broken, bent, pushed out or corroded terminals.
   4. Monitor the scan tool data relative to this circuit and wiggle test the wiring and connectors.
   5. Look for the data to change or for the DTC to reset during the wiggle test.
   6. Refer to any Technical Service Bulletins that may apply.

      Were any problems found?

      Yes

      - Repair as necessary.
      - Perform the POWERTRAIN VERIFICATION TEST. Refer to **POWERTRAIN VERIFICATION TEST** .

      No

      - Replace the Powertrain Control Module (PCM) in accordance with the Service Information.
      - Perform the POWERTRAIN VERIFICATION TEST. Refer to **POWERTRAIN VERIFICATION TEST** .

P1524-OIL PRESSURE OUT OF RANGE - CAMSHAFT ADVANCE/RETARD DISABLED

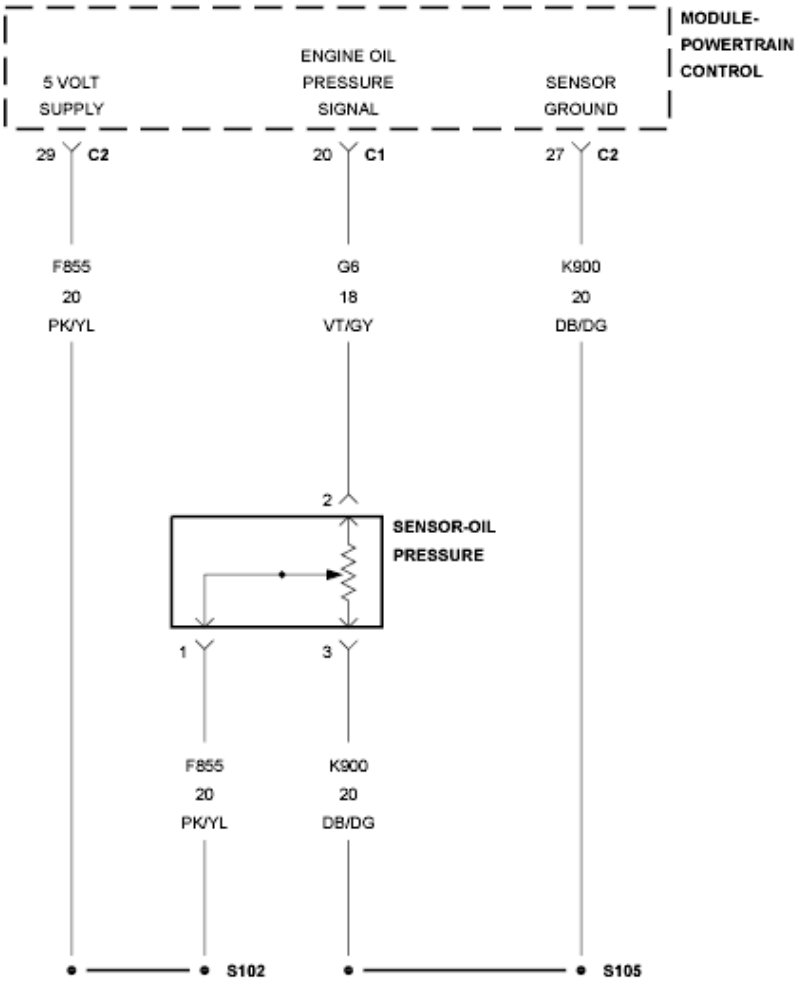
MODULE-
POWERTRAIN
CONTROL
5 VOLT
SUPPLY
ENGINE OIL
PRESSURE
SIGNAL
SENSOR
GROUND
29
C2
20
C1
27
C2
F855
20
PK/YL
G6
18
VT/GY
K900
20
DB/DG
2
SENSOR-OIL
PRESSURE
1
3
F855
20
PK/YL
K900
20
DB/DG
S102
S105

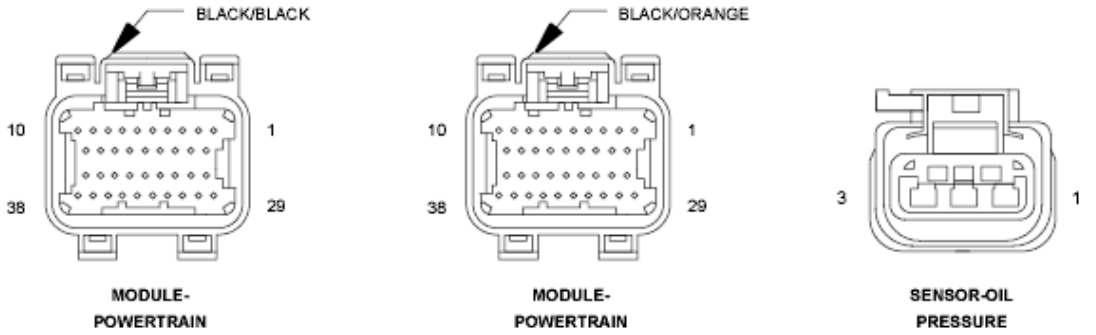
BLACK/BLACK
10
1
38
29
MODULE-
POWERTRAIN
BLACK/ORANGE
10
1
38
29
MODULE-
POWERTRAIN
3
1
SENSOR-OIL
PRESSURE

Fig. 72: Oil Pressure Sensor Circuit Schematic
Courtesy of CHRYSLER GROUP, LLC

For a complete wiring diagram, **refer to appropriate SYSTEM WIRING DIAGRAMS article** .

THEORY OF OPERATION

For the VCT to enable, the oil pressure has to be approximately 42 psi. For the VCT to remain enabled the engine oil pressure can not drop below 31 psi.

WHEN MONITORED:

Engine running. RPM greater than or equal to 1100. Oil temperature less than or equal to 100° C (212° F)

SET CONDITION:

The engine oil pressure never reaches the calibrated specification to allow the VCT activation. One trip fault.

POSSIBLE CAUSES

Possible Causes
ENGINE OIL/ENGINE MECHANICAL
(G6) ENGINE OIL PRESSURE SENSOR SIGNAL CIRCUIT SHORTED TO VOLTAGE
RESISTANCE (G6) ENGINE OIL PRESSURE SENSOR SIGNAL CIRCUIT
(G6) ENGINE OIL PRESSURE SENSOR SIGNAL CIRCUIT SHORTED TO GROUND
RESISTANCE IN (F855) 5-VOLT SUPPLY CIRCUIT
(F855) 5-VOLT SUPPLY CIRCUIT SHORTED TO GROUND
RESISTANCE IN THE (K900) SENSOR GROUND CIRCUIT
ENGINE OIL PRESSURE SENSOR
POWERTRAIN CONTROL MODULE (PCM)

Always perform the Pre-Diagnostic Troubleshooting procedure before proceeding. Refer to PRE-DIAGNOSTIC TROUBLESHOOTING PROCEDURE .

DIAGNOSTIC TEST

1. **ACTIVE DTC**

NOTE: **Make sure that the engine oil is at the proper level. Also, check the customers oil change history to ensure that the oil is being changed at the correct intervals and that the proper oil viscosity is being used.**

1. Start the engine and allow it to reach normal operating temperature.

WARNING: **When the engine is operating, do not stand in direct line with the fan. Do not put your hands near the pulleys, belts or fan. Do**

not wear loose clothing. Failure to follow these instructions may result in possible serious or fatal injury.

NOTE: **Diagnose and repair any system voltage or sensor supply voltage DTCs before continuing with this test.**

Is the DTC Active at this time?

Yes

- Go To 2.

No

- Perform the INTERMITTENT CONDITION diagnostic procedure. Refer to **INTERMITTENT CONDITION** .

2. **ENGINE OIL/ENGINE MECHANICAL**

NOTE: **The following items must be considered before determining the cause of this DTC. Failure to do so may lead to misdiagnosis.**

For the VCT to enable the oil pressure has to be approximately 42 psi.

For the VCT to remain enabled the engine oil pressure can not drop below 31 psi.

When checking the engine oil pressure use a mechanical gauge.

- **ENGINE MECHANICAL TOLERANCES OUT OF SPECIFICATION**
- **ENGINE OIL PRESSURE OUT OF SPECIFICATION**
- **LOW ENGINE OIL**
- **OIL DIRTY OR DETERIORATED (Lack of scheduled oil changes)**
- **CORRECT VISCOSITY**
- **ENGINE OIL CONTAMINATED (i.e., coolant and/or fuel)**

1. If any of the above conditions are found, repair as necessary.

Were any of the above conditions present?

Yes

- Repair as necessary.
- Perform the POWERTRAIN VERIFICATION TEST. Refer to **POWERTRAIN VERIFICATION TEST** .

No

- Go To 3.

3. **ENGINE OIL PRESSURE SENSOR**

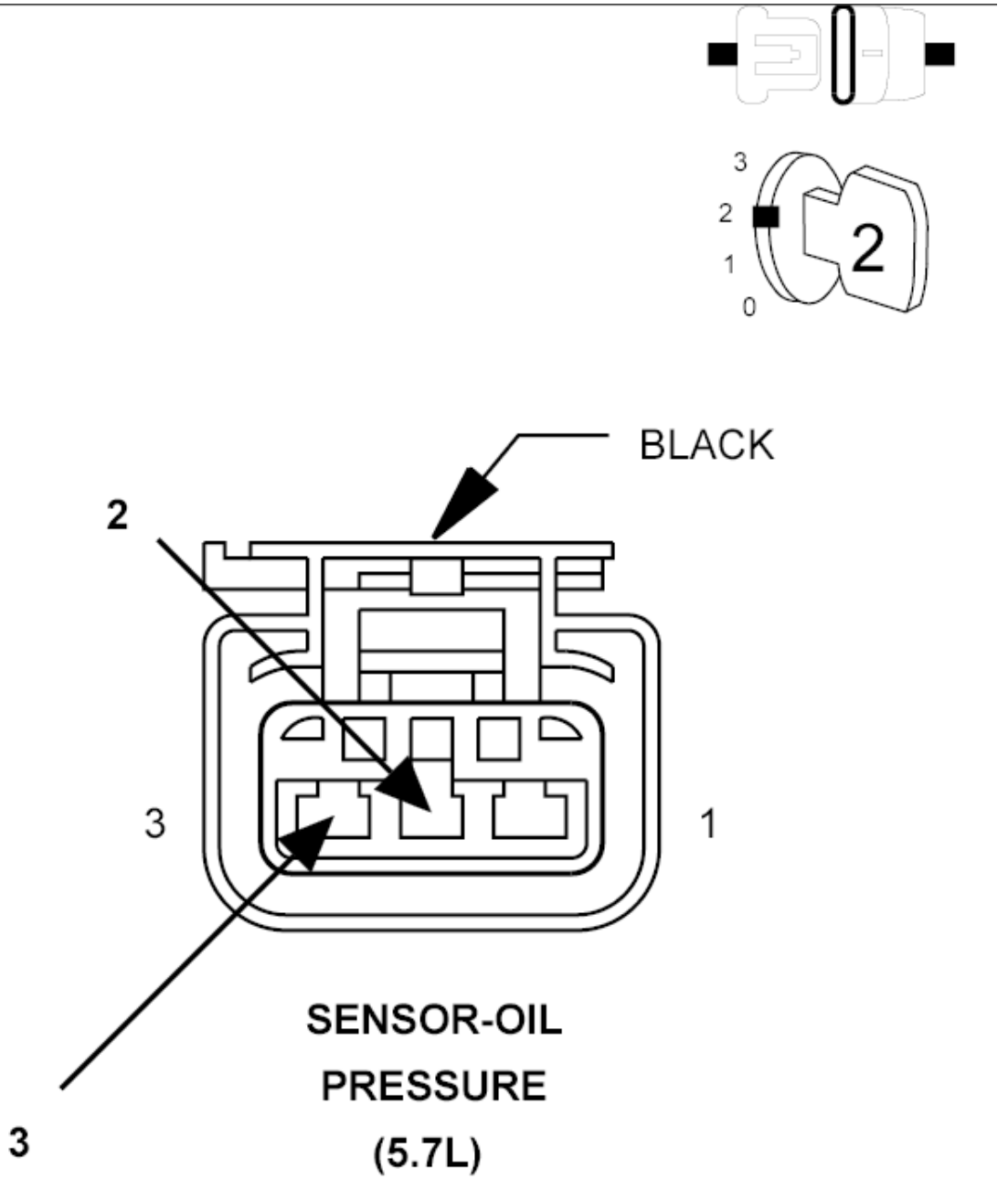

Fig. 73: Engine Oil Pressure Sensor Harness Connector
Courtesy of CHRYSLER GROUP, LLC

1. Turn the ignition off.

2. Connect the C2 PCM harness connector.
3. Ignition on, engine not running.
4. With a scan tool, monitor the Engine Oil Pressure Sensor voltage.
5. Connect a jumper wire between the (K900) Sensor Ground circuit and the (G6) Engine Oil Pressure Signal circuit.

NOTE: Engine Oil Pressure voltage should change from approximately 4.5 volts to less than 0.5 of a volt.

Is the voltage reading within the listed specification when the jumper wire is installed?

Yes

- Verify that there is good pin to terminal contact in the Sensor and Powertrain Control Module connectors. Remove the Engine Oil Pressure sensor and ensure the oil passage/port is free from any blockage. If OK, replace the Engine Oil Pressure Sensor.
- Perform the POWERTRAIN VERIFICATION TEST. Refer to **POWERTRAIN VERIFICATION TEST** .

No

- Go To 4.

NOTE: Remove the jumper wire before continuing.

4. **EXCESSIVE RESISTANCE IN THE (G6) ENGINE OIL PRESSURE SIGNAL CIRCUIT**

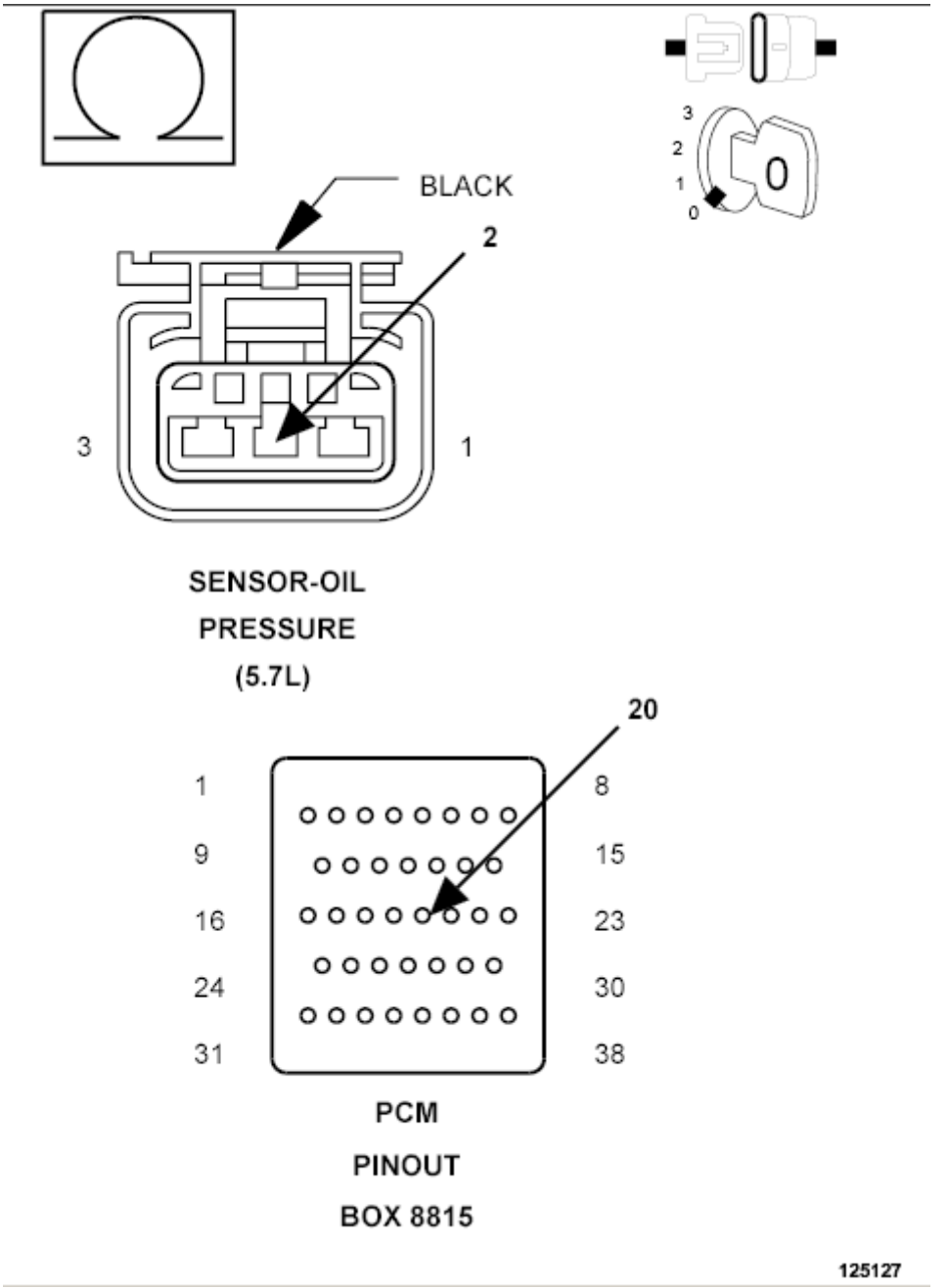

Fig. 74: Measuring Resistance Of (G6) Engine Oil Pressure Signal Circuit From Engine Oil Pressure Sensor Harness Connector To Appropriate Terminal Of PCM Pinout Box 8815
Courtesy of CHRYSLER GROUP, LLC

1. Turn the ignition off.
2. Disconnect the C1 PCM harness connector.

CAUTION: Do not probe the PCM harness connectors. Probing the PCM harness connectors will damage the PCM terminals resulting in poor terminal to pin connection. Install the PCM Pinout Box

(special tool #8815A, Kit, NGC, 38 Position) to perform diagnosis.

3. Measure the resistance of the (G6) Engine Oil Pressure Signal circuit from the Engine Oil Pressure Sensor harness connector to the appropriate terminal of PCM Pinout Box (special tool #8815A, Kit, NGC, 38 Position).

   Is the resistance below 5.0 Ohms?

   Yes

   - Go To 5.

   No

   - Repair the excessive resistance in the (G6) Engine Oil Pressure Signal circuit.
   - Perform the POWERTRAIN VERIFICATION TEST. Refer to **POWERTRAIN VERIFICATION TEST** .

5. **(G6) ENGINE OIL PRESSURE SIGNAL CIRCUIT SHORTED TO GROUND**

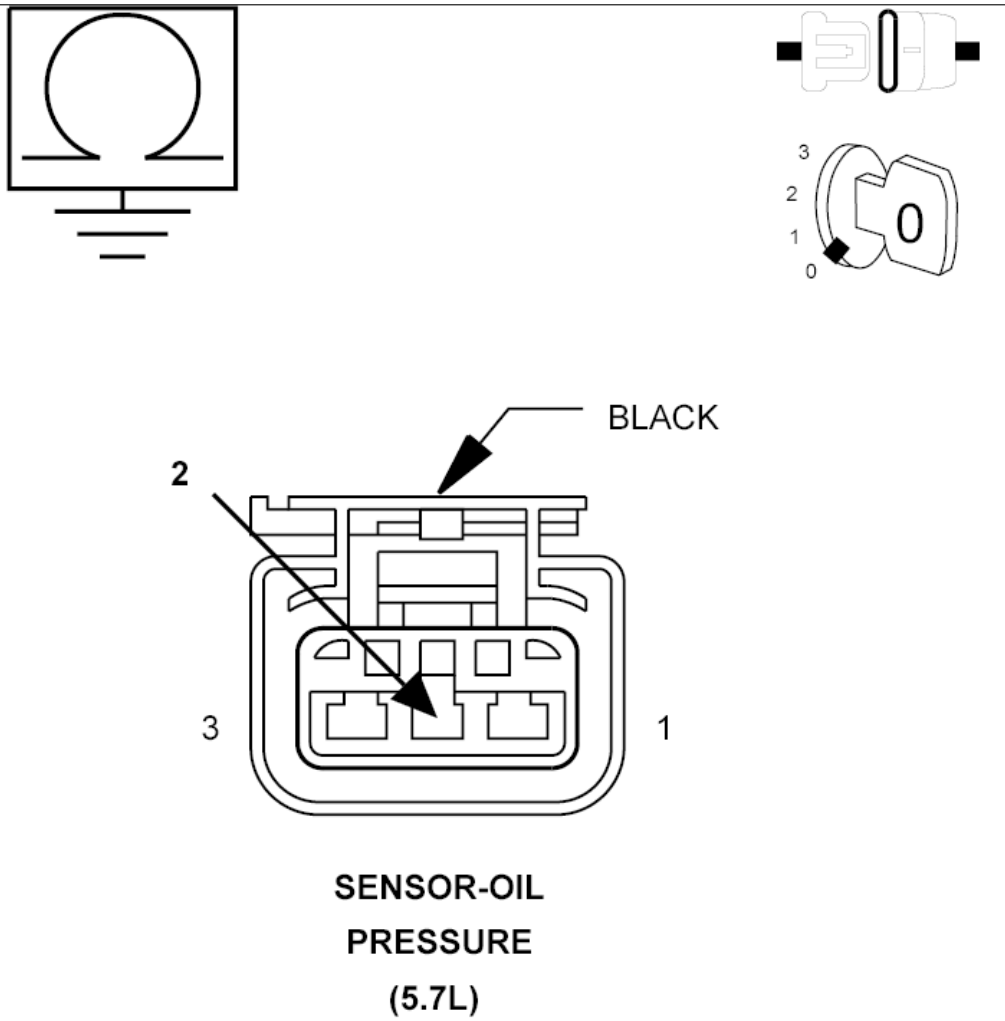

Fig. 75: Measuring Resistance Between Ground And Engine Oil Pressure Signal Circuit In Sensor Harness Connector
Courtesy of CHRYSLER GROUP, LLC

1. Measure the resistance between ground and the (G6) Engine Oil Pressure Signal circuit in the Engine Oil Pressure Sensor harness connector.

   Is the resistance below 100 Ohms?

   Yes

   - Repair the short to ground in the (G6) Engine Oil Pressure Signal circuit.
   - Perform the POWERTRAIN VERIFICATION TEST. Refer to **POWERTRAIN VERIFICATION TEST** .

   No

   - Go To 6.

6. **EXCESSIVE RESISTANCE IN THE (F855) 5-VOLT SUPPLY CIRCUIT**

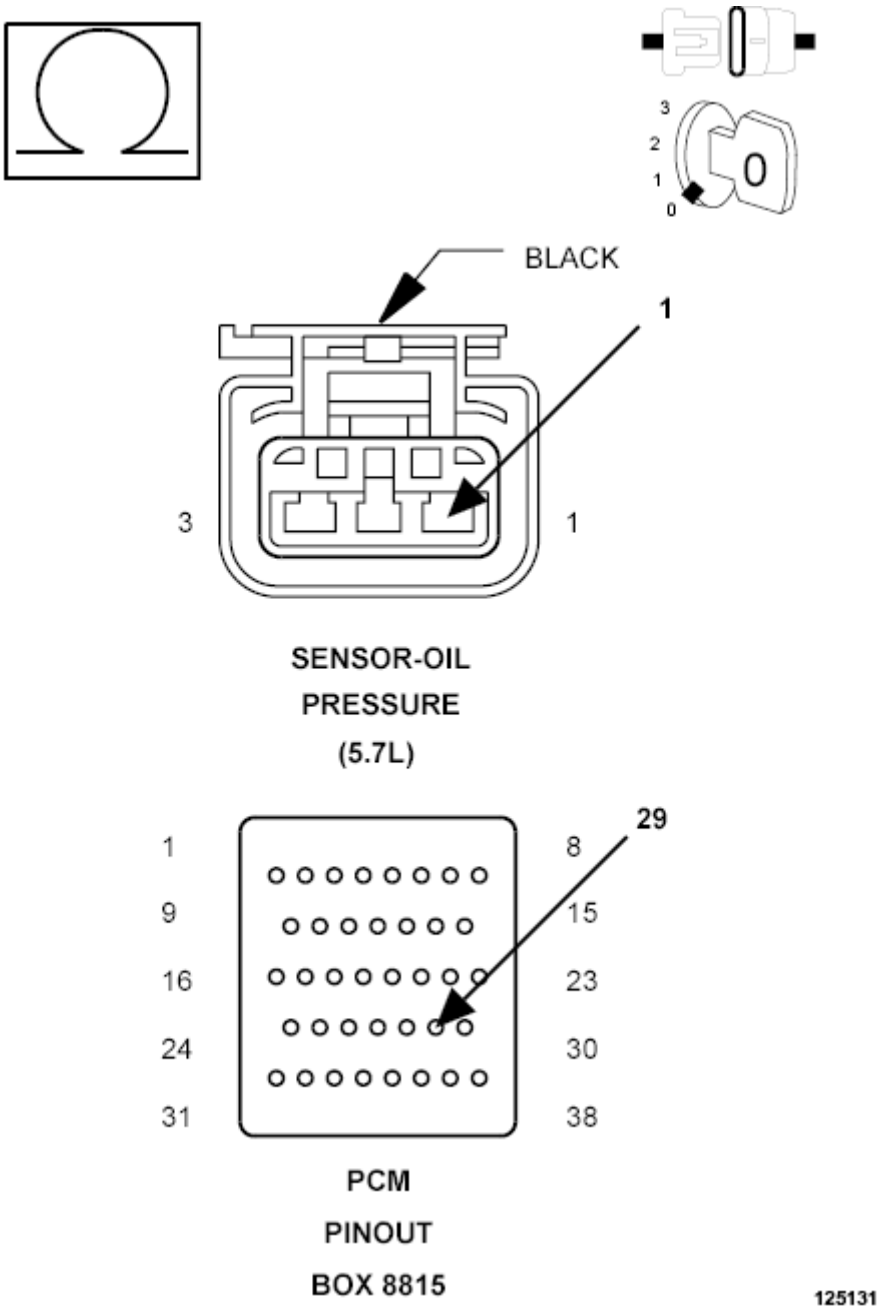

Fig. 76: Measuring Resistance Of (F855) 5-Volt Supply Circuit From Engine Oil Pressure Sensor Harness Connector To Appropriate Terminal Of PCM Pinout Box 8815
Courtesy of CHRYSLER GROUP, LLC

1. Measure the resistance of the (F855) 5-volt Supply circuit from the Engine Oil Pressure Sensor harness connector to the appropriate terminal of PCM Pinout Box (special tool #8815A, Kit, NGC, 38 Position).

   Is the resistance below 5.0 Ohms?

Yes

- Go To 7.

No

- Repair the excessive resistance in the (F855) 5-volt Supply circuit.
- Perform the POWERTRAIN VERIFICATION TEST. Refer to **POWERTRAIN VERIFICATION TEST** .

7. **(F855) 5-VOLT SUPPLY SHORTED TO GROUND**

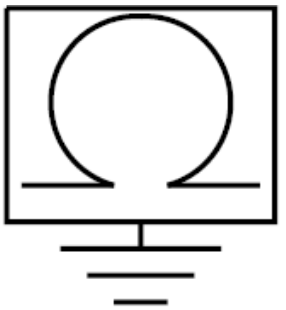

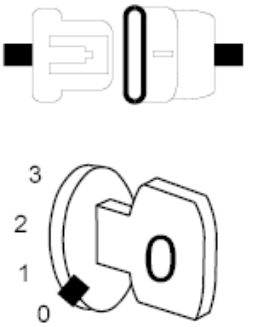

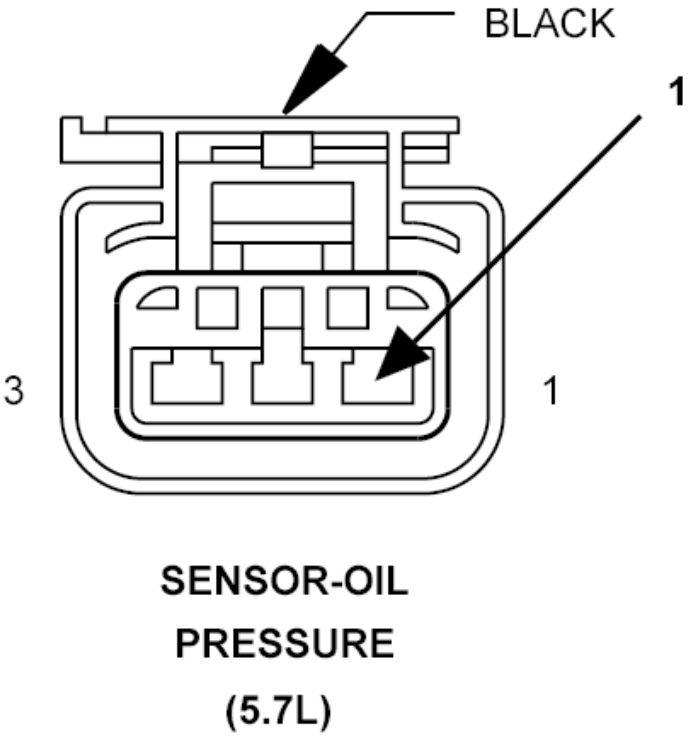

Fig. 77: Measuring Resistance Between Ground And (F855) 5-Volt Supply Circuit In Engine Oil Pressure Sensor Harness Connector

Courtesy of CHRYSLER GROUP, LLC

1. Measure the resistance between ground and the (F855) 5-volt Supply circuit in the Engine Oil Pressure Sensor harness connector.

   Is the resistance below 100 Ohms?

   Yes

   - Repair the short to ground in the (F855) 5-volt Supply circuit.
   - Perform the POWERTRAIN VERIFICATION TEST. Refer to **POWERTRAIN VERIFICATION TEST** .

   No

   - Go To 8.

8. **EXCESSIVE RESISTANCE IN THE (K900) SENSOR GROUND CIRCUIT**

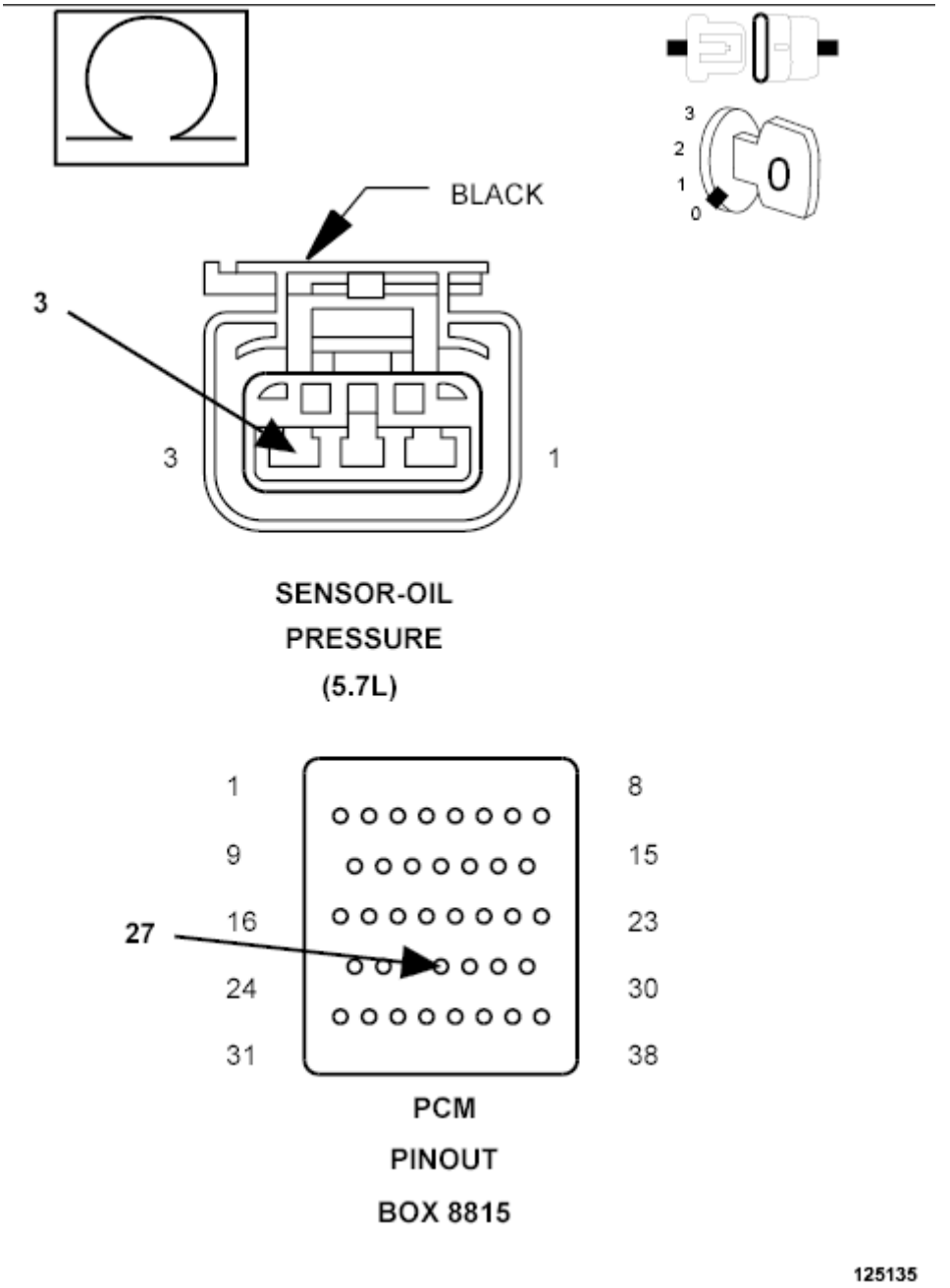

Fig. 78: Measuring Resistance Of (K900) Sensor Ground Circuit From Engine Oil Pressure Sensor Harness Connector To Appropriate Terminal Of PCM Pinout Box 8815
Courtesy of CHRYSLER GROUP, LLC

1. Measure the resistance of the (K900) Sensor Ground circuit from the Engine Oil Pressure Sensor harness connector to the appropriate terminal of PCM Pinout Box (special tool #8815A, Kit, NGC, 38 Position).

   Is the resistance below 5.0 Ohms?

   Yes

- Go To 9.

No

- Repair the excessive resistance in the (K900) Sensor Ground circuit.
- Perform the POWERTRAIN VERIFICATION TEST. Refer to **POWERTRAIN VERIFICATION TEST** .

9. **POWERTRAIN CONTROL MODULE (PCM)**
    1. Using the wiring diagram/schematic as a guide, inspect the wiring and connectors between the Engine Oil Pressure Sensor and the Powertrain Control Module (PCM).
    2. Look for any chafed, pierced, pinched, or partially broken wires.
    3. Look for broken, bent, pushed out or corroded terminals. Verify that there is good pin to terminal contact in the Sensor and Powertrain Control Module connectors.
    4. Refer to any Technical Service Bulletins that may apply.

    Were there any problems found?

    Yes

    - Repair as necessary.
    - Perform the POWERTRAIN VERIFICATION TEST. Refer to **POWERTRAIN VERIFICATION TEST** .

    No

    - Replace and program the Powertrain Control Module in accordance with the Service Information. Refer to **MODULE, POWERTRAIN CONTROL, REMOVAL** .
    - Perform the POWERTRAIN VERIFICATION TEST. Refer to **POWERTRAIN VERIFICATION TEST** .

P1572-BRAKE PEDAL STUCK ON

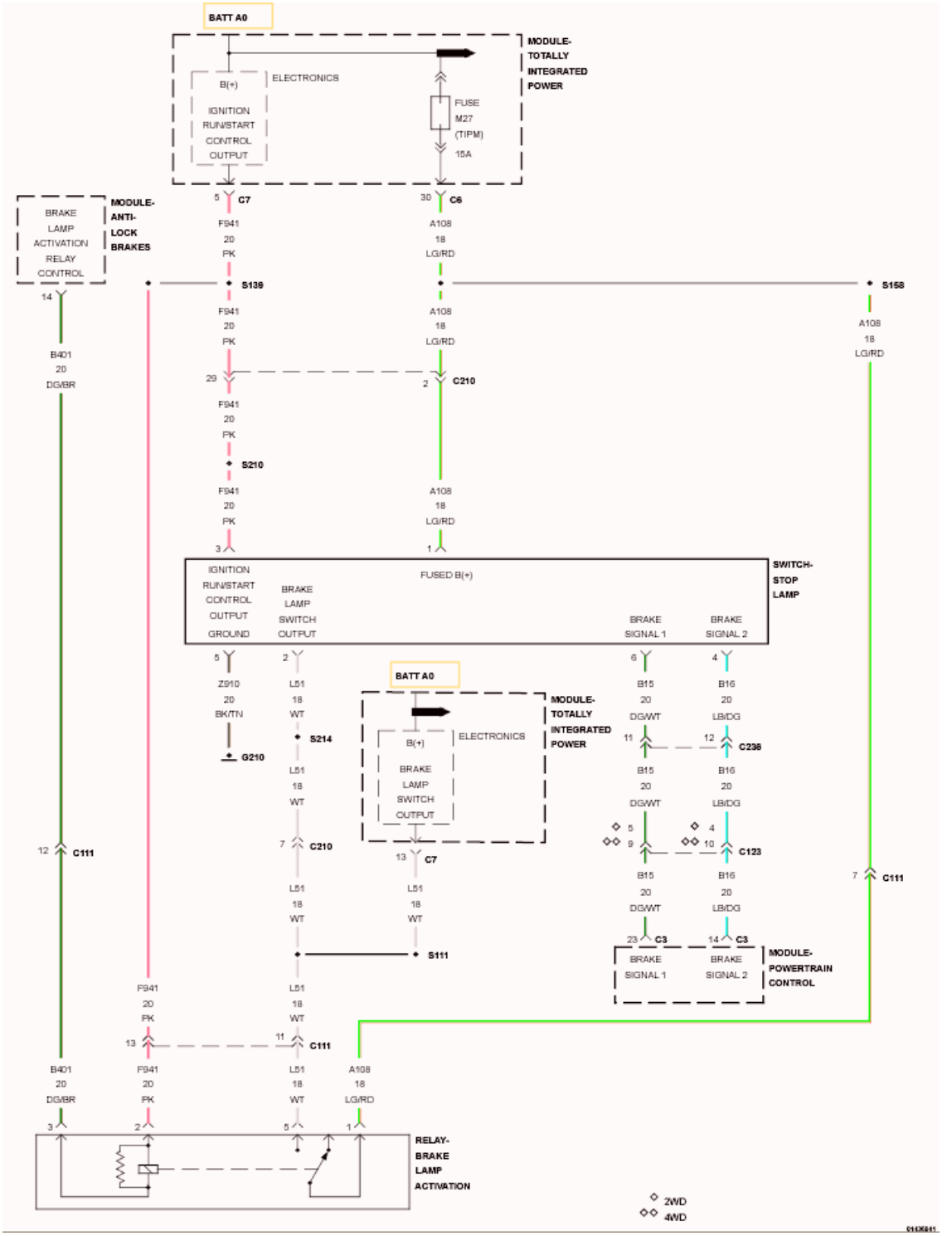

Fig. 79: Brake Lamp Switch Circuit Schematic
Courtesy of CHRYSLER GROUP, LLC

For a complete wiring diagram, **refer to appropriate SYSTEM WIRING DIAGRAMS article** .

WHEN MONITORED:

Ignition on. In plant mode only.

SET CONDITION:

The Powertrain Control Module (PCM) recognizes the Brake Pedal could not electrically indicate the applied (On) position with both switch inputs. One trip fault.

POSSIBLE CAUSES

Possible Causes
(B15) BRAKE SWITCH NO. 1 SIGNAL CIRCUIT OPEN
(B16) BRAKE SWITCH NO. 2 SIGNAL CIRCUIT OPEN
STOP LAMP SWITCH
POWERTRAIN CONTROL MODULE (PCM)

Always perform the Pre-Diagnostic Troubleshooting procedure before proceeding. Refer to PRE-DIAGNOSTIC TROUBLESHOOTING PROCEDURE .

DIAGNOSTIC TEST

1. **ACTIVE DTC**

   NOTE: Make sure the Stop Lamp Switch is adjusted properly before continuing.

   1. Ignition on, engine not running.
   2. With the scan tool, select View DTCs.

      Is the DTC Active at this time?

      Yes

      - Go To 2.

      No

      - Perform the INTERMITTENT CONDITION diagnostic procedure. Refer to **INTERMITTENT CONDITION** .

2. **STOP LAMP SWITCH OPERATION**
   1. Turn the ignition off.
   2. Disconnect the Stop Lamp Switch harness connector.
   3. Measure the resistance between the (G210) Ground circuit terminal and the (B15) Brake Switch No. 1 Signal terminal in the Stop Lamp Switch.
   4. Apply and release the brake pedal while monitoring the Ohmmeter.

      Does the resistance change from below 5.0 Ohms to open circuit when pressing and releasing the

brake pedal switch?

Yes

- Go To 3.

No

- Replace the Stop Lamp Switch.
- Perform the POWERTRAIN VERIFICATION TEST. Refer to **POWERTRAIN VERIFICATION TEST** .

3. **STOP LAMP SWITCH OPERATION**
   1. Measure the resistance between the (A108) Fused Ignition Switch Output terminal and the (B16) Brake Switch No. 2 Signal circuit terminal in the Stop Lamp Switch.
   2. Apply and release the brake pedal while monitoring the Ohmmeter.

      Does the resistance change from below 5.0 Ohms to open circuit when pressing and releasing the Stop Lamp switch?

      Yes

      - Go To 4.

      No

      - Verify that there is good pin to terminal contact in the Switch and Powertrain Control Module connectors. Replace the Stop Lamp Switch if no problems were found in the connectors.
      - Perform the POWERTRAIN VERIFICATION TEST. Refer to **POWERTRAIN VERIFICATION TEST** .
4. **(B15) BRAKE SWITCH NO. 1 SIGNAL CIRCUIT OPEN**

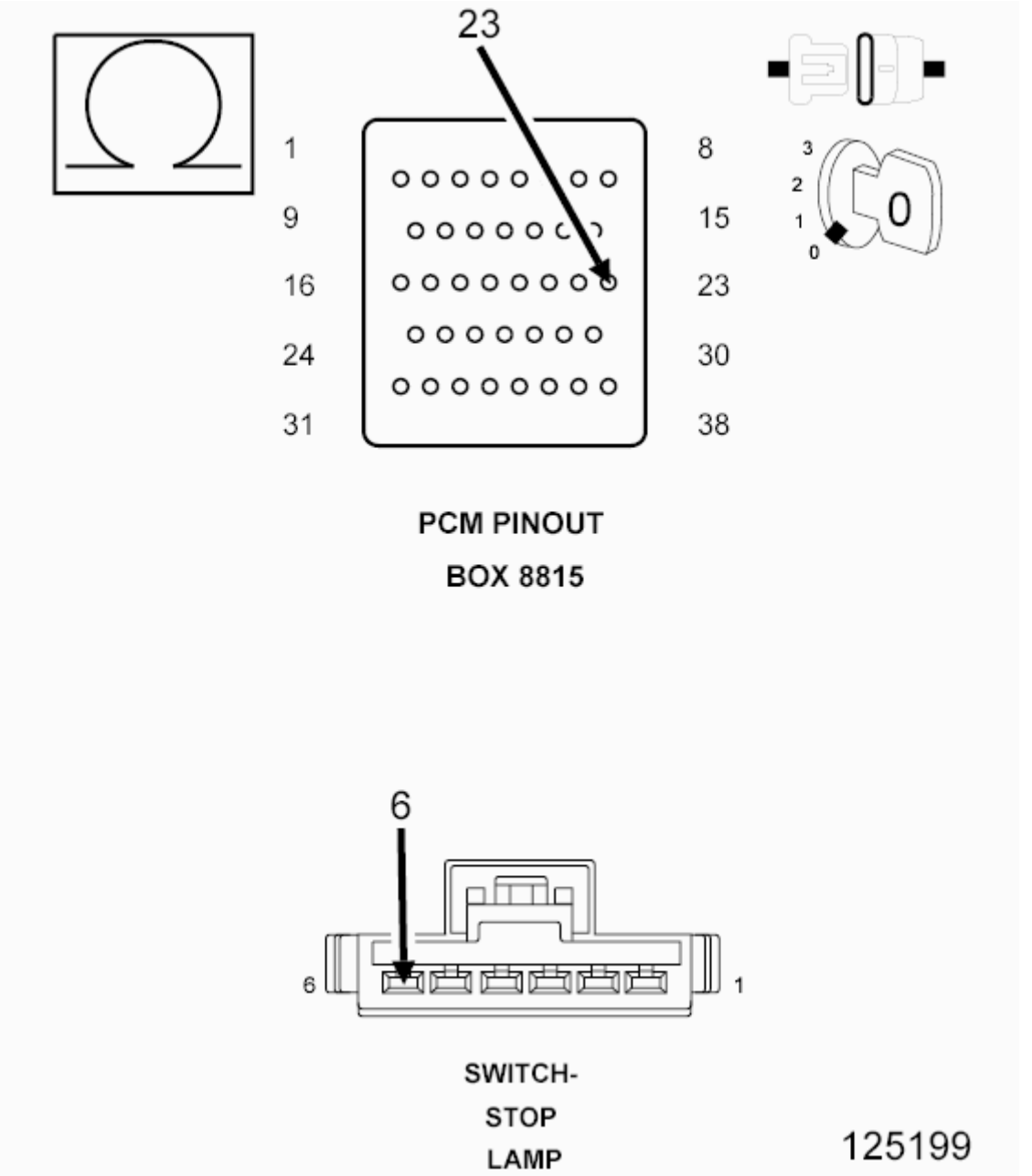

Fig. 80: Measuring Resistance Of (B15) Brake Switch No. 1 Signal Circuit From Stop Lamp Switch Harness Connector To Appropriate Terminal Of PCM Pinout Box 8815
Courtesy of CHRYSLER GROUP, LLC

1. Disconnect the C3 PCM harness connector.

CAUTION: Do not probe the PCM harness connectors. Probing the PCM harness connectors will damage the PCM terminals resulting in poor terminal to pin connection. Install the PCM Pinout Box (special tool #8815A, Kit, NGC, 38 Position) to perform diagnosis.

2. Measure the resistance of the (B15) Brake Switch No. 1 Signal circuit from the Stop Lamp Switch harness connector to the appropriate terminal of PCM Pinout Box (special tool #8815A, Kit, NGC, 38 Position).

   Is the resistance below 5.0 Ohms?

   Yes

   - Go To 5.

   No

   - Repair the open in the (B15) Brake Switch No. 1 Signal circuit.
   - Perform the POWERTRAIN VERIFICATION TEST. Refer to **POWERTRAIN VERIFICATION TEST** .

5. **(B16) BRAKE SWITCH NO. 2 SIGNAL CIRCUIT OPEN**

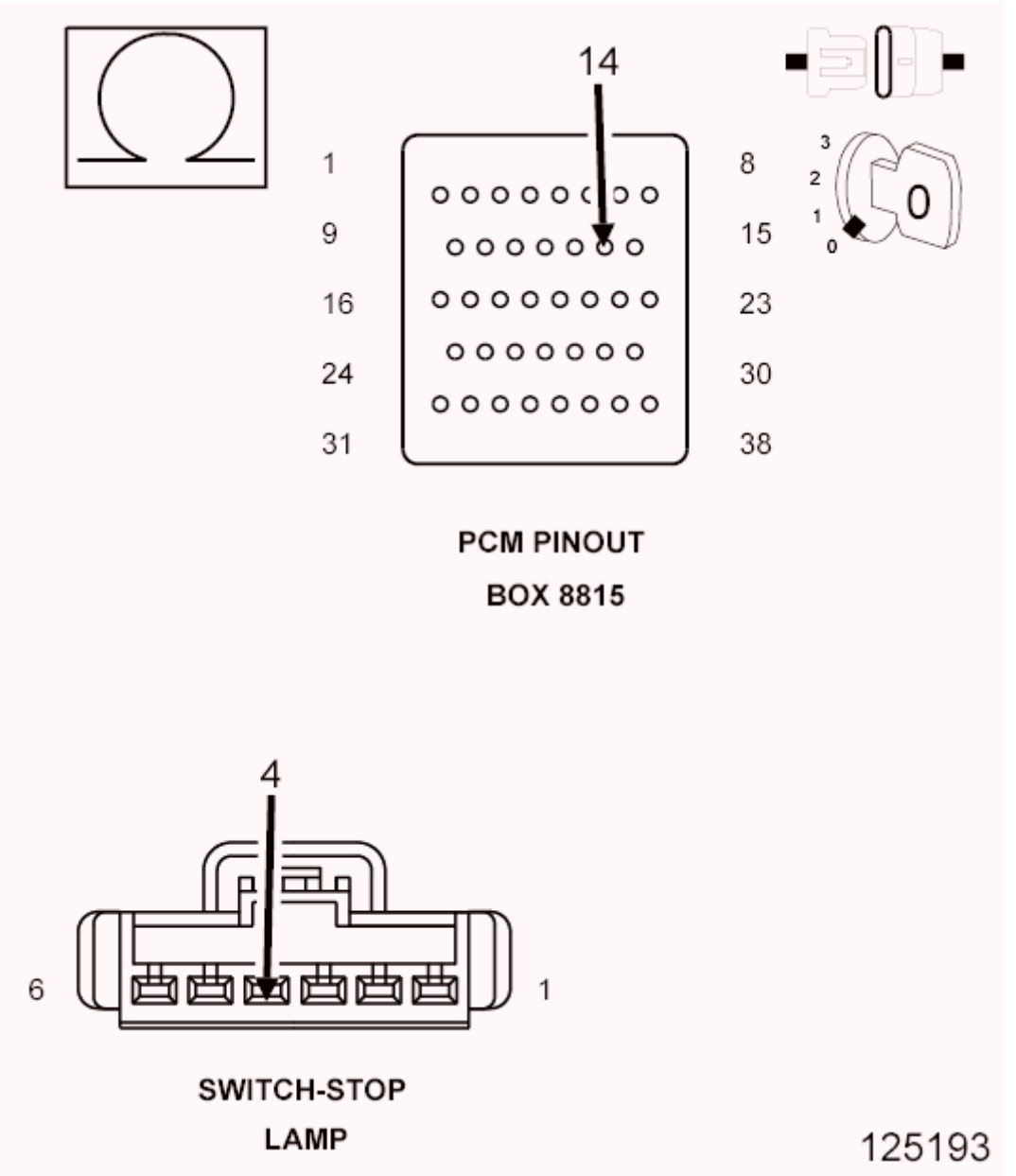

Fig. 81: Measuring Resistance Of Brake Switch No. 2 Signal Circuit From Stop Lamp Switch Harness Connector To Appropriate Terminal Of PCM Pinout Box 8815
Courtesy of CHRYSLER GROUP, LLC

1. Measure the resistance of the (B16) Brake Switch No. 2 Signal circuit from the Stop Lamp Switch harness connector to the appropriate terminal of PCM Pinout Box (special tool #8815A, Kit, NGC, 38 Position).

   Is the resistance below 5.0 Ohms?

   Yes

   - Go To 6.

No

- Repair the open in the (B16) Brake Switch No. 2 Signal circuit.
- Perform the POWERTRAIN VERIFICATION TEST. Refer to **POWERTRAIN VERIFICATION TEST** .

6. **POWERTRAIN CONTROL MODULE (PCM)**
    1. Using the wiring diagram/schematic as a guide, inspect the wiring and connectors between the Stop Lamp Switch and the Powertrain Control Module (PCM).
    2. Look for any chafed, pierced, pinched or partially broken wires.
    3. Look for broken, bent, pushed out or corroded terminals. Verify that there is good pin to terminal contact in the Switch and Powertrain Control Module connectors.
    4. Perform any Technical Service Bulletins that may apply.

    Were there any problems found?

    Yes

    - Repair as necessary.
    - Perform the POWERTRAIN VERIFICATION TEST. Refer to **POWERTRAIN VERIFICATION TEST** .

    No

    - Replace and program the Powertrain Control Module in accordance with the Service Information. Refer to **MODULE, POWERTRAIN CONTROL, REMOVAL** .
    - Perform the POWERTRAIN VERIFICATION TEST. Refer to **POWERTRAIN VERIFICATION TEST** .

P1573-BRAKE PEDAL STUCK OFF

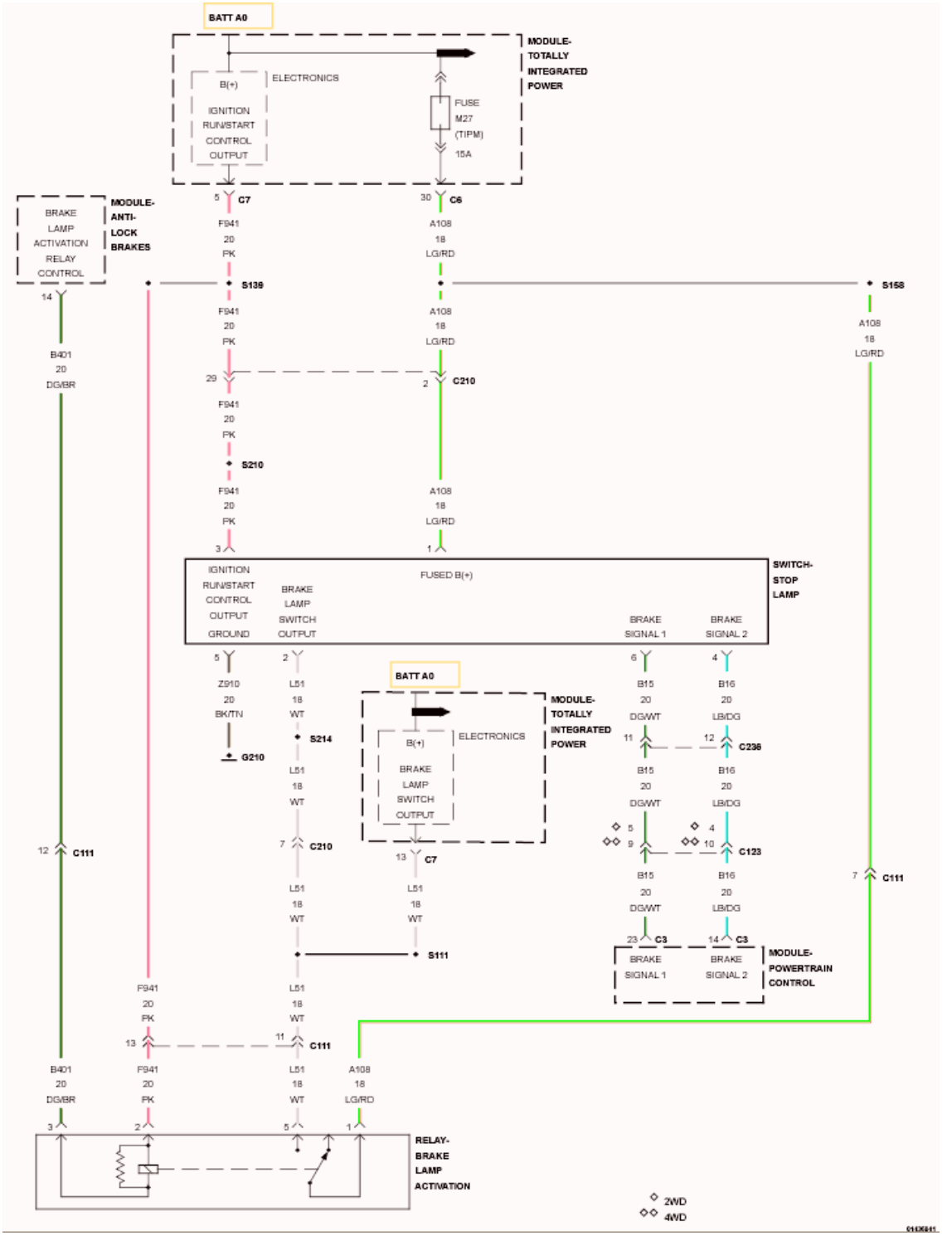

Fig. 82: Brake Lamp Switch Circuit Schematic
Courtesy of CHRYSLER GROUP, LLC

For a complete wiring diagram, **refer to appropriate SYSTEM WIRING DIAGRAMS article** .

WHEN MONITORED:

Ignition on, In plant mode passed the Applied test.

SET CONDITION:

The Powertrain Control Module (PCM) recognizes the Brake Pedal could not electronically indicate the released (Off) position with both switches. If P1572 sets, P1573 will also set. One trip fault.

POSSIBLE CAUSES

Possible Causes
(B16) BRAKE SWITCH NO. 2 SIGNAL CIRCUIT SHORTED TO VOLTAGE
(B15) BRAKE SWITCH NO. 1 SIGNAL CIRCUIT SHORTED TO GROUND
STOP LAMP SWITCH
POWERTRAIN CONTROL MODULE (PCM)

Always perform the Pre-Diagnostic Troubleshooting procedure before proceeding. Refer to PRE-DIAGNOSTIC TROUBLESHOOTING PROCEDURE .

DIAGNOSTIC TEST

1. **ACTIVE DTC**

   NOTE: Make sure the Stop Lamp Switch is adjusted properly before continuing.

   1. Ignition on, engine not running.
   2. With the scan tool, select View DTCs.

      Is the DTC Active at this time?

      Yes

      - Go To 2.

      No

      - Perform the INTERMITTENT CONDITION diagnostic procedure. Refer to **INTERMITTENT CONDITION** .

2. **STOP LAMP SWITCH OPERATION**
   1. Turn the ignition off.
   2. Disconnect the Stop Lamp Switch harness connectors.
   3. Measure the resistance between the (Z429) Ground circuit terminal and the (B15) Brake Switch No. 1 Signal terminal in the Stop Lamp Switch.
   4. Apply and release the brake pedal while monitoring the Ohmmeter.

      Does the resistance change from below 5.0 Ohms to an open circuit when pressing and releasing

the brake switch?

Yes

- Go To 3.

No

- Replace the Stop Lamp Switch.
- Perform the POWERTRAIN VERIFICATION TEST. Refer to **POWERTRAIN VERIFICATION TEST** .

3. **STOP LAMP SWITCH OPERATION**
   1. Measure the resistance between the (A108) Fused Ignition Switch Output circuit terminal and the (B16) Brake Switch No. 2 Signal terminal in the Stop Lamp Switch.
   2. Apply and release the brake pedal while monitoring the Ohmmeter.

      Does the resistance change from below 5.0 Ohms to an open circuit when pressing and releasing the Stop Lamp switch?

      Yes

      - Go To 4.

      No

      - Verify that there is good pin to terminal contact in the Switch and Powertrain Control Module connectors. Replace the Stop Lamp Switch if no problems were found in the connectors.
      - Perform the POWERTRAIN VERIFICATION TEST. Refer to **POWERTRAIN VERIFICATION TEST** .
4. **(B16) BRAKE SWITCH NO. 2 SIGNAL CIRCUIT SHORTED TO VOLTAGE**

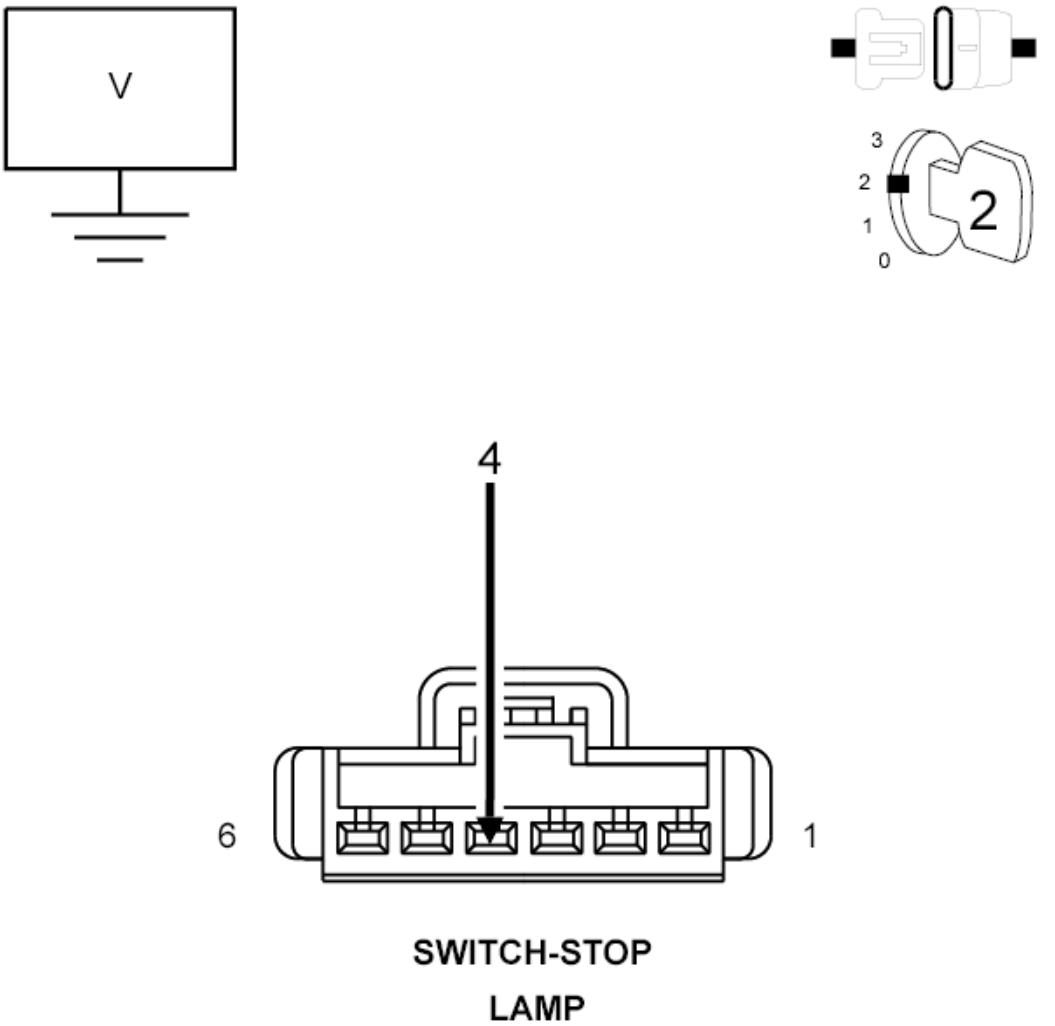

Fig. 83: Measuring Voltage On (B16) Brake Switch No. 2 Signal Circuit In Stop Lamp Switch Harness Connector
Courtesy of CHRYSLER GROUP, LLC

1. Disconnect the C2 PCM harness connector.
2. Ignition on, engine not running.
3. Measure the voltage on the (B16) Brake Switch No. 2 Signal circuit in the Stop Lamp Switch harness connector.

   Is there any voltage present?

   Yes

   - Repair the short to voltage in the (B16) Brake Switch No. 2 Signal circuit.
   - Perform the POWERTRAIN VERIFICATION TEST. Refer to **POWERTRAIN VERIFICATION TEST** .

No

- Go To 5.

5. **(B15) BRAKE SWITCH NO. 1 SIGNAL CIRCUIT SHORTED TO GROUND**

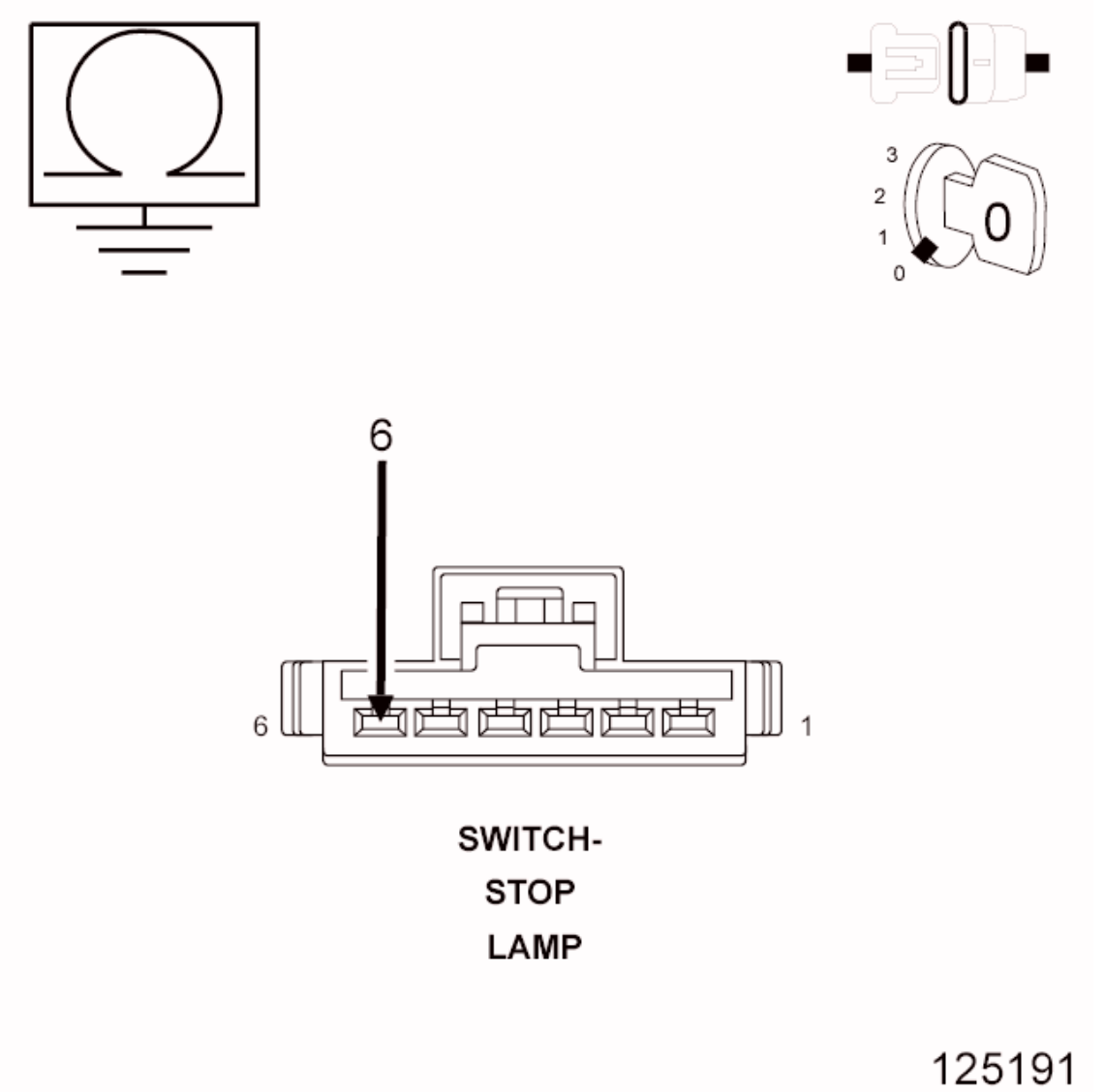

Fig. 84: Measuring Resistance Between Ground And (B15) Brake Switch No. 1 Signal Circuit In Stop Lamp Switch Harness Connector
Courtesy of CHRYSLER GROUP, LLC

1. Turn the ignition off.
2. Measure the resistance between ground and the (B15) Brake Switch No. 1 Signal circuit in the Stop Lamp Switch harness connector.

   Is the resistance below 100 Ohms?

Yes

- Repair the short to ground in the (B15) Brake Switch No. 1 Signal circuit.
- Perform the POWERTRAIN VERIFICATION TEST. Refer to **POWERTRAIN VERIFICATION TEST** .

No

- Go To 6.

6. **POWERTRAIN CONTROL MODULE (PCM)**
   1. Using the wiring diagram/schematic as a guide, inspect the wiring and connectors between the Stop Lamp Switch and the Powertrain Control Module (PCM).
   2. Look for any chafed, pierced, pinched or partially broken wires.
   3. Look for broken, bent, pushed out or corroded terminals. Verify that there is good pin to terminal contact in the Switch and Powertrain Control Module connectors.
   4. Perform any Technical Service Bulletins that may apply.

   Were there any problems found?

   Yes

   - Repair as necessary.
   - Perform the POWERTRAIN VERIFICATION TEST. Refer to **POWERTRAIN VERIFICATION TEST** .

   No

   - Replace and program the Powertrain Control Module in accordance with the Service Information. Refer to **MODULE, POWERTRAIN CONTROL, REMOVAL** .
   - Perform the POWERTRAIN VERIFICATION TEST. Refer to **POWERTRAIN VERIFICATION TEST** .

P1593-SPEED CONTROL SWITCH 1 STUCK

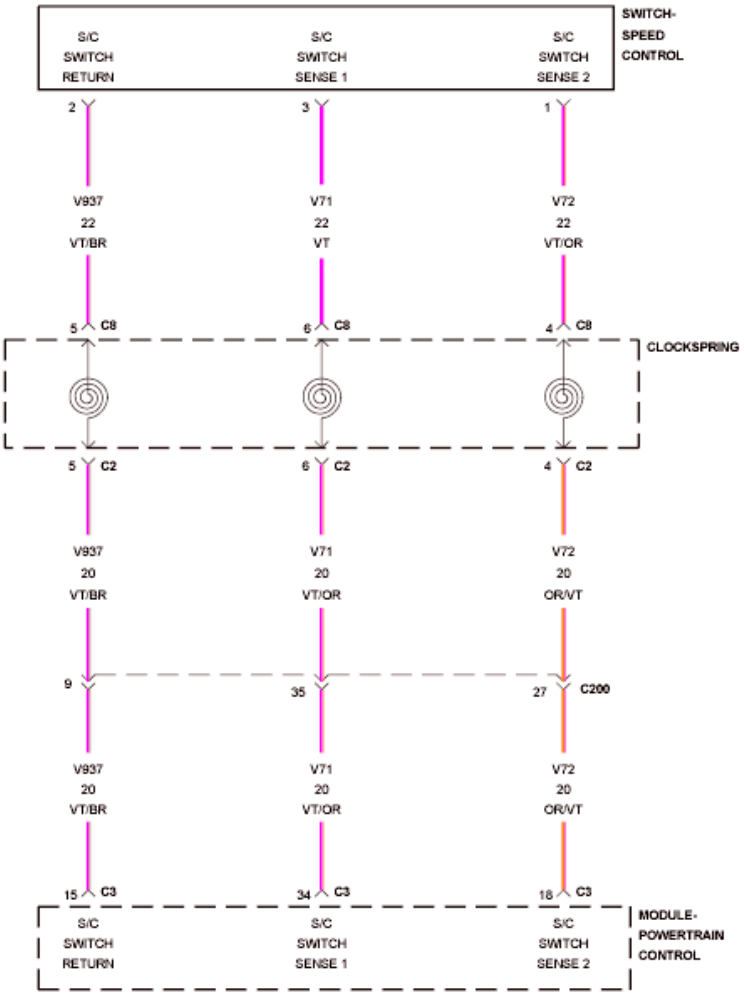

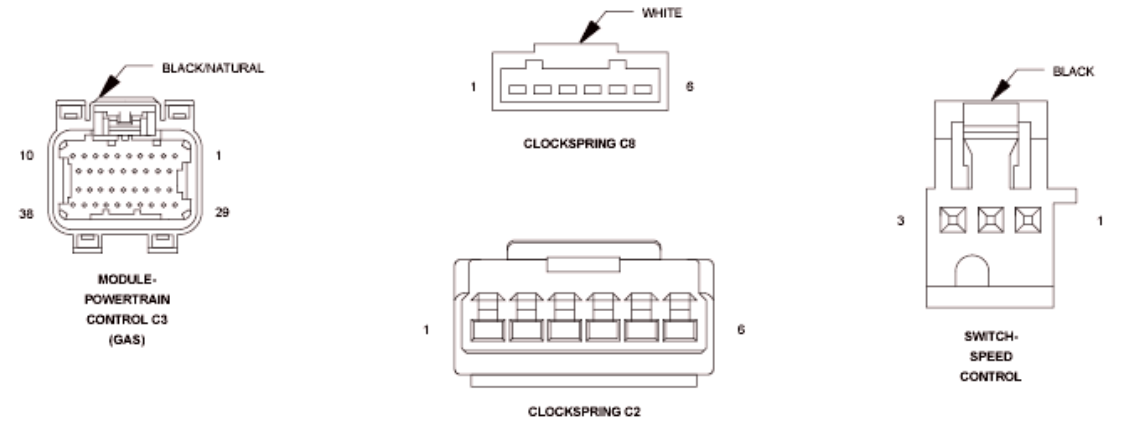

Fig. 85: Speed Control Switch Circuit Schematic
Courtesy of CHRYSLER GROUP, LLC

For a complete wiring diagram, **refer to appropriate SYSTEM WIRING DIAGRAMS article** .

WHEN MONITORED:

Ignition on.

SET CONDITION:

Cruise Switch inputs are not coherent with each other. Example: The Powertrain Control Module (PCM) is reading Switch No. 1 as Accel and Switch No. 2 as Coast at the same time. One trip fault.

POSSIBLE CAUSES

Possible Causes
S/C SWITCH SIGNAL CIRCUITS SHORTED TO VOLTAGE
RESISTANCE IN THE S/C SWITCH SIGNAL CIRCUITS
RESISTANCE IN THE (V937) S/C SWITCH RETURN CIRCUIT
S/C SWITCH SIGNAL CIRCUITS SHORTED TO THE (V937) S/C SWITCH RETURN CIRCUIT
(V71) S/C SWITCH NO. 1 SIGNAL CIRCUIT SHORTED TO THE (V72) S/C SWITCH NO. 2 SIGNAL CIRCUIT
S/C SWITCH SIGNAL CIRCUITS SHORTED TO GROUND
CLOCKSPRING
SPEED CONTROL SWITCH
POWERTRAIN CONTROL MODULE (PCM)

Always perform the Pre-Diagnostic Troubleshooting procedure before proceeding. Refer to PRE-DIAGNOSTIC TROUBLESHOOTING PROCEDURE .

DIAGNOSTIC TEST

1. **ACTIVE DIAGNOSTIC TROUBLE CODE (DTC)**
    1. Ignition on, engine not running.

        NOTE: This DTC may be the result of pressing two Speed Control Switch buttons simultaneously for more than 450 msec.

    2. Ask the customer if it is possible that two buttons were pressed at the same time before this DTC set. If this is the case, no repair is necessary.

        Is the DTC Active at this time?

        Yes

        - Go To 2.

        No

- Perform the INTERMITTENT CONDITION diagnostic procedure. Refer to **INTERMITTENT CONDITION** .

2. **SPEED CONTROL SWITCHES**
    1. Turn the ignition off.
    2. Disconnect the Speed Control Switch harness connector in accordance with the Service Information.
    3. Measure the resistance across each Speed Control Switch sense circuit.
    4. Monitor the Ohmmeter while pressing each function button.
    5. The following resistance specs are taken between terminals (V71) S/C Switch Sense 1 circuit and the (V937) Switch Return circuit of the switch when holding the switch button in the following position:
        - Not pressing any switch - 20.5 kOhms
        - On/Off - 0.47 kOhms
        - Set/Decel - 4.34 kOhms
        - Cancel - 1.24 kOhms
        - Resume/Accel - 8.80 kOhms
    6. The following resistance specs are taken between terminals (V72) S/C Switch Sense 2 circuit and the (V937) Switch Return circuit of the switch when holding the switch button in the following position:
        - Not pressing any switch - 20.5 kOhms
        - On/Off - 6.2 kOhms
        - Set/Decel - 0.79 kOhms
        - Cancel - 3.2 kOhms
        - Resume/Accel - 1.7 kOhms

    Does the function on the Speed Control Switch have the correct resistance value +/- 0.2 of an Ohm?

    Yes

    - Go To 3.

    No

    - Replace the Speed Control Switch.
    - Perform the POWERTRAIN VERIFICATION TEST. Refer to **POWERTRAIN VERIFICATION TEST** .

3. **SPEED CONTROL SWITCH VOLTAGE VALUES**

    CAUTION: Do not probe the PCM harness connectors. Probing the PCM harness connectors will damage the PCM terminals resulting in poor terminal to pin connection. Install the PCM Pinout Box (special tool #8815A, Kit, NGC, 38 Position) and PCM Pinout Box Adapter (special tool

#8815-1, PCM Pinout Box Adapter) to perform diagnosis.

1. Install the PCM Pinout Box (special tool #8815-1, PCM Pinout Box Adapter) on the C3 PCM harness connector.
2. Connect the S/C Switch harness connectors.
3. Turn the ignition on.
4. Using the scan tool, monitor the S/C Switch voltage readings.
5. Using a Voltmeter check the voltage on the (V71) S/C Switch Sense 1 circuit and the (V72) S/C Switch Sense 2 circuit at the appropriate terminals of the PCM Pinout Box (special tool #8815A, Kit, NGC, 38 Position).
6. Monitor the Voltmeter.
7. Using the scan tool, monitor the S/C Switch voltage readings.

SWITCH POSITION	SWITCH No. 1 VOLTAGE VALUE	SWITCH No. 2 VOLTAGE VALUE
NO SWITCHES PRESSED	4.31 to 4.78 Volts	4.31 to 4.78 Volts
ON/OFF PRESSED	0.59 to 1.13 Volts	3.53 to 3.92 Volts
RES/ACCEL PRESSED	3.88 to 4.17 Volts	2.04 to 2.47 Volts
SET/DECEL PRESSED	3.16 to 3.56 Volts	1.17 to 1.56 Volts
CANCEL PRESSED	1.59 to 1.99 Volts	2.84 to 3.25 Volts

8. Compare the voltage readings on the Voltmeter to what the scan tool displayed.

   Are the voltage readings out of the listed specification and is there less than a 0.2 of a Volt difference between the Voltmeter switch values and the scan tool switch value?

   Yes

   - Replace the Speed Control Switch.
   - Perform the POWERTRAIN VERIFICATION TEST. Refer to **POWERTRAIN VERIFICATION TEST** .

   No

   - Go To 4.

4. **CLOCKSPRING**
   1. Disconnect the PCM C3 harness connector.
   2. Disconnect the Clockspring C2 harness connector in accordance with the Service Information.
   3. Disconnect the Clockspring C8 harness connector.
   4. Measure the resistance of the (V71) S/C Switch Sense 1circuit between the C2 and C8 Clockspring connections.
   5. Measure the resistance of the (V72) S/C Switch Sense 2 circuit between the C2 and C8 Clockspring connections.

6. Measure the resistance of the (V937) Switch Return circuit between the C2 and C8 Clockspring connections.

   Is the resistance above 5.0 Ohms for either reading?

   Yes

   - Replace the Clockspring in accordance with the Service Information.
   - Perform the POWERTRAIN VERIFICATION TEST. Refer to **POWERTRAIN VERIFICATION TEST** .

   No

   - Go To 5.

5. **STEERING WHEEL JUMPER HARNESS**

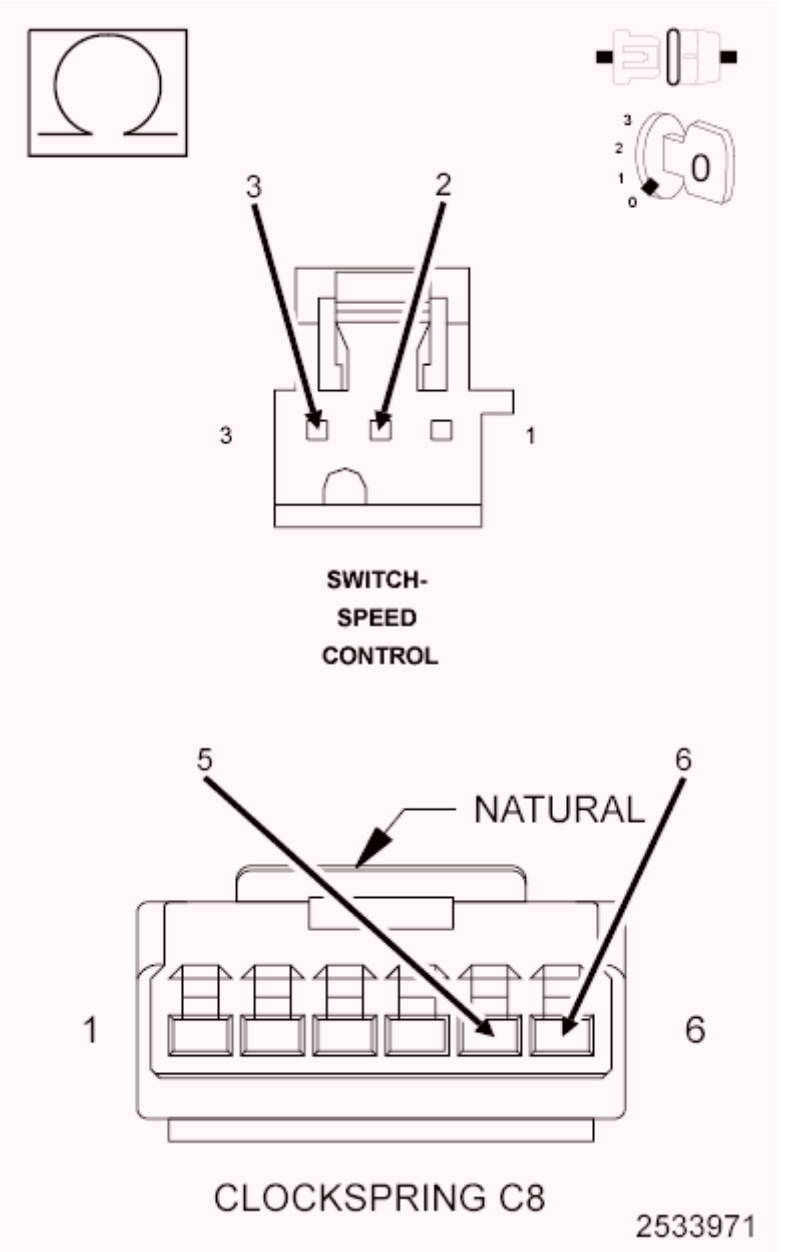

Fig. 86: Measuring Resistance Of S/C Switch Sense 1 Circuit Switch Return Circuit Between Clockspring Harness Connector And S/C Switch Harness Connector
Courtesy of CHRYSLER GROUP, LLC

1. Measure the resistance of the (V71) S/C Switch Sense 1 circuit between the Clockspring C8 harness connector and S/C Switch harness connector.
2. Measure the resistance of the (V72) S/C Switch Sense 2 circuit between the Clockspring C8 harness connector and S/C Switch harness connector.

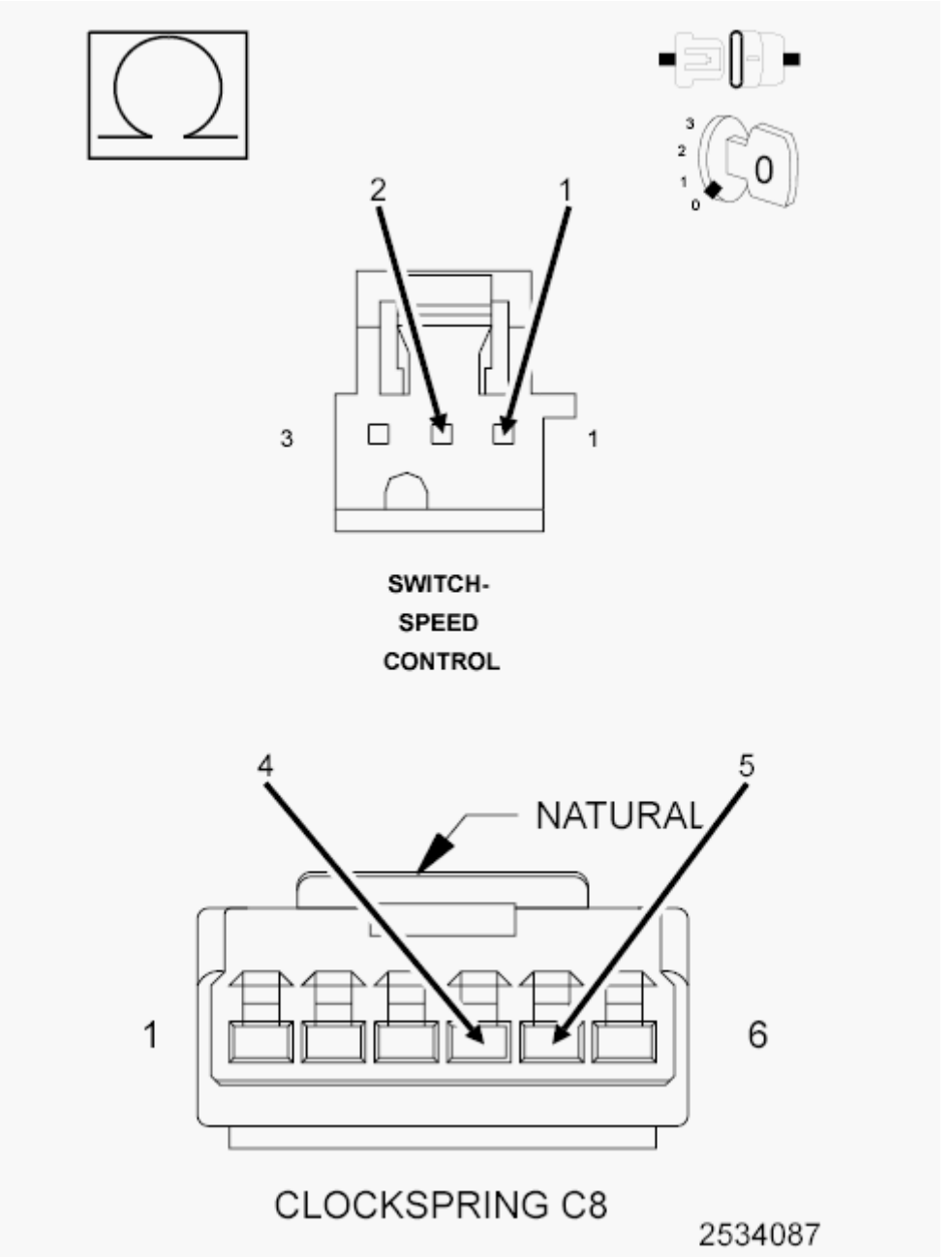

Fig. 87: Measuring Resistance Of S/C Switch Sense 2 Circuit Switch Return Circuit Between Clockspring Harness Connector And S/C Switch Harness Connector
Courtesy of CHRYSLER GROUP, LLC

3. Measure the resistance of the (V937) Switch Return circuit between the Clockspring C8 harness connector and S/C Switch harness connector.

   Is the resistance above 5.0 Ohms for either reading?

   Yes

- Replace the Steering Wheel Jumper harness in accordance with the Service Information.
- Perform the POWERTRAIN VERIFICATION TEST. Refer to **POWERTRAIN VERIFICATION TEST** .

No

- Go To 6.

6. **S/C SWITCH SIGNAL CIRCUIT SHORTED TO VOLTAGE**

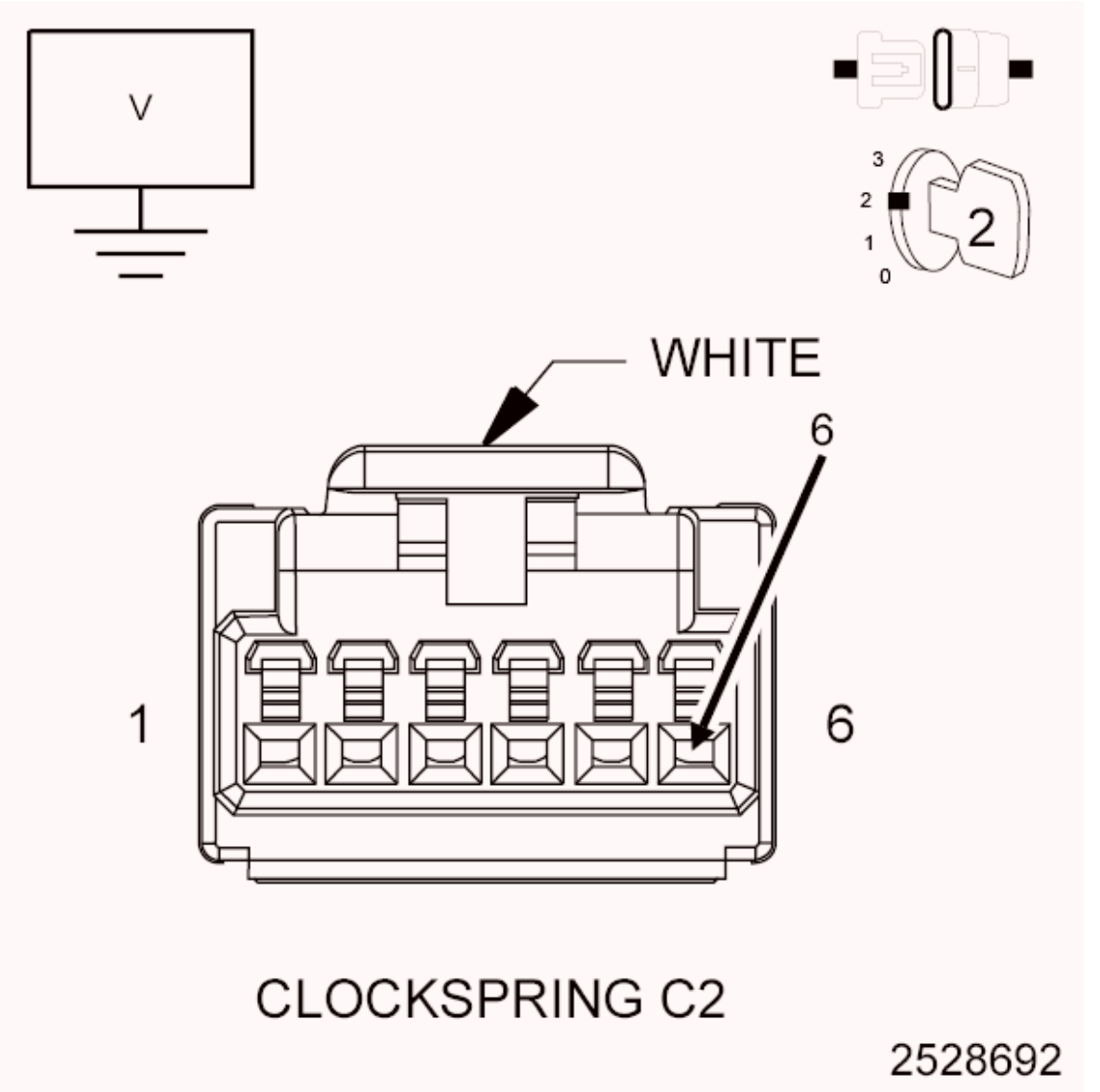

Fig. 88: Measuring Voltage On S/C Switch Sense Circuits In Clockspring Harness Connector
Courtesy of CHRYSLER GROUP, LLC

1. Turn the ignition on.
2. Measure the voltage on the (V71) and (V72) S/C Switch Sense circuits in the C2 Clockspring harness connector.

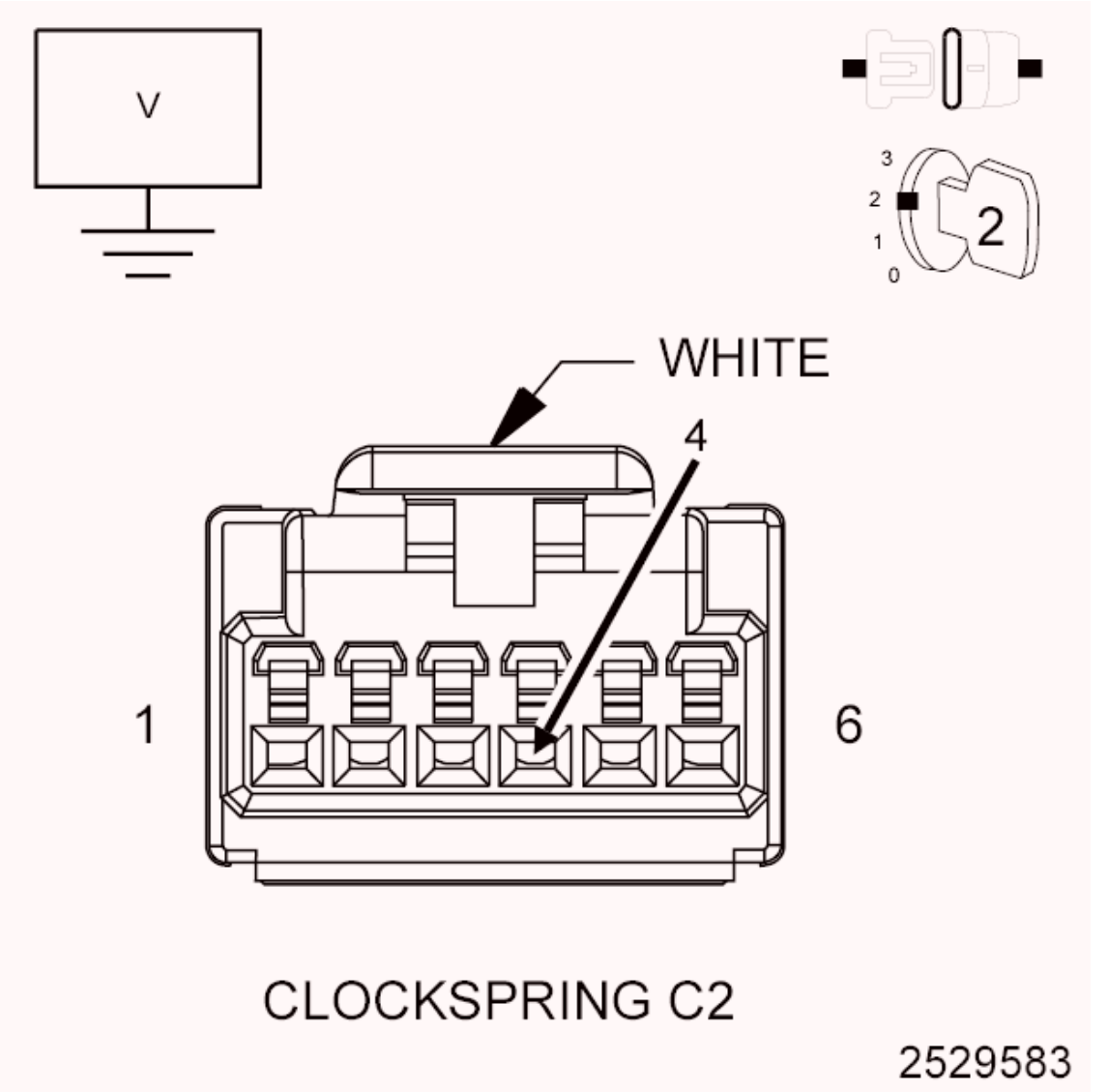

Fig. 89: Measuring Voltage On S/C Switch Sense Circuit In Clockspring C2 Harness Connector
Courtesy of CHRYSLER GROUP, LLC

Is there any voltage present?

Yes

- Repair the short to voltage in the (V71) or (V72) S/C Switch Sense circuit.
- Perform the POWERTRAIN VERIFICATION TEST. Refer to **POWERTRAIN VERIFICATION TEST** .

No

- Go To 7.

7. **S/C SWITCH SENSE CIRCUIT SHORTED TO GROUND**

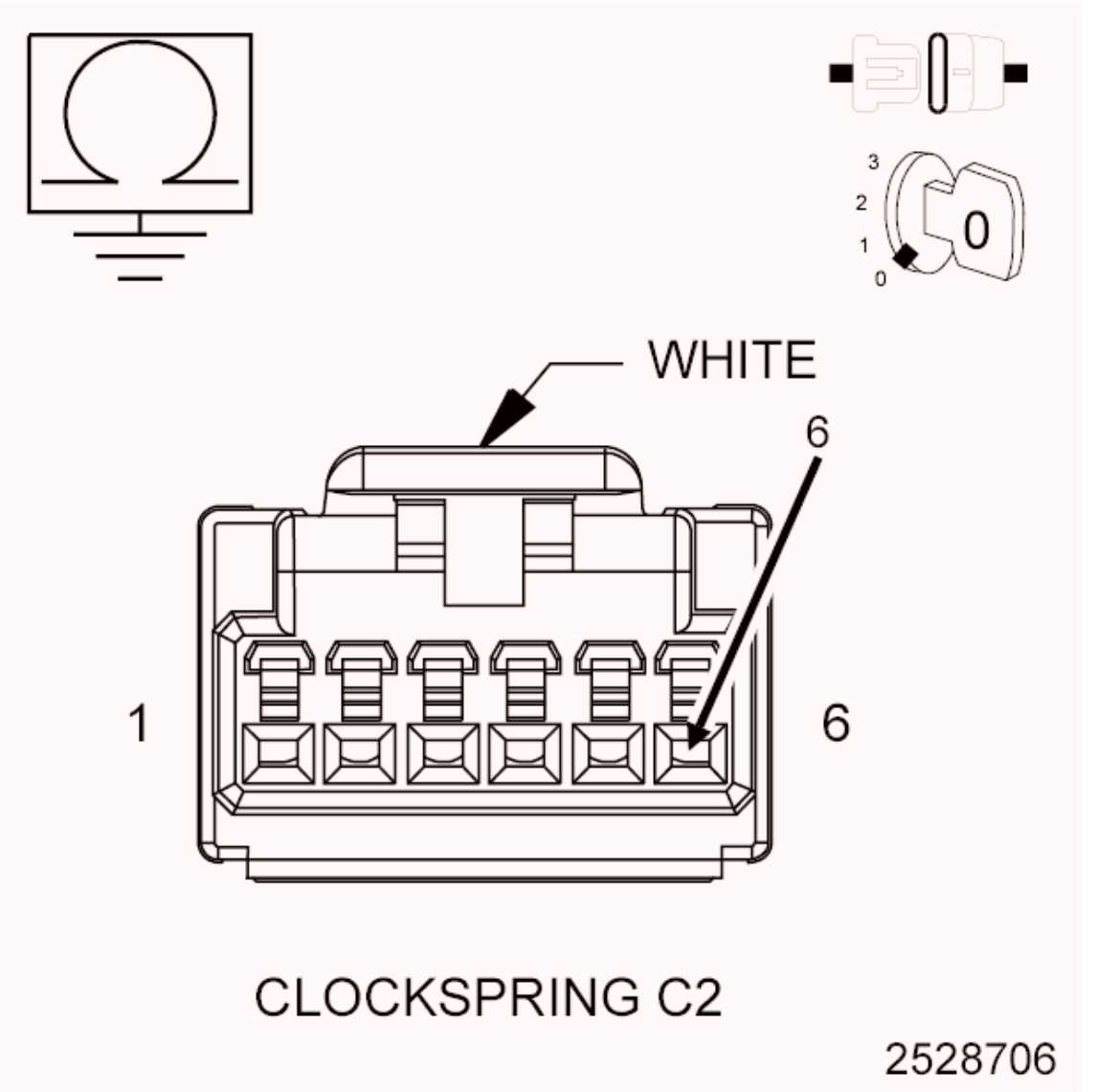

Fig. 90: Measuring Resistance Between Ground And S/C Switch Sense Circuit In SCM Harness Connector
Courtesy of CHRYSLER GROUP, LLC

1. Turn the ignition off.
2. Measure the resistance between ground and the (V71) S/C Switch Sense 1 circuit in the Clockspring C2 harness connector.

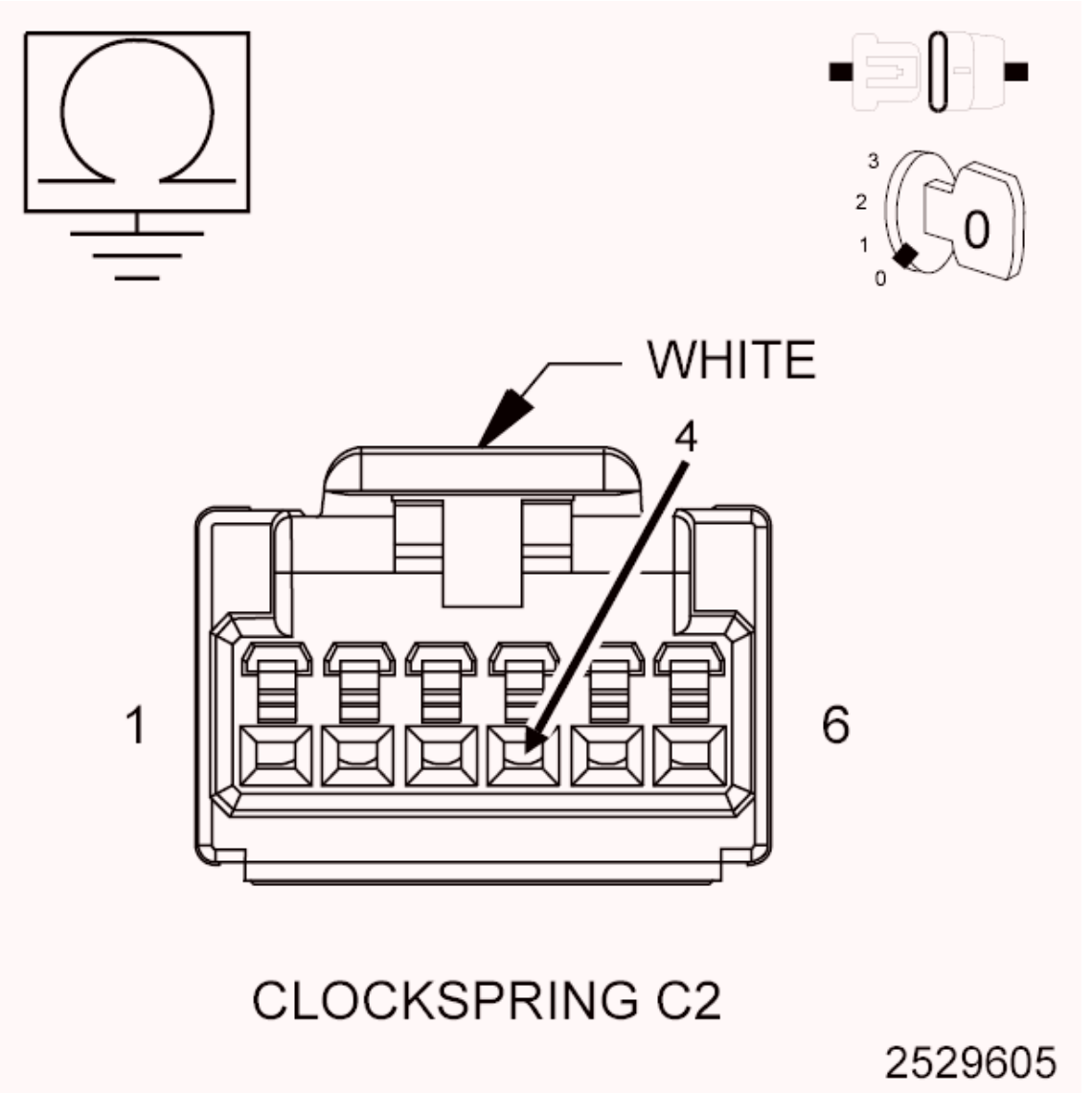

Fig. 91: Measuring Resistance Between Ground And (V72) S/C Switch Sense 2 Circuit In Clockspring C2 Harness Connector
Courtesy of CHRYSLER GROUP, LLC

3. Measure the resistance between ground and the (V72) S/C Switch Sense 2 circuit in the Clockspring C2 harness connector.

   Is the resistance below 100 Ohms?

   Yes

   - Repair the short to ground in the (V71) or (V72) S/C Switch Sense circuit.
   - Perform the POWERTRAIN VERIFICATION TEST. Refer to **POWERTRAIN VERIFICATION TEST** .

No

- Go To 8.

8. **S/C SWITCH SENSE CIRCUIT SHORTED TO THE (V937) S/C SWITCH RETURN CIRCUIT**

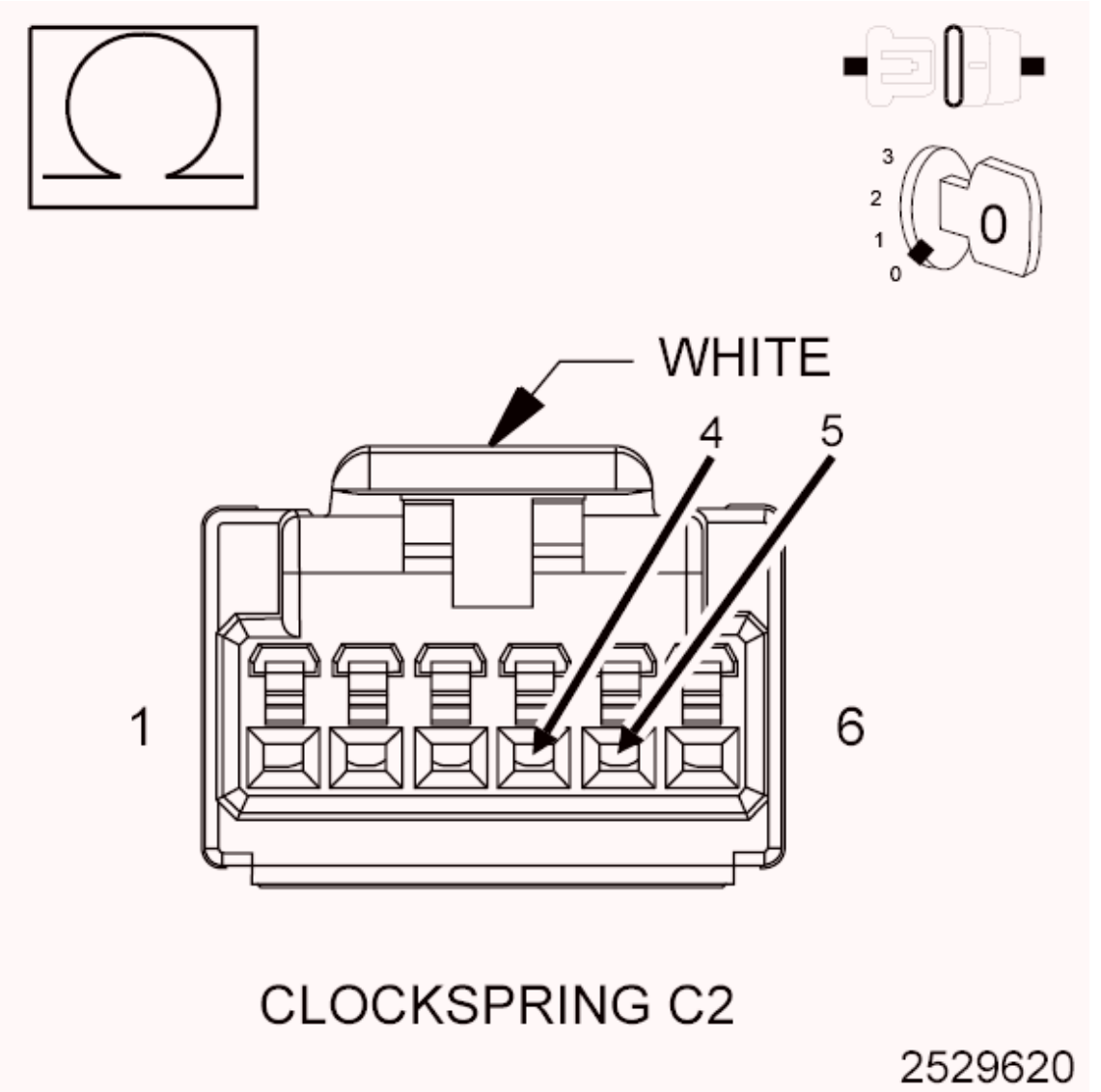

Fig. 92: Measuring Resistance Between S/C Switch Sense Circuit And S/C Switch Return Circuit In Clockspring C2 Harness Connector
Courtesy of CHRYSLER GROUP, LLC

1. Measure the resistance between the (V71) S/C Switch Sense circuit and the (V937) S/C Switch Return circuit in the Clockspring C2 harness connector.

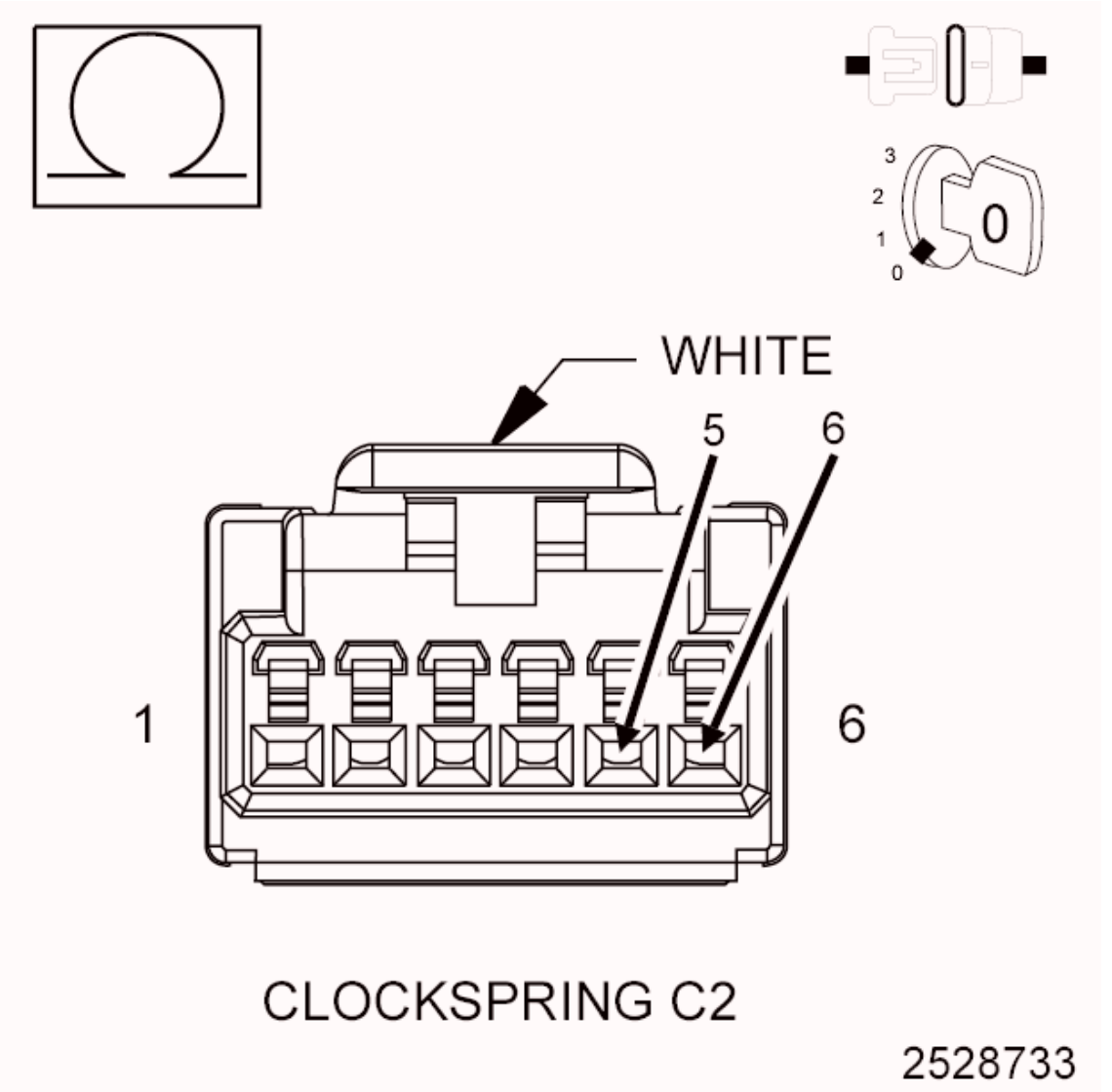

Fig. 93: Measuring Resistance Between S/C Switch Sense Circuit And S/C Switch Return Circuit In Clockspring C2 Harness Connector
Courtesy of CHRYSLER GROUP, LLC

2. Measure the resistance between the (V72) S/C Switch Sense circuit and the (V937) S/C Switch Return circuit in the Clockspring C2 harness connector.

   Is the resistance below 5.0 Ohms?

   Yes

   - Repair the short between the (V71) or (V72) S/C Switch Sense circuit and the (V937) Switch Return circuit.
   - Perform the POWERTRAIN VERIFICATION TEST. Refer to **POWERTRAIN VERIFICATION TEST** .

No

- Go To 9.

9. **S/C SWITCH SENSE CIRCUIT OPEN**

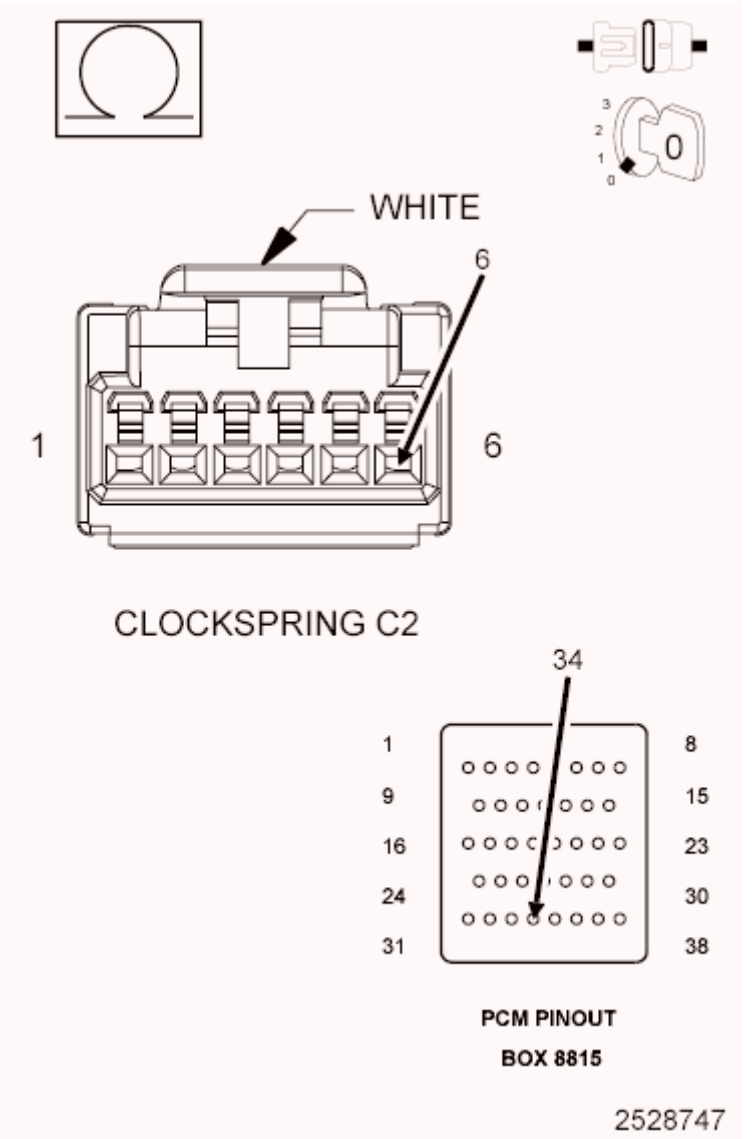

Fig. 94: Measuring Resistance Of S/C Switch Sense Circuit From C2 Clockspring Harness Connector To Appropriate Terminal Of PCM Pinout Box 8815
Courtesy of CHRYSLER GROUP, LLC

1. Connect the PCM C3 harness connector.
2. Measure the resistance of the (V71) and (V72) S/C Switch Sense circuit in the C2 Clockspring harness connector to the appropriate terminals of PCM Pinout Box (special tool #8815A, Kit, NGC, 38 Position).

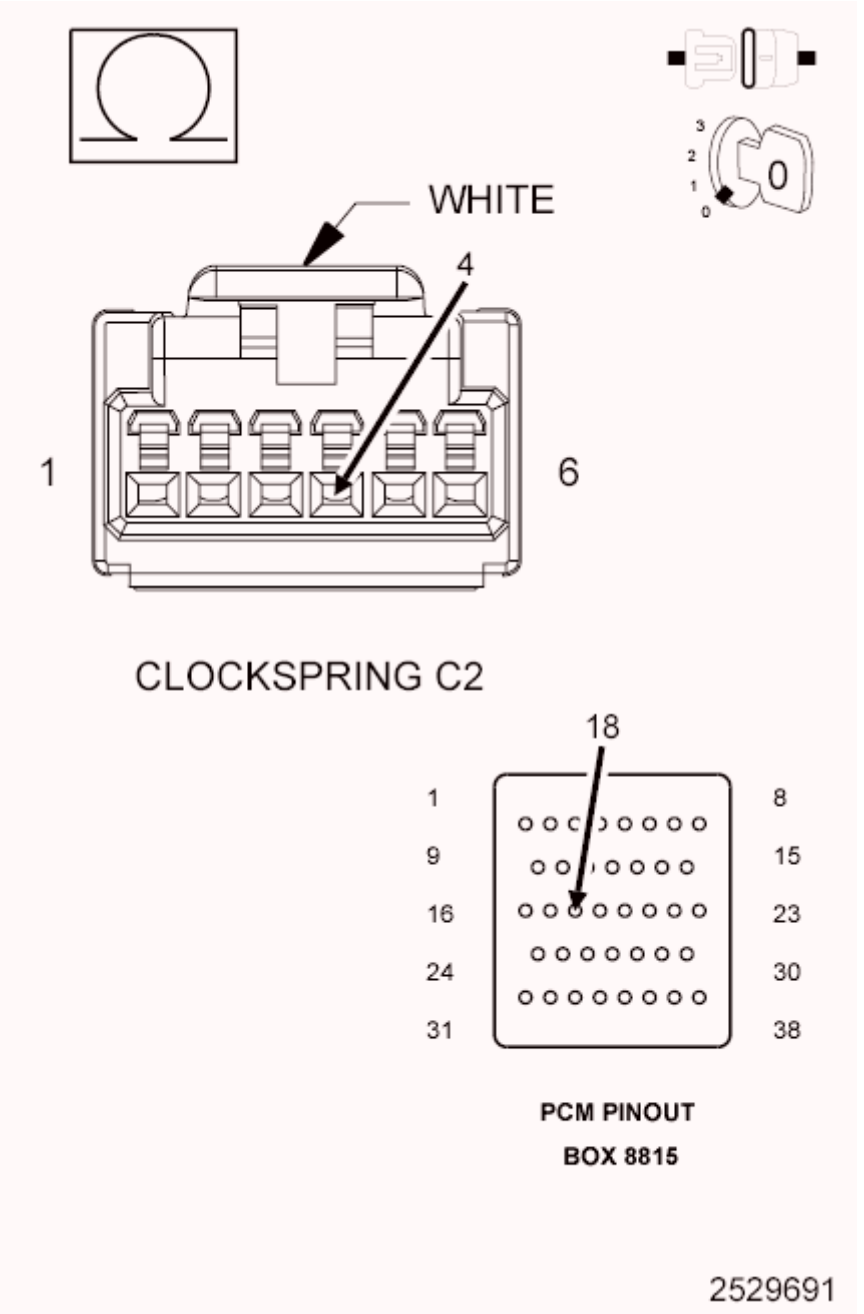

Fig. 95: Measuring Resistance Of S/C Switch Sense 2 Circuit From Clockspring Harness Connector To Appropriate Terminal Of PCM Pinout Box 8815
Courtesy of CHRYSLER GROUP, LLC

Is the resistance below 5.0 Ohms for each measurement?

Yes

- Go To 10.

No

- Repair the excessive resistance in the (V71) or (V72) S/C Switch Sense circuit.
- Perform the POWERTRAIN VERIFICATION TEST. Refer to **POWERTRAIN VERIFICATION TEST** .

10. **(V937) S/C SWITCH RETURN CIRCUIT OPEN**

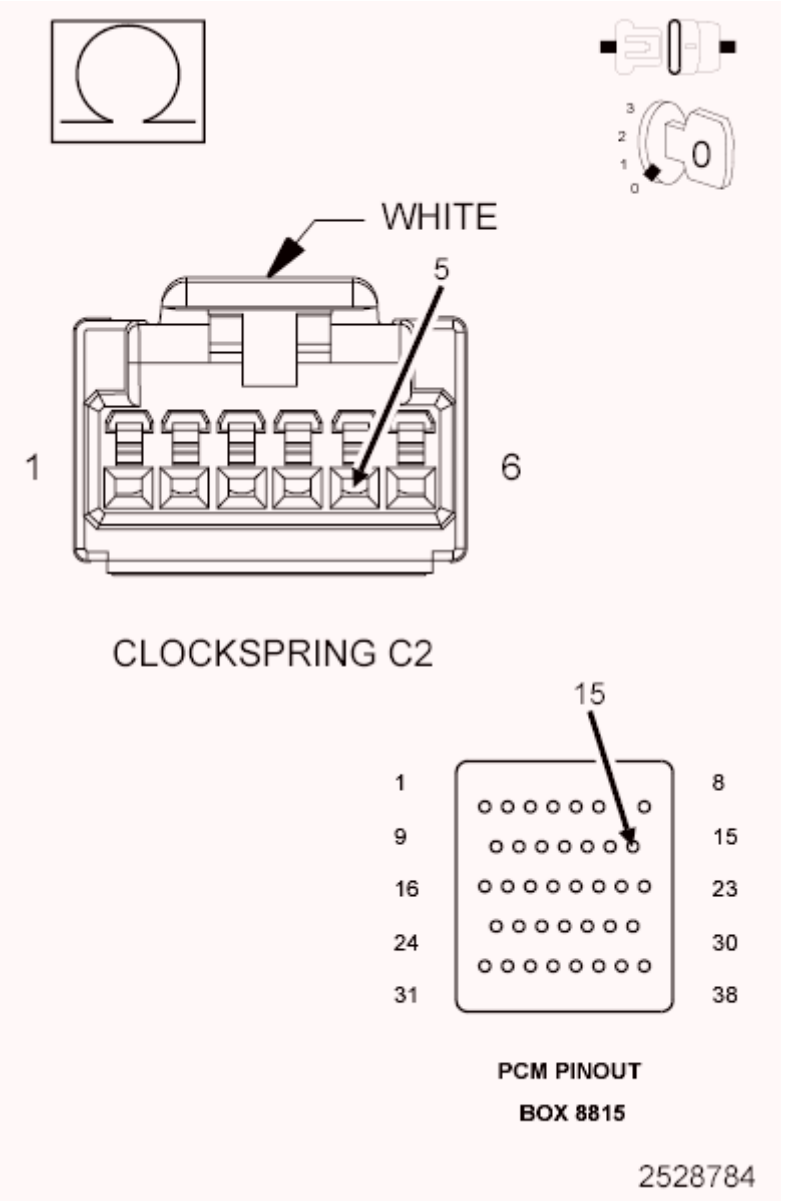

Fig. 96: Measuring Resistance Of S/C Switch Return Circuit From Clockspring C2 Harness Connector To Appropriate Terminal Of PCM Pinout Box 8815
Courtesy of CHRYSLER GROUP, LLC

1. Measure the resistance of the (V937) S/C Switch Return circuit from the Clockspring C2 harness connector to the appropriate terminal of PCM Pinout Box (special tool #8815A, Kit, NGC, 38 Position).

Is the resistance below 5.0 Ohms for both measurements?

Yes

- Go To 11.

No

- Repair the excessive resistance in the (V937) S/C Switch Return circuit.
- Perform the POWERTRAIN VERIFICATION TEST. Refer to **POWERTRAIN VERIFICATION TEST** .

11. **POWERTRAIN CONTROL MODULE (PCM)**
    1. Using the wiring diagram/schematic as a guide, inspect the wiring and connectors between the Speed Control Switch and the Powertrain Control Module (PCM).
    2. Look for any chafed, pierced, pinched or partially broken wires.
    3. Look for broken, bent, pushed out or corroded terminals. Verify that there is good pin to terminal contact in the Switch and Powertrain Control Module connectors.
    4. Perform any Technical Service Bulletins that may apply.

    Were there any problems found?

    Yes

    - Repair as necessary.
    - Perform the POWERTRAIN VERIFICATION TEST. Refer to **POWERTRAIN VERIFICATION TEST** .

    No

    - Replace and program the Powertrain Control Module in accordance with the Service Information. Refer to **MODULE, POWERTRAIN CONTROL, REMOVAL** .
    - Perform the POWERTRAIN VERIFICATION TEST. Refer to **POWERTRAIN VERIFICATION TEST** .

P1607-PCM INTERNAL SHUTDOWN TIMER SLOW RATIONALITY

For a complete wiring diagram **refer to appropriate SYSTEM WIRING DIAGRAMS article** .

THEORY OF OPERATION

The PCM compares actual shutdown time to a calculated shutdown time value. The calculated shut down time value is based on the amount the ECT should drop after a completely warmed up engine is shut down for a minimum of 8 hours. If the difference between actual shutdown time and the calculated shut down time is greater than a maximum value, a one trip failure will set. The shutdown time is measured again after 1 hour of ignition off time following the next engine warm up cycle. The PCM compares the shutdown time to a

calculated value. If the difference is greater than a maximum value, the MIL is illuminated and a DTC will set.

WHEN MONITORED:

With the engine running after a cycle when a complete engine warm up was achieved, the difference between engine coolant temperature and ambient air temperature less than or equal to 10° C (50° F), and battery voltage greater than 10 volts.

SET CONDITION:

This DTC sets if the engine coolant temp does not drop enough or drops too much during engine off time. This DTC may also set if the controller timer is inaccurate. Two Trip Fault. Three good trips to turn off the MIL.

POSSIBLE CAUSES

Possible Causes
ENGINE COOLING CONDITIONS THAT MAY SET THIS DTC
ENGINE COOLANT LEVEL
PCM INTERNAL TIMER

Always perform the Pre-Diagnostic Troubleshooting procedure before proceeding. Refer to PRE-DIAGNOSTIC TROUBLESHOOTING PROCEDURE .

DIAGNOSTIC TEST

1. **ENGINE COOLANT INSPECTION**

NOTE: **This DTC will set if the engine cools quicker than is should compared to engine off times. If the customer washed a hot engine with the engine off, a One Trip Failure will set. If the vehicle is parked in a highly ventilated area or has a large fan blowing on it which might cause the engine to cool quicker than expected this DTC may set.**

WARNING: **Do not remove or loosen the radiator cap with the system hot and under pressure. Serious burns from coolant can occur.**

1. Turn the ignition off.
2. Allow the engine to cool enough to allow the pressure in the coolant system to drop enough to safely remove the radiator cap.
3. Check the coolant level and condition. Refer to **ENGINE COOLING SYSTEM** .

   Is the engine coolant level filled to the proper level?

   Yes

   - Go To 2.

No

- Add the appropriate type and amount of engine coolant. Refer to **STANDARD PROCEDURE** .
- Perform the POWERTRAIN VERIFICATION TEST. Refer to **POWERTRAIN VERIFICATION TEST** .

2. **POWERTRAIN CONTROL MODULE (PCM)**
    1. Turn the ignition on.
    2. With the scan tool under PCM/NGC Data Display, locate the Ignition Off Time value.
    3. While monitoring a stop watch, turn the Ignition off for 10 minutes, watch the stop watch for those 10 minutes, and then turn the Ignition on.
    4. With the scan tool under Data Functions, check the Ignition Off Time value again.

    Does the Ignition Time Off value on the scan tool match the actual time you had the Ignition off on the stop watch?

    Yes

    - The conditions that set the DTC are not active at this time. For further assistance perform the INTERMITTENT CONDITION diagnostic procedure. Refer to **INTERMITTENT CONDITION** .

    No

    - Replace and program the Powertrain Control Module per Service Information. Refer to **MODULE, POWERTRAIN CONTROL, REMOVAL** .
    - Perform the POWERTRAIN VERIFICATION TEST. Refer to **POWERTRAIN VERIFICATION TEST** .

P1618-SENSOR REFERENCE VOLTAGE 1 CIRCUIT ERRATIC

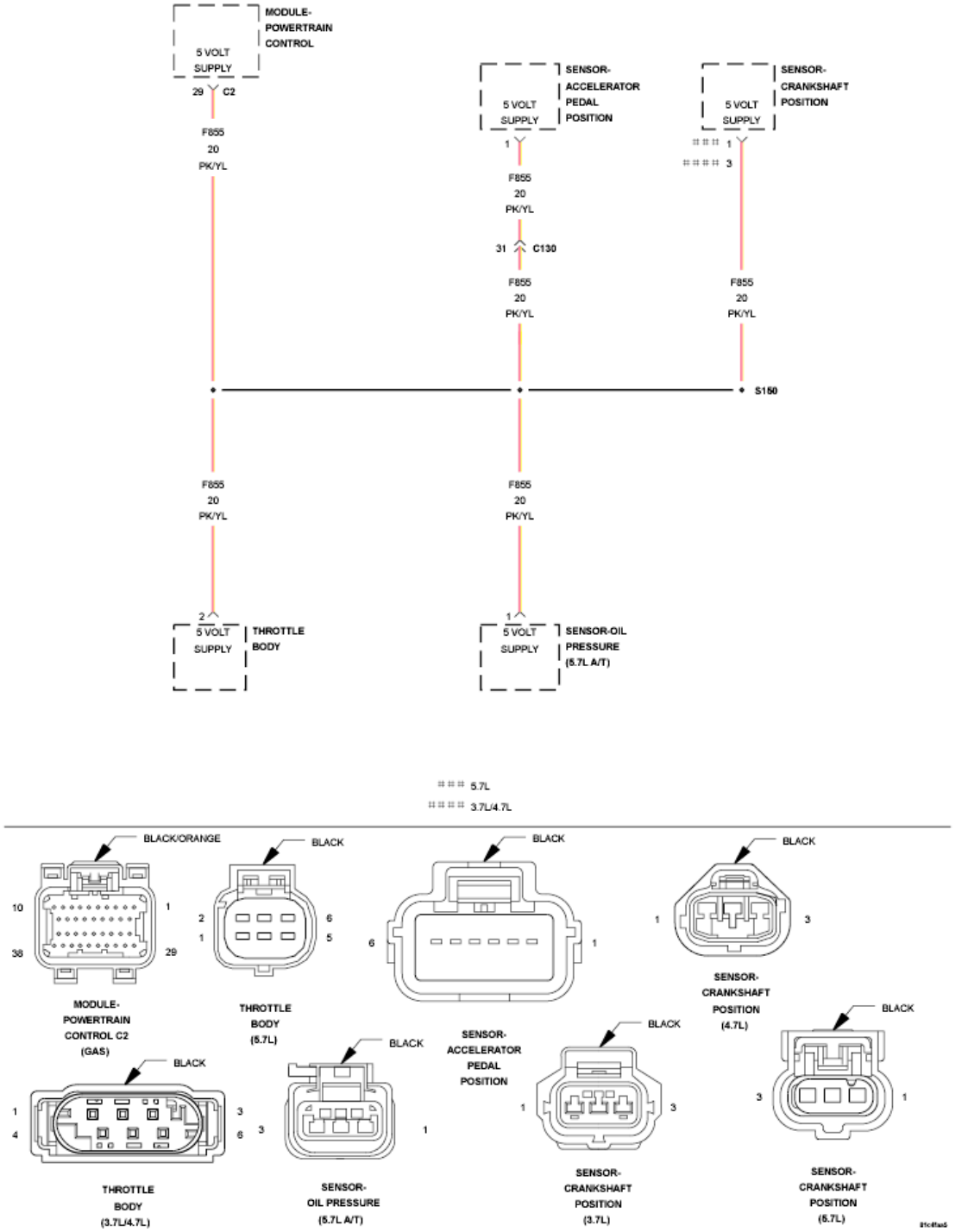

Fig. 97: APP Sensor, CKP Sensor, PCM, Throttle Body & Oil Pressure Sensor 5-Volt Supply Circuit Schematic
Courtesy of CHRYSLER GROUP, LLC

For a complete wiring diagram **refer to appropriate SYSTEM WIRING DIAGRAMS article** .

WHEN MONITORED:

Ignition on.

SET CONDITION:

When the PCM recognizes the Primary 5-volt Supply circuit voltage is varying too much too quickly. One Trip Fault. ETC light is flashing.

POSSIBLE CAUSES

Possible Causes
(F855) PRIMARY 5-VOLT SUPPLY SHORTED TO GROUND
(F855) PRIMARY 5-VOLT SUPPLY SHORTED TO VOLTAGE
(F855) PRIMARY 5-VOLT SUPPLY CIRCUIT OPEN
5-VOLT SENSOR
POWERTRAIN CONTROL MODULE (PCM)

Always perform the Pre-Diagnostic Troubleshooting procedure before proceeding. Refer to PRE-DIAGNOSTIC TROUBLESHOOTING PROCEDURE .

DIAGNOSTIC TEST

1. **ACTIVE DTC**

NOTE: **Improperly installed aftermarket accessories can cause this DTC to set. Check for any improperly installed aftermarket accessories before continuing with this test.**

1. Start the engine and allow it to idle for at least 60 seconds.

WARNING: **When the engine is operating, do not stand in direct line with the fan. Do not put your hands near the pulleys, belts or fan. Do not wear loose clothing. Failure to follow these instructions may result in possible serious or fatal injury.**

2. With a scan tool, select View DTCs.

   Is the status Active for this DTC?

   Yes

   - Go To 2.

   No

   - Perform the INTERMITTENT CONDITION diagnostic procedure. Refer to **INTERMITTENT CONDITION** .

2. **(F855) PRIMARY 5-VOLT SUPPLY CIRCUIT SHORTED TO GROUND**

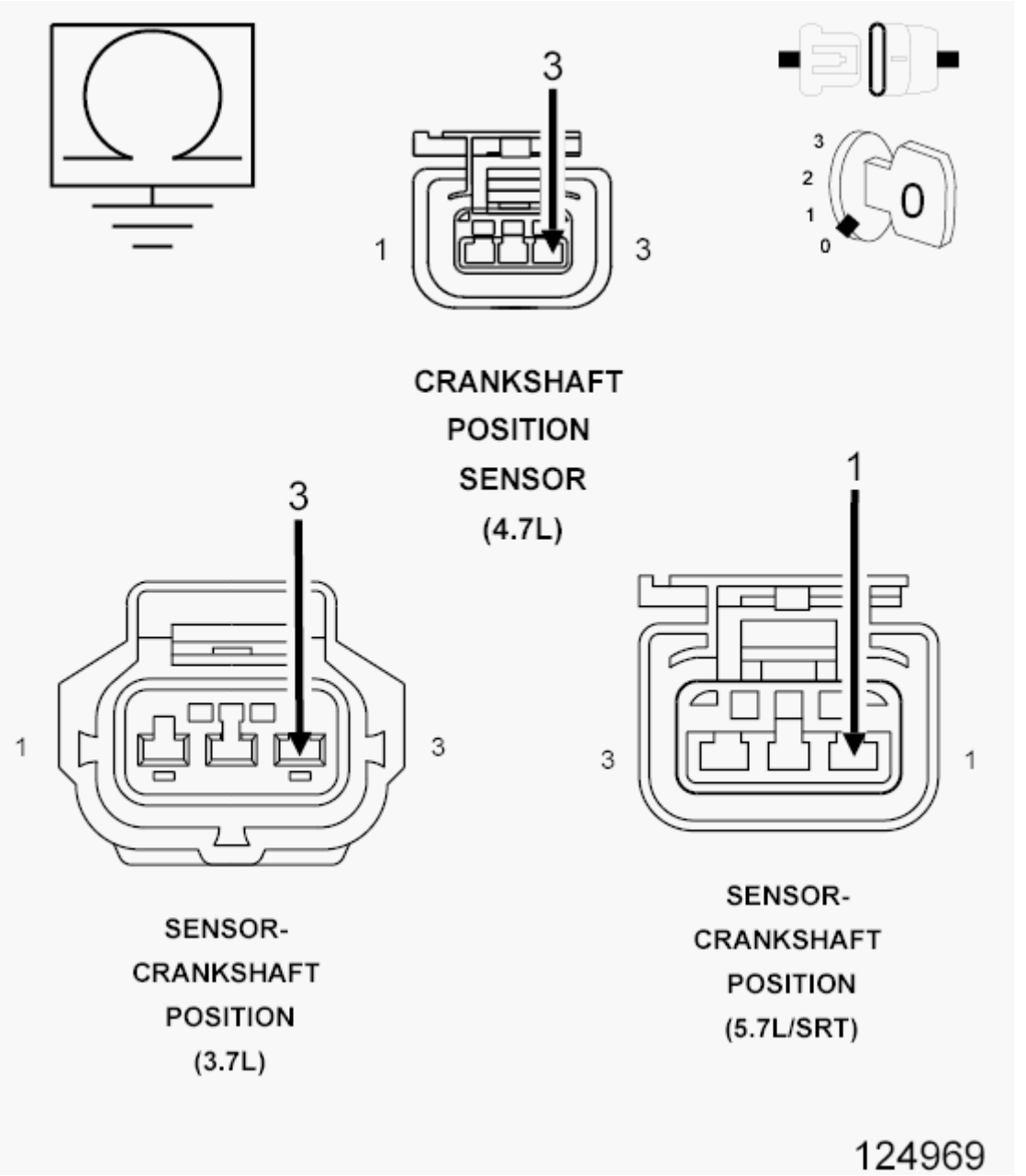

Fig. 98: Measuring Resistance Between Ground And (F855) Primary 5-Volt Supply Circuit In CKP Sensor Harness Connector
Courtesy of CHRYSLER GROUP, LLC

1. Turn the ignition off.
2. Disconnect the C2 PCM harness connector.
3. Disconnect all the Sensors that share the (F855) Primary 5-volt Supply circuit.
4. Measure the resistance between ground and the (F855) Primary 5-volt Supply circuit in the CKP Sensor harness connector.

Is the resistance below 100 ohms?

Yes

- Repair the short to ground in the (F855) Primary 5-volt Supply circuit.
- Perform the POWERTRAIN VERIFICATION TEST. Refer to **POWERTRAIN VERIFICATION TEST** .

No

- Go To 3.

3. **SENSOR SHORTED TO GROUND**

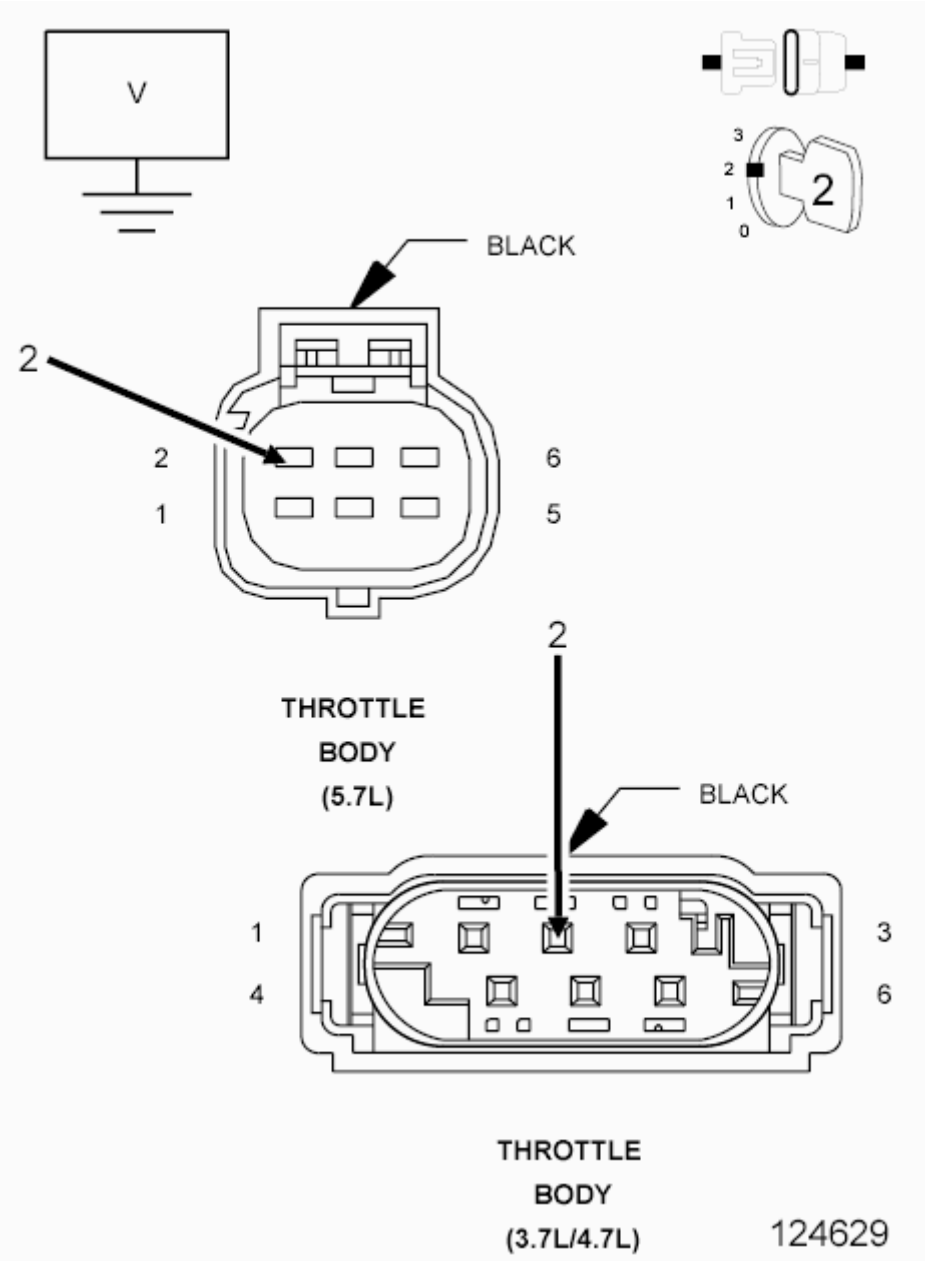

Fig. 99: Measuring Voltage On Primary 5-Volt Supply Circuit AT Throttle Body Harness Connector
Courtesy of CHRYSLER GROUP, LLC

1. Connect the C2 PCM harness connector and all the previously disconnected Sensors except for the CKP Sensor harness connector.
2. Ignition on, engine not running.
3. Measure the voltage on the (F855) Primary 5-volt Supply circuit at the Throttle Body harness connector.

CAUTION: You must Turn the Ignition Off when disconnecting any of the

Sensor harness connectors and Turn the Ignition On to check the voltage readings.

4. While monitoring the voltage, disconnect each Sensor harness connector that shares the (F855) Primary 5-volt Supply circuit, one at a time.

   Does the voltage increase above 4.5 volts when disconnecting any of the Sensor harness connectors?

   Yes

   - Replace the Sensor that causes the (F855) Primary 5-volt Supply circuit voltage to increase when disconnected.
   - Perform the POWERTRAIN VERIFICATION TEST. Refer to **POWERTRAIN VERIFICATION TEST** .

   No

   - Go To 4.

4. **5-VOLT SENSOR**

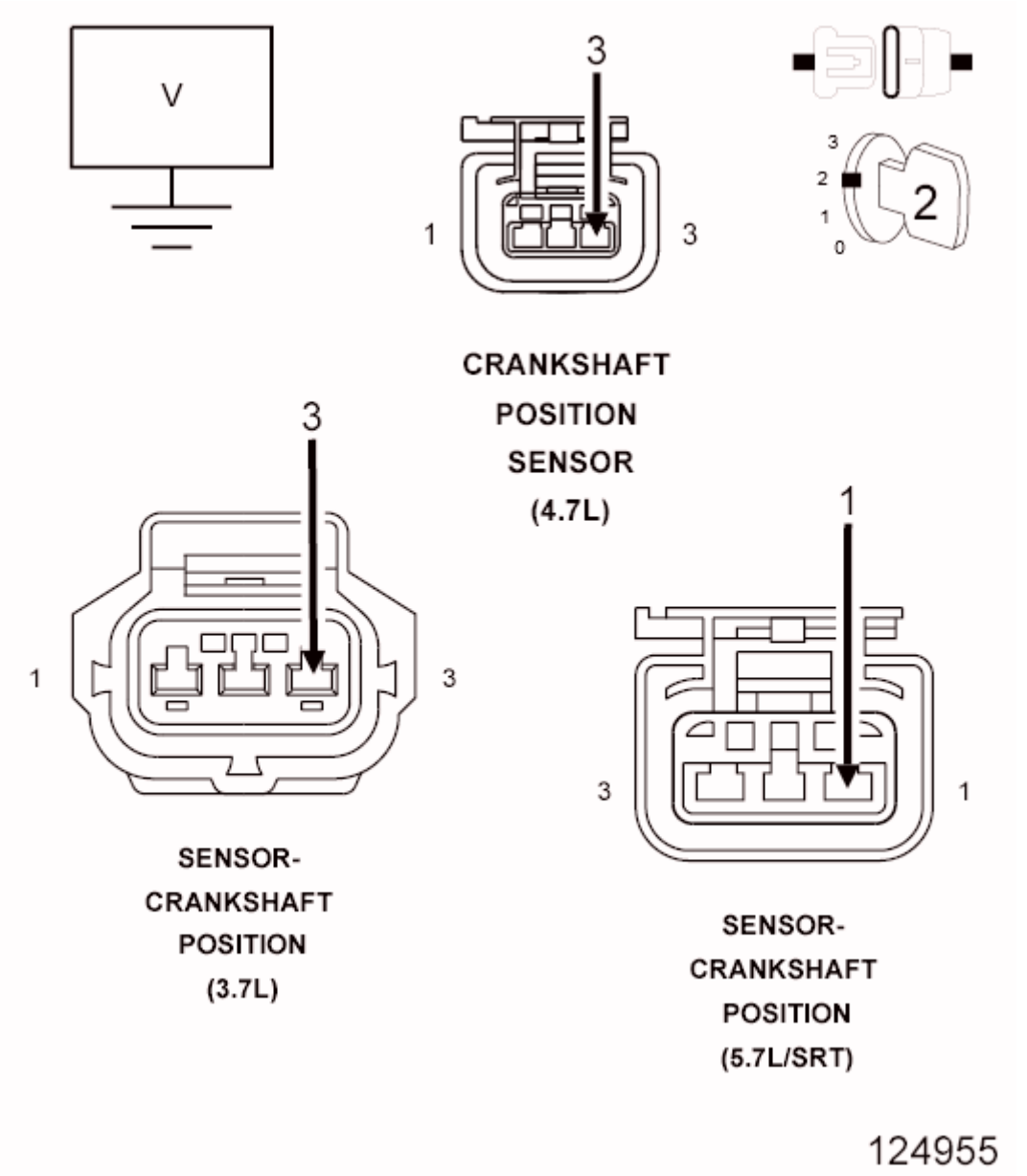

Fig. 100: Measuring Voltage On CKP Sensor 5-Volt Supply Circuit
Courtesy of CHRYSLER GROUP, LLC

1. Turn the ignition off.
2. Connect all the previously disconnected Sensors except for the CKP Sensor harness connector.
3. Ignition on, engine not running.
4. Measure the voltage on the (F855) Primary 5-volt Supply circuit at the CKP Sensor harness connector.

   Is the voltage between 4.8 and 5.2 volts?

   Yes

- Replace the Crank Position Sensor.
- Perform the POWERTRAIN VERIFICATION TEST. Refer to **POWERTRAIN VERIFICATION TEST** .

No

- Go To 5.

5. **(F855) PRIMARY 5-VOLT SUPPLY SHORTED TO VOLTAGE**

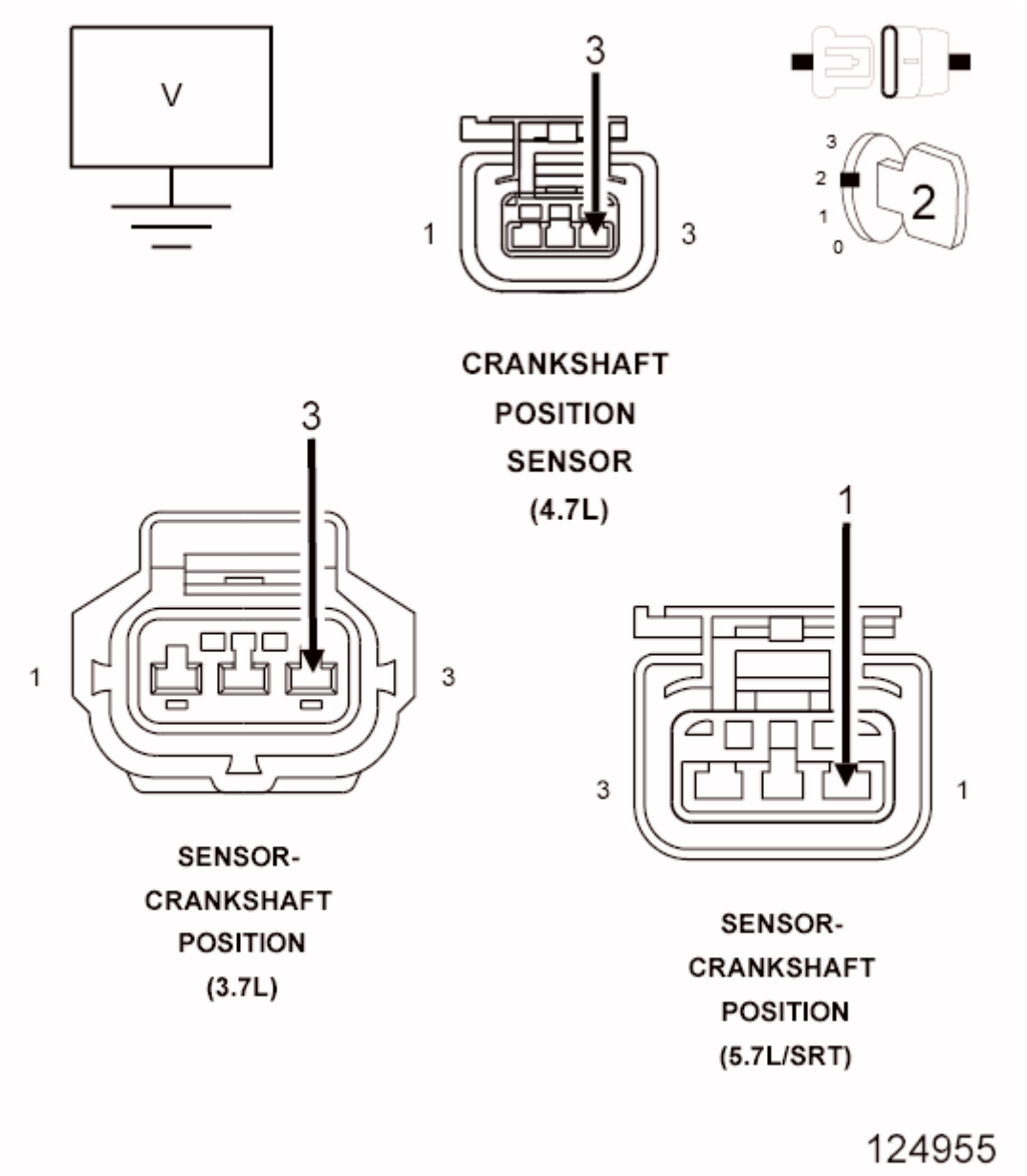

Fig. 101: Measuring Voltage On CKP Sensor 5-Volt Supply Circuit
Courtesy of CHRYSLER GROUP, LLC

1. Turn the ignition off.
2. Disconnect the C2 PCM harness connector.
3. Disconnect all the Sensors that share the (F855) Primary 5-volt Supply circuit.
4. Ignition on, engine not running.
5. Measure the voltage on the (F855) Primary 5-volt Supply circuit in the CKP Sensor harness connector.

   Is there any voltage present?

   Yes

   - Repair the short to voltage in the (F855) Primary 5-volt Supply circuit.
   - Perform the POWERTRAIN VERIFICATION TEST. Refer to **POWERTRAIN VERIFICATION TEST** .

   No

   - Go To 6.

6. **(F855) PRIMARY 5-VOLT SUPPLY CIRCUIT OPEN**

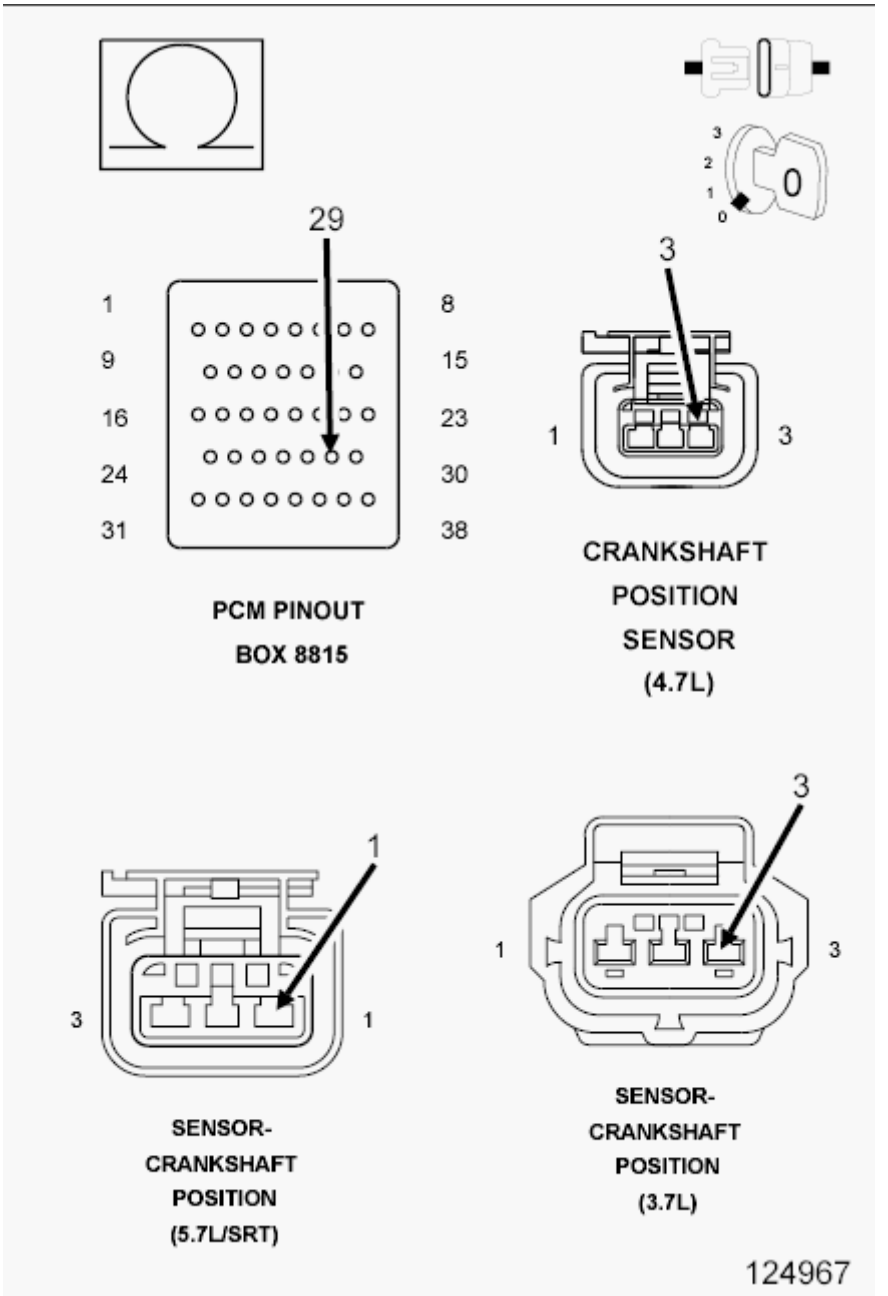

Fig. 102: Measuring Resistance In (F855) Primary 5-Volt Supply Circuit From Sensor Harness Connector To Appropriate Terminal Of Special Tool #8815
Courtesy of CHRYSLER GROUP, LLC

1. Turn the ignition off.
2. Reconnect all the sensors that were disconnected in the previous step except for the CKP Sensor harness connector.

CAUTION: Do not probe the PCM harness connectors. Probing the PCM harness connectors will damage the PCM terminals resulting in poor terminal to pin connection. Install the PCM Pinout Box

(special tool #8815A, Kit, NGC, 38 Position) to perform diagnosis.

3. Measure the resistance in the (F855) Primary 5-volt Supply circuit from the Sensor harness connector to the appropriate terminal of special tool (special tool #8815A, Kit, NGC, 38 Position).
4. It may be necessary to perform this test from every sensor that uses the (F855) Primary 5-volt Supply circuit.

   Is the resistance below 5.0 ohms?

   Yes

   - Go To 7.

   No

   - Repair the open in the (F855) Primary 5-volt Supply circuit.
   - Perform the POWERTRAIN VERIFICATION TEST. Refer to **POWERTRAIN VERIFICATION TEST** .

7. **POWERTRAIN CONTROL MODULE (PCM)**
   1. Using the wiring diagram/schematic as a guide, inspect the wiring and connectors between the Related Sensors and the Powertrain Control Module (PCM).
   2. Look for any chafed, pierced, pinched, or partially broken wires.
   3. Look for broken, bent, pushed out or corroded terminals. Verify that there is good pin to terminal contact in the Related Sensor and the Powertrain Control Module connectors.
   4. Refer to any Technical Service Bulletins that may apply.

      Were there any problems found?

      Yes

      - Repair as necessary.
      - Perform the POWERTRAIN VERIFICATION TEST. Refer to **POWERTRAIN VERIFICATION TEST** .

      No

      - Replace and program the Powertrain Control Module per Service Information. Refer to **MODULE, POWERTRAIN CONTROL, REMOVAL** .
      - Perform the POWERTRAIN VERIFICATION TEST. Refer to **POWERTRAIN VERIFICATION TEST** .

P1628-SENSOR REFERENCE VOLTAGE 2 CIRCUIT ERRATIC

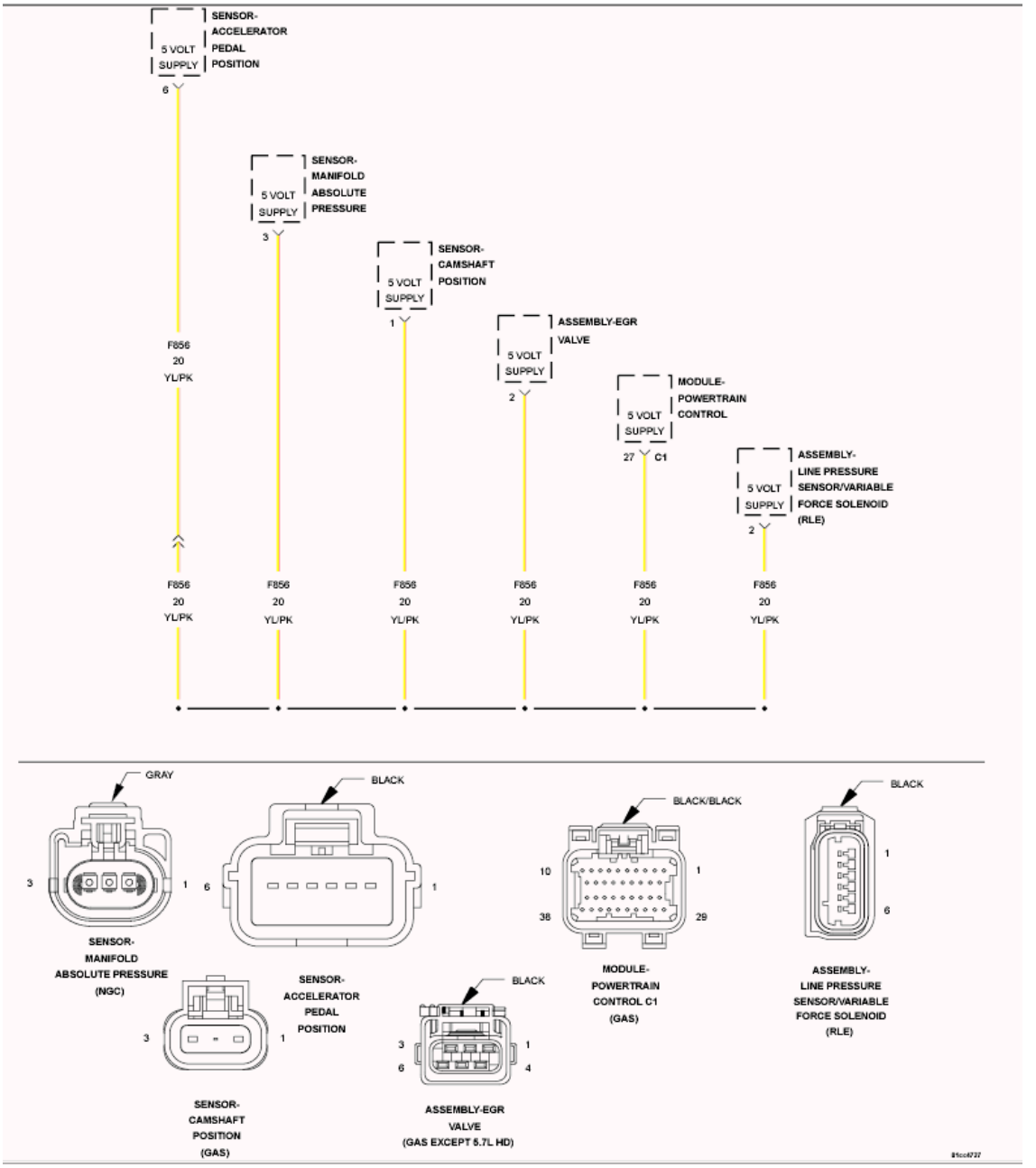

Fig. 103: Auxiliary 5-Volt Supply Circuit Schematic
Courtesy of CHRYSLER GROUP, LLC

For a complete wiring diagram **refer to appropriate SYSTEM WIRING DIAGRAMS article** .

WHEN MONITORED:

Ignition on.

SET CONDITION:

When the PCM recognizes the Auxiliary 5-volt Supply circuit voltage is varying too much too quickly. One

Trip Fault. ETC light is flashing.

POSSIBLE CAUSES

Possible Causes
(F856) AUXILIARY 5-VOLT SUPPLY CIRCUIT SHORTED TO GROUND
(F856) AUXILIARY 5-VOLT SUPPLY CIRCUIT SHORTED TO VOLTAGE
(F856) AUXILIARY 5-VOLT SUPPLY CIRCUIT OPEN
5-VOLT SENSOR
POWERTRAIN CONTROL MODULE (PCM)

Always perform the Pre-Diagnostic Troubleshooting procedure before proceeding. Refer to PRE-DIAGNOSTIC TROUBLESHOOTING PROCEDURE .

DIAGNOSTIC TEST

1. **ACTIVE DTC**

   NOTE: Improperly installed aftermarket accessories can cause this DTC to set. Check for any improperly installed aftermarket accessories before continuing with this test.

   1. Start the engine and allow it to idle for at least 60 seconds.

      WARNING: When the engine is operating, do not stand in direct line with the fan. Do not put your hands near the pulleys, belts or fan. Do not wear loose clothing. Failure to follow these instructions may result in possible serious or fatal injury.

   2. With a scan tool, select View DTCs.

      Is the DTC Active at this time?

      Yes

      - Go To 2.

      No

      - Perform the INTERMITTENT CONDITION diagnostic procedure. Refer to **INTERMITTENT CONDITION** .

2. **(F856) AUXILIARY 5-VOLT SUPPLY CIRCUIT SHORTED TO GROUND**

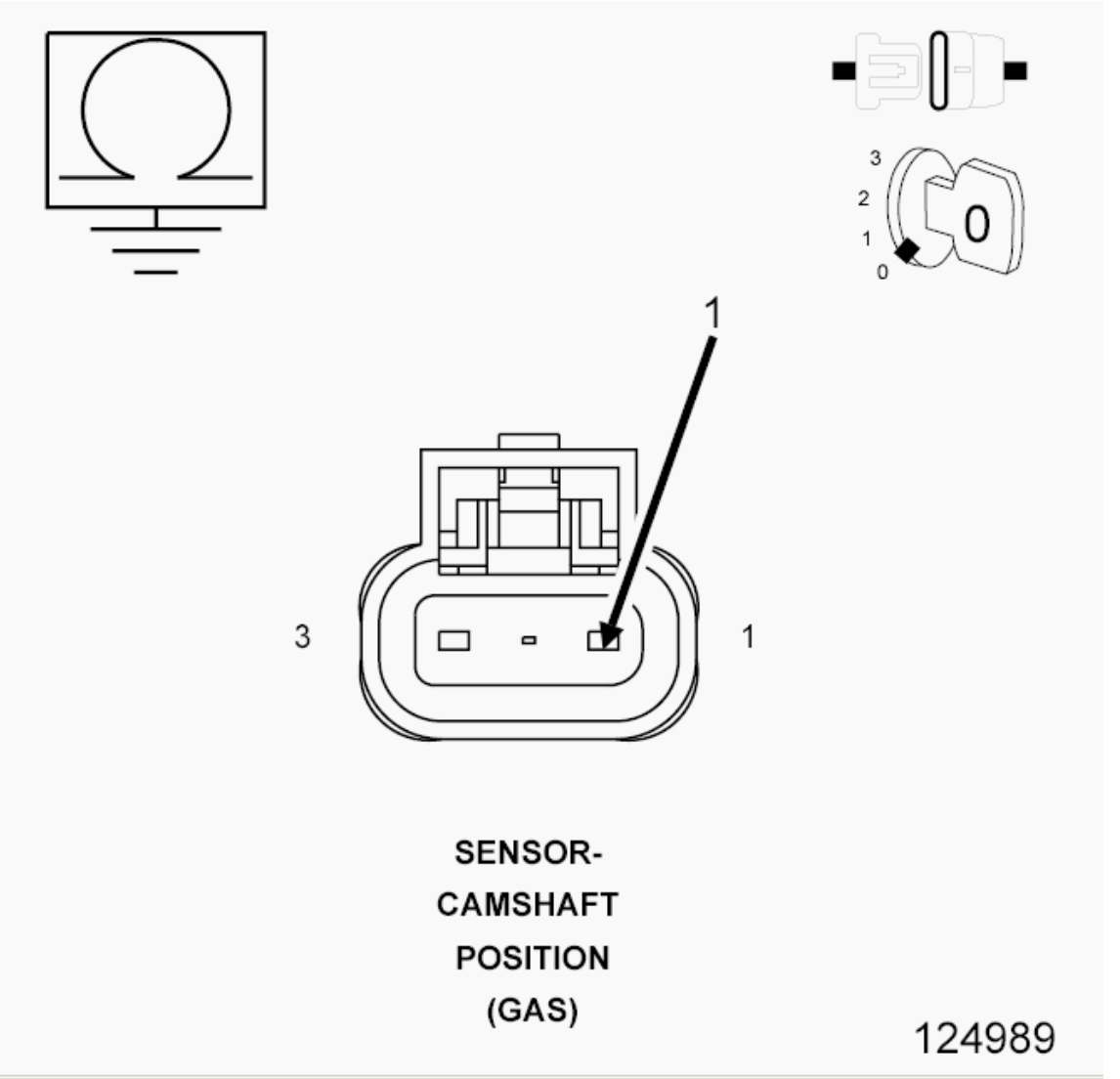

Fig. 104: Measuring Resistance Between Ground And 5-Volt Supply Circuit In CMP Sensor Harness Connector
Courtesy of CHRYSLER GROUP, LLC

1. Turn the ignition off.
2. Disconnect the C1 PCM harness connector.
3. Disconnect all the Sensors that share the (F856) Auxiliary 5-volt Supply circuit.
4. Measure the resistance between ground and the (F856) Auxiliary 5-volt Supply circuit at the CMP Sensor harness connector.

   Is the resistance below 100 ohms?

   Yes

   - Repair the short to ground in the (F856) Auxiliary 5-volt Supply circuit.
   - Perform the POWERTRAIN VERIFICATION TEST. Refer to **POWERTRAIN**

VERIFICATION TEST .

No

- Go To 3.

3. **SENSOR SHORTED TO GROUND**

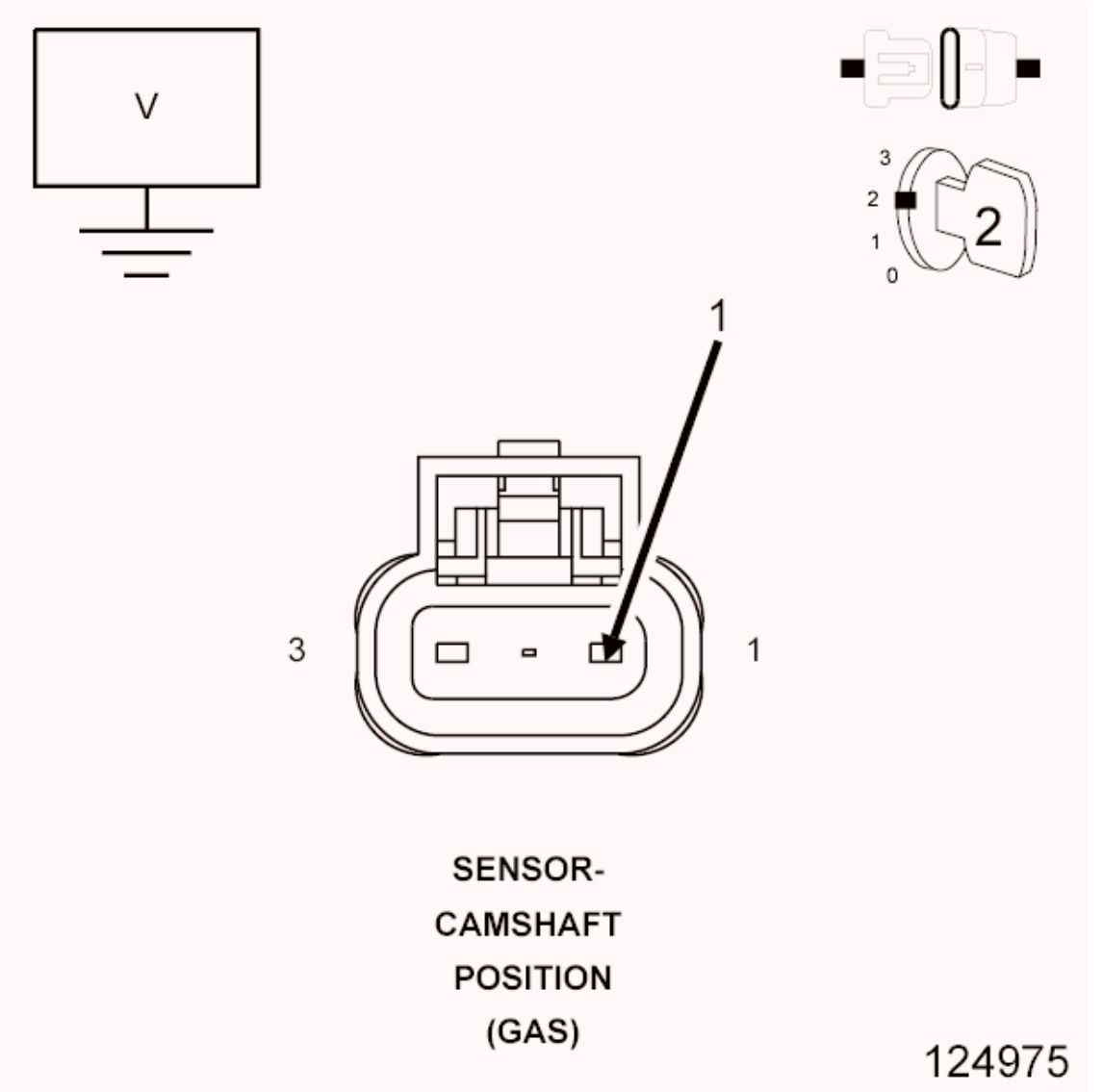

Fig. 105: Measuring Voltage On CMP Sensor 5-Volt Supply Circuit
Courtesy of CHRYSLER GROUP, LLC

1. Connect the C1 PCM harness connector and all the previously disconnected Sensors except for the CMP Sensor harness connector.
2. Ignition on, engine not running.
3. Measure the voltage on the (F856) Auxiliary 5-volt Supply circuit in the CMP Sensor harness connector.

CAUTION: You must Turn the Ignition OFF when disconnecting any of the Sensor harness connectors and Turn the Ignition On to check the voltage readings.

4. While monitoring the voltage, disconnect each Sensor harness connector that shares the (F856) Auxiliary 5-volt Supply circuit, one at a time.

   Does the voltage increase above 4.5 volts when disconnecting any of the Sensor harness connectors?

   Yes

   - Replace the Sensor that causes the (F856) Auxiliary 5-volt Supply circuit voltage to increase when disconnected.
   - Perform the POWERTRAIN VERIFICATION TEST. Refer to **POWERTRAIN VERIFICATION TEST** .

   No

   - Go To 4.

4. **5-VOLT SENSOR**

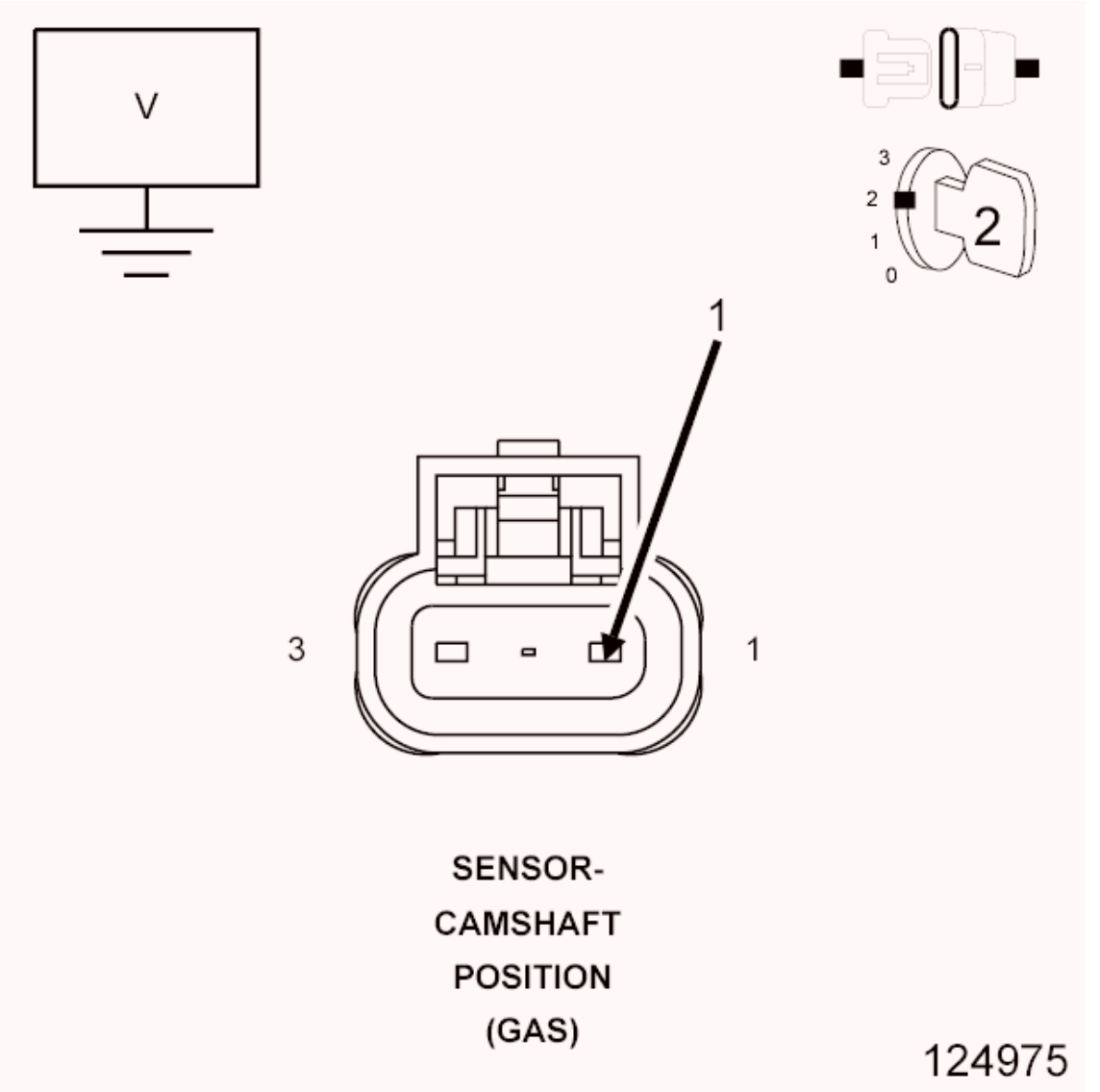

Fig. 106: Measuring Voltage On CMP Sensor 5-Volt Supply Circuit
Courtesy of CHRYSLER GROUP, LLC

1. Turn the ignition off.
2. Connect all the previously disconnected Sensors except for the CMP Sensor harness connector.
3. Ignition on, engine not running.
4. Measure the voltage on the (F856) Auxiliary 5-volt Supply circuit in the CMP Sensor harness connector.

   Is the voltage below 4.5 volts?

   Yes

   - Go To 5.

No

- Replace the Cam Position Sensor.
- Perform the POWERTRAIN VERIFICATION TEST. Refer to **POWERTRAIN VERIFICATION TEST** .

5. **(F856) AUXILIARY 5-VOLT SUPPLY CIRCUIT SHORTED TO VOLTAGE**

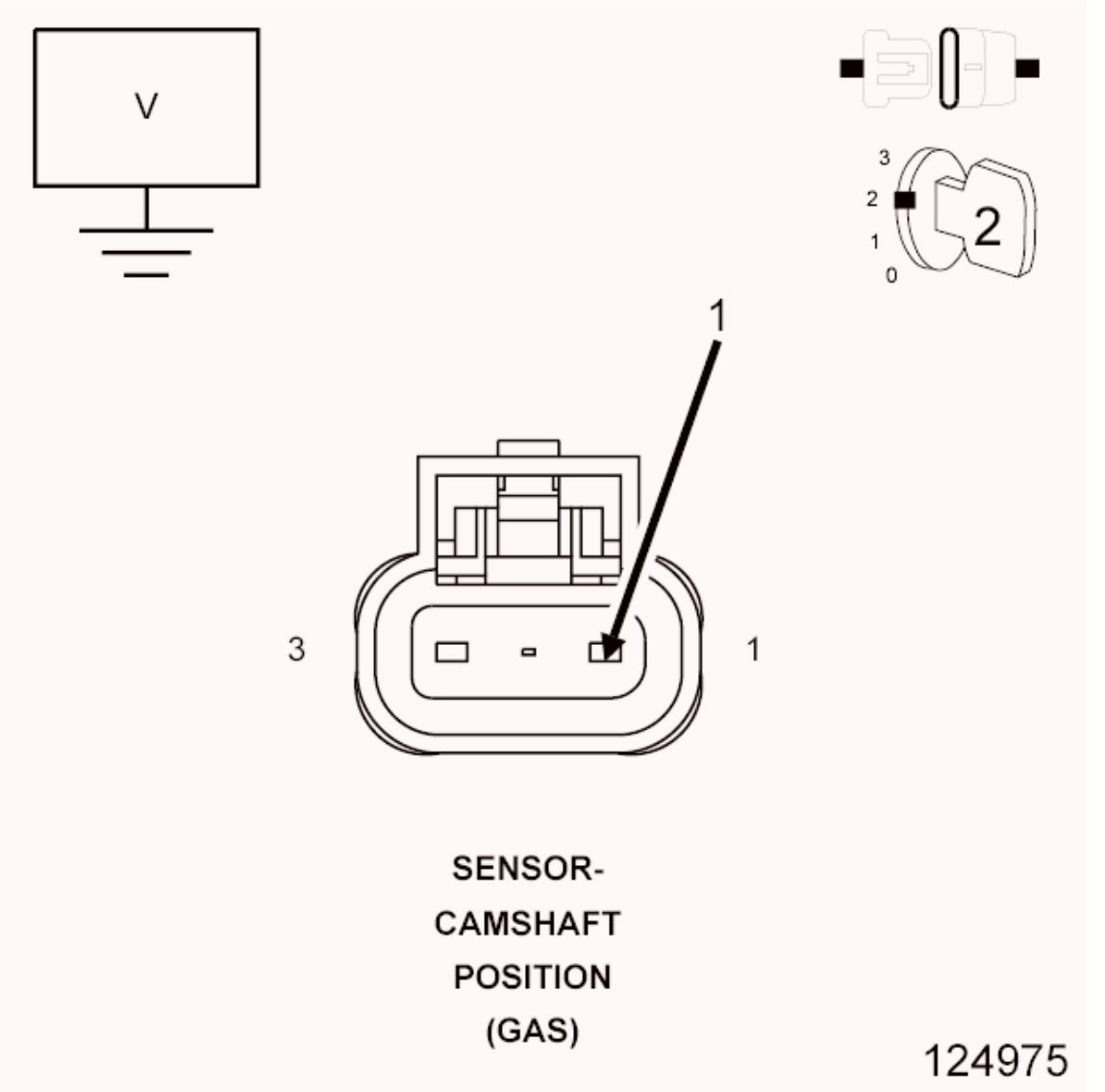

Fig. 107: Measuring Voltage On CMP Sensor 5-Volt Supply Circuit
Courtesy of CHRYSLER GROUP, LLC

1. Turn the ignition off.
2. Disconnect the C1 PCM harness connector.
3. Disconnect all the Sensors that share the (F856) Auxiliary 5-volt Supply circuit.
4. Ignition on, engine not running.

5. Measure the voltage on the (F856) Auxiliary 5-volt Supply circuit at the CMP Sensor harness connector.

   Is there any voltage present?

   Yes

   - Repair the short to voltage in the (F856) Auxiliary 5-volt Supply circuit.
   - Perform the POWERTRAIN VERIFICATION TEST. Refer to **POWERTRAIN VERIFICATION TEST** .

   No

   - Go To 6.

6. **(F856) AUXILIARY 5-VOLT SUPPLY CIRCUIT OPEN**

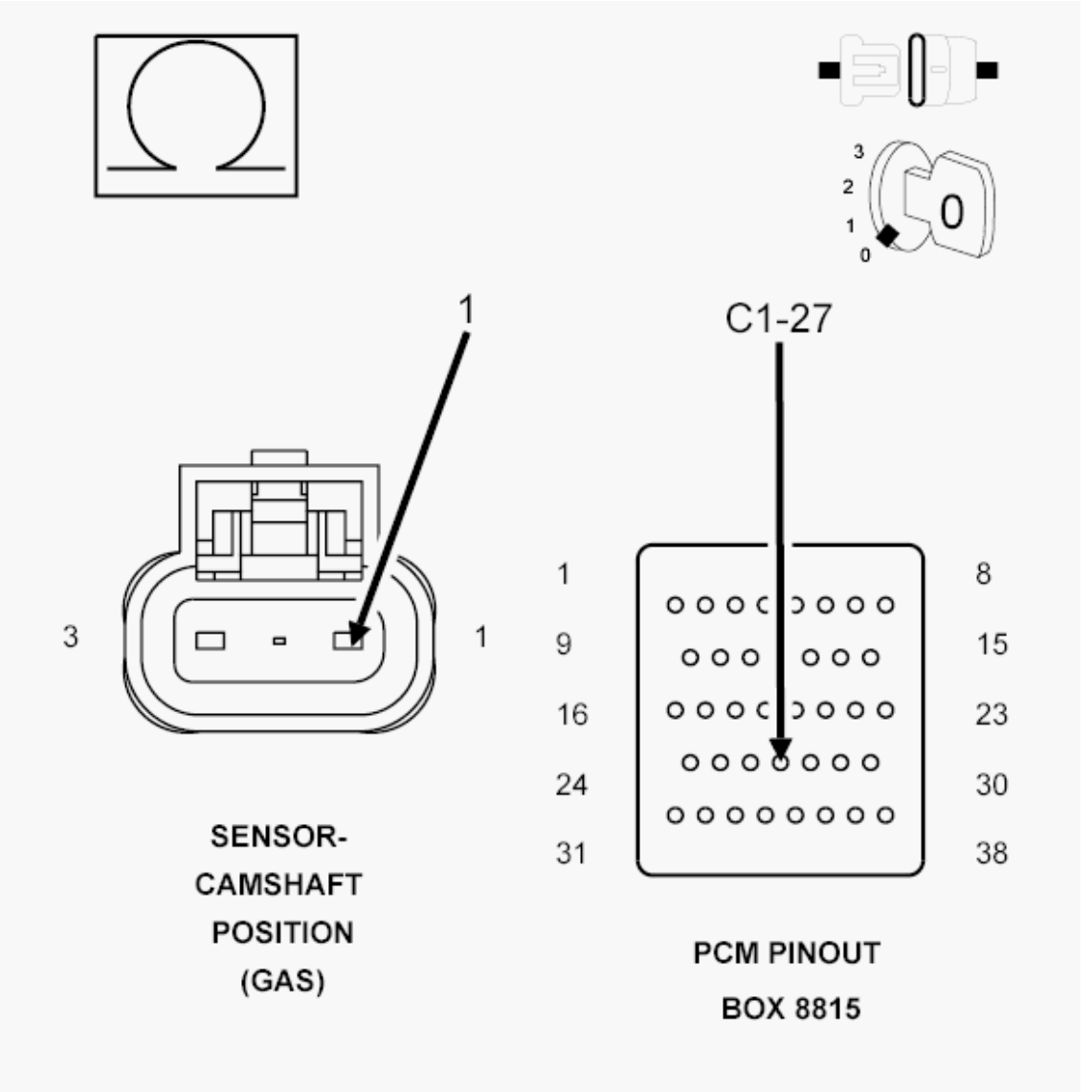

Fig. 108: Measuring Resistance Of 5-Volt Supply Circuit Between CMP Sensor Harness Connector & Appropriate Terminal Of Special Tool #8815
Courtesy of CHRYSLER GROUP, LLC

1. Turn the ignition off.
2. Reconnect all the sensors that were disconnected in the previous step except the CMP Sensor harness connector.

CAUTION: Do not probe the PCM harness connectors. Probing the PCM harness connectors will damage the PCM terminals resulting in poor terminal to pin connection. Install the PCM Pinout Box (special tool #8815A, Kit, NGC, 38 Position) to perform diagnosis.

3. Measure the resistance in the (F856) Auxiliary 5-volt Supply circuit from the Sensor harness

connector to the appropriate terminal of special tool (special tool #8815A, Kit, NGC, 38 Position).

4. It may be necessary to perform this test from every sensor that uses the (F856) Auxiliary 5-volt Supply circuit.

   Is the resistance below 5.0 ohms?

   Yes

   - Go To 7.

   No

   - Repair the open in the (F856) Auxiliary 5-volt Supply circuit.
   - Perform the POWERTRAIN VERIFICATION TEST. Refer to **POWERTRAIN VERIFICATION TEST** .

7. **POWERTRAIN CONTROL MODULE (PCM)**
   1. Using the wiring diagram/schematic as a guide, inspect the wiring and connectors between the Related Sensors and the Powertrain Control Module (PCM).
   2. Look for any chafed, pierced, pinched, or partially broken wires.
   3. Look for broken, bent, pushed out or corroded terminals. Verify that there is good pin to terminal contact in the Related Sensor and the Powertrain Control Module connectors.
   4. Refer to any Technical Service Bulletins that may apply.

      Were there any problems found?

      Yes

      - Repair as necessary.
      - Perform the POWERTRAIN VERIFICATION TEST. Refer to **POWERTRAIN VERIFICATION TEST** .

      No

      - Replace and program the Powertrain Control Module per Service Information. Refer to **MODULE, POWERTRAIN CONTROL, REMOVAL** .
      - Perform the POWERTRAIN VERIFICATION TEST. Refer to **POWERTRAIN VERIFICATION TEST** .

P1696-EEPROM MEMORY WRITE DENIED/INVALID

For a complete wiring diagram **refer to appropriate SYSTEM WIRING DIAGRAMS article** .

WHEN MONITORED:

Continuously with the ignition on.

SET CONDITION:

An attempt to program/write to the internal EEPROM failed, Also checks at power down. One Trip Fault. Three good trips to turn off the MIL.

POSSIBLE CAUSES

Possible Causes
POWERTRAIN CONTROL MODULE (PCM) SOFTWARE UPDATE EXCESSIVE RESISTANCE IN THE PCM POWER OR GROUND CIRCUITS POWERTRAIN CONTROL MODULE (PCM)

Always perform the Pre-Diagnostic Troubleshooting procedure before proceeding. Refer to PRE-DIAGNOSTIC TROUBLESHOOTING PROCEDURE .

DIAGNOSTIC TEST

1. **DTC IS ACTIVE**

NOTE: Diagnose and repair any other DTCs set in the PCM before proceeding with this test.

1. Turn the ignition on.
2. With the scan tool, Clear DTCs.
3. Start the engine and allow it to reach operating temperature.

WARNING: When the engine is operating, do not stand in direct line with the fan. Do not put your hands near the pulleys, belts or fan. Do not wear loose clothing. Failure to follow these instructions may result in possible serious or fatal injury.

NOTE: It may be necessary to test drive the vehicle in order for this DTC to set.

4. With the scan tool, select View DTCs.

   Is the DTC Active at this time?

   Yes

   - Go To 2.

   No

   - Perform the INTERMITTENT CONDITION diagnostic procedure. Refer to

INTERMITTENT CONDITION .

2. **PCM ODOMETER MILEAGE NOT PROGRAMMED**
    1. Turn the ignition on.
    2. With the scan tool, attempt to perform the Program PCM Odometer function.
    3. With the scan tool, Clear DTCs.
    4. Start the engine.
    5. Allow the engine to reach normal operating temperature.
    6. With a scan tool, select View DTCs.

    Is the status Active for this DTC?

    Yes

    - Go To 3.

    No

    - The SRI mileage has been successfully programmed into the PCM. Test is complete.
    - Perform the POWERTRAIN VERIFICATION TEST. Refer to **POWERTRAIN VERIFICATION TEST** .

3. **CHECKING THE PCM POWER AND GROUND CIRCUITS**
    1. Perform the diagnostic procedure for *CHECKING THE PCM POWER AND GROUND CIRCUITS. Refer to **DIAGNOSIS AND TESTING** .
    2. Using the wiring diagram/schematic as a guide, inspect the Powertrain Control Module (PCM) wiring and connectors.
    3. Look for any chafed, pierced, pinched, or partially broken wires.
    4. Look for broken, bent, pushed out or corroded terminals.
    5. Refer to any Technical Service Bulletins that may apply.

    Were any problems found?

    Yes

    - Repair as necessary.
    - Perform the POWERTRAIN VERIFICATION TEST. Refer to **POWERTRAIN VERIFICATION TEST** .

    No

    - Go To 4.

4. **POWERTRAIN CONTROL MODULE (PCM)**
    1. Turn the ignition on.
    2. With the scan tool, attempt to perform the Program PCM Odometer function.

3. With the scan tool, Clear DTCs.
4. Start the engine.
5. Allow the engine to reach normal operating temperature.
6. With a scan tool, select View DTCs.

   Is the DTC Active at this time?

   Yes

   - Replace and program the Powertrain Control Module (PCM) in accordance with the Service Information. Refer to **MODULE, POWERTRAIN CONTROL, REMOVAL** .
   - Perform the POWERTRAIN VERIFICATION TEST. Refer to **POWERTRAIN VERIFICATION TEST** .

   No

   - The SRI mileage has been successfully programmed into the PCM. Test is complete.
   - Perform the POWERTRAIN VERIFICATION TEST. Refer to **POWERTRAIN VERIFICATION TEST** .

P1697-EMR (SRI) MILEAGE NOT STORED

For a complete wiring diagram, **refer to appropriate SYSTEM WIRING DIAGRAMS article** .

WHEN MONITORED:

Continuously with the ignition on.

SET CONDITION:

The Powertrain Control Module (PCM) Odometer mileage has not been programmed into the PCM.

POSSIBLE CAUSES

Possible Causes
PCM ODOMETER MILEAGE NOT PROGRAMMED POWERTRAIN CONTROL MODULE (PCM)

Always perform the Pre-Diagnostic Troubleshooting procedure before proceeding. Refer to PRE-DIAGNOSTIC TROUBLESHOOTING PROCEDURE .

DIAGNOSTIC TEST

1. **PCM ODOMETER MILEAGE NOT PROGRAMMED**
   1. Turn the ignition on.

2. Using the scan tool, attempt to perform the Program PCM Odometer function.
3. Using the scan tool, clear DTCs.
4. Start the engine.
5. Allow the engine to reach normal operating temperature.
6. With a scan tool, select View DTCs.

   Is the DTC Active at this time?

   Yes

   - Replace and program the Powertrain Control Module in accordance with the Service Information. Refer to **MODULE, POWERTRAIN CONTROL, REMOVAL** .
   - Perform the POWERTRAIN VERIFICATION TEST. Refer to **POWERTRAIN VERIFICATION TEST** .

   No

   - The SRI mileage has been successfully programmed into the PCM. Test is complete.
   - Perform the POWERTRAIN VERIFICATION TEST. Refer to **POWERTRAIN VERIFICATION TEST** .

P1718-EEPROM INTEGRITY FAILURE

For a complete wiring diagram, **refer to appropriate SYSTEM WIRING DIAGRAMS article** .

WHEN MONITORED:

Continuously with the ignition on.

SET CONDITION:

An attempt to program/write to the internal EEPROM failed, Also checks at power down. One Trip Fault. Three good trips to turn off the MIL.

POSSIBLE CAUSES

Possible Causes
POWERTRAIN CONTROL MODULE (PCM) SOFTWARE UPDATE
EXCESSIVE RESISTANCE IN THE PCM POWER OR GROUND CIRCUITS
POWERTRAIN CONTROL MODULE (PCM)

Always perform the Pre-Diagnostic Troubleshooting procedure before proceeding. Refer to PRE-DIAGNOSTIC TROUBLESHOOTING PROCEDURE .

DIAGNOSTIC TEST

1. **DTC IS ACTIVE**

NOTE: Diagnose and repair any other DTCs set in the PCM before proceeding with this test.

1. Turn the ignition on.
2. With the scan tool, clear DTCs.
3. Start the engine and allow it to reach operating temperature.

WARNING: When the engine is operating, do not stand in direct line with the fan. Do not put your hands near the pulleys, belts or fan. Do not wear loose clothing. Failure to follow these instructions may result in possible serious or fatal injury.

NOTE: It may be necessary to test drive the vehicle in order for this DTC to set.

4. With the scan tool, select View DTCs.

   Is the DTC Active at this time?

   Yes

   - Go To 2.

   No

   - Perform the INTERMITTENT CONDITION diagnostic procedure. Refer to **INTERMITTENT CONDITION** .

2. **PCM ODOMETER MILEAGE NOT PROGRAMMED**
   1. Turn the ignition on.
   2. With the scan tool, attempt to perform the Program PCM Odometer function.
   3. With the scan tool, Clear DTCs.
   4. Start the engine.
   5. Allow the engine to reach normal operating temperature.
   6. With the scan tool, select View DTCs.

   Is the status Active for this DTC?

   Yes

   - Go To 3.

   No

- The SRI mileage has been successfully programmed into the PCM. Test is complete.
- Perform the POWERTRAIN VERIFICATION TEST. Refer to **POWERTRAIN VERIFICATION TEST** .

3. **CHECKING THE PCM POWER AND GROUND CIRCUITS**
    1. Perform the CHECKING THE PCM POWER AND GROUND CIRCUITS diagnostic procedure. Refer to **DIAGNOSIS AND TESTING** .
    2. Using the wiring diagram/schematic as a guide, inspect the Powertrain Control Module (PCM) wiring and connectors.
    3. Look for any chafed, pierced, pinched or partially broken wires.
    4. Look for broken, bent, pushed out or corroded terminals.
    5. Perform any Technical Service Bulletins that may apply.

    Were any problems found?

    Yes

    - Repair as necessary.
    - Perform the POWERTRAIN VERIFICATION TEST. Refer to **POWERTRAIN VERIFICATION TEST** .

    No

    - Go To 4.

4. **POWERTRAIN CONTROL MODULE (PCM)**
    1. Turn the ignition on.
    2. With the scan tool, attempt to perform the Program PCM Odometer function.
    3. With the scan tool, Clear DTCs.
    4. Start the engine.
    5. Allow the engine to reach normal operating temperature.
    6. With the scan tool, select View DTCs.

    Is the DTC Active at this time?

    Yes

    - Replace and program the Powertrain Control Module (PCM) in accordance with the Service Information. Refer to **MODULE, POWERTRAIN CONTROL, REMOVAL** .
    - Perform the POWERTRAIN VERIFICATION TEST. Refer to **POWERTRAIN VERIFICATION TEST** .

    No

    - The SRI mileage has been successfully programmed into the PCM. Test is complete.

- Perform the POWERTRAIN VERIFICATION TEST. Refer to **POWERTRAIN VERIFICATION TEST** .

P2008-SHORT RUNNER VALVE (SRV) CONTROL CIRCUIT

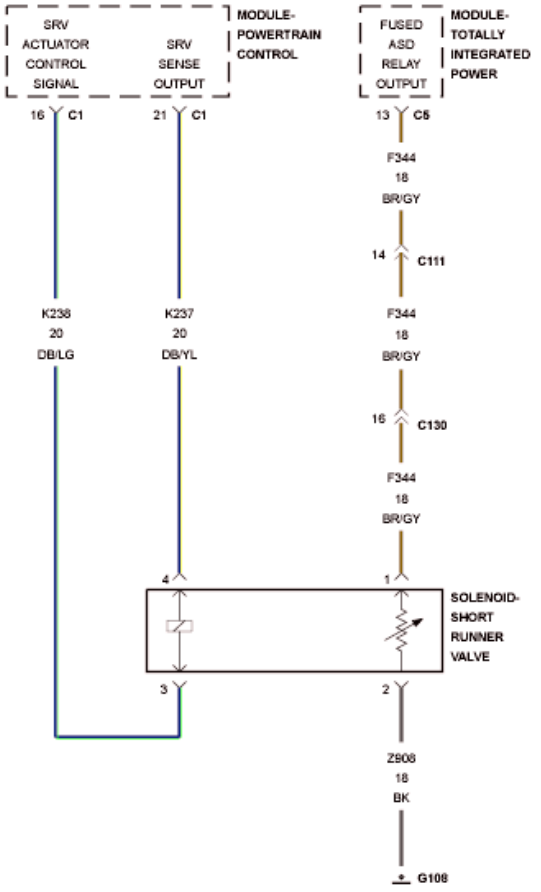

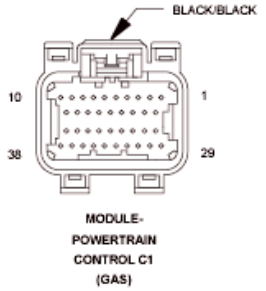

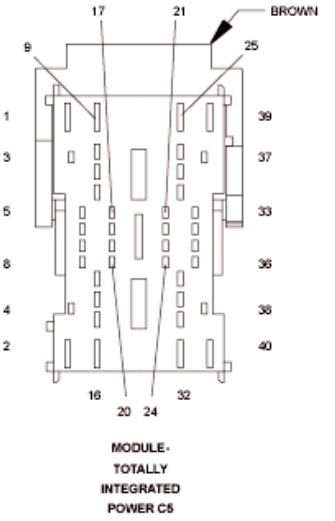

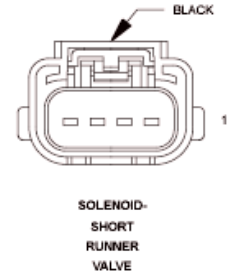

Fig. 109: Short Runner Valve (SRV) Solenoid Circuit Schematic
Courtesy of CHRYSLER GROUP, LLC

For a complete wiring diagram, **refer to appropriate SYSTEM WIRING DIAGRAMS article** .

THEORY OF OPERATION

The engine performance and power output is enhanced through the use of the "Short Runner Valve" (SRV) system. The SRV system allows the intake charge air to bypass the long intake manifold runners between the intake manifold plenum and the intake manifold interface to the cylinder heads by providing a shorter runner directly between the plenum and the cylinder head interface The SRV position is controlled by a pneumatic/spring actuator and electronic solenoid valve. When the solenoid is not energized (the "rest" position), the SRV is held in the closed position. When the solenoid is energized the SRV is moved and held in its opened position. There is a set of enable conditions including a minimum Engine Coolant Temperature (ECT) and Ambient Air Temperature (AAT), SRV enable and Powertrain Coordinator load enable condition. If any of these conditions are not met, then the SRV valve is de-energized (closed).

WHEN MONITORED:

With the engine run time above a calibrated value, battery voltage greater than 10.4 Volts, ECT within a specific range and the Short Runner Valve Assembly control active.

SET CONDITION:

This Powertrain Control Module (PCM) compares the circuit feedback to a calibrated closed range when the circuit is de-energized or to a calibrated open range when the circuit is energized. If the value is determined to be out of the calibrated range in either the de-energized or energized state for more than a calibrated amount of time, this DTC will set.

POSSIBLE CAUSES

Possible Causes
(F344) ASD RELAY OUTPUT CIRCUIT OPEN OR HIGH RESISTANCE
(Z908) SRV GROUND CIRCUIT OPEN OR HIGH RESISTANCE
(K238) SRV CONTROL CIRCUIT SHORTED TO GROUND
(K238) SRV CONTROL CIRCUIT SHORTED TO VOLTAGE
(K238) SRV CONTROL CIRCUIT OPEN OR HIGH RESISTANCE
SHORT RUNNER VALVE ASSEMBLY
POWERTRAIN CONTROL MODULE (PCM)

Always perform the Pre-Diagnostic Troubleshooting procedure before proceeding. Refer to PRE-DIAGNOSTIC TROUBLESHOOTING PROCEDURE .

DIAGNOSTIC TEST

1. **DTC IS ACTIVE**

1. Turn the ignition on.
2. With the scan tool, Clear DTCs in the Powertrain Control Module (PCM).
3. With the scan tool, actuate the SRV Solenoid Control State.
4. With the scan tool, select View DTCs.

   Is the status Active for this DTC?

   Yes

   - Go To 2.

   No

   - Perform the INTERMITTENT CONDITION diagnostic procedure. Refer to **INTERMITTENT CONDITION** .

2. **(F344) ASD RELAY OUTPUT CIRCUIT OPEN OR HIGH RESISTANCE**

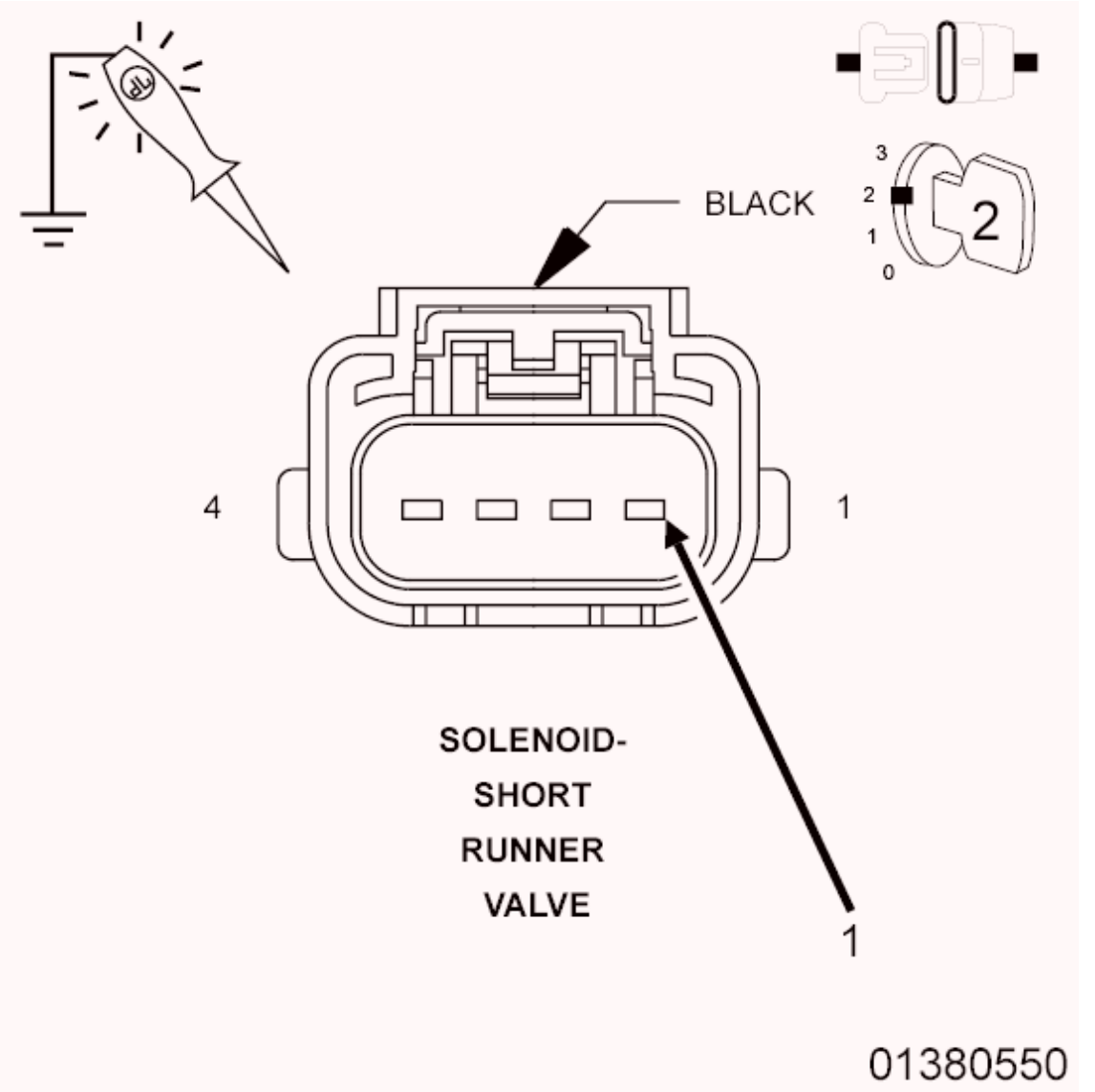

Fig. 110: Using 12-Volt Test Light Connected To Ground To Check (F344) ASD Relay Output Circuit In Short Runner Valve Assembly Harness Connector
Courtesy of CHRYSLER GROUP, LLC

1. Turn the ignition off.
2. Disconnect the Short Runner Valve Assembly harness connector.
3. Turn the ignition on.
4. With the scan tool, actuate the Auto Shutdown (ASD) Relay Control State.
5. Using a 12-volt test light connected to ground, check the (F344) ASD Relay Output circuit in the Short Runner Valve Assembly harness connector.

NOTE: **The test light should be illuminated and bright. Compare the brightness to that of a direct connection to the battery.**

Is the test light illuminated and bright?

Yes

- Go To 3.

No

- Repair the (F344) ASD Relay Output circuit for an open circuit or high resistance.
- Perform the POWERTRAIN VERIFICATION TEST. Refer to **POWERTRAIN VERIFICATION TEST** .

3. **(Z908) SRV GROUND CIRCUIT OPEN CIRCUIT OR HIGH RESISTANCE**

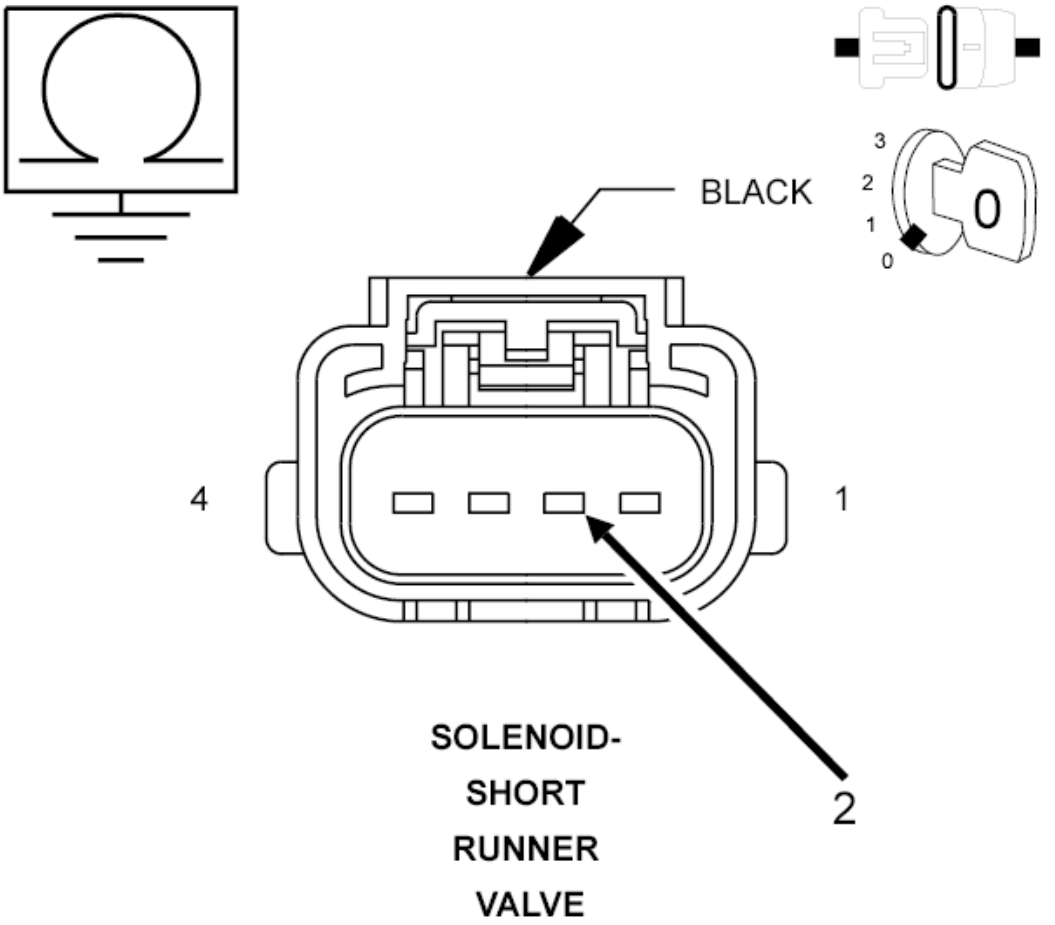

Fig. 111: Measuring Resistance Of SRV Solenoid Ground Circuit Between Ground And Harness Connector
Courtesy of CHRYSLER GROUP, LLC

1. Turn the ignition off.

2. Measure the resistance of the (Z908) SRV ground circuit in the Short Runner Valve Assembly harness connector to ground.

   Is the resistance less than 5.0 Ohms?

   Yes

   - Go To 4.

   No

   - Repair the (Z908) SRV ground circuit for an open circuit or high resistance.
   - Perform the POWERTRAIN VERIFICATION TEST. Refer to **POWERTRAIN VERIFICATION TEST** .

4. **SHORT RUNNER VALVE ASSEMBLY**

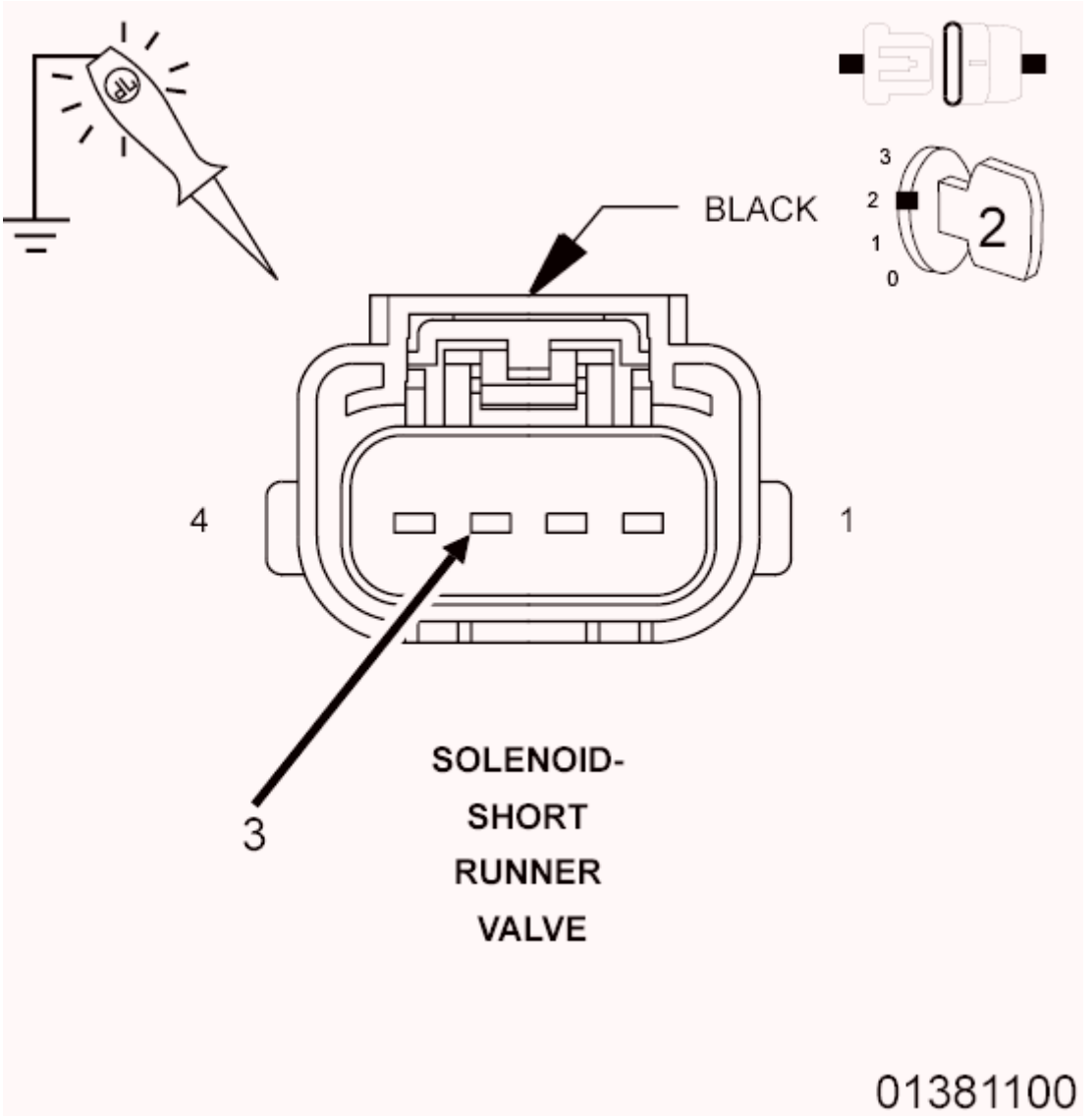

Fig. 112: Using 12-Volt Test Light Connected To Ground To Check (K238) SRV Control Circuit In Short Runner Valve Assembly Harness Connector
Courtesy of CHRYSLER GROUP, LLC

1. Turn the ignition on.
2. With the scan tool, actuate the SRV Solenoid Control State to toggle.
3. Using a 12-volt test light connected to ground, check the (K238) SRV Control circuit in the Short Runner Valve Assembly harness connector.

NOTE: **If the DTC is active, the actuation test may not be allowed by the PCM. If may be necessary to clear the DTCs before starting the actuation.**

NOTE: **The test light should illuminate on and off with the actuation.**

Does the test light illuminate on and off with the actuation?

Yes

- Replace the Short Runner Valve Assembly in accordance with the Service Information.
- Perform the POWERTRAIN VERIFICATION TEST. Refer to **POWERTRAIN VERIFICATION TEST** .

No

- Go To 5.

5. **(K238) SRV CONTROL CIRCUIT SHORTED TO GROUND**

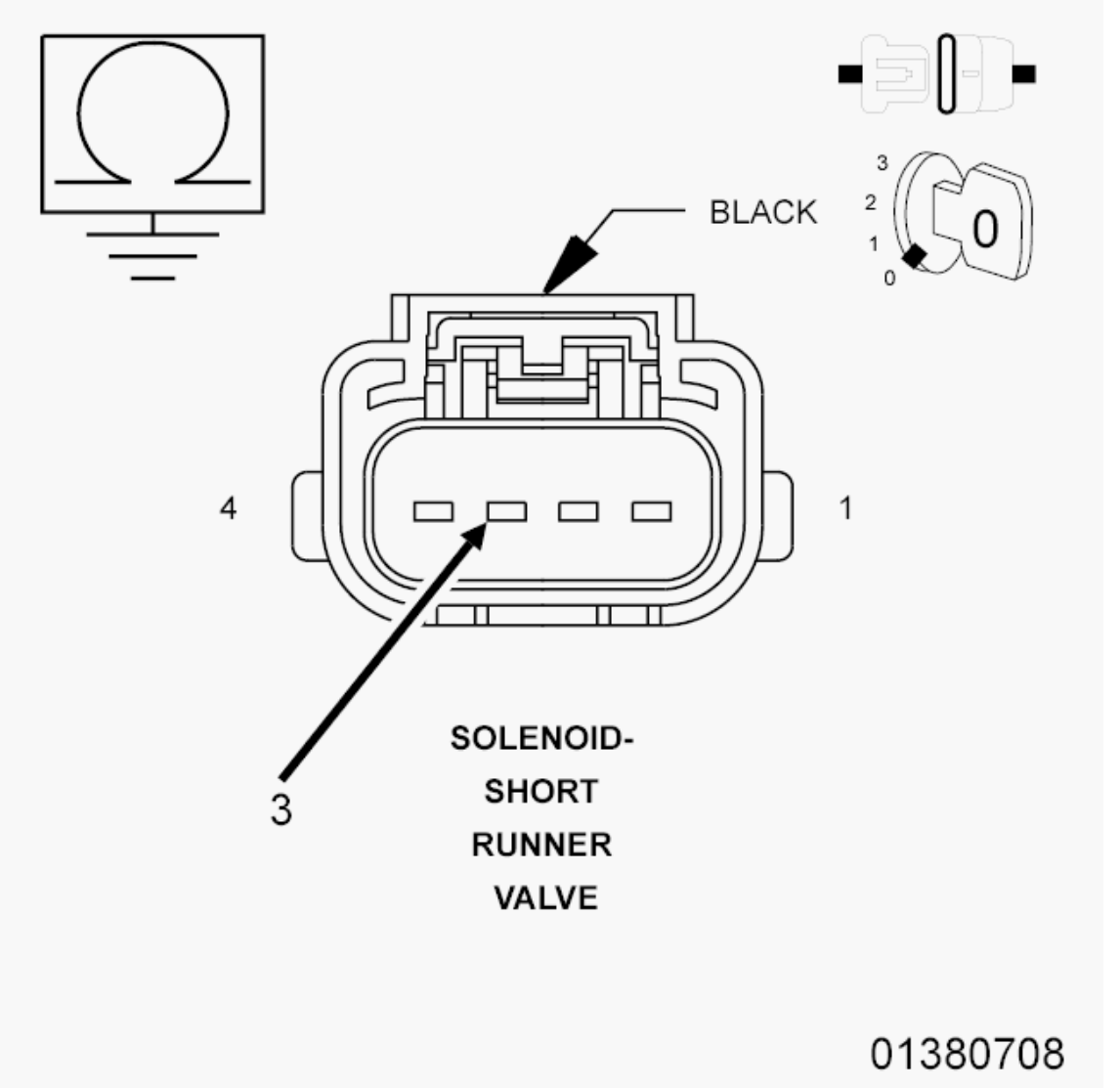

Fig. 113: Measuring Resistance Between Ground And (K238) SRV Control Circuit In Short Runner Valve Assembly Harness Connector
Courtesy of CHRYSLER GROUP, LLC

1. Turn the ignition off.
2. Disconnect the Powertrain Control Module (PCM) C1 harness connector.
3. Measure the resistance between ground and the (K238) SRV Control circuit in the Short Runner Valve Assembly harness connector.

   Is the resistance less than 100 Ohms?

   Yes

   - Repair the (K238) SRV Control circuit for a short to ground.
   - Perform the POWERTRAIN VERIFICATION TEST. Refer to **POWERTRAIN VERIFICATION TEST** .

   No

   - Go To 6.

6. **(K238) SRV CONTROL CIRCUIT OPEN OR HIGH RESISTANCE**

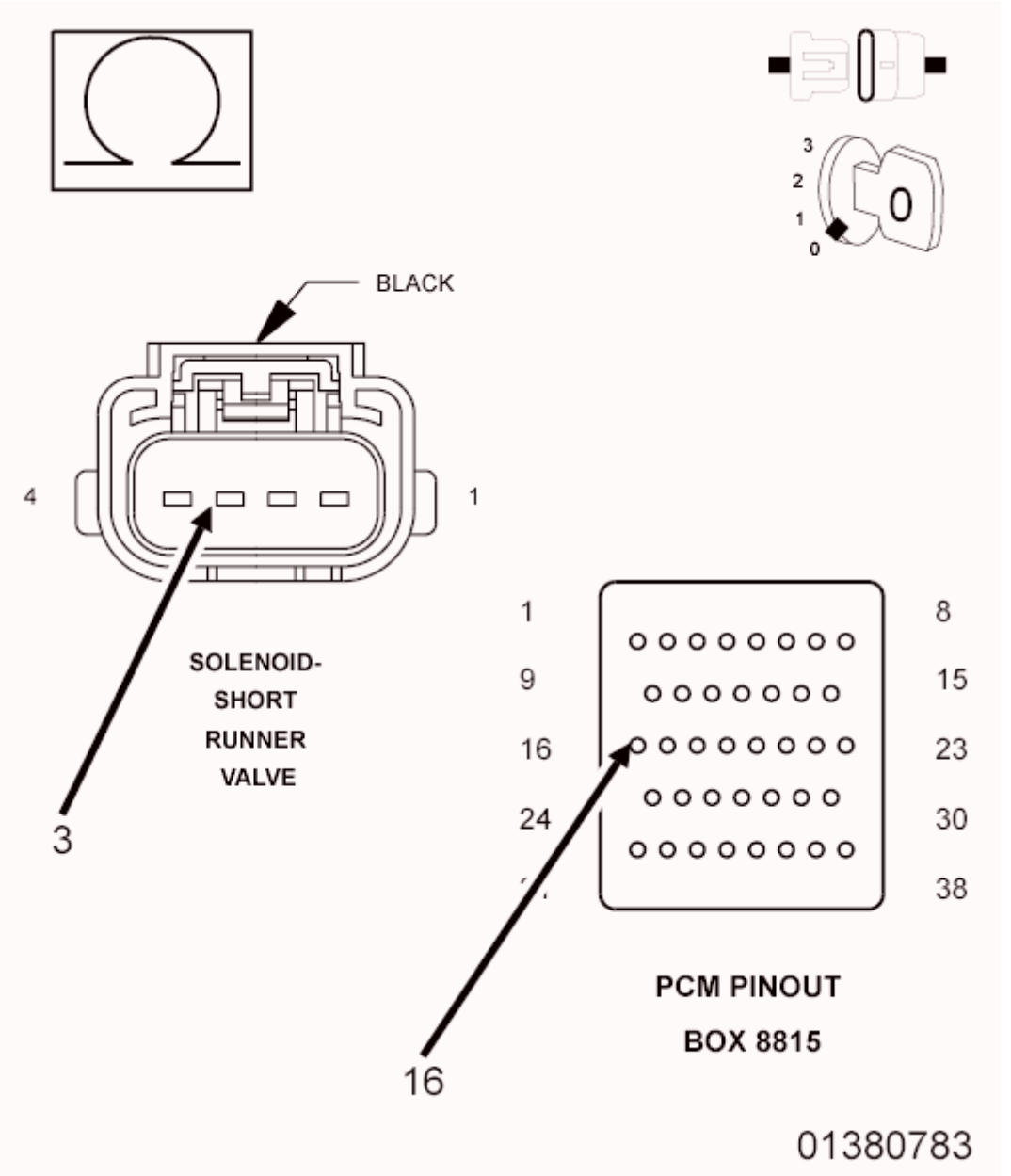

Fig. 114: Measuring Resistance Of (K238) SRV Control Circuit Between Short Runner Valve Assembly Harness Connector And Appropriate Terminal Of PCM Pinout Box 8815
Courtesy of CHRYSLER GROUP, LLC

CAUTION: Do not probe the PCM harness connectors. Probing the PCM harness connectors will damage the PCM terminals, resulting in poor terminal to pin connection. Install the PCM Pinout Box (special tool #8815A, Kit, NGC, 38 Position) to perform diagnosis.

1. Measure the resistance of the (K238) SRV Control circuit between the Short Runner Valve Assembly harness connector and the appropriate terminal of PCM Pinout Box (special tool #8815A, Kit, NGC, 38 Position).

Is the resistance less than 5.0 Ohms?

Yes

- Go To 7.

No

- Repair the (K238) SRV Control circuit for an open circuit or high resistance.
- Perform the POWERTRAIN VERIFICATION TEST. Refer to **POWERTRAIN VERIFICATION TEST** .

7. **(K238) SRV SIGNAL CIRCUIT SHORTED TO VOLTAGE**

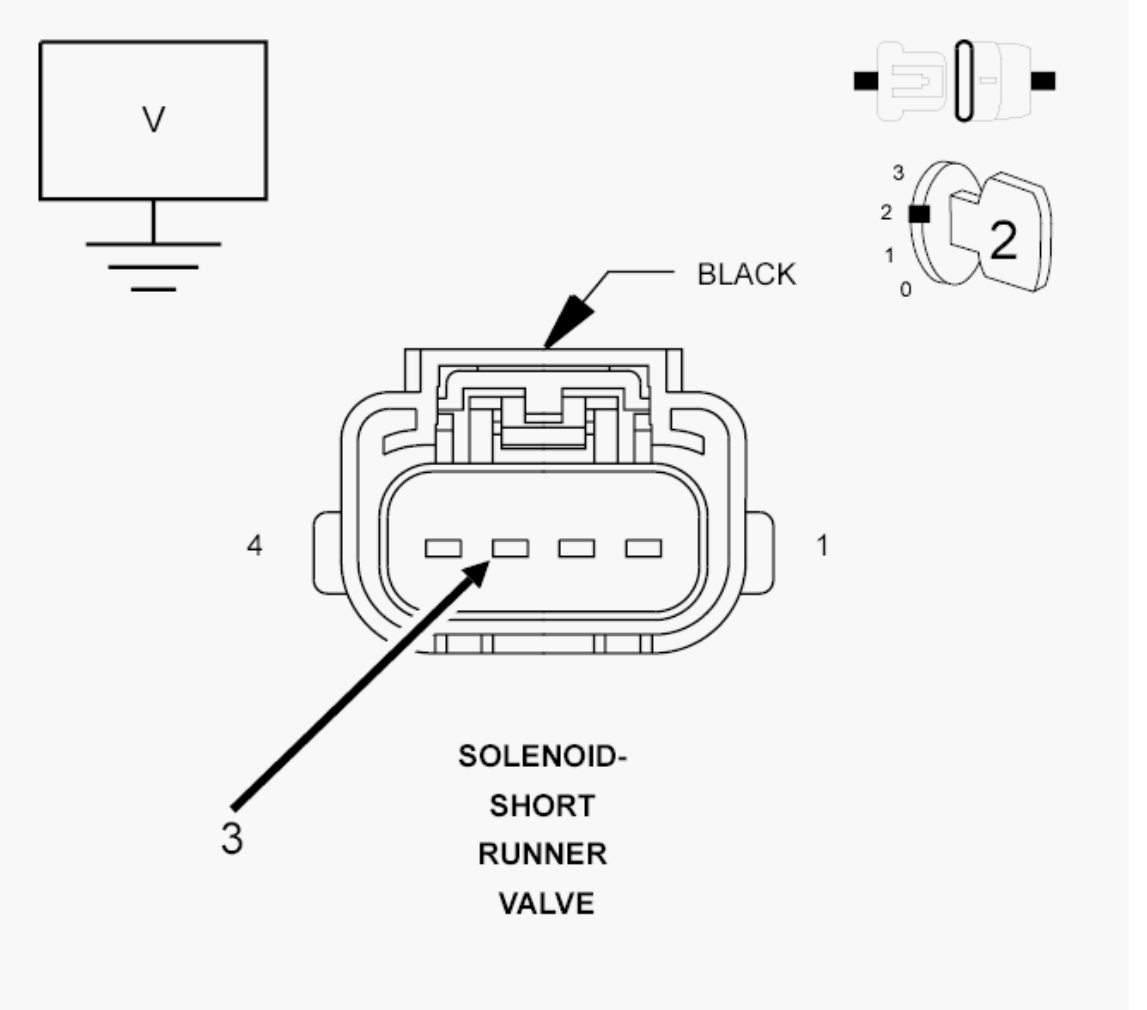

Fig. 115: Measuring Voltage Of (K238) SRV Signal Circuit In Short Runner Valve Assembly Harness Connector
Courtesy of CHRYSLER GROUP, LLC

1. Turn the ignition on

2. Measure the voltage of the (K238) SRV Signal circuit in the Short Runner Valve Assembly harness connector.

   Is there any voltage present?

   Yes

   - Repair the (K238) SRV Signal circuit for a short to voltage.
   - Perform the POWERTRAIN VERIFICATION TEST. Refer to **POWERTRAIN VERIFICATION TEST** .

   No

   - Go To 8.

8. **POWERTRAIN CONTROL MODULE (PCM)**
   1. Using the wiring diagram/schematic as a guide, inspect the wiring and connectors between the Short Runner Valve Assembly and the Powertrain Control Module (PCM).
   2. Look for any chafed, pierced, pinched or partially broken wires.
   3. Look for broken, bent, pushed out or corroded terminals.
   4. Perform any Technical Service Bulletins that may apply.

      Were any problems found?

      Yes

      - Repair as necessary.
      - Perform the POWERTRAIN VERIFICATION TEST. Refer to **POWERTRAIN VERIFICATION TEST** .

      No

      - Replace and program the Powertrain Control Module (PCM) in accordance with the Service Information. Refer to **MODULE, POWERTRAIN CONTROL, REMOVAL** .
      - Perform the POWERTRAIN VERIFICATION TEST. Refer to **POWERTRAIN VERIFICATION TEST** .

P2016-SHORT RUNNER VALVE (SRV) POSITION SENSOR CIRCUIT LOW

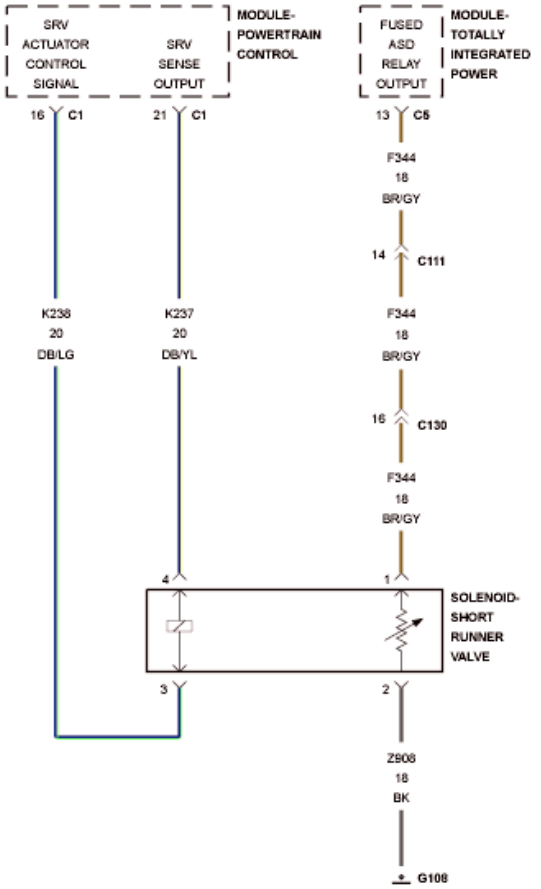

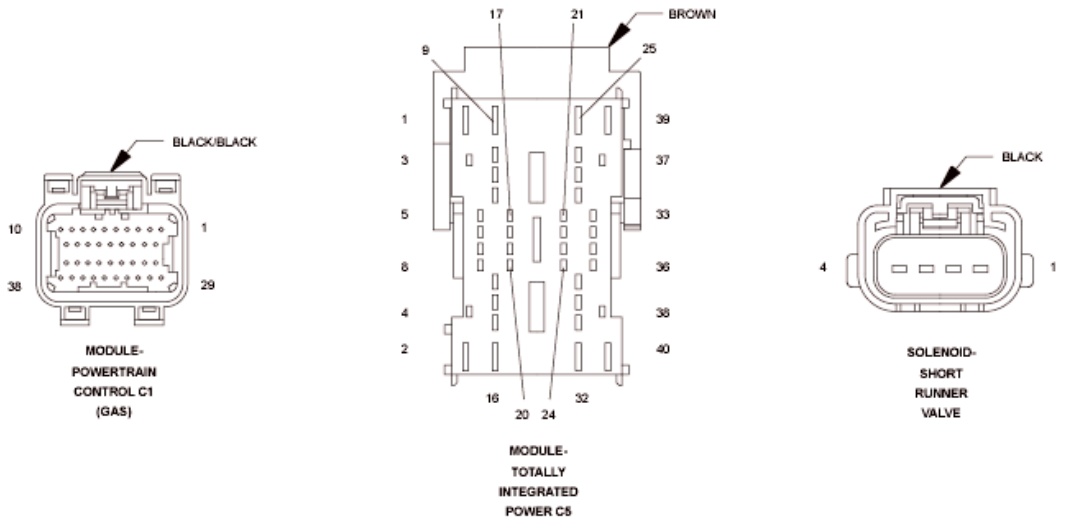

Fig. 116: Short Runner Valve (SRV) Solenoid Circuit Schematic
Courtesy of CHRYSLER GROUP, LLC

For a complete wiring diagram, **refer to appropriate SYSTEM WIRING DIAGRAMS article** .

THEORY OF OPERATION

The engine performance and power output is enhanced through the use of the "Short Runner Valve" (SRV) system. The SRV system allows the intake charge air to bypass the long intake manifold runners between the intake manifold plenum and the intake manifold interface to the cylinder heads by providing a shorter runner directly between the plenum and the cylinder head interface The SRV position is controlled by a pneumatic/spring actuator and electronic solenoid valve. When the solenoid is not energized (the "rest" position), the SRV is held in the closed position. When the solenoid is energized the SRV is moved and held in its opened position. There is a set of enable conditions including a minimum Engine Coolant Temperature (ECT) and Ambient Air Temperature (AAT), SRV enable and Powertrain Coordinator load enable condition. If any of these conditions are not met, then the SRV valve is de-energized (closed).

WHEN MONITORED:

With the ignition on and battery voltage greater than 10.4 Volts.

SET CONDITION:

The Powertrain Control Module (PCM) detects that the PWM signal from the Short Runner Valve position sensor circuit is below the minimum acceptable value.

POSSIBLE CAUSES

Possible Causes
(F344) ASD RELAY OUTPUT CIRCUIT OPEN OR HIGH RESISTANCE
(K237) SRV SIGNAL CIRCUIT SHORTED TO GROUND
SHORT RUNNER VALVE ASSEMBLY
POWERTRAIN CONTROL MODULE (PCM)

Always perform the Pre-Diagnostic Troubleshooting procedure before proceeding. Refer to PRE-DIAGNOSTIC TROUBLESHOOTING PROCEDURE .

DIAGNOSTIC TEST

1. **DTC IS ACTIVE**
    1. Turn the ignition on.
    2. With the scan tool, clear DTCs in the Powertrain Control Module (PCM).
    3. With the scan tool, actuate the SRV Solenoid Control State.
    4. With the scan tool, select View DTCs.

    Is the status Active for this DTC?

    Yes

    - Go To 2.

No

- Perform the INTERMITTENT CONDITION diagnostic procedure. Refer to **INTERMITTENT CONDITION** .

2. **(F344) ASD RELAY OUTPUT CIRCUIT OPEN OR HIGH RESISTANCE**

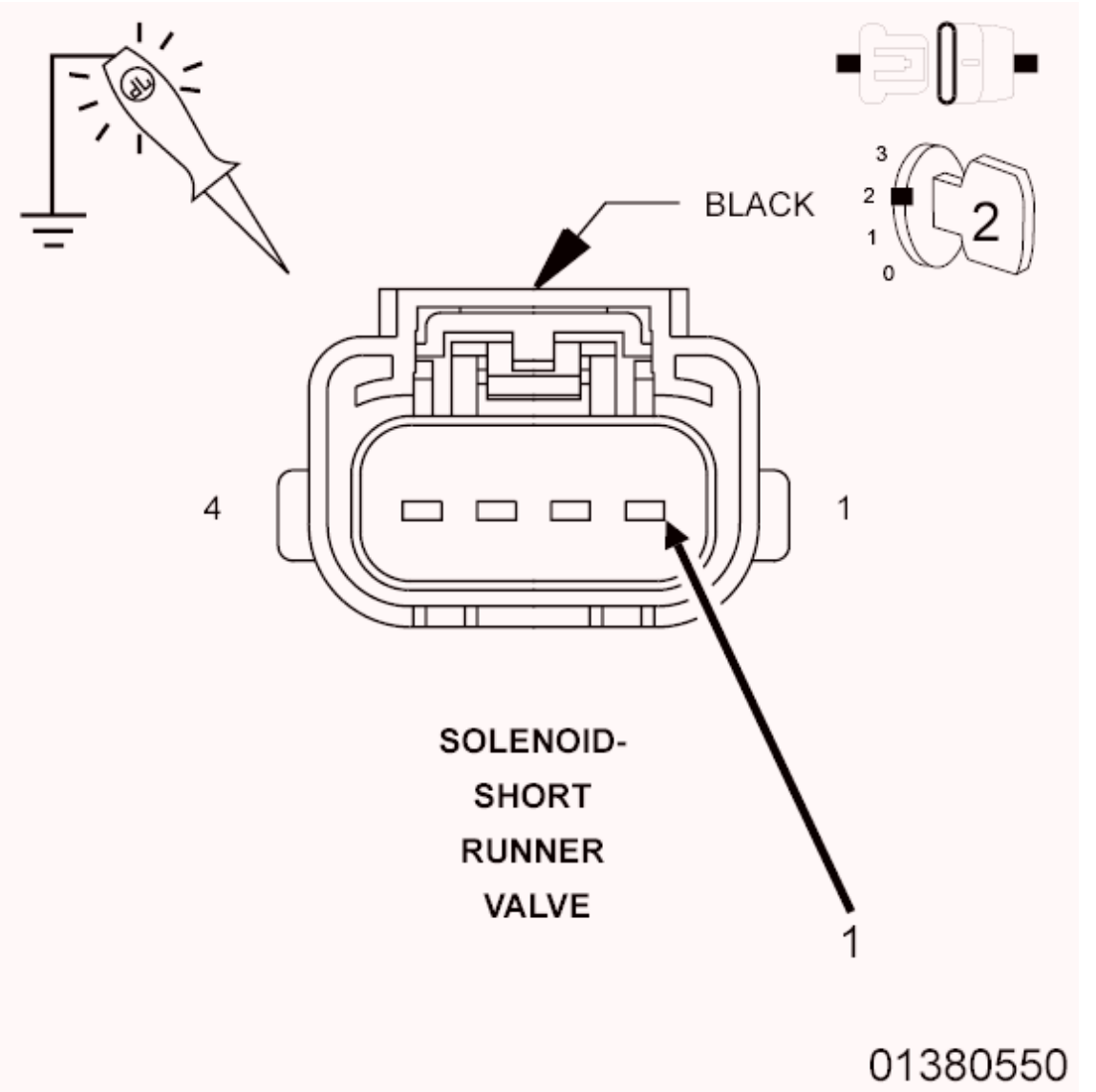

Fig. 117: Using 12-Volt Test Light Connected To Ground To Check (F344) ASD Relay Output Circuit In Short Runner Valve Assembly Harness Connector
Courtesy of CHRYSLER GROUP, LLC

1. Turn the ignition off.
2. Disconnect the Short Runner Valve Assembly harness connector.
3. Turn the ignition on.
4. With the scan tool, actuate the Auto Shutdown (ASD) Relay Control State.

5. Using a 12-volt test light connected to ground, check the (F344) ASD Relay Output circuit in the Short Runner Valve Assembly harness connector.

NOTE: **If the DTC is active, the actuation test may not be allowed by the PCM. If may be necessary to clear the DTCs before starting the actuation.**

NOTE: **The test light should be illuminated and bright. Compare the brightness to that of a direct connection to the battery.**

Is the test light illuminated and bright?

Yes

- Go To 3.

No

- Repair the (F344) ASD Relay Output circuit for an open circuit or high resistance.
- Perform the POWERTRAIN VERIFICATION TEST. Refer to **POWERTRAIN VERIFICATION TEST** .

3. **SHORT RUNNER VALVE ASSEMBLY**
   1. Turn the ignition off.
   2. Disconnect the Short Runner Valve Assembly connector.
   3. Turn the ignition on.
   4. With the scan tool, read the SRV PWM Feedback.

NOTE: **The SRV PWM Feedback should be greater than 97% with the connector disconnected.**

Is the SRV PWM Feedback greater than 97%?

Yes

- Replace the Short Runner Valve Assembly in accordance with the Service Information.
- Perform the POWERTRAIN VERIFICATION TEST. Refer to **POWERTRAIN VERIFICATION TEST** .

No

- Go To 4.

4. **(K237) SRV SIGNAL CIRCUIT SHORTED TO GROUND**

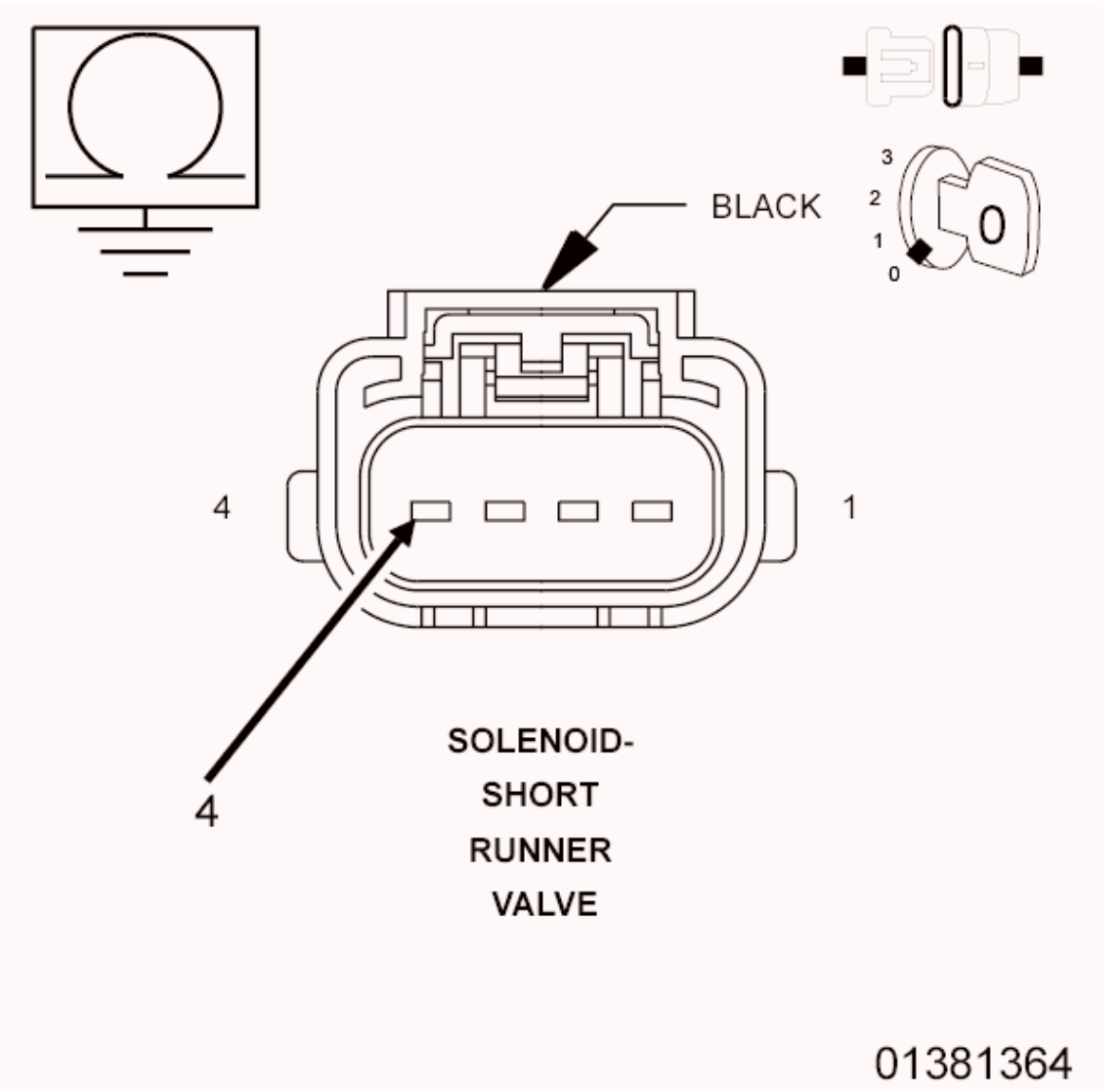

Fig. 118: Measuring Resistance Between Ground And (K237) SRV Signal Circuit In Short Runner Valve Assembly Harness Connector
Courtesy of CHRYSLER GROUP, LLC

1. Turn the ignition off.
2. Disconnect the Powertrain Control Module (PCM) C1 harness connector.
3. Measure the resistance between ground and the (K237) SRV Signal circuit in the Short Runner Valve Assembly harness connector.

   Is the resistance less than 100 Ohms?

   Yes

   - Repair the (K237) SRV signal circuit for a short to ground.
   - Perform the POWERTRAIN VERIFICATION TEST. Refer to **POWERTRAIN VERIFICATION TEST** .

No

- Go To 5.

5. **POWERTRAIN CONTROL MODULE (PCM)**
    1. Using the wiring diagram/schematic as a guide, inspect the wiring and connectors between the Short Runner Valve Assembly and the Powertrain Control Module (PCM).
    2. Look for any chafed, pierced, pinched or partially broken wires.
    3. Look for broken, bent, pushed out or corroded terminals.
    4. Monitor the scan tool data relative to this circuit and wiggle test the wiring and connectors.
    5. Look for the data to change or for the DTC to reset during the wiggle test.
    6. Perform any Technical Service Bulletins that may apply.

    Were any problems found?

    Yes

    - Repair as necessary.
    - Perform the POWERTRAIN VERIFICATION TEST. Refer to **POWERTRAIN VERIFICATION TEST** .

    No

    - Replace and program the Powertrain Control Module (PCM) in accordance with the Service Information. Refer to **MODULE, POWERTRAIN CONTROL, REMOVAL** .
    - Perform the POWERTRAIN VERIFICATION TEST. Refer to **POWERTRAIN VERIFICATION TEST** .

P2017-SHORT RUNNER VALVE (SRV) POSITION SENSOR CIRCUIT HIGH

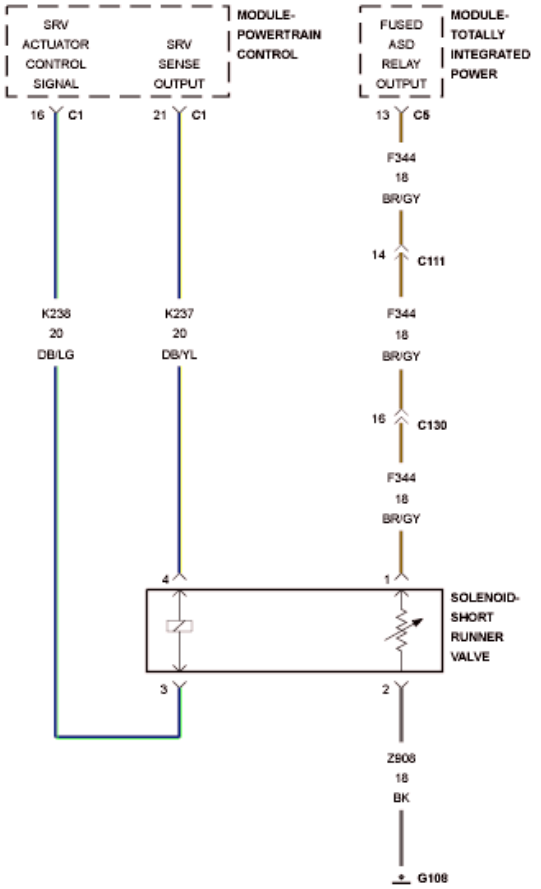

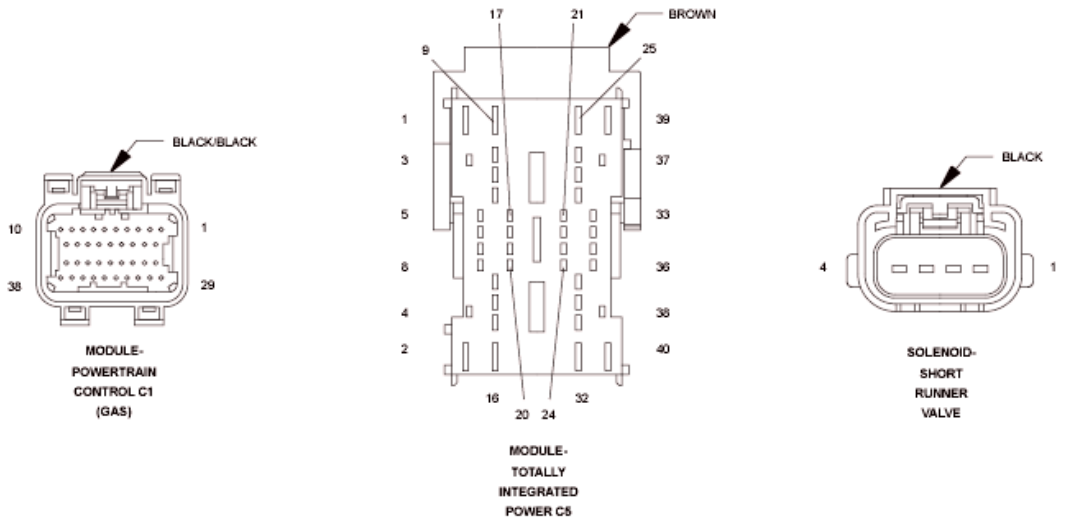

Fig. 119: Short Runner Valve (SRV) Solenoid Circuit Schematic
Courtesy of CHRYSLER GROUP, LLC

For a complete wiring diagram, **refer to appropriate SYSTEM WIRING DIAGRAMS article** .

THEORY OF OPERATION

The engine performance and power output is enhanced through the use of the Short Runner Valve (SRV) system. The SRV system allows the intake charge air to bypass the long intake manifold runners between the intake manifold plenum and the intake manifold interface to the cylinder heads by providing a shorter runner directly between the plenum and the cylinder head interface The SRV position is controlled by a pneumatic/spring actuator and electronic solenoid valve. When the solenoid is not energized (the "rest" position), the SRV is held in the closed position. When the solenoid is energized the SRV is moved and held in its opened position. There is a set of enable conditions including a minimum Engine Coolant Temperature (ECT) and Ambient Air Temperature (AAT), SRV enable and Powertrain Coordinator load enable condition. If any of these conditions are not met, then the SRV valve is de-energized (closed).

WHEN MONITORED:

With the ignition on and battery voltage greater than 10.4 Volts.

SET CONDITION:

The Powertrain Control Module (PCM) detects that the PWM signal from the Short Runner Valve Position sensor is greater than the maximum acceptable value.

POSSIBLE CAUSES

Possible Causes
(F344) ASD RELAY OUTPUT CIRCUIT OPEN OR HIGH RESISTANCE
(K237) SRV SIGNAL CIRCUIT SHORTED TO VOLTAGE
(K237) SRV SIGNAL CIRCUIT OPEN OR HIGH RESISTANCE
(Z908) SENSOR GROUND CIRCUIT OPEN OR HIGH RESISTANCE
SHORT RUNNER VALVE ASSEMBLY
POWERTRAIN CONTROL MODULE (PCM)

Always perform the Pre-Diagnostic Troubleshooting procedure before proceeding. Refer to PRE-DIAGNOSTIC TROUBLESHOOTING PROCEDURE .

DIAGNOSTIC TEST

1. **DTC IS ACTIVE**

NOTE: Diagnose and repair any system voltage or sensor supply voltage DTCs before continuing with this test.

1. Turn the ignition on.
2. With the scan tool, clear DTCs in the Powertrain Control Module (PCM).
3. With the scan tool, actuate the SRV Solenoid Control State.
4. With the scan tool, select View DTCs.

Is the status Active for this DTC?

Yes

- Go To

No

- Perform the INTERMITTENT CONDITION diagnostic procedure. Refer to **INTERMITTENT CONDITION** .

2. **SHORT RUNNER VALVE ASSEMBLY**

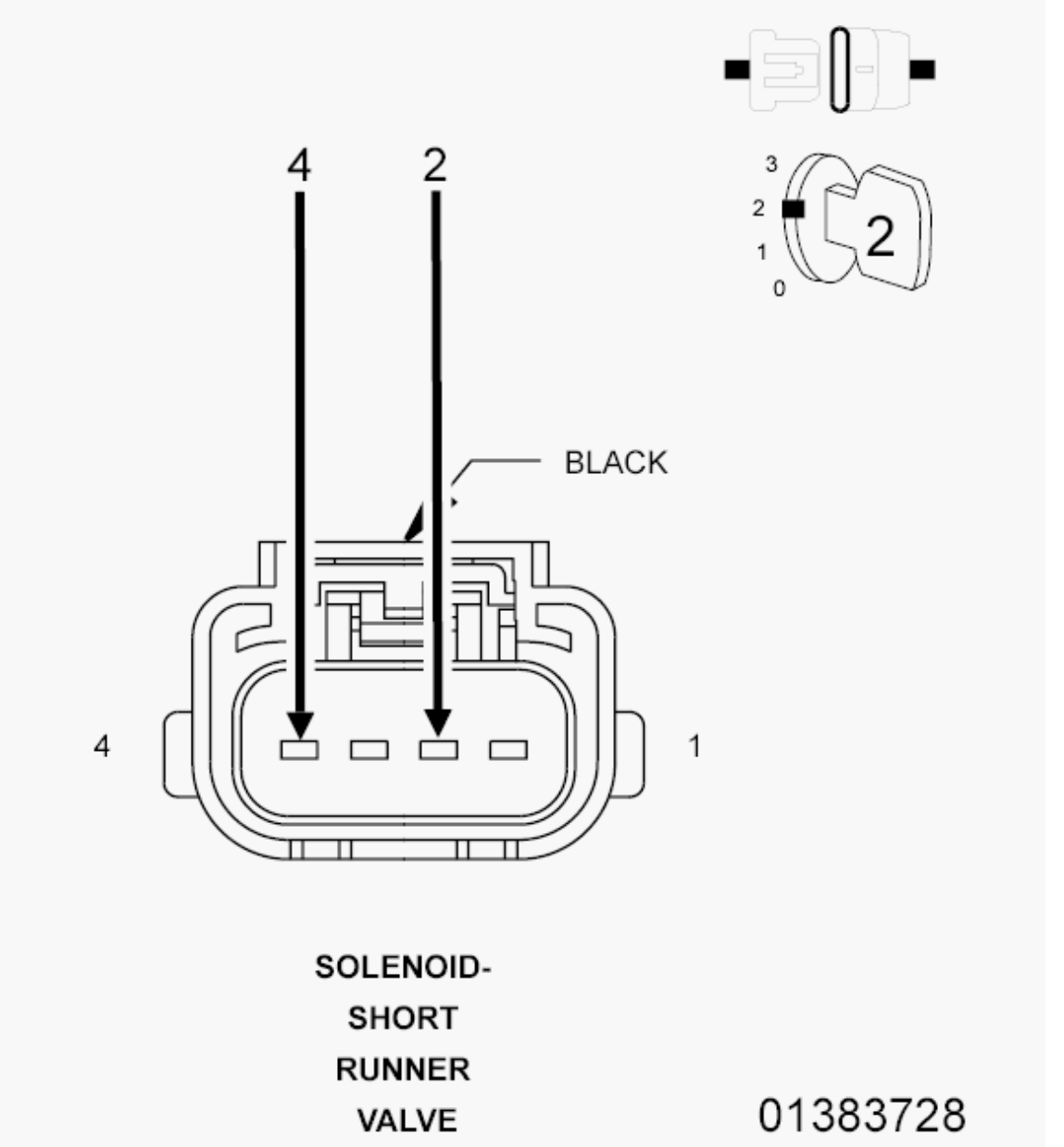

Fig. 120: Short Runner Valve Assembly Connector

Courtesy of CHRYSLER GROUP, LLC

1. Turn the ignition off.
2. Disconnect the Short Runner Valve Assembly connector.
3. Connect a jumper wire between the (Z908) Sensor Ground circuit and the (K237) SRV signal circuit in the Short Runner Valve Assembly harness connector.
4. Turn the ignition on.
5. With the scan tool, read the SRV PWM Feedback.

NOTE: The SRV PWM Feedback should be less than 3% with the jumper wire in place.

Is the SRV PWM Feedback less than 3%?

Yes

- Replace the Short Runner Valve Assembly in accordance with the Service Information.
- Perform the POWERTRAIN VERIFICATION TEST. Refer to **POWERTRAIN VERIFICATION TEST** .

No

- Go To 3.

NOTE: Remove the jumper wire before continuing.

3. **(F344) ASD RELAY OUTPUT CIRCUIT OPEN OR HIGH RESISTANCE**

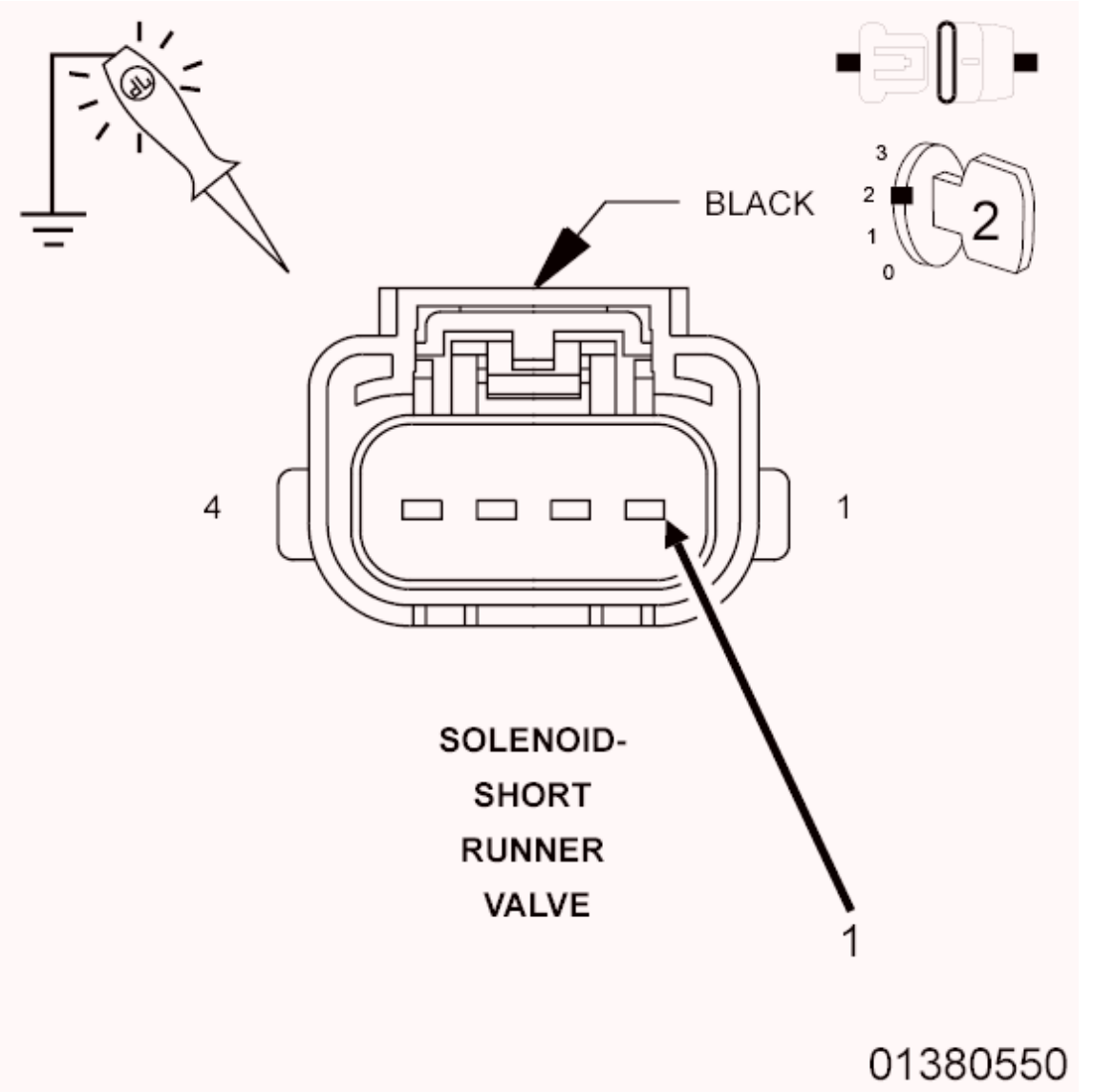

Fig. 121: Using 12-Volt Test Light Connected To Ground To Check (F344) ASD Relay Output Circuit In Short Runner Valve Assembly Harness Connector
Courtesy of CHRYSLER GROUP, LLC

1. With the scan tool, actuate the Auto Shutdown (ASD) Relay Control State.
2. Using a 12-volt test light connected to ground, check the (F344) ASD Relay Output circuit in the Short Runner Valve Assembly harness connector.

NOTE: **The test light should be illuminated and bright. Compare the brightness to that of a direct connection to the battery.**

Is the test light illuminated and bright?

Yes

- Go To 4.

No

- Repair the (F344) ASD Relay Output circuit for an open circuit or high resistance.
- Perform the POWERTRAIN VERIFICATION TEST. Refer to **POWERTRAIN VERIFICATION TEST** .

4. **(Z908) SRV GROUND CIRCUIT OPEN CIRCUIT OR HIGH RESISTANCE**

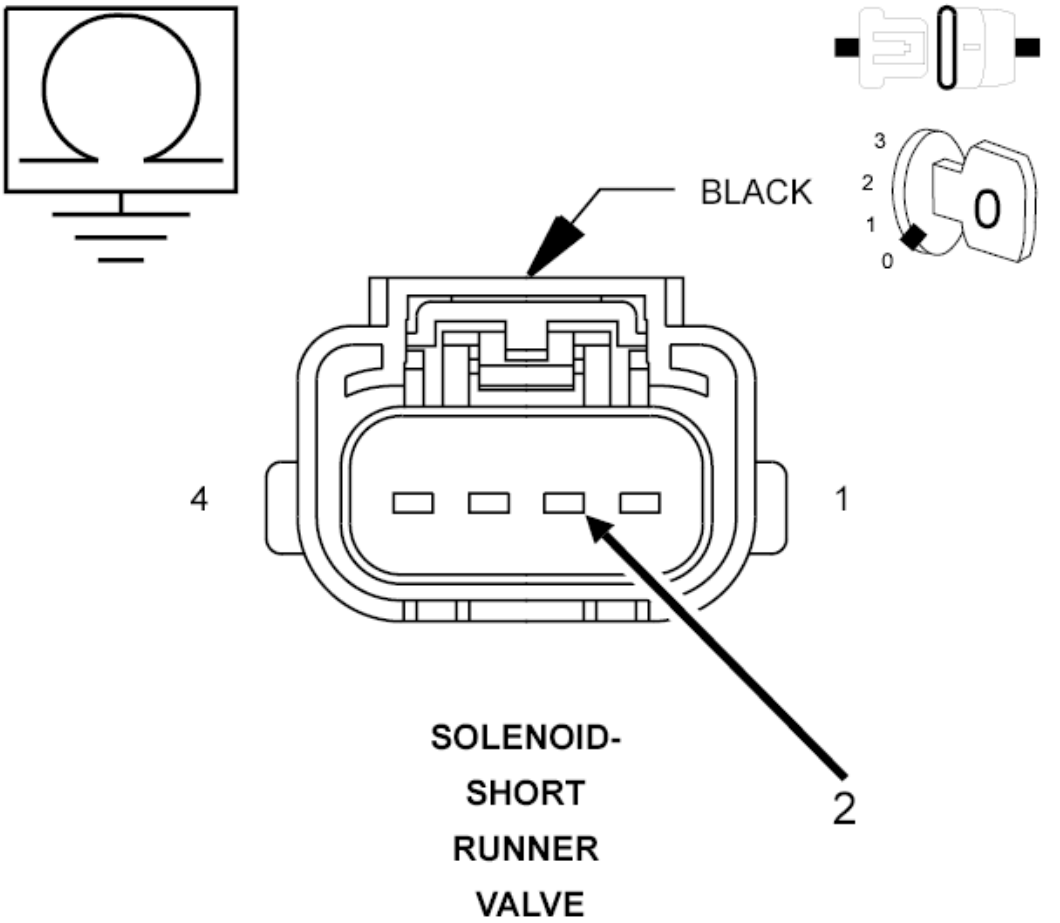

Fig. 122: Measuring Resistance Of SRV Solenoid Ground Circuit Between Ground And Harness Connector
Courtesy of CHRYSLER GROUP, LLC

1. Turn the ignition off.
2. Disconnect the Powertrain Control Module (PCM) C1 harness connector.
3. Measure the resistance of the (Z908) SRV ground circuit in the Short Runner Valve Assembly harness connector to ground.

Is the resistance less than 5.0 Ohms?

Yes

- Go To 5.

No

- Repair the (Z908) SRV ground circuit for an open circuit or high resistance.
- Perform the POWERTRAIN VERIFICATION TEST. Refer to **POWERTRAIN VERIFICATION TEST** .

5. **(K237) SRV SIGNAL CIRCUIT SHORTED TO VOLTAGE**

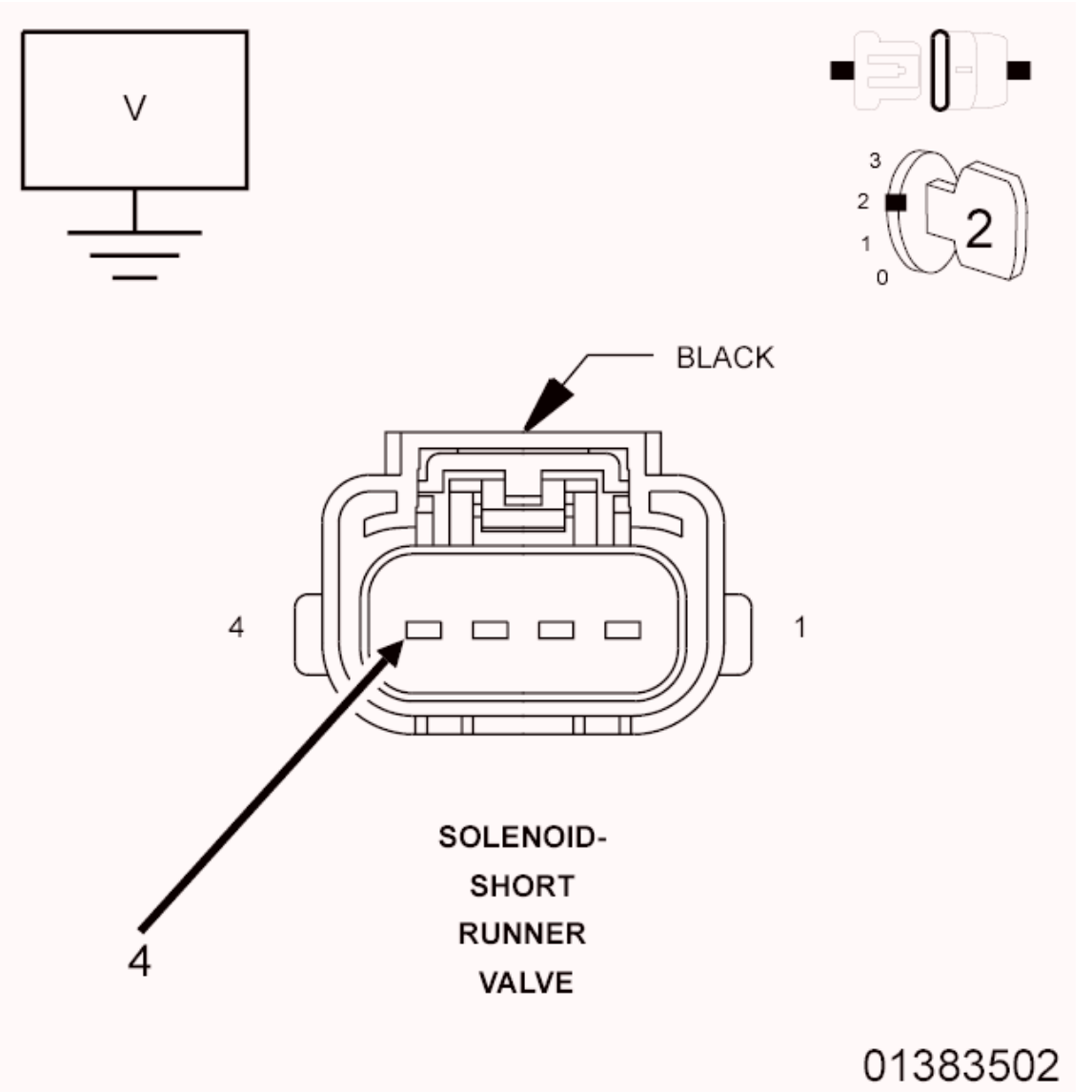

Fig. 123: Measuring Voltage Of (K237) SRV Signal Circuit In Short Runner Valve Assembly Harness Connector

Courtesy of CHRYSLER GROUP, LLC

1. Turn the ignition on.
2. Measure the voltage of the (K237) SRV signal circuit in the Short Runner Valve Assembly harness connector.

   Is there any voltage present?

   Yes

   - Repair the (K237) SRV signal circuit for a short to voltage.
   - Perform the POWERTRAIN VERIFICATION TEST. Refer to **POWERTRAIN VERIFICATION TEST** .

   No

   - Go To 6.

6. **(K237) SRV SIGNAL CIRCUIT OPEN OR HIGH RESISTANCE**

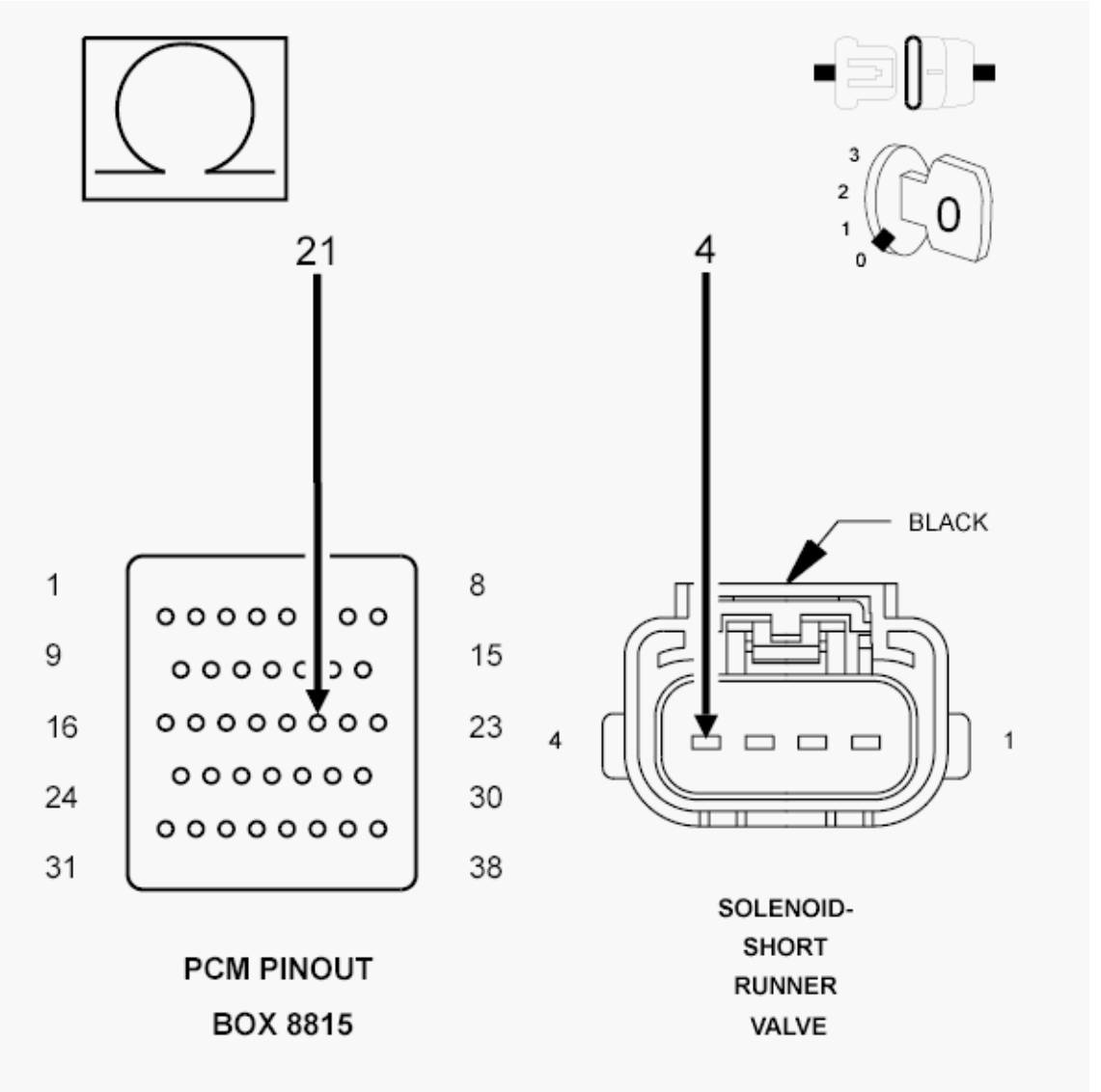

Fig. 124: Measuring Resistance Of SRV Signal Circuit Between Assembly Harness Connector And Appropriate Terminal Of PCM Pinout Box 8815
Courtesy of CHRYSLER GROUP, LLC

1. Turn the ignition off.

CAUTION: Do not probe the PCM harness connectors. Probing the PCM harness connectors will damage the PCM terminals, resulting in poor terminal to pin connection. Install the PCM Pinout Box (special tool #8815A, Kit, NGC, 38 Position) to perform diagnosis.

2. Measure the resistance of the (K237) SRV signal between the Short Runner Valve Assembly harness connector and the appropriate terminal of PCM Pinout Box (special tool #8815A, Kit, NGC, 38 Position).

Is the resistance less than 5.0 Ohms?

Yes

- Go To 7.

No

- Repair the (K237) SRV signal for an open circuit or high resistance.
- Perform the POWERTRAIN VERIFICATION TEST. Refer to **POWERTRAIN VERIFICATION TEST** .

7. **POWERTRAIN CONTROL MODULE (PCM)**
    1. Using the wiring diagram/schematic as a guide, inspect the wiring and connectors between the Short Runner Valve Assembly and the Powertrain Control Module (PCM).
    2. Look for any chafed, pierced, pinched or partially broken wires.
    3. Look for broken, bent, pushed out or corroded terminals.
    4. Monitor the scan tool data relative to this circuit and wiggle test the wiring and connectors.
    5. Look for the data to change or for the DTC to reset during the wiggle test.
    6. Refer to any Technical Service Bulletins that may apply.

    Were any problems found?

    Yes

    - Repair as necessary.
    - Perform the POWERTRAIN VERIFICATION TEST. Refer to **POWERTRAIN VERIFICATION TEST** .

    No

    - Replace and program the Powertrain Control Module (PCM) in accordance with the Service Information. Refer to **MODULE, POWERTRAIN CONTROL, REMOVAL** .
    - Perform the POWERTRAIN VERIFICATION TEST. Refer to **POWERTRAIN VERIFICATION TEST** .

P2072-ELECTRONIC THROTTLE CONTROL SYSTEM - ICE BLOCKAGE

For a complete wiring diagram, **refer to appropriate SYSTEM WIRING DIAGRAMS article** .

WHEN MONITORED:

Ignition on.

SET CONDITION:

The Powertrain Control Module (PCM) recognizes the Throttle plate is stuck during extremely cold Ambient Temperature operation. The throttle plate goes through a de-icing procedure. If the throttle blade still doesn't move this fault sets. The MIL will not illuminate. ETC light will illuminate. The vehicle will be in Limp home condition, limiting RPM and vehicle speed.

POSSIBLE CAUSES

Possible Causes
THROTTLE PLATE FROZEN

DIAGNOSTIC TEST

1. **THROTTLE BODY INSPECTION**
    1. Ignition on, engine not running.
    2. With a scan tool, read DTCs and record the related Freeze Frame data.

    NOTE: **This DTC sets in extreme cold Ambient Temperatures with the throttle plate stuck by the time the vehicle gets to the dealership the condition may be corrected.**

    NOTE: **P2110 will set with P2072. P2118 may also set and the customer will experience a Limp-in condition. If either of these two faults are set, it indicates that the ice blockage software has run and no repair is necessary.**

    NOTE: **Diagnose any other DTCs that may also be set before continuing.**

    3. Turn the ignition off.
    4. Remove the Air Cleaner Assembly from the Throttle Body.
    5. Check for any signs of a foreign material (ice or dirt) on the Throttle Plate or in the bore causing the Throttle Plate to stick.

    Is the throttle blade still stuck because it is frozen?

    Yes

    - Allow the Throttle Body to thaw naturally in a room temperature climate.
    - Perform the POWERTRAIN VERIFICATION TEST. Refer to **POWERTRAIN VERIFICATION TEST** .

    No

    - Test Complete.

P2096-DOWNSTREAM FUEL TRIM SYSTEM 1 LEAN

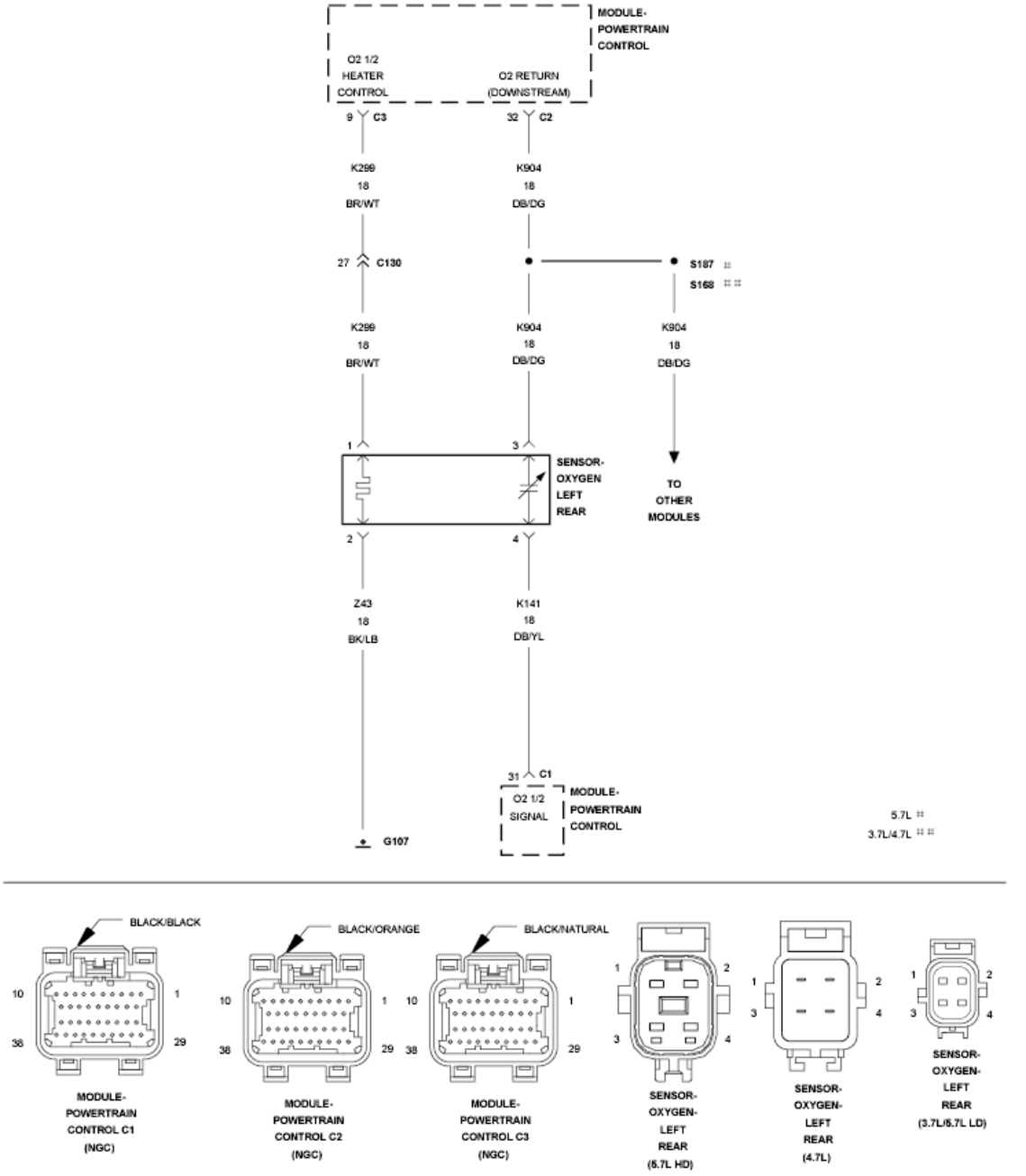

Fig. 125: Left Rear Oxygen Sensor Circuit Schematic
Courtesy of CHRYSLER GROUP, LLC

For a complete wiring diagram, **refer to appropriate SYSTEM WIRING DIAGRAMS article** .

WHEN MONITORED:

With the engine running in closed loop mode, the ambient/battery temperature above -6.7° C (20° F) and altitude below 2590.8 m (8500 ft).

SET CONDITION:

The conditions that cause this diagnostic to fail is when the upstream O2 sensor becomes biased from an exhaust leak, O2 sensor contamination, or some other extreme operating condition. The downstream O2 sensor is considered to be protected from extreme environments by the catalyst. The PCM monitors the downstream O2 sensor feedback control, called downstream fuel trim, to detect any shift in the upstream O2 sensor target voltage from nominal target voltage. The value of the downstream fuel trim is compared with the lean thresholds. Every time the value exceeds the calibrated threshold, a fail timer is incremented and mass flow through the exhaust is accumulated. If the fail timer and accumulated mass flow exceed the fail thresholds, the test fails and the diagnostic stops running for that trip. If the test fails on consecutive trips, a DTC is set.

POSSIBLE CAUSES

Possible Causes
EXHAUST LEAK
FUEL DELIVERY SYSTEM
O2 SENSOR, WIRING, OR CONNECTORS
ENGINE MECHANICAL SYSTEM
POWERTRAIN CONTROL MODULE (PCM)

Always perform the Pre-Diagnostic Troubleshooting procedure before proceeding. Refer to PRE-DIAGNOSTIC TROUBLESHOOTING PROCEDURE .

DIAGNOSTIC TEST

1. **ACTIVE DIAGNOSTIC TROUBLE CODE (DTC)**

NOTE: **Check the vehicle repair history. If the 1/2 O2 has been replaced make sure that the O2 sensor was properly installed and meets OEM specification.**

NOTE: **Check for contaminants that may have damaged the O2 Sensor: contaminated fuel, unapproved silicone, oil and coolant.**

1. Start the engine.
2. Allow the engine to reach normal operating temperature.
3. With a scan tool, select View DTCs.

NOTE: **It may be necessary to drive the vehicle to meet the conditions to set this DTC, try to repeat the conditions in which the fault originally set by reviewing the Freeze Frame data.**

Is the DTC Active or Pending at this time?

Yes

- Go To 2.

No

- Perform the INTERMITTENT CONDITION diagnostic procedure. Refer to **INTERMITTENT CONDITION** .

2. **CHECKING THE EXHAUST SYSTEM FOR LEAKS**

NOTE: **A thorough exhaust leak test must be completed before removing an O2 Sensor or any other part from the exhaust system. Do not remove any parts before an exhaust leak check has been completed.**

NOTE: **An exhaust leak may cause downstream fuel adaptives to rail out, resulting in a false O2 Sensor failure**

1. Turn the ignition off.
2. Raise the vehicle in accordance with the Service Information.

WARNING: **The normal operating temperature of the exhaust system is very high. Never work around or attempt to service any part of the exhaust system until it has cooled. Special care should be taken when working near the catalytic converter. The temperature of the converter rises to a high level after a short period of engine operating time.**

3. Connect Exhaust Cone (special tool #8404-EC, Exhaust Cone) or (special tool #8404-EC, Exhaust Cone) to Air Pressure Regulator (with hose) W-18-MIL-1146AS.

CAUTION: **The air pressure must not exceed 27.6 kPa (4 psi), otherwise engine damage can occur.**

4. Attach shop air to the air pressure regulator.
5. Adjust the Air Pressure Regulator to 27.6 kPa (4 psi).
6. Insert the exhaust cone into the vehicle tail pipe.
7. If the vehicle is equipped with dual exhaust. Use the (special tool #8404-ECT, Exhaust Cone, Truck) with equipped attached plug, plug one side of the dual exhaust pipe. Pressurize the other as described above.
8. Apply Mopar® Air Leak Detector PN# 05191804AA (or an equivalent leak finder liquid) to the following areas:
   - All welded joints from the exhaust manifold to 152.4 mm (6 inches) behind the downstream O2 sensor
   - O2 sensor seal points
   - O2 sensor boss welds
   - Flange/joint connection(s)
   - Exhaust manifold to cylinder head connection(s)

- EGR solenoid gasket base and tube seal points (if equipped)

9. Watch for the liquid/soapy water to bubble.
10. Use the following definitions to help determine if system or component repair/replacement is necessary:

    Type 1 Leak is defined as a leak where very small foam like bubbles 1 mm (0.04 of an inch) or less appear.

    Any Type 1 or greater leaks found in welded joints, O2 sensor seal points or O2 sensor boss welds must be repaired or the component must be replaced.

    Type 2 Leak is defined as a leak where larger bubbles pea size, 8 mm (0.3 of an inch) or greater appear.

    Any Type 2 or greater leaks found in flange or joint connections, exhaust manifold to cylinder head connections, or EGR gasket and tube seal points must be repaired or the components must be replaced.

Leak Location	Repair required if results at 27.6 kPa (4 psi) reveal bubble size:
Welded joints	Type 1, 1 mm (0.04 of an inch) or greater
O2 Sensor seal points	Type 1, 1 mm (0.04 of an inch) or greater
O2 Sensor boss welds	Type 1, 1 mm (0.04 of an inch) or greater
Flange / joint connections	Type 2, 8 mm (0.3 of an inch) or greater
Exhaust Manifold to cylinder head connections	Type 2, 8 mm (0.3 of an inch) or greater
EGR gasket and tube seal points	Type 2, 8 mm (0.3 of an inch) or greater

11. If a leak is found that matches the above definition, repair or replace the component as necessary.
12. Once the repair is complete, repeat the procedure to verify that all leaks have been repaired.

    Were any exhaust leaks found?

    Yes

    - Repair or replace the leaking exhaust parts as necessary.
    - Perform the POWERTRAIN VERIFICATION TEST. Refer to **POWERTRAIN VERIFICATION TEST** .

    No

    - Go To 3.

3. **CHECKING THE FUEL DELIVERY SYSTEM**
    1. Perform the diagnostic procedure for CHECKING THE FUEL DELIVERY SYSTEM. Refer to **DIAGNOSIS AND TESTING** .

Were any problems found?

Yes

- Repair as necessary in accordance with the Service Information.
- Perform the POWERTRAIN VERIFICATION TEST. Refer to **POWERTRAIN VERIFICATION TEST** .

No

- Go To 4.

4. **CHECKING THE OXYGEN SENSOR OPERATION**
   1. Perform the diagnostic procedure for CHECKING THE OXYGEN SENSOR OPERATION. Refer to **DIAGNOSIS AND TESTING** .

      Were any problems found?

      Yes

      - Repair as necessary in accordance with the Service Information.
      - Perform the POWERTRAIN VERIFICATION TEST. Refer to **POWERTRAIN VERIFICATION TEST** .

      No

      - Go To 5.

5. **ENGINE MECHANICAL**
   1. Check for any of the following conditions/mechanical problems:
      - AIR INDUCTION SYSTEM - must be free from leaks
      - ENGINE VACUUM - must be at least 13 inches in neutral
      - ENGINE VALVE TIMING - must be within specifications
      - ENGINE COMPRESSION - must be within specifications
      - ENGINE EXHAUST SYSTEM - must be free of any restrictions or leaks
      - ENGINE PCV SYSTEM - must flow freely
      - TORQUE CONVERTER STALL SPEED - must be within specifications
      - POWER BRAKE BOOSTER - no internal vacuum leaks
      - FUEL - must be free of contamination
      - FUEL INJECTOR - plugged or restricted injector; control wire not connected to correct injector

      Are there any engine mechanical problems?

      Yes

- Repair as necessary.
- Perform the POWERTRAIN VERIFICATION TEST. Refer to **POWERTRAIN VERIFICATION TEST** .

No

- Go To 6.

6. **POWERTRAIN CONTROL MODULE (PCM)**
    1. Using the wiring diagram/schematic as a guide, inspect the wiring and connectors relative to the components tested in this procedure.
    2. Look for any chafed, pierced, pinched, or partially broken wires.
    3. Look for broken, bent, pushed out or corroded terminals.
    4. Monitor the scan tool data relative to the components tested in this procedure and wiggle test the wiring and connectors.
    5. Look for the data to change or for a DTC to set during the wiggle test.
    6. Perform any Technical Service Bulletins that may apply.

    Were any problems found?

    Yes

    - Repair as necessary.
    - Perform the POWERTRAIN VERIFICATION TEST. Refer to **POWERTRAIN VERIFICATION TEST** .

    No

    - Replace and program the PCM in accordance with the Service Information.
    - Perform the POWERTRAIN VERIFICATION TEST. Refer to **POWERTRAIN VERIFICATION TEST** .

P2097-DOWNSTREAM FUEL TRIM SYSTEM 1 RICH

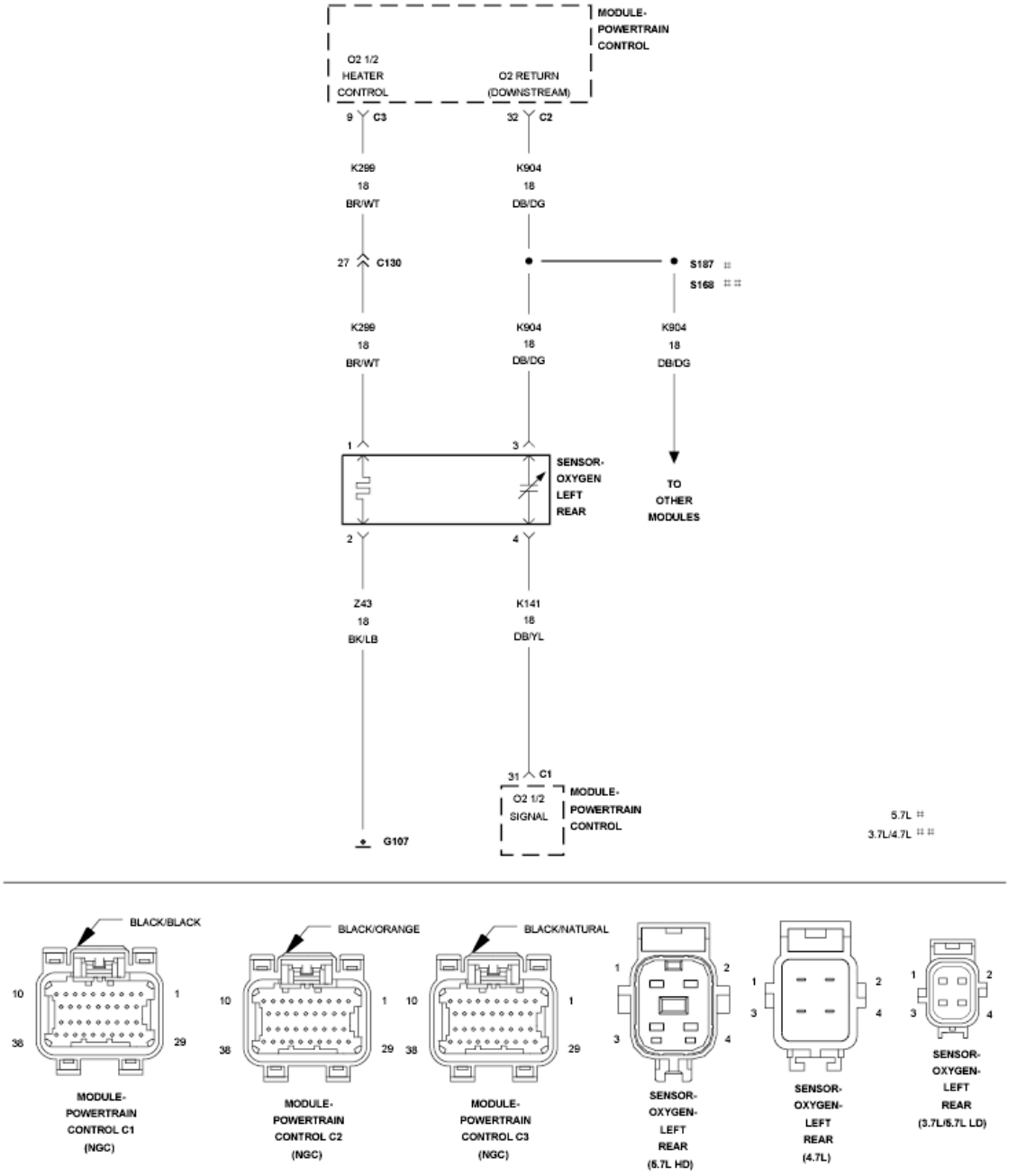

Fig. 126: Left Rear Oxygen Sensor Circuit Schematic
Courtesy of CHRYSLER GROUP, LLC

For a complete wiring diagram, **refer to appropriate SYSTEM WIRING DIAGRAMS article** .

WHEN MONITORED:

With the engine running in closed loop mode, the ambient/battery temperature above -6.7° C (20° F) and altitude below 2590.8 m (8500 ft).

SET CONDITION:

The conditions that cause this diagnostic to fail is when the upstream O2 sensor becomes biased from an exhaust leak, O2 sensor contamination, or some other extreme operating condition. The downstream O2 sensor is considered to be protected from extreme environments by the catalyst. The PCM monitors the downstream O2 sensor feedback control, called downstream fuel trim, to detect any shift in the upstream O2 sensor target voltage from nominal target voltage. The value of the downstream fuel trim is compared with the rich thresholds. Every time the value exceeds the calibrated threshold, a fail timer is incremented and mass flow through the exhaust is accumulated. If the fail timer and accumulated mass flow exceed the fail thresholds, the test fails and the diagnostic stops running for that trip. If the test fails on consecutive trips, a DTC is set.

POSSIBLE CAUSES

Possible Causes
EXHAUST LEAK
FUEL DELIVERY SYSTEM
O2 SENSOR, WIRING, OR CONNECTORS
ENGINE MECHANICAL SYSTEM
POWERTRAIN CONTROL MODULE (PCM)

Always perform the Pre-Diagnostic Troubleshooting procedure before proceeding. Refer to PRE-DIAGNOSTIC TROUBLESHOOTING PROCEDURE .

DIAGNOSTIC TEST

1. **ACTIVE DIAGNOSTIC TROUBLE CODE (DTC)**

NOTE: **Check the vehicle repair history. If the 1/2 O2 has been replaced make sure that the O2 sensor was properly installed and meets OEM specification.**

NOTE: **Check for contaminants that may have damaged the O2 Sensor: contaminated fuel, unapproved silicone, oil and coolant.**

1. Start the engine.
2. Allow the engine to reach normal operating temperature.
3. With a scan tool, select View DTCs.

NOTE: **It may be necessary to drive the vehicle to meet the conditions to set this DTC, try to repeat the conditions in which the fault originally set by reviewing the Freeze Frame data.**

Is the DTC Active or Pending at this time?

Yes

- Go To 2.

No

- Perform the INTERMITTENT CONDITION diagnostic procedure. Refer to **INTERMITTENT CONDITION** .

2. **CHECKING THE EXHAUST SYSTEM FOR LEAKS**

NOTE: **A thorough exhaust leak test must be completed before removing an O2 Sensor or any other part from the exhaust system. Do not remove any parts before an exhaust leak check has been completed.**

NOTE: **An exhaust leak may cause downstream fuel adaptives to rail out, resulting in a false O2 Sensor failure**

1. Turn the ignition off.
2. Raise the vehicle in accordance with the Service Information.

WARNING: **The normal operating temperature of the exhaust system is very high. Never work around or attempt to service any part of the exhaust system until it has cooled. Special care should be taken when working near the catalytic converter. The temperature of the converter rises to a high level after a short period of engine operating time.**

3. Connect Exhaust Cone (special tool #8404-EC, Exhaust Cone) or (special tool #8404-EC, Exhaust Cone) to Air Pressure Regulator (with hose) W-18-MIL-1146AS.

CAUTION: **The air pressure must not exceed 27.6 kPa (4 psi), otherwise engine damage can occur.**

4. Attach shop air to the air pressure regulator.
5. Adjust the Air Pressure Regulator to 27.6 kPa (4 psi).
6. Insert the exhaust cone into the vehicle tail pipe.
7. If the vehicle is equipped with dual exhaust. Use the (special tool #8404-ECT, Exhaust Cone, Truck) with equipped attached plug, plug one side of the dual exhaust pipe. Pressurize the other as described above.
8. Apply Mopar® Air Leak Detector PN# 05191804AA (or an equivalent leak finder liquid) to the following areas:
   - All welded joints from the exhaust manifold to 152.4 mm (6 inches) behind the downstream O2 sensor
   - O2 sensor seal points
   - O2 sensor boss welds
   - Flange/joint connection(s)
   - Exhaust manifold to cylinder head connection(s)

- EGR solenoid gasket base and tube seal points (if equipped)

9. Watch for the liquid/soapy water to bubble.
10. Use the following definitions to help determine if system or component repair/replacement is necessary:

    Type 1 Leak is defined as a leak where very small foam like bubbles 1 mm (0.04 of an inch) or less appear.

    Any Type 1 or greater leaks found in welded joints, O2 sensor seal points or O2 sensor boss welds must be repaired or the component must be replaced.

    Type 2 Leak is defined as a leak where larger bubbles pea size, 8 mm (0.3 of an inch) or greater appear.

    Any Type 2 or greater leaks found in flange or joint connections, exhaust manifold to cylinder head connections, or EGR gasket and tube seal points must be repaired or the components must be replaced.

Leak Location	Repair required if results at 27.6 kPa (4 psi) reveal bubble size:
Welded joints	Type 1, 1 mm (0.04 of an inch) or greater
O2 Sensor seal points	Type 1, 1 mm (0.04 of an inch) or greater
O2 Sensor boss welds	Type 1, 1 mm (0.04 of an inch) or greater
Flange / joint connections	Type 2, 8 mm (0.3 of an inch) or greater
Exhaust Manifold to cylinder head connections	Type 2, 8 mm (0.3 of an inch) or greater
EGR gasket and tube seal points	Type 2, 8 mm (0.3 of an inch) or greater

11. If a leak is found that matches the above definition, repair or replace the component as necessary.
12. Once the repair is complete, repeat the procedure to verify that all leaks have been repaired.

    Were any exhaust leaks found?

    Yes

    - Repair or replace the leaking exhaust parts as necessary.
    - Perform the POWERTRAIN VERIFICATION TEST. Refer to **POWERTRAIN VERIFICATION TEST** .

    No

    - Go To 3.

3. **CHECKING THE FUEL DELIVERY SYSTEM**
    1. Perform the diagnostic procedure for CHECKING THE FUEL DELIVERY SYSTEM. Refer to **DIAGNOSIS AND TESTING** .

Were any problems found?

Yes

- Repair as necessary in accordance with the Service Information.
- Perform the POWERTRAIN VERIFICATION TEST. Refer to **POWERTRAIN VERIFICATION TEST** .

No

- Go To 4.

4. **CHECKING THE OXYGEN SENSOR OPERATION**
   1. Perform the diagnostic procedure for CHECKING THE OXYGEN SENSOR OPERATION. Refer to **DIAGNOSIS AND TESTING** .

      Were any problems found?

      Yes

      - Repair as necessary in accordance with the Service Information.
      - Perform the POWERTRAIN VERIFICATION TEST. Refer to **POWERTRAIN VERIFICATION TEST** .

      No

      - Go To 5.

5. **ENGINE MECHANICAL**
   1. Check for any of the following conditions/mechanical problems:
      - AIR INDUCTION SYSTEM - must be free from leaks
      - ENGINE VACUUM - must be at least 13 inches in neutral
      - ENGINE VALVE TIMING - must be within specifications
      - ENGINE COMPRESSION - must be within specifications
      - ENGINE EXHAUST SYSTEM - must be free of any restrictions or leaks
      - ENGINE PCV SYSTEM - must flow freely
      - TORQUE CONVERTER STALL SPEED - must be within specifications
      - POWER BRAKE BOOSTER - no internal vacuum leaks
      - FUEL - must be free of contamination
      - FUEL INJECTOR - plugged or restricted injector; control wire not connected to correct injector

      Are there any engine mechanical problems?

      Yes

- Repair as necessary.
- Perform the POWERTRAIN VERIFICATION TEST. Refer to **POWERTRAIN VERIFICATION TEST** .

No

- Go To 6.

6. **POWERTRAIN CONTROL MODULE (PCM)**
    1. Using the wiring diagram/schematic as a guide, inspect the wiring and connectors relative to the components tested in this procedure.
    2. Look for any chafed, pierced, pinched, or partially broken wires.
    3. Look for broken, bent, pushed out or corroded terminals.
    4. Monitor the scan tool data relative to the components tested in this procedure and wiggle test the wiring and connectors.
    5. Look for the data to change or for a DTC to set during the wiggle test.
    6. Perform any Technical Service Bulletins that may apply.

    Were any problems found?

    Yes

    - Repair as necessary.
    - Perform the POWERTRAIN VERIFICATION TEST. Refer to **POWERTRAIN VERIFICATION TEST** .

    No

    - Replace and program the PCM in accordance with the Service Information.
    - Perform the POWERTRAIN VERIFICATION TEST. Refer to **POWERTRAIN VERIFICATION TEST** .

P2098-DOWNSTREAM FUEL TRIM SYSTEM 2 LEAN

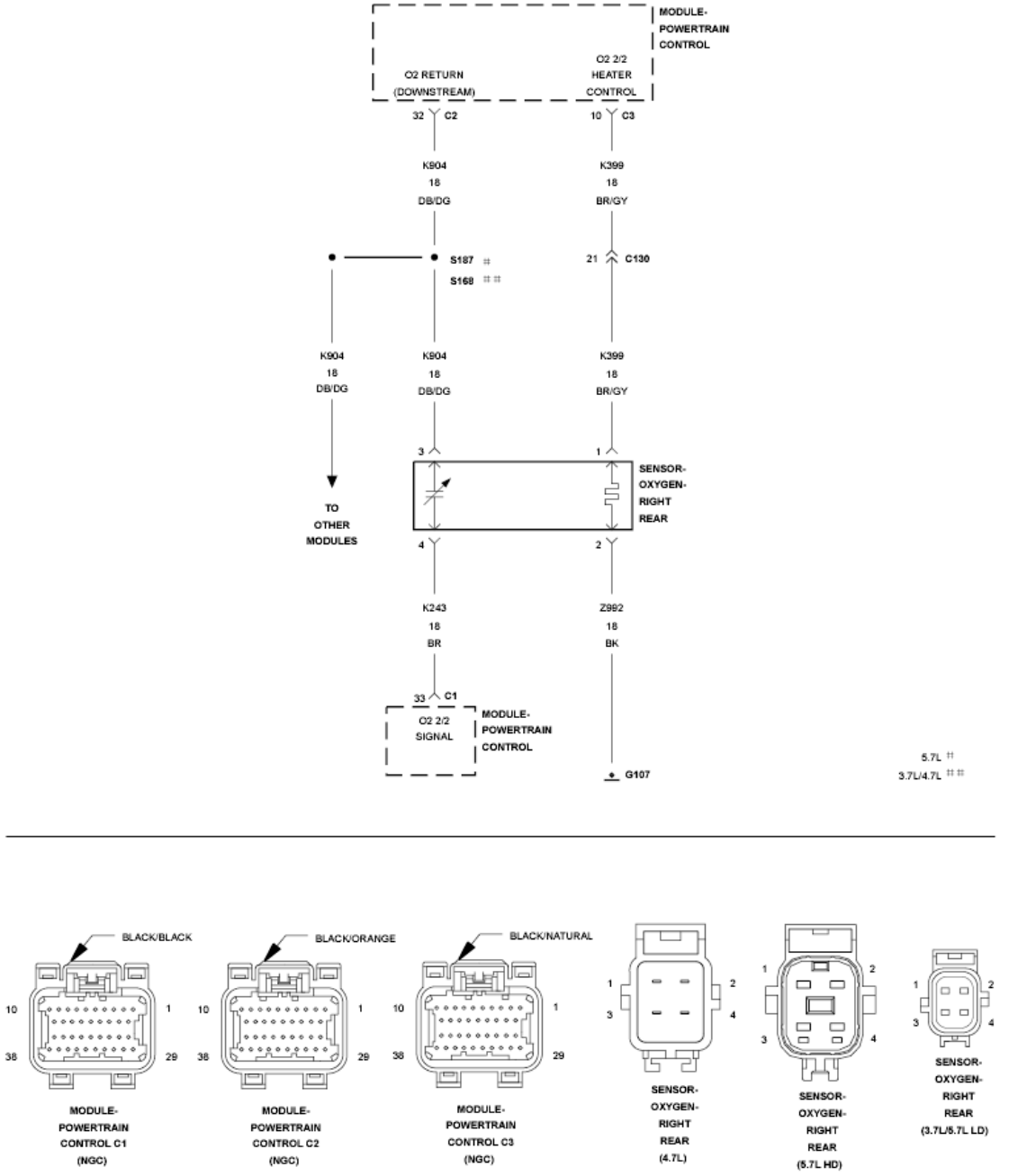

Fig. 127: Right Rear Oxygen Sensor Circuit Schematic
Courtesy of CHRYSLER GROUP, LLC

For a complete wiring diagram, **refer to appropriate SYSTEM WIRING DIAGRAMS article** .

WHEN MONITORED:

With the engine running in closed loop mode, the ambient/battery temperature above -6.7° C (20° F) and altitude below 2590.8 m (8500 ft). Fuel level greater than 15%.

SET CONDITION:

The conditions that cause this diagnostic to fail is when the upstream O2 sensor becomes biased from an exhaust leak, O2 sensor contamination, or some other extreme operating condition. The downstream O2 sensor is considered to be protected from extreme environments by the catalyst. The PCM monitors the downstream O2 sensor feedback control, called downstream fuel trim, to detect any shift in the upstream O2 sensor target voltage from nominal target voltage. The value of the downstream fuel trim is compared with the lean thresholds. Every time the value exceeds the calibrated threshold, a fail timer is incremented and mass flow through the exhaust is accumulated. If the fail timer and accumulated mass flow exceed the fail thresholds, the test fails and the diagnostic stops running for that trip. If the test fails on consecutive trips, a DTC is set.

POSSIBLE CAUSES

Possible Causes
EXHAUST LEAK
FUEL DELIVERY SYSTEM
O2 SENSOR, WIRING, OR CONNECTORS
ENGINE MECHANICAL SYSTEM
POWERTRAIN CONTROL MODULE (PCM)

Always perform the Pre-Diagnostic Troubleshooting procedure before proceeding. Refer to PRE-DIAGNOSTIC TROUBLESHOOTING PROCEDURE .

DIAGNOSTIC TEST

1. **ACTIVE DIAGNOSTIC TROUBLE CODE (DTC)**

NOTE: **Check the vehicle repair history. If the 2/2 O2 has been replaced make sure that the O2 sensor was properly installed and meets OEM specification.**

NOTE: **Check for contaminants that may have damaged the O2 Sensor: contaminated fuel, unapproved silicone, oil and coolant.**

1. Start the engine.
2. Allow the engine to reach normal operating temperature.
3. With a scan tool, select View DTCs.

NOTE: **It may be necessary to drive the vehicle to meet the conditions to set this DTC, try to repeat the conditions in which the fault originally set by reviewing the Freeze Frame data.**

Is the DTC Active or Pending at this time?

Yes

- Go To 2.

No

- Perform the INTERMITTENT CONDITION diagnostic procedure. Refer to **INTERMITTENT CONDITION** .

2. **CHECKING THE EXHAUST SYSTEM FOR LEAKS**

NOTE: **A thorough exhaust leak test must be completed before removing an O2 Sensor or any other part from the exhaust system. Do not remove any parts before an exhaust leak check has been completed.**

NOTE: **An exhaust leak may cause downstream fuel adaptives to rail out, resulting in a false O2 Sensor failure**

1. Turn the ignition off.
2. Raise the vehicle in accordance with the Service Information.

WARNING: **The normal operating temperature of the exhaust system is very high. Never work around or attempt to service any part of the exhaust system until it has cooled. Special care should be taken when working near the catalytic converter. The temperature of the converter rises to a high level after a short period of engine operating time.**

3. Connect Exhaust Cone (special tool #8404-EC, Exhaust Cone) or (special tool #8404-EC, Exhaust Cone) to Air Pressure Regulator (with hose) W-18-MIL-1146AS.

CAUTION: **The air pressure must not exceed 27.6 kPa (4 psi), otherwise engine damage can occur.**

4. Attach shop air to the air pressure regulator.
5. Adjust the Air Pressure Regulator to 27.6 kPa (4 psi).
6. Insert the exhaust cone into the vehicle tail pipe.
7. If the vehicle is equipped with dual exhaust. Use the (special tool #8404-ECT, Exhaust Cone, Truck) with equipped attached plug, plug one side of the dual exhaust pipe. Pressurize the other as described above.
8. Apply Mopar® Air Leak Detector PN# 05191804AA (or an equivalent leak finder liquid) to the following areas:
   - All welded joints from the exhaust manifold to 152.4 mm (6 inches) behind the downstream O2 sensor
   - O2 sensor seal points
   - O2 sensor boss welds

- Flange/joint connection(s)
- Exhaust manifold to cylinder head connection(s)
- EGR solenoid gasket base and tube seal points (if equipped)

9. Watch for the liquid/soapy water to bubble.
10. Use the following definitions to help determine if system or component repair/replacement is necessary:

    Type 1 Leak is defined as a leak where very small foam like bubbles 1 mm (0.04 of an inch) or less appear.

    Any Type 1 or greater leaks found in welded joints, O2 sensor seal points or O2 sensor boss welds must be repaired or the component must be replaced.

    Type 2 Leak is defined as a leak where larger bubbles pea size, 8 mm (0.3 of an inch) or greater appear.

    Any Type 2 or greater leaks found in flange or joint connections, exhaust manifold to cylinder head connections, or EGR gasket and tube seal points must be repaired or the components must be replaced.

Leak Location	Repair required if results at 27.6 kPa (4 psi) reveal bubble size:
Welded joints	Type 1, 1 mm (0.04 of an inch) or greater
O2 Sensor seal points	Type 1, 1 mm (0.04 of an inch) or greater
O2 Sensor boss welds	Type 1, 1 mm (0.04 of an inch) or greater
Flange / joint connections	Type 2, 8 mm (0.3 of an inch) or greater
Exhaust Manifold to cylinder head connections	Type 2, 8 mm (0.3 of an inch) or greater
EGR gasket and tube seal points	Type 2, 8 mm (0.3 of an inch) or greater

11. If a leak is found that matches the above definition, repair or replace the component as necessary.
12. Once the repair is complete, repeat the procedure to verify that all leaks have been repaired.

    Were any exhaust leaks found?

    Yes

    - Repair or replace the leaking exhaust parts as necessary.
    - Perform the POWERTRAIN VERIFICATION TEST. Refer to **POWERTRAIN VERIFICATION TEST** .

    No

    - Go To 3.

3. **CHECKING THE FUEL DELIVERY SYSTEM**

1. Perform the diagnostic procedure for CHECKING THE FUEL DELIVERY SYSTEM. Refer to **DIAGNOSIS AND TESTING** .

   Were any problems found?

   Yes

   - Repair as necessary in accordance with the Service Information.
   - Perform the POWERTRAIN VERIFICATION TEST. Refer to **POWERTRAIN VERIFICATION TEST** .

   No

   - Go To 4.

4. **CHECKING THE OXYGEN SENSOR OPERATION**
   1. Perform the diagnostic procedure for CHECKING THE OXYGEN SENSOR OPERATION. Refer to **DIAGNOSIS AND TESTING** .

      Were any problems found?

      Yes

      - Repair as necessary in accordance with the Service Information.
      - Perform the POWERTRAIN VERIFICATION TEST. Refer to **POWERTRAIN VERIFICATION TEST** .

      No

      - Go To 5.

5. **ENGINE MECHANICAL**
   1. Check for any of the following conditions/mechanical problems:
      - AIR INDUCTION SYSTEM - must be free from leaks
      - ENGINE VACUUM - must be at least 13 inches in neutral
      - ENGINE VALVE TIMING - must be within specifications
      - ENGINE COMPRESSION - must be within specifications
      - ENGINE EXHAUST SYSTEM - must be free of any restrictions or leaks
      - ENGINE PCV SYSTEM - must flow freely
      - TORQUE CONVERTER STALL SPEED - must be within specifications
      - POWER BRAKE BOOSTER - no internal vacuum leaks
      - FUEL - must be free of contamination
      - FUEL INJECTOR - plugged or restricted injector; control wire not connected to correct injector

Are there any engine mechanical problems?

Yes

- Repair as necessary.
- Perform the POWERTRAIN VERIFICATION TEST. Refer to **POWERTRAIN VERIFICATION TEST** .

No

- Go To 6.

6. **POWERTRAIN CONTROL MODULE (PCM)**
    1. Using the wiring diagram/schematic as a guide, inspect the wiring and connectors relative to the components tested in this procedure.
    2. Look for any chafed, pierced, pinched, or partially broken wires.
    3. Look for broken, bent, pushed out or corroded terminals.
    4. Monitor the scan tool data relative to the components tested in this procedure and wiggle test the wiring and connectors.
    5. Look for the data to change or for a DTC to set during the wiggle test.
    6. Perform any Technical Service Bulletins that may apply.

    Were any problems found?

    Yes

    - Repair as necessary.
    - Perform the POWERTRAIN VERIFICATION TEST. Refer to **POWERTRAIN VERIFICATION TEST** .

    No

    - Replace and program the PCM in accordance with the Service Information.
    - Perform the POWERTRAIN VERIFICATION TEST. Refer to **POWERTRAIN VERIFICATION TEST** .

P2099-DOWNSTREAM FUEL TRIM SYSTEM 2 RICH

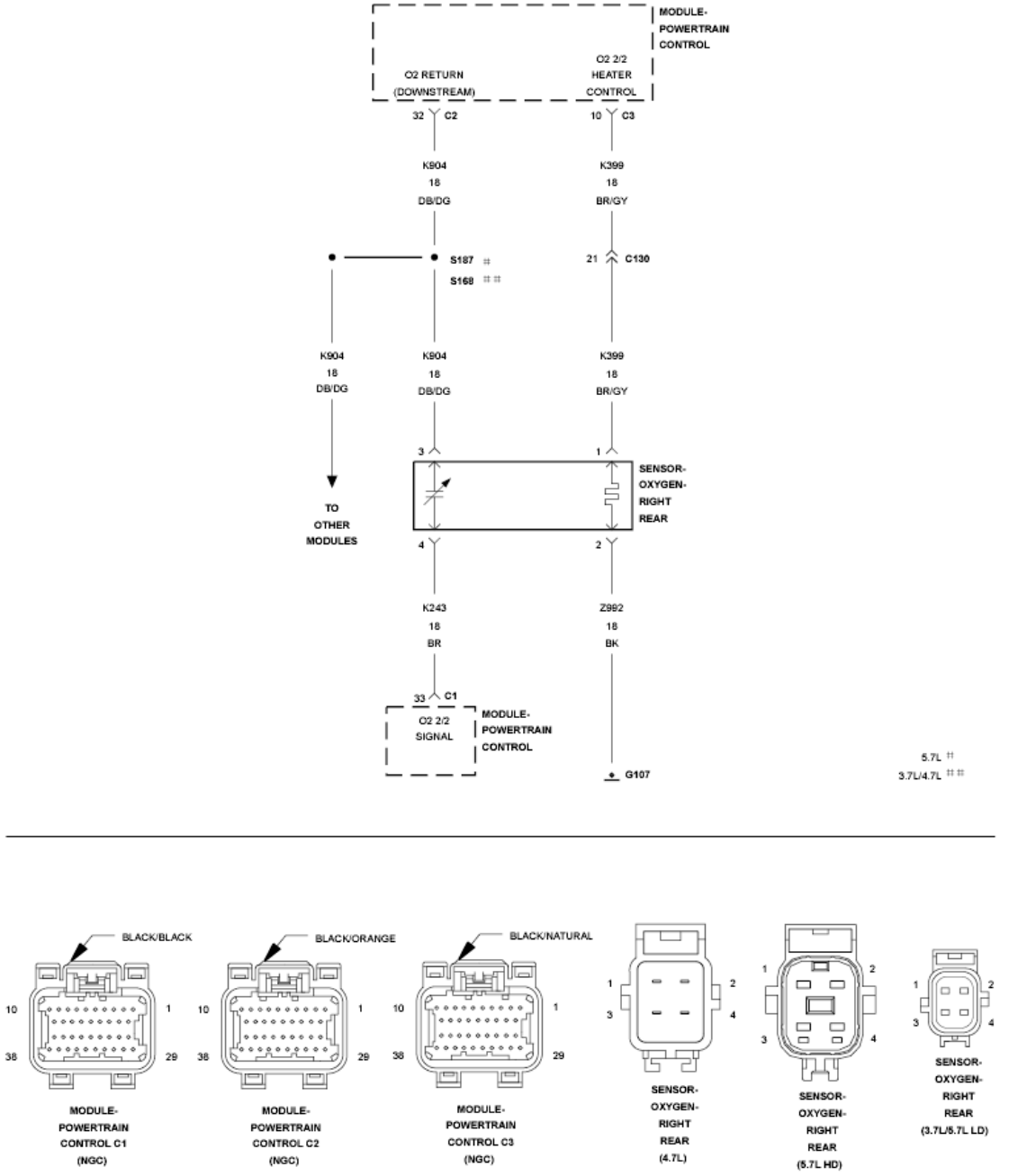

Fig. 128: Right Rear Oxygen Sensor Circuit Schematic
Courtesy of CHRYSLER GROUP, LLC

For a complete wiring diagram, **refer to appropriate SYSTEM WIRING DIAGRAMS article** .

WHEN MONITORED:

With the engine running in closed loop mode, the ambient/battery temperature above -6.7° C (20° F) and altitude below 2590.8 m (8500 ft).

SET CONDITION:

The conditions that cause this diagnostic to fail is when the upstream O2 sensor becomes biased from an exhaust leak, O2 sensor contamination, or some other extreme operating condition. The downstream O2 sensor is considered to be protected from extreme environments by the catalyst. The PCM monitors the downstream O2 sensor feedback control, called downstream fuel trim, to detect any shift in the upstream O2 sensor target voltage from nominal target voltage. The value of the downstream fuel trim is compared with the lean thresholds. Every time the value exceeds the calibrated threshold, a fail timer is incremented and mass flow through the exhaust is accumulated. If the fail timer and accumulated mass flow exceed the fail thresholds, the test fails and the diagnostic stops running for that trip. If the test fails on consecutive trips, a DTC is set.

POSSIBLE CAUSES

Possible Causes
EXHAUST LEAK
FUEL DELIVERY SYSTEM
O2 SENSOR, WIRING, OR CONNECTORS
ENGINE MECHANICAL SYSTEM
POWERTRAIN CONTROL MODULE (PCM)

Always perform the Pre-Diagnostic Troubleshooting procedure before proceeding. Refer to PRE-DIAGNOSTIC TROUBLESHOOTING PROCEDURE .

DIAGNOSTIC TEST

1. **ACTIVE DIAGNOSTIC TROUBLE CODE (DTC)**

NOTE: **Check the vehicle repair history. If the 2/2 O2 has been replaced make sure that the O2 sensor was properly installed and meets OEM specification.**

NOTE: **Check for contaminants that may have damaged the O2 Sensor: contaminated fuel, unapproved silicone, oil and coolant.**

1. Start the engine.
2. Allow the engine to reach normal operating temperature.
3. With a scan tool, select View DTCs.

NOTE: **It may be necessary to drive the vehicle to meet the conditions to set this DTC, try to repeat the conditions in which the fault originally set by reviewing the Freeze Frame data.**

Is the DTC Active or Pending at this time?

Yes

- Go To 2.

No

- Perform the INTERMITTENT CONDITION diagnostic procedure. Refer to **INTERMITTENT CONDITION** .

2. **CHECKING THE EXHAUST SYSTEM FOR LEAKS**

NOTE: **A thorough exhaust leak test must be completed before removing an O2 Sensor or any other part from the exhaust system. Do not remove any parts before an exhaust leak check has been completed.**

NOTE: **An exhaust leak may cause downstream fuel adaptives to rail out, resulting in a false O2 Sensor failure**

1. Turn the ignition off.
2. Raise the vehicle in accordance with the Service Information.

WARNING: **The normal operating temperature of the exhaust system is very high. Never work around or attempt to service any part of the exhaust system until it has cooled. Special care should be taken when working near the catalytic converter. The temperature of the converter rises to a high level after a short period of engine operating time.**

3. Connect Exhaust Cone (special tool #8404-EC, Exhaust Cone) or (special tool #8404-EC, Exhaust Cone) to Air Pressure Regulator (with hose) W-18-MIL-1146AS.

CAUTION: **The air pressure must not exceed 27.6 kPa (4 psi), otherwise engine damage can occur.**

4. Attach shop air to the air pressure regulator.
5. Adjust the Air Pressure Regulator to 27.6 kPa (4 psi).
6. Insert the exhaust cone into the vehicle tail pipe.
7. If the vehicle is equipped with dual exhaust. Use the (special tool #8404-ECT, Exhaust Cone, Truck) with equipped attached plug, plug one side of the dual exhaust pipe. Pressurize the other as described above.
8. Apply Mopar® Air Leak Detector PN# 05191804AA (or an equivalent leak finder liquid) to the following areas:
   - All welded joints from the exhaust manifold to 152.4 mm (6 inches) behind the downstream O2 sensor
   - O2 sensor seal points
   - O2 sensor boss welds

- Flange/joint connection(s)
- Exhaust manifold to cylinder head connection(s)
- EGR solenoid gasket base and tube seal points (if equipped)

9. Watch for the liquid/soapy water to bubble.
10. Use the following definitions to help determine if system or component repair/replacement is necessary:

    Type 1 Leak is defined as a leak where very small foam like bubbles 1 mm (0.04 of an inch) or less appear.

    Any Type 1 or greater leaks found in welded joints, O2 sensor seal points or O2 sensor boss welds must be repaired or the component must be replaced.

    Type 2 Leak is defined as a leak where larger bubbles pea size, 8 mm (0.3 of an inch) or greater appear.

    Any Type 2 or greater leaks found in flange or joint connections, exhaust manifold to cylinder head connections, or EGR gasket and tube seal points must be repaired or the components must be replaced.

Leak Location	Repair required if results at 27.6 kPa (4 psi) reveal bubble size:
Welded joints	Type 1, 1 mm (0.04 of an inch) or greater
O2 Sensor seal points	Type 1, 1 mm (0.04 of an inch) or greater
O2 Sensor boss welds	Type 1, 1 mm (0.04 of an inch) or greater
Flange / joint connections	Type 2, 8 mm (0.3 of an inch) or greater
Exhaust Manifold to cylinder head connections	Type 2, 8 mm (0.3 of an inch) or greater
EGR gasket and tube seal points	Type 2, 8 mm (0.3 of an inch) or greater

11. If a leak is found that matches the above definition, repair or replace the component as necessary.
12. Once the repair is complete, repeat the procedure to verify that all leaks have been repaired.

    Were any exhaust leaks found?

    Yes

    - Repair or replace the leaking exhaust parts as necessary.
    - Perform the POWERTRAIN VERIFICATION TEST. Refer to **POWERTRAIN VERIFICATION TEST** .

    No

    - Go To 3.

3. **CHECKING THE FUEL DELIVERY SYSTEM**

1. Perform the diagnostic procedure for CHECKING THE FUEL DELIVERY SYSTEM. Refer to **DIAGNOSIS AND TESTING** .

   Were any problems found?

   Yes

   - Repair as necessary in accordance with the Service Information.
   - Perform the POWERTRAIN VERIFICATION TEST. Refer to **POWERTRAIN VERIFICATION TEST** .

   No

   - Go To 4.

4. **CHECKING THE OXYGEN SENSOR OPERATION**
   1. Perform the diagnostic procedure for CHECKING THE OXYGEN SENSOR OPERATION. Refer to **DIAGNOSIS AND TESTING** .

      Were any problems found?

      Yes

      - Repair as necessary in accordance with the Service Information.
      - Perform the POWERTRAIN VERIFICATION TEST. Refer to **POWERTRAIN VERIFICATION TEST** .

      No

      - Go To 5.

5. **ENGINE MECHANICAL**
   1. Check for any of the following conditions/mechanical problems:
      - AIR INDUCTION SYSTEM - must be free from leaks
      - ENGINE VACUUM - must be at least 13 inches in neutral
      - ENGINE VALVE TIMING - must be within specifications
      - ENGINE COMPRESSION - must be within specifications
      - ENGINE EXHAUST SYSTEM - must be free of any restrictions or leaks
      - ENGINE PCV SYSTEM - must flow freely
      - TORQUE CONVERTER STALL SPEED - must be within specifications
      - POWER BRAKE BOOSTER - no internal vacuum leaks
      - FUEL - must be free of contamination
      - FUEL INJECTOR - plugged or restricted injector; control wire not connected to correct injector

Are there any engine mechanical problems?

Yes

- Repair as necessary.
- Perform the POWERTRAIN VERIFICATION TEST. Refer to **POWERTRAIN VERIFICATION TEST** .

No

- Go To 6.

6. **POWERTRAIN CONTROL MODULE (PCM)**
    1. Using the wiring diagram/schematic as a guide, inspect the wiring and connectors relative to the components tested in this procedure.
    2. Look for any chafed, pierced, pinched, or partially broken wires.
    3. Look for broken, bent, pushed out or corroded terminals.
    4. Monitor the scan tool data relative to the components tested in this procedure and wiggle test the wiring and connectors.
    5. Look for the data to change or for a DTC to set during the wiggle test.
    6. Perform any Technical Service Bulletins that may apply.

    Were any problems found?

    Yes

    - Repair as necessary.
    - Perform the POWERTRAIN VERIFICATION TEST. Refer to **POWERTRAIN VERIFICATION TEST** .

    No

    - Replace and program the PCM in accordance with the Service Information.
    - Perform the POWERTRAIN VERIFICATION TEST. Refer to **POWERTRAIN VERIFICATION TEST** .

P2100-ELECTRONIC THROTTLE CONTROL MOTOR CIRCUIT

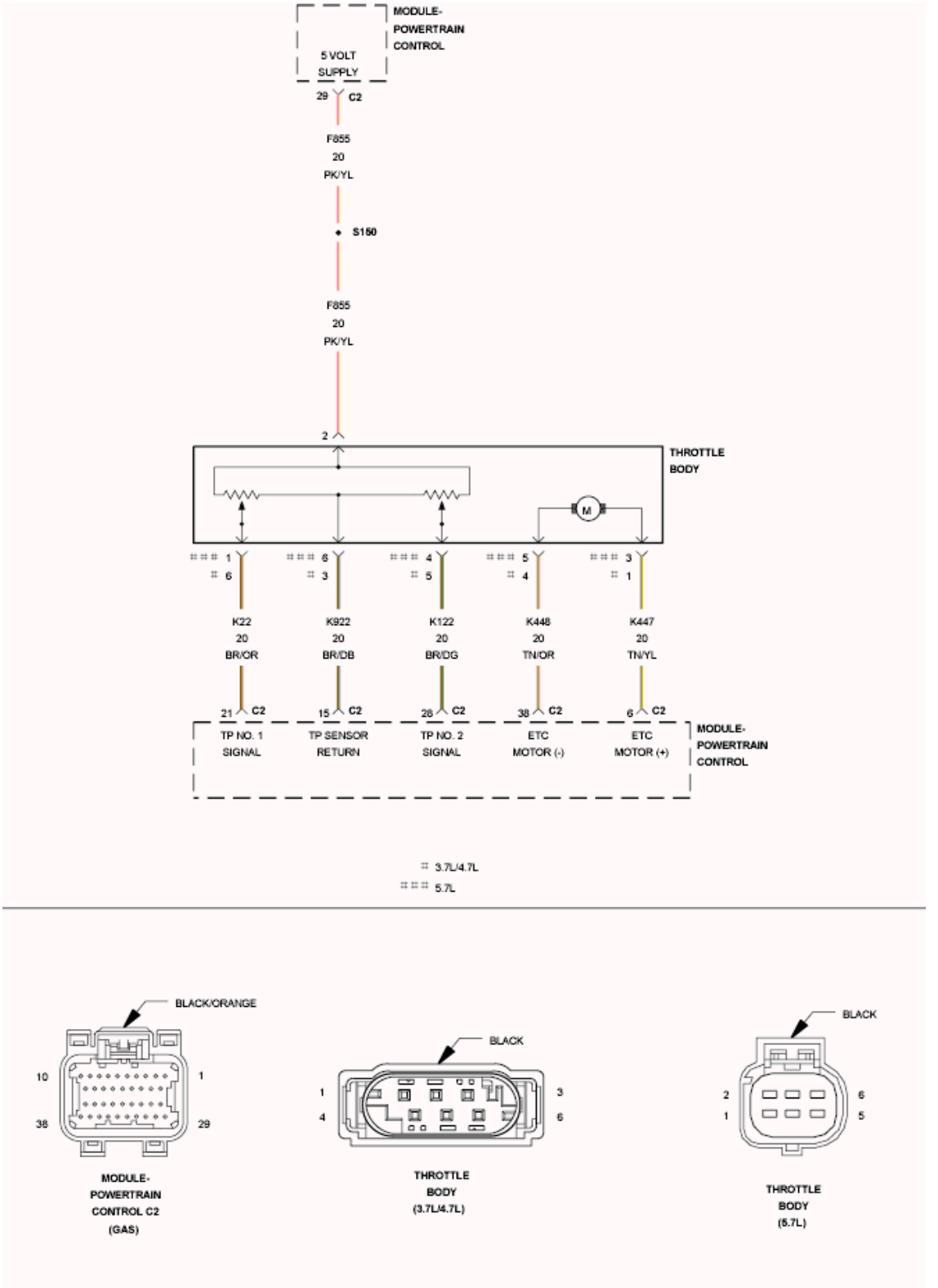

Fig. 129: Throttle Body Circuit Schematic
Courtesy of CHRYSLER GROUP, LLC

For a complete wiring diagram **refer to appropriate SYSTEM WIRING DIAGRAMS article** .

WHEN MONITORED:

With the ignition on and the ETC Motor is not in Limp Home mode.

SET CONDITION:

When the PCM detects an internal error or a short between the ETC Motor - and ETC Motor + circuits in the ETC Motor Driver. One trip fault. ETC light is flashing.

POSSIBLE CAUSES

Possible Causes
THROTTLE PLATE / BORE INSPECTION
(K447) ETC POSITIVE CIRCUIT SHORTED TO VOLTAGE
(K448) ETC NEGATIVE CIRCUIT SHORTED TO VOLTAGE
(K447) ETC POSITIVE CIRCUIT SHORTED TO THE (K448) ETC NEGATIVE CIRCUIT
(K447) ETC POSITIVE CIRCUIT OPEN
(K447) ETC POSITIVE CIRCUIT SHORTED TO GROUND
(K448) ETC NEGATIVE CIRCUIT OPEN
(K448) ETC NEGATIVE CIRCUIT SHORTED TO GROUND
LOW BATTERY VOLTAGE
ETC MOTOR/THROTTLE BODY
POWERTRAIN CONTROL MODULE (PCM)

Always perform the Pre-Diagnostic Troubleshooting procedure before proceeding. Refer to PRE-DIAGNOSTIC TROUBLESHOOTING PROCEDURE .

DIAGNOSTIC TEST

1. **ACTIVE DTC**
    1. Ignition on, engine not running.

        NOTE: **If the P2100 is intermittent, it is possible that the controller is overheating in extreme hot temperatures, and this is considered a normal protection operation. No repair is necessary.**

        NOTE: **Low battery voltage can also cause excessive current draw, in very hot and very cold ambient temperatures. Make sure the battery can pass a load test before continuing.**

    2. With a scan tool, select View DTCs.
    3. Record the Freeze Frame data and look closely at the temperatures at which this DTC set.

        Is the DTC Active at this time?

Yes

- Go To 2.

No

- Perform the INTERMITTENT CONDITION diagnostic procedure. Refer to **INTERMITTENT CONDITION** .

2. **THROTTLE PLATE INSPECTION**
   1. Turn the ignition off.
   2. Remove the Air Cleaner Assembly from the Throttle Body.
   3. Check for any signs of a foreign material (ice or dirt) on the Throttle Plate or in the bore causing the Throttle Plate to stick.

      Were any signs of foreign material or scoring of the throttle plate or bore found?

      Yes

      - Remove the debris if possible or replace the Throttle Body Assembly. Disconnect the Battery when replacing the Throttle Body Assembly. After installation is complete, use a scan tool and select the ETC RELEARN function.
      - Perform the POWERTRAIN VERIFICATION TEST. Refer to **POWERTRAIN VERIFICATION TEST** .

      No

      - Go To 3.
3. **(K447) ETC POSITIVE CIRCUIT SHORTED TO VOLTAGE**

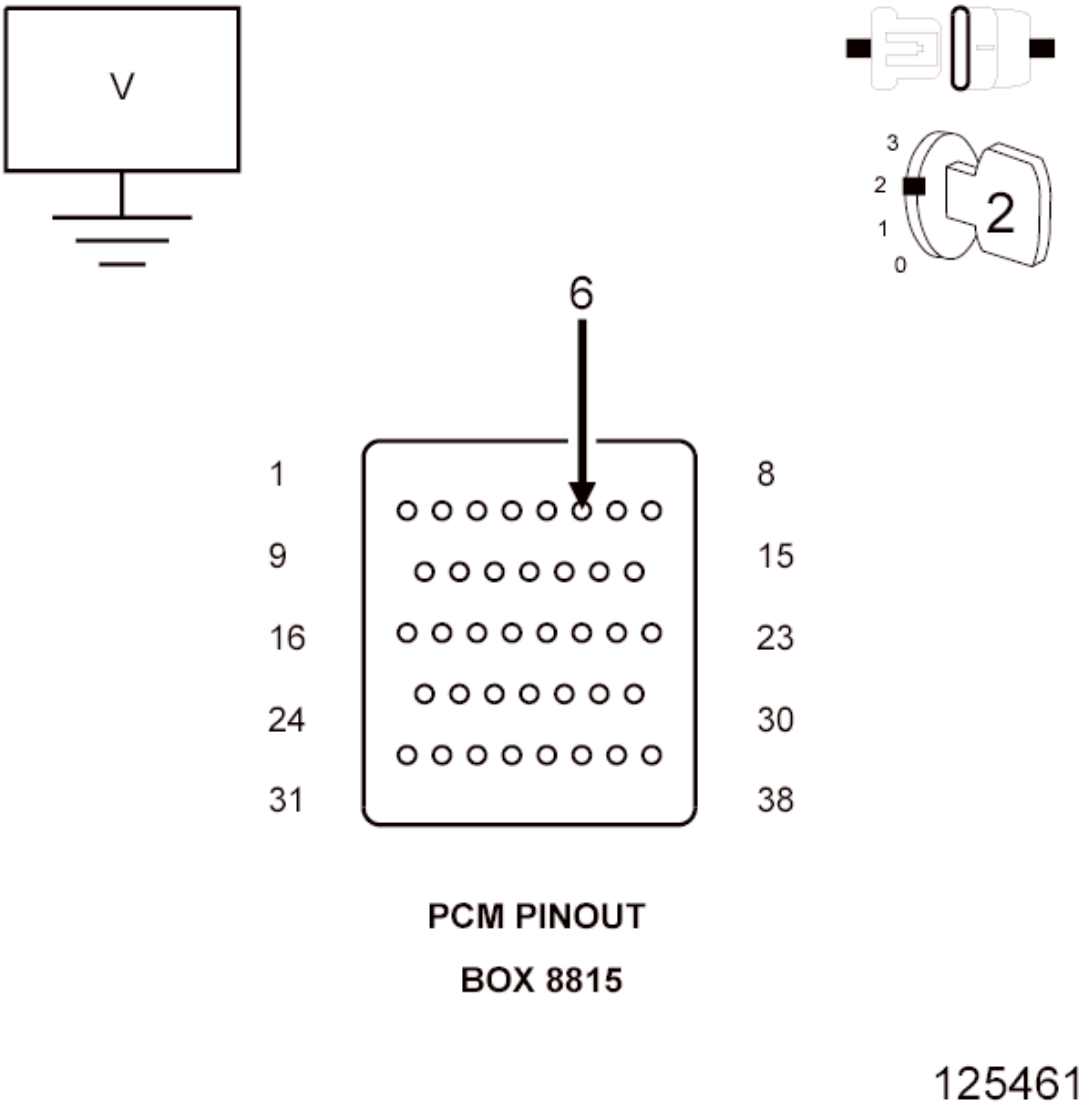

Fig. 130: Measuring Voltage On (K447) ETC Positive Circuit AT Appropriate Terminal Of Special Tool #8815
Courtesy of CHRYSLER GROUP, LLC

1. Disconnect the Throttle Body harness connector.
2. Disconnect the C2 PCM harness connector.
3. Ignition on, engine not running.

CAUTION: Do not probe the PCM harness connectors. Probing the PCM harness connectors will damage the PCM terminals resulting in poor terminal to pin connection. Install the PCM Pinout Box (special tool #8815A, Kit, NGC, 38 Position) to perform the diagnostics.

4. Measure the voltage on the (K447) ETC Positive circuit at the appropriate terminal of special tool

(special tool #8815A, Kit, NGC, 38 Position).

Is there any voltage present?

Yes

- Repair the short to voltage on the (K447) ETC Positive circuit.
- Perform the POWERTRAIN VERIFICATION TEST. Refer to **POWERTRAIN VERIFICATION TEST** .

No

- Go To 4.

4. **(K448) ETC NEGATIVE CIRCUIT SHORTED TO VOLTAGE**

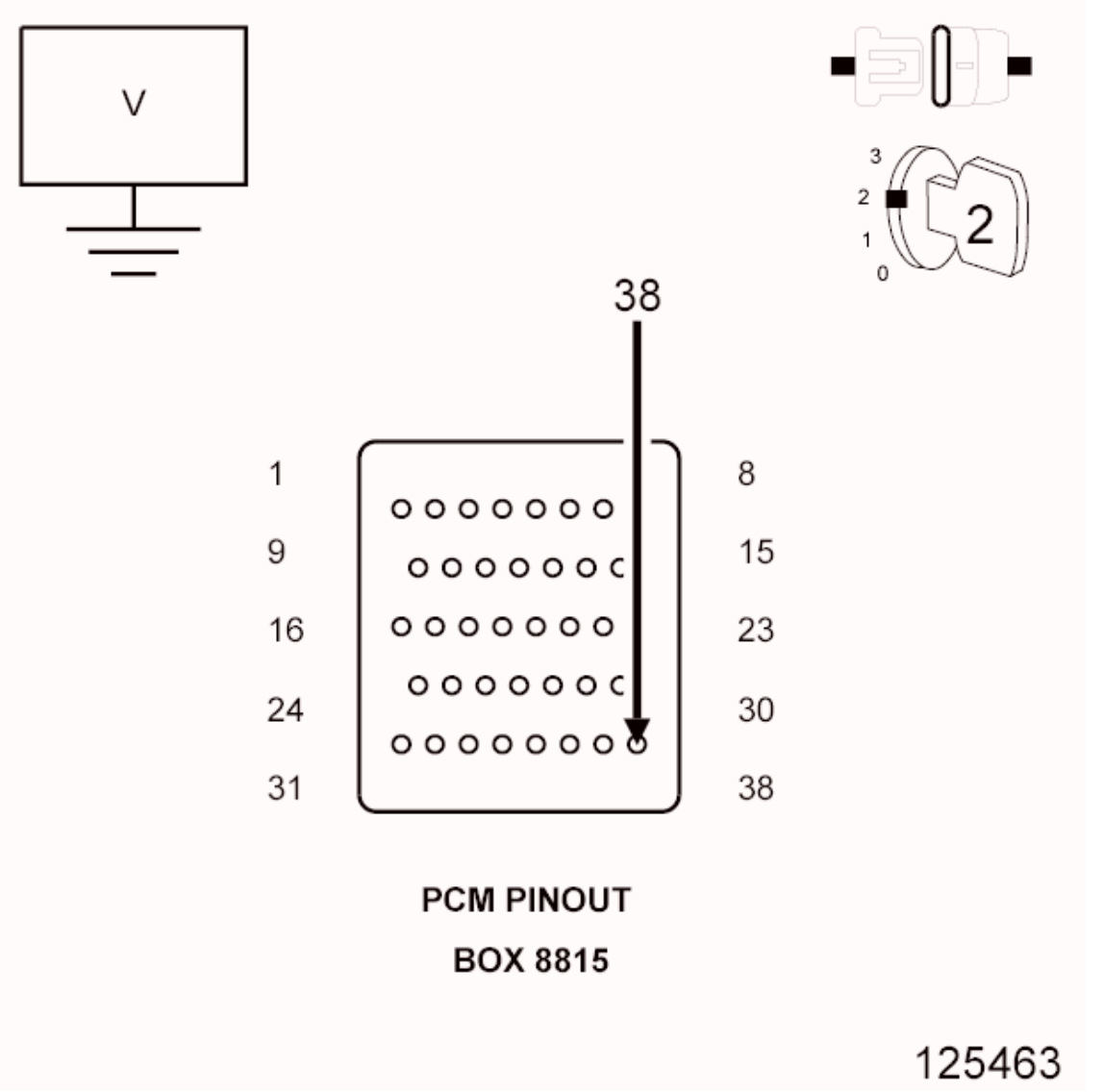

Fig. 131: Measuring Voltage On (K448) ETC Negative Circuit AT Appropriate Terminal Of Special Tool #8815
Courtesy of CHRYSLER GROUP, LLC

1. Measure the voltage on the (K448) ETC Negative circuit at the appropriate terminal of special tool (special tool #8815A, Kit, NGC, 38 Position).

   Is there any voltage present?

   Yes

   - Repair the short to voltage in the (K448) ETC Negative circuit.
   - Perform the POWERTRAIN VERIFICATION TEST. Refer to **POWERTRAIN VERIFICATION TEST** .

   No

   - Go To 5.

5. **(K447) ETC POSITIVE CIRCUIT SHORTED TO THE (K448) ETC NEGATIVE CIRCUIT**

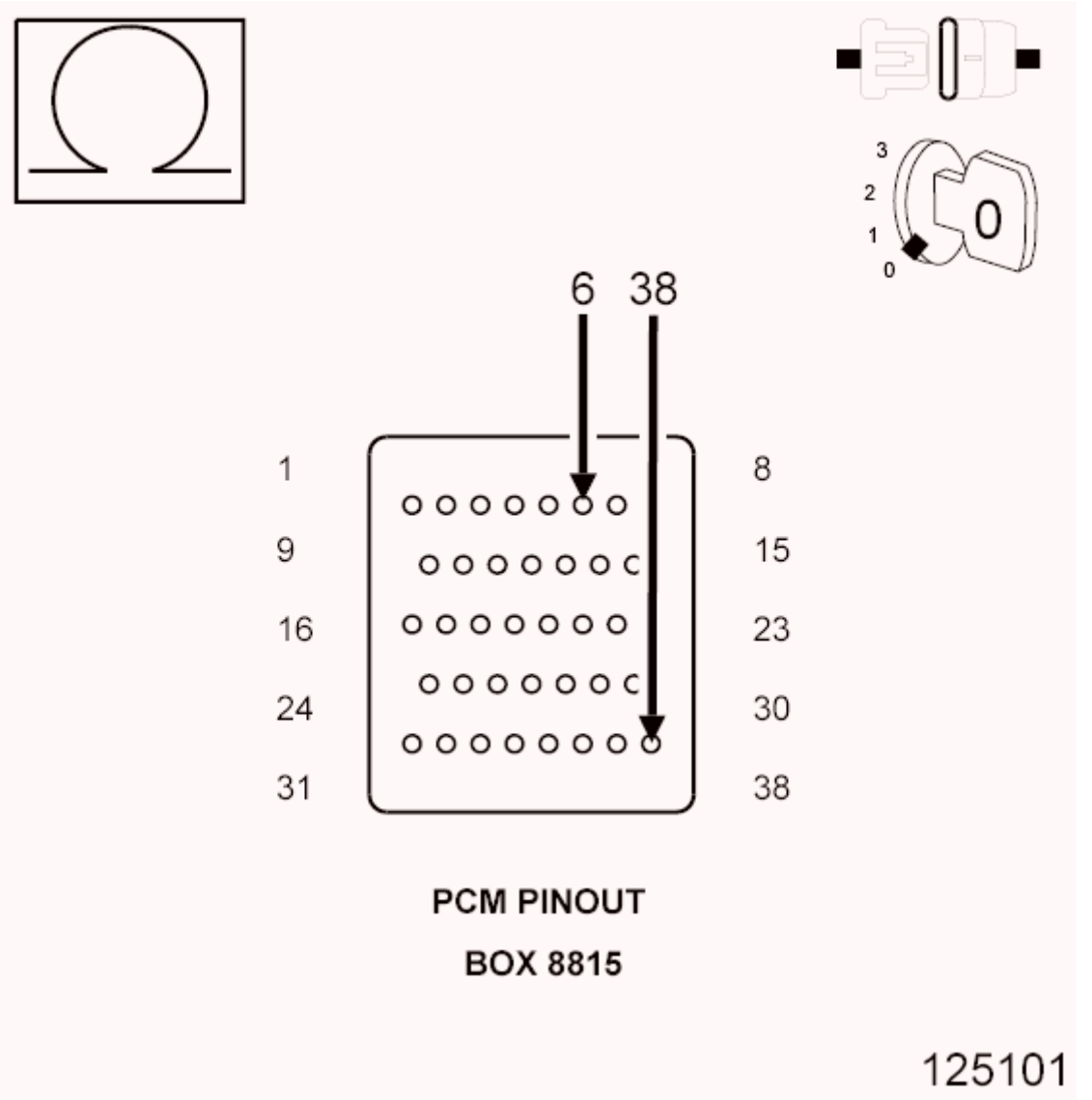

Fig. 132: Measuring Resistance Between ETC Motor Positive Circuit And Negative Circuit AT Appropriate Terminals Of Special Tool #8815
Courtesy of CHRYSLER GROUP, LLC

1. Turn the ignition off.
2. Measure the resistance between the (K447) ETC Positive circuit and the (K448) ETC Negative circuit at the appropriate terminals of special tool (special tool #8815A, Kit, NGC, 38 Position).

   Is the resistance below 100 ohms?

   Yes

   - Repair the short to between the (K447) ETC Positive circuit and the (K448) ETC Negative circuit.
   - Perform the POWERTRAIN VERIFICATION TEST. Refer to **POWERTRAIN**

VERIFICATION TEST .

No

- Go To 6.

6. **(K447) ETC POSITIVE CIRCUIT OPEN**

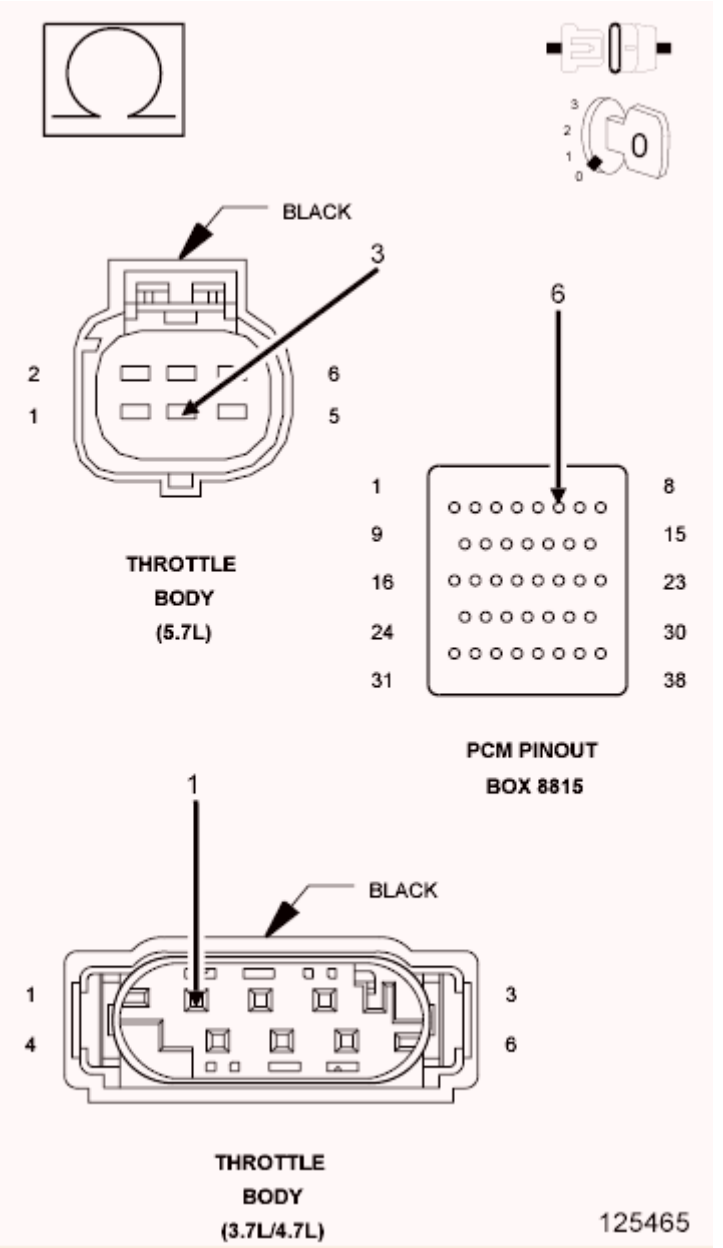

Fig. 133: Measuring Resistance Of (K447) ETC Positive Circuit From Throttle Body Harness Connector To Appropriate Terminal Of Special Tool #8815
Courtesy of CHRYSLER GROUP, LLC

1. Measure the resistance of the (K447) ETC Positive circuit from the Throttle Body harness

connector to the appropriate terminal of special tool (special tool #8815A, Kit, NGC, 38 Position).

Is the resistance below 5.0 ohms?

Yes

- Go To 7.

No

- Repair the open in the (K447) ETC Positive circuit.
- Perform the POWERTRAIN VERIFICATION TEST. Refer to **POWERTRAIN VERIFICATION TEST** .

7. **(K447) ETC POSITIVE CIRCUIT SHORTED TO GROUND**

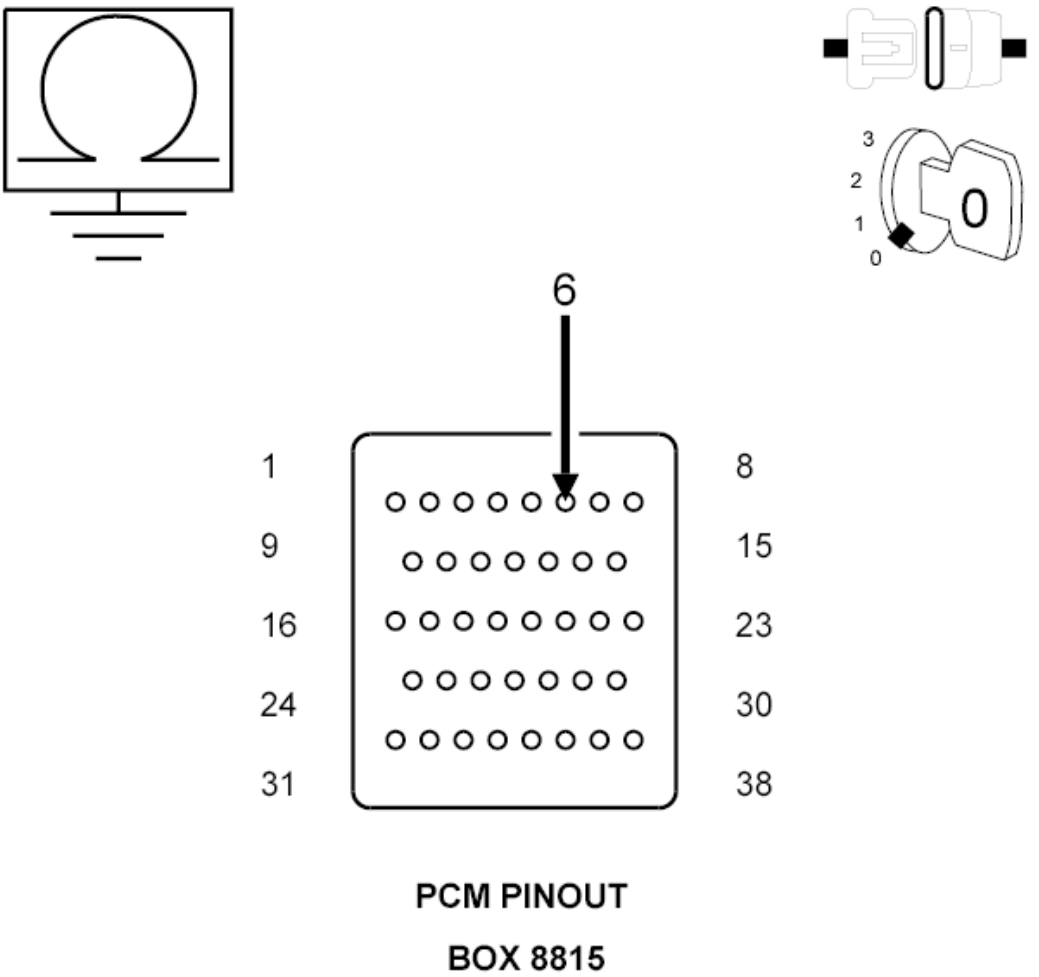

Fig. 134: Measuring Resistance Between Ground And ETC Motor Positive Circuit AT Appropriate Terminals Of Special Tool #8815
Courtesy of CHRYSLER GROUP, LLC

1. Measure the resistance between ground and the (K447) ETC Positive circuit between the appropriate terminals of special tool (special tool #8815A, Kit, NGC, 38 Position).

   Is the resistance below 100 ohms?

   Yes

   - Repair the short to ground in the (K447) ETC Positive circuit.
   - Perform the POWERTRAIN VERIFICATION TEST. Refer to **POWERTRAIN VERIFICATION TEST** .

   No

   - Go To 8.

8. **(K448) ETC NEGATIVE CIRCUIT OPEN**

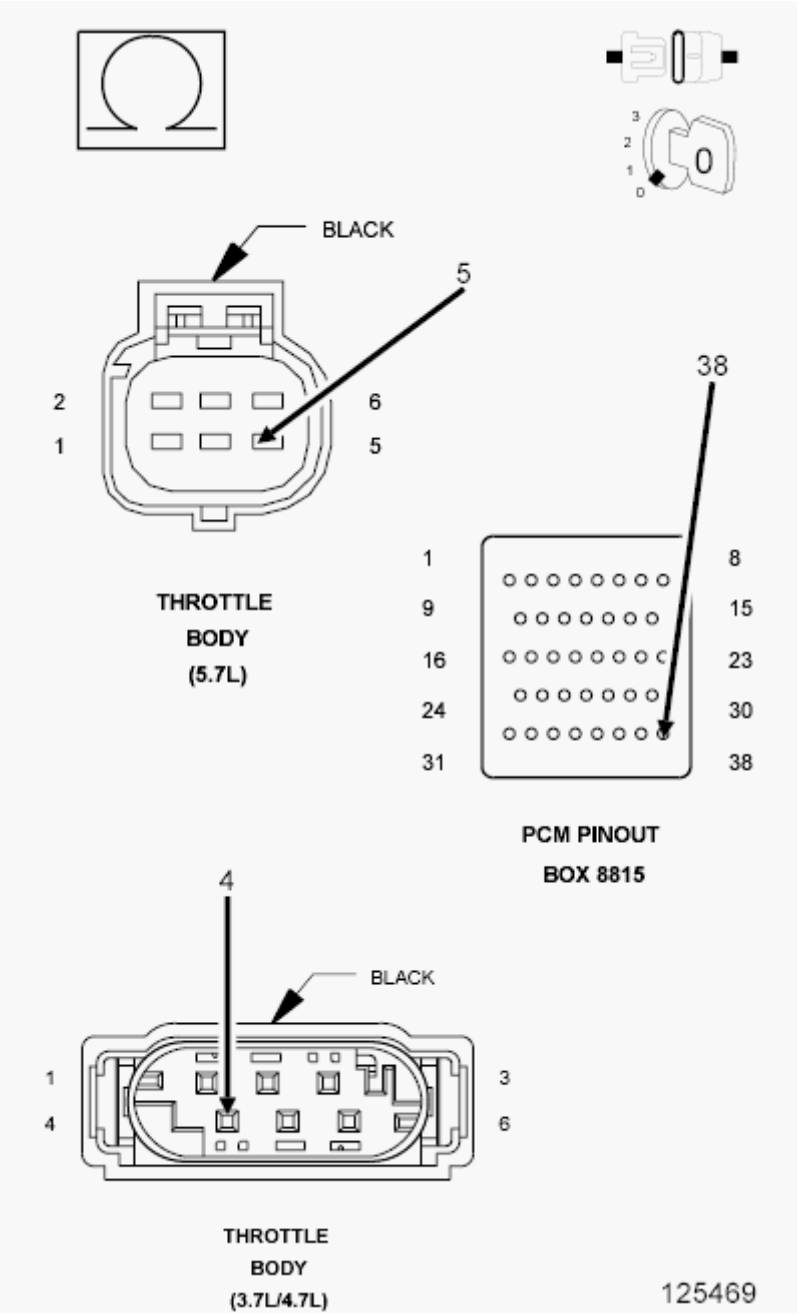

Fig. 135: Measuring Resistance Of (K448) ETC Negative Circuit From Throttle Body Harness Connector To Appropriate Terminal Of Special Tool #8815
Courtesy of CHRYSLER GROUP, LLC

1. Measure the resistance of the (K448) ETC Negative circuit from the Throttle Body harness connector to the appropriate terminal of special tool (special tool #8815A, Kit, NGC, 38 Position).

   Is the resistance below 5.0 ohms?

   Yes

- Go To 9.

No

- Repair the open in the (K448) ETC Negative circuit.
- Perform the POWERTRAIN VERIFICATION TEST. Refer to **POWERTRAIN VERIFICATION TEST** .

9. **(K448) ETC NEGATIVE CIRCUIT SHORTED TO GROUND**

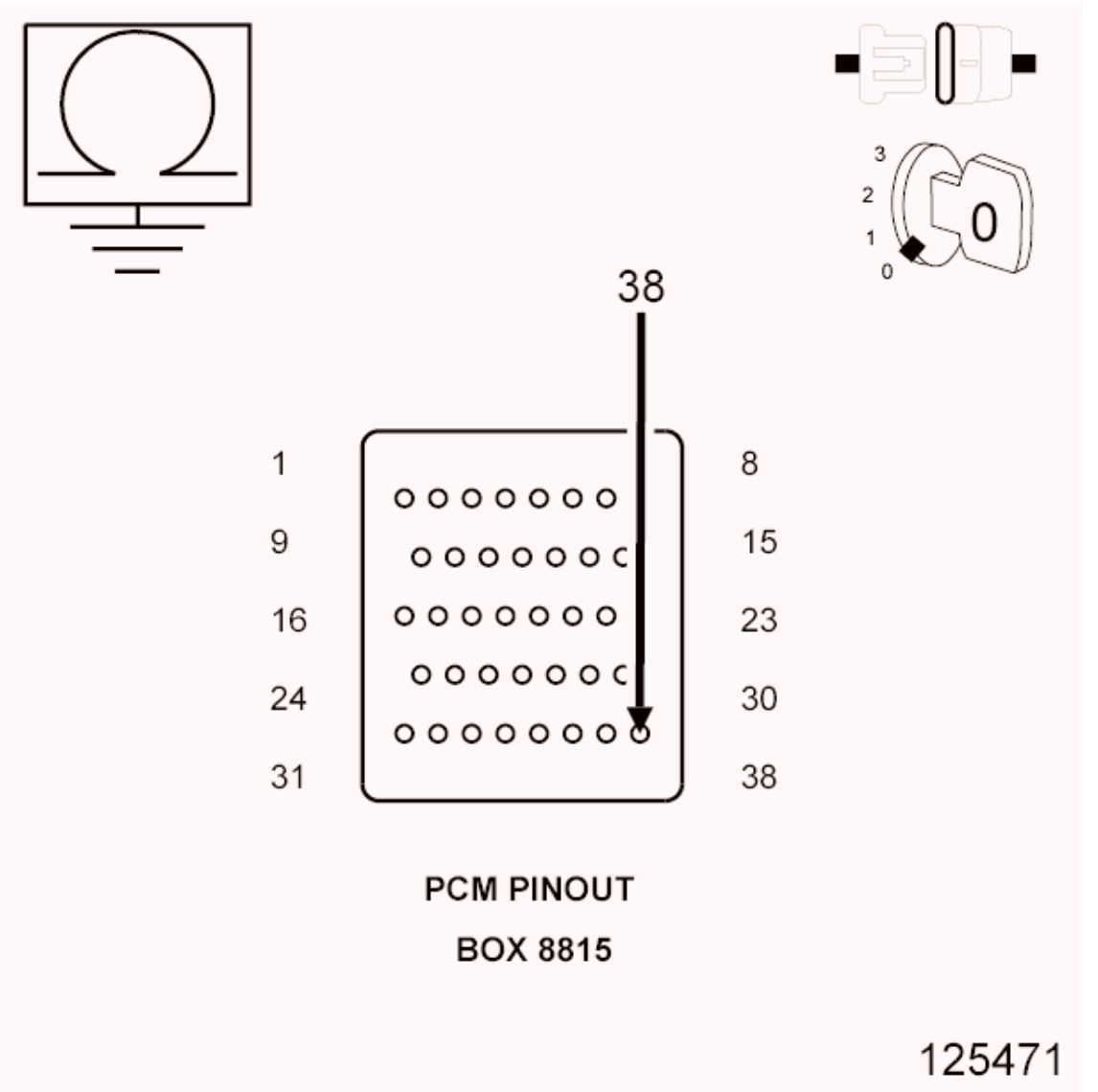

Fig. 136: Measuring Resistance Between Ground And ETC Motor Negative Circuit AT Appropriate Terminals Of Special Tool #8815
Courtesy of CHRYSLER GROUP, LLC

1. Measure the resistance between ground and the (K448) ETC Negative circuit using the appropriate terminal of special tool (special tool #8815A, Kit, NGC, 38 Position).

Is the resistance below 100 ohms?

Yes

- Repair the short to ground in the (K448) ETC Negative circuit.
- Perform the POWERTRAIN VERIFICATION TEST. Refer to **POWERTRAIN VERIFICATION TEST** .

No

- Go To 10.

10. **ETC MOTOR**

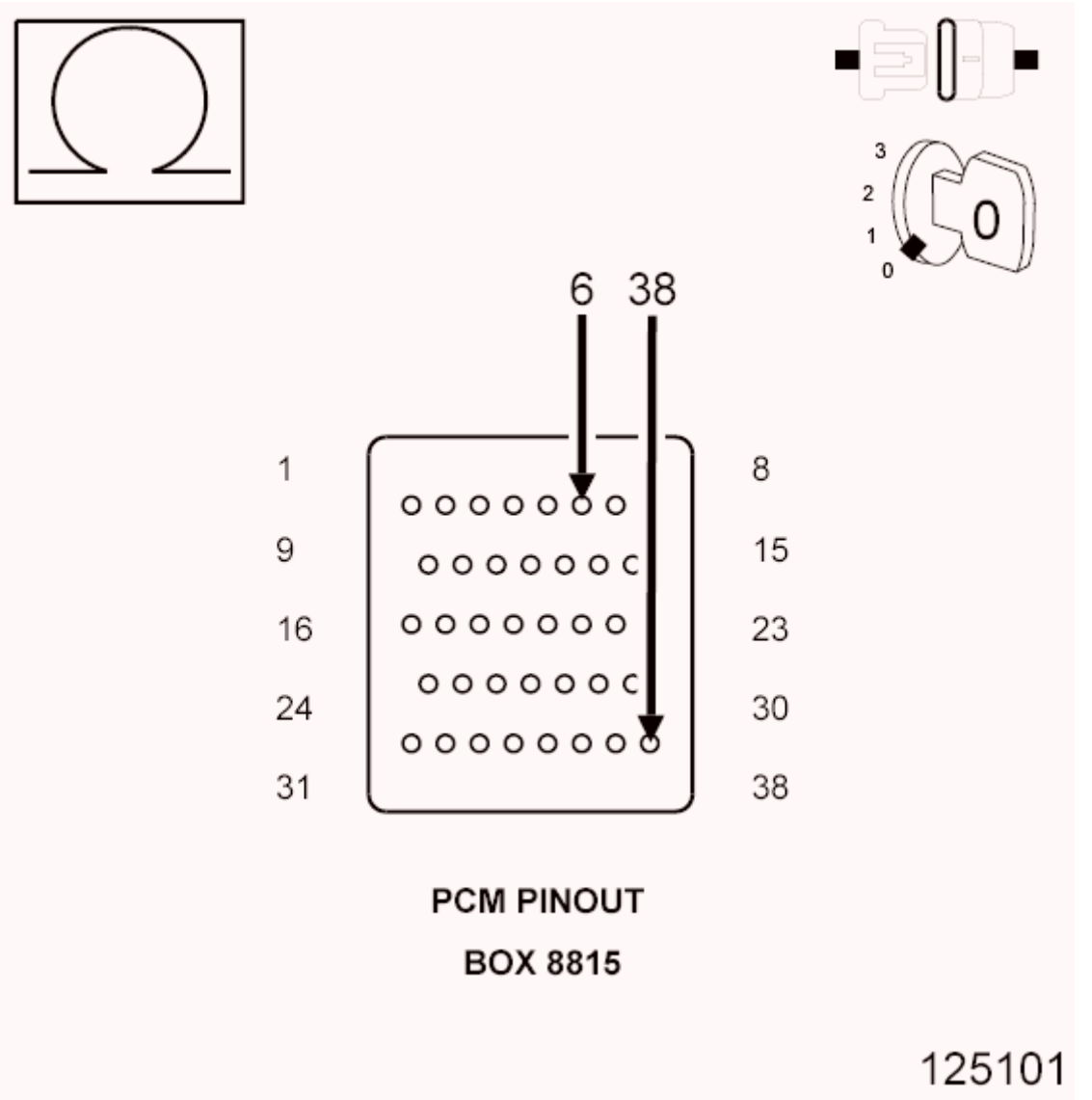

Fig. 137: Measuring Resistance Between ETC Motor Positive Circuit And Negative Circuit AT Appropriate Terminals Of Special Tool #8815

NOTE: **Take the following measurement using special tool (special tool #8815A, Kit, NGC, 38 Position) to avoid possible damage to the Throttle Body harness connector.**

1. Connect the Throttle Body harness connector.
2. Measure the resistance of the ETC Motor between the (K447) ETC Positive circuit and the (K448) ETC Negative circuit at the appropriate terminals of special tool (special tool #8815A, Kit, NGC, 38 Position).

   Is the resistance between 2.5 and 25 ohms at closed throttle?

   Yes

   - Go To 11.

   No

   - Verify that there is good pin to terminal contact at the Throttle Body and the Powertrain Control Module connectors. Replace the Throttle Body Assembly if no problems were found in the connectors. Disconnect the Battery when replacing the Throttle Body Assembly. After installation is complete, use a scan tool and select the ETC RELEARN function.
   - Perform the POWERTRAIN VERIFICATION TEST. Refer to **POWERTRAIN VERIFICATION TEST** .

11. **POWERTRAIN CONTROL MODULE (PCM)**
    1. Using the wiring diagram/schematic as a guide, inspect the wiring and connectors between the Throttle Body and the Powertrain Control Module (PCM).
    2. Look for any chafed, pierced, pinched, or partially broken wires.
    3. Look for broken, bent, pushed out or corroded terminals. Verify that there is good pin to terminal contact in the Throttle Body and the Powertrain Control Module connectors.
    4. Refer to any Technical Service Bulletins that may apply.

       Were there any problems found?

       Yes

       - Repair as necessary.
       - Perform the POWERTRAIN VERIFICATION TEST. Refer to **POWERTRAIN VERIFICATION TEST** .

       No

       - Replace and program the Powertrain Control Module per Service Information. Refer to **MODULE, POWERTRAIN CONTROL, REMOVAL** .

- Perform the POWERTRAIN VERIFICATION TEST. Refer to **POWERTRAIN VERIFICATION TEST** .

P2101-ELECTRONIC THROTTLE CONTROL MOTOR PERFORMANCE

For a complete wiring diagram **refer to appropriate SYSTEM WIRING DIAGRAMS article** .

WHEN MONITORED:

With the vehicle running, ETC Motor not in Limp Home mode, and the TPS adaptation is complete.

SET CONDITION:

The PCM recognizes too large of an error between the actual position of the Throttle Plate and the Set Point position. One trip fault and the code will set within 5 seconds. Three good trips to turn off the MIL ETC light is flashing.

POSSIBLE CAUSES

Possible Causes
THROTTLE BODY ASSEMBLY
LOW BATTERY VOLTAGE
POWERTRAIN CONTROL MODULE (PCM)

Always perform the Pre-Diagnostic Troubleshooting procedure before proceeding. Refer to PRE-DIAGNOSTIC TROUBLESHOOTING PROCEDURE .

DIAGNOSTIC TEST

1. **ACTIVE DTC**

NOTE: **Before continuing visually inspect the throttle blade and bore for any obstructions. Icing of the throttle body may have caused this code to set.**

NOTE: **Low battery voltage can also cause excessive current draw, in very hot and very cold ambient temperature. Make sure the battery can pass a Load test before continuing.**

NOTE: **Diagnose any 5-Volt Supply, Battery, and TP Sensor DTCs before continuing.**

1. Ignition on, engine not running.
2. With a scan tool, select View DTCs.

   Is the DTC Active at this time?

Yes

- Go To 2.

No

- Perform the INTERMITTENT CONDITION diagnostic procedure. Refer to **INTERMITTENT CONDITION** .

2. **THROTTLE POSITION WITHIN 2° DEGREES OF DESIRED THROTTLE POSITION**
   1. Start the engine.
   2. Allow the engine to reach normal operating temperature.
   3. With a scan tool, monitor the Actual Throttle Position and Desired Throttle Position.
   4. Compare the Actual Throttle Position and the Set Point Throttle Position.

   Is the Actual Throttle Position within 2° degrees of the Desired Throttle Position?

   Yes

   - Go To 3.

   No

   - Verify that there is good pin to terminal contact in the Throttle Body and the Powertrain Control Module connectors. If OK, replace the Throttle Body Assembly. Disconnect the Battery when replacing the Throttle Body Assembly. After installation is complete, use a scan tool and select the ETC RELEARN function.
   - Perform the POWERTRAIN VERIFICATION TEST. Refer to **POWERTRAIN VERIFICATION TEST** .

3. **ETC OPERATION**
   1. Ignition on, engine not running.
   2. With a scan tool, perform the ETC Throttle Follower Test.

   NOTE: It may be necessary to use a mirror to see the throttle blade.

   3. Observe the throttle blade.

   NOTE: Make sure the motion of the throttle blade is smooth and that it opens and closes.

   Did the ETC motor operate properly?

   Yes

   - Perform the INTERMITTENT CONDITION diagnostic procedure. Refer to

INTERMITTENT CONDITION .

No

- Verify that there is good pin to terminal contact at the Throttle Body and the Powertrain Control Module connectors. Replace the Throttle Body Assembly if no problems were found in the connectors. Disconnect the Battery when replacing the Throttle Body Assembly. After installation is complete, use a scan tool and select the ETC RELEARN function.
- Perform the POWERTRAIN VERIFICATION TEST. Refer to **POWERTRAIN VERIFICATION TEST** .

P2107-ELECTRONIC THROTTLE CONTROL MODULE PROCESSOR

For a complete wiring diagram **refer to appropriate SYSTEM WIRING DIAGRAMS article** .

WHEN MONITORED:

Ignition on.

SET CONDITION:

Internal PCM failure. Module will attempt to reset, so you will be able to hear the throttle relearning. If the condition is continuous, the vehicle may not be driveable. One trip fault. ETC light is flashing.

POSSIBLE CAUSES

Possible Causes
POWERTRAIN CONTROL MODULE NEEDS TO BE REPROGRAMMED

Always perform the Pre-Diagnostic Troubleshooting procedure before proceeding. Refer to PRE-DIAGNOSTIC TROUBLESHOOTING PROCEDURE .

DIAGNOSTIC TEST

1. **REPROGRAM THE POWERTRAIN CONTROL MODULE**
    1. Check for any related TSBs.
    2. Verify the PCM is at the latest calibration (flash level).

    NOTE: An intermittent loss of power to the PCM without performing an ETC Relearn procedure may cause this DTC to set.

    3. Flash the Powertrain Control Module per Service Information if any updates are available.
    4. Start the engine.
    5. Allow the engine to reach normal operating temperature.
    6. Operate the accelerator pedal. (do not exceed 3500 RPM)

7. Test drive the vehicle for 10 miles on a flat road surface.

   Does this DTC reset?

   Yes

   - Replace and reprogram the Powertrain Control Module per Service Information. Refer to **MODULE, POWERTRAIN CONTROL, REMOVAL** .
   - Perform the POWERTRAIN VERIFICATION TEST. Refer to **POWERTRAIN VERIFICATION TEST** .

   No

   - Test Complete.

P2110-ELECTRONIC THROTTLE CONTROL - FORCED LIMITED RPM

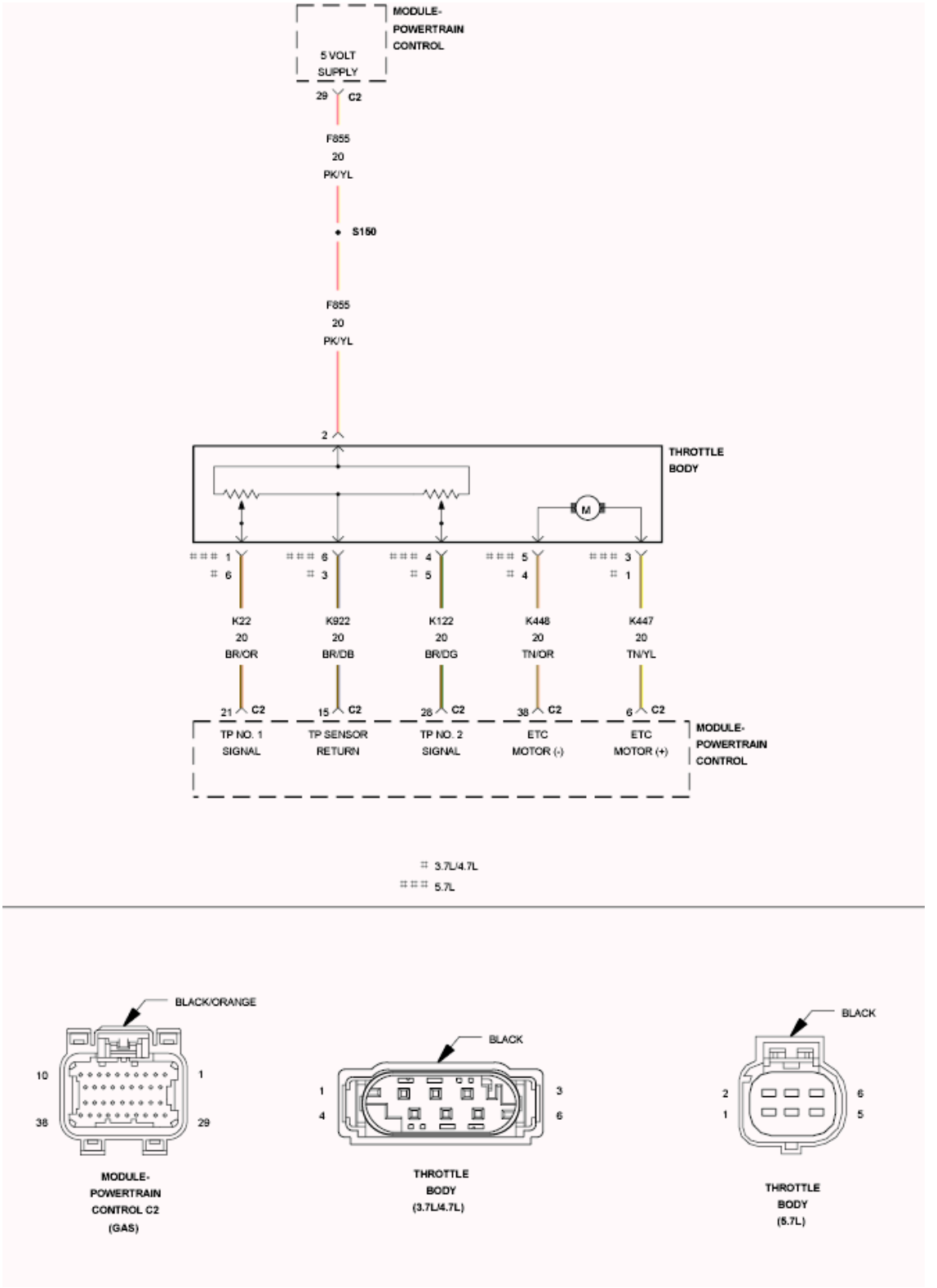

Fig. 138: Throttle Body Circuit Schematic
Courtesy of CHRYSLER GROUP, LLC

For a complete wiring diagram **refer to appropriate SYSTEM WIRING DIAGRAMS article** .

WHEN MONITORED:

Ignition on and ETC motor is working.

SET CONDITION:

When the PCM requests to limit engine speed if PWM is too high for 20.5 seconds and before P2118 sets. One trip fault and the code will set within 5 seconds. ETC light is illuminated.

POSSIBLE CAUSES

Possible Causes
THROTTLE PLATE STUCK
(K447) ETC POSITIVE CIRCUIT OPEN
(K448) ETC NEGATIVE CIRCUIT OPEN
(K447) ETC POSITIVE CIRCUIT SHORTED TO GROUND
(K448) ETC NEGATIVE CIRCUIT SHORTED TO GROUND
ETC MOTOR
POWERTRAIN CONTROL MODULE (PCM)

Always perform the Pre-Diagnostic Troubleshooting procedure before proceeding. Refer to PRE-DIAGNOSTIC TROUBLESHOOTING PROCEDURE .

DIAGNOSTIC TEST

1. **ACTIVE DTC**
    1. Ignition on, engine not running.
    2. With a scan tool select View DTCs.
    3. In the Freeze Frame data, look at the temperature at which the fault occurred. If it occurred in extreme cold temperatures, Icing of the throttle body may have caused this code to set.

    NOTE: **Diagnose any TP Sensor faults, 5-Volt Supply faults, and Battery Voltage High or Low DTCs before continuing.**

    NOTE: **If P2072 is also set, this indicates that the cold weather ice blockage routine has run. No repair action is required.**

    Is the DTC Active at this time?

    Yes

    - Go To 2.

    No

- Perform the INTERMITTENT CONDITION diagnostic procedure. Refer to **INTERMITTENT CONDITION** .

2. **(K447) ETC POSITIVE CIRCUIT OPEN**

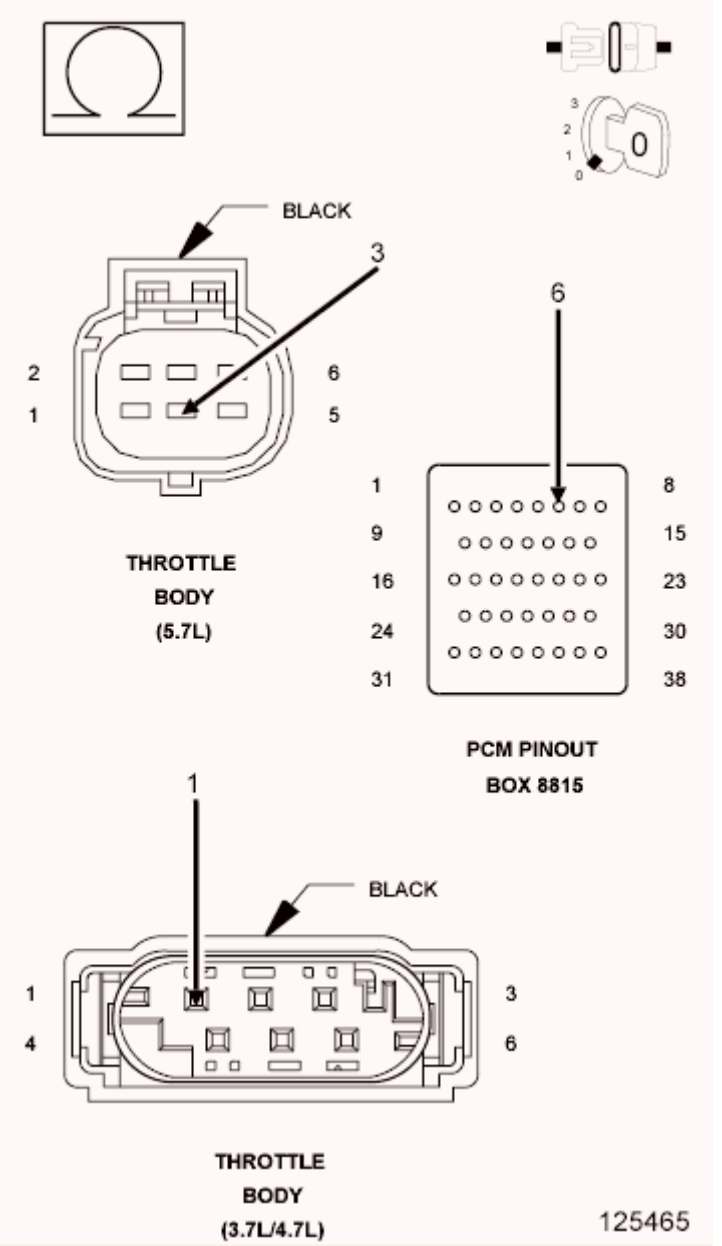

Fig. 139: Measuring Resistance Of (K447) ETC Positive Circuit From Throttle Body Harness Connector To Appropriate Terminal Of Special Tool #8815
Courtesy of CHRYSLER GROUP, LLC

1. Turn the ignition off.
2. Disconnect the Throttle Body harness connector.
3. Disconnect the C2 PCM harness connector.

CAUTION: Do not probe the PCM harness connectors. Probing the PCM harness connectors will damage the PCM terminals resulting in poor terminal to pin connection. Install the PCM Pinout Box (special tool #8815A, Kit, NGC, 38 Position) to perform diagnosis.

4. Measure the resistance of the (K447) ETC Positive circuit from the Throttle Body harness connector to the appropriate terminal of special tool (special tool #8815A, Kit, NGC, 38 Position).

   Is the resistance below 5.0 ohms?

   Yes

   - Go To 3.

   No

   - Repair the open in the (K447) ETC Positive circuit.
   - Perform the POWERTRAIN VERIFICATION TEST. Refer to **POWERTRAIN VERIFICATION TEST** .

3. **(K448) ETC NEGATIVE CIRCUIT OPEN**

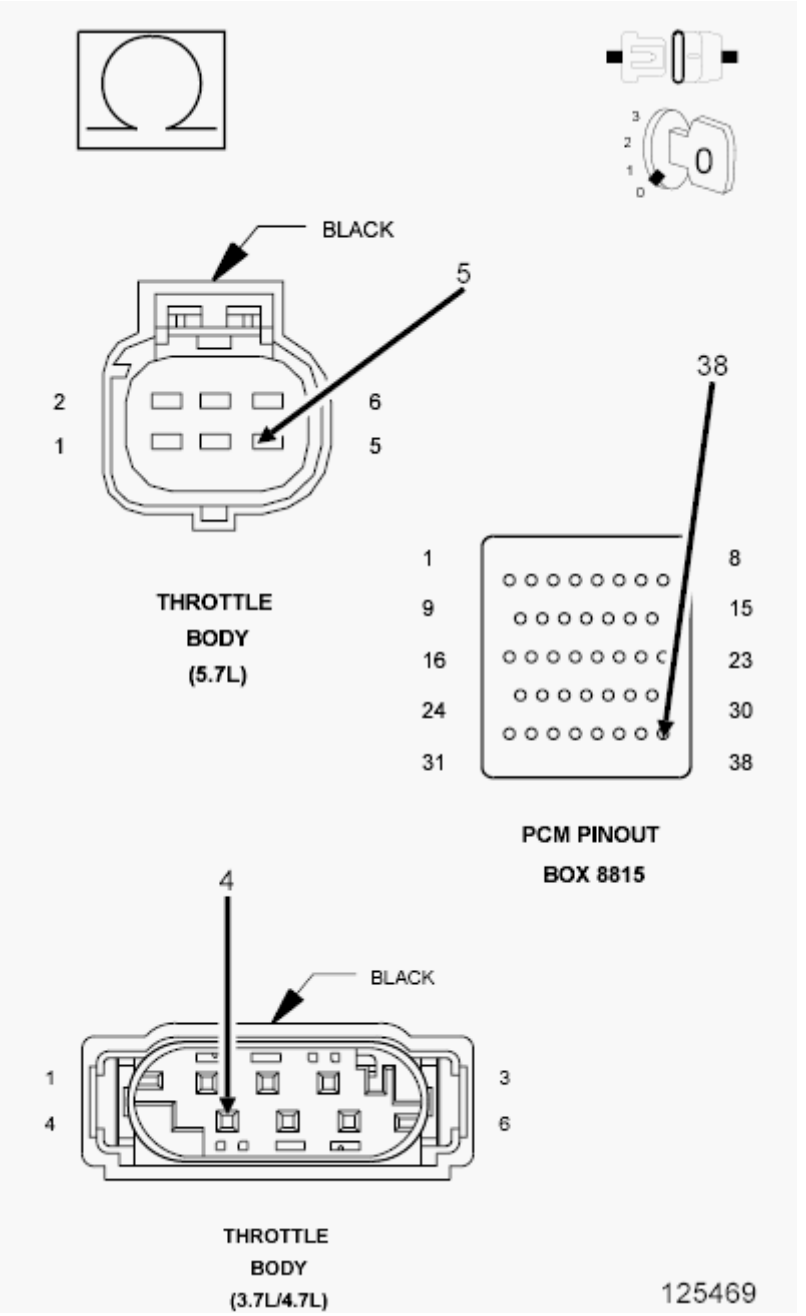

Fig. 140: Measuring Resistance Of (K448) ETC Negative Circuit From Throttle Body Harness Connector To Appropriate Terminal Of Special Tool #8815
Courtesy of CHRYSLER GROUP, LLC

1. Measure the resistance of the (K448) ETC Negative circuit from the Throttle Body harness connector to the appropriate terminal of special tool (special tool #8815A, Kit, NGC, 38 Position).

   Is the resistance below 5.0 ohms?

   Yes

- Go To 4.

No

- Repair the open in the (K448) ETC Negative circuit.
- Perform the POWERTRAIN VERIFICATION TEST. Refer to **POWERTRAIN VERIFICATION TEST** .

4. **(K447) ETC POSITIVE CIRCUIT SHORTED TO GROUND**

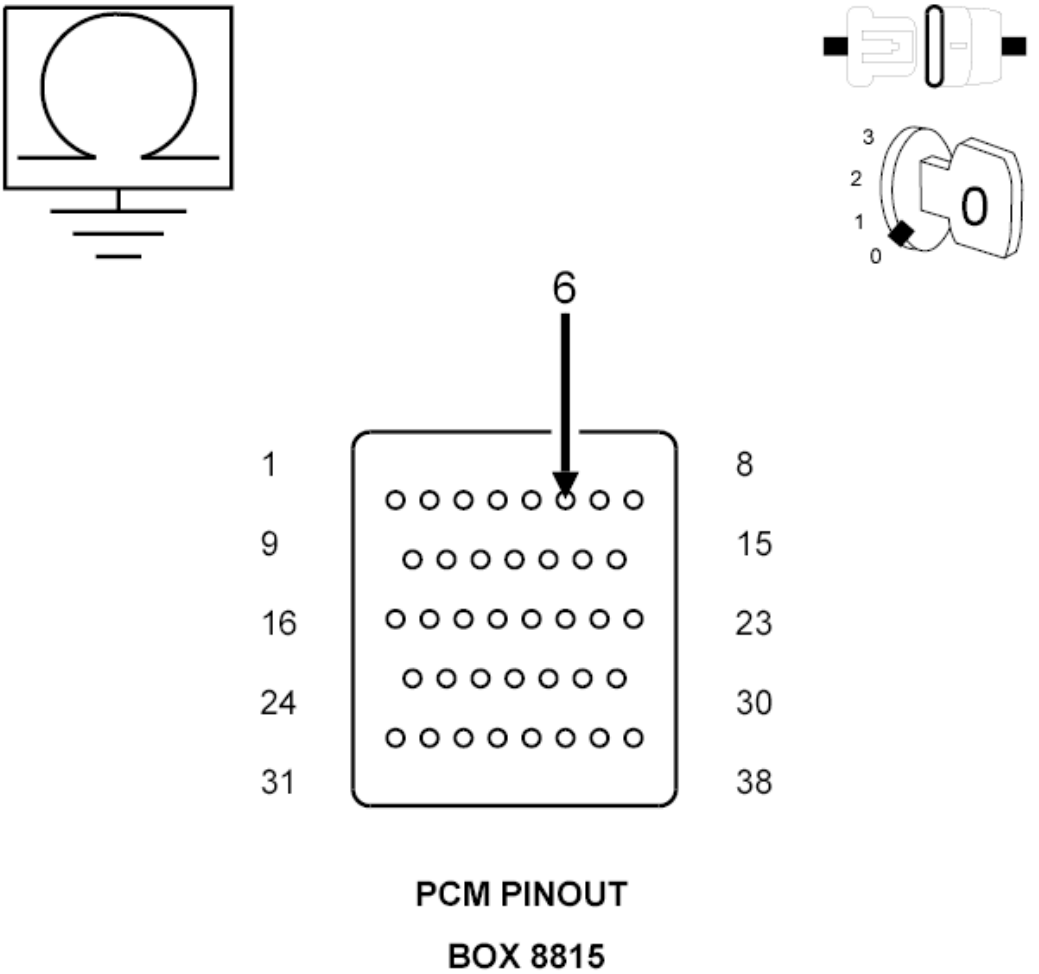

Fig. 141: Measuring Resistance Between Ground And ETC Motor Positive Circuit AT Appropriate Terminals Of Special Tool #8815
Courtesy of CHRYSLER GROUP, LLC

1. Measure the resistance between a known good ground and the (K447) ETC Positive circuit at the appropriate terminal of special tool (special tool #8815A, Kit, NGC, 38 Position).

   Is the resistance below 100 ohms?

Yes

- Repair the short to ground in the (K447) ETC Positive circuit.
- Perform the POWERTRAIN VERIFICATION TEST. Refer to **POWERTRAIN VERIFICATION TEST** .

No

- Go To 5.

5. **(K448) ETC NEGATIVE CIRCUIT SHORTED TO GROUND**

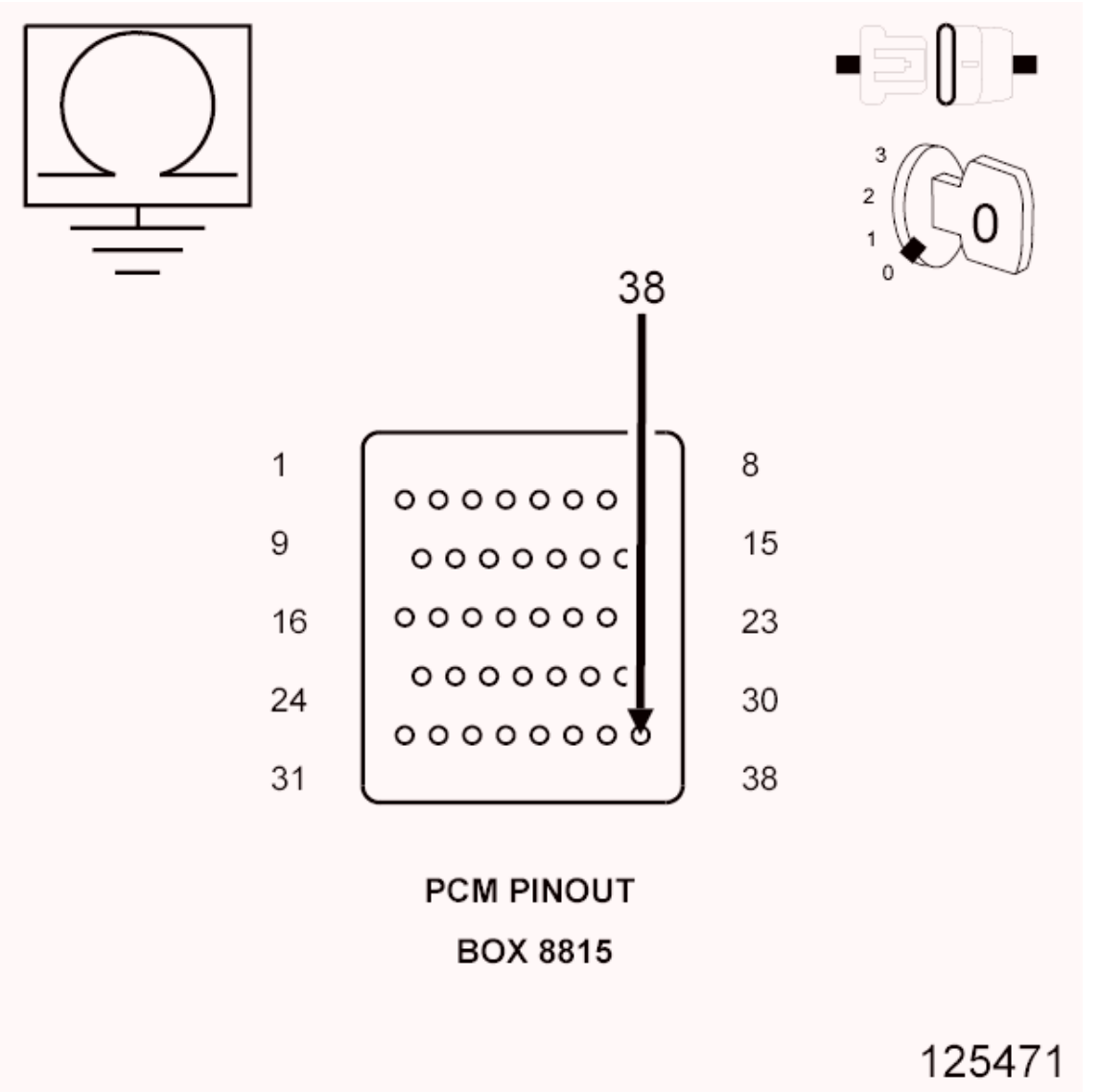

Fig. 142: Measuring Resistance Between Ground And ETC Motor Negative Circuit AT Appropriate Terminals Of Special Tool #8815
Courtesy of CHRYSLER GROUP, LLC

1. Measure the resistance between a known good ground and the (K448) ETC Negative circuit at the appropriate terminal of special tool (special tool #8815A, Kit, NGC, 38 Position).

   Is the resistance below 100 ohms?

   Yes

   - Repair the short to ground in the (K448) ETC Negative circuit.
   - Perform the POWERTRAIN VERIFICATION TEST. Refer to **POWERTRAIN VERIFICATION TEST** .

   No

   - Go To 6.

6. **ETC MOTOR**

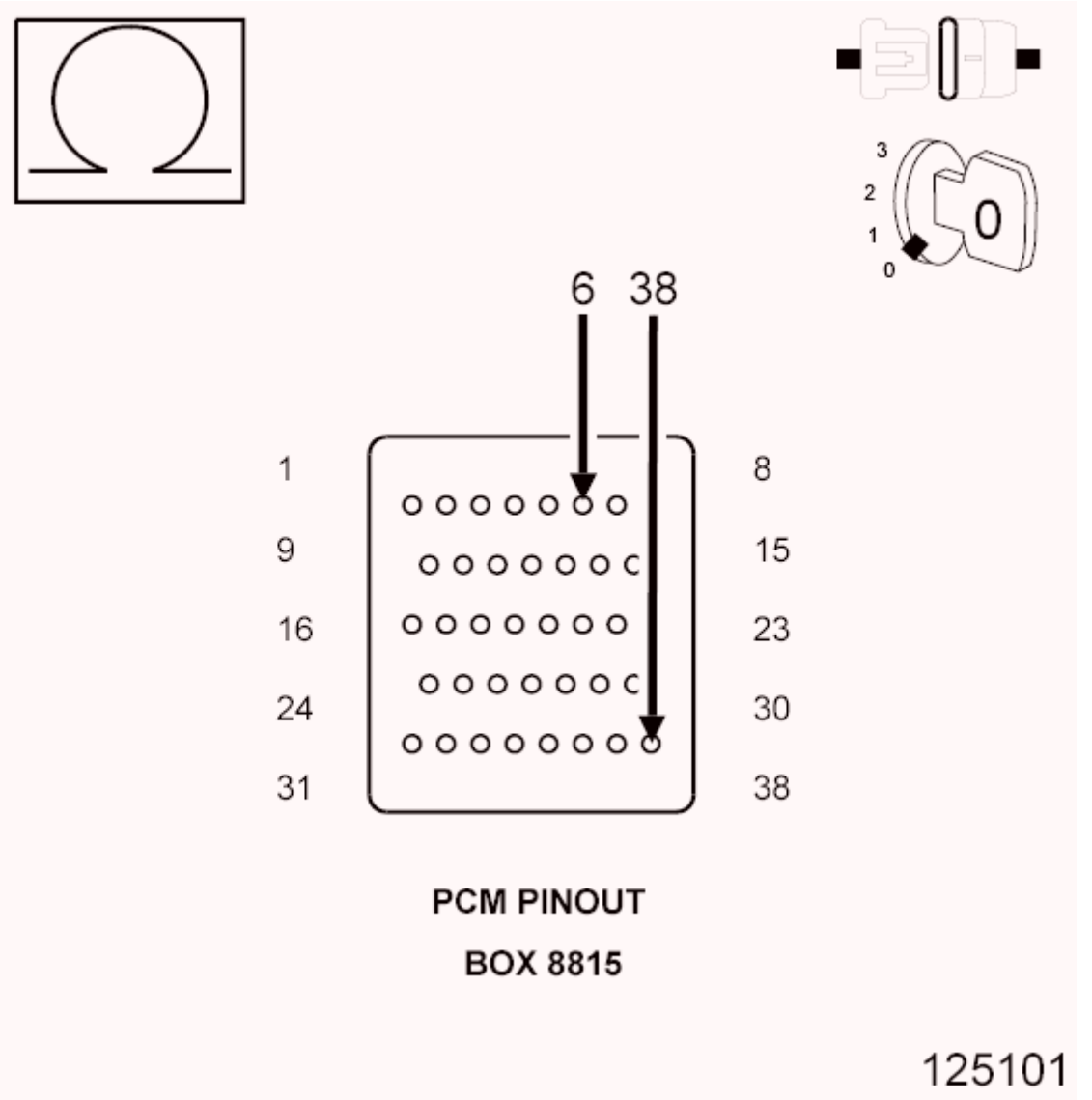

Fig. 143: Measuring Resistance Between ETC Motor Positive Circuit And Negative Circuit AT Appropriate Terminals Of Special Tool #8815
Courtesy of CHRYSLER GROUP, LLC

NOTE: **Take the following measurement using special tool (special tool #8815A, Kit, NGC, 38 Position) to avoid possible damage to the Throttle Body harness connector.**

1. Measure the resistance of the ETC Motor between the (K447) ETC Positive circuit and the (K448) ETC Negative circuit at the appropriate terminals of special tool (special tool #8815A, Kit, NGC, 38 Position).

   Is the resistance between 2.5 and 25 ohms at closed throttle?

   Yes

- Go To 7.

No

- Verify that there is good pin to terminal contact at the Throttle Body and the Powertrain Control Module connectors. Replace the Throttle Body Assembly if no problems were found in the connectors. Disconnect the Battery when replacing the Throttle Body Assembly. After installation is complete, use a scan tool and select the ETC RELEARN function.
- Perform the POWERTRAIN VERIFICATION TEST. Refer to **POWERTRAIN VERIFICATION TEST** .

7. **THROTTLE PLATE STUCK**
    1. Turn the ignition off.
    2. Remove the Air Cleaner Assembly from the Throttle Body.
    3. Check for any signs of a foreign material (ice or dirt) causing the Throttle to stick.
    4. Using a scan tool, perform the ETC Throttle Follower Test.
    5. You may need an assistant to watch the Throttle Plate move.

    Does the Throttle Plate move during the test?

    Yes

    - Go To 8.

    No

    - Remove the debris if possible or replace the Throttle Body Assembly if signs of physical damage are present. Disconnect the Battery when replacing the Throttle Body Assembly. After installation is complete, use a scan tool and select the ETC RELEARN function.
    - Perform the POWERTRAIN VERIFICATION TEST. Refer to **POWERTRAIN VERIFICATION TEST** .

8. **POWERTRAIN CONTROL MODULE (PCM)**
    1. Using the wiring diagram/schematic as a guide, inspect the wiring and connectors between the Throttle Body and the Powertrain Control Module (PCM).
    2. Look for any chafed, pierced, pinched, or partially broken wires.
    3. Look for broken, bent, pushed out or corroded terminals. Verify that there is good pin to terminal contact in the Throttle Body and the Powertrain Control Module connectors.
    4. Refer to any Technical Service Bulletins that may apply.

    Were there any problems found?

    Yes

    - Repair as necessary.

- Perform the POWERTRAIN VERIFICATION TEST. Refer to **POWERTRAIN VERIFICATION TEST** .

No

- Replace and program the Powertrain Control Module per Service Information. Refer to **MODULE, POWERTRAIN CONTROL, REMOVAL** .
- Perform the POWERTRAIN VERIFICATION TEST. Refer to **POWERTRAIN VERIFICATION TEST** .

P2111-ELECTRONIC THROTTLE CONTROL - UNABLE TO CLOSE

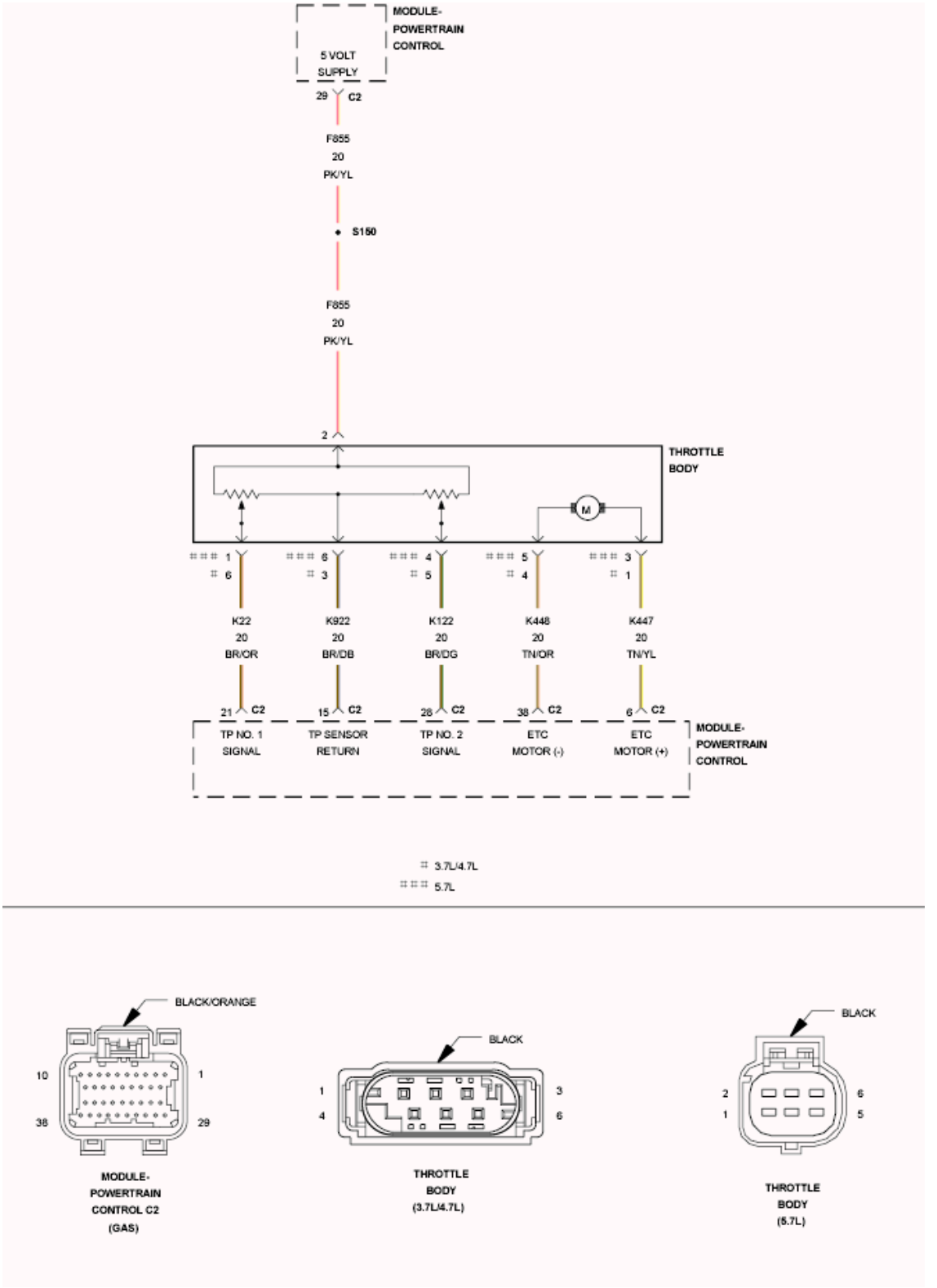

Fig. 144: Throttle Body Circuit Schematic
Courtesy of CHRYSLER GROUP, LLC

For a complete wiring diagram **refer to appropriate SYSTEM WIRING DIAGRAMS article** .

WHEN MONITORED:

Ignition on and battery voltage greater than 10 volts.

SET CONDITION:

Just after key on, the throttle is opened and closed to test the system. If the TP Sensor does not return to Limp Home Position at the end of this test, this DTC will set. One trip fault and the code will set within 5 seconds. ETC light is flashing.

POSSIBLE CAUSES

Possible Causes
THROTTLE PLATE STUCK ABOVE LIMP HOME POSITION
TP SENSOR NO. 1 AND TP SENSOR NO. 2 BOTH READ 2.5 VOLTS
(K447) ETC POSITIVE CIRCUIT SHORTED TO VOLTAGE
(K447) ETC POSITIVE CIRCUIT OPEN
(K448) ETC NEGATIVE CIRCUIT OPEN
(K447) ETC POSITIVE CIRCUIT SHORTED TO GROUND
(K448) ETC NEGATIVE CIRCUIT SHORTED TO GROUND
POWERTRAIN CONTROL MODULE (PCM)

Always perform the Pre-Diagnostic Troubleshooting procedure before proceeding. Refer to PRE-DIAGNOSTIC TROUBLESHOOTING PROCEDURE .

DIAGNOSTIC TEST

1. **ACTIVE DTC**

   NOTE: Maximum engine speed could be reduced while this fault is active, it just depends where the throttle gets stuck.

   1. Ignition on, engine not running.

      NOTE: The PCM tests the ETC Motor by opening and closing the Throttle Plate before starting the engine. If during this test the Throttle plate does not return to the closed position this DTC sets.

   2. With a scan tool select View DTCs.

      NOTE: Diagnose any TP Sensor or 5-Volt Supply DTCs before continuing.

      Is the DTC Active at this time?

      Yes

- Go To 2.

No

- Perform the INTERMITTENT CONDITION diagnostic procedure. Refer to **INTERMITTENT CONDITION** .

2. **THROTTLE PLATE STUCK OPEN**
   1. Turn the ignition off.

      NOTE: The PCM tests the ETC Motor by opening and closing the Throttle Plate before starting the engine. If during this test the Throttle plate does not return to the closed position this DTC sets.

   2. Remove the Air Cleaner Assembly from the Throttle Body.
   3. Check for any signs of a foreign material causing the Throttle to remain open.
   4. Using a scan tool under System Tests, perform the ETC Throttle Follower Test.
   5. Have an assistant watch the throttle plate to verify it moves during the test.

      Does the Throttle Plate move?

      Yes

      - Go To 3.

      No

      - Remove the debris if possible or replace the Throttle Body Assembly if signs of physical damage are present. Disconnect the Battery when replacing the Throttle Body Assembly. After installation is complete, use a scan tool and perform the ETC RELEARN function.
      - Perform the POWERTRAIN VERIFICATION TEST. Refer to **POWERTRAIN VERIFICATION TEST** .

3. **TP SENSOR NO. 1 AND TP SENSOR NO. 2 BOTH EQUAL 2.5 VOLTS**
   1. With a scan tool, perform the ETC Throttle Follower test while reading both TP Sensor voltage readings.

      Are both TP Sensor readings stuck at 2.5 volts?

      Yes

      - Check the TP Sensor Signal circuits for excessive resistance, being shorted to each other, or shorted to the Sensor Return circuit.
      - Perform the POWERTRAIN VERIFICATION TEST. Refer to **POWERTRAIN VERIFICATION TEST** .

No

- Go To 4.

4. **(K447) ETC POSITIVE CIRCUIT SHORTED TO VOLTAGE**

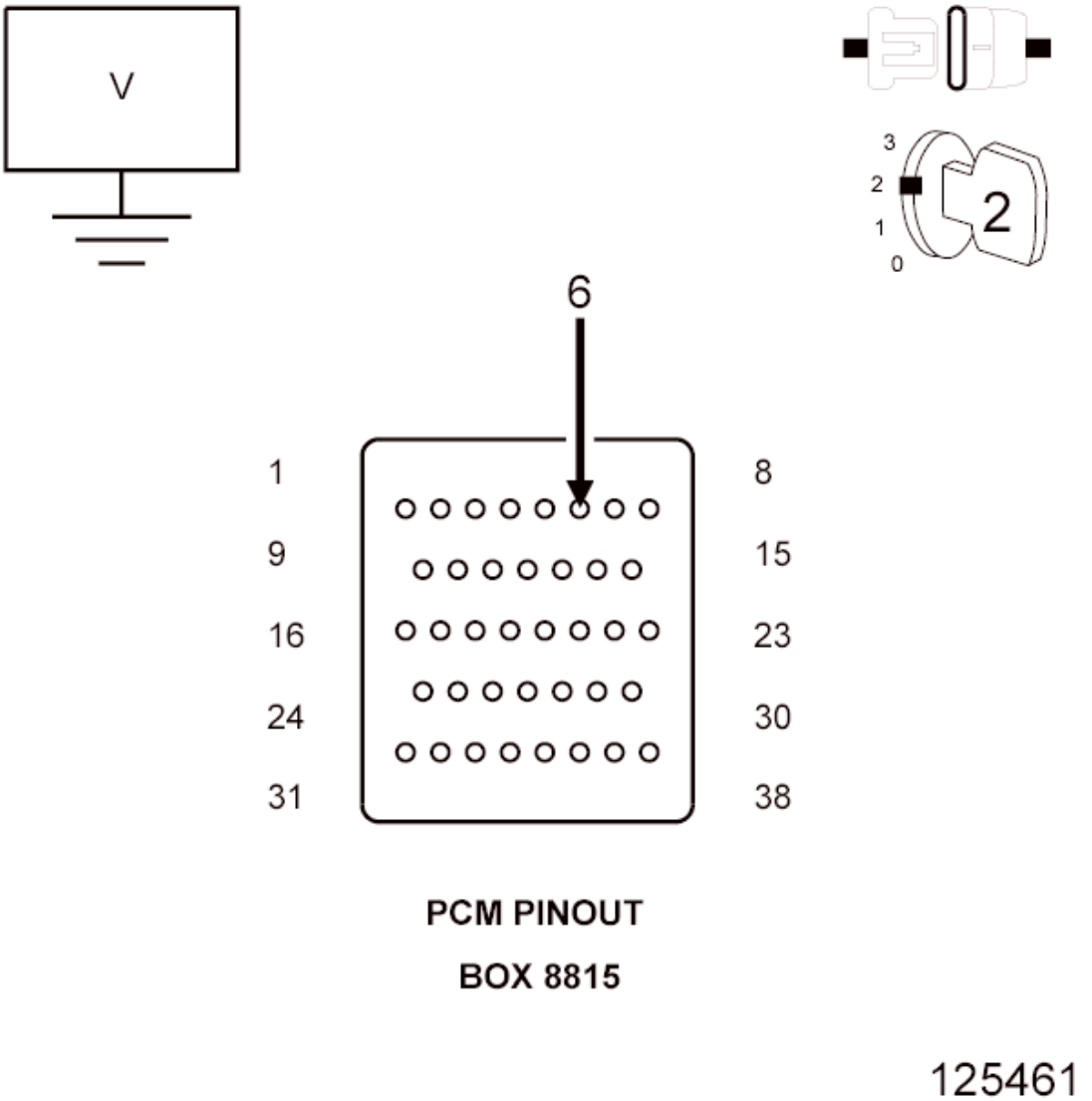

Fig. 145: Measuring Voltage On (K447) ETC Positive Circuit AT Appropriate Terminal Of Special Tool #8815
Courtesy of CHRYSLER GROUP, LLC

1. Turn the ignition off.
2. Disconnect the Throttle Body harness connector.
3. Disconnect the C2 PCM harness connector.

CAUTION: Do not probe the PCM harness connectors. Probing the PCM harness connectors will damage the PCM terminals resulting in

poor terminal to pin connection. Install the PCM Pinout Box (special tool #8815A, Kit, NGC, 38 Position) to perform the diagnostics.

4. Ignition on, engine not running.
5. Measure the voltage on the (K447) ETC Positive circuit at the appropriate terminal of special tool (special tool #8815A, Kit, NGC, 38 Position).

   Is there any voltage present?

   Yes

   - Repair the short to voltage on the (K447) ETC Positive circuit.
   - Perform the POWERTRAIN VERIFICATION TEST. Refer to **POWERTRAIN VERIFICATION TEST** .

   No

   - Go To 5.

5. **(K447) ETC POSITIVE CIRCUIT OPEN**

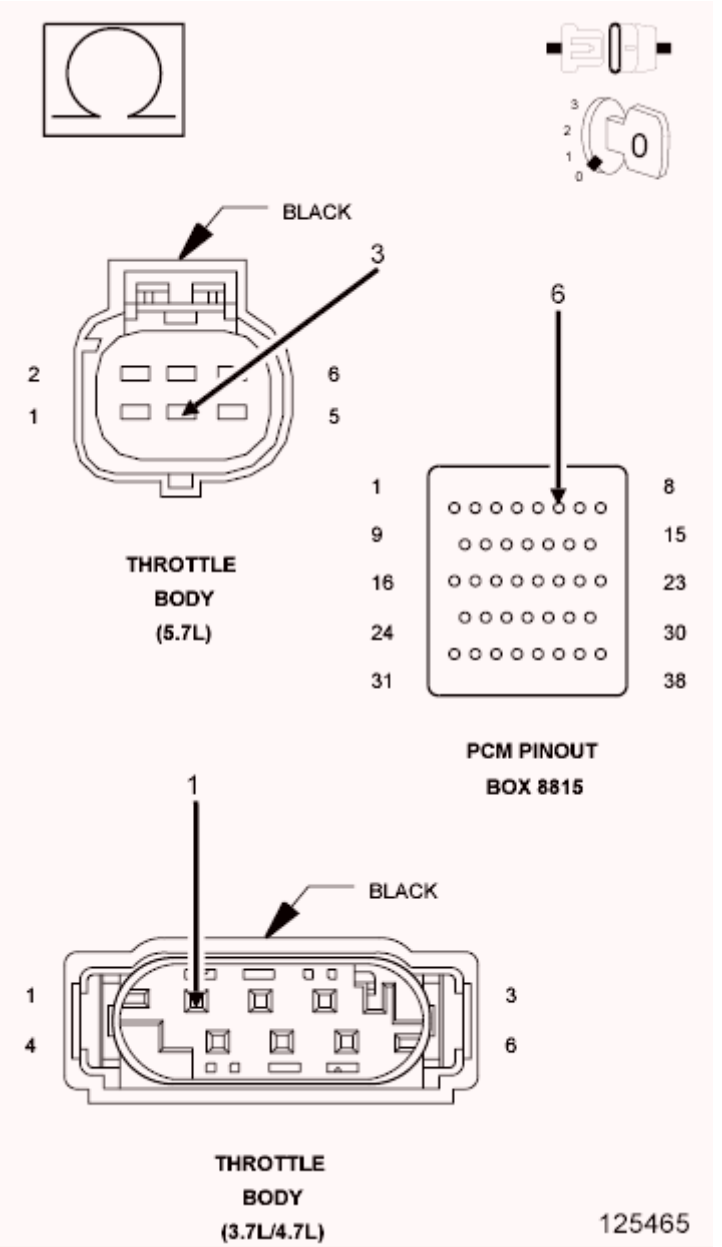

Fig. 146: Measuring Resistance Of (K447) ETC Positive Circuit From Throttle Body Harness Connector To Appropriate Terminal Of Special Tool #8815
Courtesy of CHRYSLER GROUP, LLC

1. Turn the ignition off.
2. Measure the resistance of the (K447) ETC Positive circuit from the Throttle Body harness connector to the appropriate terminal of special tool (special tool #8815A, Kit, NGC, 38 Position).

   Is the resistance below 5.0 ohms?

   Yes

- Go To 6.

No

- Repair the open in the (K447) ETC Positive circuit.
- Perform the POWERTRAIN VERIFICATION TEST. Refer to **POWERTRAIN VERIFICATION TEST** .

6. **(K448) ETC NEGATIVE CIRCUIT OPEN**

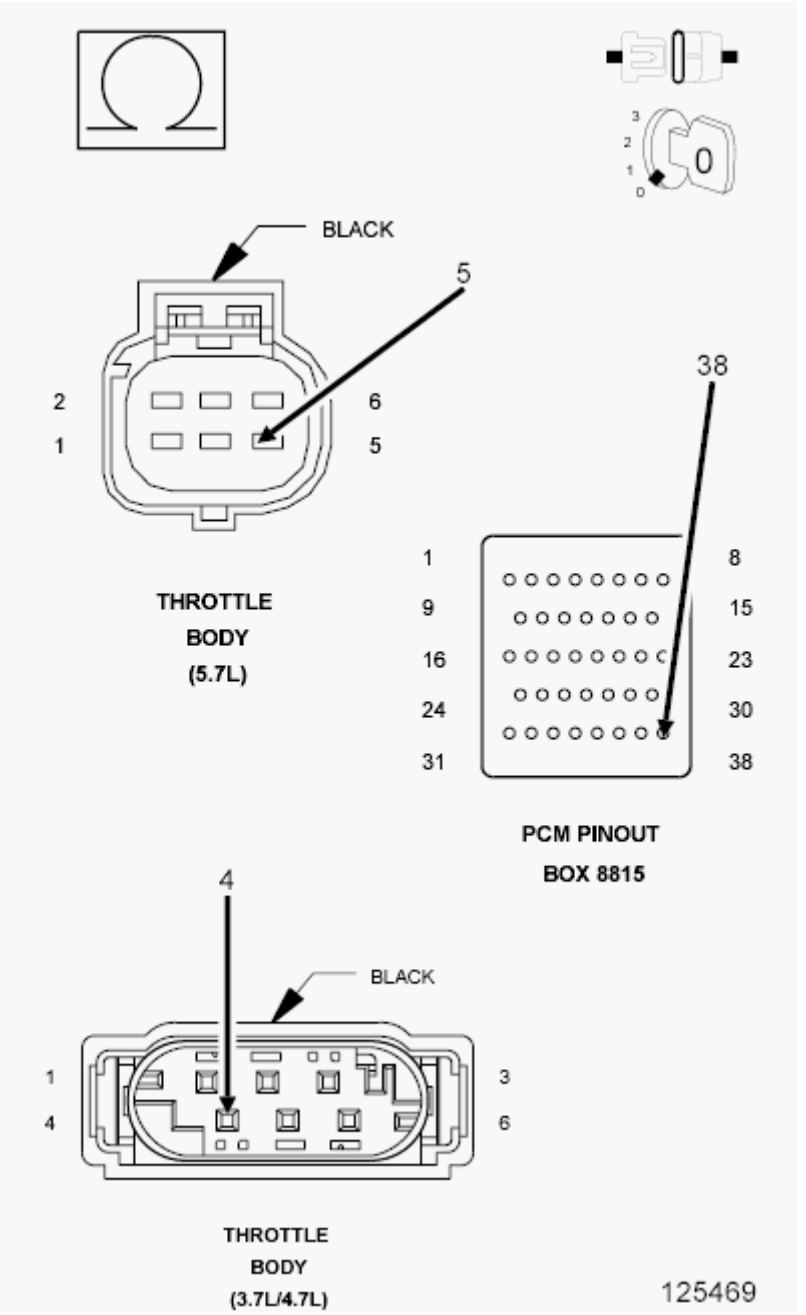

Fig. 147: Measuring Resistance Of (K448) ETC Negative Circuit From Throttle Body Harness

Connector To Appropriate Terminal Of Special Tool #8815
Courtesy of CHRYSLER GROUP, LLC

1. Measure the resistance of the (K448) ETC Negative circuit from the Throttle Body harness connector to the appropriate terminal of special tool (special tool #8815A, Kit, NGC, 38 Position).

   Is the resistance below 5.0 ohms?

   Yes

   - Go To 7.

   No

   - Repair the open in the (K448) ETC Negative circuit.
   - Perform the POWERTRAIN VERIFICATION TEST. Refer to **POWERTRAIN VERIFICATION TEST** .

7. **(K447) ETC POSITIVE CIRCUIT SHORTED TO GROUND**

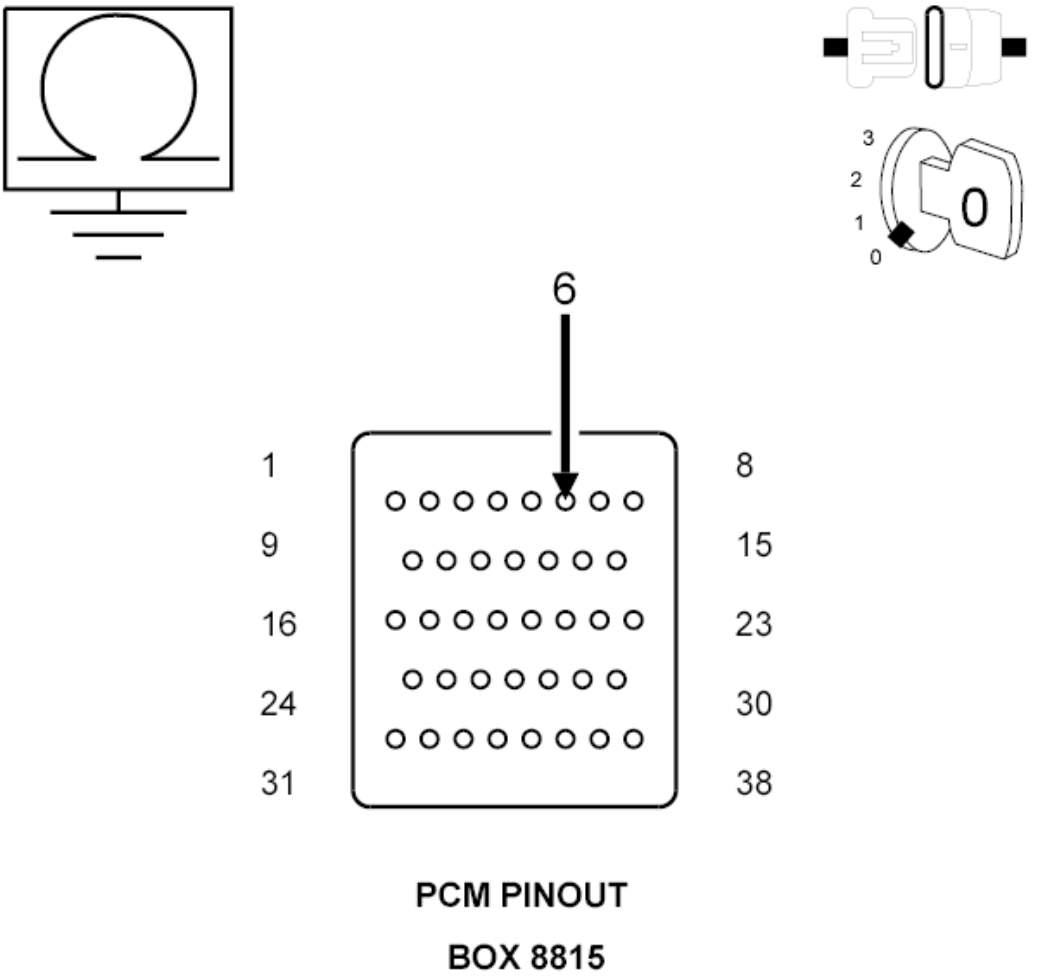

Fig. 148: Measuring Resistance Between Ground And ETC Motor Positive Circuit AT Appropriate Terminals Of Special Tool #8815
Courtesy of CHRYSLER GROUP, LLC

1. Measure the resistance between a known good ground and the (K447) ETC Positive circuit at the appropriate terminal of special tool (special tool #8815A, Kit, NGC, 38 Position).

   Is the resistance below 100 ohms?

   Yes

   - Repair the short to ground in the (K447) ETC Positive circuit.
   - Perform the POWERTRAIN VERIFICATION TEST. Refer to **POWERTRAIN VERIFICATION TEST** .

   No

   - Go To 8.

8. **(K448) ETC NEGATIVE CIRCUIT SHORTED TO GROUND**

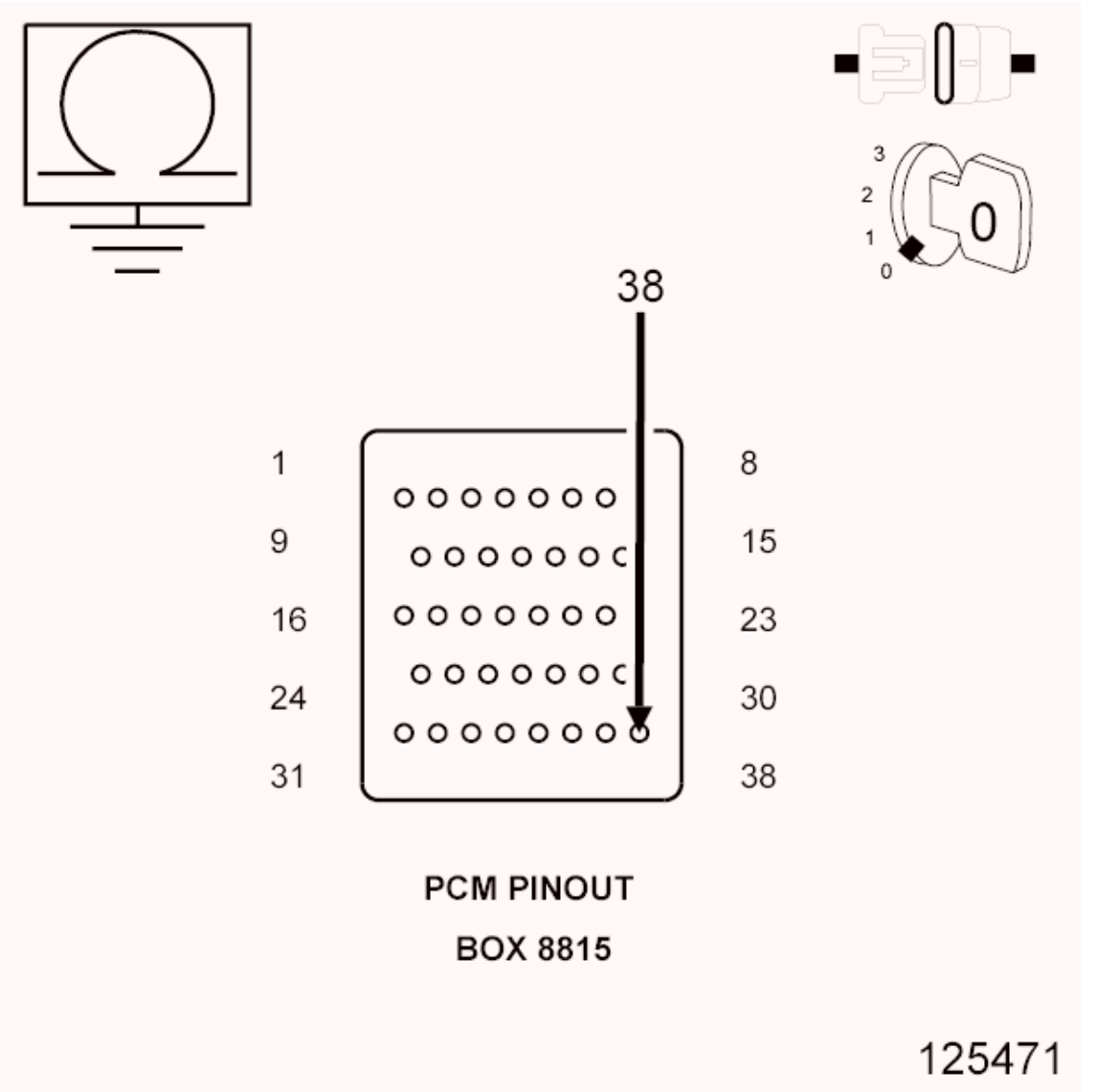

Fig. 149: Measuring Resistance Between Ground And ETC Motor Negative Circuit AT Appropriate Terminals Of Special Tool #8815
Courtesy of CHRYSLER GROUP, LLC

1. Measure the resistance between a known good ground and the (K448) ETC Negative circuit at the appropriate terminal of special tool (special tool #8815A, Kit, NGC, 38 Position).

   Is the resistance below 100 ohms?

   Yes

   - Repair the short to ground in the (K448) ETC Negative circuit.
   - Perform the POWERTRAIN VERIFICATION TEST. Refer to **POWERTRAIN**

VERIFICATION TEST .

No

- Go To 9.

9. **POWERTRAIN CONTROL MODULE (PCM)**
    1. Using the wiring diagram/schematic as a guide, inspect the wiring and connectors between the Throttle Body and the Powertrain Control Module (PCM).
    2. Look for any chafed, pierced, pinched, or partially broken wires.
    3. Look for broken, bent, pushed out or corroded terminals. Verify that there is good pin to terminal contact in the Throttle Body and the Powertrain Control Module connectors.
    4. Refer to any Technical Service Bulletins that may apply.

    Were there any problems found?

    Yes

    - Repair as necessary.
    - Perform the POWERTRAIN VERIFICATION TEST. Refer to **POWERTRAIN VERIFICATION TEST** .

    No

    - Replace and program the Powertrain Control Module per Service Information. Refer to **MODULE, POWERTRAIN CONTROL, REMOVAL** .
    - Perform the POWERTRAIN VERIFICATION TEST. Refer to **POWERTRAIN VERIFICATION TEST** .

P2112-ELECTRONIC THROTTLE CONTROL - UNABLE TO OPEN

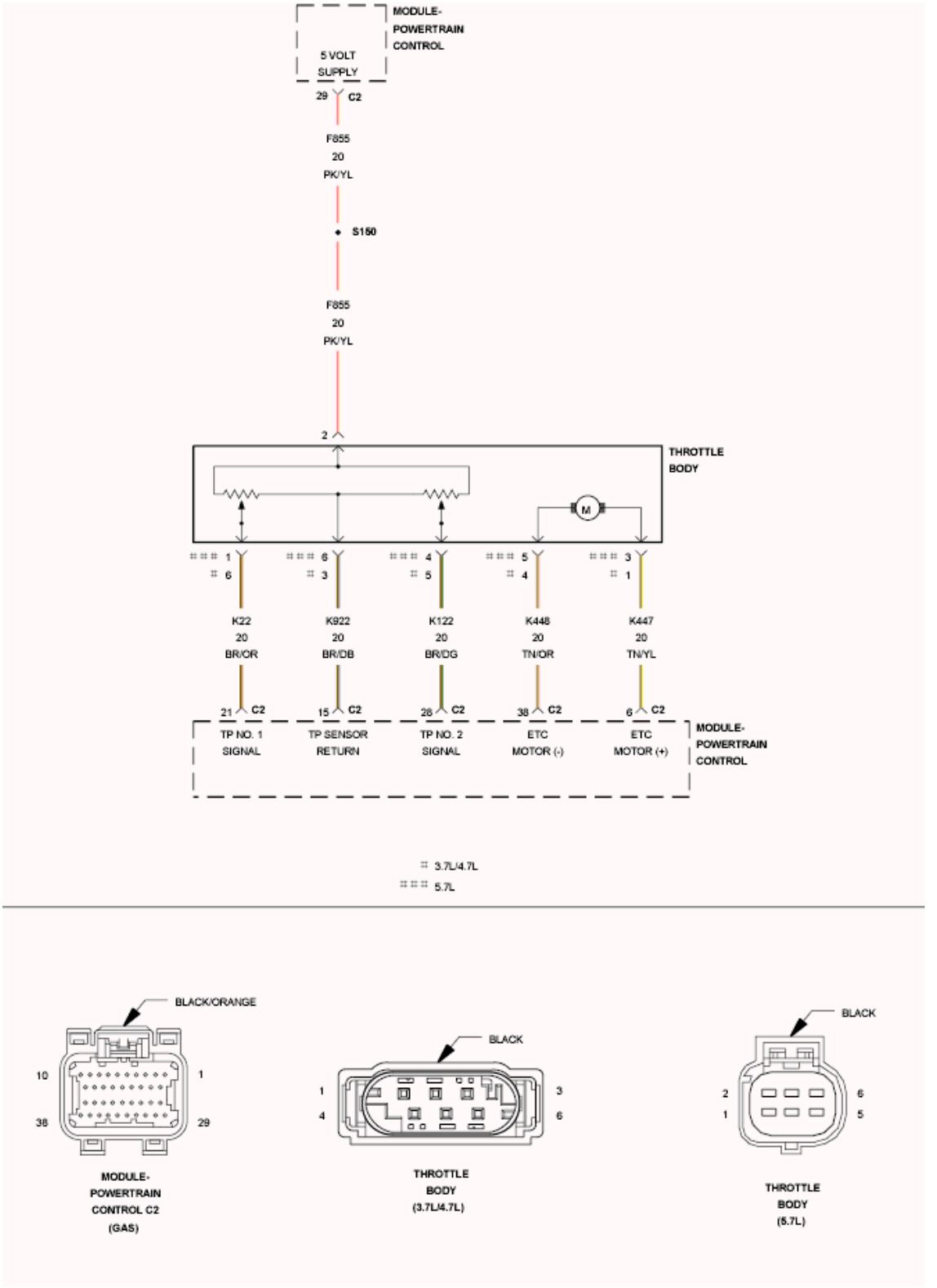

Fig. 150: Throttle Body Circuit Schematic
Courtesy of CHRYSLER GROUP, LLC

For a complete wiring diagram **refer to appropriate SYSTEM WIRING DIAGRAMS article** .

WHEN MONITORED:

Ignition on and battery voltage greater than 10 volts.

SET CONDITION:

Just after key on, the throttle is opened and closed to test the system. If the TP Sensor does not return to Limp Home Position at the end of this test, this DTC will set. One trip fault and the code will set within 5 seconds. ETC light is flashing.

POSSIBLE CAUSES

Possible Causes
THROTTLE PLATE STUCK AT OR BELOW LIMP HOME POSITION
(K448) ETC NEGATIVE CIRCUIT SHORTED TO VOLTAGE
(K447) ETC POSITIVE CIRCUIT OPEN
(K448) ETC NEGATIVE CIRCUIT OPEN
(K447) ETC POSITIVE CIRCUIT SHORTED TO GROUND
(K448) ETC NEGATIVE CIRCUIT SHORTED TO GROUND
POWERTRAIN CONTROL MODULE (PCM)

Always perform the Pre-Diagnostic Troubleshooting procedure before proceeding. Refer to PRE-DIAGNOSTIC TROUBLESHOOTING PROCEDURE .

DIAGNOSTIC TEST

1. **ACTIVE DTC**
    1. Ignition on, engine not running.

        NOTE: **The PCM tests the ETC Motor by opening and closing the Throttle Plate before starting the engine. If during this test the Throttle plate does not return to the closed position this DTC sets.**

    2. With a scan tool select View DTCs.

        NOTE: **Diagnose any TP Sensor, Battery Voltage, and 5-Volt Supply DTCs before continuing.**

        Is the DTC Active at this time?

        Yes

        - Go To 2.

        No

- Perform the INTERMITTENT CONDITION diagnostic procedure. Refer to **INTERMITTENT CONDITION** .

2. **THROTTLE PLATE STUCK OPEN**
   1. Turn the ignition off.

      NOTE: The PCM tests the ETC Motor by opening and closing the Throttle Plate before starting the engine. If during this test the Throttle plate does not open this DTC sets.

   2. Remove the Air Cleaner Assembly from the Throttle Body.
   3. Check for any signs of a foreign material causing the Throttle to remain open.
   4. Ignition on, engine not running.
   5. Using a scan tool under System Tests, perform the ETC Throttle Follower Test.
   6. Have an assistant watch the throttle plate to verify it moves during the test.

      Does the Throttle Plate move?

      Yes

      - Go To 3.

      No

      - Remove the debris if possible or replace the Throttle Body Assembly. Disconnect the Battery when replacing the Throttle Body Assembly. After installation is complete, use a scan tool and select the ETC RELEARN function.
      - Perform the POWERTRAIN VERIFICATION TEST. Refer to **POWERTRAIN VERIFICATION TEST** .

3. **(K448) ETC NEGATIVE CIRCUIT SHORTED TO VOLTAGE**

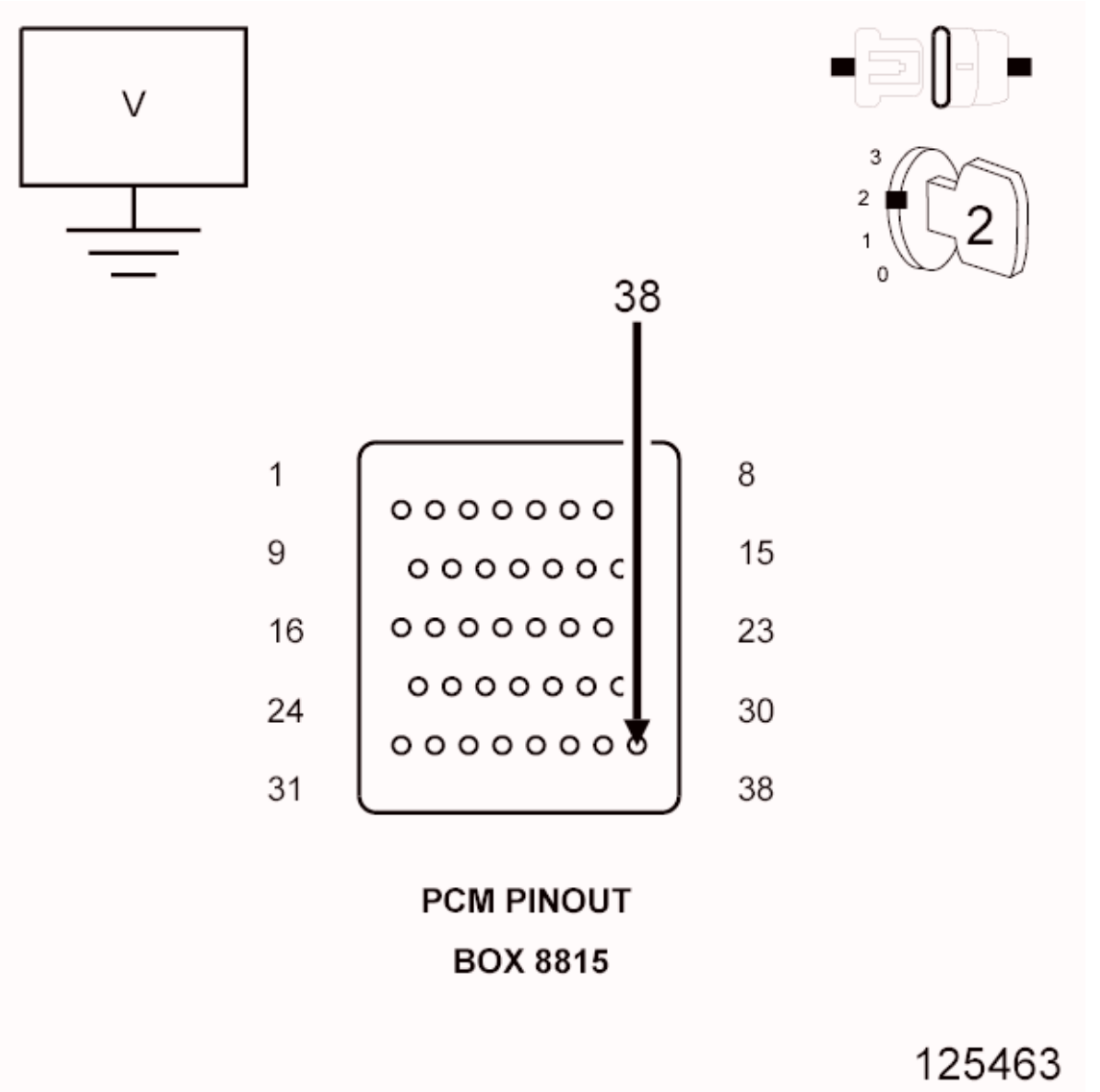

Fig. 151: Measuring Voltage On (K448) ETC Negative Circuit AT Appropriate Terminal Of Special Tool #8815
Courtesy of CHRYSLER GROUP, LLC

1. Turn the ignition off.
2. Disconnect the Throttle Body harness connector.
3. Disconnect the C2 PCM harness connector.

CAUTION: Do not probe the PCM harness connectors. Probing the PCM harness connectors will damage the PCM terminals resulting in poor terminal to pin connection. Install the PCM Pinout Box (special tool #8815A, Kit, NGC, 38 Position) to perform diagnosis.

4. Ignition on, engine not running.

5. Measure the voltage on the (K448) ETC Negative circuit at the appropriate terminal of special tool (special tool #8815A, Kit, NGC, 38 Position).

   Is there any voltage present?

   Yes

   - Repair the short to voltage on the (K448) ETC Negative circuit.
   - Perform the POWERTRAIN VERIFICATION TEST. Refer to **POWERTRAIN VERIFICATION TEST** .

   No

   - Go To 4.

4. **(K447) ETC POSITIVE CIRCUIT OPEN**

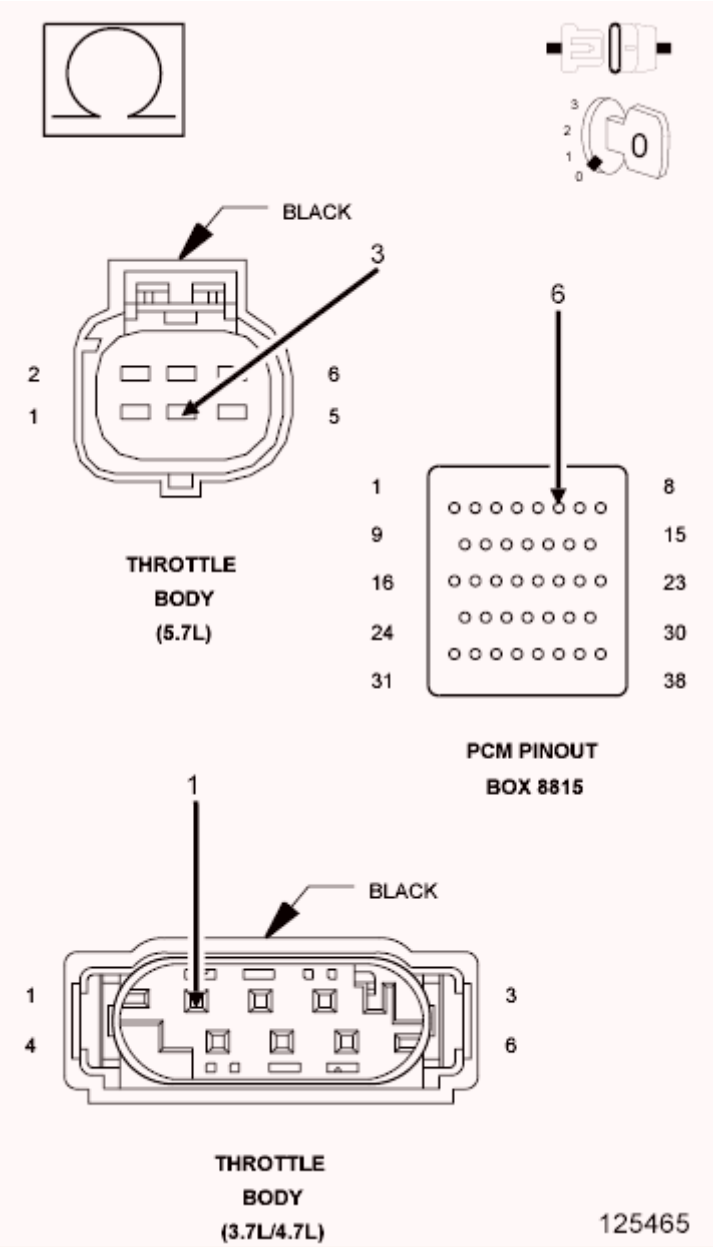

Fig. 152: Measuring Resistance Of (K447) ETC Positive Circuit From Throttle Body Harness Connector To Appropriate Terminal Of Special Tool #8815
Courtesy of CHRYSLER GROUP, LLC

1. Turn the ignition off.
2. Measure the resistance of the (K447) ETC Positive circuit from the Throttle Body harness connector to the appropriate terminal of special tool (special tool #8815A, Kit, NGC, 38 Position).

   Is the resistance below 5.0 ohms?

   Yes

- Go To 5.

No

- Repair the open in the (K447) ETC Positive circuit.
- Perform the POWERTRAIN VERIFICATION TEST. Refer to **POWERTRAIN VERIFICATION TEST** .

5. **(K448) ETC NEGATIVE CIRCUIT OPEN**

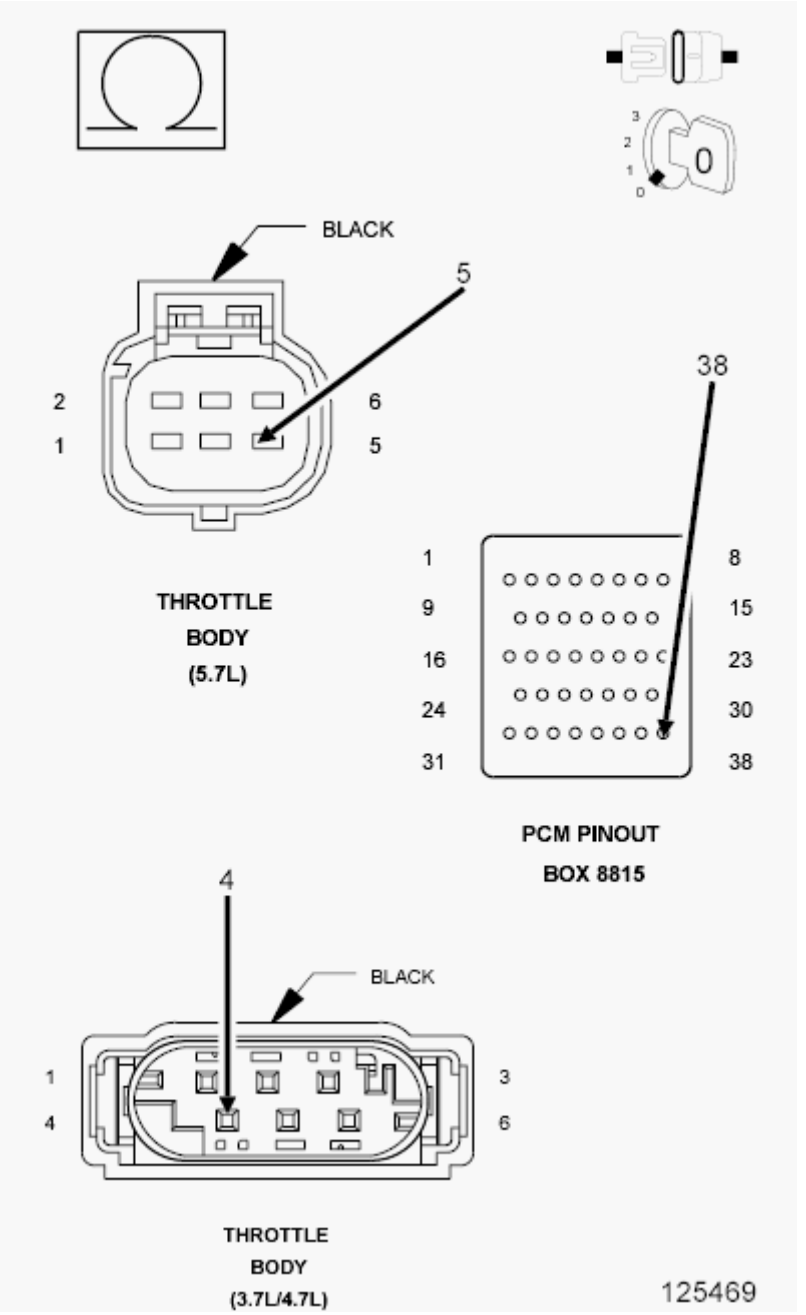

Fig. 153: Measuring Resistance Of (K448) ETC Negative Circuit From Throttle Body Harness

Connector To Appropriate Terminal Of Special Tool #8815
Courtesy of CHRYSLER GROUP, LLC

1. Measure the resistance of the (K448) ETC Negative circuit from the Throttle Body harness connector to the appropriate terminal of special tool (special tool #8815A, Kit, NGC, 38 Position).

   Is the resistance below 5.0 ohms?

   Yes

   - Go To 6.

   No

   - Repair the open in the (K448) ETC Negative circuit.
   - Perform the POWERTRAIN VERIFICATION TEST. Refer to **POWERTRAIN VERIFICATION TEST** .

6. **(K447) ETC POSITIVE CIRCUIT SHORTED TO GROUND**

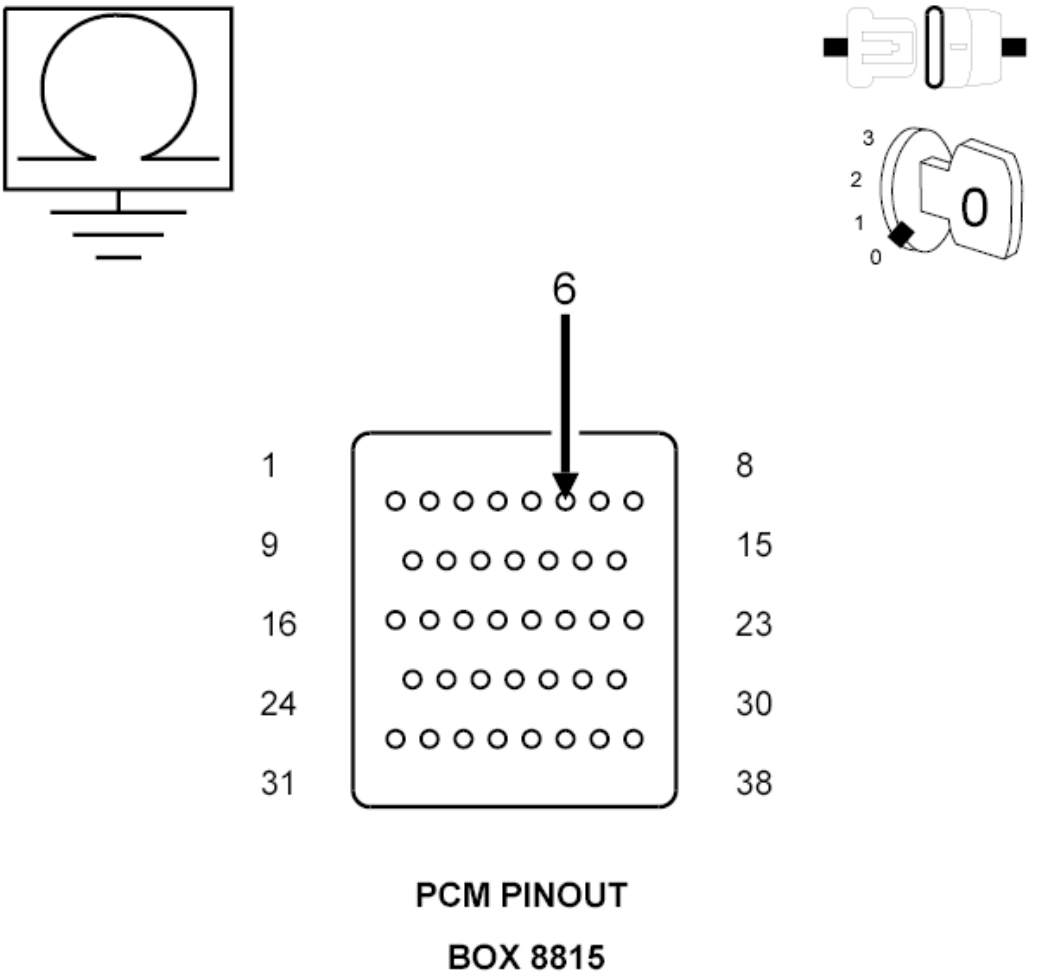

Fig. 154: Measuring Resistance Between Ground And ETC Motor Positive Circuit AT Appropriate Terminals Of Special Tool #8815
Courtesy of CHRYSLER GROUP, LLC

1. Measure the resistance between a known good ground and the (K447) ETC Positive circuit at the appropriate terminal of special tool (special tool #8815A, Kit, NGC, 38 Position).

   Is the resistance below 100 ohms?

   Yes

   - Repair the short to ground in the (K447) ETC Positive circuit.
   - Perform the POWERTRAIN VERIFICATION TEST. Refer to **POWERTRAIN VERIFICATION TEST** .

   No

   - Go To 7.

7. **(K448) ETC NEGATIVE CIRCUIT SHORTED TO GROUND**

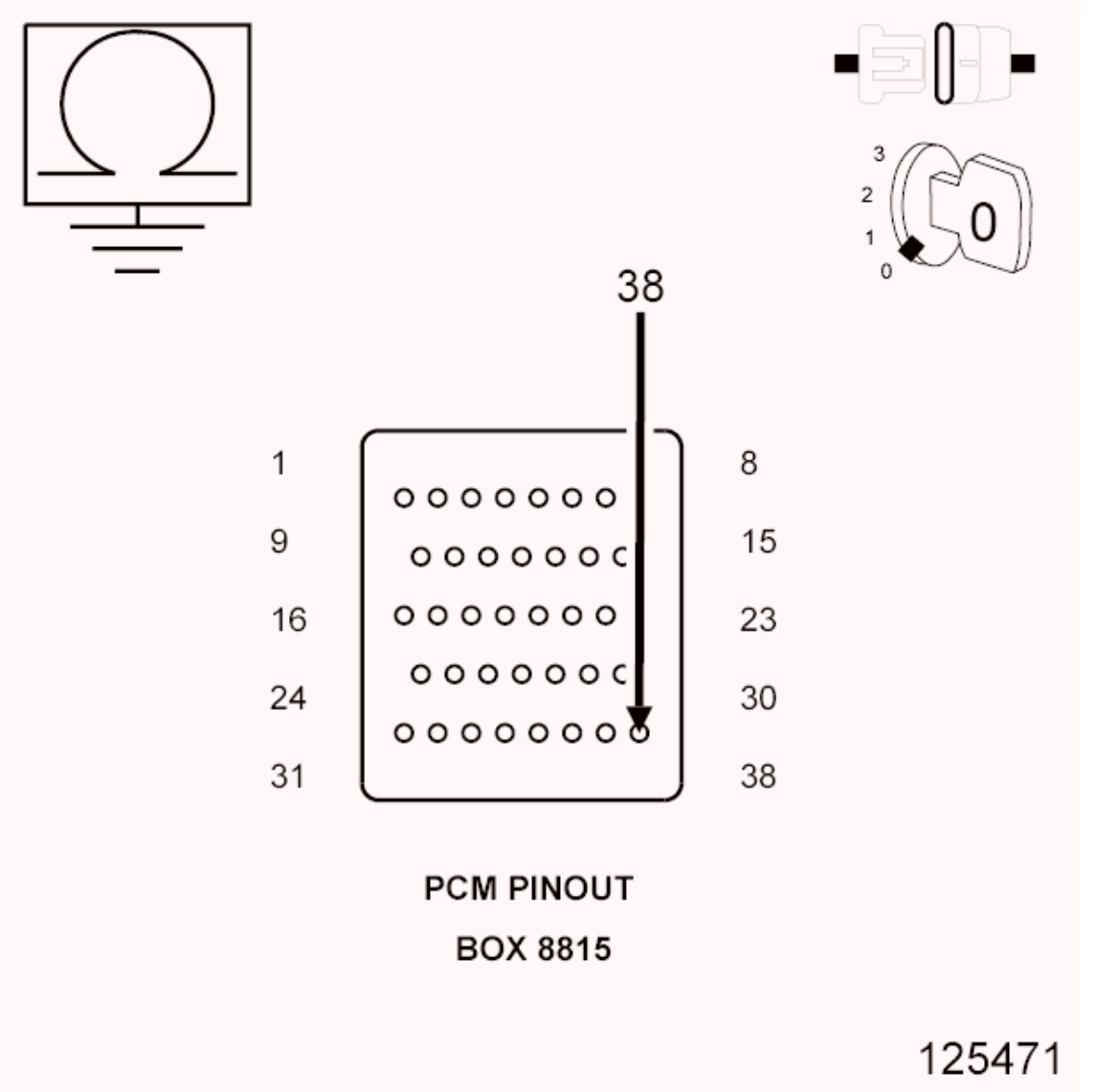

Fig. 155: Measuring Resistance Between Ground And ETC Motor Negative Circuit AT Appropriate Terminals Of Special Tool #8815
Courtesy of CHRYSLER GROUP, LLC

1. Measure the resistance between a known good ground and the (K448) ETC Negative circuit at the appropriate terminal of special tool (special tool #8815A, Kit, NGC, 38 Position).

   Is the resistance below 100 ohms?

   Yes

   - Repair the short to ground in the (K448) ETC Negative circuit.
   - Perform the POWERTRAIN VERIFICATION TEST. Refer to **POWERTRAIN**

VERIFICATION TEST .

No

- Go To 8.

8. **POWERTRAIN CONTROL MODULE (PCM)**
    1. Using the wiring diagram/schematic as a guide, inspect the wiring and connectors between the Throttle Body and the Powertrain Control Module (PCM).
    2. Look for any chafed, pierced, pinched, or partially broken wires.
    3. Look for broken, bent, pushed out or corroded terminals. Verify that there is good pin to terminal contact in the Throttle Body and the Powertrain Control Module connectors.
    4. Refer to any Technical Service Bulletins that may apply.

    Were there any problems found?

    Yes

    - Repair as necessary.
    - Perform the POWERTRAIN VERIFICATION TEST. Refer to **POWERTRAIN VERIFICATION TEST** .

    No

    - Replace and program the Powertrain Control Module per Service Information. Refer to **MODULE, POWERTRAIN CONTROL, REMOVAL** .
    - Perform the POWERTRAIN VERIFICATION TEST. Refer to **POWERTRAIN VERIFICATION TEST** .

P2115-ACCELERATOR PEDAL POSITION SENSOR 1 MINIMUM STOP PERFORMANCE

For a complete wiring diagram **refer to appropriate SYSTEM WIRING DIAGRAMS article** .

WHEN MONITORED:

Ignition on. During in plant mode the APP Sensors need to be checked to make sure that idle and full pedal travel can be reached on both sensors. The test for P2115 is only enabled once test for P2166 has passed.

SET CONDITION:

APPS No. 1 has failed to achieve the required minimum value during In Plant testing. One trip fault and the code will set within 5 seconds. Engine will only idle. ETC light is illuminated.

POSSIBLE CAUSES

Possible Causes

IN PLANT TEST FAILURE
APPS RELEARN

Always perform the Pre-Diagnostic Troubleshooting procedure before proceeding. Refer to PRE-DIAGNOSTIC TROUBLESHOOTING PROCEDURE .

DIAGNOSTIC TEST

1. **IN PLANT TEST FAILURE**
    1. Ignition on, engine not running.

        NOTE: This DTC is set when the APP Sensors are learned in plant but do not reach the Minimum or Maximum voltage range.

    2. With a scan tool view DTCs and record the related Freeze Frame data.
    3. With a scan tool, erase DTCs.
    4. Start the engine.
    5. With a scan tool, select View DTCs.

        Is the DTC Active at this time?

        Yes

        - Go To 2.

        No

        - Perform the INTERMITTENT CONDITION diagnostic procedure. Refer to **INTERMITTENT CONDITION** .
2. **APPS RELEARN**
    1. With a scan tool select the ETC RELEARN function.
    2. Next, erase DTCs.
    3. Start the engine.

        Does the DTC return?

        Yes

        - Replace the APPS Assembly per Service Information. After installation is complete, use a scan tool and select the ETC RELEARN function.
        - Perform the POWERTRAIN VERIFICATION TEST. Refer to **POWERTRAIN VERIFICATION TEST** .

        No

- Test Complete.

P2116-ACCELERATOR PEDAL POSITION SENSOR 2 MINIMUM STOP PERFORMANCE

For a complete wiring diagram **refer to appropriate SYSTEM WIRING DIAGRAMS article** .

WHEN MONITORED:

Ignition on. During in plant mode the APP Sensors need to be checked to make sure that idle and full pedal travel can be reached on both sensors. The test for P2116 is only enabled once test for P2167 has passed.

SET CONDITION:

APPS No. 2 has failed to achieve the required minimum value during In Plant testing. One trip fault and the code will be stored within 5 seconds. Engine will only idle. ETC light is illuminated.

POSSIBLE CAUSES

Possible Causes
IN PLANT TEST FAILURE APPS RELEARN

Always perform the Pre-Diagnostic Troubleshooting procedure before proceeding. Refer to PRE-DIAGNOSTIC TROUBLESHOOTING PROCEDURE .

DIAGNOSTIC TEST

1. **IN PLANT TEST FAILURE**
    1. Ignition on, engine not running.

        NOTE: This DTC is set when the APP Sensors are learned in plant but do not reach the Minimum or Maximum voltage range.

    2. With a scan tool view DTCs and record the related Freeze Frame data.
    3. With a scan tool, erase DTCs.
    4. Start the engine.
    5. With a scan tool, select View DTCs.

        Is the DTC Active at this time?

        Yes

        - Go To 2.

        No

- Perform the INTERMITTENT CONDITION diagnostic procedure. Refer to **INTERMITTENT CONDITION** .

2. **APPS RELEARN**
    1. With a scan tool select the ETC RELEARN function.
    2. Next, erase DTCs.
    3. Start the engine.

    Does the DTC return?

    Yes

    - Replace the APPS Assembly per Service Information. After installation is complete, use a scan tool and select the ETC RELEARN function.
    - Perform the POWERTRAIN VERIFICATION TEST. Refer to **POWERTRAIN VERIFICATION TEST** .

    No

    - Test Complete.

P2118-ELECTRONIC THROTTLE CONTROL MOTOR CIRCUIT

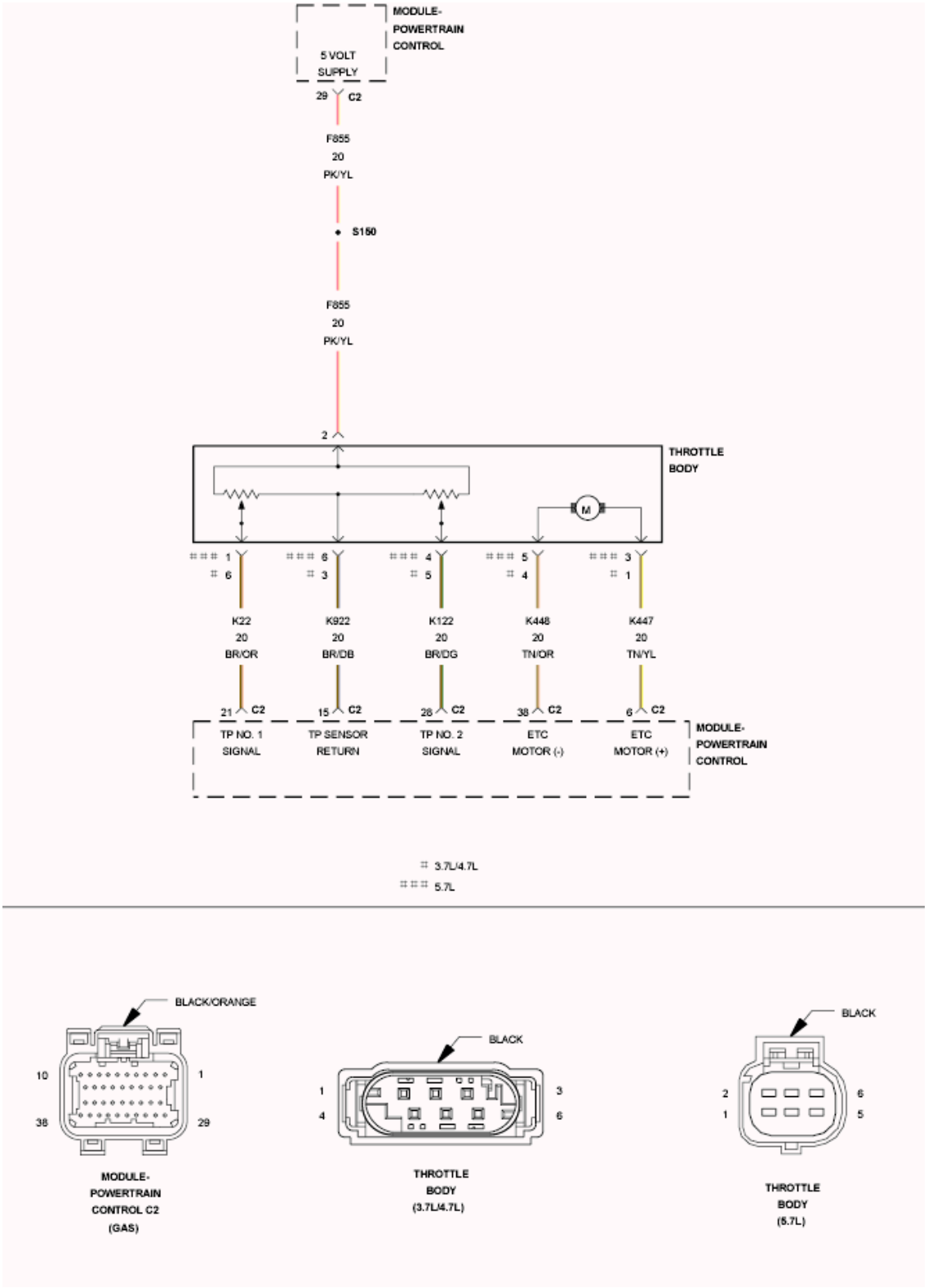

Fig. 156: Throttle Body Circuit Schematic
Courtesy of CHRYSLER GROUP, LLC

For a complete wiring diagram **refer to appropriate SYSTEM WIRING DIAGRAMS article** .

WHEN MONITORED:

With the ignition on and the ETC Motor is not in Limp Home mode.

SET CONDITION:

When the PCM detects an internal error or a short between the ETC Motor - and ETC Motor + circuits in the ETC Motor Driver. One trip fault. ETC light is flashing.

POSSIBLE CAUSES

Possible Causes
THROTTLE PLATE / BORE INSPECTION
(K447) ETC POSITIVE CIRCUIT SHORTED TO VOLTAGE
(K448) ETC NEGATIVE CIRCUIT SHORTED TO VOLTAGE
(K447) ETC POSITIVE CIRCUIT SHORTED TO THE (K448) ETC NEGATIVE CIRCUIT
(K447) ETC POSITIVE CIRCUIT OPEN
(K447) ETC POSITIVE CIRCUIT SHORTED TO GROUND
(K448) ETC NEGATIVE CIRCUIT OPEN
(K448) ETC NEGATIVE CIRCUIT SHORTED TO GROUND
ETC MOTOR
POWERTRAIN CONTROL MODULE (PCM)

Always perform the Pre-Diagnostic Troubleshooting procedure before proceeding. Refer to PRE-DIAGNOSTIC TROUBLESHOOTING PROCEDURE .

DIAGNOSTIC TEST

1. **ACTIVE DTC**
    1. Ignition on, engine not running.

        NOTE: **If the P2118 is intermittent, it is possible that the controller is overheating in extreme hot temperatures, and this is considered a normal protection operation. No repair is necessary.**

        NOTE: **If P2072 is also set, this indicates that the cold weather ice blockage routine has run. No repair action is necessary.**

    2. With a scan tool, select View DTCs.
    3. Look closely at the temperatures at which this DTC set.

        Is the DTC Active at this time?

        Yes

- Go To 2.

No

- Perform the INTERMITTENT CONDITION diagnostic procedure. Refer to **INTERMITTENT CONDITION** .

2. **THROTTLE PLATE INSPECTION**
   1. Turn the ignition off.
   2. Remove the Air Cleaner Assembly from the Throttle Body.
   3. Check for any signs of a foreign material (ice or dirt) on the Throttle Plate or in the bore causing the Throttle Plate to stick.

      Were any signs of foreign material or scoring of the throttle plate or bore found?

      Yes

      - Remove the debris if possible or replace the Throttle Body Assembly. Disconnect the Battery when replacing the Throttle Body Assembly. After installation is complete, use a scan tool and select the ETC RELEARN function.
      - Perform the POWERTRAIN VERIFICATION TEST. Refer to **POWERTRAIN VERIFICATION TEST** .

      No

      - Go To 3.
3. **(K447) ETC POSITIVE CIRCUIT SHORTED TO VOLTAGE**

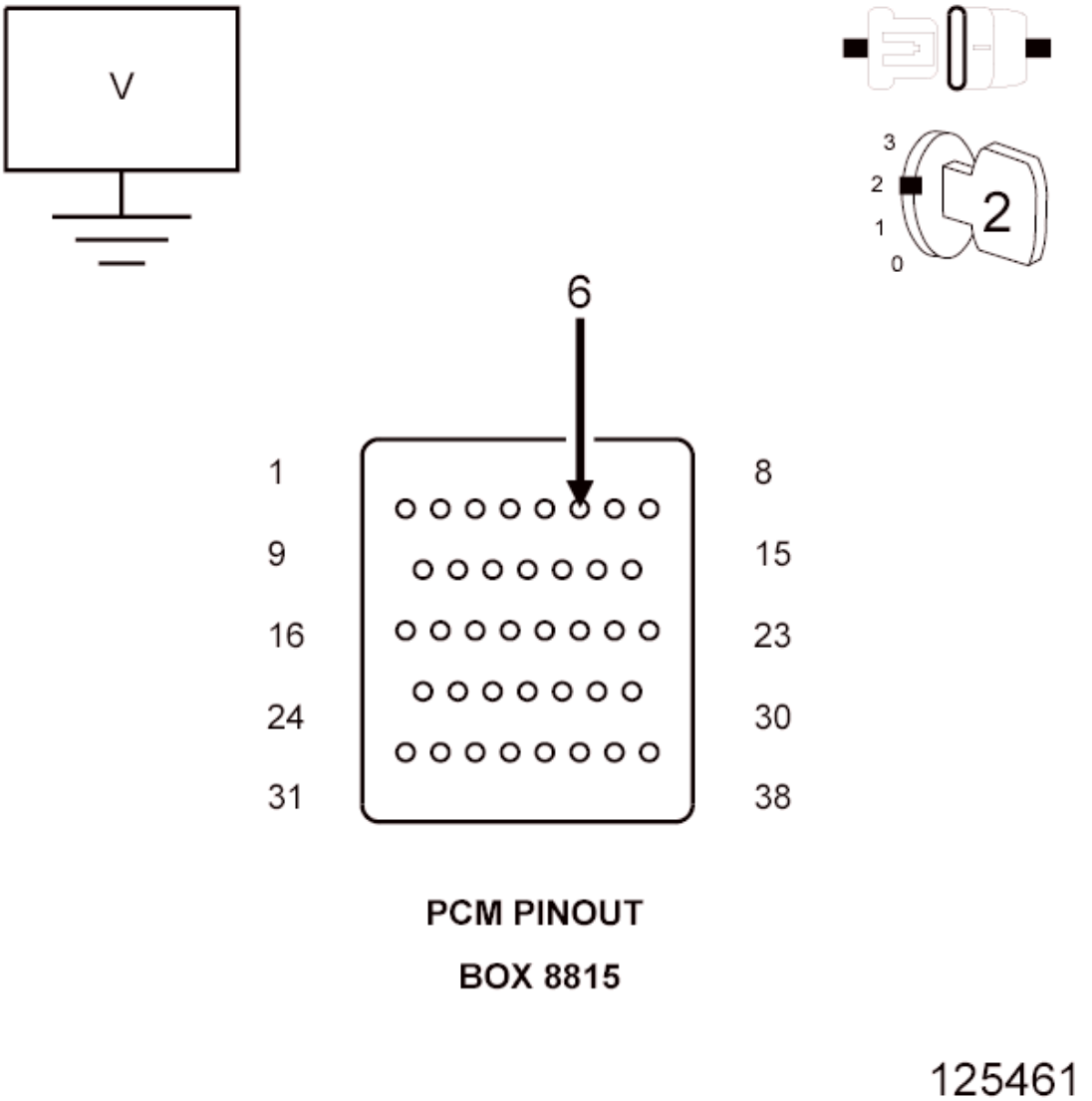

Fig. 157: Measuring Voltage On (K447) ETC Positive Circuit AT Appropriate Terminal Of Special Tool #8815
Courtesy of CHRYSLER GROUP, LLC

1. Turn the ignition off.
2. Disconnect the Throttle Body harness connector.
3. Disconnect the C2 PCM harness connector.
4. Ignition on, engine not running.

CAUTION: Do not probe the PCM harness connectors. Probing the PCM harness connectors will damage the PCM terminals resulting in poor terminal to pin connection. Install the PCM Pinout Box (special tool #8815A, Kit, NGC, 38 Position) to perform diagnosis.

5. Measure the voltage on the (K447) ETC Positive circuit at the appropriate terminal of special tool (special tool #8815A, Kit, NGC, 38 Position).

   Is there any voltage present?

   Yes

   - Repair the short to voltage on the (K447) ETC Positive circuit.
   - Perform the POWERTRAIN VERIFICATION TEST. Refer to **POWERTRAIN VERIFICATION TEST** .

   No

   - Go To 4.

4. **(K448) ETC NEGATIVE CIRCUIT SHORTED TO VOLTAGE**

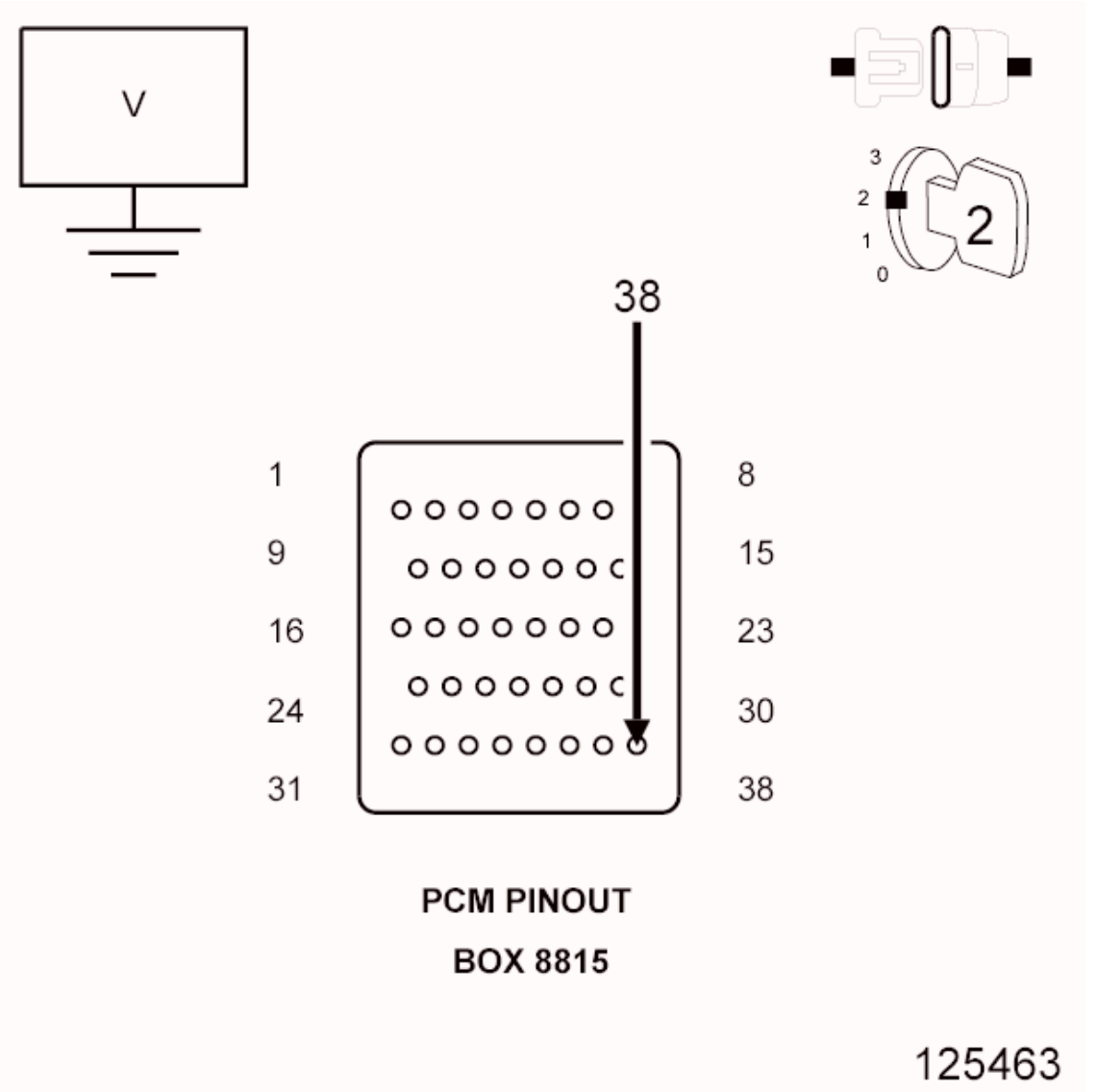

Fig. 158: Measuring Voltage On (K448) ETC Negative Circuit AT Appropriate Terminal Of Special Tool #8815
Courtesy of CHRYSLER GROUP, LLC

1. Measure the voltage on the (K448) ETC Negative circuit at the appropriate terminal of special tool (special tool #8815A, Kit, NGC, 38 Position).

   Is there any voltage present?

   Yes

   - Repair the short to voltage in the (K448) ETC Negative circuit.
   - Perform the POWERTRAIN VERIFICATION TEST. Refer to **POWERTRAIN VERIFICATION TEST** .

   No

- Go To 5.

5. **(K447) ETC POSITIVE CIRCUIT SHORTED TO THE (K448) ETC NEGATIVE CIRCUIT**

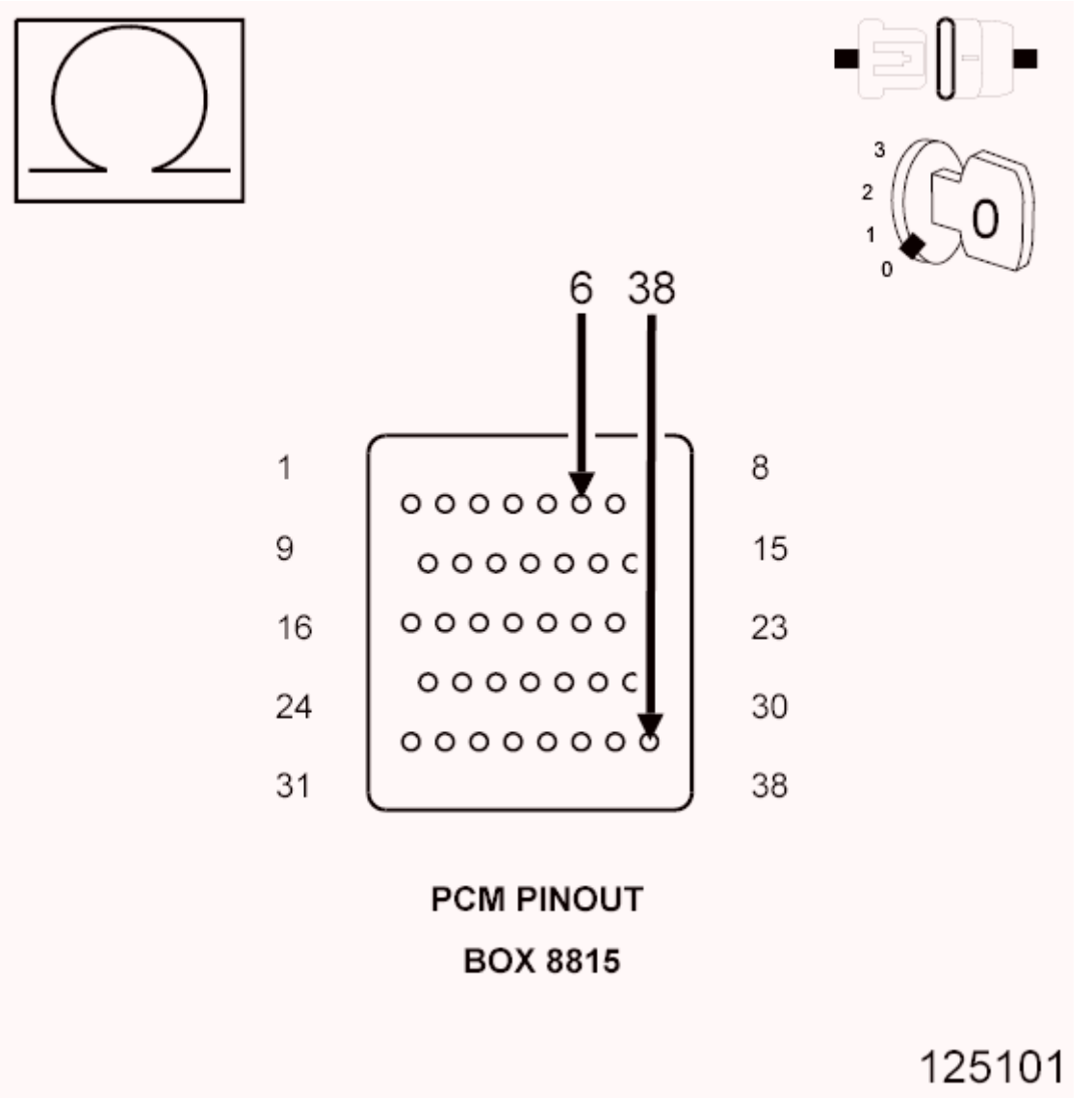

Fig. 159: Measuring Resistance Between ETC Motor Positive Circuit And Negative Circuit AT Appropriate Terminals Of Special Tool #8815
Courtesy of CHRYSLER GROUP, LLC

1. Turn the ignition off.
2. Measure the resistance between the (K447) ETC Positive circuit and the (K448) ETC Negative circuit at the appropriate terminals of special tool (special tool #8815A, Kit, NGC, 38 Position).

   Is the resistance below 100 ohms?

   Yes

- Repair the short to between the (K447) ETC Positive circuit and the (K448) ETC Negative circuit.
- Perform the POWERTRAIN VERIFICATION TEST. Refer to **POWERTRAIN VERIFICATION TEST** .

No

- Go To 6.

6. **(K447) ETC POSITIVE CIRCUIT OPEN**

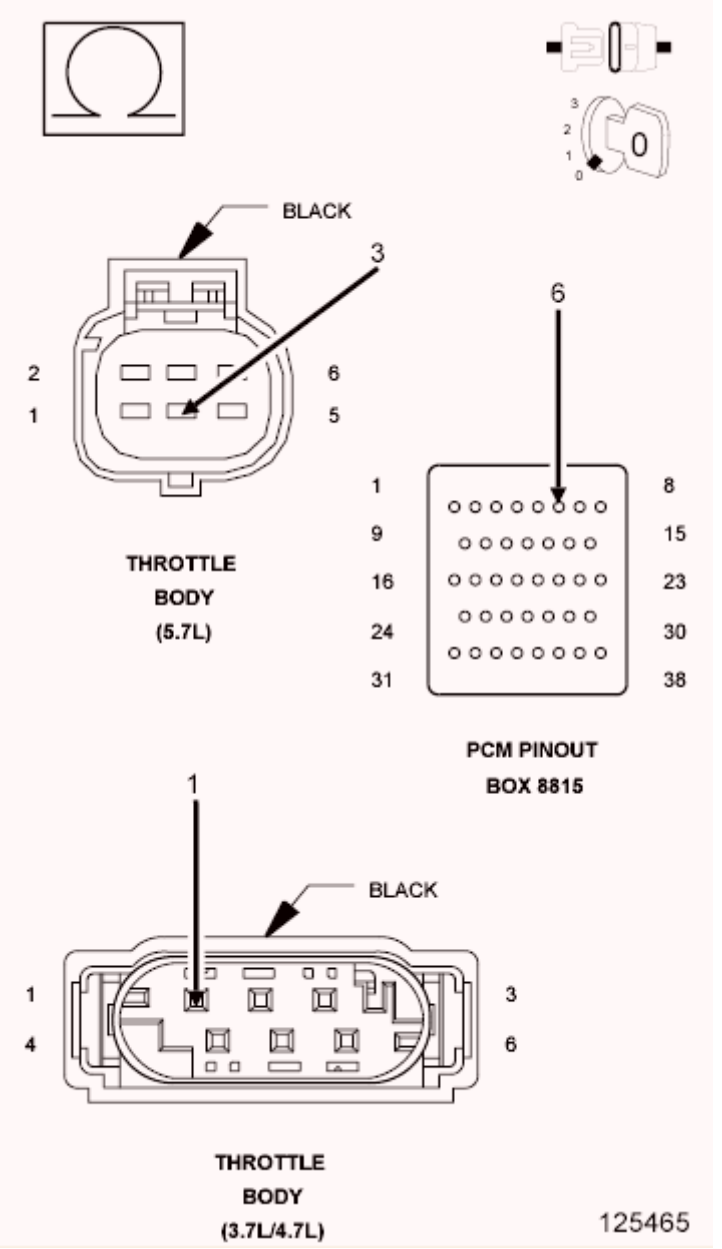

Fig. 160: Measuring Resistance Of (K447) ETC Positive Circuit From Throttle Body Harness Connector To Appropriate Terminal Of Special Tool #8815

Courtesy of CHRYSLER GROUP, LLC

1. Measure the resistance of the (K447) ETC Positive circuit from the Throttle Body harness connector to the appropriate terminal of special tool (special tool #8815A, Kit, NGC, 38 Position).

   Is the resistance below 5.0 ohms?

   Yes

   - Go To 7.

   No

   - Repair the open in the (K447) ETC Positive circuit.
   - Perform the POWERTRAIN VERIFICATION TEST. Refer to **POWERTRAIN VERIFICATION TEST** .

7. **(K447) ETC POSITIVE CIRCUIT SHORTED TO GROUND**

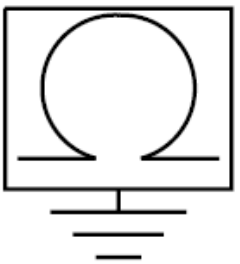

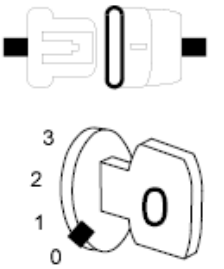

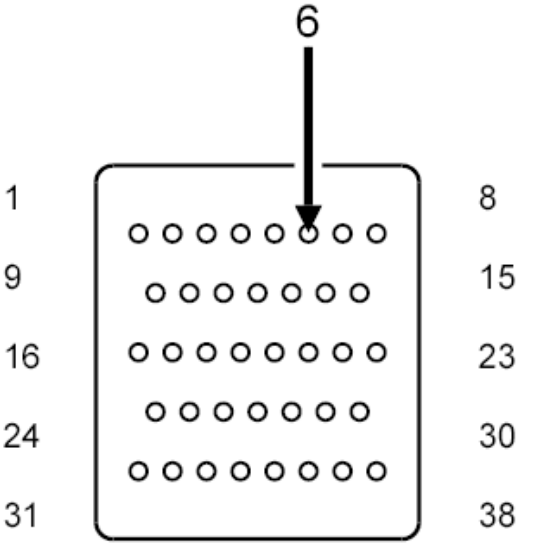

PCM PINOUT

BOX 8815

Fig. 161: Measuring Resistance Between Ground And ETC Motor Positive Circuit AT Appropriate Terminals Of Special Tool #8815
Courtesy of CHRYSLER GROUP, LLC

1. Measure the resistance between ground and the (K447) ETC Positive circuit between the appropriate terminals of special tool (special tool #8815A, Kit, NGC, 38 Position).

   Is the resistance below 100 ohms?

   Yes

   - Repair the short to ground in the (K447) ETC Positive circuit.
   - Perform the POWERTRAIN VERIFICATION TEST. Refer to **POWERTRAIN VERIFICATION TEST** .

   No

   - Go To 8.

8. **(K448) ETC NEGATIVE CIRCUIT OPEN**

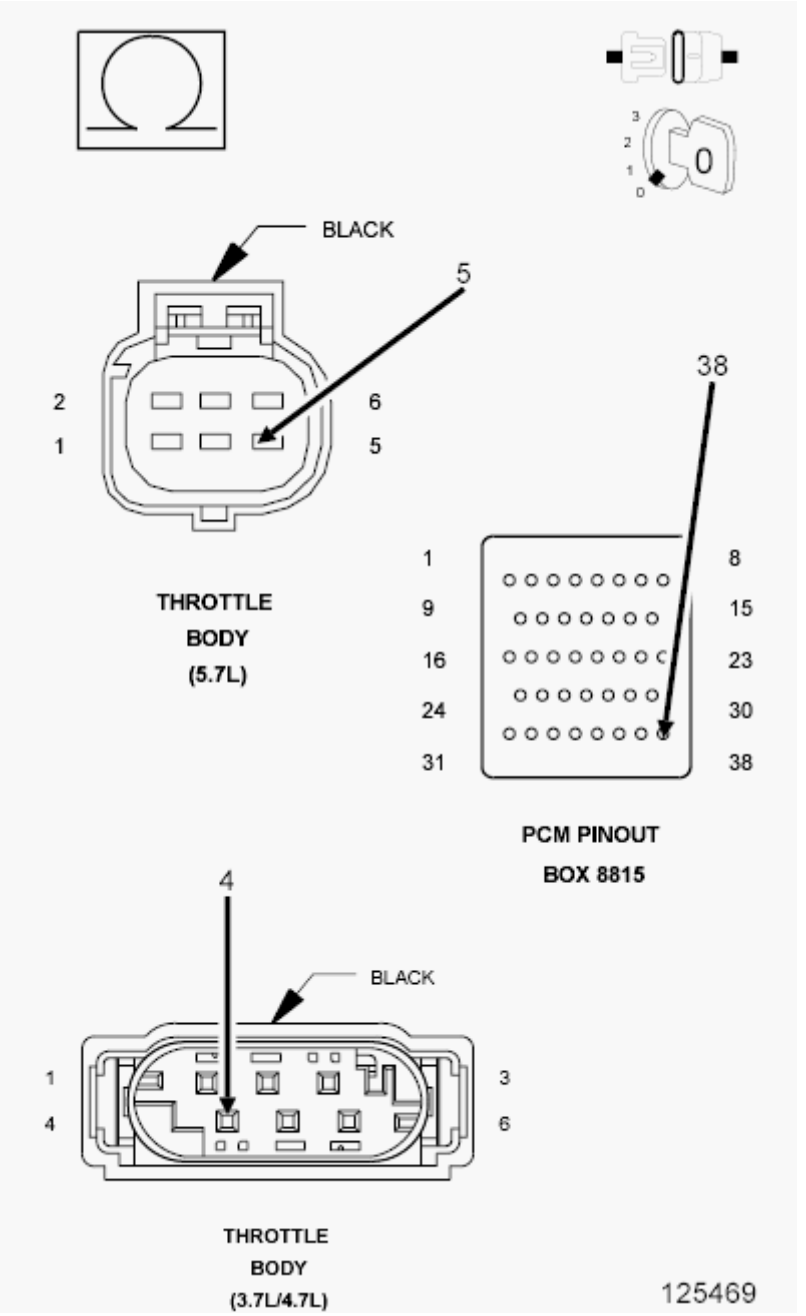

Fig. 162: Measuring Resistance Of (K448) ETC Negative Circuit From Throttle Body Harness Connector To Appropriate Terminal Of Special Tool #8815
Courtesy of CHRYSLER GROUP, LLC

1. Measure the resistance of the (K448) ETC Negative circuit from the Throttle Body harness connector to the appropriate terminal of special tool (special tool #8815A, Kit, NGC, 38 Position).

   Is the resistance below 5.0 ohms?

   Yes

- Go To 9.

No

- Repair the open in the (K448) ETC Negative circuit.
- Perform the POWERTRAIN VERIFICATION TEST. Refer to **POWERTRAIN VERIFICATION TEST** .

9. **(K448) ETC NEGATIVE CIRCUIT SHORTED TO GROUND**

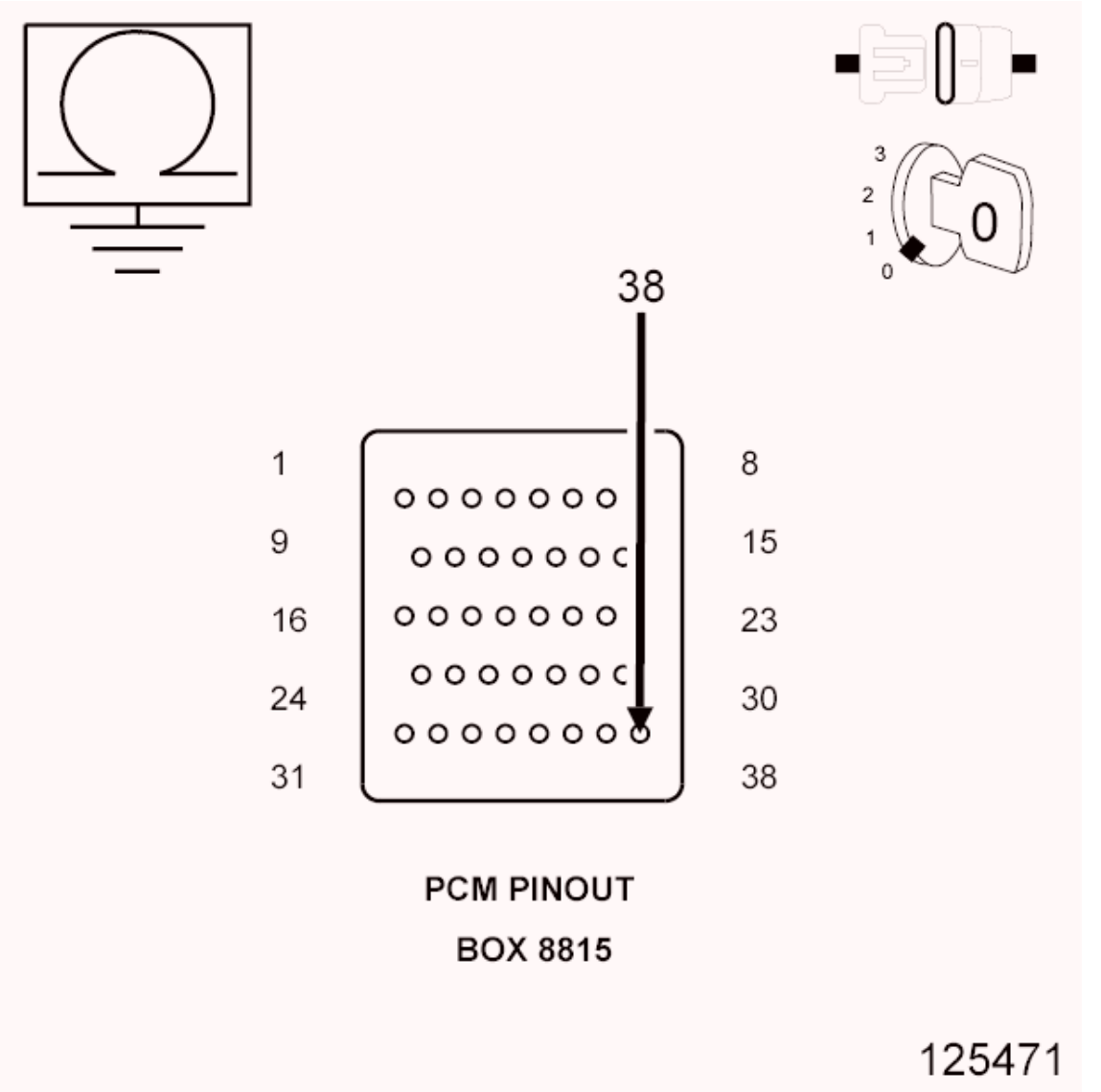

Fig. 163: Measuring Resistance Between Ground And ETC Motor Negative Circuit AT Appropriate Terminals Of Special Tool #8815
Courtesy of CHRYSLER GROUP, LLC

1. Measure the resistance between ground and the (K448) ETC Negative circuit between the appropriate terminals of special tool (special tool #8815A, Kit, NGC, 38 Position).

Is the resistance below 100 ohms?

Yes

- Repair the short to ground in the (K448) ETC Negative circuit.
- Perform the POWERTRAIN VERIFICATION TEST. Refer to **POWERTRAIN VERIFICATION TEST** .

No

- Go To 10.

10. **ETC MOTOR**

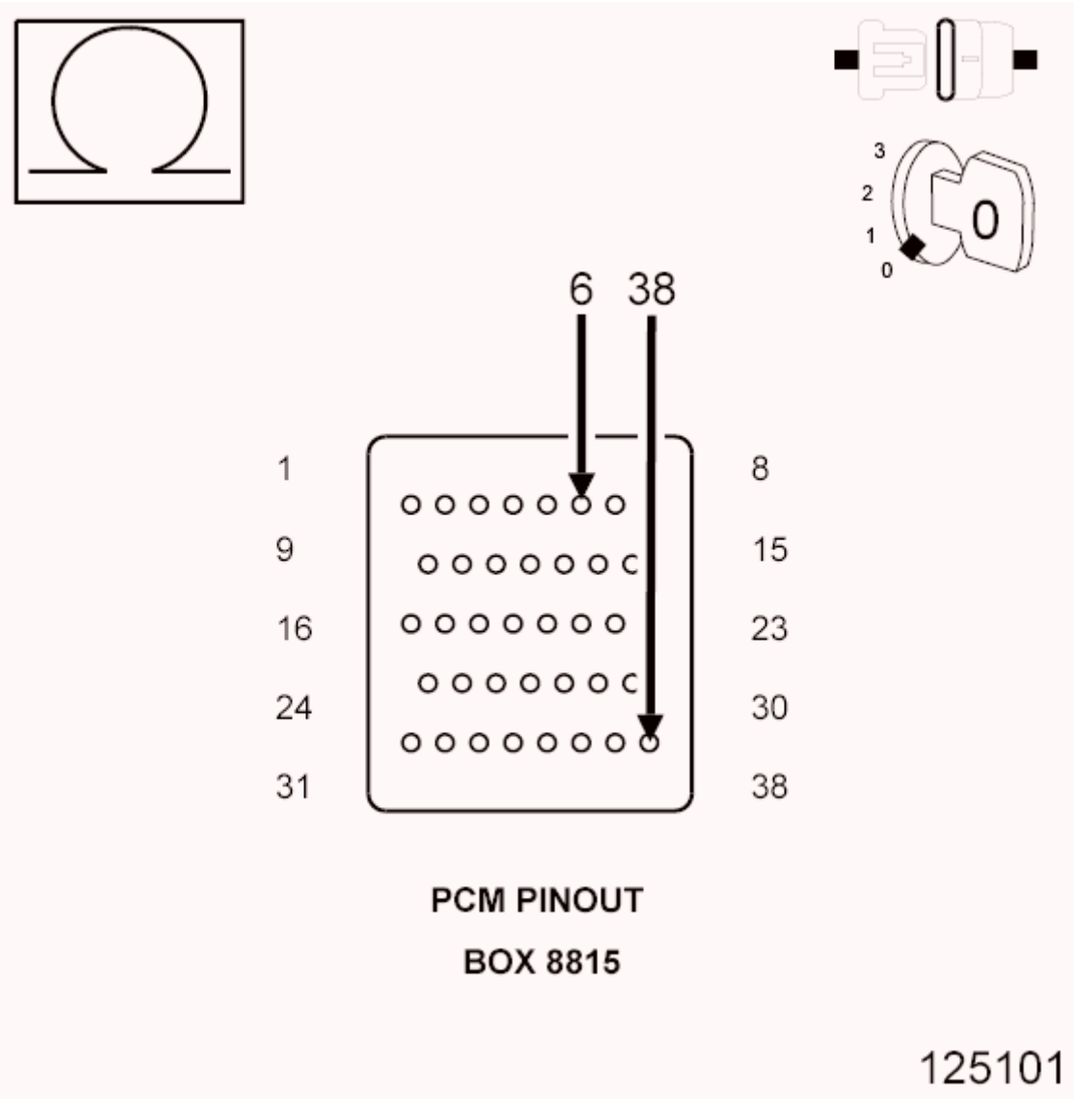

Fig. 164: Measuring Resistance Between ETC Motor Positive Circuit And Negative Circuit AT Appropriate Terminals Of Special Tool #8815

NOTE: **Take the following measurement using special tool (special tool #8815A, Kit, NGC, 38 Position) to avoid possible damage to the Throttle Body harness connector.**

1. Connect the Throttle Body harness connector.
2. Measure the resistance of the ETC Motor between the (K447) ETC Positive circuit and the (K448) ETC Negative circuit at the appropriate terminals of special tool (special tool #8815A, Kit, NGC, 38 Position).

   Is the resistance between 2.5 and 25 ohms at closed throttle?

   Yes

   - Go To 11.

   No

   - Verify that there is good pin to terminal contact at the Throttle Body and the Powertrain Control Module connectors. Replace the Throttle Body Assembly if no problems were found in the connectors. Disconnect the Battery when replacing the Throttle Body Assembly. After installation is complete, use a scan tool and select the ETC RELEARN function.
   - Perform the POWERTRAIN VERIFICATION TEST. Refer to **POWERTRAIN VERIFICATION TEST** .

11. **POWERTRAIN CONTROL MODULE (PCM)**
    1. Using the wiring diagram/schematic as a guide, inspect the wiring and connectors between the Throttle Body and the Powertrain Control Module (PCM).
    2. Look for any chafed, pierced, pinched, or partially broken wires.
    3. Look for broken, bent, pushed out or corroded terminals. Verify that there is good pin to terminal contact in the Throttle Body and the Powertrain Control Module connectors.
    4. Refer to any Technical Service Bulletins that may apply.

       Were there any problems found?

       Yes

       - Repair as necessary.
       - Perform the POWERTRAIN VERIFICATION TEST. Refer to **POWERTRAIN VERIFICATION TEST** .

       No

       - Replace and program the Powertrain Control Module per Service Information. Refer to **MODULE, POWERTRAIN CONTROL, REMOVAL** .

- Perform the POWERTRAIN VERIFICATION TEST. Refer to **POWERTRAIN VERIFICATION TEST** .

P2122-ACCELERATOR PEDAL POSITION SENSOR 1 CIRCUIT LOW

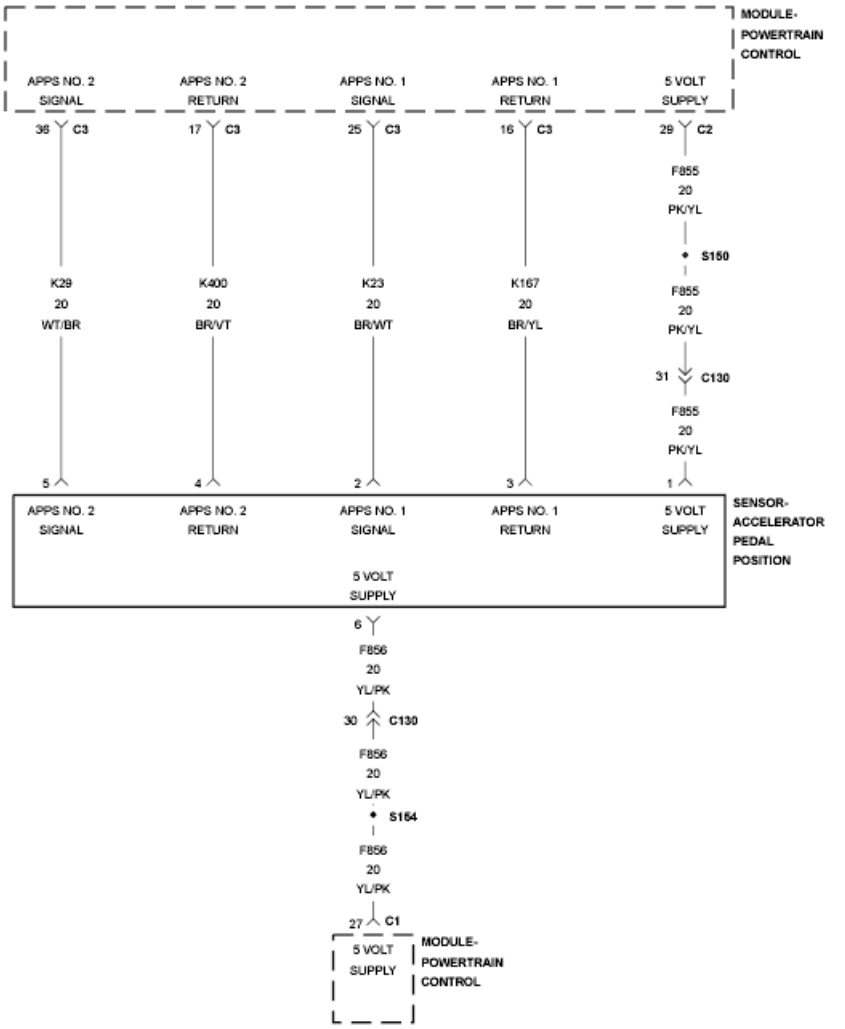

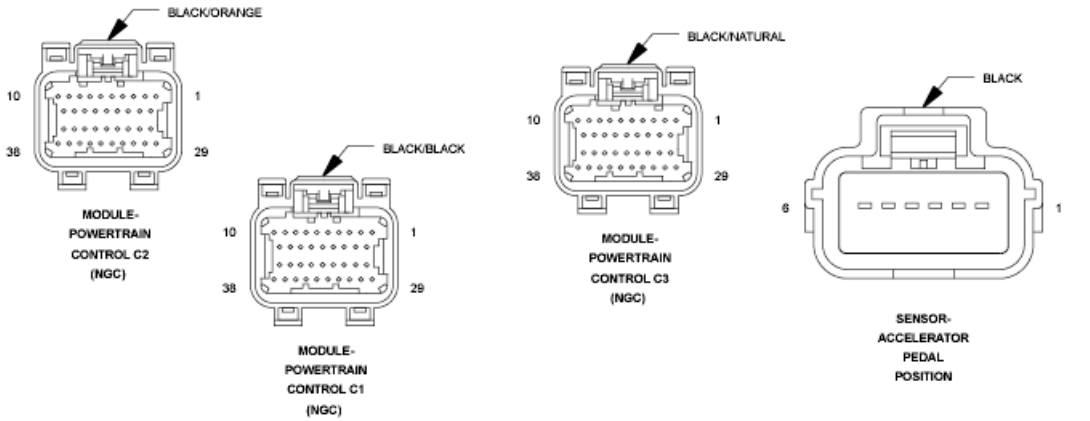

Fig. 165: Accelerator Pedal Position Sensor Circuit Schematic
Courtesy of CHRYSLER GROUP, LLC

For a complete wiring diagram **refer to appropriate SYSTEM WIRING DIAGRAMS article** .

WHEN MONITORED:

With the ignition on and no other APPS No. 1 DTCs present.

SET CONDITION:

When the APP Sensor No. 1 voltage is too low. Engine will additionally idle if the brake pedal is pressed or has failed. Acceleration rate and Engine output are limited. One trip fault and the code will set within 5 seconds. ETC light is flashing.

POSSIBLE CAUSES

Possible Causes
(F855) 5-VOLT SUPPLY CIRCUIT OPEN
(F855) 5-VOLT SUPPLY CIRCUIT SHORTED TO GROUND
(K23) APP SENSOR NO. 1 SIGNAL CIRCUIT OPEN
(K23) APP SENSOR NO. 1 SIGNAL CIRCUIT SHORTED TO GROUND
(K23) APP SENSOR NO. 1 SIGNAL CIRCUIT SHORTED TO THE (K167) APP SENSOR NO. 1 RETURN CIRCUIT
(K23) APP SENSOR NO. 1 SIGNAL CIRCUIT SHORTED TO THE (K400) APP SENSOR NO. 2 RETURN CIRCUIT
APP SENSOR
POWERTRAIN CONTROL MODULE (PCM)

Always perform the Pre-Diagnostic Troubleshooting procedure before proceeding. Refer to PRE-DIAGNOSTIC TROUBLESHOOTING PROCEDURE .

DIAGNOSTIC TEST

1. **ACTIVE DTC**
    1. Start the engine and allow it to reach normal operating temperature.

WARNING: When the engine is operating, do not stand in direct line with the fan. Do not put your hands near the pulleys, belts or fan. Do not wear loose clothing. Failure to follow these instructions may result in possible serious or fatal injury.

NOTE: Diagnose and repair any system voltage or sensor supply voltage DTCs before continuing with this test.

NOTE: **If you are viewing data recorder information or Freeze Frame data the APP Sensor No. 2 is pulled low by the PCM as part of its system testing. This test happens every 320 milliseconds and may not show up on the scan tool but may show up on a data recorder or lab scope. It is acceptable to see the voltage close to zero with a normal sensor when using a data recorder/lab scope.**

2. With the scan tool, select View DTCs.

   Is the status Active for this DTC?

   Yes

   - Go To 2.

   No

   - Go To 11.

2. **(F855) 5-VOLT SUPPLY CIRCUIT**

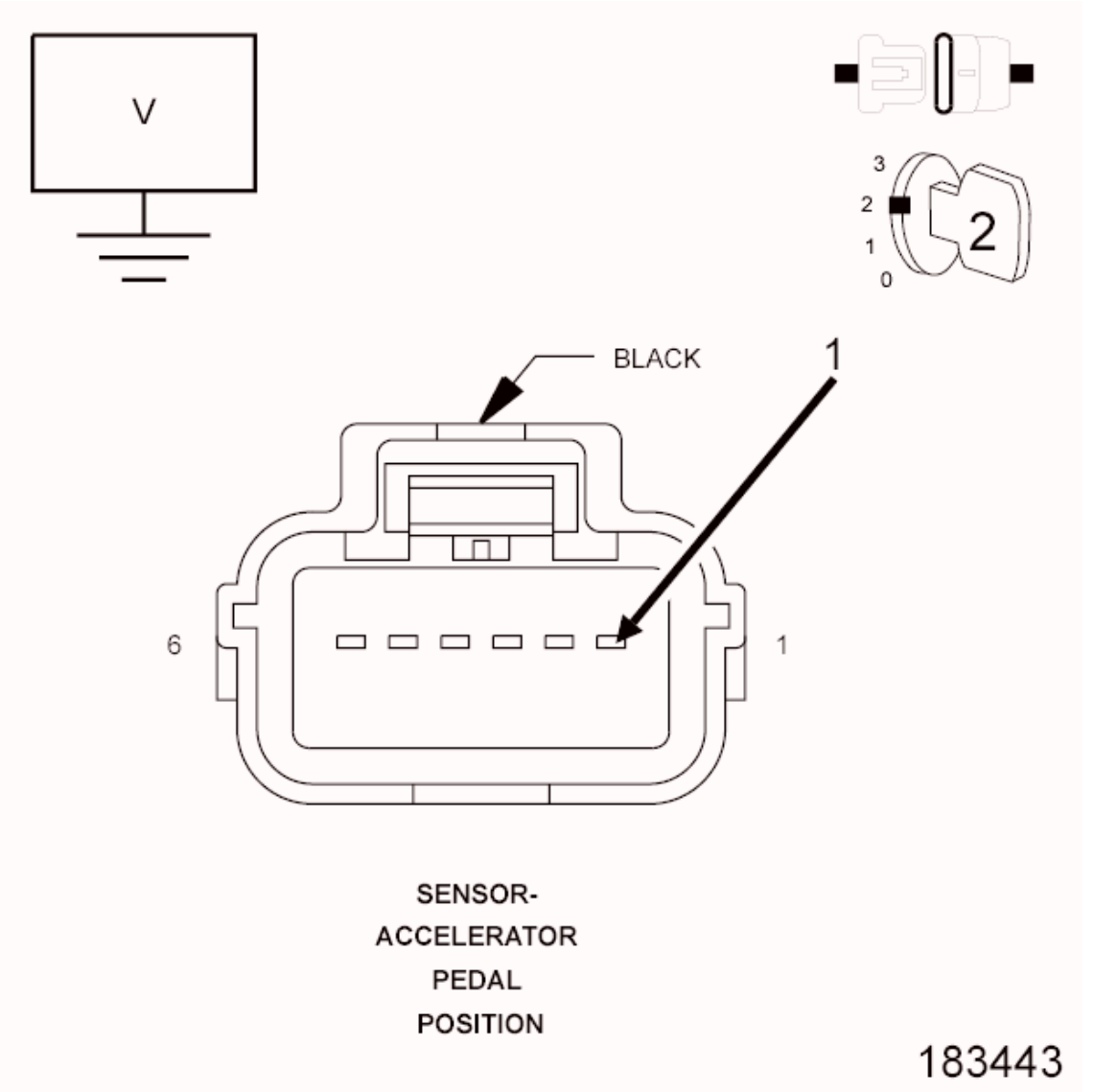

Fig. 166: Measuring Voltage On (F855) 5-Volt Supply Circuit In APP Sensor Harness Connector
Courtesy of CHRYSLER GROUP, LLC

1. Turn the ignition off.
2. Disconnect the APP Sensor harness connector.
3. Ignition on, engine not running.
4. Measure the voltage on the (F855) 5-volt Supply circuit in the APP Sensor harness connector.

   Is the voltage between 4.5 and 5.2 volts?

   Yes

   - Go To 3.

   No

- Go To 8.

3. **(K23) APP SENSOR NO. 1 SIGNAL CIRCUIT OPEN**

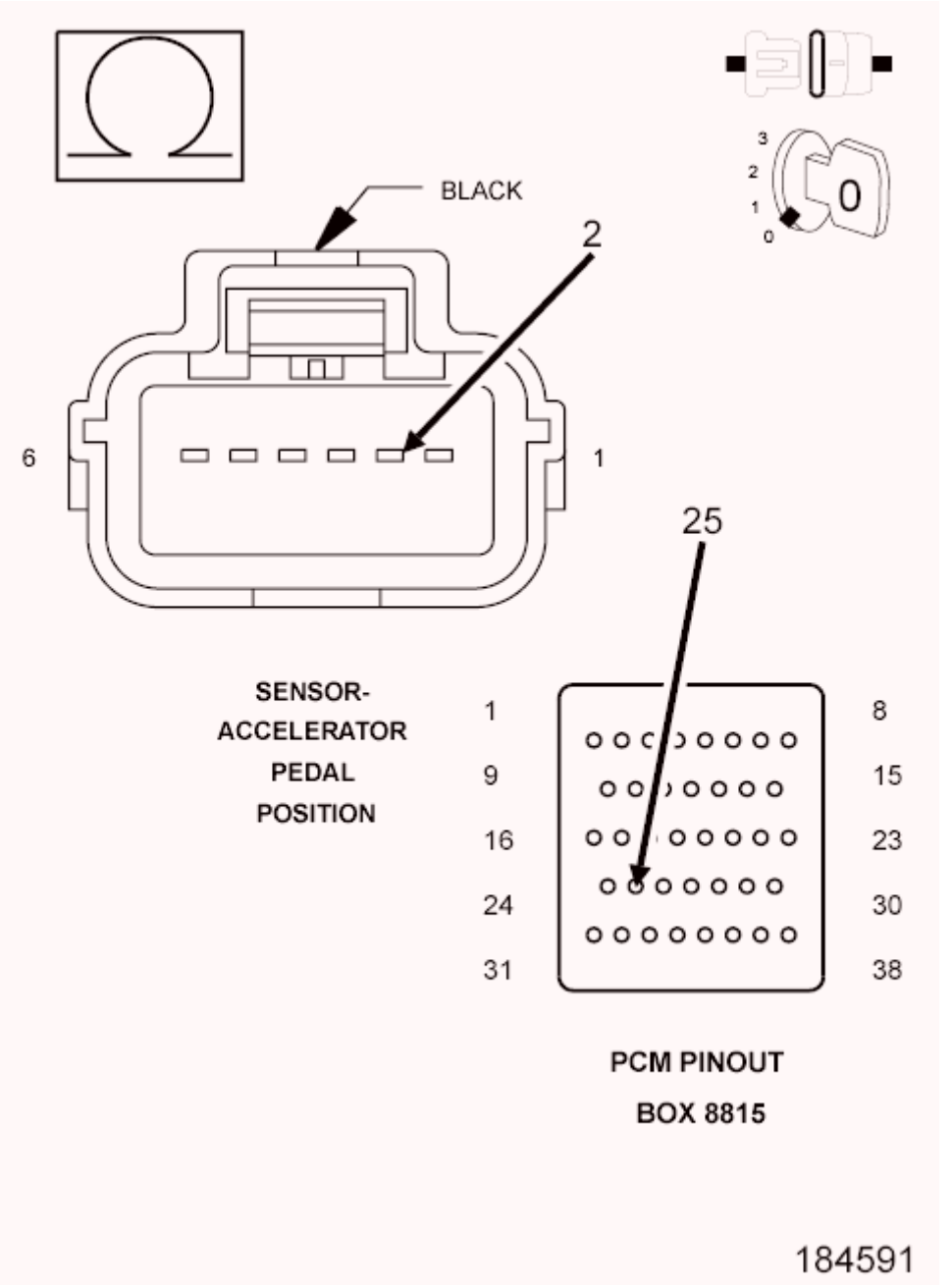

Fig. 167: Measuring Resistance Of (K23) APP Sensor No. 1 Signal Circuit From APP Sensor Harness Connector To Appropriate Terminal Of Special Tool #8815
Courtesy of CHRYSLER GROUP, LLC

1. Turn the ignition off.
2. Disconnect the C3 PCM harness connector.

CAUTION: Do not probe the PCM harness connectors. Probing the PCM harness connectors will damage the PCM terminals resulting in poor terminal to pin connection. Install the PCM Pinout Box (special tool #8815A, Kit, NGC, 38 Position) to perform diagnosis.

3. Measure the resistance of the (K23) APP Sensor No. 1 Signal circuit from the APP Sensor harness connector to the appropriate terminal of special tool (special tool #8815A, Kit, NGC, 38 Position).

   Is the resistance below 5.0 ohms?

   Yes

   - Go To 4.

   No

   - Repair the open in the (K23) APP Sensor No. 1 Signal circuit.
   - Perform the POWERTRAIN VERIFICATION TEST. Refer to **POWERTRAIN VERIFICATION TEST** .

4. **(K23) APP SENSOR NO. 1 SIGNAL CIRCUIT SHORTED TO GROUND**

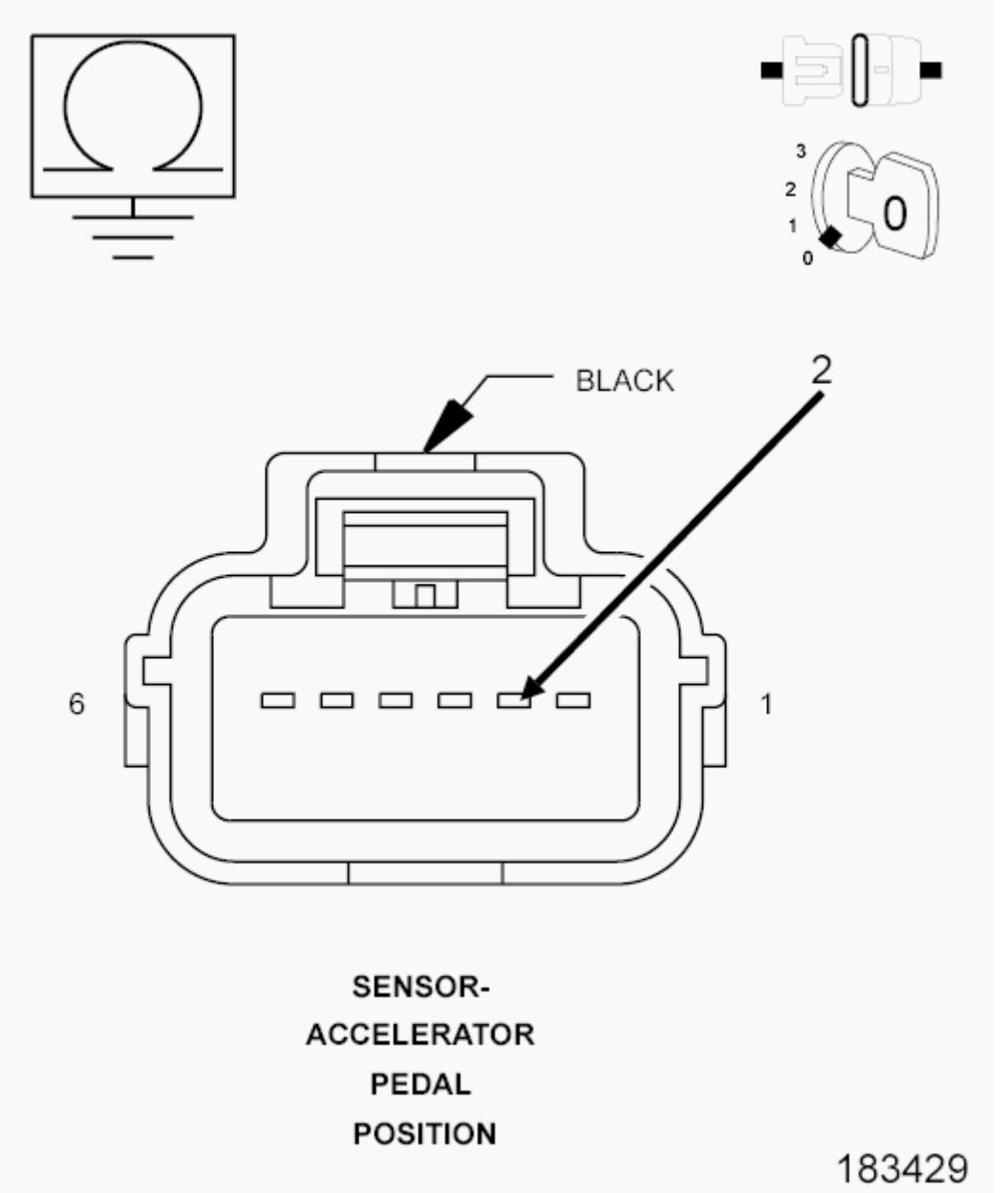

Fig. 168: Measuring Resistance Between Ground And (K23) APP Sensor No. 1 Signal Circuit In APP Sensor Harness Connector
Courtesy of CHRYSLER GROUP, LLC

1. Measure the resistance between ground and the (K23) APP Sensor No. 1 Signal circuit in the APP Sensor harness connector.

   Is the resistance below 100 ohms?

   Yes

   - Repair the short to ground in the (K23) APP Sensor No. 1 Signal circuit.

- Perform the POWERTRAIN VERIFICATION TEST. Refer to **POWERTRAIN VERIFICATION TEST** .

No

- Go To 5.

5. **(K23) APP SENSOR NO. 1 SIGNAL CIRCUIT SHORTED TO THE (K167) APP SENSOR NO. 1 RETURN CIRCUIT**

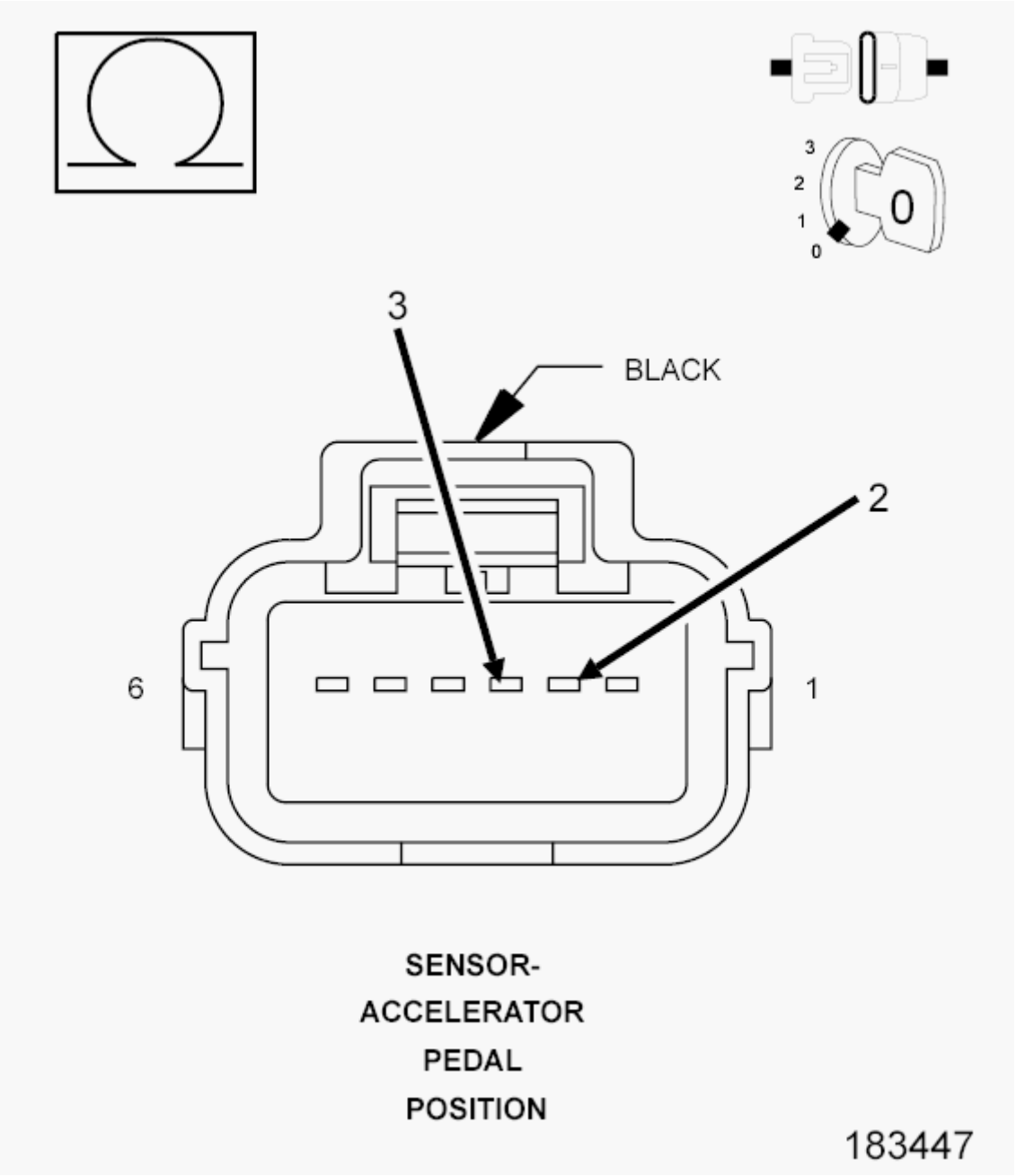

Fig. 169: Measuring Resistance Between (K23) APP Sensor No. 1 Signal Circuit And (K167) Sensor

No. 1 Return Circuit AT APP Sensor Harness Connector
Courtesy of CHRYSLER GROUP, LLC

1. Measure the resistance between the (K23) APP Sensor No. 1 Signal circuit and the (K167) Sensor No. 1 Return circuit at the APP Sensor harness connector.

   Is the resistance below 100 ohms?

   Yes

   - Repair the short between the (K167) APP Sensor No. 1 Return circuit and the (K23) APP Sensor No. 1 Signal circuit.
   - Perform the POWERTRAIN VERIFICATION TEST. Refer to **POWERTRAIN VERIFICATION TEST** .

   No

   - Go To 6.

6. **(K23) APP SENSOR NO. 1 SIGNAL CIRCUIT SHORTED TO THE (K400) APP SENSOR NO. 2 RETURN CIRCUIT**

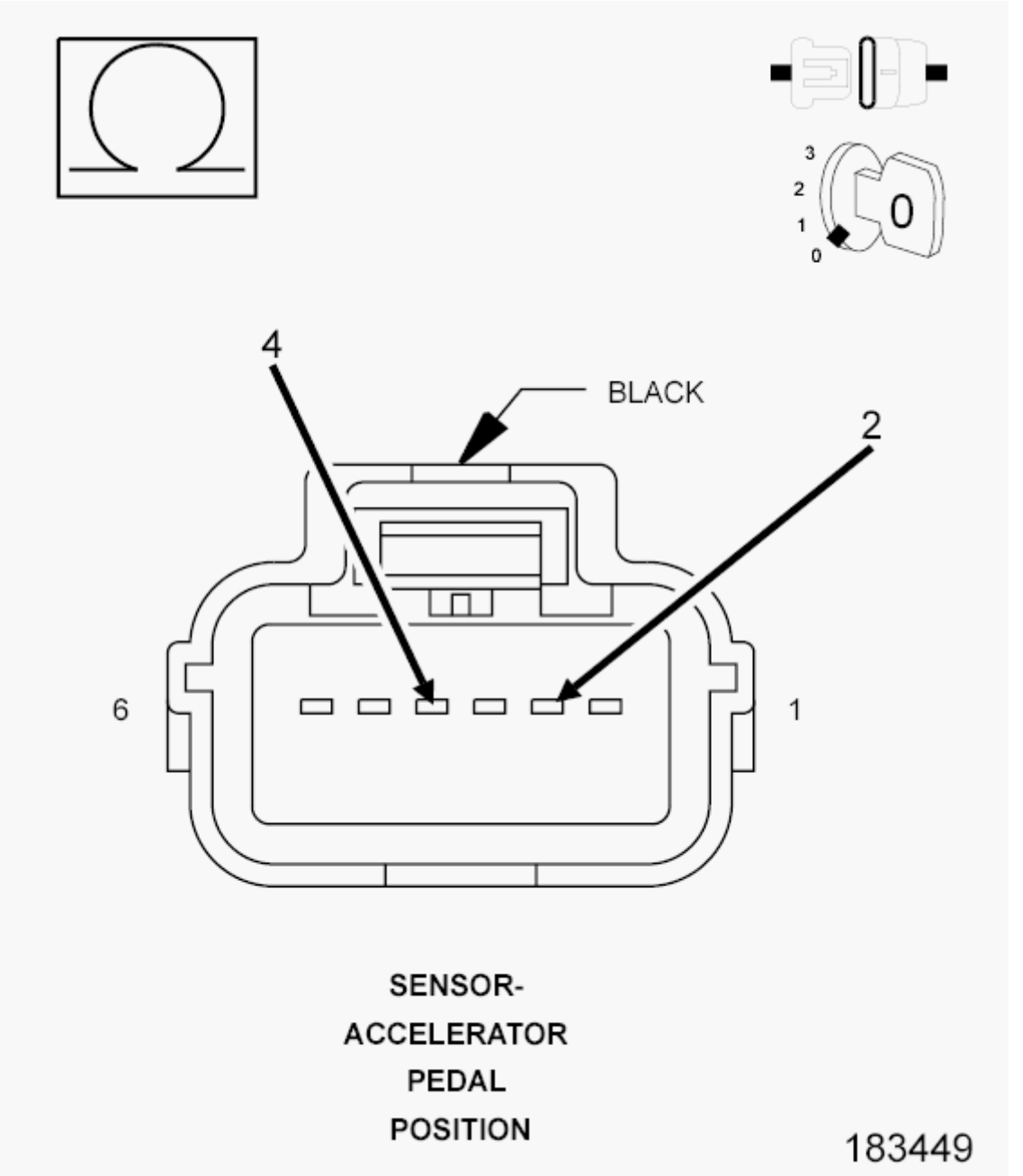

Fig. 170: Measuring Resistance Between (K23) APP Sensor No. 1 Signal Circuit And (K400) APP Sensor No. 2 Return Circuit In APP Sensor Harness Connector
Courtesy of CHRYSLER GROUP, LLC

1. Measure the resistance between the (K23) APP Sensor No. 1 Signal circuit and the (K400) APP Sensor No. 2 Return circuit in the APP Sensor harness connector.

   Is the resistance below 100 ohms?

   Yes

- Repair the short between the (K400) APP Sensor No. 2 Return circuit and the (K23) APP Sensor No. 1 Signal circuit.
- Perform the POWERTRAIN VERIFICATION TEST. Refer to **POWERTRAIN VERIFICATION TEST** .

No

- Go To 7.

7. **ACCELERATOR PEDAL POSITION SENSOR**

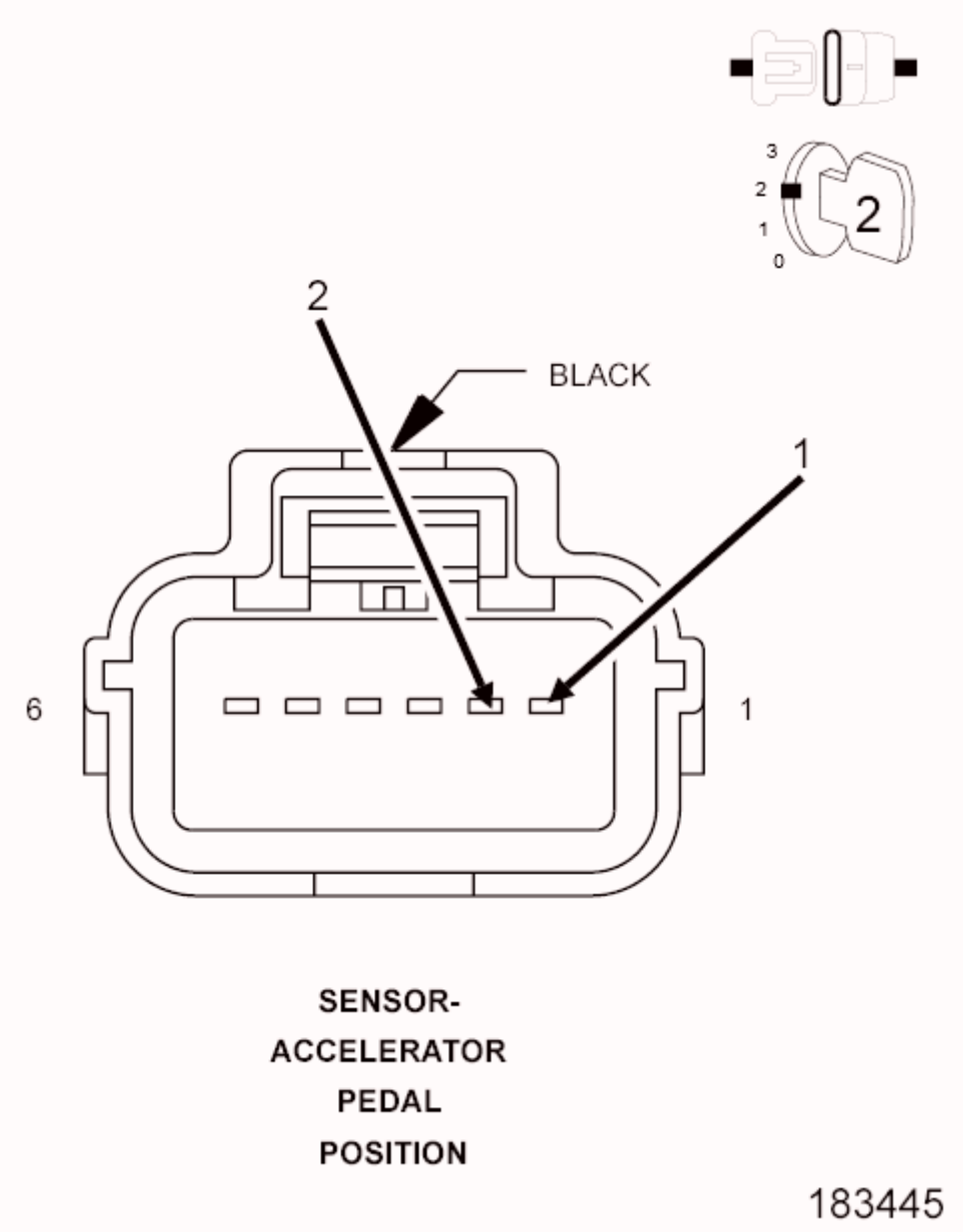

Fig. 171: Accelerator Pedal Position Sensor
Courtesy of CHRYSLER GROUP, LLC

1. Connect the PCM harness connectors.
2. Ignition on, engine not running.
3. With a scan tool, monitor the APP Sensor No. 1 voltage.
4. Connect a jumper wire between the (F855) 5-volt Supply circuit and the (K23) APP Sensor No. 1 Signal circuit in the Sensor harness connector.

NOTE: The sensor voltage should be approximately 5.0 volts (plus or minus .1 volt) with the jumper wire installed.

Does the scan tool display the voltage as described above?

Yes

- Verify that there is good pin to terminal contact in the APPS and the Powertrain Control Module connectors. Replace the APP Sensor Assembly per Service Information if no problems were found with the connectors. After installation is complete, use a scan tool and select the ETC RELEARN function to relearn the APPS values.
- Perform the POWERTRAIN VERIFICATION TEST. Refer to **POWERTRAIN VERIFICATION TEST** .

No

- Go To 10.

NOTE: Remove the jumper wire before continuing.

-

8. **(F855) 5-VOLT SUPPLY CIRCUIT OPEN**

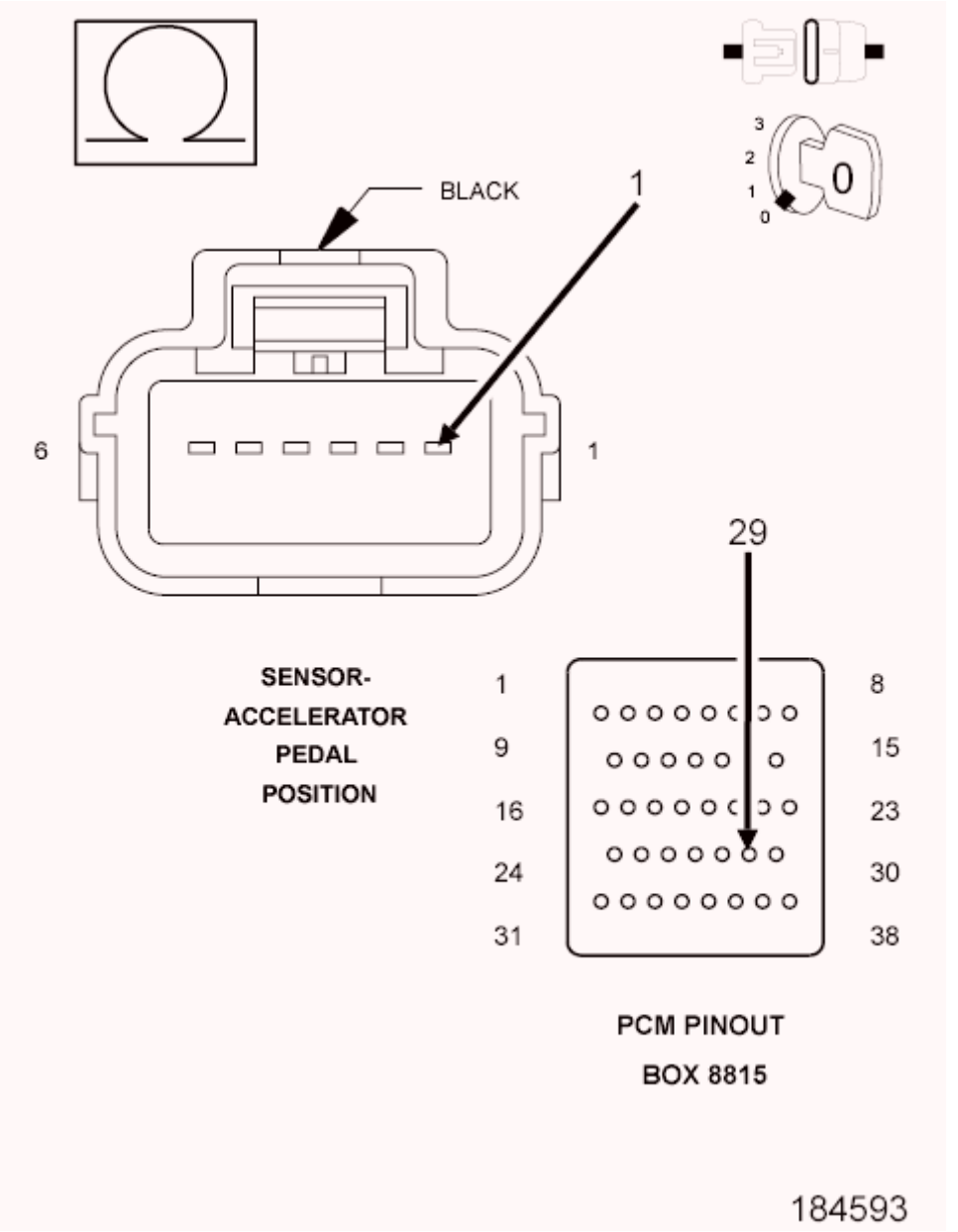

Fig. 172: Measuring Resistance Of (F855) 5-Volt Supply Circuit From Sensor Harness Connector To Appropriate Terminal Of Special Tool #8815
Courtesy of CHRYSLER GROUP, LLC

1. Turn the ignition off.
2. Disconnect the C2 PCM harness connector.

CAUTION: Do not probe the PCM harness connectors. Probing the PCM harness connectors will damage the PCM terminals resulting in poor terminal to pin connection. Install the PCM Pinout Box (special tool #8815A, Kit, NGC, 38 Position) to perform diagnosis.

3. Measure the resistance of the (F855) 5-volt Supply circuit from the Sensor harness connector to the appropriate terminal of special tool (special tool #8815A, Kit, NGC, 38 Position).

   Is the resistance below 5.0 ohms?

   Yes

   - Go To 9.

   No

   - Repair the open in the (F855) 5-volt Supply circuit.
   - Perform the POWERTRAIN VERIFICATION TEST. Refer to **POWERTRAIN VERIFICATION TEST** .

9. **(F855) 5-VOLT SUPPLY CIRCUIT SHORTED TO GROUND**

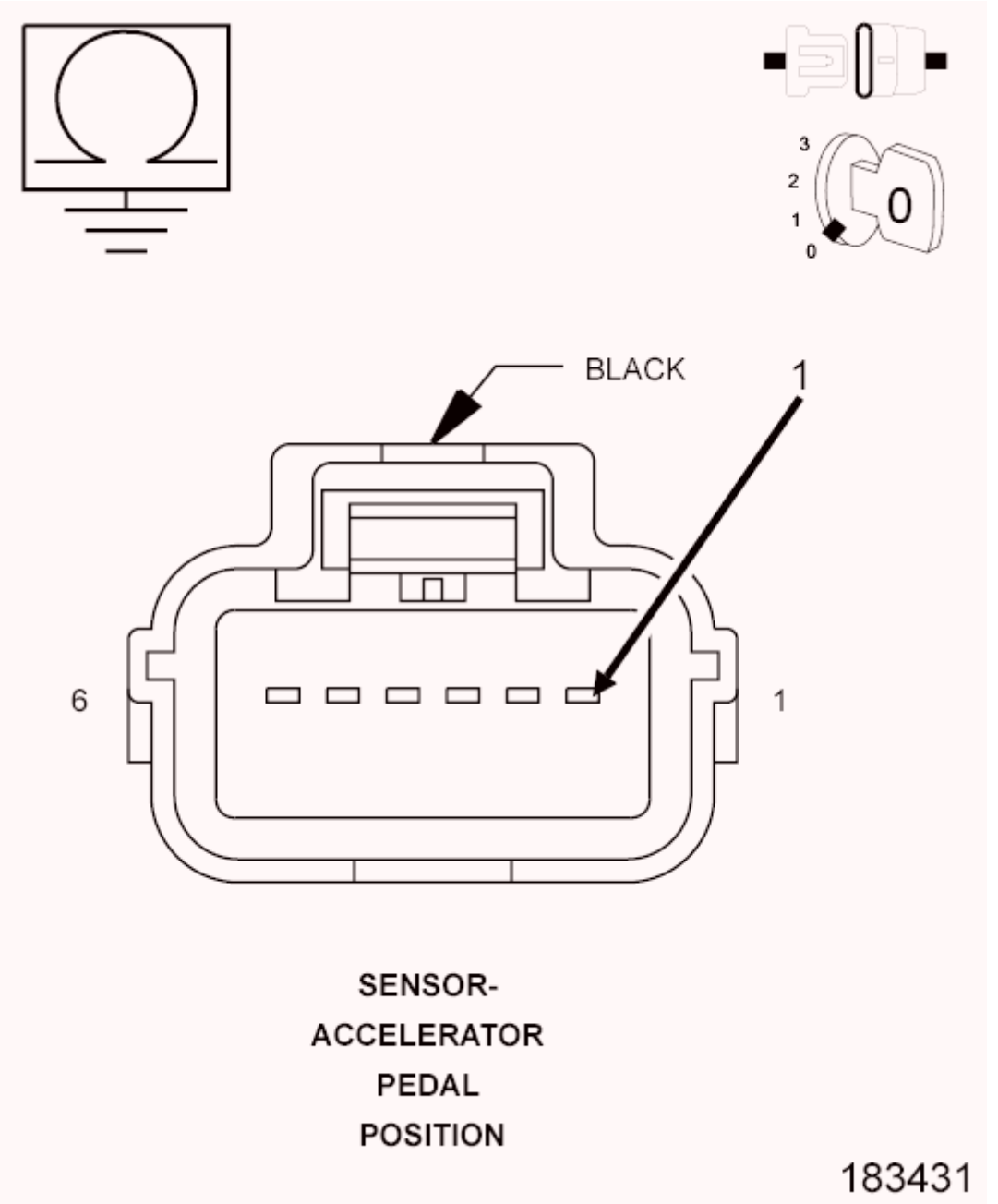

Fig. 173: Measuring Resistance Between Ground And (F855) 5-Volt Supply Circuit In APP Sensor Harness Connector
Courtesy of CHRYSLER GROUP, LLC

1. Measure the resistance between ground and the (F855) 5-volt Supply circuit in the APP Sensor harness connector.

   Is the resistance below 100 ohms?

   Yes

- Repair the short to ground in the (F855) 5-volt Supply circuit.
- Perform the POWERTRAIN VERIFICATION TEST. Refer to **POWERTRAIN VERIFICATION TEST** .

No

- Go To 10.

10. **POWERTRAIN CONTROL MODULE (PCM)**
    1. Using the wiring diagram/schematic as a guide, inspect the wiring and connectors between the Accelerator Pedal Position Sensor and the Powertrain Control Module (PCM).
    2. Look for any chafed, pierced, pinched, or partially broken wires.
    3. Look for broken, bent, pushed out or corroded terminals. Verify that there is good pin to terminal contact in the APPS and the Powertrain Control Module connectors.
    4. Refer to any Technical Service Bulletins that may apply.

    Were there any problems found?

    Yes

    - Repair as necessary.
    - Perform the POWERTRAIN VERIFICATION TEST. Refer to **POWERTRAIN VERIFICATION TEST** .

    No

    - Replace and program the Powertrain Control Module per Service Information. Refer to **MODULE, POWERTRAIN CONTROL, REMOVAL** .
    - Perform the POWERTRAIN VERIFICATION TEST. Refer to **POWERTRAIN VERIFICATION TEST** .

11. **APP SENSOR SWEEP**
    1. Ignition on, engine not running.
    2. With a scan tool, monitor the APP Sensor No. 1 voltage.
    3. Slowly press the Accelerator pedal down.

    Does voltage start at approximately 0.45 of a volt and go above 4.6 volts with a smooth transition?

    Yes

    - Perform the INTERMITTENT CONDITION diagnostic procedure. Refer to **INTERMITTENT CONDITION** .

    No

    - Replace the APP Sensor Assembly per Service Information. After installation is complete,

use a scan tool and select the ETC RELEARN function to relearn the APPS values.

- Perform the POWERTRAIN VERIFICATION TEST. Refer to **POWERTRAIN VERIFICATION TEST** .

P2123-ACCELERATOR PEDAL POSITION SENSOR 1 CIRCUIT HIGH

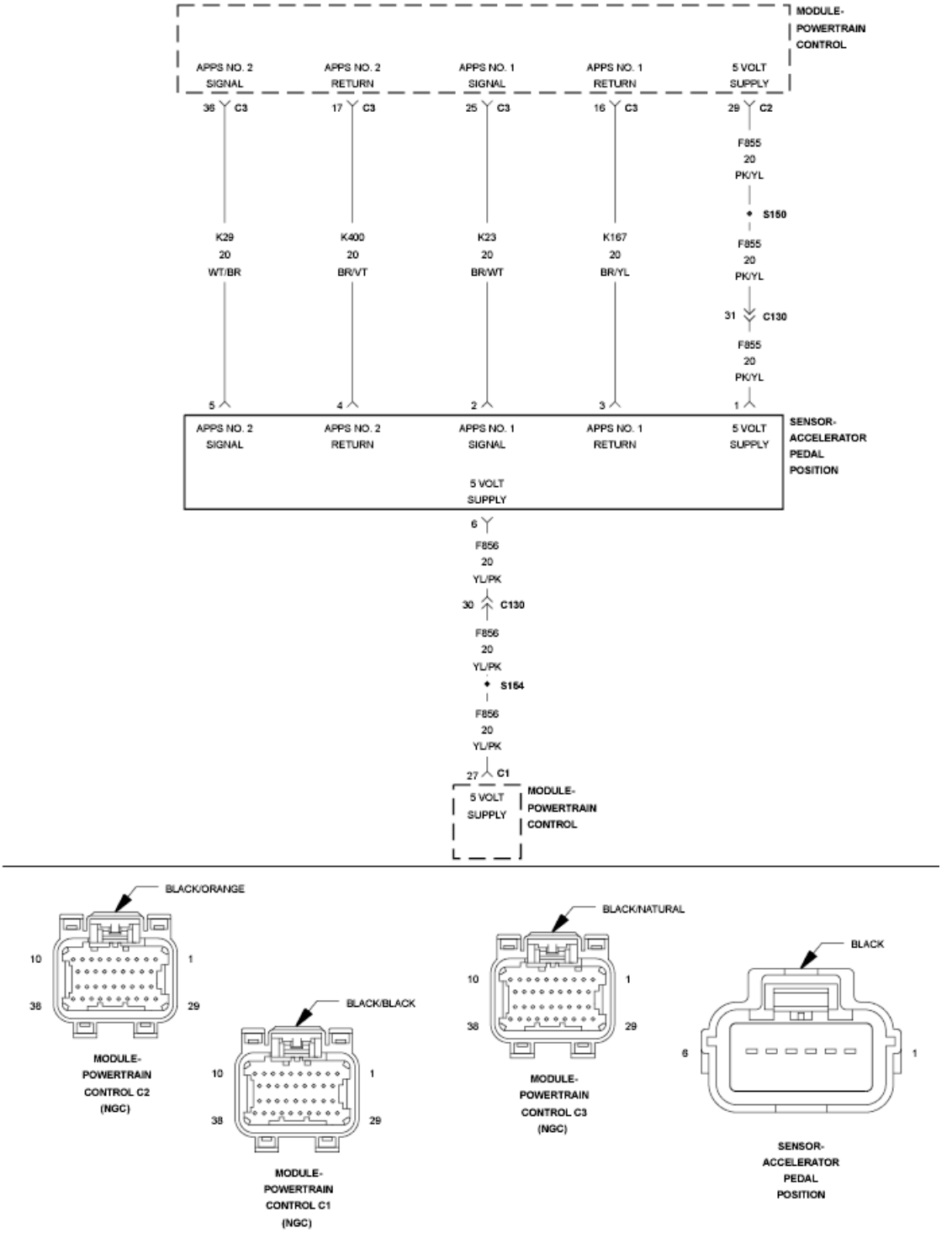

Fig. 174: Accelerator Pedal Position Sensor Circuit Schematic
Courtesy of CHRYSLER GROUP, LLC

For a complete wiring diagram **refer to appropriate SYSTEM WIRING DIAGRAMS article** .

WHEN MONITORED:

With the ignition on and no other APPS No. 1 DTCs present.

SET CONDITION:

When APP Sensor No. 1 voltage is too high. Engine will additionally idle if the brake pedal is pressed or has failed. Acceleration rate and Engine output are limited. One trip fault and the code will set within 5 seconds. ETC light is flashing.

POSSIBLE CAUSES

Possible Causes
(K23) APP SENSOR NO. 1 SIGNAL CIRCUIT SHORTED TO VOLTAGE
(K23) APP SENSOR NO. 1 SIGNAL SHORTED TO THE (F855) 5-VOLT SUPPLY CIRCUIT
(K23) APP SENSOR NO. 1 SIGNAL SHORTED TO THE (F856) 5-VOLT SUPPLY CIRCUIT
(K167) APP SENSOR NO. 1 RETURN CIRCUIT OPEN
APP SENSOR
POWERTRAIN CONTROL MODULE (PCM)

Always perform the Pre-Diagnostic Troubleshooting procedure before proceeding. Refer to PRE-DIAGNOSTIC TROUBLESHOOTING PROCEDURE .

DIAGNOSTIC TEST

1. **ACTIVE DTC**
   1. Start the engine and allow it to reach normal operating temperature.

      WARNING: When the engine is operating, do not stand in direct line with the fan. Do not put your hands near the pulleys, belts or fan. Do not wear loose clothing. Failure to follow these instructions may result in possible serious or fatal injury.

      NOTE: Diagnose and repair any system voltage or sensor supply voltage DTCs before continuing with this test.

      NOTE: If you are viewing data recorder information or Freeze Frame data the APP Sensor No. 2 is pulled low by the PCM as part of its system testing. This test happens every 320 milliseconds and may not show up on the scan tool but may show up on a data recorder or lab scope. It is acceptable to see the voltage close to zero with a normal sensor when using a data recorder/lab scope.

   2. With the scan tool, select View DTCs.

      Is the DTC Active at this time?

Yes

- Go To 2.

No

- Go To 8.

2. **(K23) APP SENSOR NO. 1 SIGNAL CIRCUIT SHORTED TO VOLTAGE**

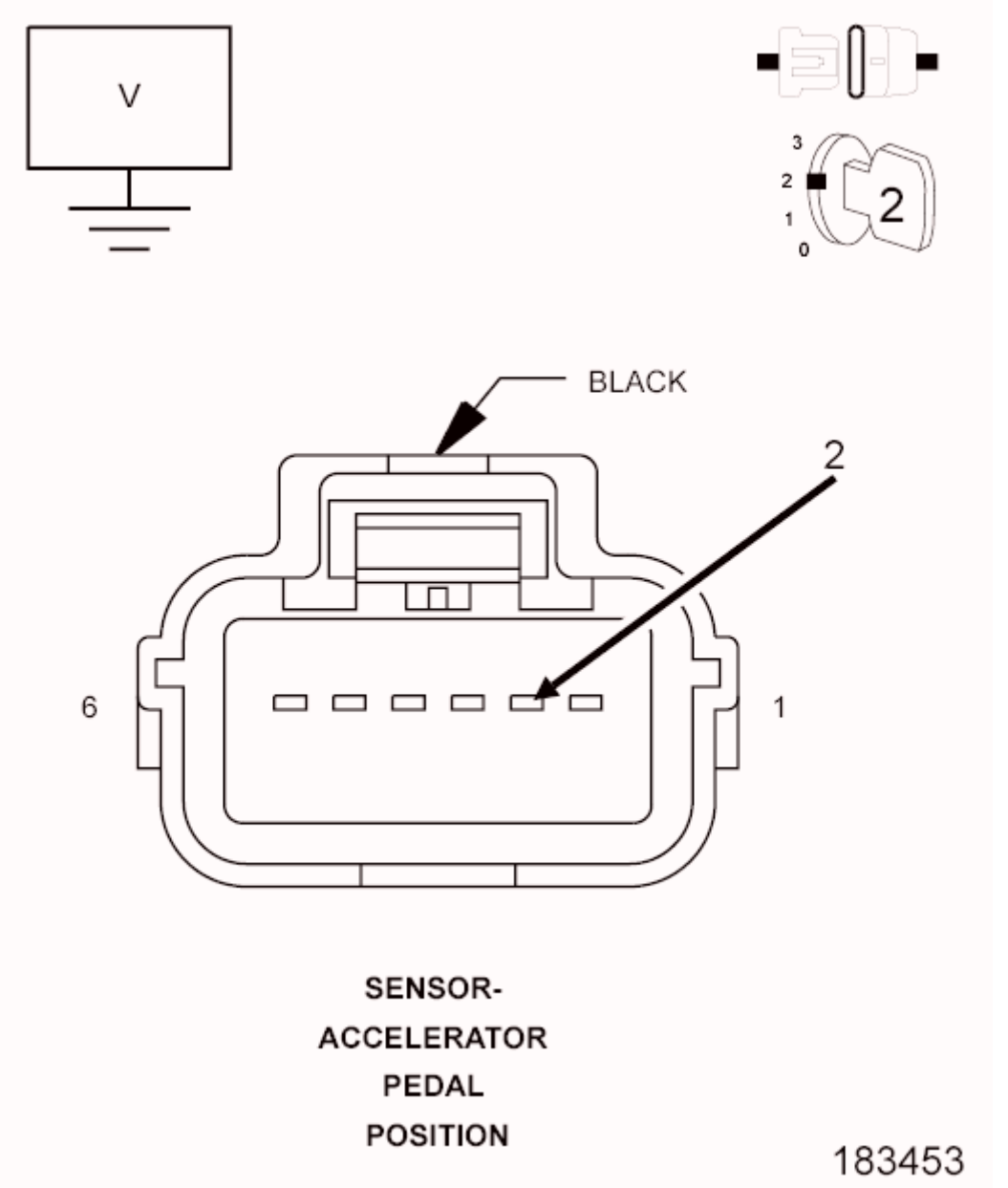

Fig. 175: Measuring Voltage On (K23) APP Sensor No. 1 Signal Circuit In APP Sensor Harness Connector
Courtesy of CHRYSLER GROUP, LLC

1. Turn the ignition off.
2. Disconnect the APP Sensor harness connector.
3. Disconnect the PCM harness connectors.
4. Ignition on, engine not running.
5. Measure the voltage on the (K23) APP Sensor No. 1 Signal circuit in the APP Sensor harness connector.

   Is there any voltage present?

   Yes

   - Repair the short to voltage in the (K23) APP Sensor No. 1 Signal circuit.
   - Perform the POWERTRAIN VERIFICATION TEST. Refer to **POWERTRAIN VERIFICATION TEST** .

   No

   - Go To 3.

3. **(K23) APPS NO. 1 SIGNAL CIRCUIT SHORTED TO THE (F855) 5-VOLT SUPPLY CIRCUIT**

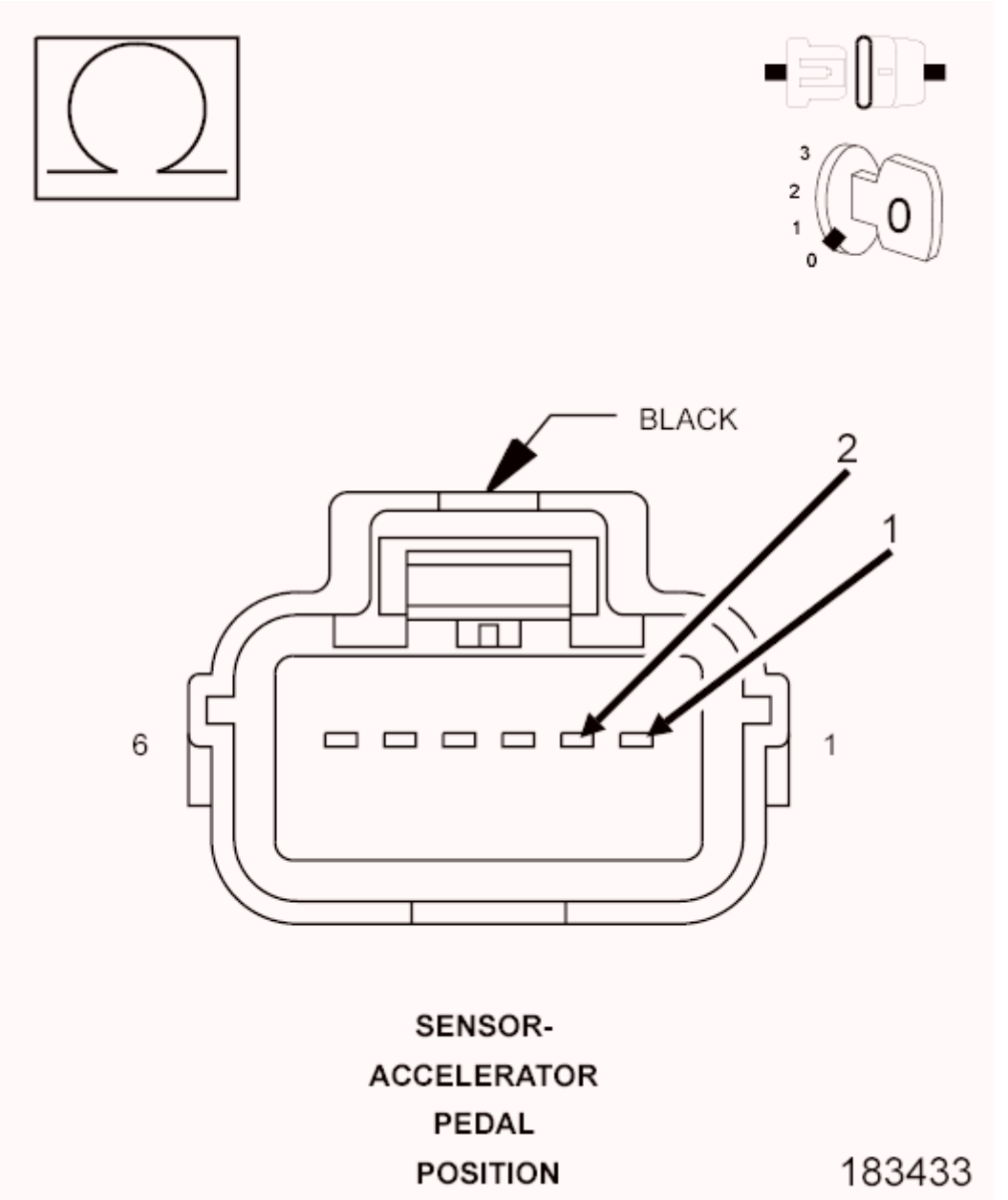

Fig. 176: Measuring Resistance Between (K23) APP Sensor No. 1 Signal Circuit And (F855) 5-Volt Supply Circuit In APP Sensor Harness Connector
Courtesy of CHRYSLER GROUP, LLC

1. Turn the ignition off.
2. Measure the resistance between the (K23) APP Sensor No. 1 Signal circuit and the (F855) 5-volt Supply circuit in the APP Sensor harness connector.

   Is the resistance below 100 ohms?

   Yes

- Repair the short between the (K23) APP Sensor No. 1 Signal circuit and the (F855) 5-volt Supply circuit.
- Perform the POWERTRAIN VERIFICATION TEST. Refer to **POWERTRAIN VERIFICATION TEST** .

No

- Go To 4.

4. **(K23) APPS NO. 1 SIGNAL CIRCUIT SHORTED TO THE (F856) 5-VOLT SUPPLY CIRCUIT**

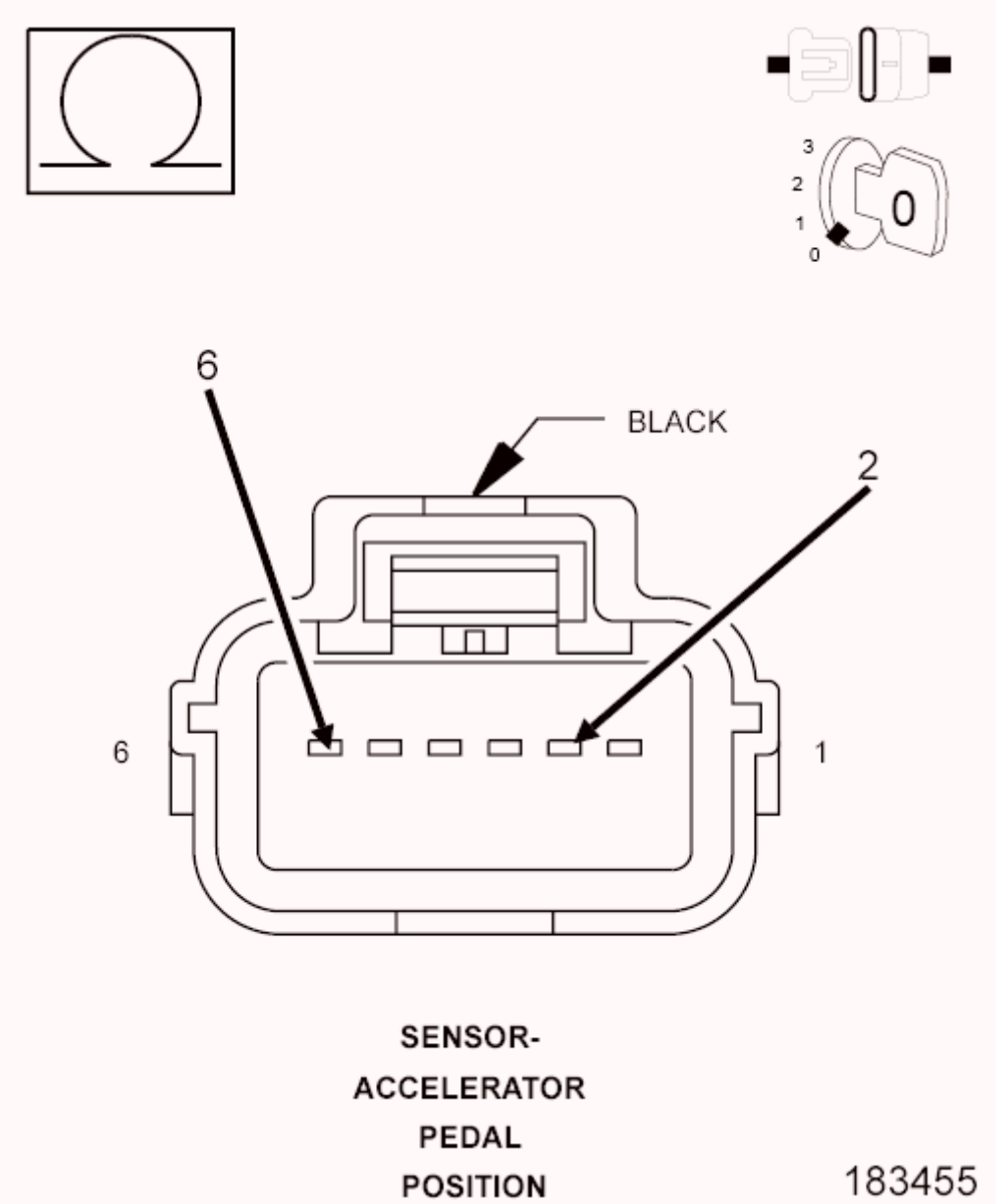

Fig. 177: Measuring Resistance Between (K23) APP Sensor No. 1 Signal Circuit And (F856) 5-Volt Supply Circuit In APP Sensor Harness Connector

Courtesy of CHRYSLER GROUP, LLC

1. Measure the resistance between the (K23) APP Sensor No. 1 Signal circuit and the (F856) 5-volt Supply circuit in the APP Sensor harness connector.

   Is the resistance below 100 ohms?

   Yes

   - Repair the short between the (K23) APP Sensor No. 1 Signal circuit and the (F856) 5-volt Supply circuit.
   - Perform the POWERTRAIN VERIFICATION TEST. Refer to **POWERTRAIN VERIFICATION TEST** .

   No

   - Go To 5.

5. **(K167) APP SENSOR NO. 1 RETURN CIRCUIT OPEN**

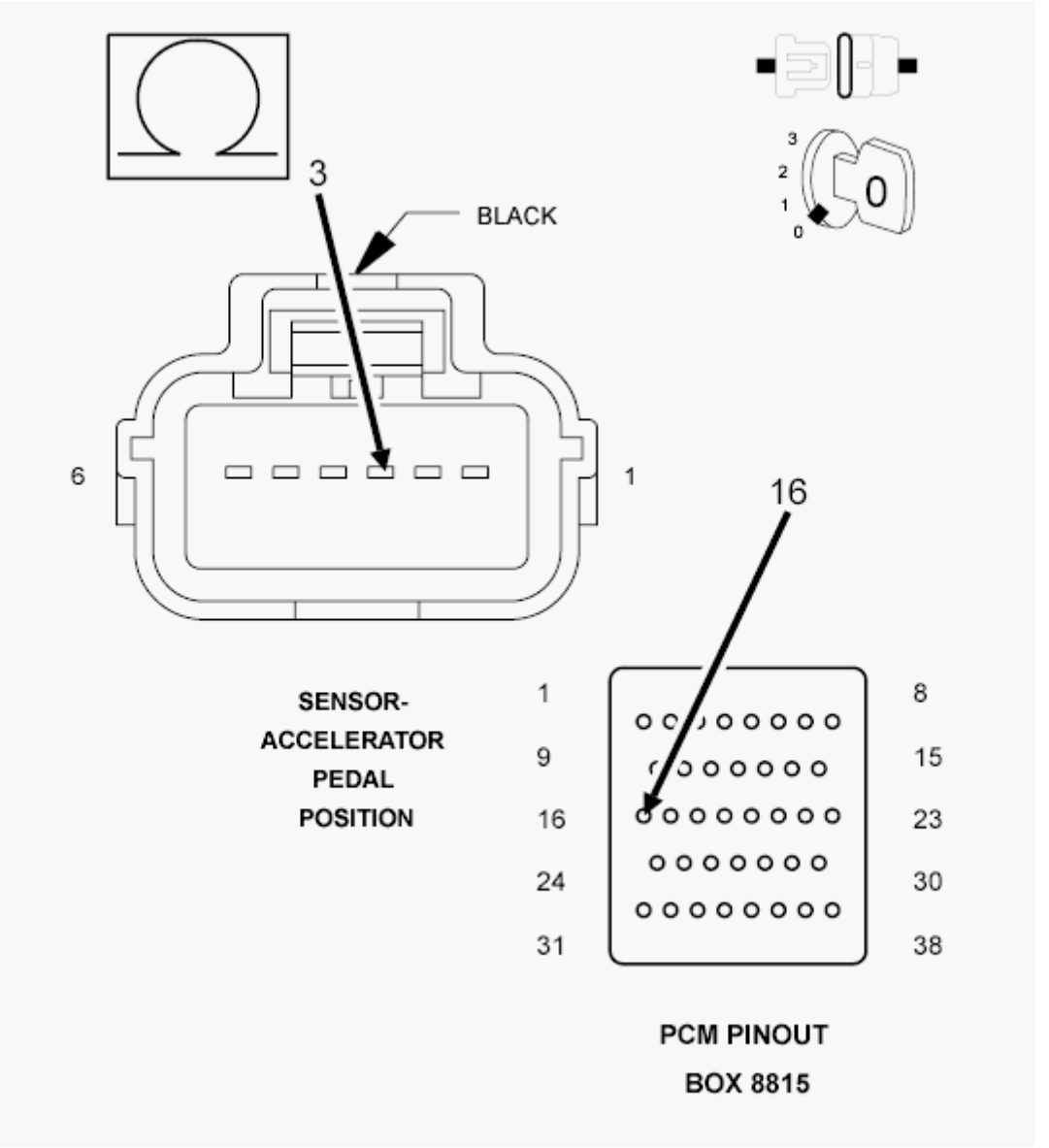

Fig. 178: Measuring Resistance Of (K167) APP Sensor No. 1 Return Circuit From APP Sensor Harness Connector To Appropriate Terminal Of Special Tool #8815
Courtesy of CHRYSLER GROUP, LLC

CAUTION: Do not probe the PCM harness connectors. Probing the PCM harness connectors will damage the PCM terminals resulting in poor terminal to pin connection. Install the PCM Pinout Box (special tool #8815A, Kit, NGC, 38 Position) to perform diagnosis.

1. Measure the resistance of the (K167) APP Sensor No. 1 Return circuit from the APP Sensor harness connector to the appropriate terminal of special tool (special tool #8815A, Kit, NGC, 38 Position).

   Is the resistance below 5.0 ohms?

Yes

- Go To 6.

No

- Repair the open in the (K167) APP Sensor No. 1 Return circuit.
- Perform the POWERTRAIN VERIFICATION TEST. Refer to **POWERTRAIN VERIFICATION TEST** .

6. **ACCELERATOR PEDAL POSITION SENSOR**
   1. Connect the PCM harness connectors.
   2. Ignition on, engine not running.
   3. With a scan tool, monitor the APP Sensor 1 voltage.

   Is the voltage above 0 volts?

   Yes

   - Go To 7.

   No

   - Verify that there is good pin to terminal contact in the APPS and the Powertrain Control Module connectors. Replace the APP Sensor Assembly per Service Information if no problems were found with the connectors. After installation is complete, use a scan tool and select the ETC RELEARN function to relearn the APPS values.
   - Perform the POWERTRAIN VERIFICATION TEST. Refer to **POWERTRAIN VERIFICATION TEST** .
7. **POWERTRAIN CONTROL MODULE (PCM)**
   1. Using the wiring diagram/schematic as a guide, inspect the wiring and connectors between the Accelerator Pedal Position Sensor and the Powertrain Control Module (PCM).
   2. Look for any chafed, pierced, pinched, or partially broken wires.
   3. Look for broken, bent, pushed out or corroded terminals. Verify that there is good pin to terminal contact in the APPS and the Powertrain Control Module connectors.
   4. Refer to any Technical Service Bulletins that may apply.

   Were there any problems found?

   Yes

   - Repair as necessary.
   - Perform the POWERTRAIN VERIFICATION TEST. Refer to **POWERTRAIN VERIFICATION TEST** .

No

- Replace and program the Powertrain Control Module per Service Information. Refer to **MODULE, POWERTRAIN CONTROL, REMOVAL** .
- Perform the POWERTRAIN VERIFICATION TEST. Refer to **POWERTRAIN VERIFICATION TEST** .

8. **APP SENSOR NO. 1 SWEEP**
   1. Ignition on, engine not running.
   2. With a scan tool, monitor the Accelerator Pedal Position Sensor voltage.
   3. Slowly press the Accelerator Pedal down.

   Does voltage start at approximately 0.45 of a volt and go above 4.6 volts with a smooth transition?

   Yes

   - Perform the INTERMITTENT CONDITION diagnostic procedure. Refer to **INTERMITTENT CONDITION** .

   No

   - Replace the APP Sensor Assembly per Service Information. After installation is complete, use a scan tool and select the ETC RELEARN function to relearn the APPS values.
   - Perform the POWERTRAIN VERIFICATION TEST. Refer to **POWERTRAIN VERIFICATION TEST** .

P2127-ACCELERATOR PEDAL POSITION SENSOR 2 CIRCUIT LOW

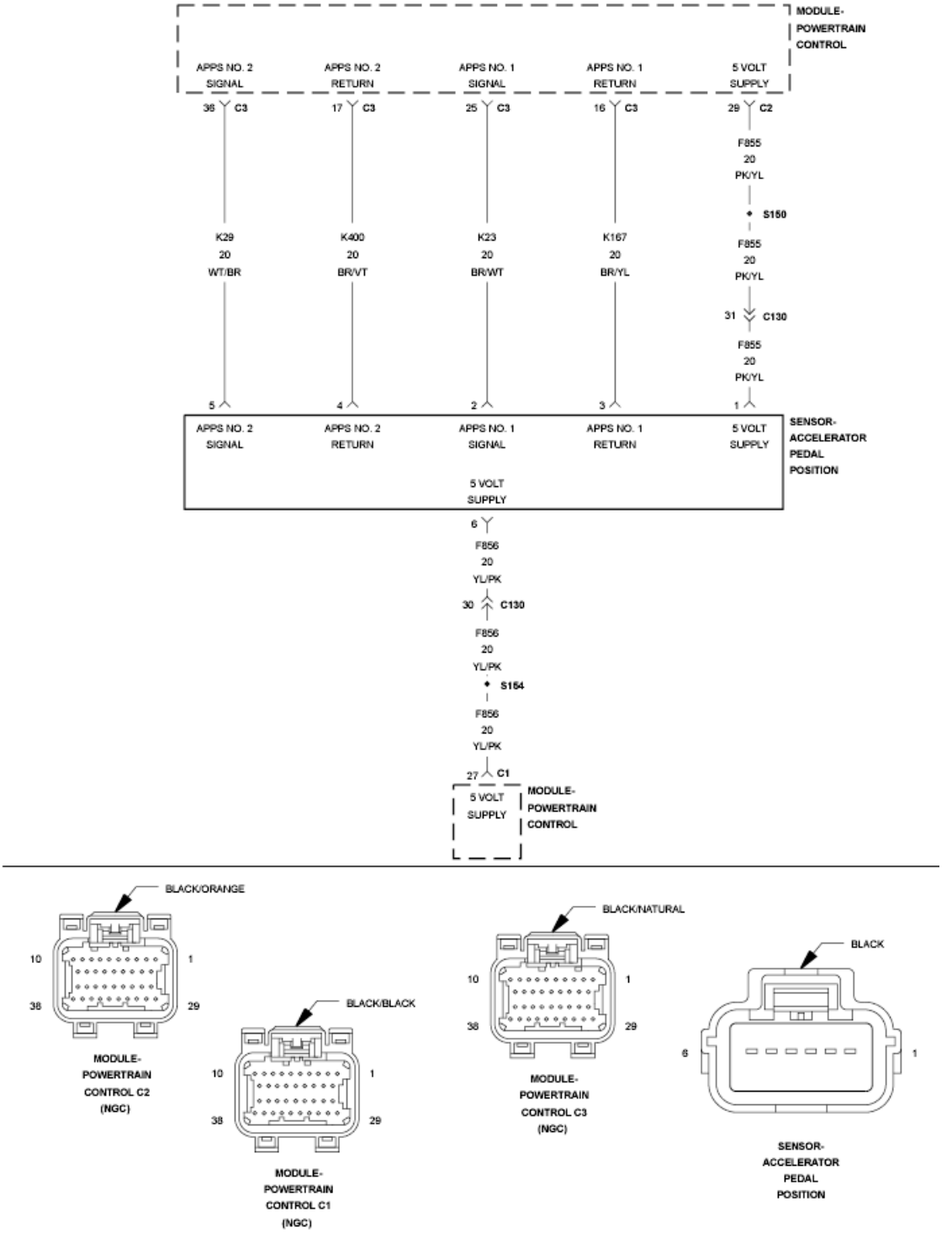

Fig. 179: Accelerator Pedal Position Sensor Circuit Schematic
Courtesy of CHRYSLER GROUP, LLC

For a complete wiring diagram **refer to appropriate SYSTEM WIRING DIAGRAMS article** .

WHEN MONITORED:

With the ignition on and no other APPS No. 2 DTCs present.

SET CONDITION:

When the APP Sensor No. 2 voltage is too low. Engine will only idle if the Brake pedal is Pressed or has failed. Acceleration rate and Engine output are limited. One trip fault and the code will set within 5 seconds. ETC light is flashing.

POSSIBLE CAUSES

Possible Causes
(F856) 5-VOLT SUPPLY CIRCUIT OPEN
(F856) 5-VOLT SUPPLY CIRCUIT SHORTED TO GROUND
(K29) APP SENSOR NO. 2 SIGNAL CIRCUIT OPEN
(K29) APP SENSOR NO. 2 SIGNAL CIRCUIT SHORTED TO GROUND
(K29) APP SENSOR NO. 2 SIGNAL CIRCUIT SHORTED TO THE (K167) APP SENSOR NO. 1 RETURN CIRCUIT
(K29) APP SENSOR NO. 2 SIGNAL CIRCUIT SHORTED TO THE (K400) APP SENSOR NO. 2 RETURN CIRCUIT
APP SENSOR
POWERTRAIN CONTROL MODULE (PCM)

Always perform the Pre-Diagnostic Troubleshooting procedure before proceeding. Refer to PRE-DIAGNOSTIC TROUBLESHOOTING PROCEDURE .

DIAGNOSTIC TEST

1. **ACTIVE DTC**
    1. Start the engine and allow it to reach normal operating temperature.

WARNING: When the engine is operating, do not stand in direct line with the fan. Do not put your hands near the pulleys, belts or fan. Do not wear loose clothing. Failure to follow these instructions may result in possible serious or fatal injury.

NOTE: Diagnose and repair any system voltage or sensor supply voltage DTCs before continuing with this test.

NOTE: If you are viewing data recorder information or Freeze Frame data the APP Sensor No. 2 is pulled low by the PCM as part of its system testing. This test happens every 320 milliseconds and may not show up on the scan tool but may show up on a data recorder or lab scope. It is acceptable to see the voltage close to zero with a normal sensor when using a data recorder/lab scope.

2. With the scan tool, select View DTCs.

   Is the status Active for this DTC?

   Yes

   - Go To 2.

   No

   - Go To 11.

2. **(F856) 5-VOLT SUPPLY CIRCUIT**

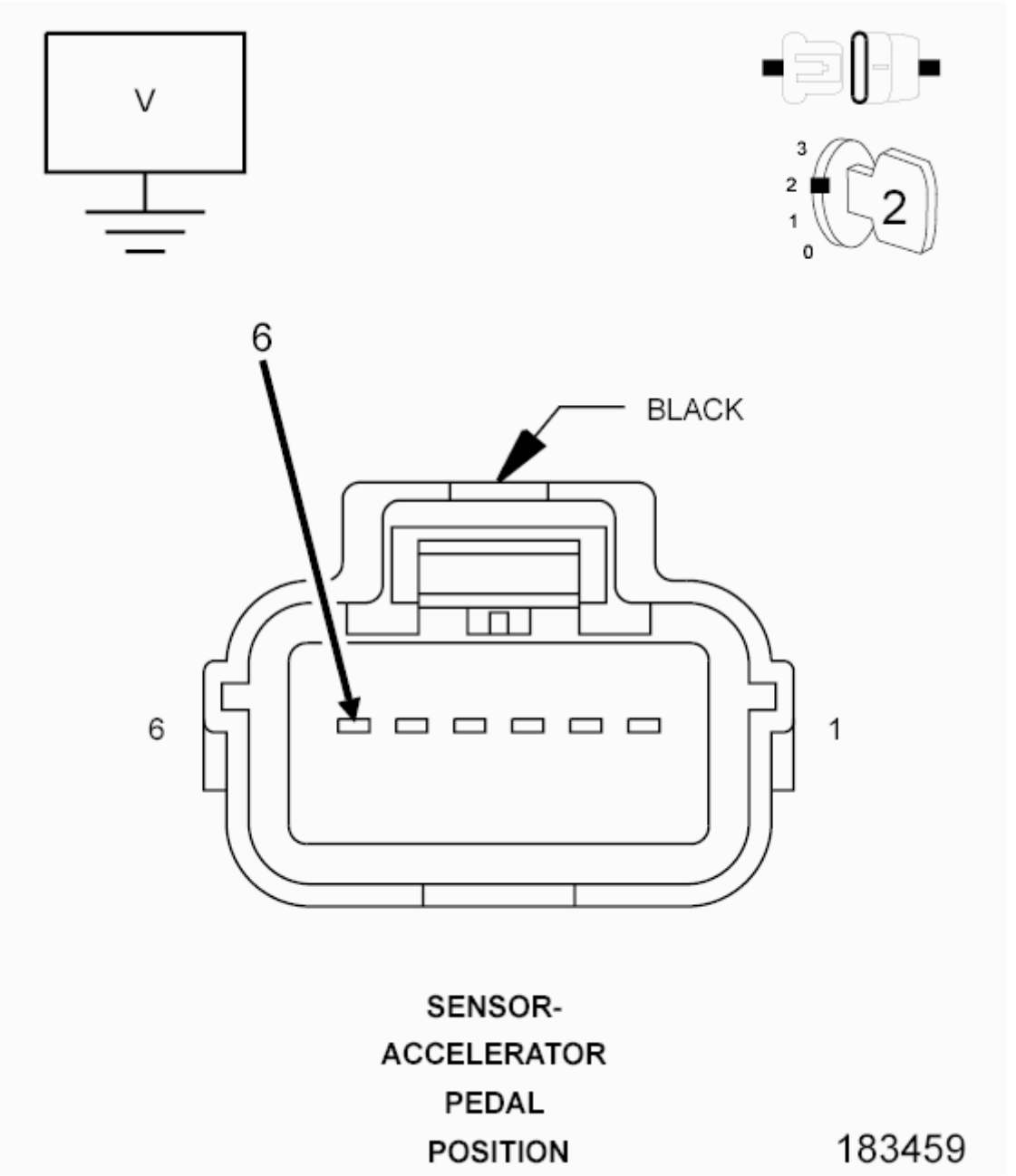

Fig. 180: Measuring Voltage On (F856) 5-Volt Supply Circuit In APP Sensor Harness Connector
Courtesy of CHRYSLER GROUP, LLC

1. Turn the ignition off.
2. Disconnect the APP Sensor harness connector.
3. Ignition on, engine not running.
4. Measure the voltage on the (F856) 5-volt Supply circuit in the APP Sensor harness connector.

   Is the voltage between 4.5 and 5.2 volts?

   Yes

- Go To 3.

No

- Go To 8.

3. **(K29) APP SENSOR NO. 2 SIGNAL CIRCUIT OPEN**

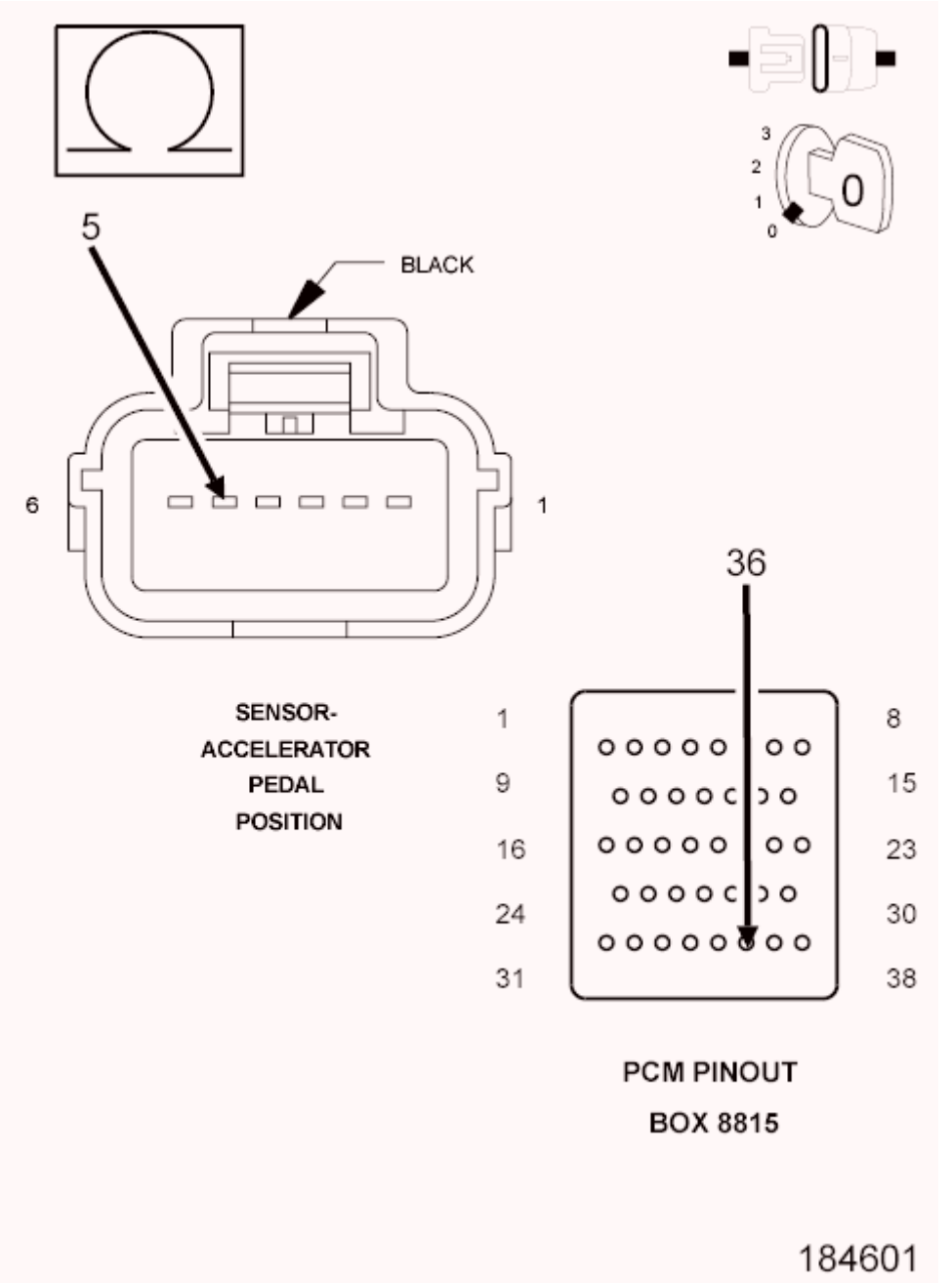

Fig. 181: Measuring Resistance Of (K29) APP Sensor No. 2 Signal Circuit From APP Sensor Harness Connector To Appropriate Terminal Of Special Tool #8815
Courtesy of CHRYSLER GROUP, LLC

1. Turn the ignition off.
2. Disconnect the PCM harness connectors.

CAUTION: Do not probe the PCM harness connectors. Probing the PCM harness connectors will damage the PCM terminals resulting in poor terminal to pin connection. Install the PCM Pinout Box (special tool #8815A, Kit, NGC, 38 Position) to perform diagnosis.

3. Measure the resistance of the (K29) APP Sensor No. 2 Signal circuit from the APP Sensor harness connector to the appropriate terminal of special tool (special tool #8815A, Kit, NGC, 38 Position).

   Is the resistance below 5.0 ohms?

   Yes

   - Go To 4.

   No

   - Repair the open in the (K29) APP Sensor No. 2 Signal circuit.
   - Perform the POWERTRAIN VERIFICATION TEST. Refer to **POWERTRAIN VERIFICATION TEST** .

4. **(K29) APP SENSOR NO. 2 SIGNAL CIRCUIT SHORTED TO GROUND**

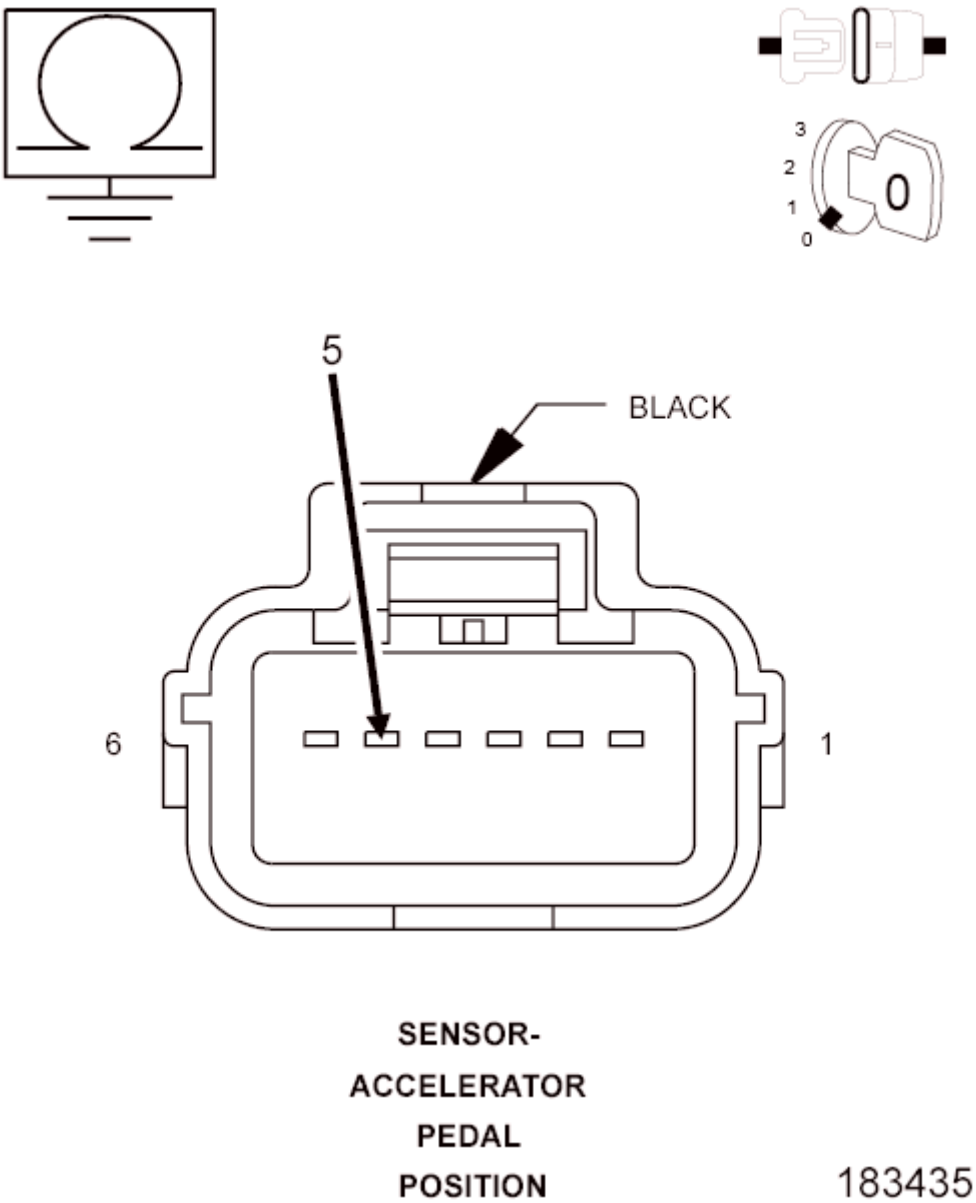

Fig. 182: Measuring Resistance Between Ground And (K29) APP Sensor No. 2 Signal Circuit In APP Sensor Harness Connector
Courtesy of CHRYSLER GROUP, LLC

1. Measure the resistance between ground and the (K29) APP Sensor No. 2 Signal circuit in the APP Sensor harness connector.

   Is the resistance below 100 ohms?

   Yes

   - Repair the short to ground in the (K29) APP Sensor No. 2 Signal circuit.
   - Perform the POWERTRAIN VERIFICATION TEST. Refer to **POWERTRAIN**

VERIFICATION TEST .

No

- Go To 5.

5. **(K29) APP SENSOR NO. 2 SIGNAL CIRCUIT SHORTED TO THE (K400) APP SENSOR NO. 2 RETURN CIRCUIT**

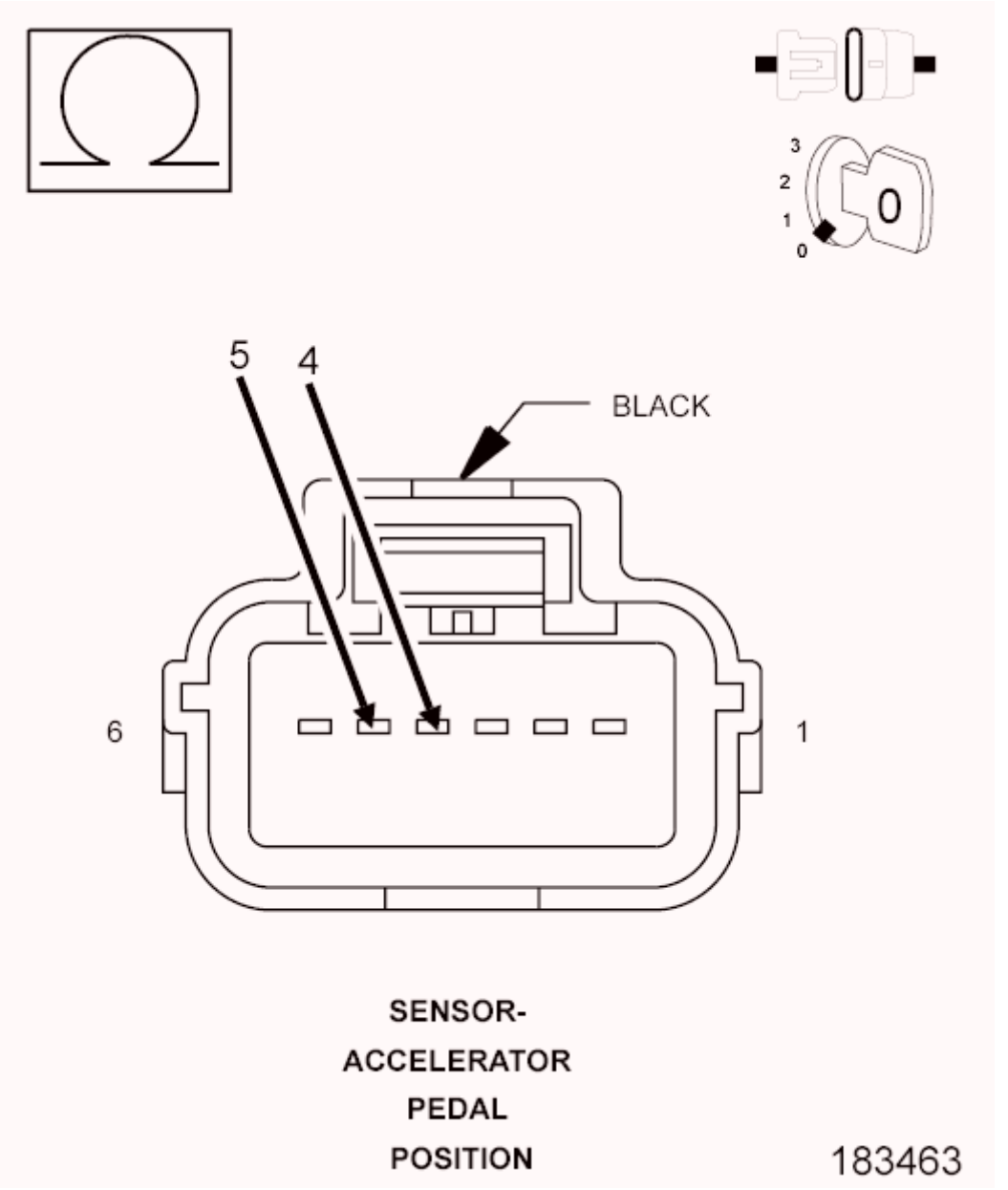

Fig. 183: Measuring Resistance Between (K29) APP Sensor No. 2 Signal Circuit And (K400) APP Sensor No. 2 Return Circuit In APP Sensor Harness Connector
Courtesy of CHRYSLER GROUP, LLC

1. Measure the resistance between the (K29) APP Sensor No. 2 Signal circuit and the (K400) APP

Sensor No. 2 Return circuit in the APP Sensor harness connector.

Is the resistance below 100 ohms?

Yes

- Repair the short between the (K400) APP Sensor No. 2 Return circuit and the (K29) APP Sensor No. 2 Signal circuit.
- Perform the POWERTRAIN VERIFICATION TEST. Refer to **POWERTRAIN VERIFICATION TEST** .

No

- Go To 6.

6. **(K29) APP SENSOR NO. 2 SIGNAL CIRCUIT SHORTED TO THE (K167) APP SENSOR NO. 1 RETURN CIRCUIT**

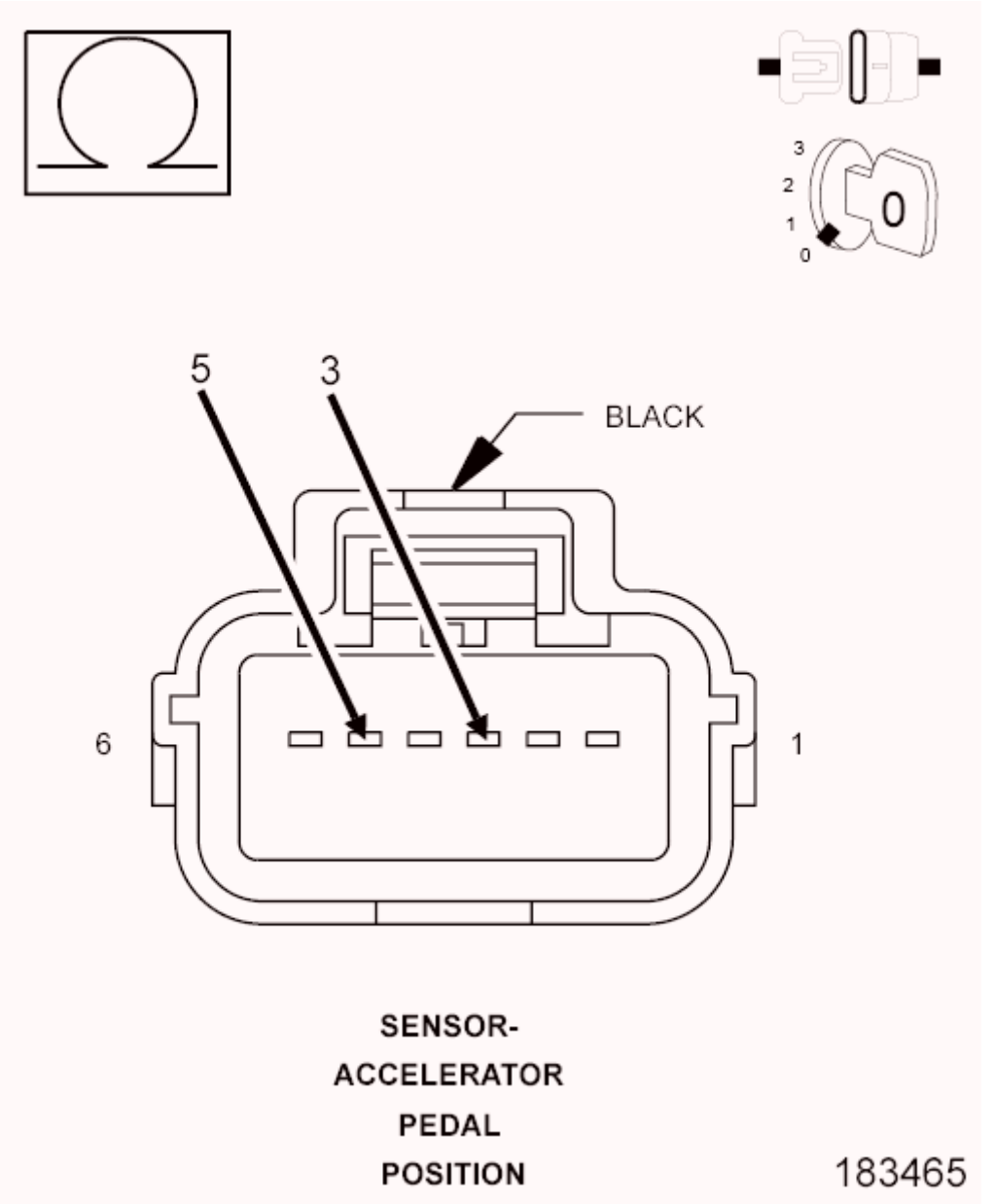

Fig. 184: Measuring Resistance Between (K29) APP Sensor No. 2 Signal Circuit And (K167) APP Sensor No. 1 Return Circuit In APP Sensor Harness Connector
Courtesy of CHRYSLER GROUP, LLC

1. Measure the resistance between the (K29) APP Sensor No. 2 Signal circuit and the (K167) APP Sensor No. 1 Return circuit in the APP Sensor harness connector.

   Is the resistance below 100 ohms?

   Yes

   - Repair the short between the (K167) APP Sensor No. 1 Return circuit and the (K29) APP Sensor No. 2 Signal circuit.

- Perform the POWERTRAIN VERIFICATION TEST. Refer to **POWERTRAIN VERIFICATION TEST** .

No

- Go To 7.

7. **ACCELERATOR PEDAL POSITION SENSOR**

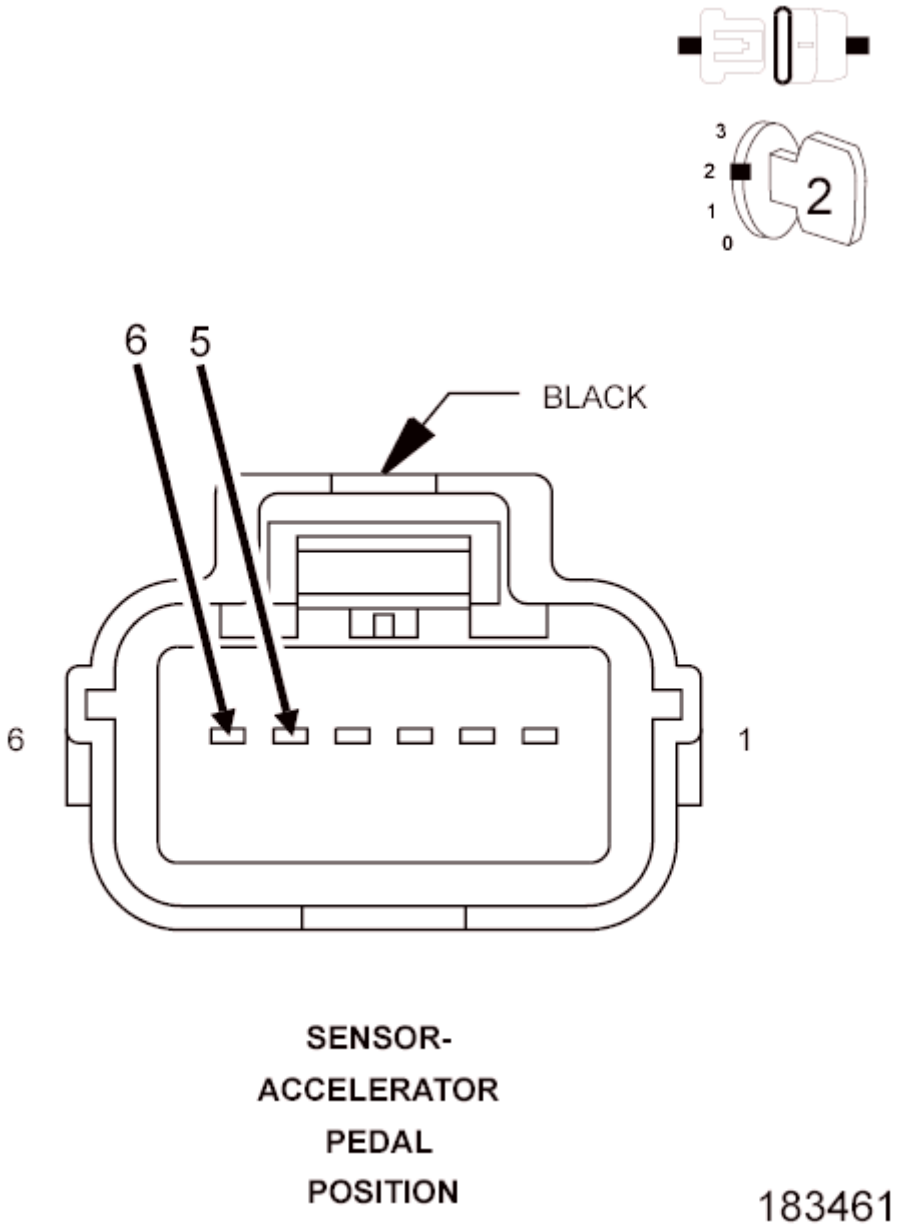

Fig. 185: Accelerator Pedal Position Sensor Harness Connector
Courtesy of CHRYSLER GROUP, LLC

1. Connect the PCM harness connectors.

2. Ignition on, engine not running.
3. Connect a jumper wire between the (F856) 5-volt Supply circuit and the (K29) APP Sensor No. 2 Signal circuit in the Sensor harness connector.
4. With a scan tool, monitor the APP Sensor No. 2 voltage.

NOTE: The sensor voltage should be approximately 5.0 volts (plus or minus .1 volt) with the jumper wire installed.

Does the scan tool display the voltage as described above?

Yes

- Verify that there is good pin to terminal contact in the APPS and the Powertrain Control Module connectors. Replace the APP Sensor Assembly per Service Information if no problems were found with the connectors. After installation is complete, use a scan tool and select the ETC RELEARN function to relearn the APPS values.
- Perform the POWERTRAIN VERIFICATION TEST. Refer to **POWERTRAIN VERIFICATION TEST** .

No

- Go To 10.

NOTE: Remove the jumper wire before continuing.

-

8. **(F856) 5-VOLT SUPPLY CIRCUIT OPEN**

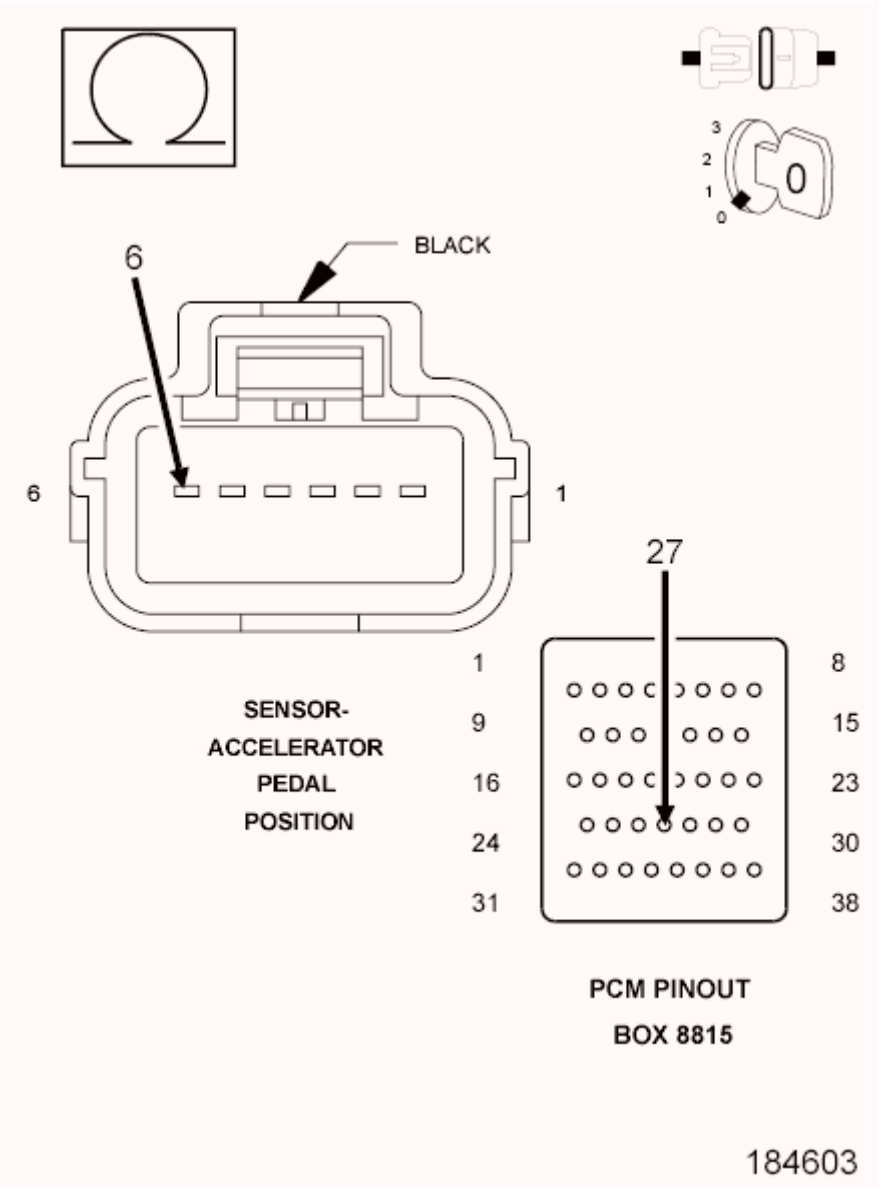

Fig. 186: Measuring Resistance Of (F856) 5-Volt Supply Circuit From Sensor Harness Connector To Appropriate Terminal Of Special Tool #8815
Courtesy of CHRYSLER GROUP, LLC

1. Turn the ignition off.
2. Disconnect the C1 PCM harness connector.

CAUTION: Do not probe the PCM harness connectors. Probing the PCM harness connectors will damage the PCM terminals resulting in poor terminal to pin connection. Install the PCM Pinout Box (special tool #8815A, Kit, NGC, 38 Position) to perform diagnosis.

3. Measure the resistance of the (F856) 5-volt Supply circuit from the Sensor harness connector to the

appropriate terminal of special tool (special tool #8815A, Kit, NGC, 38 Position).

Is the resistance below 5.0 ohms?

Yes

- Go To 9.

No

- Repair the open in the (F856) 5-volt Supply circuit.
- Perform the POWERTRAIN VERIFICATION TEST. Refer to **POWERTRAIN VERIFICATION TEST** .

9. **(F856) 5-VOLT SUPPLY CIRCUIT SHORTED TO GROUND**

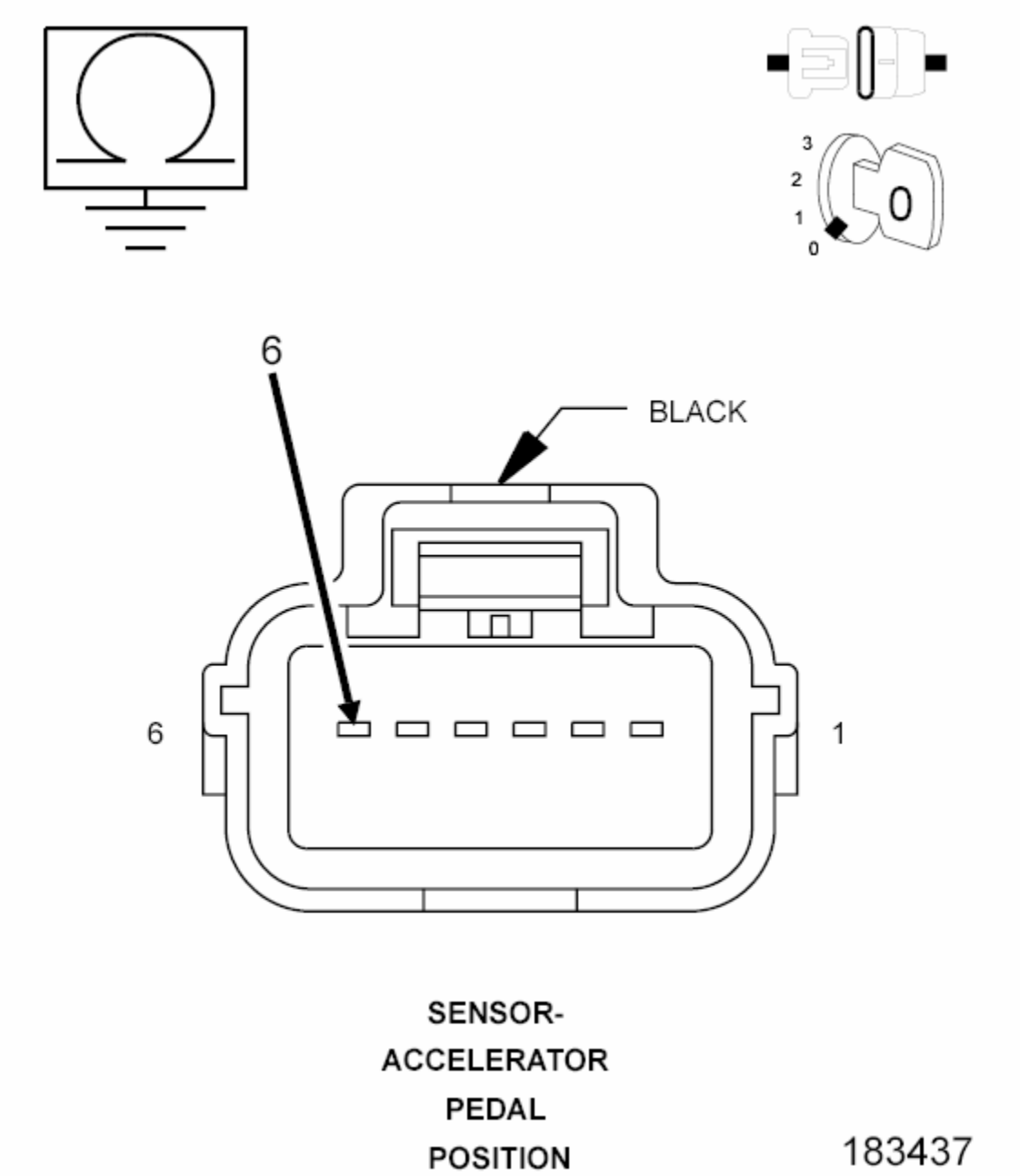

Fig. 187: Measuring Resistance Between Ground And (F856) 5-Volt Supply Circuit In APP Sensor Harness Connector
Courtesy of CHRYSLER GROUP, LLC

1. Measure the resistance between ground and the (F856) 5-volt Supply circuit in the APP Sensor harness connector.

   Is the resistance below 100 ohms?

   Yes

- Repair the short to ground in the (F856) 5-volt Supply circuit.
- Perform the POWERTRAIN VERIFICATION TEST. Refer to **POWERTRAIN VERIFICATION TEST** .

No

- Go To 10.

10. **POWERTRAIN CONTROL MODULE (PCM)**
    1. Using the wiring diagram/schematic as a guide, inspect the wiring and connectors between the Accelerator Pedal Position Sensor and the Powertrain Control Module (PCM).
    2. Look for any chafed, pierced, pinched, or partially broken wires.
    3. Look for broken, bent, pushed out or corroded terminals. Verify that there is good pin to terminal contact in the APPS and the Powertrain Control Module connectors.
    4. Refer to any Technical Service Bulletins that may apply.

    Were there any problems found?

    Yes

    - Repair as necessary.
    - Perform the POWERTRAIN VERIFICATION TEST. Refer to **POWERTRAIN VERIFICATION TEST** .

    No

    - Replace and program the Powertrain Control Module per Service Information. Refer to **MODULE, POWERTRAIN CONTROL, REMOVAL** .
    - Perform the POWERTRAIN VERIFICATION TEST. Refer to **POWERTRAIN VERIFICATION TEST** .

11. **APP SENSOR SWEEP**
    1. Ignition on, engine not running.
    2. With a scan tool, monitor the APP Sensor 2 voltage.
    3. Slowly press the Accelerator pedal down.

    Does voltage start at approximately 0.22 of a volt and go above 2.31 volts with a smooth transition?

    Yes

    - Perform the INTERMITTENT CONDITION diagnostic procedure. Refer to **INTERMITTENT CONDITION** .

    No

    - Replace the APP Sensor Assembly per Service Information. After installation is complete,

use a scan tool and select the ETC RELEARN function to relearn the APPS values.

- Perform the POWERTRAIN VERIFICATION TEST. Refer to **POWERTRAIN VERIFICATION TEST** .

Powertrain Control Module (PCM) - Electrical Diagnostics, 5.7L - 3500 Cab & Chassis

DIAGNOSIS AND TESTING

P2128-ACCELERATOR PEDAL POSITION SENSOR 2 CIRCUIT HIGH

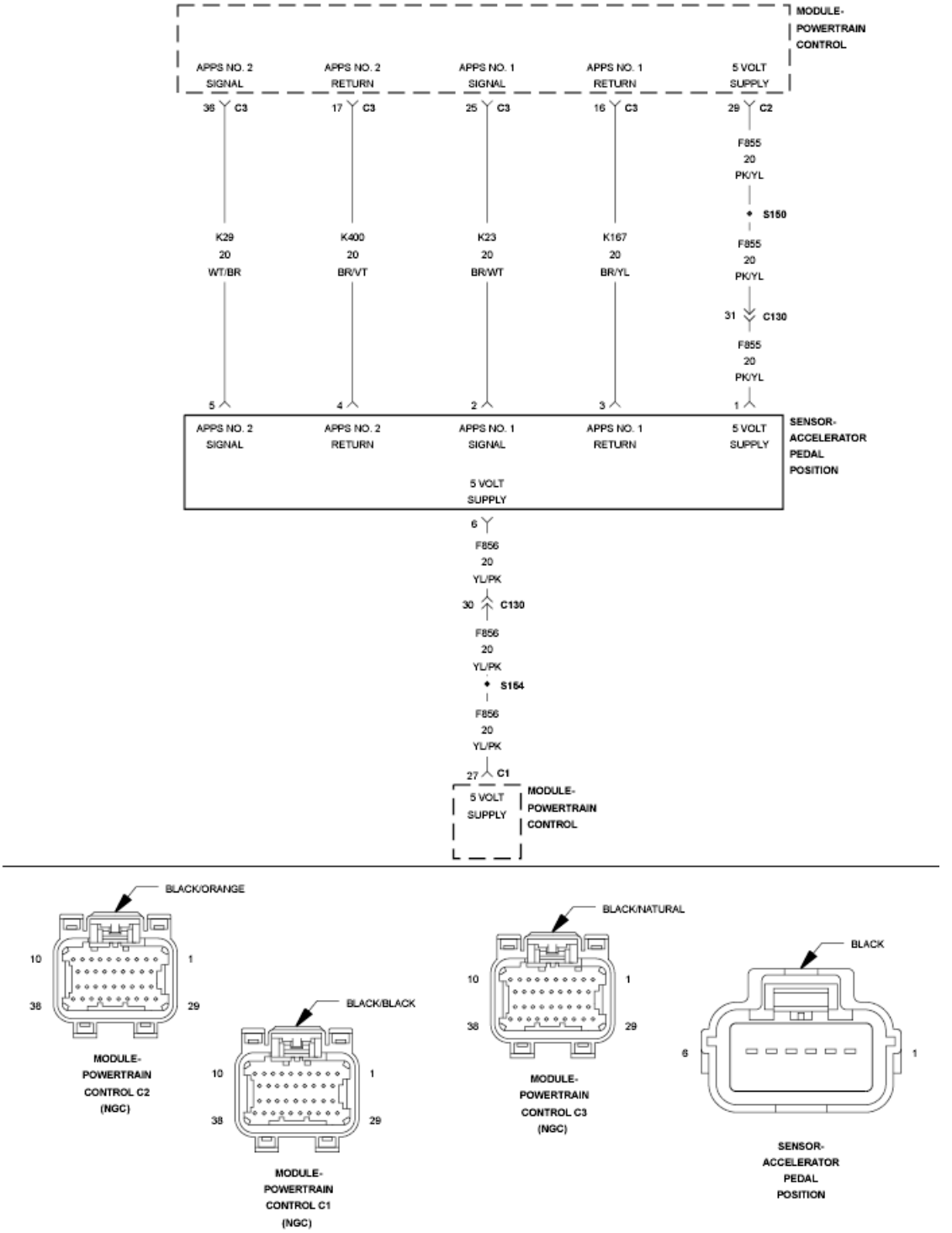

Fig. 1: Accelerator Pedal Position Sensor Circuit Schematic
Courtesy of CHRYSLER GROUP, LLC

For a complete wiring diagram **refer to appropriate SYSTEM WIRING DIAGRAMS article** .

WHEN MONITORED:

With the ignition on and no other APPS No. 2 DTCs present.

SET CONDITION:

When APP Sensor No. 2 voltage is too high. Idle is additionally forced any time the brake is applied or failed. Acceleration rate and Engine output are limited. One trip fault and the code will set within 5 seconds. ETC light is flashing.

POSSIBLE CAUSES

Possible Causes
(K29) APP SENSOR NO. 2 SIGNAL CIRCUIT SHORTED TO VOLTAGE
(K29) APP SENSOR NO. 2 SIGNAL SHORTED TO THE (F856) 5-VOLT SUPPLY CIRCUIT
(K29) APP SENSOR NO. 2 SIGNAL SHORTED TO THE (F855) 5-VOLT SUPPLY CIRCUIT
(K400) APP SENSOR NO. 2 RETURN CIRCUIT OPEN
APP SENSOR
POWERTRAIN CONTROL MODULE (PCM)

Always perform the Pre-Diagnostic Troubleshooting procedure before proceeding. Refer to PRE-DIAGNOSTIC TROUBLESHOOTING PROCEDURE .

DIAGNOSTIC TEST

1. **ACTIVE DTC**
    1. Start the engine and allow it to reach normal operating temperature.

        WARNING: When the engine is operating, do not stand in direct line with the fan. Do not put your hands near the pulleys, belts or fan. Do not wear loose clothing. Failure to follow these instructions may result in possible serious or fatal injury.

        NOTE: Diagnose and repair any system voltage or sensor supply voltage DTCs before continuing with this test.

        NOTE: If you are viewing data recorder information or Freeze Frame data the APP Sensor No. 2 is pulled low by the PCM as part of its system testing. This test happens every 320 milliseconds and may not show up on the scan tool but may show up on a data recorder or lab scope. It is acceptable to see the voltage close to zero with a normal sensor when using a data recorder/lab scope.

    2. With the scan tool, select View DTCs.

        Is the status Active for this DTC?

Yes

- Go To 2.

No

- Go To 8.

2. **(K29) APP SENSOR NO. 2 SIGNAL CIRCUIT SHORTED TO VOLTAGE**

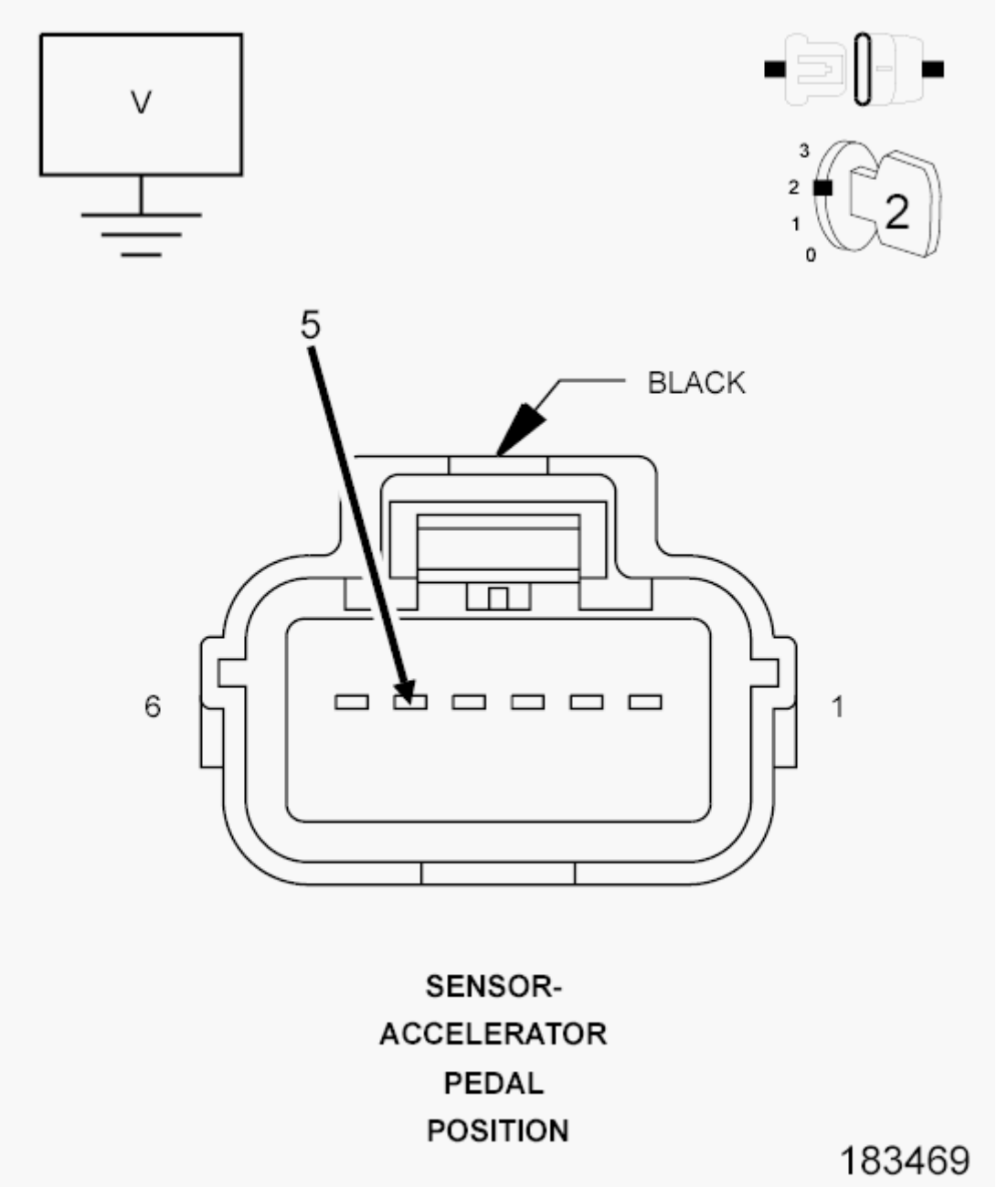

Fig. 2: Measuring Voltage On (K29) APP Sensor No. 2 Signal Circuit In APP Sensor Harness Connector

Courtesy of CHRYSLER GROUP, LLC

1. Turn the ignition off.
2. Disconnect the PCM harness connectors.
3. Disconnect the APP Sensor harness connector.
4. Ignition on, engine not running.
5. Measure the voltage on the (K29) APP Sensor No. 2 Signal circuit in the APP Sensor harness connector.

   Is there any voltage present?

   Yes

   - Repair the short to voltage in the (K29) APP Sensor No. 2 Signal circuit.
   - Perform the POWERTRAIN VERIFICATION TEST. Refer to **POWERTRAIN VERIFICATION TEST** .

   No

   - Go To 3.

3. **(K29) APPS NO. 2 SIGNAL CIRCUIT SHORTED TO THE (F856) 5-VOLT SUPPLY CIRCUIT**

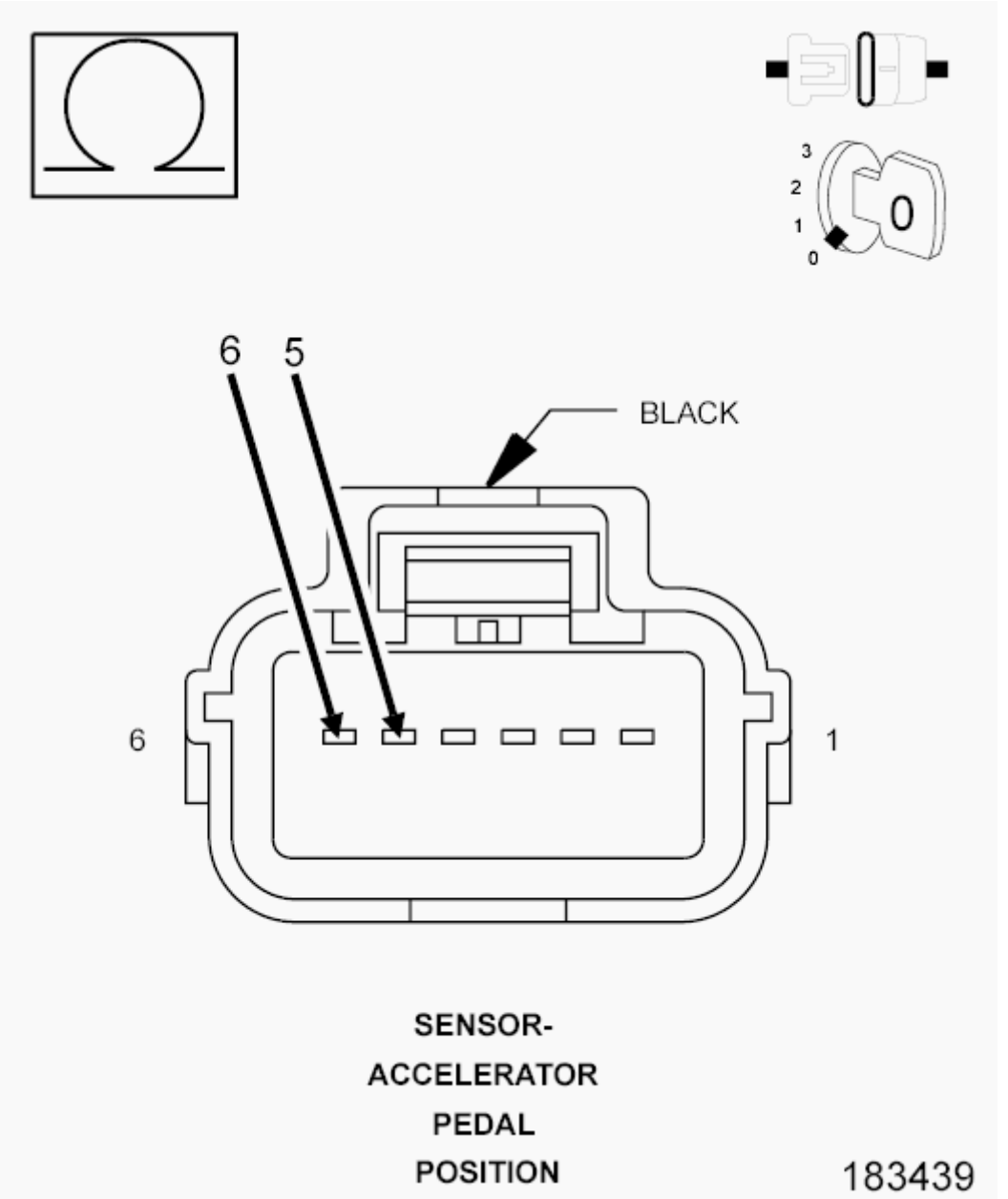

Fig. 3: Measuring Resistance Between (K29) APP Sensor No. 2 Signal Circuit And (F856) 5-Volt Supply Circuit In APP Sensor Harness Connector
Courtesy of CHRYSLER GROUP, LLC

1. Turn the ignition off.
2. Measure the resistance between the (K29) APP Sensor No. 2 Signal circuit and the (F856) 5-volt Supply circuit in the APP Sensor harness connector.

   Is the resistance below 10 ohms?

   Yes

- Repair the short between the (K29) APP Sensor No. 2 Signal circuit and the (F856) 5-volt Supply circuit.
- Perform the POWERTRAIN VERIFICATION TEST. Refer to **POWERTRAIN VERIFICATION TEST** .

No

- Go To 4.

4. **(K29) APPS NO. 2 SIGNAL CIRCUIT SHORTED TO THE (F855) 5-VOLT SUPPLY CIRCUIT**

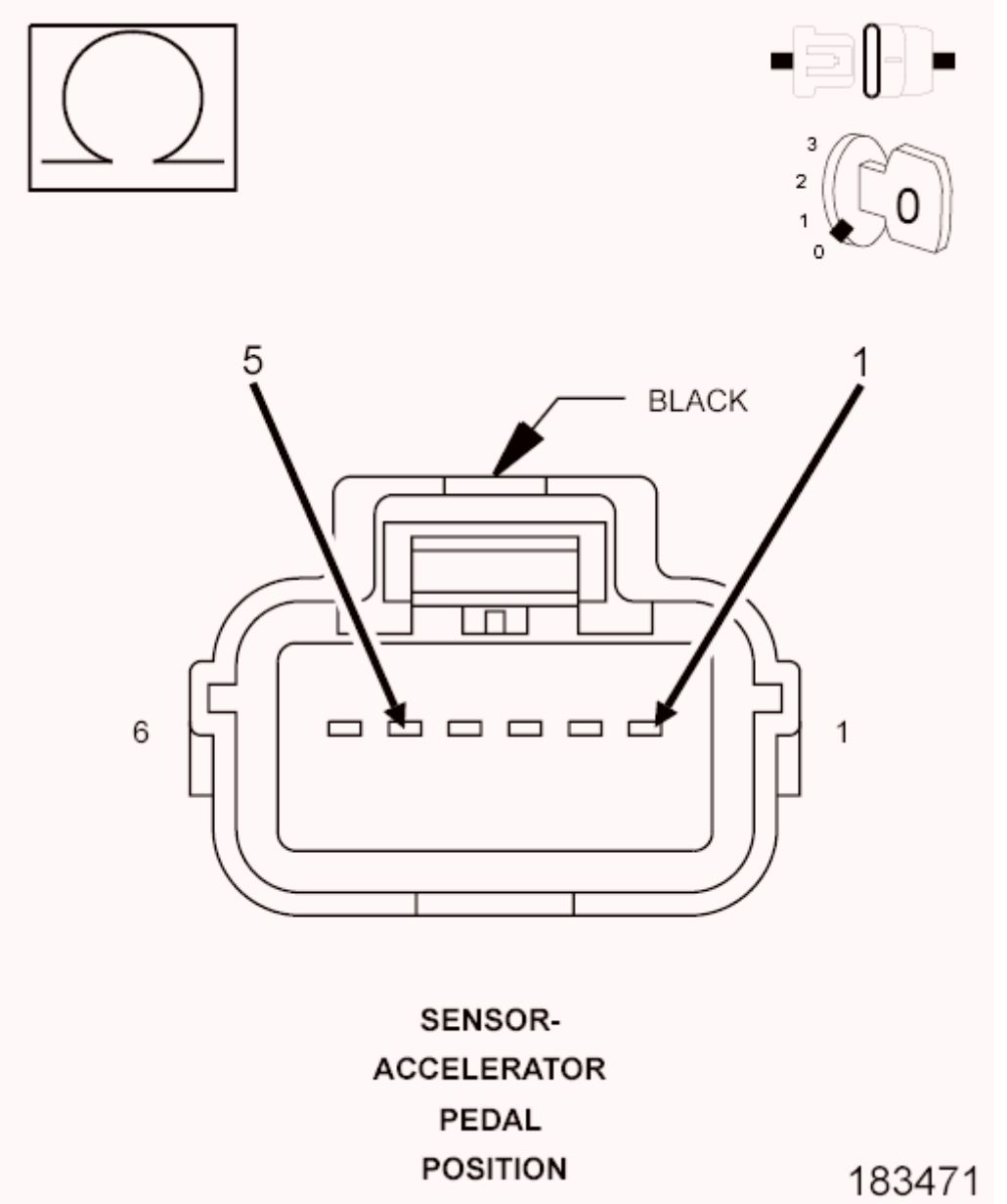

Fig. 4: Measuring Resistance Between (K29) APP Sensor No. 2 Signal Circuit And (F855) 5-Volt Supply Circuit In APP Sensor Harness Connector

Courtesy of CHRYSLER GROUP, LLC

1. Measure the resistance between the (K29) APP Sensor No. 2 Signal circuit and the (F855) 5-volt Supply circuit in the APP Sensor harness connector.

   Is the resistance below 10 ohms?

   Yes

   - Repair the short between the (K29) APP Sensor No. 2 Signal circuit and the (F855) 5-volt Supply circuit.
   - Perform the POWERTRAIN VERIFICATION TEST. Refer to **POWERTRAIN VERIFICATION TEST** .

   No

   - Go To 5.

5. **(K400) APP SENSOR NO. 2 RETURN CIRCUIT OPEN**

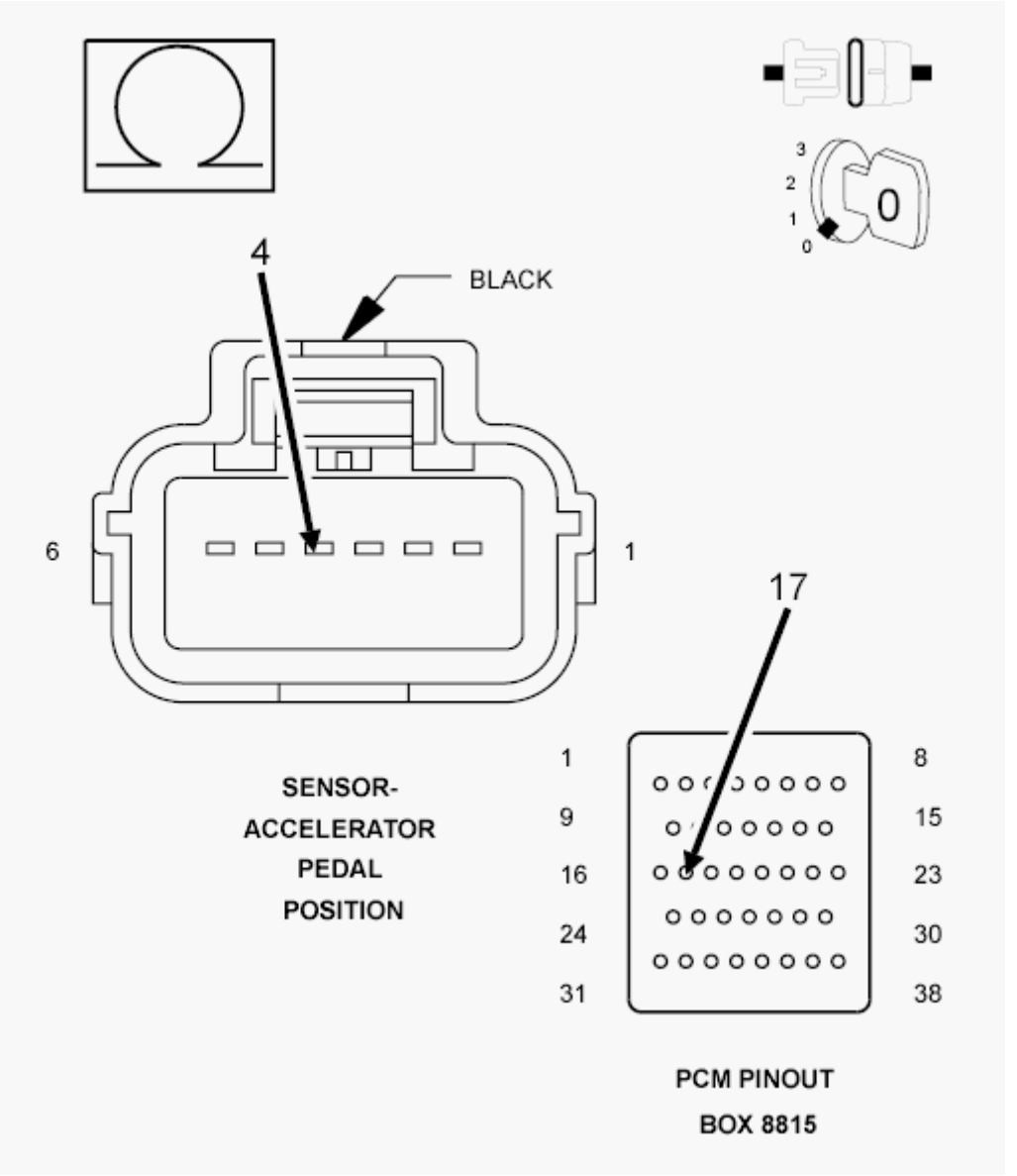

Fig. 5: Measuring Resistance Of (K400) APP Sensor No. 2 Return Circuit From APP Sensor Harness Connector To Appropriate Terminal Of Special Tool #8815
Courtesy of CHRYSLER GROUP, LLC

CAUTION: Do not probe the PCM harness connectors. Probing the PCM harness connectors will damage the PCM terminals resulting in poor terminal to pin connection. Install the PCM Pinout Box (special tool #8815A, Kit, NGC, 38 Position) to perform diagnosis.

1. Measure the resistance of the (K400) APP Sensor No. 2 Return circuit from the APP Sensor harness connector to the appropriate terminal of special tool (special tool #8815A, Kit, NGC, 38 Position).

   Is the resistance below 5.0 ohms?

Yes

- Go To 6.

No

- Repair the open in the (K400) APP Sensor No. 2 Return circuit.
- Perform the POWERTRAIN VERIFICATION TEST. Refer to **POWERTRAIN VERIFICATION TEST** .

6. **ACCELERATOR PEDAL POSITION SENSOR**
   1. Connect the PCM harness connectors.
   2. Ignition on, engine not running.
   3. With a scan tool, monitor the APP Sensor 2 voltage.

   Is the voltage above 0 volts?

   Yes

   - Go To 7.

   No

   - Verify that there is good pin to terminal contact in the APPS and the Powertrain Control Module connectors. Replace the APP Sensor Assembly per Service Information if no problems were found with the connectors. After installation is complete, use a scan tool and select the ETC RELEARN function to relearn the APPS values.
   - Perform the POWERTRAIN VERIFICATION TEST. Refer to **POWERTRAIN VERIFICATION TEST** .
7. **POWERTRAIN CONTROL MODULE (PCM)**
   1. Using the wiring diagram/schematic as a guide, inspect the wiring and connectors between the Accelerator Pedal Position Sensor and the Powertrain Control Module (PCM).
   2. Look for any chafed, pierced, pinched, or partially broken wires.
   3. Look for broken, bent, pushed out or corroded terminals. Verify that there is good pin to terminal contact in the APPS and the Powertrain Control Module connectors.
   4. Refer to any Technical Service Bulletins that may apply.

   Were there any problems found?

   Yes

   - Repair as necessary.
   - Perform the POWERTRAIN VERIFICATION TEST. Refer to **POWERTRAIN VERIFICATION TEST** .

No

- Replace and program the Powertrain Control Module per Service Information.
- Perform the POWERTRAIN VERIFICATION TEST. Refer to **POWERTRAIN VERIFICATION TEST** .

8. **APP SENSOR NO. 2 SWEEP**
    1. Ignition on, engine not running.
    2. With a scan tool, monitor the APP Sensor 2 voltage.
    3. Slowly press the Accelerator Pedal down.

    Does voltage start at approximately 0.22 of a volt and go above 2.31 volts with a smooth transition?

    Yes

    - Perform the INTERMITTENT CONDITION Diagnostic Procedure. Refer to **INTERMITTENT CONDITION** .

    No

    - Replace the APP Sensor Assembly per Service Information. After installation is complete, use a scan tool and select the ETC RELEARN function to relearn the APPS values.
    - Perform the POWERTRAIN VERIFICATION TEST. Refer to **POWERTRAIN VERIFICATION TEST** .

P2135-THROTTLE POSITION SENSOR 1/2 CORRELATION

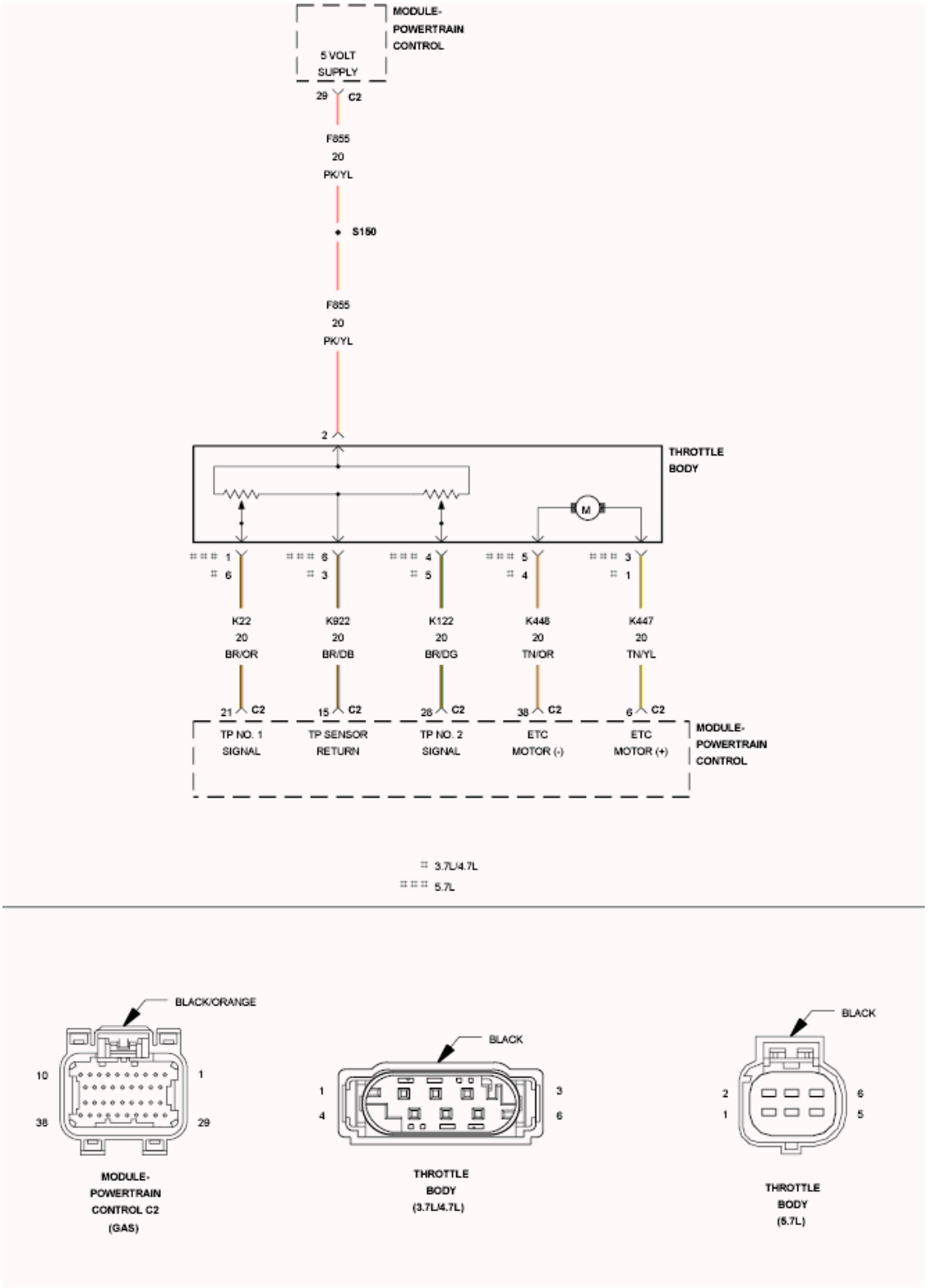

Fig. 6: Throttle Body Circuit Schematic
Courtesy of CHRYSLER GROUP, LLC

For a complete wiring diagram **refer to appropriate SYSTEM WIRING DIAGRAMS article** .

WHEN MONITORED:

With the ignition on and no other DTCs present for TP Sensor No. 1 or No. 2.

SET CONDITION:

PCM recognizes TP Sensors No. 1 and No. 2 are not coherent. One trip fault and the code will set within 5 seconds. ETC light is illuminated.

POSSIBLE CAUSES

Possible Causes
EXCESSIVE RESISTANCE IN THE (K22) TP SENSOR NO. 1 SIGNAL CIRCUIT
EXCESSIVE RESISTANCE IN THE (K122) TP SENSOR NO. 2 SIGNAL CIRCUIT
EXCESSIVE RESISTANCE IN THE (K922) TP SENSOR RETURN CIRCUIT
EXCESSIVE RESISTANCE IN THE (F855) 5-VOLT SUPPLY CIRCUIT
THROTTLE POSITION SENSOR
POWERTRAIN CONTROL MODULE (PCM)

Always perform the Pre-Diagnostic Troubleshooting procedure before proceeding. Refer to PRE-DIAGNOSTIC TROUBLESHOOTING PROCEDURE .

DIAGNOSTIC TEST

1. **ACTIVE DTC**

NOTE: **The throttle plate and linkage should be free from binding and carbon build up.**

NOTE: **Make sure the throttle plate is at the idle position.**

NOTE: **Inspect the engine for vacuum leaks.**

NOTE: **Repair any other 5-Volt Supply or TPS High and Low DTCs before diagnosing P2135.**

1. Ignition on, engine not running.
2. With a scan tool, select View DTCs.

   Is the DTC Active at this time?

   Yes

   - Go To 2.

No

- Go To 7.

2. **EXCESSIVE RESISTANCE IN THE (K22) TP NO. 1 SIGNAL CIRCUIT**
   1. Turn the ignition off.
   2. Disconnect the C2 harness connector.

      CAUTION: Do not probe the PCM harness connectors. Probing the PCM harness connectors will damage the PCM terminals resulting in poor terminal to pin connection. Install the PCM Pinout Box (special tool #8815A, Kit, NGC, 38 Position) along with the Adapter (special tool #8815-1, PCM Pinout Box Adapter) to perform the diagnosis.

   3. Using a voltmeter perform a voltage drop test. Backprobe the (K22) TP Sensor No. 1 Signal circuit at the Throttle Body harness connector and probe the appropriate terminal of the special tool (special tool #8815A, Kit, NGC, 38 Position). Make sure the voltmeter leads are connected so a positive polarity is displayed on the voltmeter.

      WARNING: When the engine is operating, do not stand in direct line with the fan. Do not put your hands near the pulleys, belts or fan. Do not wear loose clothing. Failure to follow these instructions may result in possible serious or fatal injury.

   4. Start the engine and allow it to reach normal operating temperature.
   5. Monitor the voltmeter.

      Is the voltage below 0.5 of a volt?

      Yes

      - Go To 3.

      No

      - Repair the excessive resistance in the (K22) TP Sensor No. 1 Signal circuit.
      - Perform the POWERTRAIN VERIFICATION TEST. Refer to **POWERTRAIN VERIFICATION TEST** .

3. **EXCESSIVE RESISTANCE IN THE (K922) TP SENSOR RETURN CIRCUIT**
   1. Turn the ignition off.
   2. Move the voltmeter leads to backprobe the (K922) TP Sensor Return circuit at the Throttle Body harness connector and probe the appropriate terminal of the special tool (special tool #8815A, Kit, NGC, 38 Position). Make sure the voltmeter leads are connected so a positive polarity is displayed on the voltmeter.

WARNING: When the engine is operating, do not stand in direct line with the fan. Do not put your hands near the pulleys, belts or fan. Do not wear loose clothing. Failure to follow these instructions may result in possible serious or fatal injury.

3. Start the engine and allow it to reach normal operating temperature.
4. Monitor the voltmeter.

   Is the voltage below 0.5 of a volt?

   Yes

   - Go To 4.

   No

   - Repair the excessive resistance in the (K922) TP Sensor Return circuit.
   - Perform the POWERTRAIN VERIFICATION TEST. Refer to **POWERTRAIN VERIFICATION TEST** .

4. **EXCESSIVE RESISTANCE IN THE (K122) TP SENSOR NO. 2 SIGNAL CIRCUIT**
   1. Turn the ignition off.
   2. Move the voltmeter leads to backprobe the (K122) TP Sensor No. 2 Signal circuit at the Throttle Body harness connector and probe the appropriate terminal of the special tool (special tool #8815A, Kit, NGC, 38 Position). Make sure the voltmeter leads are connected so a positive polarity is displayed on the voltmeter.

      WARNING: When the engine is operating, do not stand in direct line with the fan. Do not put your hands near the pulleys, belts or fan. Do not wear loose clothing. Failure to follow these instructions may result in possible serious or fatal injury.

   3. Start the engine and allow it to reach normal operating temperature.
   4. Monitor the voltmeter.

      Is the voltage below 0.5 of a volt?

      Yes

      - Go To 5.

      No

      - Repair the excessive resistance in the (K122) TP Sensor No. 2 Signal circuit.
      - Perform the POWERTRAIN VERIFICATION TEST. Refer to **POWERTRAIN VERIFICATION TEST** .

5. **EXCESSIVE RESISTANCE IN THE (F855) 5-VOLT SUPPLY CIRCUIT**
    1. Turn the ignition off.
    2. Using a voltmeter perform a voltage drop test. Backprobe the (F855) 5-volt Supply circuit at the Throttle Body harness connector and probe the appropriate terminal of the special tool (special tool #8815A, Kit, NGC, 38 Position). Make sure the voltmeter leads are connected so a positive polarity is displayed on the voltmeter.

        WARNING: **When the engine is operating, do not stand in direct line with the fan. Do not put your hands near the pulleys, belts or fan. Do not wear loose clothing. Failure to follow these instructions may result in possible serious or fatal injury.**

    3. Start the engine and allow it to reach normal operating temperature.
    4. Monitor the voltmeter.

    Is the voltage below 0.5 of a volt?

    Yes

    - Go To 6.

    No

    - Repair the excessive resistance in the (F855) 5-Volt Supply circuit
    - Perform the POWERTRAIN VERIFICATION TEST. Refer to **POWERTRAIN VERIFICATION TEST** .

6. **POWERTRAIN CONTROL MODULE (PCM)**
    1. Using the wiring diagram/schematic as a guide, inspect the wiring and connectors between the Throttle Body and the Powertrain Control Module (PCM).
    2. Look for any chafed, pierced, pinched, or partially broken wires.
    3. Look for broken, bent, pushed out or corroded terminals. Verify that there is good pin to terminal contact in the Throttle Body and the Powertrain Control Module connectors.
    4. Refer to any Technical Service Bulletins that may apply.

    Were there any problems found?

    Yes

    - Repair as necessary.
    - Perform the POWERTRAIN VERIFICATION TEST. Refer to **POWERTRAIN VERIFICATION TEST** .

    No

- Replace and program the Powertrain Control Module per Service Information.
- Perform the POWERTRAIN VERIFICATION TEST. Refer to **POWERTRAIN VERIFICATION TEST** .

7. **THROTTLE FOLLOWER TEST**
    1. Ignition on, engine not running.
    2. With a scan tool, perform the ETC Throttle Follower Test and monitor the TP Sensor No. 1 or No. 2 voltage.
    3. Slowly press the throttle pedal down.
    4. The voltage for TP Sensor No. 1 should start at approximately 0.7 of a volt and increase to approximately 4.3 volts.
    5. The voltage for TP Sensor No. 2 should start at approximately 4.3 volts and decrease to approximately 0.7 of a volt.

    Is the voltage within the range of the listed specification for the appropriate Sensor?

    Yes

    - Perform the INTERMITTENT CONDITION Diagnostic Procedure. Refer to **INTERMITTENT CONDITION** .

    No

    - Disconnect the Battery when replacing the Throttle Body Assembly. Replace the Throttle Body Assembly. After installation is complete, use a scan tool and select the ETC RELEARN function.
    - Perform the POWERTRAIN VERIFICATION TEST. Refer to **POWERTRAIN VERIFICATION TEST** .

P2138-ACCELERATOR PEDAL POSITION SENSOR 1/2 CORRELATION

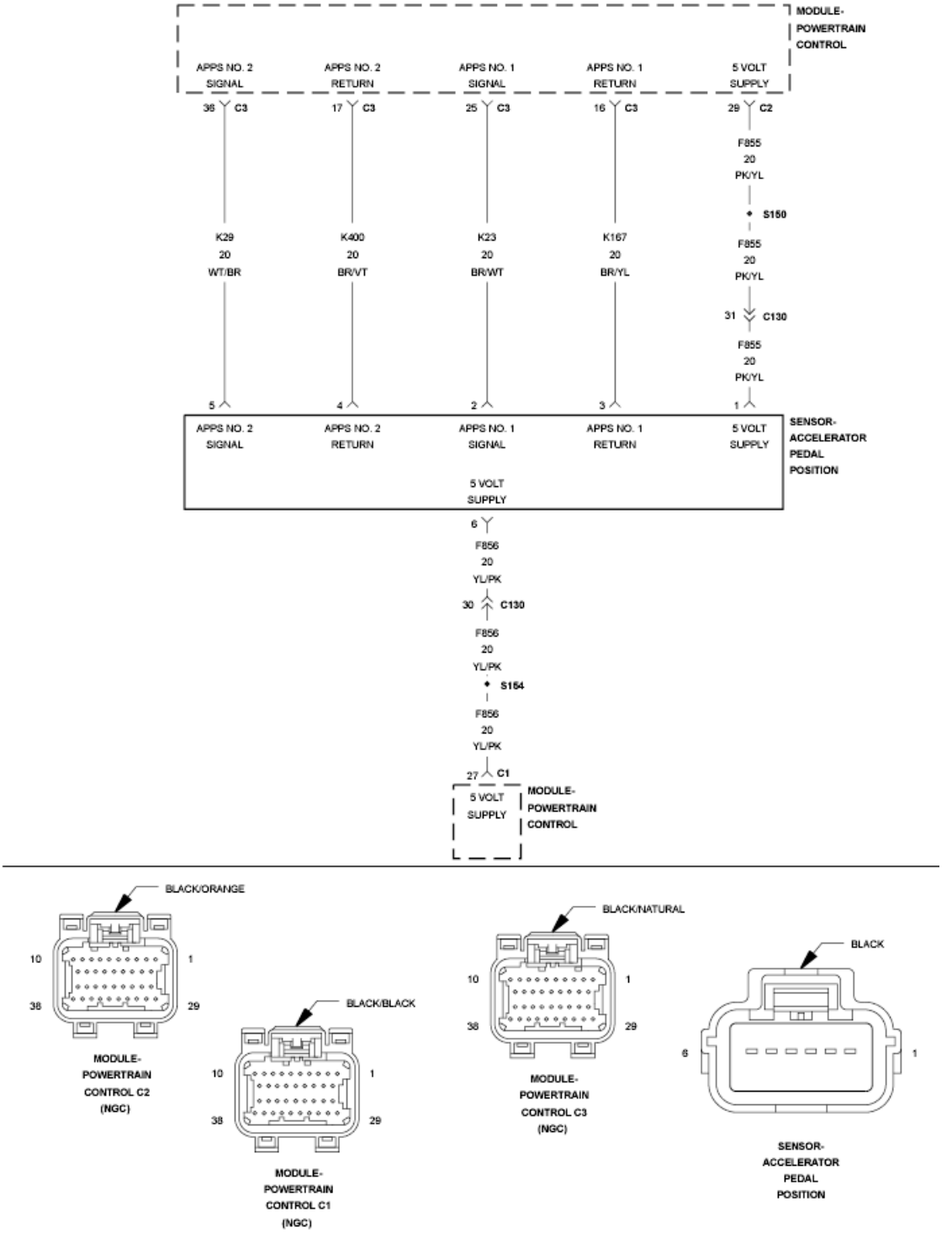

Fig. 7: Accelerator Pedal Position Sensor Circuit Schematic
Courtesy of CHRYSLER GROUP, LLC

For a complete wiring diagram **refer to appropriate SYSTEM WIRING DIAGRAMS article** .

WHEN MONITORED:

With the ignition on and no APPS No. 1 and APPS No. 2 DTC present.

SET CONDITION:

APPS values No. 1 and No. 2 are not coherent. Idle is additionally forced when the brake pedal is pressed or failed. Acceleration rate and Engine output are limited. One trip fault and the code will set within 5 seconds. ETC light is flashing.

POSSIBLE CAUSES

Possible Causes
EXCESSIVE RESISTANCE IN THE (F855) 5-VOLT SUPPLY CIRCUIT
EXCESSIVE RESISTANCE IN THE (F856) 5-VOLT SUPPLY CIRCUIT
EXCESSIVE RESISTANCE IN THE (K167) SENSOR NO. 1 RETURN CIRCUIT
EXCESSIVE RESISTANCE IN THE (K400) SENSOR NO. 2 RETURN CIRCUIT
EXCESSIVE RESISTANCE IN THE (K23) APP SENSOR NO. 1 SIGNAL CIRCUIT
EXCESSIVE RESISTANCE IN THE (K29) APP SENSOR NO. 2 SIGNAL CIRCUIT
APP SENSOR
POWERTRAIN CONTROL MODULE (PCM)

Always perform the Pre-Diagnostic Troubleshooting procedure before proceeding. Refer to PRE-DIAGNOSTIC TROUBLESHOOTING PROCEDURE .

DIAGNOSTIC TEST

1. **ACTIVE DTC**
    1. Start the engine and allow it to reach normal operating temperature.

WARNING: When the engine is operating, do not stand in direct line with the fan. Do not put your hands near the pulleys, belts or fan. Do not wear loose clothing. Failure to follow these instructions may result in possible serious or fatal injury.

NOTE: Diagnose and repair any system voltage or sensor supply voltage DTCs before continuing with this test.

NOTE: If you are viewing data recorder information or Freeze Frame data the APP Sensor No. 2 is pulled low by the PCM as part of its system testing. This test happens every 320 milliseconds and may not show up on the scan tool but may show up on a data recorder or lab scope. It is acceptable to see the voltage close to zero with a normal sensor when using a data recorder/lab scope.

    2. With the scan tool, select View DTCs.

Is the status Active for this DTC?

Yes

- Go To 2.

No

- Perform the INTERMITTENT CONDITION Diagnostic Procedure. Refer to **INTERMITTENT CONDITION** .

2. **EXCESSIVE RESISTANCE IN THE (K23) APPS NO. 1 SIGNAL CIRCUIT**
   1. Turn the ignition off.
   2. Disconnect the C3 harness connector.

      CAUTION: Do not probe the PCM harness connectors. Probing the PCM harness connectors will damage the PCM terminals resulting in poor terminal to pin connection. Install the PCM Pinout Box (special tool #8815A, Kit, NGC, 38 Position) along with the Adapter (special tool #8815-1, PCM Pinout Box Adapter) to perform the diagnosis.

   3. Using a voltmeter perform a voltage drop test. Backprobe the (K23) APPS No. 1 Signal circuit at the APPS harness connector and probe the appropriate terminal of the special tool (special tool #8815A, Kit, NGC, 38 Position). Make sure the voltmeter leads are connected so a positive polarity is displayed on the voltmeter.

      WARNING: When the engine is operating, do not stand in direct line with the fan. Do not put your hands near the pulleys, belts or fan. Do not wear loose clothing. Failure to follow these instructions may result in possible serious or fatal injury.

   4. Start the engine and allow it to reach normal operating temperature.
   5. Monitor the voltmeter.

      Is the voltage below 0.5 of a volt?

      Yes

      - Go To 3.

      No

      - Repair the excessive resistance in the (K23) APP Sensor No. 1 Signal circuit.
      - Perform the POWERTRAIN VERIFICATION TEST. Refer to **POWERTRAIN VERIFICATION TEST** .

3. **EXCESSIVE RESISTANCE IN THE (K167) SENSOR NO. 1 RETURN CIRCUIT**
    1. Turn the ignition off.
    2. Move the voltmeter leads to backprobe the (K167) APPS No. 1 Return circuit at the APPS harness connector and probe the appropriate terminal of the special tool (special tool #8815A, Kit, NGC, 38 Position). Make sure the voltmeter leads are connected so a positive polarity is displayed on the voltmeter.

        WARNING: **When the engine is operating, do not stand in direct line with the fan. Do not put your hands near the pulleys, belts or fan. Do not wear loose clothing. Failure to follow these instructions may result in possible serious or fatal injury.**

    3. Start the engine and allow it to reach normal operating temperature.
    4. Monitor the voltmeter.

        Is the voltage below 0.5 of a volt?

        Yes

        - Go To 4.

        No

        - Repair the excessive resistance in the (K167) Sensor No. 1 Return circuit.
        - Perform the POWERTRAIN VERIFICATION TEST. Refer to **POWERTRAIN VERIFICATION TEST** .
4. **EXCESSIVE RESISTANCE IN THE (K29) APPS NO. 2 SIGNAL CIRCUIT**
    1. Turn the ignition off.
    2. Move the voltmeter leads to backprobe the (K29) APPS No. 2 Signal circuit at the APPS harness connector and probe the appropriate terminal of the special tool (special tool #8815A, Kit, NGC, 38 Position). Make sure the voltmeter leads are connected so a positive polarity is displayed on the voltmeter.

        WARNING: **When the engine is operating, do not stand in direct line with the fan. Do not put your hands near the pulleys, belts or fan. Do not wear loose clothing. Failure to follow these instructions may result in possible serious or fatal injury.**

    3. Start the engine and allow it to reach normal operating temperature.
    4. Monitor the voltmeter.

        Is the voltage below 0.5 of a volt?

        Yes

- Go To 5.

No

- Repair the excessive resistance in the (K29) APP Sensor No. 2 Signal circuit.
- Perform the POWERTRAIN VERIFICATION TEST. Refer to **POWERTRAIN VERIFICATION TEST** .

5. **EXCESSIVE RESISTANCE IN THE (K400) SENSOR NO. 2 RETURN CIRCUIT**
   1. Turn the ignition off.
   2. Move the voltmeter leads to backprobe the (K400) APPS No. 2 Return circuit at the APPS harness connector and probe the appropriate terminal of the special tool (special tool #8815A, Kit, NGC, 38 Position). Make sure the voltmeter leads are connected so a positive polarity is displayed on the voltmeter.

      WARNING: **When the engine is operating, do not stand in direct line with the fan. Do not put your hands near the pulleys, belts or fan. Do not wear loose clothing. Failure to follow these instructions may result in possible serious or fatal injury.**

   3. Start the engine and allow it to reach normal operating temperature.
   4. Monitor the voltmeter.

      Is the voltage below 0.5 of a volt?

      Yes

      - Go To 6.

      No

      - Repair the excessive resistance in the (K400) Sensor No. 2 Return circuit.
      - Perform the POWERTRAIN VERIFICATION TEST. Refer to **POWERTRAIN VERIFICATION TEST** .

6. **EXCESSIVE RESISTANCE IN THE (F855) 5-VOLT SUPPLY CIRCUIT**
   1. Turn the Ignition off.
   2. Remove special tool (special tool #8815A, Kit, NGC, 38 Position) from the C3 PCM harness connector and Re-Connect the C3 PCM harness connector to the PCM.
   3. Disconnect the C2 PCM harness connector to install special tool (special tool #8815A, Kit, NGC, 38 Position) and (special tool #8815-1, PCM Pinout Box Adapter).
   4. Using a voltmeter perform a voltage drop test. Backprobe the (F855) 5-volt Supply circuit at the APPS harness connector and probe the appropriate terminal of the special tool (special tool #8815A, Kit, NGC, 38 Position). Make sure the voltmeter leads are connected so a positive polarity is displayed on the voltmeter.

WARNING: When the engine is operating, do not stand in direct line with the fan. Do not put your hands near the pulleys, belts or fan. Do not wear loose clothing. Failure to follow these instructions may result in possible serious or fatal injury.

5. Start the engine and allow it to reach normal operating temperature.
6. Monitor the voltmeter.

   Is the voltage below 0.5 of a volt?

   Yes

   - Go To 7.

   No

   - Repair the excessive resistance in the (F855) 5-volt Supply circuit.
   - Perform the POWERTRAIN VERIFICATION TEST. Refer to **POWERTRAIN VERIFICATION TEST** .

7. **EXCESSIVE RESISTANCE IN THE (F856) 5-VOLT SUPPLY CIRCUIT**
   1. Turn the Ignition off.
   2. Remove special tool (special tool #8815A, Kit, NGC, 38 Position) from the C2 PCM harness connector and Re-Connect the C2 PCM harness connector to the PCM.
   3. Disconnect the C1 PCM harness connector to install special tool (special tool #8815A, Kit, NGC, 38 Position) and (special tool #8815-1, PCM Pinout Box Adapter).
   4. Using a voltmeter perform a voltage drop test. Backprobe the (F856) 5-volt Supply circuit at the APPS harness connector and probe the appropriate terminal of the special tool (special tool #8815A, Kit, NGC, 38 Position). Make sure the voltmeter leads are connected so a positive polarity is displayed on the voltmeter.

      WARNING: When the engine is operating, do not stand in direct line with the fan. Do not put your hands near the pulleys, belts or fan. Do not wear loose clothing. Failure to follow these instructions may result in possible serious or fatal injury.

   5. Start the engine and allow it to reach normal operating temperature.
   6. Monitor the voltmeter.

      Is the voltage below 0.5 of a volt?

      Yes

      - Go To 8.

      No

- Repair the excessive resistance in the (F856) 5-volt Supply circuit.
- Perform the POWERTRAIN VERIFICATION TEST. Refer to **POWERTRAIN VERIFICATION TEST** .

8. **CHECKING APPS NO. 1 AND NO. 2 WITH A LAB SCOPE**
    1. Turn the ignition off.
    2. Remove special tool (special tool #8815A, Kit, NGC, 38 Position) and (special tool #8815-1, PCM Pinout Box Adapter).
    3. Connect the PCM harness connectors
    4. Ignition on, engine not running.
    5. Set up a lab scope in a way that you can view two graphs simultaneously.
    6. Backprobe (K23) APP Sensor No. 1 Signal circuit using Channel 1 at the APP Sensor harness connector.
    7. Backprobe (K29) APP Sensor No. 2 Signal circuit using Channel 2 at the APP Sensor harness connector.

    NOTE: **The APP Sensor No. 2 is pulled low by the PCM as part of its system testing. This test happens every 320 milliseconds and may not show up on the scan tool but may show up on a data recorder. It is acceptable to see the voltage close to zero with a normal sensor when using a data recorder/lab scope.**

    8. Slowly press and release the Accelerator Pedal while monitoring the lab scope screen.

    Does the scope pattern show any missing or erratic signals?

    Yes

    - Replace the APP Sensor Assembly per Service Information. After installation is complete, use a scan tool and select the ETC RELEARN function to relearn the APPS values.
    - Perform the POWERTRAIN VERIFICATION TEST. Refer to **POWERTRAIN VERIFICATION TEST** .

    No

    - Go To 9.

9. **POWERTRAIN CONTROL MODULE (PCM)**
    1. Using the wiring diagram/schematic as a guide, inspect the wiring and connectors between the Accelerator Pedal Position Sensor and the Powertrain Control Module (PCM).
    2. Look for any chafed, pierced, pinched, or partially broken wires.
    3. Look for broken, bent, pushed out or corroded terminals. Verify that there is good pin to terminal contact in the APPS and the Powertrain Control Module connectors.
    4. Refer to any Technical Service Bulletins that may apply.

Were there any problems found?

Yes

- Repair as necessary.
- Perform the POWERTRAIN VERIFICATION TEST. Refer to **POWERTRAIN VERIFICATION TEST** .

No

- Replace and program the Powertrain Control Module per Service Information.
- Perform the POWERTRAIN VERIFICATION TEST. Refer to **POWERTRAIN VERIFICATION TEST** .

P2161-VEHICLE SPEED SENSOR 2 ERRATIC

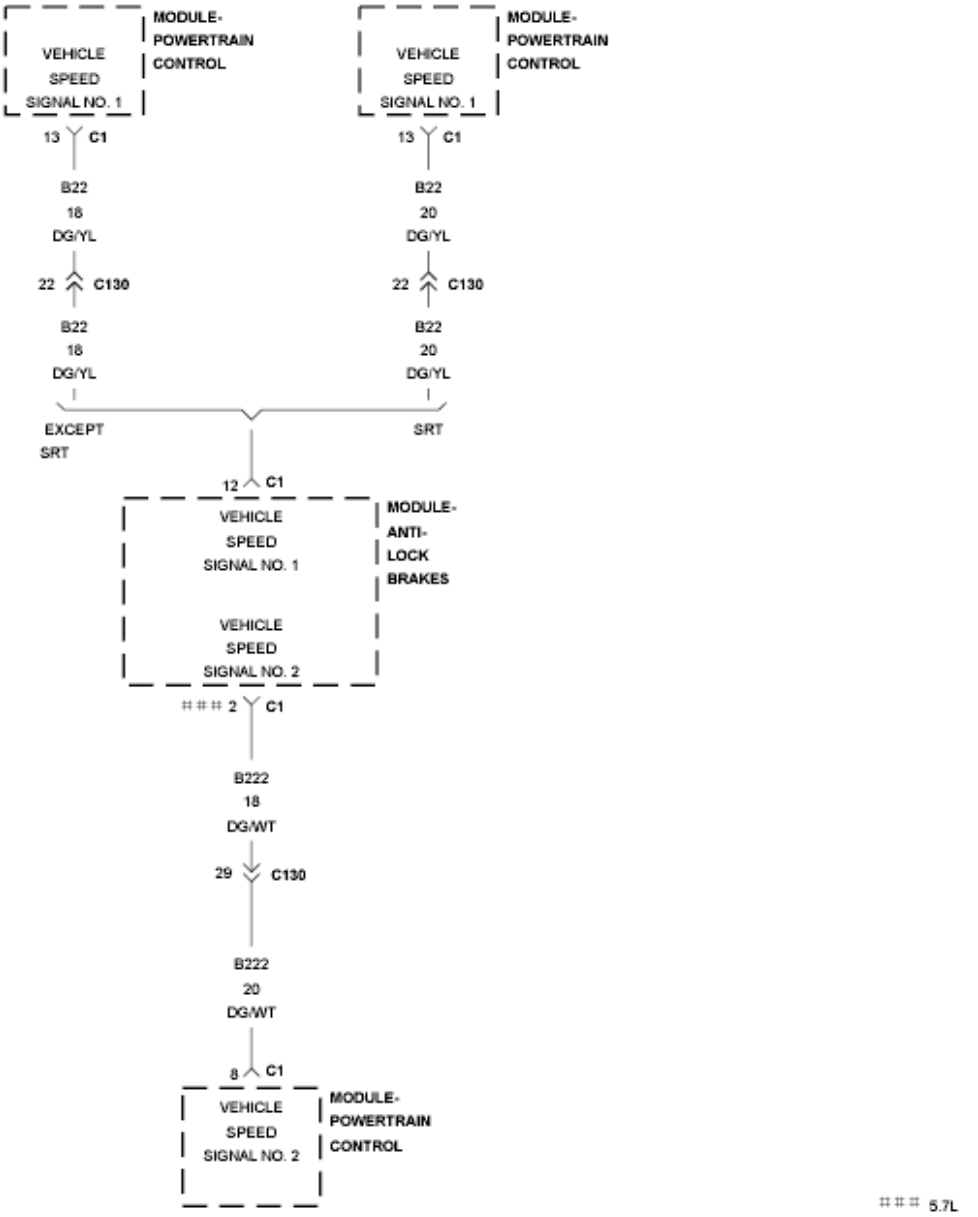

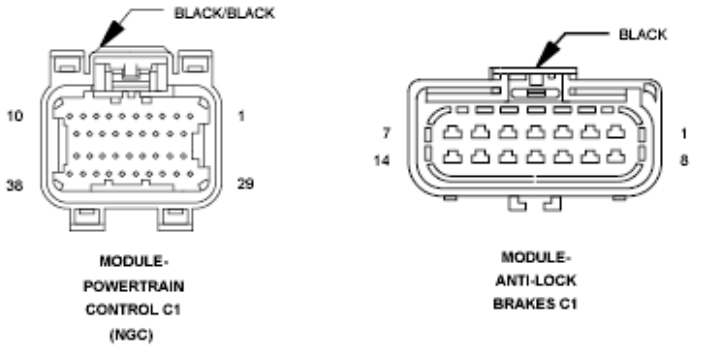

Fig. 8: Vehicle Speed Sensor Circuit Schematic

Courtesy of CHRYSLER GROUP, LLC

For a complete wiring diagram **refer to appropriate SYSTEM WIRING DIAGRAMS article** .

WHEN MONITORED:

Ignition on.

SET CONDITION:

PCM recognizes Vehicle speed input No. 2 erratic or high. VSS No. 2 is based on the average of the Front Wheel Speeds. One trip fault and the code will set within 5 seconds. No MIL and No ETC light. Cruise is disabled.

POSSIBLE CAUSES

Possible Causes
(B222) VEHICLE SPEED NO. 2 SIGNAL CIRCUIT SHORTED TO VOLTAGE
(B222) VEHICLE SPEED NO. 2 SIGNAL CIRCUIT OPEN
(B222) VEHICLE SPEED NO. 2 SIGNAL CIRCUIT SHORTED TO GROUND
TIRE CIRCUMFERENCE
POWERTRAIN CONTROL MODULE (PCM)

Always perform the Pre-Diagnostic Troubleshooting procedure before proceeding. Refer to PRE-DIAGNOSTIC TROUBLESHOOTING PROCEDURE .

DIAGNOSTIC TEST

1. **ACTIVE DTC**
    1. Ignition on, engine not running.

        NOTE: Check for any Bus Communication DTCs. If no Bus or Communication DTCs are set, check for active DTCs stored in the Anti-Lock Brake Module. Any bus or communication DTCs or VSS DTCs in the Anti-Lock Brake Module must be properly diagnosed before continuing.

    2. With a scan tool, select View DTCs.

        Is the DTC Active at this time?

        Yes

        - Go To 2.

        No

- Perform the INTERMITTENT CONDITION Diagnostic Procedure. Refer to **INTERMITTENT CONDITION** .

2. **VISUAL INSPECTION**

NOTE: **This code can set due to tire circumference differences and from the front or rear wheels being on a slippery surface while the opposite tires are not.**

1. This code may also set on a hard acceleration on loose gravel or during other off road driving conditions.
2. Check tire pressure of all the tires.
3. Check tire wear on all the tires.
4. Ask the customer what the road and driving conditions were like when the fault set.

Were any problems found?

Yes

- Repair as necessary. If the code set during a front OR rear wheel spin condition, no repair is necessary.
- Perform the POWERTRAIN VERIFICATION TEST. Refer to **POWERTRAIN VERIFICATION TEST** .

No

- Go To 3.

3. **(B222) VEHICLE SPEED NO. 2 SIGNAL CIRCUIT SHORTED TO VOLTAGE**

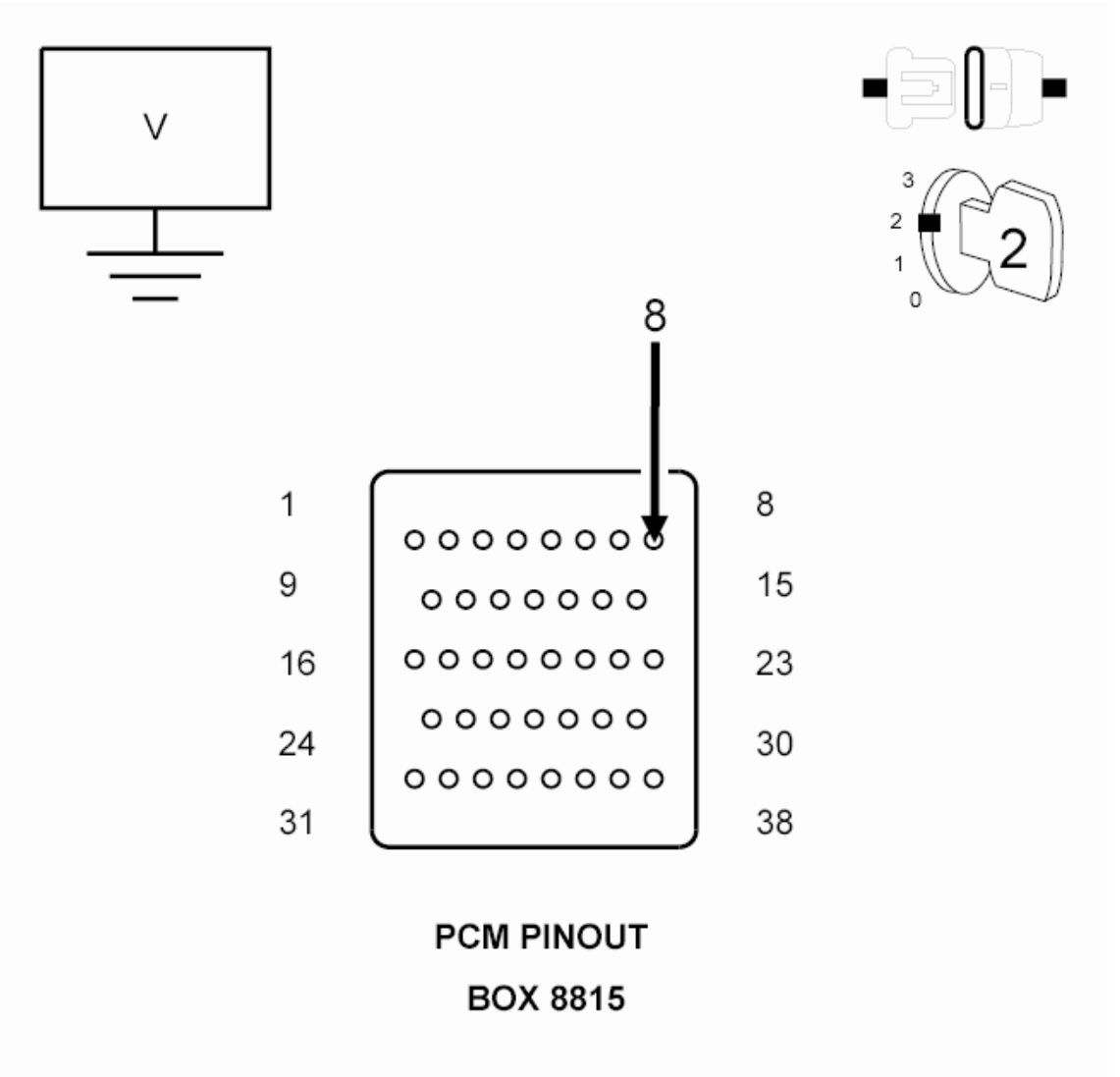

Fig. 9: Measuring Voltage Of (B222) Vehicle Speed No. 2 Signal Circuit AT Appropriate Terminals Of Special Tool #8815
Courtesy of CHRYSLER GROUP, LLC

1. Turn the ignition off.
2. Disconnect the ABS Module harness connector.
3. Disconnect the C1 PCM harness connector.

CAUTION: Do not probe the PCM harness connectors. Probing the PCM harness connectors will damage the PCM terminals resulting in poor terminal to pin connection. Install the PCM Pinout Box (special tool #8815A, Kit, NGC, 38 Position) to perform diagnosis.

4. Ignition on, engine not running.
5. Measure the voltage of the (B222) Vehicle Speed No. 2 Signal circuit at the appropriate terminals

of special tool (special tool #8815A, Kit, NGC, 38 Position).

Is there any voltage present?

Yes

- Repair the short to voltage in the (B222) Vehicle Speed No. 2 Signal circuit.
- Perform the POWERTRAIN VERIFICATION TEST. Refer to **POWERTRAIN VERIFICATION TEST** .

No

- Go To 4.

4. **(B222) VEHICLE SPEED NO. 2 SIGNAL CIRCUIT OPEN**

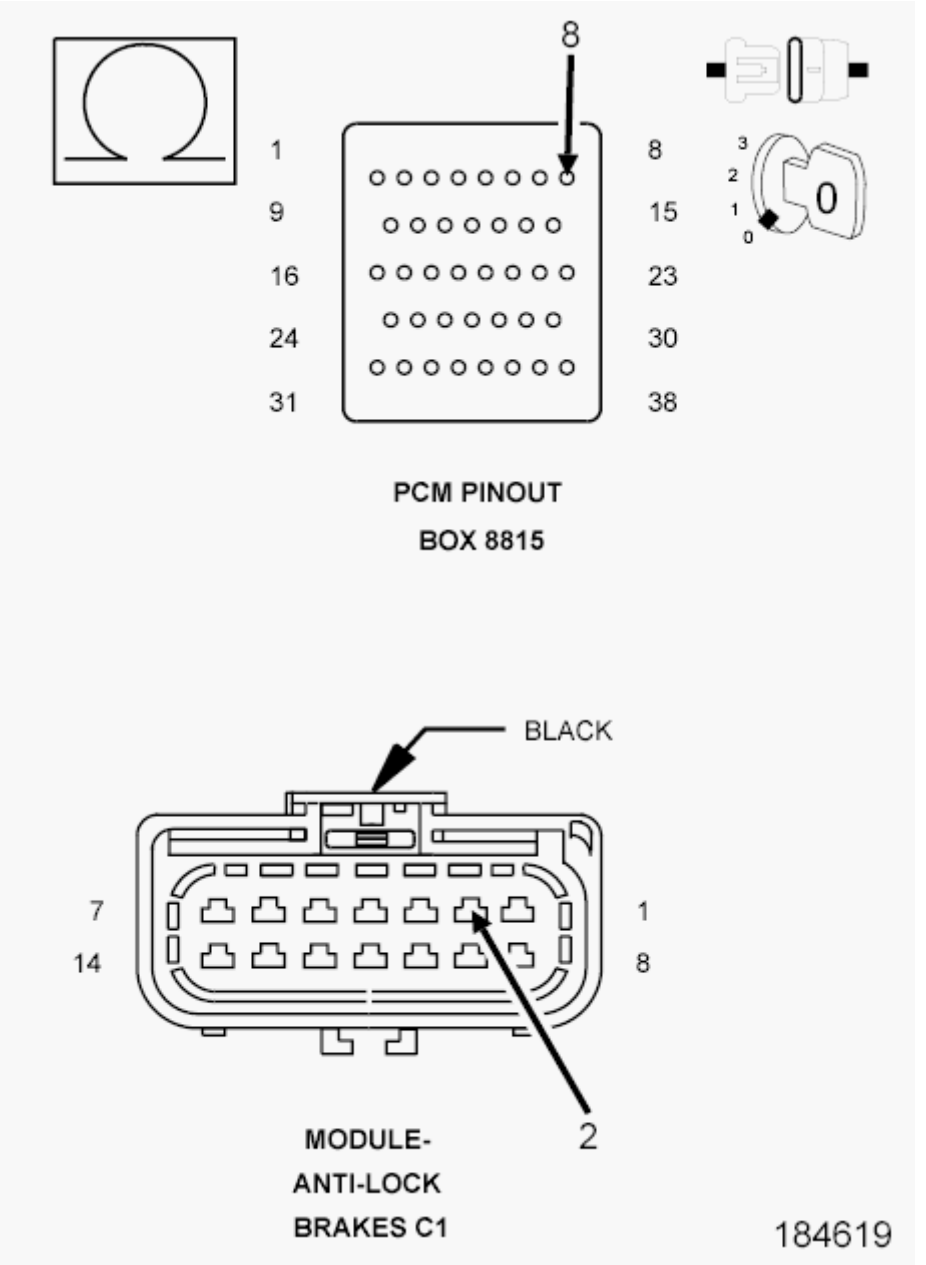

Fig. 10: Measuring Resistance Of (B222) Vehicle Speed No. 2 Signal Circuit From ABS Module Harness Connector To Appropriate Terminal Special Tool #8815
Courtesy of CHRYSLER GROUP, LLC

1. Turn the ignition off.
2. Measure the resistance of the (B222) Vehicle Speed No. 2 Signal circuit from the ABS Module harness connector to the appropriate terminal special tool (special tool #8815A, Kit, NGC, 38 Position).

   Is the resistance below 5.0 ohms?

   Yes

- Go To 5.

No

- Repair the open in the (B222) Vehicle Speed No. 2 Signal circuit.
- Perform the POWERTRAIN VERIFICATION TEST. Refer to **POWERTRAIN VERIFICATION TEST** .

5. **(B222) VEHICLE SPEED NO. 2 SIGNAL CIRCUIT SHORTED TO GROUND**

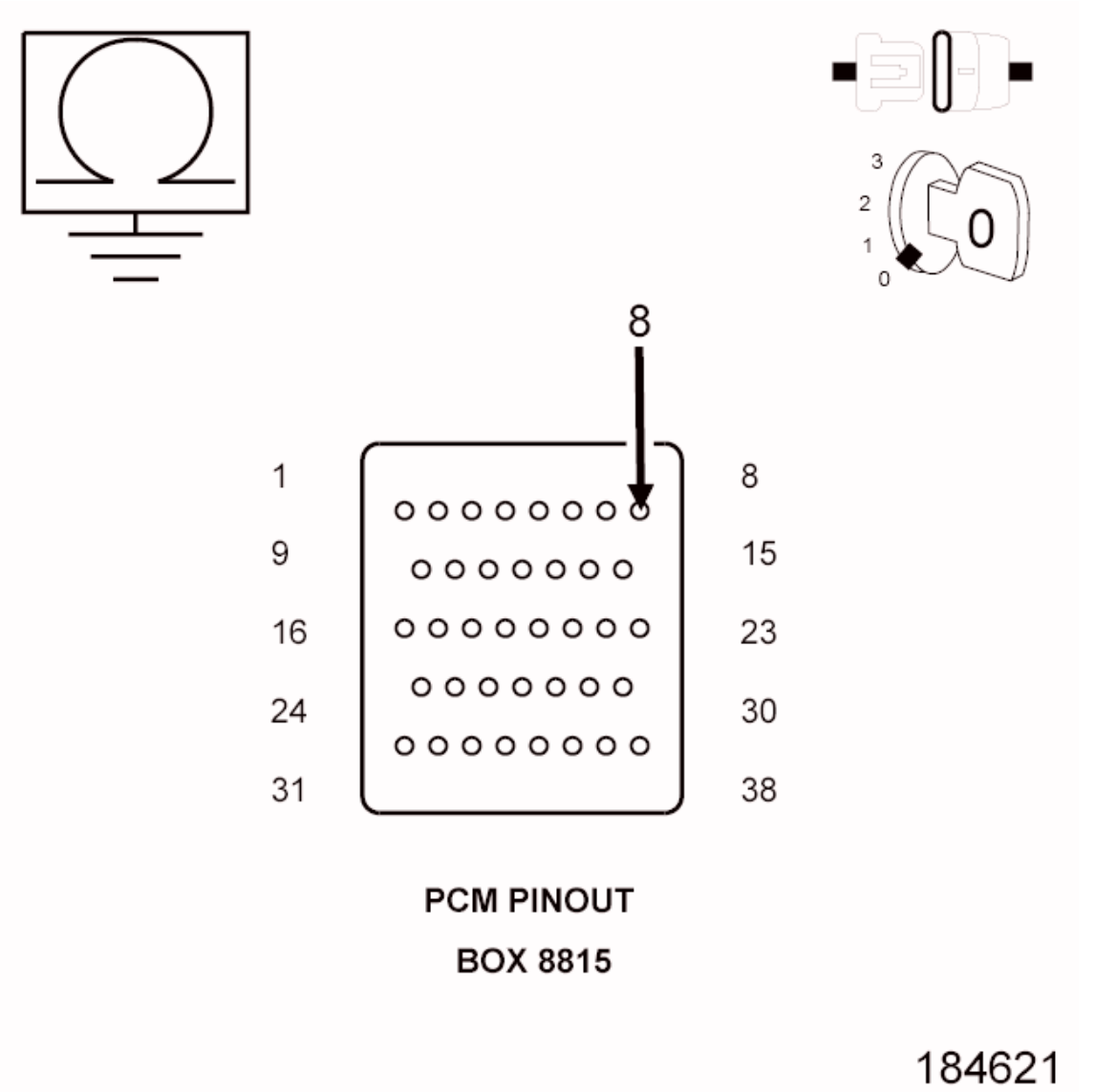

Fig. 11: Measuring Resistance Between Ground And (B222) Vehicle Speed No. 2 Signal Circuit AT Appropriate Terminals Of Special Tool #8815
Courtesy of CHRYSLER GROUP, LLC

1. Measure the resistance between ground and the (B222) Vehicle Speed No. 2 Signal circuit at the appropriate terminals of special tool (special tool #8815A, Kit, NGC, 38 Position).

Is the resistance below 100 ohms?

Yes

- Repair the short to ground in the (B222) Vehicle Speed No. 2 Signal circuit.
- Perform the POWERTRAIN VERIFICATION TEST. Refer to **POWERTRAIN VERIFICATION TEST** .

No

- Go To 6.

6. **POWERTRAIN CONTROL MODULE (PCM)**
    1. Using the wiring diagram/schematic as a guide, inspect the wiring and connectors between the ABS Module, VSS, and the Powertrain Control Module (PCM).
    2. Look for any chafed, pierced, pinched, or partially broken wires.
    3. Look for broken, bent, pushed out or corroded terminals. Verify that there is good pin to terminal contact in the ABS Module, VSS, and the Powertrain Control Module connectors.
    4. Refer to any Technical Service Bulletins that may apply.

    Were there any problems found?

    Yes

    - Repair as necessary.
    - Perform the POWERTRAIN VERIFICATION TEST. Refer to **POWERTRAIN VERIFICATION TEST** .

    No

    - Replace and program the Powertrain Control Module per Service Information.
    - Perform the POWERTRAIN VERIFICATION TEST. Refer to **POWERTRAIN VERIFICATION TEST** .

P2166-ACCELERATOR PEDAL POSITION SENSOR 1 MAXIMUM STOP PERFORMANCE

For a complete wiring diagram **refer to appropriate SYSTEM WIRING DIAGRAMS article** .

WHEN MONITORED:

Ignition on. During in plant mode the APP Sensors need to be checked to make sure that idle and full pedal travel can be reached on both sensors.

SET CONDITION:

APPS No. 1 has failed to achieve the required maximum value during In Plant testing. One trip fault and the

code will set within 5 seconds. Engine will only idle. ETC light is illuminated.

POSSIBLE CAUSES

Possible Causes
IN PLANT TEST FAILURE APPS RELEARN

Always perform the Pre-Diagnostic Troubleshooting procedure before proceeding. Refer to PRE-DIAGNOSTIC TROUBLESHOOTING PROCEDURE .

DIAGNOSTIC TEST

1. **IN PLANT TEST FAILURE**
    1. Ignition on, engine not running.

        NOTE: This DTC is set when the APP Sensors are learned in plant but do not reach the Minimum or Maximum voltage range.

    2. With a scan tool, select View DTCs.
    3. With the scan tool, erase DTCs.
    4. Start the engine.
    5. With the scan tool, View DTCs.

        Is the DTC Active at this time?

        Yes

        - Go To 2.

        No

        - Perform the INTERMITTENT CONDITION Diagnostic Procedure. Refer to **INTERMITTENT CONDITION** .
2. **APPS RELEARN**
    1. With a scan tool select the ETC RELEARN function.
    2. Next, erase DTCs.
    3. Start the engine.

        Does the DTC return?

        Yes

        - Replace the APPS Assembly per Service Information. After installation is complete, use a

scan tool and select the ETC RELEARN function.

- Perform the POWERTRAIN VERIFICATION TEST. Refer to **POWERTRAIN VERIFICATION TEST** .

No

- Test Complete.

P2167-ACCELERATOR PEDAL POSITION SENSOR 2 MAXIMUM STOP PERFORMANCE

For a complete wiring diagram **refer to appropriate SYSTEM WIRING DIAGRAMS article** .

WHEN MONITORED:

Ignition on. During in plant mode the APP Sensors need to be checked to make sure that idle and full pedal travel can be reached on both sensors.

SET CONDITION:

APPS No. 2 has failed to achieve the required maximum value during In Plant testing. One trip fault and the code will set within 5 seconds. Engine will only idle. ETC light will illuminate.

POSSIBLE CAUSES

Possible Causes
IN PLANT TEST FAILURE APPS RELEARN

DIAGNOSTIC TEST

1. **IN PLANT TEST FAILURE**
    1. Ignition on, engine not running.

        NOTE: This DTC is set when the APP Sensors are learned in plant but do not reach the Minimum or Maximum voltage range.

    2. With a scan tool, select View DTCs.
    3. With the scan tool, erase DTCs.
    4. Start the engine.
    5. With the scan tool, View DTCs.

        Is the DTC Active at this time?

        Yes

- Go To 2.

No

- Perform the INTERMITTENT CONDITION Diagnostic Procedure. Refer to **INTERMITTENT CONDITION** .

2. **APPS RELEARN**
   1. With a scan tool select the ETC RELEARN function.
   2. Next, erase DTCs.
   3. Start the engine.

   Does the DTC return?

   Yes

   - Replace the APPS Assembly per Service Information. After installation is complete, use a scan tool and select the ETC RELEARN function.
   - Perform the POWERTRAIN VERIFICATION TEST. Refer to **POWERTRAIN VERIFICATION TEST** .

   No

   - Test Complete.

P2172-HIGH AIRFLOW/VACUUM LEAK DETECTED (INSTANTANEOUS ACCUMULATION)

For a complete wiring diagram **refer to appropriate SYSTEM WIRING DIAGRAMS article** .

WHEN MONITORED:

Ignition on and engine running with no MAP Sensor DTCs.

SET CONDITION:

A large vacuum leak has been detected or both of the TP Sensors have failed based on their position being 2.5 volts and the calculated MAP value is less than the actual MAP minus an Offset value. One trip fault and the code will set within 5 seconds. ETC light will flash.

POSSIBLE CAUSES

Possible Causes
VACUUM LEAK
RESISTANCE IN THE (F856) 5-VOLT SUPPLY CIRCUIT
(F856) 5-VOLT SUPPLY CIRCUIT SHORTED TO GROUND
RESISTANCE IN THE (K1) MAP SIGNAL CIRCUIT

(K1) MAP SIGNAL CIRCUIT SHORTED TO GROUND
RESISTANCE IN (K900) SENSOR GROUND CIRCUIT
RESISTANCE IN THE (F855) 5-VOLT SUPPLY CIRCUIT
(F855) 5-VOLT SUPPLY CIRCUIT SHORTED TO GROUND
RESISTANCE IN THE TP SENSOR SIGNAL CIRCUIT
TP SENSOR SIGNAL CIRCUIT SHORTED TO GROUND
RESISTANCE IN THE (K922) TP SENSOR RETURN CIRCUIT
MAP SENSOR
THROTTLE BODY
POWERTRAIN CONTROL MODULE (PCM)

Always perform the Pre-Diagnostic Troubleshooting procedure before proceeding. Refer to PRE-DIAGNOSTIC TROUBLESHOOTING PROCEDURE .

DIAGNOSTIC TEST

1. **ACTIVE DTC**

   NOTE: The most likely cause of this DTC is a vacuum leak.

   NOTE: This fault code could be present if any Cam/Crank DTCs are set. No repair is necessary for P2172 if any Cam or Crank DTCs are set.

   NOTE: Diagnose any 5-Volt Supply, TP Sensor, Fuel System Lean or Rich, or MAP Sensor DTCs before continuing.

   NOTE: The throttle plate should be free from binding and carbon build up.

   1. Ignition on, engine not running.
   2. With a scan tool, select View DTCs.

      Is the DTC Active at this time?

      Yes

      - Go To 2.

      No

      - Perform the INTERMITTENT CONDITION Diagnostic Procedure. Refer to **INTERMITTENT CONDITION** .

2. **VACUUM LEAK**

NOTE: **This code is enabled on engines with a plastic intake manifold and is intended to limit the maximum engine speed if a large crack occurs.**

NOTE: **A large vacuum leak is most likely the cause of this DTC.**

1. Inspect the Intake Manifold and Throttle body for leaks and cracks.
2. Inspect the Power Brake Booster for any vacuum leaks.
3. Inspect the PCV system for proper operation or any vacuum leaks.
4. Inspect the MAP Sensor for proper installation.

   Were any vacuum leaks found?

   Yes

   - Repair the vacuum leak as necessary.
   - Perform the POWERTRAIN VERIFICATION TEST. Refer to **POWERTRAIN VERIFICATION TEST** .

   No

   - Go To 3.

3. **MAP SENSOR OPERATION**
   1. Start the engine.
   2. With a scan tool, monitor the MAP Sensor voltage.
   3. Snap the Accelerator pedal.

      Does the MAP Sensor voltage vary from below 2.0 volts at idle to above 3.5 volts at Wide Open Throttle?

      Yes

      - Go To 4.

      No

      - Go To 13.

4. **TP SENSOR OPERATION**
   1. Ignition on, engine not running.
   2. With a scan tool, perform the ETC Throttle Follower Test.
   3. TP Sensor No. 1 should start at approximately 0.7 of a volt and increase to 4.3 volts.
   4. TP Sensor No. 2 should start at approximately 4.3 volts and decrease to 0.7 of a volt.

      Is the voltage transition smooth between the appropriate values?

Yes

- Perform the INTERMITTENT CONDITION Diagnostic Procedure. Refer to **INTERMITTENT CONDITION** .

No

- Go To 5.

5. **RESISTANCE IN THE (F855) 5-VOLT SUPPLY CIRCUIT**

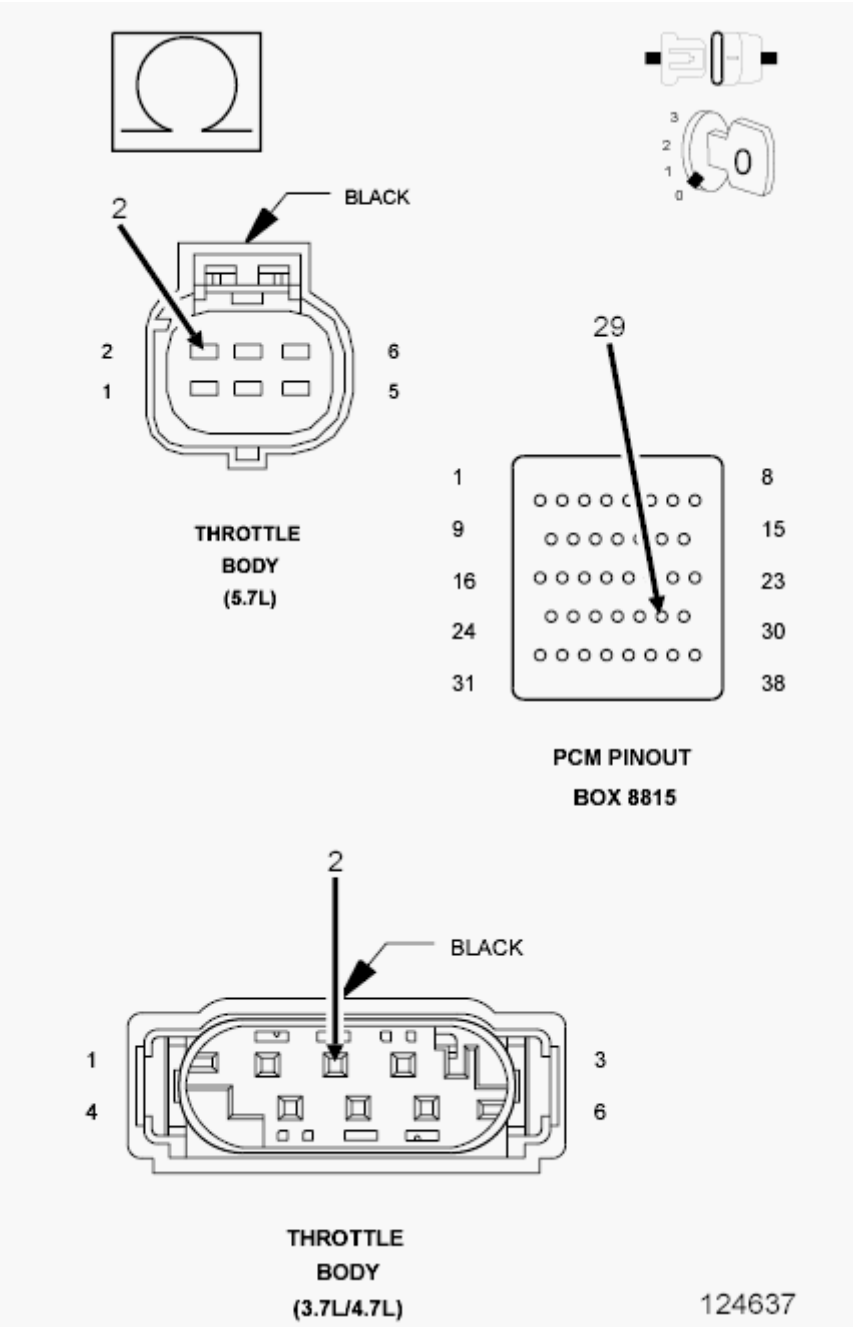

Fig. 12: Measuring Resistance Of (F855) 5-Volt Supply Circuit From Throttle Body Harness Connector To Appropriate Terminal Of Special Tool #8815
Courtesy of CHRYSLER GROUP, LLC

1. Turn the ignition off.
2. Disconnect the Throttle Body harness connector.
3. Disconnect the C2 PCM harness connector.

CAUTION: Do not probe the PCM harness connectors. Probing the PCM harness connectors will damage the PCM terminals resulting in poor terminal to pin connection. Install the PCM Pinout Box (special tool #8815A, Kit, NGC, 38 Position) to perform diagnosis.

4. Measure the resistance of the (F855) 5-volt Supply circuit from the Throttle Body harness connector to the appropriate terminal of special tool (special tool #8815A, Kit, NGC, 38 Position).

   Is the resistance above 100 ohms?

   Yes

   - Go To 6.

   No

   - Repair the excessive resistance in the (F855) 5-volt Supply circuit.
   - Perform the POWERTRAIN VERIFICATION TEST. Refer to **POWERTRAIN VERIFICATION TEST** .

6. **(F855) 5-VOLT SUPPLY CIRCUIT SHORTED TO GROUND**

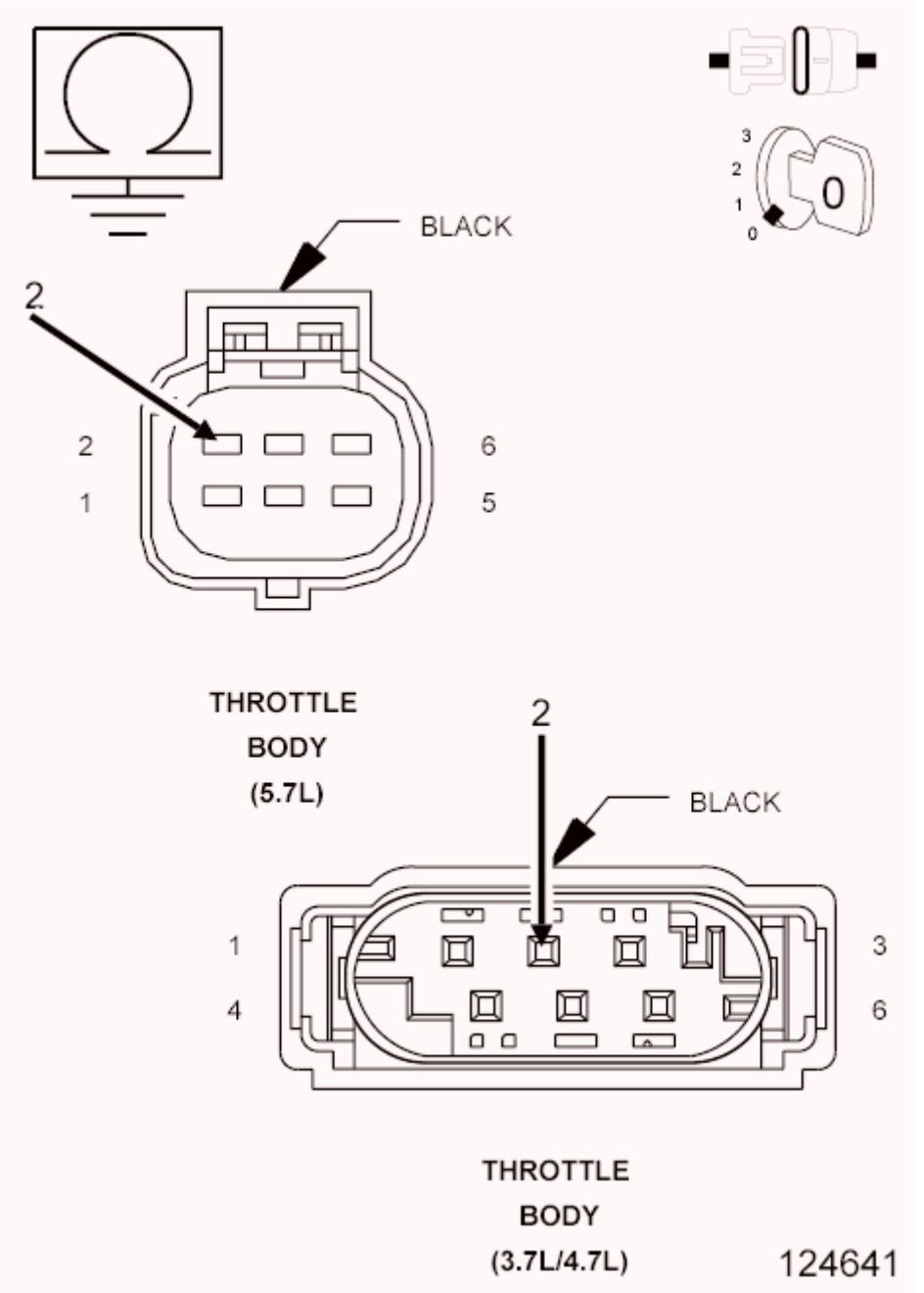

Fig. 13: Measuring Resistance Between Ground And 5-Volt Supply Circuit AT Throttle Body Harness Connector
Courtesy of CHRYSLER GROUP, LLC

1. Measure the resistance between ground and (F855) 5-volt Supply circuit at the Throttle Body harness connector.

   Is the resistance above 100 ohms?

   Yes

- Go To 7.

No

- Repair the short to ground in the (F855) 5-volt Supply circuit.
- Perform the POWERTRAIN VERIFICATION TEST. Refer to **POWERTRAIN VERIFICATION TEST** .

7. **TP SENSOR**

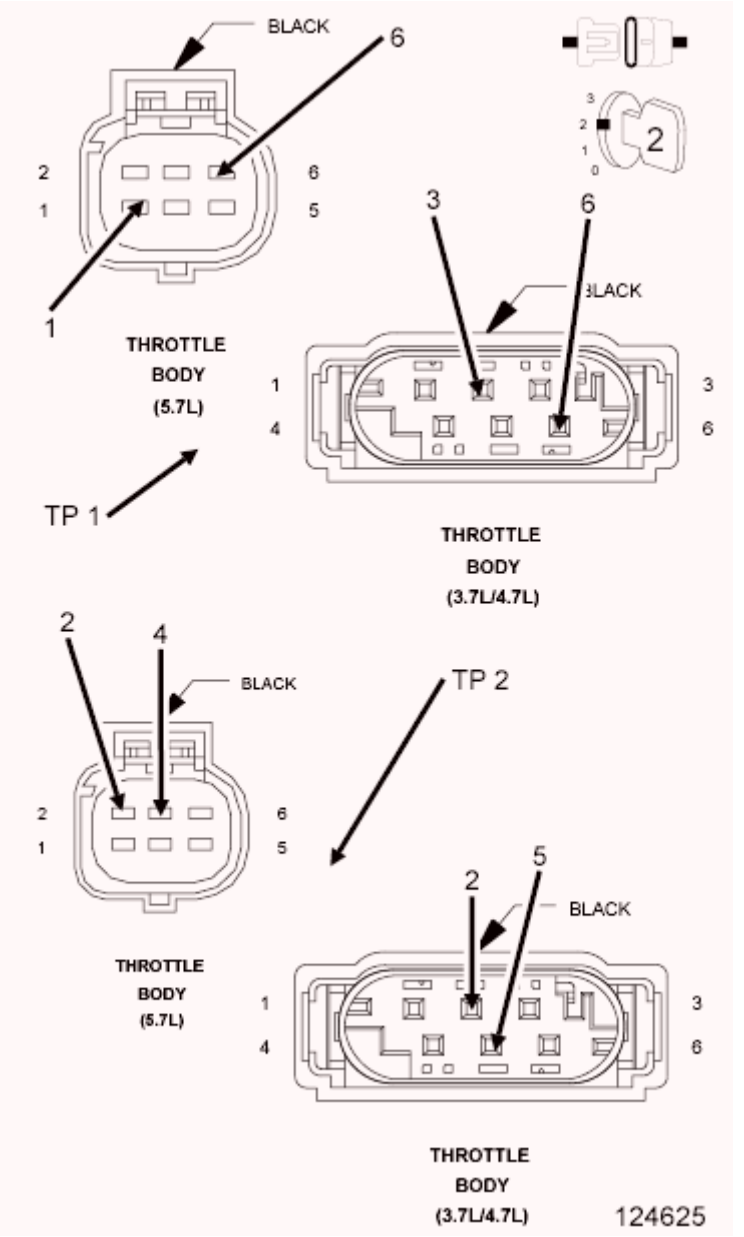

Fig. 14: Checking TP Sensors Circuits
Courtesy of CHRYSLER GROUP, LLC

1. Connect the C2 PCM harness connector.
2. Ignition on, engine not running.
3. With a scan tool, monitor the TP Sensor voltage.
4. Connect a jumper wire between the (K22) TP Sensor No. 1 Signal circuit and the (K922) TP Sensor Return circuit in the Throttle Body harness connector.
5. TP Sensor No. 1 voltage should start at approximately 4.8 volts and decrease to 0.2 of a volt.
6. Connect a jumper wire between the (K122) TP Sensor No. 2 Signal circuit and the (F855) 5-volt Supply circuit in the Throttle Body harness connector.
7. TP Sensor No. 2 voltage should start at approximately 0 volts and increase to 4.8 to 5.2 volts.

   Does the TP Sensor voltage change to the appropriate voltage with the jumper wire installed?

   Yes

   - Disconnect the Battery before replacing the Throttle Body Assembly. Replace the Throttle Body Assembly. After installation is complete, use a scan tool and select the ETC RELEARN function
   - Perform the POWERTRAIN VERIFICATION TEST. Refer to **POWERTRAIN VERIFICATION TEST** .

   No

   - Go To 8.

8. **RESISTANCE IN THE (K22) TP SENSOR NO. 1 SIGNAL CIRCUIT**

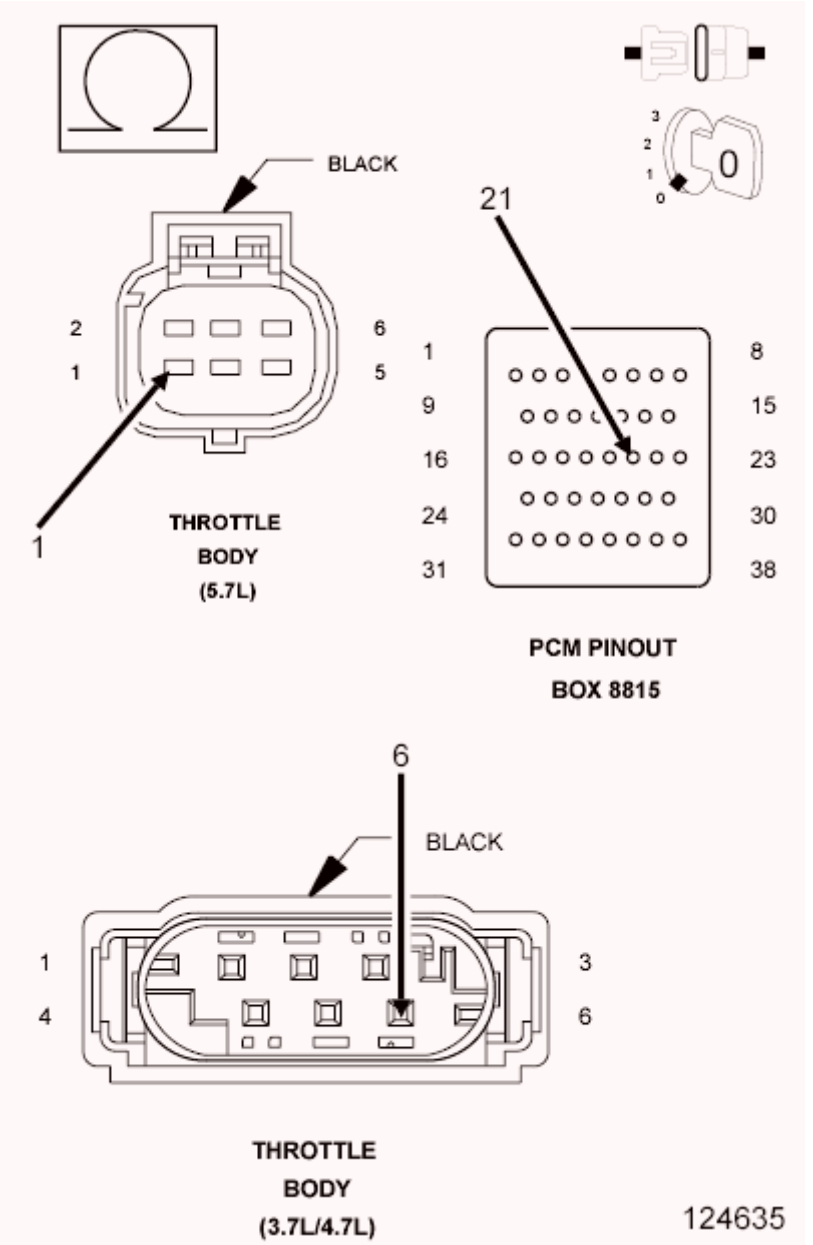

Fig. 15: Measuring Resistance Of TP Sensor No. 1 Signal Circuit Between Throttle Body Harness Connector & Appropriate Terminal Of Special Tool #8815
Courtesy of CHRYSLER GROUP, LLC

1. Turn the ignition off.
2. Disconnect the C2 PCM harness connector.
3. Measure the resistance of the (K22) TP Sensor No. 1 Signal circuit from the Throttle Body harness connector to the appropriate terminal of special tool (special tool #8815A, Kit, NGC, 38 Position).

   Is the resistance below 5.0 ohms?

   Yes

- Go To 9.

No

- Repair the excessive resistance in the (K22) TP Sensor No. 1 Signal circuit.
- Perform the POWERTRAIN VERIFICATION TEST. Refer to **POWERTRAIN VERIFICATION TEST** .

9. **RESISTANCE IN THE (K122) TP SENSOR NO. 2 SIGNAL CIRCUIT**

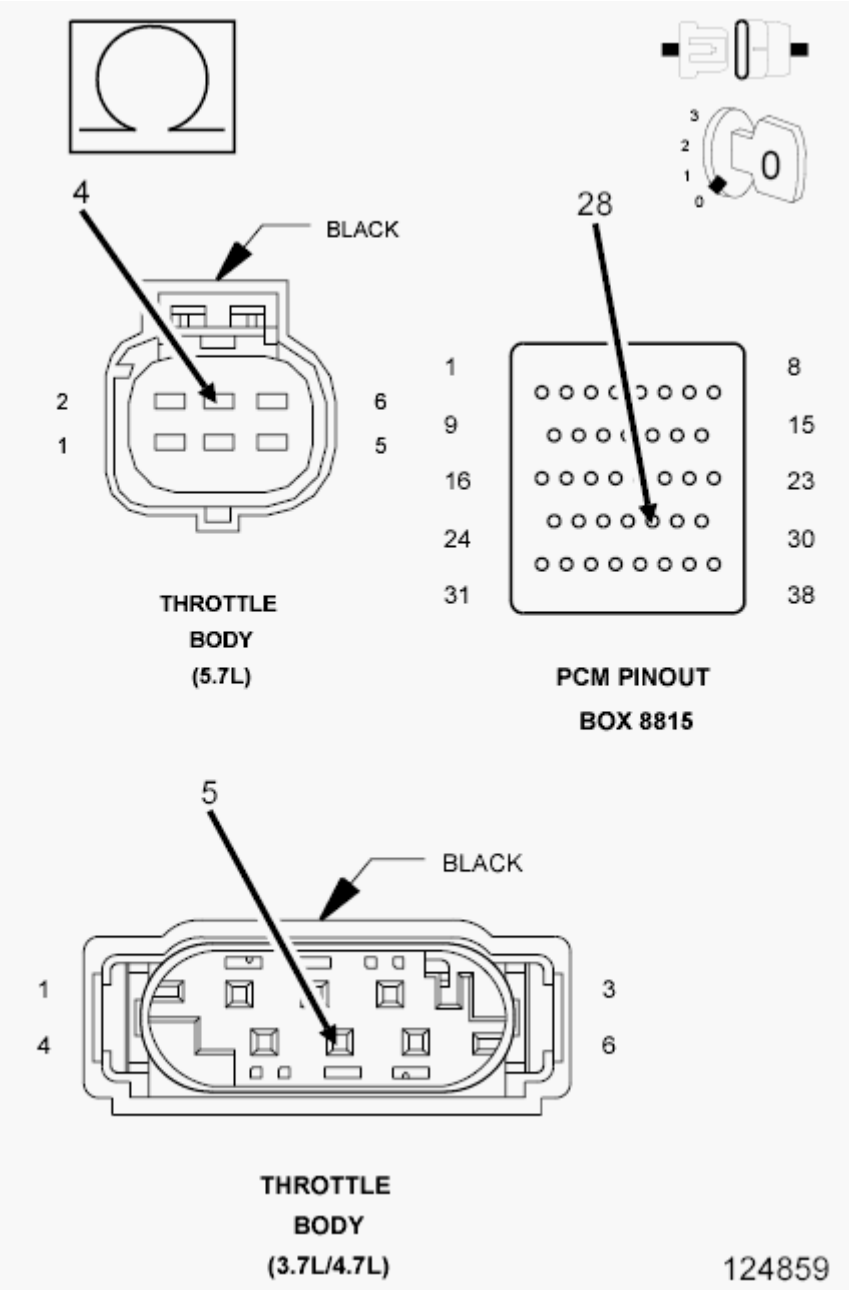

Fig. 16: Measuring Resistance Of (K122) TP Sensor No. 2 Signal Circuit From Throttle Body Harness Connector To Appropriate Terminal Of Special Tool #8815

Courtesy of CHRYSLER GROUP, LLC

1. Measure the resistance of the (K122) TP Sensor No. 2 Signal circuit from the Throttle Body harness connector to the appropriate terminal of special tool (special tool #8815A, Kit, NGC, 38 Position).

   Is the resistance below 5.0 ohms?

   Yes

   - Go To 10.

   No

   - Repair the excessive resistance in the (K122) TP Sensor No. 2 Signal circuit.
   - Perform the POWERTRAIN VERIFICATION TEST. Refer to **POWERTRAIN VERIFICATION TEST** .

10. **(K22) TP SENSOR NO. 1 SIGNAL CIRCUIT SHORTED TO GROUND**

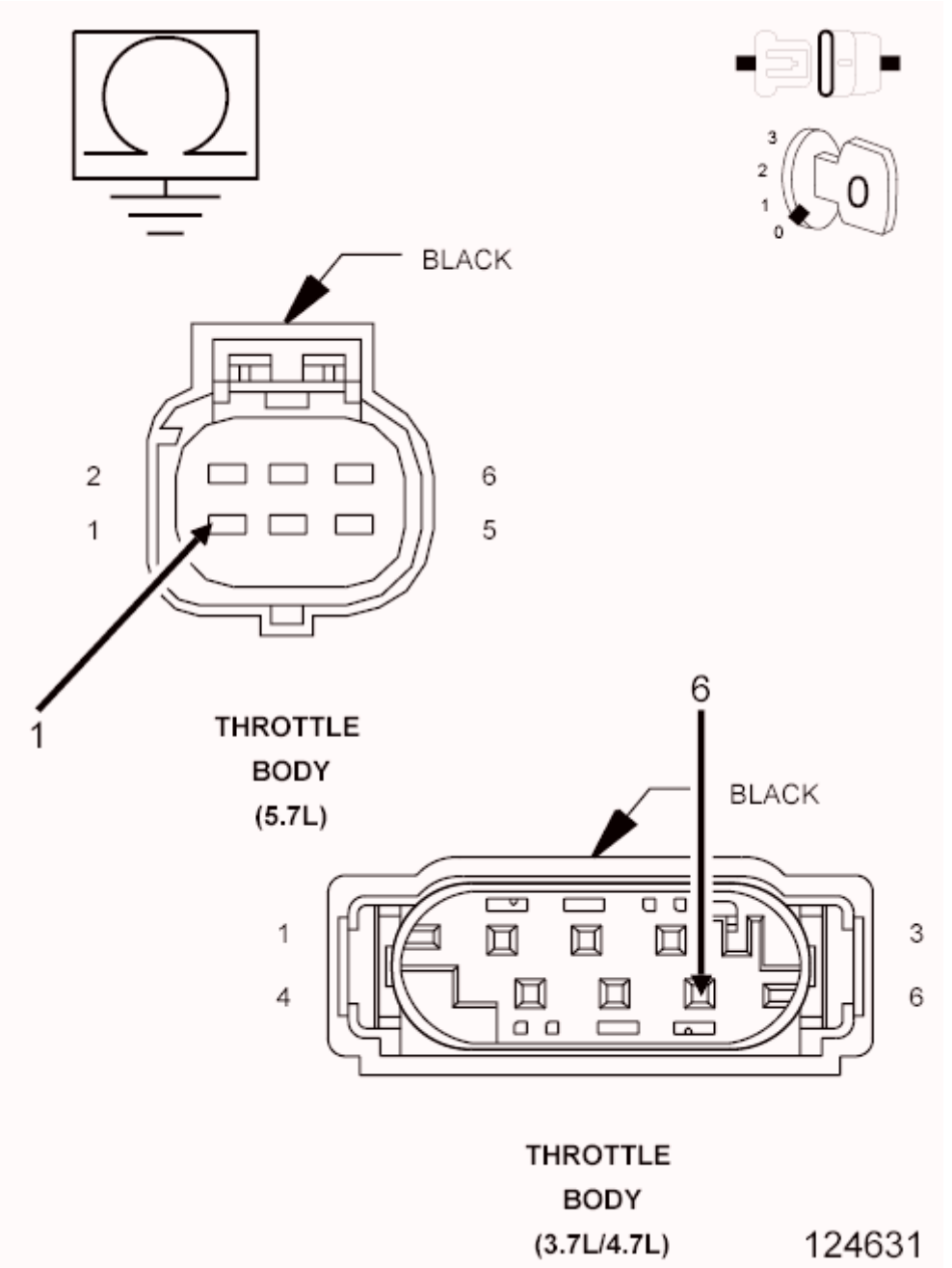

Fig. 17: Measuring Resistance Between Ground And TP Sensor No. 1 Signal Circuit AT Throttle Body Harness Connector
Courtesy of CHRYSLER GROUP, LLC

1. Measure the resistance between ground and the (K22) TP Sensor No. 1 Signal circuit at the Throttle Body harness connector.

   Is the resistance above 100 ohms?

   Yes

- Go To 11.

No

- Repair the short to ground in the (K22) TP Sensor No. 1 Signal circuit.
- Perform the POWERTRAIN VERIFICATION TEST. Refer to **POWERTRAIN VERIFICATION TEST** .

11. **(K122) TP SENSOR NO. 2 SIGNAL CIRCUIT SHORTED TO GROUND**

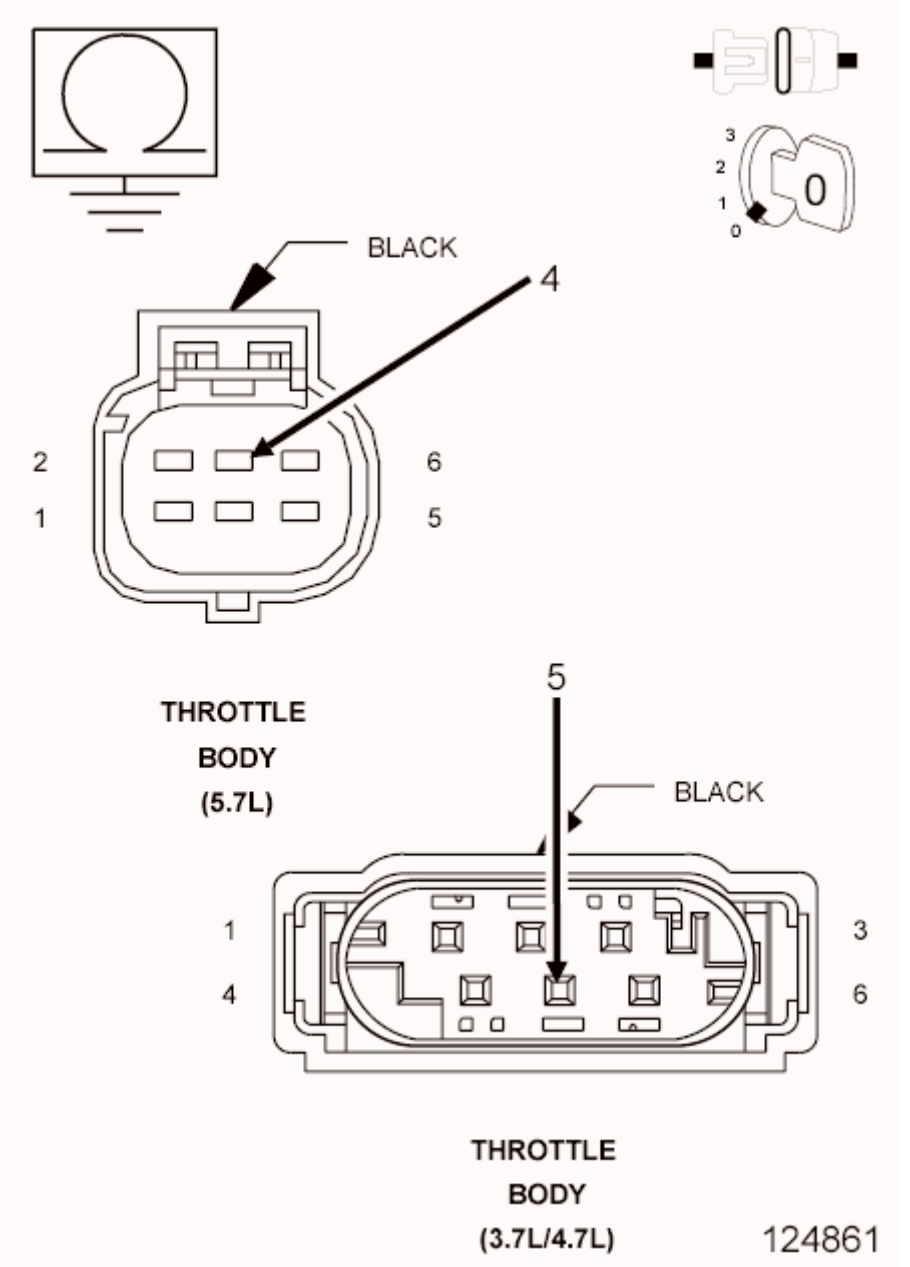

Fig. 18: Measuring Resistance Between Ground And (K122) TP Sensor No. 2 Signal Circuit AT Throttle Body Harness Connector

Courtesy of CHRYSLER GROUP, LLC

1. Measure the resistance between ground and the (K122) TP Sensor No. 2 Signal circuit at the Throttle Body harness connector.

   Is the resistance above 100 ohms?

   Yes

   - Go To 12.

   No

   - Repair the short to ground in the (K122) TP Sensor No. 2 Signal circuit.
   - Perform the POWERTRAIN VERIFICATION TEST. Refer to **POWERTRAIN VERIFICATION TEST** .

12. **RESISTANCE IN THE (K922) TP SENSOR RETURN CIRCUIT**

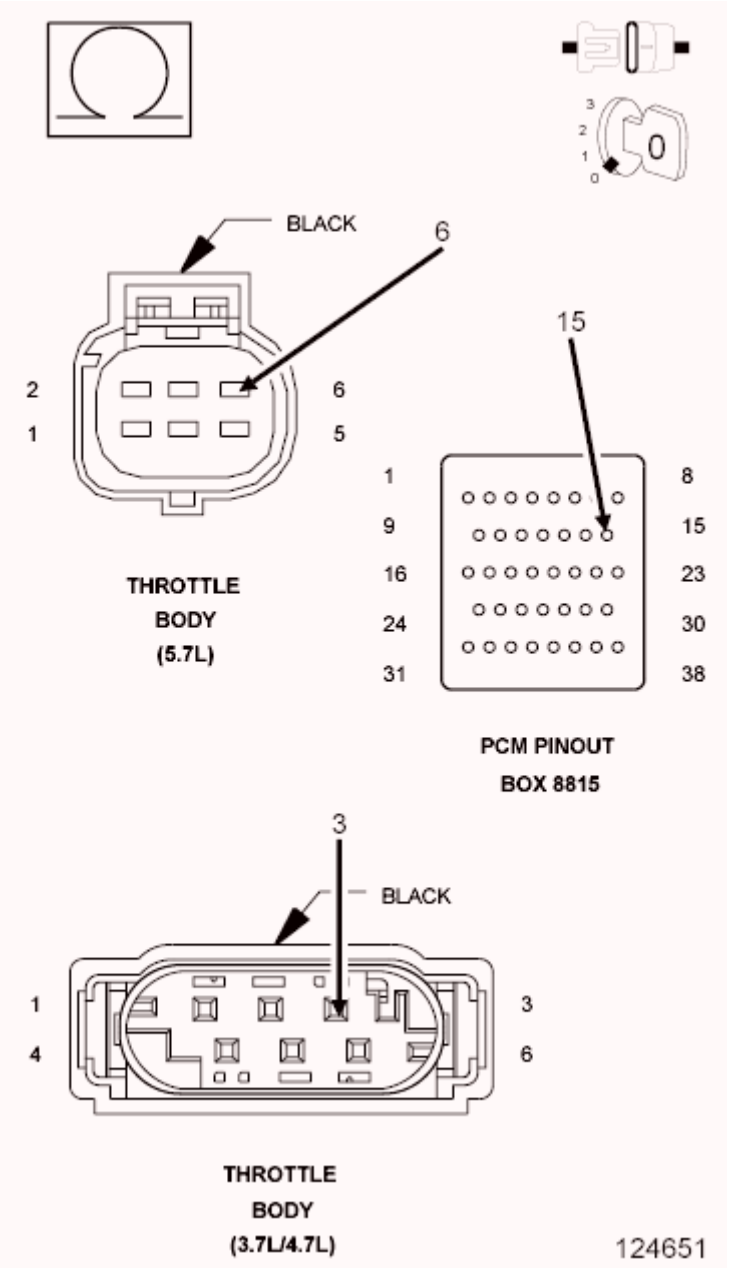

Fig. 19: Measuring Resistance Of (K922) TP Sensor Return Circuit From Throttle Body Harness Connector To Appropriate Terminal Of Special Tool #8815
Courtesy of CHRYSLER GROUP, LLC

1. Measure the resistance of the (K922) TP Sensor Return circuit from the Throttle Body harness connector to the appropriate terminal of special tool (special tool #8815A, Kit, NGC, 38 Position).

   Is the resistance below 5.0 ohms?

   Yes

   - Go To 19.

No

- Repair the excessive resistance in the (K922) TP Sensor Return circuit.
- Perform the POWERTRAIN VERIFICATION TEST. Refer to **POWERTRAIN VERIFICATION TEST** .

13. **RESISTANCE IN THE (F856) 5-VOLT SUPPLY CIRCUIT**

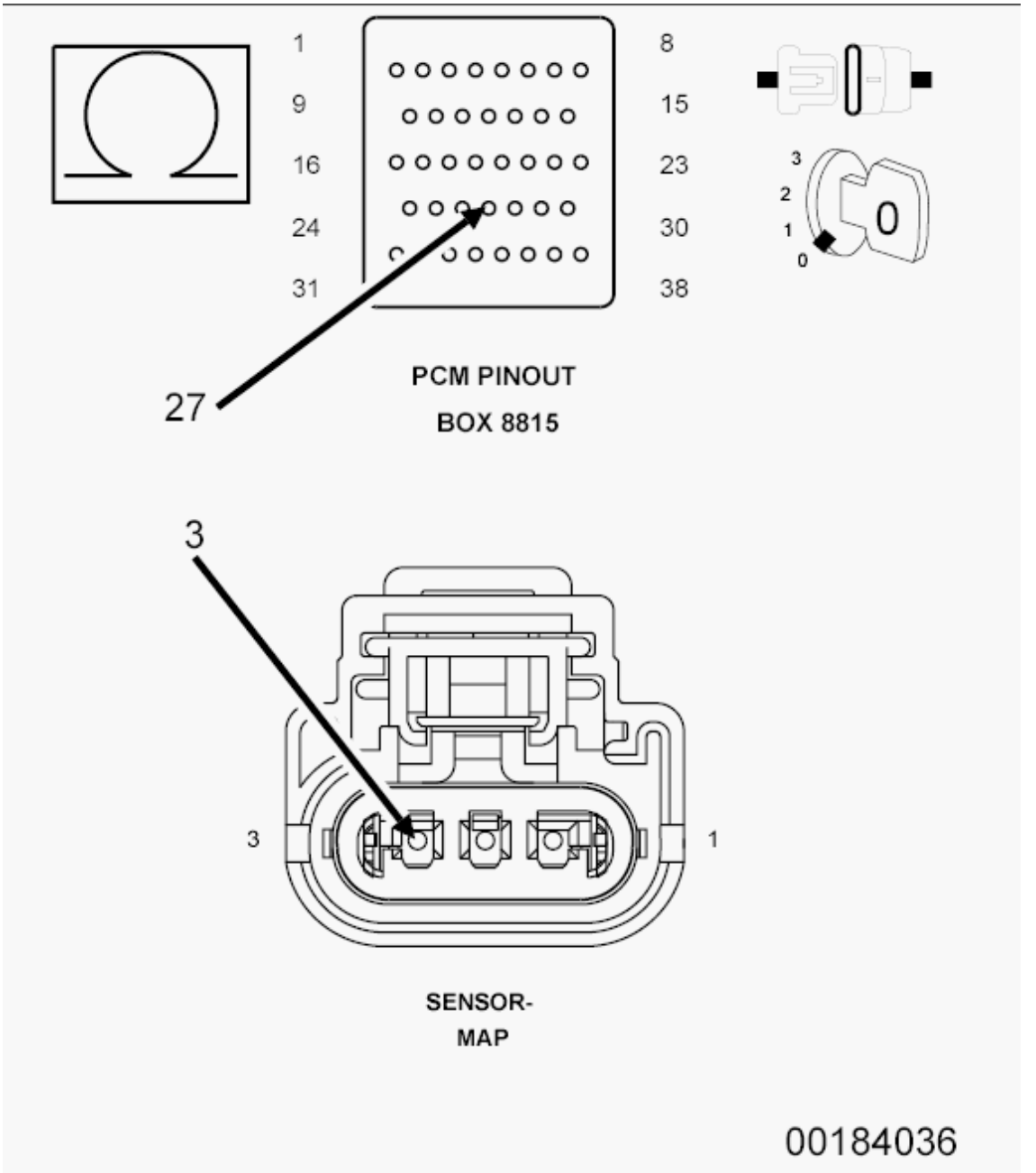

Fig. 20: Measuring Resistance Of 5-Volt Supply Circuit From MAP Sensor Harness Connector To Appropriate Terminal Of Special Tool #8815
Courtesy of CHRYSLER GROUP, LLC

1. Turn the ignition off.
2. Disconnect the MAP Sensor harness connector.
3. Disconnect the C1 PCM harness connector.

CAUTION: Do not probe the PCM harness connectors. Probing the PCM harness connectors will damage the PCM terminals resulting in poor terminal to pin connection. Install the PCM Pinout Box (special tool #8815A, Kit, NGC, 38 Position) to perform diagnosis.

4. Measure the resistance of the (F856) 5-volt Supply circuit from the MAP Sensor harness connector to the appropriate terminal of special tool (special tool #8815A, Kit, NGC, 38 Position).

   Is the resistance below 5.0 ohms?

   Yes

   - Go To 14.

   No

   - Repair the excessive resistance in the (F856) 5-volt Supply circuit.
   - Perform the POWERTRAIN VERIFICATION TEST. Refer to **POWERTRAIN VERIFICATION TEST** .

14. **(F856) 5-VOLT SUPPLY CIRCUIT SHORTED TO GROUND**

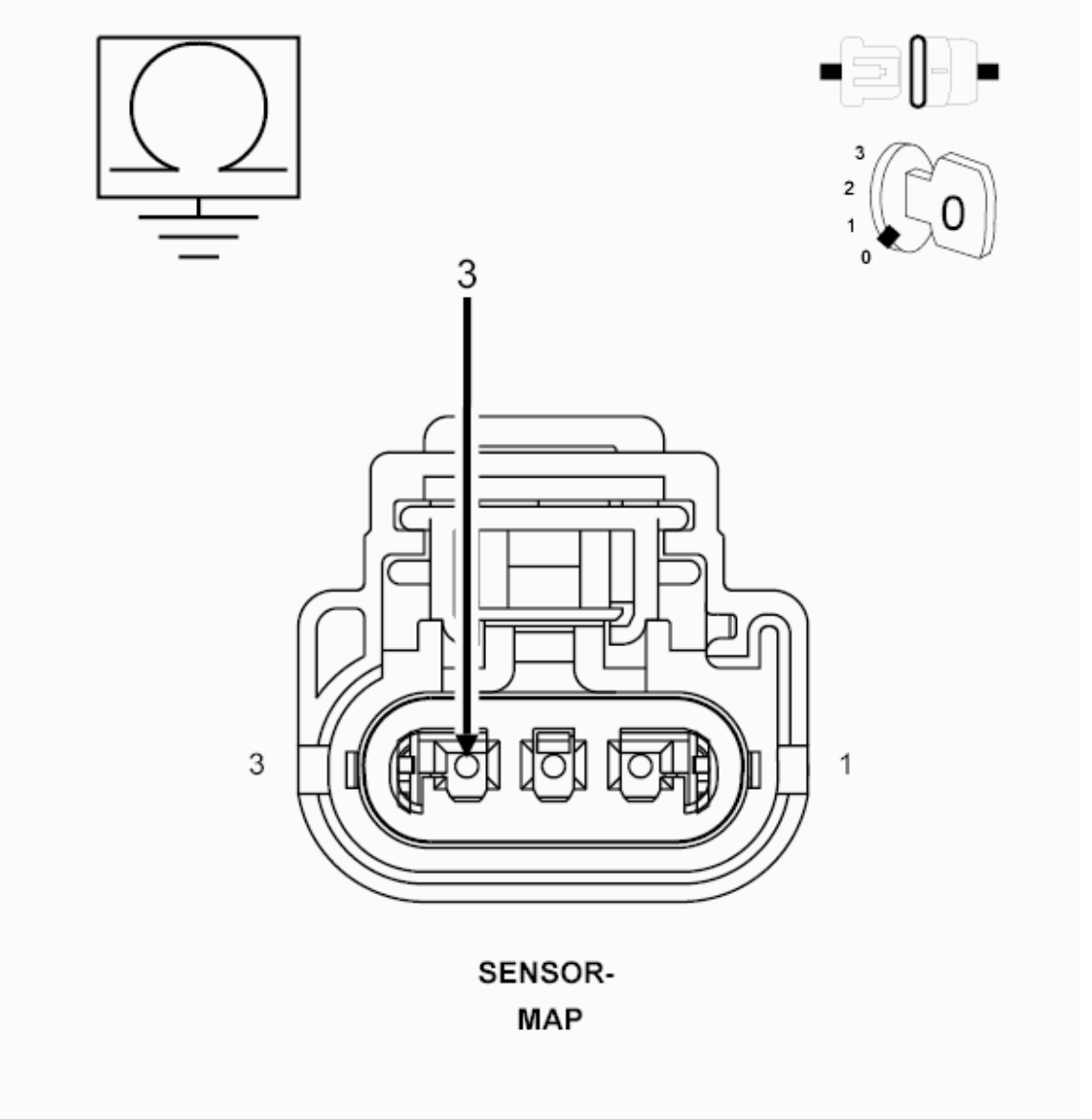

Fig. 21: Measuring Resistance Between Ground And (F856) 5-Volt Supply Circuit In MAP Sensor Harness Connector
Courtesy of CHRYSLER GROUP, LLC

1. Measure the resistance between ground and the (F856) 5-volt Supply circuit in the MAP Sensor harness connector.

   Is the resistance above 100k ohms?

   Yes

   - Go To 15.

   No

- Repair the short to ground in the (F856) 5-volt Supply circuit.
- Perform the POWERTRAIN VERIFICATION TEST. Refer to **POWERTRAIN VERIFICATION TEST** .

15. **MAP SENSOR**

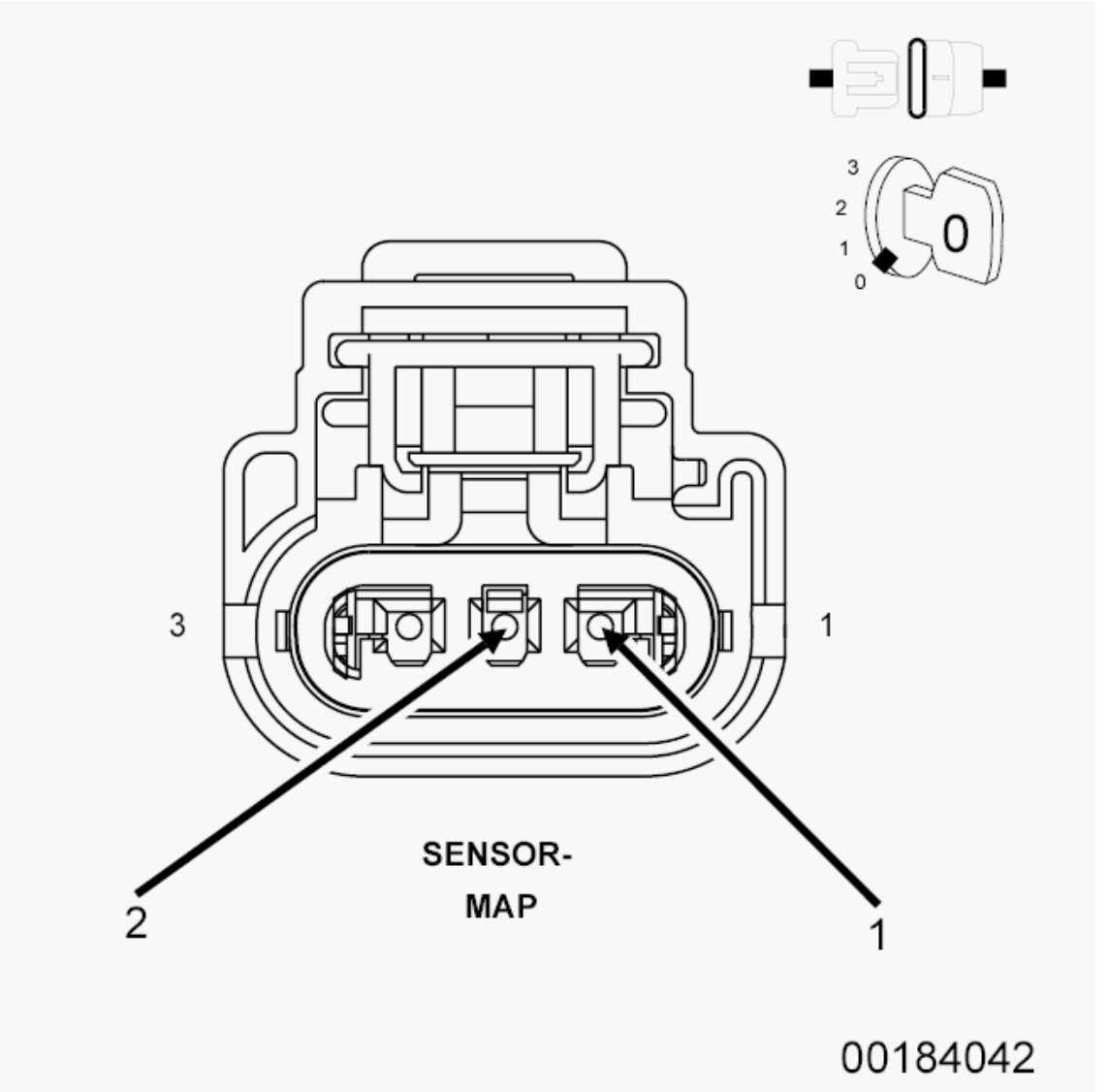

Fig. 22: MAP Sensor Harness Connector
Courtesy of CHRYSLER GROUP, LLC

1. Connect the C1 PCM harness connector.
2. Ignition on, engine not running.
3. With a scan tool, monitor the MAP Sensor voltage.
4. Connect a jumper wire between the (K1) MAP Signal circuit and the (K900) Sensor ground circuit in the MAP Sensor harness connector.
5. Cycle the ignition switch from off to on.

6. With a scan tool, monitor the MAP Sensor voltage.

   Does the scan tool display MAP voltage from approximately 4.9 volts to below 0.5 volt with the jumper wire installed?

   Yes

   - Replace the MAP Sensor.
   - Perform the POWERTRAIN VERIFICATION TEST. Refer to **POWERTRAIN VERIFICATION TEST** .

   No

   - Go To 16.

     NOTE: Remove the jumper wire before continuing.

   -

16. **RESISTANCE IN THE (K1) MAP SIGNAL CIRCUIT**

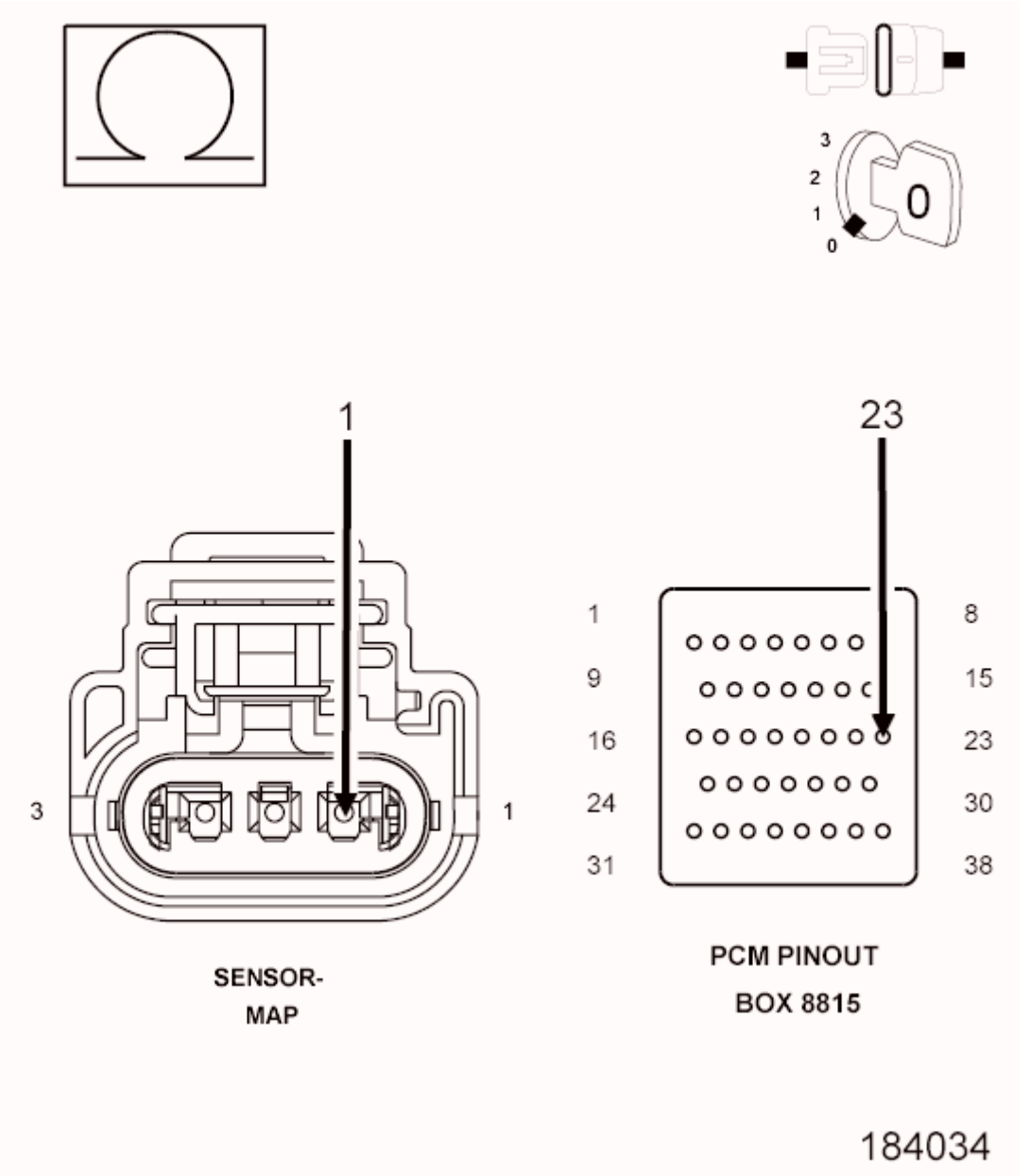

Fig. 23: Measuring Resistance Of MAP Sensor Signal Circuit Between Harness Connector And Appropriate Terminal Of Special Tool #8815
Courtesy of CHRYSLER GROUP, LLC

1. Turn the ignition off.
2. Disconnect the C2 PCM harness connector.
3. Measure the resistance of the (K1) MAP Signal circuit from the MAP Sensor harness connector to the appropriate terminal of special tool (special tool #8815A, Kit, NGC, 38 Position).

   Is the resistance below 5.0 ohms?

   Yes

- Go To 17.

No

- Repair the excessive resistance in the (K1) MAP Signal circuit
- Perform the POWERTRAIN VERIFICATION TEST. Refer to **POWERTRAIN VERIFICATION TEST** .

17. **(K1) MAP SIGNAL CIRCUIT SHORTED TO GROUND**

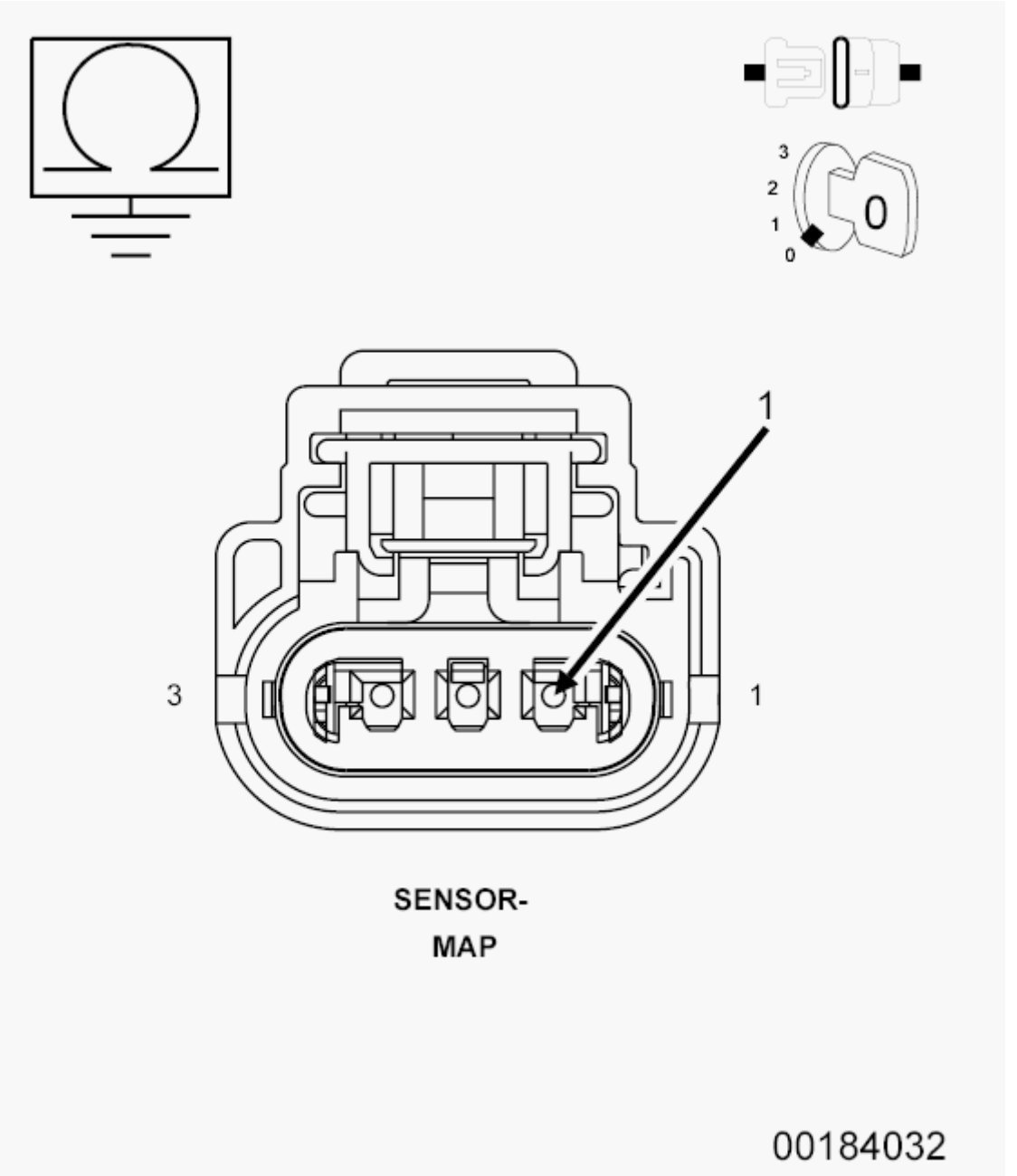

Fig. 24: Measuring Resistance Between Ground And MAP Sensor Signal Circuit AT Harness

Connector
Courtesy of CHRYSLER GROUP, LLC

1. Measure the resistance between ground and the (K1) MAP Signal circuit in the MAP Sensor harness connector.

   Is the resistance above 100k ohms?

   Yes

   - Go To 18.

   No

   - Repair the short to ground in the (K1) MAP Signal circuit.
   - Perform the POWERTRAIN VERIFICATION TEST. Refer to **POWERTRAIN VERIFICATION TEST** .

18. **RESISTANCE IN THE (K900) SENSOR GROUND CIRCUIT**

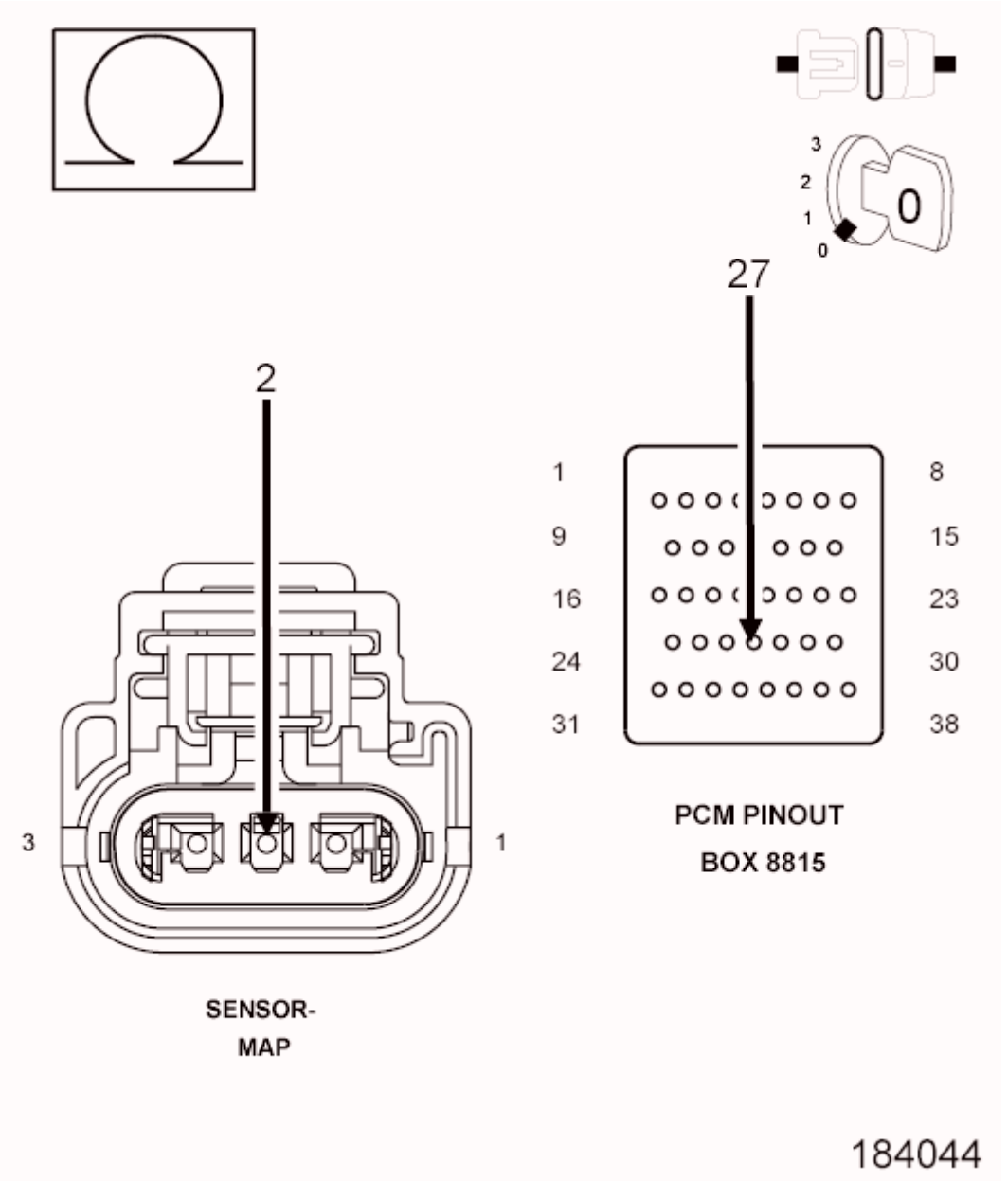

Fig. 25: Measuring Resistance Of (K900) Sensor Ground Circuit From MAP Sensor Harness Connector To Appropriate Terminal Of Special Tool #8815
Courtesy of CHRYSLER GROUP, LLC

1. Measure the resistance of the (K900) Sensor ground circuit from the MAP Sensor harness connector to the appropriate terminal of special tool (special tool #8815A, Kit, NGC, 38 Position).

   Is the resistance below 5.0 ohms?

   Yes

   - Go To 19.

No

- Repair the excessive resistance in the (K900) Sensor ground circuit.
- Perform the POWERTRAIN VERIFICATION TEST. Refer to **POWERTRAIN VERIFICATION TEST** .

19. **POWERTRAIN CONTROL MODULE (PCM)**
    1. Using the wiring diagram/schematic as a guide, inspect the wiring and connectors between the MAP Sensor, Throttle Body, and the Powertrain Control Module (PCM).
    2. Look for any chafed, pierced, pinched, or partially broken wires.
    3. Look for broken, bent, pushed out or corroded terminals. Verify that there is good pin to terminal contact in the MAP Sensor, Throttle Body, and the Powertrain Control Module connectors.
    4. Refer to any Technical Service Bulletins that may apply.

    Were there any problems found?

    Yes

    - Repair as necessary.
    - Perform the POWERTRAIN VERIFICATION TEST. Refer to **POWERTRAIN VERIFICATION TEST** .

    No

    - Replace and program the Powertrain Control Module per Service Information.
    - Perform the POWERTRAIN VERIFICATION TEST. Refer to **POWERTRAIN VERIFICATION TEST** .

P2173-HIGH AIRFLOW/VACUUM LEAK DETECTED (SLOW ACCUMULATION)

For a complete wiring diagram **refer to appropriate SYSTEM WIRING DIAGRAMS article** .

WHEN MONITORED:

Ignition on and engine running with no MAP Sensor DTCs.

SET CONDITION:

A large vacuum leak has been detected or both of the TP Sensors have failed based on their position being 2.5 volts and the calculated MAP value is less than the Gas Flow Adaptation value is too high. One trip fault the code will set within 5 seconds. ETC light will flash.

POSSIBLE CAUSES

Possible Causes
VACUUM LEAK

RESISTANCE IN THE (F856) 5-VOLT SUPPLY CIRCUIT
(F856) 5-VOLT SUPPLY CIRCUIT SHORTED TO GROUND
RESISTANCE IN THE (K1) MAP SIGNAL CIRCUIT
(K1) MAP SIGNAL CIRCUIT SHORTED TO GROUND
RESISTANCE IN (K900) SENSOR GROUND CIRCUIT
RESISTANCE IN THE (F855) 5-VOLT SUPPLY CIRCUIT
(F855) 5-VOLT SUPPLY CIRCUIT SHORTED TO GROUND
RESISTANCE IN THE TP SENSOR SIGNAL CIRCUIT
TP SENSOR SIGNAL CIRCUIT SHORTED TO GROUND
RESISTANCE IN THE (K922) TP SENSOR RETURN CIRCUIT
MAP SENSOR
THROTTLE BODY
POWERTRAIN CONTROL MODULE (PCM)

Always perform the Pre-Diagnostic Troubleshooting procedure before proceeding. Refer to PRE-DIAGNOSTIC TROUBLESHOOTING PROCEDURE .

DIAGNOSTIC TEST

1. **ACTIVE DTC**

   NOTE: The most likely cause of this DTC is a vacuum leak.

   NOTE: Diagnose any 5-Volt Supply, TP Sensor, Oxygen Sensor, Fuel related, or MAP Sensor DTCs before continuing.

   NOTE: The throttle plate should be free from binding and carbon build up.

   1. Ignition on, engine not running.
   2. With a scan tool, select View DTCs.

      Is the DTC Active at this time?

      Yes

      - Go To 2.

      No

      - Perform the INTERMITTENT CONDITION Diagnostic Procedure. Refer to **INTERMITTENT CONDITION** .

2. **VACUUM LEAK**

NOTE: **This code is enabled on engines with a plastic intake manifold and is intended to limit the maximum engine speed if a large crack occurs.**

NOTE: **A large vacuum leak is most likely the cause of this DTC.**

1. Inspect the Intake Manifold and Throttle body for leaks and cracks.
2. Inspect the Power Brake Booster for any vacuum leaks.
3. Inspect the PCV system for proper operation or any vacuum leaks.
4. Inspect the MAP Sensor for proper installation.

   Were any vacuum leaks found?

   Yes

   - Repair the vacuum leak as necessary.
   - Perform the POWERTRAIN VERIFICATION TEST. Refer to **POWERTRAIN VERIFICATION TEST** .

   No

   - Go To 3.

3. **MAP SENSOR OPERATION**
   1. Start the engine.
   2. With a scan tool, monitor the MAP Sensor voltage.
   3. Snap the Accelerator pedal.

      Does the MAP Sensor voltage vary from below 2.0 volts at idle to above 3.5 volts at Wide Open Throttle?

      Yes

      - Go To 4.

      No

      - Go To 13.

4. **TP SENSOR OPERATION**
   1. Ignition on, engine not running.
   2. With a scan tool, perform the ETC Throttle Follower Test.
   3. TP Sensor No. 1 should start at approximately 0.7 of a volt and increase to 4.3 volts.
   4. TP Sensor No. 2 should start at approximately 4.3 volts and decrease to 0.7 of a volt.

      Is the voltage transition smooth between the appropriate values?

Yes

- Perform the INTERMITTENT CONDITION Diagnostic Procedure. Refer to **INTERMITTENT CONDITION** .

No

- Go To 5.

5. **RESISTANCE IN THE (F855) 5-VOLT SUPPLY CIRCUIT**

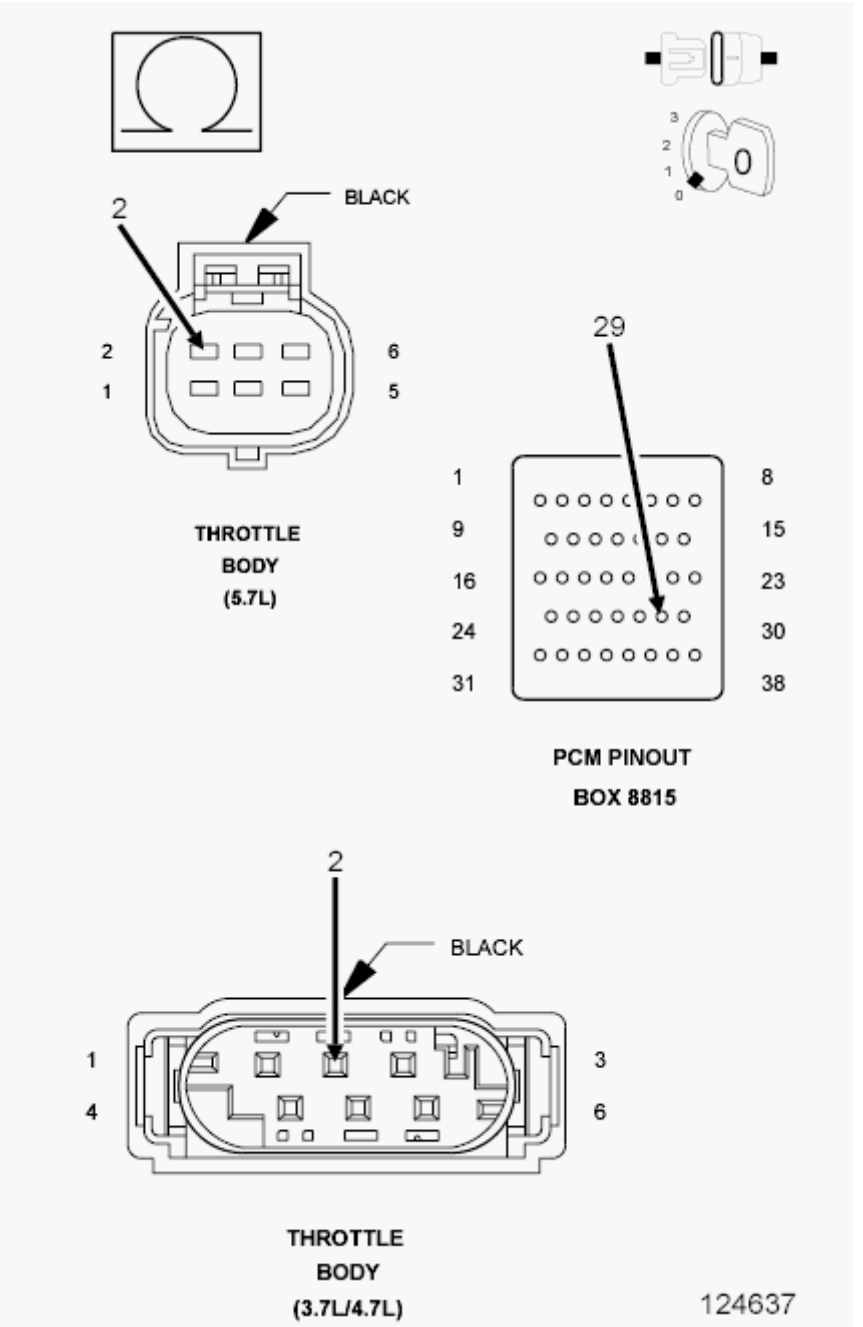

Fig. 26: Measuring Resistance Of (F855) 5-Volt Supply Circuit From Throttle Body Harness Connector To Appropriate Terminal Of Special Tool #8815
Courtesy of CHRYSLER GROUP, LLC

1. Turn the ignition off.
2. Disconnect the Throttle Body harness connector.
3. Disconnect the C2 PCM harness connector.

CAUTION: Do not probe the PCM harness connectors. Probing the PCM harness connectors will damage the PCM terminals resulting in poor terminal to pin connection. Install the PCM Pinout Box (special tool #8815A, Kit, NGC, 38 Position) to perform diagnosis.

4. Measure the resistance of the (F855) 5-volt Supply circuit from the Throttle Body harness connector to the appropriate terminal of special tool (special tool #8815A, Kit, NGC, 38 Position).

   Is the resistance below 100 ohms?

   Yes

   - Go To 6.

   No

   - Repair the excessive resistance in the (F855) 5-volt Supply circuit.
   - Perform the POWERTRAIN VERIFICATION TEST. Refer to **POWERTRAIN VERIFICATION TEST** .

6. **(F855) 5-VOLT SUPPLY CIRCUIT SHORTED TO GROUND**

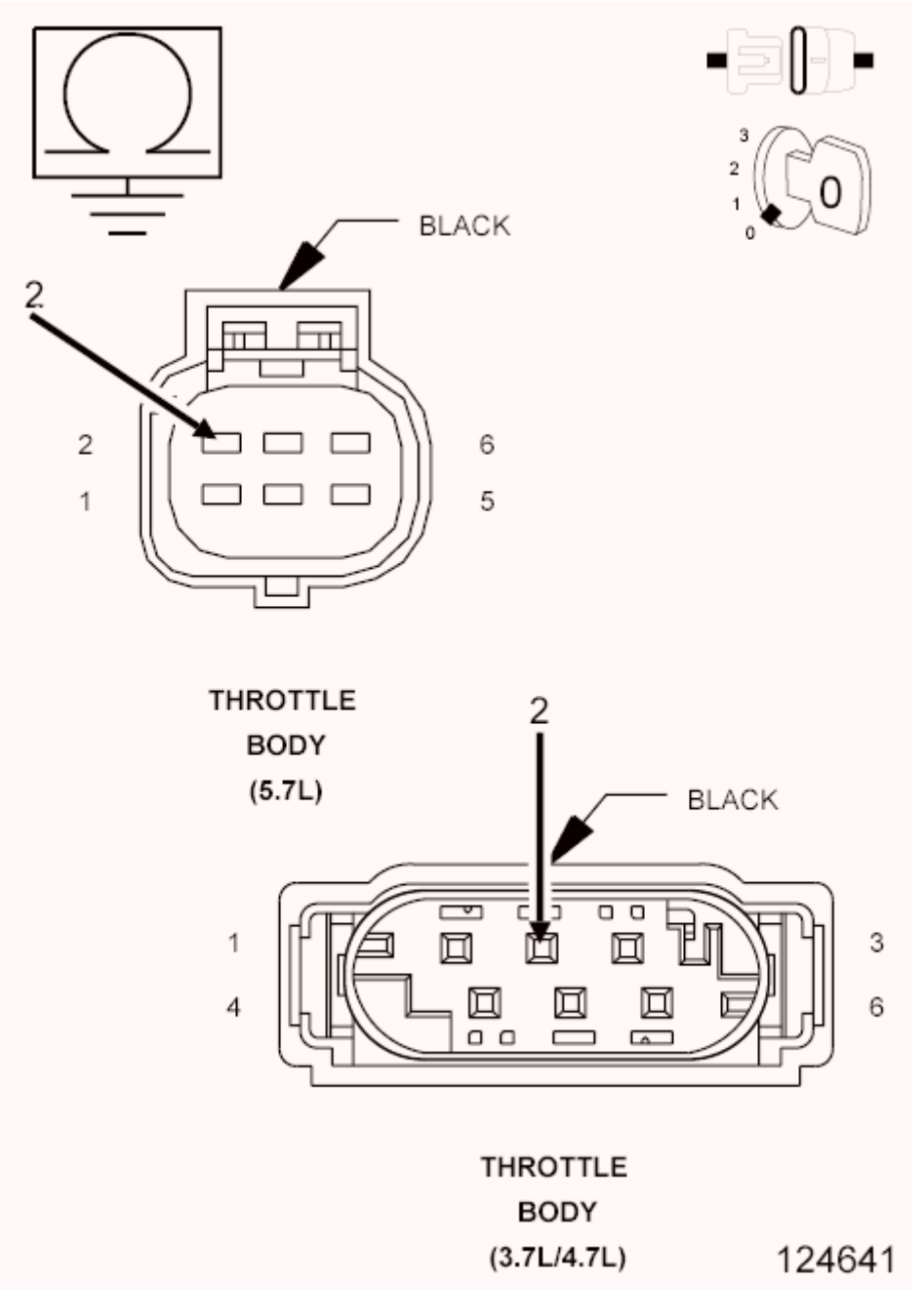

Fig. 27: Measuring Resistance Between Ground And 5-Volt Supply Circuit AT Throttle Body Harness Connector
Courtesy of CHRYSLER GROUP, LLC

1. Measure the resistance between ground and (F855) 5-volt Supply circuit at the Throttle Body harness connector.

   Is the resistance above 100 ohms?

   Yes

- Go To 7.

No

- Repair the short to ground in the (F855) 5-volt Supply circuit.
- Perform the POWERTRAIN VERIFICATION TEST. Refer to **POWERTRAIN VERIFICATION TEST** .

7. **TP SENSOR**

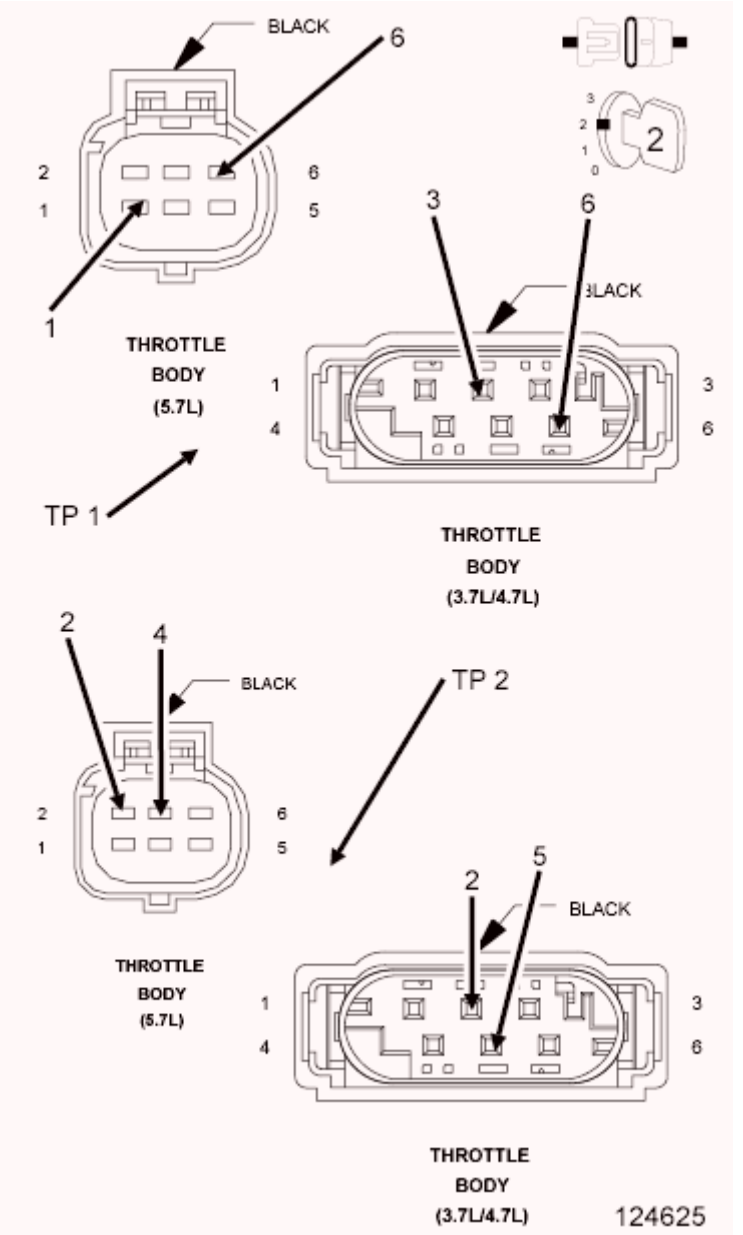

Fig. 28: Checking TP Sensors Circuits
Courtesy of CHRYSLER GROUP, LLC

1. Connect the C2 PCM harness connector.
2. Ignition on, engine not running.
3. With a scan tool, monitor the TP Sensor voltage.
4. Connect a jumper wire between the (K22) TP Sensor No. 1 Signal circuit and the (K922) TP Sensor Return circuit in the Throttle Body harness connector.
5. TP Sensor No. 1 voltage should start at approximately 4.8 volts and decrease to 0.2 of a volt.
6. Connect a jumper wire between the (K122) TP Sensor No. 2 Signal circuit and the (F855) 5-volt Supply circuit in the Throttle Body harness connector.
7. TP Sensor No. 2 voltage should start at approximately 0 volts and increase to 4.8 to 5.2 volts.

   Does the TP Sensor voltage change to the appropriate voltage with the jumper wire installed?

   Yes

   - Disconnect the Battery before replacing the Throttle Body Assembly. Replace the Throttle Body Assembly. After installation is complete, use a scan tool and select the ETC RELEARN function
   - Perform the POWERTRAIN VERIFICATION TEST. Refer to **POWERTRAIN VERIFICATION TEST** .

   No

   - Go To 8.

8. **RESISTANCE IN THE (K22) TP SENSOR NO. 1 SIGNAL CIRCUIT**

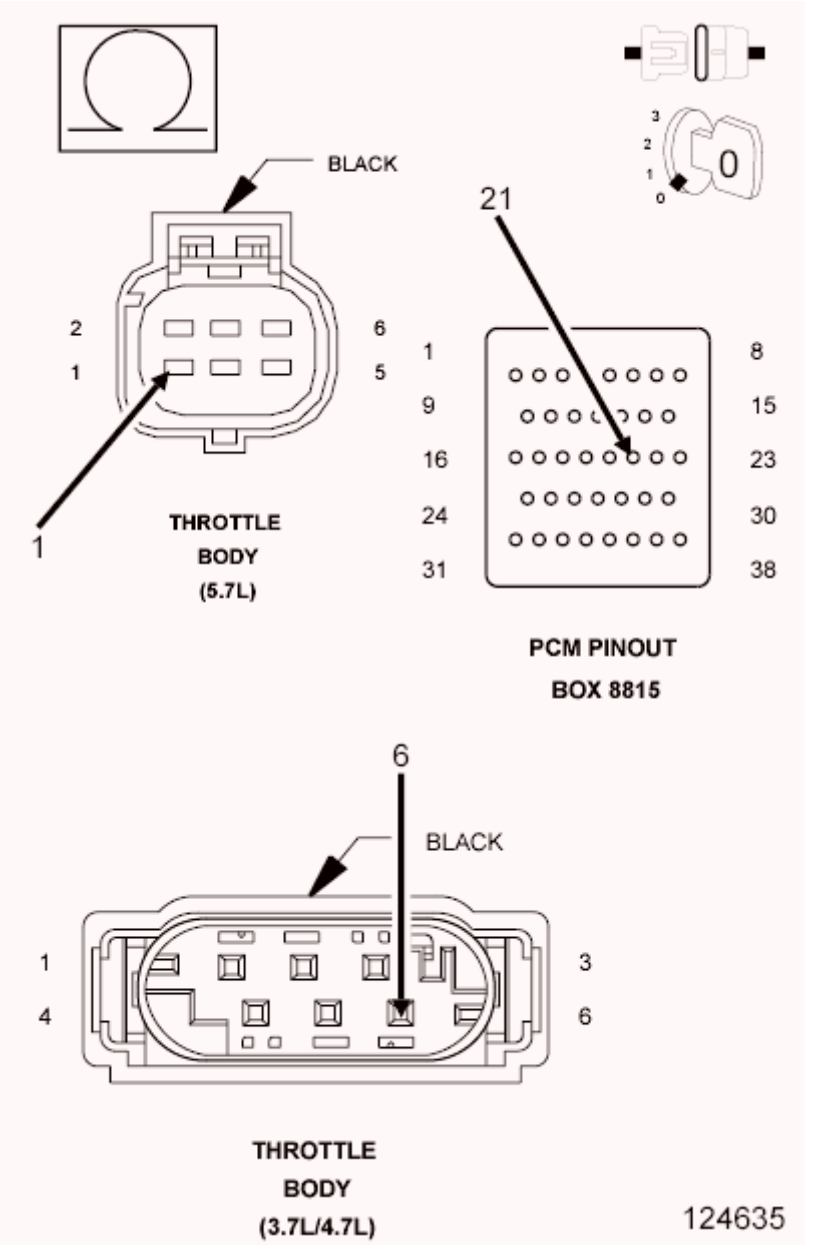

Fig. 29: Measuring Resistance Of TP Sensor No. 1 Signal Circuit Between Throttle Body Harness Connector & Appropriate Terminal Of Special Tool #8815
Courtesy of CHRYSLER GROUP, LLC

1. Turn the ignition off.
2. Disconnect the C2 PCM harness connector.
3. Measure the resistance of the (K22) TP Sensor No. 1 Signal circuit from the Throttle Body harness connector to the appropriate terminal of special tool (special tool #8815A, Kit, NGC, 38 Position).

   Is the resistance below 5.0 ohms?

   Yes

- Go To 9.

No

- Repair the excessive resistance in the (K22) TP Sensor No. 1 Signal circuit.
- Perform the POWERTRAIN VERIFICATION TEST. Refer to **POWERTRAIN VERIFICATION TEST** .

9. **RESISTANCE IN THE (K122) TP SENSOR NO. 2 SIGNAL CIRCUIT**

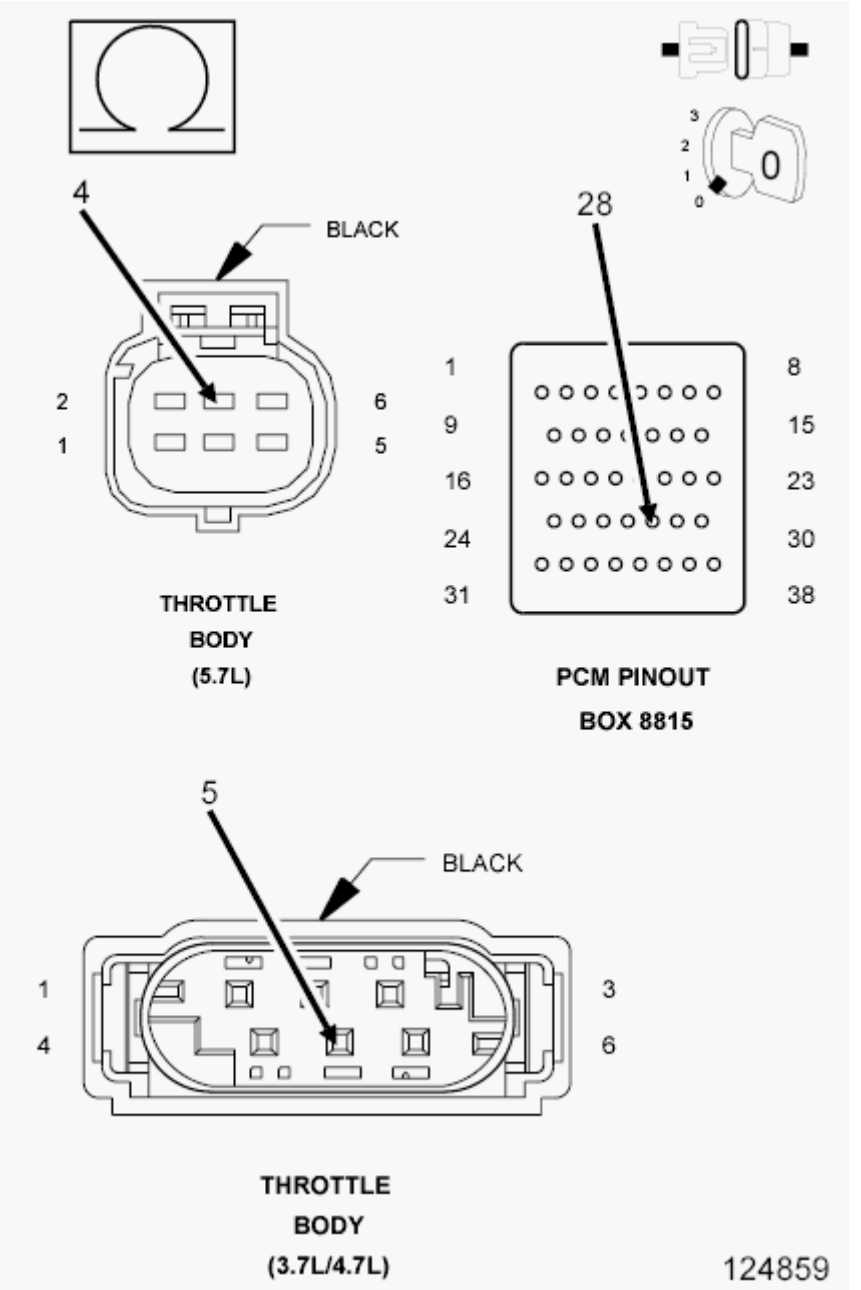

Fig. 30: Measuring Resistance Of (K122) TP Sensor No. 2 Signal Circuit From Throttle Body Harness Connector To Appropriate Terminal Of Special Tool #8815

Courtesy of CHRYSLER GROUP, LLC

1. Measure the resistance of the (K122) TP Sensor No. 2 Signal circuit from the Throttle Body harness connector to the appropriate terminal of special tool (special tool #8815A, Kit, NGC, 38 Position).

   Is the resistance below 5.0 ohms?

   Yes

   - Go To 10.

   No

   - Repair the excessive resistance in the (K122) TP Sensor No. 2 Signal circuit.
   - Perform the POWERTRAIN VERIFICATION TEST. Refer to **POWERTRAIN VERIFICATION TEST** .

10. **(K22) TP SENSOR NO. 1 SIGNAL CIRCUIT SHORTED TO GROUND**

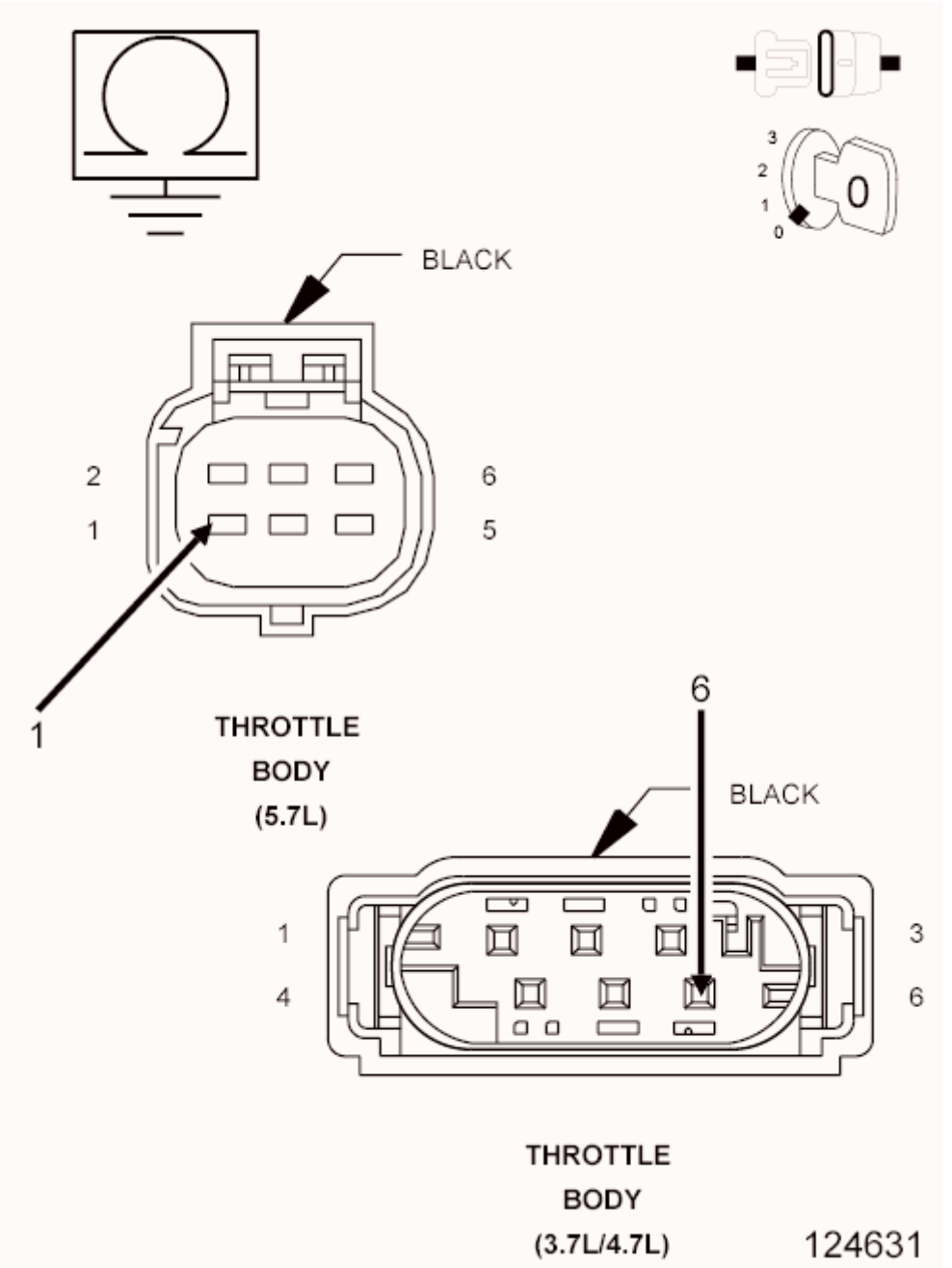

Fig. 31: Measuring Resistance Between Ground And TP Sensor No. 1 Signal Circuit AT Throttle Body Harness Connector
Courtesy of CHRYSLER GROUP, LLC

1. Measure the resistance between ground and the (K22) TP Sensor No. 1 Signal circuit at the Throttle Body harness connector.

   Is the resistance above 100k ohms?

   Yes

- Go To 11.

No

- Repair the short to ground in the (K22) TP Sensor No. 1 Signal circuit.
- Perform the POWERTRAIN VERIFICATION TEST. Refer to **POWERTRAIN VERIFICATION TEST** .

11. **(K122) TP SENSOR NO. 2 SIGNAL CIRCUIT SHORTED TO GROUND**

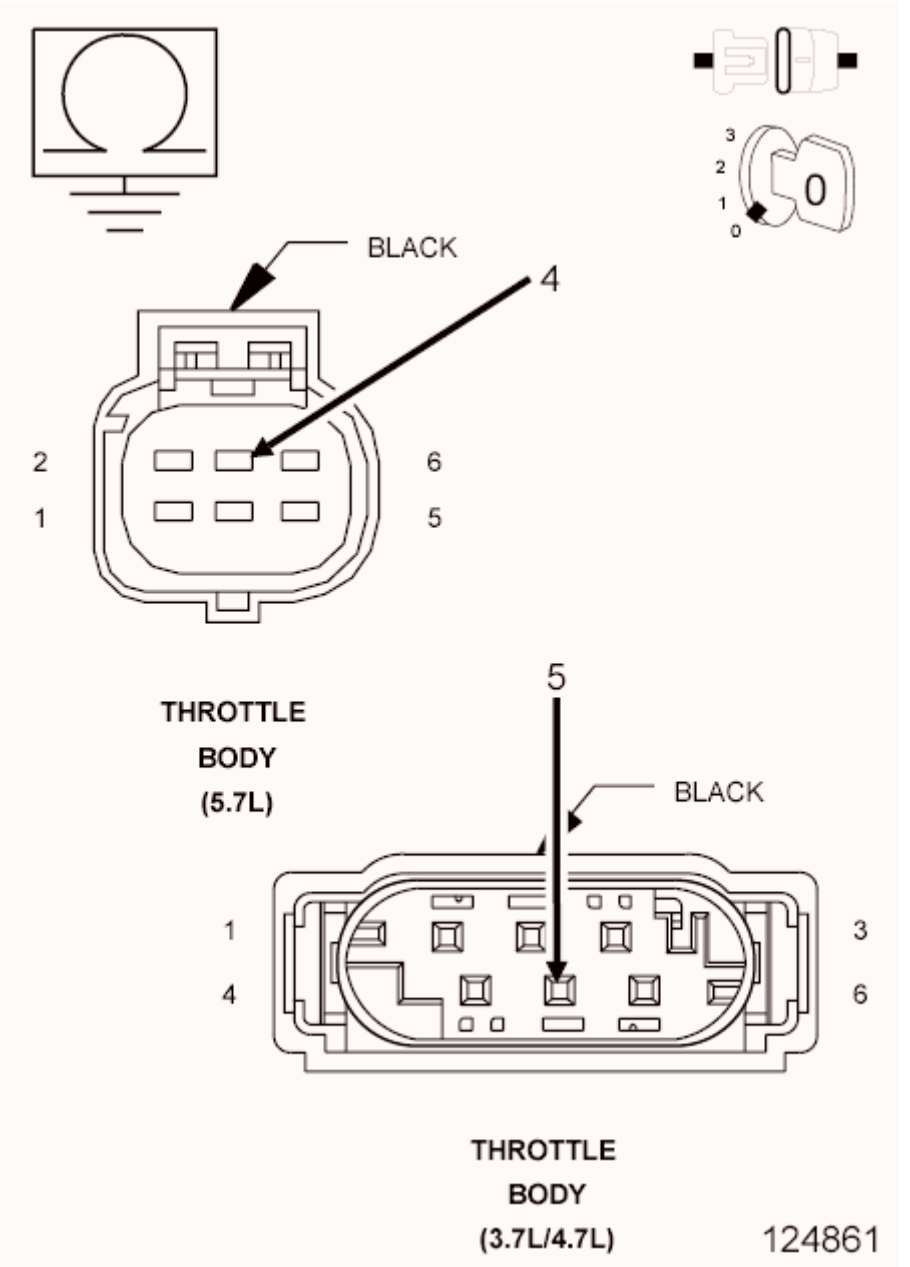

Fig. 32: Measuring Resistance Between Ground And (K122) TP Sensor No. 2 Signal Circuit AT Throttle Body Harness Connector

Courtesy of CHRYSLER GROUP, LLC

1. Measure the resistance between ground and the (K122) TP Sensor No. 2 Signal circuit at the Throttle Body harness connector.

   Is the resistance above 100k ohms?

   Yes

   - Go To 12.

   No

   - Repair the short to ground in the (K122) TP Sensor No. 2 Signal circuit.
   - Perform the POWERTRAIN VERIFICATION TEST. Refer to **POWERTRAIN VERIFICATION TEST** .

12. **RESISTANCE IN THE (K922) TP SENSOR RETURN CIRCUIT**

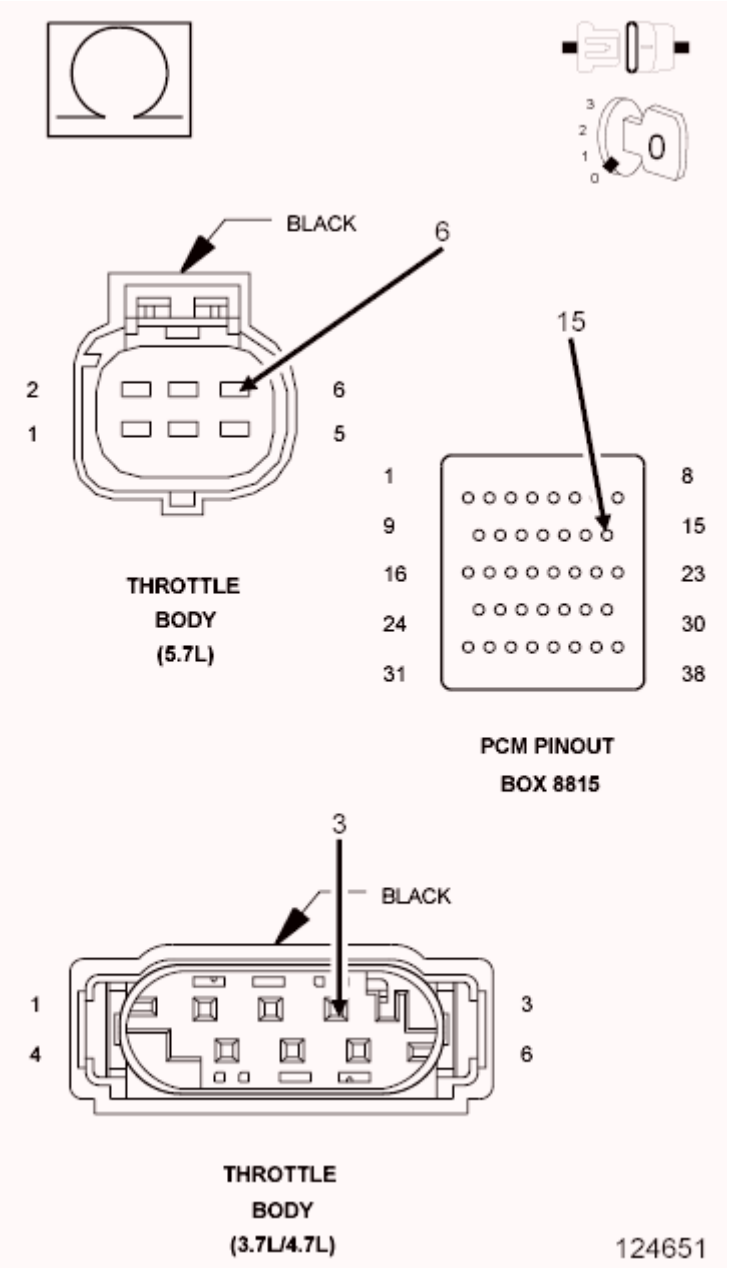

Fig. 33: Measuring Resistance Of (K922) TP Sensor Return Circuit From Throttle Body Harness Connector To Appropriate Terminal Of Special Tool #8815
Courtesy of CHRYSLER GROUP, LLC

1. Measure the resistance of the (K922) TP Sensor Return circuit from the Throttle Body harness connector to the appropriate terminal of special tool (special tool #8815A, Kit, NGC, 38 Position).

   Is the resistance below 5.0 ohms?

   Yes

   - Go To 19.

No

- Repair the excessive resistance in the (K922) TP Sensor Return circuit.
- Perform the POWERTRAIN VERIFICATION TEST. Refer to **POWERTRAIN VERIFICATION TEST** .

13. **RESISTANCE IN THE (F856) 5-VOLT SUPPLY CIRCUIT**

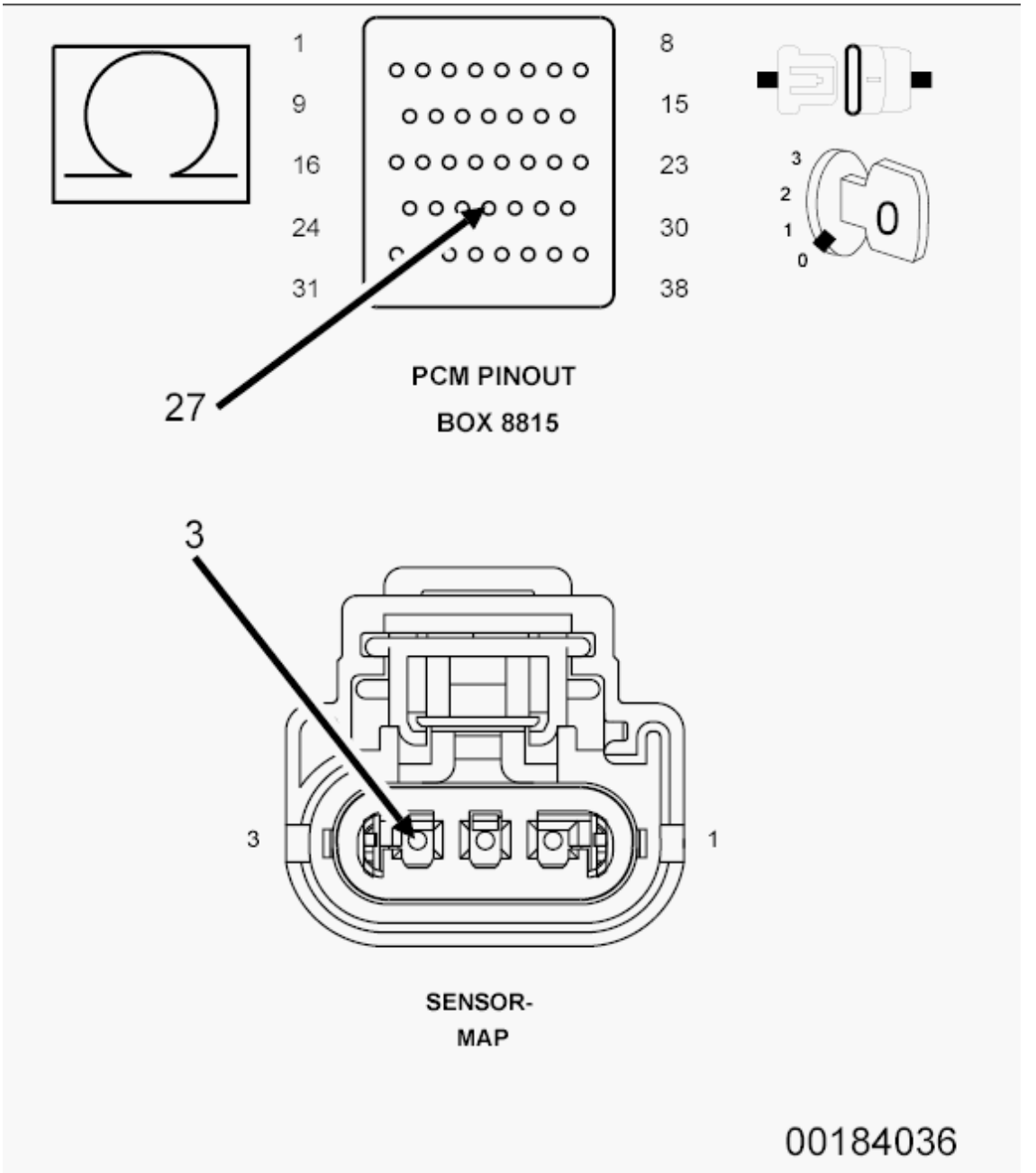

Fig. 34: Measuring Resistance Of 5-Volt Supply Circuit From MAP Sensor Harness Connector To Appropriate Terminal Of Special Tool #8815
Courtesy of CHRYSLER GROUP, LLC

1. Turn the ignition off.
2. Disconnect the MAP Sensor harness connector.
3. Disconnect the C1 PCM harness connector.

CAUTION: Do not probe the PCM harness connectors. Probing the PCM harness connectors will damage the PCM terminals resulting in poor terminal to pin connection. Install the PCM Pinout Box (special tool #8815A, Kit, NGC, 38 Position) to perform diagnosis.

4. Measure the resistance of the (F856) 5-volt Supply circuit from the MAP Sensor harness connector to the appropriate terminal of special tool (special tool #8815A, Kit, NGC, 38 Position).

   Is the resistance below 5.0 ohms?

   Yes

   - Go To 14.

   No

   - Repair the excessive resistance in the (F856) 5-volt Supply circuit.
   - Perform the POWERTRAIN VERIFICATION TEST. Refer to **POWERTRAIN VERIFICATION TEST** .

14. **(F856) 5-VOLT SUPPLY CIRCUIT SHORTED TO GROUND**

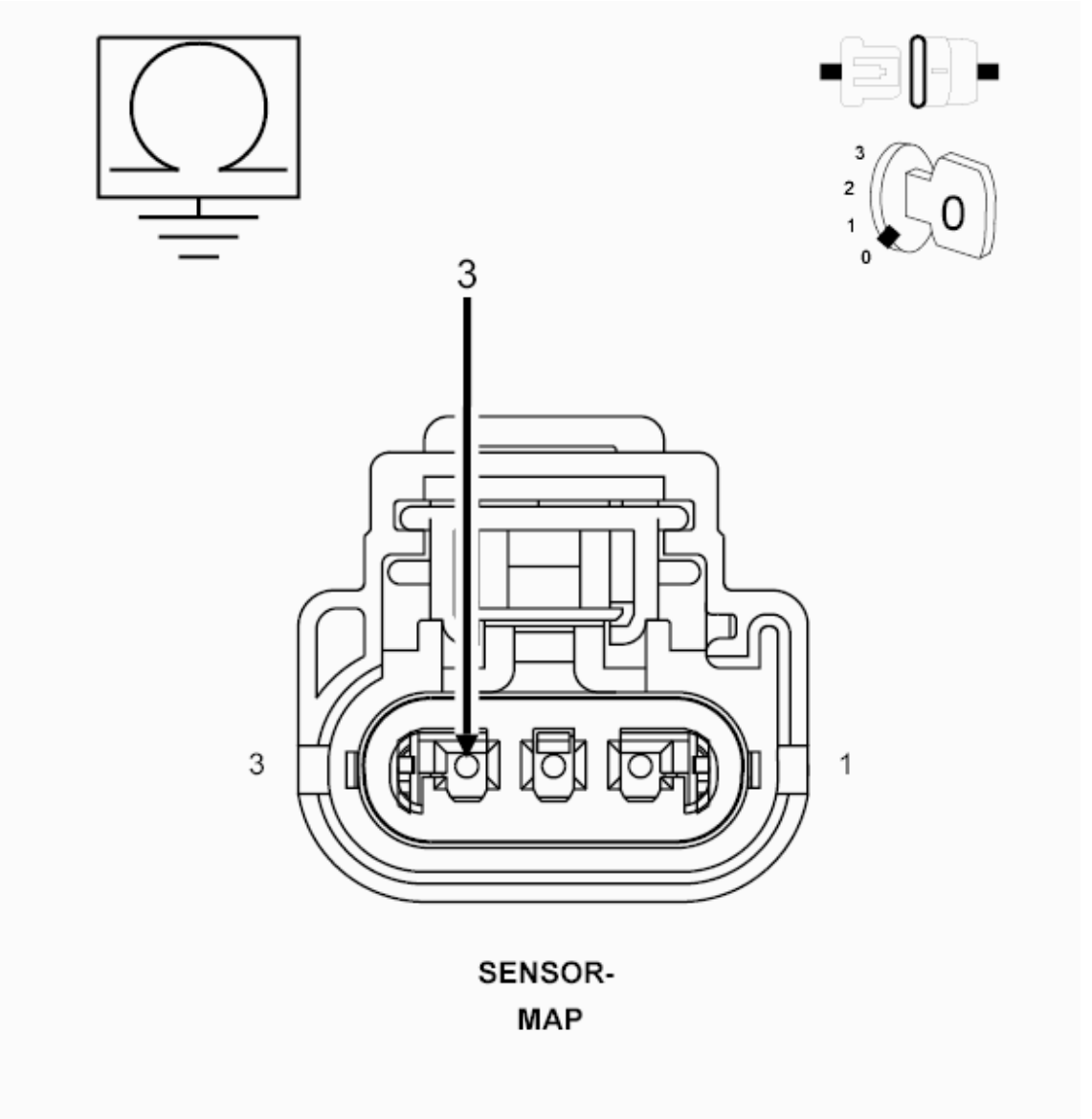

Fig. 35: Measuring Resistance Between Ground And (F856) 5-Volt Supply Circuit In MAP Sensor Harness Connector
Courtesy of CHRYSLER GROUP, LLC

1. Measure the resistance between ground and the (F856) 5-volt Supply circuit in the MAP Sensor harness connector.

   Is the resistance above 100k ohms?

   Yes

   - Go To 15.

   No

- Repair the short to ground in the (F856) 5-volt Supply circuit.
- Perform the POWERTRAIN VERIFICATION TEST. Refer to **POWERTRAIN VERIFICATION TEST** .

15. **MAP SENSOR**

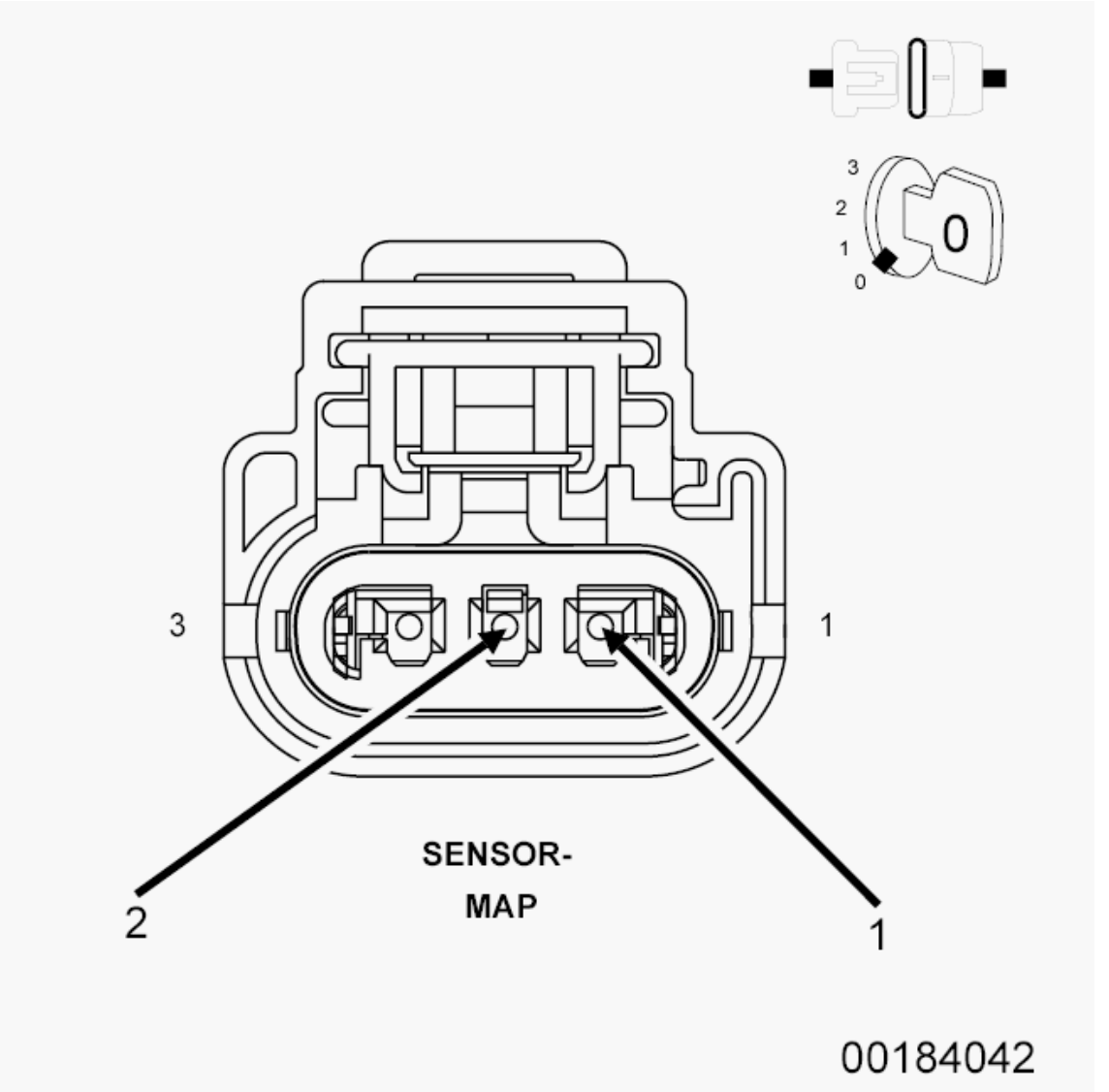

Fig. 36: MAP Sensor Harness Connector
Courtesy of CHRYSLER GROUP, LLC

1. Connect the C1 PCM harness connector.
2. Ignition on, engine not running.
3. With a scan tool, monitor the MAP Sensor voltage.
4. Connect a jumper wire between the (K1) MAP Signal circuit and the (K900) Sensor ground circuit in the MAP Sensor harness connector.
5. Cycle the ignition switch from off to on.

6. With a scan tool, monitor the MAP Sensor voltage.

   Does the scan tool display MAP voltage from approximately 4.9 volts to below 0.5 volt with the jumper wire installed?

   Yes

   - Replace the MAP Sensor.
   - Perform the POWERTRAIN VERIFICATION TEST. Refer to **POWERTRAIN VERIFICATION TEST** .

   No

   - Go To 16.

     NOTE: Remove the jumper wire before continuing.

   -

16. **RESISTANCE IN THE (K1) MAP SIGNAL CIRCUIT**

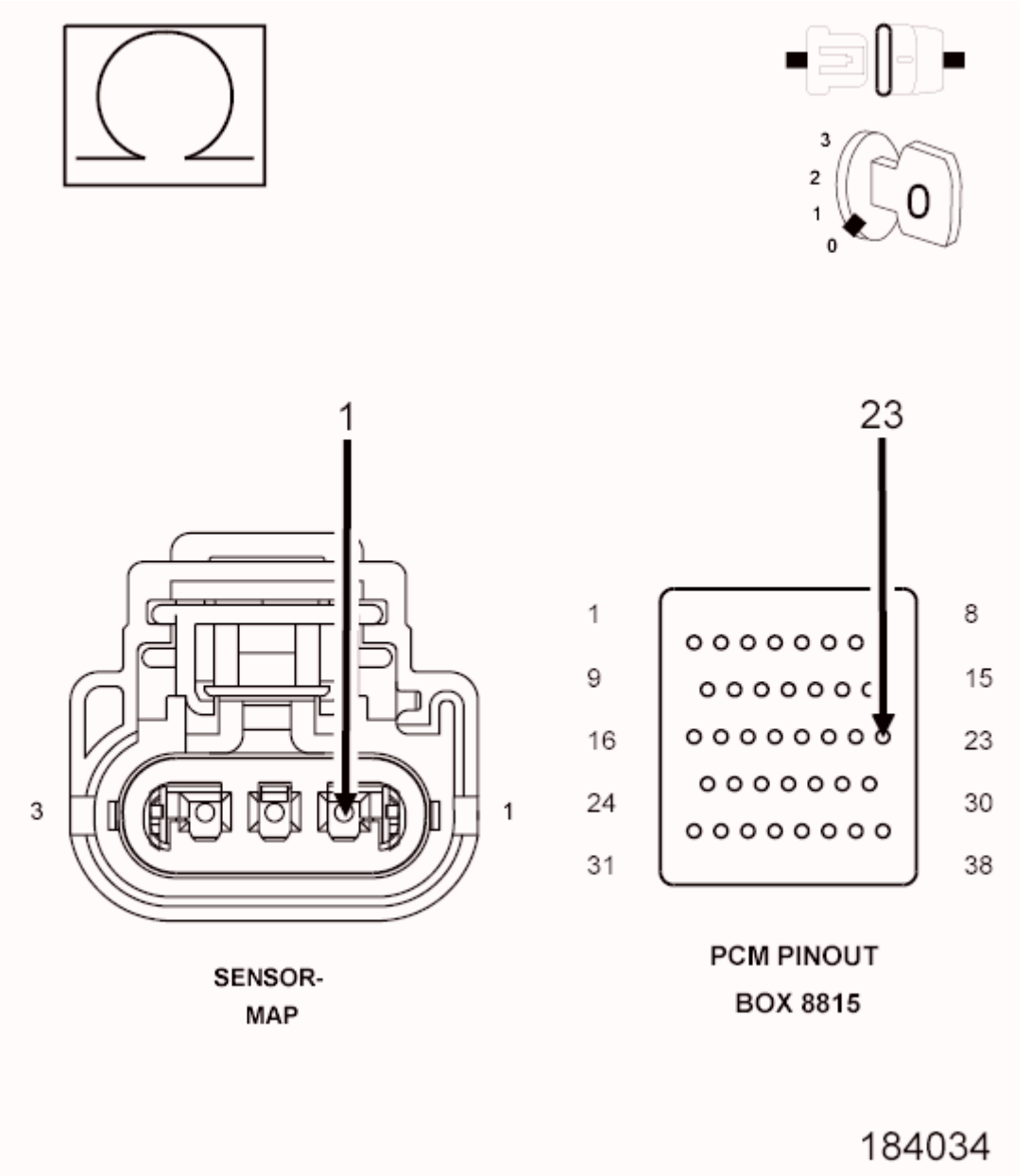

Fig. 37: Measuring Resistance Of MAP Sensor Signal Circuit Between Harness Connector And Appropriate Terminal Of Special Tool #8815
Courtesy of CHRYSLER GROUP, LLC

1. Turn the ignition off.
2. Disconnect the C2 PCM harness connector.
3. Measure the resistance of the (K1) MAP Signal circuit from the MAP Sensor harness connector to the appropriate terminal of special tool (special tool #8815A, Kit, NGC, 38 Position).

   Is the resistance below 5.0 ohms?

   Yes

- Go To 17.

No

- Repair the excessive resistance in the (K1) MAP Signal circuit.
- Perform the POWERTRAIN VERIFICATION TEST. Refer to **POWERTRAIN VERIFICATION TEST** .

17. **(K1) MAP SIGNAL CIRCUIT SHORTED TO GROUND**

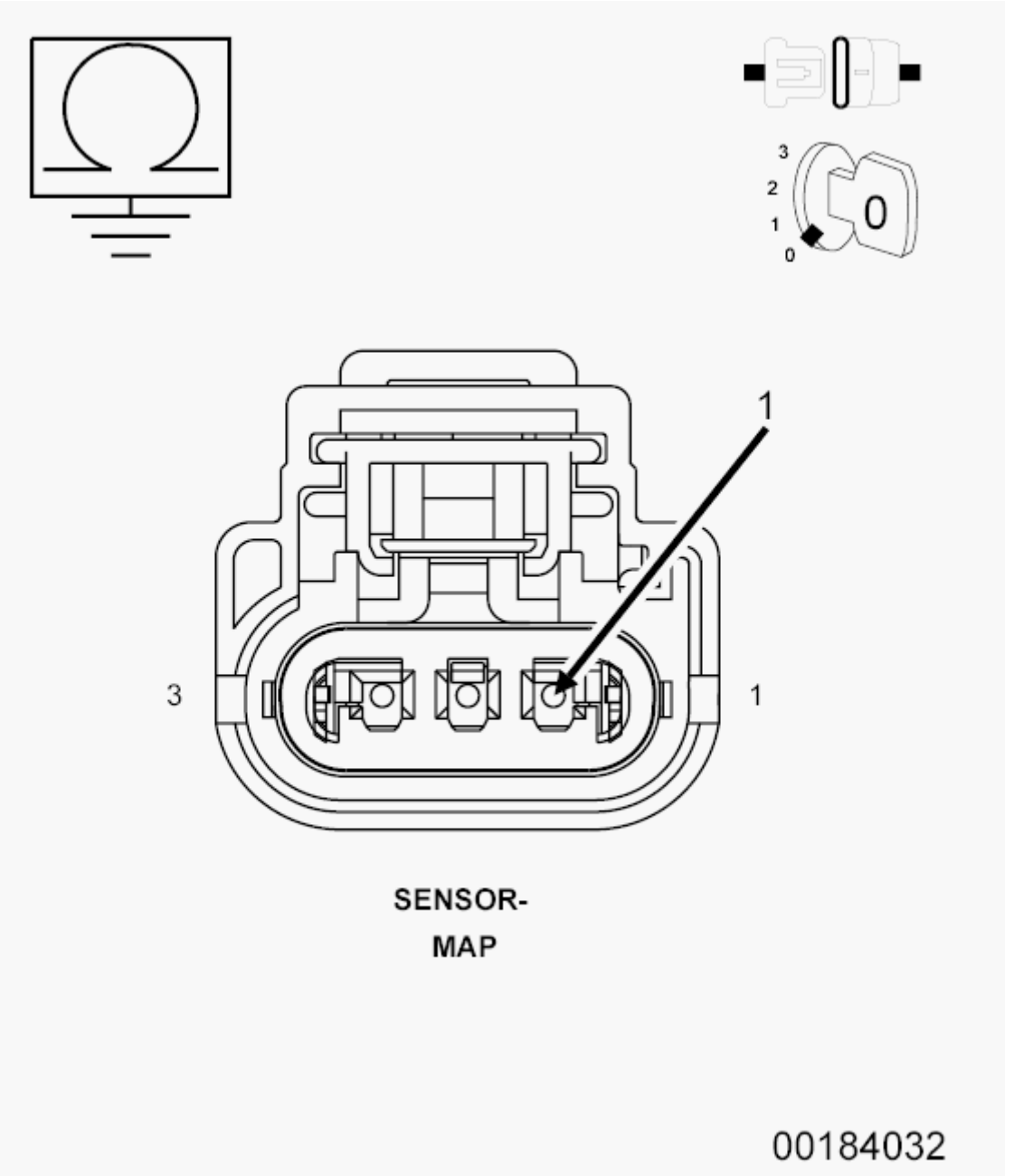

Fig. 38: Measuring Resistance Between Ground And MAP Sensor Signal Circuit AT Harness

Connector
Courtesy of CHRYSLER GROUP, LLC

1. Measure the resistance between ground and the (K1) MAP Signal circuit at the MAP Sensor harness connector.

   Is the resistance above 100k ohms?

   Yes

   - Go To 18.

   No

   - Repair the short to ground in the (K1) MAP Signal circuit.
   - Perform the POWERTRAIN VERIFICATION TEST. Refer to **POWERTRAIN VERIFICATION TEST** .

18. **RESISTANCE IN THE (K900) SENSOR GROUND CIRCUIT**

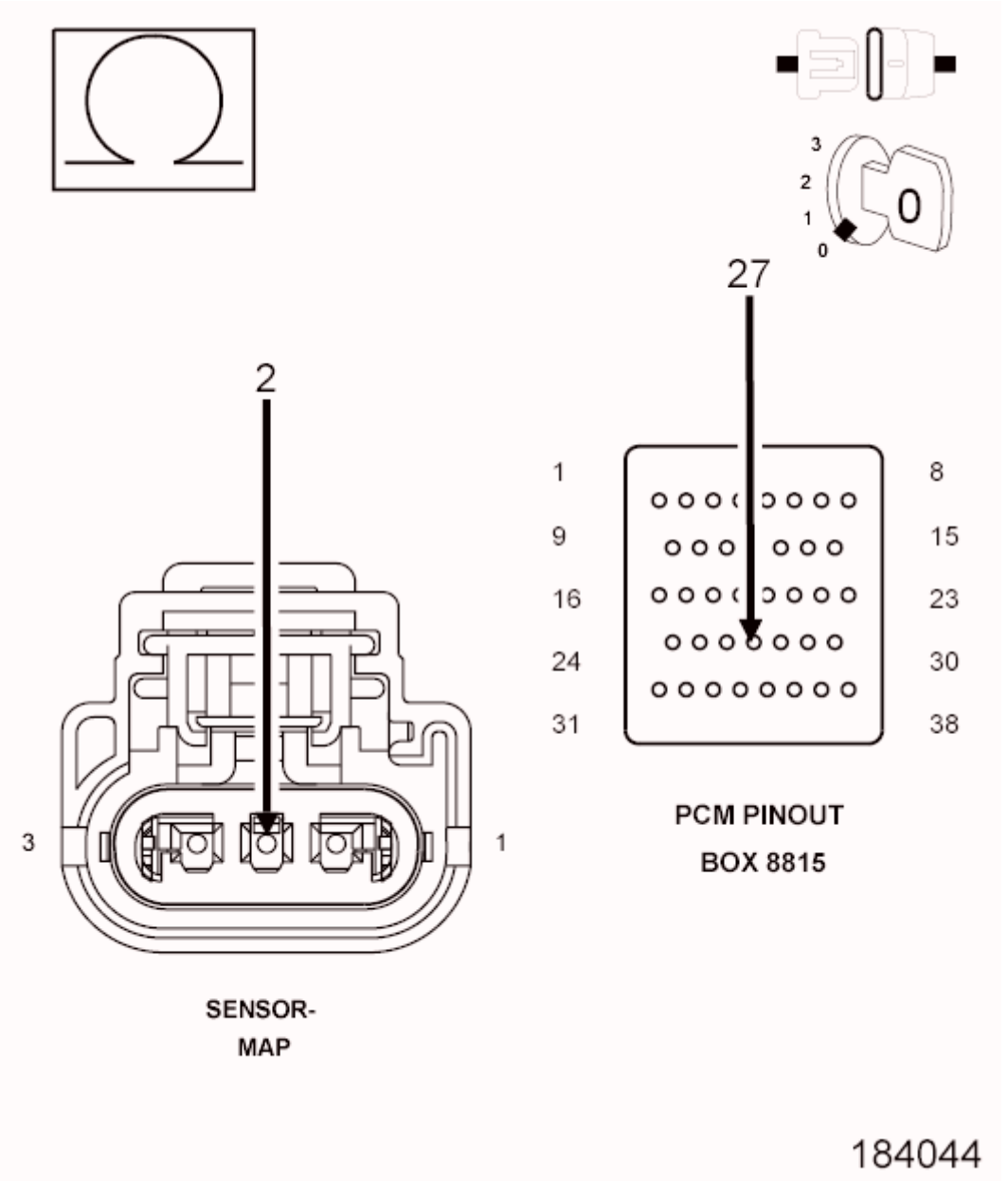

Fig. 39: Measuring Resistance Of (K900) Sensor Ground Circuit From MAP Sensor Harness Connector To Appropriate Terminal Of Special Tool #8815
Courtesy of CHRYSLER GROUP, LLC

1. Measure the resistance of the (K900) Sensor ground circuit from the MAP Sensor harness connector to the appropriate terminal of special tool (special tool #8815A, Kit, NGC, 38 Position).

   Is the resistance below 5.0 ohms?

   Yes

   - Go To 19.

No

- Repair the excessive resistance in the (K900) Sensor ground circuit.
- Perform the POWERTRAIN VERIFICATION TEST. Refer to **POWERTRAIN VERIFICATION TEST** .

19. **POWERTRAIN CONTROL MODULE (PCM)**
    1. Using the wiring diagram/schematic as a guide, inspect the wiring and connectors between the MAP Sensor, Throttle Body, and the Powertrain Control Module (PCM).
    2. Look for any chafed, pierced, pinched, or partially broken wires.
    3. Look for broken, bent, pushed out or corroded terminals. Verify that there is good pin to terminal contact in the MAP Sensor, Throttle Body, and the Powertrain Control Module connectors.
    4. Refer to any Technical Service Bulletins that may apply.

    Were there any problems found?

    Yes

    - Repair as necessary.
    - Perform the POWERTRAIN VERIFICATION TEST. Refer to **POWERTRAIN VERIFICATION TEST** .

    No

    - Replace and program the Powertrain Control Module per Service Information.
    - Perform the POWERTRAIN VERIFICATION TEST. Refer to **POWERTRAIN VERIFICATION TEST** .

P2174-LOW AIRFLOW/RESTRICTION DETECTED (INSTANTANEOUS ACCUMULATION)

For a complete wiring diagram **refer to appropriate SYSTEM WIRING DIAGRAMS article** .

WHEN MONITORED:

Ignition on and engine running with no MAP Sensor DTCs.

SET CONDITION:

PCM calculated MAP value is greater than actual MAP value plus an offset value. One trip fault. Three good trips to turn of the mil. ETC light will flash.

POSSIBLE CAUSES

Possible Causes
RESTRICTED AIR INLET SYSTEM
RESISTANCE IN THE (F856) 5-VOLT SUPPLY CIRCUIT

(F856) 5-VOLT SUPPLY CIRCUIT SHORTED TO GROUND
RESISTANCE IN THE (K1) MAP SIGNAL CIRCUIT
(K1) MAP SIGNAL CIRCUIT SHORTED TO GROUND
RESISTANCE IN (K900) SENSOR GROUND CIRCUIT
RESISTANCE IN THE (F855) 5-VOLT SUPPLY CIRCUIT
(F855) 5-VOLT SUPPLY CIRCUIT SHORTED TO GROUND
RESISTANCE IN THE TP SENSOR SIGNAL CIRCUIT
TP SENSOR SIGNAL CIRCUIT SHORTED TO GROUND
RESISTANCE IN THE (K922) TP SENSOR RETURN CIRCUIT
MAP SENSOR
THROTTLE BODY
POWERTRAIN CONTROL MODULE (PCM)

Always perform the Pre-Diagnostic Troubleshooting procedure before proceeding. Refer to PRE-DIAGNOSTIC TROUBLESHOOTING PROCEDURE .

DIAGNOSTIC TEST

1. **ACTIVE DTC**

NOTE: **The most likely cause of this DTC is a plugged intake air system or Dirty Throttle Body. Check for TSBs before continuing.**

NOTE: **Diagnose any 5-Volt Supply, TP Sensor, Fuel System Lean or Rich, or MAP Sensor DTCs before continuing.**

NOTE: **The throttle plate should be free from binding and carbon build up.**

NOTE: **Question the customer about weather conditions, as ICE build up on the blade can cause this fault when ambient is around -10° C (14° F) to 4° C (39° F) range.**

1. Ignition on, engine not running.
2. With a scan tool, select View DTCs.

   Is the DTC Active at this time?

   Yes

   - Go To 2.

   No

   - Perform the INTERMITTENT CONDITION Diagnostic Procedure. Refer to

INTERMITTENT CONDITION .

2. **RESTRICTED AIR INLET SYSTEM**
    1. Turn the ignition off.
    2. Remove the Air Cleaner Assembly.
    3. Remove the Air Filter.
    4. Inspect the Throttle Body opening for signs of any foreign materials.
    5. Check the intake tube/air cleaner for obstructions - include snow packing questions to customer.

    Were any restrictions found?

    Yes

    - Repair the restriction as necessary.
    - Perform the POWERTRAIN VERIFICATION TEST. Refer to **POWERTRAIN VERIFICATION TEST** .

    No

    - Go To 3.
3. **MAP SENSOR OPERATION**
    1. Start the engine.
    2. With a scan tool, monitor the MAP Sensor voltage.
    3. Snap the Accelerator pedal.

    Does the MAP Sensor voltage vary from below 2.0 volts at idle to above 3.5 volts at Wide Open Throttle?

    Yes

    - Go To 4.

    No

    - Go To 13.
4. **TP SENSOR OPERATION**
    1. Ignition on, engine not running.
    2. With a scan tool, perform the ETC Throttle Follower Test.
    3. TP Sensor No. 1 should start at approximately 0.7 of a volt and increase to 4.3 volts.
    4. TP Sensor No. 2 should start at approximately 4.3 volts and decrease to 0.7 of a volt.

    Is the voltage transition smooth between the appropriate values?

    Yes

- Perform the INTERMITTENT CONDITION Diagnostic Procedure. Refer to **INTERMITTENT CONDITION** .

No

- Go To 5.

5. **RESISTANCE IN THE (F855) 5-VOLT SUPPLY CIRCUIT**

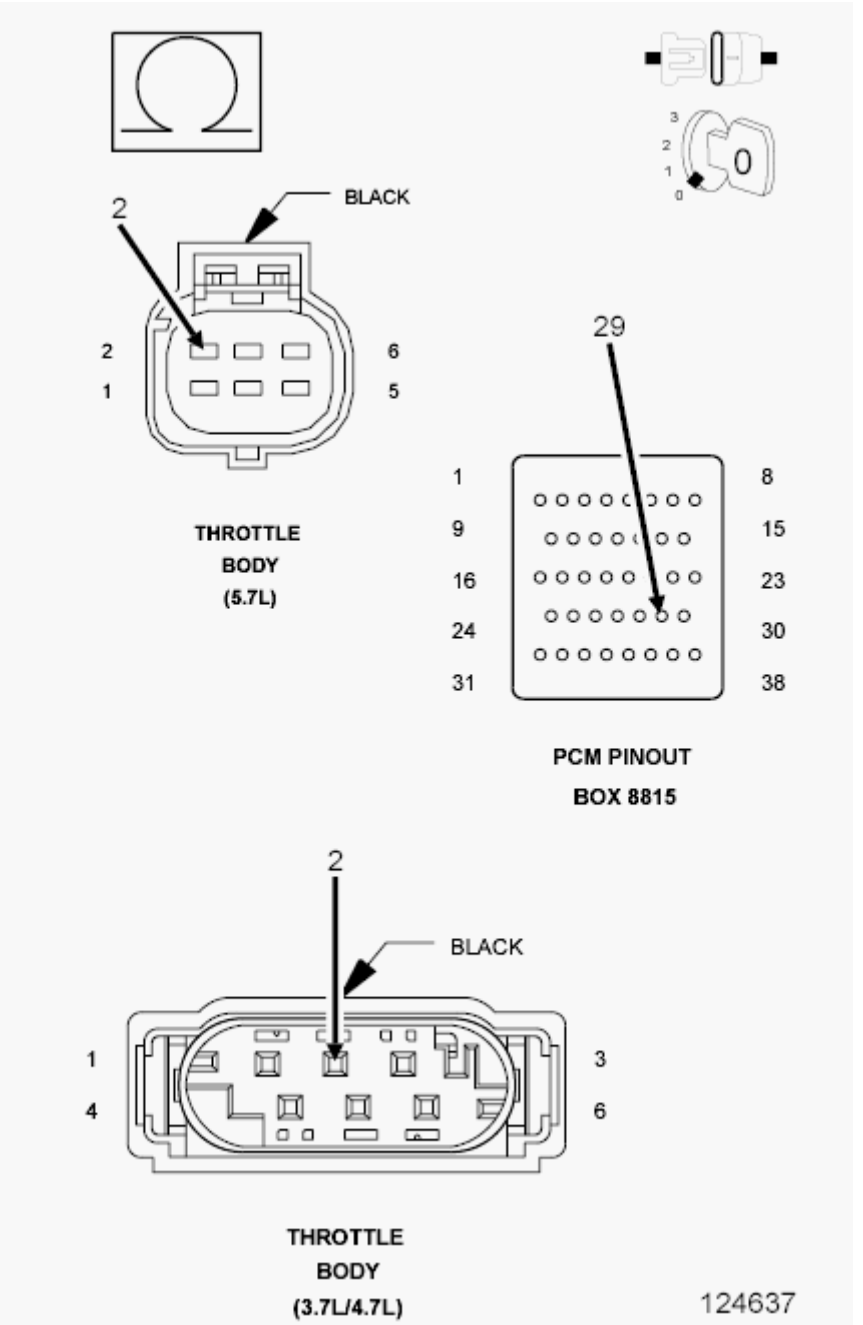

Fig. 40: Measuring Resistance Of (F855) 5-Volt Supply Circuit From Throttle Body Harness Connector To Appropriate Terminal Of Special Tool #8815

Courtesy of CHRYSLER GROUP, LLC

1. Turn the ignition off.
2. Disconnect the Throttle Body harness connector.
3. Disconnect the C2 PCM harness connector.

CAUTION: Do not probe the PCM harness connectors. Probing the PCM harness connectors will damage the PCM terminals resulting in poor terminal to pin connection. Install the PCM Pinout Box (special tool #8815A, Kit, NGC, 38 Position) to perform diagnosis.

4. Measure the resistance of the (F855) 5-volt Supply circuit from the Throttle Body harness connector to the appropriate terminal of special tool (special tool #8815A, Kit, NGC, 38 Position).

   Is the resistance below 100 ohms?

   Yes

   - Go To 6.

   No

   - Repair the excessive resistance in the (F855) 5-volt Supply circuit.
   - Perform the POWERTRAIN VERIFICATION TEST. Refer to **POWERTRAIN VERIFICATION TEST** .

6. **(F855) 5-VOLT SUPPLY CIRCUIT SHORTED TO GROUND**

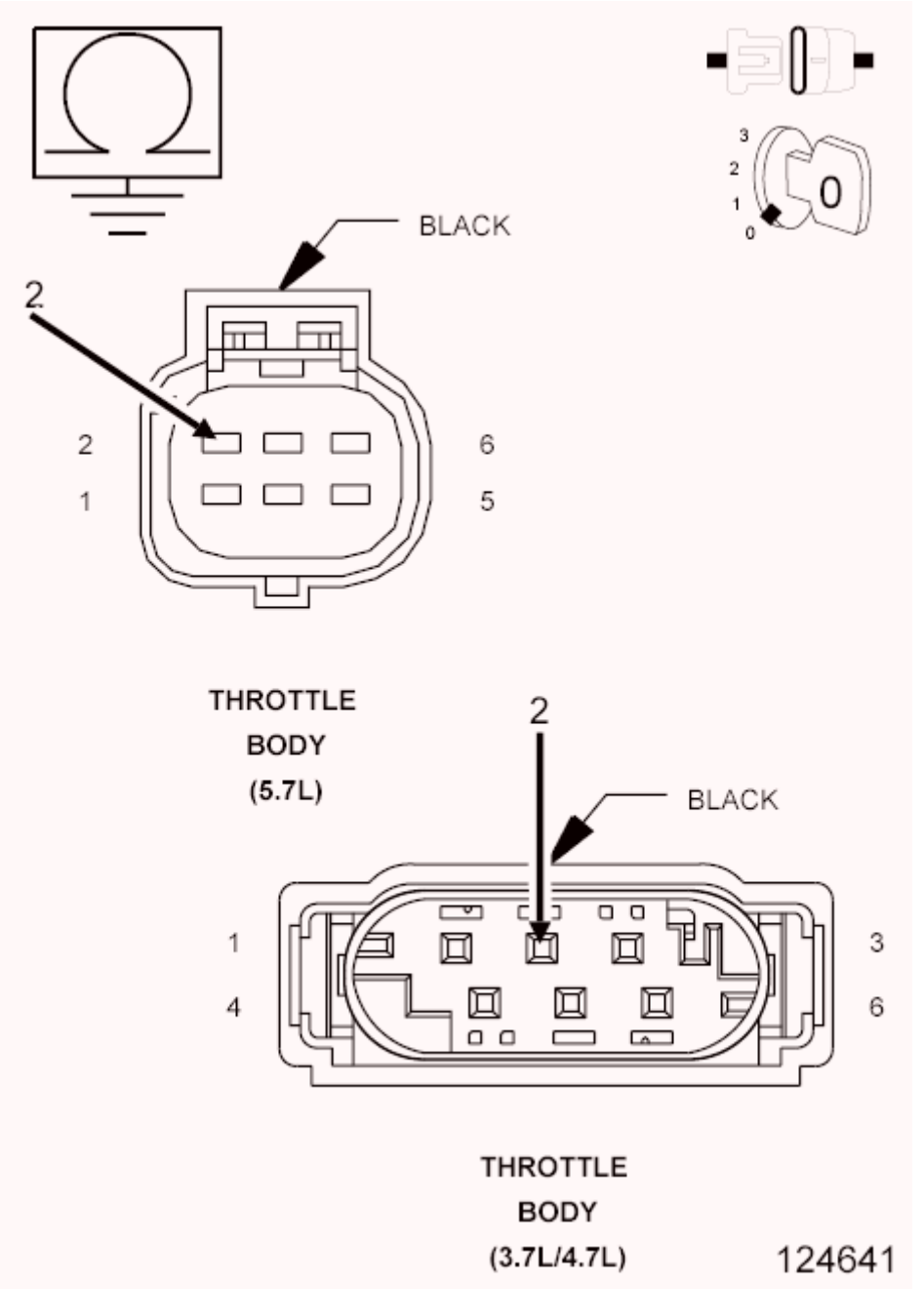

Fig. 41: Measuring Resistance Between Ground And 5-Volt Supply Circuit AT Throttle Body Harness Connector
Courtesy of CHRYSLER GROUP, LLC

1. Measure the resistance between ground and (F855) 5-volt Supply circuit at the Throttle Body harness connector.

   Is the resistance above 100k ohms?

   Yes

- Go To 7.

No

- Repair the short to ground in the (F855) 5-volt Supply circuit.
- Perform the POWERTRAIN VERIFICATION TEST. Refer to **POWERTRAIN VERIFICATION TEST** .

7. **TP SENSOR**

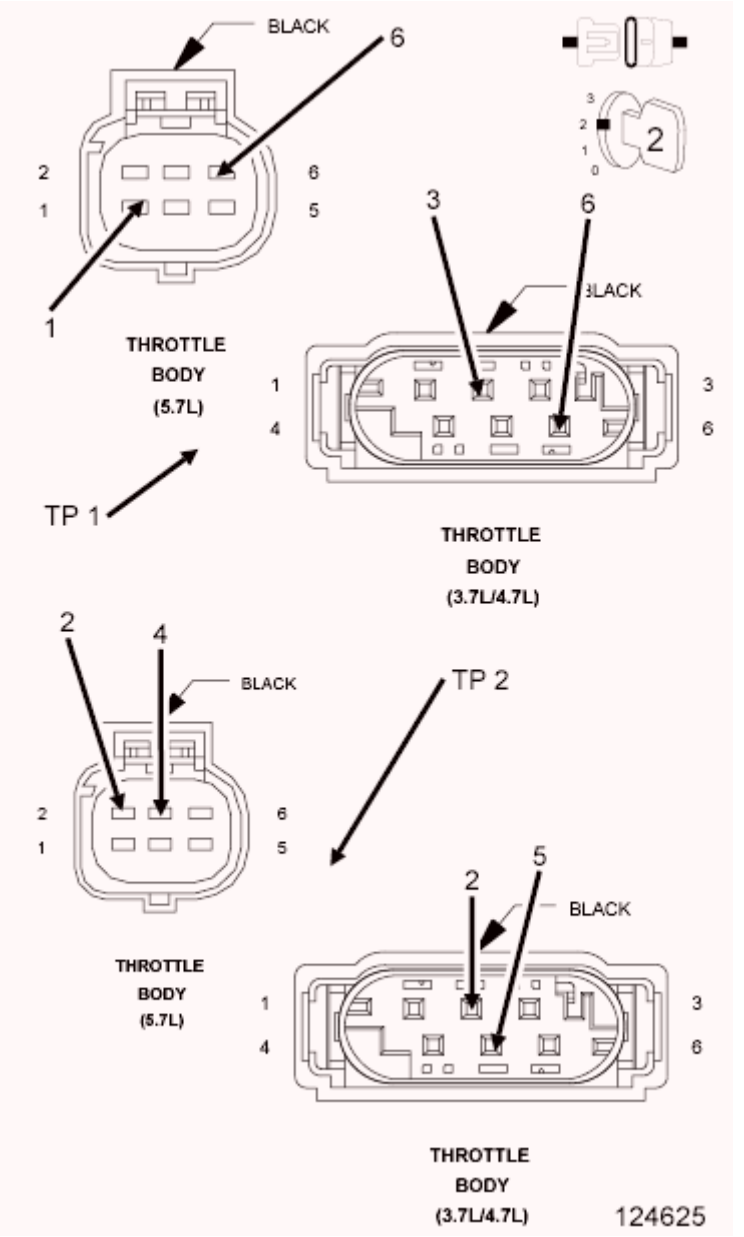

Fig. 42: Checking TP Sensors Circuits
Courtesy of CHRYSLER GROUP, LLC

1. Connect the PCM harness connectors.
2. Ignition on, engine not running.
3. With a scan tool, monitor the TP Sensor voltage.
4. Connect a jumper wire between the (K22) TP Sensor No. 1 Signal circuit and the (K922) TP Sensor Return circuit in the Throttle Body harness connector.
5. TP Sensor No. 1 voltage should start at approximately 4.8 volts and decrease to 0.2 of a volt.
6. Connect a jumper wire between the (K122) TP Sensor No. 2 Signal circuit and the (F855) 5-volt Supply circuit in the Throttle Body harness connector.
7. TP Sensor No. 2 voltage should start at approximately 0 volts and increase to 4.8 to 5.2 volts.

   Does the TP Sensor voltage change to the appropriate voltage with the jumper wire installed?

   Yes

   - Disconnect the Battery before replacing the Throttle Body Assembly. Replace the Throttle Body Assembly. After installation is complete, use a scan tool and select the ETC RELEARN function
   - Perform the POWERTRAIN VERIFICATION TEST. Refer to **POWERTRAIN VERIFICATION TEST** .

   No

   - Go To 8.

8. **RESISTANCE IN THE (K22) TP SENSOR NO. 1 SIGNAL CIRCUIT**

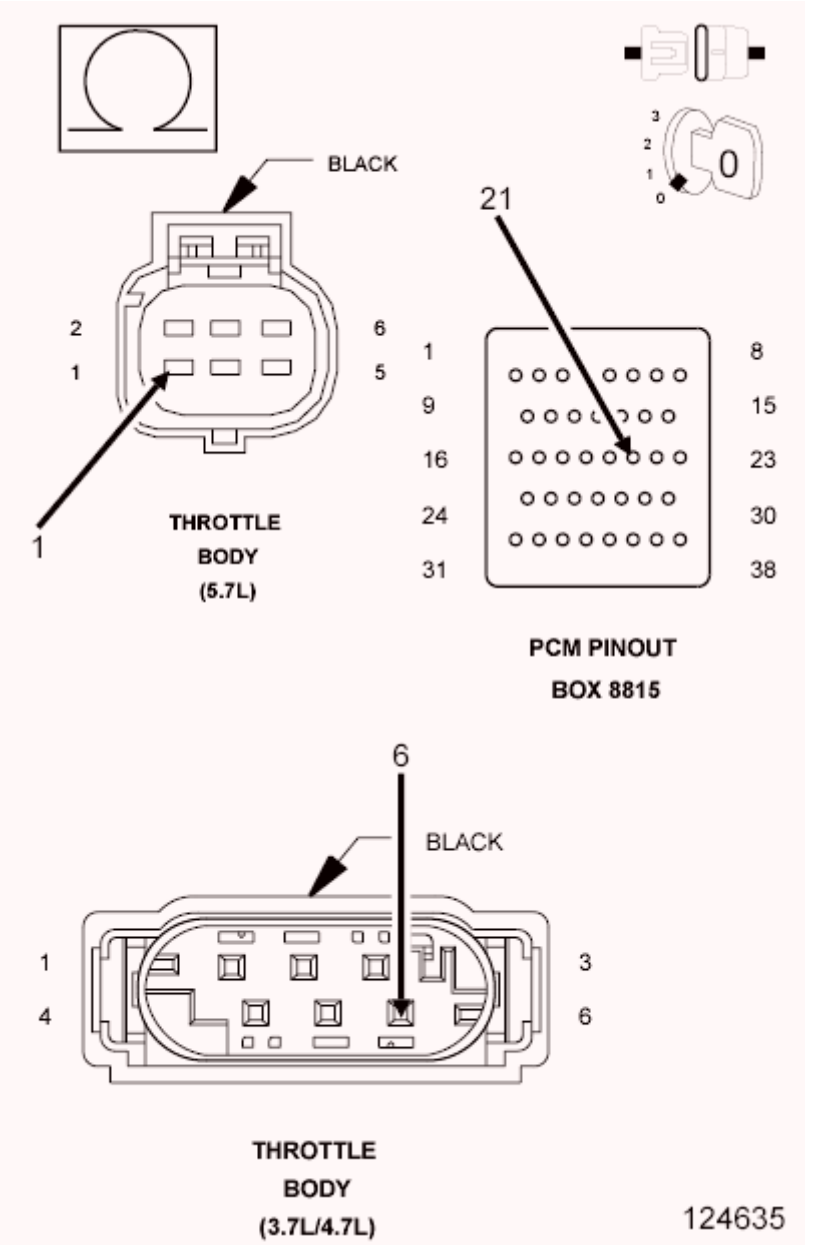

Fig. 43: Measuring Resistance Of TP Sensor No. 1 Signal Circuit Between Throttle Body Harness Connector & Appropriate Terminal Of Special Tool #8815
Courtesy of CHRYSLER GROUP, LLC

1. Turn the ignition off.
2. Disconnect the C2 PCM harness connector.
3. Measure the resistance of the (K22) TP Sensor No. 1 Signal circuit from the Throttle Body harness connector to the appropriate terminal of special tool (special tool #8815A, Kit, NGC, 38 Position).

   Is the resistance below 5.0 ohms?

   Yes

- Go To 9.

No

- Repair the excessive resistance in the (K22) TP Sensor No. 1 Signal circuit.
- Perform the POWERTRAIN VERIFICATION TEST. Refer to **POWERTRAIN VERIFICATION TEST** .

9. **RESISTANCE IN THE (K122) TP SENSOR NO. 2 SIGNAL CIRCUIT**

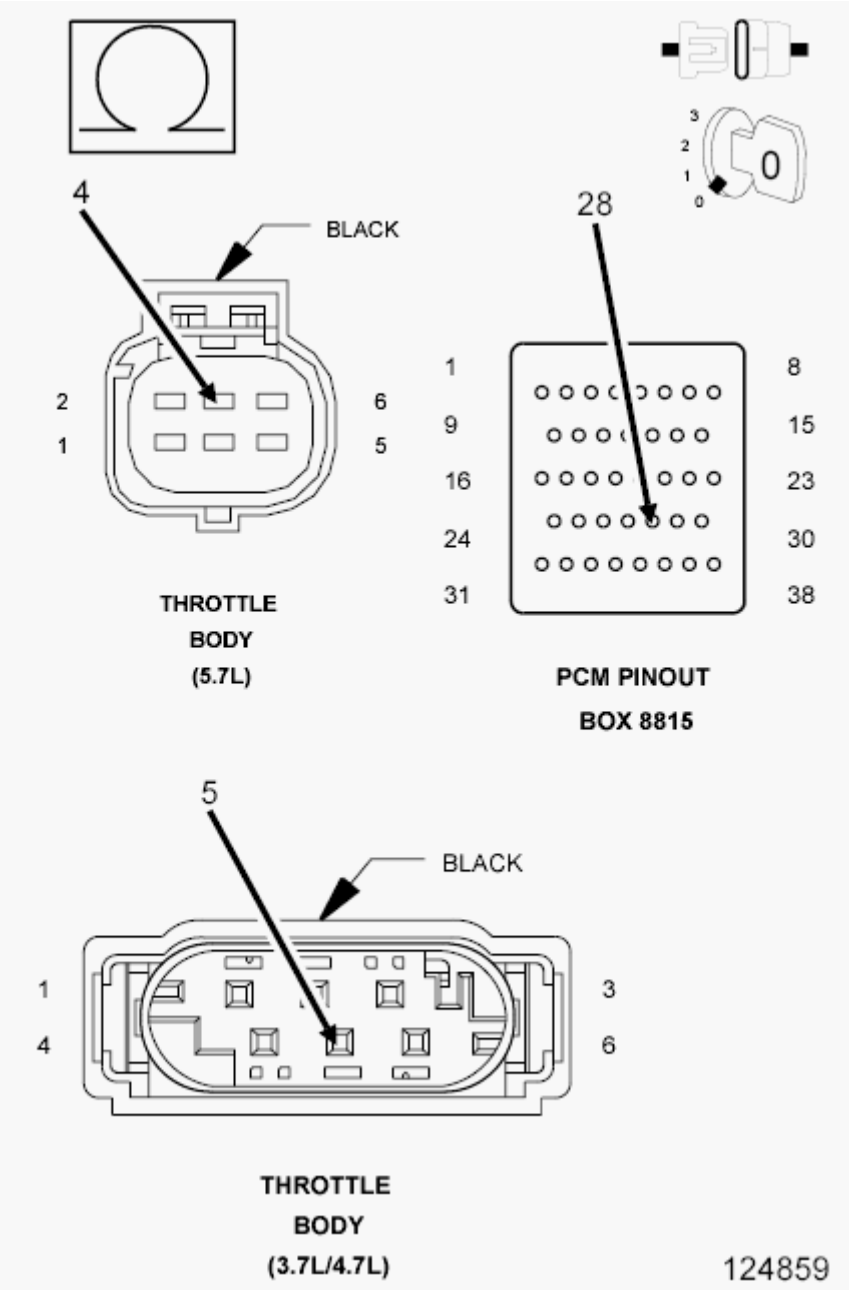

Fig. 44: Measuring Resistance Of (K122) TP Sensor No. 2 Signal Circuit From Throttle Body Harness Connector To Appropriate Terminal Of Special Tool #8815

Courtesy of CHRYSLER GROUP, LLC

1. Measure the resistance of the (K122) TP Sensor No. 2 Signal circuit from the Throttle Body harness connector to the appropriate terminal of special tool (special tool #8815A, Kit, NGC, 38 Position).

   Is the resistance below 5.0 ohms?

   Yes

   - Go To 10.

   No

   - Repair the excessive resistance in the (K122) TP Sensor No. 2 Signal circuit.
   - Perform the POWERTRAIN VERIFICATION TEST. Refer to **POWERTRAIN VERIFICATION TEST** .

10. **(K22) TP SENSOR NO. 1 SIGNAL CIRCUIT SHORTED TO GROUND**

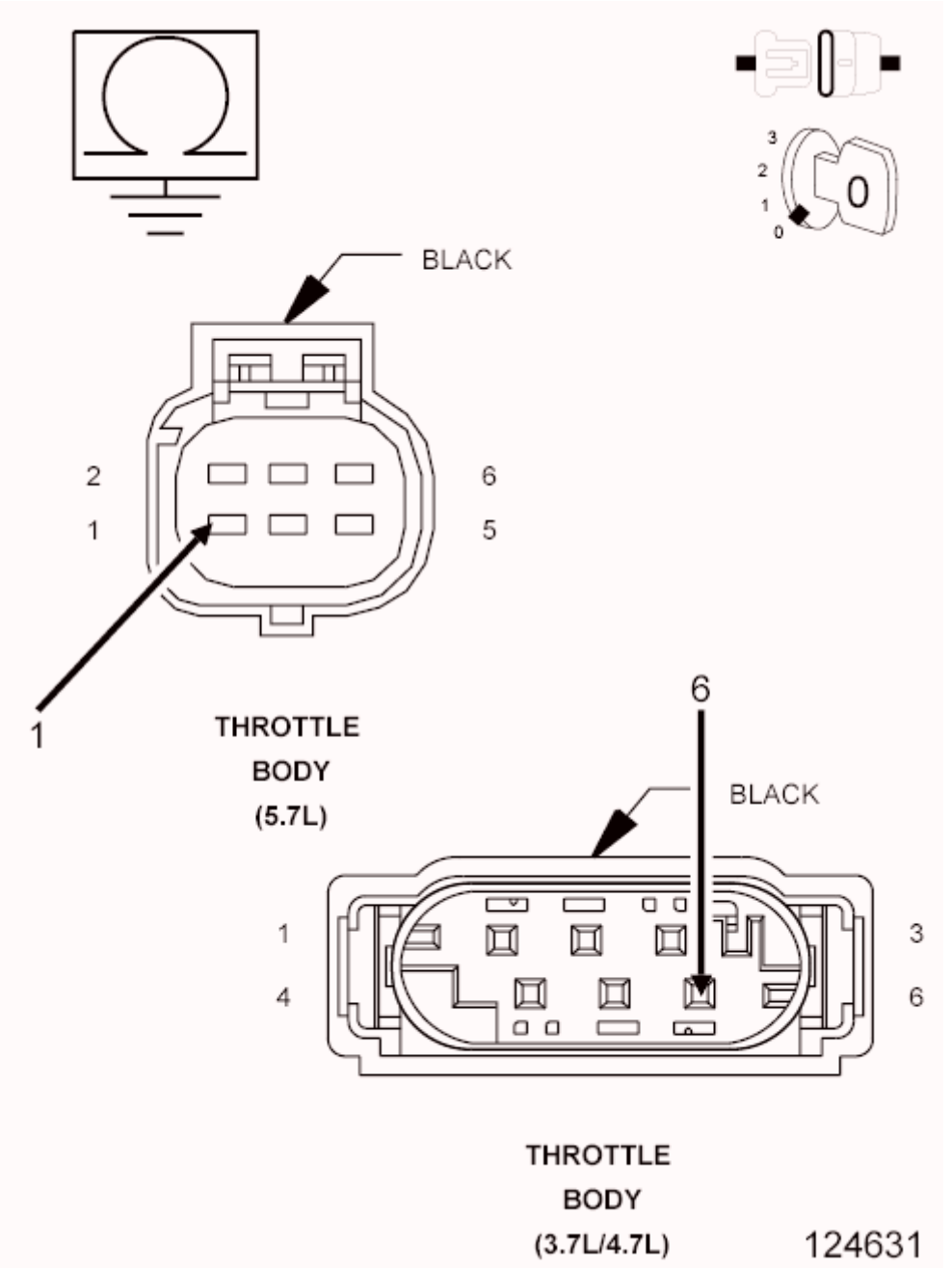

Fig. 45: Measuring Resistance Between Ground And TP Sensor No. 1 Signal Circuit AT Throttle Body Harness Connector
Courtesy of CHRYSLER GROUP, LLC

1. Measure the resistance between ground and the (K22) TP Sensor No. 1 Signal circuit at the Throttle Body harness connector.

   Is the resistance above 100k ohms?

   Yes

- Go To 11.

No

- Repair the short to ground in the (K22) TP Sensor No. 1 Signal circuit.
- Perform the POWERTRAIN VERIFICATION TEST. Refer to **POWERTRAIN VERIFICATION TEST** .

11. **(K122) TP SENSOR NO. 2 SIGNAL CIRCUIT SHORTED TO GROUND**

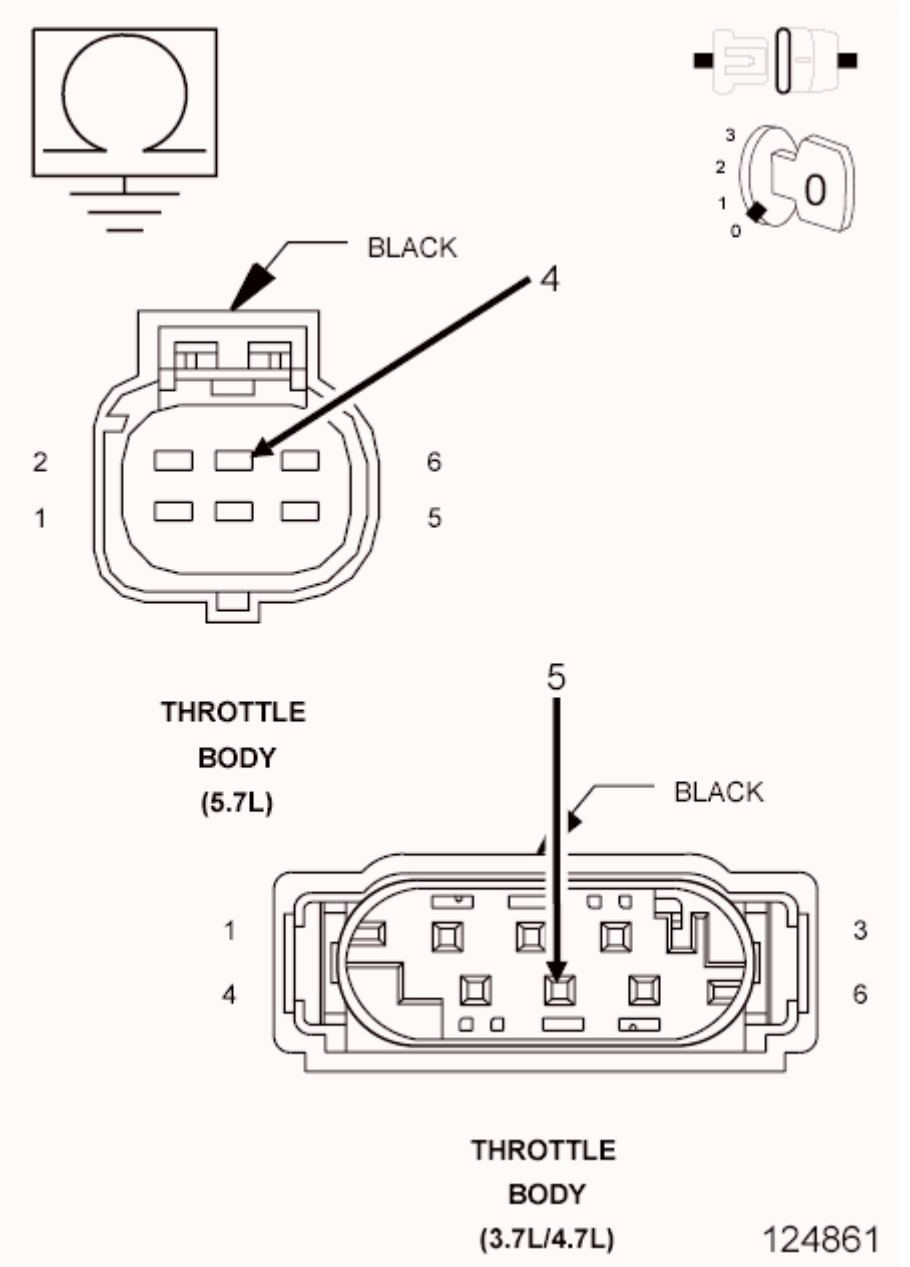

Fig. 46: Measuring Resistance Between Ground And (K122) TP Sensor No. 2 Signal Circuit AT Throttle Body Harness Connector

Courtesy of CHRYSLER GROUP, LLC

1. Measure the resistance between ground and the (K122) TP Sensor No. 2 Signal circuit at the Throttle Body harness connector.

   Is the resistance above 100k ohms?

   Yes

   - Go To 12.

   No

   - Repair the short to ground in the (K122) TP Sensor No. 2 Signal circuit.
   - Perform the POWERTRAIN VERIFICATION TEST. Refer to **POWERTRAIN VERIFICATION TEST** .

12. **RESISTANCE IN (K922) TP SENSOR RETURN CIRCUIT**

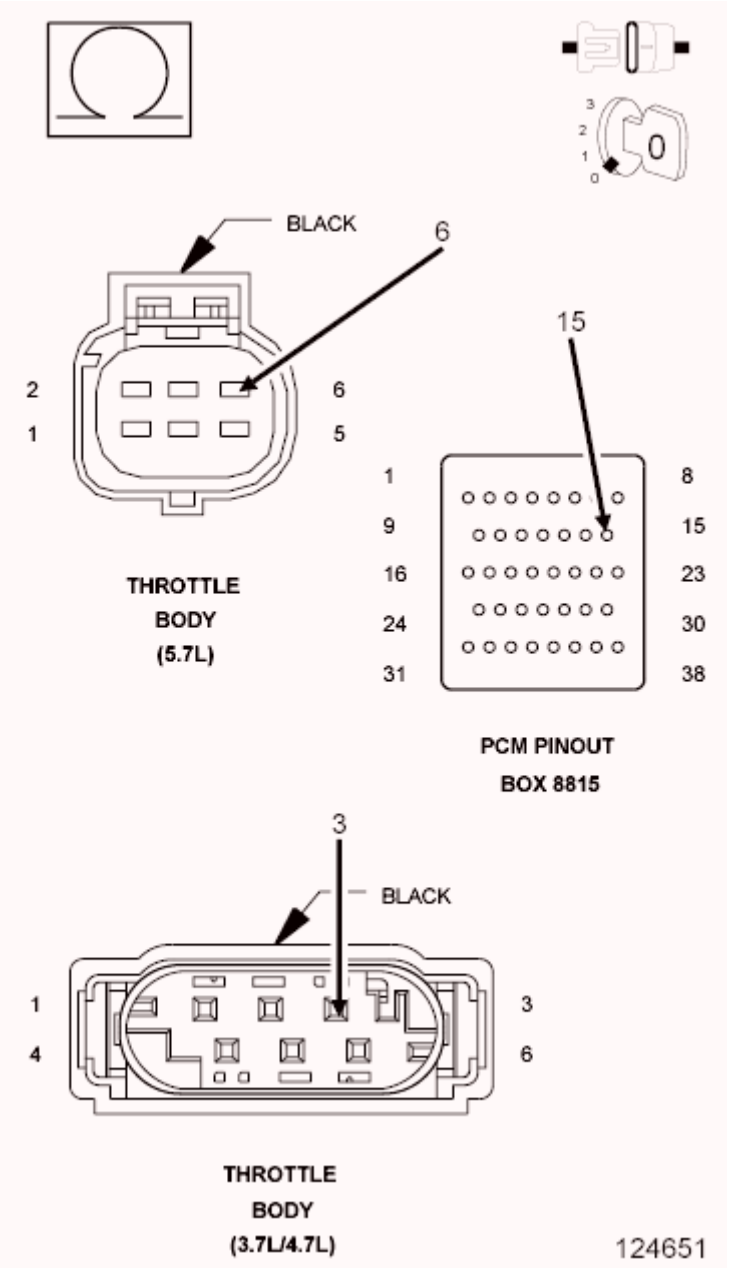

Fig. 47: Measuring Resistance Of (K922) TP Sensor Return Circuit From Throttle Body Harness Connector To Appropriate Terminal Of Special Tool #8815
Courtesy of CHRYSLER GROUP, LLC

1. Measure the resistance of the (K922) TP Sensor Return circuit from the Throttle Body harness connector to the appropriate terminal of special tool (special tool #8815A, Kit, NGC, 38 Position).

   Is the resistance below 5.0 ohms?

   Yes

   - Go To 19.

No

- Repair the excessive resistance in the (K922) TP Sensor Return circuit.
- Perform the POWERTRAIN VERIFICATION TEST. Refer to **POWERTRAIN VERIFICATION TEST** .

13. **RESISTANCE IN THE (F856) 5-VOLT SUPPLY CIRCUIT**

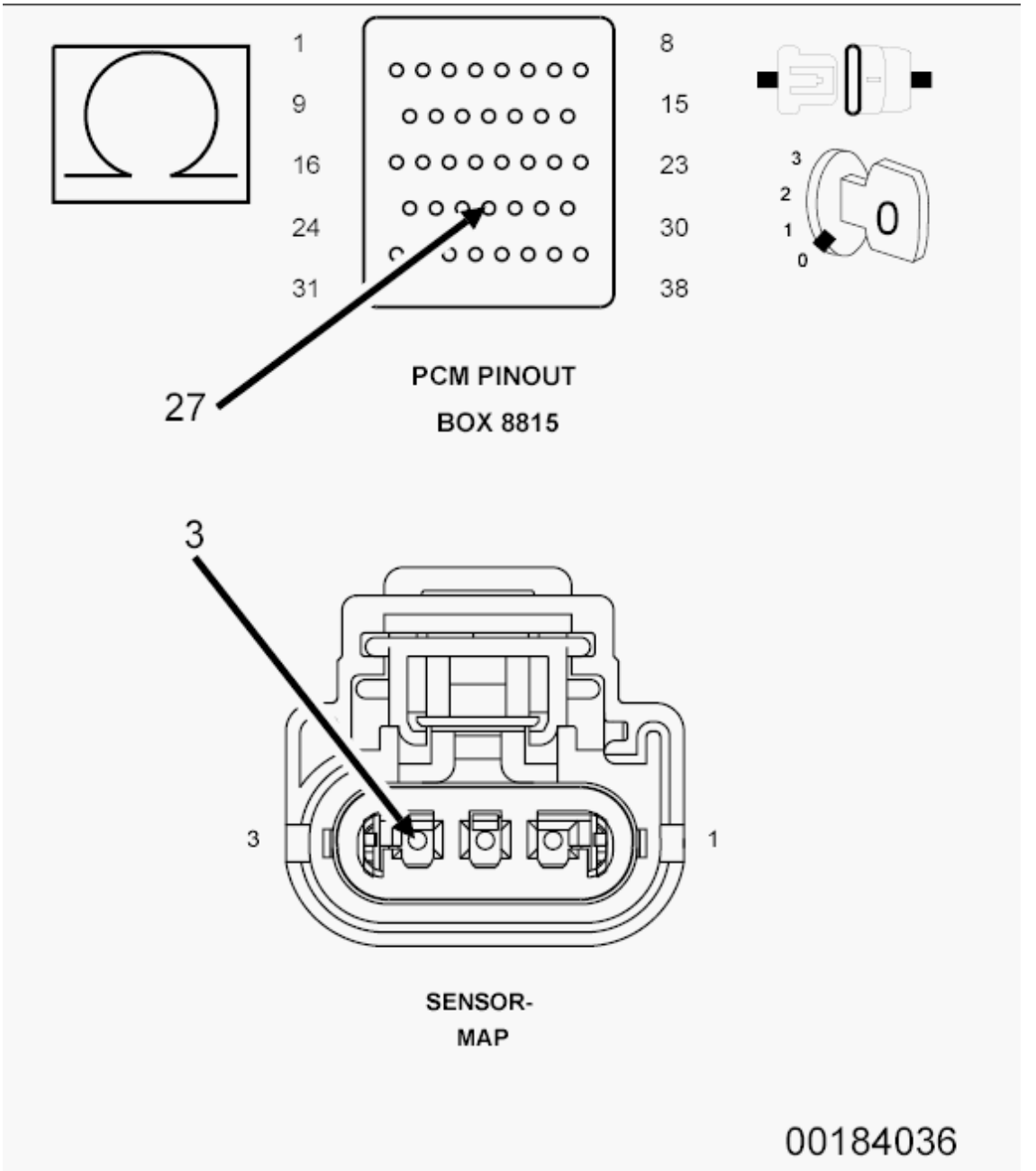

Fig. 48: Measuring Resistance Of 5-Volt Supply Circuit From MAP Sensor Harness Connector To Appropriate Terminal Of Special Tool #8815
Courtesy of CHRYSLER GROUP, LLC

1. Turn the ignition off.
2. Disconnect the MAP Sensor harness connector.
3. Disconnect the C1 PCM harness connector.

CAUTION: Do not probe the PCM harness connectors. Probing the PCM harness connectors will damage the PCM terminals resulting in poor terminal to pin connection. Install the PCM Pinout Box (special tool #8815A, Kit, NGC, 38 Position) to perform diagnosis.

4. Measure the resistance of the (F856) 5-volt Supply circuit from the MAP Sensor harness connector to the appropriate terminal of special tool (special tool #8815A, Kit, NGC, 38 Position).

   Is the resistance below 5.0 ohms?

   Yes

   - Go To 14.

   No

   - Repair the excessive resistance in the (F856) 5-volt Supply circuit.
   - Perform the POWERTRAIN VERIFICATION TEST. Refer to **POWERTRAIN VERIFICATION TEST** .

14. **(F856) 5-VOLT SUPPLY CIRCUIT SHORTED TO GROUND**

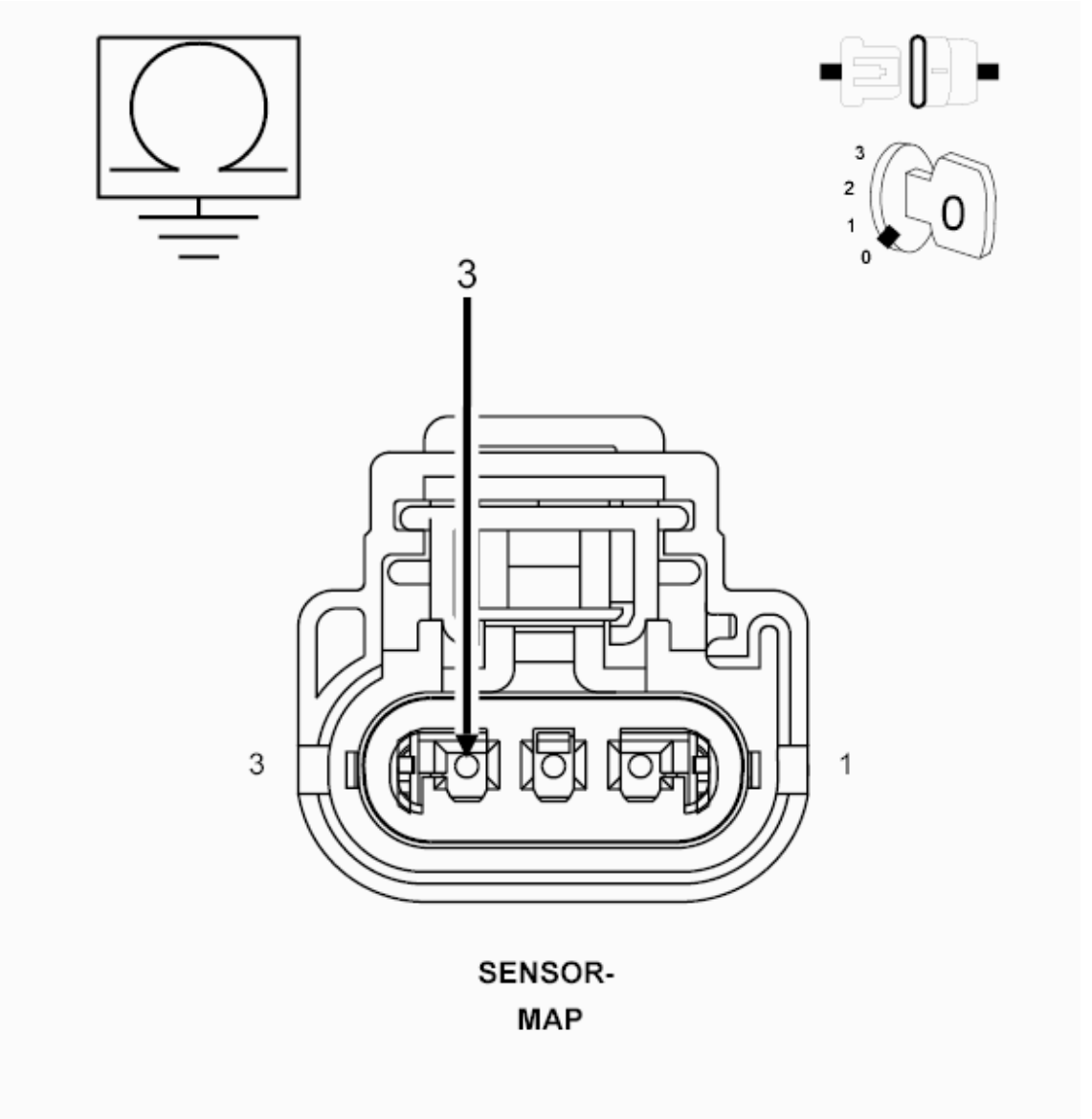

Fig. 49: Measuring Resistance Between Ground And (F856) 5-Volt Supply Circuit In MAP Sensor Harness Connector
Courtesy of CHRYSLER GROUP, LLC

1. Measure the resistance between ground and the (F856) 5-volt Supply circuit in the MAP Sensor harness connector.

   Is the resistance above 100k ohms?

   Yes

   - Go To 15.

   No

- Repair the short to ground in the (F856) 5-volt Supply circuit.
- Perform the POWERTRAIN VERIFICATION TEST. Refer to **POWERTRAIN VERIFICATION TEST** .

15. **MAP SENSOR**

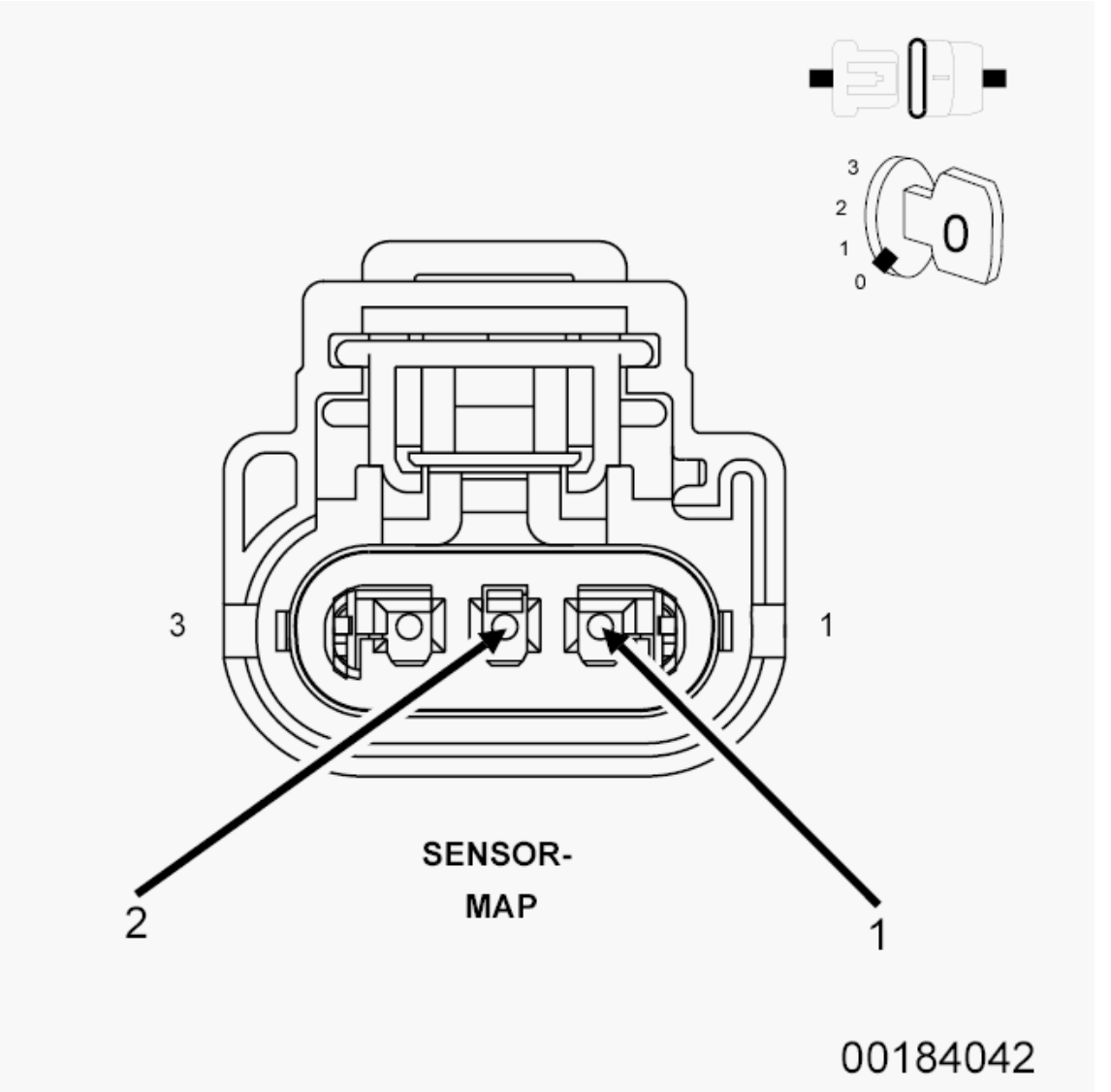

Fig. 50: MAP Sensor Harness Connector
Courtesy of CHRYSLER GROUP, LLC

1. Connect the PCM harness connectors.
2. Ignition on, engine not running.
3. With a scan tool, monitor the MAP Sensor voltage.
4. Connect a jumper wire between the (K1) MAP Signal circuit and the (K900) Sensor ground circuit.
5. Cycle the ignition switch from off to on.
6. With a scan tool, monitor the MAP Sensor voltage.

Does the scan tool display MAP voltage from approximately 4.9 volts to below 0.5 volt with the jumper wire installed?

Yes

- Replace the MAP Sensor.
- Perform the POWERTRAIN VERIFICATION TEST. Refer to **POWERTRAIN VERIFICATION TEST** .

No

- Go To 16.

  NOTE: Remove the jumper wire before continuing.

-

16. **RESISTANCE IN THE (K1) MAP SIGNAL CIRCUIT**

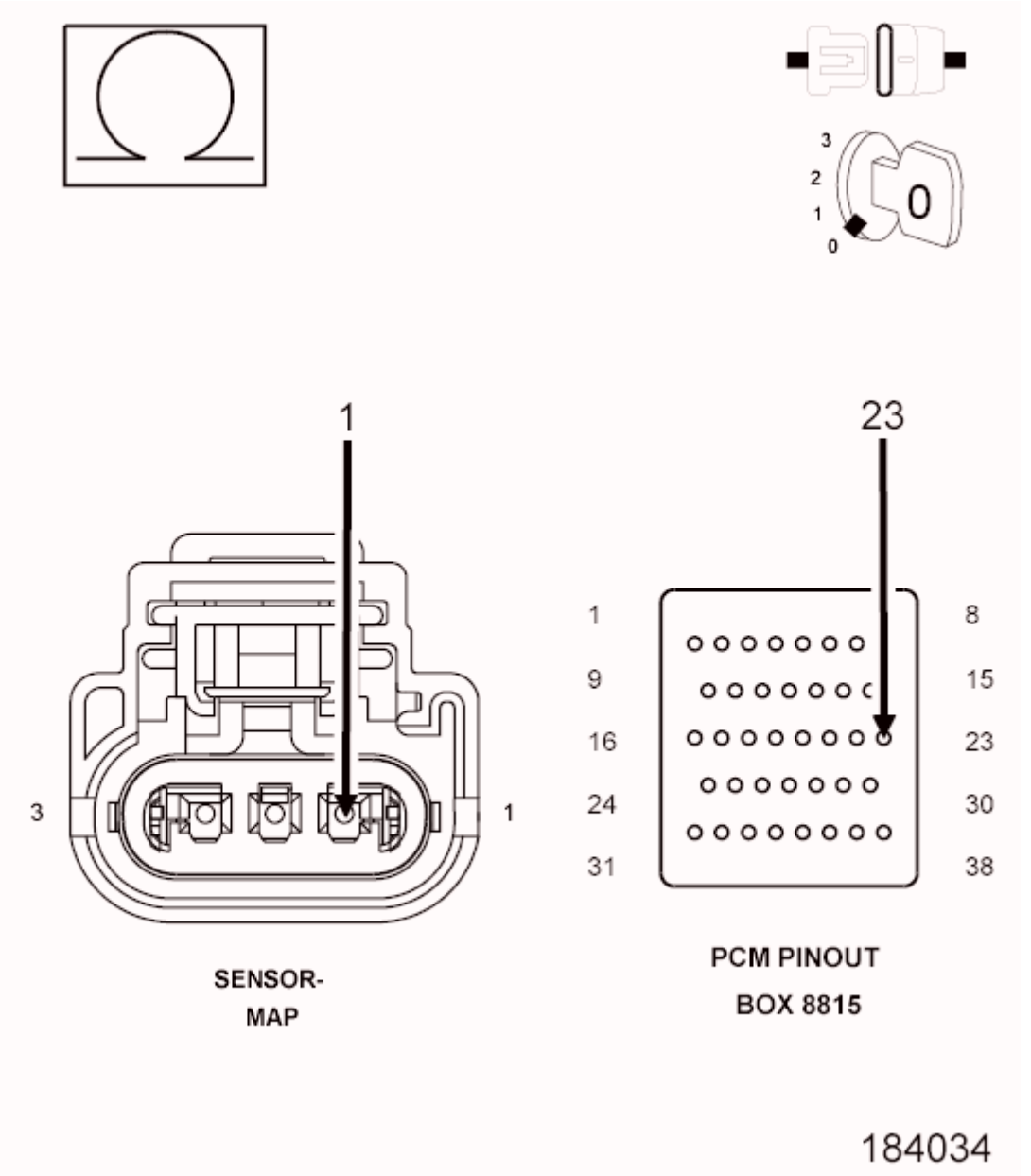

Fig. 51: Measuring Resistance Of MAP Sensor Signal Circuit Between Harness Connector And Appropriate Terminal Of Special Tool #8815
Courtesy of CHRYSLER GROUP, LLC

1. Turn the ignition off.
2. Disconnect the C2 PCM harness connector.
3. Measure the resistance of the (K1) MAP Signal circuit from the MAP Sensor harness connector to the appropriate terminal of special tool (special tool #8815A, Kit, NGC, 38 Position).

   Is the resistance below 5.0 ohms?

   Yes

- Go To 17.

No

- Repair the excessive resistance in the (K1) MAP Signal circuit
- Perform the POWERTRAIN VERIFICATION TEST. Refer to **POWERTRAIN VERIFICATION TEST** .

17. **(K1) MAP SIGNAL CIRCUIT SHORTED TO GROUND**

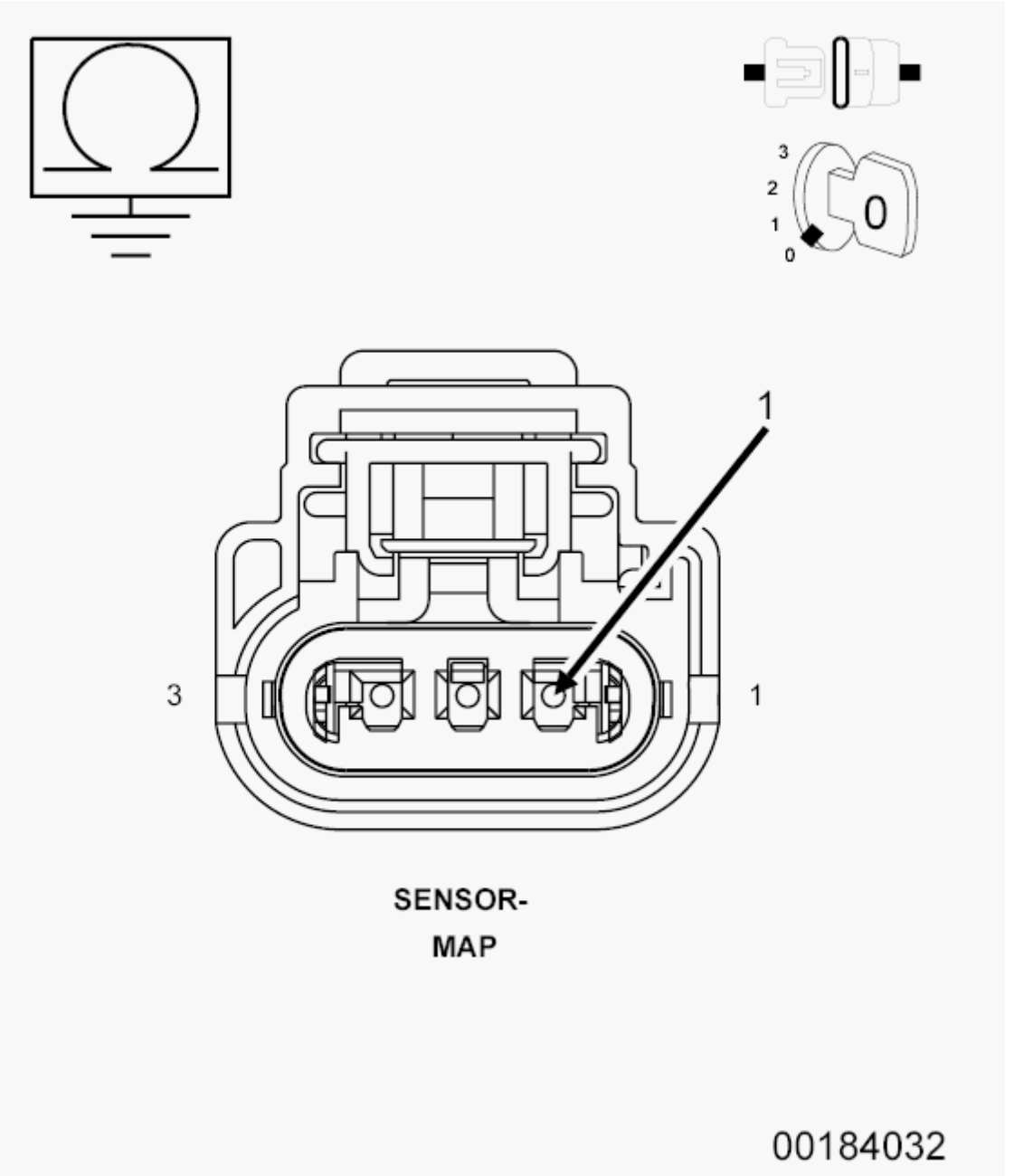

Fig. 52: Measuring Resistance Between Ground And MAP Sensor Signal Circuit AT Harness

Connector
Courtesy of CHRYSLER GROUP, LLC

1. Measure the resistance between ground and the (K1) MAP Signal circuit in the MAP Sensor harness connector.

   Is the resistance above 100k ohms?

   Yes

   - Go To 18.

   No

   - Repair the short to ground in the (K1) MAP Signal circuit.
   - Perform the POWERTRAIN VERIFICATION TEST. Refer to **POWERTRAIN VERIFICATION TEST** .

18. **RESISTANCE IN (K900) SENSOR GROUND CIRCUIT**

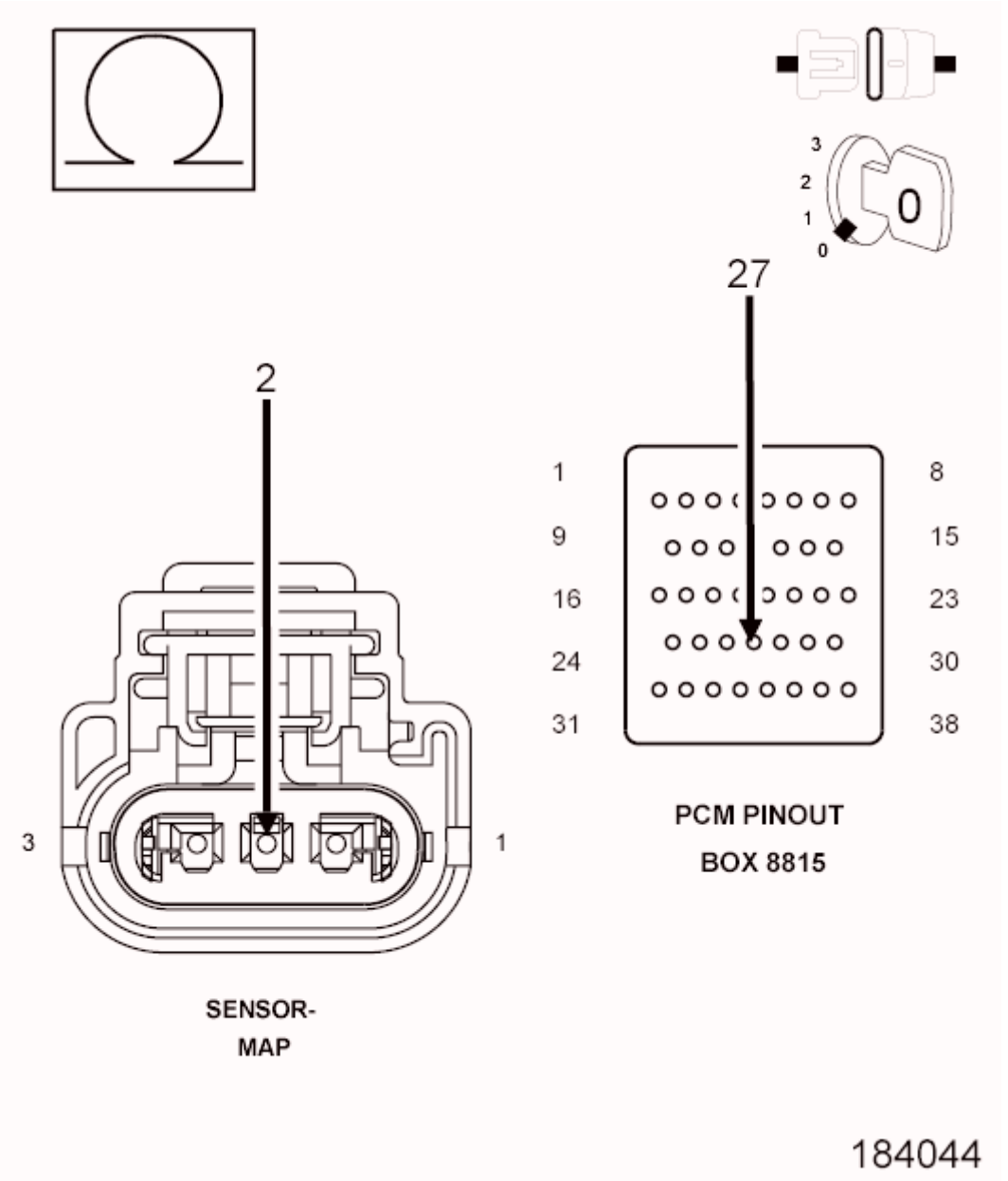

Fig. 53: Measuring Resistance Of (K900) Sensor Ground Circuit From MAP Sensor Harness Connector To Appropriate Terminal Of Special Tool #8815
Courtesy of CHRYSLER GROUP, LLC

1. Measure the resistance of the (K900) Sensor ground circuit from the MAP Sensor harness connector to the appropriate terminal of special tool (special tool #8815A, Kit, NGC, 38 Position).

   Is the resistance below 5.0 ohms?

   Yes

   - Go To 19.

No

- Repair the excessive resistance in the (K900) Sensor ground circuit.
- Perform the POWERTRAIN VERIFICATION TEST. Refer to **POWERTRAIN VERIFICATION TEST** .

19. **POWERTRAIN CONTROL MODULE (PCM)**
    1. Using the wiring diagram/schematic as a guide, inspect the wiring and connectors between the MAP Sensor, Throttle Body, and the Powertrain Control Module (PCM).
    2. Look for any chafed, pierced, pinched, or partially broken wires.
    3. Look for broken, bent, pushed out or corroded terminals. Verify that there is good pin to terminal contact in the MAP Sensor, Throttle Body, and the Powertrain Control Module connectors.
    4. Refer to any Technical Service Bulletins that may apply.

    Were there any problems found?

    Yes

    - Repair as necessary.
    - Perform the POWERTRAIN VERIFICATION TEST. Refer to **POWERTRAIN VERIFICATION TEST** .

    No

    - Replace and program the Powertrain Control Module per Service Information.
    - Perform the POWERTRAIN VERIFICATION TEST. Refer to **POWERTRAIN VERIFICATION TEST** .

P2175-LOW AIRFLOW/RESTRICTION DETECTED (SLOW ACCUMULATION)

For a complete wiring diagram **refer to appropriate SYSTEM WIRING DIAGRAMS article** .

WHEN MONITORED:

Ignition on and engine running with no MAP Sensor DTCs.

SET CONDITION:

PCM calculated MAP value is greater than actual MAP value plus an offset value. One trip fault and the code will set within 5 seconds. Three good trips to turn of the mil. ETC light will flash.

POSSIBLE CAUSES

Possible Causes
RESTRICTED AIR INLET SYSTEM
RESISTANCE IN THE (F856) 5-VOLT SUPPLY CIRCUIT

(F856) 5-VOLT SUPPLY CIRCUIT SHORTED TO GROUND
RESISTANCE IN THE (K1) MAP SIGNAL CIRCUIT
(K1) MAP SIGNAL CIRCUIT SHORTED TO GROUND
RESISTANCE IN (K900) SENSOR GROUND CIRCUIT
RESISTANCE IN THE (F855) 5-VOLT SUPPLY CIRCUIT
(F855) 5-VOLT SUPPLY CIRCUIT SHORTED TO GROUND
RESISTANCE IN THE TP SENSOR SIGNAL CIRCUIT
TP SENSOR SIGNAL CIRCUIT SHORTED TO GROUND
RESISTANCE IN THE (K922) TP SENSOR RETURN CIRCUIT
MAP SENSOR
THROTTLE BODY
POWERTRAIN CONTROL MODULE (PCM)

Always perform the Pre-Diagnostic Troubleshooting procedure before proceeding. Refer to PRE-DIAGNOSTIC TROUBLESHOOTING PROCEDURE .

DIAGNOSTIC TEST

1. **ACTIVE DTC**

NOTE: **The most likely cause of this DTC is a plugged intake air system or dirty Throttle Body. Check for any TSBs before continuing.**

NOTE: **Diagnose any 5-Volt Supply, TP Sensor, Oxygen Sensor, Fuel related or MAP Sensor DTCs before continuing.**

NOTE: **The throttle plate should be free from binding and carbon build up.**

NOTE: **Question the customer about weather conditions, as ICE build up on the blade can cause this fault when ambient is around -10° C (14° F) to 4° C (39° F) range.**

1. Ignition on, engine not running.
2. With a scan tool, select View DTCs.

   Is the DTC Active at this time?

   Yes

   - Go To 2.

   No

   - Perform the INTERMITTENT CONDITION Diagnostic Procedure. Refer to

INTERMITTENT CONDITION .

2. **RESTRICTED AIR INLET SYSTEM**
    1. Turn the ignition off.
    2. Remove the Air Cleaner Assembly.
    3. Remove the Air Filter.
    4. Inspect the Throttle Body opening for signs of any foreign materials.
    5. Check the intake tube/air cleaner for obstructions - include snow packing questions to customer.

    Were any restrictions found?

    Yes

    - Repair the restriction as necessary.
    - Perform the POWERTRAIN VERIFICATION TEST. Refer to **POWERTRAIN VERIFICATION TEST** .

    No

    - Go To 3.
3. **MAP SENSOR OPERATION**
    1. Start the engine.
    2. With a scan tool, monitor the MAP Sensor voltage.
    3. Snap the Accelerator pedal.

    Does the MAP Sensor voltage vary from below 2.0 volts at idle to above 3.5 volts at Wide Open Throttle?

    Yes

    - Go To 4.

    No

    - Go To 13.
4. **TP SENSOR OPERATION**
    1. Ignition on, engine not running.
    2. With a scan tool, perform the ETC Throttle Follower Test.
    3. TP Sensor No. 1 should start at approximately 0.7 of a volt and increase to 4.3 volts.
    4. TP Sensor No. 2 should start at approximately 4.3 volts and decrease to 0.7 of a volt.

    Is the voltage transition smooth between the appropriate values?

    Yes

- Perform the INTERMITTENT CONDITION Diagnostic Procedure. Refer to **INTERMITTENT CONDITION** .

No

- Go To 5.

5. **RESISTANCE IN THE (F855) 5-VOLT SUPPLY CIRCUIT**

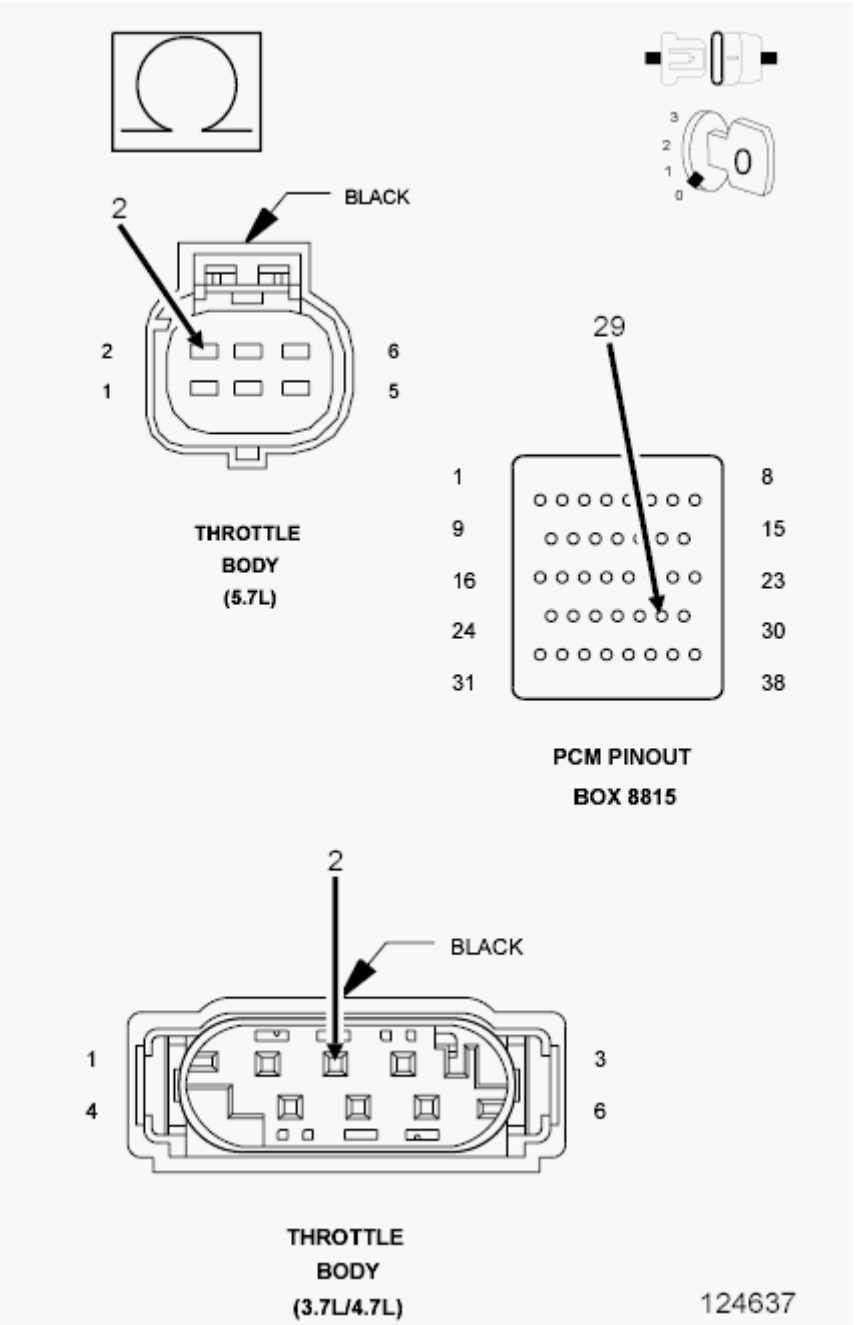

Fig. 54: Measuring Resistance Of (F855) 5-Volt Supply Circuit From Throttle Body Harness Connector To Appropriate Terminal Of Special Tool #8815

Courtesy of CHRYSLER GROUP, LLC

1. Turn the ignition off.
2. Disconnect the Throttle Body harness connector.
3. Disconnect the C2 PCM harness connector.

CAUTION: Do not probe the PCM harness connectors. Probing the PCM harness connectors will damage the PCM terminals resulting in poor terminal to pin connection. Install the PCM Pinout Box (special tool #8815A, Kit, NGC, 38 Position) to perform diagnosis.

4. Measure the resistance of the (F855) 5-volt Supply circuit from the Throttle Body harness connector to the appropriate terminal of special tool (special tool #8815A, Kit, NGC, 38 Position).

   Is the resistance below 100 ohms?

   Yes

   - Go To 6.

   No

   - Repair the excessive resistance in the (F855) 5-volt Supply circuit.
   - Perform the POWERTRAIN VERIFICATION TEST. Refer to **POWERTRAIN VERIFICATION TEST** .

6. **(F855) 5-VOLT SUPPLY CIRCUIT SHORTED TO GROUND**

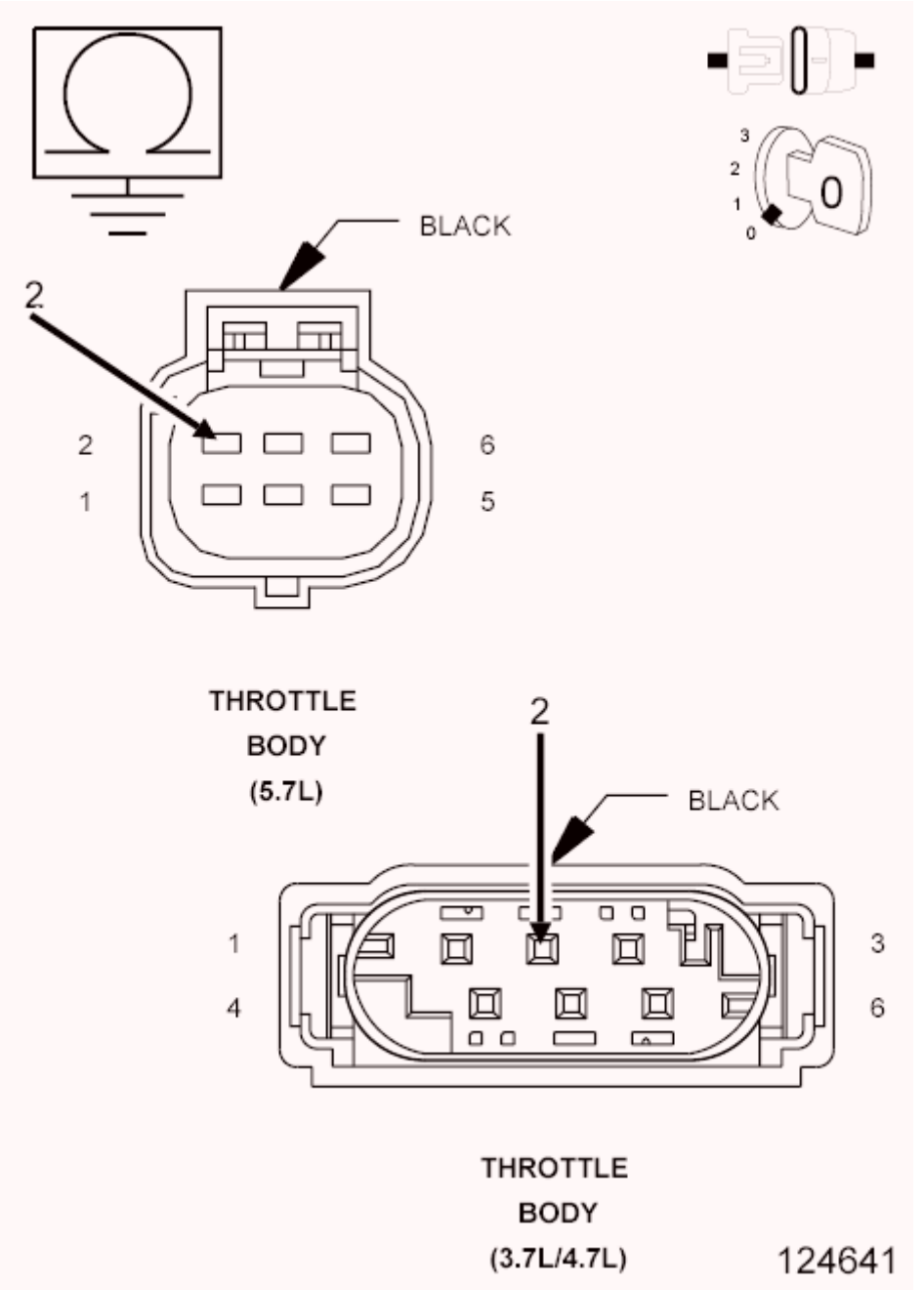

Fig. 55: Measuring Resistance Between Ground And 5-Volt Supply Circuit AT Throttle Body Harness Connector
Courtesy of CHRYSLER GROUP, LLC

1. Measure the resistance between ground and (F855) 5-volt Supply circuit at the Throttle Body harness connector.

   Is the resistance above 100k ohms?

   Yes

- Go To 7.

No

- Repair the short to ground in the (F855) 5-volt Supply circuit.
- Perform the POWERTRAIN VERIFICATION TEST. Refer to **POWERTRAIN VERIFICATION TEST** .

7. **TP SENSOR**

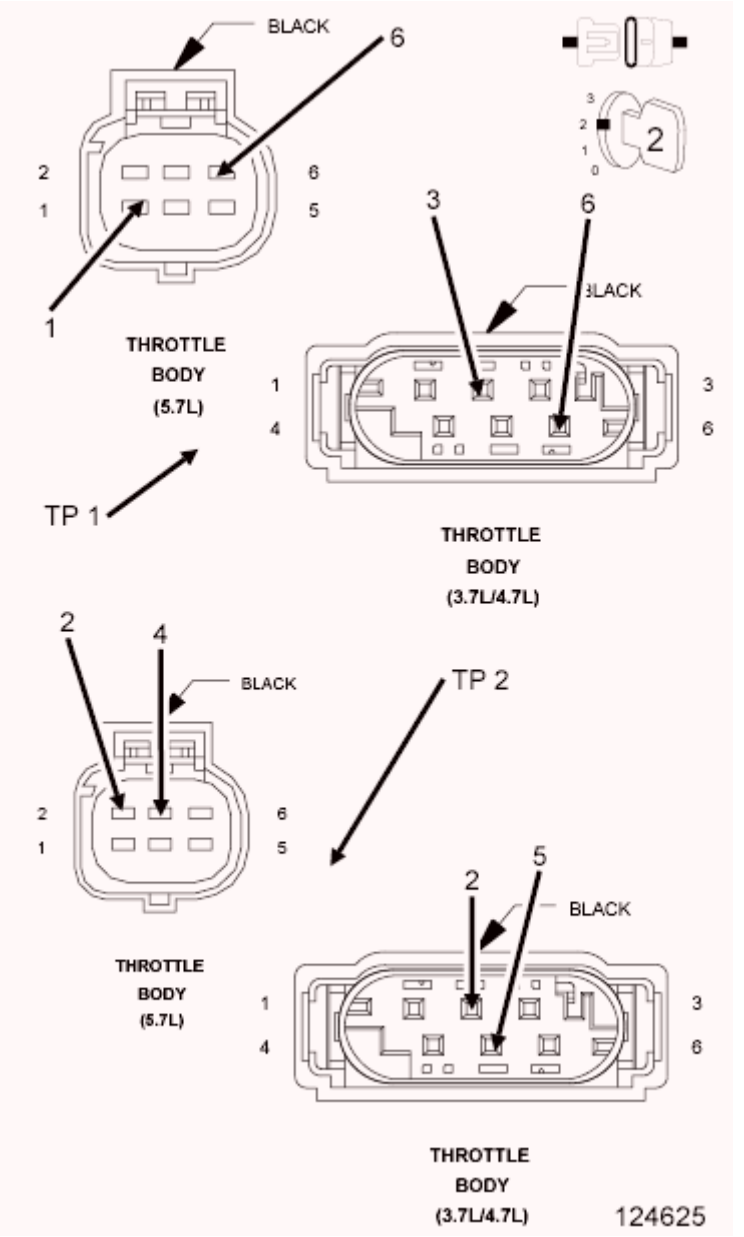

Fig. 56: Checking TP Sensors Circuits
Courtesy of CHRYSLER GROUP, LLC

1. Connect the PCM harness connector.
2. Ignition on, engine not running.
3. With a scan tool, monitor the TP Sensor voltage.
4. Connect a jumper wire between the (K22) TP Sensor No. 1 Signal circuit and the (K922) TP Sensor Return circuit in the Throttle Body harness connector.
5. TP Sensor No. 1 voltage should start at approximately 4.8 volts and decrease to 0.2 of a volt.
6. Connect a jumper wire between the (K122) TP Sensor No. 2 Signal circuit and the (F855) 5-volt Supply circuit in the Throttle Body harness connector.
7. TP Sensor No. 2 voltage should start at approximately 0 volts and increase to 4.8 to 5.2 volts.

   Does the TP Sensor voltage change to the appropriate voltage with the jumper wire installed?

   Yes

   - Disconnect the Battery before replacing the Throttle Body Assembly. Replace the Throttle Body Assembly. After installation is complete, use a scan tool and select the ETC RELEARN function
   - Perform the POWERTRAIN VERIFICATION TEST. Refer to **POWERTRAIN VERIFICATION TEST** .

   No

   - Go To 8.

8. **RESISTANCE IN THE (K22) TP SENSOR NO. 1 SIGNAL CIRCUIT**

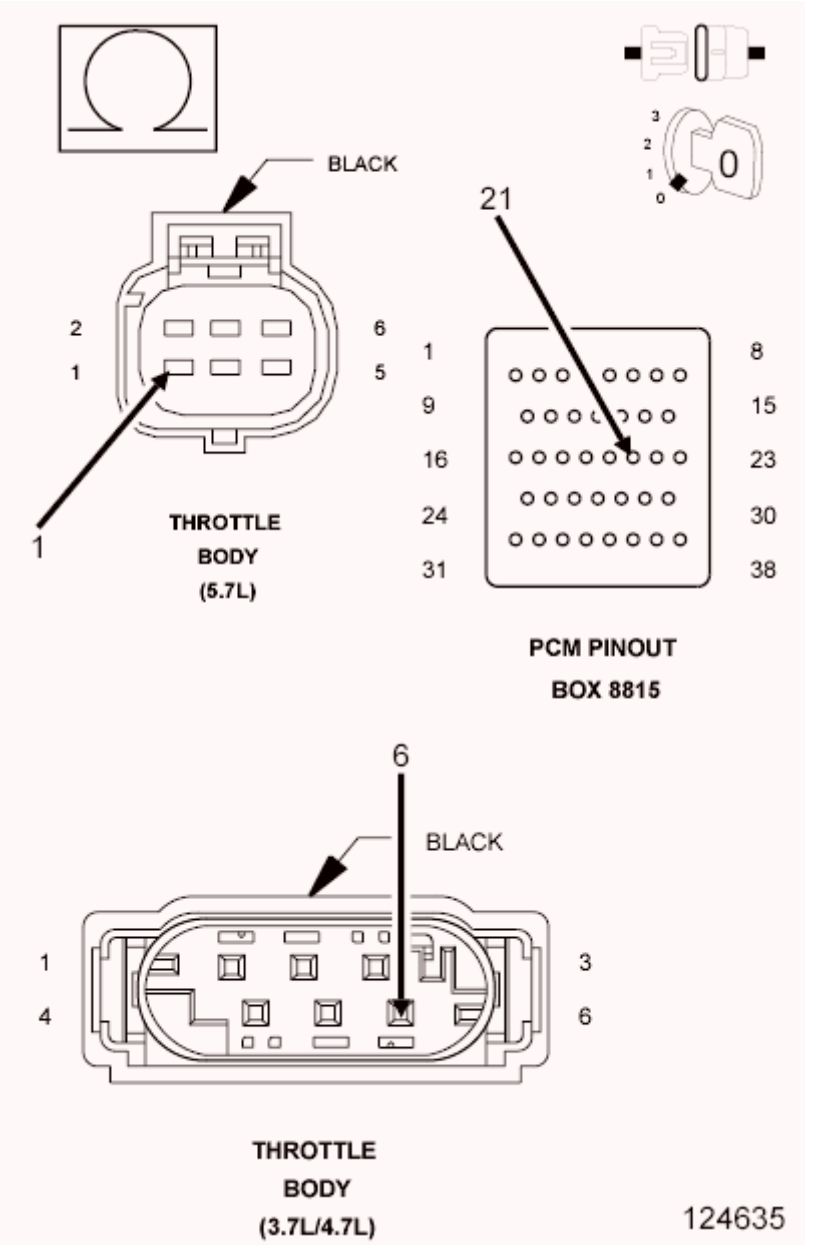

Fig. 57: Measuring Resistance Of TP Sensor No. 1 Signal Circuit Between Throttle Body Harness Connector & Appropriate Terminal Of Special Tool #8815
Courtesy of CHRYSLER GROUP, LLC

1. Turn the ignition off.
2. Disconnect the C2 PCM harness connector.
3. Measure the resistance of the (K22) TP Sensor No. 1 Signal circuit from the Throttle Body harness connector to the appropriate terminal of special tool (special tool #8815A, Kit, NGC, 38 Position).

   Is the resistance below 5.0 ohms?

   Yes

- Go To 9.

No

- Repair the excessive resistance in the (K22) TP Sensor No. 1 Signal circuit.
- Perform the POWERTRAIN VERIFICATION TEST. Refer to **POWERTRAIN VERIFICATION TEST** .

9. **RESISTANCE IN THE (K122) TP SENSOR NO. 2 SIGNAL CIRCUIT**

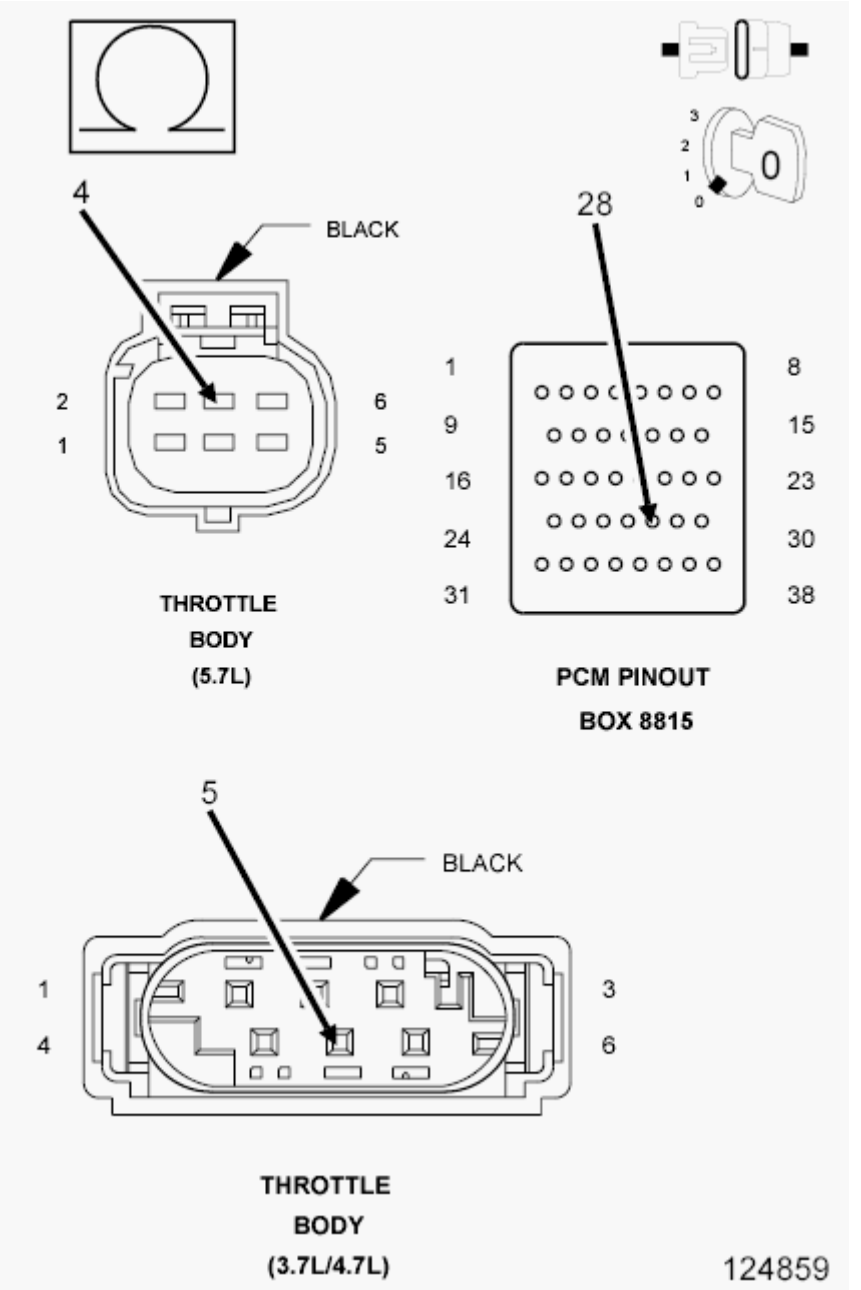

Fig. 58: Measuring Resistance Of (K122) TP Sensor No. 2 Signal Circuit From Throttle Body Harness Connector To Appropriate Terminal Of Special Tool #8815

Courtesy of CHRYSLER GROUP, LLC

1. Measure the resistance of the (K122) TP Sensor No. 2 Signal circuit from the Throttle Body harness connector to the appropriate terminal of special tool (special tool #8815A, Kit, NGC, 38 Position).

   Is the resistance below 5.0 ohms?

   Yes

   - Go To 10.

   No

   - Repair the excessive resistance in the (K122) TP Sensor No. 2 Signal circuit.
   - Perform the POWERTRAIN VERIFICATION TEST. Refer to **POWERTRAIN VERIFICATION TEST** .

10. **(K22) TP SENSOR NO. 1 SIGNAL CIRCUIT SHORTED TO GROUND**

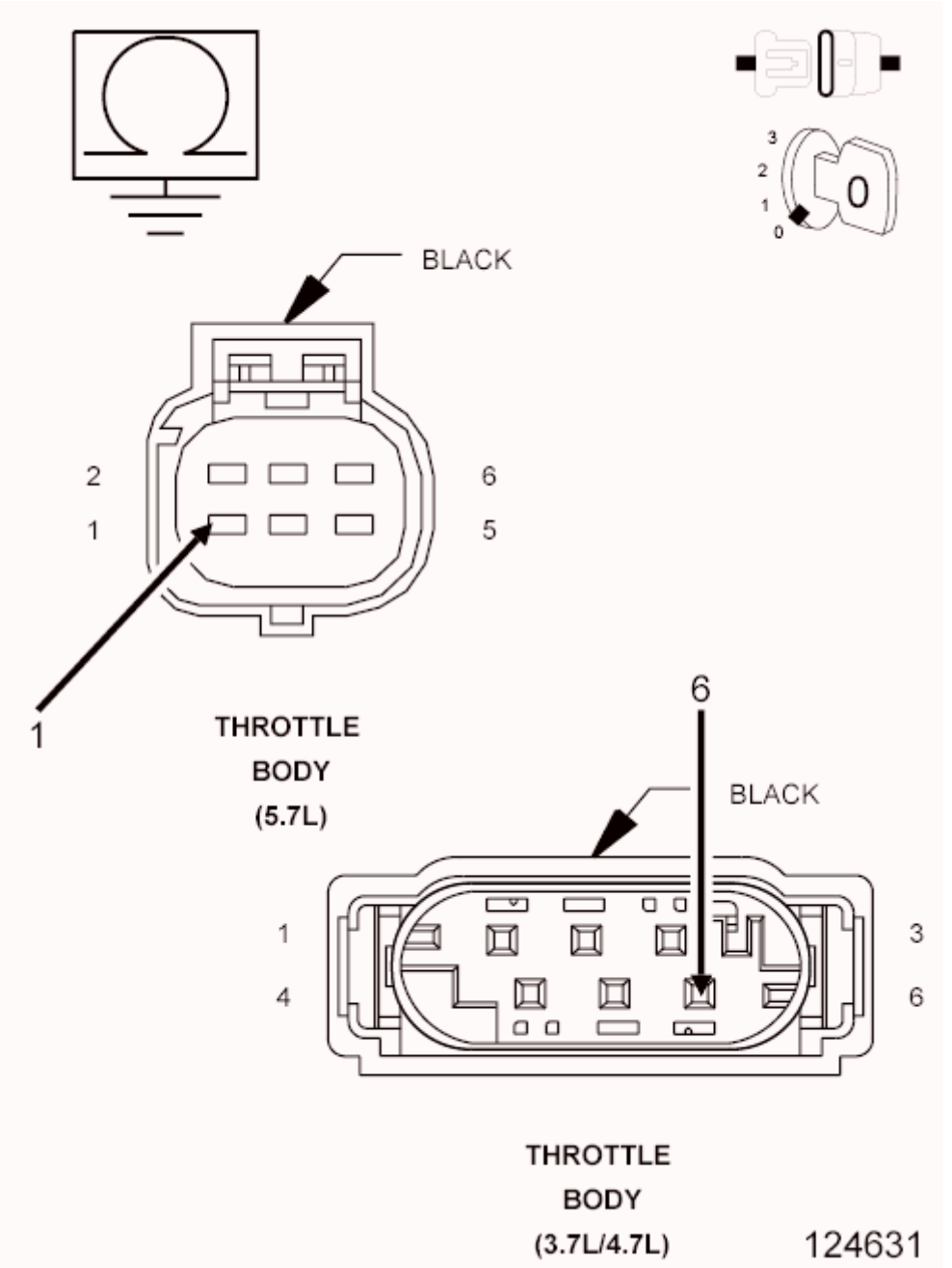

Fig. 59: Measuring Resistance Between Ground And TP Sensor No. 1 Signal Circuit AT Throttle Body Harness Connector
Courtesy of CHRYSLER GROUP, LLC

1. Measure the resistance between ground and the (K22) TP Sensor No. 1 Signal circuit at the Throttle Body harness connector.

   Is the resistance above 100k ohms?

   Yes

- Go To 11.

No

- Repair the short to ground in the (K22) TP Sensor No. 1 Signal circuit.
- Perform the POWERTRAIN VERIFICATION TEST. Refer to **POWERTRAIN VERIFICATION TEST** .

11. **(K122) TP SENSOR NO. 2 SIGNAL CIRCUIT SHORTED TO GROUND**

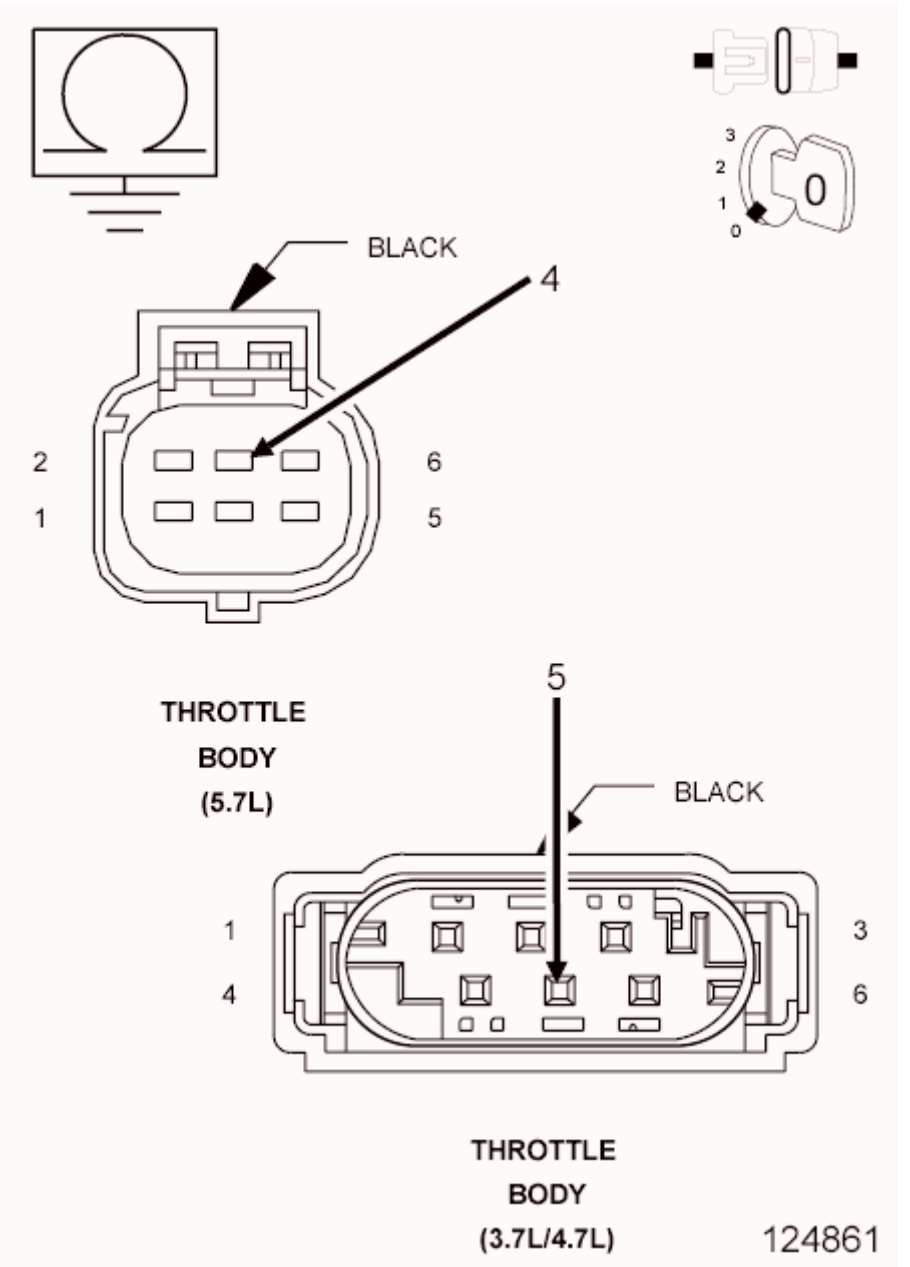

Fig. 60: Measuring Resistance Between Ground And (K122) TP Sensor No. 2 Signal Circuit AT Throttle Body Harness Connector

Courtesy of CHRYSLER GROUP, LLC

1. Measure the resistance between ground and the (K122) TP Sensor No. 2 Signal circuit at the Throttle Body harness connector.

   Is the resistance above 100k ohms?

   Yes

   - Go To 12.

   No

   - Repair the short to ground in the (K122) TP Sensor No. 2 Signal circuit.
   - Perform the POWERTRAIN VERIFICATION TEST. Refer to **POWERTRAIN VERIFICATION TEST** .

12. **RESISTANCE IN THE (K922) TP SENSOR RETURN CIRCUIT**

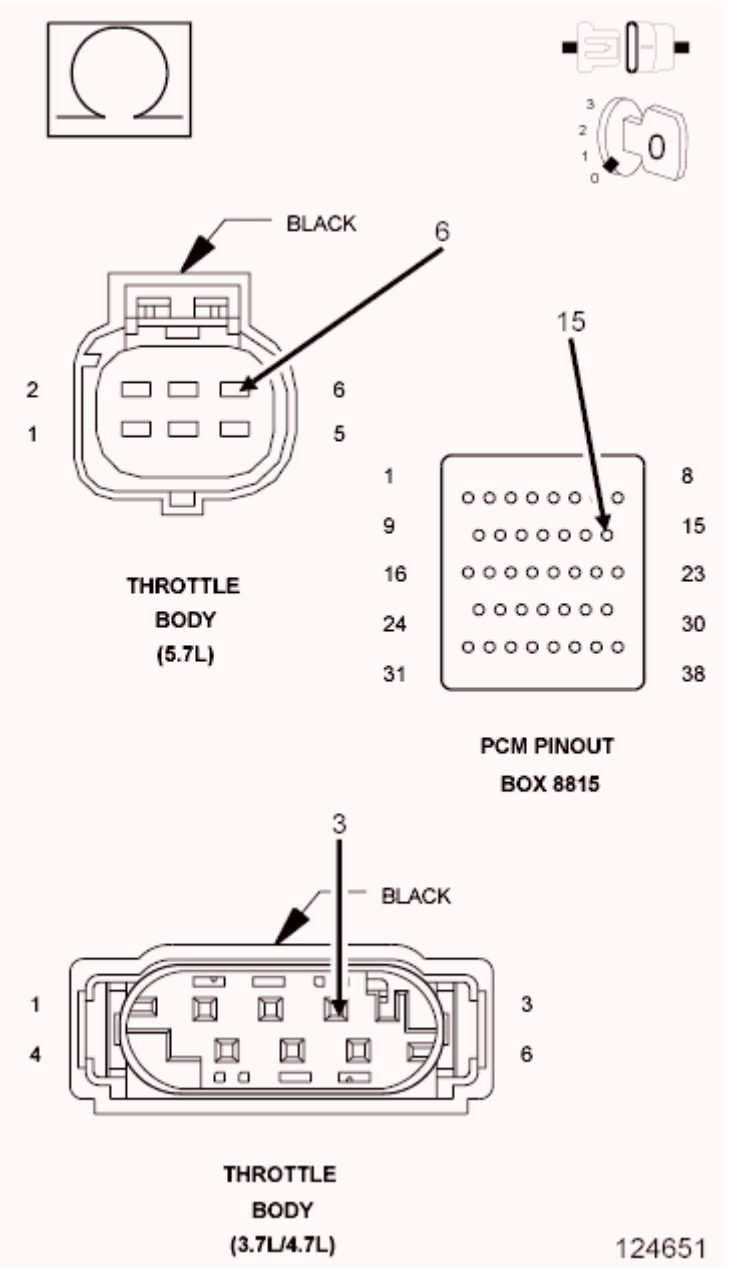

Fig. 61: Measuring Resistance Of (K922) TP Sensor Return Circuit From Throttle Body Harness Connector To Appropriate Terminal Of Special Tool #8815
Courtesy of CHRYSLER GROUP, LLC

1. Measure the resistance of the (K922) TP Sensor Return circuit from the Throttle Body harness connector to the appropriate terminal of special tool (special tool #8815A, Kit, NGC, 38 Position).

   Is the resistance below 5.0 ohms?

   Yes

   - Go To 19.

No

- Repair the excessive resistance in the (K922) TP Sensor Return circuit.
- Perform the POWERTRAIN VERIFICATION TEST. Refer to **POWERTRAIN VERIFICATION TEST** .

13. **RESISTANCE IN THE (F856) 5-VOLT SUPPLY CIRCUIT**

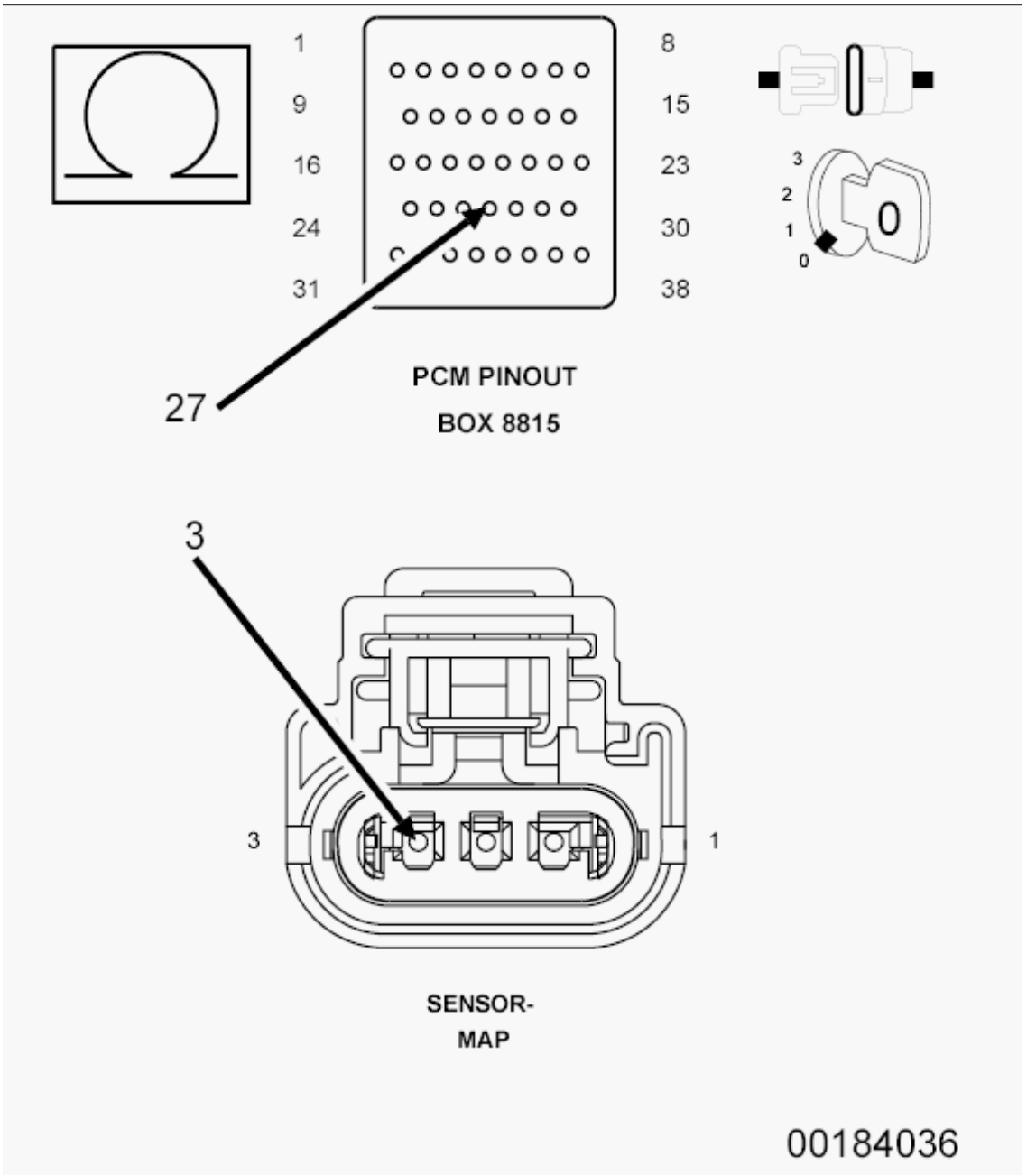

Fig. 62: Measuring Resistance Of 5-Volt Supply Circuit From MAP Sensor Harness Connector To Appropriate Terminal Of Special Tool #8815
Courtesy of CHRYSLER GROUP, LLC

1. Turn the ignition off.
2. Disconnect the MAP Sensor harness connector.
3. Disconnect the C1 PCM harness connector.

CAUTION: Do not probe the PCM harness connectors. Probing the PCM harness connectors will damage the PCM terminals resulting in poor terminal to pin connection. Install the PCM Pinout Box (special tool #8815A, Kit, NGC, 38 Position) to perform diagnosis.

4. Measure the resistance of the (F856) 5-volt Supply circuit from the MAP Sensor harness connector to the appropriate terminal of special tool (special tool #8815A, Kit, NGC, 38 Position).

   Is the resistance below 5.0 ohms?

   Yes

   - Go To 14.

   No

   - Repair the excessive resistance in the (F856) 5-volt Supply circuit.
   - Perform the POWERTRAIN VERIFICATION TEST. Refer to **POWERTRAIN VERIFICATION TEST** .

14. **(F856) 5-VOLT SUPPLY CIRCUIT SHORTED TO GROUND**

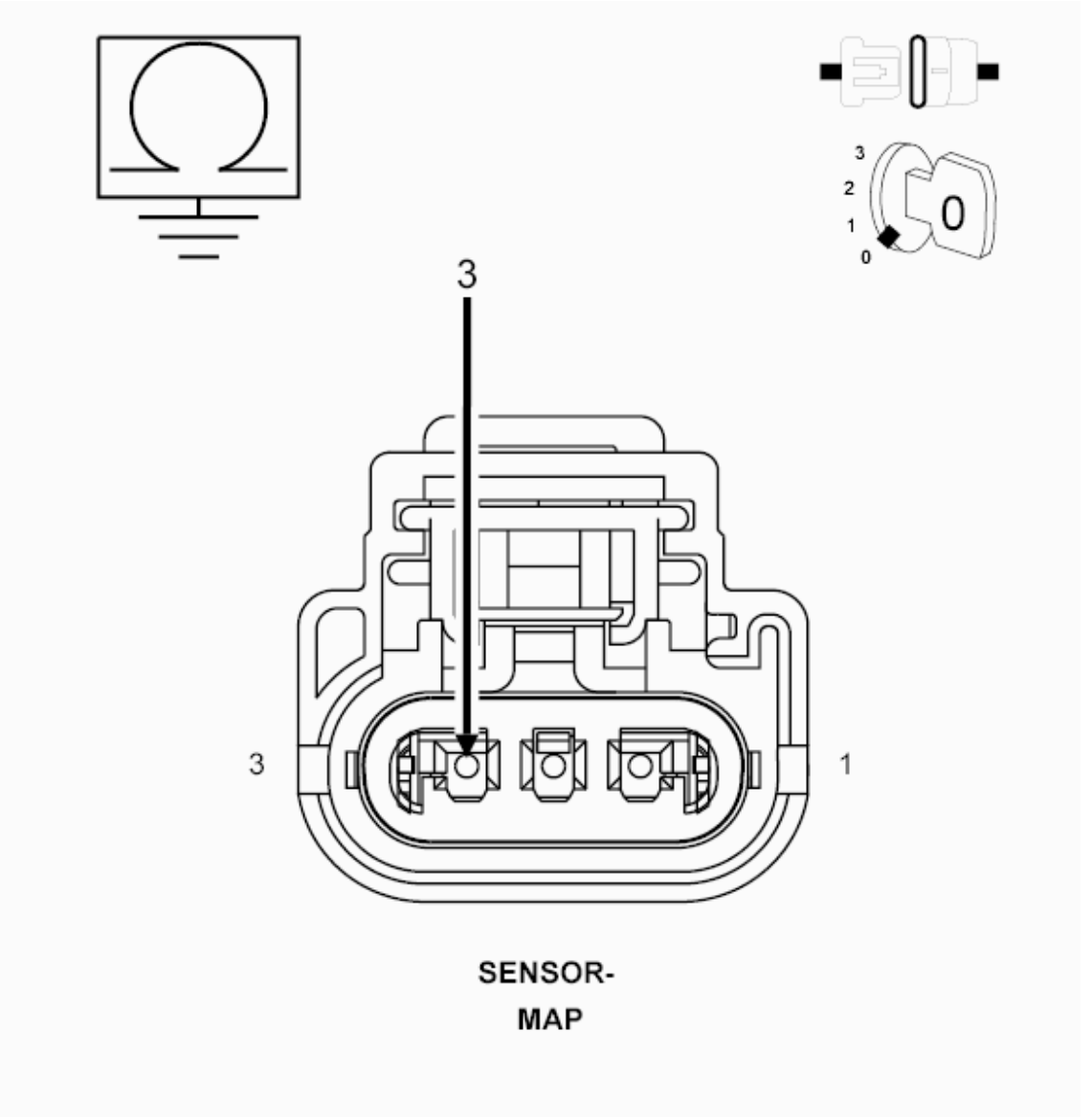

Fig. 63: Measuring Resistance Between Ground And (F856) 5-Volt Supply Circuit In MAP Sensor Harness Connector
Courtesy of CHRYSLER GROUP, LLC

1. Measure the resistance between ground and the (F856) 5-volt Supply circuit in the MAP Sensor harness connector.

   Is the resistance above 100k ohms?

   Yes

   - Go To 15.

   No

- Repair the short to ground in the (F856) 5-volt Supply circuit.
- Perform the POWERTRAIN VERIFICATION TEST. Refer to **POWERTRAIN VERIFICATION TEST** .

15. **MAP SENSOR**

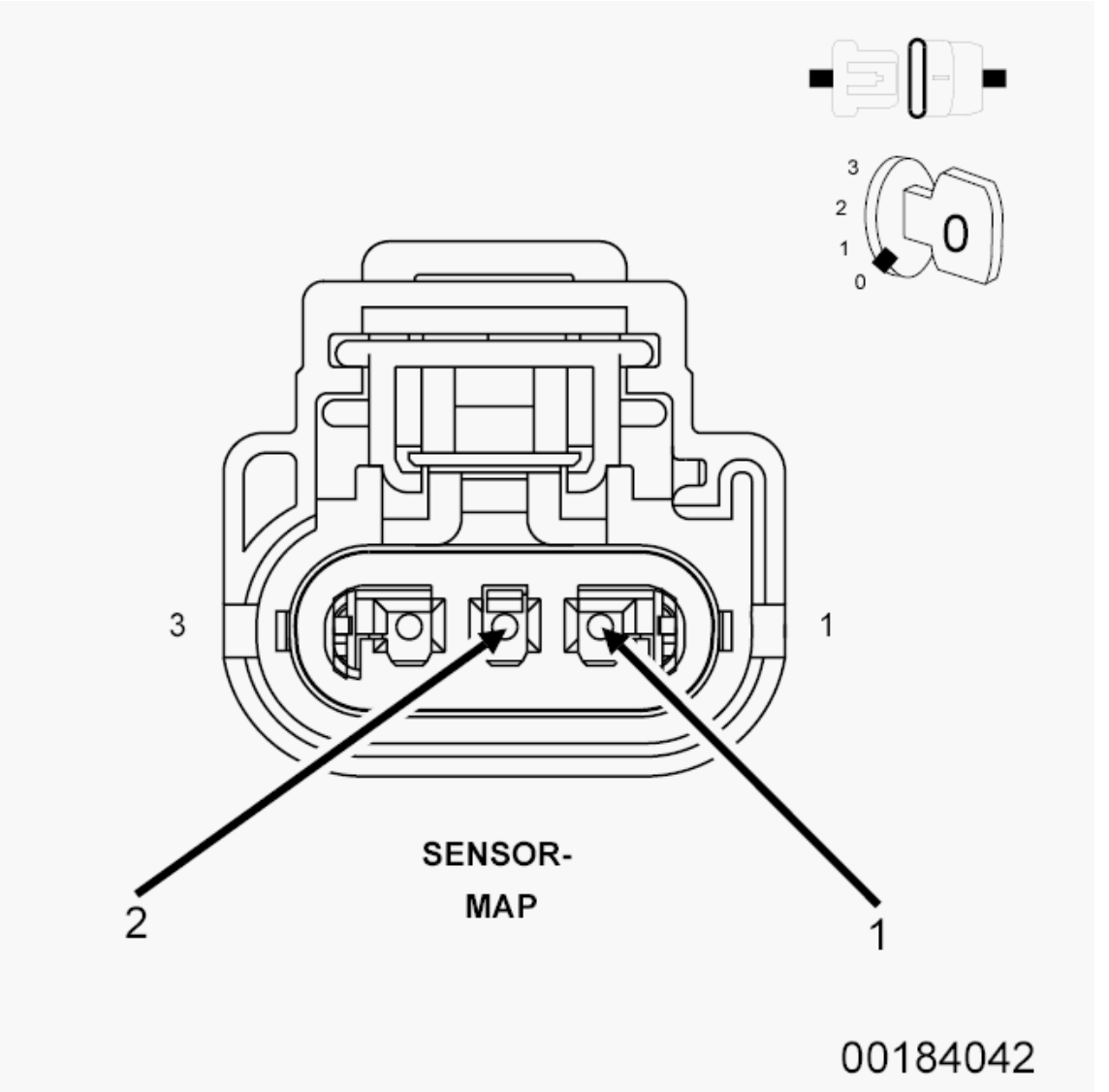

Fig. 64: MAP Sensor Harness Connector
Courtesy of CHRYSLER GROUP, LLC

1. Connect the C1 PCM harness connector.
2. Ignition on, engine not running.
3. With a scan tool, monitor the MAP Sensor voltage.
4. Connect a jumper wire between the (K1) MAP Signal circuit and the (K900) Sensor ground circuit.
5. Cycle the ignition switch from off to on.
6. With a scan tool, monitor the MAP Sensor voltage.

Does the scan tool display MAP voltage from approximately 4.9 volts to below 0.5 volt with the jumper wire installed?

Yes

- Replace the MAP Sensor.
- Perform the POWERTRAIN VERIFICATION TEST. Refer to **POWERTRAIN VERIFICATION TEST** .

No

- Go To 16.

  NOTE: Remove the jumper wire before continuing.

-

16. **RESISTANCE IN THE (K1) MAP SIGNAL CIRCUIT**

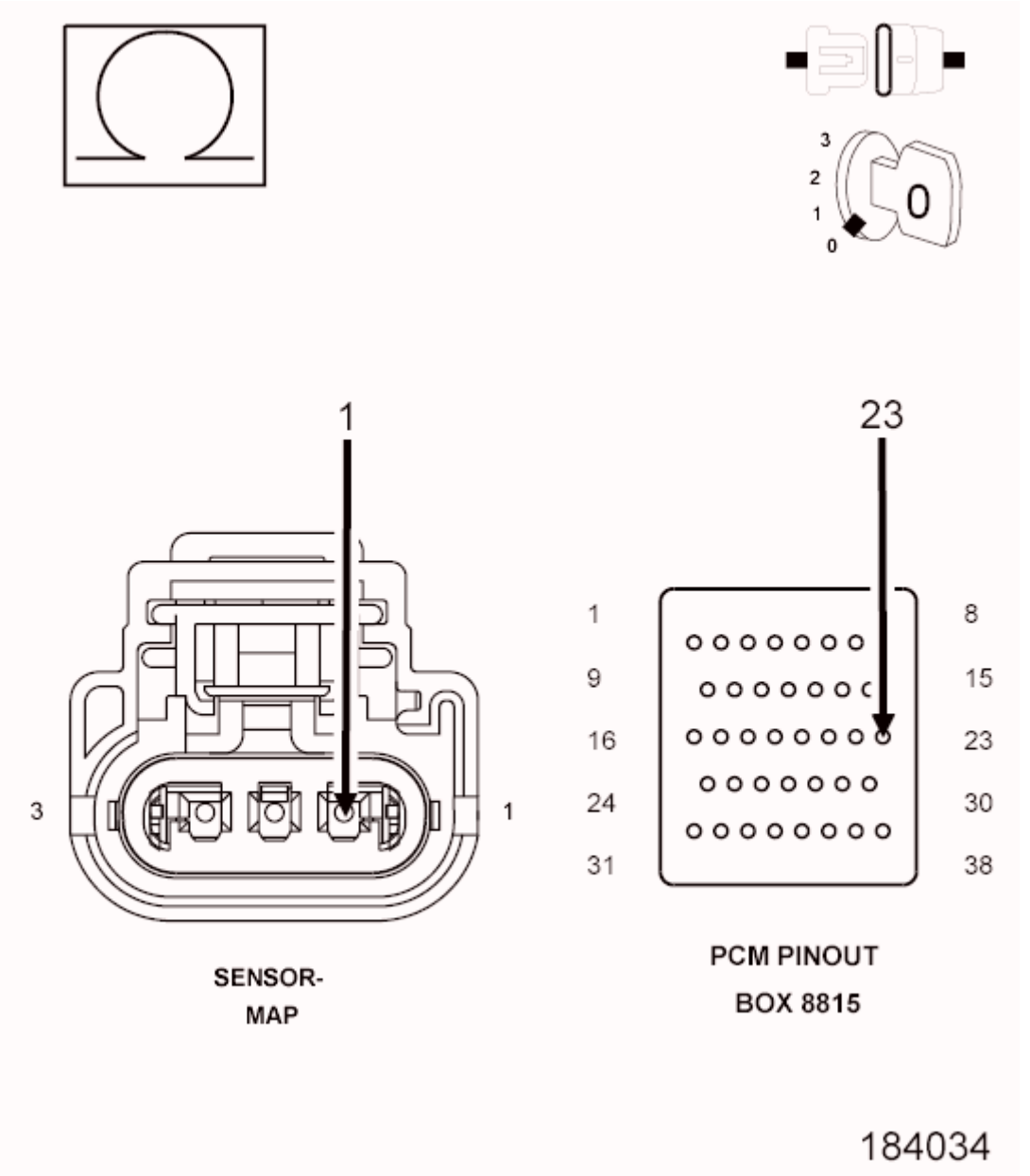

Fig. 65: Measuring Resistance Of MAP Sensor Signal Circuit Between Harness Connector And Appropriate Terminal Of Special Tool #8815
Courtesy of CHRYSLER GROUP, LLC

1. Turn the ignition off.
2. Disconnect the C2 PCM harness connector.
3. Measure the resistance of the (K1) MAP Signal circuit from the MAP Sensor harness connector to the appropriate terminal of special tool (special tool #8815A, Kit, NGC, 38 Position).

   Is the resistance below 5.0 ohms?

   Yes

- Go To 17.

No

- Repair the excessive resistance in the (K1) MAP Signal circuit
- Perform the POWERTRAIN VERIFICATION TEST. Refer to **POWERTRAIN VERIFICATION TEST** .

17. **(K1) MAP SIGNAL CIRCUIT SHORTED TO GROUND**

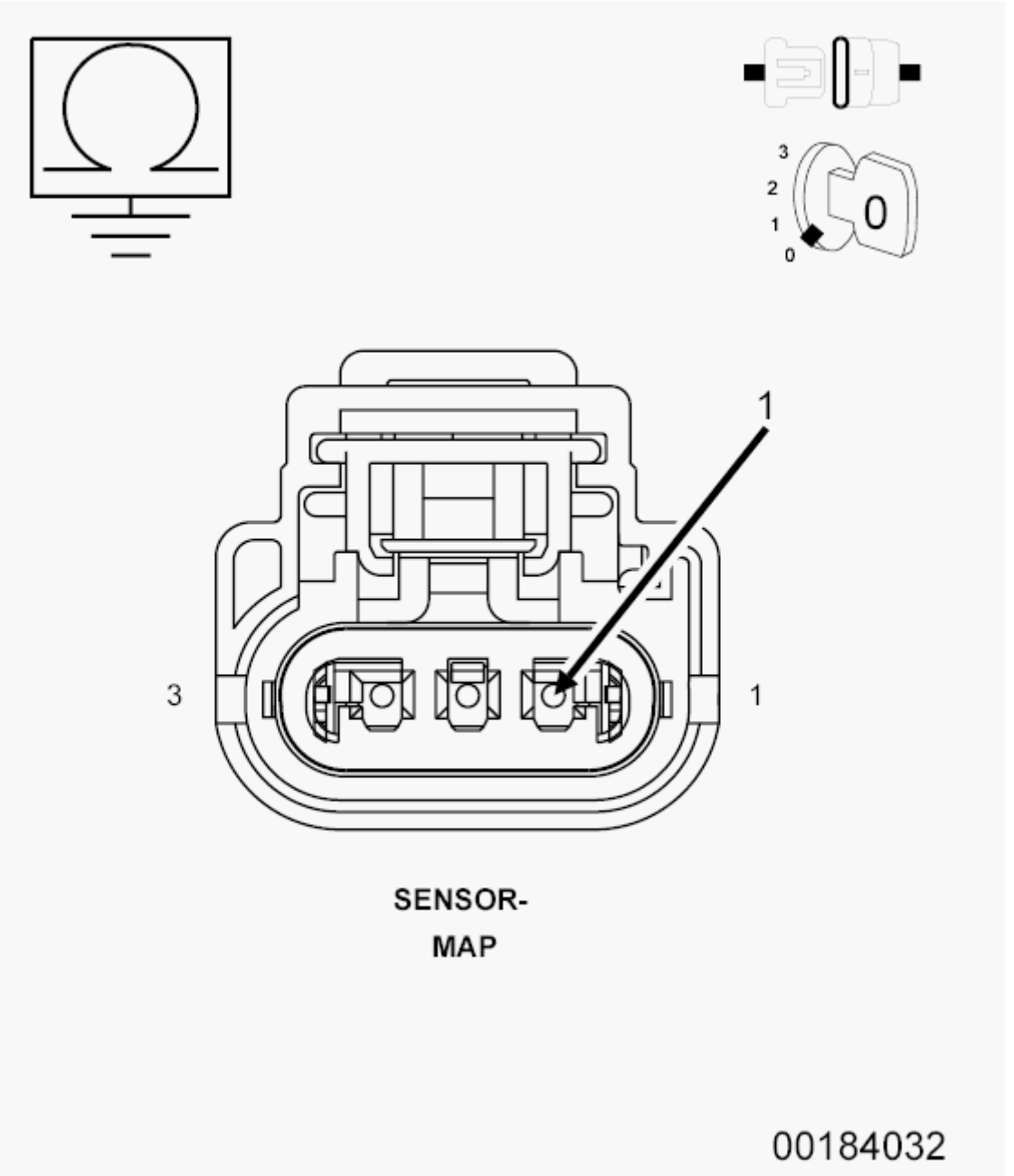

Fig. 66: Measuring Resistance Between Ground And MAP Sensor Signal Circuit AT Harness

Connector
Courtesy of CHRYSLER GROUP, LLC

1. Measure the resistance between ground and the (K1) MAP Signal circuit in the MAP Sensor harness connector.

   Is the resistance above 100k ohms?

   Yes

   - Go To 18.

   No

   - Repair the short to ground in the (K1) MAP Signal circuit.
   - Perform the POWERTRAIN VERIFICATION TEST. Refer to **POWERTRAIN VERIFICATION TEST** .

18. **RESISTANCE IN THE (K900) SENSOR GROUND CIRCUIT**

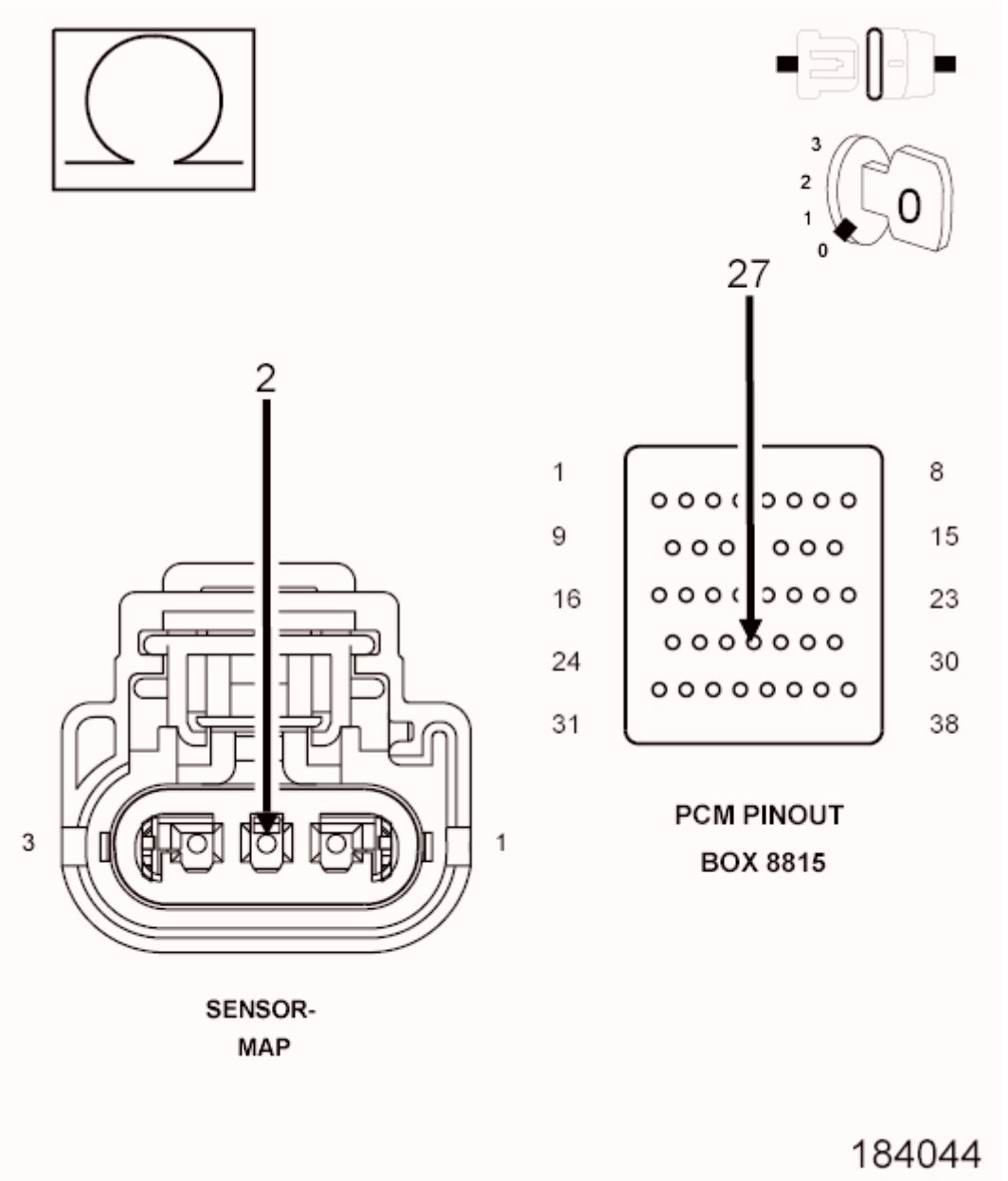

Fig. 67: Measuring Resistance Of (K900) Sensor Ground Circuit From MAP Sensor Harness Connector To Appropriate Terminal Of Special Tool #8815
Courtesy of CHRYSLER GROUP, LLC

1. Measure the resistance of the (K900) Sensor ground circuit from the MAP Sensor harness connector to the appropriate terminal of special tool (special tool #8815A, Kit, NGC, 38 Position).

   Is the resistance below 5.0 ohms?

   Yes

   - Go To 19.

No

- Repair the excessive resistance in the (K900) Sensor ground circuit.
- Perform the POWERTRAIN VERIFICATION TEST. Refer to **POWERTRAIN VERIFICATION TEST** .

19. **POWERTRAIN CONTROL MODULE (PCM)**
    1. Using the wiring diagram/schematic as a guide, inspect the wiring and connectors between the MAP Sensor, Throttle Body, and the Powertrain Control Module (PCM).
    2. Look for any chafed, pierced, pinched, or partially broken wires.
    3. Look for broken, bent, pushed out or corroded terminals. Verify that there is good pin to terminal contact in the MAP Sensor, Throttle Body, and the Powertrain Control Module connectors.
    4. Refer to any Technical Service Bulletins that may apply.

    Were there any problems found?

    Yes

    - Repair as necessary.
    - Perform the POWERTRAIN VERIFICATION TEST. Refer to **POWERTRAIN VERIFICATION TEST** .

    No

    - Replace and program the Powertrain Control Module per Service Information.
    - Perform the POWERTRAIN VERIFICATION TEST. Refer to **POWERTRAIN VERIFICATION TEST** .

P2181-COOLING SYSTEM PERFORMANCE

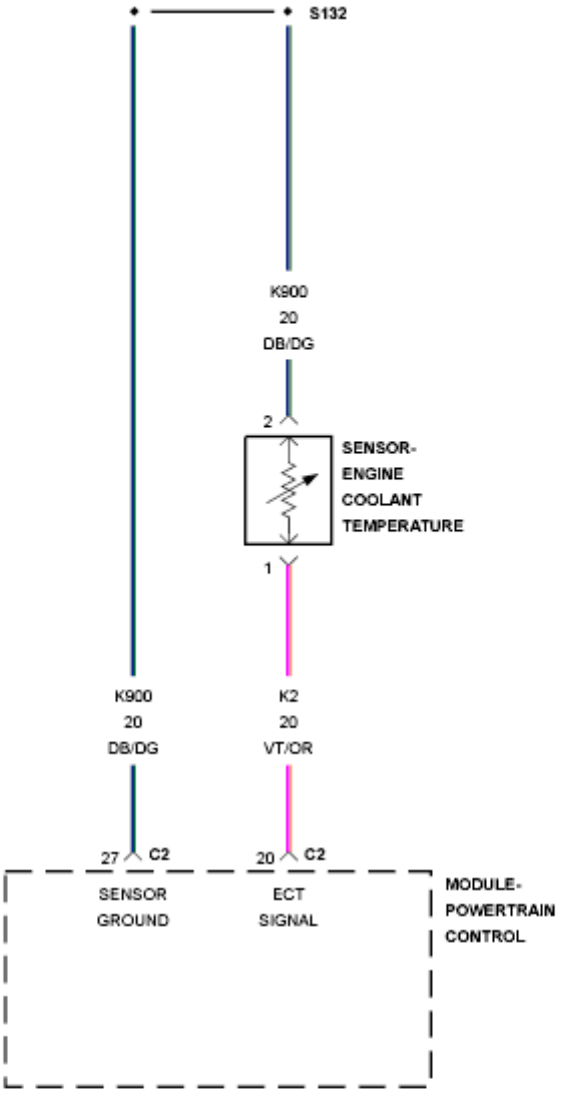

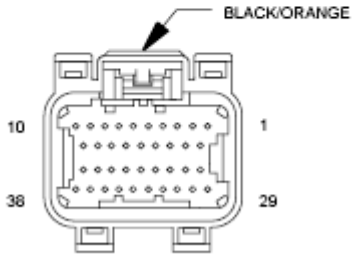

MODULE-
POWERTRAIN
CONTROL C2

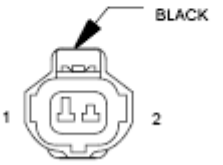

SENSOR-
ENGINE
COOLANT
TEMPERATURE
(GAS)

Fig. 68: Engine Coolant Temperature Sensor Circuit Schematic
Courtesy of CHRYSLER GROUP, LLC

For a complete wiring diagram, **refer to appropriate SYSTEM WIRING DIAGRAMS article** .

WHEN MONITORED:

Ignition on, Engine running and no ECT DTCs present.

SET CONDITION:

The Powertrain Control Module (PCM) recognizes that the Engine Coolant Temperature (ECT) Sensor has failed its self coherence test. The coolant temp should only change at a certain rate, if this rate is too slow or too fast this fault will set. Two trip fault. Three good trips to clear MIL. Electronic Throttle Control (ETC) light will illuminate on first trip failure.

POSSIBLE CAUSES

Possible Causes
LOW COOLANT LEVEL
(K2) ECT SIGNAL CIRCUIT SHORTED TO VOLTAGE
(K2) ECT SIGNAL CIRCUIT OPEN
(K900) SENSOR GROUND CIRCUIT OPEN
(K2) ECT SIGNAL CIRCUIT SHORTED TO GROUND
(K2) ECT SIGNAL CIRCUIT SHORTED TO THE (K900) SENSOR GROUND
THERMOSTAT
ENGINE COOLANT TEMPERATURE (ECT) SENSOR
POWERTRAIN CONTROL MODULE (PCM)

Always perform the Pre-Diagnostic Troubleshooting procedure before proceeding. Refer to PRE-DIAGNOSTIC TROUBLESHOOTING PROCEDURE .

DIAGNOSTIC TEST

1. **ACTIVE DTC**
    1. Ignition on, engine not running.

        NOTE: If this code sets during extreme ambient temperatures, improper installation of a block heater could be the cause of this DTC.

    2. With the scan tool, select View DTCs.
    3. Diagnose all other ECT and Cooling System codes before continuing.

        Is the DTC Active at this time?

Yes

- Go To 2.

No

- Perform the INTERMITTENT CONDITION diagnostic procedure. Refer to **INTERMITTENT CONDITION** .

2. **LOW COOLANT LEVEL**

NOTE: **If a Engine Coolant Temperature (ECT) DTC is set along with this code, diagnose the ECT DTC first.**

NOTE: **Inspect the ECT terminals and related PCM terminals. Make sure the terminals are free from corrosion and damage.**

NOTE: **The best way to diagnose this DTC is to allow the vehicle to sit overnight outside in order to have a totally cold soaked engine.**

NOTE: **Extremely cold outside ambient temperatures may have caused this DTC to set.**

NOTE: **Need to make sure that no Cooling System DTCs are set or changes that would make the warm up much slower or much faster: broken water pump can set this, addition of aftermarket auxiliary cooler can set this DTC.**

WARNING: **Never open the cooling system when the engine is hot. The system is under pressure. Failure to follow these instructions can result in personal injury or death. Allow the engine to cool before opening the cooling system.**

1. Inspect the coolant system for proper level and condition.

   Is the coolant level and condition OK?

   Yes

   - Go To 3.

   No

   - Inspect the vehicle for a coolant leak and add the necessary amount of coolant.
   - Perform the POWERTRAIN VERIFICATION TEST. Refer to **POWERTRAIN VERIFICATION TEST** .

3. **THERMOSTAT**

NOTE: This test works best if performed on a cold engine (cold soak).

1. Ignition on, engine not running.
2. With the scan tool, read the Engine Coolant Temperature Degree value. If the engine was allowed to sit overnight (cold soak), the temperature value should be a value that is close to the ambient temperature.

   NOTE: If engine coolant temperature is above 82° C (180° F), allow the engine to cool until 65° C (150° F) is reached.

3. Start the engine.
4. During engine warm-up monitor the Engine Coolant Temperature Degree value. The temp degree value change should be a smooth transition from start up to normal operating temp 82° C (180° F). Also monitor the actual coolant temperature with a thermometer.

   NOTE: As the engine warms up to operating temperature, the actual coolant temperature (thermometer reading) and the Engine Coolant Temperature Degree on the scan tool should stay relatively close to each other.

5. Using the appropriate Service Information, determine the proper opening temperature of the thermostat.

   Did the thermostat open at the proper temperature?

   Yes

   - Go To 4.

   No

   - Replace the thermostat.
   - Perform the POWERTRAIN VERIFICATION TEST. Refer to **POWERTRAIN VERIFICATION TEST** .

4. **ECT SENSOR**

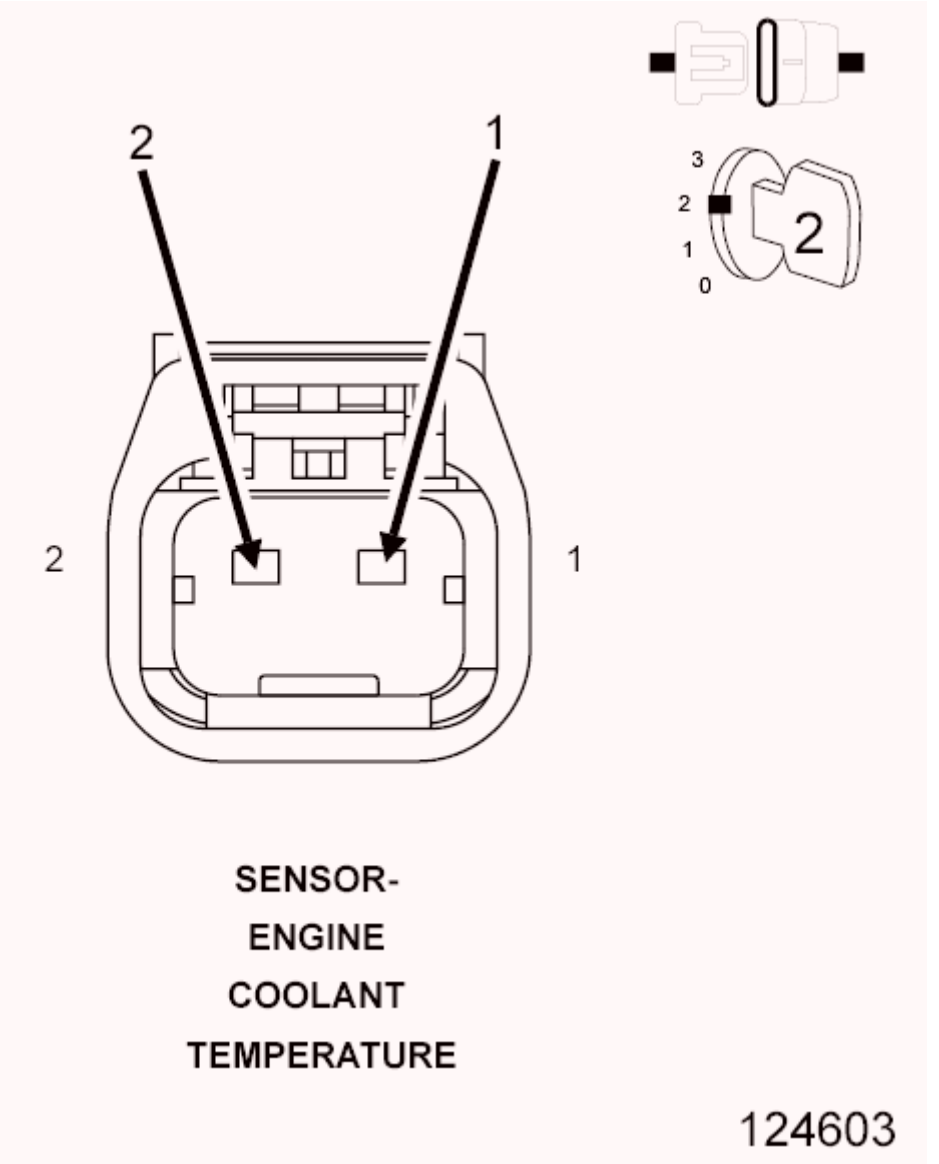

Fig. 69: Engine Coolant Temperature Sensor Harness Connector
Courtesy of CHRYSLER GROUP, LLC

1. Turn the ignition off.
2. Disconnect the ECT Sensor harness connector.
3. Ignition on, engine not running.
4. With the scan tool, read the ECT voltage.
5. Connect a jumper between the (K2) ECT Signal circuit and the (K900) Sensor ground circuit in the ECT Sensor harness connector.

NOTE: **The sensor voltage should be approximately 0.0 Volts (plus or minus.1 Volt) with the jumper wire in place.**

Does the scan tool display the voltage as described above?

Yes

- Replace the ECT Sensor.
- Perform the POWERTRAIN VERIFICATION TEST. Refer to **POWERTRAIN VERIFICATION TEST** .

No

- Go To 5.

5. **(K2) ECT SIGNAL CIRCUIT SHORTED TO VOLTAGE**

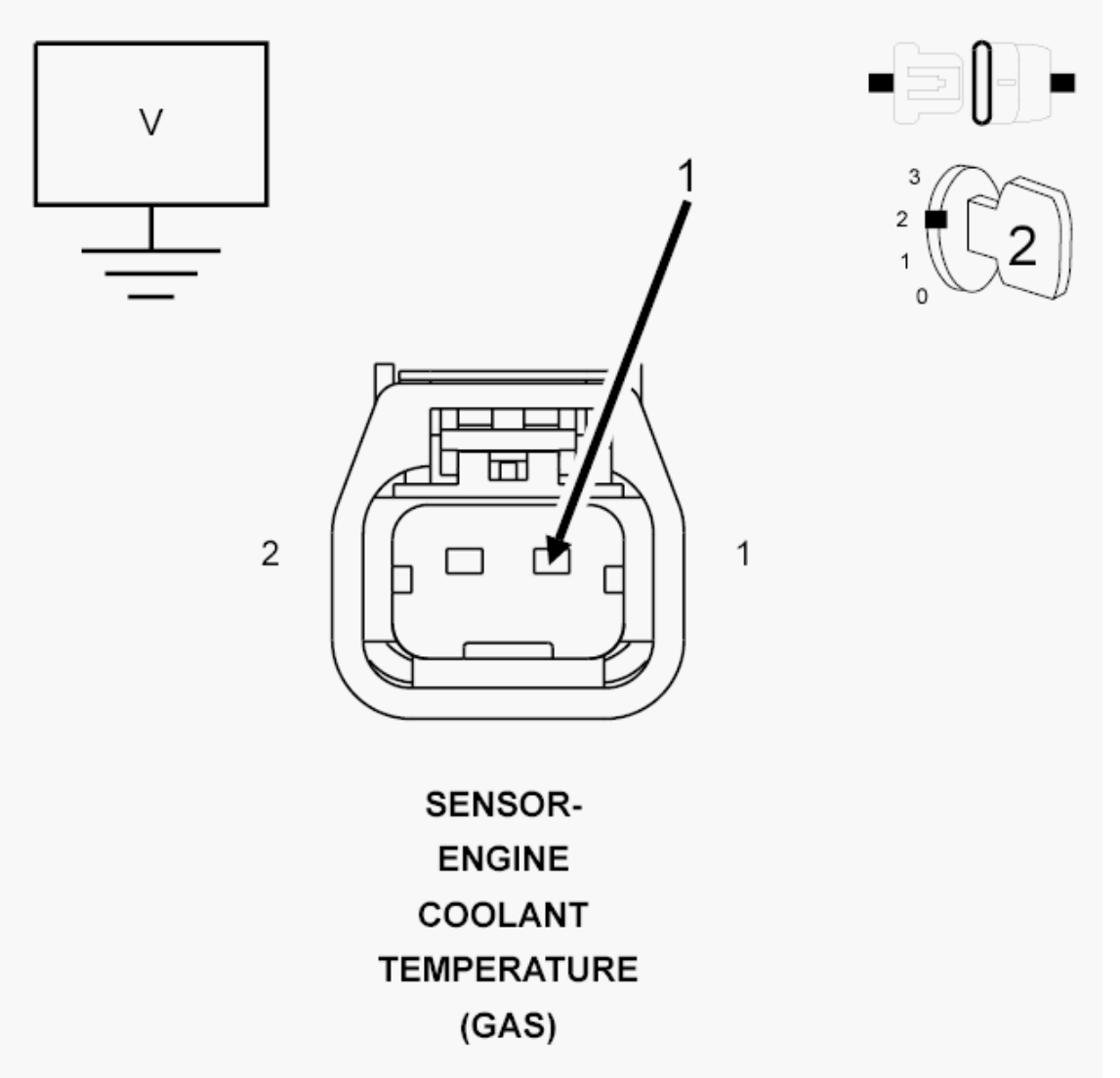

Fig. 70: Measuring Voltage On ECT Signal Circuit In ECT Sensor Harness Connector
Courtesy of CHRYSLER GROUP, LLC

1. Turn the ignition off.
2. Disconnect the C2 PCM harness connector.

3. Ignition on, engine not running.
4. Measure the voltage on the (K2) ECT Signal circuit in the ECT Sensor harness connector.

   Is there any voltage present?

   Yes

   - Repair the short to voltage in the (K2) ECT Signal circuit.
   - Perform the POWERTRAIN VERIFICATION TEST. Refer to **POWERTRAIN VERIFICATION TEST** .

   No

   - Go To 6.

6. **(K2) ECT SIGNAL CIRCUIT OPEN**

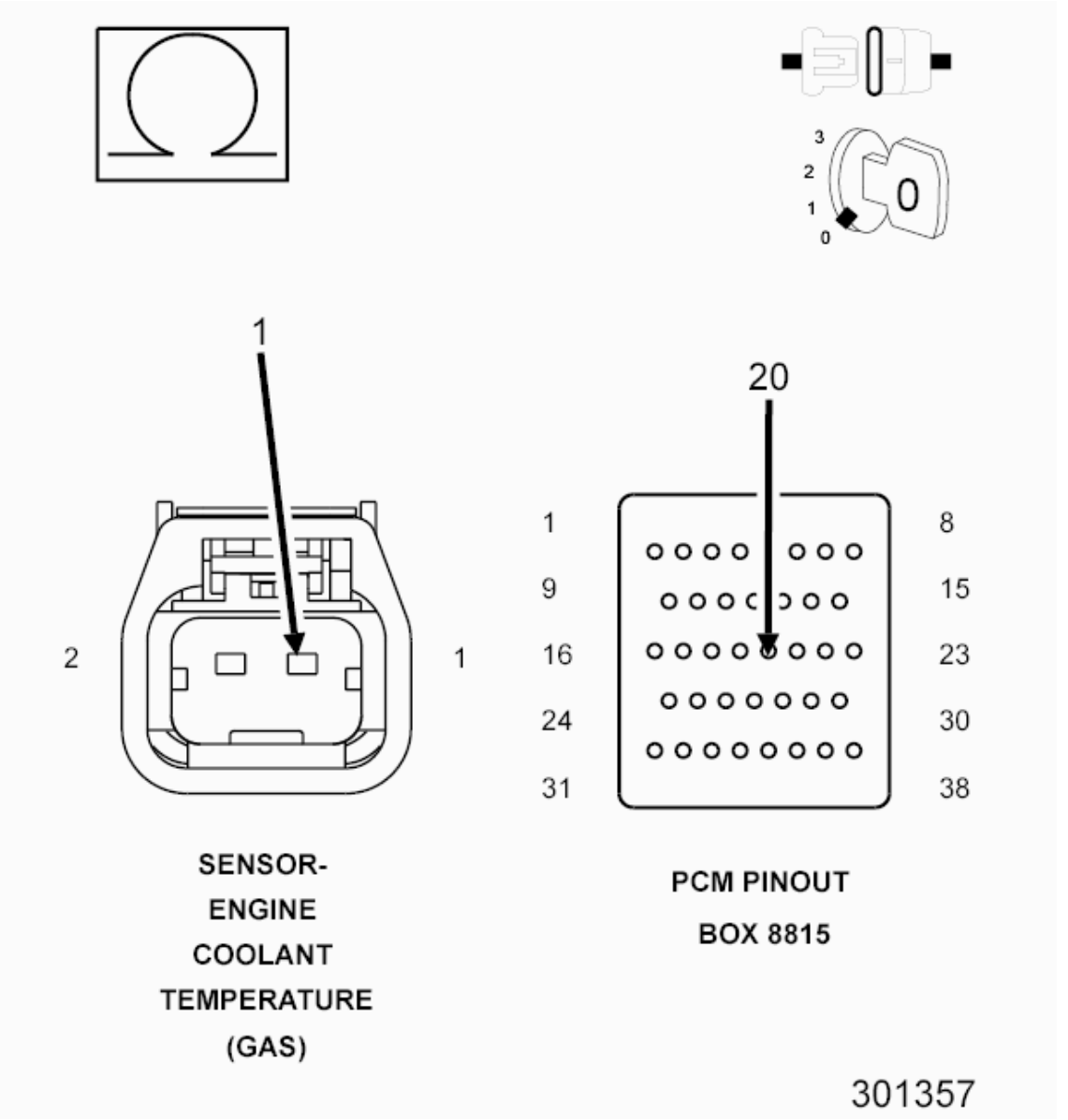

Fig. 71: Measuring Resistance Of ECT Signal Circuit From ECT Sensor Harness Connector To Appropriate Terminal Of Special Tool #8815
Courtesy of CHRYSLER GROUP, LLC

1. Turn the ignition off.

CAUTION: Do not probe the PCM harness connectors. Probing the PCM harness connectors will damage the PCM terminals resulting in poor terminal to pin connection. Install the PCM Pinout Box (special tool #8815A, Kit, NGC, 38 Position) to perform diagnosis.

2. Measure the resistance of the (K2) ECT Signal circuit from the ECT Sensor harness connector to the appropriate terminal of the PCM Pinout Box (special tool #8815A, Kit, NGC, 38 Position).

Is the resistance below 5.0 Ohms?

Yes

- Go To 7.

No

- Repair the open in the (K2) ECT Signal circuit.
- Perform the POWERTRAIN VERIFICATION TEST. Refer to **POWERTRAIN VERIFICATION TEST** .

7. **(K900) SENSOR GROUND CIRCUIT OPEN**

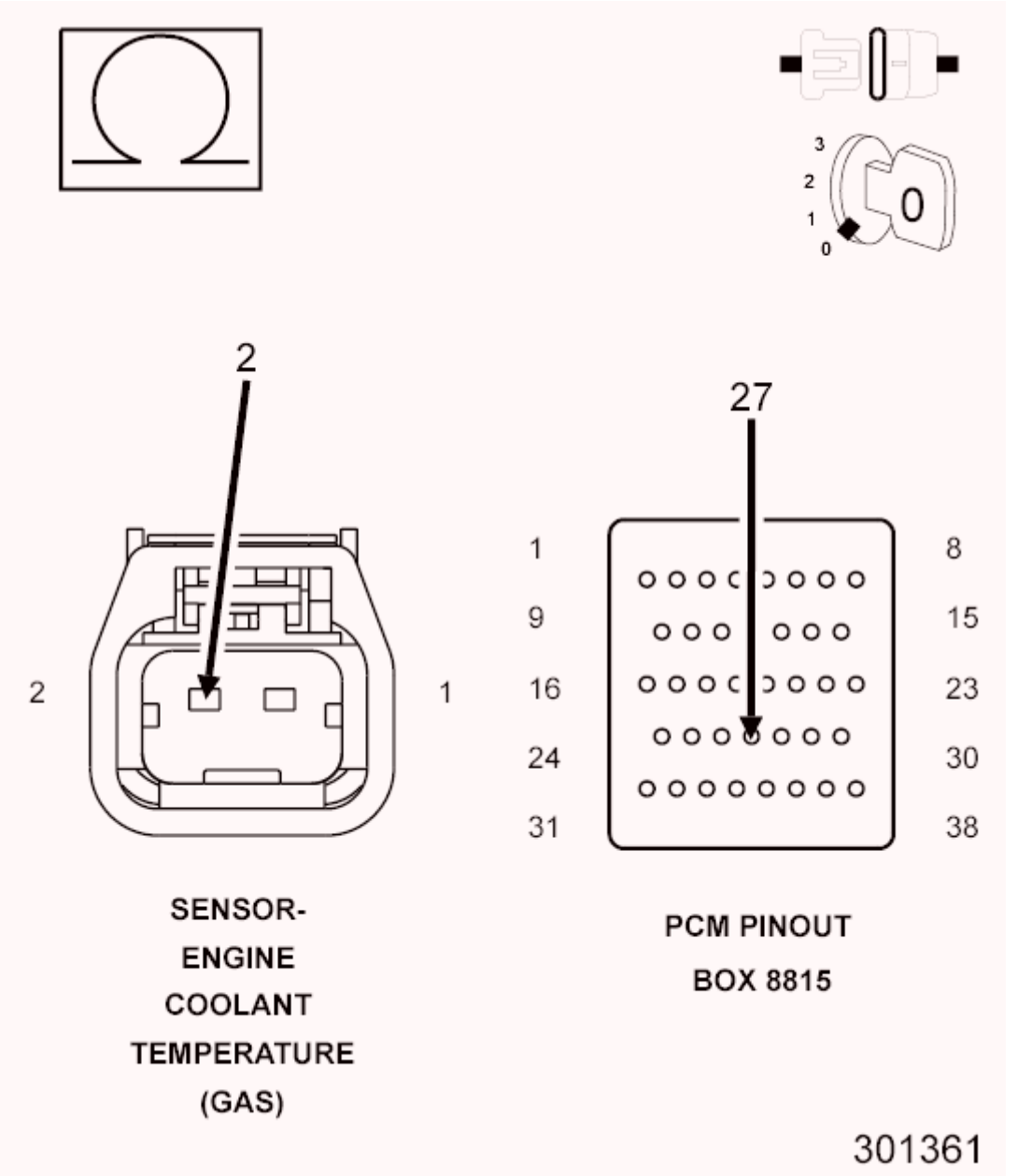

Fig. 72: Measuring Resistance Of Sensor Ground Circuit From ECT Sensor Harness Connector To Appropriate Terminal Of Special Tool #8815
Courtesy of CHRYSLER GROUP, LLC

1. Measure the resistance of the (K900) Sensor ground circuit from the ECT Sensor harness connector to the appropriate terminal the PCM Pinout Box (special tool #8815A, Kit, NGC, 38 Position).

   Is the resistance below 5.0 Ohms?

   Yes

   - Go To 8.

No

- Repair the open in the (K900) Sensor ground circuit.
- Perform the POWERTRAIN VERIFICATION TEST. Refer to **POWERTRAIN VERIFICATION TEST** .

8. **(K2) ECT SIGNAL CIRCUIT SHORTED TO GROUND**

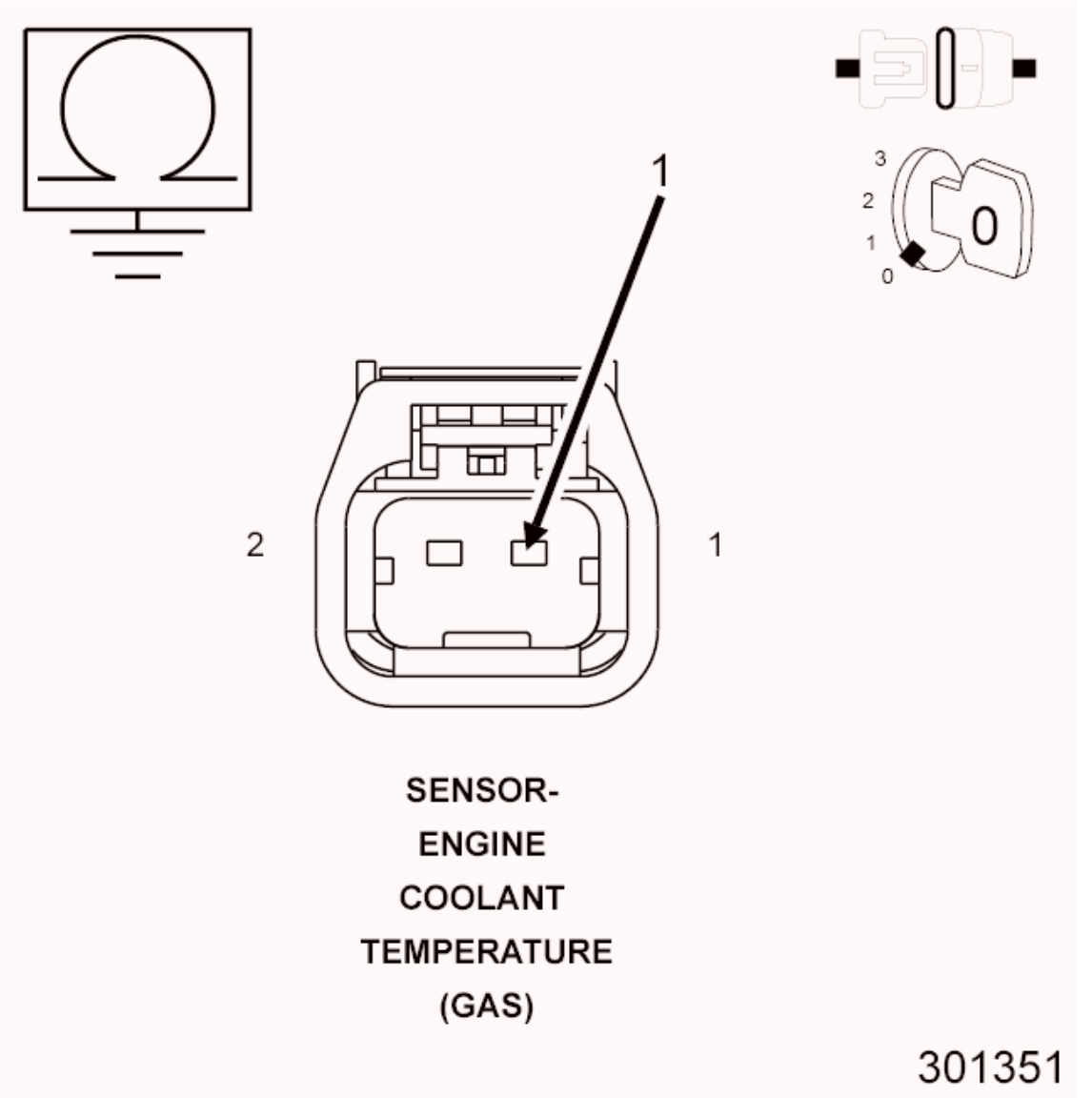

Fig. 73: Measuring Resistance Between Ground And Sensor Signal Circuit At ECT Sensor Harness Connector
Courtesy of CHRYSLER GROUP, LLC

1. Measure the resistance between ground and the (K2) ECT Signal circuit in the ECT Sensor harness connector.

   Is the resistance below 100 Ohms?

Yes

- Repair the short to ground in the (K2) ECT Signal circuit.
- Perform the POWERTRAIN VERIFICATION TEST. Refer to **POWERTRAIN VERIFICATION TEST** .

No

- Go To 9.

9. **(K2) ECT SIGNAL CIRCUIT SHORTED TO THE (K900) SENSOR GROUND CIRCUIT**

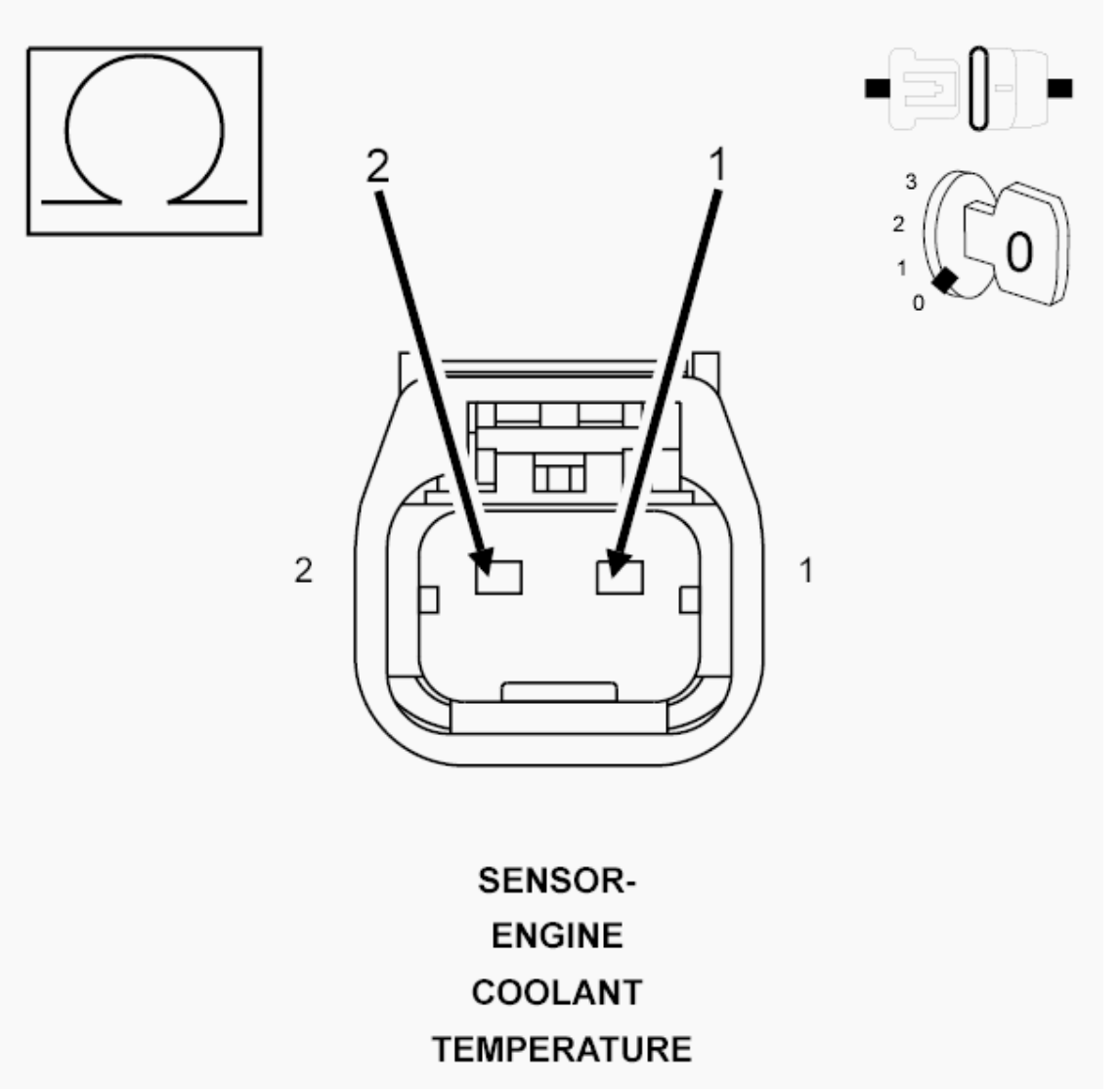

Fig. 74: Measuring Resistance Between Signal Circuit And Sensor Ground Circuit In ECT Sensor Harness Connector
Courtesy of CHRYSLER GROUP, LLC

1. Measure the resistance between the (K2) ECT Signal circuit and the (K900) Sensor ground circuit

in the ECT Sensor harness connector.

Is the resistance below 5.0 Ohms?

Yes

- Repair the short between the (K900) Sensor ground and the (K2) ECT Signal circuit.
- Perform the POWERTRAIN VERIFICATION TEST. Refer to **POWERTRAIN VERIFICATION TEST** .

No

- Go To 10.

10. **POWERTRAIN CONTROL MODULE (PCM)**
    1. Using the wiring diagram/schematic as a guide, inspect the wiring and connectors between the related Sensor and the Powertrain Control Module (PCM).
    2. Look for any chafed, pierced, pinched or partially broken wires.
    3. Look for broken, bent, pushed out or corroded terminals. Verify that there is good pin to terminal contact in the related Sensor and the Powertrain Control Module connectors.
    4. Perform any Technical Service Bulletins that may apply.

    Were there any problems found?

    Yes

    - Repair as necessary.
    - Perform the POWERTRAIN VERIFICATION TEST. Refer to **POWERTRAIN VERIFICATION TEST** .

    No

    - Replace and program the Powertrain Control Module in accordance with the Service Information.
    - Perform the POWERTRAIN VERIFICATION TEST. Refer to **POWERTRAIN VERIFICATION TEST** .

P2245-O2 SENSOR 1/1, 2/1 REFERENCE VOLTAGE CIRCUIT LOW

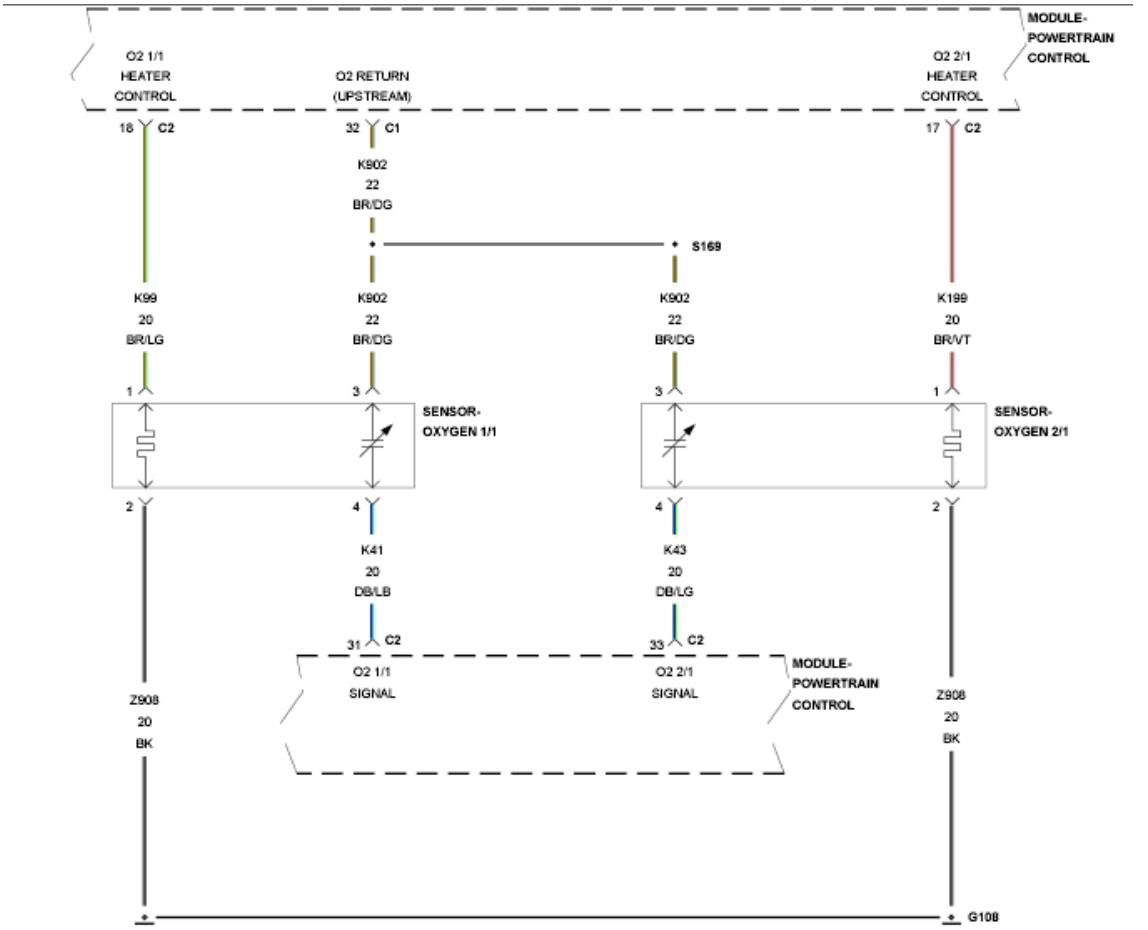

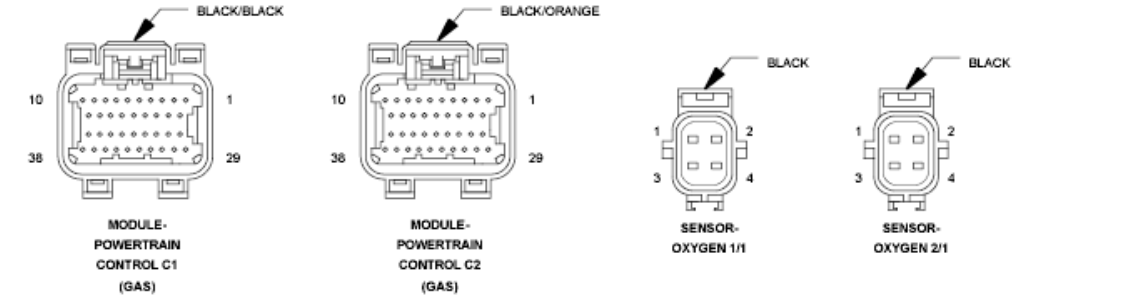

Fig. 75: O2 Sensor 1/1 & 2/1 Wiring Diagram
Courtesy of CHRYSLER GROUP, LLC

For a complete wiring diagram, **refer to appropriate SYSTEM WIRING DIAGRAMS article** .

THEORY OF OPERATION

The Oxygen sensors (O2 sensor) are used for fuel control and catalyst monitoring. Each O2 sensor compares the oxygen content of the surrounding air with the oxygen content of the exhaust stream. When the engine is started, the Powertrain Control Module (PCM) operates in an Open Loop mode, ignoring the O2 sensor signal voltage while calculating the air-to-fuel ratio. The heating elements inside each O2 sensor heat the sensor to bring the sensor up to operating conditions faster. This allows the system to enter Closed Loop earlier and the PCM to calculate the air-to-fuel ratio sooner. While the engine runs, the O2 sensor heats up and begins to generate a voltage within a range of 0-1, 275 mV. Once sufficient O2 sensor voltage fluctuation is observed by the PCM, Closed Loop is entered. The PCM uses the O2 sensor voltage to determine the air-to-fuel ratio. An O2 sensor voltage that increases toward 1, 000 mV indicates a rich fuel mixture. An O2 sensor voltage that decreases toward 0 mV indicates a lean fuel mixture.

WHEN MONITORED:

Continuously after 15 seconds of engine runtime, no O2 sensor heater DTCs present and battery voltage greater than 10.4 Volts.

SET CONDITION:

The Oxygen Sensor reference voltage is below 0.9 of a Volt for 60 seconds. The DTC will set as Pending after one trip and Active after two trips. Three good trips to turn off the MIL.

POSSIBLE CAUSES

Possible Causes
(K902) O2 RETURN (UPSTREAM) CIRCUIT SHORTED TO GROUND
O2 SENSOR
POWERTRAIN CONTROL MODULE (PCM)

Always perform the Pre-Diagnostic Troubleshooting procedure before proceeding. Refer to PRE-DIAGNOSTIC TROUBLESHOOTING PROCEDURE .

DIAGNOSTIC TEST

1. **ACTIVE DTC**

NOTE: The most likely cause of this DTC is (K902) O2 Return circuit shorted to ground

1. Ignition on, engine not running.
2. With the scan tool, select View DTCs. Copy DTC and Freeze Frame information.
3. Start the engine.

WARNING: When the engine is operating, do not stand in direct line with the fan. Do not put your hands near the pulleys, belts or fan. Do not wear loose clothing. Failure to follow these instructions may result in possible serious or fatal injury.

4. Allow the engine to reach normal operating temperature.
5. Monitor the scan tool for at least two minutes.
6. With the scan tool, select View DTCs.

   Is the status Active for this DTC?

   Yes

   - Go To 2.

   No

   - Perform the INTERMITTENT CONDITION diagnostic procedure. Refer to **INTERMITTENT CONDITION** .

2. **(K902) O2 RETURN (UPSTREAM) CIRCUIT SHORTED TO GROUND**

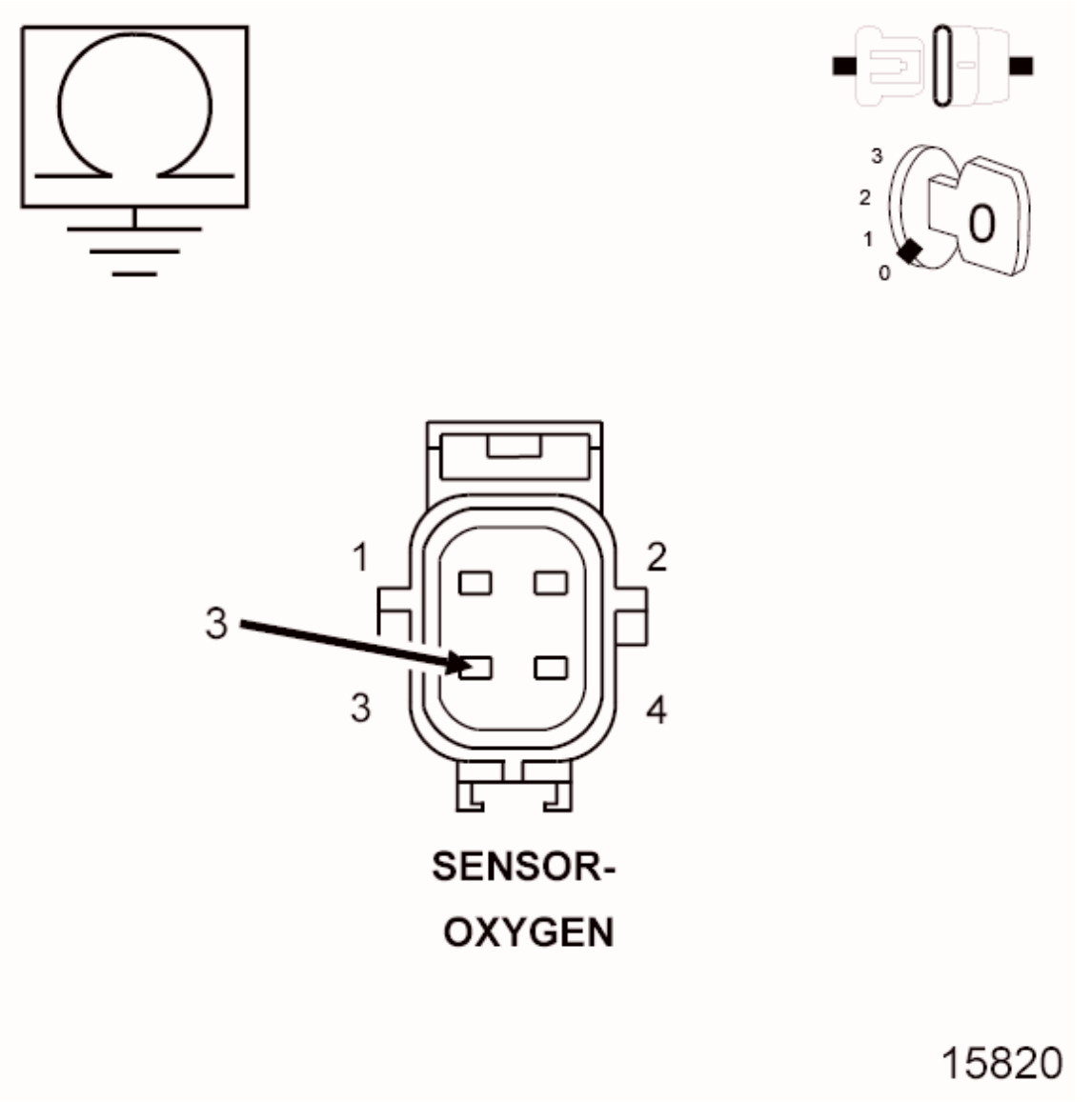

Fig. 76: Measuring Resistance Between Ground And O2 Sensor Return Circuit In O2 Sensor Harness Connector
Courtesy of CHRYSLER GROUP, LLC

1. Turn the ignition off.
2. Disconnect the C1 and C2 PCM harness connectors.
3. Disconnect the 1/1 O2 Sensor harness connector.
4. Disconnect the 1/2 O2 Sensor harness connector.
5. Measure the resistance between ground and the (K902) O2 Return (Upstream) circuit reference voltage circuit at the O2 Sensor 1/1 or 1/2 harness connector.

   Is the resistance below 10k Ohms?

   Yes

- Repair the (K902) (K902) O2 Return (Upstream) circuit for a short to ground.
- Perform the POWERTRAIN VERIFICATION TEST. Refer to **POWERTRAIN VERIFICATION TEST** .

No

- Go To

3. **1/1 OR 1/2 O2 SENSOR**

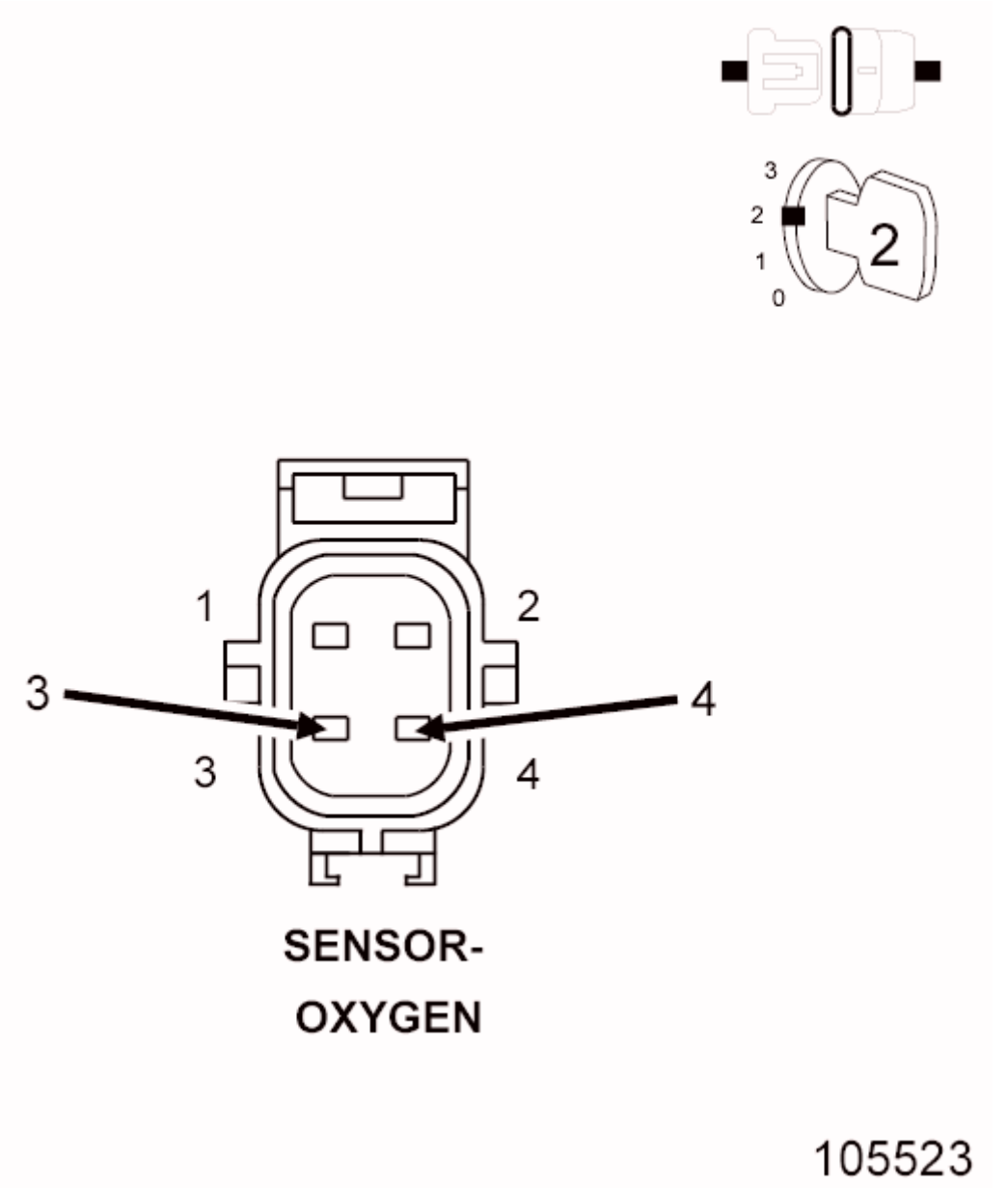

Fig. 77: O2 Sensor Harness Connector
Courtesy of CHRYSLER GROUP, LLC

1. Turn the ignition off.
2. Connect the C1 and C2 PCM harness connectors.
3. Ignition on, engine not running.
4. With the scan tool, monitor the 1/1 and 1/2 O2 Sensor voltage.
5. Connect a jumper wire between the (K41) O2 1/1 Signal circuit and the (K902) (K902) O2 Return (Upstream) circuit in the O2 Sensor harness connector.
6. Repeat step 5 for the (K141) O2 Sensor 1/2 Signal circuit

   Is the voltage between 2.3 and 2.7 Volts with the jumper wire installed?

   Yes

   - Verify that there is good pin to terminal contact in the O2 Sensor and Powertrain Control Module connectors. Replace the O2 Sensor not indicating the specified voltage if no problems were found with the connections. Refer to **SENSOR, OXYGEN, REMOVAL** .
   - Perform the POWERTRAIN VERIFICATION TEST. Refer to **POWERTRAIN VERIFICATION TEST** .

   No

   - Go To 4.

   NOTE: Remove the jumper wire before continuing.

4. **POWERTRAIN CONTROL MODULE (PCM)**
   1. Using the wiring diagram/schematic as a guide, inspect the wiring and connectors between the Oxygen Sensors and the Powertrain Control Module (PCM).
   2. Look for any chafed, pierced, pinched or partially broken wires.
   3. Look for broken, bent, pushed out or corroded terminals. Verify that there is good pin to terminal contact in the Sensor and Control Module connectors.
   4. Perform any Technical Service Bulletins that may apply.

      Were there any problems found?

      Yes

      - Repair as necessary.
      - Perform the POWERTRAIN VERIFICATION TEST. Refer to **POWERTRAIN VERIFICATION TEST** .

      No

      - Replace and program the Powertrain Control Module in accordance with the Service Information.

- Perform the POWERTRAIN VERIFICATION TEST. Refer to **POWERTRAIN VERIFICATION TEST** .

P2246-O2 SENSOR 1/1, 2/1 REFERENCE VOLTAGE CIRCUIT HIGH

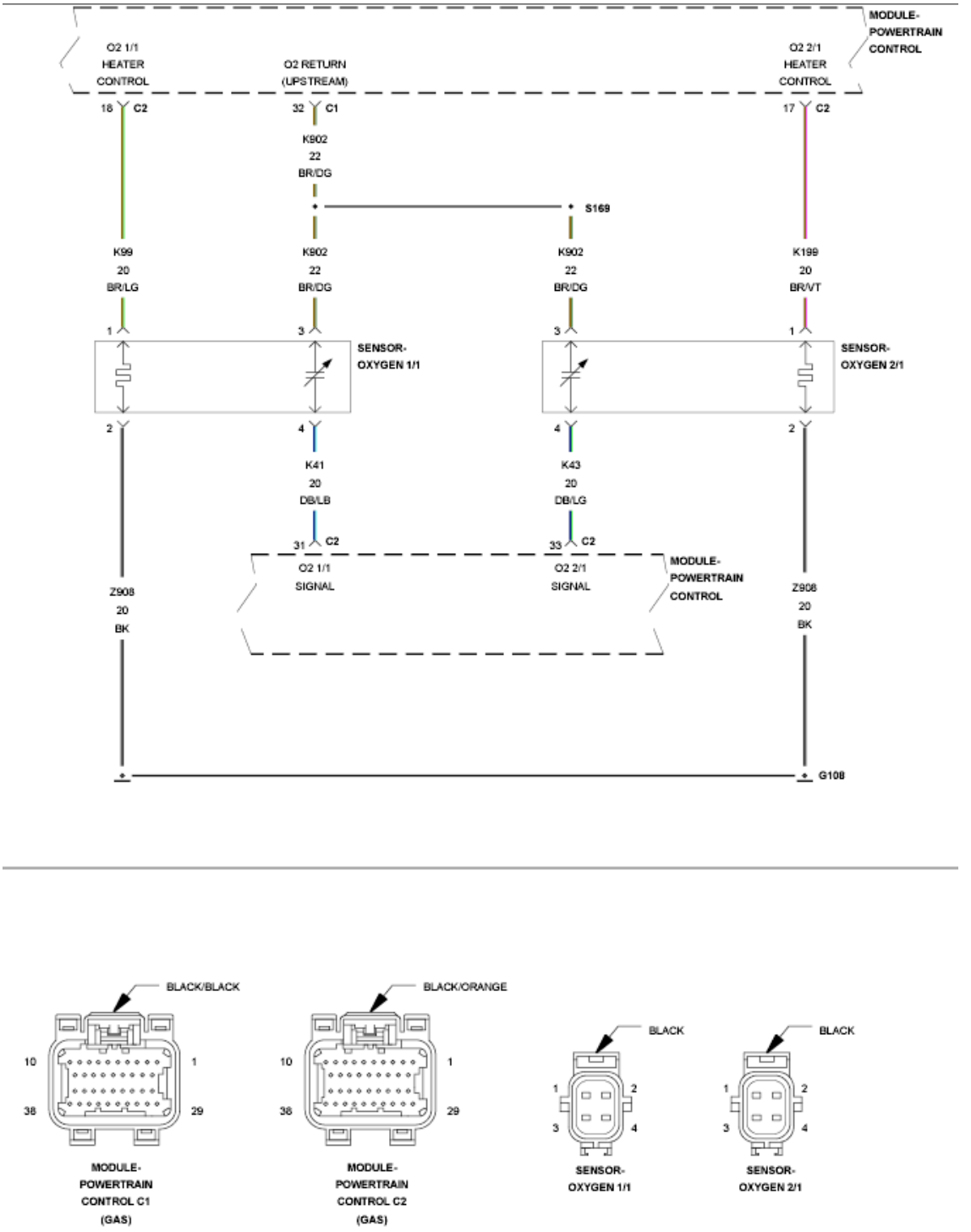

Fig. 78: O2 Sensor 1/1 & 2/1 Wiring Diagram

Courtesy of CHRYSLER GROUP, LLC

For a complete wiring diagram, **refer to appropriate SYSTEM WIRING DIAGRAMS article** .

THEORY OF OPERATION

The Oxygen sensors (O2 sensor) are used for fuel control and catalyst monitoring. Each O2 sensor compares the oxygen content of the surrounding air with the oxygen content of the exhaust stream. When the engine is started, the Powertrain Control Module (PCM) operates in an Open Loop mode, ignoring the O2 sensor signal voltage while calculating the air-to-fuel ratio. The heating elements inside each O2 sensor heat the sensor to bring the sensor up to operating conditions faster. This allows the system to enter Closed Loop earlier and the PCM to calculate the air-to-fuel ratio sooner. While the engine runs, the O2 sensor heats up and begins to generate a voltage within a range of 0-1, 275 mV. Once sufficient O2 sensor voltage fluctuation is observed by the PCM, Closed Loop is entered. The PCM uses the O2 sensor voltage to determine the air-to-fuel ratio. An O2 sensor voltage that increases toward 1, 000 mV indicates a rich fuel mixture. An O2 sensor voltage that decreases toward 0 mV indicates a lean fuel mixture.

WHEN MONITORED:

Engine running for 15 seconds, O2 Sensors at operating temperature and battery voltage greater 10.4 Volts.

SET CONDITION:

The PCM detects that the (K902) Reference Signal voltage is greater than 3.9 Volts for nine seconds.

POSSIBLE CAUSES

Possible Causes
(K902) O2 REFERENCE SIGNAL CIRCUIT SHORTED TO VOLTAGE
(K902) O2 REFERENCE SIGNAL CIRCUIT OPEN OR HIGH RESISTANCE
OXYGEN SENSOR
POWERTRAIN CONTROL MODULE (PCM)

Always perform the Pre-Diagnostic Troubleshooting procedure before proceeding. Refer to PRE-DIAGNOSTIC TROUBLESHOOTING PROCEDURE .

DIAGNOSTIC TEST

1. **DTC IS ACTIVE**
    1. Ignition on, engine not running.
    2. With the scan tool, select View DTCs. Copy DTC and Freeze Frame information.
    3. Start the engine.

WARNING: **When the engine is operating, do not stand in direct line with the fan. Do not put your hands near the pulleys, belts or fan. Do not wear loose clothing. Failure to follow these instructions**

may result in possible serious or fatal injury.

4. Allow the engine to reach normal operating temperature.
5. Monitor the scan tool for at least two minutes.
6. With the scan tool, select View DTCs.

   Is the status Active for this DTC?

   Yes

   - Go To 2.

   No

   - Perform the INTERMITTENT CONDITION diagnostic procedure. Refer to **INTERMITTENT CONDITION** .

2. **(K902) O2 REFERENCE SIGNAL CIRCUIT SHORTED TO VOLTAGE**

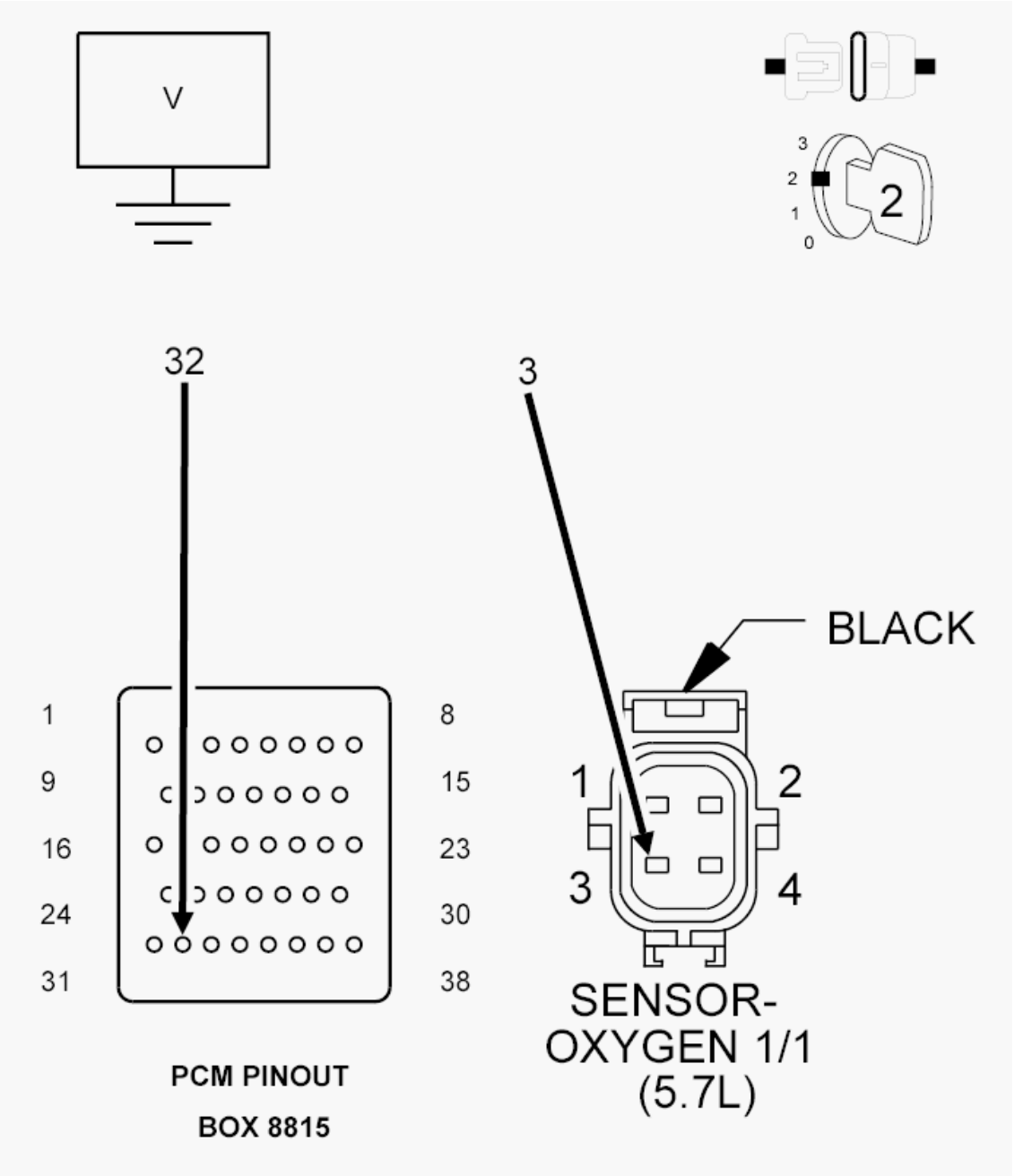

Fig. 79: Checking O2 Sensor Reference Signal Circuit For Short To Voltage
Courtesy of CHRYSLER GROUP, LLC

1. Turn the ignition off.
2. Disconnect the Oxygen Sensor harness connector.
3. Disconnect the PCM harness connector.
4. Turn the ignition on.
5. Measure the voltage of the (K902) O2 Reference Signal circuit in the Oxygen Sensor harness connector.

Is there any voltage present?

Yes

- Repair the (K902) O2 Reference Signal circuit for a short to voltage.
- Perform the POWERTRAIN VERIFICATION TEST. Refer to **POWERTRAIN VERIFICATION TEST** .

No

- Go To 3.

3. **(K902) O2 REFERENCE SIGNAL CIRCUIT OPEN OR HIGH RESISTANCE**

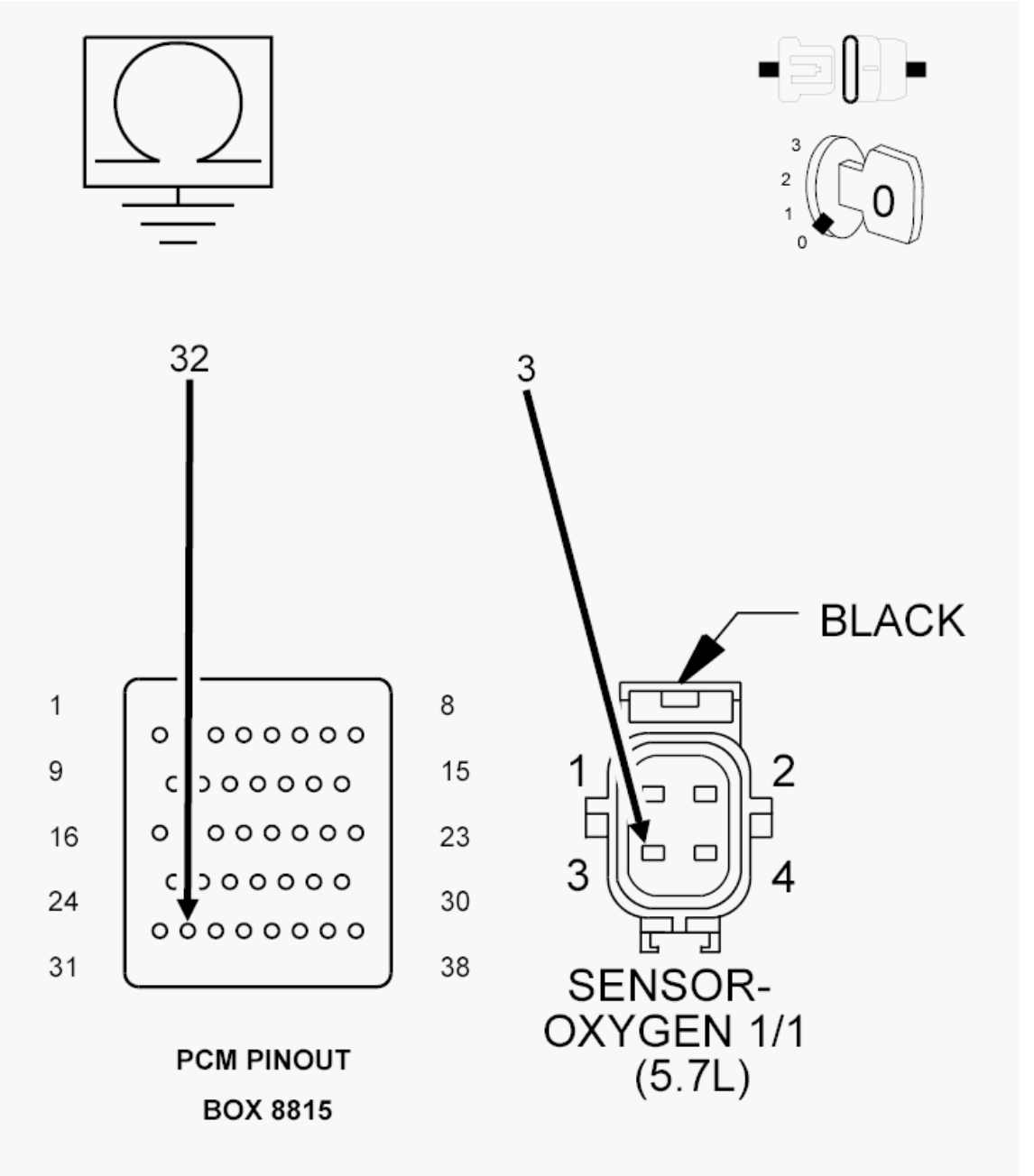

Fig. 80: Checking O2 Sensor Reference Signal Circuit For An Open Or High Resistance
Courtesy of CHRYSLER GROUP, LLC

CAUTION: Do not probe the PCM harness connectors. Probing the PCM harness connectors will damage the PCM terminals resulting in poor terminal to pin connection. Install the PCM Pinout Box (special tool #8815A, Kit, NGC, 38 Position) to perform diagnosis.

1. Measure the resistance of the (K902) O2 Reference Signal circuit between the Oxygen Sensor harness connector and the PCM harness connector.

Is the resistance below 10.0 Ohms?

Yes

- Go To 4.

No

- Repair the (K902) 02 1/1 Reference Signal circuit for an open circuit or high resistance.
- Perform the POWERTRAIN VERIFICATION TEST. Refer to **POWERTRAIN VERIFICATION TEST** .

4. **O2 SENSOR**

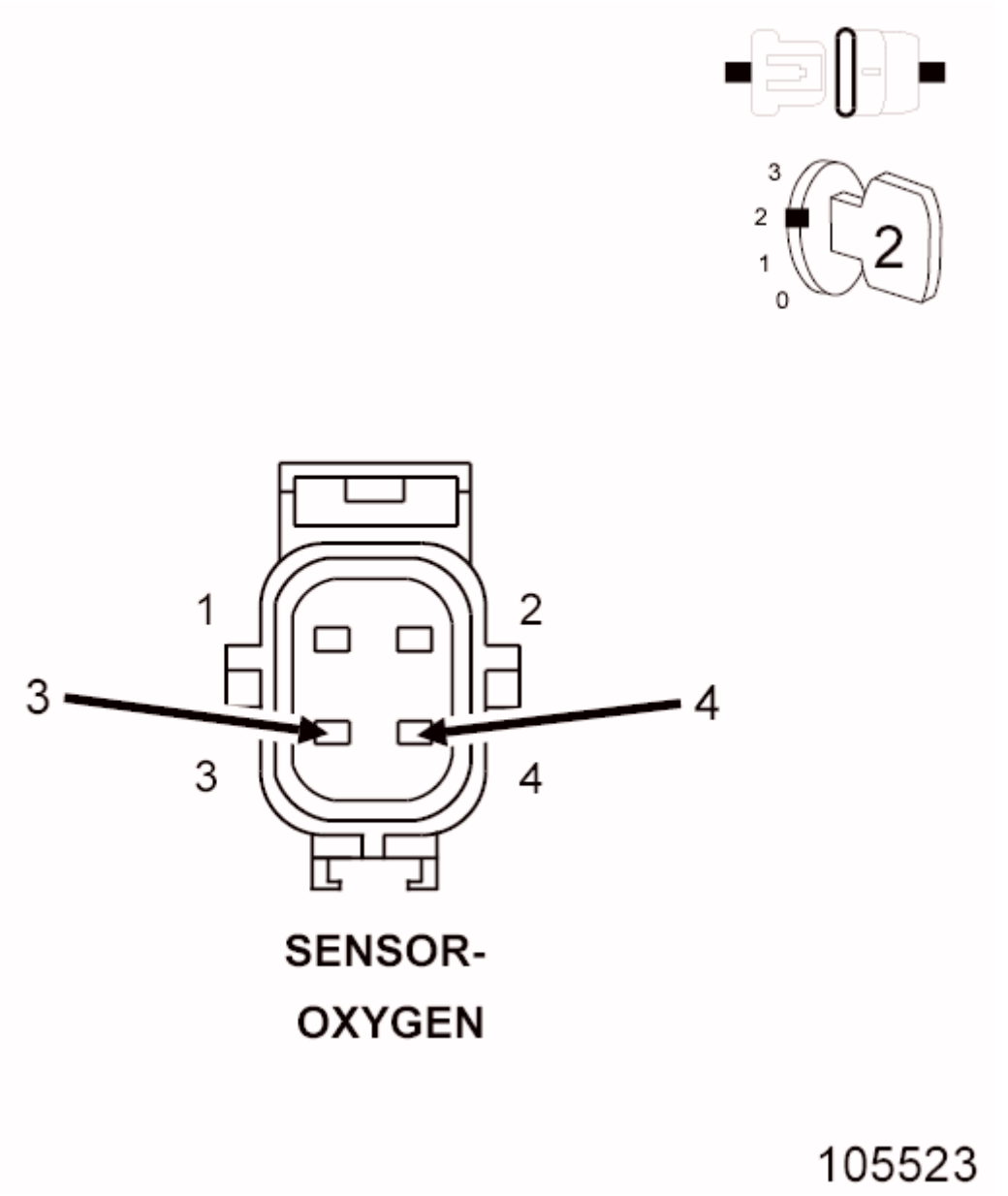

Fig. 81: O2 Sensor Harness Connector
Courtesy of CHRYSLER GROUP, LLC

1. Turn the ignition off.
2. Connect the PCM harness connector.
3. Ignition on, engine not running.
4. With the scan tool, monitor the 1/1 O2 Sensor voltage.
5. Connect a jumper wire between the (K41) O2 1/1 Signal circuit and the (K902) O2 Reference voltage Circuit in the O2 Sensor harness connector.

   Is the voltage between 2.3 and 2.7 Volts with the jumper wire installed?

   Yes

   - Verify that there is good pin to terminal contact in the O2 Sensor and Powertrain Control Module connectors. Replace the 1/1 O2 Sensor in accordance with the Service Information if no problems were found with the connectors. Refer to **SENSOR, OXYGEN, REMOVAL** .
   - Perform the POWERTRAIN VERIFICATION TEST. Refer to **POWERTRAIN VERIFICATION TEST** .

   No

   - Go To 5.

   NOTE: Remove the jumper wire before continuing.

5. **POWERTRAIN CONTROL MODULE**
   1. Using the wiring diagram/schematic as a guide, inspect the wiring and connectors between the Oxygen Sensor and the PCM.
   2. Look for any chafed, pierced, pinched or partially broken wires.
   3. Look for broken, bent, pushed out or corroded terminals.
   4. Monitor the scan tool data relative to this circuit and wiggle test the wiring and connectors.
   5. Look for the data to change or for the DTC to reset during the wiggle test.
   6. Perform any Technical Service Bulletins that may apply.

   Were any problems found?

   Yes

   - Repair as necessary.
   - Perform the POWERTRAIN VERIFICATION TEST. Refer to **POWERTRAIN VERIFICATION TEST** .

   No

- Replace the Powertrain Control Module in accordance with the Service Information.
- Perform the POWERTRAIN VERIFICATION TEST. Refer to **POWERTRAIN VERIFICATION TEST** .

P2271-O2 SENSOR 1/2 SIGNAL STUCK RICH

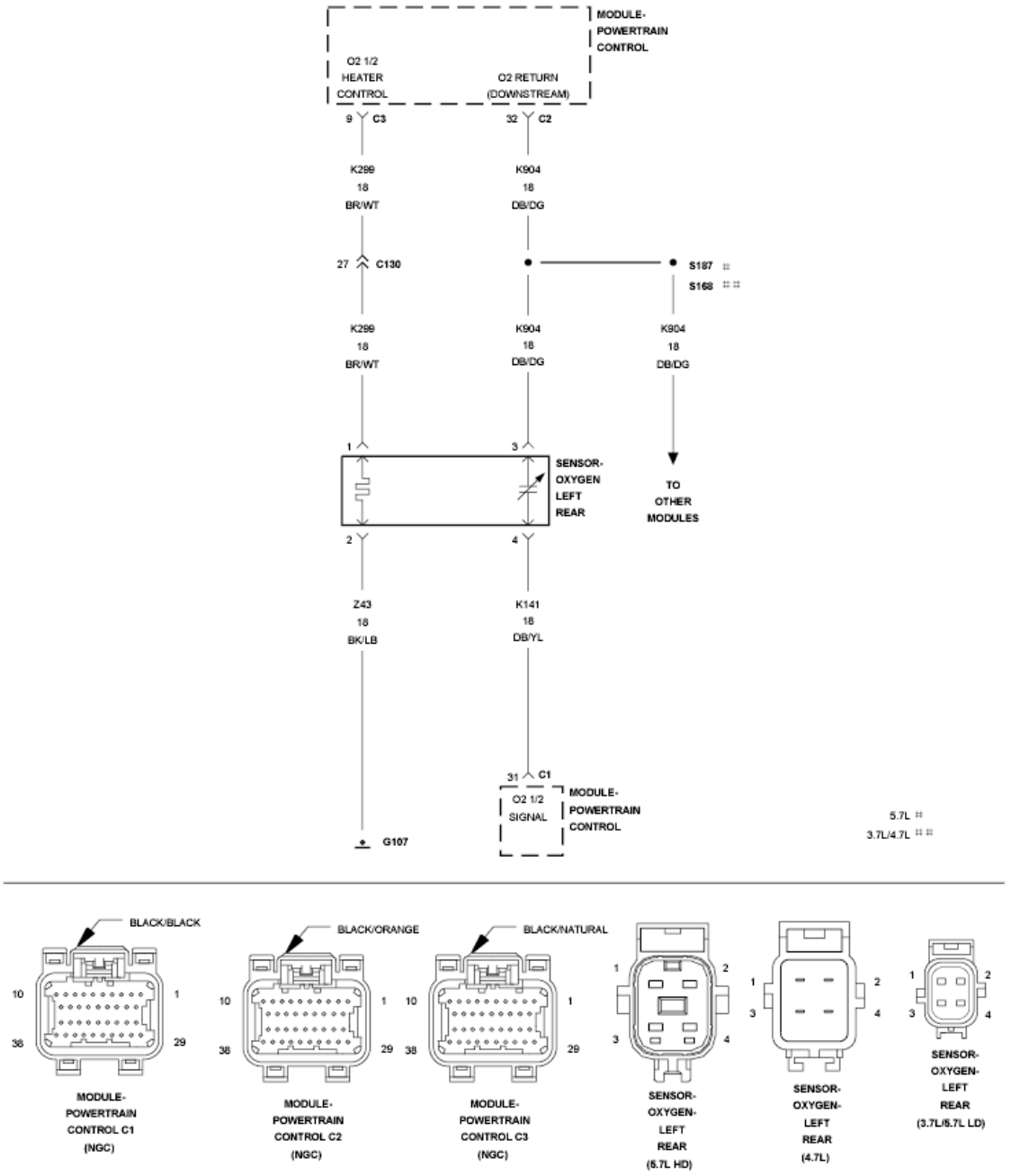

Fig. 82: Left Rear Oxygen Sensor Circuit Schematic
Courtesy of CHRYSLER GROUP, LLC

For a complete wiring diagram, **refer to appropriate SYSTEM WIRING DIAGRAMS article** .

WHEN MONITORED:

With the engine running, vehicle speed above 96 kph (60 mph), throttle open for a minimum of 120 seconds, ECT greater than 70° C (158° F), catalytic converter temperature greater than 600° C (1112° F), and downstream oxygen sensor in a rich state. During a decel fuel shutoff event, the downstream oxygen sensor should switch from rich to lean within a specific time.

SET CONDITION:

The PCM monitors the downstream O2 sensor. If the PCM does not detect a rich to lean switch within a specific time during a decel fuel shutoff event, the monitor will fail. Two trip fault. Three good trips to turn off the MIL.

POSSIBLE CAUSES

Possible Causes
OXYGEN SENSOR WIRING OR CONNECTORS
O2 SENSOR SIGNAL CIRCUIT
O2 SENSOR RETURN CIRCUIT
1/2 O2 SENSOR
POWERTRAIN CONTROL MODULE (PCM)

Always perform the Pre-Diagnostic Troubleshooting procedure before proceeding. Refer to PRE-DIAGNOSTIC TROUBLESHOOTING PROCEDURE .

DIAGNOSTIC TEST

1. **DTC IS ACTIVE**
   1. Start the engine and allow it to reach operating temperature.

      WARNING: When the engine is operating, do not stand in direct line with the fan. Do not put your hands near the pulleys, belts or fan. Do not wear loose clothing. Failure to follow these instructions may result in possible serious or fatal injury.

      NOTE: It may be necessary to test drive the vehicle within the DTC monitoring conditions in order for this DTC to set.

   2. With a scan tool, select View DTCs.

      Is the DTC Active at this time?

      Yes

      - Go To 2.

No

- Perform the INTERMITTENT CONDITION Diagnostic Procedure. Refer to **INTERMITTENT CONDITION** .

2. **CHECKING THE OXYGEN SENSOR OPERATION**

NOTE: Check for signs of contaminants that may have damaged the O2 Sensor, such as contaminated fuel, unapproved silicone, oil and coolant.

1. Perform the diagnostic procedure for CHECKING THE OXYGEN SENSOR OPERATION. Refer to **DIAGNOSIS AND TESTING** .

   Were any problems found?

   Yes

   - Repair as necessary.
   - Perform the POWERTRAIN VERIFICATION TEST. Refer to **POWERTRAIN VERIFICATION TEST** .

   No

   - Go To 3.

3. **POWERTRAIN CONTROL MODULE (PCM)**
   1. Using the wiring diagram/schematic as a guide, inspect the wiring and connectors between the 1/2 O2 Sensor and the Powertrain Control Module (PCM).
   2. Look for any chafed, pierced, pinched, or partially broken wires.
   3. Look for broken, bent, pushed out or corroded terminals.
   4. Refer to any Technical Service Bulletins that may apply.

   Were any problems found?

   Yes

   - Repair as necessary.
   - Perform the POWERTRAIN VERIFICATION TEST. Refer to **POWERTRAIN VERIFICATION TEST** .

   No

   - Replace and program the Powertrain Control Module (PCM) in accordance with the Service Information.
   - Perform the POWERTRAIN VERIFICATION TEST. Refer to **POWERTRAIN VERIFICATION TEST** .

P2273-O2 SENSOR 2/2 SIGNAL STUCK RICH

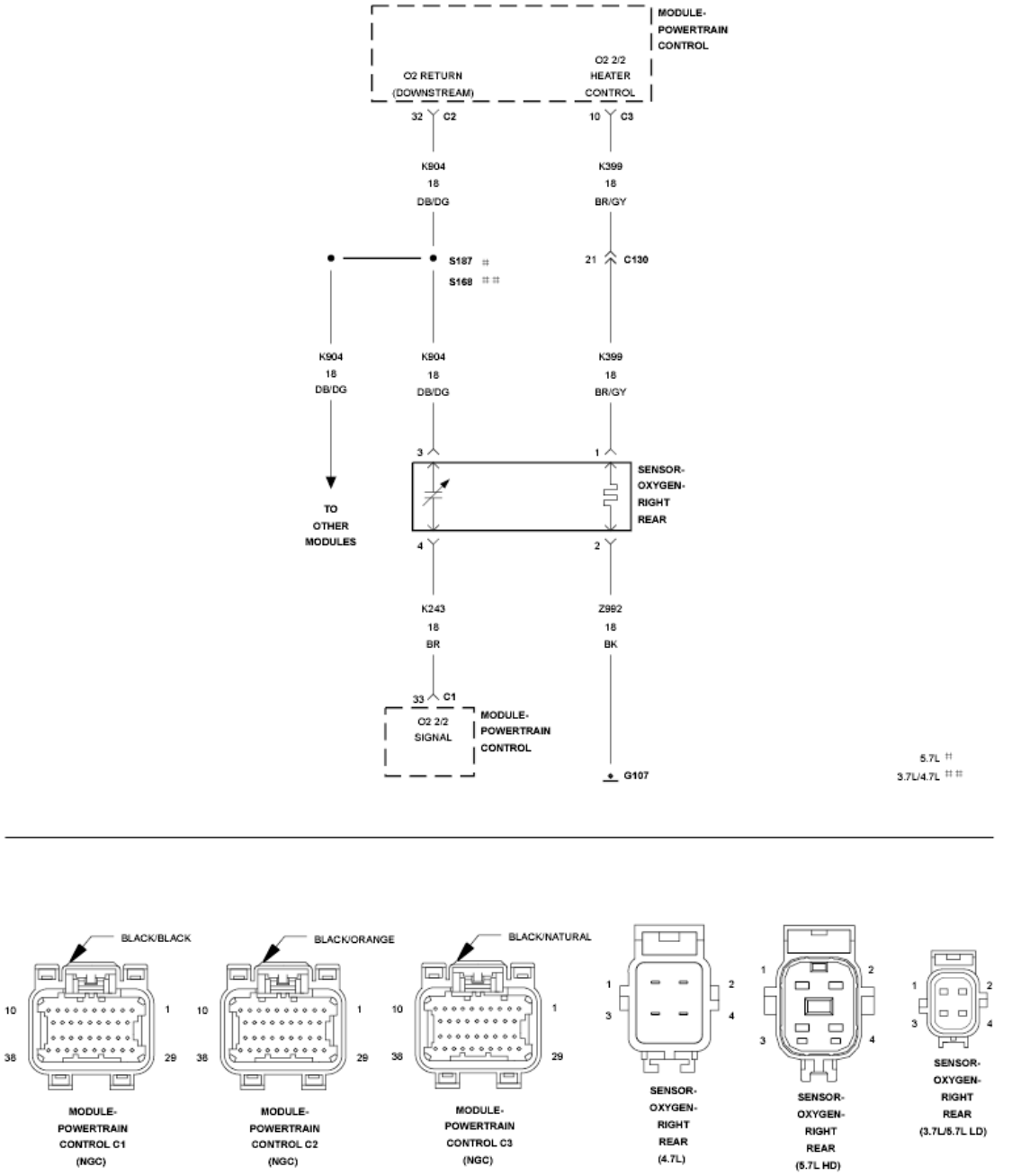

Fig. 83: Right Rear Oxygen Sensor Circuit Schematic
Courtesy of CHRYSLER GROUP, LLC

For a complete wiring diagram, **refer to appropriate SYSTEM WIRING DIAGRAMS article** .

WHEN MONITORED:

With the engine running, vehicle speed above 96 kph (60 mph), throttle open for a minimum of 120 seconds,

ECT greater than 70 C (158 F), catalytic converter temperature greater than 600 C (1112 F), and downstream oxygen sensor in a rich state. During a decel fuel shutoff event, the downstream oxygen sensor should switch from rich to lean within a specific time.

SET CONDITION:

The PCM monitors the downstream O2 sensor. If the PCM does not detect a rich to lean switch within a specific time during a decel fuel shutoff event, the monitor will fail. Two trip fault. Three good trips to turn off the MIL.

POSSIBLE CAUSES

Possible Causes
OXYGEN SENSOR WIRING OR CONNECTORS
O2 SENSOR SIGNAL CIRCUIT
O2 SENSOR RETURN CIRCUIT
2/2 O2 SENSOR
POWERTRAIN CONTROL MODULE (PCM)

Always perform the Pre-Diagnostic Troubleshooting procedure before proceeding. Refer to PRE-DIAGNOSTIC TROUBLESHOOTING PROCEDURE .

DIAGNOSTIC TEST

1. **DTC IS ACTIVE**
    1. Start the engine and allow it to reach operating temperature.

        WARNING: When the engine is operating, do not stand in direct line with the fan. Do not put your hands near the pulleys, belts or fan. Do not wear loose clothing. Failure to follow these instructions may result in possible serious or fatal injury.

        NOTE: It may be necessary to test drive the vehicle within the DTC monitoring conditions in order for this DTC to set.

    2. With a scan tool, select View DTCs.

        Is the DTC Active at this time?

        Yes

        - Go To 2.

        No

        - Perform the INTERMITTENT CONDITION Diagnostic Procedure. Refer to

INTERMITTENT CONDITION .

2. **CHECKING THE OXYGEN SENSOR OPERATION**

NOTE: **Check for signs of contaminants that may have damaged the O2 Sensor, such as contaminated fuel, unapproved silicone, oil and coolant.**

1. Perform the diagnostic procedure for CHECKING THE OXYGEN SENSOR OPERATION. Refer to **DIAGNOSIS AND TESTING** .

   Were any problems found?

   Yes

   - Repair as necessary.
   - Perform the POWERTRAIN VERIFICATION TEST. Refer to **POWERTRAIN VERIFICATION TEST** .

   No

   - Go To 3.

3. **POWERTRAIN CONTROL MODULE (PCM)**
   1. Using the wiring diagram/schematic as a guide, inspect the wiring and connectors between the 2/2 O2 Sensor and the Powertrain Control Module (PCM).
   2. Look for any chafed, pierced, pinched, or partially broken wires.
   3. Look for broken, bent, pushed out or corroded terminals.
   4. Refer to any Technical Service Bulletins that may apply.

   Were any problems found?

   Yes

   - Repair as necessary.
   - Perform the POWERTRAIN VERIFICATION TEST. Refer to **POWERTRAIN VERIFICATION TEST** .

   No

   - Replace and program the Powertrain Control Module (PCM) in accordance with the Service Information.
   - Perform the POWERTRAIN VERIFICATION TEST. Refer to **POWERTRAIN VERIFICATION TEST** .

P2299-BRAKE PEDAL POSITION/ACCELERATOR PEDAL POSITION INCOMPATIBLE

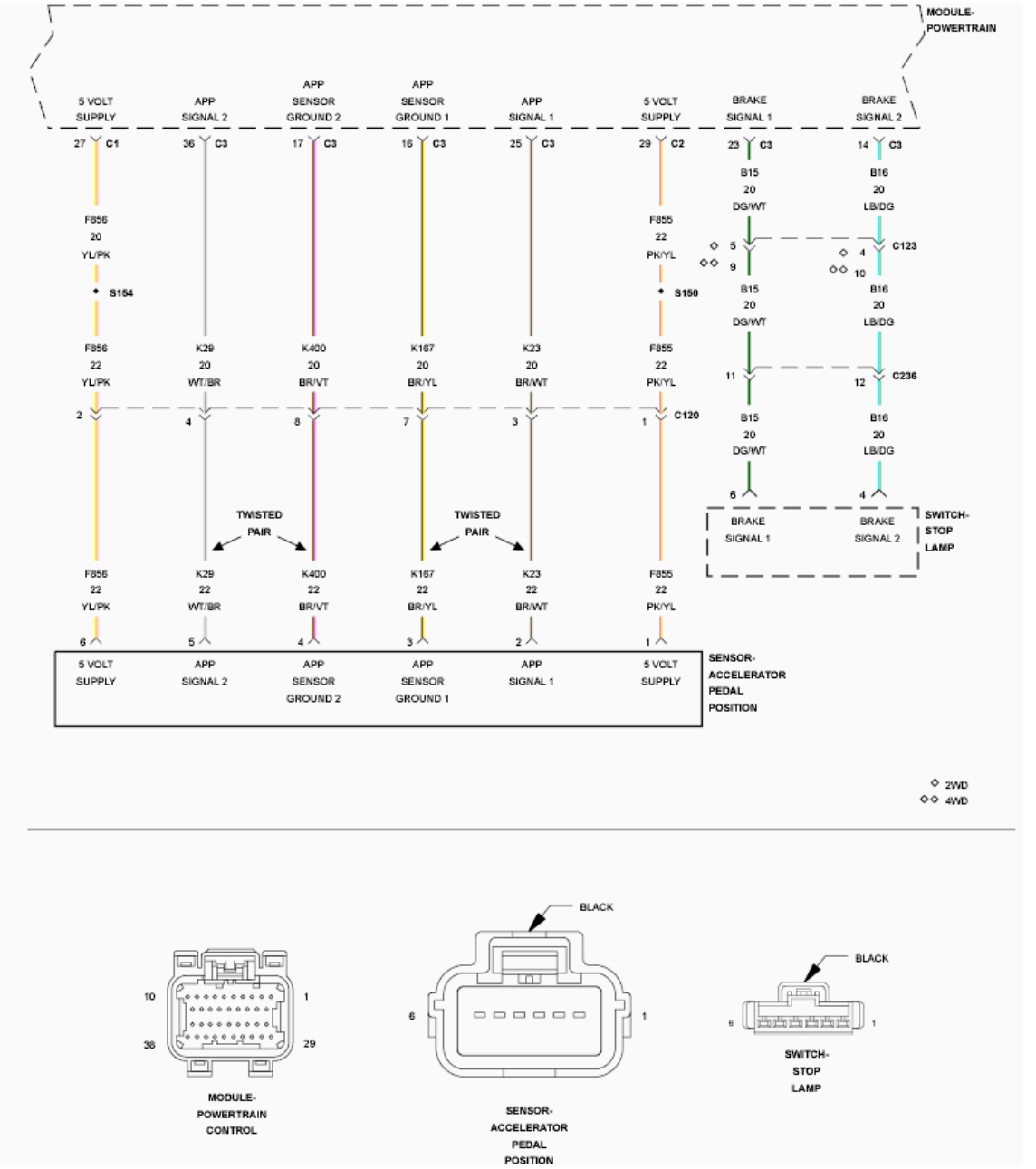

Fig. 84: Brake Pedal Position/Accelerator Pedal Position Sensor Circuit Schematic
Courtesy of CHRYSLER GROUP, LLC

For a complete wiring diagram, **refer to appropriate SYSTEM WIRING DIAGRAMS article** .

WHEN MONITORED:

Ignition on. No Brake or APPS faults present.

SET CONDITION:

The Powertrain Control Module (PCM) recognizes a brake application following the APPS showing a fixed

pedal opening. Temporary or permanent. Internally the PCM will reduce throttle opening below driver demand. One trip fault and the code will be set within five seconds. ETC light will illuminate, the light will only stay illuminated while DTC is active.

POSSIBLE CAUSES

Possible Causes
CUSTOMER PRESSING ACCELERATOR PEDAL, THEN PRESSING BRAKE PEDAL, AND CONTINUES HOLDING THEM DOWN SIMULTANEOUSLY
STOP LAMP SWITCH
APP SENSOR

Always perform the Pre-Diagnostic Troubleshooting procedure before proceeding. Refer to PRE-DIAGNOSTIC TROUBLESHOOTING PROCEDURE .

DIAGNOSTIC TEST

1. **DTC INFORMATION**

NOTE: **If a pedal assembly becomes mechanically stuck the voltage output will stay fixed, if this is also followed by a long application of the brakes this code will set.**

NOTE: **When this code sets the pedal position in the PCM software will ramp to idle. If the pedal voltage changes OR the brake pedal is released, the pedal position in the PCM software will ramp up to the pedal position and the ETC light will go out.**

1. With the scan tool, read DTCs and record the related Freeze Frame data.
2. Diagnose all other Stop Lamp Switch and APP Sensor codes before continuing.
3. This code can be set by a driver who uses both feet while driving, one for the Accelerator Pedal and the other for the Brake Pedal.

NOTE: **The most likely cause of this DTC is caused by the customer Brake Torquing the engine by pressing the Accelerator pedal and the pressing the Brake Pedal.**

4. Ask the driver of the vehicle if these conditions apply to their driving habits.

   Are the listed conditions part of the customers driving habits?

   Yes

   - Advise the customer of what caused the DTC. This is normal operation of a ETC equipped vehicle because of safety issues.

- Perform the POWERTRAIN VERIFICATION TEST. Refer to **POWERTRAIN VERIFICATION TEST** .

No

- Go To 2.

2. **STOP LAMP SWITCH OPERATION**
   1. With the scan tool, read both Stop Lamp Switch statuses while pressing and releasing the Brake Pedal.

      Does the scan tool display the Pressed and Released while pressing and releasing the Pedal?

      Yes

      - Go To 3.

      No

      - Check the Stop Lamp Switch for proper installation and check the related circuits for opens and shorts using the appropriate wiring diagram. If OK, replace the Stop Lamp Switch assembly.
      - Perform the POWERTRAIN VERIFICATION TEST. Refer to **POWERTRAIN VERIFICATION TEST** .
3. **APP SENSOR SWEEP**
   1. Ignition on, engine not running.
   2. With the scan tool, monitor both APP Sensor voltage readings.
   3. Slowly press the accelerator pedal from idle until it reaches the end stop near the floor.
   4. APPS No. 1 voltage should start at approximately 0.45 of a Volt and increase to approximately 4.6 Volts with a smooth transition.
   5. APPS No. 2 voltage should start at approximately 0.22 of a Volt and increase to approximately 2.31 Volts with a smooth transition.

      Does the voltage for the appropriate sensor follow the list specification?

      Yes

      - Perform the INTERMITTENT CONDITION diagnostic procedure. Refer to **INTERMITTENT CONDITION** .

      No

      - Check the Signal and Return circuits for opens and shorts. If OK, Replace the APP Sensor Assembly in accordance with the Service Information. After installation is complete, with a scan tool select the ETC RELEARN function to relearn the APPS values.
      - Perform the POWERTRAIN VERIFICATION TEST. Refer to **POWERTRAIN**

VERIFICATION TEST .

P2302-IGNITION COIL 1 SECONDARY CIRCUIT- INSUFFICIENT IONIZATION

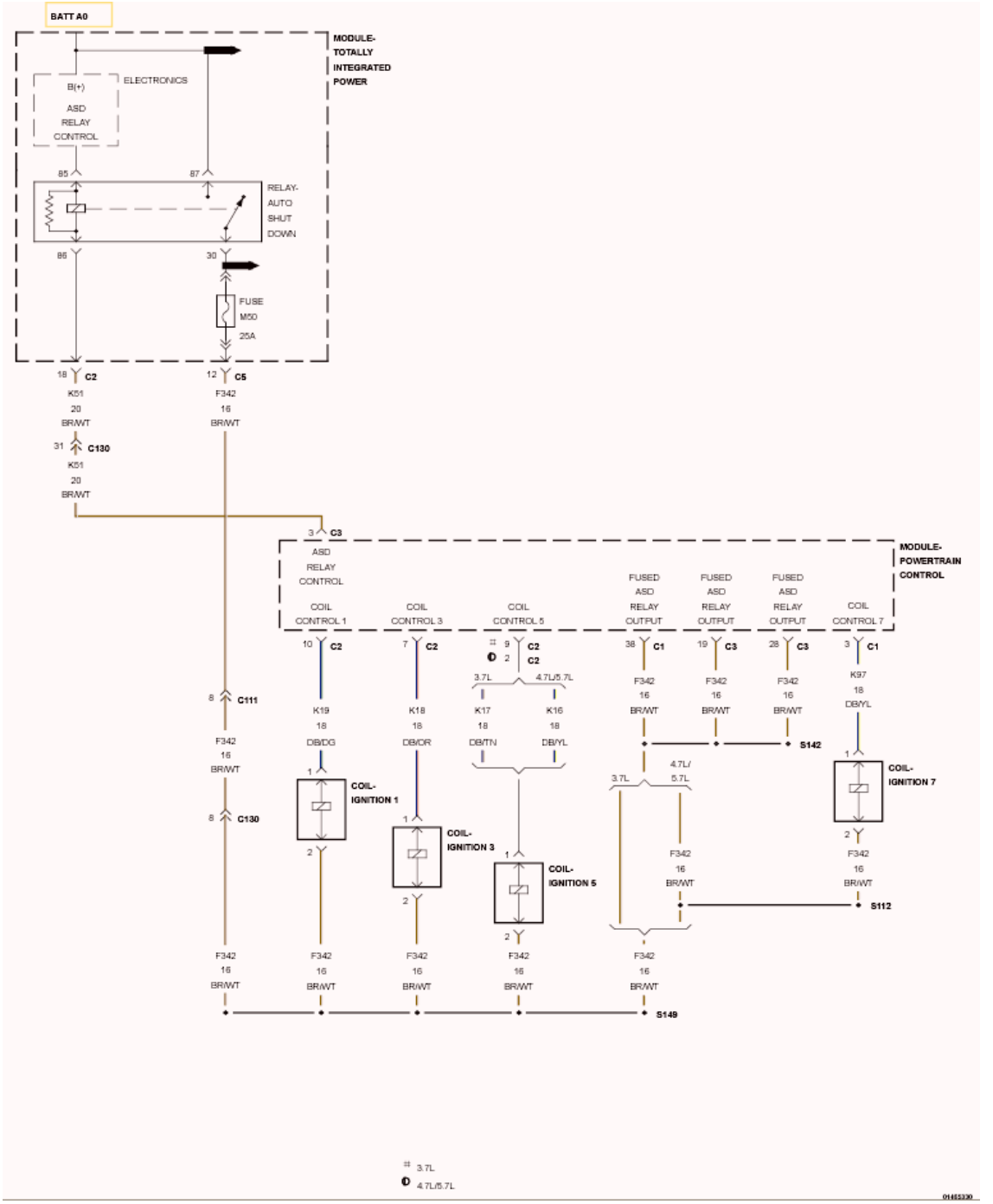

Fig. 85: Ignition Coil Secondary Circuit Schematic
Courtesy of CHRYSLER GROUP, LLC

For a complete wiring diagram, **refer to appropriate SYSTEM WIRING DIAGRAMS article** .

WHEN MONITORED:

Engine running and battery voltage greater than 10 Volts.

SET CONDITION:

If PCM detects that the secondary ignition burn time is incorrect, too short or not present, an error is detected. One Trip Fault. Three good trips to turn off the MIL.

POSSIBLE CAUSES

Possible Causes
(K342) ASD CONTROL OUTPUT CIRCUIT
(K19) COIL CONTROL NO. 1 CIRCUIT OPEN
(K19) COIL CONTROL NO. 1 CIRCUIT SHORTED TO GROUND
COIL ON PLUG
POWERTRAIN CONTROL MODULE (PCM)

Always perform the Pre-Diagnostic Troubleshooting procedure before proceeding. Refer to PRE-DIAGNOSTIC TROUBLESHOOTING PROCEDURE .

DIAGNOSTIC TEST

1. **ACTIVE DTC**

   NOTE: Diagnose any ASD related DTCs before continuing.

   1. Start the engine.
   2. With the scan tool, select View DTCs.

      NOTE: It may be necessary to drive the vehicle to meet the conditions to set this DTC, try to repeat the conditions in which the fault originally set by reviewing the Freeze Frame data.

      Does the DTC become Active?

      Yes

      - Go To 2.

      No

      - Perform the INTERMITTENT CONDITION Diagnostic Procedure. Refer to **INTERMITTENT CONDITION** .

2. **(K342) ASD CONTROL OUTPUT CIRCUIT**

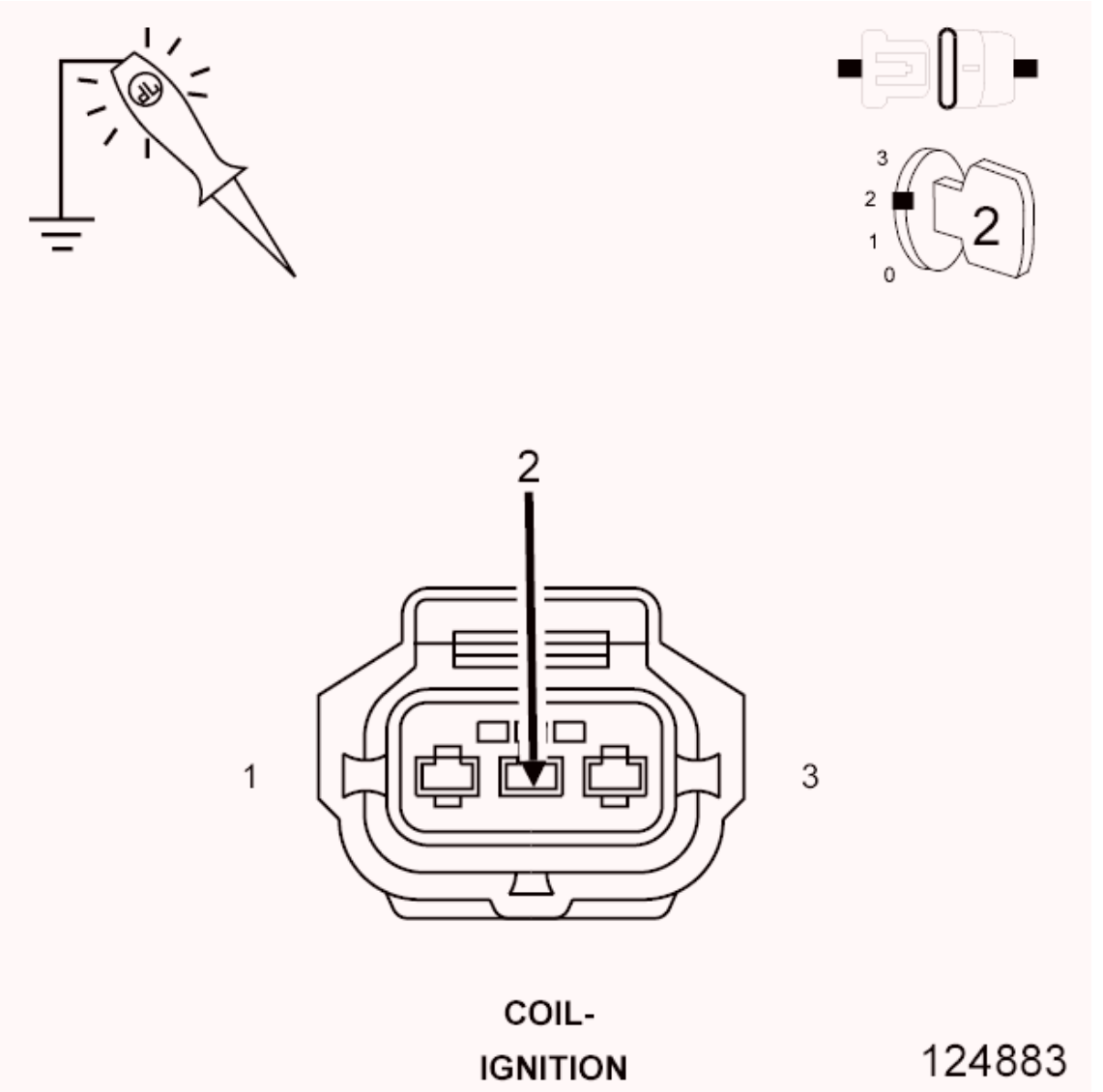

Fig. 86: Using 12-Volt Test Light Connected To Ground To Probe ASD Control Output Circuit In Ignition Coil Harness Connector
Courtesy of CHRYSLER GROUP, LLC

1. Turn the ignition off.
2. Disconnect the Coil on Plug harness connector.
3. Ignition on, engine not running.

NOTE: **Make sure the test light is probing the circuit before actuating the Coil or a DTC may set and not allow the actuation.**

4. Using a 12-volt test light connected to ground, probe the (K342) ASD Control Output circuit in the Coil on Plug harness connector.
5. With the scan tool, actuate the ASD.

Does the test light illuminate brightly?

Yes

- Go To 3.

No

- Repair the open or short to ground in the (K342) ASD Control Output circuit between the TIPM and Coil harness connector.
- Perform the POWERTRAIN VERIFICATION TEST. Refer to **POWERTRAIN VERIFICATION TEST** .

  NOTE: Stop All Actuations.

-

3. **COIL ON PLUG RESISTANCE**
   1. Turn the ignition off.

      NOTE: The following resistance measurement should be taken between 70° and 80° F.

   2. Measure the resistance of the Coil on Plug.
   3. 4.7L and 3.7L Primary Ignition Coil resistance is 0.6 to 0.9 of an ohm at 25° C (77° F).
   4. 5.7L Primary Ignition Coil resistance is 0.558 to 0.682 of an ohm at 25° C (77° F).

   Is the resistance within the given specification for the Ignition Coil being tested?

   Yes

   - Go To 4.

   No

   - Replace the Coil on plug.
   - Perform the POWERTRAIN VERIFICATION TEST. Refer to **POWERTRAIN VERIFICATION TEST** .
4. **IGNITION COIL**

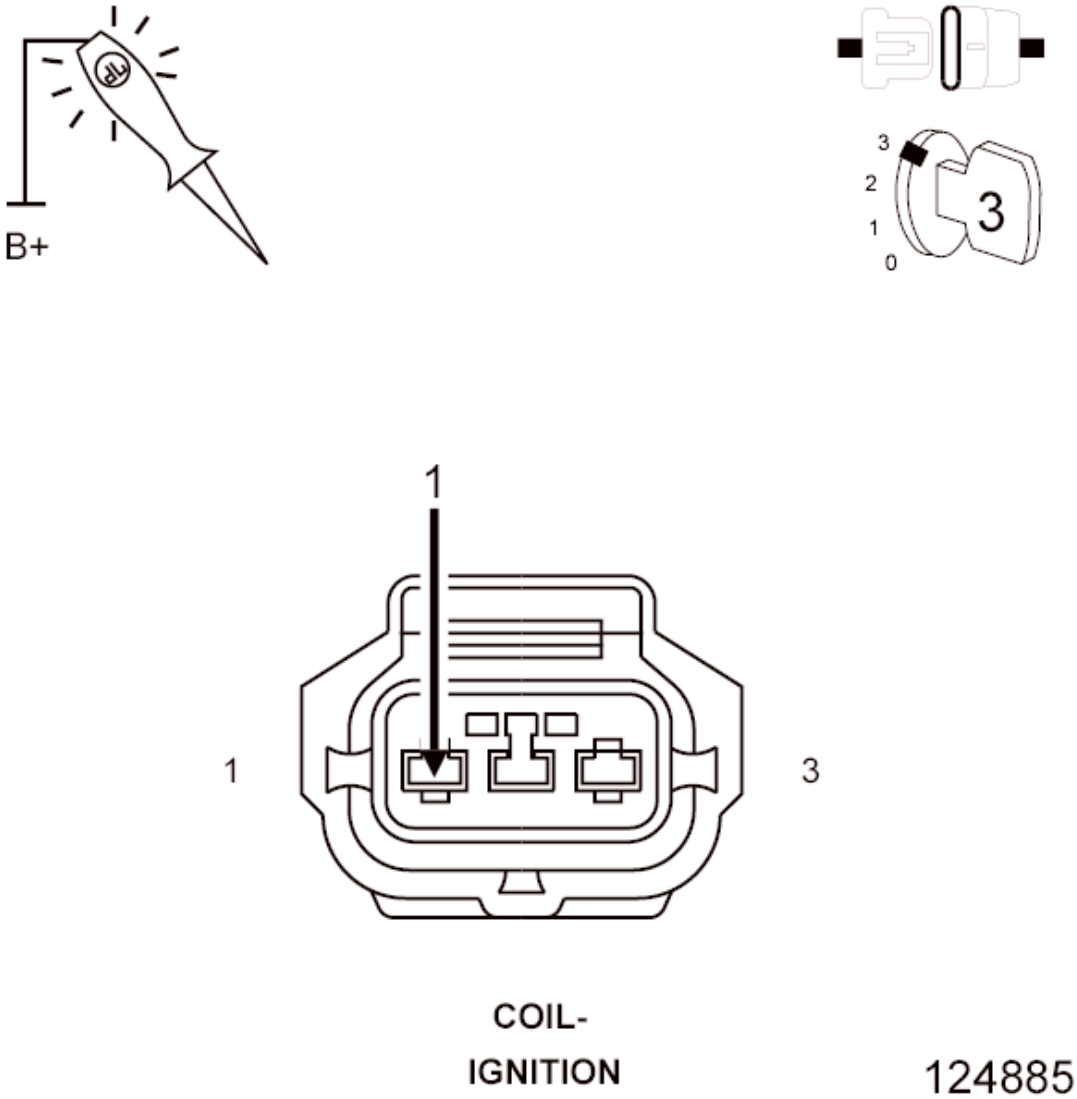

Fig. 87: Using 12-Volt Test Light Connected To 12-Volt Source To Probe Coil Control Circuit
Courtesy of CHRYSLER GROUP, LLC

WARNING: **When the engine is operating, do not stand in direct line with the fan. Do not put your hands near the pulleys, belts or fan. Do not wear loose clothing. Failure to follow these instructions may result in possible serious or fatal injury.**

1. Using a 12-volt test light connected to a 12-volt source, probe the (K19) Coil Control No. 1 circuit.
2. Crank the engine for 5 seconds while observing the test light.

   What is the condition of the test light while cranking the engine?

   Brightly blinking.

- Verify that there is good pin to terminal contact in the Ignition Coil and the Powertrain Control Module connectors. Replace the Ignition Coil if no problems were found in the connectors.
- Perform the POWERTRAIN VERIFICATION TEST. Refer to **POWERTRAIN VERIFICATION TEST** .

ON constantly.

- Go To 5.

OFF constantly.

- Go To 6.

5. **(K19) COIL CONTROL NO. 1 CIRCUIT SHORTED TO GROUND**

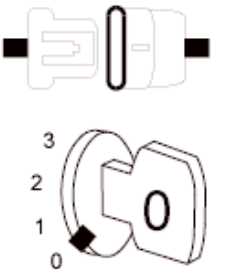

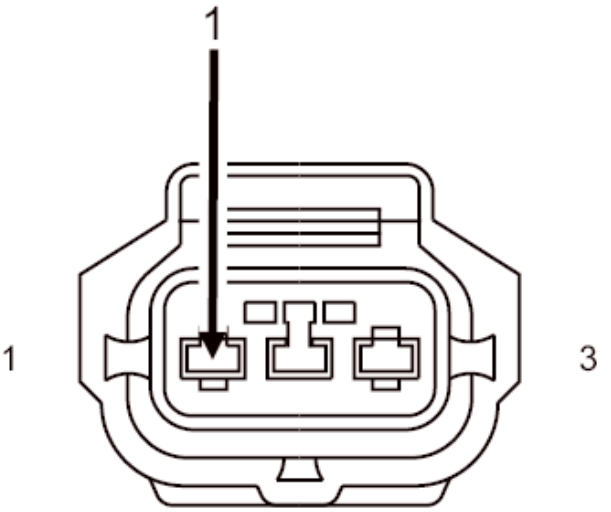

COIL-
IGNITION

125583

Fig. 88: Measuring Resistance Between Ground And Coil Control Circuit In Coil On Plug Harness Connector
Courtesy of CHRYSLER GROUP, LLC

1. Turn the ignition off.
2. Disconnect the C2 PCM harness connector.
3. Measure the resistance between ground and the (K19) Coil Control No. 1 circuit in the Coil on Plug harness connector.

   Is the resistance below 100 Ohms?

   Yes

   - Repair the short to ground in the (K19) Coil Control No. 1 circuit.
   - Perform the POWERTRAIN VERIFICATION TEST. Refer to **POWERTRAIN VERIFICATION TEST** .

   No

   - Go To 7.

6. **(K19) COIL CONTROL NO. 1 CIRCUIT OPEN**

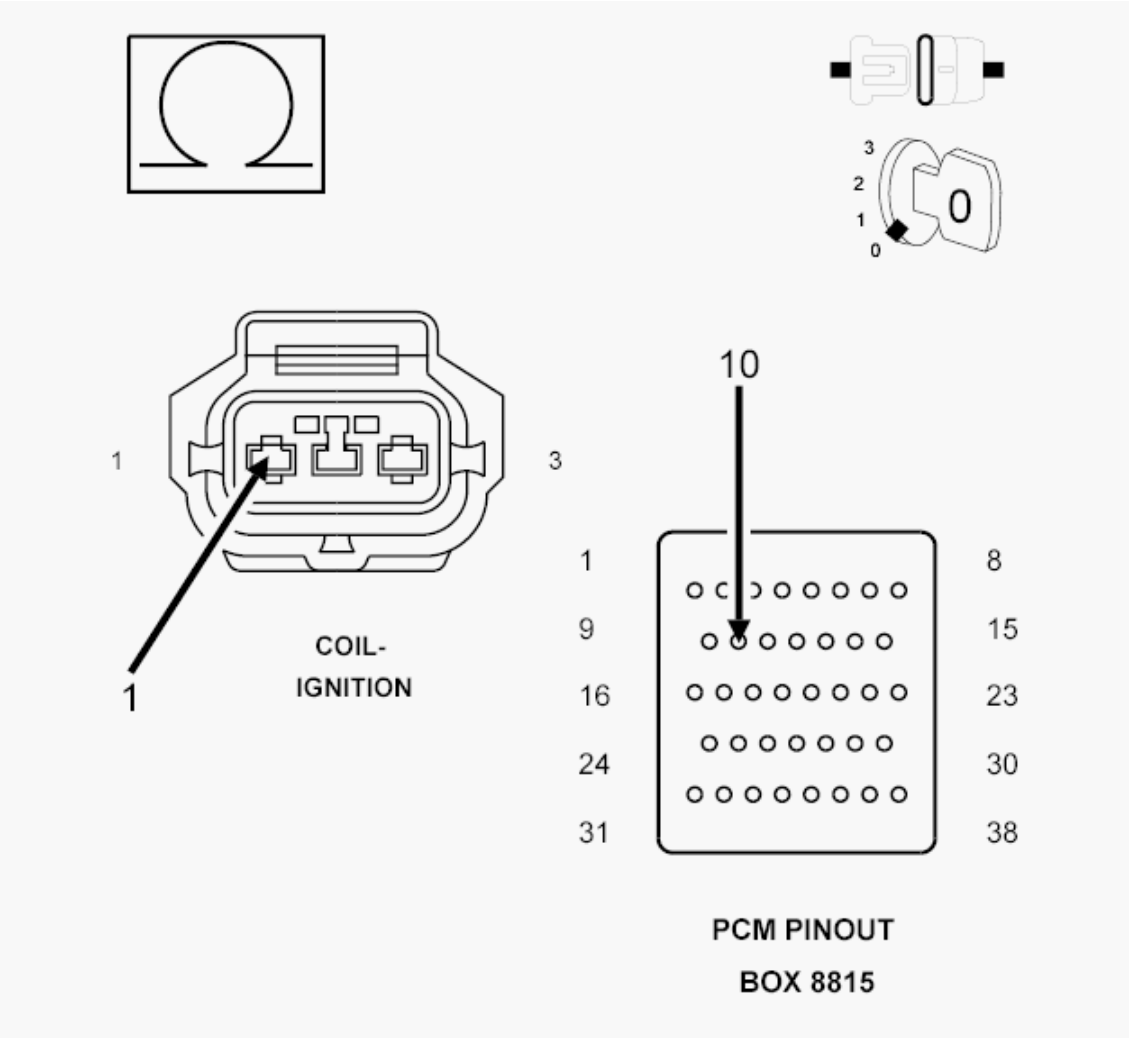

Fig. 89: Checking Coil Control No. 1 Circuit For An Open, Short To Ground, And Short To Voltage
Courtesy of CHRYSLER GROUP, LLC

1. Turn the ignition off.
2. Disconnect the C2 PCM harness connector.

CAUTION: Do not probe the PCM harness connectors. Probing the PCM harness connectors will damage the PCM terminals resulting in poor terminal to pin connection. Install the PCM Pinout Box (special tool #8815A, Kit, NGC, 38 Position) to perform diagnosis.

3. Measure the resistance of the (K19) Coil Control No. 1 circuit from the Coil on Plug harness connector to the appropriate terminal of PCM Pinout Box (special tool #8815A, Kit, NGC, 38 Position).

   Is the resistance below 5.0 Ohms?

Yes

- Go To 7.

No

- Repair the open in the (K19) Coil Control No. 1 circuit.
- Perform the POWERTRAIN VERIFICATION TEST. Refer to **POWERTRAIN VERIFICATION TEST** .

7. **POWERTRAIN CONTROL MODULE (PCM)**
    1. Using the wiring diagram/schematic as a guide, inspect the wiring and connectors between the Ignition Coil and the Powertrain Control Module (PCM).
    2. Look for any chafed, pierced, pinched or partially broken wires.
    3. Look for broken, bent, pushed out or corroded terminals. Verify that there is good pin to terminal contact in the Ignition Coil and the Powertrain Control Module connectors.
    4. Refer to any Technical Service Bulletins that may apply.

    Were there any problems found?

    Yes

    - Repair as necessary.
    - Perform the POWERTRAIN VERIFICATION TEST. Refer to **POWERTRAIN VERIFICATION TEST** .

    No

    - Replace and program the Powertrain Control Module in accordance with the Service Information.
    - Perform the POWERTRAIN VERIFICATION TEST. Refer to **POWERTRAIN VERIFICATION TEST** .

P2305-IGNITION COIL 2 SECONDARY CIRCUIT- INSUFFICIENT IONIZATION

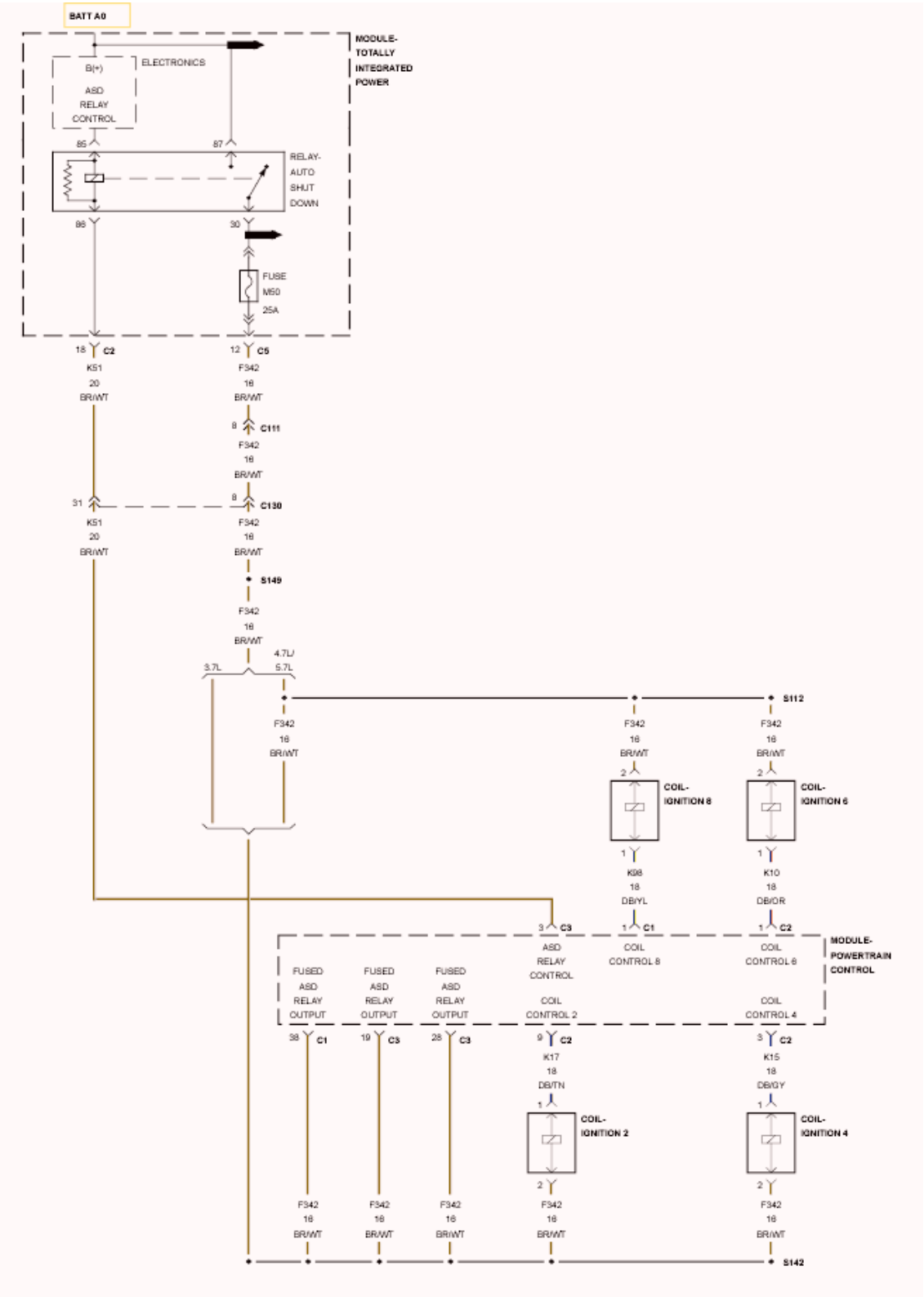

Fig. 90: Ignition Coil Secondary Circuit Schematic
Courtesy of CHRYSLER GROUP, LLC

For a complete wiring diagram, **refer to appropriate SYSTEM WIRING DIAGRAMS article** .

WHEN MONITORED:

Engine running and battery voltage greater than 10 Volts.

SET CONDITION:

If PCM detects that the secondary ignition burn time is incorrect, too short or not present, an error is detected. One Trip Fault. Three good trips to turn off the MIL.

POSSIBLE CAUSES

Possible Causes
(K342) ASD CONTROL OUTPUT CIRCUIT
(K17) COIL CONTROL NO. 2 CIRCUIT OPEN
(K17) COIL CONTROL NO. 2 CIRCUIT SHORTED TO GROUND
COIL ON PLUG
POWERTRAIN CONTROL MODULE (PCM)

Always perform the Pre-Diagnostic Troubleshooting procedure before proceeding. Refer to PRE-DIAGNOSTIC TROUBLESHOOTING PROCEDURE .

DIAGNOSTIC TEST

1. **ACTIVE DTC**

   NOTE: Diagnose any ASD related DTCs before continuing.

   1. Start the engine.
   2. With the scan tool, select View DTCs.

      NOTE: It may be necessary to drive the vehicle to meet the conditions to set this DTC, try to repeat the conditions in which the fault originally set by reviewing the Freeze Frame data.

      Does the DTC become Active?

      Yes

      - Go To 2.

      No

      - Perform the INTERMITTENT CONDITION Diagnostic Procedure. Refer to **INTERMITTENT CONDITION** .

2. **(K342) ASD CONTROL OUTPUT CIRCUIT**

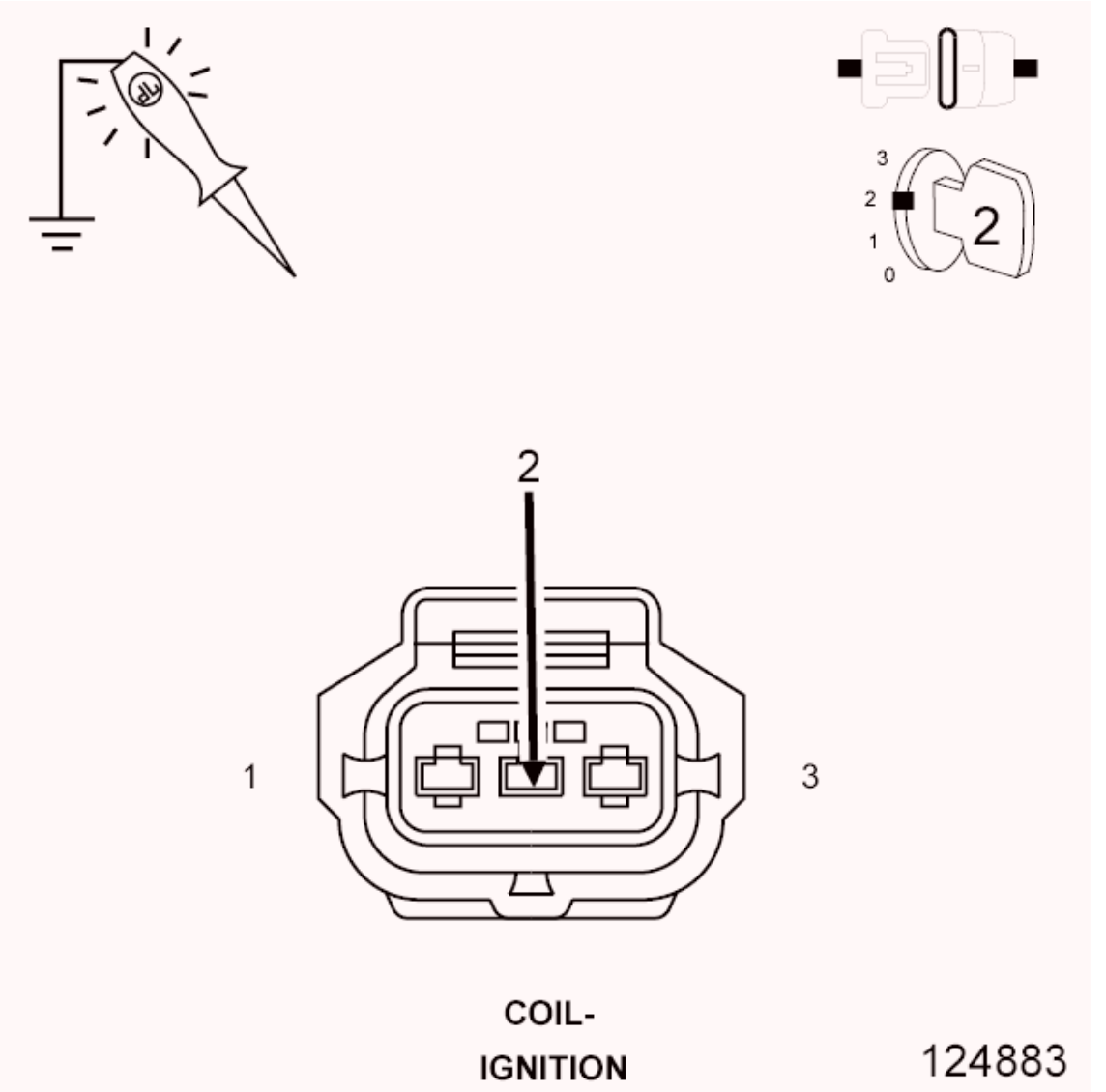

Fig. 91: Using 12-Volt Test Light Connected To Ground To Probe ASD Control Output Circuit In Ignition Coil Harness Connector
Courtesy of CHRYSLER GROUP, LLC

1. Turn the ignition off.
2. Disconnect the Coil on Plug harness connector.
3. Ignition on, engine not running.

NOTE: **Make sure the test light is probing the circuit before actuating the Coil or a DTC may set and not allow the actuation.**

4. Using a 12-volt test light connected to ground, probe the (K342) ASD Control Output circuit in the Coil on Plug harness connector.

5. With the scan tool, actuate the ASD.

   Does the test light illuminate brightly?

   Yes

   - Go To 3.

   No

   - Repair the open or short to ground in the (K342) ASD Control Output circuit between the TIPM and Coil harness connector.
   - Perform the POWERTRAIN VERIFICATION TEST. Refer to **POWERTRAIN VERIFICATION TEST** .

     NOTE: Stop All Actuations.

   -

3. **COIL ON PLUG RESISTANCE**
   1. Turn the ignition off.

      NOTE: The following resistance measurement should be taken between 70° and 80° F.

   2. Measure the resistance of the Coil on Plug.
   3. 4.7L and 3.7L Primary Ignition Coil resistance is 0.6 to 0.9 of an ohm at 25° C (77° F).
   4. 5.7L Primary Ignition Coil resistance is 0.558 to 0.682 of an ohm at 25° C (77° F).

      Is the resistance within the given specification for the Ignition Coil being tested?

      Yes

      - Go To 4.

      No

      - Replace the Coil on plug.
      - Perform the POWERTRAIN VERIFICATION TEST. Refer to **POWERTRAIN VERIFICATION TEST** .
4. **IGNITION COIL**

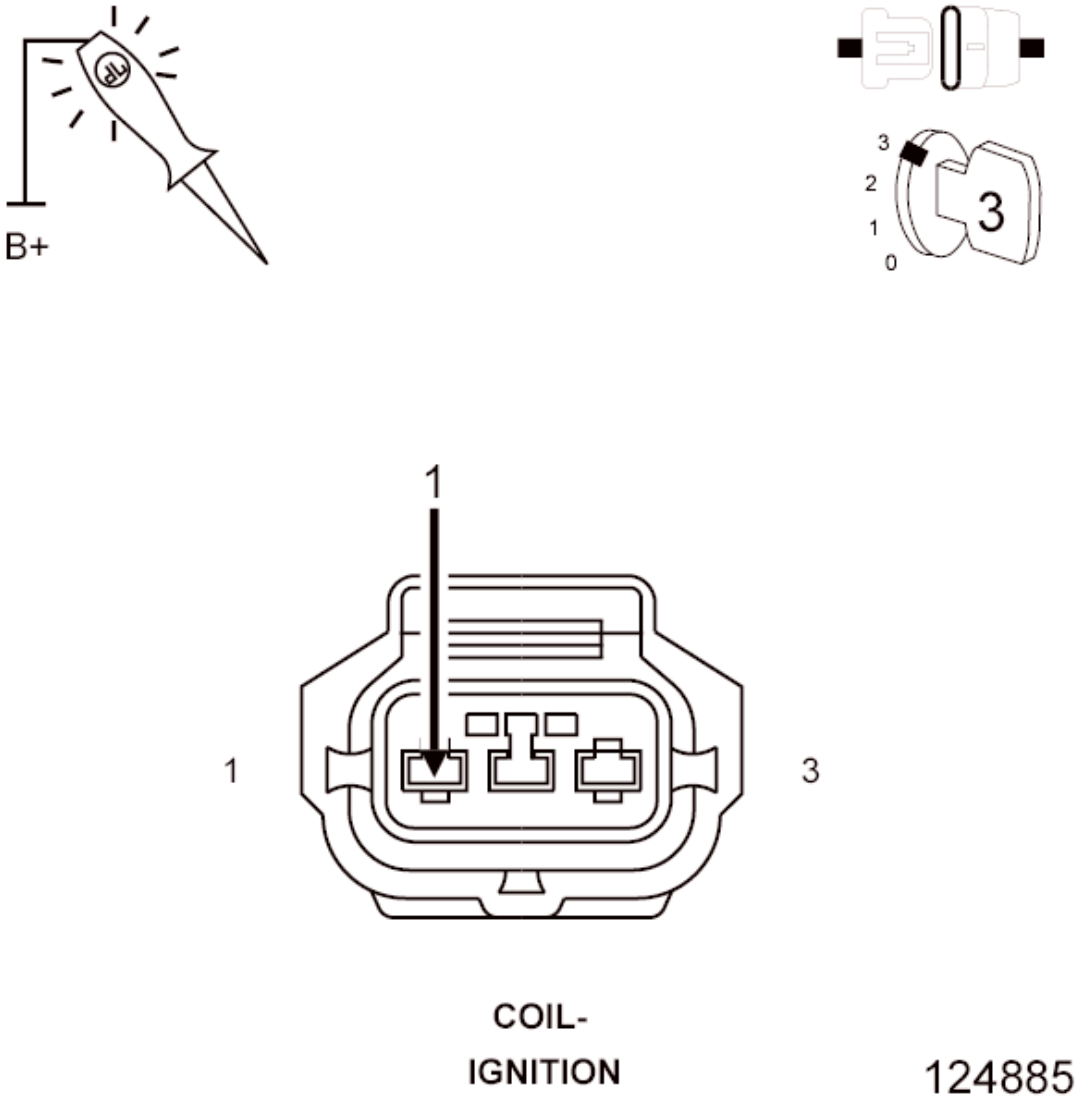

Fig. 92: Using 12-Volt Test Light Connected To 12-Volt Source To Probe Coil Control Circuit
Courtesy of CHRYSLER GROUP, LLC

WARNING: **When the engine is operating, do not stand in direct line with the fan. Do not put your hands near the pulleys, belts or fan. Do not wear loose clothing. Failure to follow these instructions may result in possible serious or fatal injury.**

1. Using a 12-volt test light connected to a 12-volt source, probe the (K17) Coil Control No. 2 circuit.
2. Crank the engine for 5 seconds while observing the test light.

   What is the state of the test light while cranking the engine?

   Brightly blinking.

- Verify that there is good pin to terminal contact in the Ignition Coil and the Powertrain Control Module connectors. Replace the Ignition Coil if no problems were found in the connectors.
- Perform the POWERTRAIN VERIFICATION TEST. Refer to **POWERTRAIN VERIFICATION TEST** .

ON constantly.

- Go To 5.

OFF constantly.

- Go To 6.

5. **(K17) COIL CONTROL NO. 2 CIRCUIT SHORTED TO GROUND**

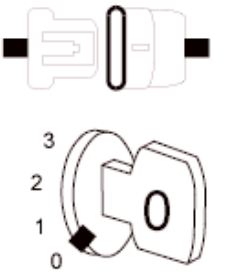

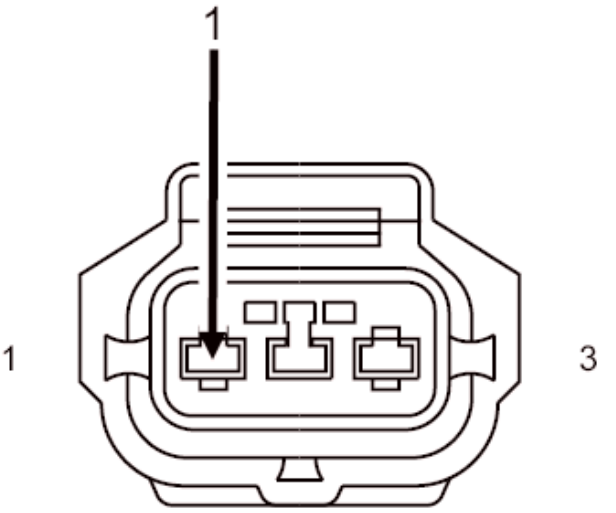

COIL-
IGNITION

125583

Fig. 93: Measuring Resistance Between Ground And Coil Control Circuit In Coil On Plug Harness Connector
Courtesy of CHRYSLER GROUP, LLC

1. Turn the ignition off.
2. Disconnect the C2 PCM harness connector.
3. Measure the resistance between ground and the (K17) Coil Control No. 2 circuit in the Coil on Plug harness connector.

   Is the resistance below 100 Ohms?

   Yes

   - Repair the short to ground in the (K17) Coil Control No. 2 circuit.
   - Perform the POWERTRAIN VERIFICATION TEST. Refer to **POWERTRAIN VERIFICATION TEST** .

   No

   - Go To 7.

6. **(K17) COIL CONTROL NO. 2 CIRCUIT OPEN**

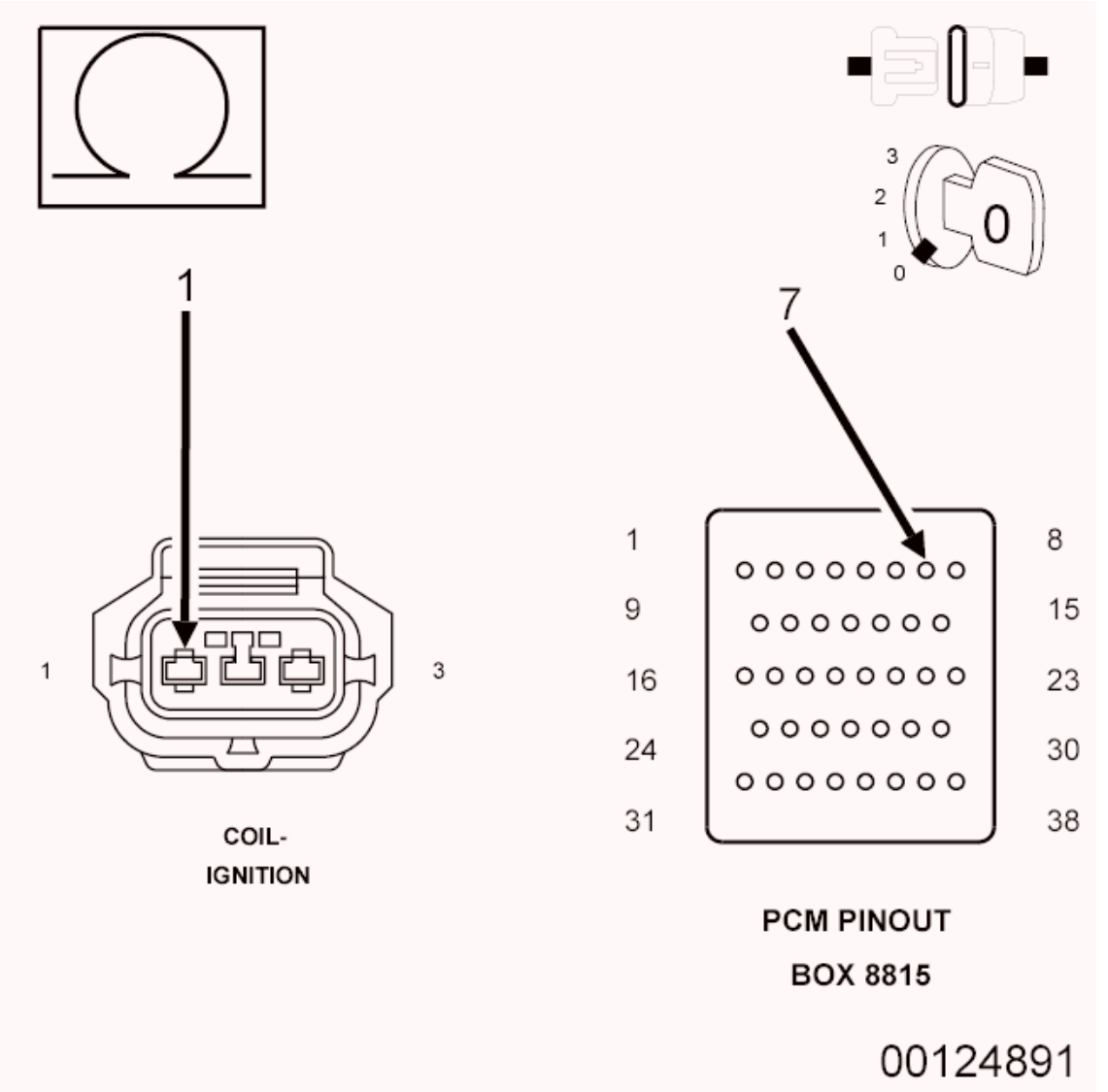

Fig. 94: Checking Coil Control Circuit For An Open, Short To Ground, And Short To Voltage
Courtesy of CHRYSLER GROUP, LLC

1. Turn the ignition off.
2. Disconnect the C2 PCM harness connector.

CAUTION: Do not probe the PCM harness connectors. Probing the PCM harness connectors will damage the PCM terminals resulting in poor terminal to pin connection. Install the PCM Pinout Box (special tool #8815A, Kit, NGC, 38 Position) to perform diagnosis.

3. Measure the resistance of the (K17) Coil Control No. 2 circuit from the Coil on Plug harness connector to the appropriate terminal of PCM Pinout Box (special tool #8815A, Kit, NGC, 38 Position).

Is the resistance below 5.0 Ohms?

Yes

- Go To 7.

No

- Repair the open in the (K17) Coil Control No. 2 circuit.
- Perform the POWERTRAIN VERIFICATION TEST. Refer to **POWERTRAIN VERIFICATION TEST** .

7. **POWERTRAIN CONTROL MODULE (PCM)**
    1. Using the wiring diagram/schematic as a guide, inspect the wiring and connectors between the Ignition Coil and the Powertrain Control Module (PCM).
    2. Look for any chafed, pierced, pinched or partially broken wires.
    3. Look for broken, bent, pushed out or corroded terminals. Verify that there is good pin to terminal contact in the Ignition Coil and the Powertrain Control Module connectors.
    4. Refer to any Technical Service Bulletins that may apply.

    Were there any problems found?

    Yes

    - Repair as necessary.
    - Perform the POWERTRAIN VERIFICATION TEST. Refer to **POWERTRAIN VERIFICATION TEST** .

    No

    - Replace and program the Powertrain Control Module in accordance with the Service Information.
    - Perform the POWERTRAIN VERIFICATION TEST. Refer to **POWERTRAIN VERIFICATION TEST** .

P2308-IGNITION COIL 3 SECONDARY CIRCUIT- INSUFFICIENT IONIZATION

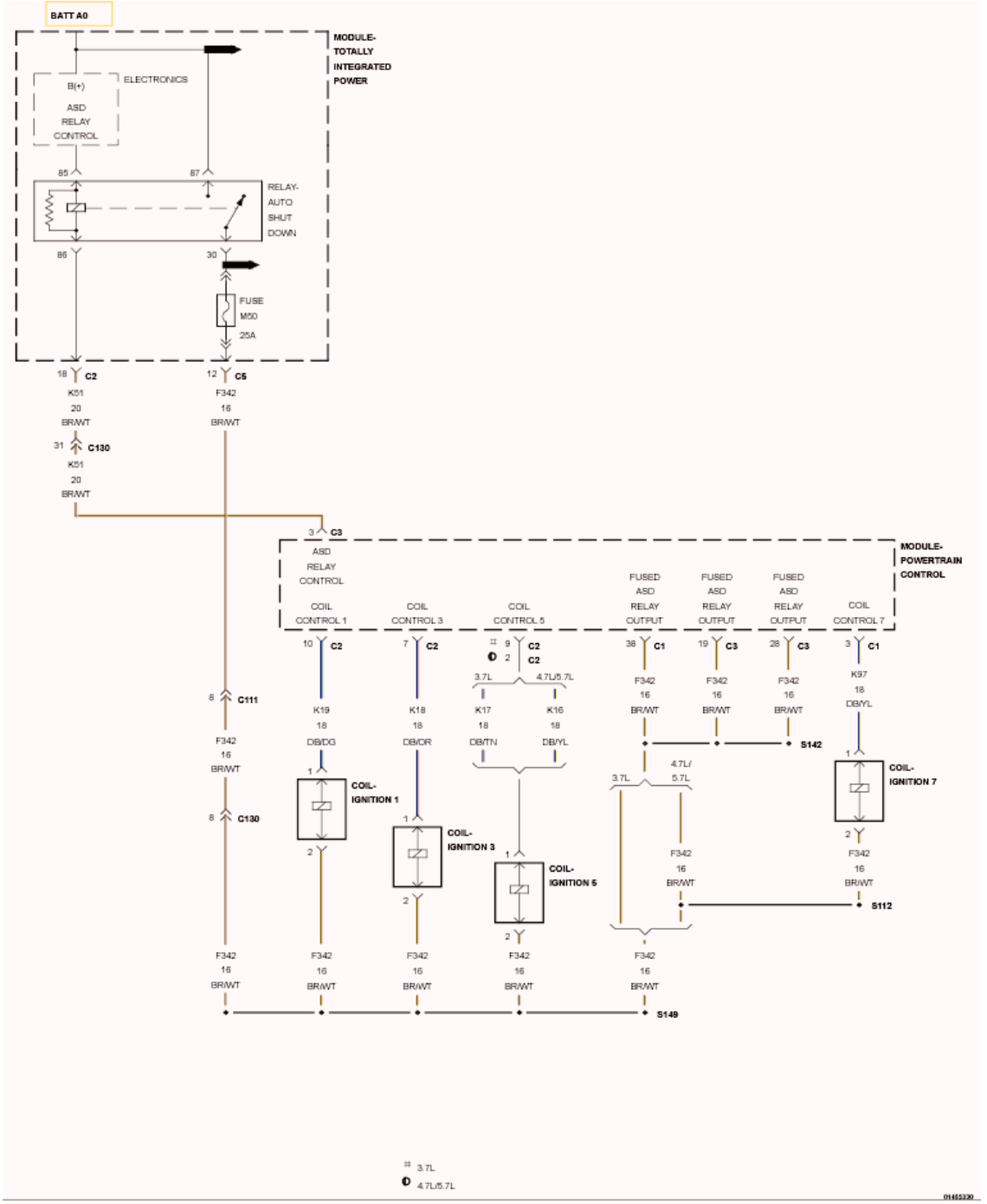

Fig. 95: Ignition Coil Secondary Circuit Schematic
Courtesy of CHRYSLER GROUP, LLC

For a complete wiring diagram, **refer to appropriate SYSTEM WIRING DIAGRAMS article** .

WHEN MONITORED:

Engine running and battery voltage greater than 10 Volts.

SET CONDITION:

If PCM detects that the secondary ignition burn time is incorrect, too short or not present, an error is detected. One Trip Fault. Three good trips to turn off the MIL.

POSSIBLE CAUSES

Possible Causes
(K342) ASD CONTROL OUTPUT CIRCUIT
(K18) COIL CONTROL NO. 3 CIRCUIT OPEN
(K18) COIL CONTROL NO. 3 CIRCUIT SHORTED TO GROUND
COIL ON PLUG
POWERTRAIN CONTROL MODULE (PCM)

Always perform the Pre-Diagnostic Troubleshooting procedure before proceeding. Refer to PRE-DIAGNOSTIC TROUBLESHOOTING PROCEDURE .

DIAGNOSTIC TEST

1. **ACTIVE DTC**

   NOTE: Diagnose any ASD related DTCs before continuing.

   1. Start the engine.
   2. With the scan tool, select View DTCs.

      NOTE: It may be necessary to drive the vehicle to meet the conditions to set this DTC, try to repeat the conditions in which the fault originally set by reviewing the Freeze Frame data.

      Does the DTC become Active?

      Yes

      - Go To 2.

      No

      - Perform the INTERMITTENT CONDITION Diagnostic Procedure. Refer to **INTERMITTENT CONDITION** .

2. **(K342) ASD CONTROL OUTPUT CIRCUIT**

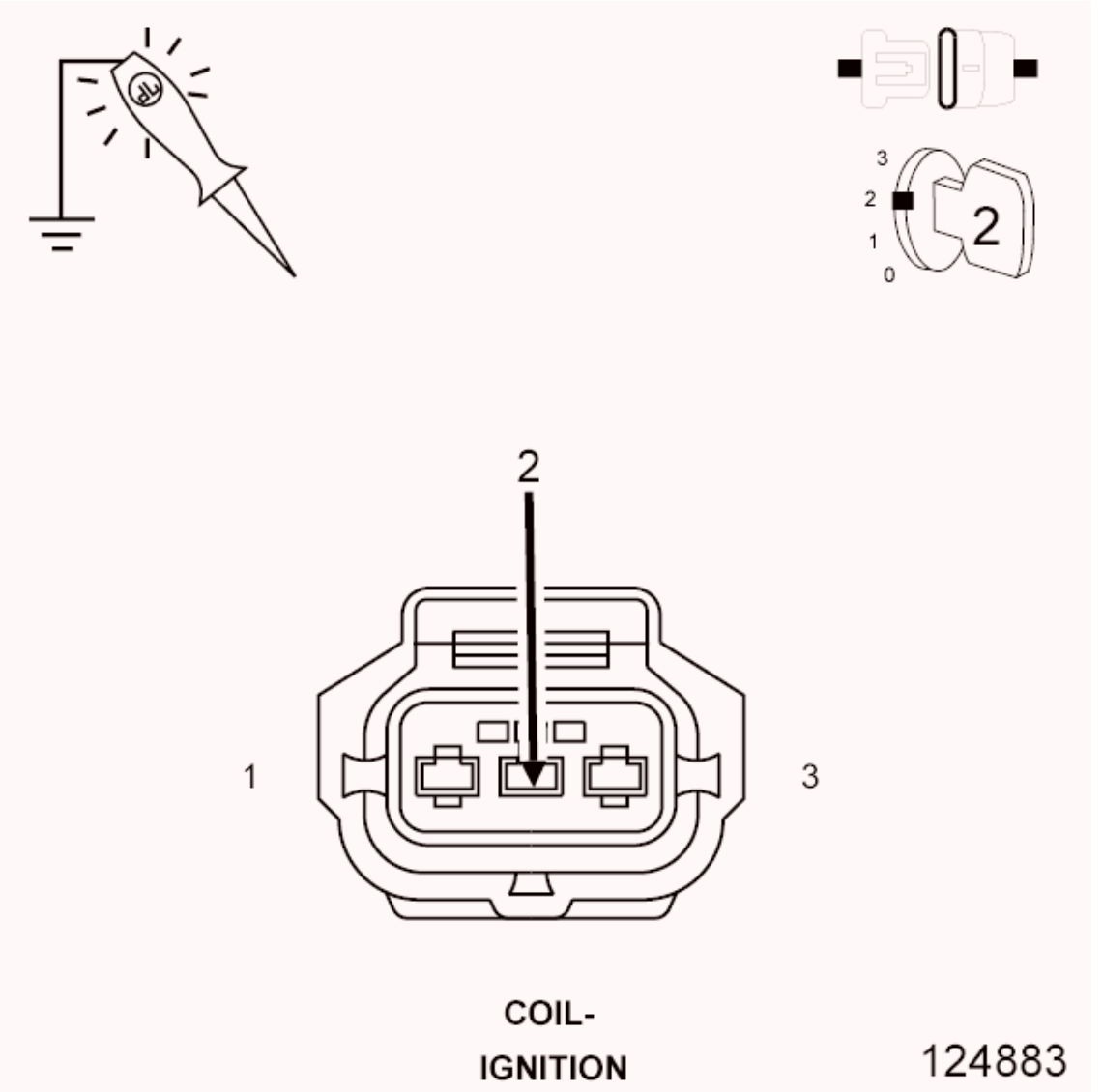

Fig. 96: Using 12-Volt Test Light Connected To Ground To Probe ASD Control Output Circuit In Ignition Coil Harness Connector
Courtesy of CHRYSLER GROUP, LLC

1. Turn the ignition off.
2. Disconnect the Coil on Plug harness connector.
3. Ignition on, engine not running.

NOTE: **Make sure the test light is probing the circuit before actuating the Coil or a DTC may set and not allow the actuation.**

4. Using a 12-volt test light connected to ground, probe the (K342) ASD Control Output circuit in the Coil on Plug harness connector.
5. With the scan tool, actuate the ASD.

Does the test light illuminate brightly?

Yes

- Go To 3.

No

- Repair the open or short to ground in the (K342) ASD Control Output circuit between the TIPM and Coil harness connector.
- Perform the POWERTRAIN VERIFICATION TEST. Refer to **POWERTRAIN VERIFICATION TEST** .

  NOTE: Stop All Actuations.

-

3. **COIL ON PLUG RESISTANCE**
   1. Turn the ignition off.

      NOTE: The following resistance measurement should be taken between 70° and 80° F.

   2. Measure the resistance of the Coil on Plug.
   3. 4.7L and 3.7L Primary Ignition Coil resistance is 0.6 to 0.9 of an ohm at 25° C (77° F).
   4. 5.7L Primary Ignition Coil resistance is 0.558 to 0.682 of an ohm at 25° C (77° F).

   Is the resistance within the given specification for the Ignition Coil being tested?

   Yes

   - Go To 4.

   No

   - Replace the Coil on plug.
   - Perform the POWERTRAIN VERIFICATION TEST. Refer to **POWERTRAIN VERIFICATION TEST** .
4. **IGNITION COIL**

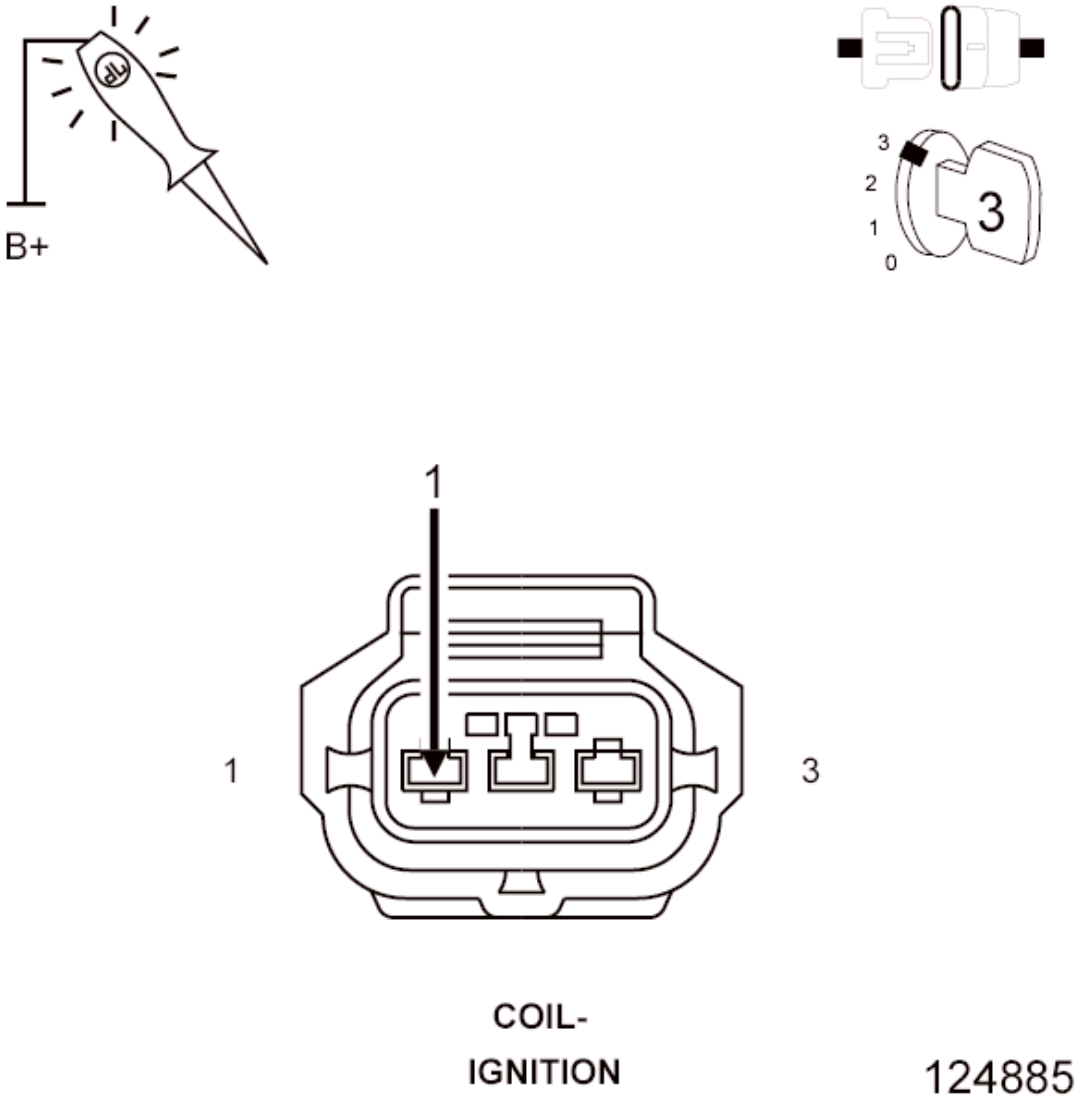

Fig. 97: Using 12-Volt Test Light Connected To 12-Volt Source To Probe Coil Control Circuit
Courtesy of CHRYSLER GROUP, LLC

WARNING: **When the engine is operating, do not stand in direct line with the fan. Do not put your hands near the pulleys, belts or fan. Do not wear loose clothing. Failure to follow these instructions may result in possible serious or fatal injury.**

1. Using a 12-volt test light connected to a 12-volt source, probe the (K18) Coil Control No. 3 circuit.
2. Crank the engine for 5 seconds while observing the test light.

   What is the state of the test light while cranking the engine?

   Brightly blinking.

- Verify that there is good pin to terminal contact in the Ignition Coil and the Powertrain Control Module connectors. Replace the Ignition Coil if no problems were found in the connectors.
- Perform the POWERTRAIN VERIFICATION TEST. Refer to **POWERTRAIN VERIFICATION TEST** .

ON constantly.

- Go To 5.

OFF constantly.

- Go To 6.

5. **(K18) COIL CONTROL NO. 3 CIRCUIT SHORTED TO GROUND**

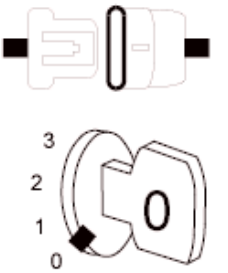

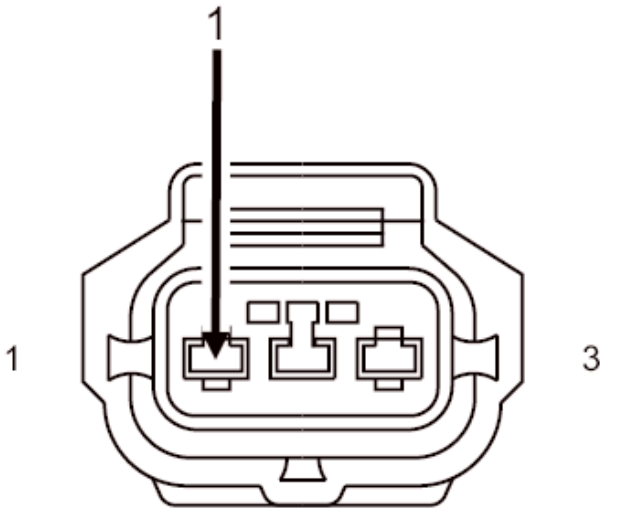

COIL-
IGNITION

125583

Fig. 98: Measuring Resistance Between Ground And Coil Control Circuit In Coil On Plug Harness Connector
Courtesy of CHRYSLER GROUP, LLC

1. Turn the ignition off.
2. Disconnect the C2 PCM harness connector.
3. Measure the resistance between ground and the (K18) Coil Control No. 3 circuit in the Coil on Plug harness connector.

   Is the resistance below 100 Ohms?

   Yes

   - Repair the short to ground in the (K18) Coil Control No. 3 circuit.
   - Perform the POWERTRAIN VERIFICATION TEST. Refer to **POWERTRAIN VERIFICATION TEST** .

   No

   - Go To 7.

6. **(K18) COIL CONTROL NO. 3 CIRCUIT OPEN**

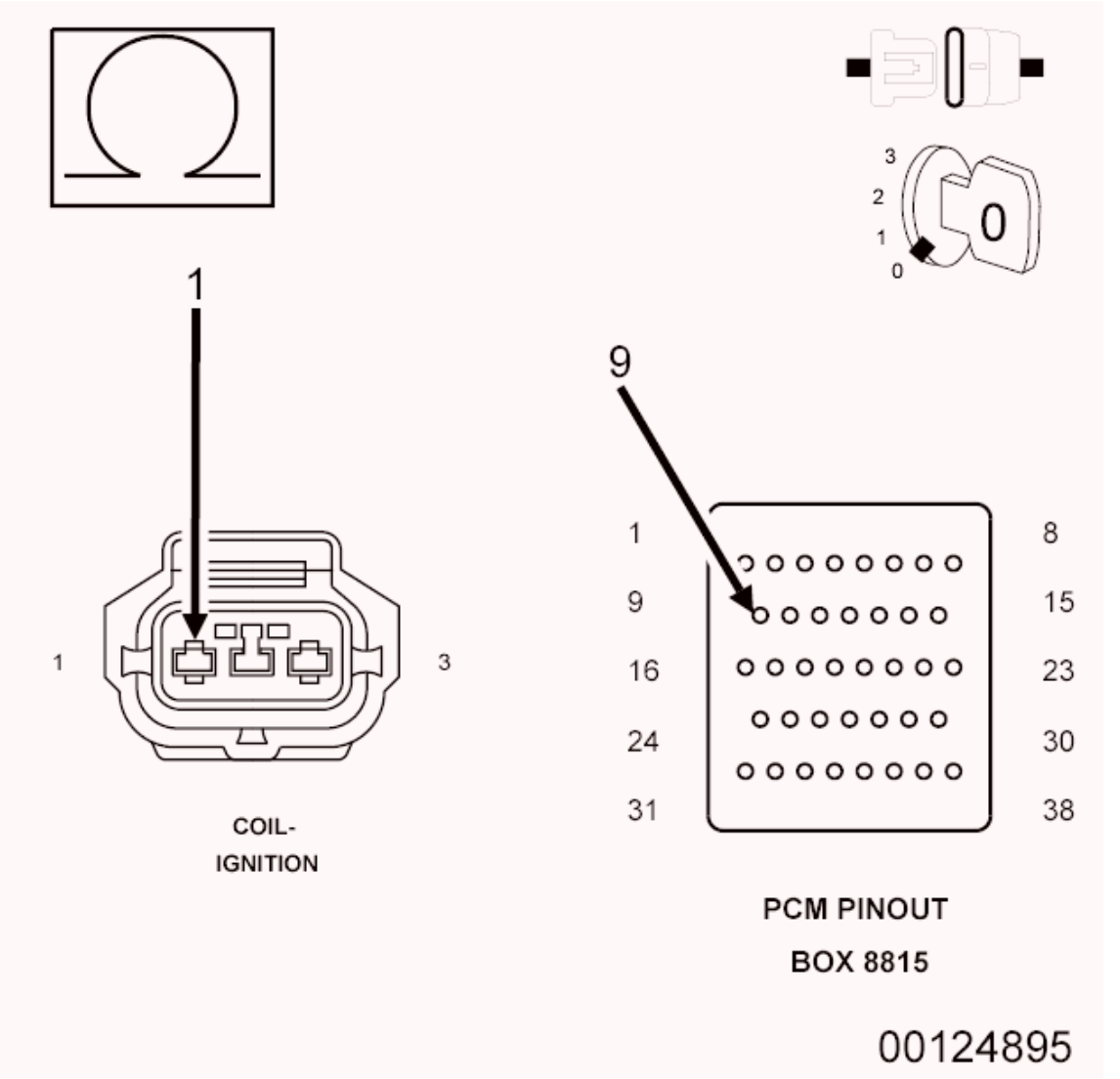

Fig. 99: Checking Coil Control No. 3 Circuit For An Open, Short To Ground, And Short To Voltage
Courtesy of CHRYSLER GROUP, LLC

1. Turn the ignition off.
2. Disconnect the C2 PCM harness connector.

CAUTION: Do not probe the PCM harness connectors. Probing the PCM harness connectors will damage the PCM terminals resulting in poor terminal to pin connection. Install the PCM Pinout Box (special tool #8815A, Kit, NGC, 38 Position) to perform diagnosis.

3. Measure the resistance of the (K18) Coil Control No. 3 circuit from the Coil on Plug harness connector to the appropriate terminal of PCM Pinout Box (special tool #8815A, Kit, NGC, 38 Position).

Is the resistance below 5.0 Ohms?

Yes

- Go To 7.

No

- Repair the open in the (K18) Coil Control No. 3 circuit.
- Perform the POWERTRAIN VERIFICATION TEST. Refer to **POWERTRAIN VERIFICATION TEST** .

7. **POWERTRAIN CONTROL MODULE (PCM)**
    1. Using the wiring diagram/schematic as a guide, inspect the wiring and connectors between the Ignition Coil and the Powertrain Control Module (PCM).
    2. Look for any chafed, pierced, pinched or partially broken wires.
    3. Look for broken, bent, pushed out or corroded terminals. Verify that there is good pin to terminal contact in the Ignition Coil and the Powertrain Control Module connectors.
    4. Refer to any Technical Service Bulletins that may apply.

    Were there any problems found?

    Yes

    - Repair as necessary.
    - Perform the POWERTRAIN VERIFICATION TEST. Refer to **POWERTRAIN VERIFICATION TEST** .

    No

    - Replace and program the Powertrain Control Module in accordance with the Service Information.
    - Perform the POWERTRAIN VERIFICATION TEST. Refer to **POWERTRAIN VERIFICATION TEST** .

P2311-IGNITION COIL 4 SECONDARY CIRCUIT- INSUFFICIENT IONIZATION

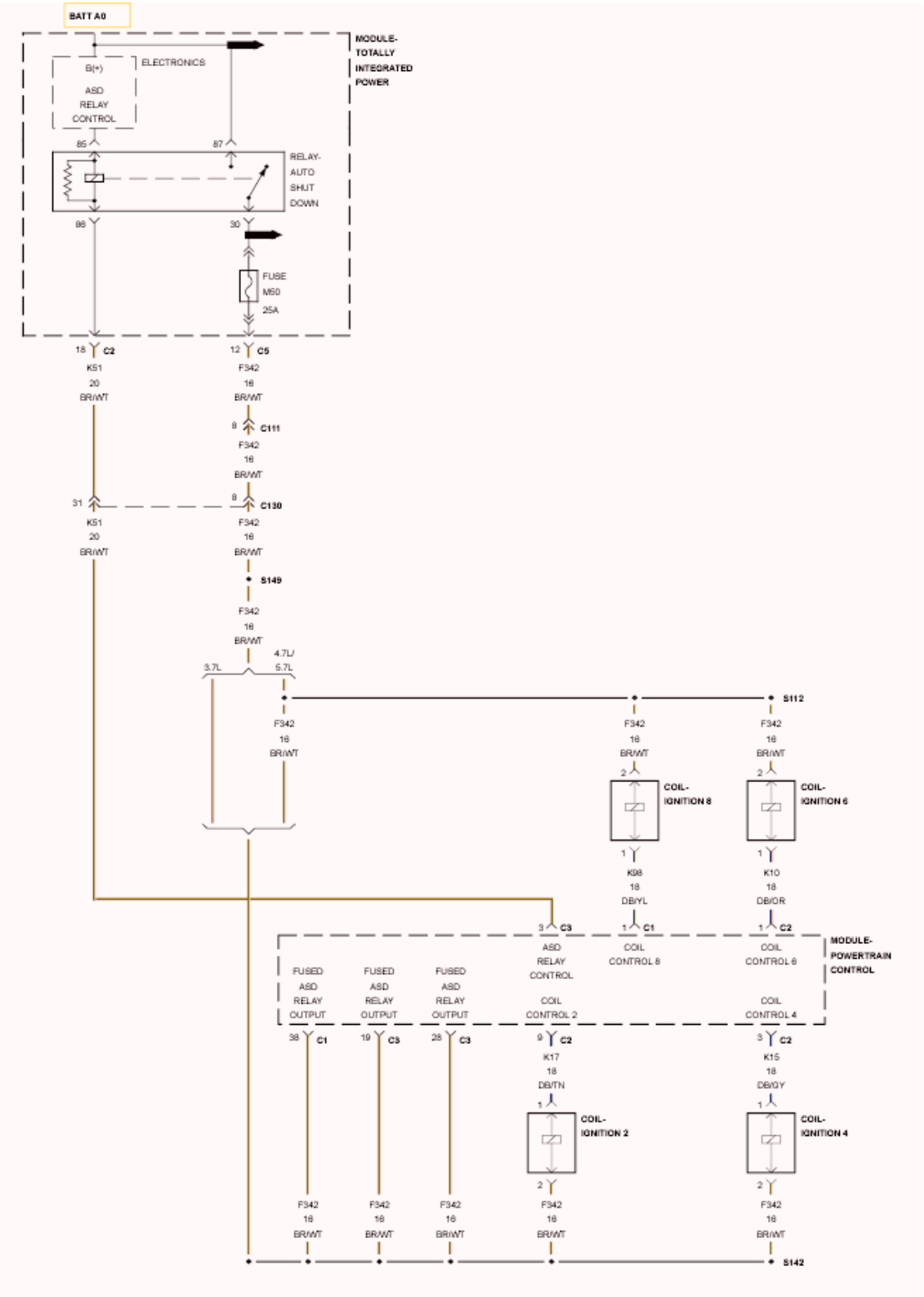

Fig. 100: Ignition Coil Secondary Circuit Schematic
Courtesy of CHRYSLER GROUP, LLC

For a complete wiring diagram, **refer to appropriate SYSTEM WIRING DIAGRAMS article** .

WHEN MONITORED:

Engine running and battery voltage greater than 10 Volts.

SET CONDITION:

If PCM detects that the secondary ignition burn time is incorrect, too short or not present, an error is detected. One Trip Fault. Three good trips to turn off the MIL.

POSSIBLE CAUSES

Possible Causes
(K342) ASD CONTROL OUTPUT CIRCUIT
(K15) COIL CONTROL NO. 4 CIRCUIT OPEN
(K15) COIL CONTROL NO. 4 CIRCUIT SHORTED TO GROUND
COIL ON PLUG
POWERTRAIN CONTROL MODULE (PCM)

Always perform the Pre-Diagnostic Troubleshooting procedure before proceeding. Refer to PRE-DIAGNOSTIC TROUBLESHOOTING PROCEDURE .

DIAGNOSTIC TEST

1. **ACTIVE DTC**

   NOTE: Diagnose any ASD related DTCs before continuing.

   1. Start the engine.
   2. With the scan tool, select View DTCs.

      NOTE: It may be necessary to drive the vehicle to meet the conditions to set this DTC, try to repeat the conditions in which the fault originally set by reviewing the Freeze Frame data.

      Does the DTC become Active?

      Yes

      - Go To 2.

      No

      - Perform the INTERMITTENT CONDITION Diagnostic Procedure. Refer to **INTERMITTENT CONDITION** .

2. **(K342) ASD CONTROL OUTPUT CIRCUIT**

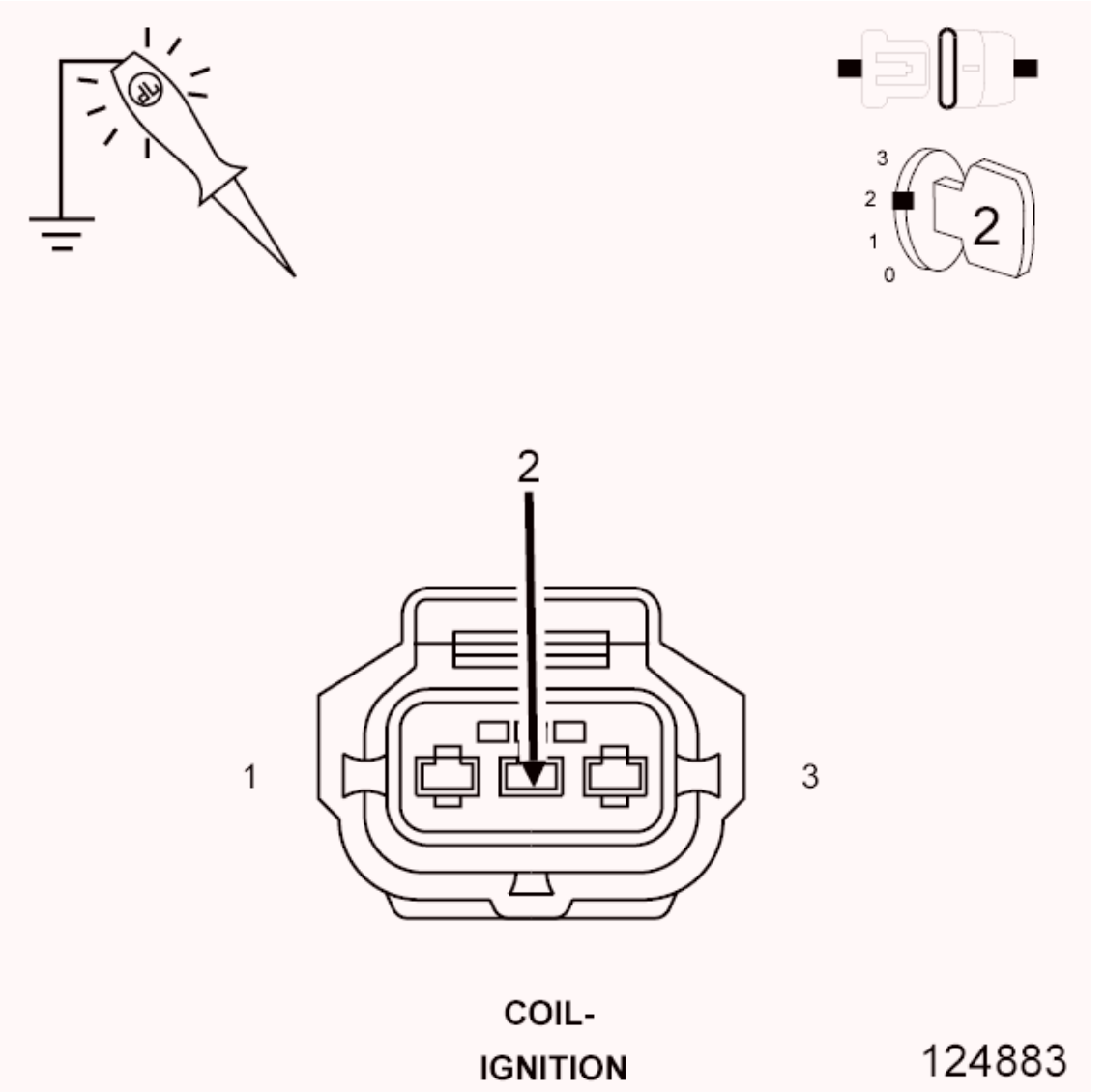

Fig. 101: Using 12-Volt Test Light Connected To Ground To Probe ASD Control Output Circuit In Ignition Coil Harness Connector
Courtesy of CHRYSLER GROUP, LLC

1. Turn the ignition off.
2. Disconnect the Coil on Plug harness connector.
3. Ignition on, engine not running.

NOTE: **Make sure the test light is probing the circuit before actuating the Coil or a DTC may set and not allow the actuation.**

4. Using a 12-volt test light connected to ground, probe the (K342) ASD Control Output circuit in the Coil on Plug harness connector.

5. With the scan tool, actuate the ASD.

   Does the test light illuminate brightly?

   Yes

   - Go To 3.

   No

   - Repair the open or short to ground in the (K342) ASD Control Output circuit between the TIPM and Coil harness connector.
   - Perform the POWERTRAIN VERIFICATION TEST. Refer to **POWERTRAIN VERIFICATION TEST** .

     NOTE: Stop All Actuations.

   -

3. **COIL ON PLUG RESISTANCE**
   1. Turn the ignition off.

      NOTE: The following resistance measurement should be taken between 70° and 80° F.

   2. Measure the resistance of the Coil on Plug.
   3. 4.7L and 3.7L Primary Ignition Coil resistance is 0.6 to 0.9 of an ohm at 25° C (77° F).
   4. 5.7L Primary Ignition Coil resistance is 0.558 to 0.682 of an ohm at 25° C (77° F).

      Is the resistance within the given specification for the Ignition Coil being tested?

      Yes

      - Go To 4.

      No

      - Replace the Coil on plug.
      - Perform the POWERTRAIN VERIFICATION TEST. Refer to **POWERTRAIN VERIFICATION TEST** .
4. **IGNITION COIL**

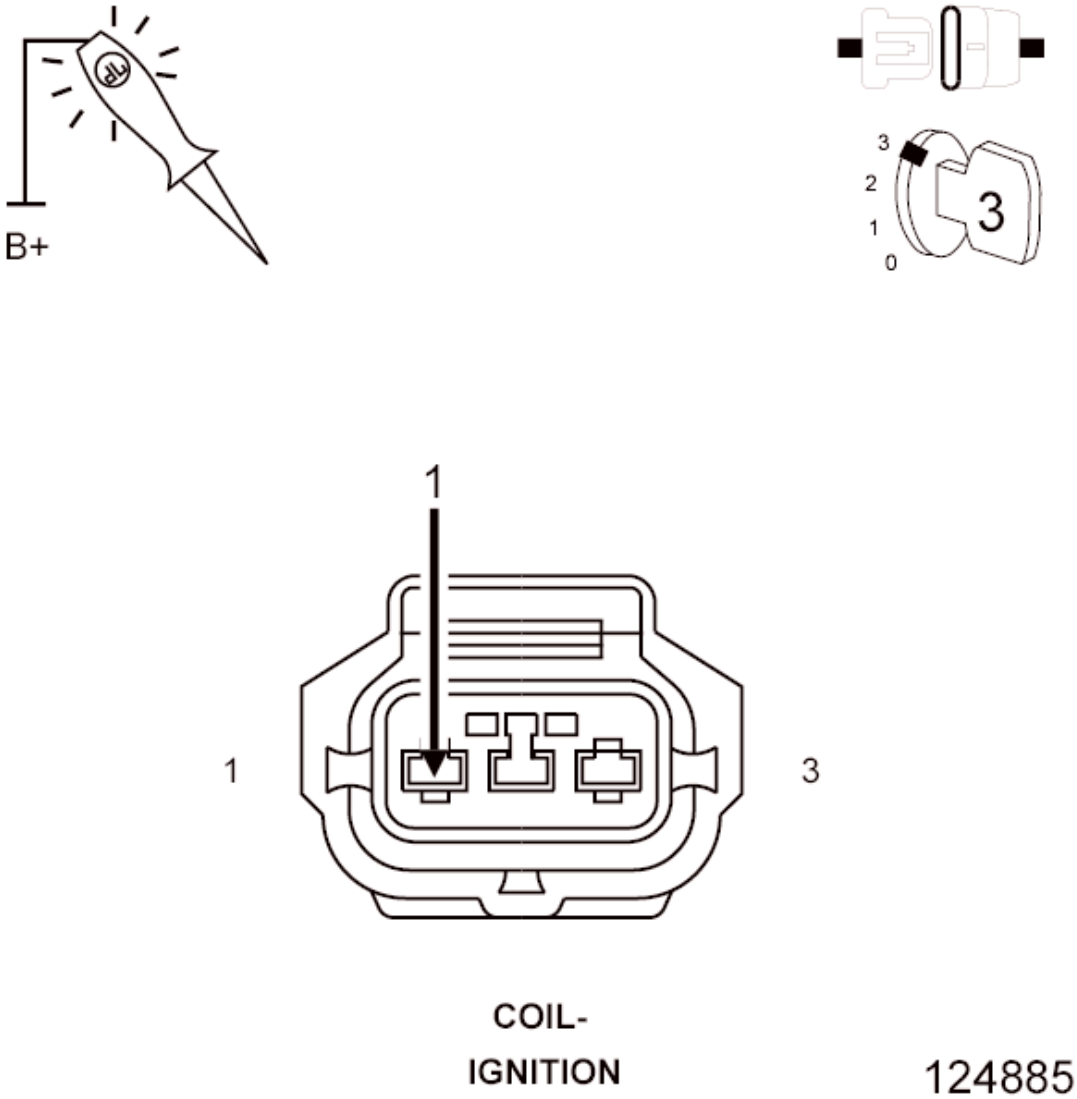

Fig. 102: Using 12-Volt Test Light Connected To 12-Volt Source To Probe Coil Control Circuit
Courtesy of CHRYSLER GROUP, LLC

WARNING: **When the engine is operating, do not stand in direct line with the fan. Do not put your hands near the pulleys, belts or fan. Do not wear loose clothing. Failure to follow these instructions may result in possible serious or fatal injury.**

1. Using a 12-volt test light connected to a 12-volt source, probe the (K15) Coil Control No. 4 circuit.
2. Crank the engine for 5 seconds while observing the test light.

   What is the state of the test light while cranking the engine?

   Brightly blinking.

- Verify that there is good pin to terminal contact in the Ignition Coil and the Powertrain Control Module connectors. Replace the Ignition Coil if no problems were found in the connectors.
- Perform the POWERTRAIN VERIFICATION TEST. Refer to **POWERTRAIN VERIFICATION TEST** .

ON constantly.

- Go To 5.

OFF constantly.

- Go To 6.

5. **(K15) COIL CONTROL NO. 4 CIRCUIT SHORTED TO GROUND**

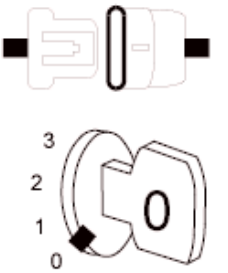

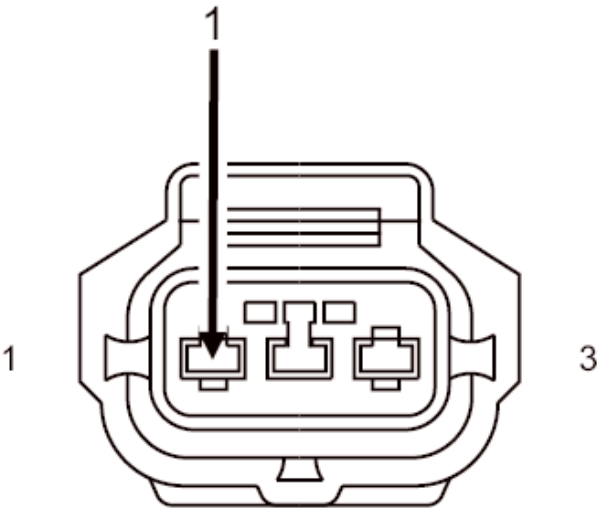

COIL-

IGNITION

125583

Fig. 103: Measuring Resistance Between Ground And Coil Control Circuit In Coil On Plug Harness Connector
Courtesy of CHRYSLER GROUP, LLC

1. Turn the ignition off.
2. Disconnect the C2 PCM harness connector.
3. Measure the resistance between ground and the (K15) Coil Control No. 4 circuit in the Coil on Plug harness connector.

   Is the resistance below 100 Ohms?

   Yes

   - Repair the short to ground in the (K15) Coil Control No. 4 circuit.
   - Perform the POWERTRAIN VERIFICATION TEST. Refer to **POWERTRAIN VERIFICATION TEST** .

   No

   - Go To 7.

6. **(K15) COIL CONTROL NO. 4 CIRCUIT OPEN**

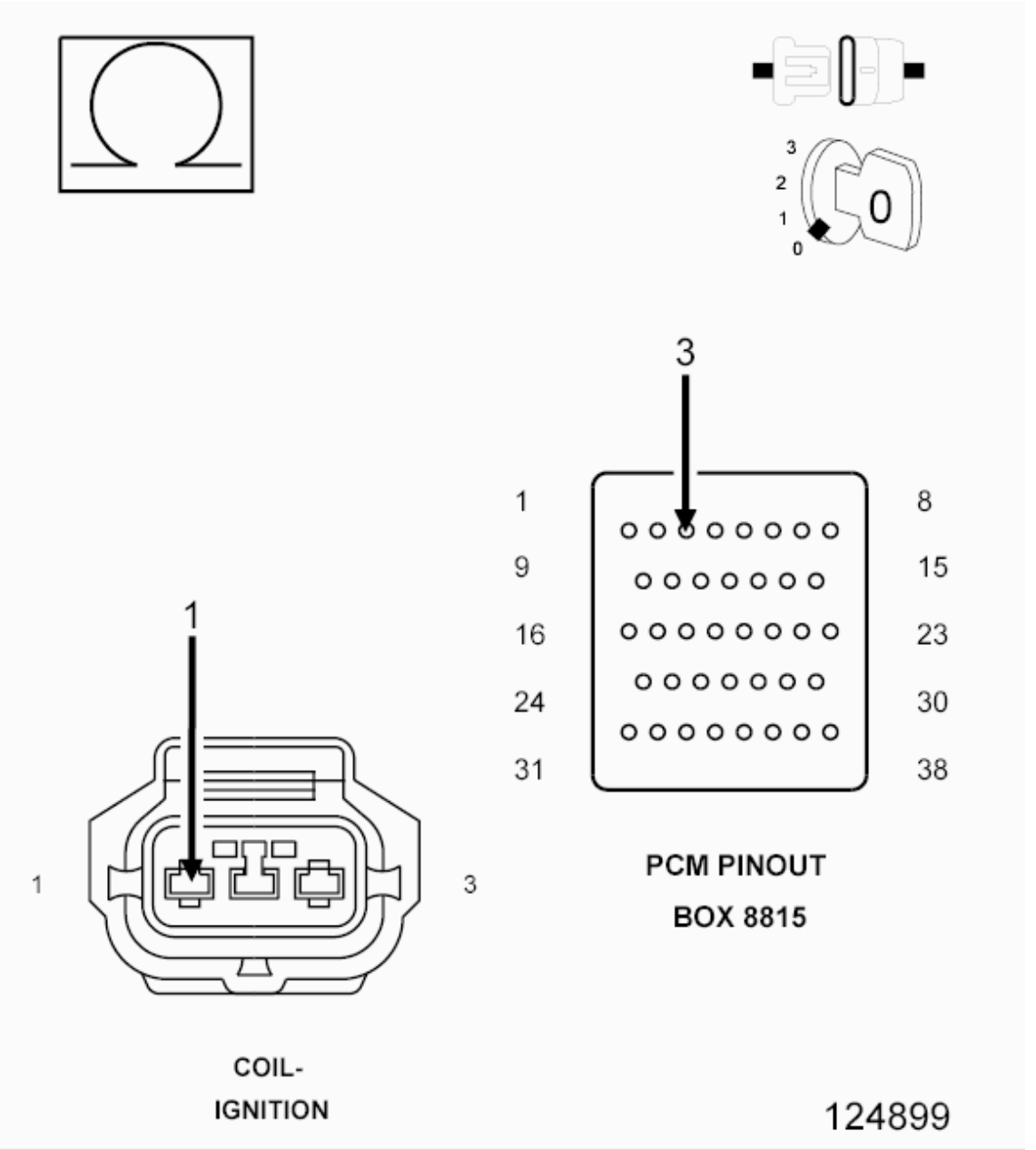

Fig. 104: Checking Coil Control Circuit For An Open, Short To Ground, And Short To Voltage
Courtesy of CHRYSLER GROUP, LLC

1. Turn the ignition off.
2. Disconnect the C2 PCM harness connector.

CAUTION: Do not probe the PCM harness connectors. Probing the PCM harness connectors will damage the PCM terminals resulting in poor terminal to pin connection. Install the PCM Pinout Box (special tool #8815A, Kit, NGC, 38 Position) to perform diagnosis.

3. Measure the resistance of the (K15) Coil Control No. 4 circuit from the Coil on Plug harness connector to the appropriate terminal of PCM Pinout Box (special tool #8815A, Kit, NGC, 38 Position).

   Is the resistance below 5.0 Ohms?

   Yes

   - Go To 7.

   No

   - Repair the open in the (K15) Coil Control No. 4 circuit.
   - Perform the POWERTRAIN VERIFICATION TEST. Refer to **POWERTRAIN VERIFICATION TEST** .

7. **POWERTRAIN CONTROL MODULE (PCM)**
   1. Using the wiring diagram/schematic as a guide, inspect the wiring and connectors between the Ignition Coil and the Powertrain Control Module (PCM).
   2. Look for any chafed, pierced, pinched or partially broken wires.
   3. Look for broken, bent, pushed out or corroded terminals. Verify that there is good pin to terminal contact in the Ignition Coil and the Powertrain Control Module connectors.
   4. Refer to any Technical Service Bulletins that may apply.

      Were there any problems found?

      Yes

      - Repair as necessary.
      - Perform the POWERTRAIN VERIFICATION TEST. Refer to **POWERTRAIN VERIFICATION TEST** .

      No

      - Replace and program the Powertrain Control Module in accordance with the Service Information.
      - Perform the POWERTRAIN VERIFICATION TEST. Refer to **POWERTRAIN VERIFICATION TEST** .

P2314-IGNITION COIL 5 SECONDARY CIRCUIT- INSUFFICIENT IONIZATION

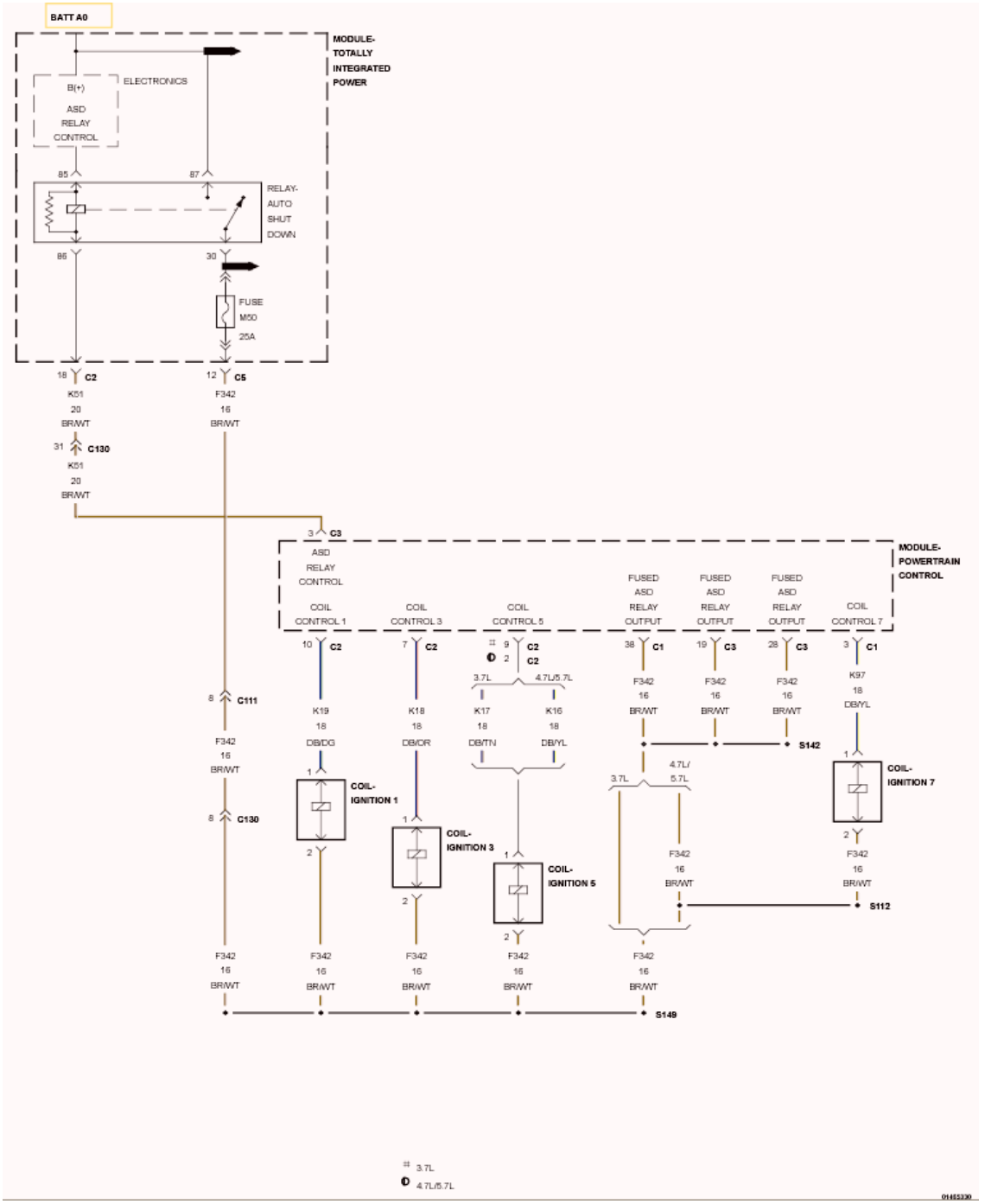

Fig. 105: Ignition Coil Secondary Circuit Schematic
Courtesy of CHRYSLER GROUP, LLC

For a complete wiring diagram, **refer to appropriate SYSTEM WIRING DIAGRAMS article** .

WHEN MONITORED:

Engine running and battery voltage greater than 10 Volts.

SET CONDITION:

If PCM detects that the secondary ignition burn time is incorrect, too short or not present, an error is detected. One Trip Fault. Three good trips to turn off the MIL.

POSSIBLE CAUSES

Possible Causes
(K342) ASD CONTROL OUTPUT CIRCUIT
(K16) COIL CONTROL NO. 5 CIRCUIT OPEN
(K16) COIL CONTROL NO. 5 CIRCUIT SHORTED TO GROUND
COIL ON PLUG
POWERTRAIN CONTROL MODULE (PCM)

Always perform the Pre-Diagnostic Troubleshooting procedure before proceeding. Refer to PRE-DIAGNOSTIC TROUBLESHOOTING PROCEDURE .

DIAGNOSTIC TEST

1. **ACTIVE DTC**

   NOTE: Diagnose any ASD related DTCs before continuing.

   1. Start the engine.
   2. With the scan tool, select View DTCs.

      NOTE: It may be necessary to drive the vehicle to meet the conditions to set this DTC, try to repeat the conditions in which the fault originally set by reviewing the Freeze Frame data.

      Does the DTC become Active?

      Yes

      - Go To 2.

      No

      - Perform the INTERMITTENT CONDITION Diagnostic Procedure. Refer to **INTERMITTENT CONDITION** .

2. **(K342) ASD CONTROL OUTPUT CIRCUIT**

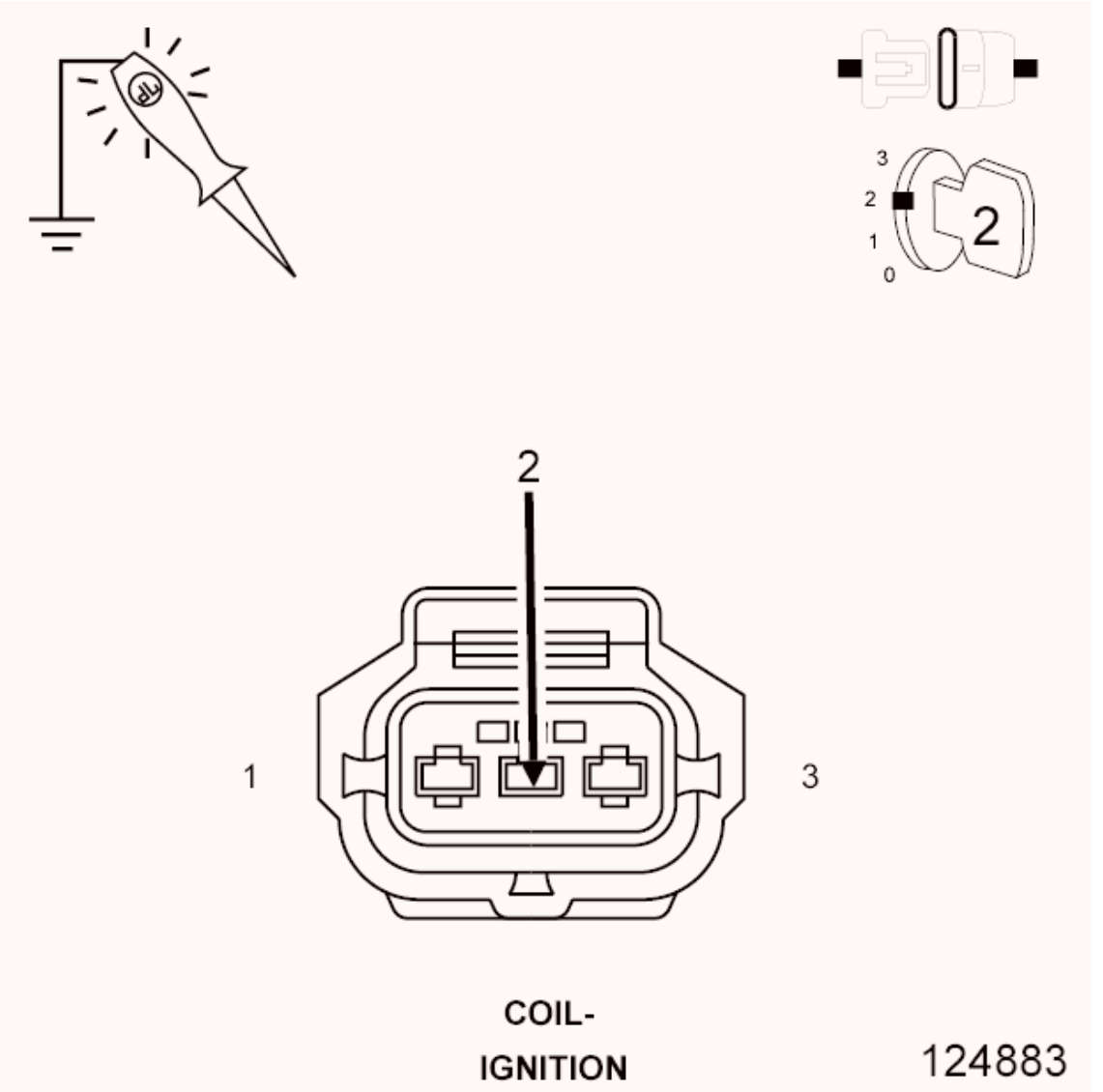

Fig. 106: Using 12-Volt Test Light Connected To Ground To Probe ASD Control Output Circuit In Ignition Coil Harness Connector
Courtesy of CHRYSLER GROUP, LLC

1. Turn the ignition off.
2. Disconnect the Coil on Plug harness connector.
3. Ignition on, engine not running.

NOTE: **Make sure the test light is probing the circuit before actuating the Coil or a DTC may set and not allow the actuation.**

4. Using a 12-volt test light connected to ground, probe the (K342) ASD Control Output circuit in the Coil on Plug harness connector.
5. With the scan tool, actuate the ASD.

Does the test light illuminate brightly?

Yes

- Go To 3.

No

- Repair the open or short to ground in the (K342) ASD Control Output circuit between the TIPM and Coil harness connector.
- Perform the POWERTRAIN VERIFICATION TEST. Refer to **POWERTRAIN VERIFICATION TEST** .

  NOTE: Stop All Actuations.

-

3. **COIL ON PLUG RESISTANCE**
   1. Turn the ignition off.

      NOTE: The following resistance measurement should be taken at 70°-80° F.

   2. Measure the resistance of the Coil on Plug.
   3. 4.7L and 3.7L Primary Ignition Coil resistance is 0.6 to 0.9 of an ohm at 25° C (77° F).
   4. 5.7L Primary Ignition Coil resistance is 0.558 to 0.682 of an ohm at 25° C (77° F).

   Is the resistance within the given specification for the Ignition Coil being tested?

   Yes

   - Go To 4.

   No

   - Replace the Coil on plug.
   - Perform the POWERTRAIN VERIFICATION TEST. Refer to **POWERTRAIN VERIFICATION TEST** .
4. **IGNITION COIL**

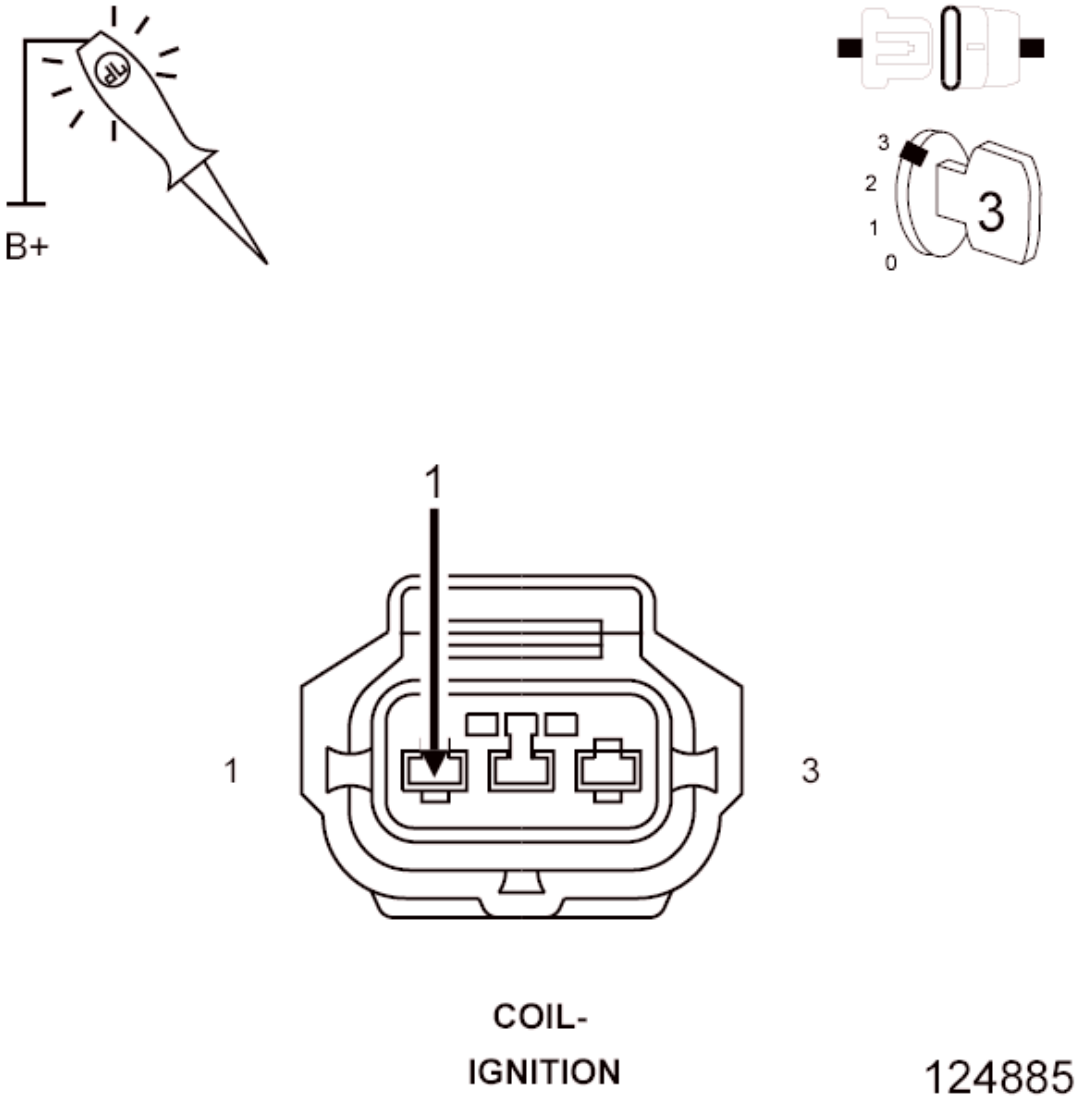

Fig. 107: Using 12-Volt Test Light Connected To 12-Volt Source To Probe Coil Control Circuit
Courtesy of CHRYSLER GROUP, LLC

WARNING: **When the engine is operating, do not stand in direct line with the fan. Do not put your hands near the pulleys, belts or fan. Do not wear loose clothing. Failure to follow these instructions may result in possible serious or fatal injury.**

1. Using a 12-volt test light connected to a 12-volt source, probe the (K16) Coil Control No. 5 circuit.
2. Crank the engine for 5 seconds while observing the test light.

   What is the state of the test light while cranking the engine?

   Brightly blinking.

- Verify that there is good pin to terminal contact in the Ignition Coil and the Powertrain Control Module connectors. Replace the Ignition Coil if no problems were found in the connectors.
- Perform the POWERTRAIN VERIFICATION TEST. Refer to **POWERTRAIN VERIFICATION TEST** .

ON constantly.

- Go To 5.

OFF constantly.

- Go To 6.

5. **(K16) COIL CONTROL NO. 5 CIRCUIT SHORTED TO GROUND**

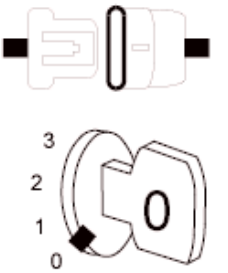

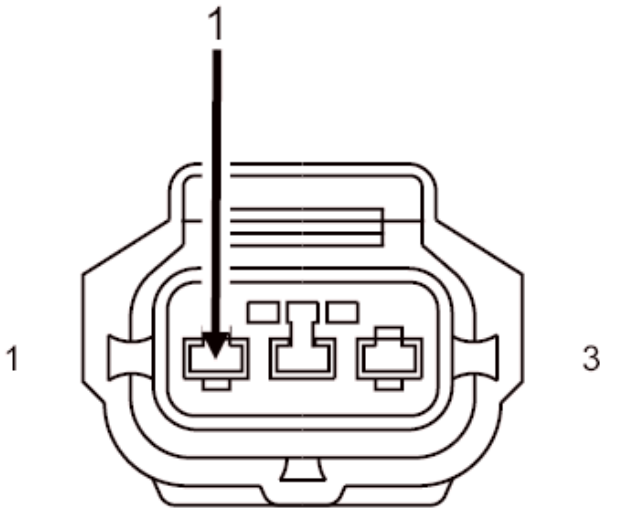

COIL-
IGNITION

125583

Fig. 108: Measuring Resistance Between Ground And Coil Control Circuit In Coil On Plug Harness Connector
Courtesy of CHRYSLER GROUP, LLC

1. Turn the ignition off.
2. Disconnect the C2 PCM harness connector.
3. Measure the resistance between ground and the (K16) Coil Control No. 5 circuit in the Coil on Plug harness connector.

   Is the resistance below 100 Ohms?

   Yes

   - Repair the short to ground in the (K16) Coil Control No. 5 circuit.
   - Perform the POWERTRAIN VERIFICATION TEST. Refer to **POWERTRAIN VERIFICATION TEST** .

   No

   - Go To 7.

6. **(K16) COIL CONTROL NO. 5 CIRCUIT OPEN**

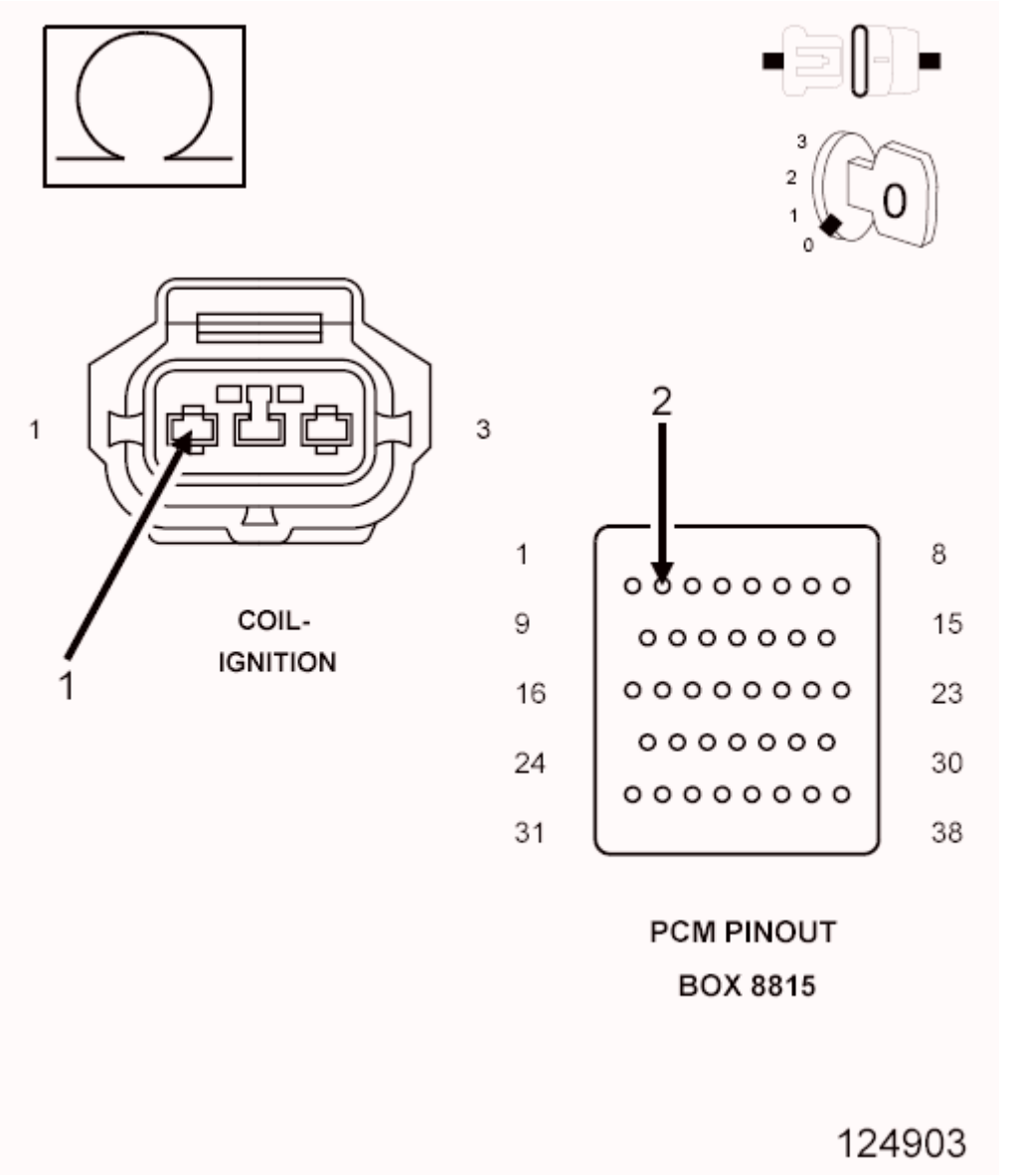

Fig. 109: Checking Coil Control No. 5 Circuit For An Open, Short To Ground, And Short To Voltage
Courtesy of CHRYSLER GROUP, LLC

1. Turn the ignition off.
2. Disconnect the C2 PCM harness connector.

CAUTION: Do not probe the PCM harness connectors. Probing the PCM harness connectors will damage the PCM terminals resulting in poor terminal to pin connection. Install the PCM Pinout Box (special tool #8815A, Kit, NGC, 38 Position) to perform diagnosis.

3. Measure the resistance of the (K16) Coil Control No. 5 circuit from the Coil on Plug harness

connector to the appropriate terminal of PCM Pinout Box (special tool #8815A, Kit, NGC, 38 Position).

Is the resistance below 5.0 Ohms?

Yes

- Go To 7.

No

- Repair the open in the (K16) Coil Control No. 5 circuit.
- Perform the POWERTRAIN VERIFICATION TEST. Refer to **POWERTRAIN VERIFICATION TEST** .

7. **POWERTRAIN CONTROL MODULE (PCM)**
    1. Using the wiring diagram/schematic as a guide, inspect the wiring and connectors between the Ignition Coil and the Powertrain Control Module (PCM).
    2. Look for any chafed, pierced, pinched or partially broken wires.
    3. Look for broken, bent, pushed out or corroded terminals. Verify that there is good pin to terminal contact in the Ignition Coil and the Powertrain Control Module connectors.
    4. Refer to any Technical Service Bulletins that may apply.

    Were there any problems found?

    Yes

    - Repair as necessary.
    - Perform the POWERTRAIN VERIFICATION TEST. Refer to **POWERTRAIN VERIFICATION TEST** .

    No

    - Replace and program the Powertrain Control Module in accordance with the Service Information.
    - Perform the POWERTRAIN VERIFICATION TEST. Refer to **POWERTRAIN VERIFICATION TEST** .

P2317-IGNITION COIL 6 SECONDARY CIRCUIT- INSUFFICIENT IONIZATION

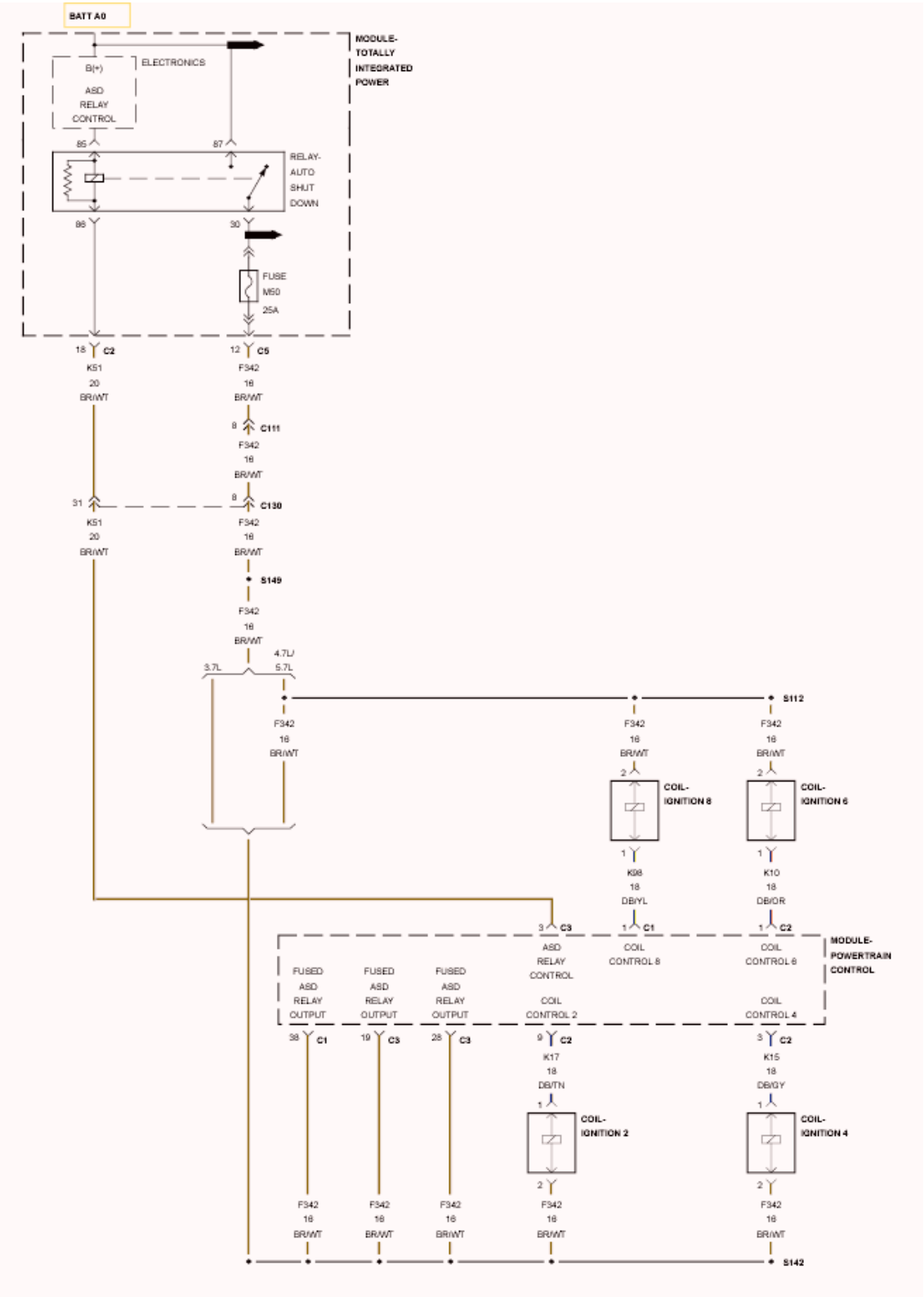

Fig. 110: Ignition Coil Secondary Circuit Schematic
Courtesy of CHRYSLER GROUP, LLC

For a complete wiring diagram, **refer to appropriate SYSTEM WIRING DIAGRAMS article** .

WHEN MONITORED:

Engine running and battery voltage greater than 10 Volts.

SET CONDITION:

If PCM detects that the secondary ignition burn time is incorrect, too short or not present, an error is detected. One Trip Fault. Three good trips to turn off the MIL.

POSSIBLE CAUSES

Possible Causes
(K342) ASD CONTROL OUTPUT CIRCUIT
(K10) COIL CONTROL NO. 6 CIRCUIT OPEN
(K10) COIL CONTROL NO. 6 CIRCUIT SHORTED TO GROUND
COIL ON PLUG
POWERTRAIN CONTROL MODULE (PCM)

Always perform the Pre-Diagnostic Troubleshooting procedure before proceeding. Refer to PRE-DIAGNOSTIC TROUBLESHOOTING PROCEDURE .

DIAGNOSTIC TEST

1. **ACTIVE DTC**

   NOTE: Diagnose any ASD related DTCs before continuing.

   1. Start the engine.
   2. With the scan tool, select View DTCs.

      NOTE: It may be necessary to drive the vehicle to meet the conditions to set this DTC, try to repeat the conditions in which the fault originally set by reviewing the Freeze Frame data.

      Does the DTC become Active?

      Yes

      - Go To 2.

      No

      - Perform the INTERMITTENT CONDITION Diagnostic Procedure. Refer to **INTERMITTENT CONDITION** .

2. **(K342) ASD CONTROL OUTPUT CIRCUIT**

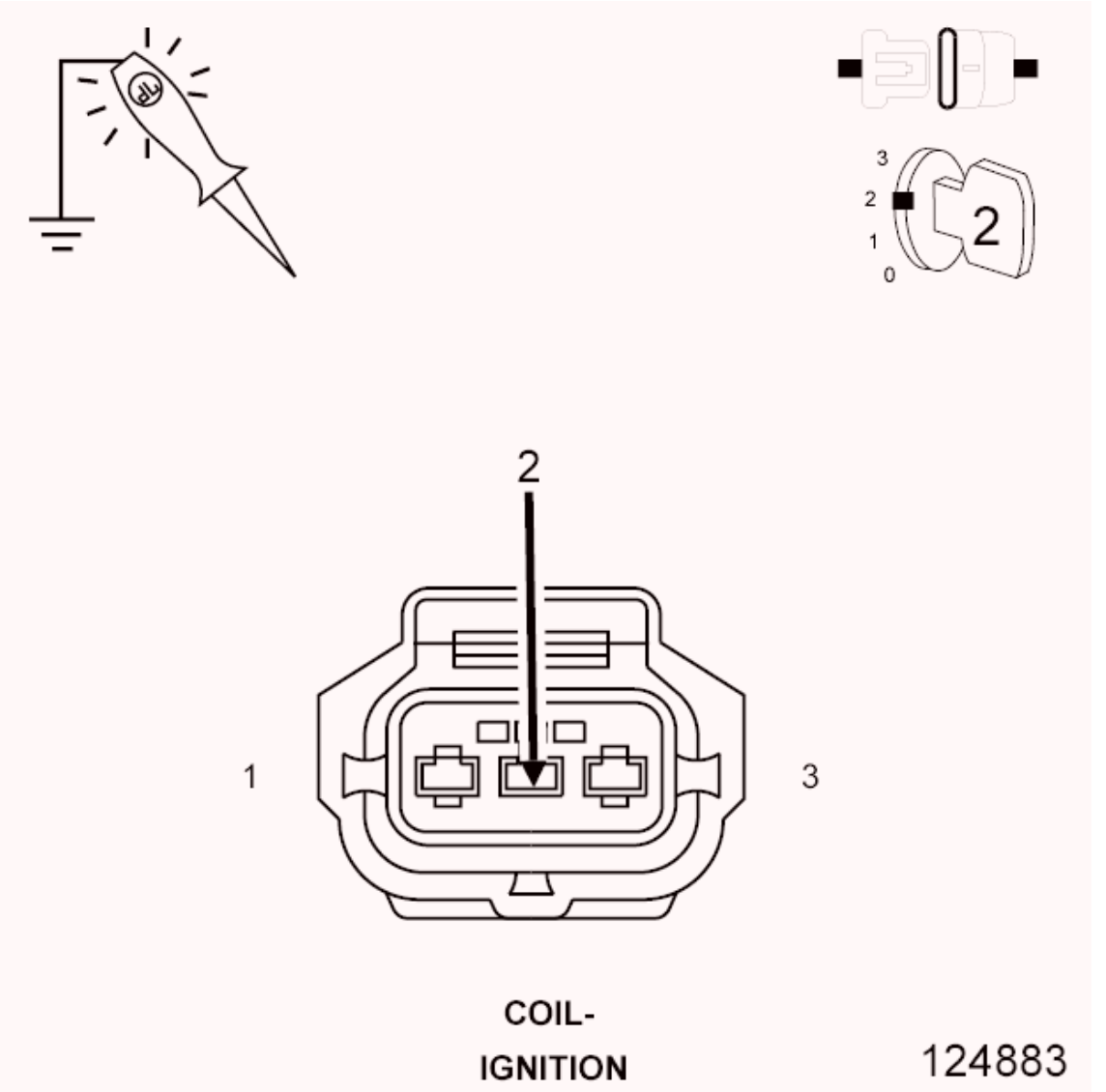

Fig. 111: Using 12-Volt Test Light Connected To Ground To Probe ASD Control Output Circuit In Ignition Coil Harness Connector
Courtesy of CHRYSLER GROUP, LLC

1. Turn the ignition off.
2. Disconnect the Coil on Plug harness connector.
3. Ignition on, engine not running.

NOTE: **Make sure the test light is probing the circuit before actuating the Coil or a DTC may set and not allow the actuation.**

4. Using a 12-volt test light connected to ground, probe the (K342) ASD Control Output circuit in the Coil on Plug harness connector.

5. With the scan tool, actuate the ASD.

   Does the test light illuminate brightly?

   Yes

   - Go To 3.

   No

   - Repair the open or short to ground in the (K342) ASD Control Output circuit between the TIPM and Coil harness connector.
   - Perform the POWERTRAIN VERIFICATION TEST. Refer to **POWERTRAIN VERIFICATION TEST** .

     NOTE: Stop All Actuations.

   -

3. **COIL ON PLUG RESISTANCE**
   1. Turn the ignition off.

      NOTE: The following resistance measurement should be taken between 70° and 80° F.

   2. Measure the resistance of the Coil on Plug.
   3. 4.7L and 3.7L Primary Ignition Coil resistance is 0.6 to 0.9 of an ohm at 25° C (77° F).
   4. 5.7L Primary Ignition Coil resistance is 0.558 to 0.682 of an ohm at 25° C (77° F).

      Is the resistance within the given specification for the Ignition Coil being tested?

      Yes

      - Go To 4.

      No

      - Replace the Coil on plug.
      - Perform the POWERTRAIN VERIFICATION TEST. Refer to **POWERTRAIN VERIFICATION TEST** .
4. **IGNITION COIL**

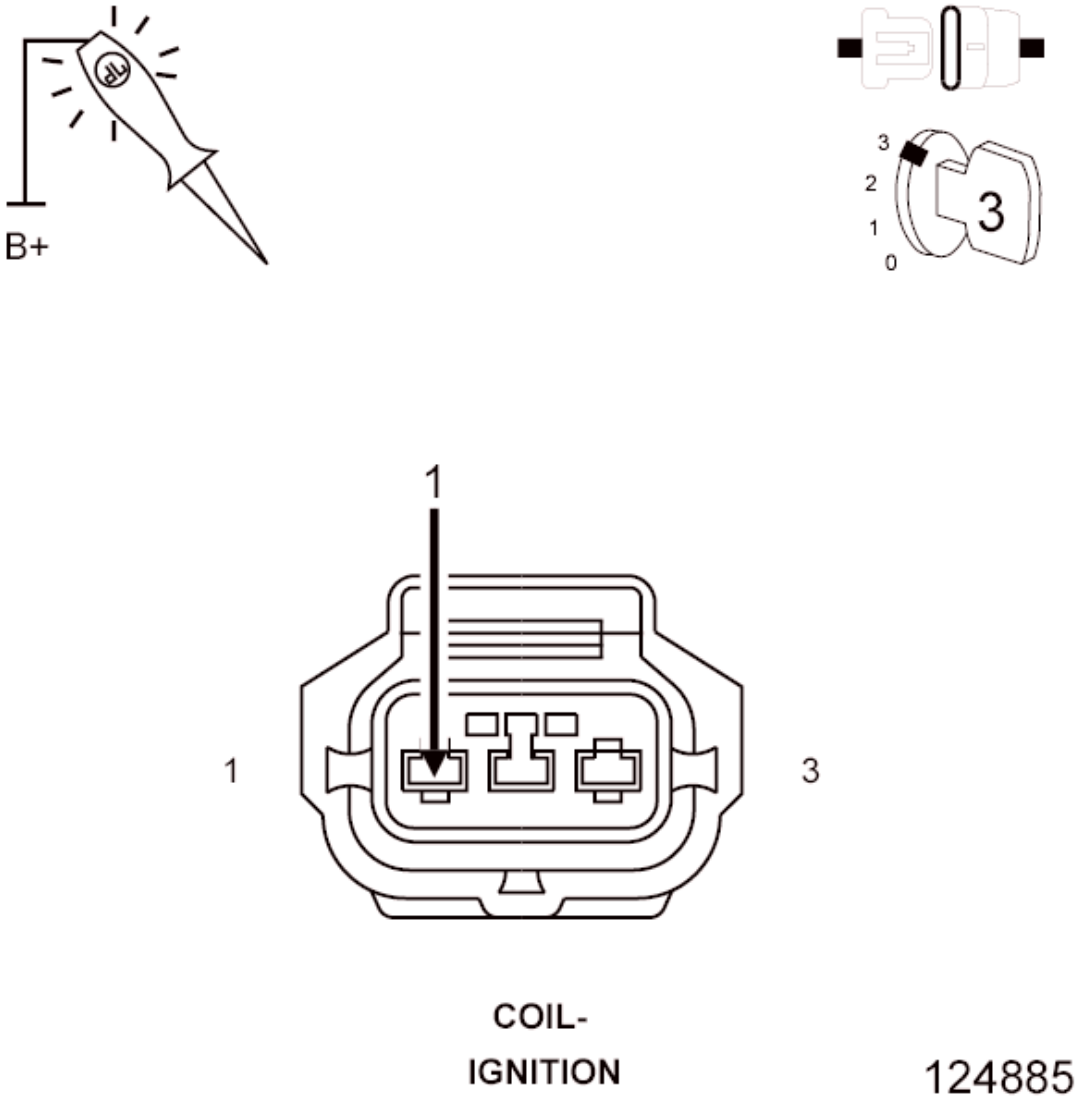

Fig. 112: Using 12-Volt Test Light Connected To 12-Volt Source To Probe Coil Control Circuit
Courtesy of CHRYSLER GROUP, LLC

WARNING: **When the engine is operating, do not stand in direct line with the fan. Do not put your hands near the pulleys, belts or fan. Do not wear loose clothing. Failure to follow these instructions may result in possible serious or fatal injury.**

1. Using a 12-volt test light connected to a 12-volt source, probe the (K10) Coil Control No. 6 circuit.
2. Crank the engine for 5 seconds while observing the test light.

   What is the state of the test light while cranking the engine?

   Brightly blinking.

- Verify that there is good pin to terminal contact in the Ignition Coil and the Powertrain Control Module connectors. Replace the Ignition Coil if no problems were found in the connectors.
- Perform the POWERTRAIN VERIFICATION TEST. Refer to **POWERTRAIN VERIFICATION TEST** .

ON constantly.

- Go To 5.

OFF constantly.

- Go To 6.

5. **(K10) COIL CONTROL NO. 6 CIRCUIT SHORTED TO GROUND**

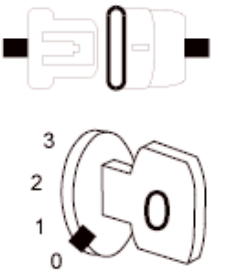

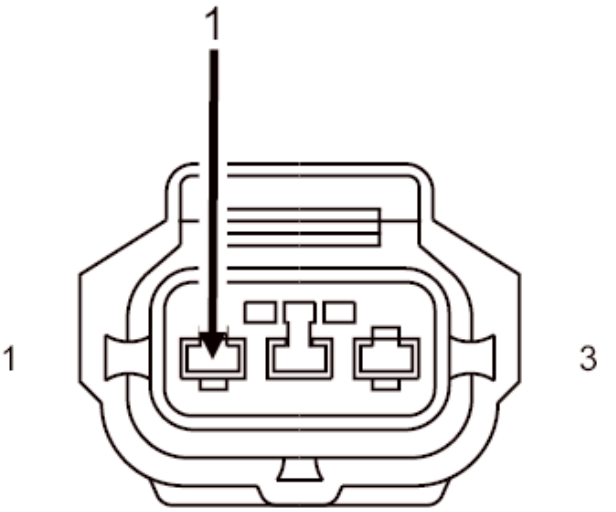

COIL-
IGNITION

125583

Fig. 113: Measuring Resistance Between Ground And Coil Control Circuit In Coil On Plug Harness Connector
Courtesy of CHRYSLER GROUP, LLC

1. Turn the ignition off.
2. Disconnect the C2 PCM harness connector.
3. Measure the resistance between ground and the (K10) Coil Control No. 6 circuit in the Coil on Plug harness connector.

   Is the resistance below 100 Ohms?

   Yes

   - Repair the short to ground in the (K10) Coil Control No. 6 circuit.
   - Perform the POWERTRAIN VERIFICATION TEST. Refer to **POWERTRAIN VERIFICATION TEST** .

   No

   - Go To 7.

6. **(K10) COIL CONTROL NO. 6 CIRCUIT OPEN**

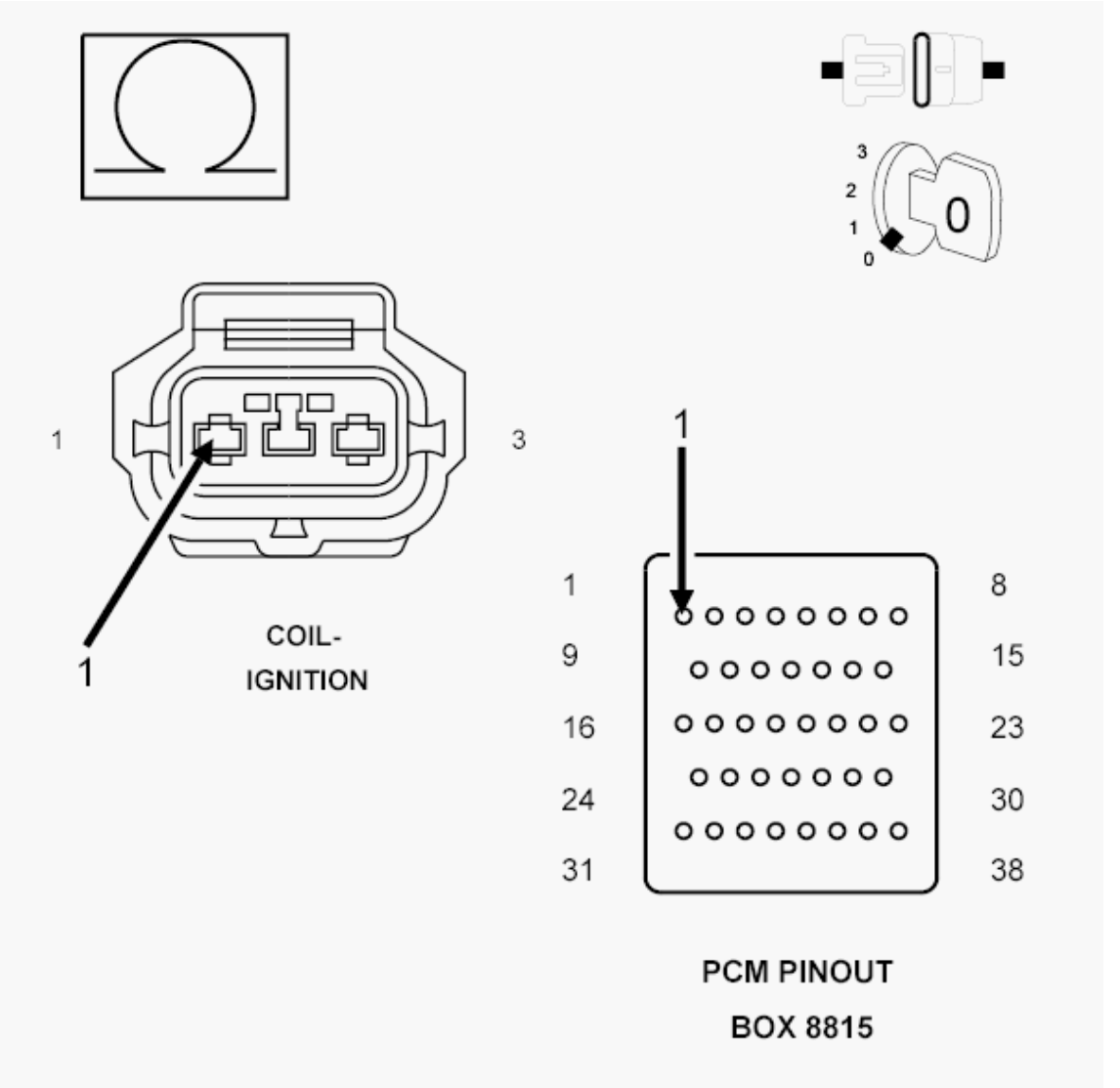

Fig. 114: Checking Coil Control Circuit For An Open, Short To Ground, And Short To Voltage
Courtesy of CHRYSLER GROUP, LLC

1. Turn the ignition off.
2. Disconnect the C2 PCM harness connectors.

CAUTION: Do not probe the PCM harness connectors. Probing the PCM harness connectors will damage the PCM terminals resulting in poor terminal to pin connection. Install the PCM Pinout Box (special tool #8815A, Kit, NGC, 38 Position) to perform diagnosis.

3. Measure the resistance of the (K10) Coil Control No. 6 circuit from the Coil on Plug harness connector to the appropriate terminal of PCM Pinout Box (special tool #8815A, Kit, NGC, 38 Position).

Is the resistance below 5.0 Ohms?

Yes

- Go To 7.

No

- Repair the open in the (K10) Coil Control No. 6 circuit.
- Perform the POWERTRAIN VERIFICATION TEST. Refer to **POWERTRAIN VERIFICATION TEST** .

7. **POWERTRAIN CONTROL MODULE (PCM)**
    1. Using the wiring diagram/schematic as a guide, inspect the wiring and connectors between the Ignition Coil and the Powertrain Control Module (PCM).
    2. Look for any chafed, pierced, pinched or partially broken wires.
    3. Look for broken, bent, pushed out or corroded terminals. Verify that there is good pin to terminal contact in the Ignition Coil and the Powertrain Control Module connectors.
    4. Refer to any Technical Service Bulletins that may apply.

    Were there any problems found?

    Yes

    - Repair as necessary.
    - Perform the POWERTRAIN VERIFICATION TEST. Refer to **POWERTRAIN VERIFICATION TEST** .

    No

    - Replace and program the Powertrain Control Module in accordance with the Service Information.
    - Perform the POWERTRAIN VERIFICATION TEST. Refer to **POWERTRAIN VERIFICATION TEST** .

P2320-IGNITION COIL 7 SECONDARY CIRCUIT- INSUFFICIENT IONIZATION

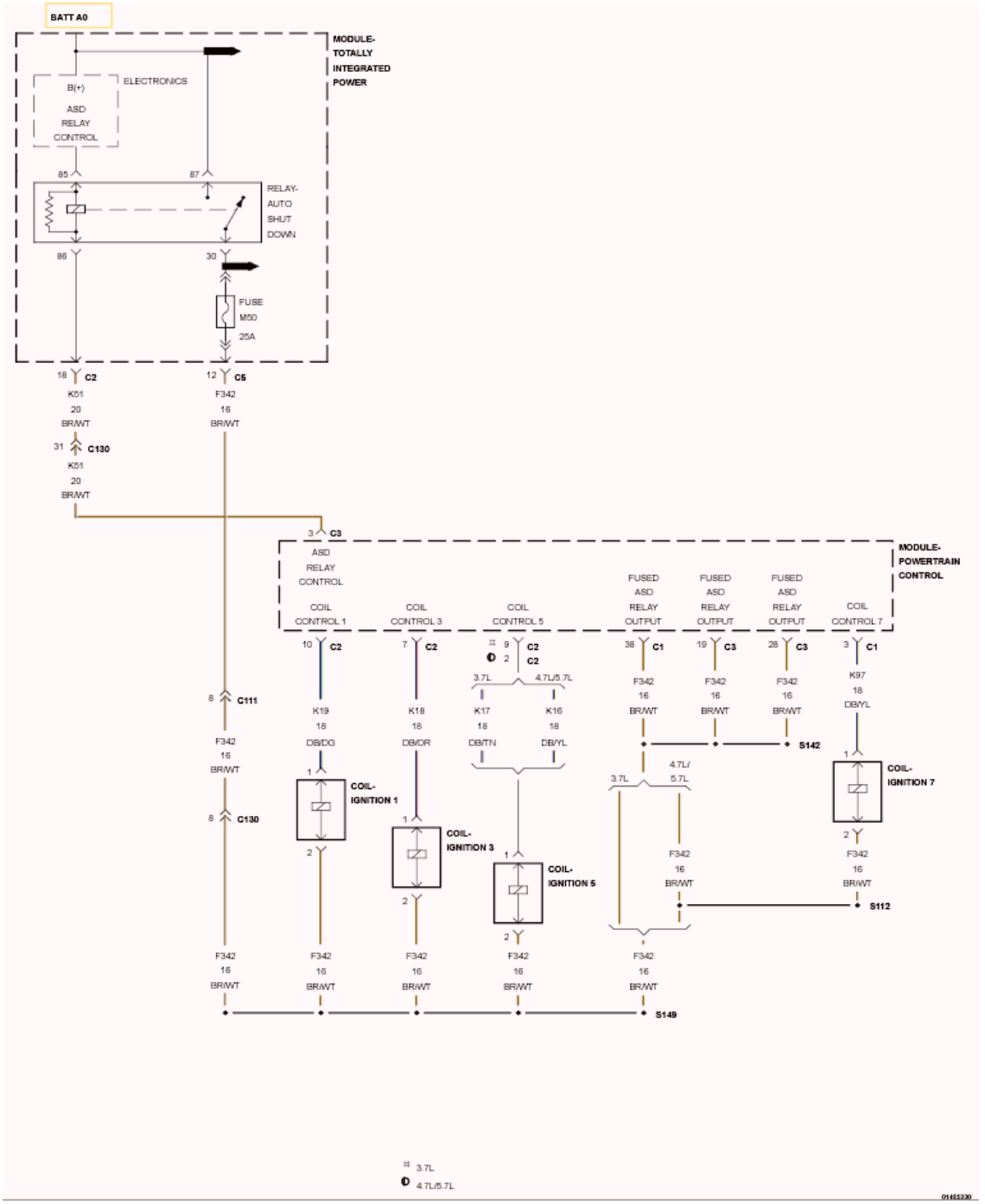

Fig. 115: Ignition Coil Secondary Circuit Schematic
Courtesy of CHRYSLER GROUP, LLC

For a complete wiring diagram, **refer to appropriate SYSTEM WIRING DIAGRAMS article** .

WHEN MONITORED:

Engine running and battery voltage greater than 10 Volts.

SET CONDITION:

If PCM detects that the secondary ignition burn time is incorrect, too short or not present, an error is detected. One Trip Fault. Three good trips to turn off the MIL.

POSSIBLE CAUSES

Possible Causes
(K342) ASD CONTROL OUTPUT CIRCUIT
(K97) COIL CONTROL NO. 7 CIRCUIT OPEN
(K97) COIL CONTROL NO. 7 CIRCUIT SHORTED TO GROUND
COIL ON PLUG
POWERTRAIN CONTROL MODULE (PCM)

Always perform the Pre-Diagnostic Troubleshooting procedure before proceeding. Refer to PRE-DIAGNOSTIC TROUBLESHOOTING PROCEDURE .

DIAGNOSTIC TEST

1. **ACTIVE DTC**

   NOTE: Diagnose any ASD related DTCs before continuing.

   1. Start the engine.
   2. With the scan tool, select View DTCs.

      NOTE: It may be necessary to drive the vehicle to meet the conditions to set this DTC, try to repeat the conditions in which the fault originally set by reviewing the Freeze Frame data.

      Does the DTC become Active?

      Yes

      - Go To 2.

      No

      - Perform the INTERMITTENT CONDITION Diagnostic Procedure. Refer to **INTERMITTENT CONDITION** .

2. **(K342) ASD CONTROL OUTPUT CIRCUIT**

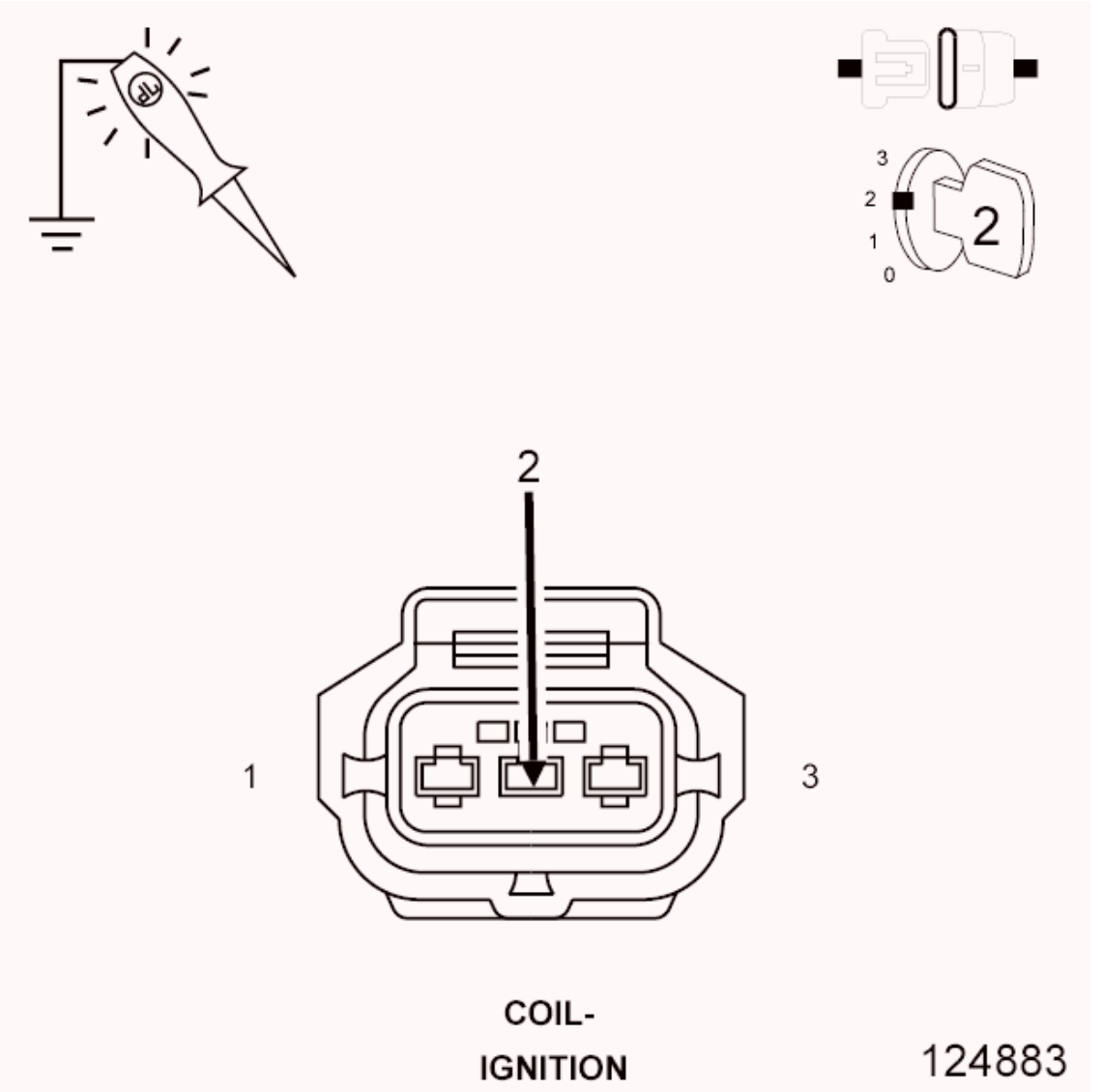

Fig. 116: Using 12-Volt Test Light Connected To Ground To Probe ASD Control Output Circuit In Ignition Coil Harness Connector
Courtesy of CHRYSLER GROUP, LLC

1. Turn the ignition off.
2. Disconnect the Coil on Plug harness connector.
3. Ignition on, engine not running.

NOTE: **Make sure the test light is probing the circuit before actuating the Coil or a DTC may set and not allow the actuation.**

4. Using a 12-volt test light connected to ground, probe the (K342) ASD Control Output circuit in the Coil on Plug harness connector.
5. With the scan tool, actuate the ASD.

Does the test light illuminate brightly?

Yes

- Go To 3.

No

- Repair the open or short to ground in the (K342) ASD Control Output circuit between the TIPM and Coil harness connector.
- Perform the POWERTRAIN VERIFICATION TEST. Refer to **POWERTRAIN VERIFICATION TEST** .

  NOTE: Stop All Actuations.

-

3. **COIL ON PLUG RESISTANCE**
   1. Turn the ignition off.

      NOTE: The following resistance measurement should be taken between 70° and 80° F.

   2. Measure the resistance of the Coil on Plug.
   3. 4.7L Primary Ignition Coil resistance is 0.6 to 0.9 of an ohm at 25° C (77° F).
   4. 5.7L Primary Ignition Coil resistance is 0.558 to 0.682 of an ohm at 25° C (77° F).

   Is the resistance within the given specification for the Ignition Coil being tested?

   Yes

   - Go To 4.

   No

   - Replace the Coil on plug.
   - Perform the POWERTRAIN VERIFICATION TEST. Refer to **POWERTRAIN VERIFICATION TEST** .
4. **IGNITION COIL**

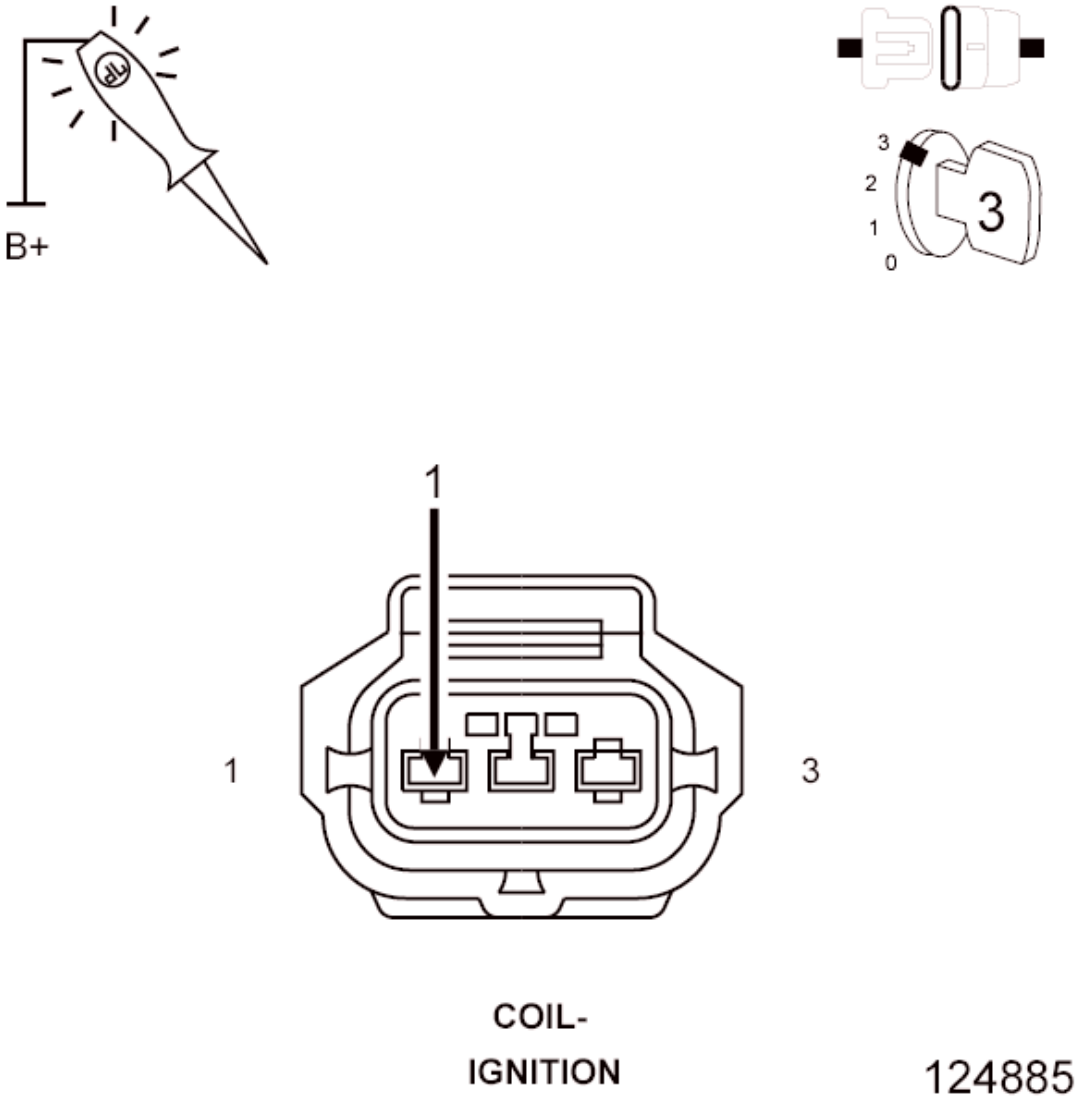

Fig. 117: Using 12-Volt Test Light Connected To 12-Volt Source To Probe Coil Control Circuit
Courtesy of CHRYSLER GROUP, LLC

WARNING: **When the engine is operating, do not stand in direct line with the fan. Do not put your hands near the pulleys, belts or fan. Do not wear loose clothing. Failure to follow these instructions may result in possible serious or fatal injury.**

1. Using a 12-volt test light connected to a 12-volt source, probe the (K97) Coil Control No. 7 circuit.
2. Crank the engine for 5 seconds while observing the test light.

   What is the state of the test light while cranking the engine?

   Brightly blinking.

- Verify that there is good pin to terminal contact in the Ignition Coil and the Powertrain Control Module connectors. Replace the Ignition Coil if no problems were found in the connectors.
- Perform the POWERTRAIN VERIFICATION TEST. Refer to **POWERTRAIN VERIFICATION TEST** .

ON constantly.

- Go To 5.

OFF constantly.

- Go To 6.

5. **(K97) COIL CONTROL NO. 7 CIRCUIT SHORTED TO GROUND**

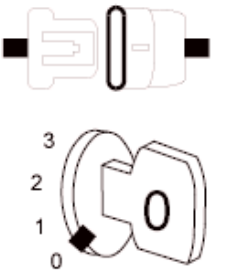

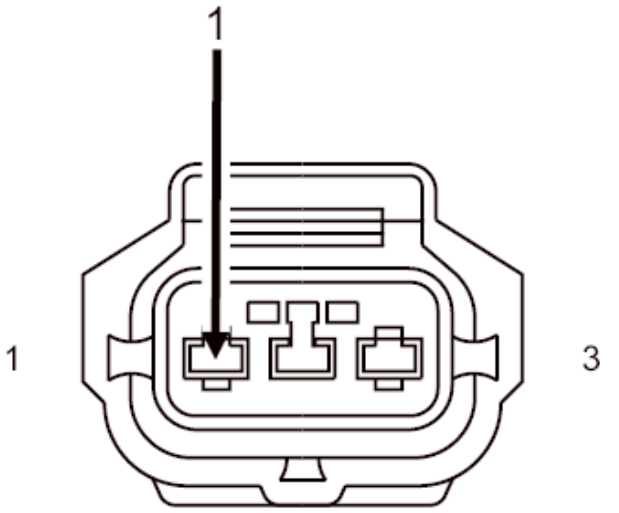

COIL-
IGNITION

125583

Fig. 118: Measuring Resistance Between Ground And Coil Control Circuit In Coil On Plug Harness Connector
Courtesy of CHRYSLER GROUP, LLC

1. Turn the ignition off.
2. Disconnect the C1 PCM harness connector.
3. Measure the resistance between ground and the (K97) Coil Control No. 7 circuit in the Coil on Plug harness connector.

   Is the resistance below 100 Ohms?

   Yes

   - Repair the short to ground in the (K97) Coil Control No. 7 circuit.
   - Perform the POWERTRAIN VERIFICATION TEST. Refer to **POWERTRAIN VERIFICATION TEST** .

   No

   - Go To 7.

6. **(K97) COIL CONTROL NO. 7 CIRCUIT OPEN**

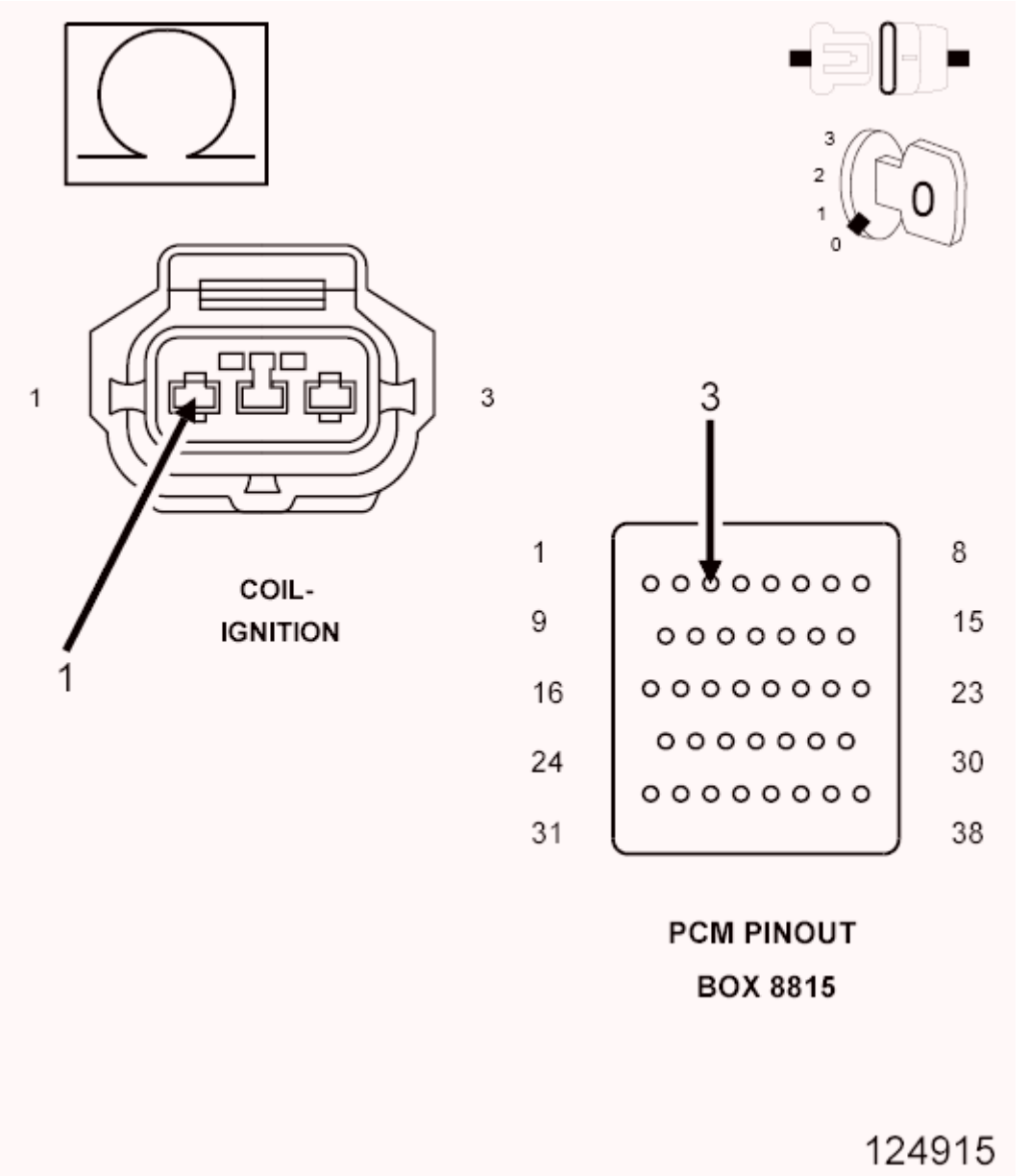

Fig. 119: Checking Coil Control No. 7 Circuit For An Open, Short To Ground, And Short To Voltage
Courtesy of CHRYSLER GROUP, LLC

1. Turn the ignition off.
2. Disconnect the C1 PCM harness connector.

CAUTION: Do not probe the PCM harness connectors. Probing the PCM harness connectors will damage the PCM terminals resulting in poor terminal to pin connection. Install the PCM Pinout Box (special tool #8815A, Kit, NGC, 38 Position) to perform diagnosis.

3. Measure the resistance of the (K97) Coil Control No. 7 circuit from the Coil on Plug connector to the appropriate terminal of PCM Pinout Box (special tool #8815A, Kit, NGC, 38 Position).

   Is the resistance below 5.0 Ohms?

   Yes

   - Go To 7.

   No

   - Repair the open in the (K97) Coil Control No. 7 circuit.
   - Perform the POWERTRAIN VERIFICATION TEST. Refer to **POWERTRAIN VERIFICATION TEST** .

7. **POWERTRAIN CONTROL MODULE (PCM)**
   1. Using the wiring diagram/schematic as a guide, inspect the wiring and connectors between the Ignition Coil and the Powertrain Control Module (PCM).
   2. Look for any chafed, pierced, pinched or partially broken wires.
   3. Look for broken, bent, pushed out or corroded terminals. Verify that there is good pin to terminal contact in the Ignition Coil and the Powertrain Control Module connectors.
   4. Refer to any Technical Service Bulletins that may apply.

      Were there any problems found?

      Yes

      - Repair as necessary.
      - Perform the POWERTRAIN VERIFICATION TEST. Refer to **POWERTRAIN VERIFICATION TEST** .

      No

      - Replace and program the Powertrain Control Module in accordance with the Service Information.
      - Perform the POWERTRAIN VERIFICATION TEST. Refer to **POWERTRAIN VERIFICATION TEST** .

P2323-IGNITION COIL 8 SECONDARY CIRCUIT- INSUFFICIENT IONIZATION

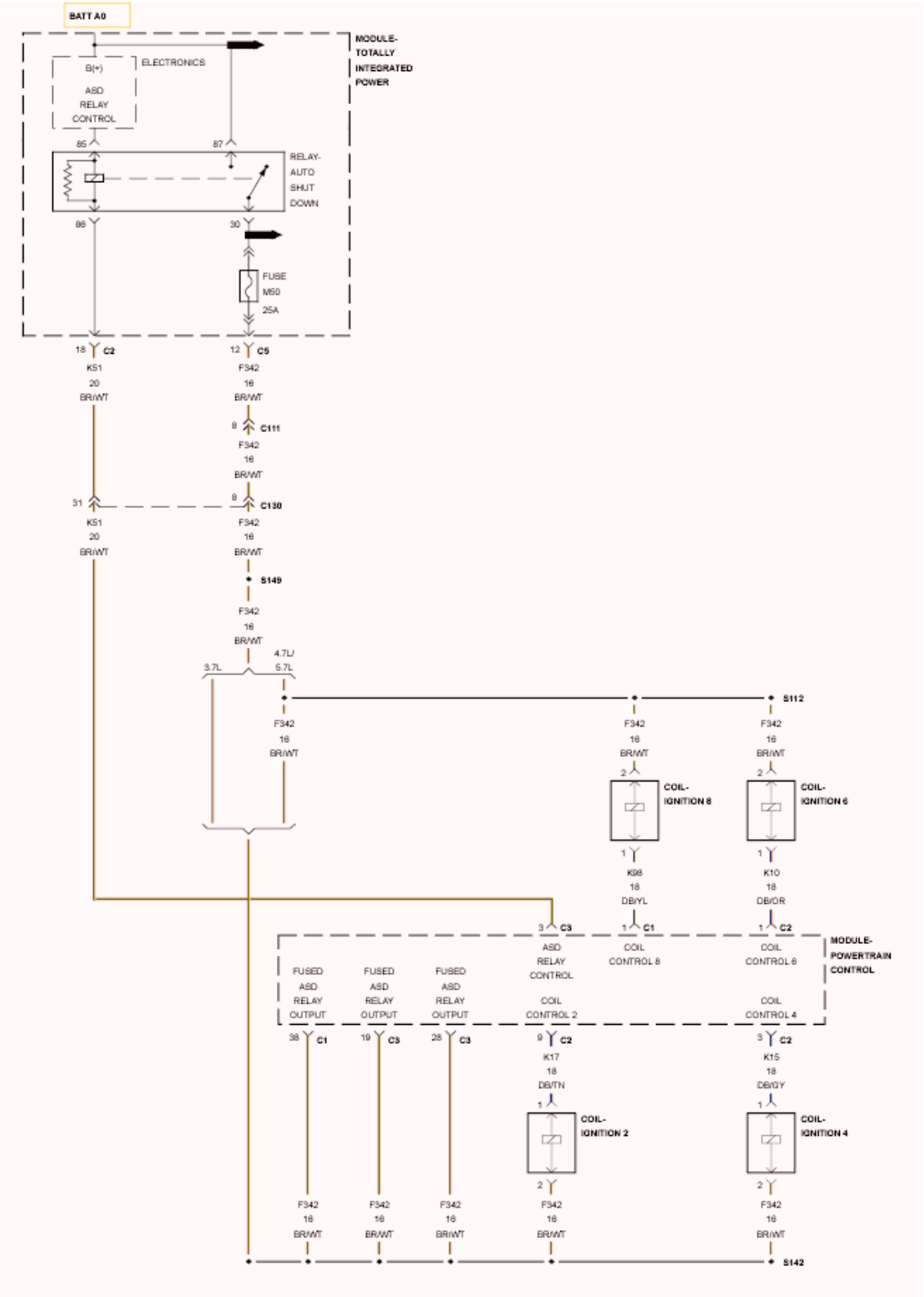

Fig. 120: Ignition Coil Secondary Circuit Schematic
Courtesy of CHRYSLER GROUP, LLC

For a complete wiring diagram, **refer to appropriate SYSTEM WIRING DIAGRAMS article** .

WHEN MONITORED:

Engine running and battery voltage greater than 10 Volts.

SET CONDITION:

If PCM detects that the secondary ignition burn time is incorrect, to short or not present, an error is detected. One Trip Fault. Three good trips to turn off the MIL.

POSSIBLE CAUSES

Possible Causes
(K342) ASD CONTROL OUTPUT CIRCUIT
(K98) COIL CONTROL NO. 8 CIRCUIT OPEN
(K98) COIL CONTROL NO. 8 CIRCUIT SHORTED TO GROUND
COIL ON PLUG
POWERTRAIN CONTROL MODULE (PCM)

Always perform the Pre-Diagnostic Troubleshooting procedure before proceeding. Refer to PRE-DIAGNOSTIC TROUBLESHOOTING PROCEDURE .

DIAGNOSTIC TEST

1. **ACTIVE DTC**

   NOTE: Diagnose any ASD related DTCs before continuing.

   1. Start the engine.
   2. With the scan tool, select View DTCs.

      NOTE: It may be necessary to drive the vehicle to meet the conditions to set this DTC, try to repeat the conditions in which the fault originally set by reviewing the Freeze Frame data.

      Does the DTC become Active?

      Yes

      - Go To 2.

      No

      - Perform the INTERMITTENT CONDITION Diagnostic Procedure. Refer to **INTERMITTENT CONDITION** .

2. **(K342) ASD CONTROL OUTPUT CIRCUIT**

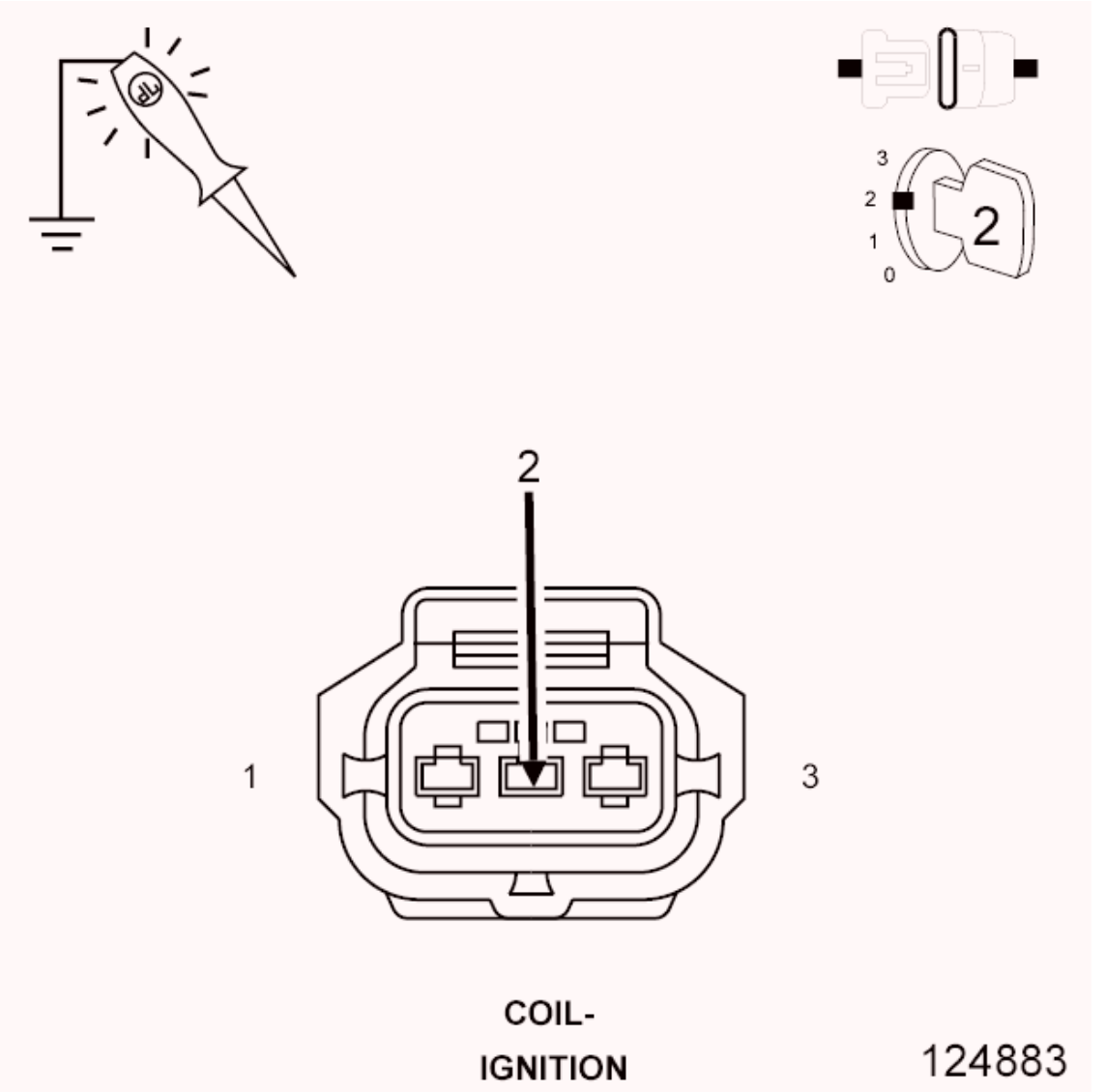

Fig. 121: Using 12-Volt Test Light Connected To Ground To Probe ASD Control Output Circuit In Ignition Coil Harness Connector
Courtesy of CHRYSLER GROUP, LLC

1. Turn the ignition off.
2. Disconnect the Coil on Plug harness connector.
3. Ignition on, engine not running.

NOTE: **Make sure the test light is probing the circuit before actuating the Coil or a DTC may set and not allow the actuation.**

4. Using a 12-volt test light connected to ground, probe the (K342) ASD Control Output circuit in the Coil on Plug harness connector.

5. With the scan tool, actuate the ASD.

   Does the test light illuminate brightly?

   Yes

   - Go To 3.

   No

   - Repair the open or short to ground in the (K342) ASD Control Output circuit between the TIPM and Coil harness connector.
   - Perform the POWERTRAIN VERIFICATION TEST. Refer to **POWERTRAIN VERIFICATION TEST** .

     NOTE: Stop All Actuations.

   -

3. **COIL ON PLUG RESISTANCE**
   1. Turn the ignition off.

      NOTE: The following resistance measurement should be taken between 70° and 80° F.

   2. Measure the resistance of the Coil on Plug.
   3. 4.7L Primary Ignition Coil resistance is 0.6 to 0.9 of an ohm at 25° C (77° F).
   4. 5.7L Primary Ignition Coil resistance is 0.558 to 0.682 of an ohm at 25° C (77° F).

      Is the resistance within the given specification for the Ignition Coil being tested?

      Yes

      - Go To 4.

      No

      - Replace the Coil on plug.
      - Perform the POWERTRAIN VERIFICATION TEST. Refer to **POWERTRAIN VERIFICATION TEST** .
4. **IGNITION COIL**

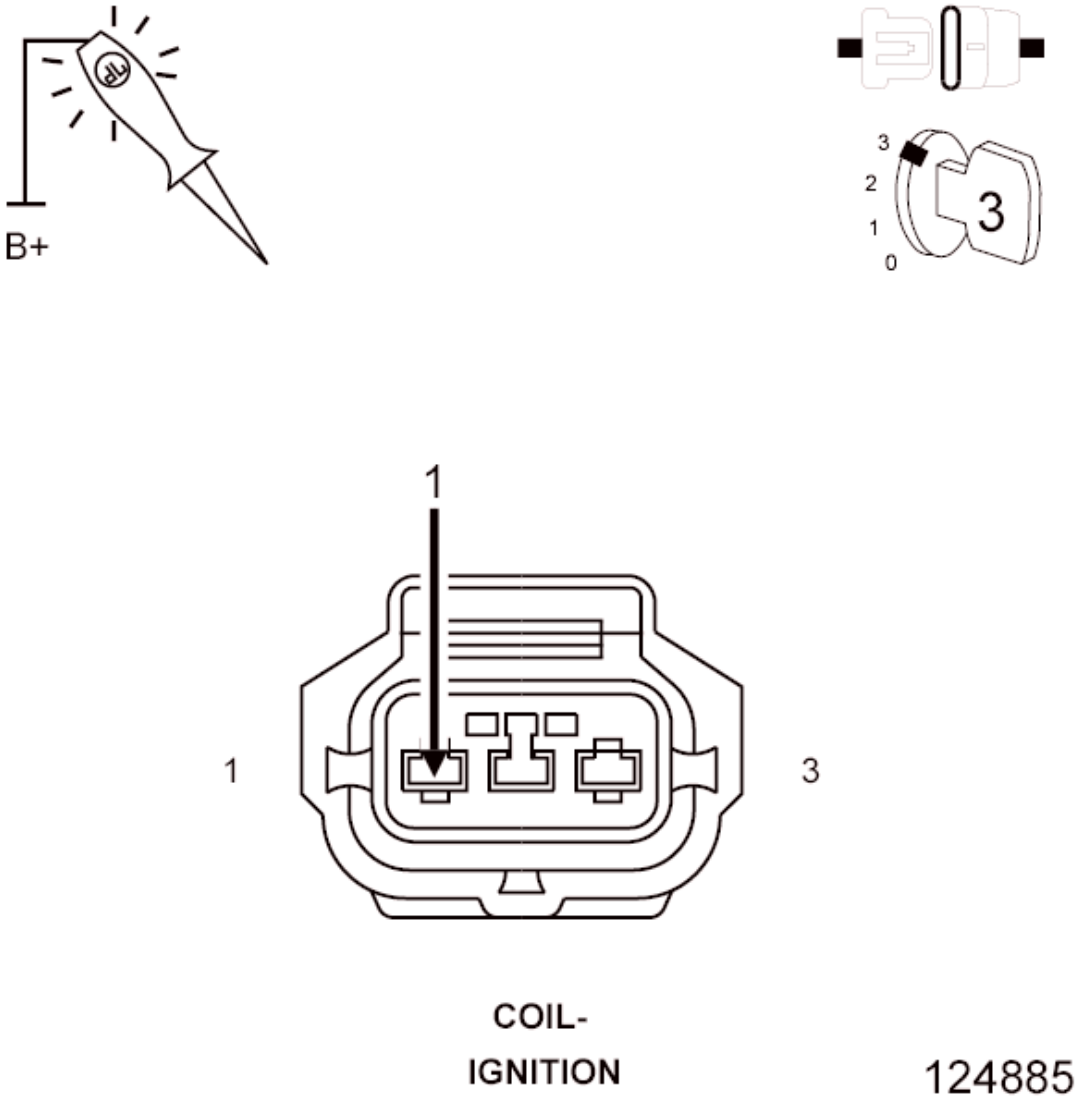

Fig. 122: Using 12-Volt Test Light Connected To 12-Volt Source To Probe Coil Control Circuit
Courtesy of CHRYSLER GROUP, LLC

WARNING: **When the engine is operating, do not stand in direct line with the fan. Do not put your hands near the pulleys, belts or fan. Do not wear loose clothing. Failure to follow these instructions may result in possible serious or fatal injury.**

1. Using a 12-volt test light connected to a 12-volt source, probe the (K98) Coil Control No. 8 circuit.
2. Crank the engine for 5 seconds while observing the test light.

   What is the state of the test light while cranking the engine?

   Brightly blinking.

- Verify that there is good pin to terminal contact in the Ignition Coil and the Powertrain Control Module connectors. Replace the Ignition Coil if no problems were found in the connectors.
- Perform the POWERTRAIN VERIFICATION TEST. Refer to **POWERTRAIN VERIFICATION TEST** .

ON constantly.

- Go To 5.

OFF constantly.

- Go To 6.

5. **(K98) COIL CONTROL NO. 8 CIRCUIT SHORTED TO GROUND**

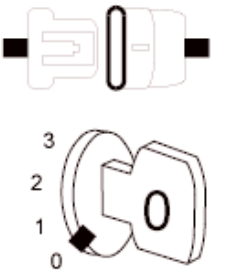

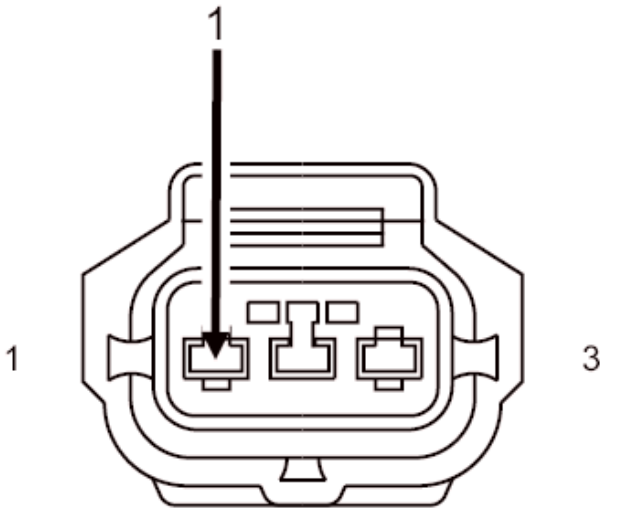

COIL-
IGNITION

125583

Fig. 123: Measuring Resistance Between Ground And Coil Control Circuit In Coil On Plug Harness Connector
Courtesy of CHRYSLER GROUP, LLC

1. Turn the ignition off.
2. Disconnect the C1 PCM harness connector.
3. Measure the resistance between ground and the (K98) Coil Control No. 8 circuit in the Coil on Plug harness connector.

   Is the resistance below 100 Ohms?

   Yes

   - Repair the short to ground in the (K98) Coil Control No. 8 circuit.
   - Perform the POWERTRAIN VERIFICATION TEST. Refer to **POWERTRAIN VERIFICATION TEST** .

   No

   - Go To 7.

6. **(K98) COIL CONTROL NO. 8 CIRCUIT OPEN**

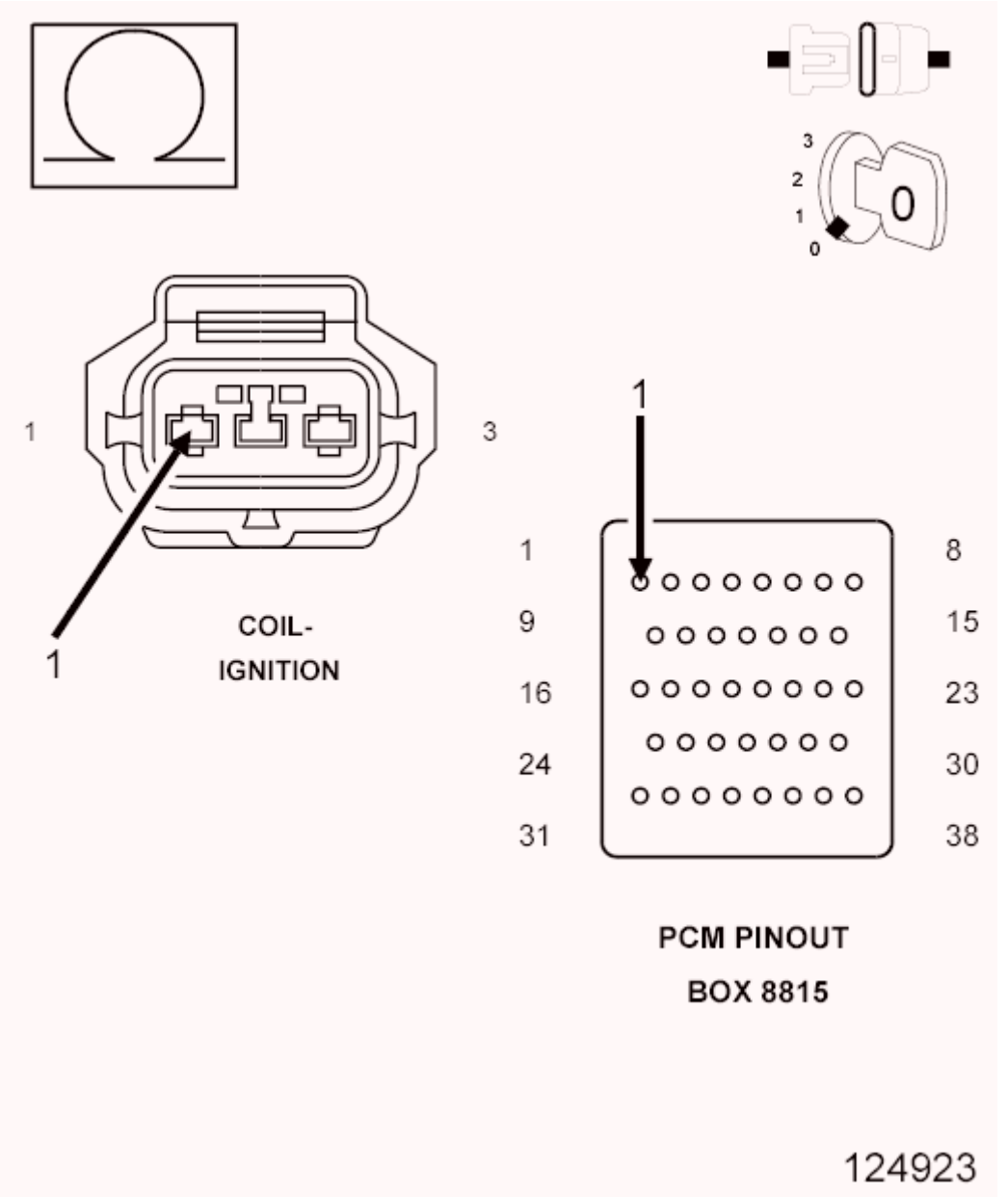

Fig. 124: Checking Coil Control No. 8 Circuit For An Open, Short To Ground, And Short To Voltage
Courtesy of CHRYSLER GROUP, LLC

1. Turn the ignition off.
2. Disconnect the C1 PCM harness connector.

CAUTION: Do not probe the PCM harness connectors. Probing the PCM harness connectors will damage the PCM terminals resulting in poor terminal to pin connection. Install the PCM Pinout Box (special tool #8815A, Kit, NGC, 38 Position) to perform diagnosis.

3. Measure the resistance of the (K98) Coil Control No. 8 circuit from the Coil on Plug harness connector to the appropriate terminal of PCM Pinout Box (special tool #8815A, Kit, NGC, 38 Position).

   Is the resistance below 5.0 Ohms?

   Yes

   - Go To 7.

   No

   - Repair the open in the (K98) Coil Control No. 8 circuit.
   - Perform the POWERTRAIN VERIFICATION TEST. Refer to **POWERTRAIN VERIFICATION TEST** .

7. **POWERTRAIN CONTROL MODULE (PCM)**
   1. Using the wiring diagram/schematic as a guide, inspect the wiring and connectors between the Ignition Coil and the Powertrain Control Module (PCM).
   2. Look for any chafed, pierced, pinched or partially broken wires.
   3. Look for broken, bent, pushed out or corroded terminals. Verify that there is good pin to terminal contact in the Ignition Coil and the Powertrain Control Module connectors.
   4. Refer to any Technical Service Bulletins that may apply.

      Were there any problems found?

      Yes

      - Repair as necessary.
      - Perform the POWERTRAIN VERIFICATION TEST. Refer to **POWERTRAIN VERIFICATION TEST** .

      No

      - Replace and program the Powertrain Control Module in accordance with the Service Information.
      - Perform the POWERTRAIN VERIFICATION TEST. Refer to **POWERTRAIN VERIFICATION TEST** .

P2503-CHARGING SYSTEM OUTPUT LOW

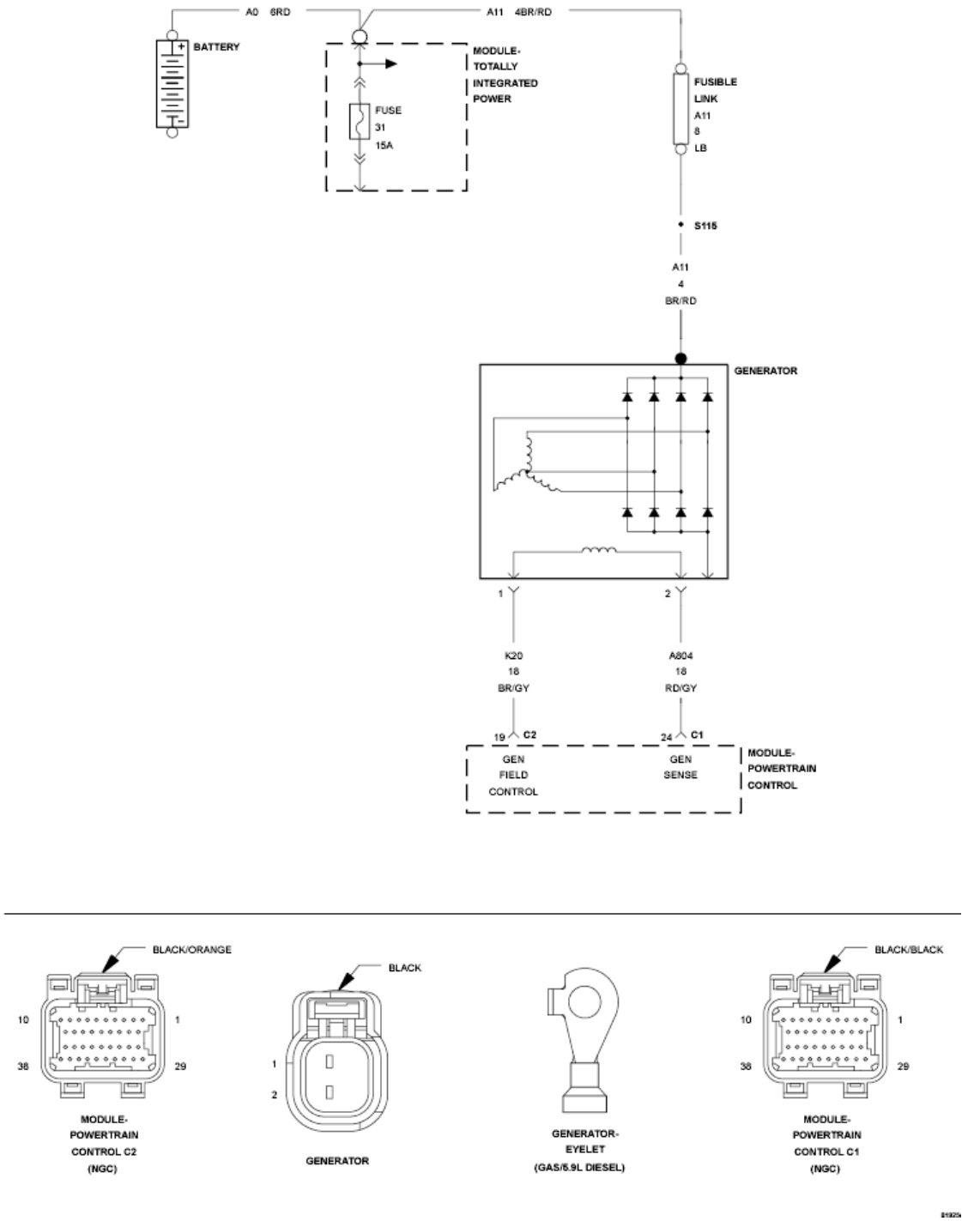

Fig. 125: Generator Circuit Schematic
Courtesy of CHRYSLER GROUP, LLC

For a complete wiring diagram **refer to appropriate SYSTEM WIRING DIAGRAMS article** .

WHEN MONITORED:

The engine running. The engine RPM is high enough to assure sufficient generator current output to satisfy the

electrical loads.

SET CONDITION:

The battery sensed voltage is less than the target charging voltage, during engine operation, for a calibrateable amount of time. One Trip Fault. Generator light will illuminate.

POSSIBLE CAUSES

Possible Causes
LOOSE ACCESSORY DRIVE BELT
EXCESSIVE RESISTANCE IN THE (A1) BATTERY POSITIVE CIRCUIT
GENERATOR
POWERTRAIN CONTROL MODULE (PCM)

Always perform the Pre-Diagnostic Troubleshooting procedure before proceeding. Refer to PRE-DIAGNOSTIC TROUBLESHOOTING PROCEDURE .

DIAGNOSTIC TEST

1. **ACTIVE DTC**

NOTE: Inspect the vehicle for aftermarket accessories that may exceed the Generator System output.

NOTE: The battery must be fully charged.

NOTE: The Generator belt tension and condition must be checked before continuing.

1. Ignition on, engine not running.
2. With a scan tool, select View DTCs.
3. Read and record the related Freeze Frame data for P2503.
4. With a scan tool, erase DTCs.
5. Start the engine.
6. Allow the idle to stabilize.
7. Ignition on, engine not running.
8. With the scan tool, select View DTCs.

Is the DTC Active at this time?

Yes

- Go To 2.

No

- Perform the INTERMITTENT CONDITION Diagnostic Procedure. Refer to **INTERMITTENT CONDITION** .

2. **FUSED B+ CIRCUIT HIGH RESISTANCE**

WARNING: When the engine is operating, do not stand in direct line with the fan. Do not put your hands near the pulleys, belts or fan. Do not wear loose clothing. Failure to follow these instructions may result in possible serious or fatal injury.

1. Ignition on, engine not running.
2. Measure the voltage between the Generator B+ Output Terminal and the Battery + Post.
3. Start the engine.

Is the voltage above 0.4 of a volt?

Yes

- Repair the excessive resistance in the battery positive circuit between the Generator and Battery.
- Perform the POWERTRAIN VERIFICATION TEST. Refer to **POWERTRAIN VERIFICATION TEST** .

No

- Go To 3.

3. **GENERATOR OPERATION**

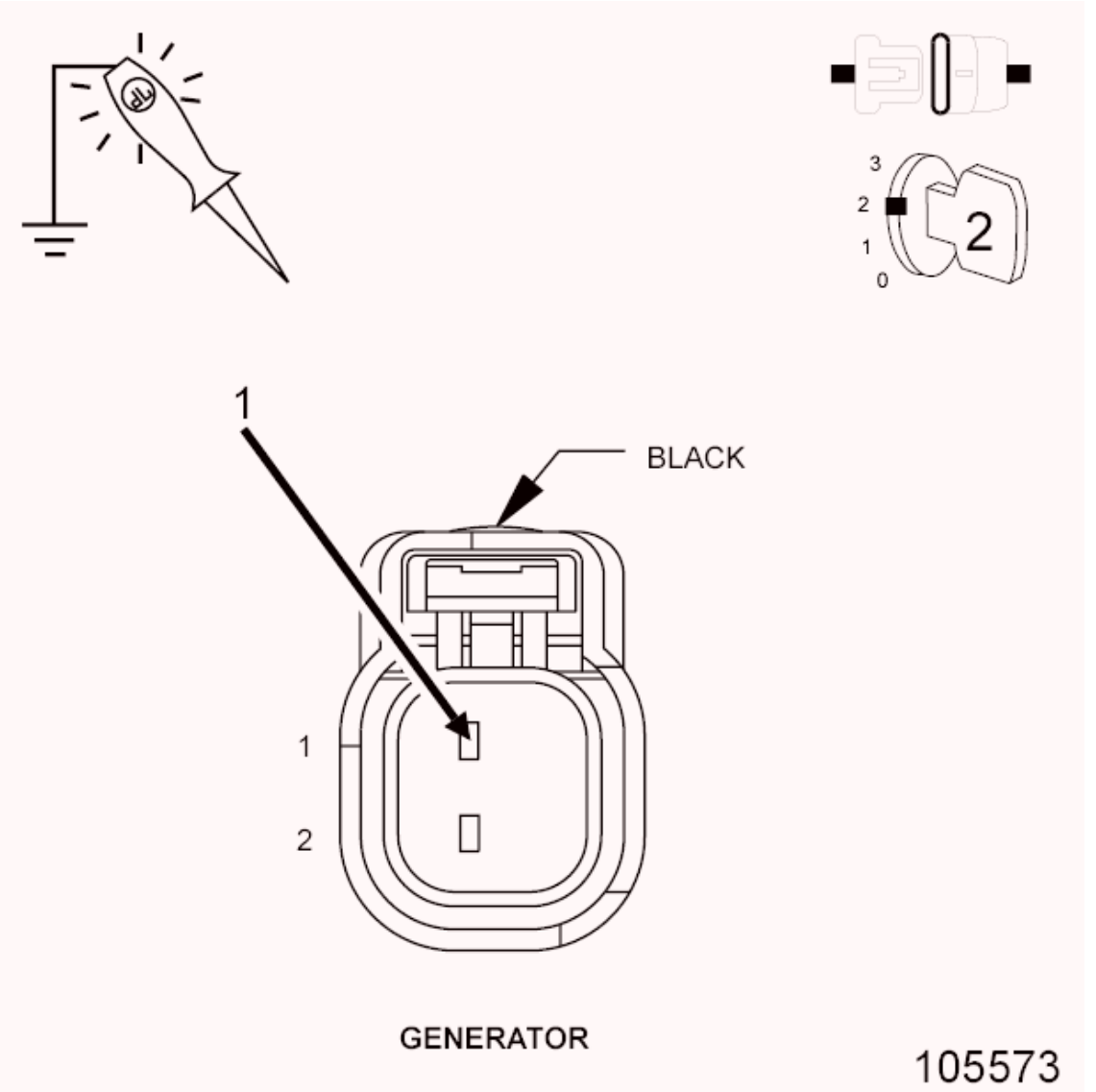

Fig. 126: Using 12-Volt Test Light Connected To Ground To Probe (K20) Generator Field Control Circuit In Generator Field Harness Connector
Courtesy of CHRYSLER GROUP, LLC

1. Turn the ignition off.
2. Disconnect the Generator Field harness connector.
3. Using a 12-volt test light connected to ground, probe (K20) Generator Field Control circuit in the Generator Field harness connector.

NOTE: **The DTC needs to be cleared before actuating the Solenoid, if the DTC is not cleared, the Solenoid may not be allowed to actuate.**

4. Ignition on, engine not running.
5. With a scan tool, actuate the Generator Field Driver.

NOTE: **The test light should be illuminated and bright proportional to the maximum duty cycle allowed by the scan tool. For example, if the scan tool allows 100% actuation, the brightness should be as bright as a direct connection to the battery. If the scan tool allows a maximum 25% actuation, the brightness should be 25% as bright as a direct connection to the battery.**

Does the test light illuminate accordingly during the actuation?

Yes

- Verify that there is good pin to terminal contact in the Generator and Powertrain Control Module connectors. Replace the Generator if no problems were found with the connectors.
- Perform the POWERTRAIN VERIFICATION TEST. Refer to **POWERTRAIN VERIFICATION TEST** .

No

- Go To 4.

4. **POWERTRAIN CONTROL MODULE (PCM)**
   1. Using the wiring diagram/schematic as a guide, inspect the wiring and connectors between the Generator and the Powertrain Control Module (PCM).
   2. Look for any chafed, pierced, pinched, or partially broken wires.
   3. Look for broken, bent, pushed out or corroded terminals. Verify that there is good pin to terminal contact in the Generator and Powertrain Control Module connectors.
   4. Refer to any Technical Service Bulletins that may apply.

   Were there any problems found?

   Yes

   - Repair as necessary.
   - Perform the POWERTRAIN VERIFICATION TEST. Refer to **POWERTRAIN VERIFICATION TEST** .

   No

   - Replace and program the Powertrain Control Module per Service Information.
   - Perform the POWERTRAIN VERIFICATION TEST. Refer to **POWERTRAIN VERIFICATION TEST** .

P2504-CHARGING SYSTEM OUTPUT HIGH

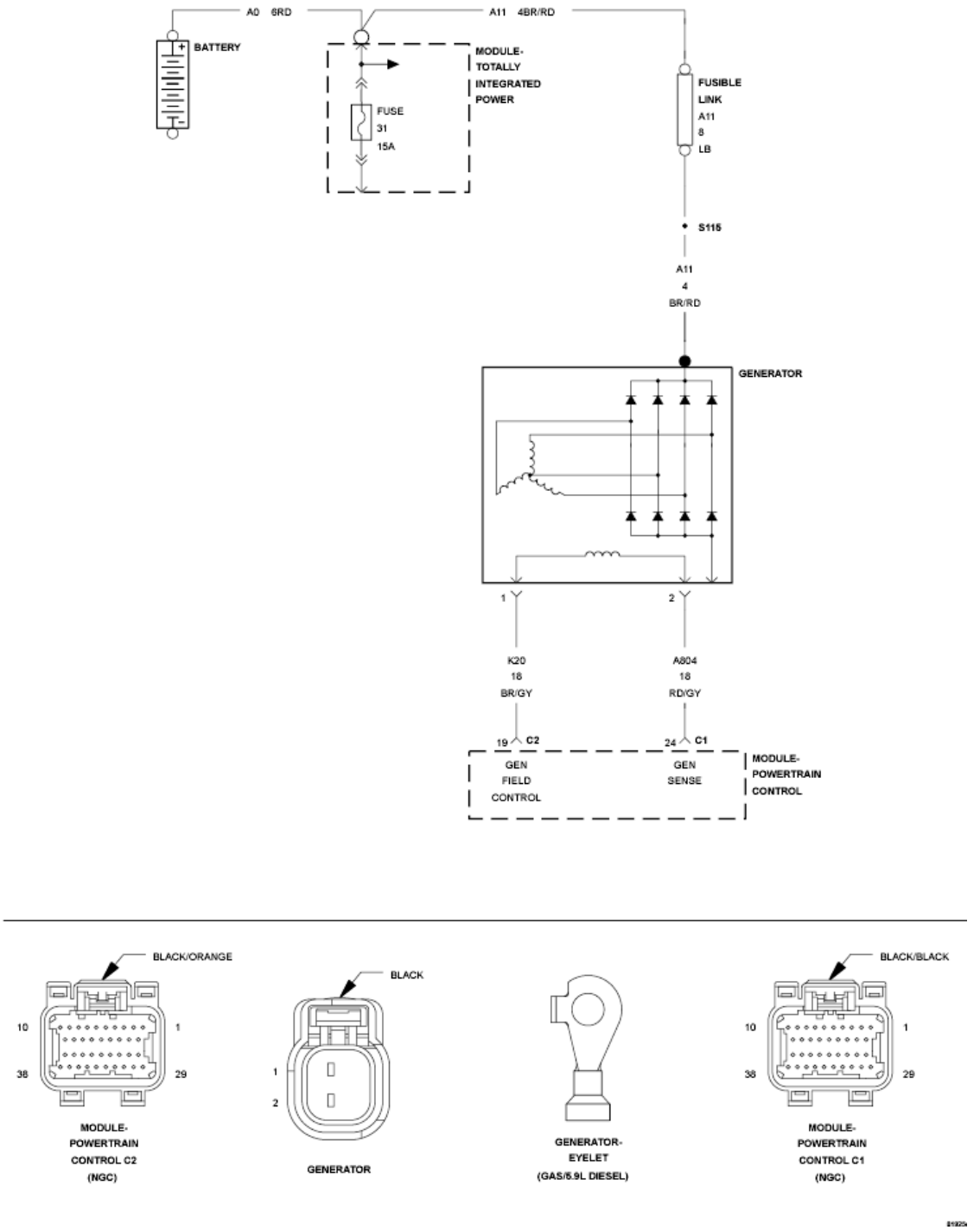

Fig. 127: Generator Circuit Schematic
Courtesy of CHRYSLER GROUP, LLC

For a complete wiring diagram **refer to appropriate SYSTEM WIRING DIAGRAMS article** .

WHEN MONITORED:

The engine running. The engine speed greater than 1157 RPM.

SET CONDITION:

The alternator B+ voltage sense circuit voltage reading exceeds the direct Battery B+ sense circuit. The Generator output terminal is not connected to the Battery B+ post. One trip fault.

POSSIBLE CAUSES

Possible Causes
EXCESSIVE RESISTANCE IN THE (A918) BATTERY FEED CIRCUIT
POWERTRAIN CONTROL MODULE (PCM)

Always perform the Pre-Diagnostic Troubleshooting procedure before proceeding. Refer to PRE-DIAGNOSTIC TROUBLESHOOTING PROCEDURE .

DIAGNOSTIC TEST

1. **ACTIVE DTC**

NOTE: Inspect the vehicle for aftermarket accessories that may exceed the Generator System output.

NOTE: The battery must be fully charged.

NOTE: The Generator belt tension and condition must be checked before continuing.

1. Ignition on, engine not running.
2. With a scan tool, select View DTCs.
3. Read and record the related Freeze Frame data for P2504.
4. With a scan tool, erase DTCs.
5. Start the engine.
6. Allow the idle to stabilize.
7. With the scan tool, View DTCs.

Is the DTC Active at this time?

Yes

- Go To 2.

No

- Perform the INTERMITTENT CONDITION Diagnostic Procedure. Refer to **INTERMITTENT CONDITION** .

2. **(A11) BATTERY POSITIVE CIRCUIT VISUAL INSPECTION**
    1. Turn the ignition off.
    2. Inspect the (A11) Battery Positive circuit at Generator Output post for corrosion and looseness.
    3. Inspect the Battery + and - cables for corrosion and looseness.
    4. Inspect the (A11) Battery Positive circuit at the TIPM Power Eyelet for corrosion and looseness.

    Were any problems found?

    Yes

    - Repair and replace as necessary.
    - Perform the POWERTRAIN VERIFICATION TEST. Refer to **POWERTRAIN VERIFICATION TEST** .

    No

    - Go To 3.
3. **EXCESSIVE RESISTANCE IN THE (A918) BATTERY FEED CIRCUIT**

    CAUTION: Do not probe the PCM harness connectors. Probing the PCM harness connectors will damage the PCM terminals resulting in poor terminal to pin connection. Install the PCM Pinout Box (special tool #8815A, Kit, NGC, 38 Position) and PCM Pinout Box Adapter (special tool #8815-1, PCM Pinout Box Adapter) to perform diagnosis.

    1. Disconnect the C1 PCM harness connector.
    2. Perform a voltage drop test on the (A918) Battery Feed circuit from the appropriate terminal of special tool (special tool #8815-1, PCM Pinout Box Adapter) to the C3 TIPM connector.
    3. Using a voltmeter probe the appropriate terminal of special tool (special tool #8815-1, PCM Pinout Box Adapter) with the Negative lead of the voltmeter and back probe the (A918) Battery Feed circuit at the C3 TIPM with the Positive lead of the voltmeter.

    WARNING: When the engine is operating, do not stand in direct line with the fan. Do not put your hands near the pulleys, belts or fan. Do not wear loose clothing. Failure to follow these instructions may result in possible serious or fatal injury.

    4. Start the engine
    5. Monitor the voltmeter.

    Is the voltage above 0.4 of a volt?

    Yes

- Repair the excessive resistance in the (A918) Battery Feed circuit between the PCM and IPM.
- Perform the POWERTRAIN VERIFICATION TEST. Refer to **POWERTRAIN VERIFICATION TEST** .

No

- Go To 4.

4. **PCM**

NOTE: Before continuing, check the PCM harness connector terminals for corrosion, damage, or terminal push out. Repair as necessary.

1. Turn the ignition off.
2. Using the schematics as a guide, inspect the wire harness and connectors. Pay particular attention to all Power and Ground circuits.

   Were there any problems found?

   Yes

   - Repair as necessary.
   - Perform the POWERTRAIN VERIFICATION TEST. Refer to **POWERTRAIN VERIFICATION TEST** .

   No

   - Replace and program the Powertrain Control Module per Service Information.
   - Perform the POWERTRAIN VERIFICATION TEST. Refer to **POWERTRAIN VERIFICATION TEST** .

P2610-PCM INTERNAL SHUTDOWN TIMER FAST RATIONALITY

For a complete wiring diagram **refer to appropriate SYSTEM WIRING DIAGRAMS article** .

THEORY OF OPERATION

The PCM compares actual shutdown time to a calculated shutdown time value. The calculated shut down time value is based on the amount of shutdown time necessary for the ECT to drop a specific amount after a completely warmed up engine is shut down. If the difference between actual shutdown time and the calculated shut down time is greater than a maximum value, a one trip failure will set. The shutdown time is measured again after 1 hour of ignition off time following the next engine warm up cycle. The PCM compares the shutdown time to a calculated value. If the difference is greater than a maximum value, the MIL is illuminated and a DTC will set.

WHEN MONITORED:

With the engine running after a cycle when a complete engine warm up was achieved, the difference between engine coolant temperature and ambient air temperature greater than 10° C (50° F), after a minimum temperature drop of 10° C (50° F) during ignition off, and battery voltage greater than 10 volts.

SET CONDITION:

The PCM detects that the engine coolant temperature drops a specified amount during the measured engine off time. Two trip fault. Three good trips to turn off the MIL.

POSSIBLE CAUSES

Possible Causes
POWERTRAIN CONTROL MODULE (PCM) SOFTWARE UPDATE
EXCESSIVE RESISTANCE IN THE PCM POWER OR GROUND CIRCUITS
POWERTRAIN CONTROL MODULE (PCM)

Always perform the Pre-Diagnostic Troubleshooting procedure before proceeding. Refer to PRE-DIAGNOSTIC TROUBLESHOOTING PROCEDURE .

DIAGNOSTIC TEST

1. **ACTIVE DTC**

NOTE: Diagnose and repair any other DTCs set in the PCM before proceeding with this test.

1. Turn the ignition on.
2. With the scan tool, Clear DTCs in the Powertrain Control Module (PCM).
3. Start the engine and allow it to reach operating temperature.

WARNING: When the engine is operating, do not stand in direct line with the fan. Do not put your hands near the pulleys, belts or fan. Do not wear loose clothing. Failure to follow these instructions may result in possible serious or fatal injury.

4. With the scan tool, select View DTCs.

   Is the DTC Active at this time?

   Yes

   - Go To 2.

   No

   - Perform the INTERMITTENT CONDITION Diagnostic Procedure. Refer to

INTERMITTENT CONDITION .

2. **PCM IGNITION CIRCUITS**

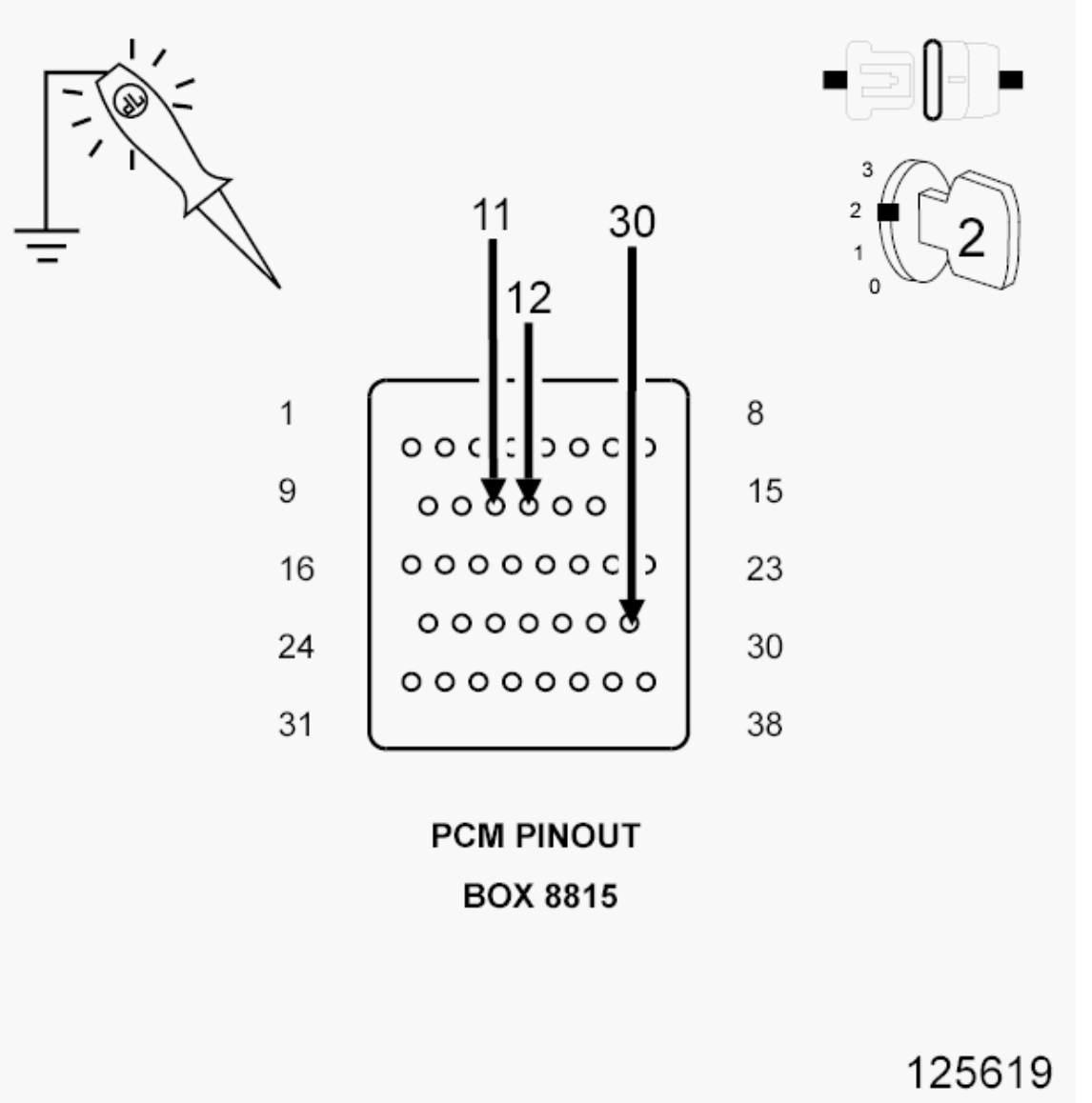

Fig. 128: Using 12 Volt Test Light Connected To Ground To Check PCM Fused Ignition Circuits
Courtesy of CHRYSLER GROUP, LLC

1. Turn the ignition off.
2. Disconnect the C1 PCM harness connector.

CAUTION: Do not probe the PCM harness connectors. Probing the PCM harness connectors will damage the PCM terminals resulting in poor terminal to pin connection. Install the PCM Pinout Box (special tool #8815A, Kit, NGC, 38 Position) to perform diagnosis.

3. With a 12-volt test light connected to ground and with special tool (special tool #8815A, Kit, NGC, 38 Position) installed, probe the (F202), (F1), and (T751) Fused Ignition Switch circuits.
4. Perform the above check with the Ignition key in the off lock position, Ignition on, engine not running position, and during cranking.
5. Wiggle the related wire harness while probing the special tool with the test light to try to interrupt the circuit.

   Does the test light illuminate brightly?

   Yes

   - Go To 3.

   No

   - Repair the open or excessive resistance in the (F202), (F1), and (T751) Fused Ignition Switch (Off, Run, Start) circuits. Inspect the related fuse, if the fuse is open check the circuits for a short to ground.
   - Perform the POWERTRAIN VERIFICATION TEST. Refer to **POWERTRAIN VERIFICATION TEST** .

3. **POWERTRAIN CONTROL MODULE (PCM)**
   1. Verify that the PCM is operating at the latest software version available.
   2. Refer to any Technical Service Bulletins that may apply.

      Were any problems found?

      Yes

      - Repair as necessary.
      - Perform the POWERTRAIN VERIFICATION TEST. Refer to **POWERTRAIN VERIFICATION TEST** .

      No

      - Replace and program the Powertrain Control Module (PCM) in accordance with the Service Information.
      - Perform the POWERTRAIN VERIFICATION TEST. Refer to **POWERTRAIN VERIFICATION TEST** .

U0001-CAN C BUS

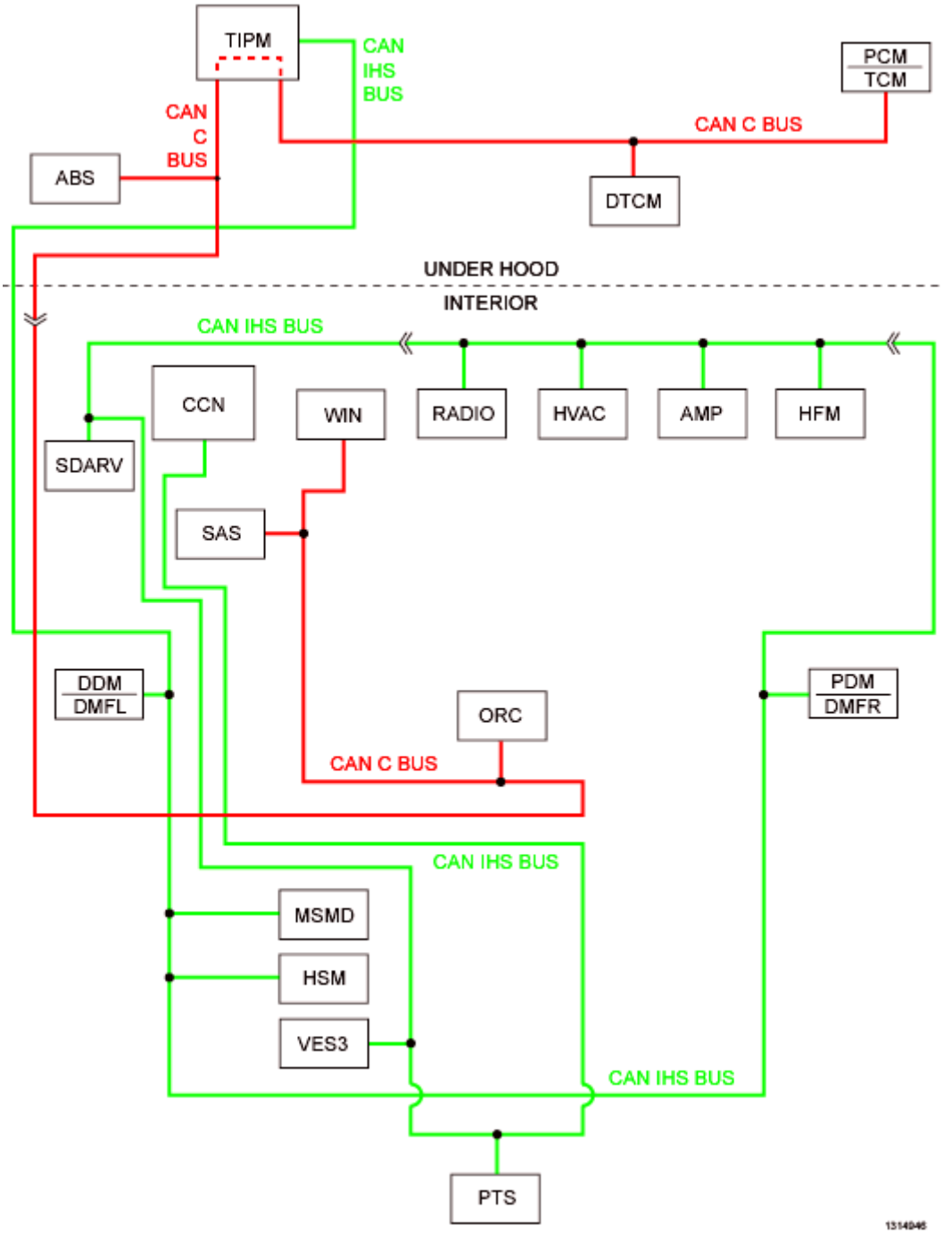

Fig. 129: TIPM CAN Bus Circuit Schematic
Courtesy of CHRYSLER GROUP, LLC

For a complete wiring diagram, **refer to appropriate SYSTEM WIRING DIAGRAMS article** .

WHEN MONITORED:

Ignition run time is greater than one second. Battery voltage between 9 and 16 volts. Engine run time greater than three seconds.

SET CONDITION:

The Powertrain Control Module (PCM) loses communication over the CAN C Bus circuit. The circuit is continuously monitored. One Trip fault.

POSSIBLE CAUSES

Possible Causes
CAN C BUS OPEN OR SHORTED CONDITION POWERTRAIN CONTROL MODULE (PCM)

Always perform the Pre-Diagnostic Troubleshooting procedure before proceeding. Refer to PRE-DIAGNOSTIC TROUBLESHOOTING PROCEDURE .

DIAGNOSTIC TEST

1. **ACTIVE DTC**
    1. Ignition on, engine not running.
    2. With the scan tool, select view PCM DTCs.

       Is the DTC Active at this time?

       Yes

       - Refer to **DIAGNOSIS AND TESTING** and perform the U0001-Can C Bus diagnostic procedure.

       No

       - Refer to **DIAGNOSIS AND TESTING** and perform the Stored Lost Communication DTCs diagnostic procedure.

U0002 CAN C BUS OFF PERFORMANCE

For a complete wiring diagram, **refer to appropriate SYSTEM WIRING DIAGRAMS article** .

THEORY OF OPERATION

The NGC controller communicates over the CAN C BUS. The transmission controller continuously monitors BUS activity. The CAN C BUS is also used to communicate transmission MIL status to the Engine Controller. If the Engine Controller is unable to communicate with the Transmission Controller, a DTC will set and the Engine Controller will illuminate the MIL.

WHEN MONITORED:

Every 7 msec with:

1) Engine speed greater than 500 RPM.

2) Battery voltage between 10 and 16 volts.

SET CONDITION:

CAN C BUS messages are not received for 10 seconds.

POSSIBLE CAUSES

Diagnose the U0002 CAN C BUS OFF PERFORMANCE as the U0001 CAN C BUS CIRCUIT test. Refer to U0001-CAN C BUS .

U0103-LOST COMMUNICATION WITH ELECTRIC GEAR SHIFT MODULE

For a complete wiring diagram, **refer to appropriate SYSTEM WIRING DIAGRAMS article** .

WHEN MONITORED:

With the ignition on, battery voltage between 9 and 16 volts, and engine run time greater than 3 seconds.

SET CONDITION:

The PCM doesn't receive a bus message from the Electronic Gear Shift Module for a specific amount of time.

POSSIBLE CAUSES

Possible Causes
CAN C BUS OPEN OR SHORTED CONDITION NO POWER TO ELECTRONIC GEAR SHIFT MODULE - MODULE UNPLUGGED OR OPEN FUSE POWERTRAIN CONTROL MODULE (PCM)

Always perform the Pre-Diagnostic Troubleshooting procedure before proceeding. Refer to PRE-DIAGNOSTIC TROUBLESHOOTING PROCEDURE .

DIAGNOSTIC TEST

1. **ACTIVE DTC**

NOTE: **For vehicle communication problems, use the scan tool to refer to the Network Review Screen. The screen depicts a high level view of the vehicle network. Fault and problem areas appear in red. Selecting any of the network components allows access to the source of the problem.**

1. Turn the ignition on.
2. With a scan tool, select View DTCs.

Is the status Active for this DTC?

Yes

- Perform the U0103-Loss Communication with Electric Gear Shift Module diagnostic procedure.

No

- Perform the CHECKING FOR AN INTERMITTENT DTC. Refer to **INTERMITTENT CONDITION** .

U0121-LOST COMMUNICATION WITH ANTI-LOCK BRAKE MODULE

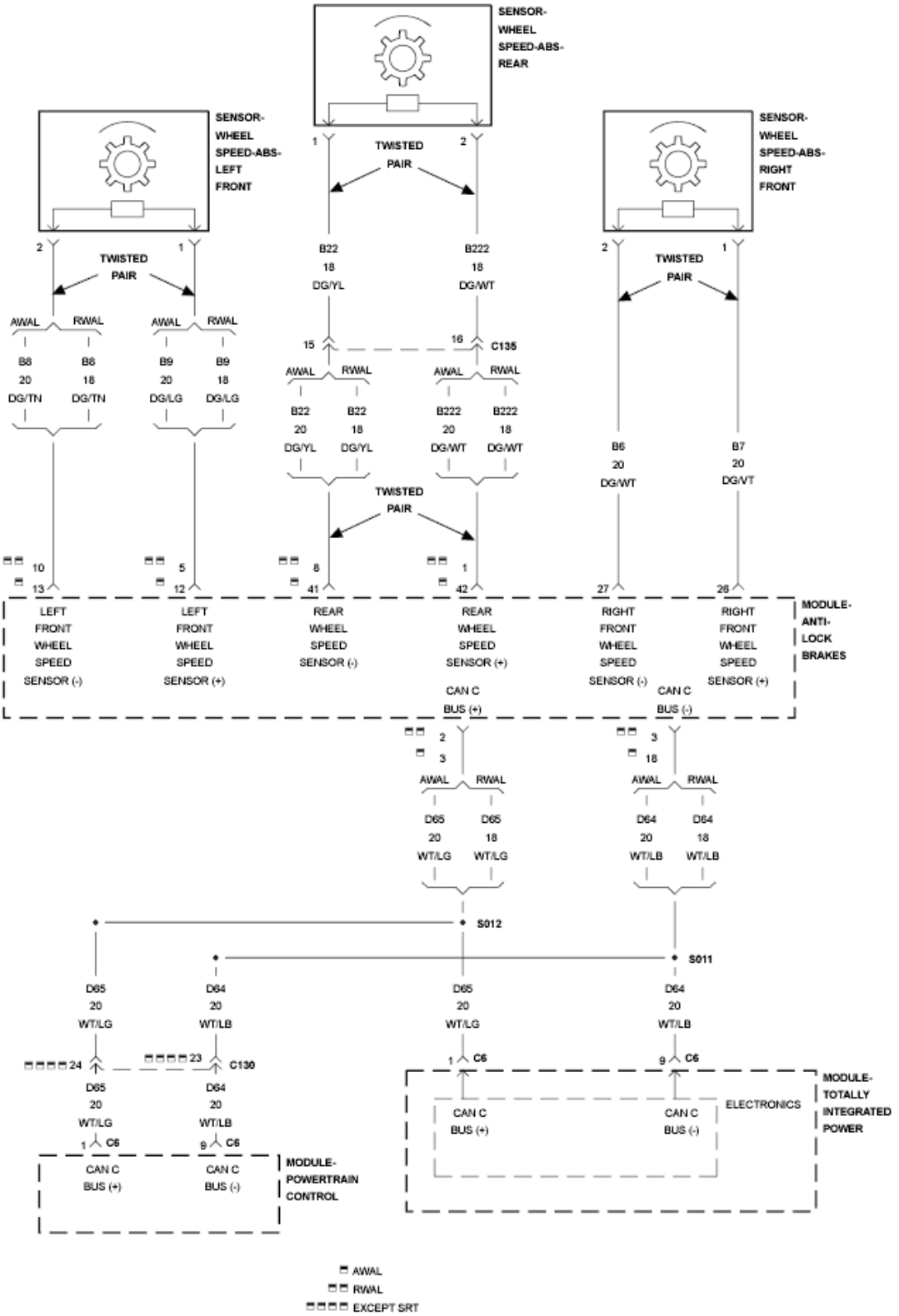

Fig. 130: Anti-Lock Brake Module Circuit Schematic
Courtesy of CHRYSLER GROUP, LLC

For a complete wiring diagram, **refer to appropriate SYSTEM WIRING DIAGRAMS article** .

WHEN MONITORED:

Ignition run time is greater than one second. Battery voltage between 9 and 16 volts. Engine run time greater than three seconds.

SET CONDITION:

The Powertrain Control Module (PCM) doesn't receive an ABS message over the CAN C circuit for seven consecutive seconds. The circuit is continuously monitored. One Trip fault.

POSSIBLE CAUSES

Possible Causes
CAN C BUS OPEN OR SHORTED CONDITION
ABS MODULE
TOTALLY INTEGRATED POWER MODULE (TIPM)
POWERTRAIN CONTROL MODULE (PCM)

DIAGNOSTIC TEST

1. **ACTIVE DTC**
    1. Ignition on, engine not running.
    2. With a scan tool, select View PCM DTCs.

       Is the DTC Active at this time?

       Yes

       - Refer to **DIAGNOSIS AND TESTING** and perform the U0121-Lost Communication with Antilock Brake Module diagnostic procedure.

       No

       - Refer to **DIAGNOSIS AND TESTING** and perform the Stored Lost Communication DTCs diagnostic procedure.

U0141-LOST COMMUNICATION WITH IPM (FCM/TIPM)

For a complete wiring diagram, **refer to appropriate SYSTEM WIRING DIAGRAMS article** .

WHEN MONITORED:

Continuously when the ignition is on.

The battery voltage between 10.0 and 16.0 Volts.

Ignition Off Draw (IOD) fuse installed.

Totally Integrated Power Module (TIPM) is configured correctly.

SET CONDITION:

Bus messages not received from the Totally Integrated Power Module (TIPM) for approximately two to five seconds.

POSSIBLE CAUSES

Possible Causes
CAN BUS CIRCUITS OPEN OR SHORTED
DTCS RELATED TO BATTERY VOLTAGE, IGNITION, OR VIN MESSAGES
TOTALLY INTEGRATED POWER MODULE POWER AND GROUND
TIPM NOT CONFIGURED CORRECTLY
TOTALLY INTEGRATED POWER MODULE (TIPM)
MODULE THAT SET THIS DTC

DIAGNOSTIC TEST

1. **VERIFY DTC IS ACTIVE**

   NOTE: Make sure the IOD fuse is installed and the battery is fully charged before proceeding.

   1. Turn the ignition on.
   2. With the scan tool, read active DTCs.

      Is this DTC active?

      Yes

      - **Refer to DIAGNOSIS AND TESTING** and perform the U0141-Lost Communication with IPM (FCM/TIPM) diagnostic procedure.

      No

      - **Refer to DIAGNOSIS AND TESTING** and perform the Stored Lost Communication DTCs diagnostic procedure.

U0151-LOST COMMUNICATION WITH OCCUPANT RESTRAINT CONTROLLER (ORC)

For a complete wiring diagram, **refer to appropriate SYSTEM WIRING DIAGRAMS article** .

WHEN MONITORED:

Ignition run time is greater than one second. Battery voltage between 9 and 16 Volts. Engine run time greater than three seconds.

SET CONDITION:

The Powertrain Control Module (PCM) doesn't receive an Occupant Restraint Controller (ORC) message over the CAN C circuit for seven consecutive seconds. The circuit is continuously monitored.

POSSIBLE CAUSES

Possible Causes
CAN C BUS OPEN OR SHORTED CONDITION
OCCUPANT RESTRAINT CONTROLLER (ORC)
TOTALLY INTEGRATED POWER MODULE (TIPM)
POWERTRAIN CONTROL MODULE (PCM)

Always perform the Pre-Diagnostic Troubleshooting procedure before proceeding. Refer to PRE-DIAGNOSTIC TROUBLESHOOTING PROCEDURE .

DIAGNOSTIC TEST

1. **ACTIVE DTC**
    1. Turn the ignition on.
    2. With the scan tool, read the active DTCs.

       Does the scan tool display U0151-LOST COMMUNICATION WITH OCCUPANT RESTRAINT CONTROLLER (ORC)?

       Yes

       - **Refer to DIAGNOSIS AND TESTING** and perform the U0151-Lost Communication with Occupant Restraint Controller (ORC) diagnostic procedure.

       No

       - **Refer to DIAGNOSIS AND TESTING** and perform the Stored Lost Communication DTC diagnostic procedure.

U0168-LOST COMMUNICATION WITH VEHICLE SECURITY CONTROL MODULE (WIN)

For a complete wiring diagram, **refer to appropriate SYSTEM WIRING DIAGRAMS article** .

WHEN MONITORED:

With the ignition on.

Battery voltage between 10 and 16 volts.

Ignition Off Draw (IOD) fuse installed.

Totally Integrated Power Module (TIPM) is configured correctly.

SET CONDITION:

Bus messages not received from the Wireless Ignition Node (WIN) for approximately two to five seconds.

POSSIBLE CAUSES

Possible Causes
CAN BUS CIRCUITS OPEN OR SHORTED
DTCS RELATED TO BATTERY VOLTAGE, IGNITION, OR VIN MESSAGES
WIRELESS IGNITION NODE POWER AND GROUND
TIPM NOT CONFIGURED CORRECTLY
WIRELESS IGNITION NODE (WIN)
MODULE THAT SET THIS DTC

DIAGNOSTIC TEST

1. **VERIFY DTC IS ACTIVE**

   NOTE: Make sure the IOD fuse is installed and the battery is fully charged before proceeding.

   1. Turn the ignition on.
   2. With the scan tool, read active DTCs.

      Is this DTC active?

      Yes

      - **Refer to <u>DIAGNOSIS AND TESTING</u>** and perform the U0168-Lost Communication with Vehicle Security Control Module (WIN) diagnostic procedure.

      No

      - **Refer to <u>DIAGNOSIS AND TESTING</u>** and perform the Stored Lost Communication DTCs diagnostic procedure.

U0300-INTERNAL CONTROL MODULE SOFTWARE INCOMPATIBILITY

For a complete wiring diagram, **refer to appropriate SYSTEM WIRING DIAGRAMS article** .

WHEN MONITORED:

Ignition on and battery voltage greater than 10 Volts.

SET CONDITION:

The Powertrain Control Module (PCM) software is incorrect.

POSSIBLE CAUSES

Possible Causes
PCM PROGRAMMED WITH INCORRECT SOFTWARE POWERTRAIN CONTROL MODULE (PCM)

Always perform the Pre-Diagnostic Troubleshooting procedure before proceeding. Refer to PRE-DIAGNOSTIC TROUBLESHOOTING PROCEDURE .

DIAGNOSTIC TEST

1. **PCM PROGRAMMED WITH INCORRECT SOFTWARE**
    1. Ignition on, engine not running.
    2. Program the PCM in accordance with the Service Information. Refer to .
    3. Start the engine.
    4. Allow the engine to reach normal operating temperature.
    5. With the scan tool, select read the active DTCs.

    Does the scan tool display U0300-INTERNAL CONTROL MODULE SOFTWARE INCOMPATIBILITY?

    Yes

    - Replace and program the Powertrain Control Module in accordance with the Service Information.
    - Perform the POWERTRAIN VERIFICATION TEST. Refer to **POWERTRAIN VERIFICATION TEST** .

    No

    - The PCM has been successfully programmed. Test is complete.
    - Perform the POWERTRAIN VERIFICATION TEST. Refer to **POWERTRAIN VERIFICATION TEST** .

U110C-NO FUEL LEVEL BUS MESSAGE RECEIVED

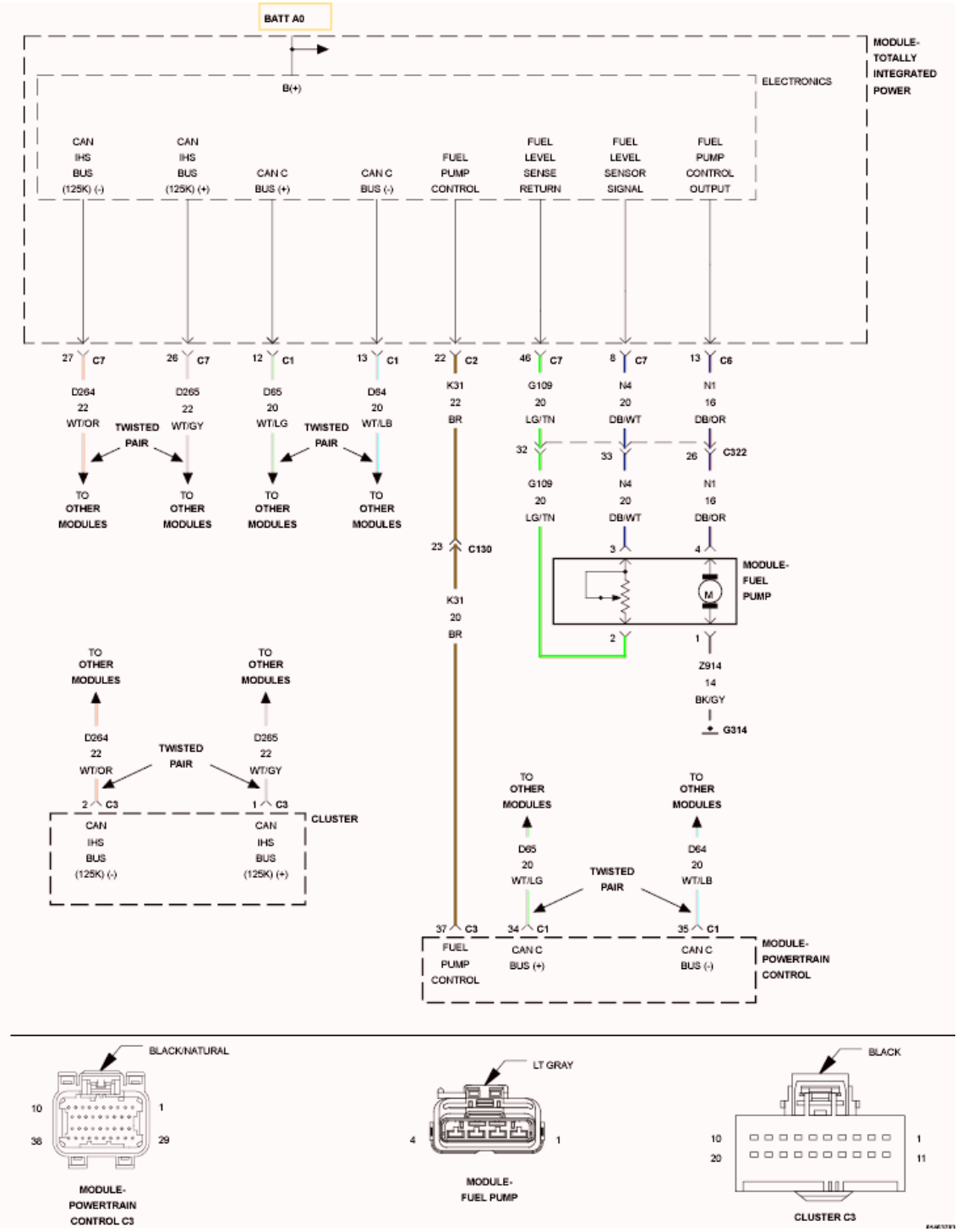

Fig. 131: Fuel Pump Module Circuit Schematic
Courtesy of CHRYSLER GROUP, LLC

For a complete wiring diagram, **refer to appropriate SYSTEM WIRING DIAGRAMS article** .

THEORY OF OPERATION

The fuel level signal is a direct input to the Cluster. The fuel level signal is sent to the TIPM over the CAN B bus circuit. The NGC receives the fuel level signal from the TIPM over the CAN C bus circuit.

WHEN MONITORED:

Ignition on.

SET CONDITION:

When the PCM does not receive a fuel level signal from the TIPM over the CAN C circuit. The circuit is constantly monitored. One Trip fault.

POSSIBLE CAUSES

Possible Causes
CAN C BUS CIRCUIT OPEN OR SHORTED
TOTALLY INTEGRATED POWER MODULE (TIPM)
POWERTRAIN CONTROL MODULE (PCM)

Always perform the Pre-Diagnostic Troubleshooting procedure before proceeding. Refer to PRE-DIAGNOSTIC TROUBLESHOOTING PROCEDURE .

DIAGNOSTIC TEST

1. **ACTIVE DTC**
    1. Ignition on, engine not running.
    2. With the scan tool, select View PCM DTCs.

       Is the DTC Active at this time?

       Yes

       - Go To 2.

       No

       - Refer to the INTERMITTENT CONDITION Diagnostic Procedure. Refer to **INTERMITTENT CONDITION** .
2. **U0141-LOST COMMUNICATION WITH FRONT CONTROL MODULE ALSO ACTIVE**
    1. With the scan tool, select View DTCs.

       Is the U0141-LOST COMMUNICATION WITH FRONT CONTROL MODULE also set?

       Yes

       - Perform the appropriate diagnostic procedure for U0141. Refer to **DIAGNOSIS AND**

TESTING .

- Perform the POWERTRAIN VERIFICATION TEST. Refer to **POWERTRAIN VERIFICATION TEST** .

No

- Replace and program the Powertrain Control Module per Service Information.
- Perform the POWERTRAIN VERIFICATION TEST. Refer to **POWERTRAIN VERIFICATION TEST** .

U110E-LOST AMBIENT TEMPERATURE MESSAGE

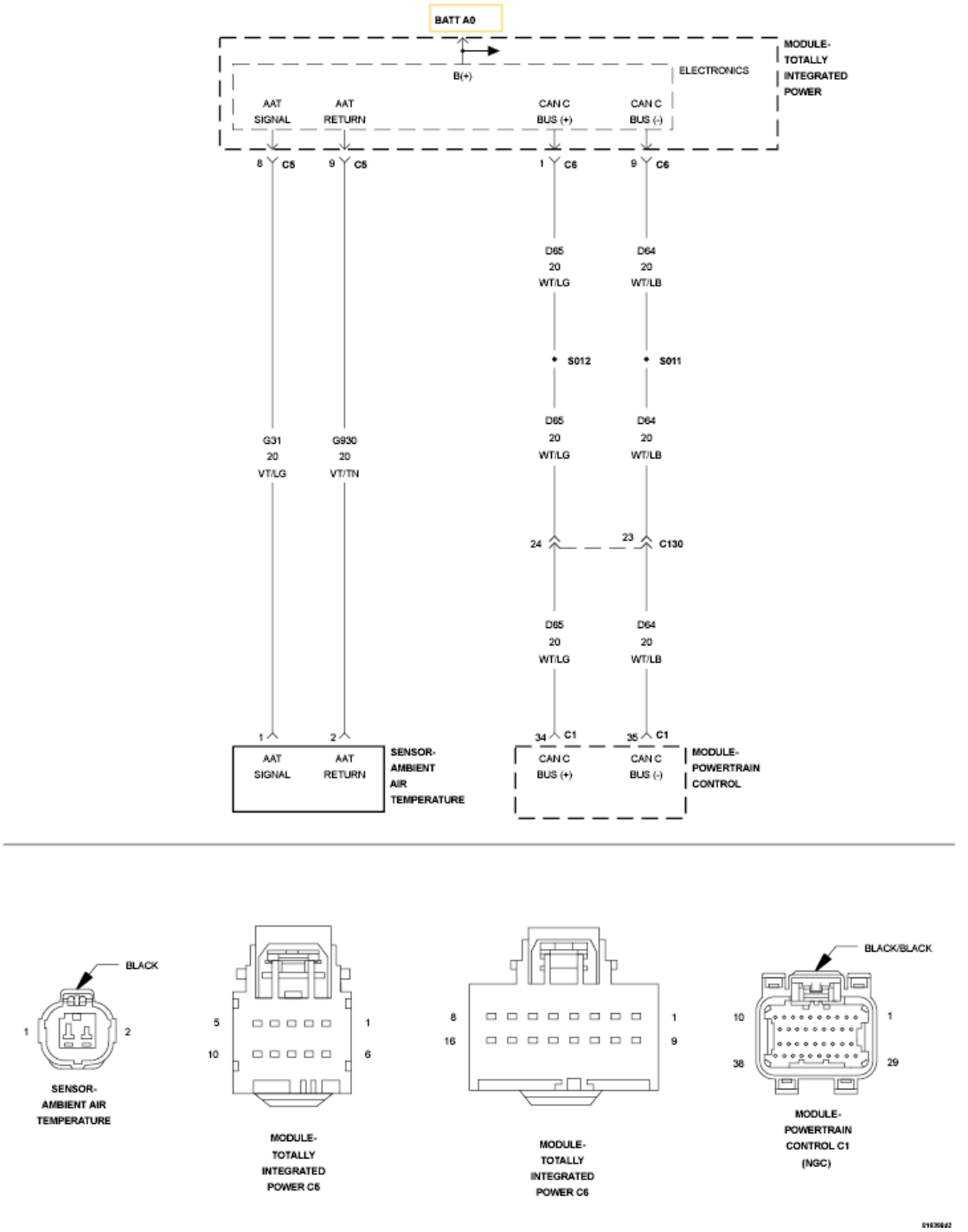

Fig. 132: Ambient Temperature Sensor Circuit Schematic
Courtesy of CHRYSLER GROUP, LLC

For a complete wiring diagram, **refer to appropriate SYSTEM WIRING DIAGRAMS article** .

THEORY OF OPERATION

The ambient temperature sensor signal is a direct input to the TIPM. The TIPM sends the PCM the ambient

temperature signal over the CAN C bus.

WHEN MONITORED:

Ignition on.

SET CONDITION:

The PCM doesn't receive the ambient temperature signal over the CAN C bus from the TIPM. The circuit is continuously monitored. One Trip fault.

POSSIBLE CAUSES

Possible Causes
CAN C BUS CIRCUIT OPEN OR SHORTED
TOTALLY INTEGRATED POWER MODULE (TIPM)
POWERTRAIN CONTROL MODULE (PCM)

Always perform the Pre-Diagnostic Troubleshooting procedure before proceeding. Refer to PRE-DIAGNOSTIC TROUBLESHOOTING PROCEDURE .

DIAGNOSTIC TEST

1. **ACTIVE DTC**
    1. Ignition on, engine not running.
    2. With the scan too, select View PCM DTCs.

       Is the DTC Active at this time?

       Yes

       - Go To 2.

       No

       - Perform the INTERMITTENT CONDITION Diagnostic Procedure. Refer to **INTERMITTENT CONDITION** .
2. **U0141-LOST COMMUNICATION WITH FRONT CONTROL MODULE (TIPM) ALSO ACTIVE**
    1. With the scan too, select View DTCs.

       Is the U0141-NO BUS MESSAGE RECEIVED FROM THE TIPM also set?

       Yes

       - Follow the diagnostics for U0141-LOST COMMUNICATION WITH FRONT CONTROL

MODULE (TIPM). Refer to **DIAGNOSIS AND TESTING** .

- Perform the POWERTRAIN VERIFICATION TEST. Refer to **POWERTRAIN VERIFICATION TEST** .

No

- Replace and program the Powertrain Control Module per Service Information.
- Perform the POWERTRAIN VERIFICATION TEST. Refer to **POWERTRAIN VERIFICATION TEST** .

U1110-LOST VEHICLE SPEED MESSAGE

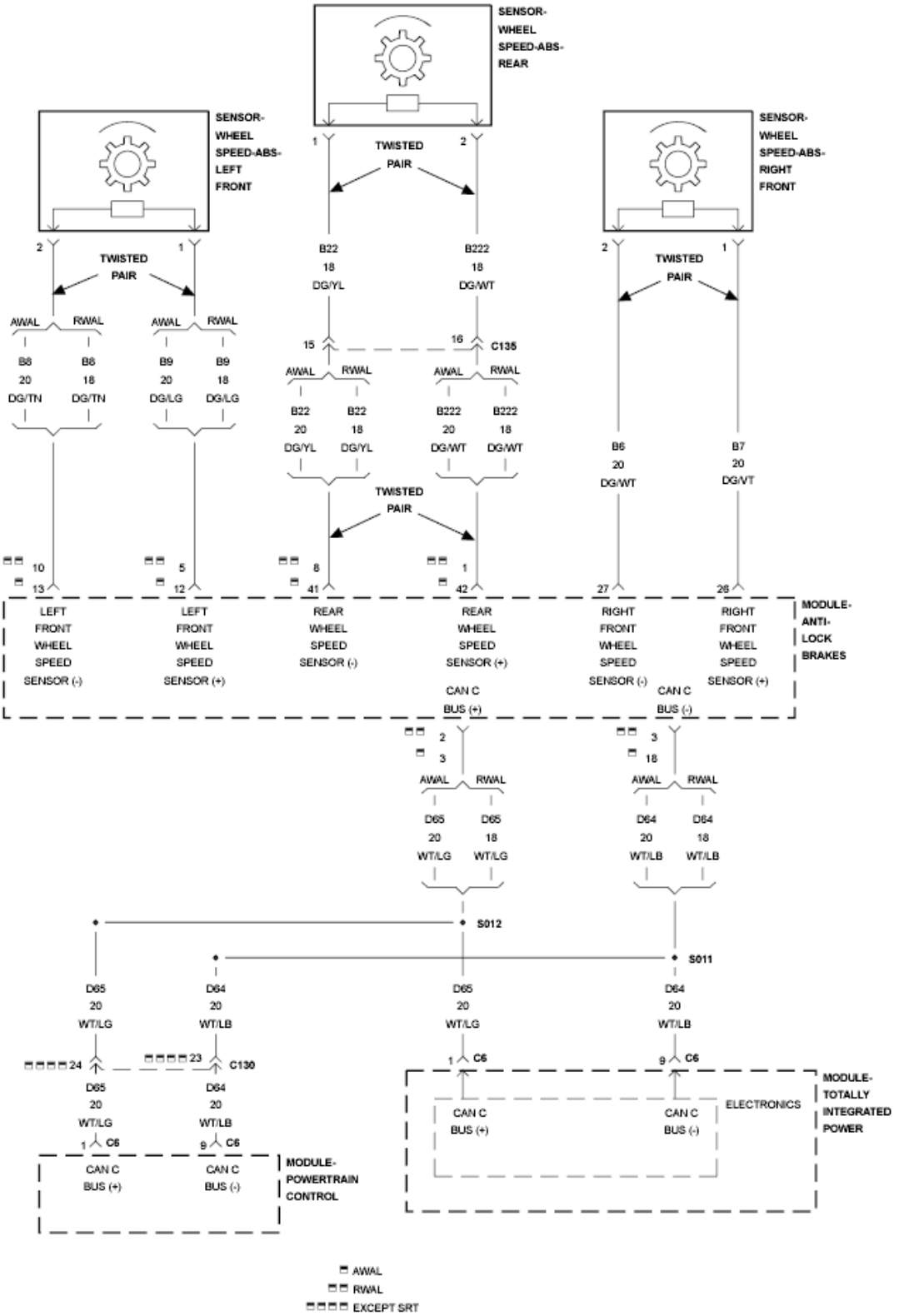

Fig. 133: Anti-Lock Brake Module Circuit Schematic
Courtesy of CHRYSLER GROUP, LLC

For a complete wiring diagram, **refer to appropriate SYSTEM WIRING DIAGRAMS article** .

THEORY OF OPERATION

The PCM receives the vehicle speed signal over the CAN C bus from the Anti-lock Brake Module.

WHEN MONITORED:

Ignition on.

SET CONDITION:

The PCM doesn't receive a vehicle speed signal from the Anti-lock brake Module over the CAN C bus. One Trip fault.

POSSIBLE CAUSES

Possible Causes
CAN C BUS CIRCUIT OPEN OR SHORTED
ANTI-LOCK BRAKE MODULE
POWERTRAIN CONTROL MODULE (PCM)

Always perform the Pre-Diagnostic Troubleshooting procedure before proceeding. Refer to PRE-DIAGNOSTIC TROUBLESHOOTING PROCEDURE .

DIAGNOSTIC TEST

1. **ACTIVE DTC**
    1. Ignition on, engine not running.
    2. With the scan tool, select View PCM DTCs.

       Is the DTC Active at this time?

       Yes

       - Go To 2.

       No

       - Perform the INTERMITTENT CONDITION Diagnostic Procedure. Refer to **INTERMITTENT CONDITION** .
2. **U0121-LOST COMMUNICATION WITH ABS MODULE ALSO SET**
    1. With the scan tool continue reading DTCs.

       Is the U0121-LOST COMMUNICATION WITH ABS MODULE also set?

Yes

- Follow the diagnostics for U0121-LOST COMMUNICATION WITH ABS MODULE. Refer to **DIAGNOSIS AND TESTING** .
- Perform the POWERTRAIN VERIFICATION TEST. Refer to **POWERTRAIN VERIFICATION TEST** .

No

- Replace and program the Powertrain Control Module per Service Information.
- Perform the POWERTRAIN VERIFICATION TEST. Refer to **POWERTRAIN VERIFICATION TEST** .

U1113-LOST A/C PRESSURE MESSAGE

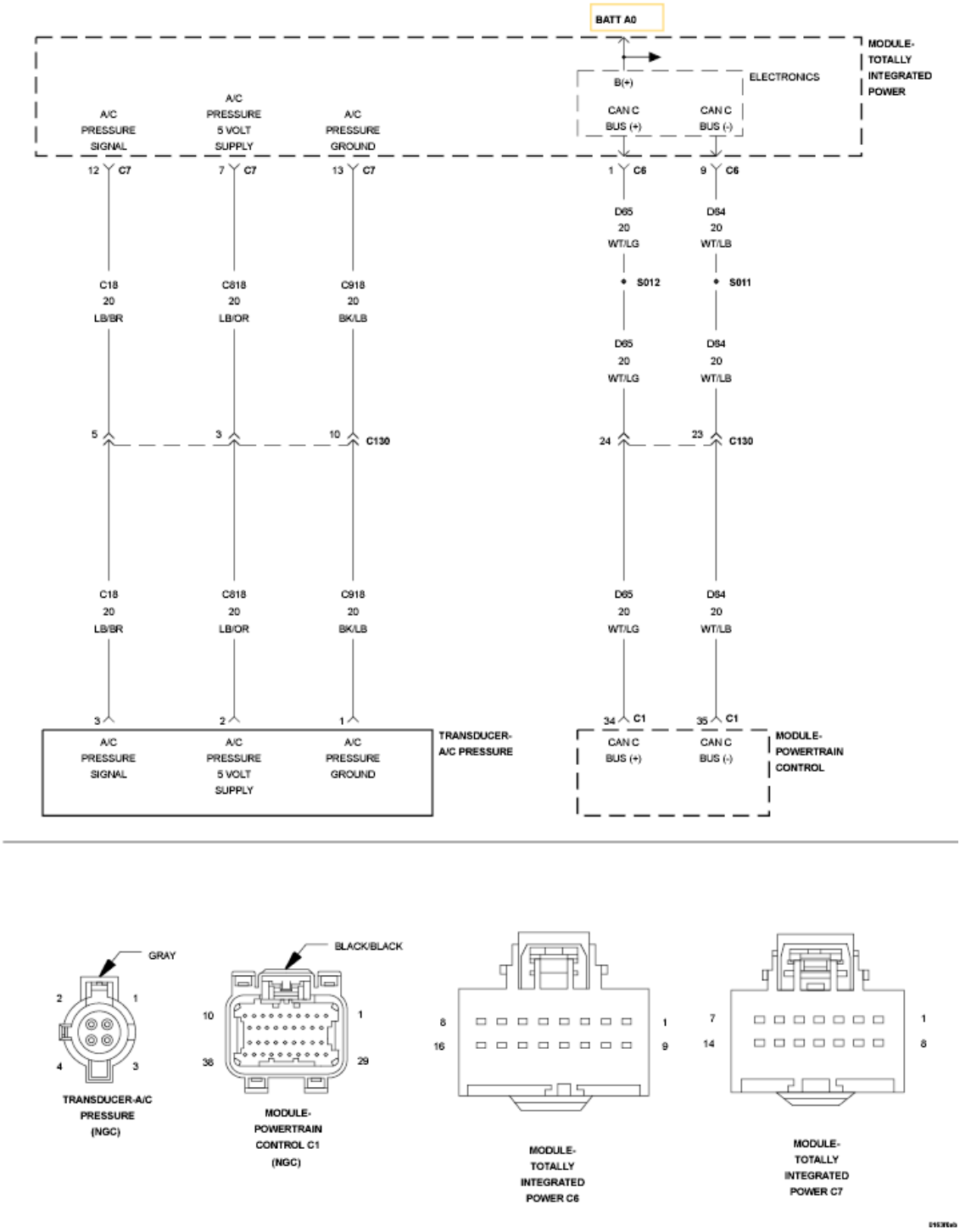

Fig. 134: A/C Pressure Transducer Circuit Schematic
Courtesy of CHRYSLER GROUP, LLC

For a complete wiring diagram, **refer to appropriate SYSTEM WIRING DIAGRAMS article** .

THEORY OF OPERATION

The A/C Pressure Transducer signal is a direct input to the TIPM. The TIPM sends the PCM the A/C pressure signal over the CAN C bus.

WHEN MONITORED:

Ignition on.

SET CONDITION:

The PCM doesn't receive the A/C Pressure signal over the CAN C bus from the TIPM. The circuit is continuously monitored. One Trip fault.

POSSIBLE CAUSES

Possible Causes
CAN C BUS CIRCUIT OPEN OR SHORTED
TOTALLY INTEGRATED POWER MODULE (TIPM)
POWERTRAIN CONTROL MODULE (PCM)

Always perform the Pre-Diagnostic Troubleshooting procedure before proceeding. Refer to PRE-DIAGNOSTIC TROUBLESHOOTING PROCEDURE .

DIAGNOSTIC TEST

1. **ACTIVE DTC**
    1. Ignition on, engine not running.
    2. With the scan tool, select View PCM DTCs.

       Is the DTC Active at this time?

       Yes

       - Go To 2.

       No

       - Perform the INTERMITTENT CONDITION Diagnostic Procedure. Refer to **INTERMITTENT CONDITION** .
2. **U0141-LOST COMMUNICATION WITH TOTALLY INTEGRATED POWER MODULE ALSO ACTIVE**
    1. With the scan tool, select View DTCs.

       Is the U0141-NO BUS MESSAGE RECEIVED FROM THE FRONT CONTROL MODULE (TIPM) also set?

       Yes

- Follow the diagnostics for U0141-LOST COMMUNICATION WITH FRONT CONTROL MODULE (TIPM). Refer to **DIAGNOSIS AND TESTING** .
- Perform the POWERTRAIN VERIFICATION TEST. Refer to **POWERTRAIN VERIFICATION TEST** .

No

- Replace and program the Powertrain Control Module per Service Information.
- Perform the POWERTRAIN VERIFICATION TEST. Refer to **POWERTRAIN VERIFICATION TEST** .

U1120-LOST WHEEL DISTANCE MESSAGE

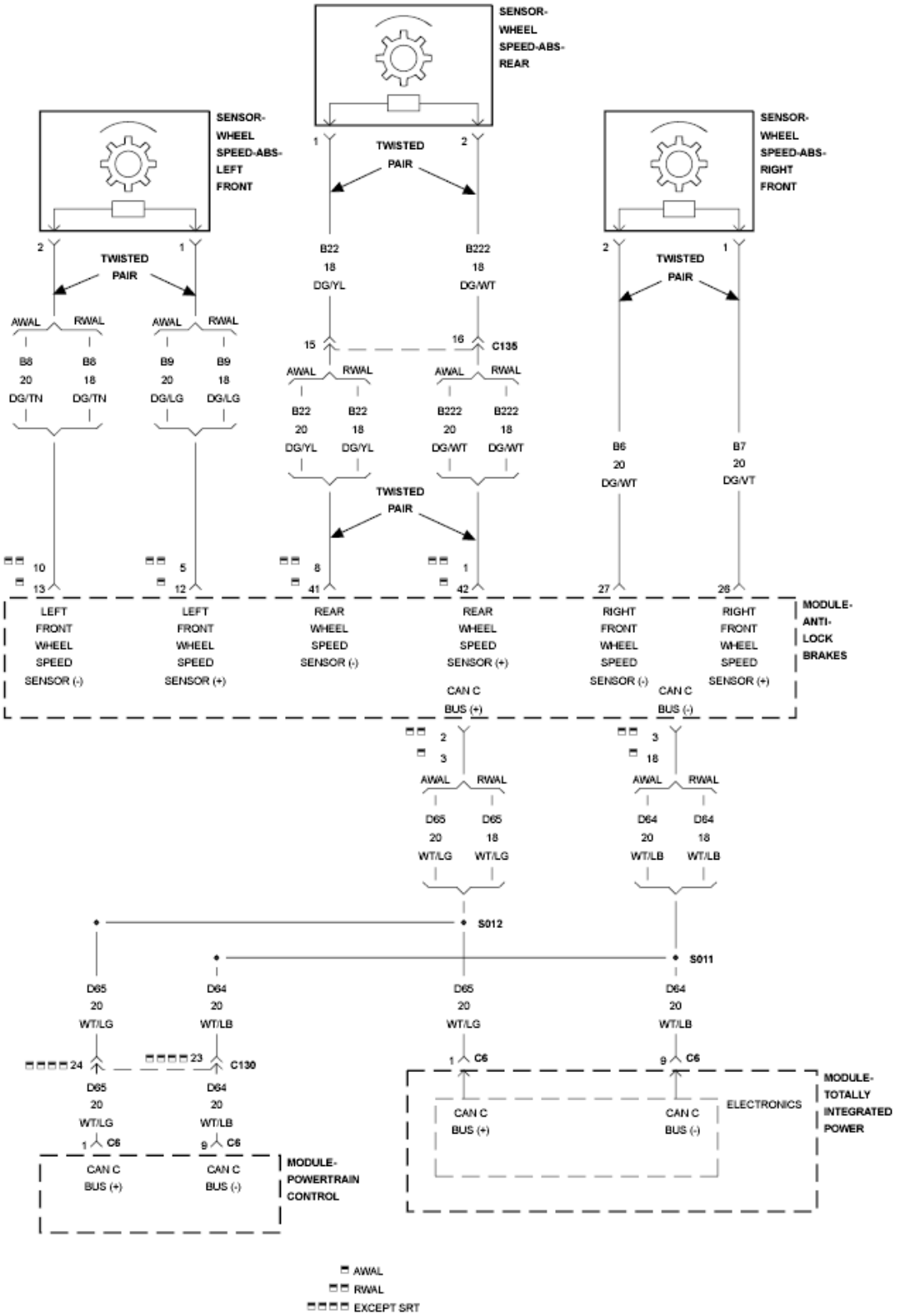

Fig. 135: Anti-Lock Brake Module Circuit Schematic
Courtesy of CHRYSLER GROUP, LLC

For a complete wiring diagram, **refer to appropriate SYSTEM WIRING DIAGRAMS article** .

THEORY OF OPERATION

The PCM receives the vehicle speed signal over the CAN C bus from the Anti-lock Brake Module.

WHEN MONITORED:

Ignition on.

SET CONDITION:

The PCM doesn't receive a vehicle speed signal from the Anti-lock brake Module over the CAN C bus. One Trip fault.

POSSIBLE CAUSES

Possible Causes
CAN C BUS CIRCUIT OPEN OR SHORTED
ANTI-LOCK BRAKE MODULE
POWERTRAIN CONTROL MODULE (PCM)

Always perform the Pre-Diagnostic Troubleshooting procedure before proceeding. Refer to PRE-DIAGNOSTIC TROUBLESHOOTING PROCEDURE .

DIAGNOSTIC TEST

1. **ACTIVE DTC**
    1. Ignition on, engine not running.
    2. With the scan tool, select View PCM DTCs.

       Is the DTC Active at this time?

       Yes

       - Go To 2.

       No

       - Perform the INTERMITTENT CONDITION Diagnostic Procedure. Refer to **INTERMITTENT CONDITION** .
2. **U0121-LOST COMMUNICATION WITH ABS MODULE ALSO SET**
    1. With the scan tool continue reading DTCs.

       Is the U0121-LOST COMMUNICATION WITH ABS MODULE also set?

Yes

- Follow the diagnostics for U0121-LOST COMMUNICATION WITH ABS MODULE. Refer to **DIAGNOSIS AND TESTING** .
- Perform the POWERTRAIN VERIFICATION TEST. Refer to **POWERTRAIN VERIFICATION TEST** .

No

- Replace and program the Powertrain Control Module per Service Information.
- Perform the POWERTRAIN VERIFICATION TEST. Refer to **POWERTRAIN VERIFICATION TEST** .

U1403-IMPLAUSIBLE FUEL LEVEL SIGNAL RECEIVED

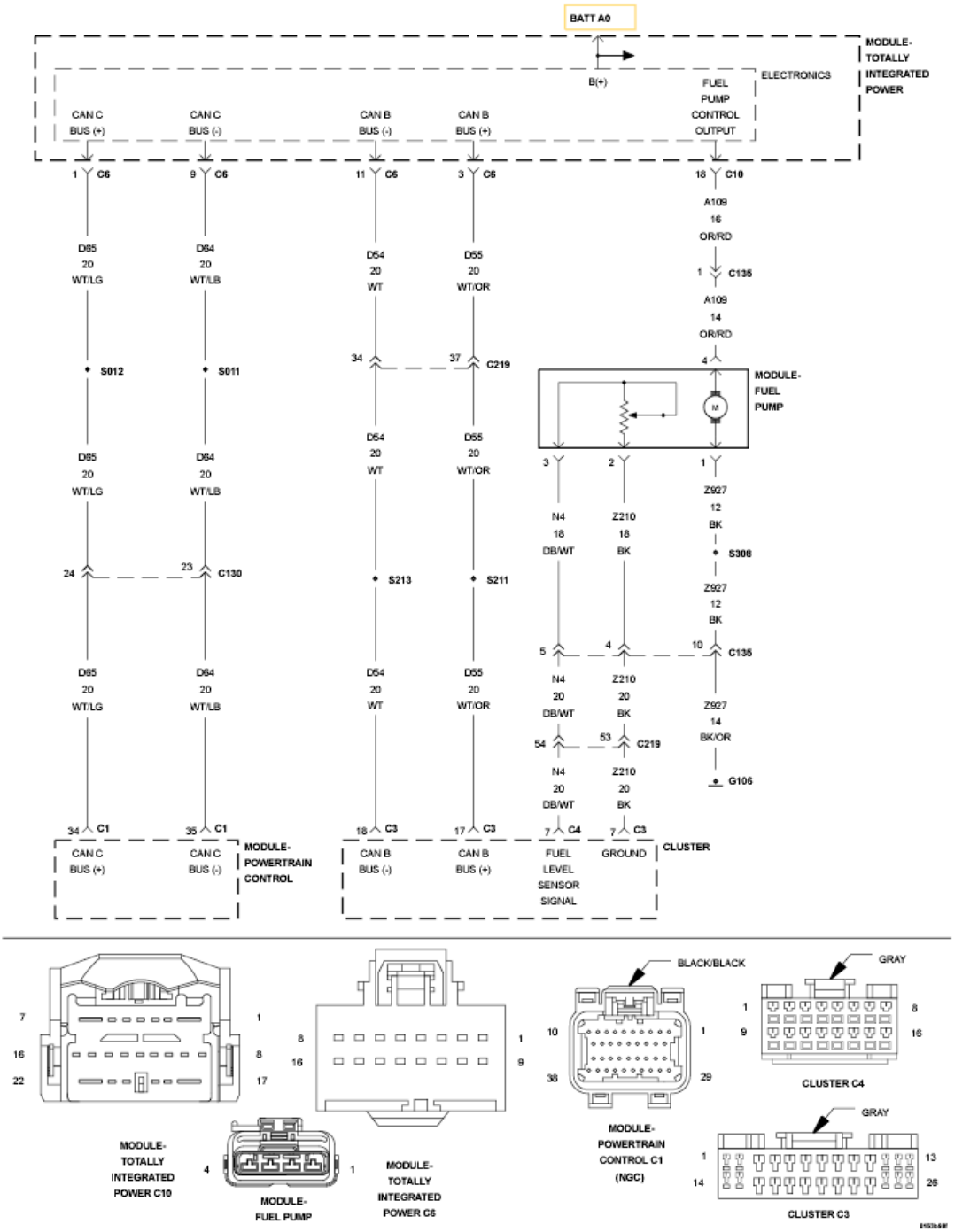

Fig. 136: Fuel Volume Signal Circuit Schematic
Courtesy of CHRYSLER GROUP, LLC

For a complete wiring diagram, **refer to appropriate SYSTEM WIRING DIAGRAMS article** .

THEORY OF OPERATION

The Totally Integrated Power Module isn't receiving a fuel volume signal over CAN B from the Cluster Module. The TIPM has to send the PCM a fuel volume signal over CAN C. The signal the TIPM sends over

CAN C is implausible.

WHEN MONITORED:

Ignition on.

SET CONDITION:

The fuel volume message the Powertrain Control Module (PCM) is receiving is implausible. The circuit is continuously monitored. One Trip fault.

POSSIBLE CAUSES

Possible Causes
FUEL LEVEL SENSOR
(N4) FUEL LEVEL SIGNAL CIRCUIT OPEN OR SHORTED
(Z210) GROUND CIRCUIT OPEN
CAN B OPEN OR SHORTED
CLUSTER MODULE
TOTALLY INTEGRATED POWER MODULE (TIPM)
POWERTRAIN CONTROL MODULE (PCM)

Always perform the Pre-Diagnostic Troubleshooting procedure before proceeding. Refer to PRE-DIAGNOSTIC TROUBLESHOOTING PROCEDURE .

DIAGNOSTIC TEST

1. **ACTIVE DIAGNOSTIC TROUBLE CODE (DTC)**
    1. Ignition on, engine not running.
    2. With a scan tool, select View DTCs.

       Is the DTC Active at this time?

       Yes

       - Go To 2.

       No

       - Perform the INTERMITTENT CONDITION diagnostic procedure. Refer to **INTERMITTENT CONDITION** .
2. **CAN B BUS HARDWARE DTCS ALSO ACTIVE**
    1. With a scan tool check for DTCs in the TIPM.

       Are any CAN B Hardware related DTCs active at this time?

Yes

- Peroform the appropriate diagnostic procedure. Refer to **DIAGNOSIS AND TESTING** .
- Perform the BODY VERIFICATION TEST. Refer to **STANDARD PROCEDURE** .

No

- Go To 3.

3. **FUEL LEVEL SENSOR**

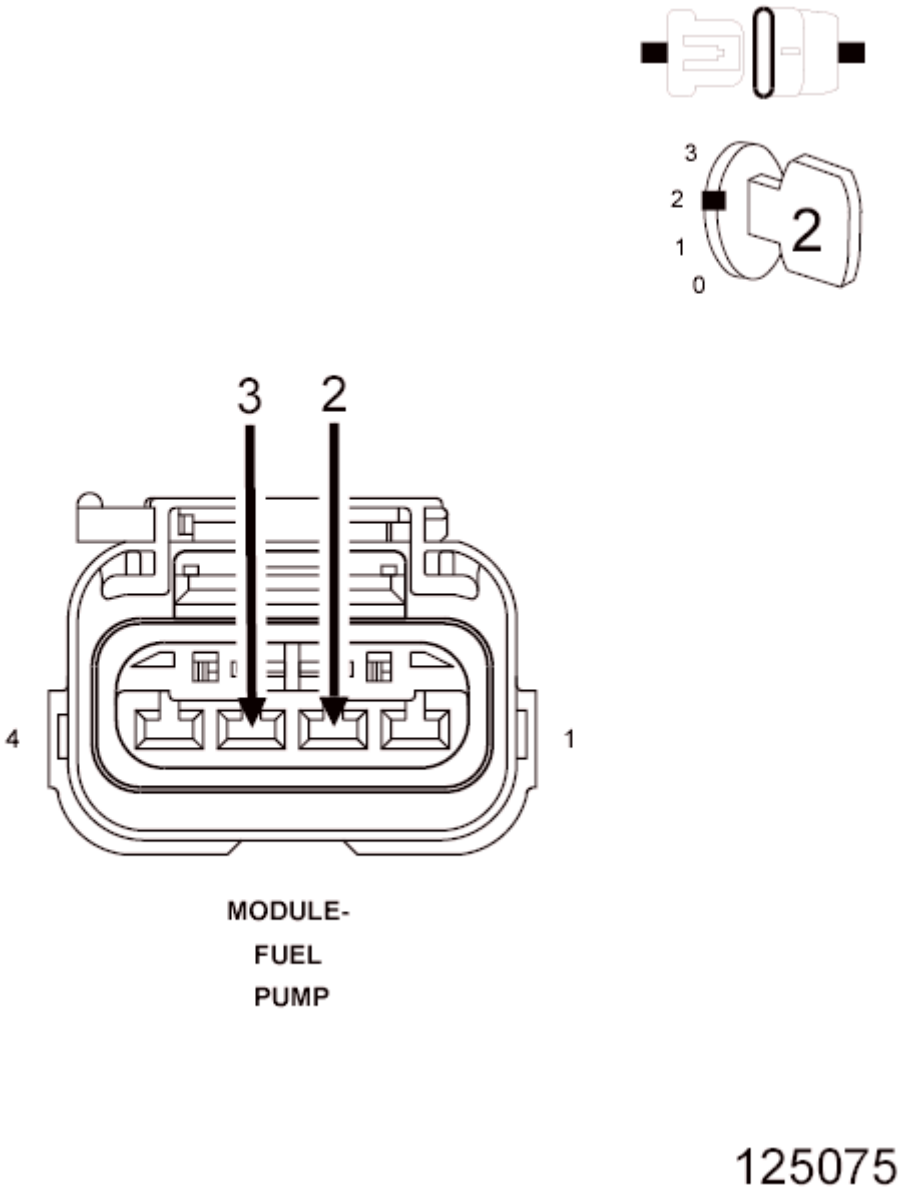

Fig. 137: Fuel Pump Module Electrical Harness Connector
Courtesy of CHRYSLER GROUP, LLC

1. Turn the ignition off.
2. Disconnect the Fuel Pump Module electrical harness connector.
3. Ignition on, engine not running.
4. Connect a jumper wire between the (N4) Fuel Level Signal circuit and the (Z210) Ground circuit in the Fuel Pump Module harness connector.
5. Using the scan tool, read the Fuel Level Sensor voltage.

   Did the Fuel Level Sensor voltage change from above 4.8 Volts to below 0.4 of a Volt with the jumper wire installed?

   Yes

   - Replace the Fuel Level Sensor.
   - Perform the POWERTRAIN VERIFICATION TEST. Refer to **POWERTRAIN VERIFICATION TEST** .

   No

   - Go To 4.

   NOTE: Remove the jumper wire before continuing.

4. **(N4) FUEL LEVEL SIGNAL CIRCUIT OPEN**

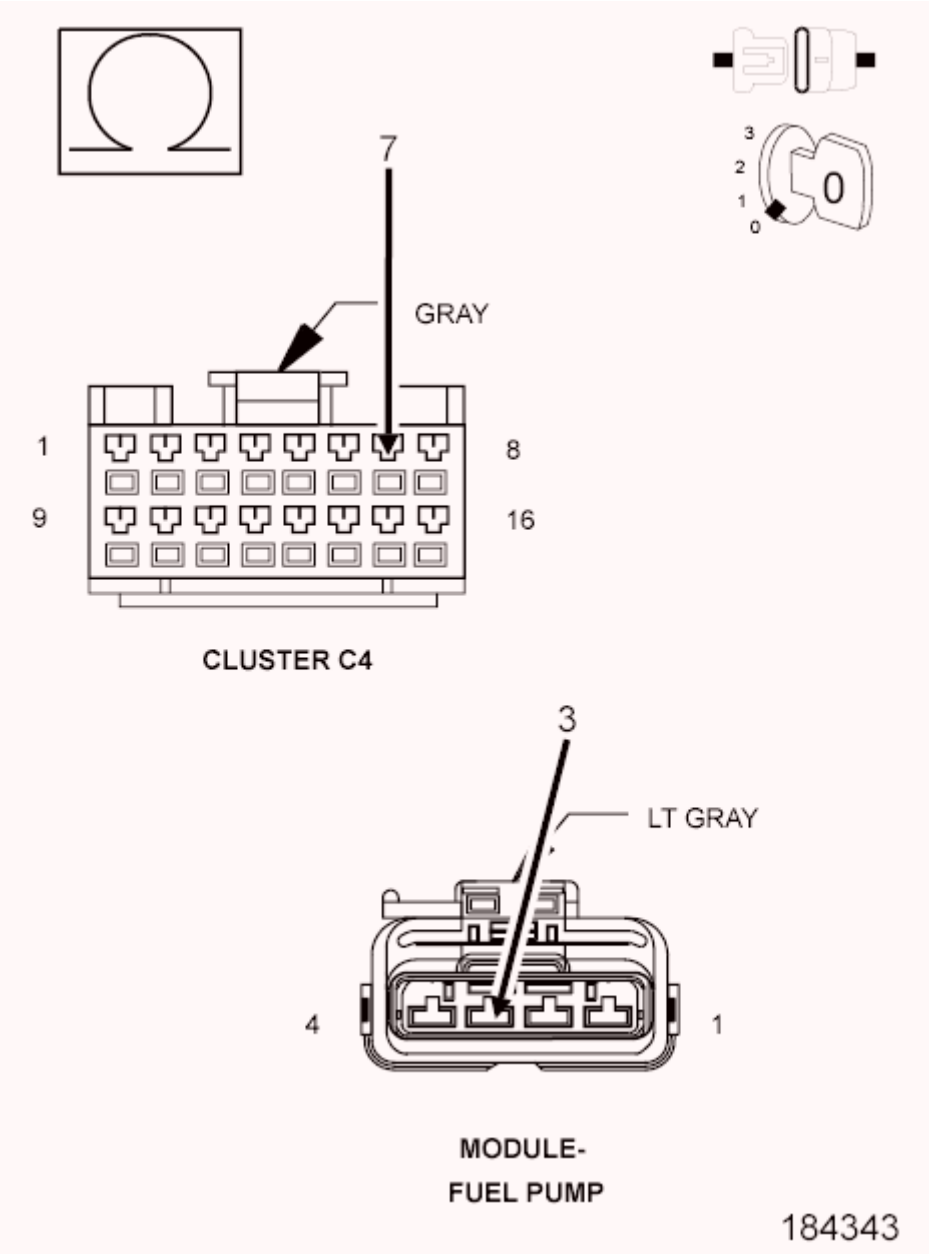

Fig. 138: Measuring Resistance Of (N4) Fuel Level Signal Circuit From Fuel Pump Module Harness Connector To C4 Cluster Harness Connector
Courtesy of CHRYSLER GROUP, LLC

1. Turn the ignition off.
2. Disconnect the C4 Cluster harness connector.
3. Measure the resistance of the (N4) Fuel Level Signal circuit from the Fuel Pump Module harness connector to the C4 Cluster harness connector.

   Is the resistance below 5.0 Ohms?

   Yes

- Go To 5.

No

- Repair the open in the (N4) Fuel Level Signal circuit.
- Perform the POWERTRAIN VERIFICATION TEST. Refer to **POWERTRAIN VERIFICATION TEST** .

5. **(Z210) GROUND CIRCUIT OPEN**

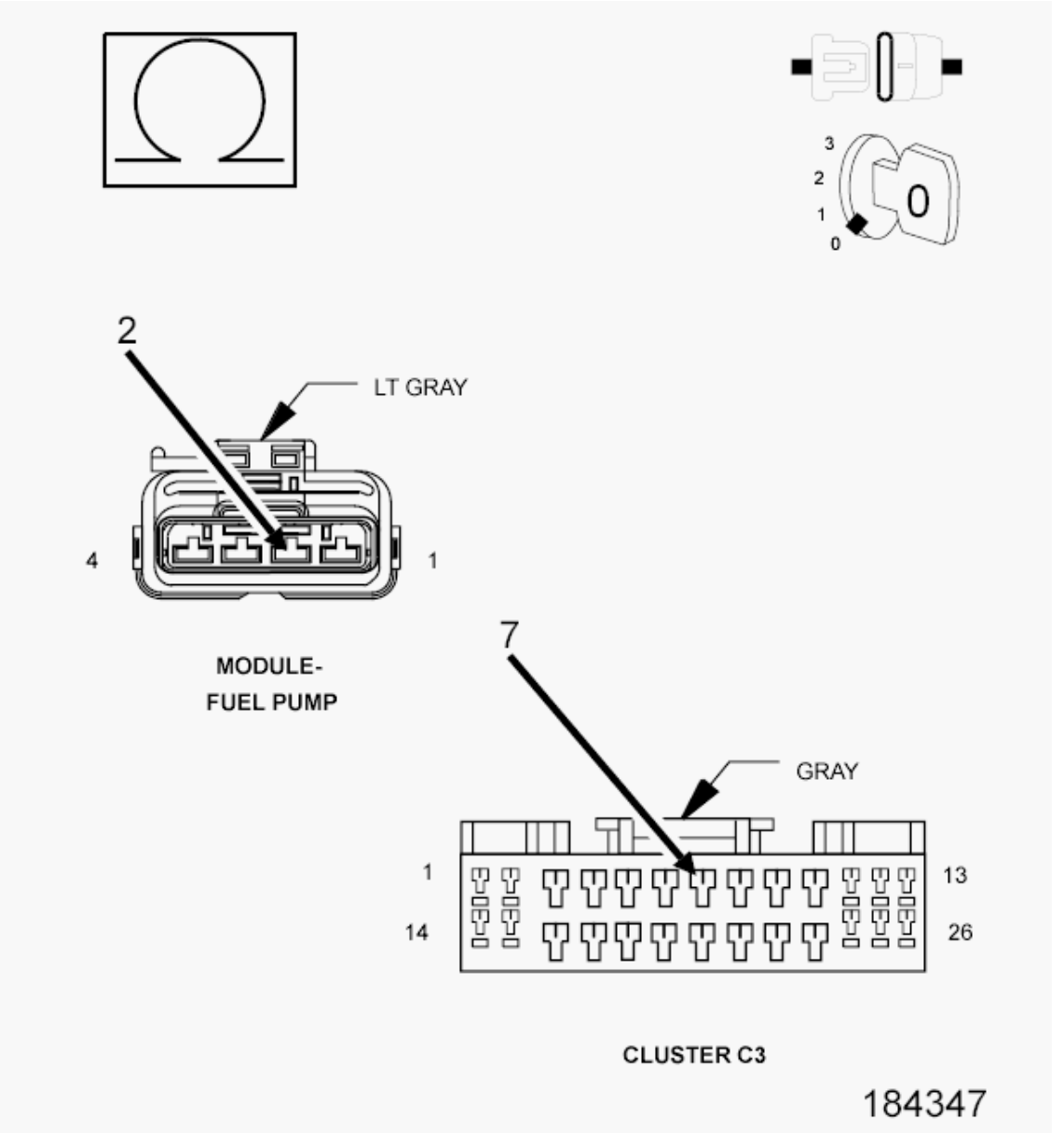

Fig. 139: Measuring Resistance Of (Z210) Ground Circuit From Fuel Pump Module Harness Connector To C3 Cluster Harness Connector
Courtesy of CHRYSLER GROUP, LLC

1. Disconnect the C3 Cluster harness connector.
2. Measure the resistance of the (Z210) Ground circuit from the Fuel Pump Module harness connector to the C3 Cluster harness connector.

   Is the resistance below 5.0 Ohms?

   Yes

   - Go To 6.

   No

   - Repair the open in the (Z210) Ground circuit.
   - Perform the POWERTRAIN VERIFICATION TEST. Refer to **POWERTRAIN VERIFICATION TEST** .

6. **POWERTRAIN CONTROL MODULE (PCM)**
   1. Using the wiring diagram/schematic as a guide, inspect the wiring and connector at the Powertrain Control Module (PCM).
   2. Look for any chafed, pierced, pinched, or partially broken wires.
   3. Look for broken, bent, pushed out or corroded terminals. Verify that there is good pin to terminal contact in the Powertrain Control Module connectors.
   4. Perform any Technical Service Bulletins that may apply.

      Were there any problems found?

      Yes

      - Repair as necessary.
      - Perform the POWERTRAIN VERIFICATION TEST. Refer to **POWERTRAIN VERIFICATION TEST** .

      No

      - Replace and program the Powertrain Control Module in accordance with the service information.
      - Perform the POWERTRAIN VERIFICATION TEST. Refer to **POWERTRAIN VERIFICATION TEST** .

U1412-IMPLAUSIBLE VEHICLE SPEED SIGNAL RECEIVED

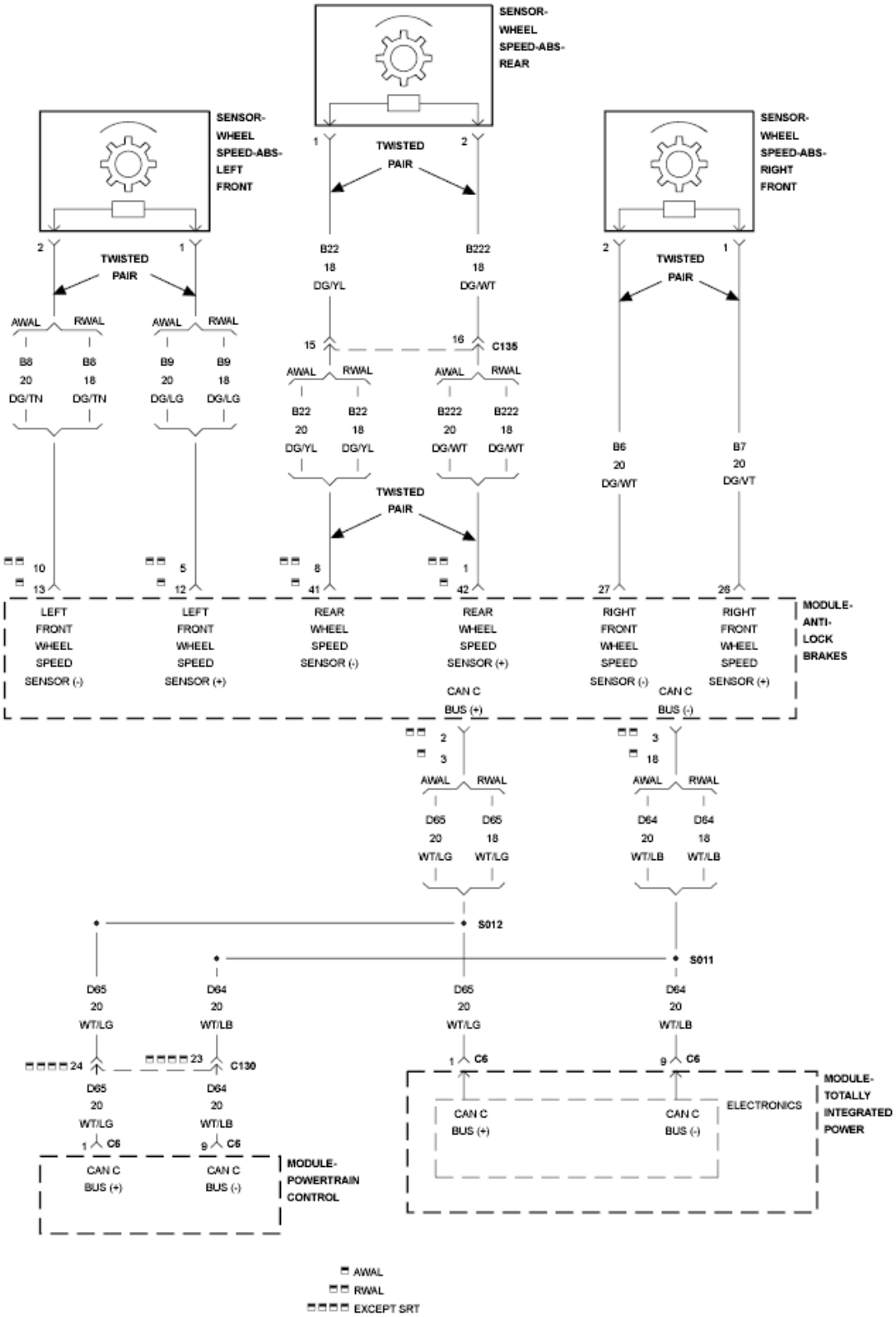

Fig. 140: Anti-Lock Brake Module Circuit Schematic
Courtesy of CHRYSLER GROUP, LLC

For a complete wiring diagram, **refer to appropriate SYSTEM WIRING DIAGRAMS article** .

THEORY OF OPERATION

The ABS Module sends vehicle speed information over the CAN C Bus circuit to the PCM.

WHEN MONITORED:

Ignition on.

SET CONDITION:

The PCM gets an implausible signal over the CAN C circuit from the ABS Module. The circuit is continuously monitored. One Trip fault.

POSSIBLE CAUSES

Possible Causes
CAN C BUS CIRCUIT SHORTED
CAN C BUS CIRCUIT OPEN
ABS MODULE
POWERTRAIN CONTROL MODULE (PCM)

Always perform the Pre-Diagnostic Troubleshooting procedure before proceeding. Refer to PRE-DIAGNOSTIC TROUBLESHOOTING PROCEDURE .

DIAGNOSTIC TEST

1. **ACTIVE DTC**
    1. Ignition on, engine not running.
    2. With a scan tool, select View DTCs.

       Is the U1412-IMPLAUSIBLE VEHICLE SPEED SIGNAL RECEIVED Active at this time?

       Yes

       - Go To 2.

       No

       - Perform the INTERMITTENT CONDITION Diagnostic Procedure. Refer to **INTERMITTENT CONDITION** .
2. **U0001-NO COMMUNICATION ON THE CAN C BUS CIRCUIT IS ACTIVE**
    1. Continue reading DTCs.

       Is the U0001-NO COMMUNICATION ON THE CAN C BUS CIRCUIT ACTIVE at this time?

Yes

- Refer to the Diagnostic Procedure for the U0001-NO COMMUNICATION ON THE CAN C BUS CIRCUIT. Refer to **DIAGNOSIS AND TESTING** .

No

- Go To 3.

3. **ABS MODULE IS ACTIVE ON THE CAN C BUS**
   1. With the scan tool, select ECU View.
   2. Verify that the ABS Module active on the bus.

   Is the ABS Module active on the bus?

   Yes

   - Go To 4.

   No

   - For No Response diagnostic procedures. Refer to **DIAGNOSIS AND TESTING** .
   - Perform the BODY VERIFICATION TEST. Refer to **STANDARD PROCEDURE** .

4. **ACTIVE DTCS IN THE TIPM**
   1. With the scan tool, select ECU View and select TIPM.
   2. With the scan tool, read Active DTCs.

   Is the U0001-NO COMMUNICATION ON THE CAN C BUS CIRCUIT ACTIVE in the TIPM at this time?

   Yes

   - Replace the ABS Module per Service Information.
   - Perform the POWERTRAIN VERIFICATION TEST. Refer to **POWERTRAIN VERIFICATION TEST** .

   No

   - Replace and program the Powertrain Control Module per Service Information.
   - Perform the POWERTRAIN VERIFICATION TEST. Refer to **POWERTRAIN VERIFICATION TEST** .

U1417-IMPLAUSIBLE LEFT WHEEL DISTANCE SIGNAL RECEIVED

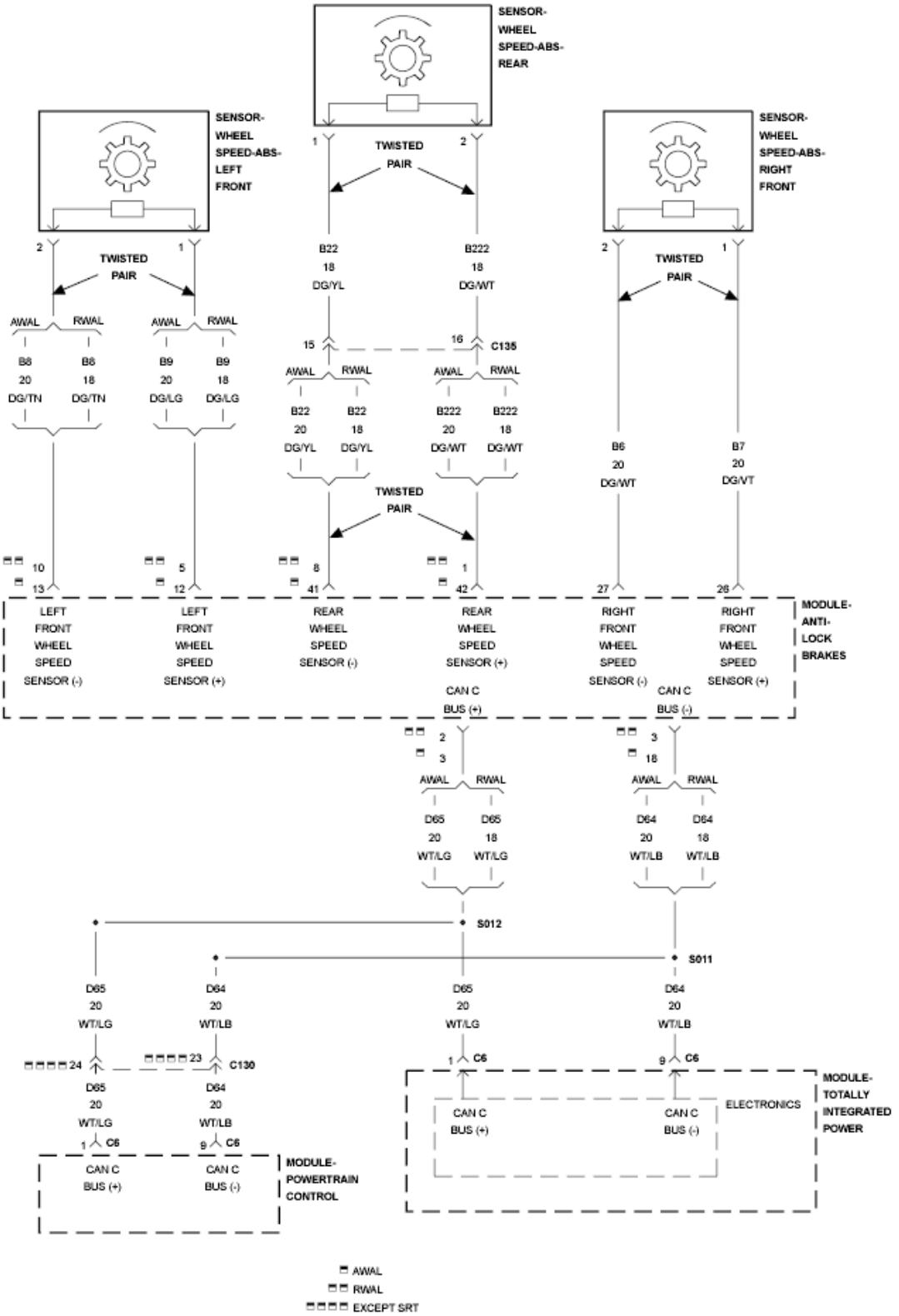

Fig. 141: Anti-Lock Brake Module Circuit Schematic
Courtesy of CHRYSLER GROUP, LLC

For a complete wiring diagram, **refer to appropriate SYSTEM WIRING DIAGRAMS article** .

THEORY OF OPERATION

The ABS Module sends an implausible distance signal over the CAN C Bus circuit to the PCM.

WHEN MONITORED:

Ignition on.

SET CONDITION:

The Powertrain Control Module (PCM) gets an implausible signal over the CAN C circuit from the ABS Module. The circuit is continuously monitored. One Trip fault.

POSSIBLE CAUSES

Possible Causes
VEHICLE SPEED SENSOR FAULT ACTIVE IN ANTI-LOCK BRAKE MODULE
CAN C BUS CIRCUIT SHORTED
CAN C BUS CIRCUIT OPEN
ABS MODULE
POWERTRAIN CONTROL MODULE (PCM)

Always perform the Pre-Diagnostic Troubleshooting procedure before proceeding. Refer to PRE-DIAGNOSTIC TROUBLESHOOTING PROCEDURE .

DIAGNOSTIC TEST

1. **ACTIVE DIAGNOSTIC TROUBLE CODE (DTC)**
    1. Ignition on, engine not running.
    2. With a scan tool, select View DTCs.

       Is the U1417-IMPLAUSIBLE LEFT WHEEL DISTANCE SIGNAL RECEIVED Active at this time?

       Yes

       - Go To 2.

       No

       - Perform the INTERMITTENT CONDITION diagnostic procedure. Refer to **INTERMITTENT CONDITION** .
2. **ABS MODULE IS ACTIVE ON THE CAN C BUS**
    1. Using the scan tool, select ECU View.

2. Verify that the ABS Module active on the bus.

   Is the ABS Module active on the bus?

   Yes

   - Go To 3.

   No

   - Perform the No Response from the ABS Module diagnostic procedure. Refer to **DIAGNOSIS AND TESTING** .

3. **DTCS STORED OR ACTIVE IN THE ABS MODULE**
   1. Check for DTCs in the ABS Module.

      Are any DTCs active or stored in the ABS Module?

      Yes

      - Go to and perform the appropriate diagnostic procedure.

      No

      - Go To 4.

4. **ACTIVE DIAGNOSTIC TROUBLE CODE (DTC)S IN THE TIPM**
   1. Using the scan tool, select ECU View and select TIPM.
   2. Using the scan tool, read Active DTCs.

      Are any Communication DTCs active in the TIPM relating to the ABS System?

      Yes

      - Replace the ABS Module in accordance with the Service Information.
      - Perform the ABS VERIFICATION TEST. Refer to **ABS VERIFICATION TEST** .

      No

      - Replace and program the Powertrain Control Module in accordance with the service information.
      - Perform the POWERTRAIN VERIFICATION TEST. Refer to **POWERTRAIN VERIFICATION TEST** .

U1418-IMPLAUSIBLE RIGHT WHEEL DISTANCE SIGNAL RECEIVED

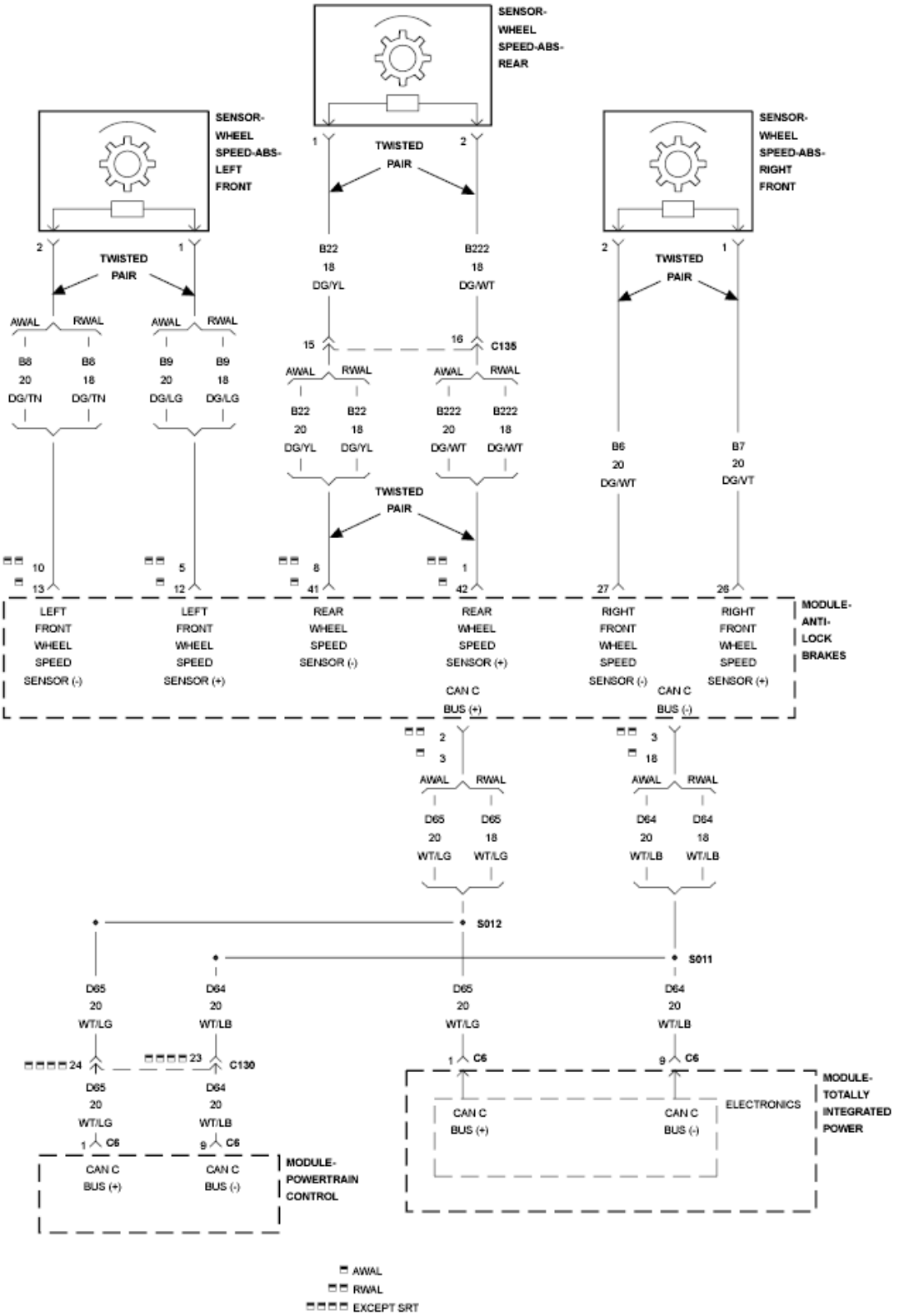

Fig. 142: Anti-Lock Brake Module Circuit Schematic
Courtesy of CHRYSLER GROUP, LLC

For a complete wiring diagram, **refer to appropriate SYSTEM WIRING DIAGRAMS article** .

THEORY OF OPERATION

The ABS Module sends an implausible distance signal over the CAN C Bus circuit to the PCM.

WHEN MONITORED:

Ignition on.

SET CONDITION:

The PCM gets an implausible signal over the CAN C circuit from the ABS Module. The circuit is continuously monitored. One Trip fault.

POSSIBLE CAUSES

Possible Causes
VEHICLE SPEED SENSOR FAULT ACTIVE IN ANTI-LOCK BRAKE MODULE
CAN C BUS CIRCUIT SHORTED
CAN C BUS CIRCUIT OPEN
ABS MODULE
POWERTRAIN CONTROL MODULE (PCM)

Always perform the Pre-Diagnostic Troubleshooting procedure before proceeding. Refer to PRE-DIAGNOSTIC TROUBLESHOOTING PROCEDURE .

DIAGNOSTIC TEST

1. **ACTIVE DTC**
    1. Ignition on, engine not running.
    2. With a scan tool, select View DTCs.

       Is the U1418-IMPLAUSIBLE RIGHT WHEEL DISTANCE SIGNAL RECEIVED Active at this time?

       Yes

       - Go To 2.

       No

       - Perform the INTERMITTENT CONDITION Diagnostic Procedure. Refer to **INTERMITTENT CONDITION** .
2. **ABS MODULE IS ACTIVE ON THE CAN C BUS**
    1. With the scan tool, select ECU View.

2. Verify that the ABS Module active on the bus.

   Is the ABS Module Active on the bus?

   Yes

   - Go To 3.

   No

   - For No Response diagnostic procedures. Refer to **DIAGNOSIS AND TESTING** .
   - Perform the BODY VERIFICATION TEST. Refer to **STANDARD PROCEDURE** .

3. **DTCS STORED OR ACTIVE IN THE ABS MODULE**
   1. Check for DTCs in the ABS Module.

      Are any DTCs active or stored in the ABS Module?

      Yes

      - Refer to DTC Based Diagnostics and perform the diagnostic procedure for the DTCs in the ABS Module. Refer to **ABS - DIAGNOSTIC CODE INDEX** .
      - Perform the ABS VERIFICATION TEST. Refer to **ABS VERIFICATION TEST** .

      No

      - Go To 4.

4. **ACTIVE DTCS IN THE TIPM**
   1. With the scan tool, select ECU View and select TIPM.
   2. With the scan tool, read Active DTCs.

      Are any Communication DTCs active in the TIPM relating to the ABS System?

      Yes

      - Replace the ABS Module per Service Information.
      - Perform the POWERTRAIN VERIFICATION TEST. Refer to **POWERTRAIN VERIFICATION TEST** .

      No

      - Replace and program the Powertrain Control Module per Service Information.
      - Perform the POWERTRAIN VERIFICATION TEST. Refer to **POWERTRAIN VERIFICATION TEST** .

STANDARD PROCEDURE

INTERMITTENT CONDITION

POSSIBLE CAUSES

POSSIBLE CAUSES
INTERMITTENT CONDITION

DIAGNOSTIC TEST

1. **INTERMITTENT CONDITION**

NOTE: **The conditions that set the DTC are not present at this time. The following list may help in identifying the intermittent condition.**

WARNING: When the engine is operating, do not stand in direct line with the fan. Do not put your hands near the pulleys, belts or fan. Do not wear loose clothing. Failure to follow these instructions may result in possible serious or fatal injury.

1. Refer to any Technical Service Bulletins (TSBs) that may apply.
2. Review the scan tool Freeze Frame information. If possible, try to duplicate the conditions under which the DTC set.
3. With the engine running at normal operating temperature, monitor the scan tool parameters related to the DTC while wiggling the wire harness. Look for parameter values to change and/or a DTC to set.
4. Turn the ignition off.
5. Visually inspect the related wire harness. Disconnect all the related harness connectors. Look for any chafed, pierced, pinched, partially broken wires and broken, bent, pushed out, or corroded terminals.
6. Perform a voltage drop test on the related circuits between the suspected inoperative component and the PCM.

CAUTION: Do not probe the PCM harness connectors. Probing the PCM harness connectors will damage the PCM terminals resulting in poor terminal to pin connection. Install the PCM Pinout Box (special tool #8815A, Kit, NGC, 38 Position) to perform diagnosis.

7. Inspect and clean all PCM, engine, and chassis grounds that are related to the most current DTC.

8. If numerous trouble codes were set, use a wire schematic and look for any common ground or supply circuits.
9. For any Relay DTCs, actuate the Relay with the scan tool and wiggle the related wire harness to try to interrupt the actuation.
10. For intermittent Evaporative Emission trouble codes perform a visual and physical inspection of the related parts including hoses and the Fuel Filler cap.
11. For intermittent Misfire DTCs check for restrictions in the Intake and Exhaust system, proper installation of Sensors, vacuum leaks, and binding components that are run by the accessory drive belt.
12. Use the scan tool to perform a System Test if one applies to failing component.
13. A co-pilot, data recorder, and/or lab scope should be used to help diagnose intermittent conditions.

    Were any problems found during the above inspections?

    Yes

    - Perform the necessary repairs.
    - Perform the POWERTRAIN VERIFICATION TEST. Refer to **POWERTRAIN VERIFICATION TEST** .

    No

    - Test Complete.

PRE-DIAGNOSTIC TROUBLESHOOTING PROCEDURE

DIAGNOSTIC TEST

1. **NO RESPONSE**
    1. Make sure the scan tool will communicate with the appropriate modules.

       Are you currently experiencing a NO RESPONSE condition?

       Yes

       - The NO RESPONSE condition must be properly diagnosed before continuing. Refer to **DIAGNOSIS AND TESTING** .

       No

       - Go To 2.
2. **NO START**

   Is the customer complaint a NO START condition?

Yes

- Check the vehicle for any NO START related PCM DTCs or Vehicle Theft Security related DTCs. Refer to **DIAGNOSTIC CODE INDEX** and **WIN-DIAGNOSTIC CODE INDEX** .
- If no Theft related DTCs are present, refer to the Non DTC Diagnostic Procedures that relate to Fuel and Starting. Refer to **DIAGNOSIS AND TESTING** .

No

- Go To 3.

3. **VEHICLE HISTORY AND TSB(s)**
   1. Continue by reading PCM DTCs and record the related Freeze Frame data if any DTCs are present.
   2. Whether or not any DTCs are present you will want to check the following items which may assist in repairing the customers complaint successfully.
   3. Check the vehicle's repair history.
   4. If the vehicle has a repair history that pertains to the customer's current complaint, review the repair.
   5. Inspect the vehicle for any aftermarket accessories that may have been installed incorrectly.
   6. Check for any TSBs related to the customer's complaint or DTCs.
   7. If a TSB applies, follow the instructions per the TSB.

      Choose the following scenario that best applies.

      The TSB repaired the customer's complaint.

      - Testing complete.

      A DTC is present, no TSB applies, or the TSB didn't repair the customer's complaint.

      - Go To 4.

      No DTCs are present.

      - Perform the INTERMITTENT CONDITION diagnostic procedure. Refer to **INTERMITTENT CONDITION** .
4. **WIRE HARNESS INSPECTION**
   1. Clear the DTCs.
   2. Attempt to duplicate the customer complaint.
   3. Whether the customer complaint can be duplicated or not, make a quick wire harness inspection related to the DTCs that were previously cleared.
   4. Check the Powertrain Control Module connectors, the suspected component connection, in-line connectors, wire harness splices, PCM power and ground circuits, and any related fuses.
   5. If the DTCs are fuel or air related, check the fuel level and quality.

Were any repairs made that fixed the customer's complaint?

Yes

- Testing complete.

No

- Perform the diagnostic test procedure related to the DTC. Refer to **DIAGNOSTIC CODE INDEX** .

PCM / TCM PROGRAMMING

PCM / TCM FLASH PROGRAMING

This procedure will need to be done when one or more of the following situations are true:

1. A vehicle's Powertrain Control Module (PCM) has been replaced.
2. A diagnostic trouble code (DTC) is set P1602 - PCM Not Programmed.
3. An updated calibration or software release is available for either the PCM or TCM ECUs.

This procedure assumes that the wiTECH™ Vehicle Connection Interface (VCI) pod, StarSCAN® and StarMOBILE® devices are configured to your dealership's network with either a wired or wireless connection. The wiTECH™ VCI pod, StarSCAN® and StarMOBILE® must also be running at the latest operating system and software release level. For more help on how to network your StarSCAN® or StarMOBILE® reference the StarSCAN® / StarMOBILE® Quick Start Networking Guide available on 'DealerCONNECT > Service > StarSCAN® and StarMOBILE® Tools > Online Documentation' or at www.dcctools.com, under the Download Center. For the wiTECH™ VCI pod use the "HELP" tab in the wiTECH™ Diagnostic Application.

TABLE OF CONTENTS

1. Refer to **SECTION 1 - PCM / TCM FLASH PROCEDURE**.
2. Refer to **REQUIRED TOOLS/EQUIPMENT:**
3. Refer to **TECH TIPS AND INFORMATION:**
4. Refer to **PARTS REQUIRED**.

SECTION 1 - PCM / TCM FLASH PROCEDURE

If using StarSCAN® or StarMOBILE® Desktop Client. Go to **REPAIR PROCEDURE - USING STARSCAN® OR STARMOBILE® DESKTOP CLIENT**.

If using wiTECH™ Diagnostic Application. Go to **REPAIR PROCEDURE - WITECH™ DIAGNOSTIC APPLICATION**.

REPAIR PROCEDURE - USING STARSCAN® OR STARMOBILE® DESKTOP CLIENT

NOTE: If this flash process is interrupted or aborted, the flash should be restarted.

1. Open the hood of the vehicle and install a battery charger. Verify that the charging rate provides a continuous charge of 13.2 - 13.5 volts.
2. Connect the StarSCAN® or StarMOBILE® to the vehicle data link connector located under the steering column and turn the ignition key to the "RUN" position.
3. Power on the StarSCAN® or StarMOBILE®. If the StarMOBILE® is being used, launch the StarMOBILE® Desktop Client and connect to the appropriate StarMOBILE® device.
4. Retrieve the old ECU part number. From the tool's Home screen,
   a. Select "ECU View"
   b. Select "PCM/ECM"
   c. Select "More Options"
   d. Select "ECU Flash"
   e. Record the part number at the top of the Flash PCM/ECM screen for later reference.
5. Program the ECU as follows:
   a. Using the StarSCAN® / StarMOBILE® at the Home screen, select "ECU View"
   b. Select "PCM/ECM"
   c. Select "More Options"
   d. Select "ECU Flash"
   e. Select "Browse for New File" and follow the on screen instructions.
   f. Highlight the appropriate calibration based on the part number recorded in Step 4e , or by using Year/Model/Engine and appropriate emissions selection for the vehicle being worked on.

      NOTE: If you are not connected to the vehicle, you may also search for flash files by selecting the "Flash Download" button from the Home screen.

   g. Select "Download to Scantool"
   h. Once the download is complete, select "Close" and then "Back"
   i. Highlight the listed calibration, select "Update Controller" and follow the on screen instructions.
   j. When the PCM/ECM update is complete, select "OK"
   k. Verify that the part number at the top of the Flash PCM/ECM screen has updated to the new part number.

NOTE: If this flash process is interrupted or aborted, the flash should be restarted.

6. Continue to complete the process if the ECU has been replaced. Refer to **SECTION 2 - ADDITIONAL PCM / TCM REPLACEMENT PROCEDURES**.
7. Type the necessary information on the "Authorized Modification Label" (p/n 04275086AB) and attach near the VECI label (See Section 3 for details). Refer to **SECTION 3 - AUTHORIZED**

MODIFICATION LABEL.

REPAIR PROCEDURE - WITECH™ DIAGNOSTIC APPLICATION

NOTE: If this flash process is interrupted or aborted, the flash should be restarted.

1. Open the hood of the vehicle and install a battery charger. Verify that the charging rate provides a continuous charge of 13.2 - 13.5 volts.
2. Connect the wiTECH™ Vehicle Connection Interface (VCI) pod to the vehicle data link connector located under the steering column and turn the ignition key to the "RUN" position.
3. Launch the wiTECH™ Diagnostic Application and connect to the appropriate wiTECH™ device.
4. From the wiTECH™ Diagnostic Application Home screen,
    1. Select "HELP"
    2. Select "HELP CONTENTS"
    3. Follow the correct "HELP TOPIC" for the ECU being programmed

SECTION 2 - ADDITIONAL PCM / TCM REPLACEMENT PROCEDURES

NOTE: Find the PCM/TCM Type for the vehicle, read and write down the steps, and then go to the step by step instructions for additional information on how to perform these procedures. Refer to STEP-BY-STEP INSTRUCTIONS.

If an EDC16-U31 PCM/ECM (2.0L) was replaced, perform the following additional steps and/or routines:

1. PCM/ECM Replaced - if WIN equipped
2. Check PCM/ECM VIN - if NOT WIN equipped
3. Program Variant Code

If an EDC16-C2 PCM/ECM (2.2L) was replaced, perform the following additional steps and/or routines:

1. PCM/ECM Replaced - if WIN equipped
2. Check PCM/ECM VIN - if NOT WIN equipped
3. IMA Rapid Calibration Test - Only on 06 PT AND up
4. Injector Quantity Adjustment - Only on 06 PT AND up

If an EDC16-CP31 (3.0L) was replaced, perform the following additional steps and/or routines:

1. PCM/ECM Replaced - if WIN equipped
2. Check PCM/ECM VIN - if NOT WIN equipped
3. Diesel Particulate Filter (Used) Learning
4. NOx Catalyst (New) Initialization
5. Injector Quantity Adjustment
6. IMA Rapid Calibration Test

7. Fuel Mean Value Adaptation Initialization
8. Exhaust Throttle Plate Adaptive Learn Position

If an EDC16-CP31-2 (2.8L) was replaced, perform the following additional steps and/or routines:

1. PCM/ECM Replaced - if WIN equipped
2. Check PCM/ECM VIN - if NOT WIN equipped
3. Injector Quantity Adjustment
4. Program Variant Code
5. ECU Replacement With Value Transfer - if the ECU to be replaced is still responsive
6. ECU Replacement Without Value Transfer - if the ECU to be replaced is NOT responsive
7. Fuel Mean Value Adaptation Initialization
8. IMA Rapid Calibration Test
9. Set Oil Dilution Mass Value

If a CM849 PCM/ECM (5.9L) was replaced, perform the following additional steps and/or routines:

1. PCM/ECM Replaced - if WIN equipped
2. Check PCM/ECM VIN - if NOT WIN equipped

If a CM2100 PCM/ECM (6.7l) was replaced, perform the following additional steps and/or routines:

1. PCM/ECM Replaced - if WIN equipped
2. Check PCM/ECM VIN - if NOT WIN equipped
3. Enable / Disable Vehicle Features - need to enable features
4. Injector Quantity Adjustment
5. Reset Regenerative Filter Timers
6. Mobile DeSoot - NO Minimum Required Soot Load

TCM Replacement

If an Aisin TCM was replaced, perform the following additional steps and/or routines:

If an EATX TCM was replaced, perform the following additional steps and/or routines:

If an NGC3 TCM ONLY was replaced, perform the following additional steps and/or routines:

If an NGC4 TCM ONLY was replaced, perform the following additional steps and/or routines:

1. Quicklearn

If an EGS TCM was replaced, perform the following additional steps and/or routines:

1. Initialize EGS

STEP-BY-STEP INSTRUCTIONS

Check PCM/ECM VIN

From the "Home" screen, select "ECU View"

- Select "PCM/ECM"
- Select "Misc. Functions"
- Select "Check PCM/ECM VIN" and follow the on screen instructions.
- When complete, select "Finish"

Diesel Particulate Filter (Used) Learning

From the "Home" screen, select "ECU View"

- Select "PCM/ECM"
- Select "Misc. Functions"
- Select "Diesel Particulate Filter (Used) Learning" and follow the on screen instructions.
- When complete, select "Finish"

ECU Replacement with Value Transfer

From the "Home" screen, select "ECU View"

- Select "PCM/ECM"
- Select "Misc. Functions"
- Select "ECU Replacement with Value Transfer" and follow the on screen instructions.
- When complete, select "Finish"

ECU Replacement without Value Transfer

From the "Home" screen, select "ECU View"

- Select "PCM/ECM"
- Select "Misc. Functions"
- Select "ECU Replacement without Value Transfer" and follow the on screen instructions.
- When complete, select "Finish"

Enable / Disable Vehicle Features

From the "Home" screen, select "ECU View"

- Select "PCM/ECM"
- Select "Misc. Functions"

- Select "Enable / Disable Vehicle Features" and follow the on screen instructions.
- When complete, select "Finish"

Exhaust Throttle Plate Adaptive Learn Position

From the "Home" screen, select "ECU View"

- Select "PCM/ECM"
- Select "Misc. Functions"
- Select "Exhaust Throttle Plate Adaptive Learn Position" and follow the on screen instructions.
- When complete, select "Finish"

Fuel Mean Value Adaptation Initialization

From the "Home" screen, select "ECU View"

- Select "PCM/ECM"
- Select "Misc. Functions"
- Select "Fuel Mean Value Adaptation Initialization" and follow the on screen instructions.
- When complete, select "Finish"

IMA Rapid Calibration

From the "Home" screen, select "ECU View"

- Select "PCM/ECM"
- Select "Misc. Functions"
- Select "IMA Rapid Calibration Test" and follow the on screen instructions.
- When complete, select "Finish"

Initialize EGS

From the "Home" screen, select "ECU View"

- Select "PCM/ECM"
- Select "Misc. Functions"
- Select "Initialize EGS" and follow the on screen instructions.
- When complete, select "Finish"

Injector Quantity Adjustment

From the "Home" screen, select "ECU View"

- Select "PCM/ECM"

- Select "Misc. Functions"
- Select "Injector Quantity Adjustment" and follow the on screen instructions.
- When complete, select "Finish"

Mobile DeSoot - NO Minimum Required Soot Load

From the "Home" screen, select "ECU View"

- Select "PCM/ECM"
- Select "Misc. Functions"
- Select "Mobile DeSoot - NO Minimum Required Soot Load" and follow the on screen instructions.
- When complete, select "Finish"

NOx Catalyst (New) Initialization

From the "Home" screen, select "ECU View"

- Select "PCM/ECM"
- Select "Misc. Functions"
- Select "NOx Catalyst (New) Initialization" and follow the on screen instructions.
- When complete, select "Finish"

PCM/ECM Replaced

The vehicle pin (Personal Identification Number) will be required to complete the routine. This information may be obtained in three ways:

1. The original selling invoice
2. DealerCONNECT > Parts > Key Codes
3. Contacting the District Manager.

From the "Home" screen, select "ECU View"

- Select "WIN"
- Select "Misc. Functions"
- Select "PCM/ECM Replaced" and follow the on screen instructions.
- When complete, select "Finish"

Program Variant Code

From the "Home" screen, select "ECU View"

- Select "PCM/ECM"

- Select "Misc. Functions"
- Select "Program Variant Code" and follow the on screen instructions.
- When complete, select "Finish"

Quicklearn

From the "Home" screen, select "ECU View"

- Select "PCM/ECM"
- Select "Misc. Functions"
- Select "Quicklearn" and follow the on screen instructions.
- When complete, select "Finish"

Reset Regenerative Filter Timers

From the "Home" screen, select "ECU View"

- Select "PCM/ECM"
- Select "Misc. Functions"
- Select "Reset Regenerative Filter Times" and follow the on screen instructions.
- When complete, select "Finish"

Set Oil Dilution Mass Value

From the "Home" screen, select "ECU View"

- Select "PCM/ECM"
- Select "Misc. Functions"
- Select "Set Oil Dilution Mass Value" and follow the on screen instructions.
- When complete, select "Finish"

SECTION 3 - AUTHORIZED MODIFICATION LABEL

NOTE: The following step is required by law when reprogramming a PCM/ECM and/or TCM.

Type the necessary information on the "Authorized Modification Label" and attach near the VECI label.

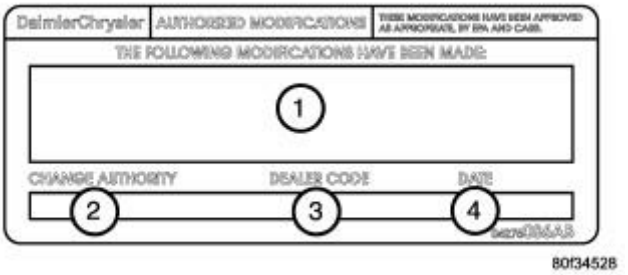

Fig. 1: Authorized Modification Label
Courtesy of CHRYSLER GROUP, LLC

1. Powertrain Control / Transmission Control Module Part Numbers (Insert P/Ns) Used
2. Change Authority: TSB XX--XX
3. Dealer Code: XXXXX
4. Date: XX-XX-XX

REQUIRED TOOLS/EQUIPMENT:

StarSCAN®	StarMOBILE®	wiTECH™
Battery Charger	Battery Charger	Battery Charger
StarSCAN® Tool Kit	StarMOBILE® Tool Kit	wiTECH™ Tool Kit
StarSCAN® Vehicle Cable	StarMOBILE® Vehicle Cable	wiTECH™ Vehicle Cable
	TechCONNECT PC or equivalent	TechCONNECT PC or equivalent
		wiTECH™ Diagnostic Application

TECH TIPS AND INFORMATION:

CAUTION: Extreme care must be taken when programming a calibration into a generic PCM. Do not randomly select a calibration. Once a calibration is selected and programmed, the controller cannot be reprogrammed to a different calibration. The module can only be reprogrammed to a more recent version of that calibration.

1. The wiTECH™ Diagnostic Application is the preferred method for flashing any Chrysler vehicle ECU. For more information, training tutorials are available under the "HELP" tab in the wiTECH™ Diagnostic Application or at www.dcctools.com, under the 'Training Aids' link.
2. To use the StarMOBILE® in Pass-Through Mode requires that your StarMOBILE® is connected to the dealership's network via a wired or wireless connection. For more information on how to use the StarMOBILE in Pass-Through Mode see the StarMOBILE® training tutorials available on 'DealerCONNECT > Service > StarSCAN® and StarMOBILE® Tools > Training Aids' link or at www.dcctools.com, under the 'Training Aids' link.
3. If the flash process is interrupted or aborted, the flash should be restarted.

4. Due to the PCM/ECM / TCM programming procedure, a DTC may be set in other ECUs within the vehicle. Some DTCs may cause the MIL to illuminate. From the "Home" screen select "System View". Then select "All DTCs". Press "Clear All Stored DTCs" if there are any DTCs shown on the list.
5. Do not allow the battery charger to time out or the charging rate to climb above 13.5 Volts during the flash process.
6. The StarSCAN® and StarMOBILE® diagnostic tools fully support Internet connectivity and must be configured for your dealership's network. For help on setting up your StarSCAN® / StarMOBILE® for the dealership's network, refer to the StarSCAN® / StarMOBILE® Quick Start Networking Guide available on 'DealerCONNECT > Service > StarSCAN® and StarMOBILE® Tools > Online Documentation' or at www.dcctools.com, under the download center.
7. The operating software in the StarSCAN® and StarMOBILE® must be programmed with the latest software release level. The software level is visible in the blue header at the top of the StarSCAN® and StarMOBILE® Desktop Client screens. For instructions on how to update your scan tool, refer to the StarSCAN® / StarMOBILE® Software Update guide available on 'DealerCONNECT > Service > StarSCAN® and StarMOBILE® Tools > Online Documentation' or at www.dcctools.com, under the download center.

PARTS REQUIRED

Qty	Part Number	DESCRIPTION
1	04275086AB	Label, Authorized Modification

POWERTRAIN VERIFICATION TEST

For a complete wiring diagram, **refer to appropriate SYSTEM WIRING DIAGRAMS article** .

DIAGNOSTIC TEST

1. **SELECTING THE PROPER VERIFICATION TEST**

   The following verification test are for different repairs. Select the appropriate Verification test for the repair that has been completed. If the battery was disconnected for any reason, you must perform the Battery Reconnection procedure in the Battery Service Information.

   Speed Control repair

   - Go To 2.

   Charging System repair

   - Go To 3.

   EVAP System repair

- Go To 4.

All other repairs

- Go To 5.

2. **SPEED CONTROL VERIFICATION TEST**

NOTE: **If this vehicle is equipped with an Electronic Throttle Control system and the APP Sensors, PCM or Throttle Body Assembly have been replaced, use the scan tool to perform the ETC RELEARN function.**

NOTE: **After completing the Powertrain Verification Test the Transmission Verification Test must be performed.**

NOTE: **If the PCM has been replaced and the correct VIN and mileage have not been programmed, a DTC will set in the ABS Module, Airbag Module and the Wireless Control Module (WCM) or Wireless Ignition Node (WIN).**

NOTE: **If the vehicle is equipped with a Sentry Key Remote Entry, Secret Key data must be updated. Refer to the Service Information for the PCM, WCM/WIN and the Transponder (ignition key) for programming information. Using the scan tool, program the Secret Key information into the PCM using the PCM replaced function under the WCM menu.**

1. Inspect the vehicle to make sure that all engine components are properly installed and connected.
2. Connect the scan tool to the data link connector and erase all codes.
3. Turn the speed control ON (if equipped, cruise light will be on).
4. Depress and release the SET Switch when the vehicle speed is greater than 56 km/h (35 mph). The speed control should engage and hold the selected speed.
5. Press and hold the RESUME/ACCEL Switch. The vehicle speed should increase by at least 3 km/h (2 mph).
6. Press and hold the COAST switch. The vehicle speed should decrease.
7. Using caution, press and release the brake pedal. The speed control should disengage.
8. Bring the vehicle speed back up to 56 km/h (35 mph).
9. Press the RESUME/ACCEL switch. The speed control should resume the previously set speed.
10. Hold down the SET switch. The vehicle should decelerate.
11. Make sure vehicle speed is greater than 56 km/h (35 mph) and release the SET Switch. The vehicle should adjust and set a new vehicle speed.
12. Press and release the CANCEL switch. The speed control should disengage.
13. Bring the vehicle speed back up above 56 km/h (35 mph) and engage speed control.
14. Turn the Speed Control Off. (Cruise light will be off). The speed control should disengage.

Did the Speed Control pass the above test?

Yes

- Repair is complete.

No

- Check for any related Technical Service Bulletins and/or refer to **DIAGNOSTIC CODE INDEX** and perform the appropriate diagnostic procedure. .

3. **CHARGING SYSTEM VERIFICATION TEST**

NOTE: **If this vehicle is equipped with an Electronic Throttle Control system and the APP Sensors, PCM or Throttle Body Assembly have been replaced, use the scan tool to perform the ETC RELEARN function.**

NOTE: **After completing the Powertrain Verification Test the Transmission Verification Test must be performed.**

NOTE: **If the PCM has been replaced and the correct VIN and mileage have not been programmed, a DTC will set in the ABS Module, Airbag Module and the Wireless Control Module (WCM) or Wireless Ignition Node (WIN).**

NOTE: **If the vehicle is equipped with a Sentry Key Remote Entry, Secret Key data must be updated. Refer to the Service Information for the PCM, WCM/WIN and the Transponder (ignition key) for programming information. Using the scan tool, program the Secret Key information into the PCM using the PCM replaced function under the WCM menu.**

1. Inspect the vehicle to make sure that all components related to the repair are properly installed and connected.
2. With the scan tool, clear DTCs.
3. Perform generator output test. Refer to the appropriate Service Information as necessary.
4. Start the engine and set engine speed to 2000 RPM for at least thirty seconds.
5. Cycle the ignition key off and on.
6. With the scan tool, read the DTCs.

Are any DTCs or symptoms remaining?

Yes

- Check for any Technical Service Bulletins and/or refer to **DIAGNOSTIC CODE INDEX** and perform the appropriate diagnostic procedure. .

No

- Repair is complete.

4. **EVAPORATIVE EMISSION VERIFICATION TEST**

NOTE: **If this vehicle is equipped with an Electronic Throttle Control system and the APP Sensors, PCM or Throttle Body Assembly have been replaced, use the scan tool to perform the ETC RELEARN function.**

1. Install the Evaporative Emission Leak Detector (EELD) (special tool #8404B, Kit, EELD And Accessory) according to the instructions in the previous DTC table.
2. Set the smoke/air control switch to AIR.
3. Insert the tester's AIR supply tip (clear hose) into the appropriate calibration orifice on the tester's control panel (based on DTC leak size).
4. Press the remote smoke/air start button.
5. Position the red flag on the air flow meter so it is aligned with the indicator ball.
6. When the calibration is complete, release the remote button. The EELD flow meter is now calibrated in liters per minute to the size of leak indicated by the DTC set in the PCM.
7. Install the service port adapter (special tool #8404-14, Adapter, Evaporative Service Port) on the vehicle's service port.
8. Connect the Air supply hose from the EELD to the vehicle.
9. Press the remote button to activate AIR flow.

NOTE: **Larger volume fuel tanks, lower fuel levels or if the vehicle is equipped with a Flow Management Valve may indicate high flow and will require four to five minutes to fill.**

10. Compare the flow meter indicator ball reading to the red flag.
11. ABOVE the red flag indicates a leak present.
12. BELOW the red flag indicates a sealed system.
13. If the indicator ball shows a leak present, perform the smoke test indicated in the previous test and identify the leak and repair. Perform this verification test when the repair is complete.

    Did the indicator ball indicate the a leak is present?

    Yes

    - Repeat the DTC test to identify the leak and repair.

    No

    - Repair is complete.

5. **POWERTRAIN VERIFICATION TEST**

NOTE: **After completing the Powertrain Verification Test the Transmission Verification Test must be performed.**

NOTE: **The Cam/Crank Variation Relearn must be performed anytime there has been a repair/replacement made to a powertrain system, for example: flywheel, valvetrain, camshaft and/or crankshaft sensors or components.**

NOTE: **If the PCM has been replaced and the correct VIN and mileage have not been programmed, a DTC will set in the ABS Module, Airbag Module and the Wireless Control Module (WCM) or Wireless Ignition Node (WIN).**

NOTE: **If the vehicle is equipped with a Sentry Key Remote Entry, Secret Key data must be updated. Refer to the Service Information for the PCM, WCM/WIN and the Transponder (ignition key) for programming information. Using the scan tool, program the Secret Key information into the PCM using the PCM replaced function under the WCM menu.**

NOTE: **If this vehicle is equipped with an Electronic Throttle Control system and the APP Sensors, PCM or Throttle Body Assembly have been replaced, use the scan tool to perform the ETC RELEARN function.**

NOTE: **When replacing an O2 Sensor, the PCM RAM memory must be cleared, either by disconnecting the PCM C1 connector or momentarily disconnecting the Battery negative terminal.**

1. The NGC learns the characteristics of each O2 heater element and these old values should be cleared when installing a new O2 sensor. The customer may experience driveability issues if this is not performed.
2. Inspect the vehicle to make sure that all engine components are properly installed and connected. Reassemble and reconnect components as necessary.
3. Connect the scan tool to the data link connector.
4. Make sure the fuel tank has at least a quarter tank of fuel. Turn off all accessories.
5. If the Catalyst was replaced, with the scan tool select "Catalyst Replaced" under the Miscellaneous Menu Option.
6. If a repair/replacement was made to a powertrain system, with the scan tool select the "Cam Crank Relearn" procedure under PCM Miscellaneous Menu Option.
7. If a Comprehensive Component DTC was repaired, perform steps 9-11. If a Major OBDII Monitor DTC was repaired skip those steps and continue verification.
8. After the ignition has been off for at least 10 seconds, restart the vehicle and run two minutes.
9. With the scan tool, monitor the appropriate pre-test enabling conditions until all conditions have been met. Once the conditions have been met, switch screen to the appropriate OBDII monitor, (Audible beeps when the monitor is running).
10. If the repaired OBDII trouble code has reset or was seen in the monitor while on the road test, the

repair is not complete. Check for any related technical service bulletins or flash updates and perform the appropriate diagnostic procedure. Refer to **DIAGNOSTIC CODE INDEX** .

11. If the conditions cannot be duplicated, erase all DTCs with the scan tool.
12. If another DTC has set, and follow the path specified for that DTC. Refer to **DIAGNOSTIC CODE INDEX** .

Did the OBDII Monitor run successfully and has the Good Trip Counter changed to one or more?

Yes

- Repair is complete.

No

- Check for any related Technical Service Bulletins and/or refer to **DIAGNOSTIC CODE INDEX** and perform the appropriate diagnostic procedure. .

DIAGNOSTIC CODE INDEX

DIAGNOSTIC CODE INDEX

DTC	Description
P0008	ENGINE POSITION SYSTEM PERFORMANCE BANK 1
P000F	FUEL SYSTEM OVER PRESSURE RELIEF VALVE ACTIVATED
P0016	CRANKSHAFT/CAMSHAFT TIMING MISALIGNMENT - BANK 1 SENSOR 1
P003A	TURBOCHARGER BOOST CONTROL MODULE POSITION EXCEEDED LEARNING LIMIT
P0046	TURBOCHARGER BOOST CONTROL CIRCUIT PERFORMANCE
P0049	TURBOCHARGER TURBINE OVERSPEED
P006E	TURBOCHARGER BOOST CONTROL SUPPLY VOLTAGE CIRCUIT LOW
P0087	FUEL RAIL PRESSURE TOO LOW
P0088	FUEL RAIL PRESSURE TOO HIGH
P00AF	TURBOCHARGER BOOST CONTROL MODULE PERFORMANCE
P00DA	AMBIENT AIR TEMPERATURE SENSOR CIRCUIT PERFORMANCE
P00DB	AMBIENT AIR TEMPERATURE SENSOR CIRCUIT LOW
P00DC	AMBIENT AIR TEMPERATURE SENSOR CIRCUIT HIGH
P0101	MASS AIR FLOW SENSOR "A" CIRCUIT PERFORMANCE
P0102	MASS AIR FLOW SENSOR "A" CIRCUIT LOW
P0103	MASS AIR FLOW SENSOR "A" CIRCUIT HIGH
P0106	MANIFOLD ABSOLUTE PRESSURE SENSOR PERFORMANCE
P0107	MANIFOLD ABSOLUTE PRESSURE SENSOR CIRCUIT LOW
P0108	MANIFOLD ABSOLUTE PRESSURE SENSOR CIRCUIT HIGH
P0111	INTAKE AIR TEMPERATURE SENSOR 1 PERFORMANCE
P0112	INTAKE AIR TEMPERATURE SENSOR 1 CIRCUIT LOW
P0113	INTAKE AIR TEMPERATURE SENSOR 1 CIRCUIT HIGH
P0116	ENGINE COOLANT TEMPERATURE SENSOR PERFORMANCE
P0117	ENGINE COOLANT TEMPERATURE SENSOR CIRCUIT LOW
P0118	ENGINE COOLANT TEMPERATURE SENSOR CIRCUIT HIGH
P0128	THERMOSTAT RATIONALITY
P0169	WATER IN FUEL DETECTED FOR TOO LONG
P0191	FUEL RAIL PRESSURE SENSOR CIRCUIT PERFORMANCE
P0192	FUEL PRESSURE SENSOR LOW
P0193	FUEL PRESSURE SENSOR HIGH
P0201	FUEL INJECTOR 1 CIRCUIT/OPEN
P0202	FUEL INJECTOR 2 CIRCUIT/OPEN

P0203	FUEL INJECTOR 3 CIRCUIT/OPEN
P0204	FUEL INJECTOR 4 CIRCUIT/OPEN
P0205	FUEL INJECTOR 5 CIRCUIT/OPEN
P0206	FUEL INJECTOR 6 CIRCUIT/OPEN
P020A	FUEL INJECTOR 1 PERFORMANCE
P020B	FUEL INJECTOR 2 PERFORMANCE
P020C	FUEL INJECTOR 3 PERFORMANCE
P020D	FUEL INJECTOR 4 PERFORMANCE
P020E	FUEL INJECTOR 5 PERFORMANCE
P020F	FUEL INJECTOR 6 PERFORMANCE
P0217	COOLANT TEMPERATURE TOO HIGH
P0219	ENGINE OVERSPEED
P0253	INJECTION PUMP FUEL CONTROL CIRCUIT LOW
P0254	INJECTION PUMP FUEL CONTROL CIRCUIT HIGH
P0255	INJECTION PUMP FUEL CONTROL CIRCUIT PERFORMANCE
P026A	CHARGE AIR COOLER EFFICIENCY BELOW THRESHOLD
P0299	MANIFOLD PRESSURE SENSOR OUT OF RANGE LOW
P02E1	DIESEL INTAKE AIR FLOW CONTROL PERFORMANCE
P02E2	DIESEL INTAKE AIR FLOW CONTROL CIRCUIT LOW
P02E3	DIESEL INTAKE AIR FLOW CONTROL CIRCUIT HIGH
P02E7	DIESEL INTAKE AIR FLOW POSITION SENSOR PERFORMANCE
P02E8	DIESEL INTAKE AIR FLOW POSITION SENSOR CIRCUIT LOW
P02E9	DIESEL INTAKE AIR FLOW POSITION SENSOR CIRCUIT HIGH
P0300	MULTIPLE CYLINDER MISFIRE
P0301	CYLINDER 1 MISFIRE
P0302	CYLINDER 2 MISFIRE
P0303	CYLINDER 3 MISFIRE
P0304	CYLINDER 4 MISFIRE
P0305	CYLINDER 5 MISFIRE
P0306	CYLINDER 6 MISFIRE
P0335	CRANKSHAFT POSITION SENSOR CIRCUIT
P0336	CRANKSHAFT POSITION SENSOR PERFORMANCE
P0340	CAMSHAFT POSITION SENSOR CIRCUIT - BANK 1 SENSOR 1
P0341	CAMSHAFT POSITION SENSOR PERFORMANCE - BANK 1 SENSOR 1
P0381	WAIT TO START LAMP INOPERATIVE
P0401	EGR SYSTEM PERFORMANCE
P0402	EGR FLOW EXCESSIVE DETECTED
P0404	EGR CONTROL CIRCUIT PERFORMANCE
P0405	EGR POSITION SENSOR CIRCUIT LOW
P040B	EXHAUST GAS RECIRCULATION TEMPERATURE SENSOR "A" CIRCUIT PERFORMANCE

P040C	EXHAUST GAS RECIRCULATION TEMPERATURE SENSOR "A" CIRCUIT LOW
P040D	EXHAUST GAS RECIRCULATION TEMPERATURE SENSOR "A" CIRCUIT HIGH
P0420	CATALYST EFFICIENCY BELOW THRESHOLD
P0461	FUEL LEVEL SENSOR 1 PERFORMANCE
P0462	FUEL LEVEL SENSOR 1 CIRCUIT LOW
P0463	FUEL LEVEL SENSOR 1 CIRCUIT HIGH
P046C	EGR POSITION SENSOR CIRCUIT PERFORMANCE
P0471	EXHAUST PRESSURE SENSOR 1 PERFORMANCE
P0472	EXHAUST PRESSURE SENSOR 1 LOW
P0473	EXHAUST PRESSURE SENSOR 1 HIGH
P0489	EGR CONTROL CIRCUIT LOW
P049D	EGR CONTROL POSITION EXCEEDED LEARNING LIMIT
P04DB	CRANKCASE VENTILATION SYSTEM DISCONNECTED
P0501	VEHICLE SPEED SENSOR 1 PERFORMANCE
P0506	IDLE CONTROL SYSTEM RPM - LOWER THAN EXPECTED
P0507	IDLE CONTROL SYSTEM RPM - HIGHER THAN EXPECTED
P0513	INVALID WIN KEY
P051B	CRANKCASE PRESSURE SENSOR CIRCUIT RANGE/PERFORMANCE
P051C	CRANKCASE PRESSURE SENSOR CIRCUIT LOW
P051D	CRANKCASE PRESSURE SENSOR CIRCUIT HIGH
P0521	ENGINE OIL PRESSURE SENSOR PERFORMANCE
P0524	ENGINE OIL PRESSURE SENSOR CIRCUIT LOW
P0532	A/C PRESSURE SENSOR CIRCUIT LOW
P0533	A/C PRESSURE SENSOR CIRCUIT HIGH
P0541	INTAKE AIR HEATER CONTROL CIRCUIT 1 LOW
P0542	INTAKE AIR HEATER CONTROL CIRCUIT 1 HIGH
P0545	EXHAUST GAS TEMPERATURE SENSOR CIRCUIT LOW - BANK 1 SENSOR 1
P0546	EXHAUST GAS TEMPERATURE SENSOR CIRCUIT HIGH - BANK 1 SENSOR 1
P0562	BATTERY VOLTAGE LOW
P0563	BATTERY VOLTAGE HIGH
P056D	REDUCTANT CONTROL MODULE SYSTEM VOLTAGE
P0571	BRAKE SWITCH 1 PERFORMANCE
P0572	BRAKE SWITCH 1 STUCK ON
P0573	BRAKE SWITCH 1 STUCK OFF
P0579	SPEED CONTROL SWITCH 1 PERFORMANCE
P0580	SPEED CONTROL SWITCH 1 CIRCUIT LOW
P0581	SPEED CONTROL SWITCH 1 CIRCUIT HIGH
P0585	SPEED CONTROL SWITCH 1/2 CORRELATION

P0591	SPEED CONTROL SWITCH 2 PERFORMANCE
P0592	SPEED CONTROL SWITCH 2 CIRCUIT LOW
P0593	SPEED CONTROL SWITCH 2 CIRCUIT HIGH
P0601	INTERNAL MEMORY CHECKSUM ERROR
P0604	INTERNAL CONTROL MODULE RAM ERROR
P0606	INTERNAL CONTROL PROCESSOR
P0607	ECU INTERNAL PERFORMANCE
P061A	ETC LEVEL 2 TORQUE PERFORMANCE
P061C	ETC LEVEL 2 RPM PERFORMANCE
P0625	GENERATOR FIELD CONTROL CIRCUIT LOW
P0626	GENERATOR FIELD CONTROL CIRCUIT HIGH
P0628	FUEL PUMP CONTROL CIRCUIT LOW
P0629	FUEL PUMP CONTROL CIRCUIT HIGH
P062C	ETC LEVEL 2 MPH PERFORMANCE
P0630	VIN NOT PROGRAMMED IN PCM
P0633	SKIM SECRET KEY NOT STORED IN PCM
P063C	GENERATOR VOLTAGE SENSE LOW
P063D	GENERATOR VOLTAGE SENSE HIGH
P0642	SENSOR REFERENCE VOLTAGE 1 CIRCUIT LOW
P0643	SENSOR REFERENCE VOLTAGE 1 CIRCUIT HIGH
P0646	A/C CONTROL CIRCUIT LOW
P0647	A/C CONTROL CIRCUIT HIGH
P064C	GLOW PLUG MODULE INTERNAL PERFORMANCE
P0652	SENSOR REFERENCE VOLTAGE 2 LOW
P0653	SENSOR REFERENCE VOLTAGE 2 HIGH
P0658	ACTUATOR SUPPLY VOLTAGE "A" CIRCUIT LOW
P0686	POWER ENABLE CONTROL CIRCUIT LOW
P0691	COOLING FAN 1 CONTROL CIRCUIT LOW
P0692	COOLING FAN 1 CONTROL CIRCUIT HIGH
P0698	SENSOR REFERENCE VOLTAGE 3 CIRCUIT LOW
P0699	SENSOR REFERENCE VOLTAGE 3 CIRCUIT HIGH
P06A4	SENSOR REFERENCE VOLTAGE 4 CIRCUIT LOW
P06A5	SENSOR REFERENCE VOLTAGE 4 CIRCUIT HIGH
P06F3	(DIESEL EXHAUST FLUID) REDUCTANT CONTROL MODULE INTERNAL TEMPERATURE SENSOR CIRCUIT HIGH
P0700	TRANSMISSION CONTROL SYSTEM (MIL REQUEST)
P0850	PARK/NEUTRAL SWITCH PERFORMANCE
P1123	POWER TAKE OFF SYSTEM MONITOR CONTROL ERROR
P1191	P1191 - INLET AIR TEMPERATURE SENSOR RATIONAL/PERFORMANCE
P1192	INLET AIR TEMPERATURE SENSOR CIRCUIT LOW
P1193	INLET AIR TEMPERATURE SENSOR CIRCUIT HIGH

P1451	DIESEL PARTICULATE FILTER SYSTEM PERFORMANCE
P1484	CATALYST OVERHEAT DETECTION
P1507	CRANKCASE FILTER RESTRICTION
P1593	SPEED CONTROL SWITCH 1 STUCK
P1C54	SCR NOx CATALYST MISSING
P1C55	NOx SENSOR INTERMITTENT - BANK 1 SENSOR 1
P1C56	NOx SENSOR INTERMITTENT - BANK 1 SENSOR 2
P1C57	REDUCTANT CONTROL MODULE SHUTDOWN - CRASH EVENT DETECTED
P1C6F	(DIESEL EXHAUST FLUID) REDUCTANT LINE HEATER RELAY CIRCUIT PERFORMANCE
P1C70	SCR ERROR DETECTED - ENGINE DISABLED
P2002	DIESEL PARTICULATE FILTER EFFICIENCY BELOW THRESHOLD
P202A	(DIESEL EXHAUST FLUID) REDUCTANT TANK HEATER CONTROL CIRCUIT OPEN
P202B	(DIESEL EXHAUST FLUID) REDUCTANT TANK HEATER CONTROL CIRCUIT LOW
P202C	(DIESEL EXHAUST FLUID) REDUCTANT TANK HEATER CONTROL CIRCUIT HIGH
P202E	(DIESEL EXHAUST FLUID) REDUCTANT INJECTOR PERFORMANCE
P2032	EXHAUST GAS TEMPERATURE SENSOR CIRCUIT LOW- BANK 1 SENSOR 2
P2033	EXHAUST GAS TEMPERATURE SENSOR CIRCUIT HIGH - BANK 1 SENSOR 2
P203C	(DIESEL EXHAUST FLUID) REDUCTANT LEVEL SENSOR CIRCUIT LOW
P203D	(DIESEL EXHAUST FLUID) REDUCTANT LEVEL SENSOR CIRCUIT HIGH
P203F	(DIESEL EXHAUST FLUID) REDUCTANT LEVEL TOO LOW
P2048	(DIESEL EXHAUST FLUID) REDUCTANT INJECTOR CIRCUIT LOW
P2049	(DIESEL EXHAUST FLUID) REDUCTANT INJECTOR CIRCUIT HIGH
P204A	(DIESEL EXHAUST FLUID) REDUCTANT PRESSURE SENSOR CIRCUIT
P204B	(DIESEL EXHAUST FLUID) REDUCTANT PRESSURE SENSOR CIRCUIT PERFORMANCE
P204C	(DIESEL EXHAUST FLUID) REDUCTANT PRESSURE SENSOR CIRCUIT LOW
P204D	(DIESEL EXHAUST FLUID) REDUCTANT PRESSURE SENSOR CIRCUIT HIGH
P204E	(DIESEL EXHAUST FLUID) REDUCTANT PRESSURE SENSOR CIRCUIT INTERMITTENT
P205B	(DIESEL EXHAUST FLUID) REDUCTANT TANK TEMPERATURE SENSOR CIRCUIT RANGE/PERFORMANCE
P205C	(DIESEL EXHAUST FLUID) REDUCTANT TANK TEMPERATURE SENSOR CIRCUIT LOW
P205D	(DIESEL EXHAUST FLUID) REDUCTANT TANK TEMPERATURE SENSOR

	CIRCUIT HIGH
P205E	(DIESEL EXHAUST FLUID) REDUCTANT TANK TEMPERATURE SENSOR CIRCUIT INTERMITTENT
P207F	REDUCTANT QUALITY PERFORMANCE
P2080	EXHAUST GAS TEMP SENSOR CIRCUIT PERFORMANCE - BANK 1 SENSOR 1
P2084	EXHAUST GAS TEMP SENSOR CIRCUIT PERFORMANCE - BANK 1 SENSOR 2
P208A	(DIESEL EXHAUST FLUID) REDUCTANT PUMP CONTROL CIRCUIT OPEN
P208B	(DIESEL EXHAUST FLUID) REDUCTANT PUMP PERFORMANCE
P208C	(DIESEL EXHAUST FLUID) REDUCTANT PUMP CONTROL CIRCUIT LOW
P208D	(DIESEL EXHAUST FLUID) REDUCTANT PUMP CONTROL CIRCUIT HIGH
P209F	(DIESEL EXHAUST FLUID) REDUCTANT TANK HEATER CONTROL CIRCUIT PERFORMANCE
P20A0	(DIESEL EXHAUST FLUID) REDUCTANT PURGE CONTROL VALVE CIRCUIT OPEN
P20A2	(DIESEL EXHAUST FLUID) REDUCTANT PURGE CONTROL VALVE CIRCUIT LOW
P20A3	(DIESEL EXHAUST FLUID) REDUCTANT PURGE CONTROL VALVE CIRCUIT HIGH
P20B0	(DIESEL EXHAUST FLUID) REDUCTANT PUMP TEMPERATURE PERFORMANCE
P20B2	(DIESEL EXHAUST FLUID) REDUCTANT HEATER CONTROL VALVE PERFORMANCE
P20B5	(DIESEL EXHAUST FLUID) REDUCTANT PUMP HEATER CONTROL CIRCUIT OPEN
P20B7	(DIESEL EXHAUST FLUID) REDUCTANT PUMP HEATER CONTROL CIRCUIT LOW
P20B8	(DIESEL EXHAUST FLUID) REDUCTANT PUMP HEATER CONTROL CIRCUIT HIGH
P20BD	(DIESEL EXHAUST FLUID) REDUCTANT PRESSURE LINE HEATER CONTROL CIRCUIT/OPEN
P20BE	(DIESEL EXHAUST FLUID) REDUCTANT PRESSURE LINE HEATER CONTROL CIRCUIT PERFORMANCE
P20BF	(DIESEL EXHAUST FLUID) REDUCTANT PRESSURE LINE HEATER CONTROL CIRCUIT LOW
P20C0	(DIESEL EXHAUST FLUID) REDUCTANT PRESSURE LINE HEATER CONTROL CIRCUIT HIGH
P20C1	(DIESEL EXHAUST FLUID) REDUCTANT RETURN LINE HEATER CONTROL CIRCUIT/OPEN
P20C3	(DIESEL EXHAUST FLUID) REDUCTANT RETURN LINE HEATER CONTROL CIRCUIT LOW
P20C4	(DIESEL EXHAUST FLUID) REDUCTANT RETURN LINE HEATER CONTROL CIRCUIT HIGH

P20C6	(DIESEL EXHAUST FLUID) REDUCTANT HEATER D CONTROL PERFORMANCE
P20E8	(DIESEL EXHAUST FLUID) REDUCTANT PRESSURE TOO LOW
P20E9	(DIESEL EXHAUST FLUID) REDUCTANT PRESSURE TOO HIGH
P20EC	SCR NOx CATALYST - OVER TEMPERATURE BANK 1
P20EE	SCR NOx CATALYST EFFICIENCY BELOW THRESHOLD - BANK 1
P20FE	(DIESEL EXHAUST FLUID) REDUCTANT METERING UNIT PERFORMANCE
P20FF	(DIESEL EXHAUST FLUID) REDUCTANT CONTROL MODULE PERFORMANCE
P2121	ACCELERATOR PEDAL POSITION SENSOR 1 PERFORMANCE
P2122	ACCELERATOR PEDAL POSITION SENSOR 1 CIRCUIT LOW
P2123	ACCELERATOR PEDAL POSITION SENSOR 1 CIRCUIT HIGH
P2127	ACCELERATOR PEDAL POSITION SENSOR 2 CIRCUIT LOW
P2128	ACCELERATOR PEDAL POSITION SENSOR 2 CIRCUIT HIGH
P214A	SCR NOx CATALYST INLET TEMPERATURE TOO HIGH
P214B	SCR NOx CATALYST INLET TEMPERATURE TOO HIGH DURING PARTICULATE FILTER REGENERATION
P214C	SCR NOx CATALYST OUTLET TEMPERATURE TOO HIGH
P214D	SCR NOx CATALYST OUTLET TEMPERATURE TOO HIGH DURING PARTICULATE FILTER REGENERATION
P21C2	(DIESEL EXHAUST FLUID) REDUCTANT LINE HEATER RELAY CONTROL CIRCUIT OPEN
P21C3	(DIESEL EXHAUST FLUID) REDUCTANT LINE HEATER RELAY CONTROL CIRCUIT LOW
P21C4	(DIESEL EXHAUST FLUID) REDUCTANT LINE HEATER RELAY CONTROL CIRCUIT HIGH
P2201	AFTERTREATMENT NOx SENSOR CIRCUIT PERFORMANCE - BANK 1 SENSOR 1
P2202	AFTERTREATMENT NOx SENSOR CIRCUIT - BANK 1 SENSOR 1
P2209	NOx SENSOR HEATER CIRCUIT PERFORMANCE - BANK 1 SENSOR 1
P220A	NOx SENSOR SUPPLY CIRCUIT PERFORMANCE - BANK 1 SENSOR 1
P220B	NOx SENSOR SUPPLY CIRCUIT PERFORMANCE - BANK 1 SENSOR 2
P2227	BAROMETERIC PRESSURE SENSOR RATIONALITY
P2228	BAROMETRIC PRESSURE CIRCUIT LOW
P2229	BAROMETRIC PRESSURE CIRCUIT HIGH
P2262	TURBOCHARGER BOOST PRESSURE NOT DETECTED - MECHANICAL
P2266	WATER IN FUEL SENSOR CIRCUIT LOW
P2267	WATER IN FUEL SENSOR CIRCUIT HIGH
P2269	WATER IN FUEL CONDITION
P226B	TURBOCHARGER BOOST PRESSURE NOT RESPONDING
P226C	TURBOCHARGER BOOST CONTROL "A" SLOW RESPONSE

P2280	AIR FLOW RESTRICTION / LEAK BETWEEN AIR CLEANER AND MAF
P2281	AIR LEAK BETWEEN MAF AND THROTTLE BODY
P2299	BRAKE PEDAL POSITION / ACCELERATOR PEDAL POSITION INCOMPATIBLE
P229E	AFTERTREATMENT NOx SENSOR CIRCUIT - BANK 1 SENSOR 2
P229F	AFTERTREATMENT NOx SENSOR CIRCUIT PERFORMANCE - BANK 1 SENSOR 2
P22A7	NOx SENSOR HEATER CIRCUIT PERFORMANCE - BANK 1 SENSOR 2
P240F	EGR SLOW RESPONSE
P242B	EXHAUST GAS TEMP SENSOR CIRCUIT PERFORMANCE - BANK 1 SENSOR 3
P242C	EXHAUST GAS TEMPERATURE SENSOR CIRCUIT LOW- BANK 1 SENSOR 3
P242D	EXHAUST GAS TEMPERATURE SENSOR CIRCUIT HIGH - BANK 1 SENSOR 3
P242F	DIESEL PARTICULATE FILTER RESTRICTION - ASH ACCUMULATION
P244A	DIESEL PARTICULATE FILTER DIFFERENTIAL PRESSURE TOO LOW
P244D	EXHAUST TEMPERATURE TOO HIGH FOR PARTICULATE FILTER REGENERATION
P2453	DIESEL PARTICULATE FILTER PRESSURE SENSOR A CIRCUIT PERFORMANCE
P2454	DIESEL PARTICULATE FILTER PRESSURE SENSOR A CIRCUIT LOW
P2455	DIESEL PARTICULATE FILTER PRESSURE SENSOR A CIRCUIT HIGH
P2457	EXHAUST GAS RECIRCULATION COOLING SYSTEM PERFORMANCE
P2459	DIESEL PARTICULATE FILTER REGENERATION TOO FREQUENT
P2463	DIESEL PARTICULATE FILTER - SOOT ACCUMULATION
P246F	EXHAUST GAS TEMP SENSOR CIRCUIT PERFORMANCE - BANK 1 SENSOR 4
P2470	EXHAUST GAS TEMPERATURE SENSOR CIRCUIT LOW - BANK 1 SENSOR 4
P242D	EXHAUST GAS TEMPERATURE SENSOR CIRCUIT HIGH - BANK 1 SENSOR 4
P249C	EXCESSIVE TIME TO ENTER CLOSED LOOP SCR REDUCTANT INJECTION CONTROL
P249E	CLOSED LOOP SCR REDUCTANT INJECTION CONTROL AT LIMIT - FLOW TOO HIGH
P249F	EXCESSIVE TIME TO ENTER CLOSED LOOP DPF REGENERATION CONTROL
P24A0	CLOSED LOOP DPF REGENERATION CONTROL AT LIMIT - TEMPERATURE TOO LOW
P2503	CHARGING SYSTEM OUTPUT LOW
P2504	CHARGING SYSTEM OUTPUT HIGH
P2509	PCM/PCM POWER INPUT SIGNAL INTERMITTENT

P2563	TURBOCHARGER BOOST CONTROL POSITION SENSOR PERFORMANCE
P2579	TURBOCHARGER SPEED SENSOR CIRCUIT PERFORMANCE
P2580	TURBOCHARGER SPEED SENSOR CIRCUIT LOW
P2609	INTAKE AIR HEATER SYSTEM PERFORMANCE
P268C	CYLINDER 1 INJECTOR DATA INCOMPATIBLE
P268D	CYLINDER 2 INJECTOR DATA INCOMPATIBLE
P268E	CYLINDER 3 INJECTOR DATA INCOMPATIBLE
P268F	CYLINDER 4 INJECTOR DATA INCOMPATIBLE
P2690	CYLINDER 5 INJECTOR DATA INCOMPATIBLE
P2691	CYLINDER 6 INJECTOR DATA INCOMPATIBLE
P2BAC	NOx EXCEEDANCE - DEACTIVATION OF EGR
U0001	CAN C BUS
U0101	LOST COMMUNICATION WITH TCM
U010C	LOST COMMUNICATION WITH TURBOCHARGER/SUPERCHARGER CONTROL MODULE
U010E	LOST COMMUNICATION WITH DIESEL EXHAUST FLUID CONTROL UNIT
U0121	LOST COMMUNICATION WITH ANTI-LOCK BRAKE MODULE
U0141	LOST COMMUNICATION WITH IPM (FCM/TIPM)
U029D	LOST COMMUNICATION WITH NOx SENSOR "A"
U029E	LOST COMMUNICATION WITH NOx SENSOR "B"
U040F	INVALID DATA RECEIVED FROM REDUCTANT CONTROL MODULE
U059E	INVALID DATA RECEIVED FROM NOx SENSOR "A"
U059F	INVALID DATA RECEIVED FROM NOx SENSOR "B"
U11C1	LOST COMMUNICATION WITH DIESEL EXHAUST FLUID CONTROL UNIT
U1403	IMPLAUSIBLE FUEL LEVEL SIGNAL RECEIVED
U1412	IMPLAUSIBLE VEHICLE SPEED SIGNAL RECEIVED
U1421	IMPLAUSIBLE IGNITION KEY OFF TIME RECEIVED
U1601	ECU APPLICATION SOFTWARE CODE 1 MISSING OR CORRUPTED

Powertrain Control Module (PCM) - Electrical Diagnostics, 6.7L Diesel - 3500 Cab & Chassis, 4500 & 5500

STANDARD PROCEDURE

DIESEL AFTERTREATMENT VALIDATION- 6.7L

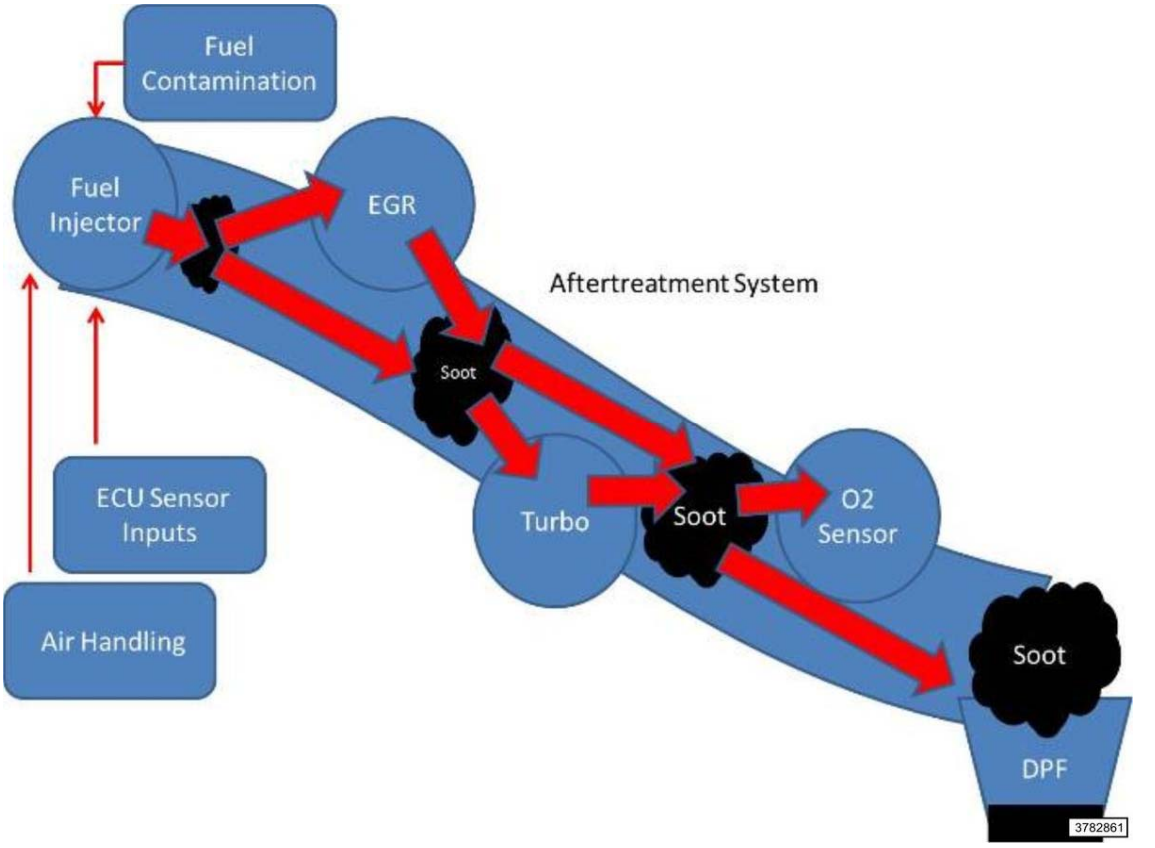

Fig. 1: Diesel Aftertreatment System Diagram
Courtesy of CHRYSLER GROUP, LLC

SOOT GENERATION CAUSES AND EFFECTS

When trying to understand the functionality of the exhaust and aftertreatment system, (more precisely the effects on the Diesel Particulate Filter (DPF)) you must think in terms of standard plumbing principals. Everything flows downstream. Systems and components along the path are affected by the soot in the exhaust, and these components can also contribute to the soot levels (cause and effect).

This overview will attempt to elaborate on the causes and effects of the Soot flowing downstream in the system. The soot originates in the combustion chamber as a by-product of the combustion process. This is the beginning of the stream. All soot generated in the combustion chamber flows downstream. Excessive amounts of soot can be caused by faulty inputs to the engine controller, air handling system leaks or restrictions, fuel contamination, or fuel injectors. Some soot will always be generated. Under proper operating conditions, soot levels will be low

and very manageable.

The next component downstream is the EGR. The EGR can be affected by soot coming from the combustion process. The soot can cause the EGR to stick open or closed, or become restricted. If the EGR malfunctions, it can cause soot generation which is then added to system.

The next component downstream is the Turbocharger. The Turbocharger can be affected by soot coming from the combustion process and/or the EGR. If the Turbocharger malfunctions (sticks, or leaks oil or coolant internally), it can cause soot generation which is then added to system.

The next components found downstream are the O2 Sensors. The O2 Sensors can be affected by soot coming from the combustion process, the EGR, and/or the Turbocharger. If an O2 Sensor malfunctions, it can cause (to a much lesser extent) soot generation which is added to system. O2 Sensor codes can be caused by excessive soot.

ALL of the soot generated upstream will land in the DPF. If a vehicle sets a DPF DTC, such as P1451 or P242F, which are related to the calculated amount of soot currently caught in the DPF this means the engine controller has calculated that the DPF is getting full. This number is and estimation, hence the name; "Estimated Soot Load Based on Delta" (ESL/D) and is measured in grams. Sometimes soot levels will be estimated high and set faults and there is little soot in the DPF!

When a DPF fault sets, it is important to root cause the reason the soot landed in the filter and could not be removed through a normal regeneration. Is fuel contamination the issue causing injectors to stick and over fuel? Is the EGR or Turbocharger sticking causing excess soot? Or is it a combination of these?

A DPF should NEVER be replaced without first determining if there is another root cause of the source of the high "Estimated Soot Load Based on Delta" and repairing this issue also. A DPF should also not be replaced without performing the AFTERTREATMENT INSPECTION GUIDELINE procedure. This will visually show you with examples how to determine if replacement of an aftertreatment component is necessary.

DIAGNOSTIC TEST

1. **VALIDATION**
    1. Before starting the validation, confirm on the scan tool that the engine is still at an operating temperature of 180°F (82°C).

        NOTE: **The following procedure will provide the necessary drive cycle to allow the PCM to learn normal system operation and the ability to detect most aftertreatment sooting issues. It is not necessary to have a technician perform the 50 minute drive cycle however, the technician must verify Estimated Soot Load Based on Delta" (ESL/D), measured in Grams while driving the vehicle at a steady state speed. The technician will monitor the scan tool while another person drives the vehicle.**

    2. The technician must perform a short light load steady state drive cycle to ensure the vehicle will operate normally and allow a passive regeneration if necessary during the next step. During the

drive cycle monitor Estimated Soot Load Based on Delta" (ESL/D), measured in Grams for a short period to ensure that the Diesel Particulate Filter (DPF) will not plug during the next steps. In addition, illumination of the MIL during the drive cycle indicates that further diagnosis may be required before proceeding.

NOTE: **If the soot load threshold for a P242F DTC is reached during this short drive cycle, the mil will illuminate and passive regeneration will not occur.**

3. Record the mileage from the vehicle odometer into section 4D "After Treatment Validation Test" of the Diesel Diagnostic Worksheet step 1.
4. Have an associate (porter) drive at the vehicle least 50 minutes at a steady state speed so the RPM is maintained at about 1900. If highway access is not available, use a lower gear on surface streets. A steady throttle is important. Use cruise control if possible.
5. Once the initial 50 minute drive cycle is complete, return to the repair shop and record the mileage from the vehicle odometer into section 4D "After Treatment Validation Test" of the Diesel Diagnostic Worksheet step 2. Turn the ignition key to OFF.
6. Have the associate restart the engine and record the key cycle event into step 3 of section 4D "After Treatment Validation Test" of the Diesel Diagnostic Worksheet.
7. The technician will ride in the passenger seat while monitoring the scan tool. Monitor "Estimated Soot Load Based on Delta" (ESL/D), measured in Grams.
8. Drive the vehicle and maintain steady engine speed of 1800 - 1900 RPM. Use cruise control if possible, (steady throttle pressure).
9. ESL/D should maintain steady or even start to decrease slowly even though truck is NOT in deSoot mode. This is because the latest software may actually "scrub" soot when driving at higher speeds.
10. Ensure vehicle is operating in "Normal" mode. (Not in desoot, desox or denox mode).
11. Take a reading of the ESL/D. Record the ESLD into step 4 of section 4D "After Treatment Validation Test" of the Diesel Diagnostic Worksheet and continue to drive for 10 minutes.
12. Record that the 10 minute drive cycle has been completed in step 5 of section 4D "After Treatment Validation Test" of the Diesel Diagnostic Worksheet.
13. After 10 minutes, take another reading of the ESL/D and record this number in step 6 of section 4D "After Treatment Validation Test" of the Diesel Diagnostic Worksheet.
14. Step 7 of section 4D "After Treatment Validation Test" of the Diesel Diagnostic Worksheet will automatically calculate the estimated soot load difference.
15. Step 8 of section 4D "After Treatment Validation Test" of the Diesel Diagnostic Worksheet will automatically PASS or FAIL based upon results of step 7 of section 4D "After Treatment Validation Test" of the Diesel Diagnostic Worksheet.

Did the ESL/D test pass?

Yes

- Vehicle is properly repaired.

No

- Vehicle is NOT repaired completely. Return back to the test that sent you here or continue diagnosing the vehicle with the ENGINE MISFIRE/RUNS ROUGH/POOR PERFORMANCE test procedure. Refer to **DIAGNOSIS AND TESTING, 6.7L** .

MIL LIGHT ON PRETEST PROCEDURE

For a complete wiring diagram, **Refer to appropriate SYSTEM WIRING DIAGRAMS article** .

DIAGNOSTIC TEST

1. **FUEL SYSTEM, AIR HANDLING, OR AFTERTREATMENT RELATED DTCS PRESENT**

   CAUTION: Inspect for aftermarket engine components on the vehicle (including labels indicating aftermarket software). If equipped with aftermarket components or software, the vehicle must be returned to OEM specifications.

   1. With the scan tool, read and record all DTCs active and stored.

      Are any one or more of the following DTCs present (P000F, P0087, P0402, P042E, P0489, P1011, P1451, P2262, P226B, P242F, P245A, P2563)?

      Yes

      - Go To 2.

      No

      - Go To 5.
2. **VISUALLY INSPECT FOR SIGNS OF AFTERMARKET COMPONENTS**
   1. Inspect for aftermarket engine components on the vehicle (including labels indicating aftermarket software).

      NOTE: If equipped with aftermarket components or software, the vehicle must be returned to OEM specifications.

      Is the vehicle equipped with aftermarket performance software/parts?

      Yes

      - Performance enhancing software/parts may be the root cause of the customers concern. Performance enhancing software should be removed and the vehicle returned to stock before proceeding.
      - Go To 3.

No

- Go To 3.

3. **REVIEW VEHICLE WARRANTY HISTORY**
   1. Review vehicle warranty history and/or previously authorized Diesel Diagnostic Worksheets to determine if the vehicle has returned for a repeat repair.

      Has the vehicle returned within the last 90 days for a repeat with any of the following DTCs present, P000F, P0087, P0402, P042E, P0489, P1011, P1451, P2262, P226B, P242F, P245A, P2563?

      Yes

      - Perform the DIESEL FUEL CONTAMINATION AND CLEANING PROCEDURE. Refer to **DIESEL FUEL SYSTEM CLEANING PROCEDURE** .

      No

      - Go To 4.

4. **VISUALLY INSPECT FOR EXTERNAL SIGNS OF FUEL CONTAMINATION**
   1. Inspect the vehicle for the following conditions:
      - Review the vehicles repair history and verify proper Fuel Filter maintenance intervals have been followed.
      - Auxiliary fuel tank that is CONNECTED to the vehicles fuel system or used as a STORAGE tank to fill the truck.
      - Fuel stains on outside and inside of truck box/bed. This may be in indication that the driver is fueling the vehicle from an auxiliary source.
      - Inspect the fuel filler cap, filler tube, and fuel filler cavity for signs of dirt and possible overfilling. Most auxiliary fuel tanks do not contain automatic shut off filler valves which may lead to over filling of the fuel tank.
      - Inspect the top of the vehicles fuel tank for excessive oily dirt stains. Sometimes, gravity feed auxiliary fuel tank installers may feed the vehicles fuel tank from the auxiliary tank through the fuel tank vent valves.
      - Inspect the fuel tank vent valves for signs of dirt or moisture contamination.
      - Both P1451 AND P242F are the ONLY DTCs present.

      Were any of the above conditions noted?

      Yes

      - Perform the DIESEL FUEL CONTAMINATION AND CLEANING PROCEDURE. Refer to **DIESEL FUEL SYSTEM CLEANING PROCEDURE** .

      No

- Go To 5.

5. **CHECK FOR TSBs/SOFTWARE FLASHES**
    1. Check for any TSBs/Software Flashes that may apply.

       Were any TSBs/Software Flashes found and did they repair the problem?

       Yes

       - Repair complete.
       - Perform POWERTRAIN VERIFICATION TEST - 6.7L. Refer to **POWERTRAIN VERIFICATION TEST - 6.7L** .

       No

       - Perform the diagnostic trouble code test that was found to be present. Refer to **DIAGNOSTIC CODE INDEX** .

PRE-DIAGNOSTIC TROUBLESHOOTING PROCEDURE - 6.7L

For a complete wiring diagram, **Refer to appropriate SYSTEM WIRING DIAGRAMS article** .

DIAGNOSTIC TEST

1. **NO RESPONSE**
    1. Make sure the scan tool will communicate with the appropriate modules.

       Are you currently experiencing a NO RESPONSE condition?

       Yes

       - The NO RESPONSE condition must be properly diagnosed before continuing.
       - Perform the appropriate BUS Communication test . Refer to **DIAGNOSIS AND TESTING** .

       No

       - Go To 2.
2. **DTC PRESENT**

   NOTE: **Before continuing, complete the 6.7L Cummins Turbo Diesel Diagnostic Worksheet. Go to the TechConnect > submit the vehicle's VIN number > Search Tab > and Select Create Diagnostic Worksheet.**

    1. Turn the ignition on.
    2. With the scan tool, view PCM for DTCs.

Is there a DTC present?

Yes

- Proceed to the MIL LIGHT ON PRETEST PROCEDURE. Refer to **MIL LIGHT ON PRETEST PROCEDURE** .

No

- Go To 3.

3. **CHECK FOR SYMPTOM BASED ISSUES**
   1. Check the vehicle for one of the following conditions:
      - Engine No Start / Hard Start
      - Engine Misfires / Runs Rough / Poor Performance
      - Engine Noise
      - Excessive Smoke (Black/Blue/White)

      Do one of the following conditions exist?

      Yes

      - Perform the appropriate symptom based diagnostic procedure. Refer to **DIAGNOSIS AND TESTING, 6.7L** .

      No

      - Verify the vehicles performance by performing the Diesel Fuel System Validation procedure. Refer to **DIESEL AFTERTREATMENT VALIDATION- 6.7L** .

PCM/ECM / TCM PROGRAMMING

PCM/ECM / TCM FLASH PROGRAMING

This procedure will need to be done when one or more of the following situations are true:

1. A vehicle's Powertrain Control Module/Engine Control Module (PCM/ECM) has been replaced.
2. A diagnostic trouble code (DTC) is set P1602 - PCM/ECM Not Programmed.
3. An updated calibration or software release is available for either the PCM/ECM or TCM ECUs.

This procedure assumes that the wiTECH™ Vehicle Connection Interface (VCI) pod, StarSCAN® and StarMOBILE® devices are configured to your dealership's network with either a wired or wireless connection. The wiTECH™ VCI pod, StarSCAN® and StarMOBILE® must also be running at the latest operating system and software release level. For more help on how to network your StarSCAN® or StarMOBILE® reference the StarSCAN® / StarMOBILE® Quick Start Networking Guide available on 'DealerCONNECT > Service > StarSCAN® and StarMOBILE® Tools > Online Documentation' or at www.dcctools.com, under the Download

Center. For the wiTECH™ VCI pod use the "HELP" tab in the wiTECH™ Diagnostic Application.

TABLE OF CONTENTS

1. Refer to **SECTION 1 - PCM/ECM / TCM FLASH PROCEDURE**.
2. Refer to **REQUIRED TOOLS / EQUIPMENT:**
3. Refer to **TECH TIPS AND INFORMATION:**
4. Refer to **PARTS REQUIRED**.

SECTION 1 - PCM/ECM / TCM FLASH PROCEDURE

If using StarSCAN® or StarMOBILE® Desktop Client. Go to **REPAIR PROCEDURE - USING STARSCAN® OR STARMOBILE® DESKTOP CLIENT**.

If using wiTECH™ Diagnostic Application. Go to **REPAIR PROCEDURE - WITECH™ DIAGNOSTIC APPLICATION**.

REPAIR PROCEDURE - USING STARSCAN® OR STARMOBILE® DESKTOP CLIENT

NOTE: If this flash process is interrupted or aborted, the flash should be restarted.

1. Open the hood of the vehicle and install a battery charger. Verify that the charging rate provides a continuous charge of 13.2 - 13.5 Volts.
2. Connect the StarSCAN® or StarMOBILE® to the vehicle data link connector located under the steering column and turn the ignition key to the "RUN" position.
3. Power on the StarSCAN® or StarMOBILE®. If the StarMOBILE® is being used, launch the StarMOBILE® Desktop Client and connect to the appropriate StarMOBILE® device.
4. Retrieve the old ECU part number. From the tool's Home screen,
   a. Select "ECU View"
   b. Select "PCM/ECM"
   c. Select "More Options"
   d. Select "ECU Flash"
   e. Record the part number at the top of the Flash PCM/ECM screen for later reference.
5. Program the ECU as follows:
   a. Using the StarSCAN® / StarMOBILE® at the Home screen, select "ECU View"
   b. Select "PCM/ECM"
   c. Select "More Options"
   d. Select "ECU Flash"
   e. Select "Browse for New File" and follow the on screen instructions
   f. Highlight the appropriate calibration based on the part number recorded in Step 4e , or by using Year/Model/Engine and appropriate emissions selection for the vehicle being worked on
   g. Select "Download to Client/Scantool"

h. Once the download is complete, select "Close" and then "Back"
i. Highlight the listed calibration, select "Update Controller" and follow the on screen instructions
j. When the PCM/ECM update is complete, select "OK"
k. Verify that the part number at the top of the Flash PCM/ECM screen has updated to the new part number

NOTE: If this flash process is interrupted or aborted, the flash should be restarted.

6. Continue to complete the process if the ECU has been replaced.
7. Type the necessary information on the "Authorized Modification Label" (p/n 04275086AB) and attach near the VECI label (See Section 3 for details). Refer to **SECTION 3 - AUTHORIZED MODIFICATION LABEL**.

REPAIR PROCEDURE - WITECH™ DIAGNOSTIC APPLICATION

NOTE: If this flash process is interrupted or aborted, the flash should be restarted.

1. Open the hood of the vehicle and install a battery charger. Verify that the charging rate provides a continuous charge of 13.2 - 13.5 Volts.
2. Connect the wiTECH™ Vehicle Connection Interface (VCI) pod to the vehicle data link connector located under the steering column and turn the ignition key to the "RUN" position.
3. Launch the wiTECH™ Diagnostic Application and connect to the appropriate wiTECH™ device.
4. From the wiTECH™ Diagnostic Application Home screen,
    1. Select "HELP"
    2. Select "HELP CONTENTS"
    3. Follow the "HELP TOPIC" for flashing an ECU.

SECTION 2 - ADDITIONAL PCM/ECM / TCM REPLACEMENT PROCEDURES

NOTE: Find the PCM/ECM /TCM Type for the vehicle, read and write down the steps, and then go to the step by step instructions for additional information on how to perform these procedures. Refer to STEP-BY-STEP INSTRUCTIONS.

If a 2.0L Controller was replaced, navigate to "Misc. Functions" and perform all applicable routines:

NOTE: The available routines may vary depending on model and year of vehicle.

1. PCM/ECM Replaced - Located within the Security Module
2. ECU Replacement With Value Transfer - if the ECU to be replaced is still responsive

NOTE: If the PCM/ECM data transfer is able to be completed, it may not be necessary to perform routines 7 - 9.

3. ECU Replacement Without Value Transfer - if the ECU to be replaced is NOT responsive
4. Verify PCM/ECM VIN
5. Injector Quantity Adjustment
6. Program Variant Code
7. Service Diesel Particulate Filter Regeneration
8. Reset Zero Fuel
9. Reset of Lambda Values

If a PT Cruiser, 2.2L Controller was replaced, navigate to "Misc. Functions" and perform all applicable routines:

NOTE: The available routines may vary depending on model and year of vehicle.

1. PCM/ECM Replaced - Located within the Security Module
2. Injector Quantity Adjustment - Only on 06 PT AND up
3. IMA Rapid Calibration Test - Only on 06 PT AND up

If a 3.0L Controller was replaced, navigate to "Misc. Functions" and perform all applicable routines:

NOTE: The available routines may vary depending on model and year of vehicle.

1. PCM/ECM Replaced - Located within the Security Module
2. ECU Replacement With Value Transfer - if the ECU to be replaced is still responsive

NOTE: If the PCM/ECM data transfer is able to be completed, it may not be necessary to perform routines 7 - 12.

3. ECU Replacement Without Value Transfer - if the ECU to be replaced is NOT responsive
4. Injector Quantity Adjustment
5. Program Variant Code
6. Verify PCM/ECM VIN
7. Diesel Particulate Filter (Used) Learning
8. Reset of Lambda Values
9. Reset Zero Fuel
10. NOx Catalyst (New) Initialization
11. IMA Rapid Calibration Test
12. Fuel Mean Value Adaptation Initialization
13. Exhaust Throttle Plate Adaptive Learn Position

If a 2.8L Controller was replaced, navigate to "Misc. Functions" and perform all applicable routines:

NOTE: The available routines may vary depending on model and year of vehicle.

1. PCM/ECM Replaced - Located within the Security Module
2. ECU Replacement With Value Transfer - if the ECU to be replaced is still responsive

NOTE: If the PCM/ECM data transfer is able to be completed, it may not be necessary to perform routines 6 - 8.

3. ECU Replacement Without Value Transfer - if the ECU to be replaced is NOT responsive
4. Injector Quantity Adjustment
5. Program Variant Code
6. Fuel Mean Value Adaptation Initialization
7. IMA Rapid Calibration Test
8. Set Oil Dilution Mass Value

If a PM/MK, 2.2L Controller was replaced, navigate to "Misc. Functions" and perform all applicable routines:

NOTE: The available routines may vary depending on model and year of vehicle.

1. PCM/ECM Replaced - Located within the Security Module
2. Engine ECU Replacement

NOTE: If the PCM/ECM data transfer is able to be completed, it may not be necessary to perform routines 5 - 10.

3. Injector Quantity Adjustment
4. Program Variant Code
5. Swirl Control Learn
6. Throttle Valve Learn
7. VGT Learn
8. MAF Sensor Replace
9. O2 Sensor Replace
10. Used DPF initialize

If a 5.9L Controller was replaced, navigate to "Misc. Functions" and perform all applicable routines:

NOTE: The available routines may vary depending on model and year of vehicle.

1. PCM/ECM Replaced - Located within the Security Module
2. Check PCM/ECM VIN - if NOT WCM equipped

If a 6.7L Controller was replaced, navigate to "Misc. Functions" and perform all applicable routines:

NOTE: The available routines may vary depending on model and year of vehicle.

1. PCM/ECM Replaced - Located within the Security Module
2. Injector Quantity Adjustment
3. Enable / Disable Vehicle Features - need to enable features
4. Set max vehicle speed
5. Set max cruise speed
6. Idle shutdown timer
7. PTO RPM adjustment
8. Set PTO Max vehicle speed

NOTE: **The numbers can be retrieved from the old PCM/ECM using the scan tool if the PCM/ECM is still functional or they may be retrieved from the Fuel Injectors themselves. The numbers are stamped on the intake manifold side of the injectors.**

9. Reset Regenerative Filter Timers

TCM Replacement:

If an Aisin TCM was replaced, perform the following additional steps and/or routines:

If an EATX TCM was replaced, perform the following additional steps and/or routines:

If an NGC3 TCM ONLY was replaced, perform the following additional steps and/or routines:

If an NGC4 TCM ONLY was replaced, perform the following additional steps and/or routines:

1. Quicklearn

If an EGS TCM was replaced, perform the following additional steps and/or routines:

1. Initialize EGS

STEP-BY-STEP INSTRUCTIONS

PCM/ECM Replaced

The vehicle PIN (Personal Identification Number) will be required to complete the routine. This information may be obtained in three ways:

1. The original selling invoice
2. DealerCONNECT > Parts > Key Codes
3. Contacting the District Manager.

From the "Home" screen, select "ECU View"

- Select the applicable Security Module
- Select "Misc. Functions"
- Select "PCM/ECM Replaced" and follow the on screen instructions.
- When complete, select "Finish"

Check PCM VIN

From the "Home" screen, select "ECU View"

- Select "PCM/ECM"
- Select "Misc. Functions"
- Select "Check PCM/ECM VIN" and follow the on screen instructions.
- When complete, select "Finish"

Diesel Particulate Filter (Used) Learning

From the "Home" screen, select "ECU View"

- Select "PCM/ECM"
- Select "Misc. Functions"
- Select "Diesel Particulate Filter (Used) Learning" and follow the on screen instructions.
- When complete, select "Finish"

ECU Replacement with Value Transfer

From the "Home" screen, select "ECU View"

- Select "PCM/ECM"
- Select "Misc. Functions"
- Select "ECU Replacement with Value Transfer" and follow the on screen instructions.
- When complete, select "Finish"

ECU Replacement without Value Transfer

From the "Home" screen, select "ECU View"

- Select "PCM/ECM"
- Select "Misc. Functions"
- Select "ECU Replacement without Value Transfer" and follow the on screen instructions.
- When complete, select "Finish"

Enable / Disable Vehicle Features

From the "Home" screen, select "ECU View"

- Select "PCM/ECM"
- Select "Misc. Functions"
- Select "Enable / Disable Vehicle Features" and follow the on screen instructions.
- When complete, select "Finish"

Exhaust Throttle Plate Adaptive Learn Position

From the "Home" screen, select "ECU View"

- Select "PCM/ECM"
- Select "Misc. Functions"
- Select "Exhaust Throttle Plate Adaptive Learn Position" and follow the on screen instructions.
- When complete, select "Finish"

Fuel Mean Value Adaptation Initialization

From the "Home" screen, select "ECU View"

- Select "PCM/ECM"
- Select "Misc. Functions"
- Select "Fuel Mean Value Adaptation Initialization" and follow the on screen instructions.
- When complete, select "Finish"

IMA Rapid Calibration

From the "Home" screen, select "ECU View"

- Select "PCM/ECM"
- Select "Misc. Functions"
- Select "IMA Rapid Calibration Test" and follow the on screen instructions.
- When complete, select "Finish"

Initialize EGS

From the "Home" screen, select "ECU View"

- Select "PCM/ECM"
- Select "Misc. Functions"
- Select "Initialize EGS" and follow the on screen instructions.
- When complete, select "Finish"

Injector Quantity Adjustment

From the "Home" screen, select "ECU View"

- Select "PCM/ECM"
- Select "Misc. Functions"
- Select "Injector Quantity Adjustment" and follow the on screen instructions.
- When complete, select "Finish"

Mobile DeSoot - NO Minimum Required Soot Load

From the "Home" screen, select "ECU View"

- Select "PCM/ECM"
- Select "Misc. Functions"
- Select "Mobile DeSoot - NO Minimum Required Soot Load" and follow the on screen instructions.
- When complete, select "Finish"

NOx Catalyst (New) Initialization

From the "Home" screen, select "ECU View"

- Select "PCM/ECM"
- Select "Misc. Functions"
- Select "NOx Catalyst (New) Initialization" and follow the on screen instructions.
- When complete, select "Finish"

Program Variant Code

From the "Home" screen, select "ECU View"

- Select "PCM/ECM"
- Select "Misc. Functions"
- Select "Program Variant Code" and follow the on screen instructions.
- When complete, select "Finish"

Quicklearn

From the "Home" screen, select "ECU View"

- Select "PCM/ECM"
- Select "Misc. Functions"
- Select "Quicklearn" and follow the on screen instructions.

- When complete, select "Finish"

Reset Regenerative Filter Timers

From the "Home" screen, select "ECU View"

- Select "PCM/ECM"
- Select "Misc. Functions"
- Select "Reset Regenerative Filter Times" and follow the on screen instructions.
- When complete, select "Finish"

Set Oil Dilution Mass Value

From the "Home" screen, select "ECU View"

- Select "PCM/ECM"
- Select "Misc. Functions"
- Select "Set Oil Dilution Mass Value" and follow the on screen instructions.
- When complete, select "Finish"

SECTION 3 - AUTHORIZED MODIFICATION LABEL

NOTE: The following step is required by law when reprogramming a PCM/ECM and/or TCM.

Type the necessary information on the "Authorized Modification Label" and attach near the VECI label.

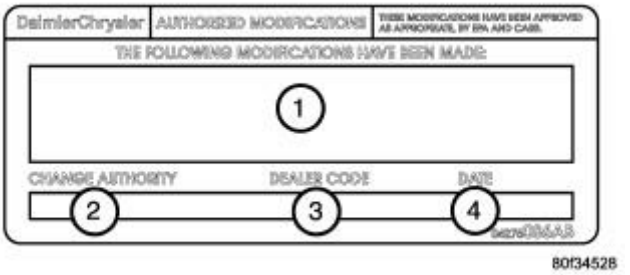

Fig. 2: Authorized Modification Label
Courtesy of CHRYSLER GROUP, LLC

1. Powertrain Control / Transmission Control Module Part Numbers (Insert P/Ns) Used
2. Change Authority: TSB XX--XX
3. Dealer Code: XXXXX
4. Date: XX-XX-XX

REQUIRED TOOLS / EQUIPMENT:

StarSCAN®	StarMOBILE®	wiTECH™
Battery Charger	Battery Charger	Battery Charger
StarSCAN® Tool Kit	StarMOBILE® Tool Kit	wiTECH™ Tool Kit
StarSCAN® Vehicle Cable	StarMOBILE® Vehicle Cable	wiTECH™ Vehicle Cable
	TechCONNECT PC or equivalent	TechCONNECT PC or equivalent
		wiTECH™ Diagnostic Application

TECH TIPS AND INFORMATION:

CAUTION: Extreme care must be taken when programming a calibration into a generic PCM. Do not randomly select a calibration. Once a calibration is selected and programmed, the controller cannot be reprogrammed to a different calibration. The module can only be reprogrammed to a more recent version of that calibration.

1. The wiTECH™ Diagnostic Application is the preferred method for flashing any Chrysler vehicle ECU. For more information, training tutorials are available under the "HELP" tab in the wiTECH™ Diagnostic Application or at www.dcctools.com, under the 'Training Aids' link.
2. To use the StarMOBILE® in Pass-Through Mode requires that your StarMOBILE® is connected to the dealership's network via a wired or wireless connection. For more information on how to use the StarMOBILE in Pass-Through Mode see the StarMOBILE® training tutorials available on 'DealerCONNECT > Service > StarSCAN® and StarMOBILE® Tools > Training Aids' link or at www.dcctools.com, under the 'Training Aids' link.
3. If the flash process is interrupted or aborted, the flash should be restarted.
4. Due to the PCM/ECM / TCM programming procedure, a DTC may be set in other ECUs within the vehicle. Some DTCs may cause the MIL to illuminate. From the "Home" screen select "System View". Then select "All DTCs". Press "Clear All Stored DTCs" if there are any DTCs shown on the list.
5. Do not allow the battery charger to time out or the charging rate to climb above 13.5 Volts during the flash process.
6. The StarSCAN® and StarMOBILE® diagnostic tools fully support Internet connectivity and must be configured for your dealership's network. For help on setting up your StarSCAN® / StarMOBILE® for the dealership's network, Refer to the StarSCAN® / StarMOBILE® Quick Start Networking Guide available on 'DealerCONNECT > Service > StarSCAN® and StarMOBILE® Tools > Online Documentation' or at www.dcctools.com, under the download center.
7. The operating software in the StarSCAN® and StarMOBILE® must be programmed with the latest software release level. The software level is visible in the blue header at the top of the StarSCAN® and StarMOBILE® Desktop Client screens. For instructions on how to update your scan tool, Refer to the StarSCAN® / StarMOBILE® Software Update guide available on 'DealerCONNECT > Service > StarSCAN® and StarMOBILE® Tools > Online Documentation' or at www.dcctools.com, under the download center.

PARTS REQUIRED

Qty	Part Number	DESCRIPTION
1	04275086AB	Label, Authorized Modification

POWERTRAIN VERIFICATION TEST - 6.7L

DIAGNOSTIC TEST

1. **POWERTRAIN VERIFICATION TEST**

NOTE: **If the battery was disconnected for any reason, you must perform the Battery Reconnection procedure in the BATTERY SYSTEM - SERVICE INFORMATION .**

1. Clear the DTC before continuing.
2. Check if any of the following conditions exist.
3. The PCM has been disconnected or replaced.
4. The battery power has been disconnected.
5. If the PCM has been replaced, do the following:
6. Record injector correlation codes.
7. For ABS and Airbag Systems: Action: Enter correct VIN and Mileage in PCM. Erase ABS and Airbag Module codes.

NOTE: **If the Powertrain Control Module has been replaced and the correct VIN and mileage have not been programmed, a DTC will be set in the ABS, Airbag Modules and Wireless Control Module.**

8. If the PCM has not been replaced, do the following.
9. Inspect the vehicles to ensure that all engine components are connected. Reassemble and reconnect components as necessary.
10. Attempt to start the engine.
11. If the engine is unable to start, look for any Technical Service Bulletins that may relate to this condition. Return to DTC list if necessary.
12. If this verification procedure is being performed after a No Trouble Code repair, do the following.
13. Check to see if the initial symptom still exists. If the initial or another symptom exists, the repair is not complete. Check all pertinent Technical Service Bulletins and return to the DTC list if necessary.
14. If this verification procedure is being performed after a Trouble Code repair, do the following.
15. Connect the scan tool to the data link connector and erase trouble codes.
16. With the scan tool, reset all memory values.
17. If this test is for an A/C trouble code, ensure it is operating during the following road test.

18. Drive the vehicle for at least five minutes, For some of the drive, go at least 64 km/h (40 MPH). At some point stop the vehicle and turn the engine off for 10 seconds or more; then restart and continue. Make sure the transmission shifts through all gears.
19. Upon completion of the road test, turn the engine off and read trouble codes with the scan tool. If a trouble code has been set, return to the DTC list and follow the path specified.

    Are any DTCs present?

    Yes

    - Repair is not complete, perform appropriate diagnostic procedure. Refer to **DIAGNOSTIC CODE INDEX** .

    No

    - Repair is complete.

INTERMITTENT CONDITION - 6.7L

POSSIBLE CAUSES

POSSIBLE CAUSES
INTERMITTENT CONDITION

DIAGNOSTIC TEST

1. **INTERMITTENT CONDITION**

NOTE: **The conditions that set the DTC are not present at this time. The following list may help in identifying the intermittent condition.**

WARNING: **When the engine is operating, do not stand in direct line with the fan. Do not put your hands near the pulleys, belts or fan. Do not wear loose clothing. Failure to follow these instructions may result in possible serious or fatal injury.**

1. Perform any Technical Service Bulletins (TSBs) that may apply.
2. Review the scan tool Freeze Frame information. If possible, try to duplicate the conditions under which the DTC set.
3. With the engine running at normal operating temperature, monitor the scan tool parameters related to the DTC while wiggling the wire harness. Look for parameter values to change and/or a DTC to set.
4. Turn the ignition off.
5. Visually inspect the related wire harness. Disconnect all the related harness connectors. Look for any chafed, pierced, pinched, partially broken wires and broken, bent, pushed out, or corroded

terminals.

6. Perform a voltage drop test on the related circuits between the suspected inoperative component and the PCM.
7. Inspect and clean all PCM, engine, and chassis grounds that are related to the most current DTC.
8. If numerous trouble codes were set, use a wire schematic and look for any common ground or supply circuits.
9. For any Relay DTCs, actuate the Relay with the scan tool and wiggle the related wire harness to try to interrupt the actuation.
10. For intermittent Misfire DTCs check for restrictions in the Intake and Exhaust system, proper installation of Sensors, vacuum leaks, and binding components that are run by the accessory drive belt.
11. Use the scan tool to perform a System Test if one applies to failing component.
12. A co-pilot, data recorder, and/or lab scope should be used to help diagnose intermittent conditions.

Were any problems found during the above inspections?

Yes

- Perform the necessary repairs.
- Perform the POWERTRAIN VERIFICATION TEST 6.7L. Refer to **POWERTRAIN VERIFICATION TEST - 6.7L** .

No

- Test Complete.

Powertrain Control Module (PCM) - Electrical Diagnostics, 6.7L Diesel - 3500 Cab & Chassis, 4500 & 5500

DIAGNOSIS AND TESTING

P0008-ENGINE POSITION SYSTEM PERFORMANCE BANK 1

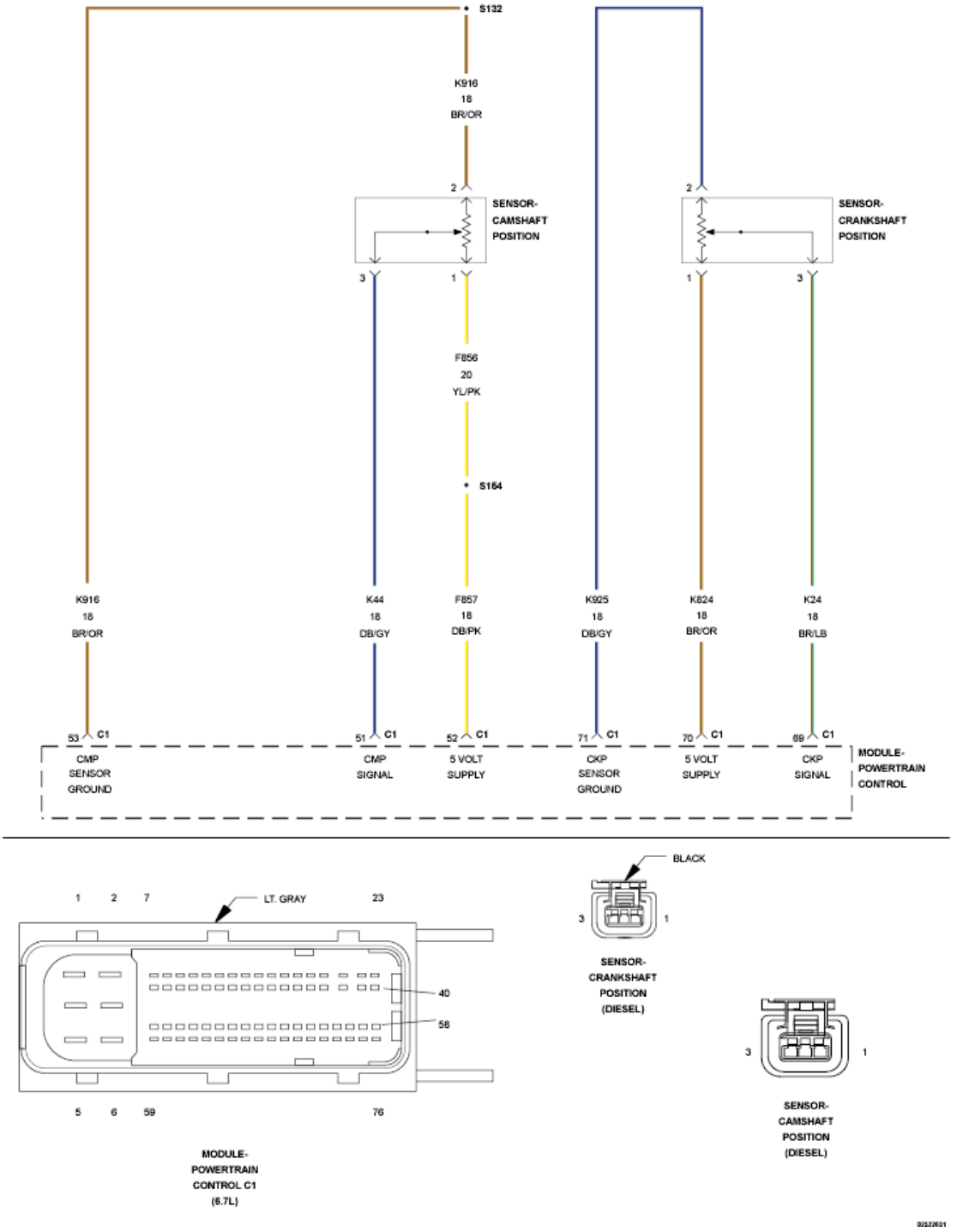

Fig. 1: Crankshaft Position Sensor & Camshaft Position Sensor Circuit Schematic
Courtesy of CHRYSLER GROUP, LLC

For a complete wiring diagram, **refer to appropriate SYSTEM WIRING DIAGRAMS article** .

THEORY OF OPERATION

The Powertrain Control Module (PCM) will turn on the MIL lamp immediately after this diagnostic runs and

fails. The PCM will turn off the MIL lamp after the diagnostic runs and passes in four consecutive drive cycles.

WHEN MONITORED:

With the engine running.

SET CONDITION:

The PCM has detected that the Crank Position Sensor (CKP) and Cam Position Sensor (CMP) signals are reversed.

POSSIBLE CAUSES

Possible Causes
CRANK AND CAM POSITION SENSOR CONNECTORS REVERSED

Always perform the Pre-Diagnostic Troubleshooting procedure before proceeding. Refer to PRE-DIAGNOSTIC TROUBLESHOOTING PROCEDURE - 6.7L .

DIAGNOSTIC TEST

1. **ACTIVE DTC**
    1. Ignition on, engine not running.
    2. With the scan tool, clear the DTC.
    3. Start or crank the engine.
    4. With the scan tool, read DTCs.

    Did the DTC reset?

    Yes

    - Go To 2.

    No

    - Perform the INTERMITTENT CONDITION - 6.7L diagnostic procedure. Refer to **INTERMITTENT CONDITION - 6.7L** .
2. **CRANK AND CAM SENSOR CONNECTORS REVERSED**
    1. This DTC indicates that the CKP and CMP Position Sensor signals are reversed.
    2. Switch the CKP and CMP Position Sensor connectors.
    3. With the scan tool, clear the DTC.
    4. Start or crank the engine.
    5. With the scan tool, read DTCs.

    Did the DTC reset?

Yes

- Using the wiring diagram as a guide, check the connectors and wiring for proper configuration.
- Perform the POWERTRAIN VERIFICATION TEST - 6.7L. Refer to **POWERTRAIN VERIFICATION TEST - 6.7L** .

No

- Repair complete.
- Perform the POWERTRAIN VERIFICATION TEST - 6.7L. Refer to **POWERTRAIN VERIFICATION TEST - 6.7L** .

P000F-FUEL SYSTEM OVER PRESSURE RELIEF VALVE ACTIVATED

For a complete wiring diagram, **refer to appropriate SYSTEM WIRING DIAGRAMS article** .

THEORY OF OPERATION

The Powertrain Control Module (PCM) will turn on the MIL lamp immediately after this diagnostic runs and fails. This DTC will cause active regeneration to be disabled. The PCM will turn off the MIL lamp after the diagnostic runs and passes in 4 consecutive drive cycles.

WHEN MONITORED:

With the engine running.

SET CONDITION:

Fuel pressure deviation from setpoint occurs at a rate higher than a calibrated amount.

POSSIBLE CAUSES

Possible Causes
PRESSURE LIMITING VALVE
LIFT PUMP
HIGH PRESSURE PUMP
EXCESSIVE INJECTOR DRAINS

Always perform the Pre-Diagnostic Troubleshooting procedure before proceeding. Refer to PRE-DIAGNOSTIC TROUBLESHOOTING PROCEDURE - 6.7L .

DIAGNOSTIC TEST

1. **CHECK THE FUEL DELIVERY SYSTEM**
    1. Perform the CHECKING THE FUEL DELIVERY SYSTEM diagnostic procedure. Refer to

DIAGNOSIS AND TESTING, 6.7L .

Were any problems found?

Yes

- Repair as necessary.

No

- Perform the INTERMITTENT CONDITION - 6.7L diagnostic procedure. Refer to **INTERMITTENT CONDITION - 6.7L** .

P0016-CRANKSHAFT/CAMSHAFT TIMING MISALIGNMENT - BANK 1 SENSOR 1

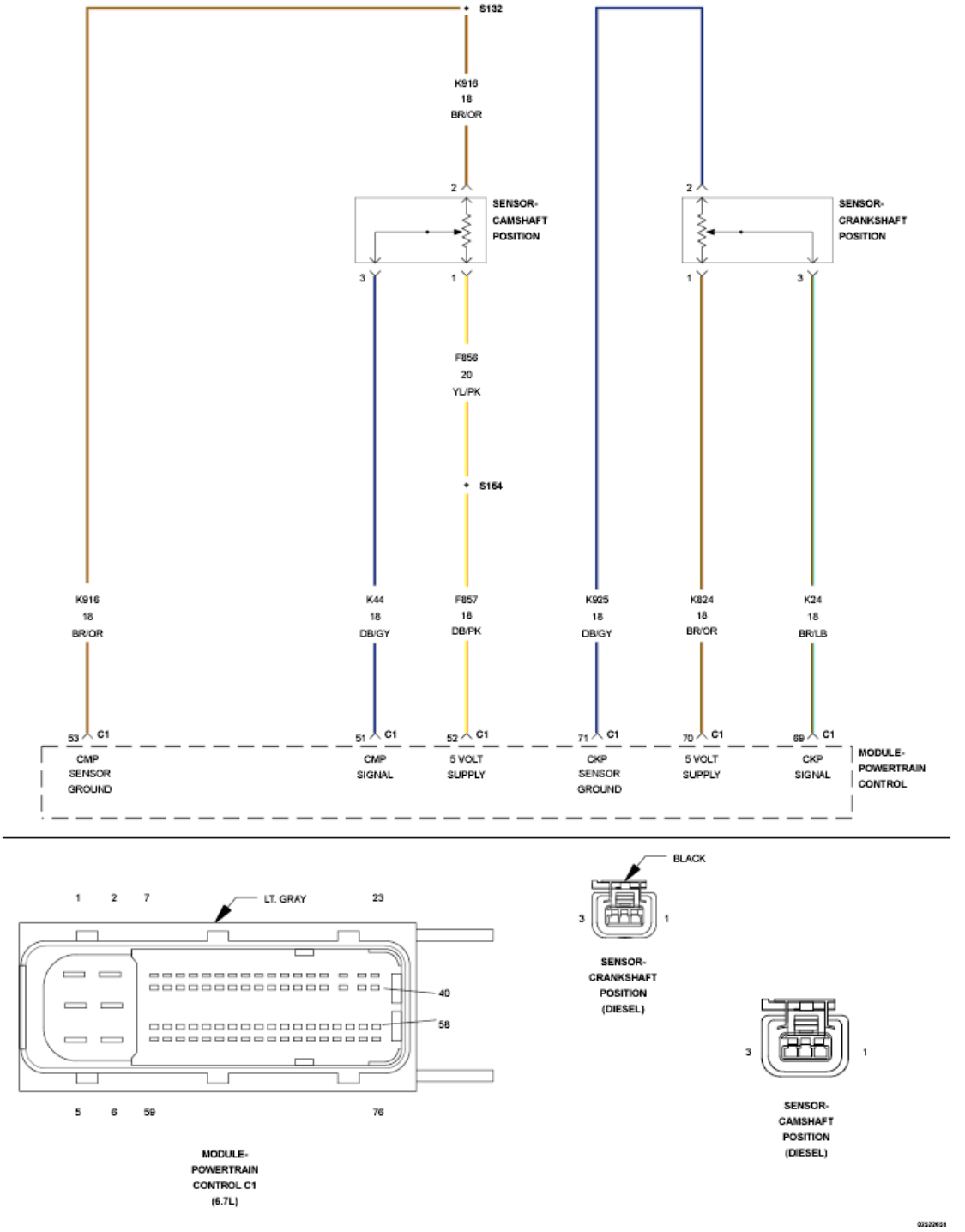

Fig. 2: Crankshaft Position Sensor & Camshaft Position Sensor Circuit Schematic
Courtesy of CHRYSLER GROUP, LLC

For a complete wiring diagram, **refer to appropriate SYSTEM WIRING DIAGRAMS article** .

THEORY OF OPERATION

The Crankshaft Position Sensor (CKP) and Camshaft Position Sensor (CMP) are hall effect type sensors. The

Powertrain Control Module (PCM) provides the sensors with a 5-Volt supply and a ground on the sensor return circuit. As the notch on the crank pulley or the windows on the camshaft gear travel by the position sensor, a signal is generated on the position sensor signal circuit. The PCM interprets this signal and converts it to an engine speed. If the fault is active the engine will run derated and a hard start/rough idle is possible.

WHEN MONITORED:

While engine is running. The Powertrain Control Module (PCM) monitors the position of the notch on the crankshaft speed sensor target and the camshaft speed sensor target. If the two positions do not match, the PCM then determines that there is a mechanical mis-alignment between the two sensors.

SET CONDITION:

When the Crankshaft Position Sensor (CKP) and Camshaft Position Sensor (CMP) are out of sync for more than five seconds. The Powertrain Control Module (PCM) illuminates the MIL light immediately.

POSSIBLE CAUSES

Possible Causes
DAMAGE TO THE CRANKSHAFT POSITION SENSOR (CKP) OR CAMSHAFT POSITION SENSOR (CMP)
DAMAGED TONE WHEEL
MECHANICAL MISALIGNMENT OF THE CKP OR CMP
MECHANICAL MISALIGNMENT OF THE CRANKSHAFT AND CAMSHAFT GEARS

Always perform the Pre-Diagnostic Troubleshooting procedure before proceeding. Refer to PRE-DIAGNOSTIC TROUBLESHOOTING PROCEDURE - 6.7L .

DIAGNOSTIC TEST

1. **DAMAGE TO THE CKP OR CMP**
    1. Visually inspect the condition of the tone wheel, CKP, and CMP for damage.

       Are any of the components damaged?

       Yes

       - Repair or replace any damaged component.
       - Perform the POWERTRAIN VERIFICATION TEST - 6.7L. Refer to **POWERTRAIN VERIFICATION TEST - 6.7L** .

       No

       - Go To 2.
2. **MECHANICAL MISALIGNMENT OF THE CKP OR CMP**
    1. Verify the tone wheel is properly positioned relative to the locating pin in the front face of the

crankshaft.

Is the tone wheel properly installed?

Yes

- Go To 3.

No

- Repair the tone wheel installation.
- Perform the POWERTRAIN VERIFICATION TEST - 6.7L. Refer to **POWERTRAIN VERIFICATION TEST - 6.7L** .

3. **MECHANICAL MISALIGNMENT OF THE CRANKSHAFT AND CAMSHAFT GEARS**
   1. Check the mechanical alignment of the camshaft gear to the crankshaft gear. Refer to service information for assistance.

      Are the gear teeth in proper alignment?

      Yes

      - Perform the INTERMITTENT CONDITION - 6.7L diagnostic procedure. Refer to **INTERMITTENT CONDITION - 6.7L** .

      No

      - Repair the gear alignment.
      - Perform the POWERTRAIN VERIFICATION TEST - 6.7L. Refer to **POWERTRAIN VERIFICATION TEST - 6.7L** .

P003A-TURBOCHARGER BOOST CONTROL MODULE POSITION EXCEEDED LEARNING LIMIT

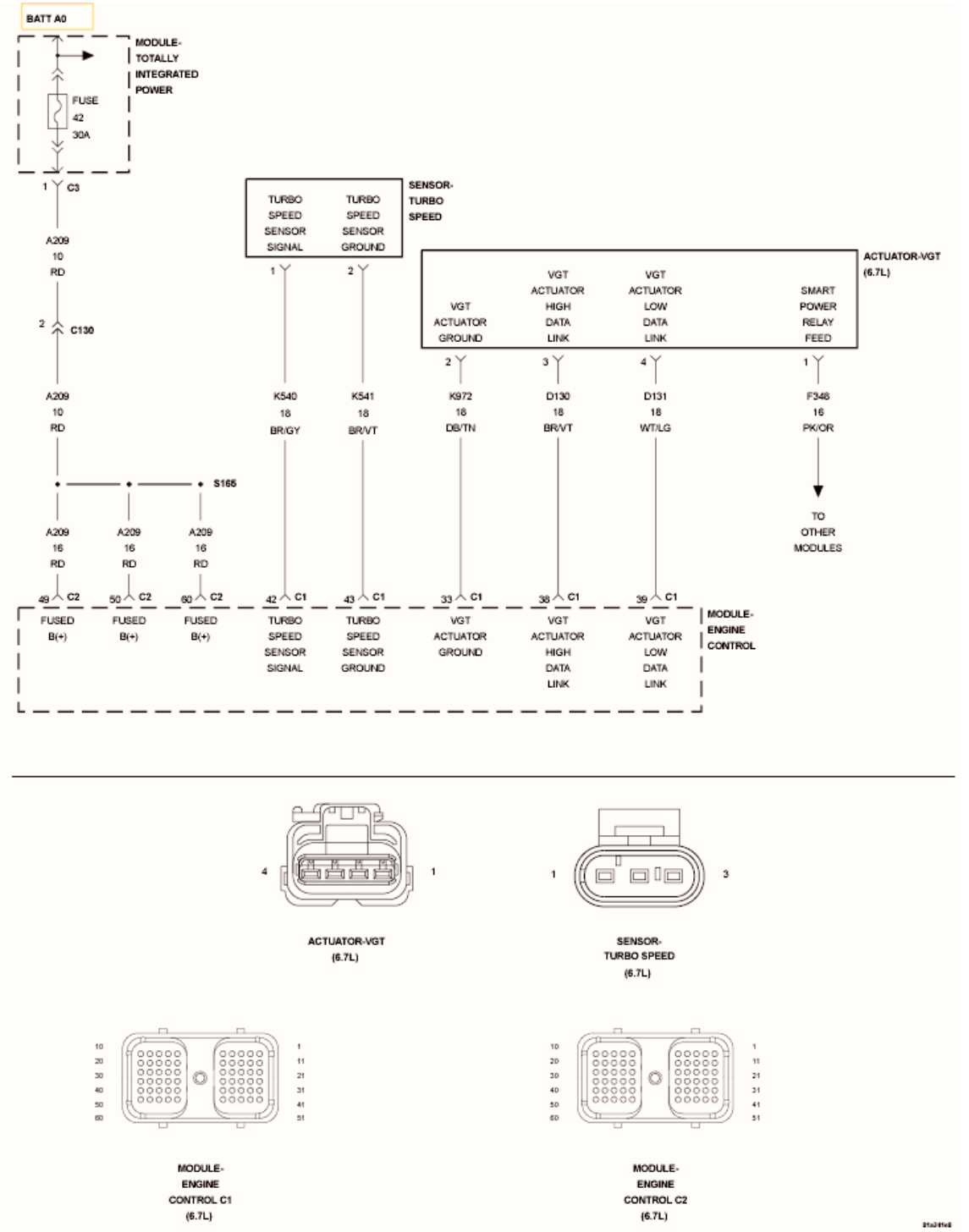

Fig. 3: Variable Geometry Turbocharger (VGT) Control Circuit Schematic
Courtesy of CHRYSLER GROUP, LLC

For a complete wiring diagram, **refer to appropriate SYSTEM WIRING DIAGRAMS article** .

THEORY OF OPERATION

The Variable Geometry Turbocharger (VGT) is electronically controlled by the Electronic Turbo Actuator. The Electronic Turbo Actuator is a smart device; it communicates information with the Powertrain Control Module (PCM) over the CAN C BUS. The Electronic Turbo Actuator performs its own internal diagnostics and reports failures back to the PCM. The PCM then decodes the error message and converts it to a fault code. The PCM lights the Malfunction Indicator Lamp (MIL) after the diagnostic runs and fails in two consecutive drive cycles. The PCM will turn off the MIL immediately after this diagnostic runs and passes in four (4) consecutive drive cycles.

WHEN MONITORED:

With the ignition on.

SET CONDITION:

The VGT Actuator calibrated end-stops were not detected.

POSSIBLE CAUSES

Possible Causes
VGT ACTUATOR CALIBRATION MISSING/CORRUPTED

Always perform the Pre-Diagnostic Troubleshooting procedure before proceeding. Refer to PRE-DIAGNOSTIC TROUBLESHOOTING PROCEDURE - 6.7L .

DIAGNOSTIC TEST

1. **ACTIVE DTC**
    1. Turn ignition on, engine not running.
    2. With the scan tool, read DTCs

       Is P003A active?

       Yes

       - Replace the Turbocharger Assembly in accordance with the service information.
       - Perform the POWERTRAIN VERIFICATION TEST - 6.7L. Refer to **POWERTRAIN VERIFICATION TEST - 6.7L** .

       No

       - Perform the INTERMITTENT CONDITION - 6.7L diagnostic procedure. Refer to **INTERMITTENT CONDITION - 6.7L** .

P0046-TURBOCHARGER BOOST CONTROL CIRCUIT PERFORMANCE

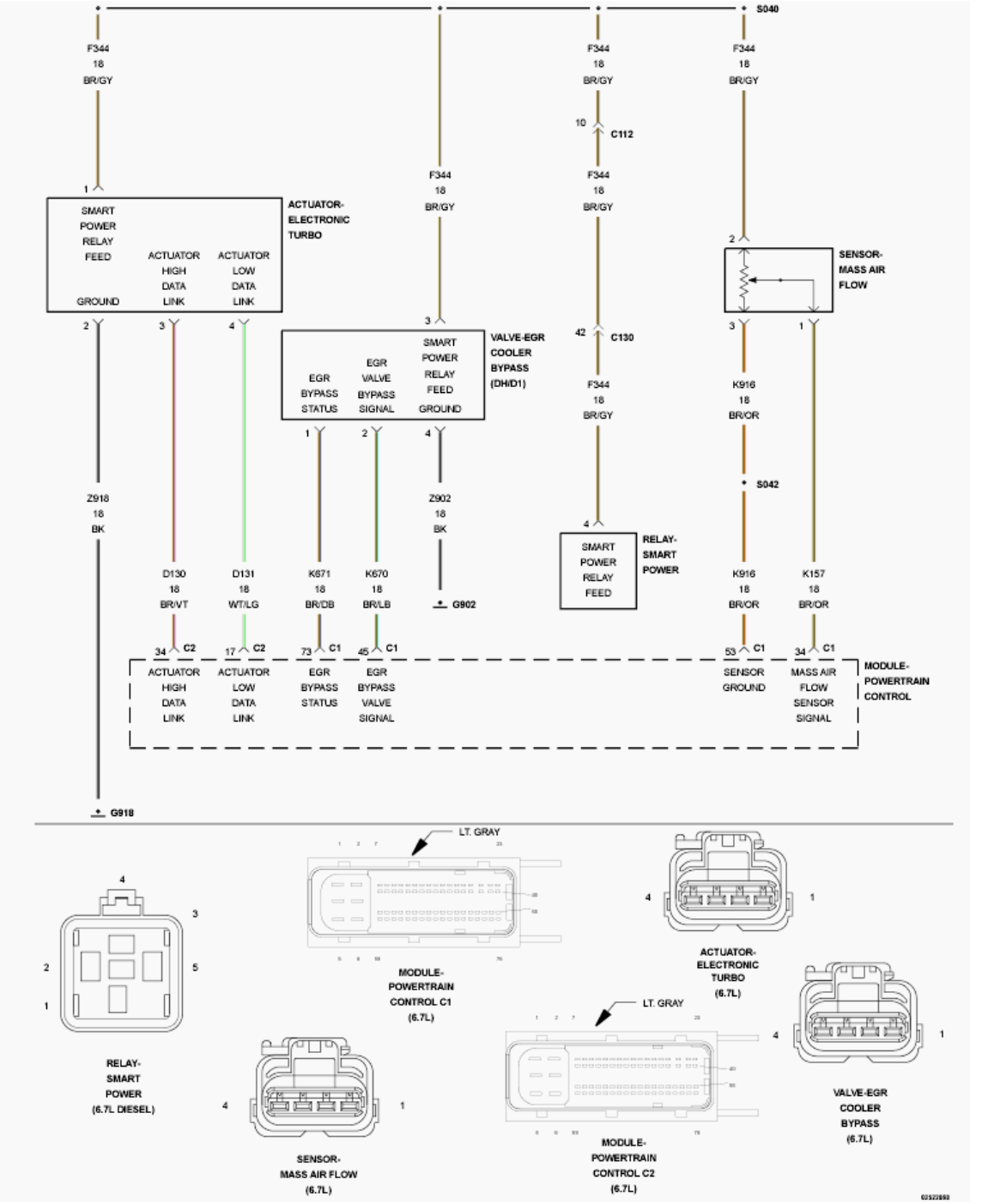

Fig. 4: Turbocharger Boost Control Circuit Schematic
Courtesy of CHRYSLER GROUP, LLC

For a complete wiring diagram, **refer to appropriate SYSTEM WIRING DIAGRAMS article** .

THEORY OF OPERATION

The Variable Geometry Turbocharger (VGT) is electronically controlled by the Electronic Turbo Actuator. The Electronic Turbo Actuator is a smart device; it communicates information with the Powertrain Control Module

(PCM) over the J1939 BUS. The Electronic Turbo Actuator performs its own internal diagnostics and reports failures back to the PCM. The PCM then decodes the error message and converts it to a fault code. The PCM lights the Malfunction Indicator Lamp (MIL) after the diagnostic runs and fails in two consecutive drive cycles. The PCM will turn off the MIL immediately after this diagnostic runs and passes in four consecutive drive cycles.

WHEN MONITORED:

With the ignition on.

SET CONDITION:

The Electronic Turbo Actuator does not receive a valid J1939 BUS message from the Powertrain Control Module (PCM) for five seconds.

POSSIBLE CAUSES

Possible Causes
(F344) SMART POWER RELAY FEED
(K918) ACTUATOR GROUND
TURBOCHARGER ASSEMBLY
POWERTRAIN CONTROL MODULE (PCM)

Always perform the Pre-Diagnostic Troubleshooting procedure before proceeding. Refer to PRE-DIAGNOSTIC TROUBLESHOOTING PROCEDURE - 6.7L .

DIAGNOSTIC TEST

1. **OTHER DTCs**
    1. Ignition on, engine not running.
    2. With the scan tool, read DTCs.

       Is U010C active?

       Yes

       - Repair U010C first.
       - Perform the POWERTRAIN VERIFICATION TEST - 6.7L. Refer to **POWERTRAIN VERIFICATION TEST - 6.7L** .

       No

       - Go To 2.
2. **POWERTRAIN CONTROL MODULE**
    1. Turn ignition off.

2. Disconnect the Electronic Turbo Actuator harness connector.

NOTE: Check connectors - Clean/repair as necessary.

3. Ignition on, engine not running.
4. After 75 seconds, monitor the system response with the scan tool.

Is U010C active?

Yes

- Go To 3.

No

- Replace the Powertrain Control Module in accordance with the Service Information.
- Perform the POWERTRAIN VERIFICATION TEST - 6.7L. Refer to **POWERTRAIN VERIFICATION TEST - 6.7L** .

3. **INTERMITTENT CONNECTION**
   1. Turn ignition off.
   2. Reconnect the Electronic Turbo Actuator harness connector.
   3. Ignition on, engine not running.
   4. After 75 seconds, monitor the system response with the scan tool.

   Is P0046 active?

   Yes

   - Go To 4.

   No

   - Repair complete.
   - Perform the POWERTRAIN VERIFICATION TEST - 6.7L. Refer to **POWERTRAIN VERIFICATION TEST - 6.7L** .

4. **PCM CONNECTION**
   1. Turn ignition off.
   2. Disconnect the PCM harness connector.

   NOTE: Check connectors - Clean/repair as necessary.

   Were their any dirty or damaged terminals?

Yes

- Repair/Replace as necessary.
- Perform the POWERTRAIN VERIFICATION TEST - 6.7L. Refer to **POWERTRAIN VERIFICATION TEST - 6.7L** .

No

- Go To 5.

5. **INTERMITTENT CONNECTION**
    1. Turn ignition off.
    2. Reconnect the Electronic Turbo Actuator harness connector.
    3. Reconnect the PCM harness connector.
    4. Ignition on, engine not running.
    5. After 75 seconds, monitor the system response with the scan tool.

    Is P0046 active?

    Yes

    - Replace the Turbocharger Assembly in accordance with the service information.
    - Perform the POWERTRAIN VERIFICATION TEST - 6.7L. Refer to **POWERTRAIN VERIFICATION TEST - 6.7L** .

    No

    - Repair complete.
    - Perform the POWERTRAIN VERIFICATION TEST - 6.7L. Refer to **POWERTRAIN VERIFICATION TEST - 6.7L** .

P0049-TURBOCHARGER TURBINE OVERSPEED

For a complete wiring diagram, **refer to appropriate SYSTEM WIRING DIAGRAMS article** .

THEORY OF OPERATION

The Turbocharger Speed Sensor is a variable reluctance speed sensor. It consists of a coil of wire and an iron core. The target on the turbocharger shaft is a ground flat surface in the center of the shaft. As the flat surface on the turbocharger shaft spins past the speed sensor, a signal is generated. The Powertrain Control Module (PCM) interprets this signal and converts it to a turbocharger speed reading. If this fault becomes active the PCM will light the MIL light immediately. During this time the PCM uses an estimated turbocharger speed. An engine power derate may be experienced. The PCM turns off the MIL when the diagnostic runs and passes in four consecutive drive cycles.

WHEN MONITORED:

When the key is on and the Powertrain Control Module (PCM) detects a valid turbocharger speed.

SET CONDITION:

Powertrain Control Module (PCM) detects that the Turbocharger Speed Sensor is out of range high.

POSSIBLE CAUSES

Possible Causes
(K540) TURBO SPEED SENSOR SIGNAL CIRCUIT SHORTED TO GROUND
(K540) TURBO SPEED SENSOR SIGNAL CIRCUIT OPEN/HIGH RESISTANCE
(K541) TURBO SPEED SENSOR RETURN CIRCUIT OPEN/HIGH RESISTANCE
TURBOCHARGER SPEED SENSOR

Always perform the Pre-Diagnostic Troubleshooting procedure before proceeding. Refer to PRE-DIAGNOSTIC TROUBLESHOOTING PROCEDURE - 6.7L .

DIAGNOSTIC TEST

1. **OTHER DTCS**
    1. With the scan tool, read DTCs.

       Are any DTCs present for Inlet Air Pressure Sensor or Boost Pressure Sensor?

       Yes

       - Troubleshoot other DTCs first.
       - Perform the POWERTRAIN VERIFICATION TEST - 6.7L. Refer to **POWERTRAIN VERIFICATION TEST - 6.7L** .

       No

       - Go To 2.
2. **INTERMITTENT CONDITION**
    1. Start the engine.
    2. Using the accelerator pedal, accelerate the engine speed to high idle and hold the engine speed at high idle for at least 20 seconds.

       Does DTC P0049 become active?

       Yes

       - Go To 3.

       No

- Perform the INTERMITTENT CONDITION - 6.7L diagnostic procedure. Refer to **INTERMITTENT CONDITION - 6.7L** .

3. **TURBOCHARGER SPEED SENSOR**

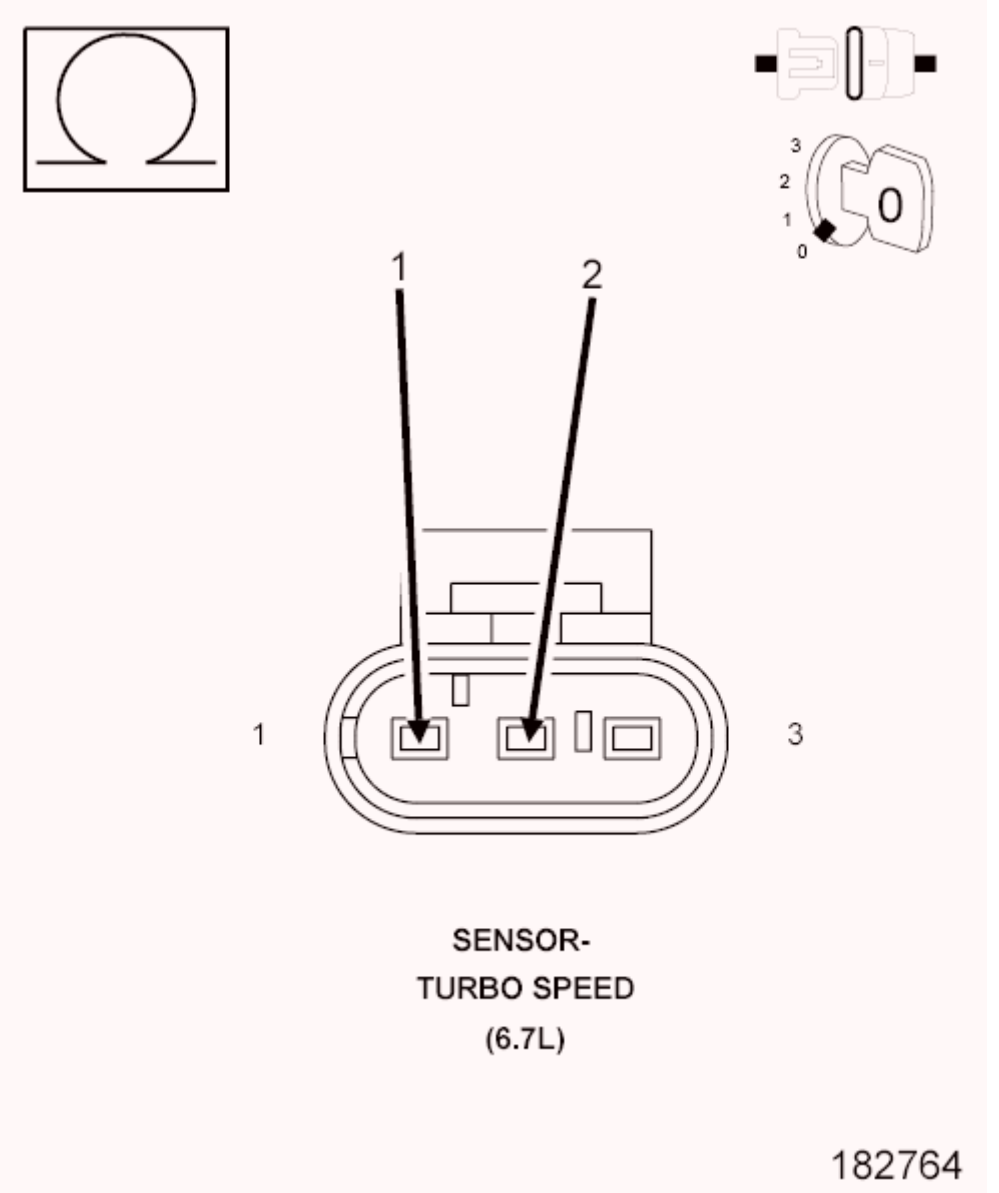

Fig. 5: Checking Turbocharger Speed Sensor
Courtesy of CHRYSLER GROUP, LLC

1. Turn Ignition off.
2. Disconnect the Turbocharger Speed Sensor connector.

NOTE: Check connectors - Clean/repair as necessary.

3. Measure the resistance across the (K540) Turbocharger Speed Sensor Signal circuit and the (K541)

Turbocharger Speed Sensor Return circuit at the Turbocharger Speed Sensor.

Is the resistance between 600 and 1600 Ohms?

Yes

- Go To 4.

No

- Replace the Turbocharger Speed Sensor.
- Perform the POWERTRAIN VERIFICATION TEST - 6.7L. Refer to **POWERTRAIN VERIFICATION TEST - 6.7L** .

4. **CHECK THE (K540) TURBO SPEED SENSOR SIGNAL CIRCUIT FOR A SHORT TO GROUND**

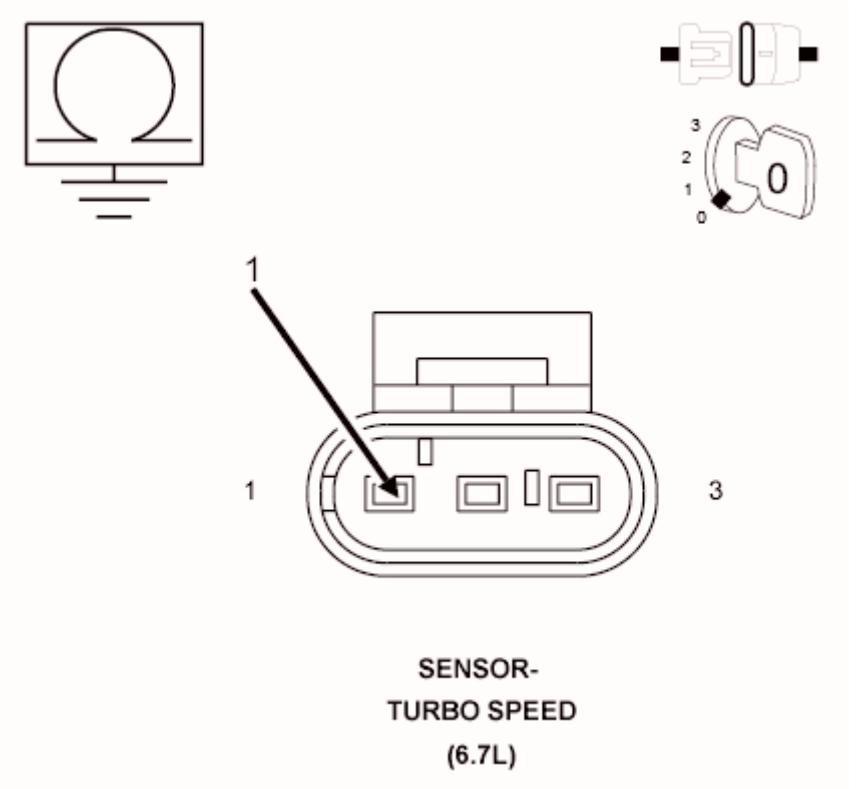

Fig. 6: Checking Turbo Speed Sensor Signal Circuit For Short To Ground
Courtesy of CHRYSLER GROUP, LLC

1. Measure the resistance between ground and the (K540) Turbocharger Speed Sensor Signal circuit at the Turbocharger Speed Sensor connector.

   Is the resistance greater than 10k Ohms?

   Yes

- Go To 5.

No

- Repair the (K540) Turbocharger Speed Sensor Signal circuit for a short to ground.
- Perform the POWERTRAIN VERIFICATION TEST - 6.7L. Refer to **POWERTRAIN VERIFICATION TEST - 6.7L** .

5. **CHECK THE (K540) TURBO SPEED SENSOR SIGNAL CIRCUIT FOR AN OPEN/HIGH RESISTANCE**

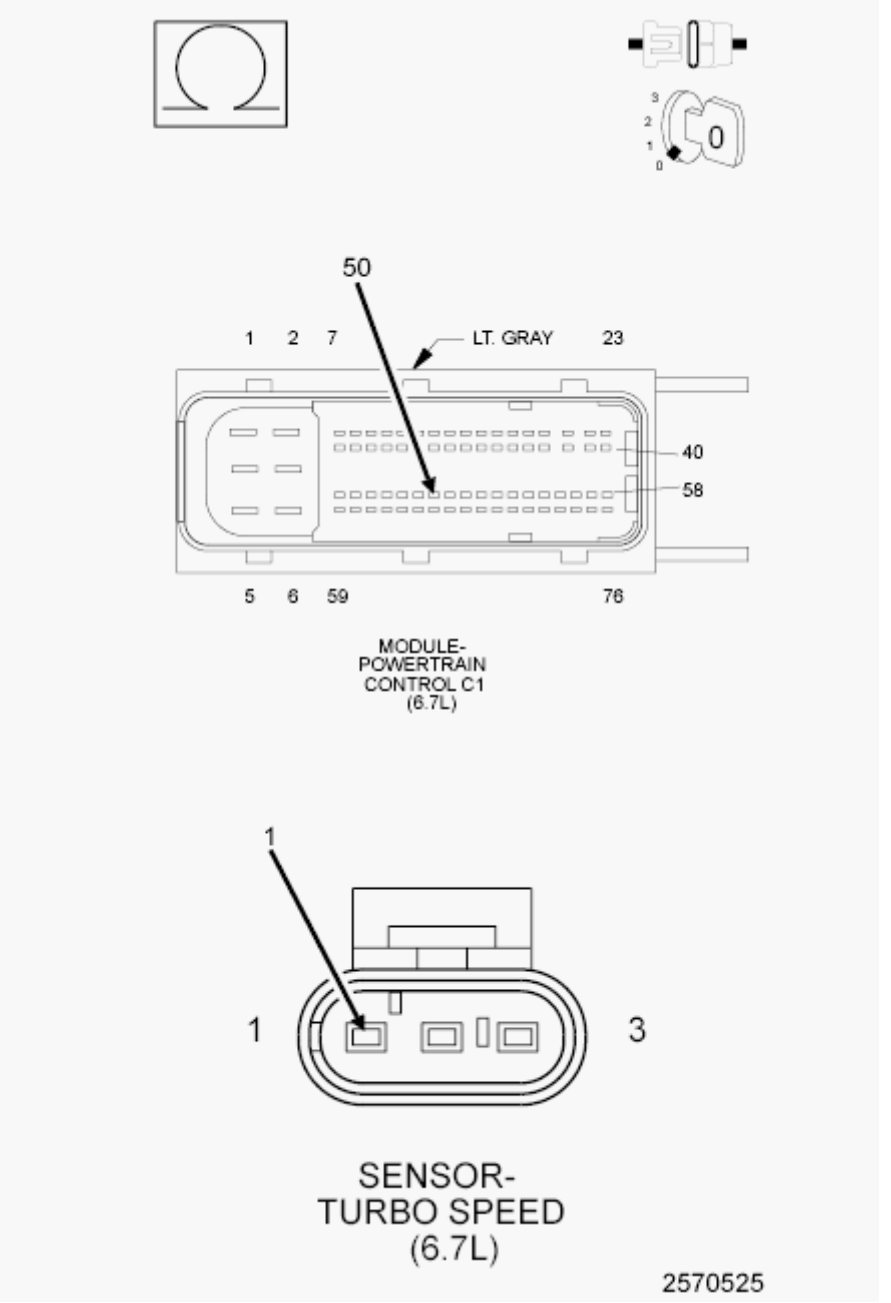

Fig. 7: Checking Turbo Speed Sensor Signal Circuit For Open Or High Resistance
Courtesy of CHRYSLER GROUP, LLC

1. Disconnect the PCM C1 harness connector.

   NOTE: Check connectors - Clean/repair as necessary.

2. Measure the resistance of the (K540) Turbocharger Speed Sensor Signal circuit between the Turbocharger Speed Sensor harness connector and the PCM C1 harness connector.

   Is the resistance below 5.0 Ohms?

   Yes

   - Go To 6.

   No

   - Repair the (K540) Turbocharger Speed Sensor Signal circuit for an open or high resistance.
   - Perform the POWERTRAIN VERIFICATION TEST - 6.7L. Refer to **POWERTRAIN VERIFICATION TEST - 6.7L** .

6. **CHECK THE (K541) TURBO SPEED SENSOR RETURN CIRCUIT FOR AN OPEN/HIGH RESISTANCE**

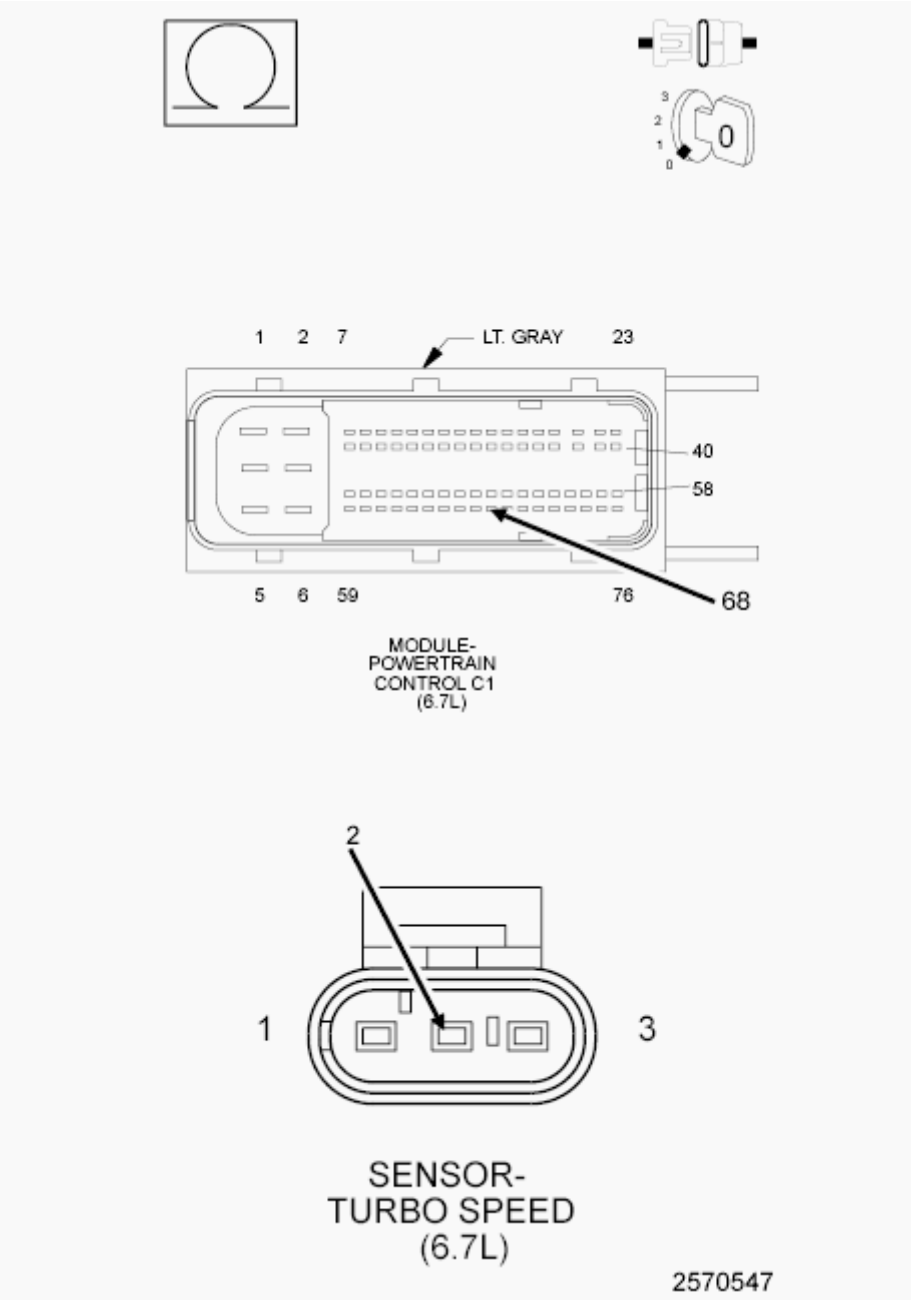

Fig. 8: Checking Turbo Speed Sensor Return Circuit For Open Or High Resistance
Courtesy of CHRYSLER GROUP, LLC

1. Measure the resistance of the (K541) Turbocharger Speed Sensor Return circuit between the Turbocharger Speed Sensor harness connector and the PCM C1 harness connector.

   Is the resistance below 5.0 Ohms?

   Yes

   - Go To 7.

No

- Repair the (K541) Turbocharger Speed Sensor Return circuit for an open or high resistance.
- Perform the POWERTRAIN VERIFICATION TEST - 6.7L. Refer to **POWERTRAIN VERIFICATION TEST - 6.7L** .

7. **POWERTRAIN CONTROL MODULE**
    1. Reconnect PCM C1 harness connector.
    2. Reconnect the Turbocharger Speed Sensor connector.
    3. Turn the ignition on.
    4. With the scan tool, clear DTCs.
    5. Test drive the vehicle.

    Does DTC P0049 become active?

    Yes

    - Replace the Powertrain Control Module in accordance with the Service Information.
    - Perform the POWERTRAIN VERIFICATION TEST - 6.7L. Refer to **POWERTRAIN VERIFICATION TEST - 6.7L** .

    No

    - Repair complete.
    - Perform the POWERTRAIN VERIFICATION TEST - 6.7L. Refer to **POWERTRAIN VERIFICATION TEST - 6.7L** .

P006E-TURBOCHARGER BOOST CONTROL SUPPLY VOLTAGE CIRCUIT LOW

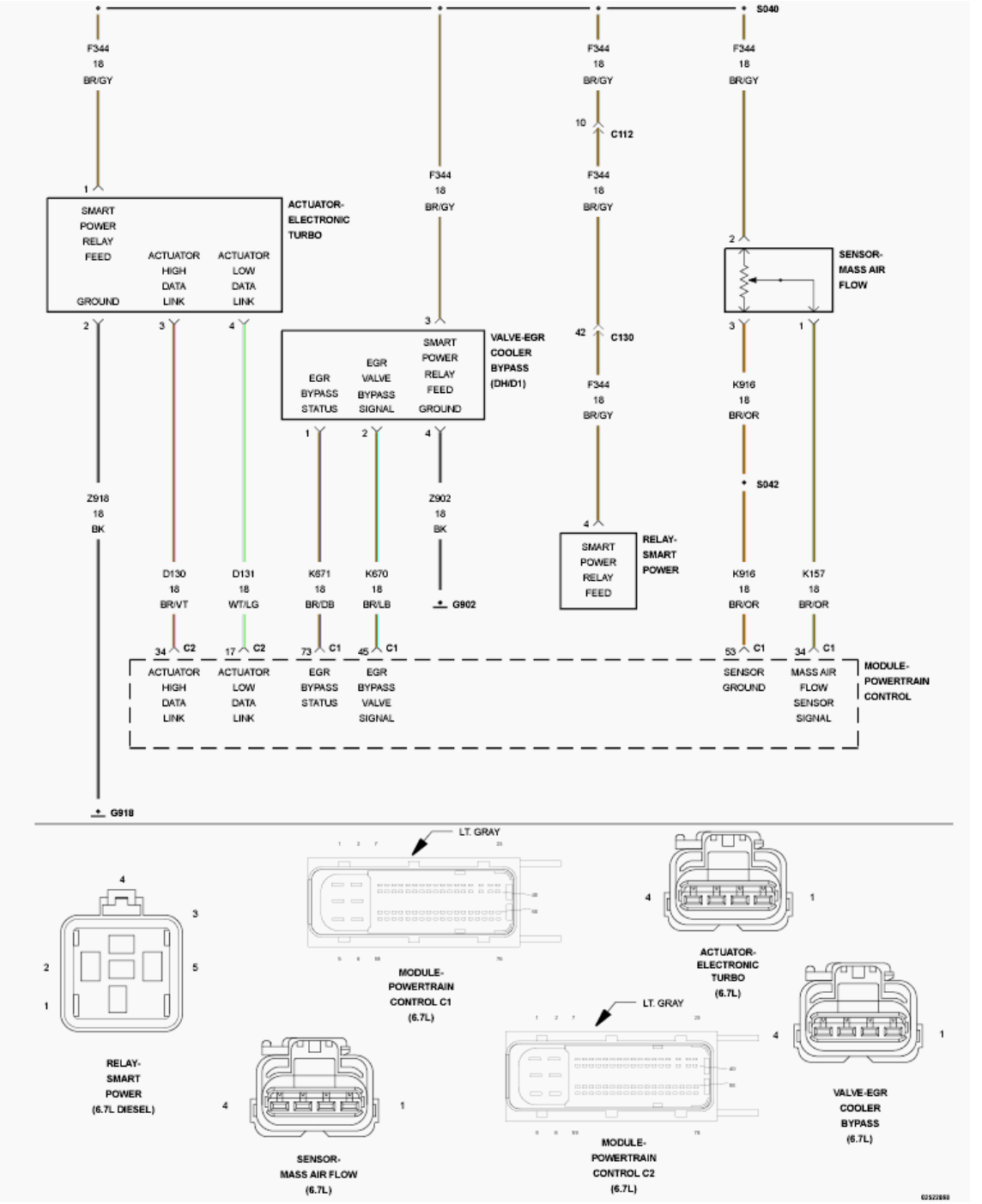

Fig. 9: Turbocharger Boost Control Circuit Schematic
Courtesy of CHRYSLER GROUP, LLC

For a complete wiring diagram, **refer to appropriate SYSTEM WIRING DIAGRAMS article** .

THEORY OF OPERATION

The Variable Geometry Turbocharger (VGT) is electronically controlled by the Electronic Turbo Actuator. The Electronic Turbo Actuator is a smart device; it communicates information with the PCM over the J1939 BUS.

The Electronic Turbo Actuator performs its own internal diagnostics and reports failures back to the PCM. The PCM then decodes the error message and converts it to a fault code. The PCM lights the Malfunction Indicator Lamp (MIL) after the diagnostic runs and fails in two consecutive drive cycles. The PCM will turn off the MIL immediately after this diagnostic runs and passes in four consecutive drive cycles.

WHEN MONITORED:

With the iIgnition on.

SET CONDITION:

Supplied voltage to the VGT Actuator dropped below 10.0 Volts.

POSSIBLE CAUSES

Possible Causes
(F344) SMART POWER RELAY FEED OPEN/HIGH RESISTANCE
SMART POWER RELAY
TURBOCHARGER ASSEMBLY

Always perform the Pre-Diagnostic Troubleshooting procedure before proceeding. Refer to PRE-DIAGNOSTIC TROUBLESHOOTING PROCEDURE - 6.7L .

DIAGNOSTIC TEST

1. **ACTIVE DTC**
    1. Turn the ignition on.
    2. With the scan tool, read DTCs.

       Is P006E active?

       Yes

       - Go To 2.

       No

       - Perform the INTERMITTENT CONDITION - 6.7L diagnostic procedure. Refer to **INTERMITTENT CONDITION - 6.7L** .
2. **RELATED DTCs**
    1. Ignition on.
    2. With the scan tool, read DTCs.

       Are there any other system voltage low DTCs present?

       Yes

- Repair the (F344) Smart Power Relay Feed circuit for an open or high resistance.
- Perform the POWERTRAIN VERIFICATION TEST - 6.7L. Refer to **POWERTRAIN VERIFICATION TEST - 6.7L** .

No

- Go To 3.

3. **CHECK THE (F344) SMART POWER RELAY FEED FOR AN OPEN**
   1. Disconnect the VGT Actuator harness connector.
   2. With a voltmeter connected to ground, measure the voltage of the (F344) Smart Power Relay Feed circuit at the VGT Actuator harness connector.

      Is the voltage above 12.0 Volts?

      Yes

      - Replace the Turbocharger Assembly in accordance with the service information.
      - Perform the POWERTRAIN VERIFICATION TEST - 6.7L. Refer to **POWERTRAIN VERIFICATION TEST - 6.7L** .

      No

      - Repair the (F344) Smart Power Relay Feed circuit for an open or high resistance.
      - Perform the POWERTRAIN VERIFICATION TEST - 6.7L. Refer to **POWERTRAIN VERIFICATION TEST - 6.7L** .

P0087-FUEL RAIL PRESSURE TOO LOW

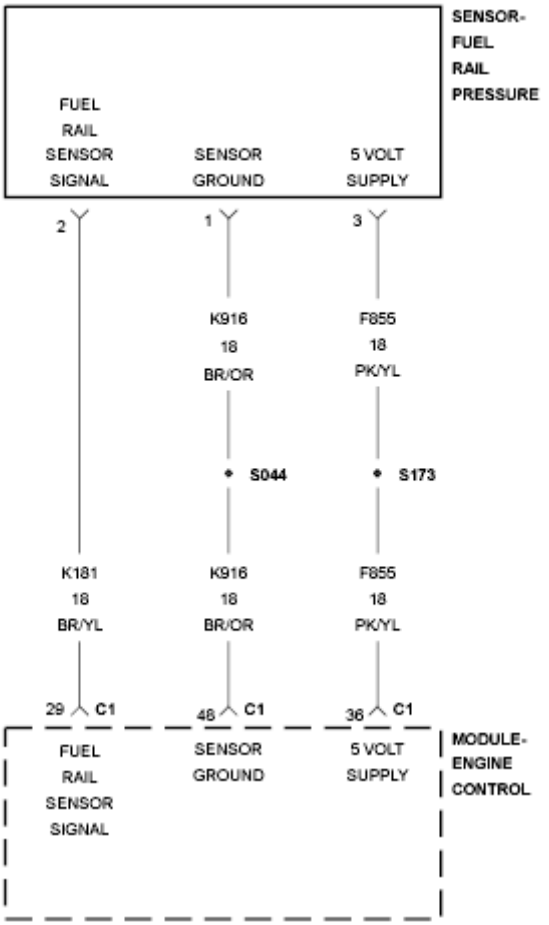

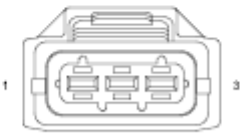

SENSOR-
FUEL RAIL
PRESSURE
(DIESEL)

Fig. 10: Fuel Rail Pressure Sensor Circuit Schematic
Courtesy of CHRYSLER GROUP, LLC

For a complete wiring diagram, **refer to appropriate SYSTEM WIRING DIAGRAMS article** .

THEORY OF OPERATION

The Powertrain Control Module (PCM) will turn on the MIL lamp immediately after this diagnostic runs and fails. This DTC will cause active regeneration to be disabled. The PCM will turn off the MIL lamp after the diagnostic runs and passes in four consecutive drive cycles.

WHEN MONITORED:

With the engine running.

SET CONDITION:

Actual fuel pressure differs from set point more than a calibrated amount for a calibrated amount of time.

POSSIBLE CAUSES

Possible Causes
P000F PRESENT
EXTERNAL FUEL LEAKS
LOW LIFT PUMP FLOW
FUEL FILTER
HIGH PRESSURE PUMP
INJECTOR LEAKAGE
IN TANK LIFT PUMP
FUEL PRESSURE LIMITING VALVE

Always perform the Pre-Diagnostic Troubleshooting procedure before proceeding. Refer to PRE-DIAGNOSTIC TROUBLESHOOTING PROCEDURE - 6.7L .

DIAGNOSTIC TEST

1. **P000F PRESENT**
    1. Ignition on, engine not running.
    2. With the scan tool, read DTCs.

    Yes

    - Troubleshoot P000F first.
    - Perform the POWERTRAIN VERIFICATION TEST - 6.7L. Refer to **POWERTRAIN VERIFICATION TEST - 6.7L** .

No

- Go To 2.

2. **OTHER DTCS**
   1. With the scan tool, read DTCs.

      Are any other injector/fuel pressure related DTCs present?

      Yes

      - Troubleshoot other injector/fuel pressure related DTCs first.

      No

      - Go To 3.

3. **EXTERNAL FUEL LEAKS**
   1. Put on personal protective equipment.
   2. Operate engine at idle when looking for fuel leaks.
   3. Use the scan tool to operate engine at a variety of engine speeds.

      Any external leaks detected?

      Yes

      - Repair or replace component with external fuel leak.
      - Perform the POWERTRAIN VERIFICATION TEST - 6.7L. Refer to **POWERTRAIN VERIFICATION TEST - 6.7L** .

      No

      - Go To 4.

4. **CHECK THE FUEL DELIVERY SYSTEM**
   1. Perform the CHECKING THE FUEL DELIVERY SYSTEM diagnostic procedure. Refer to **DIAGNOSIS AND TESTING, 6.7L** .

      Were any problems found?

      Yes

      - Repair as necessary.

      No

      - Perform the INTERMITTENT CONDITION - 6.7L diagnostic procedure. Refer to **INTERMITTENT CONDITION - 6.7L** .

P0088-FUEL RAIL PRESSURE TOO HIGH

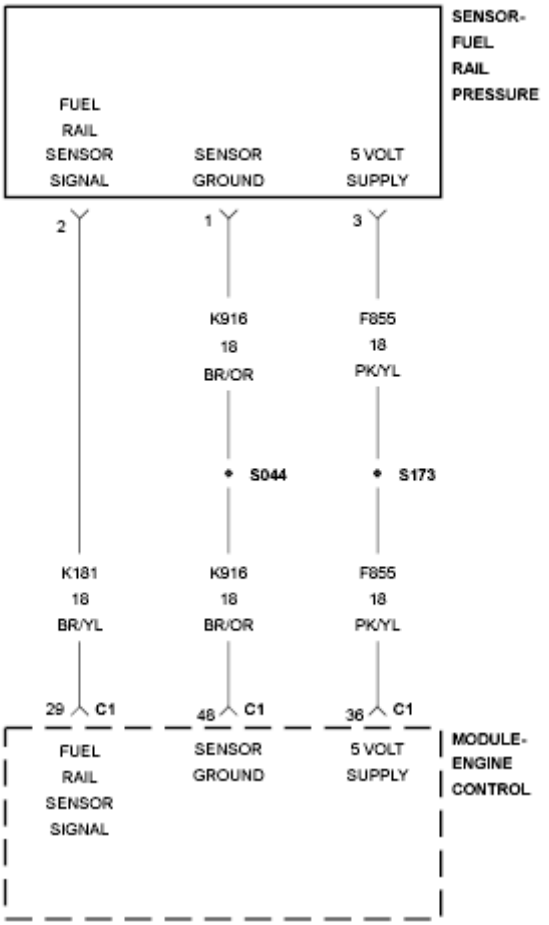

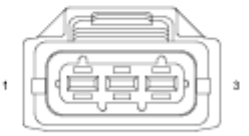

SENSOR-
FUEL RAIL
PRESSURE
(DIESEL)

Fig. 11: Fuel Rail Pressure Sensor Circuit Schematic
Courtesy of CHRYSLER GROUP, LLC

For a complete wiring diagram, **refer to appropriate SYSTEM WIRING DIAGRAMS article** .

THEORY OF OPERATION

The Powertrain Control Module (PCM) will turn on the MIL lamp immediately after the diagnostic runs and fails. During this time the ETC lamp will also illuminate. The PCM will turn off the MIL lamp after the diagnostic runs and passes in four consecutive drive cycles.

WHEN MONITORED:

With the engine running.

SET CONDITION:

Fuel pressure is above a calibrated value for a calibrated amount of time.

POSSIBLE CAUSES

Possible Causes
FUEL CONTROL ACTUATOR
CHECK VALVE DAMAGED OR BLOCKED
LOW PRESSURE FUEL SYSTEM SUPPLY
HIGH PRESSURE FUEL SYSTEM LEAKS
HIGH INLET RESTRICTION
FUEL FILTER
FUEL PRESSURE SENSOR
IN TANK LIFT PUMP

Always perform the Pre-Diagnostic Troubleshooting procedure before proceeding. Refer to PRE-DIAGNOSTIC TROUBLESHOOTING PROCEDURE - 6.7L .

DIAGNOSTIC TEST

1. **OTHER DTCs**
    1. With the scan tool, read DTCs.

       Are any other injector/fuel pressure related DTCs present?

       Yes

       - Troubleshoot other injector/fuel pressure related DTCs first.

       No

- Go To 2.

2. **CHECK THE FUEL DELIVERY SYSTEM**
   1. Perform the CHECKING THE FUEL DELIVERY SYSTEM procedure. Refer to **DIAGNOSIS AND TESTING, 6.7L** .

      Did vehicle pass the CHECKING THE FUEL DELIVERY SYSTEM TEST?

      Yes

      - Go To 3.

      No

      - Perform the appropriate repair.
      - Perform the POWERTRAIN VERIFICATION TEST - 6.7L. Refer to **POWERTRAIN VERIFICATION TEST - 6.7L** .
3. **FUEL CONTROL ACTUATOR**
   1. Check for a mechanically stuck Fuel Control Actuator (FCA). Using the scan tool, actuate the Fuel Control Actuator.

      NOTE: The Fuel Control Actuator will only click when cycled off.

      Do you hear a click from the Fuel Control Actuator when you cycle the actuator off with the scan tool?

      Yes

      - Go To 4.

      No

      - Replace the Fuel Control Actuator in accordance with the service information.
      - Perform the POWERTRAIN VERIFICATION TEST - 6.7L. Refer to **POWERTRAIN VERIFICATION TEST - 6.7L** .
4. **CHECK VALVE DAMAGED OR BLOCKED**
   1. Check the fuel drain line check valve in the rear of the cylinder head for signs of damage, blockage, or debris.

      Is the check valve damaged or blocked?

      Yes

      - Repair the cause of the damaged or blocked check valve or replace the valve.
      - Perform the POWERTRAIN VERIFICATION TEST - 6.7L. Refer to **POWERTRAIN**

VERIFICATION TEST - 6.7L .

No

- Go To 5.

5. **FUEL PRESSURE SENSOR**
   1. Using the scan tool, monitor the fuel pressure reading from the Fuel Rail Pressure Sensor at idle and at 2000 RPM.

      Is the fuel rail pressure reading higher at 2000 RPM than at idle?

      Yes

      - Repair Complete.
      - Perform the POWERTRAIN VERIFICATION TEST - 6.7L. Refer to **POWERTRAIN VERIFICATION TEST - 6.7L** .

      No

      - Replace the Fuel Rail Pressure Sensor in accordance with the service information.
      - Perform the POWERTRAIN VERIFICATION TEST - 6.7L. Refer to **POWERTRAIN VERIFICATION TEST - 6.7L** .

P00AF-TURBOCHARGER BOOST CONTROL MODULE PERFORMANCE

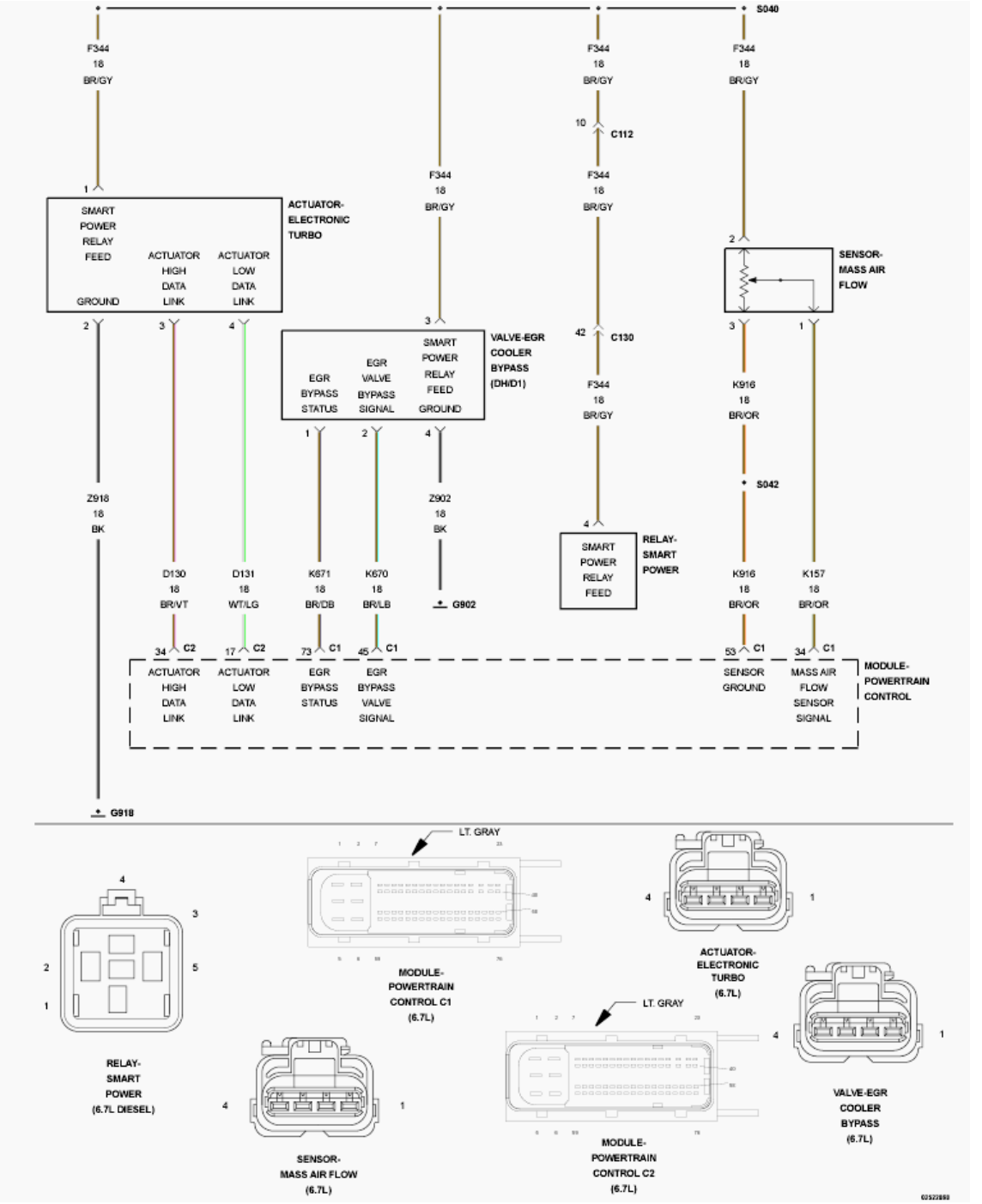

Fig. 12: Turbocharger Boost Control Circuit Schematic
Courtesy of CHRYSLER GROUP, LLC

For a complete wiring diagram, **refer to appropriate SYSTEM WIRING DIAGRAMS article** .

THEORY OF OPERATION

The Variable Geometry Turbocharger (VGT) is electronically controlled by the Electronic Turbo Actuator. The Electronic Turbo Actuator is a smart device; it communicates information with the Powertrain Control Module

(PCM) over the J1939 BUS. The Electronic Turbo Actuator performs its own internal diagnostics and reports failures back to the Powertrain Control Module (PCM). The PCM then decodes the error message and converts it to a fault code. The PCM lights the Malfunction Indicator Lamp (MIL) after the diagnostic runs and fails in two consecutive drive cycles. The PCM will turn off the MIL immediately after this diagnostic runs and passes in four consecutive drive cycles.

WHEN MONITORED:

With the ignition on.

SET CONDITION:

The Electronic Turbo Actuator has detected an internal error in the Variable Geometry Turbocharger (VGT) smart device.

POSSIBLE CAUSES

Possible Causes
TURBOCHARGER ASSEMBLY

Always perform the Pre-Diagnostic Troubleshooting procedure before proceeding. Refer to PRE-DIAGNOSTIC TROUBLESHOOTING PROCEDURE - 6.7L .

DIAGNOSTIC TEST

1. **OTHER DTCS**
    1. Ignition on, engine not running.
    2. With the scan tool, read DTCs.

       Is U010C active?

       Yes

       - Repair U010C first.
       - Perform the POWERTRAIN VERIFICATION TEST - 6.7L. Refer to **POWERTRAIN VERIFICATION TEST - 6.7L** .

       No

       - Go To 2.
2. **ELECTRONIC TURBO ACTUATOR**
    1. Turn ignition off.
    2. Disconnect the Electronic Turbo Actuator harness connector.

       NOTE: Check connectors - Clean/repair as necessary.

Are there dirty or damaged pins?

Yes

- Repair/Replace as necessary.
- Perform the POWERTRAIN VERIFICATION TEST - 6.7L. Refer to **POWERTRAIN VERIFICATION TEST - 6.7L** .

No

- Replace the Turbocharger Assembly in accordance with the service information.
- Perform the POWERTRAIN VERIFICATION TEST - 6.7L. Refer to **POWERTRAIN VERIFICATION TEST - 6.7L** .

P00DA-AMBIENT AIR TEMPERATURE SENSOR CIRCUIT PERFORMANCE

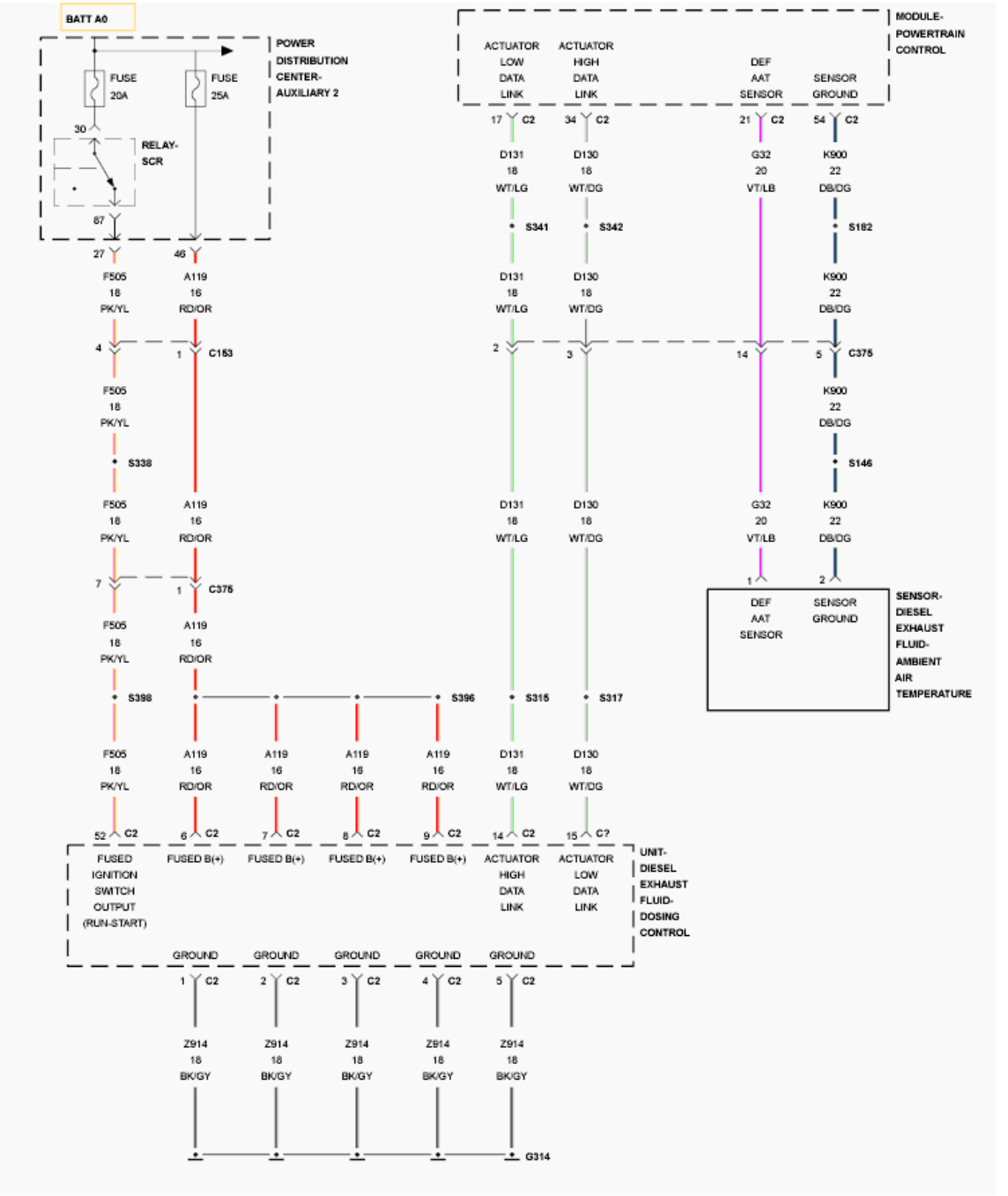

Fig. 13: Diesel Exhaust Fluid (DEF) Dosing Control Unit Wiring Diagram
Courtesy of CHRYSLER GROUP, LLC

For a complete wiring diagram, **refer to appropriate SYSTEM WIRING DIAGRAMS article** .

THEORY OF OPERATION

The Diesel Exhaust Fluid (DEF) Ambient Air Temperature Sensor is mounted to the DEF Supply Pump Assembly bracket. The Powertrain Control Module provides a 5-Volt Signal and a sensor ground circuit for the DEF Ambient Air Temperature Sensor. The DEF Ambient Air Temperature Sensor signal is provided to the

DEF Dosing Control Unit via the PCM. The DEF Dosing Control Unit uses this information along with the diesel exhaust fluid temperature information to determine when the DEF System heaters need to be turned on. The PCM will turn on the MIL Lamp immediately after the monitor runs and fails and the PCM will substitute a default value for the DEF Ambient Air Temperature Sensor.

WHEN MONITORED:

There are two for this DTC. The first monitor runs at initial key on after an eight hours cold soak. The DEF Ambient Air Temperature Sensor is compared to the other temperature sensors. The second monitor runs after the engine is running. The PCM looks for a change in temperature over time.

SET CONDITION:

The Powertrain Control Module (PCM) detects that the DEF Ambient Air Temperature Sensor is out of range as compared to the other temperature sensors at key on or is not changing over time.

POSSIBLE CAUSES

Possible Causes
HIGH RESISTANCE IN THE (G32) DEF AMBIENT AIR TEMPERATURE SENSOR SIGNAL CIRCUIT
HIGH RESISTANCE IN THE (K900) DEF AMBIENT AIR TEMPERATURE SENSOR GROUND CIRCUIT
DEF AMBIENT AIR TEMPERATURE SENSOR SIGNAL CIRCUIT
POWERTRAIN CONTROL MODULE (PCM)

Always perform the Pre-Diagnostic Troubleshooting procedure before proceeding. Refer to PRE-DIAGNOSTIC TROUBLESHOOTING PROCEDURE - 6.7L .

DIAGNOSTIC TEST

1. **ACTIVE DTC**

   NOTE: If there are any 5-Volt supply DTCs present, repair those DTCs before proceeding with this test.

   1. Turn the ignition on.
   2. With the scan tool, read DTCs.

      Is the DTC active?

      Yes

      - Go To 2.

      No

- Perform the INTERMITTENT CONDITION - 6.7L diagnostic procedure. Refer to **INTERMITTENT CONDITION - 6.7L** .

2. **CHECK THE DEF AMBIENT AIR TEMPERATURE SENSOR**
   1. With the scan tool, erase DTCs.
   2. Turn the ignition off.
   3. Disconnect the DEF Ambient Air Temperature Sensor harness connector.
   4. Turn the ignition on and wait 30 seconds while monitoring the scan tool.
   5. Use a jumper and connect the DEF Ambient Air Temperature Sensor Signal circuit to the DEF Ambient Air Temperature Sensor Ground circuit at the DEF Ambient Air Temperature Sensor harness connector and monitor the scan tool for 30 seconds.

      Did the P00DC-DEF AMBIENT AIR TEMPERATURE SENSOR HIGH set with the sensor disconnected and the P00DB-DEF AMBIENT AIR TEMPERATURE SENSOR LOW set with the jumper in place?

      Yes

      - Replace the DEF Ambient Air Temperature Sensor in accordance with the service information. Refer to **SENSOR, DIESEL EXHAUST FLUID AMBIENT TEMPERATURE, REMOVAL** .
      - Perform the POWERTRAIN VERIFICATION TEST - 6.7L. Refer to **POWERTRAIN VERIFICATION TEST - 6.7L** .

      No

      - Go To 3.

3. **CHECK THE (G32) DEF AMBIENT AIR TEMPERATURE SENSOR SIGNAL CIRCUIT FOR AN OPEN/HIGH RESISTANCE**

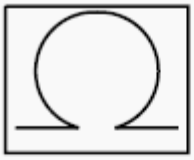

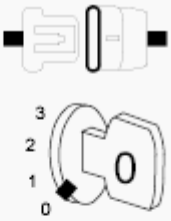

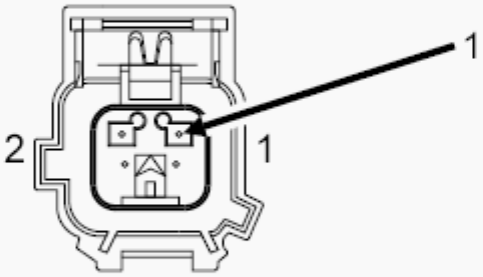

SENSOR-
DIESEL
EXHAUST FLUID-
AMBIENT AIR
TEMPERATURE
(6.7L)

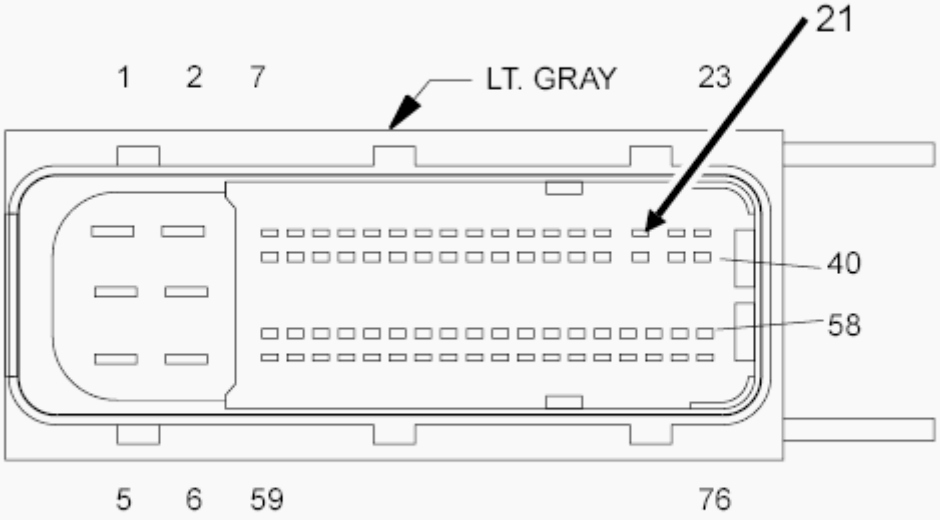

MODULE-
POWERTRAIN
CONTROL C2
(6.7L)

Fig. 14: Checking DEF Ambient Air Temperature Sensor Signal Circuit For An Open Or High Resistance
Courtesy of CHRYSLER GROUP, LLC

1. Turn the ignition off.
2. Disconnect the PCM C2 harness connector.
3. Measure the resistance of the (G32) DEF Ambient Air Temperature Sensor Signal circuit between the DEF Ambient Air Temperature Sensor harness connector and the PCM C2 harness connector.

   Is the resistance below 5.0 Ohms?

   Yes

   - Go To 4.

   No

   - Repair the (G32) DEF Ambient Air Temperature Sensor Signal circuit for an open or high resistance.
   - Perform the POWERTRAIN VERIFICATION TEST - 6.7L. Refer to **POWERTRAIN VERIFICATION TEST - 6.7L** .

4. **CHECK THE (K900) DEF AMBIENT AIR TEMPERATURE SENSOR GROUND CIRCUIT FOR AN OPEN/HIGH RESISTANCE**

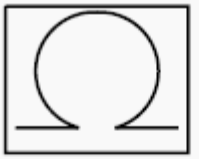

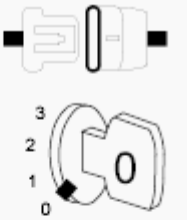

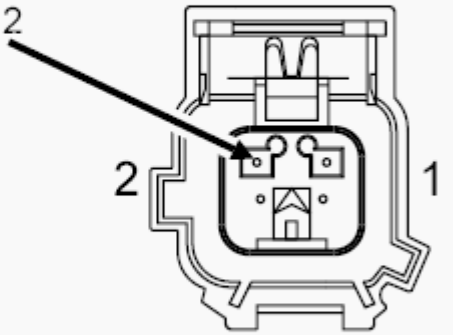

SENSOR-
DIESEL
EXHAUST FLUID-
AMBIENT AIR
TEMPERATURE
(6.7L)

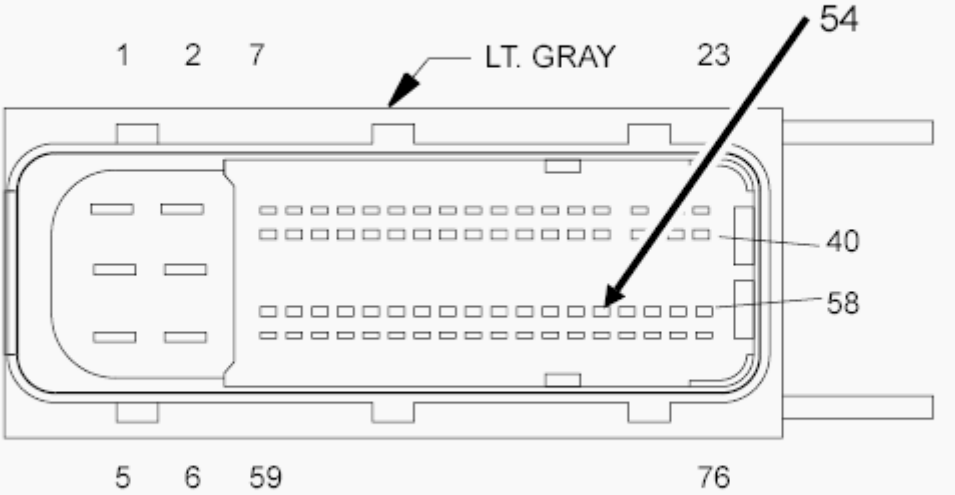

MODULE-
POWERTRAIN
CONTROL C2
(6.7L)

Fig. 15: Checking DEF Ambient Air Temperature Sensor Ground Circuit For An Open Or High Resistance
Courtesy of CHRYSLER GROUP, LLC

1. Measure the resistance of the (K900) DEF Ambient Air Temperature Sensor Ground circuit between the DEF Ambient Air Temperature Sensor harness connector and the PCM C2 harness connector.

   Is the resistance below 5.0 Ohms?

   Yes

   - Replace the Powertrain Control Module in accordance with the service information. Refer to **MODULE, POWERTRAIN CONTROL, 6.7L DIESEL, REMOVAL** .
   - Perform the POWERTRAIN VERIFICATION TEST - 6.7L. Refer to **POWERTRAIN VERIFICATION TEST - 6.7L** .

   No

   - Repair the (K900) DEF Ambient Air Temperature Sensor Ground circuit for an open or high resistance.
   - Perform the POWERTRAIN VERIFICATION TEST - 6.7L. Refer to **POWERTRAIN VERIFICATION TEST - 6.7L** .

P00DB-AMBIENT AIR TEMPERATURE SENSOR CIRCUIT LOW

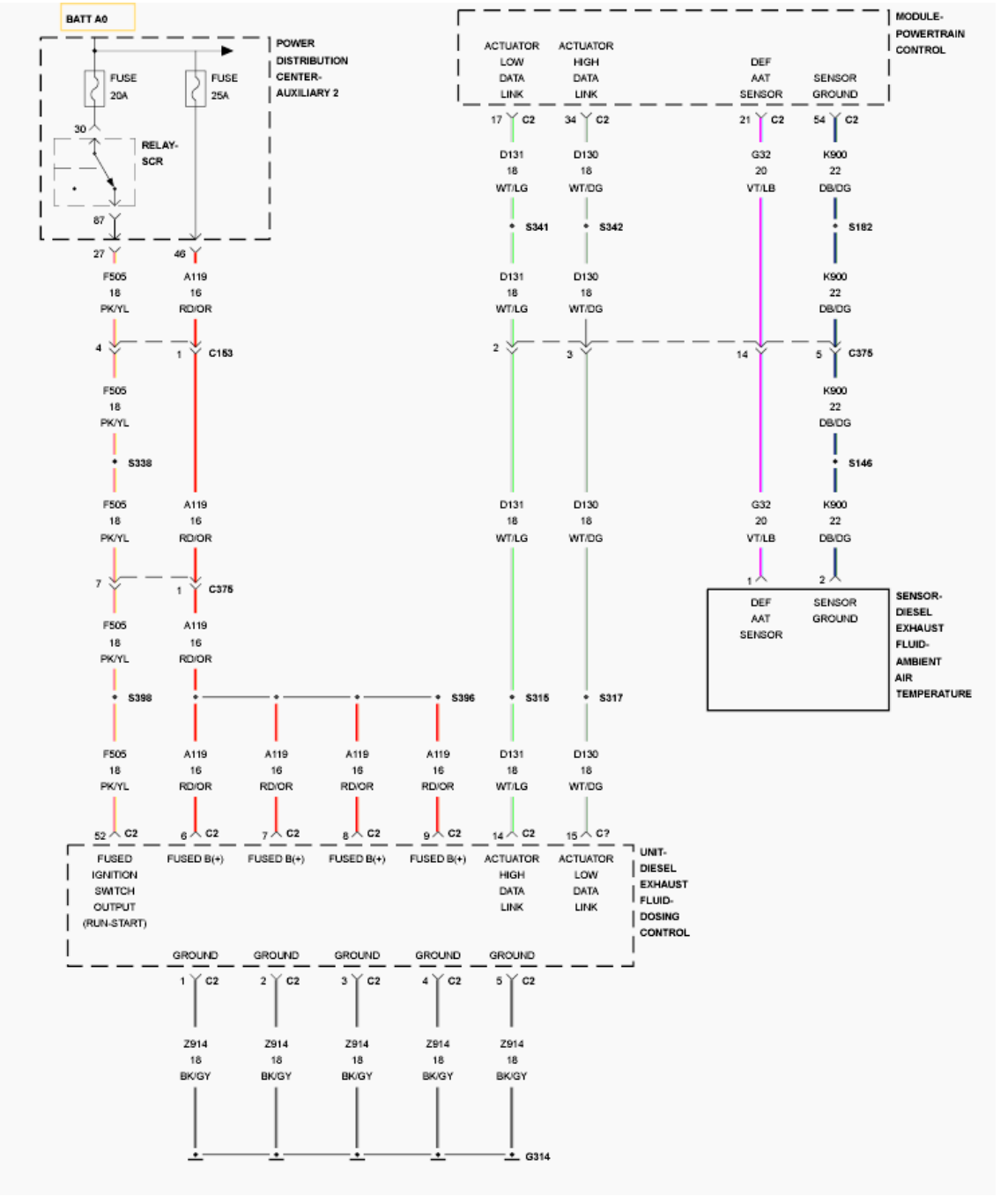

Fig. 16: Diesel Exhaust Fluid (DEF) Dosing Control Unit Wiring Diagram
Courtesy of CHRYSLER GROUP, LLC

For a complete wiring diagram, **refer to appropriate SYSTEM WIRING DIAGRAMS article** .

THEORY OF OPERATION

The Diesel Exhaust Fluid (DEF) Ambient Air Temperature Sensor is mounted to the DEF Supply Pump Assembly bracket. The Powertrain Control Module provides a 5-Volt Signal and a sensor ground circuit for the DEF Ambient Air Temperature Sensor. The DEF Ambient Air Temperature Sensor signal is provided to the

DEF Dosing Control Unit via the PCM. The DEF Dosing Control Unit uses this information along with the diesel exhaust fluid temperature information to determine if the Selective Catalytic Reduction (SCR) system is required.

WHEN MONITORED:

With the ignition on.

SET CONDITION:

The Powertrain Control Module detects that the DEF Ambient Air Temperature Sensor signal voltage is below 0.12 of a volt for one second.

POSSIBLE CAUSES

Possible Causes
(G32) DEF AMBIENT AIR TEMPERATURE SENSOR SIGNAL CIRCUIT SHORTED TO GROUND
(G32) DEF AMBIENT AIR TEMPERATURE SENSOR SIGNAL CIRCUIT SHORTED TO THE (K900) DEF AMBIENT AIR TEMPERATURE SENSOR GROUND CIRCUIT
DEF AMBIENT AIR TEMPERATURE SENSOR
POWERTRAIN CONTROL MODULE (PCM)

Always perform the Pre-Diagnostic Troubleshooting procedure before proceeding. Refer to PRE-DIAGNOSTIC TROUBLESHOOTING PROCEDURE - 6.7L .

DIAGNOSTIC TEST

1. **ACTIVE DTC**

   NOTE: If there are any 5-Volt supply DTCs present, repair those DTCs before proceeding with this test.

   1. Turn the ignition on.
   2. With the scan tool, record all Freeze frame data.
   3. With the scan tool, erase DTCs.
   4. Turn the ignition off for 75 seconds.
   5. Turn the ignition on.
   6. With the scan tool, read DTCs.

   Did the DTC return?

   Yes

   - Go To 2.

No

- Perform the INTERMITTENT CONDITION - 6.7L diagnostic procedure. Refer to **INTERMITTENT CONDITION - 6.7L** .

2. **CHECK THE DEF AMBIENT AIR TEMPERATURE SENSOR**
   1. With the scan tool, Erase DTCs.
   2. Turn the ignition off.
   3. Disconnect the DEF Ambient Air Temperature Sensor harness connector.
   4. Turn the ignition on.
   5. With the scan tool, View DTCs.

   Did the DTC P00DC-DEF AMBIENT AIR TEMPERATURE SENSOR HIGH set as active?

   Yes

   - Replace the DEF Ambient Air Temperature Sensor in accordance with the service information. Refer to **SENSOR, DIESEL EXHAUST FLUID AMBIENT TEMPERATURE, REMOVAL** .
   - Perform the POWERTRAIN VERIFICATION TEST - 6.7L. Refer to **POWERTRAIN VERIFICATION TEST - 6.7L** .

   No

   - Go To 3.

3. **CHECK THE (G32) DEF AMBIENT AIR TEMPERATURE SENSOR SIGNAL CIRCUIT FOR A SHORT TO GROUND**

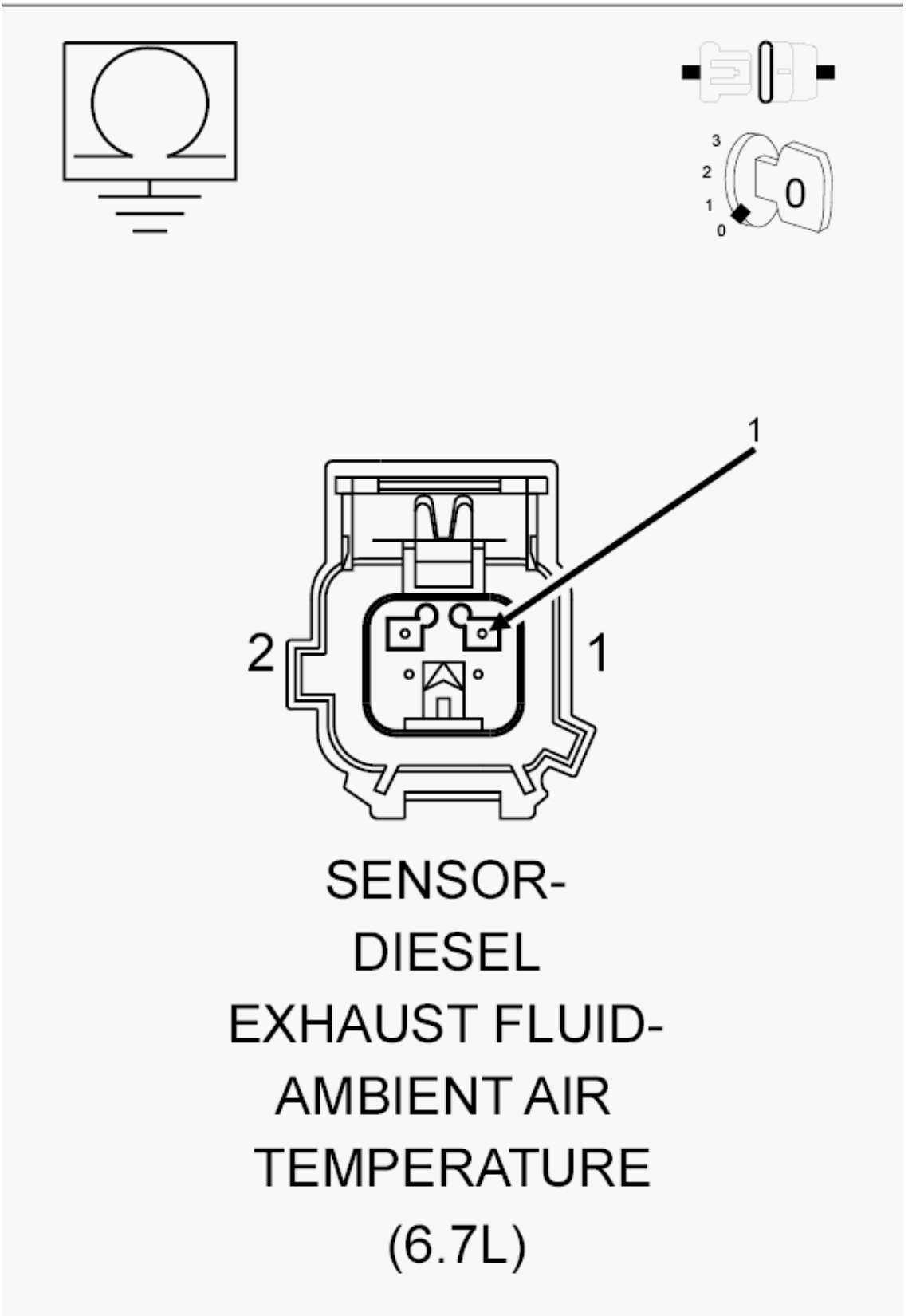

Fig. 17: Checking DEF Ambient Air Temperature Sensor Signal Circuit For A Short To Ground
Courtesy of CHRYSLER GROUP, LLC

1. Turn the ignition off.
2. Disconnect the PCM C2 harness connector.

NOTE: Check connectors - Clean/repair as necessary.

3. Measure the resistance between ground and the (G32) DEF Ambient Air Temperature Sensor Signal circuit at the DEF Ambient Air Temperature Sensor harness connector.

   Is the resistance above 10k Ohms?

   Yes

   - Go To 4.

   No

   - Repair the (G32) DEF Ambient Air Temperature Sensor Signal circuit for a short to ground.
   - Perform the POWERTRAIN VERIFICATION TEST - 6.7L. Refer to **POWERTRAIN VERIFICATION TEST - 6.7L** .

4. **CHECK FOR THE (G32) DEF AMBIENT AIR TEMPERATURE SENSOR SIGNAL CIRCUIT SHORTED TO ANOTHER CIRCUIT**
   1. Measure the resistance between the (G32) DEF Ambient Air Temperature Sensor Signal circuit and the all other circuits at the PCM C2 harness connector.

      Is the resistance above 10k Ohms?

      Yes

      - Replace the Powertrain Control Module in accordance with the service information. Refer to **MODULE, POWERTRAIN CONTROL, 6.7L DIESEL, REMOVAL** .
      - Perform the POWERTRAIN VERIFICATION TEST - 6.7L. Refer to **POWERTRAIN VERIFICATION TEST - 6.7L** .

      No

      - Repair the short between the (G32) DEF Ambient Air Temperature Sensor Signal circuit and the circuit that measured below 10k Ohms.
      - Perform the POWERTRAIN VERIFICATION TEST - 6.7L. Refer to **POWERTRAIN VERIFICATION TEST - 6.7L** .

P00DC-AMBIENT AIR TEMPERATURE SENSOR CIRCUIT HIGH

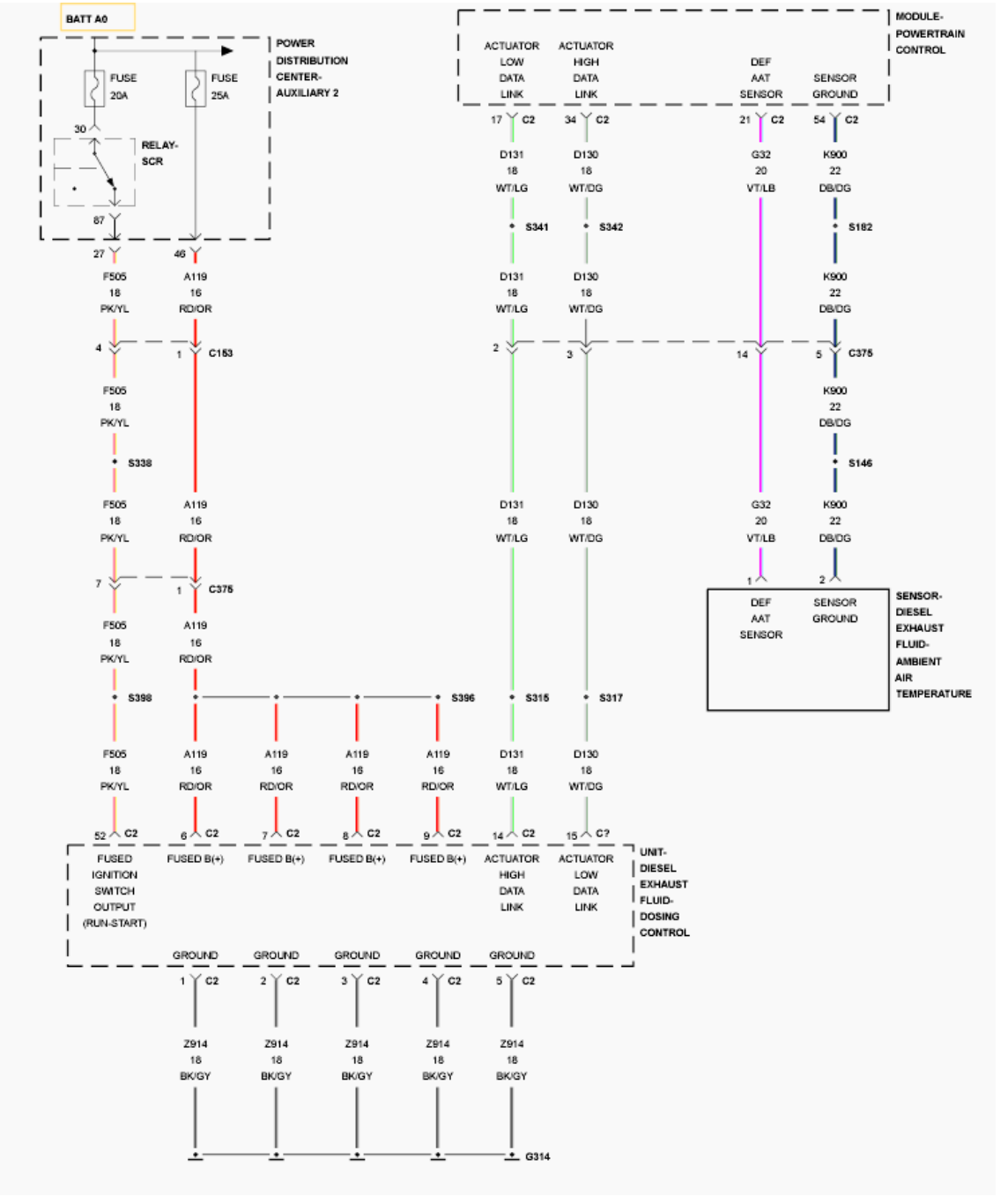

Fig. 18: Diesel Exhaust Fluid (DEF) Dosing Control Unit Wiring Diagram
Courtesy of CHRYSLER GROUP, LLC

For a complete wiring diagram, **refer to appropriate SYSTEM WIRING DIAGRAMS article** .

THEORY OF OPERATION

The Diesel Exhaust Fluid (DEF) Ambient Air Temperature Sensor is mounted to the DEF Supply Pump Assembly bracket. The Powertrain Control Module provides a 5-Volt Signal and a sensor ground circuit for the DEF Ambient Air Temperature Sensor. The DEF Ambient Air Temperature Sensor signal is provided to the

DEF Dosing Control Unit via the PCM. The DEF Dosing Control Unit uses this information along with the diesel exhaust fluid temperature information to determine if the Selective Catalytic Reduction (SCR) system is required.

WHEN MONITORED:

With the ignition on.

SET CONDITION:

The Powertrain Control Module detects that the DEF Ambient Air Temperature Sensor is above 4.8 Volts for one second.

POSSIBLE CAUSES

Possible Causes
(G32) DEF AMBIENT AIR TEMPERATURE SENSOR SIGNAL CIRCUIT SHORTED TO VOLTAGE
(G32) DEF AMBIENT AIR TEMPERATURE SENSOR SIGNAL CIRCUIT OPEN/HIGH RESISTANCE
(K900) DEF AMBIENT AIR TEMPERATURE SENSOR GROUND CIRCUIT OPEN/HIGH RESISTANCE
DEF AMBIENT AIR TEMPERATURE SENSOR
POWERTRAIN CONTROL MODULE (PCM)

Always perform the Pre-Diagnostic Troubleshooting procedure before proceeding. Refer to PRE-DIAGNOSTIC TROUBLESHOOTING PROCEDURE - 6.7L .

DIAGNOSTIC TEST

1. **ACTIVE DTC**

   NOTE: If there are any 5-Volt supply DTCs present, repair those DTCs before proceeding with this test.

   1. Turn the ignition on.
   2. With the scan tool, record all Freeze frame data.
   3. With the scan tool, erase DTCs.
   4. Turn the ignition off for 75 seconds.
   5. Turn the ignition on.
   6. With the scan tool, read DTCs.

   Did the DTC return?

   Yes

- Go To 2.

No

- Perform the INTERMITTENT CONDITION - 6.7L diagnostic procedure. Refer to **INTERMITTENT CONDITION - 6.7L** .

2. **CHECK THE (G32) DEF AMBIENT AIR TEMPERATURE SENSOR SIGNAL CIRCUIT FOR A SHORT TO VOLTAGE**
   1. Disconnect the DEF Ambient Air Temperature Sensor harness connector.

      NOTE: Check connectors - Clean/repair as necessary.

   2. With a voltmeter connected to ground, measure the voltage of the (G32) DEF Ambient Air Temperature Sensor Signal circuit at the DEF Ambient Air Temperature Sensor harness connector.

      Does the voltage measure above 5.1 Volts?

      Yes

      - Repair the (G32) DEF Ambient Air Temperature Sensor Signal circuit for a short to voltage.
      - Perform the POWERTRAIN VERIFICATION TEST - 6.7L. Refer to **POWERTRAIN VERIFICATION TEST - 6.7L** .

      No

      - Go To 3.

3. **CHECK THE DEF AMBIENT AIR TEMPERATURE SENSOR**
   1. With the scan tool, erase DTCs.
   2. While monitoring with scan tool, use a jumper and connect the DEF Ambient Air Temperature Sensor Signal circuit to the DEF Ambient Air Temperature Sensor Ground circuit at the DEF Ambient Air Temperature Sensor harness connector.

      NOTE: Be careful not to spread the terminals.

      Did the DTC P00DB-DEF AMBIENT AIR TEMPERATURE SENSOR LOW set as active or pending?

      Yes

      - Replace the DEF Ambient Air Temperature Sensor in accordance with the service information. Refer to **SENSOR, DIESEL EXHAUST FLUID AMBIENT TEMPERATURE, REMOVAL** .
      - Perform the POWERTRAIN VERIFICATION TEST - 6.7L. Refer to **POWERTRAIN VERIFICATION TEST - 6.7L** .

No

- Go To 4.

4. **CHECK THE (G32) DEF AMBIENT AIR TEMPERATURE SENSOR SIGNAL CIRCUIT FOR AN OPEN/HIGH RESISTANCE**

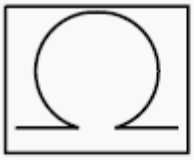

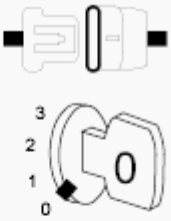

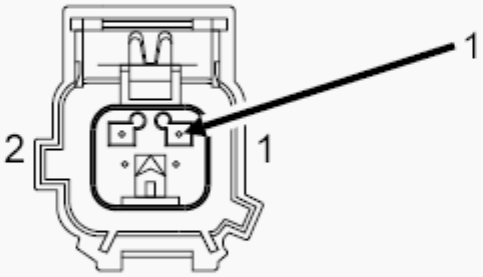

SENSOR-
DIESEL
EXHAUST FLUID-
AMBIENT AIR
TEMPERATURE
(6.7L)

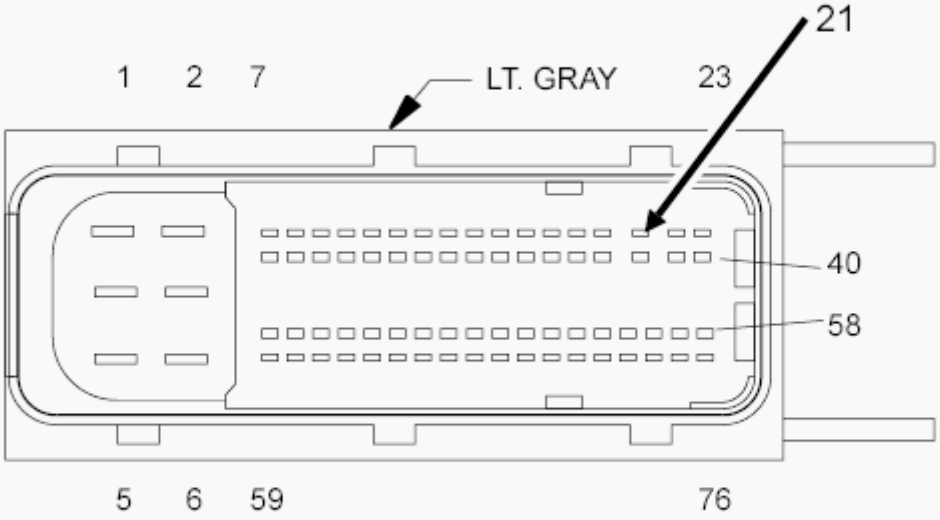

MODULE-
POWERTRAIN
CONTROL C2
(6.7L)

Fig. 19: Checking DEF Ambient Air Temperature Sensor Signal Circuit For An Open Or High Resistance
Courtesy of CHRYSLER GROUP, LLC

1. Turn the ignition off.
2. Disconnect the PCM C2 harness connector.
3. Measure the resistance of the (G32) DEF Ambient Air Temperature Sensor Signal circuit between the DEF Ambient Air Temperature Sensor harness connector and the PCM C2 harness connector.

   Is the resistance below 5.0 Ohms?

   Yes

   - Go To 5.

   No

   - Repair the (G32) DEF Ambient Air Temperature Sensor Signal circuit for an open or high resistance.
   - Perform the POWERTRAIN VERIFICATION TEST - 6.7L. Refer to **POWERTRAIN VERIFICATION TEST - 6.7L** .

5. **CHECK THE (K900) DEF AMBIENT AIR TEMPERATURE SENSOR GROUND CIRCUIT FOR AN OPEN/HIGH RESISTANCE**

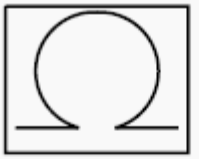

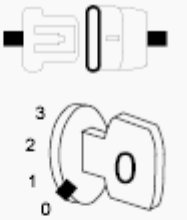

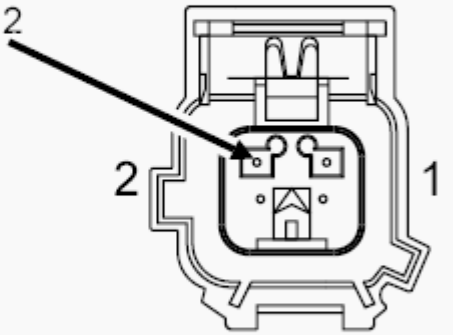

SENSOR-
DIESEL
EXHAUST FLUID-
AMBIENT AIR
TEMPERATURE
(6.7L)

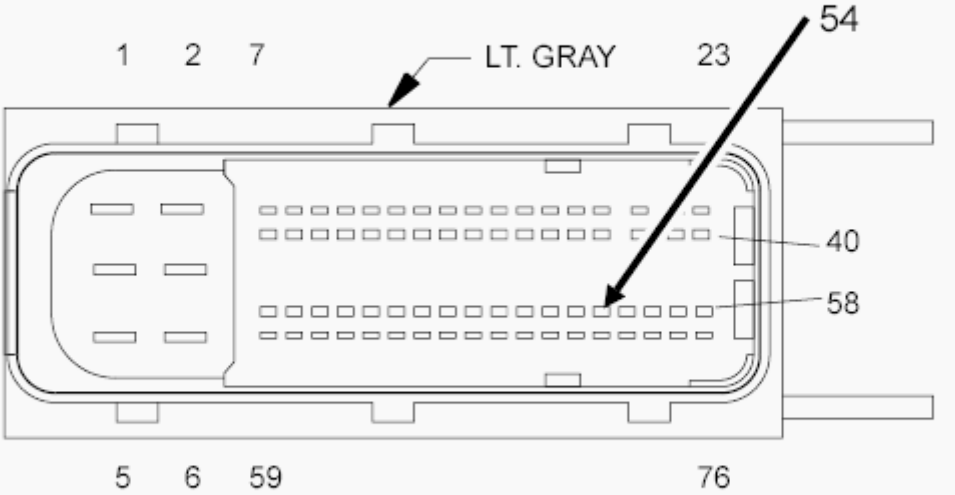

MODULE-
POWERTRAIN
CONTROL C2
(6.7L)

Fig. 20: Checking DEF Ambient Air Temperature Sensor Ground Circuit For An Open Or High Resistance
Courtesy of CHRYSLER GROUP, LLC

1. Measure the resistance of the (K900) DEF Ambient Air Temperature Sensor Ground circuit between the DEF Ambient Air Temperature Sensor harness connector and the PCM C2 harness connector.

   Is the resistance below 5.0 Ohms?

   Yes

   - Replace the Powertrain Control Module in accordance with the service information. Refer to **MODULE, POWERTRAIN CONTROL, 6.7L DIESEL, REMOVAL** .
   - Perform the POWERTRAIN VERIFICATION TEST - 6.7L. Refer to **POWERTRAIN VERIFICATION TEST - 6.7L** .

   No

   - Repair the (K900) DEF Ambient Air Temperature Sensor Ground circuit for an open or high resistance.
   - Perform the POWERTRAIN VERIFICATION TEST - 6.7L. Refer to **POWERTRAIN VERIFICATION TEST - 6.7L** .

P0101-MASS AIR FLOW SENSOR "A" CIRCUIT PERFORMANCE

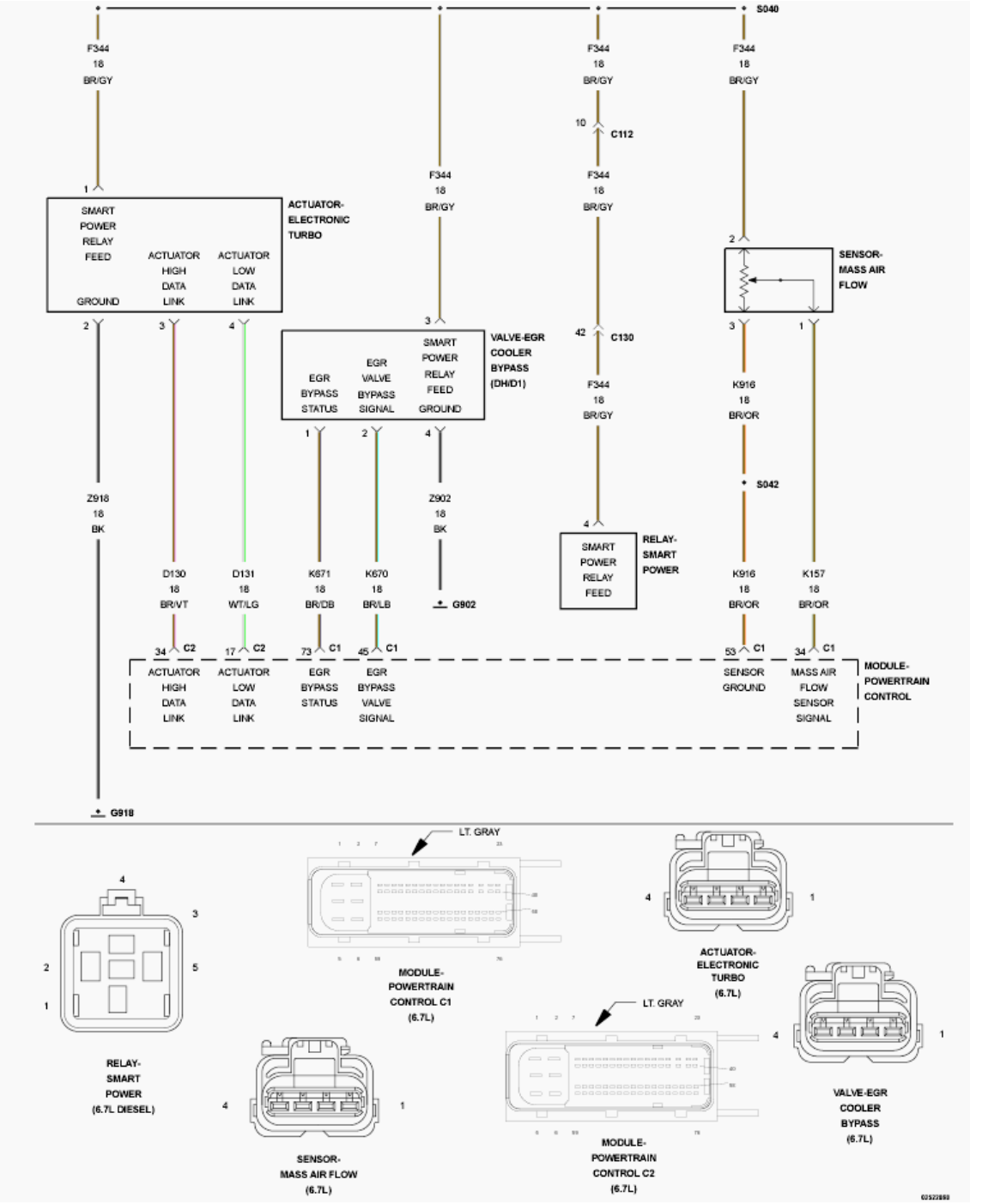

Fig. 21: Turbocharger Boost Control Circuit Schematic
Courtesy of CHRYSLER GROUP, LLC

For a complete wiring diagram, **refer to appropriate SYSTEM WIRING DIAGRAMS article** .

THEORY OF OPERATION

The Mass Air Flow Sensor is a frequency based device. A constant voltage is applied to a heated wire. This wire is positioned in the air stream and is heated by the electrical current that the voltage produces. As air flows

across it, it cools down. The heated wire or film is a positive temperature coefficient (ptc) resistor. This means that it's resistance drops when it's temperature drops. The drop in resistance allows more current to flow through it in order to maintain the programmed temperature. This current is changed to a frequency which is sent to the PCM and interpreted as air flow. Adjustments for air temperature and humidity are taken into consideration since they also affect the temperature of the heated wire or film. This diagnostic has two parts, a key on monitor and a monitor that runs in operating conditions when the EGR valve is closed. The key on monitor diagnostic fails if the Mass Air Flow Sensor reads a non-zero value at key on, engine off. The engine running monitor compares an estimated charge air flow value to the Mass Air Flow sensor reading. This monitor only runs when the EGR valve is commanded closed. During this time the MAF sensor value should equal the charge air flow estimate. The PCM will light the MIL lamp if this diagnostic runs and fails in two consecutive drive cycles. The PCM will turn off the MIL lamp when the diagnostic runs and passes in four consecutive drive cycles.

WHEN MONITORED:

Ignition on.

SET CONDITION:

With the engine running and EGR flow equal to zero, the Mass Air Flow sensor value does not equal the charge air flow estimate.

POSSIBLE CAUSES

Possible Causes
TURBOCHARGER, EGR OR INTAKE AIR SYSTEM RELATED DTCS
MAF SENSOR
AIR FILTER
AIR INTAKE LEAK

Always perform the Pre-Diagnostic Troubleshooting procedure before proceeding. Refer to PRE-DIAGNOSTIC TROUBLESHOOTING PROCEDURE - 6.7L .

DIAGNOSTIC TEST

1. **ACTIVE DTC**

NOTE: **If there are any other EGR, Turbocharger, or Intake system DTCs present, repair those DTCs before proceeding.**

1. Turn the ignition on.
2. With the scan tool, record all Freeze frame data.
3. With the scan tool, erase DTCs.
4. Turn the ignition off for 75 seconds.
5. Start the engine attempt to duplicate the conditions that set the DTC.
6. With the scan tool, read DTCs.

Did the DTC reset?

Yes

- Go To 2.

No

- Perform the INTERMITTENT CONDITION - 6.7L diagnostic procedure. Refer to **INTERMITTENT CONDITION - 6.7L** .

2. **CHECK THE MAF SENSOR**
   1. Start the engine. Warm the engine up to operating temperature and then let it idle for five minutes.

      NOTE: This is how long it takes for the EGR Valve to close.

   2. With the scan tool in Data Display, verify that the EGR Valve is at 0%.
   3. With the scan tool, read the MAF Sensor value.

      Does the Mass Air Flow Sensor read from 3.0 - 6.75 lb/min for an auto transmission, or 3.5 - 7.5 lb/min for a manual transmission?

      Yes

      - Go To 3.

      No

      - Replace the Mass Air Flow Sensor in accordance with the service information.
      - Perform the POWERTRAIN VERIFICATION TEST - 6.7L. Refer to **POWERTRAIN VERIFICATION TEST - 6.7L** .

3. **CHECK THE AIR FILTER**
   1. Remove lid from air filter box.
   2. Remove air filter and inspect for excessive debris or filter media damage.
   3. Make sure the filter was installed properly.

      Was the air filter damaged or full of debris?

      Yes

      - Replace the Air Filter.
      - Perform the POWERTRAIN VERIFICATION TEST - 6.7L. Refer to **POWERTRAIN VERIFICATION TEST - 6.7L** .

      No

- Go To 4.

4. **CHECK THE MAF SENSOR**
    1. Turn the Ignition off.
    2. Remove MAF sensor from the air filter box.

    Is it free from debris?

    Yes

    - Go To 5.

    No

    - Clean the Mass Air Flow Sensor using low pressure air and reinstall, repair complete.
    - Perform the POWERTRAIN VERIFICATION TEST - 6.7L. Refer to **POWERTRAIN VERIFICATION TEST - 6.7L** .

5. **CHECK FOR AN AIR LEAK IN THE INTAKE SYSTEM**
    1. Perform the INTAKE AIR SYSTEM PRESSURE TEST procedure. Refer to **DIAGNOSIS AND TESTING, 6.7L** .
    2. Any leak between the air box to the intake manifold could cause this fault.

    Were there any Intake Air System leaks?

    Yes

    - Repair the leak in the Intake Air System.
    - Perform the POWERTRAIN VERIFICATION TEST - 6.7L. Refer to **POWERTRAIN VERIFICATION TEST - 6.7L** .

    No

    - Replace the Mass Air Flow Sensor in accordance with the service information.
    - Perform the POWERTRAIN VERIFICATION TEST - 6.7L. Refer to **POWERTRAIN VERIFICATION TEST - 6.7L** .

P0102-MASS AIR FLOW SENSOR "A" CIRCUIT LOW

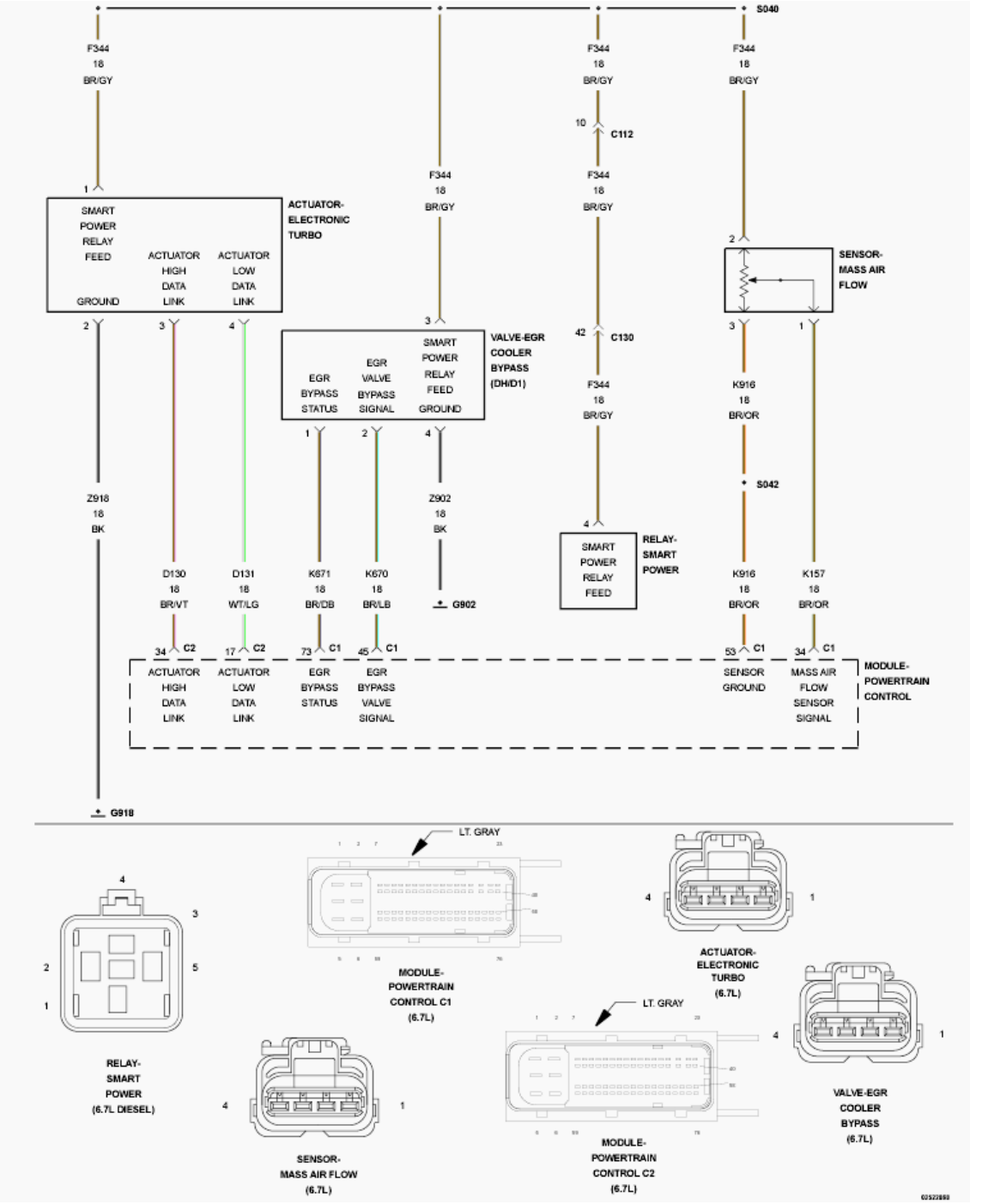

Fig. 22: Turbocharger Boost Control Circuit Schematic
Courtesy of CHRYSLER GROUP, LLC

For a complete wiring diagram, **refer to appropriate SYSTEM WIRING DIAGRAMS article** .

THEORY OF OPERATION

The Mass Air Flow (MAF) Sensor is a frequency based device. A constant voltage is applied to a heated wire. This wire is positioned in the air stream and is heated by the electrical current that the voltage produces. As air

flows across it, it cools down. The heated wire or film is a Positive Temperature Coefficient (PTC) resistor, which means that the resistance of it drops when the temperature drops. The drop in resistance allows more current to flow through it in order to maintain the programmed temperature. The current flow is changed to a frequency, which is sent to the Powertrain Control Module (PCM) and interpreted as air flow. Adjustments for air temperature and humidity are taken into consideration, since they also affect the temperature of the heated wire or film. The engine running monitor compares an estimated fresh air flow value to the Mass Air Flow Sensor reading. The PCM will light the Malfunction Indicator Lamp (MIL) immediately after this diagnostic runs and fails. The PCM will turn off the MIL when the diagnostic runs and passes in four consecutive drive cycles.

WHEN MONITORED:

When the PCM is powered on.

SET CONDITION:

The frequency detected is below what is allowable for the sensor.

POSSIBLE CAUSES

Possible Causes
INTAKE OR EXHAUST SYSTEM LEAKING OR RESTRICTED
(F344) SMART POWER RELAY OUTPUT CIRCUIT OPEN
(F344) SMART POWER RELAY OUTPUT CIRCUIT SHORTED TO THE (K916) RETURN CIRCUIT
(K157) MAF SENSOR SIGNAL CIRCUIT OPEN
(K157) MAF SENSOR SIGNAL CIRCUIT SHORTED TO THE (K916) RETURN CIRCUIT
(K157) MAF SENSOR SIGNAL CIRCUIT SHORTED TO GROUND
MASS AIR FLOW (MAF) SENSOR
POWERTRAIN CONTROL MODULE (PCM)

Always perform the Pre-Diagnostic Troubleshooting procedure before proceeding. Refer to PRE-DIAGNOSTIC TROUBLESHOOTING PROCEDURE - 6.7L .

DIAGNOSTIC TEST

1. **ACTIVE DTC**
    1. Ignition on, engine not running.
    2. With the scan tool, erase DTCs.
    3. Start the engine and let idle for at least two minutes.
    4. With the scan tool, read DTCs.

    Did the DTC return?

    Yes

- Go To 2.

No

- Perform the INTERMITTENT CONDITION - 6.7L diagnostic procedure. Refer to **INTERMITTENT CONDITION - 6.7L** .

2. **CHECK THE (F344) SMART POWER RELAY OUTPUT CIRCUIT**
   1. Turn the ignition off.
   2. Disconnect the MAF harness connector.
   3. Turn the ignition on, engine not running.

   NOTE: Check connectors - Clean/repair as necessary.

   4. Measure the voltage of the (F344) Smart Power Relay Output circuit at the MAF Sensor harness connector.

   Is the voltage equal to battery voltage?

   Yes

   - Go To 3.

   No

   - Repair the (F344) Smart Power Relay Output circuit for an open or short to ground.
   - Perform the POWERTRAIN VERIFICATION TEST - 6.7L. Refer to **POWERTRAIN VERIFICATION TEST - 6.7L** .

3. **CHECK FOR THE (F344) SMART POWER RELAY OUTPUT CIRCUIT SHORTED TO THE (K916) RETURN CIRCUIT**

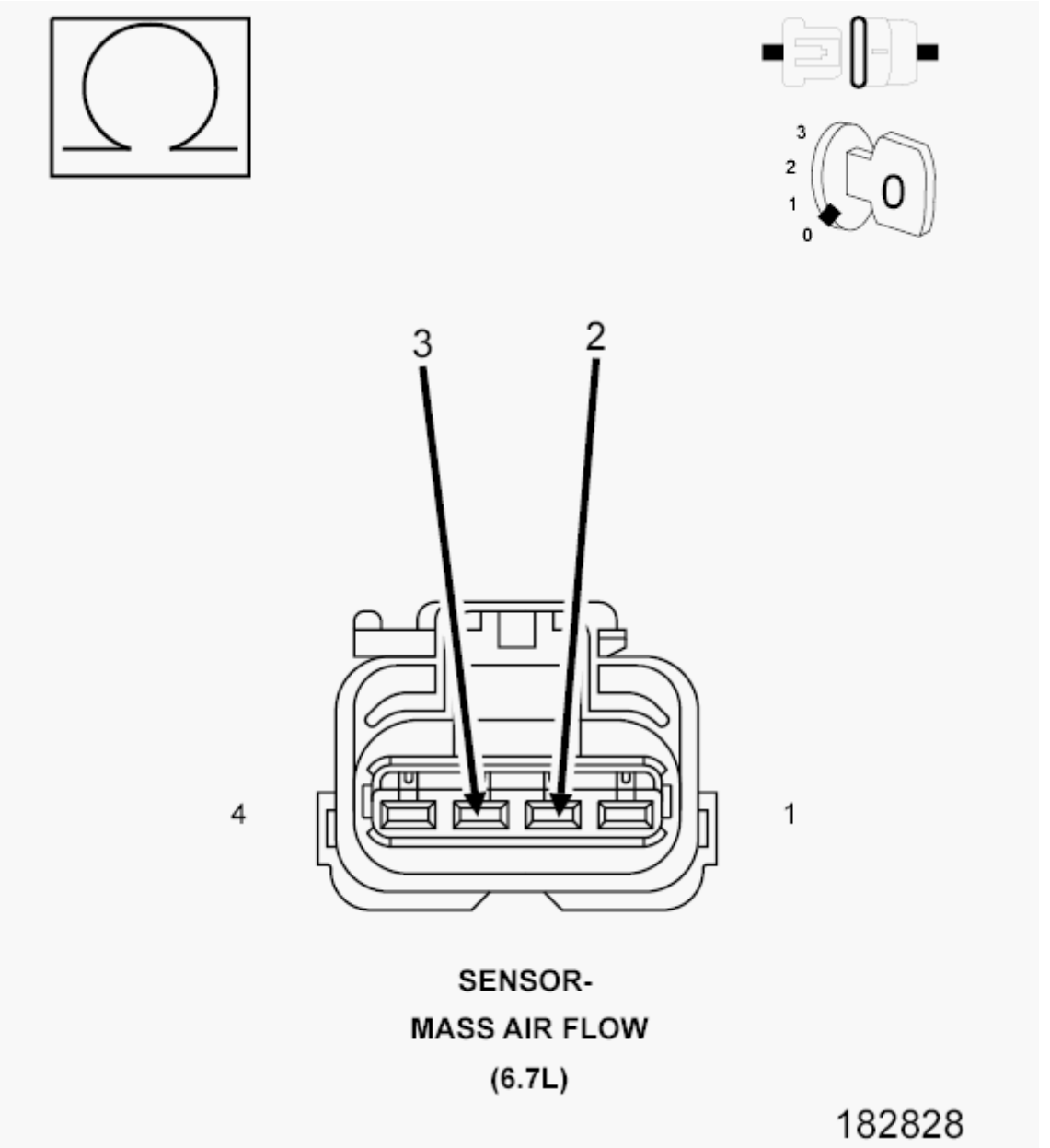

Fig. 23: Checking For Smart Power Relay Feed Circuit & Return Circuit Shorted
Courtesy of CHRYSLER GROUP, LLC

1. Turn the ignition off.
2. Disconnect the PCM C1 harness connector.
3. Measure the resistance between the (F344) Smart Power Relay Output circuit and (K916) Return circuit at the MAF Sensor harness connector.

   Is the resistance below 10k Ohms?

   Yes

- Repair the short between the (F344) Smart Power Relay Output circuit and (K916) Return circuit.
- Perform the POWERTRAIN VERIFICATION TEST - 6.7L. Refer to **POWERTRAIN VERIFICATION TEST - 6.7L** .

No

- Go To 4.

4. **CHECK FOR THE (K157) MAF SENSOR SIGNAL CIRCUIT SHORTED TO THE (K916) RETURN CIRCUIT**

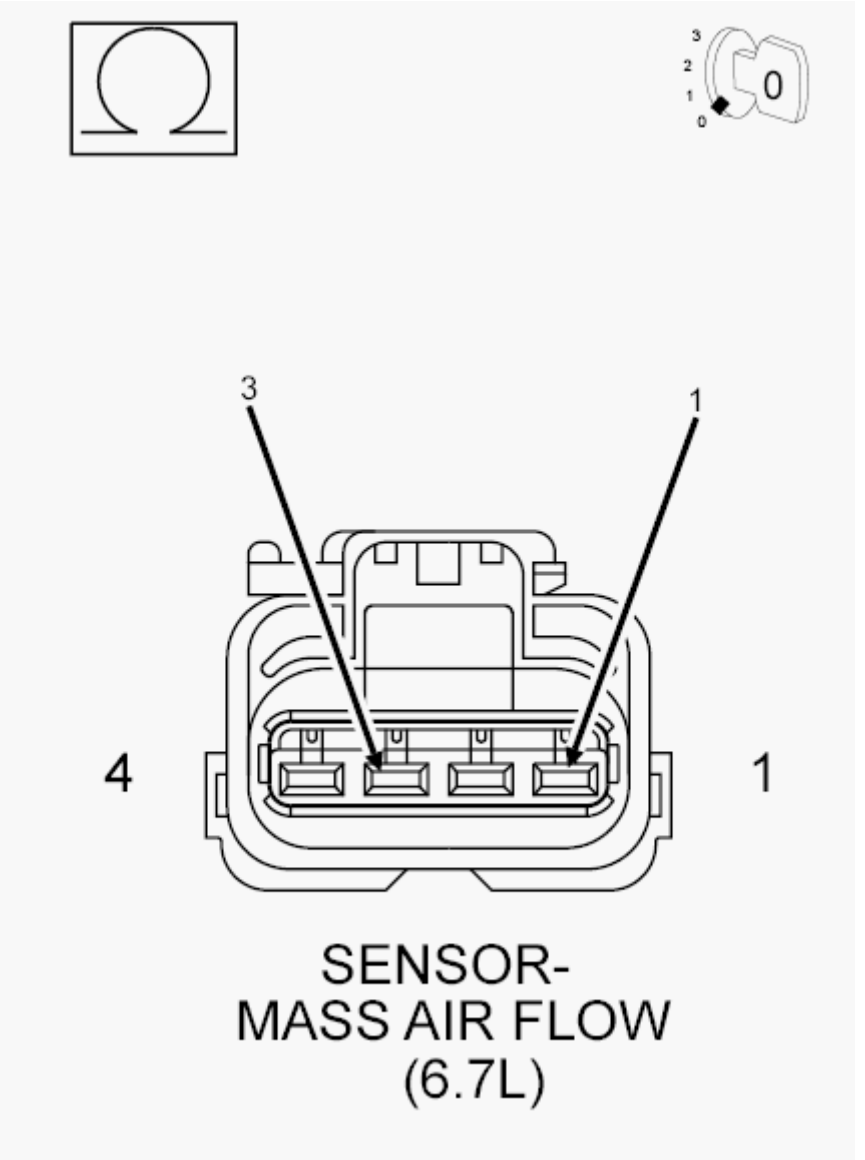

Fig. 24: Checking For MAF Sensor Signal Circuit Shorted To Return Circuit
Courtesy of CHRYSLER GROUP, LLC

1. Measure the resistance between the (K157) MAF Sensor Signal circuit and (K916) Return circuit at the MAF Sensor harness connector.

   Is the resistance below 10k Ohms?

   Yes

   - Repair the short between the (K157) MAF Sensor Signal Signal circuit and (K916) Return circuit.
   - Perform the POWERTRAIN VERIFICATION TEST - 6.7L. Refer to **POWERTRAIN VERIFICATION TEST - 6.7L** .

   No

   - Go To 5.

5. **CHECK THE (K157) MAF SENSOR SIGNAL CIRCUIT FOR AN OPEN/HIGH RESISTANCE**

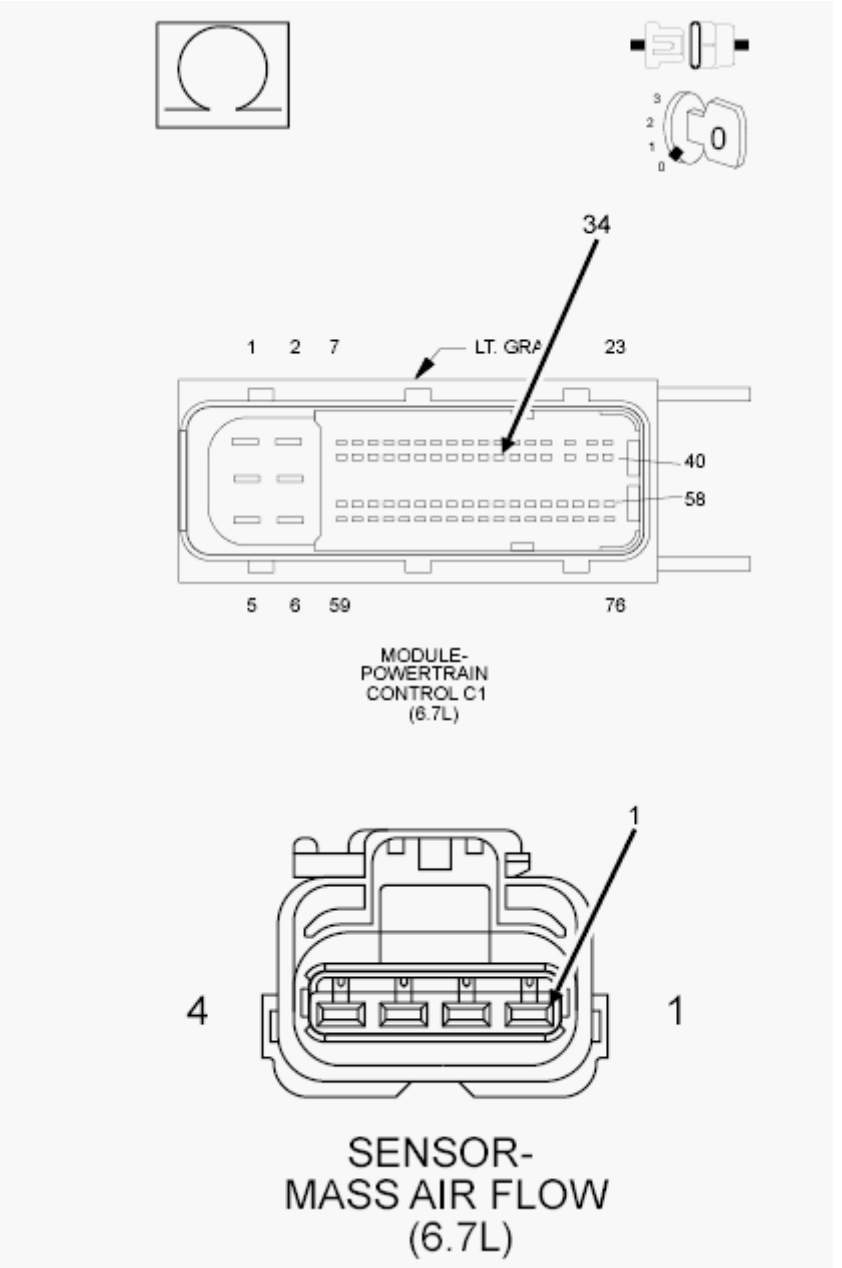

Fig. 25: Checking MAF Sensor Signal Circuit For An Open Or High Resistance
Courtesy of CHRYSLER GROUP, LLC

1. Measure the resistance of the (K157) MAF Sensor Signal circuit between the MAF Sensor harness connector and the PCM C1 harness connector.

   Is the resistance below 5.0 Ohms?

   Yes

   - Go To 6.

No

- Repair the (K157) MAF Sensor Signal circuit for an open or high resistance.
- Perform the POWERTRAIN VERIFICATION TEST - 6.7L. Refer to **POWERTRAIN VERIFICATION TEST - 6.7L** .

6. **CHECK THE (K157) MAF SENSOR SIGNAL CIRCUIT FOR A SHORT TO GROUND**

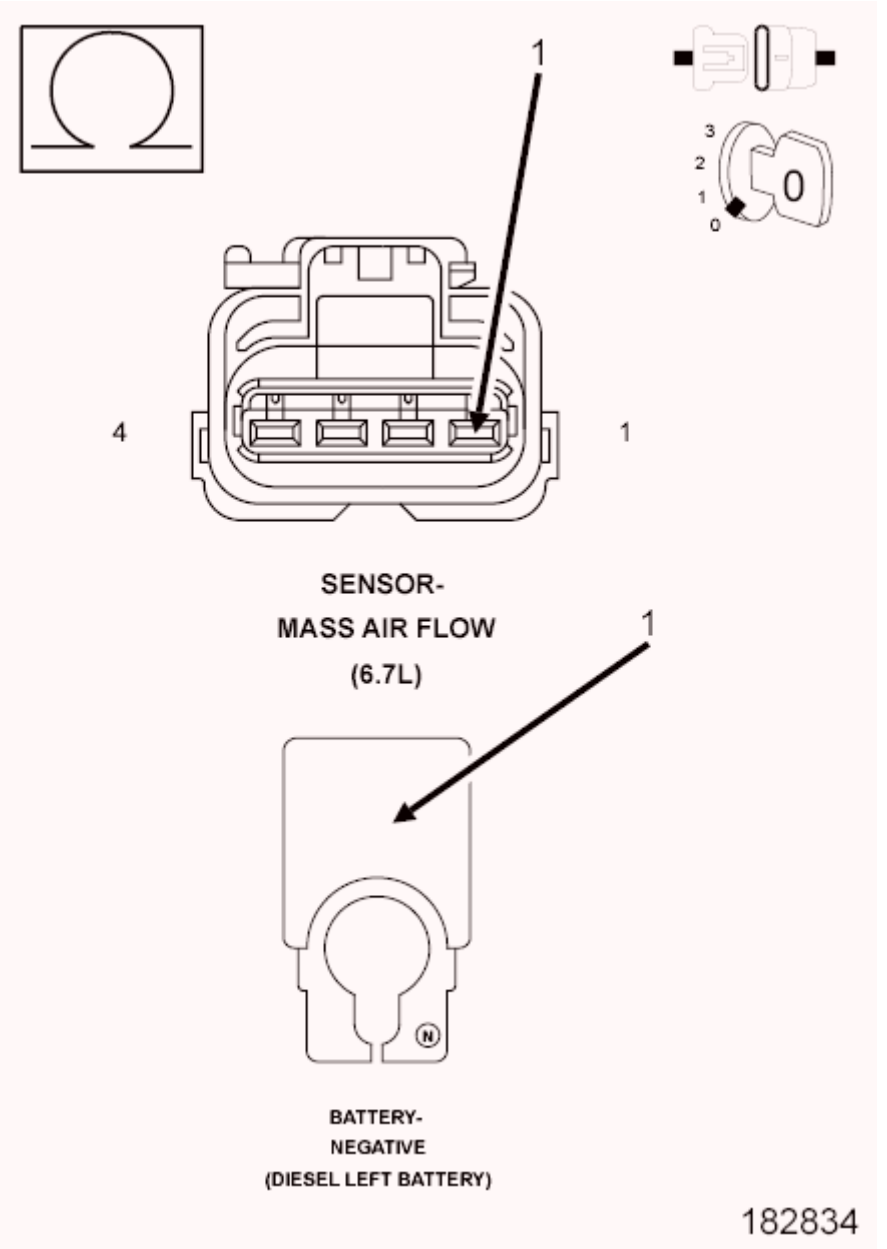

Fig. 26: Checking MAF Sensor Signal Circuit For Short To Ground
Courtesy of CHRYSLER GROUP, LLC

1. Measure the resistance between ground and the (K157) MAF Sensor Signal circuit at the Mass Air Flow Sensor harness connector.

Is the resistance below 10k Ohms?

Yes

- Repair the (K157) MAF Sensor Signal circuit for a short to ground.
- Perform the POWERTRAIN VERIFICATION TEST - 6.7L. Refer to **POWERTRAIN VERIFICATION TEST - 6.7L** .

No

- Go To 7.

7. **CHECK THE INTAKE SYSTEM**
   1. Visually inspect the Intake System for any restrictions.
   2. Perform the INTAKE AIR PRESSURE TEST diagnostic procedure. Refer to **DIAGNOSIS AND TESTING, 6.7L** .

   Were any leaks or restrictions found?

   Yes

   - Repair as necessary.
   - Perform the POWERTRAIN VERIFICATION TEST - 6.7L. Refer to **POWERTRAIN VERIFICATION TEST - 6.7L** .

   No

   - Go To 8.

8. **CHECK THE EXHAUST SYSTEM**
   1. Visually inspect the Exhaust System for any restrictions.
   2. Perform the CHECKING THE EXHAUST SYSTEM FOR LEAKS diagnostic procedure. Refer to **DIAGNOSIS AND TESTING, 6.7L** .

   Were any leaks or restrictions found?

   Yes

   - Repair as necessary.
   - Perform the POWERTRAIN VERIFICATION TEST - 6.7L. Refer to **POWERTRAIN VERIFICATION TEST - 6.7L** .

   No

   - Go To 9.

9. **CHECK THE MASS AIR FLOW SENSOR**

1. Replace the MAF Sensor in accordance with the Service Information.
2. Reconnect the PCM C1 harness connector.
3. Turn the ignition on.
4. With the scan tool, erase DTCs.
5. Start the engine and allow it to idle for one minute.
6. With the scan tool, read DTCs.

   Does the DTC P0102 return?

   Yes

   - Replace the Powertrain Control Module in accordance with the Service Information.
   - Perform the POWERTRAIN VERIFICATION TEST - 6.7L. Refer to **POWERTRAIN VERIFICATION TEST - 6.7L** .

   No

   - Test Complete.
   - Perform the POWERTRAIN VERIFICATION TEST - 6.7L. Refer to **POWERTRAIN VERIFICATION TEST - 6.7L** .

P0103-MASS AIR FLOW SENSOR "A" CIRCUIT HIGH

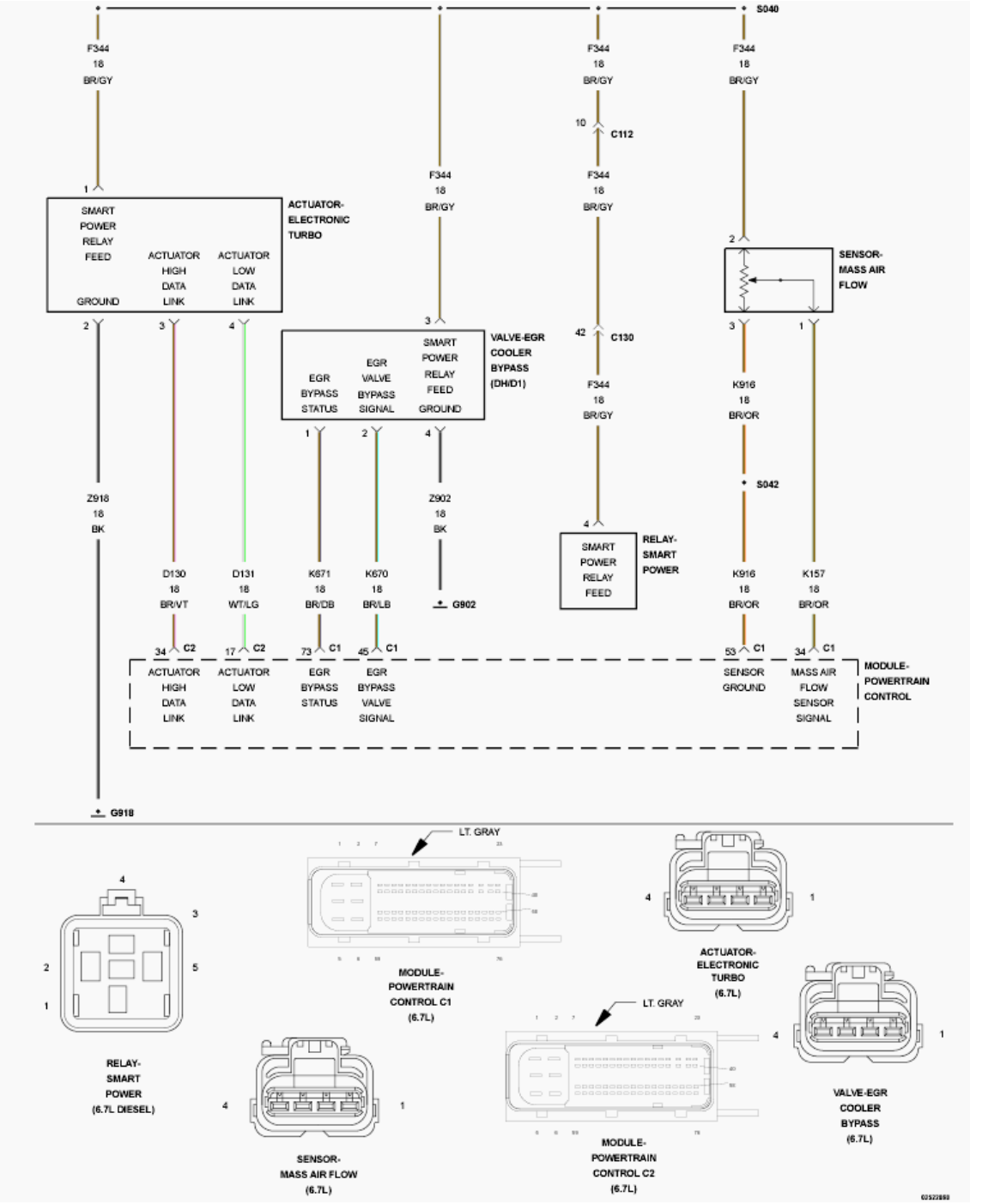

Fig. 27: Turbocharger Boost Control Circuit Schematic
Courtesy of CHRYSLER GROUP, LLC

For a complete wiring diagram, **refer to appropriate SYSTEM WIRING DIAGRAMS article** .

THEORY OF OPERATION

The Mass Air Flow (MAF) Sensor is a frequency based device. A constant voltage is applied to a heated wire. This wire is positioned in the air stream and is heated by the electrical current that the voltage produces. As air

flows across it, it cools down. The heated wire or film is a Positive Temperature Coefficient (PTC) resistor, which means that the resistance of it drops when the temperature drops. The drop in resistance allows more current to flow through it in order to maintain the programmed temperature. The current flow is changed to a frequency, which is sent to the Powertrain Control Module (PCM) and interpreted as air flow. Adjustments for air temperature and humidity are taken into consideration, since they also affect the temperature of the heated wire or film. The engine running monitor compares an estimated fresh air flow value to the Mass Air Flow Sensor reading. The PCM will light the Malfunction Indicator Lamp (MIL) immediately after this diagnostic runs and fails. The PCM will turn off the MIL when the diagnostic runs and passes in four consecutive drive cycles.

WHEN MONITORED:

When the PCM is powered on.

SET CONDITION:

The frequency detected is above what is allowable for the sensor.

POSSIBLE CAUSES

Possible Causes
(K157) MAF SENSOR SIGNAL CIRCUIT SHORTED TO VOLTAGE
(K916) MAF SENSOR RETURN CIRCUIT OPEN/HIGH RESISTANCE
MASS AIR FLOW (MAF) SENSOR
POWERTRAIN CONTROL MODULE (PCM)

Always perform the Pre-Diagnostic Troubleshooting procedure before proceeding. Refer to PRE-DIAGNOSTIC TROUBLESHOOTING PROCEDURE - 6.7L .

DIAGNOSTIC TEST

1. **ACTIVE DTC**

NOTE: The MAF Sensor, EGR Cooler Bypass Valve and Turbocharger Actuator get a 12V power supply from the Smart Power Relay.

1. Ignition on, engine not running.
2. Record freeze frame data and clear DTCs.
3. Turn the ignition off for one minute.
4. Turn the ignition on.
5. With the scan tool, read DTCs.

Did the DTC return?

Yes

- Go To 2.

No

- Perform the INTERMITTENT CONDITION - 6.7L diagnostic procedure. Refer to **INTERMITTENT CONDITION - 6.7L** .

2. **CHECK THE (K157) MAF SENSOR SIGNAL CIRCUIT SHORT TO VOLTAGE**

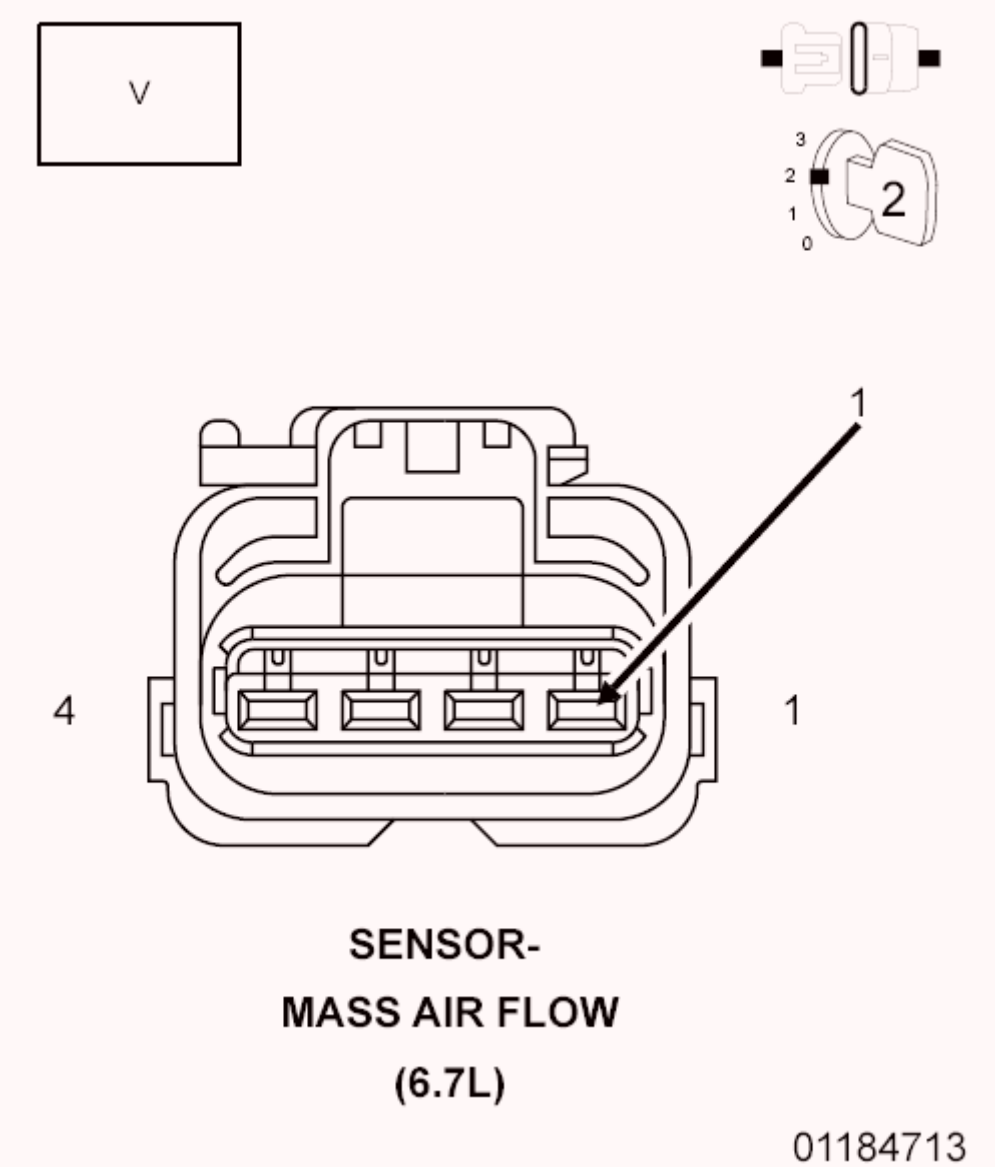

Fig. 28: Checking MAF Sensor Signal Circuit For Short To Voltage
Courtesy of CHRYSLER GROUP, LLC

1. Turn the ignition off.
2. Disconnect the MAF Sensor harness connector.
3. Turn the ignition on.

4. Measure the voltage of the (K157) MAF Sensor Signal circuit in the MAF Sensor harness connector.

   Is the voltage equal to battery voltage?

   Yes

   - Repair the short to battery in the (K157) MAF Sensor Signal circuit.
   - Perform the POWERTRAIN VERIFICATION TEST - 6.7L. Refer to **POWERTRAIN VERIFICATION TEST - 6.7L** .

   No

   - Go To 3.

3. **CHECK THE (K916) MAF SENSOR RETURN CIRCUIT FOR AN OPEN/HIGH RESISTANCE**

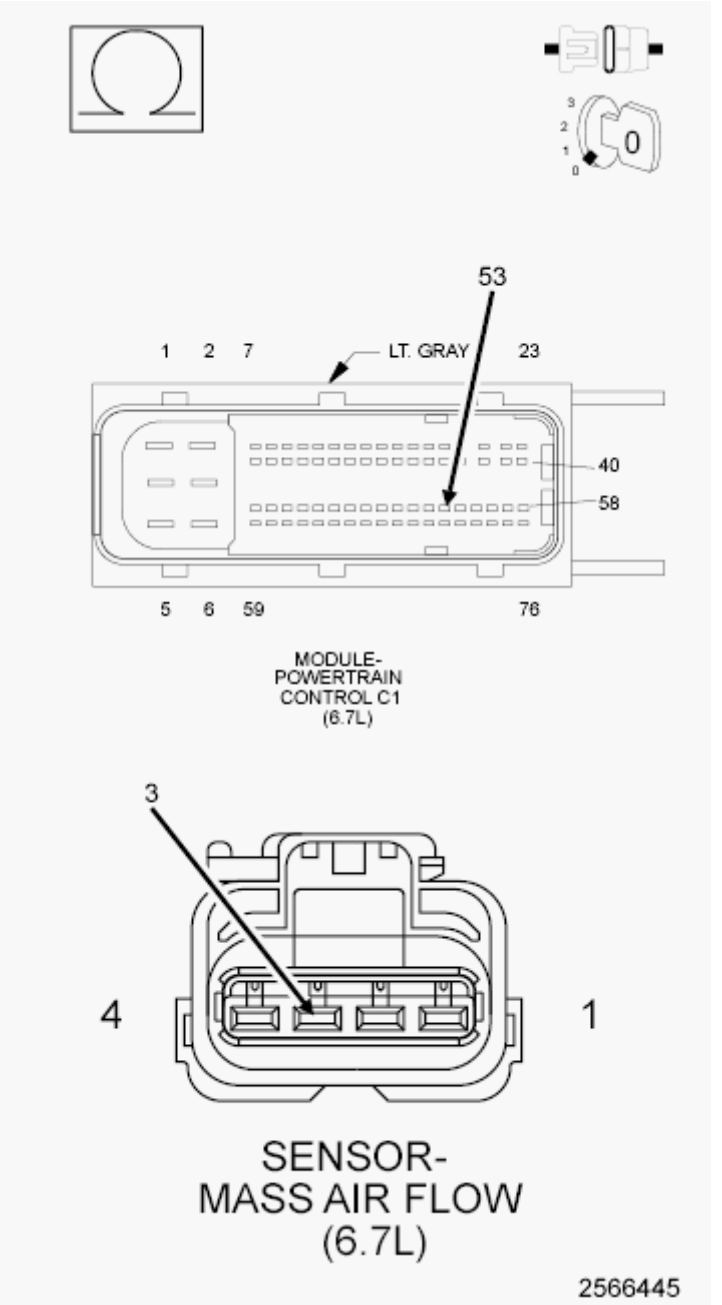

Fig. 29: Checking MAF Sensor Return Circuit For Open Or High Resistance
Courtesy of CHRYSLER GROUP, LLC

1. Turn the ignition off.
2. Disconnect the PCM C1 harness connector.
3. Measure the resistance of the (K916) MAF Sensor Return circuit between the MAF Sensor harness connector and the PCM C1 harness connector.

   Is the resistance below 5.0 Ohms?

   Yes

- Go To 4.

No

- Repair the (K916) MAF Sensor Return circuit for an open or high resistance.
- Perform the POWERTRAIN VERIFICATION TEST - 6.7L. Refer to **POWERTRAIN VERIFICATION TEST - 6.7L** .

4. **CHECK THE MASS AIR FLOW SENSOR**
    1. Turn the ignition off.
    2. Reconnect the PCM C1 harness connector.
    3. Reconnect the MAF Sensor harness connector.
    4. Turn the ignition on, engine not running.
    5. With the scan tool, clear DTCs.
    6. Disconnect the MAF Sensor harness connector and read DTCs.

    Does the scan tool display DTC P0102 as active?

    Yes

    - Replace the MAF Sensor in accordance with the Service Information.
    - Perform the POWERTRAIN VERIFICATION TEST - 6.7L. Refer to **POWERTRAIN VERIFICATION TEST - 6.7L** .

    No

    - Replace the Powertrain Control Module in accordance with the Service Information.
    - Perform the POWERTRAIN VERIFICATION TEST - 6.7L. Refer to **POWERTRAIN VERIFICATION TEST - 6.7L** .

P0106-MANIFOLD ABSOLUTE PRESSURE SENSOR PERFORMANCE

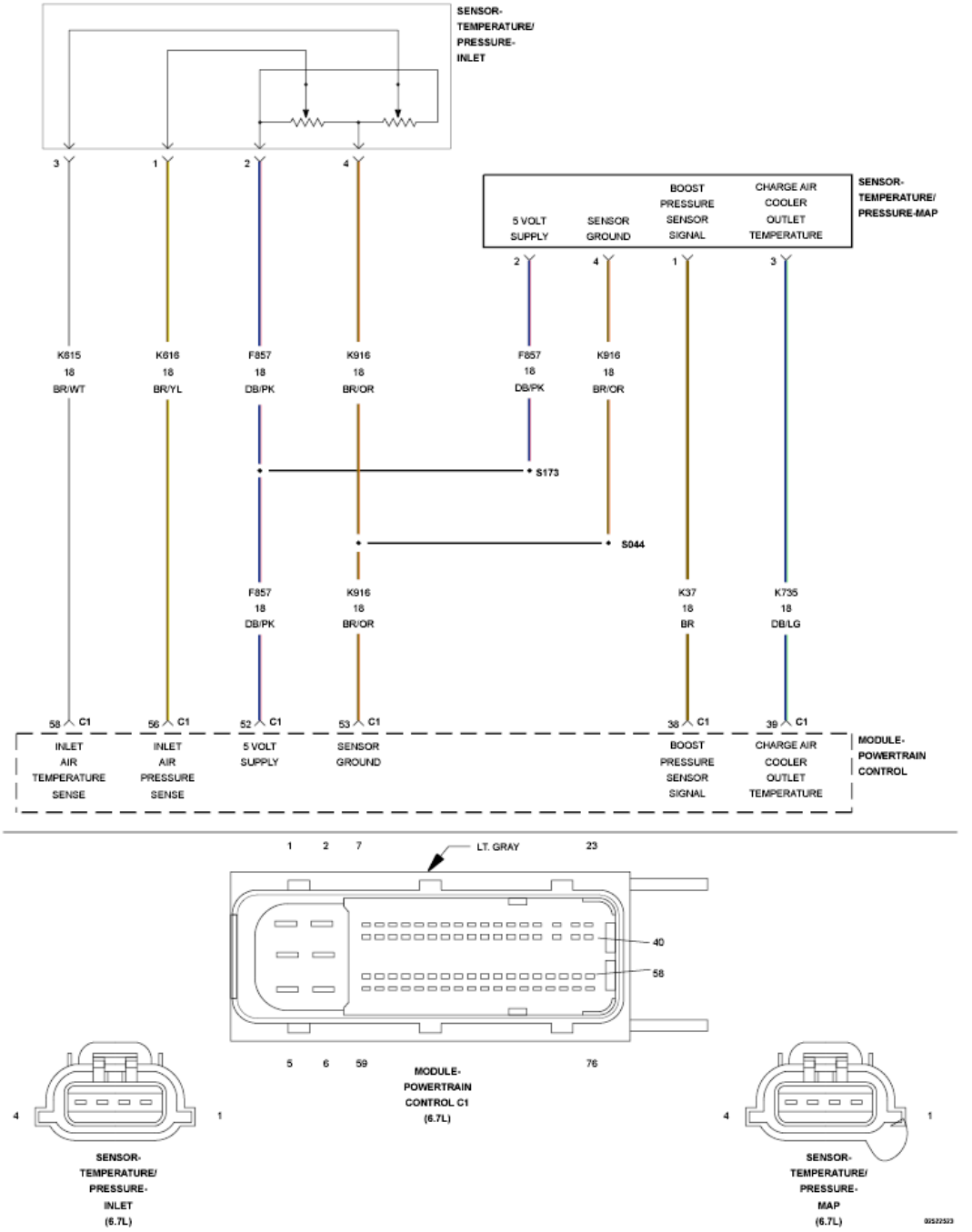

Fig. 30: Inlet Air Temperature Sensor Circuit Schematic
Courtesy of CHRYSLER GROUP, LLC

For a complete wiring diagram, **refer to appropriate SYSTEM WIRING DIAGRAMS article** .

THEORY OF OPERATION

The Charge Air Cooler Temperature Sensor (CAC) and the Boost Pressure Sensor are combined in one sensor and are located near the EGR Airflow Throttle Control Valve. The Boost Pressure Sensor is used to measure pressure in the intake manifold. The Electronic Control Module (PCM) provides a 5-Volt supply and sensor

ground for the Boost Pressure Sensor. The Boost Pressure Sensor provides a signal back to the PCM on the Boost Pressure Sensor Signal circuit. The PCM will detect a low signal voltage at operating conditions such as during an idle or a deceleration. The PCM will detect a high signal voltage during high engine load operating conditions. At key on, the readings for the Boost Pressure Sensor, Exhaust Gas Pressure Sensor, and Barometric Pressure Sensor are compared. This fault code occurs if the boost pressure reading is different from the others. During normal engine operation, the PCM estimates the Boost Pressure Sensor value using other fuel system related inputs. The PCM compares the actual Boost Pressure Sensor reading to this estimated value. If the two values are out of range for a calibrated period of time, an error is recorded. The key-on portion of the rationality will light the MIL immediately after the diagnostic runs and fails.The rationality portion will light the MIL immediately and the ETC lamp will also be illuminated. The PCM turns off the MIL when the diagnostic runs and passes in four consecutive drive cycles.

WHEN MONITORED:

Continuosly with key on or engine running.

SET CONDITION:

The boost pressure recorded at key on is not within a calibrated range of the Inlet Air Pressure Sensor or the boost pressure reading is not within a calibrated range of the of the estimated boost pressure value with engine running.

POSSIBLE CAUSES

Possible Causes
INTAKE AIR SYSTEM LEAK
EGR AIRFLOW THROTTLE CONTROL VALVE
PLUGGED AIR FILTER
BOOST PRESSURE SENSOR

Always perform the Pre-Diagnostic Troubleshooting procedure before proceeding. Refer to PRE-DIAGNOSTIC TROUBLESHOOTING PROCEDURE - 6.7L .

DIAGNOSTIC TEST

1. **ACTIVE DTC**

NOTE: **If there are any EGR Valve or EGR Airflow Control Valve DTCs present, repair those DTCs before proceeding.**

NOTE: **If customer states that there was an EVIC message "Service Air Filter", or if Freeze Frame Data shows "Air Filter Plugged Error equals ON", replace the Air Filter before continuing.**

1. Turn the ignition on.
2. With the scan tool, record all Freeze frame data.

3. With the scan tool, erase DTCs.
4. Turn the ignition on for 75 seconds.
5. Start the engine and let idle.
6. With the scan tool, read DTCs.

Did the DTC return?

Yes

- Go To 2.

No

- Perform the INTERMITTENT CONDITION - 6.7L diagnostic procedure. Refer to **INTERMITTENT CONDITION - 6.7L** .

2. **CHECK FOR AN INTAKE AIR SYSTEM LEAK**
   1. Perform the INTAKE AIR SYSTEM PRESSURE TEST. Refer to **DIAGNOSIS AND TESTING, 6.7L** .

   Where any leaks found?

   Yes

   - Repair the leak and perform a Mobile Desoot of the aftertreatment system.
   - Perform the POWERTRAIN VERIFICATION TEST - 6.7L. Refer to **POWERTRAIN VERIFICATION TEST - 6.7L** .

   No

   - Go To 3.

3. **CHECK THE EGR AIRFLOW THROTTLE CONTROL VALVE**
   1. Remove the boot from the EGR Airflow Throttle Control Valve.
   2. Using a mirror, look at the butterfly valve on the inside of the EGR Airflow Throttle Control Valve.
   3. Start the vehicle, let idle for 10 seconds.
   4. Turn the ignition off.

   NOTE: If functioning properly the EGR Airflow Throttle Control Valve will cycle closed immediately after the engine is shut down.

   Did the EGR Airflow Throttle Control Valve cycle closed immediately after the engine was shut down?

   Yes

- Go To 4.

No

- Replace the EGR Airflow Throttle Control Valve in accordance with the service information.
- Perform the POWERTRAIN VERIFICATION TEST - 6.7L. Refer to **POWERTRAIN VERIFICATION TEST - 6.7L** .

4. **BOOST PRESSURE SENSOR**
   1. Turn ignition switch on. Wait five seconds after ignition switch is turned on.
   2. Using the scan tool, read DTCs

   Is P0106 stored?

   Yes

   - Go To 5.

   No

   - Replace the Boost Pressure Sensor in accordance with the service information.
   - Perform the POWERTRAIN VERIFICATION TEST - 6.7L. Refer to **POWERTRAIN VERIFICATION TEST - 6.7L** .

5. **BOOST PRESSURE SENSOR**
   1. Erase the DTC with the scan tool.
   2. Start the engine and let it idle for one minute.
   3. With the scan tool, monitor the boost pressure reading.

   Does the Boost Pressure Sensor fluctuate slightly, indicating the sensor is not stuck?

   Yes

   - Repair complete.
   - Perform the POWERTRAIN VERIFICATION TEST - 6.7L. Refer to **POWERTRAIN VERIFICATION TEST - 6.7L** .

   No

   - Replace the Boost Pressure Sensor in accordance with the service information.
   - Perform the POWERTRAIN VERIFICATION TEST - 6.7L. Refer to **POWERTRAIN VERIFICATION TEST - 6.7L** .

P0107-MANIFOLD ABSOLUTE PRESSURE SENSOR CIRCUIT LOW

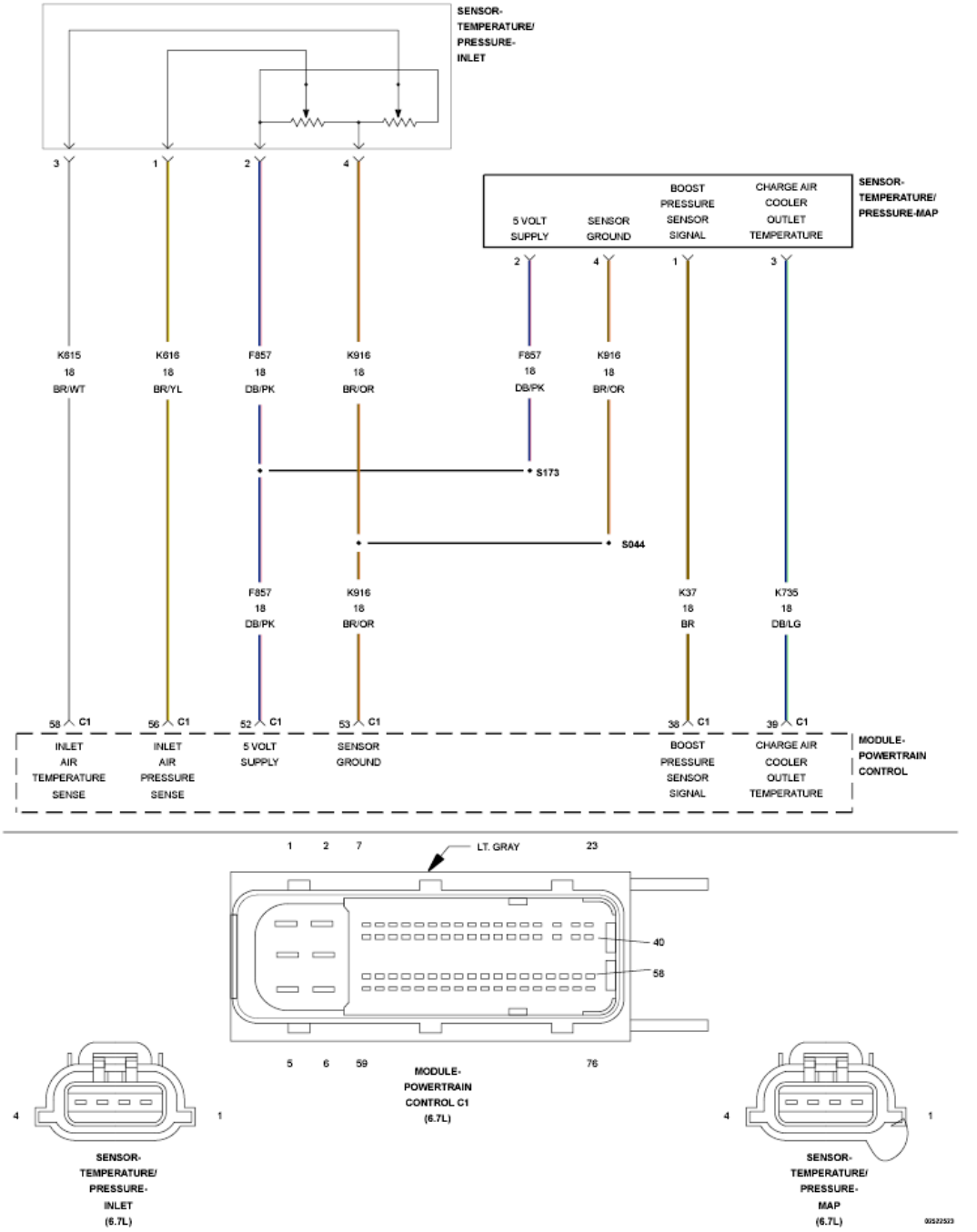

Fig. 31: Inlet Air Temperature Sensor Circuit Schematic
Courtesy of CHRYSLER GROUP, LLC

For a complete wiring diagram, **refer to appropriate SYSTEM WIRING DIAGRAMS article** .

THEORY OF OPERATION

The Charge Air Cooler Temperature Sensor (CAC) and the Boost Pressure Sensor are combined in one sensor and are located near the EGR Airflow Throttle Control Valve. The Boost Pressure Sensor is used to measure pressure in the intake manifold. The Powertrain Control Module (PCM) provides a 5-Volt supply and sensor

ground for the Boost Pressure Sensor. The Boost Pressure Sensor provides a signal back to the PCM on the Boost Pressure Sensor Signal circuit. The PCM will detect a low signal voltage at operating conditions such as during an idle or a deceleration. The PCM will detect a high signal voltage during high engine load operating conditions. At key on, the readings for the Boost Pressure Sensor, Exhaust Gas Pressure Sensor, and Barometric Pressure Sensor are compared. This fault code occurs if the boost pressure reading is different from the others. During normal engine operation, the PCM estimates the Boost Pressure Sensor value using other fuel system related inputs. The PCM compares the actual Boost Pressure Sensor reading to this estimated value. If the two values are out of range for a calibrated period of time, an error is recorded. The key-on portion of the rationality will light the MIL immediately after the diagnostic runs and fails. The rationality portion will light the MIL immediately and the ETC lamp will also be illuminated. The PCM turns off the MIL when the diagnostic runs and passes in four consecutive drive cycles.

WHEN MONITORED:

With the ignition on and battery voltage greater than 10.4 Volts.

SET CONDITION:

The (K37) Boost Pressure Sensor Signal circuit drops below 0.25 Volts for five seconds.

POSSIBLE CAUSES

Possible Causes
(F857) 5-VOLT SUPPLY CIRCUIT OPEN/HIGH RESISTANCE
(K37) BOOST PRESSURE SENSOR SIGNAL CIRCUIT SHORTED TO THE (K916) BOOST PRESSURE SENSOR RETURN CIRCUIT
(K37) BOOST PRESSURE SENSOR SIGNAL CIRCUIT SHORTED TO GROUND
(K37) BOOST PRESSURE SENSOR SIGNAL CIRCUIT OPEN/HIGH RESISTANCE
BOOST PRESSURE SENSOR
POWERTRAIN CONTROL MODULE (PCM)

Always perform the Pre-Diagnostic Troubleshooting procedure before proceeding. Refer to PRE-DIAGNOSTIC TROUBLESHOOTING PROCEDURE - 6.7L .

DIAGNOSTIC TEST

1. **ACTIVE DTC**

NOTE: **If there are any 5-Volt supply DTCs present, repair those DTCs before proceeding.**

1. Turn the ignition on.
2. With the scan tool, record all Freeze frame data.
3. With the scan tool, erase DTCs.
4. Turn the ignition off for 75 seconds.

5. Turn the ignition on.
6. With the scan tool, read DTCs.

   Did the DTC reset?

   Yes

   - Go To 2.

   No

   - Perform the INTERMITTENT CONDITION - 6.7L diagnostic procedure. Refer to **INTERMITTENT CONDITION - 6.7L** .

2. **CHECK THE (F857) 5-VOLT SUPPLY CIRCUIT FOR AN OPEN/HIGH RESISTANCE**

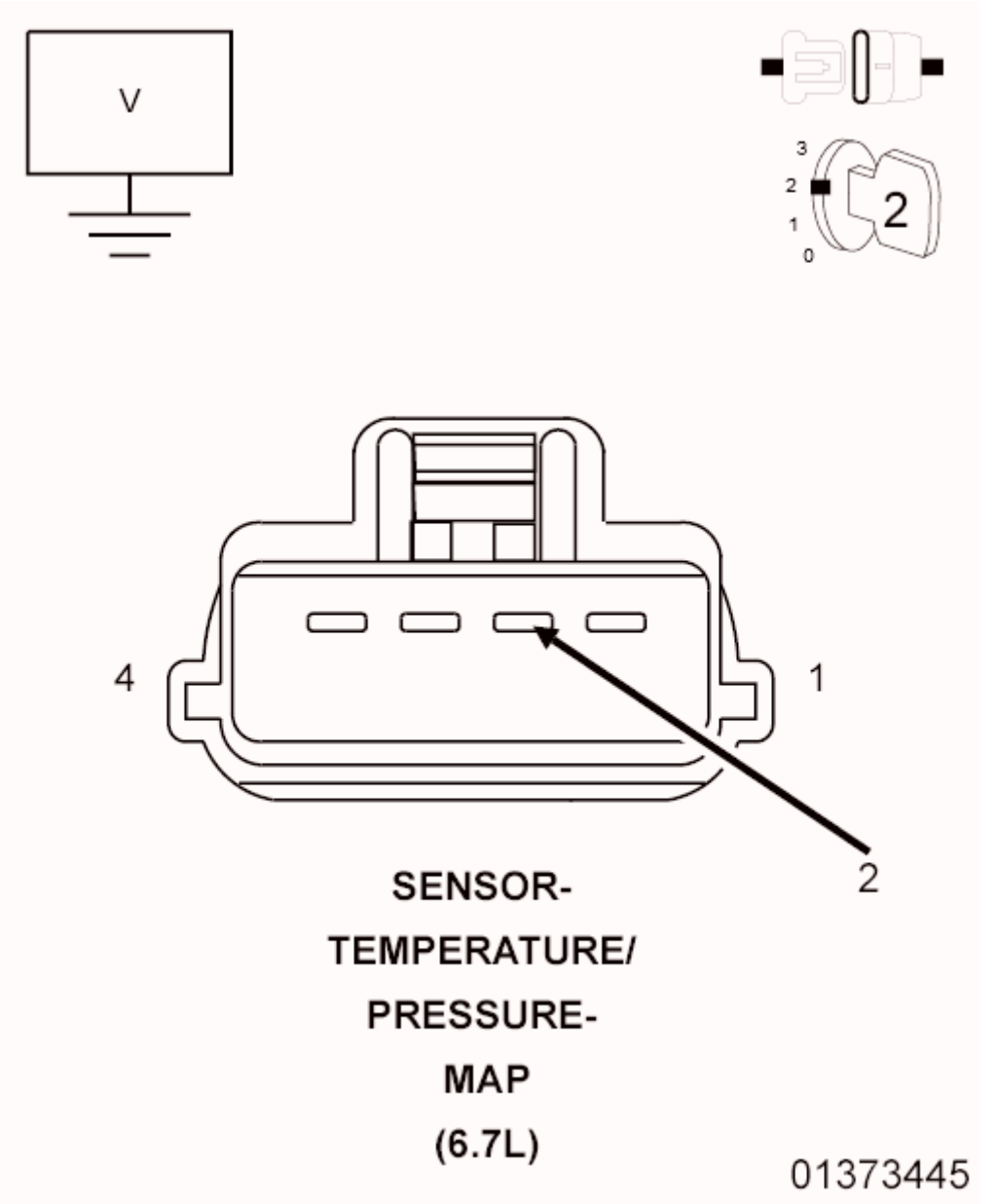

Fig. 32: Checking 5-Volt Supply Circuit For Open Or High Resistance
Courtesy of CHRYSLER GROUP, LLC

1. Ignition on.
2. Disconnect the Boost Pressure Sensor harness connector.
3. With a voltmeter, measure the voltage of the (F857) 5-Volt Supply circuit at the Boost Pressure Sensor harness connector.

   Is the voltage reading between 4.9 and 5.1 volts?

   Yes

- Go To 3.

No

- Repair the (F857) 5-Volt Supply circuit for an open or high resistance.
- Perform the POWERTRAIN VERIFICATION TEST - 6.7L. Refer to **POWERTRAIN VERIFICATION TEST - 6.7L** .

3. **CHECK THE BOOST PRESSURE SENSOR**

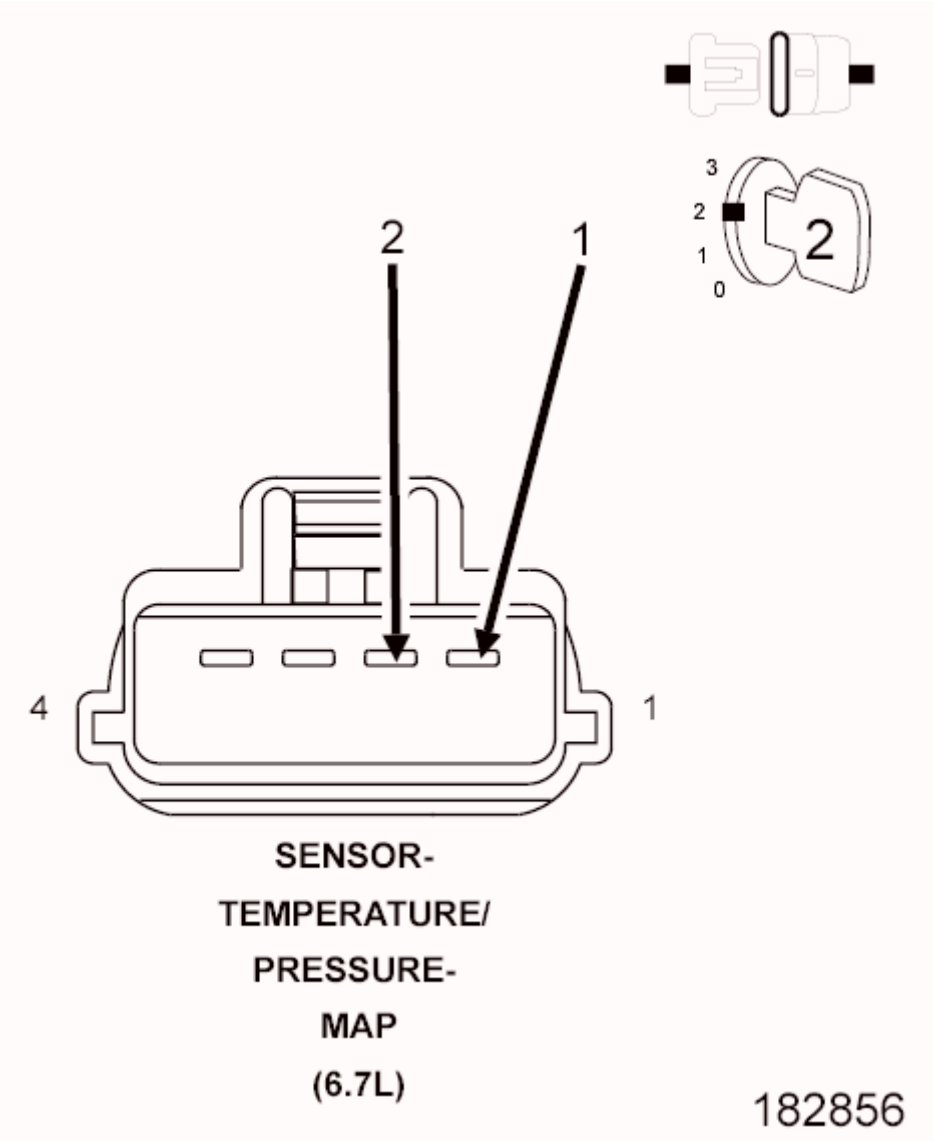

Fig. 33: MAP Pressure Sensor Harness Connector
Courtesy of CHRYSLER GROUP, LLC

1. While monitoring the scan tool, connect a jumper between the (F855) 5-Volt Supply circuit and the (K37) Boost Pressure Sensor Signal circuit at the Boost Pressure Sensor harness connector.

Did the P0108 DTC set?

Yes

- Replace the Boost Pressure Sensor in accordance with the service information.
- Perform the POWERTRAIN VERIFICATION TEST - 6.7L. Refer to **POWERTRAIN VERIFICATION TEST - 6.7L** .

No

- Go To 4.

4. **CHECK FOR THE (K37) BOOST PRESSURE SENSOR SIGNAL CIRCUIT SHORTED TO THE (K916) BOOST PRESSURE SENSOR RETURN CIRCUIT**

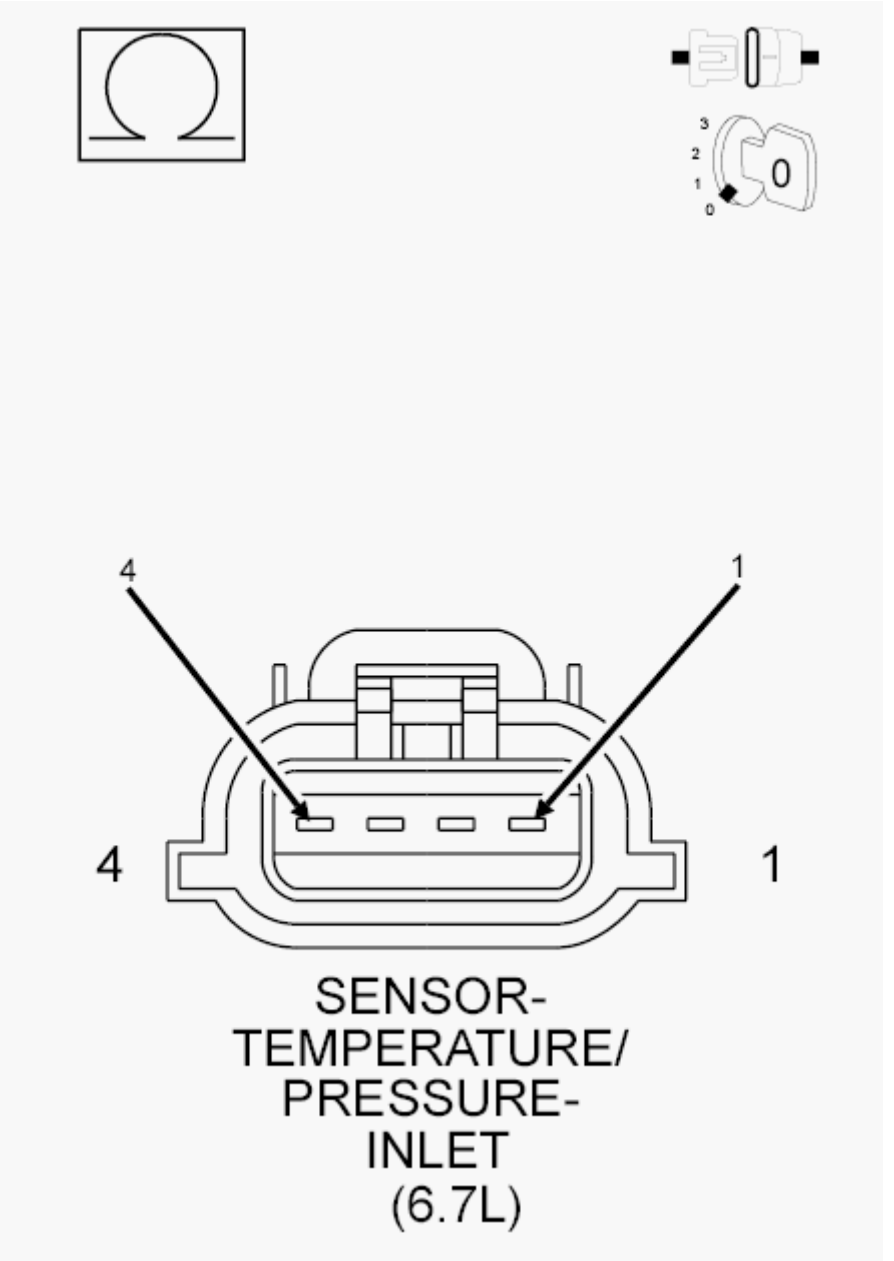

Fig. 34: Checking For Boost Pressure Sensor Signal Circuit Shorted To Boost Pressure Sensor Return Circuit
Courtesy of CHRYSLER GROUP, LLC

1. Turn the ignition off.
2. Disconnect the PCM C1 harness connector.
3. Measure the resistance between the (K37) Boost Pressure Sensor Signal circuit and (K916) Boost Pressure Sensor Return circuit at the Boost Pressure Sensor harness connector.

   Is the resistance below 10k Ohms?

   Yes

- Repair the short between the (K37) Boost Pressure Sensor Signal circuit and (K916) Boost Pressure Sensor Return circuit.
- Perform the POWERTRAIN VERIFICATION TEST - 6.7L. Refer to **POWERTRAIN VERIFICATION TEST - 6.7L** .

No

- Go To 5.

5. **CHECK THE (K37) BOOST PRESSURE SENSOR SIGNAL CIRCUIT FOR A SHORT TO GROUND**

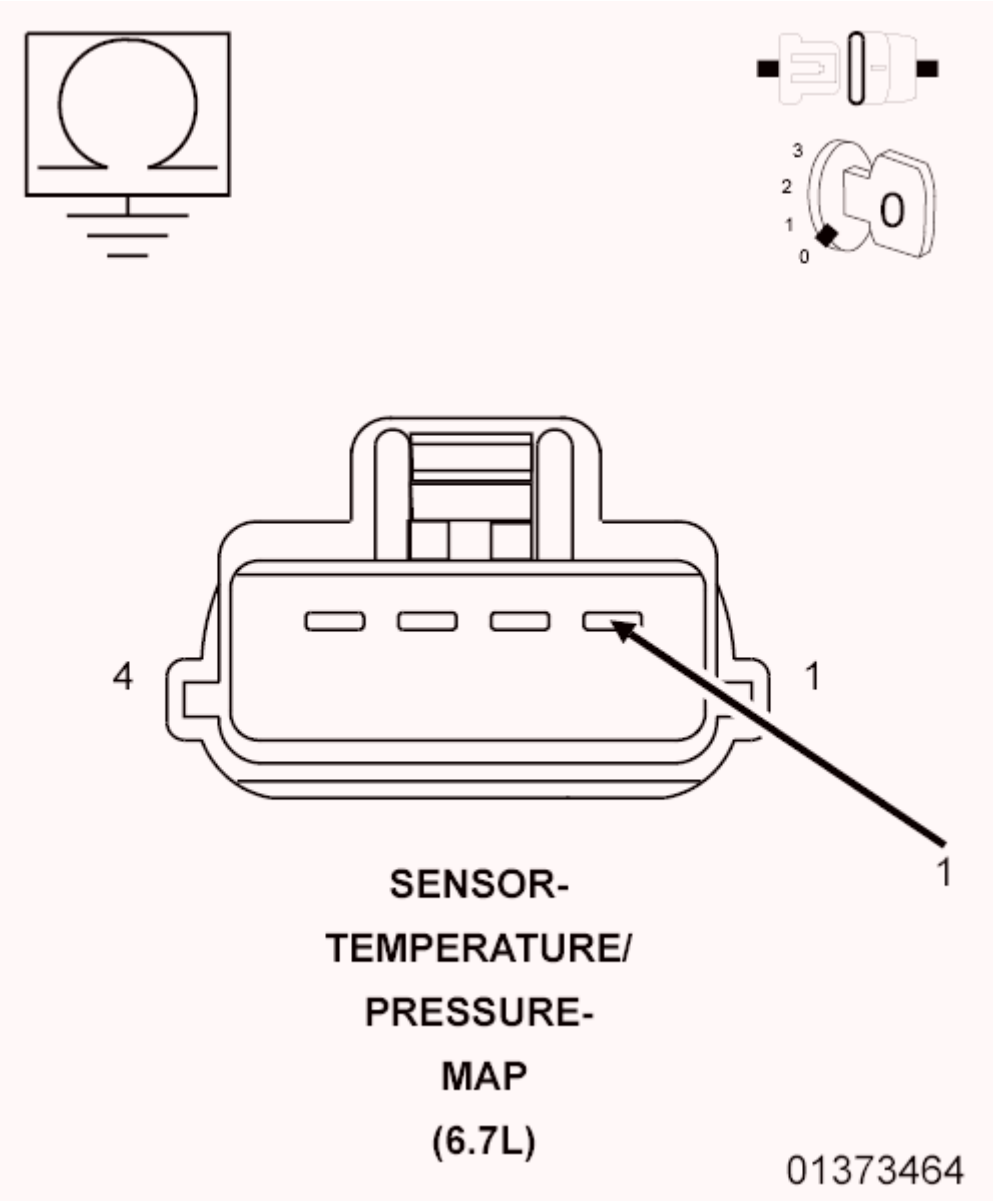

Fig. 35: Checking Boost Pressure Sensor Signal Circuit For Short To Ground
Courtesy of CHRYSLER GROUP, LLC

1. Measure the resistance between ground and the (K37) Boost Pressure Sensor Signal circuit.

   Is the resistance below 10k Ohms?

   Yes

   - Repair the (K37) Boost Pressure Sensor Signal circuit for a short to ground.
   - Perform the POWERTRAIN VERIFICATION TEST - 6.7L. Refer to **POWERTRAIN VERIFICATION TEST - 6.7L** .

   No

   - Go To 6.

6. **CHECK THE (K37) BOOST PRESSURE SENSOR SIGNAL CIRCUIT FOR AN OPEN/HIGH RESISTANCE**

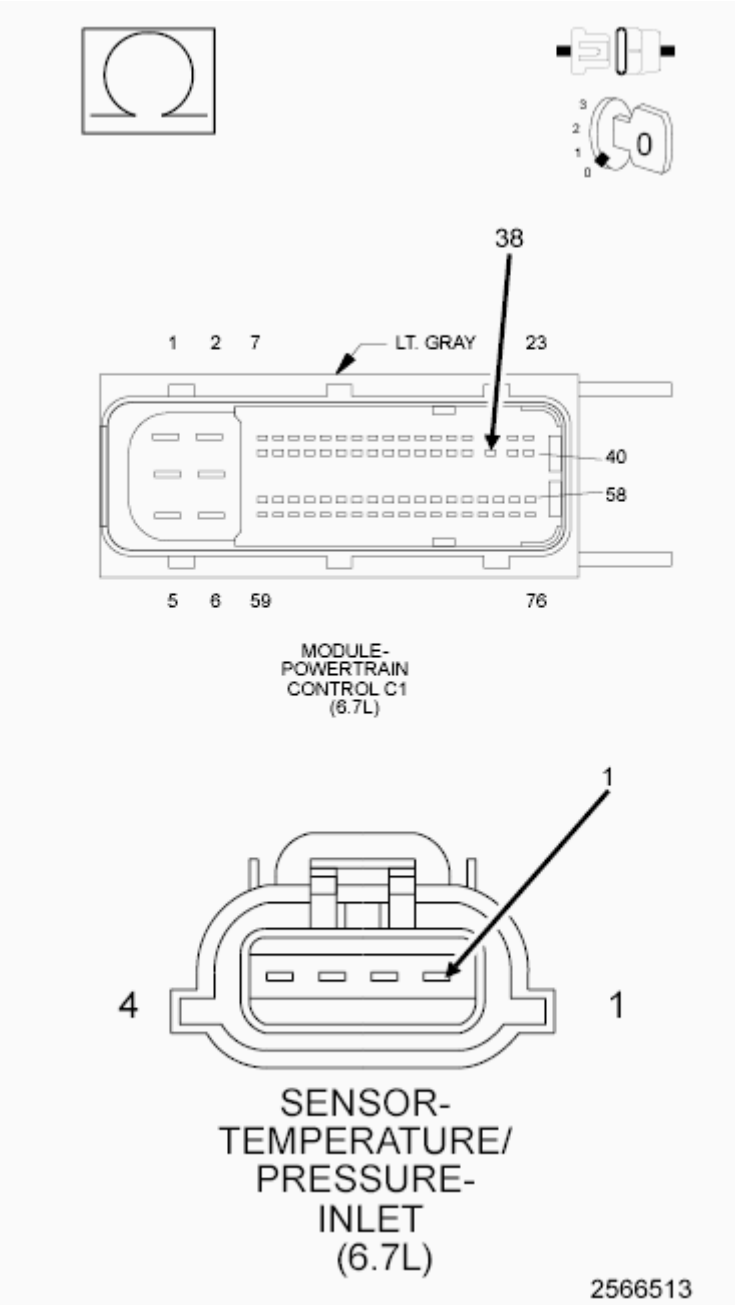

Fig. 36: Checking Boost Pressure Sensor Signal Circuit For An Open Or High Resistance
Courtesy of CHRYSLER GROUP, LLC

1. Measure the resistance of the (K37) Boost Pressure Sensor Signal circuit between the Boost Pressure Sensor and the PCM C1 harness connectors.

   Is the resistance below 5.0 Ohms?

   Yes

   - Replace the Powertrain Control Module in accordance with the service information.

- Perform the POWERTRAIN VERIFICATION TEST - 6.7L. Refer to **POWERTRAIN VERIFICATION TEST - 6.7L** .

No

- Repair the (K37) Boost Pressure Sensor Signal circuit for an open or high resistance.
- Perform the POWERTRAIN VERIFICATION TEST - 6.7L. Refer to **POWERTRAIN VERIFICATION TEST - 6.7L** .

P0108-MANIFOLD ABSOLUTE PRESSURE SENSOR CIRCUIT HIGH

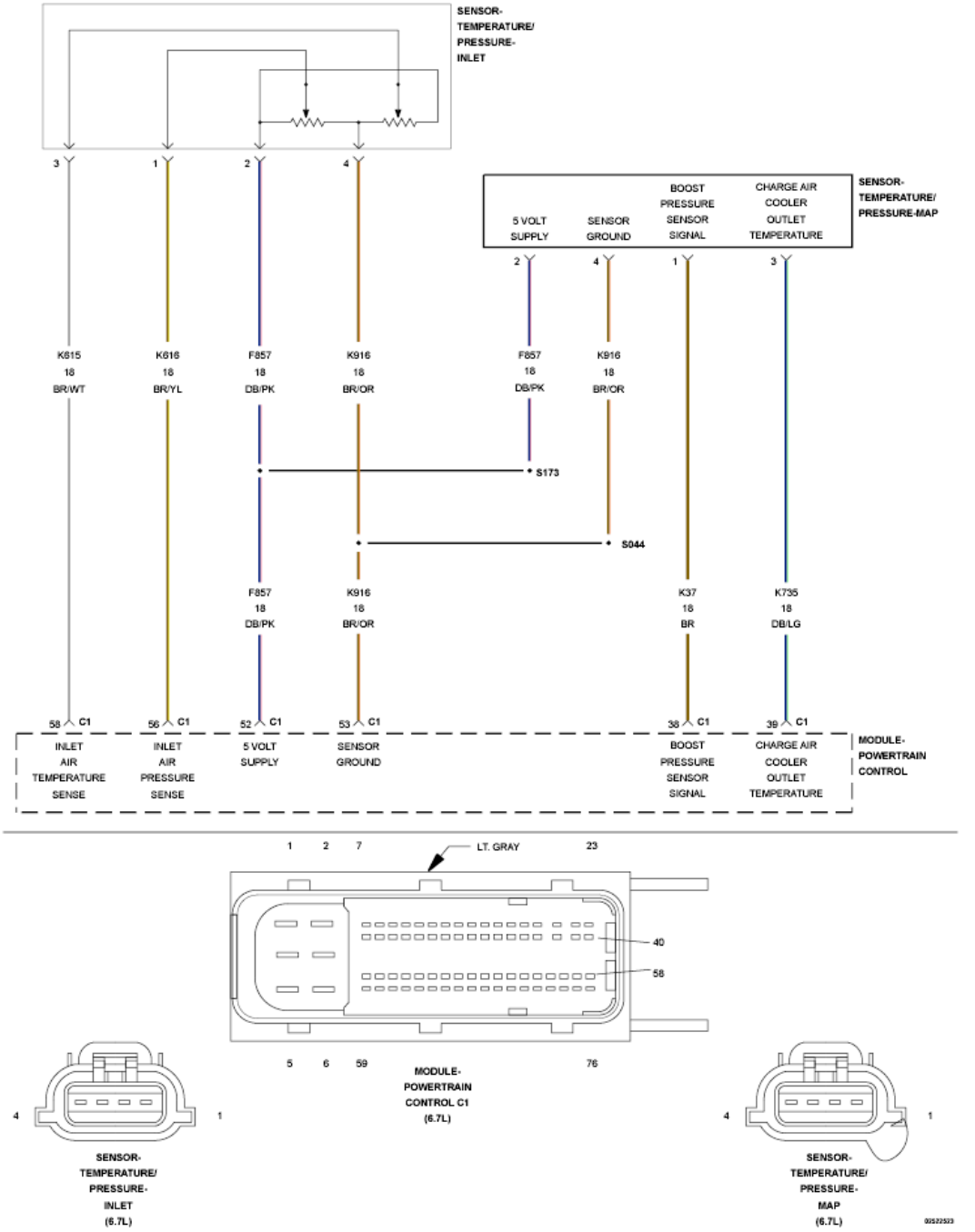

Fig. 37: Inlet Air Temperature Sensor Circuit Schematic
Courtesy of CHRYSLER GROUP, LLC

For a complete wiring diagram, **refer to appropriate SYSTEM WIRING DIAGRAMS article** .

THEORY OF OPERATION

The Charge Air Cooler Temperature Sensor (CAC) and the Boost Pressure Sensor are combined in one sensor and are located near the EGR Airflow Throttle Control Valve. The Boost Pressure Sensor is used to measure pressure in the intake manifold. The Powertrain Control Module (PCM) provides a 5-Volt supply and sensor

ground for the Boost Pressure Sensor. The Boost Pressure Sensor provides a signal back to the PCM on the Boost Pressure Sensor Signal circuit. The PCM will detect a low signal voltage at operating conditions such as during an idle or a deceleration. The PCM will detect a high signal voltage during high engine load operating conditions. The PCM performs a key on check and a rationality check. At key ON, the readings for the boost pressure, exhaust gas pressure, and barometric pressure are compared. This fault code occurs if the boost pressure reading is different from the other two. This diagnostic is run five seconds after key on. During normal engine operation, the PCM estimates the Boost Pressure Sensor value using other fuel system related inputs. The PCM compares the actual Boost Pressure Sensor reading to this estimated value. If the two values are out of range for a calibrated period of time, an error is recorded. The key-on portion of the rationality will light the MIL immediately after the diagnostic runs and fails. The rationality portion will light the MIL immediately and the ETC lamp will also be illuminated. During this time the PCM uses an estimated boost pressure reading. The PCM turns off the MIL when the diagnostic runs and passes in four consecutive drive cycles.

WHEN MONITORED:

With the ignition on and battery voltage greater than 10.4 Volts.

SET CONDITION:

The (K37) Boost Pressure Sensor Signal circuit is above 4.75 Volts for five seconds.

POSSIBLE CAUSES

Possible Causes
(F857) 5-VOLT SUPPLY CIRCUIT SHORTED TO VOLTAGE
(K37) BOOST PRESSURE SENSOR SIGNAL CIRCUIT SHORTED TO VOLTAGE
(K37) BOOST PRESSURE SENSOR SIGNAL CIRCUIT SHORTED TO THE (F855) 5-VOLT SUPPLY CIRCUIT
(K916) BOOST PRESSURE SENSOR RETURN CIRCUIT OPEN/HIGH RESISTANCE
BOOST PRESSURE SENSOR
POWERTRAIN CONTROL MODULE (PCM)

Always perform the Pre-Diagnostic Troubleshooting procedure before proceeding. Refer to PRE-DIAGNOSTIC TROUBLESHOOTING PROCEDURE - 6.7L .

DIAGNOSTIC TEST

1. **ACTIVE DTC**

NOTE: If there are any 5-Volt supply DTCs present, repair those DTCs before proceeding.

1. Turn the ignition on.
2. With the scan tool, record all Freeze frame data.
3. With the scan tool, erase DTCs.
4. Turn the ignition off for 75 seconds.

5. Turn the ignition on.
6. With the scan tool, read DTCs.

   Did the DTC reset?

   Yes

   - Go To 2.

   No

   - Perform the INTERMITTENT CONDITION - 6.7L diagnostic procedure. Refer to **INTERMITTENT CONDITION - 6.7L** .

2. **CHECK THE (K37) BOOST PRESSURE SENSOR SIGNAL CIRCUIT FOR A SHORT TO VOLTAGE**

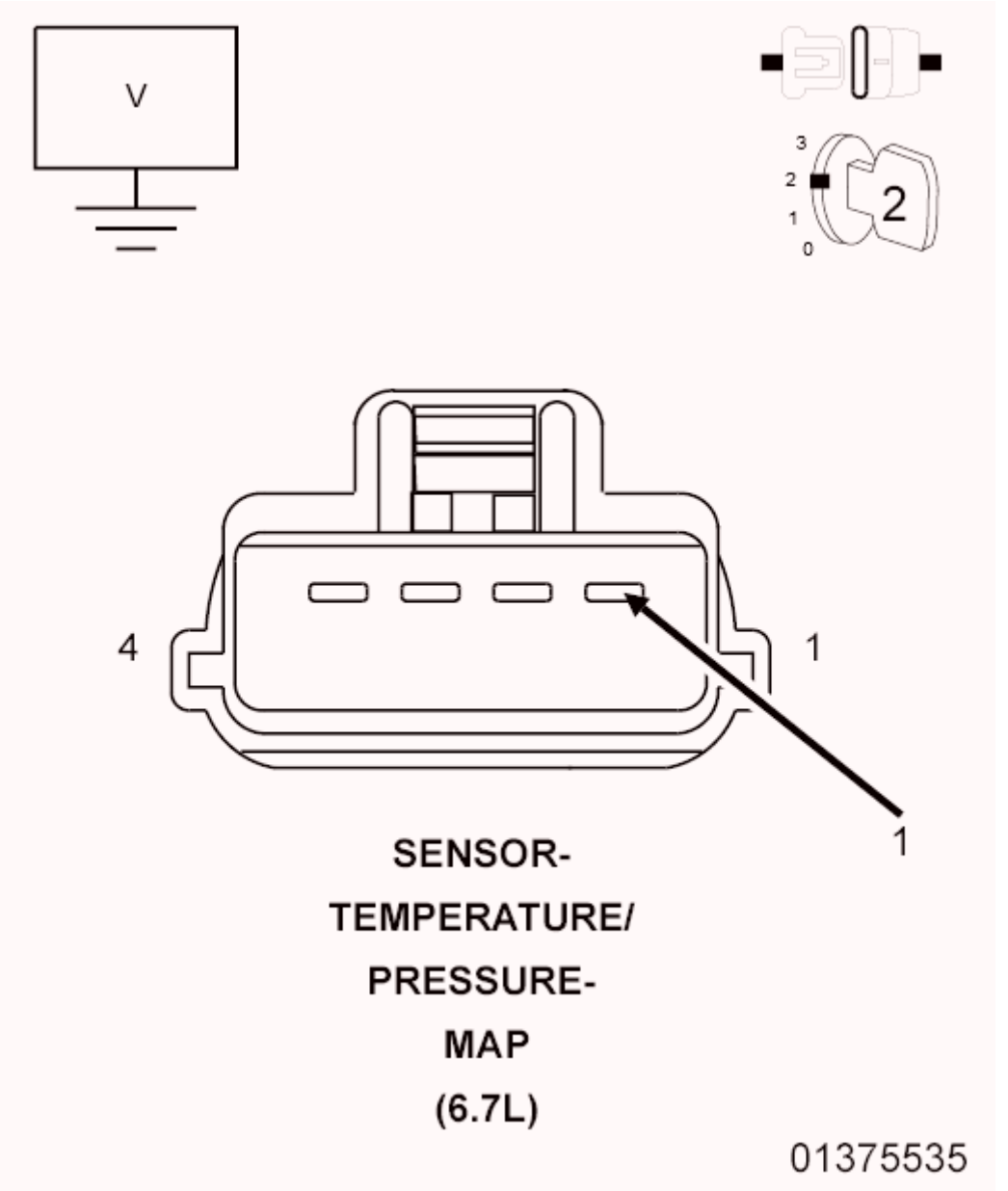

Fig. 38: Checking Boost Pressure Sensor Signal Circuit For Short To Battery
Courtesy of CHRYSLER GROUP, LLC

1. Turn the ignition off.
2. Disconnect the Boost Pressure Sensor harness connector.
3. Turn the ignition on.
4. With a voltmeter, measure the voltage of the (K37) Boost Pressure Sensor Signal circuit at the Boost Pressure Sensor harness connector.

   Is the voltage reading near battery voltage?

   Yes

- Repair the (K37) Boost Pressure Sensor Signal circuit for a short to voltage.
- Perform the POWERTRAIN VERIFICATION TEST - 6.7L. Refer to **POWERTRAIN VERIFICATION TEST - 6.7L** .

No

- Go To 3.

3. **CHECK FOR THE (K37) BOOST PRESSURE SENSOR SIGNAL CIRCUIT SHORTED TO THE (F857) 5-VOLT SUPPLY CIRCUIT**

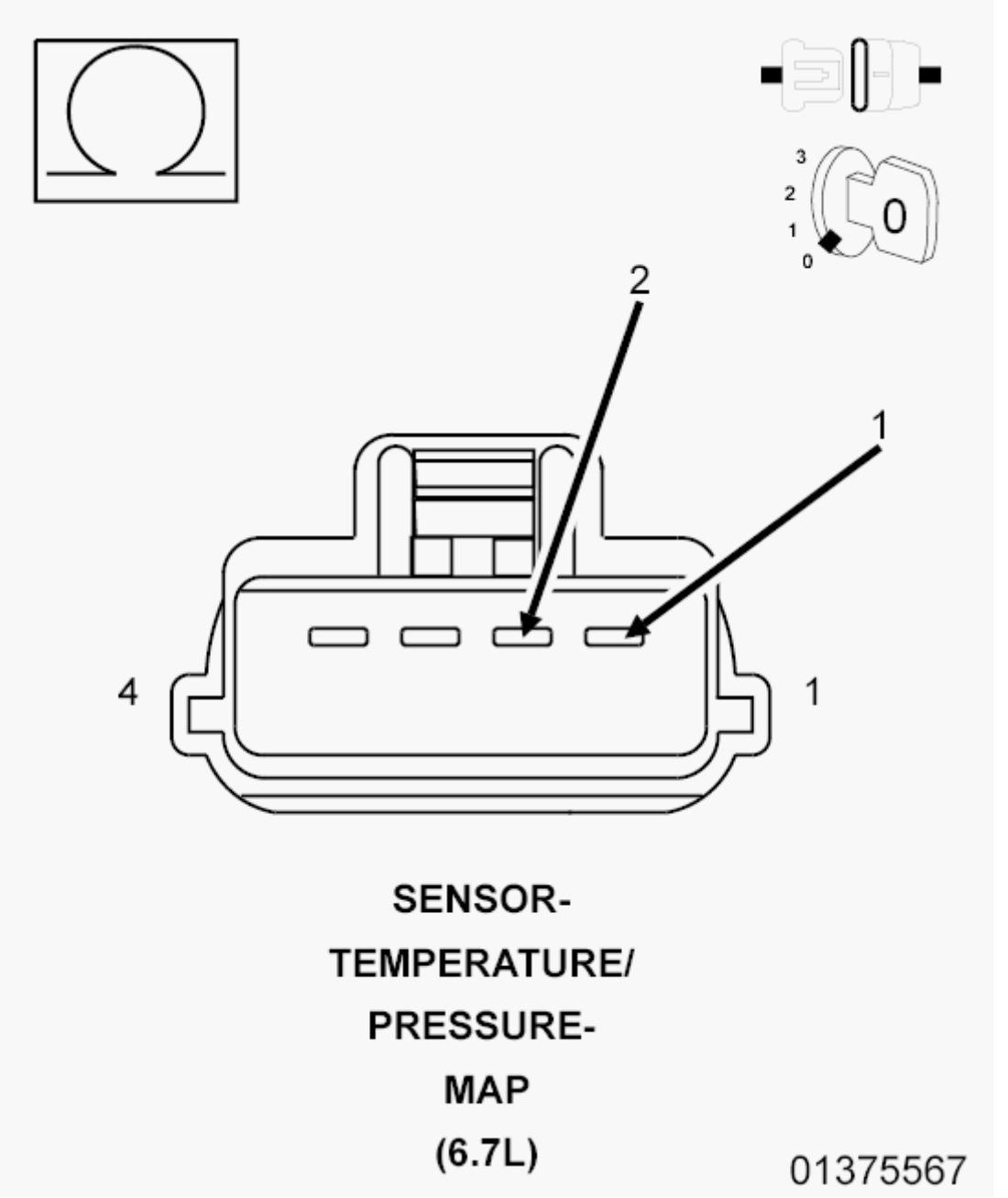

Fig. 39: Checking Boost Pressure Sensor Signal Circuit Shorted To 5-Volt Supply Circuit
Courtesy of CHRYSLER GROUP, LLC

1. Turn the ignition off.
2. Disconnect the PCM C1 harness connector.
3. Measure the resistance between the (K37) Boost Pressure Sensor Signal circuit and (F857) 5-Volt Supply circuit at the Boost Pressure Sensor harness connector.

   Is the resistance below 10k Ohms?

   Yes

   - Repair the short between the (K37) Boost Pressure Sensor Signal circuit and (F857) 5-Volt Supply circuit.
   - Perform the POWERTRAIN VERIFICATION TEST - 6.7L. Refer to **POWERTRAIN VERIFICATION TEST - 6.7L** .

   No

   - Go To 4.

4. **CHECK THE (K916) BOOST PRESSURE SENSOR RETURN CIRCUIT FOR AN OPEN/HIGH RESISTANCE**

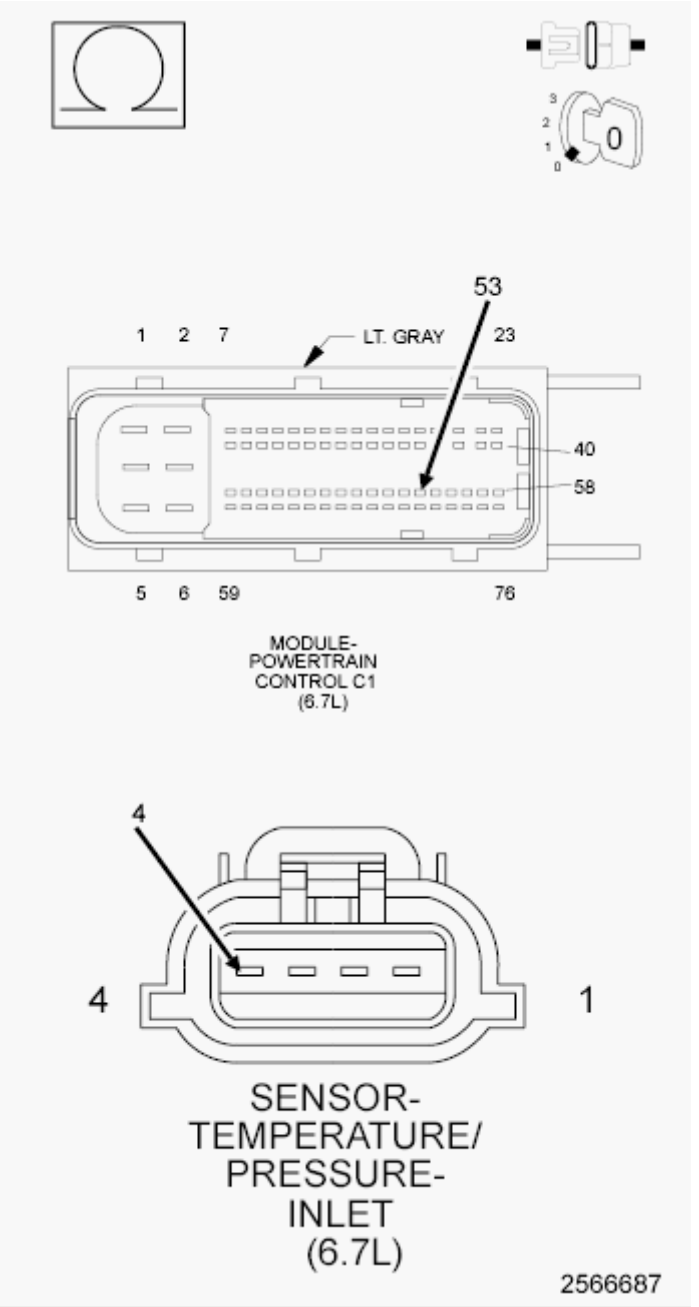

Fig. 40: Checking CAC Temperature Sensor Ground Circuit For An Open Or High Resistance
Courtesy of CHRYSLER GROUP, LLC

1. Measure the resistance of the (K916) Boost Pressure Sensor Return circuit between the Boost Pressure Sensor and the PCM C1 harness connectors.

   Is the resistance below 5.0 Ohms?

   Yes

   - Go To 4.

No

- Repair the (K916) Boost Pressure Sensor Return circuit for an open or high resistance.
- Perform the POWERTRAIN VERIFICATION TEST - 6.7L. Refer to **POWERTRAIN VERIFICATION TEST - 6.7L** .

5. **CHECK THE BOOST PRESSURE SENSOR**
    1. Reconnect the Boost Pressure Sensor harness connector.
    2. Reconnect the PCM C1 harness connector.
    3. Turn the ignition on.
    4. With the scan tool, erase DTCs.
    5. Turn the ignition off and disconnect the Boost Pressure Sensor harness connector.
    6. Turn the ignition on.
    7. With the scan tool, read DTCs.

    Did the DTC P0107 set?

    Yes

    - Replace the Boost Pressure Sensor in accordance with the service information.
    - Perform the POWERTRAIN VERIFICATION TEST - 6.7L. Refer to **POWERTRAIN VERIFICATION TEST - 6.7L** .

    No

    - Replace the Powertrain Control Module in accordance with the service information.
    - Perform the POWERTRAIN VERIFICATION TEST - 6.7L. Refer to **POWERTRAIN VERIFICATION TEST - 6.7L** .

P0111-INTAKE AIR TEMPERATURE SENSOR 1 PERFORMANCE

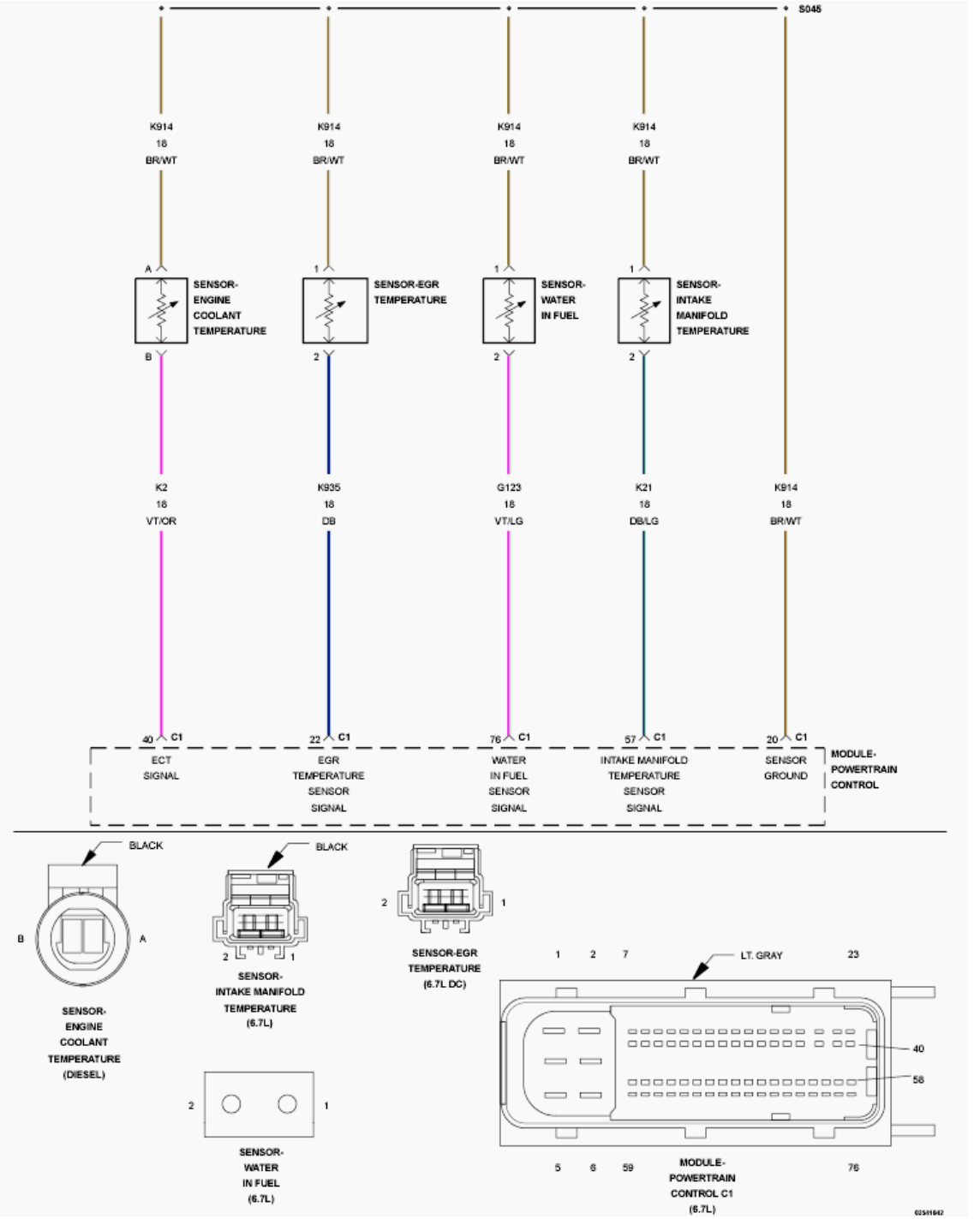

Fig. 41: Intake Manifold Temp, Engine Coolant Temp, EGR Temp, & Water In Fuel Sensor Circuit Schematic
Courtesy of CHRYSLER GROUP, LLC

For a complete wiring diagram, **refer to appropriate SYSTEM WIRING DIAGRAMS article** .

THEORY OF OPERATION

The Intake Manifold Temperature Sensor is located on the intake manifold and is used to measure the temperature of the air in the intake manifold of the engine. The Powertrain Control Module (PCM) supplies 5 Volts to the Intake Manifold Temperature Sensor. The PCM monitors the change in voltage caused by changes in the resistance of the sensor to determine the intake manifold temperature. The MIL lamp is illuminated immediately when the diagnostic runs and fails. During this time the customer may notice periods of white smoke as well as the fan running more often. The MIL lamp is turned off once the diagnostic runs and passes in four consecutive drive cycles.

WHEN MONITORED:

Key on engine off and while engine is running.

SET CONDITION:

At key on engine off, the Intake Air Temperature Sensor reads differently than the Engine Coolant Temperature Sensor and EGR Orifice Temperature Sensor, or while the engine is running the PCM does not read a change in value from the Intake Air Temperature Sensor over time.

POSSIBLE CAUSES

Possible Causes
AIR CLEANER BOX NOT SEALING PROPERLY TO THE AIR INLET TUBE
DIRT OR DEBRIS IN CHARGE AIR COOLING SYSTEM
INTAKE AIR TEMPERATURE SENSOR

Always perform the Pre-Diagnostic Troubleshooting procedure before proceeding. Refer to PRE-DIAGNOSTIC TROUBLESHOOTING PROCEDURE - 6.7L .

DIAGNOSTIC TEST

1. **CHECK THE AIR CLEANER BOX FOR PROPER SEALING**
    1. Check the connection between the Inlet Air Tube and the Air Cleaner Box to make sure that it is sealed properly.

       Is the Air Cleaner Box to Inlet Air Tube installed and sealed properly?

       Yes

       - Go To 2.

       No

       - Repair the connection between the Air Cleaner Box and the Inlet Air Tube.
       - Perform the POWERTRAIN VERIFICATION TEST - 6.7L. Refer to **POWERTRAIN VERIFICATION TEST - 6.7L** .
2. **CHECK THE CHARGE AIR COOLER AND SYSTEM FOR DIRT OR DEBRIS**

1. Remove the hoses at the Charge Air Cooler and Turbo outlet and inspect the system for signs of excessive oil, dirt or debris.

   Does the Charge Air Cooling system show signs of excessive dirt or debris?

   Yes

   - Clean the Charge Air Cooling system in accordance with the service information.
   - Perform the POWERTRAIN VERIFICATION TEST - 6.7L. Refer to **POWERTRAIN VERIFICATION TEST - 6.7L** .

   No

   - Go To 3.

3. **CHECK THE INTAKE AIR TEMPERATURE SENSOR**
   1. Disconnect the Intake Air Temperature Sensor harness connector.
   2. Remove the Intake Air Temperature Sensor and reconnect the wiring harness connector to the sensor.
   3. With the scan tool in Sensors, Monitor the Intake Air Temperature Sensor.
   4. While heating the sensor with an external heat source (DO NOT USE OPEN FLAME).

      Does the reading from the sensor increase at least (5°F) on the scan tool?

      Yes

      - Go To 4.

      No

      - Replace the Intake Air Temperature Sensor in accordance with the service information.
      - Perform the POWERTRAIN VERIFICATION TEST - 6.7L. Refer to **POWERTRAIN VERIFICATION TEST - 6.7L** .

4. **COMPARE THE INTAKE AIR TEMPERATURE SENSOR**
   1. After an eight hour cold soak, connect the scan tool and monitor intake air temperature, EGR orifice temperature, and engine coolant temperature.

      NOTE: Make sure ambient air temperature is above -6.7°C (20°F) when performing this test.

      NOTE: Make sure there is no external heat source, such as a block heater, operating during this test or within the eight hour cold soak.

      Does the Intake Air Temperature Sensor read differently from the other sensors?

Yes

- Replace the Intake Air Temperature Sensor in accordance with the service information.
- Perform the POWERTRAIN VERIFICATION TEST - 6.7L. Refer to **POWERTRAIN VERIFICATION TEST - 6.7L** .

No

- Perform the INTERMITTENT CONDITION - 6.7L diagnostic procedure. Refer to **INTERMITTENT CONDITION - 6.7L** .

P0112-INTAKE AIR TEMPERATURE SENSOR 1 CIRCUIT LOW

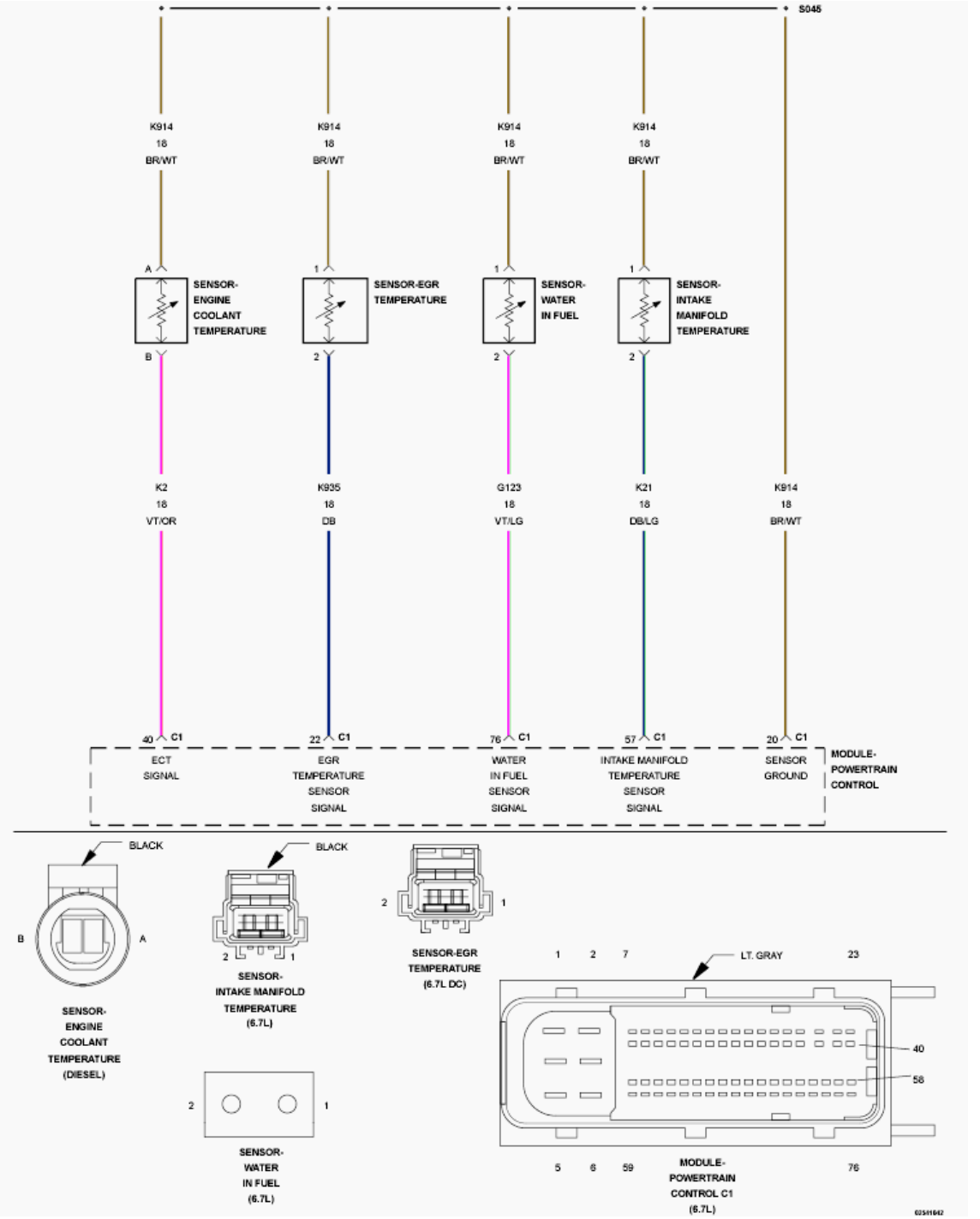

Fig. 42: Intake Manifold Temp, Engine Coolant Temp, EGR Temp, & Water In Fuel Sensor Circuit Schematic
Courtesy of CHRYSLER GROUP, LLC

For a complete wiring diagram, **refer to appropriate SYSTEM WIRING DIAGRAMS article** .

THEORY OF OPERATION

The Intake Manifold Temperature Sensor is located on the intake manifold and is used to measure the temperature of the air in the intake manifold of the engine. The Powertrain Control Module (PCM) supplies 5 volts to the intake manifold temperature signal circuit. The PCM monitors the change in voltage caused by changes in the resistance of the sensor to determine the intake manifold temperature. The MIL lamp is illuminated immediately when the diagnostic runs and fails. During this time the customer may notice periods of white smoke as well as the fan running more often. The MIL lamp is turned off once the diagnostic runs and passes in four consecutive drive cycles.

WHEN MONITORED:

The PCM monitors the change in signal voltage and converts this to a temperature value.

SET CONDITION:

The (K21) Intake Manifold Temperature Sensor Signal circuit drops below 0.25 of a Volt for five seconds.

POSSIBLE CAUSES

Possible Causes
(K21) INTAKE MANIFOLD TEMPERATURE SENSOR SIGNAL CIRCUIT SHORTED TO GROUND
(K21) INTAKE MANIFOLD TEMPERATURE SENSOR SIGNAL CIRCUIT SHORTED TO (K914) SENSOR GROUND CIRCUIT
INTAKE AIR TEMPERATURE SENSOR
POWERTRAIN CONTROL MODULE

Always perform the Pre-Diagnostic Troubleshooting procedure before proceeding. Refer to PRE-DIAGNOSTIC TROUBLESHOOTING PROCEDURE - 6.7L .

DIAGNOSTIC TEST

1. **ACTIVE DTC**
    1. Turn the ignition on.
    2. With the scan tool, record all Freeze frame data.
    3. With the scan tool, erase DTCs.
    4. Turn the ignition off for 75 seconds.
    5. Turn the ignition on.
    6. With the scan tool, read DTCs.

    Did the DTC reset?

    Yes

    - Go To 2.

No

- Perform the INTERMITTENT CONDITION - 6.7L diagnostic procedure. Refer to **INTERMITTENT CONDITION - 6.7L** .

2. **CHECK THE INTAKE MANIFOLD TEMPERATURE SENSOR**
   1. Turn the ignition off.
   2. Disconnect the Intake Manifold Temperature Sensor harness connector.

      NOTE: Check connectors - Clean/repair as necessary.

   3. Measure the resistance across the Intake Manifold Temperature Sensor.

      Is the resistance between 300 and 90k Ohms?

      Yes

      - Go To 3.

      No

      - Replace the Intake Manifold Temperature Sensor in accordance with the service information.
      - Perform the POWERTRAIN VERIFICATION TEST - 6.7L. Refer to **POWERTRAIN VERIFICATION TEST - 6.7L** .

3. **CHECK THE (K21) INTAKE MANIFOLD TEMPERATURE SENSOR SIGNAL CIRCUIT FOR A SHORT TO GROUND**

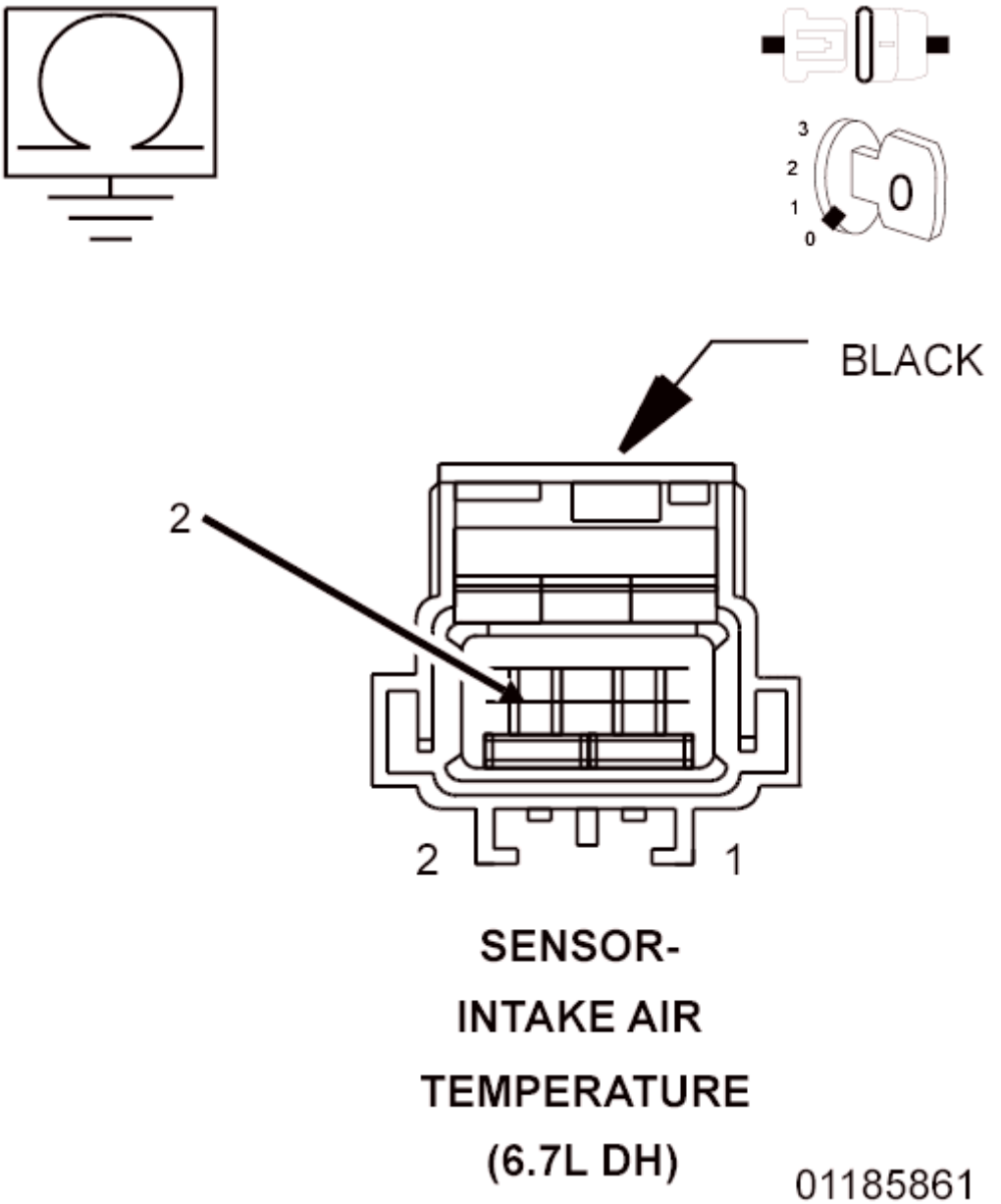

Fig. 43: Checking Intake Manifold Temperature Sensor Signal Circuit For Short To Ground
Courtesy of CHRYSLER GROUP, LLC

1. Disconnect the PCM C1 harness connector.

   NOTE: Check connectors - Clean/repair as necessary.

2. Measure the resistance between ground and the (K21) Intake Manifold Temperature Sensor Signal circuit at the Intake Manifold Temperature Sensor harness connector.

   Is the resistance below 10k Ohms?

Yes

- Repair the (K21) Intake Manifold Temperature Sensor Signal circuit for a short to ground.
- Perform the POWERTRAIN VERIFICATION TEST - 6.7L. Refer to **POWERTRAIN VERIFICATION TEST - 6.7L** .

No

- Go To 4.

4. **CHECK FOR THE (K21) INTAKE MANIFOLD TEMPERATURE SENSOR SIGNAL CIRCUIT SHORTED TO THE (K914) SENSOR GROUND CIRCUIT**

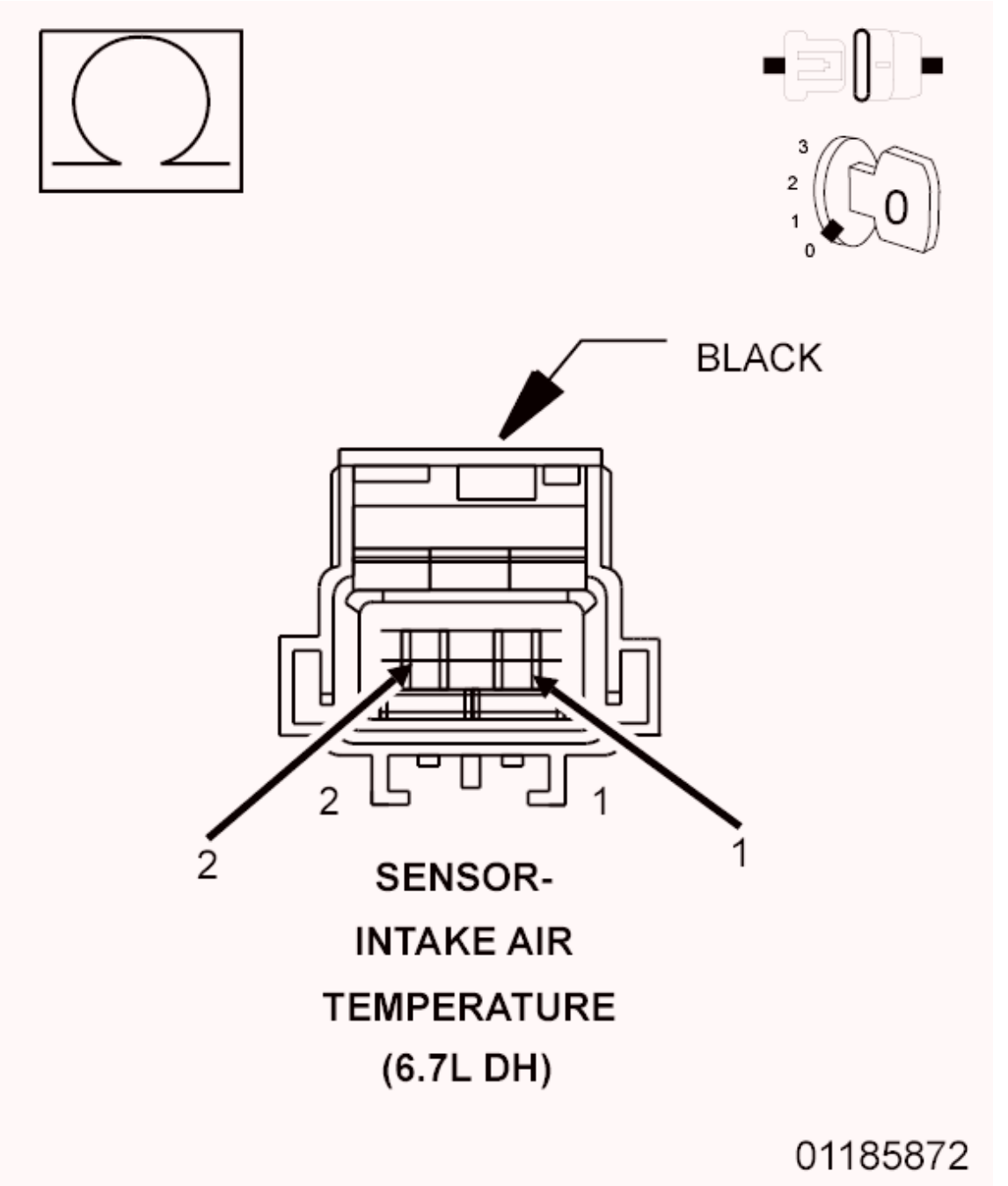

Fig. 44: Checking Intake Manifold Temperature Sensor Signal Circuit Shorted To Sensor Ground Circuit
Courtesy of CHRYSLER GROUP, LLC

1. Measure the resistance between the (K21) Intake Manifold Temperature Sensor Signal circuit and the (K914) Intake Manifold Temperature Sensor Ground circuit at the Intake Manifold Temperature Sensor harness connector.

   Is the resistance below 10k Ohms?

Yes

- Repair the short between the (K21) Intake Manifold Temperature Sensor Signal circuit and the (K914) Intake Manifold Temperature Sensor Ground circuit.
- Perform the POWERTRAIN VERIFICATION TEST - 6.7L. Refer to **POWERTRAIN VERIFICATION TEST - 6.7L** .

No

- Replace the Powertrain Control Module in accordance with the service information.
- Perform the POWERTRAIN VERIFICATION TEST - 6.7L. Refer to **POWERTRAIN VERIFICATION TEST - 6.7L** .

P0113-INTAKE AIR TEMPERATURE SENSOR 1 CIRCUIT HIGH

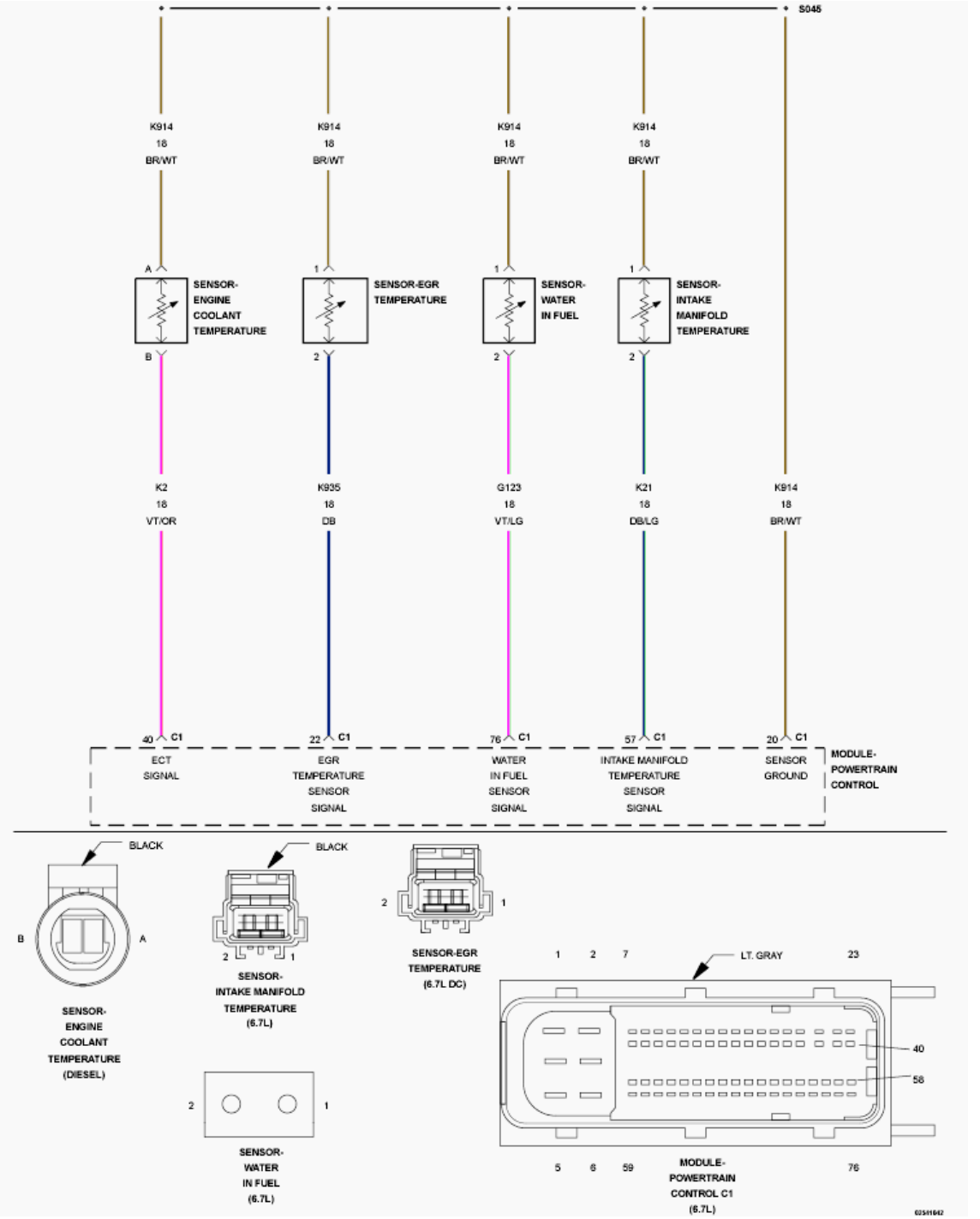

Fig. 45: Intake Manifold Temp, Engine Coolant Temp, EGR Temp, & Water In Fuel Sensor Circuit Schematic
Courtesy of CHRYSLER GROUP, LLC

For a complete wiring diagram, **refer to appropriate SYSTEM WIRING DIAGRAMS article** .

THEORY OF OPERATION

The Intake Manifold Temperature Sensor is located on the intake manifold and is used to measure the temperature of the air in the intake manifold of the engine. The Powertrain Control Module (PCM) supplies 5-Volts to the intake manifold temperature signal circuit. The PCM monitors the change in voltage caused by changes in the resistance of the sensor to determine the intake manifold temperature. The MIL lamp is illuminated immediately when the diagnostic runs and fails. During this time the customer may notice periods of white smoke as well as the fan running more often. The MIL lamp is turned off once the diagnostic runs and passes in four consecutive drive cycles.

WHEN MONITORED:

The PCM monitors the change in signal voltage and converts this to a temperature value.

SET CONDITION:

The (K21) Intake Manifold Temperature Sensor Signal circuit goes above 4.75 Volts for five seconds.

POSSIBLE CAUSES

Possible Causes
(K21) INTAKE MANIFOLD TEMPERATURE SENSOR SIGNAL CIRCUIT SHORTED TO VOLTAGE
(K21) INTAKE MANIFOLD TEMPERATURE SENSOR SIGNAL CIRCUIT OPEN/HIGH RESISTANCE
(K914) INTAKE MANIFOLD TEMPERATURE SENSOR RETURN CIRCUIT OPEN/HIGH RESISTANCE
INTAKE AIR TEMPERATURE SENSOR
POWERTRAIN CONTROL MODULE (PCM)

Always perform the Pre-Diagnostic Troubleshooting procedure before proceeding. Refer to PRE-DIAGNOSTIC TROUBLESHOOTING PROCEDURE - 6.7L .

DIAGNOSTIC TEST

1. **ACTIVE DTC**
    1. Turn the ignition on.
    2. With the scan tool, record all Freeze frame data.
    3. With the scan tool, erase DTCs.
    4. Turn the ignition off for 75 seconds.
    5. Turn the ignition on.
    6. With the scan tool, read DTCs.

    Did the DTC reset?

    Yes

- Go To 2.

No

- Perform the INTERMITTENT CONDITION - 6.7L diagnostic procedure. Refer to **INTERMITTENT CONDITION - 6.7L** .

2. **CHECK THE (K21) INTAKE MANIFOLD TEMPERATURE SENSOR SIGNAL CIRCUIT FOR A SHORT TO VOLTAGE**

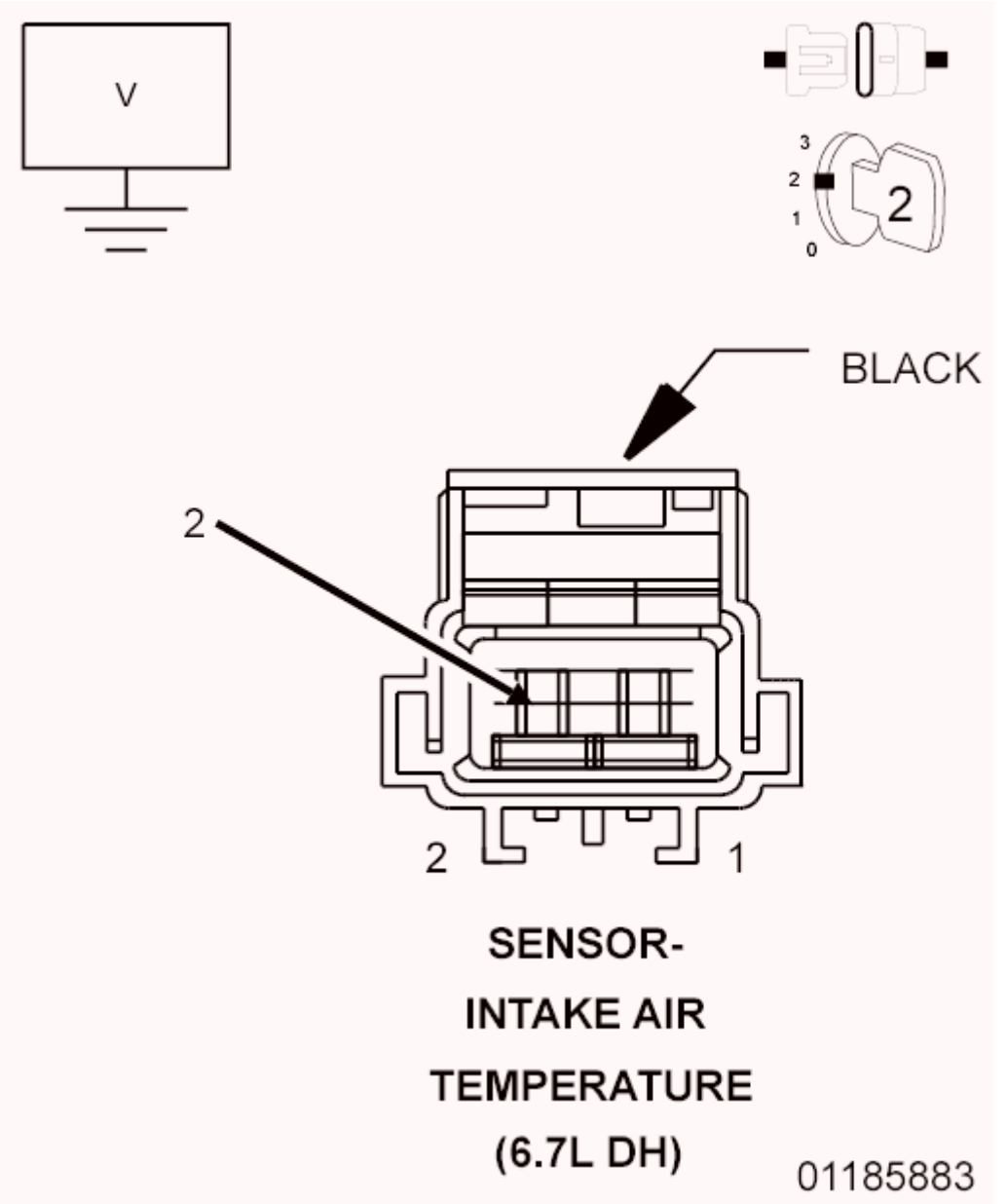

Fig. 46: Checking Intake Manifold Temperature Sensor Signal Circuit Shorted To Voltage
Courtesy of CHRYSLER GROUP, LLC

1. Ignition on.
2. Disconnect the Intake Manifold Temperature Sensor harness connector.

NOTE: Check connectors - Clean/repair as necessary.

3. With a voltmeter connected to ground, measure the voltage of the (K21) Intake Manifold Temperature Sensor Signal circuit at the Intake Manifold Temperature Sensor harness connector.

   Is the voltage above 5.1 Volts?

   Yes

   - Repair the (K21) Intake Manifold Temperature Sensor Signal circuit for a short to voltage.
   - Perform the POWERTRAIN VERIFICATION TEST - 6.7L. Refer to **POWERTRAIN VERIFICATION TEST - 6.7L** .

   No

   - Go To 3.

3. **CHECK THE INTAKE AIR TEMPERATURE SENSOR**
   1. Turn the ignition off.
   2. Measure the resistance across the terminals of the Intake Manifold Temperature Sensor.

      Is the resistance between 300 and 90k Ohms?

      Yes

      - Go To 4.

      No

      - Replace the Intake Manifold Temperature Sensor in accordance with the service information.
      - Perform the POWERTRAIN VERIFICATION TEST - 6.7L. Refer to **POWERTRAIN VERIFICATION TEST - 6.7L** .

4. **CHECK THE (K21) INTAKE MANIFOLD TEMPERATURE SENSOR SIGNAL CIRCUIT FOR AN OPEN/HIGH RESISTANCE**

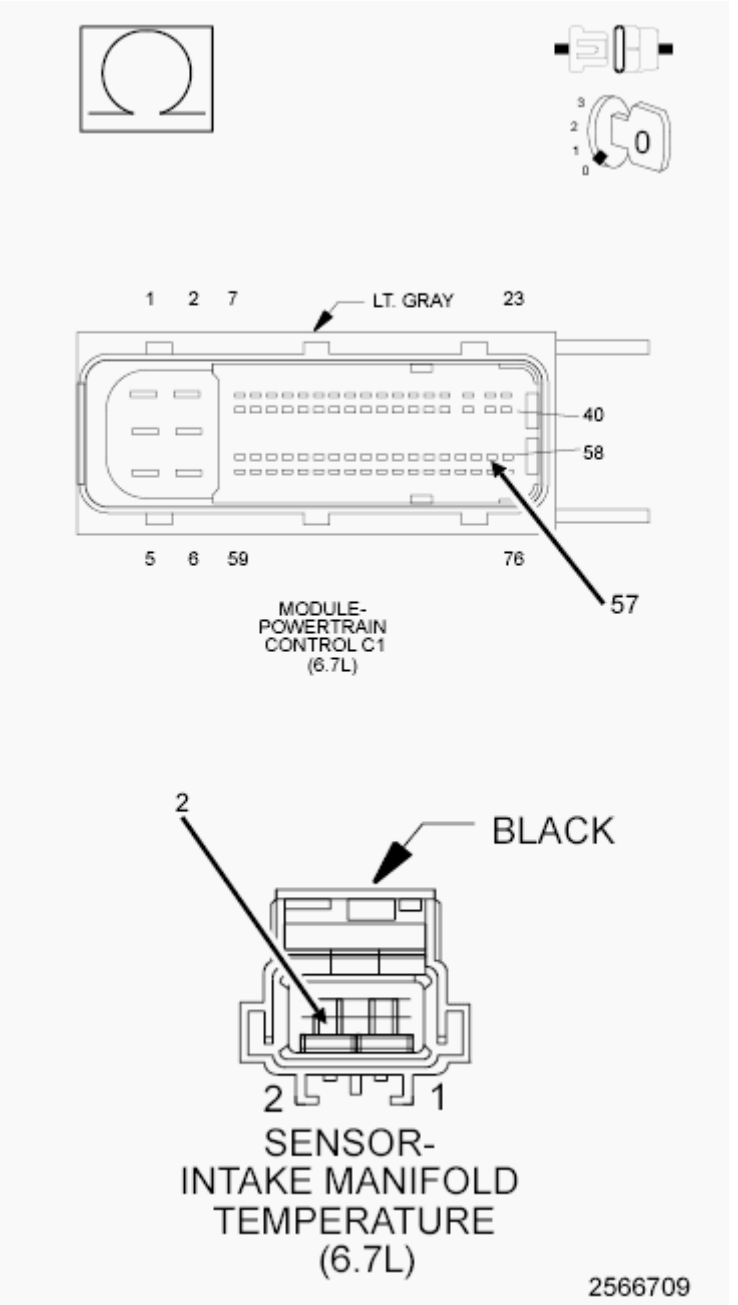

Fig. 47: Checking Intake Manifold Temperature Sensor Signal Circuit For Open Or High Resistance
Courtesy of CHRYSLER GROUP, LLC

1. Disconnect the PCM C1 harness connector.

   NOTE: Check connectors - Clean/repair as necessary.

2. Measure the resistance of the (K21) Intake Manifold Temperature Sensor Signal circuit between the Intake Manifold Temperature Sensor harness connector and the PCM C1 harness connector.

Is the resistance below 5.0 Ohms?

Yes

- Go To 5.

No

- Repair the (K21) Intake Manifold Temperature Sensor Signal circuit for an open or high resistance.
- Perform the POWERTRAIN VERIFICATION TEST - 6.7L. Refer to **POWERTRAIN VERIFICATION TEST - 6.7L** .

5. **CHECK THE (K914) INTAKE MANIFOLD TEMPERATURE SENSOR RETURN CIRCUIT FOR AN OPEN/HIGH RESISTANCE**

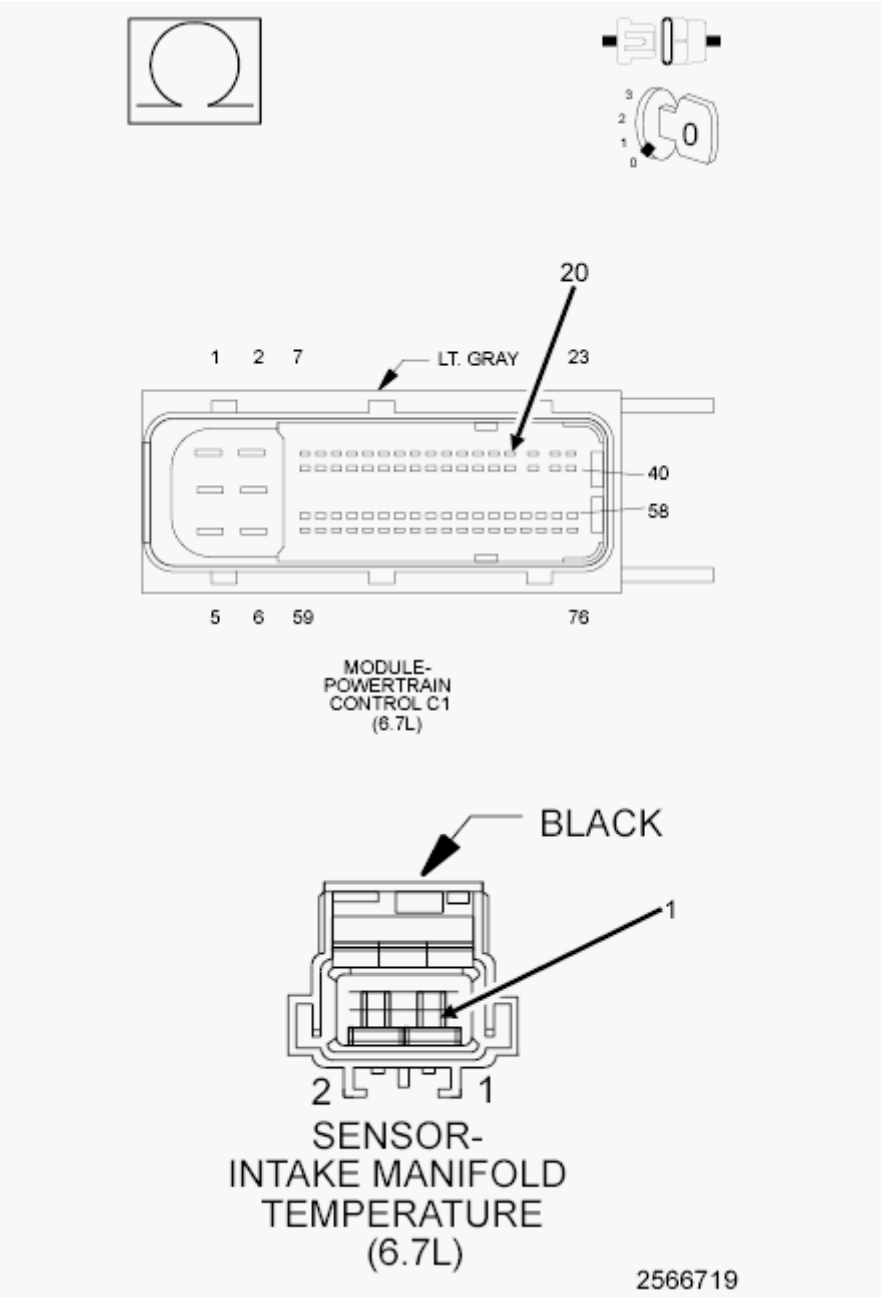

Fig. 48: Checking Intake Manifold Temperature Sensor Return Circuit For Open Or High Resistance
Courtesy of CHRYSLER GROUP, LLC

1. Measure the resistance of the (K914) Intake Manifold Temperature Sensor Return circuit between the Intake Manifold Temperature Sensor harness connector and the PCM C1 harness connector.

   Is the resistance below 5.0 Ohms?

   Yes

- Replace the Powertrain Control Module in accordance with the service information.
- Perform the POWERTRAIN VERIFICATION TEST - 6.7L. Refer to **POWERTRAIN VERIFICATION TEST - 6.7L** .

No

- Repair the (K914) Intake Manifold Temperature Sensor Return circuit for an open or high resistance.
- Perform the POWERTRAIN VERIFICATION TEST - 6.7L. Refer to **POWERTRAIN VERIFICATION TEST - 6.7L** .

P0116-ENGINE COOLANT TEMPERATURE SENSOR PERFORMANCE

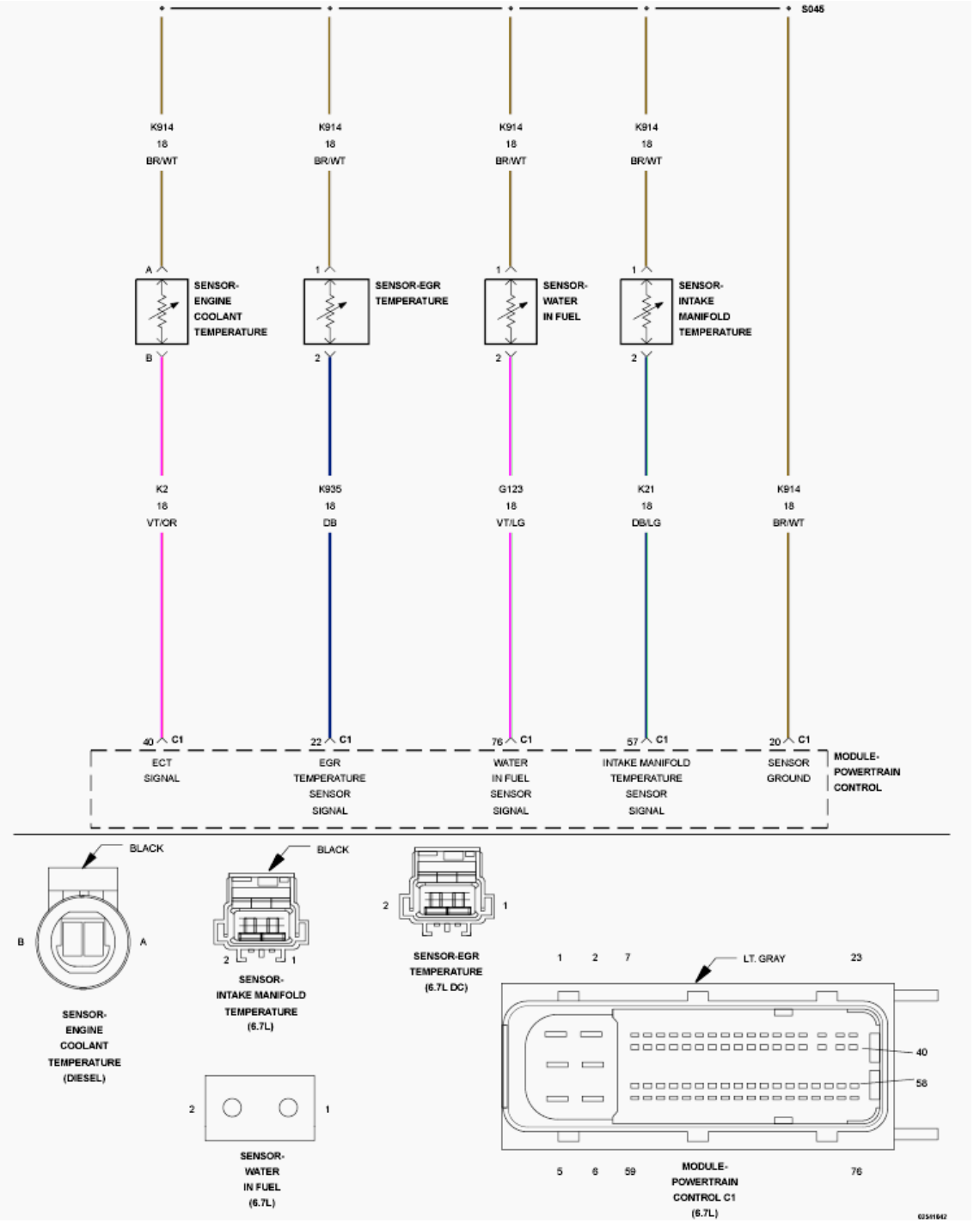

Fig. 49: Intake Manifold Temp, Engine Coolant Temp, EGR Temp, & Water In Fuel Sensor Circuit Schematic
Courtesy of CHRYSLER GROUP, LLC

For a complete wiring diagram, **refer to appropriate SYSTEM WIRING DIAGRAMS article** .

THEORY OF OPERATION

The Engine Coolant Temperature Sensor (ECT) is located near the thermostat housing and is used to measure the engine coolant temperature. The Engine Coolant Temperature Sensor recieves 5-Volts and a sensor ground from the Powertrain Control Module (PCM). The PCM monitors the change in voltage to determine the coolant temperature. There are two parts to this fault code, a key on check and a rationality check. After an eight hour cold soak, at key on the readings for the EGR Temperature, Inlet Air Temperature and Engine Coolant Temperature Sensors are all compared. If the temperatures differ more than a calibrated amount, then the appropriate sensor fault code would be recorded. This monitor looks for all the sensors to be grouped on one temperature or, in the case that the monitor fails, two sensors grouped at one temperature and one outlier. In the case that all three sensor values are distributed over a range of temperatures this diagnostic will not run. A block heater is one possible cause of such a distribution. The Coolant Temperature Sensor rationality check looks at the temperature reading from the sensor over time and ensures that it changes with engine running. If the sensor reading does not change over a calibrated time limit, the fault will be recorded. Both the key-on and rationality portions of this monitor require that the diagnostic fails in two consecutive drive cycles before the MIL lamp is lit. During this time the PCM uses a default value for the Coolant Temperature Sensor. The PCM turns off the MIL lamp when the diagnostic runs and passes in four consecutive drive cycles.

WHEN MONITORED:

While the engine is running.

SET CONDITION:

The Powertrain Control Module (PCM) does not read a change in value from the sensor over time.

POSSIBLE CAUSES

Possible Causes
LOW COOLANT LEVEL COOLANT TEMPERATURE SENSOR THERMOSTAT

Always perform the Pre-Diagnostic Troubleshooting procedure before proceeding. Refer to PRE-DIAGNOSTIC TROUBLESHOOTING PROCEDURE - 6.7L .

DIAGNOSTIC TEST

1. **CHECK THE COOLANT LEVEL**
    1. Turn the ignition off.
    2. With the engine cold, verify the level of coolant in the cooling system.

       Is the cooling system full of coolant?

       Yes

       - Go To 2.

       No

- Fill the cooling system to the proper level.
- Perform the POWERTRAIN VERIFICATION TEST - 6.7L. Refer to **POWERTRAIN VERIFICATION TEST - 6.7L** .

2. **THERMOSTAT**
   1. With the scan tool, check DTCs.

      NOTE: If DTC P0117 or P0118 are present, repair those DTCs before proceeding with this test.

      Is DTC P0128-Thermostat Rationality present?

      Yes

      - Replace the Thermostat.
      - Perform the POWERTRAIN VERIFICATION TEST - 6.7L. Refer to **POWERTRAIN VERIFICATION TEST - 6.7L** .

      No

      - Go To 3.

3. **COOLANT TEMPERATURE SENSOR**
   1. Remove the Coolant Temperature Sensor and reconnect the wiring to the sensor.
   2. Turn the ignition on.
   3. Monitor scan tool while heating the sensor with an external heat source (DO NOT USE OPEN FLAME).

      Does the reading from the Coolant Temperature Sensor increase at least 5°F on the scan tool?

      Yes

      - Go To 4.

      No

      - Replace the Coolant Temperature Sensor.
      - Perform the POWERTRAIN VERIFICATION TEST - 6.7L. Refer to **POWERTRAIN VERIFICATION TEST - 6.7L** .

4. **COOLANT TEMPERATURE SENSOR**
   1. Let vehicle cold soak for eight hours.
   2. Turn the ignition on.
   3. With a scan tool, monitor Inlet Air Temperature, EGR Temperature and Coolant Temperature Sensors.

NOTE: **Make sure the Ambient Air Temperature is above 20°F.**

NOTE: **Make sure there is no external heat source, such as a block heater, operating during this test or within the 8 hour cold soak.**

Does the Coolant Temperature Sensor read more than a 18°F (10°C) above or below the other sensors?

Yes

- Replace the Coolant Temperature Sensor.
- Perform the POWERTRAIN VERIFICATION TEST - 6.7L. Refer to **POWERTRAIN VERIFICATION TEST - 6.7L** .

No

- Perform the INTERMITTENT CONDITION - 6.7L diagnostic procedure. Refer to **INTERMITTENT CONDITION - 6.7L** .

P0117-ENGINE COOLANT TEMPERATURE SENSOR CIRCUIT LOW

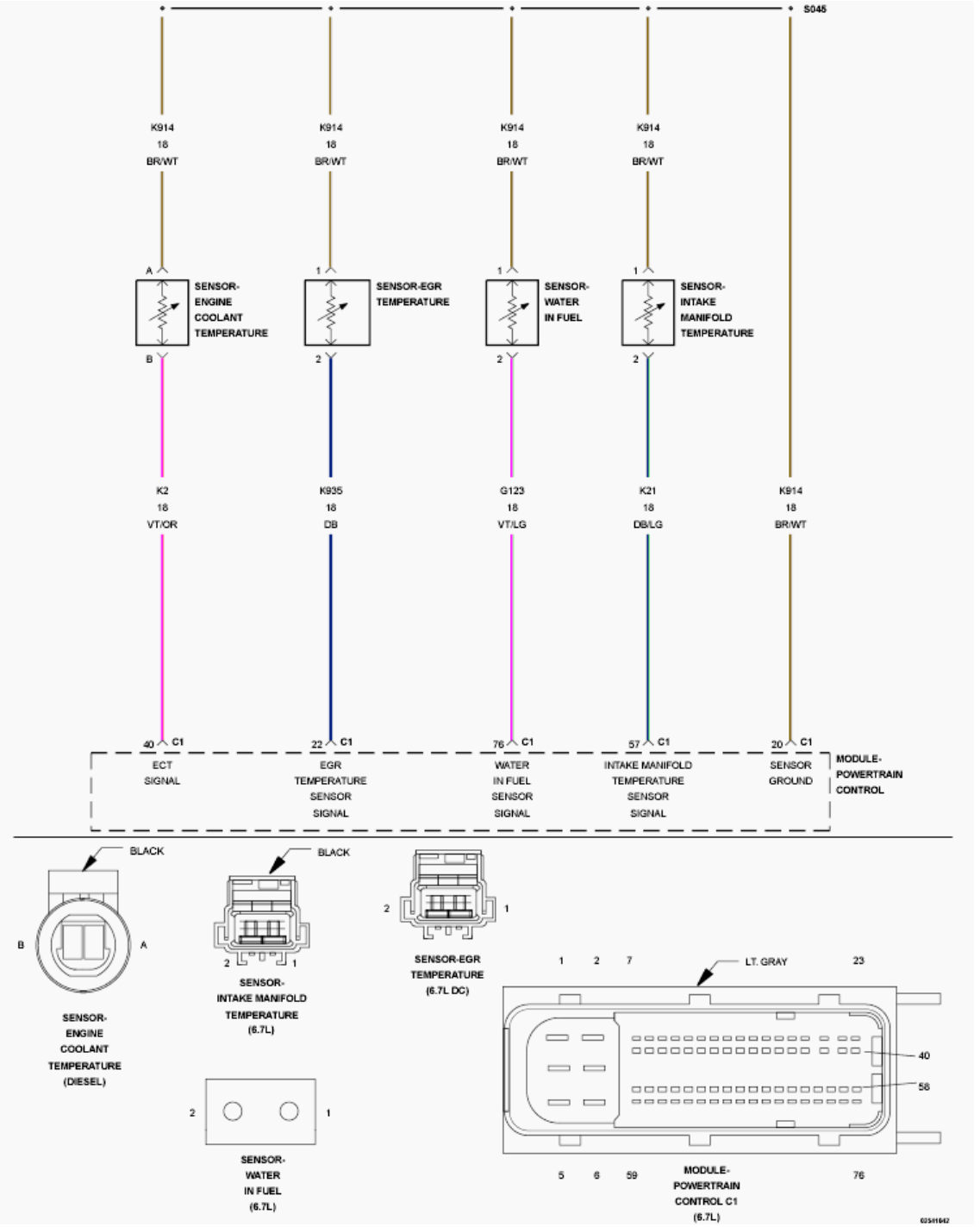

Fig. 50: Intake Manifold Temp, Engine Coolant Temp, EGR Temp, & Water In Fuel Sensor Circuit Schematic
Courtesy of CHRYSLER GROUP, LLC

For a complete wiring diagram, **refer to appropriate SYSTEM WIRING DIAGRAMS article** .

THEORY OF OPERATION

The Engine Coolant Temperature Sensor (ECT) is located near the thermostat housing and is used to measure the engine coolant temperature. The Engine Coolant Temperature Sensor receives 5-Volts and a sensor ground from the PCM. The PCM monitors the change in voltage to determine the coolant temperature. There are two parts to this fault code, a key on check and a rationality check. After an eight hour cold soak, at key on the readings for the Inlet Air Temperature, Intake Air Temperature and Engine Coolant Temperature Sensors are all compared. If the temperatures differ more than a calibrated amount, then the appropriate sensor fault code would be recorded. The key on monitor is disabled for ambient temperatures below 20°F. This monitor looks for all the sensors to be grouped on one temperature or, in the case that the monitor fails, two sensors grouped at one temperature and one outlier. In the case that all three sensor values are distributed over a range of temperatures this diagnostic will not run. A block heater is one possible cause of such a distribution. The PCM rationality check looks at the temperature reading from the sensor over time and ensures that it changes with engine running. If the sensor reading does not change over a calibrated time limit, the fault will be recorded. Both the key-on and rationality portions of this monitor require that the diagnostic fails in two consecutive drive cycles before the MIL lamp is lit. The ETC lamp will also be illuminated. During this time the PCM uses a default value for the Coolant Temperature Sensor. The PCM turns off the MIL lamp when the diagnostic runs and passes in four consecutive drive cycles.

WHEN MONITORED:

With ignition on and battery voltage greater than 10.4 Volts.

SET CONDITION:

The circuit voltage to the Powertrain Control Module (PCM) falls below a calibrated threshold for a certain period of time.

POSSIBLE CAUSES

Possible Causes
(K2) ENGINE COOLANT TEMPERATURE SENSOR SIGNAL CIRCUIT SHORTED TO GROUND (K2) ENGINE COOLANT TEMPERATURE SENSOR SIGNAL CIRCUIT SHORTED TO (K914) ENGINE COOLANT TEMPERATURE SENSOR RETURN CIRCUIT ENGINE COOLANT TEMPERATURE SENSOR
POWERTRAIN CONTROL MODULE (PCM)

Always perform the Pre-Diagnostic Troubleshooting procedure before proceeding. Refer to PRE-DIAGNOSTIC TROUBLESHOOTING PROCEDURE - 6.7L .

DIAGNOSTIC TEST

1. **ACTIVE DTC**
    1. Turn the ignition on.
    2. With the scan tool, record all Freeze frame data.
    3. With the scan tool, erase DTCs.
    4. Turn the ignition off for 75 seconds.
    5. Turn the ignition on.

6. With the scan tool, read DTCs.

   Did the DTC reset?

   Yes

   - Go To 2.

   No

   - Perform the INTERMITTENT CONDITION - 6.7L diagnostic procedure. Refer to **INTERMITTENT CONDITION - 6.7L** .

2. **CHECK THE COOLANT TEMPERATURE SENSOR**
   1. Turn the ignition off.
   2. Disconnect the Engine Coolant Temperature Sensor (ECT) harness connector.

      NOTE: Check connectors - Clean/repair as necessary.

   3. Measure the resistance between ground and one of the terminals of the ECT Sensor.

      Is the resistance below 10k Ohms?

      Yes

      - Replace the Engine Coolant Temperature Sensor in accordance with the service information.
      - Perform the POWERTRAIN VERIFICATION TEST - 6.7L. Refer to **POWERTRAIN VERIFICATION TEST - 6.7L** .

      No

      - Go To 3.

3. **CHECK THE (K2) ENGINE COOLANT TEMPERATURE SENSOR SIGNAL CIRCUIT FOR A SHORT TO GROUND**

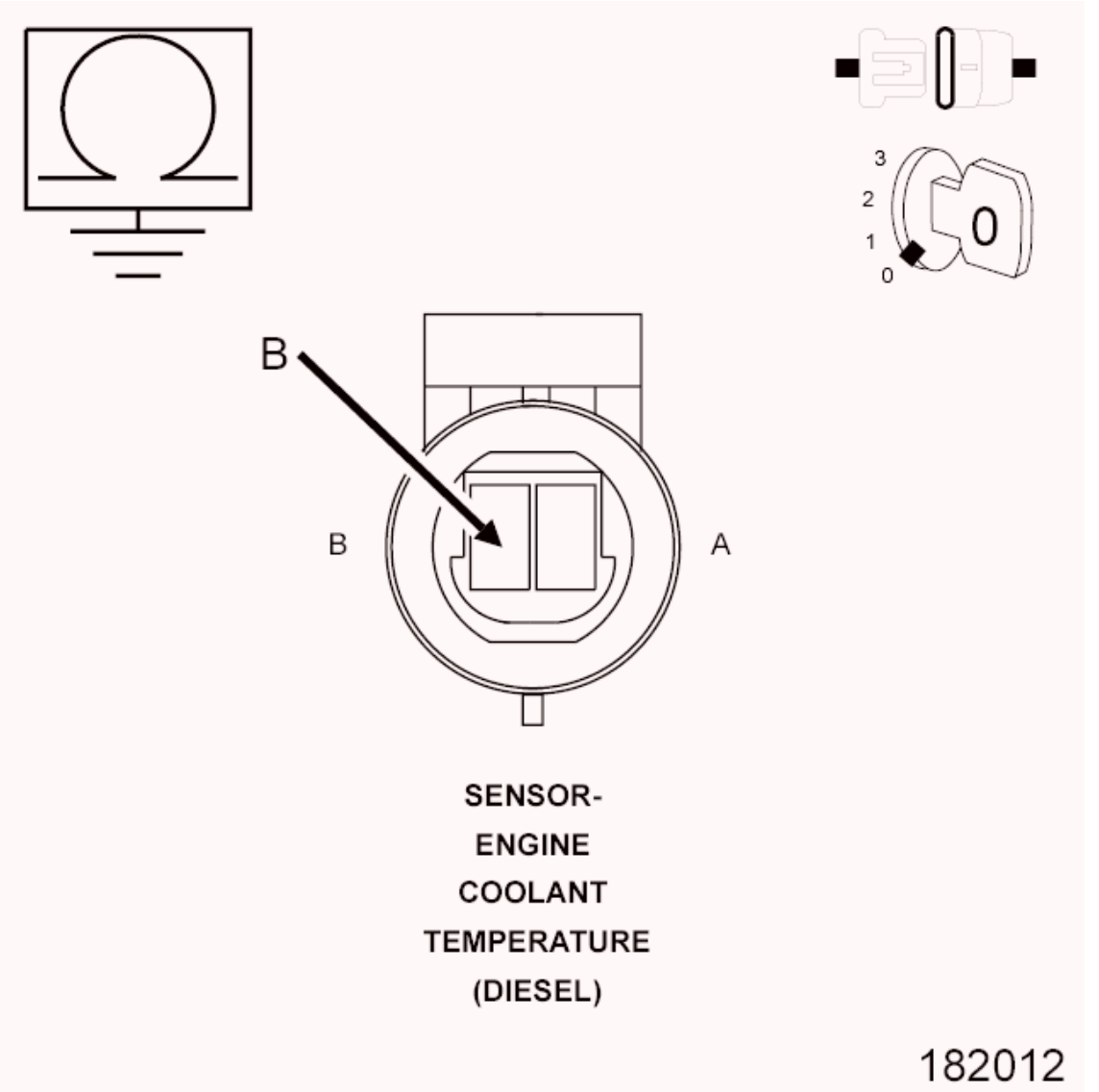

Fig. 51: Checking Coolant Temperature Sensor Signal Circuit For Short To Ground
Courtesy of CHRYSLER GROUP, LLC

1. Disconnect the PCM C1 harness connector.

   NOTE: Check connectors - Clean/repair as necessary.

2. Measure the resistance between ground and the (K2) ECT Sensor Signal circuit at the ECT Sensor harness connector.

   Is the resistance below 10k Ohms?

   Yes

   - Repair the (K2) ECT Sensor Signal circuit for a short to ground.

- Perform the POWERTRAIN VERIFICATION TEST - 6.7L. Refer to **POWERTRAIN VERIFICATION TEST - 6.7L** .

No

- Go To 4.

4. **CHECK FOR THE (K2) ENGINE COOLANT TEMPERATURE SENSOR SIGNAL CIRCUIT SHORTED TO THE (K914) ENGINE COOLANT TEMPERATURE SENSOR RETURN CIRCUIT**

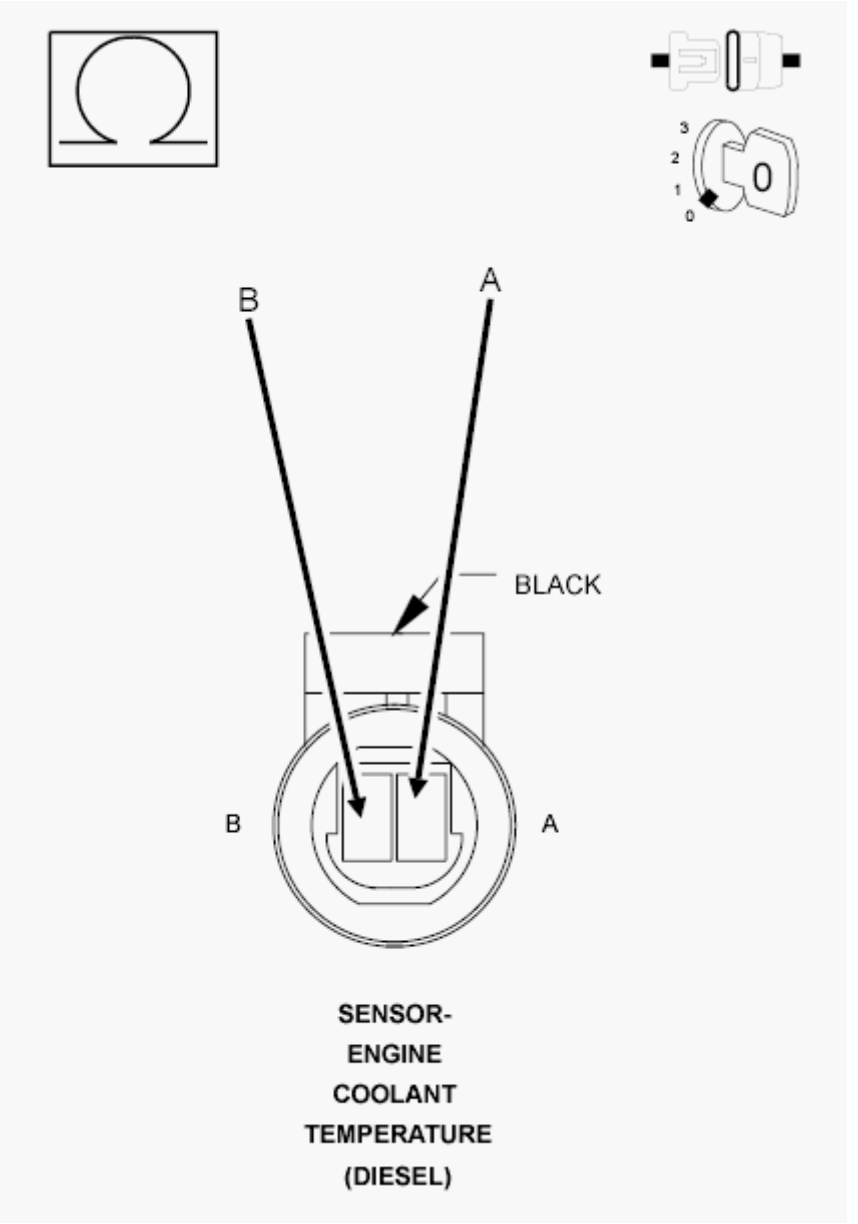

Fig. 52: Checking Coolant Temperature Sensor Signal Circuit Shorted To Sensor Return Circuit
Courtesy of CHRYSLER GROUP, LLC

1. Measure the resistance between the (K2) ECT Sensor Signal circuit and the (K914) Sensor Ground circuit at the Coolant Temperature Sensor harness connector.

   Is the resistance below 10k Ohms?

   Yes

   - Repair the short between the (K2) ECT Sensor Signal circuit and the (K914) Sensor Ground circuit.
   - Perform the POWERTRAIN VERIFICATION TEST - 6.7L. Refer to **POWERTRAIN VERIFICATION TEST - 6.7L** .

   No

   - Replace the Powertrain Control Module in accordance with the service information.
   - Perform the POWERTRAIN VERIFICATION TEST - 6.7L. Refer to **POWERTRAIN VERIFICATION TEST - 6.7L** .

P0118-ENGINE COOLANT TEMPERATURE SENSOR CIRCUIT HIGH

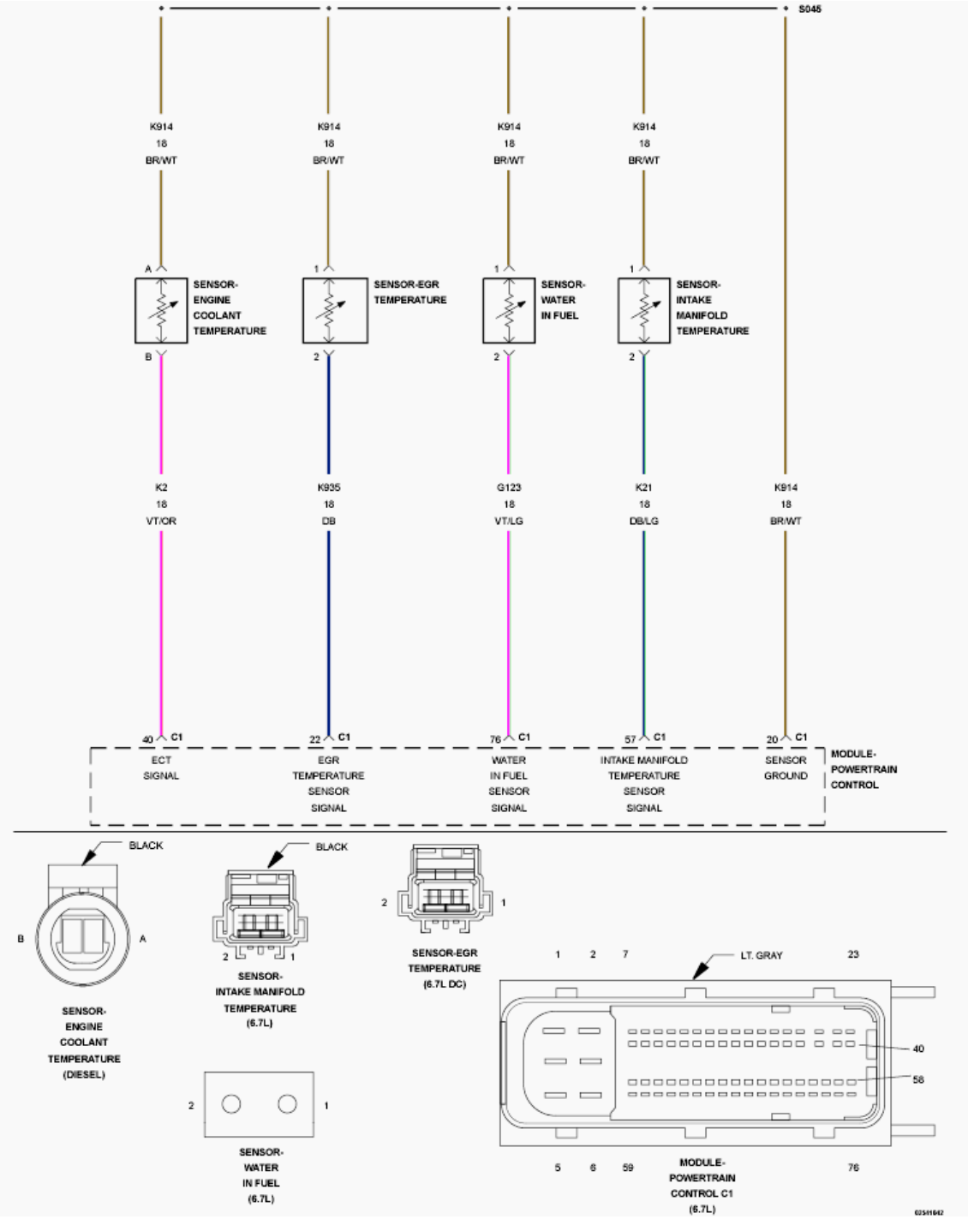

Fig. 53: Intake Manifold Temp, Engine Coolant Temp, EGR Temp, & Water In Fuel Sensor Circuit Schematic
Courtesy of CHRYSLER GROUP, LLC

For a complete wiring diagram, **refer to appropriate SYSTEM WIRING DIAGRAMS article** .

THEORY OF OPERATION

The Engine Coolant Temperature Sensor (ECT) is located near the thermostat housing and is used to measure the engine coolant temperature. The Engine Coolant Temperature Sensor receives 5-Volts and a sensor ground from the Powertrain Control Module (PCM). The PCM monitors the change in voltage to determine the coolant temperature. There are two parts to this fault code, a key on check and a rationality check. After an eight hour cold soak, at key ON the readings for the Inlet Air Temperature, Intake Air Temperature and Engine Coolant Temperature Sensors are all compared. If the temperatures differ more than a calibrated amount, then the appropriate sensor fault code would be recorded. The key on monitor is disabled for ambient temperatures below 20°F. This monitor looks for all the sensors to be grouped on one temperature or, in the case that the monitor fails, two sensors grouped at one temperature and one outlier. In the case that all three sensor values are distributed over a range of temperatures this diagnostic will not run. A block heater is one possible cause of such a distribution. The PCM rationality check looks at the temperature reading from the sensor over time and ensures that it changes with engine running. If the sensor reading does not change over a calibrated time limit, the fault will be recorded. Both the key-on and rationality portions of this monitor require that the diagnostic fails in two consecutive drive cycles before the MIL lamp is lit. The ETC lamp will also be illuminated. During this time the PCM uses a default value for the Coolant Temperature Sensor. The PCM turns off the MIL lamp when the diagnostic runs and passes in four consecutive drive cycles.

WHEN MONITORED:

With ignition on and battery voltage greater than 10.4 Volts.

SET CONDITION:

The circuit voltage to the Powertrain Control Module (PCM) is above a calibrated threshold for a certain period of time.

POSSIBLE CAUSES

Possible Causes
(K2) ENGINE COOLANT TEMPERATURE SENSOR SIGNAL CIRCUIT OPEN/HIGH RESISTANCE
(K2) ENGINE COOLANT TEMPERATURE SENSOR SIGNAL CIRCUIT SHORTED TO VOLTAGE
(K914) SENSOR RETURN CIRCUIT OPEN/HIGH RESISTANCE
ENGINE COOLANT TEMPERATURE SENSOR
POWERTRAIN CONTROL MODULE (PCM)

Always perform the Pre-Diagnostic Troubleshooting procedure before proceeding. Refer to PRE-DIAGNOSTIC TROUBLESHOOTING PROCEDURE - 6.7L .

DIAGNOSTIC TEST

1. **ACTIVE DTC**
    1. Turn the ignition on.
    2. With the scan tool, record all Freeze frame data.
    3. With the scan tool, erase DTCs.
    4. Turn the ignition off for 75 seconds.

5. Turn the ignition on.
6. With the scan tool, read DTCs.

   Did the DTC reset?

   Yes

   - Go To 2.

   No

   - Perform the INTERMITTENT CONDITION - 6.7L diagnostic procedure. Refer to **INTERMITTENT CONDITION - 6.7L** .

2. **CHECK THE (K2) ENGINE COOLANT TEMPERATURE SENSOR SIGNAL CIRCUIT FOR A SHORT TO VOLTAGE**

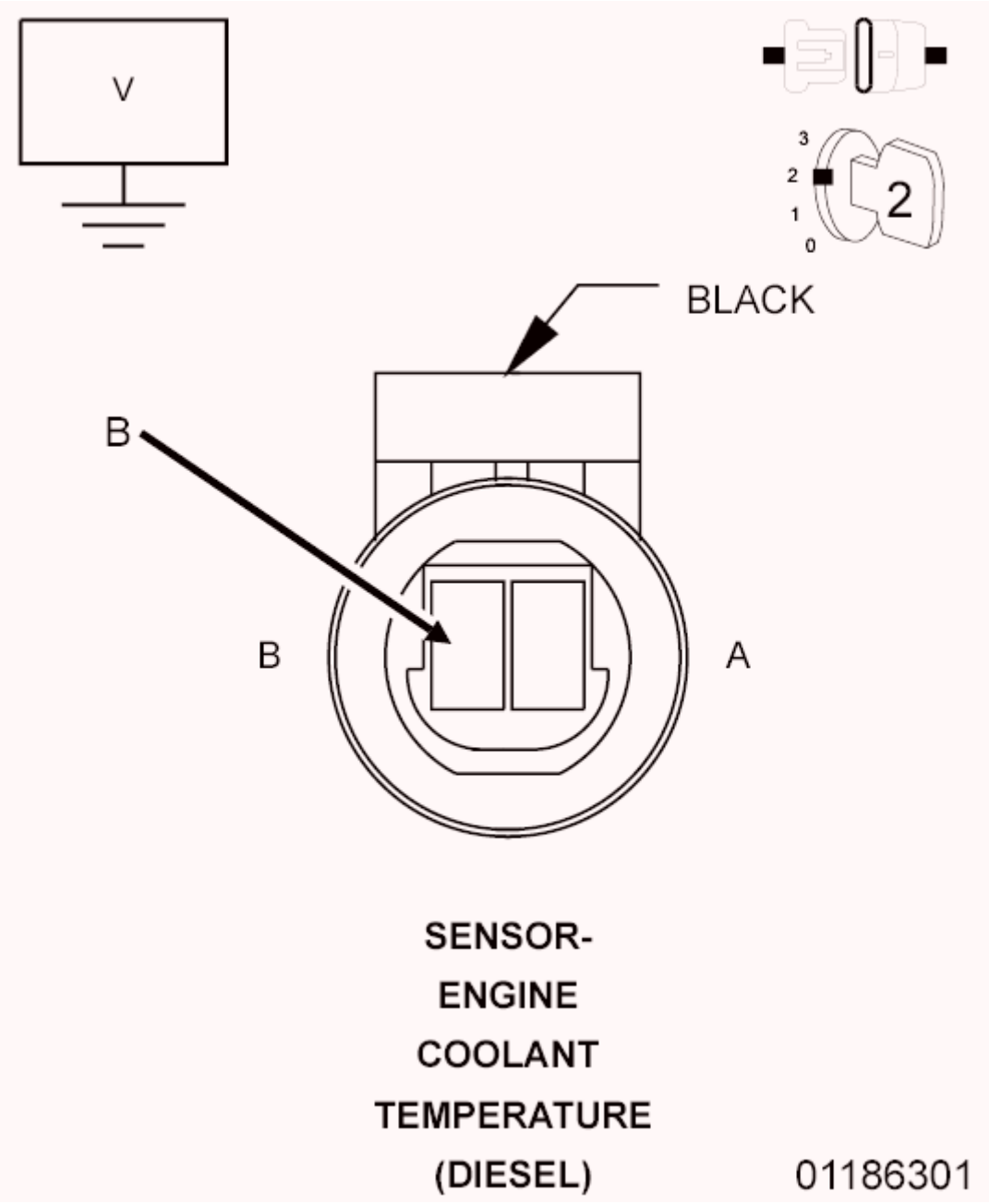

Fig. 54: Checking Coolant Temperature Sensor Signal Circuit For Short To Voltage
Courtesy of CHRYSLER GROUP, LLC

1. Ignition on.
2. Disconnect the Coolant Temperature Sensor harness connector.
3. Measure the voltage of the (K2) Engine Coolant Temperature Sensor (ECT) Signal circuit at the sensor harness connector.

NOTE: **The voltage should read approximately 5.0 Volts with connector disconnected and key on.**

Is the voltage above 5.1 Volts?

Yes

- Repair the (K2) ECT Sensor Signal circuit for a short to voltage.
- Perform the POWERTRAIN VERIFICATION TEST - 6.7L. Refer to **POWERTRAIN VERIFICATION TEST - 6.7L** .

No

- Go To 3.

3. **CHECK THE ENGINE COOLANT TEMPERATURE SENSOR**
   1. Turn the ignition off.

      NOTE: Check connectors - Clean/repair as necessary.

   2. Measure the resistance across the terminals of the ECT Sensor.

      Is the resistance between 300 and 90k Ohms?

      Yes

      - Go To 4.

      No

      - Replace the Engine Coolant Temperature Sensor in accordance with the service information.
      - Perform the POWERTRAIN VERIFICATION TEST - 6.7L. Refer to **POWERTRAIN VERIFICATION TEST - 6.7L** .

4. **CHECK THE (K2) ENGINE COOLANT TEMPERATURE SENSOR SIGNAL CIRCUIT FOR AN OPEN/HIGH RESISTANCE**

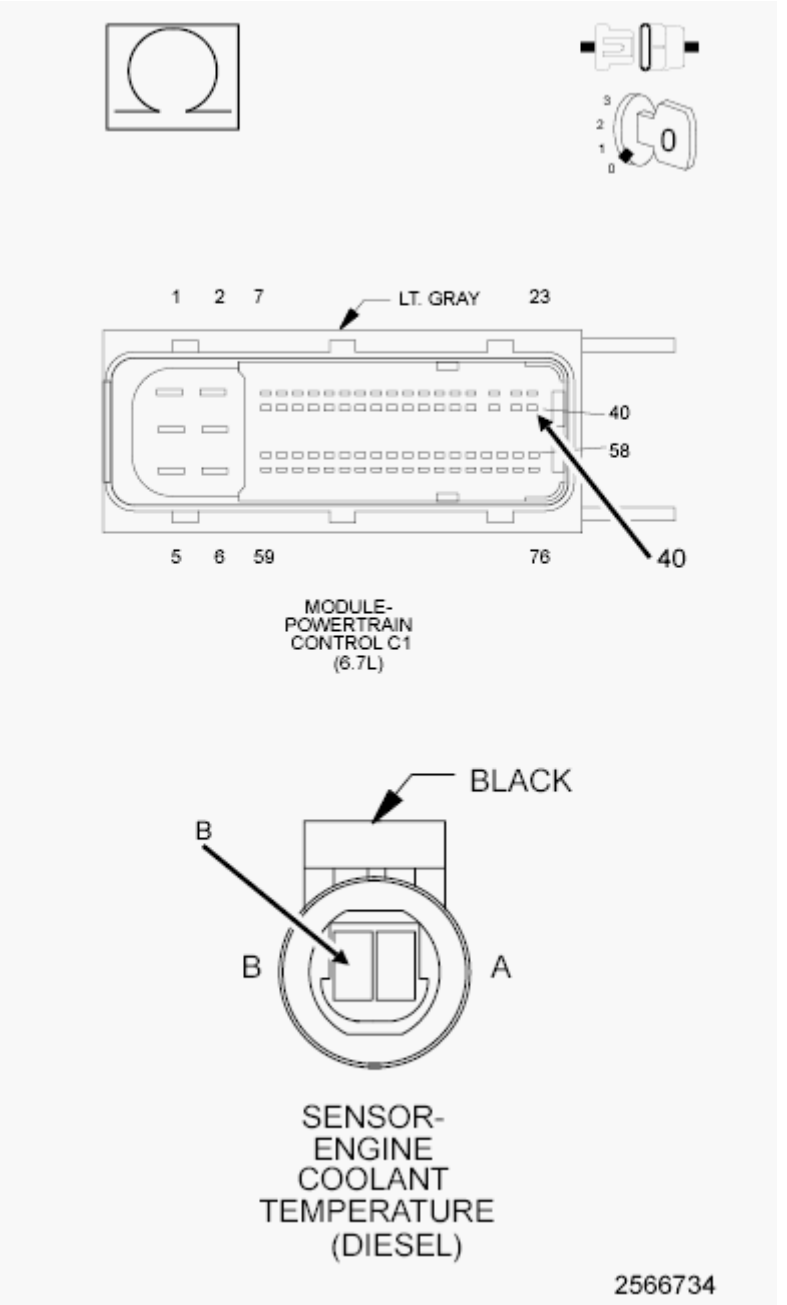

Fig. 55: Checking Engine Coolant Temperature Sensor Signal Circuit For Open Or High Resistance
Courtesy of CHRYSLER GROUP, LLC

1. Disconnect the PCM C1 harness connector.
2. Measure the resistance of the (K2) ECT Sensor Signal circuit between the ECT Sensor harness connector and the PCM C1 harness connector.

   Is the resistance below 5.0 Ohms?

   Yes

- Go To 5.

No

- Repair the (K2) ECT Sensor Signal circuit for an open or high resistance.
- Perform the POWERTRAIN VERIFICATION TEST - 6.7L. Refer to **POWERTRAIN VERIFICATION TEST - 6.7L** .

5. **CHECK THE (K914) SENSOR RETURN CIRCUIT FOR AN OPEN/HIGH RESISTANCE**

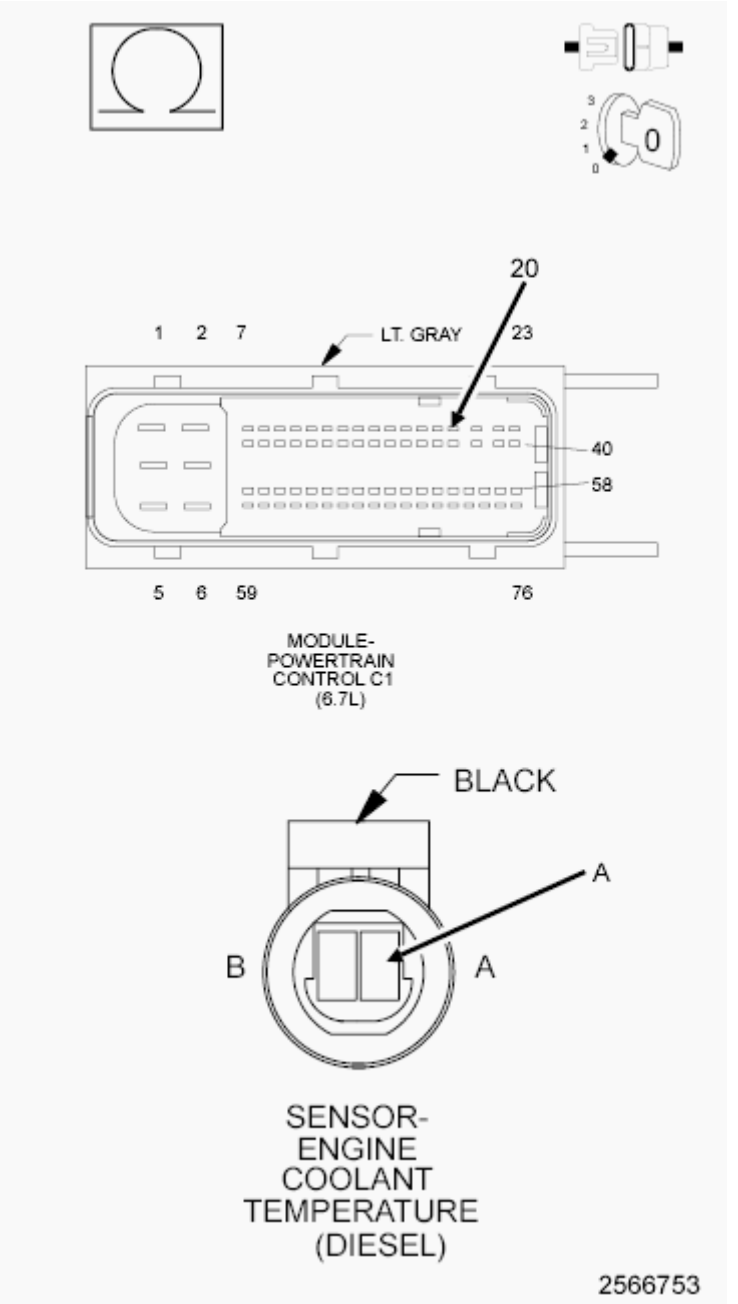

Fig. 56: Checking Sensor Return Circuit For Open Or High Resistance

Courtesy of CHRYSLER GROUP, LLC

1. Measure the resistance of the (K914) ECT Sensor Return circuit between the ECT Sensor harness connector and the PCM C1 harness connector.

   Is the resistance below 5.0 Ohms?

   Yes

   - Replace the Powertrain Control Module in accordance with the Service Information.
   - Perform the POWERTRAIN VERIFICATION TEST - 6.7L. Refer to **POWERTRAIN VERIFICATION TEST - 6.7L** .

   No

   - Repair the (K914) ECT Sensor Return circuit for an open or high resistance.
   - Perform the POWERTRAIN VERIFICATION TEST - 6.7L. Refer to **POWERTRAIN VERIFICATION TEST - 6.7L** .

P0128-THERMOSTAT RATIONALITY

For a complete wiring diagram, **refer to appropriate SYSTEM WIRING DIAGRAMS article** .

THEORY OF OPERATION

The thermostat rationality diagnostic runs during a drive cycle that starts with the coolant temperature below 140°F. This diagnostic looks at the how cold the system is at start up, what the inlet air temperature is, and the amount of fuel burned during that drive cycle. The PCM estimates what the coolant temperature should be. If the coolant temperature is not above a calibrated threshold, the rationality fails. The PCM assumes that the thermostat is stuck open.

WHEN MONITORED:

While the engine is running.

SET CONDITION:

The coolant temperature does not rise above a calibrated amount over a calibrated amount of time.

POSSIBLE CAUSES

Possible Causes
COOLANT LEVEL COOLANT TEMPERATURE SENSOR THERMOSTAT

Always perform the Pre-Diagnostic Troubleshooting procedure before proceeding. Refer to PRE-

DIAGNOSTIC TROUBLESHOOTING PROCEDURE - 6.7L .

DIAGNOSTIC TEST

1. **CHECK THE COOLANT LEVEL**

   NOTE: If DTC P0116 is also present, repair the P0116 DTC before proceeding with this test.

   NOTE: An engine block heater or oil heater can cause this DTC to set erroneously.

   1. Turn the ignition off.
   2. With the engine cold, verify the level of coolant in the cooling system.

      Is the cooling system full of coolant?

      Yes

      - Go To 2.

      No

      - Fill the cooling system to the proper level.
      - Perform the POWERTRAIN VERIFICATION TEST - 6.7L. Refer to **POWERTRAIN VERIFICATION TEST - 6.7L** .

2. **CHECK THE COOLANT TEMPERATURE SENSOR**
   1. Start the engine.
   2. With the scan tool, monitor the coolant temperature for 10 minutes.

      Did the coolant temperature change over time while the engine was running?

      Yes

      - Replace the Thermostat in accordance with the service information.
      - Perform the POWERTRAIN VERIFICATION TEST - 6.7L. Refer to **POWERTRAIN VERIFICATION TEST - 6.7L** .

      No

      - Replace the Coolant Temperature Sensor in accordance with the service information.
      - Perform the POWERTRAIN VERIFICATION TEST - 6.7L. Refer to **POWERTRAIN VERIFICATION TEST - 6.7L** .

P0169-WATER IN FUEL DETECTED FOR TOO LONG

For a complete wiring diagram, **refer to appropriate SYSTEM WIRING DIAGRAMS article** .

THEORY OF OPERATION

The Water-In-Fuel Sensor is attached to the bottom of the fuel filter. The Powertrain Control Module (PCM) provides a 5-Volt reference signal to the Water-In-Fuel Sensor. When the water collected in the fuel filter covers the sensor probes, the Water-In-Fuel Sensor then pulls the 5-Volt reference voltage to ground indicating high water accumulation in the fuel filter. The PCM illuminates the MIL lamp immediately after the diagnostic runs and fails. During this time water in fuel may cause white smoke, loss of power or hard starting. The MIL lamp will turn off after the diagnostic runs and passes in four consecutive drive cycles.

WHEN MONITORED:

While the engine is running.

SET CONDITION:

Water-In-Fuel light was on for a calibrated amount of time.

POSSIBLE CAUSES

Possible Causes
WATER IN FUEL

Always perform the Pre-Diagnostic Troubleshooting procedure before proceeding. Refer to PRE-DIAGNOSTIC TROUBLESHOOTING PROCEDURE - 6.7L .

DIAGNOSTIC TEST

1. **OTHER DTCS PRESENT**
    1. With the scan tool, read DTCs.

       Is P2269 displayed?

       Yes

       - Repair P2269 DTC first.
       - Perform the POWERTRAIN VERIFICATION TEST - 6.7L. Refer to **POWERTRAIN VERIFICATION TEST - 6.7L** .

       No

       - Drain water from the fuel filter.
       - Perform the POWERTRAIN VERIFICATION TEST - 6.7L. Refer to **POWERTRAIN VERIFICATION TEST - 6.7L** .

P0191-FUEL RAIL PRESSURE SENSOR CIRCUIT PERFORMANCE

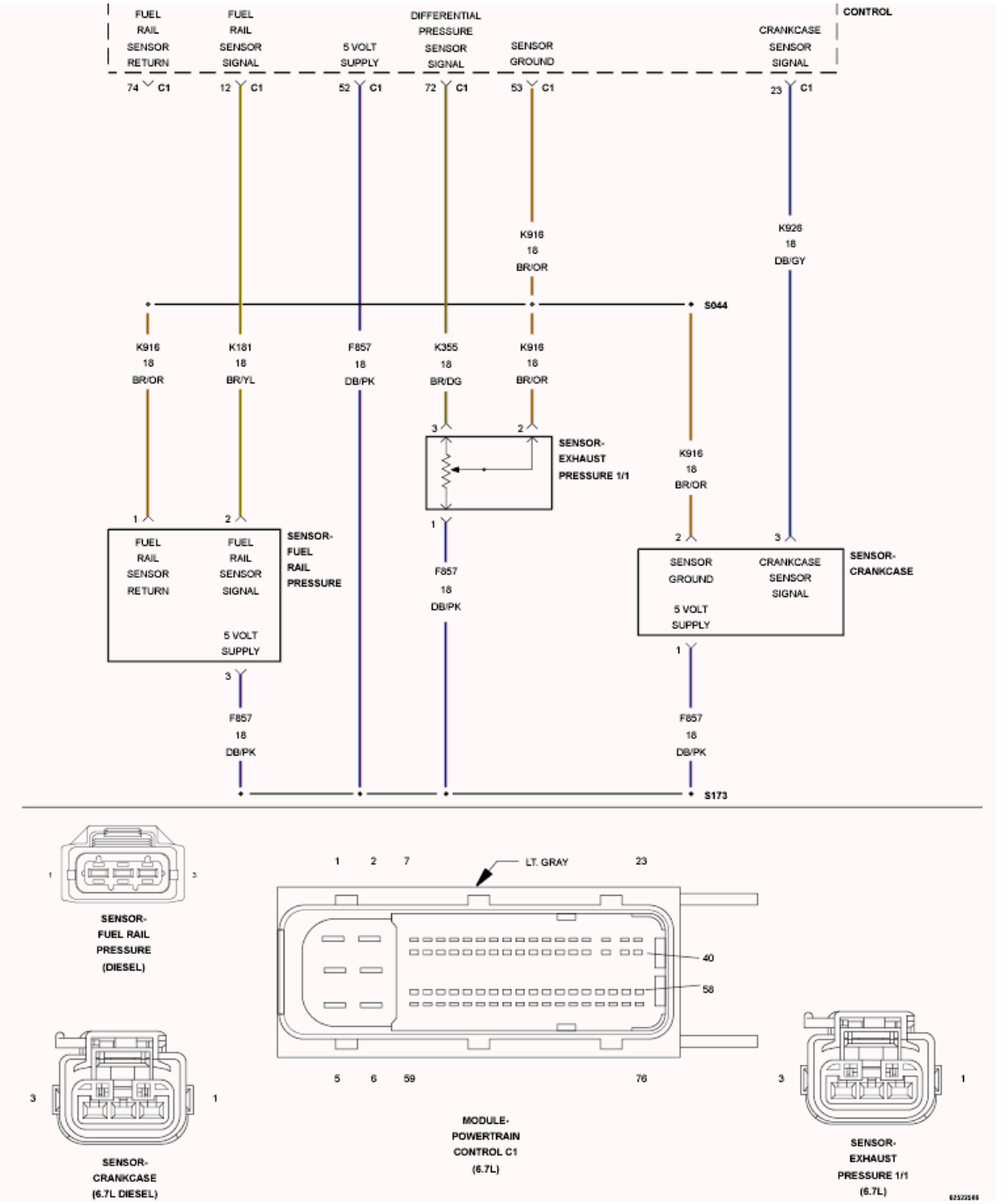

Fig. 57: Fuel Rail Pressure, Exhaust Pressure, & Crankcase Sensor Circuit Schematic
Courtesy of CHRYSLER GROUP, LLC

For a complete wiring diagram, **refer to appropriate SYSTEM WIRING DIAGRAMS article** .

THEORY OF OPERATION

This DTC is mapped to an idle diagnostic, and runs only at idle. The key-on error monitors fuel pressure voltage at key on after an eight hour cold soak. The Powertrain Control Module (PCM) varies fuel pressure and monitors the final fueling and engine speed to determine if the rate of change of fueling with respect to rate of

change of pressure is with in the normal operation limits of the pressure sensor. The engine must be at operating temperature and must not be in an active aftertreatment regeneration mode in order to run this diagnostic. The idle monitor runs once per drive cycle and the PCM will light the MIL lamp after the diagnostic runs and fails in two consecutive drive cycles. The PCM will turn off the MIL lamp after the diagnostic runs and passes in four consecutive drive cycles.

WHEN MONITORED:

Engine running at idle.

SET CONDITION:

At idle, the rate of change in fueling with respect to the rate of change of pressure is below the calibrated fail high threshold or above the calibrated fail low threshold while the monitor was running.

POSSIBLE CAUSES

Possible Causes
FUEL RAIL PRESSURE SENSOR
INJECTOR LEAKAGE

Always perform the Pre-Diagnostic Troubleshooting procedure before proceeding. Refer to PRE-DIAGNOSTIC TROUBLESHOOTING PROCEDURE - 6.7L .

DIAGNOSTIC TEST

1. **ACTIVE DTC**

   NOTE: If there are any other EGR, Turbocharger, or Intake system DTCs present, repair those DTCs before proceeding.

   1. Turn the ignition on.
   2. With the scan tool, record all Freeze frame data.
   3. With the scan tool, erase DTCs.
   4. Turn the ignition off for 75 seconds.
   5. Start the engine and let it idle for up to one minute.
   6. With the scan tool, read DTCs.

   Did the DTC reset?

   Yes

   - Go To 2.

   No

- Perform the INTERMITTENT CONDITION - 6.7L diagnostic procedure. Refer to **INTERMITTENT CONDITION - 6.7L** .

2. **FUEL RAIL PRESSURE SENSOR**
   1. With the scan tool, monitor the actual fuel pressure reading while the ignition is on and engine is not running.

      Is the actual fuel pressure reading above 870 psi?

      Yes

      - Go To 3.

      No

      - Go To 4.

3. **VISUALLY INSPECT THE FUEL RAIL PRESSURE SENSOR**
   1. Visually inspect the fuel system components for signs of tampering, pay particular attention to the Fuel Pressure Sensor on the fuel rail and the Fuel Pressure Sensor wiring harness.

      Were any signs of tampering discovered?

      Yes

      - Replace the Fuel Pressure Sensor in accordance with the service information.
      - Perform the POWERTRAIN VERIFICATION TEST - 6.7L. Refer to **POWERTRAIN VERIFICATION TEST - 6.7L** .

      No

      - Go To 4.

4. **CHECK THE INJECTOR RETURN FLOW**
   1. Perform the INJECTOR RETURN FLOW TEST. Refer to **DIAGNOSIS AND TESTING, 6.7L** .

      Does the injector drainage meet the test specification?

      Yes

      - Replace the Fuel Pressure Sensor in accordance with the service information.
      - Perform the POWERTRAIN VERIFICATION TEST - 6.7L. Refer to **POWERTRAIN VERIFICATION TEST - 6.7L** .

      No

      - Repair cause of high Fuel Injector leakage.
      - Perform the POWERTRAIN VERIFICATION TEST - 6.7L. Refer to **POWERTRAIN**

VERIFICATION TEST - 6.7L .

P0192-FUEL PRESSURE SENSOR LOW

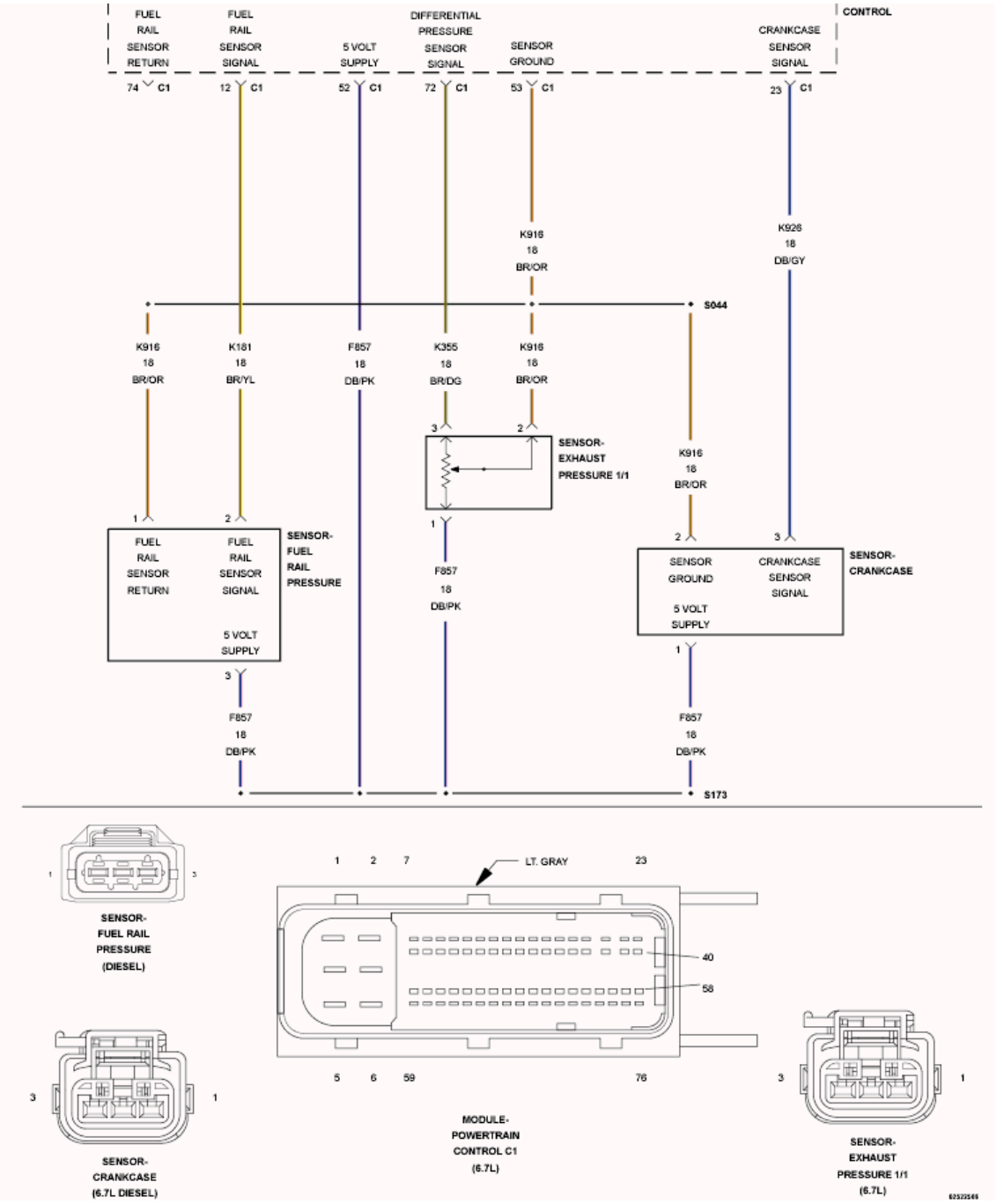

Fig. 58: Fuel Rail Pressure, Exhaust Pressure, & Crankcase Sensor Circuit Schematic
Courtesy of CHRYSLER GROUP, LLC

For a complete wiring diagram, **refer to appropriate SYSTEM WIRING DIAGRAMS article** .

THEORY OF OPERATION

The Powertrain Control Module (PCM) provides the Fuel Rail Pressure Sensor with a 5-Volt supply and sensor ground, and receives a signal voltage back from the Fuel Rail Pressure Sensor. This sensor signal voltage changes based on the pressure in the fuel rail. The PCM will light the MIL lamp immediately after the diagnostic runs and fails. During this time the customer may experience a power and or speed derate. The PCM will turn off the MIL light after the diagnostic runs and passes in four consecutive drive cycles.

WHEN MONITORED:

With the ignition on and battery voltage greater than 10.4 Volts.

SET CONDITION:

The circuit voltage to the Powertrain Control Module (PCM) falls below 0.25 of a Volt for five seconds.

POSSIBLE CAUSES

Possible Causes
(K181) FUEL RAIL PRESSURE SENSOR SIGNAL CIRCUIT SHORTED TO GROUND
(K181) FUEL RAIL PRESSURE SENSOR SIGNAL CIRCUIT SHORTED TO THE (K916) SENSOR GROUND
(K916) SENSOR GROUND CIRCUIT OPEN/HIGH RESISTANCE
(F857) 5-VOLT SUPPLY CIRCUIT SHORTED TO GROUND
FUEL PRESSURE SENSOR
POWERTRAIN CONTROL MODULE (PCM)

Always perform the Pre-Diagnostic Troubleshooting procedure before proceeding. Refer to PRE-DIAGNOSTIC TROUBLESHOOTING PROCEDURE - 6.7L .

DIAGNOSTIC TEST

1. **ACTIVE DTC**

   NOTE: If a 5-Volt reference DTC is present, repair that DTC before proceeding with this test.

   1. Turn the ignition on.
   2. With the scan tool, record all Freeze frame data.
   3. With the scan tool, erase DTCs.
   4. Turn the ignition off for 75 seconds.
   5. Turn the ignition on.
   6. With the scan tool, read DTCs.

   Did the DTC reset?

   Yes

- Go To 2.

No

- Perform the INTERMITTENT CONDITION - 6.7L diagnostic procedure. Refer to **INTERMITTENT CONDITION - 6.7L** .

2. **CHECK THE FUEL PRESSURE SENSOR**
   1. Turn the ignition off.
   2. Disconnect the Fuel Pressure Sensor harness connector.
   3. Turn the ignition on.

   Does the DTC P0193 set?

   Yes

   - Replace the Fuel Pressure Sensor in accordance with the service information.
   - Perform the POWERTRAIN VERIFICATION TEST - 6.7L. Refer to **POWERTRAIN VERIFICATION TEST - 6.7L** .

   No

   - Go To 3.

3. **CHECK THE (K181) FUEL RAIL PRESSURE SENSOR SIGNAL CIRCUIT FOR A SHORT TO GROUND**

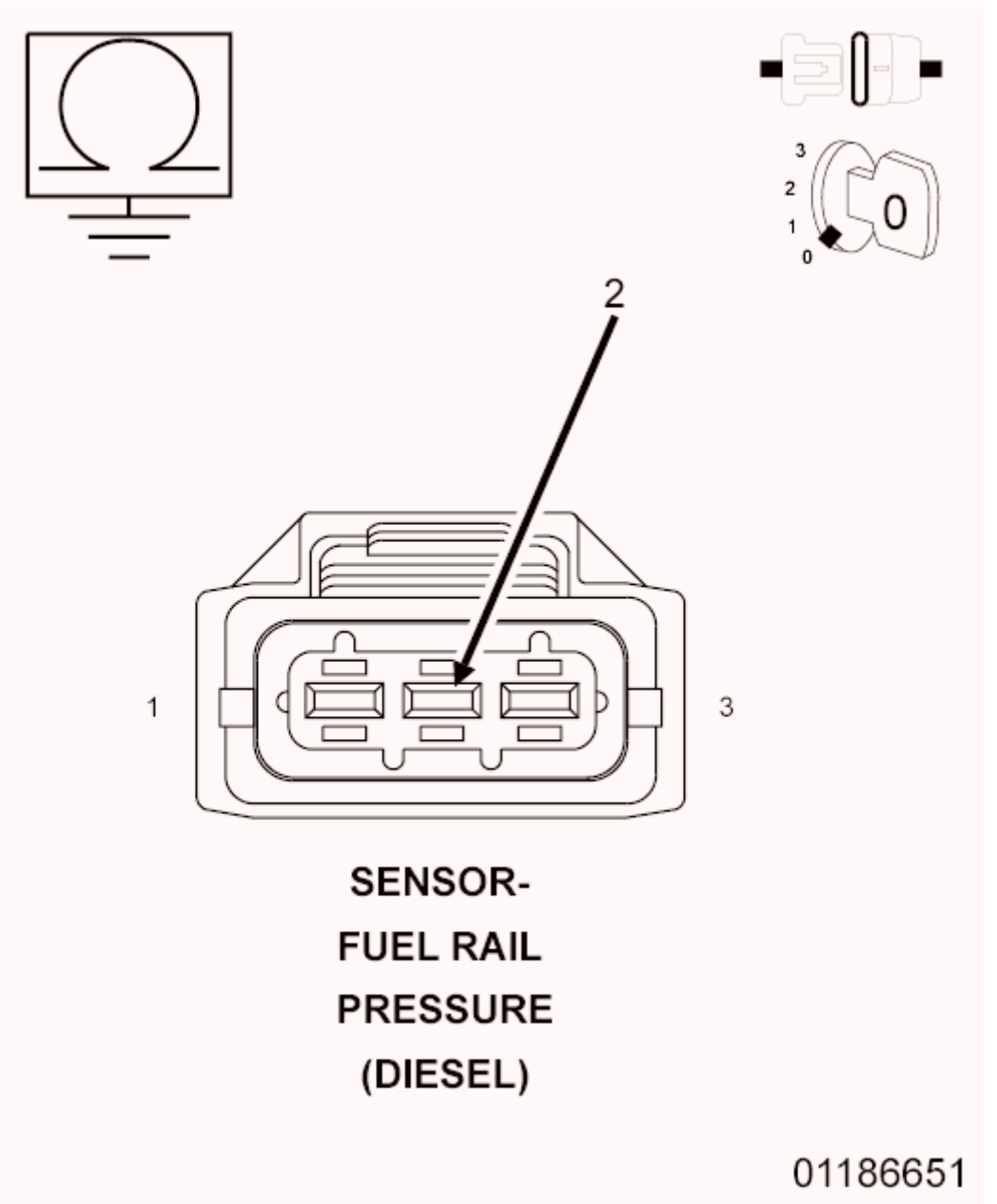

Fig. 59: Checking Fuel Rail Pressure Sensor Signal Circuit For Short To Ground
Courtesy of CHRYSLER GROUP, LLC

1. Turn the ignition off.
2. Disconnect the PCM C1 harness connector.

   NOTE: Check connectors - Clean/repair as necessary.

3. Measure the resistance between ground and the (K181) Fuel Pressure Sensor Signal circuit in the Fuel Pressure Sensor harness connector.

   Is the resistance below 10k Ohms?

Yes

- Repair the (K181) Fuel Pressure Sensor Signal circuit for a short to ground.
- Perform the POWERTRAIN VERIFICATION TEST - 6.7L. Refer to **POWERTRAIN VERIFICATION TEST - 6.7L** .

No

- Go To 4.

4. **CHECK FOR THE (K181) FUEL RAIL PRESSURE SENSOR SIGNAL CIRCUIT SHORTED TO THE (K916) SENSOR GROUND**

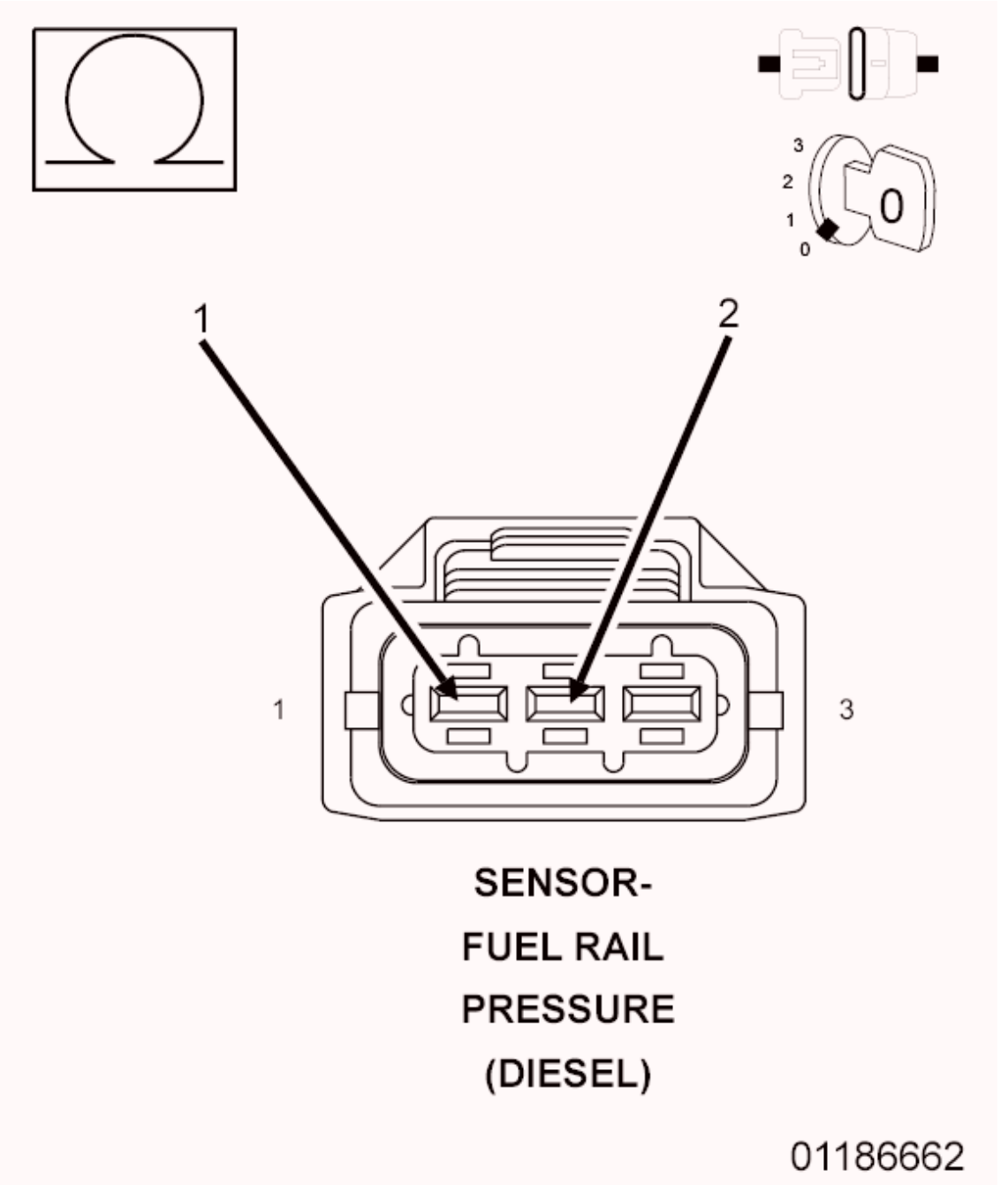

Fig. 60: Checking Fuel Rail Pressure Sensor Signal Circuit For Short To Sensor Ground
Courtesy of CHRYSLER GROUP, LLC

1. Measure the resistance between the (K181) Fuel Pressure Sensor Signal circuit and (K916) Sensor Ground circuit at the Fuel Pressure Sensor harness connector.

   Is the resistance below 10k Ohms?

   Yes

- Repair the short between the (K181) Fuel Pressure Sensor Signal circuit and (K916) Sensor Ground circuit.
- Perform the POWERTRAIN VERIFICATION TEST - 6.7L. Refer to **POWERTRAIN VERIFICATION TEST - 6.7L** .

No

- Go To 5.

5. **CHECK THE (K916) SENSOR GROUND CIRCUIT FOR AN OPEN/HIGH RESISTANCE**

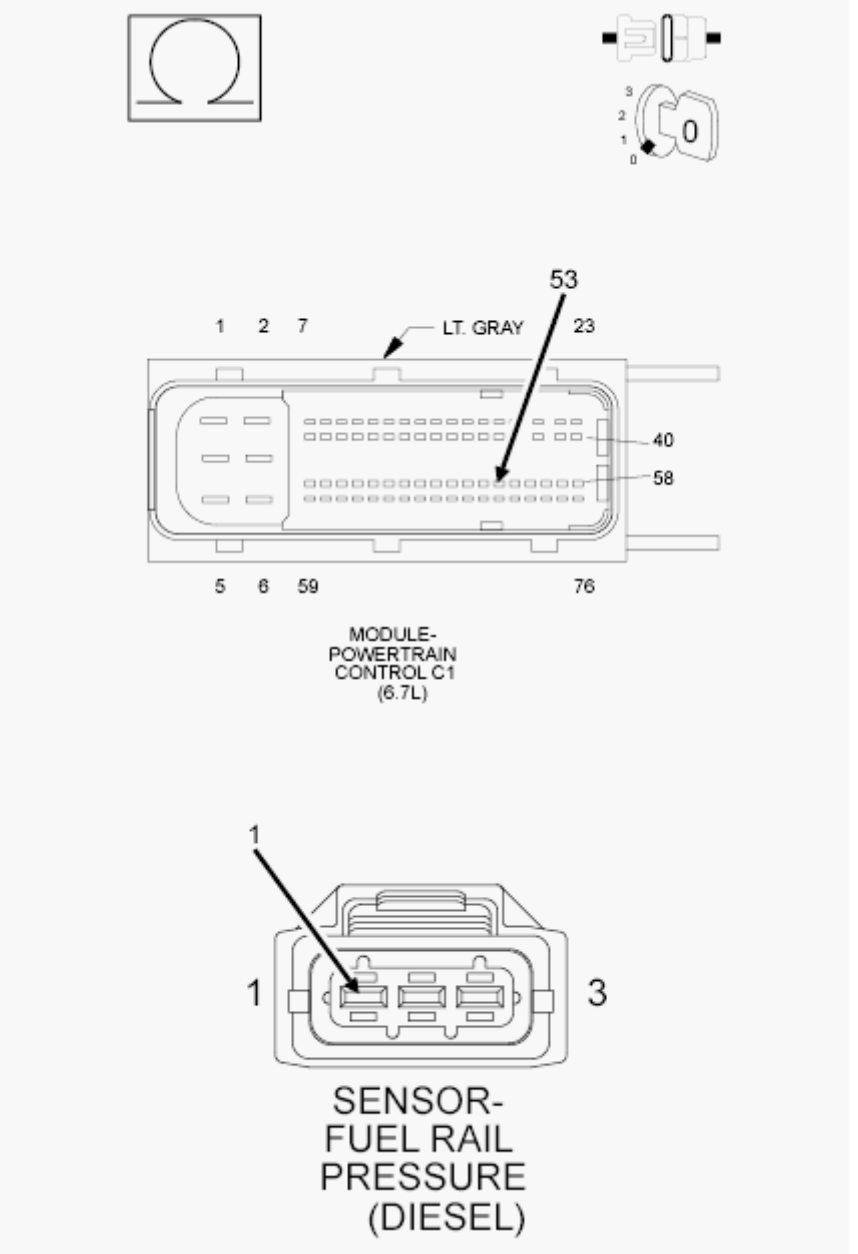

Fig. 61: Checking Sensor Ground Circuit For Open Or High Resistance
Courtesy of CHRYSLER GROUP, LLC

1. Measure the resistance of the (K916) Sensor Ground circuit between the Fuel Pressure Sensor harness connector and the PCM C1 harness connector.

   Is the resistance below 5.0 Ohms?

   Yes

   - Replace the Powertrain Control Module in accordance with the service information.
   - Perform the POWERTRAIN VERIFICATION TEST - 6.7L. Refer to **POWERTRAIN VERIFICATION TEST - 6.7L** .

   No

   - Repair the (K916) Sensor Ground circuit for an open circuit or high resistance.
   - Perform the POWERTRAIN VERIFICATION TEST - 6.7L. Refer to **POWERTRAIN VERIFICATION TEST - 6.7L** .

P0193-FUEL PRESSURE SENSOR HIGH

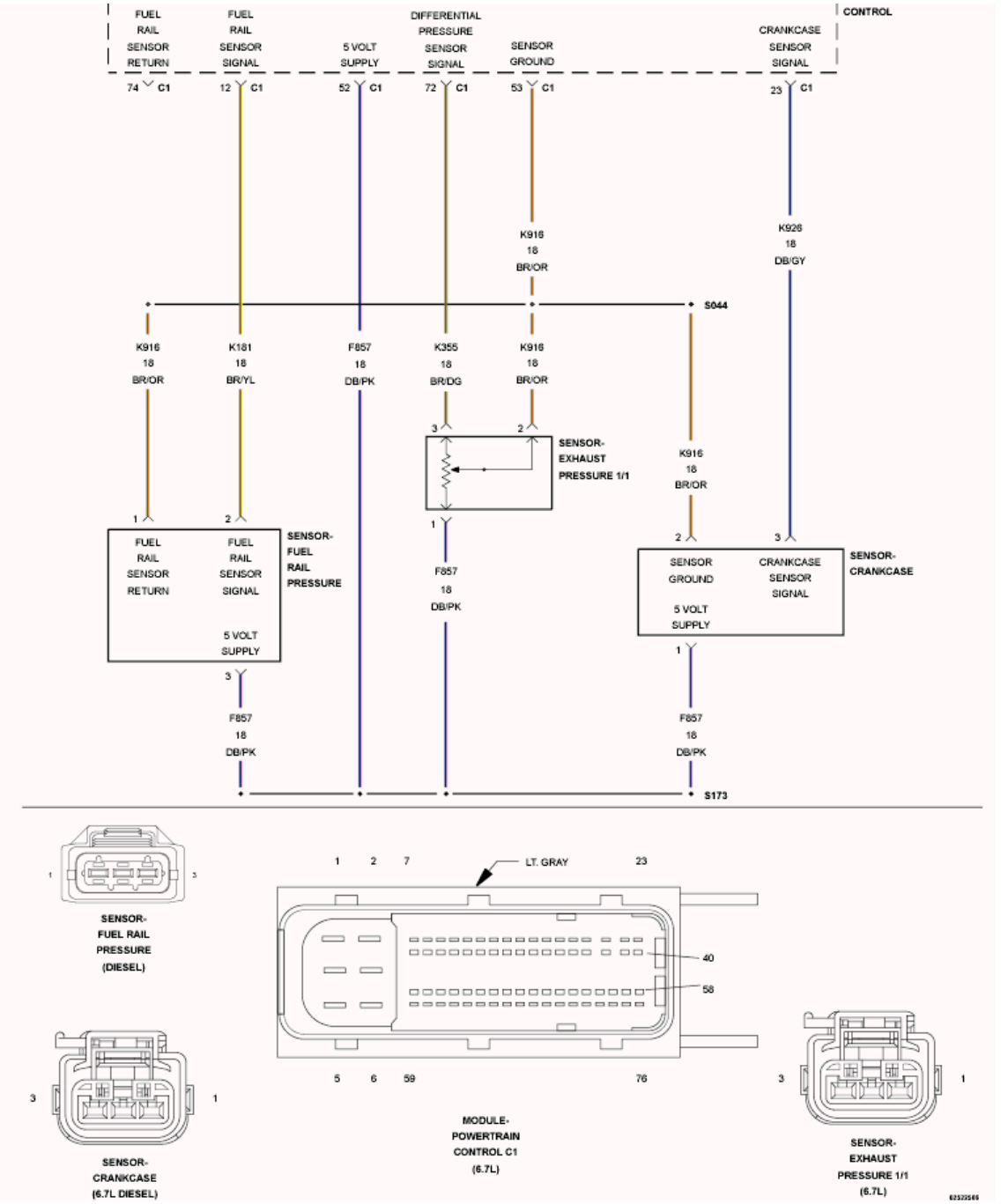

Fig. 62: Fuel Rail Pressure, Exhaust Pressure, & Crankcase Sensor Circuit Schematic
Courtesy of CHRYSLER GROUP, LLC

For a complete wiring diagram, **refer to appropriate SYSTEM WIRING DIAGRAMS article** .

THEORY OF OPERATION

The Powertrain Control Module (PCM) provides a 5-Volt supply to the Fuel Rail Pressure Sensor (RPS). The PCM also provides a ground on the sensor return circuit. The Fuel Rail Pressure Sensor provides a signal to the PCM on the Fuel Rail Pressure Sensor Signal circuit. This sensor signal voltage changes based on the pressure

in the fuel rail. The PCM will detect a low signal voltage at low rail pressures. The PCM will detect a high signal voltage during high rail pressure conditions. The PCM will light the MIL lamp immediately after the diagnostic runs and fails. During this time the customer may experience a power and or speed derate. The PCM will turn off the MIL light after the diagnostic runs and passes in four consecutive drive cycles.

WHEN MONITORED:

With the ignition on and battery voltage greater than 10.4 Volts.

SET CONDITION:

The circuit voltage to the Powertrain Control Module (PCM) is above a calibrated threshold for a certain period of time.

POSSIBLE CAUSES

Possible Causes
(F857) 5-VOLT SUPPLY CIRCUIT SHORTED TO VOLTAGE
(K181) FPS SIGNAL CIRCUIT SHORTED TO VOLTAGE
(K181) FPS SIGNAL CIRCUIT OPEN/HIGH RESISTANCE
(K181) FPS SIGNAL CIRCUIT SHORTED TO THE (F855) 5-VOLT SUPPLY CIRCUIT
(K916) SENSOR GROUND OPEN/HIGH RESISTANCE
FUEL PRESSURE SENSOR
POWERTRAIN CONTROL MODULE (PCM)

Always perform the Pre-Diagnostic Troubleshooting procedure before proceeding. Refer to PRE-DIAGNOSTIC TROUBLESHOOTING PROCEDURE - 6.7L .

DIAGNOSTIC TEST

1. **ACTIVE DTC**

   NOTE: If there are any 5-Volt supply DTCs present, repair those DTCs before proceeding.

   1. Turn the ignition on.
   2. With the scan tool, record all Freeze frame data.
   3. With the scan tool, erase DTCs.
   4. Turn the ignition off for 75 seconds.
   5. Turn the ignition on.
   6. With the scan tool, read DTCs.

   Did the DTC reset?

   Yes

- Go To 2.

No

- Perform the INTERMITTENT CONDITION - 6.7L diagnostic procedure. Refer to **INTERMITTENT CONDITION - 6.7L** .

2. **CHECK THE (K181) SIGNAL CIRCUIT FOR A SHORT TO VOLTAGE**

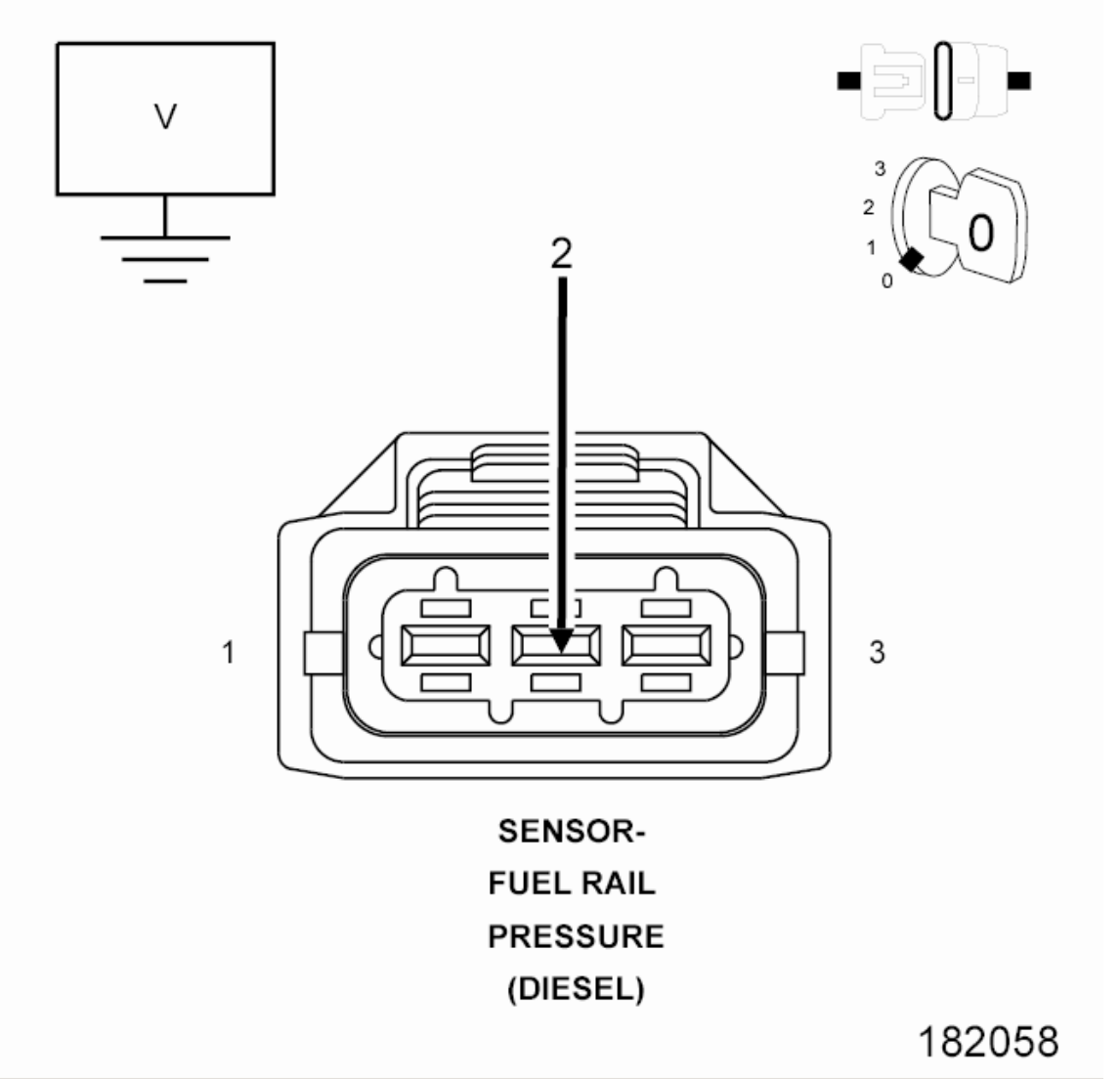

Fig. 63: Identifying Fuel Rail Pressure Sensor Harness Connector Terminals
Courtesy of CHRYSLER GROUP, LLC

1. Turn the ignition off.
2. Disconnect the Fuel Pressure Sensor harness connector.
3. Turn the ignition on.
4. Measure the voltage of the (K181) FPS Signal circuit at the Fuel Pressure Sensor harness

connector.

Is the reading above 5.2 volts?

Yes

- Repair the (K181) FPS Signal circuit for a short to voltage.
- Perform the POWERTRAIN VERIFICATION TEST - 6.7L. Refer to **POWERTRAIN VERIFICATION TEST - 6.7L** .

No

- Go To 3.

3. **CHECK FOR THE (K181) SIGNAL CIRCUIT SHORTED TO THE (F857) 5-VOLT SUPPLY CIRCUIT**

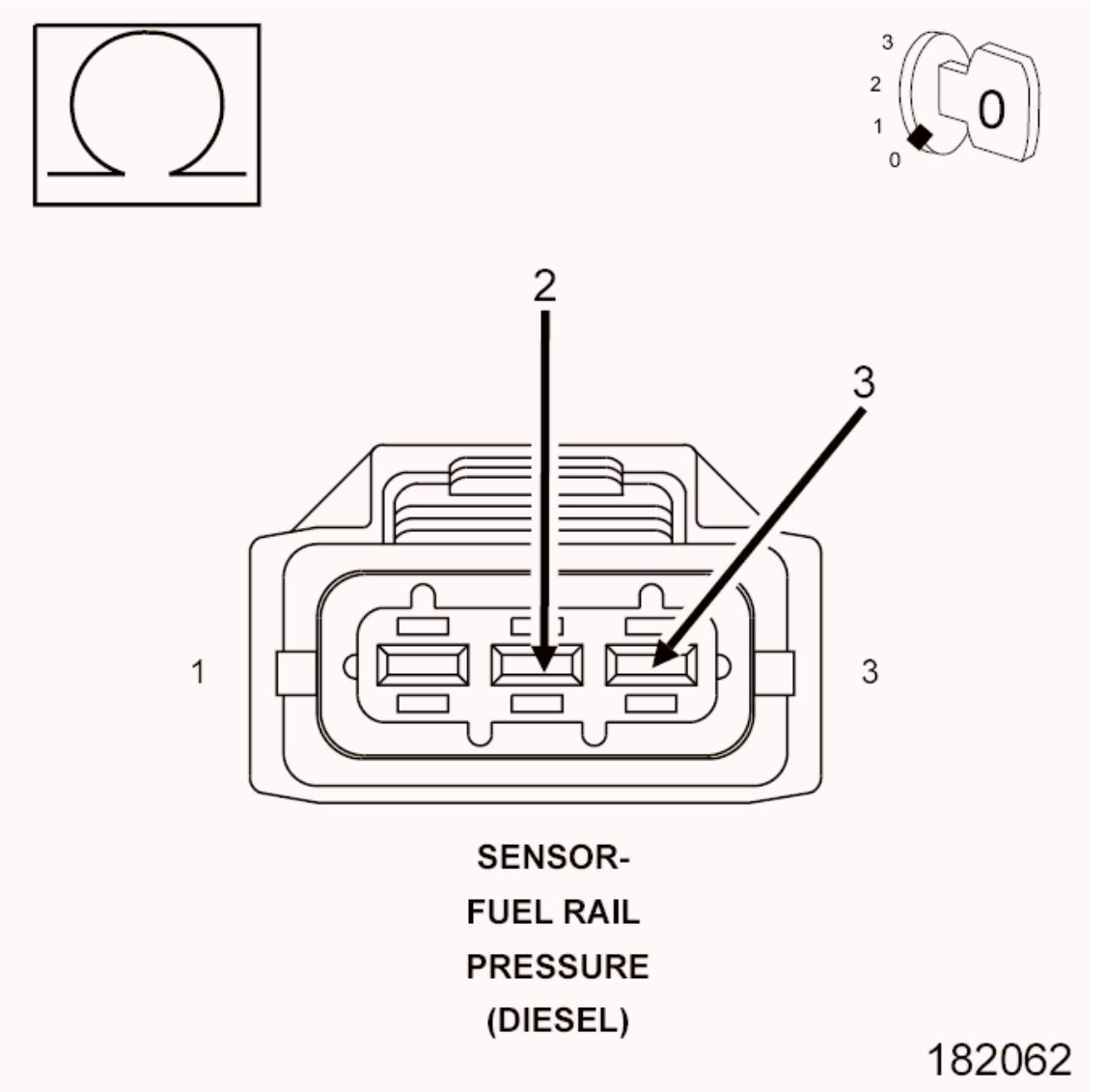

Fig. 64: Checking FPS Signal Circuit Shorted To 5-Volt Supply Circuit
Courtesy of CHRYSLER GROUP, LLC

1. Turn the ignition off.
2. Disconnected PCM C1 harness connector.
3. Measure the resistance between the (K181) FPS Signal circuit and the (F857) 5-Volt Supply circuit at the Fuel Pressure Sensor harness connector.

   Is the resistance below 10k Ohms?

   Yes

   - Repair the short between the (K181) FPS Signal circuit and the (F857) 5-Volt Supply circuit.
   - Perform the POWERTRAIN VERIFICATION TEST - 6.7L. Refer to **POWERTRAIN VERIFICATION TEST - 6.7L** .

   No

   - Go To 4.

4. **CHECK THE (K181) SIGNAL CIRCUIT FOR AN OPEN/HIGH RESISTANCE**

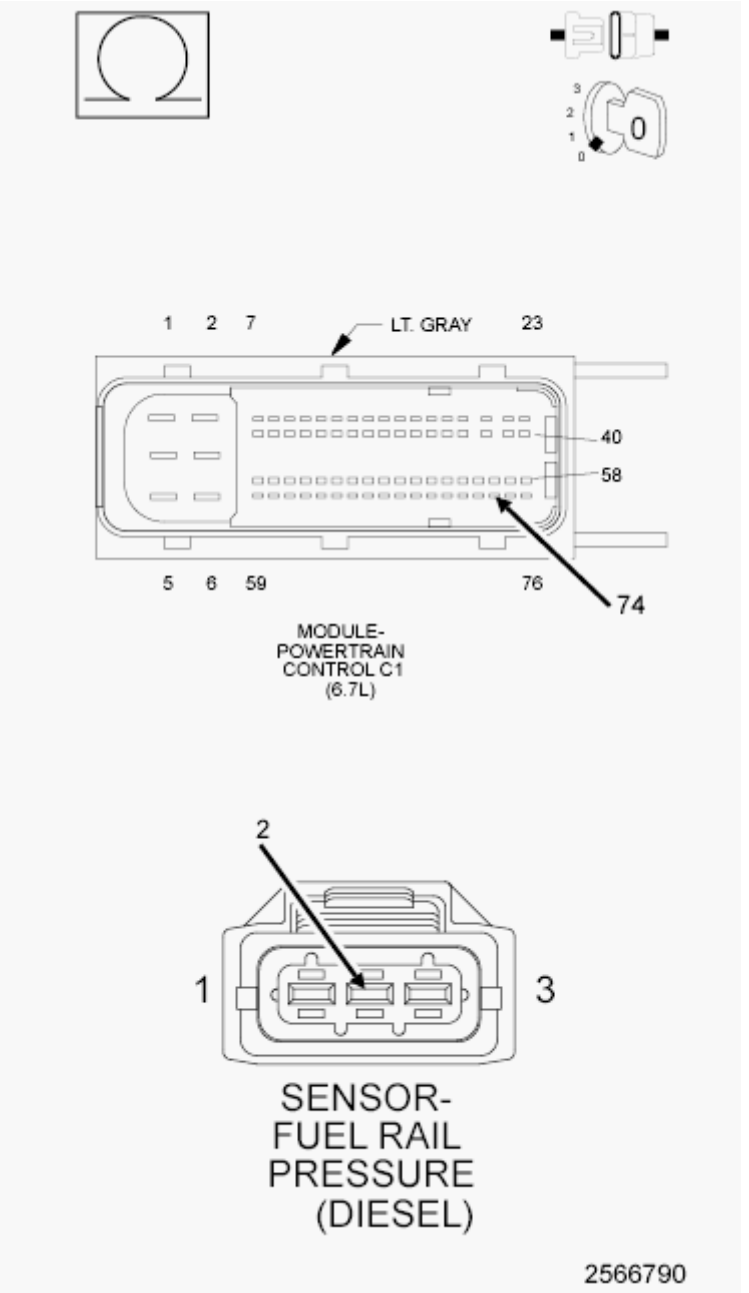

Fig. 65: Checking Signal Circuit For Open Or High Resistance
Courtesy of CHRYSLER GROUP, LLC

1. Measure the resistance of the (K181) FPS Signal circuit between the Fuel Pressure Sensor harness connector and the PCM C1 harness connector.

   Is the resistance below 5.0 Ohms?

   Yes

   - Go To 5.

No

- Repair the (K181) FPS Signal circuit for an open or high resistance.
- Perform the POWERTRAIN VERIFICATION TEST - 6.7L. Refer to **POWERTRAIN VERIFICATION TEST - 6.7L** .

5. **CHECK THE (K916) SENSOR GROUND FOR AN OPEN/HIGH RESISTANCE**

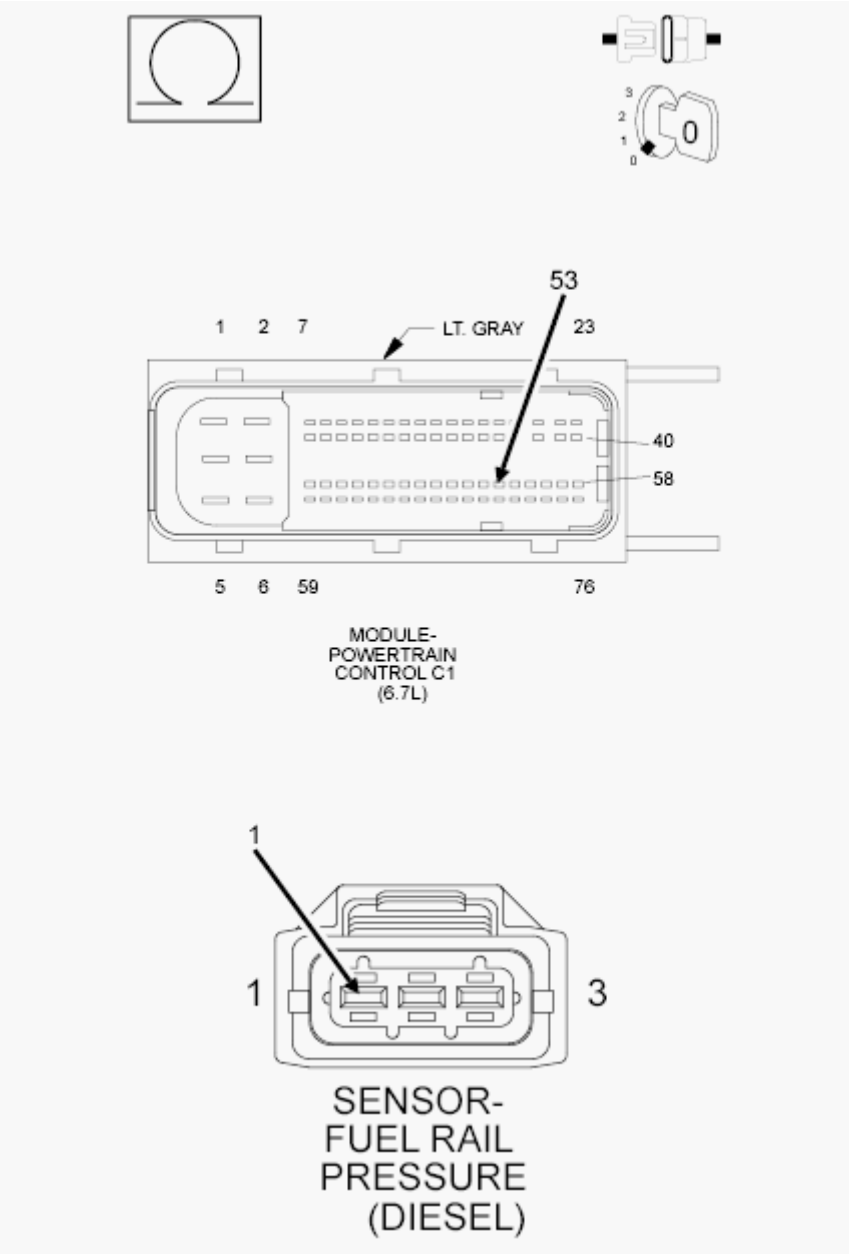

Fig. 66: Checking Sensor Ground Circuit For Open Or High Resistance
Courtesy of CHRYSLER GROUP, LLC

1. Measure the resistance of the (K916) Sensor Ground circuit between the Fuel Pressure Sensor harness connector and the PCM C1 harness connector.

Is the resistance below 5.0 Ohms?

Yes

- Go To 6.

No

- Repair the (K916) Sensor Ground circuit for an open or high resistance.
- Perform the POWERTRAIN VERIFICATION TEST - 6.7L. Refer to **POWERTRAIN VERIFICATION TEST - 6.7L** .

6. **CHECK THE FUEL PRESSURE SENSOR**

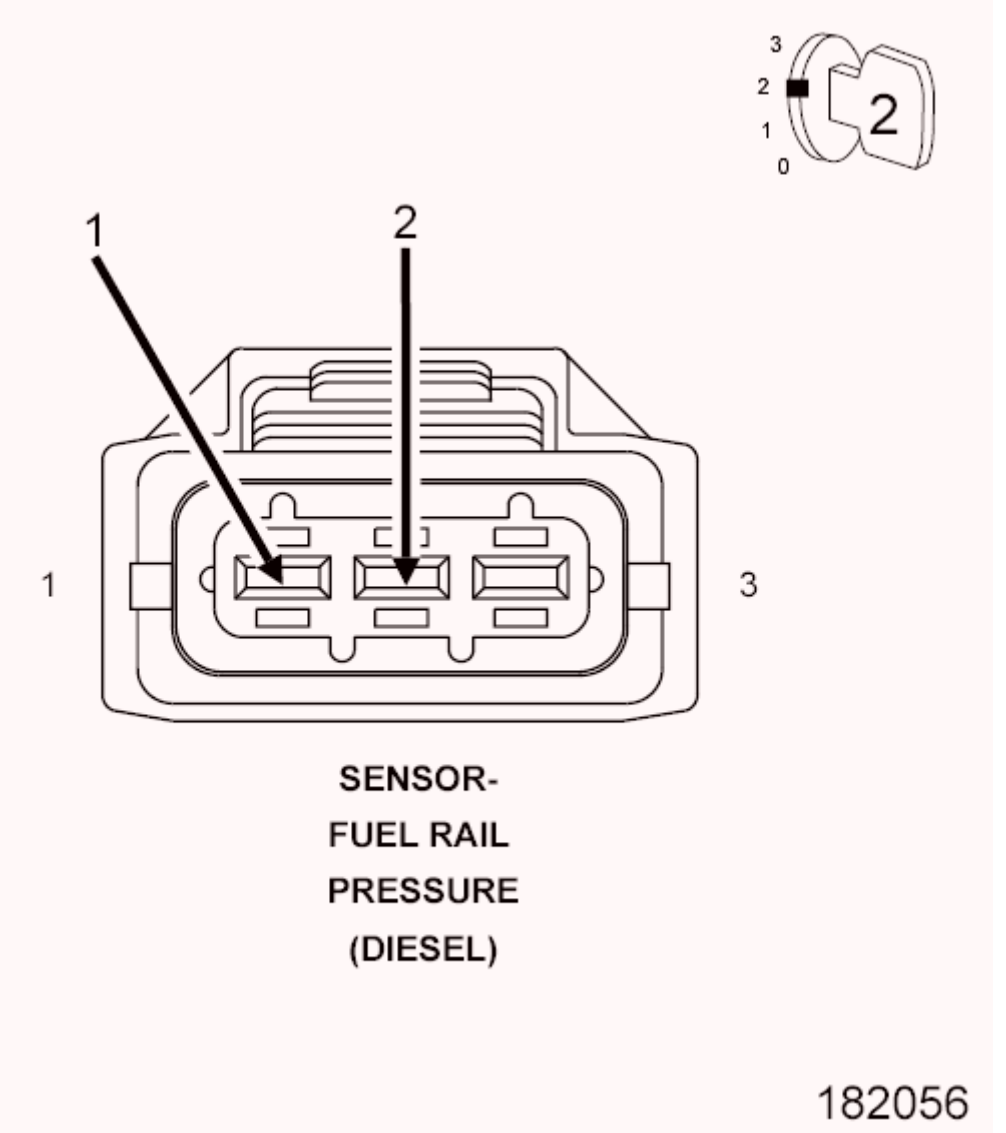

Fig. 67: Identifying Fuel Rail Pressure Sensor Harness Connector Terminals
Courtesy of CHRYSLER GROUP, LLC

1. Turn the ignition off.
2. Reconnect the PCM C1 harness connector.
3. Reconnect the Fuel Pressure Sensor harness connector.
4. Turn the ignition on.
5. With the scan tool, erase DTCs.
6. While monitoring scan tool, connect a jumper between the (K181) FPS Signal circuit and the (K916) Sensor Ground circuit at the Fuel Pressure Sensor harness connector.

   Does the DTC P0192 set?

   Yes

   - Replace the Fuel Pressure Sensor in accordance with the service information.
   - Perform the POWERTRAIN VERIFICATION TEST - 6.7L. Refer to **POWERTRAIN VERIFICATION TEST - 6.7L** .

   No

   - Replace and program the Powertrain Control Module in accordance with the service information.
   - Perform the POWERTRAIN VERIFICATION TEST - 6.7L. Refer to **POWERTRAIN VERIFICATION TEST - 6.7L** .

P0201-FUEL INJECTOR 1 CIRCUIT/OPEN

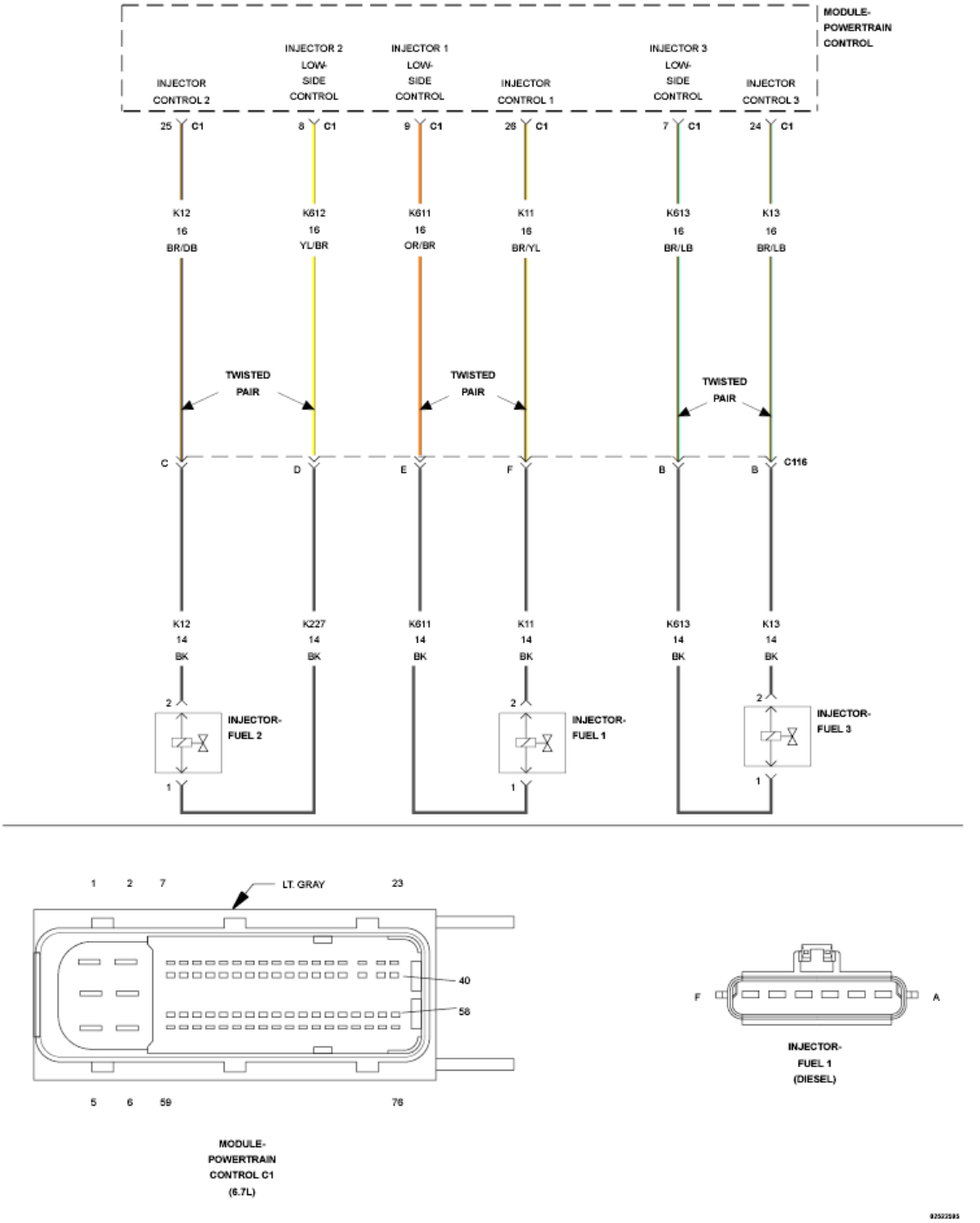

Fig. 68: Fuel Injector Circuit Schematic
Courtesy of CHRYSLER GROUP, LLC

For a complete wiring diagram, **refer to appropriate SYSTEM WIRING DIAGRAMS article** .

THEORY OF OPERATION

The Powertrain Control Module (PCM) actuates the solenoid in the Fuel Injector causing the needle valve to rise and fuel flows through the spray holes in the nozzle tip into the combustion chamber. The PCM has a

common internal driver circuit to all three Fuel Injectors on each bank. If any injector circuit on a given bank has a failure, a DTC will be set for all three Fuel Injectors on that bank. Fuel Injectors 1, 2, 3 are grouped together on bank 1. Fuel Injectors 4, 5, 6 are grouped together on bank 2. The MIL lamp will light immediately after the diagnostic runs and fails. During this time the customer may experience engine surge or stumble. The MIL lamp will turn off once the diagnostic runs and passes in four consecutive drive cycles.

WHEN MONITORED:

While the engine is running.

SET CONDITION:

When the Fuel Injector current falls below a calibrated threshold.

POSSIBLE CAUSES

Possible Causes
HIGH SIDE DRIVER CIRCUIT OPEN/HIGH RESISTANCE LOW SIDE DRIVER CIRCUIT OPEN/HIGH RESISTANCE HIGH SIDE DRIVER CIRCUIT SHORTED TO GROUND LOW SIDE DRIVER CIRCUIT SHORTED TO GROUND HIGH SIDE DRIVER CIRCUIT SHORTED TO VOLTAGE
LOW SIDE DRIVER CIRCUIT SHORTED TO VOLTAGE
DRIVER CIRCUITS SHORTED TOGETHER
FUEL INJECTOR
POWERTRAIN CONTROL MODULE (PCM)

Always perform the Pre-Diagnostic Troubleshooting procedure before proceeding. Refer to PRE-DIAGNOSTIC TROUBLESHOOTING PROCEDURE - 6.7L .

DIAGNOSTIC TEST

1. **ACTIVE DTC**
    1. Ignition on, engine not running.
    2. With the scan tool check for active DTCs.

       Is the DTC active?

       Yes

       - Go To 2.

       No

       - Perform the INTERMITTENT CONDITION - 6.7L diagnostic procedure. Refer to **INTERMITTENT CONDITION - 6.7L** .

2. **CHECK EACH FUEL INJECTOR CIRCUIT FOR AN OPEN/HIGH RESISTANCE**
    1. Turn the ignition off.
    2. Disconnect the PCM C1 harness connector.
    3. Measure the resistance between the:
        - (K11) Fuel Injector 1 High Side Driver circuit and the (K611) Fuel Injector 1 Low Side Driver circuit at the PCM C1 harness connector.
        - (K12) Fuel Injector 2 High Side Driver circuit and the (K612) Fuel Injector 2 Low Side Driver circuit at the PCM C1 harness connector.
        - (K13) Fuel Injector 3 High Side Driver circuit and the (K613) Fuel Injector 3 Low Side Driver circuit at the PCM C1 harness connector.

    NOTE: Be sure to zero out the Ohm meter prior to checking the Fuel Injector circuit. Resistance reading should be between 0-1 Ohm.

    Is the resistance between 0-1 Ohm for each Fuel Injector circuit?

    Yes

    - Go To 3.

    No

    - Go To 8.
3. **CHECK EACH FUEL INJECTOR CIRCUIT FOR A SHORT TO GROUND**
    1. Measure the resistance between ground and the:
        - (K11) Fuel Injector 1 High Side Driver circuit at the PCM C1 harness connector.
        - (K12) Fuel Injector 2 High Side Driver circuit at the PCM C1 harness connector.
        - (K13) Fuel Injector 3 High Side Driver circuit at the PCM C1 harness connector.

    NOTE: There should be no continuity between the circuit and ground.

    Is the resistance below 10k Ohms on all circuits?

    Yes

    - Go To 12.

    No

    - Go To 4.
4. **CHECK EACH FUEL INJECTOR CIRCUIT FOR A SHORT TO VOLTAGE**
    1. Turn the ignition on.
    2. Measure the voltage on the:

- (K11) Fuel Injector 1 High Side Driver circuit at the PCM C1 harness connector.
- (K12) Fuel Injector 2 High Side Driver circuit at the PCM C1 harness connector.
- (K13) Fuel Injector 3 High Side Driver circuit at the PCM C1 harness connector.

NOTE: There should be no voltage present.

Is there voltage present on any circuit?

Yes

- Go To 6.

No

- Go To 5.

5. **CHECKING FOR DRIVER CIRCUITS SHORTED TOGETHER**
   1. Turn ignition off.
   2. Disconnect all bank 1 Fuel Injector wires at the Fuel Injectors.
   3. Measure the resistance between all bank 1 Driver circuits at the PCM C1 harness connector.

   Is the resistance below 10k Ohms between any Driver circuits?

   Yes

   - Repair the Driver circuits that are shorted together.
   - Perform the POWERTRAIN VERIFICATION TEST - 6.7L. Refer to **POWERTRAIN VERIFICATION TEST - 6.7L** .

   No

   - Replace the Powertrain Control Module in accordance with the service information.
   - Perform the POWERTRAIN VERIFICATION TEST - 6.7L. Refer to **POWERTRAIN VERIFICATION TEST - 6.7L** .

6. **CHECK THE HIGH SIDE DRIVER FOR A SHORT TO VOLTAGE**

   NOTE: Perform the following tests on the Fuel Injector circuit which was faulty.

   1. Turn the ignition off.
   2. Disconnect Fuel Injector wires at the Fuel Injector.
   3. Turn the ignition on.
   4. Measure the voltage of the High Side Driver circuit at the PCM C1 harness connector.

   Is there any voltage present?

Yes

- Repair the High Side Driver circuit for a short to voltage.
- Perform the POWERTRAIN VERIFICATION TEST - 6.7L. Refer to **POWERTRAIN VERIFICATION TEST - 6.7L** .

No

- Go To 7.

7. **CHECK THE LOW SIDE DRIVER FOR A SHORT TO VOLTAGE**
   1. Measure the voltage of the Low Side Driver circuit at the PCM C1 harness connector.

      Is there any voltage present?

      Yes

      - Repair the Low Side Driver circuit for a short to voltage.
      - Perform the POWERTRAIN VERIFICATION TEST - 6.7L. Refer to **POWERTRAIN VERIFICATION TEST - 6.7L** .

      No

      - Perform the INTERMITTENT CONDITION - 6.7L diagnostic procedure. Refer to **INTERMITTENT CONDITION - 6.7L** .

8. **CHECK THE VALVE COVER PASS THROUGH HARNESS CIRCUIT**

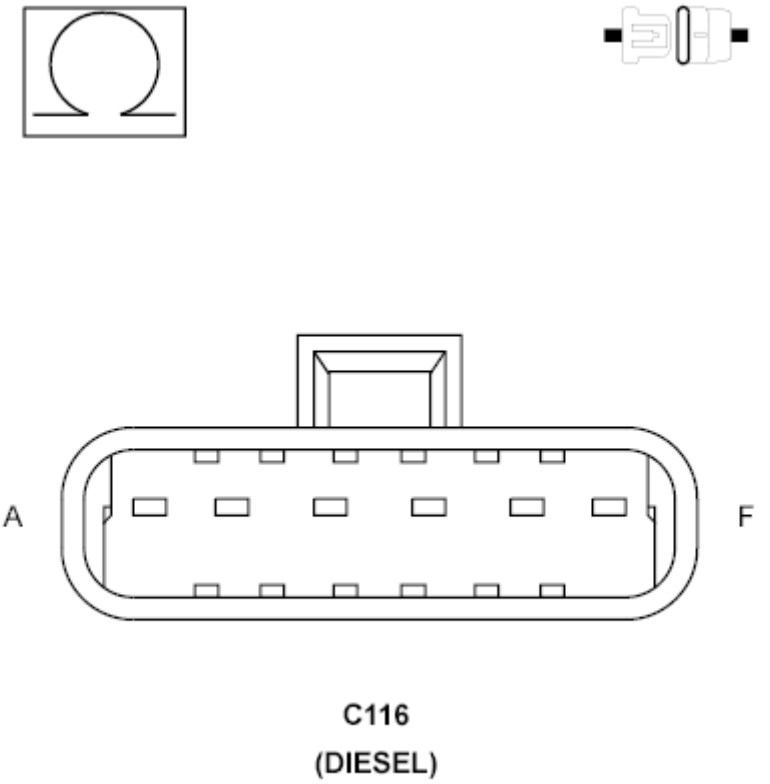

Fig. 69: Checking Valve Cover Pass Through Harness Circuits
Courtesy of CHRYSLER GROUP, LLC

NOTE: Perform the following tests on the Fuel Injector circuit which was faulty.

1. Disconnect the Valve Cover Pass Through harness connector.
2. Measure the resistance between the Low Side Driver circuit and the High Side Driver circuit at the Valve Cover Pass Through connector terminals.

   NOTE: Be sure to zero the Ohm meter prior to checking the Fuel Injector circuit.

   Is the resistance between 0-1 Ohm?

   Yes

   - Go To 9.

   No

   - Go To 11.

9. **CHECK THE HIGH SIDE CIRCUIT IN ENGINE HARNESS**

1. Measure the resistance of the High Side Driver circuit between the Valve Cover Pass Through harness connector and the PCM C1 harness connector.

NOTE: **Be sure to zero the Ohm meter prior to checking the Fuel Injector circuit.**

Is the resistance between 0-1 Ohm?

Yes

- Go To 10.

No

- Repair the High Side Driver circuit for an open or high resistance.
- Perform the POWERTRAIN VERIFICATION TEST - 6.7L. Refer to **POWERTRAIN VERIFICATION TEST - 6.7L** .

10. **CHECK THE LOW SIDE CIRCUIT IN ENGINE HARNESS**
    1. Measure the resistance of the Low Side Driver circuit between the Valve Cover Pass Through harness connector and the PCM C1 harness connector.

NOTE: **Be sure to zero the Ohm meter prior to checking the Fuel Injector circuit.**

Is the resistance between 0-1 Ohm?

Yes

- Perform the INTERMITTENT CONDITION - 6.7L diagnostic procedure. Refer to **INTERMITTENT CONDITION - 6.7L** .

No

- Repair the Low Side Driver circuit for an open or high resistance.
- Perform the POWERTRAIN VERIFICATION TEST - 6.7L. Refer to **POWERTRAIN VERIFICATION TEST - 6.7L** .

11. **CHECK THE FUEL INJECTORS**
    1. Disconnect all bank 1 Fuel Injector wires at the Fuel Injectors.
    2. Measure the resistance across the terminals at the Fuel Injector.

NOTE: **Be sure to zero the Ohm meter prior to checking the Fuel Injector circuit.**

Is the resistance between 0-1 Ohm?

Yes

- Replace the Valve Cover Pass Through harness.
- Perform the POWERTRAIN VERIFICATION TEST - 6.7L. Refer to **POWERTRAIN VERIFICATION TEST - 6.7L** .

No

- Replace the Fuel Injector in accordance with the.
- Perform the POWERTRAIN VERIFICATION TEST - 6.7L. Refer to **POWERTRAIN VERIFICATION TEST - 6.7L** .

12. **CHECK FOR THE DRIVER CIRCUITS SHORTED TOGETHER**
    1. Disconnect all bank 1 Fuel Injector wires at the Fuel Injectors.
    2. Measure the resistance between all bank 1 Driver circuits at the PCM C1 harness connector.

    Is the resistance below 10k Ohms between any circuits?

    Yes

    - Go To 13.

    No

    - Go To 14.

13. **CHECK THE VALVE COVER PASS THROUGH HARNESS CIRCUIT**

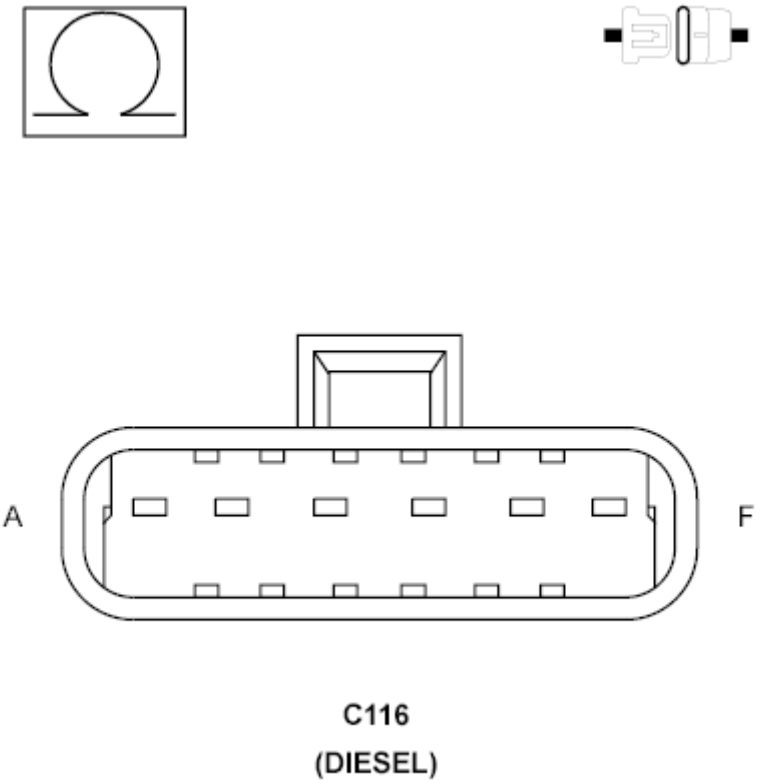

Fig. 70: Checking Valve Cover Pass Through Harness Circuits
Courtesy of CHRYSLER GROUP, LLC

1. Disconnect the Valve Cover Pass Through harness connector.
2. Measure the resistance between all bank 1 Driver circuits of the Valve Cover Pass Through connector terminals.

   Is the resistance below 10k Ohms between any circuits?

   Yes

   - Replace the Valve Cover Pass Through harness in accordance with the service information.
   - Perform the POWERTRAIN VERIFICATION TEST - 6.7L. Refer to **POWERTRAIN VERIFICATION TEST - 6.7L** .

   No

   - Repair the short between the bank 1 Driver circuits in the engine harness.
   - Perform the POWERTRAIN VERIFICATION TEST - 6.7L. Refer to **POWERTRAIN VERIFICATION TEST - 6.7L** .

14. **CHECK THE HIGH SIDE DRIVER CIRCUIT FOR A SHORT TO GROUND**

NOTE: Perform the following tests on the Fuel Injector circuit which was faulty.

1. Disconnect the Valve Cover Pass Through harness connector.
2. Measure the resistance between ground and the High Side Driver circuit at the PCM C1 harness connector.

   Is the resistance below 10k Ohms?

   Yes

   - Repair the High Side Driver circuit for a short to ground.
   - Perform the POWERTRAIN VERIFICATION TEST - 6.7L. Refer to **POWERTRAIN VERIFICATION TEST - 6.7L** .

   No

   - Go To 15.

15. **CHECK THE LOW SIDE DRIVER CIRCUIT FOR A SHORT TO GROUND**
    1. Measure the resistance between ground and the Low Side Driver circuit at the PCM C1 harness connector.

       Is the resistance below 10k Ohms?

       Yes

       - Repair the Low Side Driver circuit for a short to ground.
       - Perform the POWERTRAIN VERIFICATION TEST - 6.7L. Refer to **POWERTRAIN VERIFICATION TEST - 6.7L** .

       No

       - Go To 16.

16. **CHECK THE FUEL INJECTORS**
    1. Measure the resistance between ground and one of the Fuel Injector terminals.

       Is the resistance below 10k Ohms?

       Yes

       - Replace the Fuel Injector in accordance with the service information.
       - Perform the POWERTRAIN VERIFICATION TEST - 6.7L. Refer to **POWERTRAIN VERIFICATION TEST - 6.7L** .

       No

- Replace the Valve Cover Pass Through harness in accordance with the service information.
- Perform the POWERTRAIN VERIFICATION TEST - 6.7L. Refer to **POWERTRAIN VERIFICATION TEST - 6.7L** .

P0202-FUEL INJECTOR 2 CIRCUIT/OPEN

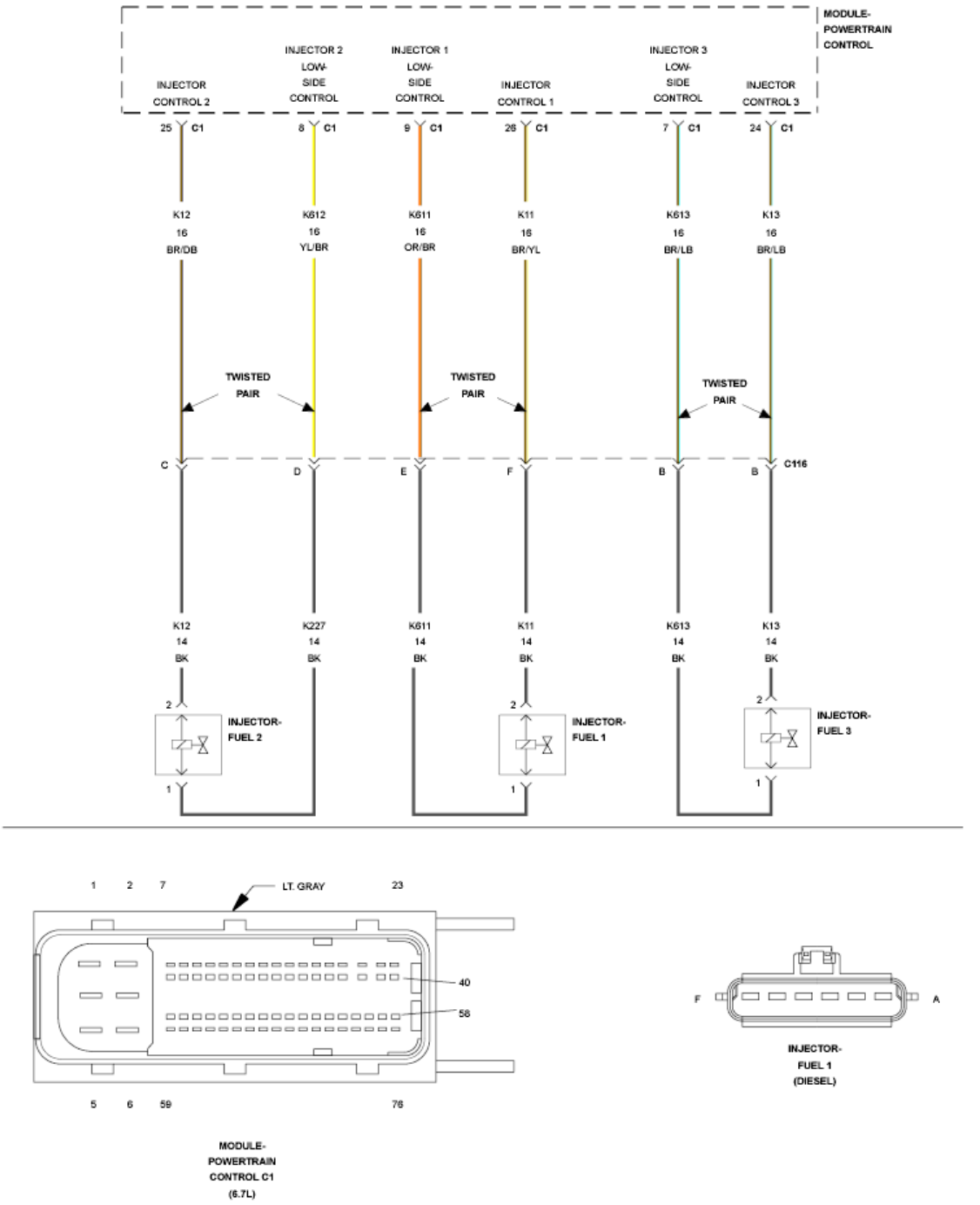

Fig. 71: Fuel Injector Circuit Schematic
Courtesy of CHRYSLER GROUP, LLC

For a complete wiring diagram, **refer to appropriate SYSTEM WIRING DIAGRAMS article** .

THEORY OF OPERATION

The Powertrain Control Module (PCM) actuates the solenoid in the Fuel Injector causing the needle valve to rise and fuel flows through the spray holes in the nozzle tip into the combustion chamber. The PCM has a common internal driver circuit to all three Fuel Injectors on each bank. If any injector circuit on a given bank has a failure, a DTC will be set for all three Fuel Injectors on that bank. Fuel Injectors 1, 2, 3 are grouped together on bank 1. Fuel Injectors 4, 5, 6 are grouped together on bank 2. The MIL lamp will light immediately after the diagnostic runs and fails. During this time the customer may experience engine surge or stumble. The MIL lamp will turn off once the diagnostic runs and passes in four consecutive drive cycles.

WHEN MONITORED:

While the engine is running.

SET CONDITION:

When the Fuel Injector current falls below a calibrated threshold.

POSSIBLE CAUSES

Possible Causes
HIGH SIDE DRIVER CIRCUIT OPEN/HIGH RESISTANCE LOW SIDE DRIVER CIRCUIT OPEN/HIGH RESISTANCE HIGH SIDE DRIVER CIRCUIT SHORTED TO GROUND LOW SIDE DRIVER CIRCUIT SHORTED TO GROUND HIGH SIDE DRIVER CIRCUIT SHORTED TO VOLTAGE
LOW SIDE DRIVER CIRCUIT SHORTED TO VOLTAGE
DRIVER CIRCUITS SHORTED TOGETHER
FUEL INJECTOR
POWERTRAIN CONTROL MODULE (PCM)

Always perform the Pre-Diagnostic Troubleshooting procedure before proceeding. Refer to PRE-DIAGNOSTIC TROUBLESHOOTING PROCEDURE - 6.7L .

DIAGNOSTIC TEST

1. **ACTIVE DTC**
    1. Ignition on, engine not running.
    2. With the scan tool check for active DTCs.

       Is the DTC active?

       Yes

- Go To 2.

No

- Perform the INTERMITTENT CONDITION - 6.7L diagnostic procedure. Refer to **INTERMITTENT CONDITION - 6.7L** .

2. **CHECK EACH FUEL INJECTOR CIRCUIT FOR AN OPEN/HIGH RESISTANCE**
   1. Turn the ignition off.
   2. Disconnect the PCM C1 harness connector.
   3. Measure the resistance between the:
      - (K11) Fuel Injector 1 High Side Driver circuit and the (K611) Fuel Injector 1 Low Side Driver circuit at the PCM C1 harness connector.
      - (K12) Fuel Injector 2 High Side Driver circuit and the (K612) Fuel Injector 2 Low Side Driver circuit at the PCM C1 harness connector.
      - (K13) Fuel Injector 3 High Side Driver circuit and the (K613) Fuel Injector 3 Low Side Driver circuit at the PCM C1 harness connector.

NOTE: **Be sure to zero the Ohm meter prior to checking the Fuel Injector circuit. Resistance reading should be between 0-1 Ohm.**

Is the resistance between 0-1 Ohm on all circuits?

Yes

- Go To 3.

No

- Go To 8.

3. **CHECK EACH FUEL INJECTOR CIRCUIT FOR A SHORT TO GROUND**
   1. Measure the resistance between ground and the:
      - (K11) Fuel Injector 1 High Side Driver circuit at the PCM C1 harness connector.
      - (K12) Fuel Injector 2 High Side Driver circuit at the PCM C1 harness connector.
      - (K13) Fuel Injector 3 High Side Driver circuit at the PCM C1 harness connector.

NOTE: **There should be no continuity between the circuit and ground.**

Is the resistance below 10k Ohms on any circuits?

Yes

- Go To 4.

No

- Go To 12.

4. **CHECK EACH FUEL INJECTOR CIRCUIT FOR A SHORT TO VOLTAGE**
   1. Turn the ignition on.
   2. Measure the voltage on the:
      - (K11) Fuel Injector 1 High Side Driver circuit at the PCM C1 harness connector.
      - (K12) Fuel Injector 2 High Side Driver circuit at the PCM C1 harness connector.
      - (K13) Fuel Injector 3 High Side Driver circuit at the PCM C1 harness connector.

   NOTE: There should be no voltage present.

   Is there voltage present on any circuit?

   Yes

   - Go To 6.

   No

   - Go To 5.

5. **CHECK FOR THE DRIVER CIRCUITS SHORTED TOGETHER**
   1. Turn ignition off.
   2. Disconnect all bank 1 Fuel Injector wires at the Fuel Injectors.
   3. Measure the resistance between all bank 1 Driver circuits at the PCM C1 harness connector.

   Is the resistance below 10k Ohms between any Driver circuits?

   Yes

   - Repair the Driver circuits that are shorted together.
   - Perform the POWERTRAIN VERIFICATION TEST - 6.7L. Refer to **POWERTRAIN VERIFICATION TEST - 6.7L** .

   No

   - Replace the Powertrain Control Module in accordance with the service information.
   - Perform the POWERTRAIN VERIFICATION TEST - 6.7L. Refer to **POWERTRAIN VERIFICATION TEST - 6.7L** .

6. **HIGH SIDE DRIVER SHORTED TO VOLTAGE**

   NOTE: Perform the following tests on the Fuel Injector circuit which was faulty.

1. Turn the ignition off.
2. Disconnect Fuel Injector wires at the Fuel Injector.
3. Turn the ignition on.
4. Measure the voltage of the High Side Driver circuit at the PCM C1 harness connector.

   Is there any voltage present?

   Yes

   - Repair the High Side Driver circuit for a short to voltage.
   - Perform the POWERTRAIN VERIFICATION TEST - 6.7L. Refer to **POWERTRAIN VERIFICATION TEST - 6.7L** .

   No

   - Go To 7.

7. **CHECK THE LOW SIDE DRIVERS FOR A SHORT TO VOLTAGE**
   1. Measure the voltage of the Low Side Driver circuit at the PCM C1 harness connector.

      Is there any voltage present?

      Yes

      - Repair the Low Side Driver circuit for a short to voltage.
      - Perform the POWERTRAIN VERIFICATION TEST - 6.7L. Refer to **POWERTRAIN VERIFICATION TEST - 6.7L** .

      No

      - Test complete. Perform the INTERMITTENT CONDITION - 6.7L diagnostic procedure. Refer to **INTERMITTENT CONDITION - 6.7L** .

8. **CHECK THE VALVE COVER PASS THROUGH HARNESS CIRCUIT**

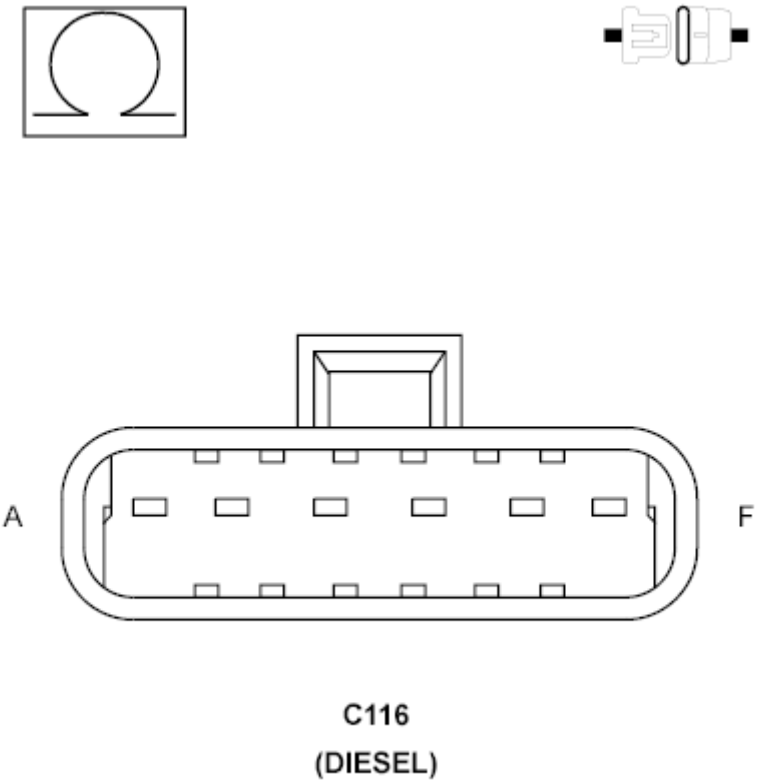

Fig. 72: Checking Valve Cover Pass Through Harness Circuits
Courtesy of CHRYSLER GROUP, LLC

NOTE: Perform the following tests on the Fuel Injector circuit which was faulty.

1. Turn the ignition off.
2. Disconnect the Valve Cover Pass Through harness connector.
3. Measure the resistance between Low Side Driver circuit and the High Side Driver circuit of the Valve Cover Pass Through connector terminals.

   NOTE: Be sure to zero the Ohm meter prior to checking the Fuel Injector circuit.

   Is the resistance between 0-1 Ohm?

   Yes

   - Go To 9.

   No

   - Go To 11.

9. **CHECK THE HIGH SIDE CIRCUITS IN ENGINE HARNESS**
    1. Measure the resistance of the High Side Driver circuit between the Valve Cover Pass Through harness connector and the PCM C1 harness connector.

    NOTE: **Be sure to zero the Ohm meter prior to checking the Fuel Injector circuit.**

    Is the resistance between 0-1 Ohm?

    Yes

    - Go To 10.

    No

    - Repair the High Side Driver circuit for an open or high resistance.
    - Perform the POWERTRAIN VERIFICATION TEST - 6.7L. Refer to **POWERTRAIN VERIFICATION TEST - 6.7L** .

10. **CHECK THE LOW SIDE CIRCUITS IN ENGINE HARNESS**
    1. Measure the resistance of the Low Side Driver circuit between the Valve Cover Pass Through harness connector and the PCM C1 harness connector.

    NOTE: **Be sure to zero the Ohm meter prior to checking the Fuel Injector circuit.**

    Is the resistance between 0-1 Ohm?

    Yes

    - Test complete. Perform the INTERMITTENT CONDITION - 6.7L diagnostic procedure. Refer to **INTERMITTENT CONDITION - 6.7L** .

    No

    - Repair the Low Side Driver circuit for an open or high resistance.
    - Perform the POWERTRAIN VERIFICATION TEST - 6.7L. Refer to **POWERTRAIN VERIFICATION TEST - 6.7L** .

11. **CHECK THE FUEL INJECTORS**
    1. Disconnect all bank 1 Fuel Injector wires at the Fuel Injectors.
    2. Measure the resistance across the terminals at the Fuel Injector.

    NOTE: **Be sure to zero the Ohm meter prior to checking the Fuel Injector circuit.**

Is the resistance between 0-1 Ohm?

Yes

- Replace the Valve Cover Pass Through harness in accordance with the service information.
- Perform the POWERTRAIN VERIFICATION TEST - 6.7L. Refer to **POWERTRAIN VERIFICATION TEST - 6.7L** .

No

- Replace the Fuel Injector in accordance with the service information.
- Perform the POWERTRAIN VERIFICATION TEST - 6.7L. Refer to **POWERTRAIN VERIFICATION TEST - 6.7L** .

12. **CHECK FOR THE DRIVER CIRCUITS SHORTED TOGETHER**
    1. Disconnect all bank 1 Fuel Injector wires at the Fuel Injectors.
    2. Measure the resistance between all bank 1 Driver circuits at the PCM C1 harness connector.

    Is the resistance below 10k Ohms between any circuits?

    Yes

    - Go To 13.

    No

    - Go To 14.

13. **CHECK THE VALVE COVER PASS THROUGH HARNESS CIRCUIT**

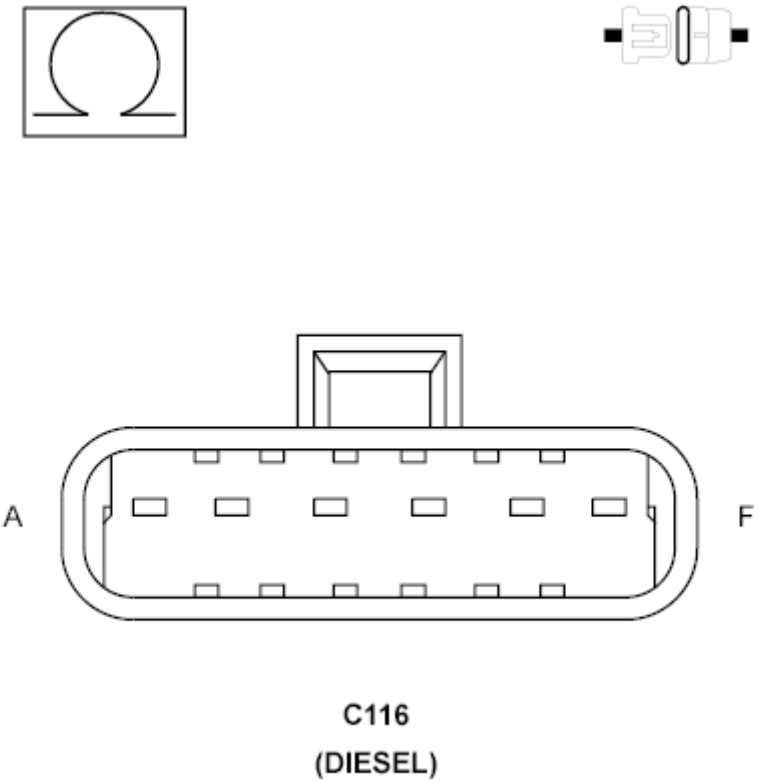

Fig. 73: Checking Valve Cover Pass Through Harness Circuits
Courtesy of CHRYSLER GROUP, LLC

1. Disconnect the Valve Cover Pass Through harness connector.
2. Measure the resistance between all bank 1 Driver circuits of the Valve Cover Pass Through harness.

   Is the resistance below 10k Ohms between any circuits?

   Yes

   - Replace the Valve Cover Pass Through harness in accordance with the service information.
   - Perform the POWERTRAIN VERIFICATION TEST - 6.7L. Refer to **POWERTRAIN VERIFICATION TEST - 6.7L** .

   No

   - Repair the short between the bank 1 Driver circuits in the engine harness.
   - Perform the POWERTRAIN VERIFICATION TEST - 6.7L. Refer to **POWERTRAIN VERIFICATION TEST - 6.7L** .

14. **CHECK THE HIGH SIDE DRIVER CIRCUIT FOR A SHORT TO GROUND**

NOTE: Perform the following tests on the Fuel Injector circuit which was faulty.

1. Disconnect the Valve Cover Pass Through harness connector.
2. Measure the resistance between ground and the High Side Driver circuit at the PCM C1 harness connector.

   Is the resistance below 10k Ohms?

   Yes

   - Repair the High Side Driver circuit for a short to ground.
   - Perform the POWERTRAIN VERIFICATION TEST - 6.7L. Refer to **POWERTRAIN VERIFICATION TEST - 6.7L** .

   No

   - Go To 15.

15. **CHECK THE LOW SIDE DRIVER CIRCUIT FOR A SHORT TO GROUND**
    1. Measure the resistance between ground and the Low Side Driver circuit at the PCM C1 connector.

       Is the resistance below 10k Ohms?

       Yes

       - Repair the Low Side Driver circuit for a short to ground.
       - Perform the POWERTRAIN VERIFICATION TEST - 6.7L. Refer to **POWERTRAIN VERIFICATION TEST - 6.7L** .

       No

       - Go To 16.

16. **CHECK THE FUEL INJECTORS**
    1. Measure the resistance between ground and one of the Fuel Injector terminals.

       Is the resistance below 10k Ohms?

       Yes

       - Replace the Fuel Injector in accordance with the service information.
       - Perform the POWERTRAIN VERIFICATION TEST - 6.7L. Refer to **POWERTRAIN VERIFICATION TEST - 6.7L** .

       No

       - Replace the Valve Cover Pass Through harness in accordance with the service information.

- Perform the POWERTRAIN VERIFICATION TEST - 6.7L. Refer to **POWERTRAIN VERIFICATION TEST - 6.7L** .

P0203-FUEL INJECTOR 3 CIRCUIT/OPEN

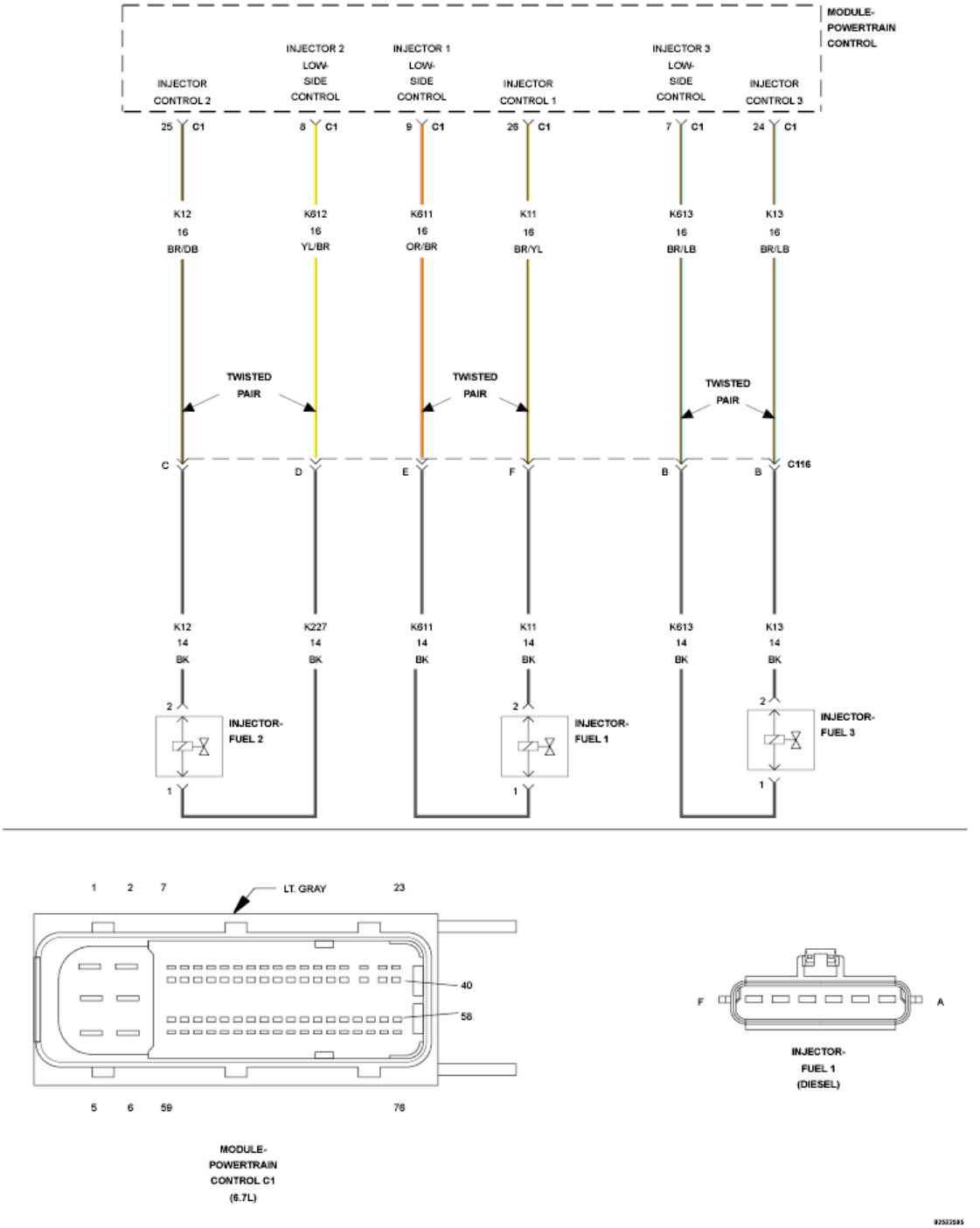

Fig. 74: Fuel Injector Circuit Schematic
Courtesy of CHRYSLER GROUP, LLC

For a complete wiring diagram, **refer to appropriate SYSTEM WIRING DIAGRAMS article** .

THEORY OF OPERATION

The Powertrain Control Module (PCM) actuates the solenoid in the Fuel Injector causing the needle valve to rise and fuel flows through the spray holes in the nozzle tip into the combustion chamber. The PCM has a common internal driver circuit to all three Fuel Injectors on each bank. If any injector circuit on a given bank has a failure, a DTC will be set for all three Fuel Injectors on that bank. Fuel Injectors 1, 2, 3 are grouped together on bank 1. Fuel Injectors 4, 5, 6 are grouped together on bank 2. The MIL lamp will light immediately after the diagnostic runs and fails. During this time the customer may experience engine surge or stumble. The MIL lamp will turn off once the diagnostic runs and passes in four consecutive drive cycles.

WHEN MONITORED:

While the engine is running.

SET CONDITION:

When the Fuel Injector current falls below a calibrated threshold.

POSSIBLE CAUSES

Possible Causes
HIGH SIDE DRIVER CIRCUIT OPEN/HIGH RESISTANCE LOW SIDE DRIVER CIRCUIT OPEN/HIGH RESISTANCE HIGH SIDE DRIVER CIRCUIT SHORTED TO GROUND LOW SIDE DRIVER CIRCUIT SHORTED TO GROUND HIGH SIDE DRIVER CIRCUIT SHORTED TO VOLTAGE
LOW SIDE DRIVER CIRCUIT SHORTED TO VOLTAGE
DRIVER CIRCUITS SHORTED TOGETHER
FUEL INJECTOR
POWERTRAIN CONTROL MODULE (PCM)

Always perform the Pre-Diagnostic Troubleshooting procedure before proceeding. Refer to PRE-DIAGNOSTIC TROUBLESHOOTING PROCEDURE - 6.7L .

DIAGNOSTIC TEST

1. **ACTIVE DTC**
    1. Ignition on, engine not running.
    2. With the scan tool check for active DTCs.

       Is the DTC active?

       Yes

- Go To 2.

No

- Perform the INTERMITTENT CONDITION - 6.7L diagnostic procedure. Refer to **INTERMITTENT CONDITION - 6.7L** .

2. **CHECK EACH FUEL INJECTOR CIRCUIT FOR AN OPEN/HIGH RESISTANCE**
   1. Turn the ignition off.
   2. Disconnect the PCM C1 harness connector.
   3. Measure the resistance between the:
      - (K11) Fuel Injector 1 High Side Driver circuit and the (K611) Fuel Injector 1 Low Side Driver circuit at the PCM C1 harness connector.
      - (K12) Fuel Injector 2 High Side Driver circuit and the (K612) Fuel Injector 2 Low Side Driver circuit at the PCM C1 harness connector.
      - (K13) Fuel Injector 3 High Side Driver circuit and the (K613) Fuel Injector 3 Low Side Driver circuit at the PCM C1 harness connector.

NOTE: **Be sure to zero the Ohm meter prior to checking the Fuel Injector circuit. Resistance reading should be between 0-1 Ohm.**

Is the resistance between 0-1 Ohm on all circuits?

Yes

- Go To 3.

No

- Go To 8.

3. **CHECK EACH FUEL INJECTOR CIRCUIT FOR A SHORT TO GROUND**
   1. Measure the resistance between ground and the:
      - (K11) Fuel Injector 1 High Side Driver circuit at the PCM C1 harness connector.
      - (K12) Fuel Injector 2 High Side Driver circuit at the PCM C1 harness connector.
      - (K13) Fuel Injector 3 High Side Driver circuit at the PCM C1 harness connector.

NOTE: **There should be no continuity between the circuit and ground.**

Is the resistance less than 10k Ohms on any circuit?

Yes

- Go To 12.

No

- Go To 4.

4. **CHECK EACH FUEL INJECTOR CIRCUIT FOR A SHORT TO VOLTAGE**
   1. Turn Ignition on.
   2. Measure the voltage on the:
      - (K11) Fuel Injector 1 High Side Driver circuit at the PCM C1 harness connector.
      - (K12) Fuel Injector 2 High Side Driver circuit at the PCM C1 harness connector.
      - (K13) Fuel Injector 3 High Side Driver circuit at the PCM C1 harness connector.

   NOTE: There should be no voltage present.

   Is there voltage present on any circuit?

   Yes

   - Go To 6.

   No

   - Go To 5.

5. **CHECK FOR THE DRIVER CIRCUITS SHORTED TOGETHER**
   1. Turn ignition off.
   2. Disconnect all bank 1 Fuel Injector wires at the Fuel Injectors.
   3. Measure the resistance between all bank 1 Driver circuits at the PCM C1 harness connector.

   Is the resistance below 10k Ohms between any Driver circuits?

   Yes

   - Repair the Driver circuits that are shorted together.
   - Perform the POWERTRAIN VERIFICATION TEST - 6.7L. Refer to **POWERTRAIN VERIFICATION TEST - 6.7L** .

   No

   - Replace the Powertrain Control Module in accordance with the service information.
   - Perform the POWERTRAIN VERIFICATION TEST - 6.7L. Refer to **POWERTRAIN VERIFICATION TEST - 6.7L** .

6. **CHECK THE HIGH SIDE DRIVER CIRCUIT FOR A SHORT TO VOLTAGE**

   NOTE: Perform the following tests on the Fuel Injector circuit which was faulty.

1. Turn the ignition off.
2. Disconnect Fuel Injector wires at the Fuel Injector.
3. Turn the ignition on.
4. Measure the voltage of the High Side Driver circuit at the PCM C1 harness connector.

   Is there any voltage present?

   Yes

   - Repair the High Side Driver circuit for a short to voltage.
   - Perform the POWERTRAIN VERIFICATION TEST - 6.7L. Refer to **POWERTRAIN VERIFICATION TEST - 6.7L** .

   No

   - Go To 7.

7. **CHECK THE LOW SIDE DRIVER CIRCUIT FOR A SHORT TO VOLTAGE**
   1. Measure the voltage of the Low Side Driver circuit at the PCM C1 harness connector.

      Is there any voltage present?

      Yes

      - Repair the Low Side Driver circuit for a short to voltage.
      - Perform the POWERTRAIN VERIFICATION TEST - 6.7L. Refer to **POWERTRAIN VERIFICATION TEST - 6.7L** .

      No

      - Test complete. Perform the INTERMITTENT CONDITION - 6.7L diagnostic procedure. Refer to **INTERMITTENT CONDITION - 6.7L** .

8. **CHECK THE VALVE COVER PASS THROUGH HARNESS CIRCUIT**

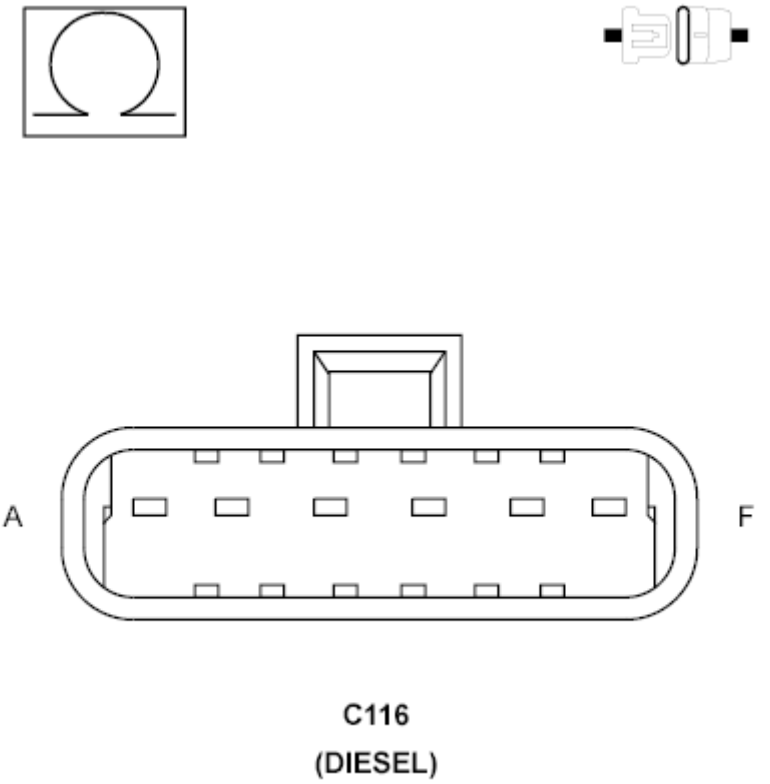

Fig. 75: Checking Valve Cover Pass Through Harness Circuits
Courtesy of CHRYSLER GROUP, LLC

NOTE: Perform the following tests on the Fuel Injector circuit which was faulty.

1. Disconnect the Valve Cover Pass Through harness connector.
2. Measure the resistance between Low Side Driver circuit and the High Side Driver circuit at the Valve Cover Pass Through connector terminals.

   NOTE: Be sure to zero the Ohm meter prior to checking the Fuel Injector circuit.

   Is the resistance between 0-1 Ohm?

   Yes

   - Go To 9.

   No

   - Go To 11.

9. **CHECK THE HIGH SIDE CIRCUITS IN ENGINE HARNESS**

1. Measure the resistance of the High Side Driver circuit between the Valve Cover Pass Through harness connector and the PCM C1 harness connector.

NOTE: **Be sure to zero the Ohm meter prior to checking the Fuel Injector circuit.**

Is the resistance between 0-1 Ohm?

Yes

- Go To 10.

No

- Repair the High Side Driver circuit for an open or high resistance.
- Perform the POWERTRAIN VERIFICATION TEST - 6.7L. Refer to **POWERTRAIN VERIFICATION TEST - 6.7L** .

10. **CHECK THE LOW SIDE CIRCUITS IN ENGINE HARNESS**
    1. Measure the resistance of the Low Side Driver circuit between the Valve Cover Pass Through harness connector and the PCM C1 harness connector.

NOTE: **Be sure to zero the Ohm meter prior to checking the Fuel Injector circuit.**

Is the resistance between 0-1 Ohm?

Yes

- Test complete. Perform the INTERMITTENT CONDITION - 6.7L diagnostic procedure. Refer to **INTERMITTENT CONDITION - 6.7L** .

No

- Repair the Low Side Driver circuit for an open or high resistance.
- Perform the POWERTRAIN VERIFICATION TEST - 6.7L. Refer to **POWERTRAIN VERIFICATION TEST - 6.7L** .

11. **CHECK THE FUEL INJECTORS**
    1. Disconnect all bank 1 Fuel Injector wires at the Fuel Injectors.
    2. Measure the resistance across the terminals at the Fuel Injector.

NOTE: **Be sure to zero the Ohm meter prior to checking the Fuel Injector circuit.**

Is the resistance between 0-1 Ohm?

Yes

- Replace the Valve Cover Pass Through harness in accordance with the service information.
- Perform the POWERTRAIN VERIFICATION TEST - 6.7L. Refer to **POWERTRAIN VERIFICATION TEST - 6.7L** .

No

- Replace the Fuel Injector in accordance with the service information.
- Perform the POWERTRAIN VERIFICATION TEST - 6.7L. Refer to **POWERTRAIN VERIFICATION TEST - 6.7L** .

12. **CHECK FOR THE DRIVER CIRCUITS SHORTED TOGETHER**
    1. Disconnect all bank 1 Fuel Injector wires at the Fuel Injectors.
    2. Measure the resistance between all bank 1 Driver circuits at the PCM C1 harness connector.

    Is the resistance below 10k Ohms between any circuits?

    Yes

    - Go To 13.

    No

    - Go To 14.

13. **CHECK THE VALVE COVER PASS THROUGH HARNESS CIRCUITS**

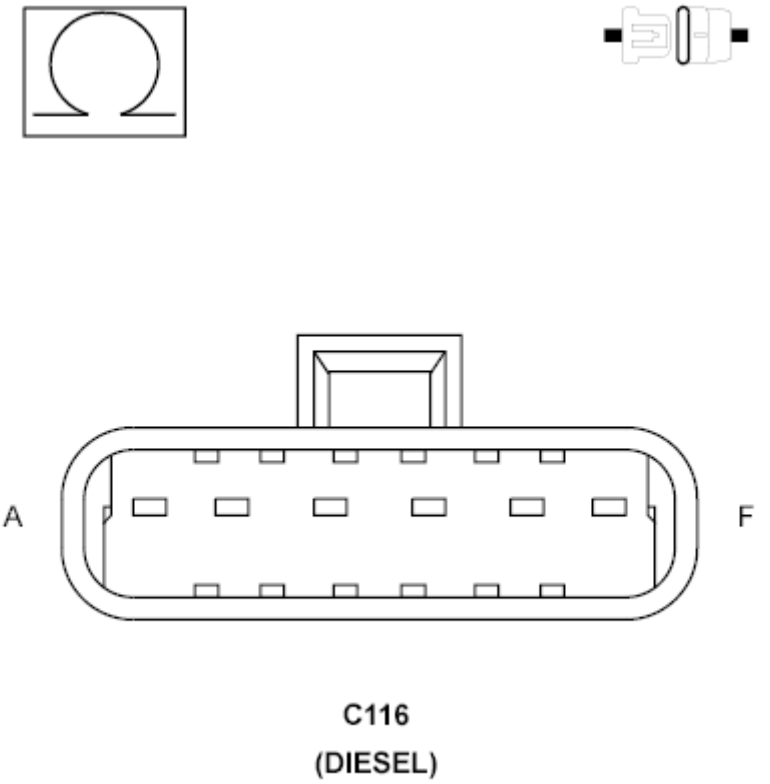

Fig. 76: Checking Valve Cover Pass Through Harness Circuits
Courtesy of CHRYSLER GROUP, LLC

1. Disconnect the Valve Cover Pass Through harness connector.
2. Measure the resistance between all bank 1 Driver circuits of the Valve Cover Pass Through connector terminals.

   Is the resistance below 10k Ohms between any circuits?

   Yes

   - Replace the Valve Cover Pass Through harness in accordance with the service information.
   - Perform the POWERTRAIN VERIFICATION TEST - 6.7L. Refer to **POWERTRAIN VERIFICATION TEST - 6.7L** .

   No

   - Repair the short between the bank 1 Driver circuits in the engine harness.
   - Perform the POWERTRAIN VERIFICATION TEST - 6.7L. Refer to **POWERTRAIN VERIFICATION TEST - 6.7L** .

14. **CHECK THE HIGH SIDE DRIVER CIRCUIT FOR A SHORT TO GROUND**

NOTE: Perform the following tests on the Fuel Injector circuit which was faulty.

1. Disconnect the Valve Cover Pass Through harness connector.
2. Measure the resistance between ground and the High Side Driver circuit at the PCM C1 connector.

   Is the resistance below 10k Ohms?

   Yes

   - Repair the short to ground in the High Side Driver circuit.
   - Perform the POWERTRAIN VERIFICATION TEST - 6.7L. Refer to **POWERTRAIN VERIFICATION TEST - 6.7L** .

   No

   - Go To 15.

15. **CHECK THE LOW SIDE DRIVER CIRCUIT FOR A SHORT TO GROUND**
    1. Measure the resistance between ground and the Low Side Driver circuit at the PCM C1 connector.

       Is the resistance below 10k Ohms?

       Yes

       - Repair the Low Side Driver circuit for a short to ground.
       - Perform the POWERTRAIN VERIFICATION TEST - 6.7L. Refer to **POWERTRAIN VERIFICATION TEST - 6.7L** .

       No

       - Go To 16.

16. **CHECK THE FUEL INJECTORS**
    1. Measure the resistance between ground and one of the Fuel Injector terminals.

       Is the resistance below 10k Ohms?

       Yes

       - Replace the Fuel Injector in accordance with the service information.
       - Perform the POWERTRAIN VERIFICATION TEST - 6.7L. Refer to **POWERTRAIN VERIFICATION TEST - 6.7L** .

       No

       - Replace the Valve Cover Pass Through harness in accordance with the service information.
       - Perform the POWERTRAIN VERIFICATION TEST - 6.7L. Refer to **POWERTRAIN**

VERIFICATION TEST - 6.7L .

P0204-FUEL INJECTOR 4 CIRCUIT/OPEN

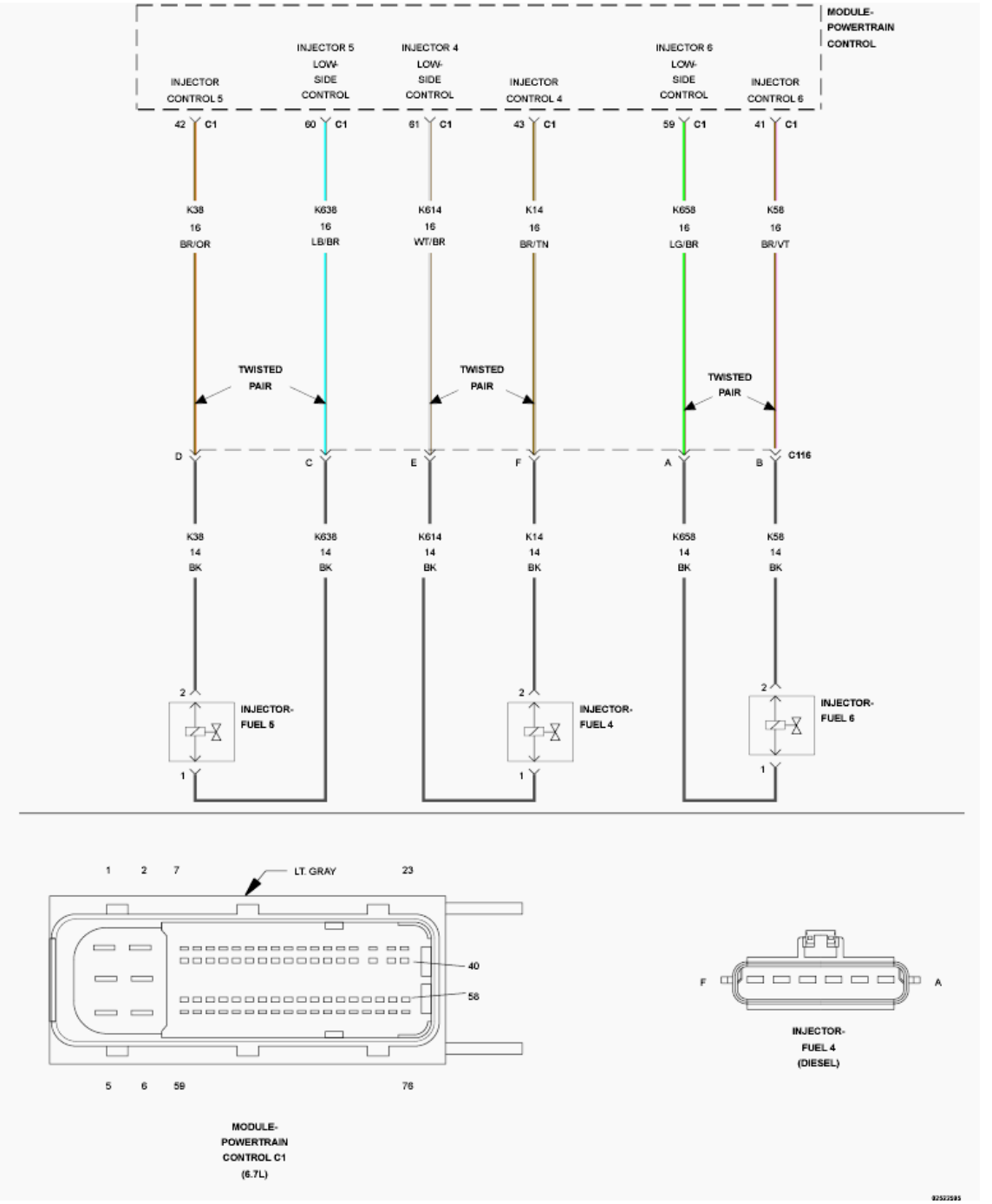

Fig. 77: Fuel Injector Circuit Schematic
Courtesy of CHRYSLER GROUP, LLC

For a complete wiring diagram, **refer to appropriate SYSTEM WIRING DIAGRAMS article** .

THEORY OF OPERATION

The Powertrain Control Module (PCM) actuates the solenoid in the Fuel Injector causing the needle valve to rise and fuel flows through the spray holes in the nozzle tip into the combustion chamber. The PCM has a common internal driver circuit to all three Fuel Injectors on each bank. If any injector circuit on a given bank has a failure, a DTC will be set for all three Fuel Injectors on that bank. Fuel Injectors 1, 2, 3 are grouped together on bank 1. Fuel Injectors 4, 5, 6 are grouped together on bank 2. The MIL lamp will light immediately after the diagnostic runs and fails. During this time the customer may experience engine surge or stumble. The MIL lamp will turn off once the diagnostic runs and passes in four consecutive drive cycles.

WHEN MONITORED:

While the engine is running.

SET CONDITION:

When the Fuel Injector current falls below a calibrated threshold.

POSSIBLE CAUSES

Possible Causes
HIGH SIDE DRIVER CIRCUIT OPEN/HIGH RESISTANCE LOW SIDE DRIVER CIRCUIT OPEN/HIGH RESISTANCE HIGH SIDE DRIVER CIRCUIT SHORTED TO GROUND LOW SIDE DRIVER CIRCUIT SHORTED TO GROUND HIGH SIDE DRIVER CIRCUIT SHORTED TO VOLTAGE
LOW SIDE DRIVER CIRCUIT SHORTED TO VOLTAGE
DRIVER CIRCUITS SHORTED TOGETHER
FUEL INJECTOR
POWERTRAIN CONTROL MODULE (PCM)

Always perform the Pre-Diagnostic Troubleshooting procedure before proceeding. Refer to PRE-DIAGNOSTIC TROUBLESHOOTING PROCEDURE - 6.7L .

DIAGNOSTIC TEST

1. **ACTIVE DTC**
    1. Ignition on, engine not running.
    2. With the scan tool check for active DTCs.

       Is the DTC active?

       Yes

       - Go To 2.

No

- Perform the INTERMITTENT CONDITION - 6.7L diagnostic procedure. Refer to **INTERMITTENT CONDITION - 6.7L** .

2. **CHECK EACH FUEL INJECTOR CIRCUIT FOR AN OPEN/HIGH RESISTANCE**
   1. Turn the ignition off.
   2. Disconnect the PCM C1 harness connector.
   3. Measure the resistance between the:
      - (K14) Fuel Injector 4 High Side Driver circuit and the (K611) Fuel Injector 4 Low Side Driver circuit at the PCM C1 harness connector.
      - (K38) Fuel Injector 5 High Side Driver circuit and the (K612) Fuel Injector 5 Low Side Driver circuit at the PCM C1 harness connector.
      - (K58) Fuel Injector 6 High Side Driver circuit and the (K613) Fuel Injector 6 Low Side Driver circuit at the PCM C1 harness connector.

NOTE: **Be sure to zero the Ohm meter prior to checking the Fuel Injector circuit. Resistance reading should be between 0-1 Ohm.**

Is the resistance between 0-1 Ohm on all circuits?

Yes

- Go To 3.

No

- Go To 8.

3. **CHECK EACH FUEL INJECTOR CIRCUIT FOR A SHORTED TO GROUND**
   1. Measure the resistance between ground and the:
      - (K14) Fuel Injector 4 High Side Driver circuit at the PCM C1 harness connector.
      - (K38) Fuel Injector 5 High Side Driver circuit at the PCM C1 harness connector.
      - (K58) Fuel Injector 6 High Side Driver circuit at the PCM C1 harness connector.

NOTE: **There should be no continuity between the circuit and ground.**

Is the resistance less than 10k Ohms on any circuit?

Yes

- Go To 12.

No

- Go To 4.

4. **CHECK EACH FUEL INJECTOR CIRCUIT FOR A SHORTED TO VOLTAGE**
   1. Turn the ignition on.
   2. Measure the voltage on the:
      - (K14) Fuel Injector 4 High Side Driver circuit at the PCM C1 harness connector.
      - (K38) Fuel Injector 5 High Side Driver circuit at the PCM C1 harness connector.
      - (K58) Fuel Injector 6 High Side Driver circuit at the PCM C1 harness connector.

   NOTE: There should be no voltage present.

   Is there voltage present on any circuit?

   Yes

   - Go To 6.

   No

   - Go To 5.

5. **CHECK FOR THE DRIVER CIRCUITS SHORTED TOGETHER**
   1. Turn ignition off.
   2. Disconnect all bank 2 Fuel Injector wires at the Fuel Injectors.
   3. Measure the resistance between all bank 2 Driver circuits at the PCM C1 harness connector.

   Is the resistance below 10k Ohms between any Driver circuits?

   Yes

   - Repair the Driver circuits that are shorted together.
   - Perform the POWERTRAIN VERIFICATION TEST - 6.7L. Refer to **POWERTRAIN VERIFICATION TEST - 6.7L** .

   No

   - Replace and program the Powertrain Control Module in accordance with the service information.
   - Perform the POWERTRAIN VERIFICATION TEST - 6.7L. Refer to **POWERTRAIN VERIFICATION TEST - 6.7L** .

6. **CHECK THE HIGH SIDE DRIVER CIRCUIT FOR A SHORT TO VOLTAGE**

   NOTE: Perform the following tests on the Fuel Injector circuit which was faulty.

   1. Turn the ignition off.

2. Disconnect Fuel Injector wires at the Fuel Injector.
3. Turn the ignition on.
4. Measure the voltage of the High Side Driver circuit at the PCM C1 harness connector.

   Is there any voltage present?

   Yes

   - Repair the High Side Driver circuit for a short to voltage.
   - Perform the POWERTRAIN VERIFICATION TEST - 6.7L. Refer to **POWERTRAIN VERIFICATION TEST - 6.7L** .

   No

   - Go To 7.

7. **CHECK THE LOW SIDE DRIVER CIRCUIT FOR A SHORT TO VOLTAGE**
   1. Measure the voltage of the Low Side Driver circuit at the PCM C1 harness connector.

      Is there any voltage present?

      Yes

      - Repair the Low Side Driver circuit for a short to voltage.
      - Perform the POWERTRAIN VERIFICATION TEST - 6.7L. Refer to **POWERTRAIN VERIFICATION TEST - 6.7L** .

      No

      - Test complete. Perform the INTERMITTENT CONDITION - 6.7L diagnostic procedure. Refer to **INTERMITTENT CONDITION - 6.7L** .

8. **CHECK THE VALVE COVER PASS THROUGH HARNESS CIRCUIT**

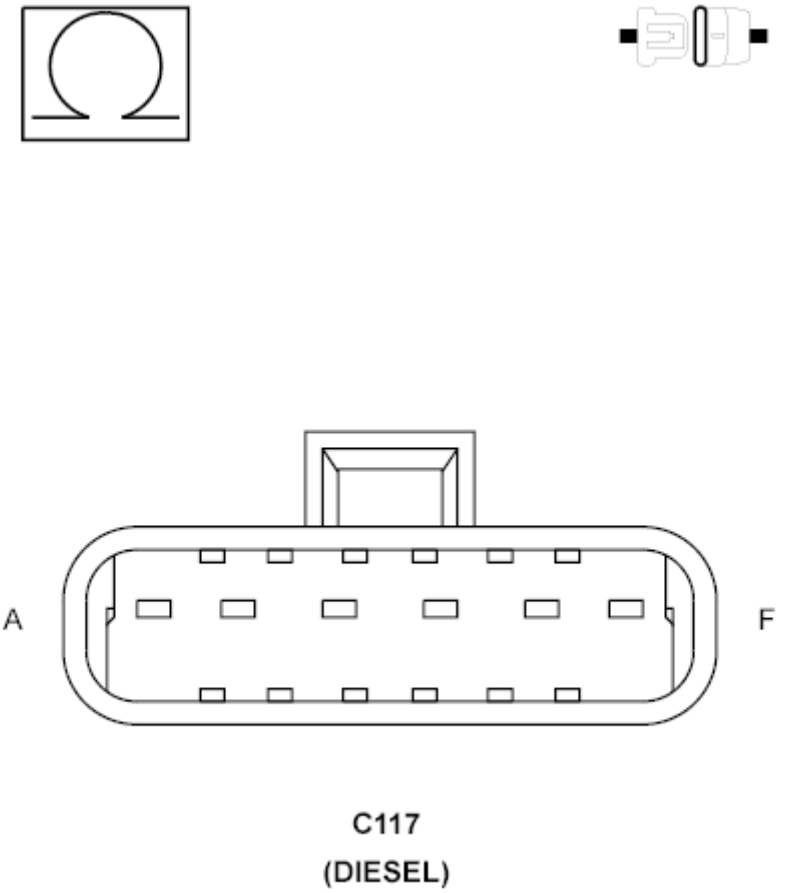

Fig. 78: Checking Valve Cover Pass Through Harness Circuits
Courtesy of CHRYSLER GROUP, LLC

NOTE: Perform the following tests on the Fuel Injector circuit which was faulty.

1. Disconnect the Valve Cover Pass Through harness connector.
2. Measure the resistance between Low Side Driver circuit and the High Side Driver circuit at the Valve Cover Pass Through connector terminals.

   NOTE: Be sure to zero the Ohm meter prior to checking the Fuel Injector circuit.

   Is the resistance between 0-1 Ohm?

   Yes

   - Go To 9.

   No

- Go To 11.

9. **CHECK THE HIGH SIDE CIRCUITS IN ENGINE HARNESS**
    1. Measure the resistance of the High Side Driver circuit between the Valve Cover Pass Through harness connector and the PCM C1 harness connector.

    NOTE: **Be sure to zero the Ohm meter prior to checking the Fuel Injector circuit.**

    Is the resistance between 0-1 Ohm?

    Yes

    - Go To 10.

    No

    - Repair the High Side Driver circuit for an open or high resistance.
    - Perform the POWERTRAIN VERIFICATION TEST - 6.7L. Refer to **POWERTRAIN VERIFICATION TEST - 6.7L** .

10. **CHECK THE LOW SIDE CIRCUITS IN ENGINE HARNESS**
    1. Measure the resistance of the Low Side Driver circuit between the Valve Cover Pass Through harness connector and the PCM C1 harness connector.

    NOTE: **Be sure to zero the Ohm meter prior to checking the Fuel Injector circuit.**

    Is the resistance between 0-1 Ohm?

    Yes

    - Test complete. Perform the INTERMITTENT CONDITION - 6.7L diagnostic procedure. Refer to **INTERMITTENT CONDITION - 6.7L** .

    No

    - Repair the Low Side Driver circuit for an open or high resistance.
    - Perform the POWERTRAIN VERIFICATION TEST - 6.7L. Refer to **POWERTRAIN VERIFICATION TEST - 6.7L** .

11. **CHECK FUEL INJECTORS**
    1. Disconnect all bank 2 Fuel Injector wires at the Fuel Injectors.
    2. Measure the resistance across the terminals at the Fuel Injector.

    NOTE: **Be sure to zero the Ohm meter prior to checking the Fuel Injector circuit.**

Is the resistance between 0-1 Ohm?

Yes

- Replace the Valve Cover Pass Through harness in accordance with the service information.
- Perform the POWERTRAIN VERIFICATION TEST - 6.7L. Refer to **POWERTRAIN VERIFICATION TEST - 6.7L** .

No

- Replace the Fuel Injector in accordance with the service information.
- Perform the POWERTRAIN VERIFICATION TEST - 6.7L. Refer to **POWERTRAIN VERIFICATION TEST - 6.7L** .

12. **CHECK FOR THE DRIVER CIRCUITS SHORTED TOGETHER**
    1. Disconnect all bank 2 Fuel Injector wires at the Fuel Injectors.
    2. Measure the resistance between all bank 2 Driver circuits at the PCM C1 harness connector.

    Is the resistance below 10k Ohms between any circuits?

    Yes

    - Go To 13.

    No

    - Go To 14.

13. **CHECK THE VALVE COVER PASS THROUGH HARNESS CIRCUITS**

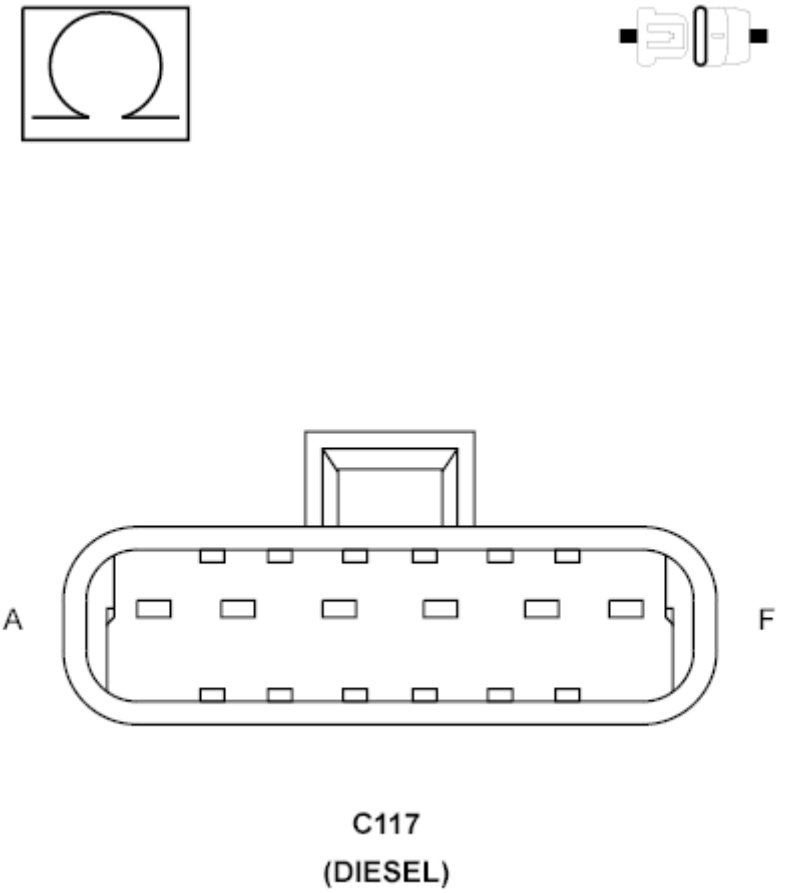

Fig. 79: Checking Valve Cover Pass Through Harness Circuits
Courtesy of CHRYSLER GROUP, LLC

1. Disconnect the Valve Cover Pass Through harness connector.
2. Measure the resistance between all bank 2 Driver circuits of the Valve Cover Pass Through connector terminals.

   Is the resistance below 10k Ohms between any circuits?

   Yes

   - Replace the Valve Cover Pass Through harness in accordance with the service information.
   - Perform the POWERTRAIN VERIFICATION TEST - 6.7L. Refer to **POWERTRAIN VERIFICATION TEST - 6.7L** .

   No

   - Repair the short between the bank 2 Driver circuits in the engine harness.
   - Perform the POWERTRAIN VERIFICATION TEST - 6.7L. Refer to **POWERTRAIN VERIFICATION TEST - 6.7L** .

14. **CHECK THE HIGH SIDE DRIVER CIRCUIT FOR A SHORT TO GROUND**

NOTE: Perform the following tests on the Fuel Injector circuit which was faulty.

1. Disconnect the Valve Cover Pass Through harness connector.
2. Measure the resistance between ground and the High Side Driver circuit at the PCM C1 connector.

Is the resistance below 10k Ohms?

Yes

- Repair the High Side Driver circuit for a short to ground.
- Perform the POWERTRAIN VERIFICATION TEST - 6.7L. Refer to **POWERTRAIN VERIFICATION TEST - 6.7L** .

No

- Go To 15.

15. **CHECK THE LOW SIDE DRIVER CIRCUIT FOR A SHORT TO GROUND**

1. Measure the resistance between ground and the Low Side Driver circuit at the PCM C1 connector.

Is the resistance below 10k Ohms?

Yes

- Repair the Low Side Driver circuit for a short to ground.
- Perform the POWERTRAIN VERIFICATION TEST - 6.7L. Refer to **POWERTRAIN VERIFICATION TEST - 6.7L** .

No

- Go To 16.

16. **CHECK THE FUEL INJECTORS**

1. Measure the resistance between ground and one of the Fuel Injector terminals.

Is the resistance below 10k Ohms?

Yes

- Replace the Fuel Injector in accordance with the service information.
- Perform the POWERTRAIN VERIFICATION TEST - 6.7L. Refer to **POWERTRAIN VERIFICATION TEST - 6.7L** .

No

- Replace the Valve Cover Pass Through harness in accordance with the service information.
- Perform the POWERTRAIN VERIFICATION TEST - 6.7L. Refer to **POWERTRAIN VERIFICATION TEST - 6.7L** .

P0205-FUEL INJECTOR 5 CIRCUIT/OPEN

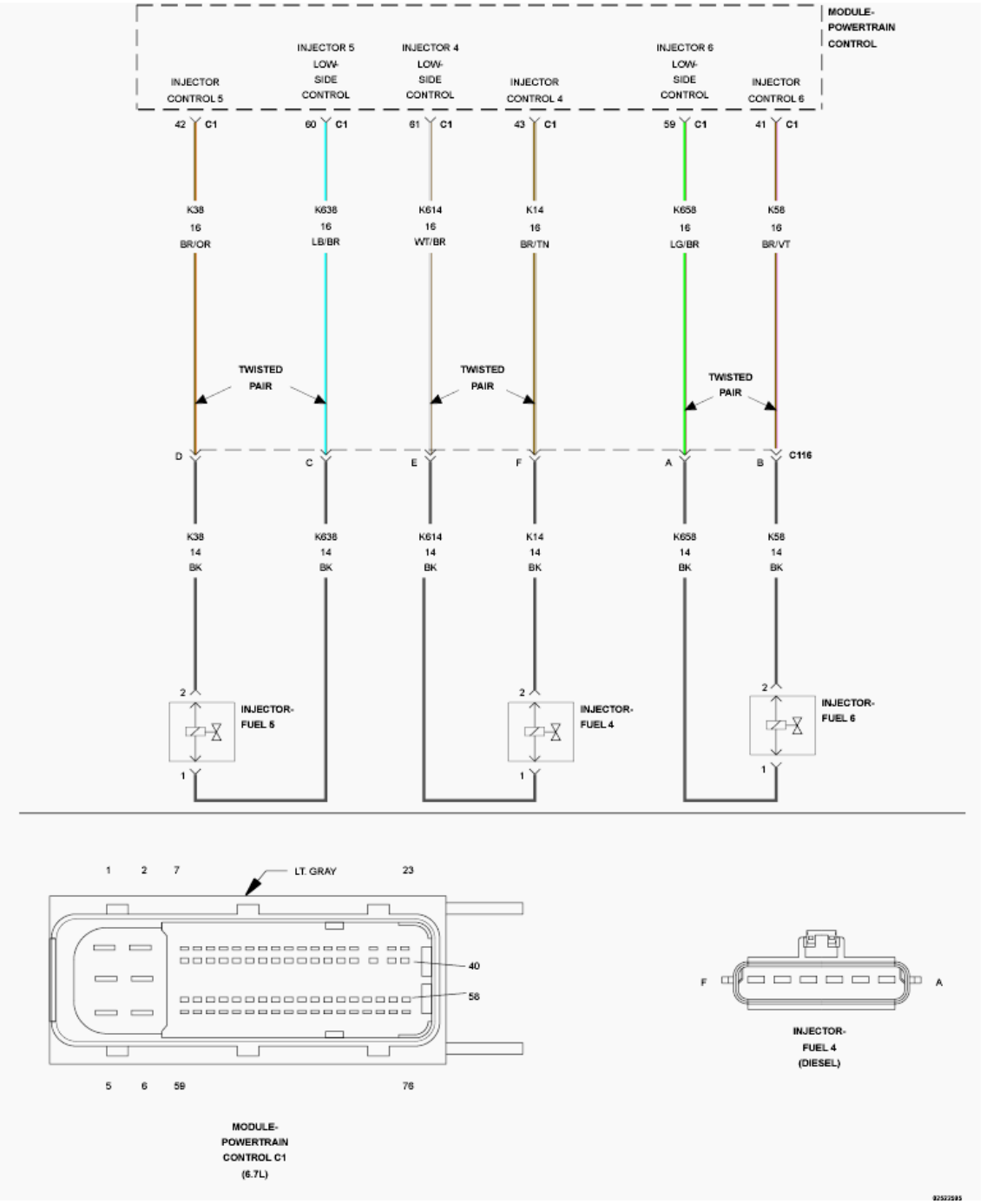

Fig. 80: Fuel Injector Circuit Schematic
Courtesy of CHRYSLER GROUP, LLC

For a complete wiring diagram, **refer to appropriate SYSTEM WIRING DIAGRAMS article** .

THEORY OF OPERATION

The Powertrain Control Module (PCM) actuates the solenoid in the Fuel Injector causing the needle valve to rise and fuel flows through the spray holes in the nozzle tip into the combustion chamber. The PCM has a common internal driver circuit to all three Fuel Injectors on each bank. If any injector circuit on a given bank has a failure, a DTC will be set for all three Fuel Injectors on that bank. Fuel Injectors 1, 2, 3 are grouped together on bank 1. Fuel Injectors 4, 5, 6 are grouped together on bank 2. The MIL lamp will light immediately after the diagnostic runs and fails. During this time the customer may experience engine surge or stumble. The MIL lamp will turn off once the diagnostic runs and passes in four consecutive drive cycles.

WHEN MONITORED:

While the engine is running.

SET CONDITION:

When the Fuel Injector current falls below a calibrated threshold.

POSSIBLE CAUSES

Possible Causes
HIGH SIDE DRIVER CIRCUIT OPEN/HIGH RESISTANCE LOW SIDE DRIVER CIRCUIT OPEN/HIGH RESISTANCE HIGH SIDE DRIVER CIRCUIT SHORTED TO GROUND LOW SIDE DRIVER CIRCUIT SHORTED TO GROUND HIGH SIDE DRIVER CIRCUIT SHORTED TO VOLTAGE
LOW SIDE DRIVER CIRCUIT SHORTED TO VOLTAGE
DRIVER CIRCUITS SHORTED TOGETHER
FUEL INJECTOR
POWERTRAIN CONTROL MODULE (PCM)

Always perform the Pre-Diagnostic Troubleshooting procedure before proceeding. Refer to PRE-DIAGNOSTIC TROUBLESHOOTING PROCEDURE - 6.7L .

DIAGNOSTIC TEST

1. **ACTIVE DTC**
    1. Ignition on, engine not running.
    2. With the scan tool check for active DTCs.

       Is the DTC active?

       Yes

- Go To 2.

No

- Perform the INTERMITTENT CONDITION - 6.7L diagnostic procedure. Refer to **INTERMITTENT CONDITION - 6.7L** .

2. **CHECK EACH FUEL INJECTOR CIRCUIT FOR AN OPEN/HIGH RESISTANCE**
   1. Turn the ignition off.
   2. Disconnect the PCM C1 harness connector.
   3. Measure the resistance between the:
      - (K14) Fuel Injector 4 High Side Driver circuit and the (K611) Fuel Injector 4 Low Side Driver circuit at the PCM C1 harness connector.
      - (K38) Fuel Injector 5 High Side Driver circuit and the (K612) Fuel Injector 5 Low Side Driver circuit at the PCM C1 harness connector.
      - (K58) Fuel Injector 6 High Side Driver circuit and the (K613) Fuel Injector 6 Low Side Driver circuit at the PCM C1 harness connector.

NOTE: **Be sure to zero the Ohm meter prior to checking the Fuel Injector circuit. Resistance reading should be between 0-1 Ohm.**

Is the resistance between 0-1 Ohm on all circuits?

Yes

- Go To 3.

No

- Go To 8.

3. **CHECK EACH FUEL INJECTOR CIRCUIT FOR A SHORTED TO GROUND**
   1. Measure the resistance between ground and the:
      - (K14) Fuel Injector 4 High Side Driver circuit at the PCM C1 harness connector.
      - (K38) Fuel Injector 5 High Side Driver circuit at the PCM C1 harness connector.
      - (K58) Fuel Injector 6 High Side Driver circuit at the PCM C1 harness connector.

NOTE: **There should be no continuity between the circuit and ground.**

Is the resistance below 10k Ohms on any circuit?

Yes

- Go To 12.

No

- Go To 4.

4. **CHECK EACH FUEL INJECTOR CIRCUIT FOR A SHORTED TO VOLTAGE**
   1. Turn Ignition on.
   2. Measure the voltage on the:
      - (K14) Fuel Injector 4 High Side Driver circuit at the PCM C1 harness connector.
      - (K38) Fuel Injector 5 High Side Driver circuit at the PCM C1 harness connector.
      - (K58) Fuel Injector 6 High Side Driver circuit at the PCM C1 harness connector.

   NOTE: There should be no voltage present.

   Is there voltage present on any circuit?

   Yes

   - Go To 6.

   No

   - Go To 5.

5. **CHECK FOR THE DRIVER CIRCUITS SHORTED TOGETHER**
   1. Turn ignition off.
   2. Disconnect all bank 2 Fuel Injector wires at the Fuel Injectors.
   3. Measure the resistance between all bank 2 Driver circuits at the PCM C1 harness connector.

   Is the resistance below 10k Ohms between any Driver circuits?

   Yes

   - Repair the Driver circuits that are shorted together.
   - Perform the POWERTRAIN VERIFICATION TEST - 6.7L. Refer to **POWERTRAIN VERIFICATION TEST - 6.7L** .

   No

   - Replace the Powertrain Control Module in accordance with the service information.
   - Perform the POWERTRAIN VERIFICATION TEST - 6.7L. Refer to **POWERTRAIN VERIFICATION TEST - 6.7L** .

6. **CHECK THE HIGH SIDE DRIVER CIRCUIT FOR A SHORT TO VOLTAGE**

   NOTE: Perform the following tests on the Fuel Injector circuit which was faulty.

1. Turn the ignition off.
2. Disconnect Fuel Injector wires at the Fuel Injector.
3. Turn the ignition on.
4. Measure the voltage of the High Side Driver circuit at the PCM C1 harness connector.

   Is there any voltage present?

   Yes

   - Repair the High Side Driver circuit for a short to voltage.
   - Perform the POWERTRAIN VERIFICATION TEST - 6.7L. Refer to **POWERTRAIN VERIFICATION TEST - 6.7L** .

   No

   - Go To 7.

7. **CHECK THE LOW SIDE DRIVER CIRCUIT FOR A SHORT TO VOLTAGE**
   1. Measure the voltage of the Low Side Driver circuit at the PCM C1 harness connector.

      Is there any voltage present?

      Yes

      - Repair the Low Side Driver circuit for a short to voltage.
      - Perform the POWERTRAIN VERIFICATION TEST - 6.7L. Refer to **POWERTRAIN VERIFICATION TEST - 6.7L** .

      No

      - Test complete. Perform the INTERMITTENT CONDITION - 6.7L diagnostic procedure. Refer to **INTERMITTENT CONDITION - 6.7L** .

8. **CHECK THE VALVE COVER PASS THROUGH HARNESS CIRCUIT**

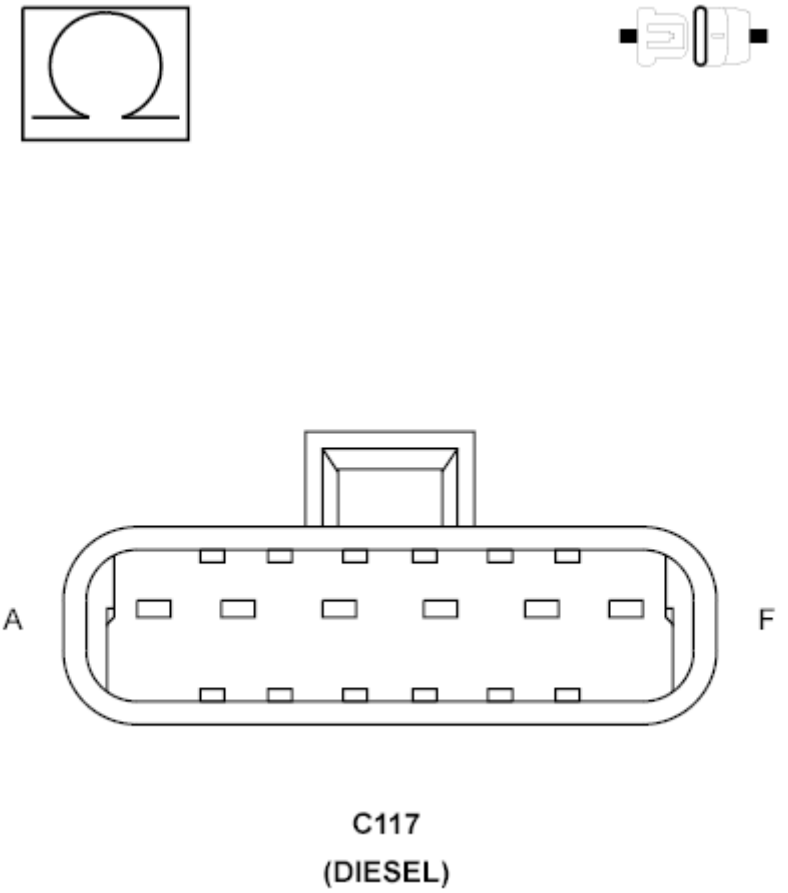

Fig. 81: Checking Valve Cover Pass Through Harness Circuits
Courtesy of CHRYSLER GROUP, LLC

NOTE: Perform the following tests on the Fuel Injector circuit which was faulty.

1. Disconnect the Valve Cover Pass Through harness connector.
2. Measure the resistance between Low Side Driver circuit and the High Side Driver circuit at the Valve Cover Pass Through connector terminals.

   NOTE: Be sure to zero the Ohm meter prior to checking the Fuel Injector circuit.

   Is the resistance between 0-1 Ohm?

   Yes

   - Go To 9.

   No

- Go To 11.

9. **CHECK THE HIGH SIDE CIRCUITS IN ENGINE HARNESS**
    1. Measure the resistance of the High Side Driver circuit between the Valve Cover Pass Through harness connector and the PCM C1 harness connector.

    NOTE: **Be sure to zero the Ohm meter prior to checking the Fuel Injector circuit.**

    Is the resistance between 0-1 Ohm?

    Yes

    - Go To 10.

    No

    - Repair the High Side Driver circuit for an open or high resistance.
    - Perform the POWERTRAIN VERIFICATION TEST - 6.7L. Refer to **POWERTRAIN VERIFICATION TEST - 6.7L** .

10. **CHECK THE LOW SIDE CIRCUITS IN ENGINE HARNESS**
    1. Measure the resistance of the Low Side Driver circuit between the Valve Cover Pass Through harness connector and the PCM C1 harness connector.

    NOTE: **Be sure to zero the Ohm meter prior to checking the Fuel Injector circuit.**

    Is the resistance between 0-1 Ohm?

    Yes

    - Test complete. Perform the INTERMITTENT CONDITION - 6.7L diagnostic procedure. Refer to **INTERMITTENT CONDITION - 6.7L** .

    No

    - Repair the Low Side Driver circuit for an open or high resistance.
    - Perform the POWERTRAIN VERIFICATION TEST - 6.7L. Refer to **POWERTRAIN VERIFICATION TEST - 6.7L** .

11. **CHECK FUEL INJECTORS**
    1. Disconnect all bank 2 Fuel Injector wires at the Fuel Injectors.
    2. Measure the resistance across the terminals at the Fuel Injector.

    NOTE: **Be sure to zero the Ohm meter prior to checking the Fuel Injector circuit.**

Is the resistance between 0-1 Ohm?

Yes

- Replace the Valve Cover Pass Through harness in accordance with the service information.
- Perform the POWERTRAIN VERIFICATION TEST - 6.7L. Refer to **POWERTRAIN VERIFICATION TEST - 6.7L** .

No

- Replace the Fuel Injector in accordance with the service information.
- Perform the POWERTRAIN VERIFICATION TEST - 6.7L. Refer to **POWERTRAIN VERIFICATION TEST - 6.7L** .

12. **CHECK FOR THE DRIVER CIRCUITS SHORTED TOGETHER**
    1. Disconnect all bank 2 Fuel Injector wires at the Fuel Injectors.
    2. Measure the resistance between all bank 2 Driver circuits at the PCM C1 harness connector.

    Is the resistance below 10k Ohms between any circuits?

    Yes

    - Go To 13.

    No

    - Go To 14.

13. **CHECK THE VALVE COVER PASS THROUGH HARNESS CIRCUITS**

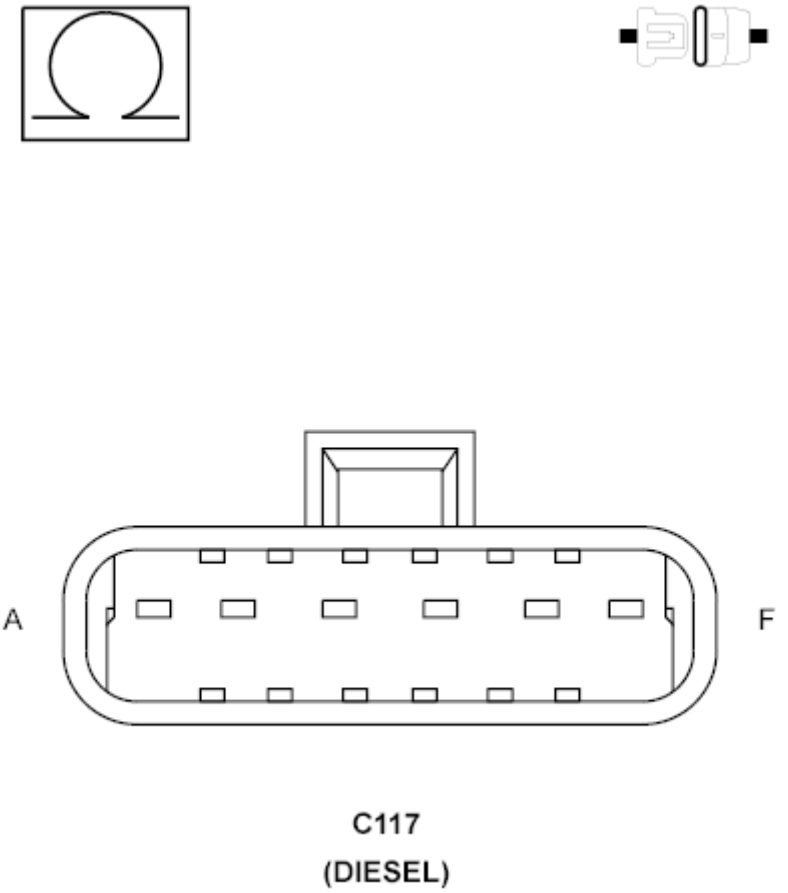

Fig. 82: Checking Valve Cover Pass Through Harness Circuits
Courtesy of CHRYSLER GROUP, LLC

1. Disconnect the Valve Cover Pass Through harness connector.
2. Measure the resistance between all bank 2 Driver circuits of the Valve Cover Pass Through connector terminals.

   Is the resistance below 10k Ohms between any circuits?

   Yes

   - Replace the Valve Cover Pass Through harness in accordance with the service information.
   - Perform the POWERTRAIN VERIFICATION TEST - 6.7L. Refer to **POWERTRAIN VERIFICATION TEST - 6.7L** .

   No

   - Repair the short between the bank 2 Driver circuits in the engine harness.
   - Perform the POWERTRAIN VERIFICATION TEST - 6.7L. Refer to **POWERTRAIN VERIFICATION TEST - 6.7L** .

14. **CHECK THE HIGH SIDE DRIVER CIRCUIT FOR A SHORT TO GROUND**

NOTE: Perform the following tests on the Fuel Injector circuit which was faulty.

1. Disconnect the Valve Cover Pass Through harness connector.
2. Measure the resistance between ground and the High Side Driver circuit at the PCM C1 connector.

Is the resistance below 10k Ohms?

Yes

- Repair the High Side Driver circuit for a short to ground.
- Perform the POWERTRAIN VERIFICATION TEST - 6.7L. Refer to **POWERTRAIN VERIFICATION TEST - 6.7L** .

No

- Go To 15.

15. **CHECK THE LOW SIDE DRIVER CIRCUIT FOR A SHORT TO GROUND**

1. Measure the resistance between ground and the Low Side Driver circuit at the PCM C1 connector.

Is the resistance below 10k Ohms?

Yes

- Repair the Low Side Driver circuit for a short to ground.
- Perform the POWERTRAIN VERIFICATION TEST - 6.7L. Refer to **POWERTRAIN VERIFICATION TEST - 6.7L** .

No

- Go To 16.

16. **CHECK THE FUEL INJECTORS**

1. Measure the resistance between ground and one of the Fuel Injector terminals.

Is the resistance below 10k Ohms?

Yes

- Replace the Fuel Injector in accordance with the service information.
- Perform the POWERTRAIN VERIFICATION TEST - 6.7L. Refer to **POWERTRAIN VERIFICATION TEST - 6.7L** .

No

- Replace the Valve Cover Pass Through harness in accordance with the service information.
- Perform the POWERTRAIN VERIFICATION TEST - 6.7L. Refer to **POWERTRAIN VERIFICATION TEST - 6.7L** .

P0206-FUEL INJECTOR 6 CIRCUIT/OPEN

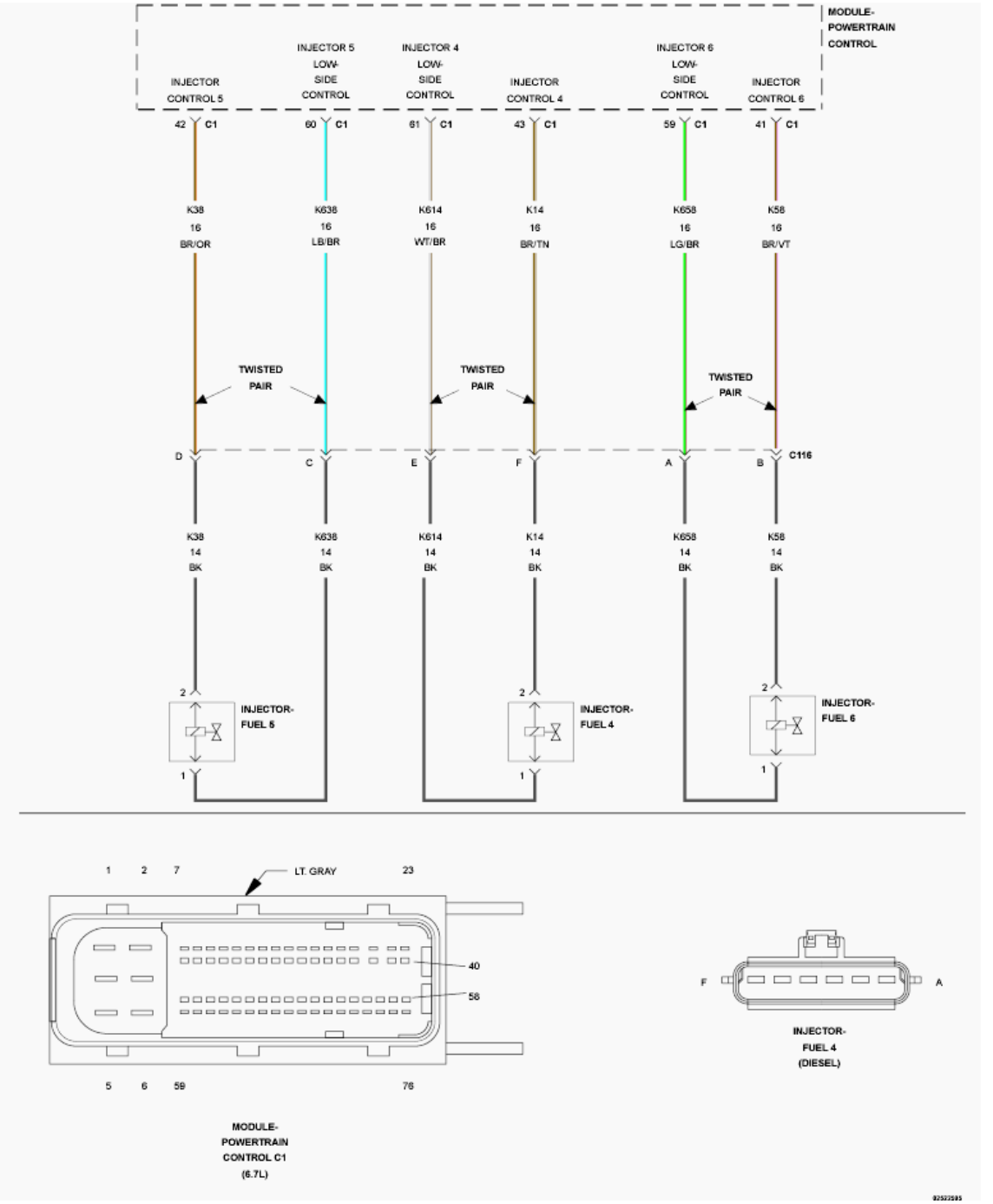

Fig. 83: Fuel Injector Circuit Schematic
Courtesy of CHRYSLER GROUP, LLC

For a complete wiring diagram, **refer to appropriate SYSTEM WIRING DIAGRAMS article** .

THEORY OF OPERATION

The Powertrain Control Module (PCM) actuates the solenoid in the Fuel Injector causing the needle valve to rise and fuel flows through the spray holes in the nozzle tip into the combustion chamber. The PCM has a common internal driver circuit to all three Fuel Injectors on each bank. If any injector circuit on a given bank has a failure, a DTC will be set for all three Fuel Injectors on that bank. Fuel Injectors 1, 2, 3 are grouped together on bank 1. Fuel Injectors 4, 5, 6 are grouped together on bank 2. The MIL lamp will light immediately after the diagnostic runs and fails. During this time the customer may experience engine surge or stumble. The MIL lamp will turn off once the diagnostic runs and passes in four consecutive drive cycles.

WHEN MONITORED:

While the engine is running.

SET CONDITION:

When the Fuel Injector current falls below a calibrated threshold.

POSSIBLE CAUSES

Possible Causes
HIGH SIDE DRIVER CIRCUIT OPEN/HIGH RESISTANCE LOW SIDE DRIVER CIRCUIT OPEN/HIGH RESISTANCE HIGH SIDE DRIVER CIRCUIT SHORTED TO GROUND LOW SIDE DRIVER CIRCUIT SHORTED TO GROUND HIGH SIDE DRIVER CIRCUIT SHORTED TO VOLTAGE
LOW SIDE DRIVER CIRCUIT SHORTED TO VOLTAGE
DRIVER CIRCUITS SHORTED TOGETHER
FUEL INJECTOR
POWERTRAIN CONTROL MODULE (PCM)

Always perform the Pre-Diagnostic Troubleshooting procedure before proceeding. Refer to PRE-DIAGNOSTIC TROUBLESHOOTING PROCEDURE - 6.7L .

DIAGNOSTIC TEST

1. **ACTIVE DTC**
    1. Ignition on, engine not running.
    2. With the scan tool check for active DTCs.

       Is the DTC active?

       Yes

- Go To 2.

No

- Perform the INTERMITTENT CONDITION - 6.7L diagnostic procedure. Refer to **INTERMITTENT CONDITION - 6.7L** .

2. **CHECK EACH FUEL INJECTOR CIRCUIT FOR AN OPEN/HIGH RESISTANCE**
   1. Turn the ignition off.
   2. Disconnect the PCM C1 harness connector.
   3. Measure the resistance between the:
      - (K14) Fuel Injector 4 High Side Driver circuit and the (K611) Fuel Injector 4 Low Side Driver circuit at the PCM C1 harness connector.
      - (K38) Fuel Injector 5 High Side Driver circuit and the (K612) Fuel Injector 5 Low Side Driver circuit at the PCM C1 harness connector.
      - (K58) Fuel Injector 6 High Side Driver circuit and the (K613) Fuel Injector 6 Low Side Driver circuit at the PCM C1 harness connector.

NOTE: **Be sure to zero the Ohm meter prior to checking the Fuel Injector circuit. Resistance reading should be between 0-1 Ohm.**

Is the resistance between 0-1 Ohm on all circuits?

Yes

- Go To 3.

No

- Go To 8.

3. **CHECK EACH FUEL INJECTOR CIRCUIT FOR A SHORTED TO GROUND**
   1. Measure the resistance between ground and the:
      - (K14) Fuel Injector 4 High Side Driver circuit at the PCM C1 harness connector.
      - (K38) Fuel Injector 5 High Side Driver circuit at the PCM C1 harness connector.
      - (K58) Fuel Injector 6 High Side Driver circuit at the PCM C1 harness connector.

NOTE: **There should be no continuity between the circuit and ground.**

Is the resistance below 10k Ohms on any circuit?

Yes

- Go To 12.

No

- Go To 4.

4. **CHECK EACH FUEL INJECTOR CIRCUIT FOR A SHORTED TO VOLTAGE**
   1. Turn Ignition on.
   2. Measure the voltage on the:
      - (K14) Fuel Injector 4 High Side Driver circuit at the PCM C1 harness connector.
      - (K38) Fuel Injector 5 High Side Driver circuit at the PCM C1 harness connector.
      - (K58) Fuel Injector 6 High Side Driver circuit at the PCM C1 harness connector.

   NOTE: There should be no voltage present.

   Is there voltage present on any circuit?

   Yes

   - Go To 6.

   No

   - Go To 5.

5. **CHECK FOR THE DRIVER CIRCUITS SHORTED TOGETHER**
   1. Turn ignition off.
   2. Disconnect all bank 2 Fuel Injector wires at the Fuel Injectors.
   3. Measure the resistance between all bank 2 Driver circuits at the PCM C1 harness connector.

   Is the resistance below 10k Ohms between any Driver circuits?

   Yes

   - Repair the Driver circuits that are shorted together.
   - Perform the POWERTRAIN VERIFICATION TEST - 6.7L. Refer to **POWERTRAIN VERIFICATION TEST - 6.7L** .

   No

   - Replace the Powertrain Control Module in accordance with the service information.
   - Perform the POWERTRAIN VERIFICATION TEST - 6.7L. Refer to **POWERTRAIN VERIFICATION TEST - 6.7L** .

6. **CHECK THE HIGH SIDE DRIVER CIRCUIT FOR A SHORT TO VOLTAGE**

   NOTE: Perform the following tests on the Fuel Injector circuit which was faulty.

1. Turn the ignition off.
2. Disconnect Fuel Injector wires at the Fuel Injector.
3. Turn the ignition on.
4. Measure the voltage of the High Side Driver circuit at the PCM C1 harness connector.

   Is there any voltage present?

   Yes

   - Repair the High Side Driver circuit for a short to voltage.
   - Perform the POWERTRAIN VERIFICATION TEST - 6.7L. Refer to **POWERTRAIN VERIFICATION TEST - 6.7L** .

   No

   - Go To 7.

7. **CHECK THE LOW SIDE DRIVER CIRCUIT FOR A SHORT TO VOLTAGE**
   1. Measure the voltage of the Low Side Driver circuit at the PCM C1 harness connector.

      Is there any voltage present?

      Yes

      - Repair the Low Side Driver circuit for a short to voltage.
      - Perform the POWERTRAIN VERIFICATION TEST - 6.7L. Refer to **POWERTRAIN VERIFICATION TEST - 6.7L** .

      No

      - Test complete. Perform the INTERMITTENT CONDITION - 6.7L diagnostic procedure. Refer to **INTERMITTENT CONDITION - 6.7L** .

8. **CHECK THE VALVE COVER PASS THROUGH HARNESS CIRCUIT**

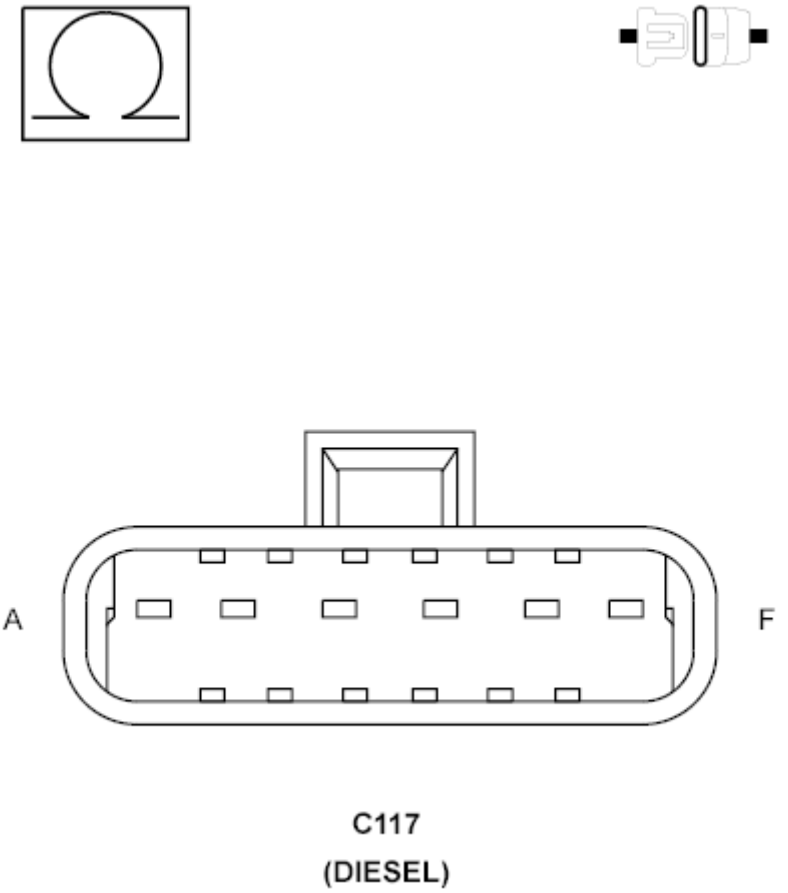

Fig. 84: Checking Valve Cover Pass Through Harness Circuits
Courtesy of CHRYSLER GROUP, LLC

NOTE: Perform the following tests on the Fuel Injector circuit which was faulty.

1. Disconnect the Valve Cover Pass Through harness connector.
2. Measure the resistance between Low Side Driver circuit and the High Side Driver circuit at the Valve Cover Pass Through connector terminals.

   NOTE: Be sure to zero the Ohm meter prior to checking the Fuel Injector circuit.

   Is the resistance between 0-1 Ohm?

   Yes

   - Go To 9.

   No

- Go To 11.

9. **CHECK THE HIGH SIDE CIRCUITS IN ENGINE HARNESS**
    1. Measure the resistance of the High Side Driver circuit between the Valve Cover Pass Through harness connector and the PCM C1 harness connector.

    NOTE: **Be sure to zero the Ohm meter prior to checking the Fuel Injector circuit.**

    Is the resistance between 0-1 Ohm?

    Yes

    - Go To 10.

    No

    - Repair the High Side Driver circuit for an open or high resistance.
    - Perform the POWERTRAIN VERIFICATION TEST - 6.7L. Refer to **POWERTRAIN VERIFICATION TEST - 6.7L** .

10. **CHECK THE LOW SIDE CIRCUITS IN ENGINE HARNESS**
    1. Measure the resistance of the Low Side Driver circuit between the Valve Cover Pass Through harness connector and the PCM C1 harness connector.

    NOTE: **Be sure to zero the Ohm meter prior to checking the Fuel Injector circuit.**

    Is the resistance between 0-1 Ohm?

    Yes

    - Test complete. Perform the INTERMITTENT CONDITION - 6.7L diagnostic procedure. Refer to **INTERMITTENT CONDITION - 6.7L** .

    No

    - Repair the Low Side Driver circuit for an open or high resistance.
    - Perform the POWERTRAIN VERIFICATION TEST - 6.7L. Refer to **POWERTRAIN VERIFICATION TEST - 6.7L** .

11. **CHECK FUEL INJECTORS**
    1. Disconnect all bank 2 Fuel Injector wires at the Fuel Injectors.
    2. Measure the resistance across the terminals at the Fuel Injector.

    NOTE: **Be sure to zero the Ohm meter prior to checking the Fuel Injector circuit.**

Is the resistance between 0-1 Ohm?

Yes

- Replace the Valve Cover Pass Through harness in accordance with the service information.
- Perform the POWERTRAIN VERIFICATION TEST - 6.7L. Refer to **POWERTRAIN VERIFICATION TEST - 6.7L** .

No

- Replace the Fuel Injector in accordance with the service information.
- Perform the POWERTRAIN VERIFICATION TEST - 6.7L. Refer to **POWERTRAIN VERIFICATION TEST - 6.7L** .

12. **CHECK FOR THE DRIVER CIRCUITS SHORTED TOGETHER**
    1. Disconnect all bank 2 Fuel Injector wires at the Fuel Injectors.
    2. Measure the resistance between all bank 2 Driver circuits at the PCM C1 harness connector.

    Is the resistance below 10k Ohms between any circuits?

    Yes

    - Go To 13.

    No

    - Go To 14.

13. **CHECK THE VALVE COVER PASS THROUGH HARNESS CIRCUITS**

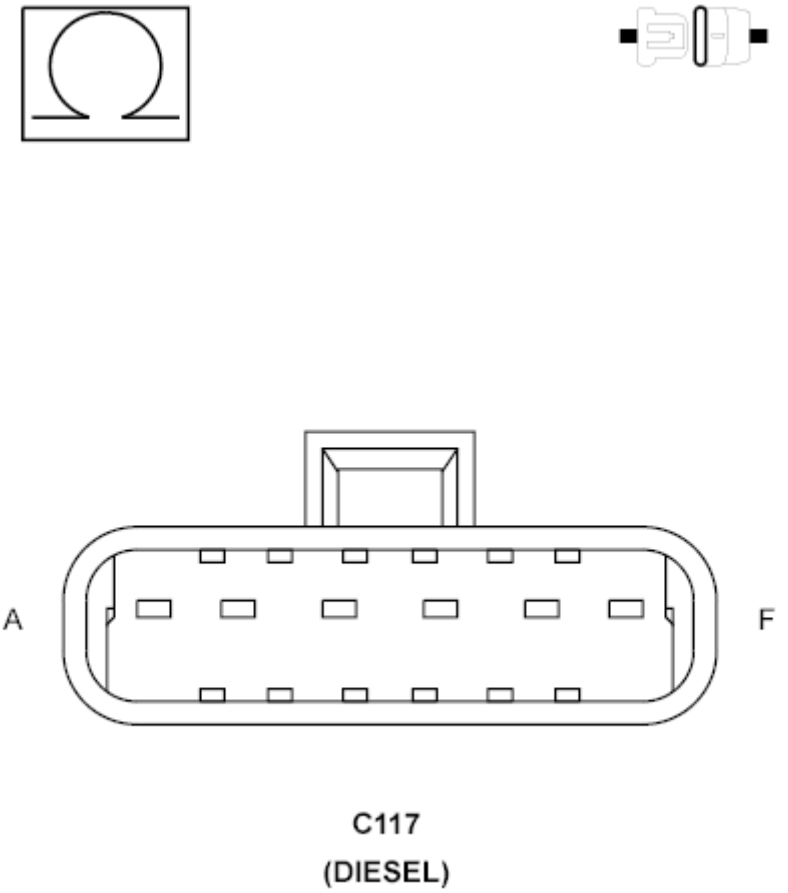

Fig. 85: Checking Valve Cover Pass Through Harness Circuits
Courtesy of CHRYSLER GROUP, LLC

1. Disconnect the Valve Cover Pass Through harness connector.
2. Measure the resistance between all bank 2 Driver circuits of the Valve Cover Pass Through connector terminals.

   Is the resistance below 10k Ohms between any circuits?

   Yes

   - Replace the Valve Cover Pass Through harness in accordance with the service information.
   - Perform the POWERTRAIN VERIFICATION TEST - 6.7L. Refer to **POWERTRAIN VERIFICATION TEST - 6.7L** .

   No

   - Repair the short between the bank 2 Driver circuits in the engine harness.
   - Perform the POWERTRAIN VERIFICATION TEST - 6.7L. Refer to **POWERTRAIN VERIFICATION TEST - 6.7L** .

14. **CHECK THE HIGH SIDE DRIVER CIRCUIT FOR A SHORT TO GROUND**

NOTE: Perform the following tests on the Fuel Injector circuit which was faulty.

1. Disconnect the Valve Cover Pass Through harness connector.
2. Measure the resistance between ground and the High Side Driver circuit at the PCM C1 connector.

Is the resistance below 10k Ohms?

Yes

- Repair the High Side Driver circuit for a short to ground.
- Perform the POWERTRAIN VERIFICATION TEST - 6.7L. Refer to **POWERTRAIN VERIFICATION TEST - 6.7L** .

No

- Go To 15.

15. **CHECK THE LOW SIDE DRIVER CIRCUIT FOR A SHORT TO GROUND**

1. Measure the resistance between ground and the Low Side Driver circuit at the PCM C1 connector.

Is the resistance below 10k Ohms?

Yes

- Repair the Low Side Driver circuit for a short to ground.
- Perform the POWERTRAIN VERIFICATION TEST - 6.7L. Refer to **POWERTRAIN VERIFICATION TEST - 6.7L** .

No

- Go To 16.

16. **CHECK THE FUEL INJECTORS**

1. Measure the resistance between ground and one of the Fuel Injector terminals.

Is the resistance below 10k Ohms?

Yes

- Replace the Fuel Injector in accordance with the service information.
- Perform the POWERTRAIN VERIFICATION TEST - 6.7L. Refer to **POWERTRAIN VERIFICATION TEST - 6.7L** .

No

- Replace the Valve Cover Pass Through harness in accordance with the service information.
- Perform the POWERTRAIN VERIFICATION TEST - 6.7L. Refer to **POWERTRAIN VERIFICATION TEST - 6.7L** .

P020A-FUEL INJECTOR 1 PERFORMANCE

For a complete wiring diagram, **refer to appropriate SYSTEM WIRING DIAGRAMS article** .

THEORY OF OPERATION

The Powertrain Control Module (PCM) can detect when unintended fuel injection occurs by monitoring fuel rail pressure and engine speed. If this condition occurs, the engine will typically die and not start. There will be exhaust smoke during cranking and no fuel rail pressure will be developed during cranking. This DTC will be active during cranking if this condition exists. Progressive cylinder damage may occur if the engine is operated for an extended period of time with this condition. This fault code is logged when the PCM determines that unintended fuel injection has occurred.

WHEN MONITORED:

While the engine is running.

SET CONDITION:

When the PCM determines that unintended fuel injection has occurred.

POSSIBLE CAUSES

Possible Causes
ENGINE MECHANICAL FAILURE
FUEL INJECTOR

Always perform the Pre-Diagnostic Troubleshooting procedure before proceeding. Refer to PRE-DIAGNOSTIC TROUBLESHOOTING PROCEDURE - 6.7L .

DIAGNOSTIC TEST

1. **ACTIVE DTC**
    1. Engine running.
    2. With the scan tool check for active DTCs and listen for an engine knock.

       Is the DTC active and engine knocking?

       Yes

       - Go To 2.

No

- Perform the INTERMITTENT CONDITION - 6.7L diagnostic procedure. Refer to **INTERMITTENT CONDITION - 6.7L** .

2. **CHECKING FOR A LEAKING FUEL INJECTOR**
   1. Turn the ignition off.
   2. Use the fuel system leak tester blocking tool to block off Fuel Injector 1.
   3. Start the engine and let idle for one minute.

   Does the knock go away and P020A become inactive?

   Yes

   - Replace the Fuel Injector. If this DTC was accompanied by a Crankcase Pressure Sensor DTC, damage to cylinder may have occurred.
   - Perform the POWERTRAIN VERIFICATION TEST - 6.7L. Refer to **POWERTRAIN VERIFICATION TEST - 6.7L** .

   No

   - Diagnose engine for a mechanical failure.
   - Perform the POWERTRAIN VERIFICATION TEST - 6.7L. Refer to **POWERTRAIN VERIFICATION TEST - 6.7L** .

P020B-FUEL INJECTOR 2 PERFORMANCE

For a complete wiring diagram, **refer to appropriate SYSTEM WIRING DIAGRAMS article** .

THEORY OF OPERATION

The Powertrain Control Module (PCM) can detect when unintended fuel injection occurs by monitoring fuel rail pressure and engine speed. If this condition occurs, the engine will typically die and not start. There will be exhaust smoke during cranking and no fuel rail pressure will be developed during cranking. This DTC will be active during cranking if this condition exists. Progressive cylinder damage may occur if the engine is operated for an extended period of time with this condition. This fault code is logged when the PCM determines that unintended fuel injection has occurred.

WHEN MONITORED:

While the engine is running.

SET CONDITION:

When the PCM determines that unintended fuel injection has occurred.

POSSIBLE CAUSES

Possible Causes
ENGINE MECHANICAL FAILURE
FUEL INJECTOR

Always perform the Pre-Diagnostic Troubleshooting procedure before proceeding. Refer to PRE-DIAGNOSTIC TROUBLESHOOTING PROCEDURE - 6.7L .

DIAGNOSTIC TEST

1. **ACTIVE DTC**
    1. Engine running.
    2. With the scan tool check for active DTCs and listen for an engine knock.

       Is the DTC active and engine knocking?

       Yes

       - Go To 2.

       No

       - Perform the INTERMITTENT CONDITION - 6.7L diagnostic procedure. Refer to **INTERMITTENT CONDITION - 6.7L** .
2. **CHECKING FOR A LEAKING FUEL INJECTOR**
    1. Turn the ignition off.
    2. Use the fuel system leak tester blocking tool to block off Fuel Injector 2.
    3. Start the engine and let idle for one minute.

       Does the knock go away and P020A become inactive?

       Yes

       - Replace the Fuel Injector. If this DTC was accompanied by a Crankcase Pressure Sensor DTC, damage to cylinder may have occurred.
       - Perform the POWERTRAIN VERIFICATION TEST - 6.7L. Refer to **POWERTRAIN VERIFICATION TEST - 6.7L** .

       No

       - Diagnose engine for a mechanical failure.
       - Perform the POWERTRAIN VERIFICATION TEST - 6.7L. Refer to **POWERTRAIN VERIFICATION TEST - 6.7L** .

P020C-FUEL INJECTOR 3 PERFORMANCE

For a complete wiring diagram, **refer to appropriate SYSTEM WIRING DIAGRAMS article** .

THEORY OF OPERATION

The Powertrain Control Module (PCM) can detect when unintended fuel injection occurs by monitoring fuel rail pressure and engine speed. If this condition occurs, the engine will typically die and not start. There will be exhaust smoke during cranking and no fuel rail pressure will be developed during cranking. This DTC will be active during cranking if this condition exists. Progressive cylinder damage may occur if the engine is operated for an extended period of time with this condition. This fault code is logged when the PCM determines that unintended fuel injection has occurred.

WHEN MONITORED:

While the engine is running.

SET CONDITION:

When the PCM determines that unintended fuel injection has occurred.

POSSIBLE CAUSES

Possible Causes
ENGINE MECHANICAL FAILURE
FUEL INJECTOR

Always perform the Pre-Diagnostic Troubleshooting procedure before proceeding. Refer to PRE-DIAGNOSTIC TROUBLESHOOTING PROCEDURE - 6.7L .

DIAGNOSTIC TEST

1. **ACTIVE DTC**
    1. Engine running.
    2. With the scan tool check for active DTCs and listen for an engine knock.

       Is the DTC active and engine knocking?

       Yes

       - Go To 2.

       No

       - Perform the INTERMITTENT CONDITION - 6.7L diagnostic procedure. Refer to **INTERMITTENT CONDITION - 6.7L** .
2. **CHECKING FOR A LEAKING FUEL INJECTOR**
    1. Turn the ignition off.

2. Use the fuel system leak tester blocking tool to block off Fuel Injector 3.
3. Start the engine and let idle for one minute.

   Does the knock go away and P020A become inactive?

   Yes

   - Replace the Fuel Injector. If this DTC was accompanied by a Crankcase Pressure Sensor DTC, damage to cylinder may have occurred.
   - Perform the POWERTRAIN VERIFICATION TEST - 6.7L. Refer to **POWERTRAIN VERIFICATION TEST - 6.7L** .

   No

   - Diagnose engine for a mechanical failure.
   - Perform the POWERTRAIN VERIFICATION TEST - 6.7L. Refer to **POWERTRAIN VERIFICATION TEST - 6.7L** .

P020D-FUEL INJECTOR 4 PERFORMANCE

For a complete wiring diagram, **refer to appropriate SYSTEM WIRING DIAGRAMS article** .

THEORY OF OPERATION

The Powertrain Control Module (PCM) can detect when unintended fuel injection occurs by monitoring fuel rail pressure and engine speed. If this condition occurs, the engine will typically die and not start. There will be exhaust smoke during cranking and no fuel rail pressure will be developed during cranking. This DTC will be active during cranking if this condition exists. Progressive cylinder damage may occur if the engine is operated for an extended period of time with this condition. This fault code is logged when the PCM determines that unintended fuel injection has occurred.

WHEN MONITORED:

While the engine is running.

SET CONDITION:

When the PCM determines that unintended fuel injection has occurred.

POSSIBLE CAUSES

Possible Causes
ENGINE MECHANICAL FAILURE
FUEL INJECTOR

Always perform the Pre-Diagnostic Troubleshooting procedure before proceeding. Refer to PRE-

DIAGNOSTIC TROUBLESHOOTING PROCEDURE - 6.7L .

DIAGNOSTIC TEST

1. **ACTIVE DTC**
    1. Engine running.
    2. With the scan tool check for active DTCs and listen for an engine knock.

       Is the DTC active and engine knocking?

       Yes

       - Go To 2.

       No

       - Perform the INTERMITTENT CONDITION - 6.7L diagnostic procedure. Refer to **INTERMITTENT CONDITION - 6.7L** .
2. **CHECKING FOR A LEAKING FUEL INJECTOR**
    1. Turn the ignition off.
    2. Use the fuel system leak tester blocking tool to block off Fuel Injector 4.
    3. Start the engine and let idle for one minute.

       Does the knock go away and P020A become inactive?

       Yes

       - Replace the Fuel Injector. If this DTC was accompanied by a Crankcase Pressure Sensor DTC, damage to cylinder may have occurred.
       - Perform the POWERTRAIN VERIFICATION TEST - 6.7L. Refer to **POWERTRAIN VERIFICATION TEST - 6.7L** .

       No

       - Diagnose engine for a mechanical failure.
       - Perform the POWERTRAIN VERIFICATION TEST - 6.7L. Refer to **POWERTRAIN VERIFICATION TEST - 6.7L** .

P020E-FUEL INJECTOR 5 PERFORMANCE

For a complete wiring diagram, **refer to appropriate SYSTEM WIRING DIAGRAMS article** .

THEORY OF OPERATION

The Powertrain Control Module (PCM) can detect when unintended fuel injection occurs by monitoring fuel

rail pressure and engine speed. If this condition occurs, the engine will typically die and not start. There will be exhaust smoke during cranking and no fuel rail pressure will be developed during cranking. This DTC will be active during cranking if this condition exists. Progressive cylinder damage may occur if the engine is operated for an extended period of time with this condition. This fault code is logged when the PCM determines that unintended fuel injection has occurred.

WHEN MONITORED:

While the engine is running.

SET CONDITION:

When the PCM determines that unintended fuel injection has occurred.

POSSIBLE CAUSES

Possible Causes
ENGINE MECHANICAL FAILURE
FUEL INJECTOR

Always perform the Pre-Diagnostic Troubleshooting procedure before proceeding. Refer to PRE-DIAGNOSTIC TROUBLESHOOTING PROCEDURE - 6.7L .

DIAGNOSTIC TEST

1. **ACTIVE DTC**
    1. Engine running.
    2. With the scan tool check for active DTCs and listen for an engine knock.

       Is the DTC active and engine knocking?

       Yes

       - Go To 2.

       No

       - Perform the INTERMITTENT CONDITION - 6.7L diagnostic procedure. Refer to **INTERMITTENT CONDITION - 6.7L** .
2. **CHECKING FOR A LEAKING FUEL INJECTOR**
    1. Turn the ignition off.
    2. Use the fuel system leak tester blocking tool to block off Fuel Injector 5.
    3. Start the engine and let idle for one minute.

       Does the knock go away and P020A become inactive?

Yes

- Replace the Fuel Injector. If this DTC was accompanied by a Crankcase Pressure Sensor DTC, damage to cylinder may have occurred.
- Perform the POWERTRAIN VERIFICATION TEST - 6.7L. Refer to **POWERTRAIN VERIFICATION TEST - 6.7L** .

No

- Diagnose engine for a mechanical failure.
- Perform the POWERTRAIN VERIFICATION TEST - 6.7L. Refer to **POWERTRAIN VERIFICATION TEST - 6.7L** .

P020F-FUEL INJECTOR 6 PERFORMANCE

For a complete wiring diagram, **refer to appropriate SYSTEM WIRING DIAGRAMS article** .

THEORY OF OPERATION

The Powertrain Control Module (PCM) can detect when unintended fuel injection occurs by monitoring fuel rail pressure and engine speed. If this condition occurs, the engine will typically die and not start. There will be exhaust smoke during cranking and no fuel rail pressure will be developed during cranking. This DTC will be active during cranking if this condition exists. Progressive cylinder damage may occur if the engine is operated for an extended period of time with this condition. This fault code is logged when the PCM determines that unintended fuel injection has occurred.

WHEN MONITORED:

While the engine is running.

SET CONDITION:

When the PCM determines that unintended fuel injection has occurred.

POSSIBLE CAUSES

Possible Causes
ENGINE MECHANICAL FAILURE
FUEL INJECTOR

Always perform the Pre-Diagnostic Troubleshooting procedure before proceeding. Refer to PRE-DIAGNOSTIC TROUBLESHOOTING PROCEDURE - 6.7L .

DIAGNOSTIC TEST

1. **ACTIVE DTC**
    1. Engine running.

2. With the scan tool check for active DTCs and listen for an engine knock.

   Is the DTC active and engine knocking?

   Yes

   - Go To 2.

   No

   - Perform the INTERMITTENT CONDITION - 6.7L diagnostic procedure. Refer to **INTERMITTENT CONDITION - 6.7L** .

2. **CHECKING FOR A LEAKING FUEL INJECTOR**
   1. Turn the ignition off.
   2. Use the fuel system leak tester blocking tool to block off Fuel Injector 6.
   3. Start the engine and let idle for one minute.

      Does the knock go away and P020A become inactive?

      Yes

      - Replace the Fuel Injector. If this DTC was accompanied by a Crankcase Pressure Sensor DTC, damage to cylinder may have occurred.
      - Perform the POWERTRAIN VERIFICATION TEST - 6.7L. Refer to **POWERTRAIN VERIFICATION TEST - 6.7L** .

      No

      - Diagnose engine for a mechanical failure.
      - Perform the POWERTRAIN VERIFICATION TEST - 6.7L. Refer to **POWERTRAIN VERIFICATION TEST - 6.7L** .

P0217-COOLANT TEMPERATURE TOO HIGH

For a complete wiring diagram, **refer to appropriate SYSTEM WIRING DIAGRAMS article** .

THEORY OF OPERATION

The Coolant Temperature Sensor is a variable resistor sensor and is used to measure the temperature of the coolant of the engine. The PCM supplies 5-Volts to the Engine Coolant Temperature Sensor (ECT) Signal circuit. The PCM monitors the change in voltage caused by changes in the resistance of the sensor to determine the coolant temperature. The engine coolant temperature value is used by the PCM for the engine protection system and engine emissions control. The Engine Coolant Temperature Sensor is located near the thermostat housing. This fault becomes active when the PCM detects a coolant temperature higher than a calibrated limit for a calibrated amount of time. The PCM illuminates the MIL lamp after the diagnostic runs and fails once. During this time the customer may experience an engine power derate, and regeneration mode will be disabled.

The PCM will turn off the MIL lamp after the diagnostic runs and passes in four consecutive drive cycles.

WHEN MONITORED:

While the engine is running.

SET CONDITION:

The engine coolant temperature is above a calibrated value for a calibrated amount of time.

POSSIBLE CAUSES

Possible Causes
COOLING SYSTEM FAILURE
ECT SENSOR MECHANICAL FAILURE

Always perform the Pre-Diagnostic Troubleshooting procedure before proceeding. Refer to PRE-DIAGNOSTIC TROUBLESHOOTING PROCEDURE - 6.7L .

DIAGNOSTIC TEST

1. **COOLING SYSTEM FAILURE**

   NOTE: If other cooling system DTCs are present, repair those DTCs before proceeding.

   1. Check the engine cooling system operation. Refer to cooling, Diagnosis and Testing, Preliminary check. Refer to **DIAGNOSIS AND TESTING** .

      Is the Cooling system operating normally?

      Yes

      - Go To 2.

      No

      - Repair the cooling system failure.
      - Perform the POWERTRAIN VERIFICATION TEST - 6.7L. Refer to **POWERTRAIN VERIFICATION TEST - 6.7L** .
2. **CHECK THE ECT SENSOR**
   1. Allow the engine to reach normal operating temperature.
   2. Use a temperature probe and measure the engine temperature near the ECT Sensor.
   3. With the scan tool, read the Engine Coolant Temperature.

4. Compare the temperature probe reading with the scan tool reading.

   Are the readings within 10°F of each other?

   Yes

   - Repair the cause of mechanical failure.
   - Perform the POWERTRAIN VERIFICATION TEST - 6.7L. Refer to **POWERTRAIN VERIFICATION TEST - 6.7L** .

   No

   - Replace the Engine Coolant Temperature Sensor in accordance with the service information.
   - Perform the POWERTRAIN VERIFICATION TEST - 6.7L. Refer to **POWERTRAIN VERIFICATION TEST - 6.7L** .

P0219-ENGINE OVERSPEED

For a complete wiring diagram, **refer to appropriate SYSTEM WIRING DIAGRAMS article** .

THEORY OF OPERATION

The Crankshaft Position and Camshaft Position Sensors are hall effect type sensors. The Powertrain Control Module (PCM) provides a 5-Volt supply to the position sensor and return circuit. A notch on the crankshaft gear is used to determine the position of the engine by the PCM. As the notch on the crankshaft speed ring or the windows in the back of the camshaft gear move past the position sensor, a signal is generated on the position sensor circuit. The PCM interprets this signal and converts it to an engine speed. The Powertrain Control Module does not light a MIL for this DTC.

WHEN MONITORED:

While the engine is running.

SET CONDITION:

The Powertrain Control Module (PCM) detects engine speed is above a calibrated threshold.

POSSIBLE CAUSES

Possible Causes
MECHANICAL OVERSPEED OF ENGINE

Always perform the Pre-Diagnostic Troubleshooting procedure before proceeding. Refer to PRE-DIAGNOSTIC TROUBLESHOOTING PROCEDURE - 6.7L .

DIAGNOSTIC TEST

1. **OTHER DTCS**
    1. Turn the ignition on.
    2. With the scan tool, read and record the freeze frame data.
    3. With the scan tool, read the Engine DTCs.

    Are there other Crankshaft Position Sensor DTCs set?

    Yes

    - Repair any other Crankshaft Position Sensor DTCs.

    No

    - Go To 2.
2. **MECHANICAL OVERSPEED OF ENGINE**

    NOTE: The most likely cause of this DTC is a mechanical overspeed. Examples of this could be downshifting into to low of a gear on a manual transmission or pulling a heavy load on a steep downgrade.

    1. Visually inspect the engine for signs of mechanical overspeed. Such as, bent push rod, broken rocker arms, bent valves, flywheel bolts backing out, etc.

    Did you notice any overspeed damage?

    Yes

    - Repair or replace any damaged components.
    - Perform the POWERTRAIN VERIFICATION TEST - 6.7L. Refer to **POWERTRAIN VERIFICATION TEST - 6.7L** .

    No

    - Test Complete.

P0253-INJECTION PUMP FUEL CONTROL CIRCUIT LOW

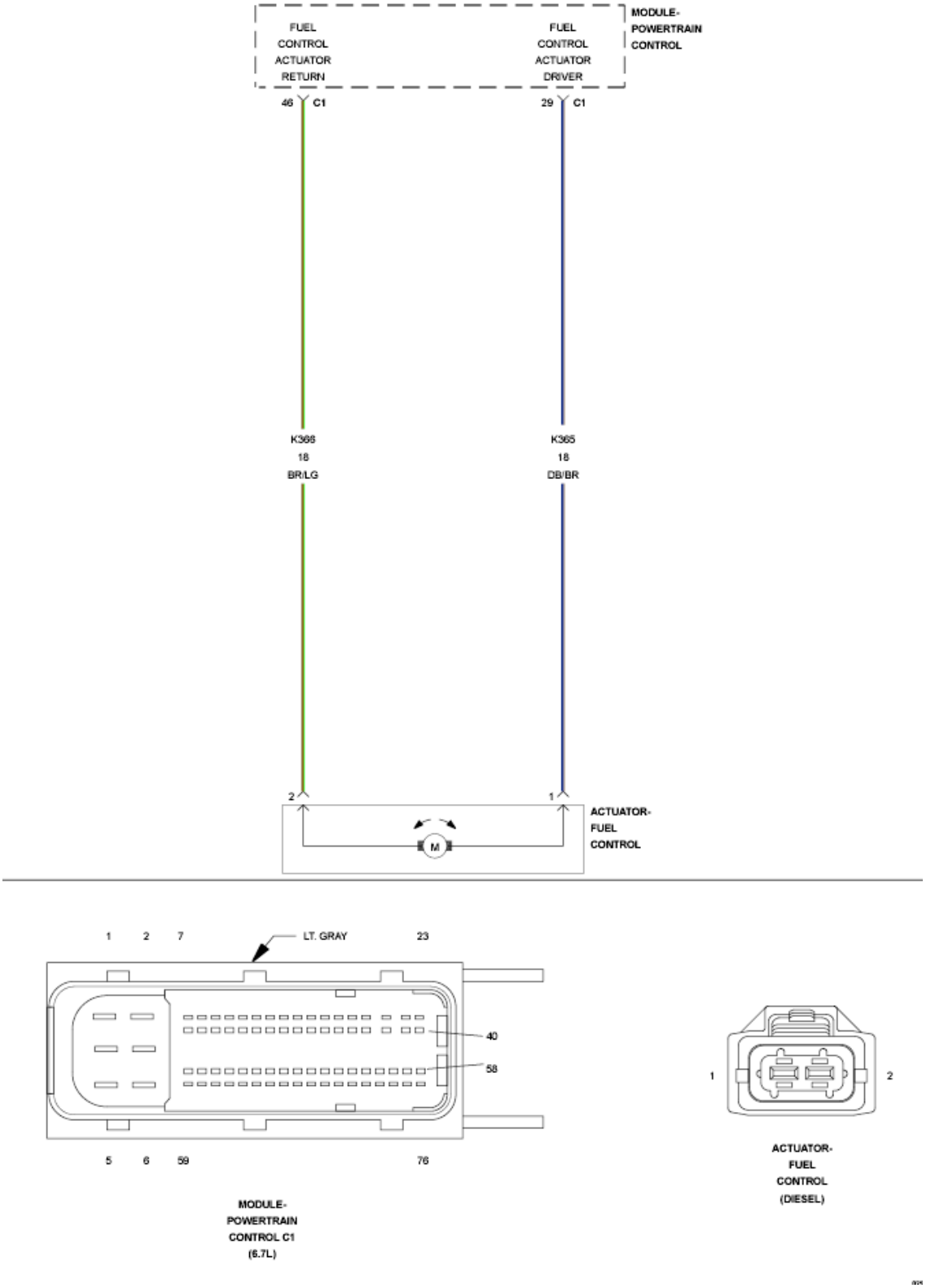

Fig. 86: Fuel Control Actuator Circuit Schematic
Courtesy of CHRYSLER GROUP, LLC

For a complete wiring diagram, **refer to appropriate SYSTEM WIRING DIAGRAMS article** .

THEORY OF OPERATION

The Powertrain Control Module (PCM) provides a PWM driver circuit and ground circuit to the Fuel Control Actuator (FCA). The PCM varies the current to this valve to provide the correct fuel flow to the High Pressure Pump based on operating conditions. The FCA is a normally open valve. High circuit resistance may cause fuel pressure to be higher than commanded at light loads. Excessive current draw or a short circuit will cause the PCM to turn the driver off during the remainder of that ignition cycle. The PCM will not turn the driver back on until the ignition is cycled off, and back on, and the current draw or short circuit is gone. The PCM illuminates the MIL lamp and the ETC lamp immediately after the diagnostic runs and fails. During this time the customer may experience low power. The PCM turns off the MIL lamp after the diagnostic runs and passes in four consecutive drive cycles.

WHEN MONITORED:

Continuously when the engine is running.

SET CONDITION:

The Powertrain Control Module (PCM) does not detect system voltage on the (K366) FCA Driver circuit when the PWM signal is turned on.

POSSIBLE CAUSES

Possible Causes
(K366) FUEL CONTROL ACTUATOR DRIVER CIRCUIT SHORTED TO GROUND
(K366) FCA DRIVER CIRCUIT SHORTED TO THE (K365) FCA RETURN CIRCUIT HIGH PRESSURE FUEL PUMP
POWERTRAIN CONTROL MODULE (PCM)

Always perform the Pre-Diagnostic Troubleshooting procedure before proceeding. Refer to PRE-DIAGNOSTIC TROUBLESHOOTING PROCEDURE - 6.7L .

DIAGNOSTIC TEST

1. **ACTIVE DTC**
    1. Ignition on, engine not running.
    2. Record freeze frame data and clear DTCs.
    3. Turn the ignition off for 75 seconds.
    4. Start the engine and let idle for at least two minutes.
    5. With the scan tool, read DTCs.

    Did the DTC reset?

    Yes

    - Go To 2.

No

- Perform the INTERMITTENT CONDITION - 6.7L diagnostic procedure. Refer to **INTERMITTENT CONDITION - 6.7L** .

2. **CHECK THE (K365) FUEL CONTROL ACTUATOR DRIVER CIRCUIT FOR A SHORT TO GROUND**

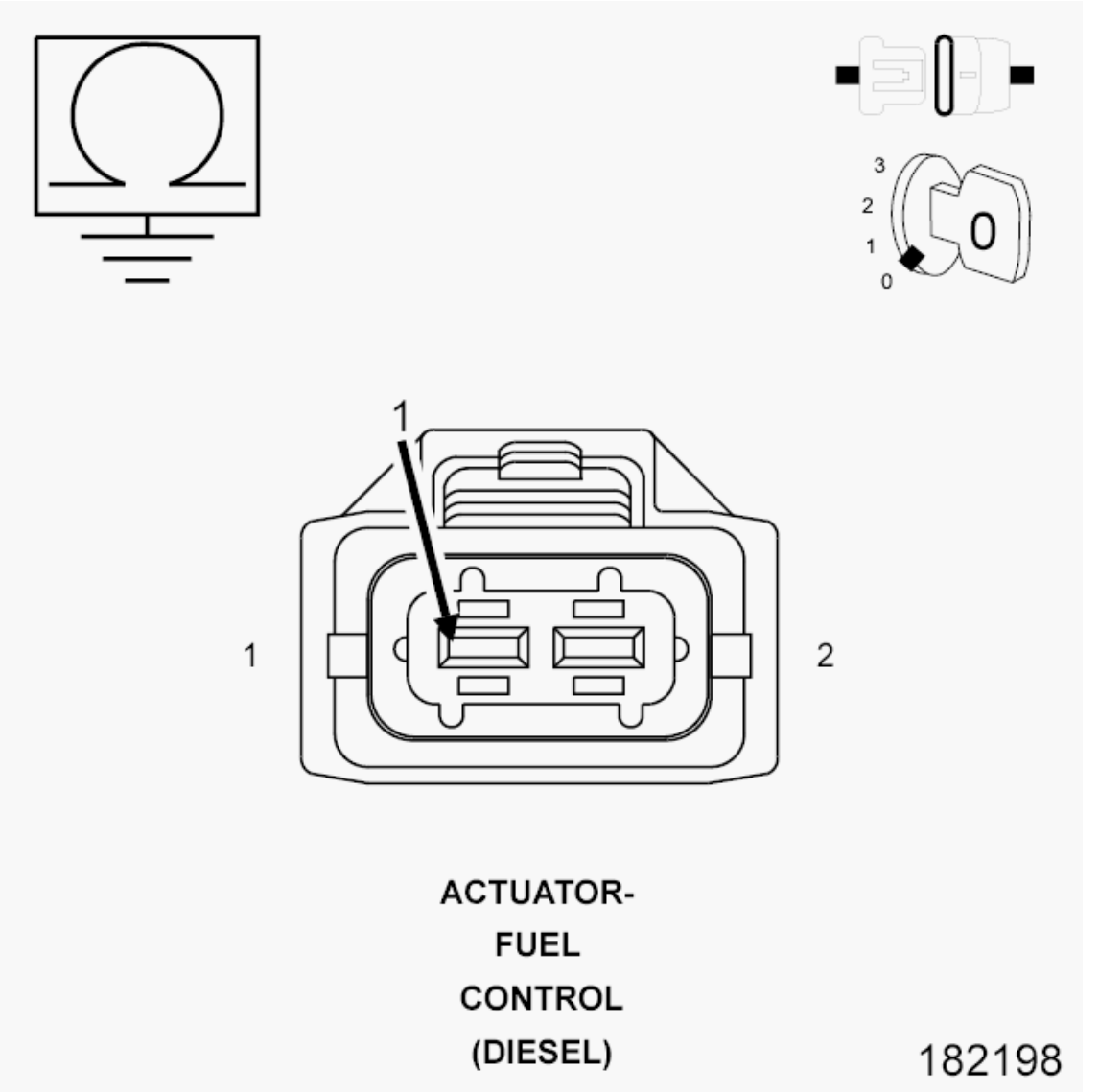

Fig. 87: Checking Fuel Control Actuator Driver Circuit For Short To Ground
Courtesy of CHRYSLER GROUP, LLC

1. Turn the ignition off.
2. Disconnect the PCM C1 harness connector.
3. Disconnect the Fuel Control Actuator harness connector.
4. Measure the resistance between ground and the (K365) FCA Driver circuit at the FCA harness connector.

Is the resistance below 10k Ohms?

Yes

- Repair the (K365) FCA Driver circuit for a short to ground.
- Perform the POWERTRAIN VERIFICATION TEST - 6.7L. Refer to **POWERTRAIN VERIFICATION TEST - 6.7L** .

No

- Go To 3.

3. **CHECK FOR THE (K365) FCA DRIVER CIRCUIT SHORTED TO THE (K366) FCA RETURN CIRCUIT**

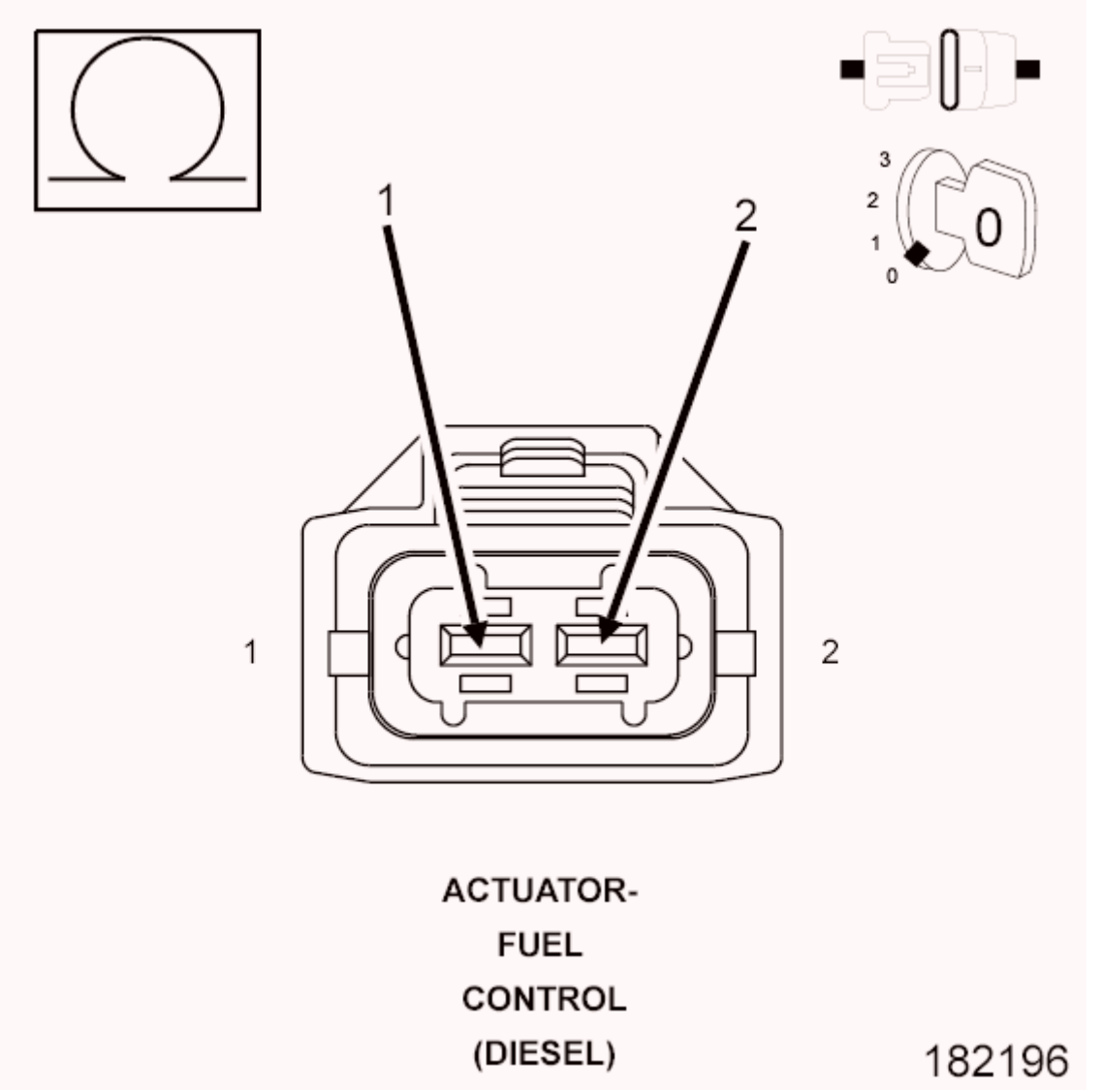

Fig. 88: Checking FCA Return Circuit Shorted To FCA Driver Circuit

Courtesy of CHRYSLER GROUP, LLC

1. Measure the Resistance between the (K365) FCA Driver circuit and the (K366) FCA Return circuit at the Fuel Control Actuator harness connector.

   Is the resistance below 10k Ohms?

   Yes

   - Repair the short between the (K365) FCA Driver circuit and the (K366) FCA Return circuit.
   - Perform the POWERTRAIN VERIFICATION TEST - 6.7L. Refer to **POWERTRAIN VERIFICATION TEST - 6.7L** .

   No

   - Go To 4.

4. **FUEL CONTROL ACTUATOR**
   1. Reconnect the PCM C1 harness connector.
   2. Replace the Fuel Control Actuator in accordance with the service information.
   3. Turn the ignition on and clear any DTCs.
   4. Start the engine and allow it to idle for at least two minutes.
   5. With the scan tool, read DTCs.

      Did the DTC reset?

      Yes

      - Replace the Powertrain Control Module in accordance with the service information.
      - Perform the POWERTRAIN VERIFICATION TEST - 6.7L. Refer to **POWERTRAIN VERIFICATION TEST - 6.7L** .

      No

      - Repair complete.
      - Perform the POWERTRAIN VERIFICATION TEST - 6.7L. Refer to **POWERTRAIN VERIFICATION TEST - 6.7L** .

P0254-INJECTION PUMP FUEL CONTROL CIRCUIT HIGH

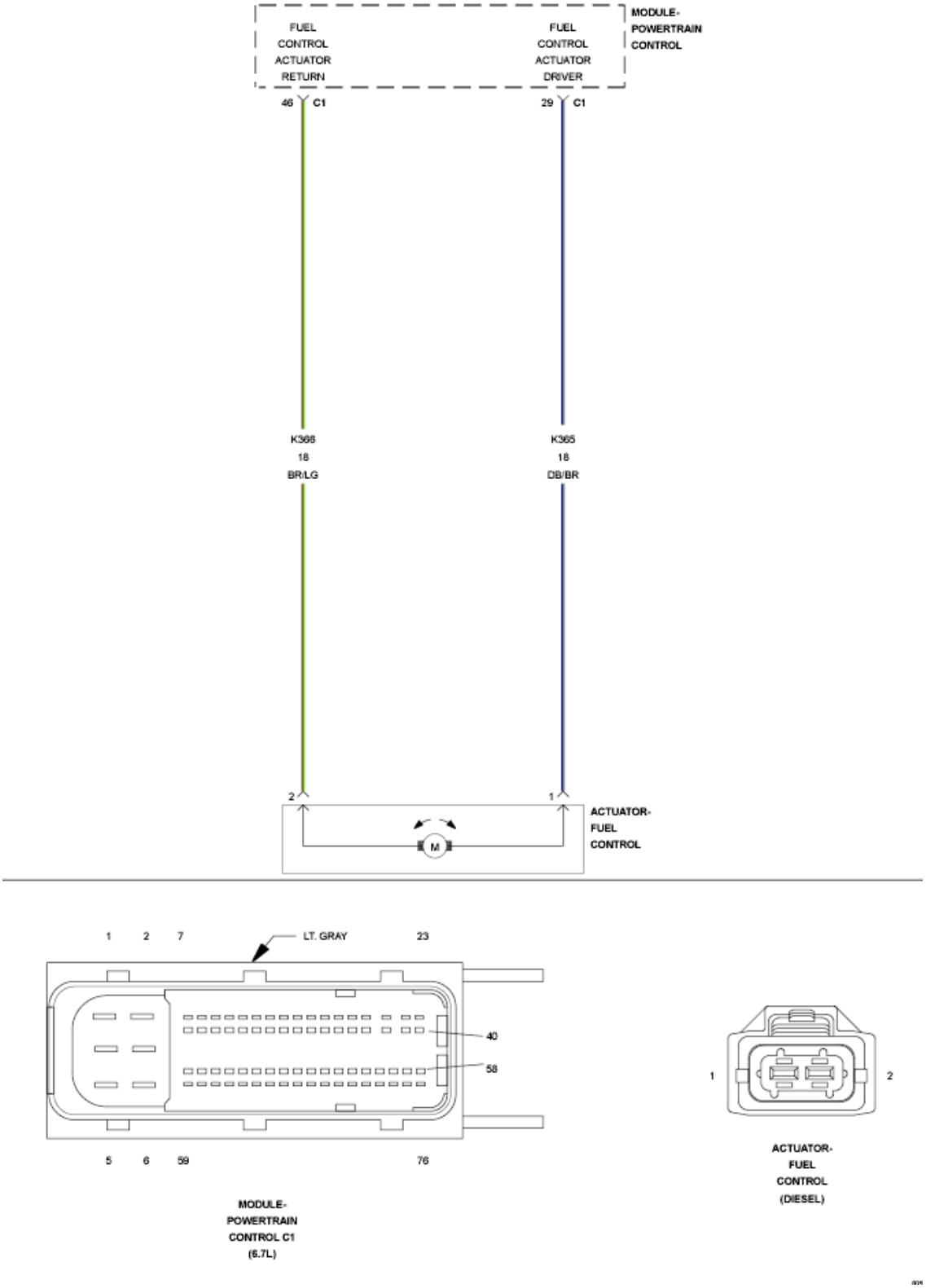

Fig. 89: Fuel Control Actuator Circuit Schematic
Courtesy of CHRYSLER GROUP, LLC

For a complete wiring diagram, **refer to appropriate SYSTEM WIRING DIAGRAMS article** .

THEORY OF OPERATION

The Fuel Control Actuator (FCA) is an electronically controlled solenoid valve. The Powertrain Control Module (PCM) provides a PWM driver circuit and ground circuit to the FCA. The PCM varies the current to this valve to provide the correct fuel flow to the High Pressure Pump based on operating conditions. The FCA is a normally open valve. High circuit resistance may cause fuel pressure to be higher than commanded at light loads. Although this is primarily an electrical diagnostic check, fuel supply issues and high pressure leaks can cause the PCM to force the Fuel Control Actuator into a region where this fault code becomes active. The PCM illuminates the MIL lamp and the ETC lamp immediately after the diagnostic runs and fails. During this time the customer may experience low power. The PCM turns off the MIL lamp after the diagnostic runs and passes in four consecutive drive cycles.

WHEN MONITORED:

Continuously with the engine running.

SET CONDITION:

The Powertrain Control Module (PCM) detects voltage on the (K366) FCA Driver circuit when the PWM signal is turned off.

POSSIBLE CAUSES

Possible Causes
(K366) FUEL CONTROL ACTUATOR DRIVER CIRCUIT SHORTED TO VOLTAGE
(K365) FUEL CONTROL ACTUATOR RETURN CIRCUIT SHORTED TO VOLTAGE
(K366) FUEL CONTROL ACTUATOR DRIVER CIRCUIT OPEN/HIGH RESISTANCE
(K365) FUEL CONTROL ACTUATOR RETURN CIRCUIT OPEN/HIGH RESISTANCE
HIGH PRESSURE FUEL PUMP
POWERTRAIN CONTROL MODULE (PCM)

Always perform the Pre-Diagnostic Troubleshooting procedure before proceeding. Refer to PRE-DIAGNOSTIC TROUBLESHOOTING PROCEDURE - 6.7L .

DIAGNOSTIC TEST

1. **ACTIVE DTC**
    1. Ignition on, engine not running.
    2. Record freeze frame data and clear DTCs.
    3. Turn the ignition off for 75 seconds.
    4. Start the engine and let idle for at least two minutes.
    5. With the scan tool, read DTCs.

    Did the DTC reset?

Yes

- Go To 2.

No

- Perform the INTERMITTENT CONDITION - 6.7L diagnostic procedure. Refer to **INTERMITTENT CONDITION - 6.7L** .

2. **CHECK THE (K365) FUEL CONTROL ACTUATOR DRIVER CIRCUIT FOR A SHORT TO VOLTAGE**

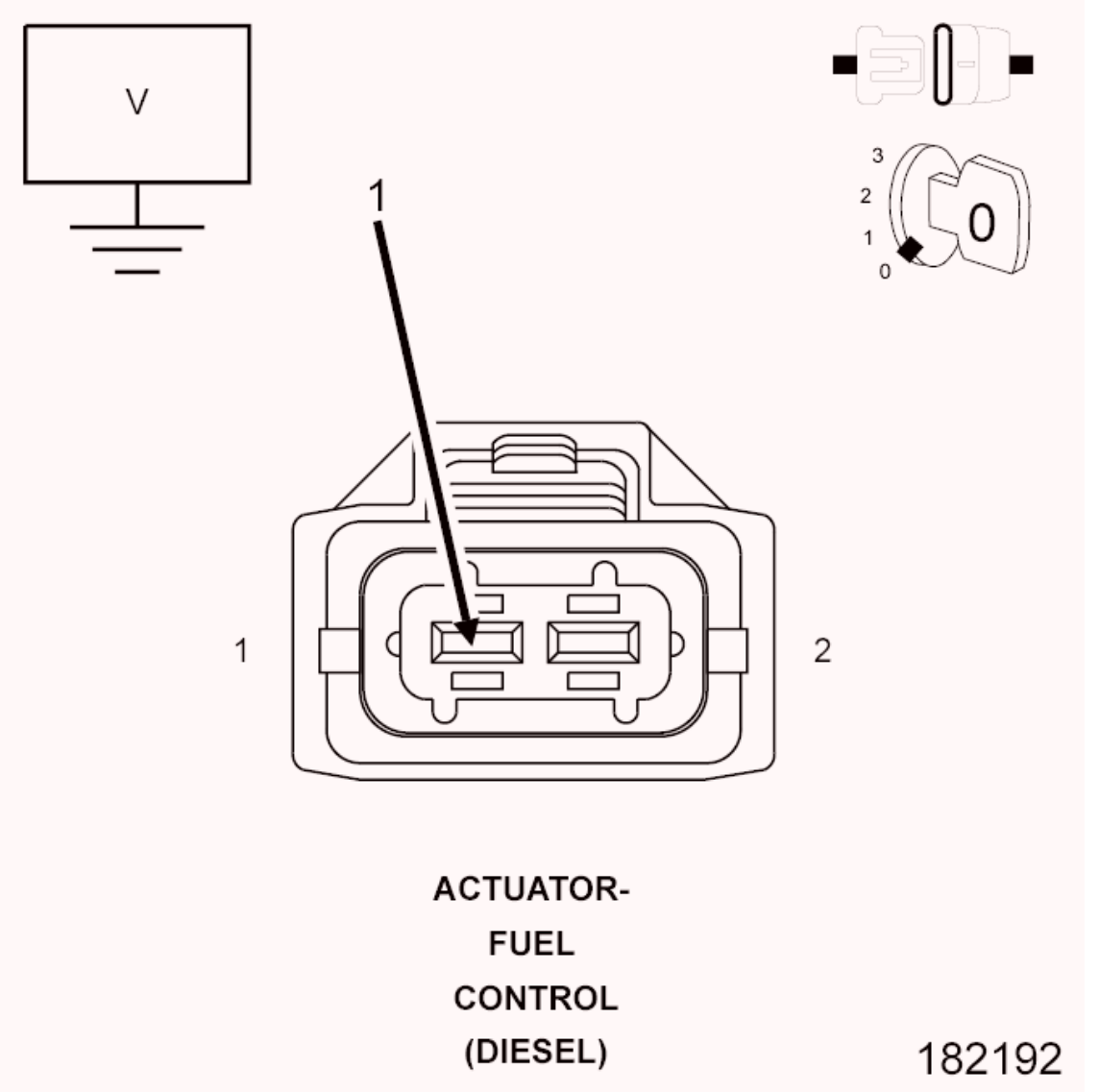

Fig. 90: Checking Fuel Control Actuator Driver Circuit For Short To Voltage
Courtesy of CHRYSLER GROUP, LLC

1. Turn the ignition off.

2. Disconnect the Fuel Control Actuator harness connector.
3. Turn the ignition on.
4. Measure the voltage of the (K365) FCA Driver circuit at the FCA harness connector.

NOTE: The (K365) FCA Driver circuit should read approximately 3.5 Volts.

Is the voltage reading near battery voltage?

Yes

- Repair the (K365) FCA Driver circuit for a short to voltage.
- Perform the POWERTRAIN VERIFICATION TEST - 6.7L. Refer to **POWERTRAIN VERIFICATION TEST - 6.7L** .

No

- Go To 3.

3. **CHECK THE (K366) FUEL CONTROL ACTUATOR RETURN CIRCUIT FOR A SHORT TO VOLTAGE**

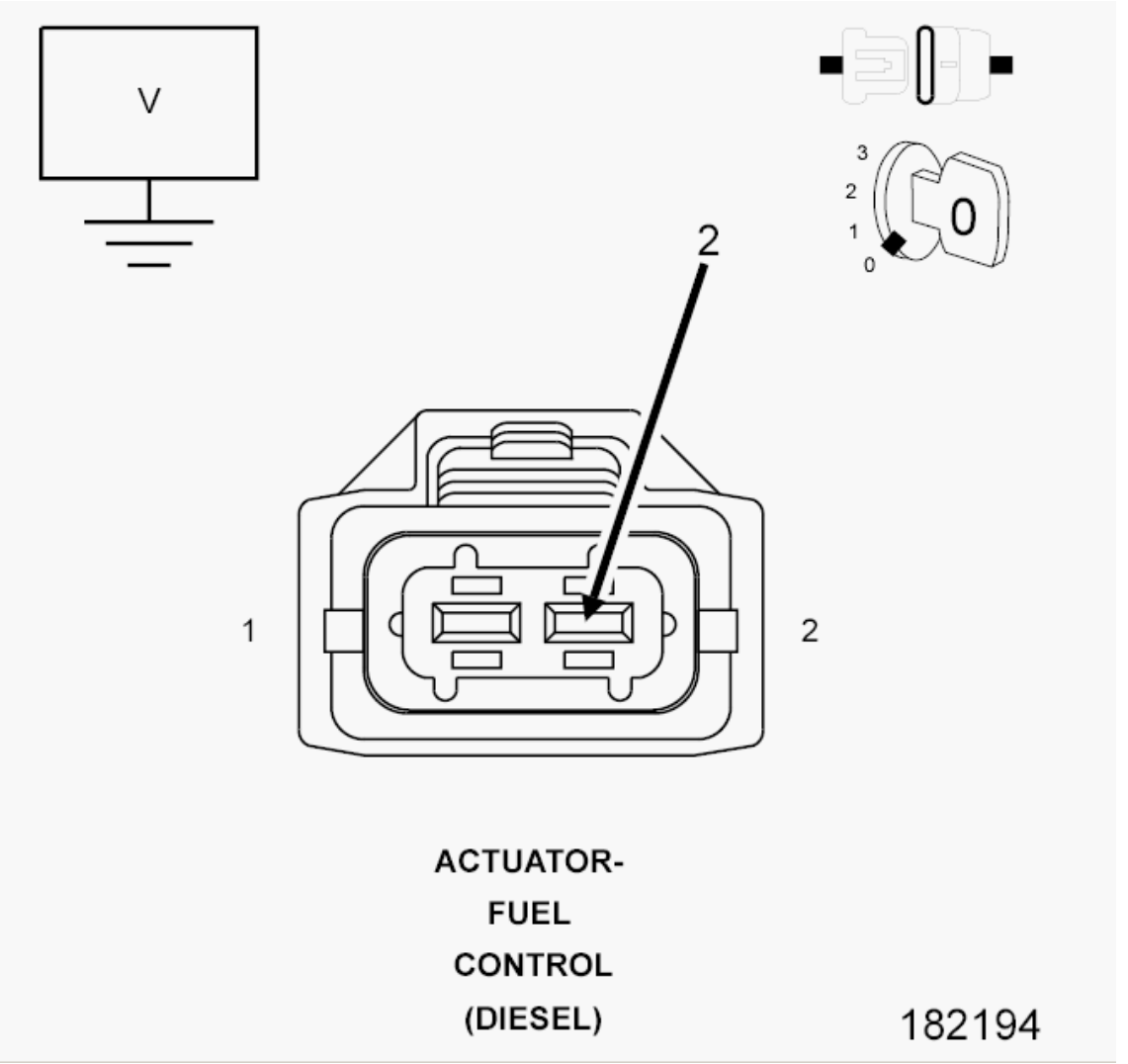

Fig. 91: Checking Fuel Control Actuator Return Circuit For Short To Voltage
Courtesy of CHRYSLER GROUP, LLC

1. Disconnect the PCM C1 harness connector.
2. Measure the voltage of the (K366) FCA Return circuit at the FCA harness connector.

NOTE: The (K366) FCA Return circuit should not have voltage present.

Is there any voltage present?

Yes

- Repair the (K366) FCA Return circuit for a short to voltage.
- Perform the POWERTRAIN VERIFICATION TEST - 6.7L. Refer to **POWERTRAIN VERIFICATION TEST - 6.7L** .

No

- Go To 4.

4. **CHECK THE (K366) FUEL CONTROL ACTUATOR DRIVER CIRCUIT FOR AN OPEN/HIGH RESISTANCE**

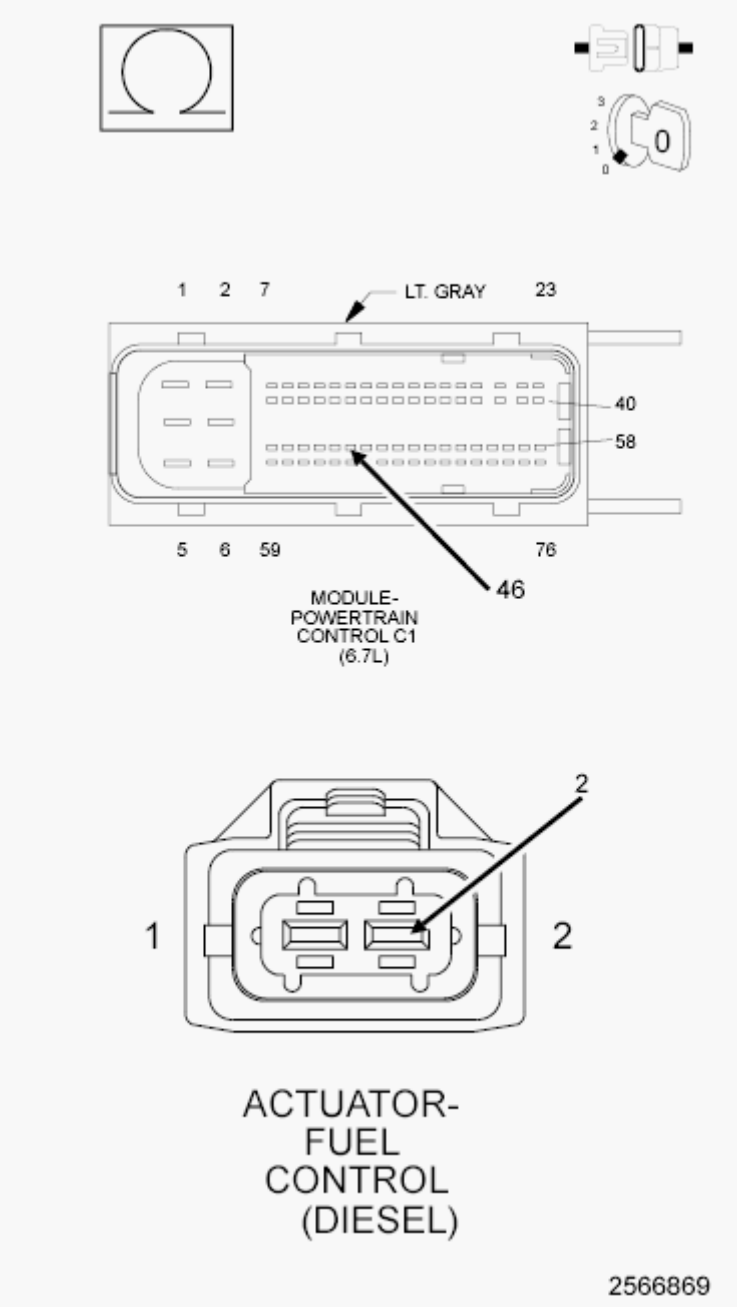

Fig. 92: Checking Fuel Control Actuator Driver Circuit For Open Or High Resistance
Courtesy of CHRYSLER GROUP, LLC

1. Turn the ignition off.
2. Measure the resistance of the (K366) FCA Driver circuit between the FCA harness connector and the PCM C1 harness connector.

Is the resistance below 5.0 Ohms?

Yes

- Go To 5.

No

- Repair the (K366) FCA Driver circuit for an open or high resistance.
- Perform the POWERTRAIN VERIFICATION TEST - 6.7L. Refer to **POWERTRAIN VERIFICATION TEST - 6.7L** .

5. **CHECK THE (K365) FUEL CONTROL ACTUATOR RETURN CIRCUIT FOR AN OPEN/HIGH RESISTANCE**

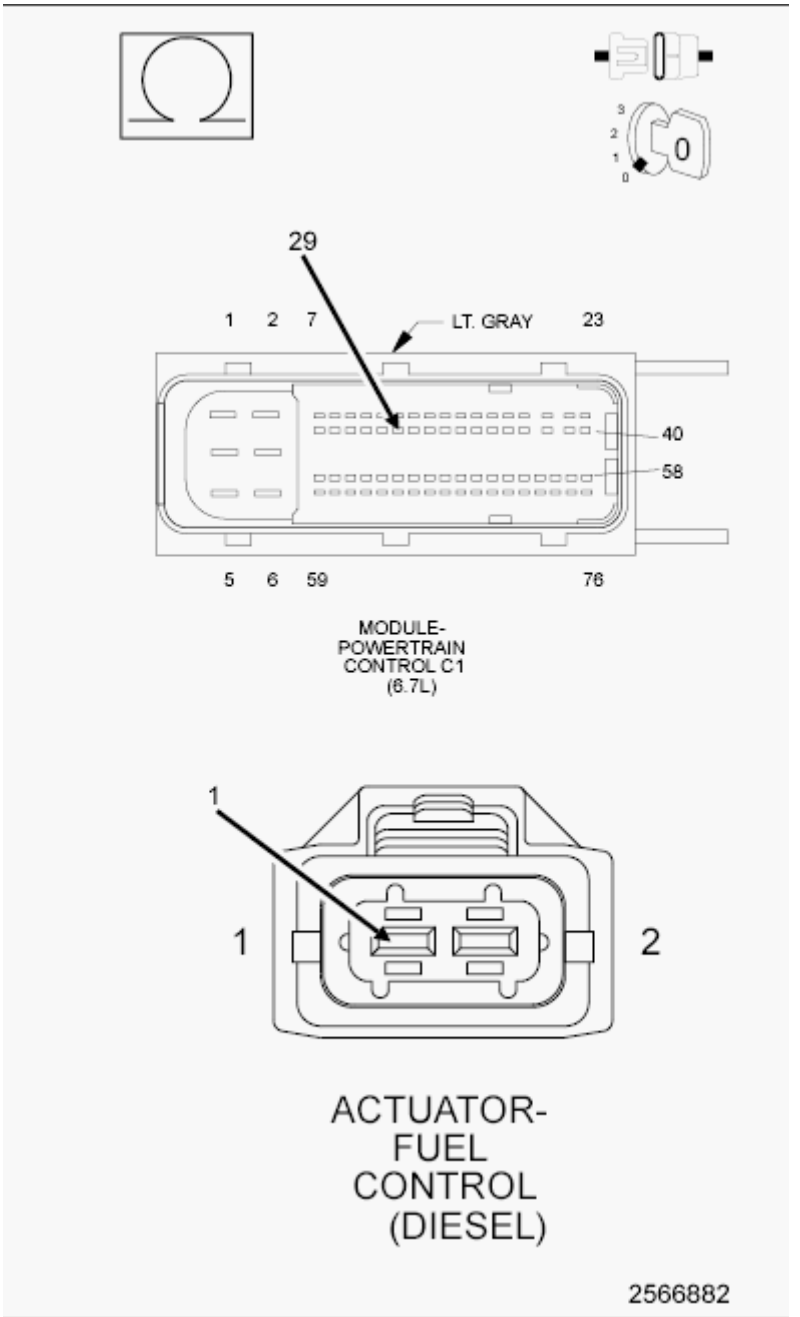

Fig. 93: Checking Fuel Control Actuator Return Circuit For Open Or High Resistance
Courtesy of CHRYSLER GROUP, LLC

1. Measure the resistance of the (K365) FCA Return circuit between the FCA harness connector and the PCM C1 harness connector.

   Is the resistance below 5.0 Ohms?

   Yes

   - Go To 6.

No

- Repair the (K365) FCA Return circuit for an open or high resistance.
- Perform the POWERTRAIN VERIFICATION TEST - 6.7L. Refer to **POWERTRAIN VERIFICATION TEST - 6.7L** .

6. **CHECK THE FUEL CONTROL ACTUATOR**
    1. Turn the ignition off.
    2. Replace the Fuel Control Actuator in accordance with the service information.
    3. Turn the ignition on.
    4. With the scan tool, clear DTCs.
    5. Start the engine.
    6. With the scan tool, view DTCs.

    Did the DTC reset?

    Yes

    - Replace the Powertrain Control Module in accordance with the service information.
    - Perform the POWERTRAIN VERIFICATION TEST - 6.7L. Refer to **POWERTRAIN VERIFICATION TEST - 6.7L** .

    No

    - Test complete.
    - Perform the POWERTRAIN VERIFICATION TEST - 6.7L. Refer to **POWERTRAIN VERIFICATION TEST - 6.7L** .

P0255-INJECTION PUMP FUEL CONTROL CIRCUIT PERFORMANCE

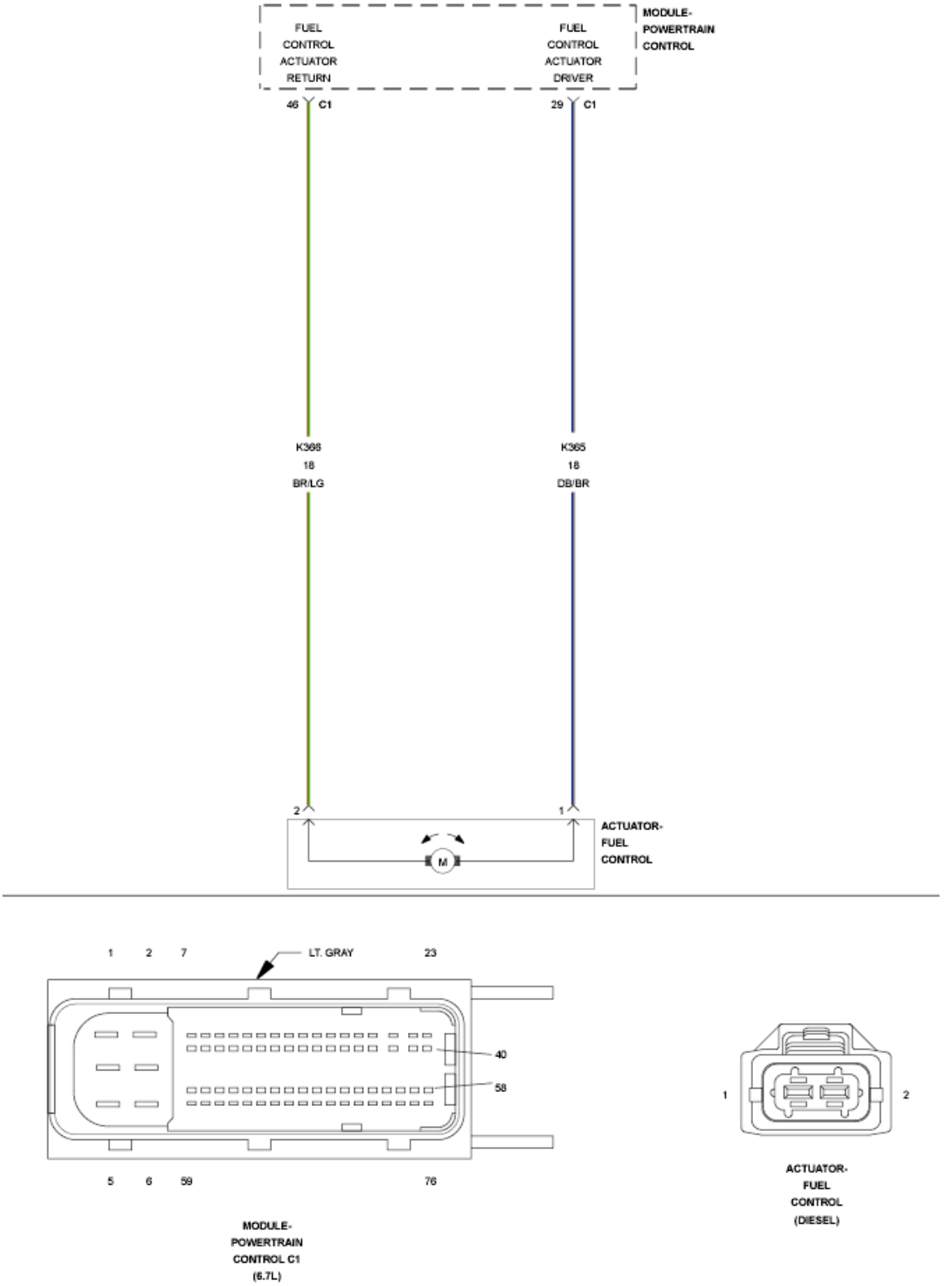

Fig. 94: Fuel Control Actuator Circuit Schematic
Courtesy of CHRYSLER GROUP, LLC

For a complete wiring diagram, **refer to appropriate SYSTEM WIRING DIAGRAMS article** .

THEORY OF OPERATION

The Fuel Control Actuator (FCA) is an electronically controlled solenoid valve. The Powertrain Control Module (PCM) provides a PWM driver circuit and ground circuit to the FCA. The PCM varies the current to this valve to provide the correct fuel flow to the High Pressure Pump based on operating conditions. The FCA is a normally open valve. High circuit resistance may cause fuel pressure to be higher than commanded at light loads. Although this is primarily an electrical diagnostic check, fuel supply issues and high pressure leaks can cause the PCM to force the Fuel Control Actuator into a region where this fault code becomes active. The PCM illuminates the MIL lamp and the ETC lamp immediately after the diagnostic runs and fails. During this time the customer may experience low power. The PCM turns off the MIL lamp after the diagnostic runs and passes in 4 consecutive drive cycles.

WHEN MONITORED:

Continuously with the engine running.

SET CONDITION:

The Powertrain Control Module (PCM) detects a discrepancy between the PWM signal supplied to the Fuel Control Actuator and the PWM returned from the Fuel Control Actuator.

POSSIBLE CAUSES

Possible Causes
HIGH RESISTANCE IN THE (K366) FUEL CONTROL ACTUATOR DRIVER CIRCUIT HIGH RESISTANCE IN THE (K365) FUEL CONTROL ACTUATOR RETURN CIRCUIT FUEL CONTROL ACTUATOR
POWERTRAIN CONTROL MODULE (PCM)

Always perform the Pre-Diagnostic Troubleshooting procedure before proceeding. Refer to PRE-DIAGNOSTIC TROUBLESHOOTING PROCEDURE - 6.7L .

DIAGNOSTIC TEST

1. **ACTIVE DTC**
    1. Ignition on, engine not running.
    2. Record freeze frame data and clear DTCs.
    3. Turn the ignition off for 75 seconds.
    4. Start the engine and let idle for up to two minutes.
    5. With the scan tool, read DTCs.

    Did the DTC reset?

    Yes

    - Go To 2.

No

- Perform the INTERMITTENT CONDITION - 6.7L diagnostic procedure. Refer to **INTERMITTENT CONDITION - 6.7L** .

2. **CHECK FOR HIGH RESISTANCE IN THE (K366) FUEL CONTROL ACTUATOR DRIVER CIRCUIT**

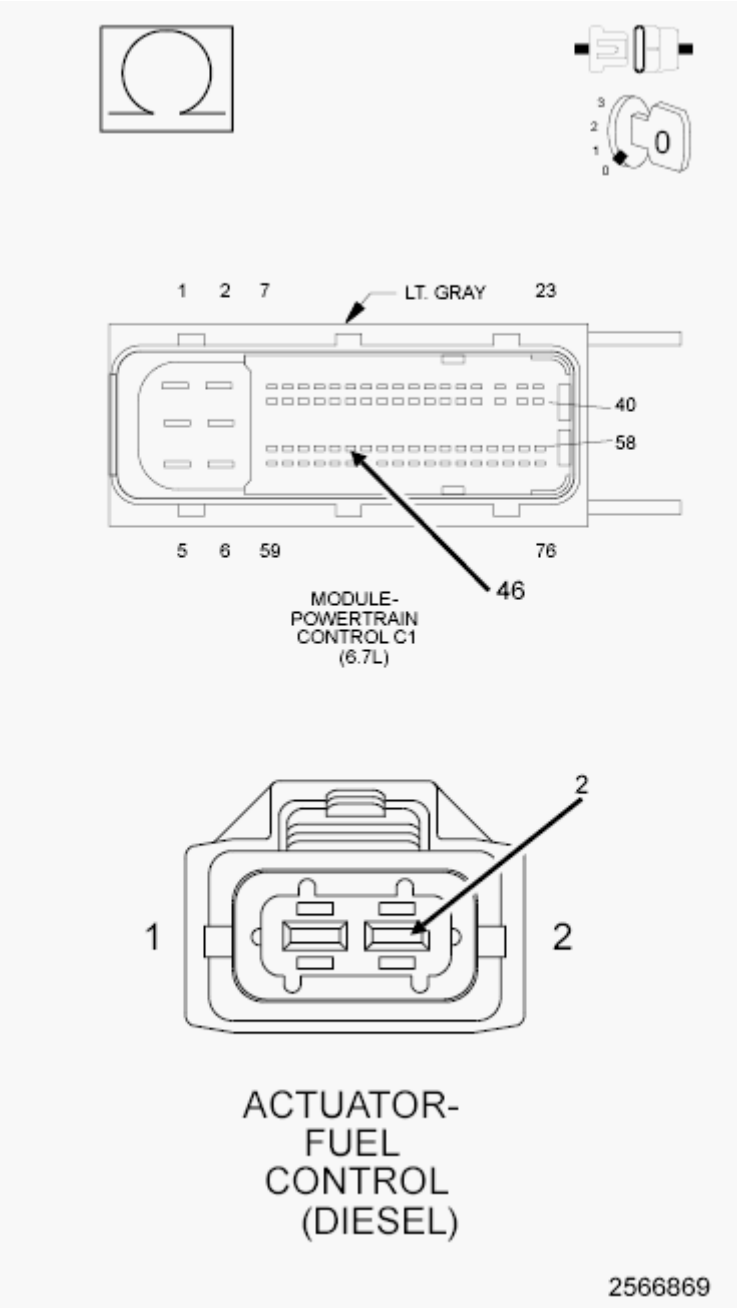

Fig. 95: Checking Fuel Control Actuator Driver Circuit For Open Or High Resistance
Courtesy of CHRYSLER GROUP, LLC

1. Turn the ignition off.

2. Disconnect the Fuel Control Actuator harness connector.
3. Disconnect the PCM C1 harness connector.

NOTE: Check connectors - Clean/repair as necessary.

4. Measure the resistance of the (K366) FCA Driver circuit between the Fuel Control Actuator harness connector and the PCM C1 harness connector.

   Is the resistance below 5.0 Ohms?

   Yes

   - Go To 3.

   No

   - Repair the (K366) Fuel Control Actuator Driver circuit for an open or high resistance.
   - Perform the POWERTRAIN VERIFICATION TEST - 6.7L. Refer to **POWERTRAIN VERIFICATION TEST - 6.7L** .

3. **CHECK FOR HIGH RESISTANCE IN THE (K365) FUEL CONTROL ACTUATOR RETURN CIRCUIT**

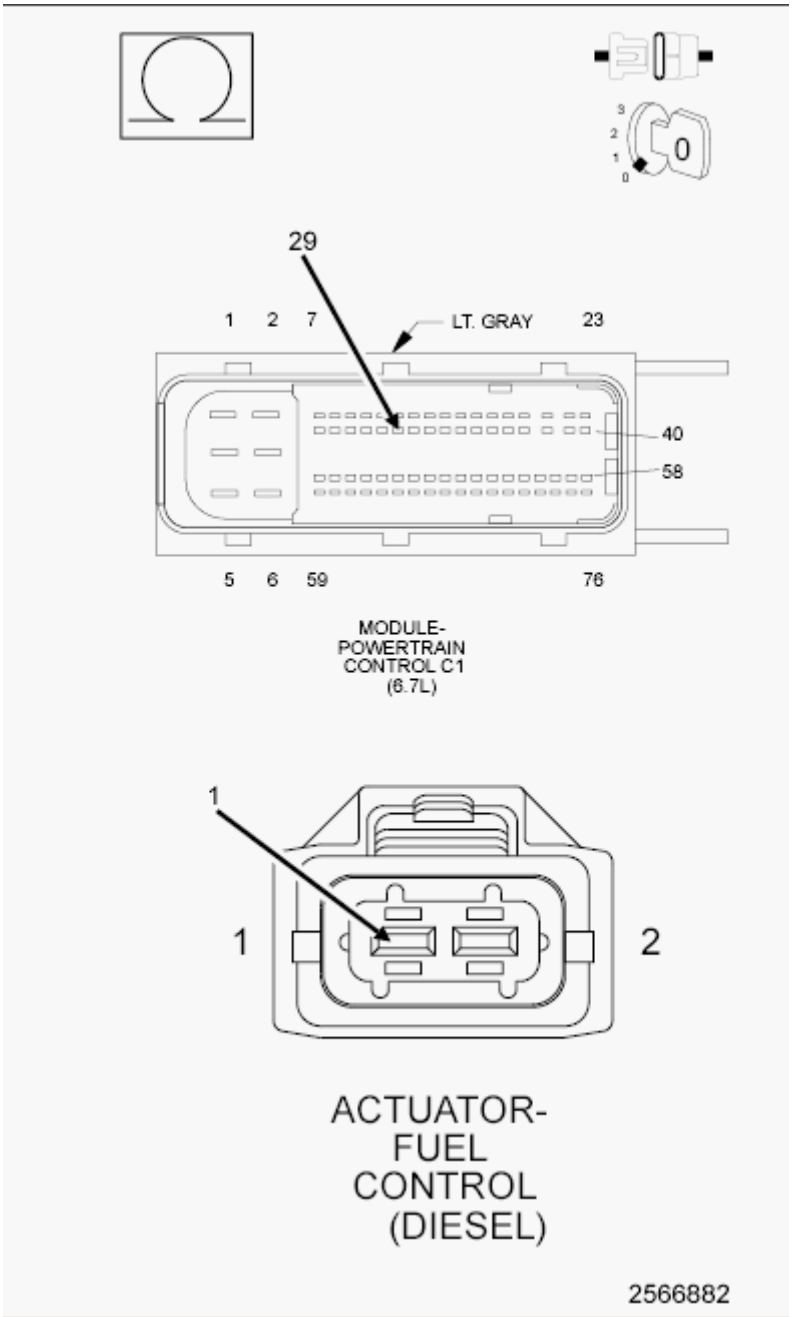

Fig. 96: Checking Fuel Control Actuator Return Circuit For Open Or High Resistance
Courtesy of CHRYSLER GROUP, LLC

1. Measure the resistance of the (K365) FCA Return circuit between the Fuel Control Actuator harness connector and the PCM C1 harness connector.

   Is the resistance below 5.0 Ohms?

   Yes

   - Go To 4.

No

- Repair the (K365) FCA Return circuit for an open or high resistance.
- Perform the POWERTRAIN VERIFICATION TEST - 6.7L. Refer to **POWERTRAIN VERIFICATION TEST - 6.7L** .

4. **FUEL CONTROL ACTUATOR**
   1. Reconnect the PCM C1 harness connector.
   2. Replace the Fuel Control Actuator in accordance with the service information.
   3. Turn the ignition on and clear any DTCs.
   4. Start the engine and let idle for at least two minutes.
   5. With the scan tool, read DTCs.

   Did the DTC reset?

   Yes

   - Replace and program the Powertrain Control Module in accordance with the service information.
   - Perform the POWERTRAIN VERIFICATION TEST - 6.7L. Refer to **POWERTRAIN VERIFICATION TEST - 6.7L** .

   No

   - Test complete.
   - Perform the POWERTRAIN VERIFICATION TEST - 6.7L. Refer to **POWERTRAIN VERIFICATION TEST - 6.7L** .

P026A-CHARGE AIR COOLER EFFICIENCY BELOW THRESHOLD

For a complete wiring diagram, **refer to appropriate SYSTEM WIRING DIAGRAMS article** .

WHEN MONITORED:

With the engine running, Charge Air Cooler (CAC) Temperature Sensor, Inlet Air Temperature, and Ambient Air Temperature Sensor status are valid.

SET CONDITION:

The Powertrain Control Module (PCM) compares the CAC Temperature Sensor reading to a calibrated threshold. The calibrated threshold varies, and is dependant on the reading from the Ambient Air Temperature Sensor. If the CAC Temperature Sensor reading is above the calibrated threshold for a cumulative total of 120 seconds, the PCM determines that the Charge Air Cooler is inefficient. Two trip fault.

POSSIBLE CAUSES

Possible Causes
CHARGE AIR COOLER TEMPERATURE SENSOR CHARGE AIR COOLER FINS BLOCKED FROM DEBRIS COOLING FAN FAULTY

Always perform the Pre-Diagnostic Troubleshooting procedure before proceeding. Refer to PRE-DIAGNOSTIC TROUBLESHOOTING PROCEDURE - 6.7L .

DIAGNOSTIC TEST

1. **OTHER DTCS**
    1. Turn the ignition on.
    2. With the scan tool, record all Freeze frame data.
    3. With the scan tool, read DTCs.

    Are there any CAC Temperature sensor or Cooling Fan DTCs present?

    Yes

    - Repair other DTCs before proceeding.

    No

    - Go To 2.
2. **CAC TEMPERATURE SENSOR**
    1. Turn the ignition off.
    2. Disconnect the CAC Temperature Sensor harness connector.
    3. Remove the CAC Temperature Sensor and reconnect the wiring to the sensor.
    4. Turn the ignition on.
    5. With the scan tool in, monitor the CAC Temperature Sensor while heating the sensor with an external heat source (DO NOT USE OPEN FLAME).

    Does the reading from the sensor increase at least 5°F on the scan tool?

    Yes

    - Go To 3.

    No

    - Replace the Charge Air Cooler Temperature Sensor in accordance with the service information.
    - Perform the POWERTRAIN VERIFICATION TEST - 6.7L. Refer to **POWERTRAIN VERIFICATION TEST - 6.7L** .

3. **VISUALLY INSPECT THE CHARGE AIR COOLER**
    1. Visually inspect the Charge Air Cooler and Radiator fins for excessive debris restricting air flow through the Charge Air Cooler.

       Are the Charge Air Cooler or Radiator restricted with debris?

       Yes

       - Clean the debris from the Charge Air Cooler or Radiator.
       - Perform the POWERTRAIN VERIFICATION TEST - 6.7L. Refer to **POWERTRAIN VERIFICATION TEST - 6.7L** .

       No

       - Go To 4.
4. **CHECK THE COOLING FAN OPERATION**
    1. Check the Viscous Cooling Fan operation. Refer to **FAN, COOLING, VISCOUS, DIAGNOSIS AND TESTING** .

       Was the Viscous Fan found to be operating normal?

       Yes

       - Check for a base engine condition, such as an engine overheat or intake air restriction that could cause the Charge Air Cooler to work inefficiently.
       - Perform the INTERMITTENT CONDITION - 6.7L diagnostic procedure. Refer to **INTERMITTENT CONDITION - 6.7L** .

       No

       - Clean the debris from the Charge Air Cooler or Radiator.
       - Perform the POWERTRAIN VERIFICATION TEST - 6.7L. Refer to **POWERTRAIN VERIFICATION TEST - 6.7L** .

P0299-MANIFOLD PRESSURE SENSOR OUT OF RANGE LOW

For a complete wiring diagram, **refer to appropriate SYSTEM WIRING DIAGRAMS article** .

WHEN MONITORED:

While the engine is running.

SET CONDITION:

The Powertrain Control Module (PCM) detects that the Inlet Air Pressure signal reading is below the expected level for the present engine operating conditions.

POSSIBLE CAUSES

Possible Causes
FAULTY INLET AIR PRESSURE/TEMPERATURE SENSOR
INTAKE SYSTEM LEAKS
RESTRICTION IN THE CHARGE AIR COOLER

Always perform the Pre-Diagnostic Troubleshooting procedure before proceeding. Refer to PRE-DIAGNOSTIC TROUBLESHOOTING PROCEDURE - 6.7L .

DIAGNOSTIC TEST

1. **OTHER DTCS**
    1. Turn the ignition on.
    2. With the scan tool, read and record the freeze frame data.
    3. With the scan tool, read the Engine DTCs.

    Are there any DTCs set for Turbocharger system, BARO Sensor, or Inlet Air Pressure Sensor?

    Yes

    - Repair other DTCs before proceeding.

    No

    - Go To 2.
2. **CHECK THE INLET AIR PRESSURE SENSOR**
    1. Turn the ignition off.
    2. Connect a mechanical intake manifold pressure gauge to the engine, as close to the Inlet Air Pressure Sensor as possible.
    3. Start the engine.
    4. With the scan tool, monitor the Inlet Air Pressure Sensor reading.

    Is the scan tool reading within 2.5 psi of the mechanical intake manifold pressure gauge?

    Yes

    - Go To 3.

    No

    - Replace the Inlet Air Pressure/Temperature Sensor in accordance with the service information.
    - Perform the POWERTRAIN VERIFICATION TEST - 6.7L. Refer to **POWERTRAIN**

VERIFICATION TEST - 6.7L .

3. **CHECK THE INTAKE SYSTEM FOR LEAKS**
   1. Perform the INTAKE AIR SYSTEM PRESSURE TEST diagnostic procedure. Refer to **DIAGNOSIS AND TESTING, 6.7L** .

      Were any Intake System leaks found?

      Yes

      - Perform the appropriate repair.
      - Perform the POWERTRAIN VERIFICATION TEST - 6.7L. Refer to **POWERTRAIN VERIFICATION TEST - 6.7L** .

      No

      - Go To 4.
4. **CHECK THE CHARGE AIR COOLER**
   1. Remove and clean the Charge Air Cooler with approved Mopar® EGR system cleaner.
   2. Reinstall the Charge Air Cooler.
   3. With the scan tool, erase DTCs.
   4. Turn the ignition off for 75 seconds.
   5. Start the engine.
   6. Test drive the vehicle. With the scan tool in Data Display, verify that the engine operating mode is normal.
   7. With the scan tool, read DTCs.

      Did the DTC return?

      Yes

      - Replace the Charge Air Cooler in accordance with the service information.
      - Perform the POWERTRAIN VERIFICATION TEST - 6.7L. Refer to **POWERTRAIN VERIFICATION TEST - 6.7L** .

      No

      - Repair complete.
      - Perform the POWERTRAIN VERIFICATION TEST - 6.7L. Refer to **POWERTRAIN VERIFICATION TEST - 6.7L** .

P02E1-DIESEL INTAKE AIR FLOW CONTROL PERFORMANCE

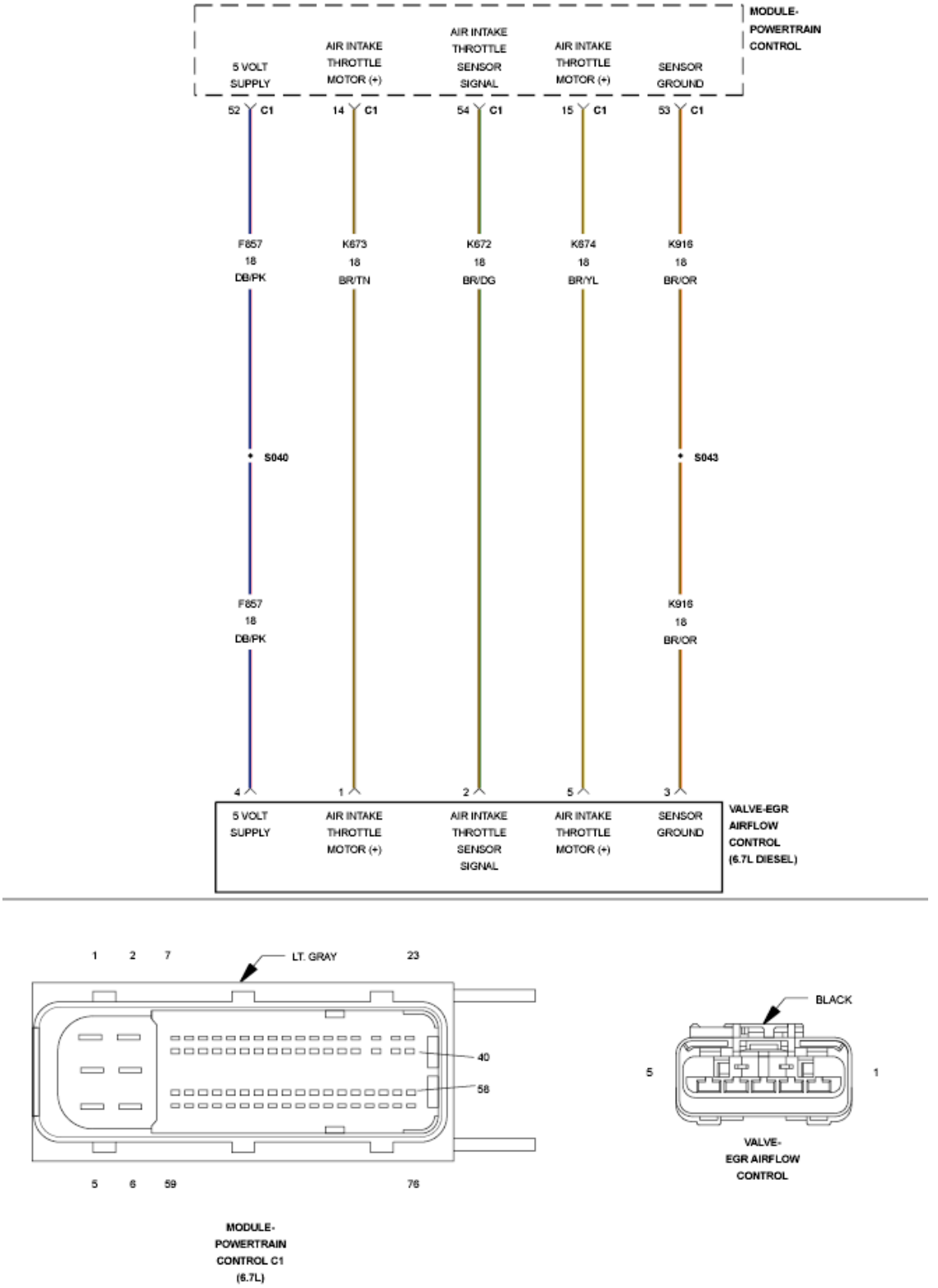

Fig. 97: EGR Airflow Control Valve Circuit Schematic
Courtesy of CHRYSLER GROUP, LLC

For a complete wiring diagram, **refer to appropriate SYSTEM WIRING DIAGRAMS article** .

THEORY OF OPERATION

The Powertrain Control Module (PCM) controls the operation of the Exhaust Gas Recirculation (EGR) Airflow Control Valve. The EGR Airflow Control Valve also has a built in position sensor. The PCM monitors the EGR Airflow Control Valve Signal circuit to determine if the EGR Airflow Control Valve is moving to the proper position commanded by the PCM. The PCM will illuminate the MIL lamp after the diagnostic runs and fails in two consecutive drive cycles. The PCM will turn off the MIL lamp after the diagnostic runs and passes in four consecutive drive cycles.

WHEN MONITORED:

With the ignition on.

SET CONDITION:

The Powertrain Control Module (PCM) detects that the EGR Airflow Control Valve sticking or out of calibration.

POSSIBLE CAUSES

Possible Causes
HIGH RESISTANCE IN THE (K674) EGR AIRFLOW CONTROL VALVE (-) CIRCUIT
HIGH RESISTANCE IN THE (K673) EGR AIRFLOW CONTROL VALVE (+) CIRCUIT
EGR AIRFLOW CONTROL VALVE
POWERTRAIN CONTROL MODULE (PCM)

Always perform the Pre-Diagnostic Troubleshooting procedure before proceeding. Refer to PRE-DIAGNOSTIC TROUBLESHOOTING PROCEDURE - 6.7L .

DIAGNOSTIC TEST

1. **DTC ACTIVE**
    1. Turn the ignition on.
    2. With the scan tool, record all Freeze frame data.
    3. With the scan tool, erase DTCs.
    4. Turn the ignition off for 75 seconds.
    5. Start the engine and let idle for one minute.
    6. With the scan tool, read DTCs.

    Is DTC P02E1 active?

    Yes

- Go To 2.

No

- Perform the INTERMITTENT CONDITION - 6.7L diagnostic procedure. Refer to **INTERMITTENT CONDITION - 6.7L** .

2. **CHECK THE (K674) EGR AIRFLOW CONTROL VALVE (-) CIRCUIT FOR HIGH RESISTANCE**

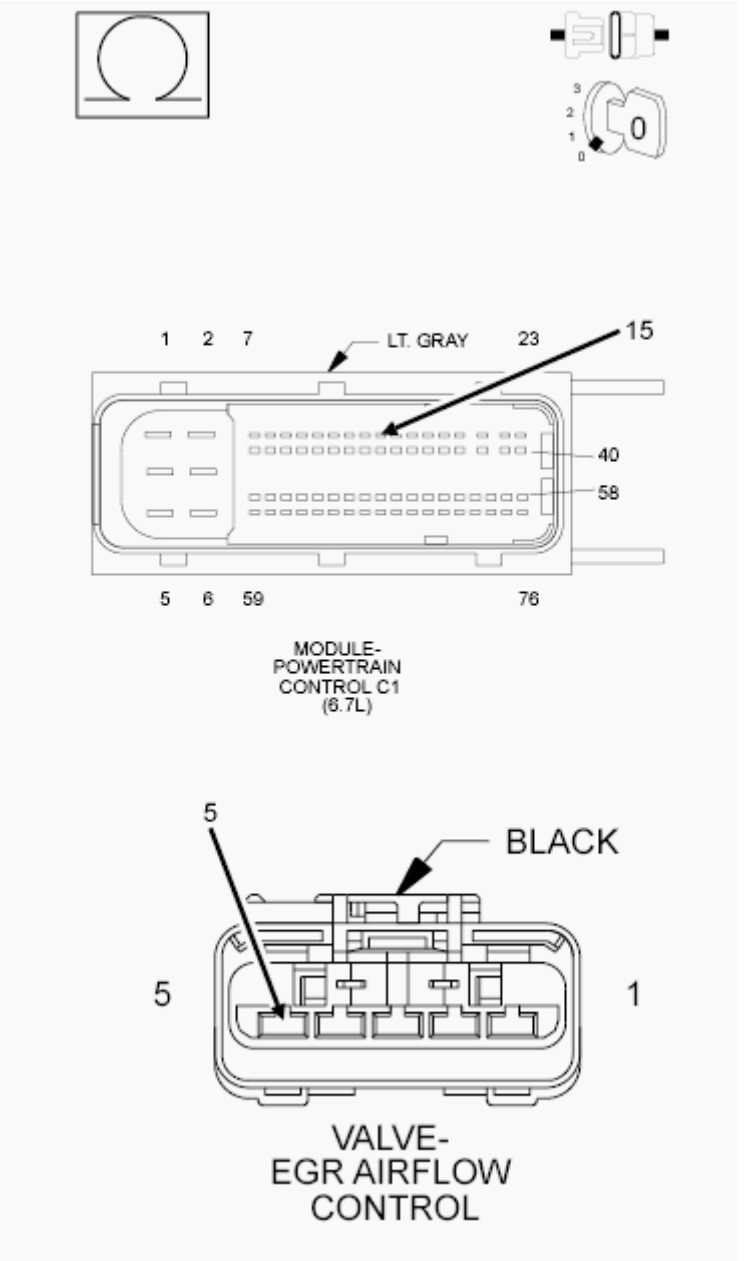

Fig. 98: Checking EGR Airflow Control Valve (-) Circuit For Open Or High Resistance
Courtesy of CHRYSLER GROUP, LLC

1. Turn the ignition off.
2. Disconnect the EGR Airflow Control Valve harness connector.
3. Disconnect the PCM C1 harness connector.

NOTE: Check connectors - Clean/repair as necessary.

4. Measure the resistance of the (K674) EGR Airflow Control Valve (-) circuit between the EGR Airflow Control Valve harness connector and the PCM C1 harness connector.

   Is the resistance below 5.0 Ohms?

   Yes

   - Go To 3.

   No

   - Repair the (K674) EGR Airflow Control Valve (-) circuit for an open or high resistance.
   - Perform the POWERTRAIN VERIFICATION TEST - 6.7L. Refer to **POWERTRAIN VERIFICATION TEST - 6.7L** .

3. **CHECK THE (K673) EGR AIRFLOW CONTROL VALVE (+) CIRCUIT FOR HIGH RESISTANCE**

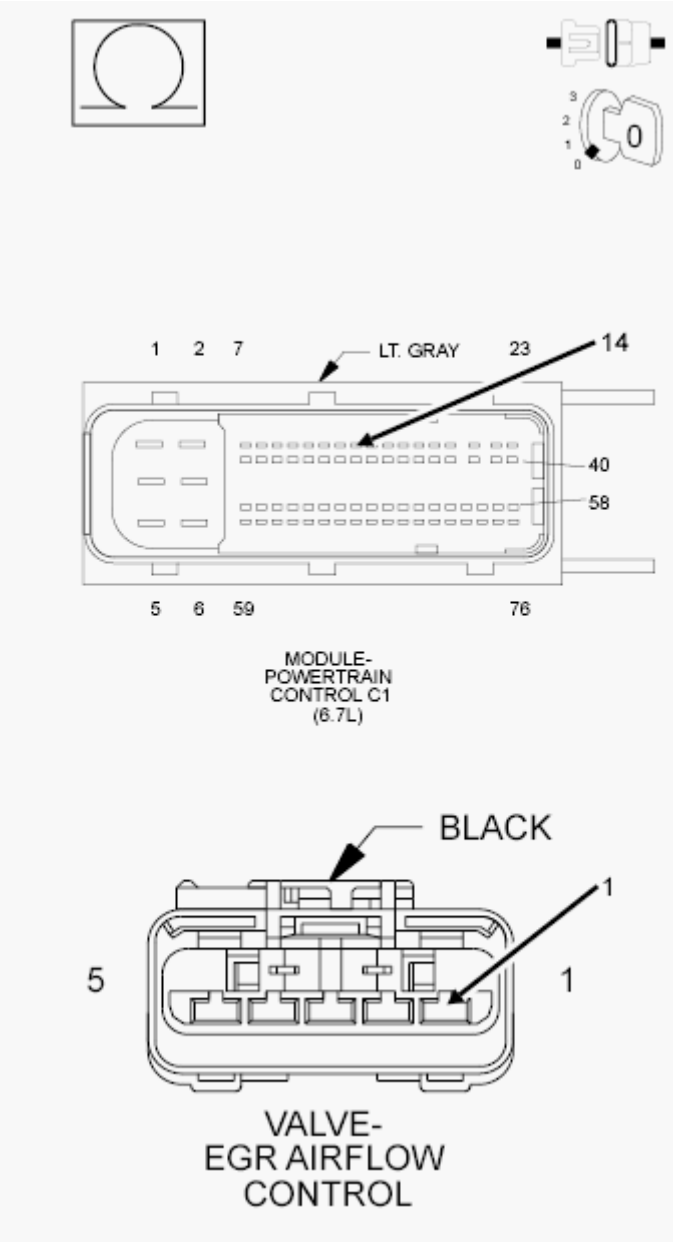

Fig. 99: Checking EGR Airflow Control Valve (+) Circuit For Open Or High Resistance
Courtesy of CHRYSLER GROUP, LLC

1. Measure the resistance of the (K673) EGR Airflow Control Valve (+) circuit between the EGR Airflow Control Valve harness connector and the PCM C1 harness connector.

   Is the resistance below 5.0 Ohms?

   Yes

   - Go To 4.

   No

- Repair the (K673) EGR Airflow Control Valve (+) circuit for an open or high resistance.
- Perform the POWERTRAIN VERIFICATION TEST - 6.7L. Refer to **POWERTRAIN VERIFICATION TEST - 6.7L** .

4. **EGR AIRFLOW CONTROL VALVE**
    1. Turn the ignition off.
    2. Reconnect the PCM C1 harness connector.
    3. Ignition on, engine not running.
    4. Using a voltmeter connected to ground, measure the voltage on the:
        - (K673) EGR Airflow Control Valve (+) circuit at the EGR Airflow Control Valve harness connector.
        - (K674) EGR Airflow Control Valve (-) circuit at the EGR Airflow Control Valve harness connector.

NOTE: **The voltage on the control circuits should read approximately battery voltage.**

Are both measurements equal to battery voltage?

Yes

- Replace the EGR Airflow Control Valve in accordance with the service information.
- Perform the POWERTRAIN VERIFICATION TEST - 6.7L. Refer to **POWERTRAIN VERIFICATION TEST - 6.7L** .

No

- Replace the Powertrain Control Module in accordance with the service information.
- Perform the POWERTRAIN VERIFICATION TEST - 6.7L. Refer to **POWERTRAIN VERIFICATION TEST - 6.7L** .

P02E2-DIESEL INTAKE AIR FLOW CONTROL CIRCUIT LOW

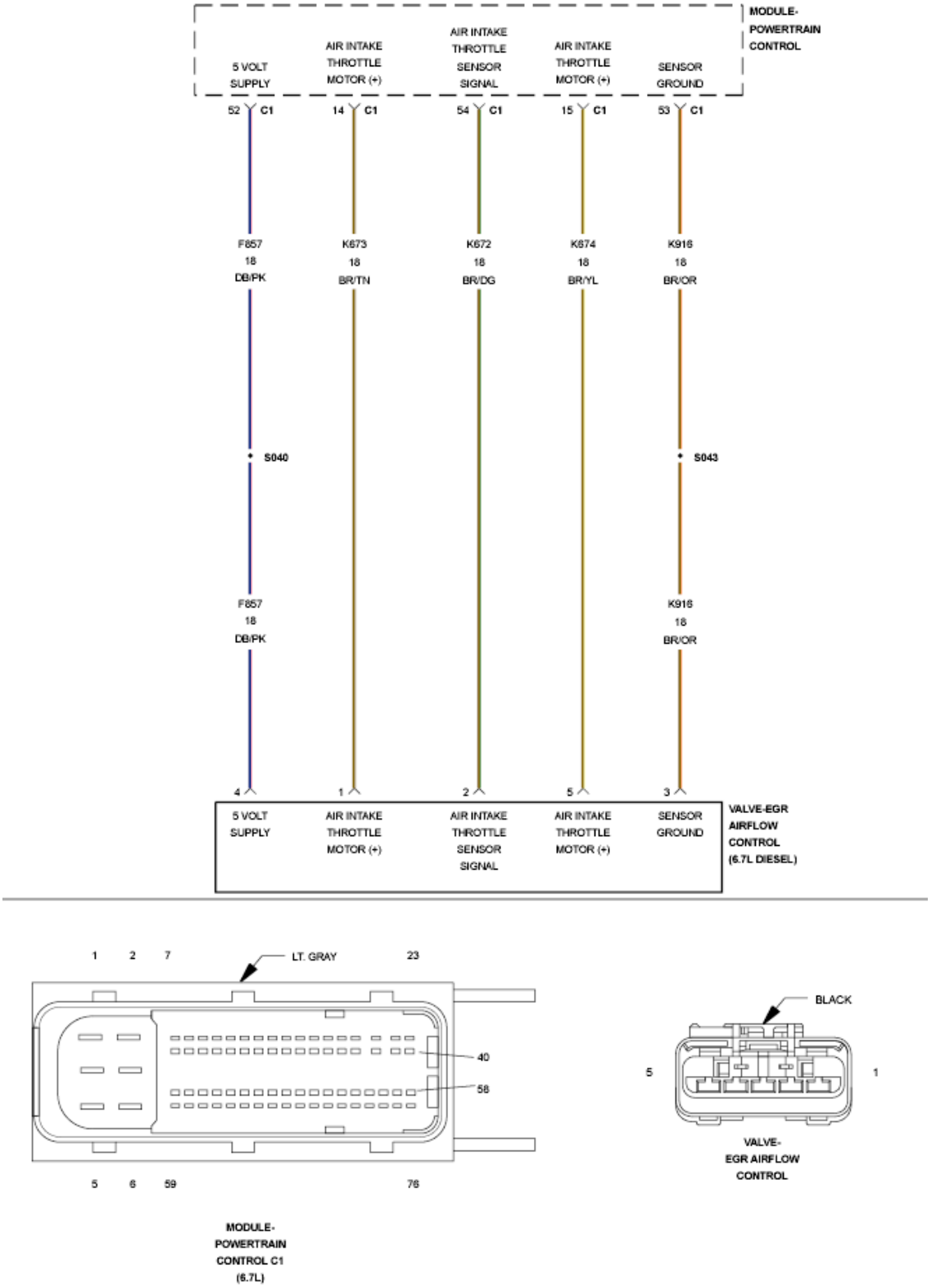

Fig. 100: EGR Airflow Control Valve Circuit Schematic
Courtesy of CHRYSLER GROUP, LLC

For a complete wiring diagram, **refer to appropriate SYSTEM WIRING DIAGRAMS article** .

THEORY OF OPERATION

The Powertrain Control Module (PCM) controls the operation of the Exhaust Gas Recirculation (EGR) Airflow Control Valve. The EGR Airflow Control Valve also has a built in position sensor. The PCM monitors the EGR Airflow Control Valve Signal circuit to determine if the EGR Airflow Control Valve is moving to the proper position commanded by the PCM. The PCM will illuminate the MIL lamp after the diagnostic runs and fails in two consecutive drive cycles. The PCM will turn off the MIL lamp after the diagnostic runs and passes in 4 consecutive drive cycles.

WHEN MONITORED:

With the ignition on.

SET CONDITION:

The Powertrain Control Module detects that the control circuit voltage for the EGR Airflow Control Valve is below the calibrated limit.

POSSIBLE CAUSES

Possible Causes
(K674) EGR AIRFLOW CONTROL VALVE (-) CIRCUIT SHORTED TO GROUND
(K673) EGR AIRFLOW CONTROL VALVE (+) CIRCUIT SHORTED TO GROUND
EGR AIRFLOW CONTROL VALVE
POWERTRAIN CONTROL MODULE (PCM)

Always perform the Pre-Diagnostic Troubleshooting procedure before proceeding. Refer to PRE-DIAGNOSTIC TROUBLESHOOTING PROCEDURE - 6.7L .

DIAGNOSTIC TEST

1. **DTC ACTIVE**
    1. Turn the ignition on.
    2. With the scan tool, record all Freeze frame data.
    3. With the scan tool, erase DTCs.
    4. Turn the ignition off for 75 seconds.
    5. Start the engine and let idle for one minute.
    6. With the scan tool, read DTCs.

    Did the DTC return?

    Yes

- Go To 2.

No

- Perform the INTERMITTENT CONDITION - 6.7L diagnostic procedure. Refer to **INTERMITTENT CONDITION - 6.7L** .

2. **CHECK THE (K674) EGR AIRFLOW CONTROL VALVE (-) CIRCUIT FOR A SHORT TO GROUND**

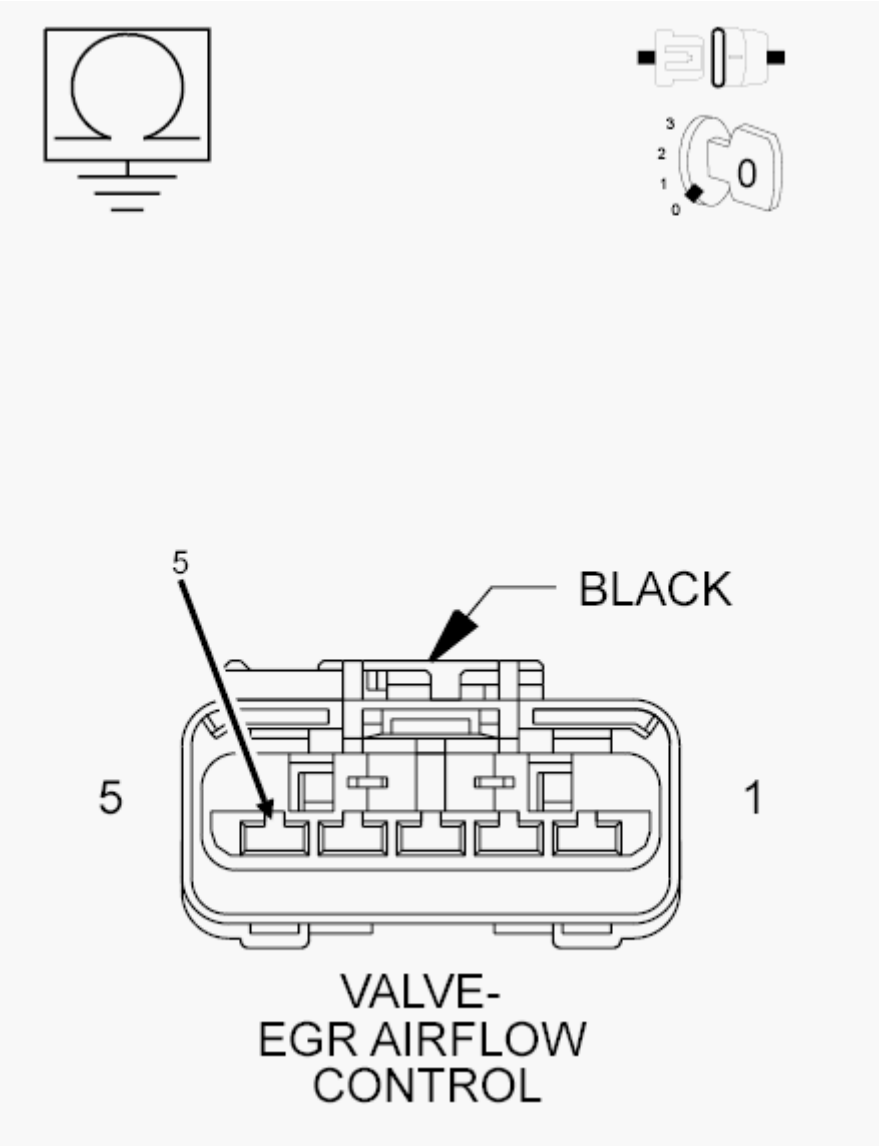

Fig. 101: Checking EGR Airflow Control Valve (-) Circuit For A Short To Ground
Courtesy of CHRYSLER GROUP, LLC

1. Turn the ignition off.
2. Disconnect the EGR Airflow Control Valve harness connector.

3. Disconnect the PCM C1 harness connector.
4. Measure the resistance between ground and the (K674) EGR Airflow Control Valve (-) circuit at the EGR Airflow Control Valve harness connector.

   Is the resistance below 10k Ohms?

   Yes

   - Repair the (K674) EGR Airflow Control Valve (-) circuit for an open or high resistance.
   - Perform the POWERTRAIN VERIFICATION TEST - 6.7L. Refer to **POWERTRAIN VERIFICATION TEST - 6.7L** .

   No

   - Go To 3.

3. **CHECK THE (K673) EGR AIRFLOW CONTROL VALVE (+) CIRCUIT FOR A SHORT TO GROUND**

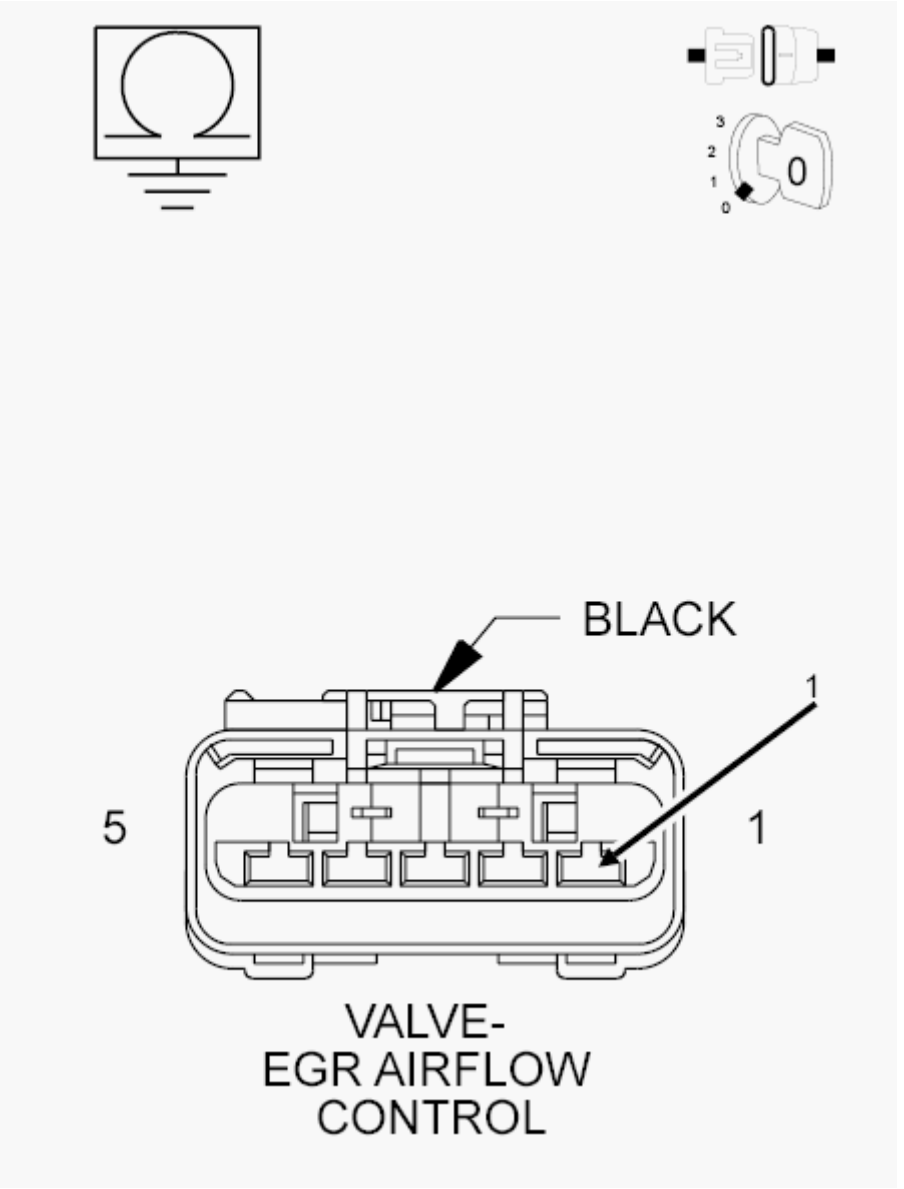

Fig. 102: Checking EGR Airflow Control Valve (+) Circuit For A Short To Ground
Courtesy of CHRYSLER GROUP, LLC

1. Measure the resistance between ground and the (K673) EGR Airflow Control Valve (+) circuit at the EGR Airflow Control Valve harness connector.

   Is the resistance below 10k Ohms?

   Yes

   - Repair the (K673) EGR Airflow Control Valve (+) circuit for a short to ground.
   - Perform the POWERTRAIN VERIFICATION TEST - 6.7L. Refer to **POWERTRAIN VERIFICATION TEST - 6.7L** .

No

- Go To 4.

4. **EGR AIRFLOW CONTROL VALVE**
    1. **Replace the EGR Airflow Control Valve in accordance with the Service Information.**
    2. Reconnect the EGR Airflow Control Valve harness connector.
    3. Reconnect the PCM C1 harness connector.
    4. Turn the ignition on.
    5. With the scan tool, erase DTCs.
    6. Start the engine and allow it to idle for one minute.
    7. With the scan tool, read DTCs.

    Did the DTC return?

    Yes

    - Replace Powertrain Control Module in accordance with the Service Information.
    - Perform the POWERTRAIN VERIFICATION TEST - 6.7L. Refer to **POWERTRAIN VERIFICATION TEST - 6.7L** .

    No

    - Repair complete.
    - Perform the POWERTRAIN VERIFICATION TEST - 6.7L. Refer to **POWERTRAIN VERIFICATION TEST - 6.7L** .

P02E3-DIESEL INTAKE AIR FLOW CONTROL CIRCUIT HIGH

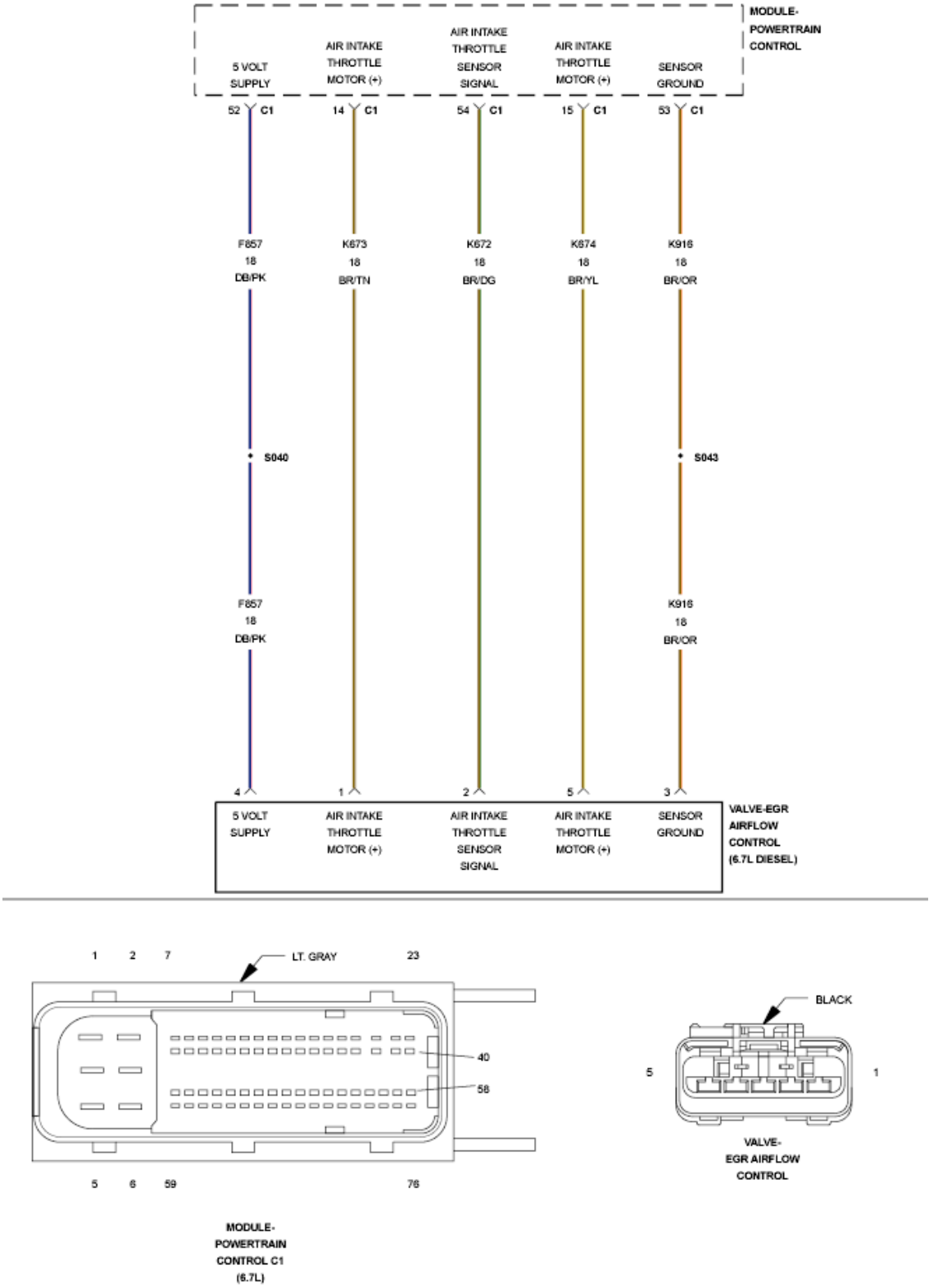

Fig. 103: EGR Airflow Control Valve Circuit Schematic
Courtesy of CHRYSLER GROUP, LLC

For a complete wiring diagram, **refer to appropriate SYSTEM WIRING DIAGRAMS article** .

THEORY OF OPERATION

The Powertrain Control Module (PCM) controls the operation of the Exhaust Gas Recirculation (EGR) Airflow Control Valve. The EGR Airflow Control Valve also has a built in position sensor. The PCM monitors the EGR Airflow Control Valve Signal circuit to determine if the EGR Airflow Control Valve is moving to the proper position commanded by the PCM. The PCM will illuminate the MIL lamp after the diagnostic runs and fails in two consecutive drive cycles. The PCM will turn off the MIL lamp after the diagnostic runs and passes in 4 consecutive drive cycles.

WHEN MONITORED:

With the ignition on.

SET CONDITION:

The Powertrain Control Module detects that the control circuit voltage for the EGR Airflow Control Valve is above the calibrated limit.

POSSIBLE CAUSES

Possible Causes
(K674) EGR AIRFLOW CONTROL VALVE (-) CIRCUIT OPEN/HIGH RESISTANCE
(K673) EGR AIRFLOW CONTROL VALVE (+) CIRCUIT OPEN/HIGH RESISTANCE
EGR AIRFLOW CONTROL VALVE
POWERTRAIN CONTROL MODULE (PCM)

Always perform the Pre-Diagnostic Troubleshooting procedure before proceeding. Refer to PRE-DIAGNOSTIC TROUBLESHOOTING PROCEDURE - 6.7L .

DIAGNOSTIC TEST

1. **ACTIVE DTC**
    1. Turn the ignition on.
    2. With the scan tool, record all Freeze frame data.
    3. With the scan tool, erase DTCs.
    4. Turn the ignition off for 75 seconds.
    5. Start the engine and let idle for one minute.
    6. With the scan tool, read DTCs.

    Did the DTC return?

    Yes

- Go To 2.

No

- Perform the INTERMITTENT CONDITION - 6.7L diagnostic procedure. Refer to **INTERMITTENT CONDITION - 6.7L** .

2. **CHECK THE (K674) EGR AIRFLOW CONTROL VALVE (-) CIRCUIT FOR AN OPEN/HIGH RESISTANCE**

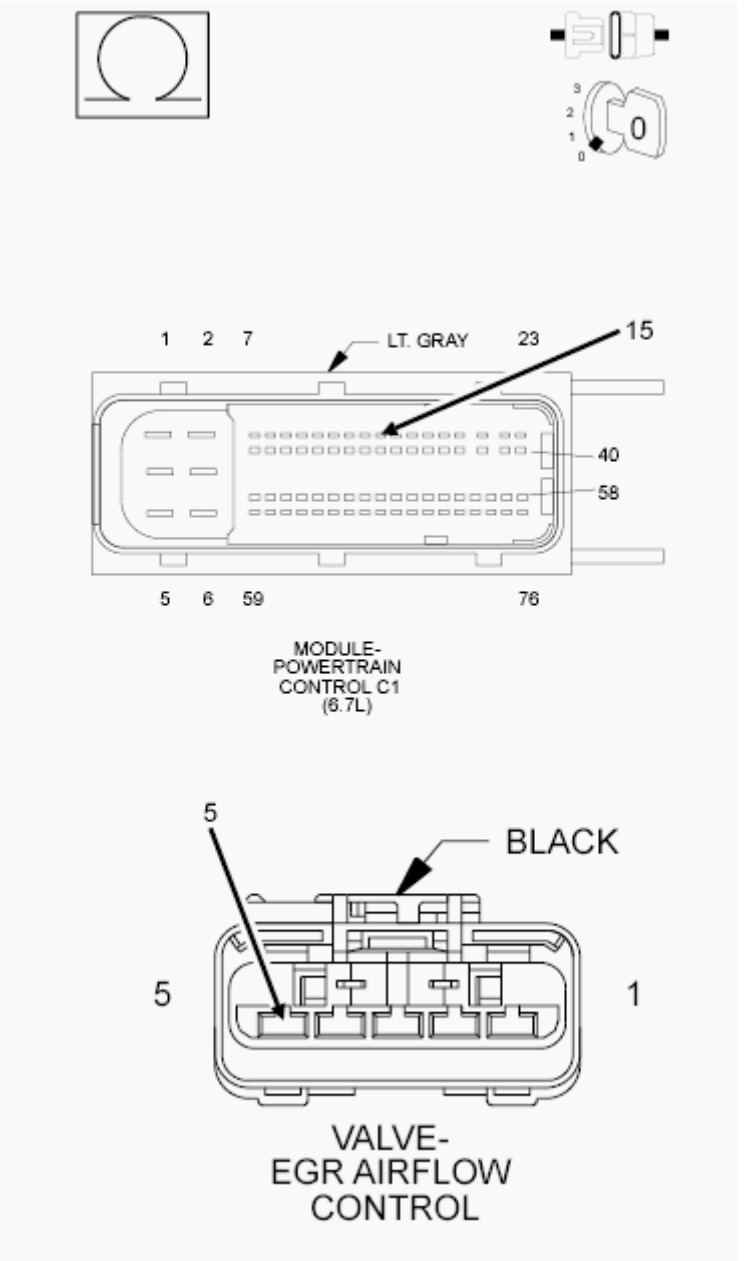

Fig. 104: Checking EGR Airflow Control Valve (-) Circuit For Open Or High Resistance
Courtesy of CHRYSLER GROUP, LLC

1. Turn the ignition off.
2. Disconnect the PCM C1 harness connector.
3. Disconnect the EGR Airflow Control Valve harness connector.
4. Measure the resistance of the (K674) EGR Airflow Control Valve (-) circuit between the EGR Airflow Control Valve harness connector and the PCM C1 harness connector.

   Is the resistance below 5.0 Ohms?

   Yes

   - Go To 3.

   No

   - Repair the (K674) EGR Airflow Control Valve (-) circuit for an open or high resistance.
   - Perform the POWERTRAIN VERIFICATION TEST - 6.7L. Refer to **POWERTRAIN VERIFICATION TEST - 6.7L** .

3. **CHECK THE (K673) EGR AIRFLOW CONTROL VALVE (+) CIRCUIT FOR AN OPEN/HIGH RESISTANCE**

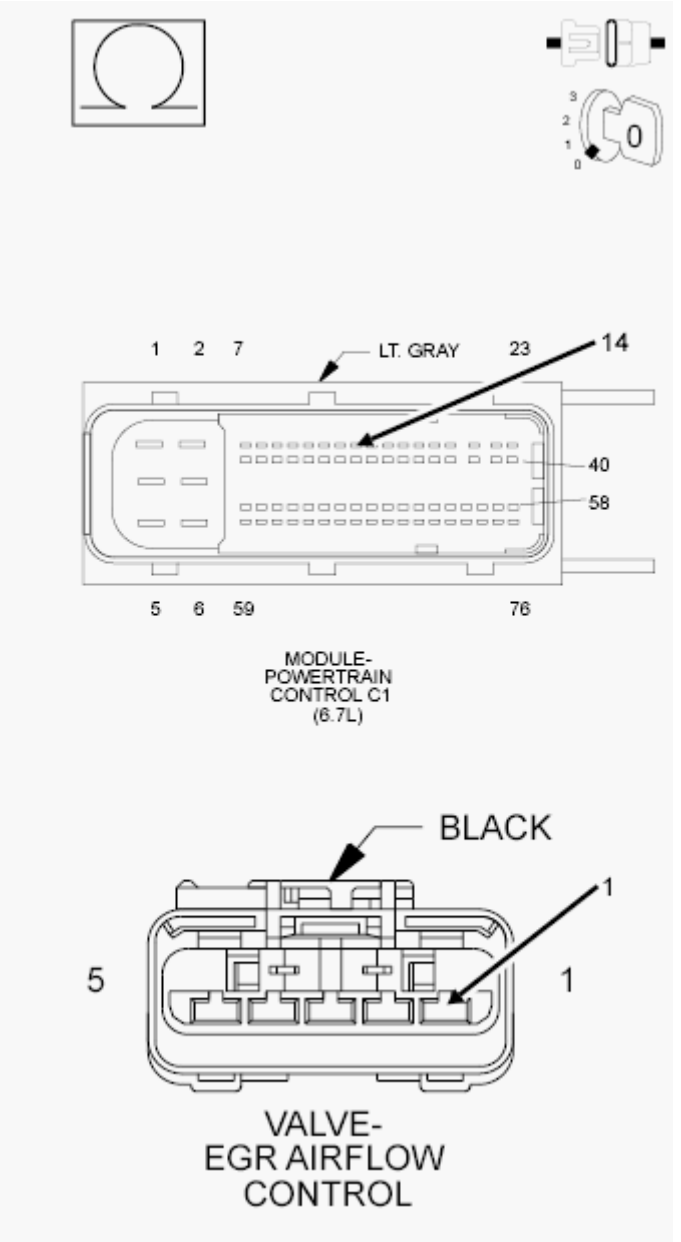

Fig. 105: Checking EGR Airflow Control Valve (+) Circuit For Open Or High Resistance
Courtesy of CHRYSLER GROUP, LLC

1. Measure the resistance of the (K673) EGR Airflow Control Valve Actuator (+) circuit between the EGR Airflow Control Valve harness connector and the PCM C1 harness connector.

   Is the resistance below 5.0 Ohms?

   Yes

   - Go To 4.

   No

- Repair the (K673) EGR Airflow Control Valve Actuator (+) circuit for an open or high resistance.
- Perform the POWERTRAIN VERIFICATION TEST - 6.7L. Refer to **POWERTRAIN VERIFICATION TEST - 6.7L** .

4. **EGR AIRFLOW CONTROL VALVE**
    1. **Replace the EGR Airflow Control Valve in accordance with the Service Information.**
    2. Reconnect the EGR Airflow Control Valve harness connector.
    3. Reconnect the PCM C1 harness connector.
    4. Turn the ignition on.
    5. With the scan tool, erase DTCs.
    6. With the scan tool, read DTCs.

    Did the DTC return?

    Yes

    - Replace Powertrain Control Module in accordance with the Service Information.
    - Perform the POWERTRAIN VERIFICATION TEST - 6.7L. Refer to **POWERTRAIN VERIFICATION TEST - 6.7L** .

    No

    - Repair complete.
    - Perform the POWERTRAIN VERIFICATION TEST - 6.7L. Refer to **POWERTRAIN VERIFICATION TEST - 6.7L** .

P02E7-DIESEL INTAKE AIR FLOW POSITION SENSOR PERFORMANCE

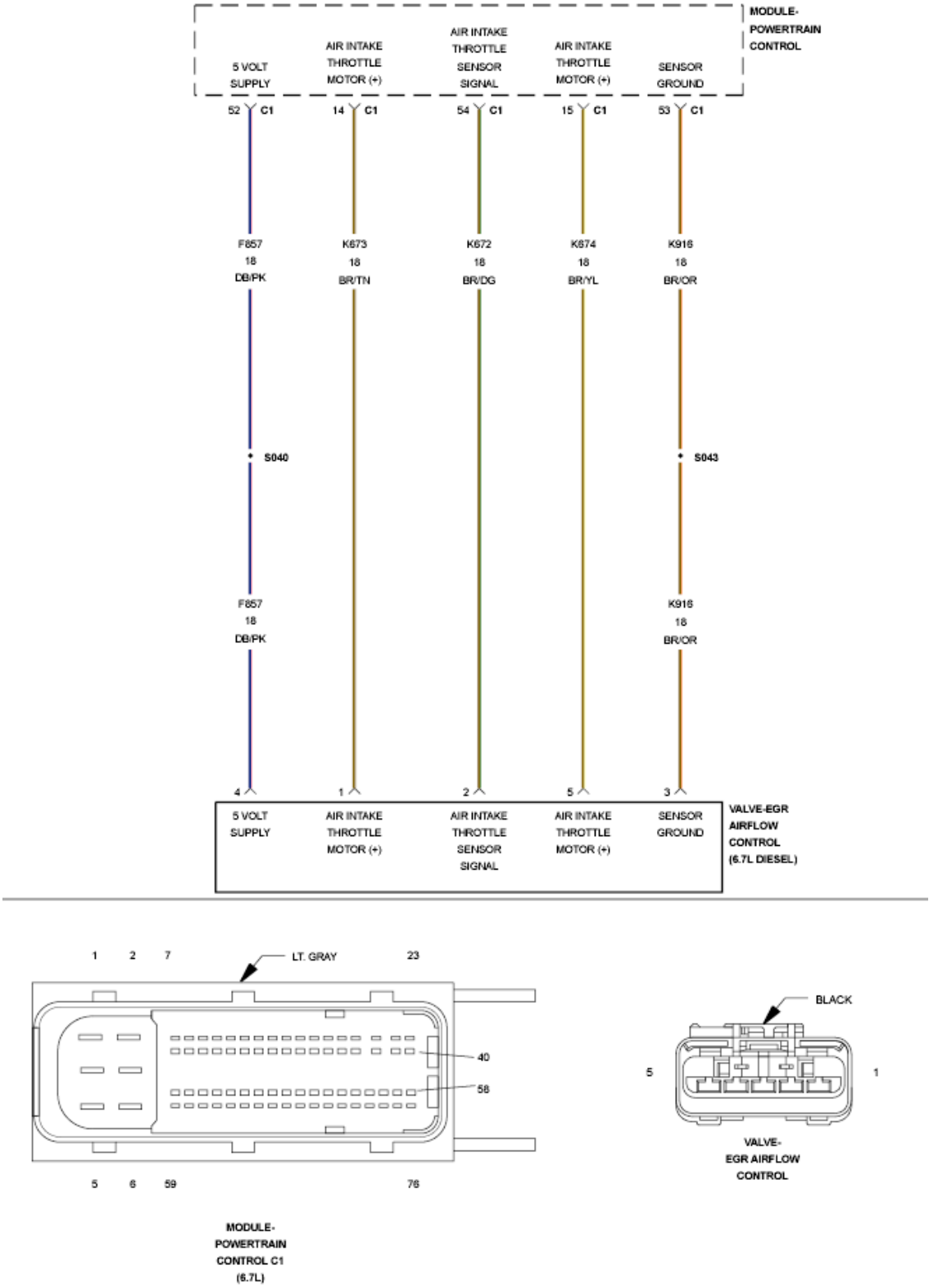

Fig. 106: EGR Airflow Control Valve Circuit Schematic
Courtesy of CHRYSLER GROUP, LLC

For a complete wiring diagram, **refer to appropriate SYSTEM WIRING DIAGRAMS article** .

THEORY OF OPERATION

The EGR Airflow Control Valve controlled by the Powertrain Control Module (PCM) and is actuated by an electric motor. A spring internal to the actuator assembly attempts to drive the valve to the fully-open position. The electric motor works to overcome the spring force when the engine control module commands the valve to close. Position feedback from the valve is sent to the PCM to allow for closed-loop control. Discrepancy in position feedback sent to the PCM, and commanded position sent to the EGR Airflow Control Valve by more than a prescribed amount will result in failure of device rationality diagnostics. Failure to properly actuate the EGR Airflow Control Valve can result in poor engine performance. The PCM will illuminate the MIL lamp after the diagnostic runs and fails in two consecutive drive cycles. This may cause active Exhaust Aftertreatment regenerations to last longer. The PCM will turn off the MIL lamp after the diagnostic runs and passes in 4 consecutive drive cycles.

WHEN MONITORED:

With the engine running.

SET CONDITION:

Actual EGR Airflow Control Valve position differs from Commanded EGR Airflow Control Valve position by more than 8% on average, over a 15 second diagnostic window.

POSSIBLE CAUSES

Possible Causes
HIGH RESISTANCE IN THE (K672) AIR INTAKE THROTTLE SENSOR SIGNAL CIRCUIT
EGR AIRFLOW CONTROL VALVE OBSTRUCTED/STICKING
EGR AIRFLOW CONTROL VALVE
POWERTRAIN CONTROL MODULE (PCM)

Always perform the Pre-Diagnostic Troubleshooting procedure before proceeding. Refer to PRE-DIAGNOSTIC TROUBLESHOOTING PROCEDURE - 6.7L .

DIAGNOSTIC TEST

1. **ACTIVE DTC**
    1. Start the engine and allow it to idle.
    2. With the scan tool, read DTCs.

       Is the DTC active?

       Yes

       - Go To 2.

No

- Perform the INTERMITTENT CONDITION - 6.7L diagnostic procedure. Refer to **INTERMITTENT CONDITION - 6.7L** .

2. **CHECK THE EGR AIRFLOW THROTTLE CONTROL VALVE**
   1. Remove the boot from the EGR Throttle Control Valve. Using a mirror, look at the butterfly valve on the inside of the EGR Throttle Control Valve.
   2. Start the vehicle, let idle for 10 seconds.
   3. Turn ignition off.

   NOTE: If functioning properly the EGR Throttle Control Valve will close immediately after the engine is shut down.

   Did the EGR Throttle Control Valve close immediately after the engine was shut down?

   Yes

   - Go To 4.

   No

   - Go To 3.

3. **CHECK THE EGR AIRFLOW CONTROL VALVE FOR BINDING OR STICKING**
   1. Turn the ignition off.
   2. Check the butterfly valve for signs of a physical obstruction.

   Was there an obstruction found?

   Yes

   - Repair as necessary.
   - Perform the POWERTRAIN VERIFICATION TEST - 6.7L. Refer to **POWERTRAIN VERIFICATION TEST - 6.7L** .

   No

   - Replace the EGR Airflow Control Valve in accordance with the service information.
   - Perform the POWERTRAIN VERIFICATION TEST - 6.7L. Refer to **POWERTRAIN VERIFICATION TEST - 6.7L** .

4. **CHECK FOR HIGH RESISTANCE IN THE (K672) AIR INTAKE THROTTLE SENSOR SIGNAL CIRCUIT**

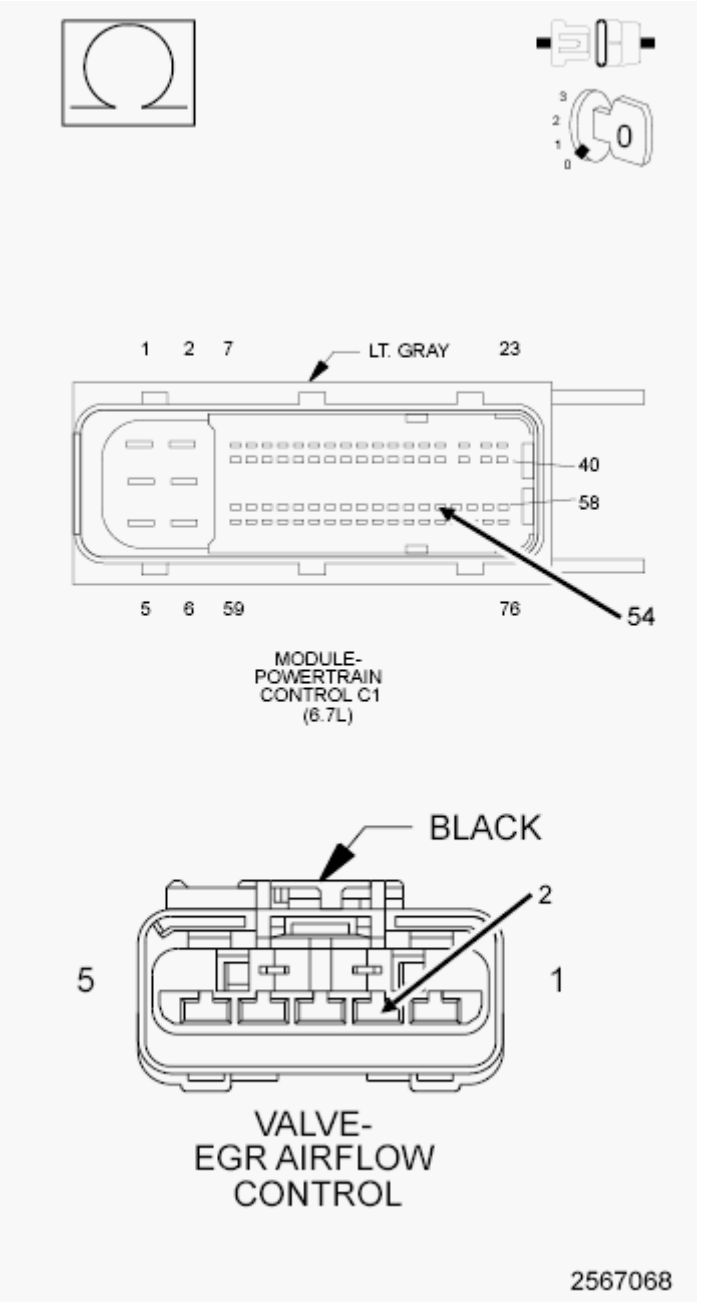

Fig. 107: Checking For Open Or High Resistance In Air Intake Throttle Sensor Signal Circuit
Courtesy of CHRYSLER GROUP, LLC

1. Disconnect the EGR Airflow Control Valve harness connector.
2. Disconnect the PCM C1 harness connector.
3. Measure the resistance between ground and the (K672) Air Intake Throttle Sensor Signal circuit at the EGR Airflow Control Valve harness connector.

   Is the resistance below 10k Ohms?

   Yes

- Go To 5.

No

- Repair the (K672) Air Intake Throttle Sensor Signal circuit for an open or high resistance.
- Perform the POWERTRAIN VERIFICATION TEST - 6.7L. Refer to **POWERTRAIN VERIFICATION TEST - 6.7L** .

5. **CHECK THE EGR AIRFLOW CONTROL VALVE**
    1. Turn the ignition off.
    2. Reconnect the PCM harness connector.
    3. Reconnect the EGR Airflow Control Valve harness connector.
    4. Ignition on, engine not running.
    5. With the scan tool, erase DTCs.
    6. While monitoring the scan tool, disconnect the EGR Airflow Control Valve harness connector.
    7. With the scan tool, read DTCs.

    Is DTC P02E9 active?

    Yes

    - Replace the EGR Airflow Control Valve in accordance with the service information.
    - Perform the POWERTRAIN VERIFICATION TEST - 6.7L. Refer to **POWERTRAIN VERIFICATION TEST - 6.7L** .

    No

    - Replace the Powertrain Control Module in accordance with the service information.
    - Perform the POWERTRAIN VERIFICATION TEST - 6.7L. Refer to **POWERTRAIN VERIFICATION TEST - 6.7L** .

P02E8-DIESEL INTAKE AIR FLOW POSITION SENSOR CIRCUIT LOW

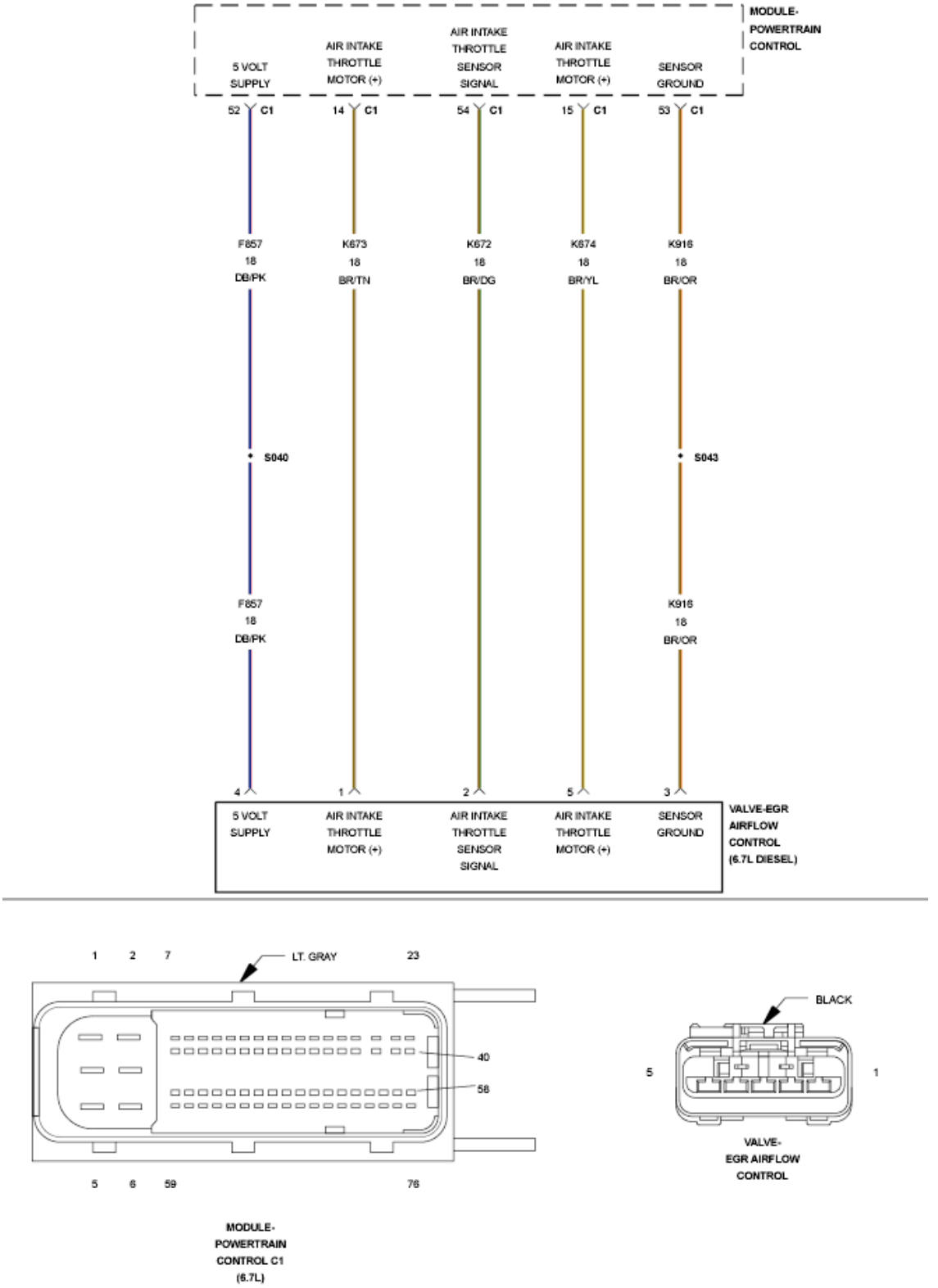

Fig. 108: EGR Airflow Control Valve Circuit Schematic
Courtesy of CHRYSLER GROUP, LLC

For a complete wiring diagram, **refer to appropriate SYSTEM WIRING DIAGRAMS article** .

THEORY OF OPERATION

The EGR Airflow Control Valve controlled by the Powertrain Control Module (PCM) and is actuated by an electric motor. A spring internal to the actuator assembly attempts to drive the valve to the fully-open position. The electric motor works to overcome the spring force when the engine control module commands the valve to close. Position feedback from the valve is sent to the PCM to allow for closed-loop control. Discrepancy in position feedback sent to the PCM, and commanded position sent to the EGR Airflow Control Valve by more than a prescribed amount will result in failure of device rationality diagnostics. Failure to properly actuate the EGR Airflow Control Valve can result in poor engine performance. The PCM will illuminate the MIL lamp after the diagnostic runs and fails in two consecutive drive cycles. This may cause active Exhaust Aftertreatment regenerations to last longer. The PCM will turn off the MIL lamp after the diagnostic runs and passes in 4 consecutive drive cycles.

WHEN MONITORED:

Ignition on.

SET CONDITION:

The PCM detects that the (K672) Air Intake Throttle Sensor Signal circuit is below a calibrated voltage for a calibrated amount of time.

POSSIBLE CAUSES

Possible Causes
(K672) AIR INTAKE THROTTLE SENSOR SIGNAL CIRCUIT SHORTED TO GROUND
EGR AIRFLOW CONTROL VALVE
POWERTRAIN CONTROL MODULE (PCM)

Always perform the Pre-Diagnostic Troubleshooting procedure before proceeding. Refer to PRE-DIAGNOSTIC TROUBLESHOOTING PROCEDURE - 6.7L .

DIAGNOSTIC TEST

1. **ACTIVE DTC**

NOTE: **If there are Mass Airflow Sensor and Turbocharger DTCs present with this DTC, repair the (F348) 12-volt Supply circuit for an open or short to ground condition.**

1. Turn the ignition on.
2. With the scan tool, record all Freeze frame data.
3. With the scan tool, erase DTCs.
4. Turn the ignition off for 75 seconds.

5. Start the engine and let idle.
6. With the scan tool, read DTCs.

   Did the DTC reset?

   Yes

   - Go To 2.

   No

   - Perform the INTERMITTENT CONDITION - 6.7L diagnostic procedure. Refer to **INTERMITTENT CONDITION - 6.7L** .

2. **CHECK THE (K672) AIR INTAKE THROTTLE SENSOR SIGNAL CIRCUIT FOR A SHORT TO GROUND**

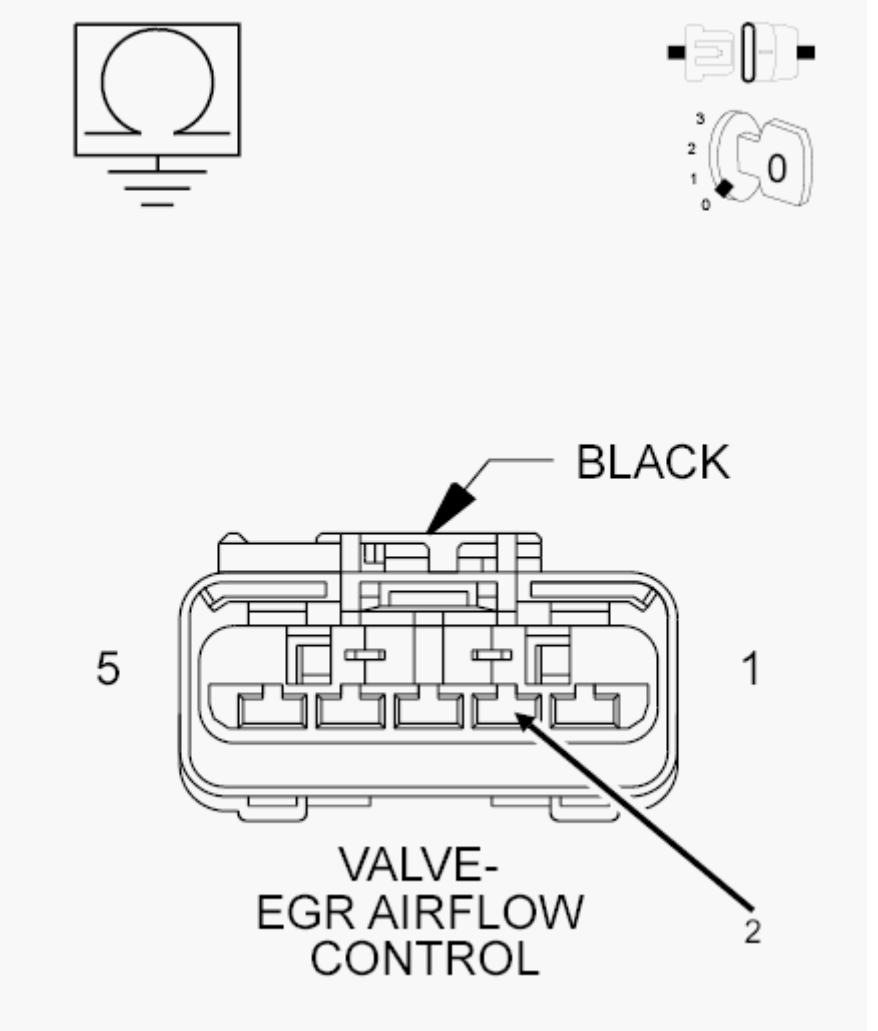

Fig. 109: Checking Air Intake Throttle Sensor Signal Circuit For Short To Ground
Courtesy of CHRYSLER GROUP, LLC

1. Ignition on.
2. Disconnect the EGR Airflow Control Valve harness connector.
3. Disconnect the PCM C1 harness connector.
4. Measure the resistance of the (K672) Air Intake Throttle Sensor Signal circuit at the EGR Airflow Control Valve harness connector.

   Is the resistance below 10k Ohms?

   Yes

   - Repair the (K672) Air Intake Throttle Sensor Signal circuit for a short to ground.
   - Perform the POWERTRAIN VERIFICATION TEST - 6.7L. Refer to **POWERTRAIN VERIFICATION TEST - 6.7L** .

   No

   - Go To 3.

3. **EGR AIRFLOW CONTROL VALVE**
   1. **Replace the EGR Airflow Control Valve.**
   2. Reconnect the EGR Airflow Control Valve harness connector.
   3. Reconnect the PCM C1 harness connector.
   4. Turn the ignition on.
   5. With the scan tool, erase DTCs.
   6. Turn the ignition off for 75 seconds.
   7. Start the engine and let idle.
   8. With the scan tool, read DTCs.

      Did the DTC reset?

      Yes

      - Replace Powertrain Control Module in accordance with the service information.
      - Perform the POWERTRAIN VERIFICATION TEST - 6.7L. Refer to **POWERTRAIN VERIFICATION TEST - 6.7L** .

      No

      - Repair complete.
      - Perform the POWERTRAIN VERIFICATION TEST - 6.7L. Refer to **POWERTRAIN VERIFICATION TEST - 6.7L** .

P02E9-DIESEL INTAKE AIR FLOW POSITION SENSOR CIRCUIT HIGH

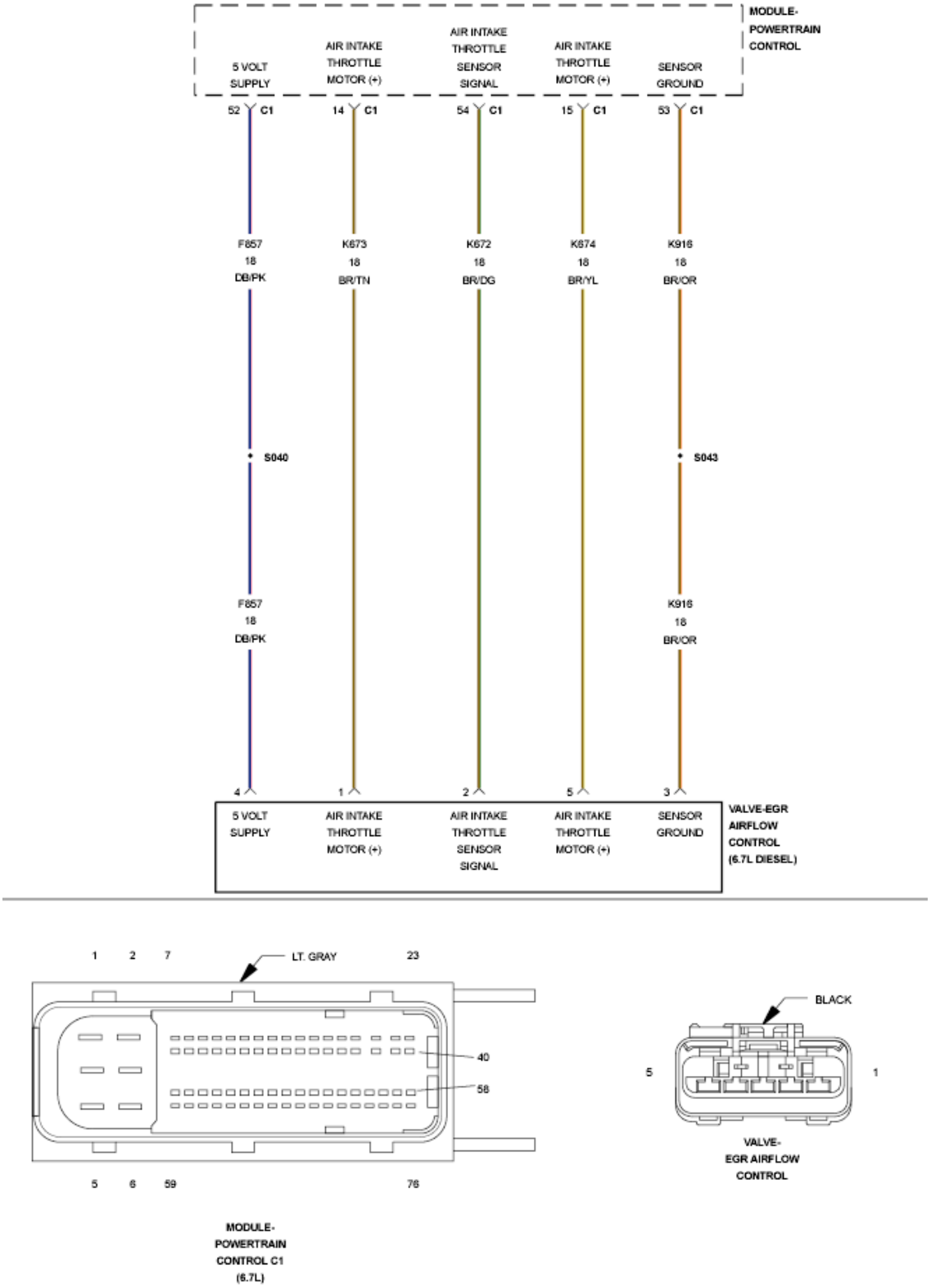

Fig. 110: EGR Airflow Control Valve Circuit Schematic
Courtesy of CHRYSLER GROUP, LLC

For a complete wiring diagram, **refer to appropriate SYSTEM WIRING DIAGRAMS article** .

THEORY OF OPERATION

The EGR Airflow Control Valve controlled by the Powertrain Control Module (PCM) and is actuated by an electric motor. A spring internal to the actuator assembly attempts to drive the valve to the fully-open position. The electric motor works to overcome the spring force when the engine control module commands the valve to close. Position feedback from the valve is sent to the PCM to allow for closed-loop control. Discrepancy in position feedback sent to the PCM, and commanded position sent to the EGR Airflow Control Valve by more than a prescribed amount will result in failure of device rationality diagnostics. Failure to properly actuate the EGR Airflow Control Valve can result in poor engine performance. The PCM will illuminate the MIL lamp after the diagnostic runs and fails in two consecutive drive cycles. This may cause active Exhaust Aftertreatment regenerations to last longer. The PCM will turn off the MIL lamp after the diagnostic runs and passes in 4 consecutive drive cycles.

WHEN MONITORED:

Ignition on.

SET CONDITION:

The PCM detects that the (K672) Air Intake Throttle Sensor Signal circuit is above a calibrated voltage for a calibrated amount of time.

POSSIBLE CAUSES

Possible Causes
(K672) AIR INTAKE THROTTLE SENSOR SIGNAL CIRCUIT SHORTED TO VOLTAGE
(K672) AIR INTAKE THROTTLE SENSOR SIGNAL CIRCUIT SHORTED TO THE (F857) 5-VOLT SUPPLY CIRCUIT
(K672) AIR INTAKE THROTTLE SENSOR SIGNAL CIRCUIT OPEN/HIGH RESISTANCE
EGR AIRFLOW CONTROL VALVE
POWERTRAIN CONTROL MODULE (PCM)

Always perform the Pre-Diagnostic Troubleshooting procedure before proceeding. Refer to PRE-DIAGNOSTIC TROUBLESHOOTING PROCEDURE - 6.7L .

DIAGNOSTIC TEST

1. **ACTIVE DTC**

NOTE: **If there are Mass Airflow Sensor and Turbocharger DTCs present with this DTC, repair the (F348) 12-volt Supply circuit for an open or short to ground condition.**

1. Turn the ignition on.

2. With the scan tool, record all Freeze frame data.
3. With the scan tool, erase DTCs.
4. Turn the ignition off for 75 seconds.
5. Start the engine and let idle.
6. With the scan tool, read DTCs.

   Did the DTC reset?

   Yes

   - Go To 2.

   No

   - Perform the INTERMITTENT CONDITION - 6.7L diagnostic procedure. Refer to **INTERMITTENT CONDITION - 6.7L** .

2. **CHECK THE (K672) AIR INTAKE THROTTLE SENSOR SIGNAL CIRCUIT FOR A SHORT TO VOLTAGE**

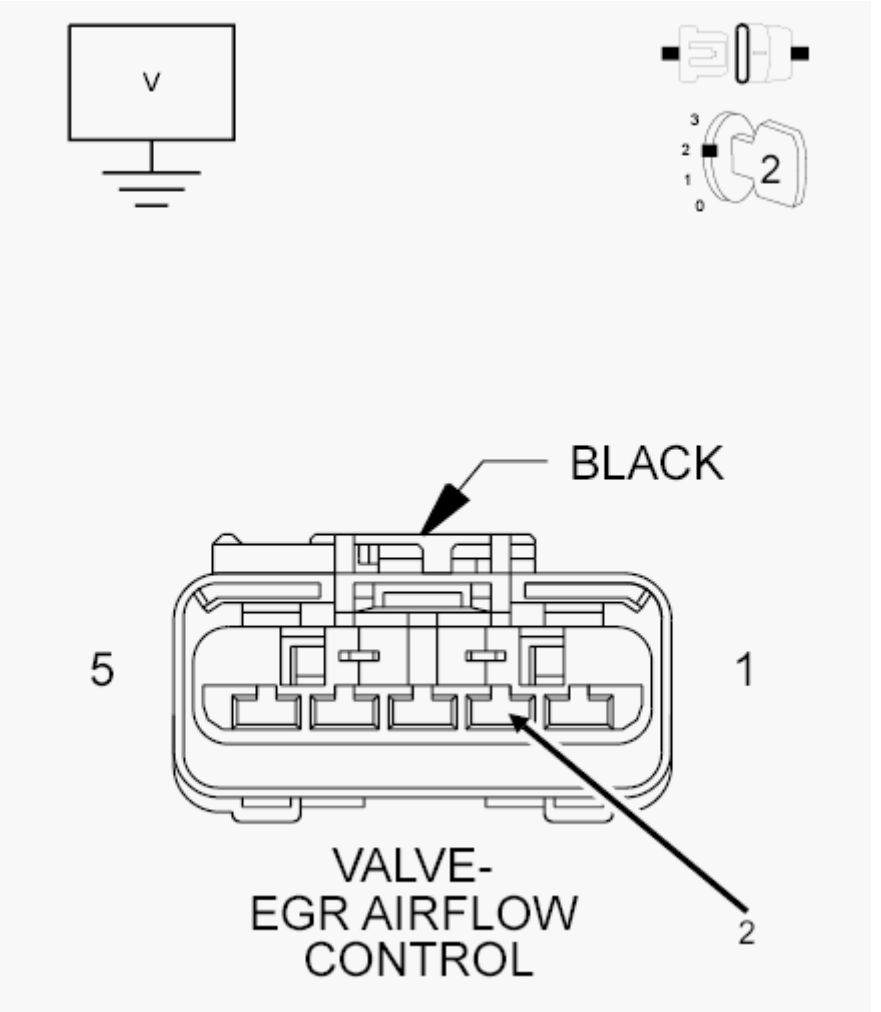

Fig. 111: Checking Air Intake Throttle Sensor Signal Circuit For Short To Voltage
Courtesy of CHRYSLER GROUP, LLC

1. Turn the ignition off.
2. Disconnect the EGR Airflow Control Valve harness connector.
3. Measure the voltage on the (K672) Air Intake Throttle Sensor Signal circuit at the EGR Airflow Control Valve harness connector.

   Is the voltage reading above 5.1 Volts?

   Yes

   - Repair the (K672) Air Intake Throttle Sensor Signal circuit for a short to voltage.
   - Perform the POWERTRAIN VERIFICATION TEST - 6.7L. Refer to **POWERTRAIN VERIFICATION TEST - 6.7L** .

   No

- Go To 3.

3. **CHECK FOR THE (K672) AIR INTAKE THROTTLE SENSOR SIGNAL CIRCUIT SHORTED TO THE (F857) 5-VOLT SUPPLY CIRCUIT**

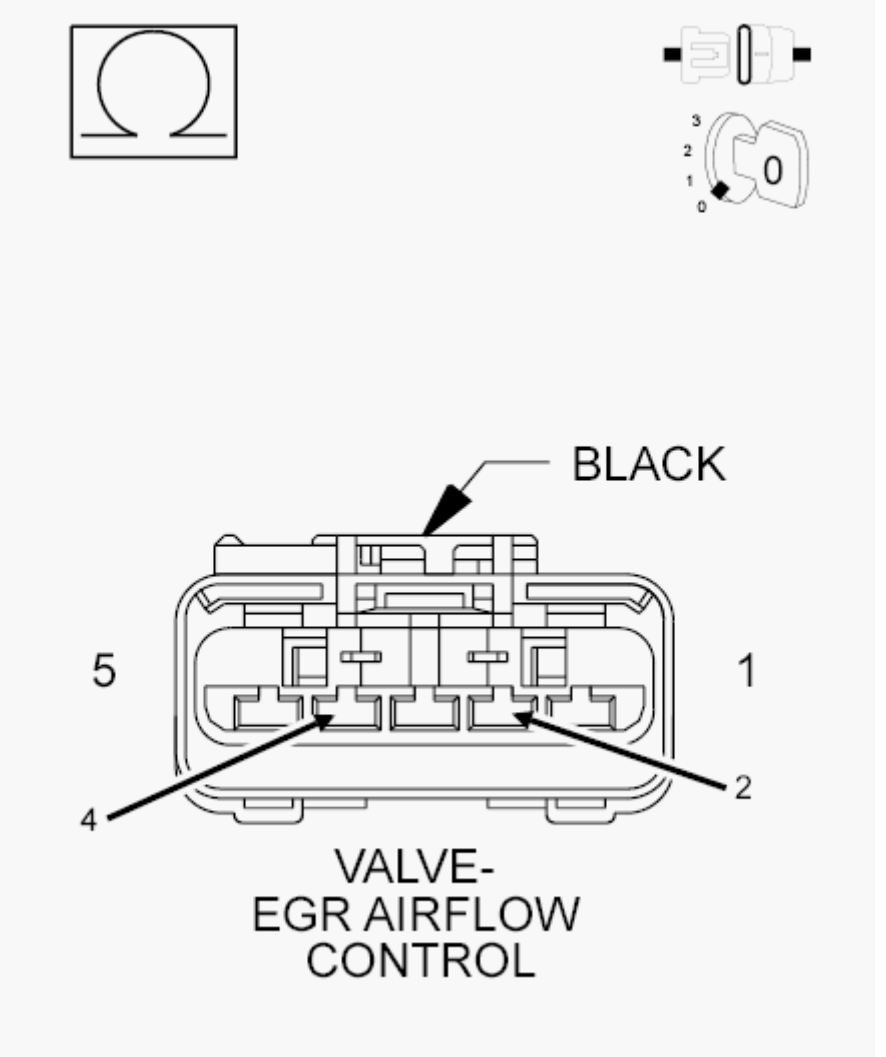

Fig. 112: Checking For Air Intake Throttle Sensor Signal Circuit Shorted To 5-Volt Supply Circuit
Courtesy of CHRYSLER GROUP, LLC

1. Disconnect the PCM C1 harness connector.
2. Measure the resistance between the (K672) Air Intake Throttle Sensor Signal circuit and the (F857) 5-Volt Sensor Supply Circuit at the EGR Airflow Control Valve harness connector.

   Is the resistance below 10k Ohms?

   Yes

   - Go To 5.

No

- Repair the short between the (K672) Air Intake Throttle Sensor Signal circuit and the (F857) 5-Volt Sensor Supply Circuit.
- Perform the POWERTRAIN VERIFICATION TEST - 6.7L. Refer to **POWERTRAIN VERIFICATION TEST - 6.7L** .

4. **CHECK THE (K672) AIR INTAKE THROTTLE SENSOR SIGNAL CIRCUIT FOR AN OPEN/HIGH RESISTANCE**

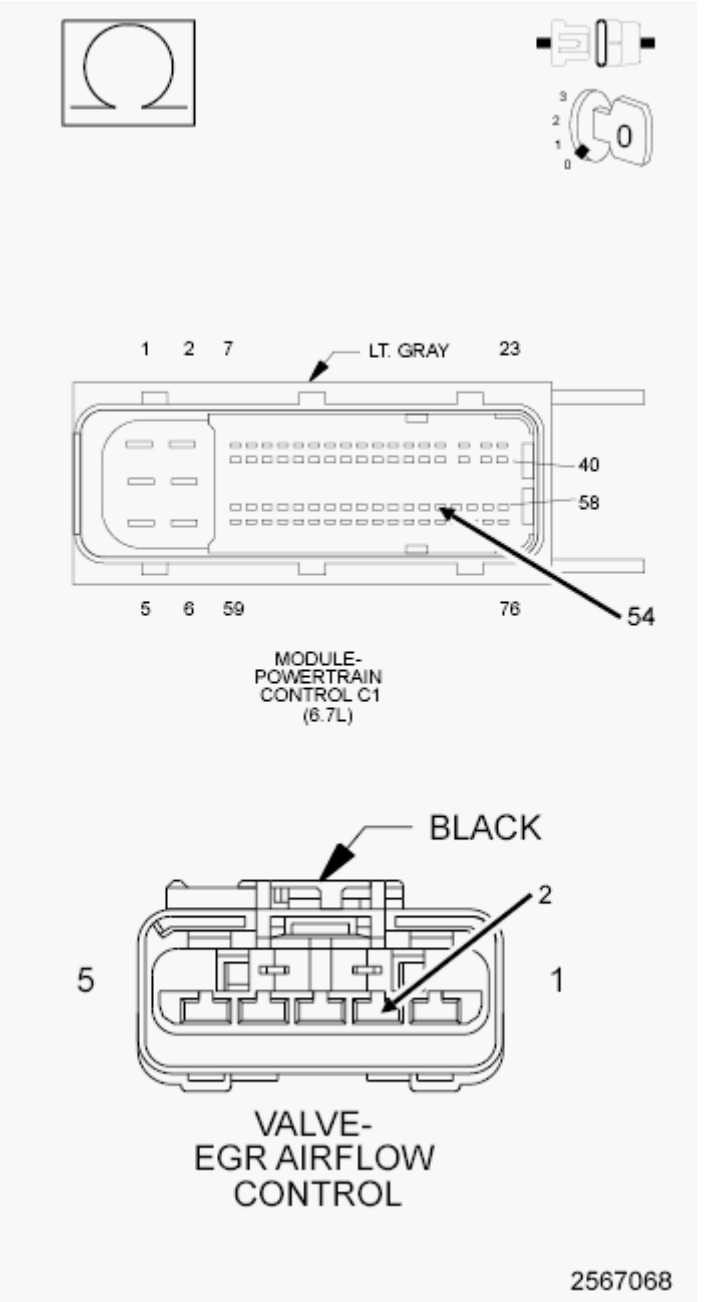

Fig. 113: Checking For Open Or High Resistance In Air Intake Throttle Sensor Signal Circuit
Courtesy of CHRYSLER GROUP, LLC

1. Measure the resistance between ground and the (K672) Air Intake Throttle Sensor Signal circuit at the EGR Airflow Control Valve harness connector.

   Is the resistance below 10k Ohms?

   Yes

   - Go To 5.

   No

   - Repair the (K672) Air Intake Throttle Sensor Signal circuit for a short to ground.
   - Perform the POWERTRAIN VERIFICATION TEST - 6.7L. Refer to **POWERTRAIN VERIFICATION TEST - 6.7L** .

5. **EGR AIRFLOW CONTROL VALVE**
   1. **Replace the EGR Airflow Control Valve.**
   2. Reconnect the EGR Airflow Control Valve harness connector.
   3. Reconnect the PCM C1 harness connector.
   4. Turn the ignition on.
   5. With the scan tool, erase DTCs.
   6. Turn the ignition off for 75 seconds.
   7. Start the engine and let idle.
   8. With the scan tool, read DTCs.

      Did the DTC reset?

      Yes

      - Replace Powertrain Control Module in accordance with the service information.
      - Perform the POWERTRAIN VERIFICATION TEST - 6.7L. Refer to **POWERTRAIN VERIFICATION TEST - 6.7L** .

      No

      - Repair complete.
      - Perform the POWERTRAIN VERIFICATION TEST - 6.7L. Refer to **POWERTRAIN VERIFICATION TEST - 6.7L** .

P0300-MULTIPLE CYLINDER MISFIRE

For a complete wiring diagram, **refer to appropriate SYSTEM WIRING DIAGRAMS article** .

THEORY OF OPERATION

The Misfire Monitor gathers and filters engine crank speed data for 10.0 seconds once the monitor conditions are met. If the crank speed deviation for a cylinder is less than a calibrated value, a misfire fault is set for that cylinder. If more than one cylinder is failed, a multiple cylinder misfire fault is set in addition to the individual faults of the failed cylinders. The engine must be at operating temperature and must not be in active aftertreatment regeneration mode in order to run this monitor. The PCM illuminates the MIL lamp after the diagnostic runs and fails twice in a row. During this time the customer may experience a cylinder miss or engine stumble. The PCM will turn off the MIL lamp once the monitor runs and passes in three consecutive diagnostic runs or drive cycles (which ever comes later).

WHEN MONITORED:

While the engine is idling.

SET CONDITION:

Misfire detected on multiple cylinders.

POSSIBLE CAUSES

Possible Causes
LOW FUEL
DAMAGED FUEL LINES
VALVE TRAIN
OBSTRUCTED FUEL INJECTOR SUPPLY LINES
DAMAGED OR OBSTRUCTED HIGH PRESSURE CONNECTORS
EXTERNAL DAMAGED FUEL INJECTOR
INTERNAL DAMAGED FUEL INJECTOR
LOW COMPRESSION
EXCESSIVE ENGINE LEAK DOWN

Always perform the Pre-Diagnostic Troubleshooting procedure before proceeding. Refer to PRE-DIAGNOSTIC TROUBLESHOOTING PROCEDURE - 6.7L .

DIAGNOSTIC TEST

1. **LOW FUEL**
    1. Using the scan tool, verify that the fuel level is above 15%.

       Is the fuel level above 15%?

       Yes

       - Go To 2.

       No

- Add fuel, Go To 2.
- Perform the POWERTRAIN VERIFICATION TEST - 6.7L. Refer to **POWERTRAIN VERIFICATION TEST - 6.7L** .

2. **OTHER DTCS**
   1. Read the Freeze frame data.

      Is the DTC equal to the freeze frame DTC?

      Yes

      - Go To 3.

      No

      - Repair any other DTCs first.
      - Perform the POWERTRAIN VERIFICATION TEST - 6.7L. Refer to **POWERTRAIN VERIFICATION TEST - 6.7L** .
3. **CHECK FOR DAMAGED FUEL LINES**
   1. Visually inspect the injector supply lines for damage.

      Do you have any kinked or bent fuel lines?

      Yes

      - Repair or replace damaged fuel lines.
      - Perform the POWERTRAIN VERIFICATION TEST - 6.7L. Refer to **POWERTRAIN VERIFICATION TEST - 6.7L** .

      No

      - Go To 4.
4. **CHECK THE VALVE TRAIN**
   1. Visually inspect the valve train and check the valve lash on the suspect cylinders.

      Is the valve train functional and the lash within the specifications listed in the service information?

      Yes

      - Go To 5.

      No

      - Adjust the lash or fix or repair any damaged components.
      - Perform the POWERTRAIN VERIFICATION TEST - 6.7L. Refer to **POWERTRAIN**

VERIFICATION TEST - 6.7L .

5. **CHECK FOR OBSTRUCTED FUEL INJECTOR SUPPLY**
    1. Remove the fuel injector supply lines for the suspect cylinders.
    2. Inspect both ends of the fuel injector supply lines for damage.
    3. Using shop air pressure, blow out the fuel injector supply lines to verify that they are not obstructed.

    Are the fuel lines free of debris or damage?

    Yes

    - Go To 6.

    No

    - Replace the damaged or obstructed fuel injector supply lines.
    - Perform the POWERTRAIN VERIFICATION TEST - 6.7L. Refer to **POWERTRAIN VERIFICATION TEST - 6.7L** .
6. **CHECK FOR DAMAGED OR OBSTRUCTED HIGH PRESSURE CONNECTORS**
    1. Remove the high pressure connectors for the suspect cylinders.
    2. Inspect both ends of the high pressure connectors for signs of damage.
    3. Using shop air pressure, blow out the high pressure connectors to verify that they are not obstructed.

    Are the high pressure connectors free of debris or damage?

    Yes

    - Go To 7.

    No

    - Replace the damaged or obstructed high pressure connectors.
    - Perform the POWERTRAIN VERIFICATION TEST - 6.7L. Refer to **POWERTRAIN VERIFICATION TEST - 6.7L** .
7. **CHECK THE FUEL INJECTORS**
    1. Remove the suspect fuel injectors.

    Are the fuel injectors damaged?

    Yes

    - Replace the external damaged fuel injectors and high pressure connectors.
    - Perform the POWERTRAIN VERIFICATION TEST - 6.7L. Refer to **POWERTRAIN**

VERIFICATION TEST - 6.7L .

No

- Go To 8.

8. **INTERNAL DAMAGED FUEL INJECTOR**
   1. With the scan tool, erase DTCs.
   2. Switch the misfiring injectors and high pressure connectors with injectors and high pressure connectors from cylinders that are firing properly.
   3. Operate the vehicle.

   Did the misfire DTC follow the suspect injectors and high pressure connectors?

   Yes

   - Replace the internal damaged fuel injector and high pressure connector.
   - Perform the POWERTRAIN VERIFICATION TEST - 6.7L. Refer to **POWERTRAIN VERIFICATION TEST - 6.7L** .

   No

   - Go To 9.

9. **CHECK FOR INTERNAL ENGINE DAMAGE**
   1. Perform engine compression test. Refer to **CYLINDER COMPRESSION/LEAKAGE TESTS** .

   Did the suspect cylinders pass the compression test?

   Yes

   - Go To 10.

   No

   - Repair the internal damage to the engine.
   - Perform the POWERTRAIN VERIFICATION TEST - 6.7L. Refer to **POWERTRAIN VERIFICATION TEST - 6.7L** .

10. **CHECK FOR INTERNAL ENGINE DAMAGE**
    1. Perform engine leak down test. Refer to **CYLINDER COMPRESSION/LEAKAGE TESTS** .

    Did the suspect cylinders pass the leak down test?

    Yes

    - Test Complete.

No

- Repair the internal damage to the engine.
- Perform the POWERTRAIN VERIFICATION TEST - 6.7L. Refer to **POWERTRAIN VERIFICATION TEST - 6.7L** .

P0301-CYLINDER 1 MISFIRE

For a complete wiring diagram, **refer to appropriate SYSTEM WIRING DIAGRAMS article** .

THEORY OF OPERATION

The Crankshaft Position (CKP) and Camshaft Position (CMP) Sensors are hall effect type sensors. The Powertrain Control Module (PCM) provides a 5-Volt supply to the position sensor and return circuit. A notch on the crankshaft gear is used to determine the position of the engine by the PCM. As the notch on the crankshaft speed ring or the windows in the back of the camshaft gear move past the position sensor, a signal is generated on the position sensor circuit. The change in engine speed when different calibrated fuel quantities are added by the injector to this cylinder is a measure of how well the cylinder is firing. This DTC is a two trip fault. Active regeneration will be disabled when the mill lamp is on. The PCM will turn off the MIL lamp after the monitor runs and passes three consecutive times.

WHEN MONITORED:

While the engine is idling at operating temperature.

SET CONDITION:

Misfire detected on this cylinder.

POSSIBLE CAUSES

Possible Causes
LOW FUEL
DAMAGED FUEL LINE
VALVE TRAIN
OBSTRUCTED FUEL INJECTOR SUPPLY LINE
DAMAGED OR OBSTRUCTED HIGH PRESSURE CONNECTOR
EXTERNAL DAMAGED FUEL INJECTOR
INTERNAL DAMAGED FUEL INJECTOR
LOW COMPRESSION
EXCESSIVE ENGINE LEAK DOWN

Always perform the Pre-Diagnostic Troubleshooting procedure before proceeding. Refer to PRE-DIAGNOSTIC TROUBLESHOOTING PROCEDURE - 6.7L .

DIAGNOSTIC TEST

1. **LOW FUEL**
    1. Using the scan tool, verify that the fuel level is above 15%.

       Is the fuel level above 15%?

       Yes

       - Go To 2.

       No

       - Add fuel.
       - Go To 2.
2. **OTHER DTCS**
    1. Read the Freeze frame data.

       Is the DTC equal to the freeze frame DTC?

       Yes

       - Go To 3.

       No

       - Repair any other DTCs first.
       - Perform the POWERTRAIN VERIFICATION TEST - 6.7L. Refer to **POWERTRAIN VERIFICATION TEST - 6.7L** .
3. **CHECK FOR DAMAGED FUEL LINES**
    1. Visually inspect the injector supply line for damage.

       Do you have any kinked or bent fuel lines?

       Yes

       - Repair or replace the damaged fuel line.
       - Perform the POWERTRAIN VERIFICATION TEST - 6.7L. Refer to **POWERTRAIN VERIFICATION TEST - 6.7L** .

       No

       - Go To 4.
4. **CHECK THE VALVE TRAIN**
    1. Visually inspect the valve train and check the valve lash on the suspect cylinder.

Is the valve train functional and the lash within the specifications listed in the service information?

Yes

- Go To 5.

No

- Adjust the lash or fix or repair any damaged components.
- Perform the POWERTRAIN VERIFICATION TEST - 6.7L. Refer to **POWERTRAIN VERIFICATION TEST - 6.7L** .

5. **CHECK FOR OBSTRUCTED FUEL INJECTOR SUPPLY**
   1. Remove the fuel injector supply line for the suspect cylinder.
   2. Inspect both ends of the fuel injector supply line for damage.
   3. Using shop air pressure, blow out the fuel injector supply line to verify that they are not obstructed.

   Are the fuel lines free of debris or damage?

   Yes

   - Go To 6.

   No

   - Replace the damaged or obstructed fuel injector supply line.
   - Perform the POWERTRAIN VERIFICATION TEST - 6.7L. Refer to **POWERTRAIN VERIFICATION TEST - 6.7L** .

6. **CHECK FOR DAMAGED OR OBSTRUCTED HIGH PRESSURE CONNECTOR**
   1. Remove the high pressure connector for the suspect cylinder.
   2. Inspect both ends of the high pressure connector for signs of damage.
   3. Using shop air pressure, blow out the high pressure connector to verify that it is not obstructed.

   Are the high pressure connectors free of debris or damage?

   Yes

   - Go To 7.

   No

   - Replace the damaged or obstructed high pressure connector.
   - Perform the POWERTRAIN VERIFICATION TEST - 6.7L. Refer to **POWERTRAIN VERIFICATION TEST - 6.7L** .

7. **CHECK THE FUEL INJECTOR**

1. Remove the suspect fuel injector.

   Is the fuel injector damaged?

   Yes

   - Replace the external damaged fuel injector and high pressure connector.
   - Perform the POWERTRAIN VERIFICATION TEST - 6.7L. Refer to **POWERTRAIN VERIFICATION TEST - 6.7L** .

   No

   - Go To 8.

8. **INTERNAL DAMAGED FUEL INJECTOR**
   1. With the scan tool, erase DTCs.
   2. Switch the misfiring injector and high pressure connector with an injector and high pressure connector from a cylinder that is firing properly.
   3. Operate the vehicle.

      Did the misfire DTC follow the suspect injectors and high pressure connectors?

      Yes

      - Replace the internal damaged fuel injector and high pressure connector.
      - Perform the POWERTRAIN VERIFICATION TEST - 6.7L. Refer to **POWERTRAIN VERIFICATION TEST - 6.7L** .

      No

      - Go To 9.

9. **CHECK FOR INTERNAL ENGINE DAMAGE**
   1. Perform engine compression test. Refer to **CYLINDER COMPRESSION/LEAKAGE TESTS** .

      Did the suspect cylinder pass the compression test?

      Yes

      - Go To 10.

      No

      - Repair the internal damage to the engine.
      - Perform the POWERTRAIN VERIFICATION TEST - 6.7L. Refer to **POWERTRAIN VERIFICATION TEST - 6.7L** .

10. **CHECK FOR INTERNAL ENGINE DAMAGE**
    1. Perform engine leak down test. Refer to **CYLINDER COMPRESSION/LEAKAGE TESTS** .

       Did the suspect cylinder pass the leak down test?

       Yes

       - Test Complete.

       No

       - Repair the internal damage to the engine.
       - Perform the POWERTRAIN VERIFICATION TEST - 6.7L. Refer to **POWERTRAIN VERIFICATION TEST - 6.7L** .

P0302-CYLINDER 2 MISFIRE

For a complete wiring diagram, **refer to appropriate SYSTEM WIRING DIAGRAMS article** .

THEORY OF OPERATION

The Crankshaft Position (CKP) and Camshaft Position (CMP) Sensors are hall effect type sensors. The Powertrain Control Module (PCM) provides a 5-Volt supply to the position sensor and return circuit. A notch on the crankshaft gear is used to determine the position of the engine by the PCM. As the notch on the crankshaft speed ring or the windows in the back of the camshaft gear move past the position sensor, a signal is generated on the position sensor circuit. The change in engine speed when different calibrated fuel quantities are added by the injector to this cylinder is a measure of how well the cylinder is firing. This DTC is a two trip fault. Active regeneration will be disabled when the mill lamp is on. The PCM will turn off the MIL lamp after the monitor runs and passes three consecutive times.

WHEN MONITORED:

While the engine is idling at operating temperature.

SET CONDITION:

Misfire detected on this cylinder.

POSSIBLE CAUSES

Possible Causes
LOW FUEL
DAMAGED FUEL LINE
VALVE TRAIN
OBSTRUCTED FUEL INJECTOR SUPPLY LINE
DAMAGED OR OBSTRUCTED HIGH PRESSURE CONNECTOR

EXTERNAL DAMAGED FUEL INJECTOR
INTERNAL DAMAGED FUEL INJECTOR
LOW COMPRESSION
EXCESSIVE ENGINE LEAK DOWN

Always perform the Pre-Diagnostic Troubleshooting procedure before proceeding. Refer to PRE-DIAGNOSTIC TROUBLESHOOTING PROCEDURE - 6.7L .

DIAGNOSTIC TEST

1. **LOW FUEL**
    1. Using the scan tool, verify that the fuel level is above 15%.

       Is the fuel level above 15%?

       Yes

       - Go To 2.

       No

       - Add fuel.
       - Go To 2.
2. **OTHER DTCS**
    1. Read the Freeze frame data.

       Is the DTC equal to the freeze frame DTC?

       Yes

       - Go To 3.

       No

       - Repair any other DTCs first.
       - Perform the POWERTRAIN VERIFICATION TEST - 6.7L. Refer to **POWERTRAIN VERIFICATION TEST - 6.7L** .
3. **CHECK FOR DAMAGED FUEL LINE**
    1. Visually inspect the injector supply line for damage.

       Do you have any kinked or bent fuel line?

       Yes

       - Repair or replace the damaged fuel line.

- Perform the POWERTRAIN VERIFICATION TEST - 6.7L. Refer to **POWERTRAIN VERIFICATION TEST - 6.7L** .

No

- Go To 4.

4. **CHECK THE VALVE TRAIN**
   1. Visually inspect the valve train and check the valve lash on the suspect cylinder.

      Is the valve train functional and the lash within the specifications listed in the service information?

      Yes

      - Go To 5.

      No

      - Adjust the lash or fix or repair any damaged components.
      - Perform the POWERTRAIN VERIFICATION TEST - 6.7L. Refer to **POWERTRAIN VERIFICATION TEST - 6.7L** .
5. **CHECK FOR OBSTRUCTED FUEL INJECTOR SUPPLY**
   1. Remove the fuel injector supply line for the suspect cylinder.
   2. Inspect both ends of the fuel injector supply line for damage.
   3. Using shop air pressure, blow out the fuel injector supply line to verify that they are not obstructed.

      Are the fuel lines free of debris or damage?

      Yes

      - Go To 6.

      No

      - Replace the damaged or obstructed fuel injector supply line.
      - Perform the POWERTRAIN VERIFICATION TEST - 6.7L. Refer to **POWERTRAIN VERIFICATION TEST - 6.7L** .
6. **CHECK FOR DAMAGED OR OBSTRUCTED HIGH PRESSURE CONNECTOR**
   1. Remove the high pressure connector for the suspect cylinder.
   2. Inspect both ends of the high pressure connector for signs of damage.
   3. Using shop air pressure, blow out the high pressure connector to verify that it is not obstructed.

      Are the high pressure connectors free of debris or damage?

      Yes

- Go To 7.

No

- Replace the damaged or obstructed high pressure connector.
- Perform the POWERTRAIN VERIFICATION TEST - 6.7L. Refer to **POWERTRAIN VERIFICATION TEST - 6.7L** .

7. **CHECK THE FUEL INJECTOR**
   1. Remove the suspect fuel injector.

      Is the fuel injector damaged?

      Yes

      - Replace the external damaged fuel injector and high pressure connector in accordance with the service information.
      - Perform the POWERTRAIN VERIFICATION TEST - 6.7L. Refer to **POWERTRAIN VERIFICATION TEST - 6.7L** .

      No

      - Go To 8.
8. **CHECK FOR INTERNAL DAMAGED FUEL INJECTOR**
   1. With the scan tool, erase DTCs.
   2. Switch the misfiring injector and high pressure connector with an injector and high pressure connector from a cylinder that is firing properly.
   3. Operate the vehicle.

      Did the misfire DTC follow the suspect injector and high pressure connector?

      Yes

      - Replace the internal damaged fuel injector and high pressure connector in accordance with the service information.
      - Perform the POWERTRAIN VERIFICATION TEST - 6.7L. Refer to **POWERTRAIN VERIFICATION TEST - 6.7L** .

      No

      - Go To 9.
9. **CHECK FOR INTERNAL ENGINE DAMAGE**
   1. Perform engine compression test. Refer to **CYLINDER COMPRESSION/LEAKAGE TESTS** .

      Did the suspect cylinder pass the compression test?

Yes

- Go To 10.

No

- Repair the internal damage to the engine.
- Perform the POWERTRAIN VERIFICATION TEST - 6.7L. Refer to **POWERTRAIN VERIFICATION TEST - 6.7L** .

10. **CHECK FOR INTERNAL ENGINE DAMAGE**
    1. Perform engine leak down test. Refer to **CYLINDER COMPRESSION/LEAKAGE TESTS** .

    Did the suspect cylinder pass the leak down test?

    Yes

    - Test Complete.

    No

    - Repair the internal damage to the engine.
    - Perform the POWERTRAIN VERIFICATION TEST - 6.7L. Refer to **POWERTRAIN VERIFICATION TEST - 6.7L** .

P0303-CYLINDER 3 MISFIRE

For a complete wiring diagram, **refer to appropriate SYSTEM WIRING DIAGRAMS article** .

THEORY OF OPERATION

The Crankshaft Position (CKP) and Camshaft Position (CMP) Sensors are hall effect type sensors. The Powertrain Control Module (PCM) provides a 5-Volt supply to the position sensor and return circuit. A notch on the crankshaft gear is used to determine the position of the engine by the PCM. As the notch on the crankshaft speed ring or the windows in the back of the camshaft gear move past the position sensor, a signal is generated on the position sensor circuit. The change in engine speed when different calibrated fuel quantities are added by the injector to this cylinder is a measure of how well the cylinder is firing. This DTC is a two trip fault. Active regeneration will be disabled when the mill lamp is on. The PCM will turn off the MIL lamp after the monitor runs and passes three consecutive times.

WHEN MONITORED:

While the engine is idling at operating temperature.

SET CONDITION:

Misfire detected on this cylinder.

POSSIBLE CAUSES

Possible Causes
LOW FUEL
DAMAGED FUEL LINE
VALVE TRAIN
OBSTRUCTED FUEL INJECTOR SUPPLY LINE
DAMAGED OR OBSTRUCTED HIGH PRESSURE CONNECTOR
EXTERNAL DAMAGED FUEL INJECTOR
INTERNAL DAMAGED FUEL INJECTOR
LOW COMPRESSION
EXCESSIVE ENGINE LEAK DOWN

Always perform the Pre-Diagnostic Troubleshooting procedure before proceeding. Refer to PRE-DIAGNOSTIC TROUBLESHOOTING PROCEDURE - 6.7L .

DIAGNOSTIC TEST

1. **LOW FUEL**
    1. Using the scan tool, verify that the fuel level is above 15%.

       Is the fuel level above 15%?

       Yes

       - Go To 2.

       No

       - Add fuel, Go To 2.
2. **OTHER DTCS**
    1. Read the Freeze frame data.

       Is the DTC equal to the freeze frame DTC?

       Yes

       - Go To 3.

       No

       - Repair any other DTCs first.
       - Perform the POWERTRAIN VERIFICATION TEST - 6.7L. Refer to **POWERTRAIN VERIFICATION TEST - 6.7L** .
3. **CHECK FOR DAMAGED FUEL LINE**

1. Visually inspect the injector supply line for damage.

   Do you have any kinked or bent fuel line?

   Yes

   - Repair or replace the damaged fuel line.
   - Perform the POWERTRAIN VERIFICATION TEST - 6.7L. Refer to **POWERTRAIN VERIFICATION TEST - 6.7L** .

   No

   - Go To 4.

4. **CHECK THE VALVE TRAIN**
   1. Visually inspect the valve train and check the valve lash on the suspect cylinder.

      Is the valve train functional and the lash within the specifications listed in the service information?

      Yes

      - Go To 5.

      No

      - Adjust the lash or fix or repair any damaged components.
      - Perform the POWERTRAIN VERIFICATION TEST - 6.7L. Refer to **POWERTRAIN VERIFICATION TEST - 6.7L** .

5. **CHECK FOR OBSTRUCTED FUEL INJECTOR SUPPLY**
   1. Remove the fuel injector supply line for the suspect cylinder.
   2. Inspect both ends of the fuel injector supply lines for damage.
   3. Using shop air pressure, blow out the fuel injector supply lines to verify that they are not obstructed.

      Are the fuel lines free of debris or damage?

      Yes

      - Go To 6.

      No

      - Replace the damaged or obstructed fuel injector supply line in accordance with the service information.
      - Perform the POWERTRAIN VERIFICATION TEST - 6.7L. Refer to **POWERTRAIN VERIFICATION TEST - 6.7L** .

6. **CHECK FOR DAMAGED OR OBSTRUCTED HIGH PRESSURE CONNECTOR**
    1. Remove the high pressure connector for the suspect cylinder.
    2. Inspect both ends of the high pressure connector for signs of damage.
    3. Using shop air pressure, blow out the high pressure connector to verify that it is not obstructed.

    Are the high pressure connectors free of debris or damage?

    Yes

    - Go To 7.

    No

    - Replace the damaged or obstructed high pressure connector.
    - Perform the POWERTRAIN VERIFICATION TEST - 6.7L. Refer to **POWERTRAIN VERIFICATION TEST - 6.7L** .
7. **CHECK THE FUEL INJECTOR**
    1. Remove the suspect fuel injector.

    Are the fuel injectors damaged?

    Yes

    - Replace the external damaged fuel injector and high pressure connector in accordance with the service information.
    - Perform the POWERTRAIN VERIFICATION TEST - 6.7L. Refer to **POWERTRAIN VERIFICATION TEST - 6.7L** .

    No

    - Go To 8.
8. **CHECK FOR INTERNAL DAMAGED FUEL INJECTOR**
    1. With the scan tool, erase DTCs.
    2. Switch the misfiring injector and high pressure connector with an injector and high pressure connector from a cylinder that are firing properly.
    3. Operate the vehicle.

    Did the misfire DTC follow the suspect injectors and high pressure connectors?

    Yes

    - Replace the internal damaged fuel injector and high pressure connector in accordance with the service information.
    - Perform the POWERTRAIN VERIFICATION TEST - 6.7L. Refer to **POWERTRAIN**

VERIFICATION TEST - 6.7L .

No

- Go To 9.

9. **CHECK FOR INTERNAL ENGINE DAMAGE**
   1. Perform engine compression test. Refer to **CYLINDER COMPRESSION/LEAKAGE TESTS** .

      Did the suspect cylinder pass the compression test?

      Yes

      - Go To 10.

      No

      - Repair the internal damage to the engine.
      - Perform the POWERTRAIN VERIFICATION TEST - 6.7L. Refer to **POWERTRAIN VERIFICATION TEST - 6.7L** .
10. **CHECK FOR INTERNAL ENGINE DAMAGE**
   1. Perform engine leak down test. Refer to **CYLINDER COMPRESSION/LEAKAGE TESTS** .

      Did the suspect cylinder pass the leak down test?

      Yes

      - Test Complete.

      No

      - Repair the internal damage to the engine.
      - Perform the POWERTRAIN VERIFICATION TEST - 6.7L. Refer to **POWERTRAIN VERIFICATION TEST - 6.7L** .

P0304-CYLINDER 4 MISFIRE

For a complete wiring diagram, **refer to appropriate SYSTEM WIRING DIAGRAMS article** .

THEORY OF OPERATION

The Crankshaft Position (CKP) and Camshaft Position (CMP) Sensors are hall effect type sensors. The Powertrain Control Module (PCM) provides a 5-Volt supply to the position sensor and return circuit. A notch on the crankshaft gear is used to determine the position of the engine by the PCM. As the notch on the crankshaft speed ring or the windows in the back of the camshaft gear move past the position sensor, a signal is generated on the position sensor circuit. The change in engine speed when different calibrated fuel quantities are added by the injector to this cylinder is a measure of how well the cylinder is firing. This DTC is a two trip

fault. Active regeneration will be disabled when the mill lamp is on. The PCM will turn off the MIL lamp after the monitor runs and passes three consecutive times.

WHEN MONITORED:

While the engine is idling at operating temperature.

SET CONDITION:

Misfire detected on this cylinder.

POSSIBLE CAUSES

Possible Causes
LOW FUEL
DAMAGED FUEL LINE
VALVE TRAIN
OBSTRUCTED FUEL INJECTOR SUPPLY LINE
DAMAGED OR OBSTRUCTED HIGH PRESSURE CONNECTOR
EXTERNAL DAMAGED FUEL INJECTOR
INTERNAL DAMAGED FUEL INJECTOR
LOW COMPRESSION
EXCESSIVE ENGINE LEAK DOWN

Always perform the Pre-Diagnostic Troubleshooting procedure before proceeding. Refer to PRE-DIAGNOSTIC TROUBLESHOOTING PROCEDURE - 6.7L .

DIAGNOSTIC TEST

1. **LOW FUEL**
    1. Using the scan tool, verify that the fuel level is above 15%.

       Is the fuel level above 15%?

       Yes

       - Go To 2.

       No

       - Add fuel, Go To 2.
       - Perform the POWERTRAIN VERIFICATION TEST - 6.7L. Refer to **POWERTRAIN VERIFICATION TEST - 6.7L** .
2. **OTHER DTCS**
    1. Read the Freeze frame data.

Is the DTC equal to the freeze frame DTC?

Yes

- Go To 3.

No

- Repair any other DTCs first.
- Perform the POWERTRAIN VERIFICATION TEST - 6.7L. Refer to **POWERTRAIN VERIFICATION TEST - 6.7L** .

3. **CHECK FOR DAMAGED FUEL LINE**
   1. Visually inspect the injector supply line for damage.

      Do you have any kinked or bent fuel line?

      Yes

      - Repair or replace the damaged fuel line.
      - Perform the POWERTRAIN VERIFICATION TEST - 6.7L. Refer to **POWERTRAIN VERIFICATION TEST - 6.7L** .

      No

      - Go To 4.
4. **CHECK THE VALVE TRAIN**
   1. Visually inspect the valve train and check the valve lash on the suspect cylinder.

      Is the valve train functional and the lash within the specifications listed in the service information?

      Yes

      - Go To 5.

      No

      - Adjust the lash or fix or repair any damaged component(s).
      - Perform the POWERTRAIN VERIFICATION TEST - 6.7L. Refer to **POWERTRAIN VERIFICATION TEST - 6.7L** .
5. **CHECK FOR OBSTRUCTED FUEL INJECTOR SUPPLY**
   1. Remove the fuel injector supply line for the suspect cylinder.
   2. Inspect both ends of the fuel injector supply line for damage.
   3. Using shop air pressure, blow out the fuel injector supply lines to verify that they are not obstructed.

Are the fuel lines free of debris or damage?

Yes

- Go To 6.

No

- Replace the damaged or obstructed fuel injector supply line in accordance with the service information.
- Perform the POWERTRAIN VERIFICATION TEST - 6.7L. Refer to **POWERTRAIN VERIFICATION TEST - 6.7L** .

6. **CHECK FOR DAMAGED OR OBSTRUCTED HIGH PRESSURE CONNECTOR**
   1. Remove the high pressure connector for the suspect cylinder.
   2. Inspect both ends of the high pressure connector for signs of damage.
   3. Using shop air pressure, blow out the high pressure connectors to verify that it is not obstructed.

   Are the high pressure connectors free of debris or damage?

   Yes

   - Go To 7.

   No

   - Replace the damaged or obstructed high pressure connector in accordance with the service information.
   - Perform the POWERTRAIN VERIFICATION TEST - 6.7L. Refer to **POWERTRAIN VERIFICATION TEST - 6.7L** .
7. **CHECK THE FUEL INJECTOR**
   1. Remove the suspect fuel injector.

   Are the fuel injectors damaged?

   Yes

   - Replace the external damaged fuel injector and high pressure connector in accordance with the service information.
   - Perform the POWERTRAIN VERIFICATION TEST - 6.7L. Refer to **POWERTRAIN VERIFICATION TEST - 6.7L** .

   No

   - Go To 8.
8. **CHECK FOR INTERNAL DAMAGED FUEL INJECTOR**

1. With the scan tool, erase DTCs.
2. Switch the misfiring injectors and high pressure connector with an injector and high pressure connector from a cylinder that is firing properly.
3. Operate the vehicle.

   Did the misfire DTC follow the suspect injectors and high pressure connectors?

   Yes

   - Replace the internal damaged fuel injector and high pressure connector in accordance with the service information.
   - Perform the POWERTRAIN VERIFICATION TEST - 6.7L. Refer to **POWERTRAIN VERIFICATION TEST - 6.7L** .

   No

   - Go To 9.

9. **CHECK FOR INTERNAL ENGINE DAMAGE**
   1. Perform engine compression test. Refer to **CYLINDER COMPRESSION/LEAKAGE TESTS** .

      Did the suspect cylinder pass the compression test?

      Yes

      - Go To 10.

      No

      - Repair the internal damage to the engine.
      - Perform the POWERTRAIN VERIFICATION TEST - 6.7L. Refer to **POWERTRAIN VERIFICATION TEST - 6.7L** .

10. **CHECK FOR INTERNAL ENGINE DAMAGE**
    1. Perform engine leak down test. Refer to **CYLINDER COMPRESSION/LEAKAGE TESTS** .

       Did the suspect cylinder pass the leak down test?

       Yes

       - Test Complete.

       No

       - Repair the internal damage to the engine.
       - Perform the POWERTRAIN VERIFICATION TEST - 6.7L. Refer to **POWERTRAIN VERIFICATION TEST - 6.7L** .

P0305-CYLINDER 5 MISFIRE

For a complete wiring diagram, **refer to appropriate SYSTEM WIRING DIAGRAMS article** .

THEORY OF OPERATION

The Crankshaft Position (CKP) and Camshaft Position (CMP) Sensors are hall effect type sensors. The Powertrain Control Module (PCM) provides a 5-Volt supply to the position sensor and return circuit. A notch on the crankshaft gear is used to determine the position of the engine by the PCM. As the notch on the crankshaft speed ring or the windows in the back of the camshaft gear move past the position sensor, a signal is generated on the position sensor circuit. The change in engine speed when different calibrated fuel quantities are added by the injector to this cylinder is a measure of how well the cylinder is firing. This DTC is a two trip fault. Active regeneration will be disabled when the mill lamp is on. The PCM will turn off the MIL lamp after the monitor runs and passes three consecutive times.

WHEN MONITORED:

While the engine is idling at operating temperature.

SET CONDITION:

Misfire detected on this cylinder.

POSSIBLE CAUSES

Possible Causes
LOW FUEL
DAMAGED FUEL LINE
VALVE TRAIN
OBSTRUCTED FUEL INJECTOR SUPPLY LINE
DAMAGED OR OBSTRUCTED HIGH PRESSURE CONNECTOR
EXTERNAL DAMAGED FUEL INJECTOR
INTERNAL DAMAGED FUEL INJECTOR
LOW COMPRESSION
EXCESSIVE ENGINE LEAK DOWN

Always perform the Pre-Diagnostic Troubleshooting procedure before proceeding. Refer to PRE-DIAGNOSTIC TROUBLESHOOTING PROCEDURE - 6.7L .

DIAGNOSTIC TEST

1. **LOW FUEL**
    1. Using the scan tool, verify that the fuel level is above 15%.

       Is the fuel level above 15%?

Yes

- Go To 2.

No

- Add fuel.
- Go To 2.

2. **OTHER DTCS**
   1. Read the Freeze frame data.

      Is the DTC equal to the freeze frame DTC?

      Yes

      - Go To 3.

      No

      - Repair any other DTCs first.
      - Perform the POWERTRAIN VERIFICATION TEST - 6.7L. Refer to **POWERTRAIN VERIFICATION TEST - 6.7L** .

3. **CHECK FOR DAMAGED FUEL LINE**
   1. Visually inspect the injector supply line for damage.

      Do you have any kinked or bent fuel line?

      Yes

      - Repair or replace the damaged fuel line.
      - Perform the POWERTRAIN VERIFICATION TEST - 6.7L. Refer to **POWERTRAIN VERIFICATION TEST - 6.7L** .

      No

      - Go To 4.

4. **CHECK THE VALVE TRAIN**
   1. Visually inspect the valve train and check the valve lash on the suspect cylinder.

      Is the valve train functional and the lash within the specifications listed in the service information?

      Yes

      - Go To 5.

No

- Adjust the lash or fix or repair any damaged components.
- Perform the POWERTRAIN VERIFICATION TEST - 6.7L. Refer to **POWERTRAIN VERIFICATION TEST - 6.7L** .

5. **CHECK FOR OBSTRUCTED FUEL INJECTOR SUPPLY**
   1. Remove the fuel injector supply lines for the suspect cylinder.
   2. Inspect both ends of the fuel injector supply lines for damage.
   3. Using shop air pressure, blow out the fuel injector supply lines to verify that they are not obstructed.

   Are the fuel lines free of debris or damage?

   Yes

   - Go To 6.

   No

   - Replace the damaged or obstructed fuel injector supply lines in accordance with the service information.
   - Perform the POWERTRAIN VERIFICATION TEST - 6.7L. Refer to **POWERTRAIN VERIFICATION TEST - 6.7L** .

6. **CHECK FOR DAMAGED OR OBSTRUCTED HIGH PRESSURE CONNECTOR**
   1. Remove the high pressure connectors for the suspect cylinder.
   2. Inspect both ends of the high pressure connector for signs of damage.
   3. Using shop air pressure, blow out the high pressure connector to verify that they are not obstructed.

   Are the high pressure connector free of debris or damage?

   Yes

   - Go To 7.

   No

   - Replace the damaged or obstructed high pressure connector in accordance with the service information.
   - Perform the POWERTRAIN VERIFICATION TEST - 6.7L. Refer to **POWERTRAIN VERIFICATION TEST - 6.7L** .

7. **CHECK THE FUEL INJECTOR**
   1. Remove the suspect fuel injector.

   Are the fuel injectors damaged?

Yes

- Replace the external damaged fuel injector and high pressure connector in accordance with the service information.
- Perform the POWERTRAIN VERIFICATION TEST - 6.7L. Refer to **POWERTRAIN VERIFICATION TEST - 6.7L** .

No

- Go To 8.

8. **CHECK FOR INTERNAL DAMAGED FUEL INJECTOR**
   1. With the scan tool, erase DTCs.
   2. Switch the misfiring injector and high pressure connector with an injector and high pressure connector from a cylinder that is firing properly.
   3. Operate the vehicle.

   Did the misfire DTC follow the suspect injector and high pressure connector?

   Yes

   - Replace the internal damaged fuel injector and high pressure connector in accordance with the service information.
   - Perform the POWERTRAIN VERIFICATION TEST - 6.7L. Refer to **POWERTRAIN VERIFICATION TEST - 6.7L** .

   No

   - Go To 9.

9. **CHECK FOR INTERNAL ENGINE DAMAGE**
   1. Perform engine compression test. Refer to **CYLINDER COMPRESSION/LEAKAGE TESTS** .

   Did the suspect cylinder pass the compression test?

   Yes

   - Go To 10.

   No

   - Repair the internal damage to the engine.
   - Perform the POWERTRAIN VERIFICATION TEST - 6.7L. Refer to **POWERTRAIN VERIFICATION TEST - 6.7L** .

10. **CHECK FOR INTERNAL ENGINE DAMAGE**
    1. Perform engine leak down test. Refer to **CYLINDER COMPRESSION/LEAKAGE TESTS** .

Did the suspect cylinder pass the leak down test?

Yes

- Test Complete.

No

- Repair the internal damage to the engine.
- Perform the POWERTRAIN VERIFICATION TEST - 6.7L. Refer to **POWERTRAIN VERIFICATION TEST - 6.7L** .

P0306-CYLINDER 6 MISFIRE

For a complete wiring diagram, **refer to appropriate SYSTEM WIRING DIAGRAMS article** .

THEORY OF OPERATION

The Crankshaft Position (CKP) and Camshaft Position (CMP) Sensors are hall effect type sensors. The Powertrain Control Module (PCM) provides a 5-Volt supply to the position sensor and return circuit. A notch on the crankshaft gear is used to determine the position of the engine by the PCM. As the notch on the crankshaft speed ring or the windows in the back of the camshaft gear move past the position sensor, a signal is generated on the position sensor circuit. The change in engine speed when different calibrated fuel quantities are added by the injector to this cylinder is a measure of how well the cylinder is firing. This DTC is a two trip fault. Active regeneration will be disabled when the mill lamp is on. The PCM will turn off the MIL lamp after the monitor runs and passes three consecutive times.

WHEN MONITORED:

While the engine is idling at operating temperature.

SET CONDITION:

Misfire detected on this cylinder.

POSSIBLE CAUSES

Possible Causes
LOW FUEL
DAMAGED FUEL LINE
VALVE TRAIN
OBSTRUCTED FUEL INJECTOR SUPPLY LINE
DAMAGED OR OBSTRUCTED HIGH PRESSURE CONNECTOR
EXTERNAL DAMAGED FUEL INJECTOR
INTERNAL DAMAGED FUEL INJECTOR
LOW COMPRESSION

EXCESSIVE ENGINE LEAK DOWN

Always perform the Pre-Diagnostic Troubleshooting procedure before proceeding. Refer to PRE-DIAGNOSTIC TROUBLESHOOTING PROCEDURE - 6.7L .

DIAGNOSTIC TEST

1. **LOW FUEL**
    1. Using the scan tool, verify that the fuel level is above 15%.

       Is the fuel level above 15%?

       Yes

       - Go To 2.

       No

       - Add fuel.
       - Go To 2.
2. **OTHER DTCS**
    1. Read the Freeze frame data.

       Is the DTC equal to the freeze frame DTC?

       Yes

       - Go To 3.

       No

       - Repair any other DTCs first.
       - Perform the POWERTRAIN VERIFICATION TEST - 6.7L. Refer to **POWERTRAIN VERIFICATION TEST - 6.7L** .
3. **CHECK FOR DAMAGED FUEL LINE**
    1. Visually inspect the injector supply line for damage.

       Do you have any kinked or bent fuel line?

       Yes

       - Repair or replace the damaged fuel line.
       - Perform the POWERTRAIN VERIFICATION TEST - 6.7L. Refer to **POWERTRAIN VERIFICATION TEST - 6.7L** .

No

- Go To 4.

4. **CHECK THE VALVE TRAIN**
   1. Visually inspect the valve train and check the valve lash on the suspect cylinder.

      Is the valve train functional and the lash within the specifications listed in the service information?

      Yes

      - Go To 5.

      No

      - Adjust the lash or fix or repair any damaged component(s).
      - Perform the POWERTRAIN VERIFICATION TEST - 6.7L. Refer to **POWERTRAIN VERIFICATION TEST - 6.7L** .

5. **CHECK FOR OBSTRUCTED FUEL INJECTOR SUPPLY**
   1. Remove the fuel injector supply line for the suspect cylinder.
   2. Inspect both ends of the fuel injector supply lines for damage.
   3. Using shop air pressure, blow out the fuel injector supply line to verify that it is not obstructed.

      Are the fuel lines free of debris or damage?

      Yes

      - Go To 6.

      No

      - Replace the damaged or obstructed fuel injector supply line in accordance with the service information.
      - Perform the POWERTRAIN VERIFICATION TEST - 6.7L. Refer to **POWERTRAIN VERIFICATION TEST - 6.7L** .

6. **CHECK FOR DAMAGED OR OBSTRUCTED HIGH PRESSURE CONNECTOR**
   1. Remove the high pressure connector for the suspect cylinder.
   2. Inspect both ends of the high pressure connectors for signs of damage.
   3. Using shop air pressure, blow out the high pressure connector to verify that they are not obstructed.

      Are the high pressure connectors free of debris or damage?

      Yes

      - Go To 7.

No

- Replace the damaged or obstructed high pressure connector in accordance with the service information.
- Perform the POWERTRAIN VERIFICATION TEST - 6.7L. Refer to **POWERTRAIN VERIFICATION TEST - 6.7L** .

7. **CHECK THE FUEL INJECTOR**
   1. Remove the suspect fuel injector.

      Are the fuel injectors damaged?

      Yes

      - Replace the external damaged fuel injector and high pressure connector in accordance with the service information.
      - Perform the POWERTRAIN VERIFICATION TEST - 6.7L. Refer to **POWERTRAIN VERIFICATION TEST - 6.7L** .

      No

      - Go To 8.
8. **CHECK FOR INTERNAL DAMAGED FUEL INJECTOR**
   1. With the scan tool, erase DTCs.
   2. Switch the misfiring injector and high pressure connector with an injector and high pressure connector from a cylinder that is firing properly.
   3. Operate the vehicle.

      Did the misfire DTC follow the suspect injectors and high pressure connectors?

      Yes

      - Replace the internal damaged fuel injector and high pressure connector in accordance with the service information.
      - Perform the POWERTRAIN VERIFICATION TEST - 6.7L. Refer to **POWERTRAIN VERIFICATION TEST - 6.7L** .

      No

      - Go To 9.
9. **CHECK FOR INTERNAL ENGINE DAMAGE**
   1. Perform engine compression test. Refer to **CYLINDER COMPRESSION/LEAKAGE TESTS** .

      Did the suspect cylinder pass the compression test?

Yes

- Go To 10.

No

- Repair the internal damage to the engine.
- Perform the POWERTRAIN VERIFICATION TEST - 6.7L. Refer to **POWERTRAIN VERIFICATION TEST - 6.7L** .

10. **CHECK FOR INTERNAL ENGINE DAMAGE**
    1. Perform engine leak down test. Refer to **CYLINDER COMPRESSION/LEAKAGE TESTS** .

    Did the suspect cylinder pass the leak down test?

    Yes

    - Test Complete.

    No

    - Repair the internal damage to the engine.
    - Perform the POWERTRAIN VERIFICATION TEST - 6.7L. Refer to **POWERTRAIN VERIFICATION TEST - 6.7L** .

P0335-CRANKSHAFT POSITION SENSOR CIRCUIT

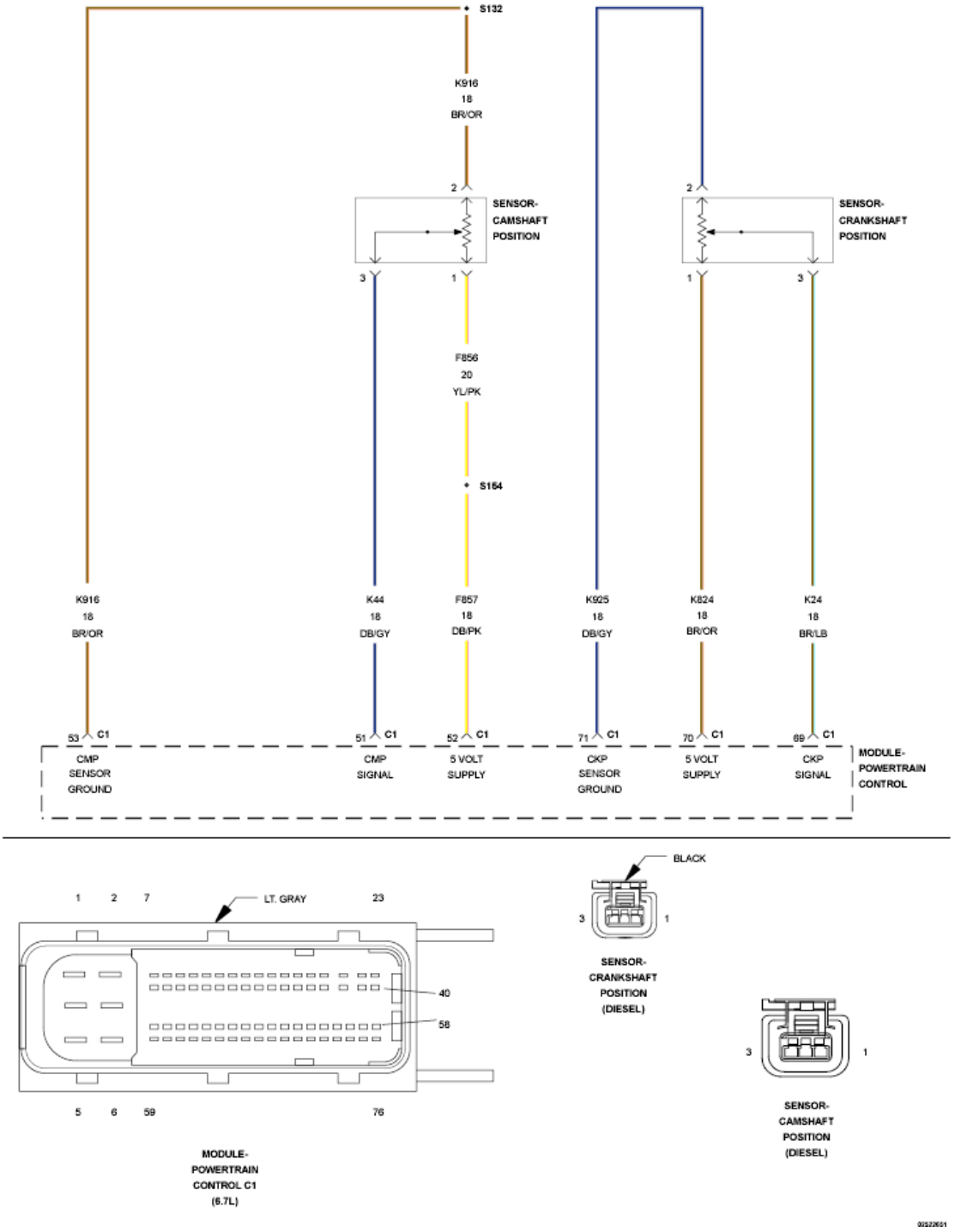

Fig. 114: Crankshaft Position Sensor & Camshaft Position Sensor Circuit Schematic
Courtesy of CHRYSLER GROUP, LLC

For a complete wiring diagram, **refer to appropriate SYSTEM WIRING DIAGRAMS article** .

THEORY OF OPERATION

The Powertrain Control Module (PCM) provides a 5-Volt supply to the Crankshaft Position Sensor (CKP) on

the sensor supply circuit. The PCM also provides a ground on the sensor return circuit. The Crankshaft Position Sensor provides a signal to the PCM on the Crankshaft Position Sensor Signal circuit. The CKP Sensor generates a signal to the PCM as a notch in the crank pulley travels by the sensor. The PCM uses this signal to determine engine speed and engine position. The PCM illuminates the MIL lamp immediately after the diagnostic runs and fails. During this time the Camshaft Position Sensor is used to provide engine speed and position information to the PCM. The customer may experience an engine misfire as control switches from the primary to the backup speed sensor. The PCM will turn off the MIL lamp when the diagnostic runs and passes in four consecutive drive cycles.

WHEN MONITORED:

While the engine is running.

SET CONDITION:

The Powertrain Control Module (PCM) no longer detects a signal from the Crankshaft Position Sensor.

POSSIBLE CAUSES

Possible Causes
PHYSICAL DAMAGE
(K24) SIGNAL CIRCUIT OPEN/HIGH RESISTANCE
(K824) 5-VOLT SUPPLY CIRCUIT OPEN/HIGH RESISTANCE
(K925) RETURN CIRCUIT OPEN/HIGH RESISTANCE
(K24) SIGNAL CIRCUIT SHORTED TO THE (K925) RETURN CIRCUIT
(K824) 5-VOLT SUPPLY CIRCUIT SHORTED TO THE (K925) RETURN CIRCUIT
(K24) SIGNAL CIRCUIT SHORTED TO THE (K824) 5-VOLT SUPPLY CIRCUIT
(K24) SIGNAL CIRCUIT SHORTED TO GROUND
(K824) 5-VOLT SUPPLY CIRCUIT SHORTED TO BATTERY NEGATIVE
CKP SENSOR
POWERTRAIN CONTROL MODULE (PCM)

Always perform the Pre-Diagnostic Troubleshooting procedure before proceeding. Refer to PRE-DIAGNOSTIC TROUBLESHOOTING PROCEDURE - 6.7L .

DIAGNOSTIC TEST

1. **ACTIVE DTC**

   NOTE: If there are any 5-Volt supply DTCs present, repair those DTCs before proceeding.

   1. Turn the ignition on.
   2. With the scan tool, record all Freeze frame data.
   3. With the scan tool, erase DTCs.

4. Turn the ignition off for 75 seconds.
5. Start, or attempt to start the engine.
6. With the scan tool, read DTCs.

   Did the DTC reset?

   Yes

   - Go To 2.

   No

   - Perform the INTERMITTENT CONDITION - 6.7L diagnostic procedure. Refer to **INTERMITTENT CONDITION - 6.7L** .

2. **CHECK FOR PHYSICAL DAMAGE**
   1. Turn the ignition off.
   2. Visually inspect the CKP Sensor, accessory belt, CKP Sensor connector, and the PCM C1 harness connector.

      Is there any physical damage present?

      Yes

      - Repair or replace the CKP Sensor, accessory belt, or harness.
      - Perform the POWERTRAIN VERIFICATION TEST - 6.7L. Refer to **POWERTRAIN VERIFICATION TEST - 6.7L** .

      No

      - Go To 3.

3. **CHECK THE (K24) SIGNAL CIRCUIT FOR AN OPEN/HIGH RESISTANCE**

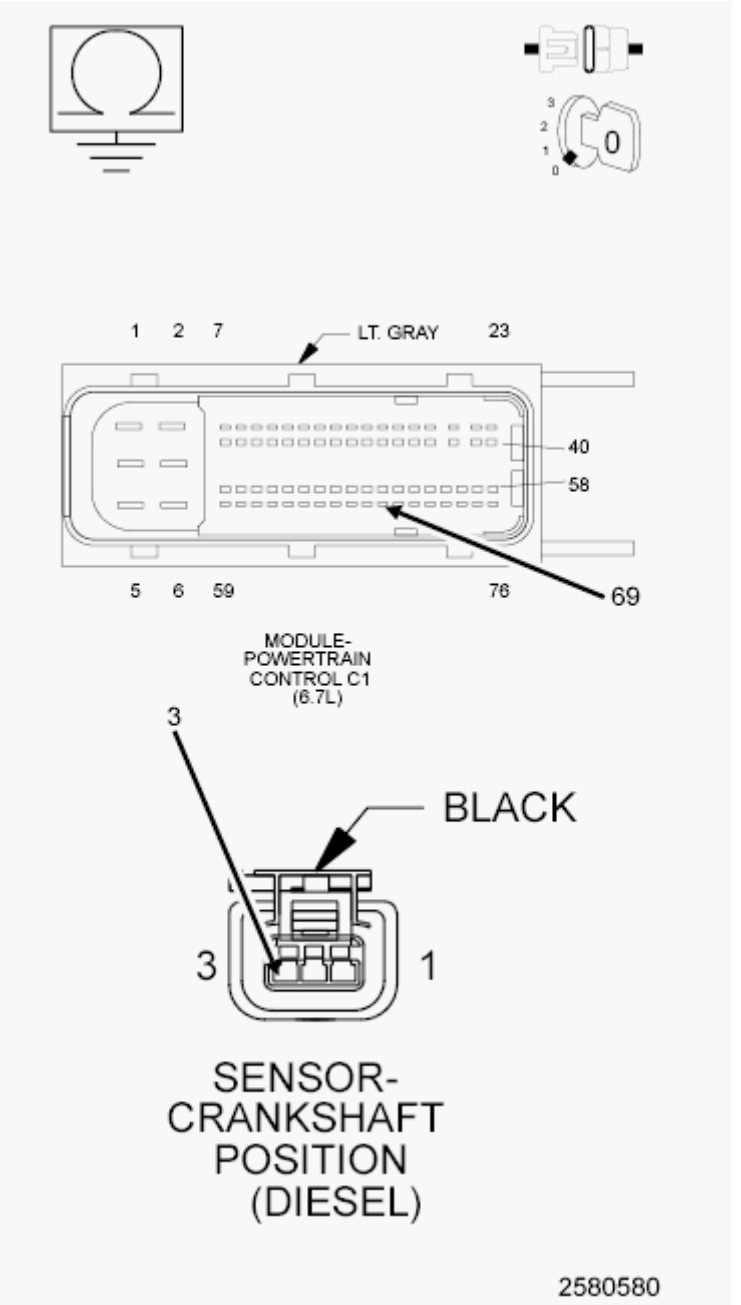

Fig. 115: Checking CKP Signal Circuit For Open Or High Resistance
Courtesy of CHRYSLER GROUP, LLC

1. Disconnect the PCM C1 harness connector.
2. Disconnect the CKP Sensor harness connector.

NOTE: Check connectors - Clean/repair as necessary.

3. Measure the resistance of the (K24) CKP Signal circuit between the PCM C1 harness connector and the CKP Sensor harness connector.

Is the resistance below 5.0 Ohms?

Yes

- Go To 4.

No

- Repair the (K24) CKP Signal circuit for an open or high resistance.
- Perform the POWERTRAIN VERIFICATION TEST - 6.7L. Refer to **POWERTRAIN VERIFICATION TEST - 6.7L** .

4. **CHECK THE (K824) 5-VOLT SUPPLY CIRCUIT FOR AN OPEN/HIGH RESISTANCE**

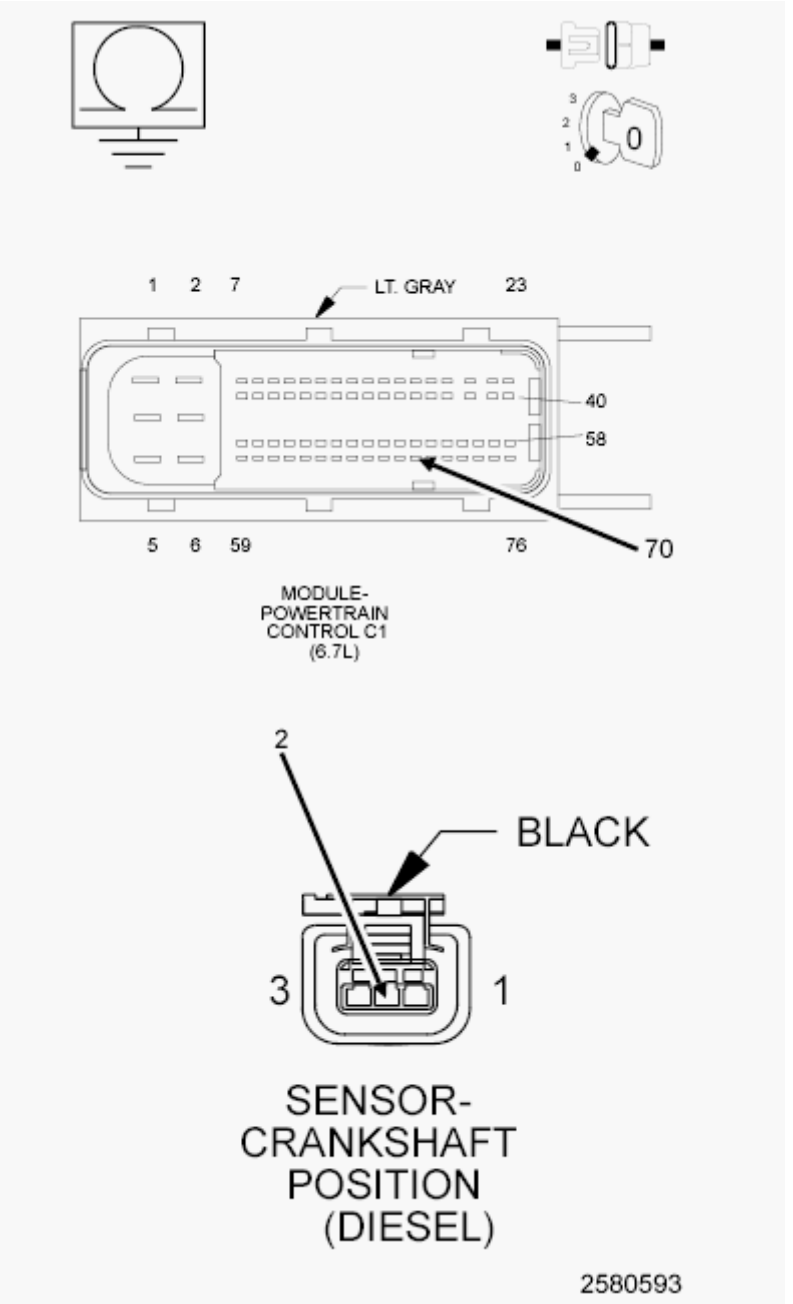

Fig. 116: Checking CKP 5-Volt Supply Circuit For An Open Or High Resistance
Courtesy of CHRYSLER GROUP, LLC

1. Measure the resistance of the (K824) 5-Volt Supply circuit between the PCM C1 harness connector and the CKP Sensor harness connector.

   Is the resistance below 5.0 Ohms?

   Yes

   - Go To 5.

No

- Repair the (K824) 5-Volt Supply circuit for an open or high resistance.
- Perform the POWERTRAIN VERIFICATION TEST - 6.7L. Refer to **POWERTRAIN VERIFICATION TEST - 6.7L** .

5. **CHECK THE (K925) RETURN CIRCUIT FOR AN OPEN/HIGH RESISTANCE**

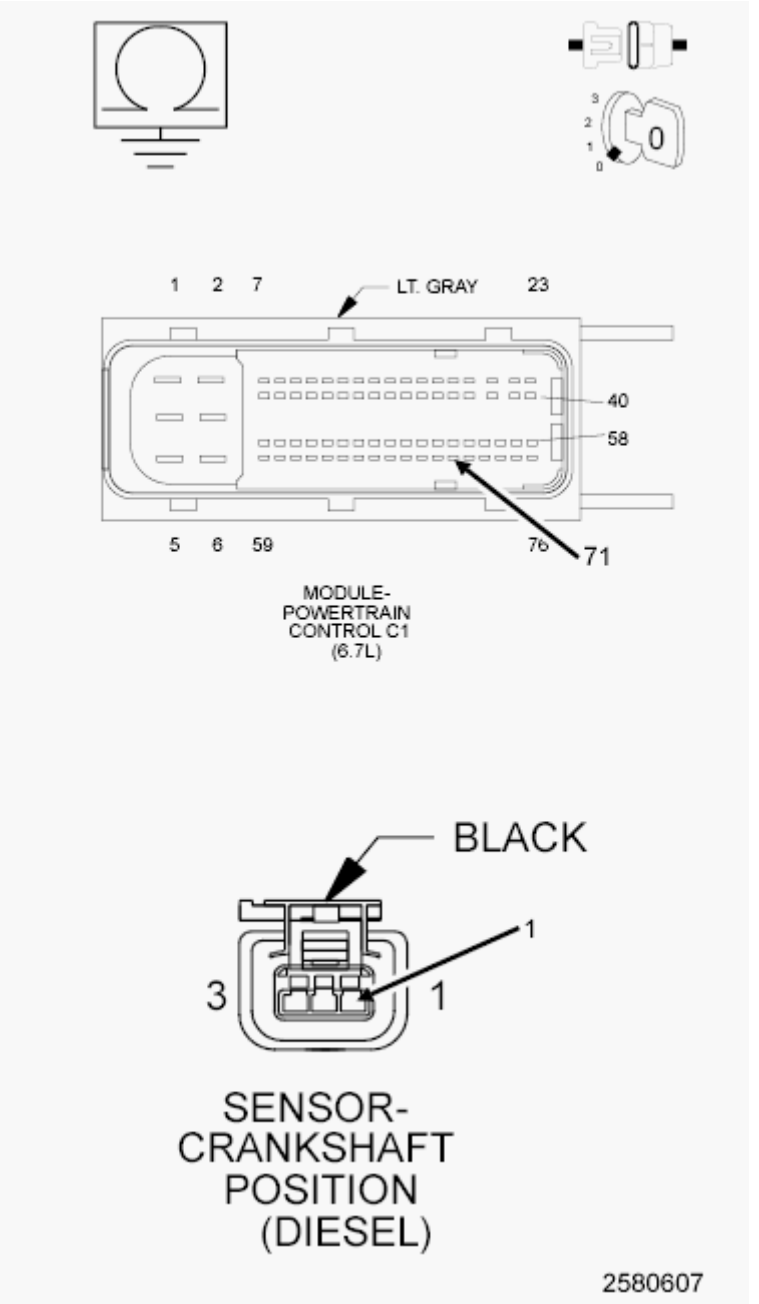

Fig. 117: Checking CKP Return Circuit For An Open Or High Resistance
Courtesy of CHRYSLER GROUP, LLC

1. Measure the resistance of the (K925) CKP Return circuit between the PCM C1 harness connector

and the CKP Sensor harness connector.

Is the resistance below 5.0 Ohms?

Yes

- Go To 6.

No

- Repair the (K925) CKP Return circuit for an open or high resistance.
- Perform the POWERTRAIN VERIFICATION TEST - 6.7L. Refer to **POWERTRAIN VERIFICATION TEST - 6.7L** .

6. **CHECK FOR THE (K24) SIGNAL CIRCUIT SHORTED TO THE (K925) RETURN CIRCUIT**

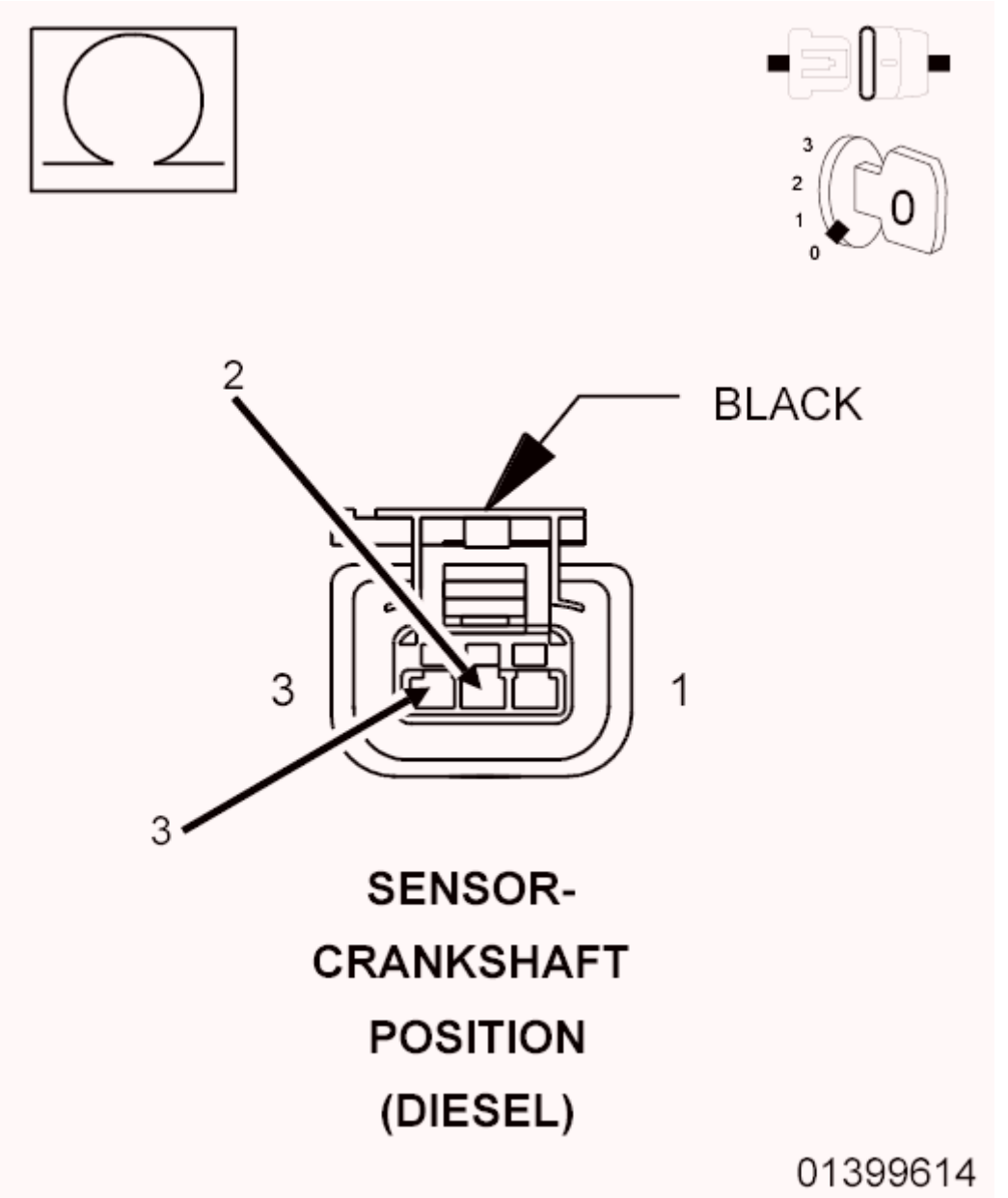

Fig. 118: Checking Signal Circuit For Short To Return Circuit
Courtesy of CHRYSLER GROUP, LLC

1. Measure the resistance between the (K24) CKP Signal circuit and the (K925) CKP Return circuit at the CKP Sensor harness connector.

   Is the resistance below 10k Ohms?

   Yes

   - Repair the short between the (K24) CKP Signal circuit and the (K925) CKP Return circuit.
   - Perform the POWERTRAIN VERIFICATION TEST - 6.7L. Refer to **POWERTRAIN VERIFICATION TEST - 6.7L** .

No

- Go To 7.

7. **CHECK FOR THE (K24) SIGNAL CIRCUIT SHORTED TO THE (K824) 5-VOLT SUPPLY CIRCUIT**

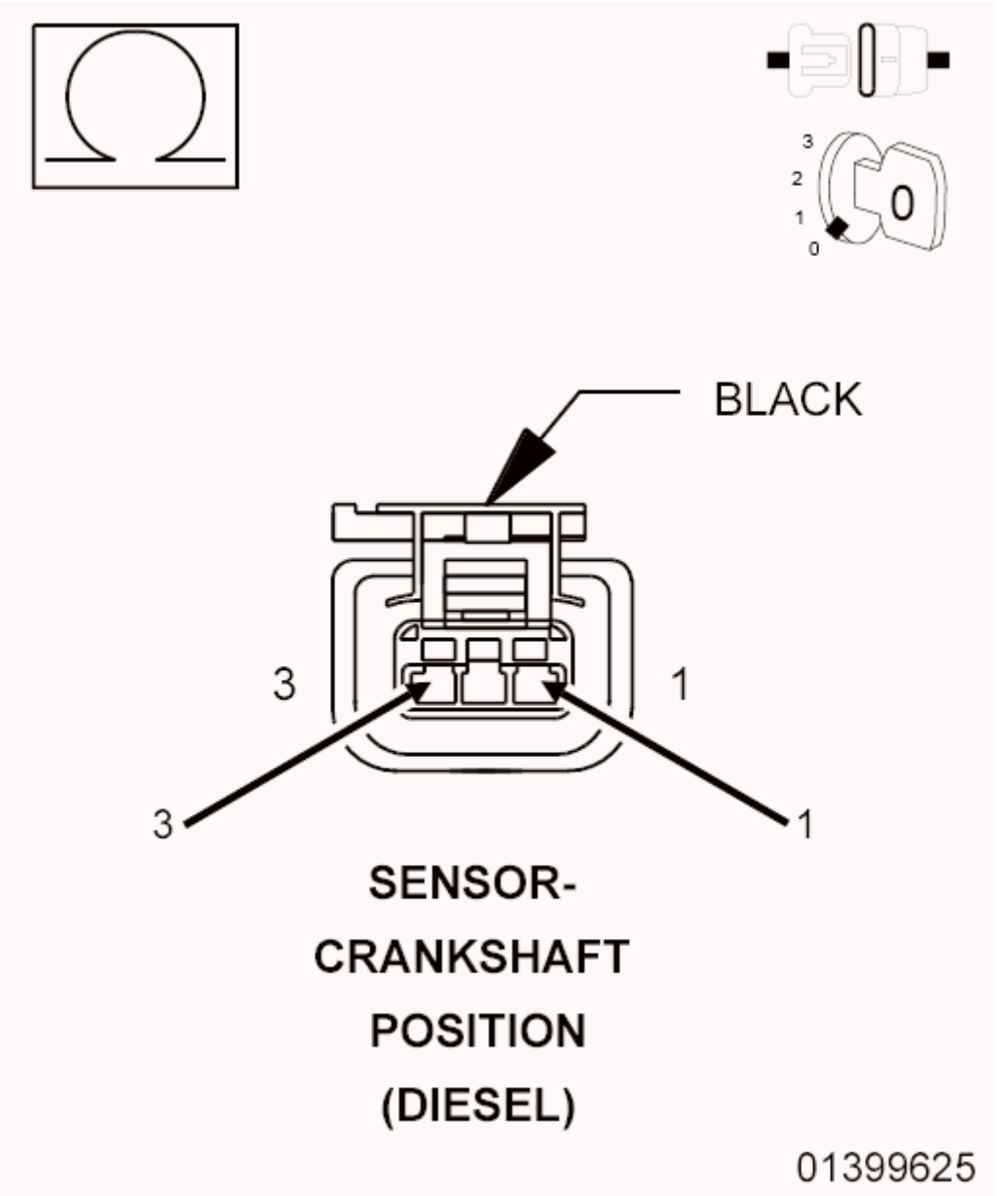

Fig. 119: Checking Signal Circuit For Short To 5-Volt Supply Circuit
Courtesy of CHRYSLER GROUP, LLC

1. Measure the resistance between the (K24) CKP Signal circuit and the (K824) 5-Volt Supply circuit in the CKP Sensor harness connector.

   Is the resistance below 10k Ohms?

Yes

- Repair the short between the (K24) CKP Signal circuit and the (K824) 5-Volt Supply circuit.
- Perform the POWERTRAIN VERIFICATION TEST - 6.7L. Refer to **POWERTRAIN VERIFICATION TEST - 6.7L** .

No

- Go To 8.

8. **CHECK THE (K24) SIGNAL CIRCUIT FOR A SHORT GROUND**

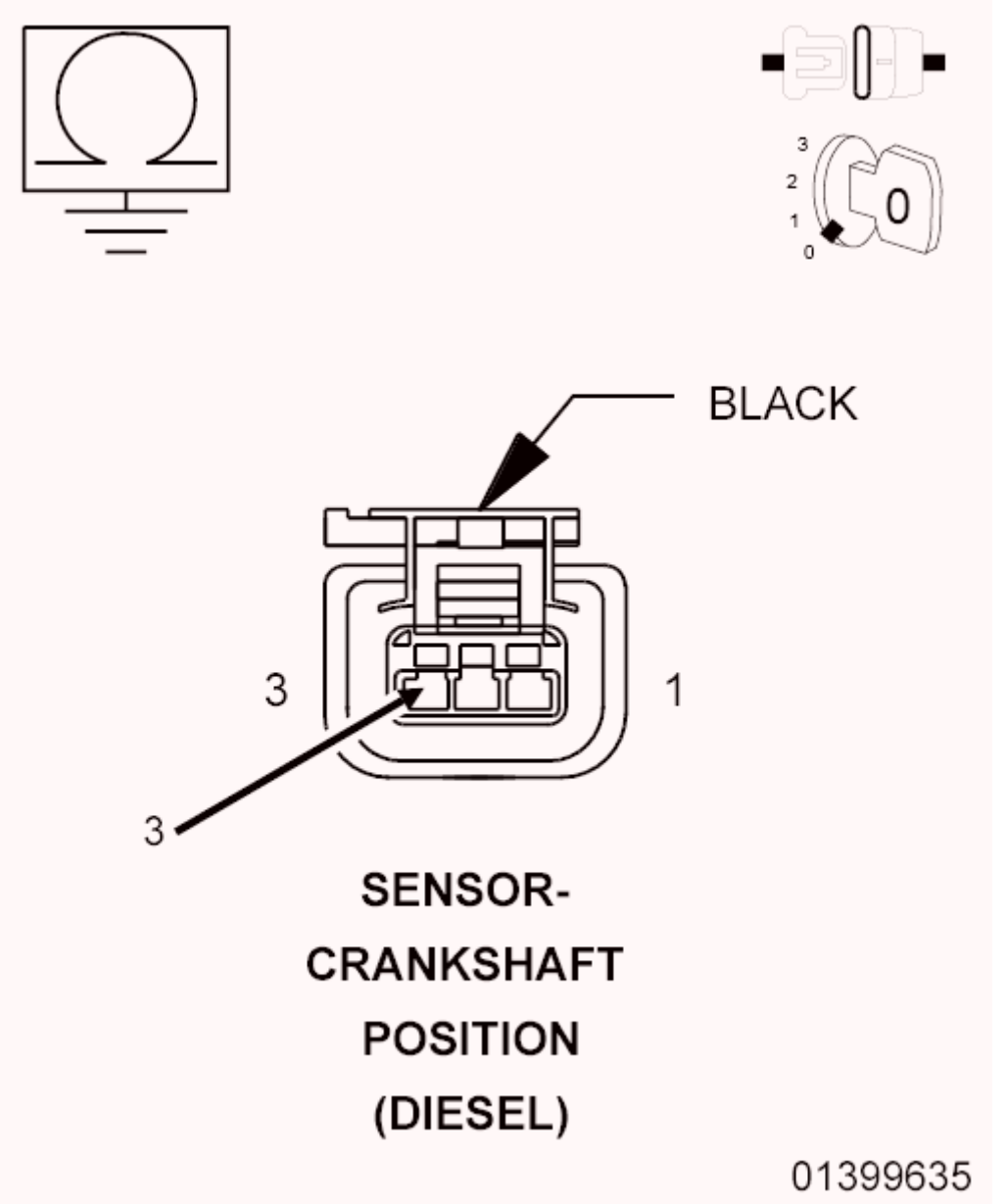

Fig. 120: Checking CKP Signal Circuit For Short To Ground
Courtesy of CHRYSLER GROUP, LLC

1. Measure the resistance between ground and the (K24) CKP Signal circuit at the CKP Sensor harness connector.

   Is the resistance below 10k Ohms?

   Yes

   - Repair the (K24) CKP Signal circuit for a short to ground.
   - Perform the POWERTRAIN VERIFICATION TEST - 6.7L. Refer to **POWERTRAIN VERIFICATION TEST - 6.7L** .

   No

   - Go To 9.

9. **CHECK THE CKP SENSOR**
   1. Measure the resistance between the (K824) 5-Volt Supply circuit and the (K24) CKP Signal circuit through the CKP Sensor.

      Is the resistance between 900 and 1100 Ohms?

      Yes

      - Replace and program the Powertrain Control Module in accordance with the service information.
      - Perform the POWERTRAIN VERIFICATION TEST - 6.7L. Refer to **POWERTRAIN VERIFICATION TEST - 6.7L** .

      No

      - Replace the CKP Sensor in accordance with the service information.
      - Perform the POWERTRAIN VERIFICATION TEST - 6.7L. Refer to **POWERTRAIN VERIFICATION TEST - 6.7L** .

P0336-CRANKSHAFT POSITION SENSOR PERFORMANCE

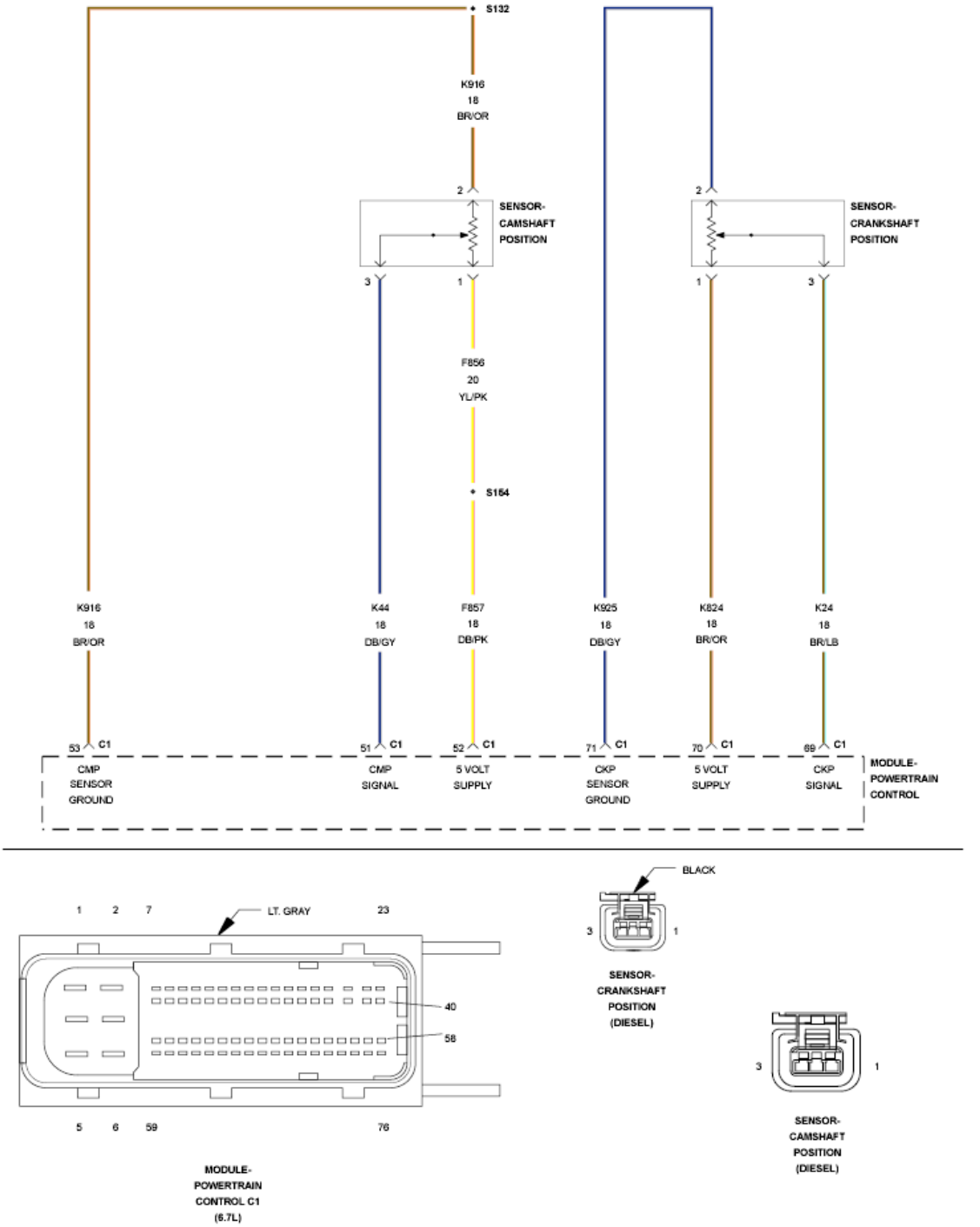

Fig. 121: Crankshaft Position Sensor & Camshaft Position Sensor Circuit Schematic
Courtesy of CHRYSLER GROUP, LLC

For a complete wiring diagram, **refer to appropriate SYSTEM WIRING DIAGRAMS article** .

THEORY OF OPERATION

The Powertrain Control Module (PCM) provides a 5-Volt supply to the Crankshaft Position Sensor (CKP) on

the sensor supply circuit. The PCM also provides a ground on the sensor return circuit. The Crankshaft Position Sensor provides a signal to the PCM on the Crankshaft Position Sensor Signal circuit. The CKP Sensor generates a signal to the PCM as a notch in the crank pulley travels by the sensor. The PCM uses this signal to determine engine speed and engine position. The PCM illuminates the MIL lamp immediately after the diagnostic runs and fails. During this time the Camshaft Position Sensor is used to provide engine speed and position information to the PCM. The customer may experience an engine misfire as control switches from the primary to the backup speed sensor. The PCM will turn off the MIL lamp when the diagnostic runs and passes in four consecutive drive cycles.

WHEN MONITORED:

With the key on.

SET CONDITION:

The voltage detected at the Crankshaft Position Sensor is below a calibrated value.

POSSIBLE CAUSES

Possible Causes
(K24) SIGNAL CIRCUIT OPEN/HIGH RESISTANCE
(K824) 5-VOLT SUPPLY CIRCUIT OPEN/HIGH RESISTANCE
(K925) RETURN CIRCUIT OPEN/HIGH RESISTANCE
(K24) SIGNAL CIRCUIT SHORTED TO THE (K925) RETURN CIRCUIT
(K824) 5-VOLT SUPPLY CIRCUIT SHORTED TO THE (K925) RETURN CIRCUIT
(K24) SIGNAL CIRCUIT SHORTED TO THE (K824) 5-VOLT SUPPLY CIRCUIT
(K24) SIGNAL CIRCUIT SHORTED TO GROUND
CRANKSHAFT POSITION SENSOR
POWERTRAIN CONTROL MODULE (PCM)

Always perform the Pre-Diagnostic Troubleshooting procedure before proceeding. Refer to PRE-DIAGNOSTIC TROUBLESHOOTING PROCEDURE - 6.7L .

DIAGNOSTIC TEST

1. **ACTIVE DTC**

NOTE: **If there are any 5-Volt supply DTCs present, repair those DTCs before proceeding.**

1. Turn the ignition on.
2. With the scan tool, record all Freeze frame data.
3. With the scan tool, erase DTCs.
4. Turn the ignition off for 75 seconds.
5. Start, or attempt to start the engine.

6. With the scan tool, read DTCs.

   Did the DTC reset?

   Yes

   - Go To 2.

   No

   - Perform the INTERMITTENT CONDITION - 6.7L diagnostic procedure. Refer to **INTERMITTENT CONDITION - 6.7L** .

2. **CHECK THE (K24) SIGNAL CIRCUIT FOR AN OPEN/HIGH RESISTANCE**

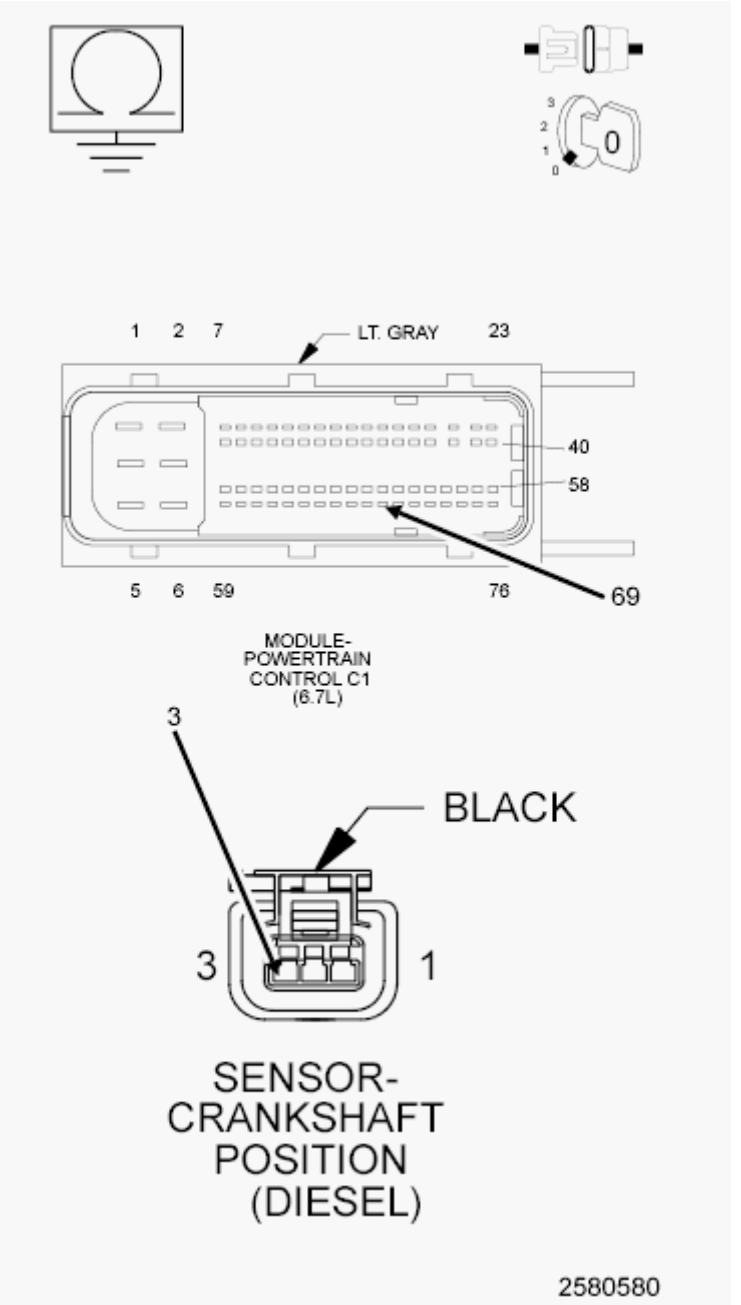

Fig. 122: Checking CKP Signal Circuit For Open Or High Resistance
Courtesy of CHRYSLER GROUP, LLC

1. Turn the ignition off.
2. Disconnect the PCM C1 harness connector.
3. Disconnect the CKP Sensor harness connector.

NOTE: Check connectors - Clean/repair as necessary.

4. Measure the resistance of the (K24) CKP Signal circuit between the PCM C1 harness connector

and the CKP Sensor harness connector.

Is the resistance below 5.0 Ohms?

Yes

- Go To 3.

No

- Repair the (K24) CKP Signal circuit for an open or high resistance.
- Perform the POWERTRAIN VERIFICATION TEST - 6.7L. Refer to **POWERTRAIN VERIFICATION TEST - 6.7L** .

3. **CHECK THE (K824) 5-VOLT SUPPLY CIRCUIT FOR AN OPEN/HIGH RESISTANCE**

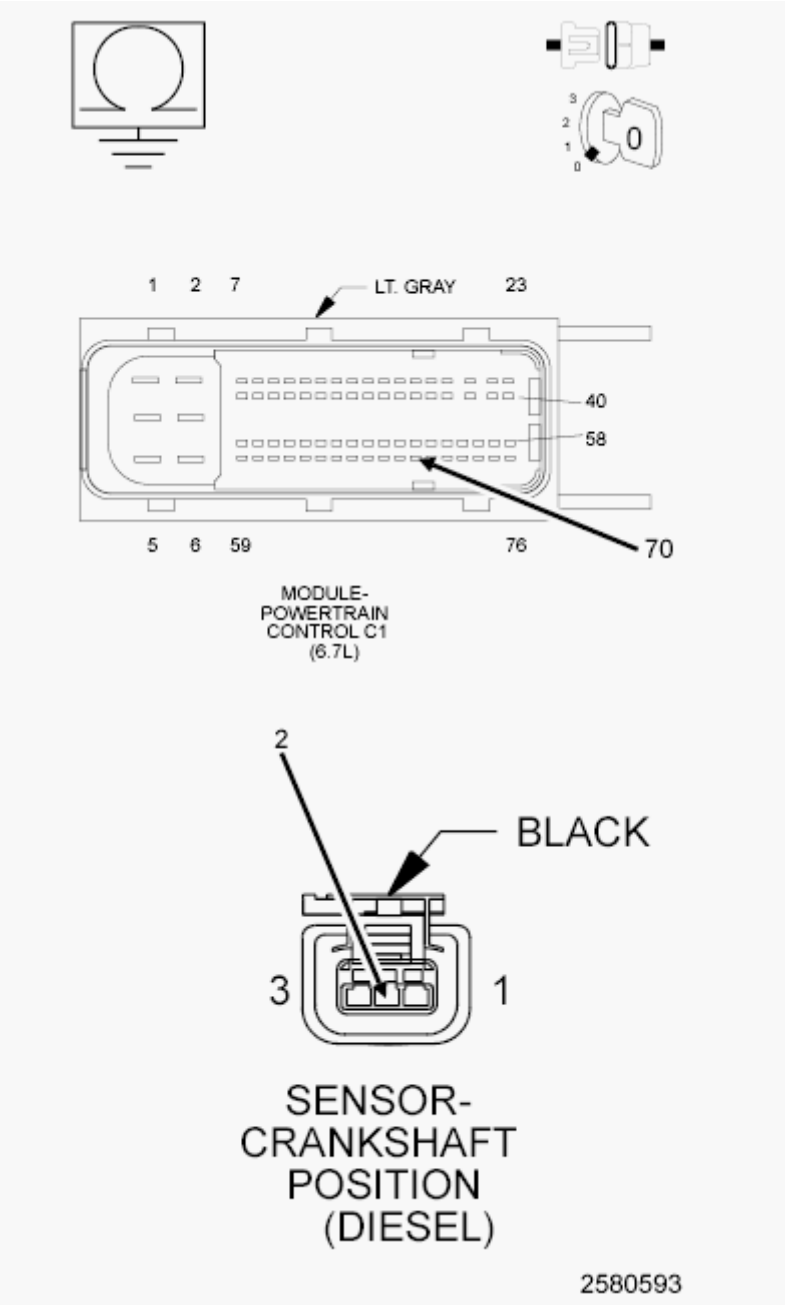

Fig. 123: Checking CKP 5-Volt Supply Circuit For An Open Or High Resistance
Courtesy of CHRYSLER GROUP, LLC

1. Measure the resistance of the (K824) 5-Volt Supply circuit between the PCM C1 harness connector and the CKP Sensor harness connector.

   Is the resistance below 5.0 Ohms?

   Yes

   - Go To 4.

No

- Repair the (K824) 5-Volt Supply circuit for an open or high resistance.
- Perform the POWERTRAIN VERIFICATION TEST - 6.7L. Refer to **POWERTRAIN VERIFICATION TEST - 6.7L** .

4. **CHECK THE (K925) RETURN CIRCUIT FOR AN OPEN/HIGH RESISTANCE**

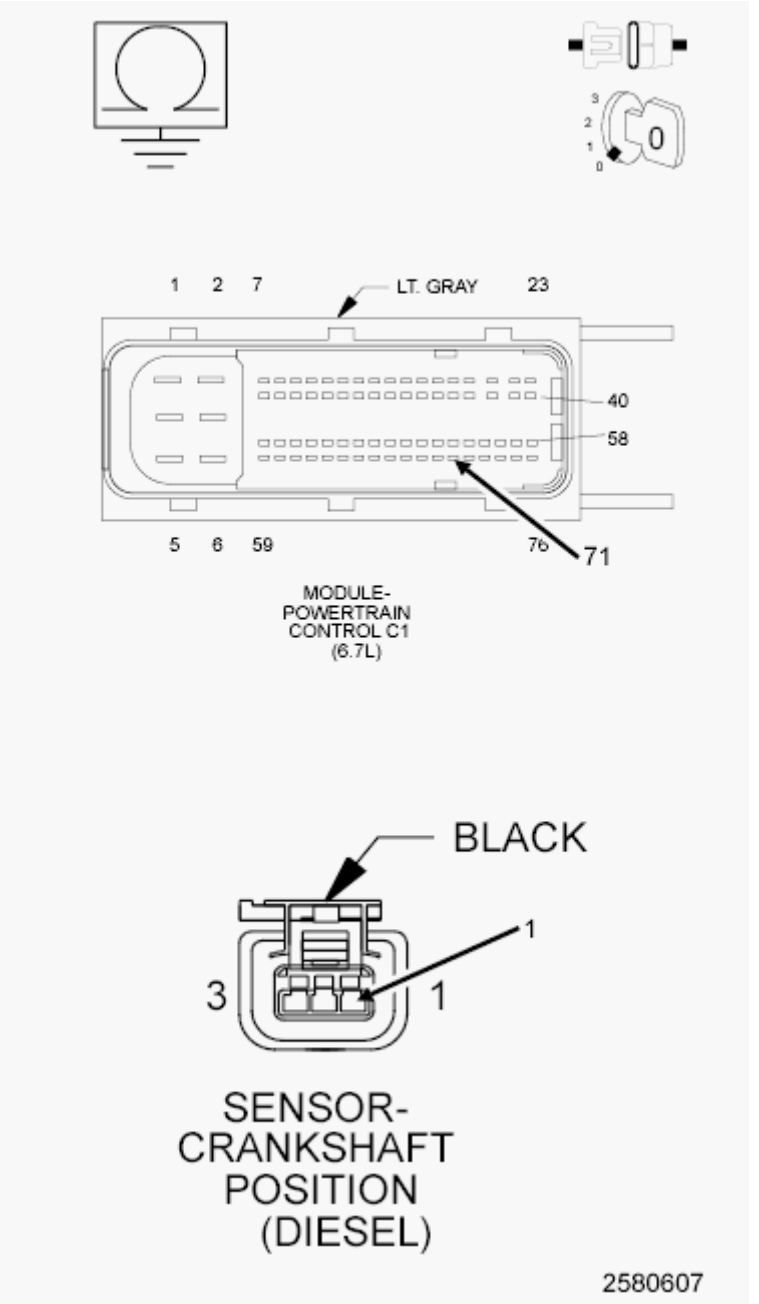

Fig. 124: Checking CKP Return Circuit For An Open Or High Resistance
Courtesy of CHRYSLER GROUP, LLC

1. Measure the resistance of the (K925) CKP Return circuit between the PCM C1 harness connector

and the CKP Sensor harness connector.

Is the resistance below 5.0 Ohms?

Yes

- Go To 5.

No

- Repair the (K925) CKP Return circuit for an open or high resistance.
- Perform the POWERTRAIN VERIFICATION TEST - 6.7L. Refer to **POWERTRAIN VERIFICATION TEST - 6.7L** .

5. **CHECK FOR THE (K24) SIGNAL CIRCUIT SHORTED TO THE (K925) RETURN CIRCUIT**

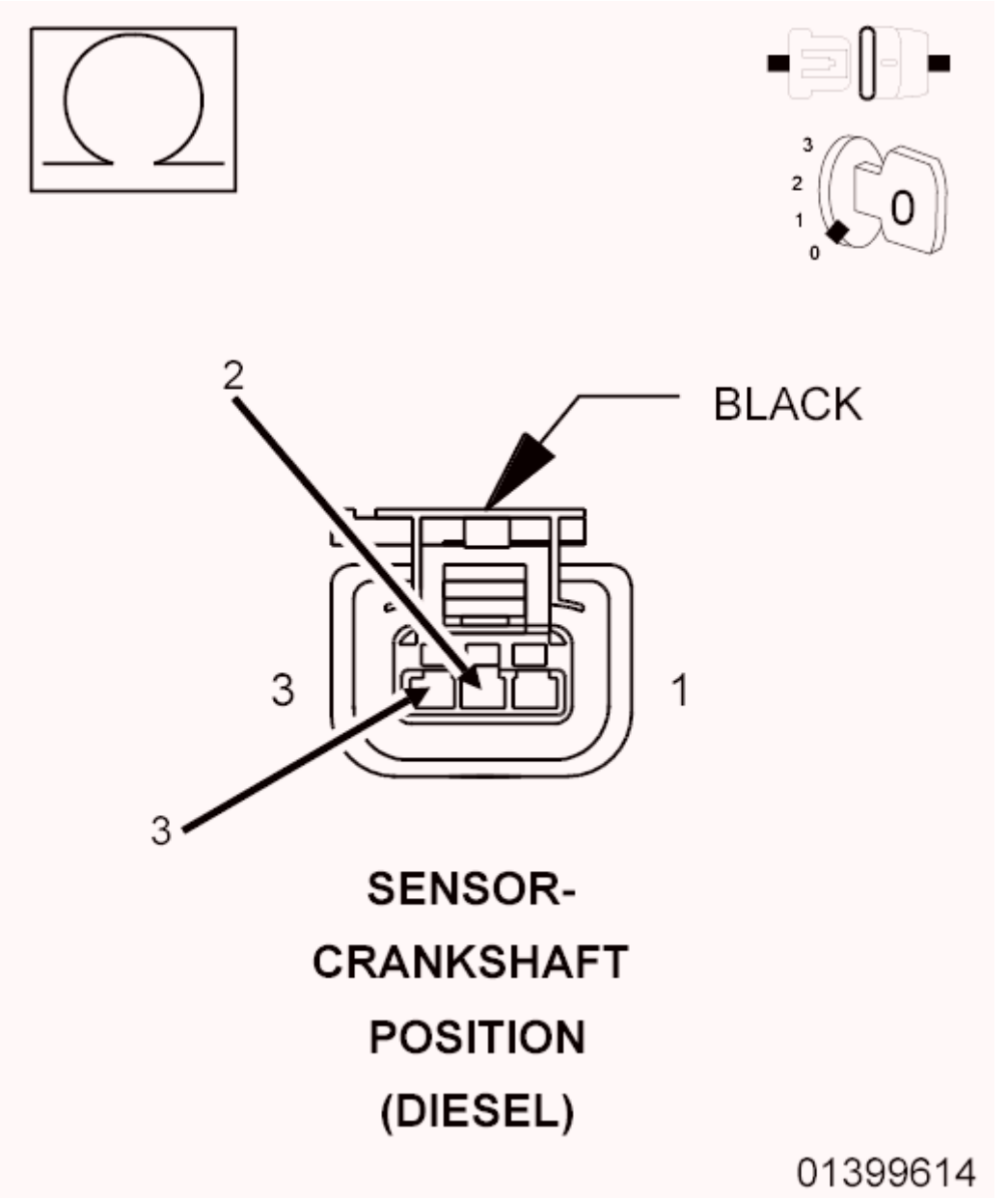

Fig. 125: Checking Signal Circuit For Short To Return Circuit
Courtesy of CHRYSLER GROUP, LLC

1. Measure the resistance between the (K24) CKP Signal circuit and the (K925) CKP Return circuit at the CKP Sensor harness connector.

   Is the resistance below 10k Ohms?

   Yes

   - Repair the short between the (K24) CKP Signal circuit and the (K925) CKP Return circuit.
   - Perform the POWERTRAIN VERIFICATION TEST - 6.7L. Refer to **POWERTRAIN VERIFICATION TEST - 6.7L** .

No

- Go To 6.

6. **CHECK FOR THE (K24) SIGNAL CIRCUIT SHORTED TO THE (K824) 5-VOLT SUPPLY CIRCUIT**

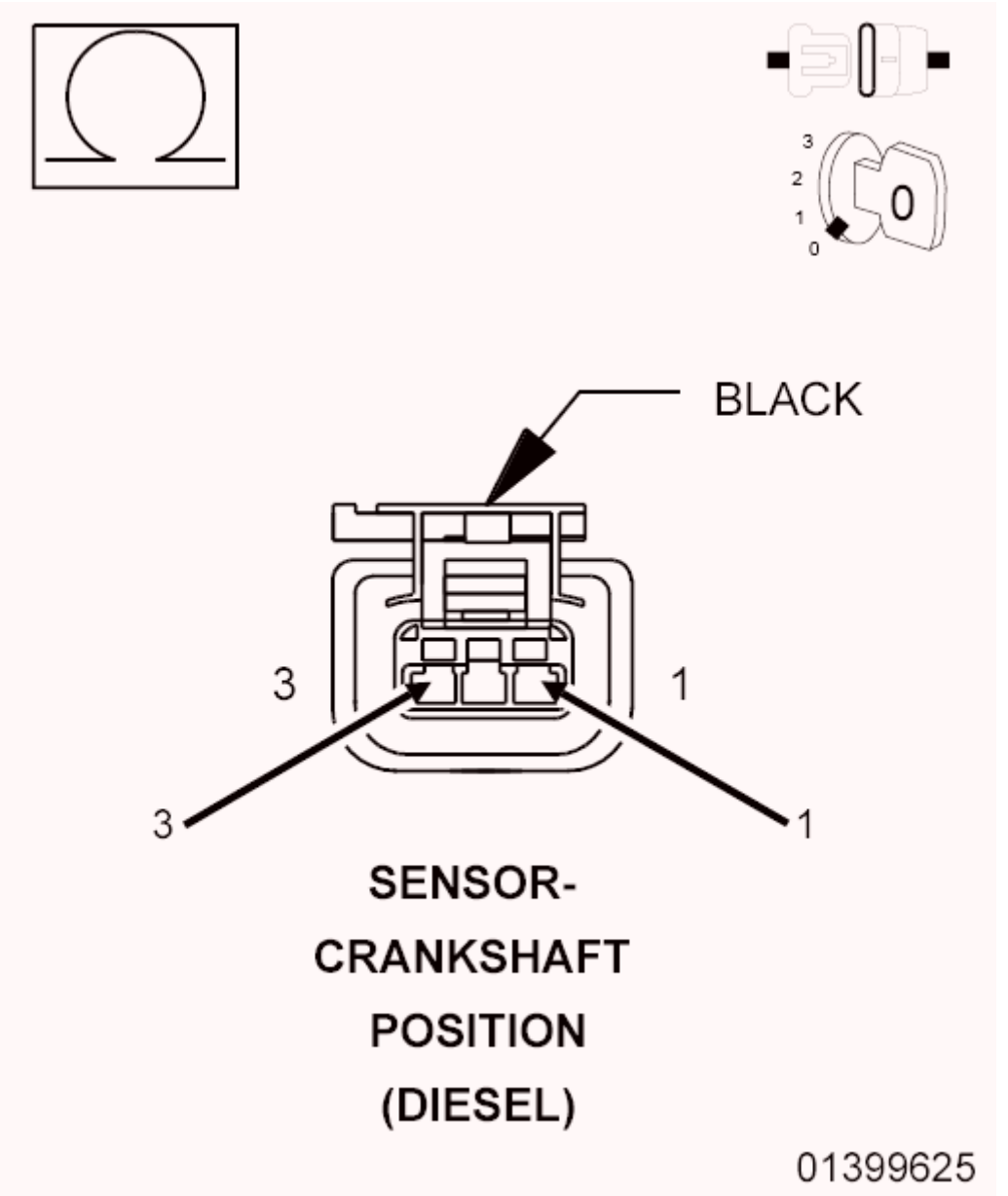

Fig. 126: Checking Signal Circuit For Short To 5-Volt Supply Circuit
Courtesy of CHRYSLER GROUP, LLC

1. Measure the resistance between the (K24) CKP Signal circuit and the (K824) 5-Volt Supply circuit in the CKP Sensor harness connector.

   Is the resistance below 10k Ohms?

Yes

- Repair the short between the (K24) CKP Signal circuit and the (K824) 5-Volt Supply circuit.
- Perform the POWERTRAIN VERIFICATION TEST - 6.7L. Refer to **POWERTRAIN VERIFICATION TEST - 6.7L** .

No

- Go To 7.

7. **CHECK THE (K24) SIGNAL CIRCUIT FOR A SHORT GROUND**

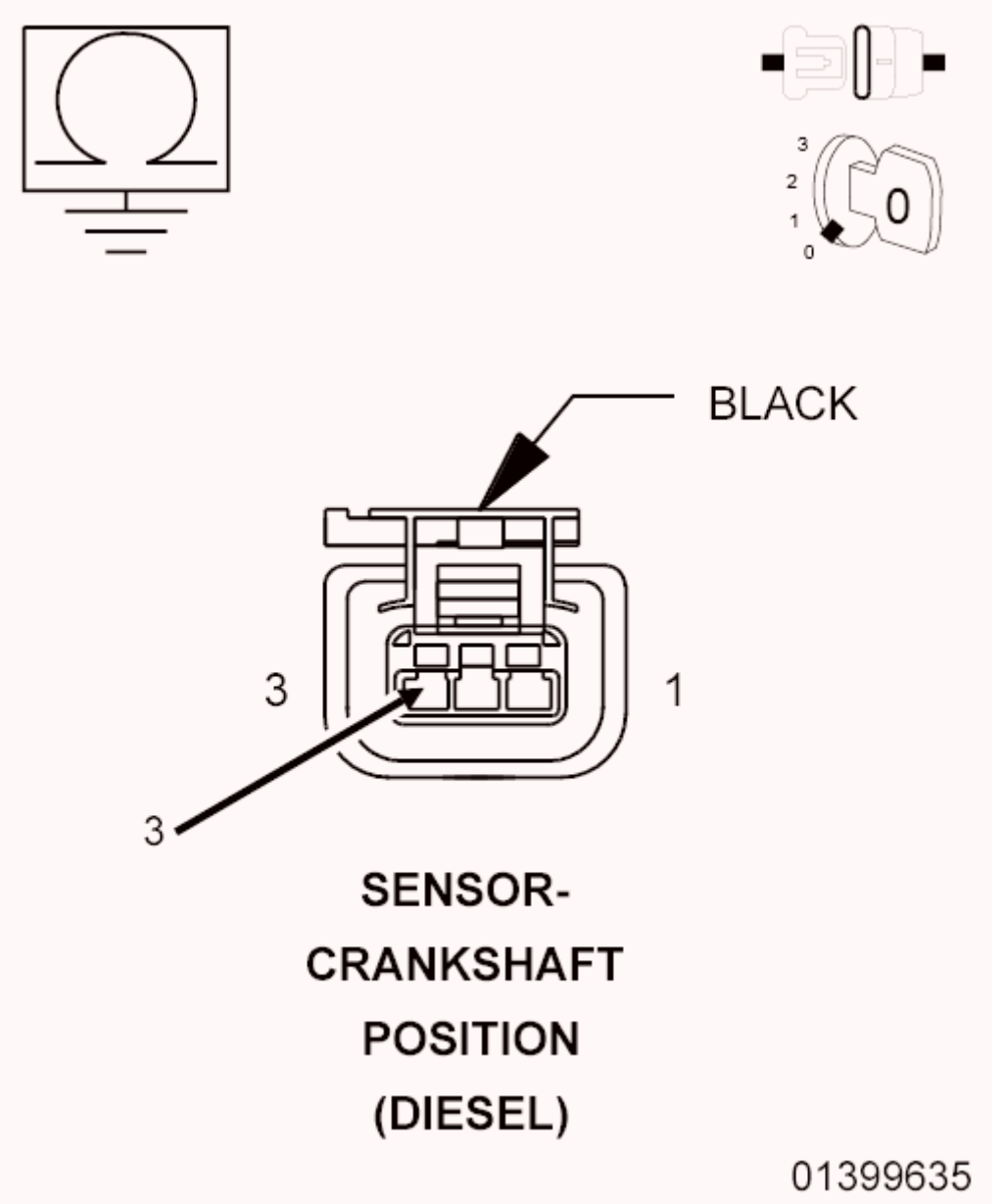

Fig. 127: Checking CKP Signal Circuit For Short To Ground
Courtesy of CHRYSLER GROUP, LLC

1. Measure the resistance between ground and the (K24) CKP Signal circuit at the CKP Sensor harness connector.

   Is the resistance below 10k Ohms?

   Yes

   - Repair the (K24) CKP Signal circuit for a short to ground.
   - Perform the POWERTRAIN VERIFICATION TEST - 6.7L. Refer to **POWERTRAIN VERIFICATION TEST - 6.7L** .

   No

   - Go To 8.

8. **CHECK THE CRANKSHAFT POSITION SENSOR**
   1. Measure the resistance between the (K824) 5-Volt Supply circuit and the (K24) CKP Signal circuit through the CKP Sensor.

      Is the resistance between 900 and 1100 Ohms?

      Yes

      - Replace and program the Powertrain Control Module in accordance with the service information.
      - Perform the POWERTRAIN VERIFICATION TEST - 6.7L. Refer to **POWERTRAIN VERIFICATION TEST - 6.7L** .

      No

      - Replace the Crank Position Sensor in accordance with the service information.
      - Perform the POWERTRAIN VERIFICATION TEST - 6.7L. Refer to **POWERTRAIN VERIFICATION TEST - 6.7L** .

P0340-CAMSHAFT POSITION SENSOR CIRCUIT - BANK 1 SENSOR 1

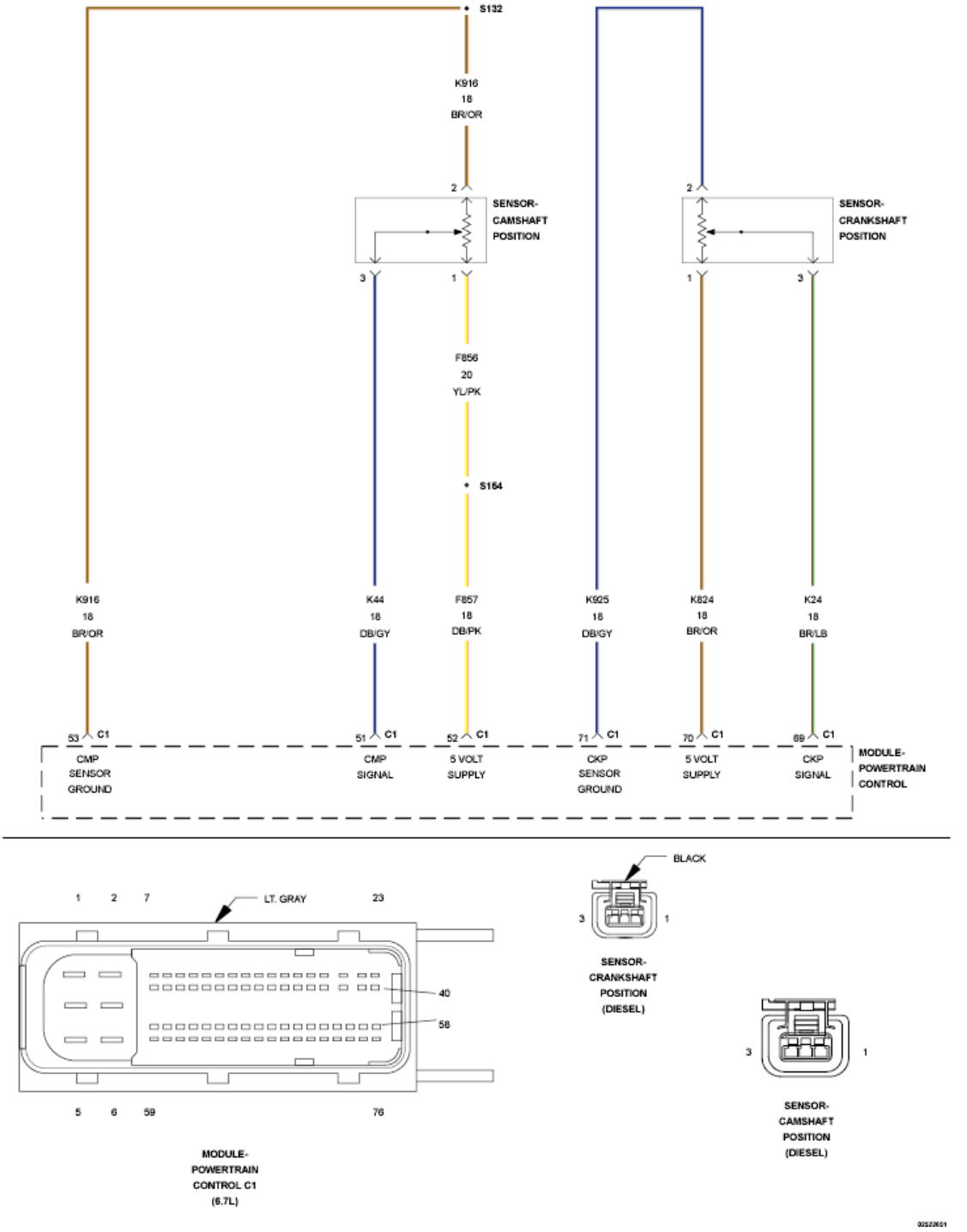

Fig. 128: Crankshaft Position Sensor & Camshaft Position Sensor Circuit Schematic
Courtesy of CHRYSLER GROUP, LLC

For a complete wiring diagram, **refer to appropriate SYSTEM WIRING DIAGRAMS article** .

THEORY OF OPERATION

The Powertrain Control Module (PCM) provides a 5-Volt supply to the engine Camshaft Position Sensor

(CMP) on the sensor supply circuit. The PCM also provides a ground on the sensor return circuit. The Camshaft Position Sensor provides a signal to the PCM on the sensor signal circuit. The CMP Sensor generates a signal to the PCM as the camshaft speed indicator lobe moves past the sensor. The PCM interprets this signal into an engine speed reading and determines engine position. This sensor is used as a backup sensor if the primary Crankshaft Position Sensor Signal is lost. The PCM illuminates the MIL lamp immediately after the diagnostic runs and fails. During the time the customer may experience a hard start/no start condition. The PCM will turn off the MIL lamp after the diagnostic runs and passes in four consecutive drive cycles.

WHEN MONITORED:

While the engine is running.

SET CONDITION:

The Powertrain Control Module (PCM) no longer detects a signal from the Camshaft Position Sensor.

POSSIBLE CAUSES

Possible Causes
(F857) 5-VOLT SUPPLY CIRCUIT OPEN/HIGH RESISTANCE
(K916) SENSOR RETURN CIRCUIT OPEN/HIGH RESISTANCE
(K44) CMP SIGNAL CIRCUIT SHORTED TO GROUND
(K44) CMP SIGNAL CIRCUIT SHORTED TO SUPPLY (F857) CIRCUIT
(K44) CMP SIGNAL CIRCUIT SHORTED TO (K916) RETURN CIRCUIT
(K44) CMP SIGNAL CIRCUIT SHORTED TO VOLTAGE
FAULTY FUEL INJECTOR
CAMSHAFT POSITION SENSOR
POWERTRAIN CONTROL MODULE (PCM)

Always perform the Pre-Diagnostic Troubleshooting procedure before proceeding. Refer to PRE-DIAGNOSTIC TROUBLESHOOTING PROCEDURE - 6.7L .

DIAGNOSTIC TEST

1. **ACTIVE DTC**

NOTE: **A faulty fuel injector can cause an erroneous CKP or CMP DTC to set. If there are any fuel injector related DTCs present, repair those DTCs before proceeding.**

NOTE: **If there are any 5-Volt supply DTCs present, repair those DTCs before proceeding.**

1. Turn the ignition on.
2. With the scan tool, record all Freeze frame data.

3. With the scan tool, erase DTCs.
4. Turn the ignition off for 75 seconds.
5. Start, or attempt to start the engine.
6. With the scan tool, read DTCs.

   Did the DTC reset?

   Yes

   - Go To 2.

   No

   - Perform the INTERMITTENT CONDITION - 6.7L diagnostic procedure. Refer to **INTERMITTENT CONDITION - 6.7L** .

2. **CHECK THE CAMSHAFT SENSOR**
   1. Turn the ignition off.
   2. Disconnect the CMP Sensor harness connector.

      NOTE: Check connectors - Clean/repair as necessary.

   3. Measure the resistance between the (F857) 5-Volt supply circuit and the (K44) CMP Signal circuit of the CMP sensor.

      Is the resistance between 900 and 1100 Ohms?

      Yes

      - Go To 3.

      No

      - Replace the Camshaft Position Sensor in accordance with the service information.
      - Perform the POWERTRAIN VERIFICATION TEST - 6.7L. Refer to **POWERTRAIN VERIFICATION TEST - 6.7L** .

3. **CHECK THE (F857) 5-VOLT SUPPLY CIRCUIT FOR AN OPEN/HIGH RESISTANCE**

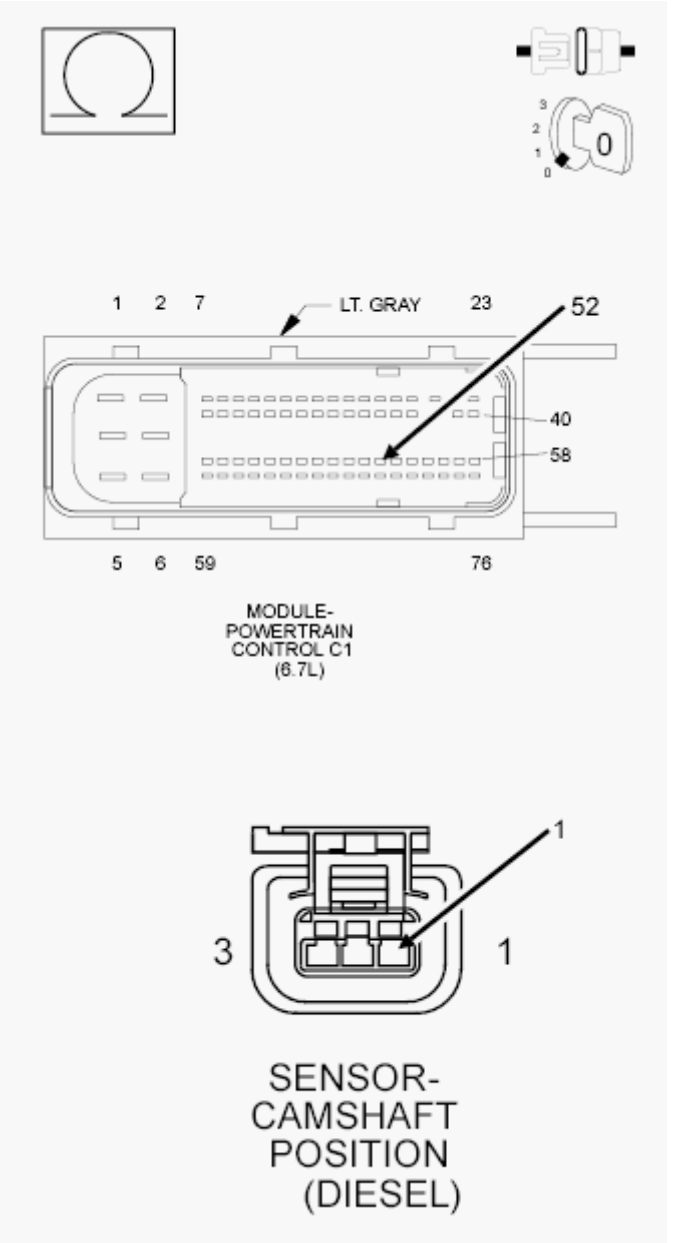

Fig. 129: Checking CMP 5-Volt Supply Circuit For Open Or High Resistance
Courtesy of CHRYSLER GROUP, LLC

1. Disconnect the PCM C1 harness connector.

   NOTE: Check connectors - Clean/repair as necessary.

2. Measure the resistance of the (F857) 5-Volt Supply circuit between the PCM C1 harness connector and the CMP Sensor harness connector.

   Is the resistance below 5.0 Ohms?

Yes

- Go To 4.

No

- Repair the (F857) 5-Volt Supply circuit for an open or high resistance.
- Perform the POWERTRAIN VERIFICATION TEST - 6.7L. Refer to **POWERTRAIN VERIFICATION TEST - 6.7L** .

4. **CHECK THE (K916) RETURN CIRCUIT FOR AN OPEN/HIGH RESISTANCE**

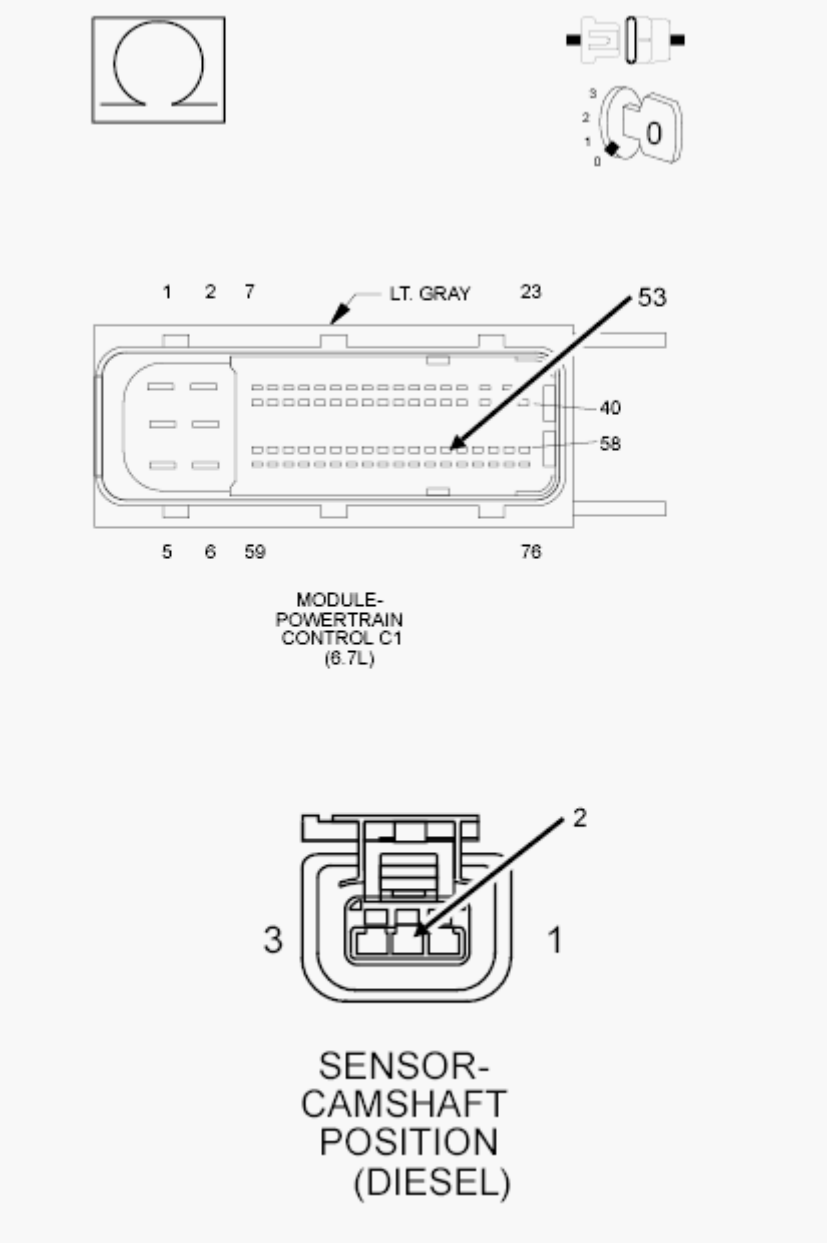

Fig. 130: Checking CMP Return Circuit For Open Or High Resistance

Courtesy of CHRYSLER GROUP, LLC

1. Measure the resistance of the (K916) Sensor Return circuit between the PCM C1 harness connector and the CMP Sensor harness connector.

   Is the resistance below 5.0 Ohms?

   Yes

   - Go To 5.

   No

   - Repair the (K916) Sensor Return circuit for an open or high resistance.
   - Perform the POWERTRAIN VERIFICATION TEST - 6.7L. Refer to **POWERTRAIN VERIFICATION TEST - 6.7L** .

5. **CHECK THE (K44) SIGNAL CIRCUIT FOR A SHORT TO GROUND**

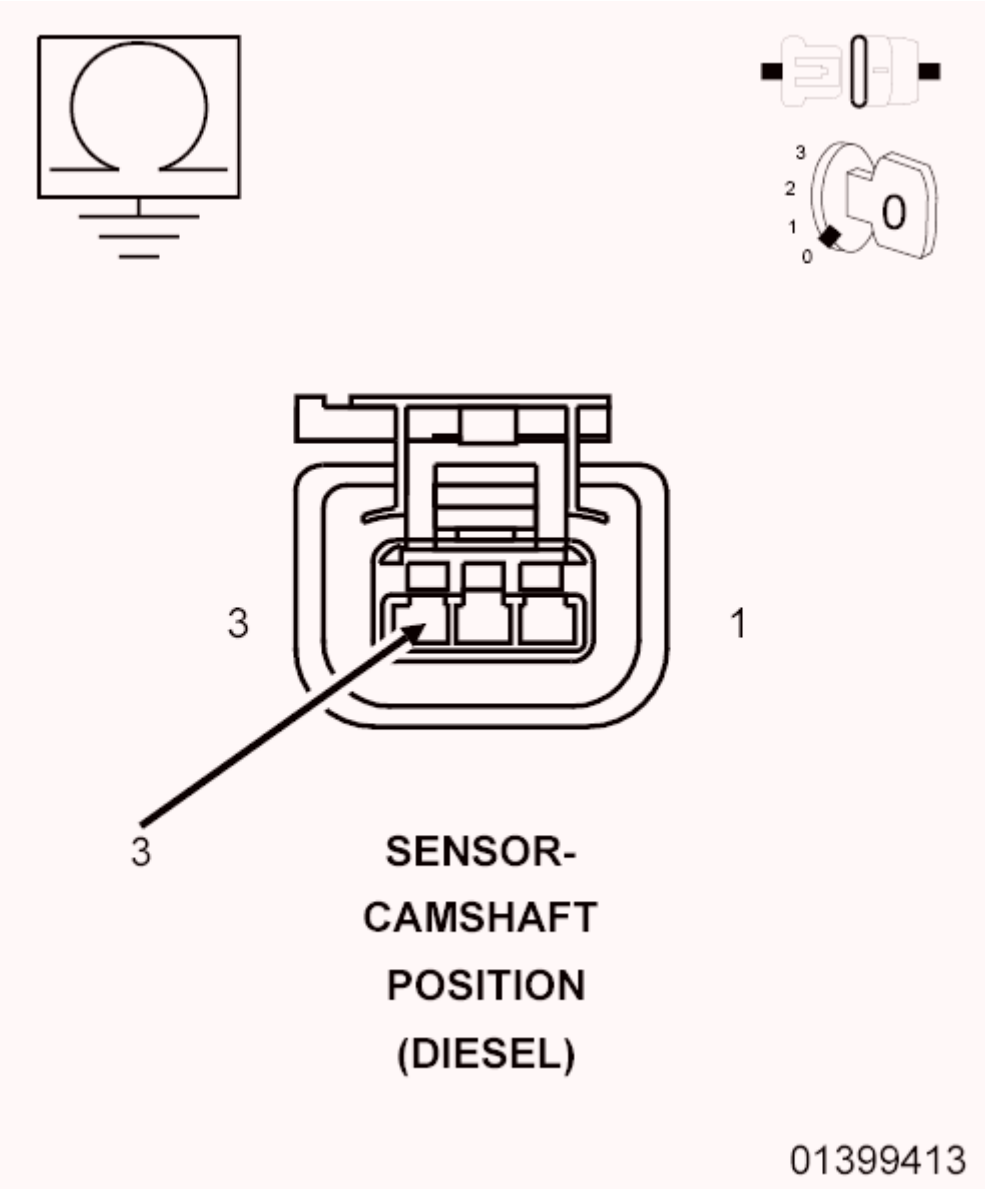

Fig. 131: Checking CMP Signal Circuit For Short To Ground
Courtesy of CHRYSLER GROUP, LLC

1. Measure the resistance between ground and the (K44) CMP Signal circuit in the CMP Sensor harness connector.

   Is the resistance below 10k Ohms?

   Yes

   - Repair the (K44) CMP Signal circuit for a short to ground.
   - Perform the POWERTRAIN VERIFICATION TEST - 6.7L. Refer to **POWERTRAIN VERIFICATION TEST - 6.7L** .

No

- Go To 6.

6. **CHECK FOR THE (K44) SIGNAL CIRCUIT SHORTED TO THE (F857) 5-VOLT SUPPLY CIRCUIT**

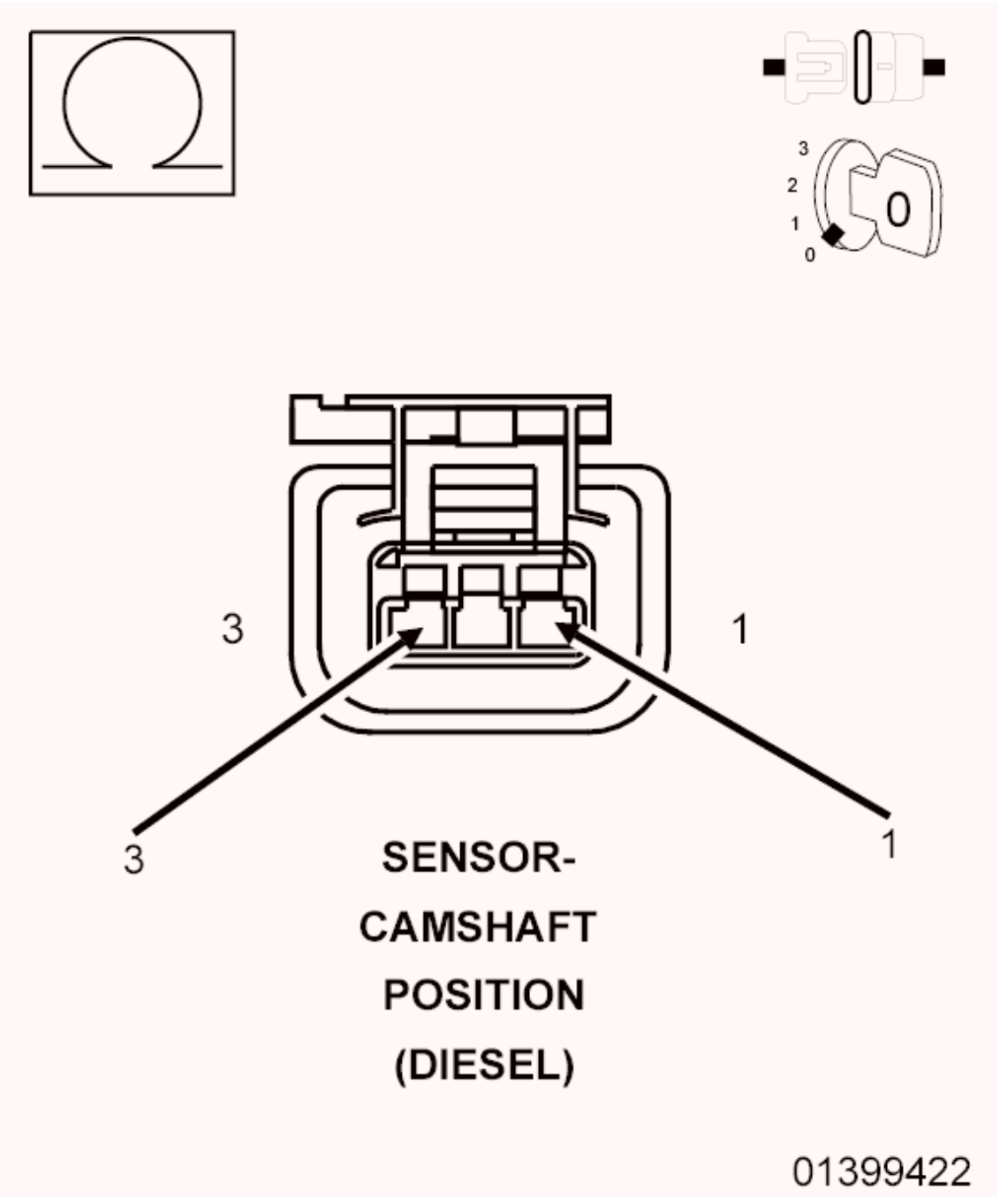

Fig. 132: Checking Signal Circuit For Short To 5-Volt Supply Circuit
Courtesy of CHRYSLER GROUP, LLC

1. Measure the resistance between the (K44) CMP Signal circuit and the (F857) 5-Volt Supply circuit in the CMP Sensor harness connector.

   Is the resistance below 10k Ohms?

   Yes

   - Repair the short between the (K44) CMP Sensor circuit and the (F857) 5-Volt supply circuit.
   - Perform the POWERTRAIN VERIFICATION TEST - 6.7L. Refer to **POWERTRAIN VERIFICATION TEST - 6.7L** .

   No

   - Go To 7.

7. **CHECK FOR THE (K44) SIGNAL CIRCUIT SHORTED TO THE (K916) RETURN CIRCUIT**

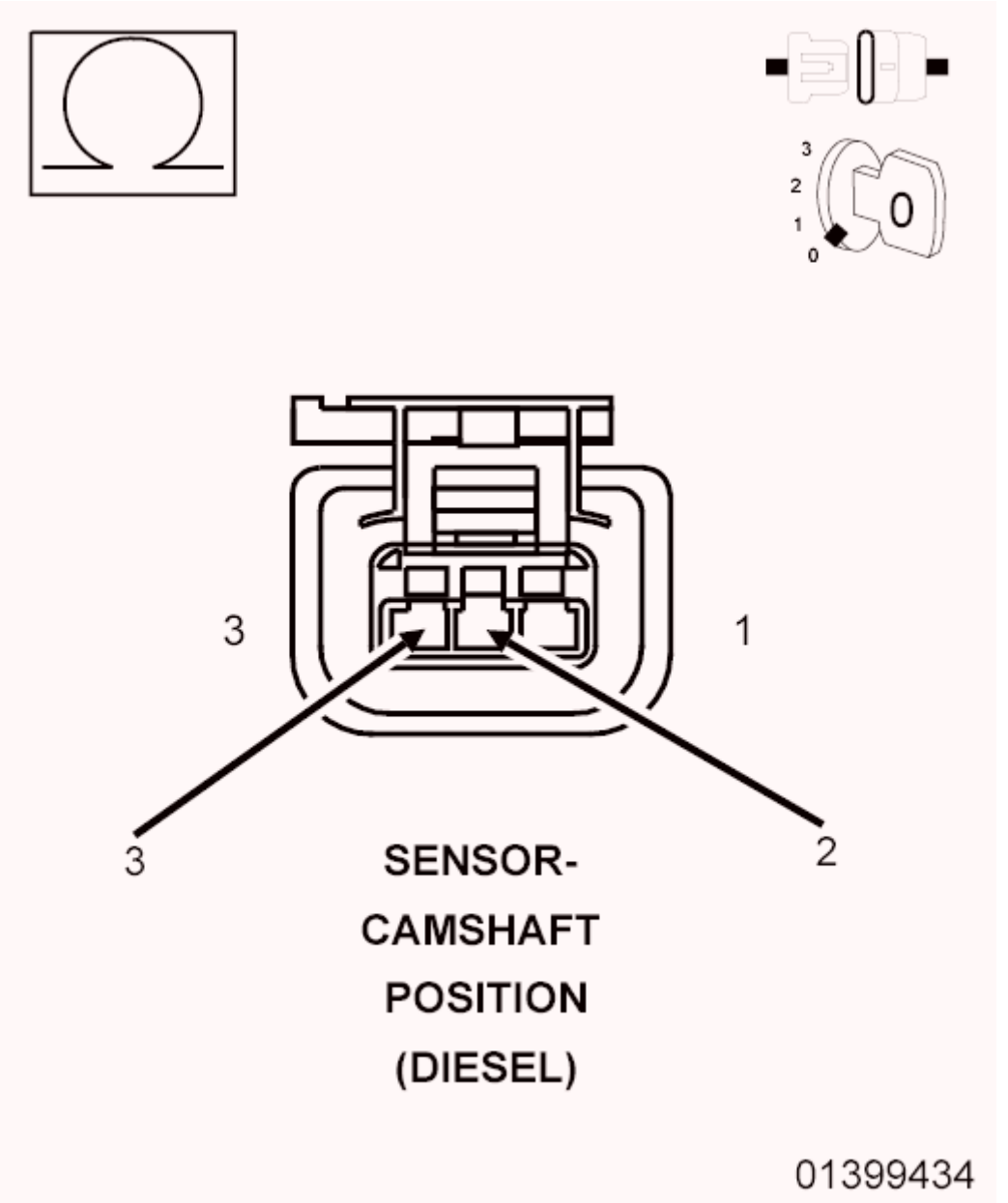

Fig. 133: Checking Signal Circuit For Short To Return Circuit
Courtesy of CHRYSLER GROUP, LLC

1. Measure the resistance between the (K44) CMP Signal circuit and the (K916) Sensor Return circuit in the CMP Sensor harness connector.

   Is the resistance below 10k Ohms?

   Yes

   - Repair the short between the (K44) CMP Signal circuit and the (K916) Sensor Return circuit.
   - Perform the POWERTRAIN VERIFICATION TEST - 6.7L. Refer to **POWERTRAIN**

VERIFICATION TEST - 6.7L .

No

- Go To 8.

8. **CHECK THE (K44) SIGNAL CIRCUIT FOR A SHORT TO VOLTAGE**

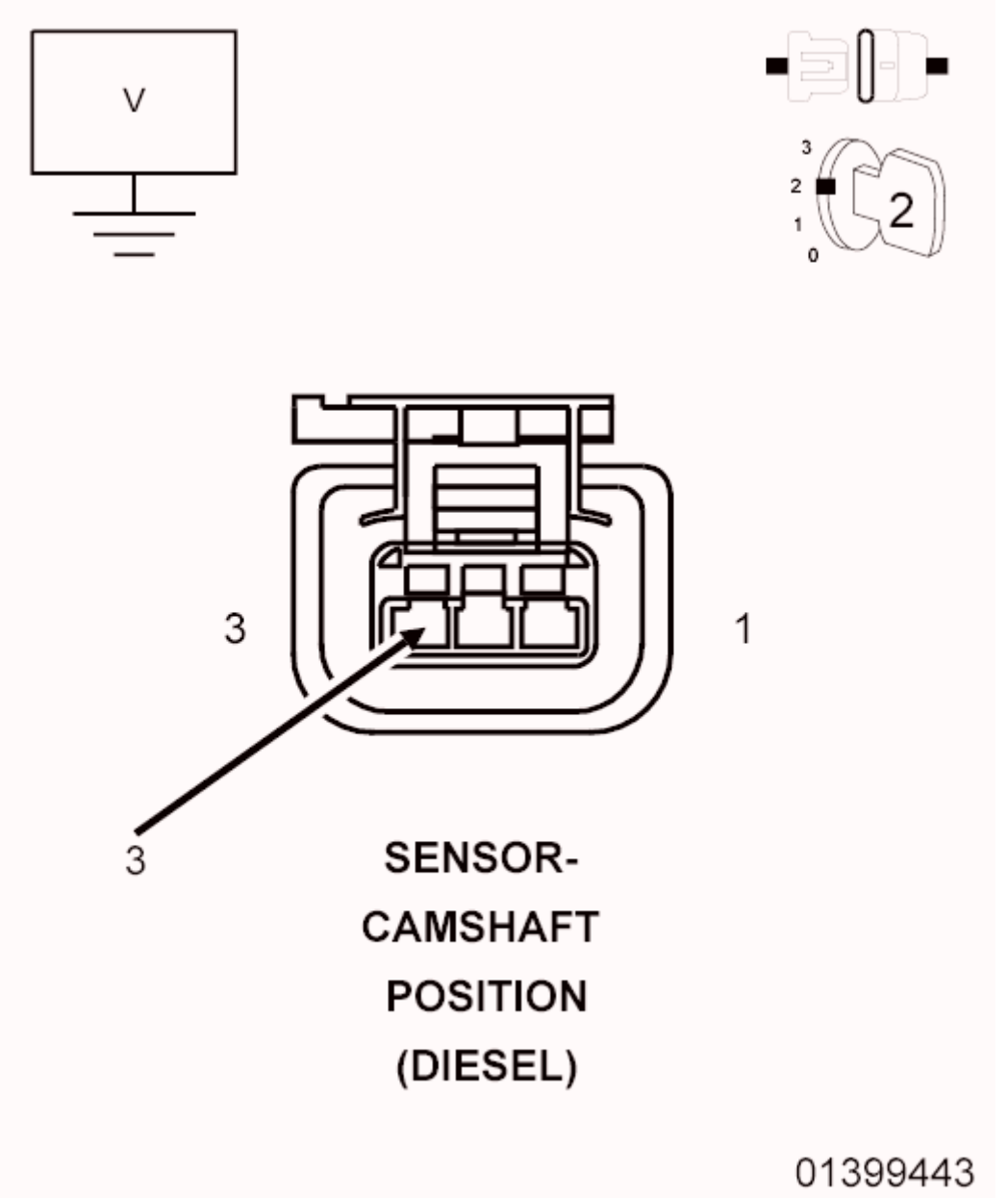

Fig. 134: Checking Signal Circuit For Short To Voltage
Courtesy of CHRYSLER GROUP, LLC

1. Turn the ignition on.
2. Measure the voltage on the (K44) CMP Signal circuit at the CMP sensor harness connector.

Is there any voltage present?

Yes

- Repair (K44) CMP Signal circuit for a short to voltage.
- Perform the POWERTRAIN VERIFICATION TEST - 6.7L. Refer to **POWERTRAIN VERIFICATION TEST - 6.7L** .

No

- Go To 9.

9. **CHECK THE POWERTRAIN CONTROL MODULE**

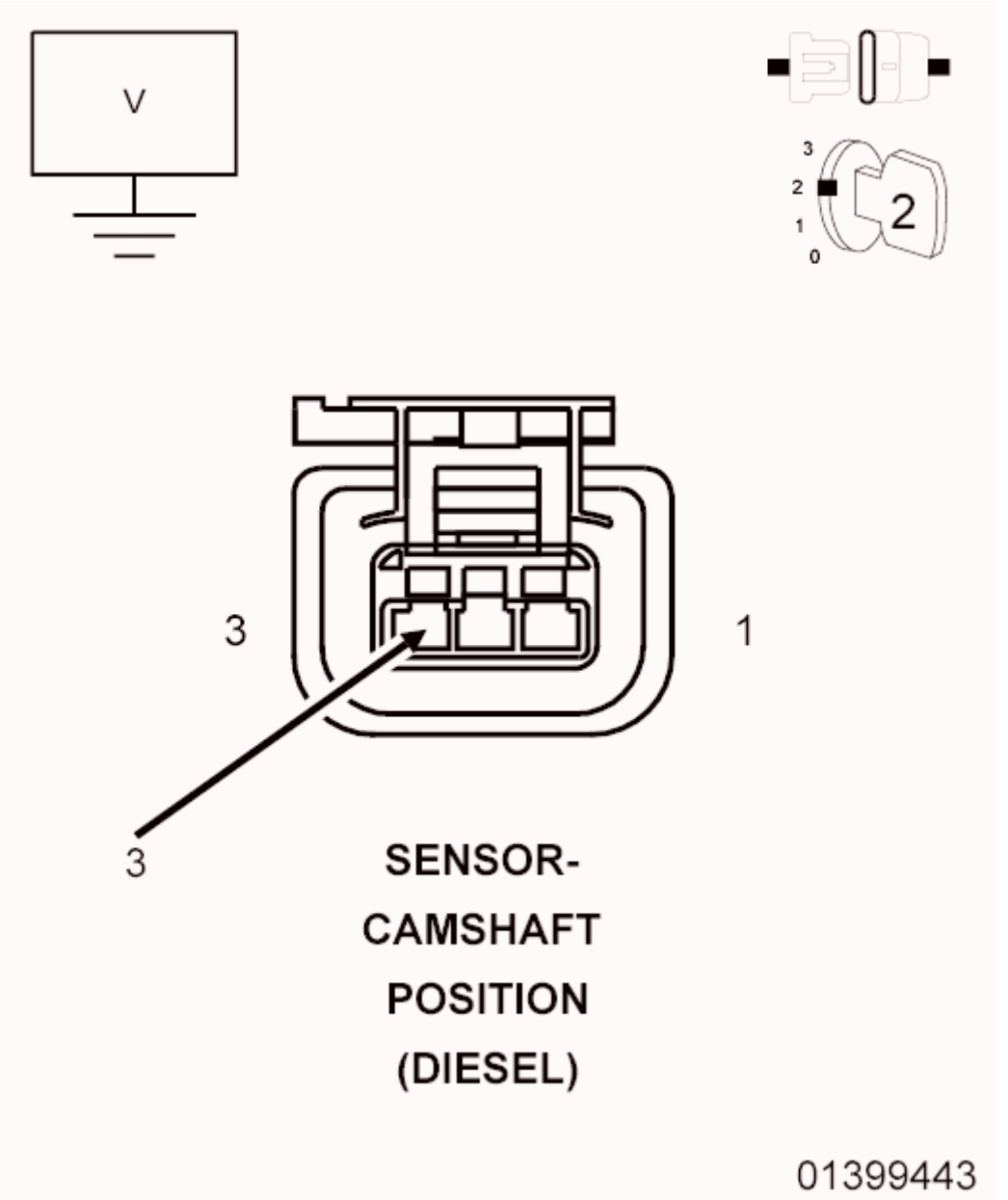

Fig. 135: Checking Signal Circuit For Short To Voltage
Courtesy of CHRYSLER GROUP, LLC

1. Reconnect the PCM C1 harness connector.
2. Measure the voltage of the (K44) CMP Signal circuit at the CMP sensor harness connector.

   Is the voltage reading below 1.0 Volt?

   Yes

   - Perform the INTERMITTENT CONDITION - 6.7L diagnostic procedure. Refer to **INTERMITTENT CONDITION - 6.7L** .

No

- Replace and program the Powertrain Control Module in accordance with the service information.
- Perform the POWERTRAIN VERIFICATION TEST - 6.7L. Refer to **POWERTRAIN VERIFICATION TEST - 6.7L** .

P0341-CAMSHAFT POSITION SENSOR PERFORMANCE - BANK 1 SENSOR 1

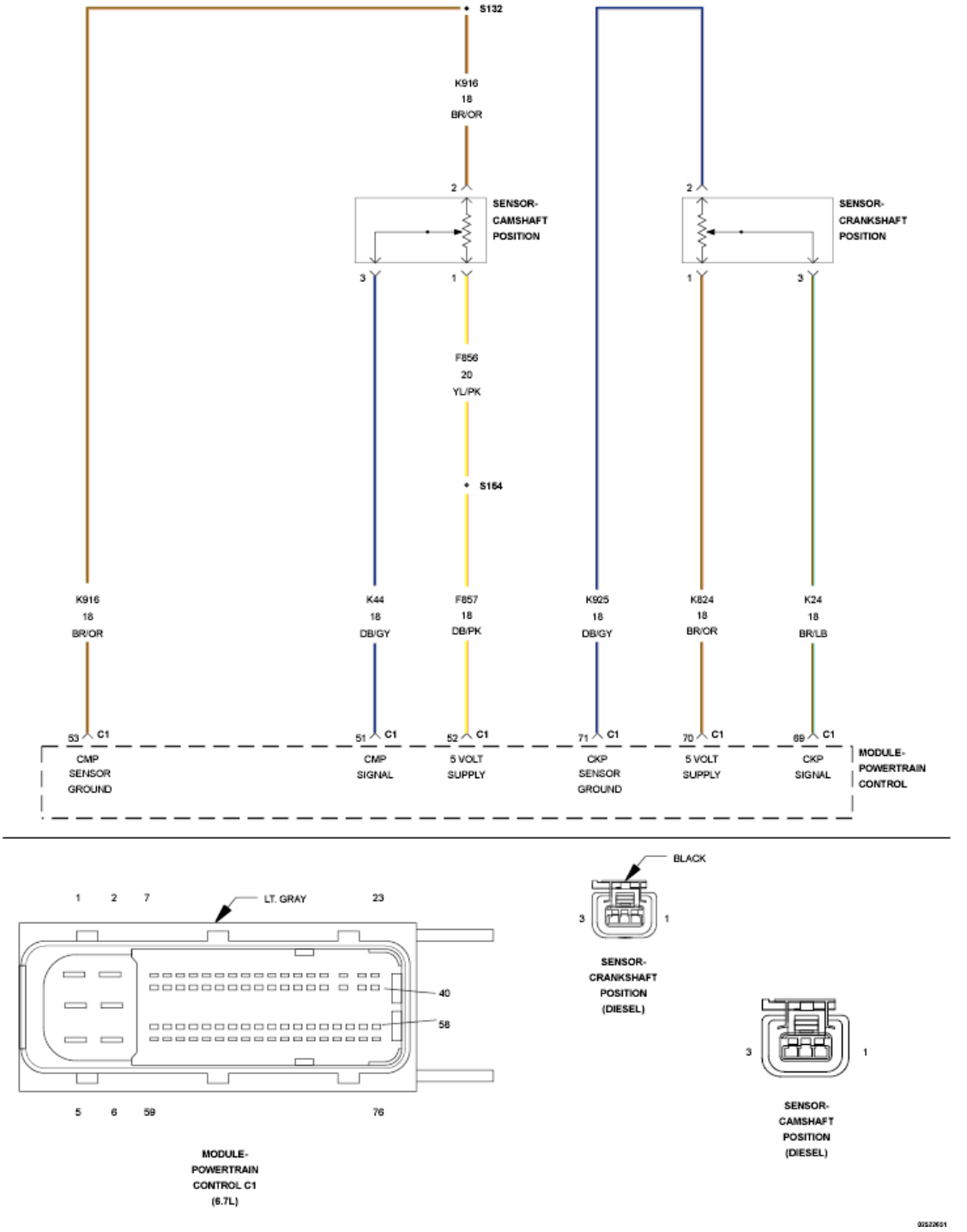

Fig. 136: Crankshaft Position Sensor & Camshaft Position Sensor Circuit Schematic
Courtesy of CHRYSLER GROUP, LLC

For a complete wiring diagram, **refer to appropriate SYSTEM WIRING DIAGRAMS article** .

THEORY OF OPERATION

The Powertrain Control Module (PCM) provides a 5-Volt supply to the engine Camshaft Position Sensor

(CMP) on the sensor supply circuit. The PCM also provides a ground on the sensor return circuit. The Camshaft Position Sensor provides a signal to the PCM on the sensor signal circuit. The CMP Sensor generates a signal to the PCM as the camshaft speed indicator lobe moves past the sensor. The PCM interprets this signal into an engine speed reading and determines engine position. This sensor is used as a backup sensor if the primary Crankshaft Position Sensor Signal is lost. The PCM illuminates the MIL lamp immediately after the diagnostic runs and fails. During the time the customer may experience a hard start/no start condition. The PCM will turn off the MIL lamp after the diagnostic runs and passes in four consecutive drive cycles.

WHEN MONITORED:

While the engine is running.

SET CONDITION:

The Powertrain Control Module (PCM) no longer detects a signal from the Camshaft Position Sensor.

POSSIBLE CAUSES

Possible Causes
(K44) CMP SIGNAL CIRCUIT OPEN/HIGH RESISTANCE
(F857) 5-VOLT SUPPLY CIRCUIT OPEN/HIGH RESISTANCE
(K916) SENSOR RETURN CIRCUIT OPEN/HIGH RESISTANCE
(K44) CMP SIGNAL CIRCUIT SHORTED TO GROUND
(K44) CMP SIGNAL CIRCUIT SHORTED TO THE (F855) 5-VOLT SUPPLY CIRCUIT
(K44) CMP SIGNAL CIRCUIT SHORTED TO THE (K916) RETURN CIRCUIT
(K44) CMP SIGNAL CIRCUIT SHORTED TO VOLTAGE
FAULTY FUEL INJECTOR
CAMSHAFT POSITION SENSOR
POWERTRAIN CONTROL MODULE (PCM)

Always perform the Pre-Diagnostic Troubleshooting procedure before proceeding. Refer to PRE-DIAGNOSTIC TROUBLESHOOTING PROCEDURE - 6.7L .

DIAGNOSTIC TEST

1. **ACTIVE DTC**

NOTE: **A faulty fuel injector can cause an erroneous CKP or CMP DTC to set. If there are any fuel injector related DTCs present, repair those DTCs before proceeding.**

NOTE: **If there are any 5-Volt supply DTCs present, repair those DTCs before proceeding.**

1. Turn the ignition on.

2. With the scan tool, record all Freeze frame data.
3. With the scan tool, erase DTCs.
4. Turn the ignition off for 75 seconds.
5. Start, or attempt to start the engine.
6. With the scan tool, read DTCs.

   Did the DTC reset?

   Yes

   - Go To 2.

   No

   - Perform the INTERMITTENT CONDITION - 6.7L diagnostic procedure. Refer to **INTERMITTENT CONDITION - 6.7L** .

2. **CHECK THE CAMSHAFT SENSOR**
   1. Turn the ignition off.
   2. Disconnect the CMP Sensor harness connector.

      NOTE: Check connectors - Clean/repair as necessary.

   3. Measure the resistance between the (F857) 5-Volt Supply Circuit and the (K44) CMP Signal Circuit at the CMP Sensor harness connector.

      Is the resistance between 900 and 1100 Ohms?

      Yes

      - Go To 3.

      No

      - Replace the Camshaft Position Sensor in accordance with the service information.
      - Perform the POWERTRAIN VERIFICATION TEST - 6.7L. Refer to **POWERTRAIN VERIFICATION TEST - 6.7L** .

3. **CHECK THE (K44) CMP SIGNAL CIRCUIT FOR AN OPEN/HIGH RESISTANCE**

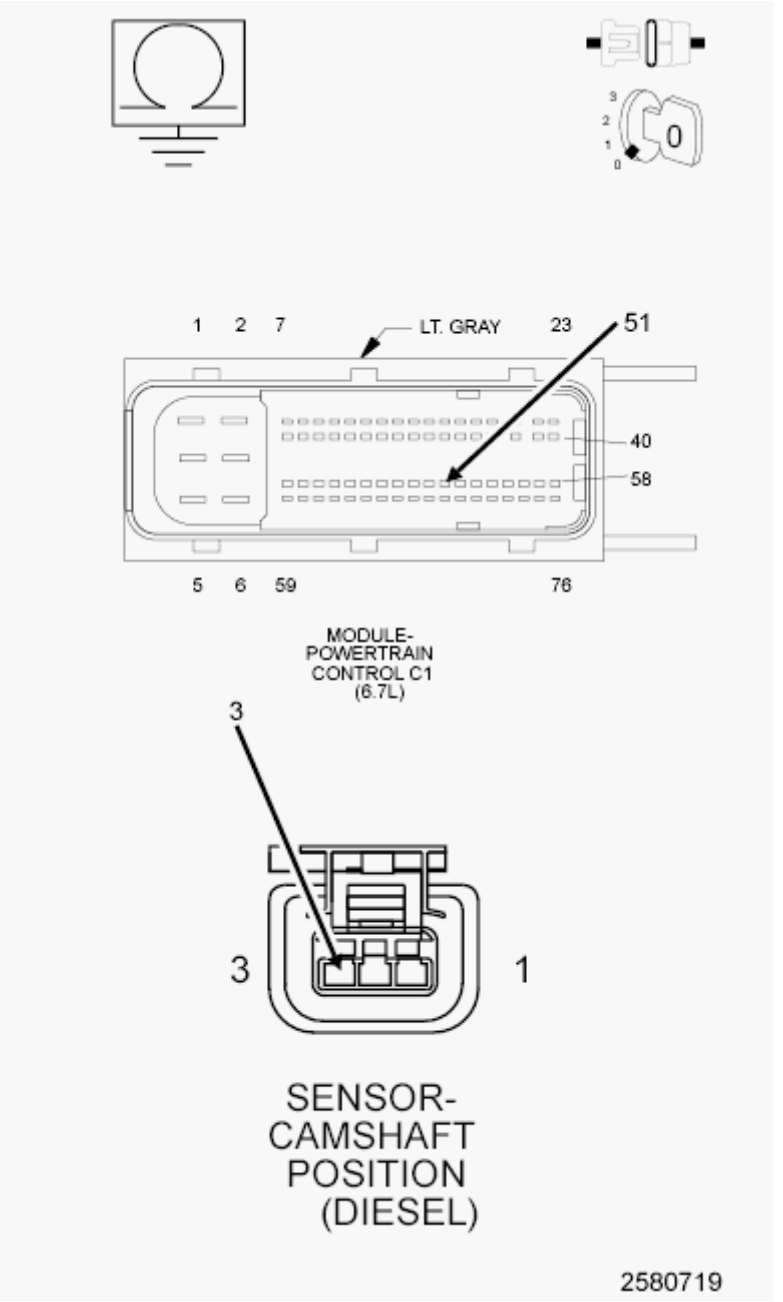

Fig. 137: Checking CMP Signal Circuit For Open Or High Resistance
Courtesy of CHRYSLER GROUP, LLC

1. Disconnect the PCM C1 harness connector.

   NOTE: Check connectors - Clean/repair as necessary.

2. Measure the resistance of the (K44) CMP Signal Circuit between the PCM C1 harness connector and the CMP Sensor harness connector.

   Is the resistance below 5.0 Ohms?

Yes

- Go To 4.

No

- Repair the (K44) CMP Signal circuit for an open or high resistance.
- Perform the POWERTRAIN VERIFICATION TEST - 6.7L. Refer to **POWERTRAIN VERIFICATION TEST - 6.7L** .

4. **CHECK THE (F857) 5-VOLT SUPPLY CIRCUIT FOR AN OPEN/HIGH RESISTANCE**

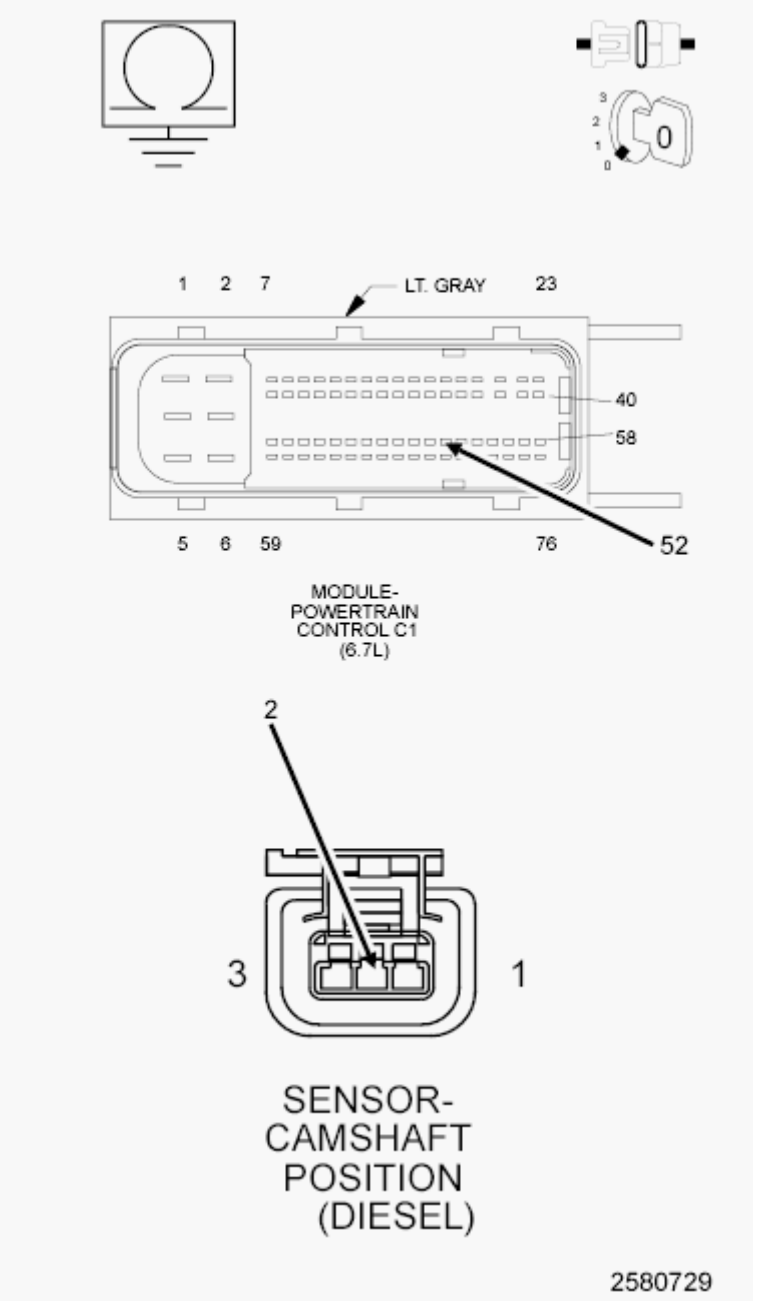

Fig. 138: Checking CMP 5-Volt Supply Circuit For An Open Or High Resistance
Courtesy of CHRYSLER GROUP, LLC

1. Measure the resistance of the (F857) 5-Volt Supply circuit between the PCM C1 harness connector and the CMP Sensor harness connector.

   Is the resistance below 5.0 Ohms?

   Yes

   - Go To 5.

   No

   - Repair the (F857) 5-Volt Supply circuit for an open or high resistance.
   - Perform the POWERTRAIN VERIFICATION TEST - 6.7L. Refer to **POWERTRAIN VERIFICATION TEST - 6.7L** .

5. **CHECK THE (K916) RETURN CIRCUIT FOR AN OPEN/HIGH RESISTANCE**

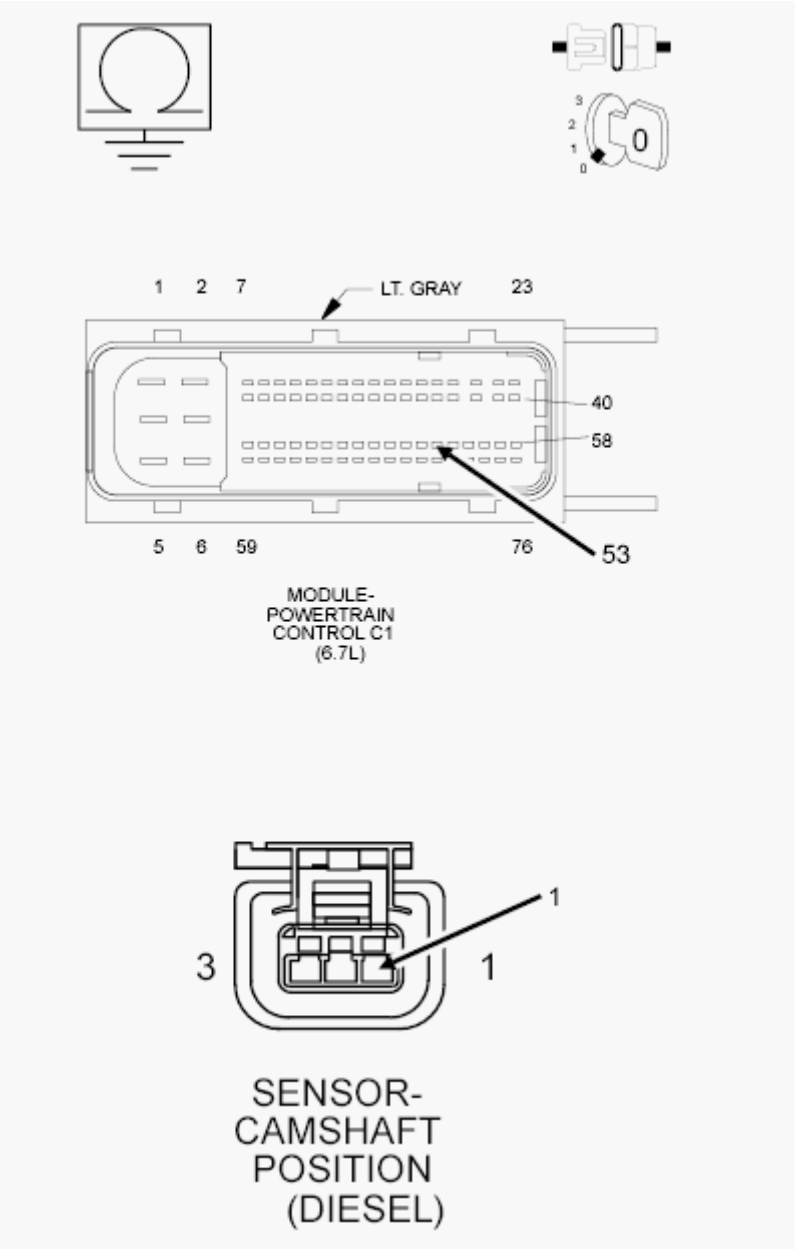

Fig. 139: Checking CMP Return Circuit For An Open Or High Resistance
Courtesy of CHRYSLER GROUP, LLC

1. Measure the resistance of the (K916) Sensor Return circuit between the PCM C1 harness connector and the CMP Sensor harness connector.

   Is the resistance below 5.0 Ohms?

   Yes

   - Go To 6.

   No

- Repair the (K916) Sensor Return circuit for an open or high resistance.
- Perform the POWERTRAIN VERIFICATION TEST - 6.7L. Refer to **POWERTRAIN VERIFICATION TEST - 6.7L** .

6. **CHECK THE (K44) SIGNAL CIRCUIT FOR A SHORT TO GROUND**

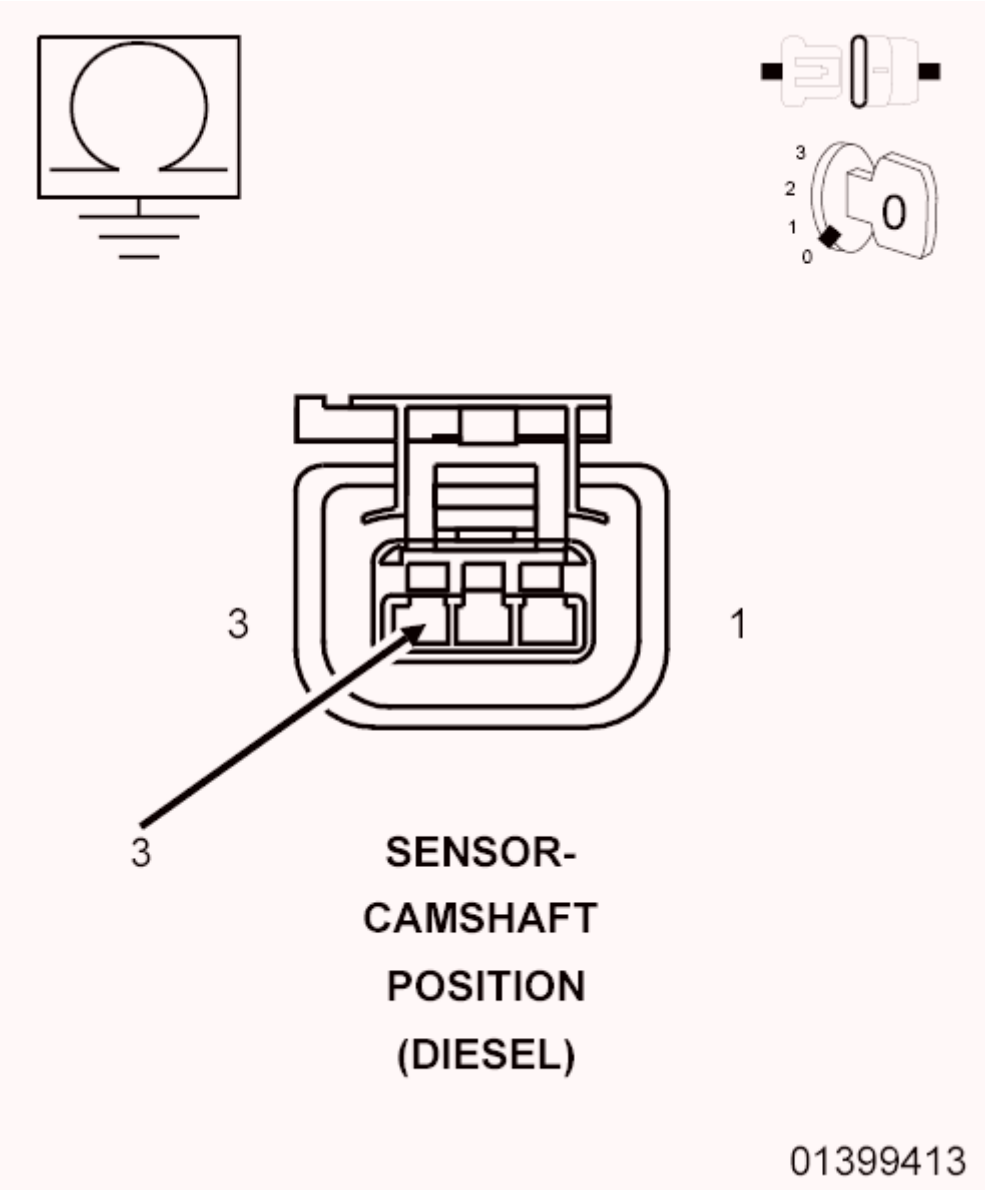

Fig. 140: Checking CMP Signal Circuit For Short To Ground
Courtesy of CHRYSLER GROUP, LLC

1. Measure the resistance between ground and the (K44) CMP Signal circuit at the CMP Sensor harness connector.

   Is the resistance below 10k Ohms?

Yes

- Repair the (K44) CMP Signal circuit for a short to ground.
- Perform the POWERTRAIN VERIFICATION TEST - 6.7L. Refer to **POWERTRAIN VERIFICATION TEST - 6.7L** .

No

- Go To 7.

7. **CHECK FOR THE (K44) SIGNAL CIRCUIT SHORTED TO THE (F857) 5-VOLT SUPPLY CIRCUIT**

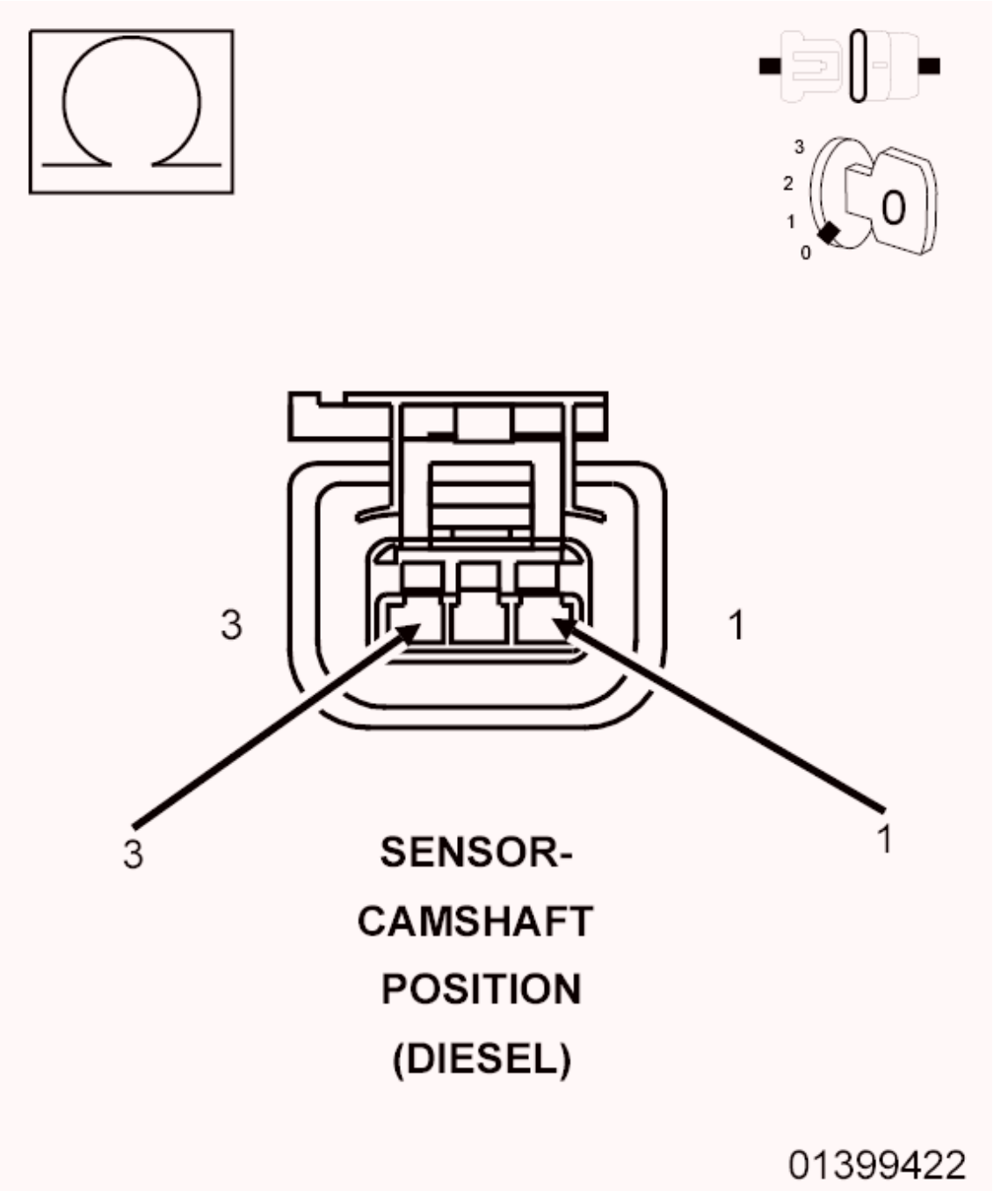

Fig. 141: Checking Signal Circuit For Short To 5-Volt Supply Circuit
Courtesy of CHRYSLER GROUP, LLC

1. Measure the resistance between the (K44) CMP Signal circuit and the (F857) 5-Volt Supply circuit in the CMP Sensor harness connector.

   Is the resistance below 10k Ohms?

   Yes

- Repair the short between the (K44) CMP Signal circuit and the (F857) 5-Volt Supply circuit.
- Perform the POWERTRAIN VERIFICATION TEST - 6.7L. Refer to **POWERTRAIN VERIFICATION TEST - 6.7L** .

No

- Go To 8.

8. **CHECK FOR THE (K44) SIGNAL CIRCUIT SHORTED TO THE (K916) RETURN CIRCUIT**

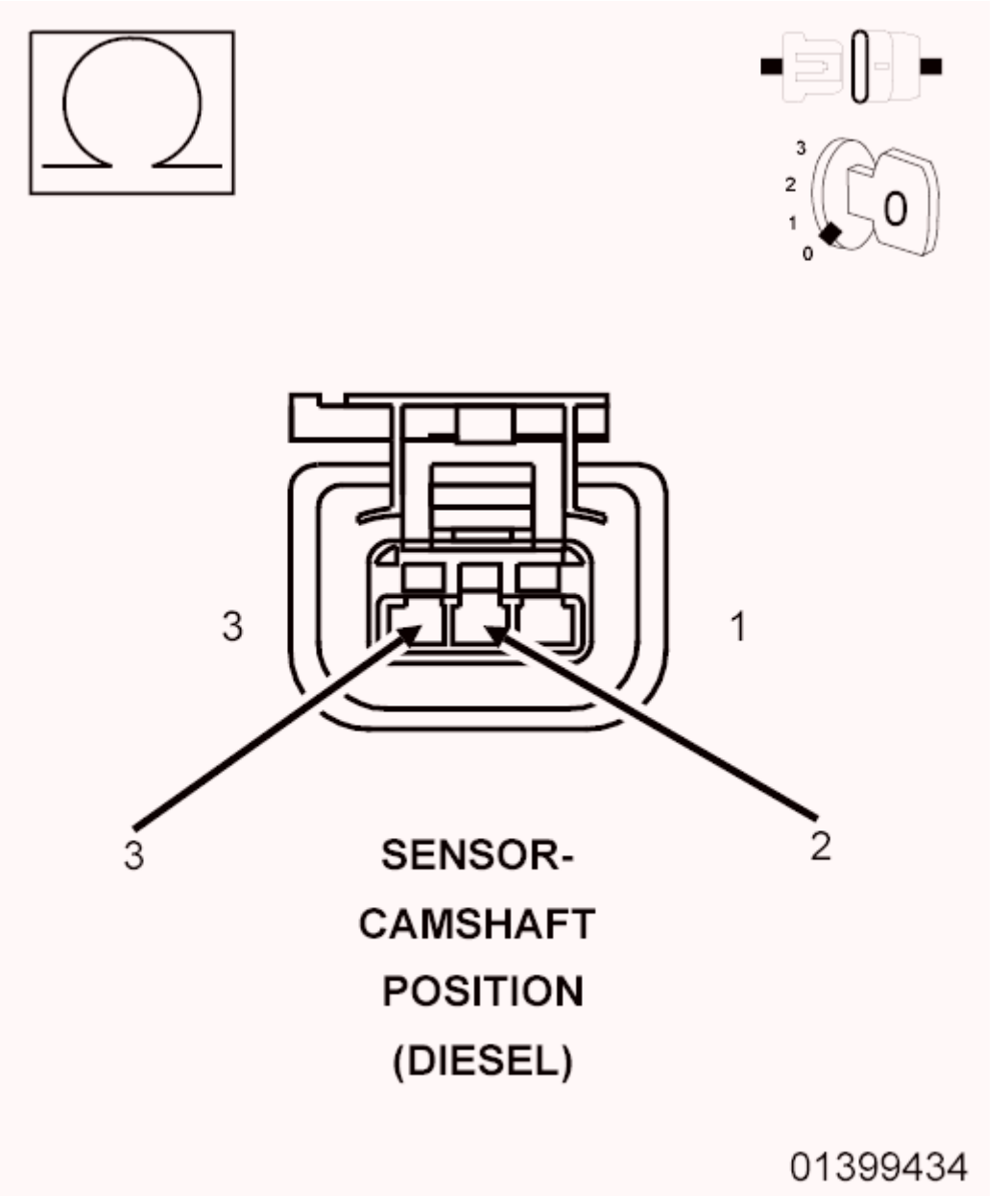

Fig. 142: Checking Signal Circuit For Short To Return Circuit
Courtesy of CHRYSLER GROUP, LLC

1. Measure the resistance between the (K44) CMP Signal circuit and the (K916) Sensor Return circuit at the CMP Sensor harness connector.

   Is the resistance below 10k Ohms?

   Yes

   - Repair the short between the (K44) CMP Signal circuit and the (K916) Sensor Return circuit.
   - Perform the POWERTRAIN VERIFICATION TEST - 6.7L. Refer to **POWERTRAIN VERIFICATION TEST - 6.7L** .

   No

   - Go To 9.

9. **CHECK THE (K44) SIGNAL CIRCUIT FOR A SHORT TO VOLTAGE**

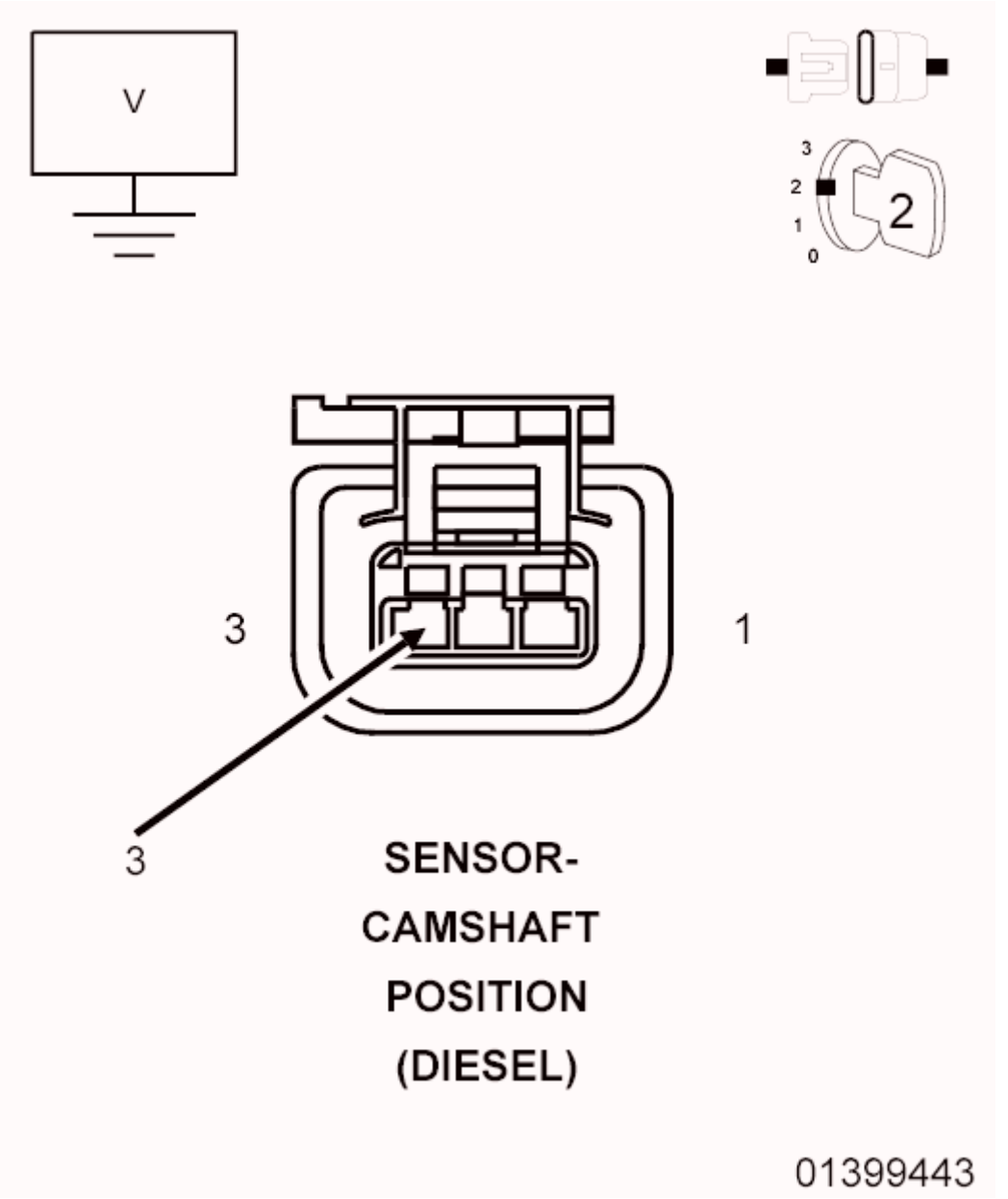

Fig. 143: Checking Signal Circuit For Short To Voltage
Courtesy of CHRYSLER GROUP, LLC

1. Turn the ignition on.
2. Measure the voltage on the (K44) CMP Signal circuit at the CMP Sensor harness connector.

   Is there any voltage present?

   Yes

   - Repair the (K44) CMP Signal circuit for a short to voltage.
   - Perform the POWERTRAIN VERIFICATION TEST - 6.7L. Refer to **POWERTRAIN**

VERIFICATION TEST - 6.7L .

No

- Go To 10.

10. **CHECK THE POWERTRAIN CONTROL MODULE**

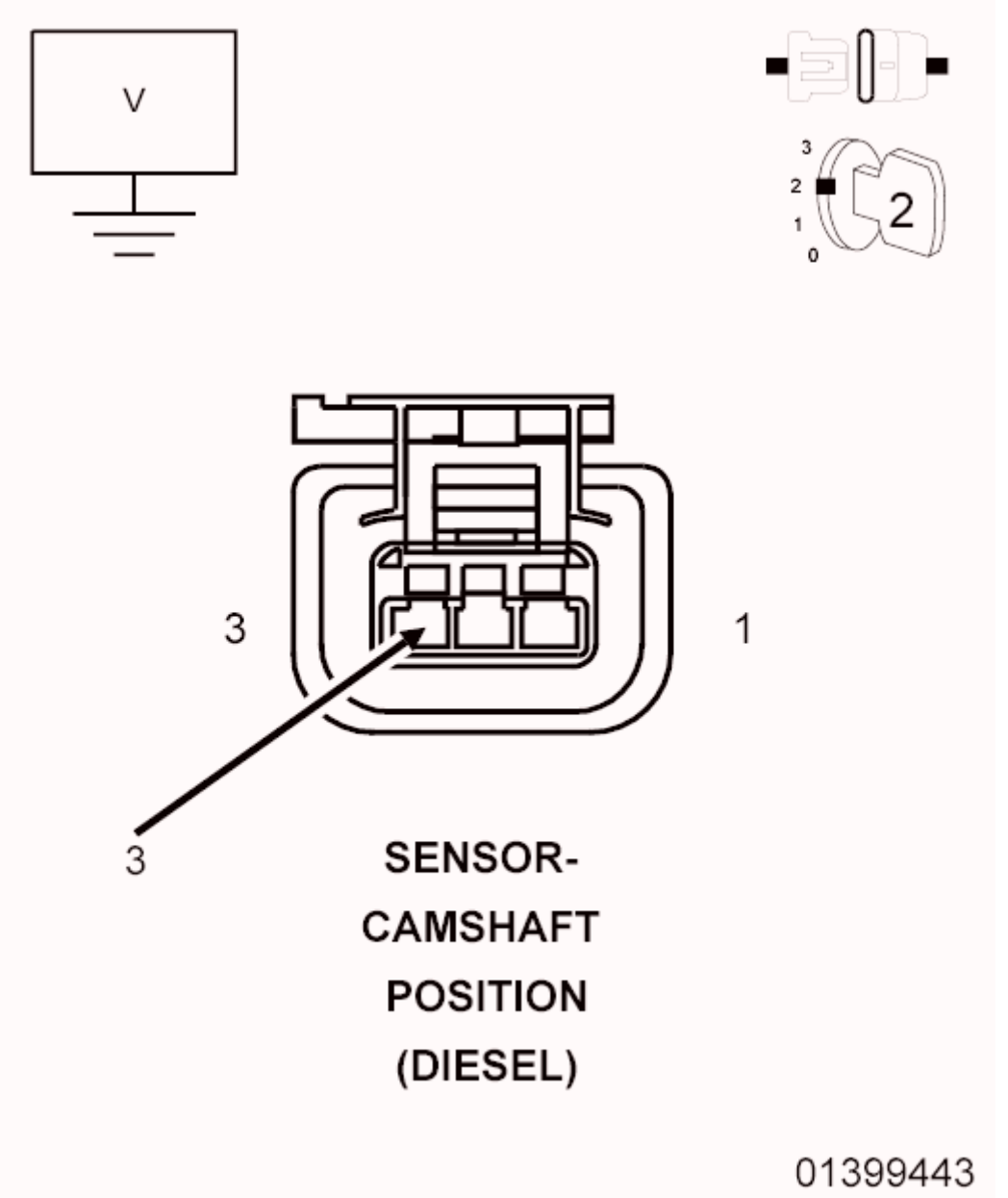

Fig. 144: Checking Signal Circuit For Short To Voltage
Courtesy of CHRYSLER GROUP, LLC

1. Reconnect the PCM C1 harness connector.
2. Measure the voltage of the (K44) CMP Signal circuit at the CMP Sensor harness connector.

Is the voltage below 1.0 volt?

Yes

- Test Complete.

No

- Replace and program the Powertrain Control Module in accordance with the service information. Refer to **PCM - REMOVAL** , also see **PCM/ECM / TCM PROGRAMMING** .
- Perform the POWERTRAIN VERIFICATION TEST - 6.7L. Refer to **POWERTRAIN VERIFICATION TEST - 6.7L** .

P0381-WAIT TO START LAMP INOPERATIVE

For a complete wiring diagram, **refer to appropriate SYSTEM WIRING DIAGRAMS article** .

WHEN MONITORED:

Ignition on.

SET CONDITION:

The cluster sends a signal to the Powertrain Control Module (PCM) that it has detected a failed wait to start lamp.

POSSIBLE CAUSES

Possible Causes
FUSED IGNITION SWITCH OUTPUT CIRCUIT OPEN/HIGH RESISTANCE
WAIT-TO-START LIGHT BULB
WIRING/CONNECTOR PROBLEM

Always perform the Pre-Diagnostic Troubleshooting procedure before proceeding. Refer to PRE-DIAGNOSTIC TROUBLESHOOTING PROCEDURE - 6.7L .

DIAGNOSTIC TEST

1. **WAIT-TO-START LAMP DOES NOT COME ON**
    1. Turn the ignition off.
    2. While watching the Wait-To-Start lamp, turn the ignition key on.

    Did the Wait-To-Start lamp light?

    Yes

- Go To 2.

No

- Go To 3.

2. **WAIT-TO-START LAMP STAYS ON ALL THE TIME**
   1. Turn the ignition off.
   2. While watching the Wait-To-Start lamp, turn the ignition key on.

      Does the Wait-To-Start lamp stay on all the time?

      Yes

      - Go To 3.

      No

      - Wait-To-Start Lamp operating normally. Test passed.
      - Perform the POWERTRAIN VERIFICATION TEST - 6.7L. Refer to **POWERTRAIN VERIFICATION TEST - 6.7L** .
3. **CHECK THE FUSED IGNITION SWITCH OUTPUT CIRCUIT FOR AN OPEN/HIGH RESISTANCE**

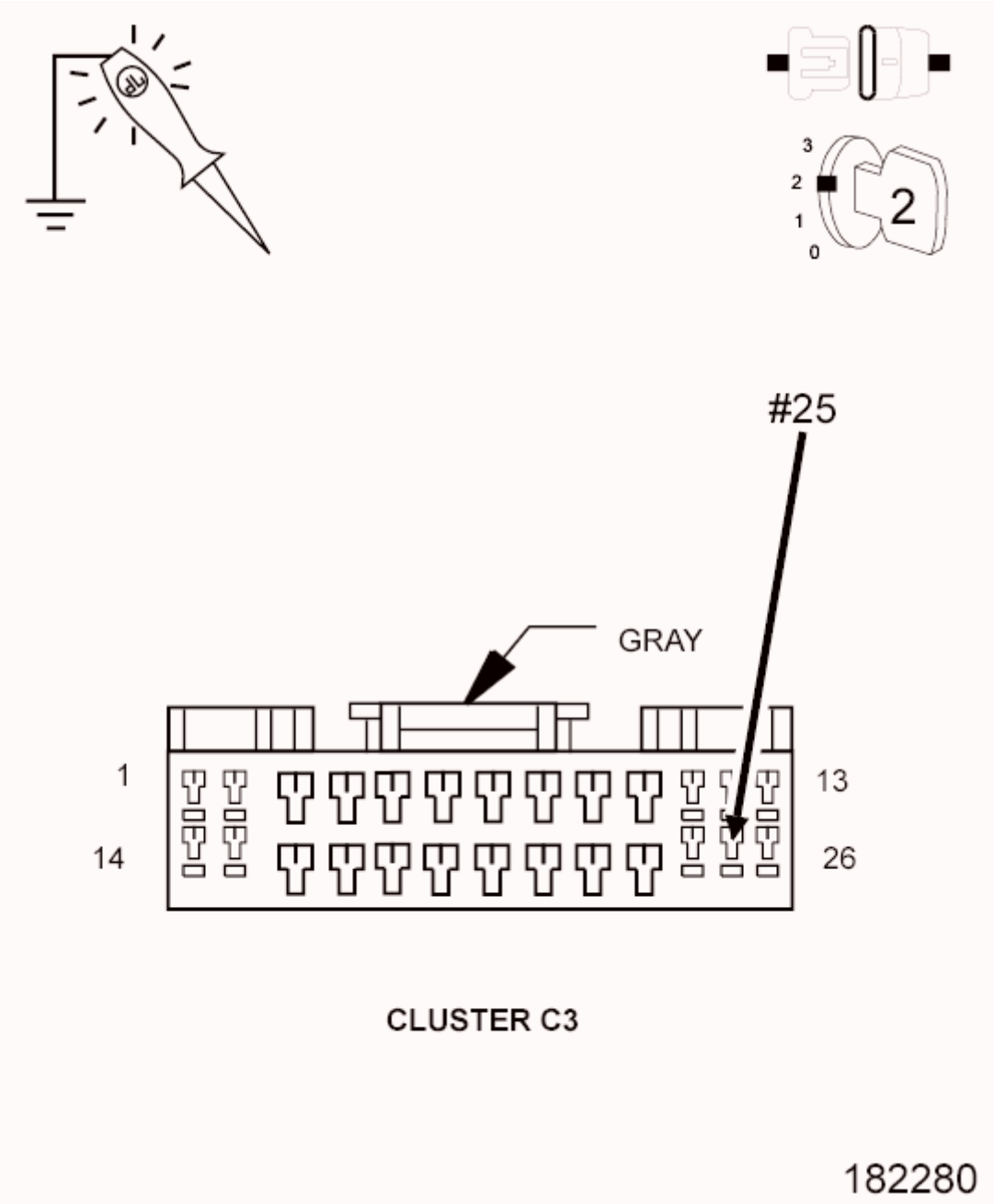

Fig. 145: Locating Fused Ignition Switch Run/Start Circuit In IP Cluster C3 (Gray) Connector
Courtesy of CHRYSLER GROUP, LLC

1. Turn the ignition off.
2. Remove the cluster.

NOTE: Check connectors - Clean/repair as necessary.

3. Turn the ignition on.
4. Using a 12-Volt test light, check the Fused Ignition Switch Run/Start circuit while the ignition is in

the run/start position.

Is the light illuminated and bright?

Yes

- Go To 4.

No

- Repair the Fused Ignition Switch Output circuit for an open or high resistance.
- Perform the POWERTRAIN VERIFICATION TEST - 6.7L. Refer to **POWERTRAIN VERIFICATION TEST - 6.7L** .

4. **CHECK THE WAIT-TO-START LIGHT BULB**
   1. Remove and inspect the Wait-to-Start Bulb.

   Is the Bulb Ok?

   Yes

   - Test complete.

   No

   - Replace the Wait-to-Start Bulb in accordance with the service information.
   - Perform the POWERTRAIN VERIFICATION TEST - 6.7L. Refer to **POWERTRAIN VERIFICATION TEST - 6.7L** .

P0401-EGR SYSTEM PERFORMANCE

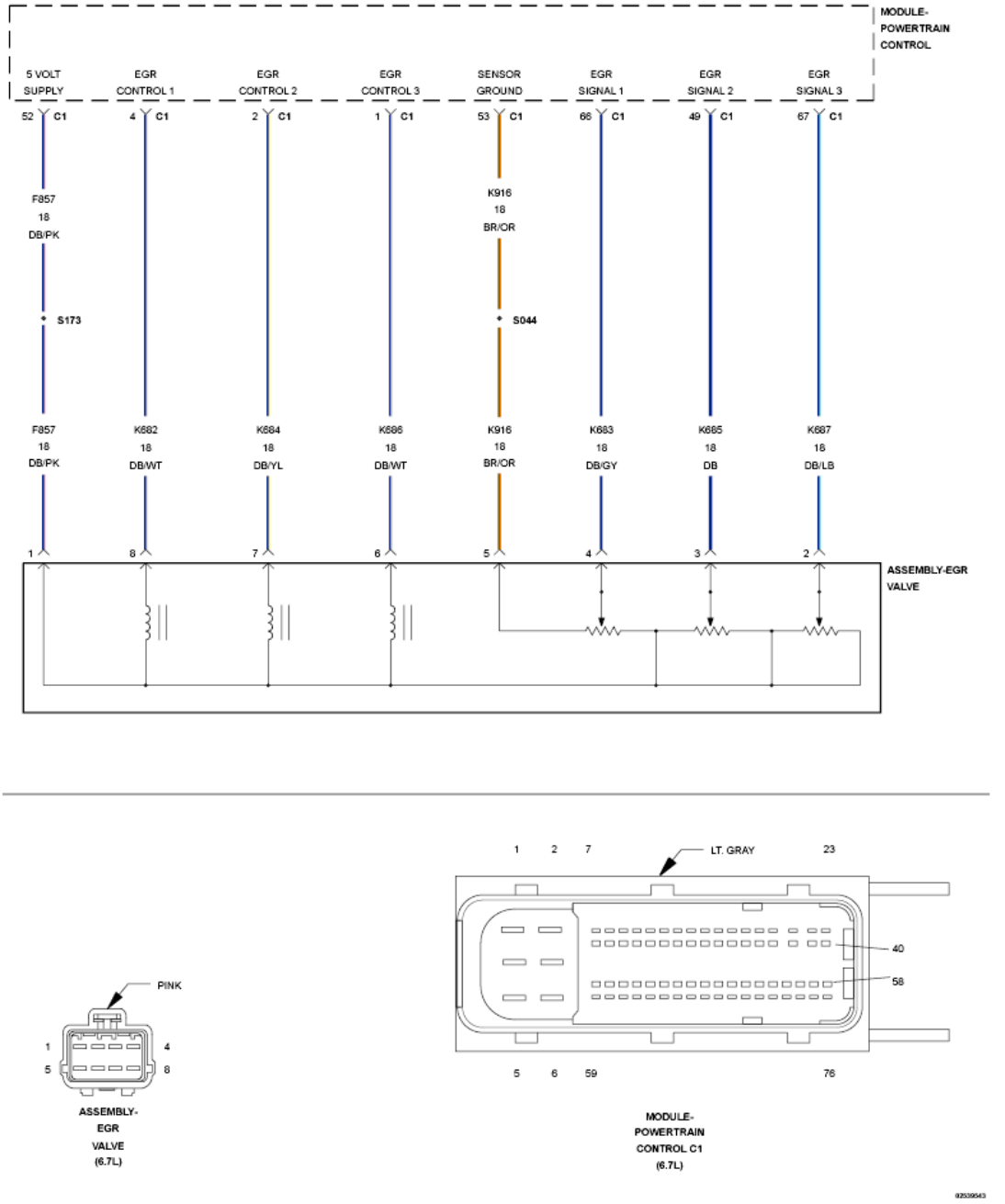

Fig. 146: EGR Valve Assembly Circuit Schematic
Courtesy of CHRYSLER GROUP, LLC

For a complete wiring diagram, **refer to appropriate SYSTEM WIRING DIAGRAMS article** .

THEORY OF OPERATION

This diagnostic is used to check for low Exhaust Gas Recirculation (EGR) flow conditions by calculating an error based on the commanded and actual EGR flow. If the error is too high for a calibrated period of time, the diagnostic fails. This algorithm is not used at areas high on the torque curve. The Powertrain Control Module (PCM) will light the MIL lamp after this monitor runs and fails twice. The PCM will turn off the MIL lamp

once the diagnostic runs and passes in four consecutive drive cycles.

WHEN MONITORED:

Engine running, coolant temperature above a calibrated threshold, intake manifold temperature above a calibrated threshold, EGR valve is open to a calibrated amount.

SET CONDITION:

Commanded versus actual EGR fraction differs by a calibrated threshold.

POSSIBLE CAUSES

Possible Causes
EGR SYSTEM LEAK
INTAKE AIR SYSTEM LEAK
AIR FILTER RESTRICTION
EGR COOLER LEAK
EGR COOLER FOULING
CROSSOVER TUBE RESTRICTION
INTAKE AIR HEATER RESTRICTION

Always perform the Pre-Diagnostic Troubleshooting procedure before proceeding. Refer to PRE-DIAGNOSTIC TROUBLESHOOTING PROCEDURE - 6.7L .

DIAGNOSTIC TEST

1. **CHECK FOR AIR FILTER RESTRICTION**

   NOTE: Repair any other EGR related DTCs before proceeding.

   1. Examine the Air Filter minder.

      Is the air filter restriction within allowable limits?

      Yes

      - Go To 2.

      No

      - Replace the Air Filter in accordance with the service information.
      - Perform the POWERTRAIN VERIFICATION TEST - 6.7L. Refer to **POWERTRAIN VERIFICATION TEST - 6.7L** .

2. **CHECK FOR INTAKE AIR HEATER RESTRICTION**

1. Remove air inlet connection and inspect Intake Air Heater.

   Is the Intake Air Heater restricted?

   Yes

   - Clean area and reassemble.
   - Perform the POWERTRAIN VERIFICATION TEST - 6.7L. Refer to **POWERTRAIN VERIFICATION TEST - 6.7L** .

   No

   - Go To 3.

3. **CHECK FOR EGR SYSTEM LEAK**
   1. Look for visible signs (soot streaks) of an external EGR system leaks around the V-band clamps and connections. Ensure that all torque is within specifications for alk EGR system components.

      Are there any EGR leaks?

      Yes

      - Repair the leak in the EGR system.
      - Perform the POWERTRAIN VERIFICATION TEST - 6.7L. Refer to **POWERTRAIN VERIFICATION TEST - 6.7L** .

      No

      - Go To 4.

4. **CHECK FOR INTAKE AIR SYSTEM LEAK**
   1. Check for leaks in the Intake Air System. Perform the INTAKE AIR SYSTEM PRESSURE TEST. Refer to **DIAGNOSIS AND TESTING, 6.7L** .

      Was an Intake Air System leak found?

      Yes

      - Repair the Intake Air System leak.
      - Perform the POWERTRAIN VERIFICATION TEST - 6.7L. Refer to **POWERTRAIN VERIFICATION TEST - 6.7L** .

      No

      - Go To 5.

5. **CHECK THE THERMOSTAT OUTLET**
   1. Remove the EGR Outlet Temperature Sensor from the thermostat outlet.

Is the outlet free of debris?

Yes

- Go To 6.

No

- Remove debris from outlet.
- Perform the POWERTRAIN VERIFICATION TEST - 6.7L. Refer to **POWERTRAIN VERIFICATION TEST - 6.7L** .

6. **CHECK FOR EGR COOLER LEAK**
   1. Verify EGR Cooler is not leaking.
   2. Check for coolant in EGR plumbing, engine overheat fault codes, and low coolant level.

   Are there signs of an EGR Cooler leak?

   Yes

   - Replace the EGR Cooler in accordance with the service information.
   - Perform the POWERTRAIN VERIFICATION TEST - 6.7L. Refer to **POWERTRAIN VERIFICATION TEST - 6.7L** .

   No

   - Go To 7.
7. **CHECK FOR EGR CROSSOVER TUBE RESTRICTION**
   1. Remove EGR Crossover tube from EGR Cooler and EGR Valve.
   2. Inspect tube for restriction.

   Is the EGR crossover tube restricted?

   Yes

   - If possible, clean the tube. If not, replace the tube.
   - Perform the POWERTRAIN VERIFICATION TEST - 6.7L. Refer to **POWERTRAIN VERIFICATION TEST - 6.7L** .

   No

   - Go To 8.
8. **CHECK FOR EGR COOLER FOULING**
   1. Remove and clean the EGR Cooler with approved Mopar® EGR System cleaner.
   2. Reinstall the EGR Cooler.

3. With the scan tool, erase DTCs.
4. Turn the ignition off for 75 seconds.
5. Start the engine. It may be necessary to test drive the vehicle.
6. With the scan tool, check for a one trip fault logged against DTC P0401.

   Is there a one trip fault logged against DTC P0401?

   Yes

   - Replace the EGR Cooler in accordance with the service information.
   - Perform the POWERTRAIN VERIFICATION TEST - 6.7L. Refer to **POWERTRAIN VERIFICATION TEST - 6.7L** .

   No

   - Test complete.

P0402-EGR FLOW EXCESSIVE DETECTED

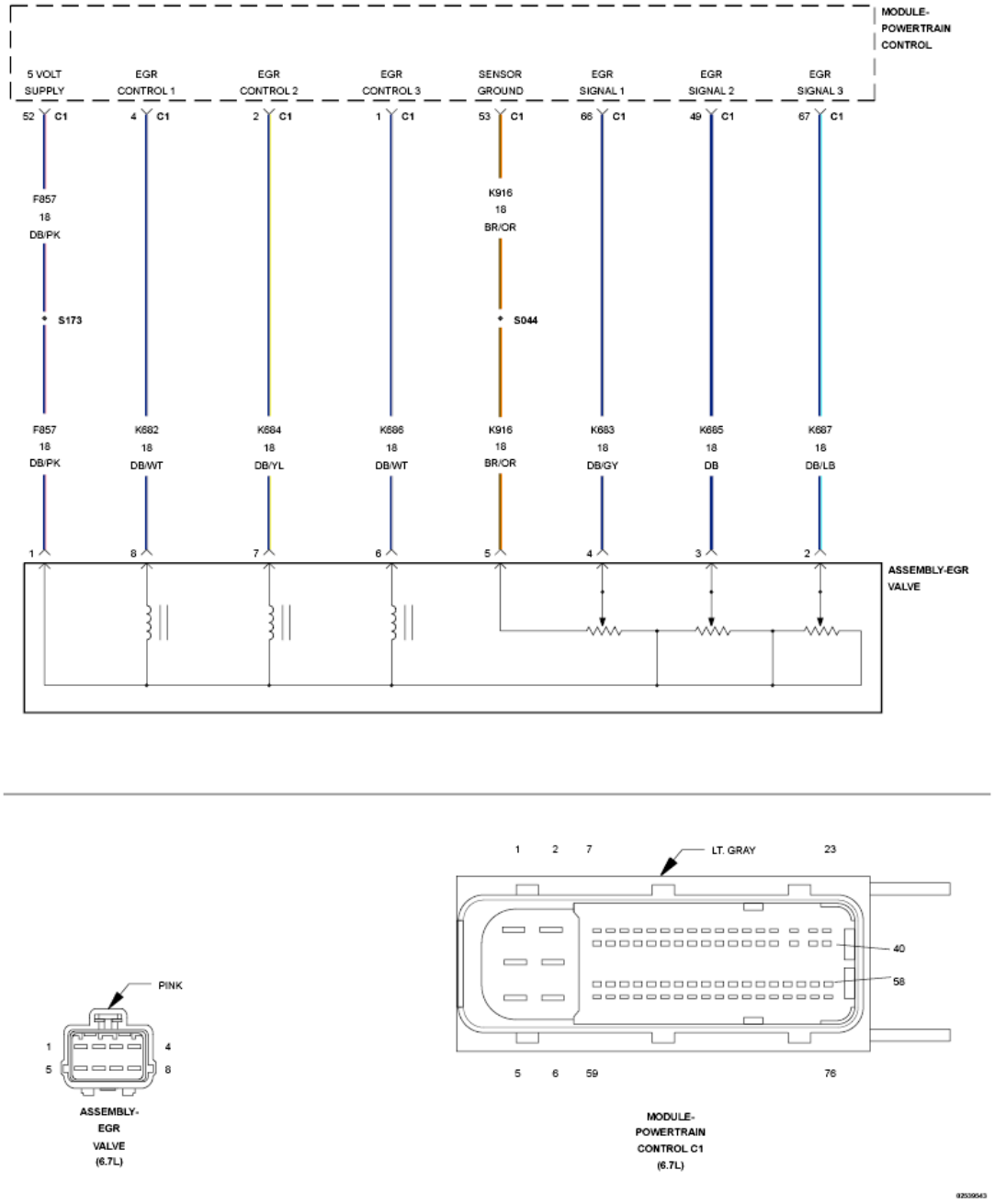

Fig. 147: EGR Valve Assembly Circuit Schematic
Courtesy of CHRYSLER GROUP, LLC

For a complete wiring diagram, **refer to Wiring Information** .

THEORY OF OPERATION

The purpose of this monitor is to check if the Exhaust Gas Recirculation (EGR) flow is higher than commanded. The diagnostic closes the EGR valve, and limits the EGR Throttle Control Valve. It then looks at fresh air flow fraction and the difference in pressure between the Exhaust Gas Pressure sensor and Boost Pressure sensor to determine if the EGR valve is leaking. The Powertrain Control Module (PCM) will

illuminate the MIL lamp after the diagnostic runs and fails in two consecutive drive cycles. The PCM will also illuminate the ETC lamp. The MIL lamp will turn off once the diagnostic runs and passes in 4 consecutive drive cycles.

WHEN MONITORED:

Engine running, at idle, coolant temperature above a calibrated threshold, intake manifold temperature above a calibrated threshold, EGR valve is closed.

SET CONDITION:

EGR Throttle Control Valve closed, EGR fraction increases more than a calibrated threshold.

POSSIBLE CAUSES

Possible Causes
EXHAUST GAS PRESSURE SENSOR
EGR AIRFLOW THROTTLE CONTROL VALVE
EXHAUST SYSTEM LEAK
INTAKE SYSTEM LEAK
EGR VALVE

Always perform the Pre-Diagnostic Troubleshooting procedure before proceeding. Refer to PRE-DIAGNOSTIC TROUBLESHOOTING PROCEDURE - 6.7L .

DIAGNOSTIC TEST

NOTE: **If other EGR related DTCs are present and active, repair those DTCs before proceeding.**

1. **ACTIVE DTCS**
    1. Ignition on, engine not running.
    2. With the scan tool, check for active DTCs.

    Is the DTC active?

    Yes

    - Go To 2.

    No

    - Perform the INTERMITTENT CONDITION - 6.7L diagnostic procedure. Refer to **INTERMITTENT CONDITION - 6.7L** .
2. **CHECK THE THERMOSTAT OUTLET FOR A RESTRICTION**

1. Turn the ignition off.
2. Remove the Exhaust Gas Pressure sensor from the thermostat outlet.
3. Inspect the Exhaust Gas Pressure sensor and the thermostat outlet for build up or debris.

   Are the Exhaust Gas Pressure Sensor and the thermostat outlet free of debris?

   Yes

   - Go To 3.

   No

   - Remove debris from Exhaust Gas Pressure Sensor and the thermostat outlet.
   - Go To 3.

3. **CHECK THE EXHAUST GAS PRESSURE SENSOR TUBE**
   1. Remove the steel tube from the exhaust manifold to the Exhaust Gas Pressure Sensor port.

      Is the tube free from debris?

      Yes

      - Go To 4.

      No

      - Clean the tube and reinstall.
      - Go To 4.

4. **CHECK THE EXHAUST SYSTEM**
   1. Perform the CHECKING THE EXHAUST SYSTEM FOR LEAKS diagnostic procedure. Refer to **DIAGNOSIS AND TESTING, 6.7L** .

      Was an Exhaust System leak found?

      Yes

      - Repair the Exhaust System leak.
      - Perform the DIESEL AFTERTREATMENT VALIDATION - 6.7L procedure. Refer to **DIESEL AFTERTREATMENT VALIDATION- 6.7L** .

      No

      - Go To 5.

5. **CHECK THE INTAKE SYSTEM**
   1. Perform INTAKE AIR SYSTEM PRESSURE TEST diagnostic procedure. Refer to **DIAGNOSIS**

AND TESTING, 6.7L .

Was an Intake System leak found?

Yes

- Repair the Intake Air System leak.
- Perform the DIESEL AFTERTREATMENT VALIDATION - 6.7L procedure. Refer to **DIESEL AFTERTREATMENT VALIDATION- 6.7L** .

No

- Go To 6.

6. **CHECK THE EGR AIRFLOW THROTTLE CONTROL VALVE**
   1. Remove the boot from the EGR Throttle Control Valve. Using a mirror, look at the butterfly valve on the inside of the EGR Throttle Control Valve.
   2. Start the vehicle, let idle for 10 seconds.
   3. Turn ignition off.

   NOTE: If functioning properly the EGR Throttle Control Valve will close immediately after the engine is shut down.

   Did the EGR Throttle Control Valve close immediately after the engine was shut down?

   Yes

   - Go To 7.

   No

   - Replace the EGR Airflow Control Valve in accordance with the service information.
   - Perform the DIESEL AFTERTREATMENT VALIDATION - 6.7L procedure. Refer to **DIESEL AFTERTREATMENT VALIDATION- 6.7L** .

7. **CHECK THE EGR VALVE**
   1. Ignition on, engine not running.
   2. With the scan tool, erase DTC.
   3. Turn the ignition off for 75 seconds.
   4. Start engine and let idle to operating temperature.

   Is DTC still active?

   Yes

   - Remove and clean the EGR valve with Mopar EGR Valve cleaner. Refer to

TURBOCHARGER SYSTEM, CLEANING, 6.7L .

- Go To 8.

No

- Repair complete.
- Perform the DIESEL AFTERTREATMENT VALIDATION - 6.7L procedure. Refer to **DIESEL AFTERTREATMENT VALIDATION- 6.7L** .

8. **ACTIVE DTC**
   1. Ignition on, engine not running.
   2. With the scan tool, erase DTC.
   3. Turn the ignition off for 75 seconds.
   4. Start engine and let idle to operating temperature.

   Is DTC still active?

   Yes

   - Replace EGR Valve in accordance with the service information.
   - Perform the DIESEL AFTERTREATMENT VALIDATION - 6.7L procedure. Refer to **DIESEL AFTERTREATMENT VALIDATION- 6.7L** .

   No

   - Repair complete.
   - Perform the DIESEL AFTERTREATMENT VALIDATION - 6.7L procedure. Refer to **DIESEL AFTERTREATMENT VALIDATION- 6.7L** .

P0404-EGR CONTROL CIRCUIT PERFORMANCE

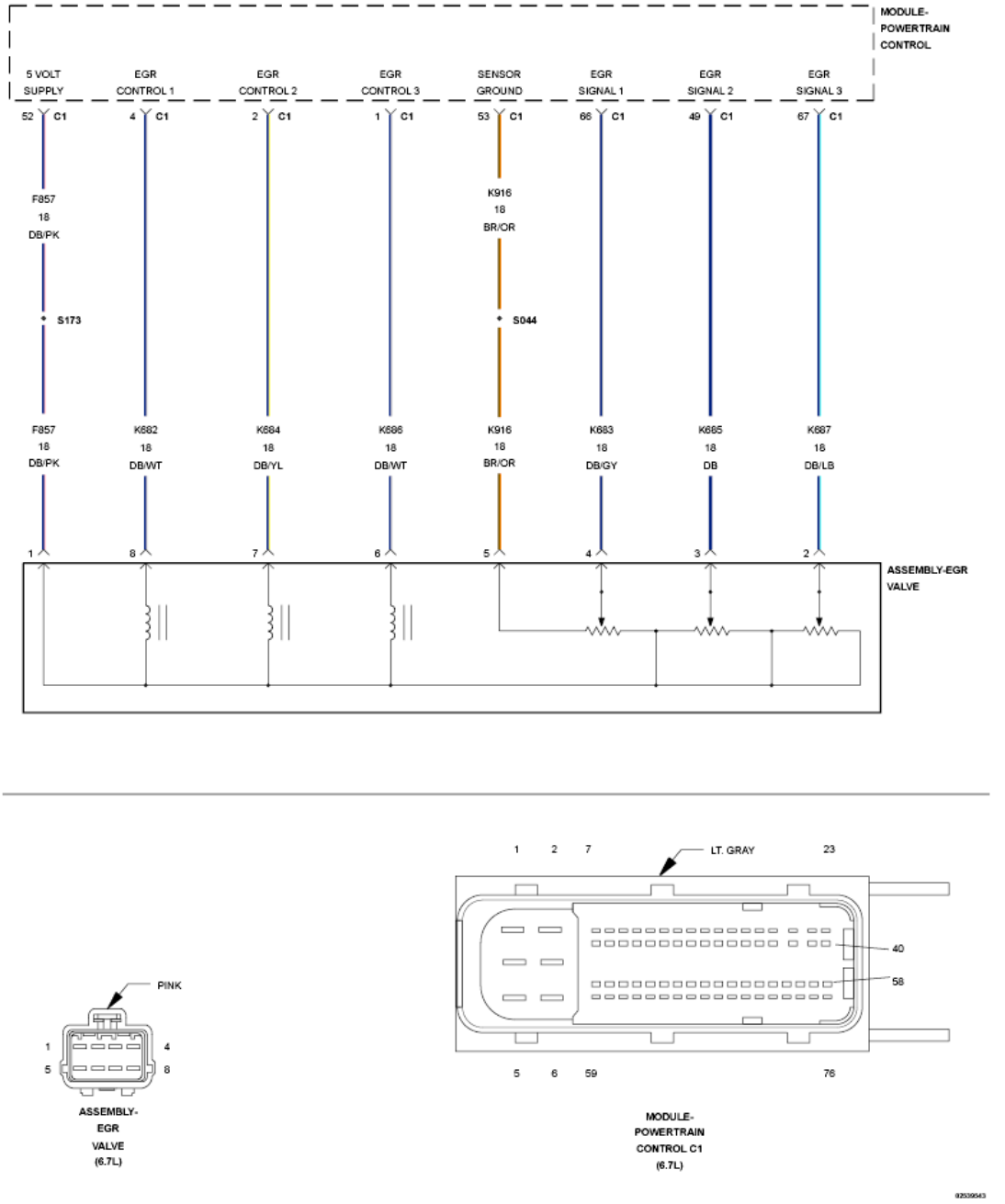

Fig. 148: EGR Valve Assembly Circuit Schematic
Courtesy of CHRYSLER GROUP, LLC

For a complete wiring diagram, **refer to appropriate SYSTEM WIRING DIAGRAMS article** .

THEORY OF OPERATION

The Exhaust Gas Recirculation (EGR) Valve is opened by a motor located on top of the EGR valve. The EGR Valve is spring loaded closed. The motor electronically opens the valve and is controlled by the Powertrain Control Module (PCM). The EGR Valve motor contains three position sensors that detect to location of the EGR Valve. The three position sensors correspond to six valid sectors that the valve can be in. If the valve

position skips a sector(s), a fault counter will increment by one. Once the counter equals a calibrated threshold, the rationality fault becomes active. The position sensors are integral to the EGR Valve assembly and are not serviced separately. The PCM lights the MIL lamp immediately after this diagnostic runs and fails. During this time the PCM will stop controlling the EGR valve. The default position for the valve is closed. The PCM will turn off the MIL lamp after the diagnostic runs and passes in four consecutive drive cycles.

WHEN MONITORED:

Key on, engine off and while running.

SET CONDITION:

The Powertrain Control Module (PCM) detects an overheat condition on the EGR control circuit.

POSSIBLE CAUSES

Possible Causes
POWERTRAIN CONTROL MODULE (PCM)

Always perform the Pre-Diagnostic Troubleshooting procedure before proceeding. Refer to PRE-DIAGNOSTIC TROUBLESHOOTING PROCEDURE - 6.7L .

DIAGNOSTIC TEST

1. **OTHER DTCS**
    1. Ignition on engine off.
    2. With the scan tool, erase DTCs.
    3. Turn the ignition off for 75 seconds.
    4. Start the vehicle. It may be necessary to drive vehicle to reset DTC.
    5. With the scan tool, read DTCs.

    Do you have any additional EGR related DTCs?

    Yes

    - Repair all other EGR DTCs and retest.

    No

    - Replace the Powertrain Control Module in accordance with the service information.
    - Perform the POWERTRAIN VERIFICATION TEST - 6.7L. Refer to **POWERTRAIN VERIFICATION TEST - 6.7L** .

P0405-EGR POSITION SENSOR CIRCUIT LOW

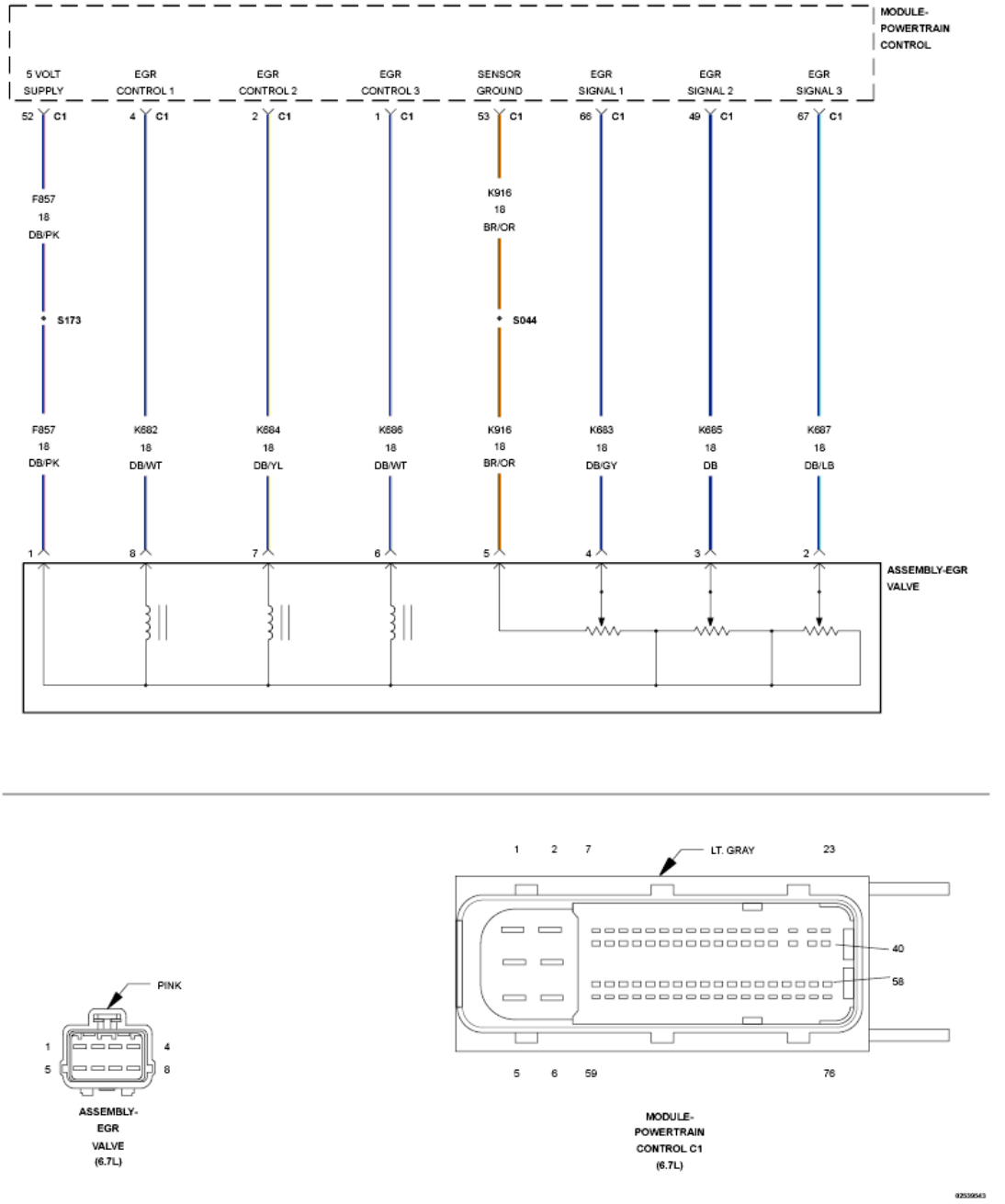

Fig. 149: EGR Valve Assembly Circuit Schematic
Courtesy of CHRYSLER GROUP, LLC

For a complete wiring diagram, **refer to appropriate SYSTEM WIRING DIAGRAMS article** .

THEORY OF OPERATION

The Exhaust Gas Recirculation (EGR) Valve is opened by a motor located on top of the EGR valve. The EGR Valve is spring loaded closed. The motor electronically opens the valve and is controlled by the PCM. The EGR Valve motor contains three position sensors that detect to location of the EGR Valve. These sensors report the position of the valve back to the PCM over the EGR position signal wires. This diagnostic monitors the EGR

solenoid driver circuits. If there is a short of open circuit detected for more than a calibrated period of time then the diagnostic will fail. The PCM lights the MIL lamp immediately after this diagnostic runs and fails. During this time the PCM will stop controlling the EGR valve. The default position for the valve is closed. The PCM will turn off the MIL lamp after the diagnostic runs and passes in four consecutive drive cycles.

WHEN MONITORED:

Ignition on and battery voltage greater than 9 Volts.

SET CONDITION:

All three EGR Valve position sensors are reading either High or Low for five seconds.

POSSIBLE CAUSES

Possible Causes
(F857) 5-VOLT SUPPLY VOLTAGE OPEN/HIGH RESISTANCE
(K916) SENSOR GROUND OPEN/HIGH RESISTANCE
EGR POSITION SIGNAL CIRCUITS SHORTED TO VOLTAGE
EGR POSITION SIGNAL CIRCUITS OPEN/HIGH RESISTANCE
EGR POSITION SIGNAL CIRCUITS SHORTED TO GROUND
EGR VALVE
POWERTRAIN CONTROL MODULE (PCM)

Always perform the Pre-Diagnostic Troubleshooting procedure before proceeding. Refer to PRE-DIAGNOSTIC TROUBLESHOOTING PROCEDURE - 6.7L .

DIAGNOSTIC TEST

1. **ACTIVE DTC**

NOTE: **The EGR Valve harness connector is difficult to lock on to the valve. A connector not locked on completely will cause this DTC to set.**

NOTE: **If there are any 5-Volt supply DTCs present, repair those DTCs before proceeding.**

1. Turn the ignition on.
2. With the scan tool, record all Freeze frame data.
3. With the scan tool, erase DTCs.
4. Turn the ignition off for 75 seconds.
5. Start the vehicle. It may be necessary to drive vehicle to reset DTC.
6. With the scan tool, read DTCs.

Did the DTC reset?

Yes

- Go To 2.

No

- Perform the INTERMITTENT CONDITION - 6.7L diagnostic procedure. Refer to **INTERMITTENT CONDITION - 6.7L** .

2. **CHECK THE (F857) 5-VOLT SUPPLY FOR AN OPEN/HIGH RESISTANCE**

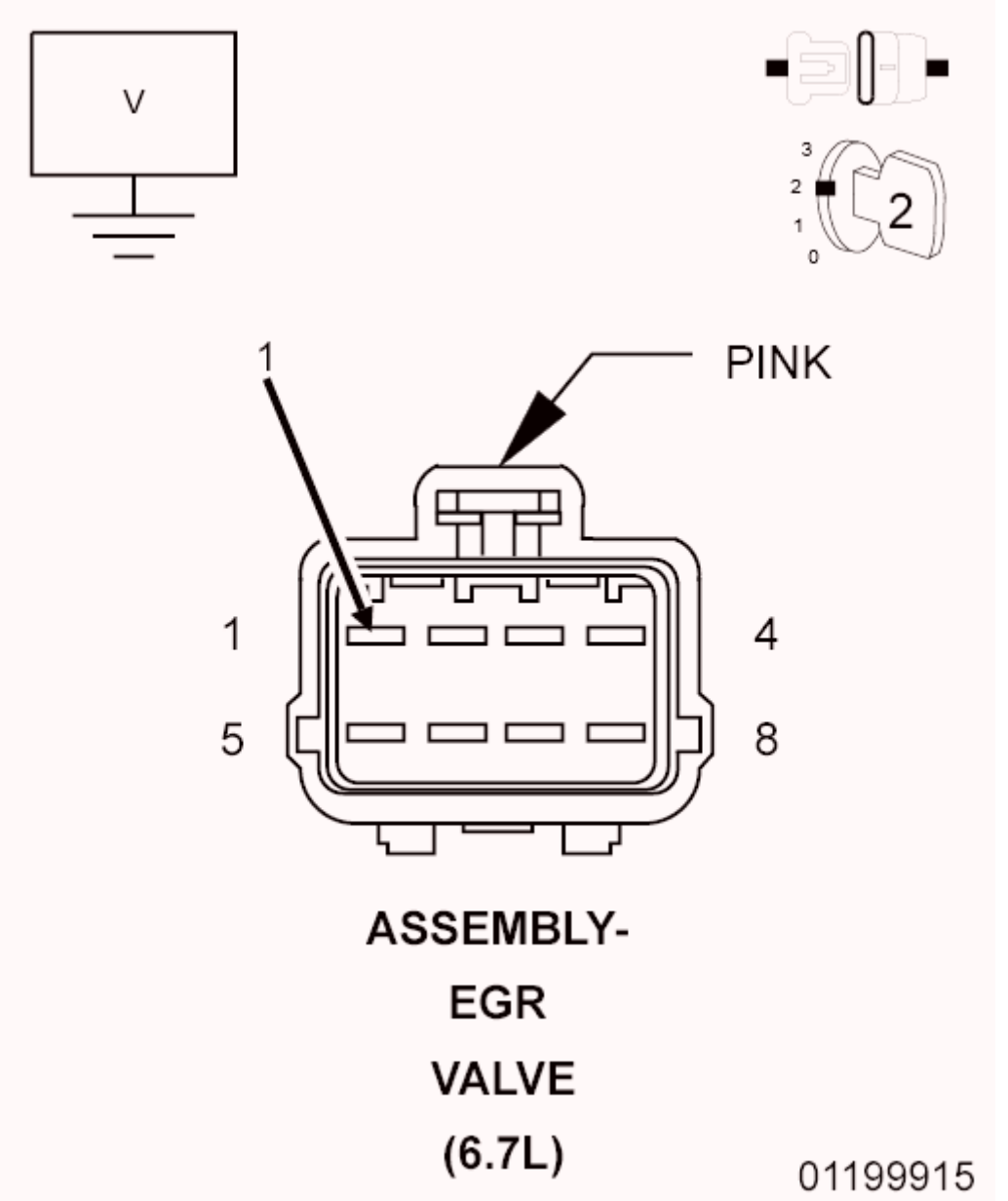

Fig. 150: Checking EGR Valve 5-Volt Supply For An Open

Courtesy of CHRYSLER GROUP, LLC

1. Turn the ignition off.
2. Disconnect the EGR Valve harness connector.

NOTE: Check connectors - Clean/repair as necessary.

3. Turn the ignition on, engine not running.
4. Measure the voltage of the (F857) 5-Volt Supply circuit at the EGR Valve harness connector.

   Is the voltage reading 5.0 Volts?

   Yes

   - Go To 3.

   No

   - Repair the (F857) 5-Volt Supply circuit.
   - Perform the POWERTRAIN VERIFICATION TEST - 6.7L. Refer to **POWERTRAIN VERIFICATION TEST - 6.7L** .

3. **CHECK THE EGR POSITION SIGNAL CIRCUITS FOR A SHORT TO VOLTAGE**

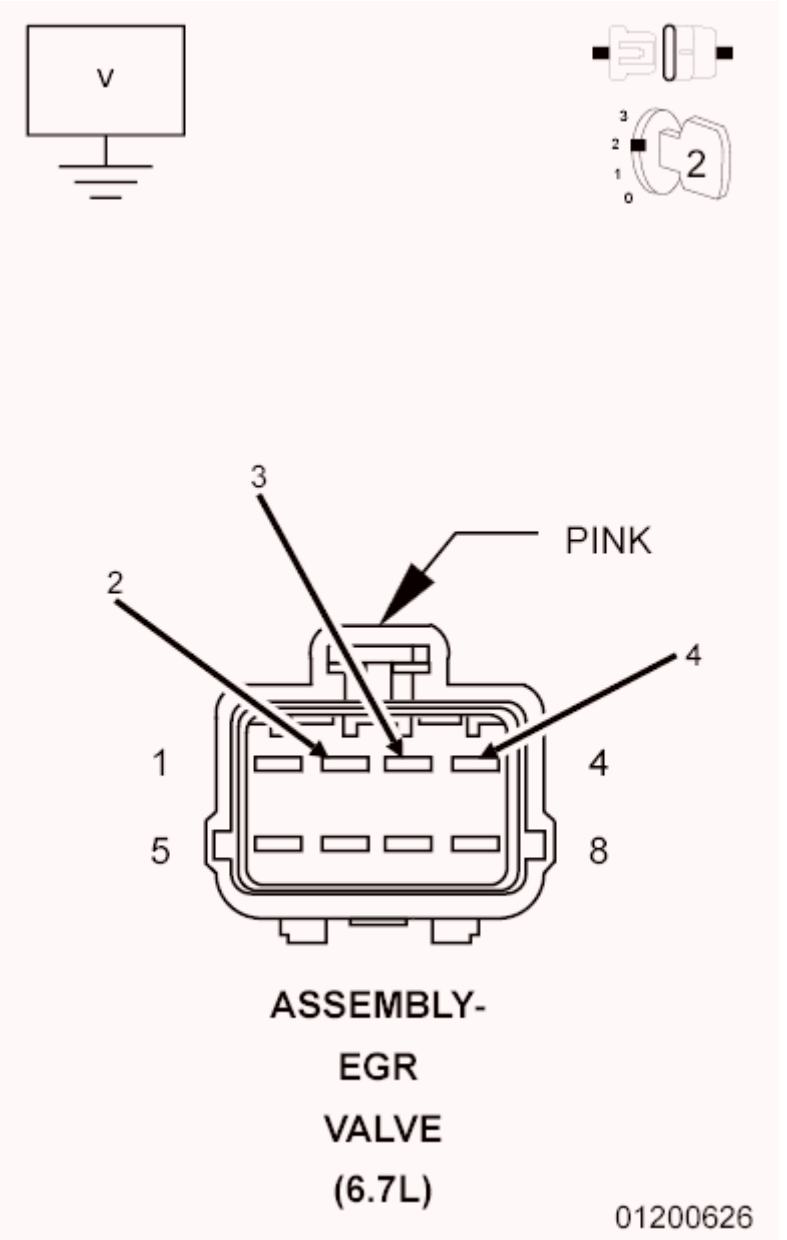

Fig. 151: Checking EGR Position Signal Circuits For Short To Voltage
Courtesy of CHRYSLER GROUP, LLC

1. Measure the voltage of the (K683) EGR Position Sensor Signal 1 circuit at the EGR Valve harness connector.
2. Measure the voltage of the (K685) EGR Position Sensor Signal 2 circuit at the EGR Valve harness connector.
3. Measure the voltage of the (K687) EGR Position Sensor Signal 3 circuit at the EGR Valve harness connector.

   Is the voltage above 2.0 Volts?

Yes

- Repair the short to voltage in the appropriate circuit.
- Perform the POWERTRAIN VERIFICATION TEST - 6.7L. Refer to **POWERTRAIN VERIFICATION TEST - 6.7L** .

No

- Go To 4.

4. **CHECK THE (K916) SENSOR GROUND FOR AN OPEN/HIGH RESISTANCE**
   1. Turn the ignition off.
   2. Disconnect the PCM C1 harness connector.
   3. Measure the resistance of the (K916) Sensor Ground circuit between the EGR Valve harness connector and the PCM C1 harness connector.

   Is the resistance below 5.0 Ohms?

   Yes

   - Go To 5.

   No

   - Repair the (K916) Sensor Ground circuit for an open or high resistance.
   - Perform the POWERTRAIN VERIFICATION TEST - 6.7L. Refer to **POWERTRAIN VERIFICATION TEST - 6.7L** .

5. **CHECK THE EGR POSITION SIGNAL CIRCUITS FOR AN OPEN/HIGH RESISTANCE**
   1. Measure the resistance of the (K683) EGR Position Sensor Signal 1 circuit between the EGR Valve harness connector and the PCM harness connector.
   2. Measure the resistance of the (K685) EGR Position Sensor Signal 2 circuit between the EGR Valve harness connector and the PCM harness connector.
   3. Measure the resistance of the (K687) EGR Position Sensor Signal 3 circuit between the EGR Valve harness connector and the PCM harness connector.

   Is the resistance less than 5.0 Ohms?

   Yes

   - Go To 6.

   No

   - Repair the open or high resistance in the appropriate circuit.
   - Perform the POWERTRAIN VERIFICATION TEST - 6.7L. Refer to **POWERTRAIN**

VERIFICATION TEST - 6.7L .

6. **CHECK THE EGR POSITION SIGNAL CIRCUITS FOR A SHORT TO GROUND**

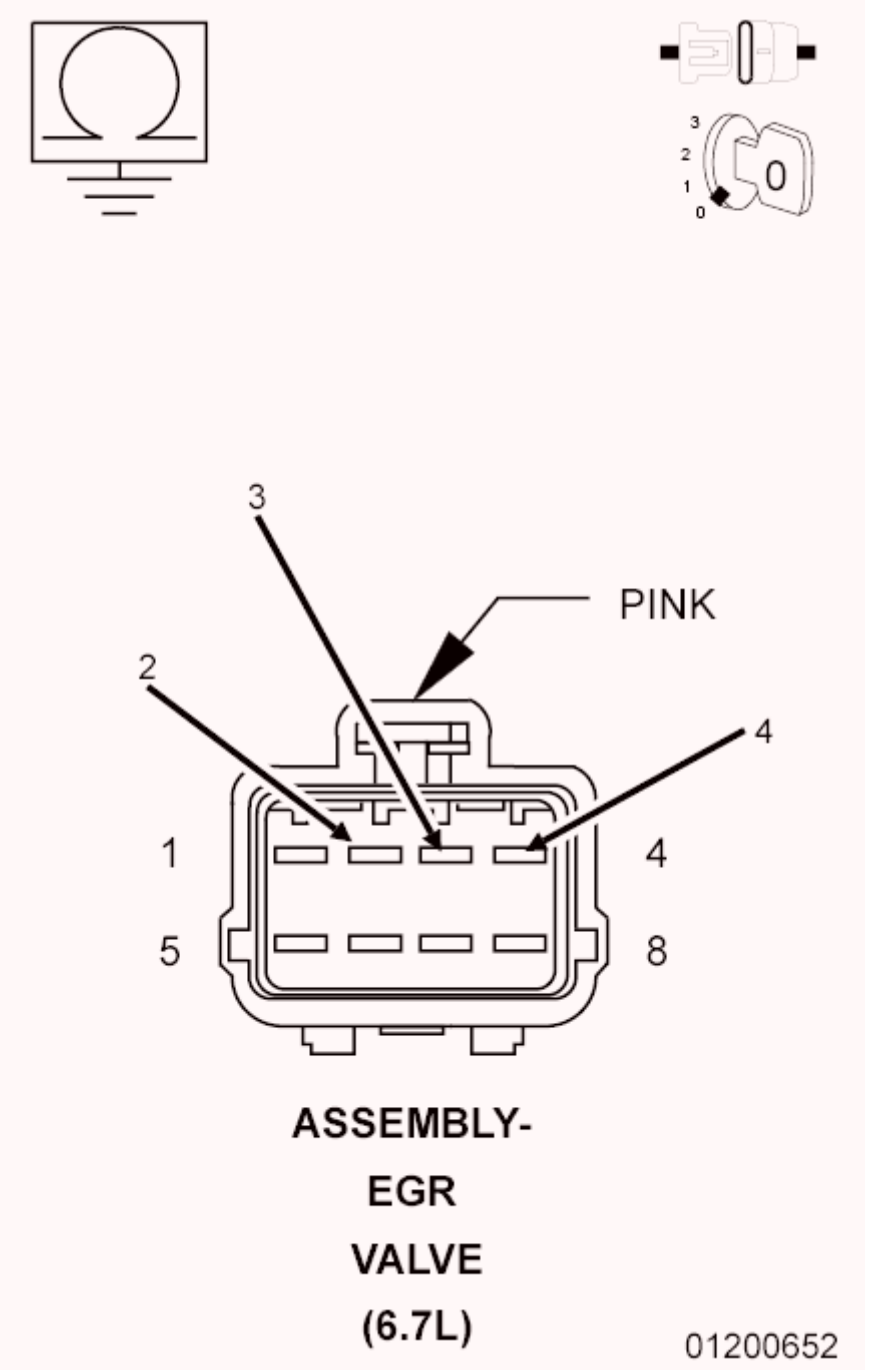

Fig. 152: Checking EGR Position Signal Circuits For Short To Ground
Courtesy of CHRYSLER GROUP, LLC

1. Measure the resistance between ground and the (K683) EGR Position Sensor Signal 1 circuit at the PCM harness connector.
2. Measure the resistance between ground and the (K685) EGR Position Sensor Signal 2 circuit at the

PCM harness connector.

3. Measure the resistance between ground and the (K687) EGR Position Sensor Signal 3 circuit at the PCM harness connector.

   Is the resistance less than 10k Ohms?

   Yes

   - Repair the short to ground in the appropriate circuit.
   - Perform the POWERTRAIN VERIFICATION TEST - 6.7L. Refer to **POWERTRAIN VERIFICATION TEST - 6.7L** .

   No

   - Go To 7.

7. **CHECK THE EGR VALVE**
   1. Reconnect the PCM C1 harness connector.
   2. Replace the EGR Valve.
   3. With the scan tool, erase DTCs.
   4. Turn the ignition off for 75 seconds.
   5. Start the vehicle. It may be necessary to drive vehicle to reset DTC.
   6. With the scan tool, read DTCs.

   Did the DTC reset?

   Yes

   - Replace the Powertrain Control Module in accordance with the service information.
   - Perform the POWERTRAIN VERIFICATION TEST - 6.7L. Refer to **POWERTRAIN VERIFICATION TEST - 6.7L** .

   No

   - Repair complete.
   - Perform the POWERTRAIN VERIFICATION TEST - 6.7L. Refer to **POWERTRAIN VERIFICATION TEST - 6.7L** .

P040B-EXHAUST GAS RECIRCULATION TEMPERATURE SENSOR "A" CIRCUIT PERFORMANCE

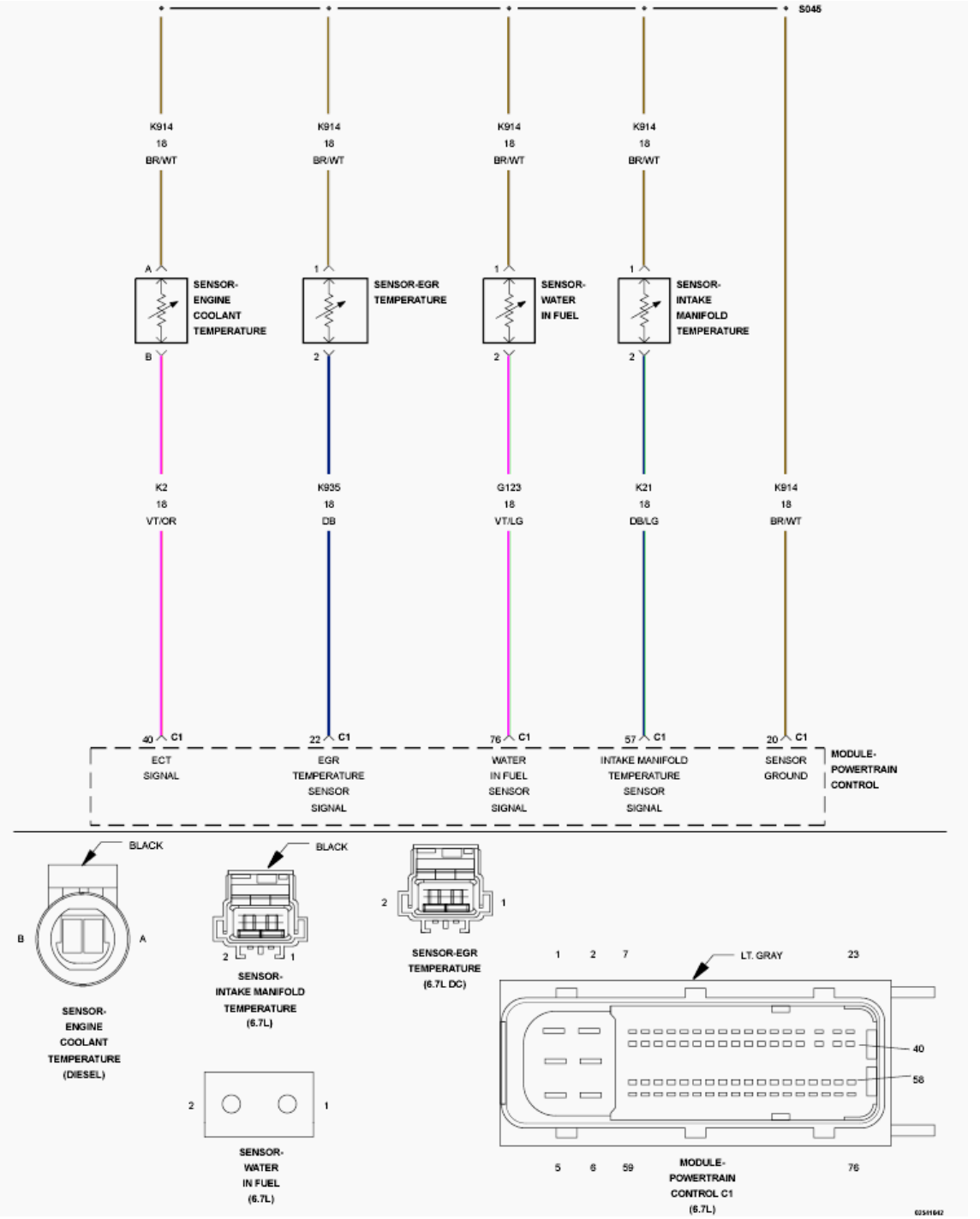

Fig. 153: Intake Manifold Temp, Engine Coolant Temp, EGR Temp, & Water In Fuel Sensor Circuit Schematic
Courtesy of CHRYSLER GROUP, LLC

For a complete wiring diagram, **refer to appropriate SYSTEM WIRING DIAGRAMS article** .

THEORY OF OPERATION

The Exhaust Gas Recirculation (EGR) Outlet Temperature Sensor is a variable resistor sensor and is used to measure the temperature of the EGR gas flow after it exits the EGR cooler. The Powertrain Control Module (PCM) supplies 5-Volts to the exhaust gas recirculation temperature signal circuit. The PCM monitors the change in voltage caused by changes in the resistance of the sensor to determine the EGR outlet temperature. There are two rationality tests. Key-on and engine running. The key-on test compares the EGR Outlet Temperature Sensor value with the Engine Coolant Temperature Sensor and Inlet Air Temperature Sensor. The key-on test fails if the EGR Outlet Temperature Sensor value is different than the key on Engine Coolant Temperature Sensor and Inlet Air Temperature Sensor by more than a calibrated threshold. The engine running test fails if the EGR Outlet Temperature Sensor value does not change by more than a calibrated threshold, over a calibrated period of time. If this fault becomes active the PCM will light the MIL light immediately. During this time the EGR valve will be closed. The PCM turns off the MIL when the diagnostic runs and passes in four consecutive drive cycles.

WHEN MONITORED:

EGR Outlet Temperature and exhaust temperature below a calibrated range at key on.

SET CONDITION:

The key-on test fails if the EGR Outlet Temperature Sensor value is different than the key on Engine Coolant Temperature Sensor and Inlet Air Temperature Sensor by more than a calibrated threshold. The engine running test fails if the EGR Outlet Temperature Sensor value does not change by more than a calibrated threshold, over a calibrated period of time.

POSSIBLE CAUSES

Possible Causes
EXHAUST GAS RECIRCULATION OUTLET TEMPERATURE SENSOR

Always perform the Pre-Diagnostic Troubleshooting procedure before proceeding. Refer to PRE-DIAGNOSTIC TROUBLESHOOTING PROCEDURE - 6.7L .

DIAGNOSTIC TEST

1. **ACTIVE DTC**
    1. Ignition on, engine not running.
    2. With the scan tool, read DTCs.

    Is the DTC active?

    Yes

    - Replace the EGR Outlet Temperature Sensor.
    - Perform the POWERTRAIN VERIFICATION TEST - 6.7L. Refer to **POWERTRAIN VERIFICATION TEST - 6.7L** .

    No

- Go To 2.

2. **CHECK THE EXHAUST GAS RECIRCULATION TEMPERATURE SENSOR**
    1. Turn the ignition off.
    2. Disconnect the EGR Outlet Temperature Sensor harness connector.

    NOTE: Check connectors - Clean/repair as necessary.

    3. Remove the EGR Outlet Temperature Sensor and reconnect the wiring harness connector to the sensor.
    4. Turn the Ignition on, engine off.
    5. Monitor scan tool, while heating the sensor with an external heat source (DO NOT USE OPEN FLAME).

    Does the reading from the sensor increase at least 2.78°C (5°F) on the scan tool?

    Yes

    - Perform the INTERMITTENT CONDITION - 6.7L diagnostic procedure. Refer to **INTERMITTENT CONDITION - 6.7L** .

    No

    - Replace the EGR Outlet Temperature Sensor in accordance with the service information.
    - Perform the POWERTRAIN VERIFICATION TEST - 6.7L. Refer to **POWERTRAIN VERIFICATION TEST - 6.7L** .

P040C-EXHAUST GAS RECIRCULATION TEMPERATURE SENSOR "A" CIRCUIT LOW

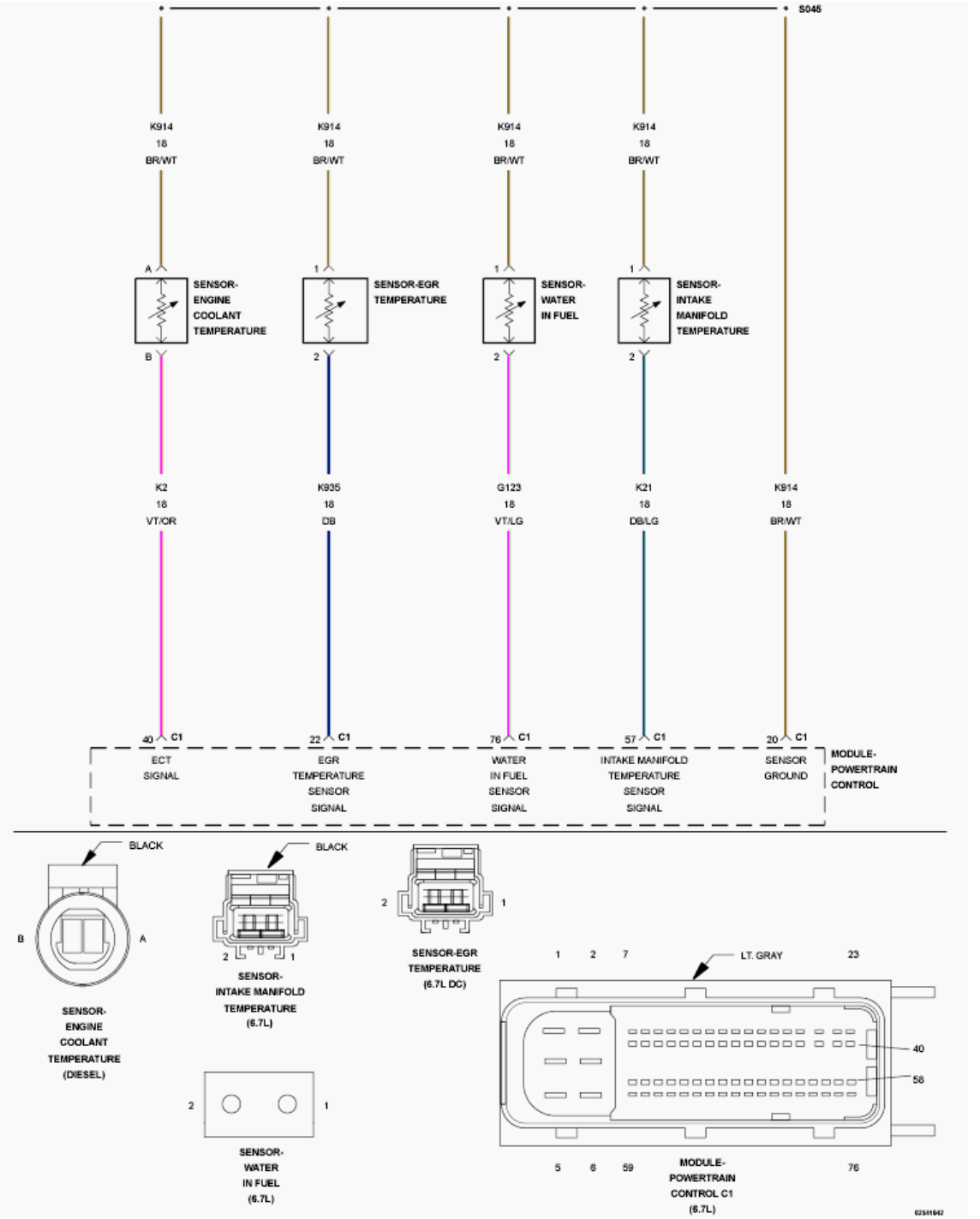

Fig. 154: Intake Manifold Temp, Engine Coolant Temp, EGR Temp, & Water In Fuel Sensor Circuit Schematic
Courtesy of CHRYSLER GROUP, LLC

For a complete wiring diagram, **refer to appropriate SYSTEM WIRING DIAGRAMS article** .

THEORY OF OPERATION

The Exhaust Gas Recirculation (EGR) Outlet Temperature Sensor is a variable resistor sensor and is used to measure the temperature of the EGR gas flow after it exits the EGR Cooler. The Powertrain Control Module (PCM) supplies 5-Volts to the exhaust gas recirculation temperature signal circuit. The PCM monitors the change in voltage caused by changes in the resistance of the sensor to determine the EGR outlet temperature. There are two rationality tests. Key-on and engine running. The key-on test fails if the EGR Outlet Temperature Sensor value is different than the key on temperature estimate by more than a calibrated threshold. The engine running test fails if the EGR Outlet Temperature Sensor value does not change by more than a calibrated threshold, over a calibrated period of time. If this fault becomes active the PCM will light the MIL light immediately. During this time the EGR valve will be closed. The PCM turns off the MIL when the diagnostic runs and passes in four consecutive drive cycles.

WHEN MONITORED:

When the key is on and battery voltage is above 10.4 Volts.

SET CONDITION:

The circuit voltage to the Powertrain Control Module (PCM) is below a calibration threshold for a calibrated period of time.

POSSIBLE CAUSES

Possible Causes
(K935) EGR OUTLET TEMPERATURE SENSOR SIGNAL CIRCUIT SHORTED TO GROUND
(K935) EGR OUTLET TEMPERATURE SENSOR SIGNAL CIRCUIT SHORTED TO THE (K914) SENSOR GROUND CIRCUIT
EXHAUST GAS RECIRCULATION OUTLET TEMPERATURE SENSOR
POWERTRAIN CONTROL MODULE (PCM)

Always perform the Pre-Diagnostic Troubleshooting procedure before proceeding. Refer to PRE-DIAGNOSTIC TROUBLESHOOTING PROCEDURE - 6.7L .

DIAGNOSTIC TEST

1. **ACTIVE DTC**
    1. Turn the ignition on.
    2. With the scan tool, record all Freeze frame data.
    3. With the scan tool, erase DTCs.
    4. Turn the ignition off for 75 seconds.
    5. Turn the ignition on.
    6. With the scan tool, read DTCs.

    Did the DTC reset?

    Yes

- Go To 2.

No

- Perform the INTERMITTENT CONDITION - 6.7L diagnostic procedure. Refer to **INTERMITTENT CONDITION - 6.7L** .

2. **CHECK THE (K935) EGR OUTLET TEMPERATURE SENSOR SIGNAL CIRCUIT FOR A SHORT TO GROUND**

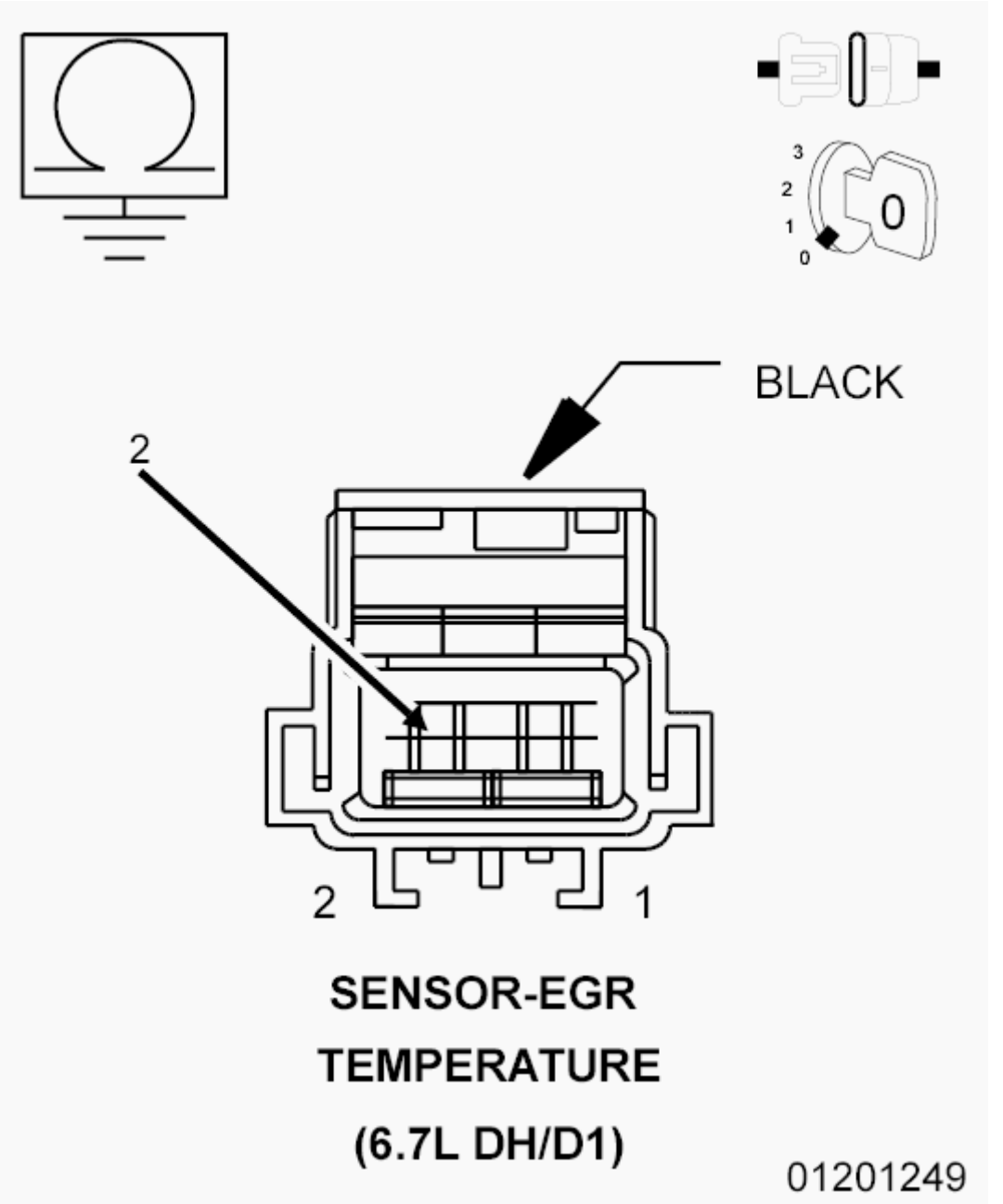

Fig. 155: Checking EGR Outlet Temperature Sensor Signal Circuit For A Short
Courtesy of CHRYSLER GROUP, LLC

1. Turn the ignition off.
2. Disconnect the PCM C1 harness connector.
3. Disconnect the (K935) EGR Outlet Temperature Sensor harness connector.

NOTE: Check connectors - Clean/repair as necessary.

4. Measure the resistance between ground and the (K935) EGR Outlet Temperature Sensor Signal circuit at the sensor harness connector.

   Is the resistance below 10k Ohms?

   Yes

   - Repair the (K935) EGR Outlet Temperature Sensor Signal circuit for a short to ground.
   - Perform the POWERTRAIN VERIFICATION TEST - 6.7L. Refer to **POWERTRAIN VERIFICATION TEST - 6.7L** .

   No

   - Go To 3.

3. **CHECK FOR THE (K935) EGR OUTLET TEMPERATURE SENSOR SIGNAL CIRCUIT SHORTED TO THE (K914) SENSOR GROUND CIRCUIT**

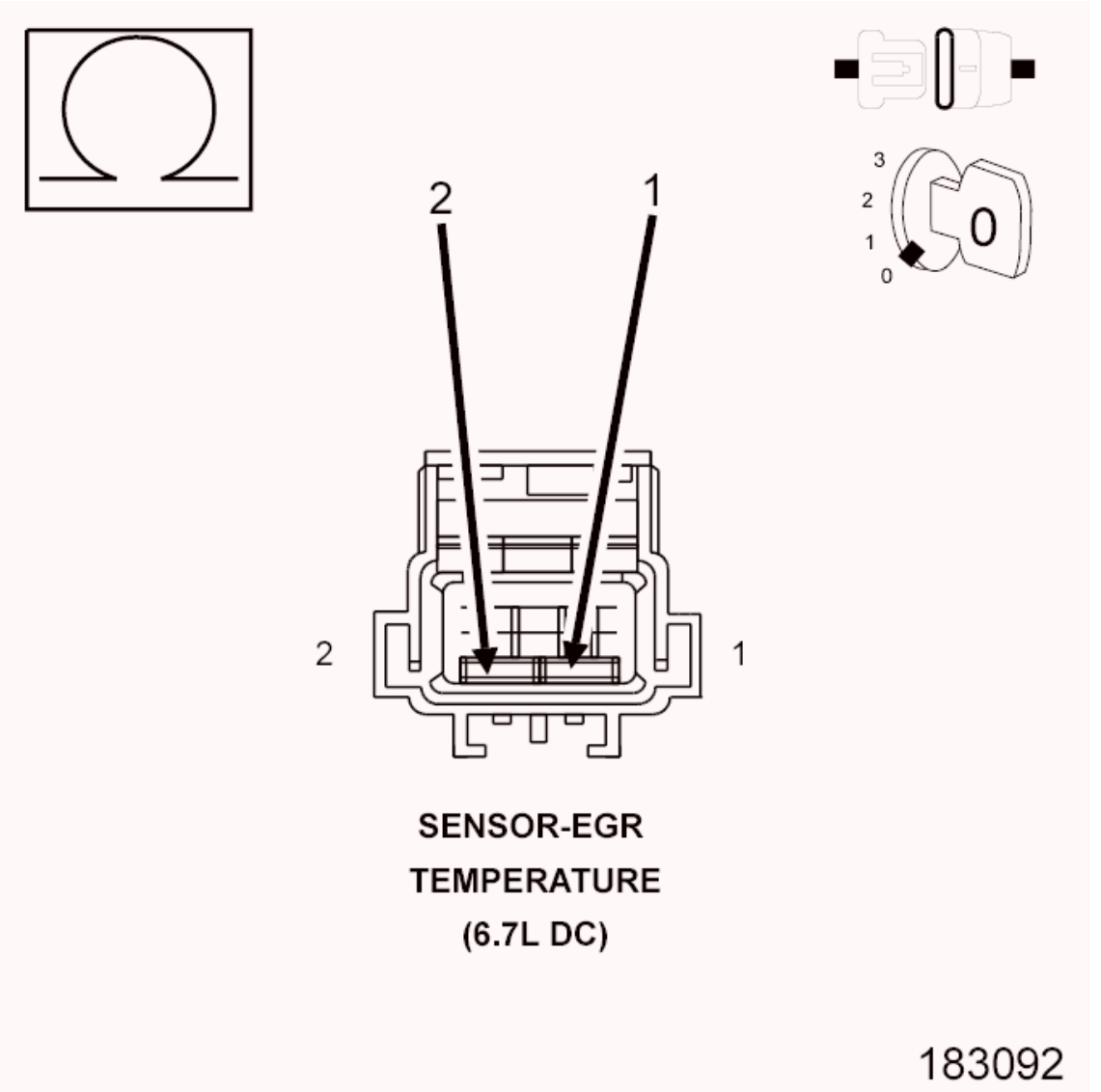

Fig. 156: Checking EGR Outlet Temperature Sensor Signal Circuit For Short To Sensor Ground Circuit
Courtesy of CHRYSLER GROUP, LLC

1. Measure the resistance between the (K935) EGR Outlet Temperature Sensor Signal circuit and the (K914) EGR Outlet Temperature Sensor Return circuit at the EGR Outlet Temperature Sensor harness connector.

   Is the resistance below 10k Ohms?

   Yes

   - Repair the short between the (K935) EGR Outlet Temperature Sensor Signal circuit and the (K914) EGR Outlet Temperature Sensor Return circuit.
   - Perform the POWERTRAIN VERIFICATION TEST - 6.7L. Refer to **POWERTRAIN VERIFICATION TEST - 6.7L** .

No

- Go To 4.

4. **CHECK THE RESISTANCE OF THE EXHAUST GAS RECIRCULATION OUTLET TEMPERATURE SENSOR**
   1. Measure the resistance between the (K935) EGR Outlet Temperature Sensor Signal circuit and the (K914) EGR Outlet Temperature Sensor Return circuit at the EGR Outlet Temperature Sensor.

      Is the resistance between 200 Ohms and 2.4M Ohms?

      Yes

      - Replace the Powertrain Control Module in accordance with the service information.
      - Perform the POWERTRAIN VERIFICATION TEST - 6.7L. Refer to **POWERTRAIN VERIFICATION TEST - 6.7L** .

      No

      - Replace the EGR Outlet Temperature Sensor in accordance with the service information.
      - Perform the POWERTRAIN VERIFICATION TEST - 6.7L. Refer to **POWERTRAIN VERIFICATION TEST - 6.7L** .

P040D-EXHAUST GAS RECIRCULATION TEMPERATURE SENSOR "A" CIRCUIT HIGH

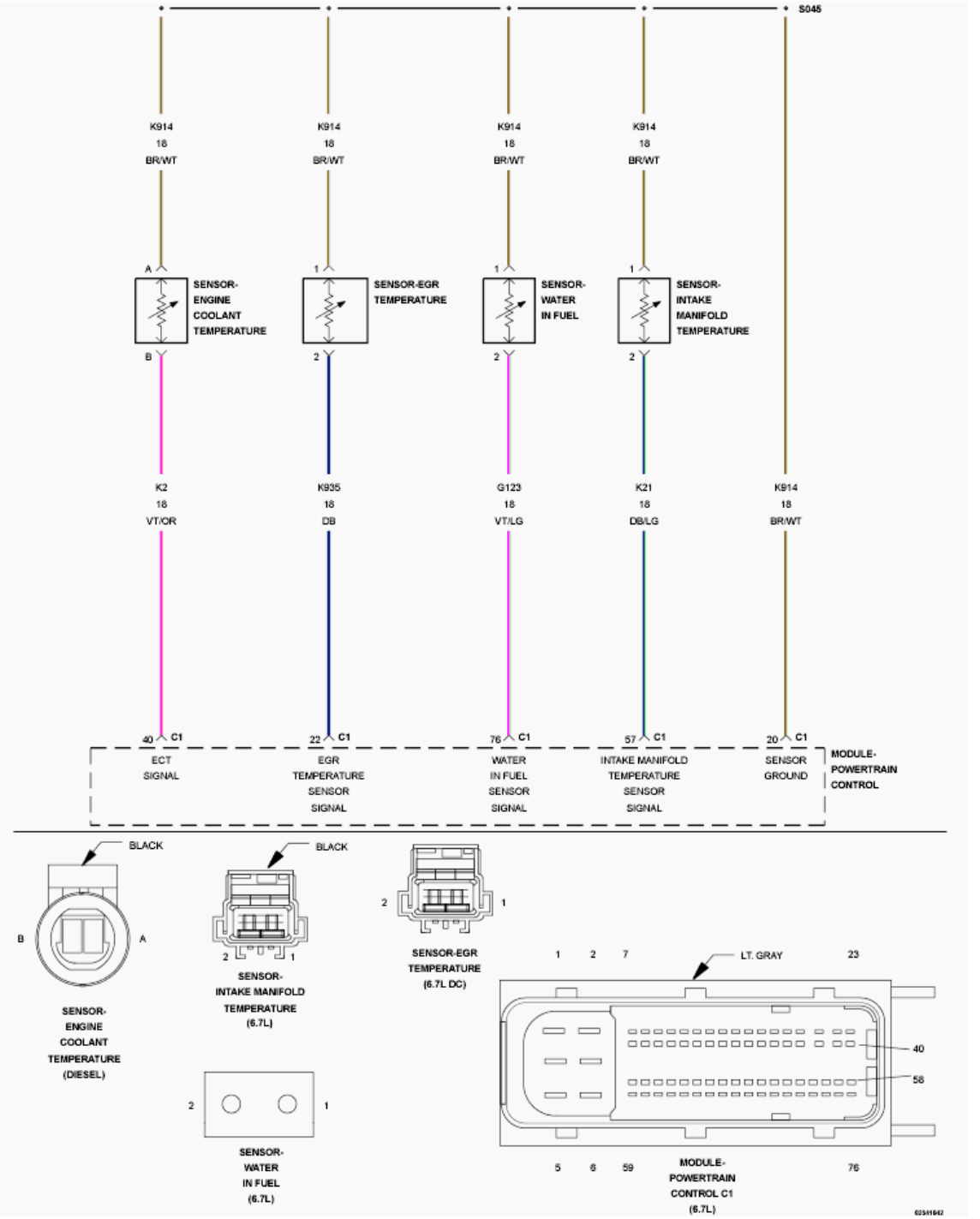

Fig. 157: Intake Manifold Temp, Engine Coolant Temp, EGR Temp, & Water In Fuel Sensor Circuit Schematic
Courtesy of CHRYSLER GROUP, LLC

For a complete wiring diagram, **refer to appropriate SYSTEM WIRING DIAGRAMS article** .

THEORY OF OPERATION

The Exhaust Gas Recirculation Temperature Sensor is a variable resistor sensor and is used to measure the temperature of the EGR gas flow after it exits the EGR Cooler. The Powertrain Control Module (PCM) supplies 5-Volts to the exhaust gas recirculation temperature signal circuit. The PCM monitors the change in voltage caused by changes in the resistance of the sensor to determine the coolant temperature. The exhaust gas recirculation temperature value is used by the PCM for the engine protection system, and engine emissions control. This fault code is set active if the sensor signal voltage is above or below the normal operating range for the sensor and the PCM has commanded the EGR valve open. This fault code will not be set active if the PCM has commanded the EGR valve closed. If this fault becomes active the PCM will light the MIL light immediately. During this time the EGR valve will be closed. The PCM turns off the MIL when the diagnostic runs and passes in four consecutive drive cycles.

WHEN MONITORED:

When the key is on and battery voltage is above 10.4 Volts.

SET CONDITION:

The circuit voltage to the Powertrain Control Module (PCM) is above a calibration threshold for a five minutes.

POSSIBLE CAUSES

Possible Causes
(K935) EGR OUTLET TEMPERATURE SENSOR SIGNAL CIRCUIT OPEN
(K935) EGR OUTLET TEMPERATURE SENSOR SIGNAL CIRCUIT SHORTED TO VOLTAGE
(K914) EGR OUTLET TEMPERATURE SENSOR RETURN CIRCUIT OPEN
EXHAUST GAS RECIRCULATION OUTLET TEMPERATURE SENSOR
POWERTRAIN CONTROL MODULE (PCM)

Always perform the Pre-Diagnostic Troubleshooting procedure before proceeding. Refer to PRE-DIAGNOSTIC TROUBLESHOOTING PROCEDURE - 6.7L .

DIAGNOSTIC TEST

1. **ACTIVE DTC**
    1. Turn the ignition on.
    2. With the scan tool, record all Freeze frame data.
    3. With the scan tool, erase DTCs.
    4. Turn the ignition off for 75 seconds.
    5. Turn the ignition on for at least five minutes.
    6. With the scan tool, read DTCs.

    Did the DTC reset?

    Yes

- Go To 2.

No

- Perform the INTERMITTENT CONDITION - 6.7L diagnostic procedure. Refer to **INTERMITTENT CONDITION - 6.7L** .

2. **CHECK THE (K935) EGR OUTLET TEMPERATURE SENSOR SIGNAL CIRCUIT FOR A SHORT TO VOLTAGE**

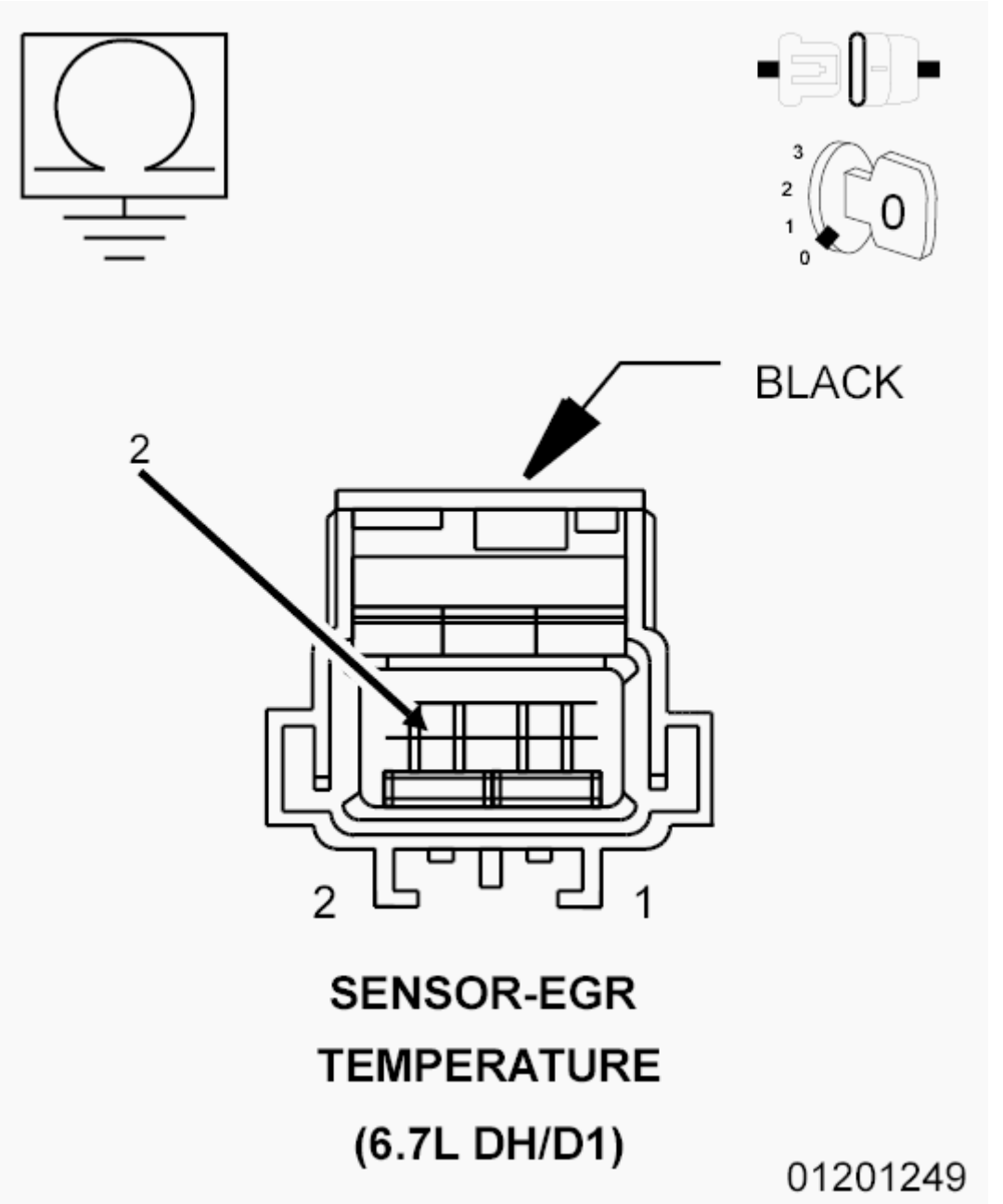

Fig. 158: Checking EGR Outlet Temperature Sensor Signal Circuit For A Short
Courtesy of CHRYSLER GROUP, LLC

1. Turn the ignition on.
2. Disconnect the (K935) EGR Outlet Temperature Sensor harness connector.

   NOTE: Check connectors - Clean/repair as necessary.

3. Measure the voltage of the (K935) EGR Outlet Temperature Sensor Signal circuit at the sensor harness connector.

   Is the voltage reading above 5.1 Volts?

   Yes

   - Repair the (K935) EGR Outlet Temperature Sensor Signal circuit for a short to voltage.
   - Perform the POWERTRAIN VERIFICATION TEST - 6.7L. Refer to **POWERTRAIN VERIFICATION TEST - 6.7L** .

   No

   - Go To 3.

3. **CHECK THE (K935) EGR OUTLET TEMPERATURE SENSOR SIGNAL CIRCUIT FOR AN OPEN/HIGH RESISTANCE**

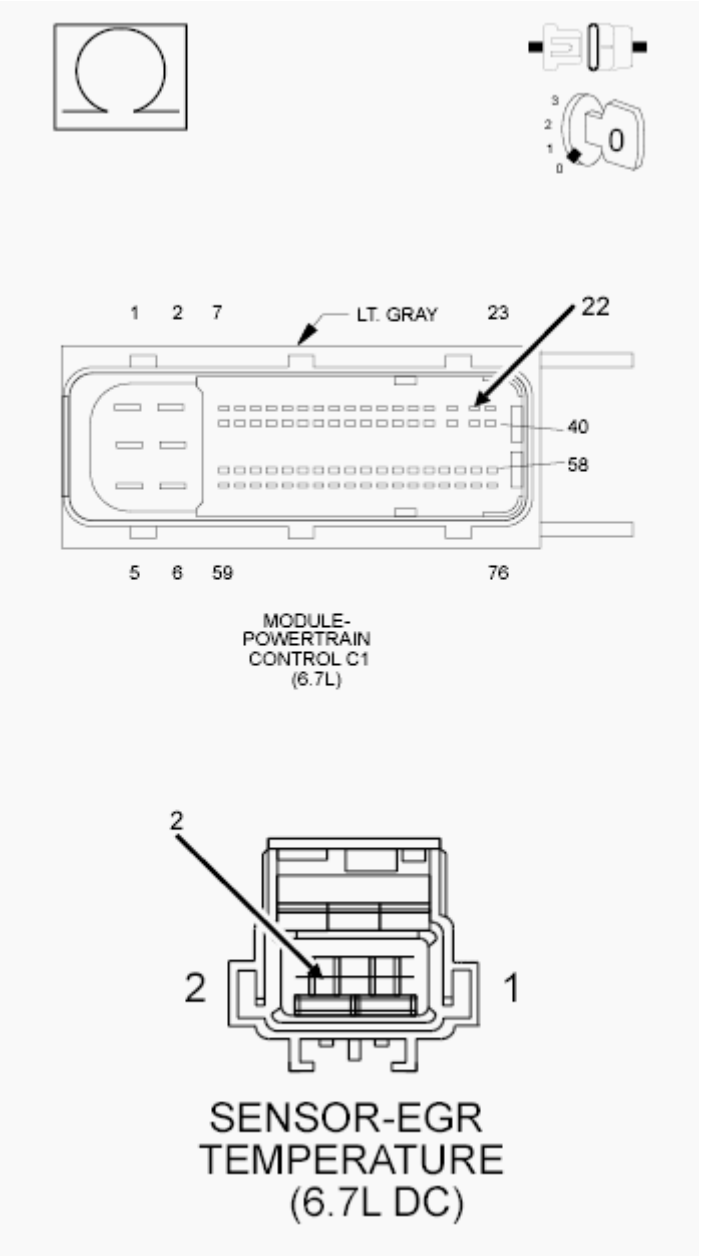

Fig. 159: Checking EGR Outlet Temperature Sensor Signal Circuit For Open Or High Resistance
Courtesy of CHRYSLER GROUP, LLC

1. Turn the ignition off.
2. Disconnect the PCM C1 harness connector.

   NOTE: Check connectors - Clean/repair as necessary.

3. Measure the resistance of the (K935) EGR Outlet Temperature Sensor Signal circuit between the EGR Outlet Temperature Sensor harness connector and the PCM C1 harness connector.

   Is the resistance below 5.0 Ohms?

Yes

- Go To 4.

No

- Repair the (K935) EGR Outlet Temperature Sensor Signal circuit for an open or high resistance.
- Perform the POWERTRAIN VERIFICATION TEST - 6.7L. Refer to **POWERTRAIN VERIFICATION TEST - 6.7L** .

4. **CHECK THE (K914) EGR OUTLET TEMPERATURE SENSOR RETURN CIRCUIT FOR AN OPEN/HIGH RESISTANCE**

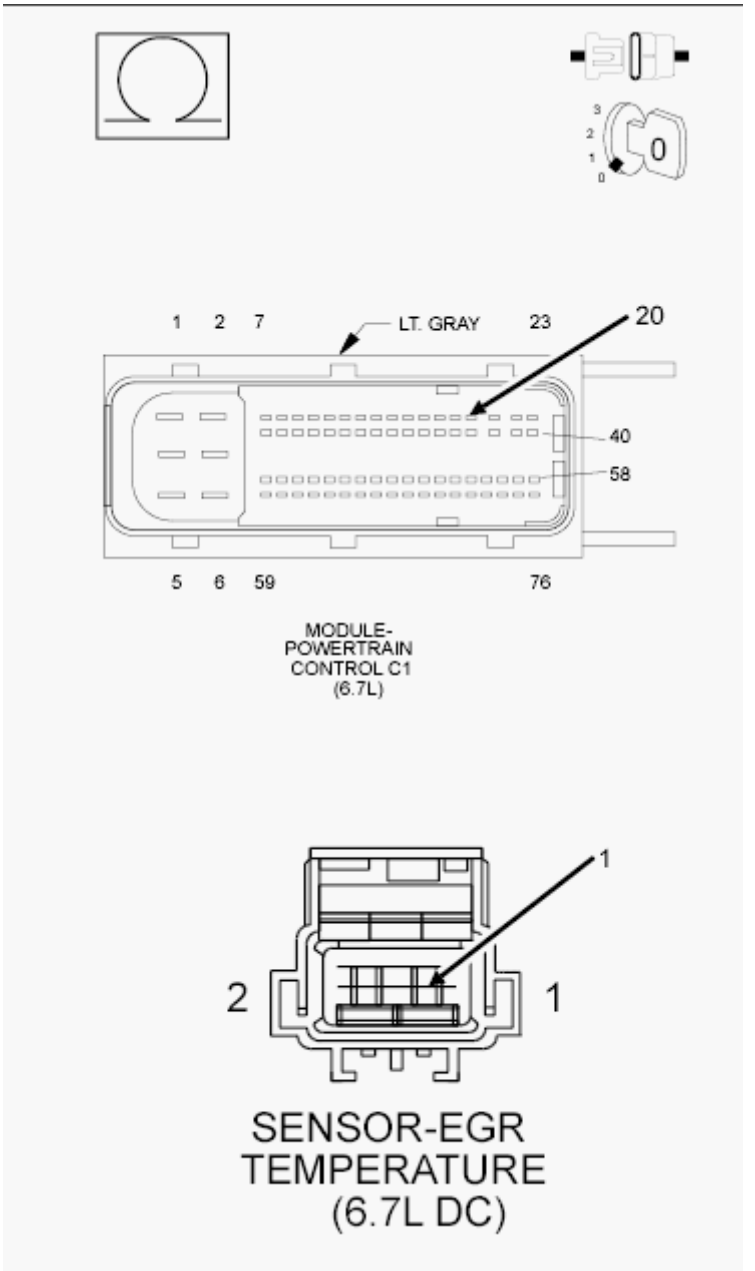

Fig. 160: Checking EGR Outlet Temperature Sensor Return Circuit For An Open Or High Resistance
Courtesy of CHRYSLER GROUP, LLC

1. Measure the resistance of the (K914) EGR Outlet Temperature Sensor Return circuit between the EGR Outlet Temperature Sensor harness connector and the PCM C1 harness connector.

   Is the resistance below 5.0 Ohms?

   Yes

   - Go To 5.

No

- Repair the (K914) EGR Outlet Temperature Sensor Return circuit for an open or high resistance.
- Perform the POWERTRAIN VERIFICATION TEST - 6.7L. Refer to **POWERTRAIN VERIFICATION TEST - 6.7L** .

5. **CHECK THE RESISTANCE OF THE EXHAUST GAS RECIRCULATION OUTLET TEMPERATURE SENSOR**
   1. Measure the resistance between the (K935) EGR Outlet Temperature Sensor Signal circuit and the (K914) EGR Outlet Temperature Sensor Return circuit at the EGR Outlet Temperature Sensor.

      Is the resistance between 200 Ohms and 2.4M Ohms?

      Yes

      - Replace the Powertrain Control Module in accordance with the service information.
      - Perform the POWERTRAIN VERIFICATION TEST - 6.7L. Refer to **POWERTRAIN VERIFICATION TEST - 6.7L** .

      No

      - Replace the EGR Outlet Temperature Sensor in accordance with the service information.
      - Perform the POWERTRAIN VERIFICATION TEST - 6.7L. Refer to **POWERTRAIN VERIFICATION TEST - 6.7L** .

Powertrain Control Module (PCM) - Electrical Diagnostics, 6.7L Diesel - 3500 Cab & Chassis, 4500 & 5500

DIAGNOSIS AND TESTING

P0420-CATALYST EFFICIENCY BELOW THRESHOLD

For a complete wiring diagram, **refer to appropriate SYSTEM WIRING DIAGRAMS article** .

THEORY OF OPERATION

The Aftertreatment Diesel Oxidation Catalyst is designed to react with hydrocarbons in the exhaust stream, this chemical reaction reduces hydrocarbon emission levels and also produces heat. Periodically, the Powertrain Control Module (PCM) will utilize the heat generated by this reaction in the Aftertreatment Diesel Oxidation Catalyst to actively regenerate and clean the Aftertreatment Diesel Particulate Filter. This diagnostic checks that the Aftertreatment Diesel Oxidation Catalyst is present and functioning correctly. The PCM monitors the efficiency of the Aftertreatment Diesel Oxidation Catalyst for DD and DP models through interpretation of data received from the Aftertreatment Diesel Oxidation Catalyst inlet and Aftertreatment Diesel Particulate Filter inlet temperature sensor. For DJ and D2 models the DOC inlet temperature is calculated by the PCM, the monitor checks for a temperature rise across the Aftertreatment Diesel Oxidation Catalyst. The PCM will set the fault if it detects that the Aftertreatment Diesel Oxidation Catalyst is not present in the aftertreatment/exhaust system. The PCM will illuminate the MIL lamp when the monitor runs and fails in two consecutive trips. The PCM will turn off the MIL lamp immediately after the diagnostic runs and passes.

WHEN MONITORED:

This diagnostic runs when the engine is running, and performing an active regeneration of the Aftertreatment Diesel Particulate Filter.

SET CONDITION:

The Powertrain Control Module (PCM) will set the fault if it detects that the Aftertreatment Diesel Oxidation Catalyst is not present in the aftertreatment/exhaust system.

POSSIBLE CAUSES

Possible Causes
AFTERTREATMENT DIESEL OXIDATION CATALYST HAS BEEN REMOVED FROM THE VEHICLE
EXHAUST GAS TEMPERATURE SENSOR 1 AND EXHAUST GAS TEMPERATURE SENSOR 2 HARNESS CONNECTORS REVERSED
AFTERTREATMENT DIESEL OXIDATION CATALYST IS DAMAGED OR NOT FUNCTIONING PROPERLY
AFTERTREATMENT DIESEL OXIDATION CATALYST INLET AND/OR OUTLET TEMPERATURE SENSORS ARE DAMAGED/FAILED

IMPROPER FUELING
WIRE HARNESS

Always perform the Pre-Diagnostic Troubleshooting procedure before proceeding. Refer to PRE-DIAGNOSTIC TROUBLESHOOTING PROCEDURE - 6.7L .

DIAGNOSTIC TEST

1. **OTHER DTCs**
   1. Ignition on, engine not running.
   2. With the scan tool, read DTCs.

      Are any other DTCs Active?

      Yes

      - Repair other DTCs before proceeding.

      No

      - Go To 2.
2. **CHECK FOR THE AFTERTREATMENT DIESEL OXIDATION CATALYST MISSING**
   1. Check the exhaust system to see if the Diesel Oxidation Catalyst has been removed.

      Is the Diesel Oxidation Catalyst present in the system?

      Yes

      - Go To 3.

      No

      - Replace the Diesel Oxidation Catalyst in accordance with the service information
      - Perform the POWERTRAIN VERIFICATION TEST - 6.7L. Refer to **POWERTRAIN VERIFICATION TEST - 6.7L** .
3. **CHECK FOR EXHAUST GAS TEMPERATURE SENSOR 1 AND EXHAUST GAS TEMPERATURE SENSOR 2 HARNESS CONNECTORS REVERSED**

   NOTE: Exhaust Gas Temperature Sensor (EGT) 1 is located at the DOC inlet and Exhaust Gas Temperature Sensor (EGT) 2 is located at the DOC outlet.

   1. Turn the ignition off.
   2. Disconnect the EGT 1 harness connector.
   3. Turn the ignition on.

4. Using the scan tool, monitor the voltage reading of EGT Sensor 1 and EGT Sensor 2.

   Does the Diesel voltage value change to 5.0 volts for EGT Sensor 1 or EGT Sensor 2?

   EGT Sensor 1

   - Go To 4.

   EGT Sensor 2

   - The harness connectors are reversed. Disconnect EGT Sensor 2 and switch the harness connectors to the correct sensors.
   - Perform the POWERTRAIN VERIFICATION TEST - 6.7L. Refer to **POWERTRAIN VERIFICATION TEST - 6.7L** .

4. **CHECK FOR AN EXHAUST LEAK**
   1. Perform the CHECKING THE EXHAUST SYSTEM FOR LEAKS diagnostic procedure. Refer to **DIAGNOSIS AND TESTING, 6.7L** .

      Are leaks found?

      Yes

      - Repair or replace as necessary.
      - Perform the POWERTRAIN VERIFICATION TEST - 6.7L. Refer to **POWERTRAIN VERIFICATION TEST - 6.7L** .

      No

      - Go To 5.

5. **EXHAUST TEMPERATURE**
   1. With the scan tool, read the Exhaust Temperature Sensors to determine the exhaust temperature.

      Is the temperature reading above 225°F?

      Yes

      - Go To 6.

      No

      - Go To 7.

6. **EXHAUST TEMPERATURE SENSORS**
   1. Start the engine.
   2. Raise the engine speed to 2500 RPM for two minutes.

Does the temperature readings of all three Exhaust Temperature Sensors change in value at least 5° F?

Yes

- Go To 8.

No

- Replace the Exhaust Temperature Sensor that did not change in value by at least 5°F or is not updating.
- Perform the POWERTRAIN VERIFICATION TEST - 6.7L. Refer to **POWERTRAIN VERIFICATION TEST - 6.7L** .

7. **EXHAUST TEMPERATURE SENSORS**
   1. Start the engine and allow it to idle for 10 minutes.
   2. With the scan tool, read the values of all three Exhaust Temperature Sensors.

      Do all three temperature sensors read above 150°F and are the values of the temperature sensors updating?

      Yes

      - Go To 8.

      No

      - Replace the Exhaust Temperature Sensor that is not above 150°F or is not updating on the scan tool.
      - Perform the POWERTRAIN VERIFICATION TEST - 6.7L. Refer to **POWERTRAIN VERIFICATION TEST - 6.7L** .
8. **CHECK THE CHARGE AIR COOLING SYSTEM FOR CONTAMINATION DAMAGING THE AFTERTREATMENT DIESEL OXIDATION CATALYST**
   1. Separate the exhaust plumbing from the Turbocharger outlet.
   2. Inspect for signs of oil, coolant or fuel being introduced into the aftertreatment system from the engine or signs of moisture in the Turbocharger exhaust outlet.

      Is contamination found in the turbocharger exhaust outlet?

      Yes

      - Identify and repair the source of the contamination within the engine and replace the Aftertreatment Diesel Oxidation Catalyst after the engine failure has been repaired.
      - Perform the POWERTRAIN VERIFICATION TEST - 6.7L. Refer to **POWERTRAIN VERIFICATION TEST - 6.7L** .

No

- Go To 9.

9. **AFTERTREATMENT DIESEL OXIDATION CATALYST INLET AND/OR OUTLET TEMPERATURE SENSORS**
   1. Remove the Aftertreatment Diesel Oxidation Catalyst and temperature sensors and inspect for damage and presence of face plugging.

      Are the components found to be missing, plugged or damaged during the inspection of the Aftertreatment Diesel Oxidation Catalyst and temperature sensors?

      Yes

      - Replace or repair damaged component(s).
      - Perform the POWERTRAIN VERIFICATION TEST - 6.7L. Refer to **POWERTRAIN VERIFICATION TEST - 6.7L** .

      No

      - Go To 10.

10. **AFTERTREATMENT DIESEL PARTICULATE FILTER**
    1. Remove the exhaust pipe and inspect the Aftertreatment Diesel Particulate Filter.

       Does Aftertreatment Diesel Particulate Filter show evidence of failure?

       Yes

       - Replace the Aftertreatment Diesel Particulate Filter, clean the EGR Valve, and reset the regenerative timers with the scan tool.
       - Perform the POWERTRAIN VERIFICATION TEST - 6.7L. Refer to **POWERTRAIN VERIFICATION TEST - 6.7L** .

       No

       - Perform the INTERMITTENT CONDITION diagnostic procedure. Refer to **INTERMITTENT CONDITION - 6.7L** .

P0461-FUEL LEVEL SENSOR 1 PERFORMANCE

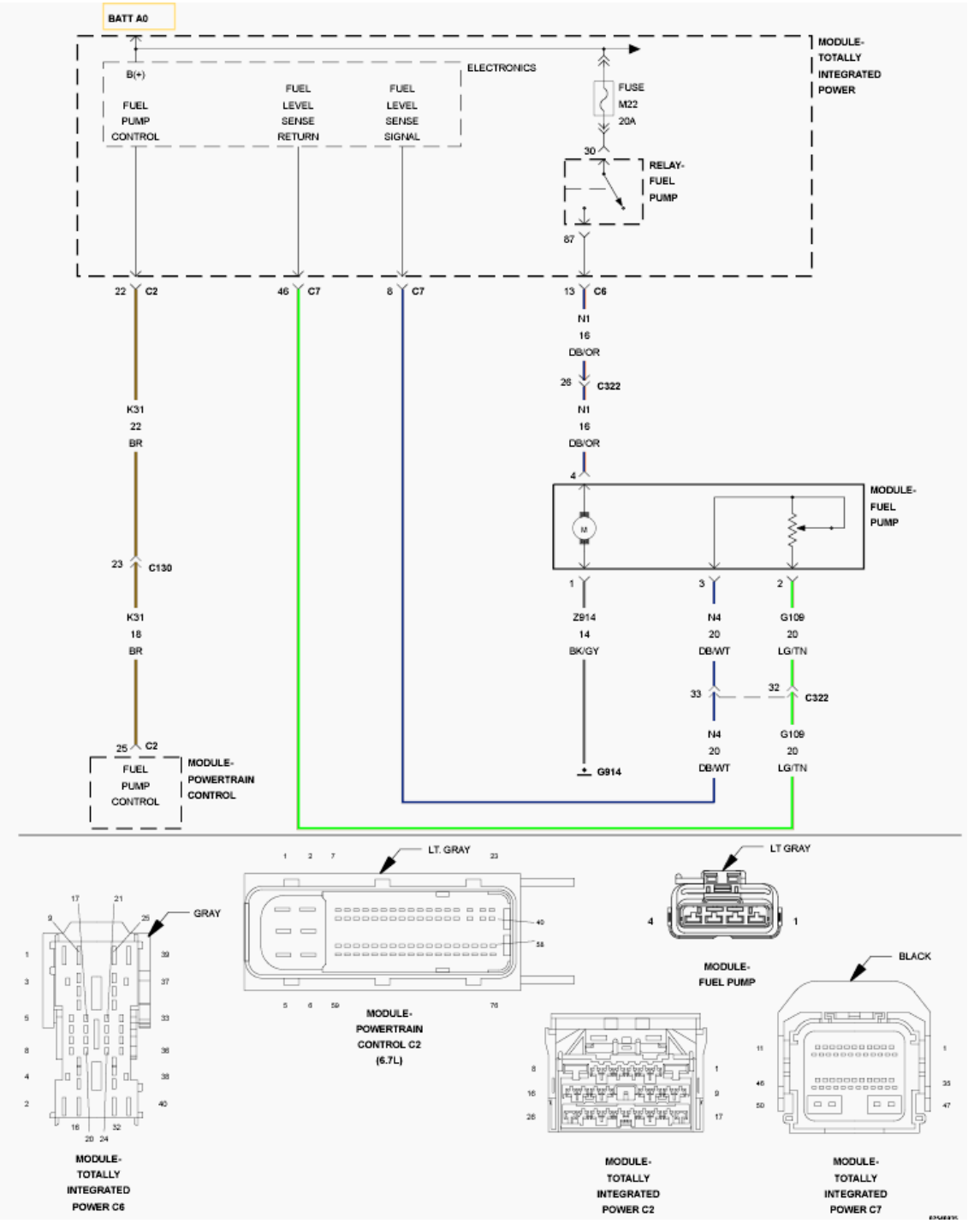

Fig. 1: Fuel Pump Module & TIPM Circuit Schematic
Courtesy of CHRYSLER GROUP, LLC

For a complete wiring diagram, **refer to appropriate SYSTEM WIRING DIAGRAMS article** .

THEORY OF OPERATION

The Fuel Level Sensor is attached to the side of the Fuel Pump Module. The sending unit consists of a float, an

arm and a variable resistor track (card). The fuel transfer pump is also attached to the Fuel Pump Module. A constant 5-Volt signal is supplied to the resistor track of the fuel gauge sending unit. The resistor track is a variable resistor used to vary the voltage signal depending on fuel tank float position. As fuel level increases, the float and arm move up, which decreases voltage. As fuel level decreases, the float and arm move down which increases voltage. When the fuel tank level is measured below 15%, the following fuel system monitors are shut off: P0191 (Fuel Pressure Idle Diagnostic portion of it), and DTCs P0300, P0301, P0302, P0303, P0304, P0305, P0306. The TIPM will illuminate the MIL lamp immediately after this diagnostic runs and fails. The TIPM will turn off the MIL lamp after the diagnostic runs and passes in four consecutive drive cycles.

WHEN MONITORED:

While the engine is running.

SET CONDITION:

Fuel level does not change by a calibrated amount over a calibrated amount of time.

POSSIBLE CAUSES

Possible Causes
EXTERNAL DAMAGE TO FUEL TANK
FUEL LEVEL SENSOR
(N4) FUEL LEVEL SENSOR SIGNAL CIRCUIT OPEN/HIGH RESISTANCE
(G109) FUEL LEVEL SENSOR GROUND CIRCUIT OPEN/HIGH RESISTANCE
INSIDE OF FUEL TANK OBSTRUCTED DAMAGED

Always perform the Pre-Diagnostic Troubleshooting procedure before proceeding. Refer to PRE-DIAGNOSTIC TROUBLESHOOTING PROCEDURE - 6.7L .

DIAGNOSTIC TEST

1. **CHECK FOR EXTERNAL DAMAGE TO FUEL TANK**
    1. Visually inspect the fuel tank for external damage.

       Is the fuel tank damaged from the outside?

       Yes

       - Replace the Fuel Tank in accordance with the Service Information.
       - Perform the POWERTRAIN VERIFICATION TEST - 6.7L. Refer to **POWERTRAIN VERIFICATION TEST - 6.7L** .

       No

       - Go To 2.
2. **CHECK THE (N4) FUEL LEVEL SENSOR SIGNAL CIRCUIT FOR AN OPEN/HIGH**

RESISTANCE

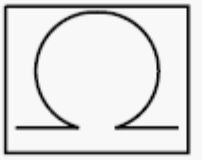

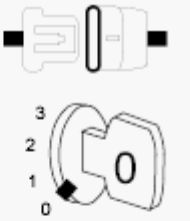

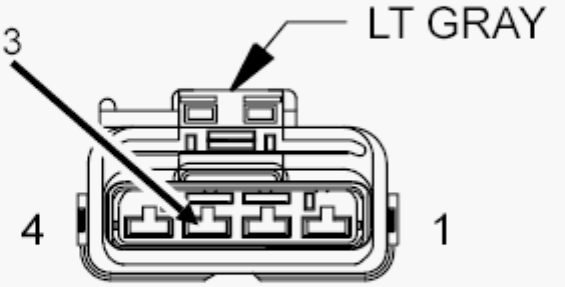

MODULE-
FUEL PUMP

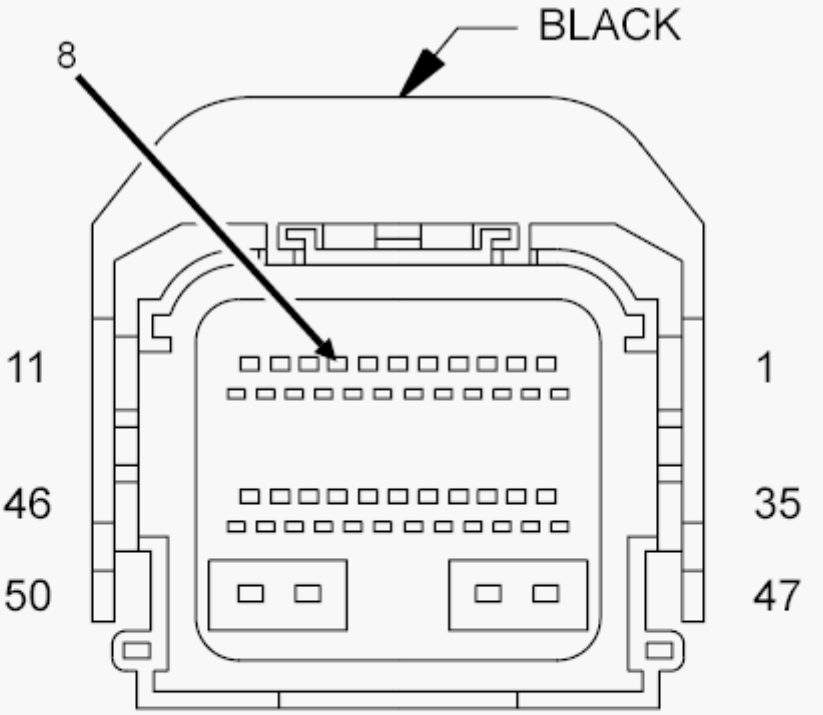

MODULE-
TOTALLY
INTEGRATED
POWER C7

Fig. 2: Checking The Fuel Level Sensor Signal Circuit For An Open Or High Resistance
Courtesy of CHRYSLER GROUP, LLC

1. Turn ignition off.
2. Disconnect the Fuel Pump Module harness connector.
3. Disconnect the TIPM C7 harness connector.
4. Measure the resistance of the (N4) Fuel Level Sensor Signal circuit between the TIPM C7 harness connector and the Fuel Level Sensor harness connector.

   Is the resistance below 5.0 Ohms?

   Yes

   - Go To 3.

   No

   - Repair the (N4) Fuel Level Sensor Signal circuit for an open or high resistance.
   - Perform the POWERTRAIN VERIFICATION TEST - 6.7L. Refer to **POWERTRAIN VERIFICATION TEST - 6.7L** .

3. **CHECK THE (G109) FUEL LEVEL SENSOR RETURN CIRCUIT FOR AN OPEN/HIGH RESISTANCE**

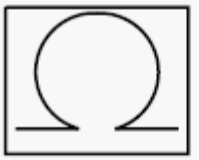

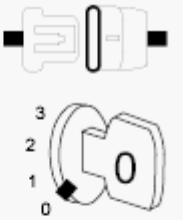

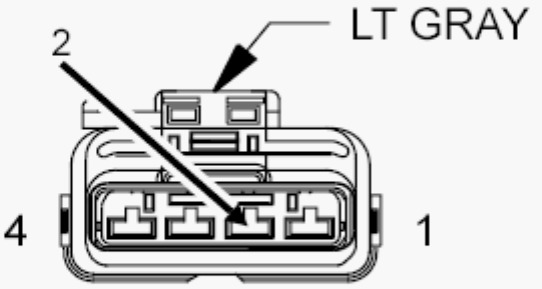

MODULE-
FUEL PUMP

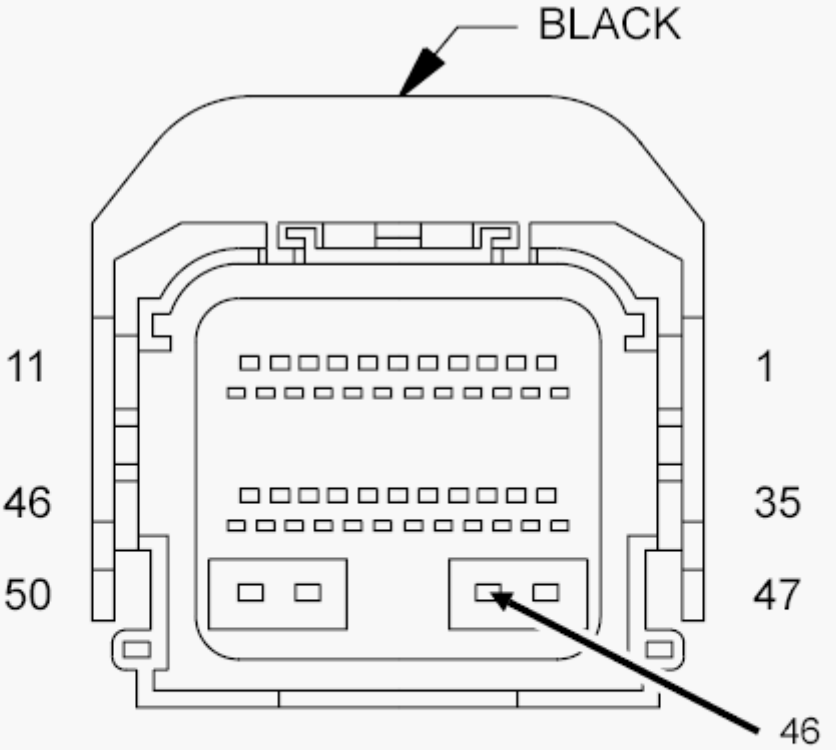

MODULE-
TOTALLY
INTEGRATED
POWER C7

Fig. 3: Checking Fuel Level Sensor Return Circuit For An Open Or High Resistance
Courtesy of CHRYSLER GROUP, LLC

1. Turn the ignition off.
2. Measure the resistance of the (G109) Fuel Level Sensor Return circuit between the TIPM C7 harness connector and the Fuel Pump Module harness connector.

   Is the resistance less than 5.0 Ohms?

   Yes

   - Go To 4.

   No

   - Repair the (Z210) Fuel Level Sensor Return circuit for an open or high resistance.
   - Perform the POWERTRAIN VERIFICATION TEST - 6.7L. Refer to **POWERTRAIN VERIFICATION TEST - 6.7L** .

4. **CHECK THE FUEL LEVEL SENSOR**
   1. Remove the Fuel Level Sensor from the fuel tank.

      Does the fuel level float arm move freely?

      Yes

      - Go To 5.

      No

      - Replace the Fuel Level Sensor in accordance with the Service Information.
      - Perform the POWERTRAIN VERIFICATION TEST - 6.7L. Refer to **POWERTRAIN VERIFICATION TEST - 6.7L** .

5. **CHECK THE FUEL LEVEL SENSOR RESISTANCE**

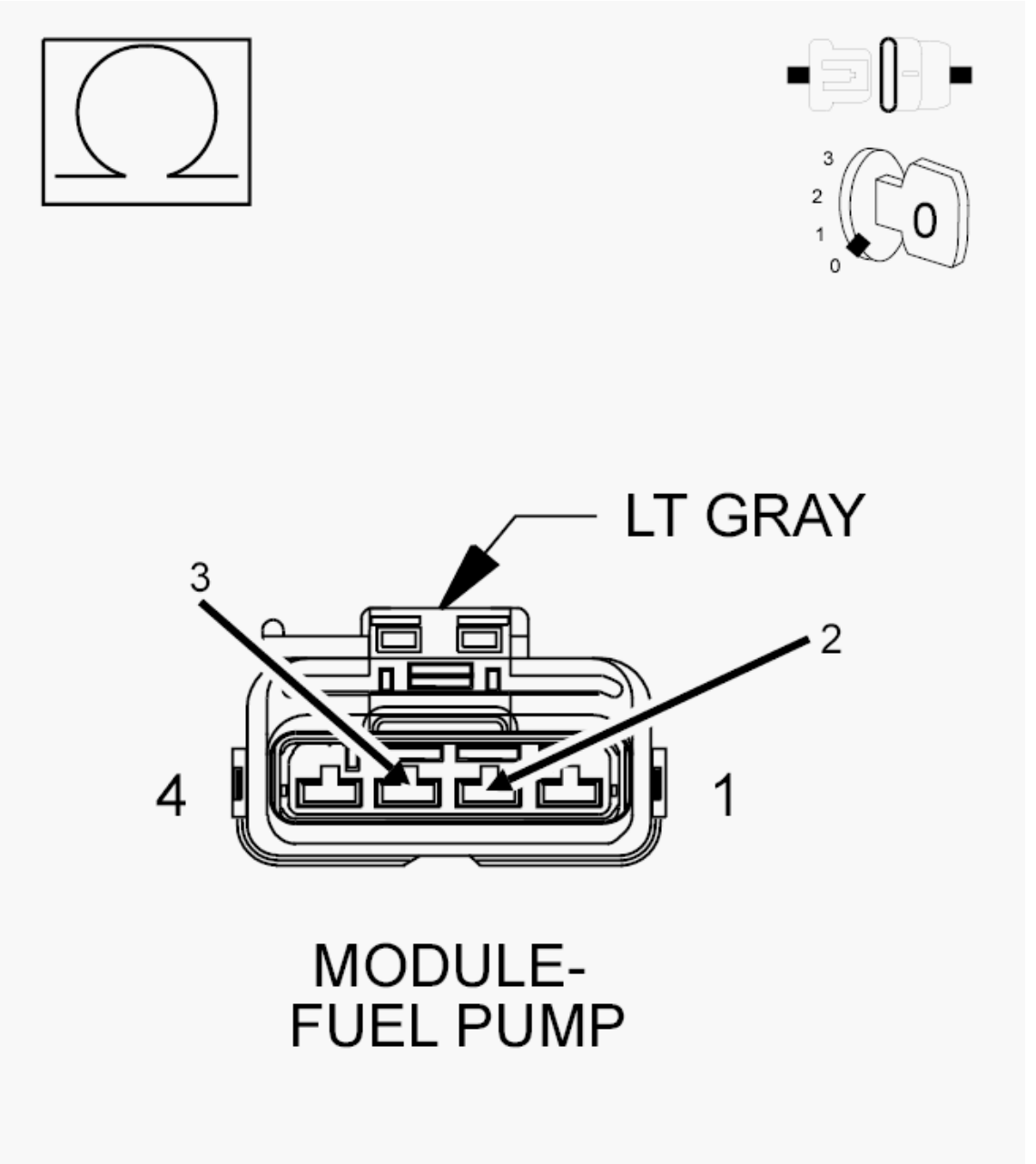

Fig. 4: Checking Fuel Level Sensor Resistance
Courtesy of CHRYSLER GROUP, LLC

1. Measure the resistance across the (N4) Fuel Level Sensor Signal circuit and (G109) Fuel Level Sensor Return circuit at the Fuel Level Sensor while moving the sensor float arm up and down.

   Does the resistance read between approximately 20 and 220 Ohms as you move the sensor arm?

   Yes

   - Go To 6.

No

- Replace the Fuel Level Sensor in accordance with the Service Information.
- Perform the POWERTRAIN VERIFICATION TEST - 6.7L. Refer to **POWERTRAIN VERIFICATION TEST - 6.7L** .

6. **CHECK INSIDE OF FUEL TANK FOR OBSTRUCTION**
   1. Visually inspect the inside of the fuel tank for obstructions.

      Is the inside of the fuel tank damaged or obstructing the Fuel Level Sensor?

      Yes

      - Replace the Fuel Tank in accordance with the Service Information.
      - Perform the POWERTRAIN VERIFICATION TEST - 6.7L. Refer to **POWERTRAIN VERIFICATION TEST - 6.7L** .

      No

      - Test Complete.
      - Perform the POWERTRAIN VERIFICATION TEST - 6.7L. Refer to **POWERTRAIN VERIFICATION TEST - 6.7L** .

P0462-FUEL LEVEL SENSOR 1 CIRCUIT LOW

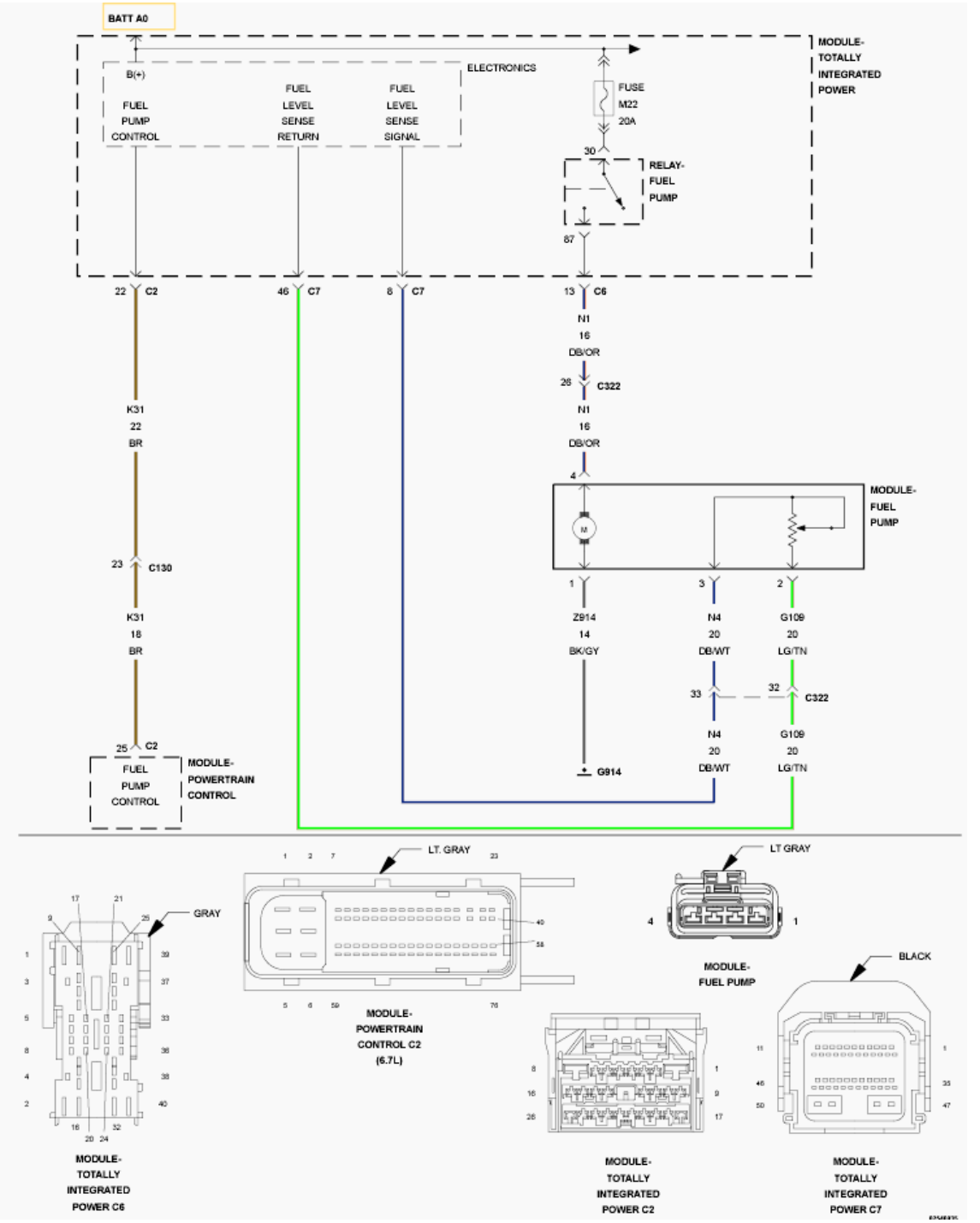

Fig. 5: Fuel Pump Module & TIPM Circuit Schematic
Courtesy of CHRYSLER GROUP, LLC

For a complete wiring diagram, **refer to appropriate SYSTEM WIRING DIAGRAMS article** .

THEORY OF OPERATION

The Fuel Level Sensor is attached to the side of the Fuel Pump Module. The sending unit consists of a float, an

arm and a variable resistor track (card). The fuel transfer pump is also attached to the Fuel Pump Module. A constant 5-Volt signal is supplied to the resistor track of the fuel gauge sending unit. The resistor track is a variable resistor used to vary the voltage signal depending on fuel tank float position. As fuel level increases, the float and arm move up, which decreases voltage. As fuel level decreases, the float and arm move down which increases voltage. When the fuel tank level is measured below 15%, the following fuel system monitors are shut off: P0191 (Fuel Pressure Idle Diagnostic portion of it), and DTCs P0300, P0301, P0302, P0303, P0304, P0305, P0306. The TIPM will illuminate the MIL lamp immediately after this diagnostic runs and fails. The TIPM will turn off the MIL lamp after the diagnostic runs and passes in four consecutive drive cycles.

WHEN MONITORED:

Ignition on and battery voltage above 10.4 Volts.

SET CONDITION:

The signal voltage from the sensor falls below a calibrated value for a calibrated amount of time.

POSSIBLE CAUSES

Possible Causes
FUEL LEVEL SENSOR
(N4) FUEL LEVEL SENSOR SIGNAL CIRCUIT SHORTED TO GROUND
(N4) FUEL LEVEL SENSOR SIGNAL CIRCUIT SHORTED TO THE (G109) FUEL LEVEL SENSOR RETURN CIRCUIT
TIPM

Always perform the Pre-Diagnostic Troubleshooting procedure before proceeding. Refer to PRE-DIAGNOSTIC TROUBLESHOOTING PROCEDURE - 6.7L .

DIAGNOSTIC TEST

1. **ACTIVE DTC**
    1. Ignition on, engine not running.
    2. With the scan tool check for active DTCs.

       Is the DTC active?

       Yes

       - Go To 2.

       No

       - Perform the INTERMITTENT CONDITION diagnostic procedure. Refer to **INTERMITTENT CONDITION - 6.7L** .
2. **CHECK THE FUEL LEVEL SENSOR**

1. Ignition on, engine not running.
2. Disconnect the Fuel Pump Module harness connector.
3. With the scan tool check for DTC P0463.

   Did DTC P0463 set after unplugging sensor?

   Yes

   - Replace the Fuel Level Sensor in accordance with the service information.
   - Perform the POWERTRAIN VERIFICATION TEST - 6.7L. Refer to **POWERTRAIN VERIFICATION TEST - 6.7L** .

   No

   - Go To 3.

3. **CHECK THE (N4) FUEL LEVEL SENSOR SIGNAL CIRCUIT FOR A SHORT TO GROUND**

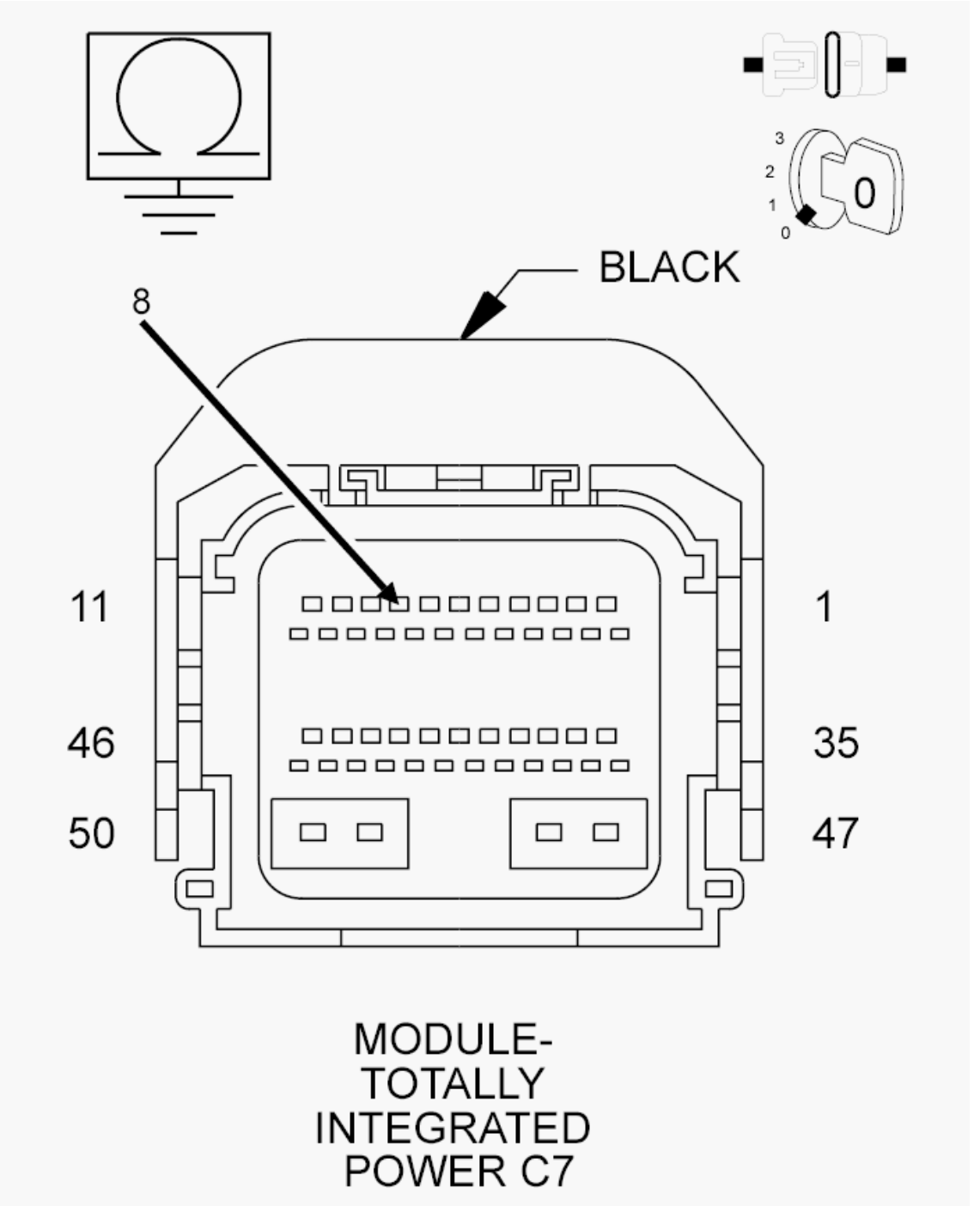

Fig. 6: Checking The Fuel Level Sensor Signal Circuit For A Short To Ground
Courtesy of CHRYSLER GROUP, LLC

1. Turn ignition off.
2. Disconnect the TIPM C7 harness connector.
3. Measure the resistance between ground and the (N4) Fuel Level Sensor Signal circuit at the TIPM C7 harness connector.

Is the resistance below 10k Ohms?

Yes

- Repair the (N4) Fuel Level Sensor Signal circuit for a short to ground.
- Perform the POWERTRAIN VERIFICATION TEST - 6.7L. Refer to **POWERTRAIN VERIFICATION TEST - 6.7L** .

No

- Go To 4.

4. **CHECK FOR THE FUEL LEVEL SENSOR SIGNAL CIRCUIT SHORTED TO THE (G109) FUEL LEVEL SENSOR RETURN CIRCUIT**

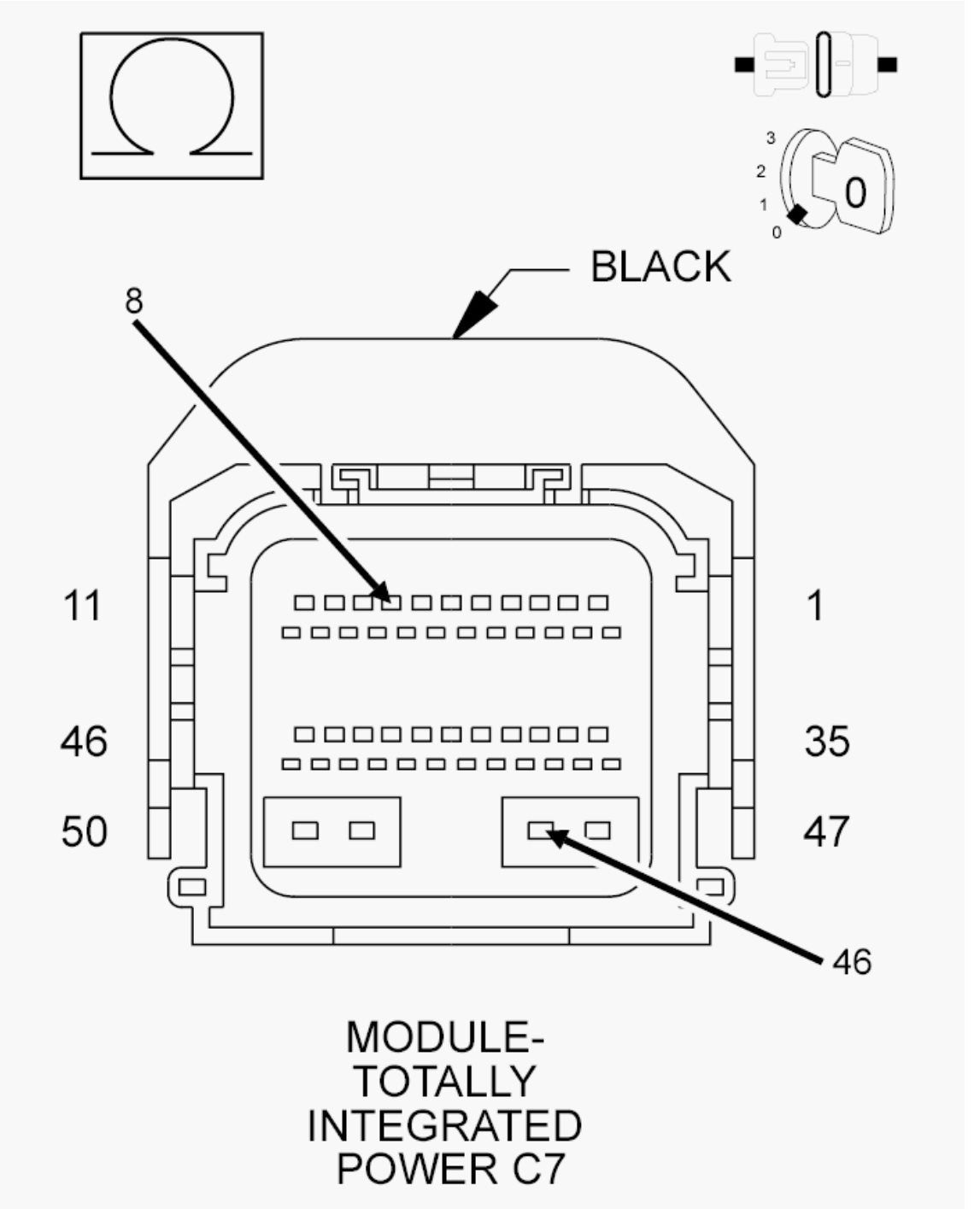

Fig. 7: Check For Fuel Level Sensor Signal Circuit For A Short
Courtesy of CHRYSLER GROUP, LLC

1. Measure the resistance between the (N4) Fuel Level Sensor Signal circuit and the (G109) Fuel Level Sensor Return circuit at the TIPM C7 harness connector.

   Is the resistance below 10k Ohms?

Yes

- Repair the short between the (N4) Fuel Level Sensor Signal circuit and the (G109) Fuel Level Sensor Return circuit.
- Perform the POWERTRAIN VERIFICATION TEST - 6.7L. Refer to **POWERTRAIN VERIFICATION TEST - 6.7L** .

No

- Replace the Totally Integrated Power Module (TIPM) in accordance with the service information.
- Perform the BODY VERIFICATION TEST. Refer to **STANDARD PROCEDURE** .

P0463-FUEL LEVEL SENSOR 1 CIRCUIT HIGH

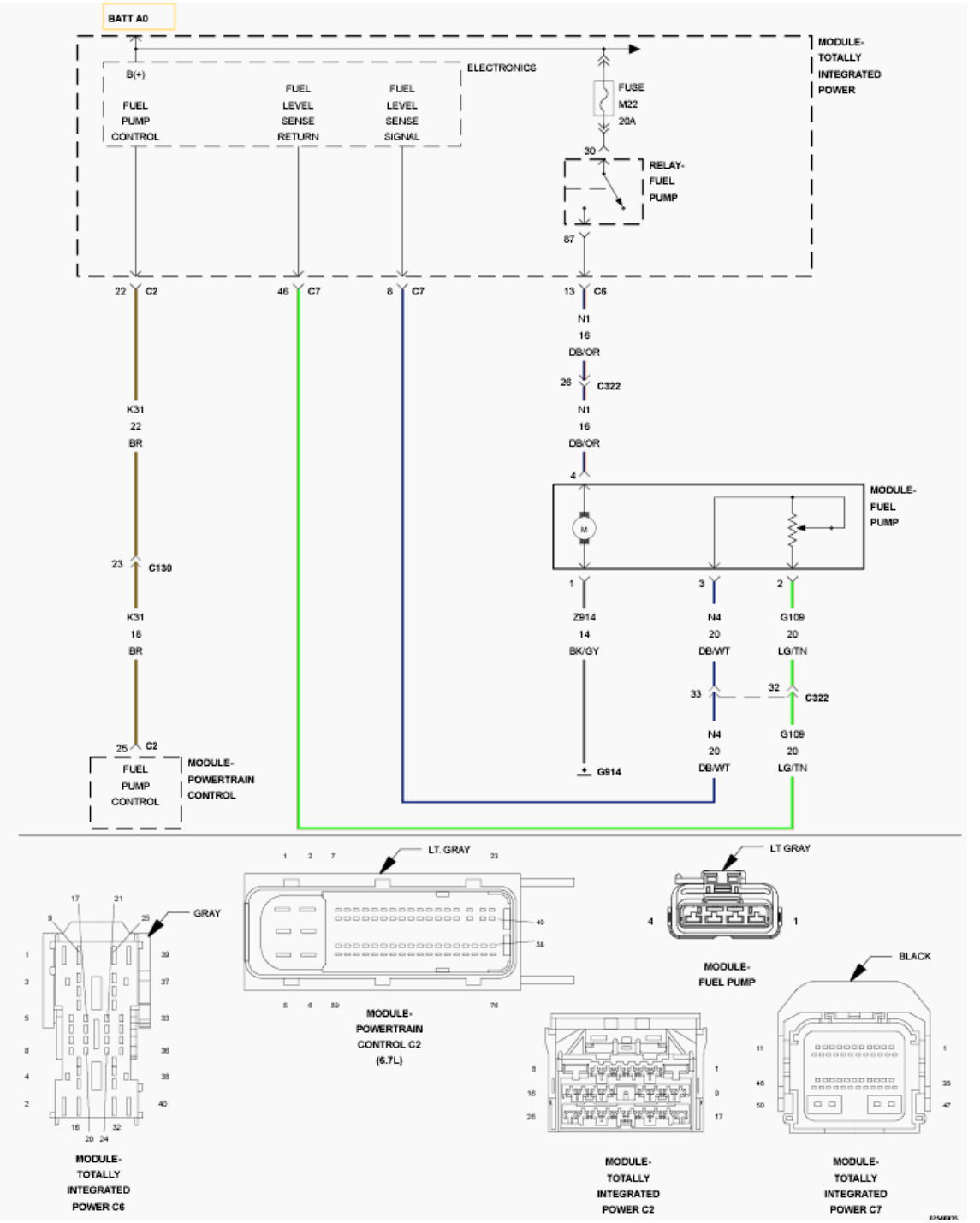

Fig. 8: Fuel Pump Module & TIPM Circuit Schematic
Courtesy of CHRYSLER GROUP, LLC

For a complete wiring diagram, **refer to appropriate SYSTEM WIRING DIAGRAMS article** .

THEORY OF OPERATION

The Fuel Level Sensor is attached to the side of the Fuel Pump Module. The sending unit consists of a float, an

arm and a variable resistor track (card). The fuel transfer pump is also attached to the Fuel Pump Module. A constant 5-Volt signal is supplied to the resistor track of the fuel gauge sending unit. The resistor track is a variable resistor used to vary the voltage signal depending on fuel tank float position. As fuel level increases, the float and arm move up, which decreases voltage. As fuel level decreases, the float and arm move down which increases voltage. When the fuel tank level is measured below 15%, the following fuel system monitors are shut off: P0191 (Fuel Pressure Idle Diagnostic portion of it), and DTCs P0300, P0301, P0302, P0303, P0304, P0305, P0306. The TIPM will illuminate the MIL lamp immediately after this diagnostic runs and fails. The TIPM will turn off the MIL lamp after the diagnostic runs and passes in four consecutive drive cycles.

WHEN MONITORED:

Ignition on and battery voltage above 10.4 Volts.

SET CONDITION:

The signal voltage from the sensor goes above a calibrated value for a calibrated amount of time.

POSSIBLE CAUSES

Possible Causes
FUEL LEVEL SENSOR
(N4) FUEL LEVEL SENSOR SIGNAL CIRCUIT SHORTED TO VOLTAGE
(N4) FUEL LEVEL SENSOR SIGNAL CIRCUIT OPEN/HIGH RESISTANCE
(G109) FUEL LEVEL SENSOR GROUND CIRCUIT OPEN/HIGH RESISTANCE
TOTALLY INTEGRATED POWER MODULE (TIPM)

Always perform the Pre-Diagnostic Troubleshooting procedure before proceeding. Refer to PRE-DIAGNOSTIC TROUBLESHOOTING PROCEDURE - 6.7L .

DIAGNOSTIC TEST

1. **ACTIVE DTC**
    1. Ignition on, engine not running.
    2. With the scan tool check for active DTCs.

       Is the DTC active?

       Yes

       - Go To 2.

       No

       - Perform the INTERMITTENT CONDITION diagnostic procedure. Refer to **INTERMITTENT CONDITION - 6.7L** .
2. **CHECK THE FUEL LEVEL SENSOR**

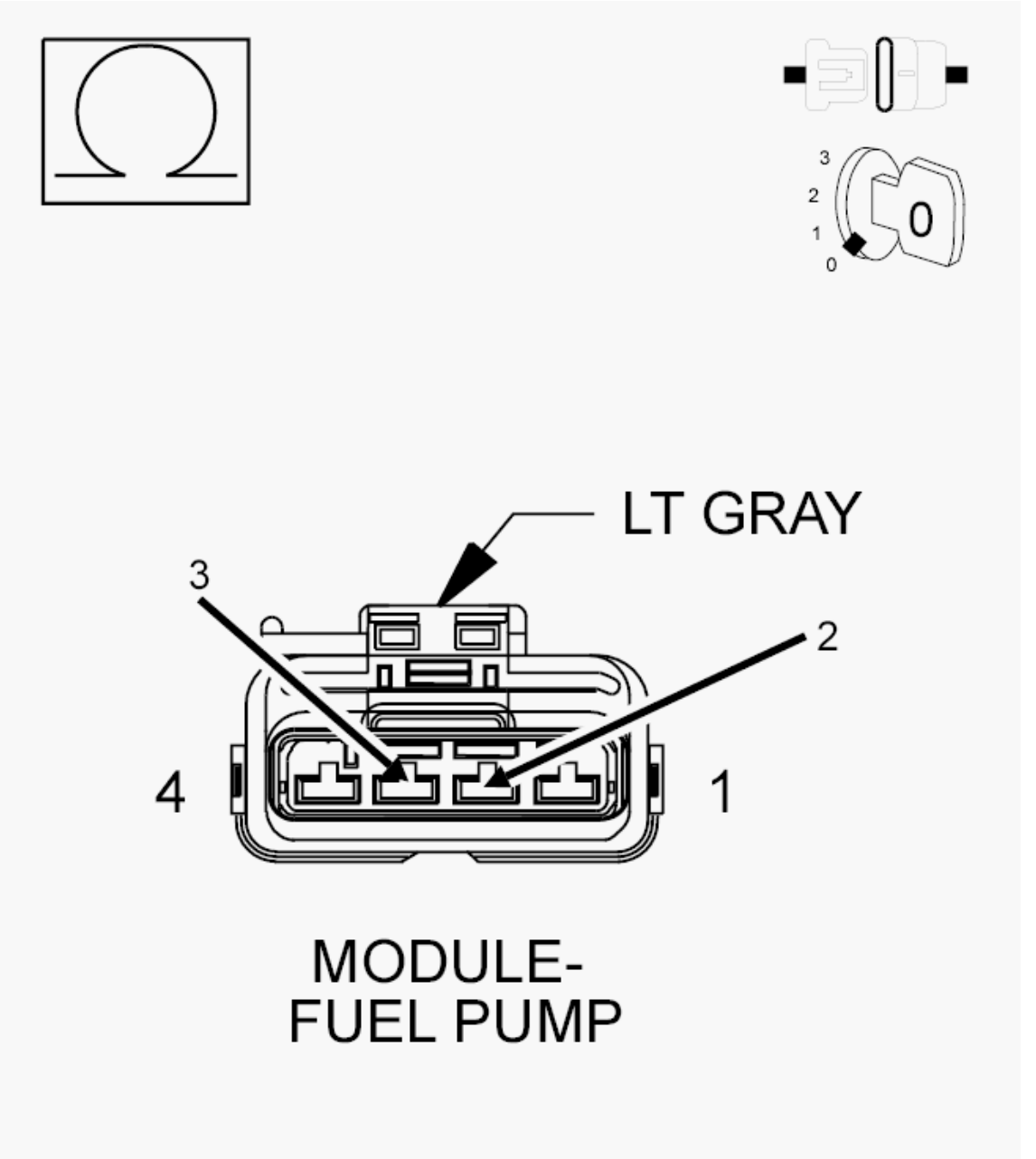

Fig. 9: Checking Fuel Level Sensor Resistance
Courtesy of CHRYSLER GROUP, LLC

1. Turn ignition off.
2. Disconnect the Fuel Level Sensor harness connector.

NOTE: Check connectors - Clean/repair as necessary.

3. Measure the resistance of the Fuel Level Sensor across the (N4) Fuel Level Sensor Signal circuit and (Z210) Fuel Level Sensor Return circuit terminals.

Is the resistance between approximately 20 and 220 Ohms?

Yes

- Go To 3.

No

- Replace the Fuel Level Sensor in accordance with the service information.
- Perform the POWERTRAIN VERIFICATION TEST - 6.7L. Refer to **POWERTRAIN VERIFICATION TEST - 6.7L** .

3. **CHECK THE (N4) FUEL LEVEL SENSOR SIGNAL CIRCUIT FOR A SHORT TO VOLTAGE**

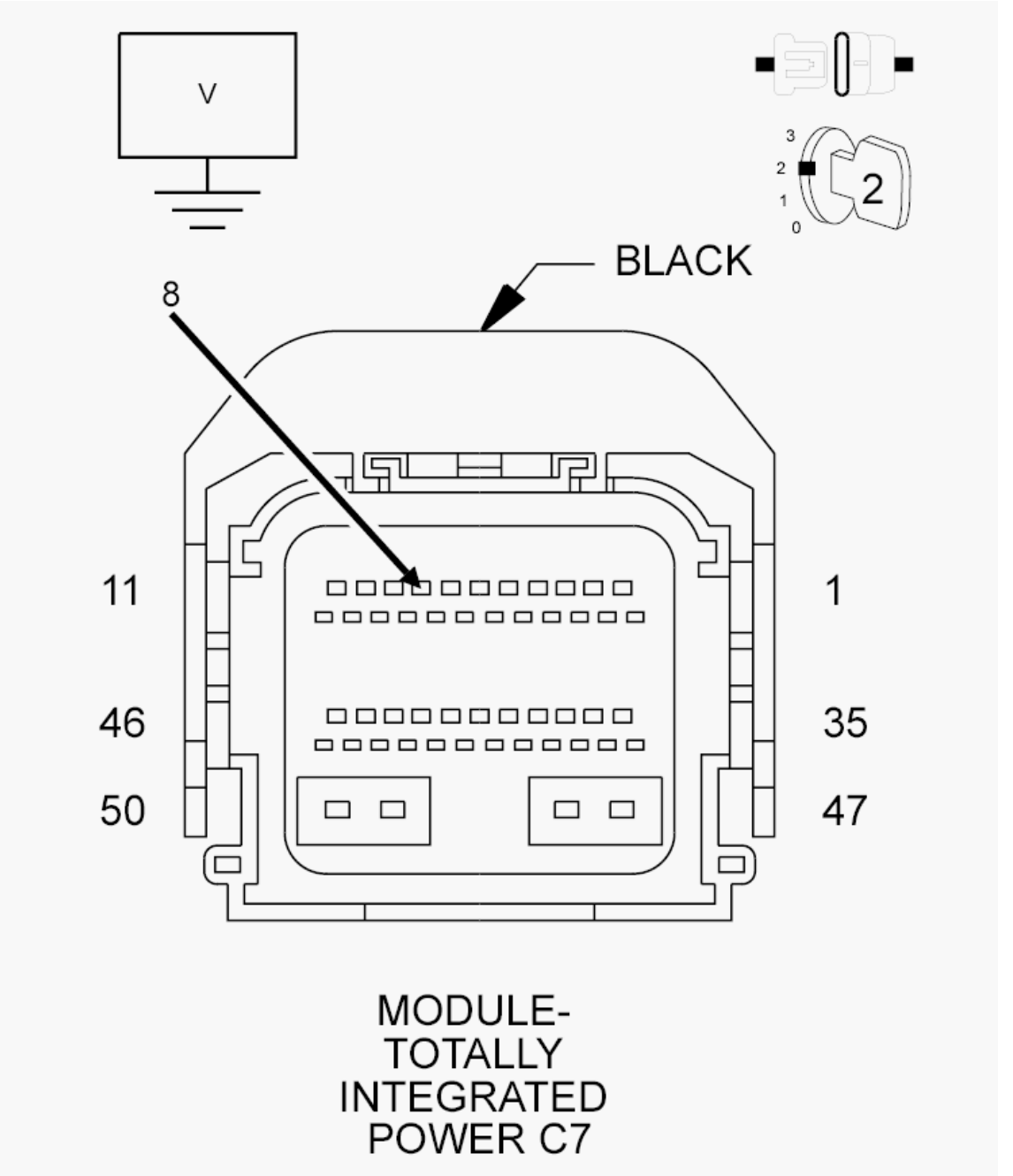

Fig. 10: Checking Fuel Level Sensor Signal Circuit For A Short To Voltage
Courtesy of CHRYSLER GROUP, LLC

1. Disconnect the TIPM C7 harness connector.
2. Turn ignition on.
3. Measure the voltage of the (N4) Fuel Level Sensor Signal circuit at the TIPM C7 harness connector.

   Is there any voltage present?

Yes

- Repair the short to voltage in the (N4) Fuel Level Sensor Signal circuit.
- Perform the POWERTRAIN VERIFICATION TEST - 6.7L. Refer to **POWERTRAIN VERIFICATION TEST - 6.7L** .

No

- Go To 4.

4. **CHECK THE (N4) FUEL LEVEL SENSOR SIGNAL CIRCUIT FOR AN OPEN/HIGH RESISTANCE**

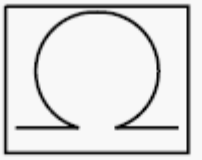

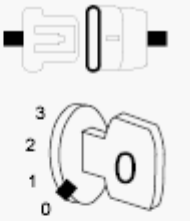

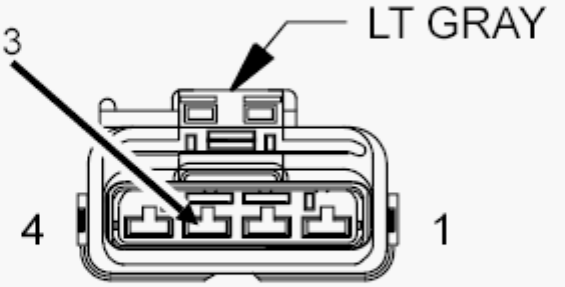

MODULE-
FUEL PUMP

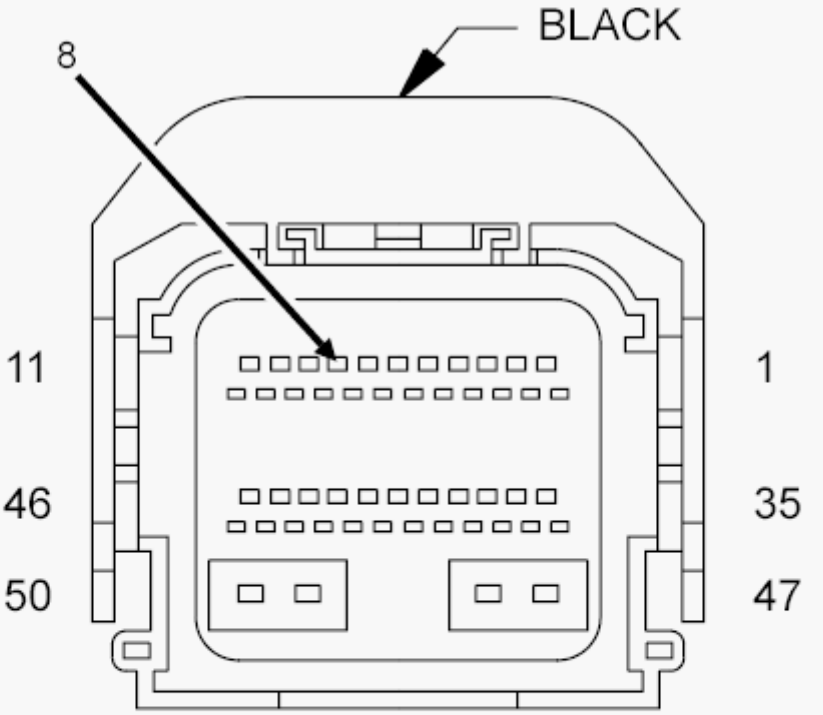

MODULE-
TOTALLY
INTEGRATED
POWER C7

Fig. 11: Checking The Fuel Level Sensor Signal Circuit For An Open Or High Resistance
Courtesy of CHRYSLER GROUP, LLC

1. Turn ignition off.
2. Measure the resistance of the (N4) Fuel Level Sensor Signal circuit between the TIPM C7 harness connector and the Fuel Pump Module harness connector.

   Is the resistance below 5.0 Ohms?

   Yes

   - Go To 5.

   No

   - Repair the (N4) Fuel Level Sensor Signal circuit for an open or high resistance.
   - Perform the POWERTRAIN VERIFICATION TEST - 6.7L. Refer to **POWERTRAIN VERIFICATION TEST - 6.7L** .

5. **CHECK THE (G109) FUEL LEVEL SENSOR RETURN CIRCUIT FOR AN OPEN/HIGH RESISTANCE**

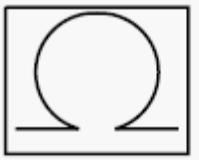

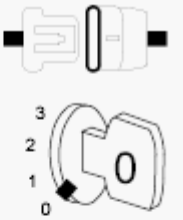

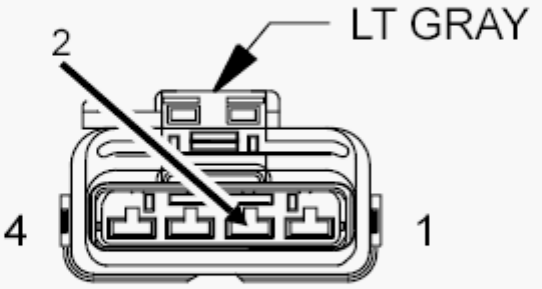

MODULE-
FUEL PUMP

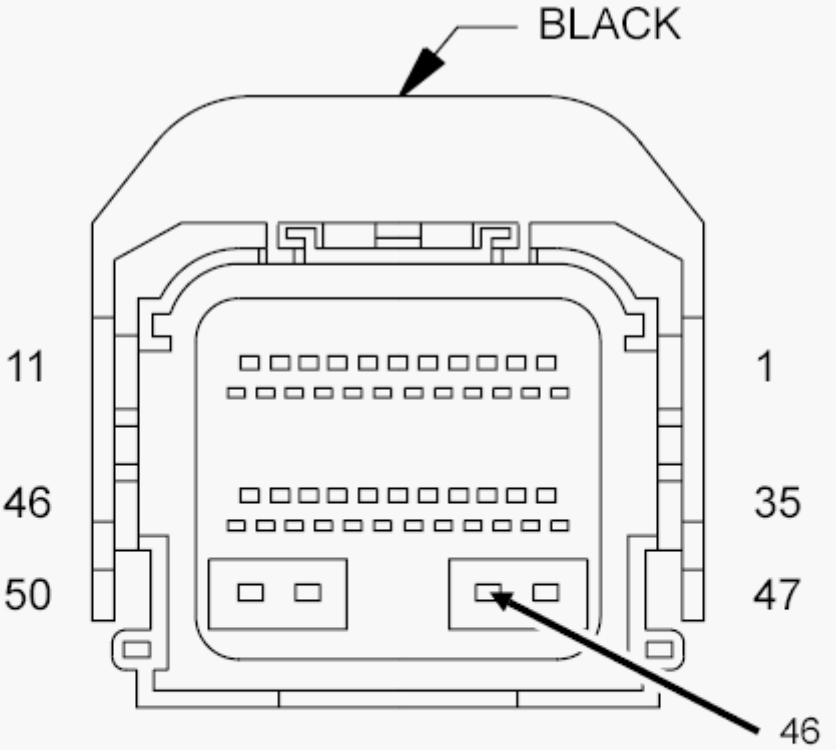

MODULE-
TOTALLY
INTEGRATED
POWER C7

Fig. 12: Checking Fuel Level Sensor Return Circuit For An Open Or High Resistance
Courtesy of CHRYSLER GROUP, LLC

1. Measure the resistance of the (G109) Fuel Level Sensor Return circuit between the TIPM C7 harness connector and the Fuel Pump Module harness connector.

   Is the resistance below 5.0 Ohms?

   Yes

   - Replace the Totally Integrated Power Module (TIPM) in accordance with the service information.
   - Perform the BODY VERIFICATION TEST. Refer to **STANDARD PROCEDURE** .

   No

   - Repair the (G109) Fuel Level Sensor Return circuit for an open or high resistance.
   - Perform the POWERTRAIN VERIFICATION TEST - 6.7L. Refer to **POWERTRAIN VERIFICATION TEST - 6.7L** .

P046C-EGR POSITION SENSOR CIRCUIT PERFORMANCE

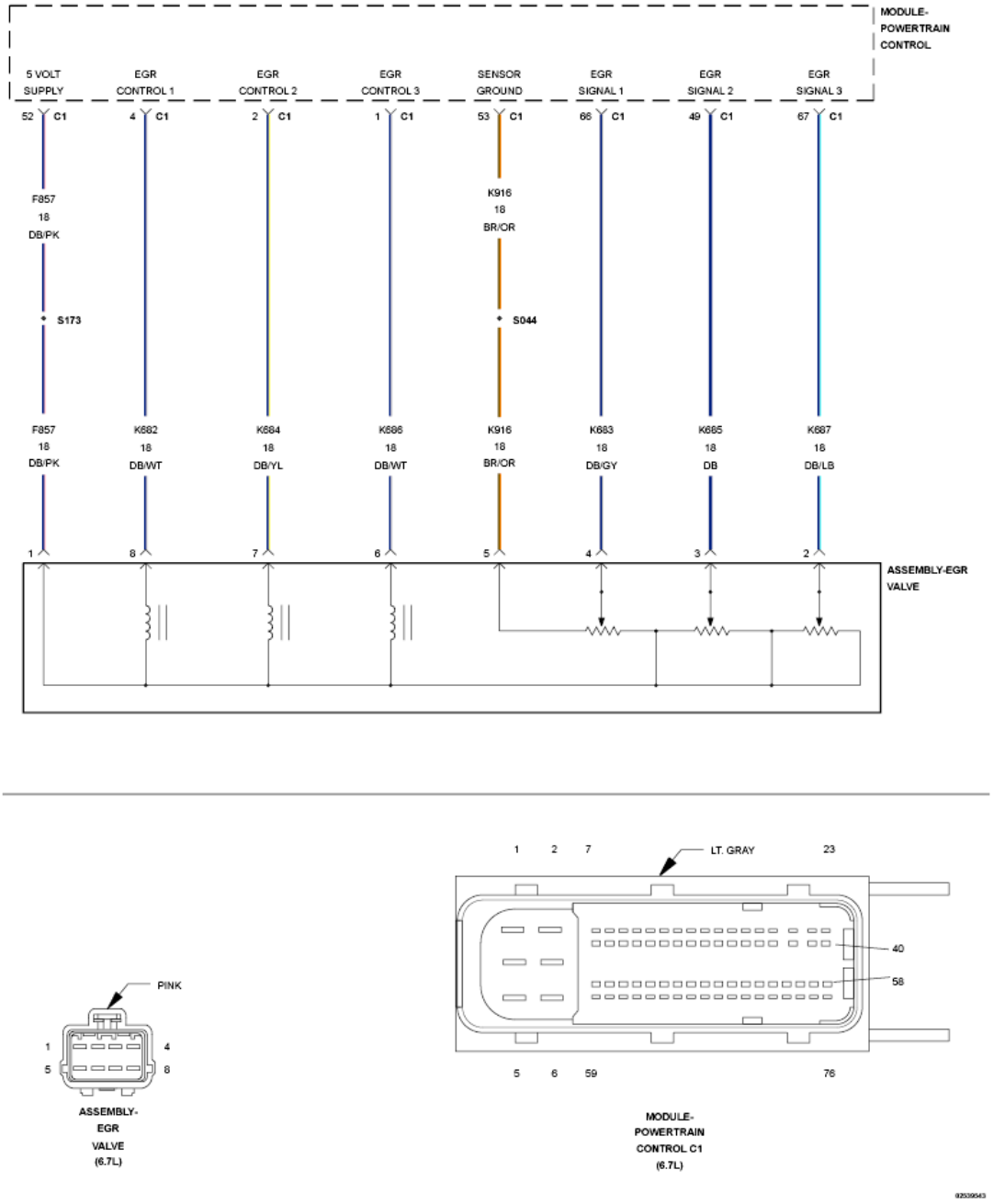

Fig. 13: EGR Valve Assembly Circuit Schematic
Courtesy of CHRYSLER GROUP, LLC

For a complete wiring diagram, **refer to appropriate SYSTEM WIRING DIAGRAMS article** .

THEORY OF OPERATION

The Exhaust Gas Recirculation (EGR) Valve is opened by a motor located on top of the EGR Valve. The EGR Valve is spring loaded closed. The motor electronically opens the valve and is controlled by the Powertrain Control Module (PCM). The PCM monitors three functions of the EGR Valve. The commanded position; actual position; and an acceptable tolerance between the actual and commanded position.If the difference between the

actual and commanded positions exceeds a calibrated threshold over a period of time then the fault will set.If the error is set in two consecutive drive cycles the system will set the MIL Lamp.After the diagnostic runs and passes on four consecutive drive cycles, the MIL Lamp will clear.

WHEN MONITORED:

At key on, and with engine running.

SET CONDITION:

EGR Valve is not able to reach the commanded position over a calibrated period of time.

POSSIBLE CAUSES

Possible Causes
EGR CONTROL CIRCUITS OPEN/HIGH RESISTANCE
EGR POSITION SIGNAL CIRCUITS OPEN/HIGH RESISTANCE
BOOST PRESSURE SENSOR
EGR TEMPERATURE SENSOR
EGR VALVE SOOTED / STICKING
EGR VALVE
POWERTRAIN CONTROL MODULE (PCM)

Always perform the Pre-Diagnostic Troubleshooting procedure before proceeding. Refer to PRE-DIAGNOSTIC TROUBLESHOOTING PROCEDURE - 6.7L .

DIAGNOSTIC TEST

1. **ACTIVE DTC**

NOTE: **If there are any DTCs present for the Boost Pressure Sensor or EGR Temperature Sensor, perform the diagnostics for those DTCs before proceeding with this test procedure.**

1. Turn the ignition on.
2. With the scan tool, record all Freeze frame data.
3. With the scan tool, erase DTCs.
4. Turn the ignition off for 30 seconds.
5. Start the vehicle. It may be necessary to drive vehicle to reset DTC.
6. With the scan tool, read DTCs.

Did the DTC reset?

Yes

- Go To 2.

No

- Perform the INTERMITTENT CONDITION diagnostic procedure. Refer to **INTERMITTENT CONDITION - 6.7L** .

2. **CHECK THE EGR CONTROL CIRCUITS FOR AN OPEN/HIGH RESISTANCE**
   1. Turn the ignition off.
   2. Disconnect the EGR Valve harness connector.
   3. Disconnect the PCM C1 harness connector.
   4. Measure the resistance of the (K682) EGR Control 1 circuit between the EGR Valve harness connector and the PCM harness connector.
   5. Measure the resistance of the (K684) EGR Control 2 circuit between the EGR Valve harness connector and the PCM harness connector.
   6. Measure the resistance of the (K686) EGR Control 3 circuit between the EGR Valve harness connector and the PCM harness connector.

   Is the resistance below 5.0 Ohms for each circuit?

   Yes

   - Go To 3.

   No

   - Repair the open or high resistance in the circuit that measured above 5.0 Ohms.
   - Perform the POWERTRAIN VERIFICATION TEST - 6.7L. Refer to **POWERTRAIN VERIFICATION TEST - 6.7L** .

3. **CHECK THE EGR POSITION SIGNAL CIRCUITS FOR AN OPEN/HIGH RESISTANCE**
   1. Measure the resistance of the (K683) EGR Position Signal 1 circuit circuit between the EGR Valve harness connector and the PCM harness connector.
   2. Measure the resistance of the (K685) EGR Position Signal 2 circuit between the EGR Valve harness connector and the PCM harness connector.
   3. Measure the resistance of the (K687) EGR Position Signal 3 circuit between the EGR Valve harness connector and the PCM harness connector.

   Is the resistance below 5.0 Ohms for each circuit?

   Yes

   - Go To 4.

   No

- Repair the open or high resistance in the circuit that measured above 5.0 Ohms.
- Perform the POWERTRAIN VERIFICATION TEST - 6.7L. Refer to **POWERTRAIN VERIFICATION TEST - 6.7L** .

4. **CLEAN THE EGR VALVE**
    1. Reconnect the PCM C1 harness connector.
    2. Remove and clean the EGR Valve in accordance with the service information. Refer to **VALVE, EXHAUST GAS RECIRCULATION (EGR), 6.7L DIESEL, CLEANING** .
    3. Reconnect the EGR Valve harness connector.
    4. Turn the ignition on.
    5. With the scan tool, erase DTCs.
    6. Turn the ignition off for 75 seconds.
    7. Start the vehicle. It may be necessary to drive vehicle to reset DTC.
    8. With the scan tool, read DTCs.

    Did the DTC return?

    Yes

    - Go To 5.

    No

    - Repair complete.
    - Perform the POWERTRAIN VERIFICATION TEST - 6.7L. Refer to **POWERTRAIN VERIFICATION TEST - 6.7L** .

5. **REPLACE THE EGR VALVE**
    1. Replace the EGR Valve in accordance with the service information. Refer to **VALVE, EXHAUST GAS RECIRCULATION (EGR), 6.7L DIESEL REMOVAL** .
    2. Turn the ignition on.
    3. With the scan tool, erase DTCs.
    4. Turn the ignition off for 75 seconds.
    5. Start the vehicle. It may be necessary to drive vehicle to reset DTC.
    6. With the scan tool, read DTCs.

    Did the DTC return?

    Yes

    - Replace the Powertrain Control Module in accordance with the service information. Refer to **MODULE, POWERTRAIN CONTROL, 6.7L DIESEL, REMOVAL** .
    - Perform the POWERTRAIN VERIFICATION TEST - 6.7L. Refer to **POWERTRAIN VERIFICATION TEST - 6.7L** .

No

- Repair complete.
- Perform the POWERTRAIN VERIFICATION TEST - 6.7L. Refer to **POWERTRAIN VERIFICATION TEST - 6.7L** .

P0471-EXHAUST PRESSURE SENSOR 1 PERFORMANCE

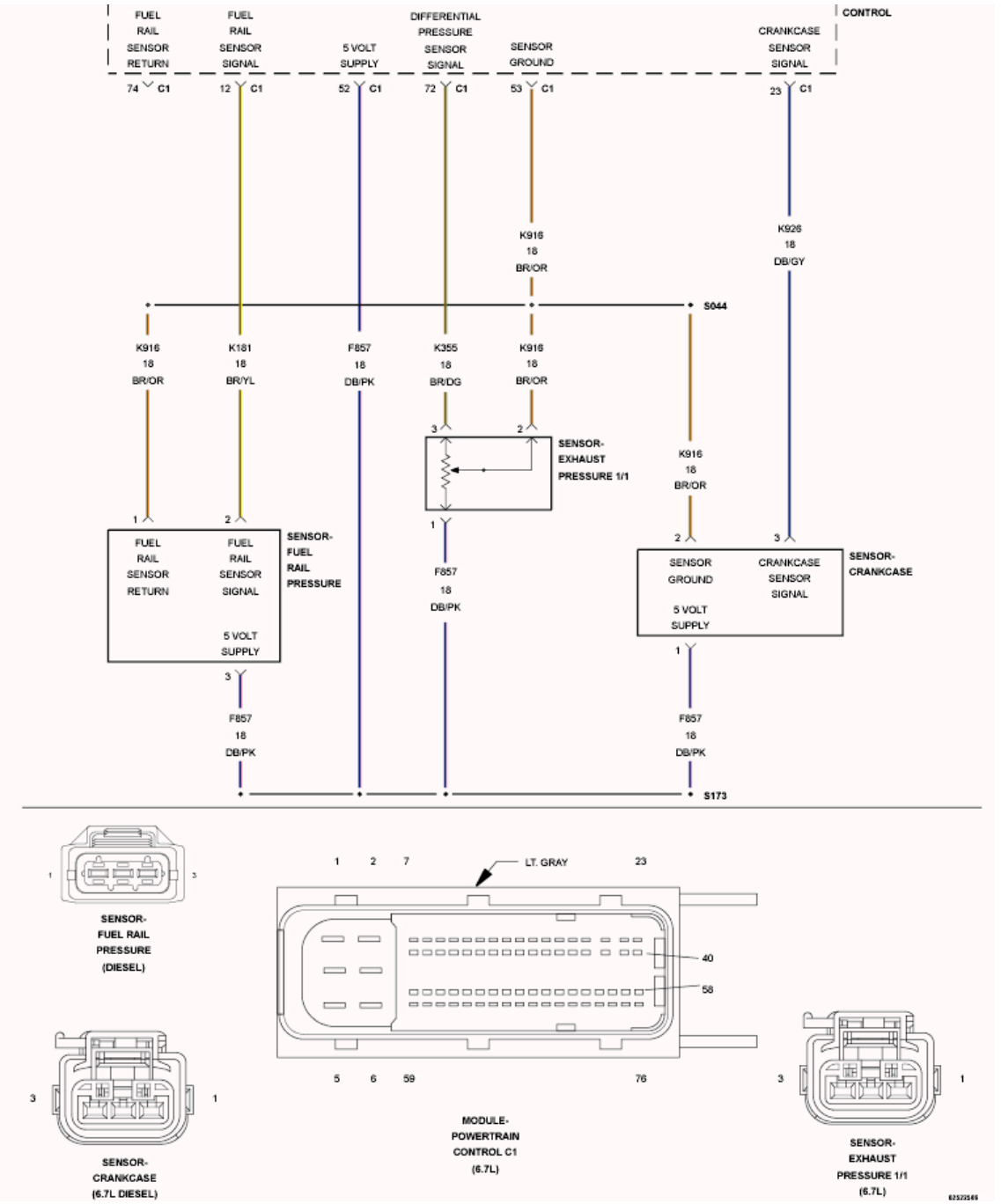

Fig. 14: Fuel Rail Pressure, Exhaust Pressure, & Crankcase Sensor Circuit Schematic

Courtesy of CHRYSLER GROUP, LLC

For a complete wiring diagram, **refer to appropriate SYSTEM WIRING DIAGRAMS article** .

THEORY OF OPERATION

The Exhaust Gas Pressure Sensor is used to measure exhaust gas pressure in the exhaust manifold. The Powertrain Control Module (PCM) provides a 5-Volt supply to the Exhaust Gas Pressure Sensor on the sensor supply circuit. The PCM also provides a ground on the sensor return circuit. The Exhaust Gas Pressure Sensor provides a signal to the PCM on the Exhaust Gas Pressure Sensor Signal circuit. At key on, the readings for the exhaust gas pressure, intake manifold pressure, and ambient air pressure are compared. This fault code occurs if the exhaust gas pressure reading is different from the other two. During normal engine operation EGR position and Boost Pressure Sensor readings are used to calculate an estimated exhaust pressure. If the difference between the estimated and the value read from the Exhaust Gas Pressure Sensor is above a calibrated threshold for a calibrated period of time then an error is recorded. The key-on portion of the rationality will light the MIL immediately after the diagnostic runs and fails. The rationality portion has to fail in two consecutive drive cycles for the MIL to become illuminated. If this fault becomes active the PCM will light the MIL immediately. During this time the PCM uses an estimated exhaust gas pressure. The PCM turns off the MIL when the diagnostic runs and passes in four consecutive drive cycles.

WHEN MONITORED:

Five seconds after key on.

SET CONDITION:

The Exhaust Gas Pressure Sensor reading at key on differs by a calibrated amount of pressure from the Barometric Pressure Sensor and Boost Pressure Sensor or the Exhaust Gas Pressure Sensor reading varies from an estimated value during normal engine operation.

POSSIBLE CAUSES

Possible Causes
DEBRIS PLUGGING THE PRESSURE TUBE
DEBRIS PLUGGING THE PRESSURE SENSOR PORTS ON THE WATER OUTLET CONNECTION
EXHAUST GAS PRESSURE SENSOR

Always perform the Pre-Diagnostic Troubleshooting procedure before proceeding. Refer to PRE-DIAGNOSTIC TROUBLESHOOTING PROCEDURE - 6.7L .

DIAGNOSTIC TEST

1. **CHECK THE EXHAUST GAS PRESSURE SENSOR TUBE AND PRESSURE SENSING PORTS**
    1. Remove the steel tube between the Exhaust Manifold and the Exhaust Gas Pressure Sensor port (located on the water outlet connection).

NOTE: The orifice in the water outlet connection is 2 mm in diameter.

Closely inspect this location as it can accumulate debris.

Is the pressure tube and pressure sensor ports located in the manifold and water outlet connection free from debris?

Yes

- Go To 2.

No

- Clean the tube and pressure sensing ports.
- Go To 2.

2. **CHECK THE THERMOSTAT OUTLET**
   1. Remove the Exhaust Gas Pressure Sensor from the thermostat outlet.

      NOTE: Carefully make sure the sensing end of the Exhaust Gas Pressure Sensor is clear. The Exhaust Gas Pressure Sensor diaphragm can be damaged if a tool is inserted into the end of the sensor. Take care not to damage the sensor.

      Is the outlet and sensor free of debris?

      Yes

      - Go To 3.

      No

      - Remove debris from outlet and wipe the sensor with a clean cloth. Reinstall pressure tube and sensor and retest.
      - Perform the POWERTRAIN VERIFICATION TEST - 6.7L. Refer to **POWERTRAIN VERIFICATION TEST - 6.7L** .

3. **CHECK THE AIR INLET/CHARGE AIR/EXHAUST GAS RECIRCULATION FOR LEAKS**
   1. Check vehicle/engine for leaks of inlet air (Air Filter to Turbocharger), Charge Air (Turbocharger to Intake Manifold), or EGR gases (Exhaust Manifold to Intake Manifold). Refer to **DIAGNOSIS AND TESTING, 6.7L** .

      Were there any leaks detected?

      Yes

      - Repair leak condition.
      - Perform the POWERTRAIN VERIFICATION TEST - 6.7L. Refer to **POWERTRAIN VERIFICATION TEST - 6.7L** .

No

- Go To 4.

4. **CHECK THE EXHAUST GAS PRESSURE SENSOR**
   1. Turn ignition switch on.
   2. Wait five seconds after ignition switch is turned on.
   3. With the scan tool, read DTCs.

   Is P0471 stored?

   Yes

   - Go To 5.

   No

   - Replace the Exhaust Gas Pressure Sensor in accordance with the service information.
   - Perform the POWERTRAIN VERIFICATION TEST - 6.7L. Refer to **POWERTRAIN VERIFICATION TEST - 6.7L** .

5. **CHECK THE EXHAUST GAS PRESSURE SENSOR OPERATION**
   1. With the scan tool, erase DTCs.
   2. Start the engine and let it idle for one minute.
   3. With the scan tool, monitor the Exhaust Gas Pressure Sensor reading.

   Does the value fluctuate slightly, indicating the sensor is not stuck?

   Yes

   - Repair complete.
   - Perform the POWERTRAIN VERIFICATION TEST - 6.7L. Refer to **POWERTRAIN VERIFICATION TEST - 6.7L** .

   No

   - Replace the Exhaust Gas Pressure Sensor.
   - Perform the POWERTRAIN VERIFICATION TEST - 6.7L. Refer to **POWERTRAIN VERIFICATION TEST - 6.7L** .

P0472-EXHAUST PRESSURE SENSOR 1 LOW

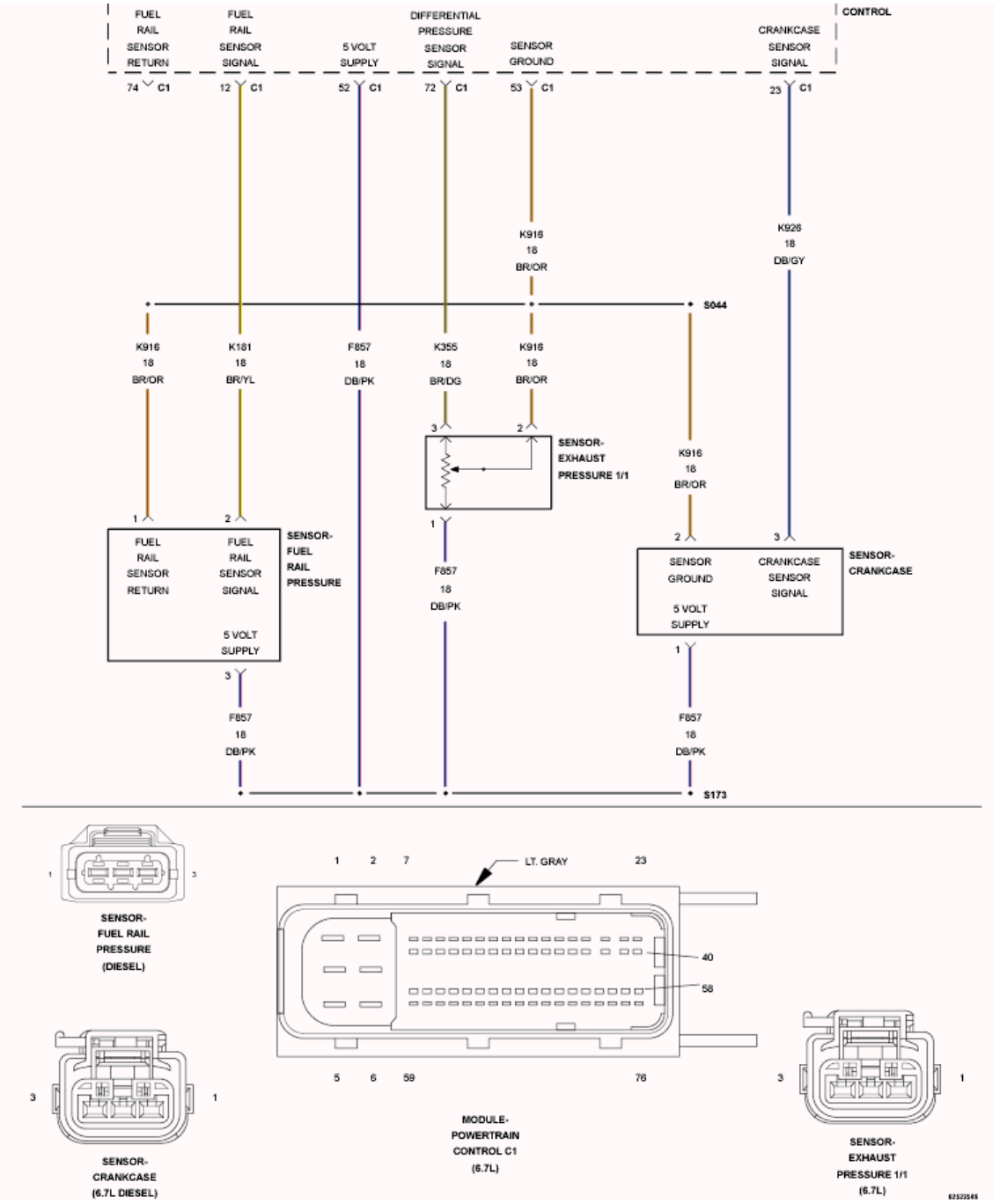

Fig. 15: Fuel Rail Pressure, Exhaust Pressure, & Crankcase Sensor Circuit Schematic
Courtesy of CHRYSLER GROUP, LLC

For a complete wiring diagram, **refer to appropriate SYSTEM WIRING DIAGRAMS article** .

THEORY OF OPERATION

The Exhaust Gas Pressure Sensor is used to measure exhaust gas pressure in the exhaust manifold. The Powertrain Control Module (PCM) provides a 5-Volt supply to the Exhaust Gas Pressure Sensor on the sensor supply circuit. The PCM also provides a ground on the sensor return circuit. The Exhaust Gas Pressure Sensor

provides a signal to the PCM on the Exhaust Gas Pressure Sensor Signal circuit. At key on, the readings for the exhaust gas pressure, intake manifold pressure and ambient air pressure are compared. This fault code occurs if the exhaust gas pressure reading is different from the other two. During normal engine operation EGR position and Boost Pressure Sensor readings are used to calculate an estimated exhaust pressure. If the difference between the estimated and the value read from the Exhaust Gas Pressure Sensor is above a calibrated threshold for a calibrated period of time then an error is recorded. The key-on portion of the rationality will light the MIL immediately after the diagnostic runs and fails. The rationality portion has to fail in two consecutive drive cycles for the MIL to become illuminated. If this fault becomes active the PCM will light the MIL light immediately. During this time the PCM uses an estimated exhaust gas pressure. The PCM turns off the MIL when the diagnostic runs and passes in four consecutive drive cycles.

WHEN MONITORED:

Ignition on, engine not running.

SET CONDITION:

The circuit voltage to the Powertrain Control Module (PCM) falls below 0.25 of a Volt for five seconds.

POSSIBLE CAUSES

Possible Causes
(F857) 5-VOLT SUPPLY CIRCUIT OPEN/HIGH RESISTANCE
(F857) 5-VOLT SUPPLY CIRCUIT SHORTED TO GROUND
(K355) EXHAUST PRESSURE SENSOR SIGNAL CIRCUIT OPEN/HIGH RESISTANCE
(K355) EXHAUST PRESSURE SENSOR SIGNAL CIRCUIT SHORTED TO GROUND
(K355) EXHAUST PRESSURE SENSOR SIGNAL CIRCUIT SHORTED TO THE (K916) SENSOR GROUND CIRCUIT
EXHAUST PRESSURE SENSOR
POWERTRAIN CONTROL MODULE (PCM)

Always perform the Pre-Diagnostic Troubleshooting procedure before proceeding. Refer to PRE-DIAGNOSTIC TROUBLESHOOTING PROCEDURE - 6.7L .

DIAGNOSTIC TEST

1. **ACTIVE DTC**

NOTE: If there are any 5-Volt supply DTCs present, repair those DTCs before proceeding.

1. Turn the ignition on.
2. With the scan tool, record all Freeze frame data.
3. With the scan tool, erase DTCs.
4. Turn the ignition off for 75 seconds.

5. Turn the ignition on.
6. With the scan tool, read DTCs.

   Did the DTC return?

   Yes

   - Go To 2.

   No

   - Perform the INTERMITTENT CONDITION diagnostic procedure. Refer to **INTERMITTENT CONDITION - 6.7L** .

2. **CHECK THE (K355) EXHAUST PRESSURE SENSOR SIGNAL CIRCUIT FOR AN OPEN/HIGH RESISTANCE**

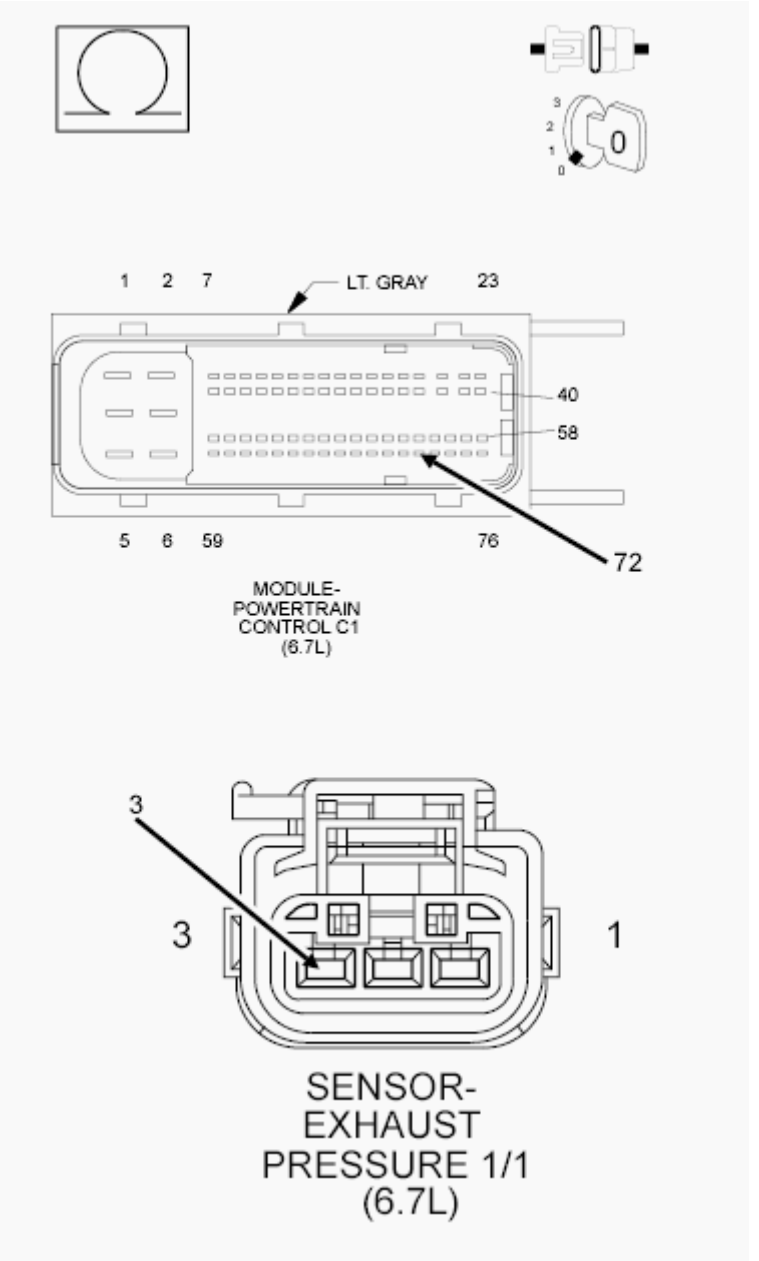

Fig. 16: Checking Exhaust Pressure Sensor Signal Circuit For An Open Or High Resistance
Courtesy of CHRYSLER GROUP, LLC

1. Turn the ignition off.
2. Disconnect the Exhaust Pressure Sensor harness connector.
3. Disconnect the PCM C1 harness connector.
4. Measure the resistance of the (K355) Exhaust Pressure Sensor Signal circuit between the Exhaust Pressure Sensor harness connector and the PCM C1 harness connector.

   Is the resistance below 5.0 Ohms?

Yes

- Go To 3.

No

- Repair the (K355) Exhaust Pressure Sensor Signal circuit for an open or high resistance.
- Perform the POWERTRAIN VERIFICATION TEST - 6.7L. Refer to **POWERTRAIN VERIFICATION TEST - 6.7L** .

3. **CHECK THE (K355) EXHAUST PRESSURE SENSOR SIGNAL CIRCUIT FOR A SHORT TO GROUND**

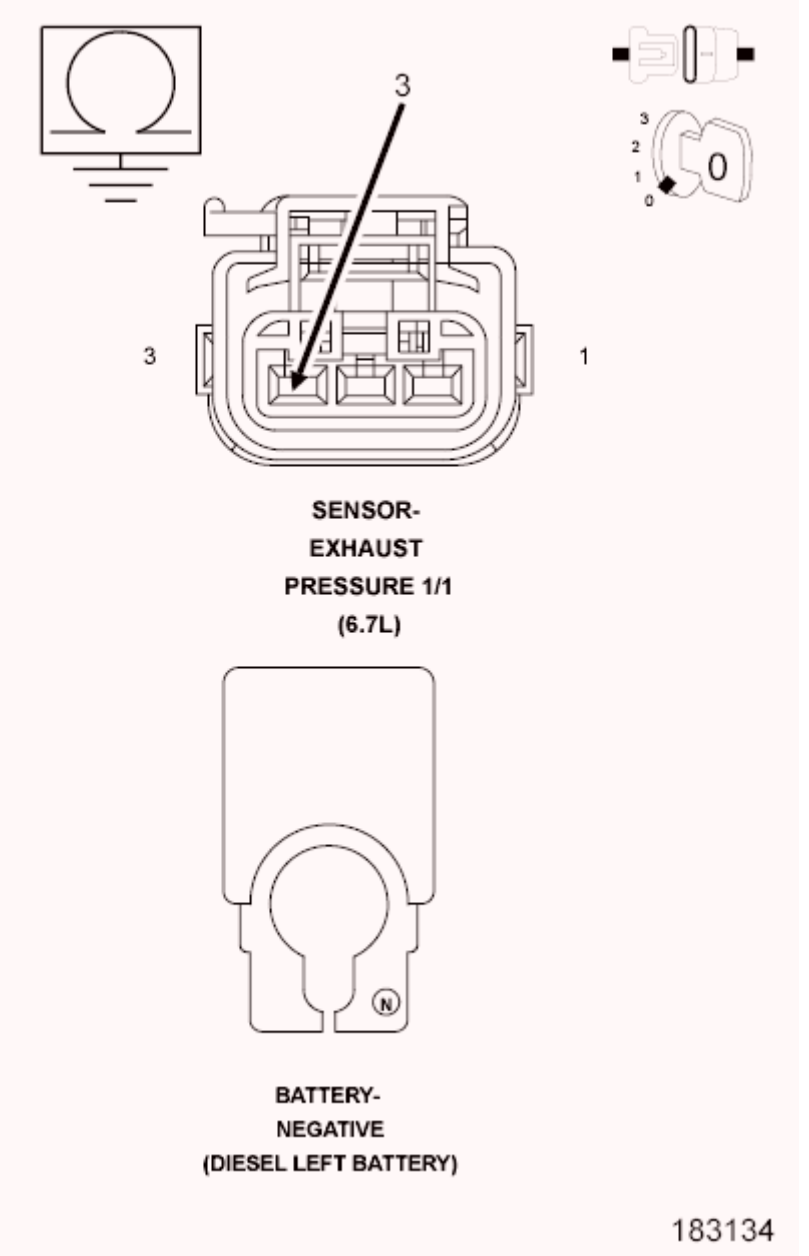

Fig. 17: Exhaust Pressure Sensor 1 Connector Pin ID & Negative Battery Cable
Courtesy of CHRYSLER GROUP, LLC

1. Measure the resistance between ground and the (K355) Exhaust Pressure Sensor Signal circuit at the Exhaust Pressure Sensor harness connector.

   Is the resistance below 10k Ohms?

   Yes

   - Repair the (K355) Exhaust Pressure Sensor Signal circuit for a short to ground.
   - Perform the POWERTRAIN VERIFICATION TEST - 6.7L. Refer to **POWERTRAIN VERIFICATION TEST - 6.7L** .

   No

   - Go To 4.

4. **CHECK FOR THE (K355) EXHAUST PRESSURE SENSOR SIGNAL CIRCUIT SHORTED TO THE (K916) SENSOR GROUND CIRCUIT**

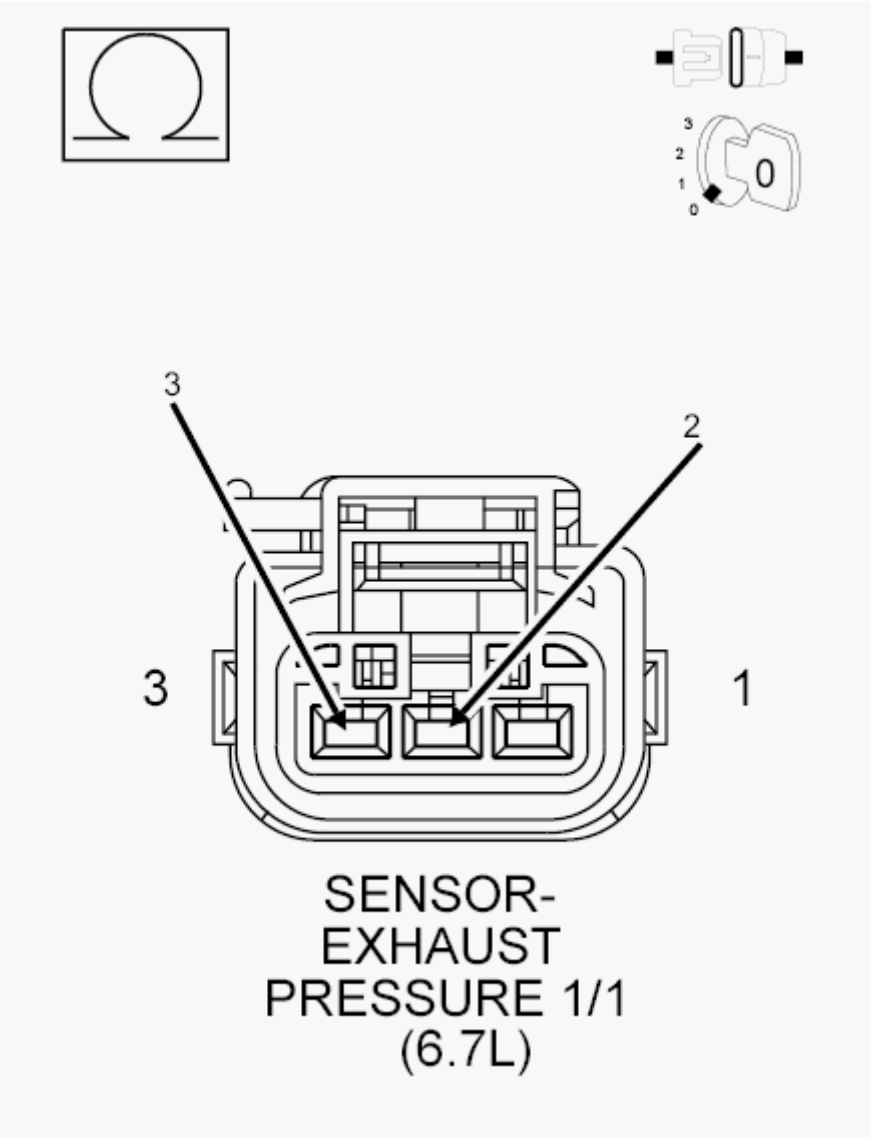

Fig. 18: Checking For Exhaust Pressure Sensor Signal Circuit Shorted To Sensor Ground Circuit
Courtesy of CHRYSLER GROUP, LLC

1. Measure the resistance between the (K355) Exhaust Pressure Sensor Signal circuit and the (K916) Sensor Ground circuit at the Exhaust Pressure Sensor harness connector.

   Is the resistance below 10k Ohms?

   Yes

   - Repair the short between the (K355) Exhaust Pressure Sensor Signal circuit and the (K916) Sensor Ground circuit.
   - Perform the POWERTRAIN VERIFICATION TEST - 6.7L. Refer to **POWERTRAIN VERIFICATION TEST - 6.7L** .

No

- Go To 5.

5. **CHECK THE EXHAUST PRESSURE SENSOR**

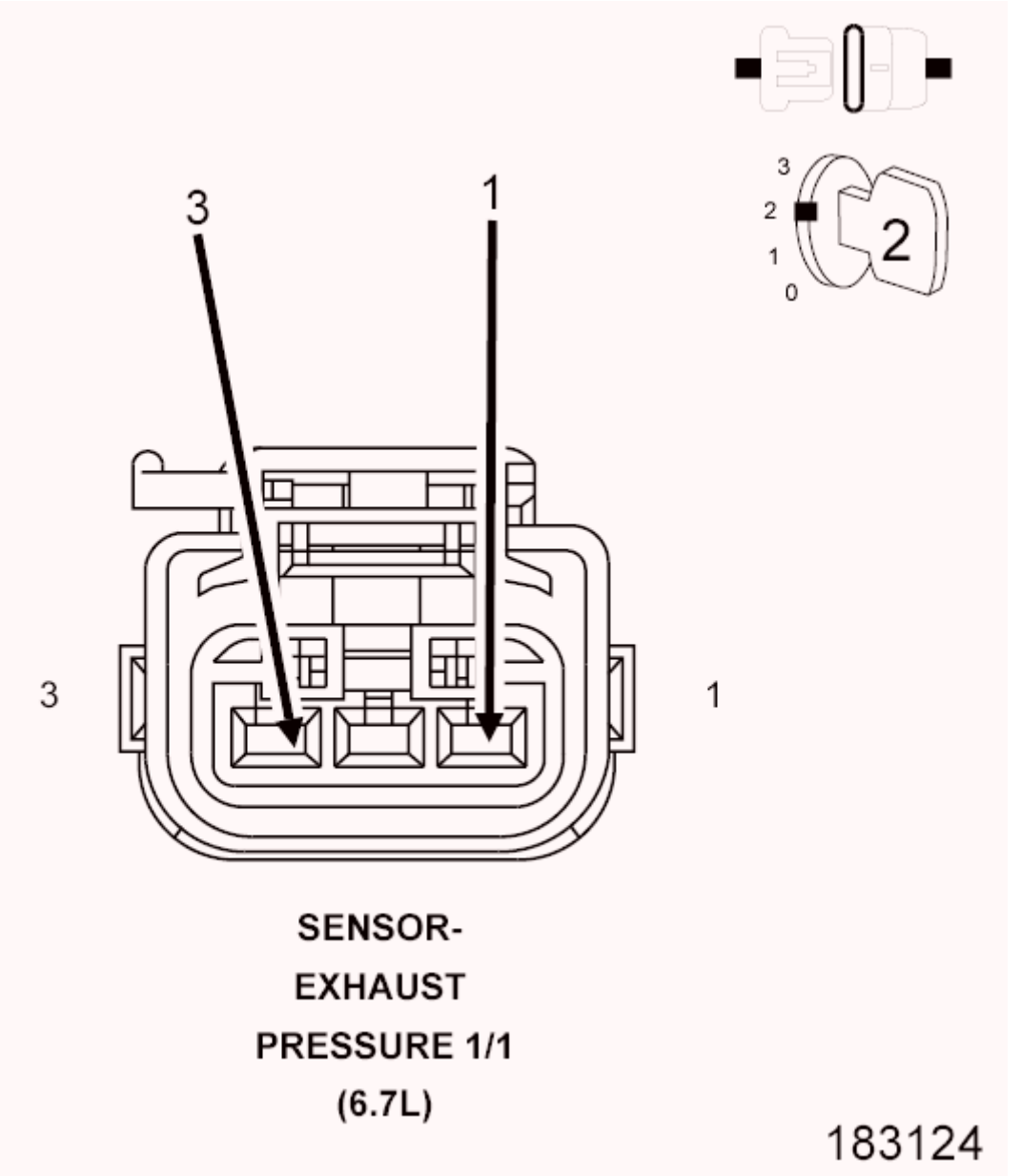

Fig. 19: Exhaust Pressure Sensor Harness Connector
Courtesy of CHRYSLER GROUP, LLC

1. Reconnect the PCM C1 harness connector.
2. Turn the ignition on.
3. While monitoring scan tool, connect a jumper across the (F857) 5-Volt supply circuit and the (K355) Exhaust Pressure Sensor Signal circuit at the Exhaust Pressure Sensor harness connector.

Did the scan tool display DTC P0473 active?

Yes

- Replace the Exhaust Pressure Sensor in accordance with the service information.
- Perform the POWERTRAIN VERIFICATION TEST - 6.7L. Refer to **POWERTRAIN VERIFICATION TEST - 6.7L** .

No

- Replace the Powertrain Control Module in accordance with the Service Information.
- Perform the POWERTRAIN VERIFICATION TEST - 6.7L. Refer to **POWERTRAIN VERIFICATION TEST - 6.7L** .

P0473-EXHAUST PRESSURE SENSOR 1 HIGH

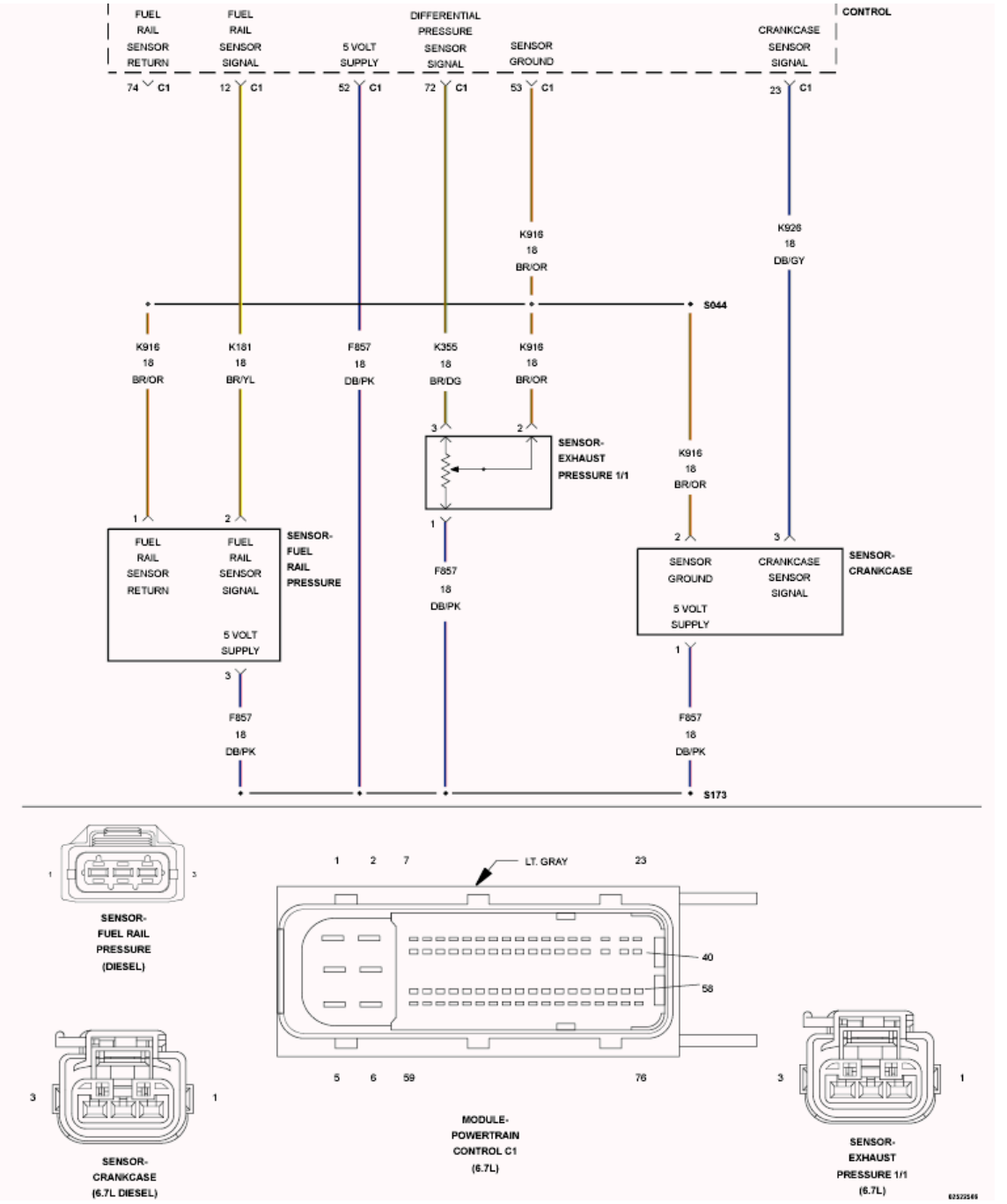

Fig. 20: Fuel Rail Pressure, Exhaust Pressure, & Crankcase Sensor Circuit Schematic
Courtesy of CHRYSLER GROUP, LLC

For a complete wiring diagram, **refer to appropriate SYSTEM WIRING DIAGRAMS article** .

THEORY OF OPERATION

The Exhaust Gas Pressure Sensor is used to measure exhaust gas pressure in the exhaust manifold. The Powertrain Control Module (PCM) provides a 5-Volt supply to the Exhaust Gas Pressure Sensor on the sensor supply circuit. The PCM also provides a ground on the sensor return circuit. The Exhaust Gas Pressure Sensor

provides a signal to the PCM on the Exhaust Gas Pressure Sensor Signal circuit. At key on, the readings for the exhaust gas pressure, intake Manifold pressure and ambient air pressure are compared. This fault code occurs if the exhaust gas pressure reading is different from the other two. During normal engine operation EGR position and Boost Pressure Sensor readings are used to calculate an estimated exhaust pressure. If the difference between the estimated and the value read from the Exhaust Gas Pressure Sensor is above a calibrated threshold for a calibrated period of time then an error is recorded. The key-on portion of the rationality will light the MIL immediately after the diagnostic runs and fails. The rationality portion has to fail in two consecutive drive cycles for the MIL to become illuminated. If this fault becomes active the PCM will light the MIL light immediately. During this time the PCM uses an estimated exhaust gas pressure. The PCM turns off the MIL when the diagnostic runs and passes in four consecutive drive cycles.

WHEN MONITORED:

Ignition on.

SET CONDITION:

The circuit voltage to the PCM is above 4.75 Volts for five seconds.

POSSIBLE CAUSES

Possible Causes
(F857) 5-VOLT SUPPLY SHORTED TO VOLTAGE
(K355) EXHAUST PRESSURE SENSOR SIGNAL WIRE SHORTED TO VOLTAGE
(K916) SENSOR GROUND CIRCUIT OPEN/HIGH RESISTANCE
EXHAUST PRESSURE SENSOR
POWERTRAIN CONTROL MODULE (PCM)

Always perform the Pre-Diagnostic Troubleshooting procedure before proceeding. Refer to PRE-DIAGNOSTIC TROUBLESHOOTING PROCEDURE - 6.7L .

DIAGNOSTIC TEST

1. **ACTIVE DTC**

NOTE: **If any 5-Volt supply DTCs are present, repair those DTCs before proceeding.**

1. Turn the ignition on.
2. With the scan tool, record all Freeze frame data.
3. With the scan tool, erase DTCs.
4. Turn the ignition off for 75 seconds.
5. Turn the ignition on.
6. With the scan tool, read DTCs.

Did the DTC reset?

Yes

- Go To 2.

No

- Perform the INTERMITTENT CONDITION diagnostic procedure. Refer to **INTERMITTENT CONDITION - 6.7L** .

2. **CHECK THE (K355) EXHAUST PRESSURE SENSOR SIGNAL FOR A SHORT TO VOLTAGE**

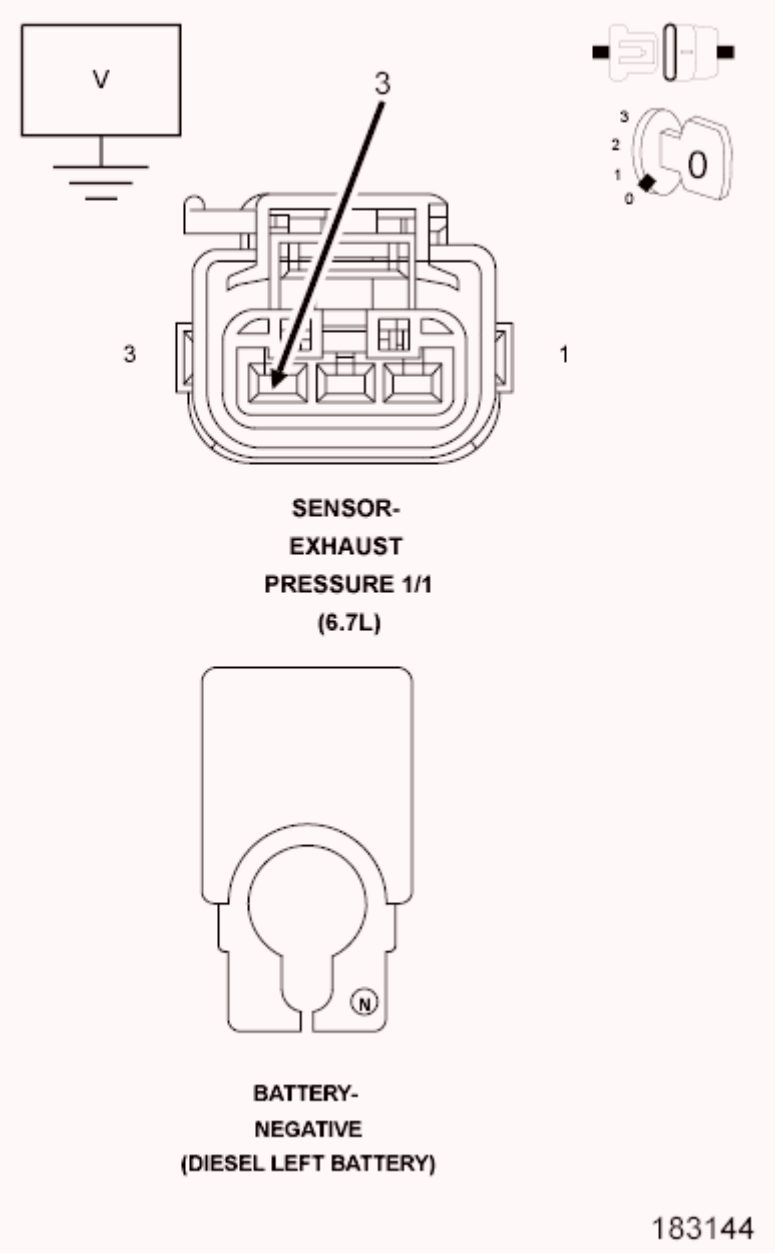

Fig. 21: Exhaust Pressure Sensor 1 Connector Pin ID & Battery Negative Cable
Courtesy of CHRYSLER GROUP, LLC

1. Turn the ignition off.
2. Disconnect the Exhaust Pressure Sensor harness connector.
3. Disconnect the PCM C1 harness connector.

NOTE: Check connectors - Clean/repair as necessary.

4. Remove the ASD/Main Relay.
5. Connect a jumper between cavity 30 and cavity 87 of the ASD/Main Relay connector.
6. Turn the ignition on.
7. Measure the voltage on the (K355) Exhaust Pressure Sensor Signal circuit at the Exhaust Pressure Sensor harness connector.

   Is there any voltage present?

   Yes

   - Repair the (K355) Exhaust Pressure Sensor Signal circuit for a short to voltage.
   - Perform the POWERTRAIN VERIFICATION TEST - 6.7L. Refer to **POWERTRAIN VERIFICATION TEST - 6.7L** .

   No

   - Go To 3.

3. **CHECK THE (K916) SENSOR GROUND CIRCUIT FOR AN OPEN/HIGH RESISTANCE**

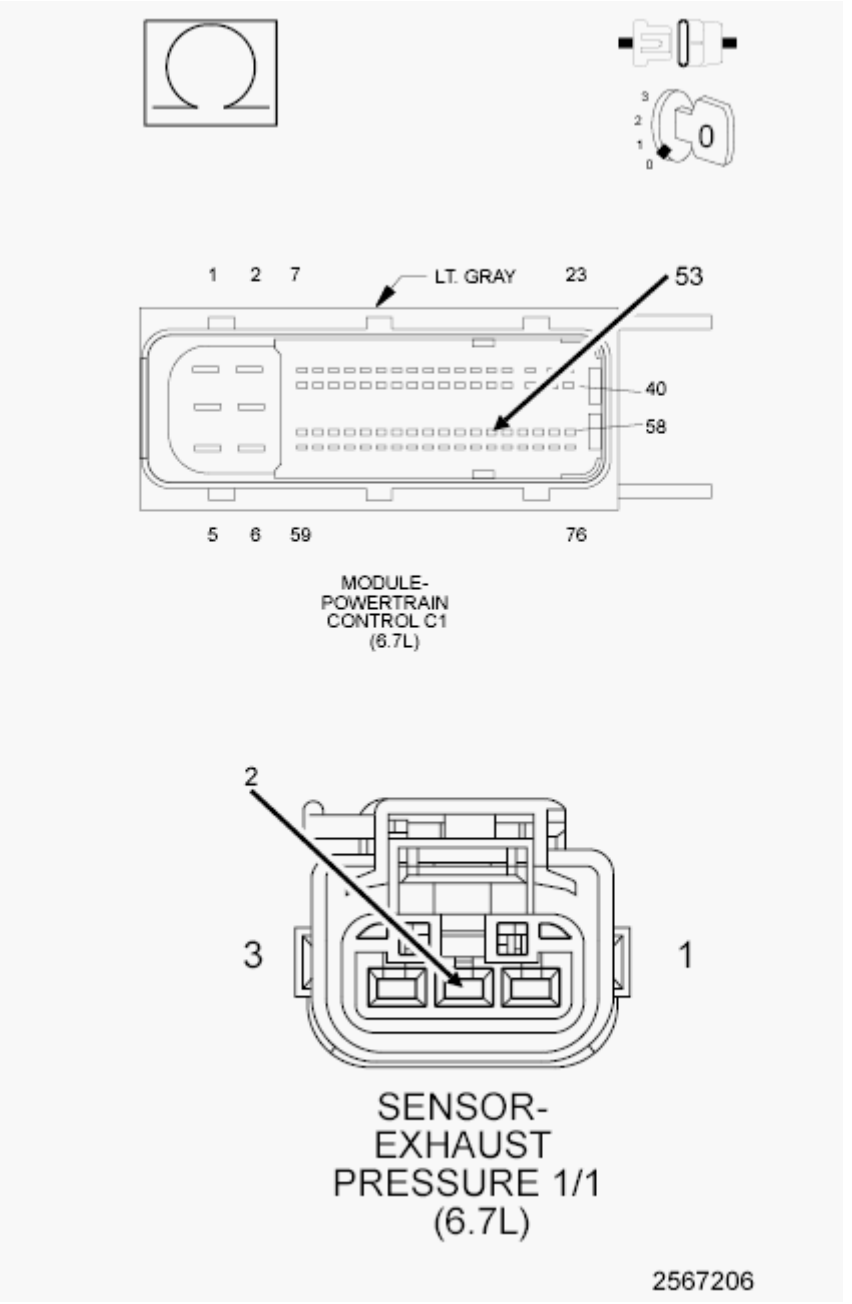

Fig. 22: Checking Exhaust Pressure Sensor Ground Circuit For Open Or High Resistance
Courtesy of CHRYSLER GROUP, LLC

1. Turn the ignition off.
2. Disconnect the PCM C1 harness connector.
3. Measure the resistance of the (K916) Sensor Ground circuit between the Exhaust Pressure Sensor harness connector and the PCM C1 harness connector.

   Is the resistance below 5.0 Ohms?

   Yes

- Go To 4.

No

- Repair the (K916) Sensor Ground circuit for an open or high resistance.
- Perform the POWERTRAIN VERIFICATION TEST - 6.7L. Refer to **POWERTRAIN VERIFICATION TEST - 6.7L** .

4. **CHECK THE EXHAUST PRESSURE SENSOR**

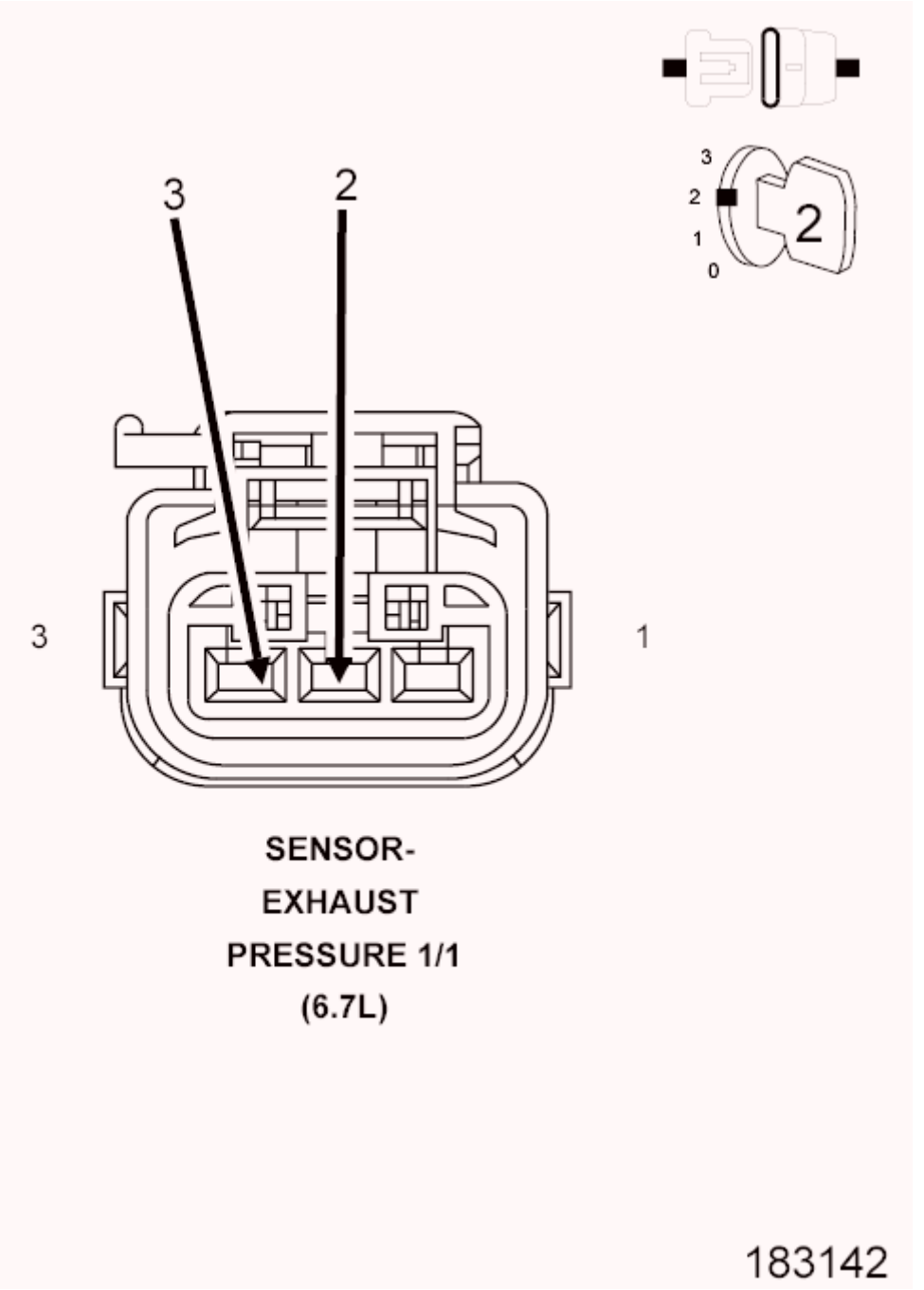

Fig. 23: Exhaust Pressure Sensor Harness Connector
Courtesy of CHRYSLER GROUP, LLC

1. Reconnect the PCM C1 harness connector.
2. Turn the ignition on.
3. While monitoring the scan tool, connect a jumper across the (K355) Exhaust Pressure Sensor Signal circuit and the (K916) Sensor Ground circuit at the Exhaust Pressure Sensor harness connector.

   Did the scan tool display DTC P0472 active?

   Yes

   - Replace the Exhaust Pressure Sensor in accordance with the service information.
   - Perform the POWERTRAIN VERIFICATION TEST - 6.7L. Refer to **POWERTRAIN VERIFICATION TEST - 6.7L** .

   No

   - Replace the Powertrain Control Module in accordance with the service information.
   - Perform the POWERTRAIN VERIFICATION TEST - 6.7L. Refer to **POWERTRAIN VERIFICATION TEST - 6.7L** .

P0489-EGR CONTROL CIRCUIT LOW

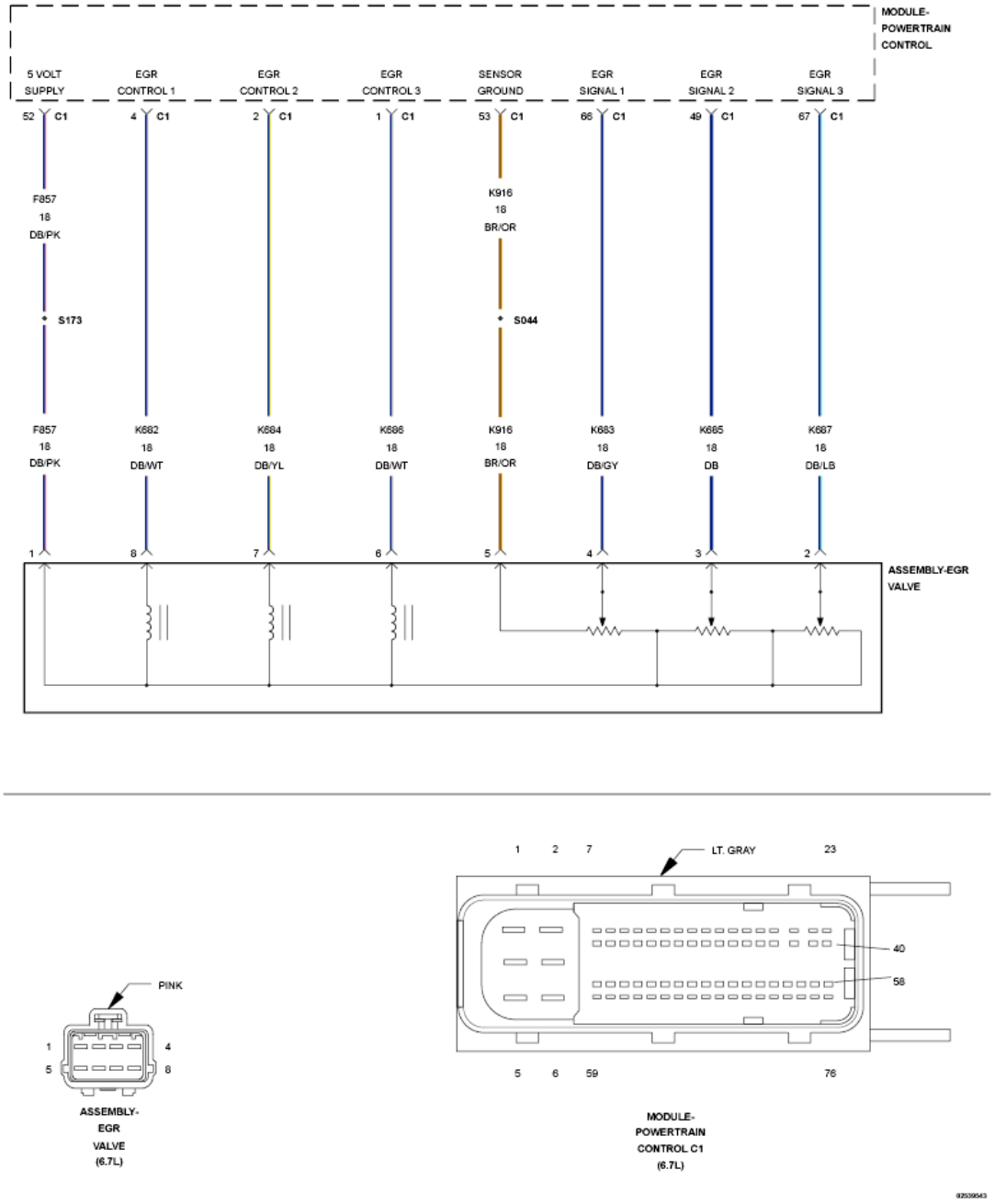

Fig. 24: EGR Valve Assembly Circuit Schematic
Courtesy of CHRYSLER GROUP, LLC

For a complete wiring diagram, **refer to appropriate SYSTEM WIRING DIAGRAMS article** .

THEORY OF OPERATION

When the Exhaust Gas Recirculation (EGR) Valve is opening to a position and uses too much current to achieve that position, the diagnostic will fail. Also at every key on, the EGR valve tries to recalibrate it's position. The valve shaft will move until it comes into contact with the valve. If the distance the valve shaft must move is different by a calibrated amount than the original learned movement the diagnostic fails. The valve will perform

this auto zero function at every key on and every time the valve is commanded closed throughout the engine operating cycle. The Powertrain Control Module (PCM) will illuminate the MIL lamp after the diagnostic runs and fails in two consecutive drive cycles. The PCM will also turn on the ETC lamp. During this time the PCM will no longer control the EGR valve. The MIL lamp will turn off once the diagnostic runs and passes in four consecutive drive cycles.

WHEN MONITORED:

At key on, while engine running.

SET CONDITION:

Motor effort exceeds a calibrated level or auto zero function fails.

POSSIBLE CAUSES

Possible Causes
EGR VALVE

Always perform the Pre-Diagnostic Troubleshooting procedure before proceeding. Refer to PRE-DIAGNOSTIC TROUBLESHOOTING PROCEDURE - 6.7L .

DIAGNOSTIC TEST

1. **OTHER EGR VALVE DTCS PRESENT**
    1. Ignition on, engine not running.
    2. With the scan tool, read DTCs.

    Are there any EGR circuit DTCs present?

    Yes

    - Repair the other EGR Valve DTCs before proceeding.

    No

    - Remove and clean the EGR Valve with Mopar EGR system cleaner. Refer to **TURBOCHARGER SYSTEM, CLEANING, 6.7L** .
    - Go To 2.
2. **EGR VALVE**
    1. Ignition on, engine not running.
    2. With the scan tool, erase DTC.
    3. Test drive the vehicle.
    4. With the scan tool, read DTCs.

Did DTC P0489 return?

Yes

- Replace the EGR Valve in accordance with the service information.
- Perform the DIESEL AFTERTREATMENT VALIDATION - 6.7L procedure. Refer to **DIESEL AFTERTREATMENT VALIDATION- 6.7L** .

No

- Repair complete.
- Perform the DIESEL AFTERTREATMENT VALIDATION - 6.7L procedure. Refer to **DIESEL AFTERTREATMENT VALIDATION- 6.7L** .

P049D-EGR CONTROL POSITION EXCEEDED LEARNING LIMIT

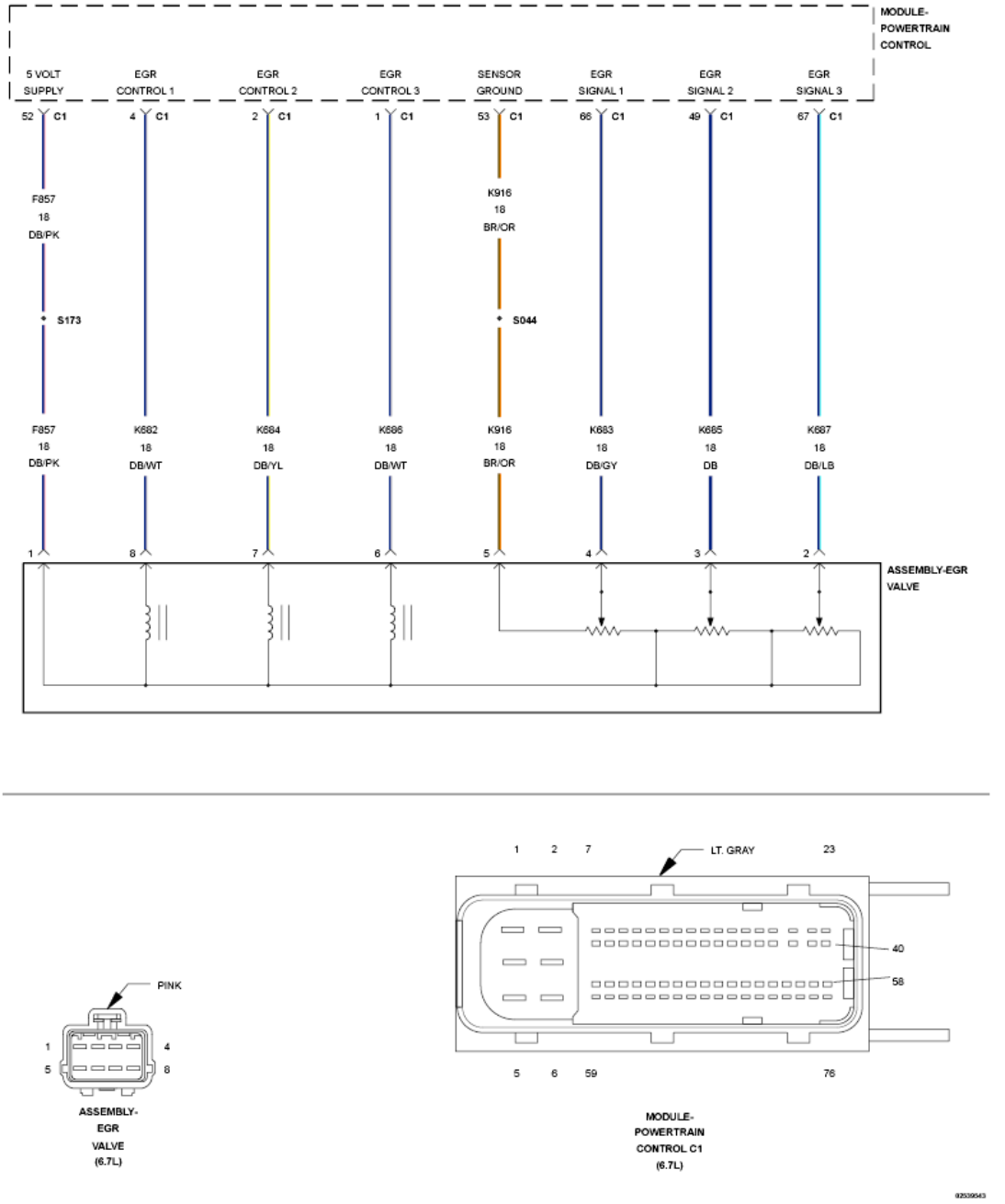

Fig. 25: EGR Valve Assembly Circuit Schematic
Courtesy of CHRYSLER GROUP, LLC

For a complete wiring diagram, **refer to appropriate SYSTEM WIRING DIAGRAMS article** .

THEORY OF OPERATION

When the Exhaust Gas Recirculation (EGR) Valve is opening to a position and uses too much current to achieve that position, the diagnostic will fail. Also at every key on, the EGR valve tries to recalibrate it's position. The valve shaft will move until it comes into contact with the valve. If the distance the valve shaft must move is different by a calibrated amount than the original learned movement the diagnostic fails. The valve will perform

this auto zero function at every key on and every time the valve is commanded closed throughout the engine operating cycle. The Powertrain Control Module (PCM) will illuminate the MIL lamp after the diagnostic runs and fails in two consecutive drive cycles. The PCM will also turn on the ETC lamp. During this time the PCM will no longer control the EGR valve. The MIL lamp will turn off once the diagnostic runs and passes in four consecutive drive cycles.

WHEN MONITORED:

At key on, while engine running.

SET CONDITION:

Motor effort exceeds a calibrated level or auto zero function fails.

POSSIBLE CAUSES

Possible Causes
EGR VALVE

Always perform the Pre-Diagnostic Troubleshooting procedure before proceeding. Refer to PRE-DIAGNOSTIC TROUBLESHOOTING PROCEDURE - 6.7L .

DIAGNOSTIC TEST

1. **OTHER EGR VALVE DTCS PRESENT**
    1. Ignition on, engine not running.
    2. With the scan tool, read DTCs.

    Are there any EGR circuit DTCs present?

    Yes

    - Repair the other EGR Valve DTCs before proceeding.

    No

    - Remove and clean the EGR Valve with Mopar EGR system cleaner.
    - Go To 2.
2. **EGR VALVE**
    1. Ignition on, engine not running.
    2. With the scan tool, erase DTC.
    3. Test drive the vehicle.
    4. With the scan tool, read DTCs.

    Did DTC P049D return?

Yes

- Replace the EGR Valve in accordance with the service information.
- Perform the POWERTRAIN VERIFICATION TEST - 6.7L. Refer to **POWERTRAIN VERIFICATION TEST - 6.7L** .

No

- Repair complete.
- Perform the POWERTRAIN VERIFICATION TEST - 6.7L. Refer to **POWERTRAIN VERIFICATION TEST - 6.7L** .

P04DB-CRANKCASE VENTILATION SYSTEM DISCONNECTED

For a complete wiring diagram, **refer to appropriate SYSTEM WIRING DIAGRAMS article** .

WHEN MONITORED:

Engine at operating temperature, driving at a steady speed. This monitor takes 10 minutes to completely run.

SET CONDITION:

Crankcase Pressure readings have been significantly elevated, as compared to historic trends saved in the Powertrain Control Module.

POSSIBLE CAUSES

Possible Causes
DISCONNECTED CRANKCASE VENTILATION HOSE
INTAKE SYSTEM LEAK
CRANKCASE BREATHER FILTER CLOGGED

Always perform the Pre-Diagnostic Troubleshooting procedure before proceeding. Refer to PRE-DIAGNOSTIC TROUBLESHOOTING PROCEDURE - 6.7L .

DIAGNOSTIC TEST

1. **CHECK THE CRANKCASE VENTILATION HOSE**

NOTE: **If there are any DTCs present for the EGR Valve, EGR Airflow Control Valve, or any of the pressure sensors, perform the diagnostics for those DTCs before proceeding with this test procedure.**

1. Visually inspect the Crankcase Ventilation Hose.

   Is the hose disconnected, cracked, pinched or damaged?

Yes

- Repair or replace the Crankcase Ventilation Hose in accordance with the service information.
- Perform the POWERTRAIN VERIFICATION TEST - 6.7L. Refer to **POWERTRAIN VERIFICATION TEST - 6.7L** .

No

- Go To 2.

2. **CHECK THE INTAKE SYSTEM FOR LEAKS**
   1. Perform the INTAKE AIR SYSTEM PRESSURE TEST diagnostic procedure. Refer to **DIAGNOSIS AND TESTING, 6.7L** .

      Were any Intake System leaks found?

      Yes

      - Perform the appropriate repair.
      - Perform the POWERTRAIN VERIFICATION TEST - 6.7L. Refer to **POWERTRAIN VERIFICATION TEST - 6.7L** .

      No

      - Replace the Crankcase Breather Filter in accordance with the service information.
      - Perform the POWERTRAIN VERIFICATION TEST - 6.7L. Refer to **POWERTRAIN VERIFICATION TEST - 6.7L** .

P0501-VEHICLE SPEED SENSOR 1 PERFORMANCE

For a complete wiring diagram, **refer to appropriate SYSTEM WIRING DIAGRAMS article** .

THEORY OF OPERATION

The Powertrain Control Module (PCM) monitors the vehicle speed via the Anti-Lock Brake Module over the CAN BUS. When the PCM sees a high torque and high boost condition for a period of time and the vehicle speed has continually reported 0 MPH, a DTC is set. This monitor is a one trip fault.

WHEN MONITORED:

While the engine is running.

SET CONDITION:

The PCM indicates a high torque and high boost condition, and the VSS has continually reported zero.

POSSIBLE CAUSES

Possible Causes
(B222) REAR WHEEL SPEED SENSOR SUPPLY CIRCUIT SHORT TO GROUND
(B22) REAR WHEEL SPEED SENSOR SIGNAL CIRCUIT SHORT TO GROUND
(B222) REAR WHEEL SPEED SENSOR SUPPLY CIRCUIT OPEN
(B22) REAR WHEEL SPEED SENSOR SIGNAL CIRCUIT OPEN
(B222) REAR WHEEL SPEED SENSOR SUPPLY CIRCUIT SHORTED TO VOLTAGE
(B22) REAR WHEEL SPEED SENSOR SIGNAL CIRCUIT SHORTED TO VOLTAGE
(B222) REAR WHEEL SPEED SENSOR SUPPLY CIRCUIT SHORTED TO THE (B22) REAR WHEEL SPEED SENSOR SIGNAL CIRCUIT
TONE WHEEL
EXCESSIVE REAR WHEEL SPEED SENSOR AIR GAP
WHEEL BEARING
REAR WHEEL SPEED SENSOR
ANTI-LOCK BRAKE MODULE

Always perform the Pre-Diagnostic Troubleshooting procedure before proceeding. Refer to PRE-DIAGNOSTIC TROUBLESHOOTING PROCEDURE - 6.7L .

DIAGNOSTIC TEST

1. **DTC IS ACTIVE**
    1. Turn the ignition on.
    2. With the scan tool, clear DTCs.
    3. Test drive the vehicle.
    4. With the scan tool, select View DTCs.

    Is the status Active for this DTC?

    Yes

    - Go To 2.

    No

    - Perform the INTERMITTENT CONDITION diagnostic procedure. Refer to **INTERMITTENT CONDITION - 6.7L** .
2. **INSPECT THE WHEEL SPEED SENSOR**
    1. Turn the ignition off.
    2. Inspect the Wheel Speed Sensor for proper mounting.
    3. Inspect the Wheel Speed Sensor harness and connector.
    4. Inspect the Wheel Speed Sensor for excessive debris on the sensor.

    Were any problems found?

Yes

- Repair as necessary in accordance with the Service Information.
- Perform the ABS VERIFICATION TEST. Refer to **ABS VERIFICATION TEST** .

No

- Go To 3.

3. **CHECK FOR TONE WHEEL DAMAGED/MISSING**
   1. Inspect the Tone Wheel in accordance with the Service Information.

      NOTE: The Tone Wheel Teeth should be perfectly square, not bent or nicked.

      Were any problems found?

      Yes

      - Replace the Tone Wheel in accordance with the Service Information.
      - Perform the ABS VERIFICATION TEST. Refer to **ABS VERIFICATION TEST** .

      No

      - Go To 4.

4. **CHECK FOR EXCESSIVE WHEEL SPEED SENSOR AIR GAP**
   1. Measure the Wheel Speed Sensor Air Gap in accordance with the Service Information.

      Were any problems found?

      Yes

      - Repair as necessary in accordance with the Service Information.
      - Perform the ABS VERIFICATION TEST. Refer to **ABS VERIFICATION TEST** .

      No

      - Go To 5.

5. **CHECK FOR WHEEL BEARING LOOSE/BINDING**
   1. Inspect the wheel bearings for excessive run out or improper clearance in accordance with the Service Information.

      Were any problems found?

      Yes

- Repair as necessary in accordance with the Service Information.
- Perform the ABS VERIFICATION TEST. Refer to **ABS VERIFICATION TEST** .

No

- Go To 6.

6. **CHECK THE (B222) REAR WHEEL SPEED SENSOR SUPPLY CIRCUIT FOR A SHORT TO GROUND**

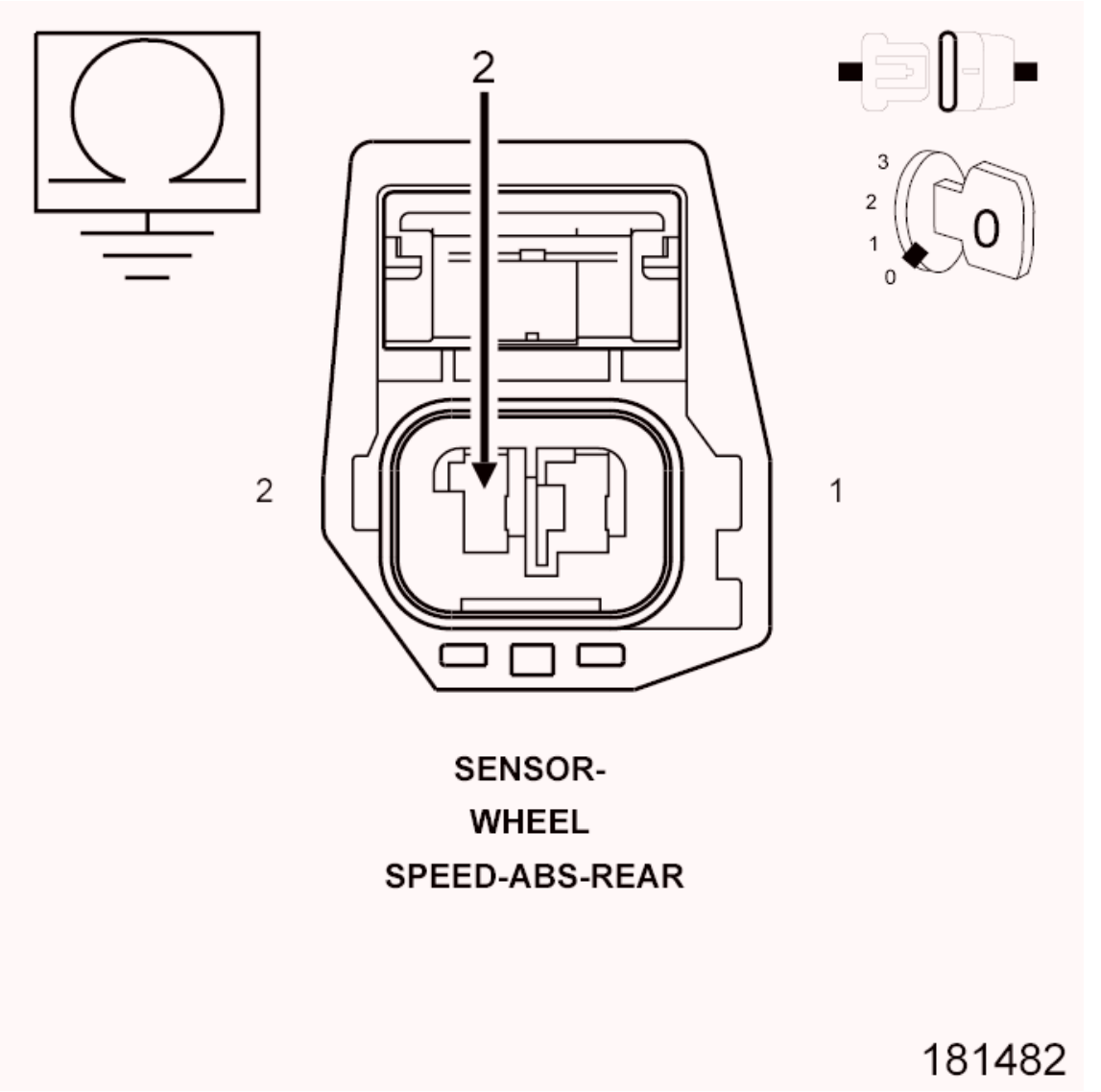

Fig. 26: Rear Wheel Speed Sensor Connector Pin ID
Courtesy of CHRYSLER GROUP, LLC

1. Turn the ignition off.
2. Disconnect the Rear Wheel Speed Sensor harness connector.

3. Disconnect the Anti-lock Brake Module harness connector.

   NOTE: Check connector - Clean/repair as necessary.

4. Measure the resistance between the (B222) Rear Wheel Speed Sensor Supply circuit and ground.

   Is the resistance above 5.0 Ohms?

   Yes

   - Go To 7.

   No

   - Repair the (B222) Rear Wheel Speed Sensor Supply circuit for a short to ground.
   - Perform the ABS VERIFICATION TEST. Refer to **ABS VERIFICATION TEST** .

7. **CHECK THE (B22) REAR WHEEL SPEED SENSOR SIGNAL CIRCUIT FOR A SHORT TO GROUND**

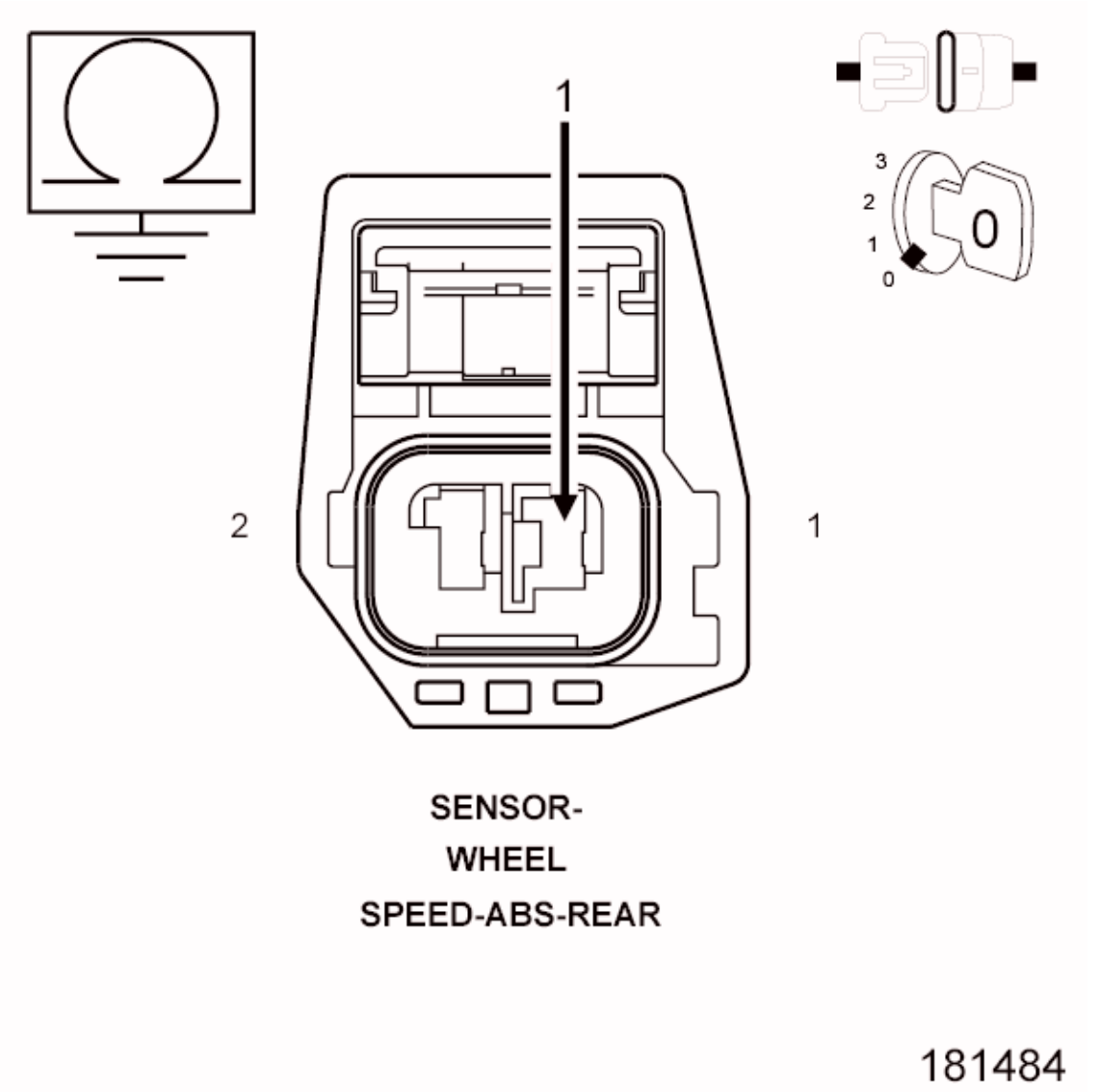

Fig. 27: Rear Wheel Speed Sensor Connector Pin ID
Courtesy of CHRYSLER GROUP, LLC

1. Measure the resistance between the (B22) Rear Wheel Speed Sensor Signal circuit and ground.

   Is the resistance above 5.0 Ohms?

   Yes

   - Go To 8.

   No

   - Repair the (B22) Rear Wheel Speed Sensor Signal circuit for a short to ground.
   - Perform the ABS VERIFICATION TEST. Refer to **ABS VERIFICATION TEST** .

8. **CHECK THE (B222) REAR WHEEL SPEED SENSOR SUPPLY CIRCUIT FOR AN OPEN/HIGH RESISTANCE**

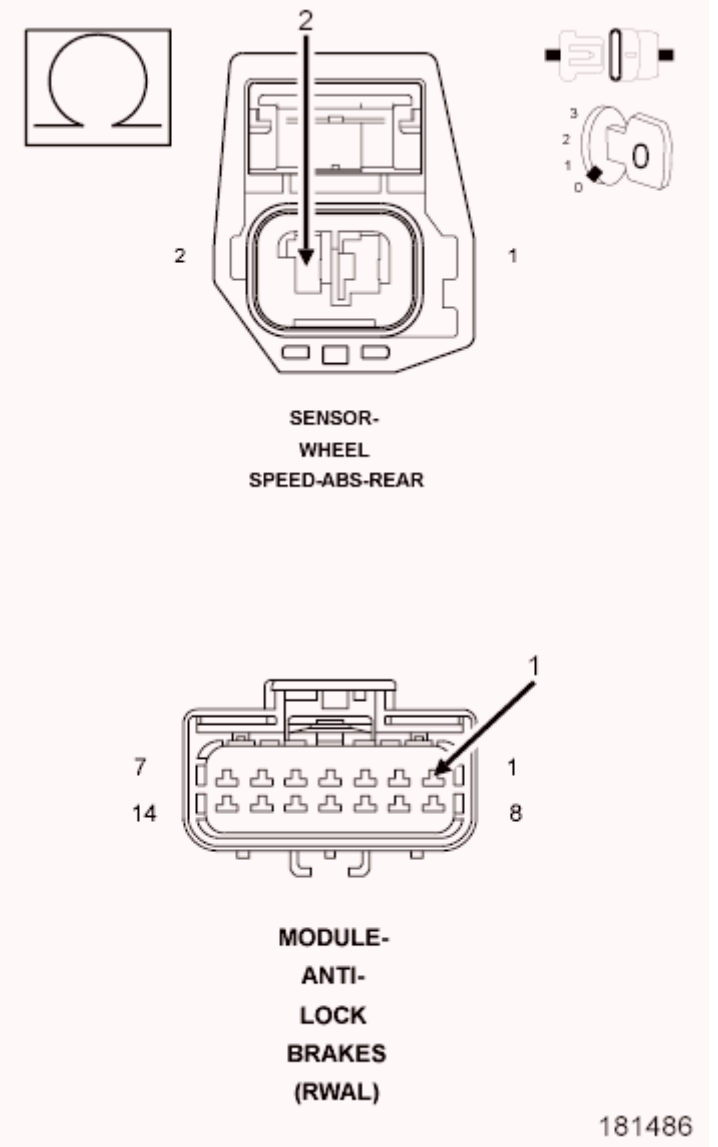

Fig. 28: Checking Rear Wheel Speed Sensor Supply Circuit For Open Or High Resistance
Courtesy of CHRYSLER GROUP, LLC

1. Measure the resistance of the (B222) Rear Wheel Speed Sensor Supply circuit.

   Is the resistance below 5.0 Ohms?

   Yes

   - Go To 9.

   No

- Repair the (B222) Rear Wheel Speed Sensor Supply circuit for an open or high resistance.
- Perform the ABS VERIFICATION TEST. Refer to **ABS VERIFICATION TEST** .

9. **CHECK THE (B22) REAR WHEEL SPEED SENSOR SIGNAL CIRCUIT FOR AN OPEN/HIGH RESISTANCE**

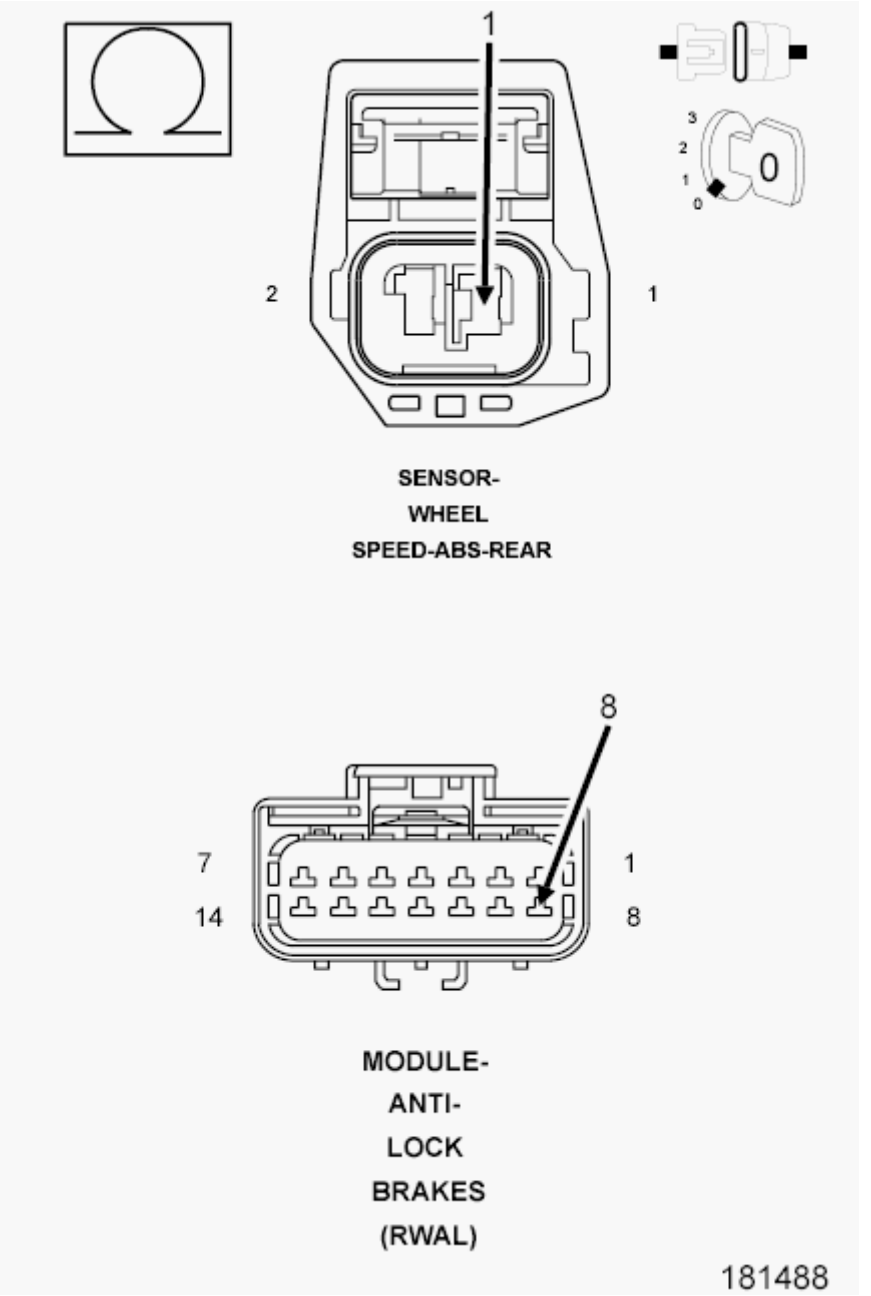

Fig. 29: Checking Rear Wheel Speed Sensor Signal Circuit For Open Or High Resistance
Courtesy of CHRYSLER GROUP, LLC

1. Measure the resistance of the (B22) Rear Wheel Speed Sensor Signal circuit.

   Is the resistance below 5.0 Ohms?

Yes

- Go To 10.

No

- Repair the (B22) Rear Wheel Speed Sensor Signal circuit for an open or high resistance.
- Perform the ABS VERIFICATION TEST. Refer to **ABS VERIFICATION TEST** .

10. **CHECK THE (B222) REAR WHEEL SPEED SENSOR SUPPLY CIRCUIT FOR A SHORT TO VOLTAGE**

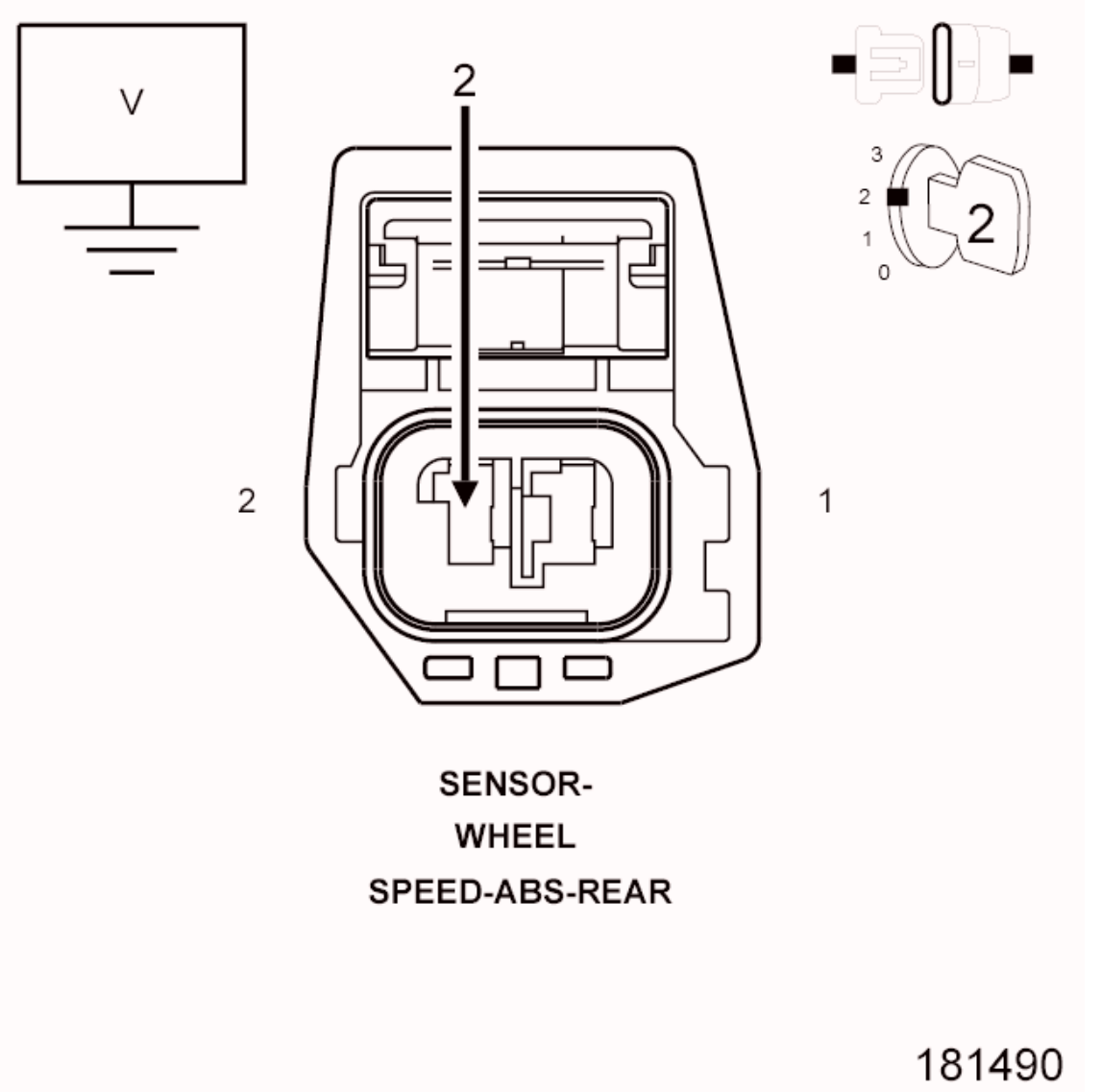

Fig. 30: Rear Wheel Speed Sensor Connector Pin ID
Courtesy of CHRYSLER GROUP, LLC

1. Turn the ignition on.

2. Measure the voltage of the (B222) Rear Wheel Speed Sensor Supply circuit.

   Is there any voltage present?

   Yes

   - Repair the (B222) Rear Wheel Speed Sensor Supply circuit for a short to voltage.
   - Perform the ABS VERIFICATION TEST. Refer to **ABS VERIFICATION TEST** .

   No

   - Go To 11.

11. **CHECK THE (B22) REAR WHEEL SPEED SENSOR SIGNAL CIRCUIT FOR A SHORT TO VOLTAGE**

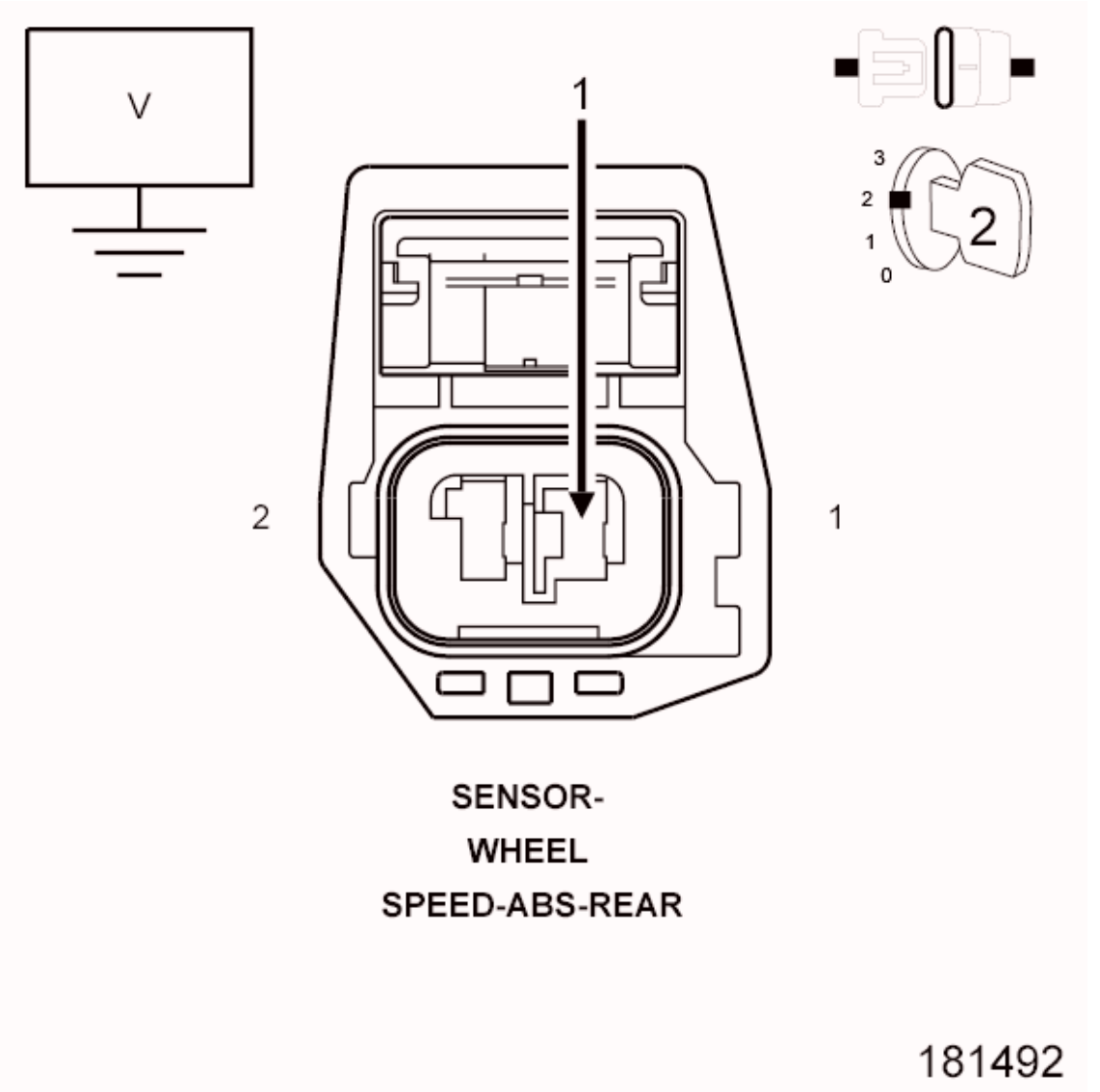

Fig. 31: Rear Wheel Speed Sensor Connector Pin ID
Courtesy of CHRYSLER GROUP, LLC

1. Measure the voltage of the (B22) Rear Wheel Speed Sensor Signal circuit.

   Is there any voltage present?

   Yes

   - Repair the (B22) Rear Wheel Speed Sensor Signal circuit for a short to voltage.
   - Perform the ABS VERIFICATION TEST. Refer to **ABS VERIFICATION TEST** .

   No

   - Go To 12.

12. **CHECK FOR THE (B222) REAR WHEEL SPEED SENSOR SUPPLY CIRCUIT SHORTED TO THE (B22) REAR WHEEL SPEED SENSOR SIGNAL CIRCUIT**

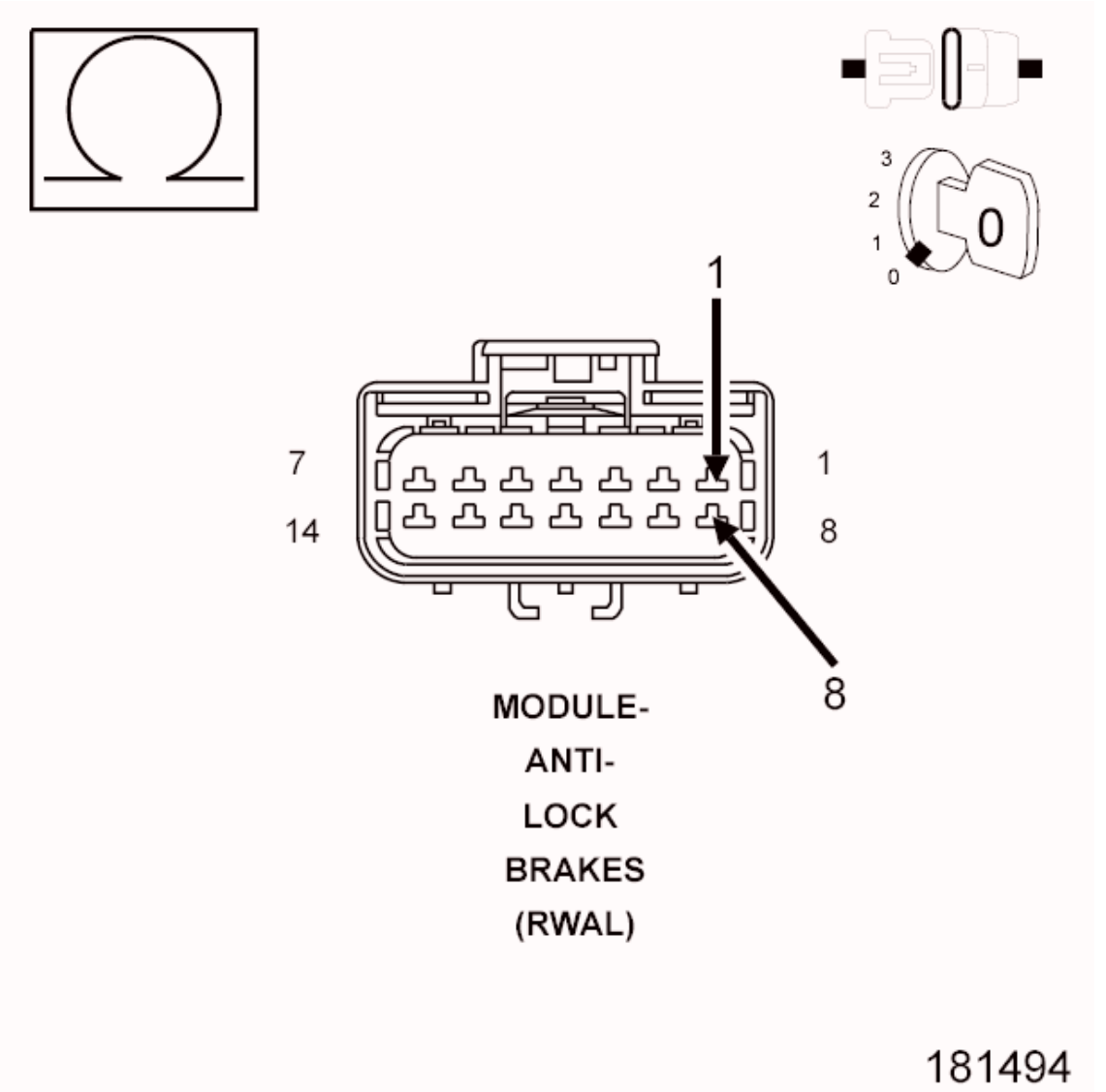

Fig. 32: Checking Rear Wheel Speed Sensor Supply Circuit For A Short To Sensor Signal Circuit
Courtesy of CHRYSLER GROUP, LLC

1. Turn the ignition off.
2. Measure the resistance between the (B222) Rear Wheel Speed Sensor Supply circuit and the (B22) Rear Wheel Speed Sensor Signal circuit at the Anti-lock Brake Module harness connector.

   Is the resistance below 10k Ohms?

   Yes

   - Repair the (B222) Rear Wheel Speed Sensor Supply circuit for a short to the (B22) Rear Wheel Speed Sensor Signal circuit.
   - Perform the ABS VERIFICATION TEST. Refer to **ABS VERIFICATION TEST** .

No

- Go To 13.

13. **CHECK THE REAR WHEEL SPEED SENSOR**

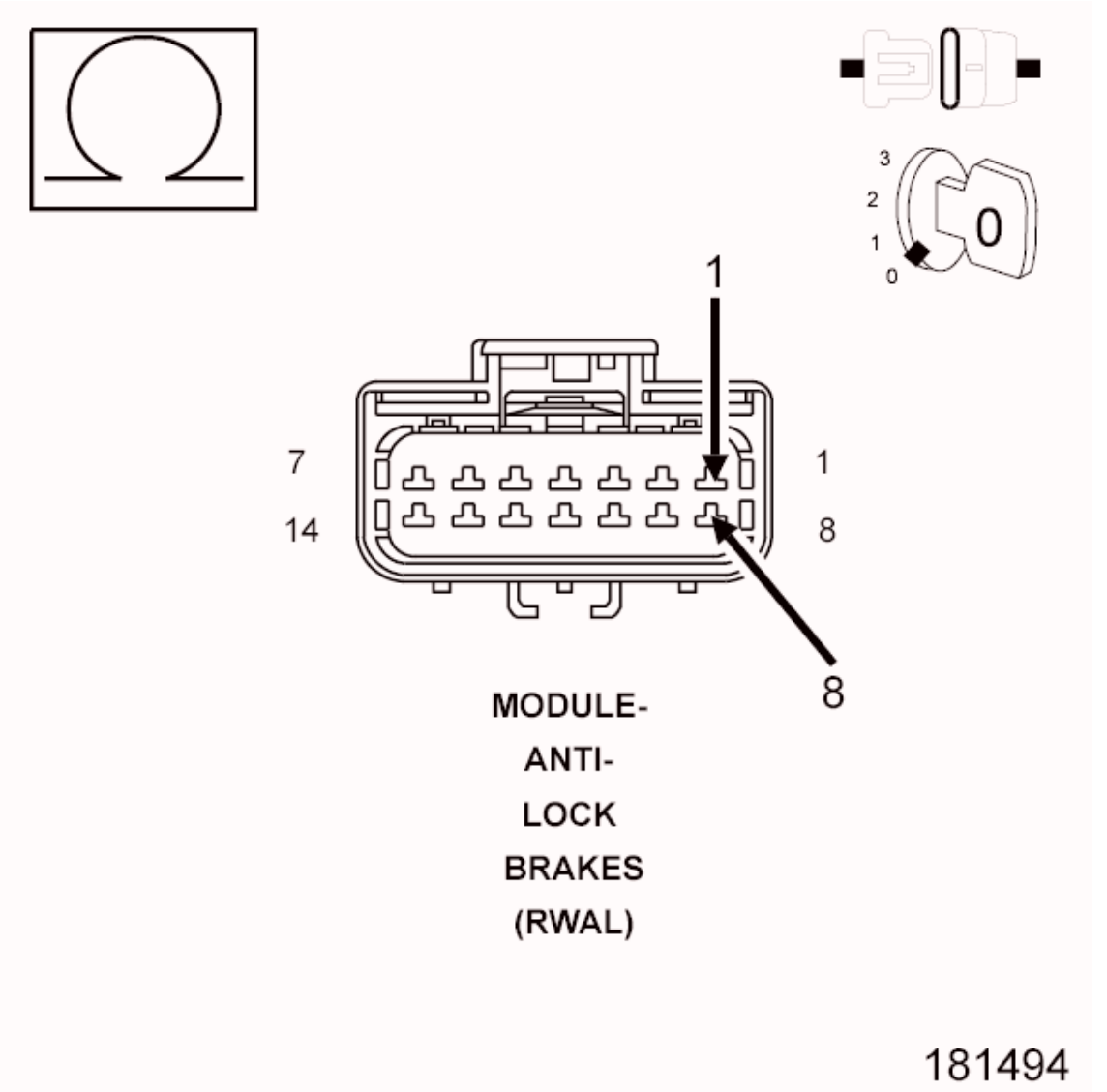

Fig. 33: Checking Rear Wheel Speed Sensor Supply Circuit For A Short To Sensor Signal Circuit
Courtesy of CHRYSLER GROUP, LLC

1. Turn the ignition off.
2. Connect the Rear Wheel Speed Sensor harness connector.
3. Measure the resistance between the (B222) Rear Wheel Speed Sensor Supply circuit and (B22) Rear Wheel Speed Sensor Signal circuit at the Anti-lock Brake Module harness connector.

NOTE: **The resistance should be approximately 1600-2300 Ohms at 76° F (24.5° C).**

Is the resistance within the noted range?

Yes

- Go To 14.

No

- Replace the Rear Wheel Speed Sensor in accordance with the Service Information.
- Perform the ABS VERIFICATION TEST. Refer to **ABS VERIFICATION TEST** .

14. **CHECK THE ANTI-LOCK BRAKE MODULE**
    1. Turn the ignition off.
    2. Inspect the related wiring harness. Look for any chafed, pierced, pinched, or partially broken wires.
    3. Inspect the related wire harness connectors. Look for broken, bent, pushed out, or corroded terminals.
    4. Perform any Technical Service Bulletins that may apply.

    Were any problems found?

    Yes

    - Repair as necessary in accordance with the Service Information.
    - Perform the ABS VERIFICATION TEST. Refer to **ABS VERIFICATION TEST** .

    No

    - Replace the Anti-lock Brake Module in accordance with the Service Information.
    - Perform the ABS VERIFICATION TEST. Refer to **ABS VERIFICATION TEST** .

P0506-IDLE CONTROL SYSTEM RPM - LOWER THAN EXPECTED

For a complete wiring diagram, **refer to appropriate SYSTEM WIRING DIAGRAMS article** .

THEORY OF OPERATION

The engine control system uses many methods to achieve stable idle speed (RPM), and is capable of compensating for unexpected changes in load (accessory devices switching on, etc.). In the event that the engine is incapable of steadily maintaining the desired idle speed, either due to overshooting this target, undershooting, or "hunting", this DTC may be set.

WHEN MONITORED:

With the engine running at idle.

SET CONDITION:

Engine speed is consistently at least 50 RPM below the target idle speed.

POSSIBLE CAUSES

Possible Causes
MECHANICALLY DAMAGED ENGINE ACCESSORIES
SEVERE INTAKE SYSTEM RESTRICTIONS
PLUGGED EXHAUST SYSTEM
TRANSMISSION IMPROPERLY LOCKING TORQUE CONVERTER
FAULTY FUEL SYSTEM

Always perform the Pre-Diagnostic Troubleshooting procedure before proceeding. Refer to PRE-DIAGNOSTIC TROUBLESHOOTING PROCEDURE - 6.7L .

DIAGNOSTIC TEST

1. **CHECK THE ENGINE ACCESSORIES**

   NOTE: If there are any Transmission DTCs present involving the Torque Converter or lock up operation, perform those diagnostic procedures before continuing.

   1. Visually inspect the engine accessories for damage, binding or dragging.

      Were any problems found?

      Yes

      - Repair as necessary.
      - Perform the POWERTRAIN VERIFICATION TEST - 6.7L. Refer to **POWERTRAIN VERIFICATION TEST - 6.7L** .

      No

      - Go To 2.
2. **CHECK THE INTAKE SYSTEM**
   1. Visually inspect the entire Intake System for a restriction.

      Were any restrictions found?

      Yes

      - Repair as necessary.
      - Perform the POWERTRAIN VERIFICATION TEST - 6.7L. Refer to **POWERTRAIN VERIFICATION TEST - 6.7L** .

No

- Go To 3.

3. **CHECK THE EXHAUST SYSTEM**
   1. Visually inspect the entire Exhaust System for a restriction.

      Were any restrictions found?

      Yes

      - Repair as necessary.
      - Perform the POWERTRAIN VERIFICATION TEST - 6.7L. Refer to **POWERTRAIN VERIFICATION TEST - 6.7L** .

      No

      - Go To 4.

4. **CHECK THE FUEL DELIVERY SYSTEM**
   1. and perform the CHECKING THE FUEL DELIVERY SYSTEM diagnostic procedure. Refer to **DIAGNOSIS AND TESTING, 6.7L** .

      Were any problems found?

      Yes

      - Perform the appropriate repair.
      - Perform the POWERTRAIN VERIFICATION TEST - 6.7L. Refer to **POWERTRAIN VERIFICATION TEST - 6.7L** .

      No

      - Perform the INTERMITTENT CONDITION diagnostic procedure. Refer to **INTERMITTENT CONDITION - 6.7L** .

P0507-IDLE CONTROL SYSTEM RPM - HIGHER THAN EXPECTED

For a complete wiring diagram, **refer to appropriate SYSTEM WIRING DIAGRAMS article** .

THEORY OF OPERATION

The engine control system uses many methods to achieve stable idle speed (RPM), and is capable of compensating for unexpected changes in load (accessory devices switching on, etc.). In the event that the engine is incapable of steadily maintaining the desired idle speed, either due to overshooting this target, undershooting, or "hunting", this DTC may be set.

WHEN MONITORED:

Engine is at idle.

SET CONDITION:

Engine speed is consistently at least 50 RPM above the target idle speed.

POSSIBLE CAUSES

Possible Causes
LEAKING FUEL INJECTOR

Always perform the Pre-Diagnostic Troubleshooting procedure before proceeding. Refer to PRE-DIAGNOSTIC TROUBLESHOOTING PROCEDURE - 6.7L .

DIAGNOSTIC TEST

1. **CHECK FUEL INJECTORS**
    1. Using Fuel Rail Cap (special tool #9864, Cap, Fuel Rail), cap off the Fuel Injectors one at a time to determine which Fuel Injector is leaking into a cylinder.

       View repair

       Yes

       - Replace the faulty Fuel Injector in accordance with the Service Information.
       - Perform the POWERTRAIN VERIFICATION TEST - 6.7L. Refer to **POWERTRAIN VERIFICATION TEST - 6.7L** .

P0513-INVALID WIN KEY

For a complete wiring diagram, **refer to appropriate SYSTEM WIRING DIAGRAMS article** .

WHEN MONITORED:

With the ignition on.

SET CONDITION:

Invalid Key Code received from Wireless Ignition Node (WIN).

POSSIBLE CAUSES

Possible Causes
GENERAL NETWORK ERROR
KEY NOT PROGRAMMED
INCORRECT KEY

INCORRECT VIN IN PCM OR WCM
LOSS OF COMMUNICATION BETWEEN PCM AND WIN
POWERTRAIN CONTROL MODULE (PCM)

Always perform the Pre-Diagnostic Troubleshooting procedure before proceeding. Refer to PRE-DIAGNOSTIC TROUBLESHOOTING PROCEDURE - 6.7L .

DIAGNOSTIC TEST

1. **ACTIVE DTC**

   NOTE: **An external Radio-Frequency Identification (RFID) key (and/or pass/radio key), such as one used to gain access to a 24 hour gym, can cause this DTC to set and create a no start condition. Inspect the customer's key chain for any type of RFID key. If one is not found, question the customer to see if a spare key chain has this RFID key on it or if it was removed from the original key chain before the vehicle was released for service. If a RFID key is present, remove the ignition key from the vehicle and remove the RFID key from the key chain. For PCM equipped vehicles, the vehicle should start once the RFID key is removed. If the vehicle does not start, continue with the diagnostic test.**

   1. Ignition on, engine not running.
   2. With the scan tool, read the PCM DTCs.

      Is the DTC active at this time?

      Yes

      - Go To 2.

      No

      - Go To 6.
2. **CHECK COMMUNICATION WITH WIN**
   1. With the scan tool, attempt to communicate with the WIN.

      Can the scan tool communicate with the WIN?

      Yes

      - Go To 3.

      No

      - Go to and perform the appropriate diagnostic procedure.

- Perform the WIN VERIFICATION TEST. Refer to **DIAGNOSIS AND TESTING** .

3. **CHECK FOR WIN TROUBLE CODES SET**
    1. With the scan tool, check for WIN DTCs.

       Are any DTCs present in the WIN?

       Yes

       - Go to and perform the appropriate diagnostic procedure. Refer to **DIAGNOSIS AND TESTING** .
       - Perform the WIN VERIFICATION TEST. Refer to **DIAGNOSIS AND TESTING** .

       No

       - Go To 4.
4. **CHECK FOR THE VIN PROGRAMMED INTO PCM**
    1. With the scan tool, display the VIN that is programmed in the PCM.

       Has a VIN been programmed into the PCM?

       Yes

       - Go To 5.

       No

       - Program the correct VIN into the PCM and retest.
       - Perform the WIN VERIFICATION TEST. Refer to **DIAGNOSIS AND TESTING** .
5. **POWERTRAIN CONTROL MODULE**
    1. Turn the ignition off.
    2. Replace and program the WIN in accordance with the Service Information.
    3. Ignition on, engine not running.
    4. With the scan tool, erase all WIN and PCM DTCs.
    5. Attempt to start and idle the engine.
    6. With the scan tool, read the PCM DTCs.

       Does the scan tool display this code?

       Yes

       - Check the PCM harness connector terminals for corrosion, damage, or terminal push out. Repair as necessary. Replace and program the Powertrain Control Module per Service Information.

- Perform the WIN VERIFICATION TEST. Refer to **DIAGNOSIS AND TESTING** .

No

- Test Complete.

6. **IGNITION KEY**

NOTE: You must obtain the WIN pin number.

NOTE: This DTC could have been set if the WIN harness connector was disconnected, or if the WIN was replaced recently.

NOTE: All keys that the customer uses for this vehicle must be tested to verify they are operating properly.

1. Ignition on, engine not running.
2. Verify the correct VIN is programmed into the PCM and WIN.
3. Turn the ignition off.
4. With each customer key turn the ignition on and crank the engine to start.
5. With the scan tool, read the PCM DTCs. Look for P0513.

NOTE: If this DTC cannot be reset, it could have been an actual theft attempt.

Is the DTC P0513 still active?

Yes

- Replace the Ignition Key.
- Perform the WIN VERIFICATION TEST. Refer to **DIAGNOSIS AND TESTING** .

No

- Test Complete.

P051B-CRANKCASE PRESSURE SENSOR CIRCUIT RANGE/PERFORMANCE

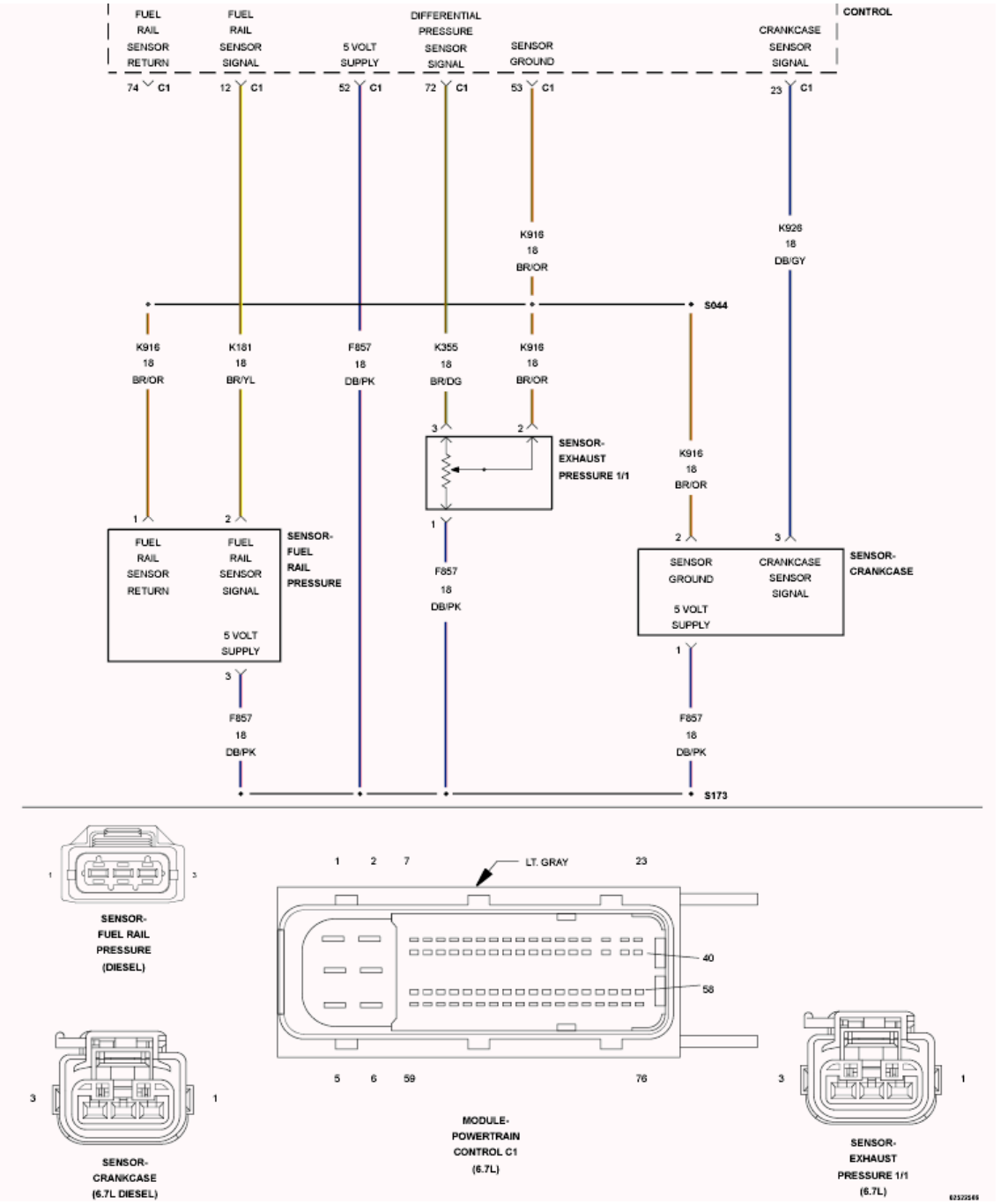

Fig. 34: Fuel Rail Pressure, Exhaust Pressure, & Crankcase Sensor Circuit Schematic
Courtesy of CHRYSLER GROUP, LLC

For a complete wiring diagram, **refer to appropriate SYSTEM WIRING DIAGRAMS article** .

THEORY OF OPERATION

The Crankcase Pressure Sensor is used to monitor the pressure inside the crankcase. The Powertrain Control Module (PCM) supplies the crankcase pressure sensor a 5-Volt reference voltage. When the crankcase pressure is low, the sensor signal voltage is low. When the crankcase pressure is high, the sensor signal voltage is near

the 5-Volt reference voltage. The PCM monitors the crankcase pressure signal circuit voltage to calculate the pressure of the air within the crankcase. The PCM does not illuminate the MIL or ETC lamp for any of the crankcase pressure faults.

WHEN MONITORED:

Ignition on, engine not running.

SET CONDITION:

At key on, engine not running the Crankcase Pressure Sensor reading is higher than a calibrated threshold, or during engine operation the crankcase pressure reading is not changing with engine operating conditions.

POSSIBLE CAUSES

Possible Causes
CRANKCASE VENTED TO ATMOSPHERE
HIGH RESISTANCE IN THE (K926) CRANKCASE PRESSURE SIGNAL CIRCUIT
CRANKCASE PRESSURE SENSOR
POWERTRAIN CONTROL MODULE (PCM)

Always perform the Pre-Diagnostic Troubleshooting procedure before proceeding. Refer to PRE-DIAGNOSTIC TROUBLESHOOTING PROCEDURE - 6.7L .

DIAGNOSTIC TEST

1. **OTHER DTCS**
    1. Turn the ignition on.
    2. Wait five seconds after ignition is turned on.
    3. With the scan tool, read DTCs.

    Is DTC P051D or P051C active?

    Yes

    - Troubleshoot other DTCs first.

    No

    - Go To 2.
2. **CHECK FOR CRANKCASE VENTED TO ATMOSPHERE**
    1. Inspect engine for crankcase leaks of oil or crankcase gases.
    2. Check the valve cover gasket, crankcase breather tube, dipstick tube, block plugs, and oil fill cap.

    Are any leaks found?

Yes

- Repair leaks.
- Perform the POWERTRAIN VERIFICATION TEST - 6.7L. Refer to **POWERTRAIN VERIFICATION TEST - 6.7L** .

No

- Go To 3.

3. **CHECK FOR HIGH RESISTANCE IN THE (K926) CRANKCASE PRESSURE SENSOR SIGNAL CIRCUIT**

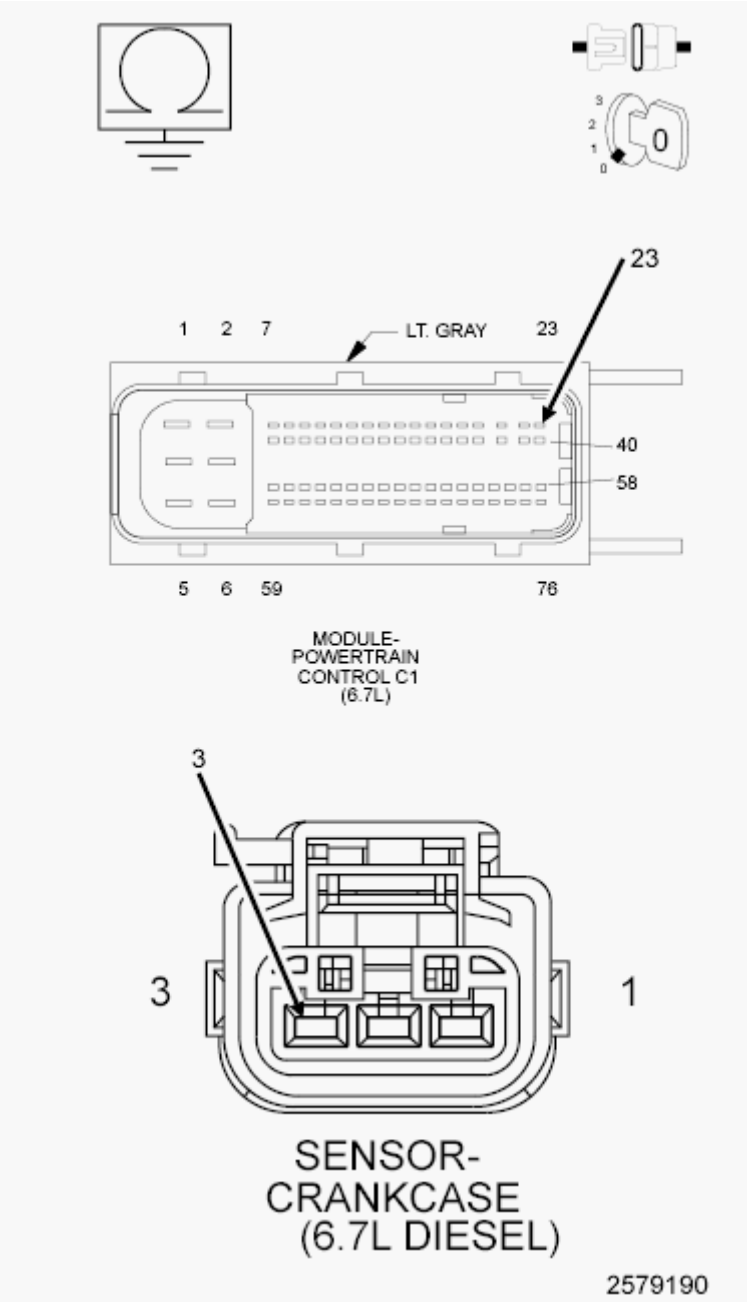

Fig. 35: Checking Crankcase Pressure Signal Circuit For An Open Or High Resistance
Courtesy of CHRYSLER GROUP, LLC

1. Turn the ignition off.
2. Disconnect the Crankcase Pressure Sensor harness connector.
3. Disconnect the PCM C1 harness connector.

NOTE: Check connectors - Clean/repair as necessary.

4. Measure the resistance of the (K926) Crankcase Pressure Signal circuit between the Crankcase

Pressure Sensor harness connector and the PCM C1 harness connector.

Is the resistance below 5.0 Ohms?

Yes

- Go To 4.

No

- Repair the (K926) Crankcase Pressure Signal circuit for an open or high resistance.
- Perform the POWERTRAIN VERIFICATION TEST - 6.7L. Refer to **POWERTRAIN VERIFICATION TEST - 6.7L** .

4. **CHECK THE CRANKCASE PRESSURE SENSOR**
   1. Reconnect the PCM C1 harness connector.
   2. Turn the ignition on.
   3. Connect a jumper between the (F855) 5-Volt Supply circuit and the (K926) Crankcase Pressure Sensor Signal circuit at the Crankcase Pressure Sensor harness connector.
   4. With the scan tool, read DTCs.

   Is DTC P051C active?

   Yes

   - Replace the Crankcase Pressure Sensor in accordance with the service information.
   - Perform the POWERTRAIN VERIFICATION TEST - 6.7L. Refer to **POWERTRAIN VERIFICATION TEST - 6.7L** .

   No

   - Replace the Powertrain Control Module in accordance with the Service Information.
   - Perform the POWERTRAIN VERIFICATION TEST - 6.7L. Refer to **POWERTRAIN VERIFICATION TEST - 6.7L** .

P051C-CRANKCASE PRESSURE SENSOR CIRCUIT LOW

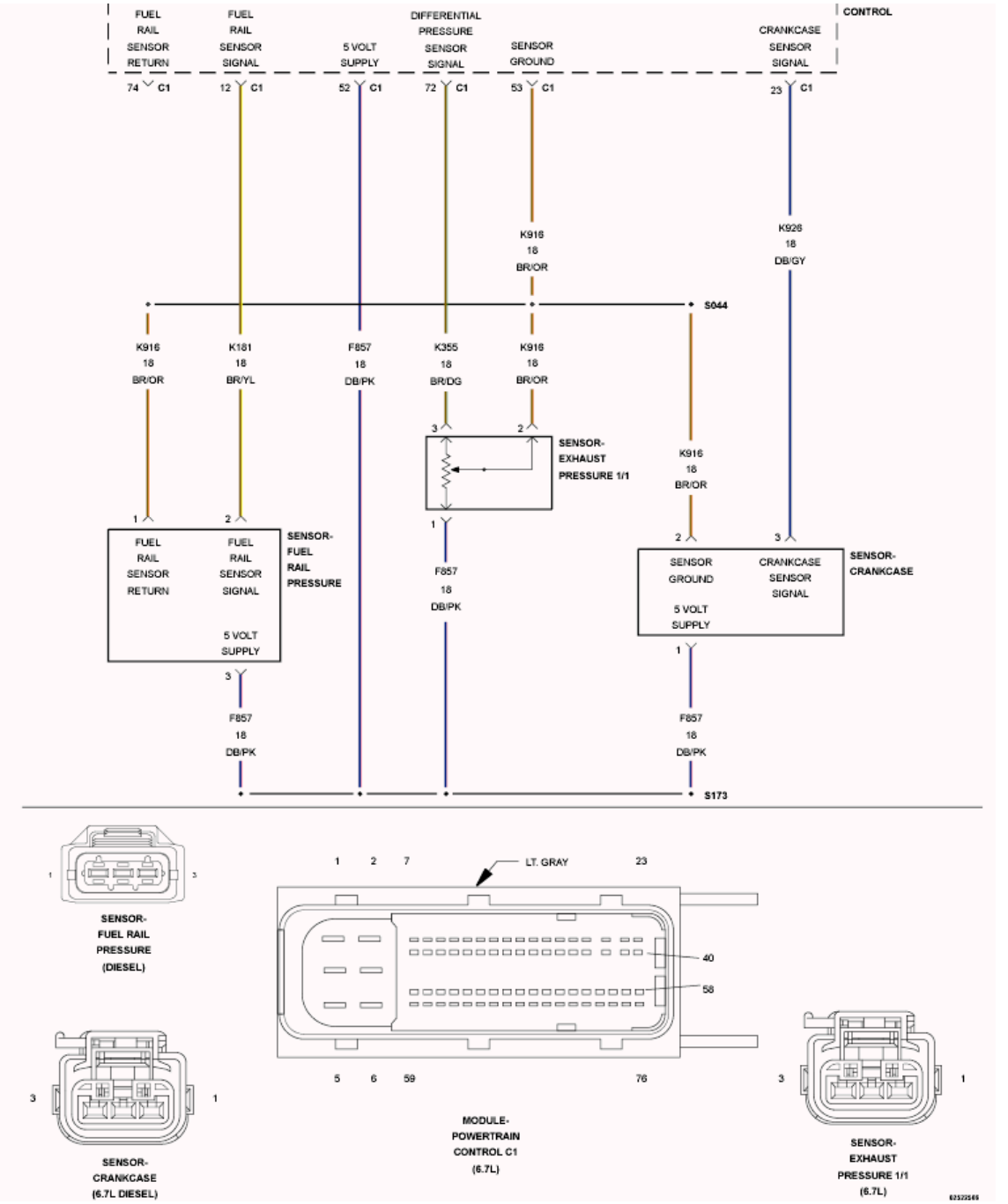

Fig. 36: Fuel Rail Pressure, Exhaust Pressure, & Crankcase Sensor Circuit Schematic
Courtesy of CHRYSLER GROUP, LLC

For a complete wiring diagram, **refer to appropriate SYSTEM WIRING DIAGRAMS article** .

THEORY OF OPERATION

The Crankcase Pressure Sensor is used to monitor the pressure inside the crankcase. The Powertrain Control Module (PCM) supplies the Crankcase Pressure Sensor a 5-Volt reference voltage. When the crankcase pressure is low, the sensor signal voltage is low. When the crankcase pressure is high, the sensor signal voltage

is near the 5-Volt reference voltage. The PCM monitors the Crankcase Pressure Sensor Signal circuit voltage to calculate the pressure of the air within the crankcase. The PCM does not illuminate the MIL or ETC lamp for any of the crankcase pressure faults.

WHEN MONITORED:

Ignition on, engine not running.

SET CONDITION:

At key on, engine not running the crankcase pressure sensor reading is higher than a calibrated threshold.

POSSIBLE CAUSES

Possible Causes
(F857) 5-VOLT SUPPLY CIRCUIT OPEN/HIGH RESISTANCE
(F857) 5-VOLT SUPPLY CIRCUIT SHORTED TO GROUND
(F857) 5-VOLT SUPPLY CIRCUIT SHORTED TO THE (K916) SENSOR GROUND
(K926) CRANKCASE PRESSURE SIGNAL CIRCUIT OPEN/HIGH RESISTANCE
(K926) CRANKCASE PRESSURE SIGNAL CIRCUIT SHORTED TO GROUND
(K926) CRANKCASE PRESSURE SIGNAL CIRCUIT SHORTED TO THE (K916) SENSOR GROUND CIRCUIT
CRANKCASE PRESSURE SENSOR
POWERTRAIN CONTROL MODULE (PCM)

Always perform the Pre-Diagnostic Troubleshooting procedure before proceeding. Refer to PRE-DIAGNOSTIC TROUBLESHOOTING PROCEDURE - 6.7L .

DIAGNOSTIC TEST

1. **OTHER DTCS**
    1. Ignition on, engine not running.
    2. With the scan tool, read DTCs.

       Are there any 5-Volt Reference DTCs present?

       Yes

       - Repair the 5-Volt Reference DTCs before proceeding.
       - Perform the POWERTRAIN VERIFICATION TEST - 6.7L. Refer to **POWERTRAIN VERIFICATION TEST - 6.7L** .

       No

       - Go To 2.

2. **P051C ACTIVE**

   Is DTC P051C active?

   Yes

   - Go To 3.

   No

   - Perform the INTERMITTENT CONDITION diagnostic procedure. Refer to **INTERMITTENT CONDITION - 6.7L** .

3. **CHECK THE (F857) 5-VOLT SUPPLY CIRCUIT**
   1. Turn the ignition off.
   2. Disconnect the Crankcase Pressure Sensor harness connector.

      NOTE: Check connectors - Clean/repair as necessary.

   3. Turn the ignition on.
   4. Measure the voltage across the (F857) 5-Volt Supply circuit and the (K916) Sensor Return circuit at the Crankcase Pressure Sensor harness connector.

      Is the voltage between 4.9 and 5.1 Volts?

      Yes

      - Go To 4.

      No

      - Repair the (F857) 5-Volt Supply circuit for an open or high resistance.
      - Perform the POWERTRAIN VERIFICATION TEST - 6.7L. Refer to **POWERTRAIN VERIFICATION TEST - 6.7L** .

4. **CHECK THE CRANKCASE PRESSURE SENSOR**

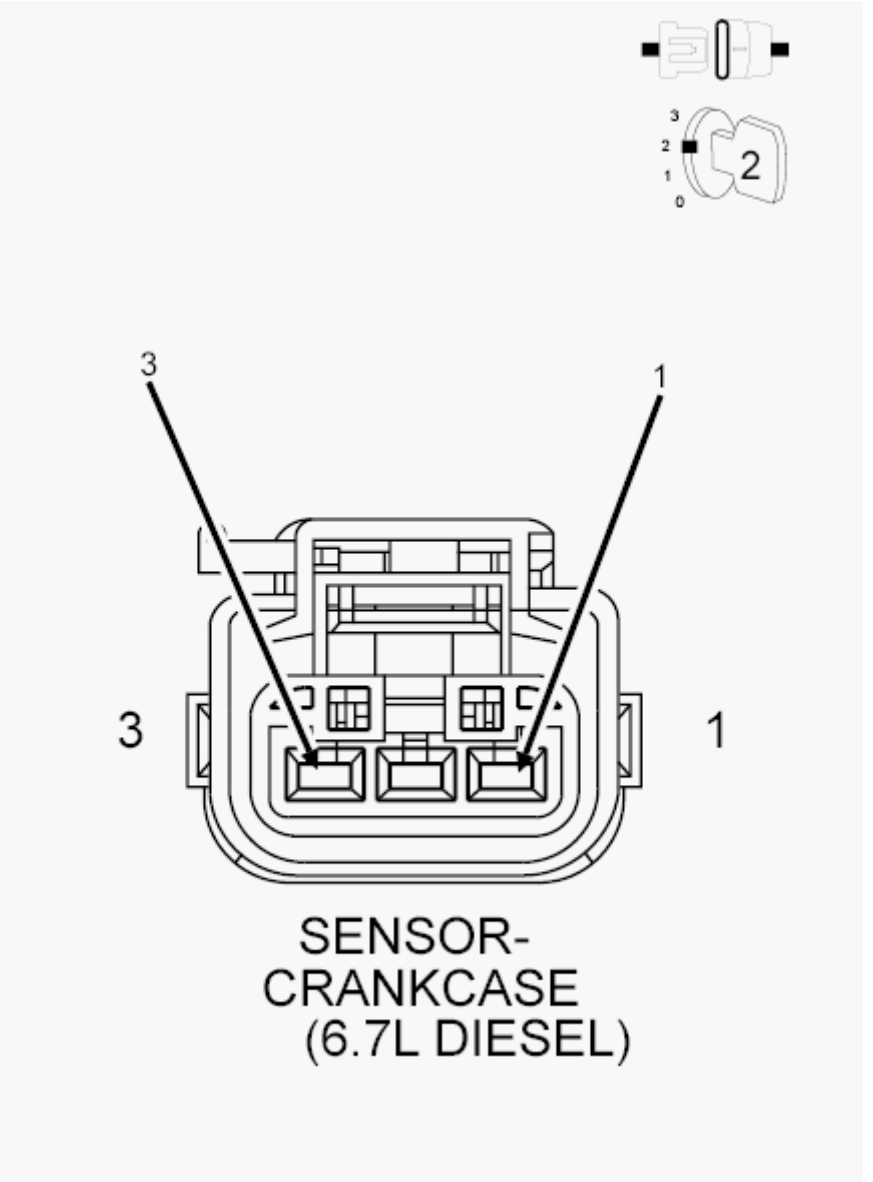

Fig. 37: Crankcase Pressure Sensor Harness Connector
Courtesy of CHRYSLER GROUP, LLC

1. While monitoring scan tool, connect a jumper between the (F857) 5-Volt Supply circuit and the (K926) Crankcase Pressure Sensor Signal circuit at the Crankcase Pressure Sensor harness connector.

   Does the scan tool display DTC P051D as active or pending and P051C as stored with the jumper in place?

   Yes

   - Replace the Crankcase Pressure Sensor in accordance with the service information.
   - Perform the POWERTRAIN VERIFICATION TEST - 6.7L. Refer to **POWERTRAIN**

VERIFICATION TEST - 6.7L .

No

- Go To 5.

5. **CHECK FOR THE (K926) CRANKCASE PRESSURE SENSOR SIGNAL CIRCUIT SHORTED TO THE (K916) SENSOR GROUND CIRCUIT**

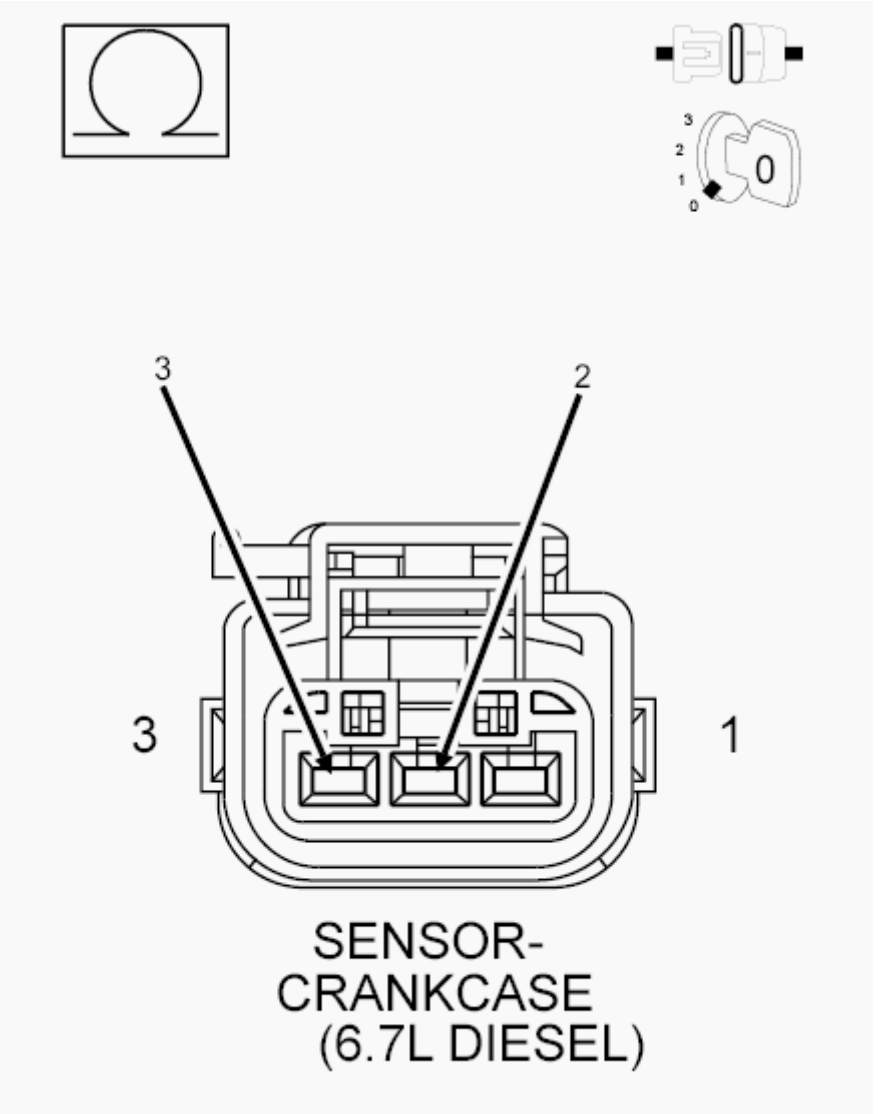

Fig. 38: Checking For Crankcase Pressure Signal Circuit Shorted To Sensor Return Circuit
Courtesy of CHRYSLER GROUP, LLC

1. Turn the ignition off.
2. Remove the jumper.
3. Disconnect the PCM C1 harness connector.

NOTE: Check connectors - Clean/repair as necessary.

4. Measure the resistance between the (K926) Crankcase Pressure Sensor Signal circuit and (K916) Sensor Ground circuit in the Crankcase Pressure Sensor harness connector.

   Is the resistance above 10k Ohms?

   Yes

   - Go To 6.

   No

   - Repair the short between the (K926) Crankcase Pressure Sensor Signal circuit and (K916) Sensor Ground circuit.
   - Perform the POWERTRAIN VERIFICATION TEST - 6.7L. Refer to **POWERTRAIN VERIFICATION TEST - 6.7L** .

6. **CHECK THE (K926) CRANKCASE PRESSURE SIGNAL CIRCUIT FOR A SHORT TO GROUND**

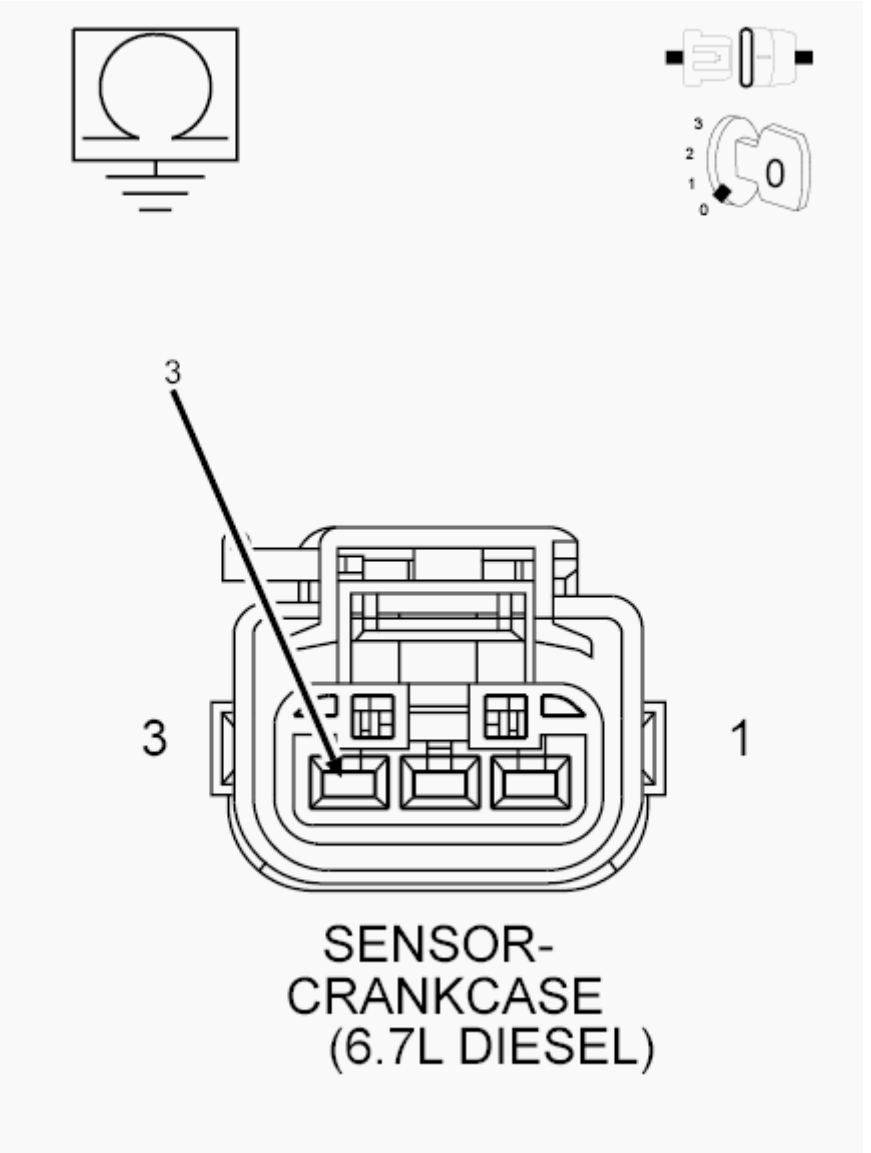

Fig. 39: Checking Crankcase Pressure Signal Circuit For Short To Ground
Courtesy of CHRYSLER GROUP, LLC

1. Measure the resistance between ground and the (K926) Crankcase Pressure Sensor Signal circuit at the Crankcase Pressure Sensor harness connector.

   Is the resistance above 10k Ohms?

   Yes

   - Go To 7.

   No

   - Repair the (K926) Crankcase Pressure Sensor Signal circuit for a short to ground.

- Perform the POWERTRAIN VERIFICATION TEST - 6.7L. Refer to **POWERTRAIN VERIFICATION TEST - 6.7L** .

7. **CHECK THE (K926) CRANKCASE PRESSURE SENSOR SIGNAL CIRCUIT FOR AN OPEN/HIGH RESISTANCE**

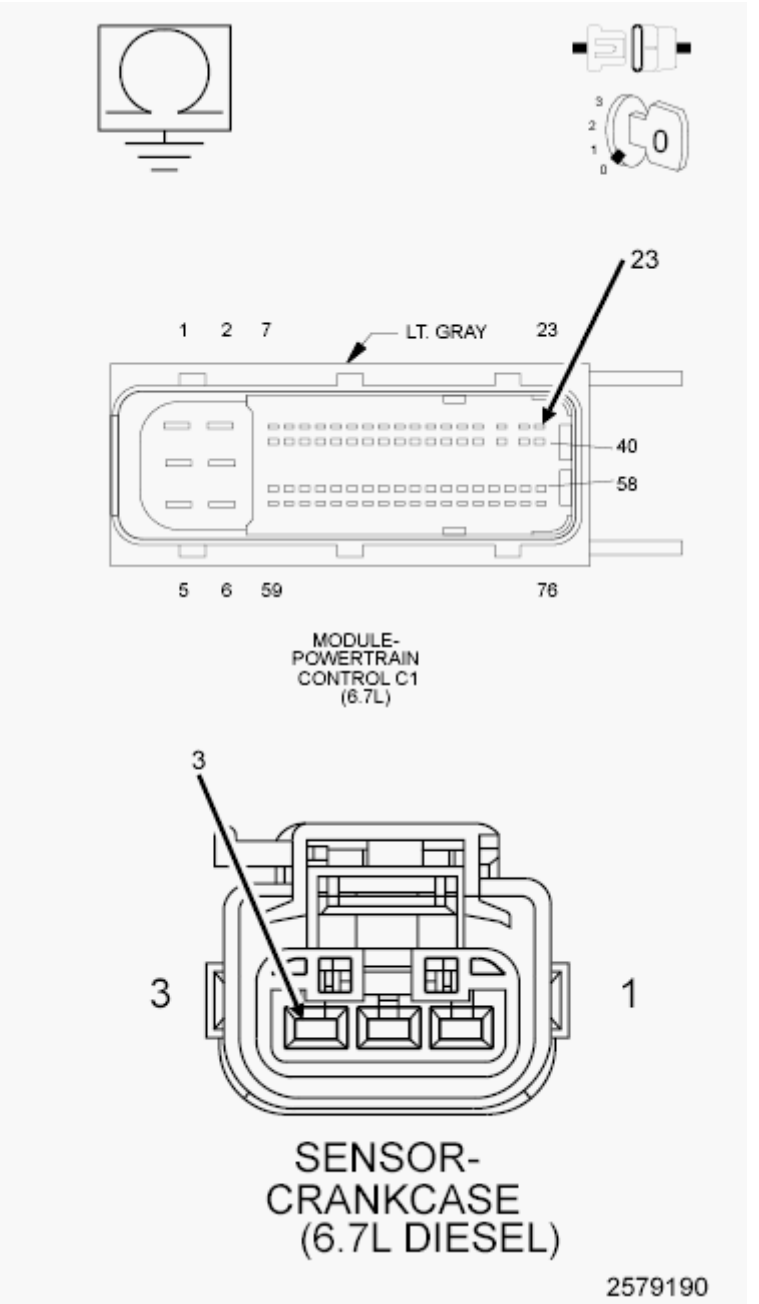

Fig. 40: Checking Crankcase Pressure Signal Circuit For An Open Or High Resistance
Courtesy of CHRYSLER GROUP, LLC

1. Measure the resistance of the (K926) Crankcase Pressure Signal circuit between the Crankcase Pressure Sensor harness connector and the PCM C1 harness connector.

Is the resistance below 5.0 Ohms?

Yes

- Replace the Powertrain Control Module (PCM) in accordance with the service information.
- Perform the POWERTRAIN VERIFICATION TEST - 6.7L. Refer to **POWERTRAIN VERIFICATION TEST - 6.7L** .

No

- Repair the (K926) Crankcase Pressure Signal circuit for an open or high resistance.
- Perform the POWERTRAIN VERIFICATION TEST - 6.7L. Refer to **POWERTRAIN VERIFICATION TEST - 6.7L** .

P051D-CRANKCASE PRESSURE SENSOR CIRCUIT HIGH

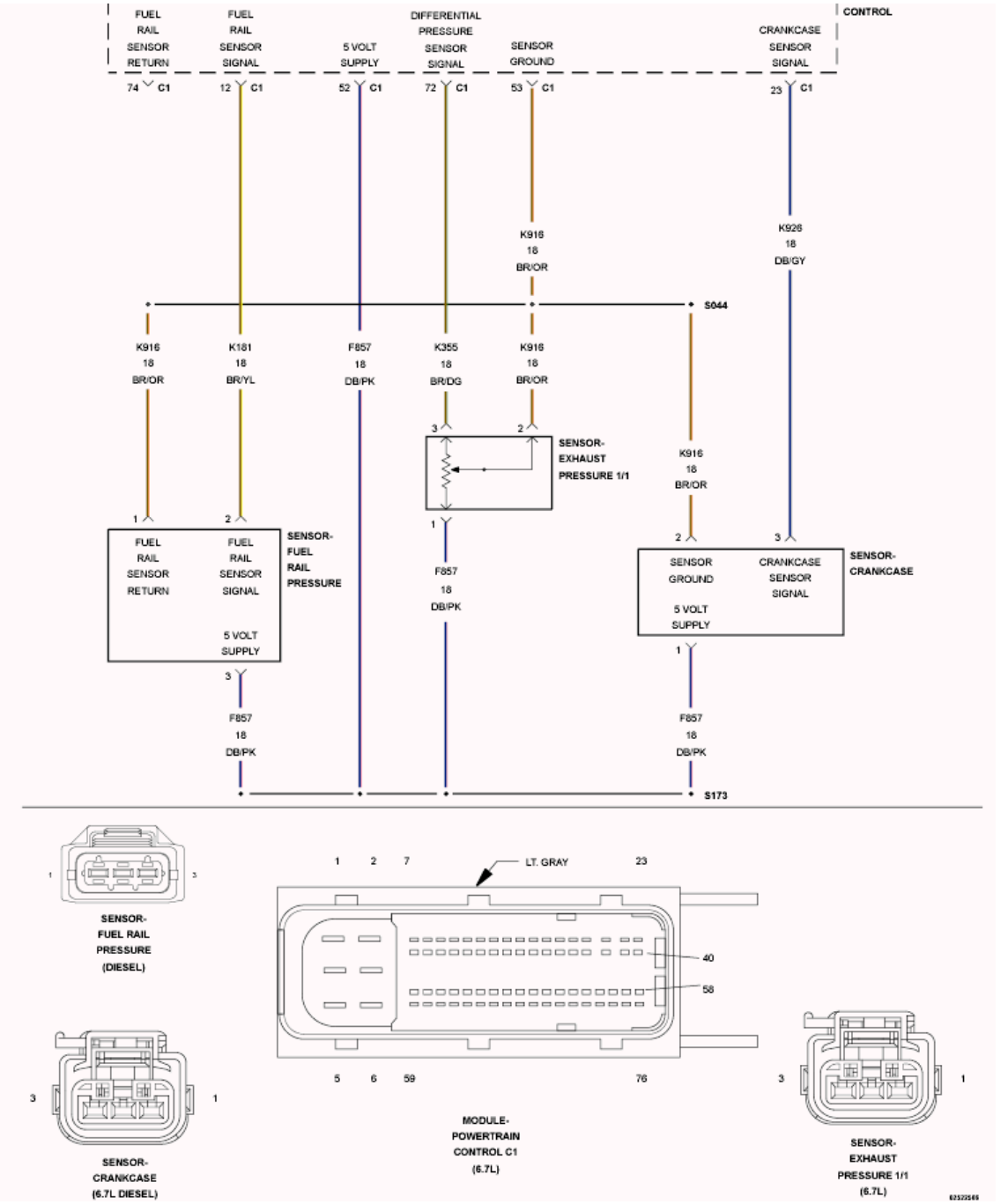

Fig. 41: Fuel Rail Pressure, Exhaust Pressure, & Crankcase Sensor Circuit Schematic
Courtesy of CHRYSLER GROUP, LLC

For a complete wiring diagram, **refer to appropriate SYSTEM WIRING DIAGRAMS article** .

THEORY OF OPERATION

The Crankcase Pressure Sensor is used to monitor the pressure inside the crankcase. The Powertrain Control Module (PCM) supplies the Crankcase Pressure Sensor a 5-Volt reference voltage. When the crankcase pressure is low, the sensor signal voltage is low. When the crankcase pressure is high, the sensor signal voltage

is near the 5-Volt reference voltage. The PCM monitors the Crankcase Pressure Sensor Signal circuit voltage to calculate the pressure of the air within the crankcase. The PCM does not illuminate the MIL or ETC lamp for any of the crankcase pressure faults.

WHEN MONITORED:

Ignition on, engine not running.

SET CONDITION:

The circuit voltage to the PCM is above a calibrated threshold for a certain period of time.

POSSIBLE CAUSES

Possible Causes
(F857) 5-VOLT SUPPLY CIRCUIT SHORTED TO BATTERY VOLTAGE
(K926) CRANKCASE PRESSURE SIGNAL CIRCUIT SHORTED TO VOLTAGE
(K926) CRANKCASE PRESSURE SIGNAL CIRCUIT SHORTED TO THE (F857) 5-VOLT SUPPLY CIRCUIT
(K916) SENSOR GROUND CIRCUIT OPEN/HIGH RESISTANCE
CRANKCASE PRESSURE SENSOR
ENGINE CONTROL MODULE (ECM)

Always perform the Pre-Diagnostic Troubleshooting procedure before proceeding. Refer to PRE-DIAGNOSTIC TROUBLESHOOTING PROCEDURE - 6.7L .

DIAGNOSTIC TEST

1. **OTHER DTCS**
    1. Ignition on, engine not running.
    2. With the scan tool, read DTCs.

    Are there any 5-Volt Reference DTCs ?

    Yes

    - Repair other DTCs first.

    No

    - Go To 2.
2. **P051D ACTIVE**

    Is DTC P051D active?

    Yes

- Go To 3.

No

- Perform the INTERMITTENT CONDITION diagnostic procedure. Refer to **INTERMITTENT CONDITION - 6.7L** .

3. **CHECK FOR THE (K926) CRANKCASE PRESSURE SENSOR SIGNAL CIRCUIT SHORTED TO ANOTHER CIRCUIT**
   1. Turn the ignition off.
   2. Disconnect the Crankcase Pressure Sensor harness connector.
   3. Disconnect the PCM C1 harness connector.

      NOTE: Check connectors - Clean/repair as necessary.

   4. Measure the resistance between the (K926) Crankcase Pressure Sensor Signal circuit and all other circuits of the PCM C1 harness connector.

      Is the resistance below 10k Ohms between the (K926) Crankcase Pressure Sensor Signal circuit and all other circuits?

      Yes

      - Repair the (K926) Crankcase Pressure Sensor Signal circuit for a short to the circuit that measured below 10k Ohms.
      - Perform the POWERTRAIN VERIFICATION TEST - 6.7L. Refer to **POWERTRAIN VERIFICATION TEST - 6.7L** .

      No

      - Go To 4.

4. **CHECK THE (K916) SENSOR GROUND CIRCUIT FOR AN OPEN/HIGH RESISTANCE**

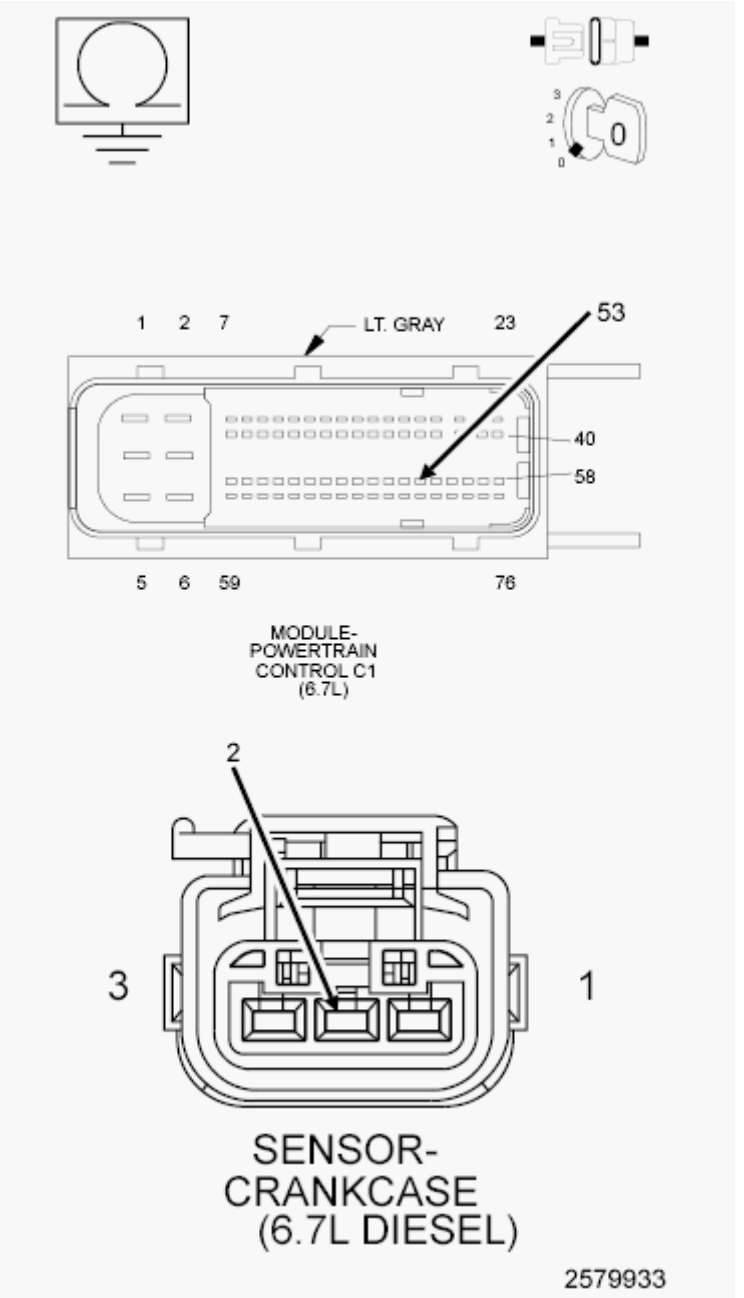

Fig. 42: Checking Sensor Return Circuit For An Open Or High Resistance
Courtesy of CHRYSLER GROUP, LLC

1. Measure the resistance of the (K916) Sensor Ground circuit between the Crankcase Pressure Sensor harness connector and the PCM C1 harness connector.

   Is the resistance below 5.0 Ohms?

   Yes

   - Go To 5.

No

- Repair the (K916) Sensor Ground circuit for an open or high resistance.
- Perform the POWERTRAIN VERIFICATION TEST - 6.7L. Refer to **POWERTRAIN VERIFICATION TEST - 6.7L** .

5. **CHECK THE CRANKCASE PRESSURE SENSOR**
   1. Reconnect the Crankcase Pressure Sensor harness connector.
   2. Reconnect the PCM C1 harness connector.
   3. Turn the ignition on.
   4. While monitoring the scan tool, disconnect the Crankcase Pressure Sensor harness connector.

   Does the scan tool display P051C Crankcase Pressure Sensor low DTC as active or pending?

   Yes

   - Replace the Crankcase Pressure Sensor in accordance with the service information.
   - Perform the POWERTRAIN VERIFICATION TEST - 6.7L. Refer to **POWERTRAIN VERIFICATION TEST - 6.7L** .

   No

   - Replace the Powertrain Control Module in accordance with the service information.
   - Perform the POWERTRAIN VERIFICATION TEST - 6.7L. Refer to **POWERTRAIN VERIFICATION TEST - 6.7L** .

P0521-ENGINE OIL PRESSURE SENSOR PERFORMANCE

For a complete wiring diagram, **refer to appropriate SYSTEM WIRING DIAGRAMS article** .

THEORY OF OPERATION

The Engine Oil Pressure Switch is used by the Powertrain Control Module (PCM) to monitor the lubricating oil pressure. The Oil Pressure Switch is normally closed when the engine is not running or oil pressure drops below the engine protection limit, and open when oil pressure is present. This monitor checks for the Oil Pressure Switch state to change from open to closed in a calibrated period of time after the engine is turned off. When the fault is set, the PCM illuminates the oil pressure lamp on the Vehicle Information Center. The PCM will turn off the oil pressure lamp after the diagnostic runs and passes on the next key cycle.

WHEN MONITORED:

This monitor runs for a calibrated amount of time after the engine speed reaches zero.

SET CONDITION:

The Oil Pressure Switch is in a closed state after a calibrated amount of time with the engine speed equal zero.

POSSIBLE CAUSES

Possible Causes
ENGINE OIL PRESSURE SWITCH
ENGINE OIL PRESSURE SWITCH (G6) SIGNAL CIRCUIT OPEN
POWERTRAIN CONTROL MODULE (PCM)

Always perform the Pre-Diagnostic Troubleshooting procedure before proceeding. Refer to PRE-DIAGNOSTIC TROUBLESHOOTING PROCEDURE - 6.7L .

DIAGNOSTIC TEST

1. **CHECK THE ENGINE OIL PRESSURE (EOP) SWITCH**
   1. Turn the ignition off.
   2. Disconnect the Engine Oil Pressure (EOP) Switch harness connector.

      NOTE: Check connectors - Clean/repair as necessary.

   3. Measure the resistance between the EOP (G6) Signal circuit terminal and ground at the Engine Oil Pressure Switch.

      Is the resistance below 5.0 Ohms?

      Yes

      - Go To 2.

      No

      - Replace the Engine Oil Pressure Switch in accordance with the service information.
      - Perform the POWERTRAIN VERIFICATION TEST - 6.7L. Refer to **POWERTRAIN VERIFICATION TEST - 6.7L** .
2. **CHECK THE EOP (G6) SIGNAL CIRCUIT OPEN/HIGH RESISTANCE**
   1. Disconnect the C1 PCM harness connector.

      NOTE: Check connectors - Clean/repair as necessary.

   2. Measure the resistance of the (G6) EOP Signal Circuit between the Engine Oil Pressure Switch harness connector and the PCM C1 harness connector.

      Is the resistance below 5.0 Ohms?

      Yes

      - Go To 3.

No

- Repair the (G6) EOP Signal Circuit for an open or high resistance.
- Perform the POWERTRAIN VERIFICATION TEST - 6.7L. Refer to **POWERTRAIN VERIFICATION TEST - 6.7L** .

3. **POWERTRAIN CONTROL MODULE**

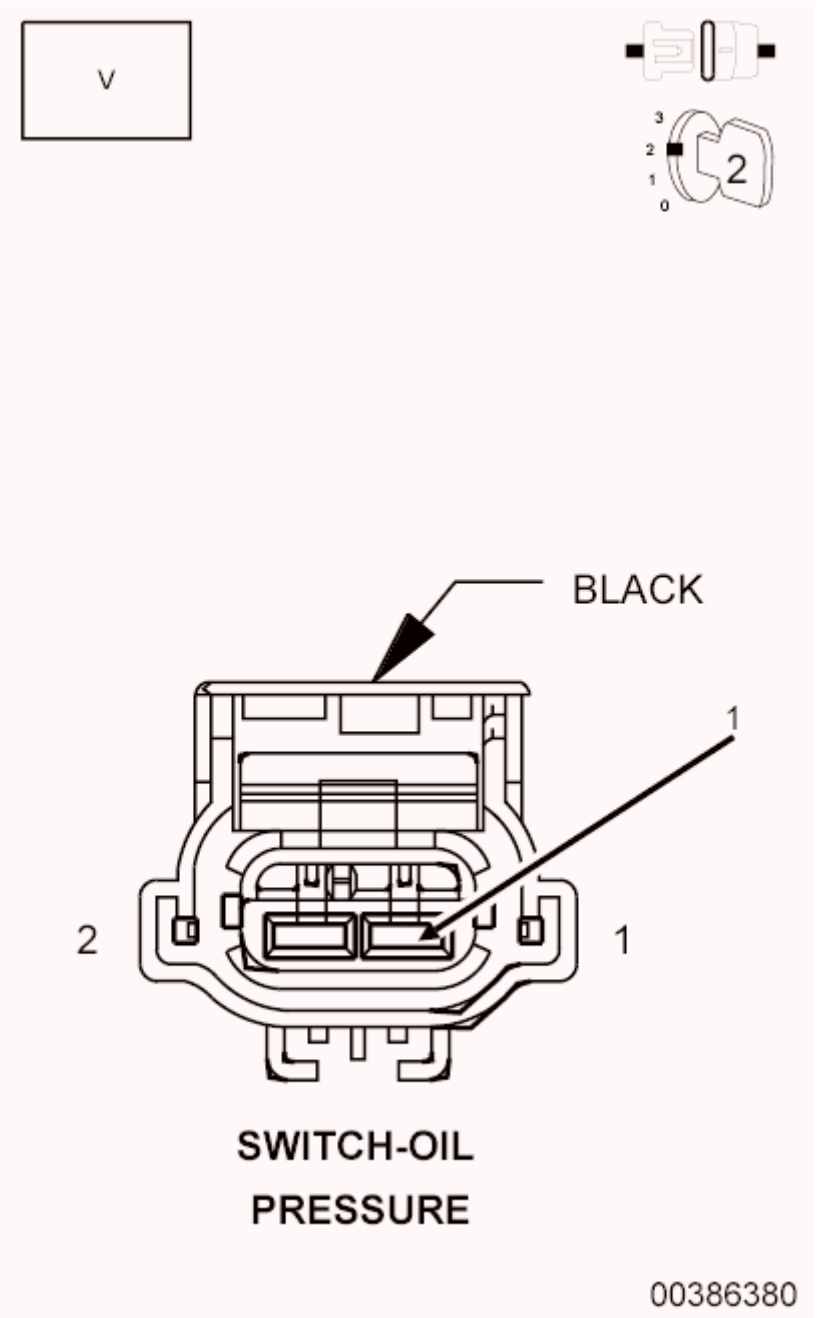

Fig. 43: Oil Pressure Switch Connector Pin ID
Courtesy of CHRYSLER GROUP, LLC

1. Reconnect the C1 PCM harness connector.
2. Engine Oil Pressure Switch still disconnected.
3. Turn the ignition on.
4. Measure the voltage between ground and the (G6) EOP Signal circuit at the Engine Oil Pressure Switch harness connector.

   Is the voltage between 4.5 and 5.5 Volts?

   Yes

   - Perform the INTERMITTENT CONDITION diagnostic procedure. Refer to **INTERMITTENT CONDITION - 6.7L** .

   No

   - Replace the Powertrain Control Module in accordance with the service information.
   - Perform the POWERTRAIN VERIFICATION TEST - 6.7L. Refer to **POWERTRAIN VERIFICATION TEST - 6.7L** .

P0524-ENGINE OIL PRESSURE SENSOR CIRCUIT LOW

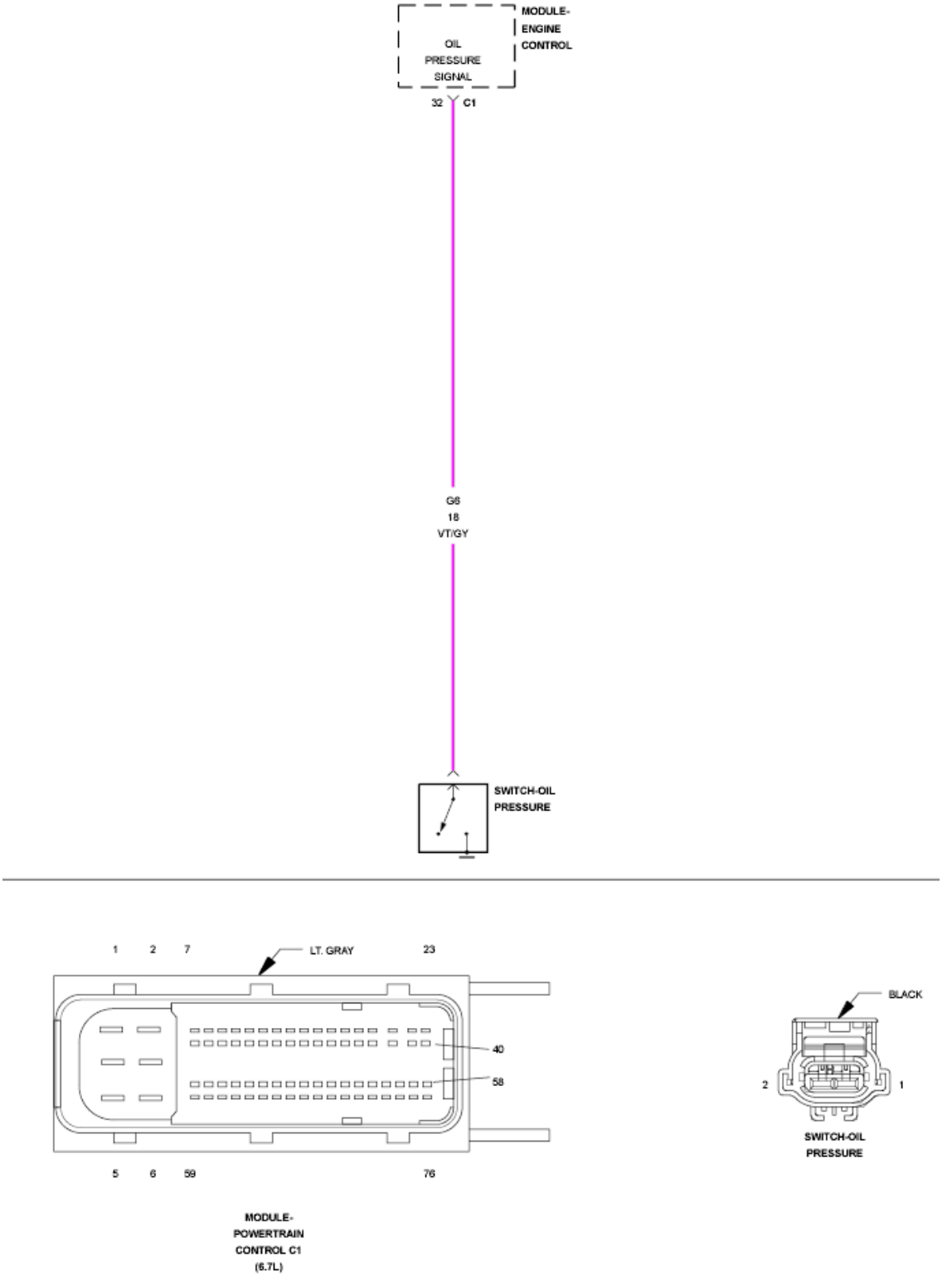

Fig. 44: Engine Oil Pressure Switch Circuit Schematic
Courtesy of CHRYSLER GROUP, LLC

For a complete wiring diagram, **refer to appropriate SYSTEM WIRING DIAGRAMS article** .

THEORY OF OPERATION

The Engine Oil Pressure (EOP) Switch is used by the Powertrain Control Module (PCM) to monitor the lubricating oil pressure. If the oil pressure drops below the engine protection limit, the switch will close and cause the fault to log. The Oil Pressure Switch is normally closed when the engine is not running and open when oil pressure is present. When the fault is set, the PCM illuminates the MIL light. The PCM will turn off the MIL light after the diagnostic runs and passes in four consecutive drive cycles.

WHEN MONITORED:

While the engine is running.

SET CONDITION:

The oil pressure detected by the PCM is less than a calibrated value.

POSSIBLE CAUSES

Possible Causes
LOW OIL LEVEL
EOP (G6) SIGNAL CIRCUIT SHORT TO GROUND
OIL PRESSURE SWITCH
INTERNAL ENGINE DAMAGE

Always perform the Pre-Diagnostic Troubleshooting procedure before proceeding. Refer to PRE-DIAGNOSTIC TROUBLESHOOTING PROCEDURE - 6.7L .

DIAGNOSTIC TEST

1. **DTC ACTIVE**

   NOTE: Verify that the engine oil is at the proper level before continuing.

   1. Turn the ignition on.
   2. With the scan tool, erase DTCs.
   3. Turn the ignition off for 75 seconds.
   4. Start the engine and let idle.
   5. With the scan tool, read DTCs.

   Did the DTC reset?

   Yes

   - Go To 2.

   No

- Perform the INTERMITTENT CONDITION diagnostic procedure. Refer to **INTERMITTENT CONDITION - 6.7L** .

2. **CHECK THE EOP (G6) SIGNAL CIRCUIT FOR A SHORT TO GROUND**
    1. Turn the ignition off.
    2. Disconnect the EOP Switch harness connector.
    3. Turn the ignition on.

    Did the DTC reset?

    Yes

    - Go To 3.

    No

    - Repair the (G6) Oil Pressure Switch Signal circuit for a short to ground.
    - Perform the POWERTRAIN VERIFICATION TEST - 6.7L. Refer to **POWERTRAIN VERIFICATION TEST - 6.7L** .
3. **CHECK THE OIL PRESSURE SWITCH**
    1. Measure the engine oil pressure with a mechanical gauge.

    Is the oil pressure within the acceptable operating range?

    Yes

    - Replace the Oil Pressure Switch in accordance with the service information.
    - Perform the POWERTRAIN VERIFICATION TEST - 6.7L. Refer to **POWERTRAIN VERIFICATION TEST - 6.7L** .

    No

    - Repair internal engine damage.
    - Perform the POWERTRAIN VERIFICATION TEST - 6.7L. Refer to **POWERTRAIN VERIFICATION TEST - 6.7L** .

P0532-A/C PRESSURE SENSOR CIRCUIT LOW

For a complete wiring diagram, **refer to appropriate SYSTEM WIRING DIAGRAMS article** .

THEORY OF OPERATION

The Powertrain Control Module (PCM) receives various information from the operator controls and engine sensor inputs to determine when the A/C Compressor Clutch should be turned on. The Totally Integrated Power Module (TIPM) receives a signal from the PCM to turn on the A/C Compressor Clutch. The A/C Pressure Sensor information is an input to the TIPM. The TIPM uses the A/C Pressure Sensor input signal to determine if

the A/C Compressor Clutch should be turned on. The TIPM supplies 12-Volts to the A/C compressor clutch which has a dedicated ground circuit. You will not receive a MIL lamp for this fault, but the customer may complain of poor A/C performance.

WHEN MONITORED:

With the ignition on and battery voltage greater than 10.4 Volts.

SET CONDITION:

The circuit voltage to the TIPM falls below 0.25 Volts for five seconds.

POSSIBLE CAUSES

Possible Causes
(C818) 5-VOLT SUPPLY CIRCUIT OPEN/HIGH RESISTANCE
(C818) 5-VOLT SUPPLY CIRCUIT SHORTED TO GROUND
(C18) A/C PRESSURE SENSOR SIGNAL CIRCUIT SHORTED TO GROUND
(C18) A/C PRESSURE SENSOR SIGNAL CIRCUIT SHORTED TO THE (C918) A/C PRESSURE SENSOR RETURN
(C18) A/C PRESSURE SENSOR SIGNAL CIRCUIT OPEN/HIGH RESISTANCE
A/C PRESSURE SENSOR
TOTALLY INTEGRATED POWER MODULE (TIPM)

Always perform the Pre-Diagnostic Troubleshooting procedure before proceeding. Refer to PRE-DIAGNOSTIC TROUBLESHOOTING PROCEDURE - 6.7L .

DIAGNOSTIC TEST

1. **ACTIVE DTC**

NOTE: **If any 5-Volt supply DTCs are present, repair those DTCs before proceeding with this test.**

1. Turn the ignition on.
2. With the scan tool, record all Freeze frame data.
3. With the scan tool, erase DTCs.
4. Turn the ignition off for 75 seconds.
5. Turn the ignition on.
6. With the scan tool, read DTCs.

Did the DTC reset?

Yes

- Go To 2.

No

- Perform the INTERMITTENT CONDITION diagnostic procedure. Refer to **INTERMITTENT CONDITION - 6.7L** .

2. **CHECK THE (C18) A/C PRESSURE SENSOR SIGNAL CIRCUIT FOR A SHORT TO GROUND**

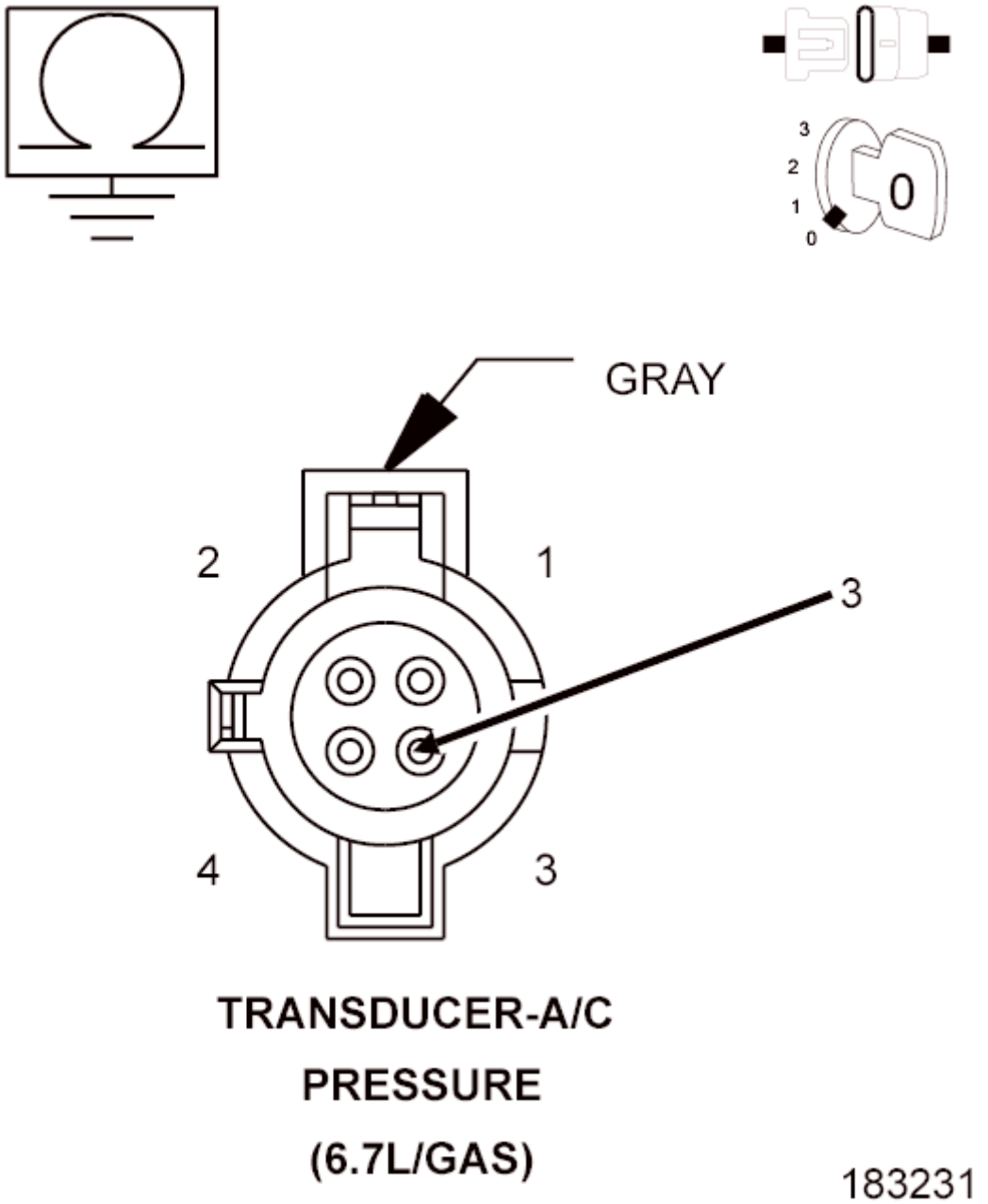

Fig. 45: Checking A/C Pressure Sensor Signal Circuit Shorted To Ground
Courtesy of CHRYSLER GROUP, LLC

1. Turn the ignition off.
2. Disconnect the A/C Pressure Sensor harness connector.
3. Disconnect the TIPM C1 harness connector.

NOTE: Check connectors - Clean/repair as necessary.

4. Measure the resistance between ground and the (C18) A/C Pressure Sensor Signal circuit at the A/C Pressure Sensor harness connector.

   Is the resistance below 10k Ohms?

   Yes

   - Repair the (C18) A/C Pressure Sensor Signal circuit for a short to ground.
   - Perform the POWERTRAIN VERIFICATION TEST - 6.7L. Refer to **POWERTRAIN VERIFICATION TEST - 6.7L** .

   No

   - Go To 3.

3. **CHECK FOR THE (C18) A/C PRESSURE SENSOR SIGNAL CIRCUIT SHORTED TO THE (C918) A/C PRESSURE SENSOR RETURN**
   1. Measure the resistance between the (C18) A/C Pressure Sensor Signal circuit and the (C918) A/C Pressure Sensor Return circuit in the TIPM C1 harness connector.

      Is the resistance below 10k Ohms?

      Yes

      - Repair the short between the (C18) A/C Pressure Sensor Signal circuit and the (C918) A/C Pressure Sensor Return circuit.
      - Perform the POWERTRAIN VERIFICATION TEST - 6.7L. Refer to **POWERTRAIN VERIFICATION TEST - 6.7L** .

      No

      - Go To 4.

4. **CHECK THE (C18) A/C PRESSURE SENSOR SIGNAL CIRCUIT FOR A OPEN/HIGH RESISTANCE**
   1. Measure the resistance of the (C18) A/C Pressure Sensor Signal circuit between the A/C Pressure Sensor harness connector and the TIPM C1 harness connector.

      Is the resistance below 5.0 Ohms?

      Yes

- Go To 5.

No

- Repair the (C18) signal circuit for an open or high resistance.
- Perform the POWERTRAIN VERIFICATION TEST - 6.7L. Refer to **POWERTRAIN VERIFICATION TEST - 6.7L** .

5. **CHECK THE A/C PRESSURE SENSOR**

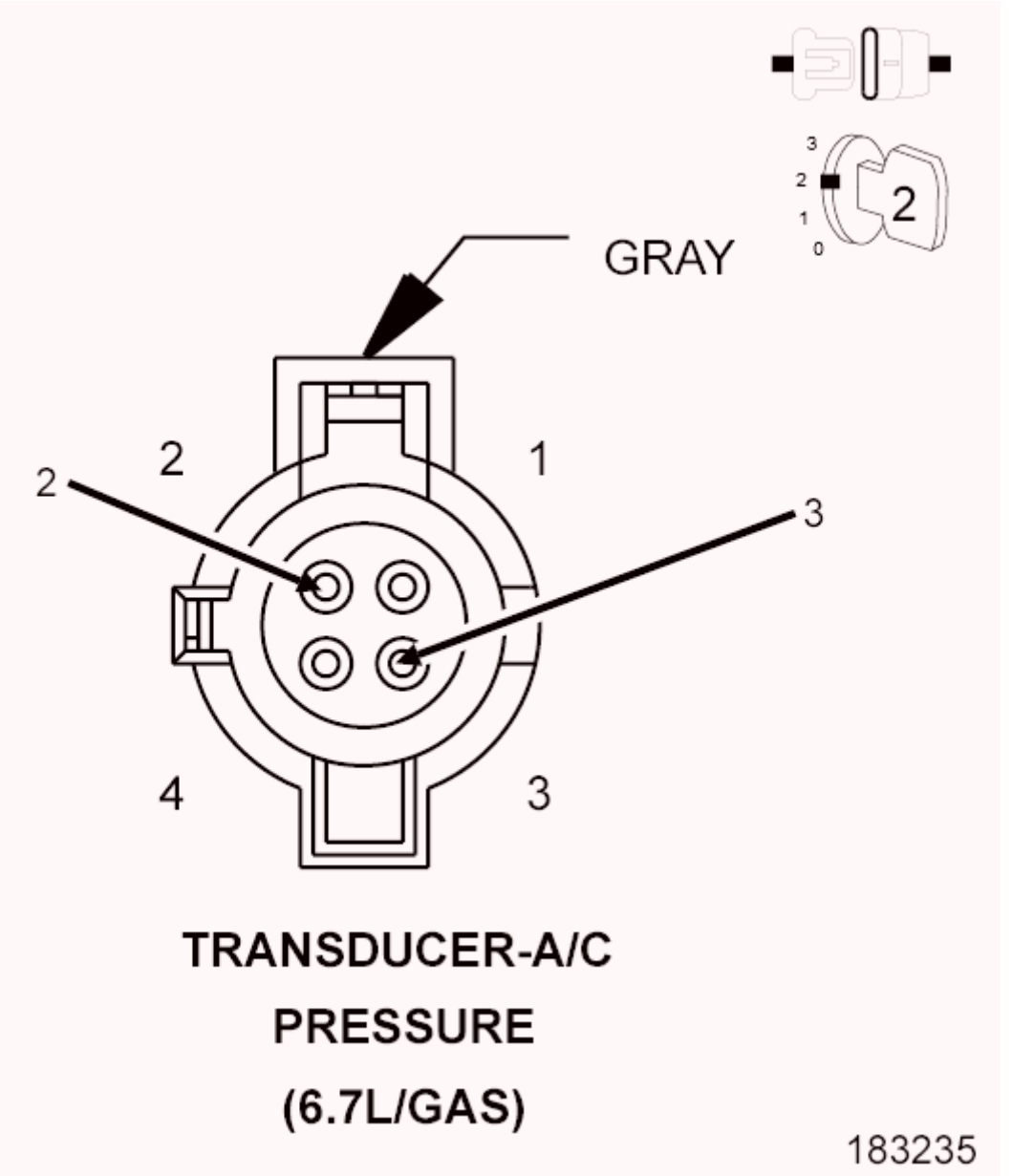

Fig. 46: Checking ECM Sets A/C Pressure Sensor DTC
Courtesy of CHRYSLER GROUP, LLC

1. Turn the ignition on.
2. Reconnect the TIPM C1 harness connector.
3. While monitoring scan tool, connect a jumper between the (C18) A/C Pressure Sensor Signal circuit and the (C918) A/C Pressure Sensor Return circuit at the A/C Pressure Sensor harness connector.

   Did DTC P0533 set?

   Yes

   - Replace the A/C Pressure Sensor in accordance with the service information.
   - Perform the POWERTRAIN VERIFICATION TEST - 6.7L. Refer to **POWERTRAIN VERIFICATION TEST - 6.7L** .

   No

   - Replace the Totally Integrated Power Module in accordance with the service information.
   - Perform the BODY VERIFICATION TEST. Refer to **STANDARD PROCEDURE** .

P0533-A/C PRESSURE SENSOR CIRCUIT HIGH

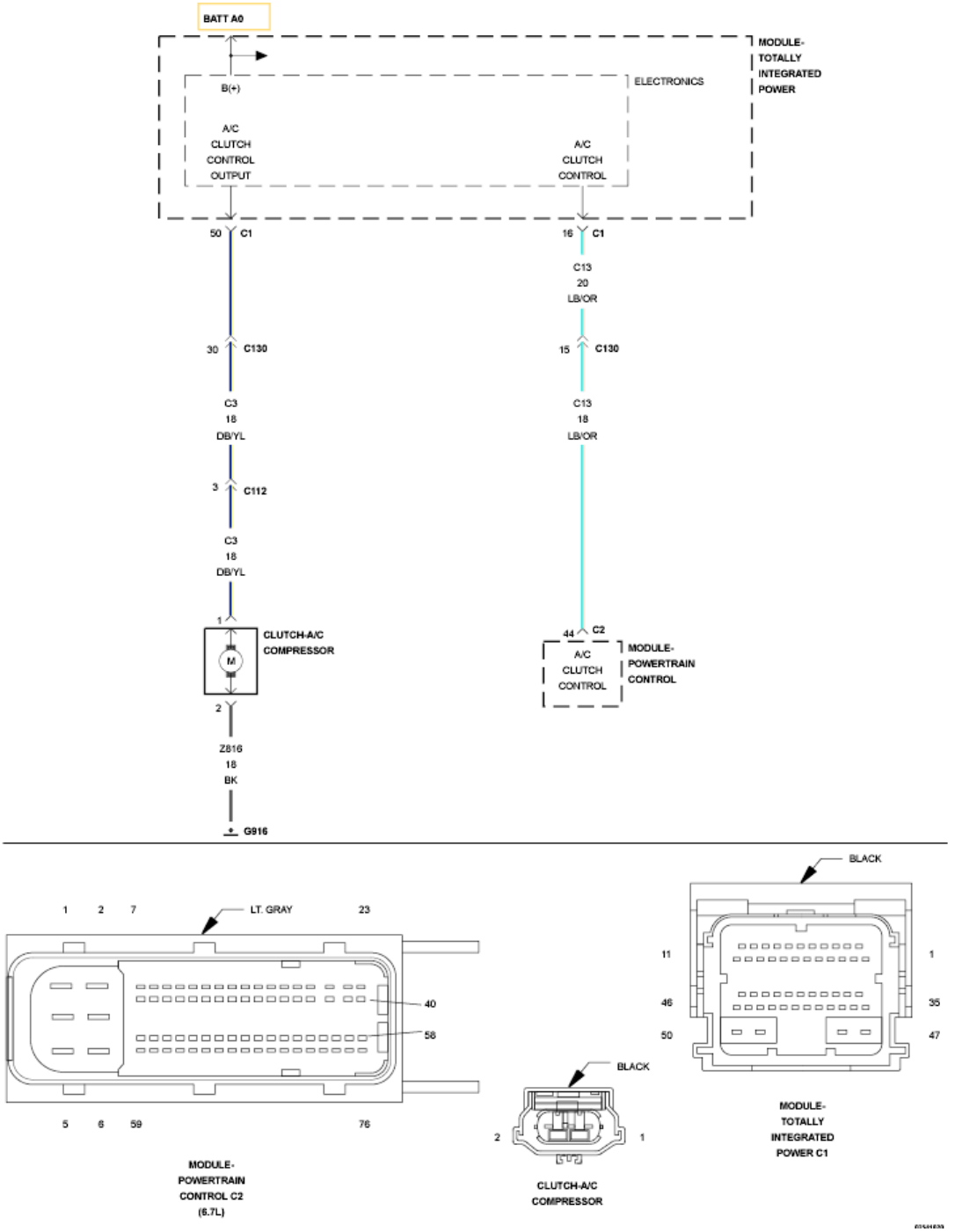

Fig. 47: A/C Compressor Clutch & TIPM Circuit Schematic
Courtesy of CHRYSLER GROUP, LLC

For a complete wiring diagram, **refer to appropriate SYSTEM WIRING DIAGRAMS article** .

THEORY OF OPERATION

The A/C pressure sensor is mounted in the Freon circuit of the A/C system. This sensor monitors the pressure in the system. This pressure information is part of the information the Totally Integrated Power Module (TIPM)

uses to determine if the A/C clutch should turned on or off. This information is also important to protect the Freon compressor from damage. A MIL lamp will not be lit for this fault. The customer may notice poor A/C performance.

WHEN MONITORED:

With the ignition on and battery voltage greater than 10.4 Volts.

SET CONDITION:

The circuit voltage to the Totally Integrated Power Module (TIPM) is above a calibrated threshold for a certain period of time.

POSSIBLE CAUSES

Possible Causes
(C18) SIGNAL CIRCUIT SHORTED TO VOLTAGE
(C818) 5-VOLT SUPPLY CIRCUIT SHORTED TO VOLTAGE
(C918) RETURN CIRCUIT OPEN
A/C PRESSURE TRANSDUCER
TOTALLY INTEGRATED POWER MODULE (TIPM)

Always perform the Pre-Diagnostic Troubleshooting procedure before proceeding. Refer to PRE-DIAGNOSTIC TROUBLESHOOTING PROCEDURE - 6.7L .

DIAGNOSTIC TEST

1. **OTHER DTCS**
    1. Turn the ignition on.
    2. With the scan tool, read DTCs.

       Are other DTCs present?

       Yes

       - Repair other DTCs first.
       - Perform the POWERTRAIN VERIFICATION TEST - 6.7L. Refer to **POWERTRAIN VERIFICATION TEST - 6.7L** .

       No

       - Go To 2.
2. **HARNESS OPEN**

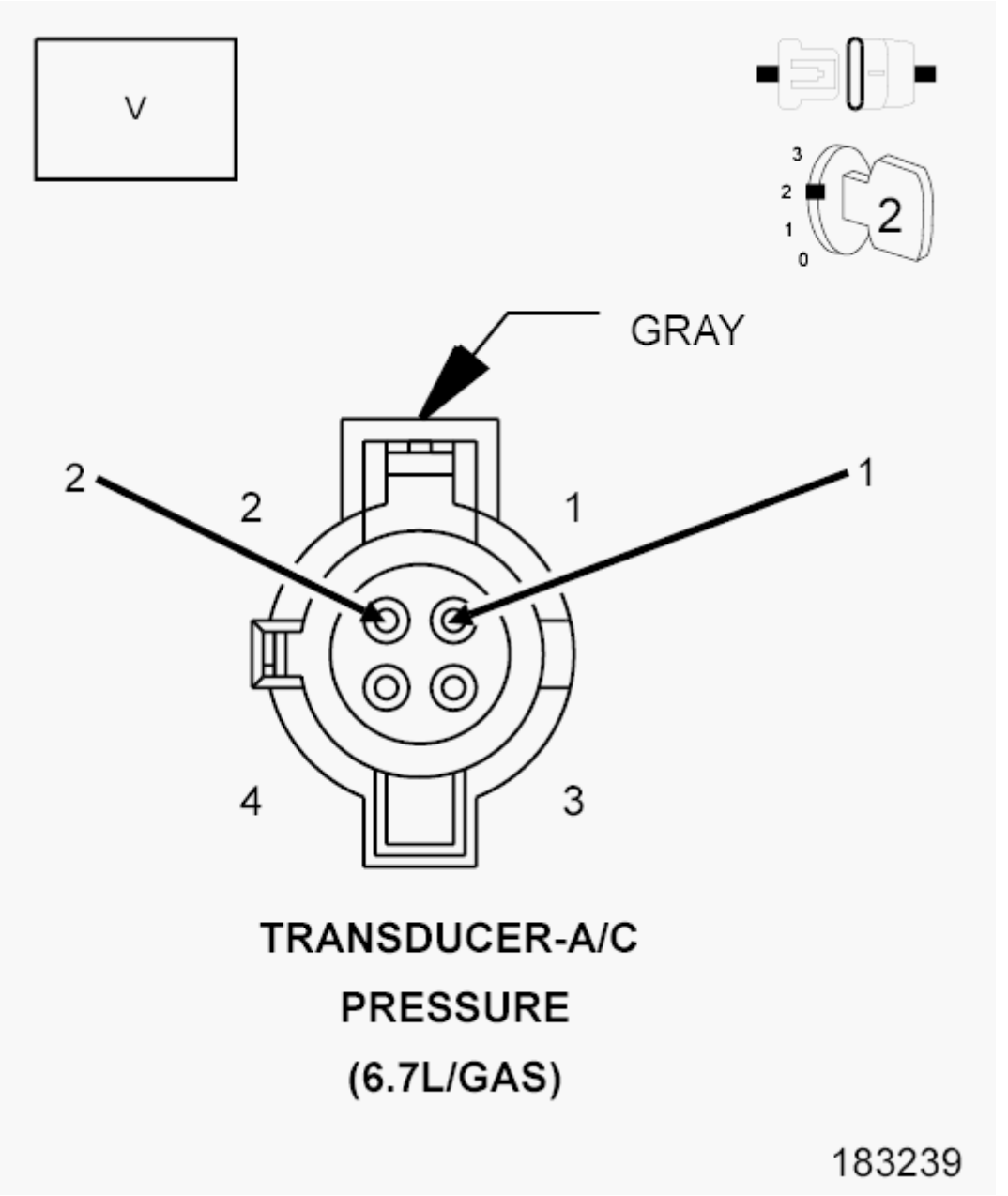

Fig. 48: Measuring Voltage Between 5-Volt Supply Circuit & A/C Pressure Sensor Return Circuit Of A/C Pressure Sensor Harness Connector
Courtesy of CHRYSLER GROUP, LLC

1. Turn the ignition off.
2. Disconnect the A/C Pressure Sensor harness connector.

NOTE: Check connectors - Clean/repair as necessary.

3. Turn the ignition on.
4. Measure the voltage between the (C818) 5-Volt Supply circuit and (C918) A/C Pressure Sensor

Return circuit of the A/C Pressure Sensor harness connector.

Is the voltage between 4.5 and 5.5 volts?

Yes

- Go To 3.

No

- Go To 4.

3. **A/C PRESSURE SENSOR**

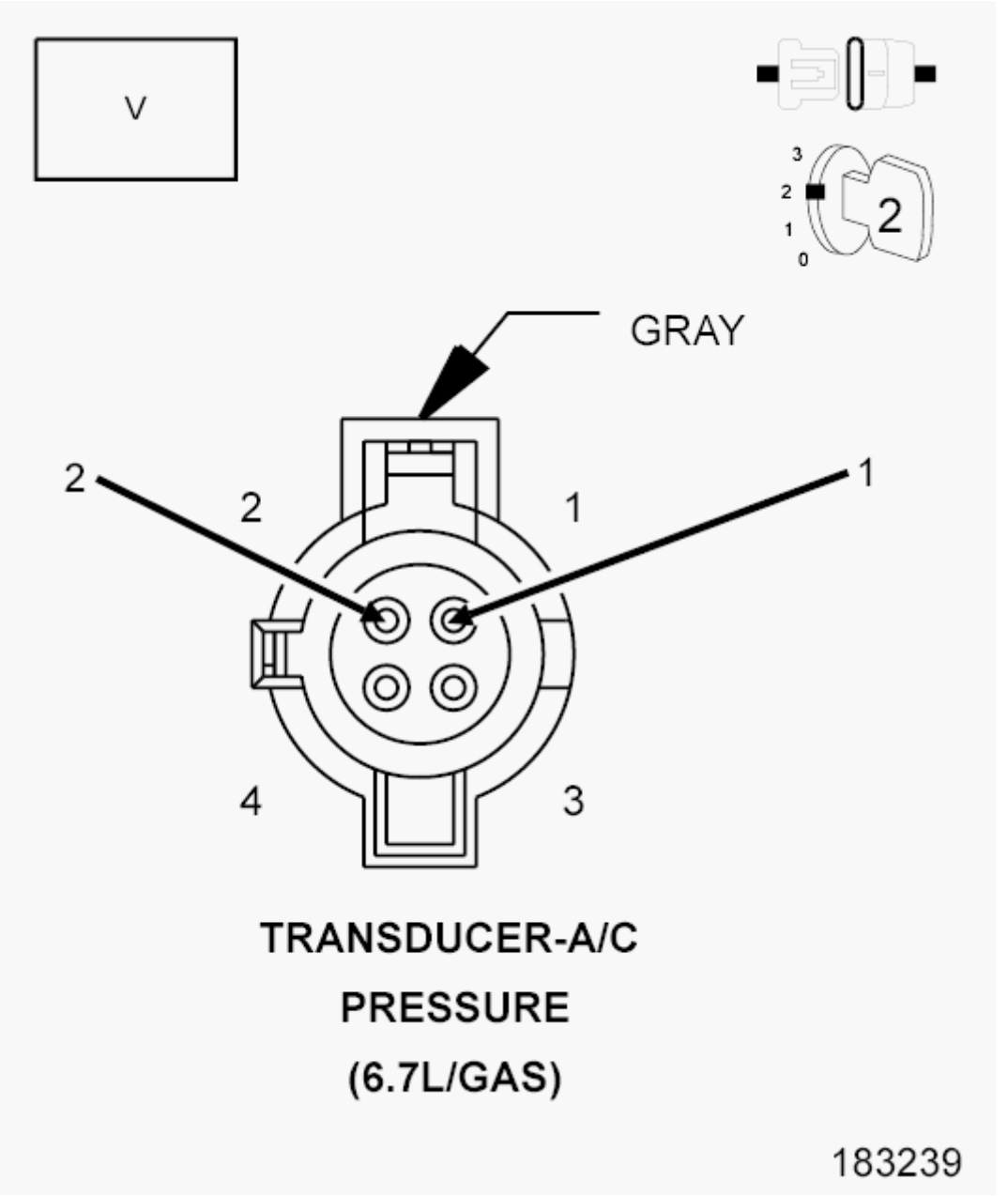

Fig. 49: Measuring Voltage Between 5-Volt Supply Circuit & A/C Pressure Sensor Return Circuit Of A/C Pressure Sensor Harness Connector
Courtesy of CHRYSLER GROUP, LLC

1. While monitoring scan tool, use a jumper wire to connect the (C918) A/C Pressure Sensor Return circuit to the (C18) A/C Pressure Sensor Signal circuit at the A/C Pressure Sensor harness connector.

   Did P0532 set?

   Yes

- Replace the A/C Pressure Sensor.
- Perform the POWERTRAIN VERIFICATION TEST - 6.7L. Refer to **POWERTRAIN VERIFICATION TEST - 6.7L** .

No

- Go To 4.

4. **CHECK THE (C818) 5-VOLT SUPPLY CIRCUIT FOR A SHORT TO VOLTAGE**

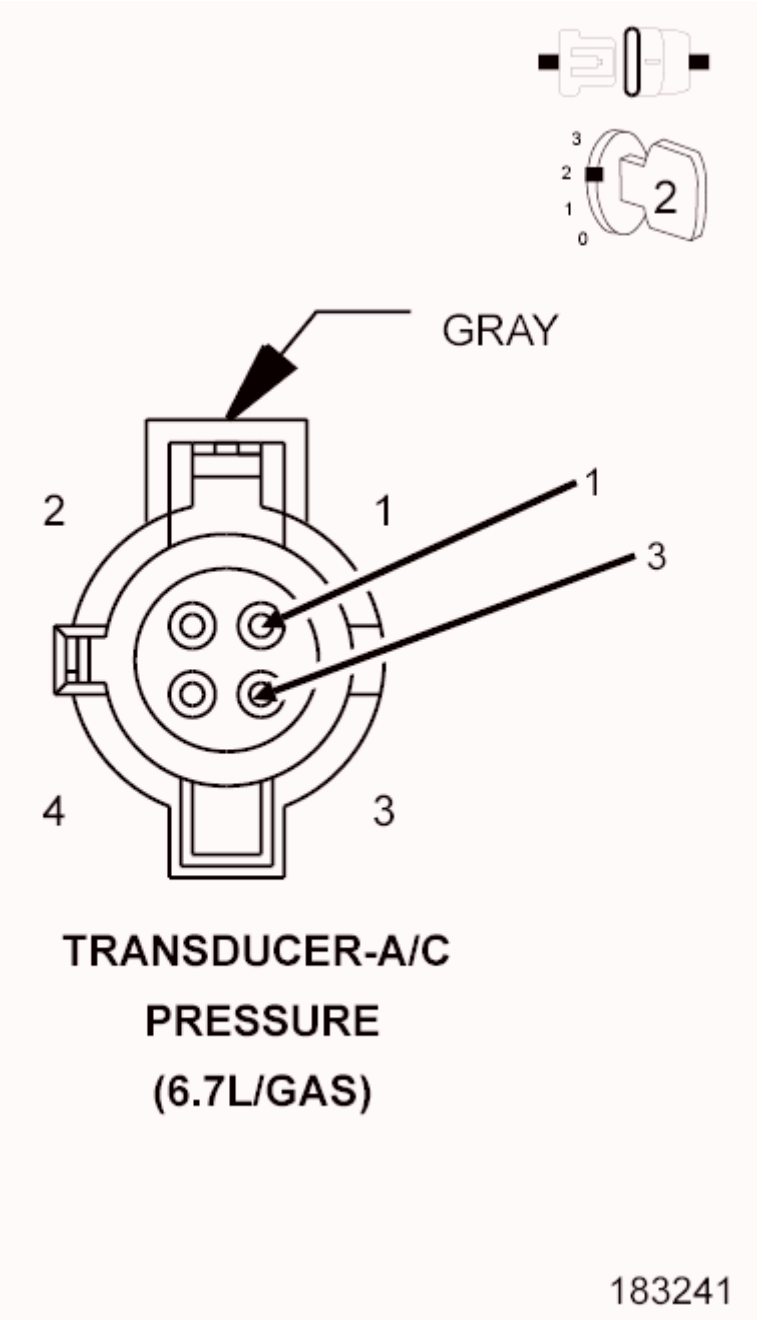

Fig. 50: Checking The Totally Integrated Power Module (TIPM)

Courtesy of CHRYSLER GROUP, LLC

1. Turn the ignition off.
2. Disconnect the C1 TIPM harness connectors.

   NOTE: Check connectors - Clean/repair as necessary.

3. Measure the voltage between the (C818) 5-Volt Supply circuit at the harness connector and ground.

   Is the voltage below 1.0 Volt?

   Yes

   - Go To 5.

   No

   - Repair the (C818) 5-Volt Supply circuit for a short to voltage.
   - Perform the POWERTRAIN VERIFICATION TEST - 6.7L. Refer to **POWERTRAIN VERIFICATION TEST - 6.7L** .

5. **CHECK THE (C18) SIGNAL CIRCUIT FOR A SHORT TO VOLTAGE**
   1. Measure the voltage between the (C18) A/C Pressure Sensor Signal circuit at the harness connector and ground.

      Is the voltage below 1.0 Volt?

      Yes

      - Go To 6.

      No

      - Repair the (C18) A/C Pressure Sensor Signal circuit for a short to voltage.
      - Perform the POWERTRAIN VERIFICATION TEST - 6.7L. Refer to **POWERTRAIN VERIFICATION TEST - 6.7L** .

6. **CHECK THE (C918) RETURN CIRCUIT FOR AN OPEN BETWEEN THE TIPM HARNESS CONNECTOR AND THE A/C HARNESS CONNECTOR**
   1. Measure the resistance of the (C918) A/C Pressure Sensor Return circuit between the A/C Pressure Sensor harness connector and the C1 TIPM harness connector.

      Is the resistance below 5.0 Ohms?

      Yes

      - Go To 7.

No

- Repair the (C918) A/C Pressure Sensor Return circuit for an open or high resistance.
- Perform the POWERTRAIN VERIFICATION TEST - 6.7L. Refer to **POWERTRAIN VERIFICATION TEST - 6.7L** .

7. **TOTALLY INTEGRATED POWER MODULE**

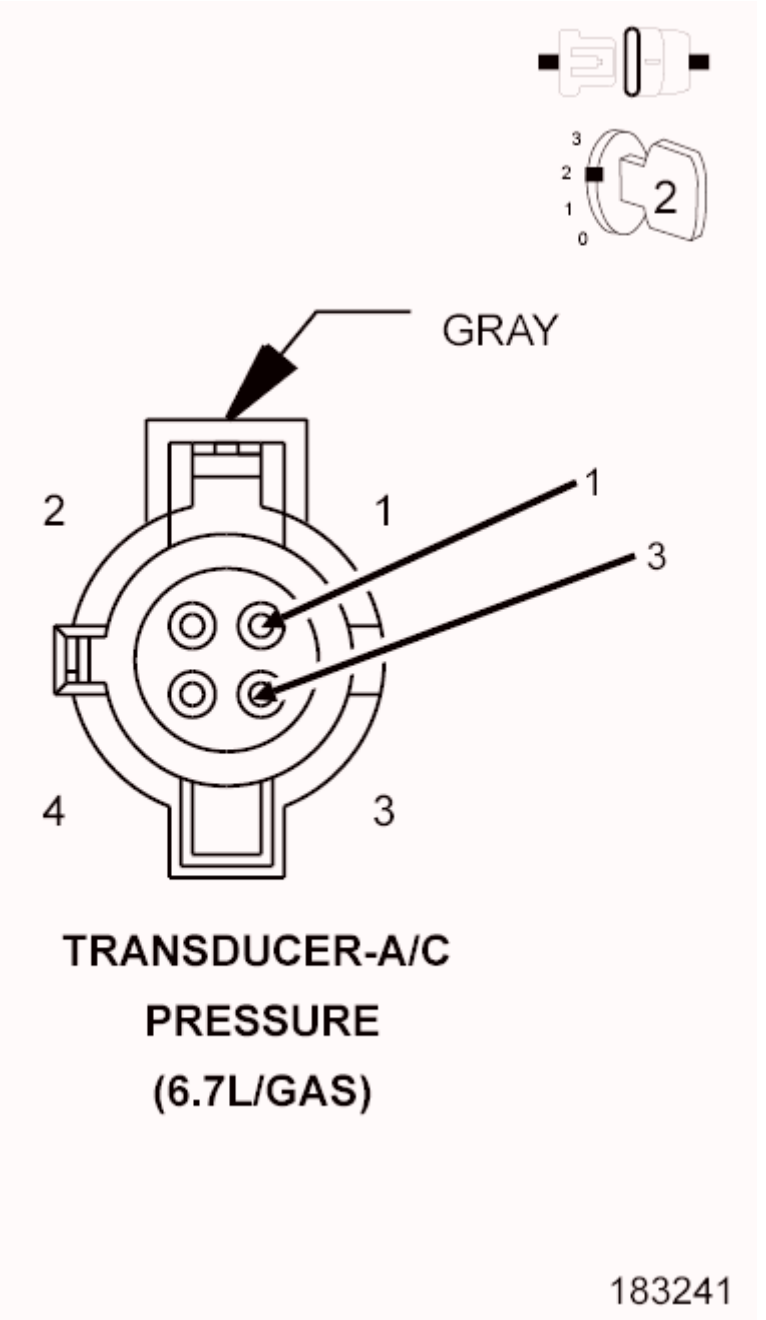

Fig. 51: Checking The Totally Integrated Power Module (TIPM)
Courtesy of CHRYSLER GROUP, LLC

1. Reconnect the C1 TIPM harness connectors.
2. Turn the ignition on.
3. While monitoring scan tool, use a jumper wire to connect the (C918) A/C Pressure Sensor Return circuit with the (C18) A/C Pressure Sensor Signal circuit at the A/C Pressure Sensor harness connector.

   Did DTC P0532 set?

   Yes

   - Perform the INTERMITTENT CONDITION diagnostic procedure. Refer to **INTERMITTENT CONDITION - 6.7L** .

   No

   - Replace the Totally Integrated Power Module in accordance with the Service Information.
   - Perform the BODY VERIFICATION TEST. Refer to **STANDARD PROCEDURE** .

P0541-INTAKE AIR HEATER CONTROL CIRCUIT 1 LOW

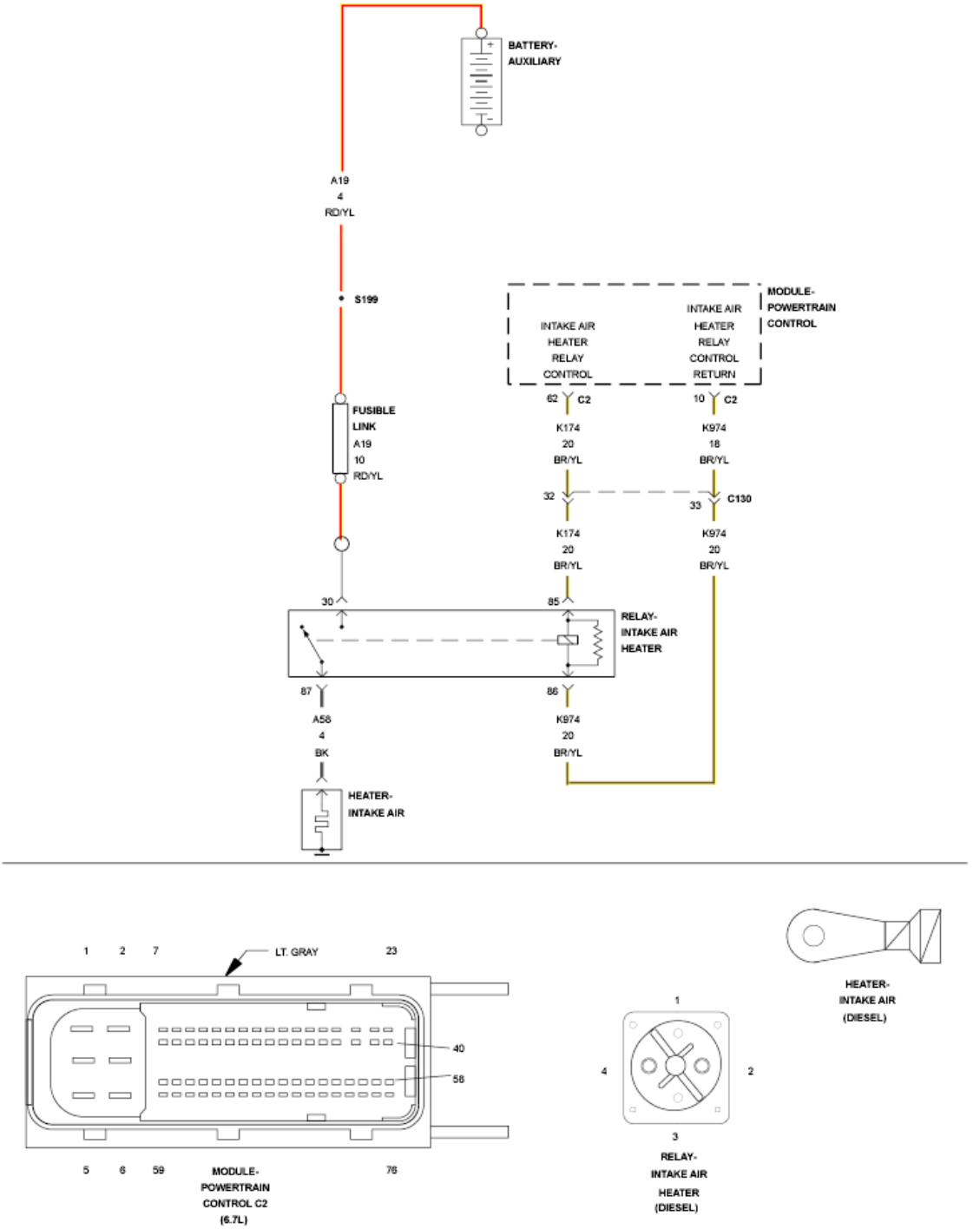

Fig. 52: Intake Air Heater & Relay Circuit Schematic
Courtesy of CHRYSLER GROUP, LLC

For a complete wiring diagram, **refer to appropriate SYSTEM WIRING DIAGRAMS article** .

THEORY OF OPERATION

The Intake Air Heater is integrated into the intake manifold cover. The Intake Air Heater element is used to heat

the air coming into the Intake Manifold. This is done to help engine starting and improve driveability with cool or cold outside temperatures. Electrical supply for the air heater element is controlled by the Powertrain Control Module (PCM) through the Intake Air Heater Relay. One heavy duty cable connects the air heater element to the Intake Air Heater Relay. This cable will supply 12 volts to the air heater elements. The PCM will light the MIL lamp as soon as this diagnostic runs and fails. The PCM will turn off the MIL lamp when the diagnostic runs and passes in four consecutive drive cycles.

WHEN MONITORED:

When the ignition is on and the Intake Air Heater Relay is commanded OFF.

SET CONDITION:

The Powertrain Control Module (PCM) is reading low voltage on the Intake Air Heater Relay Control circuit when performing a diagnostic check of the circuit.

POSSIBLE CAUSES

Possible Causes
(K174) INTAKE AIR HEATER RELAY CONTROL CIRCUIT SHORTED TO GROUND
(K174) INTAKE AIR HEATER RELAY CONTROL CIRCUIT SHORTED TO THE (K974) INTAKE AIR HEATER RELAY CONTROL RETURN CIRCUIT
INTAKE AIR HEATER RELAY POWERTRAIN CONTROL MODULE (PCM)

Always perform the Pre-Diagnostic Troubleshooting procedure before proceeding. Refer to PRE-DIAGNOSTIC TROUBLESHOOTING PROCEDURE - 6.7L .

DIAGNOSTIC TEST

1. **ACTIVE DTC**
    1. Turn the ignition on.
    2. With the scan tool, record all Freeze frame data.
    3. With the scan tool, read DTCs.

    Is the DTC active?

    Yes

    - Go To 2.

    No

    - Perform the INTERMITTENT CONDITION diagnostic procedure. Refer to **INTERMITTENT CONDITION - 6.7L** .
2. **CHECK THE (K174) INTAKE AIR HEATER RELAY CONTROL CIRCUIT FOR A SHORT TO**

GROUND

1. Turn ignition off.
2. Disconnect the (K174) Intake Air Heater Relay Control circuit connector at the Intake Air Heater Relay.
3. Disconnect the (K974) Intake Air Heater Relay Control Return circuit connector at the Intake Air Heater Relay.
4. Disconnect the PCM C2 harness connector.
5. Measure resistance between ground and the (K174) Intake Air Heater Relay Control circuit at the Intake Air Heater Relay Control circuit connector at the Intake Air Heater Relay.

   Is the resistance above 10k Ohms?

   Yes

   - Go To 3.

   No

   - Repair the (K174) Intake Air Heater Relay Control circuit for a short to ground.
   - Perform the POWERTRAIN VERIFICATION TEST - 6.7L. Refer to **POWERTRAIN VERIFICATION TEST - 6.7L** .

3. **CHECK FOR THE (K174) INTAKE AIR HEATER RELAY CONTROL CIRCUIT SHORTED TO THE (K974) INTAKE AIR HEATER RELAY CONTROL RETURN CIRCUIT**

   1. Measure the resistance between the (K174) Intake Air Heater Relay Control circuit and the (K974) Intake Air Heater Relay Control Return circuit at the terminals for the Intake Air Heater Relay.

      Is the resistance above 10k Ohms?

      Yes

      - Go To 4.

      No

      - Repair the short between the (K174) Intake Air Heater Relay Control circuit and the (K974) Intake Air Heater Relay Control circuit.
      - Perform the POWERTRAIN VERIFICATION TEST - 6.7L. Refer to **POWERTRAIN VERIFICATION TEST - 6.7L** .

4. **INTAKE AIR HEATER RELAY CONTROL**

   CAUTION: Excessive actuation to the Intake Air Heater may overheat and damage the heater assembly. Allow the Intake Air heater to cool for five minutes between each actuation procedure to prevent any possible damage from overheating to occur to the Intake Air Heater.

1. Turn ignition off.
2. Replace the Intake Air Heater Relay in accordance with the service information.
3. Reconnect all previously disconnected connectors.
4. Turn ignition on.
5. With the scan tool, erase DTCs.
6. Using a scan tool, actuate the Cold Start Aid Driver 1 Output circuit.

   NOTE: Set the actuation to toggle.

7. With the scan tool, read DTCs.

   Did the DTC return?

   Yes

   - Replace the Powertrain Control Module in accordance with the service information.
   - Perform the POWERTRAIN VERIFICATION TEST - 6.7L. Refer to **POWERTRAIN VERIFICATION TEST - 6.7L** .

   No

   - Repair complete.
   - Perform the POWERTRAIN VERIFICATION TEST - 6.7L. Refer to **POWERTRAIN VERIFICATION TEST - 6.7L** .

P0542-INTAKE AIR HEATER CONTROL CIRCUIT 1 HIGH

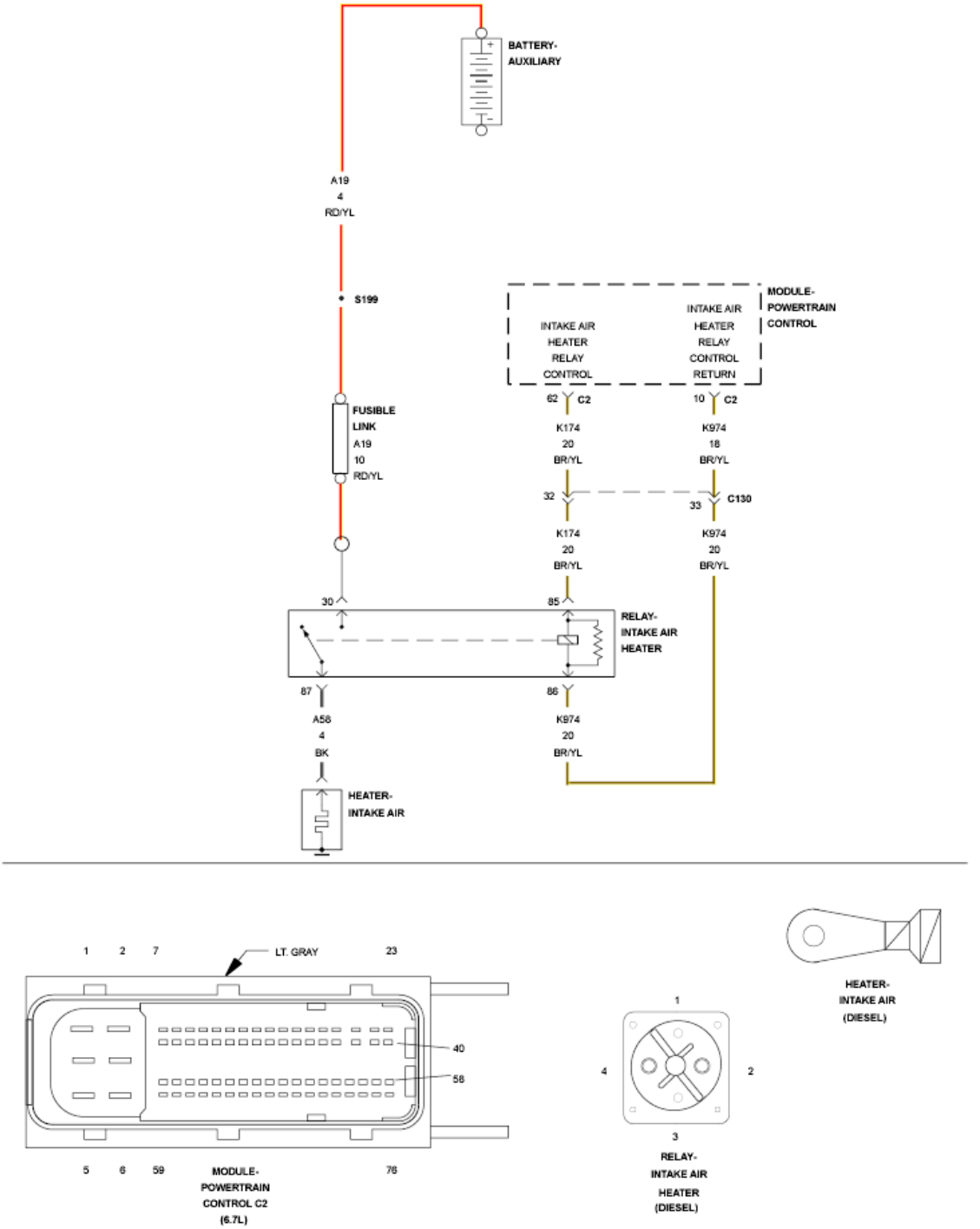

Fig. 53: Intake Air Heater & Relay Circuit Schematic
Courtesy of CHRYSLER GROUP, LLC

For a complete wiring diagram, **refer to appropriate SYSTEM WIRING DIAGRAMS article** .

THEORY OF OPERATION

The Intake Air Heater is integrated into the intake manifold cover. The Intake Air Heater element is used to heat

the air coming into the Intake Manifold. This is done to help engine starting and improve driveability with cool or cold outside temperatures. Electrical supply for the air heater element is controlled by the Powertrain Control Module (PCM) through the Intake Air Heater Relay. One heavy duty cable connects the air heater element to the Intake Air Heater Relay. This cable will supply 12 volts to the air heater elements. The PCM will light the MIL lamp as soon as this diagnostic runs and fails. The PCM will turn off the MIL lamp when the diagnostic runs and passes in four consecutive drive cycles.

WHEN MONITORED:

When the ignition is on and the Intake Air Heater Relay is commanded ON.

SET CONDITION:

With the Intake Air Heater Relay commanded on, the Powertrain Control Module (PCM) is not reading any voltage on the Intake Air Heater Relay Control Return circuit.

POSSIBLE CAUSES

Possible Causes
(K174) INTAKE AIR HEATER RELAY CONTROL CIRCUIT OPEN/HIGH RESISTANCE
(K974) INTAKE AIR HEATER RELAY CONTROL RETURN OPEN/HIGH RESISTANCE INTAKE AIR HEATER RELAY POWERTRAIN CONTROL MODULE (PCM)

Always perform the Pre-Diagnostic Troubleshooting procedure before proceeding. Refer to PRE-DIAGNOSTIC TROUBLESHOOTING PROCEDURE - 6.7L .

DIAGNOSTIC TEST

1. **ACTIVE DTC**
    1. Turn the ignition on.
    2. With the scan tool, record all Freeze frame data.
    3. With the scan tool, read DTCs.

    Did the DTC return?

    Yes

    - Go To 2.

    No

    - Perform the INTERMITTENT CONDITION diagnostic procedure. Refer to **INTERMITTENT CONDITION - 6.7L** .
2. **CHECK THE (K174) INTAKE AIR HEATER RELAY CONTROL CIRCUIT**

CAUTION: Excessive actuation to the Intake Air Heater may overheat and damage the heater assembly. Allow the Intake Air heater to cool for five minutes between each actuation procedure to prevent any possible damage from overheating to occur to the Intake Air Heater.

1. Turn ignition on, engine not running.
2. Disconnect the (K174) Intake Air Heater Relay Control circuit connector at the Intake Air Heater Relay.
3. Using a scan tool, actuate the Cold Start Aid Driver 1 Output circuit.

   NOTE: Set the actuation to on.

4. Using a voltmeter, probe the (K174) Intake Air Heater Relay Control circuit at the connector.

   Does the voltmeter read equivalent to battery voltage?

   Yes

   - Go To 4.

   No

   - Go To 3.

3. **CHECK THE (K174) INTAKE AIR HEATER RELAY CONTROL CIRCUIT FOR AN OPEN/HIGH RESISTANCE**
   1. Turn ignition off.
   2. Disconnect the PCM C2 harness connector.
   3. Measure the resistance of the (K174) Intake Air Heater Relay Control circuit between the Intake Air Heater Relay and the PCM C2 harness connector.

      Is the resistance below 5.0 Ohms?

      Yes

      - Replace the Powertrain Control Module in accordance with the service information.
      - Perform the POWERTRAIN VERIFICATION TEST - 6.7L. Refer to **POWERTRAIN VERIFICATION TEST - 6.7L** .

      No

      - Repair the (K174) Intake Air Heater Relay Control circuit for an open or high resistance.
      - Perform the POWERTRAIN VERIFICATION TEST - 6.7L. Refer to **POWERTRAIN VERIFICATION TEST - 6.7L** .

4. **CHECK THE (K974) INTAKE AIR HEATER RELAY CONTROL RETURN CIRCUIT**

1. Turn ignition off.
2. Disconnect the (K974) Intake Air Heater Relay Control Return circuit connector at the Intake Air Heater Relay.
3. Using a voltmeter connected to battery positive, probe the (K974) Intake Air Heater Relay Control Return circuit at the connector.

   Does the voltmeter read equivalent to battery voltage?

   Yes

   - Replace the Intake Air Heater Relay in accordance with the service information.
   - Perform the POWERTRAIN VERIFICATION TEST - 6.7L. Refer to **POWERTRAIN VERIFICATION TEST - 6.7L** .

   No

   - Go To 5.

5. **CHECK THE (K974) INTAKE AIR HEATER RELAY CONTROL RETURN FOR AN OPEN/HIGH RESISTANCE**
   1. Disconnect the PCM C2 harness connector.
   2. Measure the resistance of the (K974) Intake Air Heater Relay Control Return circuit between the Intake Air Heater Relay connector and the PCM C2 harness connector.

      Is the resistance below 5.0 Ohms?

      Yes

      - Repair the (K974) Intake Air Heater Relay Control Return circuit for an open or high resistance.
      - Perform the POWERTRAIN VERIFICATION TEST - 6.7L. Refer to **POWERTRAIN VERIFICATION TEST - 6.7L** .

      No

      - Replace the Powertrain Control Module in accordance with the service information.
      - Perform the POWERTRAIN VERIFICATION TEST - 6.7L. Refer to **POWERTRAIN VERIFICATION TEST - 6.7L** .

P0545-EXHAUST GAS TEMPERATURE SENSOR CIRCUIT LOW - BANK 1 SENSOR 1

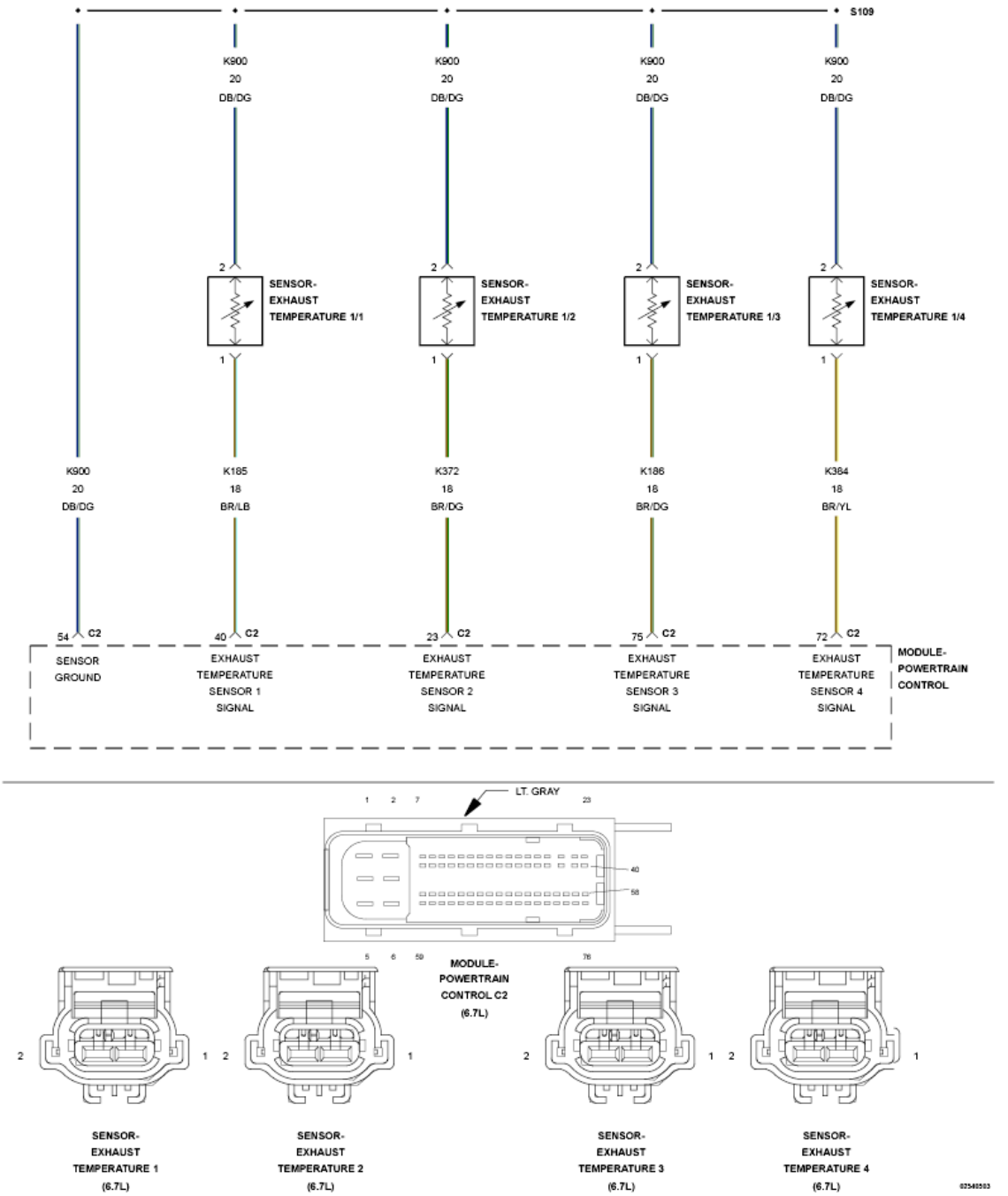

Fig. 54: Exhaust Gas Temperature Sensor Circuit Schematic
Courtesy of CHRYSLER GROUP, LLC

For a complete wiring diagram, **refer to appropriate SYSTEM WIRING DIAGRAMS article** .

THEORY OF OPERATION

The aftertreatment temperature sensors are used by the Powertrain Control Module (PCM) to monitor the engine exhaust temperatures in the aftertreatment system. The aftertreatment temperature sensors are thermistors and change resistance based on the temperature being measured. The PCM provides a 5-Volt

reference voltage to the sensor. The PCM monitors the change in signal voltage and converts this to a temperature value. When the exhaust gas temperature is cold, the sensor or thermistor resistance is high. The PCM signal voltage only pulls down a small amount through the sensor to ground. Therefore, the PCM senses a high signal voltage or low temperature. When the exhaust gas temperature is hot, the sensor resistance is low. The signal voltage pulls down a large amount. Therefore, the PCM senses a low signal voltage, or a high temperature. The PCM will set the fault code if it detects that the aftertreatment Diesel Particulate Filter inlet Exhaust Gas Temperature Sensor Signal voltage is less than a calibrated voltage for longer than a calibrated period. The PCM illuminates the MIL lamp immediately when the diagnostic runs and fails. A default value for the aftertreatment diesel particulate filter inlet temperature reading will be used and active regeneration of the diesel particulate filter will be disabled. The PCM will turn off the MIL lamp immediately after the diagnostic runs and passes.

WHEN MONITORED:

Ignition on.

SET CONDITION:

The Exhaust Gas Temperature Sensor 1/1 Signal voltage is below 0.25 of a Volt for 15.0 seconds.

POSSIBLE CAUSES

Possible Causes
(K185) EXHAUST TEMPERATURE SENSOR 1/1 SIGNAL CIRCUIT SHORTED TO THE (K900) SENSOR GROUND CIRCUIT
(K185) EXHAUST TEMPERATURE SENSOR 1/1 SIGNAL CIRCUIT SHORTED TO GROUND
(K185) EXHAUST TEMPERATURE SENSOR 1/1
POWERTRAIN CONTROL MODULE (PCM)

Always perform the Pre-Diagnostic Troubleshooting procedure before proceeding. Refer to PRE-DIAGNOSTIC TROUBLESHOOTING PROCEDURE - 6.7L .

DIAGNOSTIC TEST

1. **ACTIVE DTC**
    1. Turn the ignition on.
    2. With the scan tool, record all Freeze frame data.
    3. With the scan tool, erase DTCs.
    4. Turn the ignition off for 75 seconds.
    5. Turn the ignition on.
    6. With the scan tool, read DTCs.

    Did the DTC reset?

    Yes

- Go To 2.

No

- Perform the INTERMITTENT CONDITION diagnostic procedure. Refer to **INTERMITTENT CONDITION - 6.7L** .

2. **CHECK THE (K185) EXHAUST TEMPERATURE SENSOR 1/1 SIGNAL CIRCUIT FOR A SHORT TO GROUND**

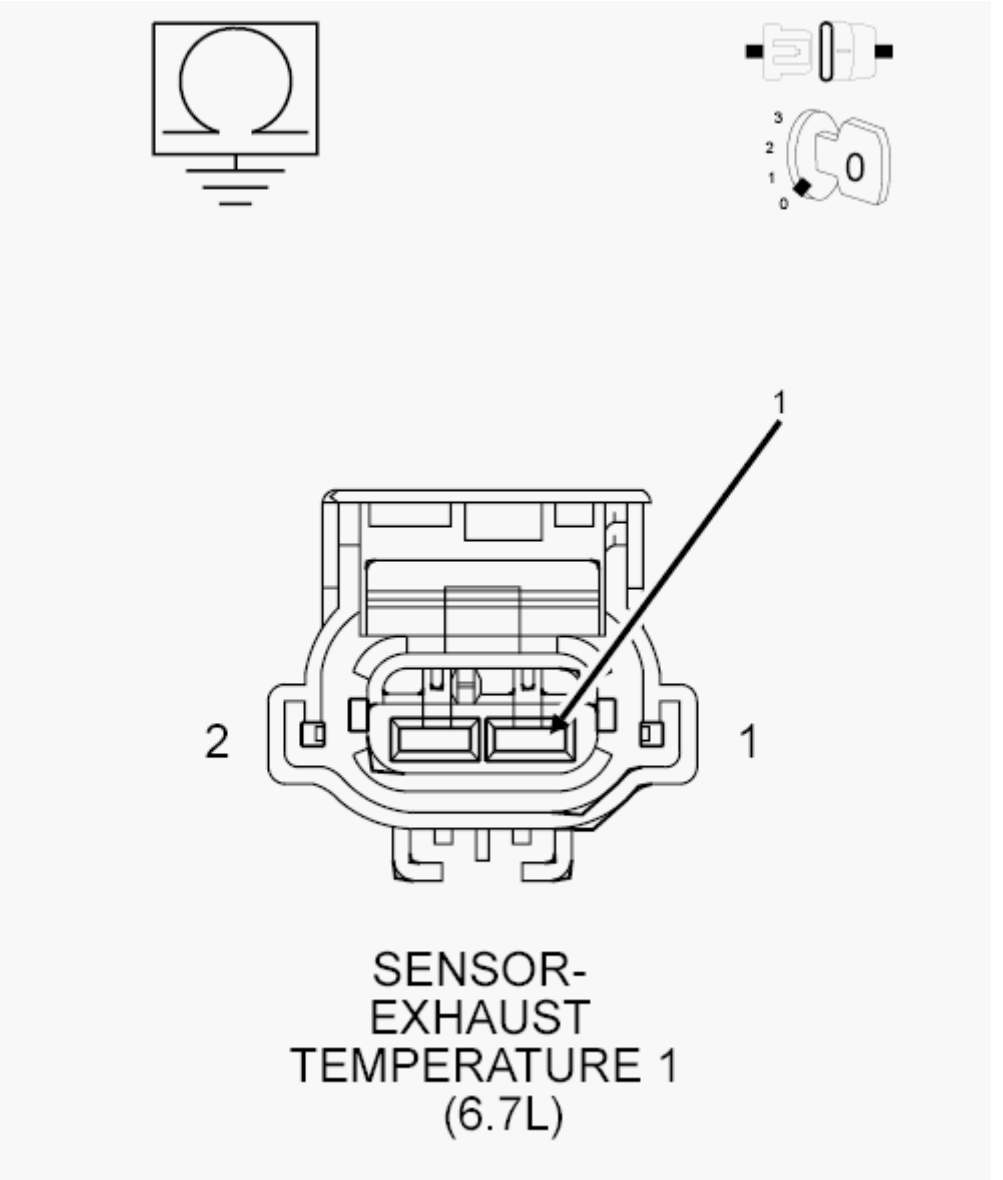

Fig. 55: Checking Exhaust Temperature Sensor Signal Circuit For Short To Ground
Courtesy of CHRYSLER GROUP, LLC

1. Turn the ignition off.
2. Disconnect the Exhaust Gas Temperature Sensor 1/1.

3. Disconnect the PCM C2 harness connector.
4. Measure the resistance between ground and the (K185) Exhaust Temperature Sensor 1/1 Signal circuit at the Exhaust Gas Temperature Sensor 1/1 harness connector.

   Is the resistance below 10k Ohms?

   Yes

   - Repair the (K185) Exhaust Gas Temperature Sensor 1/1 Signal circuit for a short to ground.
   - Perform the POWERTRAIN VERIFICATION TEST - 6.7L. Refer to **POWERTRAIN VERIFICATION TEST - 6.7L** .

   No

   - Go To 3.

3. **CHECK FOR THE (K185) EXHAUST TEMPERATURE SENSOR 1/1 SIGNAL CIRCUIT SHORTED TO THE (K900) SENSOR GROUND CIRCUIT**

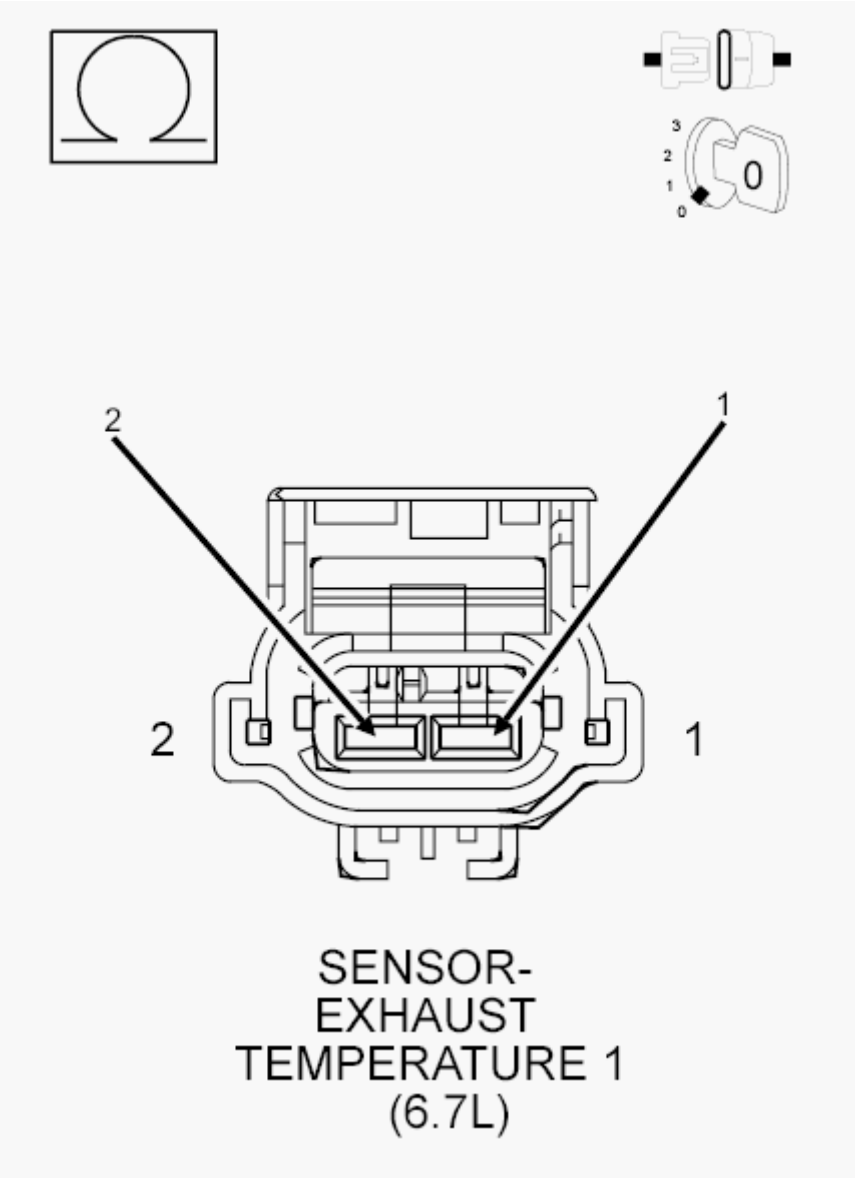

Fig. 56: Checking For Exhaust Temperature Sensor Signal Circuit Shorted To Sensor Ground Circuit
Courtesy of CHRYSLER GROUP, LLC

1. Turn the ignition off.

   NOTE: Check connectors - Clean/repair as necessary.

2. Measure the resistance between the (K185) Exhaust Temperature Sensor 1/1 Signal circuit and (K900) Sensor Ground circuit at the PCM C2 harness connector.

   Is the resistance below 10k Ohms?

   Yes

- Repair the short between the (K185) Exhaust Temperature Sensor 1/1 Signal circuit and (K900) Sensor Ground circuit.
- Perform the POWERTRAIN VERIFICATION TEST - 6.7L. Refer to **POWERTRAIN VERIFICATION TEST - 6.7L** .

No

- Go To 4.

4. **CHECK THE EXHAUST GAS TEMPERATURE SENSOR**
   1. Reconnect the Exhaust Gas Temperature Sensor 1/1 harness connector.
   2. Reconnect the PCM C2 harness connector.
   3. Turn the ignition on.
   4. With the scan tool, erase DTCs.
   5. Turn the ignition off for 75 seconds.
   6. Disconnect the Exhaust Gas Temperature Sensor 1/1 harness connector.
   7. Turn the ignition on.
   8. With the scan tool, read DTCs.

   Does DTC P0546 become active?

   Yes

   - Replace the Exhaust Temperature Sensor 1/1 in accordance with the service information.
   - Perform the POWERTRAIN VERIFICATION TEST - 6.7L. Refer to **POWERTRAIN VERIFICATION TEST - 6.7L** .

   No

   - Replace the Powertrain Control Module in accordance with the service information.
   - Perform the POWERTRAIN VERIFICATION TEST - 6.7L. Refer to **POWERTRAIN VERIFICATION TEST - 6.7L** .

P0546-EXHAUST GAS TEMPERATURE SENSOR CIRCUIT HIGH - BANK 1 SENSOR 1

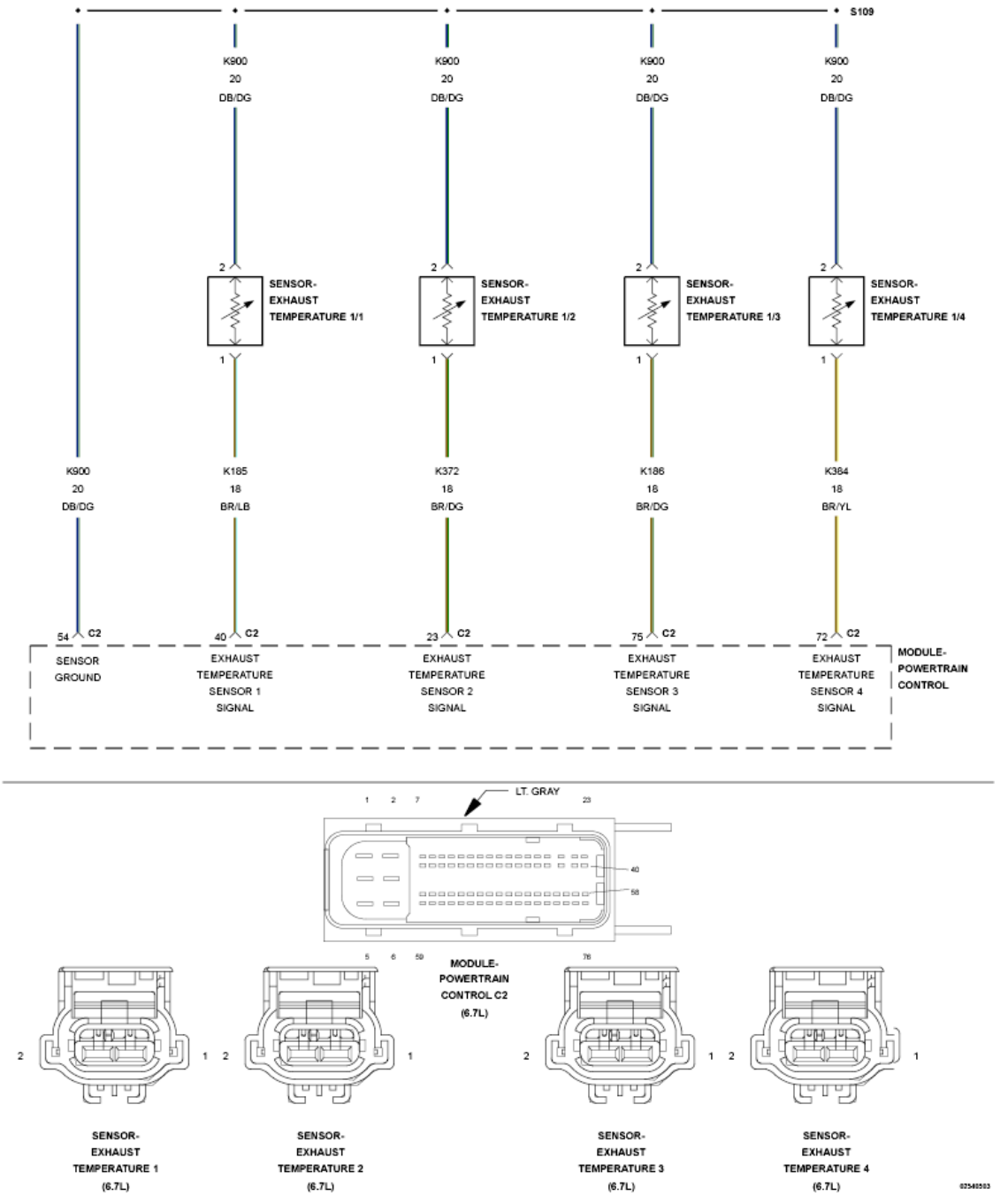

Fig. 57: Exhaust Gas Temperature Sensor Circuit Schematic
Courtesy of CHRYSLER GROUP, LLC

For a complete wiring diagram, **refer to appropriate SYSTEM WIRING DIAGRAMS article** .

THEORY OF OPERATION

The aftertreatment temperature sensors are used by the Powertrain Control Module (PCM) to monitor the engine exhaust temperatures in the aftertreatment system. The aftertreatment temperature sensors are thermistors and change resistance based on the temperature being measured. The PCM provides a 5-Volt

reference voltage to the sensor. The PCM monitors the change in signal voltage and converts this to a temperature value. When the exhaust gas temperature is cold, the sensor or thermistor resistance is high. The PCM signal voltage only pulls down a small amount through the sensor to ground. Therefore, the PCM senses a high signal voltage or low temperature. When the exhaust gas temperature is hot, the sensor resistance is low. The signal voltage pulls down a large amount. Therefore, the PCM senses a low signal voltage, or a high temperature. The PCM will set the fault if it detects that the diesel oxidation catalyst inlet exhaust gas temperature sensor signal voltage is greater than a calibrated voltage (VDC) for more than a calibrated time. The PCM illuminates the MIL lamp immediately when the diagnostic runs and fails. A default value for the aftertreatment diesel oxidation catalyst inlet temperature reading will be used and active regeneration of the diesel particulate filter will be disabled. The PCM will turn off the MIL lamp immediately after the diagnostic runs and passes.

WHEN MONITORED:

Ignition on.

SET CONDITION:

The Exhaust Gas Temperature Sensor 1/1 Signal voltage goes above 4.9 Volts for 15.0 seconds.

POSSIBLE CAUSES

Possible Causes
(K185) EXHAUST GAS TEMPERATURE SENSOR 1 SIGNAL CIRCUIT SHORTED TO VOLTAGE
(K185) EXHAUST GAS TEMPERATURE SENSOR 1 SIGNAL CIRCUIT OPEN/HIGH RESISTANCE
(K900) SENSOR GROUND CIRCUIT OPEN/HIGH RESISTANCE
EXHAUST GAS TEMPERATURE SENSOR 1
POWERTRAIN CONTROL MODULE (PCM)

Always perform the Pre-Diagnostic Troubleshooting procedure before proceeding. Refer to PRE-DIAGNOSTIC TROUBLESHOOTING PROCEDURE - 6.7L .

DIAGNOSTIC TEST

1. **ACTIVE DTC**
    1. Turn the ignition on.
    2. With the scan tool, record all Freeze frame data.
    3. With the scan tool, erase DTCs.
    4. Turn the ignition off for 75 seconds.
    5. Turn the ignition on.
    6. With the scan tool, read DTCs.

    Did the DTC reset?

Yes

- Go To 2.

No

- Perform the INTERMITTENT CONDITION diagnostic procedure. Refer to **INTERMITTENT CONDITION - 6.7L** .

2. **CHECK THE (K185) EXHAUST GAS TEMPERATURE 1/1 SENSOR SIGNAL CIRCUIT FOR A SHORT TO VOLTAGE**

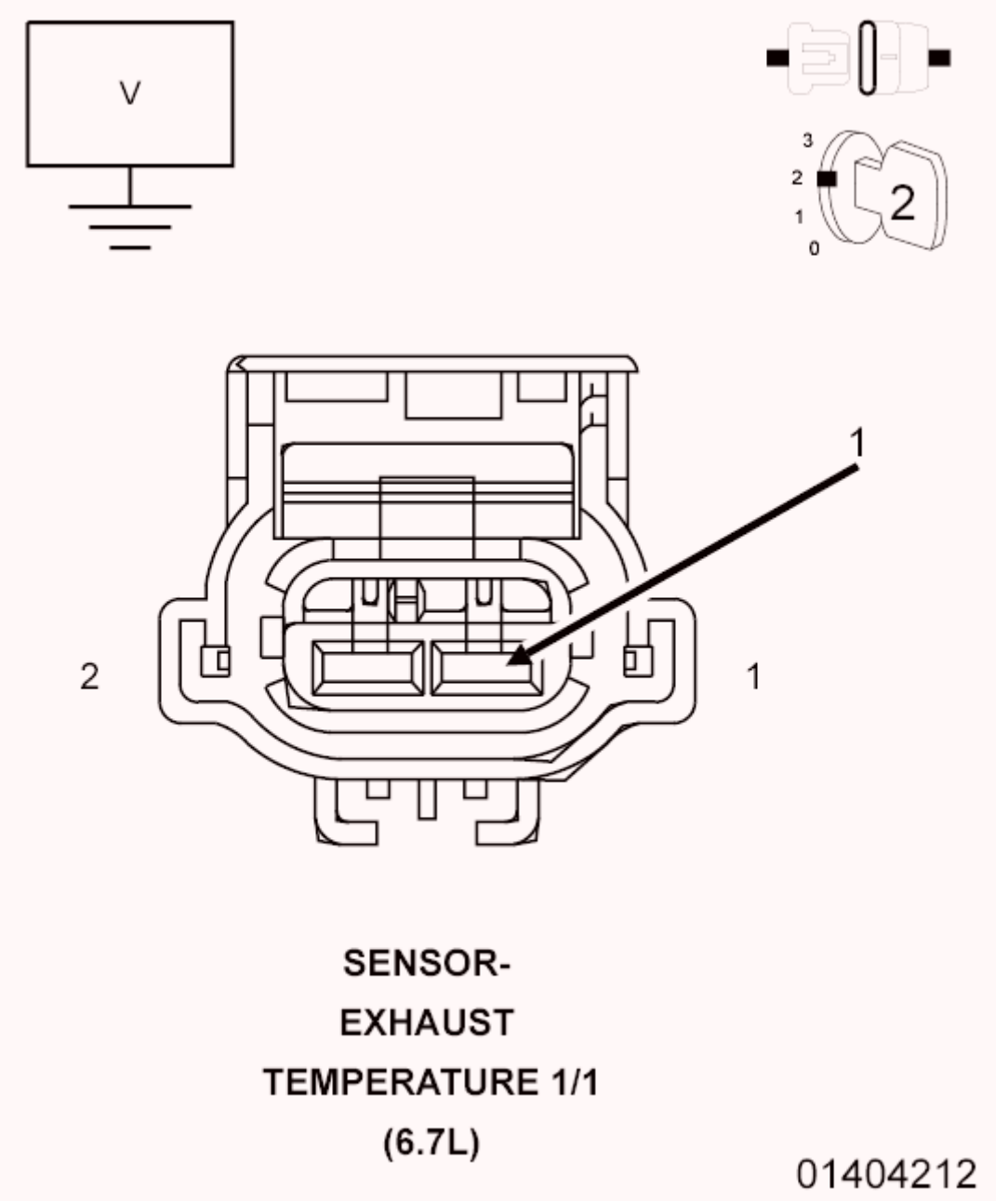

Fig. 58: Exhaust Gas Temperature Sensor 1 Connector Pin ID
Courtesy of CHRYSLER GROUP, LLC

1. Ignition on.
2. Disconnect the Exhaust Gas Temperature Sensor 1/1 harness connector.

NOTE: Check connectors - Clean/repair as necessary.

3. Measure the voltage on the (K185) Exhaust Gas Temperature Sensor 1/1 Signal circuit at the Exhaust Gas Temperature Sensor 1/1 harness connector.

   Is the voltage above 5.1 Volts?

   Yes

   - Repair the (K185) Exhaust Gas Temperature Sensor 1/1 Signal circuit for a short to voltage.
   - Perform the POWERTRAIN VERIFICATION TEST - 6.7L. Refer to **POWERTRAIN VERIFICATION TEST - 6.7L** .

   No

   - Go To 3.

3. **CHECK THE (K185) EXHAUST GAS TEMPERATURE SENSOR 1/1 SIGNAL CIRCUIT FOR AN OPEN/HIGH RESISTANCE**

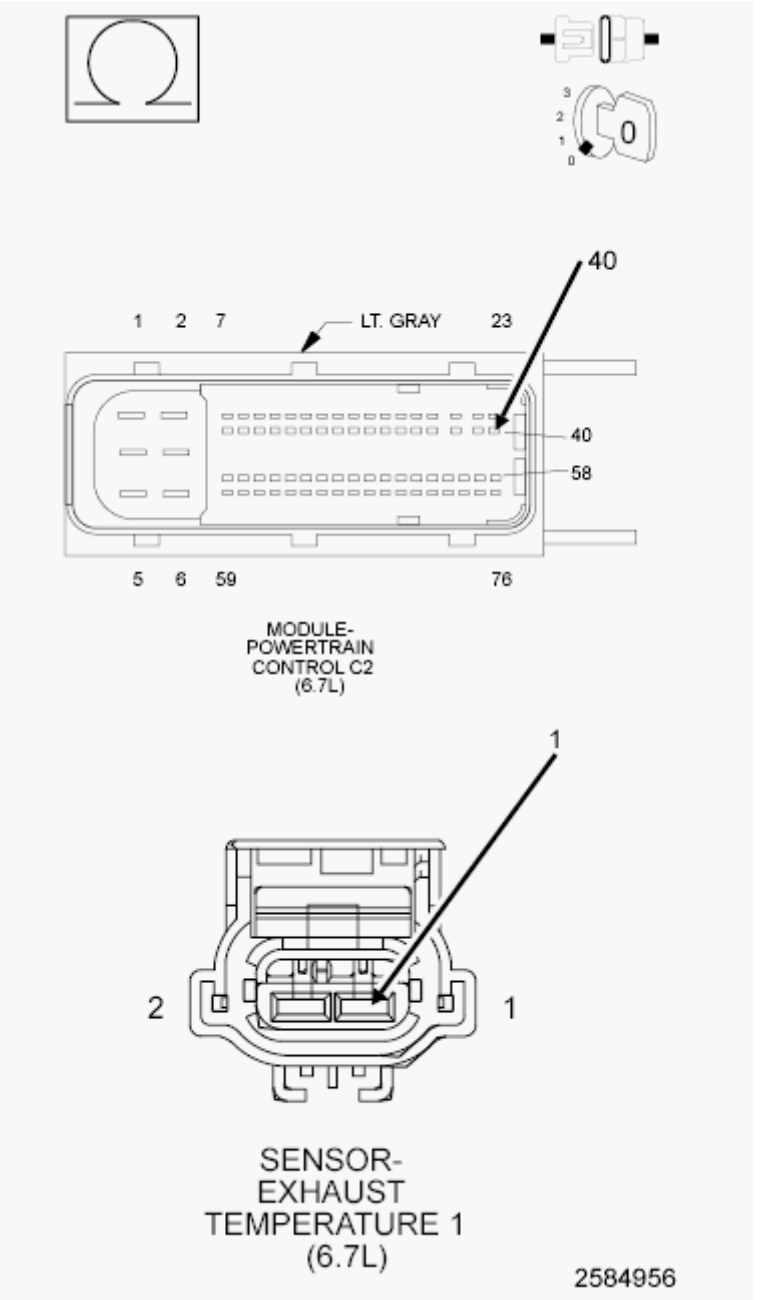

Fig. 59: Checking Exhaust Gas Temperature Sensor Signal Circuit For Open Or High Resistance
Courtesy of CHRYSLER GROUP, LLC

1. Turn the ignition off.
2. Disconnect the PCM C2 harness connector.
3. Measure the resistance of the (K185) Exhaust Gas Temperature Sensor 1/1 Signal circuit between the Exhaust Gas Temperature Sensor 1/1 harness connector and the PCM C2 harness connector.

   Is the resistance below 5.0 Ohms?

   Yes

- Go To 4.

No

- Repair the (K185) Exhaust Gas Temperature Sensor 1/1 Signal circuit for an open or high resistance.
- Perform the POWERTRAIN VERIFICATION TEST - 6.7L. Refer to **POWERTRAIN VERIFICATION TEST - 6.7L** .

4. **CHECK THE (K900) SENSOR GROUND CIRCUIT FOR AN OPEN/HIGH RESISTANCE**

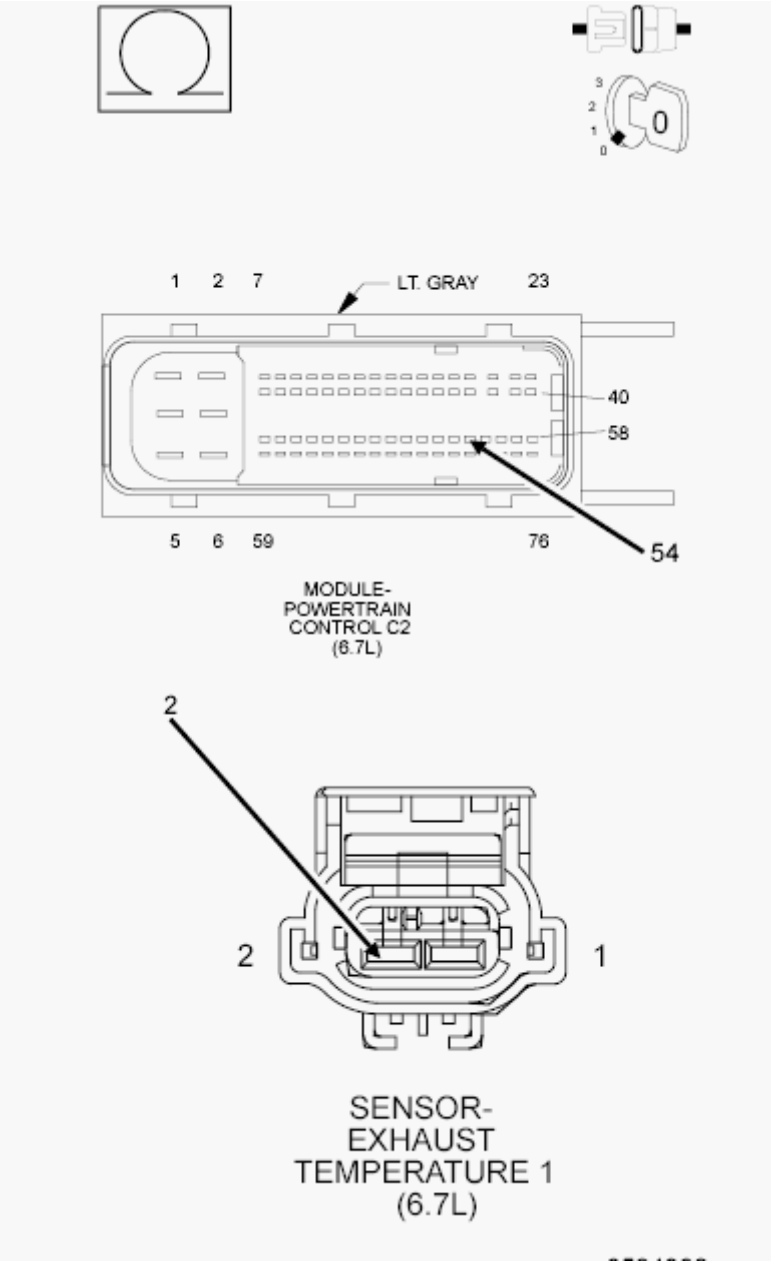

Fig. 60: Checking Exhaust Gas Temperature Sensor Ground Circuit For Open Or High Resistance
Courtesy of CHRYSLER GROUP, LLC

1. Measure the resistance of the (K900) Sensor ground circuit between the Exhaust Gas Temperature Sensor 1 harness connector and the PCM C2 harness connector.

   Is the resistance below 5.0 Ohms?

   Yes

   - Go To 5.

   No

   - Repair the (K900) Sensor ground circuit for an open or high resistance.
   - Perform the POWERTRAIN VERIFICATION TEST - 6.7L. Refer to **POWERTRAIN VERIFICATION TEST - 6.7L** .

5. **CHECK THE TEMPERATURE SENSOR**

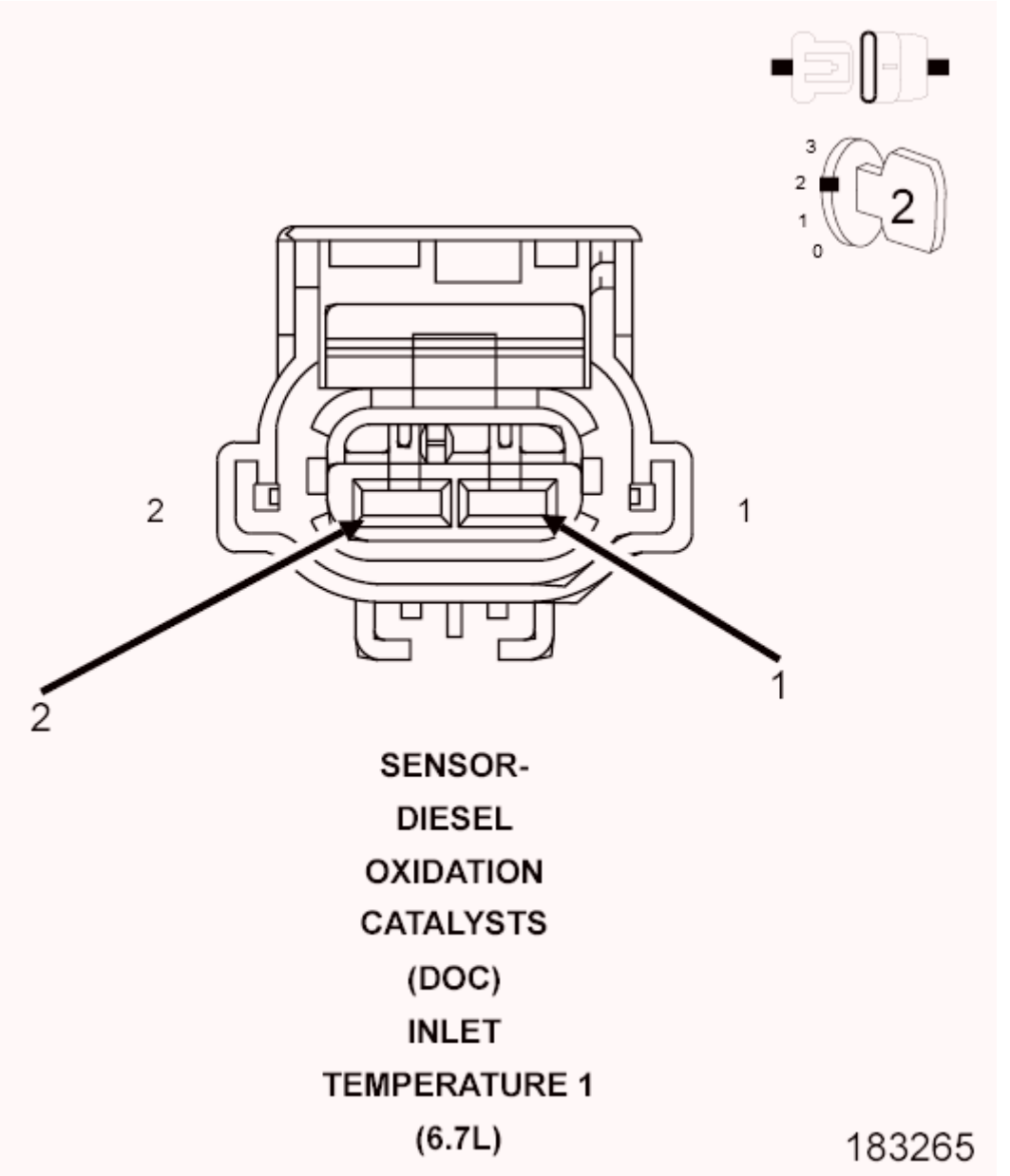

Fig. 61: Exhaust Temperature Sensor 1 Connector Pin ID
Courtesy of CHRYSLER GROUP, LLC

1. While monitoring the scan tool, connect a jumper between the Exhaust Temperature Sensor 1/1 Signal circuit and (K900) Sensor Ground circuit at the Exhaust Temperature Sensor 1/1 harness connector.

   Does DTC P0545 become active?

   Yes

   - Replace the Exhaust Gas Temperature Sensor 1/1 in accordance with the service information.
   - Perform the POWERTRAIN VERIFICATION TEST - 6.7L. Refer to **POWERTRAIN**

VERIFICATION TEST - 6.7L .

No

- Replace the Powertrain Control Module in accordance with the service information.
- Perform the POWERTRAIN VERIFICATION TEST - 6.7L. Refer to **POWERTRAIN VERIFICATION TEST - 6.7L** .

P0562-BATTERY VOLTAGE LOW

For a complete wiring diagram, **refer to appropriate SYSTEM WIRING DIAGRAMS article** .

WHEN MONITORED:

With the key on or the engine running.

SET CONDITION:

The battery voltage detected by the Powertrain Control Module (PCM) is less than a calibrated value.

POSSIBLE CAUSES

Possible Causes
BATTERY TERMINAL CONNECTIONS
ACCESSORY WIRING
BATTERY
HIGH RESISTANCE IN WIRE HARNESS
POWERTRAIN CONTROL MODULE (PCM)

Always perform the Pre-Diagnostic Troubleshooting procedure before proceeding. Refer to PRE-DIAGNOSTIC TROUBLESHOOTING PROCEDURE - 6.7L .

DIAGNOSTIC TEST

1. **CHECK THE BATTERY TERMINAL CONNECTIONS**

NOTE: **If DTCs P0622 or P2503 are present, repair those DTCs before continuing with this test.**

1. Visually inspect the positive and negative connections at the batteries and inspect the battery negative connections at the engine block.

   Are the connections free of corrosion and are they tight?

   Yes

- Go To 2.

No

- Repair the poor connections.
- Perform the POWERTRAIN VERIFICATION TEST - 6.7L. Refer to **POWERTRAIN VERIFICATION TEST - 6.7L** .

2. **ACCESSORY WIRING**
   1. Check for add-on or accessory wiring at positive (+) terminal of the battery.

      Are there any damaged wires at the battery?

      Yes

      - Repair accessory wiring.
      - Perform the POWERTRAIN VERIFICATION TEST - 6.7L. Refer to **POWERTRAIN VERIFICATION TEST - 6.7L** .

      No

      - Go To 3.
3. **CHECK THE BATTERY(S)**
   1. Perform battery load test using the Midtronics Micro 420 battery system tester.

      Did the batteries pass the test?

      Yes

      - Go To 4.

      No

      - Replace the weak battery or batteries.
      - Perform the POWERTRAIN VERIFICATION TEST - 6.7L. Refer to **POWERTRAIN VERIFICATION TEST - 6.7L** .
4. **CHECK FOR HIGH RESISTANCE IN WIRE HARNESS**
   1. Turn the ignition off.
   2. Disconnect the PCM harness connectors.
   3. Disconnect the battery terminals.
   4. Measure the resistance from the positive and negative battery posts to the appropriate circuits in the PCM harness connector.

      Is the resistance below 5.0 Ohms?

Yes

- Go To 5.

No

- Repair the high resistance in the wire harness.
- Perform the POWERTRAIN VERIFICATION TEST - 6.7L. Refer to **POWERTRAIN VERIFICATION TEST - 6.7L** .

5. **POWERTRAIN CONTROL MODULE**
   1. Reconnect the battery terminals.
   2. Measure and record the voltage between battery positive pins of the PCM connector and the battery negative circuits of the PCM harness connector.
   3. Reconnect the PCM harness connectors.
   4. Use the scan tool to measure and record battery voltage.

   Are the readings within 3.0 Volts of each other?

   Yes

   - Perform the INTERMITTENT CONDITION diagnostic procedure. Refer to **INTERMITTENT CONDITION - 6.7L** .

   No

   - Replace and program the Powertrain Control Module in accordance with the service information. Refer to **MODULE, POWERTRAIN CONTROL, 6.7L DIESEL, REMOVAL** and **PCM/ECM / TCM PROGRAMMING** .
   - Perform the POWERTRAIN VERIFICATION TEST - 6.7L. Refer to **POWERTRAIN VERIFICATION TEST - 6.7L** .

P0563-BATTERY VOLTAGE HIGH

For a complete wiring diagram, **refer to appropriate SYSTEM WIRING DIAGRAMS article** .

WHEN MONITORED:

With the key on or the engine running.

SET CONDITION:

The battery voltage detected by the Powertrain Control Module (PCM) is greater than a calibrated value.

POSSIBLE CAUSES

Possible Causes
BATTERIES IMPROPERLY INSTALLED POWERTRAIN CONTROL MODULE (PCM)

Always perform the Pre-Diagnostic Troubleshooting procedure before proceeding. Refer to PRE-DIAGNOSTIC TROUBLESHOOTING PROCEDURE - 6.7L .

DIAGNOSTIC TEST

1. **BATTERIES IMPROPERLY INSTALLED**

   NOTE: If DTCs P0622 of P2504 are present, repair those DTCs before continuing with this test.

   1. Disconnect the PCM C2 harness connector.
   2. Measure the battery voltage between the positive circuits and ground circuits of the PCM C2 harness connector.

      Is the voltage below 19.0 Volts?

      Yes

      - Go To 2.

      No

      - Install the battery system correctly.
      - Perform the POWERTRAIN VERIFICATION TEST - 6.7L. Refer to **POWERTRAIN VERIFICATION TEST - 6.7L** .
2. **POWERTRAIN CONTROL MODULE**
   1. Reconnect the battery terminals.
   2. Measure and record the voltage between battery positive pins of the PCM connector and the battery negative circuits of the PCM harness connector.
   3. Reconnect the PCM C2 harness connector.
   4. Use the scan tool to measure and record battery voltage.

      Are the readings within 3 volts of each other?

      Yes

      - Perform the INTERMITTENT CONDITION diagnostic procedure. Refer to **INTERMITTENT CONDITION - 6.7L** .

      No

- Replace and program the Powertrain Control Module in accordance with the service information. Refer to **MODULE, POWERTRAIN CONTROL, 6.7L DIESEL, REMOVAL** and **PCM/ECM / TCM PROGRAMMING** .
- Perform the POWERTRAIN VERIFICATION TEST - 6.7L. Refer to **POWERTRAIN VERIFICATION TEST - 6.7L** .

P056D-REDUCTANT CONTROL MODULE SYSTEM VOLTAGE

For a complete wiring diagram, **refer to appropriate SYSTEM WIRING DIAGRAMS article** .

WHEN MONITORED:

Continuously with the ignition on.

SET CONDITION:

The battery voltage detected by the DEF Dosing Control Unit is below or above a calibrated threshold.

POSSIBLE CAUSES

Possible Causes
WEAK OR DAMAGED BATTERY FAULTY ALTERNATOR DEF DOSING CONTROL UNIT 12-VOLT SUPPLY CIRCUIT(S) OPEN OR HIGH RESISTANCE
DEF DOSING CONTROL UNIT GROUND CIRCUIT(S) OPEN OR HIGH RESISTANCE

Always perform the Pre-Diagnostic Troubleshooting procedure before proceeding. Refer to PRE-DIAGNOSTIC TROUBLESHOOTING PROCEDURE - 6.7L .

DIAGNOSTIC TEST

1. **ACTIVE DTC**

NOTE: **If DTCs P0562 or P2503 are present, repair those DTCs before continuing with this test.**

NOTE: **If the vehicle was jump started, and there was a momentary voltage spike of 16 Volts, this DTC could be set.**

1. Turn the ignition on for one minute, engine not running.
2. With the scan tool check for active DTCs.

   Is the DTC active?

   Yes

- Go To 2.

No

- Perform the INTERMITTENT CONDITION diagnostic procedure. Refer to **INTERMITTENT CONDITION - 6.7L** .

2. **CHECK THE BATTERY TERMINALS AND LOAD TEST THE BATTERIES**
   1. Perform battery load test using the Midtronics Micro 420 battery system tester.
   2. Inspect the terminals of both batteries for signs of corrosion.

   Did both batteries pass the Midtronics test and have no signs of corrosion?

   Yes

   - Go To 3.

   No

   - Replace the defective battery or clean the battery posts and terminals and retest.
   - Perform the POWERTRAIN VERIFICATION TEST - 6.7L. Refer to **POWERTRAIN VERIFICATION TEST - 6.7L** .

3. **CHECK THE CHARGING SYSTEM OUTPUT**
   1. Reconnect the battery terminals.
   2. Perform a check of the charging system. Refer to **DIAGNOSIS AND TESTING** .

   Is the charging system performing properly?

   Yes

   - Go To 4.

   No

   - Diagnose and repair the charging system.
   - Perform the POWERTRAIN VERIFICATION TEST - 6.7L. Refer to **POWERTRAIN VERIFICATION TEST - 6.7L** .

4. **CHECK THE DEF DOSING CONTROL UNIT 12-VOLT SUPPLY CIRCUITS**
   1. Turn the engine off, ignition on.
   2. Disconnect the DEF Dosing Control Unit C2 harness connector.
   3. Using the wiring diagram as a guide, measure the voltage of the 12-Volt Supply circuits at the DEF Dosing Control Unit C2 harness connector.

   Do the DEF Dosing Control Unit 12-Volt Supply circuits read battery voltage +/- 0.2 of a Volt?

Yes

- Go To 5.

No

- Using the wiring diagram as a guide, repair the 12-Volt Supply circuits for an open or high resistance. If the fuse in the circuit is found to be open, check the circuits for a short to ground.
- Perform the POWERTRAIN VERIFICATION TEST - 6.7L. Refer to **POWERTRAIN VERIFICATION TEST - 6.7L** .

5. **CHECK THE DEF DOSING CONTROL UNIT GROUND CIRCUITS**
   1. Turn the engine off.
   2. Using the wiring diagram as a guide, measure the resistance between ground and the ground circuits at the DEF Dosing Control Unit C2 harness connector.

      Do the DEF Dosing Control Unit ground circuits measure below 5.0 Ohms?

      Yes

      - Check the DEF Dosing Control Unit C2 connector for signs of cracks, water intrusion, debris, or corrosion that could affect the connection.
      - Perform the POWERTRAIN VERIFICATION TEST - 6.7L. Refer to **POWERTRAIN VERIFICATION TEST - 6.7L** .

      No

      - Using the wiring diagram as a guide, repair the ground circuits for an open or high resistance.
      - Perform the POWERTRAIN VERIFICATION TEST - 6.7L. Refer to **POWERTRAIN VERIFICATION TEST - 6.7L** .

P0571-BRAKE SWITCH 1 PERFORMANCE

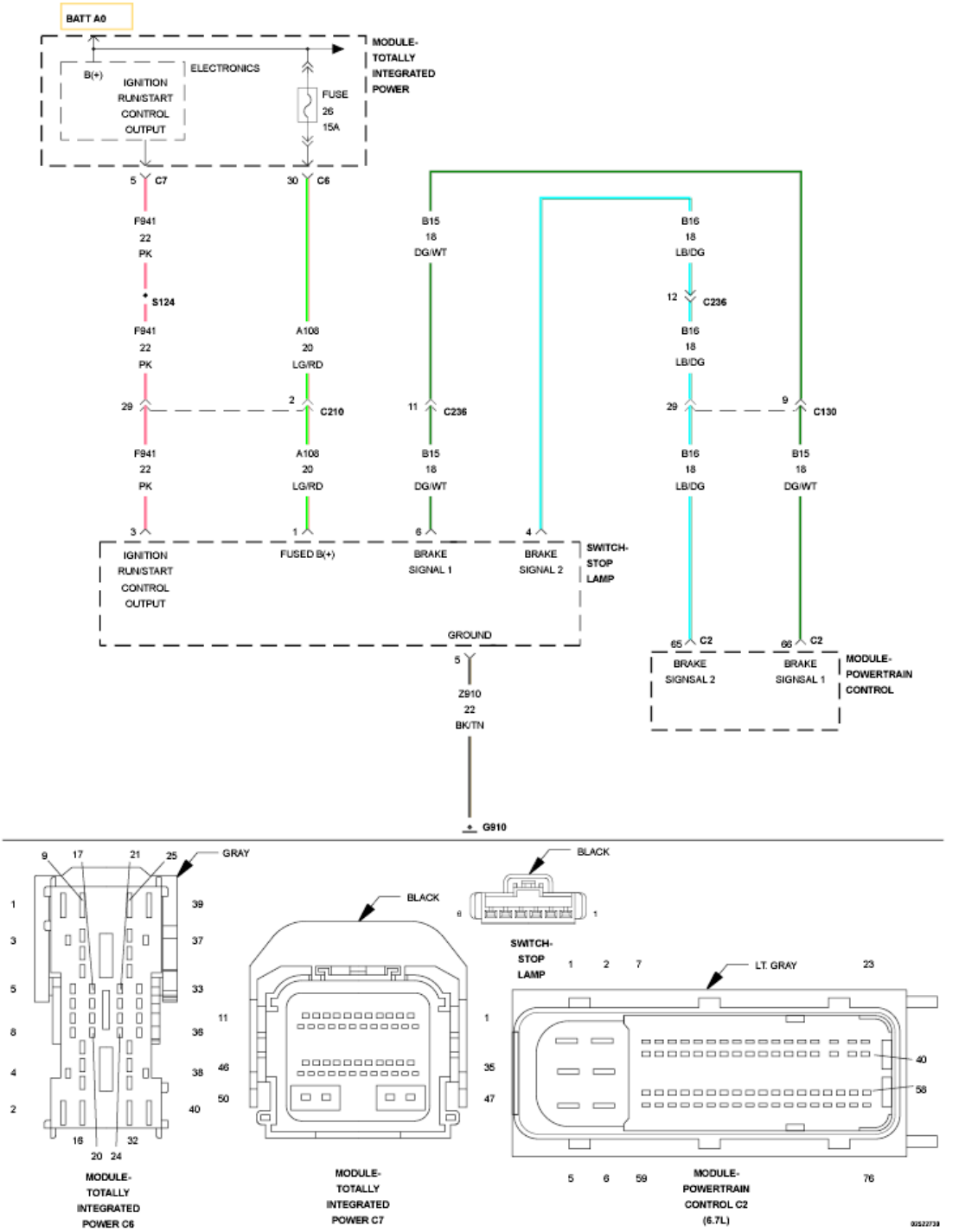

Fig. 62: Brake Switch Circuit Schematic
Courtesy of CHRYSLER GROUP, LLC

For a complete wiring diagram, **refer to appropriate SYSTEM WIRING DIAGRAMS article** .

THEORY OF OPERATION

This diagnostic is designed to detect a faulty brake switch. The algorithm starts to run when the operator is

driving above 30 mph (48 kmh) for more than five minutes. If after that time vehicle speed drops to below 2 mph (3 kmh) and the Powertrain Control Module (PCM) does not detect brake activity the diagnostic will fail. The PCM will turn on the ETC lamp immediately after the diagnostic runs and fails.

WHEN MONITORED:

Engine speed is above 30 mph (48 kmh) for more than five minutes

SET CONDITION:

Vehicle speed is detected at 2 mph (3 kmh) without brake activity.

POSSIBLE CAUSES

Possible Causes
VEHICLE SPEED SENSOR
BRAKE SWITCH
POWERTRAIN CONTROL MODULE (PCM)

Always perform the Pre-Diagnostic Troubleshooting procedure before proceeding. Refer to PRE-DIAGNOSTIC TROUBLESHOOTING PROCEDURE - 6.7L .

DIAGNOSTIC TEST

1. **OTHER DTCS**
    1. With the scan tool, read DTCs.

       Are other DTCs present?

       Yes

       - Troubleshoot other DTCs first.

       No

       - Go To 2.
2. **POWERTRAIN CONTROL MODULE**
    1. Interview customer. This fault can be set if the customer coasts to a vehicle speed below 2 mph (3 kmh) by using the parking brake or exhaust brake.

       Did the customer coast to a near stop without using the service brake?

       Yes

       - Explain diagnostic operation to customer. Repair complete.

No

- Replace the Powertrain Control Module in accordance with the service information.
- Perform the POWERTRAIN VERIFICATION TEST - 6.7L. Refer to **POWERTRAIN VERIFICATION TEST - 6.7L** .

P0572-BRAKE SWITCH 1 STUCK ON

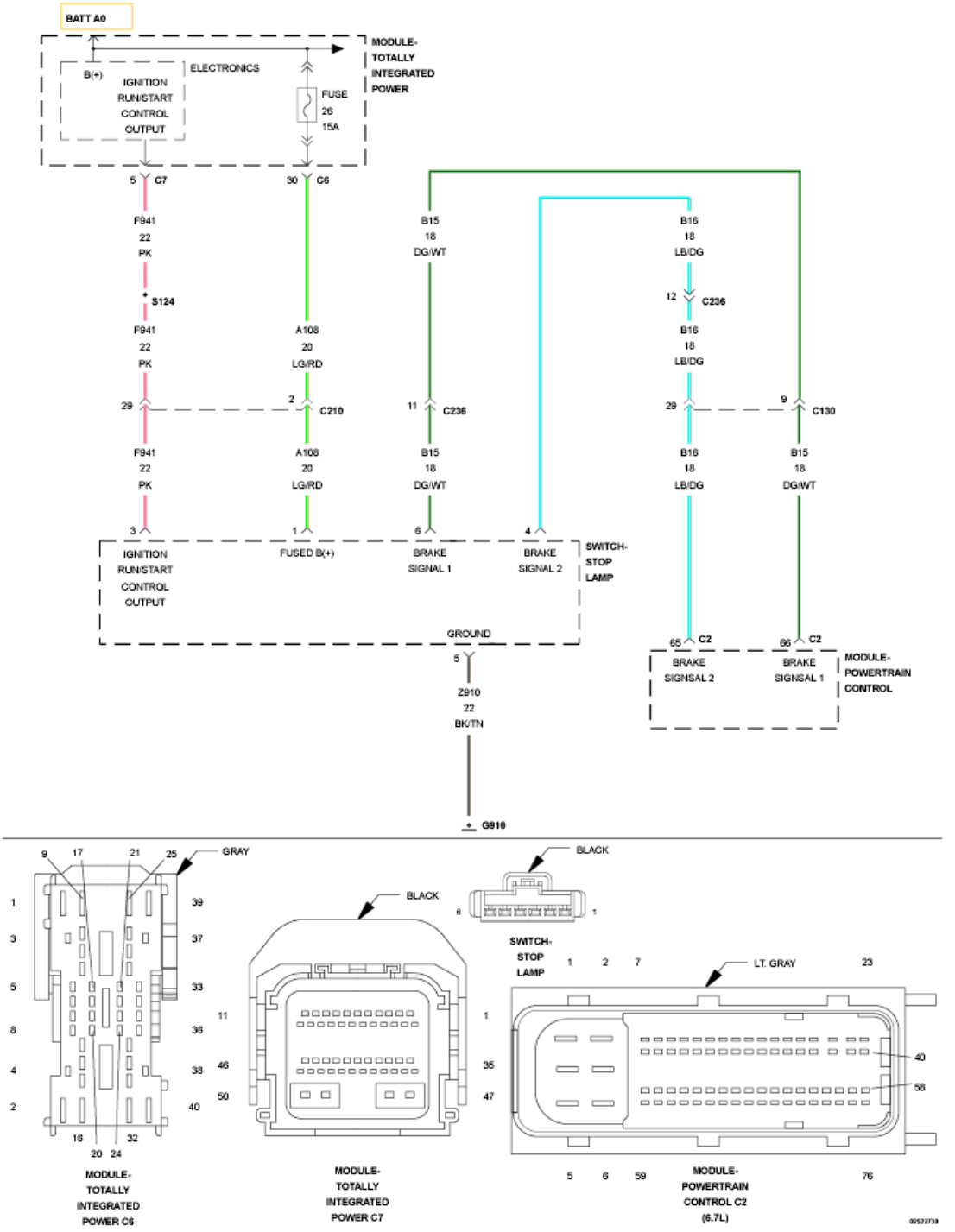

Fig. 63: Brake Switch Circuit Schematic
Courtesy of CHRYSLER GROUP, LLC

For a complete wiring diagram, **refer to appropriate SYSTEM WIRING DIAGRAMS article** .

WHEN MONITORED:

While the ignition is on.

SET CONDITION:

The brake switch status is equal to off and the not brake switch status is equal to on for a calibrated amount of time.

POSSIBLE CAUSES

Possible Causes
DAMAGED WIRING HARNESS OR CONNECTORS
BRAKE SWITCH CIRCUIT SHORTED TO GROUND (BRAKE SWITCH WILL ALWAYS BE OFF)
BRAKE SWITCH
POWERTRAIN CONTROL MODULE (PCM)

Always perform the Pre-Diagnostic Troubleshooting procedure before proceeding. Refer to PRE-DIAGNOSTIC TROUBLESHOOTING PROCEDURE - 6.7L .

DIAGNOSTIC TEST

1. **CHECK THE BRAKE SWITCH CIRCUIT FOR A SHORT TO GROUND**
    1. Turn the ignition off.
    2. Disconnect the Brake Switch harness connector. Inspect the terminals and connector for damage, corrosion, etc.
    3. Disconnect the PCM C2 harness connector. Inspect the terminals and connector for damage, corrosion, etc.

    NOTE: Check connectors - Clean/repair as necessary.

    4. Measure the resistance between the brake switch circuit in the PCM C2 harness connector and ground.

    Is the resistance below 10k Ohms?

    Yes

    - Repair the Brake Switch circuit shorted to ground.
    - Perform the POWERTRAIN VERIFICATION TEST - 6.7L. Refer to **POWERTRAIN**

VERIFICATION TEST - 6.7L .

No

- Go To 2.

2. **CHECK FOR THE BRAKE SWITCH CIRCUIT SHORTED TO OTHER CIRCUITS IN HARNESS**
   1. Measure the resistance between the Brake Switch wire in the PCM C2 harness connector and all other pins in the PCM connector.

      Is the resistance below 10k Ohms?

      Yes

      - Repair or replace the harness.
      - Perform the POWERTRAIN VERIFICATION TEST - 6.7L. Refer to **POWERTRAIN VERIFICATION TEST - 6.7L** .

      No

      - Go To 3.

3. **POWERTRAIN CONTROL MODULE**
   1. Reconnect the PCM C2 harness connector.
   2. Measure the resistance between the Brake Switch circuit at the switch connector and ground.

      Is the resistance below 10.0 Ohms?

      Yes

      - Replace the Powertrain Control Module in accordance with the service information.
      - Perform the POWERTRAIN VERIFICATION TEST - 6.7L. Refer to **POWERTRAIN VERIFICATION TEST - 6.7L** .

      No

      - Go To 4.

4. **CHECK THE BRAKE SWITCH**
   1. Reconnect the Brake Switch connector.
   2. Using the scan tool, clear the DTCs.
   3. Turn the ignition on.
   4. Cycle the brake pedal several times.
   5. Using the scan tool, read the DTCs.

      Has the Brake Switch Low DTC returned?

Yes

- Replace the Brake Switch in accordance with the service information.
- Perform the POWERTRAIN VERIFICATION TEST - 6.7L. Refer to **POWERTRAIN VERIFICATION TEST - 6.7L** .

No

- Perform the INTERMITTENT CONDITION diagnostic procedure. Refer to **INTERMITTENT CONDITION - 6.7L** .

P0573-BRAKE SWITCH 1 STUCK OFF

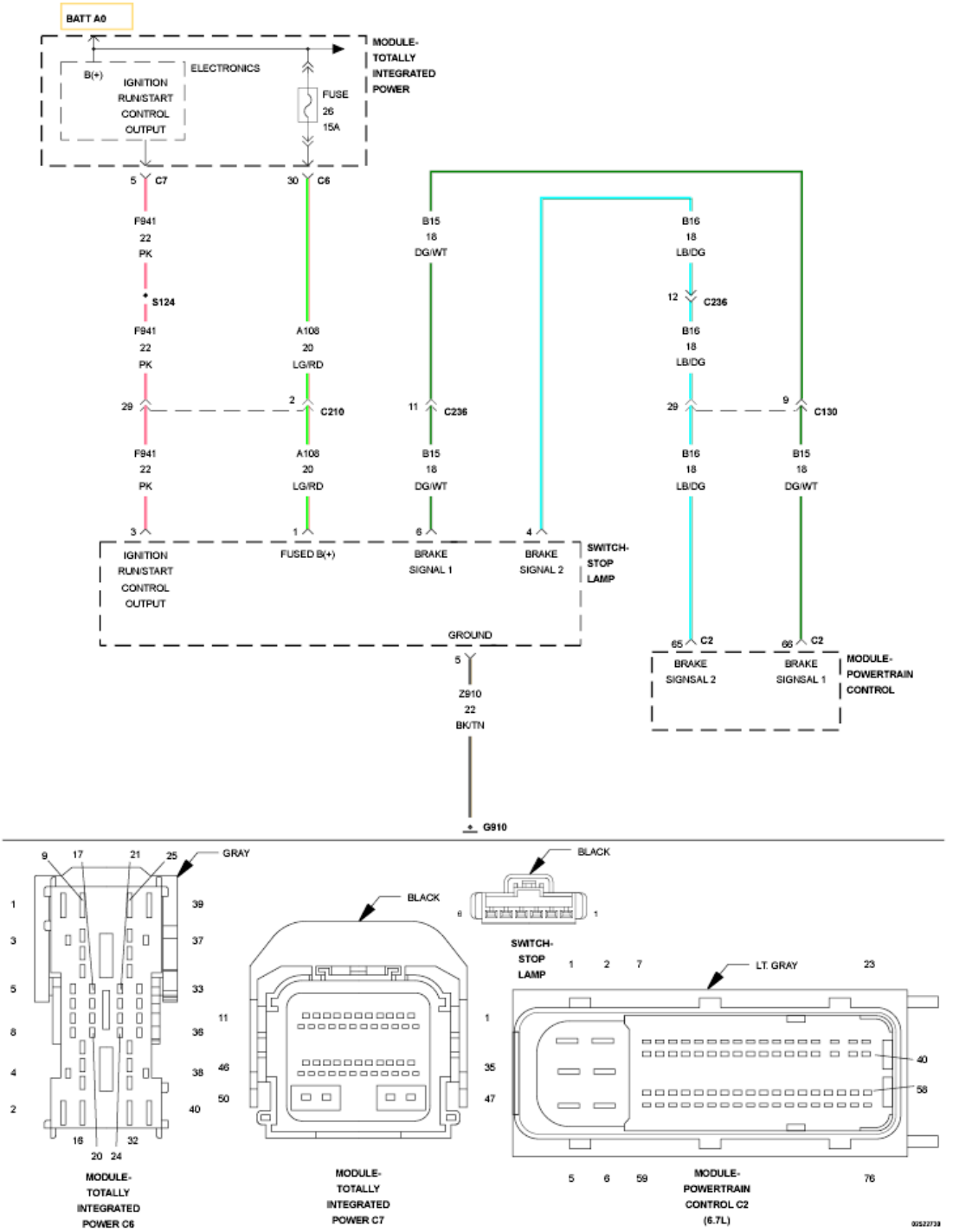

Fig. 64: Brake Switch Circuit Schematic
Courtesy of CHRYSLER GROUP, LLC

For a complete wiring diagram, **refer to appropriate SYSTEM WIRING DIAGRAMS article** .

WHEN MONITORED:

While the ignition is on.

SET CONDITION:

The brake switch status is equal to on and the no brake switch status is equal to off for a calibrated amount of time.

POSSIBLE CAUSES

Possible Causes
DAMAGED WIRING HARNESS OR CONNECTORS
BRAKE SWITCH CIRCUIT OPEN (BRAKE SWITCH WILL ALWAYS BE ON)
BRAKE SWITCH CIRCUIT SHORTED TO BATTERY VOLTAGE (BRAKE SWITCH WILL ALWAYS BE ON)
BRAKE SWITCH
POWERTRAIN CONTROL MODULE (PCM)

Always perform the Pre-Diagnostic Troubleshooting procedure before proceeding. Refer to PRE-DIAGNOSTIC TROUBLESHOOTING PROCEDURE - 6.7L .

DIAGNOSTIC TEST

1. **CHECK THE BRAKE SWITCH CIRCUIT FOR AN OPEN**
    1. Turn the ignition off.
    2. Disconnect the Brake Switch connection. Inspect the pins and connector for damage, corrosion, etc.
    3. Disconnect the PCM C2 harness connector. Inspect the pins and connector for damage, corrosion, etc.

    NOTE: Check connectors - Clean/repair as necessary.

    4. Measure the resistance of the Brake Switch signal circuits between the PCM C2 harness connector and the Brake Switch harness connector.

    Is the resistance below 10.0 Ohms?

    Yes

    - Go To 2.

    No

    - Repair the open Brake Switch circuits.
    - Perform the POWERTRAIN VERIFICATION TEST - 6.7L. Refer to **POWERTRAIN VERIFICATION TEST - 6.7L** .
2. **CHECK THE BRAKE SWITCH CIRCUIT FOR A SHORT TO VOLTAGE**
    1. Measure the voltage between the Brake Switch circuits in the PCM C2 harness connector and ground.

Is the voltage below 1.0 Volt?

Yes

- Go To 3.

No

- Repair the short to voltage in the circuit.
- Perform the POWERTRAIN VERIFICATION TEST - 6.7L. Refer to **POWERTRAIN VERIFICATION TEST - 6.7L** .

3. **POWERTRAIN CONTROL MODULE**
   1. Reconnect the PCM C2 harness connector.
   2. Install a jumper wire in the Brake Switch connector between signal circuit and ground.
   3. Turn the ignition on.
   4. Cycle the brake pedal several times.
   5. Using the scan tool, read the DTCs.

   Is the DTC for Brake Switch Low DTC present?

   Yes

   - Go To 4.

   No

   - Replace the Powertrain Control Module in accordance with the service information.
   - Perform the POWERTRAIN VERIFICATION TEST - 6.7L. Refer to **POWERTRAIN VERIFICATION TEST - 6.7L** .
4. **CHECK THE BRAKE SWITCH**
   1. Reconnect the Brake Switch connector.
   2. Using the scan tool, clear the DTCs.
   3. Turn the ignition on.
   4. Cycle the brake pedal several times.
   5. Using the scan tool, read the DTCs.

   Has the Brake Switch High DTC returned?

   Yes

   - Replace the Brake Switch in accordance with the service information.
   - Perform the POWERTRAIN VERIFICATION TEST - 6.7L. Refer to **POWERTRAIN VERIFICATION TEST - 6.7L** .

No

- Perform the INTERMITTENT CONDITION diagnostic procedure. Refer to **INTERMITTENT CONDITION - 6.7L** .

P0579-SPEED CONTROL SWITCH 1 PERFORMANCE

For a complete wiring diagram, **refer to appropriate SYSTEM WIRING DIAGRAMS article** .

WHEN MONITORED:

With the ignition key on.

SET CONDITION:

Speed Control (S/C) switch voltage output is not out of range but it does not equal any of the values for any of the button positions. One trip fault.

POSSIBLE CAUSES

Possible Causes
(V37) S/C SWITCH SENSE 1 CIRCUIT SHORTED TO VOLTAGE
(V37) S/C SWITCH SENSE 1 CIRCUIT OPEN
(V937) SWITCH RETURN CIRCUIT OPEN
(V37) S/C SWITCH SENSE 1 CIRCUIT SHORTED TO GROUND
(V37) S/C SWITCH SENSE 1 CIRCUIT SHORTED TO THE (V937) SWITCH RETURN CIRCUIT
CLOCKSPRING
STEERING WHEEL JUMPER HARNESS
SPEED CONTROL SWITCH
POWERTRAIN CONTROL MODULE (PCM)

Always perform the Pre-Diagnostic Troubleshooting procedure before proceeding. Refer to PRE-DIAGNOSTIC TROUBLESHOOTING PROCEDURE - 6.7L .

DIAGNOSTIC TEST

1. **ACTIVE DIAGNOSTIC TROUBLE CODE (DTC)**
    1. Start the engine and allow it to idle for at least 60 seconds.

WARNING: **When the engine is operating, do not stand in direct line with the fan. Do not put your hands near the pulleys, belts, or fan. Do not wear loose clothing. Failure to follow these instructions can result in possible serious or fatal injury.**

NOTE: **It may be necessary to test drive the vehicle and operate the speed**

control in order for this DTC to set.

2. Using the scan tool, select View DTCs.

   Is the DTC Active at this time?

   Yes

   - Go To 2.

   No

   - Perform the INTERMITTENT CONDITION diagnostic procedure. Refer to **INTERMITTENT CONDITION - 6.7L** .

2. **SPEED CONTROL SWITCH**
   1. Turn the ignition off.
   2. Disconnect the Speed Control Switch harness connector in accordance with the service information.
   3. Measure the resistance between (V37) S/C Switch Sense 1 circuit and the (V937) Switch Return circuit.
   4. Monitor the Ohmmeter while pressing each function button on each switch.
   5. The following resistance specs are taken between terminals (V37) S/C Switch Sense 1 circuit and the (V937) Switch Return circuit of the switch when holding the switch button in the following position:
      - Not pressing any switch - 20.5k Ohms
      - On/Off - 0.47k Ohms
      - Set/Decel - 4.34k Ohms
      - Cancel - 1.24k Ohms
      - Resume/Accel - 8.80k Ohms

      Does the function on the Speed Control Switch have the correct resistance value +/- 0.2 Ohm?

      Yes

      - Go To 3.

      No

      - Replace the Speed Control Switch in accordance with the service information.
      - Perform the POWERTRAIN VERIFICATION TEST. Refer to **POWERTRAIN VERIFICATION TEST - 6.7L** .

3. **(V37) S/C SWITCH SENSE 1 CIRCUIT SHORTED TO VOLTAGE**

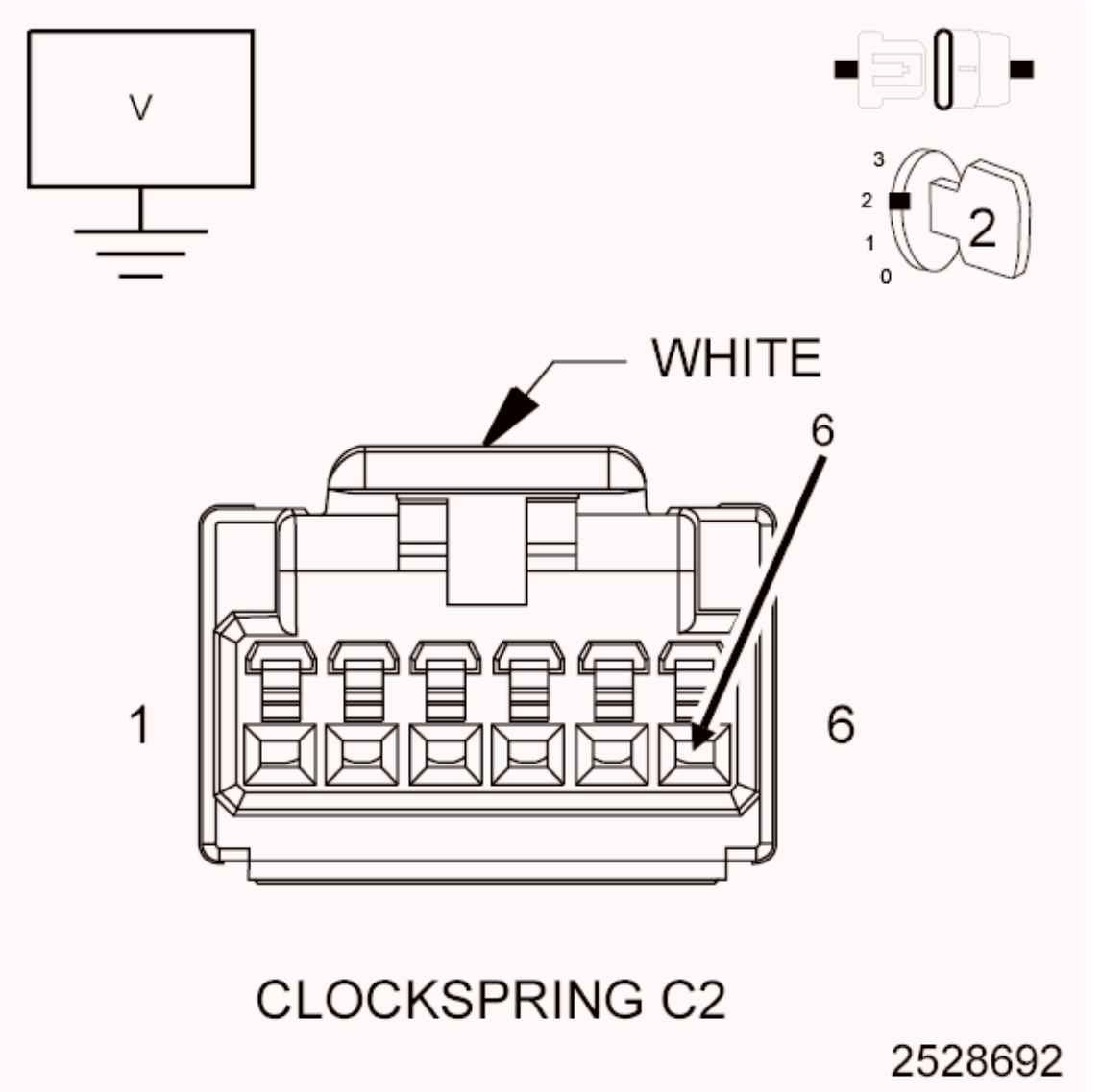

Fig. 65: Measuring Voltage On S/C Switch Sense Circuits In Clockspring Harness Connector
Courtesy of CHRYSLER GROUP, LLC

1. Disconnect the Clockspring C2 harness connector in accordance with the service information.
2. Ignition on, engine not running.
3. Measure the voltage on the (V37) S/C Switch Sense 1 circuit at the Clockspring C2 harness connector.

   Is the voltage reading above 5.2 volts?

   Yes

   - Repair the short to voltage in the (V37) S/C Switch Sense 1 circuit.
   - Perform the POWERTRAIN VERIFICATION TEST. Refer to **POWERTRAIN VERIFICATION TEST - 6.7L** .

No

- Go To 4.

4. **(V37) S/C NO. 1 SWITCH SIGNAL CIRCUIT SHORTED TO GROUND**

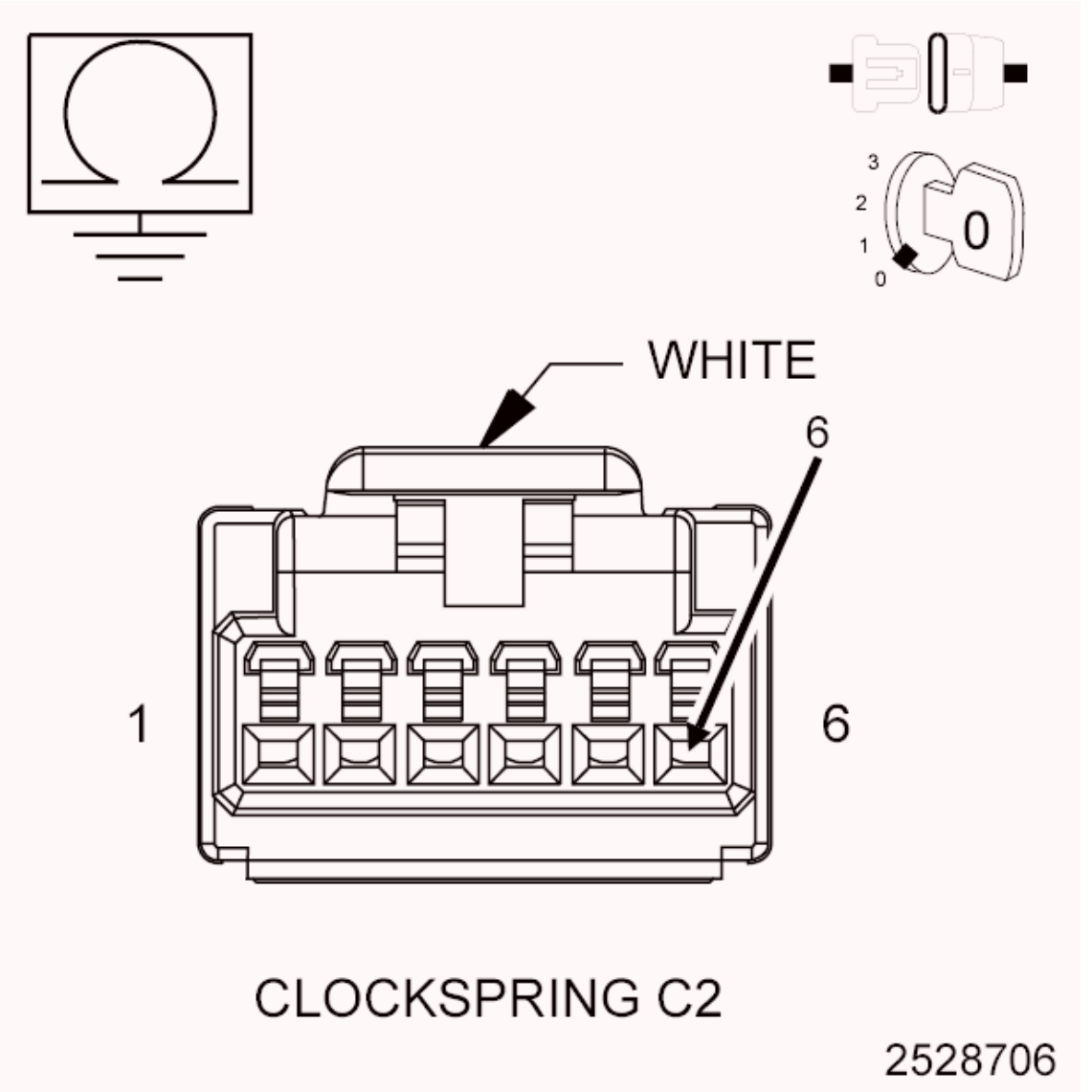

Fig. 66: Measuring Resistance Between Ground And S/C Switch Sense Circuit In SCM Harness Connector
Courtesy of CHRYSLER GROUP, LLC

1. Turn the ignition off.
2. Disconnect the PCM C2 harness connector.
3. Measure the resistance between ground and the (V37) S/C Switch Sense 1 circuit at the Clockspring C2 harness connector.

   Is the resistance above 10k Ohms?

Yes

- Go To 5.

No

- Repair the short to ground in the (V37) S/C Switch Sense 1 circuit.
- Perform the POWERTRAIN VERIFICATION TEST. Refer to **POWERTRAIN VERIFICATION TEST - 6.7L** .

5. **(V37) S/C SWITCH SENSE 1 CIRCUIT SHORTED TO THE (V937) S/C SWITCH RETURN CIRCUIT**

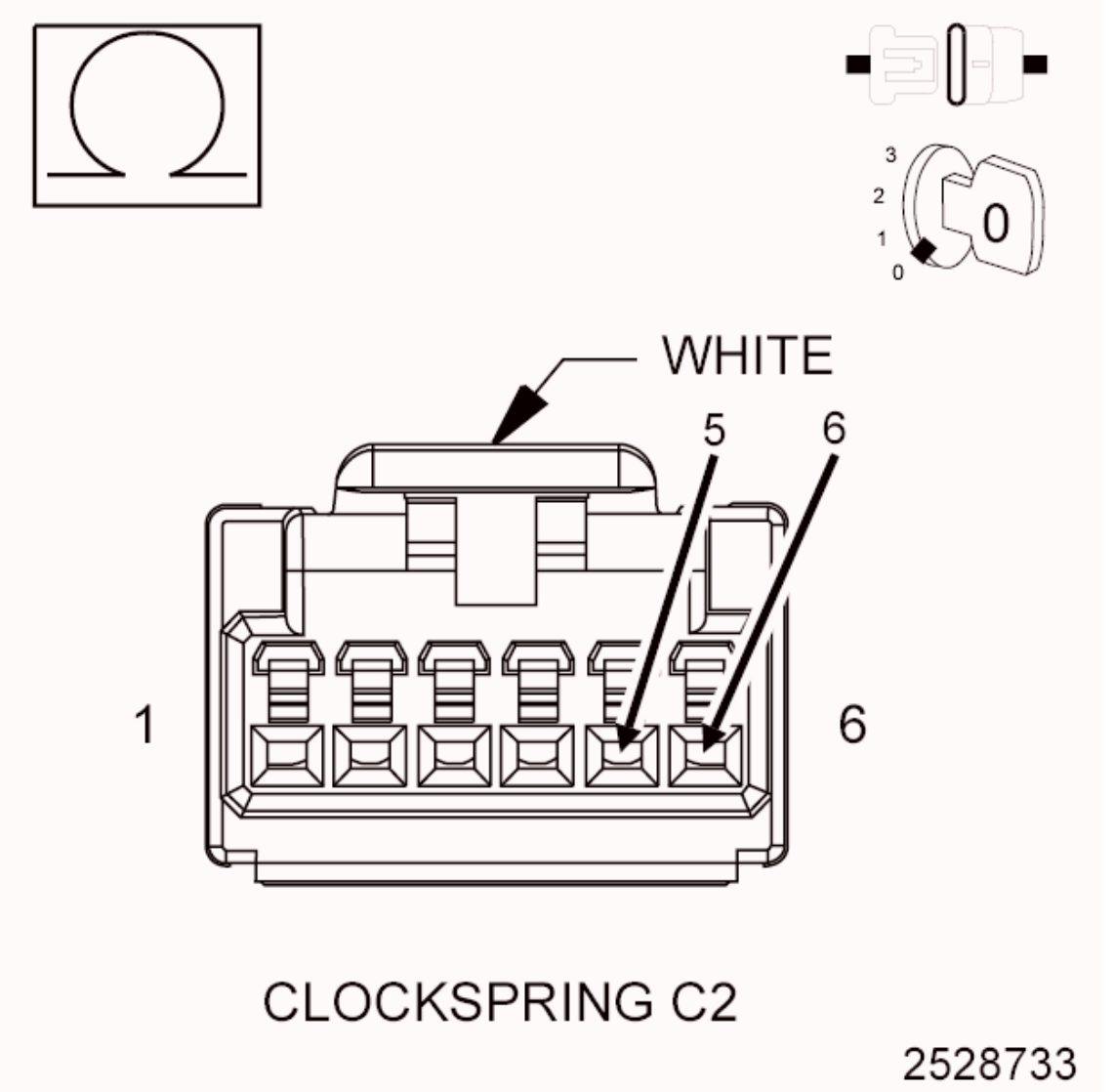

Fig. 67: Measuring Resistance Between S/C Switch Sense Circuit And S/C Switch Return Circuit In Clockspring C2 Harness Connector
Courtesy of CHRYSLER GROUP, LLC

1. Measure the resistance between the (V37) S/C Switch Sense 1 circuit and the (V937) S/C Switch Return circuit at the Clockspring C2 harness connector.

   Is the resistance above 10k Ohms?

   Yes

   - Go To 6.

   No

   - Repair the short between the (V37) S/C Switch Sense 1 circuit and the (V937) Switch Return circuit.
   - Perform the POWERTRAIN VERIFICATION TEST. Refer to **POWERTRAIN VERIFICATION TEST - 6.7L** .

6. **CLOCKSPRING**
   1. Disconnect the Clockspring C8 harness connector in accordance with the service information.
   2. Measure the resistance of the (V37) S/C Switch Sense 1 circuit between the Clockspring C2 and C8 at the Clockspring connectors.
   3. Measure the resistance of the (V937) Switch Return circuit between the Clockspring C2 and C8 at the Clockspring connectors.

      Is the resistance above 5.0 Ohms for either reading?

      Yes

      - Replace the Clockspring in accordance with the service information.
      - Perform the POWERTRAIN VERIFICATION TEST. Refer to **POWERTRAIN VERIFICATION TEST - 6.7L** .

      No

      - Go To 7.

7. **STEERING WHEEL JUMPER HARNESS**

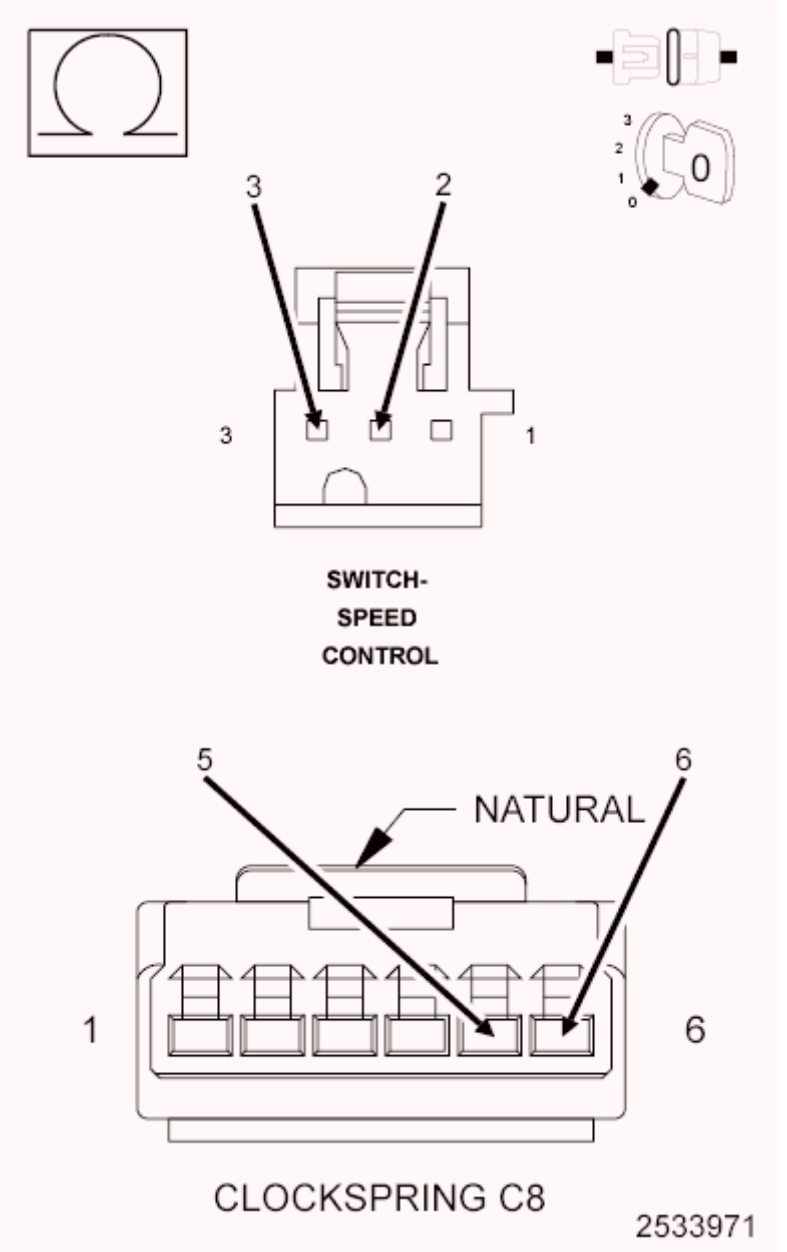

Fig. 68: Measuring Resistance Of S/C Switch Sense 1 Circuit Switch Return Circuit Between Clockspring Harness Connector And S/C Switch Harness Connector
Courtesy of CHRYSLER GROUP, LLC

1. Turn the ignition off.
2. Measure the resistance of the (V37) S/C Switch Sense 1 circuit between the Clockspring C8 harness connector and S/C Switch harness connector.
3. Measure the resistance of the (V937) Switch Return circuit between the Clockspring C8 harness connector and S/C Switch harness connector.

   Is the resistance above 5.0 Ohms for either reading?

Yes

- Replace the Steering Wheel Jumper harness in accordance with the service information.
- Perform the POWERTRAIN VERIFICATION TEST. Refer to **POWERTRAIN VERIFICATION TEST - 6.7L** .

No

- Go To 8.

8. **(V37) S/C SWITCH SENSE 1 CIRCUIT OPEN/HIGH RESISTANCE**
   1. Measure the resistance of the (V37) S/C Switch Sense 1 circuit between the Clockspring C2 harness connector and the of PCM C2 harness connector.

      Is the resistance below 5.0 Ohms?

      Yes

      - Go To 9.

      No

      - Repair the open in the (V37) S/C Switch Sense 1 circuit.
      - Perform the POWERTRAIN VERIFICATION TEST. Refer to **POWERTRAIN VERIFICATION TEST - 6.7L** .
9. **(V937) SWITCH RETURN CIRCUIT OPEN/HIGH RESISTANCE**
   1. Measure the resistance of the (V937) Switch Return circuit between the Clockspring C2 harness connector and the of PCM C2 harness connector.

      Is the resistance below 5.0 Ohms ?

      Yes

      - Go To 10.

      No

      - Repair the open in the (V937) Switch Return circuit.
      - Perform the POWERTRAIN VERIFICATION TEST. Refer to **POWERTRAIN VERIFICATION TEST - 6.7L** .
10. **SPEED CONTROL SWITCH VOLTAGE VALUES**
    1. Reconnect the S/C Switch harness connectors.
    2. Reconnect the Clockspring harness connectors.
    3. Reconnect the PCM C2 harness connector.
    4. Back probe the (V37) S/C Switch Sense 1 circuit and the (V38) S/C Switch Sense 2 circuit at the

PCM C2 harness connector.

CAUTION: Use only approved back probe tools when back probing a connector so as not to cause damage to the terminals or insulation of the connector. Damage to the terminals can cause poor terminal contact or retention. Damage to the insulation can introduce corrosion due to water infiltration.

5. Turn the ignition on.
6. Using the scan tool, monitor the S/C Switch voltage readings.
7. Using a Voltmeter check the voltage on the (V37) S/C Switch Sense 1 circuit and the (V38) S/C Switch Sense 2 circuit at the PCM C2 harness connector.
8. Monitor the Voltmeter.
9. Using the scan tool, monitor the S/C Switch voltage readings.

SWITCH POSITION	SWITCH No. 1 VOLTAGE VALUE	SWITCH No. 2 VOLTAGE VALUE
NO SWITCHES PRESSED	4.31 to 4.78 Volts	4.31 to 4.78 Volts
ON/OFF PRESSED	0.59 to 1.13 Volts	3.53 to 3.92 Volts
RES/ACCEL PRESSED	3.88 to 4.17 Volts	2.04 to 2.47 Volts
SET/DECEL PRESSED	3.16 to 3.56 Volts	1.17 to 1.56 Volts
CANCEL PRESSED	1.59 to 1.99 Volts	2.84 to 3.25 Volts

10. Compare the voltage readings on the Voltmeter to what the scan tool displayed.

    Are the voltage readings out of the listed specification and is there less than a 0.2 Volt difference between the Voltmeter switch values and the scan tool switch value?

    Yes

    - Replace the Speed Control Switch in accordance with the service information.
    - Perform the POWERTRAIN VERIFICATION TEST. Refer to **POWERTRAIN VERIFICATION TEST - 6.7L** .

    No

    - Go To 11.

11. **POWERTRAIN CONTROL MODULE (PCM)**
    1. Using the wiring diagram/schematic as a guide, inspect the wiring and connectors between the Speed Control Switch and the Powertrain Control Module (PCM).
    2. Look for any chafed, pierced, pinched or partially broken wires.
    3. Look for broken, bent, pushed out or corroded terminals. Verify that there is good pin to terminal contact in the Switch and Powertrain Control Module connectors.

4. Perform any Technical Service Bulletins that may apply.

   Were there any problems found?

   Yes

   - Repair as necessary.
   - Perform the POWERTRAIN VERIFICATION TEST. Refer to **POWERTRAIN VERIFICATION TEST - 6.7L** .

   No

   - Replace and program the Powertrain Control Module in accordance with the service information. Refer to **MODULE, POWERTRAIN CONTROL, 6.7L DIESEL, REMOVAL** and **PCM/ECM / TCM PROGRAMMING** .
   - Perform the POWERTRAIN VERIFICATION TEST. Refer to **POWERTRAIN VERIFICATION TEST - 6.7L** .

P0580-SPEED CONTROL SWITCH 1 CIRCUIT LOW

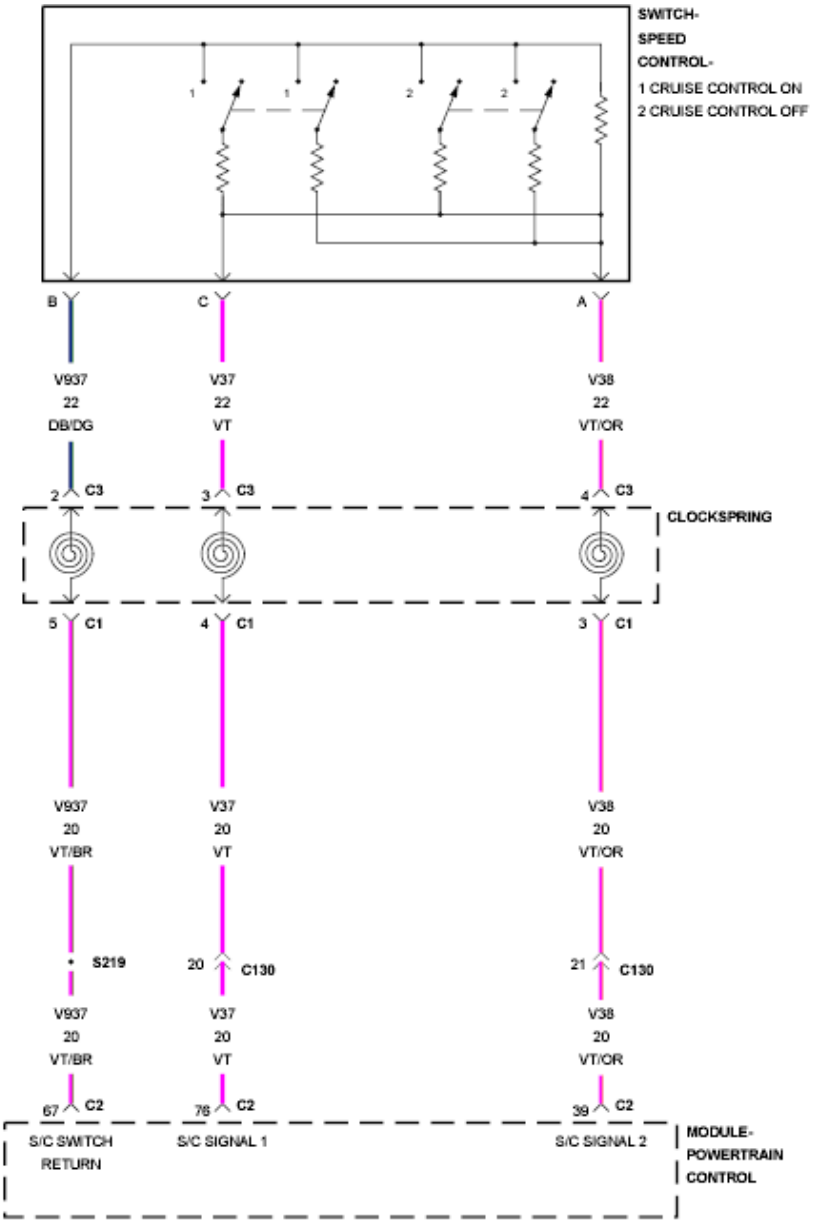

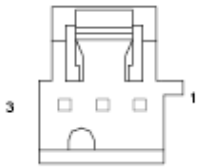

SWITCH-
SPEED
CONTROL

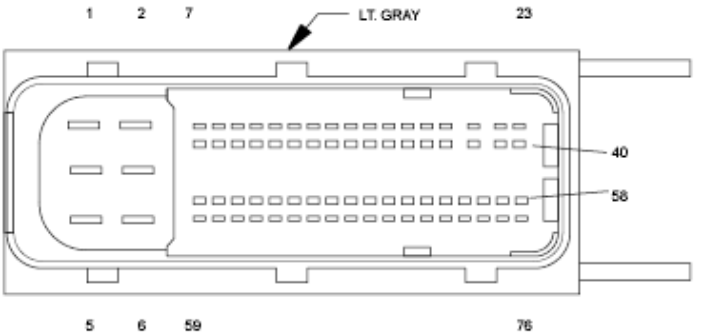

MODULE-
POWERTRAIN
CONTROL C2

Fig. 69: Speed Control Switch Circuit Schematic
Courtesy of CHRYSLER GROUP, LLC

For a complete wiring diagram, **refer to appropriate SYSTEM WIRING DIAGRAMS article** .

WHEN MONITORED:

While the ignition is on.

SET CONDITION:

Speed control MUX switch is below 1.0 Volt for five seconds.

POSSIBLE CAUSES

Possible Causes
S/C WIRING HARNESS OBSERVABLE PROBLEM S/C SWITCH (ON/OFF) S/C SWITCH (RESUME/ACCEL) (V37) S/C SWITCH 1 SIGNAL CIRCUIT SHORTED TO GROUND (V37) S/C SWITCH 1 SIGNAL CIRCUIT SHORTED TO THE (V937) SWITCH RETURN CIRCUIT CLOCKSPRING
POWERTRAIN CONTROL MODULE (PCM)

Always perform the Pre-Diagnostic Troubleshooting procedure before proceeding. Refer to PRE-DIAGNOSTIC TROUBLESHOOTING PROCEDURE - 6.7L .

DIAGNOSTIC TEST

1. **CHECK FOR THE S/C SWITCH VOLTAGE BELOW 1.0 VOLT**
    1. Turn the ignition on.
    2. With the scan tool, read the S/C Switch Volts status in the PCM.

       Is the S/C Switch voltage below 1.0 Volt?

       Yes

       - Go To 3.

       No

       - Go To 2.
2. **VISUALLY INSPECT THE S/C WIRING HARNESS**
    1. Turn the ignition off.
    2. Using the Schematics as a guide, inspect the Wiring and Connectors.

Were any problems found?

Yes

- Repair as necessary.
- Perform the POWERTRAIN VERIFICATION TEST - 6.7L. Refer to **POWERTRAIN VERIFICATION TEST - 6.7L** .

No

- Go To 3.

3. **CHECK THE S/C SWITCH (ON/OFF)**
   1. Turn the ignition off.
   2. Disconnect the S/C ON/OFF Switch harness connector.

      NOTE: Check connectors - Clean/repair as necessary.

   3. Turn the ignition on.
   4. With the scan tool in Sensors, read the S/C Switch Volts in the PCM.

      Did the S/C Switch Volts change to 5.0 Volts?

      Yes

      - Replace the S/C ON/OFF Switch in accordance with the service information.
      - Perform the POWERTRAIN VERIFICATION TEST - 6.7L. Refer to **POWERTRAIN VERIFICATION TEST - 6.7L** .

      No

      - Go To 4.

4. **CHECK THE S/C SWITCH (RESUME/ACCEL)**
   1. Turn the ignition off.
   2. Disconnect the S/C RESUME/ACCEL Switch harness connector.

      NOTE: Check connectors - Clean/repair as necessary.

   3. Ignition on, engine not running.
   4. With the scan tool in Sensors, read the S/C Switch volts in the PCM.

      Did the S/C Switch Volts go above 4.0 Volts?

      Yes

- Replace the Resume/Accel Switch in accordance with the service information.
- Perform the POWERTRAIN VERIFICATION TEST - 6.7L. Refer to **POWERTRAIN VERIFICATION TEST - 6.7L** .

No

- Go To 5.

5. **CHECK THE CLOCKSPRING**
   1. Turn the ignition off.
   2. Disconnect the Clockspring harness connector (instrument panel wiring side).
   3. Turn the ignition on.
   4. With the scan tool in Sensors, read the S/C Switch Volts in the PCM.

      Did the S/C Switch Volts change to 5.0 Volts?

      Yes

      - Replace the Clockspring in accordance with the Service Information.
      - Perform the POWERTRAIN VERIFICATION TEST - 6.7L. Refer to **POWERTRAIN VERIFICATION TEST - 6.7L** .

      No

      - Go To 6.

6. **CHECK THE (V37) S/C SWITCH 1 SIGNAL CIRCUIT FOR A SHORT TO GROUND**
   1. Turn the ignition off.
   2. Disconnect the S/C ON/OFF Switch harness connector.
   3. Disconnect the PCM C2 harness connector.

      NOTE: Check connectors - Clean/repair as necessary.

   4. Measure the resistance between ground and the (V37) S/C Switch 1 Signal circuit at the S/C ON/OFF Switch harness connector.

      Is the resistance below 10k Ohms?

      Yes

      - Repair the (V37) S/C Switch 1 Signal circuit for a short to ground.
      - Perform the POWERTRAIN VERIFICATION TEST - 6.7L. Refer to **POWERTRAIN VERIFICATION TEST - 6.7L** .

      No

- Go To 7.

7. **CHECK FOR THE (V37) S/C SWITCH 1 SIGNAL CIRCUIT SHORTED TO THE (V937) S/C SWITCH RETURN CIRCUIT**

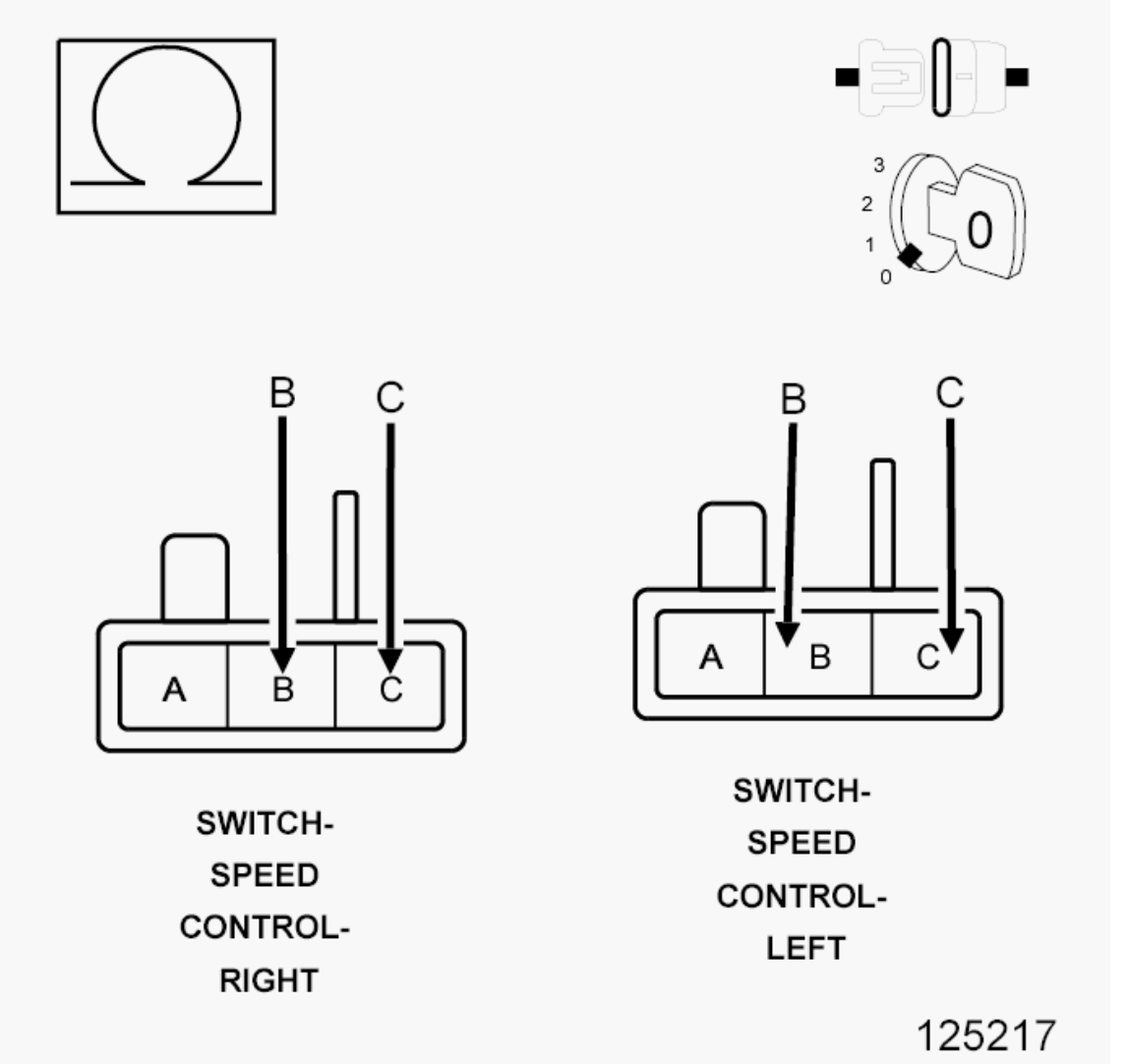

Fig. 70: Speed Control Switch Connector Pin ID
Courtesy of CHRYSLER GROUP, LLC

1. Measure the resistance between the (V37) S/C Switch Signal circuit and the (V937) S/C Switch Return circuit at the ON/OFF switch harness connector.

   Is the resistance below 10k Ohms?

   Yes

   - Repair the short between the (V37) S/C Switch 1 Signal circuit and the (V937) S/C Switch Return circuit.

- Perform the POWERTRAIN VERIFICATION TEST - 6.7L. Refer to **POWERTRAIN VERIFICATION TEST - 6.7L** .

No

- Replace and program the Powertrain Control Module in accordance with the service information. Refer to **MODULE, POWERTRAIN CONTROL, 6.7L DIESEL, REMOVAL** and **PCM/ECM / TCM PROGRAMMING** .
- Perform the POWERTRAIN VERIFICATION TEST - 6.7L. Refer to **POWERTRAIN VERIFICATION TEST - 6.7L** .

P0581-SPEED CONTROL SWITCH 1 CIRCUIT HIGH

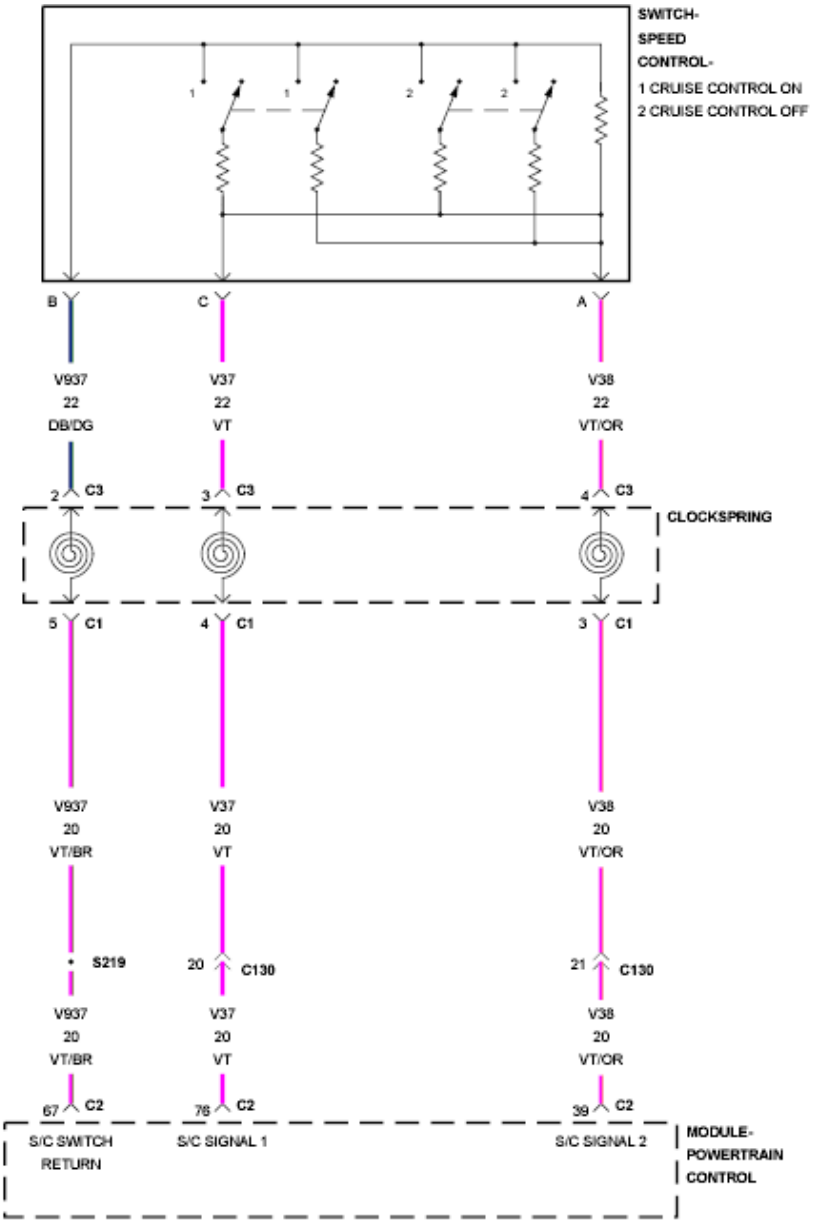

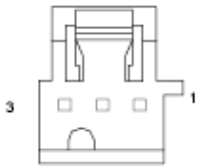

SWITCH-
SPEED
CONTROL

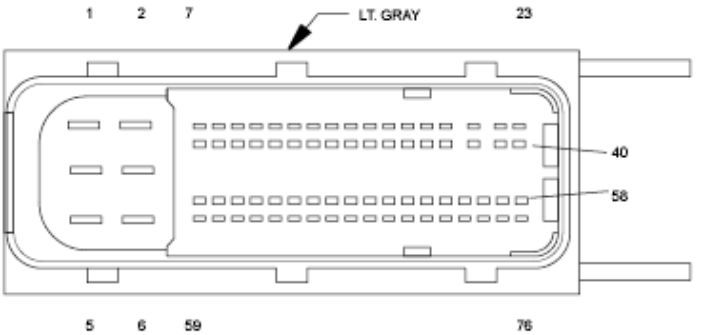

MODULE-
POWERTRAIN
CONTROL C2

Fig. 71: Speed Control Switch Circuit Schematic
Courtesy of CHRYSLER GROUP, LLC

For a complete wiring diagram, **refer to appropriate SYSTEM WIRING DIAGRAMS article** .

WHEN MONITORED:

Key on or engine running.

SET CONDITION:

Speed Control MUX switch is above 11.5 Volts for five seconds.

POSSIBLE CAUSES

Possible Causes
S/C WIRING HARNESS OBSERVABLE PROBLEM (V37) S/C SWITCH 1 SIGNAL CIRCUIT SHORTED TO VOLTAGE (V37) S/C SWITCH 1 SIGNAL CIRCUIT OPEN PCM TO CLOCK SPRING (V37) S/C SWITCH 1 SIGNAL CIRCUIT OPEN CLOCKSPRING TO S/C SWITCH (V937) S/C SWITCH RETURN CIRCUIT OPEN CLOCKSPRING TO S/C SWITCH (V937) S/C SWITCH RETURN CIRCUIT OPEN PCM TO CLOCKSPRING SPEED CONTROL ON/OFF SWITCH
CLOCKSPRING
POWERTRAIN CONTROL MODULE (PCM)

Always perform the Pre-Diagnostic Troubleshooting procedure before proceeding. Refer to PRE-DIAGNOSTIC TROUBLESHOOTING PROCEDURE - 6.7L .

DIAGNOSTIC TEST

1. **SCAN TOOL SHOWS SPEED CONTROL SWITCH ON/OFF**
    1. Turn the ignition on.
    2. With the scan tool in Inputs/Outputs, read the Speed Control inputs state in PCM.
    3. While monitoring the scan tool, push the Speed Control On/Off Switch several times, then leave it on.

    Did the scan tool show Speed Control Switch off and on?

    Yes

    - Perform the INTERMITTENT CONDITION diagnostic procedure. Refer to **INTERMITTENT CONDITION - 6.7L** .

    No

- Go To 2.

2. **VISUALLY INSPECT THE S/C WIRING HARNESS**
    1. Turn the ignition off.
    2. Using the Schematics as a guide, inspect the wiring and connectors.

    Were any problems found?

    Yes

    - Repair as necessary.
    - Perform the POWERTRAIN VERIFICATION TEST - 6.7L. Refer to **POWERTRAIN VERIFICATION TEST - 6.7L** .

    No

    - Go To 3.

3. **CLOCKSPRING**

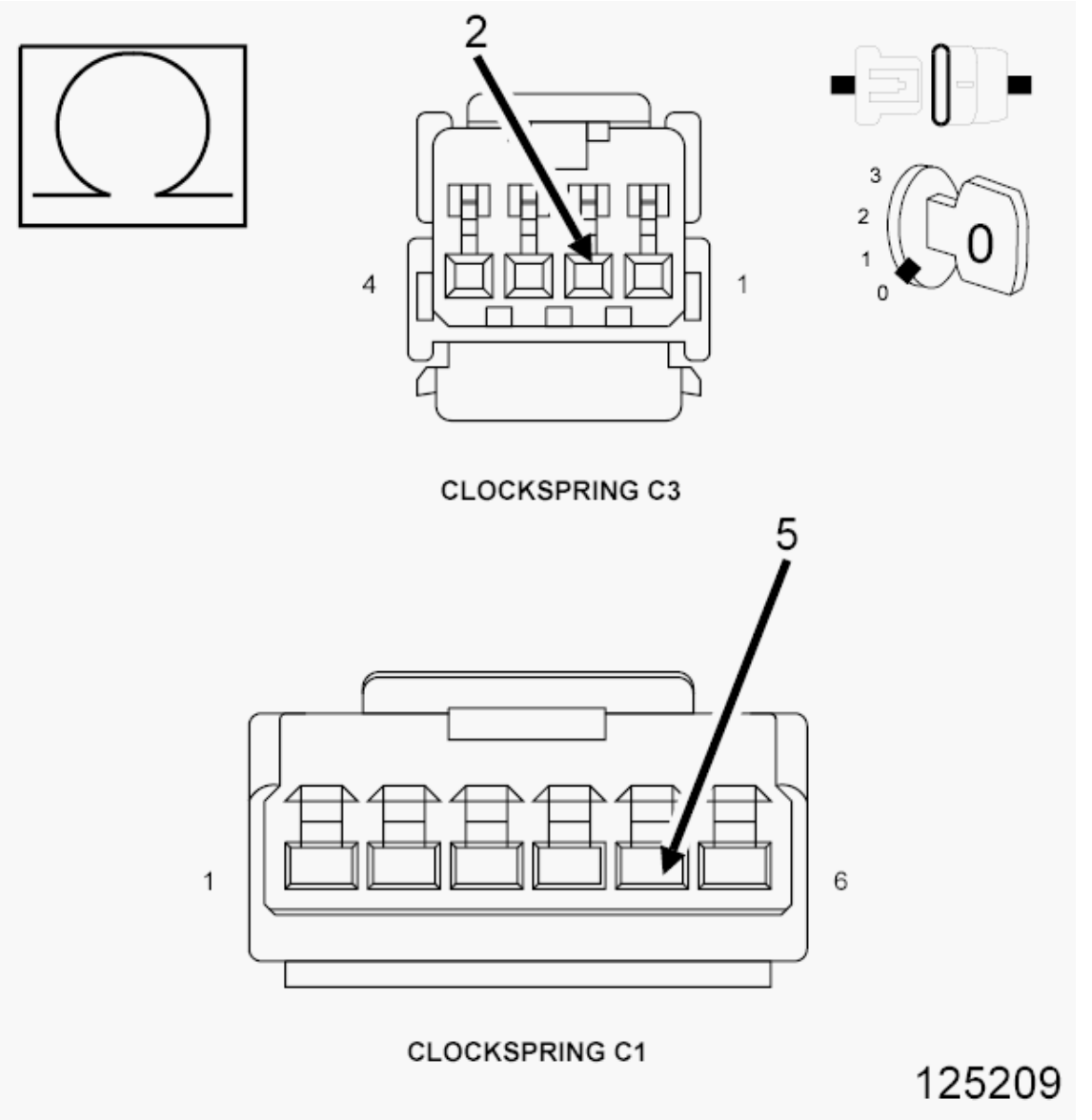

Fig. 72: Measuring Resistance Of S/C Switch Return Circuit Between Upper And Lower Clockspring Harness Connectors
Courtesy of CHRYSLER GROUP, LLC

1. Disconnect the C1 and C3 Clockspring harness connectors.

   NOTE: Check connectors - Clean/repair as necessary.

2. Measure the resistance of the (V937) S/C Switch Return circuit between the Clockspring C1 and C3 harness connectors.

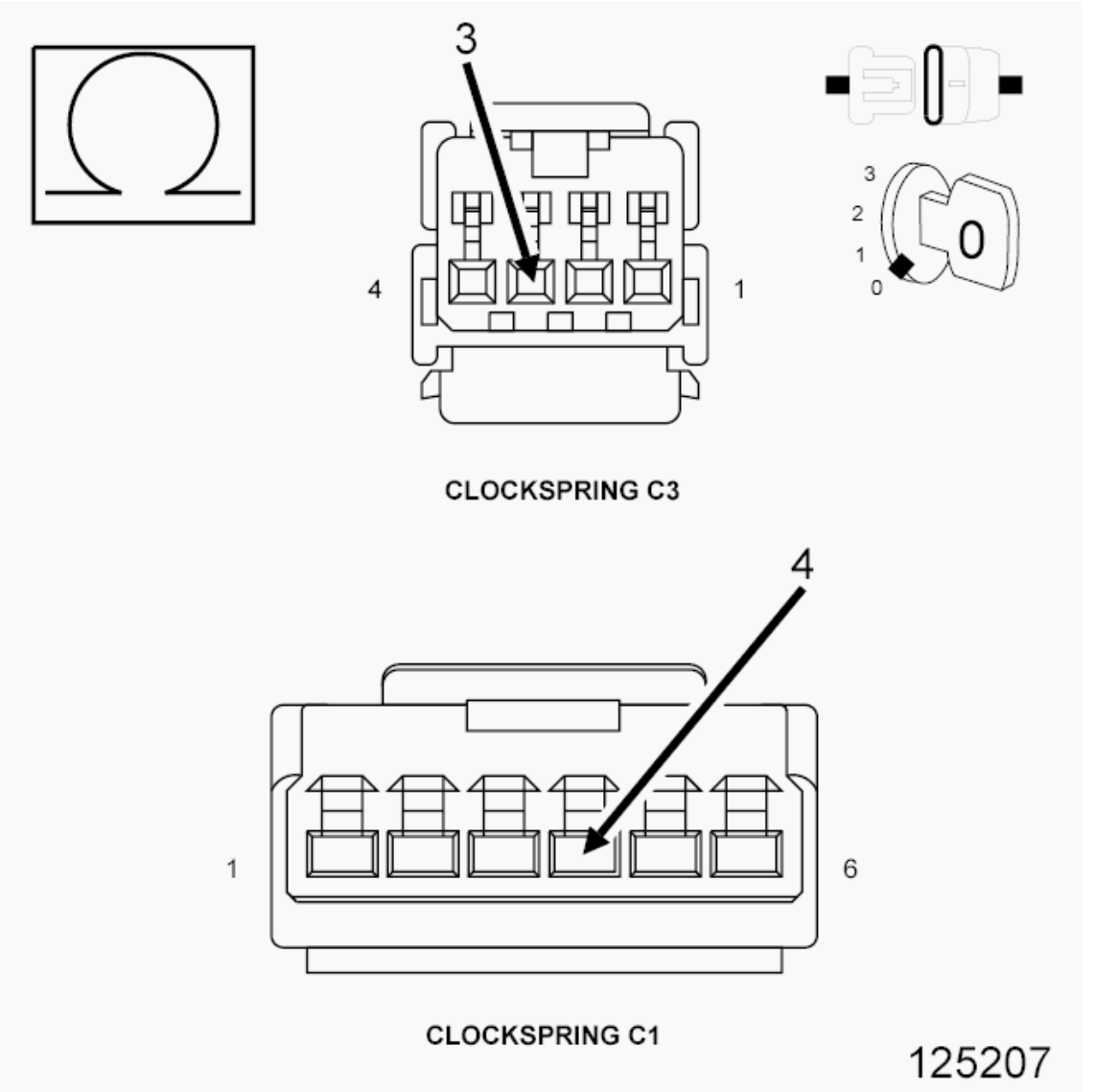

Fig. 73: Measuring Resistance Of S/C Switch Signal Circuit Between Upper And Lower Clockspring Harness Connectors
Courtesy of CHRYSLER GROUP, LLC

3. Measure the resistance of the (V37) S/C Switch 1 Signal circuit between the C1 and C3 harness connectors.

   Was the resistance above 5.0 Ohms for either circuit?

   Yes

   - Replace the Clockspring in accordance with the service information.
   - Perform the POWERTRAIN VERIFICATION TEST - 6.7L. Refer to **POWERTRAIN VERIFICATION TEST - 6.7L** .

No

- Go To 4.

4. **CHECK THE SPEED CONTROL ON/OFF SWITCH**
   1. Disconnect the Speed Control On/Off Switch 2-way harness connector only.

      NOTE: Check connectors - Clean/repair as necessary.

   2. Measure the resistance across the S/C On/Off Switch.

      Is the resistance between 20.3K and 20.7K Ohms?

      Yes

      - Go To 5.

      No

      - Replace the On/Off Switch in accordance with the service information.
      - Perform the POWERTRAIN VERIFICATION TEST - 6.7L. Refer to **POWERTRAIN VERIFICATION TEST - 6.7L** .

5. **CHECK THE (V37) S/C SWITCH 1 SIGNAL CIRCUIT FOR A SHORT TO VOLTAGE**

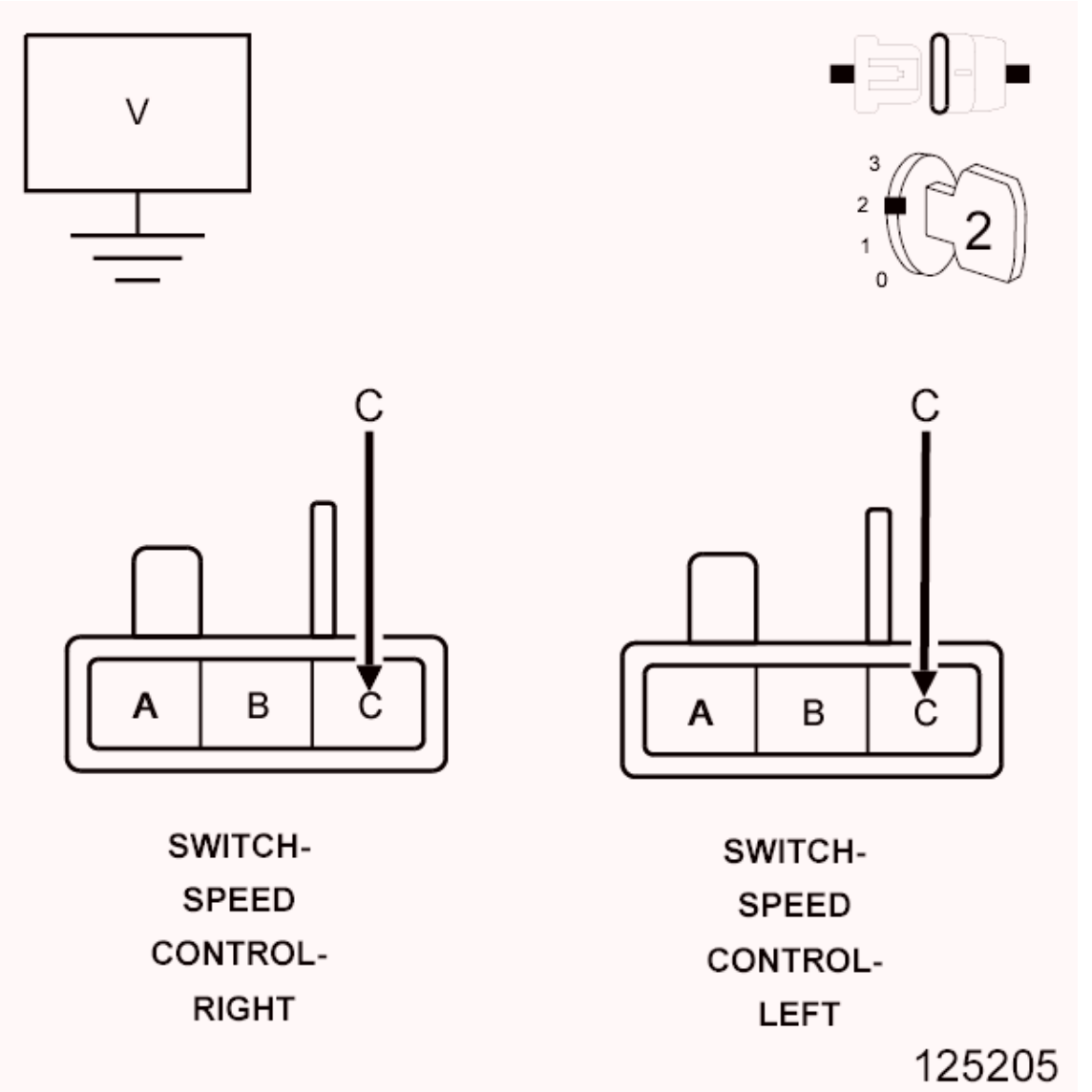

Fig. 74: Speed Control Switch Connector Pin ID
Courtesy of CHRYSLER GROUP, LLC

1. Turn the ignition on.
2. Measure the voltage of the (V37) S/C Switch 1 Signal circuit at the On/Off Switch connector.

   Is the voltage above 6.0 Volts?

   Yes

   - Repair the (V37) Switch 1 Signal circuit for a short to voltage.
   - Perform the POWERTRAIN VERIFICATION TEST - 6.7L. Refer to **POWERTRAIN VERIFICATION TEST - 6.7L** .

   No

- Go To 6.

6. **CHECK THE (V37) S/C SWITCH 1 SIGNAL CIRCUIT FOR AN OPEN BETWEEN THE PCM AND CLOCKSPRING**
   1. Turn the ignition off.
   2. Disconnect the PCM C2 harness connector.

      NOTE: Check connectors - Clean/repair as necessary.

   3. Measure the resistance of the (V37) S/C Switch 1 Signal circuit between the PCM C2 harness connector and the Clockspring C1 harness connector.

      Is the resistance below 5.0 Ohms?

      Yes

      - Go To 7.

      No

      - Repair the open in the (V37) S/C Switch 1 Signal circuit between the PCM and Clockspring.
      - Perform the POWERTRAIN VERIFICATION TEST - 6.7L. Refer to **POWERTRAIN VERIFICATION TEST - 6.7L** .

7. **CHECK THE (V37) S/C SWITCH 1 SIGNAL CIRCUIT FOR AN OPEN BETWEEN THE CLOCKSPRING AND S/C SWITCH**

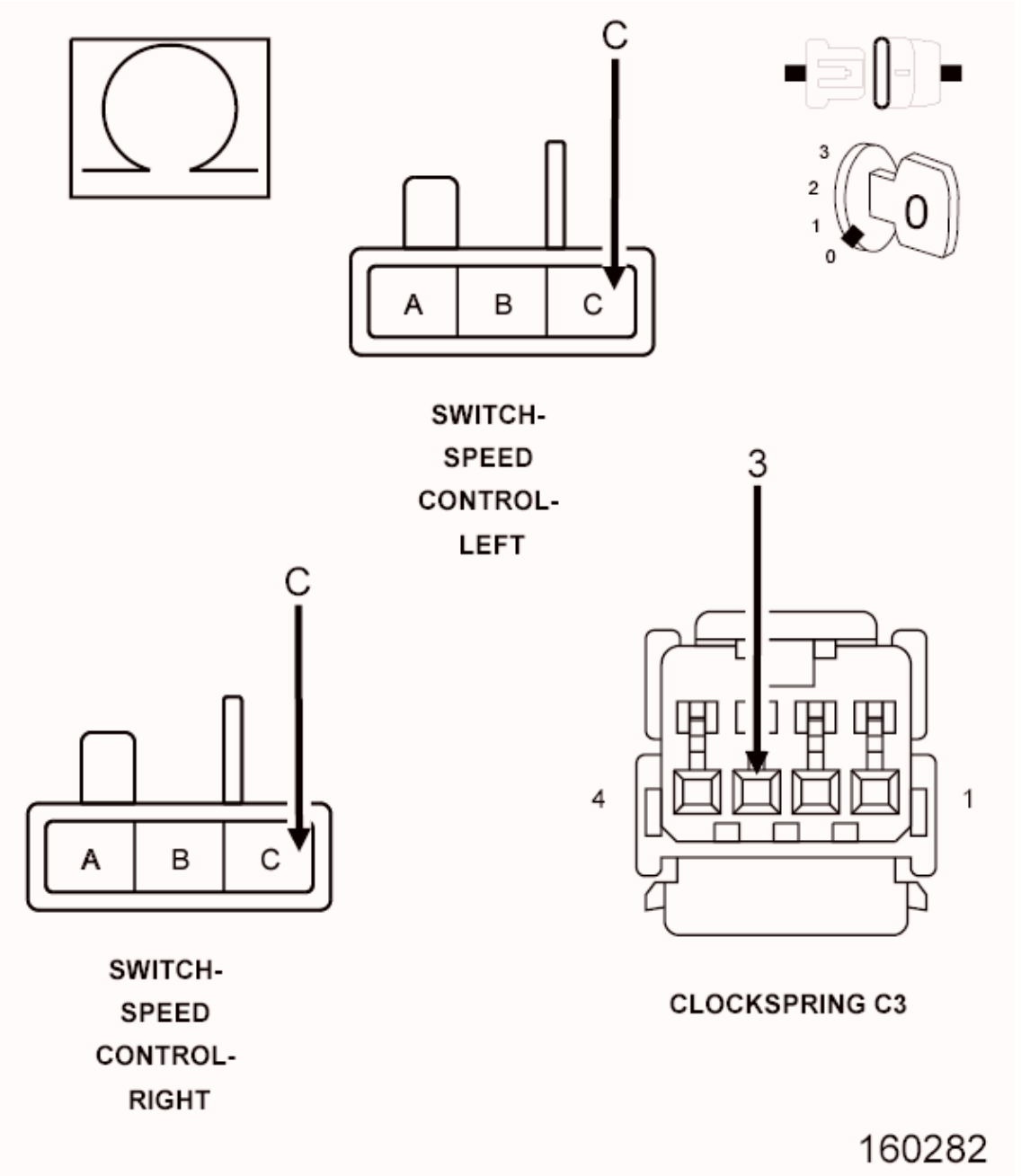

Fig. 75: Checking S/C Switch 1 Signal Circuit For Open Between Clockspring & S/C Switch
Courtesy of CHRYSLER GROUP, LLC

1. Measure the resistance of the (V37) S/C Switch 1 Signal circuit from the Clockspring C3 harness connector to the S/C switch harness connectors.

   Is the resistance below 5.0 Ohms?

   Yes

   - Go To 8.

No

- Repair the open in the (V37) S/C Switch 1 Signal circuit between the Clockspring and S/C Switches.
- Perform the POWERTRAIN VERIFICATION TEST - 6.7L. Refer to **POWERTRAIN VERIFICATION TEST - 6.7L** .

8. **CHECK THE (V937) S/C SWITCH RETURN CIRCUIT FOR AN OPEN BETWEEN THE CLOCKSPRING AND S/C SWITCH**

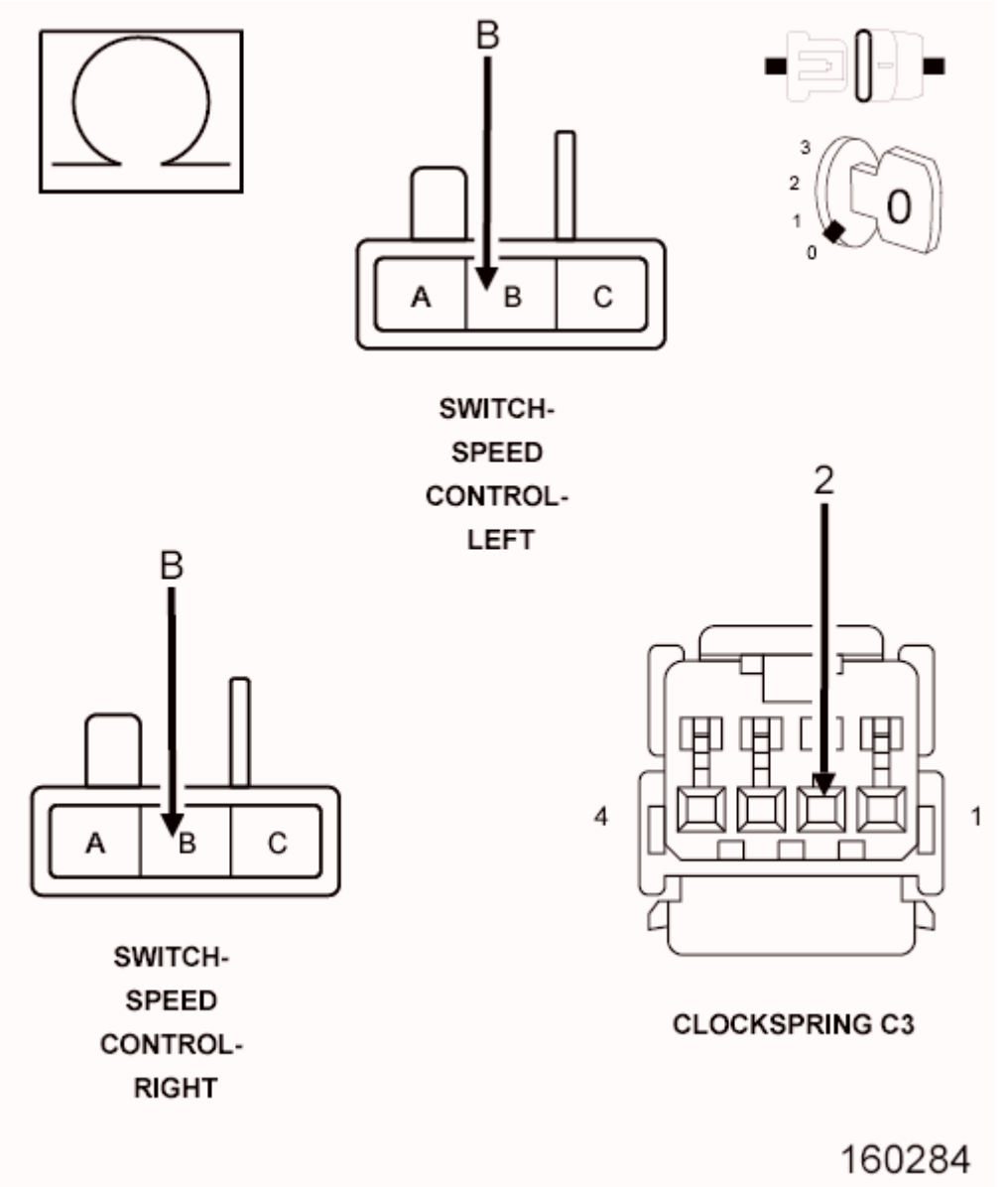

Fig. 76: Checking S/C Switch Return Circuit Open Clockspring To S/C Switch
Courtesy of CHRYSLER GROUP, LLC

1. Measure the resistance of the (V937) S/C Switch Return circuit between the S/C Switch harness connectors to the Clockspring C3 harness connector.

Is the resistance below 5.0 Ohms?

Yes

- Go To 9.

No

- Repair the open in the (V937) S/C Switch Return circuit between the Clockspring and the S/C Switches.
- Perform the POWERTRAIN VERIFICATION TEST - 6.7L. Refer to **POWERTRAIN VERIFICATION TEST - 6.7L** .

9. **CHECK THE (V937) S/C SWITCH RETURN CIRCUIT FOR AN OPEN BETWEEN THE PCM AND CLOCKSPRING**
   1. Measure the resistance of the (V937) S/C Switch Return circuit between the PCM harness connector and the Clockspring C1 harness connector.

      Is the resistance below 5.0 Ohms?

      Yes

      - Replace and program the Powertrain Control Module in accordance with the service information. Refer to **MODULE, POWERTRAIN CONTROL, 6.7L DIESEL, REMOVAL** and **PCM/ECM / TCM PROGRAMMING** .
      - Perform the POWERTRAIN VERIFICATION TEST - 6.7L. Refer to **POWERTRAIN VERIFICATION TEST - 6.7L** .

      No

      - Repair the open in the (V937) S/C Switch Return circuit from between the PCM and Clockspring.
      - Perform the POWERTRAIN VERIFICATION TEST - 6.7L. Refer to **POWERTRAIN VERIFICATION TEST - 6.7L** .

P0585-SPEED CONTROL SWITCH 1/2 CORRELATION

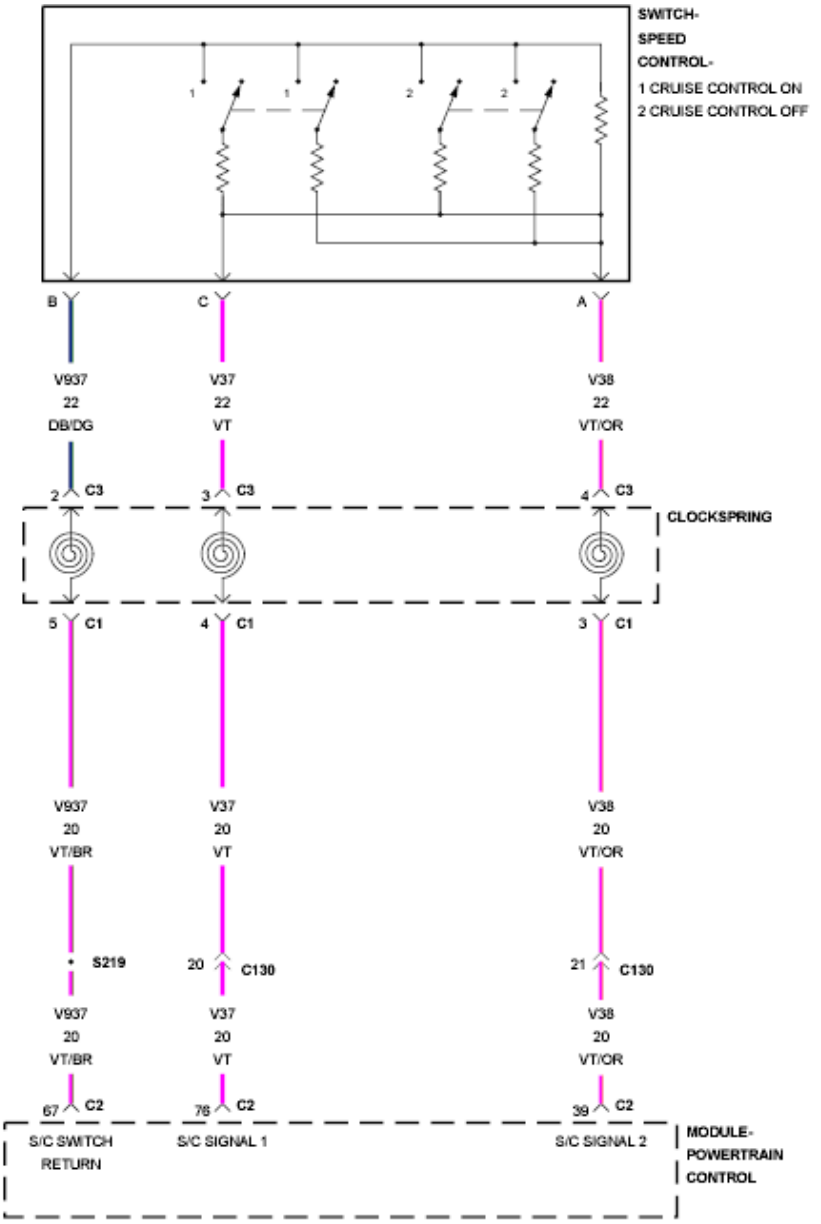

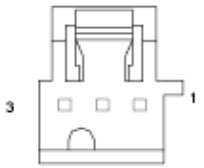

SWITCH-
SPEED
CONTROL

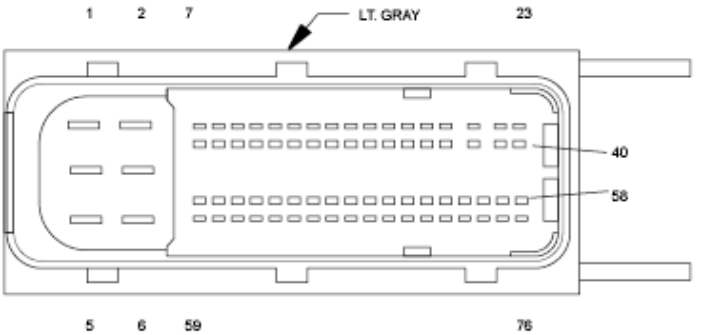

MODULE-
POWERTRAIN
CONTROL C2

Fig. 77: Speed Control Switch Circuit Schematic
Courtesy of CHRYSLER GROUP, LLC

For a complete wiring diagram, **refer to appropriate SYSTEM WIRING DIAGRAMS article** .

WHEN MONITORED:

Ignition on.

SET CONDITION:

Speed control switches do not correlate with each other.

POSSIBLE CAUSES

Possible Causes
SPEED CONTROL SWITCHES

Always perform the Pre-Diagnostic Troubleshooting procedure before proceeding. Refer to PRE-DIAGNOSTIC TROUBLESHOOTING PROCEDURE - 6.7L .

DIAGNOSTIC TEST

1. **SPEED CONTROL SWITCHES**

   View repair

   Repair

   - Replace both speed control switches.
   - Perform the POWERTRAIN VERIFICATION TEST - 6.7L. Refer to **POWERTRAIN VERIFICATION TEST - 6.7L** .

P0591-SPEED CONTROL SWITCH 2 PERFORMANCE

For a complete wiring diagram, **refer to appropriate SYSTEM WIRING DIAGRAMS article** .

WHEN MONITORED:

With the ignition key on.

SET CONDITION:

Speed Control (S/C) switch voltage output is not out of range but it does not equal any of the values for any of the button positions. One trip fault.

POSSIBLE CAUSES

Possible Causes
(V38) S/C SWITCH SENSE 2 CIRCUIT OPEN
(V38) S/C SWITCH SENSE 2 CIRCUIT SHORTED TO VOLTAGE
(V937) S/C SWITCH RETURN CIRCUIT OPEN
(V38) S/C SWITCH SENSE 2 CIRCUIT SHORTED TO GROUND
(V38) S/C SWITCH SENSE 2 CIRCUIT SHORTED TO THE (V937) S/C SWITCH RETURN CIRCUIT
SPEED CONTROL SWITCH
CLOCKSPRING
POWERTRAIN CONTROL MODULE (PCM)

Always perform the Pre-Diagnostic Troubleshooting procedure before proceeding. Refer to PRE-DIAGNOSTIC TROUBLESHOOTING PROCEDURE - 6.7L .

DIAGNOSTIC TEST

1. **ACTIVE DIAGNOSTIC TROUBLE CODE (DTC)**
   1. Start the engine and allow it to idle for at least 60 seconds.

      WARNING: **When the engine is operating, do not stand in direct line with the fan. Do not put your hands near the pulleys, belts, or fan. Do not wear loose clothing. Failure to follow these instructions can result in possible serious or fatal injury.**

      NOTE: **It may be necessary to test drive the vehicle and operate the speed control in order for this DTC to set.**

   2. Using the scan tool, select View DTCs.

      Is the DTC Active at this time?

      Yes

      - Go To 2.

      No

      - Perform the INTERMITTENT CONDITION diagnostic procedure. Refer to **INTERMITTENT CONDITION - 6.7L** .
2. **SPEED CONTROL SWITCH**
   1. Turn the ignition off.
   2. Disconnect the Speed Control Switch harness connector in accordance with the service information.
   3. Measure the resistance between (V38) S/C Switch Sense 2 circuit and the (V937) Switch Return

circuit.

4. Monitor the Ohmmeter while pressing each function button on each switch.
5. The following resistance specs are taken between terminals (V38) S/C Switch Sense 2 circuit and the (V937) Switch Return circuit of the switch when holding the switch button in the following position:
    - Not pressing any switch - 20.5k Ohms
    - On/Off - 6.2k Ohms
    - Set/Decel - 0.79k Ohms
    - Cancel - 3.2k Ohms
    - Resume/Accel - 1.7k Ohms

    Does the function on the Speed Control Switch have the correct resistance value +/- 0.2 Ohm?

    Yes

    - Go To 3.

    No

    - Replace the Speed Control Switch in accordance with the service information.
    - Perform the POWERTRAIN VERIFICATION TEST. Refer to **POWERTRAIN VERIFICATION TEST - 6.7L** .

3. **(V38) S/C SWITCH SENSE 2 CIRCUIT SHORTED TO VOLTAGE**

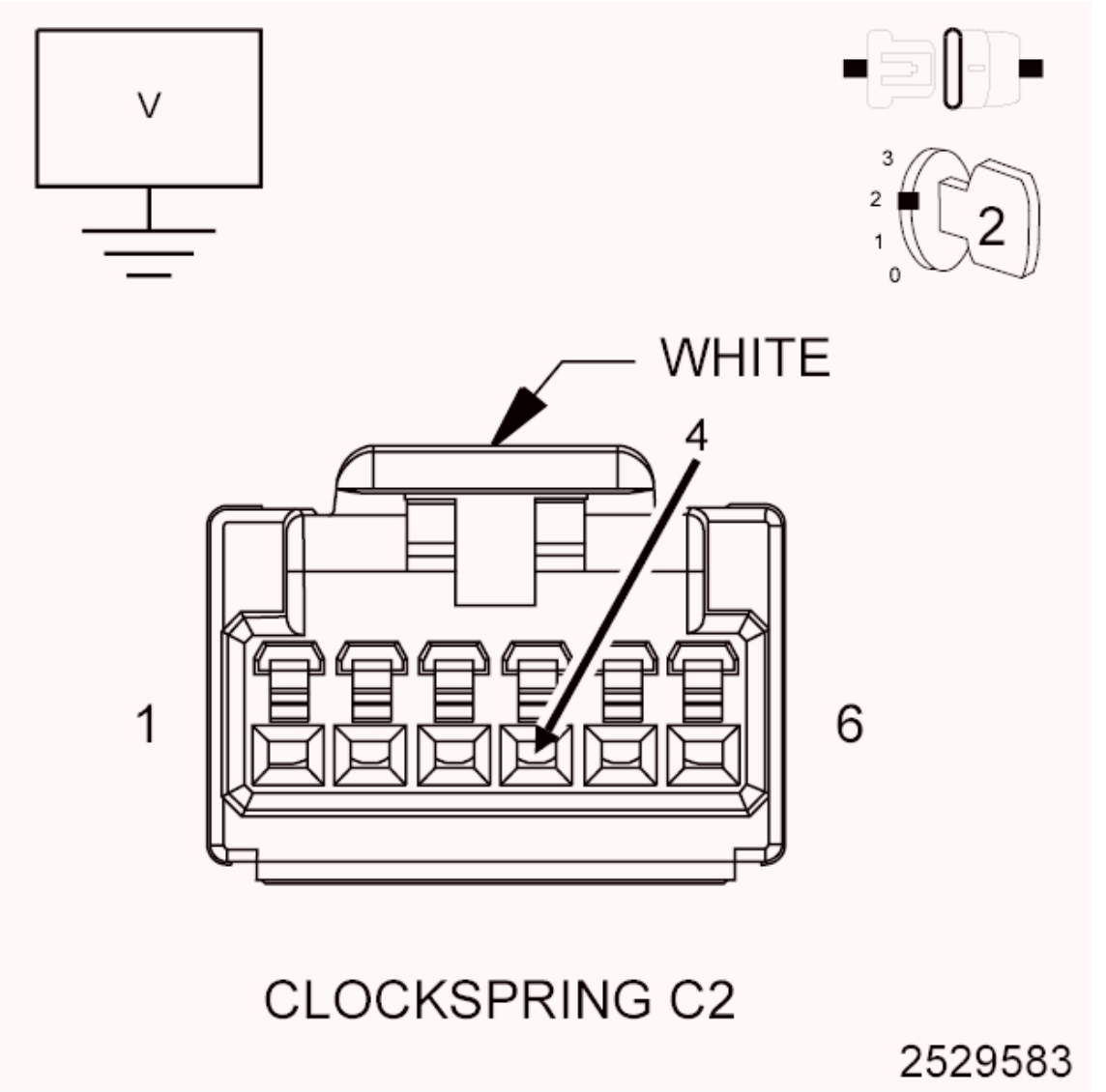

Fig. 78: Measuring Voltage On S/C Switch Sense Circuit In Clockspring C2 Harness Connector
Courtesy of CHRYSLER GROUP, LLC

1. Disconnect the Clockspring C2 harness connector in accordance with the service information.
2. Turn the ignition on.
3. Measure the voltage on the (V38) S/C Switch Sense 2 circuit in the Clockspring C2 harness connector.

   Is the voltage reading above 5.2 volts?

   Yes

   - Repair the short to voltage in the (V38) S/C Switch Sense 2 circuit.
   - Perform the POWERTRAIN VERIFICATION TEST. Refer to **POWERTRAIN VERIFICATION TEST - 6.7L** .

No

- Go To 4.

4. **(V38) S/C SWITCH SENSE 2 CIRCUIT SHORTED TO GROUND**

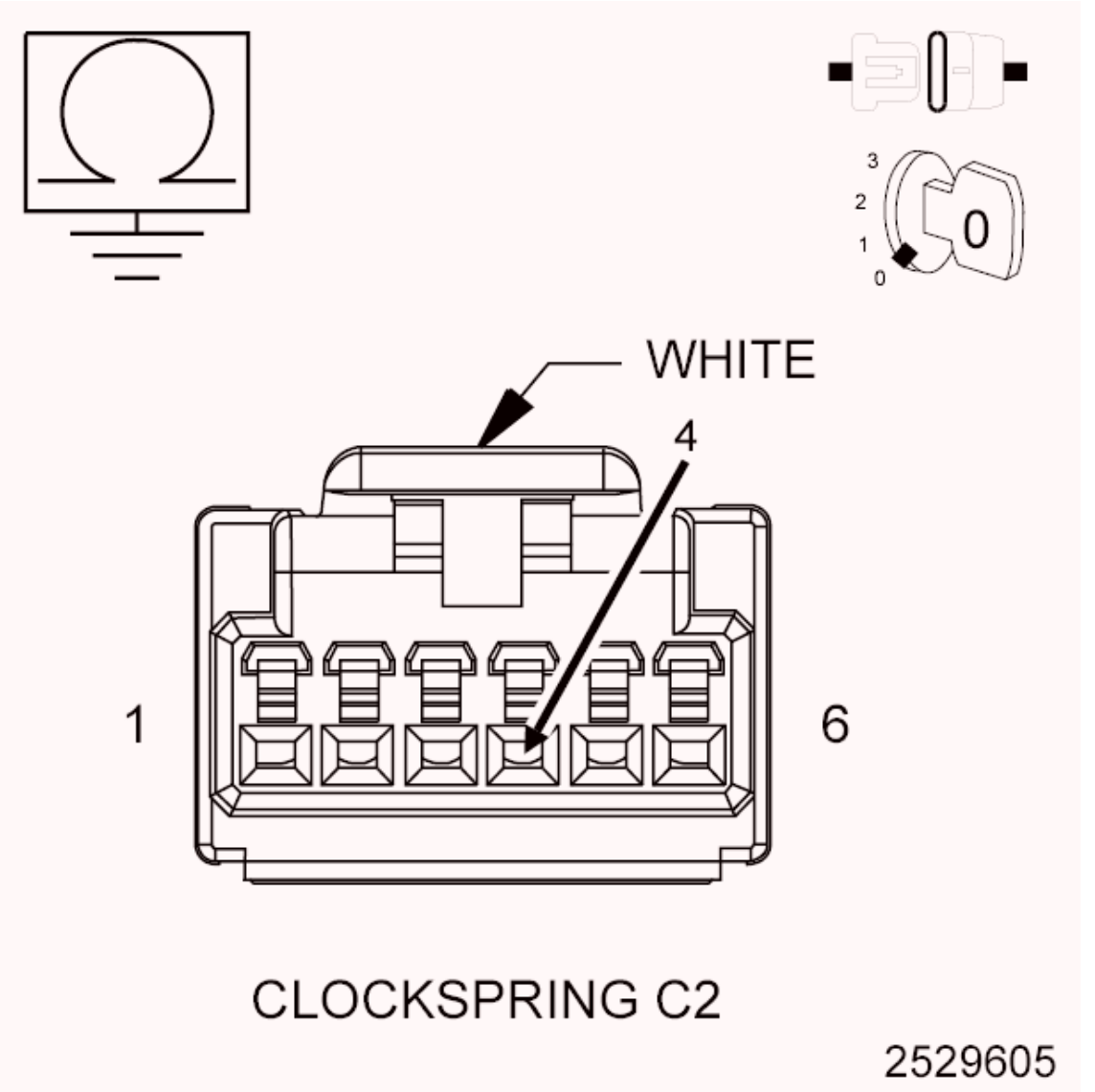

Fig. 79: Measuring Resistance Between Ground And (V72) S/C Switch Sense 2 Circuit In Clockspring C2 Harness Connector
Courtesy of CHRYSLER GROUP, LLC

1. Turn the ignition off.
2. Disconnect the PCM C2 harness connector.
3. Measure the resistance between ground and the (V38) S/C Switch Sense 2 circuit at the Clockspring C2 harness connector.

   Is the resistance above 10k Ohms?

Yes

- Go To 5.

No

- Repair the short to ground in the (V38) S/C Switch Sense 2 circuit.
- Perform the POWERTRAIN VERIFICATION TEST. Refer to **POWERTRAIN VERIFICATION TEST - 6.7L** .

5. **(V38) S/C SWITCH SENSE 2 CIRCUIT SHORTED TO THE (V937) S/C SWITCH RETURN CIRCUIT**

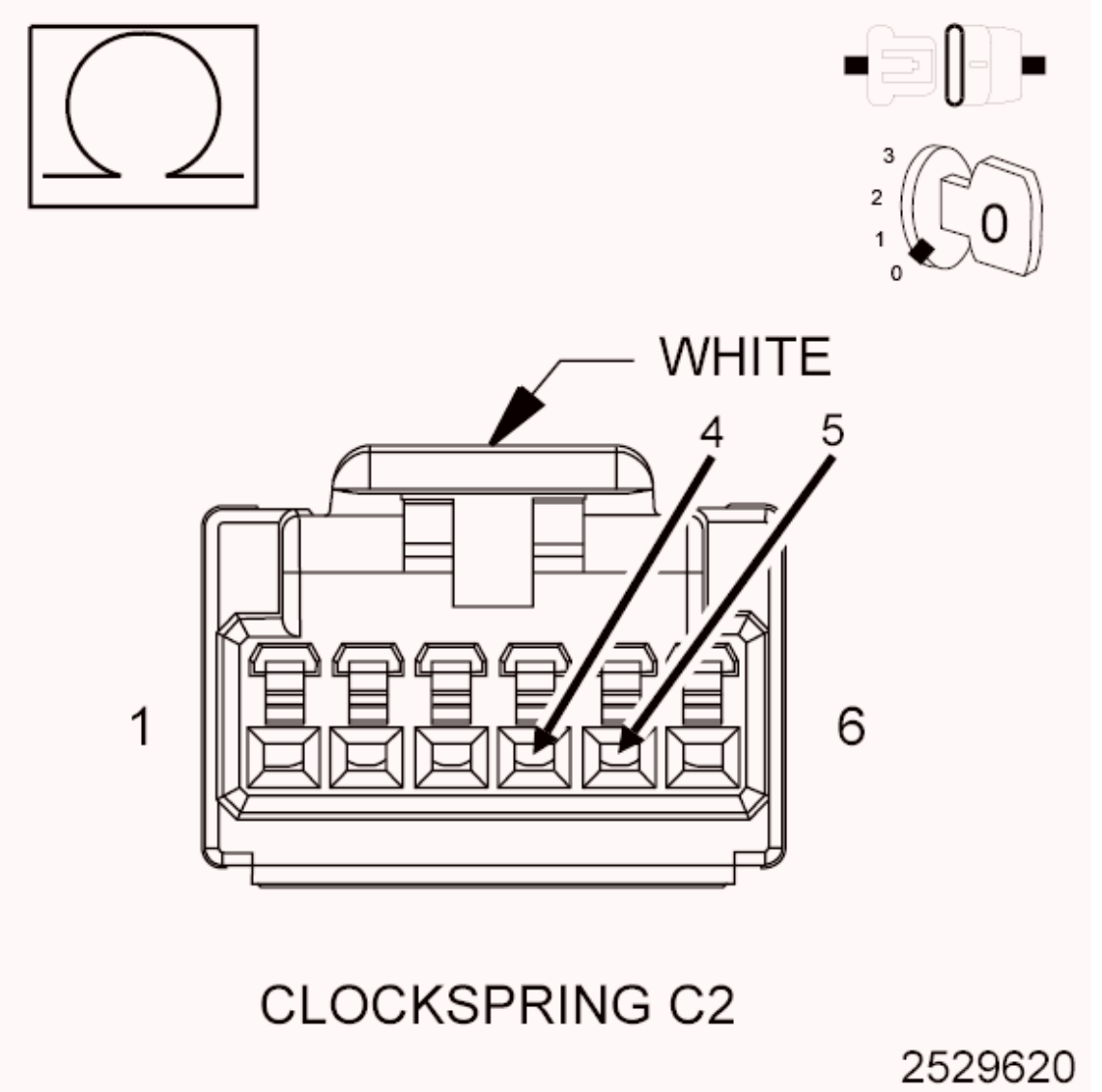

Fig. 80: Measuring Resistance Between S/C Switch Sense Circuit And S/C Switch Return Circuit In Clockspring C2 Harness Connector
Courtesy of CHRYSLER GROUP, LLC

1. Measure the resistance between the (V38) S/C Switch Sense 2 circuit and the (V937) S/C Switch Return circuit in the Clockspring C2 harness connector.

   Is the resistance above 10k Ohms?

   Yes

   - Go To 6.

   No

   - Repair the short between the (V38) S/C Switch Sense 2 circuit and the (V937) Switch Return circuit.
   - Perform the POWERTRAIN VERIFICATION TEST. Refer to **POWERTRAIN VERIFICATION TEST - 6.7L** .

6. **CLOCKSPRING**
   1. Disconnect the Clockspring C8 harness connector.
   2. Measure the resistance of the (V38) S/C Switch Sense 2 circuit between the Clockspring C2 and C8 at the Clockspring connectors.
   3. Measure the resistance of the (V937) Switch Return circuit between the Clockspring C2 and C8 at the Clockspring connectors.

      Is the resistance above 5.0 Ohms for either reading?

      Yes

      - Replace the Clockspring in accordance with the service information.
      - Perform the POWERTRAIN VERIFICATION TEST. Refer to **POWERTRAIN VERIFICATION TEST - 6.7L** .

      No

      - Go To 7.

7. **STEERING WHEEL JUMPER HARNESS**

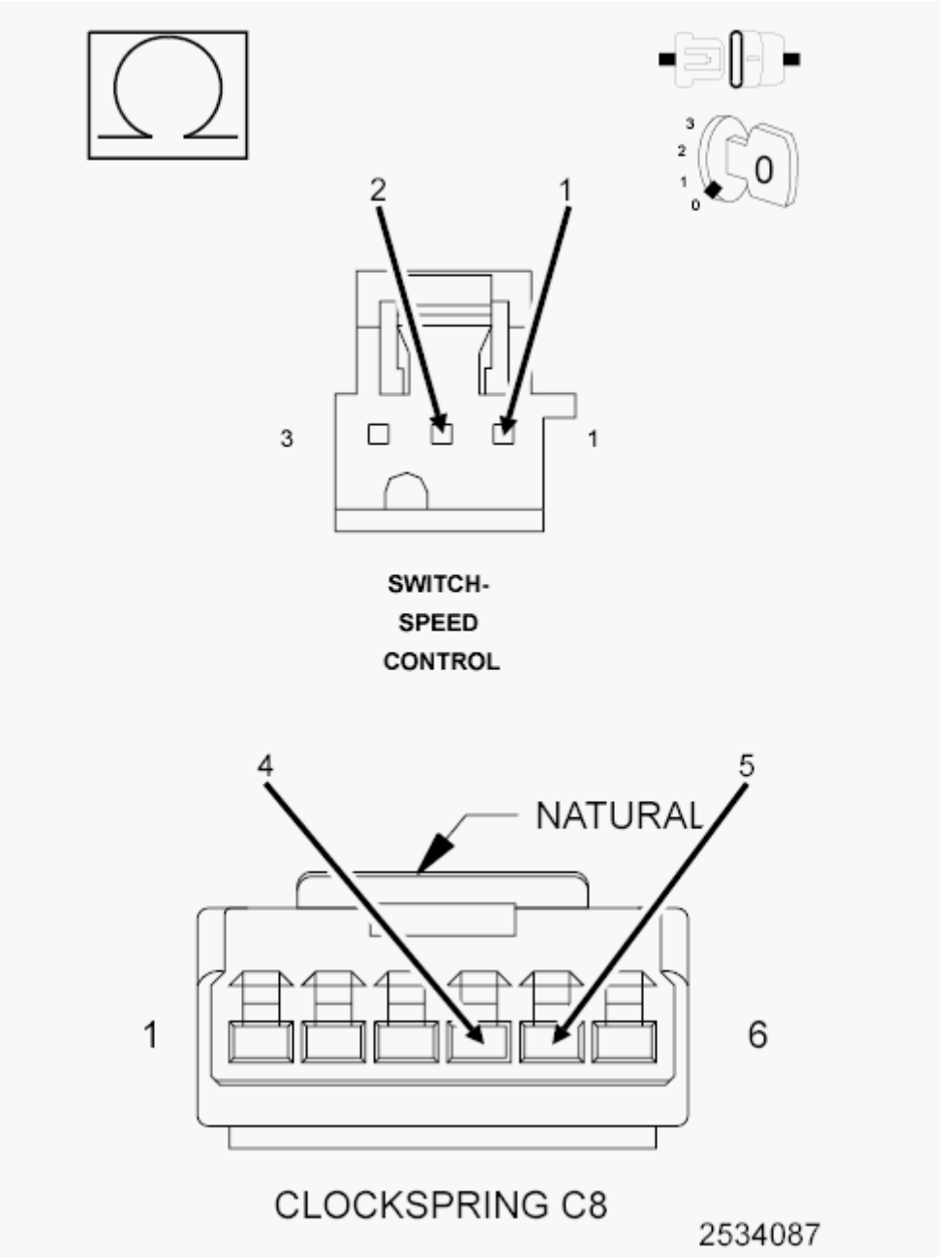

Fig. 81: Measuring Resistance Of S/C Switch Sense 2 Circuit Switch Return Circuit Between Clockspring Harness Connector And S/C Switch Harness Connector
Courtesy of CHRYSLER GROUP, LLC

1. Measure the resistance of the (V38) S/C Switch Sense 2 circuit between the Clockspring C8 harness connector and S/C Switch harness connector.
2. Measure the resistance of the (V937) Switch Return circuit between the Clockspring C8 harness connector and S/C Switch harness connector.

   Is the resistance above 5.0 Ohms for either reading?

Yes

- Replace the Steering Wheel Jumper harness in accordance with the service information.
- Perform the POWERTRAIN VERIFICATION TEST. Refer to **POWERTRAIN VERIFICATION TEST - 6.7L** .

No

- Go To 8.

8. **(V937) S/C SWITCH RETURN OPEN**
   1. Measure the resistance of the (V937) S/C Switch Return circuit between the Clockspring C2 harness connector and the of PCM C2 harness connector.

      Is the resistance below 5.0 Ohms?

      Yes

      - Go To 9.

      No

      - Repair the open in the (V937) S/C Switch Return circuit.
      - Perform the POWERTRAIN VERIFICATION TEST. Refer to **POWERTRAIN VERIFICATION TEST - 6.7L** .
9. **(V38) S/C SWITCH SENSE 2 CIRCUIT OPEN**
   1. Measure the resistance of the (V38) S/C Switch Sense 2 circuit between the Clockspring C2 harness connector and the of PCM C2 harness connector.

      Is the resistance below 5.0 Ohms?

      Yes

      - Go To 10.

      No

      - Repair the open in the (V38) S/C Switch Sense 2 circuit.
      - Perform the POWERTRAIN VERIFICATION TEST. Refer to **POWERTRAIN VERIFICATION TEST - 6.7L** .
10. **SPEED CONTROL SWITCH VOLTAGE VALUES**
    1. Reconnect the Speed Control Switch harness connector.
    2. Reconnect the Clockspring harness connectors.
    3. Reconnect the PCM C2 harness connector.
    4. Back probe the (V37) S/C Switch Sense 1 circuit and the (V38) S/C Switch Sense 2 circuit at the

PCM C2 harness connector.

CAUTION: Use only approved back probe tools when back probing a connector so as not to cause damage to the terminals or insulation of the connector. Damage to the terminals can cause poor terminal contact or retention. Damage to the insulation can introduce corrosion due to water infiltration.

5. Turn the ignition on.
6. Using the scan tool, monitor the S/C Switch voltage readings.
7. Using a Voltmeter check the voltage on the (V71) S/C Switch Sense 1 circuit and the (V38) S/C Switch Sense 2 circuit at the PCM C2 harness connector.
8. Monitor the Voltmeter.
9. Using the scan tool, monitor the S/C Switch voltage readings.

SWITCH POSITION	SWITCH No. 1 VOLTAGE VALUE	SWITCH No. 2 VOLTAGE VALUE
NO SWITCHES PRESSED	4.31 to 4.78 Volts	4.31 to 4.78 Volts
ON/OFF PRESSED	0.59 to 1.13 Volts	3.53 to 3.92 Volts
RES/ACCEL PRESSED	3.88 to 4.17 Volts	2.04 to 2.47 Volts
SET/DECEL PRESSED	3.16 to 3.56 Volts	1.17 to 1.56 Volts
CANCEL PRESSED	1.59 to 1.99 Volts	2.84 to 3.25 Volts

10. Compare the voltage readings on the Voltmeter to what the scan tool displayed.

    Are the voltage readings out of the listed specification and is there less than a 0.2 Volt difference between the Voltmeter switch values and the scan tool switch values?

    Yes

    - Replace the Speed Control Switch in accordance with the service information.
    - Perform the POWERTRAIN VERIFICATION TEST. Refer to **POWERTRAIN VERIFICATION TEST - 6.7L** .

    No

    - Go To 11.

11. **POWERTRAIN CONTROL MODULE (PCM)**
    1. Using the wiring diagram/schematic as a guide, inspect the wiring and connectors between the Speed Control Switch and the Powertrain Control Module (PCM).
    2. Look for any chafed, pierced, pinched or partially broken wires.
    3. Look for broken, bent, pushed out or corroded terminals. Verify that there is good pin to terminal contact in the Switch and Powertrain Control Module connectors.

4. Perform any Technical Service Bulletins that may apply.

   Were there any problems found?

   Yes

   - Repair as necessary.
   - Perform the POWERTRAIN VERIFICATION TEST. Refer to **POWERTRAIN VERIFICATION TEST - 6.7L** .

   No

   - Replace and program the Powertrain Control Module in accordance with the service information. Refer to **MODULE, POWERTRAIN CONTROL, 6.7L DIESEL, REMOVAL** and **PCM/ECM / TCM PROGRAMMING** .
   - Perform the POWERTRAIN VERIFICATION TEST. Refer to **POWERTRAIN VERIFICATION TEST - 6.7L** .

P0592-SPEED CONTROL SWITCH 2 CIRCUIT LOW

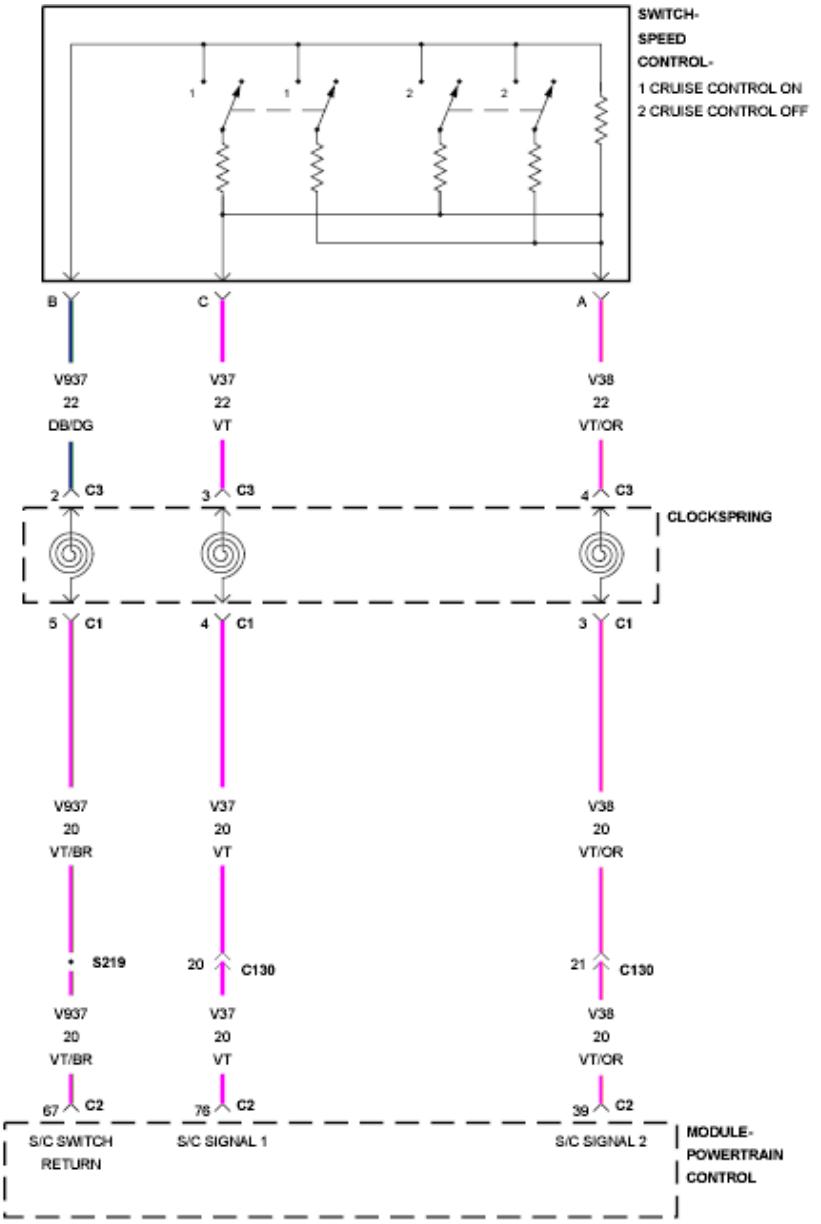

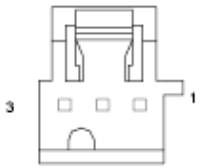

SWITCH-
SPEED
CONTROL

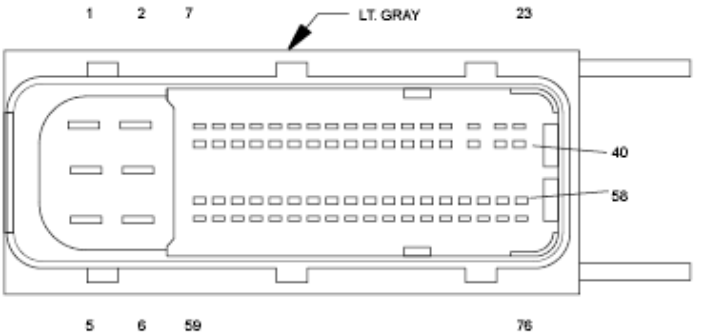

MODULE-
POWERTRAIN
CONTROL C2

Fig. 82: Speed Control Switch Circuit Schematic
Courtesy of CHRYSLER GROUP, LLC

For a complete wiring diagram, **refer to appropriate SYSTEM WIRING DIAGRAMS article** .

WHEN MONITORED:

While the ignition is on.

SET CONDITION:

Speed control MUX switch below 1.0 Volt for five seconds.

POSSIBLE CAUSES

Possible Causes
S/C WIRING HARNESS OBSERVABLE PROBLEM
S/C SWITCH (ON/OFF)
CLOCKSPRING
S/C SWITCH (RESUME/ACCEL)
(V38) S/C SWITCH 2 SIGNAL CIRCUIT SHORTED TO GROUND
(V38) S/C SWITCH 2 SIGNAL CIRCUIT SHORTED TO THE (V937) S/C SWITCH RETURN CIRCUIT
POWERTRAIN CONTROL MODULE (PCM)

Always perform the Pre-Diagnostic Troubleshooting procedure before proceeding. Refer to PRE-DIAGNOSTIC TROUBLESHOOTING PROCEDURE - 6.7L .

DIAGNOSTIC TEST

1. **S/C SWITCH VOLTAGE BELOW 1.0 VOLT**
    1. Turn the ignition on.
    2. With the scan tool, read the S/C Switch Volts status in the PCM.

       Is the S/C Switch voltage below 1.0 Volt?

       Yes

       - Go To 3.

       No

       - Go To 2.
2. **VISUALLY INSPECT THE S/C WIRING HARNESS**
    1. Turn the ignition off.

2. Using the Schematics as a guide, inspect the Wiring and Connectors.

   Were any problems found?

   Yes

   - Repair as necessary.
   - Perform the POWERTRAIN VERIFICATION TEST - 6.7L. Refer to **POWERTRAIN VERIFICATION TEST - 6.7L** .

   No

   - Go To 3.

3. **S/C SWITCH (ON/OFF)**
   1. Turn the ignition off.
   2. Disconnect the S/C ON/OFF Switch harness connector.

      NOTE: Check connectors - Clean/repair as necessary.

   3. Turn the ignition on.
   4. With the scan tool in Sensors, read the S/C Switch Volts in the PCM.

      Did the S/C Switch voltage change to 5.0 Volts?

      Yes

      - Replace the S/C ON/OFF Switch in accordance with the service information.
      - Perform the POWERTRAIN VERIFICATION TEST - 6.7L. Refer to **POWERTRAIN VERIFICATION TEST - 6.7L** .

      No

      - Go To 4.

4. **S/C SWITCH (RESUME/ACCEL)**
   1. Turn the ignition off.
   2. Disconnect the S/C RESUME/ACCEL Switch harness connector.

      NOTE: Check connectors - Clean/repair as necessary.

   3. Ignition on, engine not running.
   4. With the scan tool in Sensors, read the S/C Switch Volts in the PCM.

      Did the S/C Switch voltage go above 4.0 Volts?

Yes

- Replace the Resume/Accel Switch in accordance with the service information.
- Perform the POWERTRAIN VERIFICATION TEST - 6.7L. Refer to **POWERTRAIN VERIFICATION TEST - 6.7L** .

No

- Go To 5.

5. **CLOCKSPRING**
   1. Turn the ignition off.
   2. Disconnect the Clockspring C1 harness connector (instrument panel wiring side).
   3. Turn the ignition on.
   4. With the scan tool in sensors, read the S/C Switch Volts in the PCM.

      Did the S/C Switch voltage change to 5.0 Volts?

      Yes

      - Replace the Clockspring in accordance with the service information.
      - Perform the POWERTRAIN VERIFICATION TEST - 6.7L. Refer to **POWERTRAIN VERIFICATION TEST - 6.7L** .

      No

      - Go To 6.

6. **CHECK THE (V38) S/C SWITCH 2 SIGNAL CIRCUIT FOR A SHORT TO GROUND**
   1. Turn the ignition off.
   2. Disconnect the S/C ON/OFF Switch harness connector.
   3. Disconnect the PCM C2 harness connector.

      NOTE: Check connectors - Clean/repair as necessary.

   4. Measure the resistance between ground and the (V38) S/C Switch 2 Signal circuit at S/C ON/OFF Switch harness connector.

      Is the resistance below 5.0 Ohms?

      Yes

      - Repair (V38) S/C Switch 2 Signal circuit for a short to ground.
      - Perform the POWERTRAIN VERIFICATION TEST - 6.7L. Refer to **POWERTRAIN VERIFICATION TEST - 6.7L** .

No

- Go To 7.

7. **CHECK FOR THE (V38) S/C SWITCH 2 SIGNAL CIRCUIT SHORTED TO THE (V937) S/C SWITCH RETURN CIRCUIT**
   1. Measure the resistance between the (V38) S/C Switch 2 Signal circuit and the (V937) S/C Switch Return circuit at the ON/OFF switch harness connector.

      Is the resistance below 5.0 Ohms?

      Yes

      - Repair the short between the (V38) S/C Switch 2 Signal circuit and the (V937) S/C Switch Return circuit.
      - Perform the POWERTRAIN VERIFICATION TEST - 6.7L. Refer to **POWERTRAIN VERIFICATION TEST - 6.7L** .

      No

      - Replace and program the Powertrain Control Module in accordance with the service information. Refer to **MODULE, POWERTRAIN CONTROL, 6.7L DIESEL, REMOVAL** and **PCM/ECM / TCM PROGRAMMING** .
      - Perform the POWERTRAIN VERIFICATION TEST - 6.7L. Refer to **POWERTRAIN VERIFICATION TEST - 6.7L** .

P0593-SPEED CONTROL SWITCH 2 CIRCUIT HIGH

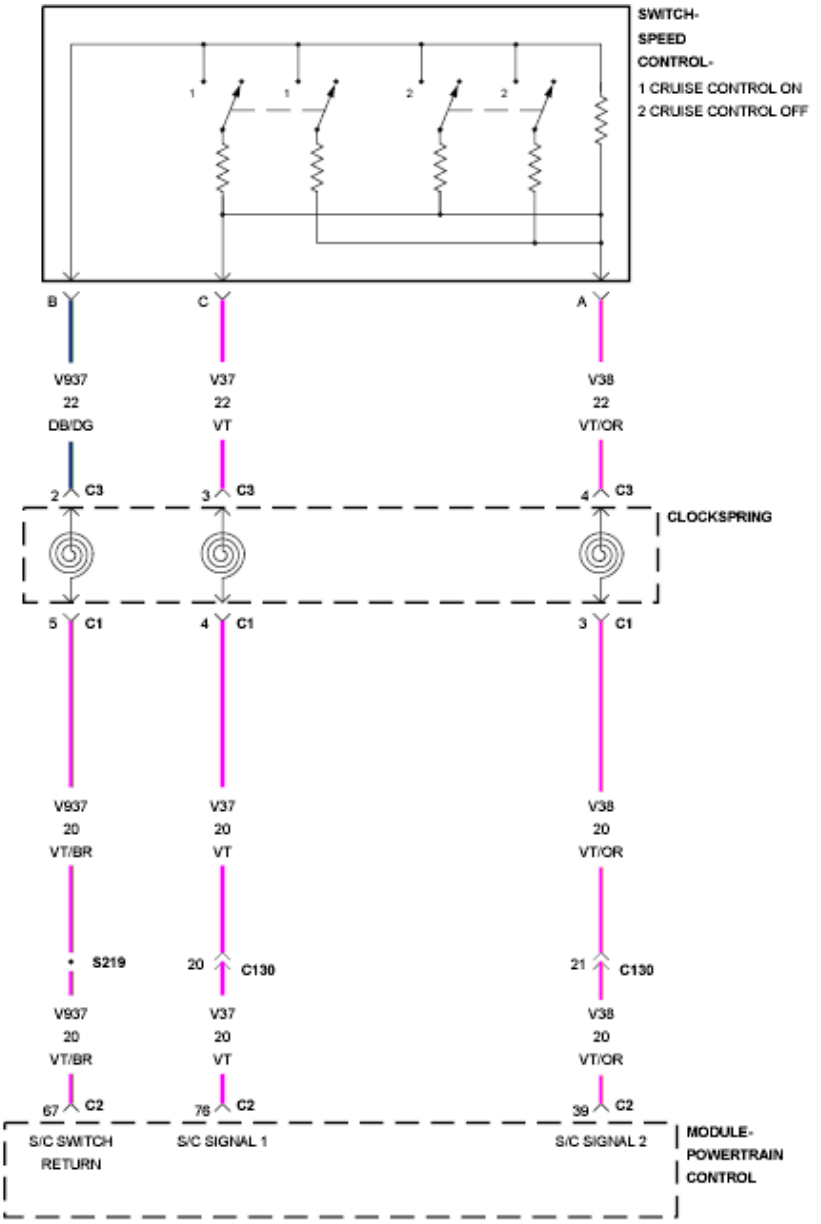

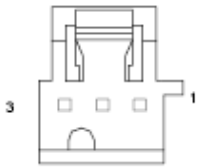

SWITCH-
SPEED
CONTROL

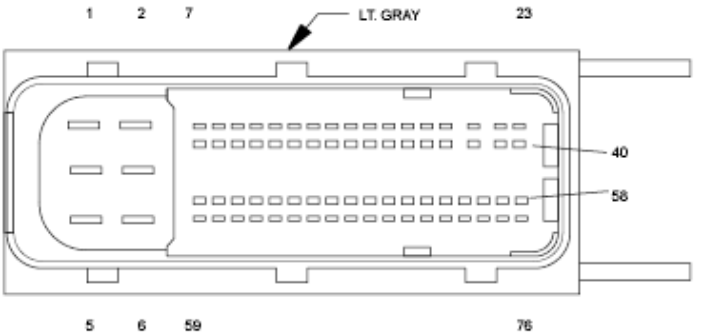

MODULE-
POWERTRAIN
CONTROL C2

Fig. 83: Speed Control Switch Circuit Schematic
Courtesy of CHRYSLER GROUP, LLC

For a complete wiring diagram, **refer to appropriate SYSTEM WIRING DIAGRAMS article** .

WHEN MONITORED:

Key on or engine running.

SET CONDITION:

Speed Control MUX switch above 11.5 Volts for five seconds.

POSSIBLE CAUSES

Possible Causes
S/C WIRING HARNESS OBSERVABLE PROBLEM
CLOCKSPRING
SPEED CONTROL ON/OFF SWITCH
(V38) S/C SWITCH 2 SIGNAL CIRCUIT SHORTED TO VOLTAGE
(V38) S/C SWITCH 2 SIGNAL CIRCUIT OPEN PCM TO CLOCK SPRING
(V38) S/C SWITCH 2 SIGNAL CIRCUIT OPEN CLOCKSPRING TO S/C SWITCH
(V937) S/C SWITCH RETURN CIRCUIT OPEN CLOCKSPRING TO S/C SWITCH
(V937) S/C SWITCH RETURN CIRCUIT OPEN PCM TO CLOCKSPRING
POWERTRAIN CONTROL MODULE (PCM)

Always perform the Pre-Diagnostic Troubleshooting procedure before proceeding. Refer to PRE-DIAGNOSTIC TROUBLESHOOTING PROCEDURE - 6.7L .

DIAGNOSTIC TEST

1. **SCAN TOOL SHOWS SPEED CONTROL SWITCH ON/OFF**
    1. Turn the ignition on.
    2. With the scan tool in Inputs/Outputs, read the Speed Control inputs state in PCM.
    3. While monitoring the scan tool, push the Speed Control On/Off Switch several times, then leave it on.

    Did the scan tool show Speed Control Switch off and on?

    Yes

    - Perform the INTERMITTENT CONDITION diagnostic procedure. Refer to **INTERMITTENT CONDITION - 6.7L** .

    No

- Go To 2.

2. **S/C WIRING HARNESS VISUAL INSPECTION**
    1. Turn the ignition off.
    2. Using the Schematics as a guide, inspect the Wiring and Connectors.

    Were any problems found?

    Yes

    - Repair as necessary.
    - Perform the POWERTRAIN VERIFICATION TEST - 6.7L. Refer to **POWERTRAIN VERIFICATION TEST - 6.7L** .

    No

    - Go To 3.

3. **CHECK THE CLOCKSPRING**

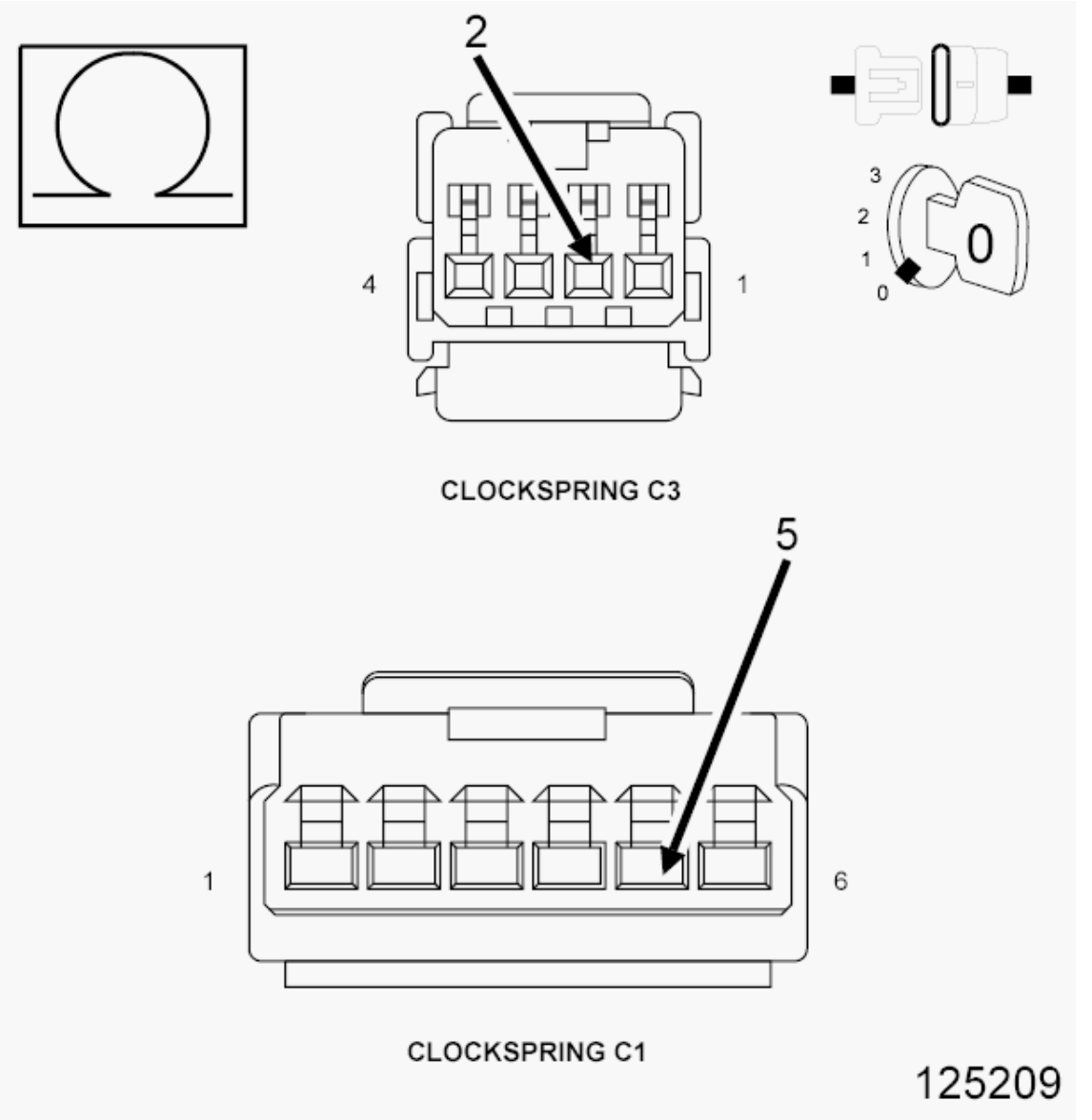

Fig. 84: Measuring Resistance Of S/C Switch Return Circuit Between Upper And Lower Clockspring Harness Connectors
Courtesy of CHRYSLER GROUP, LLC

1. Disconnect the Clockspring C1 and C3 harness connectors.

   NOTE: Check connectors - Clean/repair as necessary.

2. Measure the resistance of the (V937) S/C Switch Return circuit between the Clockspring C1 and C3 harness connectors.

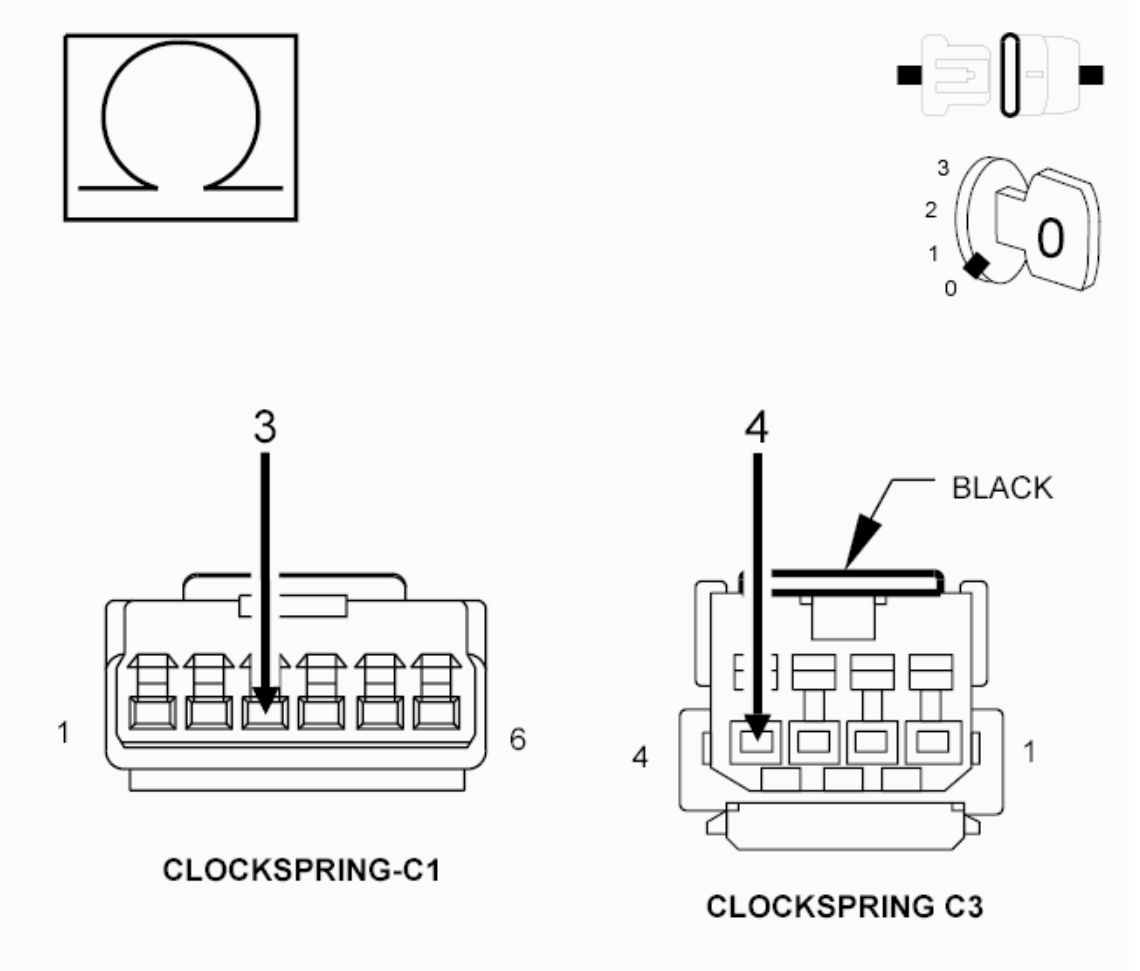

Fig. 85: Measuring Resistance Of S/C Switch Signal Circuits Between Clockspring Harness Connectors
Courtesy of CHRYSLER GROUP, LLC

3. Measure the resistance of the (V38) S/C Switch 2 Signal circuit between the Clockspring C1 and C3 harness connectors.

   Was the resistance above 5.0 Ohms for either circuit?

   Yes

   - Replace the Steering Column Control Module in accordance with the service information.
   - Perform the POWERTRAIN VERIFICATION TEST - 6.7L. Refer to **POWERTRAIN VERIFICATION TEST - 6.7L** .

   No

   - Go To 4.

4. **SPEED CONTROL ON/OFF SWITCH**

1. Disconnect the Speed Control On/Off Switch harness connector only.

   NOTE: Check connectors - Clean/repair as necessary.

2. Measure the resistance across the S/C On/Off Switch.

   Is the resistance between 20.3K and 20.7K Ohms?

   Yes

   - Go To 5.

   No

   - Replace the On/Off Switch in accordance with the service information.
   - Perform the POWERTRAIN VERIFICATION TEST - 6.7L. Refer to **POWERTRAIN VERIFICATION TEST - 6.7L** .

5. **CHECK THE (V38) S/C SWITCH 2 SIGNAL CIRCUIT FOR A SHORT TO VOLTAGE**
   1. Turn the ignition on.
   2. Measure the voltage of the (V38) S/C Switch 2 Signal circuit at both S/C Switch harness connectors.

      Is the voltage above 6.0 Volts?

      Yes

      - Repair the (V38) S/C Switch 2 Signal circuit for a short to voltage.
      - Perform the POWERTRAIN VERIFICATION TEST - 6.7L. Refer to **POWERTRAIN VERIFICATION TEST - 6.7L** .

      No

      - Go To 6.

6. **CHECK THE (V38) S/C SWITCH 2 SIGNAL CIRCUIT FOR AN OPEN BETWEEN THE PCM AND CLOCKSPRING**
   1. Turn the ignition off.
   2. Disconnect the PCM harness connector.

      NOTE: Check connectors - Clean/repair as necessary.

   3. Measure the resistance of the (V38) S/C Switch Signal 2 circuit between the PCM connector and the Clockspring C1 harness connector.

      Is the resistance below 5.0 Ohms?

Yes

- Go To 7.

No

- Repair the (V38) S/C Switch 2 Signal circuit for an open between the PCM and the Clockspring.
- Perform the POWERTRAIN VERIFICATION TEST - 6.7L. Refer to **POWERTRAIN VERIFICATION TEST - 6.7L** .

7. **CHECK THE (V38) S/C SWITCH 2 SIGNAL CIRCUIT FOR AN OPEN BETWEEN THE CLOCKSPRING AND S/C SWITCH**
   1. Measure the resistance of the (V38) S/C Switch 2 Signal circuit from the Clockspring C3 harness connector to the S/C Switch harness connectors.

      Is the resistance below 5.0 Ohms?

      Yes

      - Go To 8.

      No

      - Repair the (V38) S/C Switch 2 Signal circuit for an open between the Clockspring and the S/C switches.
      - Perform the POWERTRAIN VERIFICATION TEST - 6.7L. Refer to **POWERTRAIN VERIFICATION TEST - 6.7L** .
8. **CHECK THE (V937) S/C SWITCH RETURN CIRCUIT FOR AN OPEN BETWEEN THE CLOCKSPRING AND S/C SWITCHES**
   1. Measure the resistance of the (V937) S/C Switch Return circuit between the S/C harness connectors to the Clockspring C3 harness connector.

      Is the resistance below 5.0 Ohms?

      Yes

      - Go To 9.

      No

      - Repair the (V937) S/C Switch Return circuit for an open between the Clockspring and the S/C switches.
      - Perform the POWERTRAIN VERIFICATION TEST - 6.7L. Refer to **POWERTRAIN VERIFICATION TEST - 6.7L** .
9. **CHECK THE (V937) S/C SWITCH RETURN CIRCUIT FOR AN OPEN BETWEEN THE PCM**

AND CLOCKSPRING

1. Measure the resistance of the (V38) S/C Switch Return circuit between the PCM harness connector and the Clockspring C1 harness connector.

   Is the resistance below 5.0 Ohms?

   Yes

   - Replace and program the Powertrain Control Module in accordance with the service information. Refer to **MODULE, POWERTRAIN CONTROL, 6.7L DIESEL, REMOVAL** and **PCM/ECM / TCM PROGRAMMING** .
   - Perform the POWERTRAIN VERIFICATION TEST - 6.7L. Refer to **POWERTRAIN VERIFICATION TEST - 6.7L** .

   No

   - Repair the (V937) S/C Switch Return circuit for an open between the PCM and Clockspring.
   - Perform the POWERTRAIN VERIFICATION TEST - 6.7L. Refer to **POWERTRAIN VERIFICATION TEST - 6.7L** .

P0601-INTERNAL MEMORY CHECKSUM ERROR

For a complete wiring diagram, **refer to appropriate SYSTEM WIRING DIAGRAMS article** .

WHEN MONITORED:

While the ignition is on.

SET CONDITION:

A deviation between the Powertrain Control Module memory and a stored calibration.

POSSIBLE CAUSES

Possible Causes
FLASH PCM POWERTRAIN CONTROL MODULE (PCM)

Always perform the Pre-Diagnostic Troubleshooting procedure before proceeding. Refer to PRE-DIAGNOSTIC TROUBLESHOOTING PROCEDURE - 6.7L .

DIAGNOSTIC TEST

1. **FLASH PCM**
   1. Using the scan tool, reflash the PCM with the proper calibration for the particular truck.

Is the flash successful?

Yes

- Repair complete.

No

- Go To 2.

2. **POWERTRAIN CONTROL MODULE**
    1. With the scan tool, read DTCs.

    Did P0601 set after the reflash?

    Yes

    - Replace the Powertrain Control Module in accordance with the service information.
    - Perform the POWERTRAIN VERIFICATION TEST - 6.7L. Refer to **POWERTRAIN VERIFICATION TEST - 6.7L** .

    No

    - Test Complete.
    - Perform the POWERTRAIN VERIFICATION TEST - 6.7L. Refer to **POWERTRAIN VERIFICATION TEST - 6.7L** .

P0604-INTERNAL CONTROL MODULE RAM ERROR

For a complete wiring diagram, **refer to appropriate SYSTEM WIRING DIAGRAMS article** .

WHEN MONITORED:

While the key is on.

SET CONDITION:

Internal Powertrain Control Module software error.

POSSIBLE CAUSES

Possible Causes
REFLASH PCM POWERTRAIN CONTROL MODULE

Always perform the Pre-Diagnostic Troubleshooting procedure before proceeding. Refer to PRE-DIAGNOSTIC TROUBLESHOOTING PROCEDURE - 6.7L .

DIAGNOSTIC TEST

1. **REFLASH PCM**
    1. Using the scan tool, reflash the module with latest calibration.

       Was the flash successful?

       Yes

       - Go To 2.

       No

       - Replace the Powertrain Control Module in accordance with the service information.
       - Perform the POWERTRAIN VERIFICATION TEST - 6.7L. Refer to **POWERTRAIN VERIFICATION TEST - 6.7L** .
2. **POWERTRAIN CONTROL MODULE**
    1. Run the engine for one minute and shut off.
    2. With the scan tool, read DTCs.

       Did P0604 set?

       Yes

       - Replace the Powertrain Control Module in accordance with the service information.
       - Perform the POWERTRAIN VERIFICATION TEST - 6.7L. Refer to **POWERTRAIN VERIFICATION TEST - 6.7L** .

       No

       - Test Complete.

P0606-INTERNAL CONTROL PROCESSOR

THEORY OF OPERATION

This fault code is triggered when the internal Powertrain Control Module (PCM) diagnostics detect a read or write error internal to the module. The PCM illuminates the MIL light immediately when the diagnostic runs and fails. The PCM will turn off the MIL light immediately after the diagnostic runs and passes. This fault code can only be caused by an internal PCM problem and may prevent the engine from starting.

WHEN MONITORED:

With ignition on.

SET CONDITION:

Powertrain Control Module has detected internal failures.

POSSIBLE CAUSES

Possible Causes
ENGINE OR FUEL MODIFICATIONS THAT EXCEED OEM SPECIFICATIONS
POWERTRAIN CONTROL MODULE (PCM)

Always perform the Pre-Diagnostic Troubleshooting procedure before proceeding. Refer to PRE-DIAGNOSTIC TROUBLESHOOTING PROCEDURE - 6.7L .

DIAGNOSTIC TEST

1. **POWERTRAIN CONTROL MODULE**
    1. Turn the ignition off.
    2. Verify all chassis grounds are properly connected. Perform the CHECKING ECM POWERS AND GROUNDS diagnostic procedure. Refer to **DIAGNOSIS AND TESTING, 6.7L** .
    3. Turn ignition on, engine not running.
    4. With the scan tool, read DTCs.

    Is P0606 stored?

    Yes

    - Repair complete.

    No

    - Replace and program the Powertrain Control Module in accordance with the service information. Refer to **MODULE, POWERTRAIN CONTROL, 6.7L DIESEL, REMOVAL** and **PCM/ECM / TCM PROGRAMMING** .

P0607-ECU INTERNAL PERFORMANCE

For a complete wiring diagram, **refer to appropriate SYSTEM WIRING DIAGRAMS article** .

THEORY OF OPERATION

The purpose of this test is to check the internal Powertrain Control Module (PCM) fuel system diagnostic (ASIC) for proper operation by intentionally inducing a failure and looking for the proper PCM response. At key off, the diagnostic overwrites injector on time and falsely cycles the injectors. If the internal PCM detection chip (ASIC) detects the firing and sets an error then the diagnostic passes. This diagnostic initially only runs at key off. If the diagnostic failed at the last key off cycle, then it will also run at the next cranking event. If the driver stalls the engine (manual transmission only) at the same moment that the key is turned off this diagnostic could fail. When the diagnostic fails, the PCM will flash the ETC lamp.

WHEN MONITORED:

Initially at key off. If the diagnostic fails at last key off then it will also run at the next cranking event.

SET CONDITION:

Induced failure does not set the internal Powertrain Control Module (PCM) detection chip (ASIC) error.

POSSIBLE CAUSES

Possible Causes
FUEL INJECTOR CIRCUIT OPEN/HIGH RESISTANCE
UPRATE KIT THAT MODIFIES INJECTOR ON TIME
POWERTRAIN CONTROL MODULE (PCM)

Always perform the Pre-Diagnostic Troubleshooting procedure before proceeding. Refer to PRE-DIAGNOSTIC TROUBLESHOOTING PROCEDURE - 6.7L .

DIAGNOSTIC TEST

1. **ACTIVE DTC**

   NOTE: **High resistance, opens, or shorts in any fuel injector circuits will cause this DTC to set, but may not set a Fuel Injector circuit DTC. Always check Fuel Injector circuits before replacing the Powertrain Control Module. Pay special attention to the valve cover gasket molded in injector harness.**

   1. Ignition on, engine not running.
   2. With the scan tool check for active DTCs.

      Is the DTC active?

      Yes

      - Go To 2.

      No

      - Perform the INTERMITTENT CONDITION diagnostic procedure. Refer to **INTERMITTENT CONDITION - 6.7L** .
2. **FUEL INJECTOR CIRCUIT DTCS**
   1. Ignition on, engine not running.
   2. With the scan tool, read DTCs.

      Are there any Fuel Injector circuit DTCs present?

Yes

- Repair the Fuel Injector circuit DTCs before proceeding.
- Perform the POWERTRAIN VERIFICATION TEST - 6.7L. Refer to **POWERTRAIN VERIFICATION TEST - 6.7L** .

No

- Go To 3.

3. **INTERMITTENT CONDITION**
   1. Ask customer if the truck was stalled at key off shortly before the ETC lamp started flashing.

      Was the truck stalled at a recent key off event?

      Yes

      - Explain diagnostic to customer. Repair complete.

      No

      - Go To 4.

4. **POWERTRAIN CONTROL MODULE**

   NOTE: High resistance, opens or shorts in any fuel injector circuits will cause this DTC to set, but may not set a Fuel Injector circuit DTC. Always check Fuel Injector circuit wiring before replacing the Powertrain Control Module. Pay special attention to the valve cover gasket molded in injector harness.

   1. Investigate truck for signs of a performance enhancement kit.

      Are there signs that the customer has used a performance enhancement kit?

      Yes

      - Repair complete. Return vehicle to owner.

      No

      - Replace the Powertrain Control Module in accordance with the service information.
      - Perform the POWERTRAIN VERIFICATION TEST - 6.7L. Refer to **POWERTRAIN VERIFICATION TEST - 6.7L** .

P061A-ETC LEVEL 2 TORQUE PERFORMANCE

For a complete wiring diagram, **refer to appropriate SYSTEM WIRING DIAGRAMS article** .

THEORY OF OPERATION

This algorithm monitors the control system to ensure that the fueling output is consistent based on the operating conditions. The Engine Control Module (PCM) will light the ETC lamp immediately after the diagnostic runs and fails. During this time the customer may experience an engine derate or engine running rough. The PCM will turn off the ETC lamp once the diagnostic passes in one drive cycle.

WHEN MONITORED:

With the engine running.

SET CONDITION:

Varies with operation. Verifies the control system fueling output is consistent based on the operating conditions.

POSSIBLE CAUSES

Possible Causes
SOFTWARE REVISION/TSBS
COOLANT TEMPERATURE SENSOR
EXHAUST MANIFOLD PRESSURE SENSOR
INTAKE MANIFOLD PRESSURE SENSOR
BRAKE SWITCH
ENGINE OR FUEL MODIFICATIONS THAT EXCEED OEM SPECIFICATIONS
ACCELERATOR PEDAL POSITION SENSOR
POWERTRAIN CONTROL MODULE (PCM)

Always perform the Pre-Diagnostic Troubleshooting procedure before proceeding. Refer to PRE-DIAGNOSTIC TROUBLESHOOTING PROCEDURE - 6.7L .

DIAGNOSTIC TEST

1. **OTHER DTCS**
    1. Ignition on, engine not running.
    2. With the scan tool, read DTCs.

    Are there any other DTCs?

    Yes

    - Repair all other DTCs first.
    - Perform the POWERTRAIN VERIFICATION TEST - 6.7L. Refer to **POWERTRAIN VERIFICATION TEST - 6.7L** .

    No

- Go To 2.

2. **CHECK THE COOLANT TEMPERATURE SENSOR**
    1. With the scan tool, read the Freeze frame data.

       Is the coolant temperature reading uncharacteristically low for the operating conditions?

       Yes

       - Replace Coolant Temperature Sensor in accordance with the service information.
       - Perform the POWERTRAIN VERIFICATION TEST - 6.7L. Refer to **POWERTRAIN VERIFICATION TEST - 6.7L** .

       No

       - Go To 3.

3. **CHECK THE ACCELERATOR PEDAL POSITION SENSOR**
    1. Monitor the APPS 1 and APPS 2 voltage with scan tool while depressing the throttle pedal.

       Is the voltage transition shown on the scan tool smooth while depressing the throttle and is the Volt swing smooth?

       Yes

       - Go To 4.

       No

       - Replace the APPS in accordance with the service information.
       - Perform the POWERTRAIN VERIFICATION TEST - 6.7L. Refer to **POWERTRAIN VERIFICATION TEST - 6.7L** .

4. **CHECK THE EXHAUST GAS PRESSURE SENSOR**
    1. With the scan tool, read the Freeze frame data.

       Is the Exhaust Gas Pressure Sensor reading higher than the Boost Pressure reading?

       Yes

       - Replace the Exhaust Gas Pressure Sensor in accordance with the service information.
       - Perform the POWERTRAIN VERIFICATION TEST - 6.7L. Refer to **POWERTRAIN VERIFICATION TEST - 6.7L** .

       No

       - Go To 5.

5. **CHECK THE INTAKE MANIFOLD PRESSURE SENSOR**
    1. With the scan tool, read the Freeze frame data.

       Is the Boost Pressure Sensor reading higher than the Exhaust Gas Pressure Sensor reading?

       Yes

       - Replace the Boost Pressure Sensor in accordance with the service information.
       - Perform the POWERTRAIN VERIFICATION TEST - 6.7L. Refer to **POWERTRAIN VERIFICATION TEST - 6.7L** .

       No

       - Go To 6.
6. **CHECK THE BRAKE SWITCH**
    1. Using a scan tool monitor brake switch position while cycling the brake pedal.

       Is the brake switch status changing correctly?

       Yes

       - Go To 7.

       No

       - Replace the Brake Switch or repair the wiring.
       - Perform the POWERTRAIN VERIFICATION TEST - 6.7L. Refer to **POWERTRAIN VERIFICATION TEST - 6.7L** .
7. **CHECK FOR SOFTWARE REVISION/TSBS**
    1. Check TSBs for software releases.

       Are there any new software releases?

       Yes

       - Reflash the Powertrain Control Module in accordance with the service information.
       - Perform the POWERTRAIN VERIFICATION TEST - 6.7L. Refer to **POWERTRAIN VERIFICATION TEST - 6.7L** .

       No

       - Go To 8.
8. **CHECK FOR ENGINE OR FUEL MODIFICATIONS THAT EXCEED OEM SPECIFICATIONS**
    1. An Engine or Fuel modification that exceeds OEM specifications can affect the parameters that this

diagnostic monitors.

2. Any device/software that modifies the values reported by any of the Cummins actuators/sensors could fail this diagnostic.
3. Any device that puts a high parasitic load on the engine could also cause this diagnostic to fail.

Is there evidence of Engine or Fuel modifications that exceed OEM specifications?

Yes

- Return vehicle to customer.

No

- Replace Powertrain Control Module in accordance with the Service Information.
- Perform the POWERTRAIN VERIFICATION TEST - 6.7L. Refer to **POWERTRAIN VERIFICATION TEST - 6.7L** .

P061C-ETC LEVEL 2 RPM PERFORMANCE

For a complete wiring diagram, **refer to appropriate SYSTEM WIRING DIAGRAMS article** .

THEORY OF OPERATION

This diagnostic is testing for an internal Powertrain Control Module (PCM) failure. The PCM redundantly calculates engine speed based crankcase speed sensor. This calculation is done in a different part of the PCM than the primary calculation. It detects if the primary engine speed calculation is lower than the redundant calculation by more than a calibrated amount 675 RPM for a calibrated amount of time two sec. The PCM will light the ETC lamp when the diagnostic runs and fails. The light will remain on for the drive cycle or until both calculations agree for two seconds.

WHEN MONITORED:

Engine speed is detected.

SET CONDITION:

The primary engine speed calculation differs from the redundant engine speed calculation (internal calculation) by a calibrated amount for a calibrated amount of time.

POSSIBLE CAUSES

Possible Causes
OTHER CRANK POSITION SENSOR RELATED DTCS
POWERTRAIN CONTROL MODULE (PCM)

Always perform the Pre-Diagnostic Troubleshooting procedure before proceeding. Refer to PRE-

DIAGNOSTIC TROUBLESHOOTING PROCEDURE - 6.7L .

DIAGNOSTIC TEST

1. **OTHER DTCS**
    1. Ignition on, engine not running.
    2. With the scan tool, read DTCs.

    Are the other DTCs?

    Yes

    - Repair other DTCs first.

    No

    - Go To 2.
2. **CRANK POSITION SENSOR**
    1. Replace the Crank Position Sensor in accordance with the service information.
    2. Ignition on, engine not running.
    3. With the scan tool, erase DTCs.
    4. Test drive the vehicle.
    5. With the scan tool, read DTCs.

    Did the DTC reset?

    Yes

    - Replace the Powertrain Control Module in accordance with the service information.
    - Perform the POWERTRAIN VERIFICATION TEST - 6.7L. Refer to **POWERTRAIN VERIFICATION TEST - 6.7L** .

    No

    - Repair is complete.
    - Perform the POWERTRAIN VERIFICATION TEST - 6.7L. Refer to **POWERTRAIN VERIFICATION TEST - 6.7L** .

P0625-GENERATOR FIELD CONTROL CIRCUIT LOW

For a complete wiring diagram, **refer to appropriate SYSTEM WIRING DIAGRAMS article** .

THEORY OF OPERATION

There are two communication lines between the Powertrain Control Module (PCM) and Generator. Based on

sensed battery voltage, the PCM commands the Generator to charge the batteries to a desired voltage. The max voltage the PCM will command the alternator to charge is 14.75 Volts. The PCM then receives feedback from the Generator on the voltage level it is charging the batteries through a sense line. The PCM will not light a MIL lamp for this fault.

WHEN MONITORED:

When the ignition is on.

SET CONDITION:

The PCM detects that the (K20) Generator Field Control circuit is shorted to ground.

POSSIBLE CAUSES

Possible Causes
(K20) GENERATOR FIELD CONTROL CIRCUIT SHORTED TO GROUND GENERATOR
POWERTRAIN CONTROL MODULE (PCM)

Always perform the Pre-Diagnostic Troubleshooting procedure before proceeding. Refer to PRE-DIAGNOSTIC TROUBLESHOOTING PROCEDURE - 6.7L .

DIAGNOSTIC TEST

1. **ACTIVE DTC**
    1. Turn the ignition on.
    2. With the scan tool, erase DTCs.
    3. Turn the ignition off for 75 seconds.
    4. Start the engine and let idle for up to five minutes.
    5. With the scan tool, read DTCs.

    Did the DTC reset?

    Yes

    - Go To

    No

    - Perform the INTERMITTENT CONDITION diagnostic procedure. Refer to **INTERMITTENT CONDITION - 6.7L** .
2. **CHECK THE (K20) GENERATOR FIELD CONTROL CIRCUIT FOR A SHORT TO GROUND**
    1. Turn the ignition off.
    2. Disconnect the Generator field harness connector.

3. Disconnect the PCM C1 harness connector.
4. Measure the resistance between ground and the (K20) Generator Field Control circuit at the Generator harness connector.

   Is the resistance below 10k Ohms.

   No

   - Go To

   Yes

   - Repair the (K20) Generator Field Control circuit for a short to ground.
   - Perform the POWERTRAIN VERIFICATION TEST - 6.7L. Refer to **POWERTRAIN VERIFICATION TEST - 6.7L** .

3. **CHECK THE GENERATOR**
   1. Reconnect the PCM C1 harness connector.
   2. Connect a jumper between the Generator output stud and the (K20) Generator Field Control circuit at the Generator field harness connector.
   3. Turn the ignition on.
   4. With the scan tool, read DTCs.

      Did DTC P0625 become stored and P0626 become active or pending?

      Yes

      - Replace the Generator in accordance with the service information.
      - Perform he POWERTRAIN VERIFICATION TEST - 6.7L. Refer to .

      No

      - Replace the Powertrain Control Module in accordance with the service information.
      - Perform the POWERTRAIN VERIFICATION TEST - 6.7L. Refer to **POWERTRAIN VERIFICATION TEST - 6.7L** .

P0626-GENERATOR FIELD CONTROL CIRCUIT HIGH

For a complete wiring diagram, **refer to appropriate SYSTEM WIRING DIAGRAMS article** .

THEORY OF OPERATION

There are two communication lines between the Powertrain Control Module (PCM) and Generator. Based on sensed battery voltage, the PCM commands the Generator to charge the batteries to a desired voltage. The max voltage the PCM will command the Generator to charge is 14.75 Volts. The PCM then receives feedback from the alternator on the voltage level it is charging the batteries through a sense line. The PCM will not light a MIL

lamp for this fault.

WHEN MONITORED:

When the engine is running.

SET CONDITION:

The PCM detects that the (K20) Generator Field Control circuit is open or shorted to voltage.

POSSIBLE CAUSES

Possible Causes
(K20) GENERATOR FIELD CONTROL CIRCUIT SHORTED TO VOLTAGE (K20) GENERATOR FIELD CONTROL CIRCUIT OPEN/HIGH RESISTANCE
GENERATOR
POWERTRAIN CONTROL MODULE (PCM)

Always perform the Pre-Diagnostic Troubleshooting procedure before proceeding. Refer to PRE-DIAGNOSTIC TROUBLESHOOTING PROCEDURE - 6.7L .

DIAGNOSTIC TEST

1. **ACTIVE DTC**
    1. Turn the ignition on.
    2. With the scan tool, erase DTCs.
    3. Turn the ignition off for 75 seconds.
    4. Start the engine and let idle for up to five minutes.
    5. With the scan tool, read DTCs.

    Did the DTC reset?

    Yes

    - Go To 2.

    No

    - Perform the INTERMITTENT CONDITION diagnostic procedure. Refer to **INTERMITTENT CONDITION - 6.7L** .
2. **CHECK THE (K20) GENERATOR FIELD CONTROL CIRCUIT FOR A SHORT TO VOLTAGE**
    1. Turn the ignition off.
    2. Disconnect the PCM C1 harness connector.
    3. Turn the ignition on.

4. Measure the voltage on the (K20) Generator Field Control circuit at the Generator harness connector.

   Is there any voltage present?

   Yes

   - Go To 3.

   No

   - Go To 4.

3. **CHECK THE GENERATOR FOR A SHORT TO VOLTAGE**
   1. Disconnect the Generator field harness connector.
   2. Turn the ignition on.
   3. Measure the voltage on the (K20) Generator Field Control circuit at the Generator harness connector.

      Is there any voltage present?

      Yes

      - Repair the (K20) Generator Field Control circuit for a short to voltage.
      - Perform the POWERTRAIN VERIFICATION TEST - 6.7L. Refer to **POWERTRAIN VERIFICATION TEST - 6.7L** .

      No

      - Replace the Generator in accordance with the service information.
      - Perform the POWERTRAIN VERIFICATION TEST - 6.7L. Refer to **POWERTRAIN VERIFICATION TEST - 6.7L** .

4. **CHECK THE (K20) GENERATOR FIELD CONTROL CIRCUIT FOR AN OPEN/HIGH RESISTANCE**
   1. Disconnect the Generator field harness connector.
   2. Measure the resistance of the (K20) Generator Field Control circuit between the Generator harness connector and the PCM C1 harness connector.

      Is the resistance below 5.0 Ohms?

      Yes

      - Replace the Powertrain Control Module in accordance with the service information.
      - Perform the POWERTRAIN VERIFICATION TEST - 6.7L. Refer to **POWERTRAIN VERIFICATION TEST - 6.7L** .

No

- Repair the (K20) Generator Field Control circuit for an open or high resistance.
- Perform the POWERTRAIN VERIFICATION TEST - 6.7L. Refer to **POWERTRAIN VERIFICATION TEST - 6.7L** .

P0628-FUEL PUMP CONTROL CIRCUIT LOW

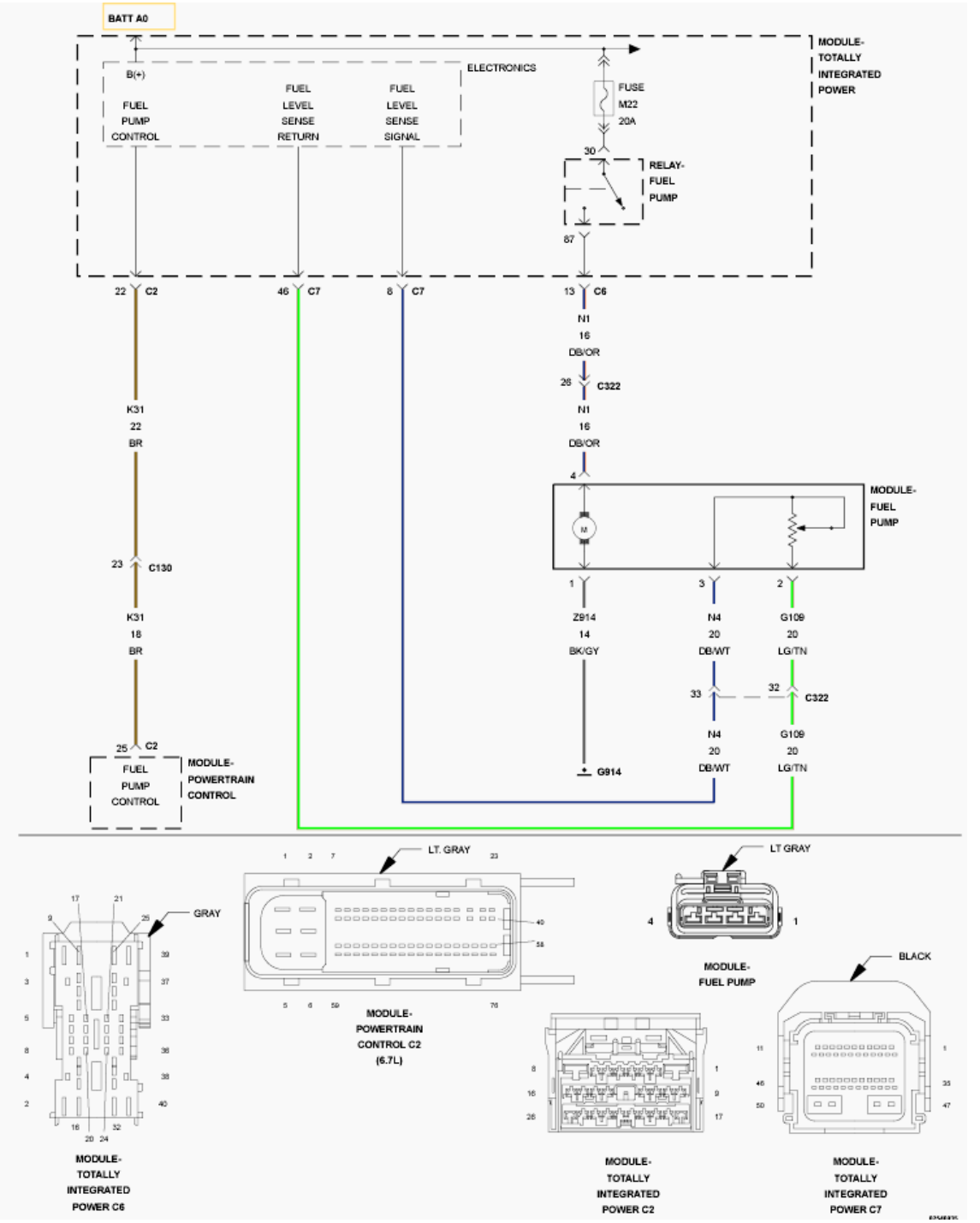

Fig. 86: Fuel Pump Module & TIPM Circuit Schematic
Courtesy of CHRYSLER GROUP, LLC

For a complete wiring diagram, **refer to appropriate SYSTEM WIRING DIAGRAMS article** .

THEORY OF OPERATION

The Fuel Lift Pump Control circuit is a low side driver inside the Powertrain Control Module (PCM). The PCM sends a ground signal to the Totally Integrated Power Module (TIPM). The TIPM then sends a 12 Volt feed to the Fuel Lift Pump. The Fuel Lift Pump grounds through a dedicated ground circuit. The MIL lamp and ETC lamp will illuminate immediately after this diagnostic runs and fails. During this time, the customer may experience engine stumble/stall or low power due to lack of fuel supply to the high pressure system. The PCM will turn off the MIL lamp once the diagnostic runs and passes in four consecutive drive cycles.

WHEN MONITORED:

While the key is on.

SET CONDITION:

The Fuel Lift Pump is commanded off by the PCM, but feedback voltage is high.

POSSIBLE CAUSES

Possible Causes
(K31) FUEL LIFT PUMP CONTROL CIRCUIT SHORTED TO VOLTAGE
POWERTRAIN CONTROL MODULE (PCM)
TOTALLY INTEGRATED POWER MODULE (TIPM)

Always perform the Pre-Diagnostic Troubleshooting procedure before proceeding. Refer to PRE-DIAGNOSTIC TROUBLESHOOTING PROCEDURE - 6.7L .

DIAGNOSTIC TEST

1. **ACTIVE DTC**
    1. Turn the ignition on.
    2. With the scan tool, record all Freeze frame data.
    3. With the scan tool, erase DTCs.
    4. Turn the ignition off for 75 seconds.
    5. Turn the ignition on.
    6. With the scan tool, read DTCs.

    Did the DTC reset?

    Yes

- Go To 2.

No

- Perform the INTERMITTENT CONDITION diagnostic procedure. Refer to **INTERMITTENT CONDITION - 6.7L** .

2. **CHECK THE (K31) FUEL LIFT PUMP CONTROL CIRCUIT FOR A SHORT TO VOLTAGE**

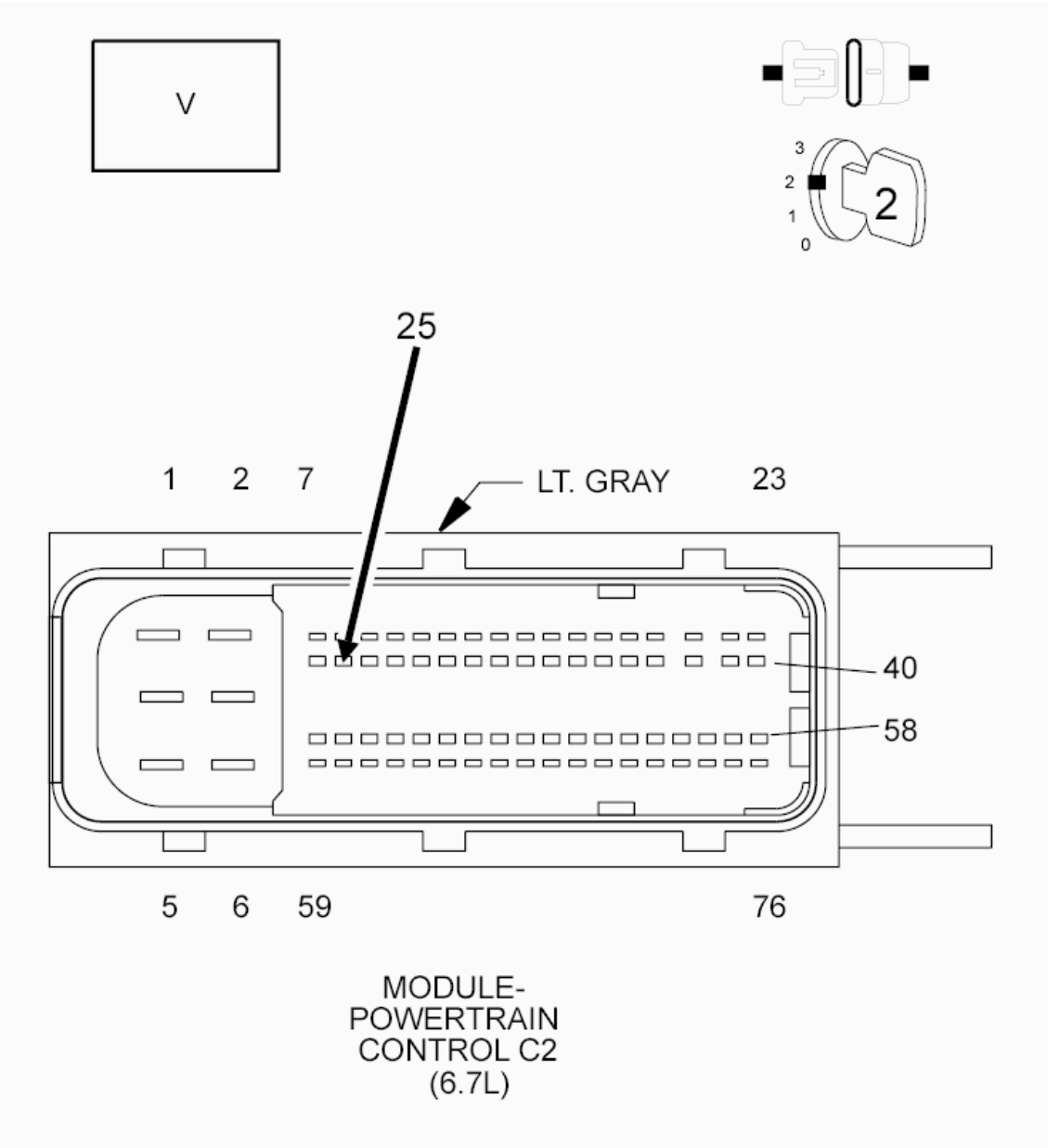

Fig. 87: Checking Fuel Lift Pump Control Circuit For A Short To Voltage
Courtesy of CHRYSLER GROUP, LLC

1. Turn the ignition off.

2. Disconnect the PCM C2 harness connector.

NOTE: Check connectors - Clean/repair as necessary.

3. Turn the ignition on.
4. Measure for voltage on the (K31) Fuel Lift Pump Control circuit at the PCM C2 harness connector.

   Is there any voltage present?

   Yes

   - Repair the (K31) Fuel Lift Pump Control circuit for a short to voltage.
   - Perform the POWERTRAIN VERIFICATION TEST - 6.7L. Refer to **POWERTRAIN VERIFICATION TEST - 6.7L** .

   No

   - Go To 3.

3. **CHECK THE PCM/TIPM**

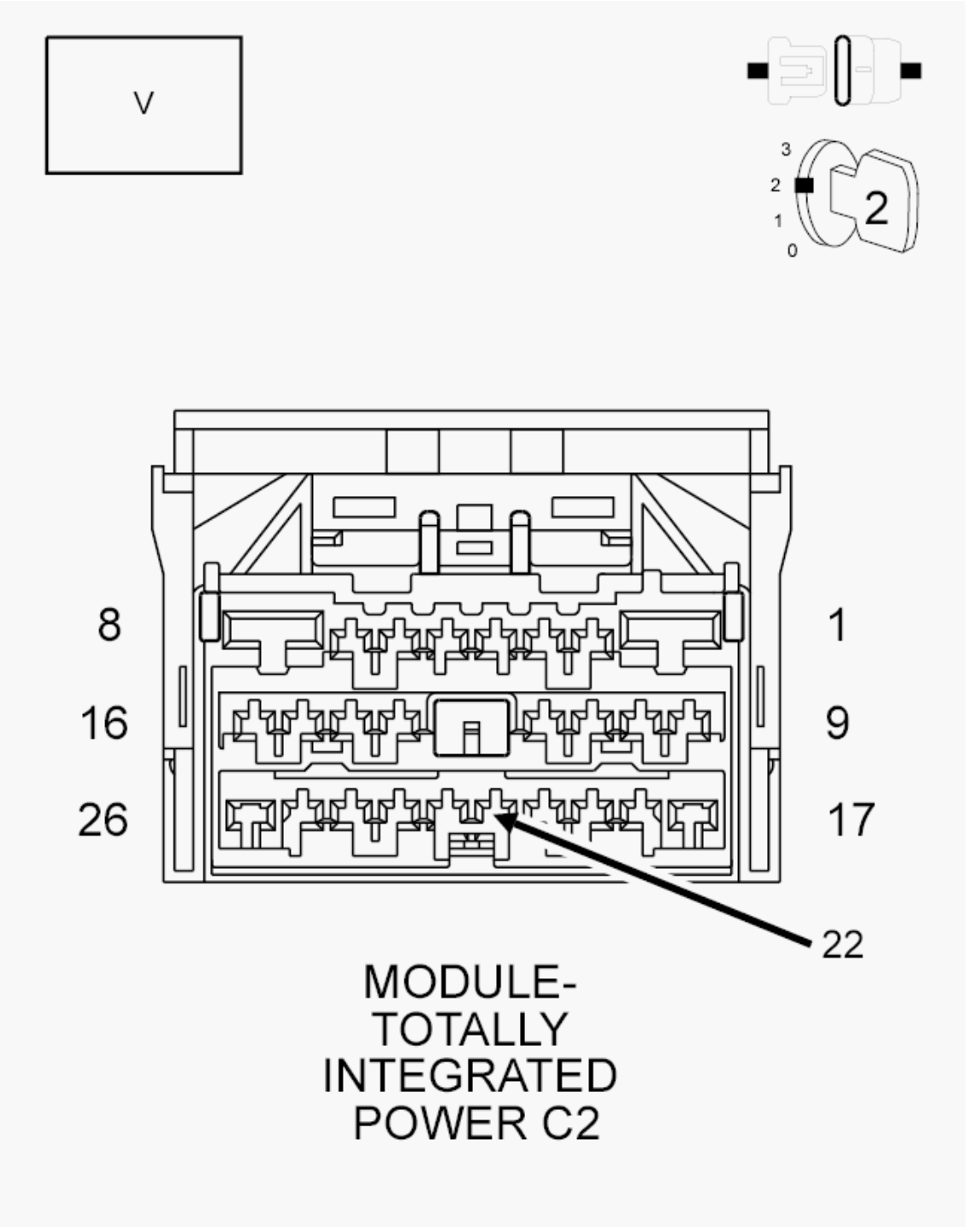

Fig. 88: Checking Fuel Lift Pump Control Circuit
Courtesy of CHRYSLER GROUP, LLC

1. Turn Ignition off.
2. Disconnect the TIPM C2 harness connector.
3. Reconnect the PCM C2 harness connector.
4. Turn the ignition on, engine off.

5. Using a 12-Volt test light connected to 12 Volts, probe the (K31) Fuel Lift Pump Control circuit at the TIPM C2 harness connector.
6. Toggle the lift pump actuator with the scan tool.

NOTE: The test light must illuminate brightly.

7. Compare the brightness to that of a direct connection to the battery.

   Does the test light cycle on and off and illuminate brightly?

   Yes

   - Replace the Totally Integrated Power Module (TIPM) in accordance with the service information.
   - Perform the BODY VERIFICATION TEST. Refer to **STANDARD PROCEDURE** .

   No

   - Replace the Powertrain Control Module (PCM) in accordance with the service information.
   - Perform the POWERTRAIN VERIFICATION TEST - 6.7L. Refer to **POWERTRAIN VERIFICATION TEST - 6.7L** .

P0629-FUEL PUMP CONTROL CIRCUIT HIGH

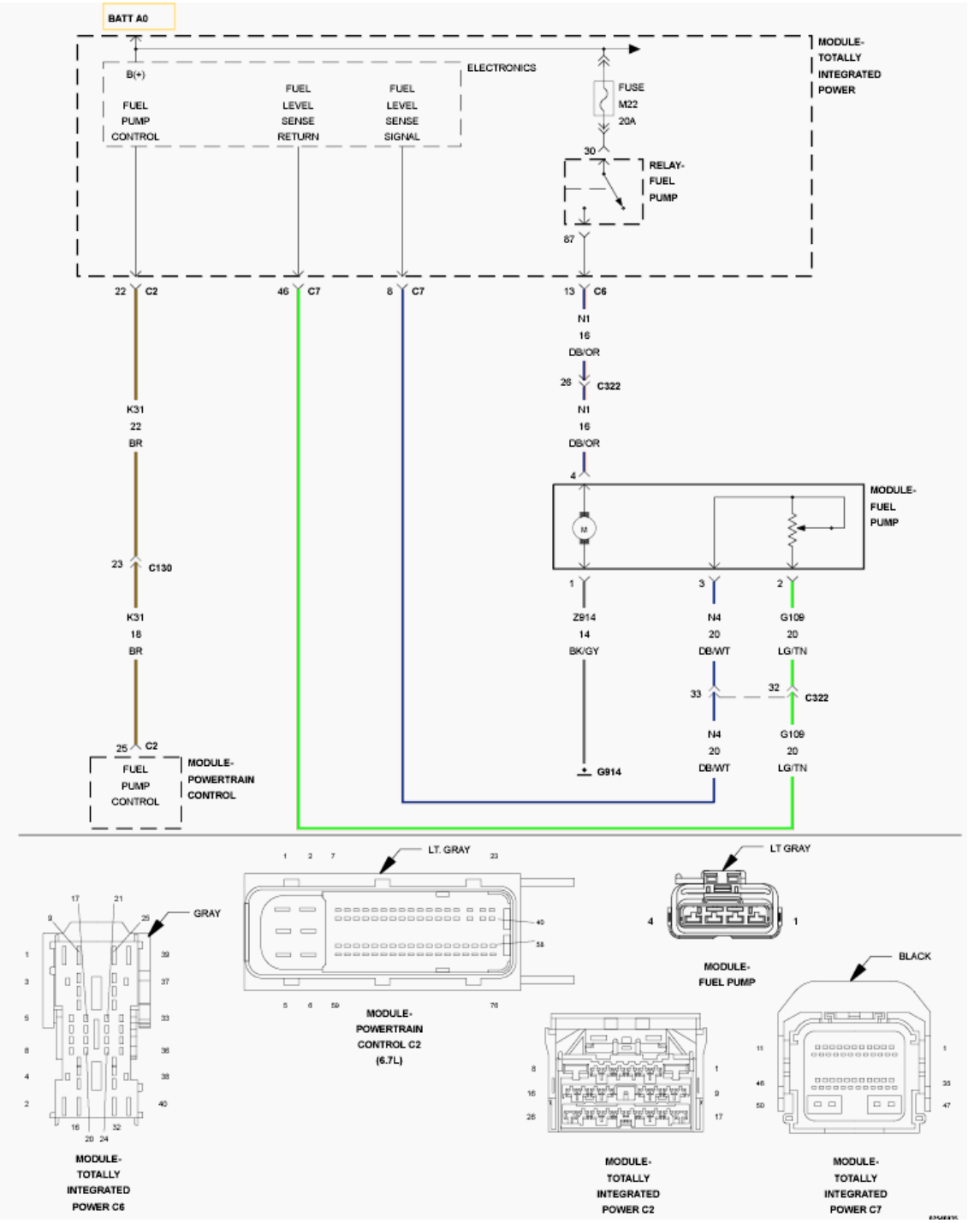

Fig. 89: Fuel Pump Module & TIPM Circuit Schematic
Courtesy of CHRYSLER GROUP, LLC

For a complete wiring diagram, **refer to appropriate SYSTEM WIRING DIAGRAMS article** .

THEORY OF OPERATION

The Fuel Lift Pump Control circuit is a low side driver inside the Powertrain Control Module (PCM). The PCM

sends a ground signal to the Totally Integrated Power Module (TIPM). The TIPM then sends a 12 Volt feed to the Fuel Lift Pump. The Fuel Lift Pump grounds through a dedicated ground circuit. The MIL lamp and ETC lamp will illuminate immediately after this diagnostic runs and fails. During this time, the customer may experience engine stumble/stall or low power due to lack of fuel supply to the high pressure system. The PCM will turn off the MIL lamp once the diagnostic runs and passes in four consecutive drive cycles.

WHEN MONITORED:

While the key is on.

SET CONDITION:

The Fuel Lift Pump is commanded on by the Powertrain Control Module (PCM), but feedback voltage is low.

POSSIBLE CAUSES

Possible Causes
(K31) FUEL LIFT PUMP CONTROL CIRCUIT OPEN/HIGH RESISTANCE
(K31) FUEL LIFT PUMP CONTROL CIRCUIT SHORTED TO GROUND
TOTALLY INTEGRATED POWER MODULE (TIPM)
POWERTRAIN CONTROL MODULE (PCM)

Always perform the Pre-Diagnostic Troubleshooting procedure before proceeding. Refer to PRE-DIAGNOSTIC TROUBLESHOOTING PROCEDURE - 6.7L .

DIAGNOSTIC TEST

1. **ACTIVE DTC**
    1. Turn the ignition on.
    2. With the scan tool, record all Freeze frame data.
    3. With the scan tool, erase DTCs.
    4. Turn the ignition off for 75 seconds.
    5. Turn the ignition on.
    6. With the scan tool, read DTCs.

    Did the DTC return?

    Yes

    - Go To 2.

    No

    - Perform the INTERMITTENT CONDITION diagnostic procedure. Refer to **INTERMITTENT CONDITION - 6.7L** .

2. **CHECK THE (K31) FUEL LIFT PUMP CONTROL CIRCUIT FOR A SHORT TO GROUND**

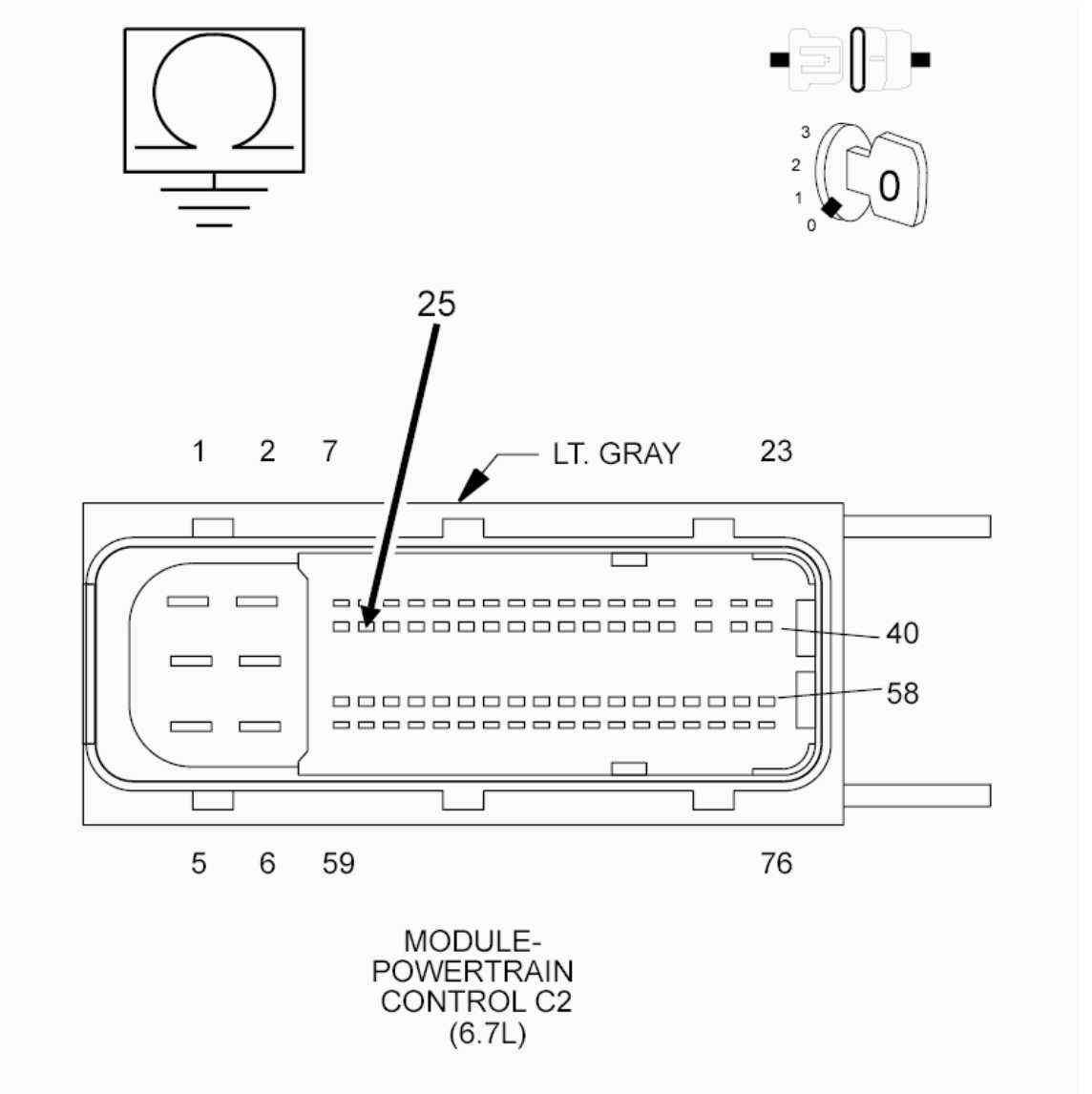

Fig. 90: Checking Fuel Lift Pump Control Circuit For A Short To Ground
Courtesy of CHRYSLER GROUP, LLC

1. Turn the ignition off.
2. Disconnect the PCM C2 harness connector.
3. Disconnect the TIPM C6 harness connector.
4. Measure the resistance between ground and the (K31) Fuel Lift Pump Control circuit at the PCM C2 harness connector.

   Is the resistance below 10k Ohms?

   Yes

- Repair the (K31) Fuel Lift Pump Control circuit for a short to ground.
- Perform the POWERTRAIN VERIFICATION TEST - 6.7L. Refer to **POWERTRAIN VERIFICATION TEST - 6.7L** .

No

- Go To 3.

3. **CHECK THE (K31) FUEL LIFT PUMP CONTROL CIRCUIT FOR AN OPEN/HIGH RESISTANCE**

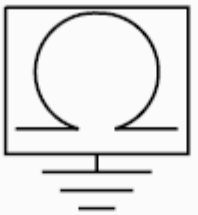

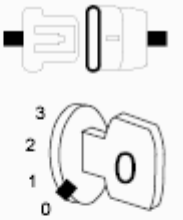

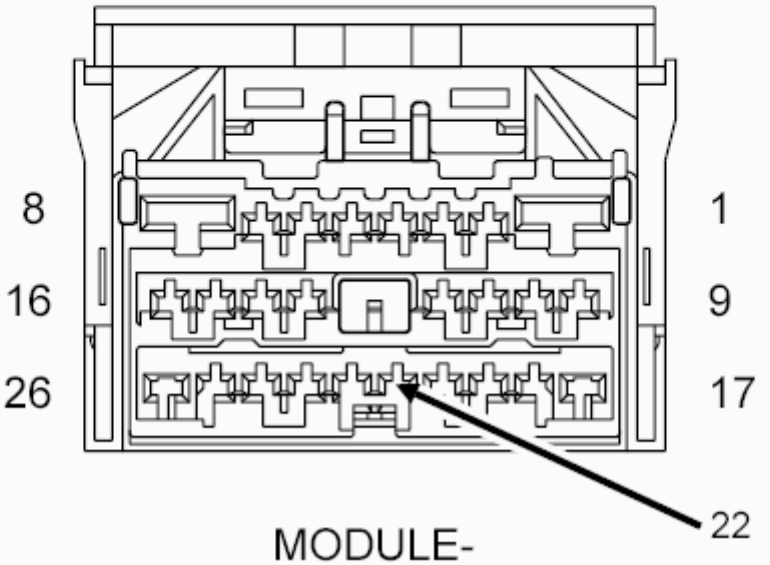

MODULE-
TOTALLY
INTEGRATED
POWER C2

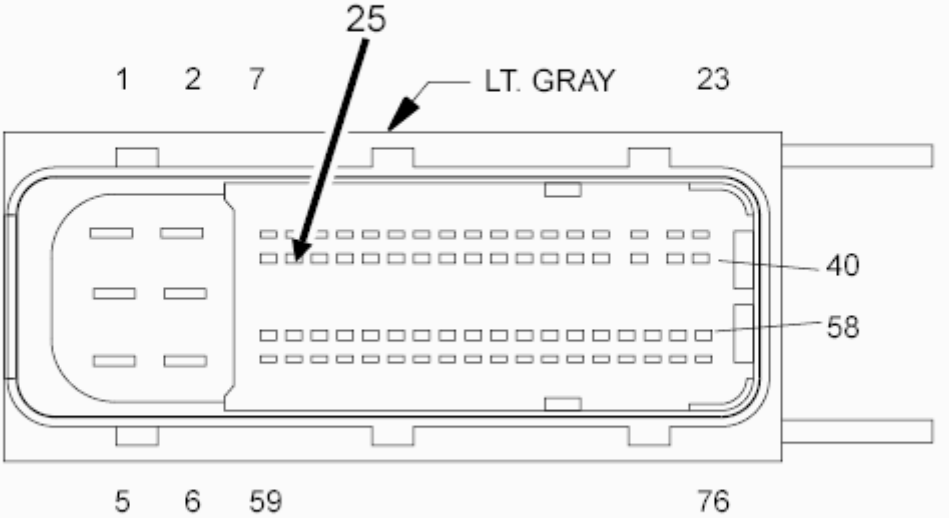

MODULE-
POWERTRAIN
CONTROL C2

Fig. 91: Checking Fuel Lift Pump Control Circuit For An Open/High Resistance
Courtesy of CHRYSLER GROUP, LLC

1. Measure the resistance of the (K31) Fuel Lift Pump Control circuit between the PCM C2 harness connector and the TIPM C2 harness connector.

   Is the resistance below 5.0 Ohms?

   Yes

   - Repair the (K31) Fuel Lift Pump Control circuit for an open or high resistance.
   - Perform the POWERTRAIN VERIFICATION TEST - 6.7L. Refer to **POWERTRAIN VERIFICATION TEST - 6.7L** .

   No

   - Go To 4.

4. **POWERTRAIN CONTROL MODULE**
   1. Reconnect the PCM C2 and TIPM C6 harness connectors.
   2. Using a back probing tool, back probe the (K31) Fuel Lift Pump Control circuit at the TIPM C6 harness connector.
   3. Turn the ignition on.
   4. With the scan tool toggle the Fuel Lift Pump actuator.
   5. Using a 12-volt test light connected to 12 Volts, probe the (K31) Fuel Lift Pump Control circuit at the TIPM C6 harness connector.

      NOTE: The test light should be illuminated and bright. Compare the brightness to that of a direct connection to the battery.

      Does the test light cycle on and off brightly?

      Yes

      - Replace the Totally Integrated Power Module (TIPM) in accordance with the service information.
      - Perform the POWERTRAIN VERIFICATION TEST - 6.7L. Refer to **POWERTRAIN VERIFICATION TEST - 6.7L** .

      No

      - Replace the Powertrain Control Module (PCM) in accordance with the service information.
      - Perform the POWERTRAIN VERIFICATION TEST - 6.7L. Refer to **POWERTRAIN VERIFICATION TEST - 6.7L** .

P062C-ETC LEVEL 2 MPH PERFORMANCE

For a complete wiring diagram, **refer to appropriate SYSTEM WIRING DIAGRAMS article** .

THEORY OF OPERATION

While in cruise control, this monitor verifies that vehicle speed stays within 5 MPH (8 KPH) of cruise control setpoint. The monitor will abort if during this condition engine speed is decreasing by more than 13 RPM/second. This is meant to detect a condition when the vehicle is travelling downhill as that could cause an increase in overall vehicle speed. This monitor will abort if the driver goes out of cruise mode by pressing the brake or accelerator pedal. Cruise will be disabled the rest of the drive cycle (until key off).

WHEN MONITORED:

Engine in cruise control mode but not travelling downhill.

SET CONDITION:

Vehicle speed is more than 5 MPH (8 KPH) over targeted cruise control speed.

POSSIBLE CAUSES

Possible Causes
VEHICLE SPEED SENSOR DTCS
SPEED CONTROL DTCS
POWERTRAIN CONTROL MODULE (PCM)

Always perform the Pre-Diagnostic Troubleshooting procedure before proceeding. Refer to PRE-DIAGNOSTIC TROUBLESHOOTING PROCEDURE - 6.7L .

DIAGNOSTIC TEST

1. **POWERTRAIN CONTROL MODULE**
    1. Ignition on, engine not running.
    2. With the scan tool, read DTCs.

       Are there other DTCs?

       Yes

       - Repair other DTCs first.

       No

       - Replace the Powertrain Control Module in accordance with the service information.
       - Perform the POWERTRAIN VERIFICATION TEST - 6.7L. Refer to **POWERTRAIN VERIFICATION TEST - 6.7L** .

P0630-VIN NOT PROGRAMMED IN PCM

For a complete wiring diagram, **refer to appropriate SYSTEM WIRING DIAGRAMS article** .

WHEN MONITORED:

While the key is on.

SET CONDITION:

The VIN was not calibrated into the Powertrain Control Module (PCM).

POSSIBLE CAUSES

Possible Causes
VIN NOT CALIBRATED INTO PCM

Always perform the Pre-Diagnostic Troubleshooting procedure before proceeding. Refer to PRE-DIAGNOSTIC TROUBLESHOOTING PROCEDURE - 6.7L .

DIAGNOSTIC TEST

1. **VIN NOT CALIBRATED INTO PCM**
    1. Using the scan tool, recalibrate the PCM with the proper VIN.

       Did the DTC P0630 return?

       Yes

       - Replace the Powertrain Control Module (PCM) in accordance with the service information.
       - Perform the POWERTRAIN VERIFICATION TEST - 6.7L. Refer to **POWERTRAIN VERIFICATION TEST - 6.7L** .

       No

       - Test Complete.

P0633-SKIM SECRET KEY NOT STORED IN PCM

For a complete wiring diagram, **refer to appropriate SYSTEM WIRING DIAGRAMS article** .

WHEN MONITORED:

While the key is on.

SET CONDITION:

The SKIM secret key was not calibrated into the Powertrain Control Module (PCM).

POSSIBLE CAUSES

Possible Causes
SKIM NOT CALIBRATED PROPERLY

Always perform the Pre-Diagnostic Troubleshooting procedure before proceeding. Refer to PRE-DIAGNOSTIC TROUBLESHOOTING PROCEDURE - 6.7L .

DIAGNOSTIC TEST

1. **SKIM DTCS**
    1. With the scan tool, read WIN DTC.

       Are any SKIM DTCs present in the WIN?

       Yes

       - Repair all SKIM DTCs first.
       - Perform the POWERTRAIN VERIFICATION TEST - 6.7L. Refer to **POWERTRAIN VERIFICATION TEST - 6.7L** .

       No

       - Go To 2.
2. **SKIM NOT CALIBRATED PROPERLY**
    1. Using the scan tool, recalibrate the PCM with the proper SKIM secret key.
    2. With the scan tool, erase DTCs.
    3. Cycle the ignition switch from on to off to on.
    4. With the scan tool, read DTCs.

       Did the DTC reset?

       No

       - Test Complete.
       - Perform the POWERTRAIN VERIFICATION TEST - 6.7L. Refer to **POWERTRAIN VERIFICATION TEST - 6.7L** .

       Yes

       - Replace the Powertrain Control Module in accordance with the service information.
       - Perform the POWERTRAIN VERIFICATION TEST - 6.7L. Refer to **POWERTRAIN VERIFICATION TEST - 6.7L** .

P063C-GENERATOR VOLTAGE SENSE LOW

For a complete wiring diagram, **refer to appropriate SYSTEM WIRING DIAGRAMS article** .

THEORY OF OPERATION

There are two communication lines between the Powertrain Control Module (PCM) and Generator. Based on sensed battery voltage, the PCM commands the Generator to charge the batteries to a desired voltage. The max voltage the EPCM will command the Generator to charge is 14.75 Volts. The PCM then receives feedback from the Generator on the voltage level it is charging the batteries. The PCM will not light a MIL lamp for this fault.

WHEN MONITORED:

With the engine running.

SET CONDITION:

Battery voltage exceeds charging voltage by more than a calibrated amount for a calibratable period of time.

POSSIBLE CAUSES

Possible Causes
DAMAGED, CORRODED, OR LOOSE CONNECTIONS
(A804) GENERATOR SENSE CIRCUIT SHORTED TO GROUND
(A804) GENERATOR SENSE CIRCUIT OPEN
OPEN CIRCUIT BETWEEN GENERATOR AND AUXILIARY BATTERY
GENERATOR
POWERTRAIN CONTROL MODULE (PCM)

Always perform the Pre-Diagnostic Troubleshooting procedure before proceeding. Refer to PRE-DIAGNOSTIC TROUBLESHOOTING PROCEDURE - 6.7L .

DIAGNOSTIC TEST

1. **BATTERY TERMINALS DAMAGED, CORRODED, OR LOOSE CONNECTIONS**

NOTE: **Batteries must be fully charged and capable of passing a battery load test. The generator belt tension must be within specification. Inspect the vehicle for any aftermarket equipment that may exceed the maximum Generator output.**

1. Visually inspect the positive and negative connections at the battery. Visually inspect the battery negative connections at the engine block.

   Are the connections free of corrosion and are they tight?

Yes

- Go To 2.

No

- Clean and/or tighten the connections.
- Perform the POWERTRAIN VERIFICATION TEST - 6.7L. Refer to **POWERTRAIN VERIFICATION TEST - 6.7L** .

2. **CHECK THE (A804) GENERATOR SENSE CIRCUIT FOR A SHORT TO GROUND**
   1. Turn the ignition off.
   2. Disconnect the Generator harness connector.
   3. Disconnect the PCM C1 harness connector.

      NOTE: Check connectors - Clean/repair as necessary.

   4. Measure the resistance between the (A804) Generator Sense circuit at the PCM C1 harness connector and ground.

      Is the resistance above 10k Ohms?

      Yes

      - Go To 3.

      No

      - Repair the (A804) Generator Sense circuit for a short to ground.
      - Perform the POWERTRAIN VERIFICATION TEST - 6.7L. Refer to **POWERTRAIN VERIFICATION TEST - 6.7L** .

3. **CHECK THE (A804) GENERATOR SENSE CIRCUIT FOR AN OPEN/HIGH RESISTANCE**
   1. Measure the resistance of the (A804) Generator Sense circuit between the Generator harness connector to the PCM C1 harness connector.

      Is the resistance below 5.0 Ohms?

      Yes

      - Go To 4.

      No

      - Repair the (A804) Generator Sense circuit for an open or high resistance.
      - Perform the POWERTRAIN VERIFICATION TEST - 6.7L. Refer to **POWERTRAIN VERIFICATION TEST - 6.7L** .

4. **CHECK FOR AN OPEN CIRCUIT BETWEEN GENERATOR AND AUXILIARY BATTERY**
    1. Disconnect the positive battery cables from both the primary and auxiliary battery.
    2. Disconnect the harness from the auxiliary battery to the Generator.
    3. Measure the resistance in the harness that connects the auxiliary battery to the Generator.

    Is the resistance below 5.0 Ohms?

    Yes

    - Go To 5.

    No

    - Repair/replace open positive battery cable in wiring harness.
    - Perform the POWERTRAIN VERIFICATION TEST - 6.7L. Refer to **POWERTRAIN VERIFICATION TEST - 6.7L** .
5. **CHECK THE GENERATOR**
    1. Measure the resistance between the Generator output stud and the generator Sense circuit on the Generator connector.

    NOTE: There should be approximately 2.4k Ohms resistance.

    Does the resistance measure approximately 2.4k Ohms?

    Yes

    - Replace Powertrain Control Module in accordance with the service information.
    - Perform the POWERTRAIN VERIFICATION TEST - 6.7L. Refer to **POWERTRAIN VERIFICATION TEST - 6.7L** .

    No

    - Replace Generator in accordance with the service information.
    - Perform the POWERTRAIN VERIFICATION TEST - 6.7L. Refer to **POWERTRAIN VERIFICATION TEST - 6.7L** .

P063D-GENERATOR VOLTAGE SENSE HIGH

For a complete wiring diagram, **refer to appropriate SYSTEM WIRING DIAGRAMS article** .

THEORY OF OPERATION

There are two communication lines between the Powertrain Control Module (PCM) and Generator. Based on sensed Battery voltage, the PCM commands the Generator to charge the batteries to a desired voltage. The max voltage the PCM will command the Generator to charge is 14.75-Volts. The PCM then receives feedback from

the Generator on the voltage level it is charging the batteries. The PCM will not light a MIL lamp for this fault, but the ETC lamp will be on solid.

WHEN MONITORED:

With the engine running.

SET CONDITION:

Charging voltage exceeds Battery voltage by more than a calibrated amount for a calibrated period of time.

POSSIBLE CAUSES

Possible Causes
SHORT CIRCUIT BETWEEN THE AUXILIARY BATTERY AND THE PCM
OPEN CIRCUIT BETWEEN THE PRIMARY BATTERY AND THE AUXILIARY BATTERY
SHORT CIRCUIT BETWEEN THE GENERATOR AND PRIMARY BATTERY
OPEN CIRCUIT BETWEEN THE GENERATOR AND PRIMARY BATTERY
POWERTRAIN CONTROL MODULE (PCM)

Always perform the Pre-Diagnostic Troubleshooting procedure before proceeding. Refer to PRE-DIAGNOSTIC TROUBLESHOOTING PROCEDURE - 6.7L .

DIAGNOSTIC TEST

1. **OTHER DTCS**

   NOTE: Batteries must be fully charged and capable of passing a Battery load test. The Generator belt tension must be within specification. Inspect the vehicle for any aftermarket equipment that may exceed the maximum Generator output.

   1. Ignition on, engine not running.
   2. Using the scan tool, read DTCs.

      Are there any other charging related faults?

      Yes

      - Go to and perform the appropriate diagnostic procedure.

      No

      - Go To 2.
2. **CHECK FOR A SHORT CIRCUIT BETWEEN THE AUXILIARY BATTERY AND THE PCM**
   1. Using the scan tool, monitor Battery voltage in the PCM.

2. Measure battery voltage of the primary Battery (one that powers PCM) using a Voltmeter.

   Is the reported voltage from the scan tool equal to both Battery voltages?

   Yes

   - Go To 3.

   No

   - Repair or replace open/short circuit in harness from Battery to PCM.
   - Perform the POWERTRAIN VERIFICATION TEST - 6.7L. Refer to **POWERTRAIN VERIFICATION TEST - 6.7L** .

3. **CHECK THE CIRCUIT BETWEEN THE PRIMARY BATTERY AND THE AUXILIARY BATTERY**
   1. Turn the ignition off.
   2. Using a Voltmeter, measure Battery voltage of the auxiliary Battery (one that Generator charges).

      Is the measured voltage of the auxiliary Battery equal to the measured voltage of the primary battery? NOTE: Primary battery voltage was measured in step 2.

      Yes

      - Go To 6.

      No

      - Go To 4.

4. **CHECK FOR AN OPEN CIRCUIT BETWEEN THE PRIMARY BATTERY AND THE AUXILIARY BATTERY**
   1. Disconnect the positive Battery cables from both the primary and auxiliary Battery.
   2. Disconnect the cable that connects the primary battery to the auxiliary Battery.

      NOTE: Check connectors - Clean/repair as necessary.

   3. Measure the resistance in the cable that connects the primary Battery to the auxiliary Battery.

      Is the resistance below 10.0 Ohms?

      Yes

      - Go To 5.

      No

- Repair/replace open circuit in the wiring harness.
- Perform the POWERTRAIN VERIFICATION TEST - 6.7L. Refer to **POWERTRAIN VERIFICATION TEST - 6.7L** .

5. **CHECK FOR A SHORT CIRCUIT BETWEEN THE GENERATOR AND PRIMARY BATTERY**
   1. Turn the ignition off.
   2. Measure the resistance between each end of the harness and Battery ground.

      Is the measured resistance above 10k Ohms?

      Yes

      - Go To 6.

      No

      - Repair/replace short circuit in the wiring harness.
      - Perform the POWERTRAIN VERIFICATION TEST - 6.7L. Refer to **POWERTRAIN VERIFICATION TEST - 6.7L** .
6. **CHECK FOR AN OPEN CIRCUIT BETWEEN THE GENERATOR AND PRIMARY BATTERY**
   1. Disconnect the power cable from the Generator stud to the auxiliary Battery.
   2. Measure the resistance in the harness that connects the auxiliary Battery to the Generator.

      Is the resistance less than 10.0 Ohms?

      Yes

      - Go To 7.

      No

      - Repair/replace open circuit in the wiring harness.
      - Perform the POWERTRAIN VERIFICATION TEST - 6.7L. Refer to **POWERTRAIN VERIFICATION TEST - 6.7L** .
7. **POWERTRAIN CONTROL MODULE**
   1. Disconnect the Generator harness connector.
   2. Disconnect the power cable from the Generator stud to the auxiliary Battery.

      NOTE: Check connectors - Clean/repair as necessary.

   3. Measure the resistance between the Generator output stud and the Generator Sense circuit at the Generator.

      Is the resistance below 10.0 Ohms?

Yes

- Replace the Powertrain Control Module in accordance with the service information.
- Perform the POWERTRAIN VERIFICATION TEST - 6.7L. Refer to **POWERTRAIN VERIFICATION TEST - 6.7L** .

No

- Replace the Generator in accordance with the service information.
- Perform the POWERTRAIN VERIFICATION TEST - 6.7L. Refer to **POWERTRAIN VERIFICATION TEST - 6.7L** .

P0642-SENSOR REFERENCE VOLTAGE 1 CIRCUIT LOW

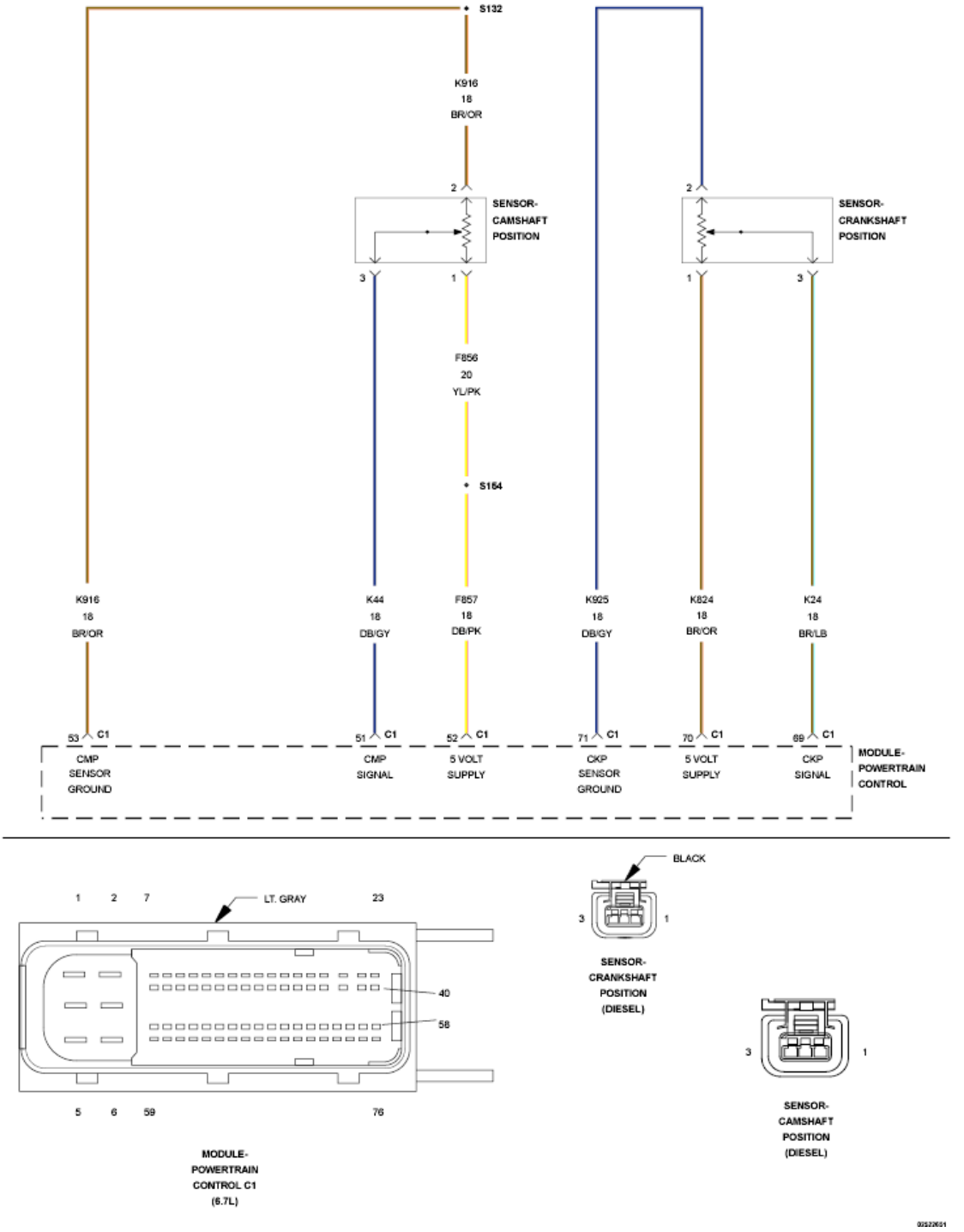

Fig. 92: Crankshaft Position Sensor & Camshaft Position Sensor Circuit Schematic
Courtesy of CHRYSLER GROUP, LLC

For a complete wiring diagram, **refer to appropriate SYSTEM WIRING DIAGRAMS article** .

THEORY OF OPERATION

This sensor supply circuit provides a 5-Volt supply to the Crankshaft Position Sensor. A MIL lamp will be lit

immediately after this diagnostic runs and fails. The MIL lamp will turn off once the diagnostic runs and passes in four consecutive drive cycles.

WHEN MONITORED:

With the key on.

SET CONDITION:

Voltage detected on the 5-Volt Supply circuit is below a calibrated value.

POSSIBLE CAUSES

Possible Causes
CRANKSHAFT POSITION SENSOR
(K824) 5-VOLT SHORTED TO GROUND
(K824) 5-VOLT SUPPLY SHORTED TO ANOTHER CIRCUIT
POWERTRAIN CONTROL MODULE (PCM)

Always perform the Pre-Diagnostic Troubleshooting procedure before proceeding. Refer to PRE-DIAGNOSTIC TROUBLESHOOTING PROCEDURE - 6.7L .

DIAGNOSTIC TEST

1. **ACTIVE DTC**
    1. Turn the ignition on.
    2. With the scan tool, record all Freeze frame data.
    3. With the scan tool, erase DTCs.
    4. Turn the ignition off for 75 seconds.
    5. Turn the ignition on.
    6. With the scan tool, read DTCs.

    Did the DTC reset?

    Yes

    - Go To 2.

    No

    - Perform the INTERMITTENT CONDITION diagnostic procedure. Refer to **INTERMITTENT CONDITION - 6.7L** .
2. **CHECK THE CRANKSHAFT POSITION SENSOR**
    1. Ignition on.

2. Disconnect the Crankshaft Position Sensor.

NOTE: Check connectors - Clean/repair as necessary.

3. Measure the voltage on the (K824) 5-Volt Supply circuit at the Crankshaft Position Sensor harness connector.

   Is the voltage reading between 4.9 and 5.1 Volts?

   Yes

   - Replace the Crankshaft Position Sensor in accordance with the service information.
   - Perform the POWERTRAIN VERIFICATION TEST - 6.7L. Refer to **POWERTRAIN VERIFICATION TEST - 6.7L** .

   No

   - Go To 3.

3. **CHECK THE (K824) 5-VOLT FOR A SHORT TO GROUND**

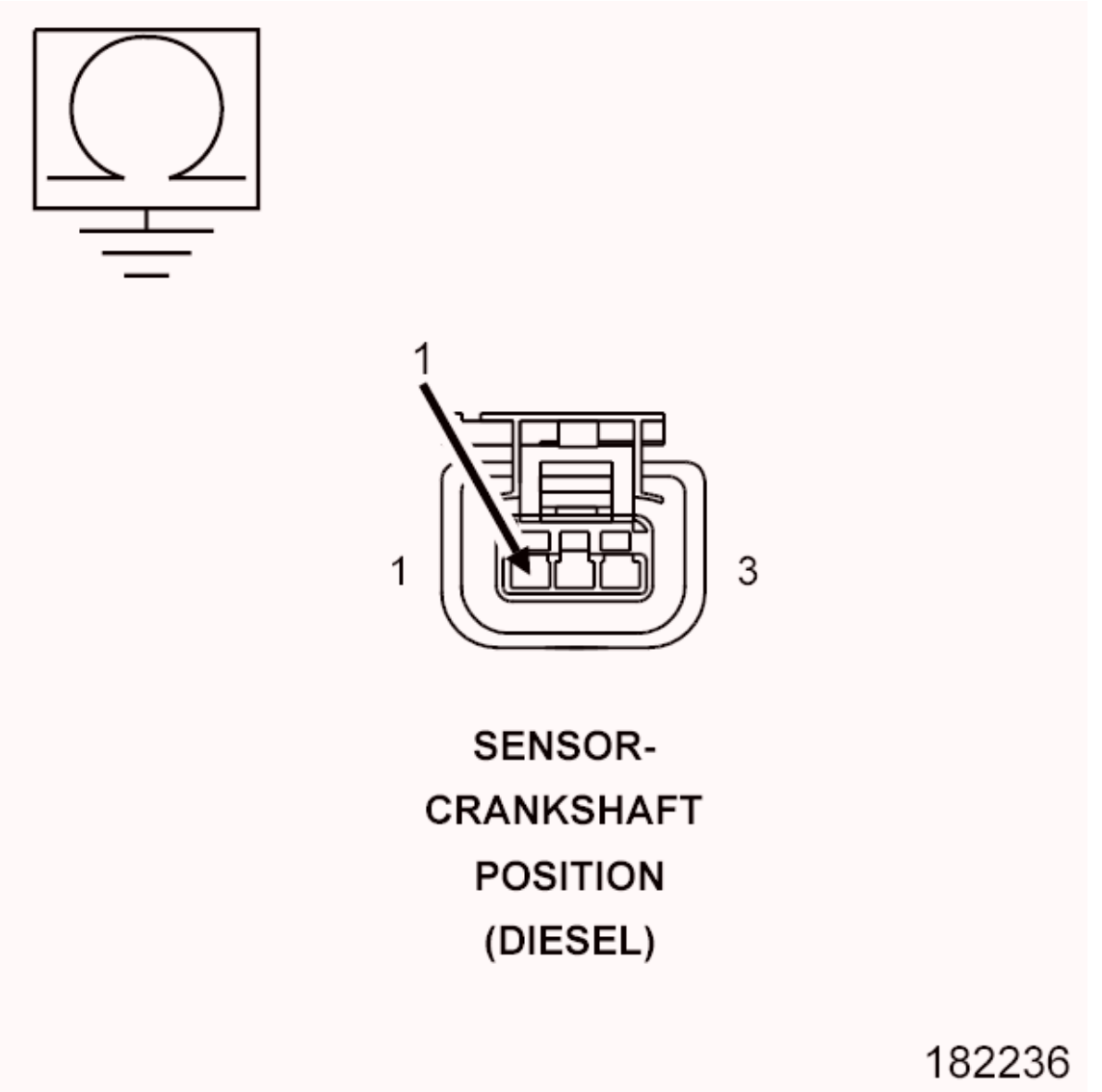

Fig. 93: Measuring Resistance Between 5-Volt Supply Circuit & Battery Negative
Courtesy of CHRYSLER GROUP, LLC

1. Turn the ignition off.
2. Disconnect the PCM C1 harness connector.

   NOTE: Check connectors - Clean/repair as necessary.

3. Measure the resistance between ground and the (K824) 5-Volt Supply circuit at the Crankshaft Position Sensor harness connector.

   Is the resistance below 10k Ohms?

   Yes

- Repair the (K824) 5-Volt Supply circuit for a short to ground.
- Perform the POWERTRAIN VERIFICATION TEST - 6.7L. Refer to **POWERTRAIN VERIFICATION TEST - 6.7L** .

No

- Go To 4.

4. **CHECK THE (K824) 5-VOLT SUPPLY CIRCUIT SHORTED TO ANOTHER CIRCUIT**
   1. Measure the resistance between the (K824) 5-Volt Supply circuit and all other circuits in the PCM C1 harness connector.

      Is the resistance below 10k Ohms between the (K854) 5-Volt Supply circuit and any of the circuits?

      Yes

      - Repair the short to the circuit that measured less than 10k Ohms.
      - Perform the POWERTRAIN VERIFICATION TEST - 6.7L. Refer to **POWERTRAIN VERIFICATION TEST - 6.7L** .

      No

      - Replace the Powertrain Control Module in accordance with the service information.
      - Perform the POWERTRAIN VERIFICATION TEST - 6.7L. Refer to **POWERTRAIN VERIFICATION TEST - 6.7L** .

P0643-SENSOR REFERENCE VOLTAGE 1 CIRCUIT HIGH

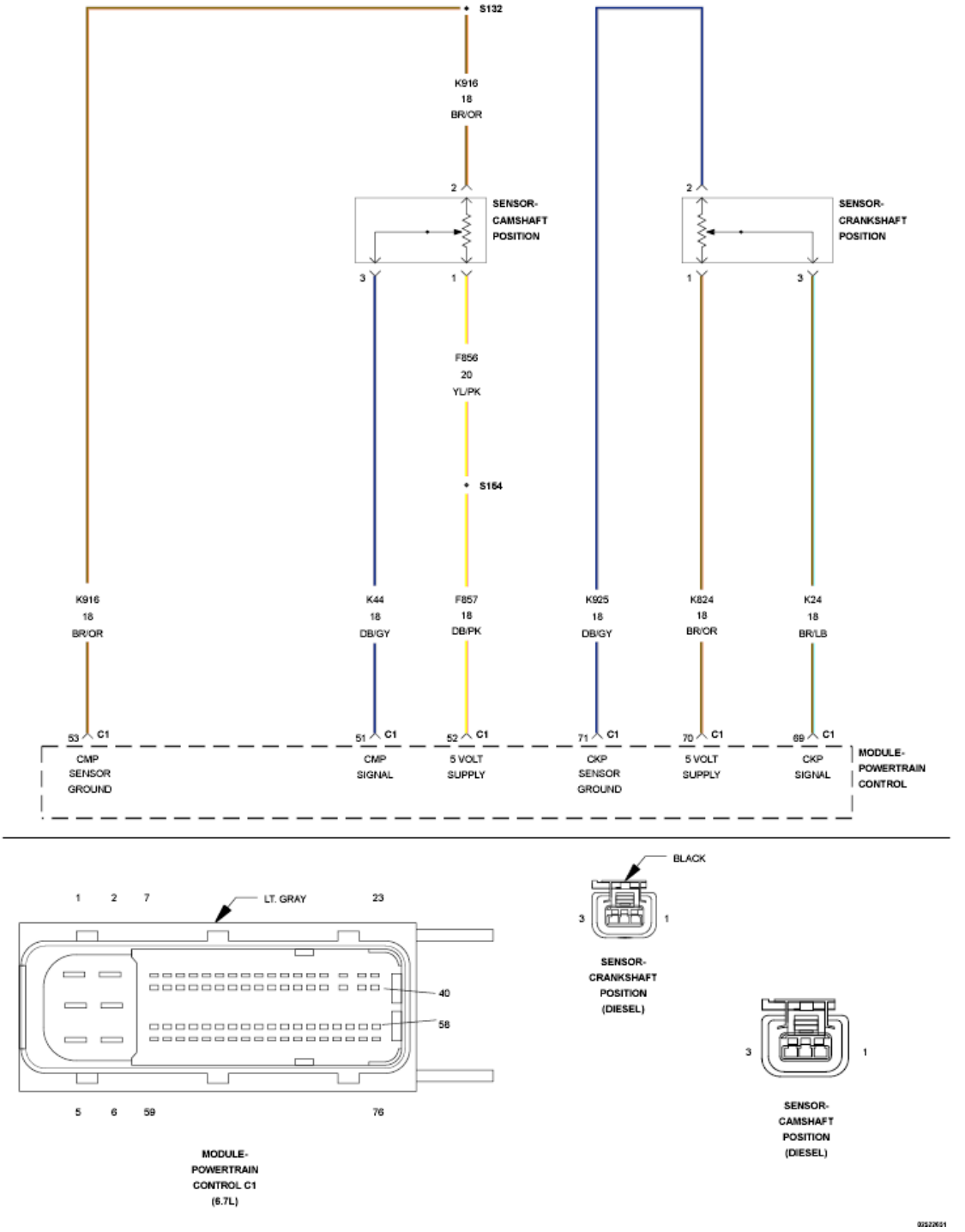

Fig. 94: Crankshaft Position Sensor & Camshaft Position Sensor Circuit Schematic
Courtesy of CHRYSLER GROUP, LLC

For a complete wiring diagram, **refer to appropriate SYSTEM WIRING DIAGRAMS article** .

THEORY OF OPERATION

This sensor supply circuit provides a 5-Volt supply to the Crankshaft Position Sensor. A MIL lamp will be lit

immediately after this diagnostic runs and fails. The MIL lamp will turn off once the diagnostic runs and passes in four consecutive drive cycles.

WHEN MONITORED:

With the key on.

SET CONDITION:

Voltage detected on the 5-Volt Supply circuit was above a calibrated value.

POSSIBLE CAUSES

Possible Causes
(K824) 5-VOLT SUPPLY CIRCUIT SHORTED TO VOLTAGE
POWERTRAIN CONTROL MODULE (PCM)

Always perform the Pre-Diagnostic Troubleshooting procedure before proceeding. Refer to PRE-DIAGNOSTIC TROUBLESHOOTING PROCEDURE - 6.7L .

DIAGNOSTIC TEST

1. **ACTIVE DTC**
    1. Turn the ignition on.
    2. With the scan tool, record all Freeze frame data.
    3. With the scan tool, erase DTCs.
    4. Turn the ignition off for 75 seconds.
    5. Turn the ignition on.
    6. With the scan tool, read DTCs.

    Did the DTC reset?

    Yes

    - Go To 2.

    No

    - Perform the INTERMITTENT CONDITION diagnostic procedure. Refer to **INTERMITTENT CONDITION - 6.7L** .
2. **CHECK THE (K824) 5-VOLT CIRCUIT FOR A SHORT TO VOLTAGE**

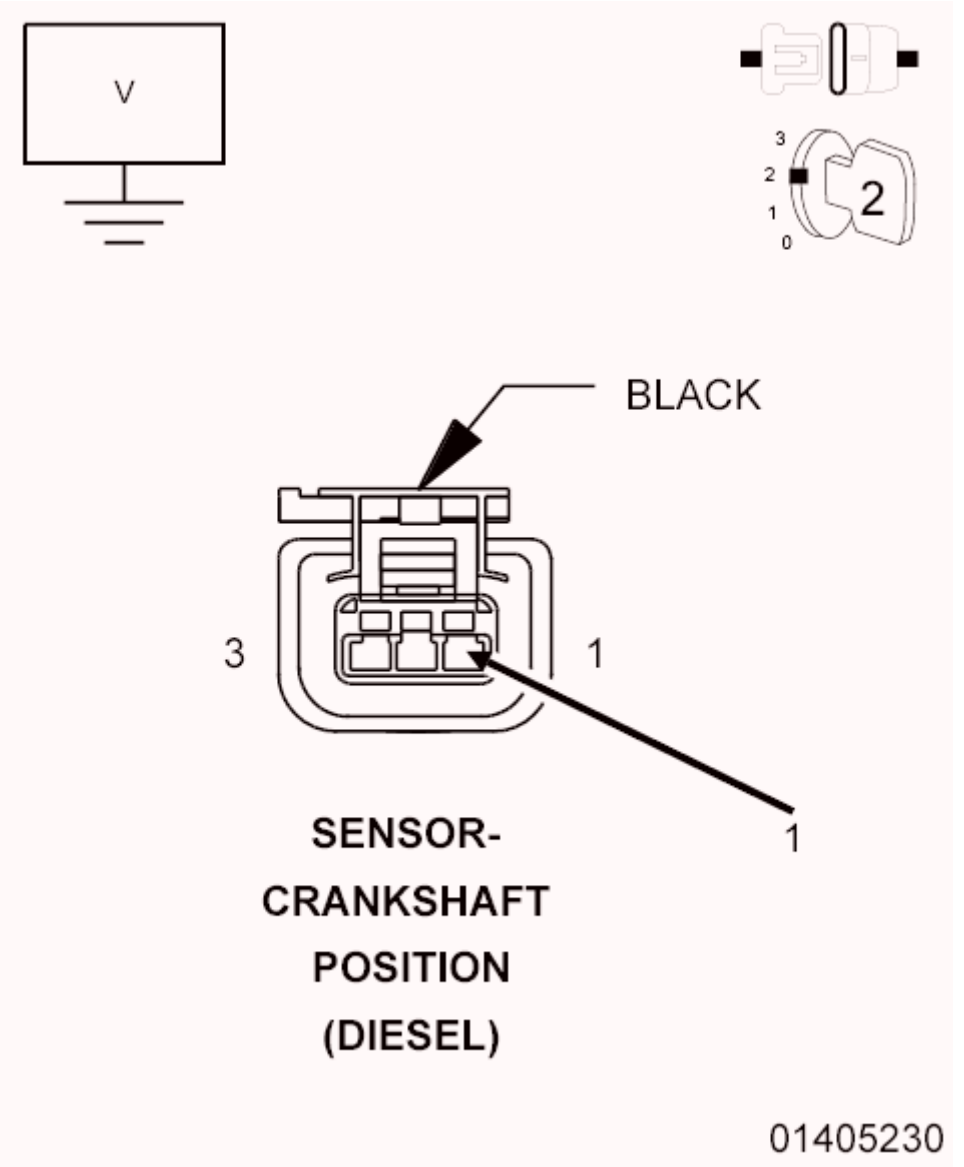

Fig. 95: Checking CKP Sensor 5-Volt Supply Circuit For Short To Voltage
Courtesy of CHRYSLER GROUP, LLC

1. Disconnect the Crankshaft Position Sensor harness connector.

   NOTE: Check connectors - Clean/repair as necessary.

2. Measure the voltage on the (K824) 5-Volt Supply circuit at the Crankshaft Position Sensor harness connector.

   Is the voltage greater than 5.1 Volts?

   Yes

- Go To 3.

No

- Perform the INTERMITTENT CONDITION diagnostic procedure. Refer to **INTERMITTENT CONDITION - 6.7L** .

3. **CHECK THE (K824) 5-VOLT SUPPLY CIRCUIT FOR A SHORT TO ANOTHER CIRCUIT**
   1. Disconnect the PCM C1 harness connector.

      NOTE: Check connectors - Clean/repair as necessary.

   2. Measure the resistance between the (K824) 5-Volt Supply circuit and all other circuits in the PCM C1 connector.

      Is the resistance below 10k Ohms between the (K824) 5-Volt Supply circuit and any of the circuits?

      Yes

      - Repair the short to the circuit that measured below 10k Ohms.
      - Perform the POWERTRAIN VERIFICATION TEST - 6.7L. Refer to **POWERTRAIN VERIFICATION TEST - 6.7L** .

      No

      - Replace the Powertrain Control Module in accordance with the service information.
      - Perform the POWERTRAIN VERIFICATION TEST - 6.7L. Refer to **POWERTRAIN VERIFICATION TEST - 6.7L** .

P0646-A/C CONTROL CIRCUIT LOW

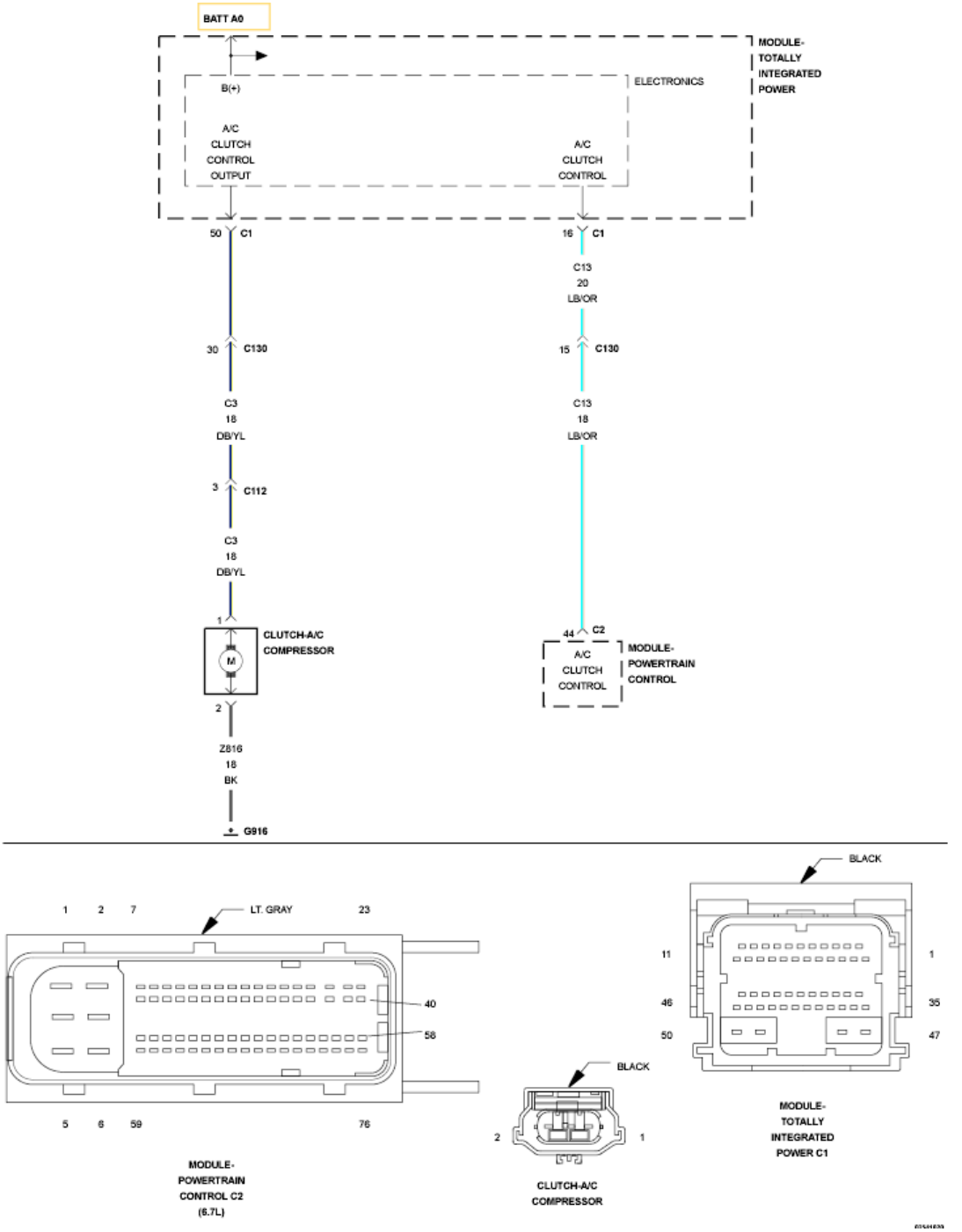

Fig. 96: A/C Compressor Clutch & TIPM Circuit Schematic
Courtesy of CHRYSLER GROUP, LLC

For a complete wiring diagram, **refer to appropriate SYSTEM WIRING DIAGRAMS article** .

THEORY OF OPERATION

The Powertrain Control Module (PCM) receives various information from the operator controls and A/C system to determine when the A/C Compressor Clutch should be turned on. The Totally Integrated Power Module

(TIPM) receives a signal from the PCM to turn on the A/C Compressor Clutch. The TIPM supplies 12 Volts to the A/C Compressor Clutch which has a dedicated ground circuit. You will not receive a MIL lamp for this fault, but the customer may complain of poor A/C performance.

WHEN MONITORED:

When the ignition is on.

SET CONDITION:

When the signal from the A/C Compressor Clutch circuit output does not match the signal from the A/C Clutch feedback.

POSSIBLE CAUSES

Possible Causes
LOW VOLTAGE SUPPLY TO THE TIPM (C13) A/C CLUTCH COMPRESSOR CONTROL CIRCUIT OPEN/HIGH RESISTANCE (C13) A/C CLUTCH CONTROL COMPRESSOR CIRCUIT SHORTED TO GROUND
TOTALLY INTEGRATED POWER MODULE (TIPM) POWERTRAIN CONTROL MODULE (PCM)

Always perform the Pre-Diagnostic Troubleshooting procedure before proceeding. Refer to PRE-DIAGNOSTIC TROUBLESHOOTING PROCEDURE - 6.7L .

DIAGNOSTIC TEST

1. **CHECK THE (C13) A/C COMPRESSOR CLUTCH CONTROL CIRCUIT FOR AN OPEN/HIGH RESISTANCE**

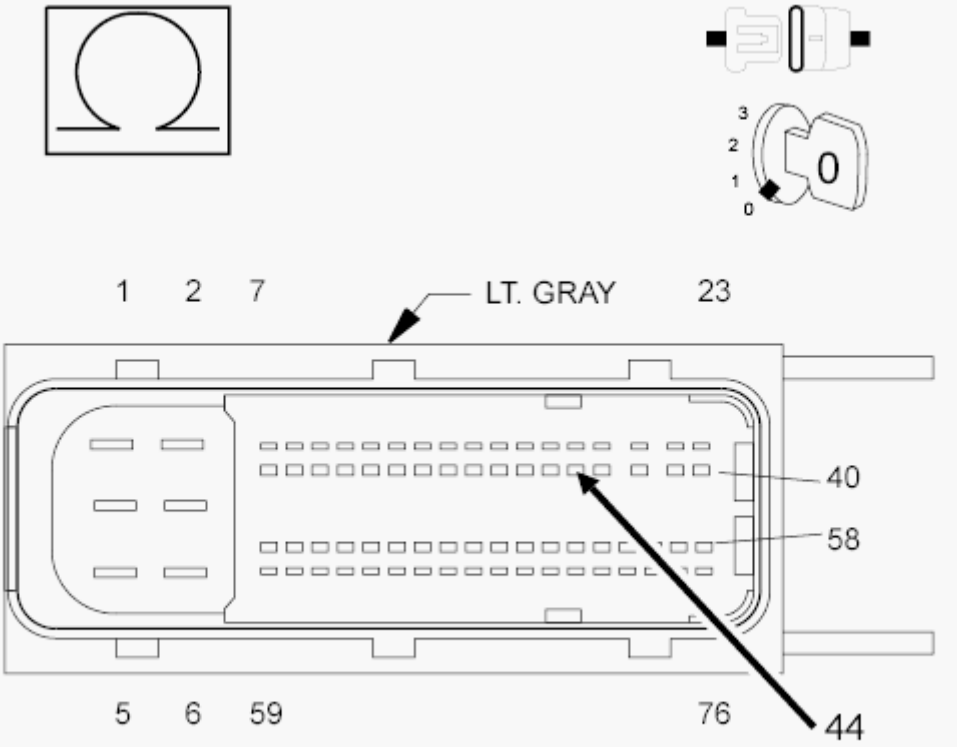

MODULE-
POWERTRAIN
CONTROL C2
(6.7L)

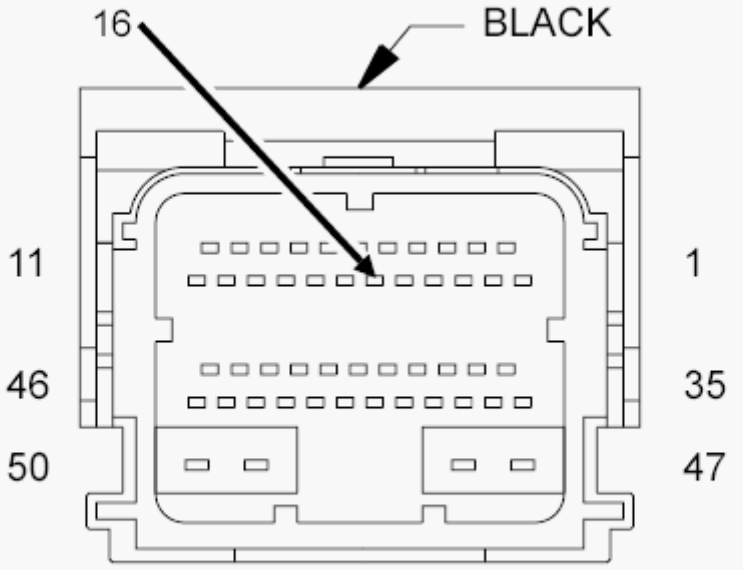

MODULE-
TOTALLY
INTEGRATED

Fig. 97: Checking A/C Compressor Clutch Control Circuit For An Open Or High Resistance
Courtesy of CHRYSLER GROUP, LLC

1. Turn the ignition off.
2. Disconnect the PCM C2 harness connector.
3. Disconnect the TIPM C1 harness connector.

NOTE: Check connectors - Clean/repair as necessary.

4. Measure the resistance of the (C13) A/C Compressor Clutch Control circuit between the PCM C2 and TIPM C1 harness connectors.

   Is the resistance below 5.0 Ohms?

   No

   - Repair the (C13) A/C Compressor Clutch Control circuit for an open or high resistance.
   - Perform the POWERTRAIN VERIFICATION TEST - 6.7L. Refer to **POWERTRAIN VERIFICATION TEST - 6.7L** .

   Yes

   - Go To 2.

2. **CHECK THE (C13) A/C COMPRESSOR CLUTCH CIRCUIT FOR A SHORT TO GROUND**

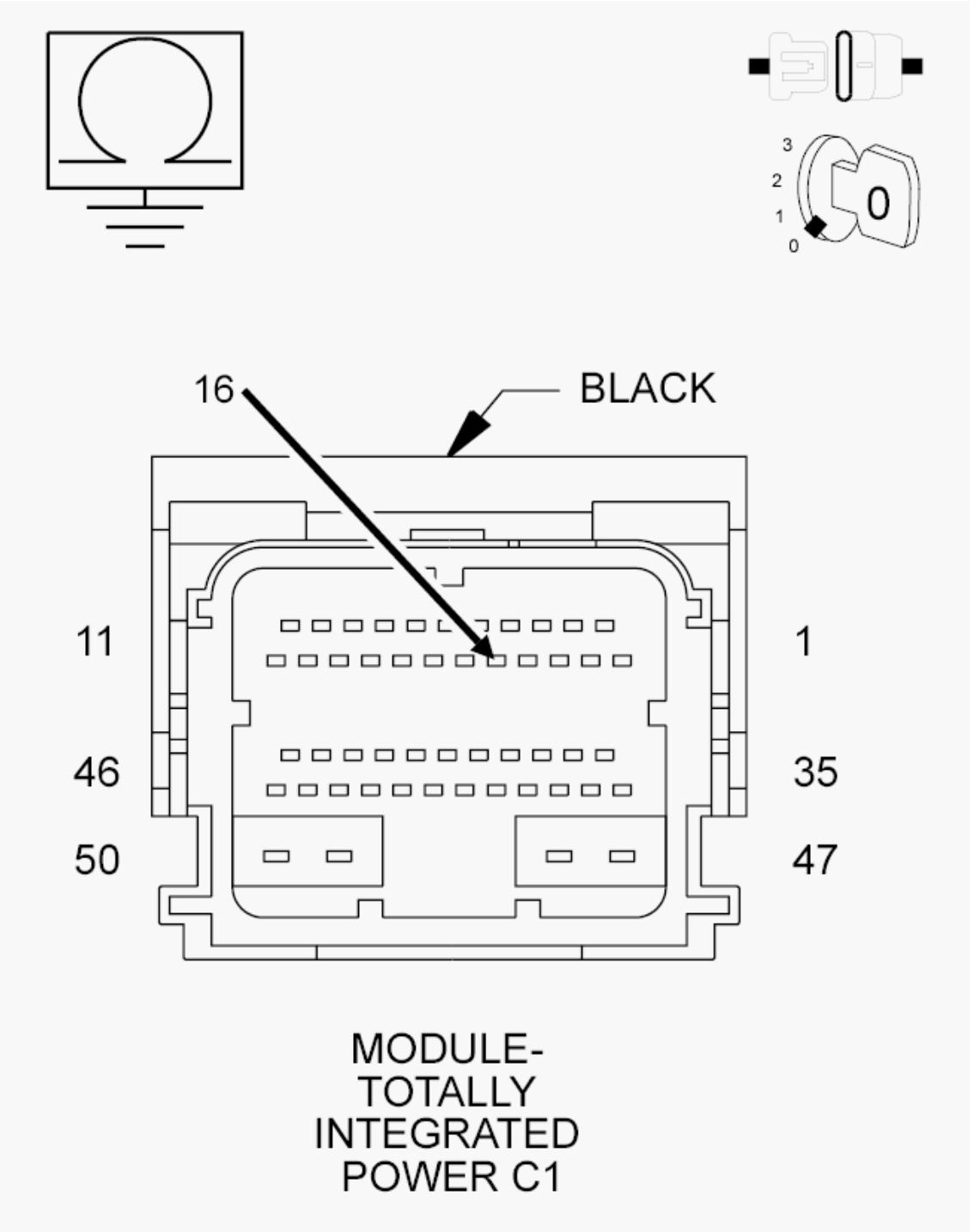

Fig. 98: Checking A/C Compressor Clutch Circuit For A Short To Ground
Courtesy of CHRYSLER GROUP, LLC

1. Measure the resistance between ground and the (C13) A/C Compressor Clutch Control circuit at the TIPM C1 harness connector.

   Is the resistance below 10k Ohms?

Yes

- Go To 3.

No

- Repair the (C13) A/C Compressor Clutch Control circuit for a short to ground.
- Perform the POWERTRAIN VERIFICATION TEST - 6.7L. Refer to **POWERTRAIN VERIFICATION TEST - 6.7L** .

3. **CHECK THE PCM/TIPM**

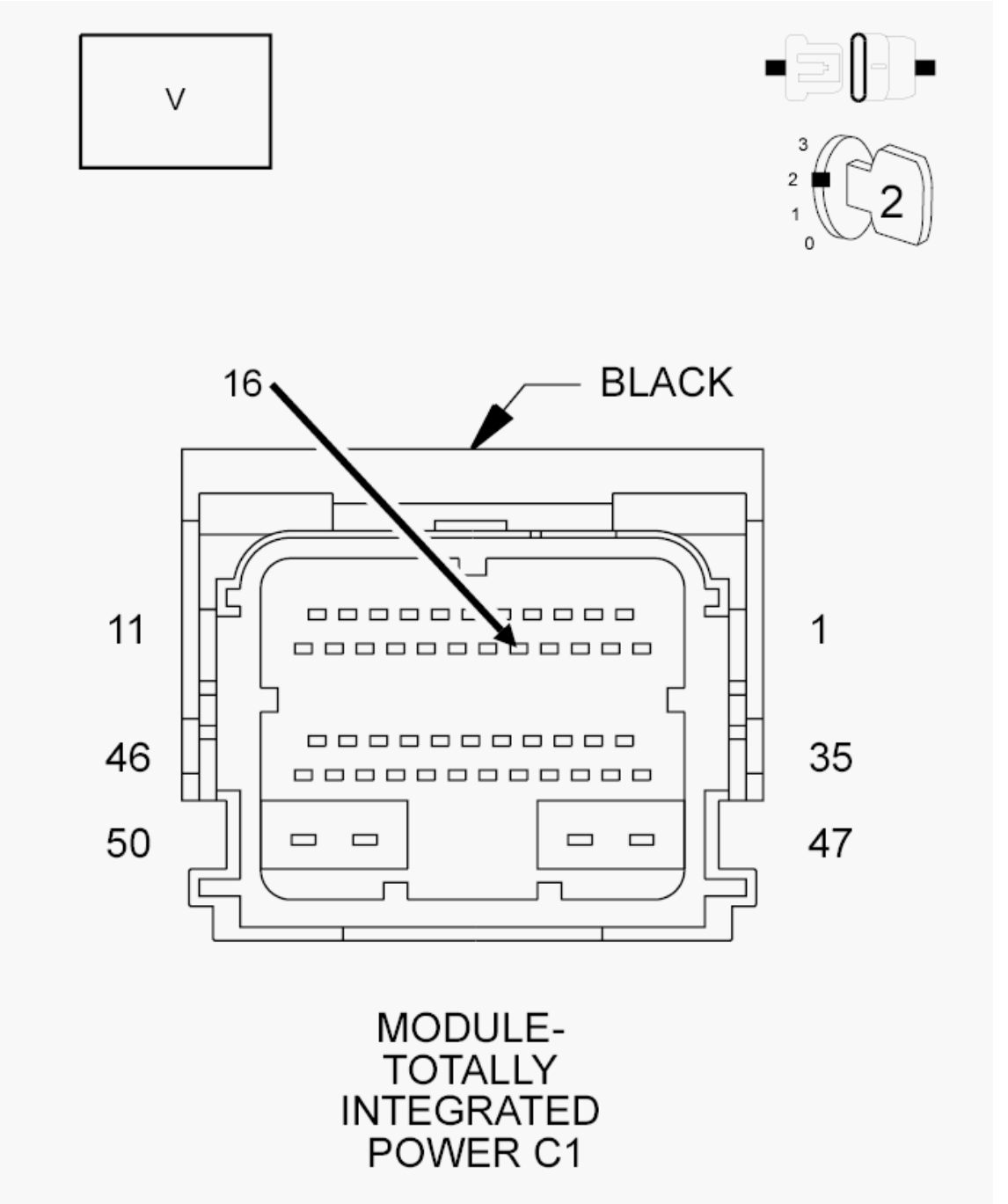

Fig. 99: Checking PCM/TIPM Control Circuits
Courtesy of CHRYSLER GROUP, LLC

1. Reconnect the PCM C2 harness connector.
2. Ignition on, engine not running.
3. Using a 12-Volt test light connected to battery positive, probe the (C13) A/C Clutch Control circuit at the TIPM C1 harness connector while actuating the A/C Compressor Clutch circuit with the scan tool.

NOTE: The test light must illuminate brightly.

4. Compare the brightness to that of a direct connection to the Battery.

   Does the test light illuminate brightly?

   Yes

   - Replace the Totally Integrated Power Module (TIPM) in accordance with the service information.
   - Perform the BODY VERIFICATION TEST. Refer to **STANDARD PROCEDURE** .

   No

   - Replace the Powertrain Control Module (PCM) in accordance with the service information.
   - Perform the POWERTRAIN VERIFICATION TEST - 6.7L. Refer to **POWERTRAIN VERIFICATION TEST - 6.7L** .

P0647-A/C CONTROL CIRCUIT HIGH

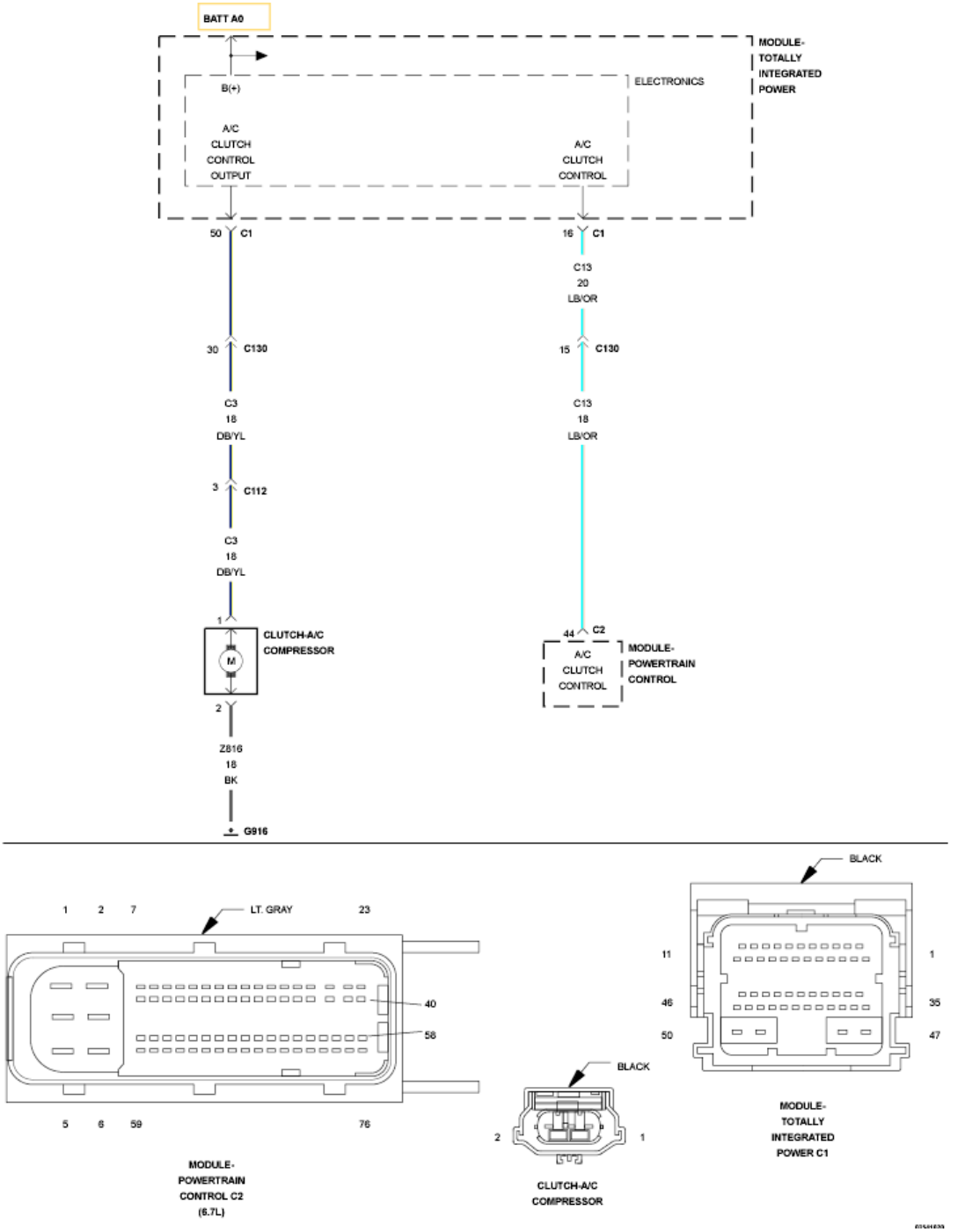

Fig. 100: A/C Compressor Clutch & TIPM Circuit Schematic
Courtesy of CHRYSLER GROUP, LLC

For a complete wiring diagram, **refer to appropriate SYSTEM WIRING DIAGRAMS article** .

THEORY OF OPERATION

The Powertrain Control Module (PCM) receives various information from the operator controls and engine sensor inputs to determine when the A/C Compressor Clutch should be turned on. The Totally Integrated Power

Module (TIPM) receives a signal from the PCM to turn on the A/C Compressor Clutch. The A/C Pressure Sensor information is an input to the TIPM. The TIPM uses the A/C Pressure Sensor input signal to determine if the A/C Compressor Clutch should be turned on. The TIPM supplies 12-Volts to the A/C compressor clutch which has a dedicated ground circuit. You will not receive a MIL lamp for this fault, but the customer may complain of poor A/C performance.

WHEN MONITORED:

When the ignition is on.

SET CONDITION:

When the signal from the A/C Compressor Clutch output does not match the signal from the A/C Compressor Clutch feedback.

POSSIBLE CAUSES

Possible Causes
(C13) A/C COMPRESSOR CLUTCH CONTROL CIRCUIT SHORTED TO VOLTAGE
TOTALLY INTEGRATED POWER MODULE (TIPM)
POWERTRAIN CONTROL MODULE (PCM)

Always perform the Pre-Diagnostic Troubleshooting procedure before proceeding. Refer to PRE-DIAGNOSTIC TROUBLESHOOTING PROCEDURE - 6.7L .

DIAGNOSTIC TEST

1. **CHECK THE (C13) A/C COMPRESSOR CLUTCH CONTROL CIRCUIT FOR A SHORT TO VOLTAGE**

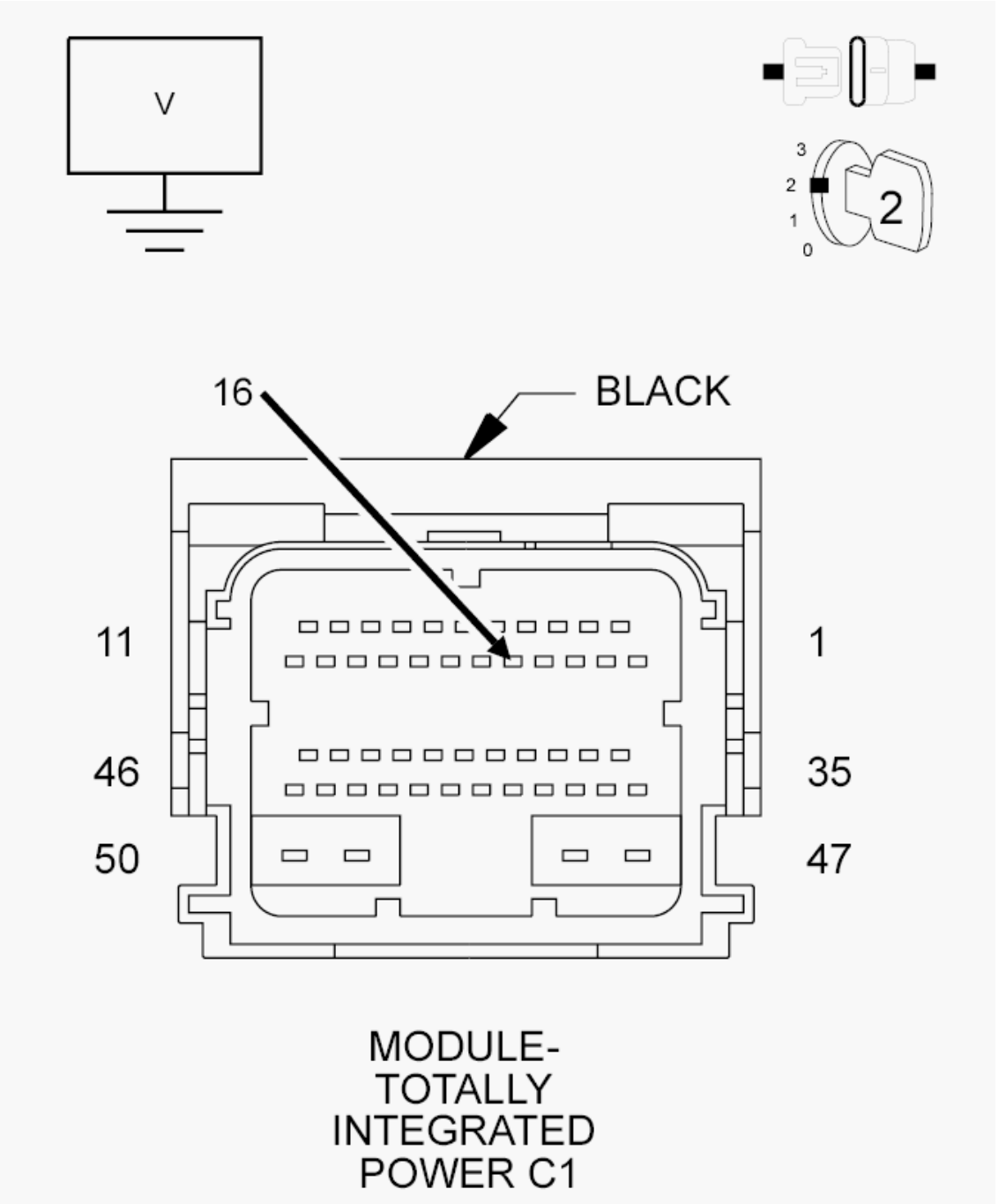

Fig. 101: Checking The A/C Compressor Clutch Control Circuit For A Short To Voltage
Courtesy of CHRYSLER GROUP, LLC

1. Turn the ignition off.
2. Disconnect the TIPM C1 harness connector.

NOTE: Check connectors - Clean/repair as necessary.

3. Turn the ignition on, engine not running.

4. Using a Voltmeter, measure the voltage on the (C13) A/C Compressor Clutch Control circuit at the TIPM C1 harness connector.

   Is there any voltage present?

   Yes

   - Repair the (C13) A/C Compressor Clutch Control circuit for a short to voltage.
   - Perform the POWERTRAIN VERIFICATION TEST - 6.7L. Refer to **POWERTRAIN VERIFICATION TEST - 6.7L** .

   No

   - Go To 2.

2. **CHECK THE POWERTRAIN CONTROL MODULE**

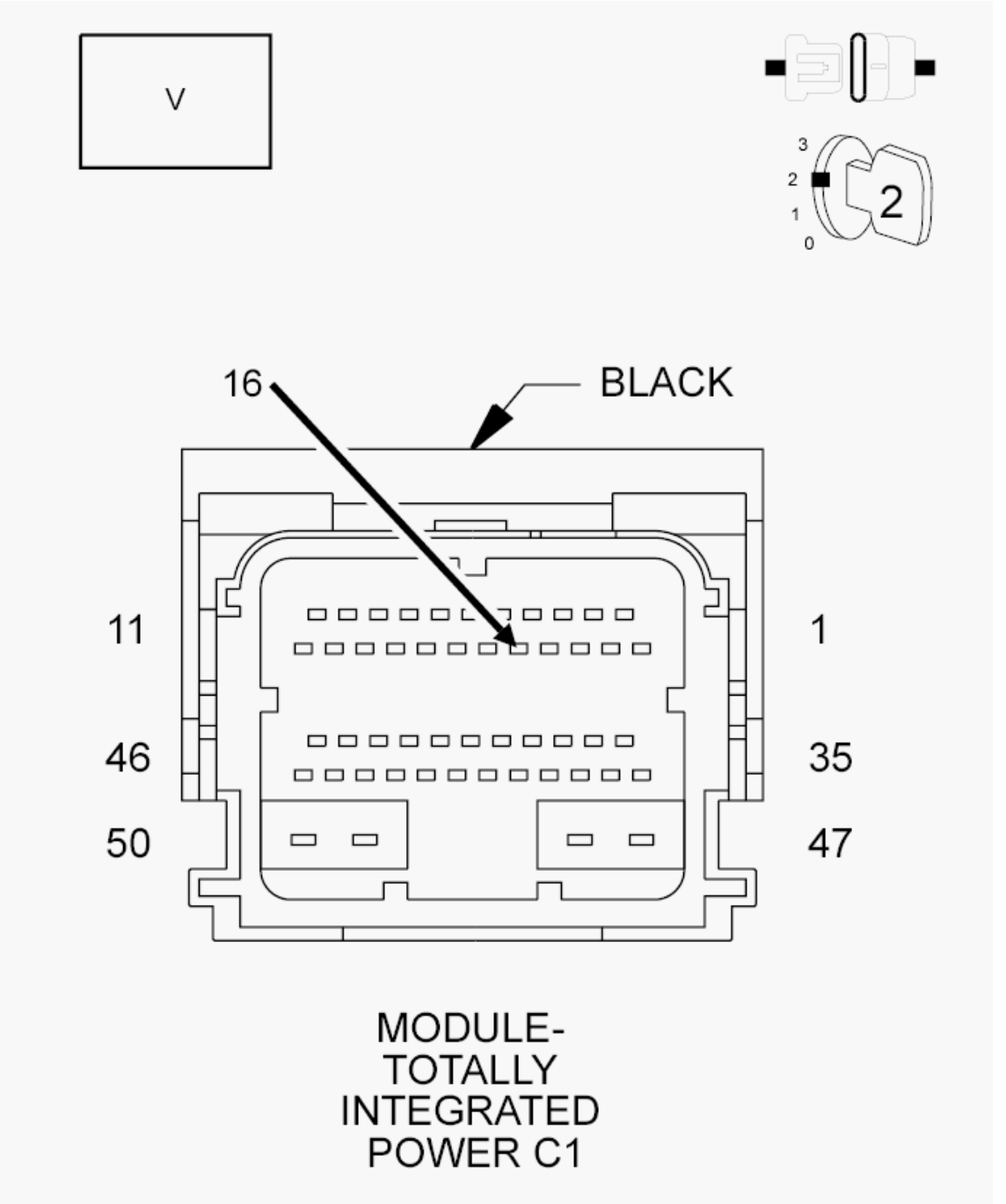

Fig. 102: Checking PCM/TIPM Control Circuits
Courtesy of CHRYSLER GROUP, LLC

1. Using a 12-Volt test light connected battery positive, probe the (C13) A/C Compressor Clutch Control circuit at the TIPM C1 harness connector while actuating the A/C Compressor Clutch with the scan tool.

NOTE: **The test light must illuminate brightly.**

2. Compare the brightness to that of a direct connection to the Battery.

   Does the test light illuminate brightly?

   Yes

   - Go To 3.

   No

   - Replace the Powertrain Control Module in accordance with the service information.
   - Perform the POWERTRAIN VERIFICATION TEST - 6.7L. Refer to **POWERTRAIN VERIFICATION TEST - 6.7L** .

3. **CHECK THE TOTALLY INTEGRATED POWER MODULE**
   1. Reconnect the TIPM C1 harness connector.
   2. Using a back probing tool back probe the (C3) A/C Compressor Clutch Output Control circuit in the TIPM C1 harness connector.
   3. Using a 12-Volt test light connected to ground, probe the (C3) A/C Compressor Clutch Output Control at the TIPM C1 harness connector while actuating the A/C Compressor Clutch circuit with the scan tool.

      NOTE: The test light must illuminate brightly.

   4. Compare the brightness to that of a direct connection to the battery.

      Does the test light illuminate brightly?

      Yes

      - Test complete.
      - Perform the POWERTRAIN VERIFICATION TEST - 6.7L. Refer to **POWERTRAIN VERIFICATION TEST - 6.7L** .

      No

      - Replace the Totally Integrated Power Module in accordance with the service information.
      - Perform the BODY VERIFICATION TEST. Refer to **STANDARD PROCEDURE** .

P064C-GLOW PLUG MODULE INTERNAL PERFORMANCE

For a complete wiring diagram, **refer to appropriate SYSTEM WIRING DIAGRAMS article** .

THEORY OF OPERATION

The glow plugs provide a hot spot in the combustion chamber, and are used to aid in cold starting. The Glow

Plug Control Module (GPCM) controls the glow plug temperature by regulating the current supplied to the glow plugs. The GPCM communicates with the ECM via the J1939 engine datalink, and the glow plug temperature and operation time is based on engine information supplied by the ECM. The GPCM monitors the status of each glow plug individually, and reports diagnostic failures to the ECM via the J1939 datalink. The glow plug system will be disabled when the fault is set. The ECM will turn OFF the MIL after 3 consecutive ignition cycles that the diagnostic runs and passes.

WHEN MONITORED:

Initially at key on and the Glow Plug Control Module is commanding the Glow Plugs on.

SET CONDITION:

The Glow Plug Control Module detects an issue with it's internal circuitry or hardware.

POSSIBLE CAUSES

Possible Causes
FUEL INJECTOR CIRCUIT OPEN/HIGH RESISTANCE
UPRATE KIT THAT MODIFIES INJECTOR ON TIME
POWERTRAIN CONTROL MODULE (PCM)

Always perform the Pre-Diagnostic Troubleshooting procedure before proceeding. Refer to PRE-DIAGNOSTIC TROUBLESHOOTING PROCEDURE - 6.7L .

DIAGNOSTIC TEST

1. **POWERTRAIN CONTROL MODULE CALIBRATION**
    1. Ignition on, engine not running.
    2. With the scan tool, check the PCM for the proper calibration level.

       Is the PCM calibration correct and at the latest version?

       Yes

       - Go To 2.

       No

       - Reprogram the Powertrain Control Module with the latest software version.
       - Perform the POWERTRAIN VERIFICATION TEST - 6.7L. Refer to **POWERTRAIN VERIFICATION TEST - 6.7L** .
2. **ACTIVE DTC**
    1. Turn the ignition off for at least 10 seconds.
    2. Turn the ignition on.

3. With the scan tool, clear DTCs.
4. With the scan tool, navigate to actuator tests and perform the Glow Plug Service Override Test twice without starting the engine.

   Did the DTC become active?

   Yes

   - Replace the Glow Plug Control Module.
   - Perform the POWERTRAIN VERIFICATION TEST - 6.7L. Refer to **POWERTRAIN VERIFICATION TEST - 6.7L** .

   No

   - Perform the INTERMITTENT CONDITION diagnostic procedure. Refer to **INTERMITTENT CONDITION - 6.7L** .

P0652-SENSOR REFERENCE VOLTAGE 2 LOW

For a complete wiring diagram, **refer to appropriate SYSTEM WIRING DIAGRAMS article** .

THEORY OF OPERATION

This sensor supply circuit provides a 5-Volt supply to: Camshaft Position Sensor, Inlet Air Temperature/Pressure Sensor, Exhaust Pressure Sensor, Fuel Pressure Sensor, Boost Pressure/CAC Temperature, EGR Valve, Fan Clutch Assembly, EGR Airflow Control Valve, and Crankcase Pressure Sensor. A MIL lamp will be lit immediately after this diagnostic runs and fails. The MIL lamp will turn off once the diagnostic runs and passes in four consecutive drive cycles.

WHEN MONITORED:

With the key on.

SET CONDITION:

Voltage detected on the 5-Volt supply circuit is below a calibrated value.

POSSIBLE CAUSES

Possible Causes
(F857) 5-VOLT SUPPLY CIRCUIT SHORTED TO GROUND
CAMSHAFT POSITION SENSOR
INLET AIR TEMPERATURE/PRESSURE SENSOR EXHAUST PRESSURE SENSOR FUEL RAIL PRESSURE SENSOR
BOOST PRESSURE/CAC TEMPERATURE SENSOR

EGR VALVE
FAN CLUTCH ASSEMBLY
CRANKCASE PRESSURE SENSOR EGR AIRFLOW CONTROL VALVE
POWERTRAIN CONTROL MODULE (PCM)

Always perform the Pre-Diagnostic Troubleshooting procedure before proceeding. Refer to PRE-DIAGNOSTIC TROUBLESHOOTING PROCEDURE - 6.7L .

DIAGNOSTIC TEST

1. **ACTIVE DIAGNOSTIC TROUBLE CODE (DTC)**
    1. Turn the ignition on.
    2. Using the scan tool, record all Freeze frame data.
    3. Using the scan tool, erase DTCs.
    4. Turn the ignition off for 75 seconds.
    5. Turn the ignition on.
    6. Using the scan tool, read DTCs.

    Did the DTC reset?

    Yes

    - Go To 2.

    No

    - Perform the INTERMITTENT CONDITION diagnostic procedure. Refer to **INTERMITTENT CONDITION - 6.7L** .
2. **CHECK THE CAMSHAFT POSITION SENSOR**

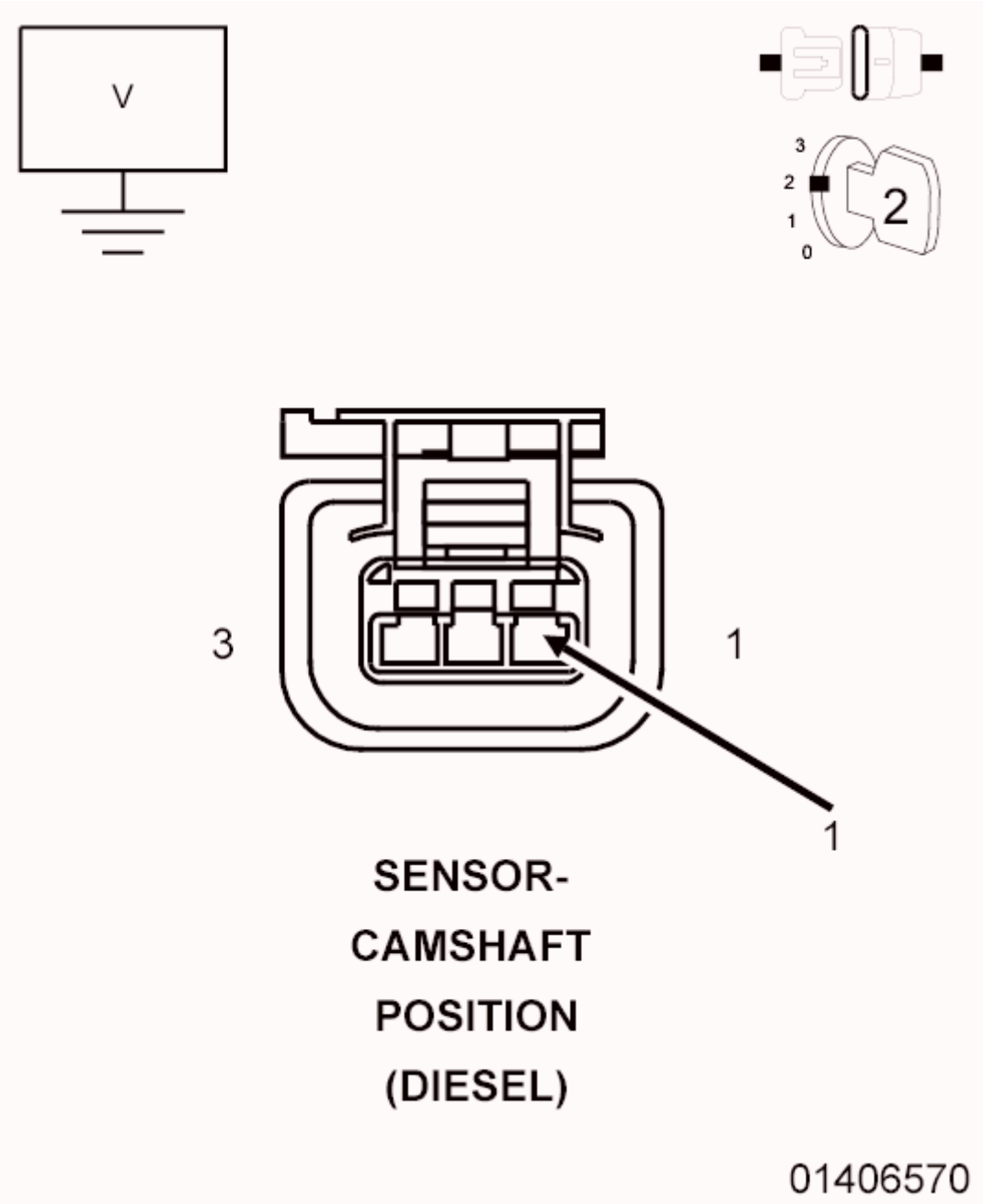

Fig. 103: Measuring Voltage Of 5-Volt Supply Circuit At Camshaft Position Sensor Harness Connector
Courtesy of CHRYSLER GROUP, LLC

1. Turn the ignition off.
2. Disconnect the Camshaft Position Sensor harness connector.
3. Turn the ignition on.
4. Measure the voltage on the (F857) 5-Volt Supply circuit at the Camshaft Position Sensor harness connector.

Is the voltage reading between 4.9 and 5.1 Volts?

Yes

- Replace the Camshaft Position Sensor in accordance with the Service Information.
- Perform the POWERTRAIN VERIFICATION TEST - 6.7L. Refer to **POWERTRAIN VERIFICATION TEST - 6.7L** .

No

- Go To 3.

3. **CHECK THE INLET AIR TEMPERATURE/PRESSURE SENSOR**

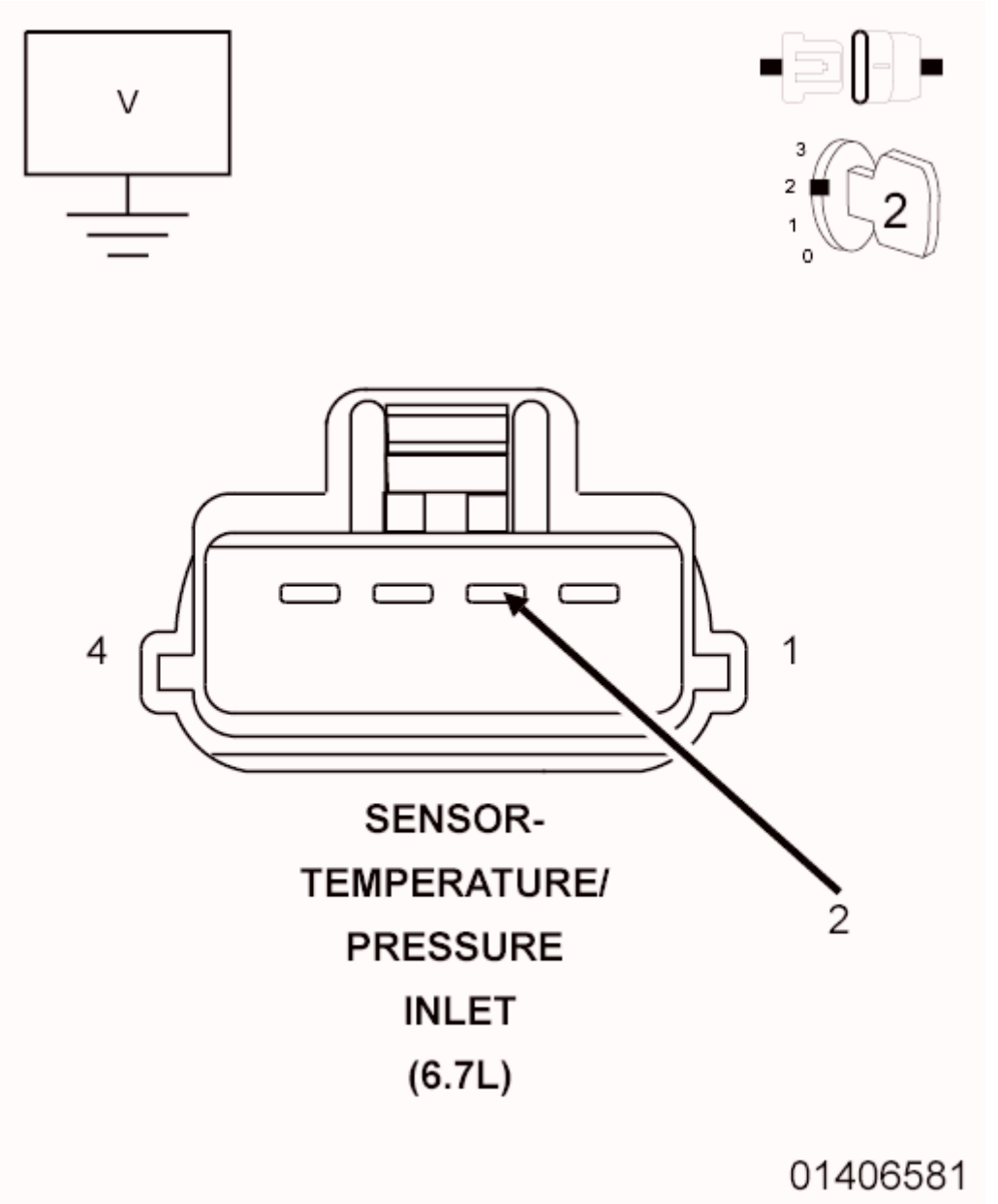

Fig. 104: Measuring Voltage Of 5-Volt Supply Circuit At Inlet Air Temperature/Pressure Sensor Harness Connector
Courtesy of CHRYSLER GROUP, LLC

1. Turn the ignition off.
2. Disconnect the Inlet Air Temperature/Pressure Sensor harness connector.
3. Turn the ignition on.
4. Measure the voltage on the (F857) 5-Volt Supply circuit at the Inlet Air Temperature/Pressure Sensor harness connector.

   Is the voltage reading between 4.9 and 5.1 Volts?

Yes

- Replace the Inlet Air Temperature/Pressure Sensor in accordance with the Service Information.
- Perform the POWERTRAIN VERIFICATION TEST - 6.7L. Refer to **POWERTRAIN VERIFICATION TEST - 6.7L** .

No

- Go To 4.

4. **CHECK THE EXHAUST PRESSURE SENSOR**

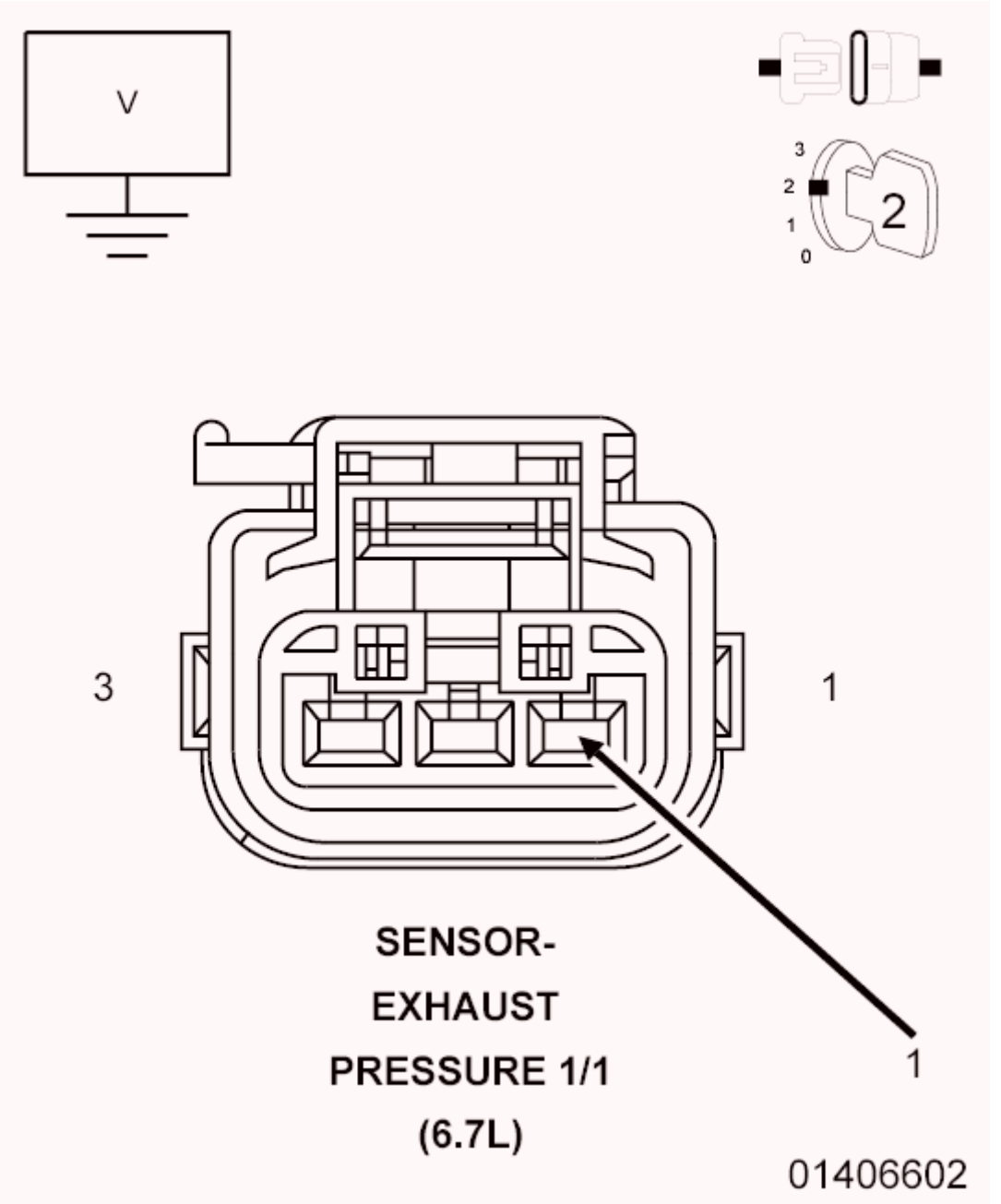

Fig. 105: Measuring Voltage Of 5-Volt Supply Circuit At Inlet Exhaust Pressure Sensor Harness Connector
Courtesy of CHRYSLER GROUP, LLC

1. Turn the ignition off.
2. Disconnect the Exhaust Pressure Sensor harness connector.
3. Turn the ignition on.
4. Measure the voltage on the (F857) 5-Volt Supply circuit at the Inlet Exhaust Pressure Sensor harness connector.

Is the voltage reading between 4.9 and 5.1 Volts?

Yes

- Replace the Exhaust Pressure Sensor in accordance with the Service Information.
- Perform the POWERTRAIN VERIFICATION TEST - 6.7L. Refer to **POWERTRAIN VERIFICATION TEST - 6.7L** .

No

- Go To 5.

5. **CHECK THE FUEL RAIL PRESSURE SENSOR**

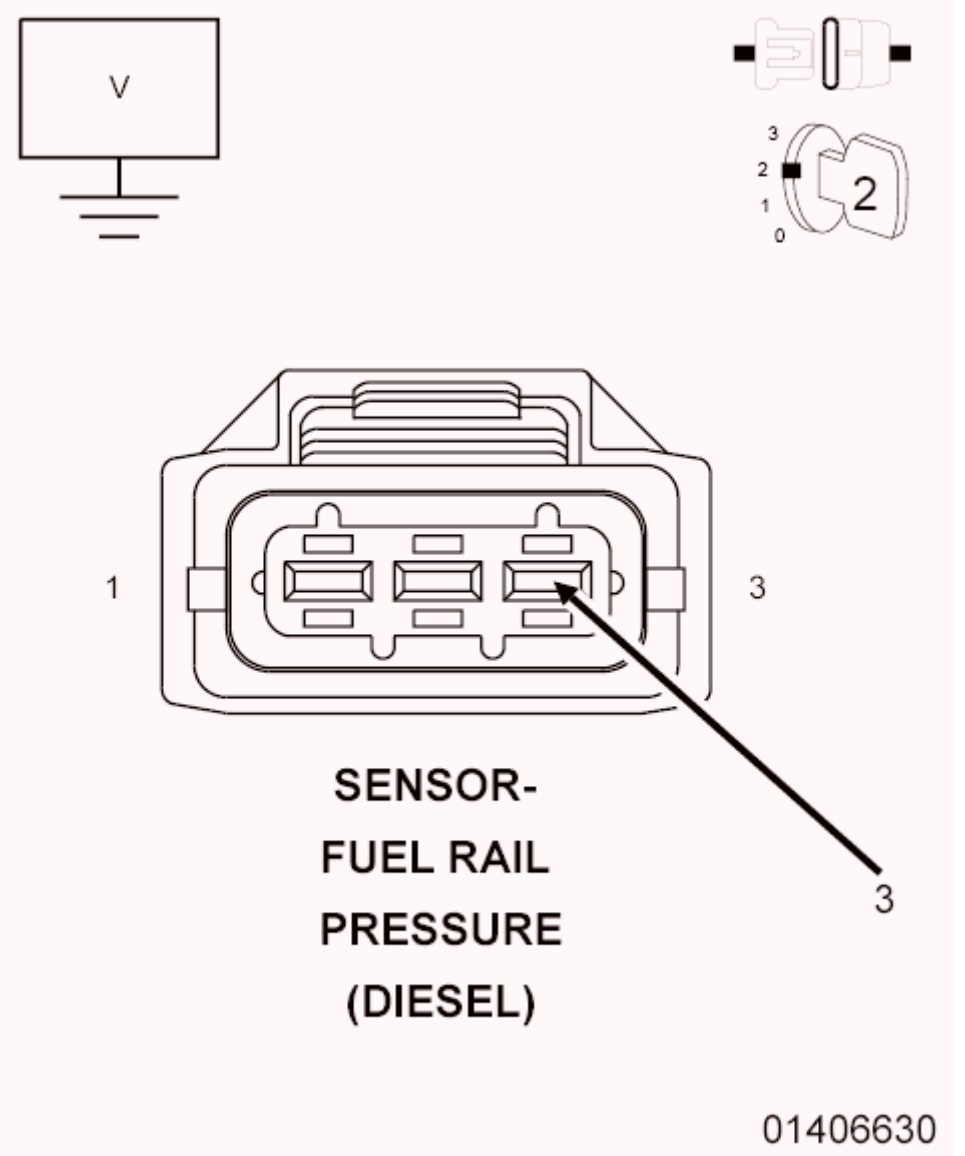

Fig. 106: Measuring Voltage Of 5-Volt Supply Circuit At Fuel Rail Pressure Sensor Harness Connector

Courtesy of CHRYSLER GROUP, LLC

1. Turn the ignition off.
2. Disconnect the Fuel Rail Pressure Sensor harness connector.
3. Turn the ignition on.
4. Measure the voltage on the (F857) 5-Volt Supply circuit at the Fuel Rail Pressure Sensor harness connector.

   Is the voltage reading between 4.9 and 5.1 Volts?

   Yes

   - Replace the Fuel Rail Pressure Sensor n accordance with the Service Information.
   - Perform the POWERTRAIN VERIFICATION TEST - 6.7L. Refer to **POWERTRAIN VERIFICATION TEST - 6.7L** .

   No

   - Go To 6.

6. **CHECK THE BOOST PRESSURE/CAC TEMPERATURE SENSOR**

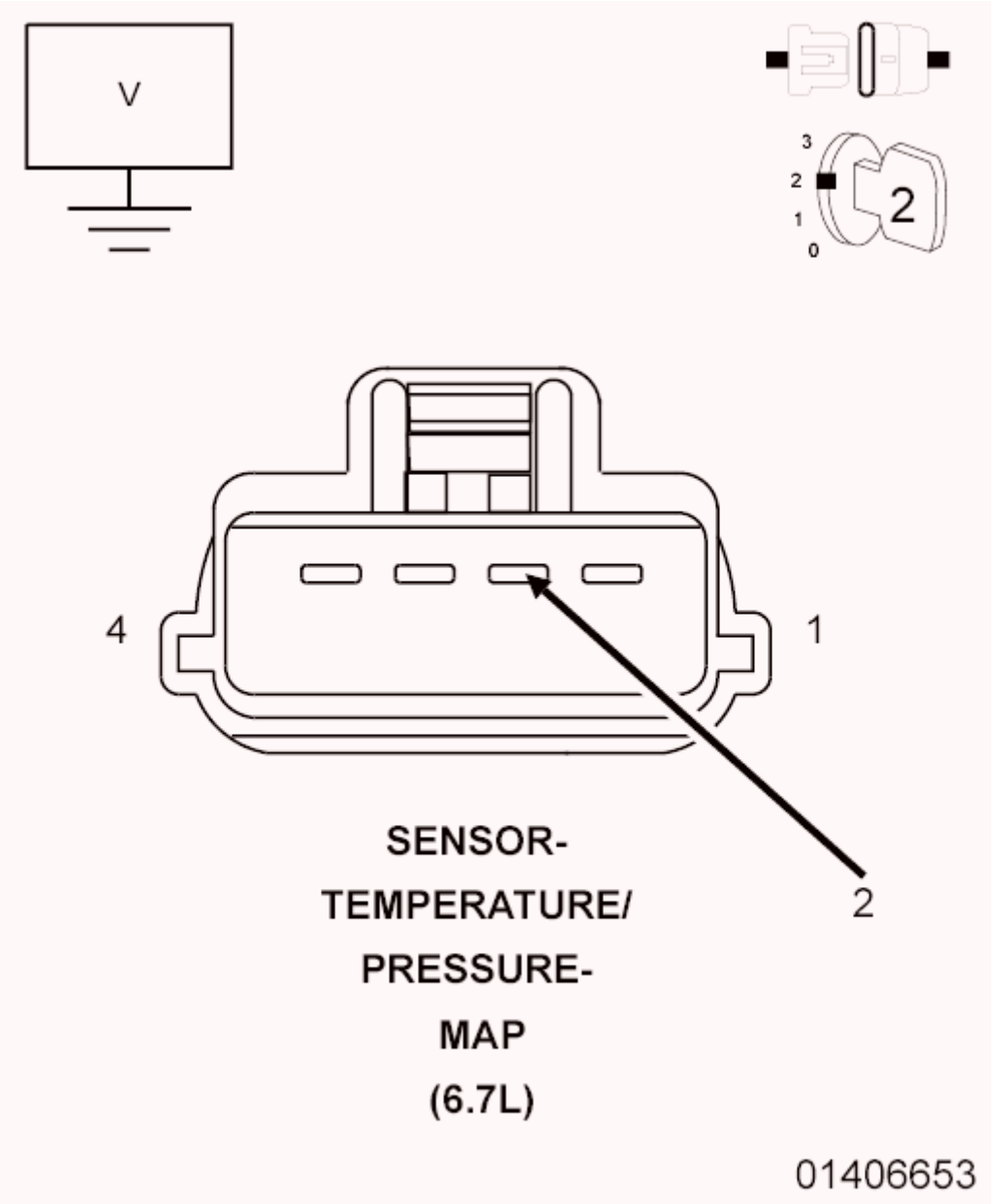

Fig. 107: Measuring Voltage Of 5-Volt Supply Circuit At Boost Pressure/CAC Temperature Sensor Harness Connector
Courtesy of CHRYSLER GROUP, LLC

1. Turn the ignition off.
2. Disconnect the Boost Pressure/CAC Temperature Sensor harness connector.
3. Turn the ignition on.
4. Measure the voltage on the (F857) 5-Volt Supply circuit at the Boost Pressure/CAC Temperature Sensor harness connector.

   Is the voltage reading between 4.9 and 5.1 Volts?

Yes

- Replace the Boost Pressure/CAC Temperature Sensor in accordance with the Service Information.
- Perform the POWERTRAIN VERIFICATION TEST - 6.7L. Refer to **POWERTRAIN VERIFICATION TEST - 6.7L** .

No

- Go To 7.

7. **CHECK THE EGR VALVE**

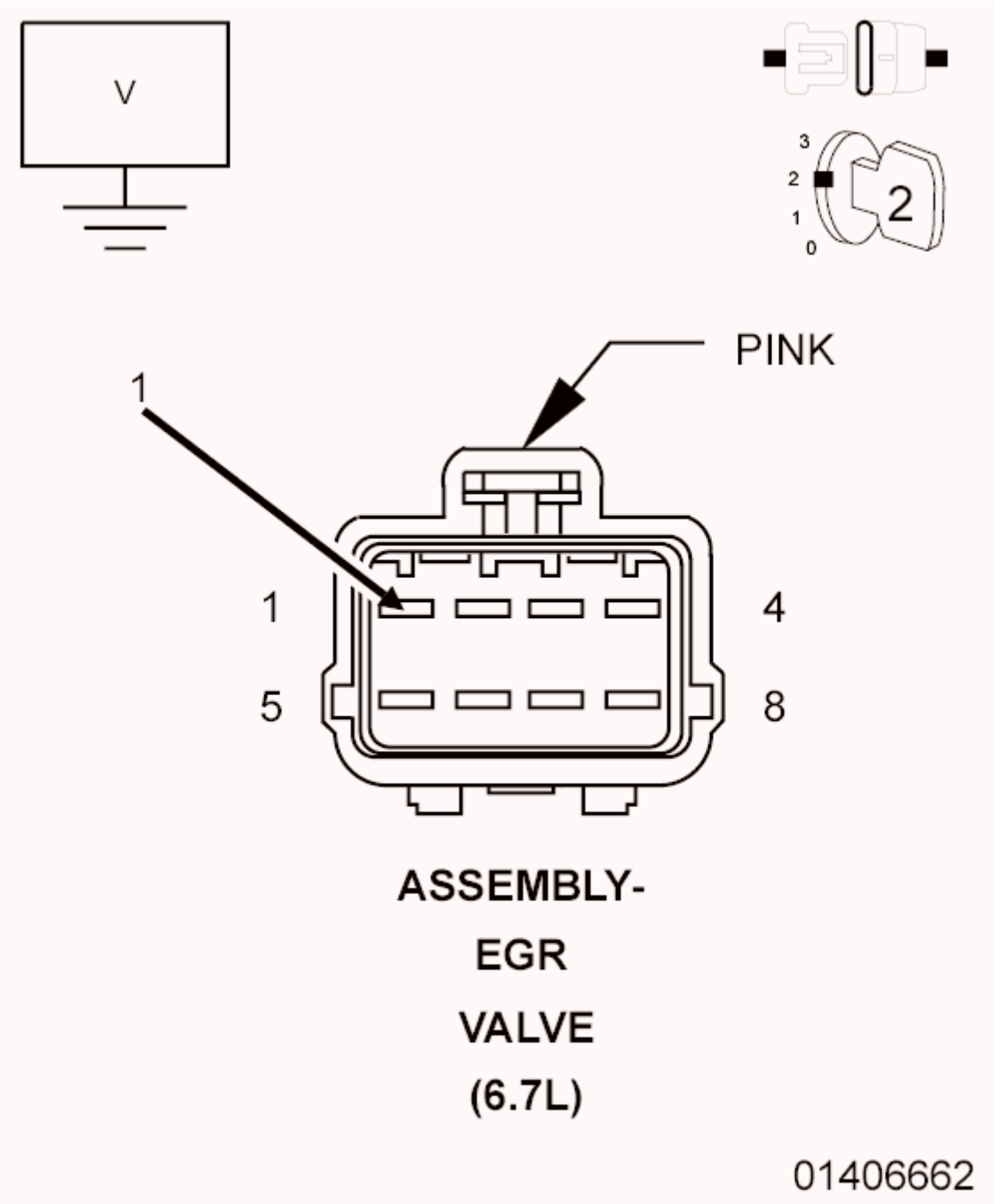

Fig. 108: Measuring Voltage Of 5-Volt Supply Circuit At EGR Valve Harness Connector
Courtesy of CHRYSLER GROUP, LLC

1. Turn the ignition off.
2. Disconnect the EGR Valve harness connector.
3. Turn the ignition on.
4. Measure the voltage on the (F857) 5-Volt Supply circuit at the EGR Valve harness connector.

   Is the voltage reading between 4.9 and 5.1 Volts?

Yes

- Replace the EGR Valve in accordance with the service information.
- Perform the POWERTRAIN VERIFICATION TEST - 6.7L. Refer to **POWERTRAIN VERIFICATION TEST - 6.7L** .

No

- Go To 8.

8. **CHECK THE FAN SPEED SENSOR**

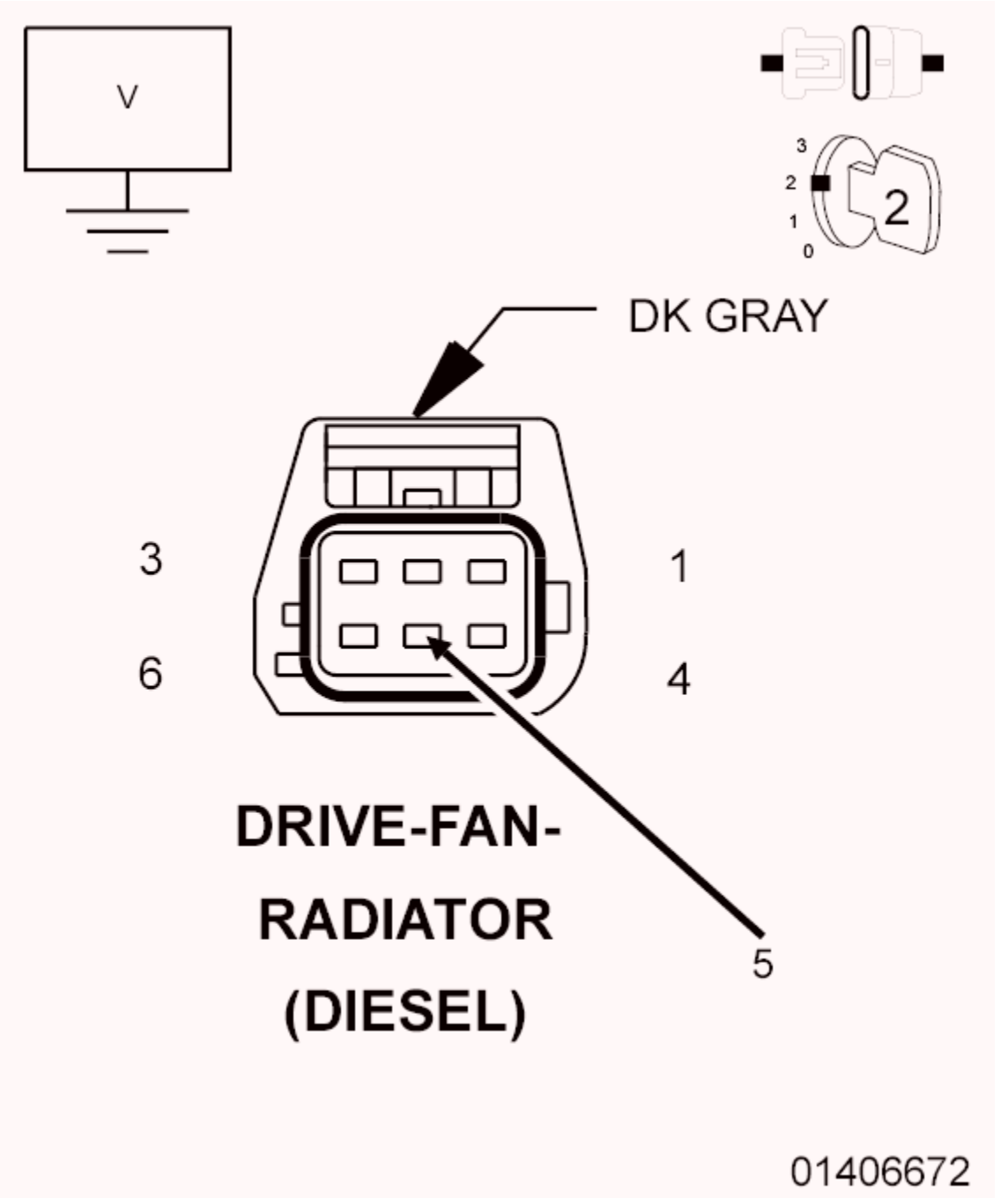

Fig. 109: Measuring Voltage Of 5-Volt Supply Circuit At Fan Clutch Assembly Harness Connector
Courtesy of CHRYSLER GROUP, LLC

1. Turn the ignition off.
2. Disconnect the Fan Clutch Assembly harness connector.
3. Turn the ignition on.
4. Measure the voltage on the (F857) 5-Volt Supply circuit at the Fan Clutch Assembly harness connector.

Is the voltage reading between 4.9 and 5.1 Volts?

Yes

- Replace the Fan Clutch Assembly in accordance with the service information.
- Perform the POWERTRAIN VERIFICATION TEST - 6.7L. Refer to **POWERTRAIN VERIFICATION TEST - 6.7L** .

No

- Go To 9.

9. **CHECK THE CRANKCASE PRESSURE SENSOR**

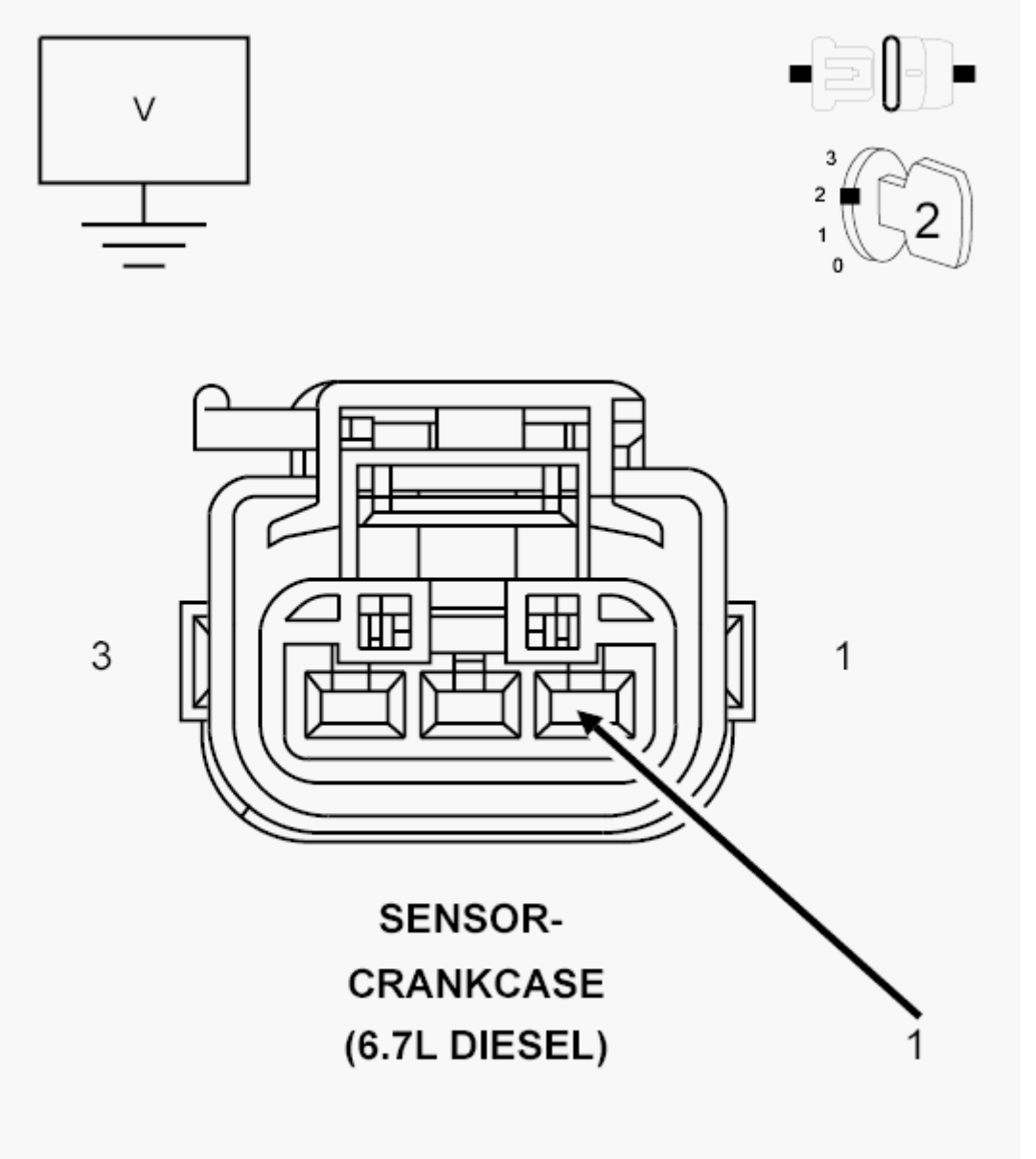

Fig. 110: Measuring Voltage Of 5-Volt Supply Circuit At Crankcase Pressure Sensor Harness Connector
Courtesy of CHRYSLER GROUP, LLC

1. Turn the ignition off.
2. Disconnect the Crankcase Pressure Sensor harness connector.
3. Turn the ignition on.
4. Measure the voltage on the (F857) 5-Volt Supply circuit at the Crankcase Pressure Sensor harness connector.

   Is the voltage reading between 4.9 and 5.1 Volts?

   Yes

   - Replace the Crankcase Pressure Sensor in accordance with the service information.
   - Perform the POWERTRAIN VERIFICATION TEST - 6.7L. Refer to **POWERTRAIN VERIFICATION TEST - 6.7L** .

   No

   - Go To 10.

10. **CHECK THE EGR AIRFLOW CONTROL VALVE**
    1. Turn the ignition off.
    2. Disconnect the EGR Airflow Control Valve harness connector.
    3. Turn the ignition on.
    4. Measure the voltage on the (F857) 5-Volt Supply circuit at the EGR Airflow Control Valve harness connector.

       Is the voltage reading between 4.9 and 5.1 Volts?

       Yes

       - Replace the EGR Airflow Control Valve in accordance with the service information.
       - Perform the POWERTRAIN VERIFICATION TEST - 6.7L. Refer to **POWERTRAIN VERIFICATION TEST - 6.7L** .

       No

       - Go To 11.

11. **CHECK THE (F857) 5-VOLT SUPPLY CIRCUIT FOR A SHORT TO GROUND**
    1. Disconnect the PCM C1 harness connector.
    2. Measure the resistance between ground and the (F857) 5-Volt Supply circuit at the PCM C1 harness connector.

Is the resistance below 10k Ohms?

Yes

- Repair the (F857) 5-Volt Supply circuit for a short to ground.
- Perform the POWERTRAIN VERIFICATION TEST - 6.7L. Refer to **POWERTRAIN VERIFICATION TEST - 6.7L** .

No

- Replace the Powertrain Control Module in accordance with the service information.
- Perform the POWERTRAIN VERIFICATION TEST - 6.7L. Refer to **POWERTRAIN VERIFICATION TEST - 6.7L** .

P0653-SENSOR REFERENCE VOLTAGE 2 HIGH

For a complete wiring diagram, **refer to appropriate SYSTEM WIRING DIAGRAMS article** .

THEORY OF OPERATION

This sensor supply circuit provides a 5-Volt supply to the Camshaft Position Sensor, Inlet Air Temperature/Pressure Sensor, Exhaust Pressure Sensor, Fuel Pressure Sensor, Boost Pressure/CAC Temperature, EGR Valve, Fan Clutch Assembly, and Crankcase Pressure Sensor. A MIL lamp will be lit immediately after this diagnostic runs and fails. The MIL lamp will turn off once the diagnostic runs and passes in four consecutive drive cycles.

WHEN MONITORED:

While the engine is running.

SET CONDITION:

Voltage detected on the 5-Volt Supply circuit is above a calibrated value.

POSSIBLE CAUSES

Possible Causes
(F857) 5-VOLT SUPPLY CIRCUIT SHORTED TO VOLTAGE POWERTRAIN CONTROL MODULE (PCM)

Always perform the Pre-Diagnostic Troubleshooting procedure before proceeding. Refer to PRE-DIAGNOSTIC TROUBLESHOOTING PROCEDURE - 6.7L .

DIAGNOSTIC TEST

1. **ACTIVE DTC**
    1. Turn the ignition on.

2. With the scan tool, record all Freeze frame data.
3. With the scan tool, erase DTCs.
4. Turn the ignition off for 75 seconds.
5. Turn the ignition on.
6. With the scan tool, read DTCs.

   Did the DTC reset?

   Yes

   - Go To 2.

   No

   - Perform the INTERMITTENT CONDITION diagnostic procedure. Refer to **INTERMITTENT CONDITION - 6.7L** .

2. **CHECK THE (F857) 5-VOLT SUPPLY FOR A SHORT TO VOLTAGE**
   1. Turn the ignition off.
   2. Disconnect the connectors for each component listed in the Theory Of Operation.
   3. Turn the ignition on.
   4. Measure the voltage of the (F857) 5-Volt Supply circuit at any of the disconnected component harness connectors.

      Is the voltage reading above 5.1 Volts?

      Yes

      - Repair the (F857) 5-Volt Supply circuit for a short to voltage.
      - Perform the POWERTRAIN VERIFICATION TEST - 6.7L. Refer to **POWERTRAIN VERIFICATION TEST - 6.7L** .

      No

      - Go To 3.

3. **CHECK THE (F857) 5-VOLT SUPPLY CIRCUIT FOR A SHORT TO ANOTHER CIRCUIT**
   1. Turn the ignition off.
   2. Disconnect the PCM C1 harness connector.

      NOTE: Check connectors - Clean/repair as necessary.

   3. Measure the resistance between the (F857) 5-Volt Supply circuit and all other circuits in the PCM C1 connector.

Is the resistance below 10k Ohms between the (F857) 5-Volt Supply circuit and any of the circuits?

Yes

- Repair the short to the circuit that measured below 10k Ohms.
- Perform the POWERTRAIN VERIFICATION TEST - 6.7L. Refer to **POWERTRAIN VERIFICATION TEST - 6.7L** .

No

- Replace the Powertrain Control Module in accordance with the service information.
- Perform the POWERTRAIN VERIFICATION TEST - 6.7L. Refer to **POWERTRAIN VERIFICATION TEST - 6.7L** .

P0658-ACTUATOR SUPPLY VOLTAGE "A" CIRCUIT LOW

For a complete wiring diagram, **refer to appropriate SYSTEM WIRING DIAGRAMS article** .

The EGR Valve receives 12.0 Volts from an internal driver in the Powertrain Control Module (PCM). The PCM monitors this internal power supply to the EGR Valve. The PCM illuminates the MIL Lamp immediately when the monitor runs and fails. The EGR Valve Driver is disabled and can no longer control the EGR Valve. The EGR Valve will default to the closed position. The PCM will turn off the MIL Lamp after the monitor runs and passes.

WHEN MONITORED:

With the key on or the engine running.

SET CONDITION:

The PCM detects low voltage at the EGR Valve driver circuit. The PCM is no longer able to control the EGR Valve.

POSSIBLE CAUSES

Possible Causes
LOW SYSTEM VOLTAGE
POWERTRAIN CONTROL MODULE (PCM)

Always perform the Pre-Diagnostic Troubleshooting procedure before proceeding. Refer to PRE-DIAGNOSTIC TROUBLESHOOTING PROCEDURE - 6.7L .

DIAGNOSTIC TEST

1. **CHECK FOR RELATED DTCS**
    1. Start the engine and allow it to idle for one minute.

2. With the scan tool, read all DTCs.

   Are there any Low Voltage DTCs present?

   Yes

   - Go To 2.

   No

   - Replace and program the Powertrain Control Module in accordance with the service information. Refer to **MODULE, POWERTRAIN CONTROL, 6.7L DIESEL, REMOVAL** and **PCM/ECM / TCM PROGRAMMING** .
   - Perform the POWERTRAIN VERIFICATION TEST - 6.7L. Refer to **POWERTRAIN VERIFICATION TEST - 6.7L** .

2. **VERIFY REPAIR**
   1. Repair the cause of the low battery voltage DTCs.
   2. Turn the ignition on.
   3. With the scan tool, erase DTCs.
   4. Start the engine and allow it to idle for one minute.
   5. With the scan tool, read all DTCs.

      Did the DTC return?

      Yes

      - Replace and program the Powertrain Control Module in accordance with the service information. Refer to **MODULE, POWERTRAIN CONTROL, 6.7L DIESEL, REMOVAL** and **PCM/ECM / TCM PROGRAMMING** .
      - Perform the POWERTRAIN VERIFICATION TEST - 6.7L. Refer to **POWERTRAIN VERIFICATION TEST - 6.7L** .

      No

      - Repair complete.
      - Perform the POWERTRAIN VERIFICATION TEST - 6.7L. Refer to **POWERTRAIN VERIFICATION TEST - 6.7L** .

P0686-POWER ENABLE CONTROL CIRCUIT LOW

For a complete wiring diagram, **refer to appropriate SYSTEM WIRING DIAGRAMS article** .

THEORY OF OPERATION

The Smart Power Relay supplies 12 Volts to the Mass Airflow Sensor, the Exhaust Gas Recirculation (EGR)

Airflow Control Valve and the Variable Geometry Turbocharger. The Smart Power Relay Control circuit is a low side driver controlled by the Powertrain Control Module (PCM). The Smart Power Relay is powered up at key on, and remains powered until just after key off. The power supply to the Smart Power Relay is wired directly from the Totally Integrated Power Module (TIPM). The PCM will illuminate the Malfunction Indicator Lamp (MIL) and disable the regeneration mode immediately after this diagnostic runs and fails. During this time there will likely also be voltage supply faults for the Mass Airflow Sensor, the EGR Airflow Control Valve and the Variable Geometry Turbocharger. The PCM will turn off the MIL once the diagnostic runs and passes in four consecutive drive cycles.

WHEN MONITORED:

Key on, Smart Power Relay commanded on.

SET CONDITION:

The Smart Power Relay is commanded on by the PCM, and feedback voltage is reading high.

POSSIBLE CAUSES

Possible Causes
SMART POWER RELAY
POWERTRAIN CONTROL MODULE (PCM)

Always perform the Pre-Diagnostic Troubleshooting procedure before proceeding. Refer to PRE-DIAGNOSTIC TROUBLESHOOTING PROCEDURE - 6.7L .

DIAGNOSTIC TEST

1. **ACTIVE DTC**
    1. Ignition on, engine not running.
    2. With the scan tool, read DTCs.

       Is DTC active?

       Yes

       - Go To 2.

       No

       - Perform the INTERMITTENT CONDITION diagnostic procedure. Refer to **INTERMITTENT CONDITION - 6.7L** .
2. **POWERTRAIN CONTROL MODULE**
    1. Replace the Smart Power Relay in accordance with the Service Information.
    2. Turn the ignition on.
    3. With the scan tool, erase DTCs.

4. Turn the ignition off for 75 seconds.
5. Turn the ignition on.
6. With the scan tool, read DTCs.

   Did the DTC reset?

   Yes

   - Replace Powertrain Control Module in accordance with the Service Information.
   - Perform the POWERTRAIN VERIFICATION TEST - 6.7L. Refer to **POWERTRAIN VERIFICATION TEST - 6.7L** .

   No

   - Repair complete.
   - Perform the POWERTRAIN VERIFICATION TEST - 6.7L. Refer to **POWERTRAIN VERIFICATION TEST - 6.7L** .

P0691-COOLING FAN 1 CONTROL CIRCUIT LOW

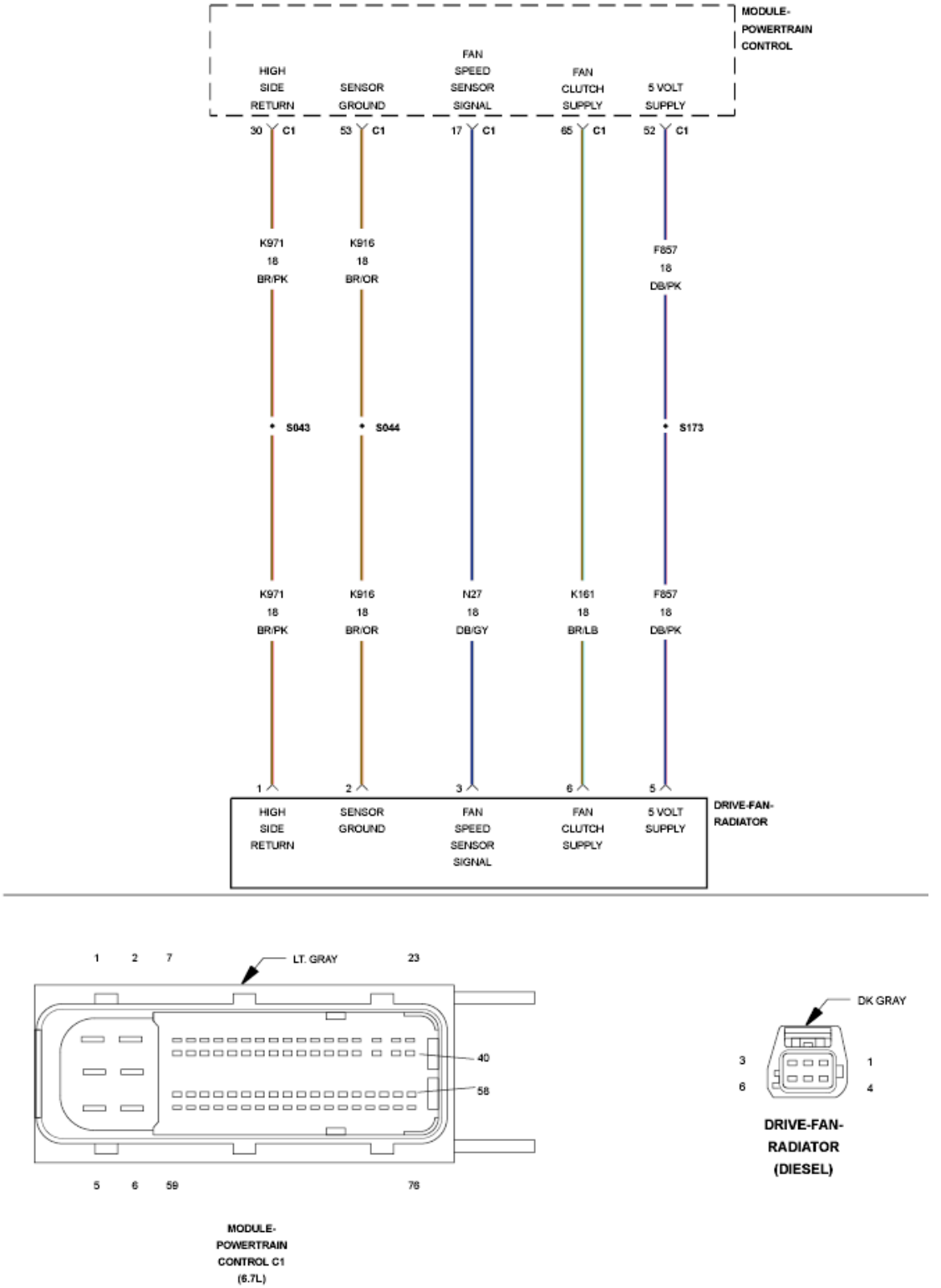

Fig. 111: Radiator Drive Fan Circuit Schematic
Courtesy of CHRYSLER GROUP, LLC

For a complete wiring diagram, **refer to appropriate SYSTEM WIRING DIAGRAMS article** .

THEORY OF OPERATION

The cooling fan is a hydro-electric controlled device that is engine mounted. The Powertrain Control Module (PCM) monitors various sensors to control fan speed. The cooling fan provides temperature control for engine coolant, engine charged air, A/C Freon and automatic transmission fluid. Fan speed increases as cooling requirements increase. Since the fan is mounted to the engine, fan speed is related to engine speed (RPM). The PCM uses a Pulse Width Modulated (PWM) driver to control the amount of fluid to the clutch fan. When the fan is fully engaged it is capable of speeds about 10% greater than engine speed. The fan will rotate anytime the engine is running, even when the PCM is not sending a PWM signal.

WHEN MONITORED:

When the ignition is on.

SET CONDITION:

When the control coil is electrically shorted or open.

POSSIBLE CAUSES

Possible Causes
(K161) CLUTCH FAN SUPPLY CIRCUIT SHORTED TO GROUND
(K161) CLUTCH FAN SUPPLY CIRCUIT SHORTED TO THE (K971) ACTUATOR GROUND CIRCUIT
RADIATOR FAN
POWERTRAIN CONTROL MODULE (PCM)

Always perform the Pre-Diagnostic Troubleshooting procedure before proceeding. Refer to PRE-DIAGNOSTIC TROUBLESHOOTING PROCEDURE - 6.7L .

DIAGNOSTIC TEST

1. **ACTIVE DTC**
    1. Turn the ignition on.
    2. Using the scan tool, erase DTCs.
    3. Turn the ignition off for 75 seconds.
    4. Turn the ignition on.
    5. Using the scan tool, actuate the Radiator Clutch Fan control on.
    6. Using the scan tool, read DTCs.

    Did the DTC reset?

    Yes

    - Go To 2.

No

- Perform the INTERMITTENT DTC diagnostic procedure. Refer to **INTERMITTENT CONDITION - 6.7L** .

2. **CHECK THE (K161) CLUTCH FAN SUPPLY CIRCUIT FOR A SHORT TO GROUND**

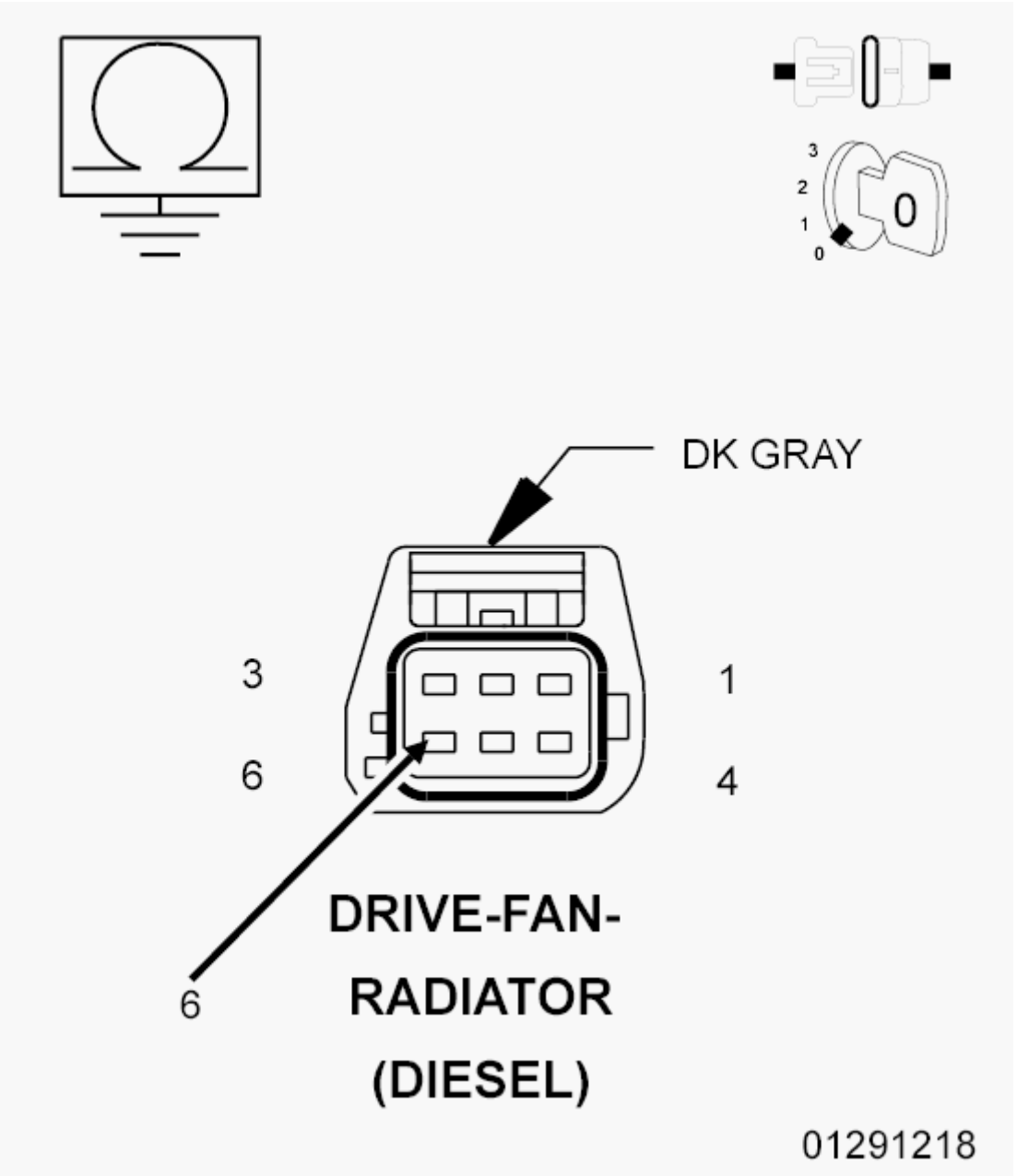

Fig. 112: Radiator Fan Drive Connector Pin ID
Courtesy of CHRYSLER GROUP, LLC

1. Stop actuation of the Radiator Clutch Fan.
2. Disconnect the Radiator Clutch Fan harness connector.

3. Disconnect the PCM C1 harness connector.
4. Measure the resistance between ground and the (K161) Clutch Fan Supply circuit at the Radiator Clutch Fan harness connector.

   Is the resistance below 10k Ohms?

   Yes

   - Repair the (K161) Clutch Fan Supply circuit for a short to ground.
   - Perform the POWERTRAIN VERIFICATION TEST - 6.7L. Refer to **POWERTRAIN VERIFICATION TEST - 6.7L** .

   No

   - Go To 3.

3. **CHECK FOR THE (K161) CLUTCH FAN SUPPLY CIRCUIT SHORTED TO THE (K971) ACTUATOR GROUND CIRCUIT**

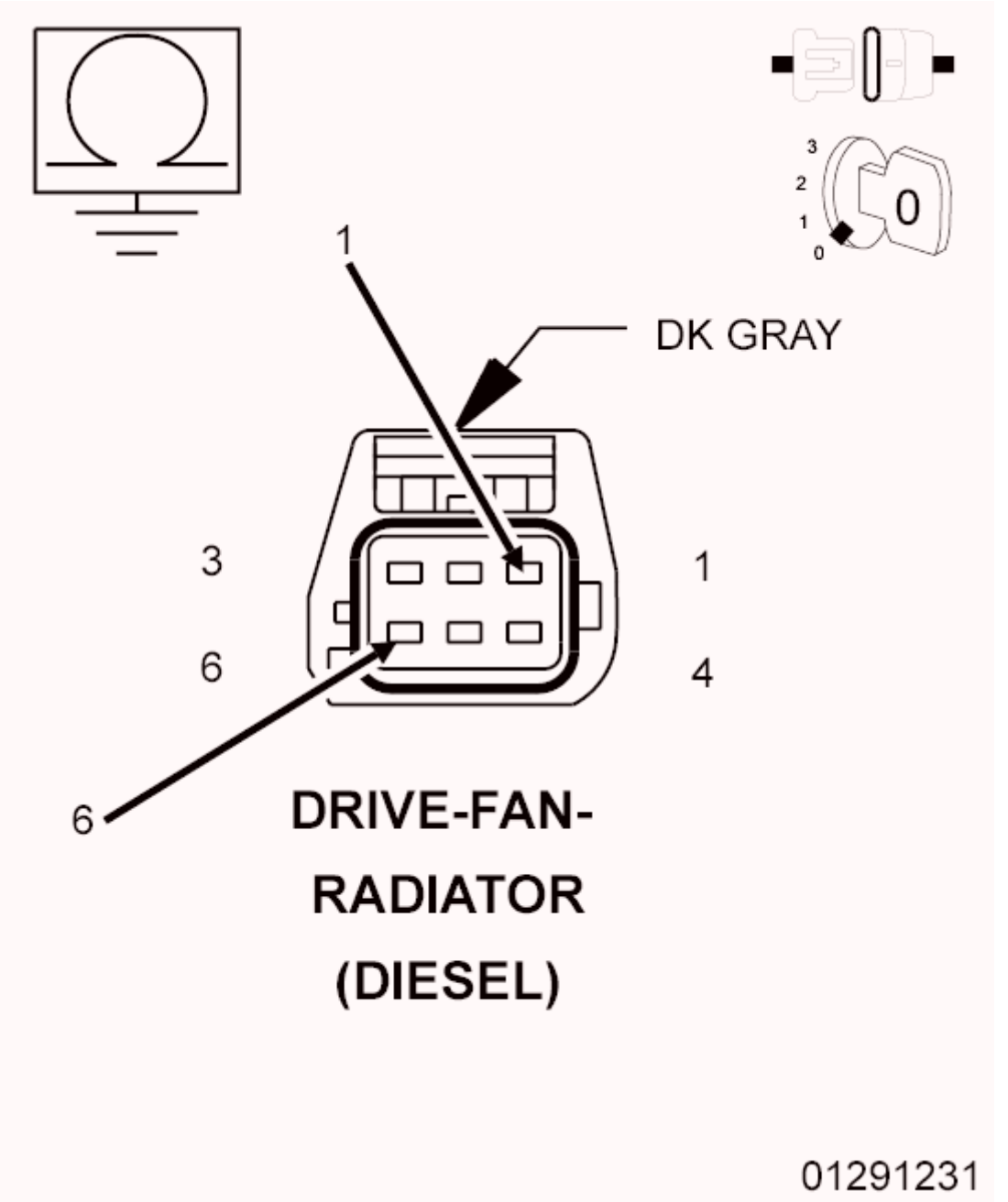

Fig. 113: Radiator Fan Drive Connector Pin ID
Courtesy of CHRYSLER GROUP, LLC

1. Measure the resistance between the (K161) Clutch Fan Supply circuit and the (K971) Actuator Ground circuit at the Radiator Clutch Fan harness connector.

   Is the resistance below 10k Ohms?

   Yes

   - Repair the short between the (K161) Clutch Fan Supply circuit and the (K971) Actuator

Ground circuit.

- Perform the POWERTRAIN VERIFICATION TEST - 6.7L. Refer to **POWERTRAIN VERIFICATION TEST - 6.7L** .

No

- Go To 4.

4. **CHECK THE RADIATOR CLUTCH FAN**
   1. Measure the resistance between ground and the (K161) Clutch Fan Supply circuit at the Radiator Clutch Fan.

      Is the resistance below 10k Ohms?

      Yes

      - Replace the Powertrain Control Module (PCM) in accordance with the Service Information.
      - Perform the POWERTRAIN VERIFICATION TEST - 6.7L. Refer to **POWERTRAIN VERIFICATION TEST - 6.7L** .

      No

      - Replace the Radiator Clutch Fan in accordance with the Service Information.
      - Perform the POWERTRAIN VERIFICATION TEST - 6.7L. Refer to **POWERTRAIN VERIFICATION TEST - 6.7L** .

P0692-COOLING FAN 1 CONTROL CIRCUIT HIGH

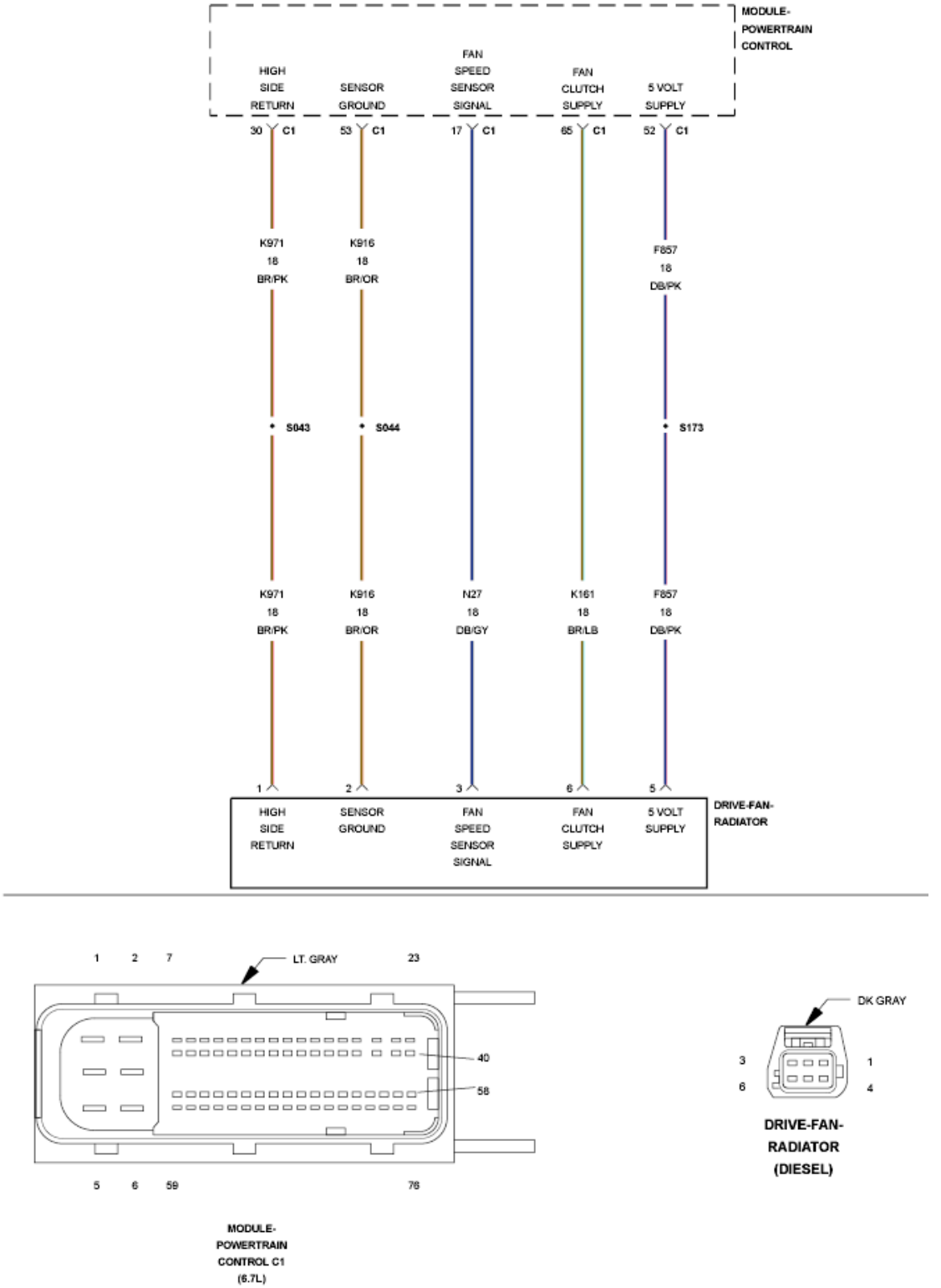

Fig. 114: Radiator Drive Fan Circuit Schematic
Courtesy of CHRYSLER GROUP, LLC

For a complete wiring diagram, **refer to appropriate SYSTEM WIRING DIAGRAMS article** .

THEORY OF OPERATION

The cooling fan is a hydro-electric controlled device that is engine mounted. The Powertrain Control Module (PCM) monitors various sensors to control fan speed. The cooling fan provides temperature control for engine coolant, engine charged air, A/C Freon and automatic transmission fluid. Fan speed increases as cooling requirements increase. Since the fan is mounted to the engine, fan speed is related to engine speed (RPM). The PCM uses a Pulse Width Modulated (PWM) driver to control the amount of fluid to the clutch fan. When the fan is fully engaged it is capable of speeds about 10% greater than engine speed. The fan will rotate anytime the engine is running, even when the PCM is not sending a PWM signal.

WHEN MONITORED:

With the ignition on.

SET CONDITION:

The Smart Power Relay is commanded on by the PCM, and feedback voltage is reading high.

POSSIBLE CAUSES

Possible Causes
(K161) CLUTCH FAN SUPPLY CIRCUIT SHORTED TO VOLTAGE
(K161) CLUTCH FAN SUPPLY CIRCUIT OPEN/HIGH RESISTANCE
(K971) ACTUATOR GROUND CIRCUIT OPEN/HIGH RESISTANCE
RADIATOR FAN
POWERTRAIN CONTROL MODULE (PCM)

Always perform the Pre-Diagnostic Troubleshooting procedure before proceeding. Refer to PRE-DIAGNOSTIC TROUBLESHOOTING PROCEDURE - 6.7L .

DIAGNOSTIC TEST

1. **ACTIVE DTC**
    1. Turn the ignition on.
    2. Using the scan tool, record all Freeze frame data.
    3. Using the scan tool, erase DTCs.
    4. Turn the ignition off for 75 seconds.
    5. Turn the ignition on.
    6. Using the scan tool, actuate the Radiator Clutch Fan control on.
    7. Using the scan tool, read DTCs.

    Did the DTC reset?

    Yes

- Go To 2.

No

- Perform the INTERMITTENT CONDITION diagnostic procedure. Refer to **INTERMITTENT CONDITION - 6.7L** .

2. **CHECK THE (K161) CLUTCH FAN SUPPLY CIRCUIT FOR A SHORT TO VOLTAGE**
   1. Stop actuation of the Radiator Clutch Fan.
   2. Turn the ignition off.
   3. Disconnect the Radiator Clutch Fan harness connector.

      NOTE: Check connectors - Clean/repair as necessary.

   4. Turn the ignition on.
   5. Measure the voltage on the (K161) Clutch Fan Supply circuit at the Radiator Clutch Fan harness connector.

      Is the voltage reading near battery voltage?

      Yes

      - Repair the (K161) Clutch Fan Supply circuit for a short to voltage.
      - Perform the POWERTRAIN VERIFICATION TEST - 6.7L. Refer to **POWERTRAIN VERIFICATION TEST - 6.7L** .

      No

      - Go To 3.

3. **CHECK THE (K161) CLUTCH FAN SUPPLY CIRCUIT FOR AN OPEN/HIGH RESISTANCE**
   1. Turn the ignition off.
   2. Disconnect the PCM C1 harness connector.

      NOTE: Check connectors - Clean/repair as necessary.

   3. Measure the resistance of the (K161) Clutch Fan Supply circuit between the PCM C1 harness connector and the Radiator Clutch Fan harness connector.

      Is the resistance below 5.0 Ohms?

      Yes

      - Go To 4.

      No

- Repair the (K161) Clutch Fan Supply circuit for an open or high resistance.
- Perform the POWERTRAIN VERIFICATION TEST - 6.7L. Refer to **POWERTRAIN VERIFICATION TEST - 6.7L** .

4. **CHECK THE (K971) ACTUATOR GROUND CIRCUIT FOR AN OPEN/HIGH RESISTANCE**
   1. Measure the resistance of the (K971) Actuator Ground circuit between the PCM C1 harness connector and the Radiator Fan harness connector.

      Is the resistance below 5.0 Ohms?

      Yes

      - Go To 5.

      No

      - Repair the (K971) Actuator Ground circuit for an open or high resistance.
      - Perform the POWERTRAIN VERIFICATION TEST - 6.7L. Refer to **POWERTRAIN VERIFICATION TEST - 6.7L** .
5. **CHECK THE RADIATOR CLUTCH FAN**
   1. Measure the resistance between the (K161) Clutch Fan Supply circuit and the (K971) Actuator Ground circuit through the Radiator Clutch Fan.

      Is the resistance between 6.0 and 10.0 Ohms?

      Yes

      - Replace the Powertrain Control Module in accordance with the Service Information.
      - Perform the POWERTRAIN VERIFICATION TEST - 6.7L. Refer to **POWERTRAIN VERIFICATION TEST - 6.7L** .

      No

      - Replace the Radiator Clutch Fan in accordance with the Service Information.
      - Perform the POWERTRAIN VERIFICATION TEST - 6.7L. Refer to **POWERTRAIN VERIFICATION TEST - 6.7L** .

P0698-SENSOR REFERENCE VOLTAGE 3 CIRCUIT LOW

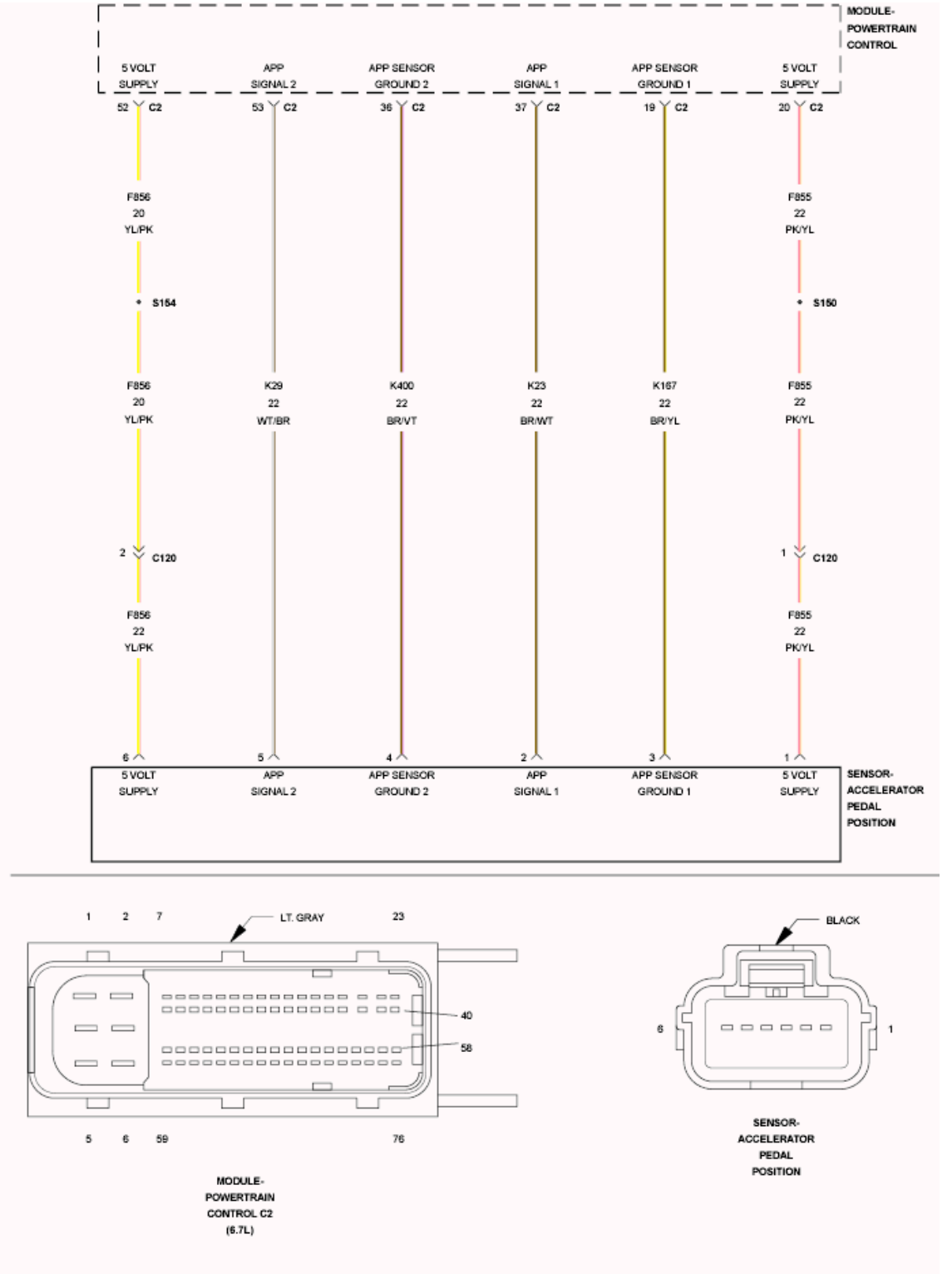

Fig. 115: Accelerator Pedal Position Sensor Circuit Schematic
Courtesy of CHRYSLER GROUP, LLC

For a complete wiring diagram, **refer to appropriate SYSTEM WIRING DIAGRAMS article** .

THEORY OF OPERATION

This sensor supply circuit provides a 5-Volt supply to the Accelerator Pedal Position 1 Sensor (APPS). The Powertrain Control Module (PCM) illuminates the MIL lamp immediately after the diagnostic runs and fails. The ETC lamp will also flash. During this time the customer will be in a limp home mode. The PCM will turn off the MIL lamp after the diagnostic runs and passes in four consecutive drive cycles.

WHEN MONITORED:

With the ignition on, PCM powered.

SET CONDITION:

Low voltage detected at the (F855) 5-Volt Supply circuit.

POSSIBLE CAUSES

Possible Causes
APPS SENSOR 1
(F855) 5-VOLT SUPPLY CIRCUIT SHORTED TO GROUND
(F855) 5-VOLT SUPPLY CIRCUIT SHORTED TO ANOTHER CIRCUIT
POWERTRAIN CONTROL MODULE (PCM)

Always perform the Pre-Diagnostic Troubleshooting procedure before proceeding. Refer to PRE-DIAGNOSTIC TROUBLESHOOTING PROCEDURE - 6.7L .

DIAGNOSTIC TEST

1. **ACTIVE DTC**
    1. Turn the ignition on.
    2. With the scan tool, record all Freeze frame data.
    3. With the scan tool, erase DTCs.
    4. Turn the ignition off for 75 seconds.
    5. Turn the ignition on.
    6. With the scan tool, read DTCs.

    Did the DTC reset?

    Yes

    - Go To 2.

    No

    - Perform the INTERMITTENT CONDITION diagnostic procedure. Refer to

INTERMITTENT CONDITION - 6.7L .

2. **CHECK THE APP SENSOR 1**

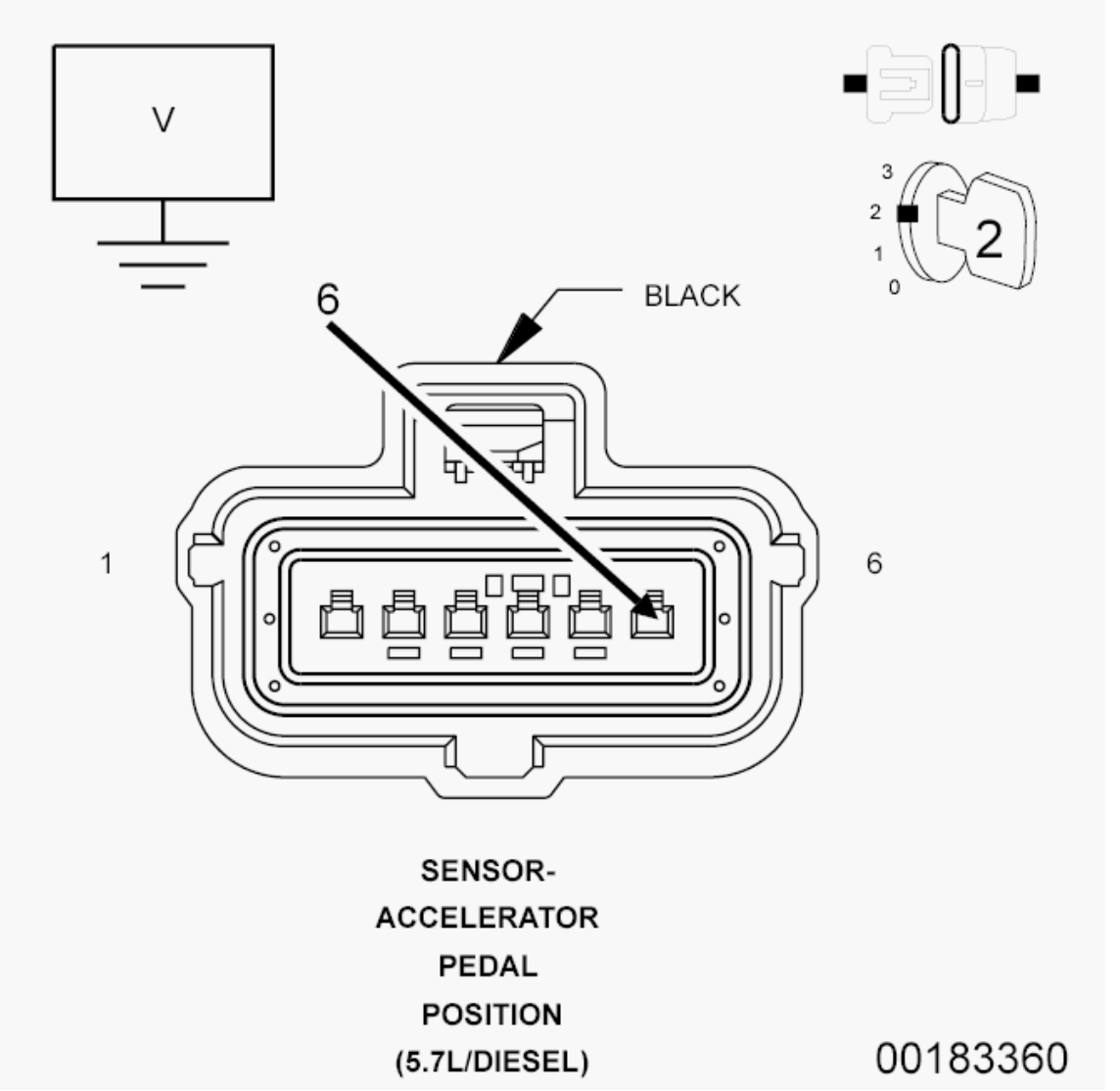

Fig. 116: Measuring Voltage On 5-Volt Supply Circuit At Accelerator Pedal Position Sensor Harness Connector
Courtesy of CHRYSLER GROUP, LLC

1. Ignition on.
2. Disconnect the Accelerator Pedal Position Sensor harness connector.

NOTE: Check connectors - Clean/repair as necessary.

3. Measure the voltage on the (F855) 5-Volt Supply circuit at the Accelerator Pedal Position Sensor harness connector.

   Is the voltage reading between 4.9 and 5.1 Volts?

Yes

- Replace the Accelerator Pedal Position Sensor in accordance with the service information.
- Perform the POWERTRAIN VERIFICATION TEST - 6.7L. Refer to **POWERTRAIN VERIFICATION TEST - 6.7L** .

No

- Go To 3.

3. **CHECK THE (F855) 5-VOLT SUPPLY CIRCUIT FOR A SHORT TO GROUND**

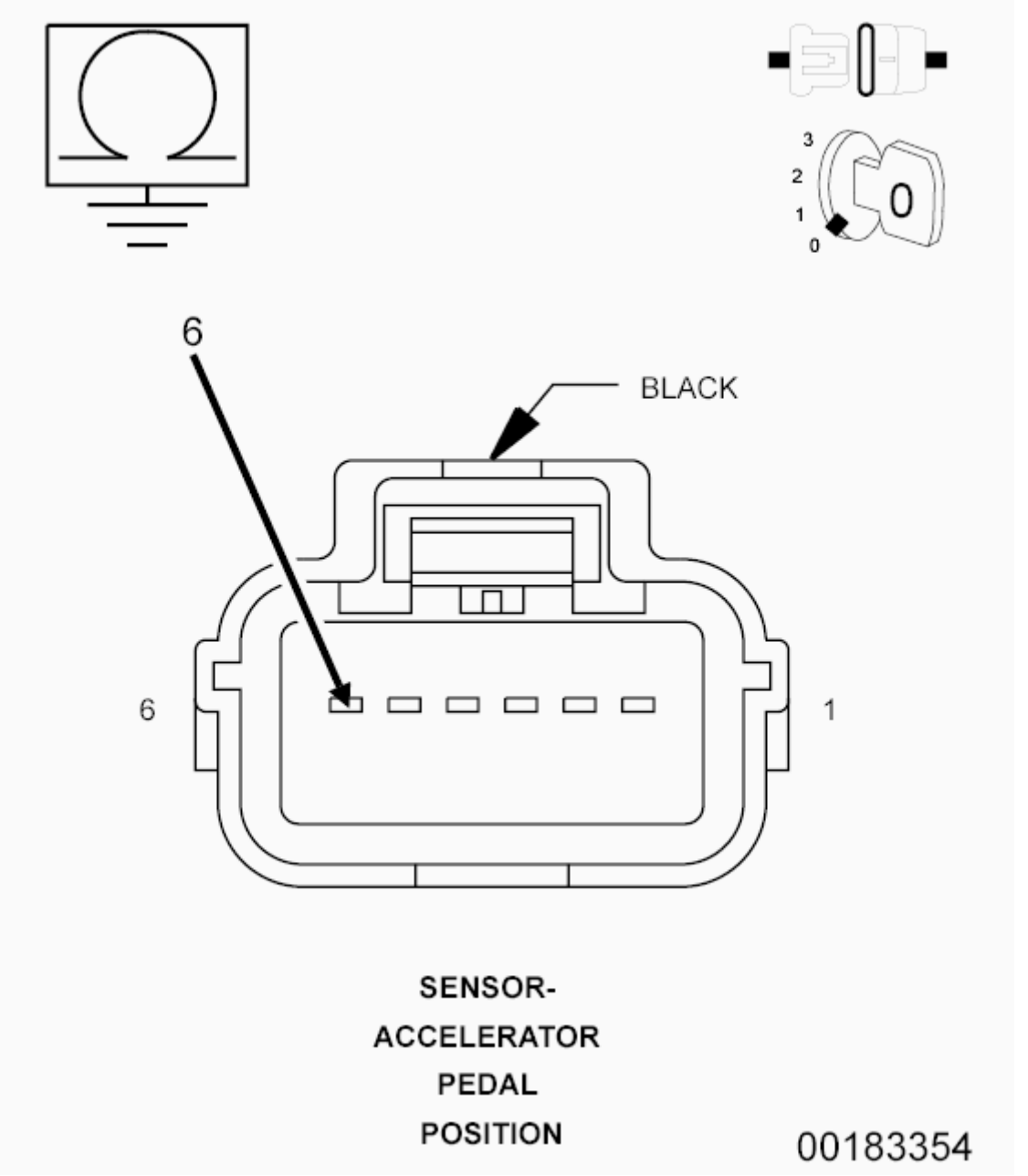

Fig. 117: Measuring Resistance Between Ground & 5-Volt Supply Circuit At Accelerator Pedal Position Sensor Harness Connector
Courtesy of CHRYSLER GROUP, LLC

1. Turn the ignition off.
2. Disconnect the PCM C2 harness connector.
3. Check connectors - Clean/repair as necessary.
4. Measure the resistance between ground and the (F855) 5-Volt Supply circuit at the Accelerator Pedal Position Sensor harness connector.

   Is the resistance below 10k Ohms?

   Yes

   - Repair the (F855) 5-Volt Supply circuit for a short to ground.
   - Perform the POWERTRAIN VERIFICATION TEST - 6.7L. Refer to **POWERTRAIN VERIFICATION TEST - 6.7L** .

   No

   - Go To 4.

4. **CHECK THE (F855) 5-VOLT SUPPLY CIRCUIT FOR A SHORT TO ANOTHER CIRCUIT**
   1. Measure the resistance between the (F855) 5-Volt Supply circuit and all other circuits at the PCM C2 harness connector.

      Is the resistance below 10k Ohms between the (F855) 5-Volt supply circuit and any of the circuits?

      Yes

      - Repair the short to the circuit that measured below 10k Ohms.
      - Perform the POWERTRAIN VERIFICATION TEST - 6.7L. Refer to **POWERTRAIN VERIFICATION TEST - 6.7L** .

      No

      - Replace and program the Powertrain Control Module in accordance with the service information. Refer to **MODULE, POWERTRAIN CONTROL, 6.7L DIESEL, REMOVAL** and **PCM/ECM / TCM PROGRAMMING** .
      - Perform the POWERTRAIN VERIFICATION TEST - 6.7L. Refer to **POWERTRAIN VERIFICATION TEST - 6.7L** .

P0699-SENSOR REFERENCE VOLTAGE 3 CIRCUIT HIGH

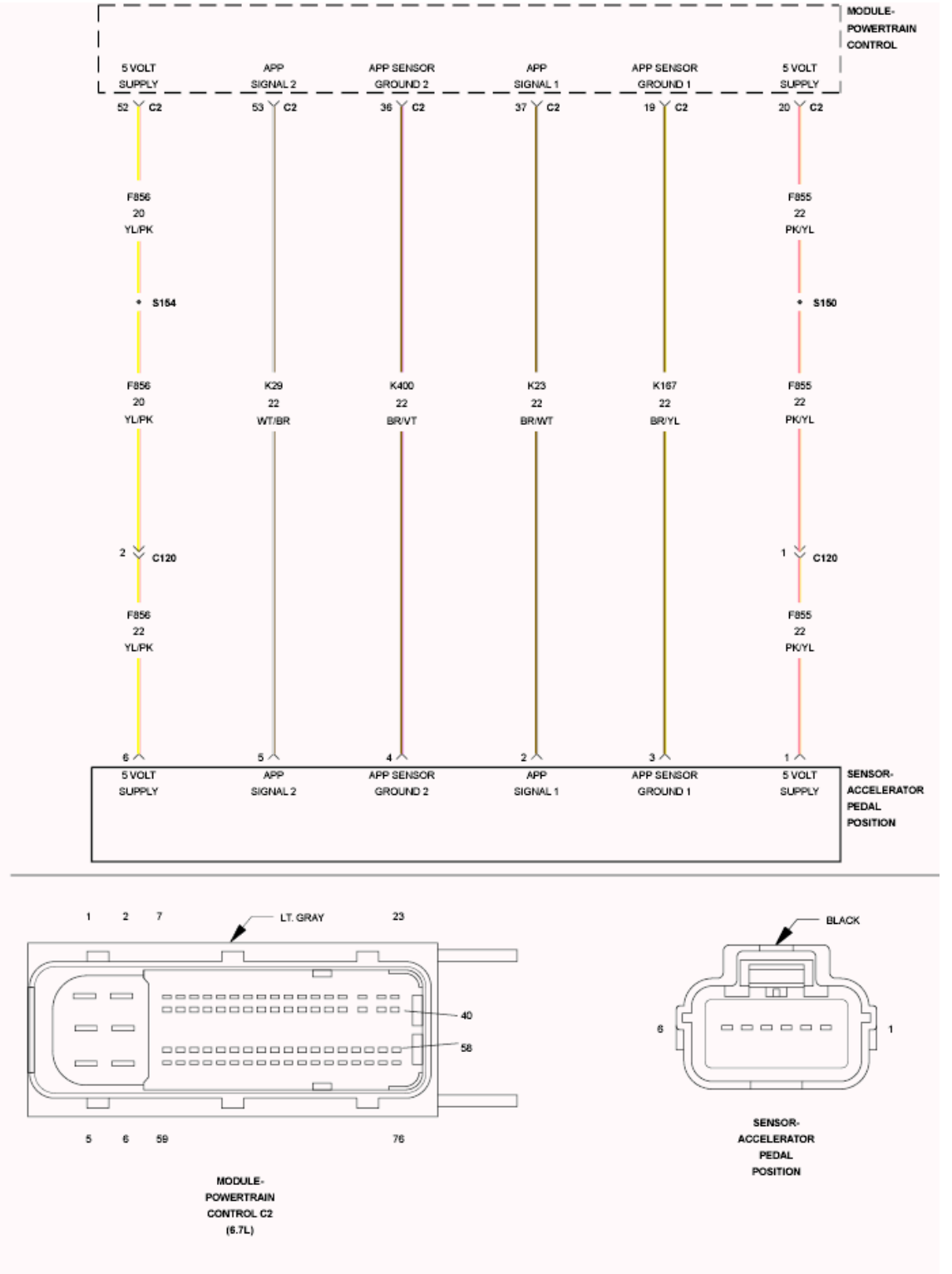

Fig. 118: Accelerator Pedal Position Sensor Circuit Schematic
Courtesy of CHRYSLER GROUP, LLC

For a complete wiring diagram, **refer to appropriate SYSTEM WIRING DIAGRAMS article** .

THEORY OF OPERATION

This sensor supply circuit provides a 5-Volt supply to the Accelerator Pedal Position 1 Sensor (APPS). The Powertrain Control Module (PCM) illuminates the MIL lamp immediately after the diagnostic runs and fails. The ETC lamp will also flash. During this time the customer will be in a limp home mode. The PCM will turn off the MIL lamp after the diagnostic runs and passes in four consecutive drive cycles.

WHEN MONITORED:

With the ignition on, PCM powered.

SET CONDITION:

Voltage detected at the APPS 1 5-Volt Supply circuit is above a calibrated value.

POSSIBLE CAUSES

Possible Causes
(F855) 5-VOLT SUPPLY CIRCUIT SHORTED TO VOLTAGE
POWERTRAIN CONTROL MODULE (PCM)

Always perform the Pre-Diagnostic Troubleshooting procedure before proceeding. Refer to PRE-DIAGNOSTIC TROUBLESHOOTING PROCEDURE - 6.7L .

DIAGNOSTIC TEST

1. **ACTIVE DTC**
    1. Turn the ignition on.
    2. With the scan tool, record all Freeze frame data.
    3. With the scan tool, erase DTCs.
    4. Turn the ignition off for 75 seconds.
    5. Turn the ignition on.
    6. With the scan tool, read DTCs.

    Did the DTC reset?

    Yes

    - Go To 2.

    No

    - Perform the INTERMITTENT CONDITION diagnostic procedure. Refer to **INTERMITTENT CONDITION - 6.7L** .
2. **CHECK THE (F855) 5-VOLT SUPPLY CIRCUIT FOR A SHORT TO VOLTAGE**

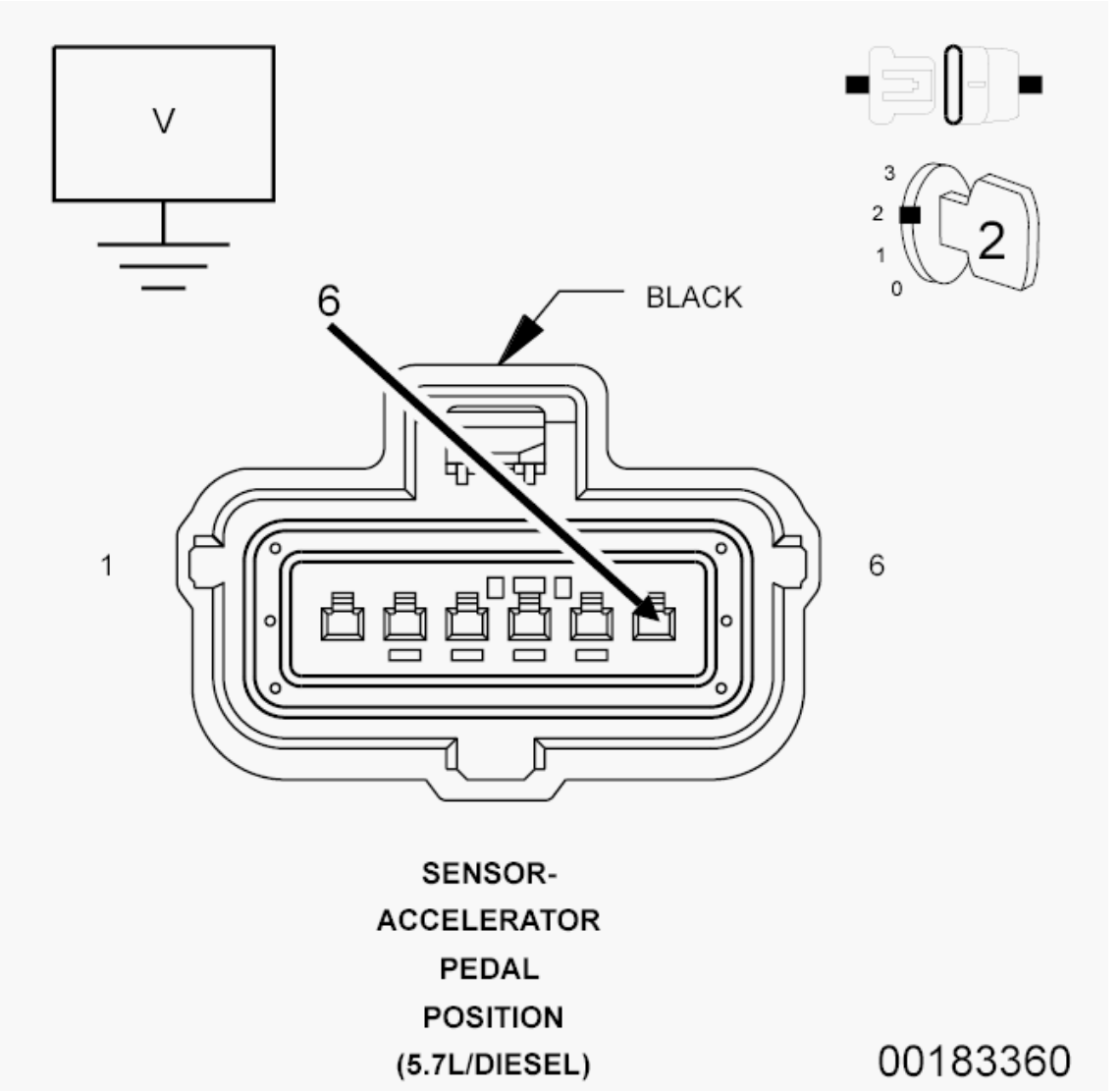

Fig. 119: Measuring Voltage On 5-Volt Supply Circuit At Accelerator Pedal Position Sensor Harness Connector
Courtesy of CHRYSLER GROUP, LLC

1. Turn the ignition off.
2. Disconnect the Accelerator Pedal Position harness connector.
3. Turn the ignition on.
4. Measure the voltage of the (F855) 5-Volt Supply circuit at the Accelerator Pedal Position harness connector.

   Is the voltage reading above 5.1 Volts?

   Yes

   - Repair the (F855) 5-Volt Supply circuit for a short to voltage.

- Perform the POWERTRAIN VERIFICATION TEST - 6.7L. Refer to **POWERTRAIN VERIFICATION TEST - 6.7L** .

No

- Go To 3.

3. **CHECK THE (F855) 5-VOLT SUPPLY CIRCUIT FOR A SHORT TO ANOTHER CIRCUIT**
   1. Turn the ignition off.
   2. Disconnect the PCM C2 harness connector.

      NOTE: Check connectors - Clean/repair as necessary.

   3. Measure the resistance between the (F855) 5-Volt Supply circuit and all other circuits in the PCM C2 connector.

      Is the resistance below 10k Ohms between the (F855) 5-Volt Supply circuit and any of the circuits?

      Yes

      - Repair the short to the circuit that measured below 10k Ohms.
      - Perform the POWERTRAIN VERIFICATION TEST - 6.7L. Refer to **POWERTRAIN VERIFICATION TEST - 6.7L** .

      No

      - Replace the Powertrain Control Module in accordance with the service information.
      - Perform the POWERTRAIN VERIFICATION TEST - 6.7L. Refer to **POWERTRAIN VERIFICATION TEST - 6.7L** .

P06A4-SENSOR REFERENCE VOLTAGE 4 CIRCUIT LOW

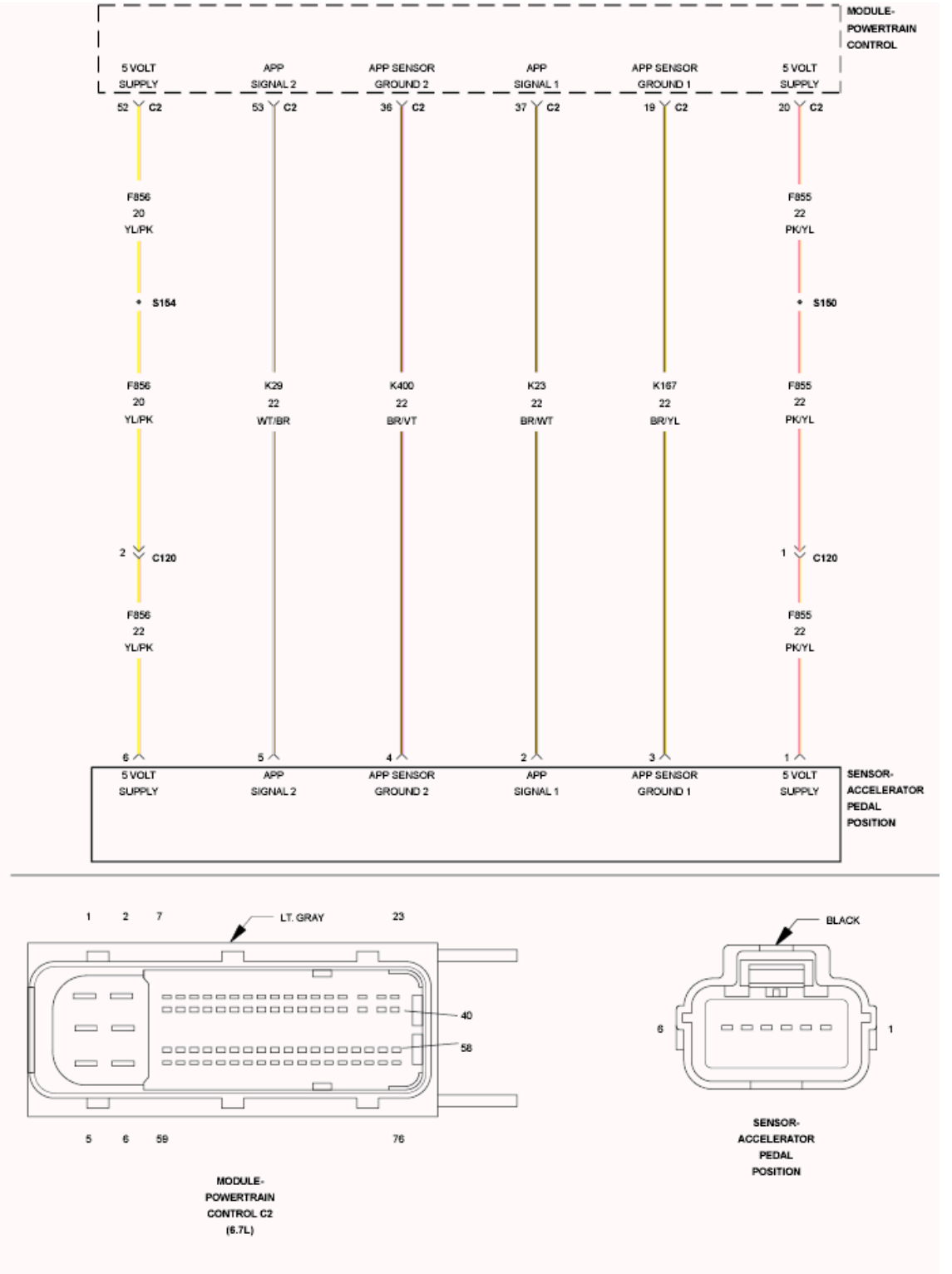

Fig. 120: Accelerator Pedal Position Sensor Circuit Schematic
Courtesy of CHRYSLER GROUP, LLC

For a complete wiring diagram, **refer to appropriate SYSTEM WIRING DIAGRAMS article** .

THEORY OF OPERATION

This sensor supply circuit provides a 5-Volt supply to the Accelerator Pedal Position 2 Sensor (APPS), Diesel Particulate Filter Pressure Sensor and the Transmission Pressure Sensor. The Powertrain Control Module (PCM) illuminates the MIL lamp immediately after the diagnostic runs and fails. The ETC lamp will also flash. During this time the customer will be in a limp home mode. The PCM will turn off the MIL lamp after the diagnostic runs and passes in four consecutive drive cycles.

WHEN MONITORED:

With the ignition on, PCM powered.

SET CONDITION:

Low voltage detected at the (F854) 5-Volt Supply circuit.

POSSIBLE CAUSES

Possible Causes
APPS SENSOR 2
DIESEL PARTICULATE FILTER PRESSURE SENSOR
TRANSMISSION PRESSURE SENSOR
(F854) 5-VOLT SUPPLY CIRCUIT SHORTED TO GROUND
(F854) 5-VOLT SUPPLY CIRCUIT SHORTED TO ANOTHER CIRCUIT
POWERTRAIN CONTROL MODULE (PCM)

Always perform the Pre-Diagnostic Troubleshooting procedure before proceeding. Refer to PRE-DIAGNOSTIC TROUBLESHOOTING PROCEDURE - 6.7L .

DIAGNOSTIC TEST

1. **ACTIVE DTC**
    1. Turn the ignition on.
    2. With the scan tool, record all Freeze frame data.
    3. With the scan tool, erase DTCs.
    4. Turn the ignition off for 75 seconds.
    5. Turn the ignition on.
    6. With the scan tool, read DTCs.

    Did the DTC reset?

    Yes

    - Go To 2.

No

- Perform the INTERMITTENT CONDITION diagnostic procedure. Refer to **INTERMITTENT CONDITION - 6.7L** .

2. **CHECK THE APPS SENSOR 2**

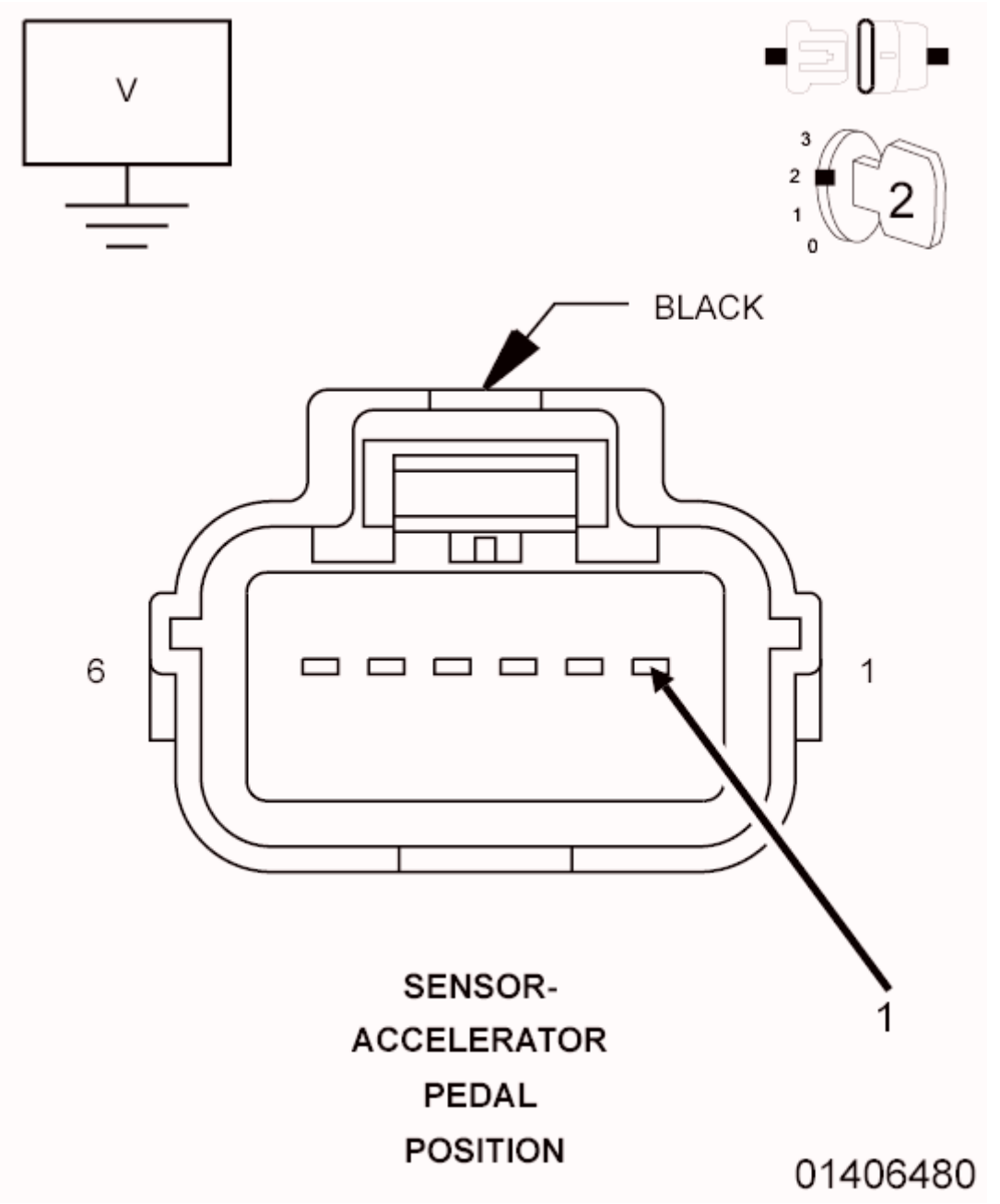

Fig. 121: Measuring Voltage On 5-Volt Supply Circuit At Accelerator Pedal Position Sensor Harness Connector
Courtesy of CHRYSLER GROUP, LLC

1. Ignition on.

2. Disconnect the Accelerator Pedal Position Sensor harness connector.

NOTE: Check connectors - Clean/repair as necessary.

3. Measure the voltage on the (F854) 5-Volt Supply circuit at the Accelerator Pedal Position Sensor harness connector.

   Is the voltage reading between 4.9 and 5.1 Volts?

   Yes

   - Replace the Accelerator Pedal Position Sensor in accordance with the service information.
   - Perform the POWERTRAIN VERIFICATION TEST - 6.7L. Refer to **POWERTRAIN VERIFICATION TEST - 6.7L** .

   No

   - Go To 3.

3. **CHECK THE DIESEL PARTICULATE FILTER PRESSURE SENSOR**

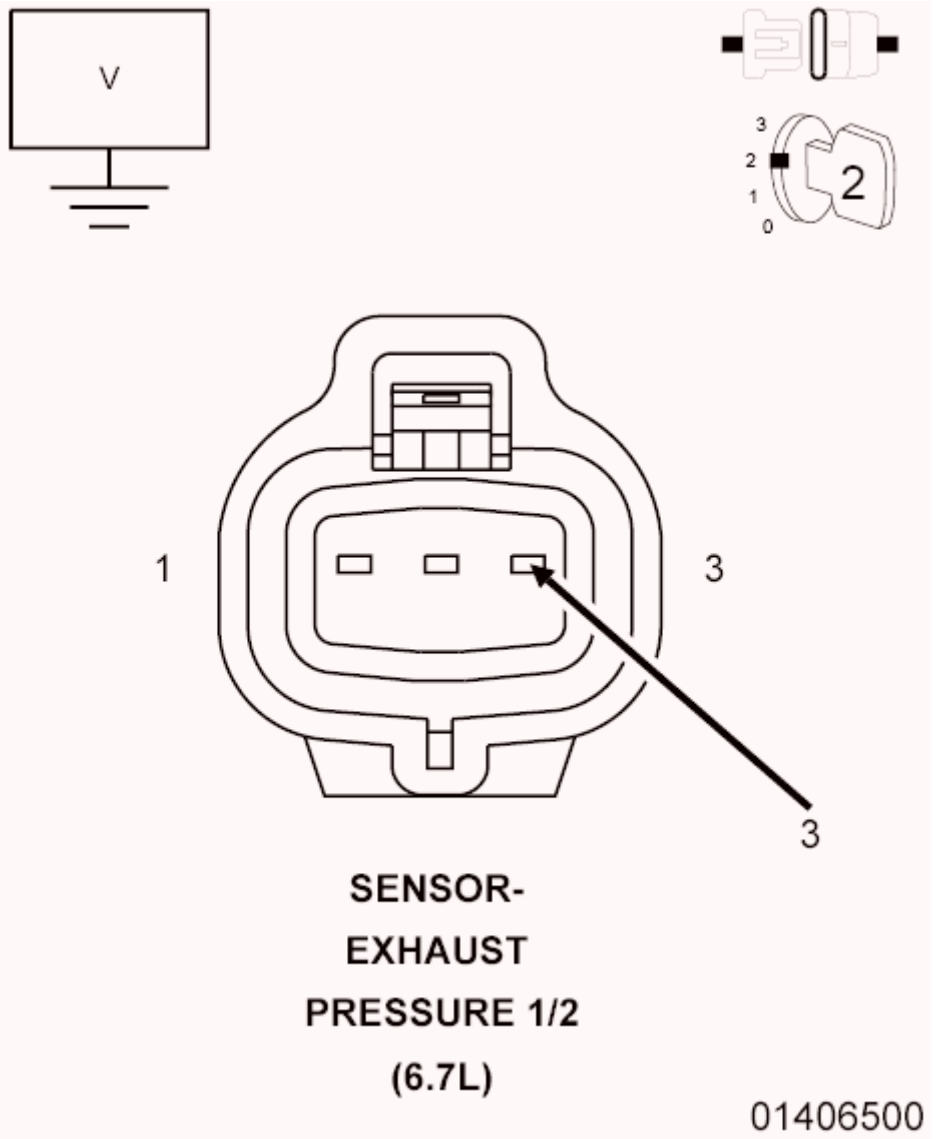

Fig. 122: Measuring Voltage On 5-Volt Supply Circuit At Diesel Particulate Filter Pressure Sensor Harness Connector
Courtesy of CHRYSLER GROUP, LLC

1. Disconnect the Diesel Particulate Filter Pressure Sensor harness connector.

   NOTE: Check connectors - Clean/repair as necessary.

2. Measure the voltage on the (F854) 5-Volt Supply circuit at the Diesel Particulate Filter Pressure Sensor harness connector.

   Is the voltage reading between 4.9 and 5.1 Volts?

   Yes

- Replace the Diesel Particulate Filter Pressure Sensor in accordance with the service information.
- Perform the POWERTRAIN VERIFICATION TEST - 6.7L. Refer to **POWERTRAIN VERIFICATION TEST - 6.7L** .

No

- Go To 4.

4. **CHECK THE TRANSMISSION PRESSURE SENSOR**
   1. Disconnect the Transmission Pressure Sensor harness connector.

      NOTE: Check connectors - Clean/repair as necessary.

   2. Measure the voltage on the (F854) 5-Volt Supply circuit at the Transmission Pressure Sensor harness connector.

      Is the voltage reading between 4.9 and 5.1 Volts?

      Yes

      - Replace the Transmission Pressure Sensor in accordance with the service information.
      - Perform the POWERTRAIN VERIFICATION TEST - 6.7L. Refer to **POWERTRAIN VERIFICATION TEST - 6.7L** .

      No

      - Go To 5.

5. **CHECK THE (F854) 5-VOLT SUPPLY CIRCUIT FOR A SHORT TO GROUND**

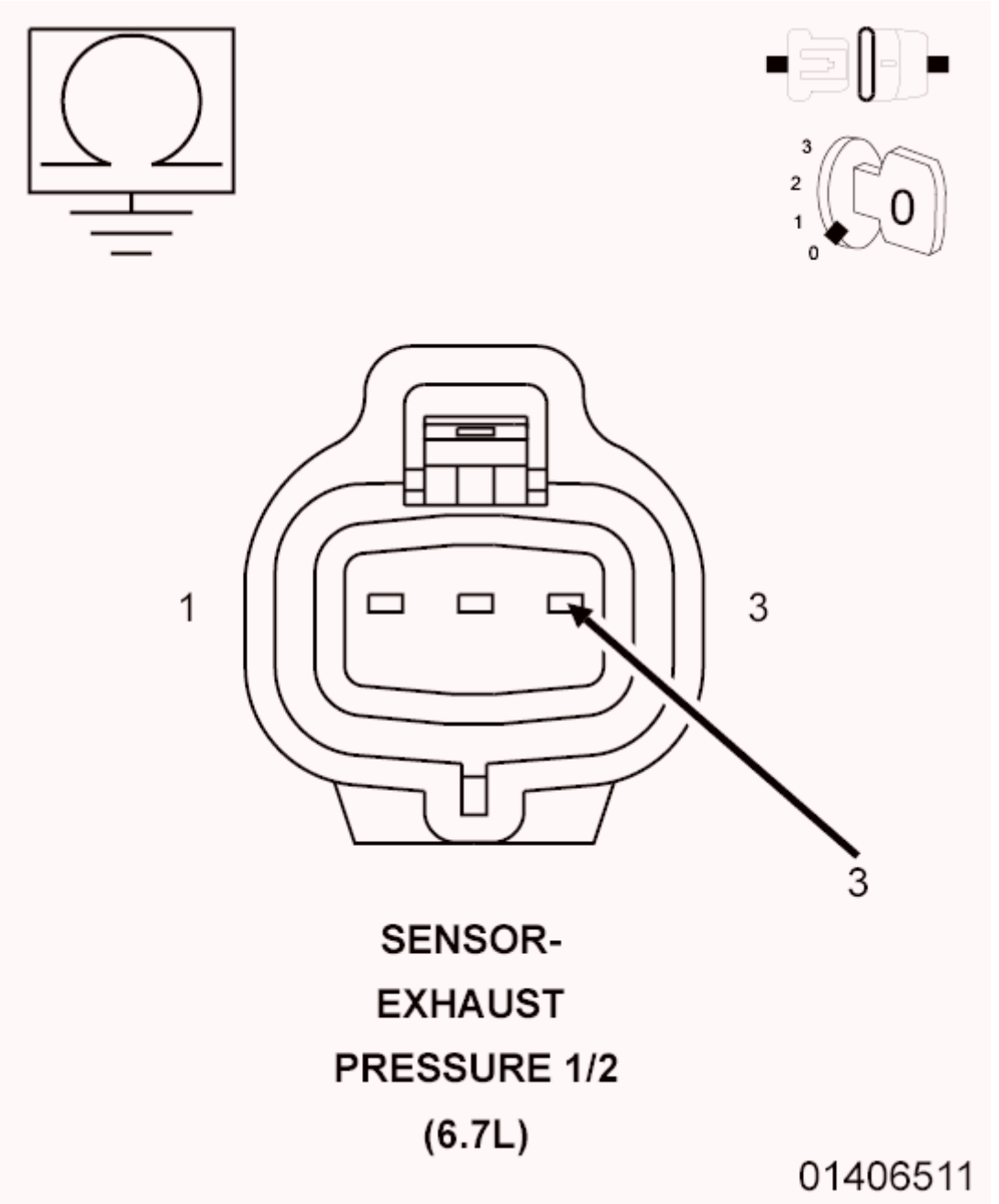

Fig. 123: Measuring Resistance Between Ground & 5-Volt Supply Circuit At Diesel Particulate Filter Pressure Sensor Harness Connector
Courtesy of CHRYSLER GROUP, LLC

1. Turn the ignition off.
2. Disconnect the PCM C2 harness connector.
3. Check connectors - Clean/repair as necessary.
4. Measure the resistance between ground and the (F854) 5-Volt Supply circuit at the Diesel Particulate Filter Pressure Sensor harness connector.

Is the resistance below 10k Ohms?

Yes

- Repair the (F854) 5-Volt Supply circuit for a short to ground.
- Perform the POWERTRAIN VERIFICATION TEST - 6.7L. Refer to **POWERTRAIN VERIFICATION TEST - 6.7L** .

No

- Go To 6.

6. **CHECK FOR THE (F854) 5-VOLT SUPPLY CIRCUIT SHORTED TO ANOTHER CIRCUIT**
   1. Measure the resistance between the (F854) 5-Volt Supply circuit and all other circuits at the PCM C2 harness connector.

      Is the resistance below 10k Ohms between the (F854) 5-Volt Supply circuit and any of the circuits?

      Yes

      - Repair the short to the circuit that measured below 10k Ohms.
      - Perform the POWERTRAIN VERIFICATION TEST - 6.7L. Refer to **POWERTRAIN VERIFICATION TEST - 6.7L** .

      No

      - Replace and program the Powertrain Control Module in accordance with the service information. Refer to **MODULE, POWERTRAIN CONTROL, 6.7L DIESEL, REMOVAL** and **PCM/ECM / TCM PROGRAMMING** .
      - Perform the POWERTRAIN VERIFICATION TEST - 6.7L. Refer to **POWERTRAIN VERIFICATION TEST - 6.7L** .

P06A5-SENSOR REFERENCE VOLTAGE 4 CIRCUIT HIGH

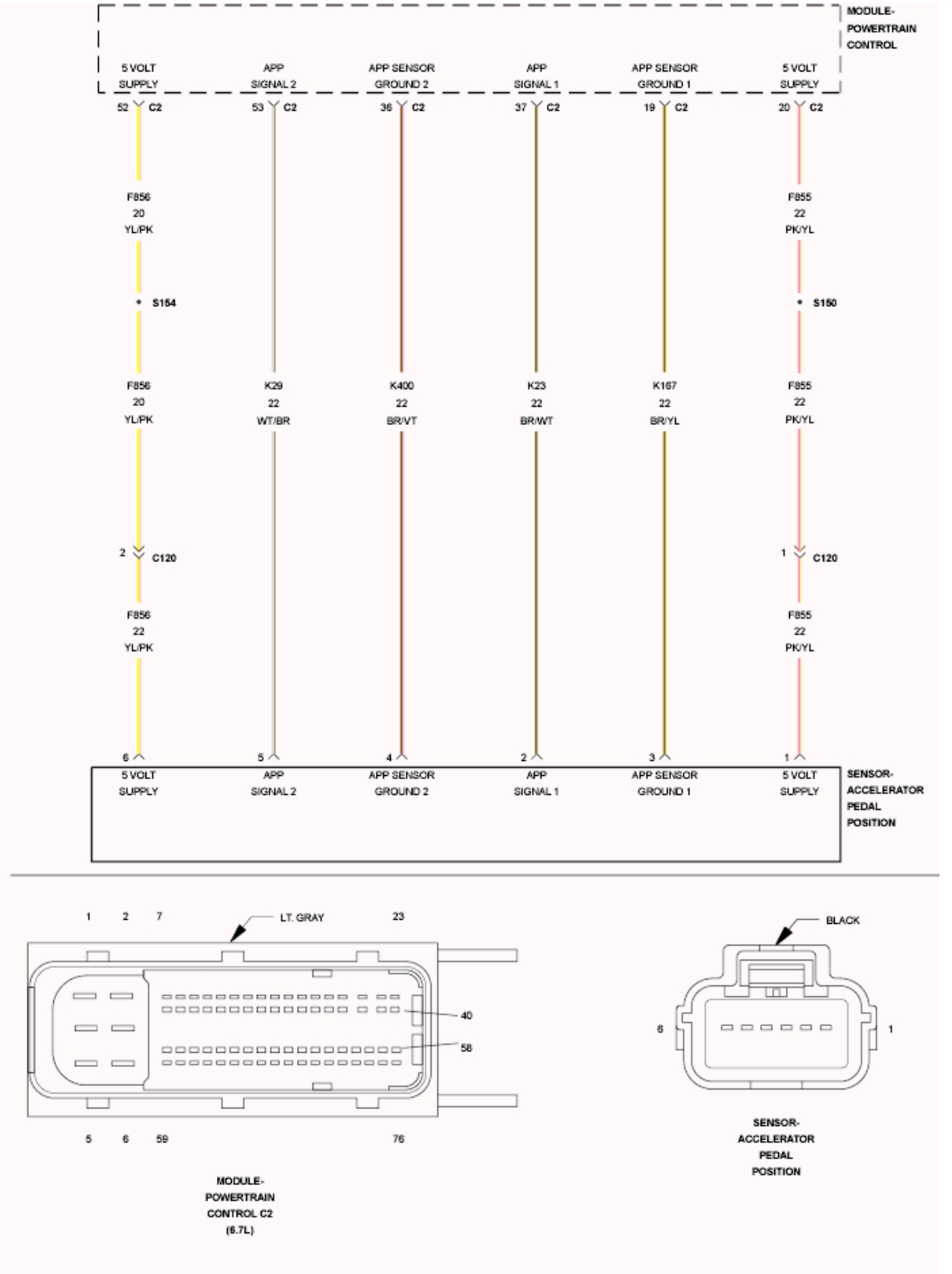

Fig. 124: Accelerator Pedal Position Sensor Circuit Schematic
Courtesy of CHRYSLER GROUP, LLC

For a complete wiring diagram, **refer to appropriate SYSTEM WIRING DIAGRAMS article** .

THEORY OF OPERATION

This sensor supply circuit provides a 5-Volt supply to the Accelerator Pedal Position 2 Sensor (APPS), Diesel Particulate Filter Pressure Sensor and the Transmission Pressure Sensor. The Powertrain Control Module (PCM) illuminates the MIL lamp immediately after the diagnostic runs and fails. The ETC lamp will also flash. During this time the customer will be in a limp home mode. The PCM will turn off the MIL lamp after the diagnostic runs and passes in four consecutive drive cycles.

WHEN MONITORED:

With the ignition on, PCM powered.

SET CONDITION:

Voltage detected at the 5-Volt Supply circuit is above a calibrated value.

POSSIBLE CAUSES

Possible Causes
(K854) 5-VOLT SUPPLY SHORT TO VOLTAGE
POWERTRAIN CONTROL MODULE (PCM)

Always perform the Pre-Diagnostic Troubleshooting procedure before proceeding. Refer to PRE-DIAGNOSTIC TROUBLESHOOTING PROCEDURE - 6.7L .

DIAGNOSTIC TEST

1. **ACTIVE DTC**
    1. Turn the ignition on.
    2. With the scan tool, record all Freeze frame data.
    3. With the scan tool, erase DTCs.
    4. Turn the ignition off for 75 seconds.
    5. Turn the ignition on.
    6. With the scan tool, read DTCs.

    Did the DTC reset?

    Yes

    - Go To 2.

    No

    - Perform the INTERMITTENT CONDITION diagnostic procedure. Refer to **INTERMITTENT CONDITION - 6.7L** .

2. **CHECK THE (K854) 5-VOLT SUPPLY FOR A SHORT TO VOLTAGE**

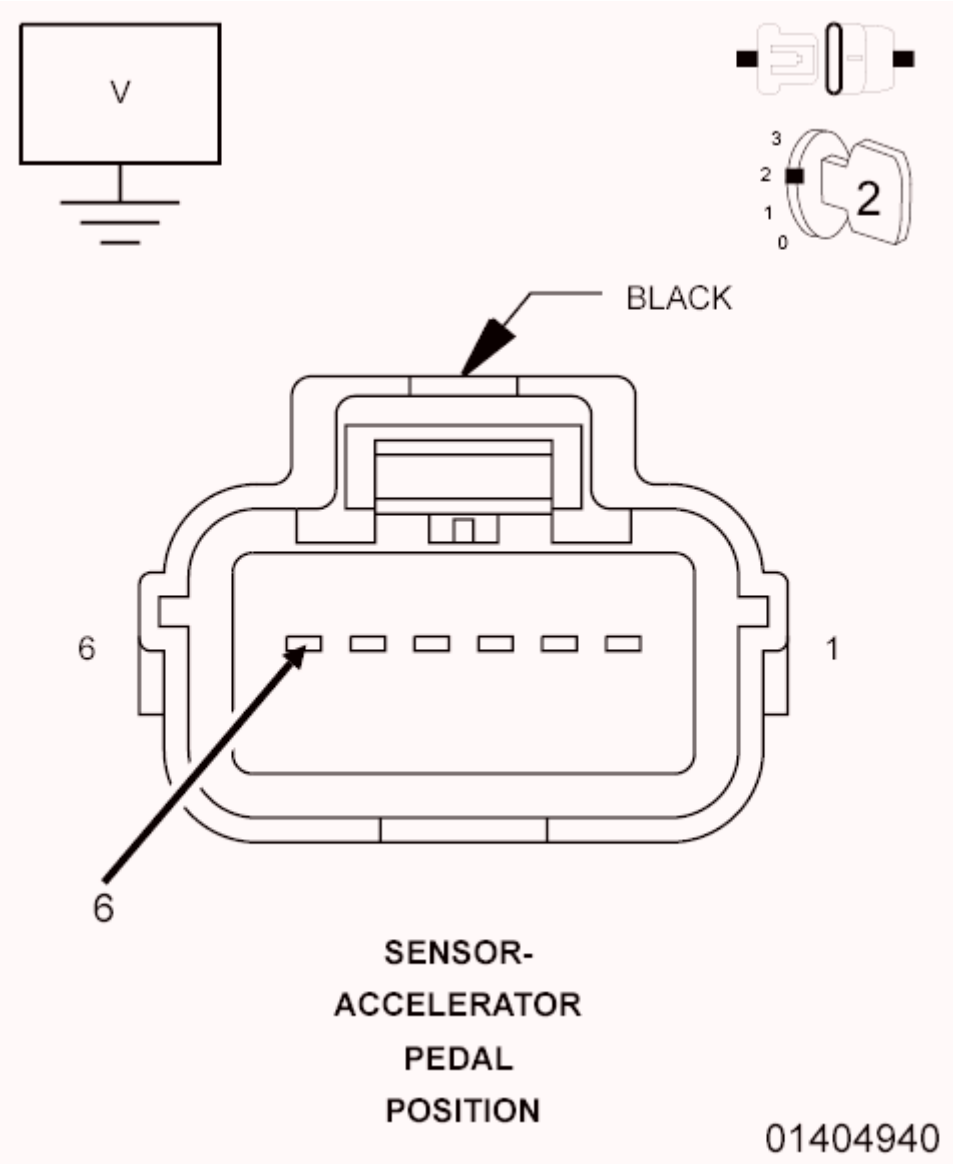

Fig. 125: Measuring Voltage Of 5-Volt Supply Circuit At Accelerator Pedal Position Harness Connector
Courtesy of CHRYSLER GROUP, LLC

1. Turn the ignition off.
2. Disconnect the components listed in the theory of operation.
3. Turn the ignition on.
4. Measure the voltage of the (K854) 5-Volt Supply circuit at the Accelerator Pedal Position harness connector.

   Is the voltage reading above 5.1 Volts?

Yes

- Repair the (K854) 5-Volt Supply circuit for a short to voltage.
- Perform the POWERTRAIN VERIFICATION TEST - 6.7L. Refer to **POWERTRAIN VERIFICATION TEST - 6.7L** .

No

- Go To 3.

3. **CHECK THE (F855) 5-VOLT SUPPLY CIRCUIT FOR A SHORT TO ANOTHER CIRCUIT**
   1. Turn the ignition off.
   2. Disconnect the PCM C2 harness connector.

      NOTE: Check connectors - Clean/repair as necessary.

   3. Measure the resistance between the (K854) 5-Volt Supply circuit and all other circuits in the PCM C2 connector.

      Is the resistance below 10k Ohms between the (K854) 5-Volt Supply circuit and any of the circuits?

      Yes

      - Repair the short to the circuit that measured below 10k Ohms.
      - Perform the POWERTRAIN VERIFICATION TEST - 6.7L. Refer to **POWERTRAIN VERIFICATION TEST - 6.7L** .

      No

      - Replace the Powertrain Control Module in accordance with the service information.
      - Perform the POWERTRAIN VERIFICATION TEST - 6.7L. Refer to **POWERTRAIN VERIFICATION TEST - 6.7L** .

P06F3-(DIESEL EXHAUST FLUID) REDUCTANT CONTROL MODULE INTERNAL TEMPERATURE SENSOR CIRCUIT HIGH

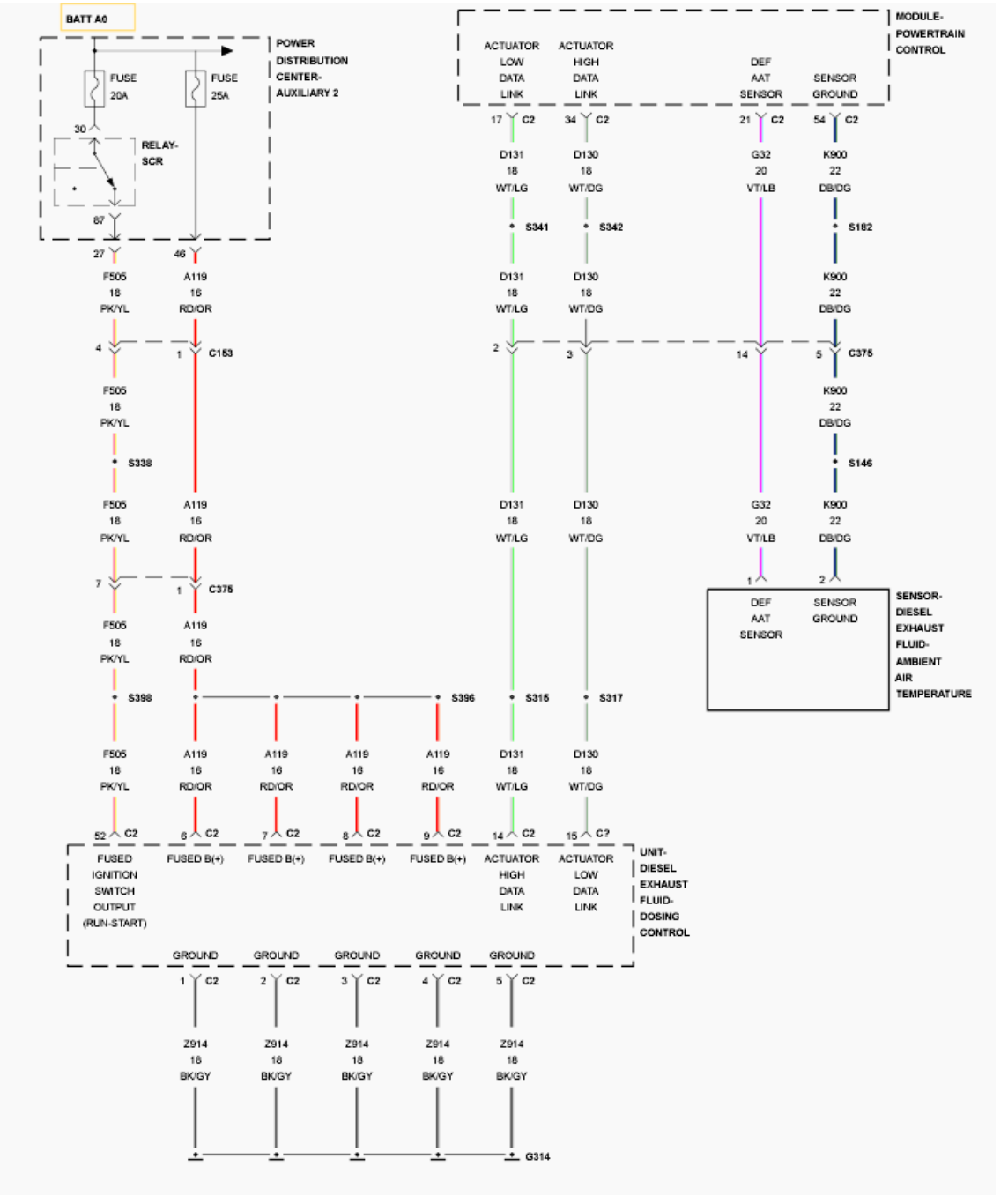

Fig. 126: Diesel Exhaust Fluid (DEF) Dosing Control Unit Wiring Diagram
Courtesy of CHRYSLER GROUP, LLC

For a complete wiring diagram, **refer to appropriate SYSTEM WIRING DIAGRAMS article** .

THEORY OF OPERATION

The Diesel Exhaust Fluid (DEF) Dosing Control Unit is used to control the operation and monitoring of the Diesel Exhaust Fluid system. The aftertreatment Diesel Exhaust Fluid Dosing Control Unit is equipped with an internal temperature sensor, which monitors the temperature inside the control unit during operation. The DEF

Dosing Control Unit shares this information with the Powertrain Control Module over the J1939 Data Link. Diesel exhaust fluid injection into the aftertreatment system is disabled.

WHEN MONITORED:

This monitor runs during normal operation when dosing is being commanded by the DEF Dosing Control Unit.

SET CONDITION:

The internal temperature of the DEF Dosing Control Unit is above 114°F [238°C] for more than five seconds.

POSSIBLE CAUSES

Possible Causes
INADEQUATE AIRFLOW TO COOL THE DEF DOSING CONTROL UNIT
IMPROPER MOUNTING OF THE DEF DOSING CONTROL UNIT
DEF DOSING CONTROL UNIT

Always perform the Pre-Diagnostic Troubleshooting procedure before proceeding. Refer to PRE-DIAGNOSTIC TROUBLESHOOTING PROCEDURE - 6.7L .

DIAGNOSTIC TEST

1. **CHECK THE DEF DOSING CONTROL UNIT FOR PROPER MOUNTING**

   NOTE: Perform the diagnostics for this DTC regardless or whether code is active or stored.

   1. Visually inspect to ensure that the DEF Dosing Control Unit is mounted in the correct location on the vehicle.
   2. Check that all the fasteners are properly installed and secured.

      Is the DEF Dosing Control Unit properly installed?

      Yes

      - Go To 2.

      No

      - Re-secure the DEF Dosing Control Unit properly.
      - Perform the POWERTRAIN VERIFICATION TEST - 6.7L. Refer to **POWERTRAIN VERIFICATION TEST - 6.7L** .
2. **CHECK FOR AN OBSTRUCTION OF AIRFLOW TO THE DEF DOSING CONTROL UNIT**
   1. Visually inspect for excessive debris on or around the DEF Dosing Control Unit.

2. Visually inspect for any aftermarket brackets or shields that can obstruct airflow to the DEF Dosing Control Unit.

   Is there any obstructions to the airflow to the DEF Dosing Control Unit?

   Yes

   - Repair the cause of the obstruction to the DEF Dosing Control Unit.
   - Perform the POWERTRAIN VERIFICATION TEST - 6.7L. Refer to **POWERTRAIN VERIFICATION TEST - 6.7L** .

   No

   - Erase the DTC and test drive the vehicle. If the DTC returns, replace the DEF Dosing Control Unit in accordance with the service information. Refer to **UNIT, DIESEL EXHAUST FLUID DOSING CONTROL, REMOVAL** .
   - Perform the POWERTRAIN VERIFICATION TEST - 6.7L. Refer to **POWERTRAIN VERIFICATION TEST - 6.7L** .

P0700-TRANSMISSION CONTROL SYSTEM (MIL REQUEST)

For a complete wiring diagram, **refer to appropriate SYSTEM WIRING DIAGRAMS article** .

WHEN MONITORED:

With the ignition on and battery voltage above 10.0 Volts.

SET CONDITION:

An active DTC is stored in the Transmission Control Module. This is a one trip fault. Three good trips to turn off the MIL Lamp.

POSSIBLE CAUSES

Possible Causes
DTC PRESENT IN THE TRANSMISSION CONTROL MODULE (TCM)

Always perform the Pre-Diagnostic Troubleshooting procedure before proceeding. Refer to PRE-DIAGNOSTIC TROUBLESHOOTING PROCEDURE - 6.7L .

DIAGNOSTIC TEST

1. **DTC PRESENT IN EATX CONTROLLER**
   1. This is an information only DTC to inform that a DTC(s) is stored in the Transmission Control Module.
   2. Erase the DTC in the PCM after all Transmission DTC(s) have been repaired.

3. With the scan tool, View all Transmission DTCs and perform the appropriate diagnostic procedure.

   PCM diagnostic information

   Continue

   - Test complete.

P0850-PARK/NEUTRAL SWITCH PERFORMANCE

For a complete wiring diagram, **refer to appropriate SYSTEM WIRING DIAGRAMS article** .

THEORY OF OPERATION

The transmission PRNDL diagnostics will detect transmission stuck in park error, if the vehicle speed is greater than a calibrated threshold and selected gear is PARK according to the received CAN message. It will also detect transmission stuck in drive error, if the engine crank state is seen while the selected gear is DRIVE according to the received CAN message.

WHEN MONITORED:

When the vehicle is moving.

SET CONDITION:

Vehicle speed is detected while the transmission reports that the vehicle is in park.

POSSIBLE CAUSES

Possible Causes
TRANSMISSION STUCK IN PARK
TOWING VEHICLE WITH THE IGNITION ON

Always perform the Pre-Diagnostic Troubleshooting procedure before proceeding. Refer to PRE-DIAGNOSTIC TROUBLESHOOTING PROCEDURE - 6.7L .

DIAGNOSTIC TEST

1. **TRANSMISSION STUCK IN PARK**

   See repair.

   Repair

   - Repair the transmission/CAN related problem.

P1123-POWER TAKE OFF SYSTEM MONITOR CONTROL ERROR

For a complete wiring diagram, **refer to appropriate SYSTEM WIRING DIAGRAMS article** .

WHEN MONITORED:

Continuously with the ignition on, and Powertrain Control Module (PCM) receives an input from the Power Take Off (PTO) switch.

SET CONDITION:

Torque engagement inputs for PTO operation are out of range or torque disengagement inputs for PTO operation is not being followed within expected fail-safe boundaries for 0.5 of a second.

POSSIBLE CAUSES

Possible Causes
AFTERMARKET PTO SYSTEM INSTALLED ON VEHICLE
SPEED CONTROL SWITCH
PCM SOFTWARE UPDATE
POWERTRAIN CONTROL MODULE (PCM)

Always perform the Pre-Diagnostic Troubleshooting procedure before proceeding. Refer to PRE-DIAGNOSTIC TROUBLESHOOTING PROCEDURE - 6.7L .

DIAGNOSTIC TEST

1. **OTHER DTCS**
    1. Ignition on, engine not running.
    2. With the scan tool, read DTCs.

       Is DTC P061A also present?

       Yes

       - Repair DTC P061A before proceeding.

       No

       - Go To 3.
2. **CHECK FOR AFTERMARKET PTO SYSTEM INSTALLED ON VEHICLE**

   NOTE: If there are any Speed Control DTCs present, perform those test procedures before continuing with this procedure.

    1. Visually inspect for an aftermarket PTO system installed on the vehicle.

       Was an aftermarket PTO system installed?

Yes

- Test complete. Inform customer that aftermarket system is causing fault.

No

- Go To

3. **CHECK FOR SOFTWARE UPDATES**
   1. Check for any TSBs that may apply.
   2. Check the PCM part number and insure that the PCM is at the latest release level.

   Are any PCM updates available?

   Yes

   - Reprogram the Powertrain Control Module with the latest software version
   - Perform the POWERTRAIN VERIFICATION TEST - 6.7L. Refer to **POWERTRAIN VERIFICATION TEST - 6.7L** .

   No

   - Replace the Powertrain Control Module in accordance with the service information.
   - Perform the POWERTRAIN VERIFICATION TEST - 6.7L. Refer to **POWERTRAIN VERIFICATION TEST - 6.7L** .

P1191 - INLET AIR TEMPERATURE SENSOR RATIONAL/PERFORMANCE

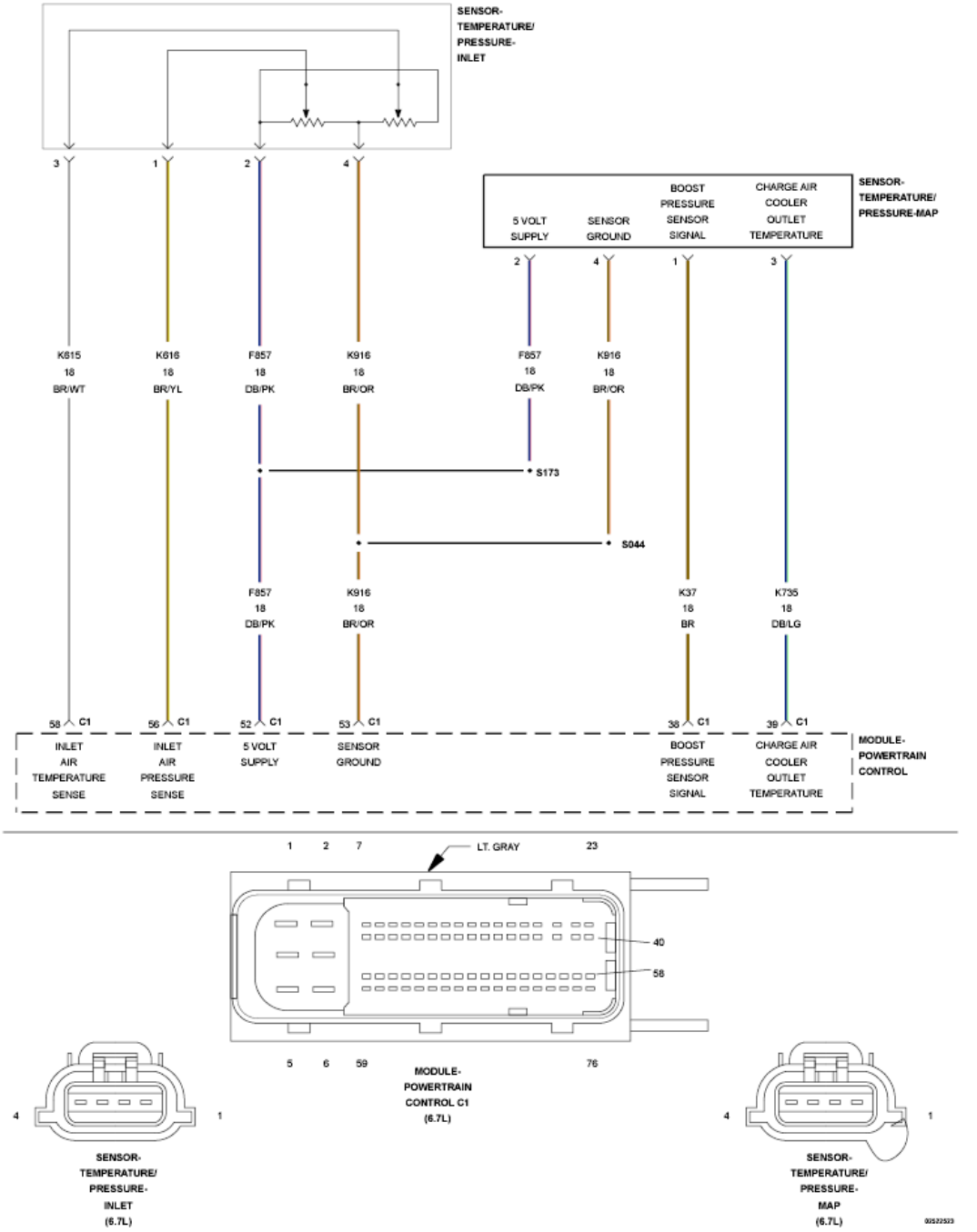

Fig. 127: Inlet Air Temperature Sensor Circuit Schematic
Courtesy of CHRYSLER GROUP, LLC

For a complete wiring diagram, **refer to appropriate SYSTEM WIRING DIAGRAMS article** .

THEORY OF OPERATION

The Inlet Air Pressure is part of the Inlet Temperature/Pressure Sensor which is located in the top of the air cleaner box. The Inlet Air Temperature Sensor performance looks at the outputs of four temperature sensors and compares them under cold start conditions. At key on after an eight hour cold soak, the values of the Inlet Air

Temperature, Engine Coolant Temperature, Intake Air Temperature and EGR Orifice Temperature sensors are compared. If the Engine Coolant, Intake Air and EGR Orifice Temperature Sensors agree and the Inlet Air Temperature does not agree, the Inlet Air Temperature Sensor is declared irrational. This diagnostics also checks for a change in sensor value over a period of time. This is to verify that the sensor is responding with temperature change. The Powertrain Control Module (PCM) will illuminate the MIL lamp after this diagnostic runs and fails in two consecutive drive cycles. The PCM will turn off the MIL lamp once the diagnostic runs and passes in four consecutive drive cycles.

WHEN MONITORED:

While the engine is running.

SET CONDITION:

The Powertrain Control Module (PCM) does not read a change in value from the sensor over time. The PCM value after a cold soak for the inlet air temperature sensor varies from other engine temperature sensors.

POSSIBLE CAUSES

Possible Causes
HIGH RESISTANCE IN THE (K615) INLET AIR TEMPERATURE SENSOR SIGNAL CIRCUIT INLET AIR TEMPERATURE SENSOR

Always perform the Pre-Diagnostic Troubleshooting procedure before proceeding. Refer to PRE-DIAGNOSTIC TROUBLESHOOTING PROCEDURE - 6.7L .

DIAGNOSTIC TEST

1. **CHECK THE INLET AIR TEMPERATURE SENSOR**
    1. Remove the temperature sensor and reconnect the wiring to the sensor.
    2. With the scan tool in Sensors, monitor the Inlet Air Temperature.
    3. While heating the sensor with an external heat source (DO NOT USE OPEN FLAME).

    Does the reading from the sensor increase at least 5° F on the scan tool?

    Yes

    - Go To 2.

    No

    - Replace the Inlet Air Temperature/Pressure Sensor in accordance with the service information.
    - Perform the POWERTRAIN VERIFICATION TEST - 6.7L. Refer to **POWERTRAIN VERIFICATION TEST - 6.7L** .
2. **CHECK THE INLET AIR TEMPERATURE SENSOR**

1. After an eight hour cold soak, with the scan tool connected, monitor Inlet Air Temperature Sensor, Battery Temperature Sensor, Intake Air Temperature Sensor and Engine Coolant Temperature Sensor.

   NOTE: Make sure inlet air temperature is above 20° F when performing this test.

   NOTE: Make sure there is no external heat source, such as a block heater, operating during this test or within the eight hour cold soak.

   Does the Inlet Air Temperature Sensor read differently from the other sensors?

   Yes

   - Go To 3.

   No

   - Perform the INTERMITTENT CONDITION diagnostic procedure. Refer to **INTERMITTENT CONDITION - 6.7L** .

3. **CHECK FOR HIGH RESISTANCE IN THE (K615) INLET AIR TEMPERATURE SENSOR SIGNAL CIRCUIT**
   1. Disconnect the Inlet Air Temperature/Pressure Sensor harness connector.
   2. Disconnect the PCM C1 harness connector.
   3. Measure the resistance of the (K615) Inlet Air Temperature Sensor Signal circuit between the Inlet Air Pressure/Temperature Sensor harness connector and the PCM C1 harness connector.

      Is the resistance below 5.0 Ohms?

      Yes

      - Replace the Inlet Air Temperature/Pressure Sensor in accordance with the service information.
      - Perform the POWERTRAIN VERIFICATION TEST - 6.7L. Refer to **POWERTRAIN VERIFICATION TEST - 6.7L** .

      No

      - Repair the (K615) Inlet Air Temperature Sensor Signal circuit for an open or high resistance.
      - Perform the POWERTRAIN VERIFICATION TEST - 6.7L. Refer to **POWERTRAIN VERIFICATION TEST - 6.7L** .

Powertrain Control Module (PCM) - Electrical Diagnostics, 6.7L Diesel - 3500 Cab & Chassis, 4500 & 5500

DIAGNOSIS AND TESTING

P1192-INLET AIR TEMPERATURE SENSOR CIRCUIT LOW

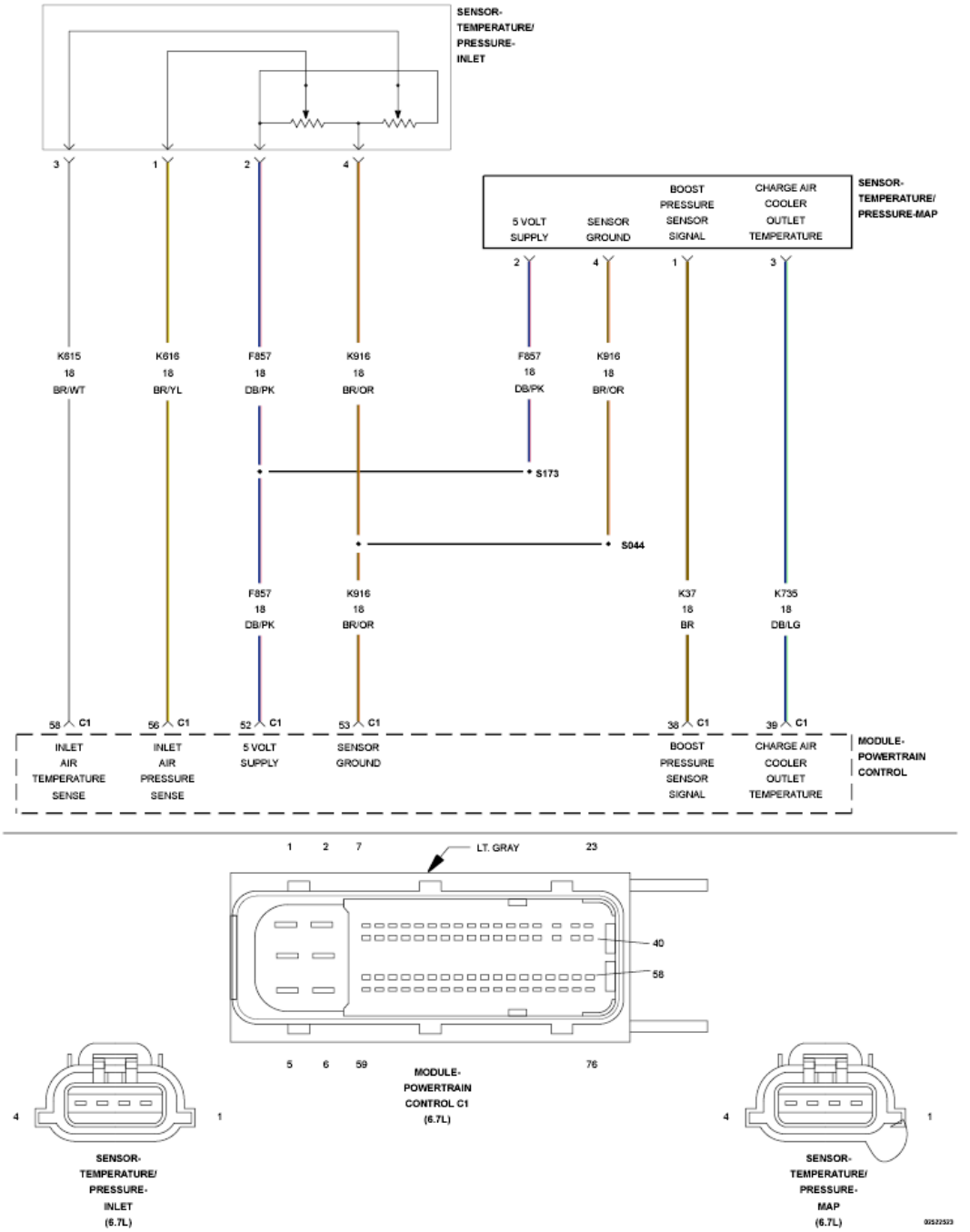

Fig. 1: Inlet Air Temperature Sensor Circuit Schematic

Courtesy of CHRYSLER GROUP, LLC

For a complete wiring diagram, **refer to appropriate SYSTEM WIRING DIAGRAMS article** .

THEORY OF OPERATION

The Inlet Air Temperature Sensor and the Inlet Air Pressure Sensor are combined in one sensor and are located in the top of the air cleaner box. The Inlet Air Temperature Sensor is used to measure the temperature of the air entering the intake system. The Powertrain Control Module (PCM) provides a 5-Volt supply and sensor ground for the Inlet Air Temperature Sensor. The Inlet Air Temperature Sensor provides a signal back to the PCM on the Inlet Air Temperature Sensor Signal circuit. If this fault becomes active the PCM will light the MIL light.

WHEN MONITORED:

When the Powertrain Control Module (PCM) is powered on.

SET CONDITION:

The signal voltage to the PCM falls below a 0.1 Volts for one second.

POSSIBLE CAUSES

Possible Causes
(K615) INLET AIR TEMPERATURE SENSOR SIGNAL CIRCUIT SHORTED TO GROUND
(K615) INLET AIR TEMPERATURE SENSOR SIGNAL CIRCUIT SHORTED TO THE (K916) SENSOR GROUND
INLET AIR TEMPERATURE/PRESSURE SENSOR
POWERTRAIN CONTROL MODULE (PCM)

Always perform the Pre-Diagnostic Troubleshooting procedure before proceeding. Refer to PRE-DIAGNOSTIC TROUBLESHOOTING PROCEDURE - 6.7L .

DIAGNOSTIC TEST

1. **ACTIVE DTC**

NOTE: **If there are any 5-Volt supply DTCs present, repair those DTCs before proceeding.**

1. Turn the ignition on.
2. With the scan tool, record all Freeze frame data.
3. With the scan tool, erase DTCs.
4. Turn the ignition off for 75 seconds.
5. Turn the ignition on.
6. With the scan tool, read DTCs.

Did the DTC reset?

Yes

- Go To 2.

No

- Perform the INTERMITTENT CONDITION diagnostic procedure. Refer to **INTERMITTENT CONDITION - 6.7L** .

2. **CHECK THE (K615) INLET AIR TEMPERATURE SENSOR SIGNAL CIRCUIT FOR A SHORT TO GROUND**

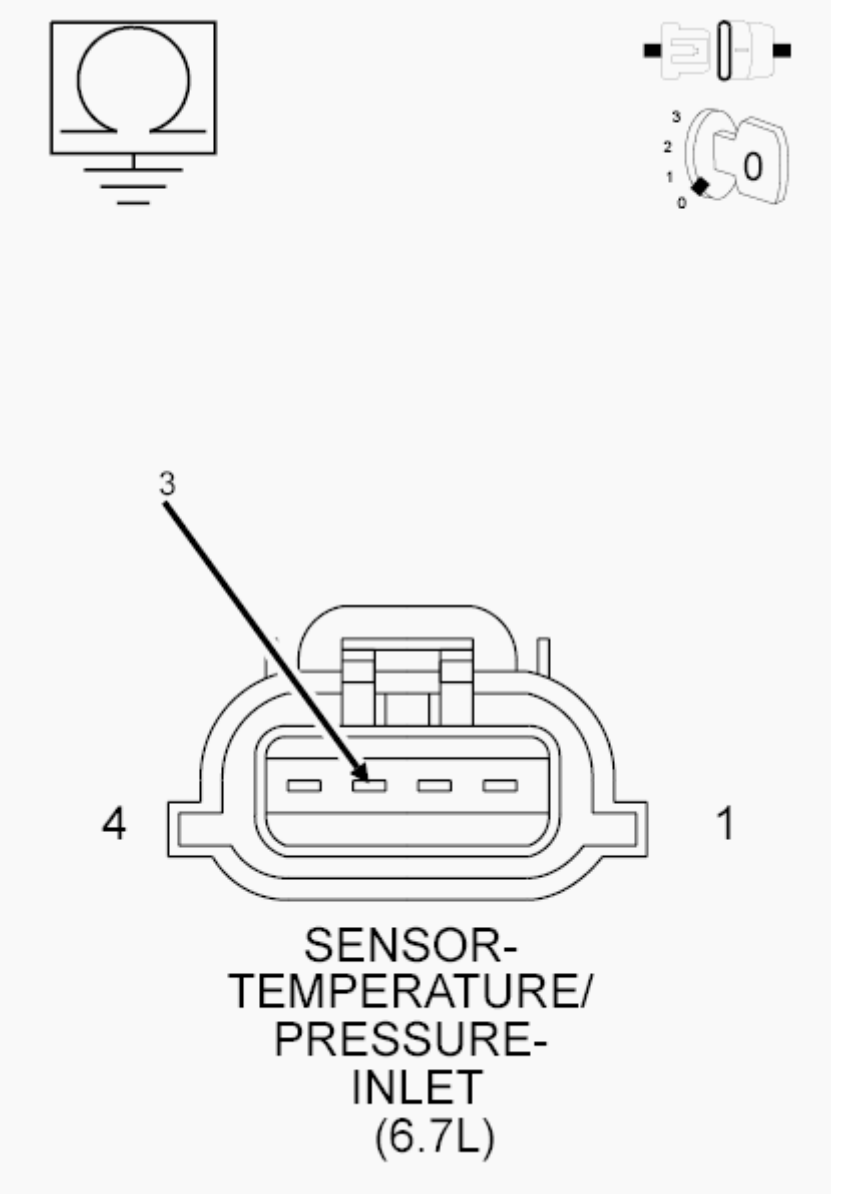

Fig. 2: Checking Inlet Air Temperature Sensor Signal Circuit For Short To Ground

Courtesy of CHRYSLER GROUP, LLC

1. Turn the ignition off.
2. Disconnect the Inlet Air Temperature/Pressure Sensor harness connector.
3. Disconnect the PCM C1 harness connector.
4. Measure the resistance between ground and the (K615) Inlet Air Temperature/Pressure Sensor Signal circuit at the Inlet Air Temperature/Pressure Sensor harness connector.

   Is the resistance below 10k Ohms?

   Yes

   - Repair the (K615) Inlet Air Temperature Sensor Signal circuit for a short to ground.
   - Perform the POWERTRAIN VERIFICATION TEST. Refer to **POWERTRAIN VERIFICATION TEST - 6.7L** .

   No

   - Go To 3.

3. **CHECK FOR THE (K615) INLET AIR TEMPERATURE SENSOR SIGNAL CIRCUIT SHORTED TO (K916) SENSOR GROUND**

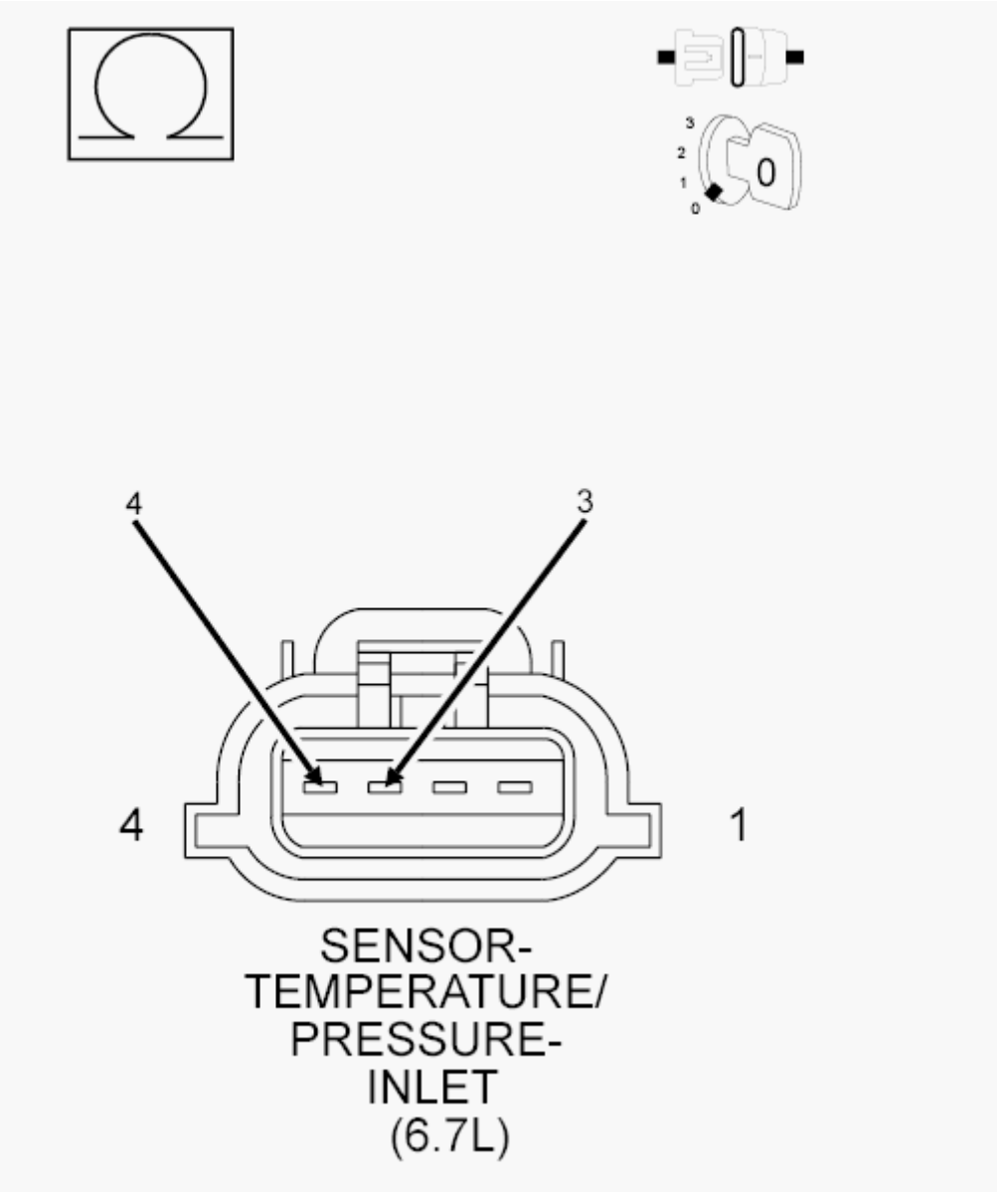

Fig. 3: Check Inlet Air Temperature Sensor Signal Circuit For A Short To Sensor Ground
Courtesy of CHRYSLER GROUP, LLC

1. Measure the resistance between the (K615) Inlet Air Temperature Sensor Signal circuit and the (K916) Sensor Ground circuit at the Inlet Air Temperature/Pressure Sensor harness connector.

   Is the resistance below 10k Ohms?

   Yes

   - Repair the short between the (K615) Inlet Air Temperature Sensor Signal circuit and the (K916) Sensor Ground circuit.
   - Perform the POWERTRAIN VERIFICATION TEST. Refer to **POWERTRAIN VERIFICATION TEST - 6.7L** .

No

- Go To 4.

4. **CHECK THE INLET AIR TEMP SENSOR**
    1. Reconnect the Inlet Air Temperature/Pressure Sensor harness connector.
    2. Reconnect the PCM C1 harness connector.
    3. Turn the ignition on.
    4. With the scan tool, erase DTCs.
    5. While monitoring the scan tool, disconnect the Inlet Air Temperature/Pressure Sensor harness connector.

    Did the DTC P1193 set?

    Yes

    - Replace the Inlet Air Temperature/Pressure Sensor in accordance with the service information.
    - Perform the POWERTRAIN VERIFICATION TEST. Refer to **POWERTRAIN VERIFICATION TEST - 6.7L** .

    No

    - Replace the Powertrain Control Module in accordance with the service information.
    - Perform the POWERTRAIN VERIFICATION TEST. Refer to **POWERTRAIN VERIFICATION TEST - 6.7L** .

P1193-INLET AIR TEMPERATURE SENSOR CIRCUIT HIGH

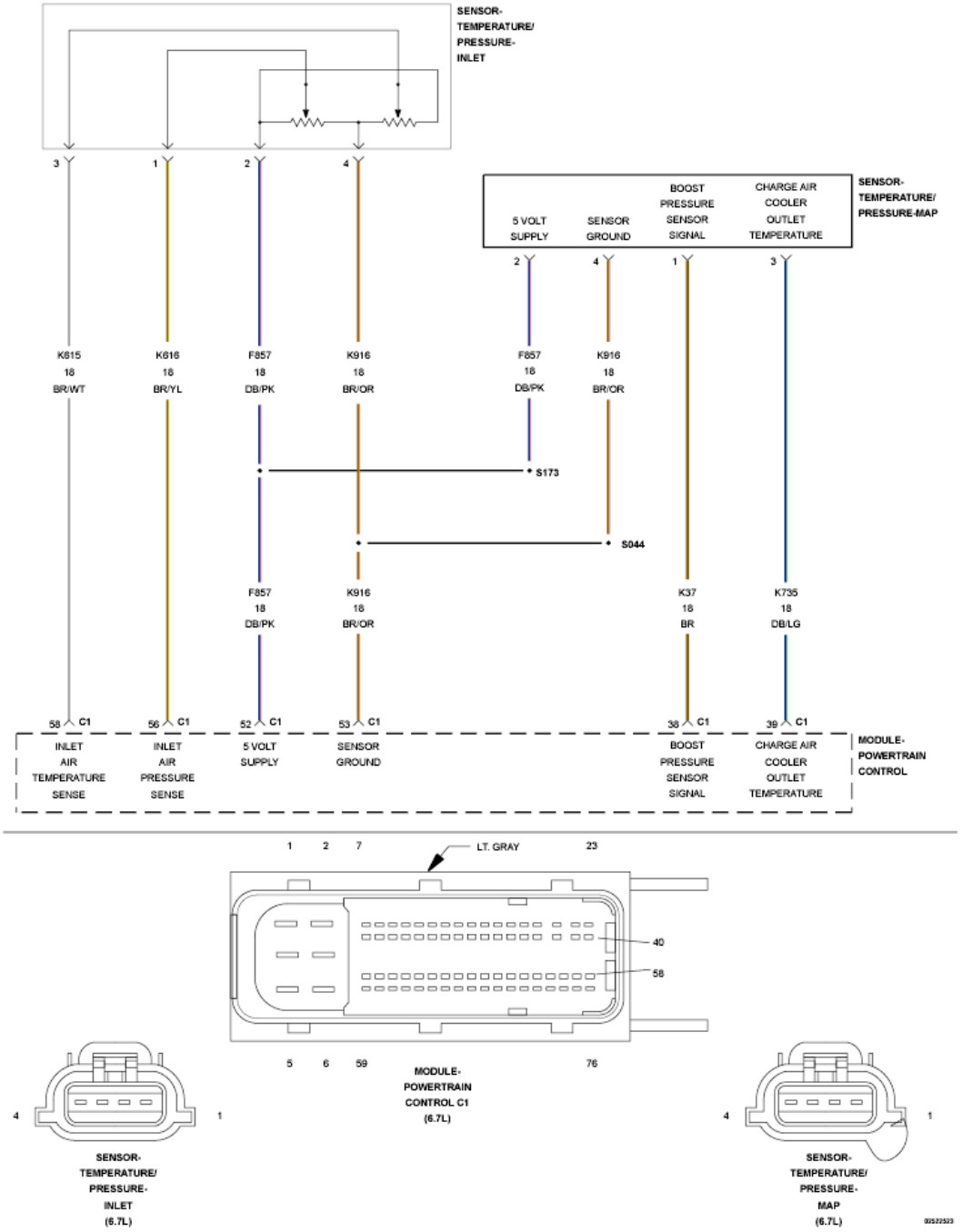

Fig. 4: Inlet Air Temperature Sensor Circuit Schematic
Courtesy of CHRYSLER GROUP, LLC

For a complete wiring diagram, **refer to appropriate SYSTEM WIRING DIAGRAMS article** .

THEORY OF OPERATION

The Inlet Air Temperature Sensor and the Inlet Air Pressure Sensor are combined in one sensor and are located in the top of the air cleaner box. The Inlet Air Temperature Sensor is used to measure the temperature of the air entering the intake system. The Powertrain Control Module (PCM) provides a 5-Volt supply and sensor ground

for the Inlet Air Temperature Sensor. The Inlet Air Temperature Sensor provides a signal back to the PCM on the Inlet Air Temperature Sensor Signal circuit. If this fault becomes active the PCM will light the MIL light.

WHEN MONITORED:

When the Powertrain Control Module (PCM) is powered on.

SET CONDITION:

The circuit voltage to the PCM is above 4.75 Volts for more than one second.

POSSIBLE CAUSES

Possible Causes
(F855) 5-VOLT SUPPLY CIRCUIT SHORTED TO VOLTAGE
(K615) INLET AIR TEMPERATURE SENSOR SIGNAL CIRCUIT SHORTED TO VOLTAGE
(K615) INLET AIR TEMPERATURE SENSOR SIGNAL CIRCUIT OPEN
(K916)) INLET AIR TEMPERATURE SENSOR RETURN CIRCUIT OPEN
INLET AIR TEMPERATURE/PRESSURE SENSOR
POWERTRAIN CONTROL MODULE (PCM)

Always perform the Pre-Diagnostic Troubleshooting procedure before proceeding. Refer to PRE-DIAGNOSTIC TROUBLESHOOTING PROCEDURE - 6.7L .

DIAGNOSTIC TEST

1. **ACTIVE DTC**

   NOTE: If there are any 5-Volt supply DTCs present, repair those DTCs before proceeding.

   1. Turn the ignition on.
   2. With the scan tool, record all Freeze frame data.
   3. With the scan tool, erase DTCs.
   4. Turn the ignition off for 75 seconds.
   5. Turn the ignition on.
   6. With the scan tool, read DTCs.

   Did the DTC reset?

   Yes

   - Go To 2.

   No

- Perform the INTERMITTENT CONDITION diagnostic procedure. Refer to **INTERMITTENT CONDITION - 6.7L** .

2. **CHECK THE (K615) INLET AIR TEMPERATURE SENSOR SIGNAL CIRCUIT FOR A SHORT TO VOLTAGE**

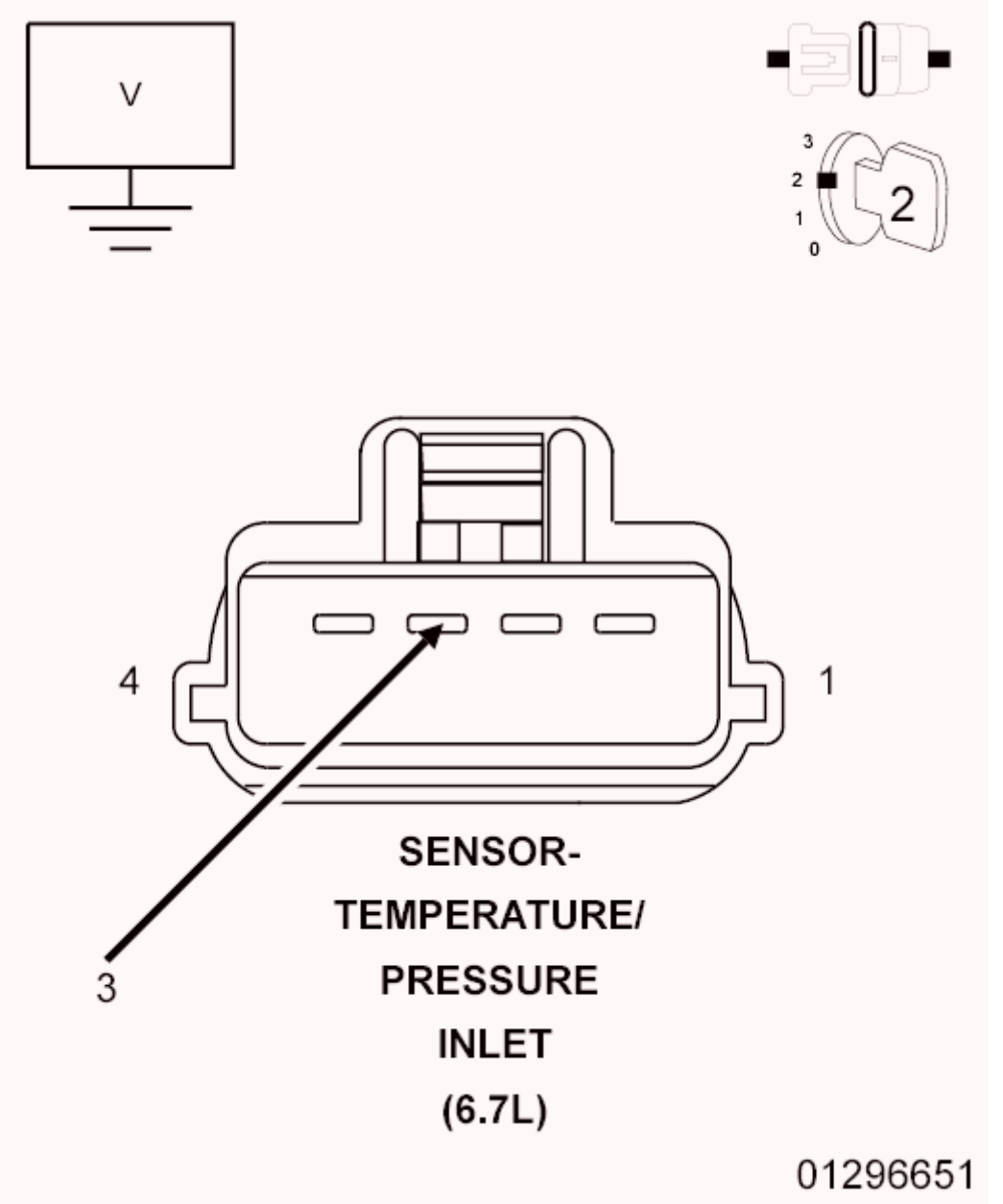

Fig. 5: Checking Inlet Air Temperature Sensor Signal Circuit For Short To Voltage
Courtesy of CHRYSLER GROUP, LLC

1. Turn the ignition off.
2. Disconnect the Inlet Air Temperature/Pressure Sensor harness connector.

NOTE: Check connectors - Clean/repair as necessary.

3. Turn the ignition on.
4. Measure the voltage on the (K615) Inlet Air Temperature Sensor Signal circuit at the Inlet Air Temperature/Pressure Sensor harness connector.

   Does the voltage measure battery voltage?

   Yes

   - Repair the (K615) Inlet Air Temperature Sensor Signal circuit for a short to voltage.
   - Perform the POWERTRAIN VERIFICATION TEST. Refer to **POWERTRAIN VERIFICATION TEST - 6.7L** .

   No

   - Go To 3.

3. **CHECK THE (K615) INLET AIR TEMPERATURE SIGNAL CIRCUIT FOR AN OPEN/HIGH RESISTANCE**

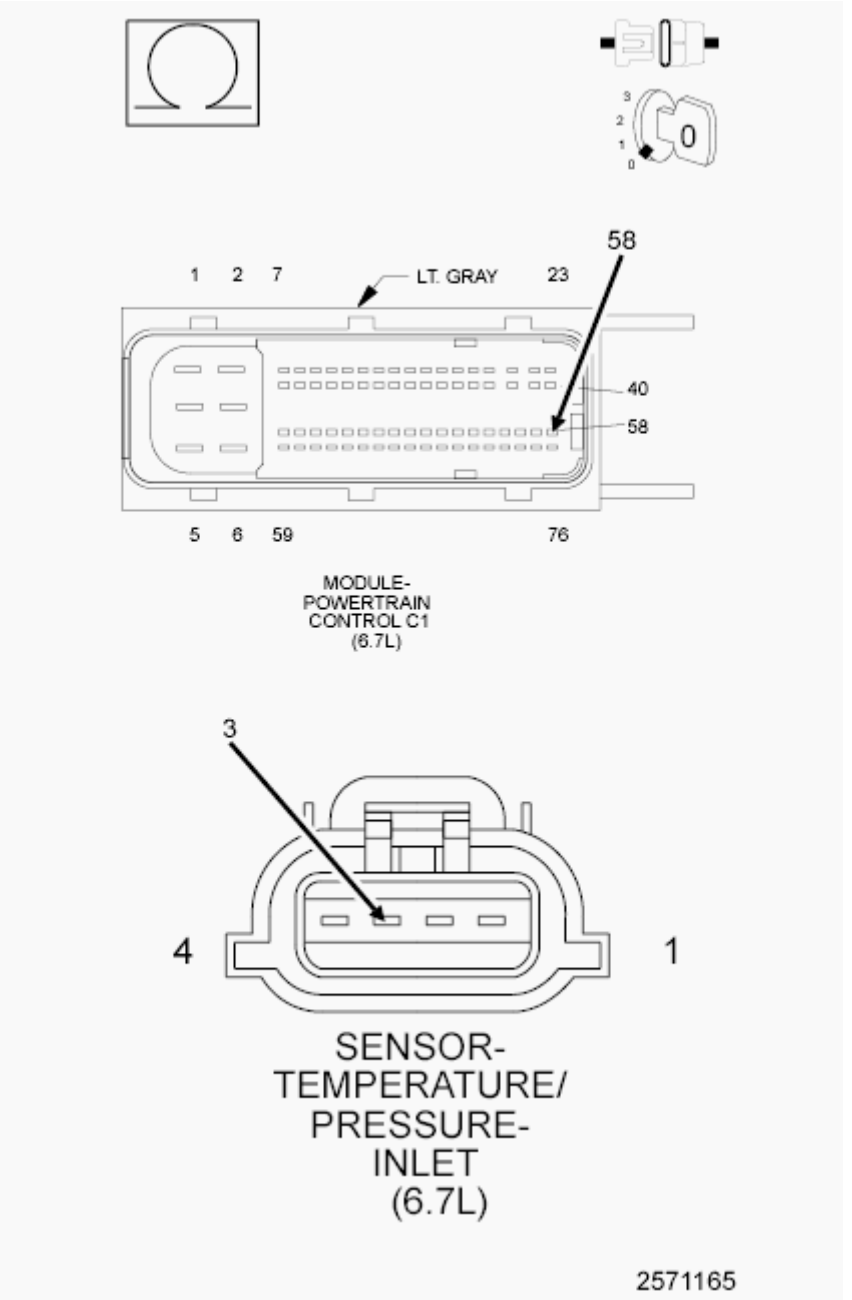

Fig. 6: Checking Inlet Air Temperature Signal Circuit For Open Or High Resistance
Courtesy of CHRYSLER GROUP, LLC

1. Disconnect the PCM C1 harness connector.
2. Measure the resistance of the (K615) Inlet Air Temperature Sensor Signal circuit between the Inlet Air Temperature/Pressure Sensor harness connector and the PCM C1 harness connector.

   Is the resistance below 5.0 Ohms?

   Yes

- Go To 4.

No

- Repair the (K615) Inlet Air Temperature Sensor Signal circuit for an open or high resistance.
- Perform the POWERTRAIN VERIFICATION TEST. Refer to **POWERTRAIN VERIFICATION TEST - 6.7L** .

4. **CHECK THE (K916) INLET AIR TEMPERATURE SENSOR GROUND CIRCUIT FOR AN OPEN/HIGH RESISTANCE**

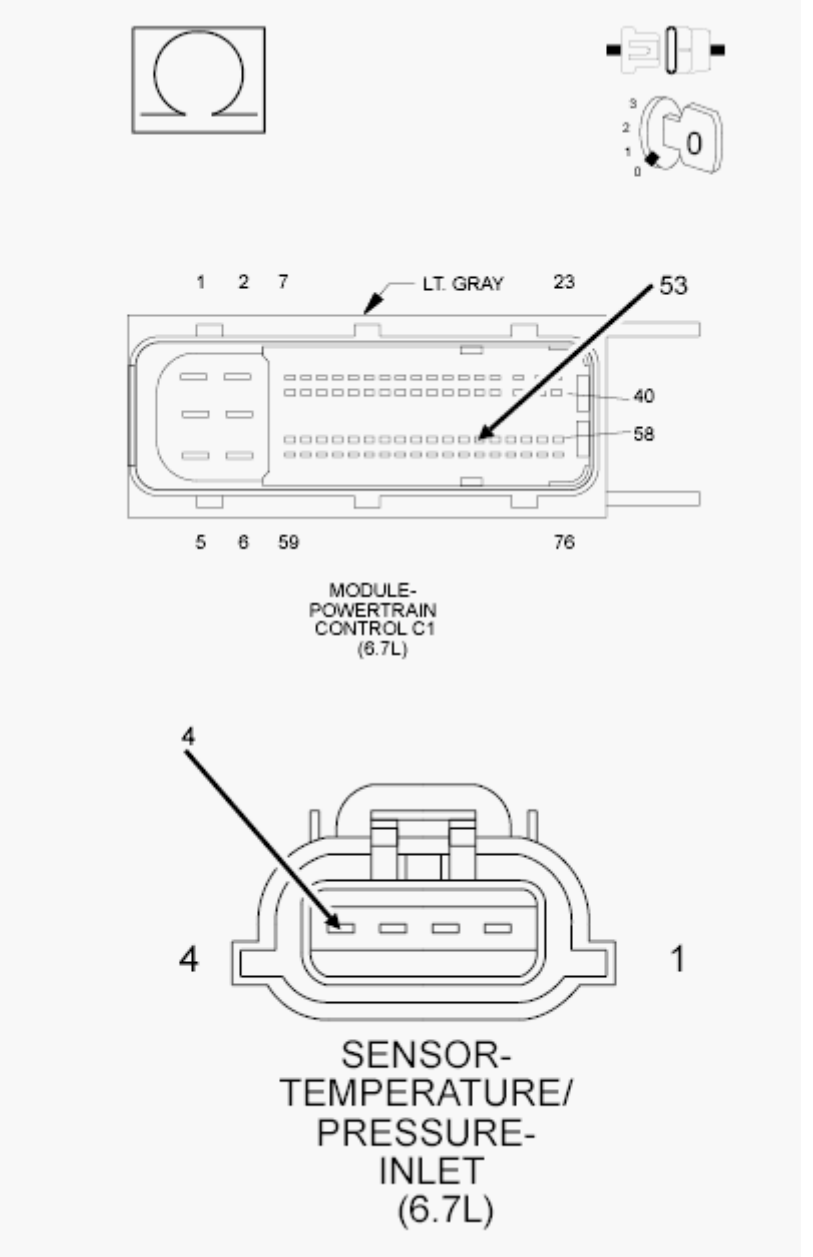

Fig. 7: Checking Inlet Air Temperature Sensor Ground Circuit For An Open Or High Resistance
Courtesy of CHRYSLER GROUP, LLC

1. Measure the resistance of the (K916) Inlet Air Temperature Sensor Ground circuit between the Inlet Air Temperature/Pressure Sensor harness connector and the PCM C1 harness connector.

   Is the resistance below 5.0 Ohms?

   Yes

   - Go To 5.

   No

   - Repair the (K916) Inlet Air Temperature Sensor Ground circuit for an open or high resistance.
   - Perform the POWERTRAIN VERIFICATION TEST. Refer to **POWERTRAIN VERIFICATION TEST - 6.7L** .

5. **CHECK THE INLET AIR TEMPERATURE/PRESSURE SENSOR**
   1. Reconnect the PCM C1 harness connector.
   2. Turn the ignition on.
   3. With the scan tool, erase DTCs.
   4. Turn the ignition off.
   5. Connect a jumper between the (K615) Inlet Air Temperature Sensor Signal circuit and the (K916) Inlet Air Temperature/Pressure Sensor Ground circuit at the Inlet Air Temperature/Pressure Sensor harness connector.
   6. Turn the ignition on.
   7. With the scan tool, read DTCs.

      Did the DTC P1192 set?

      Yes

      - Replace the Inlet Air Temperature/Pressure Sensor in accordance with the service information.
      - Perform the POWERTRAIN VERIFICATION TEST. Refer to **POWERTRAIN VERIFICATION TEST - 6.7L** .

      No

      - Replace the Powertrain Control Module in accordance with the service information.
      - Perform the POWERTRAIN VERIFICATION TEST. Refer to **POWERTRAIN VERIFICATION TEST - 6.7L** .

P1451-DIESEL PARTICULATE FILTER SYSTEM PERFORMANCE

For a complete wiring diagram, **refer to appropriate SYSTEM WIRING DIAGRAMS article** .

THEORY OF OPERATION

The Powertrain Control Module (PCM) monitors the soot load in the Diesel Particulate Filter. The soot load in the Diesel Particulate Filter is estimated by the PCM using the Exhaust Differential Pressure Sensor values and the calculated soot output of the engine. Under normal operating conditions the Diesel Particulate Filter is self-cleaning, where accumulated soot is converted to ash. Under light load operating conditions, the driver may be notified via the vehicle's EVIC message center that it is necessary to modify the vehicles driving routine/duty-cycle (see Owner's Manual for details) in order to allow the Aftertreatment Diesel Particulate Filter system to self clean. There is not a MIL lamp associated with this fault code, though the driver will be notified via the EVIC message.

WHEN MONITORED:

Engine running.

SET CONDITION:

The Powertrain Control Module (PCM) will set this fault if it detects that the soot level has exceeded the normal desoot trigger threshold by a sufficient amount to indicate that the driver intervention is required.

POSSIBLE CAUSES

Possible Causes
ENGINE HAS BEEN OPERATING IN LIGHT LOAD CONDITIONS THAT PREVENT EXHAUST TEMPERATURES FROM BEING HIGH ENOUGH TO ACTIVELY REGENERATE THE DIESEL PARTICULATE FILTER
PROGRESSIVE DAMAGE TO THE AFTERTREATMENT SYSTEM FROM AN ENGINE FAILURE, INCLUDING BUT NOT LIMITED TO EXCESSIVE FUEL, OIL OR COOLANT IN THE AFTERTREATMENT SYSTEM
EXHAUST PRESSURE SENSOR TUBES OR HOSES DAMAGED OR RESTRICTED
EXHAUST LEAK PREVENTING DIESEL PARTICULATE FILTER REGENERATION TEMPERATURES FROM BEING ACHIEVED

Always perform the Pre-Diagnostic Troubleshooting procedure before proceeding. Refer to PRE-DIAGNOSTIC TROUBLESHOOTING PROCEDURE - 6.7L .

DIAGNOSTIC TEST

1. **ACTIVE OR STORED DTC**

NOTE: **DTC P1451 is usually the result of a driveability or fuel system failure. This DTC indicates that there is an excessive soot level in the Diesel Particulate Filter, and that the Diesel Particulate Filter needs to be regenerated. This can be caused by the customers driving habits, (not allowing the vehicle to actively regenerate the Diesel Particulate Filter on it's own), or due to a driveability concern causing excessive soot generation in the exhaust system. If there are any other DTCs or driveability concerns present with**

this DTC, diagnose and repair those concerns before continuing with this test procedure. Not repairing the cause of the excess soot being generated will cause the soot levels to climb too rapidly and the Diesel Particulate Filter to fill with soot too often. This DTC will return prematurely.

1. Ignition on, engine not running.
2. With the scan tool, read DTCs.

   Is the DTC Active or Stored?

   Active

   - Perform the scan tool initiated Stationary Desoot. Refer to **FILTER, DIESEL PARTICULATE, STANDARD PROCEDURE** .

     NOTE: The Mobile Desoot procedure has been replaced by a scan tool initiated Stationary Desoot procedure. The scan tool initiated Stationary Desoot procedure can only be performed if the DTC is active and the PCM is at the latest software version.

   - Go To 2.

   Stored

   - The Aftertreatment Diesel Particulate Filter has been regenerated with an active desoot initiated during normal driving conditions.
   - Perform the DIESEL AFTERTREATMENT VALIDATION - 6.7L. Refer to **DIESEL AFTERTREATMENT VALIDATION- 6.7L** .

2. **PERFORM THE AFTERTREATMENT INSPECTION**
   1. Perform the AFTERTREATMENT INSPECTION GUIDELINE - 6.7L procedure. Refer to **DIAGNOSIS AND TESTING, 6.7L** .

      Did the Diesel Particulate Filter pass inspection?

      Yes

      - Repair complete. Reset DPF timer, ensure all other fault codes have been addressed.
      - Perform the DIESEL AFTERTREATMENT VALIDATION - 6.7L procedure. Refer to **DIESEL AFTERTREATMENT VALIDATION- 6.7L** .

      No

      - Replace the Diesel Particulate Filter in accordance with the service information.
      - Perform the DIESEL AFTERTREATMENT VALIDATION - 6.7L procedure. Refer to **DIESEL AFTERTREATMENT VALIDATION- 6.7L** .

P1484-CATALYST OVERHEAT DETECTION

For a complete wiring diagram, **refer to appropriate SYSTEM WIRING DIAGRAMS article** .

THEORY OF OPERATION

The Aftertreatment Diesel Oxidation Catalyst is designed to react with hydrocarbons in the exhaust stream, this reaction produces heat. The heat can become excessive if too much hydrocarbon enters the Aftertreatment Diesel Oxidation Catalyst too quickly. Excessive heat can damage the diesel aftertreatment components, so the temperature of the aftertreatment system is closely monitored by the Powertrain Control Module (PCM). The Exhaust Temperature Sensors are used by the PCM to monitor the temperatures throughout the aftertreatment system. The Exhaust Temperature Sensors are thermistors and change resistance based on the temperature being measured. The PCM provides a calibrated reference voltage to the sensor. The PCM monitors the voltage on the signal pin and converts this to a temperature value. When the exhaust gas temperature is cold, the sensor or thermistor resistance is high. The PCM signal voltage only pulls down a small amount through the sensor to ground. Therefore, the PCM senses a high signal voltage or low temperature. When the exhaust gas temperature is hot, the sensor resistance is low. The signal voltage pulls down a large amount. Therefore, the PCM senses a low signal voltage, or a high temperature. The PCM will illuminate the MIL lamp immediately when the diagnostic runs and fails. The PCM will also disable active regeneration of the aftertreatment diesel particulate filter. This DTC will not self clear and must be cleared by a scan tool.

WHEN MONITORED:

With the ignition on.

SET CONDITION:

The Powertrain Control Module (PCM) detects that the Exhaust Temperature Sensor 1/1 temperature is greater than calibrated temperature for longer than a calibrated time.

POSSIBLE CAUSES

Possible Causes
FAULTY FUEL INJECTOR CAUSING EXCESSIVE UNBURNED FUEL TO ENTER THE EXHAUST SYSTEM
IMPROPER FUELING
TEMPERATURE SENSORS FAILED IN-RANGE
EXCESSIVE ENGINE OIL BEING INTRODUCED INTO THE AFTERTREATMENT SYSTEM FROM THE ENGINE

Always perform the Pre-Diagnostic Troubleshooting procedure before proceeding. Refer to PRE-DIAGNOSTIC TROUBLESHOOTING PROCEDURE - 6.7L .

DIAGNOSTIC TEST

1. **CHECK THE EXHAUST TEMPERATURE SENSORS**
    1. Turn the ignition off for five minutes to allow the Exhaust Temperature Sensors to stabilize.

2. Turn the ignition on, engine not running.
3. With the scan tool check the temperature values of the Exhaust Temperature Sensors.

   Are the Exhaust Temperature Sensors reading within 6°C (43°F) of each other?

   Yes

   - Go To 2.

   No

   - Replace the Exhaust Temperature Sensor that is out of range as compared to the others.
   - Perform the POWERTRAIN VERIFICATION TEST. Refer to **POWERTRAIN VERIFICATION TEST - 6.7L** .

2. **CHECK FOR EXCESSIVE ENGINE OIL BEING INTRODUCED INTO THE AFTERTREATMENT SYSTEM**
   1. Remove the turbocharger outlet and inspect for signs of oil, fuel or moisture being introduced into the Aftertreatment system from the engine.

      Was engine oil, fuel or moisture found in the turbocharger exhaust outlet?

      Yes

      - Locate the cause of possible diesel fuel or engine oil being carried from the engine into the Exhaust system. Inspect the Exhaust for possible damage.
      - Perform the POWERTRAIN VERIFICATION TEST. Refer to **POWERTRAIN VERIFICATION TEST - 6.7L** .

      No

      - Go To 3.

3. **CHECK ENGINE/FUEL SYSTEM PERFORMANCE**
   1. Perform the CHECKING ENGINE MISFIRE / RUNS ROUGH / PERFORMANCE TEST diagnostic procedure. Refer to **DIAGNOSIS AND TESTING, 6.7L** .

      Were any problems found?

      Yes

      - Perform the appropriate repair.
      - Perform the POWERTRAIN VERIFICATION TEST. Refer to **POWERTRAIN VERIFICATION TEST - 6.7L** .

      No

- Perform the INTERMITTENT CONDITION diagnostic procedure. Refer to **INTERMITTENT CONDITION - 6.7L** .

P1507-CRANKCASE FILTER RESTRICTION

For a complete wiring diagram, **refer to appropriate SYSTEM WIRING DIAGRAMS article** .

THEORY OF OPERATION

The crankcase pressure sensor is used to monitor the pressure inside the crankcase. The Powertrain Control Module (PCM) supplies the Crankcase Pressure Sensor a 5-Volt reference voltage. When the crankcase pressure is low, the sensor signal voltage is low. When the crankcase pressure is high, the sensor signal voltage is near the 5-Volt reference voltage. The PCM monitors the Crankcase Pressure Signal Circuit voltage to calculate the pressure of the air within the crankcase. The PCM will illuminate the MIL lamp after the monitor runs and fails in two consecutive trips.

WHEN MONITORED:

Engine speed greater than 500 RPM and engine temperature is above 82°C (180°F) for five minutes.

SET CONDITION:

The Powertrain Control Module (PCM) detects the crankcase pressure exceeds a calibrated limit.

POSSIBLE CAUSES

Possible Causes
OBSTRUCTIONS IN CRANKCASE HOSES
CLOSED CRANKCASE VENTILATION (CCV) FILTER
CRANKCASE DEPRESSION REGULATION (CDR) VALVE

Always perform the Pre-Diagnostic Troubleshooting procedure before proceeding. Refer to PRE-DIAGNOSTIC TROUBLESHOOTING PROCEDURE - 6.7L .

DIAGNOSTIC TEST

1. **CHECK THE CRANKCASE VENTILATION HOSE**
    1. Disconnect the crankcase ventilation hose from the breather cover and compressor inlet plumbing.
    2. Blow regulated shop air, less than or equal to 5.0 psi through the hose.

    Are there any obstructions in the crankcase outlet hose?

    Yes

    - Clear the obstructions.
    - Go To 2.

No

- Go To 2.

2. **CRANKCASE DEPRESSION REGULATION VALVE**
   1. Remove the breather cover.
   2. Blow regulated shop air, less than or equal to 5.0 psi through the CDR Valve.

      NOTE: The air can be applied at either the inlet or outlet of the valve.

      Is the Crankcase Depression Valve stuck shut?

      Yes

      - Replace the CDR Valve:
      - Go To 3.

      No

      - Go To 3.

3. **CCV FILTER ELEMENT**
   1. Ignition on, engine not running.
   2. With the scan tool, read DTCs.

      Were there any obstructions in the crankcase hose and/or CDR Valve?

      Yes

      - Test complete.
      - Turn the ignition off and wait for the PCM to power down (this will take 10 minutes). Turn the ignition on. With the scan tool, erase the DTC.
      - Perform the POWERTRAIN VERIFICATION TEST. Refer to **POWERTRAIN VERIFICATION TEST - 6.7L** .

      No

      - Replace the CCV Filter Element.
      - Turn the ignition off and wait for the PCM to power down (this will take 10 minutes). Turn the ignition on. With the scan tool, erase the DTC.
      - Perform the POWERTRAIN VERIFICATION TEST. Refer to **POWERTRAIN VERIFICATION TEST - 6.7L** .

P1593-SPEED CONTROL SWITCH 1 STUCK

For a complete wiring diagram, **refer to appropriate SYSTEM WIRING DIAGRAMS article** .

WHEN MONITORED:

With the ignition on.

SET CONDITION:

Cruise Switch inputs are not coherent with each other. Example: The Powertrain Control Module (PCM) is reading Switch No. 1 as Accel and Switch No. 2 as Coast at the same time. One trip fault.

POSSIBLE CAUSES

Possible Causes
S/C SWITCH SIGNAL CIRCUITS SHORTED TO VOLTAGE
RESISTANCE IN THE S/C SWITCH SIGNAL CIRCUITS
RESISTANCE IN THE (V937) S/C SWITCH RETURN CIRCUIT
S/C SWITCH SIGNAL CIRCUITS SHORTED TO THE (V937) S/C SWITCH RETURN CIRCUIT
(V37) S/C SWITCH NO. 1 SIGNAL CIRCUIT SHORTED TO THE (V38) S/C SWITCH NO. 2 SIGNAL CIRCUIT
S/C SWITCH SIGNAL CIRCUITS SHORTED TO GROUND
CLOCKSPRING
SPEED CONTROL SWITCH
POWERTRAIN CONTROL MODULE (PCM)

Always perform the Pre-Diagnostic Troubleshooting procedure before proceeding. Refer to PRE-DIAGNOSTIC TROUBLESHOOTING PROCEDURE - 6.7L .

DIAGNOSTIC TEST

1. **ACTIVE DIAGNOSTIC TROUBLE CODE (DTC)**
    1. Ignition on, engine not running.

        NOTE: This DTC may be the result of pressing two Speed Control Switch buttons simultaneously for more than 450 msec.

    2. Ask the customer if it is possible that two buttons were pressed at the same time before this DTC set. If this is the case, no repair is necessary.

        Is the DTC Active at this time?

        Yes

        - Go To 2.

        No

- Perform the INTERMITTENT CONDITION diagnostic procedure. Refer to **INTERMITTENT CONDITION - 6.7L** .

2. **SPEED CONTROL SWITCHES**
    1. Turn the ignition off.
    2. Disconnect the Speed Control Switch harness connector in accordance with the service information.
    3. Measure the resistance across each Speed Control Switch sense circuit.
    4. Monitor the Ohmmeter while pressing each function button.
    5. The following resistance specs are taken between terminals (V37) S/C Switch Sense 1 circuit and the (V937) Switch Return circuit of the switch when holding the switch button in the following position:
        - Not pressing any switch - 20.5k Ohms
        - On/Off - 0.47k Ohms
        - Set/Decel - 4.34k Ohms
        - Cancel - 1.24k Ohms
        - Resume/Accel - 8.80k Ohms
    6. The following resistance specs are taken between terminals (V38) S/C Switch Sense 2 circuit and the (V937) Switch Return circuit of the switch when holding the switch button in the following position:
        - Not pressing any switch - 20.5k Ohms
        - On/Off - 6.2k Ohms
        - Set/Decel - 0.79k Ohms
        - Cancel - 3.2k Ohms
        - Resume/Accel - 1. k Ohms

    Does the function on the Speed Control Switch have the correct resistance value +/- 0.2 Ohm?

    Yes

    - Go To 3.

    No

    - Replace the Speed Control Switch.
    - Perform the POWERTRAIN VERIFICATION TEST. Refer to **POWERTRAIN VERIFICATION TEST - 6.7L** .

3. **S/C SWITCH SIGNAL CIRCUIT SHORTED TO VOLTAGE**

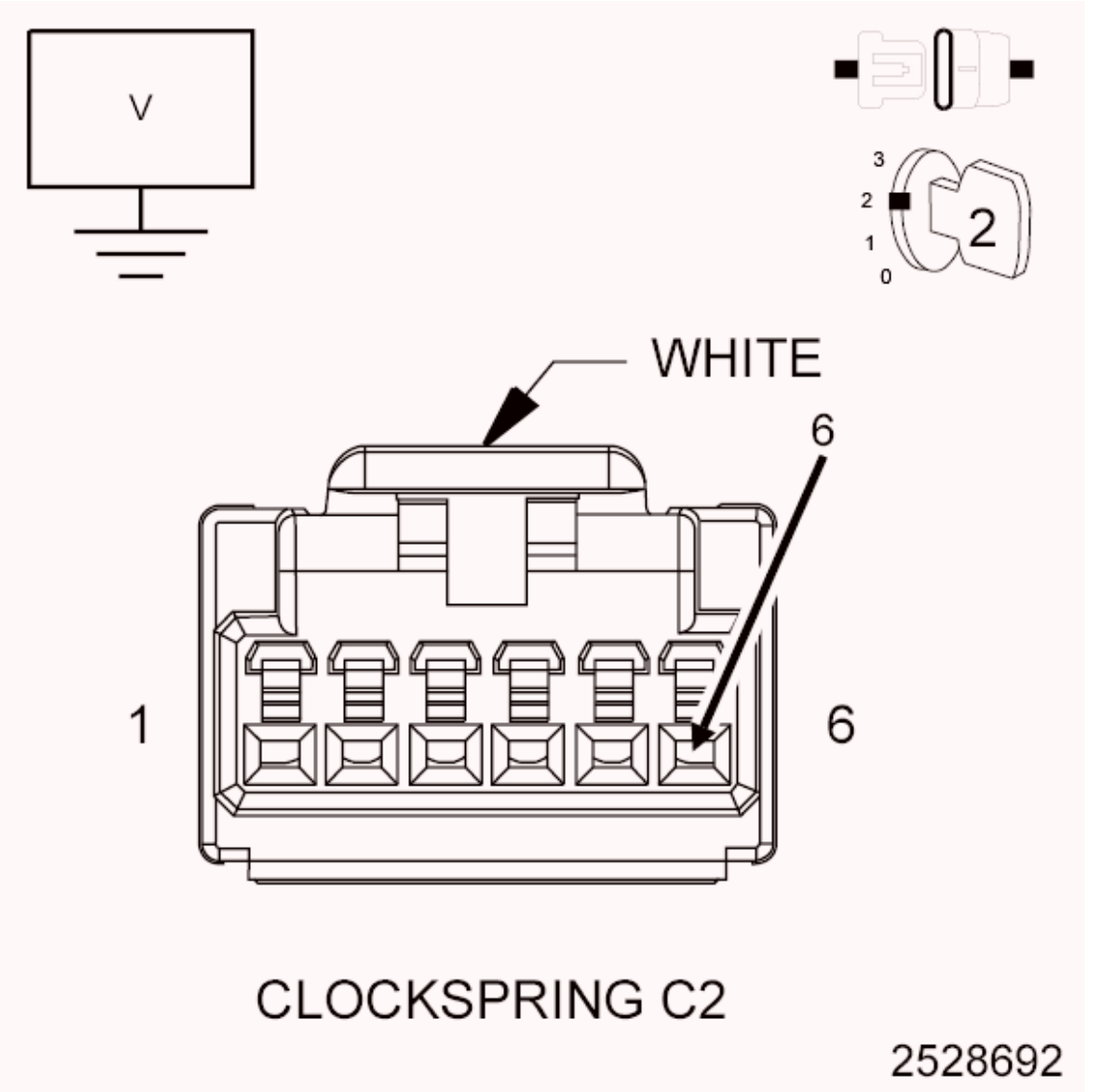

Fig. 8: Measuring Voltage On S/C Switch Sense Circuits In Clockspring Harness Connector
Courtesy of CHRYSLER GROUP, LLC

1. Disconnect the Clockspring C2 harness connector in accordance with the Service Information.
2. Turn the ignition on.
3. Measure the voltage on the (V37) and (V38) S/C Switch Sense circuits in the Clockspring C2 harness connector.

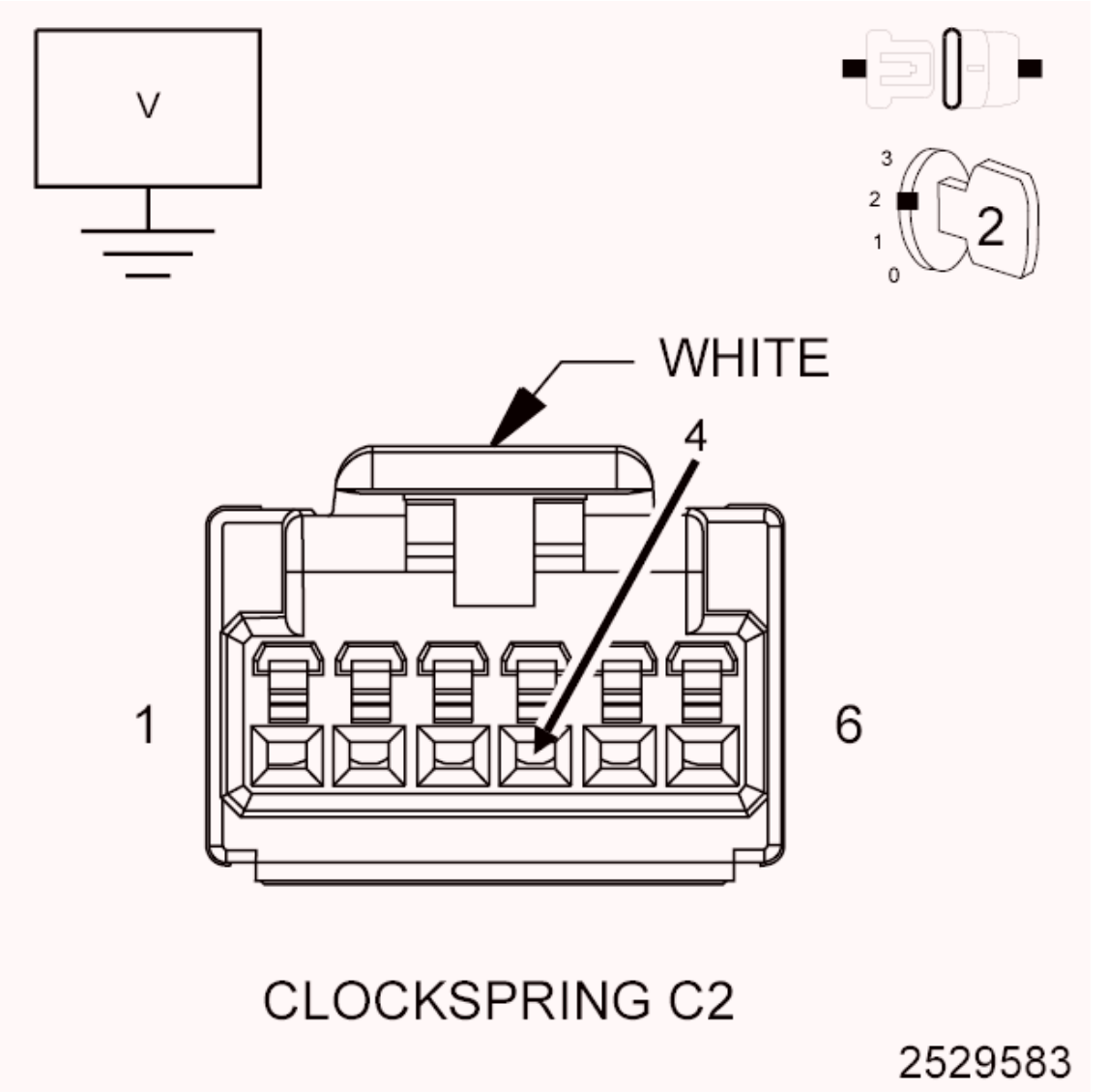

Fig. 9: Measuring Voltage On S/C Switch Sense Circuit In Clockspring C2 Harness Connector
Courtesy of CHRYSLER GROUP, LLC

Is the voltage reading above 5.2 volts for either circuit?

Yes

- Repair the short to voltage in the (V37) or (V38) S/C Switch Sense circuit.
- Perform the POWERTRAIN VERIFICATION TEST. Refer to **POWERTRAIN VERIFICATION TEST - 6.7L** .

No

- Go To 4.

4. **S/C SWITCH SENSE CIRCUIT SHORTED TO GROUND**

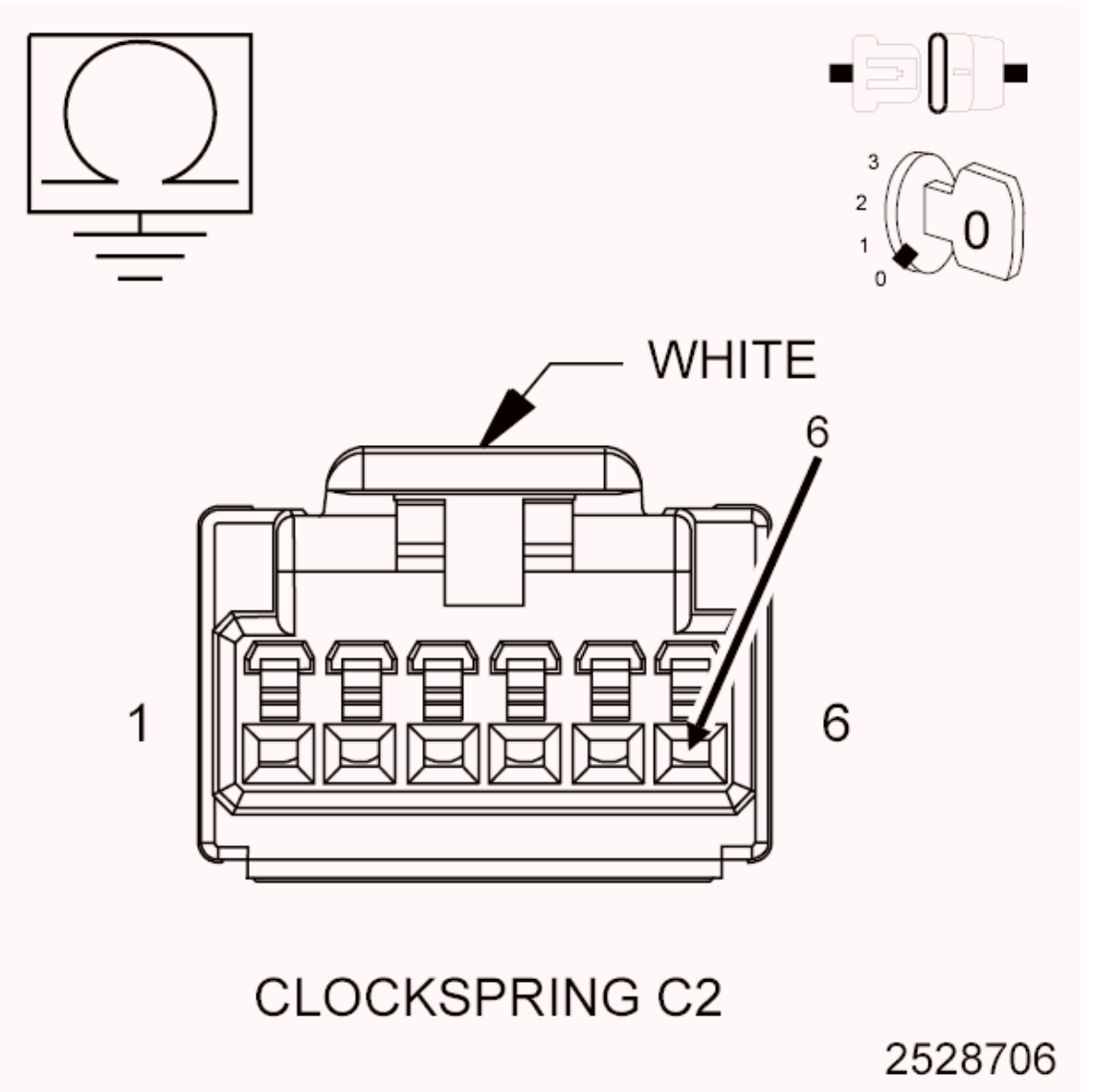

Fig. 10: Measuring Resistance Between Ground And S/C Switch Sense Circuit In SCM Harness Connector
Courtesy of CHRYSLER GROUP, LLC

1. Turn the ignition off.
2. Disconnect the PCM C2 harness connector.
3. Measure the resistance between ground and the (V37) S/C Switch Sense 1 circuit in the Clockspring C2 harness connector.

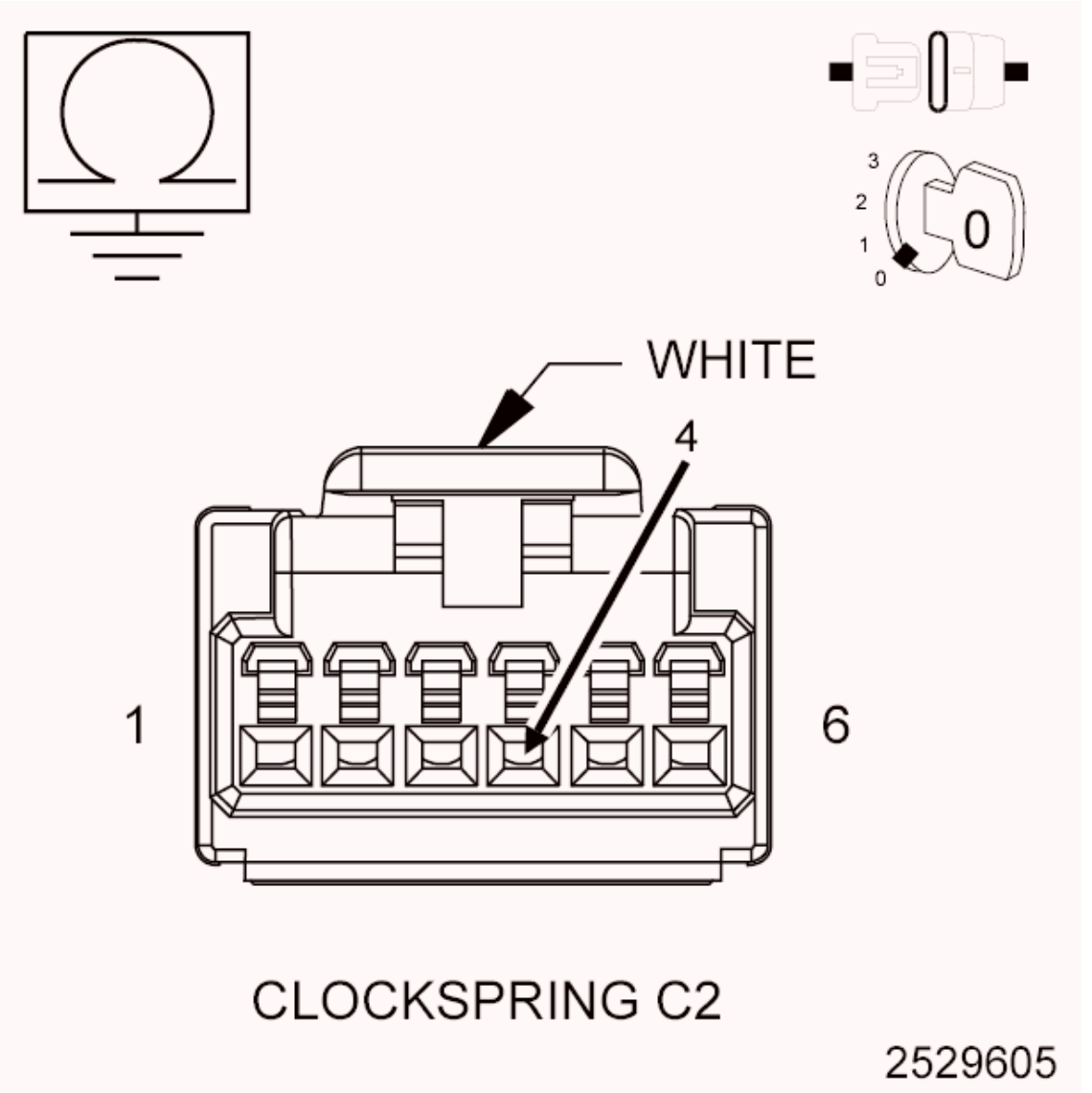

Fig. 11: Measuring Resistance Between Ground And (V72) S/C Switch Sense 2 Circuit In Clockspring C2 Harness Connector
Courtesy of CHRYSLER GROUP, LLC

4. Measure the resistance between ground and the (V38) S/C Switch Sense 2 circuit in the Clockspring C2 harness connector.

   Is the resistance above 10k Ohms?

   Yes

   - Go To 5.

   No

   - Repair the short to ground in the (V37) or (V38) S/C Switch Sense circuit.

- Perform the POWERTRAIN VERIFICATION TEST. Refer to **POWERTRAIN VERIFICATION TEST - 6.7L** .

5. **S/C SWITCH SENSE CIRCUIT SHORTED TO THE (V937) S/C SWITCH RETURN CIRCUIT**

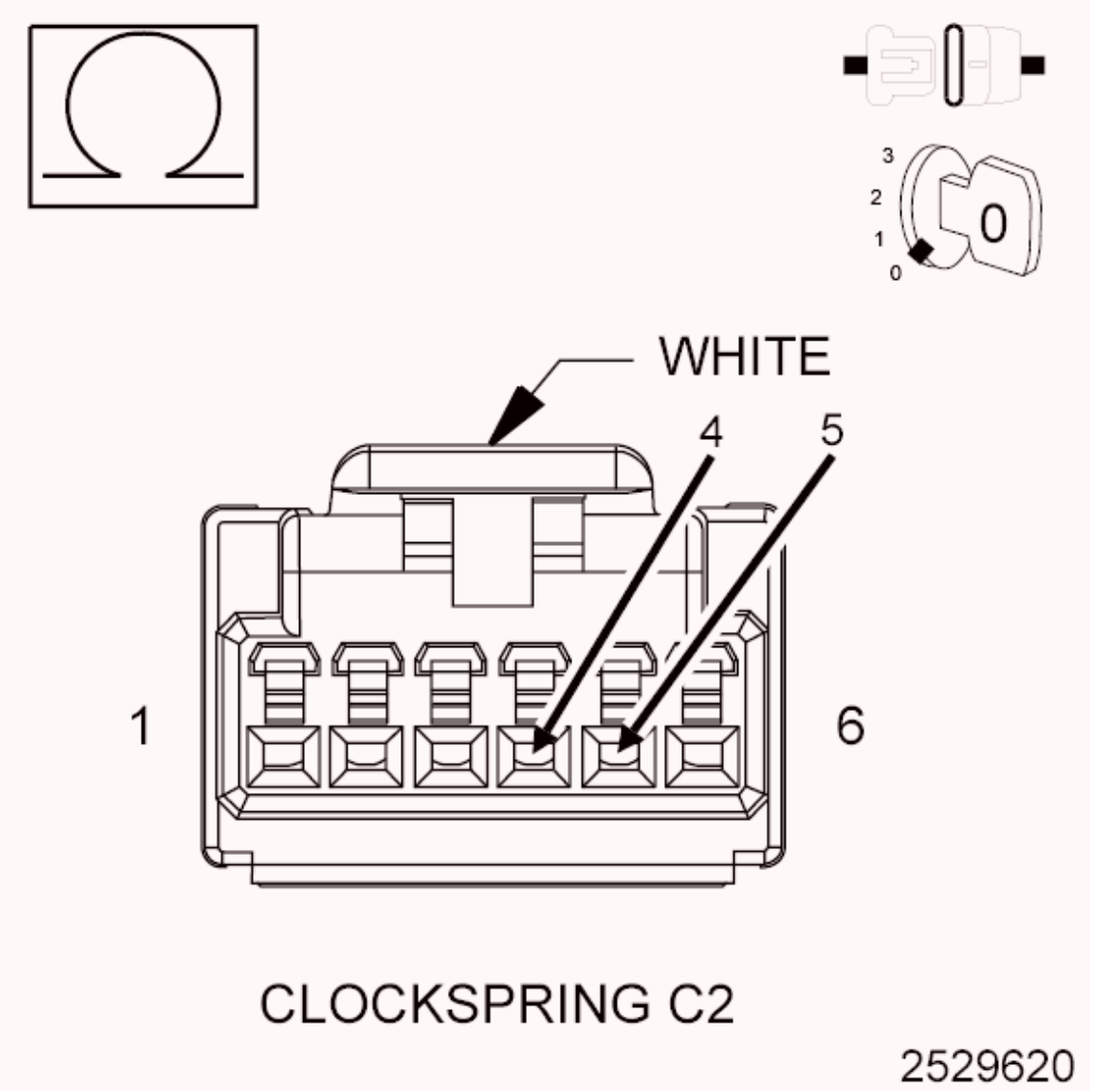

Fig. 12: Measuring Resistance Between S/C Switch Sense Circuit And S/C Switch Return Circuit In Clockspring C2 Harness Connector
Courtesy of CHRYSLER GROUP, LLC

1. Measure the resistance between the (V37) S/C Switch Sense circuit and the (V937) S/C Switch Return circuit in the Clockspring C2 harness connector.

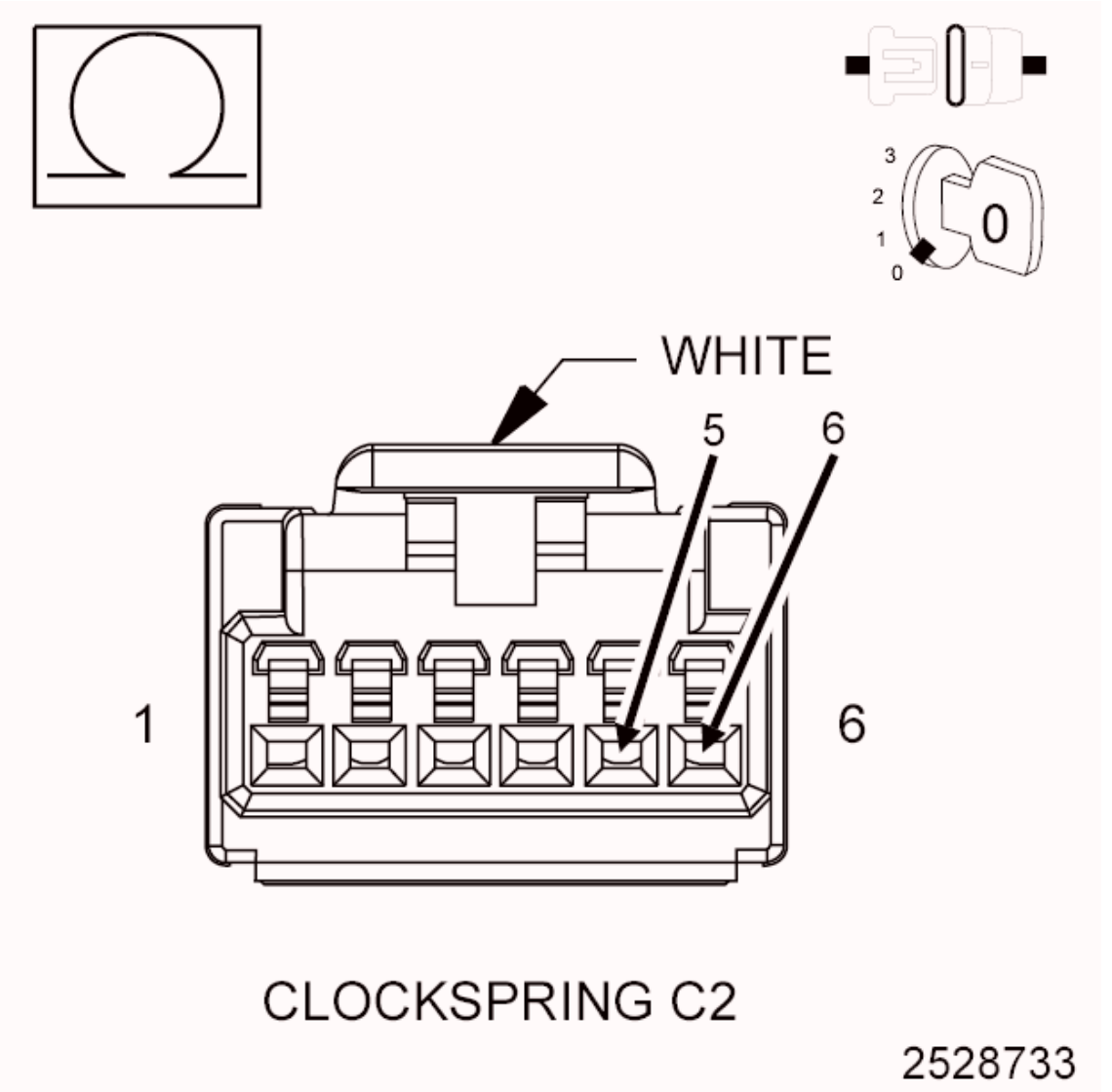

Fig. 13: Measuring Resistance Between S/C Switch Sense Circuit And S/C Switch Return Circuit In Clockspring C2 Harness Connector
Courtesy of CHRYSLER GROUP, LLC

2. Measure the resistance between the (V38) S/C Switch Sense circuit and the (V937) S/C Switch Return circuit in the Clockspring C2 harness connector.

   Is the resistance above 10k Ohms?

   Yes

   - Go To 6.

   No

   - Repair the short between the (V37) or (V38) S/C Switch Sense circuit and the (V937) Switch

Return circuit.

- Perform the POWERTRAIN VERIFICATION TEST. Refer to **POWERTRAIN VERIFICATION TEST - 6.7L** .

6. **CLOCKSPRING**
    1. Disconnect the Clockspring C8 harness connector.
    2. Measure the resistance of the (V37) S/C Switch Sense 1 circuit between the Clockspring C2 and C8 on the Clockspring.
    3. Measure the resistance of the (V38) S/C Switch Sense 2 circuit between the Clockspring C2 and C8 on the Clockspring.
    4. Measure the resistance of the (V937) Switch Return circuit between the Clockspring C2 and C8 on the Clockspring.

    Is the resistance above 5.0 Ohms for any of the circuits?

    Yes

    - Replace the Clockspring in accordance with the service information.
    - Perform the POWERTRAIN VERIFICATION TEST. Refer to **POWERTRAIN VERIFICATION TEST - 6.7L** .

    No

    - Go To 7.

7. **STEERING WHEEL JUMPER HARNESS**

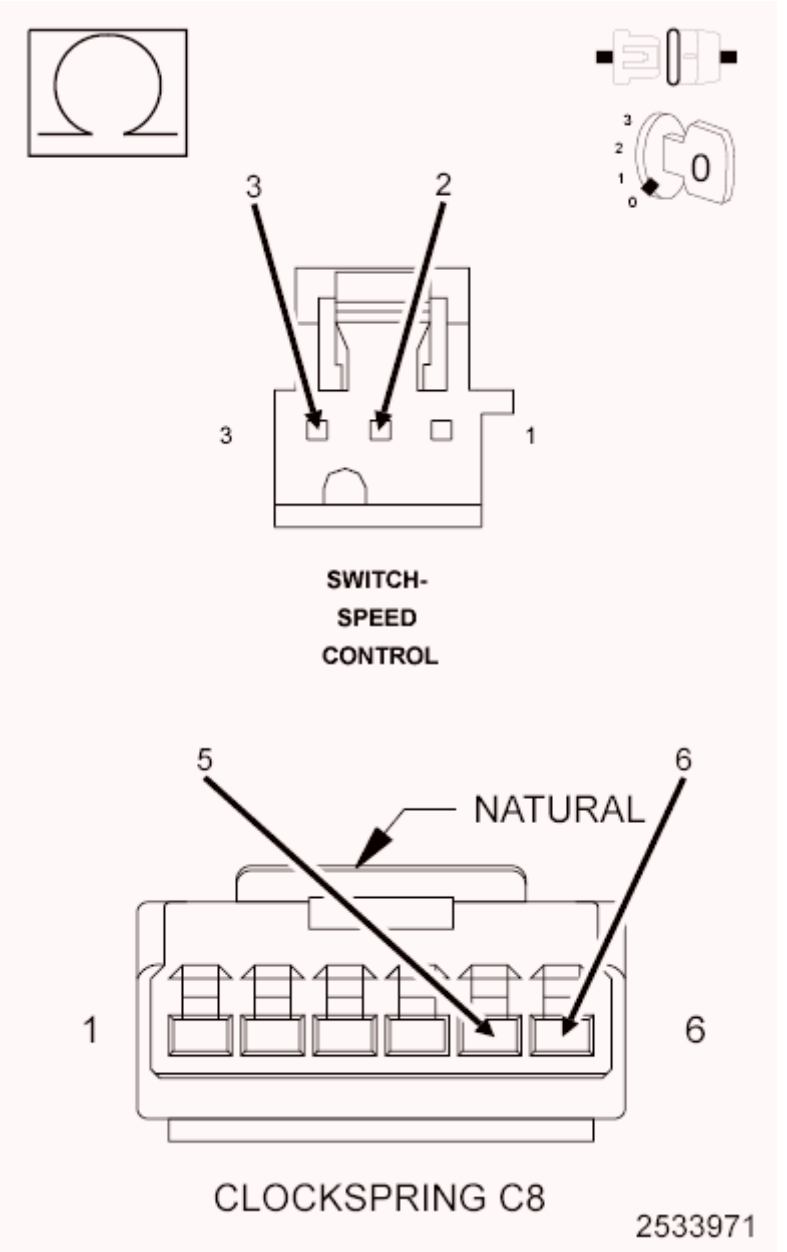

Fig. 14: Measuring Resistance Of S/C Switch Sense 1 Circuit Switch Return Circuit Between Clockspring Harness Connector And S/C Switch Harness Connector
Courtesy of CHRYSLER GROUP, LLC

1. Measure the resistance of the (V37) S/C Switch Sense 1 circuit between the Clockspring C8 harness connector and S/C Switch harness connector.
2. Measure the resistance of the (V38) S/C Switch Sense 2 circuit between the Clockspring C8 harness connector and S/C Switch harness connector.
3. Measure the resistance of the (V937) Switch Return circuit between the Clockspring C8 harness connector and S/C Switch harness connector.

   Is the resistance above 5.0 Ohms for any of the circuits?

Yes

- Replace the Steering Wheel Jumper harness in accordance with the service information.
- Perform the POWERTRAIN VERIFICATION TEST. Refer to **POWERTRAIN VERIFICATION TEST - 6.7L** .

No

- Go To 8.

8. **S/C SWITCH SENSE CIRCUIT OPEN**
   1. Reconnect the PCM C2 harness connector.
   2. Measure the resistance of the (V37) and (V38) S/C Switch Sense circuits between the Clockspring C2 harness connector and the PCM C2 harness connector.

      Is the resistance below 5.0 Ohms for each measurement?

      Yes

      - Go To 9.

      No

      - Repair the excessive resistance in the (V37) or (V38) S/C Switch Sense circuit.
      - Perform the POWERTRAIN VERIFICATION TEST. Refer to **POWERTRAIN VERIFICATION TEST - 6.7L** .
9. **(V937) S/C SWITCH RETURN CIRCUIT OPEN**
   1. Measure the resistance of the (V937) S/C Switch Return circuit between the Clockspring C2 harness connector and the PCM C2 harness connector.

      Is the resistance below 5.0 Ohms?

      Yes

      - Go To 10.

      No

      - Repair the excessive resistance in the (V937) S/C Switch Return circuit.
      - Perform the POWERTRAIN VERIFICATION TEST. Refer to **POWERTRAIN VERIFICATION TEST - 6.7L** .
10. **SPEED CONTROL SWITCH VOLTAGE VALUES**
    1. Reconnect the Speed Control Switch harness connector.
    2. Reconnect the Clockspring harness connectors.
    3. Reconnect the PCM C2 harness connector.

4. Back probe the (V37) S/C Switch Sense 1 circuit and the (V38) S/C Switch Sense 2 circuit at the PCM C2 harness connector.

CAUTION: Use only approved back probe tools when back probing a connector so as not to cause damage to the terminals or insulation of the connector. Damage to the terminals can cause poor terminal contact or retention. Damage to the insulation can introduce corrosion due to water infiltration.

5. Turn the ignition on.
6. Using the scan tool, monitor the S/C Switch voltage readings.
7. Using a Voltmeter check the voltage on the (V37) S/C Switch Sense 1 circuit and the (V38) S/C Switch Sense 2 circuit at the PCM C2 harness connector.
8. Monitor the Voltmeter.
9. Using the scan tool, monitor the S/C Switch voltage readings.

SWITCH POSITION	SWITCH No. 1 VOLTAGE VALUE	SWITCH No. 2 VOLTAGE VALUE
NO SWITCHES PRESSED	4.31 to 4.78 Volts	4.31 to 4.78 Volts
ON/OFF PRESSED	0.59 to 1.13 Volts	3.53 to 3.92 Volts
RES/ACCEL PRESSED	3.88 to 4.17 Volts	2.04 to 2.47 Volts
SET/DECEL PRESSED	3.16 to 3.56 Volts	1.17 to 1.56 Volts
CANCEL PRESSED	1.59 to 1.99 Volts	2.84 to 3.25 Volts

10. Compare the voltage readings on the Voltmeter to what the scan tool displayed.

    Are the voltage readings out of the listed specification and is there less than a 0.2 Volt difference between the Voltmeter switch values and the scan tool switch value?

    Yes

    - Replace the Speed Control Switch in accordance with the service information.
    - Perform the POWERTRAIN VERIFICATION TEST. Refer to **POWERTRAIN VERIFICATION TEST - 6.7L** .

    No

    - Go To 11.

11. **POWERTRAIN CONTROL MODULE (PCM)**
    1. Using the wiring diagram/schematic as a guide, inspect the wiring and connectors between the Speed Control Switch and the Powertrain Control Module (PCM).
    2. Look for any chafed, pierced, pinched or partially broken wires.
    3. Look for broken, bent, pushed out or corroded terminals. Verify that there is good pin to terminal

contact in the Switch and Powertrain Control Module connectors.

4. Perform any Technical Service Bulletins that may apply.

   Were there any problems found?

   Yes

   - Repair as necessary.
   - Perform the POWERTRAIN VERIFICATION TEST. Refer to **POWERTRAIN VERIFICATION TEST - 6.7L** .

   No

   - Replace and program the Powertrain Control Module in accordance with the service information. Refer to **PCM - REMOVAL** , also see **PCM/ECM / TCM PROGRAMMING** .
   - Perform the POWERTRAIN VERIFICATION TEST. Refer to **POWERTRAIN VERIFICATION TEST - 6.7L** .

P1C54-SCR NOX CATALYST MISSING

For a complete wiring diagram, **refer to appropriate SYSTEM WIRING DIAGRAMS article** .

THEORY OF OPERATION

The aftertreatment system is equipped with two NOx Sensors and modules. The upstream NOx Sensor 1/1 is located before the SCR Catalyst and is permanently connected to a corresponding NOx Sensor Module mounted on the right frame rail. The downstream NOx Sensor 1/2 is located at the outlet of the SCR Catalyst and is permanently connected to a corresponding NOx Sensor Module also mounted on the right frame rail. The NOx Sensors and NOx Sensor Modules are calibrated to each other and must be replaced as an assembly. The two NOx Sensor and Module assemblies are not interchangeable. The NOx Sensor Modules are smart devices and communicate with the Powertrain Control Module (PCM) over the J1939 Data Link. The NOx Sensor Modules perform their own internal diagnostics and report malfunctions back to the PCM. The NOx Sensors are used to monitor the efficiency of the SCR Catalyst and dosing system. The Powertrain Control Module compares the values of the NOx Sensors to monitor the efficiency of the SCR Catalyst and dosing system. The PCM will illuminate the MIL lamp immediately after the monitor runs and fails.

WHEN MONITORED:

NOx Sensor data is gathered over varying engine speeds and loads. When enough data has been gathered, the monitor will run, make a pass/fail decision, and begin to gather data again.

SET CONDITION:

The PCM determines that the NOx conversion across the SCR Catalyst is below expectations.

POSSIBLE CAUSES

Possible Causes
DEGRADED, DILUTED, OR INCORRECT DIESEL EXHAUST FLUID
DIESEL EXHAUST FLUID DEPOSITS IN THE DECOMPOSITION TUBE
EXHAUST SYSTEM LEAKS
MALFUNCTIONING DIESEL EXHAUST FLUID DOSING SYSTEM
MALFUNCTIONING SCR CATALYST

Always perform the Pre-Diagnostic Troubleshooting procedure before proceeding. Refer to PRE-DIAGNOSTIC TROUBLESHOOTING PROCEDURE - 6.7L .

DIAGNOSTIC TEST

1. **OTHER DEF SYSTEM DTCS PRESENT**
    1. Ignition on, engine not running.
    2. With the scan tool, View DTCs.

    Are there any NOx Sensor or DEF System DTCs active?

    Yes

    - Repair all other DTCs before proceeding with this test procedure.

    No

    - Go To 2.
2. **CHECK THE DIESEL EXHAUST FLUID**
    1. Turn the ignition off.

    NOTE: Repair any fuel, emissions, or DEF system component DTCs before continuing with this diagnostic procedure.

    2. Remove the DEF Filter cap and collect a sample of diesel exhaust fluid from the system.
    3. Visually inspect the fluid for signs of contamination or debris.
    4. Test the quality of the fluid using litmus paper (supplied by parts) or by using an SPX DEF/UREA Refractometer 94-F-00K-108-456 or equivalent.

    NOTE: The diesel exhaust fluid should register approximately 9 ph with the litmus paper and 32.5 percent using a refractometer.

    Is the diesel exhaust fluid quality within specification and free of debris and contamination?

    Yes

    - Go To 3.

No

- Drain the diesel exhaust fluid from the tank and fill the system. If the fluid is contaminated, follow the cleaning procedure. Refer to **TANK, DIESEL EXHAUST FLUID, CLEANING** .
- Perform the POWERTRAIN VERIFICATION TEST. Refer to **POWERTRAIN VERIFICATION TEST - 6.7L** .

3. **CHECK THE DIESEL EXHAUST FLUID SYSTEM FOR EXTERNAL LEAKS**
   1. Visually inspect the DEF system for signs of external leaks.

      NOTE: Diesel exhaust fluid will form white deposits around leaky fittings.

      Were any leaks found?

      Yes

      - Go To 4.

      No

      - Perform the appropriate repair.
      - Perform the POWERTRAIN VERIFICATION TEST. Refer to **POWERTRAIN VERIFICATION TEST - 6.7L** .

4. **CHECK THE EXHAUST SYSTEM FOR LEAKS**
   1. Visually inspect the exhaust system between the Turbocharger outlet and the SCR Catalyst outlet for signs of loose or leaking connections or damaged components

      Were any leaks or damage found?

      Yes

      - Perform the appropriate repair in accordance with the service information.
      - Perform the POWERTRAIN VERIFICATION TEST. Refer to **POWERTRAIN VERIFICATION TEST - 6.7L** .

      No

      - Go To 5.

5. **CHECK THE DECOMPOSITION TUBE FOR DIESEL EXHAUST FLUID DEPOSITS**
   1. Remove the DEF Injector. Refer to **INJECTOR, DIESEL EXHAUST FLUID, REMOVAL** .
   2. Visually inspect the Decomposition Tube for signs of diesel exhaust fluid crystals or deposits.

      Were any deposits found?

Yes

- Clean the deposits from the Decomposition Tube.
- Perform the POWERTRAIN VERIFICATION TEST. Refer to **POWERTRAIN VERIFICATION TEST - 6.7L** .

No

- Go To 6.

6. **CHECK THE DEF INJECTOR**
   1. Reconnect the DEF Injector harness connector.
   2. Place the DEF Injector in a container to capture the fluid sprayed.
   3. Turn the ignition on.
   4. With the scan tool, navigate to Systems Tests and actuate the Diesel Exhaust Fluid Doser Pump Override Test.

      NOTE: **This Test will run for six minutes before timing out. The amount of flow may fluctuate through out the test, therefore the test must be allowed to run completely in order for the results to be accurate. The fluid should spray out as a mist. There should be no dripping from the holes in the DEF Injector at any time during the duration of the test procedure.**

   5. Measure the amount of fluid sprayed after the test times out.

      Does the fluid sprayed measure between 85 ml and 115 ml?

      Yes

      - Replace the SCR Catalyst in accordance with the service information. Refer to **CATALYST, SELECTIVE CATALYTIC REDUCTION (SCR), REMOVAL** .
      - Perform the POWERTRAIN VERIFICATION TEST. Refer to **POWERTRAIN VERIFICATION TEST - 6.7L** .

      No

      - Replace the DEF Injector in accordance with the service information. Refer to **INJECTOR, DIESEL EXHAUST FLUID, REMOVAL** .
      - Perform the POWERTRAIN VERIFICATION TEST. Refer to **POWERTRAIN VERIFICATION TEST - 6.7L** .

P1C55-NOX SENSOR INTERMITTENT - BANK 1 SENSOR 1

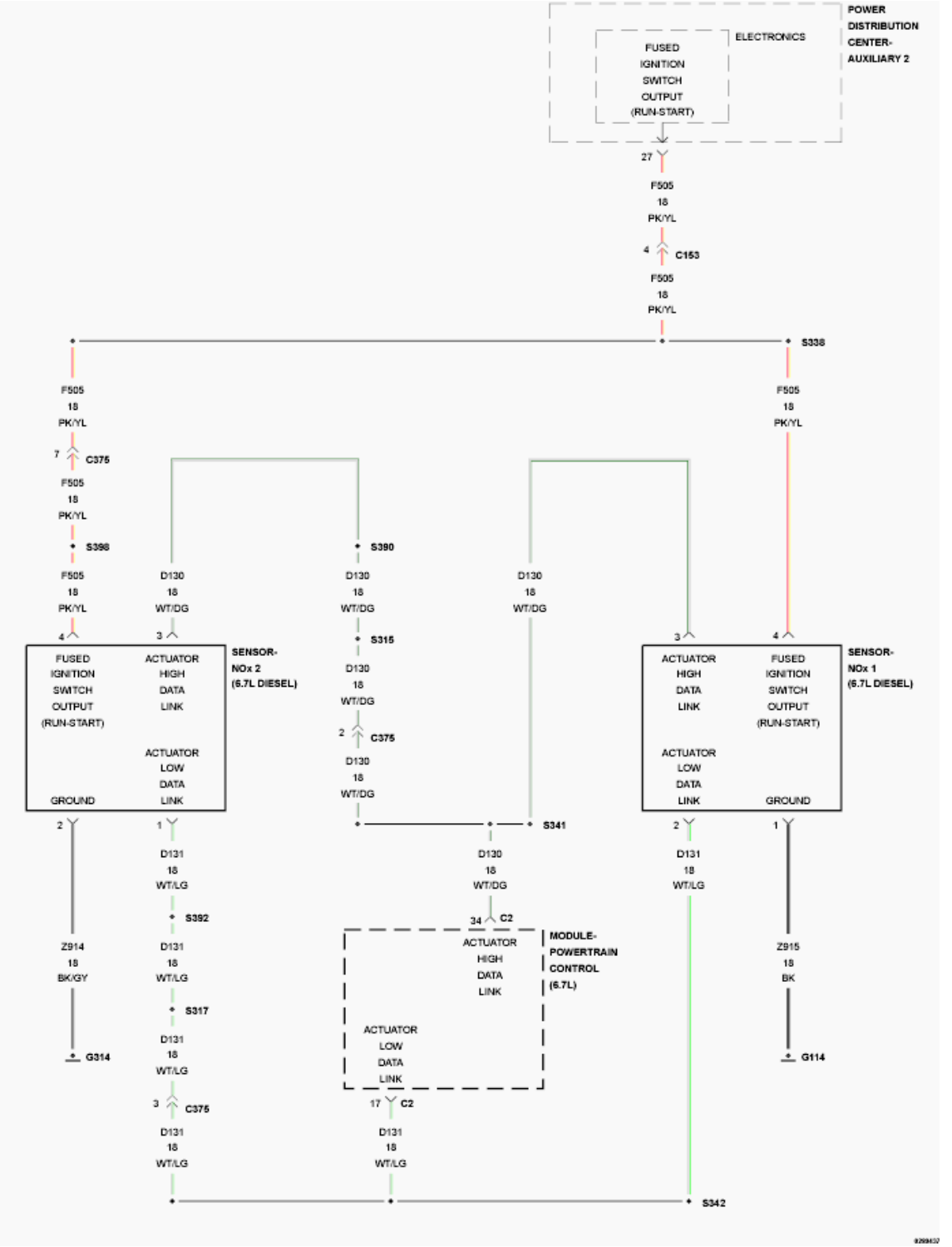

Fig. 15: NOx Sensors Wiring Diagram
Courtesy of CHRYSLER GROUP, LLC

For a complete wiring diagram, **refer to appropriate SYSTEM WIRING DIAGRAMS article** .

THEORY OF OPERATION

The aftertreatment system is equipped with two NOx Sensors and modules. The upstream NOx Sensor 1/1 is located before the SCR Catalyst and is permanently connected to a corresponding NOx Sensor Module mounted on the right frame rail. The downstream NOx Sensor 1/2 is located at the outlet of the SCR Catalyst and is permanently connected to a corresponding NOx Sensor Module also mounted on the right frame rail. The NOx Sensors and NOx Sensor Modules are calibrated to each other and must be replaced as an assembly. The two NOx Sensor and Module assemblies are not interchangeable. The NOx Sensor Modules are smart devices and communicate with the Powertrain Control Module (PCM) over the J1939 Data Link. The NOx Sensor Modules perform their own internal diagnostics and report malfunctions back to the PCM. The NOx Sensors are used to monitor the efficiency of the SCR Catalyst and dosing system. The PCM will illuminate the MIL lamp immediately after the monitor runs and fails. The PCM will turn off the MIL Lamp immediately after the monitor runs and passes.

WHEN MONITORED:

When the engine is running and the exhaust temperature at NOx Sensor 1/1 is above 150°C (302°F).

SET CONDITION:

The PCM has detected that the NOx Sensor 1/1 reading is higher or lower than what is expected for the engine operating conditions.

POSSIBLE CAUSES

Possible Causes
ENGINE MISFIRE
EXCESSIVE OIL CONSUMPTION
EGR SYSTEM LEAK
NOx SENSOR 1/1

Always perform the Pre-Diagnostic Troubleshooting procedure before proceeding. Refer to PRE-DIAGNOSTIC TROUBLESHOOTING PROCEDURE - 6.7L .

DIAGNOSTIC TEST

1. **OTHER DTCS**
    1. Ignition on, engine not running.
    2. With the scan tool check for active DTCs.

    Are any of the P2202, P2209, P220A, U029D DTCs active?

    Yes

    - Repair the other active DTCs before continuing with this diagnostic procedure.

    No

- Go To 2.

2. **CHECK FOR CYLINDER MISFIRE**
   1. Start the engine.
   2. With the scan tool, navigate to Systems Tests, and perform the injector Kill system test.

      Were any cylinders found to be faulty or low?

      Yes

      - Perform the CHECKING ENGINE MISFIRE / RUNS ROUGH / PERFORMANCE TEST diagnostic procedure. Refer to **DIAGNOSIS AND TESTING, 6.7L** .
      - Perform the POWERTRAIN VERIFICATION TEST. Refer to **POWERTRAIN VERIFICATION TEST - 6.7L** .

      No

      - Go To 3.

3. **CHECK FOR EXCESSIVE ENGINE OIL BEING INTRODUCED INTO THE AFTERTREATMENT SYSTEM**
   1. Turn the ignition off.
   2. Remove the turbocharger outlet and inspect for signs of oil, fuel or moisture being introduced into the Aftertreatment system from the engine.

      Was engine oil, fuel or moisture found in the turbocharger exhaust outlet?

      Yes

      - Locate the cause of possible diesel fuel or engine oil being carried from the engine into the exhaust system. Inspect the SCR Catalyst for possible damage.
      - Perform the POWERTRAIN VERIFICATION TEST. Refer to **POWERTRAIN VERIFICATION TEST - 6.7L** .

      No

      - Go To 4.

4. **CHECK THE EGR SYSTEM FOR LEAKS**
   1. Visually inspect the entire EGR system for signs soot indicating a leak.

      Is there signs of an EGR system leak?

      Yes

      - Repair the EGR system leak in accordance with the service information.
      - Perform the POWERTRAIN VERIFICATION TEST. Refer to **POWERTRAIN**

VERIFICATION TEST - 6.7L .

No

- Replace the NOx Sensor 1/1 in accordance with the service information. Refer to **SENSOR, NOX, REMOVAL** .
- Perform the POWERTRAIN VERIFICATION TEST. Refer to **POWERTRAIN VERIFICATION TEST - 6.7L** .

P1C56-NOX SENSOR INTERMITTENT - BANK 1 SENSOR 2

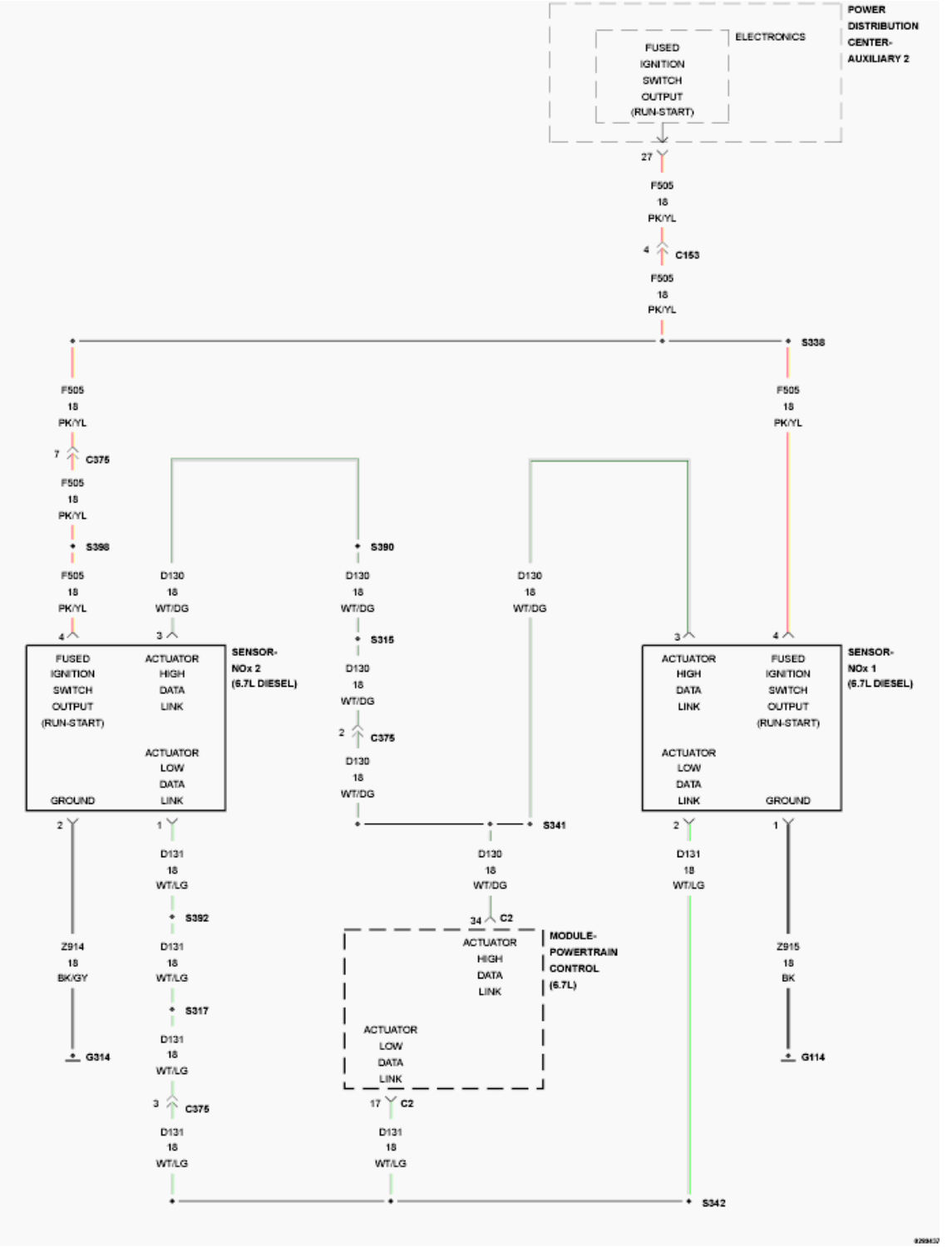

Fig. 16: NOx Sensors Wiring Diagram
Courtesy of CHRYSLER GROUP, LLC

For a complete wiring diagram, **refer to appropriate SYSTEM WIRING DIAGRAMS article** .

THEORY OF OPERATION

The aftertreatment system is equipped with two NOx Sensors and modules. The Upstream NOx Sensor 1/1 is located before the SCR Catalyst and is permanently connected to a corresponding NOx Sensor Module mounted on the right frame rail. The downstream NOx Sensor 1/2 is located at the outlet of the SCR Catalyst and is permanently connected to a corresponding NOx Sensor Module also mounted on the right frame rail. The NOx Sensors and NOx Sensor Modules are calibrated to each other and must be replaced as an assembly. The two NOx Sensor and Module assemblies are not interchangeable. The NOx Sensor Modules are smart devices and communicate with the Powertrain Control Module (PCM) over the J1939 Data Link. The NOx Sensor Modules perform their own internal diagnostics and report malfunctions back to the PCM. The NOx Sensors are used to monitor the efficiency of the SCR Catalyst and dosing system. The PCM will illuminate the MIL lamp immediately after the monitor runs and fails. The PCM will turn off the MIL Lamp immediately after the monitor runs and passes.

WHEN MONITORED:

When the engine is running and the exhaust temperature at NOx Sensor 1/2 is above 150°C (302°F).

SET CONDITION:

The PCM has detected that the NOx Sensor 1/2 reading is higher or lower than what is expected for the engine operating conditions.

POSSIBLE CAUSES

Possible Causes
DIESEL EXHAUST FLUID DEPOSITS IN THE DECOMPOSITION TUBE
EXHAUST SYSTEM LEAK
ENGINE MISFIRE
EXCESSIVE OIL CONSUMPTION
EGR SYSTEM LEAK
NOx SENSOR 1/2

Always perform the Pre-Diagnostic Troubleshooting procedure before proceeding. Refer to PRE-DIAGNOSTIC TROUBLESHOOTING PROCEDURE - 6.7L .

DIAGNOSTIC TEST

1. **OTHER DTCS**
    1. Ignition on, engine not running.
    2. With the scan tool check for active DTCs.

       Are any of the P2119 P0102 P229F, U029E, U059F DTCs active?

       Yes

       - Repair the other active DTCs before continuing with this diagnostic procedure.

No

- Go To 2.

2. **CHECK FOR DEPOSITS IN THE DECOMPOSITION TUBE**
   1. Turn the ignition off.
   2. Remove the DEF Injector from the Decomp Tube. Refer to **INJECTOR, DIESEL EXHAUST FLUID, REMOVAL** .
   3. Visually inspect the Decomp Tube for diesel exhaust fluid deposits.

      Were any deposits found?

      Yes

      - Clean the deposits from the Decomp Tube. Use a non-metallic abrasive pad to clean the remaining small particles from the decomp tube.
      - Perform the POWERTRAIN VERIFICATION TEST. Refer to **POWERTRAIN VERIFICATION TEST - 6.7L** .

      No

      - Go To 3.

3. **CHECK THE EXHAUST SYSTEM FOR LEAKS**
   1. Visually inspect the entire exhaust system for signs of a leak.

      Were any exhaust leaks found?

      Yes

      - Perform the appropriate repair.
      - Perform the POWERTRAIN VERIFICATION TEST. Refer to **POWERTRAIN VERIFICATION TEST - 6.7L** .

      No

      - Go To 4.

4. **CHECK FOR CYLINDER MISFIRE**
   1. Start the engine.
   2. With the scan tool, navigate to Systems Tests, and perform the Injector Kill system test.

      Were any cylinders found to be faulty or low?

      Yes

      - Perform the CHECKING ENGINE MISFIRE / RUNS ROUGH / PERFORMANCE TEST

diagnostic procedure. Refer to **DIAGNOSIS AND TESTING, 6.7L** .

- Perform the POWERTRAIN VERIFICATION TEST. Refer to **POWERTRAIN VERIFICATION TEST - 6.7L** .

No

- Go To 5.

5. **CHECK FOR EXCESSIVE ENGINE OIL BEING INTRODUCED INTO THE AFTERTREATMENT SYSTEM**
   1. Turn the ignition off.
   2. Remove the turbocharger outlet and inspect for signs of oil, fuel or moisture being introduced into the Aftertreatment system from the engine.

      Was engine oil, fuel or moisture found in the turbocharger exhaust outlet?

      Yes

      - Locate the cause of possible diesel fuel or engine oil being carried from the engine into the exhaust system. Inspect the SCR Catalyst for possible damage.
      - Perform the POWERTRAIN VERIFICATION TEST. Refer to **POWERTRAIN VERIFICATION TEST - 6.7L** .

      No

      - Go To 6.

6. **CHECK THE EGR SYSTEM FOR LEAKS**
   1. Visually inspect the entire EGR system for signs soot indicating a leak.

      Is there signs of an EGR system leak?

      Yes

      - Repair the EGR system leak in accordance with the service information.
      - Perform the POWERTRAIN VERIFICATION TEST. Refer to **POWERTRAIN VERIFICATION TEST - 6.7L** .

      No

      - Replace the NOx Sensor 1/2 in accordance with the service information. Refer to **SENSOR, NOX, REMOVAL** .
      - Perform the POWERTRAIN VERIFICATION TEST. Refer to **POWERTRAIN VERIFICATION TEST - 6.7L** .

P1C57-REDUCTANT CONTROL MODULE SHUTDOWN - CRASH EVENT DETECTED

For a complete wiring diagram, **refer to appropriate SYSTEM WIRING DIAGRAMS article** .

WHEN MONITORED:

With the ignition on.

SET CONDITION:

The Airbag Control Module reported a crash event to the Powertrain Control Module (PCM).

POSSIBLE CAUSES

Possible Causes
A CRASH EVENT OCCURED

Always perform the Pre-Diagnostic Troubleshooting procedure before proceeding. Refer to PRE-DIAGNOSTIC TROUBLESHOOTING PROCEDURE - 6.7L .

DIAGNOSTIC TEST

1. **ACTIVE DTC**
    1. Ignition on, engine not running.
    2. With the scan tool check for active DTCs.

    Is the DTC active?

    Yes

    - Perform the appropriate repairs and erase the DTC.
    - Perform the POWERTRAIN VERIFICATION TEST. Refer to **POWERTRAIN VERIFICATION TEST - 6.7L** .

    No

    - Perform the INTERMITTENT CONDITION diagnostic procedure. Refer to **INTERMITTENT CONDITION - 6.7L** .

P1C6F-(DIESEL EXHAUST FLUID) REDUCTANT LINE HEATER RELAY CIRCUIT PERFORMANCE

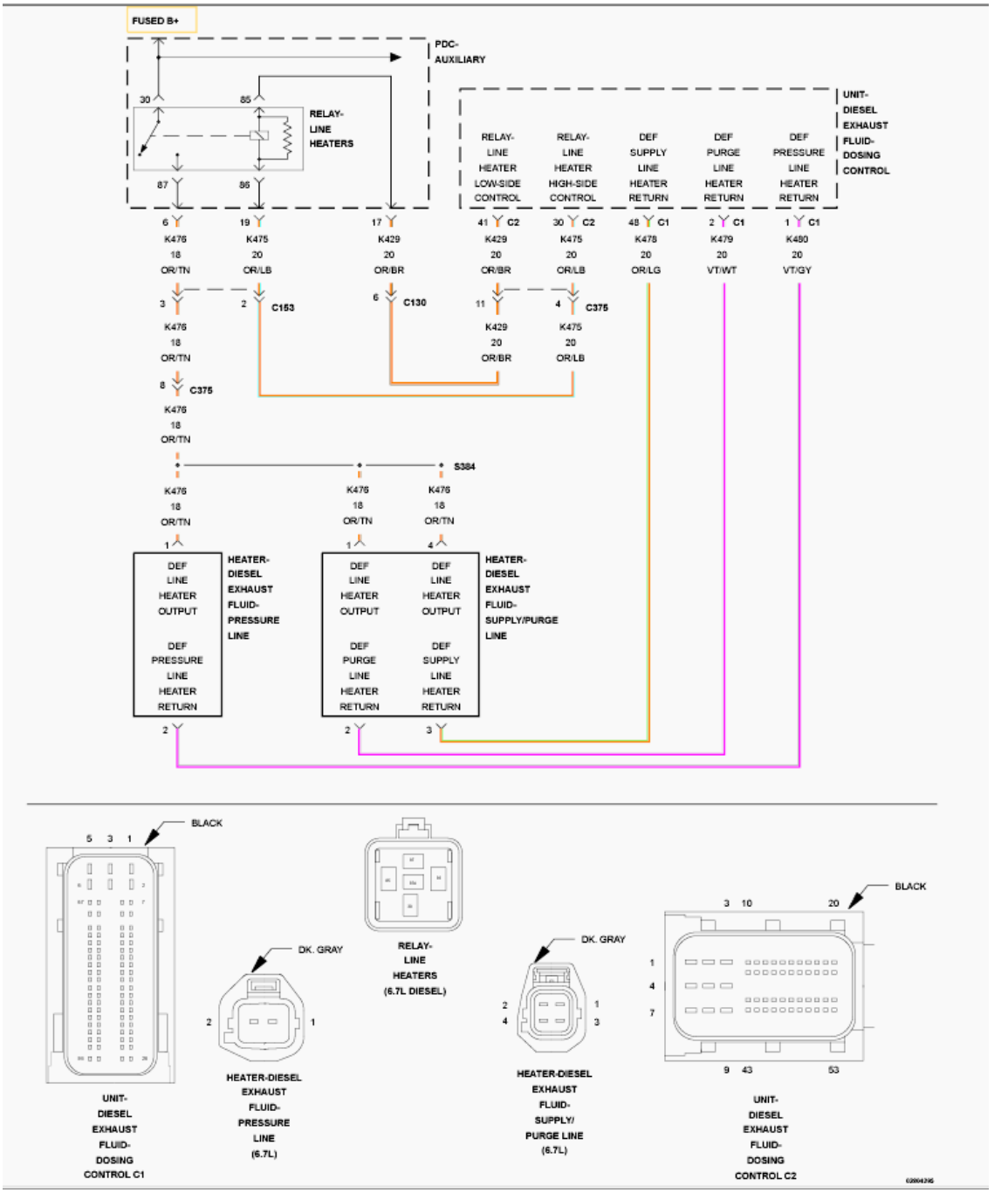

Fig. 17: Diesel Exhaust Fluid Reductant Line Heater Relay Control Circuit Wiring Diagram
Courtesy of CHRYSLER GROUP, LLC

For a complete wiring diagram, **refer to appropriate SYSTEM WIRING DIAGRAMS article** .

THEORY OF OPERATION

Each of the Diesel Exhaust Fluid (DEF) system hoses has a built in heater to warm the fluid in the lines. The three line heaters share a common power supply via the DEF Line Heater Relay which is controlled by the DEF Dosing Control Unit. The DEF Dosing Control Unit controls the heaters individually through the line heater

return circuits. The three line heater circuits are monitored at the return circuit. The DEF Dosing Unit Module will illuminate the MIL light via the PCM immediately after the diagnostics runs and fails and the line heaters will be disabled. The DEF Dosing Control Unit will turn off the MIL light via the PCM immediately after the monitor runs and passes.

WHEN MONITORED:

This monitor runs at key off.

SET CONDITION:

Battery voltage has been detected at the DEF Line Heaters when the Line Heater Relay is commanded off.

POSSIBLE CAUSES

Possible Causes
LINE HEATER RELAY STUCK ON
(K476) DEF LINE HEATER OUTPUT CIRCUIT SHORTED TO VOLTAGE

Always perform the Pre-Diagnostic Troubleshooting procedure before proceeding. Refer to PRE-DIAGNOSTIC TROUBLESHOOTING PROCEDURE - 6.7L .

DIAGNOSTIC TEST

1. **ACTIVE DTC**
    1. Turn the ignition on, engine not running.
    2. With the scan tool check for active DTCs.

    Is the DTC active?

    Yes

    - Go To 2.

    No

    - Perform the INTERMITTENT CONDITION diagnostic procedure. Refer to **INTERMITTENT CONDITION - 6.7L** .
2. **CHECK THE LINE HEATER RELAY**
    1. Remove the Line Heater Relay.
    2. Turn the ignition off for one minute.
    3. Turn the ignition on, engine not running.
    4. With the scan tool check for active DTCs.

    Is the DTC active?

Yes

- Repair the (K476) DEF Line Heater Output circuit for a short to voltage.
- Perform the POWERTRAIN VERIFICATION TEST. Refer to **POWERTRAIN VERIFICATION TEST - 6.7L** .

No

- Replace the Line Heater Relay in accordance with the service information.
- Perform the POWERTRAIN VERIFICATION TEST. Refer to **POWERTRAIN VERIFICATION TEST - 6.7L** .

P1C70-SCR ERROR DETECTED - ENGINE DISABLED

For a complete wiring diagram, **refer to appropriate SYSTEM WIRING DIAGRAMS article** .

THEORY OF OPERATION

The Diesel Exhaust Fluid (DEF) system holds a total of eight gallons of fluid. There are a series of three warning levels to indicate to the customer when the fluid is low or incorrect. The driver warning and inducement strategy for a low fluid condition is as follows: The first warning will occur when the tank level is at approximately three gallons. The customer will here a chime and get an EVIC message reading "LOW DEF REFILL SOON". The second warning level will occur when the tank level is at approximately two gallons. The customer will here a chime and get an EVIC message reading "REFILL DEF ENGINE WILL NOT RESTART IN XXX MILES". If the message is ignored until the tank is empty, the vehicle will not start. The customer will here a chime and get an EVIC message reading "REFILL DEF ENGINE WILL NOT START". The system will arrive at this level with approximately 0.7 gallon of fluid left in the tank. **The vehicle will not start until a minimum of two and a half gallons of approved Diesel Exhaust Fluid is added to the tank** .

WHEN MONITORED:

Continuously with the engine running.

SET CONDITION:

The Powertrain Control Module (PCM) detects that the engine has been operated for an extended period of time with critical Selective Catalytic Reduction (SCR) faults active, and no repair action has been taken. This amount of time will vary, depending on which SCR faults are active.

POSSIBLE CAUSES

Possible Causes
DIESEL EXHAUST FLUID TANK EMPTY

Always perform the Pre-Diagnostic Troubleshooting procedure before proceeding. Refer to PRE-DIAGNOSTIC TROUBLESHOOTING PROCEDURE - 6.7L .

DIAGNOSTIC TEST

1. **ACTIVE DTC**
    1. Ignition on, engine not running.
    2. With the scan tool check for active DTCs.

       Is the DTC active?

       Yes

       - If this DTC is present, the DEF Tank is Empty causing the starter to be disabled. **A minimum of two and a half gallons of approved Diesel Exhaust Fluid** must be added for engine to be started.
       - Perform the POWERTRAIN VERIFICATION TEST. Refer to **POWERTRAIN VERIFICATION TEST - 6.7L** .

       No

       - Perform the INTERMITTENT CONDITION diagnostic procedure. Refer to **INTERMITTENT CONDITION - 6.7L** .

P2002-DIESEL PARTICULATE FILTER EFFICIENCY BELOW THRESHOLD

For a complete wiring diagram, **refer to appropriate SYSTEM WIRING DIAGRAMS article** .

THEORY OF OPERATION

The Diesel Particulate Filter is designed to physically filter soot and to eliminate hydrocarbons from the engine exhaust gases through catalyst reactions in the exhaust stream. Federal law requires that the filter's efficiency be monitored for signs of degradation that would compromise the efficiency of the filter. The Powertrain Control Module (PCM) monitors the efficiency of the Diesel Particulate Filter soot level using data received from the Exhaust Differential Pressure Sensor, which monitors the restriction across the Diesel Particulate Filter. The PCM monitors the restriction in the Diesel Particulate Filter at various engine speeds/loads and will set the fault if the restriction is below a calibrated threshold minimum value. The PCM will illuminate the MIL light Immediately when the diagnostic runs and fails in two consecutive drive cycles. The PCM will turn off the MIL light immediately after the diagnostic runs and passes in four consecutive drive cycles.

WHEN MONITORED:

This diagnostic runs when the engine is running and after an active regeneration of the Diesel Particulate Filter has completed.

SET CONDITION:

The Powertrain Control Module (PCM) will set the fault if the delta pressure signal goes below a calibrated threshold for a calibrated time.

POSSIBLE CAUSES

Possible Causes
FAILED DIESEL PARTICULATE FILTER
EXHAUST SYSTEM LEAK
INTAKE AIR SYSTEM LEAK
EGR LEAK
FAILED EXHAUST DIFFERENTIAL PRESSURE SENSOR
REVERSED OR LEAKING DIESEL PARTICULATE FILTER PRESSURE SENSOR LINES

Always perform the Pre-Diagnostic Troubleshooting procedure before proceeding. Refer to PRE-DIAGNOSTIC TROUBLESHOOTING PROCEDURE - 6.7L .

DIAGNOSTIC TEST

1. **ACTIVE DTC**
    1. Ignition on, engine not running.
    2. With the scan tool, read DTCs.

    Is DTC P2002 Active?

    Yes

    - Go To 2.

    No

    - Perform the INTERMITTENT CONDITION diagnostic procedure. Refer to **INTERMITTENT CONDITION - 6.7L** .
2. **CHECK THE DIESEL PARTICULATE FILTER PRESSURE SENSOR TUBES AND HOSES**
    1. Inspect the Exhaust Differential Pressure sensor tubes and hoses.

    Are leaks or blockages found or hoses reversed?

    Yes

    - Repair as necessary.
    - Perform the DIESEL AFTERTREATMENT VALIDATION - 6.7L procedure. Refer to **DIESEL AFTERTREATMENT VALIDATION- 6.7L** .

    No

    - Go To 3.
3. **CHECK THE EGR FOR A LEAK**

1. Look for visible signs (soot streaks) of an external EGR leak.

   Are there any EGR system leaks?

   Yes

   - Repair the EGR system leak.
   - Perform the DIESEL AFTERTREATMENT VALIDATION - 6.7L procedure. Refer to **DIESEL AFTERTREATMENT VALIDATION- 6.7L** .

   No

   - Go To 4.

4. **CHECK THE INTAKE AIR SYSTEM**
   1. Perform the INTAKE AIR SYSTEM PRESSURE TEST diagnostic procedure. Refer to **DIAGNOSIS AND TESTING, 6.7L** .

      Were any intake system leaks found?

      Yes

      - Repair the intake system leak.
      - Perform the DIESEL AFTERTREATMENT VALIDATION - 6.7L procedure. Refer to **DIESEL AFTERTREATMENT VALIDATION- 6.7L** .

      No

      - Go To 5.

5. **CHECK THE EXHAUST SYSTEM FOR LEAKS**
   1. Perform the CHECKING THE EXHAUST SYSTEM FOR LEAKS diagnostic procedure. Refer to **DIAGNOSIS AND TESTING, 6.7L** .

      Are there any exhaust system leaks?

      Yes

      - Repair the Exhaust system leak.
      - Perform the DIESEL AFTERTREATMENT VALIDATION - 6.7L procedure. Refer to **DIESEL AFTERTREATMENT VALIDATION- 6.7L** .

      No

      - Go To 6.

6. **CHECK THE DIESEL PARTICULATE FILTER**
   1. Perform the AFTERTREATMENT INSPECTION GUIDELINE - 6.7L procedure. Refer to

DIAGNOSIS AND TESTING, 6.7L .

Was any internal damage found in the Diesel Particulate Filter?

Yes

- Replace the Diesel Particulate Filter in accordance with the service information.
- Perform the DIESEL AFTERTREATMENT VALIDATION - 6.7L procedure. Refer to **DIESEL AFTERTREATMENT VALIDATION- 6.7L** .

No

- Perform the INTERMITTENT CONDITION diagnostic procedure. Refer to **INTERMITTENT CONDITION - 6.7L** .

P202A-(DIESEL EXHAUST FLUID) REDUCTANT TANK HEATER CONTROL CIRCUIT OPEN

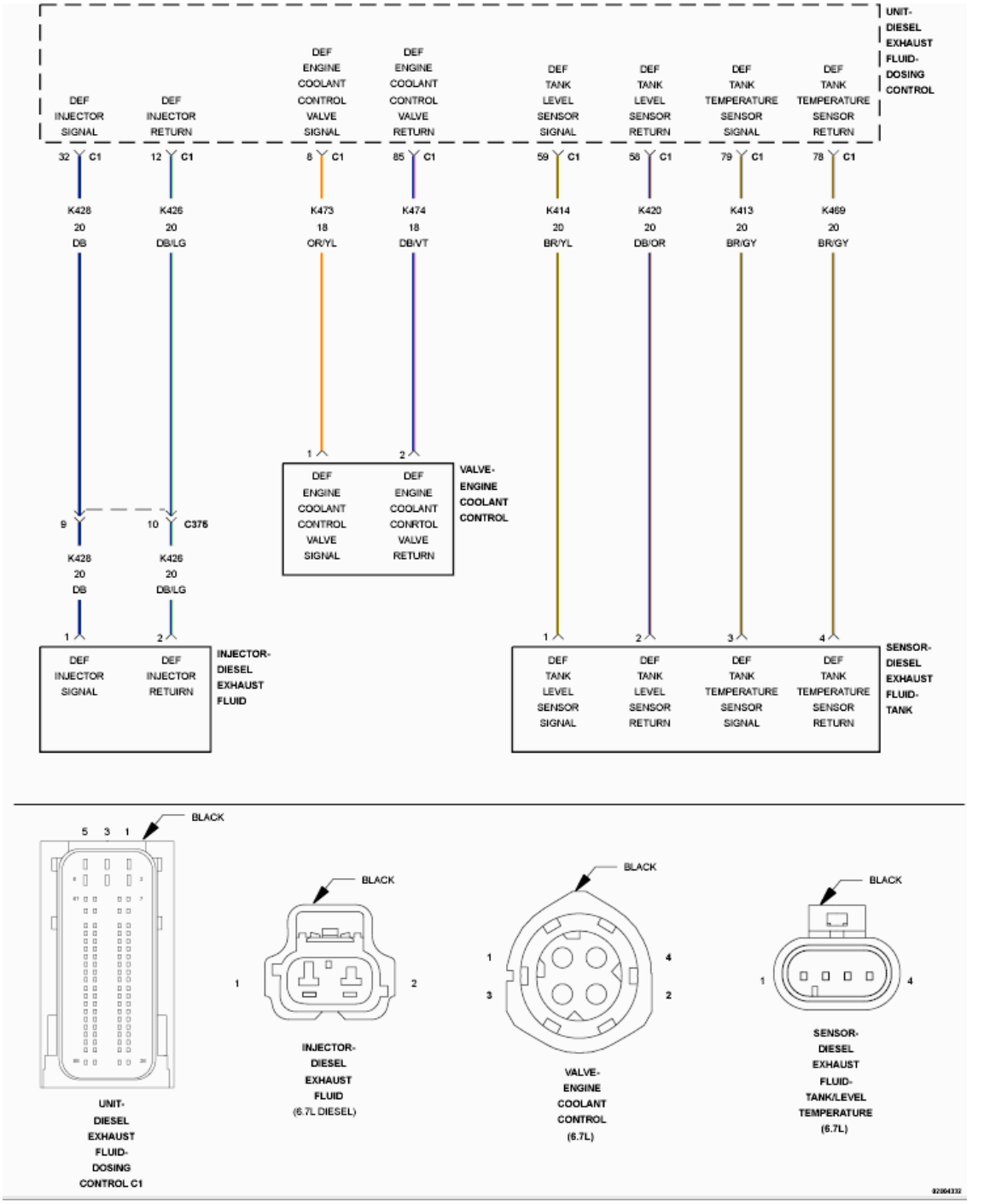

Fig. 18: Diesel Exhaust Fluid Reductant Tank Heater Control Circuit Wiring Diagram
Courtesy of CHRYSLER GROUP, LLC

For a complete wiring diagram, **refer to appropriate SYSTEM WIRING DIAGRAMS article** .

THEORY OF OPERATION

The Diesel Exhaust Fluid (DEF) Tank has an internal heating coil to help eliminate freezing of Diesel Exhaust

Fluid. The DEF Dosing Control Unit monitors the temperature of the Diesel Exhaust Fluid inside the tank. When it is determined that the Diesel Exhaust Fluid needs to be heated, the DEF Dosing Control Unit opens the DEF Engine Coolant Valve which is located nest to the DEF Tank, and allows warm engine coolant to circulate through the heating coil inside the tank to warm the Diesel Exhaust Fluid in the tank. The DEF Dosing Control Unit will illuminate the MIL lamp via the PCM immediately after this diagnostic runs and fails. The DEF Dosing Control Unit will turn off the MIL lamp via the PCM immediately after the diagnostic runs and passes for three consecutive key cycles.

WHEN MONITORED:

Continuously with the ignition on.

SET CONDITION:

The DEF Dosing Control Unit detects that the DEF Engine Coolant Control Valve circuit is open.

POSSIBLE CAUSES

Possible Causes
(K473) DIESEL EXHAUST FLUID ENGINE COOLANT CONTROL VALVE SIGNAL CIRCUIT OPEN/HIGH RESISTANCE
(K474) DIESEL EXHAUST FLUID ENGINE COOLANT CONTROL VALVE RETURN CIRCUIT OPEN/HIGH RESISTANCE
DIESEL EXHAUST FLUID ENGINE COOLANT CONTROL VALVE
DIESEL EXHAUST FLUID DOSING CONTROL UNIT

Always perform the Pre-Diagnostic Troubleshooting procedure before proceeding. Refer to PRE-DIAGNOSTIC TROUBLESHOOTING PROCEDURE - 6.7L .

DIAGNOSTIC TEST

1. **ACTIVE DTC**
    1. Turn the ignition on for one minute, engine not running.
    2. With the scan tool check for active DTCs.

       Is the DTC active?

       Yes

       - Go To 3.

       No

       - Perform the INTERMITTENT CONDITION diagnostic procedure. Refer to **INTERMITTENT CONDITION - 6.7L** .
2. **CHECK THE DIESEL EXHAUST FLUID ENGINE COOLANT CONTROL VALVE**

1. Turn ignition off.
2. Disconnect the DEF Engine Coolant Control Valve harness connector.
3. Connect a jumper between the (K473) DEF Engine Coolant Control Valve Signal circuit and the (K474) DEF Engine Coolant Control Valve Return circuit at the DEF Engine Coolant Control Valve harness connector.

NOTE: Be careful not to spread the terminals in the connector.

4. Turn the ignition on.
5. With a scan tool, View DTCs.

Does the scan tool display DTC P202B as active and P202A as stored with the jumper in place?

Yes

- Replace the DEF Engine Coolant Control Valve in accordance with the service information. Refer to **VALVE, DIESEL EXHAUST FLUID ENGINE COOLANT CONTROL, REMOVAL** .
- Perform the POWERTRAIN VERIFICATION TEST. Refer to **POWERTRAIN VERIFICATION TEST - 6.7L** .

No

- Go To 3.

3. **CHECK THE (K473) DIESEL EXHAUST FLUID ENGINE COOLANT CONTROL VALVE SIGNAL CIRCUIT FOR AN OPEN/HIGH RESISTANCE**

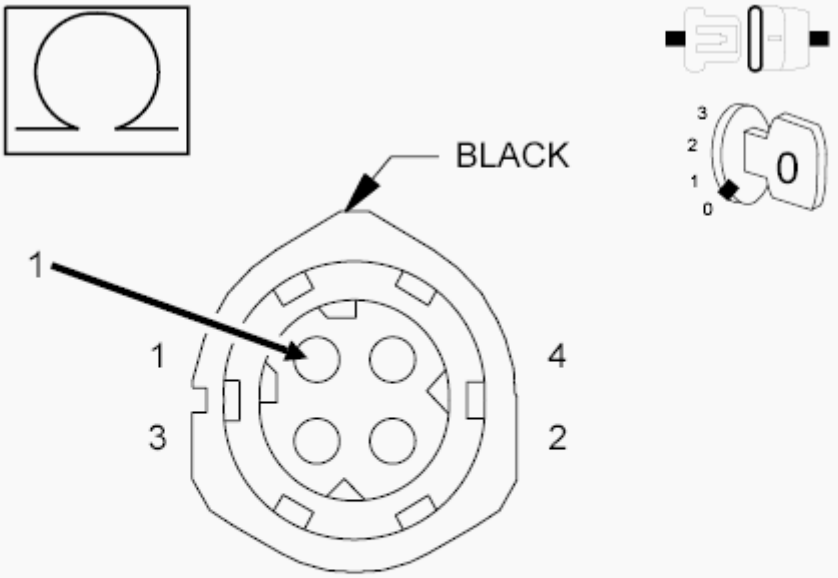

VALVE-
ENGINE
COOLANT
CONTROL
(6.7L)

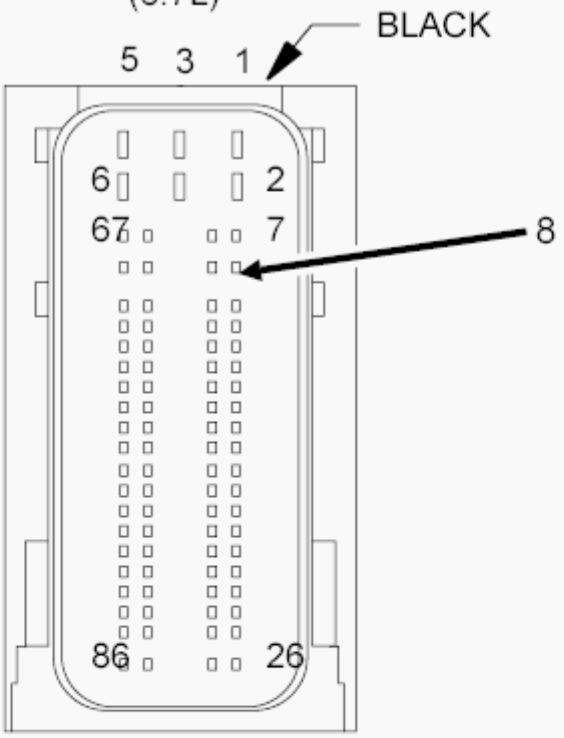

UNIT-
DIESEL
EXHAUST
FLUID-
DOSING

Fig. 19: Checking Diesel Exhaust Fluid Engine Coolant Control Valve Signal Circuit For An Open Or High Resistance
Courtesy of CHRYSLER GROUP, LLC

1. Turn ignition off.
2. Disconnect the DEF Dosing Control Unit C1 harness connector.
3. Measure the resistance of the (K473) DEF Engine Coolant Control Valve Signal circuit between the DEF Dosing Control Unit C1 harness connector and the DEF Engine Coolant Control Valve harness connector.

   Is the resistance below 5.0 Ohms?

   Yes

   - Go To 4.

   No

   - Repair the (K473) DEF Engine Coolant Control Valve Signal circuit for an open or high resistance.
   - Perform the POWERTRAIN VERIFICATION TEST. Refer to **POWERTRAIN VERIFICATION TEST - 6.7L** .

4. **CHECK THE (K474) DIESEL EXHAUST FLUID ENGINE COOLANT CONTROL VALVE RETURN CIRCUIT FOR AN OPEN/HIGH RESISTANCE**

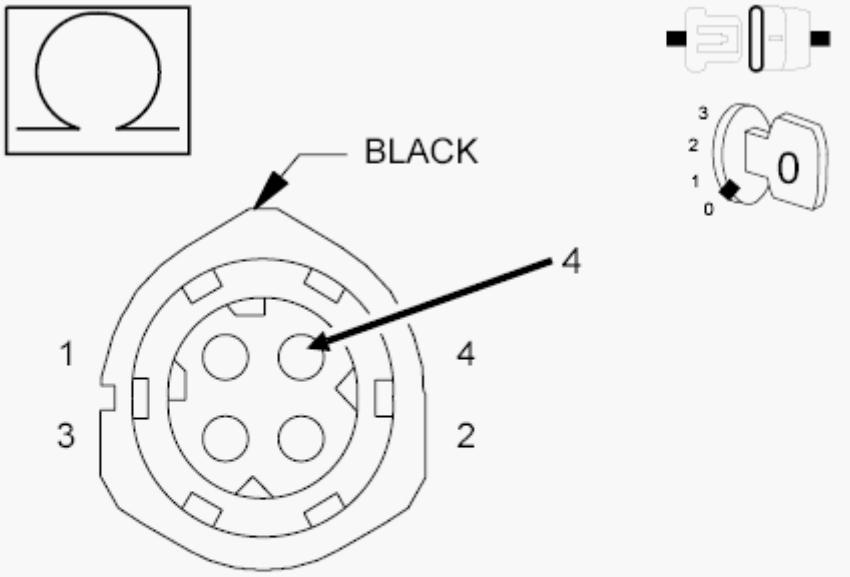

VALVE-
ENGINE
COOLANT
CONTROL
(6.7L)

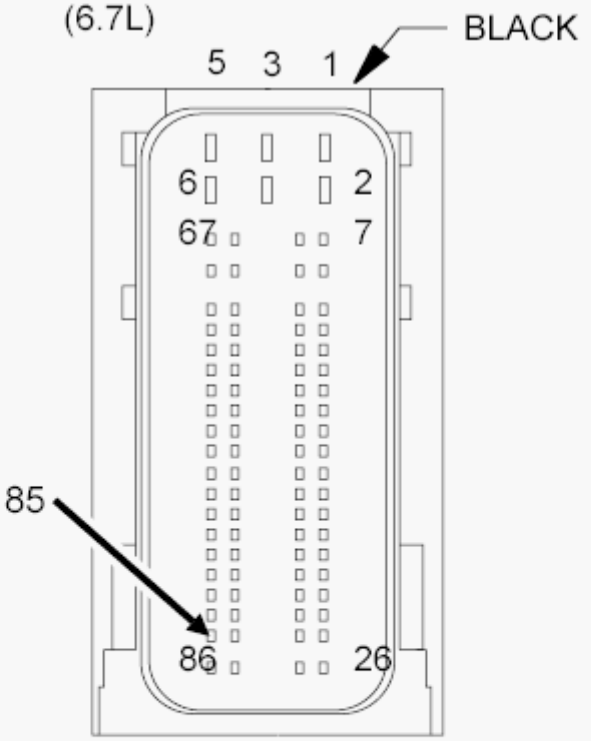

UNIT-
DIESEL
EXHAUST
FLUID-
DOSING
CONTROL C1

Fig. 20: Checking Diesel Exhaust Fluid Engine Coolant Control Valve Return Circuit For An Open/High Resistance
Courtesy of CHRYSLER GROUP, LLC

1. Measure the resistance of the (K474) DEF Engine Coolant Control Valve Return circuit between the DEF Dosing Control Unit C1 harness connector and the DEF Engine Coolant Control Valve harness connector.

   Is the resistance below 5.0 Ohms?

   Yes

   - Replace the DEF Dosing Control Unit in accordance with the service information. Refer to **UNIT, DIESEL EXHAUST FLUID DOSING CONTROL, REMOVAL** .
   - Perform the POWERTRAIN VERIFICATION TEST. Refer to **POWERTRAIN VERIFICATION TEST - 6.7L** .

   No

   - Repair the (K474) DEF Engine Coolant Control Valve Return circuit for an open or high resistance.
   - Perform the POWERTRAIN VERIFICATION TEST. Refer to **POWERTRAIN VERIFICATION TEST - 6.7L** .

P202B-(DIESEL EXHAUST FLUID) REDUCTANT TANK HEATER CONTROL CIRCUIT LOW

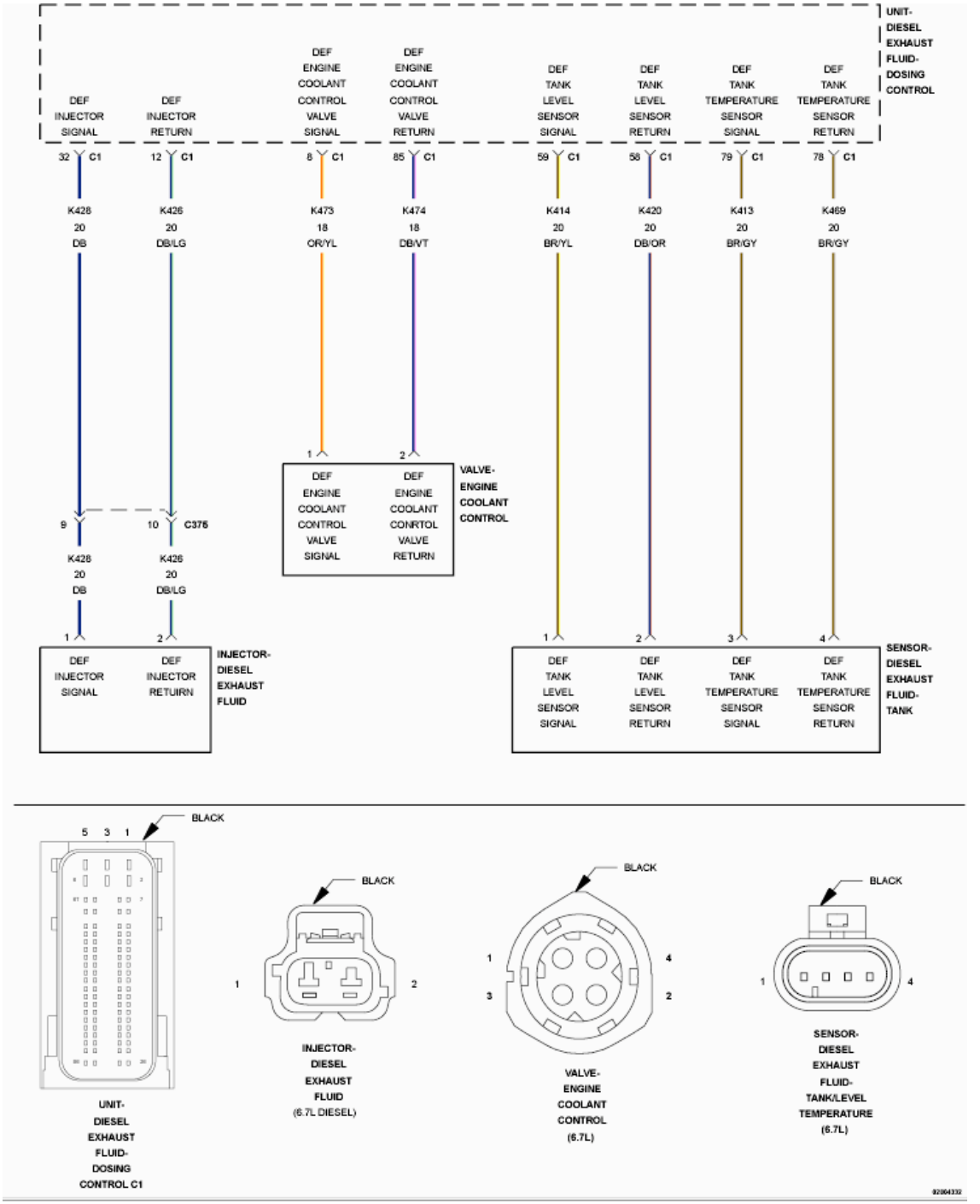

Fig. 21: Diesel Exhaust Fluid Reductant Tank Heater Control Circuit Wiring Diagram
Courtesy of CHRYSLER GROUP, LLC

For a complete wiring diagram, **refer to appropriate SYSTEM WIRING DIAGRAMS article** .

THEORY OF OPERATION

The Diesel Exhaust Fluid (DEF) Tank has an internal heating coil to help eliminate freezing of Diesel Exhaust

Fluid. The DEF Dosing Control Unit monitors the temperature of the Diesel Exhaust Fluid inside the tank. When it is determined that the Diesel Exhaust Fluid needs to be heated, the DEF Dosing Control Unit opens the DEF Engine Coolant Valve which is located nest to the DEF Tank, and allows warm engine coolant to circulate through the heating coil inside the tank to warm the Diesel Exhaust Fluid in the tank. The DEF Dosing Control Unit will illuminate the MIL lamp via the Powertrain Control Module (PCM) immediately after this diagnostic runs and fails. The DEF Dosing Control Unit will turn off the MIL lamp via the PCM immediately after the diagnostic runs and passes for three consecutive key cycles.

WHEN MONITORED:

With the ignition on.

SET CONDITION:

The DEF Dosing Control Unit detects a low signal voltage or short to ground on the (K473) DEF Engine Coolant Control Valve Signal circuit.

POSSIBLE CAUSES

Possible Causes
(K473) DIESEL EXHAUST FLUID ENGINE COOLANT CONTROL VALVE SIGNAL CIRCUIT SHORTED TO GROUND
(K474) DIESEL EXHAUST FLUID ENGINE COOLANT CONTROL VALVE RETURN CIRCUIT SHORTED TO GROUND
DIESEL EXHAUST FLUID ENGINE COOLANT CONTROL VALVE
DIESEL EXHAUST FLUID DOSING CONTROL UNIT

Always perform the Pre-Diagnostic Troubleshooting procedure before proceeding. Refer to PRE-DIAGNOSTIC TROUBLESHOOTING PROCEDURE - 6.7L .

DIAGNOSTIC TEST

1. **ACTIVE DTC**
    1. Turn the ignition on for one minute, engine not running.
    2. With the scan tool check for active DTCs.

       Is the DTC active?

       Yes

       - Go To 3.

       No

       - Perform the INTERMITTENT CONDITION diagnostic procedure. Refer to **INTERMITTENT CONDITION - 6.7L** .

2. **DIESEL EXHAUST FLUID ENGINE COOLANT CONTROL VALVE**
    1. Turn ignition off.
    2. Disconnect the DEF Engine Coolant Control Valve harness connector.
    3. Turn ignition on.
    4. With a scan tool, View DTCs.

    Does the scan tool display DTC P202A as active and P202B as stored with the DEF Dosing Control Unit C1 harness connector disconnected?

    Yes

    - Replace the DEF Engine Coolant Control Valve in accordance with the service information. Refer to **VALVE, DIESEL EXHAUST FLUID ENGINE COOLANT CONTROL, REMOVAL** .
    - Perform the POWERTRAIN VERIFICATION TEST. Refer to **POWERTRAIN VERIFICATION TEST - 6.7L** .

    No

    - Go To 3.
3. **CHECK THE (K473) DIESEL EXHAUST FLUID ENGINE COOLANT CONTROL VALVE SIGNAL CIRCUIT FOR A SHORT TO GROUND**

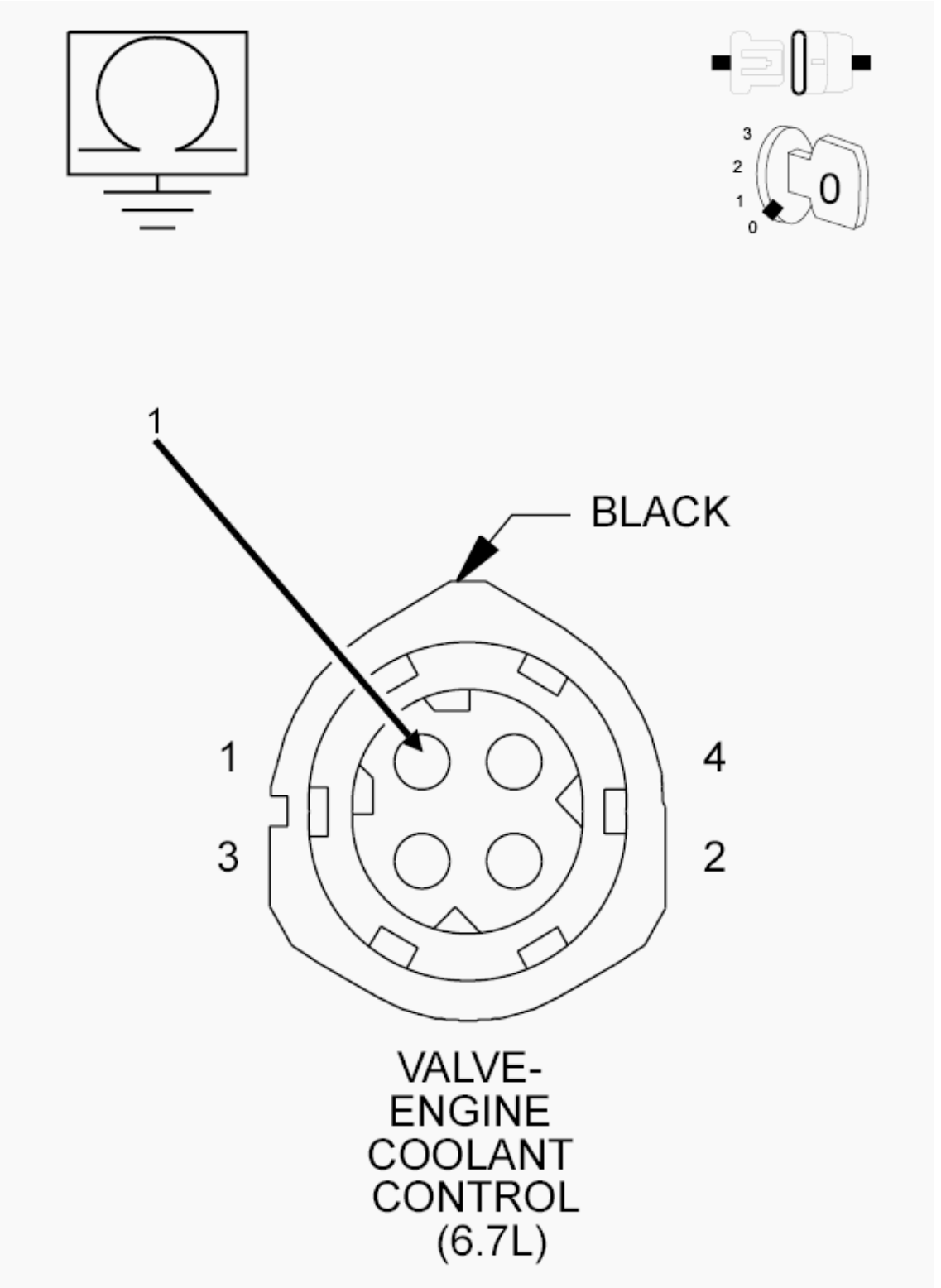

Fig. 22: Checking Diesel Exhaust Fluid Engine Coolant Control Valve Signal Circuit For A Short
Courtesy of CHRYSLER GROUP, LLC

1. Turn ignition off.

2. Disconnect the DEF Dosing Control Unit C1 harness connector.
3. Measure the resistance between ground and the (K473) DEF Engine Coolant Control Valve Signal circuit at the DEF Engine Coolant Control Valve harness connector.

   Is the resistance above 10k Ohms?

   Yes

   - Go To 4.

   No

   - Repair the (K473) DEF Engine Coolant Control Valve Signal circuit for a short to ground.
   - Perform the POWERTRAIN VERIFICATION TEST. Refer to **POWERTRAIN VERIFICATION TEST - 6.7L** .

4. **CHECK THE (K474) DIESEL EXHAUST FLUID ENGINE COOLANT CONTROL VALVE RETURN CIRCUIT FOR A SHORT TO GROUND**

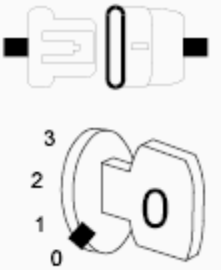

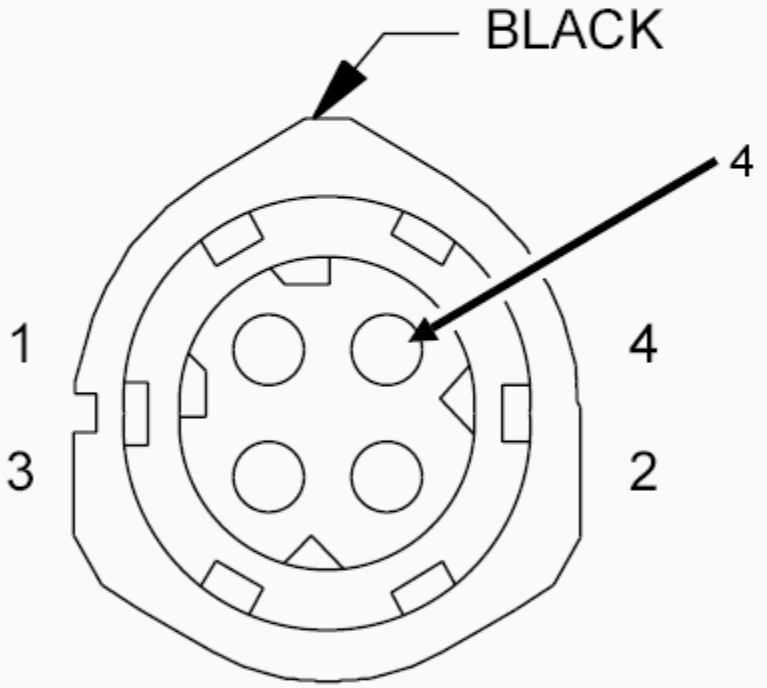

VALVE-
ENGINE
COOLANT
CONTROL
(6.7L)

Fig. 23: Checking Diesel Exhaust Fluid Engine Coolant Control Valve Return Circuit For A Short
Courtesy of CHRYSLER GROUP, LLC

1. Measure the resistance between ground and the (K474) DEF Engine Coolant Control Valve Return circuit at the DEF Engine Coolant Control Valve harness connector.

   Is the resistance above 10k Ohms?

   Yes

   - Replace the DEF Dosing Control Unit in accordance with the service information. Refer to **UNIT, DIESEL EXHAUST FLUID DOSING CONTROL, REMOVAL** .
   - Perform the POWERTRAIN VERIFICATION TEST. Refer to **POWERTRAIN VERIFICATION TEST - 6.7L** .

   No

   - Repair the (K474) DEF Engine Coolant Control Valve Return circuit for a short to ground.
   - Perform the POWERTRAIN VERIFICATION TEST. Refer to **POWERTRAIN VERIFICATION TEST - 6.7L** .

P202C-(DIESEL EXHAUST FLUID) REDUCTANT TANK HEATER CONTROL CIRCUIT HIGH

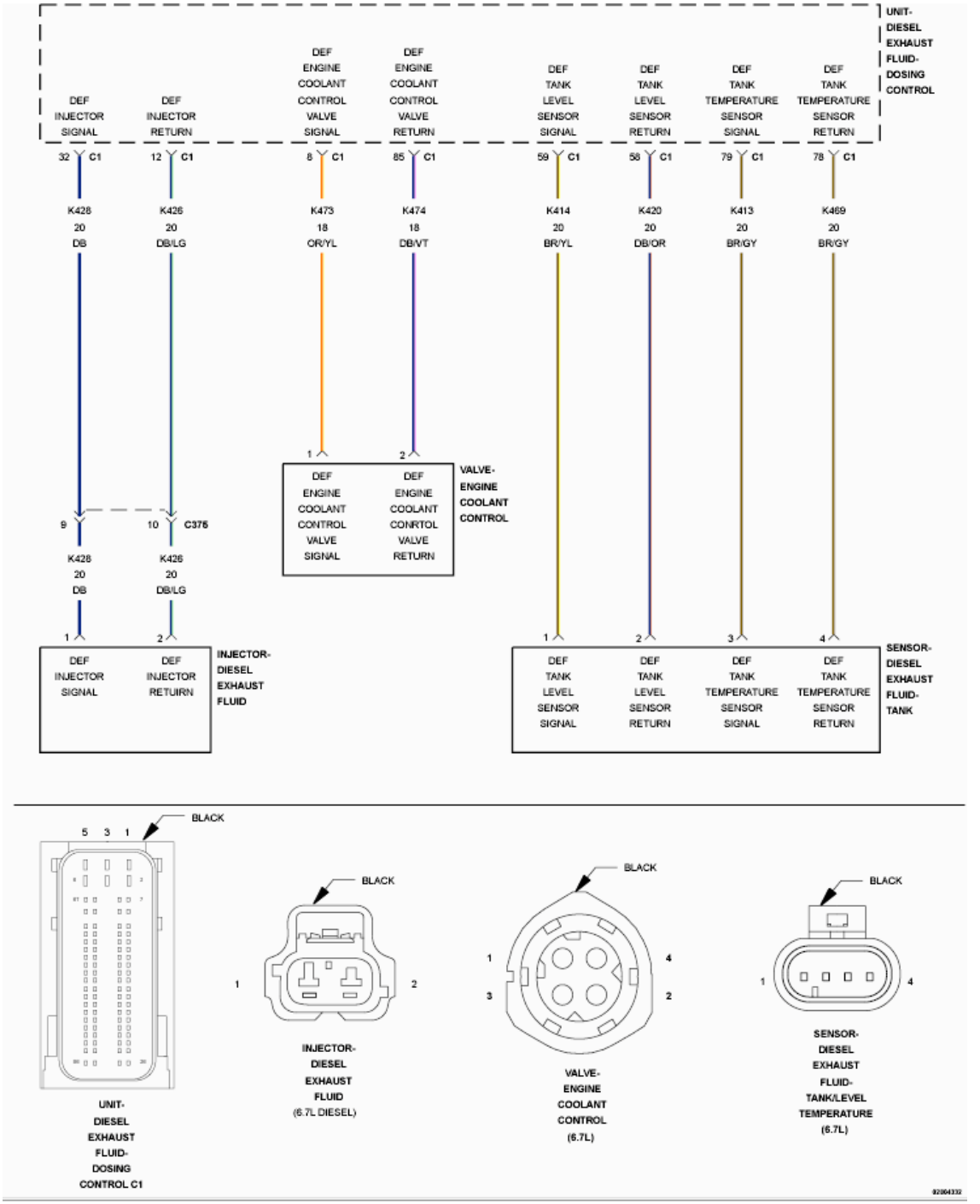

Fig. 24: Diesel Exhaust Fluid Reductant Tank Heater Control Circuit Wiring Diagram
Courtesy of CHRYSLER GROUP, LLC

For a complete wiring diagram, **refer to appropriate SYSTEM WIRING DIAGRAMS article** .

THEORY OF OPERATION

The Diesel Exhaust Fluid (DEF) Tank has an internal heating coil to help eliminate freezing of Diesel Exhaust

Fluid. The DEF Dosing Control Unit monitors the temperature of the Diesel Exhaust Fluid inside the tank. When it is determined that the Diesel Exhaust Fluid needs to be heated, the DEF Dosing Control Unit opens the DEF Engine Coolant Valve which is located nest to the DEF Tank, and allows warm engine coolant to circulate through the heating coil inside the tank to warm the Diesel Exhaust Fluid in the tank. The DEF Dosing Control Unit will illuminate the MIL lamp via the Powertrain Control Module (PCM) immediately after this diagnostic runs and fails. The DEF Dosing Control Unit will turn off the MIL lamp via the PCM immediately after the diagnostic runs and passes for three consecutive key cycles.

WHEN MONITORED:

With the ignition on.

SET CONDITION:

The DEF Dosing Control Unit detects high signal voltage on the (K473) DEF Engine Coolant Control Valve Signal circuit.

POSSIBLE CAUSES

Possible Causes
(K473) DIESEL EXHAUST FLUID ENGINE COOLANT CONTROL VALVE SIGNAL CIRCUIT SHORTED TO VOLTAGE
(K473) DIESEL EXHAUST FLUID ENGINE COOLANT CONTROL VALVE SIGNAL CIRCUIT OPEN/HIGH RESISTANCE
(K474) DIESEL EXHAUST FLUID ENGINE COOLANT CONTROL VALVE RETURN CIRCUIT OPEN/HIGH RESISTANCE
(K473) DIESEL EXHAUST FLUID ENGINE COOLANT CONTROL VALVE SIGNAL CIRCUIT SHORTED TO THE (K474) DIESEL EXHAUST FLUID ENGINE COOLANT CONTROL VALVE RETURN CIRCUIT
DIESEL EXHAUST FLUID ENGINE COOLANT CONTROL VALVE
DIESEL EXHAUST FLUID DOSING CONTROL UNIT

Always perform the Pre-Diagnostic Troubleshooting procedure before proceeding. Refer to PRE-DIAGNOSTIC TROUBLESHOOTING PROCEDURE - 6.7L .

DIAGNOSTIC TEST

1. **ACTIVE DTC**
    1. Turn the ignition on for one minute, engine not running.
    2. With the scan tool check for active DTCs.

       Is the DTC active?

       Yes

       - Go To 2.

No

- Perform the INTERMITTENT CONDITION diagnostic procedure. Refer to **INTERMITTENT CONDITION - 6.7L** .

2. **CHECK THE (K473) DIESEL EXHAUST FLUID ENGINE COOLANT CONTROL VALVE SIGNAL CIRCUIT FOR AN OPEN/HIGH RESISTANCE**

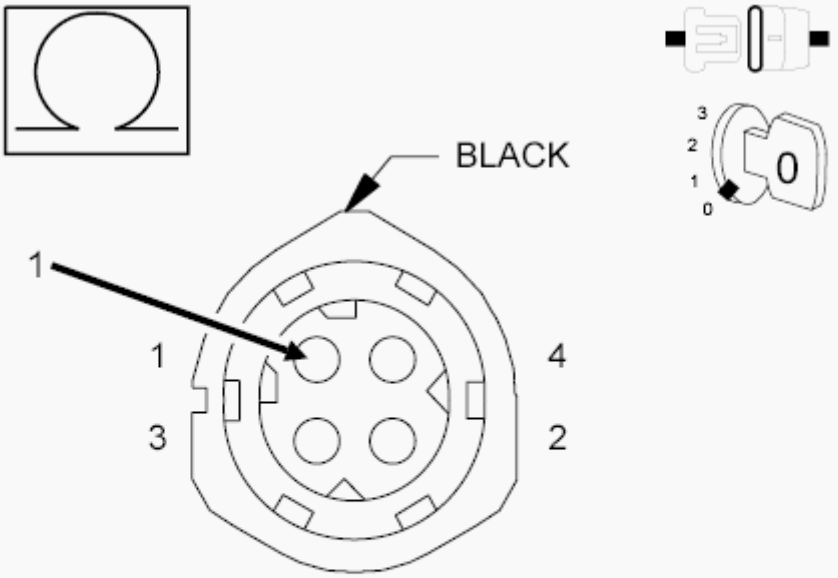

VALVE-
ENGINE
COOLANT
CONTROL
(6.7L)

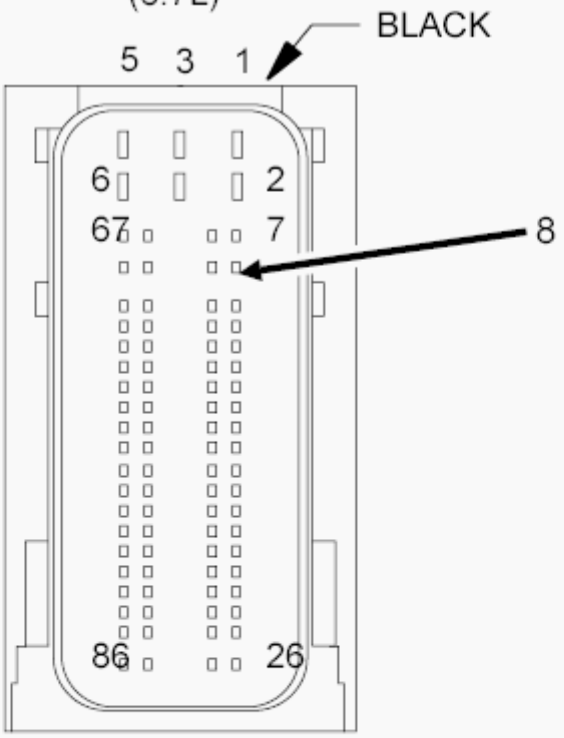

UNIT-
DIESEL
EXHAUST
FLUID-
DOSING

Fig. 25: Checking Diesel Exhaust Fluid Engine Coolant Control Valve Signal Circuit For An Open Or High Resistance
Courtesy of CHRYSLER GROUP, LLC

1. Turn ignition off.
2. Disconnect the DEF Engine Coolant Control Valve harness connector.
3. Disconnect the DEF Dosing Control Unit C1 harness connector.
4. Measure the resistance of the (K473) DEF Engine Coolant Control Valve Signal circuit between the DEF Tank Level/Temperature Sensor harness connector and the Diesel Exhaust Fluid Control Unit C1 harness connector.

   Is the resistance below 5.0 Ohms?

   Yes

   - Go To 3.

   No

   - Repair the (K473) DEF Engine Coolant Control Valve Signal circuit for an open or high resistance.
   - Perform the POWERTRAIN VERIFICATION TEST. Refer to **POWERTRAIN VERIFICATION TEST - 6.7L** .

3. **CHECK THE (K474) DIESEL EXHAUST FLUID ENGINE COOLANT CONTROL VALVE RETURN CIRCUIT FOR AN OPEN/HIGH RESISTANCE**

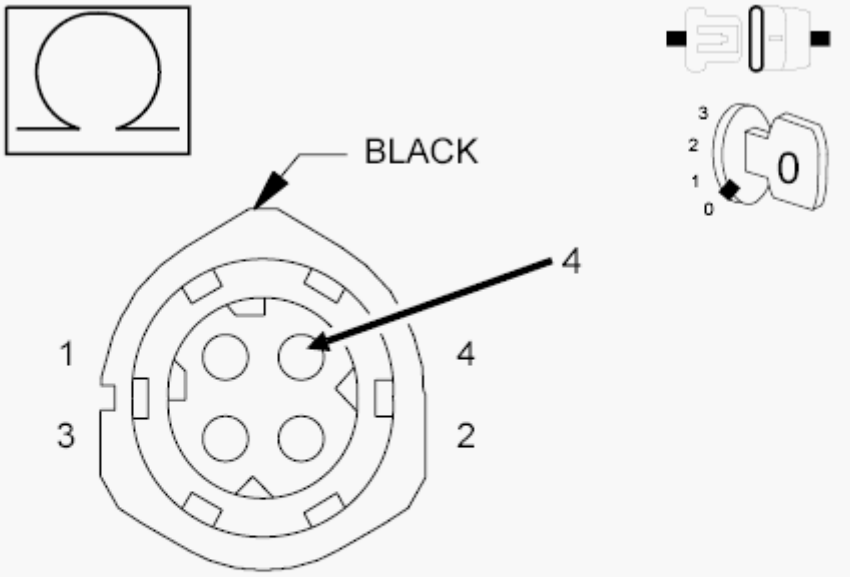

VALVE-
ENGINE
COOLANT
CONTROL
(6.7L)

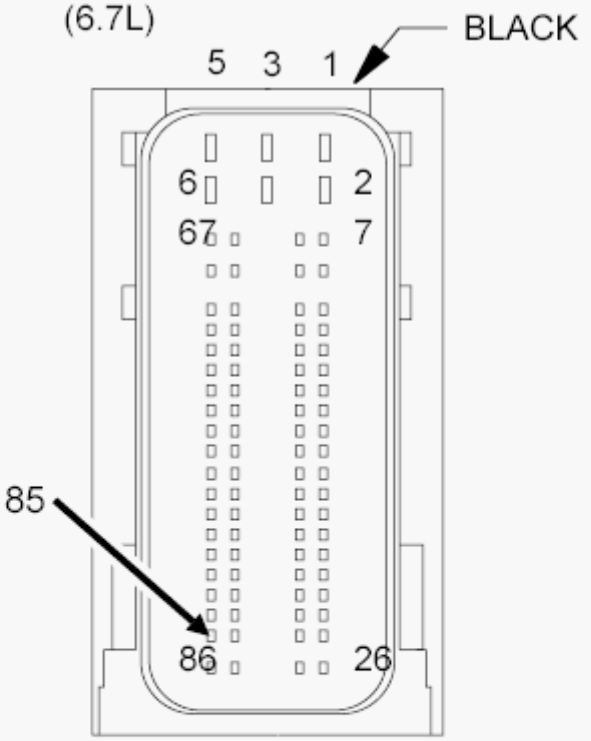

UNIT-
DIESEL
EXHAUST
FLUID-
DOSING
CONTROL C1

Fig. 26: Checking Diesel Exhaust Fluid Engine Coolant Control Valve Return Circuit For An Open/High Resistance
Courtesy of CHRYSLER GROUP, LLC

1. Measure the resistance of the (K474) DEF Engine Coolant Control Valve Return circuit between the DEF Tank Level/Temperature Sensor harness connector and the DEF Dosing Control Unit C1 harness connector.

   Is the resistance below 5.0 Ohms?

   Yes

   - Go To 4.

   No

   - Repair the (K474) DEF Engine Coolant Control Valve Return circuit for an open or high resistance.
   - Perform the POWERTRAIN VERIFICATION TEST. Refer to **POWERTRAIN VERIFICATION TEST - 6.7L** .

4. **CHECK FOR THE (K473) DIESEL EXHAUST FLUID ENGINE COOLANT CONTROL VALVE SIGNAL CIRCUIT SHORTED TO THE (K474) DIESEL EXHAUST FLUID ENGINE COOLANT CONTROL VALVE RETURN CIRCUIT**
   1. Measure the resistance between the (K473) DEF Engine Coolant Control Valve Signal circuit and the (K474) DEF Engine Coolant Control Valve Return circuit at the DEF Engine Coolant Control Valve harness connector.

      Is the resistance above 10k Ohms?

      Yes

      - Go To 5.

      No

      - Repair the short between the (K473) DEF Engine Coolant Control Valve Signal circuit and the (K474) DEF Engine Coolant Control Valve Return circuit.
      - Perform the POWERTRAIN VERIFICATION TEST. Refer to **POWERTRAIN VERIFICATION TEST - 6.7L** .

5. **CHECK THE (K473) DIESEL EXHAUST FLUID ENGINE COOLANT CONTROL VALVE SIGNAL CIRCUIT FOR A SHORT TO ANOTHER CIRCUIT**
   1. Measure the resistance between the (K473) DEF Engine Coolant Control Valve Signal circuit and all other circuits at the DEF Dosing Control Unit C1 harness connector.

      Is the resistance above 10k Ohms between the (K473) DEF Engine Coolant Control Valve Signal circuit and all other circuits?

Yes

- Go To 6.

No

- Repair the (K473) DEF Engine Coolant Control Valve Signal circuit for a short to the circuit that measured below 10k Ohms.
- Perform the POWERTRAIN VERIFICATION TEST. Refer to **POWERTRAIN VERIFICATION TEST - 6.7L** .

6. **DIESEL EXHAUST FLUID ENGINE COOLANT CONTROL VALVE**
   1. Turn ignition off.
   2. Reconnect the DEF Dosing Control Unit C1 harness connector.
   3. Turn ignition on.
   4. With a scan tool, View DTCs.

   Does the scan tool display DTC P202A as active and P202C as stored with the DEF Dosing Control Unit C1 harness connector disconnected?

   Yes

   - Replace the DEF Engine Coolant Control Valve in accordance with the service information. Refer to **VALVE, DIESEL EXHAUST FLUID ENGINE COOLANT CONTROL, REMOVAL** .
   - Perform the POWERTRAIN VERIFICATION TEST. Refer to **POWERTRAIN VERIFICATION TEST - 6.7L** .

   No

   - Replace the DEF Dosing Control Unit in accordance with the service information. Refer to **UNIT, DIESEL EXHAUST FLUID DOSING CONTROL, REMOVAL** .
   - Perform the POWERTRAIN VERIFICATION TEST. Refer to **POWERTRAIN VERIFICATION TEST - 6.7L** .

P202E-(DIESEL EXHAUST FLUID) REDUCTANT INJECTOR PERFORMANCE

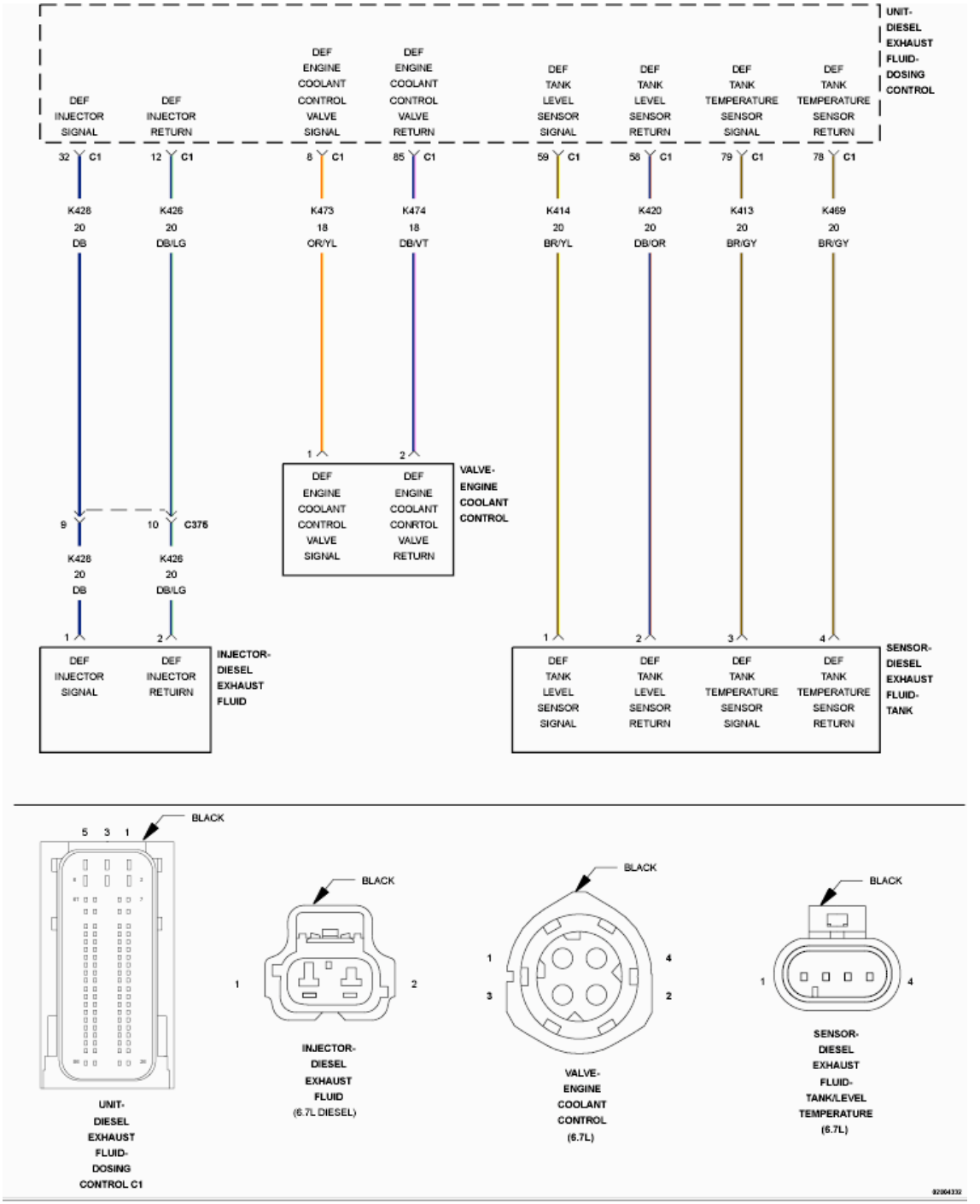

Fig. 27: Diesel Exhaust Fluid Reductant Tank Heater Control Circuit Wiring Diagram
Courtesy of CHRYSLER GROUP, LLC

For a complete wiring diagram, **refer to appropriate SYSTEM WIRING DIAGRAMS article** .

THEORY OF OPERATION

The Diesel Exhaust Fluid (DEF) Injector is mounted to the decomposition tube at the inlet of the Selective

Catalytic Reduction (SCR) Catalyst. The DEF Dosing Control Unit sends a Pulse Width Modulated (PWM) signal to DEF Injector to vary the amount of fluid sprayed into the exhaust stream. The DEF Dosing Control Unit will illuminate the MIL lamp via the Powertrain Control Module (PCM) after this diagnostic runs and fails in two consecutive trips and diesel exhaust fluid injection into the aftertreatment system is disabled. The DEF Dosing Control Unit will turn off the MIL lamp via the PCM immediately after the diagnostic runs and passes for three consecutive key cycles.

WHEN MONITORED:

This monitor runs when the DEF Injector is being commanded on.

SET CONDITION:

The DEF Dosing Control Unit detects mechanical failure of the DEF Injector.

POSSIBLE CAUSES

Possible Causes
(K428) DIESEL EXHAUST FLUID INJECTOR SIGNAL CIRCUIT SHORTED TO ANOTHER CIRCUIT
(K426) DIESEL EXHAUST FLUID INJECTOR RETURN CIRCUIT SHORTED TO ANOTHER CIRCUIT
DIESEL EXHAUST FLUID INJECTOR

Always perform the Pre-Diagnostic Troubleshooting procedure before proceeding. Refer to PRE-DIAGNOSTIC TROUBLESHOOTING PROCEDURE - 6.7L .

DIAGNOSTIC TEST

1. **ACTIVE DTC**
    1. Turn the ignition on for one minute, engine not running.
    2. With the scan tool, navigate to Systems Tests and actuate the Diesel Exhaust Fluid Doser Pump Override Test.
    3. With the scan tool, View DTCs.

    Is the DTC active?

    Yes

    - Go To 2.

    No

    - Perform the INTERMITTENT CONDITION diagnostic procedure. Refer to **INTERMITTENT CONDITION - 6.7L** .
2. **CHECK FOR THE (K428) DEF INJECTOR SIGNAL CIRCUIT SHORTED TO ANOTHER**

CIRCUIT

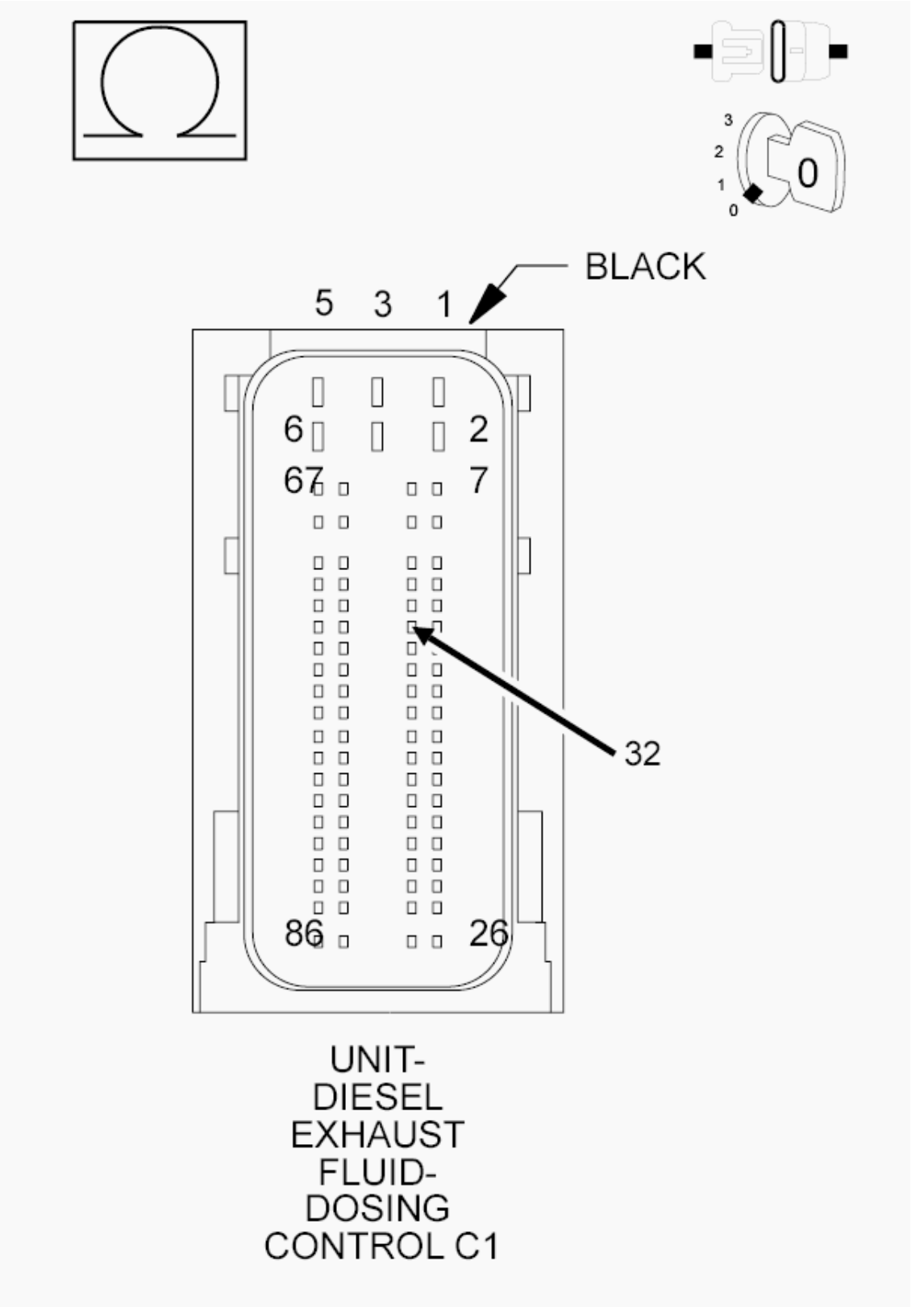
3
2
1
0
0
BLACK
5
3
1
6
2
67
7
32
86
26
UNIT-
DIESEL
EXHAUST
FLUID-
DOSING
CONTROL C1

Fig. 28: Checking DEF Injector Signal Circuit For A Short
Courtesy of CHRYSLER GROUP, LLC

1. Turn ignition off.
2. Disconnect the DEF Injector harness connector.
3. Disconnect the DEF Dosing Control Unit C1 harness connector.
4. Measure the resistance between the (K428) DEF Injector Signal circuit and all other circuits at the DEF Dosing Control Unit C1 harness connector.

   Is the resistance above 10k Ohms between the (K428) DEF Injector Signal circuit and all other circuits?

   Yes

   - Go To 3.

   No

   - Repair the short between the (K428) DEF Injector Signal circuit and the circuit that measured below 10k Ohms.
   - Perform the POWERTRAIN VERIFICATION TEST. Refer to **POWERTRAIN VERIFICATION TEST - 6.7L** .

3. **CHECK FOR THE (K426) DEF INJECTOR RETURN CIRCUIT SHORTED TO ANOTHER CIRCUIT**

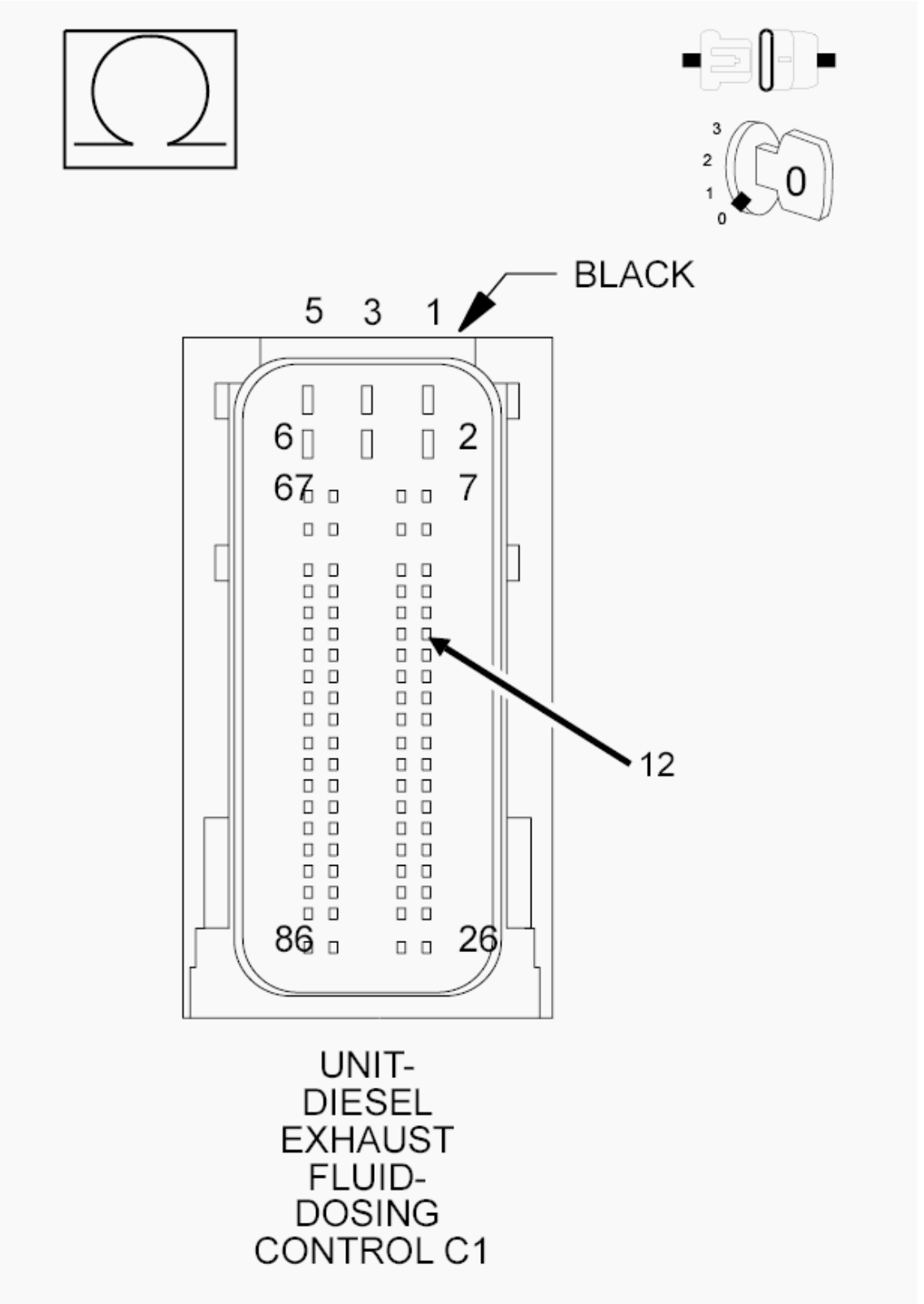

Fig. 29: Checking DEF Injector Return Circuit For A Short
Courtesy of CHRYSLER GROUP, LLC

1. Measure the resistance between the (K426) DEF Injector Return circuit and all other circuits at the DEF Dosing Control Unit C1 harness connector.

   Is the resistance above 10k Ohms between the (K426) DEF Injector Return circuit and all other circuits?

   Yes

   - Go To 4.

   No

   - Repair the short between the (K428) DEF Injector Return circuit and the circuit that measured below 10k Ohms.
   - Perform the POWERTRAIN VERIFICATION TEST. Refer to **POWERTRAIN VERIFICATION TEST - 6.7L** .

4. **DEF INJECTOR**
   1. Turn ignition off.
   2. Reconnect the DEF Dosing Control Unit C1 harness connector.
   3. Remove the DEF Injector from the decomposition tube.
   4. Reconnect the DEF Injector harness connector.
   5. Place the DEF Injector in a container to capture the fluid sprayed.
   6. Turn the ignition on.
   7. With the scan tool, navigate to Systems Tests and actuate the Diesel Exhaust Fluid Doser Pump Override Test.

      NOTE: **This Test will run for six minutes before timing out. The amount of flow may fluctuate through out the test, therefore the test must be allowed to run completely in order for the results to be accurate. The fluid should spray out as a mist. There should be no dripping from the holes in the DEF Injector at any time during the duration of the test procedure.**

   8. Measure the amount of fluid sprayed after the test times out.

      Does the fluid sprayed measure between 85 ml and 115 ml?

      Yes

      - The DEF Injector is functioning properly. Remove the DEF Pressure line from the DEF Injector and DEF Supply Pump Assembly and check the fittings for a partial restriction which could cause an intermittent low flow condition.
      - Perform the POWERTRAIN VERIFICATION TEST. Refer to **POWERTRAIN VERIFICATION TEST - 6.7L** .

No

- Replace the DEF Injector in accordance with the service information. Refer to **INJECTOR, DIESEL EXHAUST FLUID, REMOVAL** .
- Perform the POWERTRAIN VERIFICATION TEST. Refer to **POWERTRAIN VERIFICATION TEST - 6.7L** .

P2032-EXHAUST GAS TEMPERATURE SENSOR CIRCUIT LOW- BANK 1 SENSOR 2

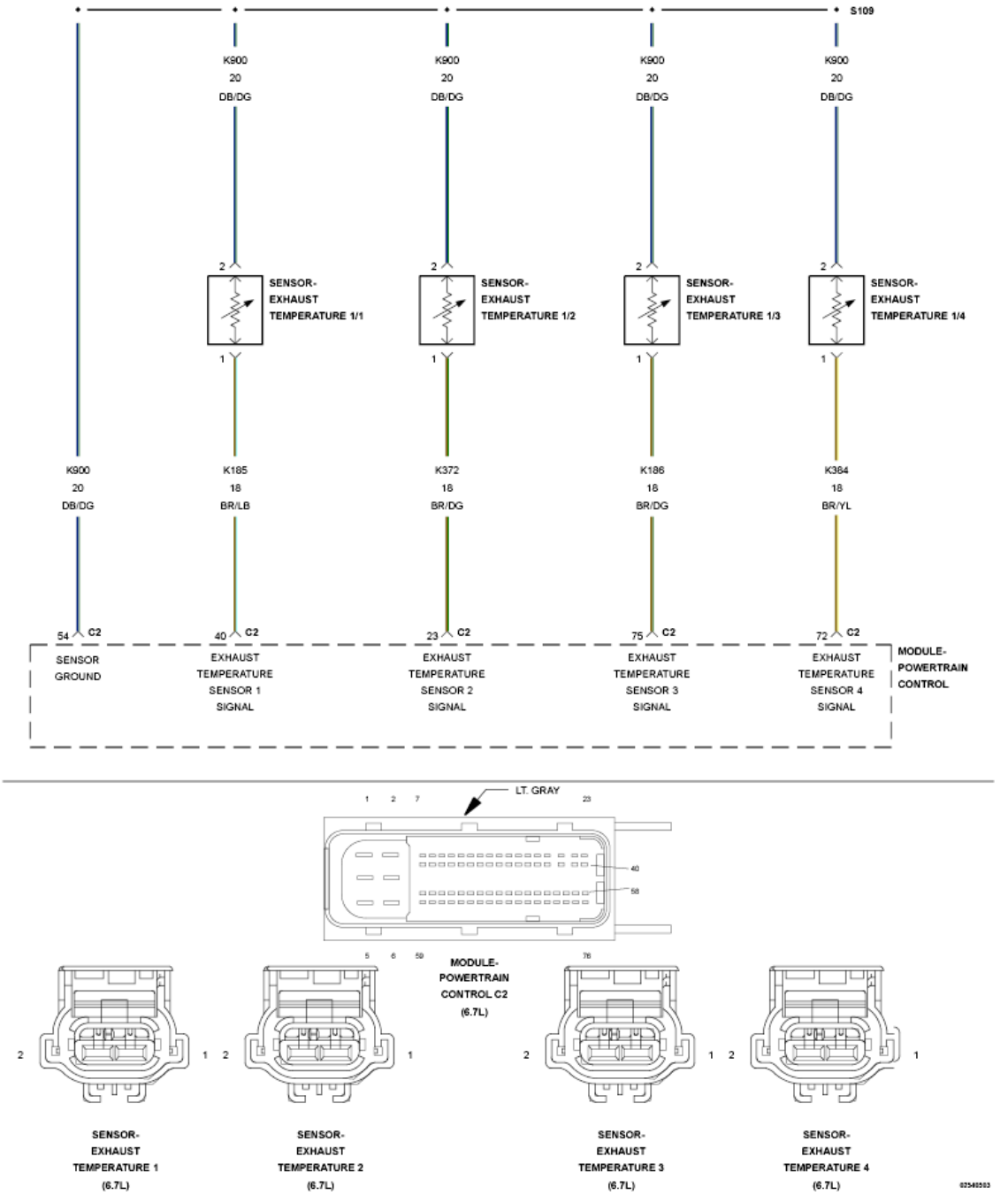

Fig. 30: Exhaust Gas Temperature Sensor Circuit Schematic

Courtesy of CHRYSLER GROUP, LLC

For a complete wiring diagram, **refer to appropriate SYSTEM WIRING DIAGRAMS article** .

THEORY OF OPERATION

The Exhaust Temperature Sensors are used by the Powertrain Control Module (PCM) to monitor the engine exhaust temperatures in the aftertreatment system. The Exhaust Temperature Sensors are thermistors and change resistance based on the temperature being measured. The Exhaust Temperature Sensors receive a 5-Volt signal from the PCM and share a sensor ground. The PCM monitors the change in signal voltage and converts this to a temperature value. The PCM illuminates the MIL lamp when the monitor runs and fails in two consecutive trips. A default value will be used for the Exhaust Temperature Sensor 1/2 and active regeneration of the Diesel Particulate Filter will be disabled. The PCM will turn off the MIL light immediately after the diagnostic runs and passes in four consecutive drive cycles.

WHEN MONITORED:

Any time the Powertrain Control Module is powered up.

SET CONDITION:

The Exhaust Temperature Sensor Signal circuit is below 0.08 Volts for 2.0 seconds.

POSSIBLE CAUSES

Possible Causes
(K372) EXHAUST GAS TEMPERATURE 1/2 SIGNAL CIRCUIT SHORTED TO GROUND
(K372) EXHAUST GAS TEMPERATURE 1/2 SIGNAL CIRCUIT SHORTED TO THE (K900) SENSOR GROUND CIRCUIT
EXHAUST GAS TEMPERATURE SENSOR 1/2
POWERTRAIN CONTROL MODULE (PCM)

Always perform the Pre-Diagnostic Troubleshooting procedure before proceeding. Refer to PRE-DIAGNOSTIC TROUBLESHOOTING PROCEDURE - 6.7L .

DIAGNOSTIC TEST

1. **ACTIVE DTC**
    1. Turn the ignition on.
    2. With the scan tool, record all Freeze frame data.
    3. With the scan tool, erase DTCs.
    4. Turn the ignition off for 75 seconds.
    5. Turn the ignition on.
    6. With the scan tool, read DTCs.

Did the DTC reset?

Yes

- Go To 2.

No

- Perform the INTERMITTENT CONDITION diagnostic procedure. Refer to **INTERMITTENT CONDITION - 6.7L** .

2. **CHECK THE (K372) EXHAUST TEMPERATURE 1/2 SIGNAL CIRCUIT FOR A SHORT TO GROUND**

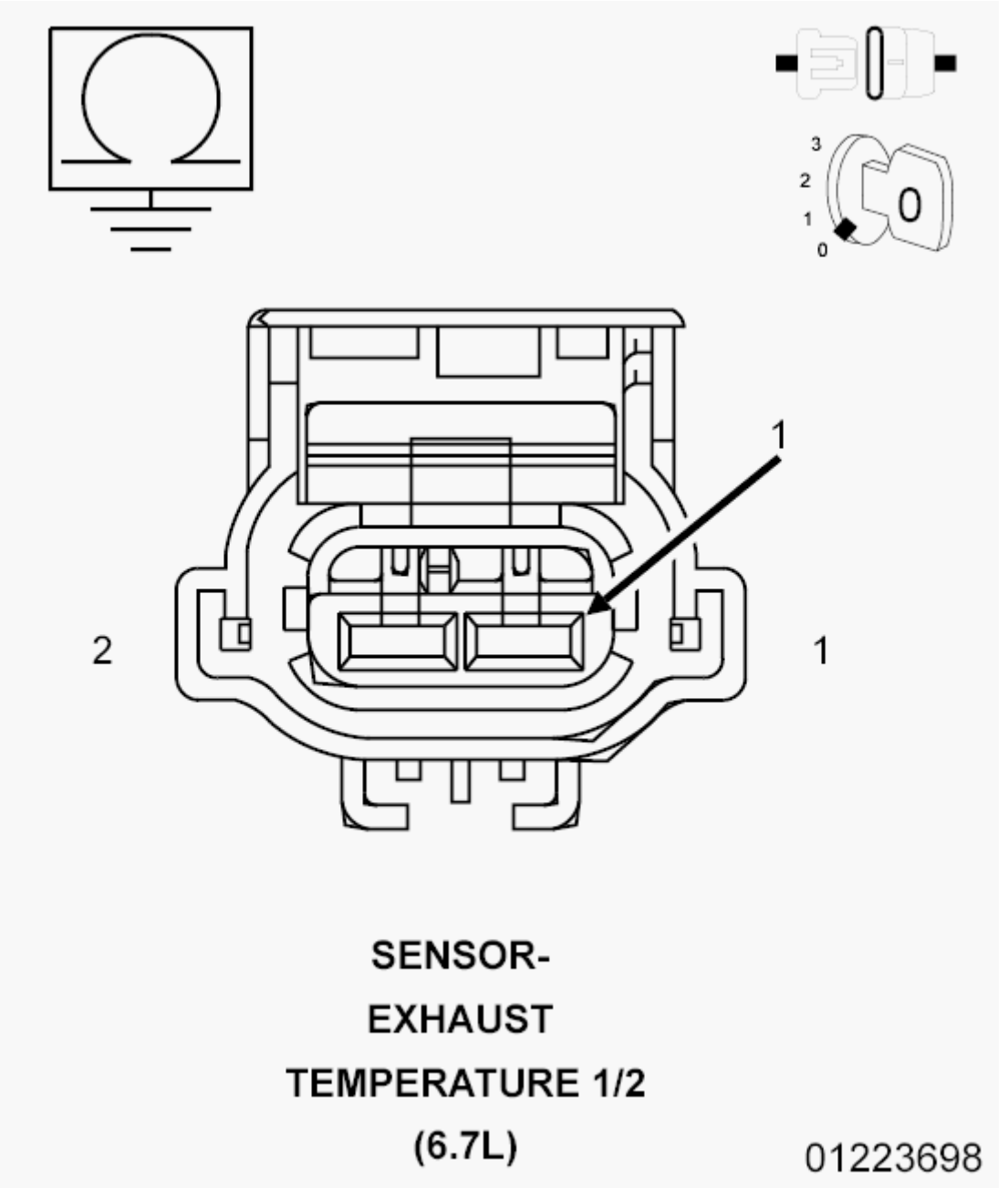

Fig. 31: Checking Exhaust Temperature 1/2 Signal Circuit For Short To Ground
Courtesy of CHRYSLER GROUP, LLC

1. Turn the ignition off.
2. Disconnect the Exhaust Gas Temperature Sensor 1/2 harness connector.
3. Disconnect the PCM C2 harness connector.
4. Measure the resistance between ground and the (K372) Exhaust Gas Temperature Sensor 1/2 Signal circuit at the sensor Exhaust Gas Temperature 1/2 harness connector.

   Is the resistance below 10k Ohms?

Yes

- Repair the (K372) Exhaust Gas Temperature Sensor 1/2 Signal circuit for a short to ground.
- Perform the POWERTRAIN VERIFICATION TEST. Refer to **POWERTRAIN VERIFICATION TEST - 6.7L** .

No

- Go To 3.

3. **CHECK FOR THE (K372) EXHAUST TEMPERATURE 1/2 SIGNAL CIRCUIT SHORTED TO THE (K900) SENSOR GROUND CIRCUIT**

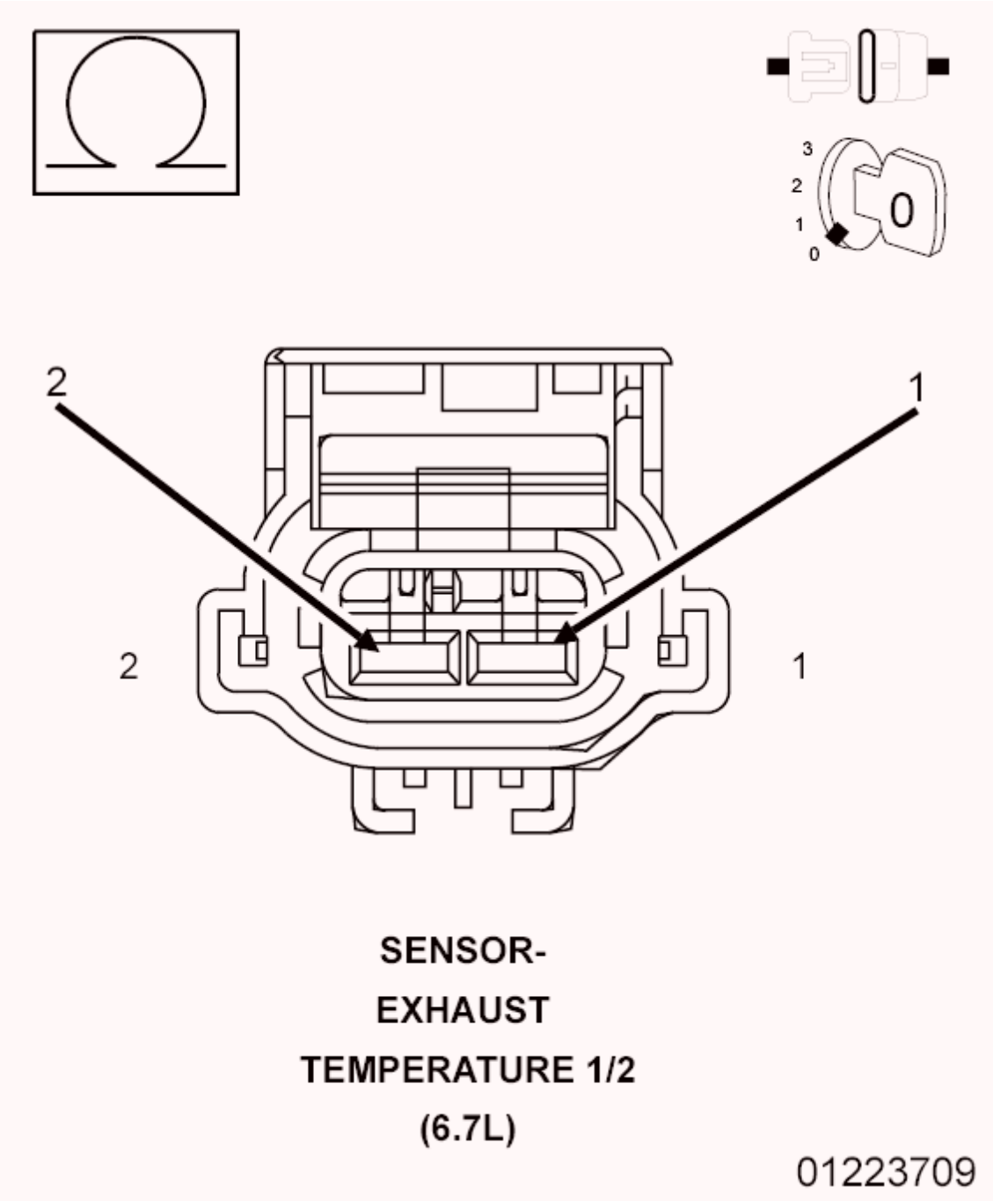

Fig. 32: Checking Exhaust Temperature 1/2 Signal Circuit Shorted To Sensor Ground Circuit
Courtesy of CHRYSLER GROUP, LLC

1. Measure the resistance between the (K372) Exhaust Gas Temperature Sensor 1/2 Signal circuit and (K900) Sensor Ground circuit at the Exhaust Gas Temperature Sensor 1/2 harness connector.

   Is the resistance below 10k Ohms?

   Yes

- Repair the short between the (K372) Exhaust Gas Temperature Sensor 1/2 Signal circuit and (K900) Sensor Ground circuit.
- Perform the POWERTRAIN VERIFICATION TEST. Refer to **POWERTRAIN VERIFICATION TEST - 6.7L** .

No

- Go To 4.

4. **CHECK THE EXHAUST GAS TEMPERATURE SENSOR**
   1. Reconnect the Exhaust Gas Temperature Sensor 1/2 harness connector.
   2. Reconnect the PCM C2 harness connector.
   3. Turn the ignition on.
   4. With the scan tool, erase DTCs.
   5. Turn the ignition off for 75 seconds.
   6. Disconnect the Exhaust Gas Temperature Sensor 1/2 harness connector.
   7. Turn the ignition on.
   8. With the scan tool, read DTCs.

   Does the DTC P2033 become active?

   Yes

   - Replace the Exhaust Gas Temperature Sensor 1/2 in accordance with the service information.
   - Perform the POWERTRAIN VERIFICATION TEST. Refer to **POWERTRAIN VERIFICATION TEST - 6.7L** .

   No

   - Replace and program the Powertrain Control Module in accordance with the service information. Refer to **PCM - REMOVAL** , also see **PCM/ECM / TCM PROGRAMMING** .
   - Perform the POWERTRAIN VERIFICATION TEST. Refer to **POWERTRAIN VERIFICATION TEST - 6.7L** .

P2033-EXHAUST GAS TEMPERATURE SENSOR CIRCUIT HIGH - BANK 1 SENSOR 2

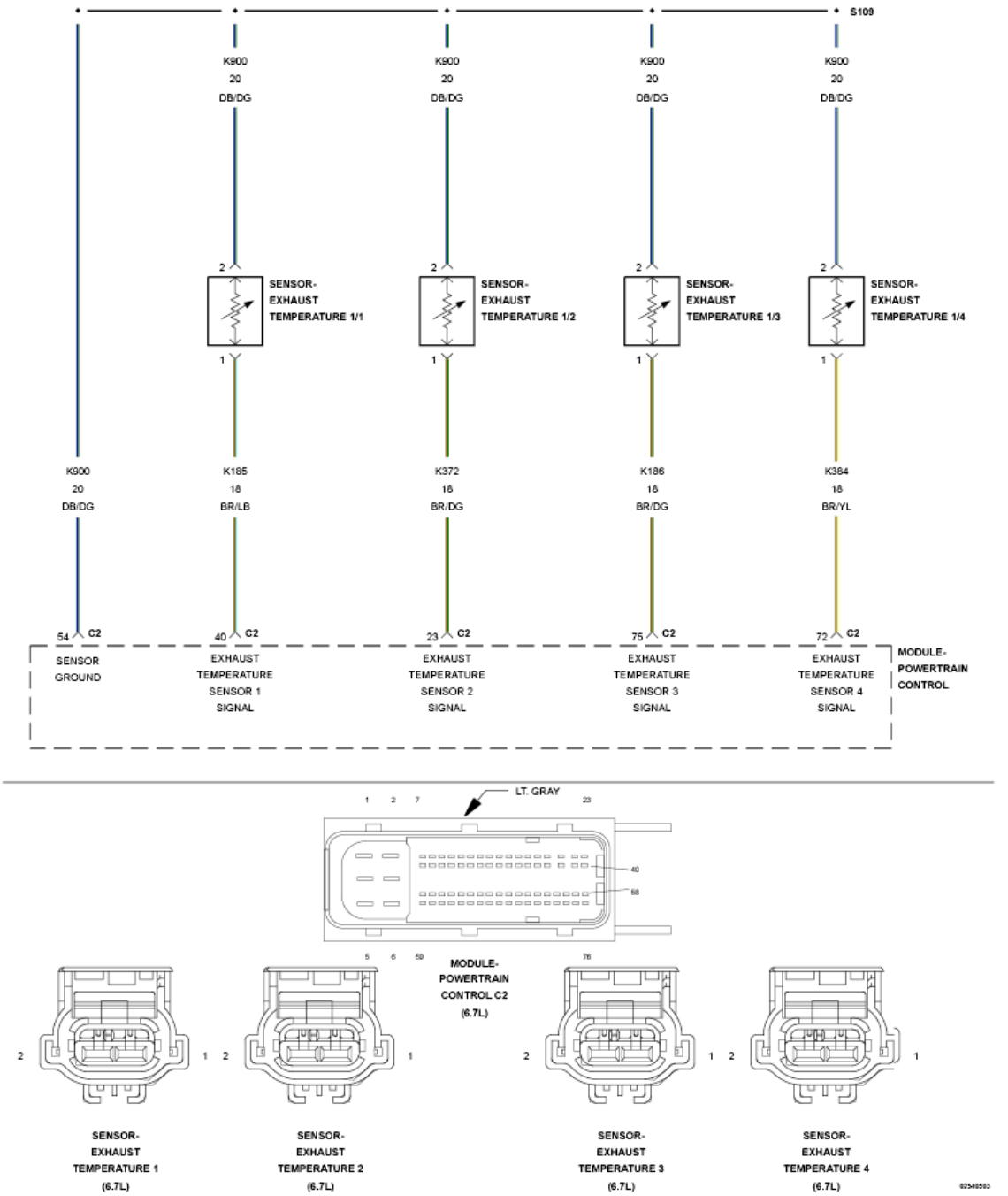

Fig. 33: Exhaust Gas Temperature Sensor Circuit Schematic
Courtesy of CHRYSLER GROUP, LLC

For a complete wiring diagram, **refer to appropriate SYSTEM WIRING DIAGRAMS article** .

THEORY OF OPERATION

The Exhaust Temperature Sensors are used by the Powertrain Control Module (PCM) to monitor the engine exhaust temperatures in the aftertreatment system. The Exhaust Temperature Sensors are thermistors and change resistance based on the temperature being measured. The Exhaust Temperature Sensors receive a 5-Volt

signal from the PCM and share a sensor ground. The PCM monitors the change in signal voltage and converts this to a temperature value. The PCM illuminates the MIL lamp immediately when the diagnostic runs and fails. A default value will be used for the Exhaust Temperature Sensor 1/2 and active regeneration of the diesel particulate filter will be disabled. The PCM will turn off the MIL light immediately after the diagnostic runs and passes in four consecutive drive cycles.

WHEN MONITORED:

Any time the Powertrain Control Module is powered up.

SET CONDITION:

The Exhaust Temperature Sensor 1/2 Signal circuit is above 4.88 Volts for 2.0 seconds.

POSSIBLE CAUSES

Possible Causes
(K372) EXHAUST GAS TEMPERATURE SENSOR 1/2 SIGNAL CIRCUIT SHORTED TO VOLTAGE
(K372) EXHAUST GAS TEMPERATURE SENSOR 1/2 SIGNAL CIRCUIT OPEN/HIGH RESISTANCE
(K900) SENSOR GROUND CIRCUIT OPEN/HIGH RESISTANCE
EXTREME COLD AMBIENT TEMPERATURE AT ENGINE START
EXHAUST GAS TEMPERATURE SENSOR
POWERTRAIN CONTROL MODULE (PCM)

Always perform the Pre-Diagnostic Troubleshooting procedure before proceeding. Refer to PRE-DIAGNOSTIC TROUBLESHOOTING PROCEDURE - 6.7L .

DIAGNOSTIC TEST

1. **ACTIVE DTC**
    1. Turn the ignition on.
    2. With the scan tool, record all Freeze frame data.

    NOTE: **Starting the vehicle under extreme cold conditions may cause this DTC to set. Check the ambient and/or coolant temperature in freeze frame data to see if this is the possible cause.**

    3. With the scan tool, erase DTCs.
    4. Turn the ignition off for 75 seconds.
    5. Turn the ignition on.
    6. With the scan tool, read DTCs.

    Did the DTC reset?

Yes

- Go To 2.

No

- Perform the INTERMITTENT CONDITION diagnostic procedure. Refer to **INTERMITTENT CONDITION - 6.7L** .

2. **CHECK THE (K372) EXHAUST GAS TEMPERATURE 1/2 SIGNAL CIRCUIT FOR A SHORT TO VOLTAGE**

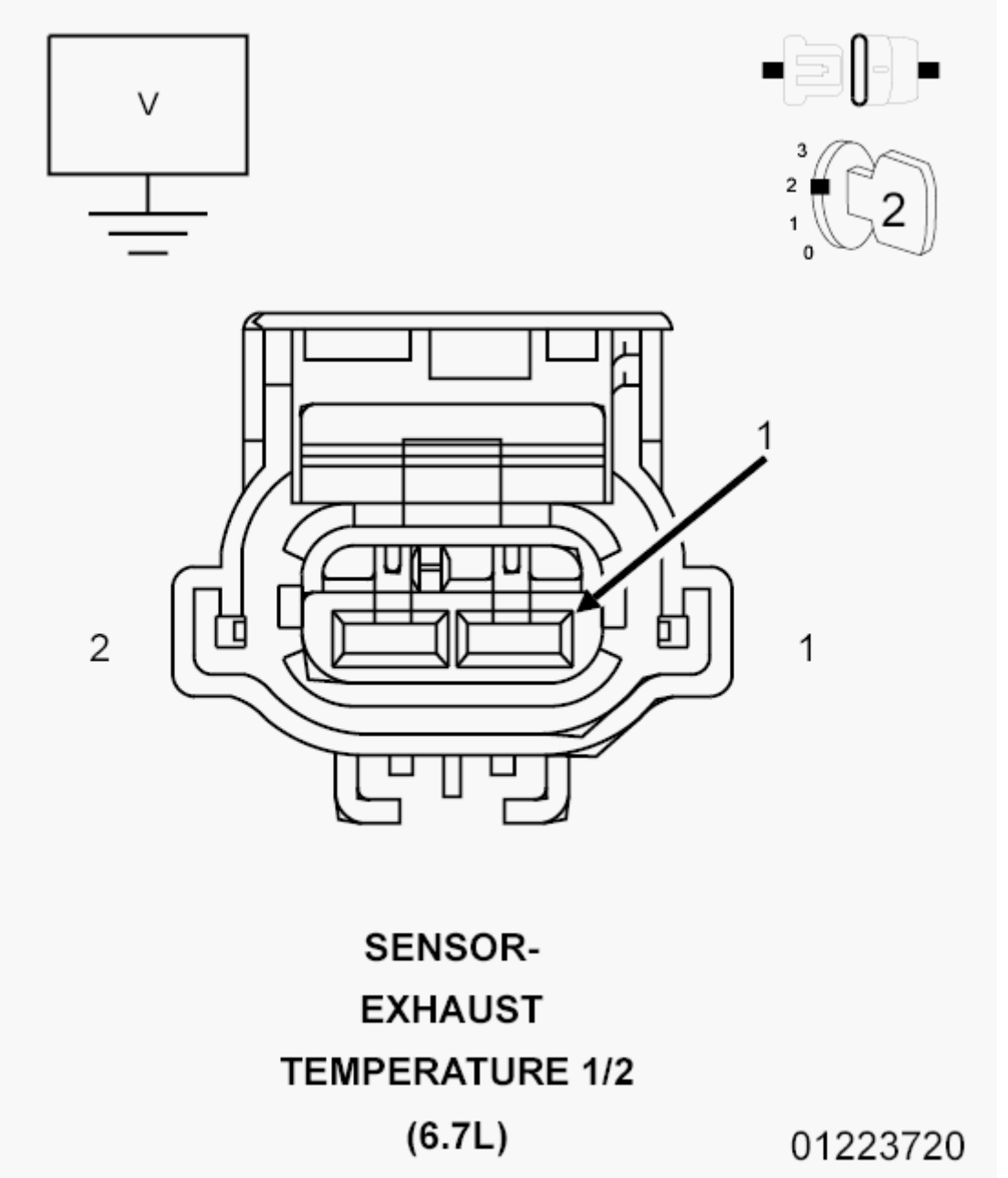

Fig. 34: Checking Exhaust Gas Temperature 1/2 Signal Circuit For Short To Voltage
Courtesy of CHRYSLER GROUP, LLC

1. Disconnect the Exhaust Temperature Sensor 1/2 harness connector.

   NOTE: Check connectors - Clean/repair as necessary.

2. Measure the voltage on the (K372) Exhaust Gas Temperature Sensor 1/2 Signal circuit at the Exhaust Temperature Sensor 1/2 harness connector.

   Is the voltage reading above 5.1 volts?

   Yes

   - Repair the (K372) Exhaust Gas Temperature Sensor 1/2 Signal circuit for a short to voltage.
   - Perform the POWERTRAIN VERIFICATION TEST. Refer to **POWERTRAIN VERIFICATION TEST - 6.7L** .

   No

   - Go To 3.

3. **CHECK THE (K372) EXHAUST GAS TEMPERATURE 1/2 SIGNAL CIRCUIT FOR AN OPEN/HIGH RESISTANCE**

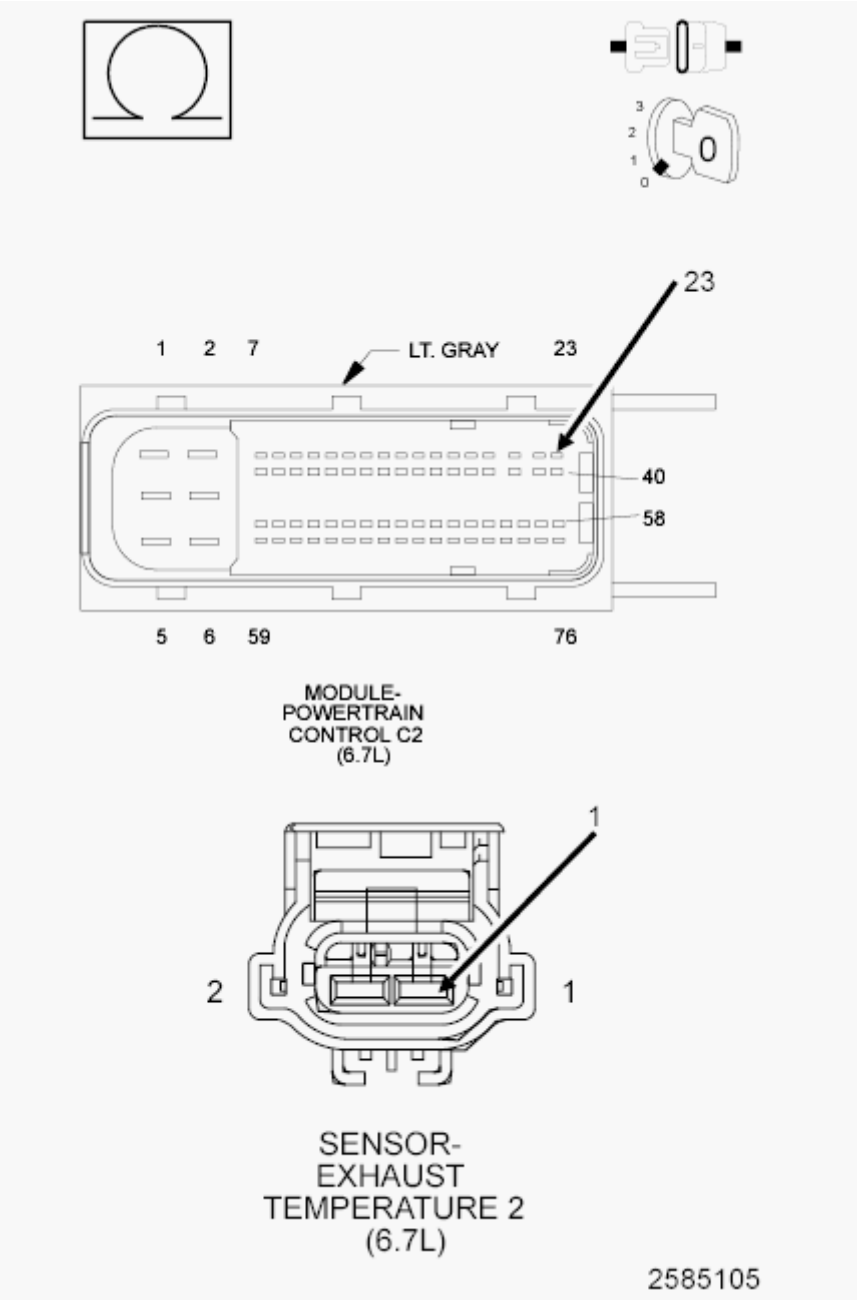

Fig. 35: Checking Exhaust Gas Temperature 1/2 Signal Circuit For An Open Or High Resistance
Courtesy of CHRYSLER GROUP, LLC

1. Turn the ignition off.
2. Disconnect the PCM C2 harness connector.
3. Measure the resistance of the (K372) Exhaust Gas Temperature Sensor 1/2 Signal circuit between the Exhaust Gas Temperature Sensor 1/2 harness connector and the PCM C2 harness connector.

   Is the resistance below 5.0 Ohms?

   Yes

- Go To 4.

No

- Repair the (K372) Exhaust Temperature 1/2 Signal circuit for an open or high resistance.
- Perform the POWERTRAIN VERIFICATION TEST. Refer to **POWERTRAIN VERIFICATION TEST - 6.7L** .

4. **CHECK THE (K900) SENSOR GROUND CIRCUIT FOR AN OPEN/HIGH RESISTANCE**

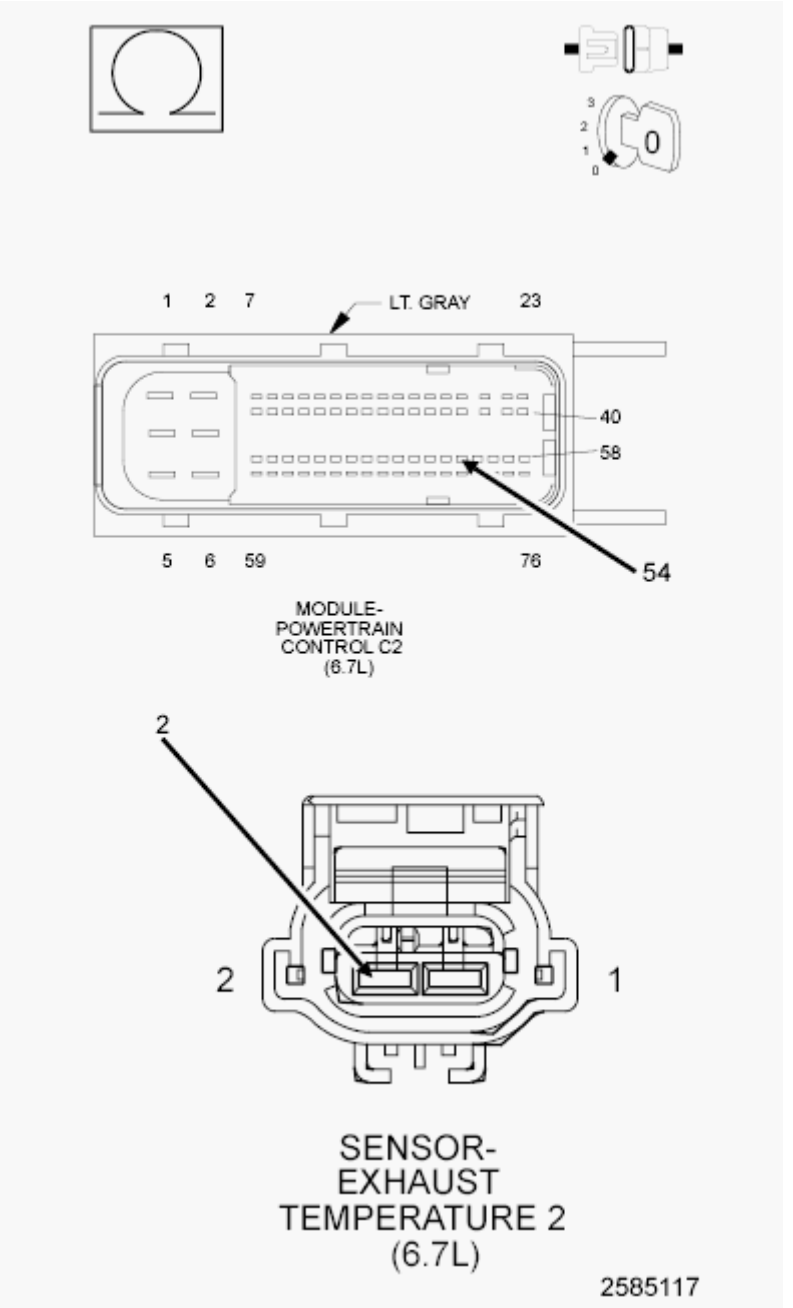

Fig. 36: Measuring Resistance Of Sensor Ground Circuit Between Exhaust Gas Temperature

Sensor 1/2 Harness Connector & PCM C2 Harness Connector
Courtesy of CHRYSLER GROUP, LLC

1. Measure the resistance of the (K900) Sensor Ground circuit between the Exhaust Gas Temperature Sensor 1/2 harness connector and the PCM C2 harness connector.

   Is the resistance below 5.0 Ohms?

   Yes

   - Go To 5.

   No

   - Repair the (K900) Sensor ground circuit for an open or high resistance.
   - Perform the POWERTRAIN VERIFICATION TEST. Refer to **POWERTRAIN VERIFICATION TEST - 6.7L** .

5. **CHECK THE EXHAUST GAS TEMPERATURE SENSOR**
   1. Turn the ignition on.
   2. While monitoring the scan tool, connect a jumper across the Exhaust Gas Temperature Sensor 1/2 harness connector for at least five seconds.

      Does the DTC P2032 become active?

      Yes

      - Replace the Exhaust Gas Temperature Sensor 1/2.
      - Perform the POWERTRAIN VERIFICATION TEST. Refer to **POWERTRAIN VERIFICATION TEST - 6.7L** .

      No

      - Replace the Powertrain Control Module in accordance with the service information.
      - Perform the POWERTRAIN VERIFICATION TEST. Refer to **POWERTRAIN VERIFICATION TEST - 6.7L** .

P203C-(DIESEL EXHAUST FLUID) REDUCTANT LEVEL SENSOR CIRCUIT LOW

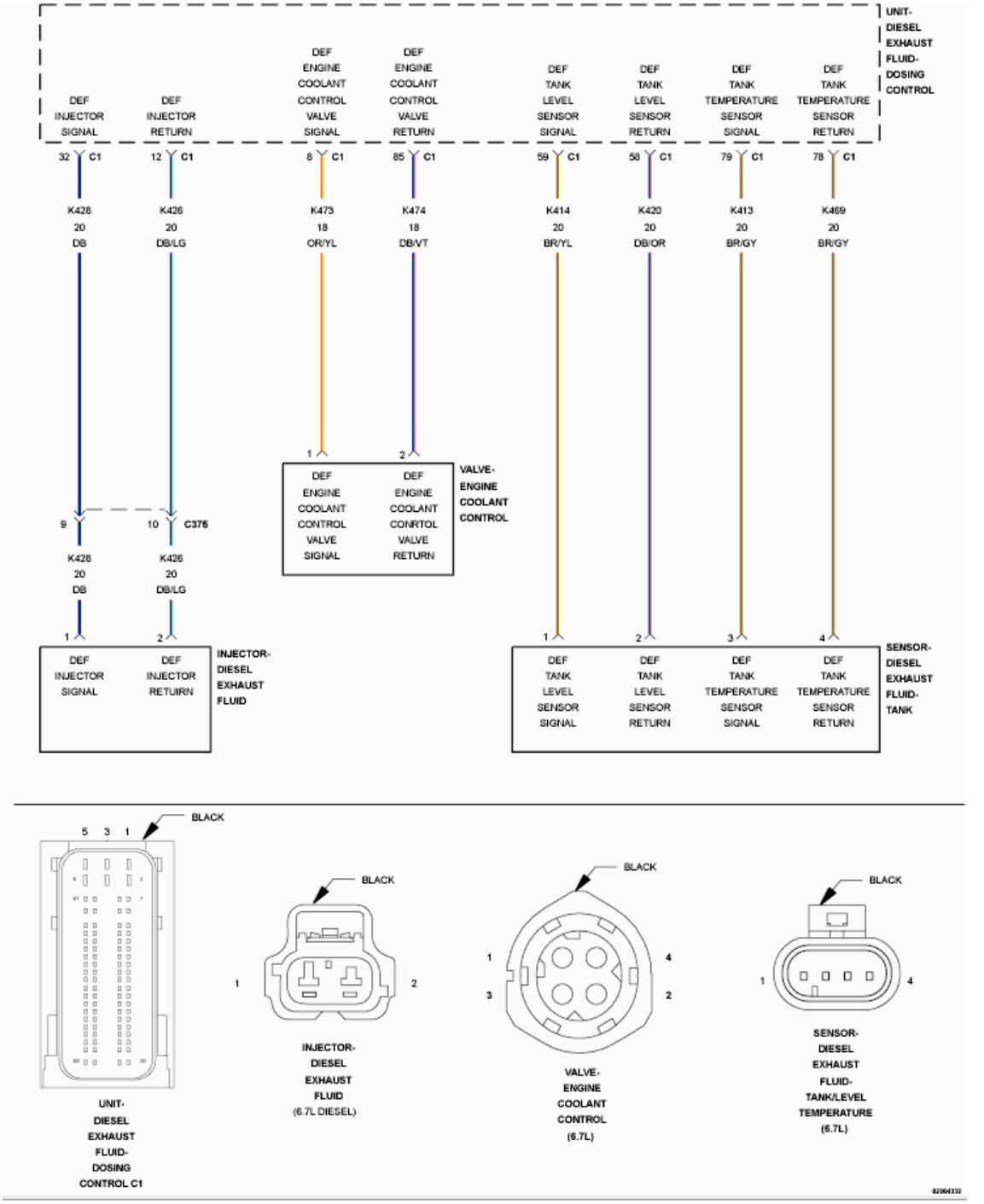

Fig. 37: Diesel Exhaust Fluid Reductant Tank Heater Control Circuit Wiring Diagram
Courtesy of CHRYSLER GROUP, LLC

For a complete wiring diagram, **refer to appropriate SYSTEM WIRING DIAGRAMS article** .

THEORY OF OPERATION

The Diesel Exhaust Fluid (DEF) Tank Level Sensor and Diesel Exhaust Fluid (DEF) Tank Temperature Sensor

are a combination sensor used to measure the level and temperature of the fluid inside the DEF Tank. Though combined, the level sensor and the temperature sensor operate independent of each other. Both sensors operate as a two wire 5-Volt sensor. The DEF Tank Level Sensor is a 14 point magnetic reed switch sensor. The DEF Tank Temperature Sensor is a negative temperature coefficient sensor. The DEF Dosing Control Unit will illuminate the MIL lamp via the Powertrain Control Module (PCM) immediately after this diagnostic runs and fails. The DEF Dosing Control Unit will turn off the MIL lamp via the PCM immediately after the diagnostic runs and passes. The DEF system will continue to dose and the NOx monitor will continue to execute while the DTC is active.

WHEN MONITORED:

With the ignition on.

SET CONDITION:

The DEF Dosing Control Unit detects that the (K414) DEF Tank Level Sensor Signal circuit is below 0.25 of a Volt for one second.

POSSIBLE CAUSES

Possible Causes
(K414) DIESEL EXHAUST FLUID TANK LEVEL SENSOR SIGNAL CIRCUIT SHORTED TO GROUND
(K414) DEF TANK LEVEL SENSOR SIGNAL CIRCUIT SHORTED TO THE (K420) DIESEL EXHAUST FLUID TANK LEVEL SENSOR RETURN CIRCUIT
DIESEL EXHAUST FLUID TANK LEVEL SENSOR
DIESEL EXHAUST FLUID DOSING CONTROL UNIT

Always perform the Pre-Diagnostic Troubleshooting procedure before proceeding. Refer to PRE-DIAGNOSTIC TROUBLESHOOTING PROCEDURE - 6.7L .

DIAGNOSTIC TEST

1. **ACTIVE DTC**
    1. Turn the ignition on for one minute, engine not running.
    2. With the scan tool check for active DTCs.

       Is the DTC active?

       Yes

       - Go To 2.

       No

       - Perform the INTERMITTENT CONDITION diagnostic procedure. Refer to

INTERMITTENT CONDITION - 6.7L .

2. **CHECK THE DEF TANK LEVEL SENSOR**
    1. Ignition on, engine not running.
    2. Disconnect the DEF Tank Level/Temperature Sensor harness connector.
    3. With the scan tool check DTCs.
    4. Monitor the scan tool for one minute.

    Did DTC P203D set as active after disconnecting the sensor?

    Yes

    - Replace the DEF Tank Level/Temperature Sensor in accordance with the service information. Refer to **SENSOR, DIESEL EXHAUST FLUID LEVEL/TEMPERATURE, REMOVAL** .
    - Perform the POWERTRAIN VERIFICATION TEST. Refer to **POWERTRAIN VERIFICATION TEST - 6.7L** .

    No

    - Go To 3.

3. **CHECK THE (K414) DEF TANK LEVEL SENSOR SIGNAL CIRCUIT FOR A SHORT TO GROUND**

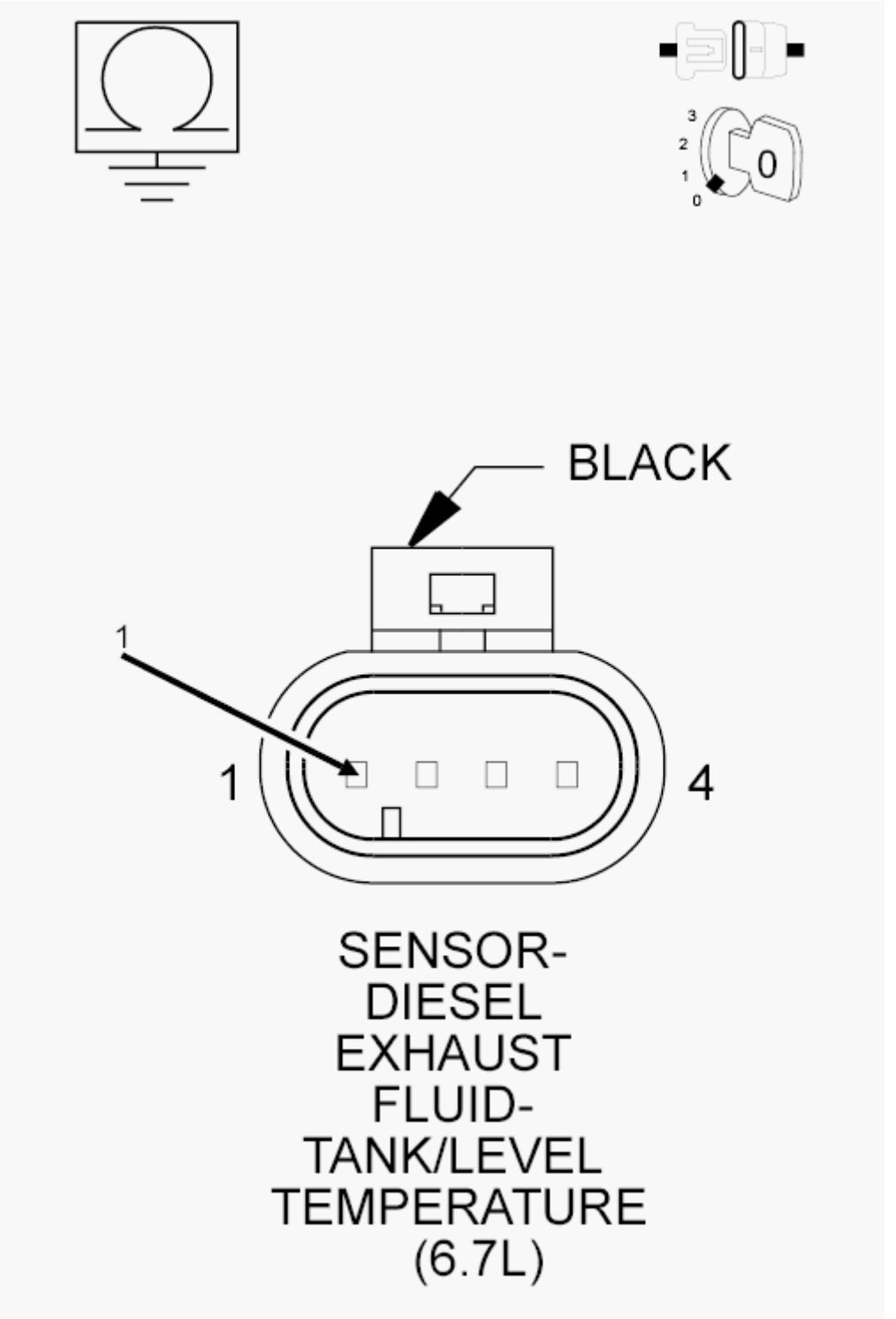

Fig. 38: Checking DEF Tank Level Sensor Signal Circuit For A Short To Ground
Courtesy of CHRYSLER GROUP, LLC

1. Turn ignition off.
2. Disconnect the DEF Dosing Control Unit C1 harness connector.

3. Measure the resistance between ground and the (K414) DEF Tank Level Sensor Signal circuit at the DEF Tank Level/Temperature Sensor harness connector.

   Is the resistance above 10k Ohms?

   Yes

   - Go To 4.

   No

   - Repair the (K414) DEF Tank Level Sensor Signal circuit for a short to ground.
   - Perform the POWERTRAIN VERIFICATION TEST. Refer to **POWERTRAIN VERIFICATION TEST - 6.7L** .

4. **CHECK FOR THE (K414) DEF TANK LEVEL SENSOR SIGNAL CIRCUIT SHORTED TO THE (K420) DEF TANK LEVEL SENSOR RETURN CIRCUIT**

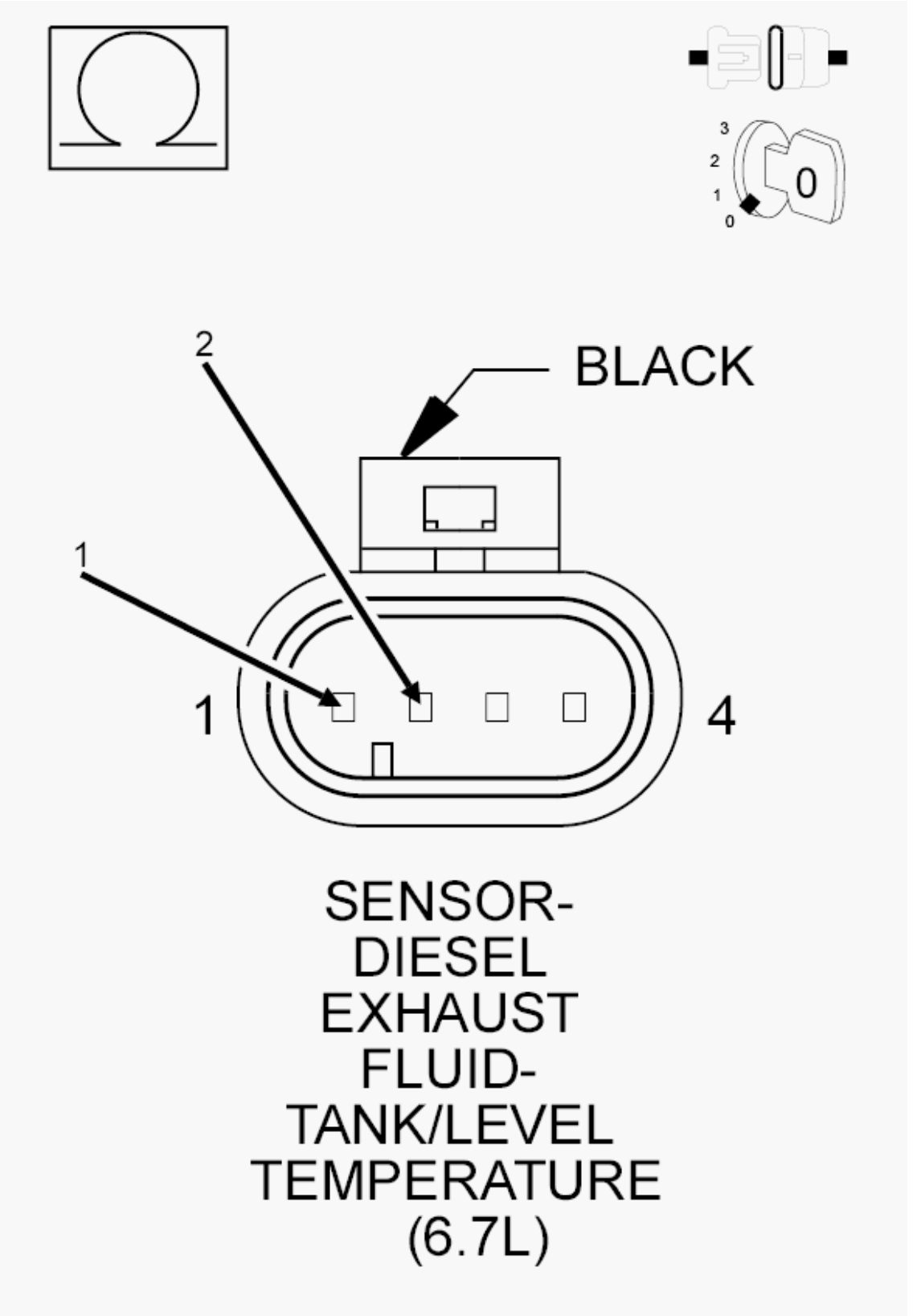

Fig. 39: Checking DEF Tank Level Sensor Signal Circuit For A Short
Courtesy of CHRYSLER GROUP, LLC

1. Measure the resistance between the (K414) DEF Tank Level Sensor Signal circuit and the (K420) DEF Tank Level Sensor Return circuit at the DEF Tank Level/Temperature harness connector.

   Is the resistance above 10k Ohms?

   Yes

   - Replace the DEF Dosing Control Unit in accordance with the service information. Refer to **UNIT, DIESEL EXHAUST FLUID DOSING CONTROL, REMOVAL** .
   - Perform the POWERTRAIN VERIFICATION TEST. Refer to **POWERTRAIN VERIFICATION TEST - 6.7L** .

   No

   - Repair the short between the (K414) DEF Tank Level Sensor Signal circuit and the (K420) DEF Tank Level Sensor Return circuit.
   - Perform the POWERTRAIN VERIFICATION TEST. Refer to **POWERTRAIN VERIFICATION TEST - 6.7L** .

P203D-(DIESEL EXHAUST FLUID) REDUCTANT LEVEL SENSOR CIRCUIT HIGH

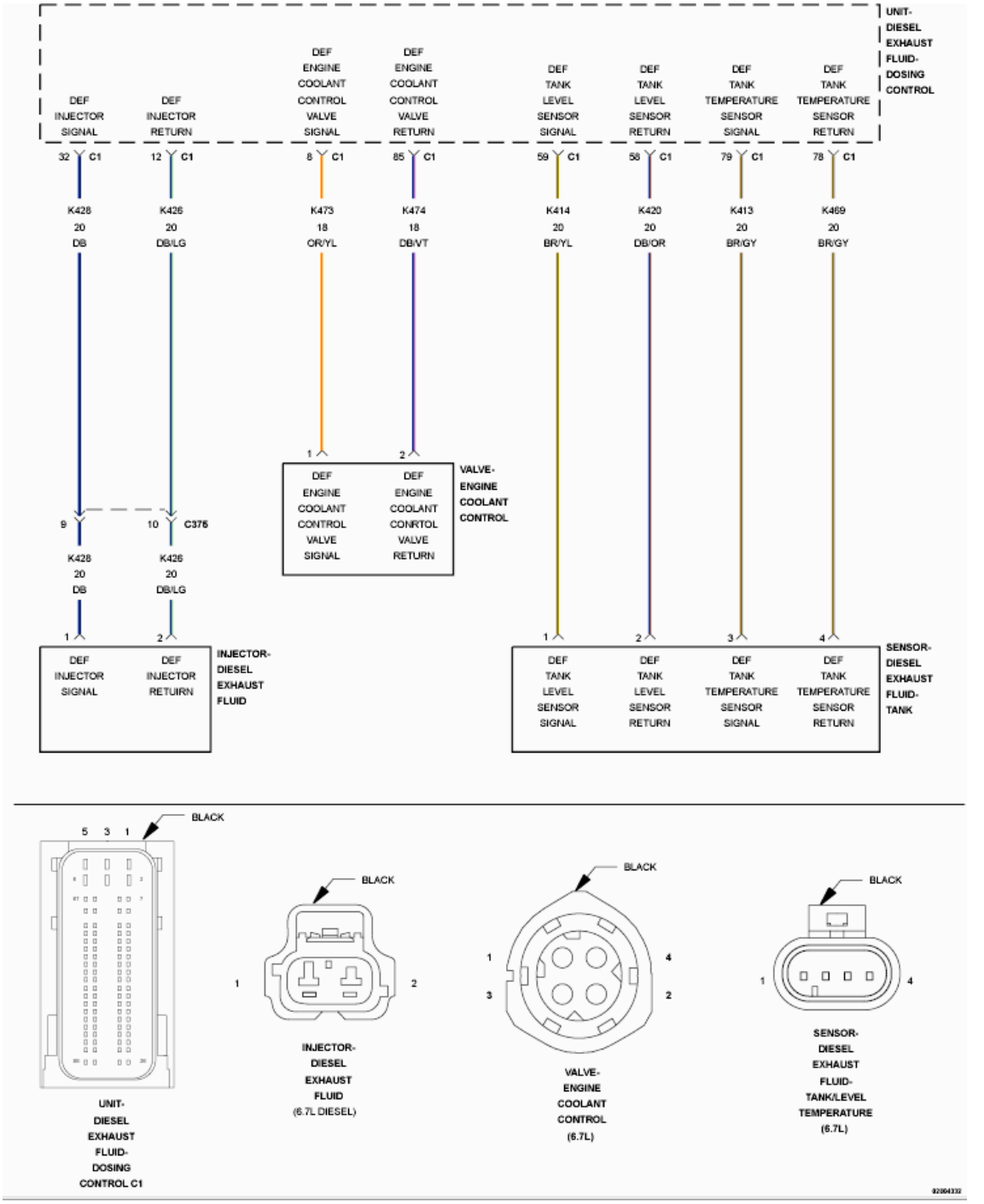

Fig. 40: Diesel Exhaust Fluid Reductant Tank Heater Control Circuit Wiring Diagram
Courtesy of CHRYSLER GROUP, LLC

For a complete wiring diagram, **refer to appropriate SYSTEM WIRING DIAGRAMS article** .

THEORY OF OPERATION

The Diesel Exhaust Fluid (DEF) Tank Level Sensor and Diesel Exhaust Fluid (DEF) Tank Temperature Sensor

are a combination sensor used to measure the level and temperature of the fluid inside the DEF Tank. Though combined, the level sensor and the temperature sensor operate independent of each other. Both sensors operate as a two wire 5-Volt sensor. The DEF Tank Level Sensor is a 14 point magnetic reed switch sensor. The DEF Tank Temperature Sensor is a negative temperature coefficient sensor. The DEF Dosing Control Unit will illuminate the MIL lamp immediately via the Powertrain Control Module (PCM) after this diagnostic runs and fails. The DEF Dosing Control Unit will turn off the MIL lamp via the PCM immediately after the diagnostic runs and passes. The DEF system will continue to dose and the NOx monitor will continue to execute while the DTC is active.

WHEN MONITORED:

With the ignition on.

SET CONDITION:

The DEF Dosing Control Unit detects that the (K414) DEF Tank Level Sensor Signal circuit is above 4.5 Volts for one second.

POSSIBLE CAUSES

Possible Causes
(K414) DIESEL EXHAUST FLUID TANK LEVEL SENSOR SIGNAL CIRCUIT SHORTED TO VOLTAGE
(K414) DIESEL EXHAUST FLUID TANK LEVEL SENSOR SIGNAL CIRCUIT OPEN/HIGH RESISTANCE
(K420) DIESEL EXHAUST FLUID TANK LEVEL SENSOR RETURN CIRCUIT OPEN/HIGH RESISTANCE
DIESEL EXHAUST FLUID TANK LEVEL SENSOR
DIESEL EXHAUST FLUID DOSING CONTROL UNIT

Always perform the Pre-Diagnostic Troubleshooting procedure before proceeding. Refer to PRE-DIAGNOSTIC TROUBLESHOOTING PROCEDURE - 6.7L .

DIAGNOSTIC TEST

1. **ACTIVE DTC**
    1. Turn the ignition on for one minute, engine not running.
    2. With the scan tool check for active DTCs.

       Is the DTC active?

       Yes

       - Go To 2.

       No

- Perform the INTERMITTENT CONDITION diagnostic procedure. Refer to **INTERMITTENT CONDITION - 6.7L** .

2. **CHECK THE (K414) DEF TANK LEVEL SENSOR SIGNAL CIRCUIT FOR A SHORT TO VOLTAGE**

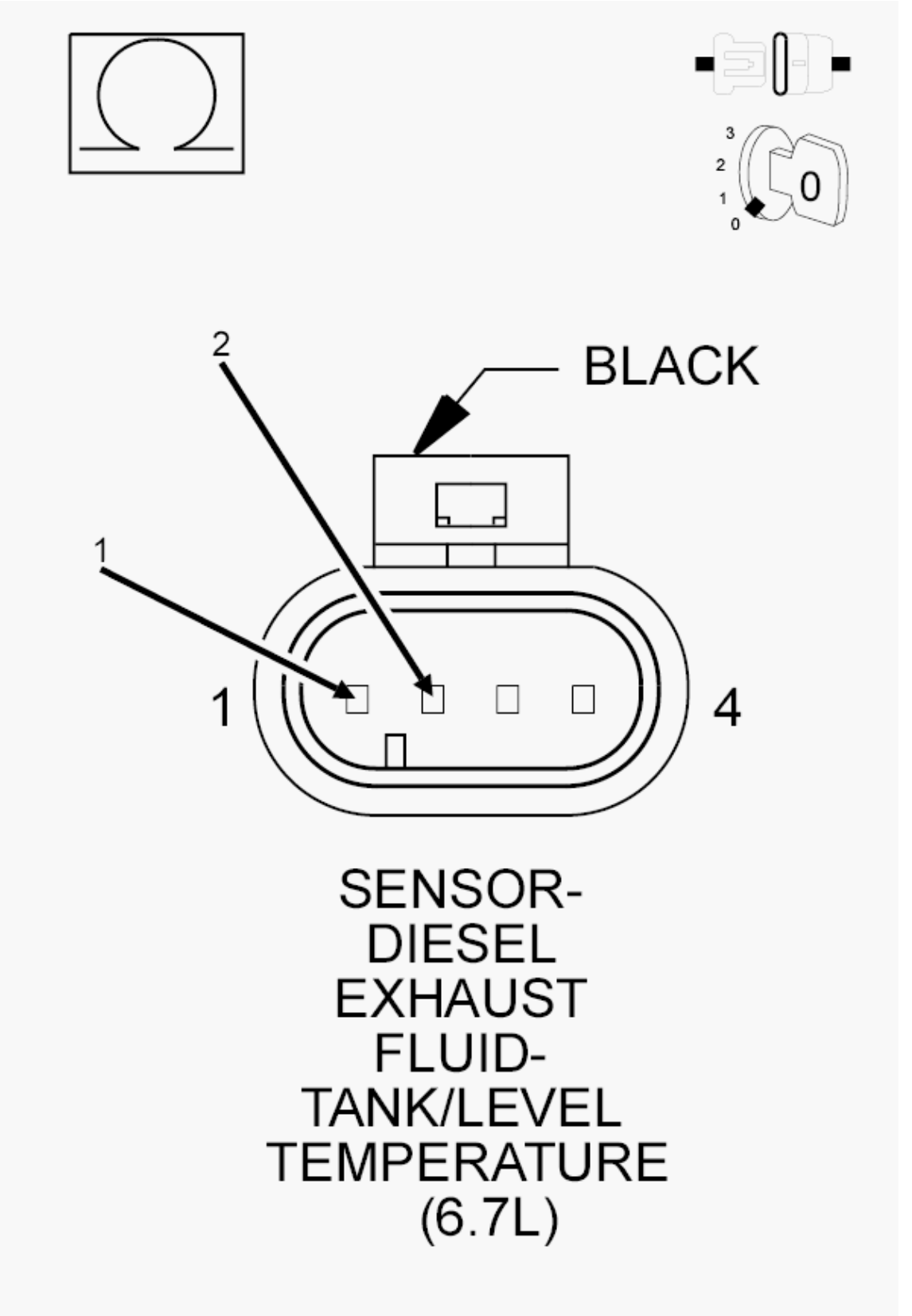

Fig. 41: Checking DEF Tank Level Sensor Signal Circuit For A Short To Voltage

Courtesy of CHRYSLER GROUP, LLC

1. Turn ignition off.
2. Disconnect the DEF Tank Level/Temperature Sensor harness connector.
3. Turn the ignition on.
4. Measure the voltage on the (K414) DEF Tank Level Sensor Signal circuit at the DEF Tank Level/Temperature Sensor harness connector.

   Does the voltage measure above 5.1 Volts?

   Yes

   - Repair the (K414) DEF Tank Level Sensor Signal circuit for a short to voltage.
   - Perform the POWERTRAIN VERIFICATION TEST. Refer to **POWERTRAIN VERIFICATION TEST - 6.7L** .

   No

   - Go To 3.

3. **FUEL LEVEL SENSOR**
   1. Turn the ignition off.
   2. Connect a jumper between the (K414) DEF Tank Level Sensor Signal circuit and the (K420) DEF Tank Level Sensor Return circuit at the DEF Tank Level/Temperature harness connector.
   3. Turn the ignition on, engine not running.
   4. With the scan tool check for DTCs.
   5. Monitor the scan tool for one minute.

      Did DTC P203C set as active after shorting the circuits together?

      Yes

      - Replace the DEF Tank Level/Temperature Sensor in accordance with the service information. Refer to **SENSOR, DIESEL EXHAUST FLUID LEVEL/TEMPERATURE, REMOVAL** .
      - Perform the POWERTRAIN VERIFICATION TEST. Refer to **POWERTRAIN VERIFICATION TEST - 6.7L** .

      No

      - Go To 4.

4. **CHECK THE (K414) DEF TANK LEVEL SENSOR SIGNAL CIRCUIT FOR AN OPEN/HIGH RESISTANCE**

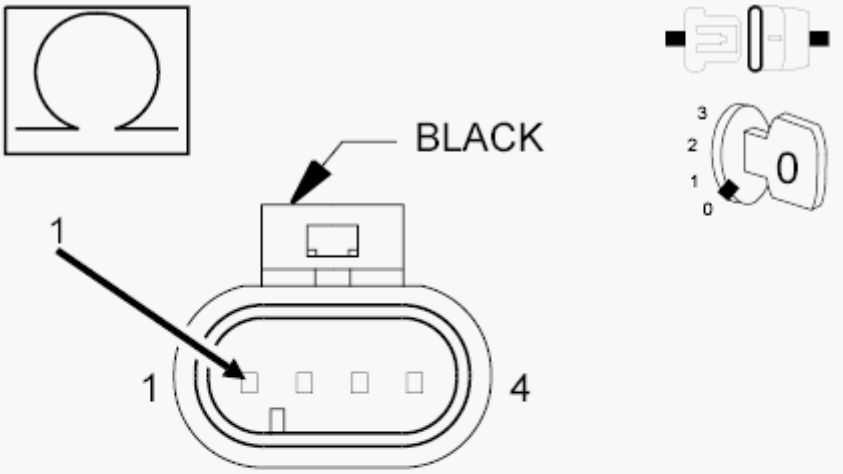

SENSOR-
DIESEL
EXHAUST
FLUID-
TANK/LEVEL
TEMPERATURE
(6.7L)

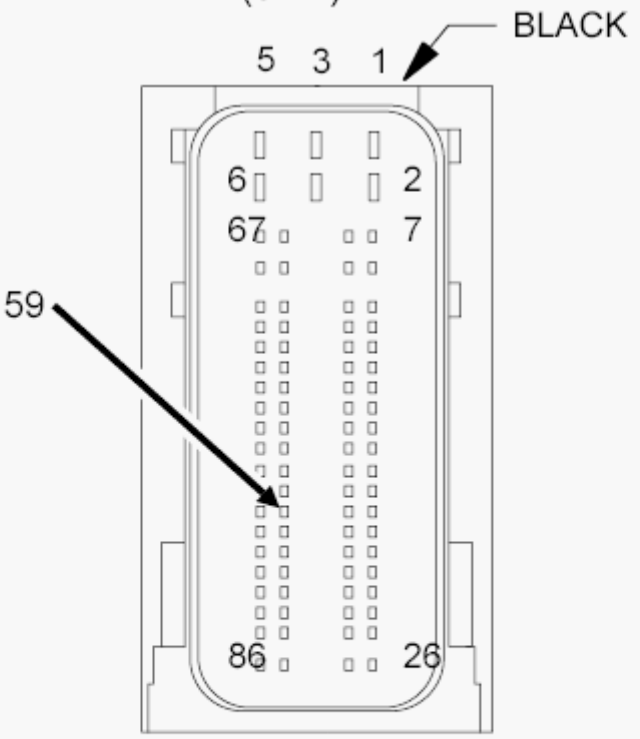

UNIT-
DIESEL
EXHAUST
FLUID-
DOSING

Fig. 42: Checking DEF Tank Level Sensor Signal Circuit For An Open/High Resistance
Courtesy of CHRYSLER GROUP, LLC

1. Turn ignition off.
2. Disconnect the DEF Dosing Control Unit C1 harness connector.
3. Measure the resistance of the (K414) DEF Tank Level Sensor Signal circuit between the DEF Tank Level/Temperature Sensor harness connector and the Diesel Exhaust Fluid Control Unit C1 harness connector.

   Is the resistance below 5.0 Ohms?

   Yes

   - Go To 5.

   No

   - Repair the (K414) DEF Tank Level Sensor Signal circuit for an open or high resistance.
   - Perform the POWERTRAIN VERIFICATION TEST. Refer to **POWERTRAIN VERIFICATION TEST - 6.7L** .

5. **CHECK THE (K420) DEF TANK LEVEL SENSOR RETURN CIRCUIT FOR AN OPEN/HIGH RESISTANCE**

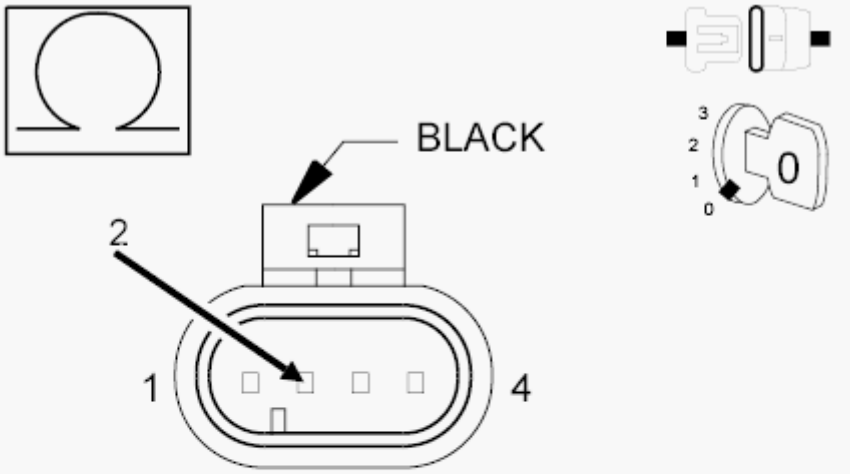

SENSOR-
DIESEL
EXHAUST
FLUID-
TANK/LEVEL
TEMPERATURE
(6.7L)

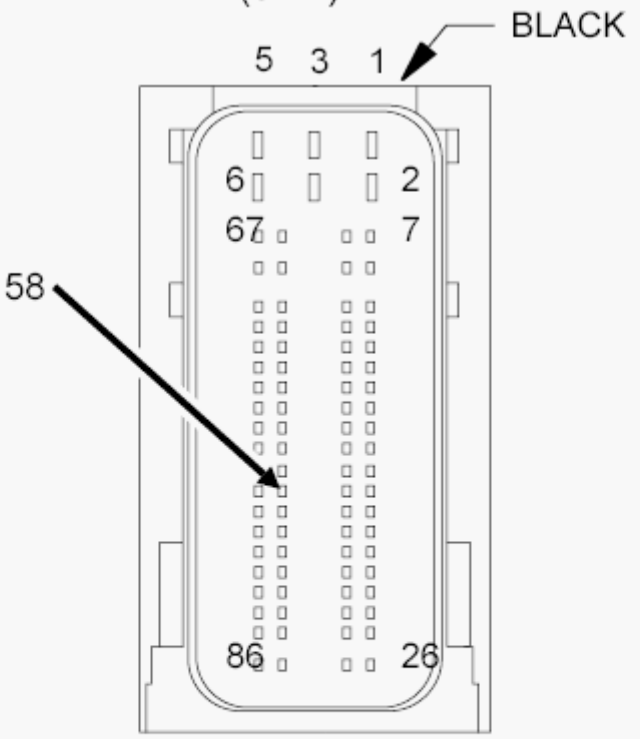

UNIT-
DIESEL
EXHAUST
FLUID-
DOSING

Fig. 43: Checking DEF Tank Level Sensor Return Circuit For An Open/High Resistance
Courtesy of CHRYSLER GROUP, LLC

1. Measure the resistance of the (K420) DEF Tank Level Sensor Return circuit between the DEF Tank Level/Temperature Sensor harness connector and the DEF Dosing Control Unit C1 harness connector.

   Is the resistance below 5.0 Ohms?

   Yes

   - Replace the DEF Dosing Control Unit in accordance with the service information. Refer to **UNIT, DIESEL EXHAUST FLUID DOSING CONTROL, REMOVAL** .
   - Perform the POWERTRAIN VERIFICATION TEST. Refer to **POWERTRAIN VERIFICATION TEST - 6.7L** .

   No

   - Repair the (K420) DEF Tank Level Sensor Return circuit for an open or high resistance.
   - Perform the POWERTRAIN VERIFICATION TEST. Refer to **POWERTRAIN VERIFICATION TEST - 6.7L** .

P203F-(DIESEL EXHAUST FLUID) REDUCTANT LEVEL TOO LOW

For a complete wiring diagram, **refer to appropriate SYSTEM WIRING DIAGRAMS article** .

THEORY OF OPERATION

The Diesel Exhaust Fluid (DEF) system holds a total of eight gallons of fluid. There are a series of three warning levels to indicate to the customer when the fluid is low or incorrect. The driver warning and inducement strategy for a low fluid condition is as follows: The first warning will occur when the tank level is at approximately three gallons. The customer will here a chime and get an EVIC message reading "LOW DEF REFILL SOON". The second warning level will occur when the tank level is at approximately two gallons. The customer will here a chime and get an EVIC message reading "REFILL DEF ENGINE WILL NOT RESTART IN XXX MILES". If the message is ignored until the tank is empty, the vehicle will not start. The customer will here a chime and get an EVIC message reading "REFILL DEF ENGINE WILL NOT START". The system will arrive at this level with approximately 0.7 gallon of fluid left in the tank. **The vehicle will not start until a minimum of two and a half gallons of approved Diesel Exhaust Fluid is added to the tank** .

WHEN MONITORED:

Continuously with the ignition on.

SET CONDITION:

The DEF Dosing Control Unit detects that the DEF Tank is low.

POSSIBLE CAUSES

Possible Causes
DIESEL EXHAUST FLUID TANK LOW

Always perform the Pre-Diagnostic Troubleshooting procedure before proceeding. Refer to PRE-DIAGNOSTIC TROUBLESHOOTING PROCEDURE - 6.7L .

DIAGNOSTIC TEST

1. **ACTIVE DTC**
    1. Turn the ignition on, engine not running.
    2. With the scan tool check for active DTCs.

    Is the DTC active?

    Yes

    - The DEF Tank is low. If the vehicle will not start due to the tank being empty, **a minimum of two and a half gallons of approved Diesel Exhaust Fluid** must be added for engine to be started.
    - Perform the POWERTRAIN VERIFICATION TEST. Refer to **POWERTRAIN VERIFICATION TEST - 6.7L** .

    No

    - Perform the INTERMITTENT CONDITION diagnostic procedure. Refer to **INTERMITTENT CONDITION - 6.7L** .

P2048-(DIESEL EXHAUST FLUID) REDUCTANT INJECTOR CIRCUIT LOW

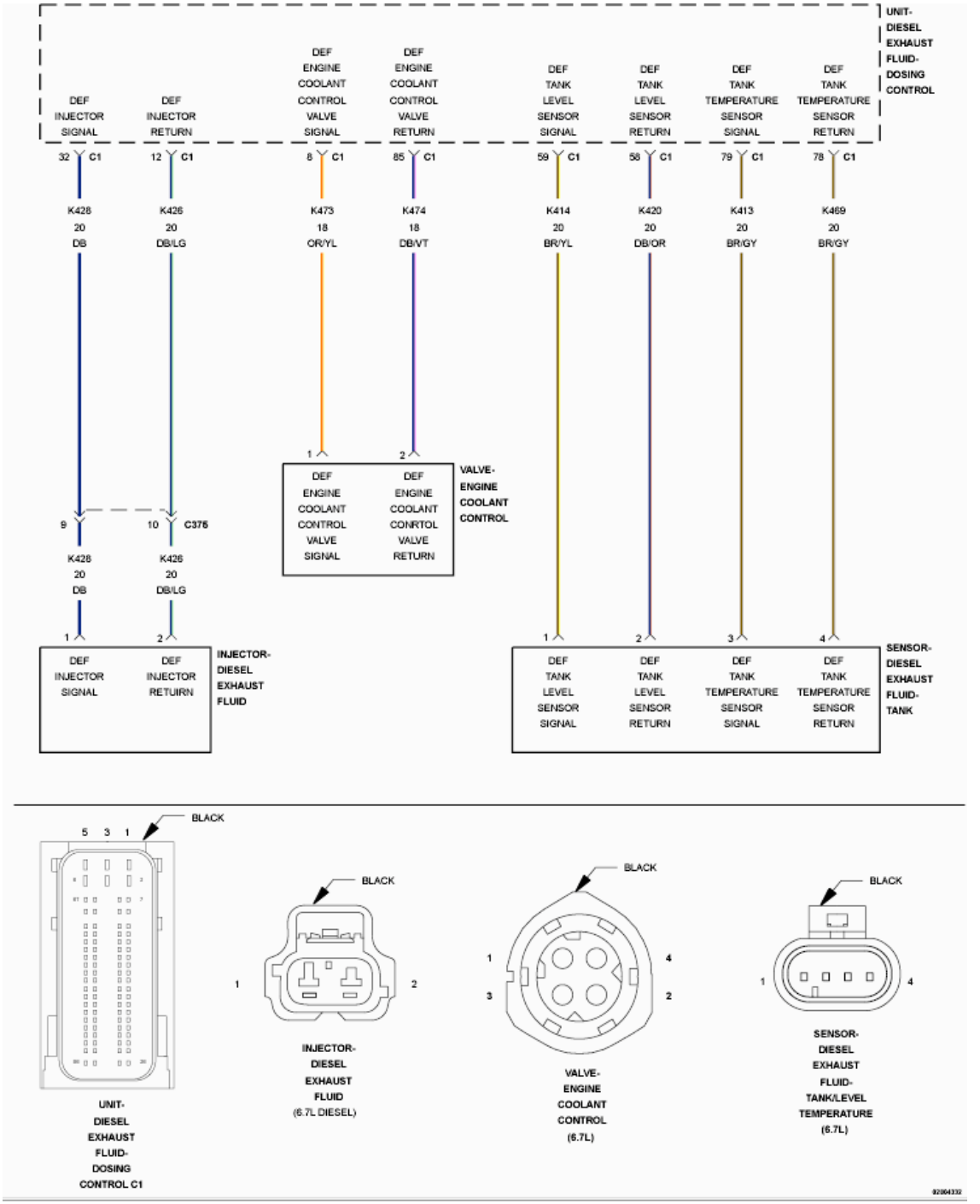

Fig. 44: Diesel Exhaust Fluid Reductant Tank Heater Control Circuit Wiring Diagram
Courtesy of CHRYSLER GROUP, LLC

For a complete wiring diagram, **refer to appropriate SYSTEM WIRING DIAGRAMS article** .

THEORY OF OPERATION

The Diesel Exhaust Fluid (DEF) Injector is mounted to the decomposition tube at the inlet of the Selective

Catalytic Reduction (SCR) Catalyst. The DEF Dosing Control Unit sends a Pulse Width Modulated (PWM) signal to DEF Injector to vary the amount of fluid sprayed into the exhaust stream. The DEF Dosing Control Unit will illuminate the MIL lamp via the Powertrain Control Module (PCM) immediately after this diagnostic runs and fails and diesel exhaust fluid injection into the aftertreatment system is disabled. The DEF Dosing Control Unit will turn off the MIL lamp via the PCM immediately after the diagnostic runs and passes for three consecutive key cycles.

WHEN MONITORED:

With the ignition on and the DEF Injector is commanded on.

SET CONDITION:

The DEF Dosing Control Unit that the DEF Injector control circuit voltage is below a calibrated value.

POSSIBLE CAUSES

Possible Causes
(K428) DIESEL EXHAUST FLUID INJECTOR SIGNAL CIRCUIT OPEN/HIGH RESISTANCE
(K426) DIESEL EXHAUST FLUID INJECTOR RETURN CIRCUIT OPEN/HIGH RESISTANCE
(K428) DIESEL EXHAUST FLUID INJECTOR SIGNAL CIRCUIT SHORTED TO GROUND
(K426) DIESEL EXHAUST FLUID INJECTOR RETURN CIRCUIT SHORTED TO GROUND
DIESEL EXHAUST FLUID INJECTOR
DIESEL EXHAUST FLUID DOSING CONTROL UNIT

Always perform the Pre-Diagnostic Troubleshooting procedure before proceeding. Refer to PRE-DIAGNOSTIC TROUBLESHOOTING PROCEDURE - 6.7L .

DIAGNOSTIC TEST

1. **ACTIVE DTC**
    1. Turn the ignition on for one minute, engine not running.
    2. With the scan tool, navigate to Systems Tests and actuate the Diesel Exhaust Fluid Doser Pump Override Test.
    3. With the scan tool, View DTCs.

    Is the DTC active?

    Yes

    - Go To 2.

    No

    - Perform the INTERMITTENT CONDITION diagnostic procedure. Refer to **INTERMITTENT CONDITION - 6.7L** .

2. **CHECK THE (K428) DEF INJECTOR SIGNAL CIRCUIT FOR AN OPEN/HIGH RESISTANCE**

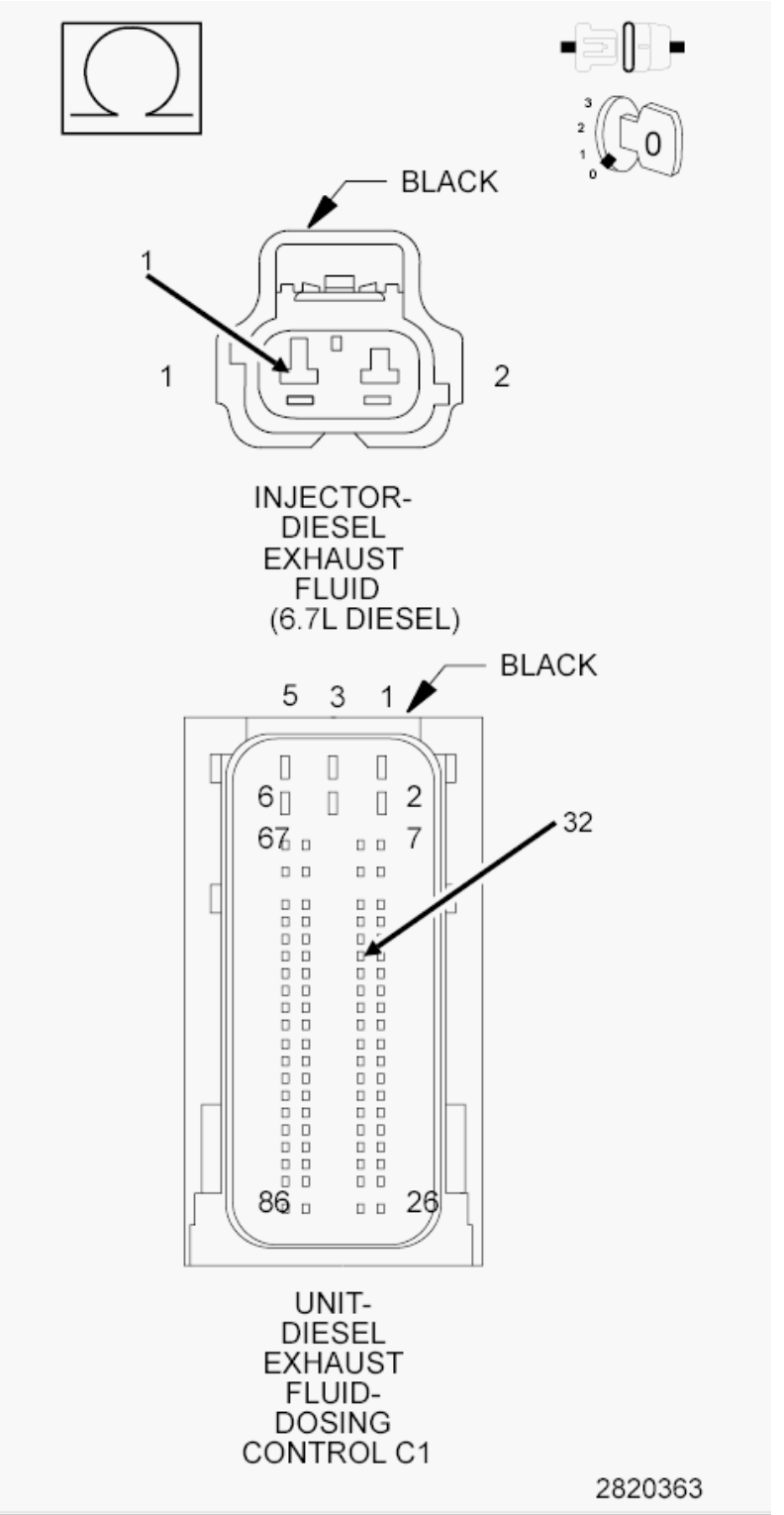

Fig. 45: Checking DEF Injector Signal Circuit For An Open/High Resistance
Courtesy of CHRYSLER GROUP, LLC

1. Stop actuation of the Diesel Exhaust Fluid Doser Pump Override Test.
2. Turn ignition off.
3. Disconnect the DEF Injector harness connector.
4. Disconnect the DEF Dosing Control Unit C1 harness connector.
5. Measure the resistance of the (K428) DEF Injector Signal circuit between the Diesel Exhaust Fluid Injector harness connector and the DEF Dosing Control Unit C1 harness connector.

   Is the resistance below 5.0 Ohms?

   Yes

   - Go To 3.

   No

   - Repair the (K428) DEF Injector Signal circuit for an open or high resistance.
   - Perform the POWERTRAIN VERIFICATION TEST. Refer to **POWERTRAIN VERIFICATION TEST - 6.7L** .

3. **CHECK THE (K426) DEF INJECTOR RETURN CIRCUIT FOR AN OPEN/HIGH RESISTANCE**

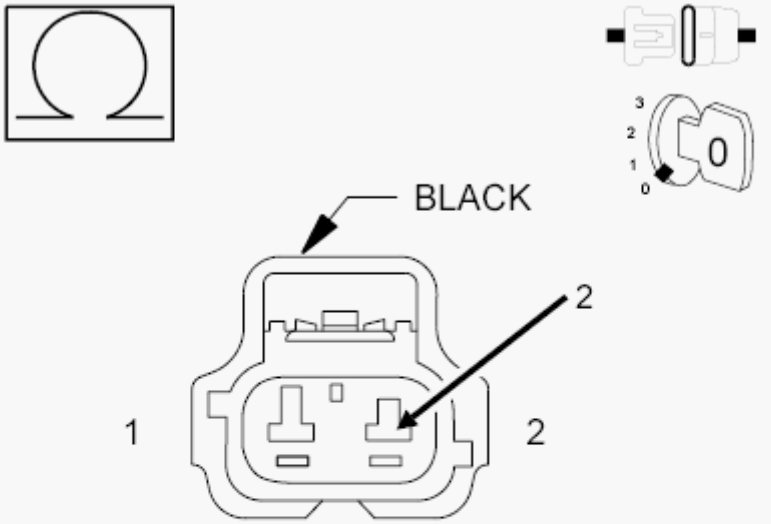

INJECTOR-
DIESEL
EXHAUST
FLUID
(6.7L DIESEL)

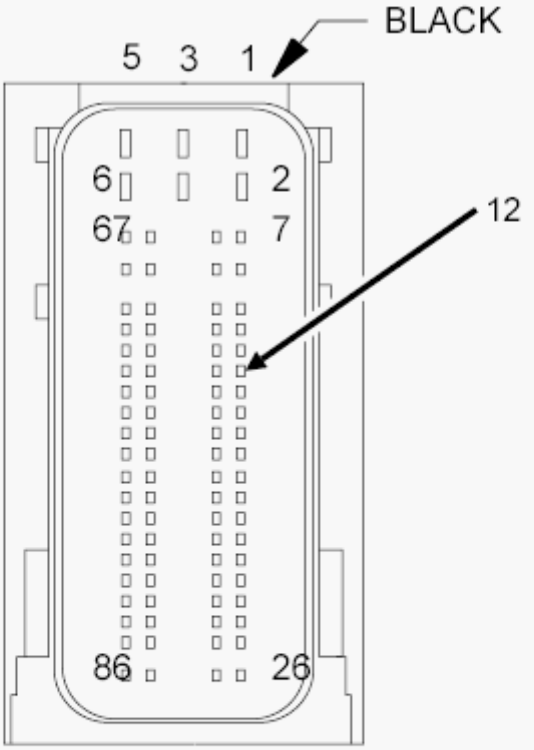

UNIT-
DIESEL
EXHAUST
FLUID-
DOSING

Fig. 46: Checking DEF Injector Return Circuit For An Open/High Resistance
Courtesy of CHRYSLER GROUP, LLC

1. Measure the resistance of the (K426) DEF Injector Return circuit between the Diesel Exhaust Fluid Injector harness connector and the DEF Dosing Control Unit C1 harness connector.

   Is the resistance below 5.0 Ohms?

   Yes

   - Go To 4.

   No

   - Repair the (K426) DEF Injector Return circuit for an open or high resistance.
   - Perform the POWERTRAIN VERIFICATION TEST. Refer to **POWERTRAIN VERIFICATION TEST - 6.7L** .

4. **CHECK THE (K428) DEF INJECTOR SIGNAL CIRCUIT FOR A SHORT TO GROUND**

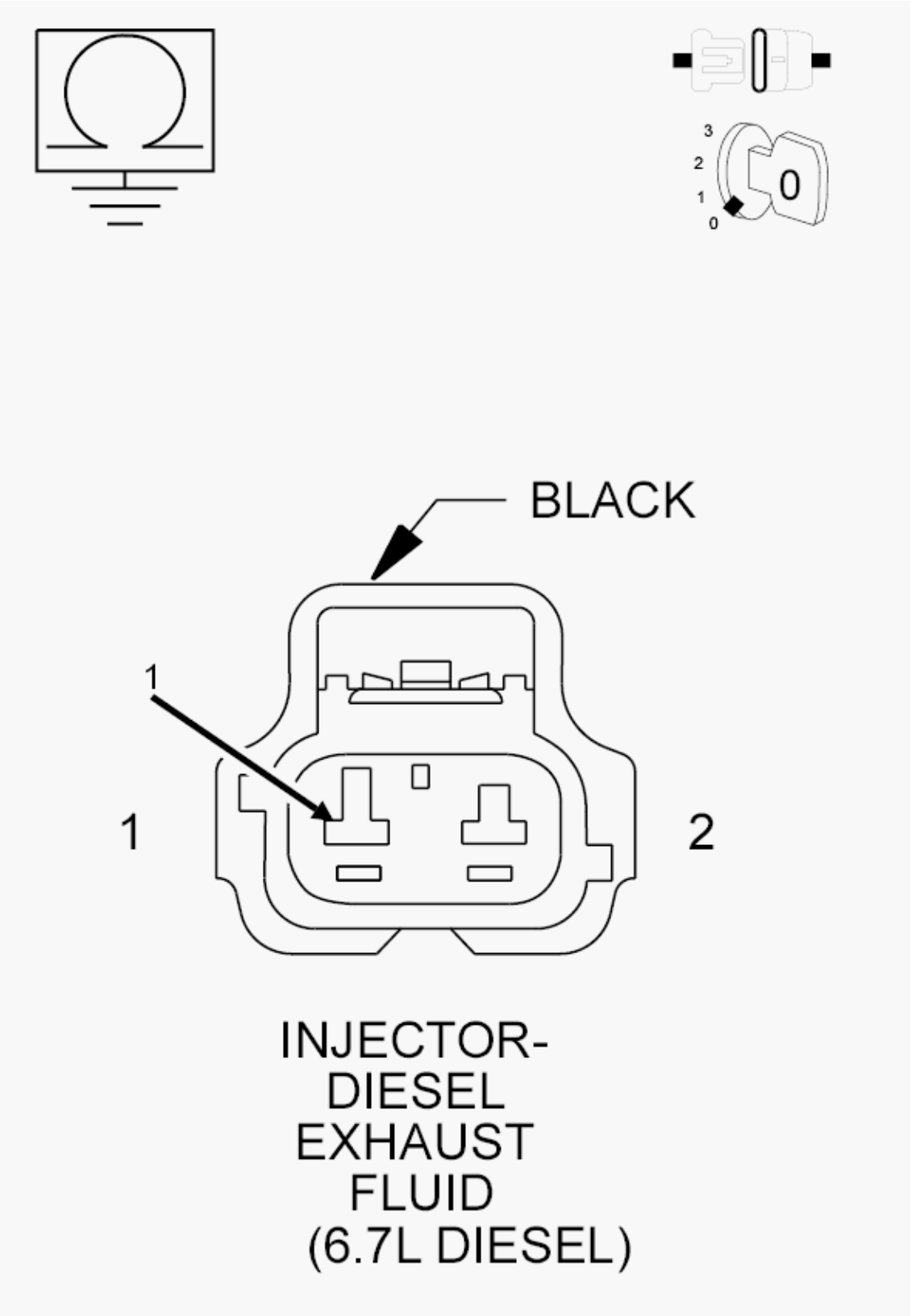

Fig. 47: Checking DEF Injector Signal Circuit For A Short To Ground
Courtesy of CHRYSLER GROUP, LLC

1. Measure the resistance between ground and the (K428) DEF Injector Signal circuit at the Diesel Exhaust Fluid Injector harness connector.

   Is the resistance above 10k Ohms?

   Yes

   - Go To 5.

   No

   - Repair the (K428) DEF Injector Signal circuit for a short to ground.
   - Perform the POWERTRAIN VERIFICATION TEST. Refer to **POWERTRAIN VERIFICATION TEST - 6.7L** .

5. **CHECK THE (K426) DEF INJECTOR RETURN CIRCUIT FOR A SHORT TO GROUND**

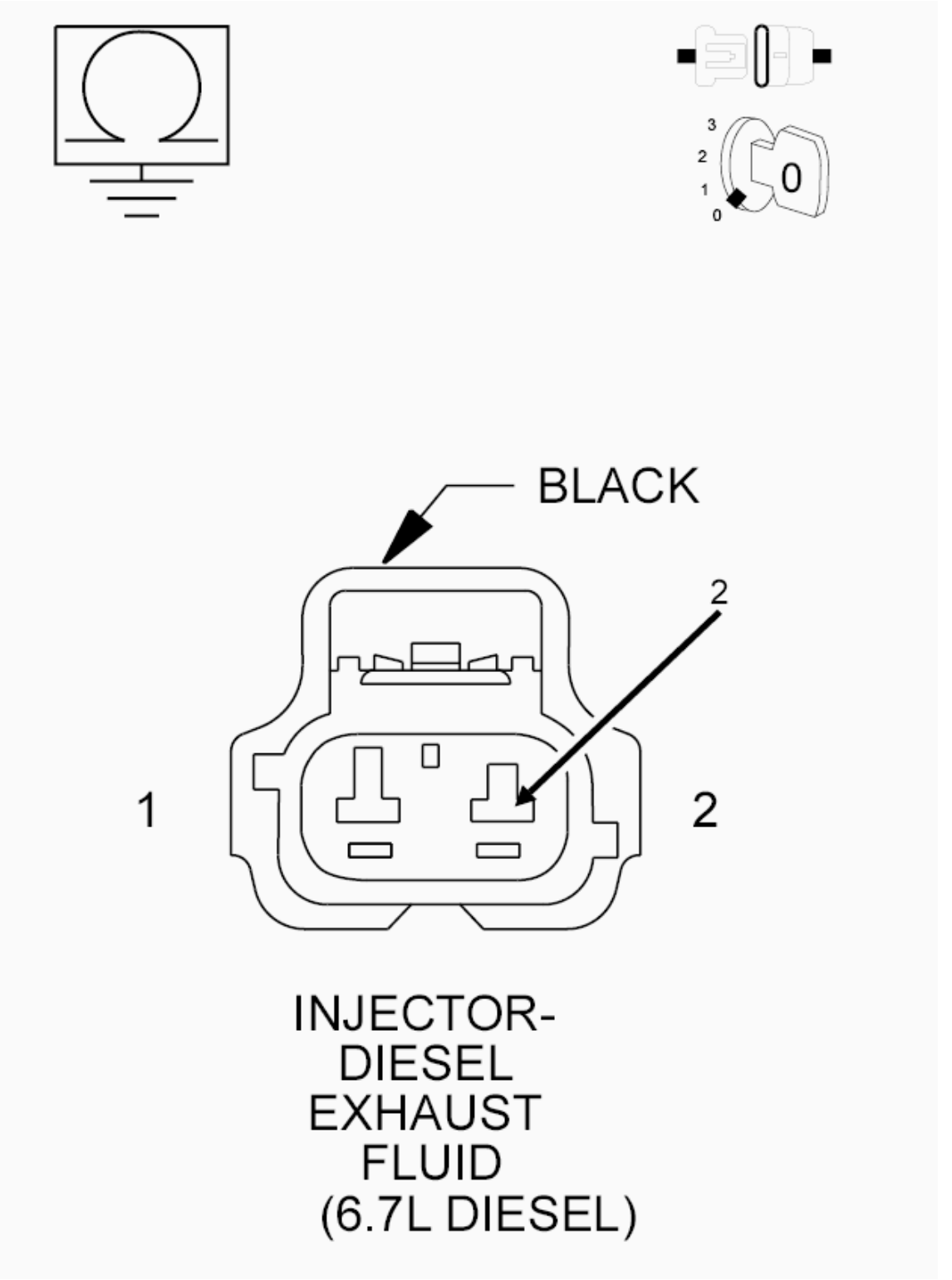

Fig. 48: Checking DEF Injector Return Circuit For A Short To Ground
Courtesy of CHRYSLER GROUP, LLC

1. Measure the resistance between ground and the (K426) DEF Injector Return circuit at the Diesel Exhaust Fluid Injector harness connector.

Is the resistance above 10k Ohms?

Yes

- Go To 6.

No

- Repair the (K426) DEF Injector Return circuit for a short to ground.
- Perform the POWERTRAIN VERIFICATION TEST. Refer to **POWERTRAIN VERIFICATION TEST - 6.7L** .

6. **CHECK THE DEF INJECTOR**
   1. Measure the resistance across the terminals of the DEF Injector.

NOTE: **The resistance through the DEF Injector should be between 11.0 Ohms and 13.0 Ohms.**

Does the resistance measure between 11.0 Ohms and 13.0 Ohms?

Yes

- Replace the DEF Dosing Control Unit in accordance with the Service Information. Refer to **UNIT, DIESEL EXHAUST FLUID DOSING CONTROL, REMOVAL** .
- Perform the POWERTRAIN VERIFICATION TEST. Refer to **POWERTRAIN VERIFICATION TEST - 6.7L** .

No

- Replace the DEF Injector in accordance with the Service Information. Refer to **INJECTOR, DIESEL EXHAUST FLUID, REMOVAL** .
- Perform the POWERTRAIN VERIFICATION TEST. Refer to **POWERTRAIN VERIFICATION TEST - 6.7L** .

P2049-(DIESEL EXHAUST FLUID) REDUCTANT INJECTOR CIRCUIT HIGH

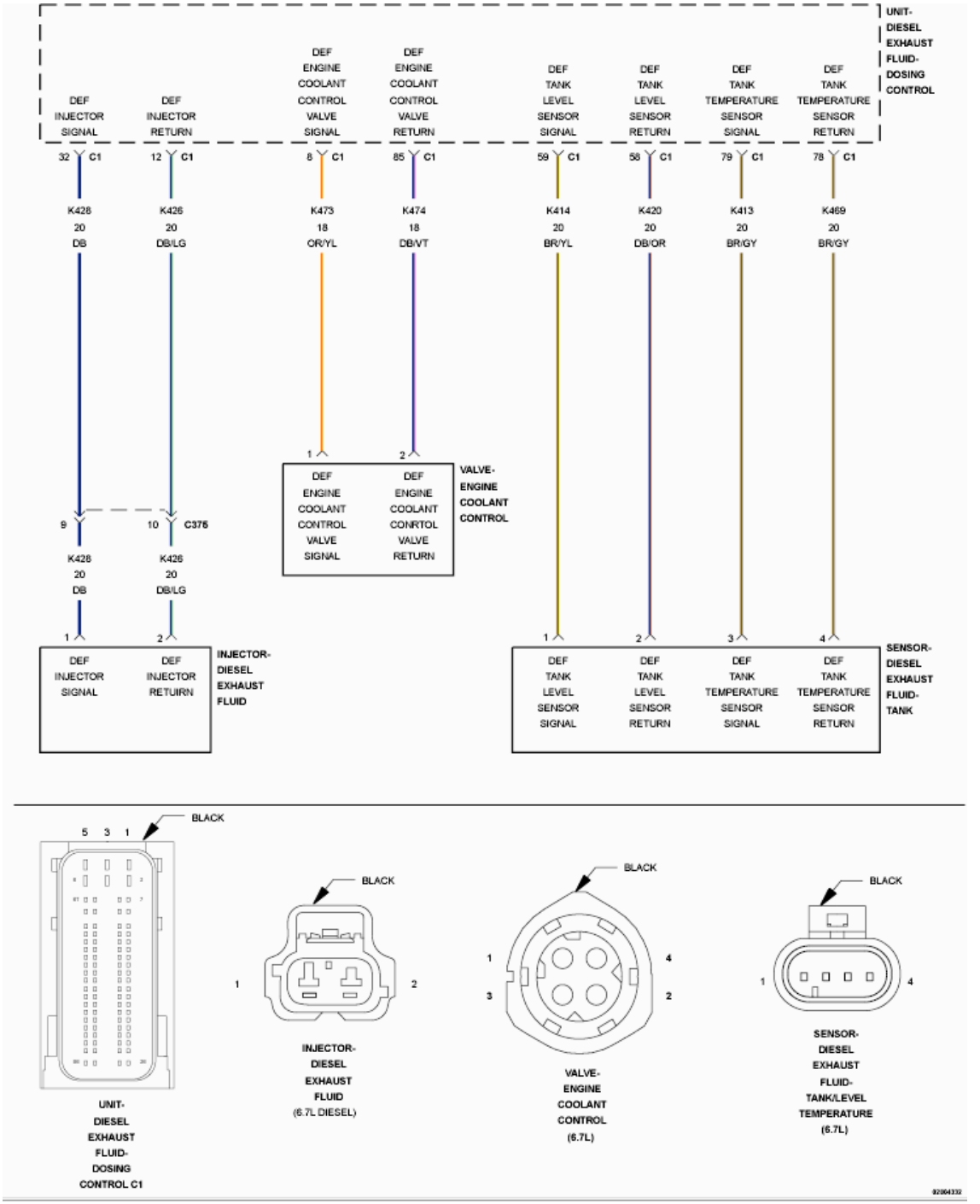

Fig. 49: Diesel Exhaust Fluid Reductant Tank Heater Control Circuit Wiring Diagram
Courtesy of CHRYSLER GROUP, LLC

For a complete wiring diagram, **refer to appropriate SYSTEM WIRING DIAGRAMS article** .

THEORY OF OPERATION

The Diesel Exhaust Fluid (DEF) Injector is mounted to the decomposition tube at the inlet of the Selective

Catalytic Reduction (SCR) Catalyst. The DEF Dosing Control Unit sends a Pulse Width Modulated (PWM) signal to DEF Injector to vary the amount of fluid sprayed into the exhaust stream. The DEF Dosing Control Unit will illuminate the MIL lamp via the Powertrain Control Module (PCM) immediately after this diagnostic runs and fails and diesel exhaust fluid injection into the aftertreatment system is disabled. The DEF Dosing Control Unit will turn off the MIL lamp via the PCM immediately after the diagnostic runs and passes for three consecutive key cycles.

WHEN MONITORED:

With the ignition on and the DEF Injector is commanded on.

SET CONDITION:

The DEF Dosing Control Unit that the DEF Injector control circuit voltage is above a calibrated value.

POSSIBLE CAUSES

Possible Causes
(K428) DIESEL EXHAUST FLUID INJECTOR SIGNAL CIRCUIT SHORTED TO VOLTAGE
(K426) DIESEL EXHAUST FLUID INJECTOR RETURN CIRCUIT SHORTED TO VOLTAGE
DEF INJECTOR
DIESEL EXHAUST FLUID DOSING CONTROL UNIT

Always perform the Pre-Diagnostic Troubleshooting procedure before proceeding. Refer to PRE-DIAGNOSTIC TROUBLESHOOTING PROCEDURE - 6.7L .

DIAGNOSTIC TEST

1. **ACTIVE DTC**
    1. Turn the ignition on, engine not running.
    2. With the scan tool, View DTCs.

       Is the DTC active?

       Yes

       - Go To 3.

       No

       - Perform the INTERMITTENT CONDITION diagnostic procedure. Refer to **INTERMITTENT CONDITION - 6.7L** .
2. **DEF INJECTOR**
    1. With the scan tool, Erase DTCs.
    2. Turn ignition off.

3. Disconnect the DEF Injector harness connector.
4. Turn the ignition on.
5. With the scan tool, navigate to Systems Tests actuate of the Diesel Exhaust Fluid Doser Pump Override Test.
6. With the scan tool, View DTCs.

   Does DTC P2048 become active and P2049 stored with the DEF Injector harness connector disconnected?

   Yes

   - Replace the DEF Injector in accordance with the Service Information. Refer to **INJECTOR, DIESEL EXHAUST FLUID, REMOVAL** .
   - Perform the POWERTRAIN VERIFICATION TEST. Refer to **POWERTRAIN VERIFICATION TEST - 6.7L** .

   No

   - Go To 3.

3. **CHECK FOR THE (K428) DEF INJECTOR SIGNAL CIRCUIT SHORTED TO ANOTHER CIRCUIT**

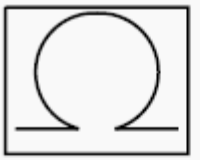

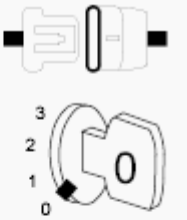

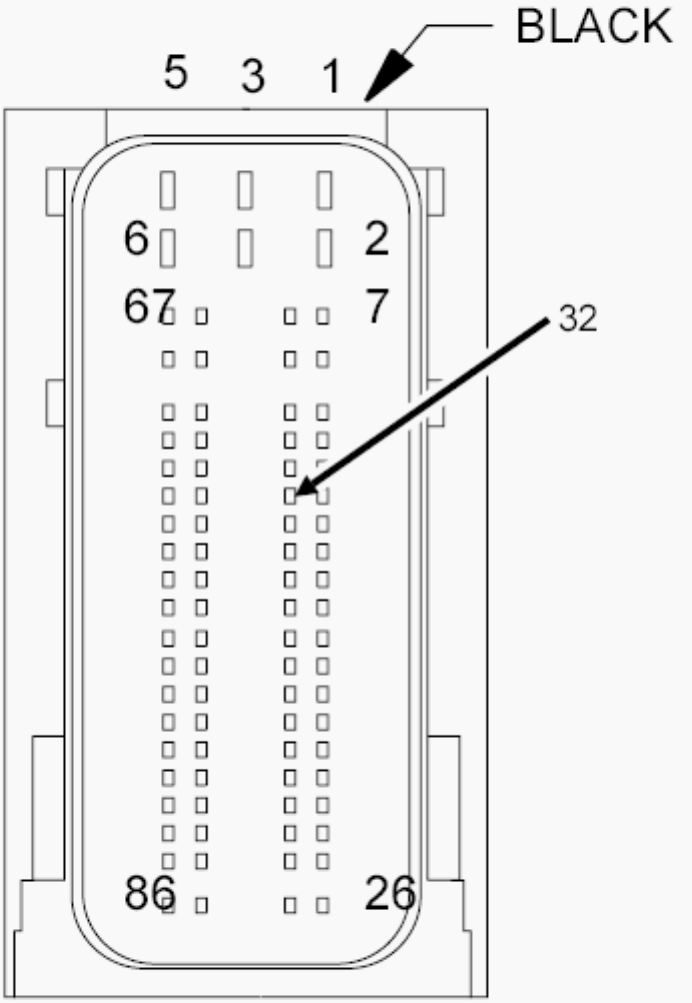

UNIT-
DIESEL
EXHAUST
FLUID-
DOSING
CONTROL C1

Fig. 50: Checking DEF Injector Signal Circuit For A Short
Courtesy of CHRYSLER GROUP, LLC

1. Turn ignition off.
2. Disconnect the DEF Dosing Control Unit C1 harness connector.
3. Measure the resistance between the (K428) DEF Injector Signal circuit and all other circuits at the DEF Dosing Control Unit C1 harness connector.

   Is the resistance above 10k Ohms between the (K428) DEF Injector Signal circuit and all other circuits?

   Yes

   - Go To 4.

   No

   - Repair the short between the (K428) DEF Injector Signal circuit and the circuit that measured below 10k Ohms.
   - Perform the POWERTRAIN VERIFICATION TEST. Refer to **POWERTRAIN VERIFICATION TEST - 6.7L** .

4. **CHECK FOR THE (K426) DEF INJECTOR RETURN CIRCUIT SHORTED TO ANOTHER CIRCUIT**

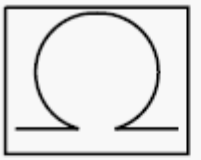

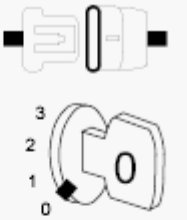

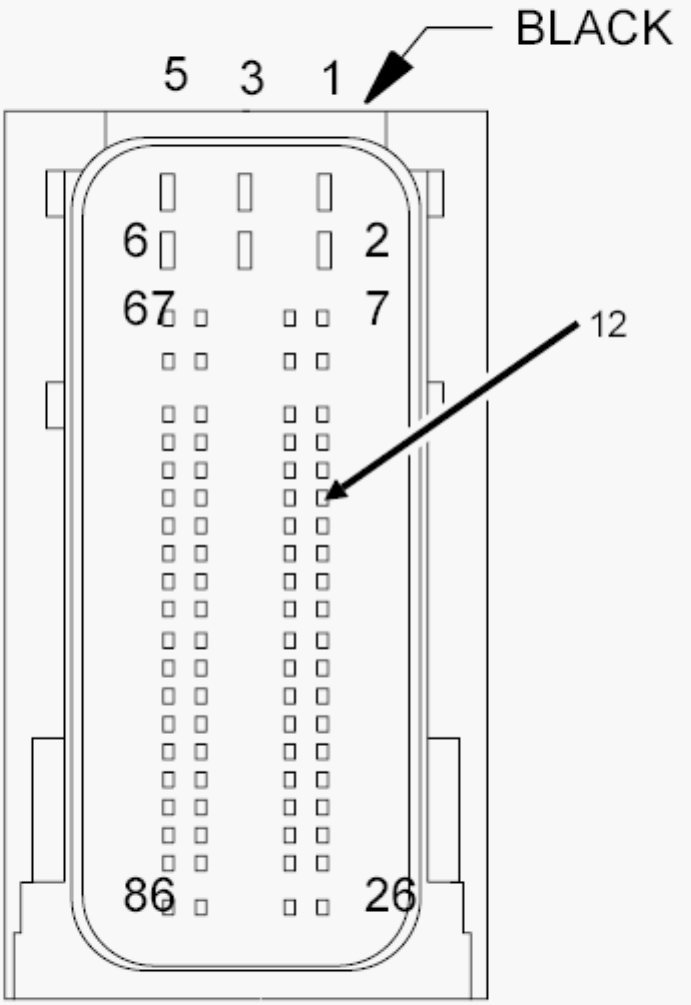

UNIT-
DIESEL
EXHAUST
FLUID-
DOSING
CONTROL C1

Fig. 51: Checking DEF Injector Return Circuit For Short To Another Circuit
Courtesy of CHRYSLER GROUP, LLC

1. Measure the resistance between the (K426) DEF Injector Return circuit and all other circuits at the DEF Dosing Control Unit C1 harness connector.

   Is the resistance above 10k Ohms between the (K426) DEF Injector Return circuit and all other circuits?

   Yes

   - Replace the DEF Dosing Control Unit in accordance with the Service Information. Refer to **UNIT, DIESEL EXHAUST FLUID DOSING CONTROL, REMOVAL** .
   - Perform the POWERTRAIN VERIFICATION TEST. Refer to **POWERTRAIN VERIFICATION TEST - 6.7L** .

   No

   - Repair the short between the (K428) DEF Injector Return circuit and the circuit that measured below 10k Ohms.
   - Perform the POWERTRAIN VERIFICATION TEST. Refer to **POWERTRAIN VERIFICATION TEST - 6.7L** .

P204A-(DIESEL EXHAUST FLUID) REDUCTANT PRESSURE SENSOR CIRCUIT

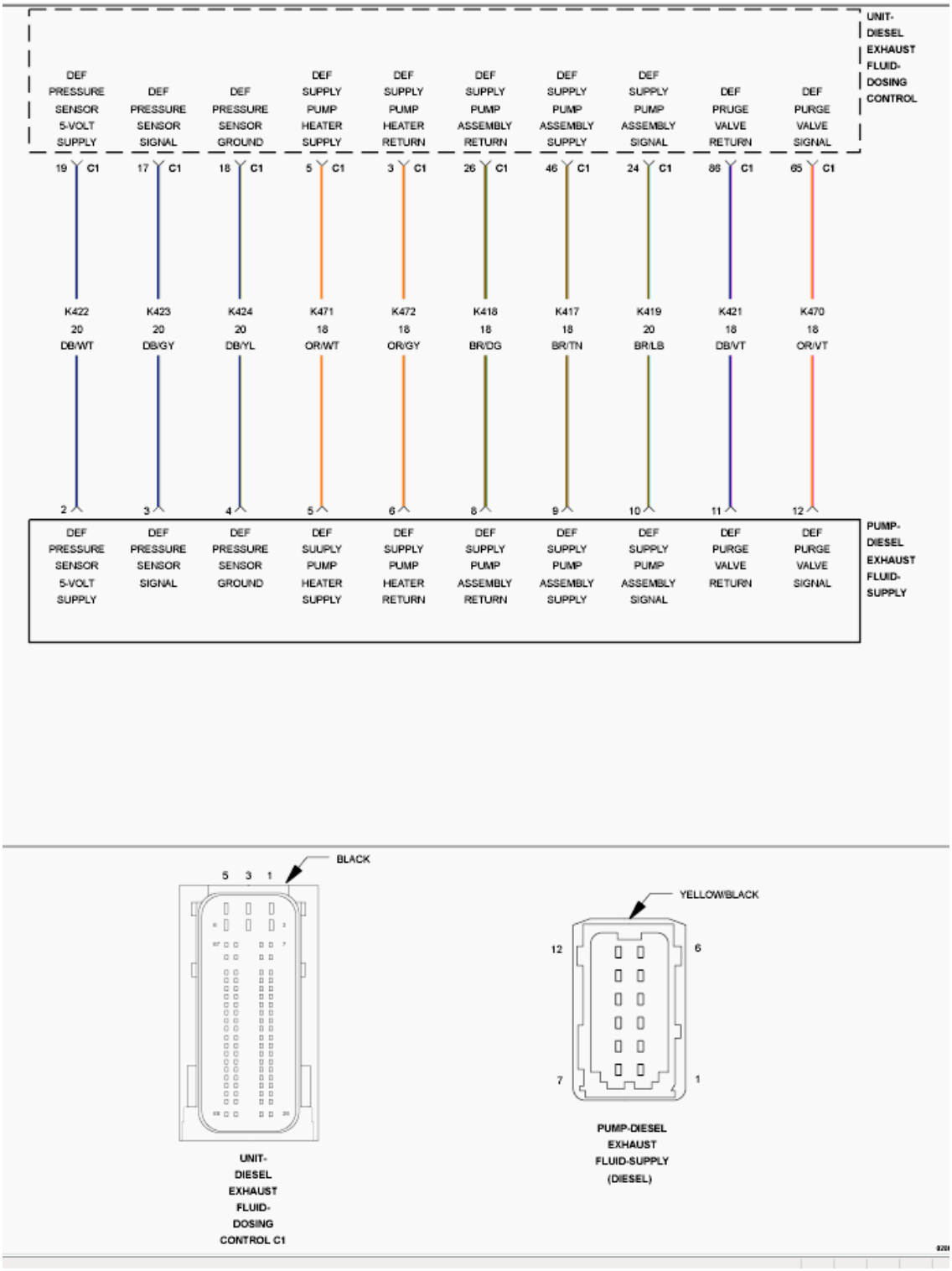

Fig. 52: Diesel Exhaust Fluid (DEF) Dosing Control Unit Wiring Diagram
Courtesy of CHRYSLER GROUP, LLC

For a complete wiring diagram, **refer to appropriate SYSTEM WIRING DIAGRAMS article** .

THEORY OF OPERATION

The Diesel Exhaust Fluid (DEF) Pressure Sensor is a three wire sensor, integrated into the DEF Supply Pump and is not serviceable separate from the pump. The DEF Pressure Sensor monitors supply pressure to the DEF Injector. The Diesel Exhaust Fluid (DEF) Dosing Control Unit provides a 5-Volt Supply and a ground to the DEF Pressure Sensor. The sensor provides a signal to the DEF Dosing Control Unit on the DEF Pressure Sensor Signal circuit. This DEF Pressure Sensor Signal voltage changes, based on the diesel exhaust fluid pressure supplied by the DEF Supply Pump. The DEF Dosing Control Unit uses this information to vary pump speed and maintain the 130 psi (9 bar) pressure needed for proper DEF injection. The DEF Dosing Control Unit will detect a low signal voltage at low diesel exhaust fluid pressures, and a high signal voltage at high diesel exhaust fluid pressures. The DEF Dosing Control Module will illuminate the MIL light via the Powertrain Control Module (PCM) immediately after the diagnostics runs and fails. Diesel exhaust fluid injection into the aftertreatment system is disabled. The DEF Dosing Control Module will turn off the MIL light via the PCM when the monitor runs and passes in three consecutive key cycles.

WHEN MONITORED:

Continuously with the ignition on.

SET CONDITION:

The DEF Dosing Control Unit detects an implausible signal from the DEF Pressure Sensor.

POSSIBLE CAUSES

Possible Causes
(K422) DEF PRESSURE SENSOR SUPPLY CIRCUIT SHORTED TO VOLTAGE
DIESEL EXHAUST FLUID SUPPLY PUMP
DIESEL EXHAUST FLUID DOSING CONTROL UNIT

Always perform the Pre-Diagnostic Troubleshooting procedure before proceeding. Refer to PRE-DIAGNOSTIC TROUBLESHOOTING PROCEDURE - 6.7L .

DIAGNOSTIC TEST

1. **ACTIVE DTC**
    1. Ignition on, engine not running.
    2. With the scan tool check for active DTCs.

    Is the DTC active?

    Yes

    - Go To 2.

    No

- Perform the INTERMITTENT CONDITION diagnostic procedure. Refer to **INTERMITTENT CONDITION - 6.7L** .

2. **CHECK THE DEF PRESSURE SENSOR**
   1. Turn the ignition off.
   2. Disconnect the DEF Supply Pump harness connector.
   3. Turn the ignition on, engine not running.
   4. With the scan tool, View DTCs.

   NOTE: Other DTCs will also set from unplugging the DEF Pump Assembly. Ignore any DTCs that do not pertain to the DEF Pressure Sensor.

   Did DTC P204D set as active after unplugging the connector?

   Yes

   - Replace the DEF Supply Pump Assembly in accordance with the service information. Refer to **ASSEMBLY, DIESEL EXHAUST FLUID PUMP, REMOVAL** .
   - Perform the POWERTRAIN VERIFICATION TEST. Refer to **POWERTRAIN VERIFICATION TEST - 6.7L** .

   No

   - Go To 3.

3. **CHECK FOR THE (K422) DEF PRESSURE SENSOR SUPPLY CIRCUIT SHORTED TO ANOTHER CIRCUIT**

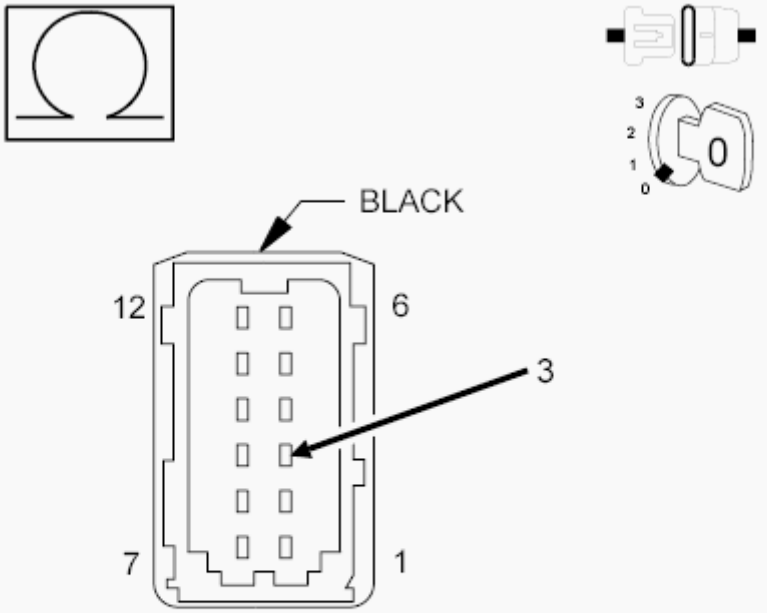

PUMP-DIESEL
EXHAUST
FLUID-SUPPLY
(DIESEL)

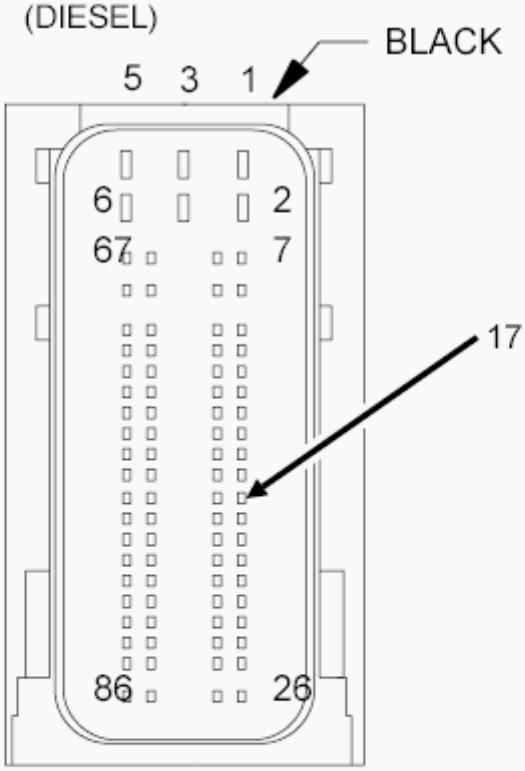

UNIT-
DIESEL
EXHAUST
FLUID-
DOSING

Fig. 53: Checking DEF Pressure Sensor Supply Circuit For A Short To Another Circuit
Courtesy of CHRYSLER GROUP, LLC

1. Turn ignition off.
2. Disconnect the DEF Dosing Control Unit C1 harness connector.
3. Measure the resistance between the (K422) DEF Pressure Sensor Supply circuit and all other circuits at the DEF Dosing Control Unit C1 harness connector.

   Is the resistance above 10k Ohms between the (K422) DEF Pressure Sensor Supply circuit and all other circuits?

   Yes

   - Replace the DEF Dosing Control Unit in accordance with the service information. Refer to **UNIT, DIESEL EXHAUST FLUID DOSING CONTROL, REMOVAL** .
   - Perform the POWERTRAIN VERIFICATION TEST. Refer to **POWERTRAIN VERIFICATION TEST - 6.7L** .

   No

   - Repair the (K422) DEF Pressure Sensor Supply circuit for a short to the circuit that measured below 10k Ohms.
   - Perform the POWERTRAIN VERIFICATION TEST. Refer to **POWERTRAIN VERIFICATION TEST - 6.7L** .

P204B-(DIESEL EXHAUST FLUID) REDUCTANT PRESSURE SENSOR CIRCUIT PERFORMANCE

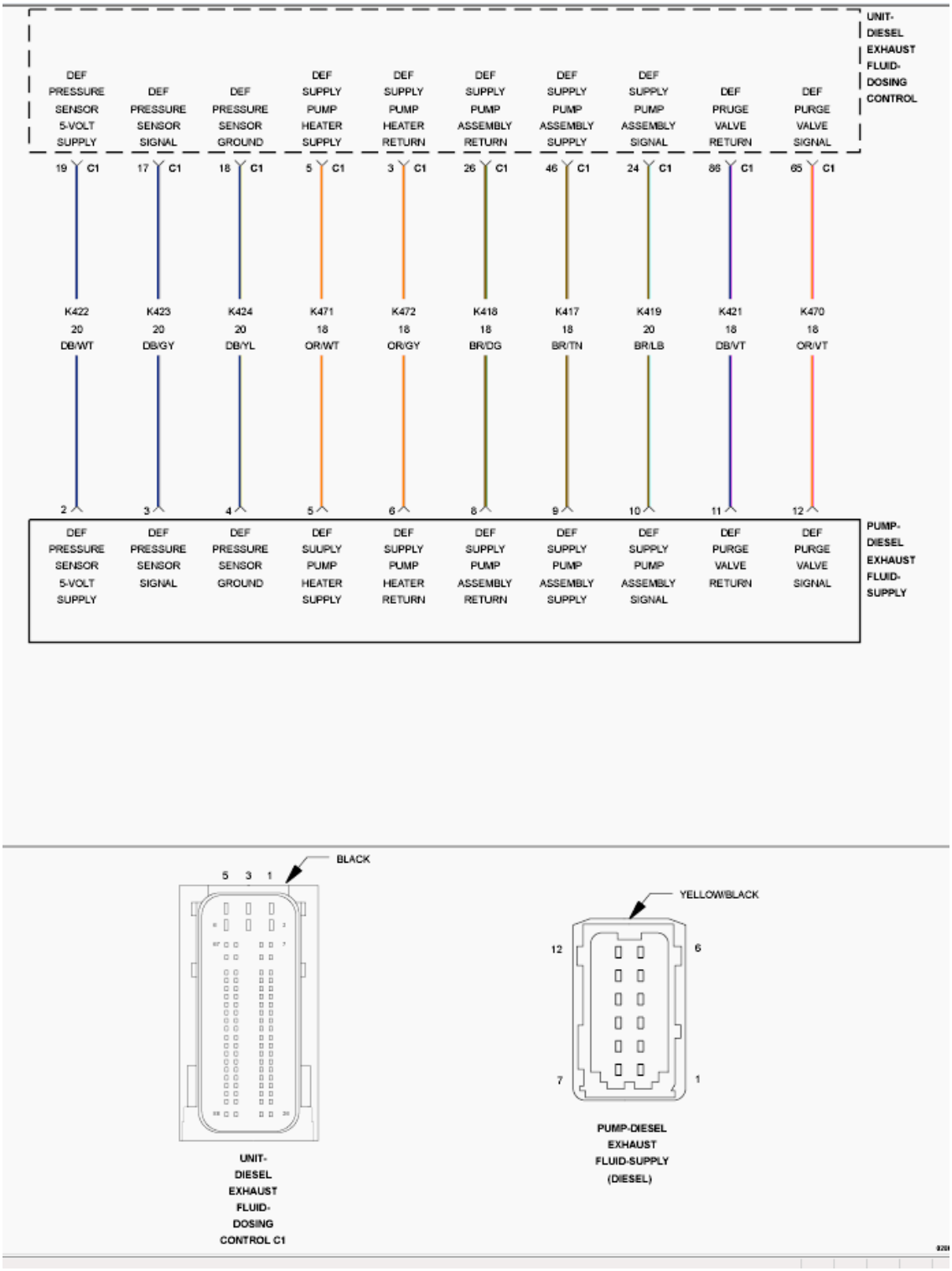

Fig. 54: Diesel Exhaust Fluid (DEF) Dosing Control Unit Wiring Diagram
Courtesy of CHRYSLER GROUP, LLC

For a complete wiring diagram, **refer to appropriate SYSTEM WIRING DIAGRAMS article** .

THEORY OF OPERATION

The Diesel Exhaust Fluid (DEF) Pressure Sensor is a three wire sensor, integrated into the DEF Supply Pump and is not serviceable separate from the pump. The DEF Pressure Sensor monitors supply pressure to the DEF Injector. The Diesel Exhaust Fluid (DEF) Dosing Control Unit provides a 5-Volt Supply and a ground to the DEF Pressure Sensor. The sensor provides a signal to the DEF Dosing Control Unit on the DEF Pressure Sensor Signal circuit. This DEF Pressure Sensor Signal voltage changes, based on the diesel exhaust fluid pressure supplied by the DEF Supply Pump. The DEF Dosing Control Unit uses this information to vary pump speed and maintain the 130 psi (9 bar) pressure needed for proper DEF injection. The DEF Dosing Control Unit will detect a low signal voltage at low diesel exhaust fluid pressures, and a high signal voltage at high diesel exhaust fluid pressures. The DEF Dosing Control Module will illuminate the MIL light via the Powertrain Control Module (PCM) immediately after the diagnostics runs and fails. The DEF Dosing Control Module will turn off the MIL light via the PCM when the monitor runs and passes in three consecutive key cycles.

WHEN MONITORED:

When the DEF Injector is in the priming or dosing state.

SET CONDITION:

The DEF Dosing Control Unit detects that the DEF system is not able to build or maintain adequate line pressure.

POSSIBLE CAUSES

Possible Causes
LOW DIESEL EXHAUST FLUID TANK LEVEL
CONTAMINATED DIESEL EXHAUST FLUID
BLOCKED OR RESTRICTED DIESEL EXHAUST FLUID TANK FILTER
BLOCKED OR RESTRICTED DIESEL EXHAUST FLUID SUPPLY PUMP FILTER
BLOCKED, RESTRICTED OR FROZEN DIESEL EXHAUST FLUID SUPPLY PUMP FITTING OR DEF SUPPLY LINE
LEAKING DEF SUPPLY LINE OR DEF PRESSURE LINE
DIESEL EXHAUST FLUID SUPPLY PUMP

Always perform the Pre-Diagnostic Troubleshooting procedure before proceeding. Refer to PRE-DIAGNOSTIC TROUBLESHOOTING PROCEDURE - 6.7L .

DIAGNOSTIC TEST

1. **CHECK THE DEF TANK LEVEL AND FLUID**
    1. Verify the DEF Tank level.
    2. Check the fluid for signs of contamination.

    Is the fluid level in the DEF Tank above the minimum requirement and free of contamination?

Yes

- Go To 2.

No

- Fill the DEF Tank to the proper level with clean Diesel Exhaust Fluid. If the fluid is contaminated, follow the cleaning procedure. Refer to **TANK, DIESEL EXHAUST FLUID, CLEANING** .
- Perform the POWERTRAIN VERIFICATION TEST. Refer to **POWERTRAIN VERIFICATION TEST - 6.7L** .

2. **ACTIVE DTC**

NOTE: Perform the diagnostics for any other DEF system DTCs that are present with this fault before continuing.

1. Turn the ignition on for one minute, engine not running.
2. With the scan tool, navigate to Systems Tests and actuate the Diesel Exhaust Fluid Doser Pump Override Test.
3. With the scan tool, View DTCs.

Is the DTC active?

Yes

- Go To 3.

No

- Perform the INTERMITTENT CONDITION diagnostic procedure. Refer to **INTERMITTENT CONDITION - 6.7L** .

3. **CHECK FOR LEAKING DEF SUPPLY LINE OR DEF PRESSURE LINE**

1. Turn the ignition off.
2. Visually inspect the DEF Supply and DEF Pressure Lines and fittings for signs of a fluid leak.

Was a leak found in the DEF system?

Yes

- Repair or replace the DEF Lines in accordance with the service information.
- Perform the POWERTRAIN VERIFICATION TEST. Refer to **POWERTRAIN VERIFICATION TEST - 6.7L** .

No

- Go To 4.

4. **CHECK THE DEF SUPPLY PUMP INLET FITTING AND DEF SUPPLY LINE**
    1. Remove the DEF Supply Line.
    2. Inspect the DEF Supply Pump fitting for blockage or debris.
    3. Using regulated low pressure shop air, check the DEF Supply Line for a restriction. Blow the air in the opposite direction of the fluid flow.

    Were any restrictions found?

    Yes

    - Perform the appropriate repair.
    - Perform the POWERTRAIN VERIFICATION TEST. Refer to **POWERTRAIN VERIFICATION TEST - 6.7L** .

    No

    - Go To 5.

5. **CHECK THE DEF SUPPLY PUMP FILTER**
    1. Reinstall the DEF Supply Line.
    2. Remove and inspect the DEF Supply Pump Filter.

    Is the DEF Supply Pump Filter blocked or restricted?

    Yes

    - Replace the DEF Supply Pump Filter in accordance with the service information.
    - Perform the POWERTRAIN VERIFICATION TEST. Refer to **POWERTRAIN VERIFICATION TEST - 6.7L** .

    No

    - Go To 6.

6. **CHECK THE DEF TANK FILTER**
    1. Reinstall the DEF Supply Pump Filter.
    2. Remove the DEF Tank Level/Temperature Sensor Assembly and inspect the DEF Tank Filter.

    Is the DEF Tank Filter blocked or restricted?

    Yes

    - Replace the DEF Tank Level/Temperature Sensor Assembly in accordance with the service information. Refer to **SENSOR, DIESEL EXHAUST FLUID LEVEL/TEMPERATURE, REMOVAL** .

- Perform the POWERTRAIN VERIFICATION TEST. Refer to **POWERTRAIN VERIFICATION TEST - 6.7L** .

No

- Replace the DEF Supply Pump Assembly in accordance with the service information. Refer to **ASSEMBLY, DIESEL EXHAUST FLUID PUMP, REMOVAL** .
- Perform the POWERTRAIN VERIFICATION TEST. Refer to **POWERTRAIN VERIFICATION TEST - 6.7L** .

P204C-(DIESEL EXHAUST FLUID) REDUCTANT PRESSURE SENSOR CIRCUIT LOW

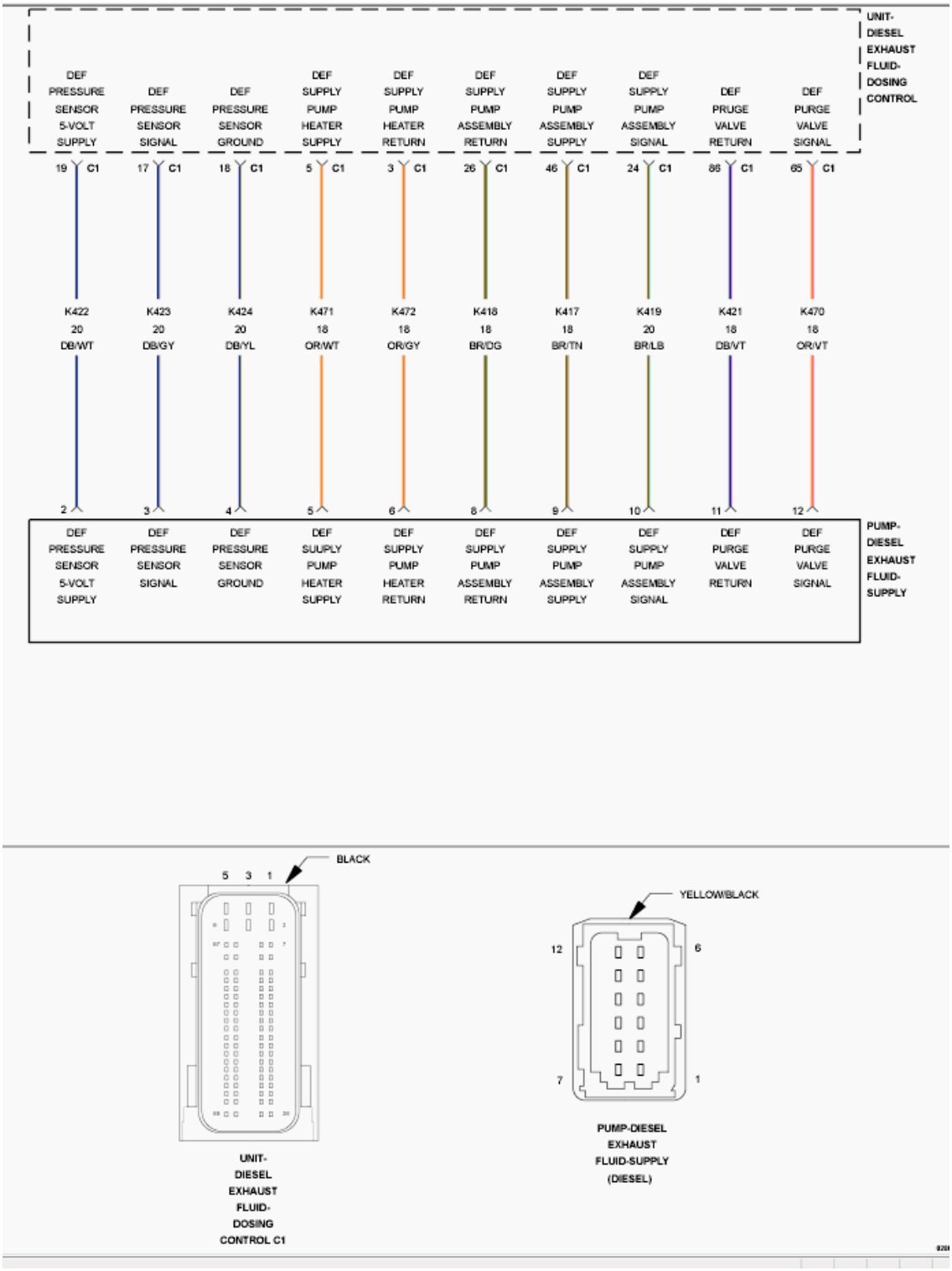

Fig. 55: Diesel Exhaust Fluid (DEF) Dosing Control Unit Wiring Diagram
Courtesy of CHRYSLER GROUP, LLC

For a complete wiring diagram, **refer to appropriate SYSTEM WIRING DIAGRAMS article** .

THEORY OF OPERATION

The Diesel Exhaust Fluid (DEF) Pressure Sensor is a three wire sensor, integrated into the DEF Supply Pump and is not serviceable separate from the pump. The DEF Pressure Sensor monitors supply pressure to the DEF Injector. The Diesel Exhaust Fluid (DEF) Dosing Control Unit provides a 5-Volt Supply and a ground to the DEF Pressure Sensor. The sensor provides a signal to the DEF Dosing Control Unit on the DEF Pressure Sensor Signal circuit. This DEF Pressure Sensor Signal voltage changes, based on the diesel exhaust fluid pressure supplied by the DEF Supply Pump. The DEF Dosing Control Unit uses this information to vary pump speed and maintain the 130 psi (9 bar) pressure needed for proper DEF injection. The DEF Dosing Control Unit will detect a low signal voltage at low diesel exhaust fluid pressures, and a high signal voltage at high diesel exhaust fluid pressures. The DEF Dosing Control Module will illuminate the MIL light via the Powertrain Control Module (PCM) immediately after the diagnostics runs and fails. Diesel exhaust fluid injection into the aftertreatment system is disabled. The DEF Dosing Control Module will turn off the MIL light via the PCM when the monitor runs and passes in three consecutive key cycles.

WHEN MONITORED:

With the ignition on.

SET CONDITION:

The DEF Dosing Control Unit detects that the signal voltage from the sensor falls below 0.25 Volts for one second.

POSSIBLE CAUSES

Possible Causes
(K422) DEF PRESSURE SENSOR SUPPLY CIRCUIT OPEN OR SHORTED TO GROUND
(K423) DEF PRESSURE SENSOR SIGNAL CIRCUIT SHORTED TO GROUND
(K423) DEF PRESSURE SENSOR SIGNAL CIRCUIT SHORTED TO THE (K424) DEF PRESSURE SENSOR GROUND CIRCUIT
DIESEL EXHAUST FLUID SUPPLY PUMP
DIESEL EXHAUST FLUID DOSING CONTROL UNIT

Always perform the Pre-Diagnostic Troubleshooting procedure before proceeding. Refer to PRE-DIAGNOSTIC TROUBLESHOOTING PROCEDURE - 6.7L .

DIAGNOSTIC TEST

1. **ACTIVE DTC**

NOTE: **If DTC P204A is also active, perform the diagnostic procedures for that DTC before continuing with this test.**

1. Ignition on, engine not running.
2. With the scan tool check for active DTCs.

Is the DTC active?

Yes

- Go To 2.

No

- Perform the INTERMITTENT CONDITION diagnostic procedure. Refer to **INTERMITTENT CONDITION - 6.7L** .

2. **CHECK THE DEF PRESSURE SENSOR**
   1. Turn the ignition off.
   2. Disconnect the DEF Supply Pump harness connector.
   3. Turn ignition on.
   4. With the scan tool check DTCs.

   Did DTC P204D become active with the DEF Supply Pump harness connector disconnected?

   Yes

   - Go To 3.

   No

   - Replace the DEF Supply Pump Assembly in accordance with the service information. Refer to **ASSEMBLY, DIESEL EXHAUST FLUID PUMP, REMOVAL** .
   - Perform the POWERTRAIN VERIFICATION TEST. Refer to **POWERTRAIN VERIFICATION TEST - 6.7L** .
3. **CHECK THE (K422) DEF PRESSURE SENSOR SUPPLY CIRCUIT FOR AN OPEN OR SHORT TO GROUND**

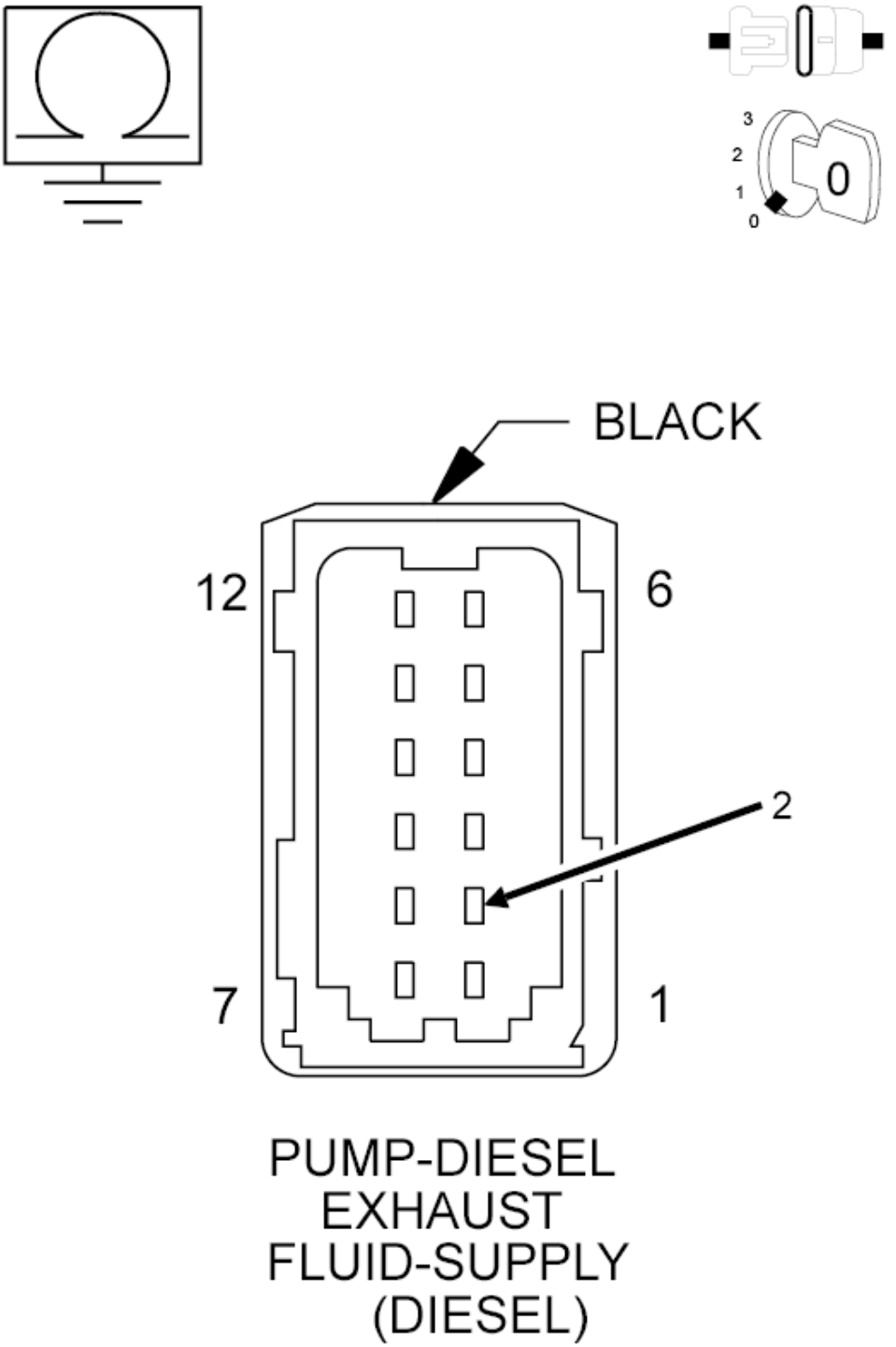

Fig. 56: Checking DEF Pressure Sensor Supply Circuit For An Open Or Short To Ground
Courtesy of CHRYSLER GROUP, LLC

1. Turn ignition off.
2. Disconnect the DEF Dosing Control Unit C1 harness connector.

3. Measure the resistance between ground and the (K422) DEF Pressure Sensor Supply circuit at the DEF Supply Pump harness connector.

   Is the resistance above 10k Ohms?

   Yes

   - Go To 4.

   No

   - Repair the (K422) DEF Pressure Sensor Supply circuit for an open circuit or short to ground.
   - Perform the POWERTRAIN VERIFICATION TEST. Refer to **POWERTRAIN VERIFICATION TEST - 6.7L** .

4. **CHECK THE (K423) DEF PRESSURE SENSOR SIGNAL CIRCUIT FOR A SHORT TO GROUND**

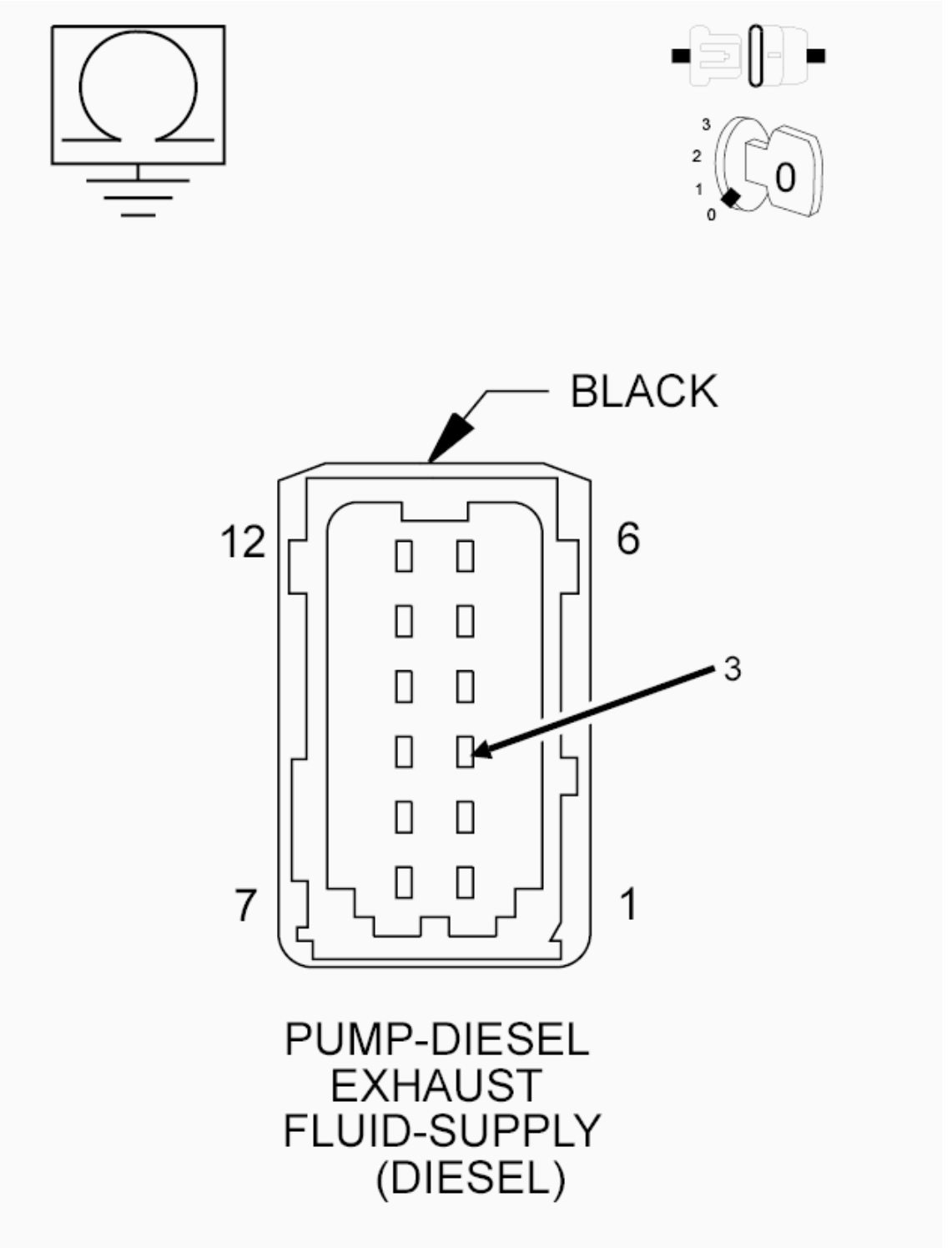

Fig. 57: Checking DEF Pressure Sensor Signal Circuit For A Short To Ground
Courtesy of CHRYSLER GROUP, LLC

1. Turn ignition off.
2. Disconnect the DEF Dosing Control Unit C1 harness connector.

3. Measure the resistance between ground and the (K423) DEF Pressure Sensor Signal circuit at the DEF Supply Pump harness connector.

   Is the resistance above 10k Ohms?

   Yes

   - Go To 5.

   No

   - Repair the (K423) DEF Pressure Sensor Signal circuit for a short to ground.
   - Perform the POWERTRAIN VERIFICATION TEST. Refer to **POWERTRAIN VERIFICATION TEST - 6.7L** .

5. **CHECK FOR THE (K423) DEF PRESSURE SENSOR SIGNAL CIRCUIT SHORTED TO THE (K424) DEF PRESSURE SENSOR GROUND CIRCUIT**

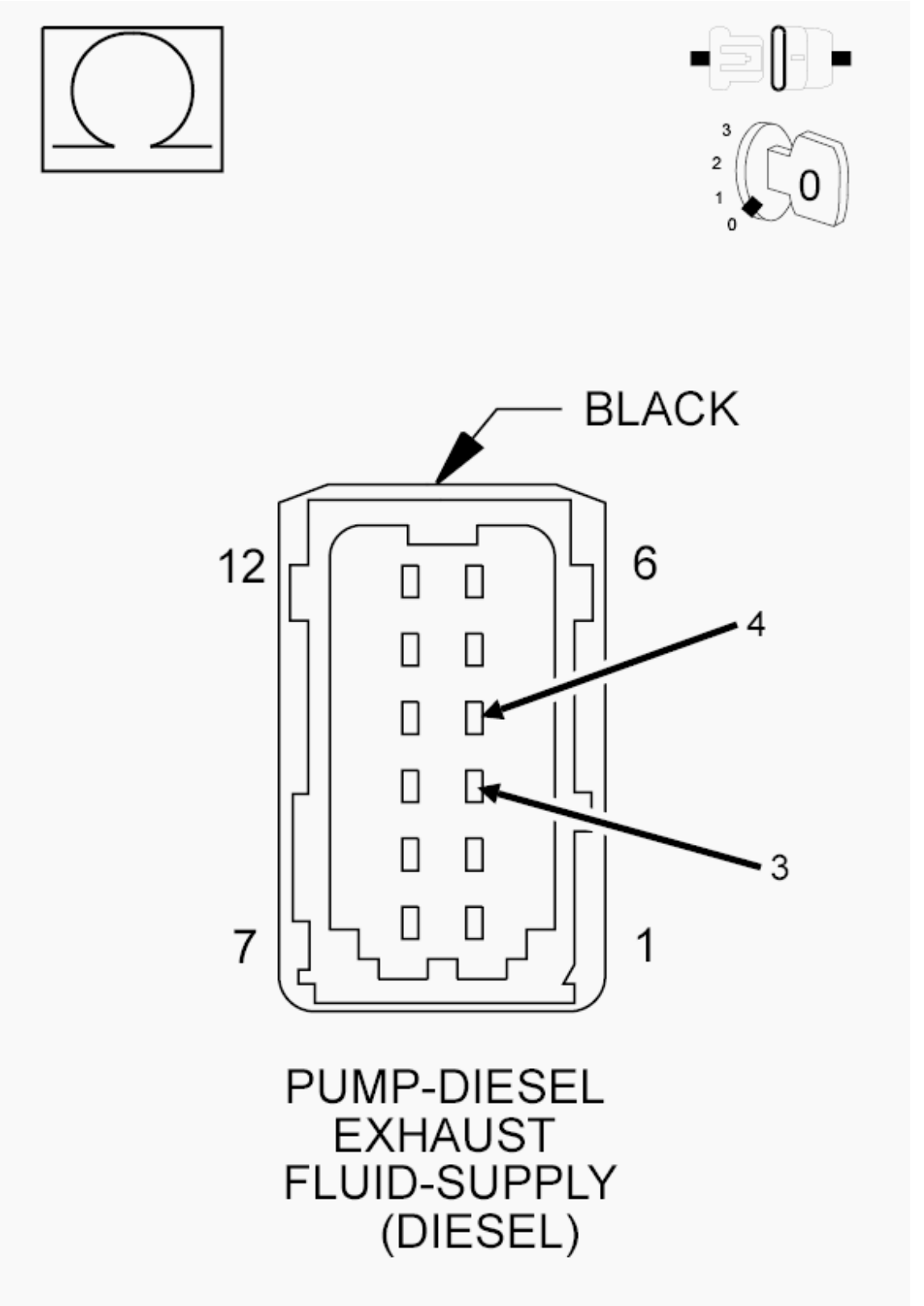

Fig. 58: Checking For DEF Pressure Sensor Signal Circuit For A Short
Courtesy of CHRYSLER GROUP, LLC

1. Measure the resistance between the (K423) DEF Pressure Sensor Signal circuit and the (K424) DEF Pressure Sensor Ground circuit at the DEF Supply Pump harness connector.

   Is the resistance above 10k Ohms?

   Yes

   - Replace the DEF Dosing Control Unit in accordance with the service information. Refer to **UNIT, DIESEL EXHAUST FLUID DOSING CONTROL, REMOVAL** .
   - Perform the POWERTRAIN VERIFICATION TEST. Refer to **POWERTRAIN VERIFICATION TEST - 6.7L** .

   No

   - Repair the short between the (K423) DEF Pressure Sensor Signal circuit and the (K424) DEF Pressure Sensor Ground circuit.
   - Perform the POWERTRAIN VERIFICATION TEST. Refer to **POWERTRAIN VERIFICATION TEST - 6.7L** .

P204D-(DIESEL EXHAUST FLUID) REDUCTANT PRESSURE SENSOR CIRCUIT HIGH

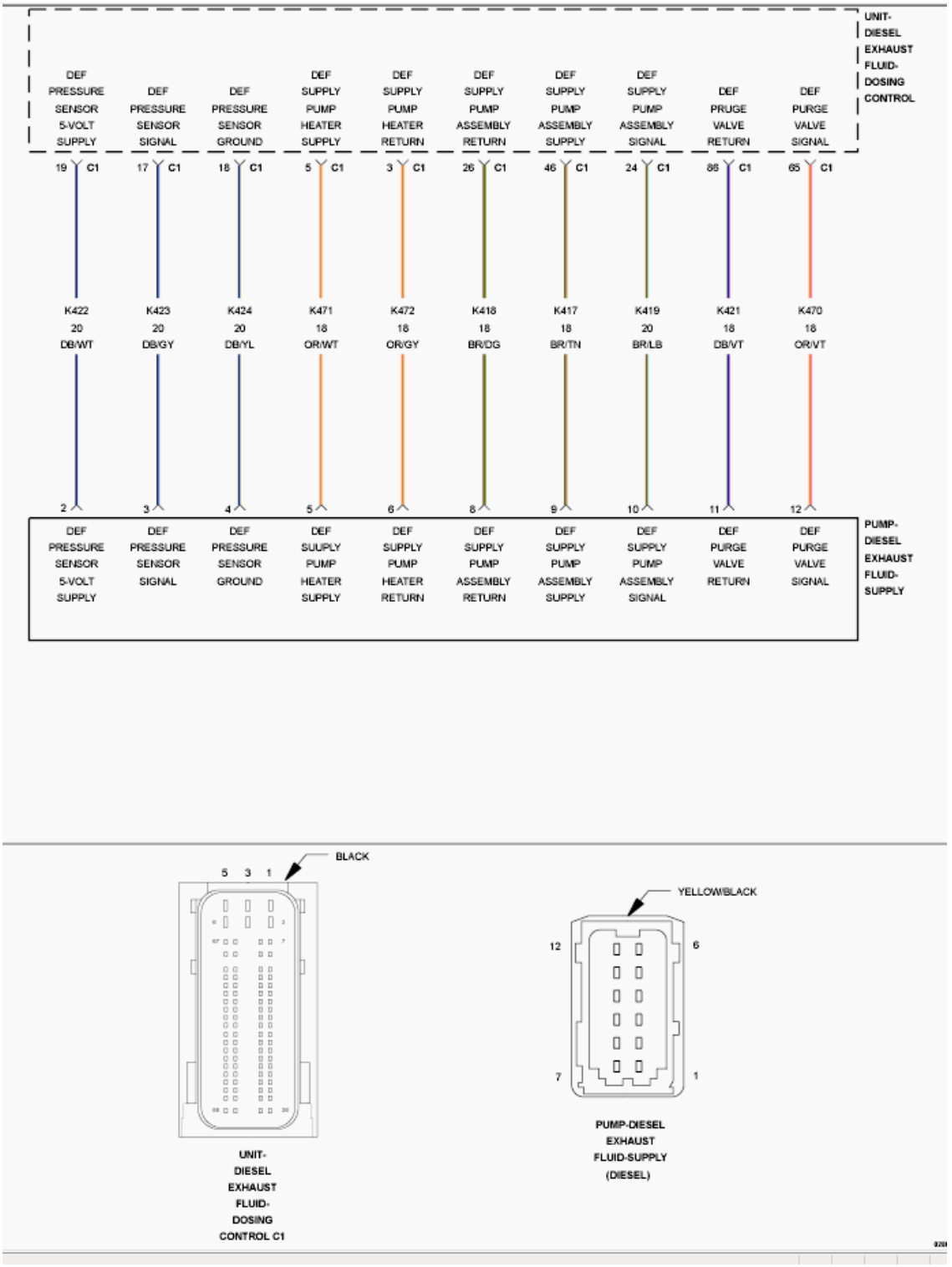

Fig. 59: Diesel Exhaust Fluid (DEF) Dosing Control Unit Wiring Diagram
Courtesy of CHRYSLER GROUP, LLC

For a complete wiring diagram, **refer to appropriate SYSTEM WIRING DIAGRAMS article** .

THEORY OF OPERATION

The Diesel Exhaust Fluid (DEF) Pressure Sensor is a three wire sensor, integrated into the DEF Supply Pump and is not serviceable separate from the pump. The DEF Pressure Sensor monitors supply pressure to the DEF Injector. The Diesel Exhaust Fluid (DEF) Dosing Control Unit provides a 5-Volt Supply and a ground to the DEF Pressure Sensor. The sensor provides a signal to the DEF Dosing Control Unit on the DEF Pressure Sensor Signal circuit. This DEF Pressure Sensor Signal voltage changes, based on the diesel exhaust fluid pressure supplied by the DEF Supply Pump. The DEF Dosing Control Unit uses this information to vary pump speed and maintain the 130 psi (9 bar) pressure needed for proper DEF injection. The DEF Dosing Control Unit will detect a low signal voltage at low diesel exhaust fluid pressures, and a high signal voltage at high diesel exhaust fluid pressures. The DEF Dosing Control Module will illuminate the MIL light via the Powertrain Control Module (PCM) immediately after the diagnostics runs and fails. Diesel exhaust fluid injection into the aftertreatment system is disabled. The DEF Dosing Control Module will turn off the MIL light via the PCM when the monitor runs and passes in three consecutive key cycles.

WHEN MONITORED:

With the ignition on.

SET CONDITION:

The DEF Dosing Control Unit detects that the signal voltage from the sensor is above 4.75 Volts for one second.

POSSIBLE CAUSES

Possible Causes
(K423) DEF PRESSURE SENSOR SIGNAL CIRCUIT SHORTED TO VOLTAGE
(K423) DEF PRESSURE SENSOR SIGNAL CIRCUIT SHORTED TO THE (K422) DEF PRESSURE SENSOR 5-VOLT SUPPLY CIRCUIT
(K423) DEF PRESSURE SENSOR SIGNAL CIRCUIT OPEN/HIGH RESISTANCE
(K424) DEF PRESSURE SENSOR GROUND CIRCUIT OPEN/HIGH RESISTANCE
DIESEL EXHAUST FLUID SUPPLY PUMP
DIESEL EXHAUST FLUID DOSING CONTROL UNIT

Always perform the Pre-Diagnostic Troubleshooting procedure before proceeding. Refer to PRE-DIAGNOSTIC TROUBLESHOOTING PROCEDURE - 6.7L .

DIAGNOSTIC TEST

1. **ACTIVE DTC**
    1. Ignition on, engine not running.
    2. With the scan tool check for active DTCs.

       Is the DTC active?

Yes

- Go To 2.

No

- Perform the INTERMITTENT CONDITION diagnostic procedure. Refer to **INTERMITTENT CONDITION - 6.7L** .

2. **CHECK THE (K423) DEF PRESSURE SENSOR SIGNAL CIRCUIT FOR A SHORT TO VOLTAGE**

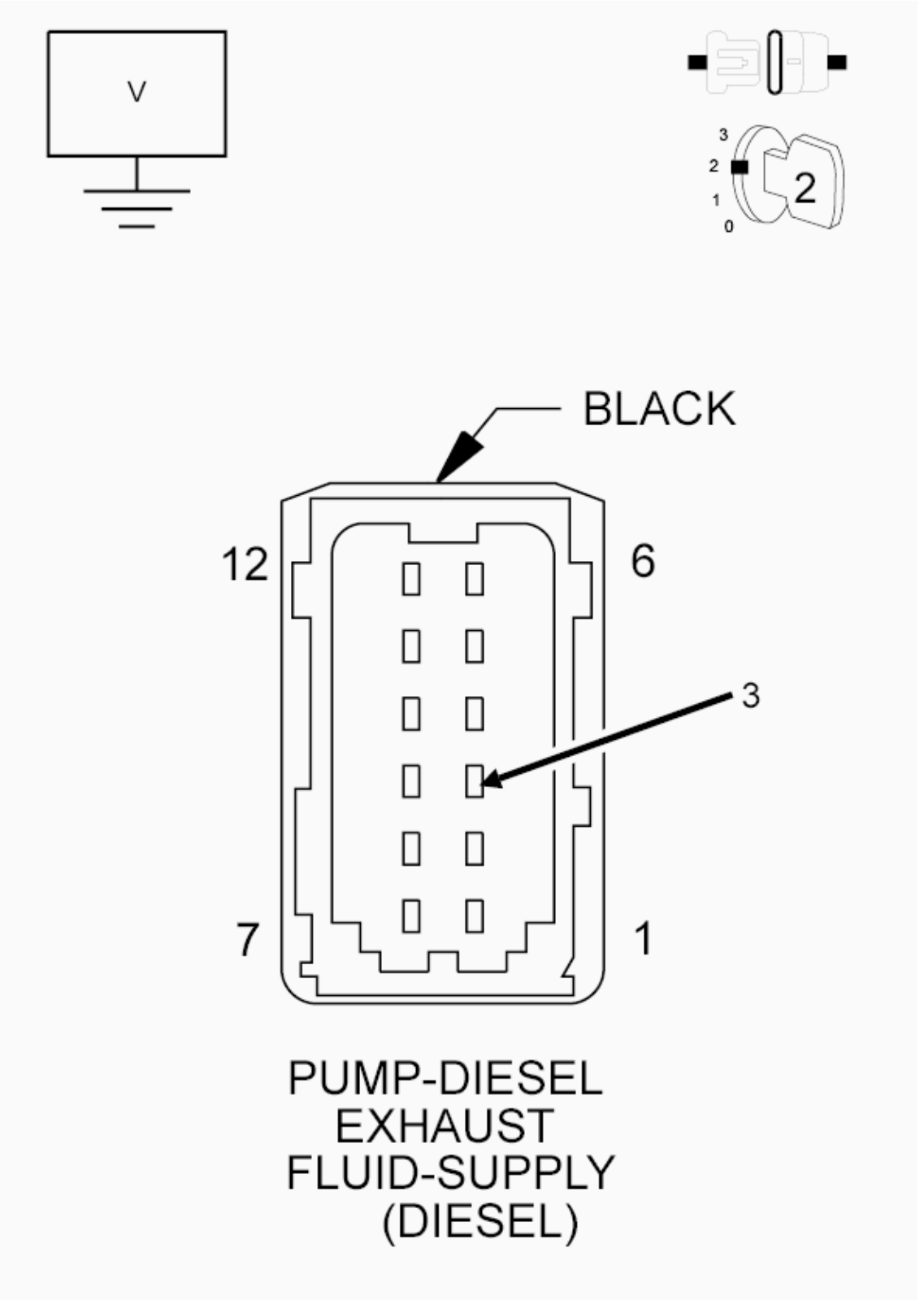

Fig. 60: Checking DEF Pressure Sensor Signal Circuit For A Short To Voltage
Courtesy of CHRYSLER GROUP, LLC

1. Turn ignition off.
2. Disconnect the DEF Supply Pump harness connector.
3. Turn the ignition on.
4. Measure the voltage on the (K423) DEF Pressure Sensor Signal circuit at the DEF Supply Pump harness connector.

   Does the voltage measure above 5.1 Volts?

   Yes

   - Repair the (K423) DEF Pressure Sensor Signal circuit for a short to voltage.
   - Perform the POWERTRAIN VERIFICATION TEST. Refer to **POWERTRAIN VERIFICATION TEST - 6.7L** .

   No

   - Go To 4.

3. **DEF PRESSURE SENSOR**
   1. Turn the ignition off.
   2. Connect a jumper between the (K423) DEF Pressure Sensor Signal circuit and the (K424) DEF Pressure Sensor Ground circuit at the DEF Supply Pump harness connector.
   3. Turn the ignition on, engine not running.
   4. With the scan tool check for DTCs.

      Did DTC P204C set as active after shorting the circuits together?

      Yes

      - Replace the DEF Supply Pump Assembly in accordance with the service information. Refer to **ASSEMBLY, DIESEL EXHAUST FLUID PUMP, REMOVAL** .
      - Perform the POWERTRAIN VERIFICATION TEST. Refer to **POWERTRAIN VERIFICATION TEST - 6.7L** .

      No

      - Go To 4.

4. **CHECK FOR THE (K423) DEF PRESSURE SENSOR SIGNAL CIRCUIT SHORTED TO THE (K422) DEF PRESSURE SENSOR 5-VOLT SUPPLY CIRCUIT**

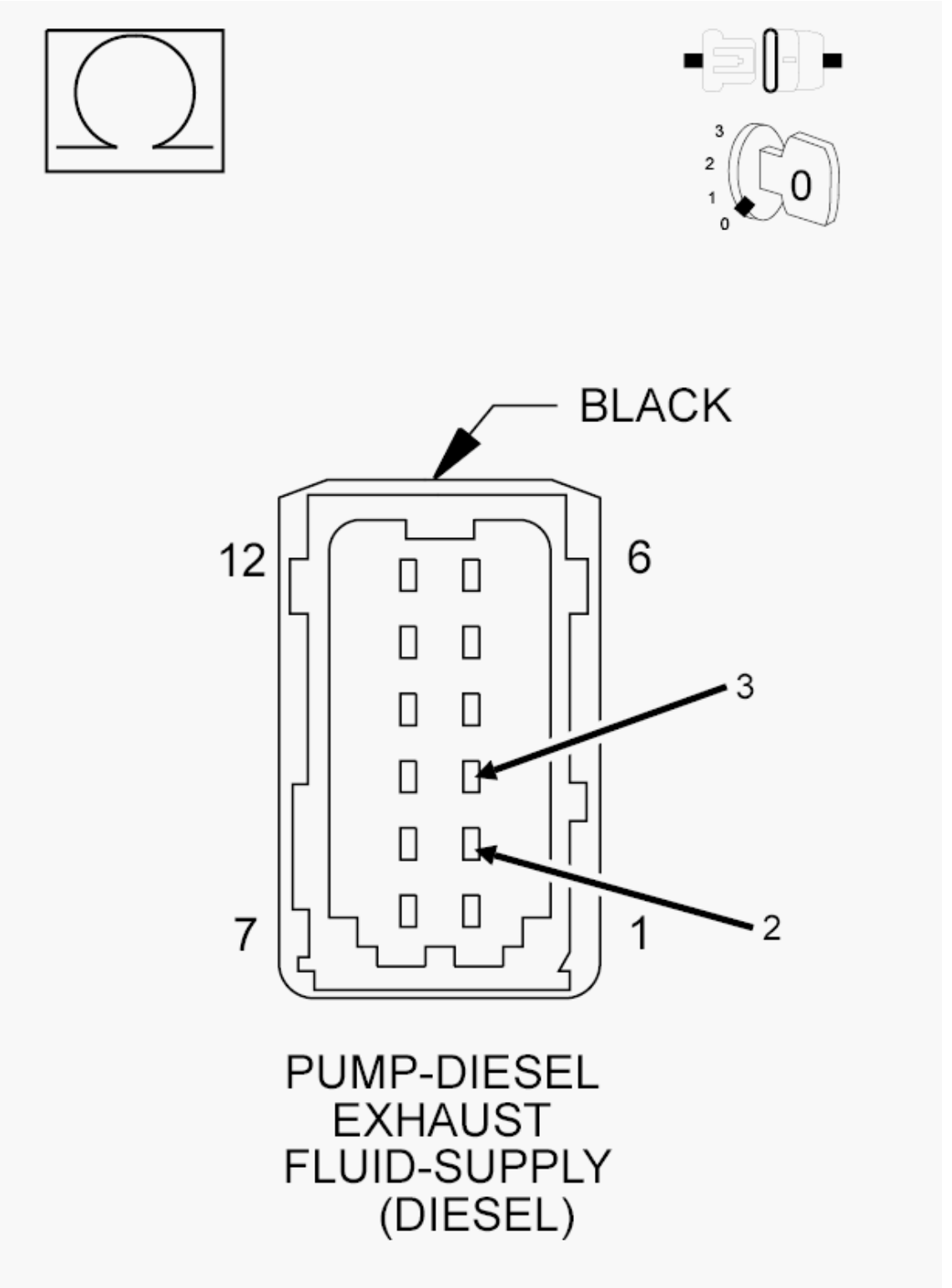

Fig. 61: Checking DEF Pressure Sensor Signal Circuit For A Short
Courtesy of CHRYSLER GROUP, LLC

1. Turn ignition off.

2. Disconnect the DEF Dosing Control Unit C1 harness connector.
3. Measure the resistance between the (K423) DEF Pressure Sensor Signal circuit and the (K422) DEF Pressure Sensor 5-Volt Supply circuit at the DEF Supply Pump harness connector.

   Is the resistance above 10k Ohms?

   Yes

   - Go To 5.

   No

   - Repair the short between the (K423) DEF Pressure Sensor Signal circuit and the (K422) DEF Pressure Sensor 5-Volt Supply circuit.
   - Perform the POWERTRAIN VERIFICATION TEST. Refer to **POWERTRAIN VERIFICATION TEST - 6.7L** .

5. **CHECK THE (K423) DEF PRESSURE SENSOR SIGNAL CIRCUIT FOR AN OPEN/HIGH RESISTANCE**

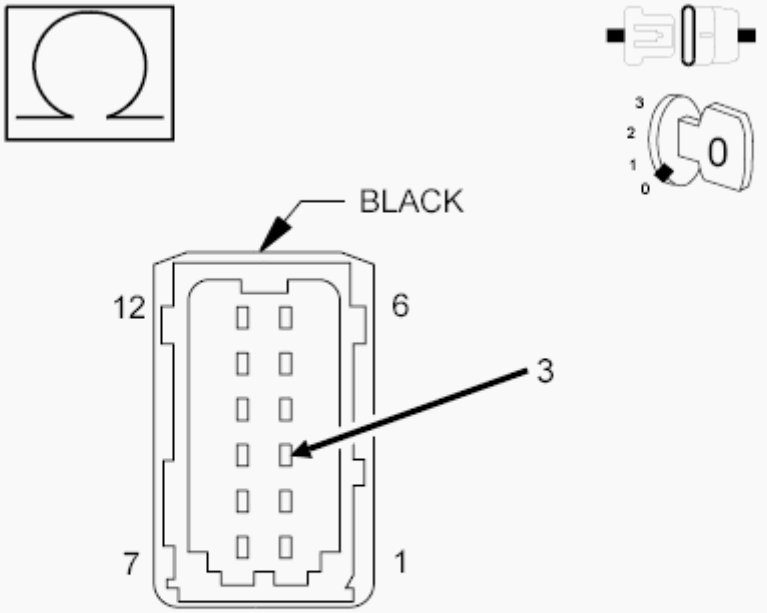

PUMP-DIESEL
EXHAUST
FLUID-SUPPLY
(DIESEL)

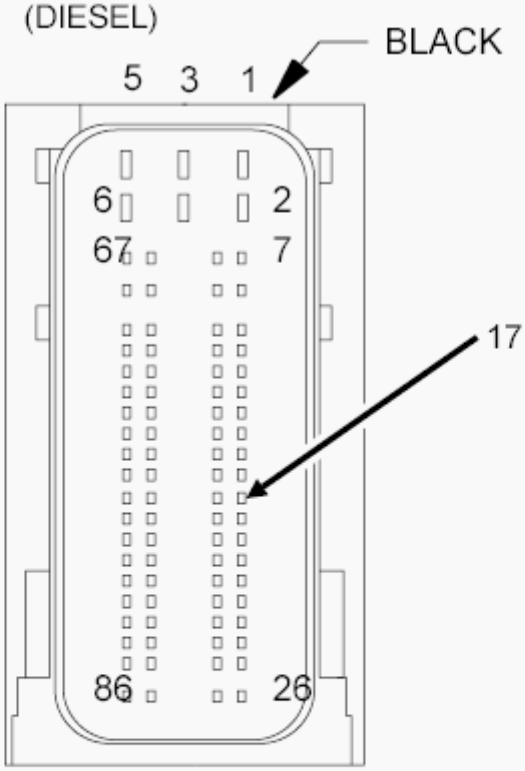

UNIT-
DIESEL
EXHAUST
FLUID-
DOSING

Fig. 62: Checking DEF Pressure Sensor Supply Circuit For A Short To Another Circuit
Courtesy of CHRYSLER GROUP, LLC

1. Measure the resistance of the (K423) DEF Pressure Sensor Signal circuit at the DEF Supply Pump harness connector and the DEF Dosing Control Unit C1 harness connector.

   Is the resistance below 5.0 Ohms?

   Yes

   - Go To 6.

   No

   - Repair the (K423) DEF Pressure Sensor Signal circuit for an open or high resistance.
   - Perform the POWERTRAIN VERIFICATION TEST. Refer to **POWERTRAIN VERIFICATION TEST - 6.7L** .

6. **CHECK THE (K424) DEF PRESSURE SENSOR GROUND CIRCUIT FOR AN OPEN/HIGH RESISTANCE**

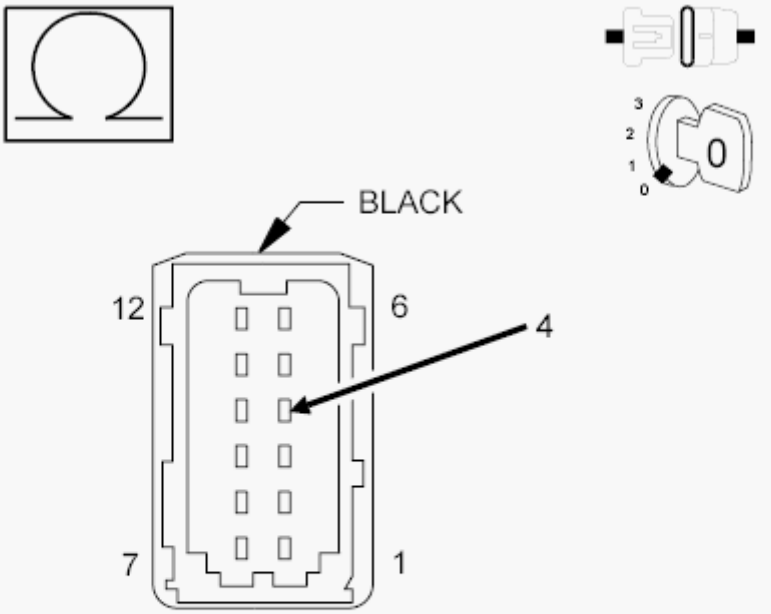

PUMP-DIESEL
EXHAUST
FLUID-SUPPLY
(DIESEL)

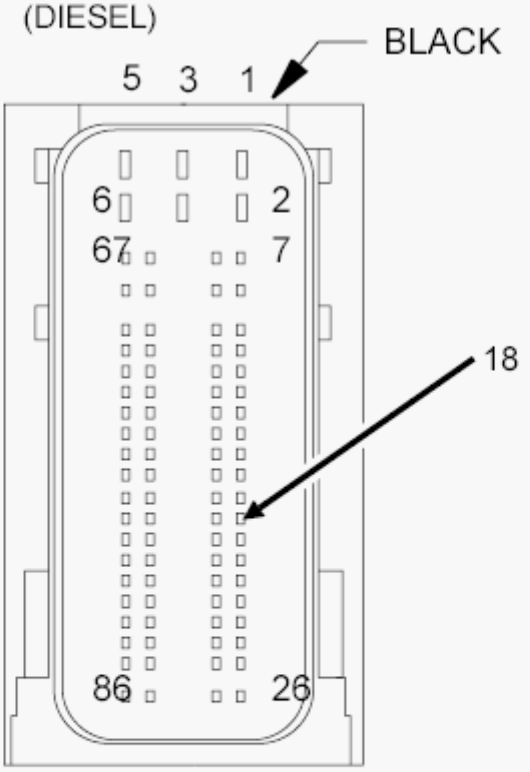

UNIT-
DIESEL
EXHAUST
FLUID-
DOSING

Fig. 63: Checking DEF Pressure Sensor Ground Circuit For An Open/High Resistance
Courtesy of CHRYSLER GROUP, LLC

1. Measure the resistance of the (K424) DEF Pressure Sensor Ground circuit at the DEF Supply Pump harness connector and the DEF Dosing Control Unit C1 harness connector.

   Is the resistance below 5.0 Ohms?

   Yes

   - Replace the DEF Dosing Control Unit in accordance with the service information. Refer to **UNIT, DIESEL EXHAUST FLUID DOSING CONTROL, REMOVAL** .
   - Perform the POWERTRAIN VERIFICATION TEST. Refer to **POWERTRAIN VERIFICATION TEST - 6.7L** .

   No

   - Repair the (K424) DEF Pressure Sensor Ground circuit for an open or high resistance.
   - Perform the POWERTRAIN VERIFICATION TEST. Refer to **POWERTRAIN VERIFICATION TEST - 6.7L** .

P204E-(DIESEL EXHAUST FLUID) REDUCTANT PRESSURE SENSOR CIRCUIT INTERMITTENT

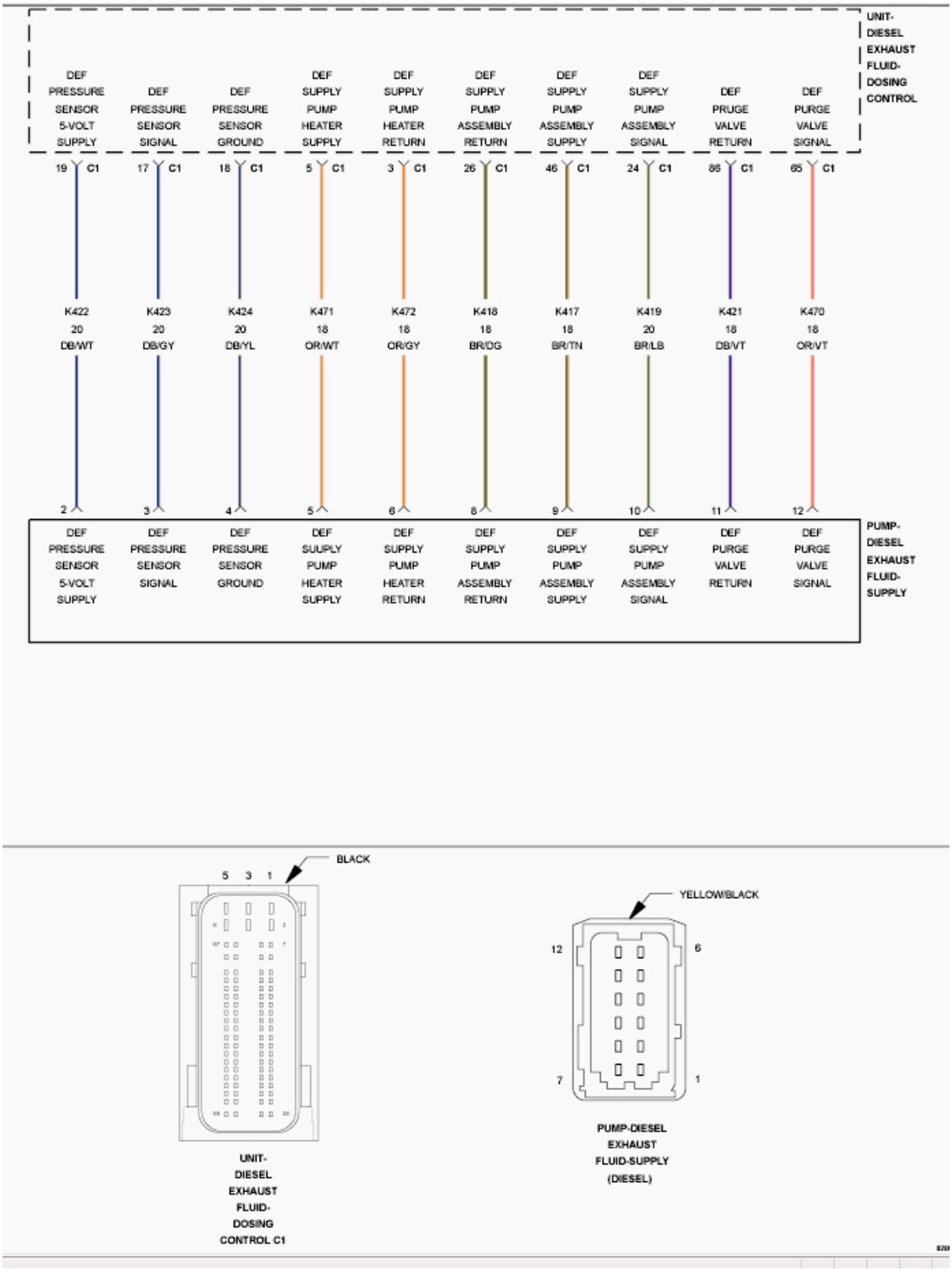

Fig. 64: Diesel Exhaust Fluid (DEF) Dosing Control Unit Wiring Diagram
Courtesy of CHRYSLER GROUP, LLC

For a complete wiring diagram, **refer to appropriate SYSTEM WIRING DIAGRAMS article** .

THEORY OF OPERATION

The Diesel Exhaust Fluid (DEF) Pressure Sensor is a three wire sensor, integrated into the DEF Supply Pump and is not serviceable separate from the pump. The DEF Pressure Sensor monitors supply pressure to the DEF Injector. The Diesel Exhaust Fluid (DEF) Dosing Control Unit provides a 5-Volt Supply and a ground to the DEF Pressure Sensor. The sensor provides a signal to the DEF Dosing Control Unit on the DEF Pressure Sensor Signal circuit. This DEF Pressure Sensor Signal voltage changes, based on the diesel exhaust fluid pressure supplied by the DEF Supply Pump. The DEF Dosing Control Unit uses this information to vary pump speed and maintain the 130 psi (9 bar) pressure needed for proper DEF injection. The DEF Dosing Control Unit will detect a low signal voltage at low diesel exhaust fluid pressures, and a high signal voltage at high diesel exhaust fluid pressures. The DEF Dosing Control Module will illuminate the MIL light via the Powertrain Control Module (PCM) immediately after the diagnostics runs and fails. The DEF Dosing Control Module will turn off the MIL light via the PCM when the monitor runs and passes in three consecutive key cycles.

WHEN MONITORED:

When the DEF Injector is fully primed and is actively maintaining diesel exhaust fluid pressure in the system.

SET CONDITION:

The DEF Dosing Control Unit detects that the DEF system is not able to maintain adequate line pressure.

POSSIBLE CAUSES

Possible Causes
LOW DIESEL EXHAUST FLUID TANK LEVEL
CONTAMINATED DIESEL EXHAUST FLUID
BLOCKED OR RESTRICTED DIESEL EXHAUST FLUID TANK FILTER
BLOCKED OR RESTRICTED DIESEL EXHAUST FLUID SUPPLY PUMP FILTER
BLOCKED, RESTRICTED OR FROZEN DIESEL EXHAUST FLUID SUPPLY PUMP FITTING OR DEF SUPPLY LINE
LEAKING DEF SUPPLY LINE OR DEF PRESSURE LINE
DIESEL EXHAUST FLUID SUPPLY PUMP

Always perform the Pre-Diagnostic Troubleshooting procedure before proceeding. Refer to PRE-DIAGNOSTIC TROUBLESHOOTING PROCEDURE - 6.7L .

DIAGNOSTIC TEST

1. **CHECK THE DEF TANK LEVEL AND FLUID**
    1. Verify the DEF Tank level.
    2. Check the fluid for signs of contamination.

    Is the fluid level in the DEF Tank above the minimum requirement and free of contamination?

    Yes

- Go To 2.

No

- Fill the DEF Tank to the proper level with clean Diesel Exhaust Fluid. If the fluid is contaminated, perform the cleaning procedure. Refer to **TANK, DIESEL EXHAUST FLUID, CLEANING** .
- Perform the POWERTRAIN VERIFICATION TEST. Refer to **POWERTRAIN VERIFICATION TEST - 6.7L** .

2. **ACTIVE DTC**

NOTE: Perform the diagnostics for any other DEF system DTCs that are present with this fault before continuing.

1. Turn the ignition on for one minute, engine not running.
2. With the scan tool, navigate to Systems Tests and actuate the Diesel Exhaust Fluid Doser Pump Override Test.
3. With the scan tool, View DTCs.

Is the DTC active?

Yes

- Go To 3.

No

- Perform the INTERMITTENT CONDITION diagnostic procedure. Refer to **INTERMITTENT CONDITION - 6.7L** .

3. **CHECK FOR LEAKING DEF SUPPLY LINE OR DEF PRESSURE LINE**

1. Turn the ignition off.
2. Visually inspect the DEF Supply and DEF Pressure Lines and fittings for signs of a fluid leak.

Was a leak found in the DEF system?

Yes

- Repair or replace the DEF Lines in accordance with the service information.
- Perform the POWERTRAIN VERIFICATION TEST. Refer to **POWERTRAIN VERIFICATION TEST - 6.7L** .

No

- Go To 4.

4. **CHECK THE DEF SUPPLY PUMP INLET FITTING AND DEF SUPPLY LINE**
    1. Remove the DEF Supply Line.
    2. Inspect the DEF Supply Pump fitting for blockage or debris.
    3. Using regulated low pressure shop air, check the DEF Supply Line for a restriction. Blow the air in the opposite direction of the fluid flow.

    Were any restrictions found?

    Yes

    - Perform the appropriate repair.
    - Perform the POWERTRAIN VERIFICATION TEST. Refer to **POWERTRAIN VERIFICATION TEST - 6.7L** .

    No

    - Go To 5.
5. **CHECK THE DEF SUPPLY PUMP FILTER**
    1. Reinstall the DEF Supply Line.
    2. Remove and inspect the DEF Supply Pump Filter.

    Is the DEF Supply Pump Filter blocked or restricted?

    Yes

    - Replace the DEF Supply Pump Filter in accordance with the service information.
    - Perform the POWERTRAIN VERIFICATION TEST. Refer to **POWERTRAIN VERIFICATION TEST - 6.7L** .

    No

    - Go To 6.
6. **CHECK THE DEF TANK FILTER**
    1. Reinstall the DEF Supply Pump Filter.
    2. Remove the DEF Tank Level/Temperature Sensor Assembly and inspect the DEF Tank Filter.

    Is the DEF Tank Filter blocked or restricted?

    Yes

    - Replace the DEF Tank Level/Temperature Sensor Assembly in accordance with the service information. Refer to **SENSOR, DIESEL EXHAUST FLUID LEVEL/TEMPERATURE, REMOVAL** .
    - Perform the POWERTRAIN VERIFICATION TEST. Refer to **POWERTRAIN**

VERIFICATION TEST - 6.7L .

No

- Replace the DEF Supply Pump Assembly in accordance with the service information. Refer to **ASSEMBLY, DIESEL EXHAUST FLUID PUMP, REMOVAL** .
- Perform the POWERTRAIN VERIFICATION TEST. Refer to **POWERTRAIN VERIFICATION TEST - 6.7L** .

P205B-(DIESEL EXHAUST FLUID) REDUCTANT TANK TEMPERATURE SENSOR CIRCUIT RANGE/PERFORMANCE

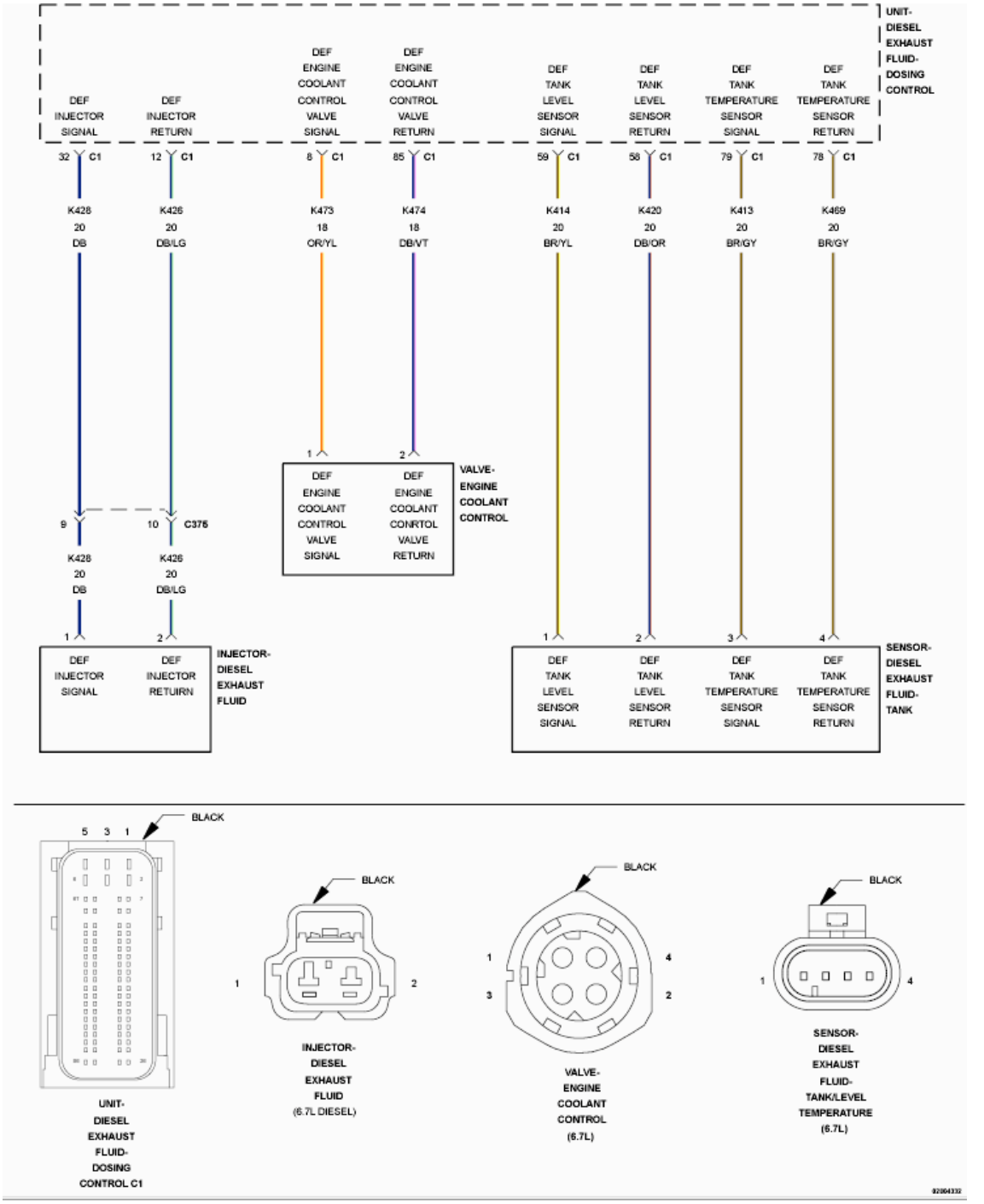

Fig. 65: Diesel Exhaust Fluid Reductant Tank Heater Control Circuit Wiring Diagram
Courtesy of CHRYSLER GROUP, LLC

For a complete wiring diagram, **refer to appropriate SYSTEM WIRING DIAGRAMS article** .

THEORY OF OPERATION

The Diesel Exhaust Fluid (DEF) Tank Level Sensor and Diesel Exhaust Fluid (DEF) Tank Temperature Sensor

are a combination sensor used to measure the level and temperature of the fluid in the DEF Tank. Though combined, the level sensor and the temperature sensor operate independent of each other. Both sensors operate as a two wire 5-Volt sensor. The DEF Tank Level Sensor is a 14 point magnetic reed switch sensor. The DEF Tank Temperature Sensor is a negative temperature coefficient sensor. The DEF Dosing Control Unit will illuminate the MIL lamp via the Powertrain Control Module (PCM) immediately after this diagnostic runs and fails. The DEF Dosing Control Unit will turn off the MIL lamp via the PCM immediately after the diagnostic runs and passes in three consecutive key cycles.

WHEN MONITORED:

This monitor runs continuously when Diesel Exhaust Fluid Tank heating is commanded.

SET CONDITION:

The DEF Dosing Control Unit does not detect a corresponding temperature increase by the DEF Tank Temperature Sensor after the Diesel Exhaust Fluid Tank heating is commanded on.

POSSIBLE CAUSES

Possible Causes
DIESEL EXHAUST FLUID ENGINE COOLANT CONTROL VALVE PHYSICALLY STUCK OPEN
ENGINE COOLANT CONTROL VALVE
DEF CONTROL UNIT

Always perform the Pre-Diagnostic Troubleshooting procedure before proceeding. Refer to PRE-DIAGNOSTIC TROUBLESHOOTING PROCEDURE - 6.7L .

DIAGNOSTIC TEST

1. **CHECK THE ENGINE COOLANT LEVEL**

   NOTE: If there are DTCs present for the DEF Tank Temperature Sensor or DEF Engine Coolant Control Valve, perform those diagnostic procedures before continuing with this test procedure.

   1. Turn the ignition off.
   2. Verify the engine coolant level.

      Is the engine coolant level above the minimum?

      Yes

      - Go To 2.

      No

- Fill the engine coolant to the proper level.
- Perform the POWERTRAIN VERIFICATION TEST. Refer to **POWERTRAIN VERIFICATION TEST - 6.7L** .

2. **CHECK FOR BLOCKED OR RESTRICTED ENGINE COOLANT LINES/HOSES**
   1. Visually inspect the engine coolant supply and return lines for signs of a restriction of leaks.

      Were any restrictions or leaks found?

      Yes

      - Repair or replace the engine coolant lines in accordance with the service information.
      - Perform the POWERTRAIN VERIFICATION TEST. Refer to **POWERTRAIN VERIFICATION TEST - 6.7L** .

      No

      - Go To 3.
3. **CHECK FOR BLOCKED OR RESTRICTED DIESEL EXHAUST FLUID TANK HEATER**
   1. Remove the coolant lines at the DEF Tank Heater Coil.
   2. Blow regulated low pressure shop air through the DEF Tank Heater Coil.

      Were any restrictions found?

      Yes

      - Replace the DEF Tank Heater Coil in accordance with the service information. Refer to **SENSOR, DIESEL EXHAUST FLUID LEVEL/TEMPERATURE, REMOVAL** .
      - Perform the POWERTRAIN VERIFICATION TEST. Refer to **POWERTRAIN VERIFICATION TEST - 6.7L** .

      No

      - Replace the DEF Engine Coolant Control Valve in accordance with the service information. Refer to **VALVE, DIESEL EXHAUST FLUID ENGINE COOLANT CONTROL, REMOVAL** .
      - Perform the POWERTRAIN VERIFICATION TEST. Refer to **POWERTRAIN VERIFICATION TEST - 6.7L** .

P205C-(DIESEL EXHAUST FLUID) REDUCTANT TANK TEMPERATURE SENSOR CIRCUIT LOW

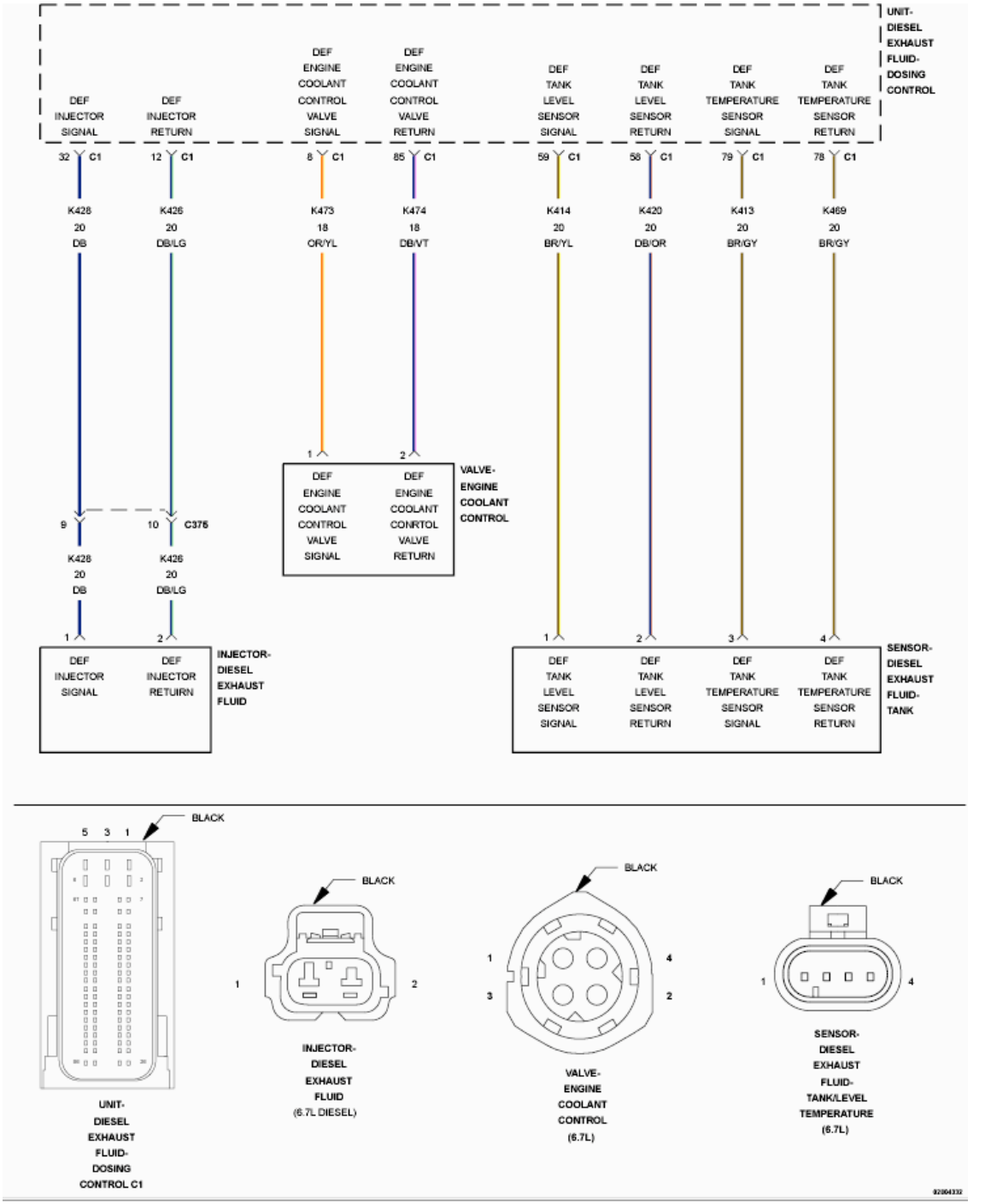

Fig. 66: Diesel Exhaust Fluid Reductant Tank Heater Control Circuit Wiring Diagram
Courtesy of CHRYSLER GROUP, LLC

For a complete wiring diagram, **refer to appropriate SYSTEM WIRING DIAGRAMS article** .

THEORY OF OPERATION

The Diesel Exhaust Fluid (DEF) Tank Level Sensor and Diesel Exhaust Fluid (DEF) Tank Temperature Sensor

are a combination sensor used to measure the level and temperature of the fluid in the DEF Tank. Though combined, the level sensor and the temperature sensor operate independent of each other. Both sensors operate as a two wire 5-Volt sensor. The DEF Tank Level Sensor is a 14 point magnetic reed switch sensor. The DEF Tank Temperature Sensor is a negative temperature coefficient sensor. The DEF Dosing Control Unit will illuminate the MIL lamp via the Powertrain Control Module (PCM) immediately after this diagnostic runs and fails. The DEF Dosing Control Unit will turn off the MIL lamp via the PCM immediately after the diagnostic runs and passes in three consecutive key cycles.

WHEN MONITORED:

With the ignition on.

SET CONDITION:

The DEF Dosing Control Unit detects that the DEF Tank Temperature Sensor Signal circuit is below 0.2 of a Volt for one second.

POSSIBLE CAUSES

Possible Causes
(K413) DIESEL EXHAUST FLUID TANK TEMPERATURE SENSOR SIGNAL CIRCUIT SHORTED TO GROUND
(K413) DEF TANK TEMPERATURE SENSOR SIGNAL CIRCUIT SHORTED TO THE (K469) DIESEL EXHAUST FLUID TANK TEMPERATURE SENSOR RETURN CIRCUIT
DIESEL EXHAUST FLUID TANK TEMPERATURE SENSOR
DIESEL EXHAUST FLUID DOSING CONTROL UNIT

Always perform the Pre-Diagnostic Troubleshooting procedure before proceeding. Refer to PRE-DIAGNOSTIC TROUBLESHOOTING PROCEDURE - 6.7L .

DIAGNOSTIC TEST

1. **ACTIVE DTC**
    1. Turn the ignition on for one minute, engine not running.
    2. With the scan tool check for active DTCs.

       Is the DTC active?

       Yes

       - Go To 2.

       No

       - Perform the INTERMITTENT CONDITION diagnostic procedure. Refer to **INTERMITTENT CONDITION - 6.7L** .

2. **CHECK THE DEF TANK LEVEL SENSOR**
    1. Ignition on, engine not running.
    2. Disconnect the DEF Tank Level/Temperature Sensor harness connector.
    3. With the scan tool check DTCs.
    4. Monitor the scan tool for one minute.

    Did DTC P205D set as active after disconnecting the sensor?

    Yes

    - Replace the DEF Tank Level/Temperature Sensor in accordance with the service information.
    - Perform the POWERTRAIN VERIFICATION TEST. Refer to **POWERTRAIN VERIFICATION TEST - 6.7L** .

    No

    - Go To 3.
3. **CHECK THE (K413) DEF TANK TEMPERATURE SENSOR SIGNAL CIRCUIT FOR A SHORT TO GROUND**

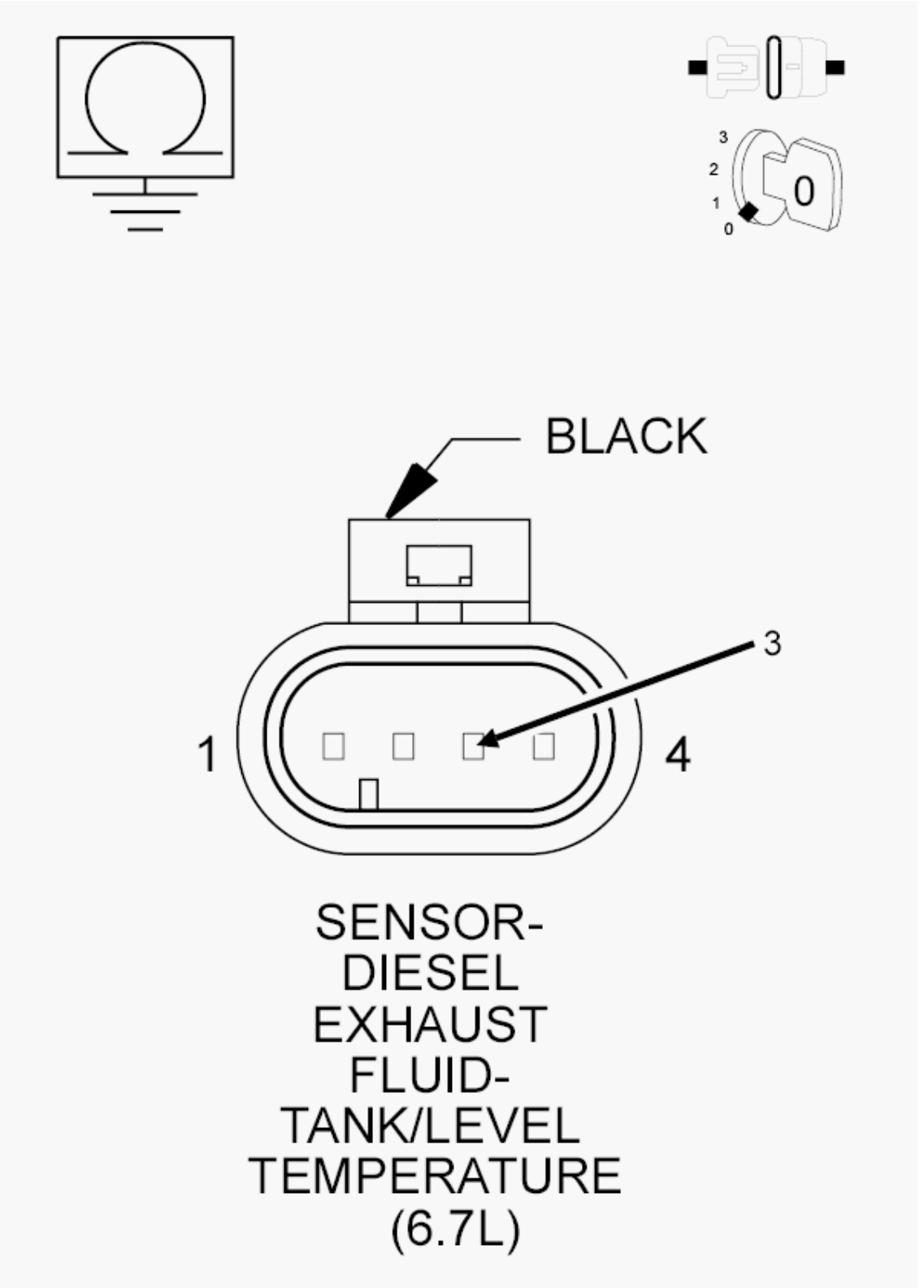

Fig. 67: Checking DEF Tank Temperature Sensor Signal Circuit For A Short To Ground
Courtesy of CHRYSLER GROUP, LLC

1. Turn ignition off.
2. Disconnect the DEF Dosing Control Unit C1 harness connector.
3. Measure the resistance between ground and the (K413) DEF Tank Temperature Sensor Signal circuit at the DEF Tank Level/Temperature Sensor harness connector.

   Is the resistance above 10k Ohms?

   Yes

   - Go To 4.

   No

   - Repair the (K413) DEF Tank Temperature Sensor Signal circuit for a short to ground.
   - Perform the POWERTRAIN VERIFICATION TEST. Refer to **POWERTRAIN VERIFICATION TEST - 6.7L** .

4. **CHECK FOR THE (K413) DEF TANK TEMPERATURE SENSOR SIGNAL CIRCUIT SHORTED TO THE (K469) DEF TANK TEMPERATURE SENSOR RETURN CIRCUIT**

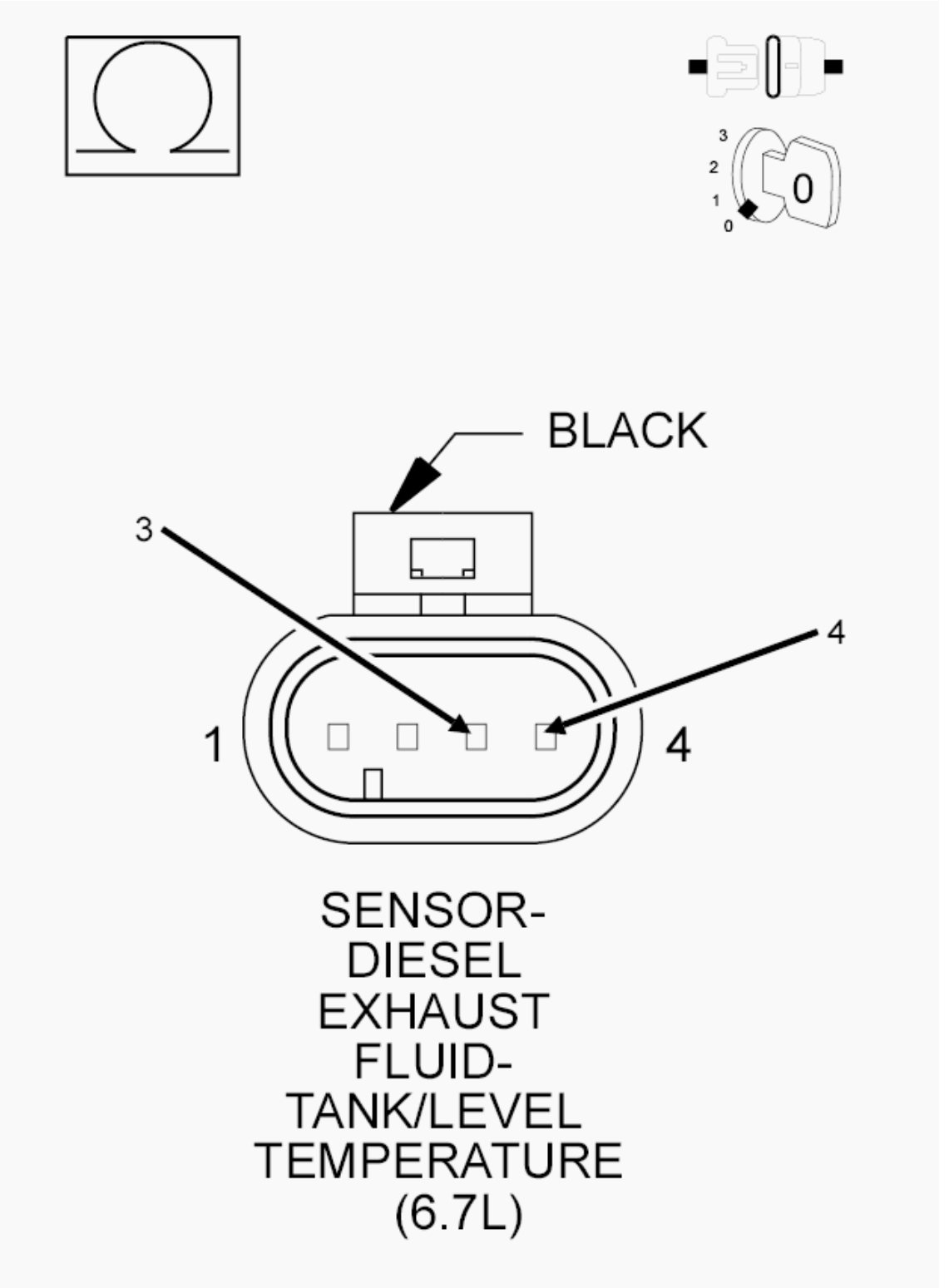

Fig. 68: Checking DEF Tank Temperature Sensor Signal Circuit For A Short
Courtesy of CHRYSLER GROUP, LLC

1. Measure the resistance between the (K413) DEF Tank Temperature Sensor Signal circuit and the

(K469) DEF Tank Temperature Sensor Return circuit at the DEF Tank Level/Temperature harness connector.

Is the resistance above 10k Ohms?

Yes

- Replace the DEF Dosing Control Unit in accordance with the service information. Refer to **UNIT, DIESEL EXHAUST FLUID DOSING CONTROL, REMOVAL** .
- Perform the POWERTRAIN VERIFICATION TEST. Refer to **POWERTRAIN VERIFICATION TEST - 6.7L** .

No

- Repair the short between the (K413) DEF Tank Temperature Sensor Signal circuit and the (K469) Fuel Temperature Sensor Return circuit.
- Perform the POWERTRAIN VERIFICATION TEST. Refer to **POWERTRAIN VERIFICATION TEST - 6.7L** .

P205D-(DIESEL EXHAUST FLUID) REDUCTANT TANK TEMPERATURE SENSOR CIRCUIT HIGH

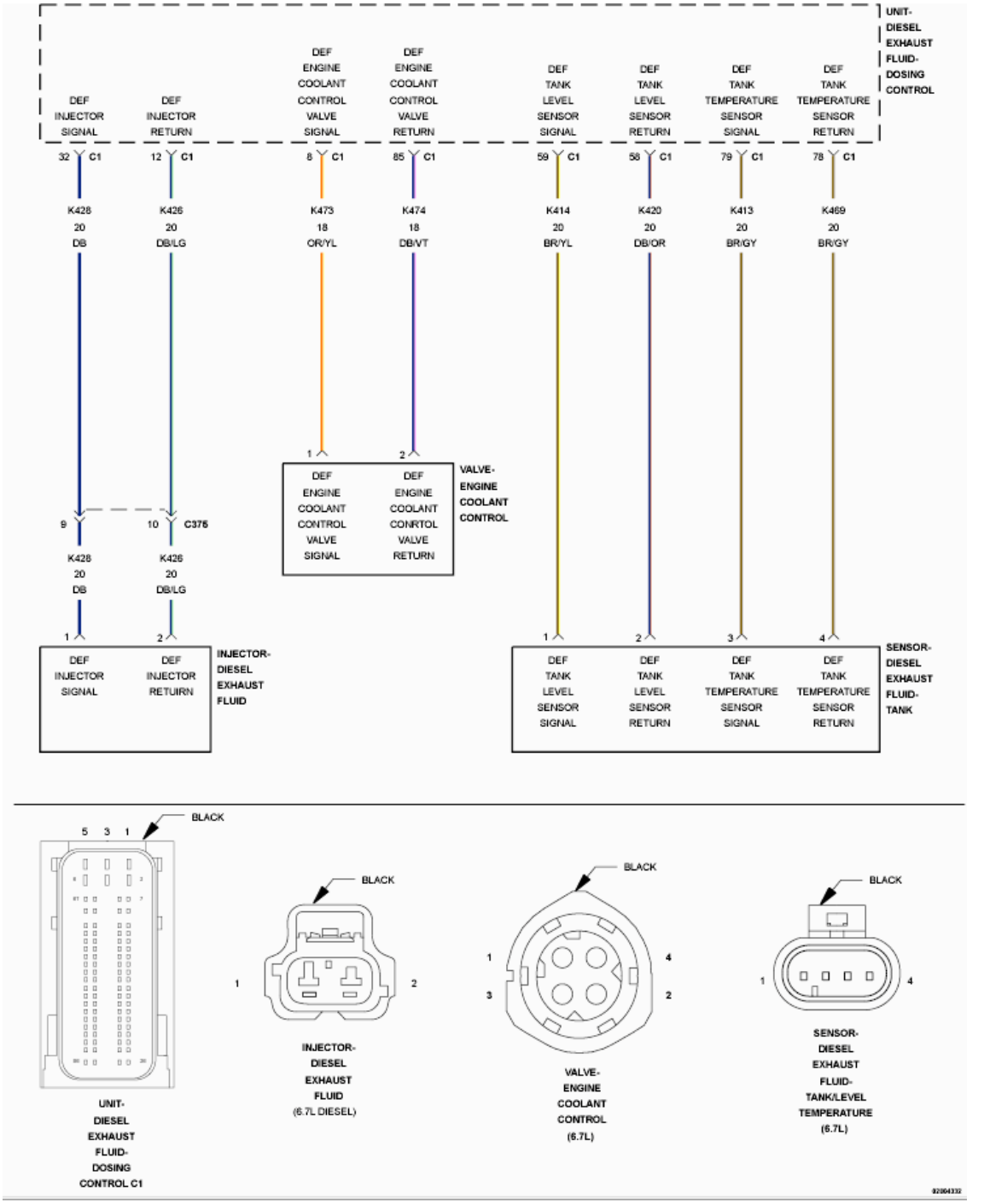

Fig. 69: Diesel Exhaust Fluid Reductant Tank Heater Control Circuit Wiring Diagram
Courtesy of CHRYSLER GROUP, LLC

For a complete wiring diagram, **refer to appropriate SYSTEM WIRING DIAGRAMS article** .

THEORY OF OPERATION

The Diesel Exhaust Fluid (DEF) Tank Level Sensor and Diesel Exhaust Fluid (DEF) Tank Temperature Sensor

are a combination sensor used to measure the level and temperature of the fluid in the DEF Tank. Though combined, the level sensor and the temperature sensor operate independent of each other. Both sensors operate as a two wire 5-Volt sensor. The DEF Tank Level Sensor is a 14 point magnetic reed switch sensor. The DEF Tank Temperature Sensor is a negative temperature coefficient sensor. The DEF Dosing Control Unit will illuminate the MIL lamp via the Powertrain Control Module (PCM) immediately after this diagnostic runs and fails. The DEF Dosing Control Unit will turn off the MIL lamp via the PCM immediately after the diagnostic runs and passes. The DEF system will continue to dose and the NOx monitor will continue to execute while the DTC is active.

WHEN MONITORED:

With the ignition on.

SET CONDITION:

The DEF Dosing Control Unit detects that the (K413) DEF Tank Temperature Sensor Signal circuit is above 4.7 Volts for one second.

POSSIBLE CAUSES

Possible Causes
(K413) DIESEL EXHAUST FLUID TANK TEMPERATURE SENSOR SIGNAL CIRCUIT SHORTED TO VOLTAGE
(K413) DIESEL EXHAUST FLUID TANK TEMPERATURE SENSOR SIGNAL CIRCUIT OPEN/HIGH RESISTANCE
(K469) DIESEL EXHAUST FLUID TANK TEMPERATURE SENSOR RETURN CIRCUIT OPEN/HIGH RESISTANCE
DIESEL EXHAUST FLUID TANK TEMPERATURE SENSOR
DIESEL EXHAUST FLUID DOSING CONTROL UNIT

Always perform the Pre-Diagnostic Troubleshooting procedure before proceeding. Refer to PRE-DIAGNOSTIC TROUBLESHOOTING PROCEDURE - 6.7L .

DIAGNOSTIC TEST

1. **ACTIVE DTC**
    1. Turn the ignition on for one minute, engine not running.
    2. With the scan tool check for active DTCs.

       Is the DTC active?

       Yes

       - Go To 2.

       No

- Perform the INTERMITTENT CONDITION diagnostic procedure. Refer to **INTERMITTENT CONDITION - 6.7L** .

2. **CHECK THE (K413) DEF TANK TEMPERATURE SENSOR SIGNAL CIRCUIT FOR A SHORT TO VOLTAGE**

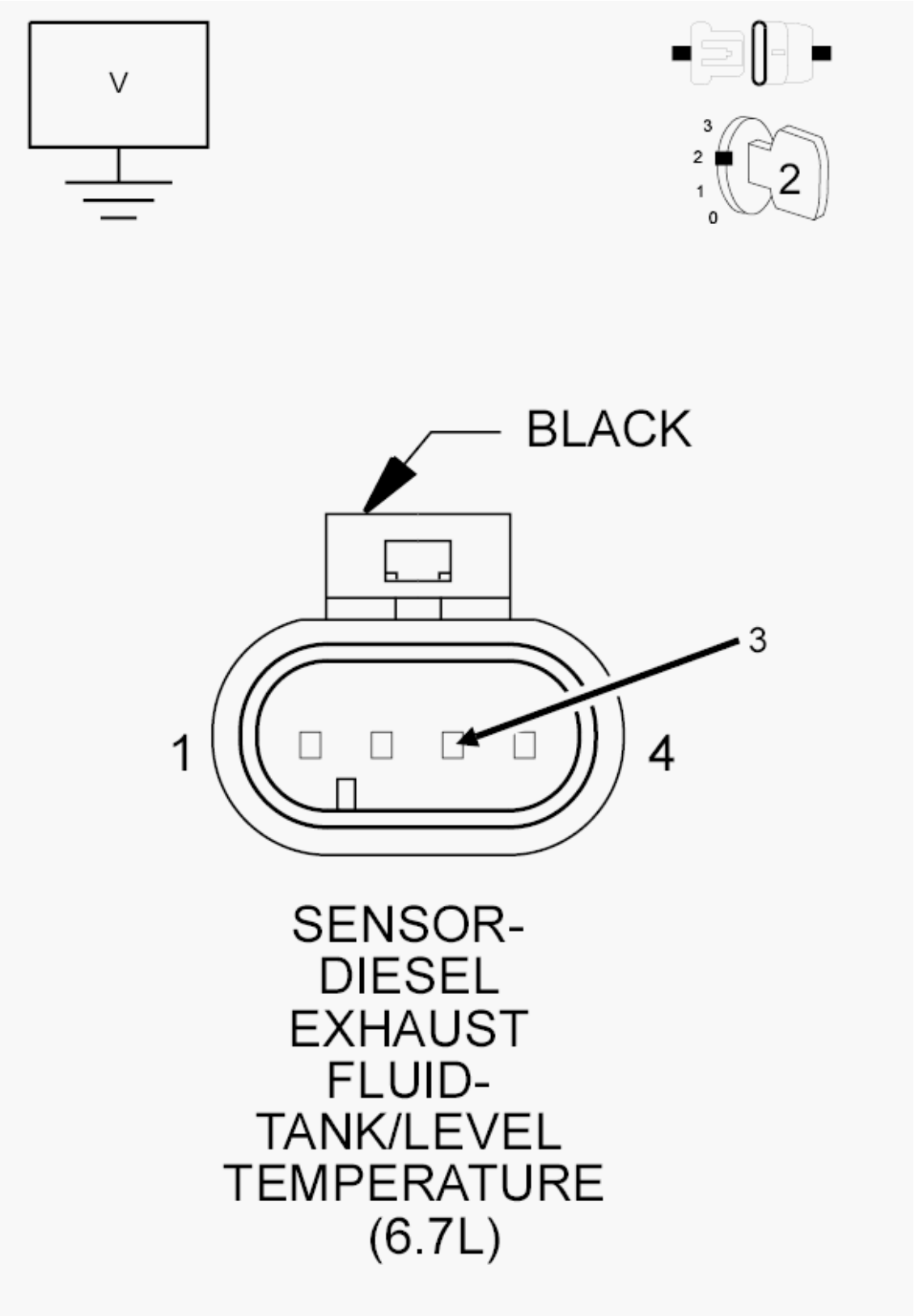

Fig. 70: Checking The DEF Tank Temperature Sensor Signal Circuit For A Short To Voltage
Courtesy of CHRYSLER GROUP, LLC

1. Turn ignition off.
2. Disconnect the DEF Tank Level/Tank Temperature Sensor harness connector.
3. Turn the ignition on.
4. Measure the voltage on the (K413) DEF Tank Temperature Sensor Signal circuit at the DEF Tank Level/Temperature Sensor harness connector.

   Does the voltage measure above 5.1 Volts?

   Yes

   - Repair the (K413) DEF Tank Temperature Sensor Signal circuit for a short to voltage.
   - Perform the POWERTRAIN VERIFICATION TEST. Refer to **POWERTRAIN VERIFICATION TEST - 6.7L** .

   No

   - Go To 3.

3. **CHECK THE FUEL TEMPERATURE SENSOR**
   1. Ignition on, engine not running.
   2. Connect a jumper between the (K413) DEF Tank Temperature Sensor Signal circuit and the (K469) DEF Tank Temperature Sensor Return circuit at the DEF Tank Level/Temperature harness connector.
   3. With the scan tool check for DTCs.
   4. Monitor the scan tool for one minute.

      Did DTC P205C set as active after shorting the circuits together?

      Yes

      - Replace the DEF Tank Level/Temperature Sensor in accordance with the service information. Refer to **SENSOR, DIESEL EXHAUST FLUID LEVEL/TEMPERATURE, REMOVAL** .
      - Perform the POWERTRAIN VERIFICATION TEST. Refer to **POWERTRAIN VERIFICATION TEST - 6.7L** .

      No

      - Go To 4.

4. **CHECK THE (K413) DEF TANK TEMPERATURE SENSOR SIGNAL CIRCUIT FOR AN OPEN/HIGH RESISTANCE**

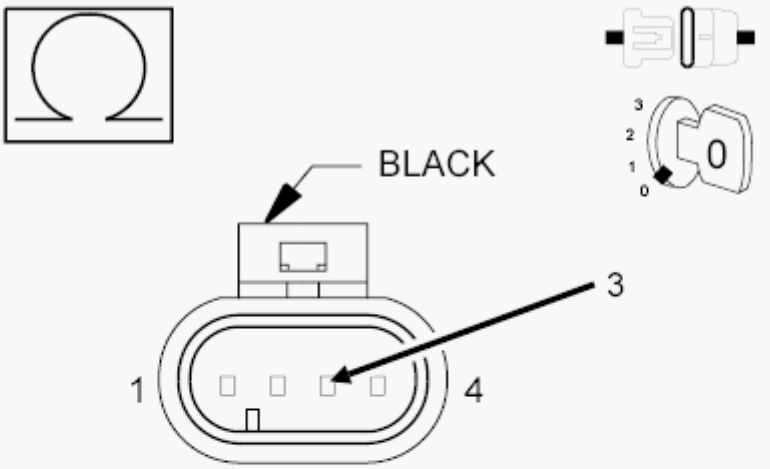

SENSOR-
DIESEL
EXHAUST
FLUID-
TANK/LEVEL
TEMPERATURE
(6.7L)

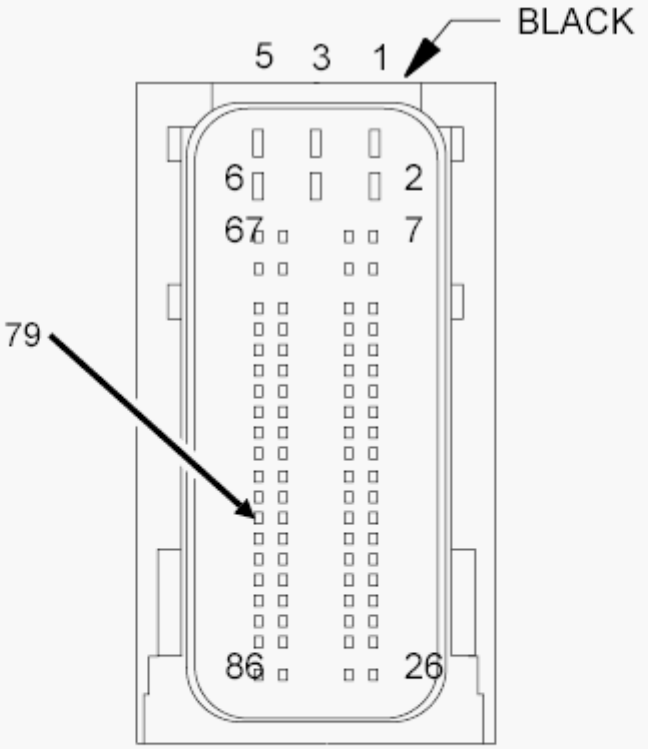

UNIT-
DIESEL
EXHAUST
FLUID-
DOSING

Fig. 71: Checking DEF Tank Temperature Sensor Signal Circuit For An Open Or High
Courtesy of CHRYSLER GROUP, LLC

1. Turn ignition off.
2. Disconnect the DEF Dosing Control Unit C1 harness connector.
3. Measure the resistance of the (K413) DEF Tank Temperature Sensor Signal circuit between the DEF Tank Level/Temperature Sensor harness connector and the DEF Dosing Control Unit C1 harness connector.

   Is the resistance below 5.0 Ohms?

   Yes

   - Go To 5.

   No

   - Repair the (K413) DEF Tank Temperature Sensor Signal circuit for an open or high resistance.
   - Perform the POWERTRAIN VERIFICATION TEST. Refer to **POWERTRAIN VERIFICATION TEST - 6.7L** .

5. **CHECK THE (K469) DEF TANK LEVEL TEMPERATURE RETURN CIRCUIT FOR AN OPEN/HIGH RESISTANCE**

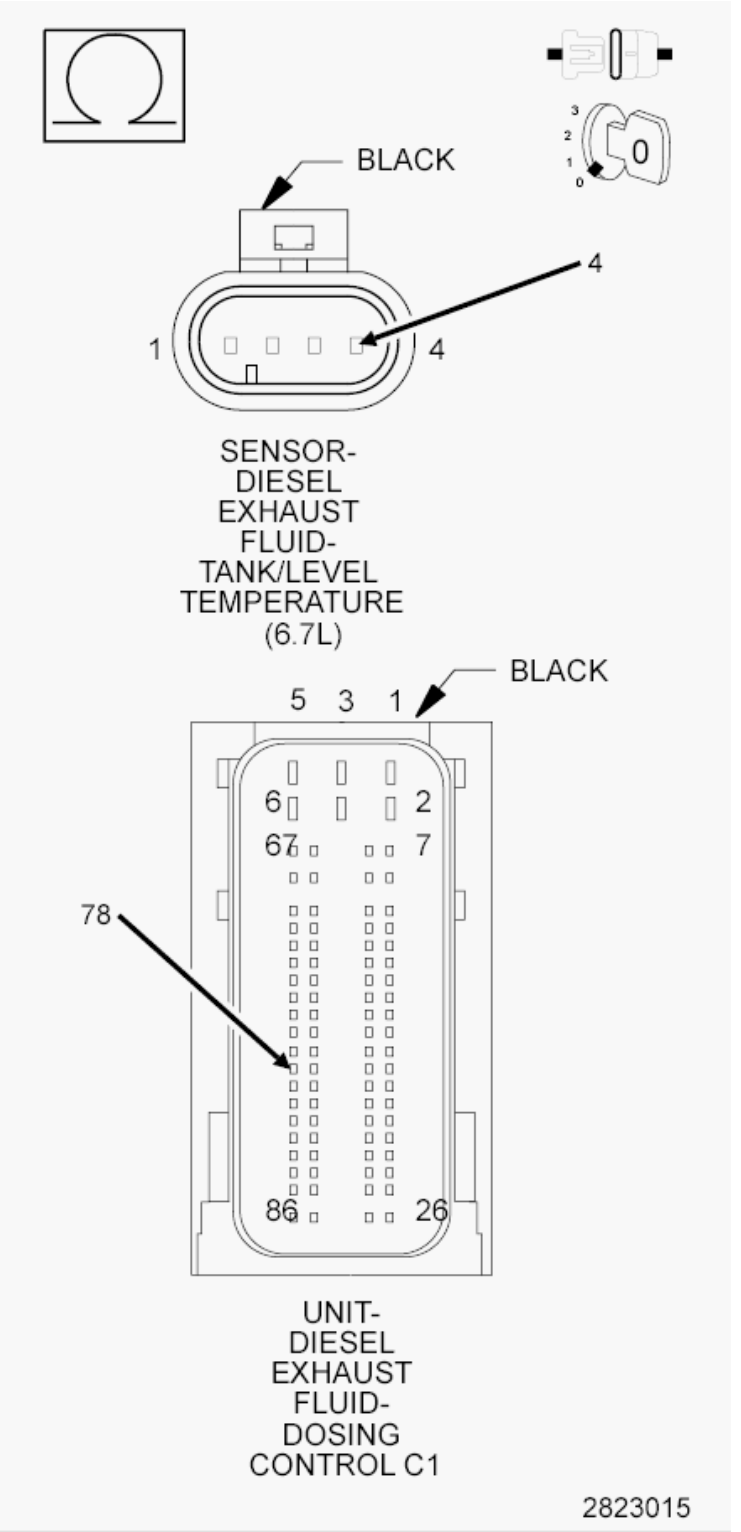

Fig. 72: Checking The DEF Tank Level Temperature Return Circuit For An Open Or High Resistance
Courtesy of CHRYSLER GROUP, LLC

1. Measure the resistance of the (K469) DEF Tank Temperature Sensor Return circuit between the

DEF Tank Level/Temperature Sensor harness connector and the DEF Dosing Control Unit C1 harness connector.

Is the resistance below 5.0 Ohms?

Yes

- Replace the DEF Dosing Control Unit in accordance with the service information. Refer to **UNIT, DIESEL EXHAUST FLUID DOSING CONTROL, REMOVAL** .
- Perform the POWERTRAIN VERIFICATION TEST. Refer to **POWERTRAIN VERIFICATION TEST - 6.7L** .

No

- Repair the (K469) DEF Tank Temperature Sensor Return circuit for an open or high resistance.
- Perform the POWERTRAIN VERIFICATION TEST. Refer to **POWERTRAIN VERIFICATION TEST - 6.7L** .

P205E-(DIESEL EXHAUST FLUID) REDUCTANT TANK TEMPERATURE SENSOR CIRCUIT INTERMITTENT

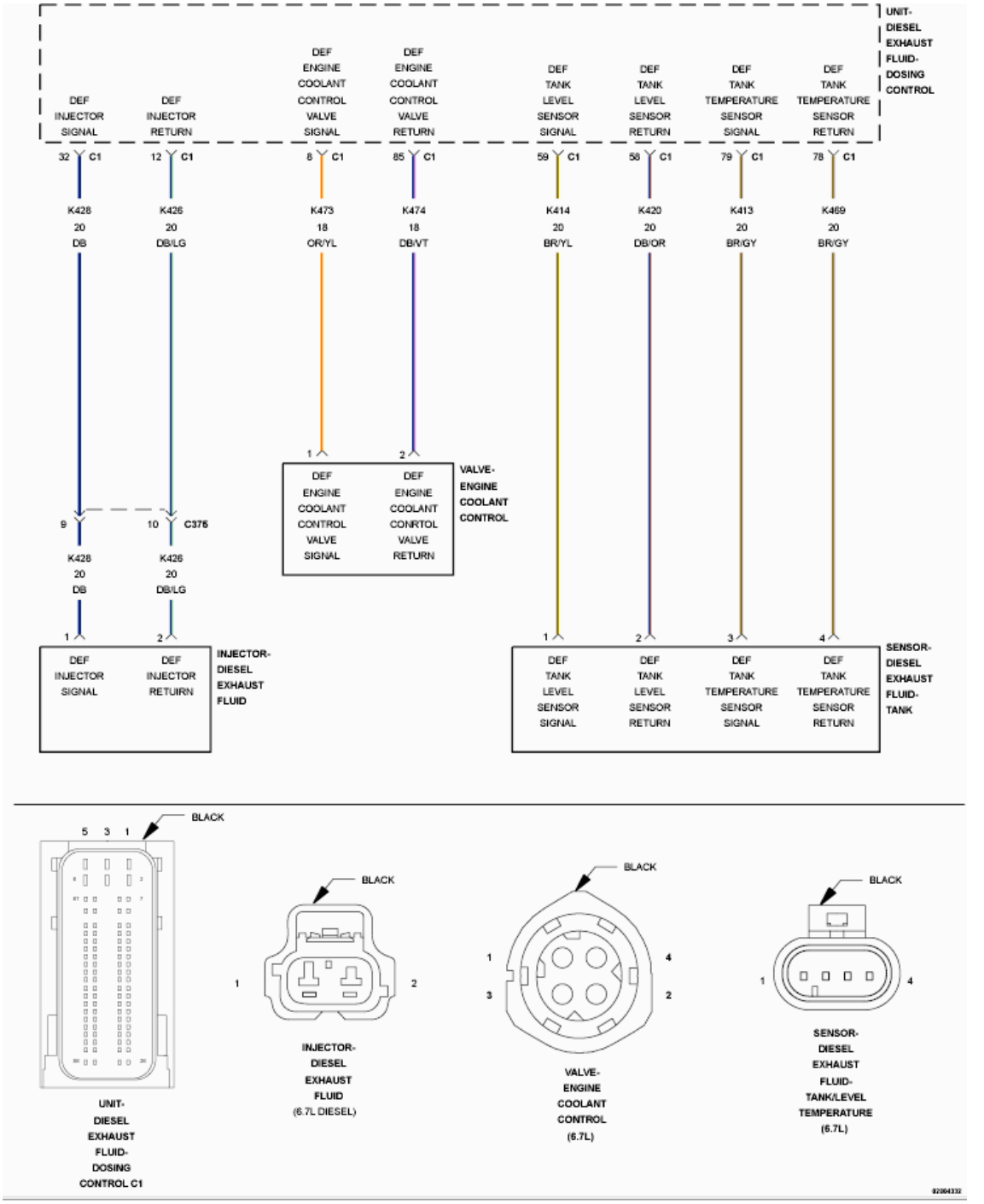

Fig. 73: Diesel Exhaust Fluid Reductant Tank Heater Control Circuit Wiring Diagram
Courtesy of CHRYSLER GROUP, LLC

For a complete wiring diagram, **refer to appropriate SYSTEM WIRING DIAGRAMS article** .

THEORY OF OPERATION

The Diesel Exhaust Fluid (DEF) Tank Level Sensor and Diesel Exhaust Fluid (DEF) Tank Temperature Sensor

are a combination sensor used to measure the level and temperature of the fluid in the DEF Tank. Though combined, the level sensor and the temperature sensor operate independent of each other. Both sensors operate as a two wire 5-Volt sensor. The DEF Tank Level Sensor is a 14 point magnetic reed switch sensor. The DEF Tank Temperature Sensor is a negative temperature coefficient sensor. The DEF Dosing Control Unit will illuminate the MIL lamp via the Powertrain Control Module (PCM) immediately after this diagnostic runs and fails. The DEF Dosing Control Unit will turn off the MIL lamp via the PCM immediately after the diagnostic runs and passes in three consecutive key cycles.

WHEN MONITORED:

The engine must be turned off for a period of eight hours before this monitor will run. This monitor runs when the ignition is turned to the on position after an eight hour cold soak.

SET CONDITION:

At initial key on, the DEF Dosing Control Unit detects an 30°C (86°F) difference between the DEF Tank Temperature Sensor and the DEF Ambient Air Temperature Sensor for a calibrated time.

POSSIBLE CAUSES

Possible Causes
HIGH RESISTANCE IN THE (K413) DIESEL EXHAUST FLUID TANK TEMPERATURE SENSOR SIGNAL CIRCUIT
HIGH RESISTANCE IN THE (K469) DIESEL EXHAUST FLUID TANK TEMPERATURE SENSOR RETURN CIRCUIT
DIESEL EXHAUST FLUID TANK TEMPERATURE SENSOR
ENGINE COOLANT CONTROL VALVE
DIESEL EXHAUST FLUID DOSING CONTROL UNIT

Always perform the Pre-Diagnostic Troubleshooting procedure before proceeding. Refer to PRE-DIAGNOSTIC TROUBLESHOOTING PROCEDURE - 6.7L .

DIAGNOSTIC TEST

1. **ACTIVE DTC**
    1. Ignition on, engine not running.
    2. With the scan tool check for active DTCs.

       Is the DTC active?

       Yes

       - Go To 2.

       No

- Perform the INTERMITTENT CONDITION diagnostic procedure. Refer to **INTERMITTENT CONDITION - 6.7L** .

2. **CHECK FOR HIGH RESISTANCE IN THE (K413) DEF TANK TEMPERATURE SENSOR SIGNAL CIRCUIT**

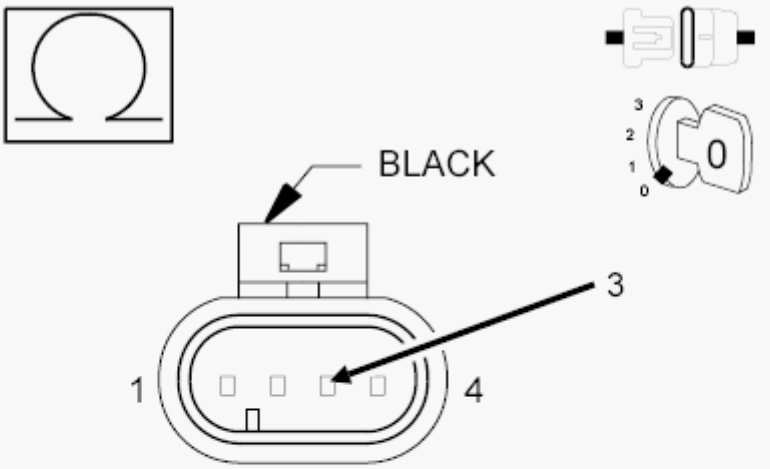

SENSOR-
DIESEL
EXHAUST
FLUID-
TANK/LEVEL
TEMPERATURE
(6.7L)

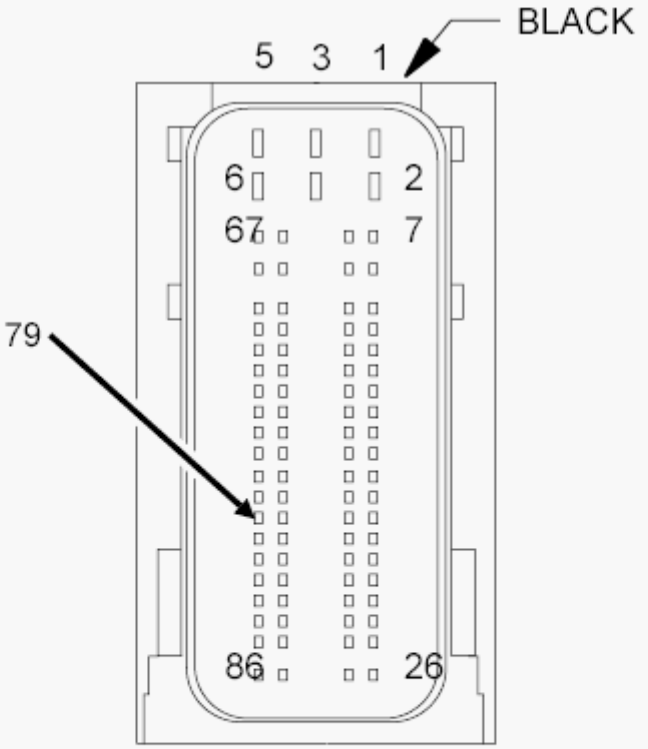

UNIT-
DIESEL
EXHAUST
FLUID-
DOSING

Fig. 74: Checking DEF Tank Temperature Sensor Signal Circuit For An Open Or High
Courtesy of CHRYSLER GROUP, LLC

1. Turn ignition off.
2. Disconnect the DEF Tank Level/Tank Temperature Sensor harness connector.
3. Disconnect the DEF Dosing Control Unit C1 harness connector.
4. Measure the resistance of the (K413) DEF Tank Temperature Sensor Signal circuit between the DEF Tank Level/Temperature Sensor harness connector and the DEF Dosing Control Unit C1 harness connector.

   Is the resistance below 5.0 Ohms?

   Yes

   - Go To 3.

   No

   - Repair the (K413) DEF Tank Temperature Sensor Signal circuit for an open or high resistance.
   - Perform the POWERTRAIN VERIFICATION TEST. Refer to **POWERTRAIN VERIFICATION TEST - 6.7L** .

3. **CHECK FOR HIGH RESISTANCE IN THE (K469) DEF TANK TEMPERATURE SENSOR RETURN CIRCUIT FOR AN OPEN/HIGH RESISTANCE**

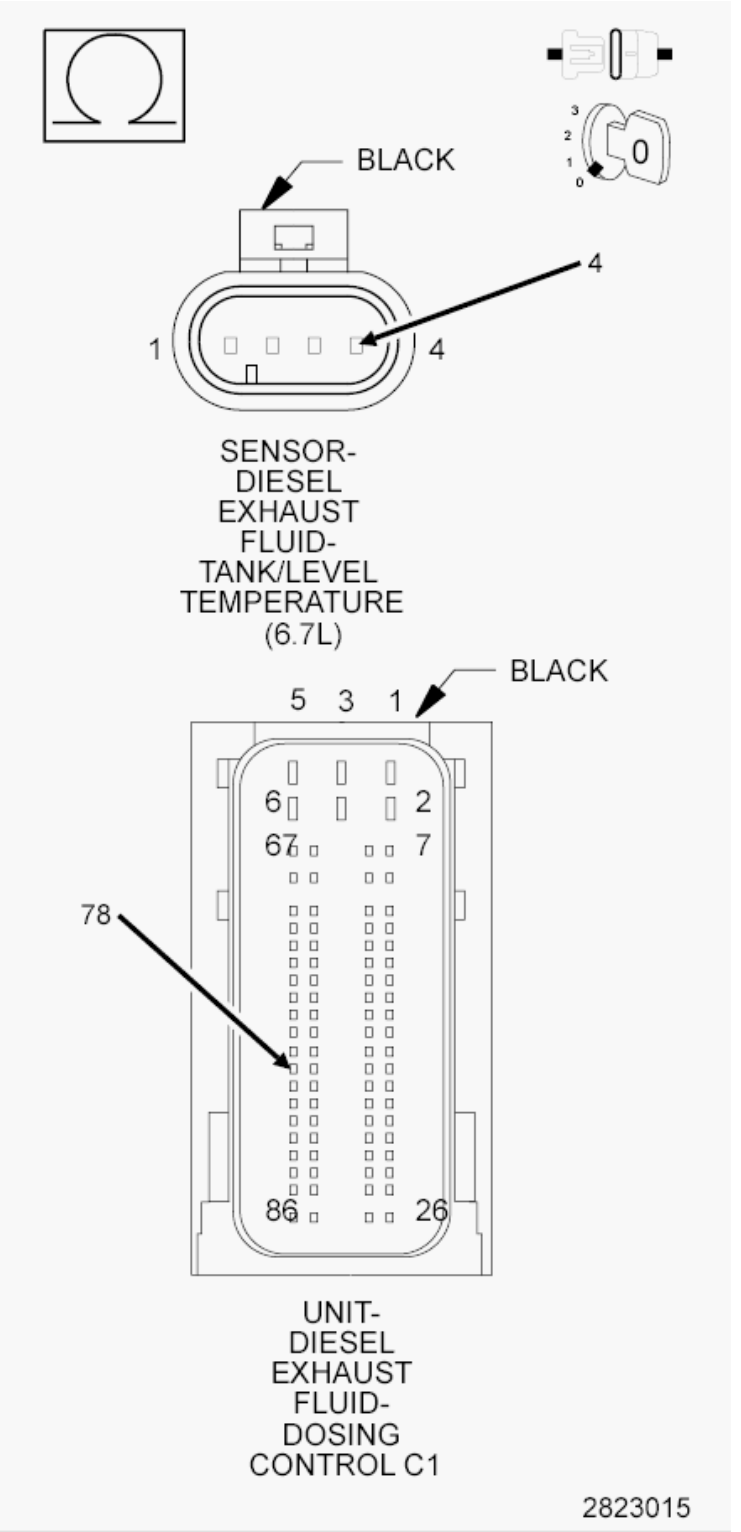

Fig. 75: Checking The DEF Tank Level Temperature Return Circuit For An Open Or High Resistance
Courtesy of CHRYSLER GROUP, LLC

1. Measure the resistance of the (K469) DEF Tank Temperature Sensor Return circuit between the

DEF Tank Level/Temperature Sensor harness connector and the DEF Dosing Control Unit C1 harness connector.

Is the resistance below 5.0 Ohms?

Yes

- Go To 4.

No

- Repair the (K469) DEF Tank Temperature Sensor Return circuit for an open or high resistance.
- Perform the POWERTRAIN VERIFICATION TEST. Refer to **POWERTRAIN VERIFICATION TEST - 6.7L** .

4. **CHECK THE DEF TANK TEMPERATURE SENSOR**
   1. Reconnect the DEF Dosing Control Unit C1 harness connector.
   2. Connect a jumper between the (K413) DEF Tank Temperature Sensor Signal circuit and the (K469) DEF Tank Temperature Sensor Return circuit at the DEF Tank Level/Temperature harness connector.

      NOTE: Be careful not to spread the terminals in the connector.

   3. Turn the ignition on.
   4. Monitor the scan tool for one minute.
   5. Remove the jumper and continue to monitor the scan tool one minute after removing.

      Did the scan tool display P205C active with the jumper in place and P205D with the jumper removed?

      Yes

      - Replace the DEF Tank Level/Temperature Sensor in accordance with the service information. Refer to **SENSOR, DIESEL EXHAUST FLUID LEVEL/TEMPERATURE, REMOVAL** .
      - Perform the POWERTRAIN VERIFICATION TEST. Refer to **POWERTRAIN VERIFICATION TEST - 6.7L** .

      No

      - Replace the DEF Dosing Control Unit in accordance with the service information. Refer to **UNIT, DIESEL EXHAUST FLUID DOSING CONTROL, REMOVAL** .
      - Perform the POWERTRAIN VERIFICATION TEST. Refer to **POWERTRAIN VERIFICATION TEST - 6.7L** .

P207F-REDUCTANT QUALITY PERFORMANCE

For a complete wiring diagram, **refer to appropriate SYSTEM WIRING DIAGRAMS article** .

THEORY OF OPERATION

The Diesel Exhaust Fluid system is used to reduce the amount of NOx being discharged through the exhaust system. The DEF Dosing Control Module receives feedback from the two NOx Sensors in the system. The first NOx Sensor is located before the SCR Catalyst, and the second NOx Sensor is located at the outlet of the SCR Catalyst. The DEF Dosing Control Module compares the two values to determine the conversion efficiency of the SCR Catalyst and the Diesel Exhaust Fluid system. The DEF Dosing Control Unit will illuminate the MIL light via the Powertrain Control Module (PCM) immediately after the diagnostics runs and fails.

WHEN MONITORED:

This monitor runs after the DEF Tank has been refilled. NOx sensor data is gathered over varying engine speeds and loads. When enough data has been gathered, the diagnostic will run, make a pass/fail decision, and begin to gather data again.

SET CONDITION:

The DEF Dosing Control Module detects that the NOx conversion rate across the SCR Catalyst is lower than expected and the tank has been recently refilled.

POSSIBLE CAUSES

Possible Causes
DEGRADED, DILUTED OR INCORRECT DIESEL EXHAUST FLUID
EXHAUST SYSTEM LEAK
DIESEL EXHAUST FLUID DEPOSITS IN DEF INJECTOR DECOMP TUBE
DEFECTIVE SCR CATALYST

Always perform the Pre-Diagnostic Troubleshooting procedure before proceeding. Refer to PRE-DIAGNOSTIC TROUBLESHOOTING PROCEDURE - 6.7L .

DIAGNOSTIC TEST

1. **CHECK THE DIESEL EXHAUST FLUID**

NOTE: Repair any DEF system component DTCs before continuing with this diagnostic procedure.

1. Collect a sample of diesel exhaust fluid from the system.
2. Visually inspect the fluid for signs of contamination or debris.
3. Test the quality of the fluid using litmus paper (supplied by parts) or by using an SPX DEF/UREA Refractometer 94-F-00K-108-456 or equivalent.

NOTE: **The diesel exhaust fluid should register approximately 9 ph with the litmus paper and 32.5 percent using a refractometer.**

Is the diesel exhaust fluid quality within specification and free of debris and contamination?

Yes

- Go To 2.

No

- Drain the diesel exhaust fluid from the tank and fill the system. If the fluid is contaminated, follow the cleaning procedure. Refer to **TANK, DIESEL EXHAUST FLUID, CLEANING** .
- Perform the POWERTRAIN VERIFICATION TEST. Refer to **POWERTRAIN VERIFICATION TEST - 6.7L** .

2. **CHECK THE EXHAUST SYSTEM FOR LEAKS**
   1. Visually inspect the entire exhaust system for signs of a leak.

      Were any exhaust leaks found?

      Yes

      - Perform the appropriate repair.
      - Perform the POWERTRAIN VERIFICATION TEST. Refer to **POWERTRAIN VERIFICATION TEST - 6.7L** .

      No

      - Go To 3.
3. **CHECK THE DEF INJECTOR DECOMP TUBE FOR DEPOSITS**

   NOTE: **The diesel exhaust fluid will form hard deposits when exposed to air.**

   1. Remove the DEF Injector from the Decomp Tube. Refer to **INJECTOR, DIESEL EXHAUST FLUID, REMOVAL** .
   2. Visually inspect the Decomp Tube for diesel exhaust fluid deposits.

      Were any deposits found?

      Yes

      - Clean the deposits from the Decomp Tube.
      - Perform the POWERTRAIN VERIFICATION TEST. Refer to **POWERTRAIN VERIFICATION TEST - 6.7L** .

No

- Go To 4.

4. **CHECK THE DEF INJECTOR**
   1. Reconnect the DEF Injector harness connector.
   2. Place the DEF Injector in a container to capture the fluid sprayed.
   3. Turn the ignition on.
   4. With the scan tool, navigate to Systems Tests and actuate the Diesel Exhaust Fluid Doser Pump Override Test.

      NOTE: **This Test will run for six minutes before timing out. The amount of flow may fluctuate through out the test, therefore the test must be allowed to run completely in order for the results to be accurate. The fluid should spray out as a mist. There should be no dripping from the holes in the DEF Injector at any time during the duration of the test procedure.**

   5. Measure the amount of fluid sprayed after the test times out.

      Does the fluid sprayed measure between 85 ml and 115 ml?

      Yes

      - Replace the SCR Catalyst in accordance with the service information.
      - Perform the POWERTRAIN VERIFICATION TEST. Refer to **POWERTRAIN VERIFICATION TEST - 6.7L** .

      No

      - Replace the DEF Injector in accordance with the service information. Refer to **INJECTOR, DIESEL EXHAUST FLUID, REMOVAL** .
      - Perform the POWERTRAIN VERIFICATION TEST. Refer to **POWERTRAIN VERIFICATION TEST - 6.7L** .

P2080-EXHAUST GAS TEMP SENSOR CIRCUIT PERFORMANCE - BANK 1 SENSOR 1

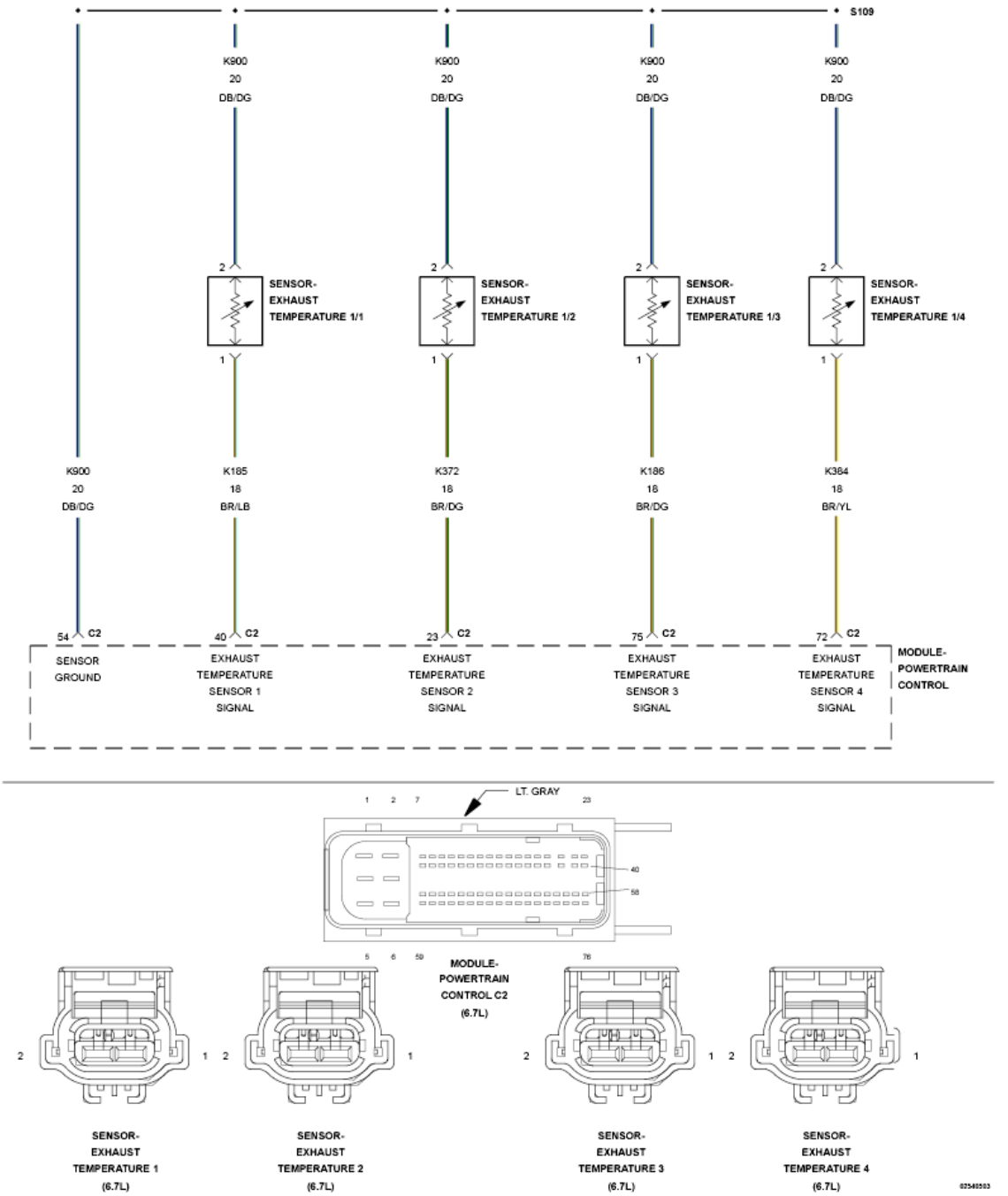

Fig. 76: Exhaust Gas Temperature Sensor Circuit Schematic
Courtesy of CHRYSLER GROUP, LLC

For a complete wiring diagram, **refer to appropriate SYSTEM WIRING DIAGRAMS article** .

THEORY OF OPERATION

The Exhaust Temperature sensors are used by the Powertrain Control Module (PCM) to monitor the engine exhaust temperatures in the aftertreatment system. The Exhaust Temperature sensors are thermistors and change resistance based on the temperature being measured. The PCM provides a 5-Volt reference voltage to the

sensor. The PCM monitors the voltage on the signal pin and converts this to a temperature value. This fault is set by the PCM if it detects that the NOx Absorber Catalyst (NAC)-(DJ/D2) inlet or the Diesel Oxidation Catalyst (DOC)-(DC/DM) inlet temperature is not increasing along with the engine operating temperature after engine start up. The PCM will illuminate the MIL lamp after the diagnostic runs and fails on two consecutive drive cycles. The PCM will turn off the MIL lamp after the diagnostic runs and passes on four consecutive drive cycles.

WHEN MONITORED:

Engine running.

SET CONDITION:

The PCM detects that the NOx Absorber Catalyst (NAC)-(DJ/D2) inlet or the Diesel Oxidation Catalyst (DOC)-(DC/DM) inlet temperature sensor reading is not increasing with engine operating temperature after engine startup.

POSSIBLE CAUSES

Possible Causes
EXHAUST TEMPERATURE SENSOR 1/1
EXHAUST TEMPERATURE SENSOR 1/3
WIRING HARNESS OR CONNECTION

Always perform the Pre-Diagnostic Troubleshooting procedure before proceeding. Refer to PRE-DIAGNOSTIC TROUBLESHOOTING PROCEDURE - 6.7L .

DIAGNOSTIC TEST

1. **OTHER DTCS PRESENT**
    1. Turn the ignition on.
    2. With the scan tool, read DTCs.

       Are either of the Exhaust Temperature Sensor 1/1 Low or High DTCs present?

       Yes

       - Repair the other DTCs before proceeding.
       - Perform the POWERTRAIN VERIFICATION TEST. Refer to **POWERTRAIN VERIFICATION TEST - 6.7L** .

       No

       - Go To 2.
2. **EXHAUST TEMPERATURE**
    1. With the scan tool, read the Exhaust Temperature Sensors to determine the exhaust temperature.

Is the temperature reading above 225°F?

Yes

- Go To 3.

No

- Go To 4.

3. **EXHAUST TEMPERATURE SENSOR 1/1 AND 1/3**
   1. Start the engine.
   2. Raise the engine speed to 2500 RPM for two minutes.

   Do the temperature readings of Exhaust Temperature Sensor 1/1 and Exhaust Temperature Sensor 1/3 change in value at least 5°F?

   Yes

   - Perform the INTERMITTENT CONDITION diagnostic procedure. Refer to **INTERMITTENT CONDITION - 6.7L** .

   No

   - Replace the Exhaust Temperature Sensor that did not change in value by at least 5°F or is not updating.
   - Perform the POWERTRAIN VERIFICATION TEST. Refer to **POWERTRAIN VERIFICATION TEST - 6.7L** .

4. **EXHAUST TEMPERATURE SENSOR 1/1 AND 1/3**
   1. Start the engine and allow it to idle for 10 minutes.
   2. With the scan tool, read the values of Exhaust Temperature Sensor 1/1 and Exhaust Temperature Sensor 1/3.

   Do both temperature sensors read above 150°F and are the values of both temperature sensors updating?

   Yes

   - Perform the INTERMITTENT CONDITION diagnostic procedure. Refer to **INTERMITTENT CONDITION - 6.7L** .

   No

   - Replace the Exhaust Temperature Sensor that is not above 150°F or is not updating on the scan tool.
   - Perform the POWERTRAIN VERIFICATION TEST. Refer to **POWERTRAIN**

VERIFICATION TEST - 6.7L .

P2084-EXHAUST GAS TEMP SENSOR CIRCUIT PERFORMANCE - BANK 1 SENSOR 2

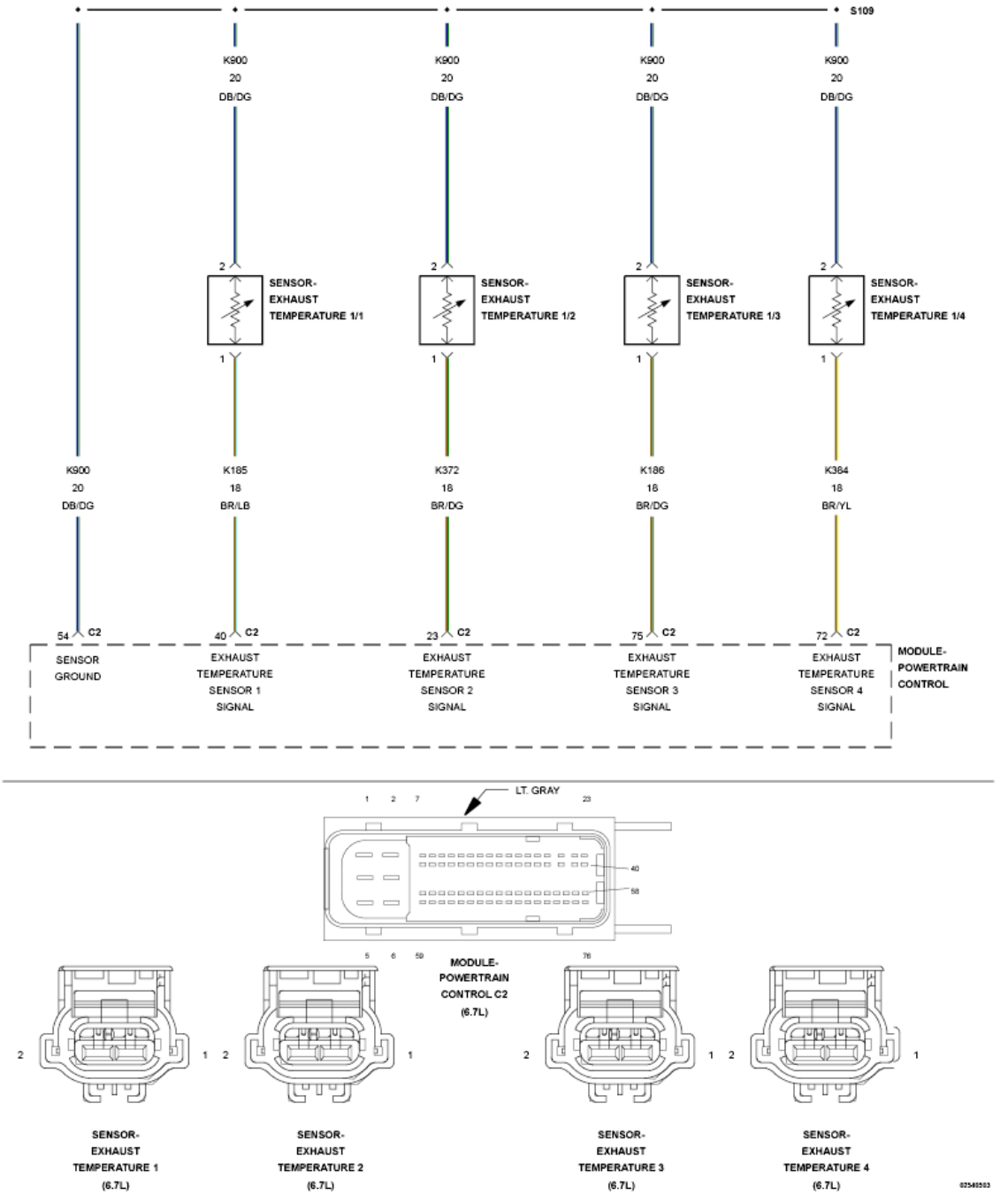

Fig. 77: Exhaust Gas Temperature Sensor Circuit Schematic
Courtesy of CHRYSLER GROUP, LLC

For a complete wiring diagram, **refer to appropriate SYSTEM WIRING DIAGRAMS article** .

THEORY OF OPERATION

The Exhaust Temperature Sensors are used by the Powertrain Control Module (PCM) to monitor the engine exhaust temperatures in the aftertreatment system. The Exhaust Temperature Sensors are thermistors and change resistance based on the temperature being measured. The PCM provides a 5-Volt reference voltage to the sensor. The PCM monitors the voltage on the signal pin and converts this to a temperature value. This fault is set by the PCM if it detects that the Aftertreatment Diesel Particulate Filter inlet temperature sensor reading is not increasing with engine operating temperature after engine startup. The PCM illuminates the MIL lamp immediately when the diagnostic runs and fails. The PCM will turn off the MIL lamp after the diagnostic runs and passes on four consecutive drive cycles. The PCM will disable active regeneration mode.

WHEN MONITORED:

Engine running.

SET CONDITION:

The PCM detects that the Exhaust Temperature Sensor 1/2 reading is not increasing with engine operating temperature after engine startup.

POSSIBLE CAUSES

Possible Causes
EXHAUST TEMPERATURE SENSOR 1/2
EXHAUST TEMPERATURE SENSOR 1/3
WIRING HARNESS OR CONNECTION

Always perform the Pre-Diagnostic Troubleshooting procedure before proceeding. Refer to PRE-DIAGNOSTIC TROUBLESHOOTING PROCEDURE - 6.7L .

DIAGNOSTIC TEST

1. **OTHER DTCS PRESENT**
    1. Turn the ignition on.
    2. With the scan tool, read DTCs.

       Do you have any other DTC for the Exhaust Temperature Sensors?

       Yes

       - Repair the other DTCs before proceeding.
       - Perform the POWERTRAIN VERIFICATION TEST. Refer to **POWERTRAIN VERIFICATION TEST - 6.7L** .

       No

       - Go To 2.
2. **EXHAUST TEMPERATURE**

1. With the scan tool, read the Exhaust Temperature Sensors to determine the exhaust temperature.

   Is the temperature reading above 225°F?

   Yes

   - Go To 3.

   No

   - Go To 4.

3. **EXHAUST TEMPERATURE SENSOR 1/2 AND 1/3**
   1. Start the engine.
   2. Raise the engine speed to 2500 RPM's for two minutes.

      Do the temperature readings of Exhaust Temperature Sensor 1/2 and Exhaust Temperature Sensor 1/3 change in value at least 5°F?

      Yes

      - Perform the INTERMITTENT CONDITION diagnostic procedure. Refer to **INTERMITTENT CONDITION - 6.7L** .

      No

      - Replace the Exhaust Temperature Sensor that did not change in value by at least 5°F or is not updating.
      - Perform the POWERTRAIN VERIFICATION TEST. Refer to **POWERTRAIN VERIFICATION TEST - 6.7L** .

4. **EXHAUST TEMPERATURE SENSOR 1/2 AND 1/3**
   1. Start the engine and allow it to idle for 10 minutes.
   2. With the scan tool, read the values of Exhaust Temperature Sensor 1/2 and Exhaust Temperature Sensor 1/3.

      Do both temperature sensors read above 150°F and are the values of both temperature sensors updating?

      Yes

      - Perform the INTERMITTENT CONDITION diagnostic procedure. Refer to **INTERMITTENT CONDITION - 6.7L** .

      No

      - Replace the Exhaust Temperature Sensor that is not above 150°F or is not updating on the

scan tool.

- Perform the POWERTRAIN VERIFICATION TEST. Refer to **POWERTRAIN VERIFICATION TEST - 6.7L** .

P208A-(DIESEL EXHAUST FLUID) REDUCTANT PUMP CONTROL CIRCUIT OPEN

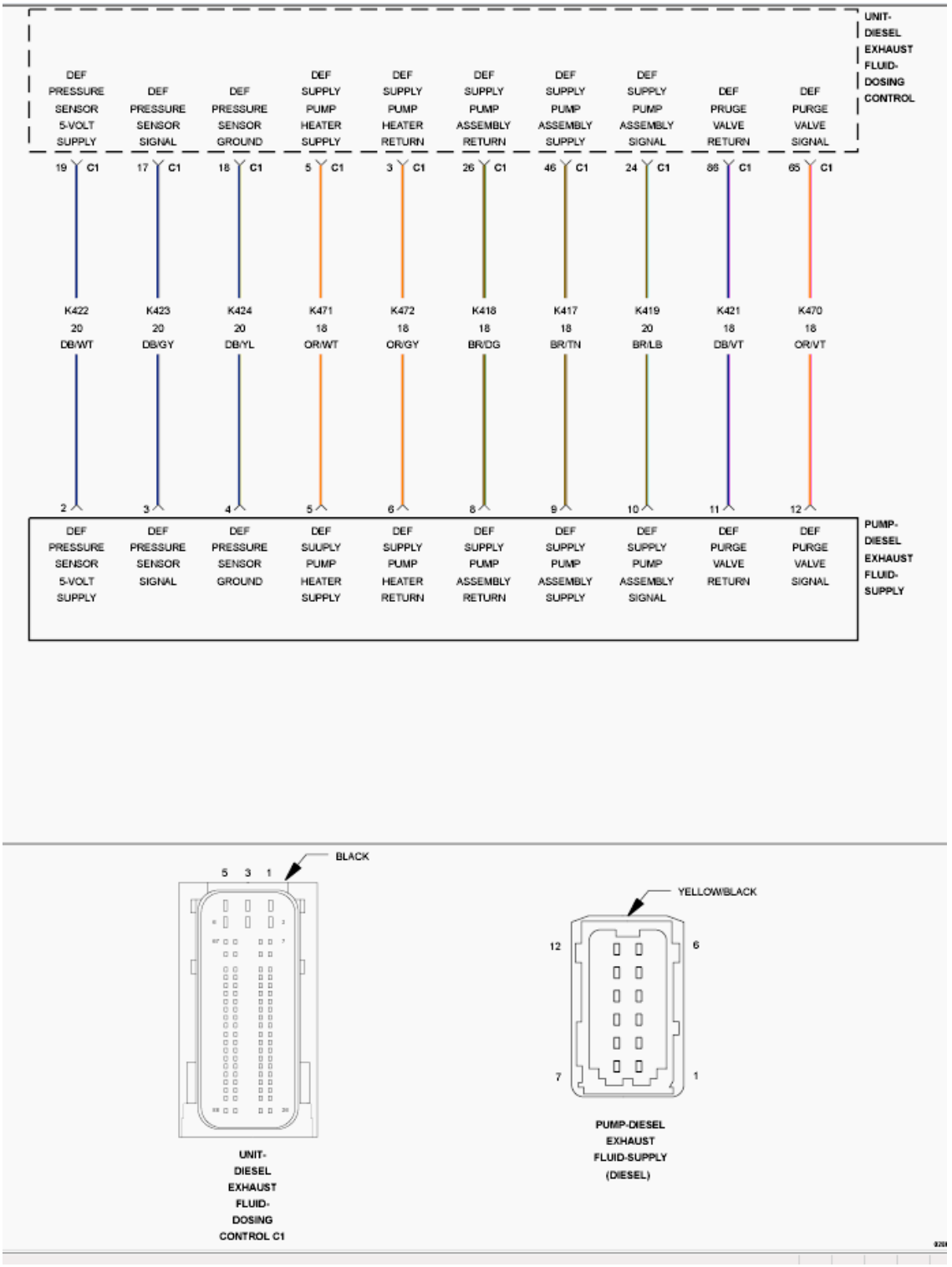

Fig. 78: Diesel Exhaust Fluid (DEF) Dosing Control Unit Wiring Diagram
Courtesy of CHRYSLER GROUP, LLC

For a complete wiring diagram, **refer to appropriate SYSTEM WIRING DIAGRAMS article** .

THEORY OF OPERATION

The Diesel Exhaust Fluid (DEF) Supply Pump Assembly has many functions. It's primary purpose is to draw fluid from the tank and build adequate system pressure for dosing into the exhaust. The DEF Dosing Control Unit provides the 12 Volt supply and ground for the pump. The DEF Dosing Control Unit also provides a Pulse Width Modulated (PWM) signal to the DEF Supply Pump Assembly to control the speed and output of the pump. The DEF Dosing Control Unit will illuminate the MIL light via the Powertrain Control Module (PCM) immediately after the diagnostics runs and fails and diesel exhaust fluid injection into the aftertreatment system is disabled. The DEF Dosing Control Unit will turn off the MIL light via the PCM when the monitor runs and passes in three consecutive key cycles.

WHEN MONITORED:

Continuously with the ignition on.

SET CONDITION:

The DEF Dosing Control Unit detects that the DEF Supply Pump circuit is open.

POSSIBLE CAUSES

Possible Causes
(K417) DEF SUPPLY PUMP ASSEMBLY SUPPLY CIRCUIT OPEN/HIGH RESISTANCE
(K418) DEF SUPPLY PUMP ASSEMBLY RETURN CIRCUIT OPEN/HIGH RESISTANCE
(K419) DEF SUPPLY PUMP ASSEMBLY SIGNAL CIRCUIT OPEN/HIGH RESISTANCE
DEF SUPPLY PUMP ASSEMBLY
DEF DOSING CONTROL UNIT

Always perform the Pre-Diagnostic Troubleshooting procedure before proceeding. Refer to PRE-DIAGNOSTIC TROUBLESHOOTING PROCEDURE - 6.7L .

DIAGNOSTIC TEST

1. **ACTIVE DTC**
    1. Turn the ignition on, engine not running.
    2. With the scan tool, navigate to Systems Tests and actuate the Diesel Exhaust Fluid Doser Pump Override Test.
    3. With the scan tool, View DTCs.

       Is the DTC Active?

       Yes

       - Go To 3.

       No

- Perform the INTERMITTENT CONDITION diagnostic procedure. Refer to **INTERMITTENT CONDITION - 6.7L** .

2. **CHECK THE DEF SUPPLY PUMP ASSEMBLY**
   1. Turn the ignition off.
   2. Disconnect the DEF Supply Pump Assembly harness connector.
   3. Connect a jumper between the (K417) DEF Supply Pump Assembly Supply circuit and the (K419) DEF Supply Pump Assembly Signal circuit at the DEF Supply Pump Assembly harness connector.

      NOTE: Be careful not to spread the terminals.

   4. Turn the ignition on.
   5. With a scan tool, View DTCs.

      Did DTC P208D become active and DTC P208A change to stored with the jumper in place?

      Yes

      - Replace the DEF Supply Pump Assembly in accordance with the service information. Refer to **ASSEMBLY, DIESEL EXHAUST FLUID PUMP, REMOVAL** .
      - Perform the POWERTRAIN VERIFICATION TEST. Refer to **POWERTRAIN VERIFICATION TEST - 6.7L** .

      No

      - Go To 3.

3. **CHECK THE (K417) DEF SUPPLY PUMP ASSEMBLY SUPPLY CIRCUIT FOR AN OPEN/HIGH RESISTANCE**

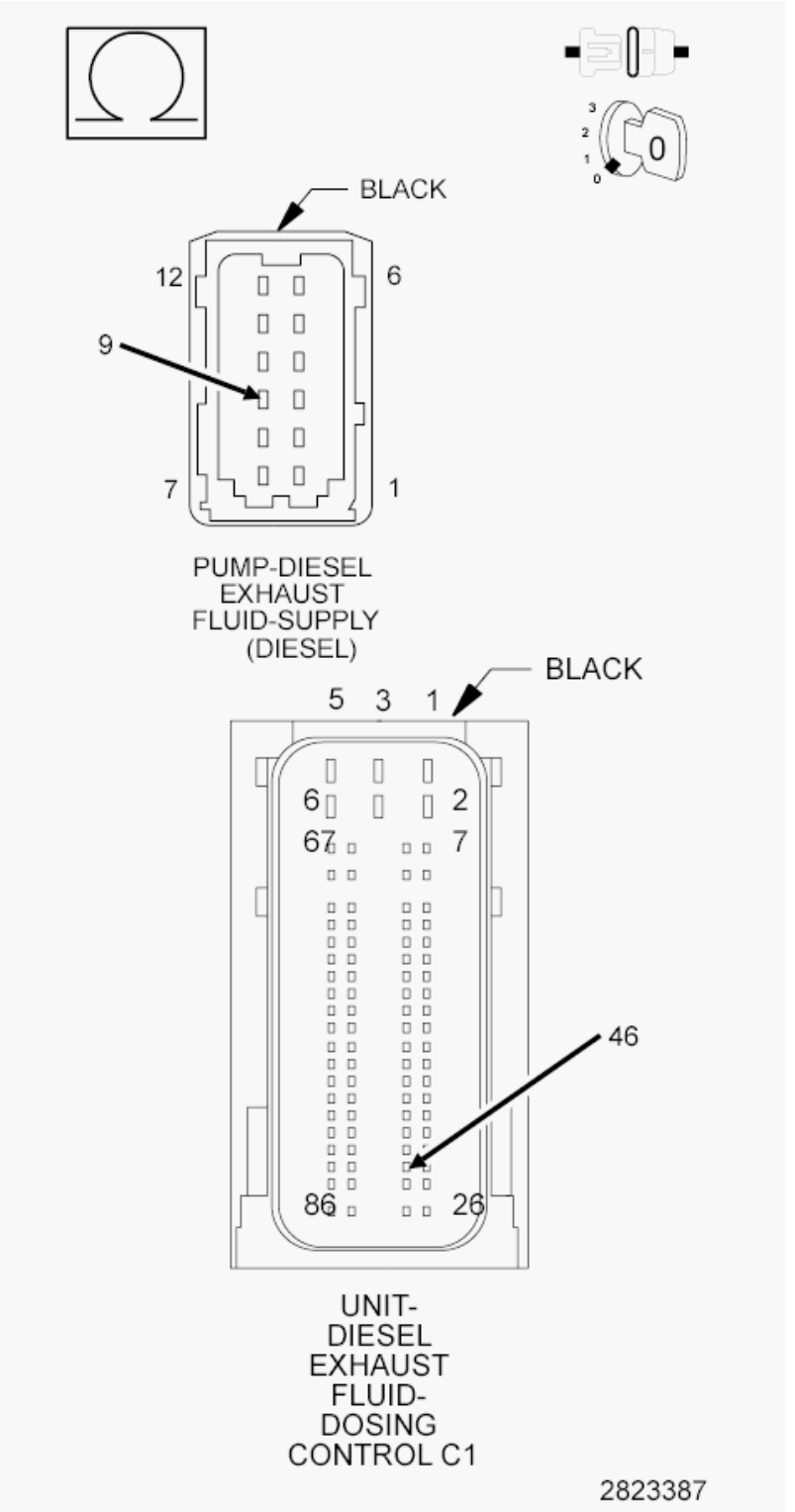

Fig. 79: Checking DEF Supply Pump Assembly Supply Circuit For An Open Or High Resistance
Courtesy of CHRYSLER GROUP, LLC

1. Turn the ignition off.
2. Disconnect the DEF Dosing Control Unit C1 harness connector.

3. Measure the resistance of the (K417) DEF Supply Pump Assembly Supply circuit between the DEF Supply Pump Assembly harness connector and the DEF Dosing Control Unit C1 harness connector.

   Is the resistance below 5.0 Ohms?

   Yes

   - Go To 4.

   No

   - Repair the (K417) DEF Supply Pump Assembly Supply circuit for an open or high resistance.
   - Perform the POWERTRAIN VERIFICATION TEST. Refer to **POWERTRAIN VERIFICATION TEST - 6.7L** .

4. **CHECK THE (K418) DEF SUPPLY PUMP ASSEMBLY RETURN CIRCUIT FOR AN OPEN/HIGH RESISTANCE**

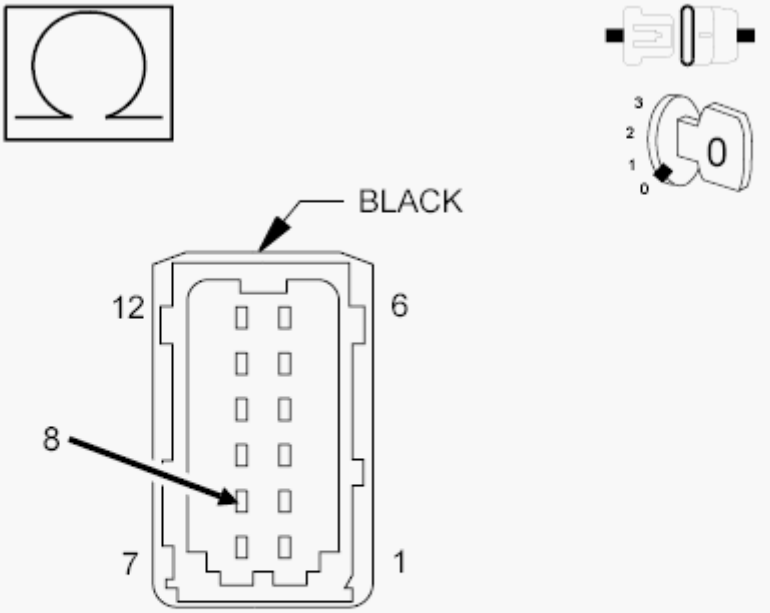

PUMP-DIESEL
EXHAUST
FLUID-SUPPLY
(DIESEL)

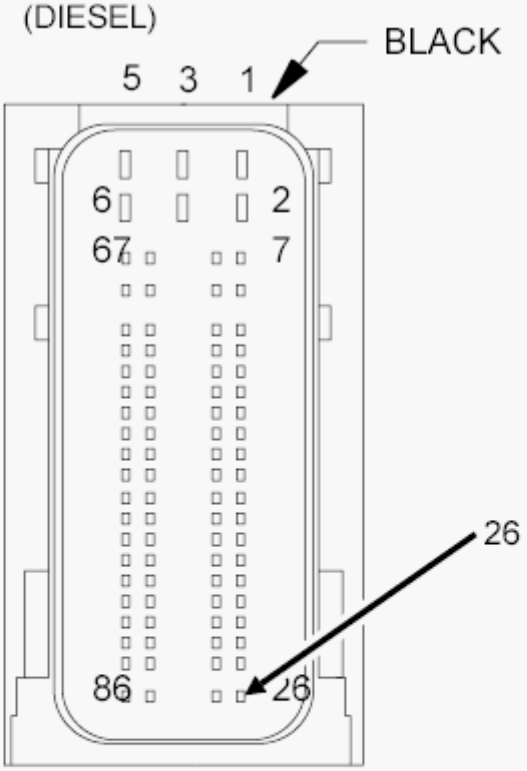

UNIT-
DIESEL
EXHAUST
FLUID-
DOSING

Fig. 80: Checking DEF Supply Pump Assembly Return Circuit For An Open Or High Resistance
Courtesy of CHRYSLER GROUP, LLC

1. Measure the resistance of the (K418) DEF Supply Pump Assembly Return circuit between the DEF Supply Pump Assembly harness connector and the DEF Dosing Control Unit C1 harness connector.

   Is the resistance below 5.0 Ohms?

   Yes

   - Go To 5.

   No

   - Repair the (K418) DEF Supply Pump Assembly Return circuit for an open or high resistance.
   - Perform the POWERTRAIN VERIFICATION TEST. Refer to **POWERTRAIN VERIFICATION TEST - 6.7L** .

5. **CHECK THE (K419) DEF SUPPLY PUMP ASSEMBLY SIGNAL CIRCUIT FOR AN OPEN/HIGH RESISTANCE**

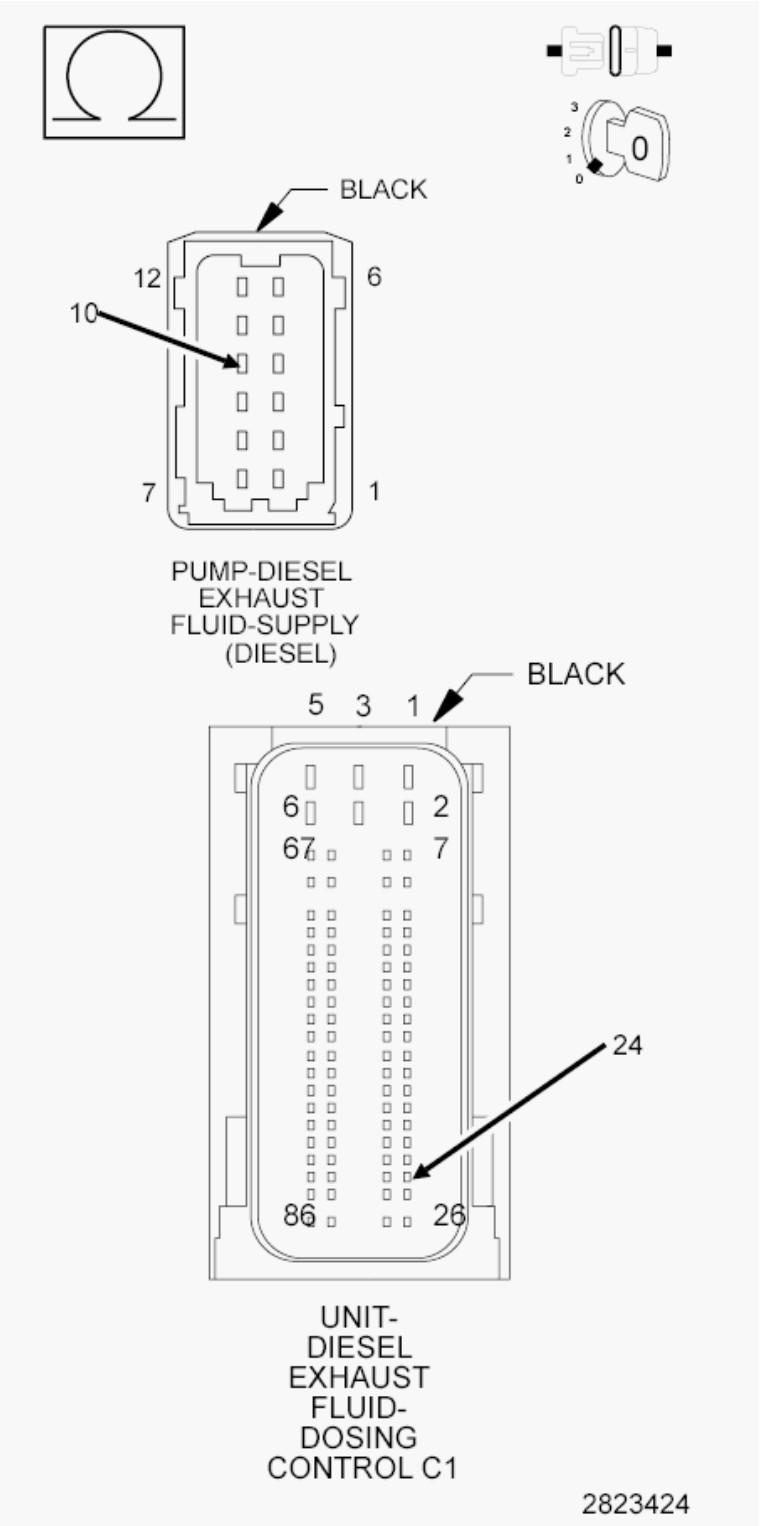

Fig. 81: Checking The DEF Supply Pump Assembly Signal Circuit For An Open Or High Resistance
Courtesy of CHRYSLER GROUP, LLC

1. Measure the resistance of the (K419) DEF Supply Pump Assembly Signal circuit between the DEF

Supply Pump Assembly harness connector and the DEF Dosing Control Unit C1 harness connector.

Is the resistance below 5.0 Ohms?

Yes

- Replace the DEF Dosing Control Unit in accordance with the service information. Refer to **UNIT, DIESEL EXHAUST FLUID DOSING CONTROL, REMOVAL** .
- Perform the POWERTRAIN VERIFICATION TEST. Refer to **POWERTRAIN VERIFICATION TEST - 6.7L** .

No

- Repair the (K419) DEF Supply Pump Assembly Signal circuit for an open or high resistance.
- Perform the POWERTRAIN VERIFICATION TEST. Refer to **POWERTRAIN VERIFICATION TEST - 6.7L** .

P208B-(DIESEL EXHAUST FLUID) REDUCTANT PUMP PERFORMANCE

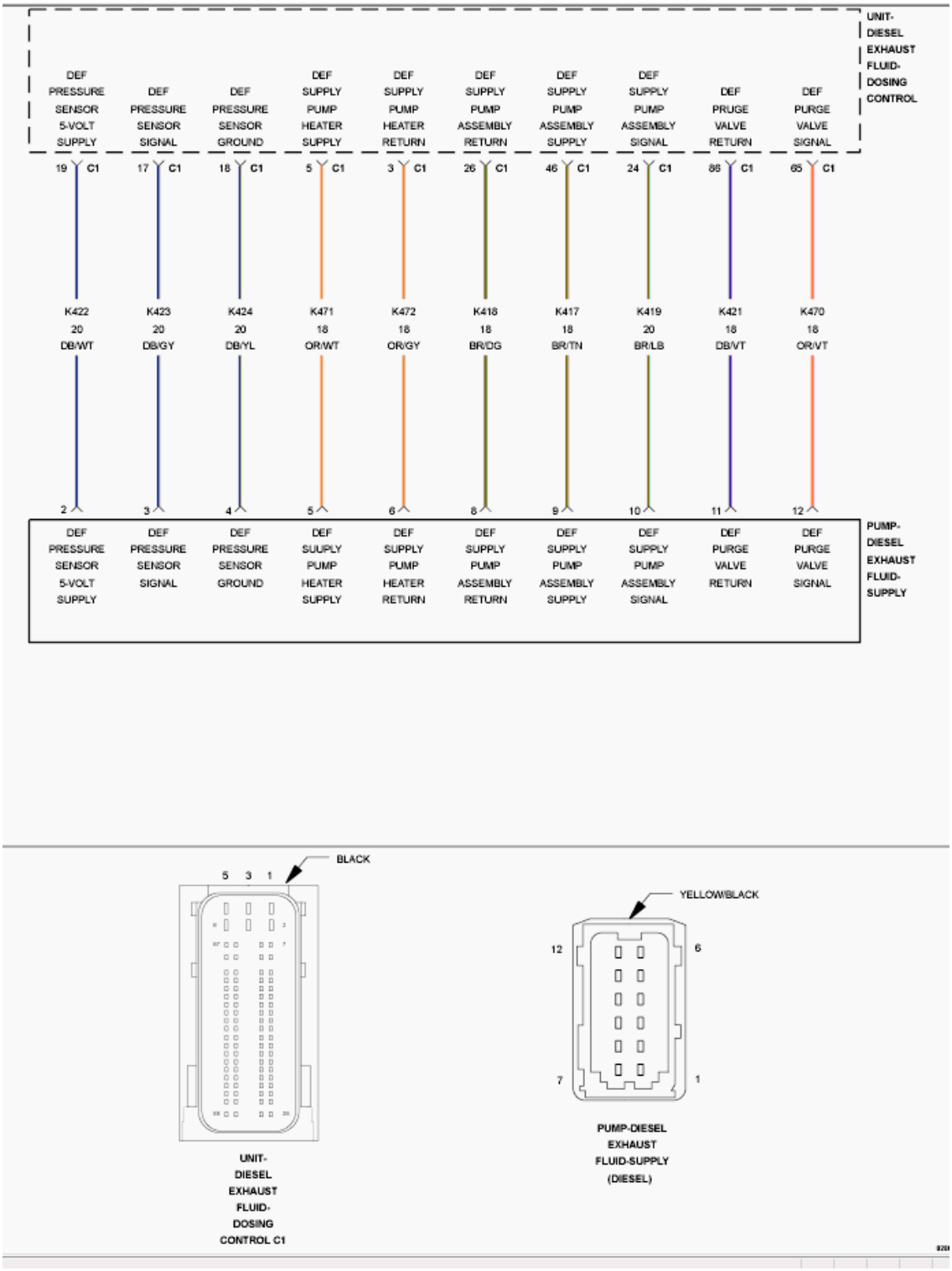

Fig. 82: Diesel Exhaust Fluid (DEF) Dosing Control Unit Wiring Diagram
Courtesy of CHRYSLER GROUP, LLC

For a complete wiring diagram, **refer to appropriate SYSTEM WIRING DIAGRAMS article** .

THEORY OF OPERATION

When the DEF Dosing Control Unit is in pressure control mode, it provides a Pulse Width Modulated (PWM) signal to turn on the DEF Supply Pump Assembly to refill the lines. As the lines fill, the pressure builds to the set point. When the pressure reaches the set point, the DEF Dosing Control Unit turns on the DEF Injector to bleed air out of the Pressure Line. Each time the injector is turned off, the DEF Dosing Control Unit the amount of time it takes for the pressure to rise back to the set point to determine when all of the air is bled out of the line. The DEF Dosing Control Unit will illuminate the MIL light via the PCM immediately after the diagnostics runs and fails and diesel exhaust fluid injection into the aftertreatment system is disabled. The DEF Dosing Control Unit will turn off the MIL light via the PCM when the monitor runs and passes in three consecutive key cycles.

WHEN MONITORED:

At initial key on, and when dosing is commanded on.

SET CONDITION:

There are two conditions that will set this DTC. The first is if the DEF Supply Pump Assembly is not able to communicate it's internal temperature to the DEF Dosing Control Unit at key on. The second is detected at the end of the prime sequence. When the DEF Supply Pump can build and maintain 130 psi (9 bar), the DEF Dosing Control Unit will command the DEF Injector to open and looks for a pressure drop in the system. If the pressure drop does not occur, the DEF Dosing Control Unit assumes there is a blockage in the DEF Pressure Line or DEF Injector nozzle. If the DEF Dosing Control Unit detects a blockage after ten attempts, a DTC is set and diesel exhaust fluid injection into the aftertreatment system is disabled.

POSSIBLE CAUSES

Possible Causes
HIGH RESISTANCE IN THE (K417) DEF SUPPLY PUMP ASSEMBLY SUPPLY CIRCUIT
HIGH RESISTANCE IN THE (K418) DEF SUPPLY PUMP ASSEMBLY RETURN CIRCUIT
HIGH RESISTANCE IN THE (K419) DEF SUPPLY PUMP ASSEMBLY SIGNAL CIRCUIT
DEF PRESSURE LINE BLOCKED OR RESTRICTED
DEF SUPPLY PUMP ASSEMBLY BLOCKED OR RESTRICTED
DEF SUPPLY PUMP ASSEMBLY

Always perform the Pre-Diagnostic Troubleshooting procedure before proceeding. Refer to PRE-DIAGNOSTIC TROUBLESHOOTING PROCEDURE - 6.7L .

DIAGNOSTIC TEST

1. **ACTIVE DTC**

NOTE: Check the fluid level in the DEF Tank before proceeding with this test procedure.

1. Turn the ignition on.

2. With the scan tool, navigate to Systems Tests and actuate the Diesel Exhaust Fluid Doser Pump Override Test.
3. With the scan tool, View DTCs.

   Is the DTC active?

   Yes

   - Go To 2.

   No

   - Perform the INTERMITTENT CONDITION diagnostic procedure. Refer to **INTERMITTENT CONDITION - 6.7L** .

2. **CHECK THE DEF SUPPLY LINE**
   1. Stop actuation of the Diesel Exhaust Fluid Doser Pump Override Test.
   2. Turn the ignition off.
   3. Disconnect the DEF Pressure Line.
   4. Check the DEF Pressure Line for a restriction.
   5. Inspect the DEF Supply Pump Assembly Outlet fitting and the DEF Injector connector and nozzle for signs of crystallization.

      Is the DEF Pressure Line, DEF Supply Pump Assembly outlet fitting, and DEF Injector free of obstructions?

      Yes

      - Go To 2.

      No

      - Clean the obstruction from the system or replace the blocked component if unable to clear obstruction.
      - Perform the POWERTRAIN VERIFICATION TEST. Refer to **POWERTRAIN VERIFICATION TEST - 6.7L** .

3. **CHECK THE (K417) DEF SUPPLY PUMP ASSEMBLY SUPPLY CIRCUIT FOR HIGH RESISTANCE**

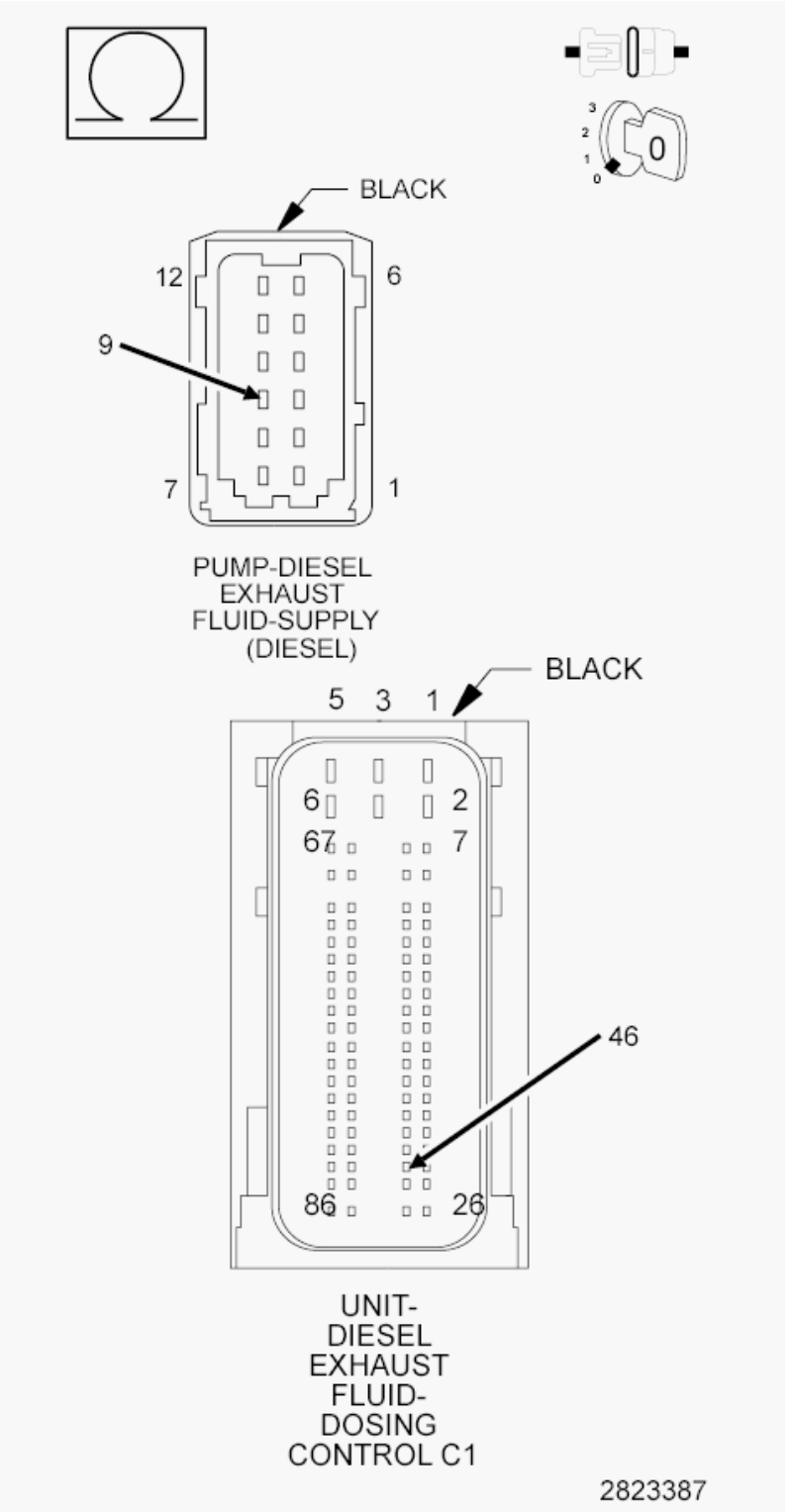

Fig. 83: Checking DEF Supply Pump Assembly Supply Circuit For An Open Or High Resistance
Courtesy of CHRYSLER GROUP, LLC

1. Disconnect the DEF Supply Pump Assembly harness connector.
2. Disconnect the DEF Dosing Control Unit C1 harness connector.

3. Measure the resistance of the (K417) DEF Supply Pump Assembly Supply circuit between the DEF Supply Pump Assembly harness connector and the DEF Dosing Control Unit C1 harness connector.

   Is the resistance below 5.0 Ohms?

   Yes

   - Go To 4.

   No

   - Repair the (K417) DEF Supply Pump Assembly Supply circuit for an open or high resistance.
   - Perform the POWERTRAIN VERIFICATION TEST. Refer to **POWERTRAIN VERIFICATION TEST - 6.7L** .

4. **CHECK THE (K418) DEF SUPPLY PUMP ASSEMBLY RETURN CIRCUIT FOR HIGH RESISTANCE**

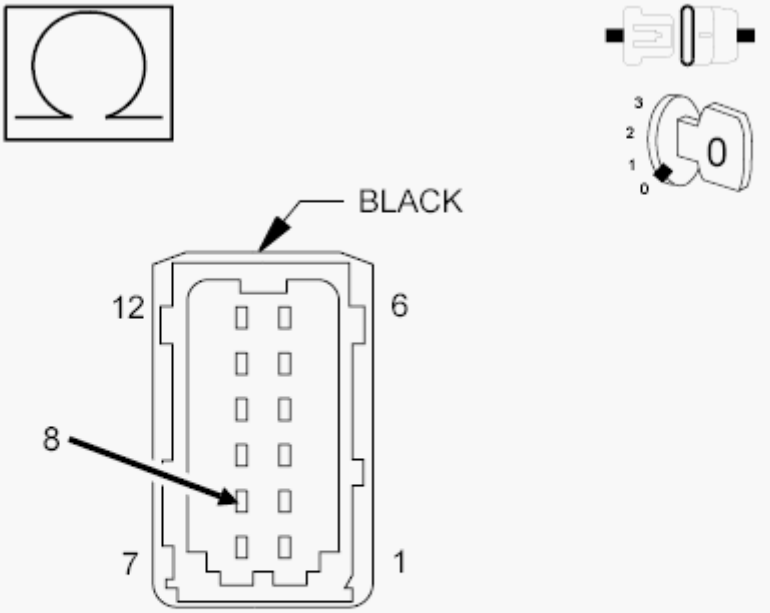

PUMP-DIESEL
EXHAUST
FLUID-SUPPLY
(DIESEL)

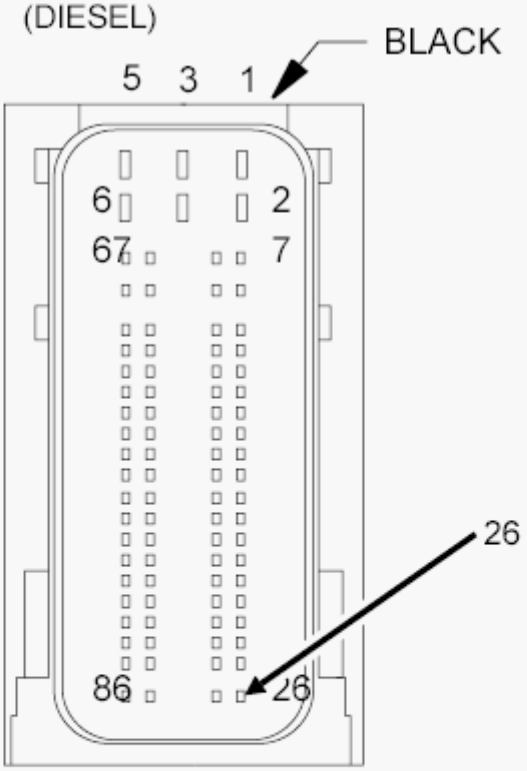

UNIT-
DIESEL
EXHAUST
FLUID-
DOSING

Fig. 84: Checking DEF Supply Pump Assembly Return Circuit For An Open Or High Resistance
Courtesy of CHRYSLER GROUP, LLC

1. Measure the resistance of the (K418) DEF Supply Pump Assembly Return circuit between the DEF Supply Pump Assembly harness connector and the DEF Dosing Control Unit C1 harness connector.

   Is the resistance below 5.0 Ohms?

   Yes

   - Go To 5.

   No

   - Repair the (K418) DEF Supply Pump Assembly Return circuit for an open or high resistance.
   - Perform the POWERTRAIN VERIFICATION TEST. Refer to **POWERTRAIN VERIFICATION TEST - 6.7L** .

5. **CHECK THE (K419) DEF SUPPLY PUMP ASSEMBLY SIGNAL CIRCUIT FOR HIGH RESISTANCE**

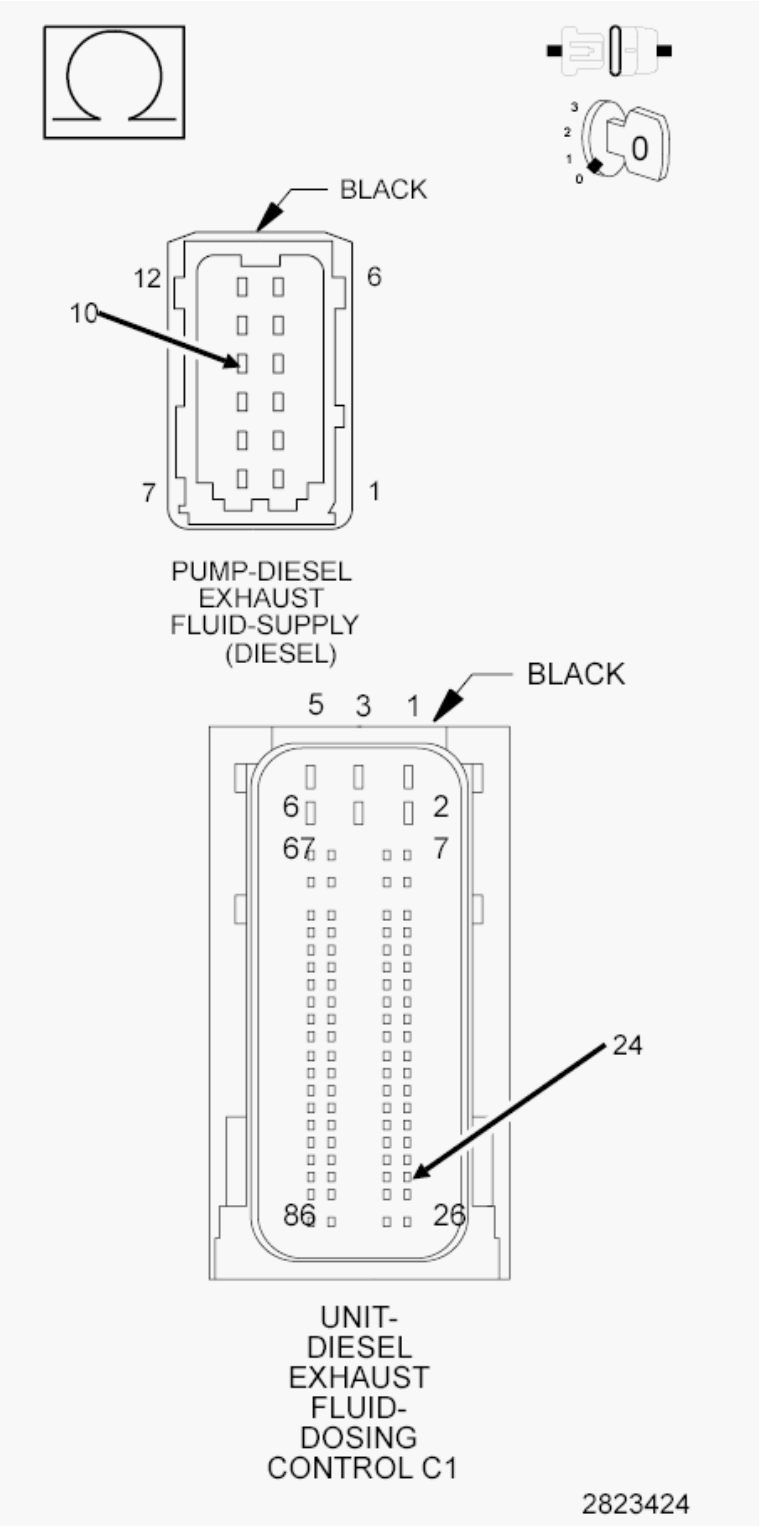

Fig. 85: Checking The DEF Supply Pump Assembly Signal Circuit For An Open Or High Resistance
Courtesy of CHRYSLER GROUP, LLC

1. Measure the resistance of the (K419) DEF Supply Pump Assembly Signal circuit between the DEF

Supply Pump Assembly harness connector and the DEF Dosing Control Unit C1 harness connector.

Is the resistance below 5.0 Ohms?

Yes

- Replace the DEF Supply Pump Assembly in accordance with the service information. Refer to **ASSEMBLY, DIESEL EXHAUST FLUID PUMP, REMOVAL** .
- Perform the POWERTRAIN VERIFICATION TEST. Refer to **POWERTRAIN VERIFICATION TEST - 6.7L** .

No

- Repair the (K419) DEF Supply Pump Assembly Signal circuit for an open or high resistance.
- Perform the POWERTRAIN VERIFICATION TEST. Refer to **POWERTRAIN VERIFICATION TEST - 6.7L** .

P208C-(DIESEL EXHAUST FLUID) REDUCTANT PUMP CONTROL CIRCUIT LOW

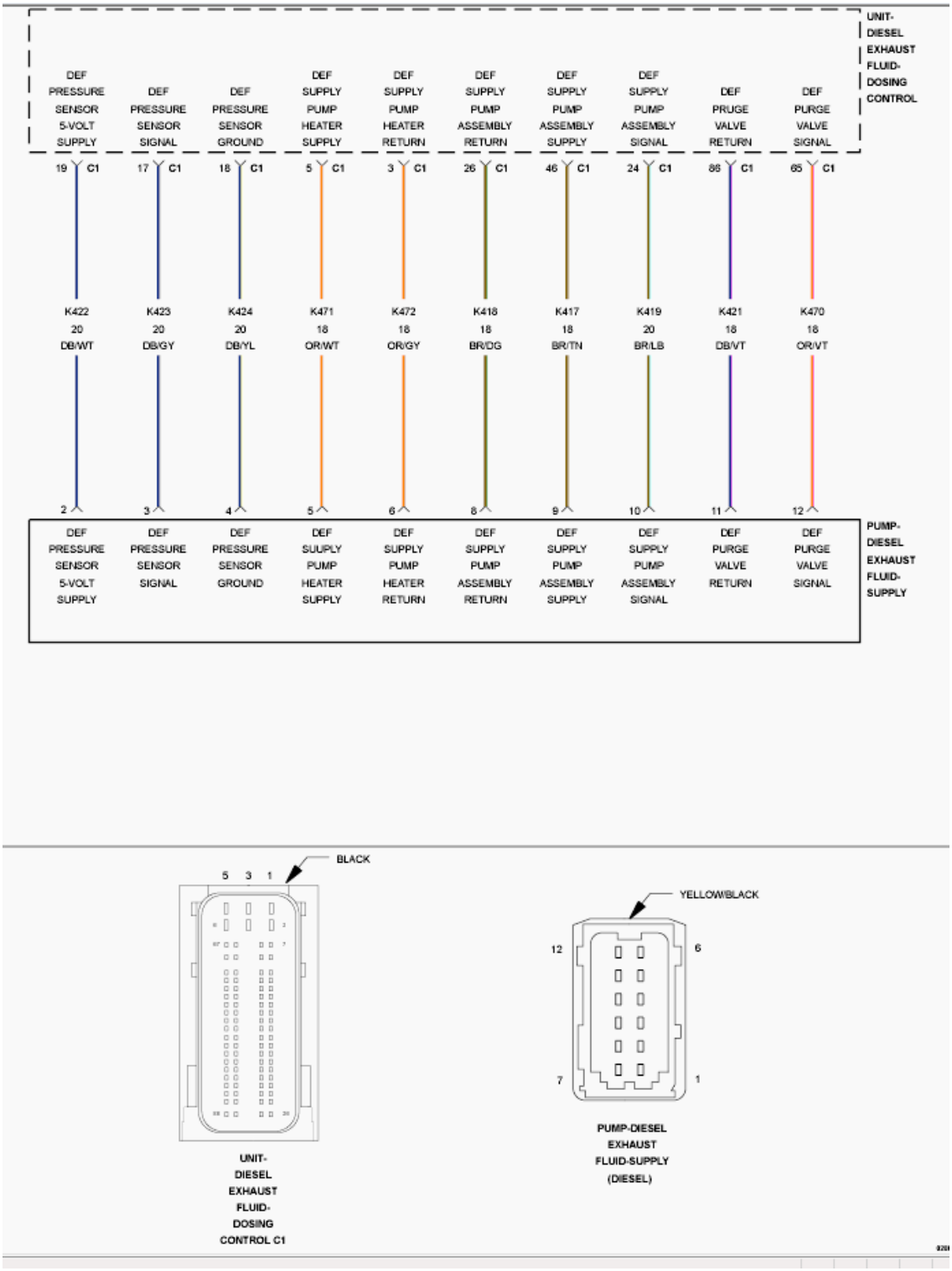

Fig. 86: Diesel Exhaust Fluid (DEF) Dosing Control Unit Wiring Diagram
Courtesy of CHRYSLER GROUP, LLC

For a complete wiring diagram, **refer to appropriate SYSTEM WIRING DIAGRAMS article** .

THEORY OF OPERATION

The Diesel Exhaust Fluid (DEF) Supply Pump Assembly has many functions. It's primary purpose is to draw fluid from the tank and build adequate system pressure for dosing into the exhaust. The DEF Dosing Control Unit provides the 12 Volt supply and ground for the pump. The DEF Dosing Control Unit also provides a Pulse Width Modulated (PWM) signal to the DEF Supply Pump Assembly to control the speed and output of the pump. The DEF Dosing Control Unit will illuminate the MIL light via the Powertrain Control Module (PCM) immediately after the diagnostics runs and fails and diesel exhaust fluid injection into the aftertreatment system is disabled. The DEF Dosing Control Unit will turn off the MIL light via the PCM when the monitor runs and passes in three consecutive key cycles.

WHEN MONITORED:

Continuously with the ignition on.

SET CONDITION:

The DEF Dosing Control Unit detects that the DEF Supply Pump Assembly circuit is below a calibrated value.

POSSIBLE CAUSES

Possible Causes
(K417) DEF SUPPLY PUMP ASSEMBLY SUPPLY CIRCUIT SHORTED TO GROUND
(K418) DEF SUPPLY PUMP ASSEMBLY RETURN CIRCUIT SHORTED TO GROUND
(K419) DEF SUPPLY PUMP ASSEMBLY SIGNAL CIRCUIT SHORTED TO GROUND
DEF SUPPLY PUMP ASSEMBLY
DEF DOSING CONTROL UNIT

Always perform the Pre-Diagnostic Troubleshooting procedure before proceeding. Refer to PRE-DIAGNOSTIC TROUBLESHOOTING PROCEDURE - 6.7L .

DIAGNOSTIC TEST

1. **ACTIVE DTC**
    1. Turn the ignition on, engine not running.
    2. With the scan tool, navigate to Systems Tests and actuate the Diesel Exhaust Fluid Doser Pump Override Test.
    3. With the scan tool, View DTCs.

    Is the DTC Active?

    Yes

    - Go To 2.

    No

- Perform the INTERMITTENT CONDITION diagnostic procedure. Refer to **INTERMITTENT CONDITION - 6.7L** .

2. **CHECK THE (K417) DEF SUPPLY PUMP ASSEMBLY SUPPLY CIRCUIT FOR A SHORT TO GROUND**

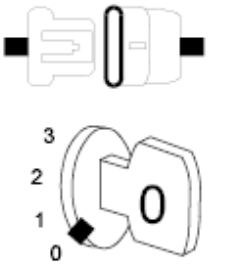

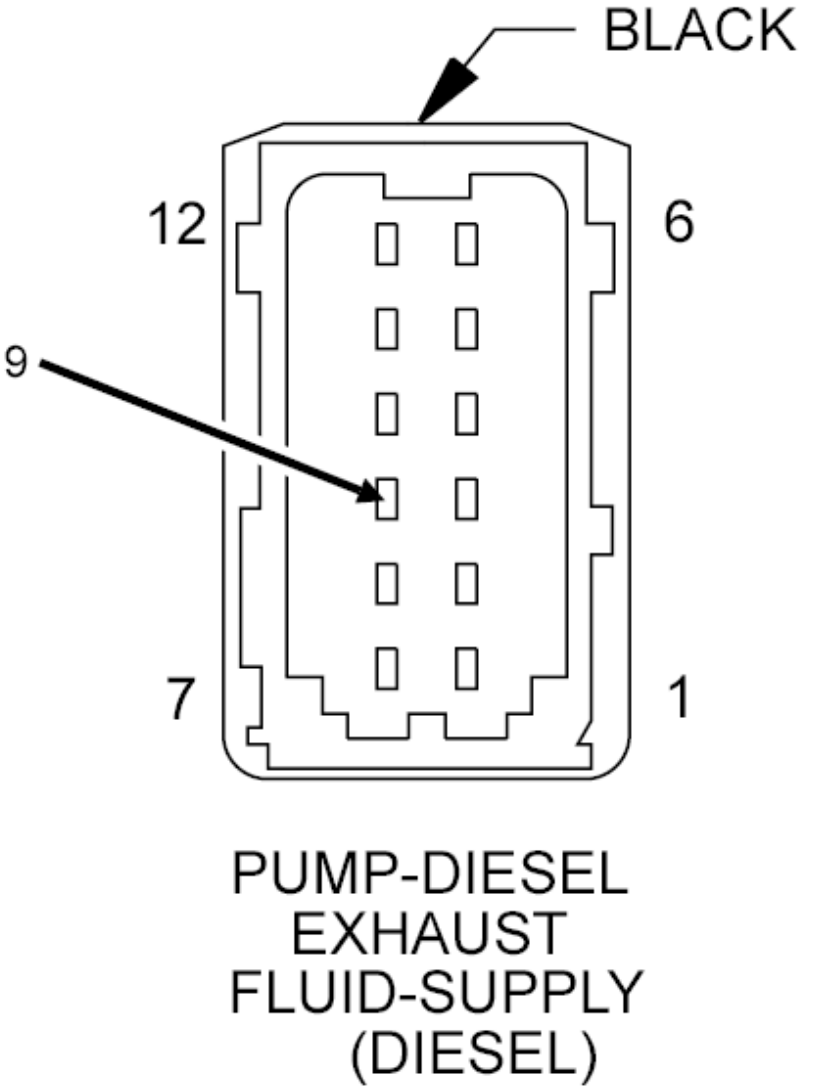

Fig. 87: Checking DEF Supply Pump Assembly Supply Circuit For A Short To Ground

Courtesy of CHRYSLER GROUP, LLC

1. Turn the ignition off.
2. Disconnect the DEF Supply Pump Assembly harness connector.
3. Disconnect the DEF Dosing Control Unit C1 harness connector.
4. Measure the resistance between ground and the (K417) DEF Supply Pump Assembly Supply circuit at the DEF Supply Pump Assembly harness connector.

   Is the resistance above 10k Ohms?

   Yes

   - Go To 3.

   No

   - Repair the (K417) DEF Supply Pump Assembly Supply circuit for a short to ground.
   - Perform the POWERTRAIN VERIFICATION TEST. Refer to **POWERTRAIN VERIFICATION TEST - 6.7L** .

3. **CHECK THE (K418) DEF SUPPLY PUMP ASSEMBLY RETURN CIRCUIT FOR A SHORT TO GROUND**

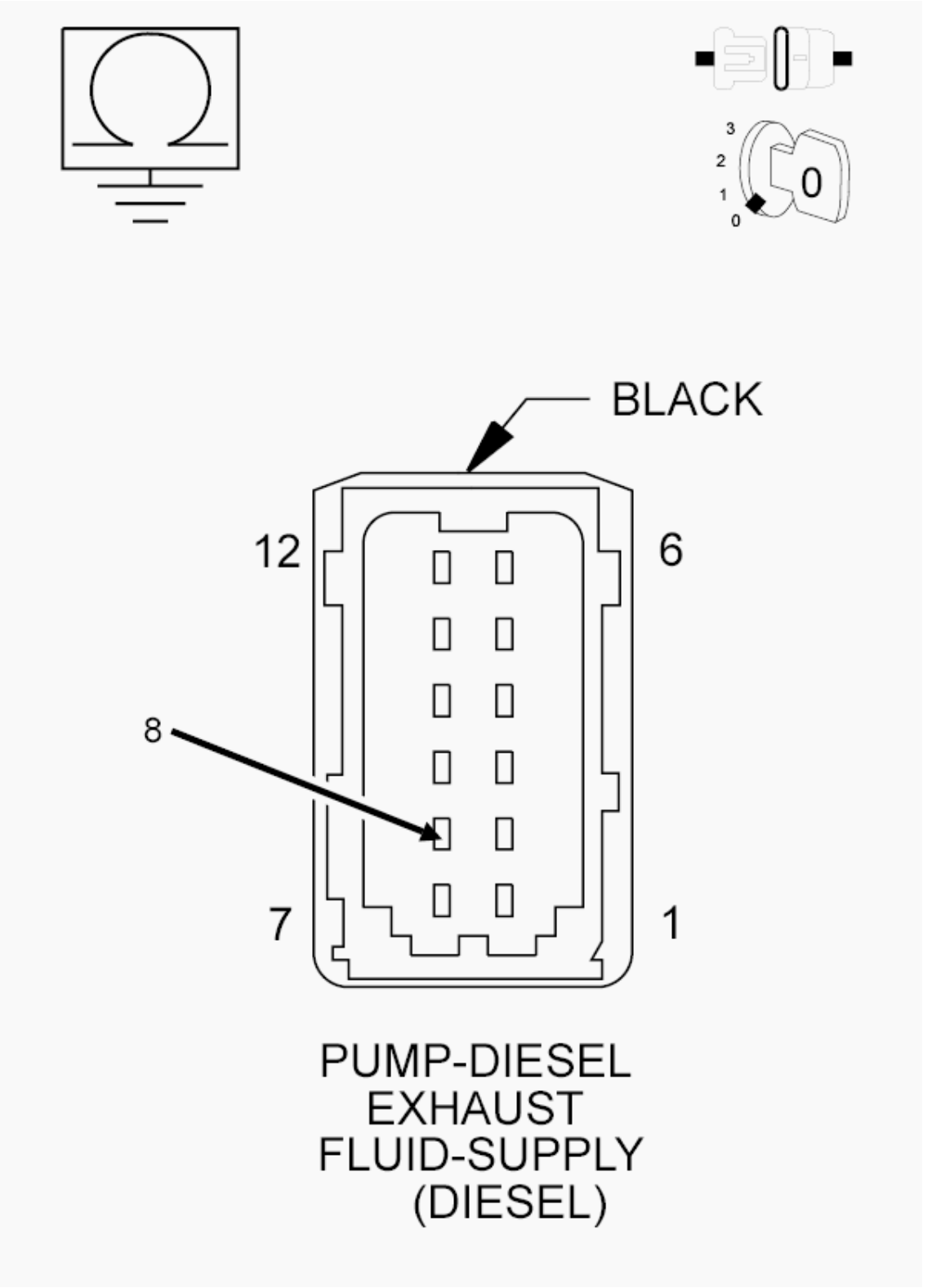

Fig. 88: Checking DEF Supply Pump Assembly Return Circuit For A Short To Ground
Courtesy of CHRYSLER GROUP, LLC

1. Measure the resistance between ground and the (K418) DEF Supply Pump Assembly Return circuit

at the DEF Supply Pump Assembly harness connector.

Is the resistance above 10k Ohms?

Yes

- Go To 4.

No

- Repair the (K418) DEF Supply Pump Assembly Return circuit for a short to ground.
- Perform the POWERTRAIN VERIFICATION TEST. Refer to **POWERTRAIN VERIFICATION TEST - 6.7L** .

4. **CHECK THE (K419) DEF SUPPLY PUMP ASSEMBLY SIGNAL CIRCUIT FOR A SHORT TO GROUND**

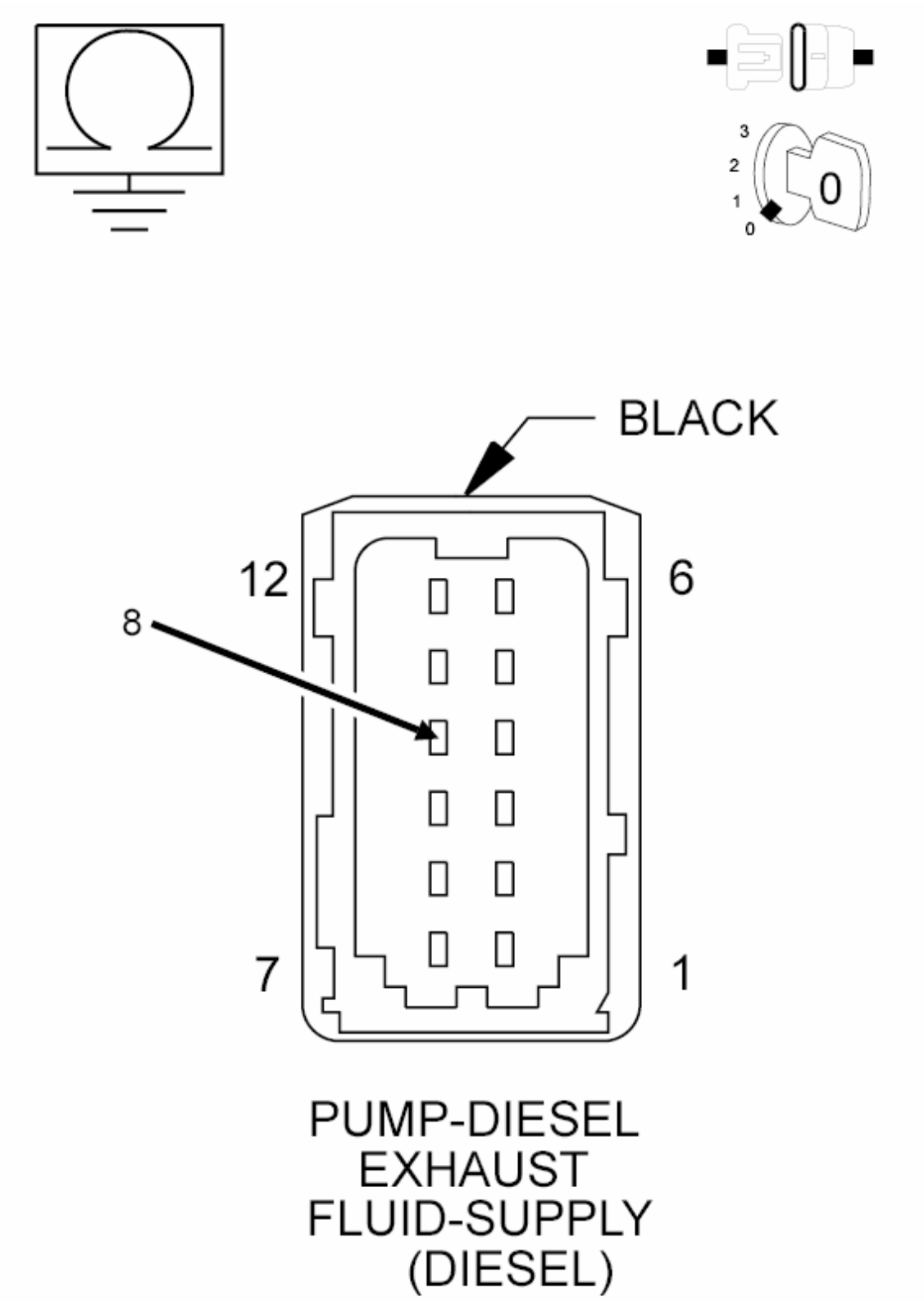

Fig. 89: Checking DEF Supply Pump Assembly Signal Circuit For A Short To Ground
Courtesy of CHRYSLER GROUP, LLC

1. Measure the resistance between ground and the (K419) DEF Supply Pump Assembly Signal circuit at the DEF Supply Pump Assembly harness connector.

   Is the resistance above 10k Ohms?

   Yes

   - Go To 5.

   No

   - Repair the (K419) DEF Supply Pump Assembly Signal circuit for a short to ground.
   - Perform the POWERTRAIN VERIFICATION TEST. Refer to **POWERTRAIN VERIFICATION TEST - 6.7L** .

5. **CHECK THE DEF DOSING CONTROL UNIT**
   1. Reconnect the DEF Dosing Control Unit C1 harness connector.
   2. Connect a jumper between the (K417) DEF Supply Pump Assembly Supply circuit and the (K419) DEF Supply Pump Assembly Signal circuit at the DEF Supply Pump Assembly harness connector.

      NOTE: Be careful not to spread the terminals.

   3. Turn the ignition on.
   4. With a scan tool, View DTCs.

      Did DTC P208D become active and DTC P208C change to stored?

      Yes

      - Replace the DEF Supply Pump Assembly in accordance with the service information. Refer to **ASSEMBLY, DIESEL EXHAUST FLUID PUMP, REMOVAL** .
      - Perform the POWERTRAIN VERIFICATION TEST. Refer to **POWERTRAIN VERIFICATION TEST - 6.7L** .

      No

      - Replace the DEF Dosing Control Unit in accordance with the service information. Refer to **UNIT, DIESEL EXHAUST FLUID DOSING CONTROL, REMOVAL** .
      - Perform the POWERTRAIN VERIFICATION TEST. Refer to **POWERTRAIN VERIFICATION TEST - 6.7L** .

P208D-(DIESEL EXHAUST FLUID) REDUCTANT PUMP CONTROL CIRCUIT HIGH

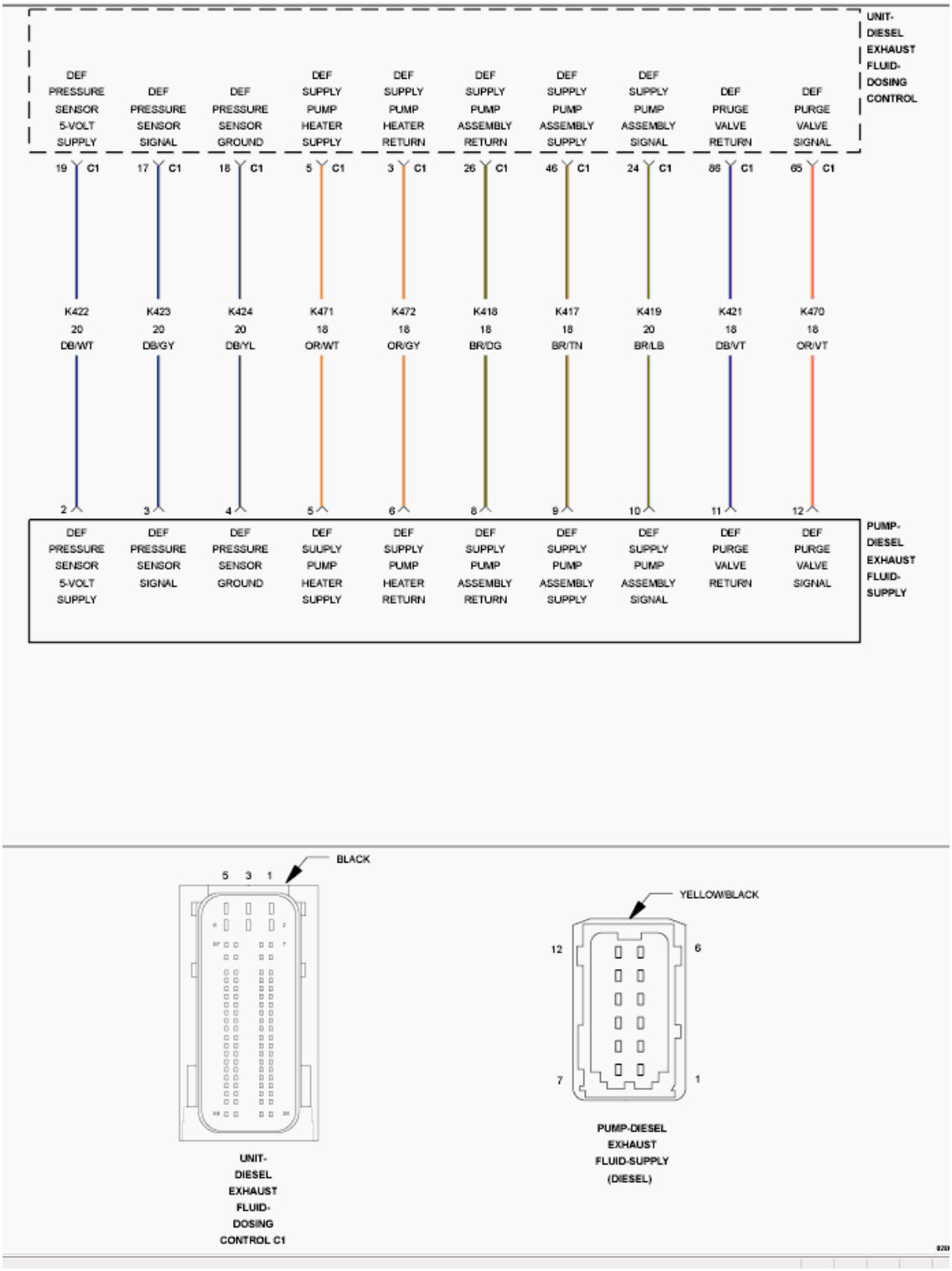

Fig. 90: Diesel Exhaust Fluid (DEF) Dosing Control Unit Wiring Diagram
Courtesy of CHRYSLER GROUP, LLC

For a complete wiring diagram, **refer to appropriate SYSTEM WIRING DIAGRAMS article** .

THEORY OF OPERATION

The Diesel Exhaust Fluid (DEF) Supply Pump Assembly has many functions. It's primary purpose is to draw fluid from the tank and build adequate system pressure for dosing into the exhaust. The DEF Dosing Control Unit provides the 12 Volt supply and ground for the pump. The DEF Dosing Control Unit also provides a Pulse Width Modulated (PWM) signal to the DEF Supply Pump Assembly to control the speed and output of the pump. The DEF Dosing Control Unit will illuminate the MIL light via the Powertrain Control Module (PCM) immediately after the diagnostics runs and fails and diesel exhaust fluid injection into the aftertreatment system is disabled. The DEF Dosing Control Unit will turn off the MIL light via the PCM when the monitor runs and passes in three consecutive key cycles.

WHEN MONITORED:

Continuously with the ignition on.

SET CONDITION:

The DEF Dosing Control Unit detects that the DEF Supply Pump Assembly circuit is above a calibrated value.

POSSIBLE CAUSES

Possible Causes
(K417) DEF SUPPLY PUMP ASSEMBLY SUPPLY CIRCUIT SHORTED TO VOLTAGE
(K418) DEF SUPPLY PUMP ASSEMBLY RETURN CIRCUIT SHORTED TO VOLTAGE
(K419) DEF SUPPLY PUMP ASSEMBLY SIGNAL CIRCUIT SHORTED TO VOLTAGE
DEF SUPPLY PUMP ASSEMBLY
DEF DOSING CONTROL UNIT

Always perform the Pre-Diagnostic Troubleshooting procedure before proceeding. Refer to PRE-DIAGNOSTIC TROUBLESHOOTING PROCEDURE - 6.7L .

DIAGNOSTIC TEST

1. **ACTIVE DTC**
    1. Turn the ignition on, engine not running.
    2. With the scan tool, navigate to Systems Tests and actuate the Diesel Exhaust Fluid Doser Pump Override Test.
    3. With the scan tool, View DTCs.

    Is the DTC active?

    Yes

    - Go To 2.

    No

- Perform the INTERMITTENT CONDITION diagnostic procedure. Refer to **INTERMITTENT CONDITION - 6.7L** .

2. **CHECK FOR THE (K417) DEF SUPPLY PUMP ASSEMBLY SUPPLY CIRCUIT SHORTED TO ANOTHER CIRCUIT**

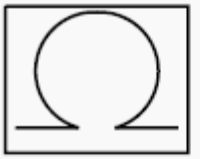

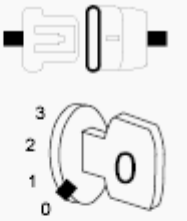

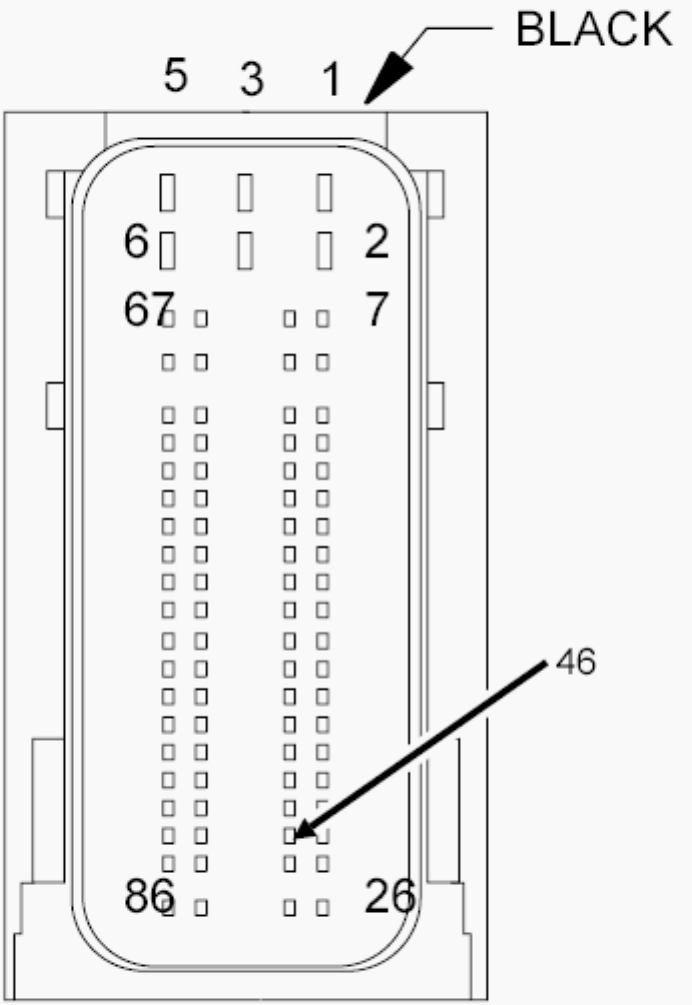

UNIT-
DIESEL
EXHAUST
FLUID-
DOSING
CONTROL C1

Fig. 91: Checking For DEF Supply Pump Assembly Supply Circuit For A Short
Courtesy of CHRYSLER GROUP, LLC

1. Turn the ignition off.
2. Disconnect the DEF Supply Pump Assembly harness connector.
3. Disconnect the DEF Dosing Control Unit C1 harness connector.
4. Measure the resistance between and the (K417) DEF Supply Pump Assembly Supply circuit and all other circuits at the DEF Dosing Control Module C1 harness connector.

   Is the resistance above 10k Ohms between the (K417) DEF Supply Pump Assembly Supply circuit and all other circuits?

   Yes

   - Go To 3.

   No

   - Repair the (K417) DEF Supply Pump Assembly Supply circuit for a short to the circuit that measured below 10k Ohms.
   - Perform the POWERTRAIN VERIFICATION TEST. Refer to **POWERTRAIN VERIFICATION TEST - 6.7L** .

3. **CHECK FOR THE (K418) DEF SUPPLY PUMP ASSEMBLY RETURN CIRCUIT SHORTED TO ANOTHER CIRCUIT**

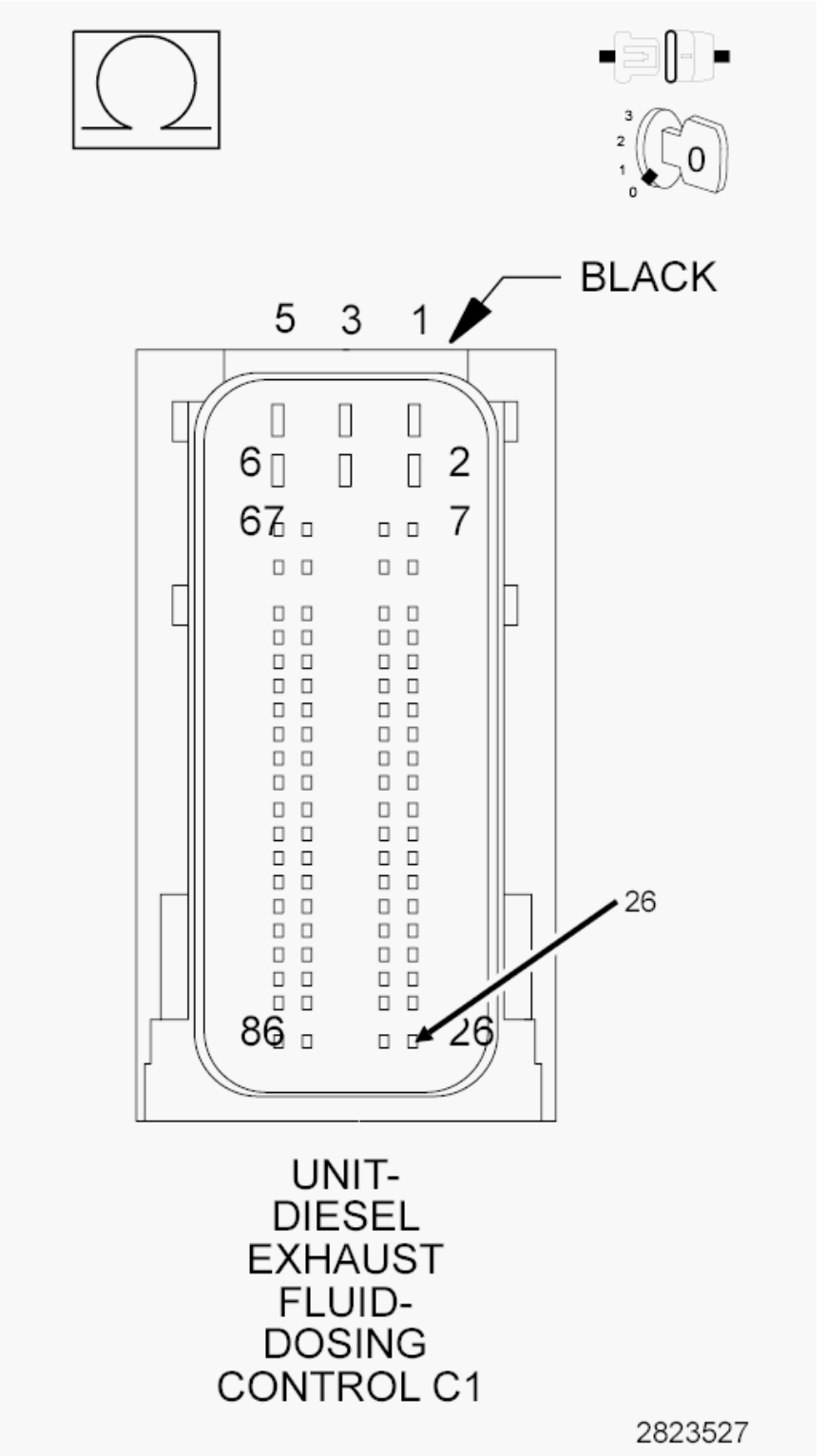

Fig. 92: Checking For DEF Supply Pump Assembly Return Circuit For A Short
Courtesy of CHRYSLER GROUP, LLC

1. Measure the resistance between and the (K418) DEF Supply Pump Assembly Return circuit and all other circuits at the DEF Dosing Control Unit C1 harness connector.

Is the resistance above 10k Ohms between the (K418) DEF Supply Pump Assembly Return circuit and all other circuits?

Yes

- Go To 4.

No

- Repair the (K418) DEF Supply Pump Assembly Return circuit for a short to the circuit that measured below 10k Ohms.
- Perform the POWERTRAIN VERIFICATION TEST. Refer to **POWERTRAIN VERIFICATION TEST - 6.7L** .

4. **CHECK FOR THE (K419) DEF SUPPLY PUMP ASSEMBLY SIGNAL CIRCUIT SHORTED TO ANOTHER CIRCUIT**

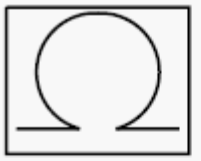

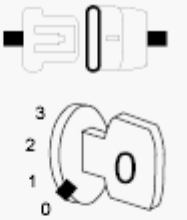

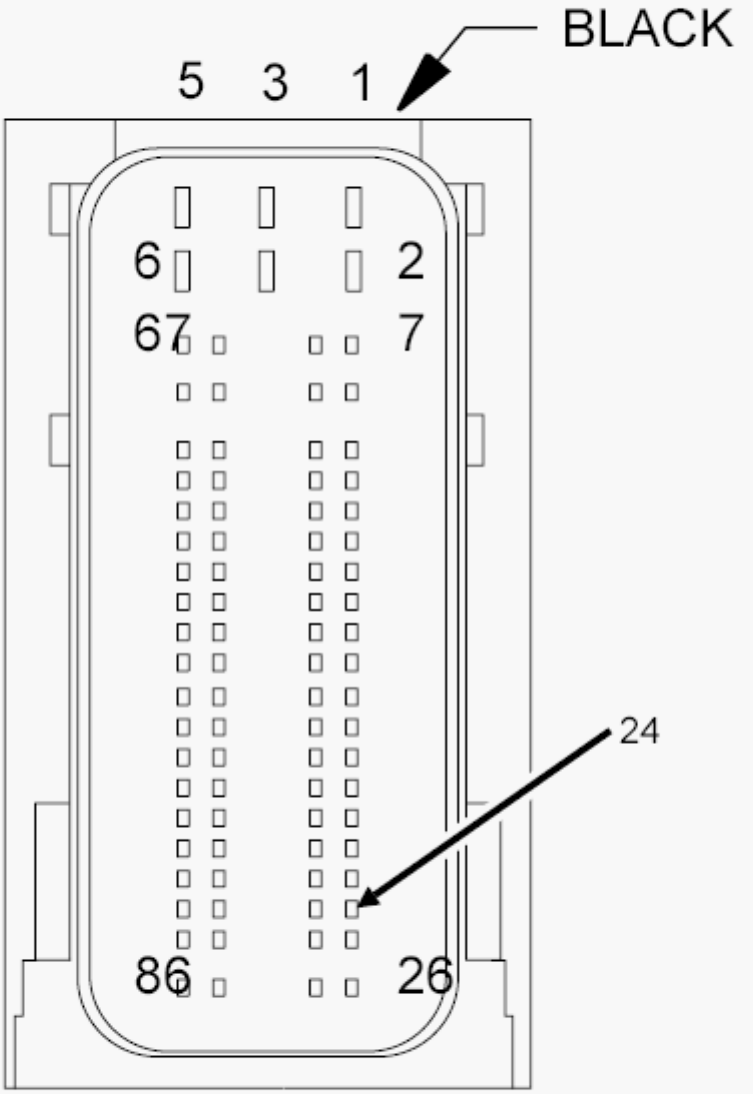

UNIT-
DIESEL
EXHAUST
FLUID-
DOSING
CONTROL C1

Fig. 93: Checking DEF Supply Pump Assembly Signal Circuit For A Short To Another Circuit
Courtesy of CHRYSLER GROUP, LLC

1. Measure the resistance between and the (K419) DEF Supply Pump Assembly Signal circuit and all other circuits at the DEF Dosing Control Unit C1 harness connector.

   Is the resistance above 10k Ohms between the (K419) DEF Supply Pump Assembly Signal circuit and all other circuits?

   Yes

   - Go To 5.

   No

   - Repair the (K419) DEF Supply Pump Assembly Signal circuit for a short to the circuit that measured below 10k Ohms.
   - Perform the POWERTRAIN VERIFICATION TEST. Refer to **POWERTRAIN VERIFICATION TEST - 6.7L** .

5. **CHECK THE DEF DOSING CONTROL UNIT**
   1. Reconnect the DEF Dosing Control Unit C1 harness connector. Leave the DEF Supply Pump Assembly harness connector disconnected.
   2. Turn the ignition on.
   3. With a scan tool, View DTCs.

      Did DTC P208A become active and DTC P208D change to stored with the DEF Supply Pump Assembly harness connector disconnected?

      Yes

      - Replace the DEF Supply Pump Assembly in accordance with the service information. Refer to **ASSEMBLY, DIESEL EXHAUST FLUID PUMP, REMOVAL** .
      - Perform the POWERTRAIN VERIFICATION TEST. Refer to **POWERTRAIN VERIFICATION TEST - 6.7L** .

      No

      - Replace the DEF Dosing Control Unit in accordance with the service information. Refer to **UNIT, DIESEL EXHAUST FLUID DOSING CONTROL, REMOVAL** .
      - Perform the POWERTRAIN VERIFICATION TEST. Refer to **POWERTRAIN VERIFICATION TEST - 6.7L** .

P209F-(DIESEL EXHAUST FLUID) REDUCTANT TANK HEATER CONTROL CIRCUIT PERFORMANCE

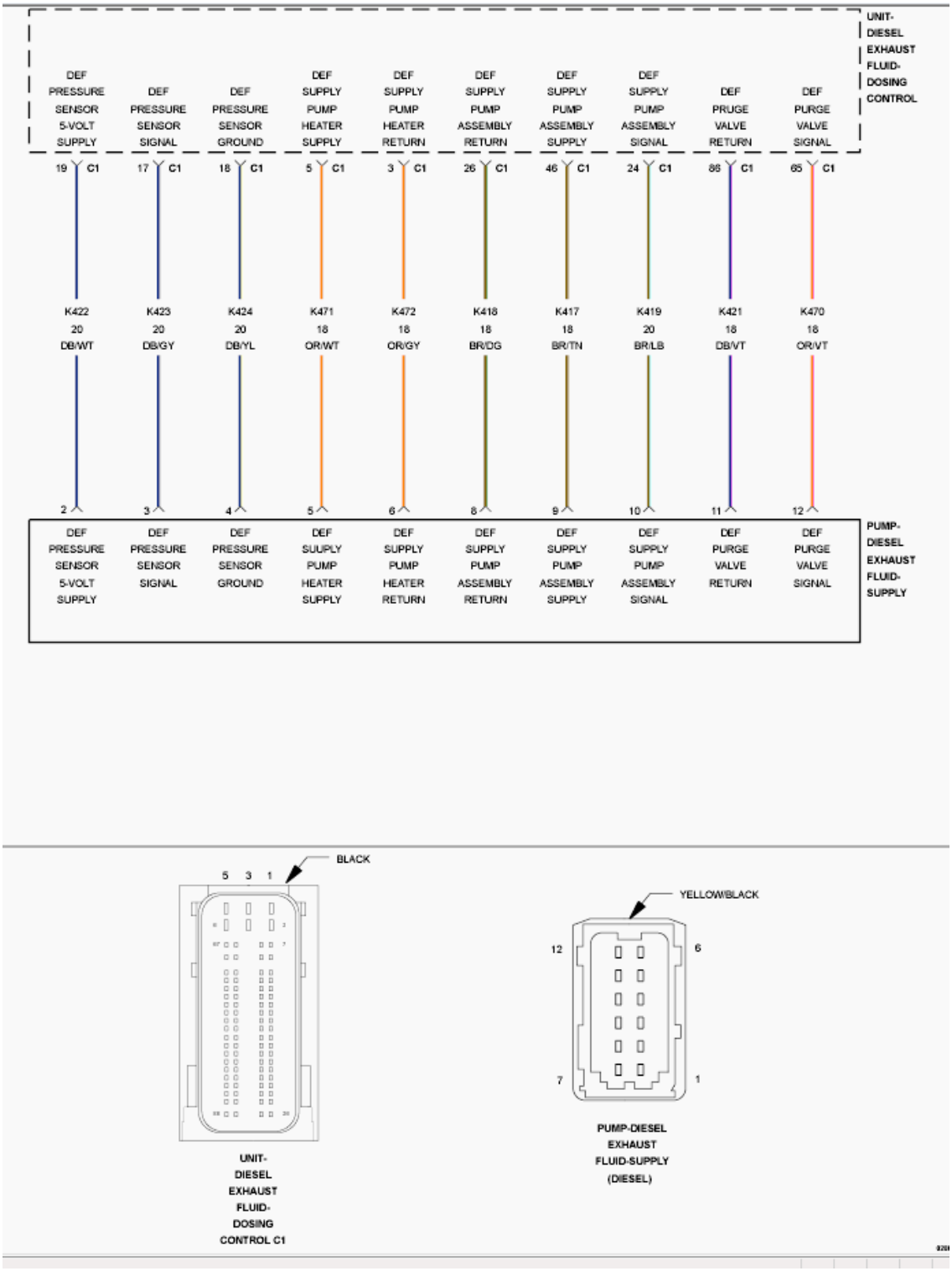

Fig. 94: Diesel Exhaust Fluid (DEF) Dosing Control Unit Wiring Diagram
Courtesy of CHRYSLER GROUP, LLC

For a complete wiring diagram, **refer to appropriate SYSTEM WIRING DIAGRAMS article** .

THEORY OF OPERATION

The Diesel Exhaust Fluid (DEF) Tank has an internal heating coil to help eliminate freezing of Diesel Exhaust Fluid. The DEF Dosing Control Unit monitors the temperature of the Diesel Exhaust Fluid inside the tank. When it is determined that the Diesel Exhaust Fluid needs to be heated, the DEF Dosing Control Unit opens the DEF Engine Coolant Valve which is located nest to the DEF Tank, and allows warm engine coolant to circulate through the heating coil inside the tank to warm the Diesel Exhaust Fluid in the tank. The DEF Dosing Control Unit will illuminate the MIL lamp via the Powertrain Module (PCM) immediately after this diagnostic runs and fails. The DEF Dosing Control Unit will turn off the MIL lamp via the PCM immediately after the diagnostic runs and passes for three consecutive key cycles.

WHEN MONITORED:

This diagnostic runs a calibrated amount of time after Diesel Exhaust Fluid Tank heating is first commanded.

SET CONDITION:

The DEF Tank heater has been on long enough for sufficient thawing of the Diesel Exhaust Fluid and the DEF system is still not able to prime.

POSSIBLE CAUSES

Possible Causes
LOW ENGINE COOLANT LEVEL
RESTRICTED OR LEAKING COOLANT LINES TO THE DIESEL EXHAUST FLUID ENGINE COOLANT CONTROL VALVE
RESTRICTED OR LEAKING COOLANT LINES TO THE DIESEL EXHAUST FLUID TANK HEATER
DIESEL EXHAUST FLUID ENGINE COOLANT CONTROL VALVE PHYSICALLY STUCK CLOSED

Always perform the Pre-Diagnostic Troubleshooting procedure before proceeding. Refer to PRE-DIAGNOSTIC TROUBLESHOOTING PROCEDURE - 6.7L .

DIAGNOSTIC TEST

1. **OTHER DTCS**
    1. Turn the ignition on, engine not running.
    2. With the scan tool, View DTCs.

       Are any of the P202A, P202B, P202C, P205C, P205D, P205E DTCs Active?

       Yes

       - Perform the diagnostic procedures for the other active DTCs before proceeding with this test.

       No

- Go To 2.

2. **CHECK THE ENGINE COOLANT LEVEL**

NOTE: **If there are DTCs present for the DEF Tank Temperature Sensor or DEF Engine Coolant Control Valve, perform those diagnostic procedures before continuing with this test procedure.**

1. Turn the ignition off.
2. Verify the engine coolant level.

   Is the engine coolant level above the minimum?

   Yes

   - Go To 3.

   No

   - Fill the engine coolant to the proper level.
   - Perform the POWERTRAIN VERIFICATION TEST. Refer to **POWERTRAIN VERIFICATION TEST - 6.7L** .

3. **CHECK FOR RESTRICTED OR LEAKING ENGINE COOLANT LINES/HOSES**
   1. Visually inspect the engine coolant supply and return lines for signs of a restriction or leaks.

      Were any restrictions or leaks found?

      Yes

      - Repair or replace the engine coolant lines in accordance with the service information.
      - Perform the POWERTRAIN VERIFICATION TEST. Refer to **POWERTRAIN VERIFICATION TEST - 6.7L** .

      No

      - Go To 4.

4. **CHECK FOR RESTRICTED DIESEL EXHAUST FLUID TANK HEATER**
   1. Remove the coolant lines at the DEF Tank Heater Coil.
   2. Blow regulated low pressure shop air through the DEF Tank Heater Coil.

      Were any restrictions found?

      Yes

      - Replace the DEF Tank Heater Coil in accordance with the service information. Refer to

SENSOR, DIESEL EXHAUST FLUID LEVEL/TEMPERATURE, REMOVAL .

- Perform the POWERTRAIN VERIFICATION TEST. Refer to **POWERTRAIN VERIFICATION TEST - 6.7L** .

No

- Replace the DEF Engine Coolant Control Valve in accordance with the service information. Refer to **VALVE, DIESEL EXHAUST FLUID ENGINE COOLANT CONTROL, REMOVAL** .
- Perform the POWERTRAIN VERIFICATION TEST. Refer to **POWERTRAIN VERIFICATION TEST - 6.7L** .

P20A0-(DIESEL EXHAUST FLUID) REDUCTANT PURGE CONTROL VALVE CIRCUIT OPEN

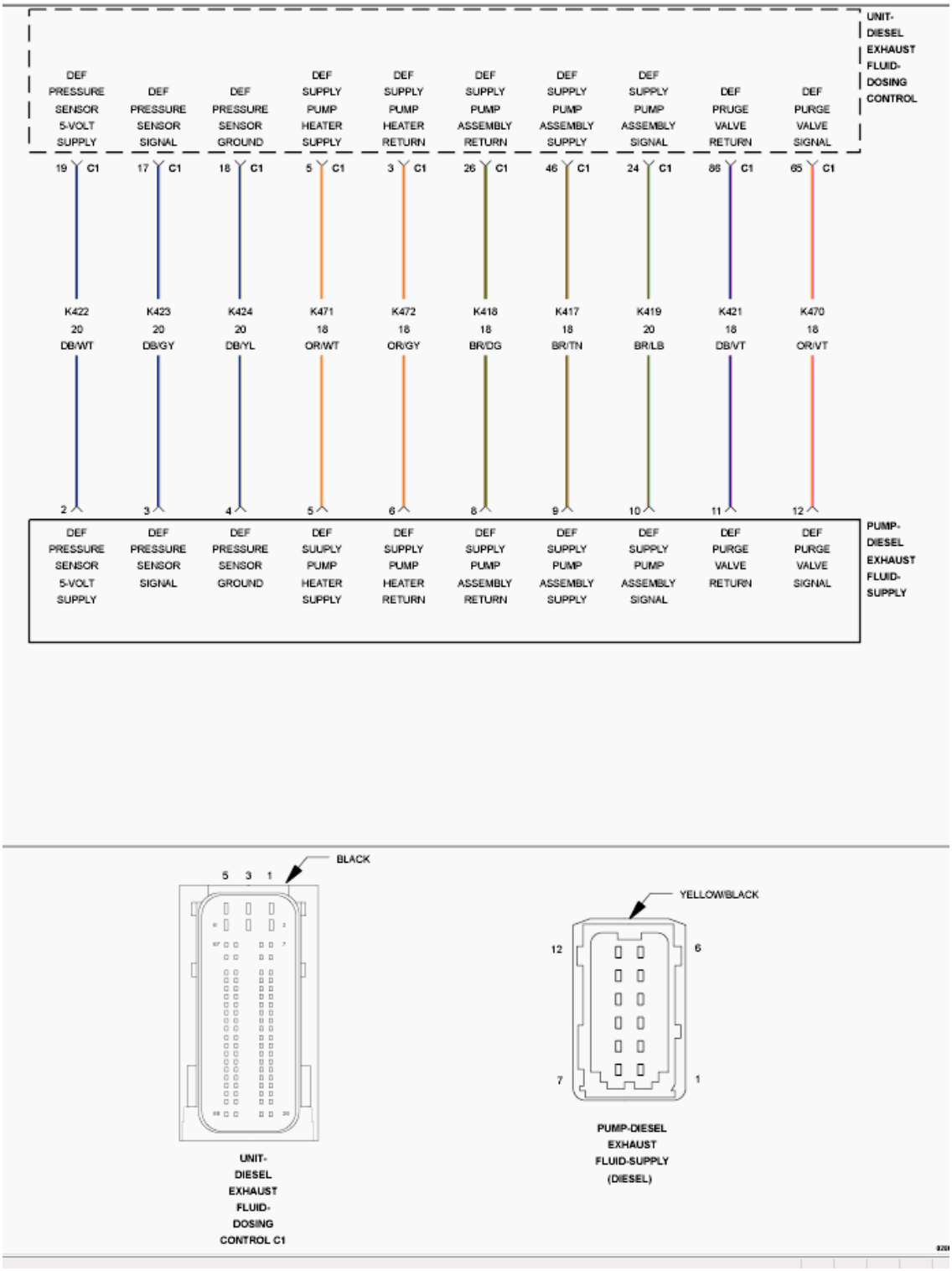

Fig. 95: Diesel Exhaust Fluid (DEF) Dosing Control Unit Wiring Diagram
Courtesy of CHRYSLER GROUP, LLC

For a complete wiring diagram, **refer to appropriate SYSTEM WIRING DIAGRAMS article** .

THEORY OF OPERATION

The Diesel Exhaust Fluid (DEF) Purge Valve is integrated into the DEF Supply Pump and is not serviceable separately. The power supply and control circuits are controlled by the DEF Dosing Control Unit. The DEF Dosing Control Unit uses the DEF Purge Valve to control the direction of the fluid flow in the DEF system. The Purge Valve position determines where diesel exhaust fluid will flow as it exits the DEF Supply Pump Assembly. The diesel exhaust fluid is pumped out of the lines and back to the tank at engine shut down to prevent the fluid from freezing in the lines. The DEF Dosing Control Unit will illuminate the MIL light via the Powertrain Control Module (PCM) immediately after the diagnostics runs and fails. The DEF Dosing Control Unit will turn off the MIL light via the PCM after the monitor runs and passes for three consecutive key cycles.

WHEN MONITORED:

Continuously with the ignition on.

SET CONDITION:

The DEF Dosing Control Unit detects that the DEF Purge Valve control circuit is open.

POSSIBLE CAUSES

Possible Causes
(K470) DEF PURGE VALVE SIGNAL CIRCUIT OPEN/HIGH RESISTANCE
(K421) DEF PURGE VALVE RETURN CIRCUIT OPEN/HIGH RESISTANCE
DEF SUPPLY PUMP ASSEMBLY
DEF DOSING CONTROL UNIT

Always perform the Pre-Diagnostic Troubleshooting procedure before proceeding. Refer to PRE-DIAGNOSTIC TROUBLESHOOTING PROCEDURE - 6.7L .

DIAGNOSTIC TEST

1. **ACTIVE DTC**
    1. Turn the ignition on, engine not running.
    2. With the scan tool, View DTCs.

    Is the DTC active?

    Yes

    - Go To 2.

    No

    - Perform the INTERMITTENT CONDITION diagnostic procedure. Refer to **INTERMITTENT CONDITION - 6.7L** .

2. **CHECK THE (K470) DEF PURGE VALVE SIGNAL CIRCUIT FOR AN OPEN/HIGH RESISTANCE**

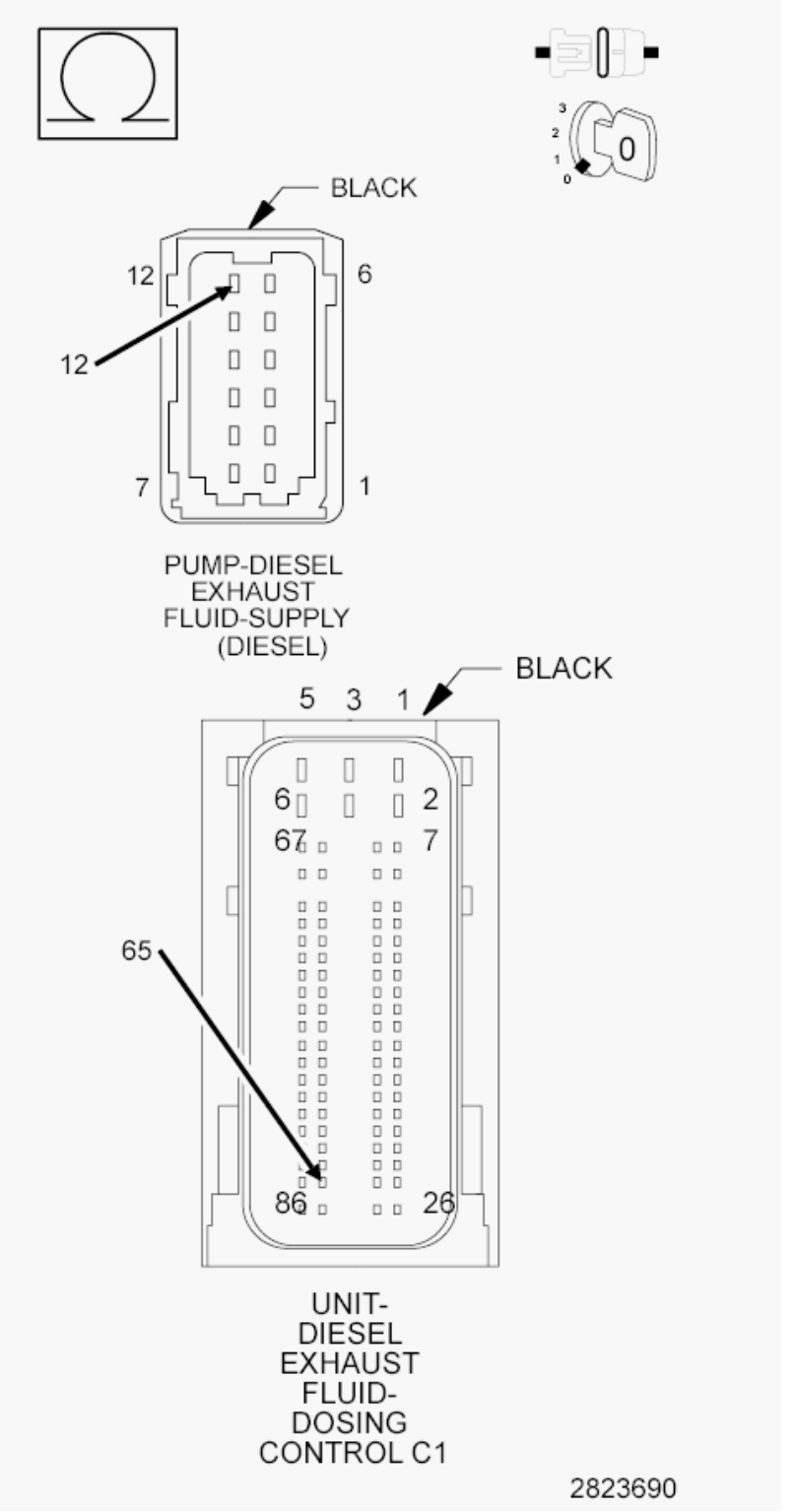

Fig. 96: Checking The DEF Purge Valve Signal Circuit For An Open Or High Resistance

Courtesy of CHRYSLER GROUP, LLC

1. Turn the ignition off.
2. Disconnect the DEF Supply Pump Assembly harness connector.
3. Disconnect the DEF Dosing Control Unit C1 harness connector.
4. Measure the resistance of the (K470) DEF Purge Valve Signal circuit between the DEF Supply Pump Assembly harness connector and the DEF Dosing Control Unit C1 harness connector.

   Is the resistance below 5.0 Ohms?

   Yes

   - Go To 3.

   No

   - Repair the (K470) DEF Purge Valve Signal circuit for an open or high resistance.
   - Perform the POWERTRAIN VERIFICATION TEST. Refer to **POWERTRAIN VERIFICATION TEST - 6.7L** .

3. **CHECK THE (K421) DEF PURGE VALVE RETURN CIRCUIT FOR AN OPEN/HIGH RESISTANCE**

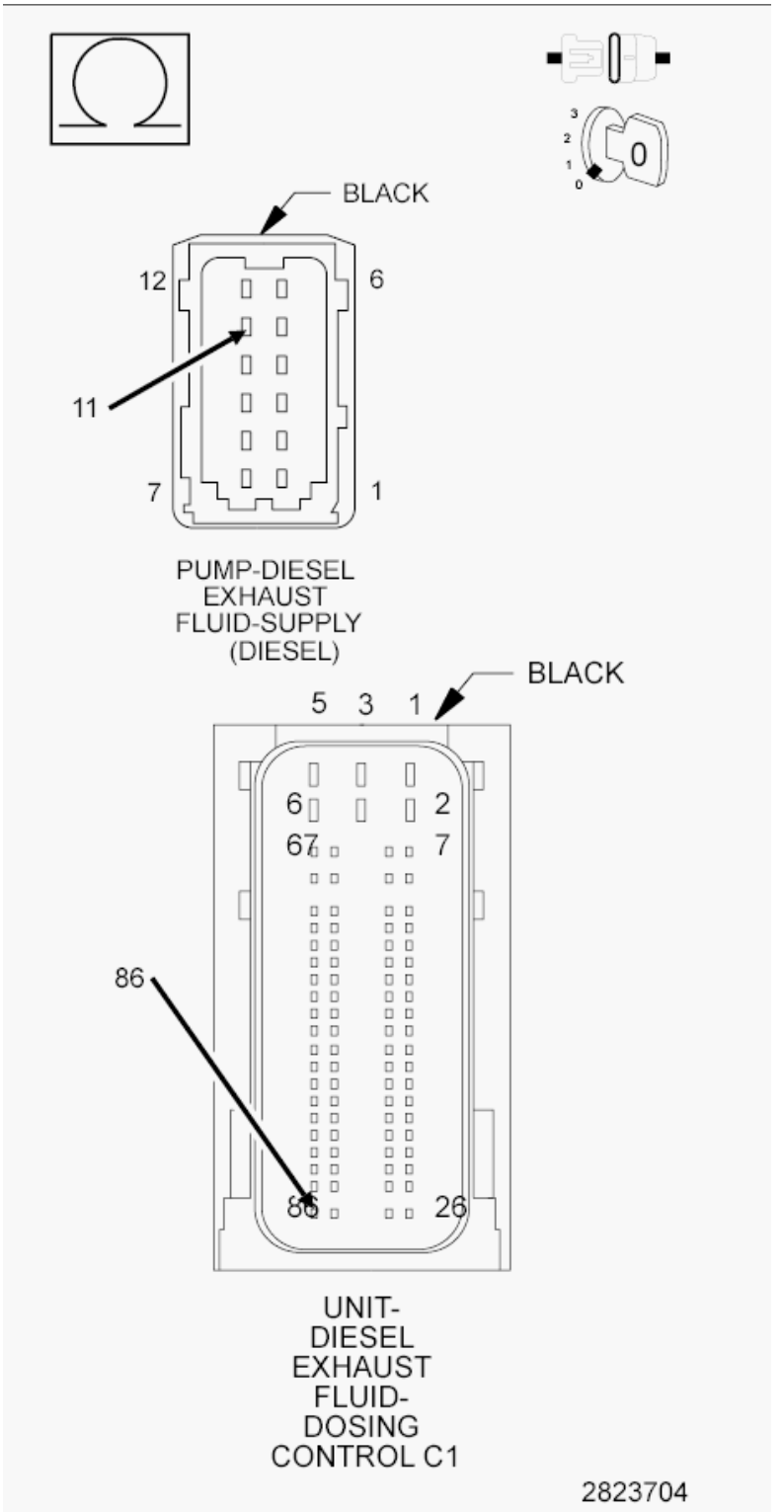

Fig. 97: Checking The DEF Purge Valve Return Circuit For An Open Or High Resistance
Courtesy of CHRYSLER GROUP, LLC

1. Measure the resistance of the (K421) DEF Purge Valve Return circuit between the DEF Supply Pump Assembly harness connector and the DEF Dosing Control Unit C1 harness connector.

Is the resistance below 5.0 Ohms?

Yes

- Go To 4.

No

- Repair the (K421) DEF Purge Valve Return circuit for an open or high resistance.
- Perform the POWERTRAIN VERIFICATION TEST. Refer to **POWERTRAIN VERIFICATION TEST - 6.7L** .

4. **CHECK THE DEF PURGE VALVE**
   1. Reconnect the DEF Dosing Control Unit C1 harness connector.
   2. Connect a jumper between the (K470) DEF Purge Valve Signal circuit and the (K421) DEF Purge Valve Return circuit at the DEF Supply Pump Assembly harness connector.

      NOTE: Be careful not to spread the terminals.

   3. Turn the ignition on.
   4. With a scan tool, View DTCs.

      Did DTC P20A3 become active and DTC P20A0 change to stored with the jumper in place?

      Yes

      - Replace the DEF Supply Pump Assembly in accordance with the service information. Refer to **ASSEMBLY, DIESEL EXHAUST FLUID PUMP, REMOVAL** .
      - Perform the POWERTRAIN VERIFICATION TEST. Refer to **POWERTRAIN VERIFICATION TEST - 6.7L** .

      No

      - Replace the DEF Dosing Control Unit in accordance with the service information. Refer to **UNIT, DIESEL EXHAUST FLUID DOSING CONTROL, REMOVAL** .
      - Perform the POWERTRAIN VERIFICATION TEST. Refer to **POWERTRAIN VERIFICATION TEST - 6.7L** .

P20A2-(DIESEL EXHAUST FLUID) REDUCTANT PURGE CONTROL VALVE CIRCUIT LOW

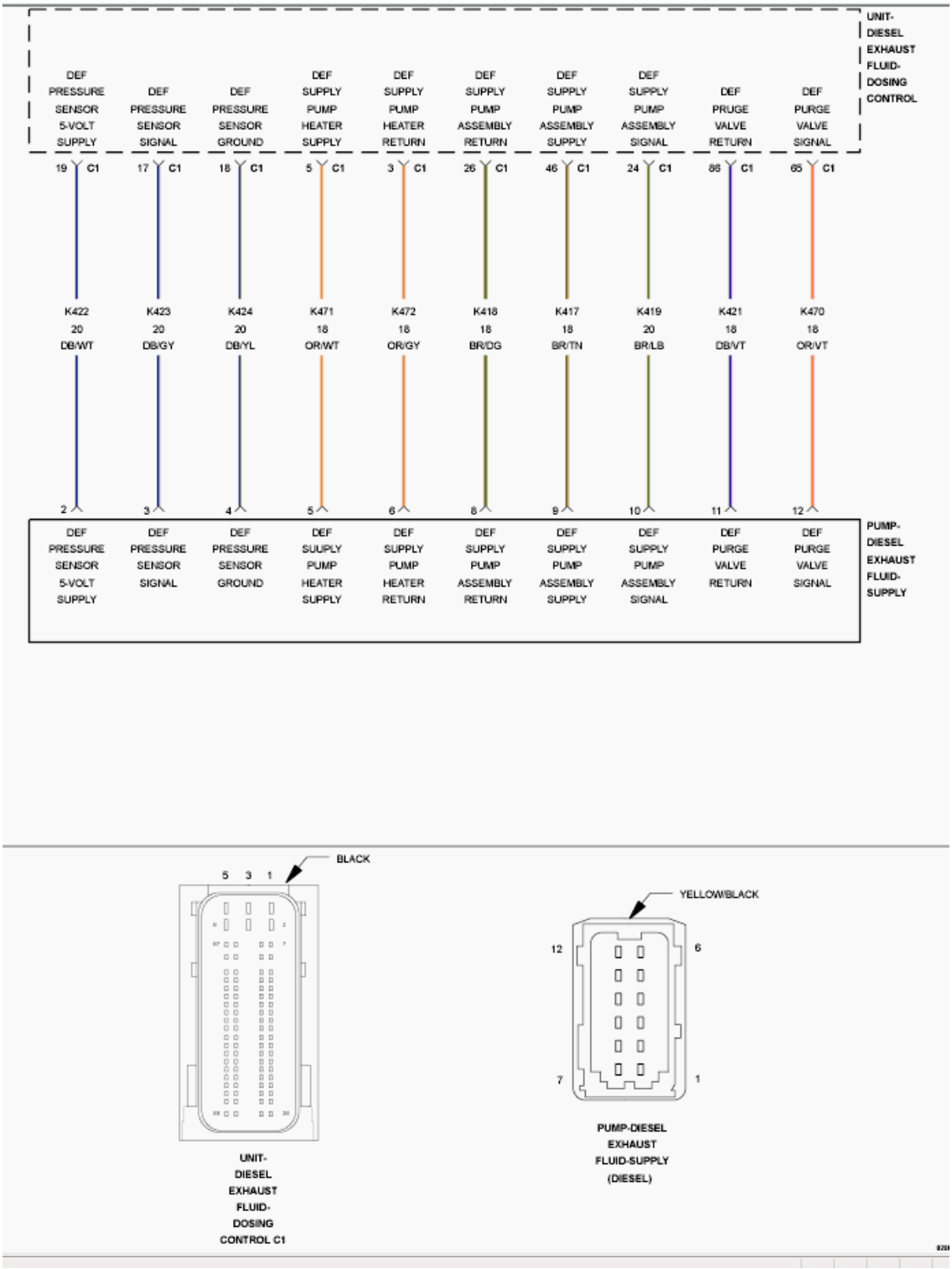

Fig. 98: Diesel Exhaust Fluid (DEF) Dosing Control Unit Wiring Diagram
Courtesy of CHRYSLER GROUP, LLC

For a complete wiring diagram, **refer to appropriate SYSTEM WIRING DIAGRAMS article** .

THEORY OF OPERATION

The Diesel Exhaust Fluid (DEF) Purge Valve is housed inside the DEF Supply Pump and is not serviceable separately. The power supply and control circuits are controlled by the DEF Dosing Control Unit. The DEF Dosing Control Unit uses the DEF Purge Valve to control the direction of the fluid flow in the DEF system. The Purge Valve position determines where diesel exhaust fluid will flow as it exits the DEF Supply Pump Assembly. The diesel exhaust fluid is pumped out of the lines and back to the tank at engine shut down to prevent the fluid from freezing in the lines. The DEF Dosing Control Unit will illuminate the MIL light via the Powertrain Control Module (PCM) immediately after the diagnostics runs and fails. The DEF Dosing Control Unit will turn off the MIL light via the PCM after the monitor runs and passes for three consecutive key cycles.

WHEN MONITORED:

Continuously with the ignition on.

SET CONDITION:

The DEF Dosing Control Unit detects that the DEF Purge Valve control circuit is below 0.25 Volts for one second.

POSSIBLE CAUSES

Possible Causes
(K470) DEF PURGE VALVE SIGNAL CIRCUIT SHORTED TO GROUND
(K421) DEF PURGE VALVE RETURN CIRCUIT SHORTED TO GROUND
DEF SUPPLY PUMP ASSEMBLY
DEF DOSING CONTROL UNIT

Always perform the Pre-Diagnostic Troubleshooting procedure before proceeding. Refer to PRE-DIAGNOSTIC TROUBLESHOOTING PROCEDURE - 6.7L .

DIAGNOSTIC TEST

1. **ACTIVE DTC**
    1. Turn the ignition on, engine not running.
    2. With the scan tool, View DTCs.

       Is the DTC active?

       Yes

       - Go To 2.

       No

       - Perform the INTERMITTENT CONDITION diagnostic procedure. Refer to **INTERMITTENT CONDITION - 6.7L** .

2. **CHECK THE (K470) DEF PURGE VALVE SIGNAL CIRCUIT FOR A SHORT TO GROUND**

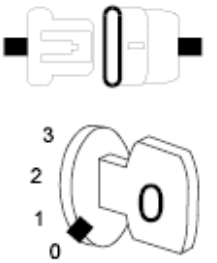

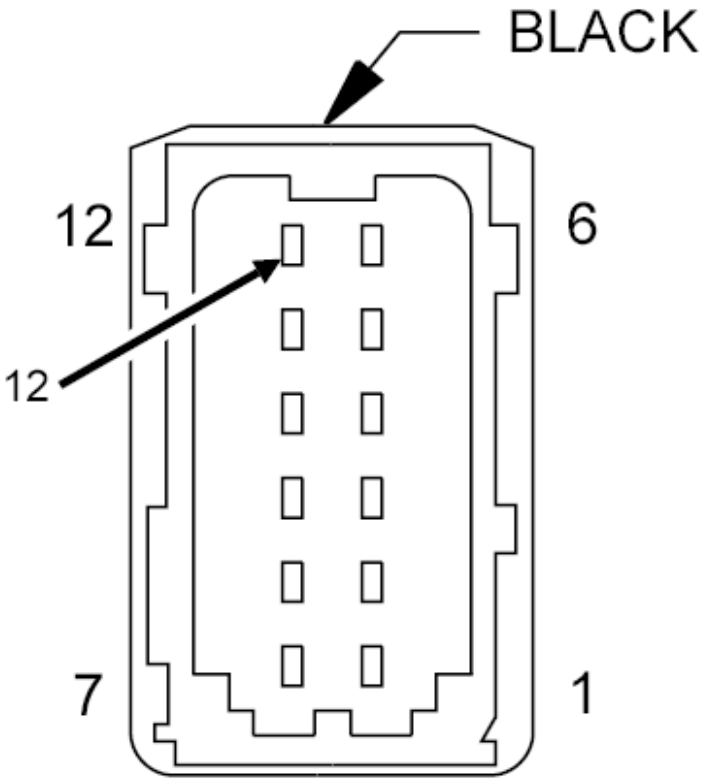

PUMP-DIESEL
EXHAUST
FLUID-SUPPLY
(DIESEL)

Fig. 99: Checking The DEF Purge Valve Signal Circuit For A Short To Ground
Courtesy of CHRYSLER GROUP, LLC

1. Turn the ignition off.
2. Disconnect the DEF Supply Pump Assembly harness connector.
3. Disconnect the DEF Dosing Control Unit C1 harness connector.
4. Measure the resistance between ground and the (K470) DEF Purge Valve Signal circuit at the DEF Supply Pump Assembly harness connector.

   Is the resistance above 10k Ohms?

   Yes

   - Go To 3.

   No

   - Repair the (K470) DEF Purge Valve Signal circuit for a short to ground.
   - Perform the POWERTRAIN VERIFICATION TEST. Refer to **POWERTRAIN VERIFICATION TEST - 6.7L** .

3. **CHECK THE (K421) DEF PURGE VALVE RETURN CIRCUIT FOR A SHORT TO GROUND**

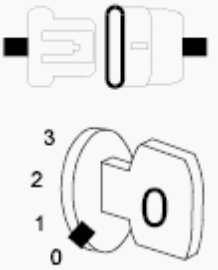

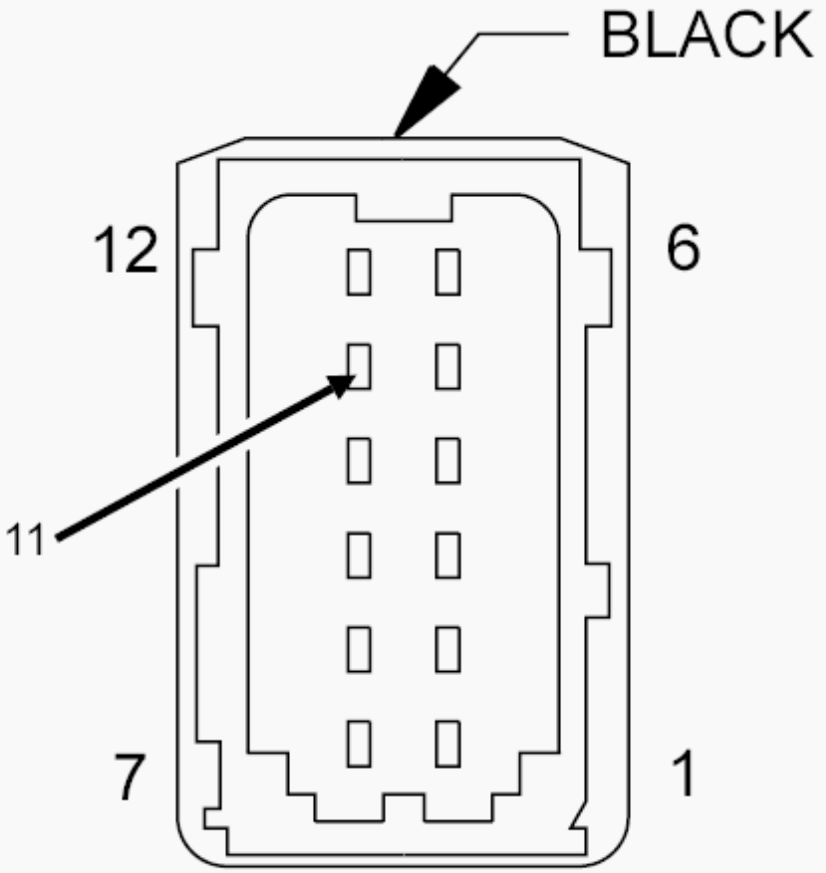

PUMP-DIESEL
EXHAUST
FLUID-SUPPLY
(DIESEL)

Fig. 100: Checking The DEF Purge Valve Return Circuit For A Short To Ground
Courtesy of CHRYSLER GROUP, LLC

1. Measure the resistance between ground and the (K421) DEF Purge Valve Return circuit at the DEF Supply Pump Assembly harness connector.

   Is the resistance above 10k Ohms?

   Yes

   - Go To 4.

   No

   - Repair the (K421) DEF Purge Valve Return circuit for a short to ground.
   - Perform the POWERTRAIN VERIFICATION TEST. Refer to **POWERTRAIN VERIFICATION TEST - 6.7L** .

4. **CHECK THE DEF PURGE VALVE**
   1. Reconnect the DEF Dosing Control Unit C1 harness connector.
   2. Connect a jumper between the (K470) DEF Purge Valve Signal circuit and the (K421) DEF Purge Valve Return circuit at the DEF Supply Pump Assembly harness connector.

      NOTE: Be careful not to spread the terminals.

   3. Turn the ignition on.
   4. With a scan tool, View DTCs.

      Did DTC P20A3 become active and DTC P20A2 change to stored with the jumper in place?

      Yes

      - Replace the DEF Supply Pump Assembly in accordance with the service information. Refer to **ASSEMBLY, DIESEL EXHAUST FLUID PUMP, REMOVAL** .
      - Perform the POWERTRAIN VERIFICATION TEST. Refer to **POWERTRAIN VERIFICATION TEST - 6.7L** .

      No

      - Replace the DEF Dosing Control Unit in accordance with the service information. Refer to **UNIT, DIESEL EXHAUST FLUID DOSING CONTROL, REMOVAL** .
      - Perform the POWERTRAIN VERIFICATION TEST. Refer to **POWERTRAIN VERIFICATION TEST - 6.7L** .

P20A3-(DIESEL EXHAUST FLUID) REDUCTANT PURGE CONTROL VALVE CIRCUIT HIGH

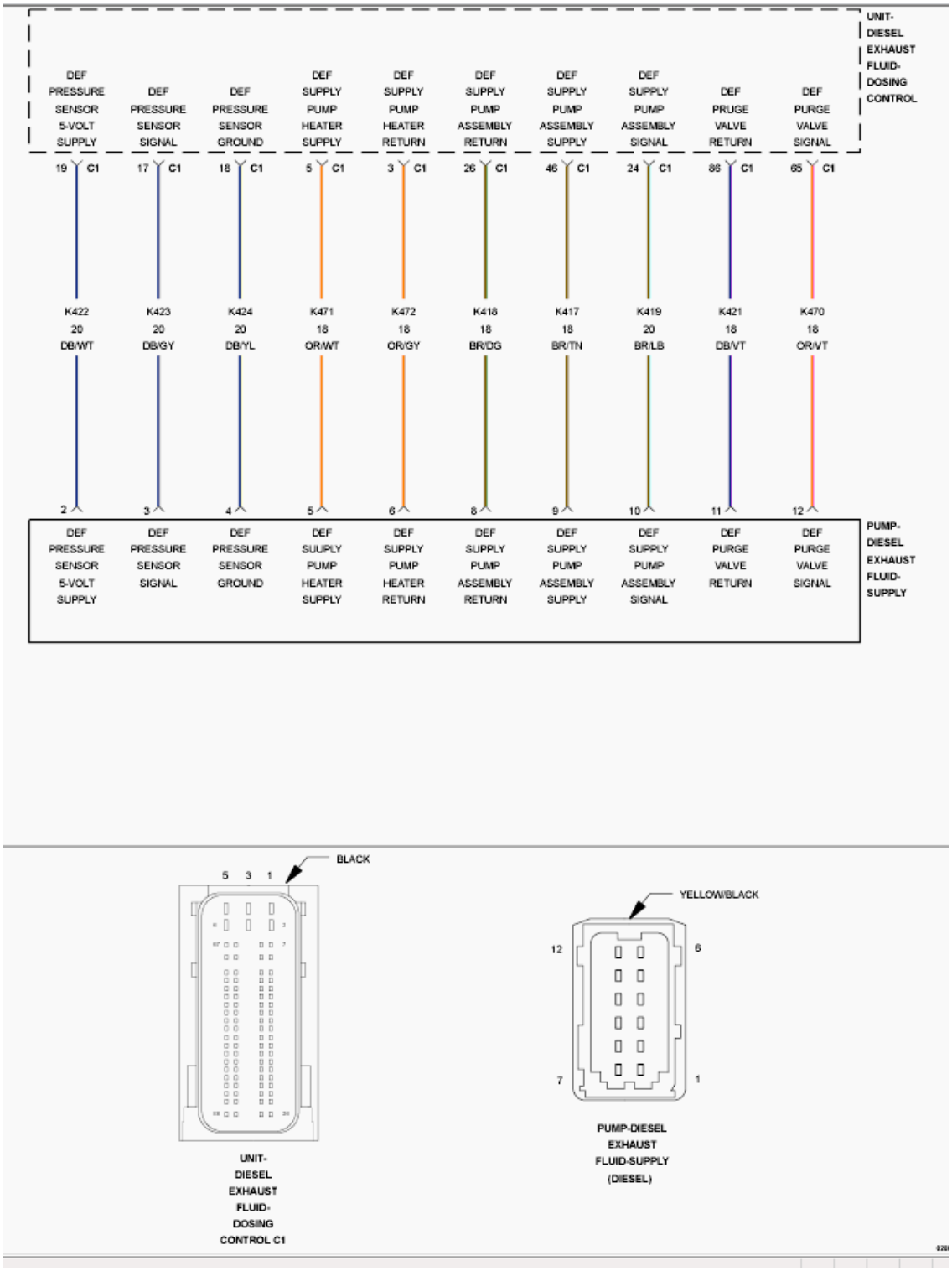

Fig. 101: Diesel Exhaust Fluid (DEF) Dosing Control Unit Wiring Diagram
Courtesy of CHRYSLER GROUP, LLC

For a complete wiring diagram, **refer to appropriate SYSTEM WIRING DIAGRAMS article** .

THEORY OF OPERATION

The Diesel Exhaust Fluid (DEF) Purge Valve is housed inside the DEF Supply Pump and is not serviceable separately. The power supply and control circuits are controlled by the DEF Dosing Control Unit. The DEF Dosing Control Unit uses the DEF Purge Valve to control the direction of the fluid flow in the DEF system. The Purge Valve position determines where diesel exhaust fluid will flow as it exits the DEF Supply Pump Assembly. The diesel exhaust fluid is pumped out of the lines and back to the tank at engine shut down to prevent the fluid from freezing in the lines. The DEF Dosing Control Unit will illuminate the MIL light via the Powertrain Control Module (PCM) immediately after the diagnostics runs and fails. The DEF Dosing Control Unit will turn off the MIL light via the PCM after the monitor runs and passes for three consecutive key cycles.

WHEN MONITORED:

Continuously with the ignition on.

SET CONDITION:

The DEF Dosing Control Unit detects that the DEF Purge Valve control circuit is above a calibrated value for one second.

POSSIBLE CAUSES

Possible Causes
(K421) DEF PURGE VALVE RETURN CIRCUIT SHORTED TO VOLTAGE
(K421) DEF PURGE VALVE RETURN CIRCUIT SHORTED TO THE (K470) DEF PURGE VALVE SIGNAL CIRCUIT
DEF SUPPLY PUMP ASSEMBLY
DEF DOSING CONTROL UNIT

Always perform the Pre-Diagnostic Troubleshooting procedure before proceeding. Refer to PRE-DIAGNOSTIC TROUBLESHOOTING PROCEDURE - 6.7L .

DIAGNOSTIC TEST

1. **ACTIVE DTC**
    1. Turn the ignition on, engine not running.
    2. With the scan tool, View DTCs.

    Is the DTC active?

    Yes

    - Go To 2.

    No

    - Perform the INTERMITTENT CONDITION diagnostic procedure. Refer to

INTERMITTENT CONDITION - 6.7L .

2. **CHECK THE DEF PURGE VALVE**
    1. Turn the ignition off.
    2. Disconnect the DEF Supply Pump Assembly harness connector.
    3. Turn the ignition on.
    4. With a scan tool, View DTCs.

    Did DTC P20A0 become active and DTC P20A3 change to stored with the jumper in place?

    Yes

    - Replace the DEF Supply Pump Assembly in accordance with the service information. Refer to **ASSEMBLY, DIESEL EXHAUST FLUID PUMP, REMOVAL** .
    - Perform the POWERTRAIN VERIFICATION TEST. Refer to **POWERTRAIN VERIFICATION TEST - 6.7L** .

    No

    - Go To 3.

3. **CHECK FOR THE (K421) DEF PURGE VALVE RETURN CIRCUIT SHORTED TO ANOTHER CIRCUIT**

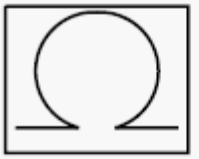

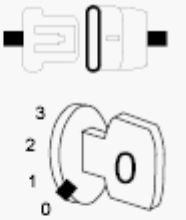

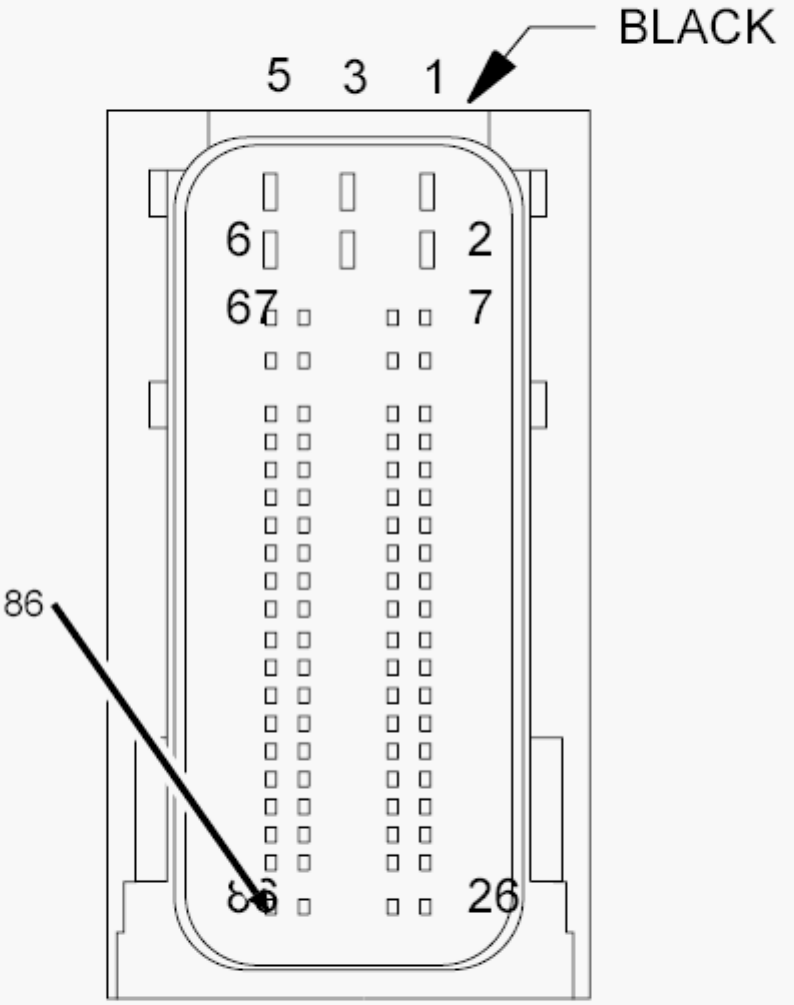

UNIT-
DIESEL
EXHAUST
FLUID-
DOSING
CONTROL C1

Fig. 102: Checking DEF Purge Valve Return Circuit For A Short To Another Circuit
Courtesy of CHRYSLER GROUP, LLC

1. Disconnect the DEF Dosing Control Unit C1 harness connector.
2. Measure the resistance between the (K421) DEF Purge Valve Return circuit and all other circuits at the DEF Dosing Control Unit C1 harness connector.

   Is the resistance above 10k Ohms?

   Yes

   - Replace the DEF Dosing Control Unit in accordance with the service information. Refer to **UNIT, DIESEL EXHAUST FLUID DOSING CONTROL, REMOVAL** .
   - Perform the POWERTRAIN VERIFICATION TEST. Refer to **POWERTRAIN VERIFICATION TEST - 6.7L** .

   No

   - Repair the (K421) DEF Purge Valve Return circuit for a short to the circuit that measured below 10k Ohms.
   - Perform the POWERTRAIN VERIFICATION TEST. Refer to **POWERTRAIN VERIFICATION TEST - 6.7L** .

P20B0-(DIESEL EXHAUST FLUID) REDUCTANT PUMP TEMPERATURE PERFORMANCE

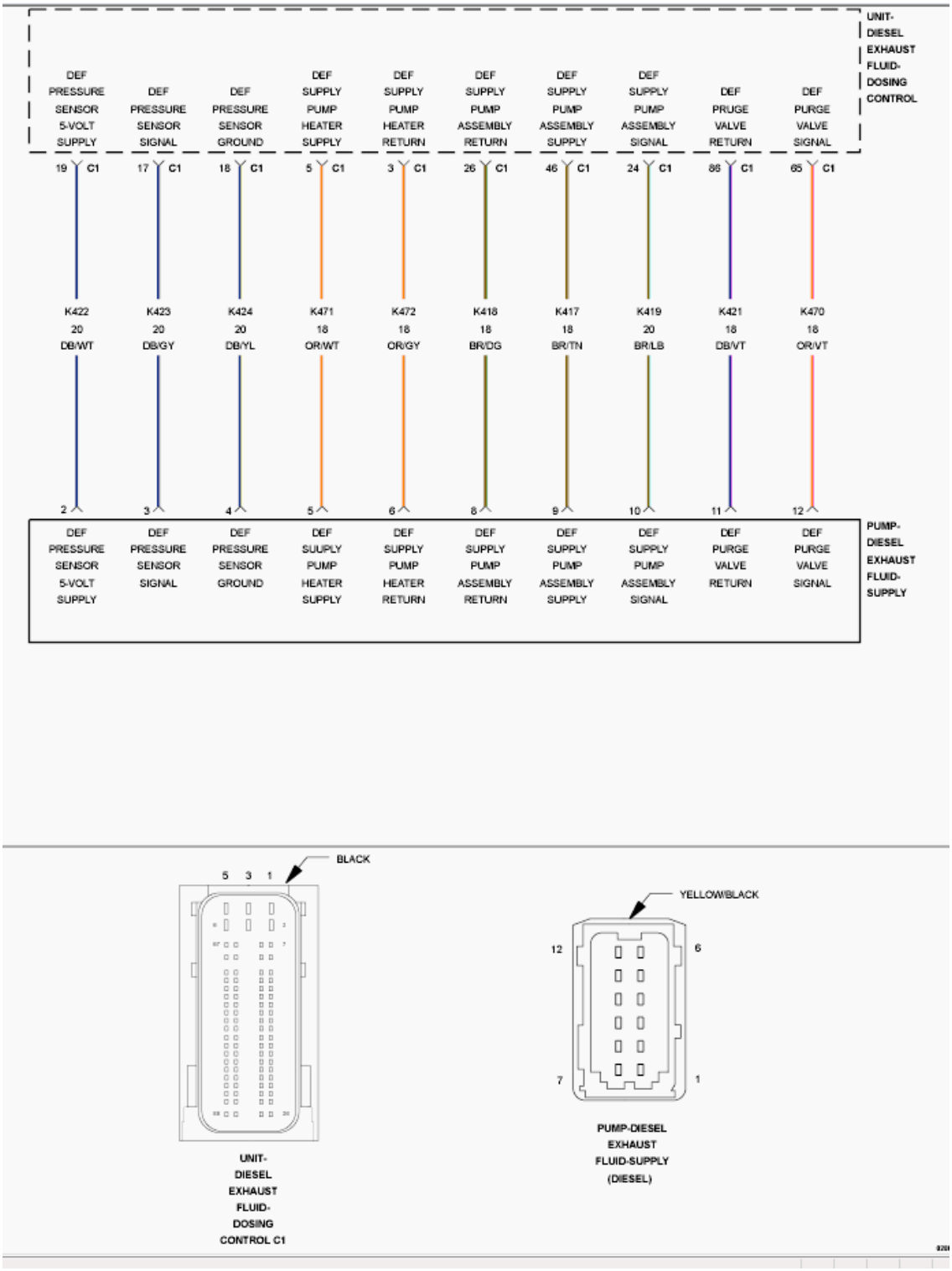

Fig. 103: Diesel Exhaust Fluid (DEF) Dosing Control Unit Wiring Diagram
Courtesy of CHRYSLER GROUP, LLC

For a complete wiring diagram, **refer to appropriate SYSTEM WIRING DIAGRAMS article** .

THEORY OF OPERATION

The Diesel Exhaust Fluid (DEF) Supply Pump Assembly has an internal temperature sensor which reports the internal temperature of the DEF Supply Pump Assembly to the DEF Dosing Control Unit. This fault is triggered if the DEF Supply Pump Assembly Temperature Sensor is different than the other temperature sensors on the engine. This indicates an internal problem in the DEF Supply Pump Assembly.

WHEN MONITORED:

At ignition on. Monitor runs until the DEF Supply Pump attempts to prime the system.

SET CONDITION:

The Supply Pump temperature reading is erratic or the Supply Pump internal temperature is not communicated to Powertrain Control Module by the DEF Dosing Control Unit.

POSSIBLE CAUSES

Possible Causes
(K419) DEF SUPPLY PUMP ASSEMBLY SIGNAL CIRCUIT SHORTED TO GROUND
DEF SUPPLY PUMP ASSEMBLY

Always perform the Pre-Diagnostic Troubleshooting procedure before proceeding. Refer to PRE-DIAGNOSTIC TROUBLESHOOTING PROCEDURE - 6.7L .

DIAGNOSTIC TEST

1. **ACTIVE DTC**

   NOTE: Diagnose and repair any other DEF system DTCs that are active before continuing with this test procedure.

   1. Ignition on, engine not running.
   2. With the scan tool, read DTCs.

      Is the DTC active?

      Yes

      - Go To 2.

      No

      - Perform the INTERMITTENT CONDITION diagnostic procedure. Refer to **INTERMITTENT CONDITION - 6.7L** .

2. **CHECK THE (K419) DEF SUPPLY PUMP ASSEMBLY SIGNAL CIRCUIT FOR A SHORT TO**

GROUND

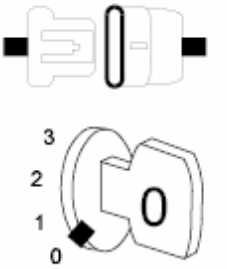

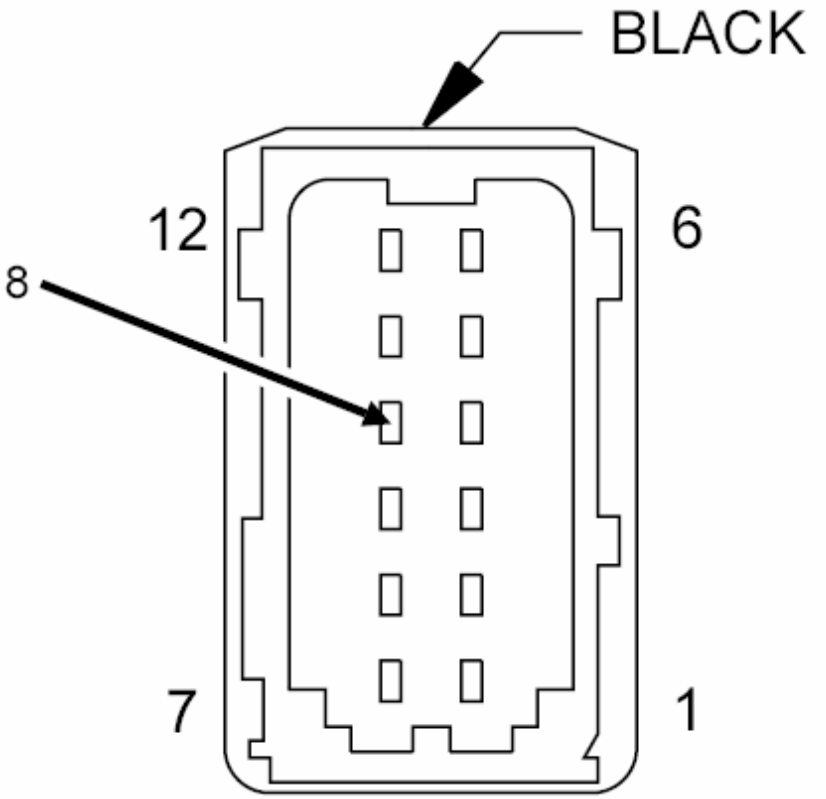

PUMP-DIESEL
EXHAUST
FLUID-SUPPLY
(DIESEL)

Fig. 104: Checking DEF Supply Pump Assembly Signal Circuit For A Short To Ground
Courtesy of CHRYSLER GROUP, LLC

1. Turn the ignition off.
2. Disconnect the DEF Supply Pump Assembly harness connector.
3. Disconnect the DEF Dosing Control Unit C1 harness connector.
4. Measure the resistance between ground and the (K419) DEF Supply Pump Assembly Signal circuit at the DEF Supply Pump Assembly harness connector.

   Is the resistance above 10k Ohms?

   Yes

   - Replace the DEF Supply Pump Assembly in accordance with the service information. Refer to **ASSEMBLY, DIESEL EXHAUST FLUID PUMP, REMOVAL** .
   - Perform the POWERTRAIN VERIFICATION TEST. Refer to **POWERTRAIN VERIFICATION TEST - 6.7L** .

   No

   - Repair the (K419) DEF Supply Pump Assembly Signal circuit for a short to ground.
   - Perform the POWERTRAIN VERIFICATION TEST. Refer to **POWERTRAIN VERIFICATION TEST - 6.7L** .

P20B2-(DIESEL EXHAUST FLUID) REDUCTANT HEATER CONTROL VALVE PERFORMANCE

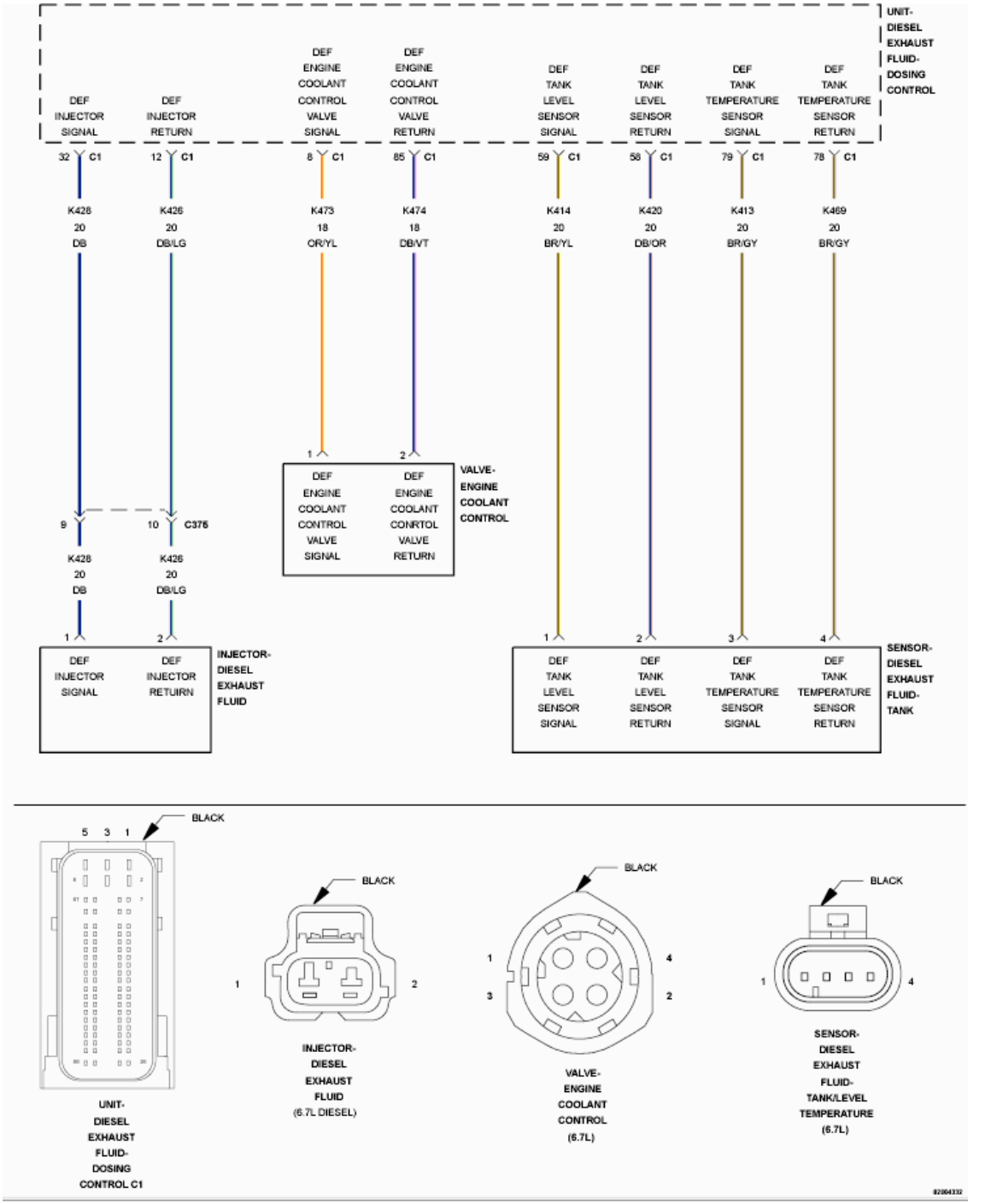

Fig. 105: Diesel Exhaust Fluid Reductant Tank Heater Control Circuit Wiring Diagram
Courtesy of CHRYSLER GROUP, LLC

For a complete wiring diagram, **refer to appropriate SYSTEM WIRING DIAGRAMS article** .

THEORY OF OPERATION

The Diesel Exhaust Fluid (DEF) Tank Level Sensor and Diesel Exhaust Fluid (DEF) Tank Temperature Sensor

are a combination sensor used to measure the level and temperature of the fluid in the DEF Tank. Though combined, the level sensor and the temperature sensor operate independent of each other. Both sensors operate as a two wire 5-Volt sensor. The DEF Tank Level Sensor is a 14 point magnetic reed switch sensor. The DEF Tank Temperature Sensor is a negative temperature coefficient sensor. The DEF Dosing Control Unit will illuminate the MIL lamp via the Powertrain Control Module (PCM) immediately after this diagnostic runs and fails. The DEF Dosing Control Unit will turn off the MIL lamp via the PCM immediately after the diagnostic runs and passes in three consecutive key cycles.

WHEN MONITORED:

This monitor runs a short time after Diesel Exhaust Fluid Tank heating is commanded.

SET CONDITION:

The DEF Dosing Control Unit does not detect a corresponding temperature increase by the DEF Tank Temperature Sensor after the Diesel Exhaust Fluid Tank heating is commanded on.

POSSIBLE CAUSES

Possible Causes
LOW ENGINE COOLANT LEVEL
BLOCKED OR RESTRICTED COOLANT LINES TO THE DIESEL EXHAUST FLUID ENGINE COOLANT CONTROL VALVE
BLOCKED OR RESTRICTED COOLANT LINES TO THE DIESEL EXHAUST FLUID TANK HEATER
DIESEL EXHAUST FLUID ENGINE COOLANT CONTROL VALVE PHYSICALLY STUCK CLOSED

Always perform the Pre-Diagnostic Troubleshooting procedure before proceeding. Refer to PRE-DIAGNOSTIC TROUBLESHOOTING PROCEDURE - 6.7L .

DIAGNOSTIC TEST

1. **CHECK THE ENGINE COOLANT LEVEL**

   NOTE: If there are DTCs present for the DEF Tank Temperature Sensor or DEF Engine Coolant Control Valve, perform those diagnostic procedures before continuing with this test procedure.

   1. Turn the ignition off.
   2. Verify the engine coolant level.

      Is the engine coolant level above the minimum?

      Yes

- Go To 2.

No

- Fill the engine coolant to the proper level.
- Perform the POWERTRAIN VERIFICATION TEST. Refer to **POWERTRAIN VERIFICATION TEST - 6.7L** .

2. **CHECK FOR BLOCKED OR RESTRICTED ENGINE COOLANT LINES/HOSES**
   1. Visually inspect the engine coolant supply and return lines for signs of a restriction of leaks.

      Were any restrictions or leaks found?

      Yes

      - Repair or replace the engine coolant lines in accordance with the service information.
      - Perform the POWERTRAIN VERIFICATION TEST. Refer to **POWERTRAIN VERIFICATION TEST - 6.7L** .

      No

      - Go To 3.
3. **CHECK FOR BLOCKED OR RESTRICTED DIESEL EXHAUST FLUID TANK HEATER**
   1. Remove the coolant lines at the DEF Tank Heater Coil.
   2. Blow regulated low pressure shop air through the DEF Tank Heater Coil.

      Were any restrictions found?

      Yes

      - Replace the DEF Tank Heater Coil in accordance with the service information. Refer to **SENSOR, DIESEL EXHAUST FLUID LEVEL/TEMPERATURE, REMOVAL** .
      - Perform the POWERTRAIN VERIFICATION TEST. Refer to **POWERTRAIN VERIFICATION TEST - 6.7L** .

      No

      - Replace the DEF Engine Coolant Control Valve in accordance with the service information. Refer to **VALVE, DIESEL EXHAUST FLUID ENGINE COOLANT CONTROL, REMOVAL** .
      - Perform the POWERTRAIN VERIFICATION TEST. Refer to **POWERTRAIN VERIFICATION TEST - 6.7L** .

P20B5-(DIESEL EXHAUST FLUID) REDUCTANT PUMP HEATER CONTROL CIRCUIT OPEN

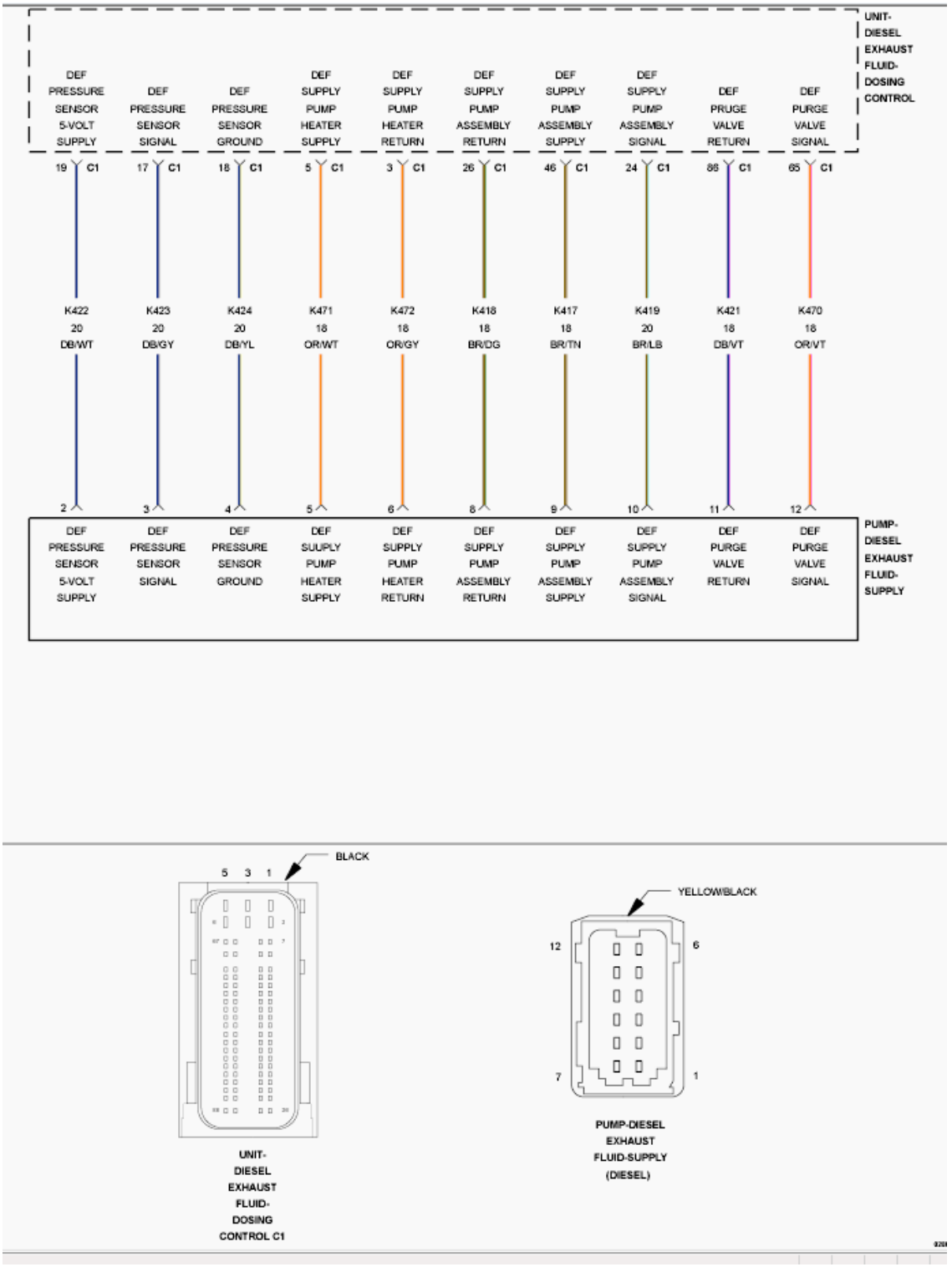

Fig. 106: Diesel Exhaust Fluid (DEF) Dosing Control Unit Wiring Diagram
Courtesy of CHRYSLER GROUP, LLC

For a complete wiring diagram, **refer to appropriate SYSTEM WIRING DIAGRAMS article** .

THEORY OF OPERATION

The Diesel Exhaust Fluid (DEF) Supply Pump Assembly has an internal heater to prevent the fluid from freezing inside the pump. The power supply and control circuits are controlled by the DEF Dosing Control Unit. The DEF Supply Pump Heater is integrated into the DEF Supply Pump Assembly and is not serviced separately. The DEF Dosing Control Unit will illuminate the MIL light via the Powertrain Control Module (PCM) immediately after the diagnostics runs and fails and the line heater will be disabled. The DEF Dosing Control Unit will turn off the MIL light via the PCM when the monitor runs and passes in three consecutive key cycles.

WHEN MONITORED:

Continuously with the ignition on.

SET CONDITION:

The DEF Dosing Control Unit detects that the DEF Supply Pump heater circuit is open or shorted to ground.

POSSIBLE CAUSES

Possible Causes
(K471) DEF SUPPLY PUMP HEATER SUPPLY CIRCUIT OPEN/HIGH RESISTANCE
(K472) DEF SUPPLY PUMP HEATER RETURN CIRCUIT OPEN/HIGH RESISTANCE
(K471) DEF SUPPLY PUMP HEATER SUPPLY CIRCUIT SHORTED TO GROUND
(K472) DEF SUPPLY PUMP HEATER RETURN CIRCUIT SHORTED TO GROUND
DEF SUPPLY PUMP ASSEMBLY
DEF DOSING CONTROL UNIT

Always perform the Pre-Diagnostic Troubleshooting procedure before proceeding. Refer to PRE-DIAGNOSTIC TROUBLESHOOTING PROCEDURE - 6.7L .

DIAGNOSTIC TEST

1. **ACTIVE DTC**
    1. Turn the ignition on, engine not running.
    2. With the scan tool, navigate to Actuator Tests and actuate the DEF Supply Pump Heater.
    3. With the scan tool, View DTCs.

    Is the DTC active?

    Yes

    - Go To 2.

    No

- Perform the INTERMITTENT CONDITION diagnostic procedure. Refer to **INTERMITTENT CONDITION - 6.7L** .

2. **CHECK THE RESISTANCE OF THE DEF SUPPLY PUMP HEATER**
   1. Turn the ignition off.
   2. Disconnect the DEF Supply Pump Assembly harness connector.
   3. Measure the resistance across the terminals of the DEF Supply Pump Heater circuits at the DEF Supply Pump Assembly.

      Is the resistance above 2.0 Ohms?

      Yes

      - Go To 3.

      No

      - Replace the DEF Supply Pump Assembly in accordance with the service information. Refer to **ASSEMBLY, DIESEL EXHAUST FLUID PUMP, REMOVAL** .
      - Perform the POWERTRAIN VERIFICATION TEST. Refer to **POWERTRAIN VERIFICATION TEST - 6.7L** .

3. **CHECK THE (K472) DEF SUPPLY PUMP HEATER RETURN CIRCUIT FOR A SHORT TO GROUND**

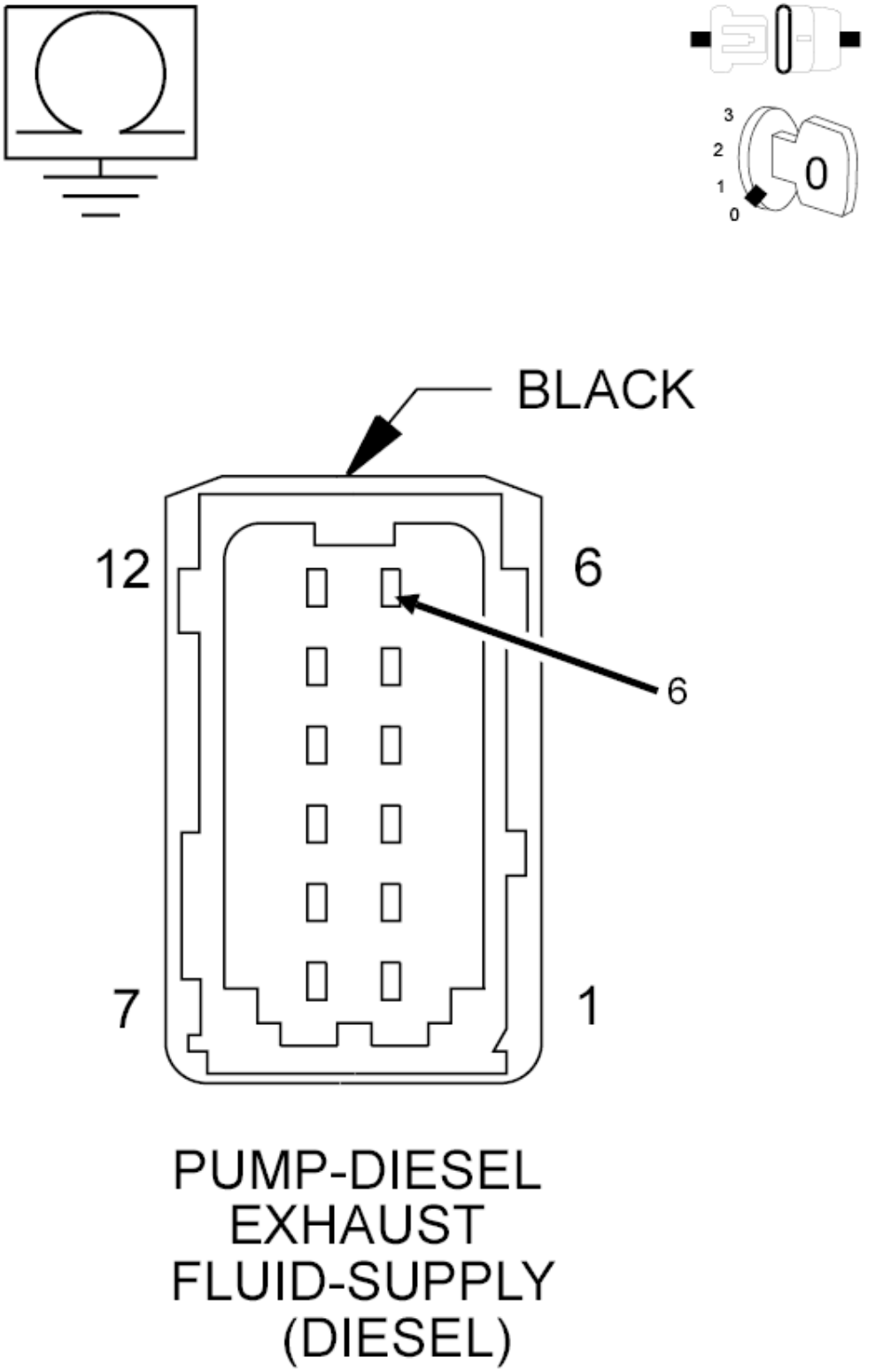

Fig. 107: Checking DEF Supply Pump Heater Return Circuit For A Short To Ground
Courtesy of CHRYSLER GROUP, LLC

1. Disconnect the DEF Dosing Control Unit C1 harness connector.
2. Measure the resistance between ground and the (K472) DEF Supply Pump Heater Return circuit at the DEF Supply Pump Assembly harness connector.

   Is the resistance above 10k Ohms?

   Yes

   - Go To 4.

   No

   - Repair the (K472) DEF Supply Pump Heater Return circuit for a short to ground.
   - Perform the POWERTRAIN VERIFICATION TEST. Refer to **POWERTRAIN VERIFICATION TEST - 6.7L** .

4. **CHECK THE (K471) DEF SUPPLY PUMP HEATER SUPPLY CIRCUIT FOR A SHORT TO GROUND**

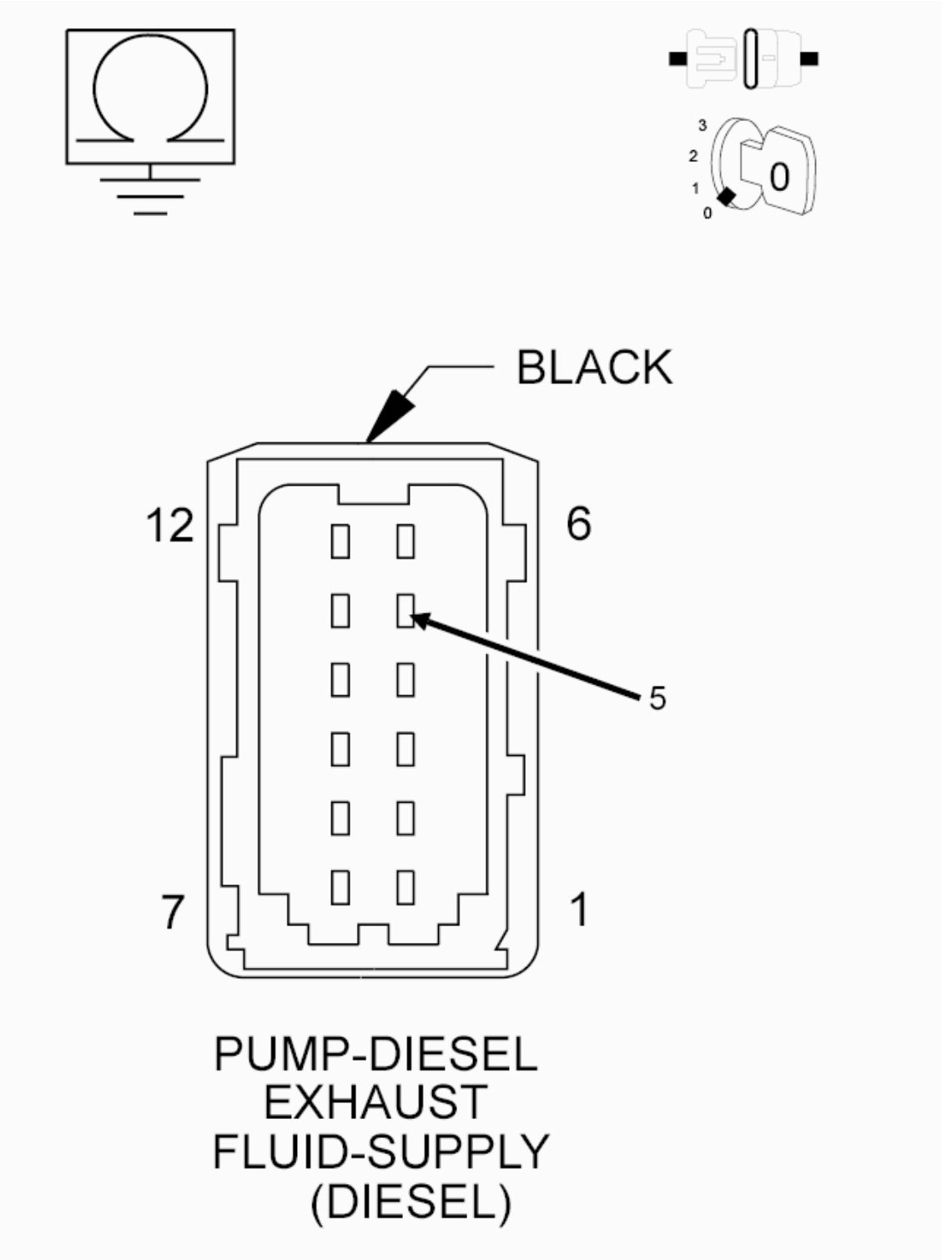

Fig. 108: Checking DEF Supply Pump Heater Supply Circuit For A Short To Ground
Courtesy of CHRYSLER GROUP, LLC

1. Disconnect the DEF Dosing Control Unit C1 harness connector.
2. Measure the resistance between ground and the (K471) DEF Supply Pump Heater Supply circuit at

the DEF Supply Pump Assembly harness connector.

Is the resistance above 10k Ohms?

Yes

- Go To 5.

No

- Repair the (K471) DEF Supply Pump Heater Supply circuit for a short to ground.
- Perform the POWERTRAIN VERIFICATION TEST. Refer to **POWERTRAIN VERIFICATION TEST - 6.7L** .

5. **CHECK THE (K472) DEF SUPPLY PUMP HEATER RETURN CIRCUIT FOR AN OPEN/HIGH RESISTANCE**

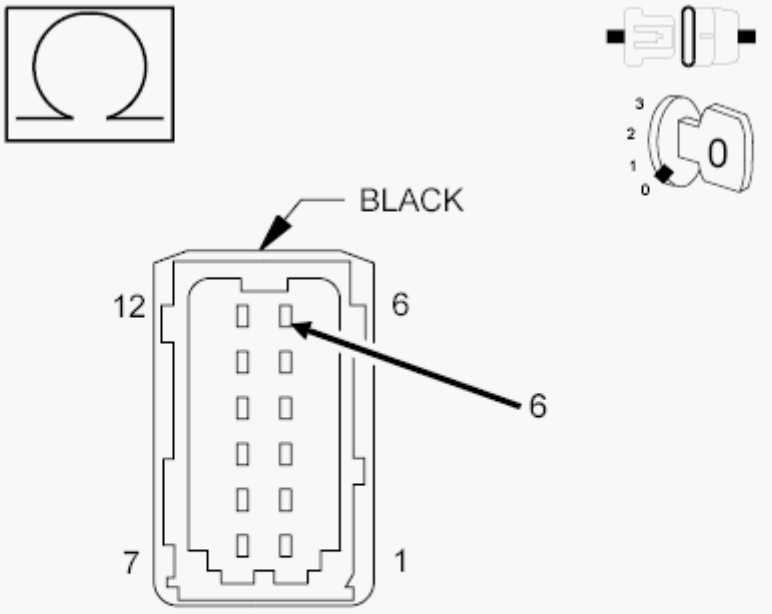

PUMP-DIESEL EXHAUST FLUID-SUPPLY (DIESEL)

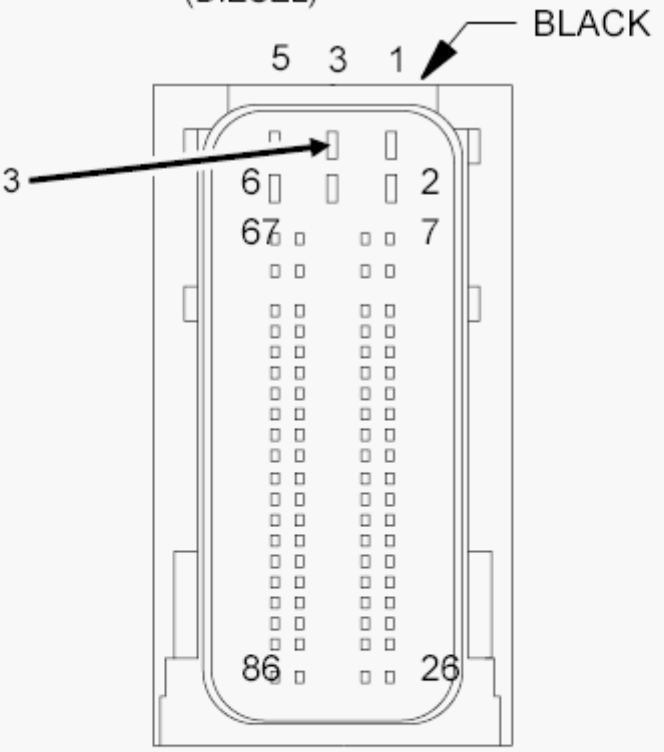

UNIT-DIESEL EXHAUST FLUID-DOSING

Fig. 109: Checking DEF Supply Pump Heater Return Circuit For An Open/High Resistance
Courtesy of CHRYSLER GROUP, LLC

1. Measure the resistance of the (K472) DEF Supply Pump Heater Return circuit between the DEF Supply Pump Assembly harness connector and the DEF Dosing Control Unit C1 harness connector.

   Is the resistance below 5.0 Ohms?

   Yes

   - Go To 6.

   No

   - Repair the (K472) DEF Supply Pump Heater Return circuit for an open or high resistance.
   - Perform the POWERTRAIN VERIFICATION TEST. Refer to **POWERTRAIN VERIFICATION TEST - 6.7L** .

6. **CHECK THE (K471) DEF SUPPLY PUMP HEATER SUPPLY CIRCUIT FOR AN OPEN/HIGH RESISTANCE**

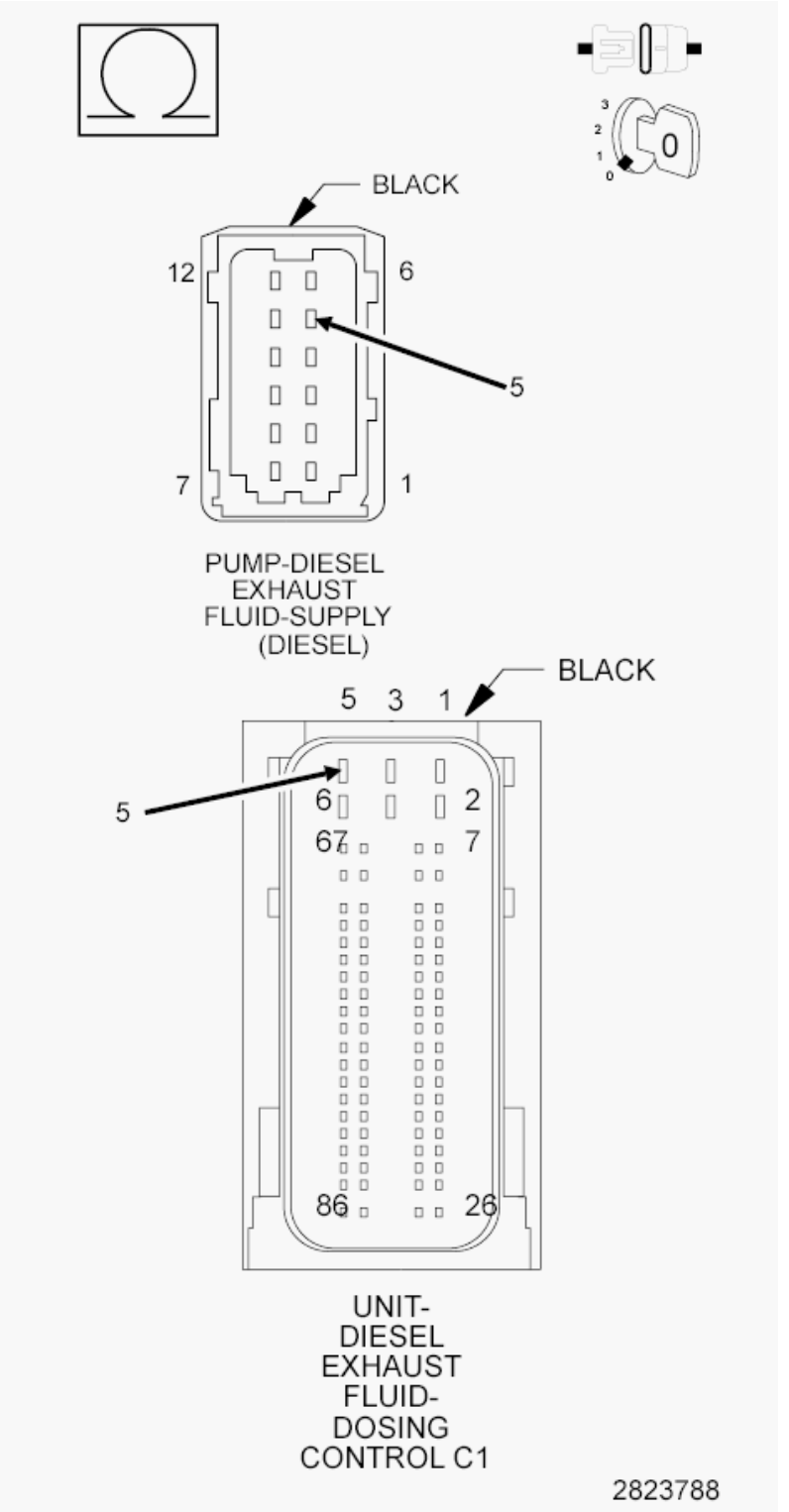

Fig. 110: Checking DEF Supply Pump Heater Supply Circuit For An Open Or High Resistance
Courtesy of CHRYSLER GROUP, LLC

1. Measure the resistance of the (K471) DEF Supply Pump Heater Supply circuit between the DEF Supply Pump Assembly harness connector and the DEF Dosing Control Unit C1 harness connector.

Is the resistance below 5.0 Ohms?

Yes

- Replace the DEF Dosing Control Unit in accordance with the service information. Refer to **UNIT, DIESEL EXHAUST FLUID DOSING CONTROL, REMOVAL** .
- Perform the POWERTRAIN VERIFICATION TEST. Refer to **POWERTRAIN VERIFICATION TEST - 6.7L** .

No

- Repair the (K471) DEF Supply Pump Heater Supply circuit for an open or high resistance.
- Perform the POWERTRAIN VERIFICATION TEST. Refer to **POWERTRAIN VERIFICATION TEST - 6.7L** .

P20B7-(DIESEL EXHAUST FLUID) REDUCTANT PUMP HEATER CONTROL CIRCUIT LOW

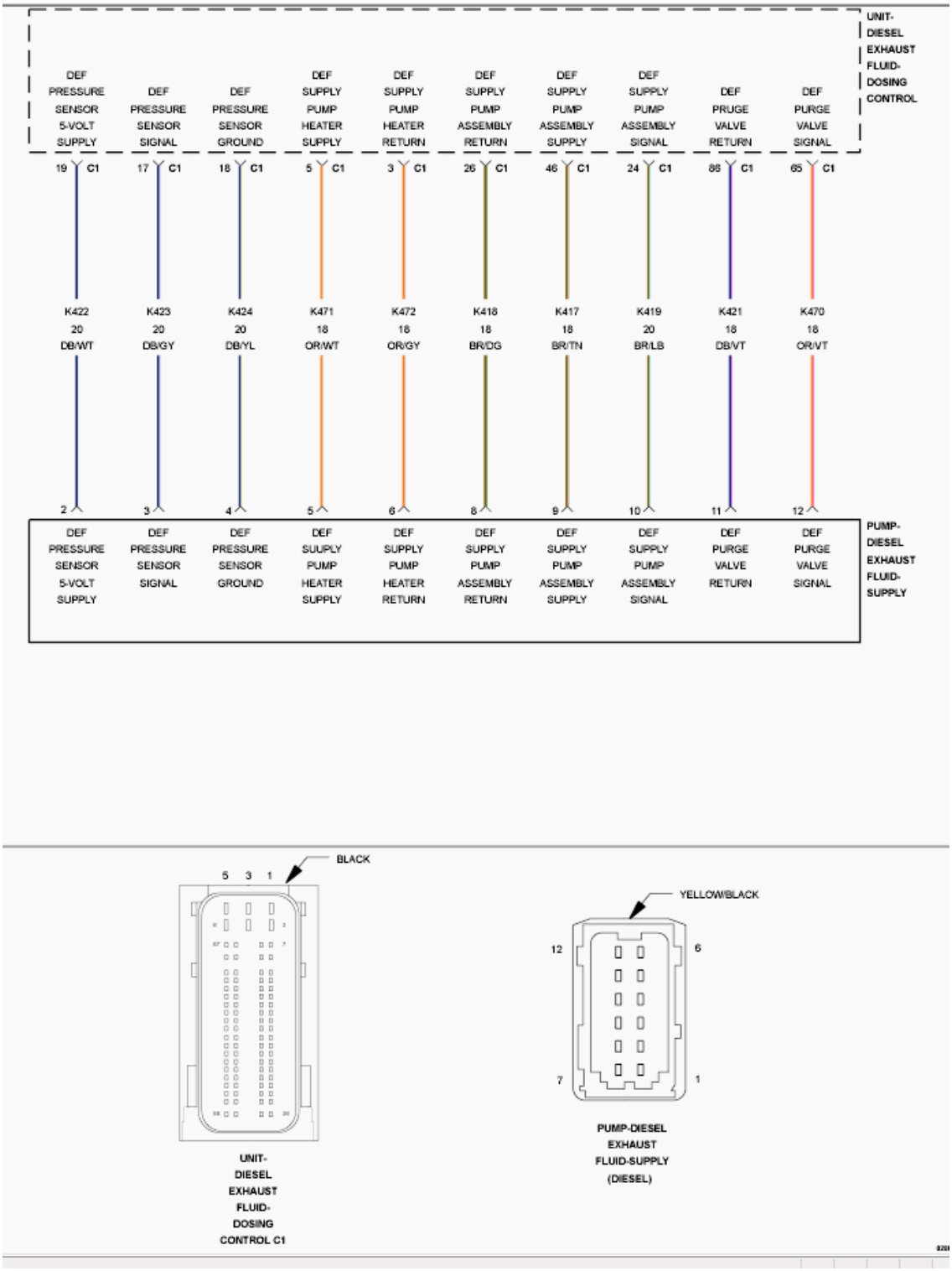

Fig. 111: Diesel Exhaust Fluid (DEF) Dosing Control Unit Wiring Diagram
Courtesy of CHRYSLER GROUP, LLC

For a complete wiring diagram, **refer to appropriate SYSTEM WIRING DIAGRAMS article** .

THEORY OF OPERATION

The Diesel Exhaust Fluid (DEF) Supply Pump Assembly has an internal heater to prevent the fluid from freezing inside the pump. The power supply and control circuits are controlled by the DEF Dosing Control Unit. The DEF Supply Pump Heater is integrated into the DEF Supply Pump Assembly and is not serviced separately. The DEF Dosing Control Unit will illuminate the MIL light via the Powertrain Control Module (PCM) immediately after the diagnostics runs and fails and the line heater will be disabled. The DEF Dosing Control Unit will turn off the MIL light via the PCM when the monitor runs and passes in three consecutive key cycles.

WHEN MONITORED:

Continuously with the ignition on.

SET CONDITION:

The DEF Dosing Control Unit detects that the DEF Supply Pump heater circuit is shorted to ground.

POSSIBLE CAUSES

Possible Causes
(K471) DEF SUPPLY PUMP HEATER SUPPLY CIRCUIT SHORTED TO GROUND
(K472) DEF SUPPLY PUMP HEATER RETURN CIRCUIT SHORTED TO GROUND
DEF SUPPLY PUMP ASSEMBLY
DEF DOSING CONTROL UNIT

Always perform the Pre-Diagnostic Troubleshooting procedure before proceeding. Refer to PRE-DIAGNOSTIC TROUBLESHOOTING PROCEDURE - 6.7L .

DIAGNOSTIC TEST

1. **ACTIVE DTC**
    1. Turn the ignition on, engine not running.
    2. With the scan tool, navigate to Actuator Tests and actuate the DEF Supply Pump Heater.
    3. With the scan tool, View DTCs.

    Is the DTC Active?

    Yes

    - Go To 2.

    No

    - Perform the INTERMITTENT CONDITION diagnostic procedure. Refer to **INTERMITTENT CONDITION - 6.7L** .

2. **CHECK THE RESISTANCE OF THE DEF SUPPLY PUMP HEATER**
    1. Turn the ignition off.
    2. Disconnect the DEF Supply Pump Assembly harness connector.
    3. Measure the resistance across the terminals of the DEF Supply Pump Heater circuits at the DEF Supply Pump Assembly.

       Is the resistance above 2.0 Ohms?

       Yes

       - Go To 3.

       No

       - Replace the DEF Supply Pump Assembly in accordance with the service information. Refer to **ASSEMBLY, DIESEL EXHAUST FLUID PUMP, REMOVAL** .
       - Perform the POWERTRAIN VERIFICATION TEST. Refer to **POWERTRAIN VERIFICATION TEST - 6.7L** .
3. **CHECK THE (K472) DEF SUPPLY PUMP HEATER RETURN CIRCUIT FOR A SHORT TO GROUND**

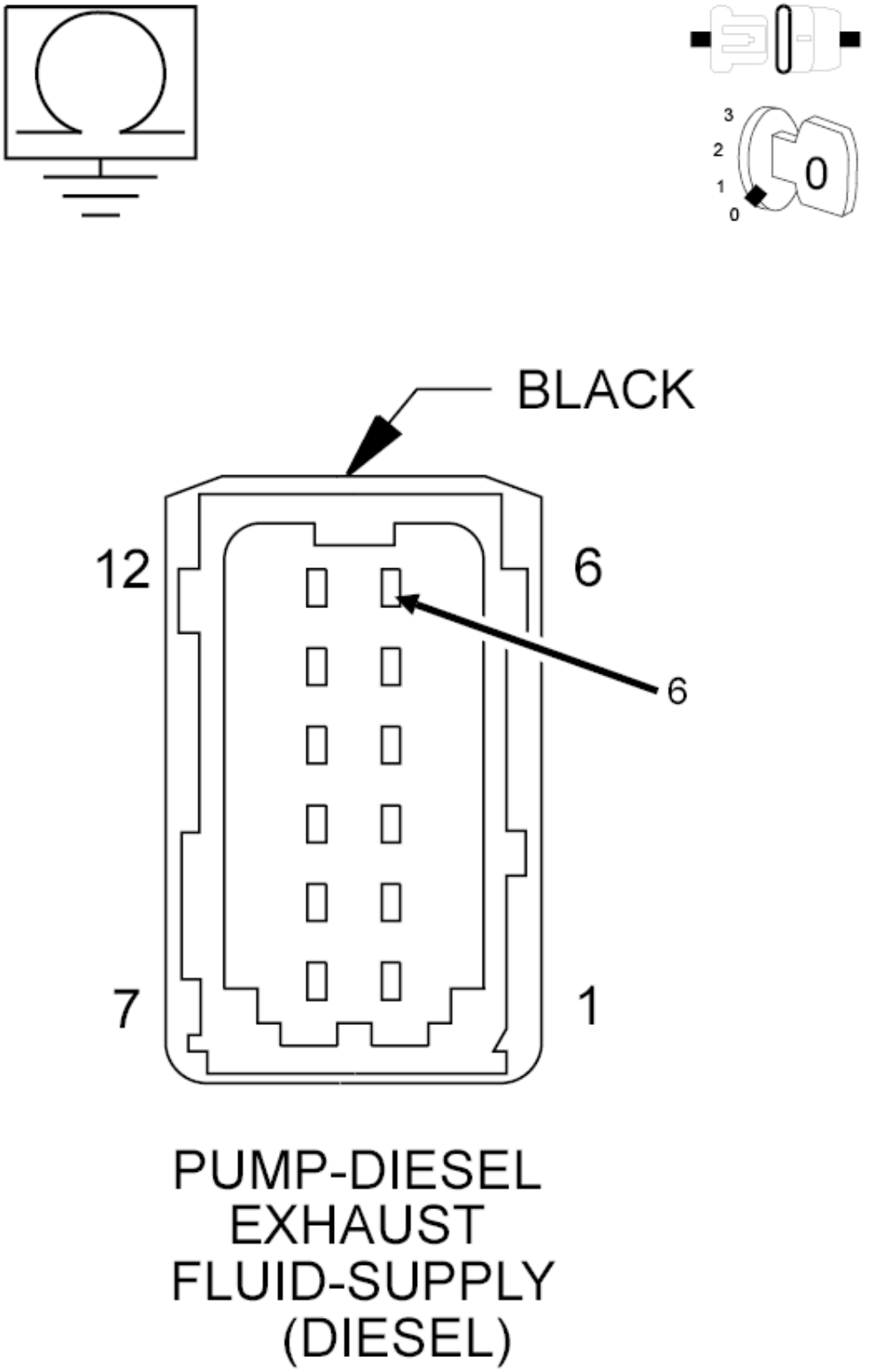

Fig. 112: Checking DEF Supply Pump Heater Return Circuit For A Short To Ground
Courtesy of CHRYSLER GROUP, LLC

1. Disconnect the DEF Dosing Control Unit C1 harness connector.
2. Measure the resistance between ground and the (K472) DEF Supply Pump Heater Return circuit at the DEF Supply Pump Assembly harness connector.

   Is the resistance above 10k Ohms?

   Yes

   - Go To 4.

   No

   - Repair the (K472) DEF Supply Pump Heater Return circuit for a short to ground.
   - Perform the POWERTRAIN VERIFICATION TEST. Refer to **POWERTRAIN VERIFICATION TEST - 6.7L** .

4. **CHECK THE (K471) DEF SUPPLY PUMP HEATER SUPPLY CIRCUIT FOR A SHORT TO GROUND**

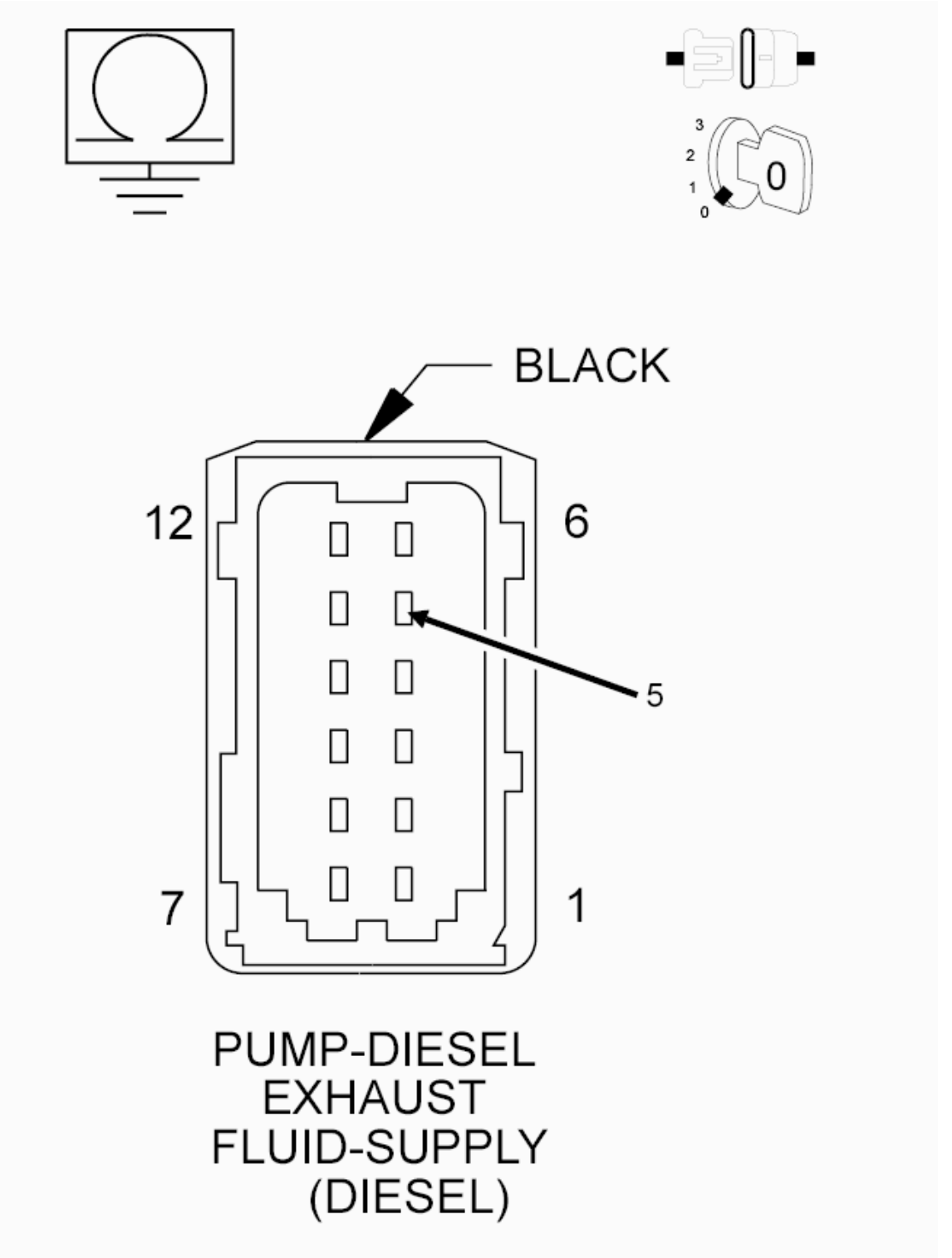

Fig. 113: Checking DEF Supply Pump Heater Supply Circuit For A Short To Ground
Courtesy of CHRYSLER GROUP, LLC

1. Disconnect the DEF Dosing Control Unit C1 harness connector.
2. Measure the resistance between ground and the (K471) DEF Supply Pump Heater Supply circuit at

the DEF Supply Pump Assembly harness connector.

Is the resistance above 10k Ohms?

Yes

- Replace the DEF Dosing Control Unit in accordance with the service information. Refer to **UNIT, DIESEL EXHAUST FLUID DOSING CONTROL, REMOVAL** .
- Perform the POWERTRAIN VERIFICATION TEST. Refer to **POWERTRAIN VERIFICATION TEST - 6.7L** .

No

- Repair the (K471) DEF Supply Pump Heater Supply circuit for a short to ground.
- Perform the POWERTRAIN VERIFICATION TEST. Refer to **POWERTRAIN VERIFICATION TEST - 6.7L** .

P20B8-(DIESEL EXHAUST FLUID) REDUCTANT PUMP HEATER CONTROL CIRCUIT HIGH

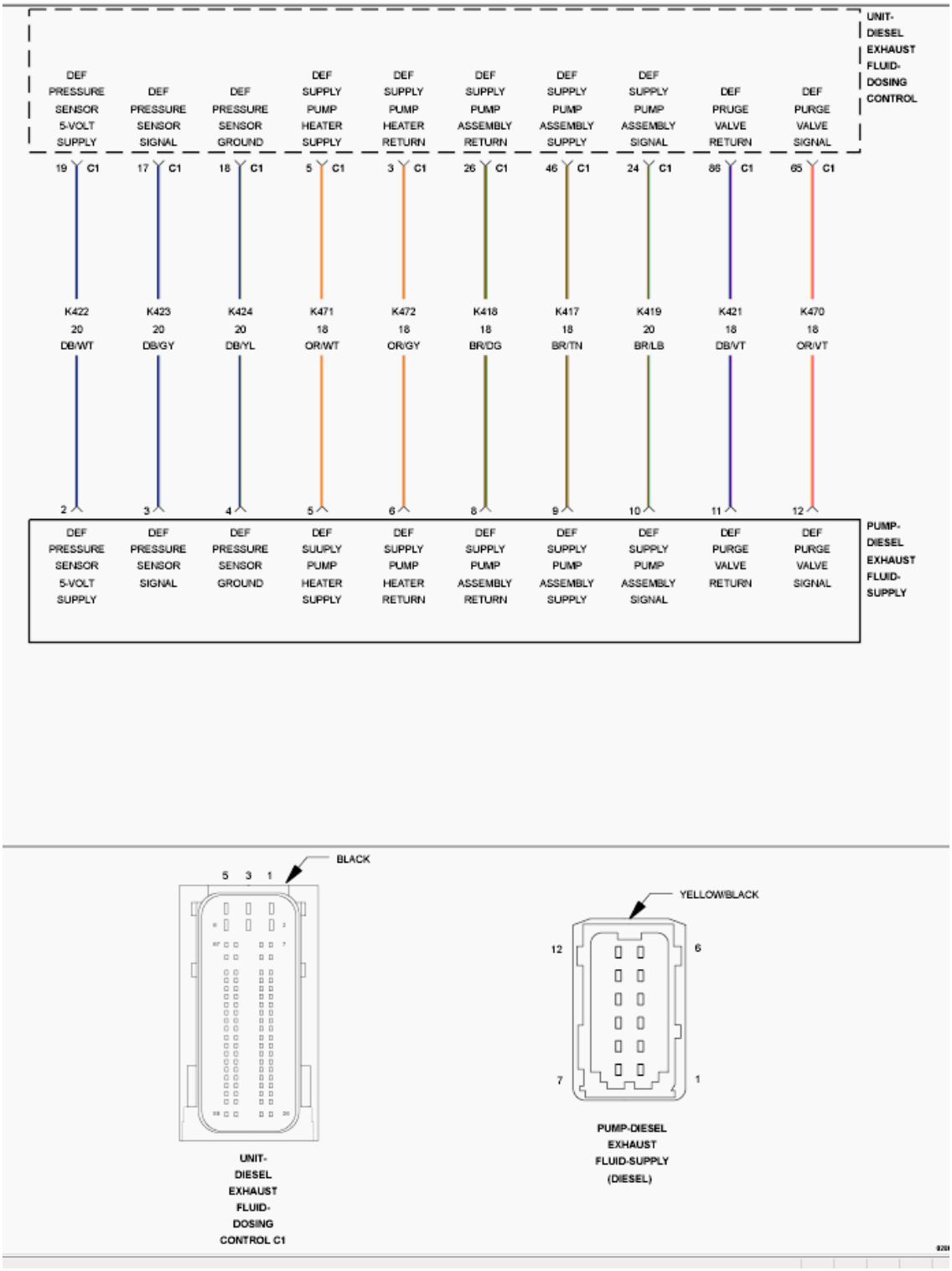

Fig. 114: Diesel Exhaust Fluid (DEF) Dosing Control Unit Wiring Diagram
Courtesy of CHRYSLER GROUP, LLC

For a complete wiring diagram, **refer to appropriate SYSTEM WIRING DIAGRAMS article** .

THEORY OF OPERATION

The Diesel Exhaust Fluid (DEF) Supply Pump Assembly has an internal heater to prevent the fluid from freezing inside the pump. The power supply and control circuits are controlled by the DEF Dosing Control Unit. The DEF Supply Pump Heater is integrated into the DEF Supply Pump Assembly and is not serviced separately. The DEF Dosing Control Unit will illuminate the MIL light via the Powertrain Control Module (PCM) immediately after the diagnostics runs and fails and the line heater will be disabled. The DEF Dosing Control Module will turn off the MIL light via the PCM when the monitor runs and passes in three consecutive key cycles.

WHEN MONITORED:

Continuously with the ignition on, and the heater commanded on.

SET CONDITION:

The DEF Dosing Control Unit detects that the DEF Supply Pump heater circuit voltage is above a calibrated value.

POSSIBLE CAUSES

Possible Causes
(K471) DEF SUPPLY PUMP HEATER SUPPLY CIRCUIT SHORTED TO VOLTAGE
(K472) DEF SUPPLY PUMP HEATER RETURN CIRCUIT SHORTED TO VOLTAGE
DEF SUPPLY PUMP ASSEMBLY
DEF DOSING CONTROL UNIT

Always perform the Pre-Diagnostic Troubleshooting procedure before proceeding. Refer to PRE-DIAGNOSTIC TROUBLESHOOTING PROCEDURE - 6.7L .

DIAGNOSTIC TEST

1. **ACTIVE DTC**
    1. Turn the ignition on, engine not running.
    2. With the scan tool, navigate to Actuator Tests and actuate the DEF Supply Pump Heater.
    3. With the scan tool, View DTCs.

    Is the DTC Active?

    Yes

    - Go To 2.

    No

    - Perform the INTERMITTENT CONDITION diagnostic procedure. Refer to

INTERMITTENT CONDITION - 6.7L .

2. **CHECK THE RESISTANCE OF THE DEF SUPPLY PUMP HEATER**
    1. Turn the ignition off.
    2. Disconnect the DEF Supply Pump Assembly harness connector.
    3. Measure the resistance across the terminals of the DEF Supply Pump Heater circuits at the DEF Supply Pump Assembly.

       Is the resistance above 2.0 Ohms?

       Yes

       - Go To 3.

       No

       - Replace the DEF Supply Pump Assembly in accordance with the service information. Refer to **ASSEMBLY, DIESEL EXHAUST FLUID PUMP, REMOVAL** .
       - Perform the POWERTRAIN VERIFICATION TEST. Refer to **POWERTRAIN VERIFICATION TEST - 6.7L** .
3. **CHECK THE (K471) DEF SUPPLY PUMP HEATER SUPPLY CIRCUIT FOR A SHORT TO ANOTHER CIRCUIT**

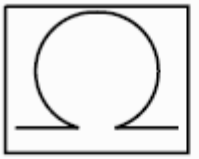

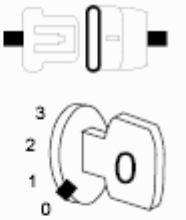

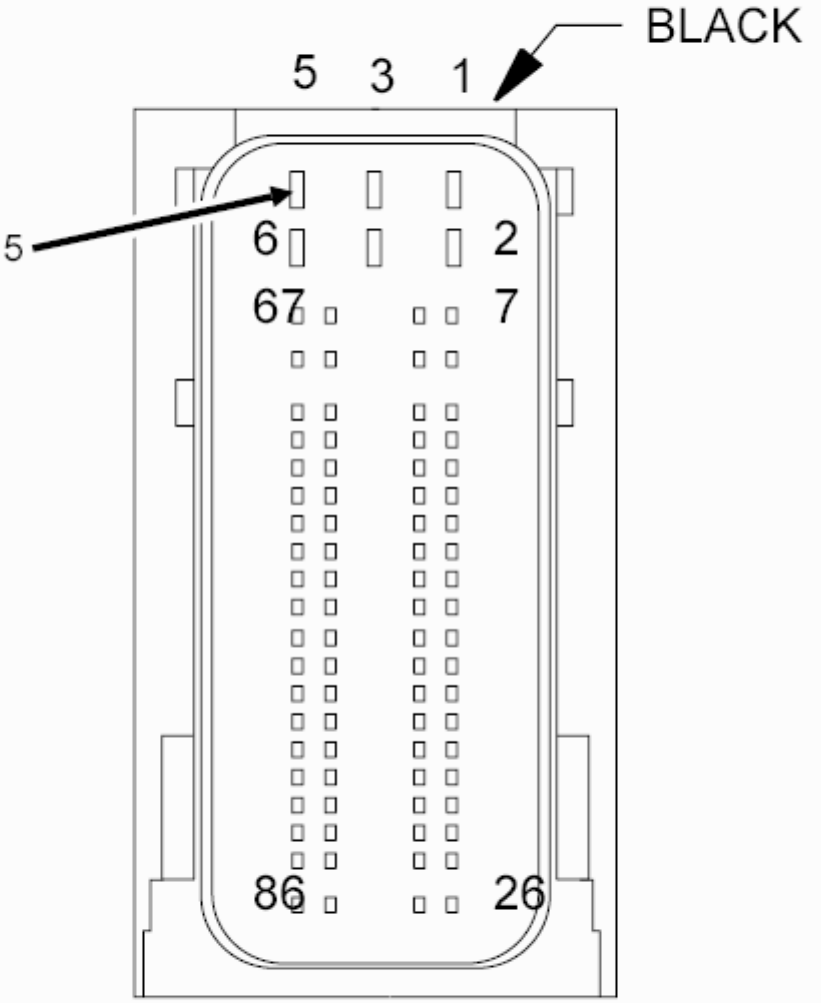

UNIT-
DIESEL
EXHAUST
FLUID-
DOSING
CONTROL C1

Fig. 115: Checking DEF Supply Pump Heater Supply Circuit For A Short
Courtesy of CHRYSLER GROUP, LLC

1. Disconnect the DEF Dosing Control Unit C1 harness connector.
2. Measure the resistance between the (K471) DEF Supply Pump Heater Supply circuit and all other circuits at the DEF Dosing Control Unit C1 harness connector.

   Is the resistance above 10k Ohms between the (K471) DEF Supply Pump Heater Supply circuit and all other circuits?

   Yes

   - Go To 4.

   No

   - Repair the short between the (K471) DEF Supply Pump Heater Supply circuit and the circuit that measured below 10k Ohms.
   - Perform the POWERTRAIN VERIFICATION TEST. Refer to **POWERTRAIN VERIFICATION TEST - 6.7L** .

4. **CHECK THE (K472) DEF SUPPLY PUMP HEATER RETURN CIRCUIT FOR A SHORT TO ANOTHER CIRCUIT**

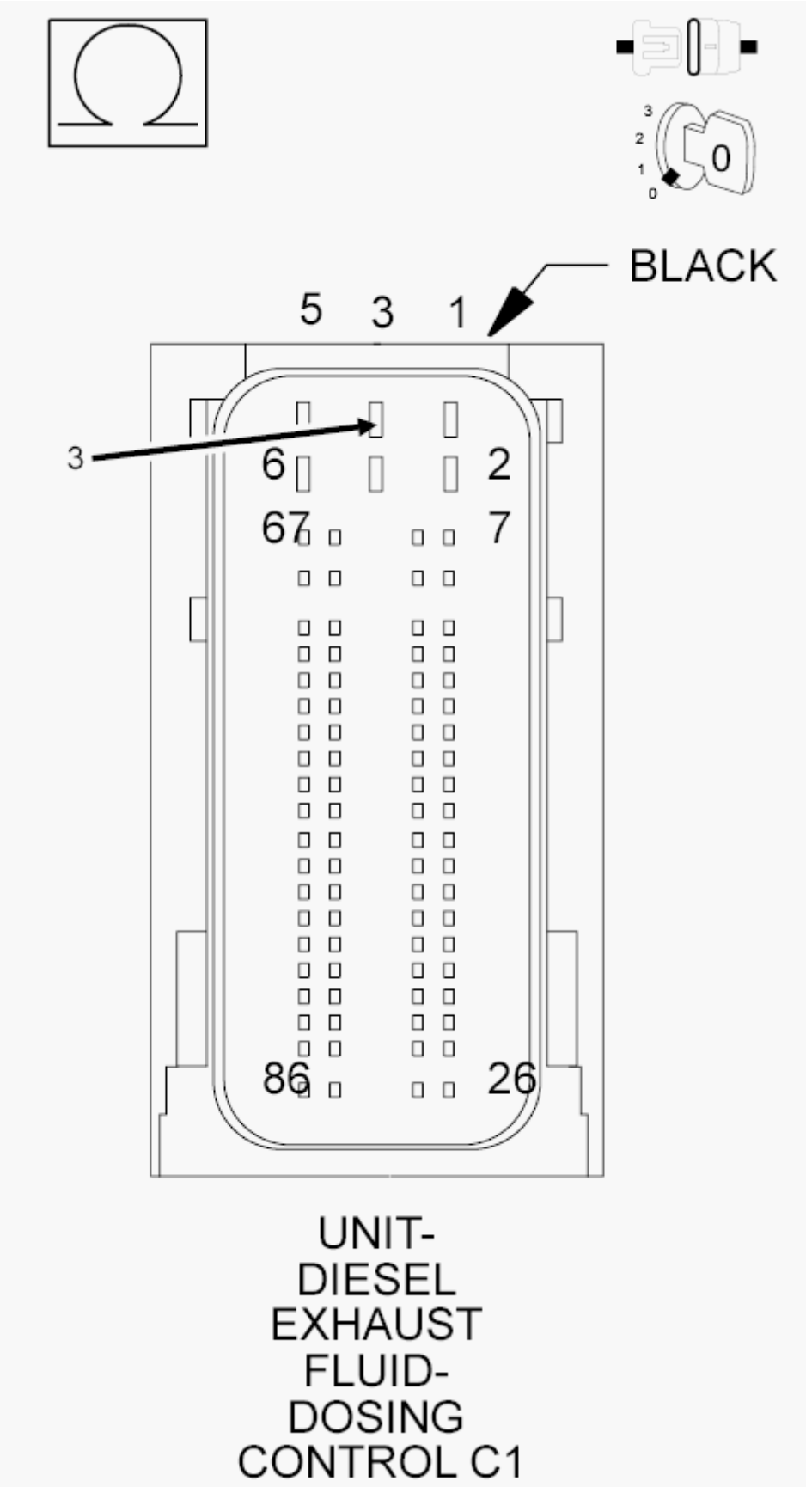
3
2
1
0
BLACK
5
3
1
3
6
2
67
7
86
26
UNIT-
DIESEL
EXHAUST
FLUID-
DOSING
CONTROL C1

Fig. 116: Checking DEF Supply Pump Heater Return Circuit For A Short
Courtesy of CHRYSLER GROUP, LLC

1. Measure the resistance between the (K472) DEF Supply Pump Heater Return circuit and all other circuits at the DEF Dosing Control Unit C1 harness connector

   Is the resistance above 10k Ohms between the (K472) DEF Supply Pump Heater Return circuit and all other circuits?

   Yes

   - Replace the DEF Dosing Control Unit in accordance with the service information. Refer to **UNIT, DIESEL EXHAUST FLUID DOSING CONTROL, REMOVAL** .
   - Perform the POWERTRAIN VERIFICATION TEST. Refer to **POWERTRAIN VERIFICATION TEST - 6.7L** .

   No

   - Repair the short between the (K472) DEF Supply Pump Heater Return circuit and the circuit that measured below 10k Ohms.
   - Perform the POWERTRAIN VERIFICATION TEST. Refer to **POWERTRAIN VERIFICATION TEST - 6.7L** .

P20BD-(DIESEL EXHAUST FLUID) REDUCTANT PRESSURE LINE HEATER CONTROL CIRCUIT/OPEN

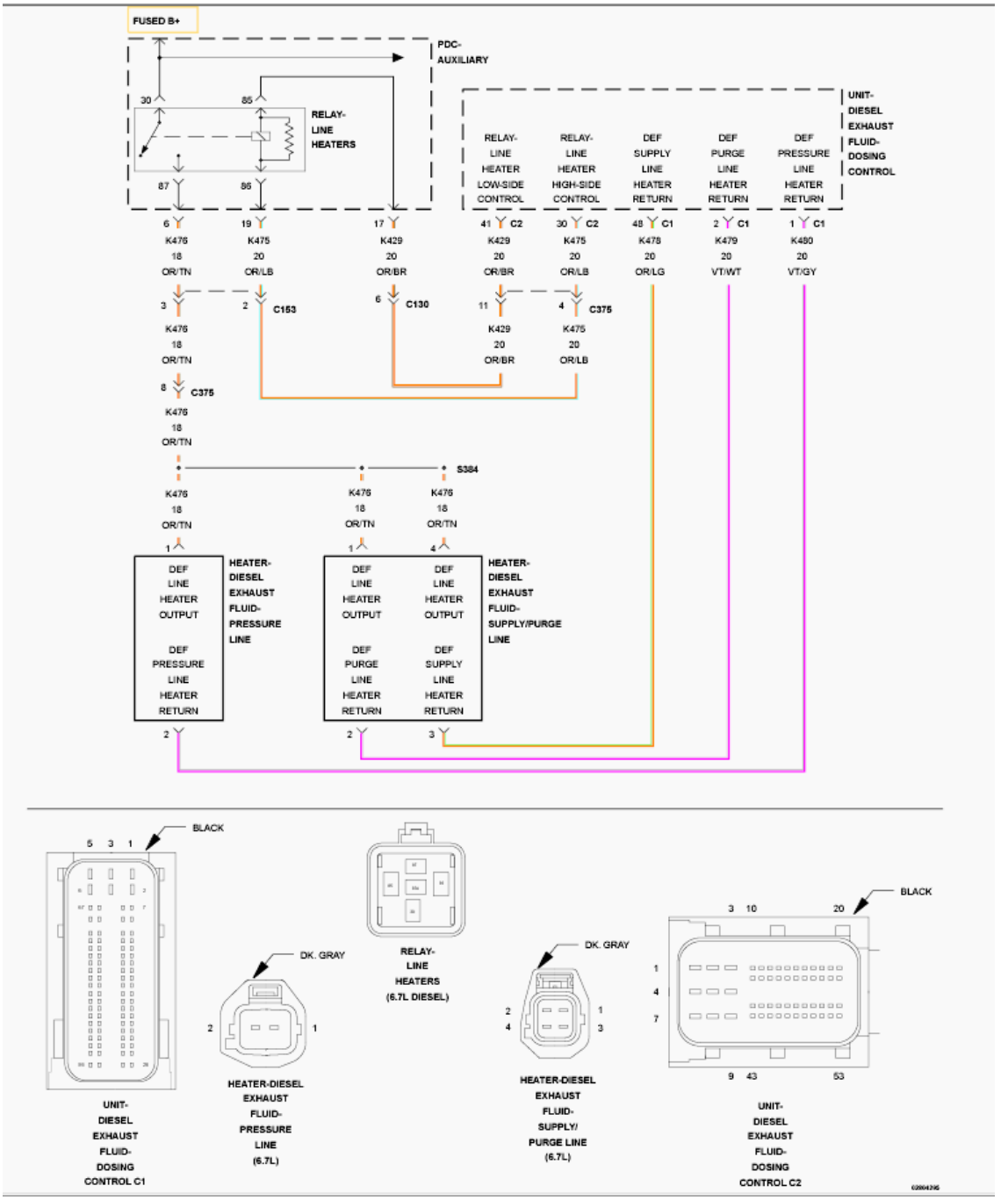

Fig. 117: Diesel Exhaust Fluid Reductant Line Heater Relay Control Circuit Wiring Diagram
Courtesy of CHRYSLER GROUP, LLC

For a complete wiring diagram, **refer to appropriate SYSTEM WIRING DIAGRAMS article** .

THEORY OF OPERATION

This DTC referring to the DEF Pressure Line Heater. Each of the Diesel Exhaust Fluid (DEF) system hoses has a built in heater to warm the fluid in the lines. The three line heaters share a common power supply via the DEF Line Heater Relay which is controlled by the DEF Dosing Control Unit. The DEF Dosing Control Unit controls

the heaters individually through the line heater return circuits. The three line heater circuits are monitored at the return circuit. The DEF Dosing Control Unit will illuminate the MIL light via the PCM immediately after the diagnostics runs and fails. The DEF Dosing Control Unit will turn off the MIL light via the PCM when the monitor runs and passes in three consecutive key cycles.

WHEN MONITORED:

When line heating is commanded on.

SET CONDITION:

The DEF Dosing Control Unit detects that the DEF Pressure Line heater circuit is open or shorted to ground.

POSSIBLE CAUSES

Possible Causes
(K476) DEF LINE HEATER OUTPUT CIRCUIT OPEN/HIGH RESISTANCE
(K478) DEF PRESSURE LINE HEATER RETURN CIRCUIT OPEN/HIGH RESISTANCE
(K478) DEF PRESSURE LINE HEATER RETURN CIRCUIT SHORTED TO GROUND
DEF LINE HEATER RELAY
DEF PRESSURE LINE HEATER
DEF DOSING CONTROL UNIT

Always perform the Pre-Diagnostic Troubleshooting procedure before proceeding. Refer to PRE-DIAGNOSTIC TROUBLESHOOTING PROCEDURE - 6.7L .

NOTE: **The DEF Line Heater monitor runs only when the DEF Line Heater Relay is commanded on. If the ambient temperature is too warm for the DEF Line Heaters to be turned on, the DTC will remain active and will not be able to be erased after repair is completed. Using the scan tool, navigate to Actuator Tests and actuate the Line Heater Relay test for the appropriate Line Heater to run the diagnostic and determine if the repair has been completed. If the repair is complete, the fault will move to stored and be able to be cleared with the scan tool.**

DIAGNOSTIC TEST

1. **CHECK FOR RELATED DTCS**
    1. Turn the ignition on.
    2. With the scan tool, View all active DTCs.

    Are the P20BD, P20B9 and P20C1 DTCs active together?

    Yes

    - Go To 2.

No

- Go To 4.

2. **CHECK THE (K476) DEF LINE HEATER OUTPUT CIRCUIT FOR AN OPEN/HIGH RESISTANCE**

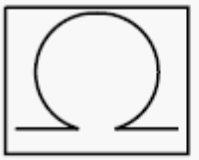

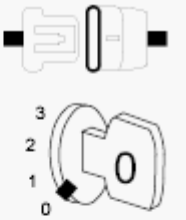

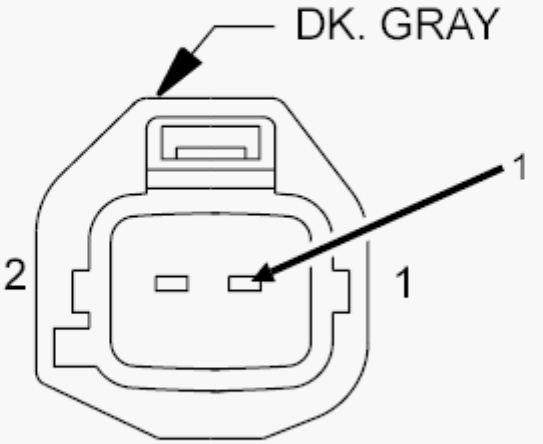

HEATER-DIESEL EXHAUST FLUID-PRESSURE LINE (6.7L)

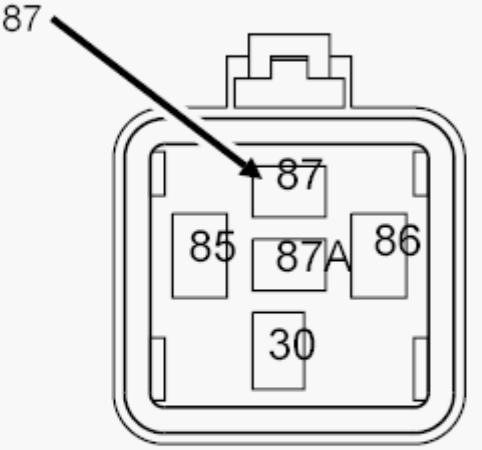

RELAY-LINE HEATERS (6.7L DIESEL)

Fig. 118: Checking DEF Line Heater Output Circuit For An Open/High Resistance
Courtesy of CHRYSLER GROUP, LLC

1. Turn the ignition off.
2. Remove the DEF Line Heater Relay.
3. Disconnect the DEF Pressure Line Heater harness connector.
4. Measure the resistance of the (K476) DEF Line Heater Output circuit between terminal 87 of the Line Heater Relay connector and the DEF Pressure Line Heater harness connector.

   Is the resistance below 5.0 Ohms?

   Yes

   - Go To 3.

   No

   - Repair the (K476) DEF Line Heater Relay Output circuit for an open or high resistance. If the circuit fuse is found to be open, check the (K476) DEF Line Heater Relay Output circuit for a short to ground.
   - Perform the POWERTRAIN VERIFICATION TEST. Refer to **POWERTRAIN VERIFICATION TEST - 6.7L** .

3. **CHECK THE DEF LINE HEATER**
   1. Reconnect the DEF Pressure Line Heater harness connector.
   2. Replace the DEF Line Heater Relay with a known good relay.
   3. Turn the ignition on.
   4. With the scan tool, Erase DTCs.
   5. With the scan tool, navigate to Systems Tests and actuate the DEF Pressure Line Heater.
   6. With the scan tool, View all active DTCs.

      Did the DTCs return?

      Yes

      - Using the wiring diagram as a guide, check the DEF Line Heater Relay control circuits for an open or short to ground.
      - Perform the POWERTRAIN VERIFICATION TEST. Refer to **POWERTRAIN VERIFICATION TEST - 6.7L** .

      No

      - Test complete.
      - Perform the POWERTRAIN VERIFICATION TEST. Refer to **POWERTRAIN VERIFICATION TEST - 6.7L** .

4. **CHECK THE (K476) DEF LINE HEATER OUTPUT CIRCUIT FOR AN OPEN/HIGH RESISTANCE**

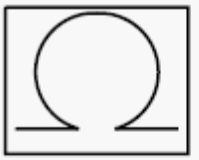

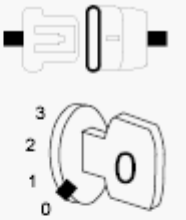

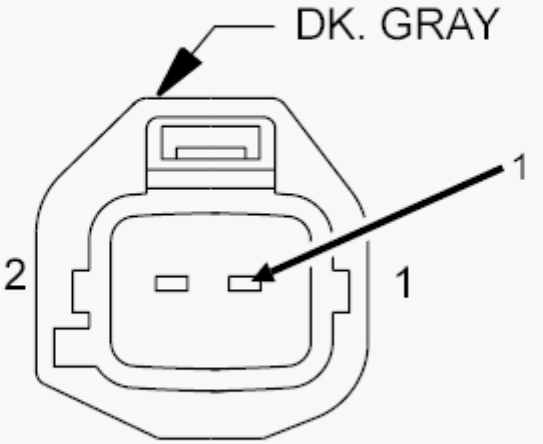

HEATER-DIESEL EXHAUST FLUID-PRESSURE LINE (6.7L)

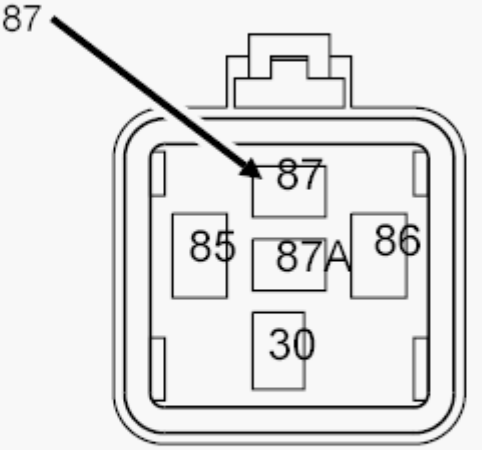

RELAY-LINE HEATERS (6.7L DIESEL)

Fig. 119: Checking DEF Line Heater Output Circuit For An Open/High Resistance
Courtesy of CHRYSLER GROUP, LLC

1. Turn the ignition off.
2. Remove the DEF Line Heater Relay.
3. Disconnect the DEF Pressure Line Heater harness connector.
4. Measure the resistance of the (K476) DEF Line Heater Output circuit between terminal 87 of the Line Heater Relay connector and the DEF Pressure Line Heater harness connector.

   Is the resistance below 5.0 Ohms?

   Yes

   - Go To 5.

   No

   - Repair the (K476) DEF Line Heater Relay Output circuit for an open or high resistance. If the circuit fuse is found to be open, check the (K476) DEF Line Heater Relay Output circuit for a short to ground.
   - Perform the POWERTRAIN VERIFICATION TEST. Refer to **POWERTRAIN VERIFICATION TEST - 6.7L** .

5. **CHECK THE (K478) DEF PRESSURE LINE HEATER RETURN CIRCUIT FOR AN OPEN/HIGH RESISTANCE**

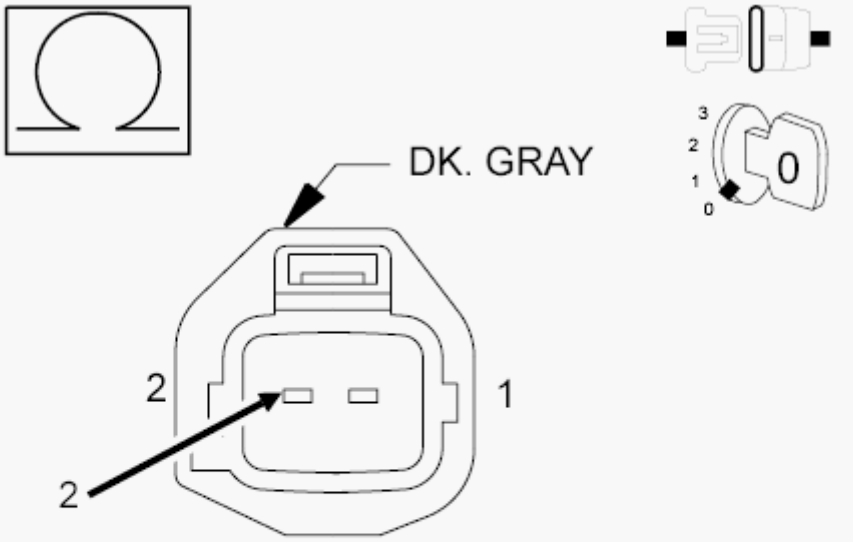

HEATER-DIESEL EXHAUST FLUID-PRESSURE LINE (6.7L)

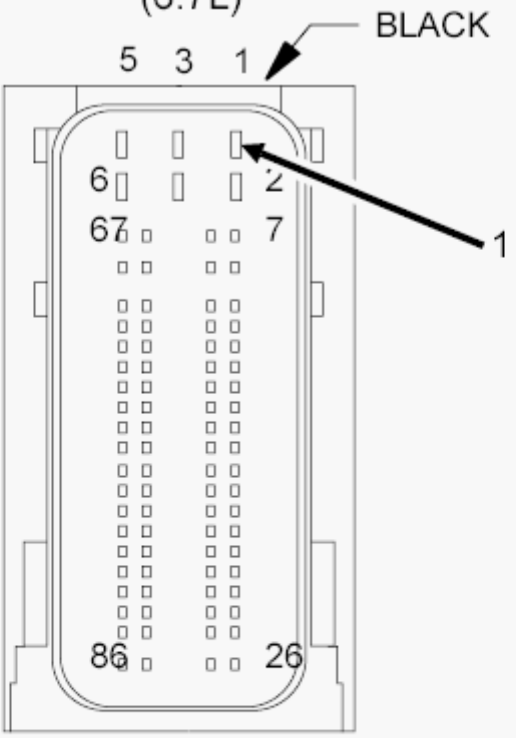

UNIT-DIESEL EXHAUST FLUID-DOSING

Fig. 120: Checking DEF Pressure Line Heater Return Circuit For An Open/High Resistance
Courtesy of CHRYSLER GROUP, LLC

1. Disconnect the DEF Dosing Control Unit C1 harness connector.
2. Measure the resistance of the (K478) DEF Pressure Line Heater Return circuit between the DEF Pressure Line Heater harness connector and the DEF Dosing Control Unit C1 harness connector.

   Is the resistance below 5.0 Ohms?

   Yes

   - Go To 6.

   No

   - Repair the (K478) DEF Pressure Line Heater Return circuit for an open or high resistance.
   - Perform the POWERTRAIN VERIFICATION TEST. Refer to **POWERTRAIN VERIFICATION TEST - 6.7L** .

6. **CHECK THE (K478) DEF PRESSURE LINE HEATER RETURN CIRCUIT FOR A SHORT TO GROUND**

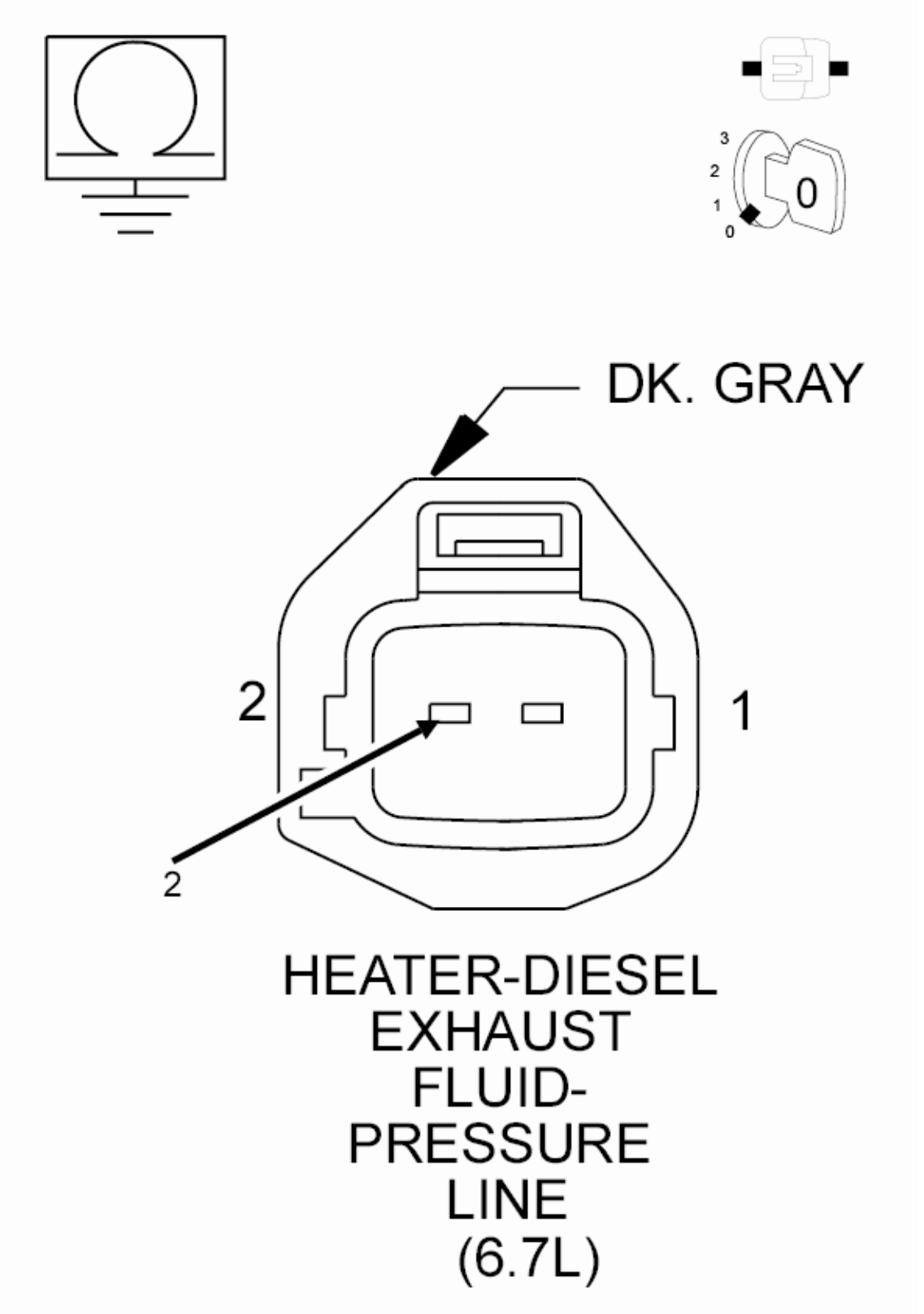

Fig. 121: Checking The DEF Pressure Line Heater Return Circuit For A Short To Ground
Courtesy of CHRYSLER GROUP, LLC

1. Measure the resistance between ground and the (K478) DEF Pressure Line Heater Return circuit at the DEF Pressure Line Heater harness connector.

   Is the resistance above 10k Ohms?

   Yes

   - Go To 7.

   No

   - Repair the (K478) DEF Pressure Line Heater Return circuit for a short to ground.
   - Perform the POWERTRAIN VERIFICATION TEST. Refer to **POWERTRAIN VERIFICATION TEST - 6.7L** .

7. **CHECK THE RESISTANCE OF THE DEF PRESSURE LINE HEATER**
   1. Measure the resistance across the terminals of the DEF Pressure Line Heater.

      Does the resistance measure between 5.7 Ohms and 6.9 Ohms?

      Yes

      - Replace the DEF Dosing Control Unit in accordance with the service information. Refer to **UNIT, DIESEL EXHAUST FLUID DOSING CONTROL, REMOVAL** .
      - Perform the POWERTRAIN VERIFICATION TEST. Refer to **POWERTRAIN VERIFICATION TEST - 6.7L** .

      No

      - Replace the DEF Pressure Line in accordance with the service information. Refer to **LINE, DIESEL EXHAUST FLUID PRESSURE, REMOVAL** .
      - Perform the POWERTRAIN VERIFICATION TEST. Refer to **POWERTRAIN VERIFICATION TEST - 6.7L** .

P20BE-(DIESEL EXHAUST FLUID) REDUCTANT PRESSURE LINE HEATER CONTROL CIRCUIT PERFORMANCE

For a complete wiring diagram, **refer to appropriate SYSTEM WIRING DIAGRAMS article** .

THEORY OF OPERATION

The Diesel Exhaust Fluid (DEF) Tank has an internal heating coil to help eliminate freezing of Diesel Exhaust Fluid. The DEF Dosing Control Unit monitors the temperature of the Diesel Exhaust Fluid inside the tank. When it is determined that the Diesel Exhaust Fluid needs to be heated, the DEF Dosing Control Unit opens the DEF Engine Coolant Valve which is located nest to the DEF Tank, and allows warm engine coolant to circulate through the heating coil inside the tank to warm the Diesel Exhaust Fluid in the tank. The DEF Dosing Control Unit will stop dosing fluid into the aftertreatment system and the purge the system. The DEF Dosing Control

Unit will illuminate the MIL lamp via the PCM immediately after this diagnostic runs and fails. The DEF Dosing Control Unit will turn off the MIL lamp via the PCM immediately after the diagnostic runs and passes for three consecutive key cycles.

WHEN MONITORED:

This monitor runs when the DEF Tank temperature is being maintained by using the DEF Tank Heater.

SET CONDITION:

There are two conditions that will set this DTC. The first is if the DEF Dosing Control Unit detects that the DEF Tank temperature drops from above defrosted temperature, 41°F (5°C) to below frozen temperature, 0°F. The second is if there are any line heater continuity faults present for any of the heater circuits in the system.

POSSIBLE CAUSES

Possible Causes
LOW ENGINE COOLANT LEVEL
DEF LINE HEATER OR SUPPLY PUMP ASSEMBLY DTCS PRESENT
RESTRICTED OR LEAKING COOLANT LINES TO THE DIESEL EXHAUST FLUID ENGINE COOLANT CONTROL VALVE
RESTRICTED OR LEAKING COOLANT LINES TO THE DIESEL EXHAUST FLUID TANK HEATER
DIESEL EXHAUST FLUID ENGINE COOLANT CONTROL VALVE PHYSICALLY STUCK CLOSED

Always perform the Pre-Diagnostic Troubleshooting procedure before proceeding. Refer to PRE-DIAGNOSTIC TROUBLESHOOTING PROCEDURE - 6.7L .

NOTE: The DEF Line Heater monitor runs only when the DEF Line Heater Relay is commanded on. If the ambient temperature is too warm for the DEF Line Heaters to be turned on, the DTC will remain active and will not be able to be erased after repair is completed. Using the scan tool, navigate to Actuator Tests and actuate the Line Heater Relay test for the appropriate Line Heater to run the diagnostic and determine if the repair has been completed. If the repair is complete, the fault will move to stored and be able to be cleared with the scan tool.

DIAGNOSTIC TEST

1. **CHECK THE ENGINE COOLANT LEVEL**

NOTE: If there are DTCs present for the DEF Line Heaters or DEF Supply Pump Assembly Heater, perform those diagnostic procedures before continuing with this test procedure.

1. Turn the ignition off.
2. Verify the engine coolant level.

   Is the engine coolant level above the minimum?

   Yes

   - Go To 2.

   No

   - Fill the engine coolant to the proper level.
   - Perform the POWERTRAIN VERIFICATION TEST. Refer to **POWERTRAIN VERIFICATION TEST - 6.7L** .

2. **CHECK FOR RESTRICTED OR LEAKING ENGINE COOLANT LINES/HOSES**
   1. Visually inspect the engine coolant supply and return lines for signs of a restriction or leaks.

      Were any restrictions or leaks found?

      Yes

      - Repair or replace the engine coolant lines in accordance with the service information.
      - Perform the POWERTRAIN VERIFICATION TEST. Refer to **POWERTRAIN VERIFICATION TEST - 6.7L** .

      No

      - Go To 3.

3. **CHECK FOR RESTRICTED DIESEL EXHAUST FLUID TANK HEATER**
   1. Remove the coolant lines at the DEF Tank Heater Coil.
   2. Blow regulated low pressure shop air through the DEF Tank Heater Coil.

      Were any restrictions found?

      Yes

      - Replace the DEF Tank Heater Coil in accordance with the service information. Refer to **SENSOR, DIESEL EXHAUST FLUID LEVEL/TEMPERATURE, REMOVAL** .
      - Perform the POWERTRAIN VERIFICATION TEST. Refer to **POWERTRAIN VERIFICATION TEST - 6.7L** .

      No

      - Replace the DEF Engine Coolant Control Valve in accordance with the service information. Refer to **VALVE, DIESEL EXHAUST FLUID ENGINE COOLANT CONTROL,**

REMOVAL .

- Perform the POWERTRAIN VERIFICATION TEST. Refer to **POWERTRAIN VERIFICATION TEST - 6.7L** .

P20BF-(DIESEL EXHAUST FLUID) REDUCTANT PRESSURE LINE HEATER CONTROL CIRCUIT LOW

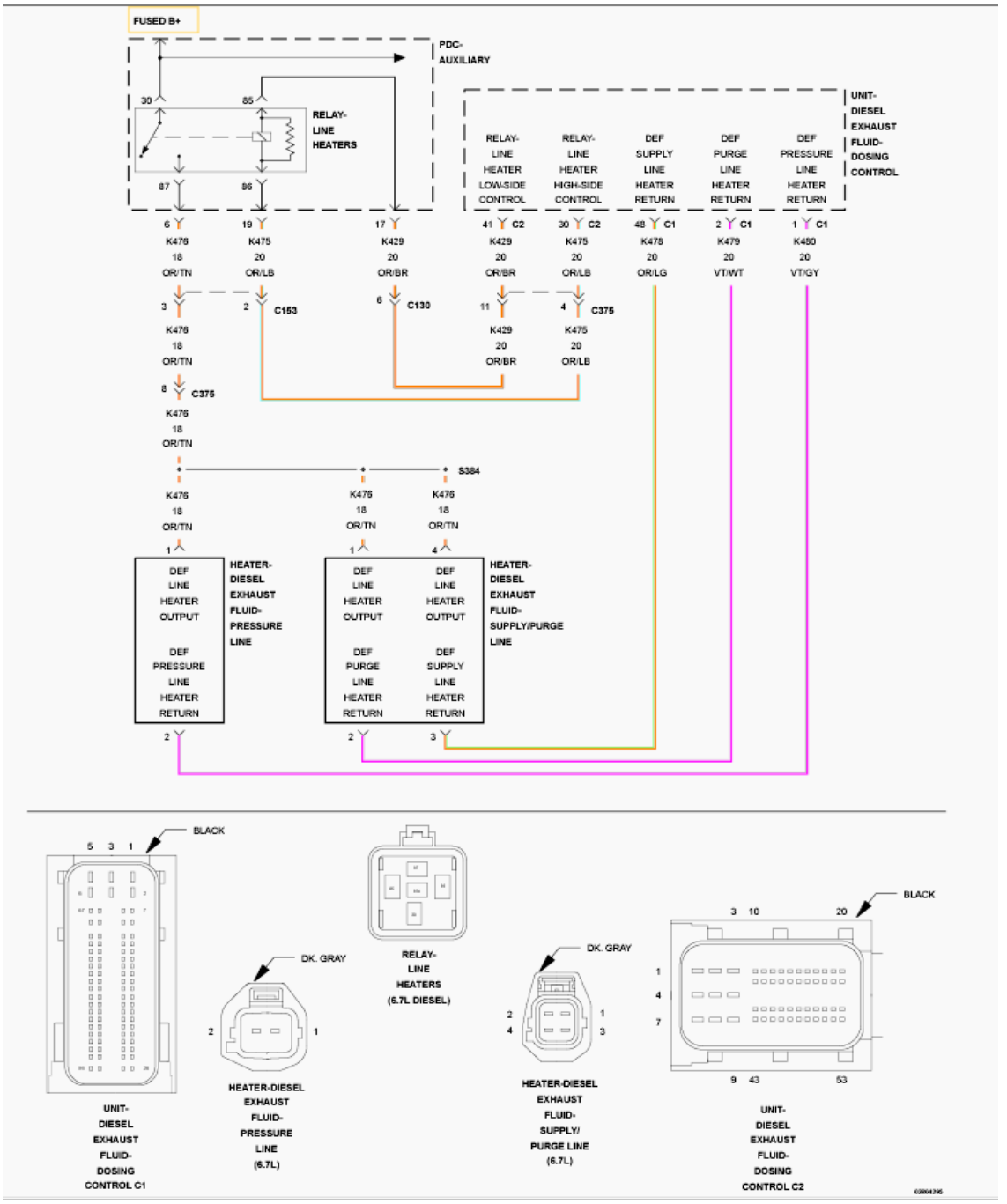

Fig. 122: Diesel Exhaust Fluid Reductant Line Heater Relay Control Circuit Wiring Diagram
Courtesy of CHRYSLER GROUP, LLC

For a complete wiring diagram, **refer to appropriate SYSTEM WIRING DIAGRAMS article** .

THEORY OF OPERATION

This DTC referring to the DEF Pressure Line Heater. Each of the Diesel Exhaust Fluid (DEF) system hoses has a built in heater to warm the fluid in the lines. The three line heaters share a common power supply via the DEF Line Heater Relay which is controlled by the DEF Dosing Control Unit. The DEF Dosing Control Unit controls the heaters individually through the line heater return circuits. The three line heater circuits are monitored at the return circuit. The DEF Dosing Control Unit will illuminate the MIL light via the PCM immediately after the diagnostics runs and fails. The DEF Dosing Control Unit will turn off the MIL light via the PCM when the monitor runs and passes in three consecutive key cycles.

WHEN MONITORED:

Continuously with the ignition on.

SET CONDITION:

The DEF Dosing Control Unit detects that the DEF Pressure Line heater circuit is open or shorted to ground.

POSSIBLE CAUSES

Possible Causes
(K478) DEF PRESSURE LINE HEATER RETURN CIRCUIT SHORTED TO GROUND
DEF PRESSURE LINE HEATER
DEF DOSING CONTROL UNIT

Always perform the Pre-Diagnostic Troubleshooting procedure before proceeding. Refer to PRE-DIAGNOSTIC TROUBLESHOOTING PROCEDURE - 6.7L .

NOTE: **The DEF Line Heater monitor runs only when the DEF Line Heater Relay is commanded on. If the ambient temperature is too warm for the DEF Line Heaters to be turned on, the DTC will remain active and will not be able to be erased after repair is completed. Using the scan tool, navigate to Actuator Tests and actuate the Line Heater Relay test for the appropriate Line Heater to run the diagnostic and determine if the repair has been completed. If the repair is complete, the fault will move to stored and be able to be cleared with the scan tool.**

DIAGNOSTIC TEST

1. **DTC ACTIVE**
    1. Turn the ignition on.
    2. With the scan tool, View all active DTCs.

    Is the DTC active?

Yes

- Go To 2.

No

- Perform the INTERMITTENT CONDITION diagnostic procedure. Refer to **INTERMITTENT CONDITION - 6.7L** .

2. **CHECK THE (K478) DEF PRESSURE LINE HEATER RETURN CIRCUIT FOR A SHORT TO GROUND**

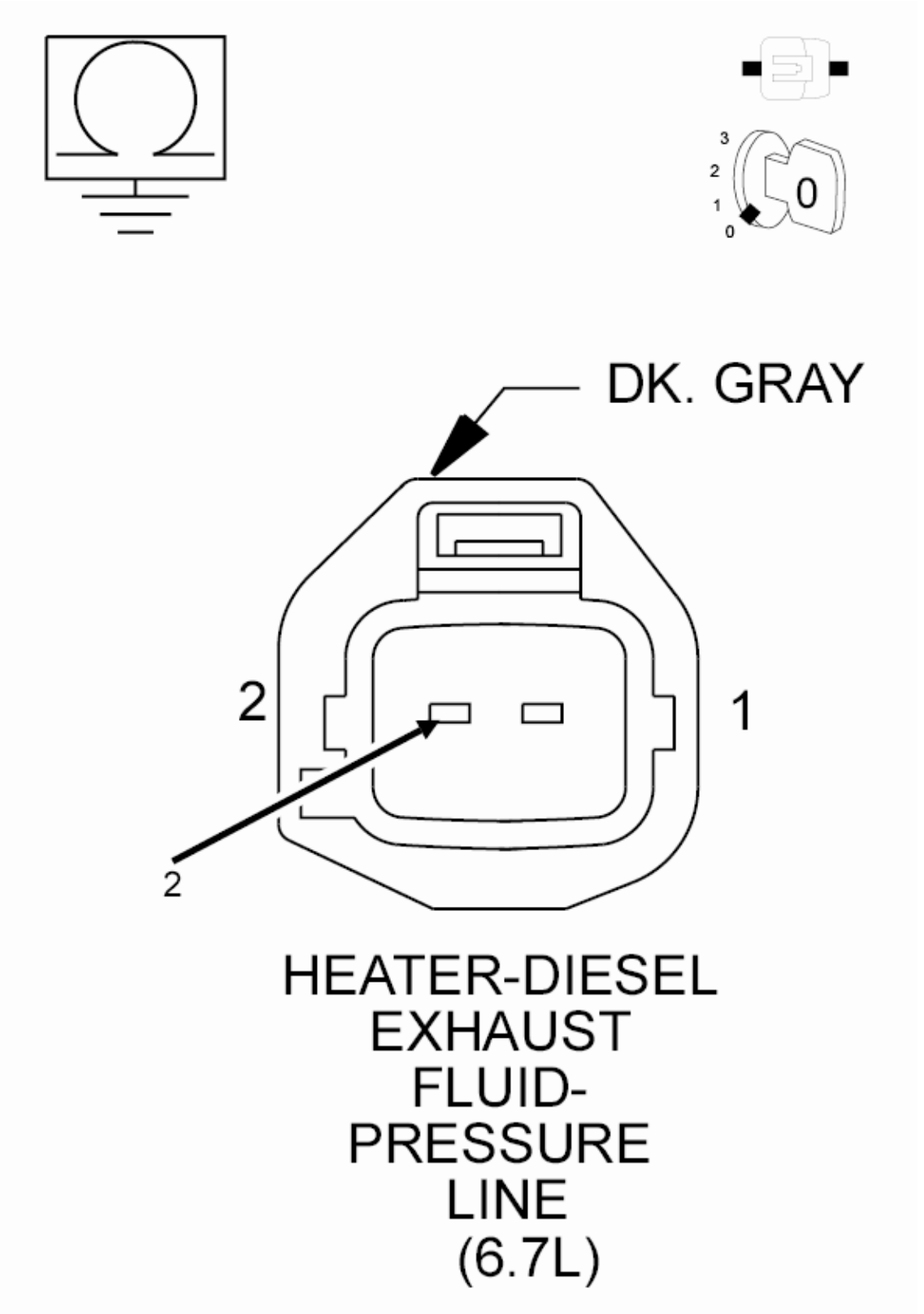

Fig. 123: Checking The DEF Pressure Line Heater Return Circuit For A Short To Ground
Courtesy of CHRYSLER GROUP, LLC

1. Turn the ignition off.
2. Disconnect the DEF Supply/Purge Line Heater harness connector.
3. Disconnect the DEF Dosing Control Unit C1 harness connector.
4. Measure the resistance between ground and the (K478) DEF Pressure Line Heater Return circuit at the DEF Pressure Line Heater harness connector.

   Is the resistance above 10k Ohms?

   Yes

   - Go To 3.

   No

   - Repair the (K478) DEF Pressure Line Heater Return circuit for a short to ground.
   - Perform the POWERTRAIN VERIFICATION TEST. Refer to **POWERTRAIN VERIFICATION TEST - 6.7L** .

3. **CHECK THE RESISTANCE OF THE DEF PRESSURE LINE HEATER**
   1. Measure the resistance across the terminals of the DEF Pressure Line Heater.

      Does the resistance measure between 5.74 Ohms and 6.88 Ohms?

      Yes

      - Replace the DEF Dosing Control Unit in accordance with the service information. Refer to **UNIT, DIESEL EXHAUST FLUID DOSING CONTROL, REMOVAL** .
      - Perform the POWERTRAIN VERIFICATION TEST. Refer to **POWERTRAIN VERIFICATION TEST - 6.7L** .

      No

      - Replace the DEF Pressure Line in accordance with the service information. Refer to **LINE, DIESEL EXHAUST FLUID PRESSURE, REMOVAL** .
      - Perform the POWERTRAIN VERIFICATION TEST. Refer to **POWERTRAIN VERIFICATION TEST - 6.7L** .

P20C0-(DIESEL EXHAUST FLUID) REDUCTANT PRESSURE LINE HEATER CONTROL CIRCUIT HIGH

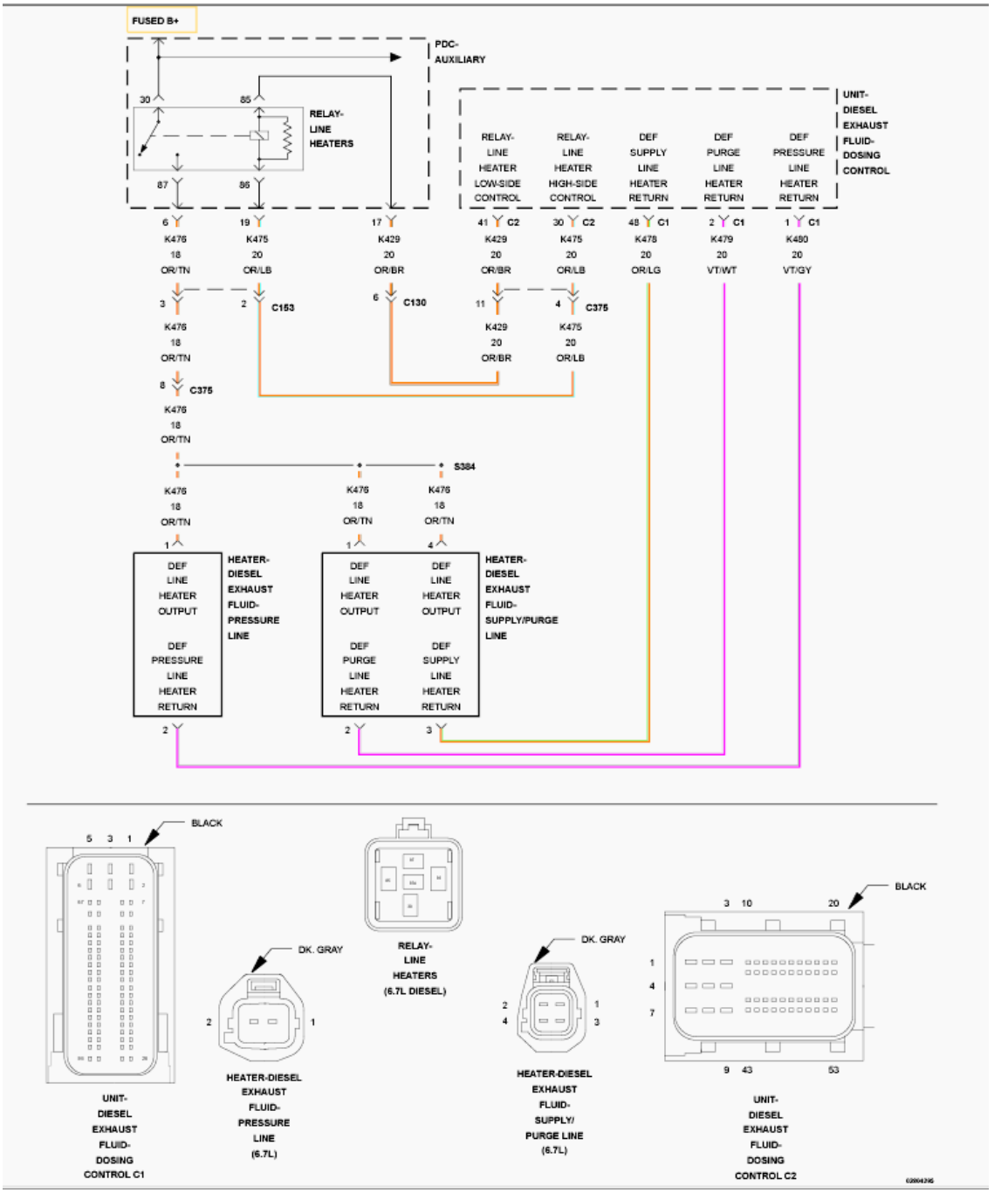

Fig. 124: Diesel Exhaust Fluid Reductant Line Heater Relay Control Circuit Wiring Diagram
Courtesy of CHRYSLER GROUP, LLC

For a complete wiring diagram, **refer to appropriate SYSTEM WIRING DIAGRAMS article** .

THEORY OF OPERATION

This DTC is referring to the DEF Pressure Line Heater. Each of the Diesel Exhaust Fluid (DEF) system hoses has a built in heater to warm the fluid in the lines. The three line heaters share a common power supply via the DEF Line Heater Relay which is controlled by the DEF Dosing Control Unit. The DEF Dosing Control Unit

controls the heaters individually through the line heater return circuits. The three line heater circuits are monitored at the return circuit. The DEF Dosing Control Unit will illuminate the MIL light via the PCM immediately after the diagnostics runs and fails and the line heater will be disabled. The DEF Dosing Control Unit will turn off the MIL light via the PCM when the monitor runs and passes in three consecutive key cycles.

WHEN MONITORED:

Continuously with the ignition on, and the heater commanded on.

SET CONDITION:

The DEF Dosing Control Unit detects that the DEF Pressure Line heater circuit voltage is above a calibrated value.

POSSIBLE CAUSES

Possible Causes
(K478) DEF PRESSURE LINE HEATER RETURN CIRCUIT SHORTED TO VOLTAGE
DEF PRESSURE LINE HEATER
DEF DOSING CONTROL UNIT

Always perform the Pre-Diagnostic Troubleshooting procedure before proceeding. Refer to PRE-DIAGNOSTIC TROUBLESHOOTING PROCEDURE - 6.7L .

NOTE: **The DEF Line Heater monitor runs only when the DEF Line Heater Relay is commanded on. If the ambient temperature is too warm for the DEF Line Heaters to be turned on, the DTC will remain active and will not be able to be erased after repair is completed. Using the scan tool, navigate to Actuator Tests and actuate the Line Heater Relay test for the appropriate Line Heater to run the diagnostic and determine if the repair has been completed. If the repair is complete, the fault will move to stored and be able to be cleared with the scan tool.**

DIAGNOSTIC TEST

1. **ACTIVE DTC**
    1. Turn the ignition on, engine not running.
    2. With the scan tool, navigate to Systems Tests and actuate the Pressure Line Heater.
    3. With the scan tool, View DTCs.

    Is the DTC active?

    Yes

    - Go To 2.

No

- Perform the INTERMITTENT CONDITION diagnostic procedure. Refer to **INTERMITTENT CONDITION - 6.7L** .

2. **CHECK THE RESISTANCE OF THE DEF PRESSURE LINE HEATER**
   1. Turn the ignition off.
   2. Disconnect the DEF Pressure Line Heater harness connector.
   3. Measure the resistance across the terminals of the DEF Pressure Line Heater.

   Does the resistance measure between 5.7 Ohms and 6.9 Ohms?

   Yes

   - Go To 3.

   No

   - Replace the DEF Pressure Line in accordance with the service information. Refer to **LINE, DIESEL EXHAUST FLUID PRESSURE, REMOVAL** .
   - Perform the POWERTRAIN VERIFICATION TEST. Refer to **POWERTRAIN VERIFICATION TEST - 6.7L** .

3. **CHECK THE (K478) DEF PRESSURE LINE HEATER RETURN CIRCUIT FOR A SHORT TO ANOTHER CIRCUIT**

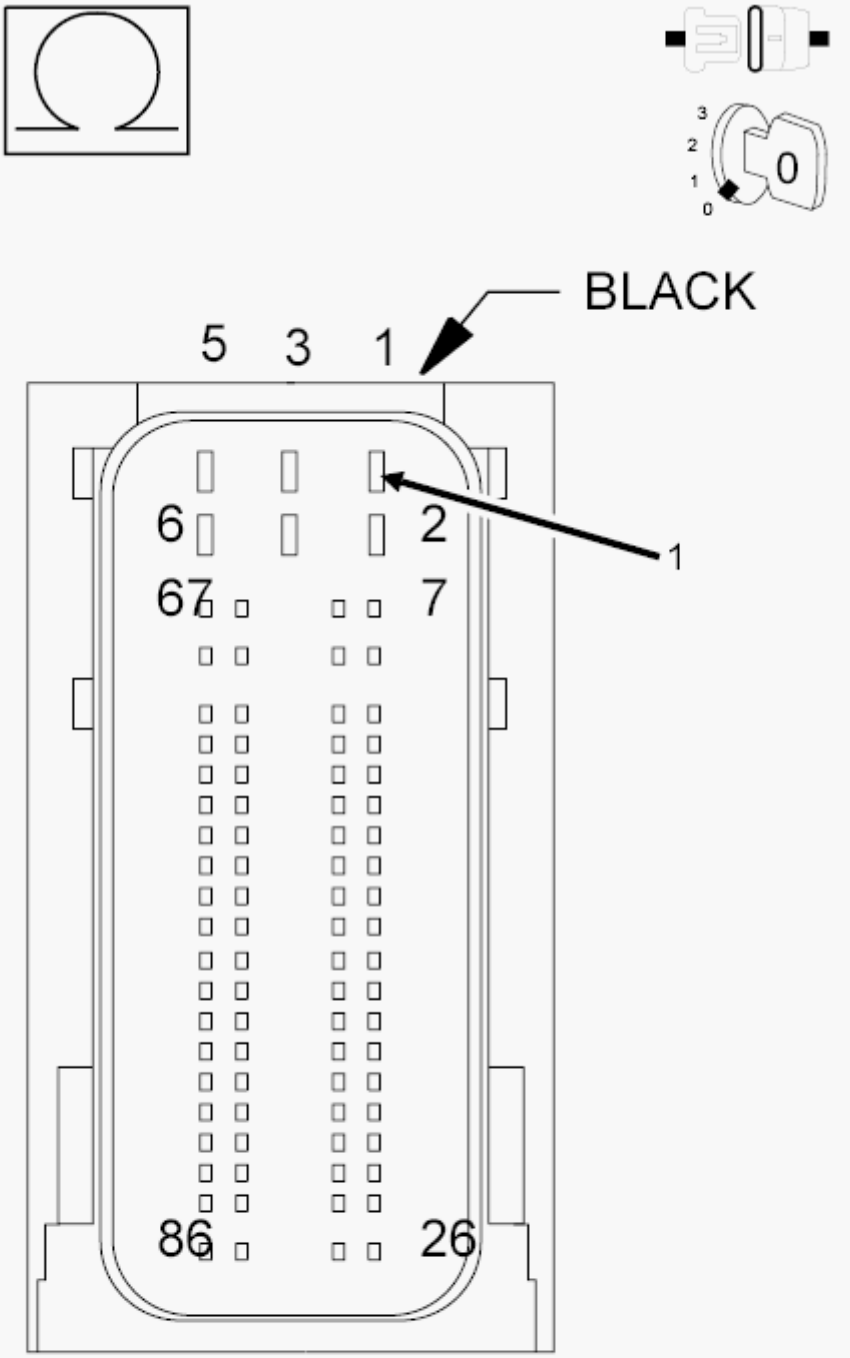

UNIT-
DIESEL
EXHAUST
FLUID-
DOSING
CONTROL C1

Fig. 125: Checking DEF Pressure Line Heater Return Circuit For A Short To Another Circuit
Courtesy of CHRYSLER GROUP, LLC

1. With the DEF Pressure Line Heater harness connector still disconnected, disconnect the DEF Dosing Control Unit C1 harness connector.
2. Measure the resistance between the (K478) DEF Pressure Line Heater Return circuit and all other circuits at the DEF Dosing Control Unit C1 harness connector.

   Is the resistance above 10k Ohms between the (K478) DEF Pressure Line Heater Return circuit and all other circuits?

   Yes

   - Replace the DEF Dosing Control Unit in accordance with the service information. Refer to **UNIT, DIESEL EXHAUST FLUID DOSING CONTROL, REMOVAL** .
   - Perform the POWERTRAIN VERIFICATION TEST. Refer to **POWERTRAIN VERIFICATION TEST - 6.7L** .

   No

   - Repair the short between the (K478) DEF Pressure Line Heater Return circuit and the circuit that measured below 10k Ohms.
   - Perform the POWERTRAIN VERIFICATION TEST. Refer to **POWERTRAIN VERIFICATION TEST - 6.7L** .

P20C1-(DIESEL EXHAUST FLUID) REDUCTANT RETURN LINE HEATER CONTROL CIRCUIT/OPEN

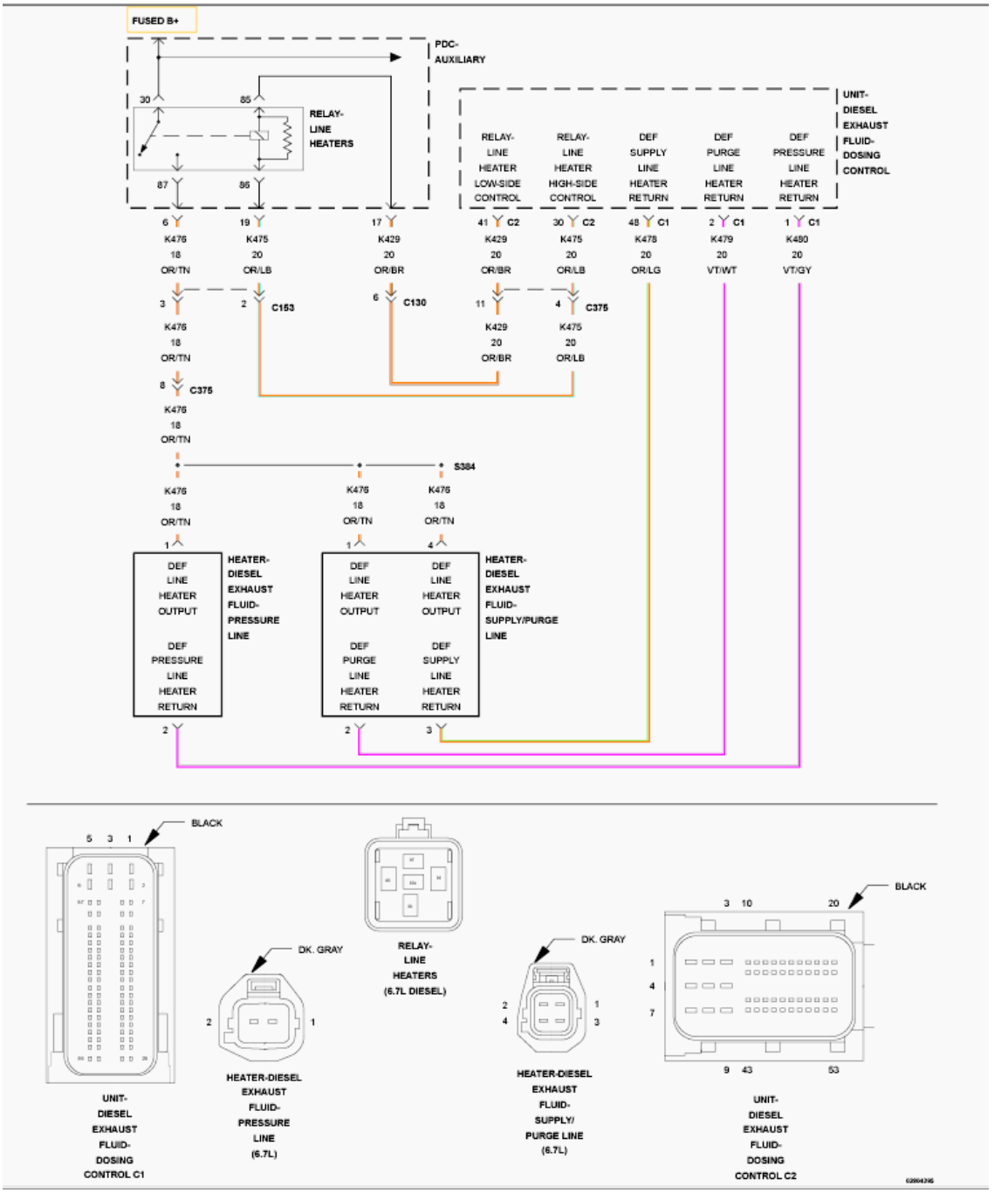

Fig. 126: Diesel Exhaust Fluid Reductant Line Heater Relay Control Circuit Wiring Diagram
Courtesy of CHRYSLER GROUP, LLC

For a complete wiring diagram, **refer to appropriate SYSTEM WIRING DIAGRAMS article** .

THEORY OF OPERATION

This DTC is referring to the DEF Supply/Purge Line Heaters. Each of the Diesel Exhaust Fluid (DEF) system hoses has a built in heater to warm the fluid in the lines. The three line heaters share a common power supply via the DEF Line Heater Relay which is controlled by the DEF Dosing Control Unit. The DEF Dosing Control

Unit controls the heaters individually through the line heater return circuits. The three line heater circuits are monitored at the return circuit. The DEF Dosing Control Unit will illuminate the MIL light via the PCM immediately after the diagnostics runs and fails. The DEF Dosing Control Unit will turn off the MIL light via the PCM when the monitor runs and passes in three consecutive key cycles.

WHEN MONITORED:

Continuously with the ignition on.

SET CONDITION:

The DEF Dosing Control Unit detects that the DEF Supply Line heater circuit or DEF Purge Line Heater circuit is open or shorted to ground.

POSSIBLE CAUSES

Possible Causes
(K476) DEF LINE HEATER OUTPUT CIRCUIT OPEN/HIGH RESISTANCE
(K480) DEF SUPPLY LINE HEATER RETURN CIRCUIT OPEN/HIGH RESISTANCE
(K479) DEF PURGE LINE HEATER RETURN CIRCUIT OPEN/HIGH RESISTANCE
(K480) DEF SUPPLY LINE HEATER RETURN CIRCUIT SHORTED TO GROUND
(K479) DEF PURGE LINE HEATER RETURN CIRCUIT SHORTED TO GROUND
DEF LINE HEATER RELAY
DEF SUPPLY/PURGE LINE HEATER
DEF DOSING CONTROL UNIT

Always perform the Pre-Diagnostic Troubleshooting procedure before proceeding. Refer to PRE-DIAGNOSTIC TROUBLESHOOTING PROCEDURE - 6.7L .

NOTE: **The DEF Line Heater monitor runs only when the DEF Line Heater Relay is commanded on. If the ambient temperature is too warm for the DEF Line Heaters to be turned on, the DTC will remain active and will not be able to be erased after repair is completed. Using the scan tool, navigate to Actuator Tests and actuate the Line Heater Relay test for the appropriate Line Heater to run the diagnostic and determine if the repair has been completed. If the repair is complete, the fault will move to stored and be able to be cleared with the scan tool.**

DIAGNOSTIC TEST

1. **CHECK FOR RELATED DTCS**
    1. Turn the ignition on.
    2. With the scan tool, View all active DTCs.

    Are the P20BD and P20C1 DTCs active together?

Yes

- Go To 2.

No

- Go To 4.

2. **CHECK THE (K476) DEF LINE HEATER OUTPUT CIRCUIT FOR AN OPEN/HIGH RESISTANCE**

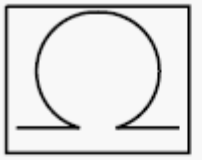

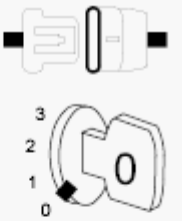

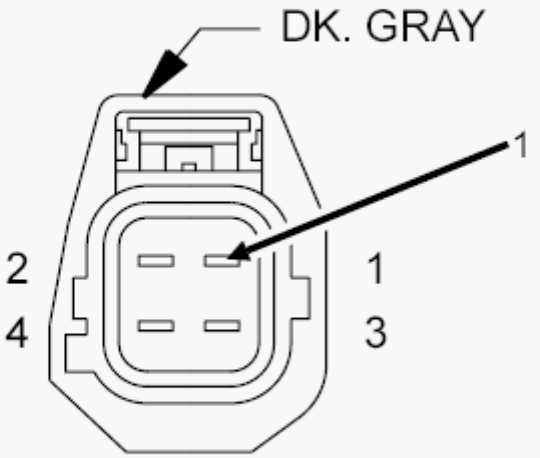

HEATER-DIESEL EXHAUST FLUID-SUPPLY/ PURGE LINE (6.7L)

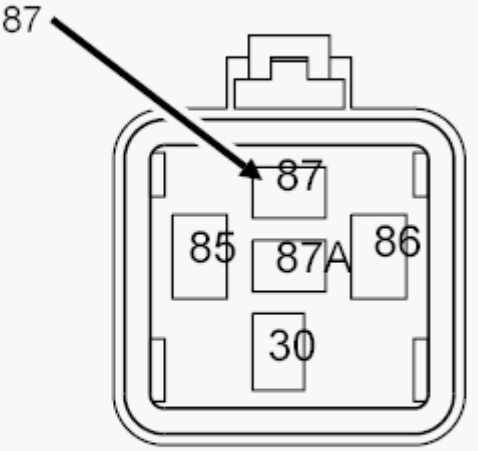

RELAY-LINE HEATERS (6.7L DIESEL)

Fig. 127: Checking DEF Line Heater Output Circuit For An Open Or High Resistance
Courtesy of CHRYSLER GROUP, LLC

1. Turn the ignition off.
2. Remove the DEF Line Heater Relay.
3. Disconnect the DEF Supply/Purge Line Heater harness connector.
4. Measure the resistance of the (K476) DEF Line Heater Output circuit between terminal 87 of the Line Heater Relay connector and the DEF Supply/Purge Line Heater harness connector.

   Is the resistance below 5.0 Ohms?

   Yes

   - Go To 3.

   No

   - Repair the (K476) DEF Line Heater Relay Output circuit for an open or high resistance. If the circuit fuse is found to be open, check the (K476) DEF Line Heater Relay Output circuit for a short to ground.
   - Perform the POWERTRAIN VERIFICATION TEST. Refer to **POWERTRAIN VERIFICATION TEST - 6.7L** .

3. **CHECK THE DEF LINE HEATER**
   1. Reconnect the DEF Supply/Purge Line Heater harness connector.
   2. Replace the DEF Line Heater Relay with a known good relay.
   3. Turn the ignition on.
   4. With the scan tool, Erase DTCs.
   5. With the scan tool, navigate to Systems Tests and actuate the DEF Supply and Purge Line Heaters.
   6. With the scan tool, View all active DTCs.

      Did the DTCs return?

      Yes

      - Using the wiring diagram as a guide, check the DEF Line Heater Relay control circuits for an open or short to ground.
      - Perform the POWERTRAIN VERIFICATION TEST. Refer to **POWERTRAIN VERIFICATION TEST - 6.7L** .

      No

      - Test complete.
      - Perform the POWERTRAIN VERIFICATION TEST. Refer to **POWERTRAIN VERIFICATION TEST - 6.7L** .

4. **CHECK THE (K476) DEF LINE HEATER OUTPUT CIRCUIT FOR AN OPEN/HIGH RESISTANCE**

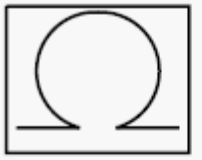

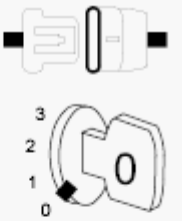

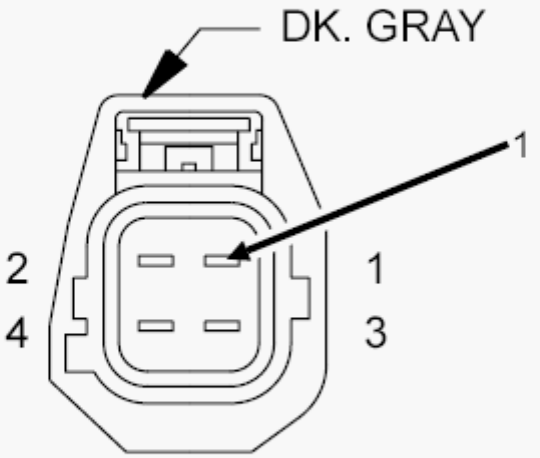

HEATER-DIESEL EXHAUST FLUID-SUPPLY/ PURGE LINE (6.7L)

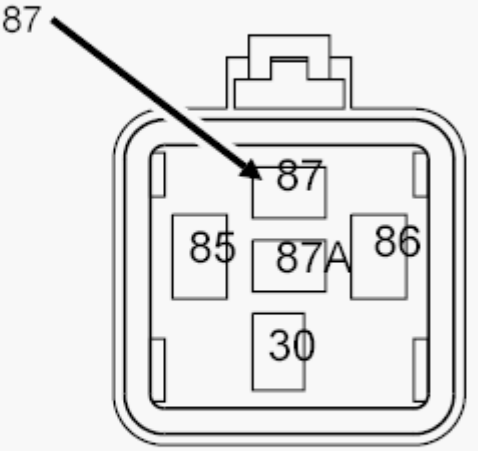

RELAY-LINE HEATERS (6.7L DIESEL)

Fig. 128: Checking DEF Line Heater Output Circuit For An Open Or High Resistance
Courtesy of CHRYSLER GROUP, LLC

1. Turn the ignition off.
2. Remove the DEF Line Heater Relay.
3. Disconnect the DEF Supply/Purge Line Heater harness connector.
4. Measure the resistance of the (K476) DEF Line Heater Output circuit between terminal 87 of the Line Heater Relay connector and the DEF Supply/Purge Line Heater harness connector.

   Is the resistance below 5.0 Ohms?

   Yes

   - Go To 5.

   No

   - Repair the (K476) DEF Line Heater Relay Output circuit for an open or high resistance. If the circuit fuse is found to be open, check the (K476) DEF Line Heater Relay Output circuit for a short to ground.
   - Perform the POWERTRAIN VERIFICATION TEST. Refer to **POWERTRAIN VERIFICATION TEST - 6.7L** .

5. **CHECK THE (K480) DEF SUPPLY LINE HEATER RETURN CIRCUIT FOR AN OPEN/HIGH RESISTANCE**

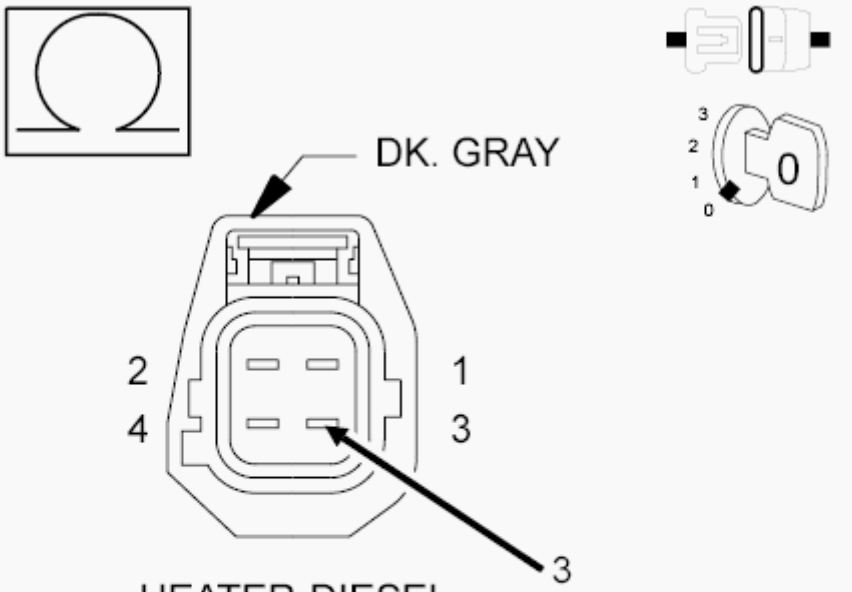

HEATER-DIESEL EXHAUST FLUID-SUPPLY/ PURGE LINE (6.7L)

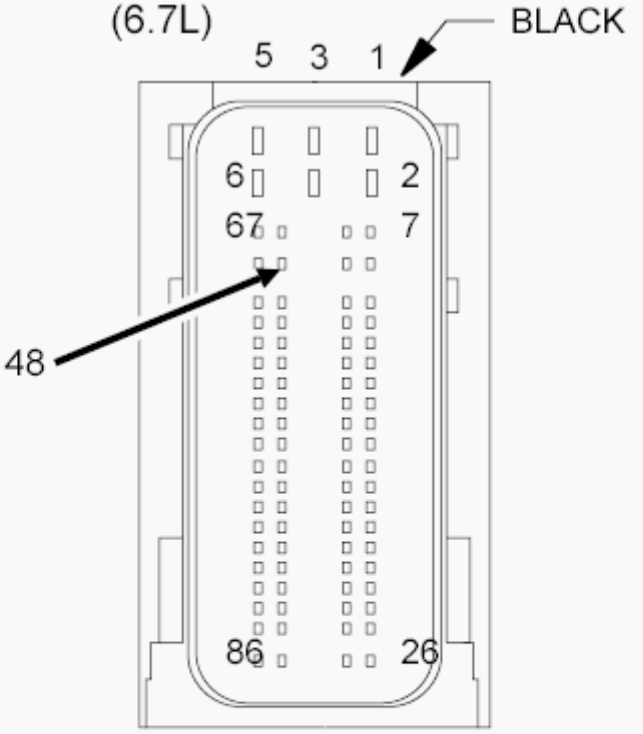

UNIT-DIESEL EXHAUST FLUID-DOSING

Fig. 129: Checking DEF Supply Line Heater Return Circuit For An Open Or High Resistance
Courtesy of CHRYSLER GROUP, LLC

1. Disconnect the DEF Dosing Control Unit C1 harness connector.
2. Measure the resistance of the (K480) DEF Supply Line Heater Return circuit between the DEF Supply/Purge Line Heater harness connector and the DEF Dosing Control Unit C1 harness connector.

   Is the resistance below 5.0 Ohms?

   Yes

   - Go To 6.

   No

   - Repair the (K480) DEF Supply Line Heater Return circuit for an open or high resistance.
   - Perform the POWERTRAIN VERIFICATION TEST. Refer to **POWERTRAIN VERIFICATION TEST - 6.7L** .

6. **CHECK THE (K479) DEF PURGE LINE HEATER RETURN CIRCUIT FOR AN OPEN/HIGH RESISTANCE**

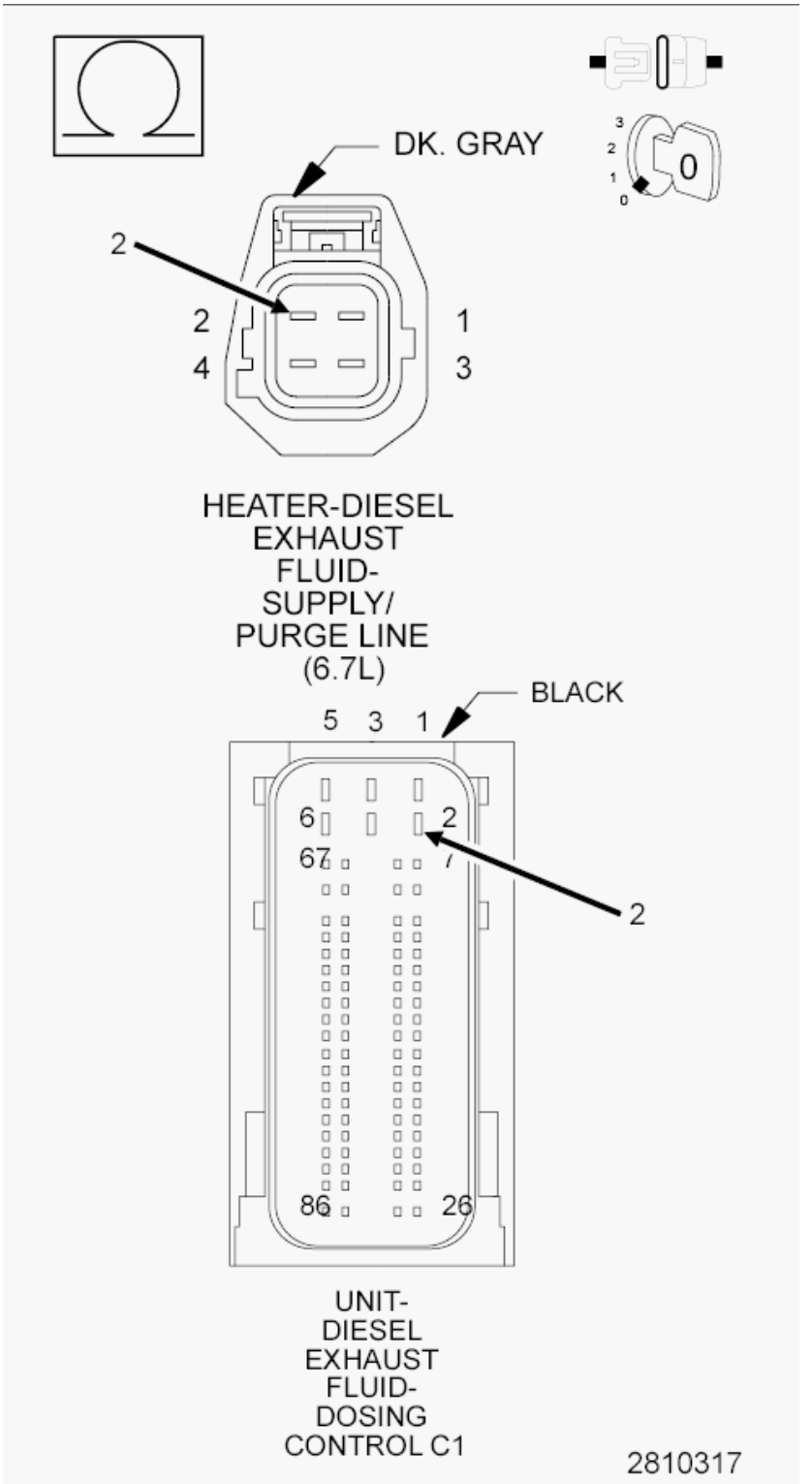

Fig. 130: Checking DEF Purge Line Heater Return Circuit For An Open/High Resistance
Courtesy of CHRYSLER GROUP, LLC

1. Measure the resistance of the (K479) DEF Pressure Line Heater Return circuit between the DEF Supply/Purge Line Heater harness connector and the DEF Dosing Control Unit C1 harness

connector.

Is the resistance below 5.0 Ohms?

Yes

- Go To 7.

No

- Repair the (K479) DEF Pressure Line Heater Return circuit for an open or high resistance.
- Perform the POWERTRAIN VERIFICATION TEST. Refer to **POWERTRAIN VERIFICATION TEST - 6.7L** .

7. **CHECK THE (K480) DEF SUPPLY LINE HEATER RETURN CIRCUIT FOR A SHORT TO GROUND**

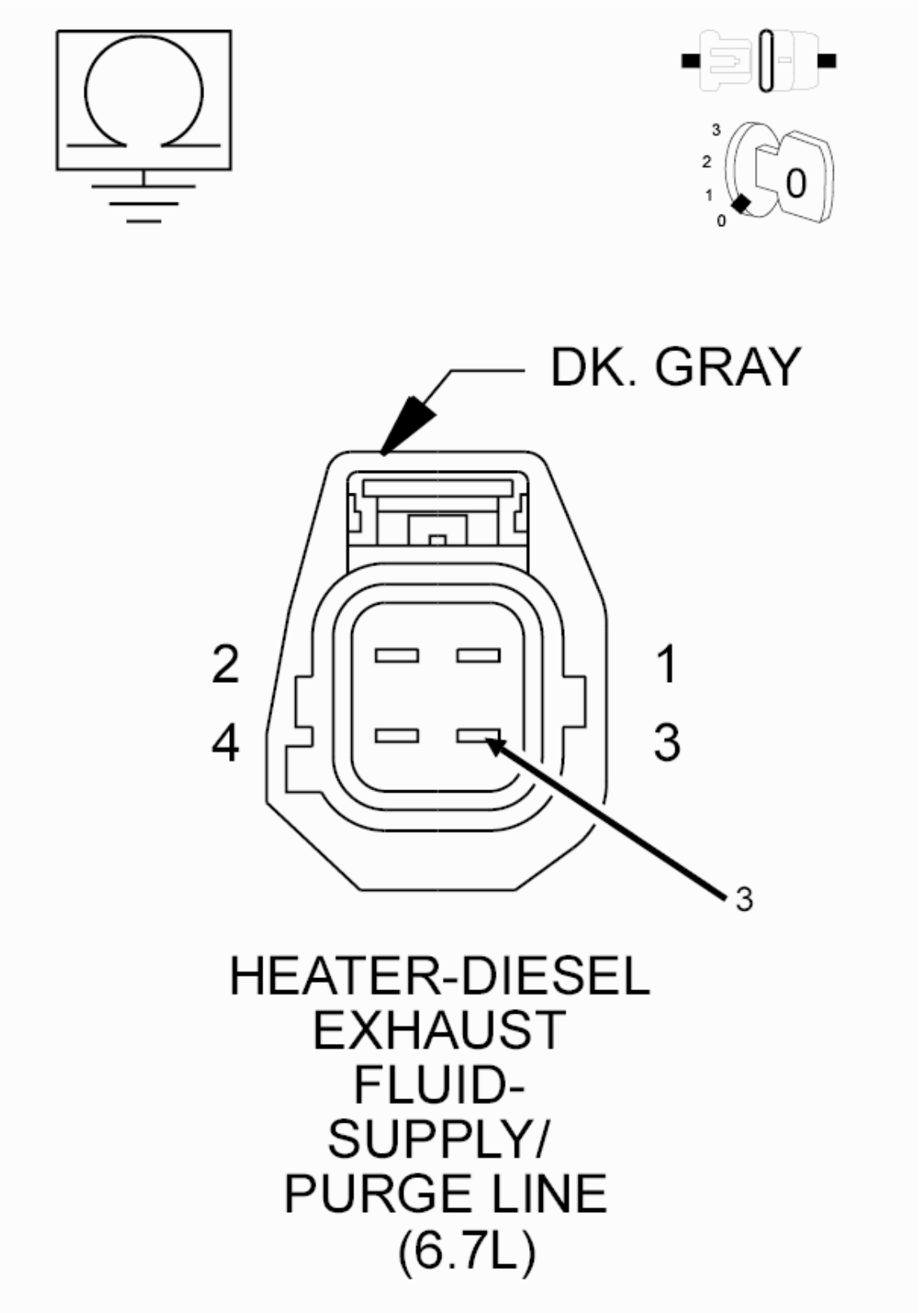

Fig. 131: Checking DEF Supply Line Heater Return Circuit For A Short To Ground
Courtesy of CHRYSLER GROUP, LLC

1. Measure the resistance between ground and the (K480) DEF Supply Line Heater Return circuit at the DEF Supply/Purge Line Heater harness connector.

   Is the resistance above 10k Ohms?

   Yes

   - Go To 8.

   No

   - Repair the (K480) DEF Supply Line Heater Return circuit for a short to ground.
   - Perform the POWERTRAIN VERIFICATION TEST. Refer to **POWERTRAIN VERIFICATION TEST - 6.7L** .

8. **CHECK THE (K479) DEF PURGE LINE HEATER RETURN CIRCUIT FOR A SHORT TO GROUND**

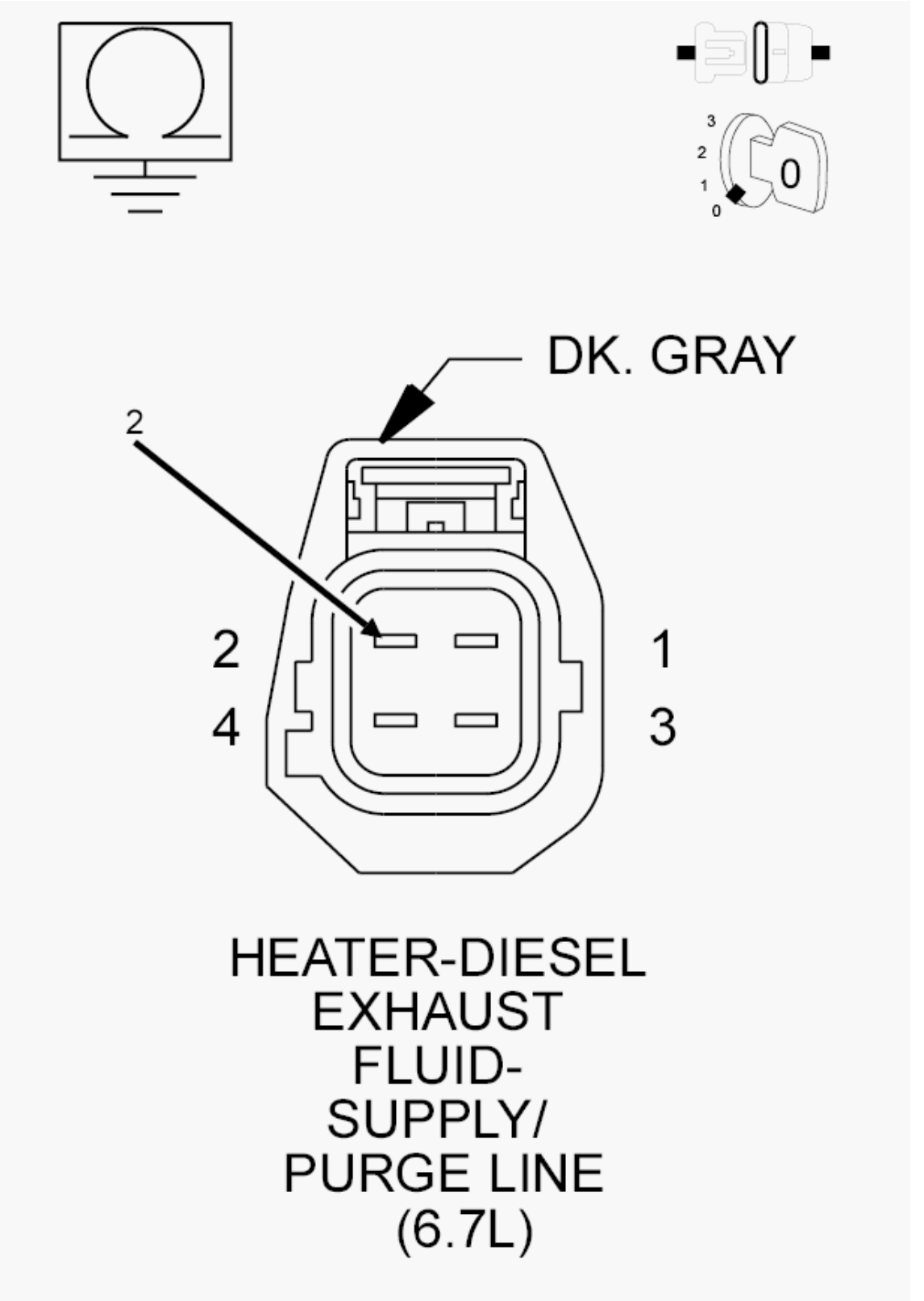

Fig. 132: Checking DEF Purge Line Heater Return Circuit For A Short To Ground
Courtesy of CHRYSLER GROUP, LLC

1. Measure the resistance between ground and the (K479) DEF Purge Line Heater Return circuit at the DEF Supply/Purge Line Heater harness connector.

   Is the resistance above 10k Ohms?

   Yes

   - Go To 9.

   No

   - Repair the (K479) DEF Purge Line Heater Return circuit for a short to ground.
   - Perform the POWERTRAIN VERIFICATION TEST. Refer to **POWERTRAIN VERIFICATION TEST - 6.7L** .

9. **CHECK THE RESISTANCE OF THE DEF SUPPLY LINE HEATER**
   1. Measure the resistance across the terminals of the DEF Supply Line Heater.

      Does the resistance measure between 7.2 Ohms and 8.7 Ohms?

      Yes

      - Go To 10.

      No

      - Replace the DEF Supply/Purge Line Assembly in accordance with the service information. Refer to **LINE, DIESEL EXHAUST FLUID SUPPLY, REMOVAL** .
      - Perform the POWERTRAIN VERIFICATION TEST. Refer to **POWERTRAIN VERIFICATION TEST - 6.7L** .

10. **CHECK THE RESISTANCE OF THE DEF PURGE LINE HEATER**
    1. Measure the resistance across the terminals of the DEF Purge Line Heater.

       Does the resistance measure between 7.4 Ohms and 8.9 Ohms?

       Yes

       - Replace the DEF Dosing Control Unit in accordance with the service information. Refer to **UNIT, DIESEL EXHAUST FLUID DOSING CONTROL, REMOVAL** .
       - Perform the POWERTRAIN VERIFICATION TEST. Refer to **POWERTRAIN VERIFICATION TEST - 6.7L** .

       No

       - Replace the DEF Supply/Purge Line Assembly in accordance with the service information. Refer to **LINE, DIESEL EXHAUST FLUID RETURN, REMOVAL** .

- Perform the POWERTRAIN VERIFICATION TEST. Refer to **POWERTRAIN VERIFICATION TEST - 6.7L** .

P20C3-(DIESEL EXHAUST FLUID) REDUCTANT RETURN LINE HEATER CONTROL CIRCUIT LOW

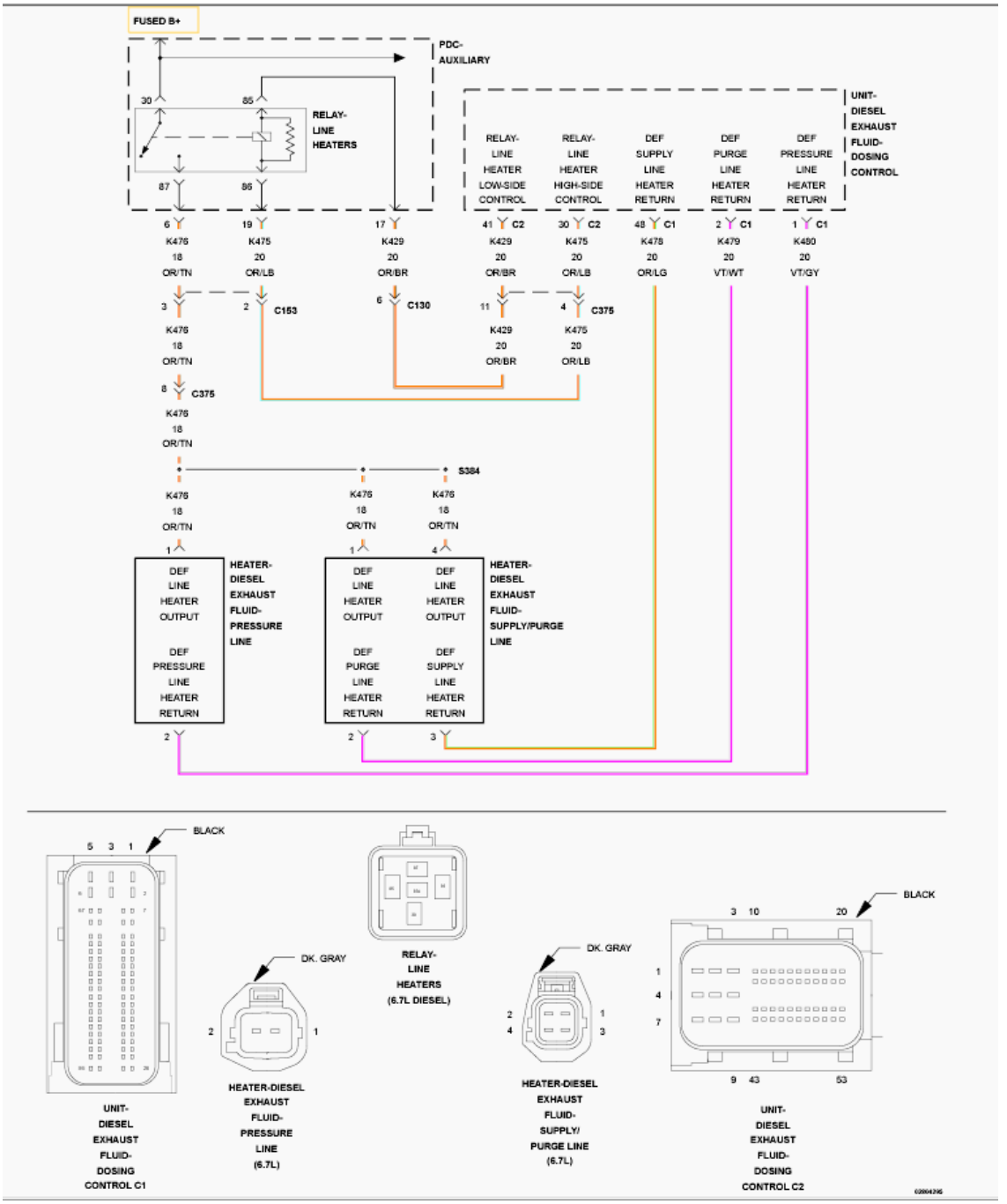

Fig. 133: Diesel Exhaust Fluid Reductant Line Heater Relay Control Circuit Wiring Diagram
Courtesy of CHRYSLER GROUP, LLC

For a complete wiring diagram, **refer to appropriate SYSTEM WIRING DIAGRAMS article** .

THEORY OF OPERATION

This DTC is referring to the DEF Purge Line Heater. Each of the Diesel Exhaust Fluid (DEF) system hoses has a built in heater to warm the fluid in the lines. The three line heaters share a common power supply via the DEF Line Heater Relay which is controlled by the DEF Dosing Control Unit. The DEF Dosing Control Unit controls the heaters individually through the line heater return circuits. The three line heater circuits are monitored at the return circuit. The DEF Dosing Control Unit will illuminate the MIL light via the PCM immediately after the diagnostics runs and fails. The DEF Dosing Control Unit will turn off the MIL light via the PCM when the monitor runs and passes in three consecutive key cycles.

WHEN MONITORED:

Continuously with the ignition on.

SET CONDITION:

The DEF Dosing Control Unit detects that the DEF Purge Line Heater circuit is shorted to ground.

POSSIBLE CAUSES

Possible Causes
(K479) DEF PURGE LINE HEATER RETURN CIRCUIT SHORTED TO GROUND
DEF SUPPLY/PURGE LINE HEATER
DEF DOSING CONTROL UNIT

Always perform the Pre-Diagnostic Troubleshooting procedure before proceeding. Refer to PRE-DIAGNOSTIC TROUBLESHOOTING PROCEDURE - 6.7L .

NOTE: **The DEF Line Heater monitor runs only when the DEF Line Heater Relay is commanded on. If the ambient temperature is too warm for the DEF Line Heaters to be turned on, the DTC will remain active and will not be able to be erased after repair is completed. Using the scan tool, navigate to Actuator Tests and actuate the Line Heater Relay test for the appropriate Line Heater to run the diagnostic and determine if the repair has been completed. If the repair is complete, the fault will move to stored and be able to be cleared with the scan tool.**

DIAGNOSTIC TEST

1. **DTC ACTIVE**
    1. Turn the ignition on.
    2. With the scan tool, View all active DTCs.

    Is the DTC active?

Yes

- Go To 2.

No

- Perform the INTERMITTENT CONDITION diagnostic procedure. Refer to **INTERMITTENT CONDITION - 6.7L** .

2. **CHECK THE (K479) DEF PURGE LINE HEATER RETURN CIRCUIT FOR A SHORT TO GROUND**

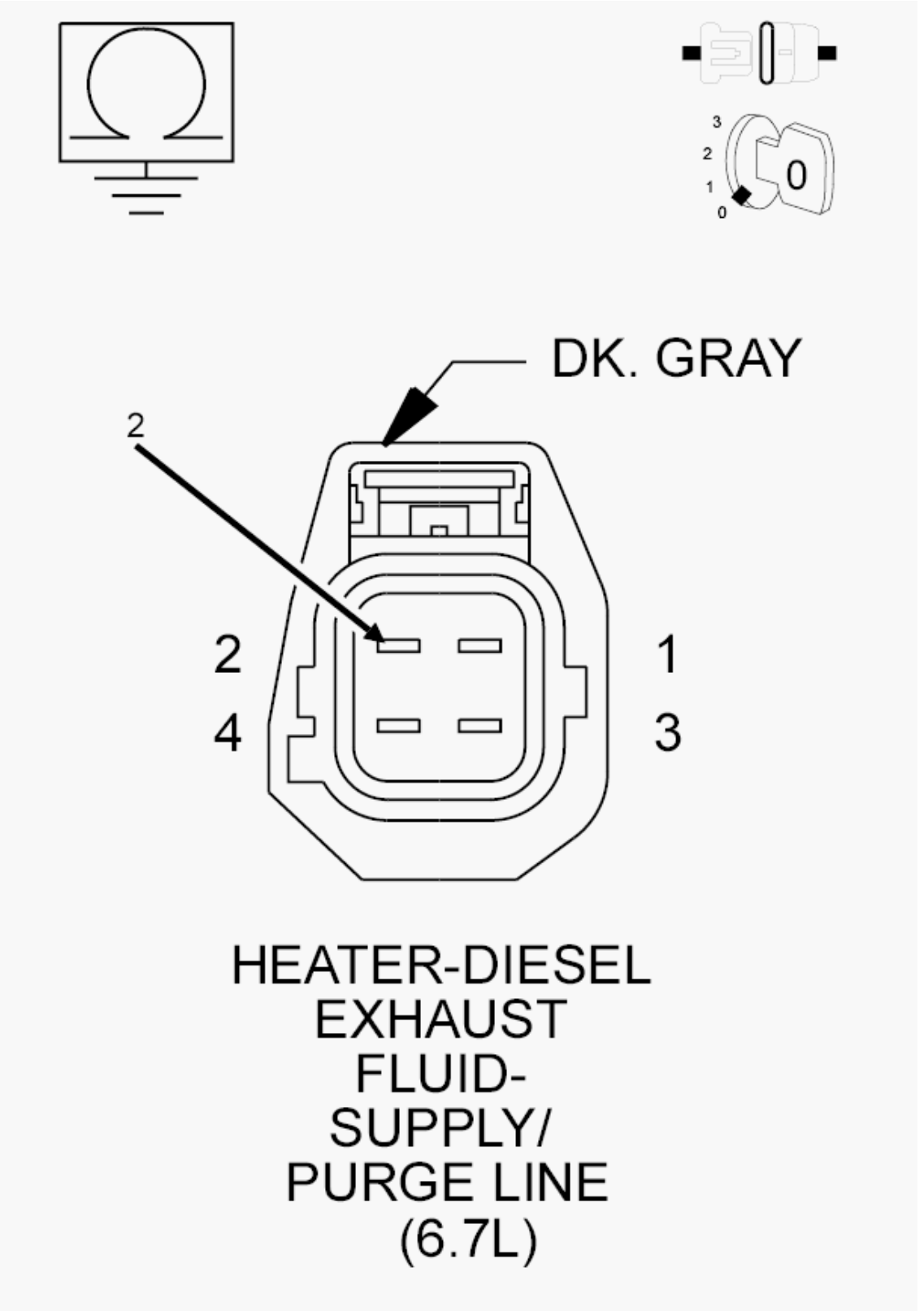

Fig. 134: Checking DEF Purge Line Heater Return Circuit For A Short To Ground
Courtesy of CHRYSLER GROUP, LLC

1. Turn the ignition off.
2. Disconnect the DEF Supply/Purge Line Heater harness connector.
3. Disconnect the DEF Dosing Control Unit C1 harness connector.
4. Measure the resistance between ground and the (K479) DEF Purge Line Heater Return circuit at the DEF Supply/Purge Line Heater harness connector.

   Is the resistance above 10k Ohms?

   Yes

   - Go To 3.

   No

   - Repair the (K479) DEF Purge Line Heater Return circuit for a short to ground.
   - Perform the POWERTRAIN VERIFICATION TEST. Refer to **POWERTRAIN VERIFICATION TEST - 6.7L** .

3. **CHECK THE RESISTANCE OF THE DEF PURGE LINE HEATER**
   1. Measure the resistance of the DEF Purge Line Heater.

      Does the resistance measure between 7.4 Ohms and 8.9 Ohms?

      Yes

      - Replace the DEF Dosing Control Unit in accordance with the service information. Refer to **UNIT, DIESEL EXHAUST FLUID DOSING CONTROL, REMOVAL** .
      - Perform the POWERTRAIN VERIFICATION TEST. Refer to **POWERTRAIN VERIFICATION TEST - 6.7L** .

      No

      - Replace the DEF Supply/Purge Line Assembly in accordance with the service information. Refer to **LINE, DIESEL EXHAUST FLUID RETURN, REMOVAL** .
      - Perform the POWERTRAIN VERIFICATION TEST. Refer to **POWERTRAIN VERIFICATION TEST - 6.7L** .

P20C4-(DIESEL EXHAUST FLUID) REDUCTANT RETURN LINE HEATER CONTROL CIRCUIT HIGH

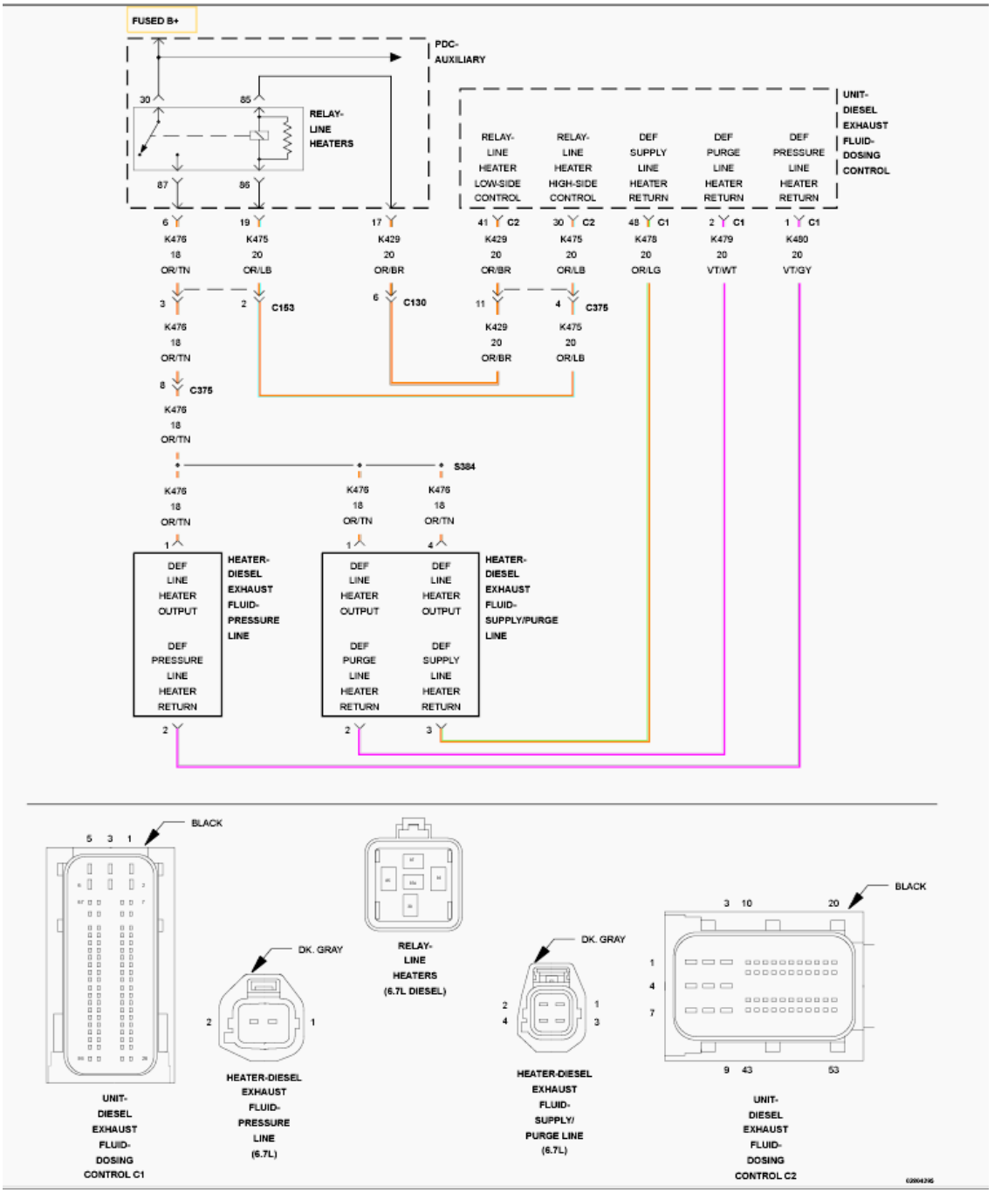

Fig. 135: Diesel Exhaust Fluid Reductant Line Heater Relay Control Circuit Wiring Diagram
Courtesy of CHRYSLER GROUP, LLC

For a complete wiring diagram, **refer to appropriate SYSTEM WIRING DIAGRAMS article** .

THEORY OF OPERATION

This DTC is referring to the DEF Supply/Purge Line Heater. Each of the Diesel Exhaust Fluid (DEF) system hoses has a built in heater to warm the fluid in the lines. The three line heaters share a common power supply via the DEF Line Heater Relay which is controlled by the DEF Dosing Control Unit. The DEF Dosing Control

Unit controls the heaters individually through the line heater return circuits. The three line heater circuits are monitored at the return circuit. The DEF Dosing Control Unit will illuminate the MIL light via the PCM immediately after the diagnostics runs and fails and the line heater will be disabled. The DEF Dosing Control Unit will turn off the MIL light via the PCM when the monitor runs and passes in three consecutive key cycles.

WHEN MONITORED:

Continuously with the ignition on, and the heater commanded on.

SET CONDITION:

The DEF Dosing Control Unit detects that the DEF Purge Line Heater circuit voltage is above a calibrated value.

POSSIBLE CAUSES

Possible Causes
(K480) DEF SUPPLY LINE HEATER RETURN CIRCUIT SHORTED TO VOLTAGE
(K479) DEF RETURN LINE HEATER RETURN CIRCUIT SHORTED TO VOLTAGE
DEF SUPPLY/PURGE LINE HEATER
DEF DOSING CONTROL UNIT

Always perform the Pre-Diagnostic Troubleshooting procedure before proceeding. Refer to PRE-DIAGNOSTIC TROUBLESHOOTING PROCEDURE - 6.7L .

NOTE: **The DEF Line Heater monitor runs only when the DEF Line Heater Relay is commanded on. If the ambient temperature is too warm for the DEF Line Heaters to be turned on, the DTC will remain active and will not be able to be erased after repair is completed. Using the scan tool, navigate to Actuator Tests and actuate the Line Heater Relay test for the appropriate Line Heater to run the diagnostic and determine if the repair has been completed. If the repair is complete, the fault will move to stored and be able to be cleared with the scan tool.**

DIAGNOSTIC TEST

1. **ACTIVE DTC**
    1. Turn the ignition on, engine not running.
    2. With the scan tool, navigate to Systems Tests and actuate the DEF Supply and Purge Line Heaters.
    3. With the scan tool, View DTCs.

    Is the DTC active?

    Yes

    - Go To 2.

No

- Perform the INTERMITTENT CONDITION diagnostic procedure. Refer to **INTERMITTENT CONDITION - 6.7L** .

2. **CHECK THE RESISTANCE OF THE DEF SUPPLY LINE HEATER**
   1. Turn the ignition off.
   2. Disconnect the DEF Supply/Purge Line Heater harness connector.
   3. Measure the resistance across the terminals of the DEF Supply Line Heater.

   Does the resistance between 7.2 Ohms and 8.6 Ohms?

   Yes

   - Go To 3.

   No

   - Replace the DEF Supply/Purge Line Assembly in accordance with the service information. Refer to **LINE, DIESEL EXHAUST FLUID SUPPLY, REMOVAL** .
   - Perform the POWERTRAIN VERIFICATION TEST. Refer to **POWERTRAIN VERIFICATION TEST - 6.7L** .

3. **CHECK THE RESISTANCE OF THE DEF PURGE LINE HEATER**
   1. Measure the resistance across the terminals of the DEF Purge Line Heater.

   Does the resistance measure between 7.4 Ohms and 8.9 Ohms?

   Yes

   - Go To 4.

   No

   - Replace the DEF Supply/Purge Line Assembly in accordance with the service information. Refer to **LINE, DIESEL EXHAUST FLUID RETURN, REMOVAL** .
   - Perform the POWERTRAIN VERIFICATION TEST. Refer to **POWERTRAIN VERIFICATION TEST - 6.7L** .

4. **CHECK THE (K480) DEF SUPPLY LINE HEATER RETURN CIRCUIT FOR A SHORT TO ANOTHER CIRCUIT**

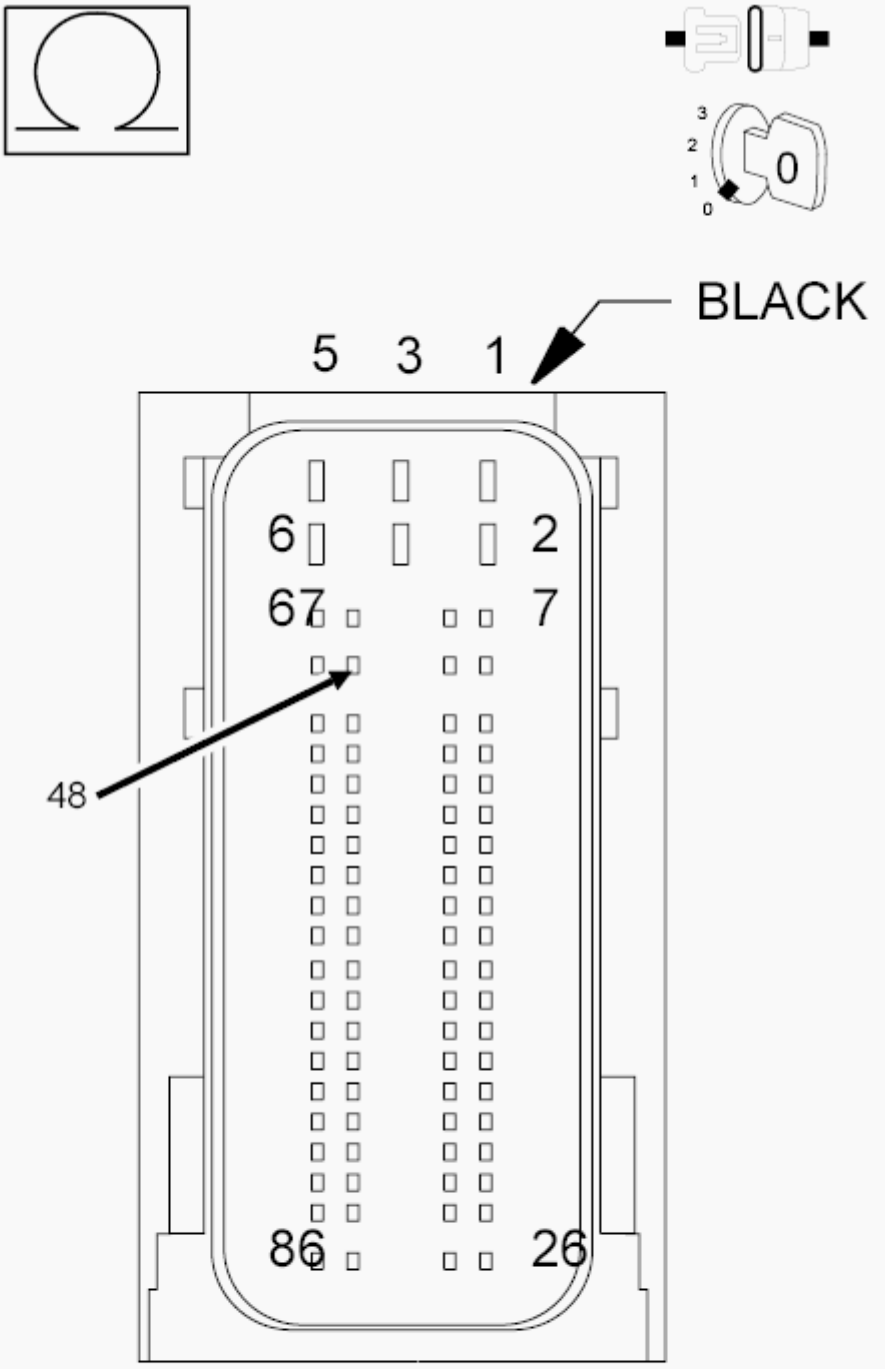

UNIT-
DIESEL
EXHAUST
FLUID-
DOSING
CONTROL C1

Fig. 136: Checking DEF Supply Line Heater Return Circuit For A Short To Another Circuit
Courtesy of CHRYSLER GROUP, LLC

1. Disconnect the DEF Dosing Control Unit C1 harness connector.
2. Measure the resistance between the (K480) DEF Supply Line Heater Return circuit and all other circuits at the DEF Dosing Control Unit C1 harness connector

   Is the resistance above 10k Ohms between the (K480) DEF Supply Line Heater Return circuit and all other circuits?

   Yes

   - Go To 5.

   No

   - Repair the short between the (K480) DEF Supply Line Heater Return circuit and the circuit that measured below 10k Ohms.
   - Perform the POWERTRAIN VERIFICATION TEST. Refer to **POWERTRAIN VERIFICATION TEST - 6.7L** .

5. **CHECK THE (K479) DEF PURGE LINE HEATER RETURN CIRCUIT FOR A SHORT TO ANOTHER CIRCUIT**

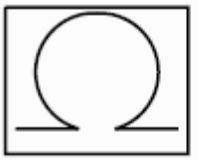

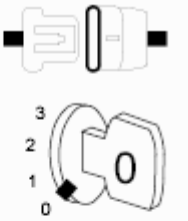

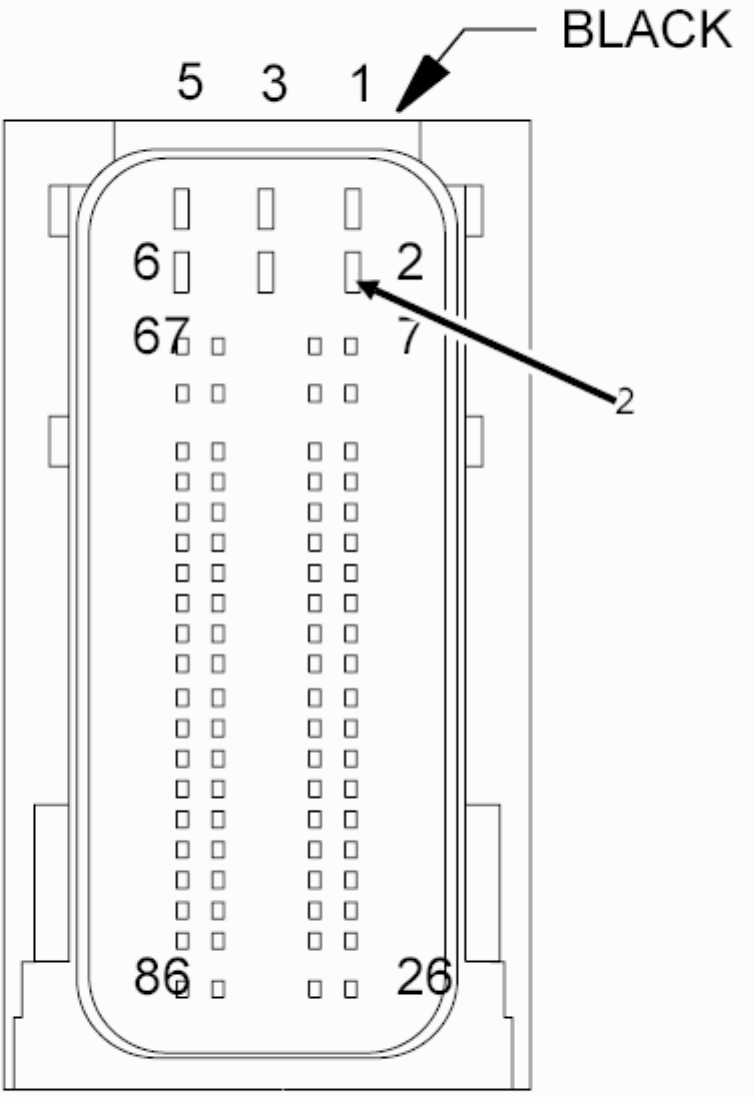

UNIT-
DIESEL
EXHAUST
FLUID-
DOSING
CONTROL C1

Fig. 137: Checking DEF Purge Line Heater Return Circuit For A Short To Another Circuit
Courtesy of CHRYSLER GROUP, LLC

1. Measure the resistance between the (K479) DEF Purge Line Heater Return circuit and all other circuits at the DEF Dosing Control Unit C1 harness connector

   Is the resistance above 10k Ohms between the (K479) DEF Purge Line Heater Return circuit and all other circuits?

   Yes

   - Replace the DEF Dosing Control Unit in accordance with the service information. Refer to **UNIT, DIESEL EXHAUST FLUID DOSING CONTROL, REMOVAL** .
   - Perform the POWERTRAIN VERIFICATION TEST. Refer to **POWERTRAIN VERIFICATION TEST - 6.7L** .

   No

   - Repair the short between the (K479) DEF Purge Line Heater Return circuit and the circuit that measured below 10k Ohms.
   - Perform the POWERTRAIN VERIFICATION TEST. Refer to **POWERTRAIN VERIFICATION TEST - 6.7L** .

P20C6-(DIESEL EXHAUST FLUID) REDUCTANT HEATER D CONTROL PERFORMANCE

For a complete wiring diagram, **refer to appropriate SYSTEM WIRING DIAGRAMS article** .

THEORY OF OPERATION

The DEF Line Heater Relay provides the power supply to DEF Line Heaters 1, 2, and 3. It is controlled by the DEF Dosing Control Unit.

WHEN MONITORED:

The monitor runs at ignition off.

SET CONDITION:

Battery voltage has been detected at the Diesel Exhaust Fluid Line Heaters when the DEF Line Heater Relay is commanded off. The Powertrain Control Module (PCM) illuminates the MIL lamp immediately after the monitor runs and fails. Diesel exhaust fluid line heating will be disabled. The PCM will turn off the MIL lamp after the monitor runs and passes.

POSSIBLE CAUSES

Possible Causes
(K476) LINE HEATER RELAY OUTPUT CIRCUIT SHORTED TO VOLTAGE

DEF LINE HEATER RELAY STUCK CLOSED

Always perform the Pre-Diagnostic Troubleshooting procedure before proceeding. Refer to PRE-DIAGNOSTIC TROUBLESHOOTING PROCEDURE - 6.7L .

DIAGNOSTIC TEST

1. **ACTIVE DTC**
   1. Ignition on, engine not running.
   2. With the scan tool, read DTCs.

      Is the DTC active?

      Yes

      - Go To 2.

      No

      - Perform the INTERMITTENT CONDITION diagnostic procedure. Refer to **INTERMITTENT CONDITION - 6.7L** .
2. **CHECK THE DEF LINE HEATER RELAY**
   1. Turn the ignition off.
   2. Remove the DEF Line Heater Relay.
   3. Measure the resistance between terminal 30 and terminal 87 of the DEF Line Heater Relay.

      Is the resistance below 10k Ohms?

      Yes

      - Replace the DEF Line Heater Relay in accordance with the service information.
      - Perform the POWERTRAIN VERIFICATION TEST. Refer to **POWERTRAIN VERIFICATION TEST - 6.7L** .

      No

      - Repair the (K476) DEF Line Heater Relay Output circuit for a short to voltage.
      - Perform the POWERTRAIN VERIFICATION TEST. Refer to **POWERTRAIN VERIFICATION TEST - 6.7L** .

P20E8-(DIESEL EXHAUST FLUID) REDUCTANT PRESSURE TOO LOW

For a complete wiring diagram, **refer to appropriate SYSTEM WIRING DIAGRAMS article** .

THEORY OF OPERATION

When the DEF Dosing Control Unit is in pressure control mode, the DEF Dosing Control Unit also provides a Pulse Width Modulated (PWM) signal to turn on the DEF Supply Pump Assembly to refill the lines. As the lines fill, the pressure builds to the set point. When the pressure reaches the set point, the DEF Dosing Control Unit turns on the DEF Injector to bleed air out of the Pressure Line. Each time the injector is turned off, the DEF Dosing Control Unit the amount of time it takes for the pressure to rise back to the set point to determine when all of the air is bled out of the line. The DEF Dosing Control Unit will illuminate the MIL light via the Powertrain Control Module (PCM) immediately after the diagnostics runs and fails and diesel exhaust fluid injection into the aftertreatment system is disabled. The DEF Dosing Control Unit will turn off the MIL light via the PCM immediately after the monitor runs and passes.

WHEN MONITORED:

When the Diesel Exhaust Fluid system is attempting to prime.

SET CONDITION:

When the Diesel Exhaust Fluid system has been unable to successfully prime after ten attempts.

POSSIBLE CAUSES

Possible Causes
LOW DIESEL EXHAUST FLUID LEVEL
CONTAMINATED DIESEL EXHAUST FLUID
DEF SUPPLY LINE DAMAGED/LEAKING
DEF PRESSURE LINE DAMAGED/LEAKING
DEF SUPPLY PUMP ASSEMBLY

Always perform the Pre-Diagnostic Troubleshooting procedure before proceeding. Refer to PRE-DIAGNOSTIC TROUBLESHOOTING PROCEDURE - 6.7L .

DIAGNOSTIC TEST

1. **CHECK THE DEF TANK LEVEL AND FLUID**
    1. Verify the DEF Tank level.
    2. Check the fluid for signs of contamination.

    Is the fluid level in the DEF Tank above the minimum requirement and free of contamination?

    Yes

    - Go To 2.

    No

    - Fill the DEF Tank to the proper level with clean Diesel Exhaust Fluid. If the fluid is contaminated, perform the cleaning procedure. Refer to **TANK, DIESEL EXHAUST**

FLUID, CLEANING .

- Perform the POWERTRAIN VERIFICATION TEST. Refer to **POWERTRAIN VERIFICATION TEST - 6.7L** .

2. **ACTIVE DTC**
   1. Turn the ignition on.
   2. With the scan tool, navigate to Systems Tests and actuate the Diesel Exhaust Fluid Doser Pump Override Test.
   3. With the scan tool, View DTCs.

      Is the DTC active?

      Yes

      - Go To 3.

      No

      - Perform the INTERMITTENT CONDITION diagnostic procedure. Refer to **INTERMITTENT CONDITION - 6.7L** .

3. **CHECK THE DEF SUPPLY SYSTEM FOR LEAKS**
   1. During the actuation of the Diesel Exhaust Fluid Doser Pump Override Test, visually inspect the DEF Supply Pump Assembly and DEF Lines for signs of a fluid leak.

      Are there any leaks in the DEF System?

      Yes

      - Perform the appropriate repair.
      - Perform the POWERTRAIN VERIFICATION TEST. Refer to **POWERTRAIN VERIFICATION TEST - 6.7L** .

      No

      - Go To 4.

4. **CHECK THE DEF SUPPLY LINE**
   1. Stop actuation of the Diesel Exhaust Fluid Doser Pump Override Test.
   2. Turn the ignition off.
   3. Remove the DEF Supply Line.
   4. Check the DEF Supply Line for a restriction and check for crystallization on the DEF Supply Pump Assembly inlet fitting.

      Is the DEF Supply Line and DEF Supply Pump Assembly fitting free of obstructions?

      Yes

- Replace the DEF Supply Pump Assembly in accordance with the service information. Refer to **ASSEMBLY, DIESEL EXHAUST FLUID PUMP, REMOVAL** .
- Perform the POWERTRAIN VERIFICATION TEST. Refer to **POWERTRAIN VERIFICATION TEST - 6.7L** .

No

- Clear the restriction from the DEF Supply Line or DEF Supply Pump Assembly inlet fitting.
- Perform the POWERTRAIN VERIFICATION TEST. Refer to **POWERTRAIN VERIFICATION TEST - 6.7L** .

P20E9-(DIESEL EXHAUST FLUID) REDUCTANT PRESSURE TOO HIGH

For a complete wiring diagram, **refer to appropriate SYSTEM WIRING DIAGRAMS article** .

THEORY OF OPERATION

The DEF Pressure Sensor provides a signal to the DEF Dosing Control Unit on the sensor signal circuit. This sensor signal voltage changes based on the diesel exhaust fluid pressure supplied by the DEF Pump Assembly. The DEF Dosing Control Unit will detect a low signal voltage at low diesel exhaust fluid pressures, and high signal voltage at high diesel exhaust fluid pressures. The DEF Dosing Control Unit will illuminate the MIL light via the Powertrain Control Module (PCM) immediately after the diagnostics runs and fails and diesel exhaust fluid injection into the aftertreatment system is disabled. The DEF Dosing Control Unit will turn off the MIL light via the PCM immediately after the monitor runs and passes.

WHEN MONITORED:

Continuously with the ignition on.

SET CONDITION:

DEF Dosing Control Unit detects that the pressure in the system is above a calibrated value for 20 seconds.

POSSIBLE CAUSES

Possible Causes
DEF PRESSURE SENSOR FAILED IN RANGE
DEF LINES OR FITTINGS LEAKING OR RESTRICTED
DEF SUPPLY PUMP ASSEMBLY FILTER
DEF SUPPLY PUMP ASSEMBLY

Always perform the Pre-Diagnostic Troubleshooting procedure before proceeding. Refer to PRE-DIAGNOSTIC TROUBLESHOOTING PROCEDURE - 6.7L .

DIAGNOSTIC TEST

1. **ACTIVE DTC**
    1. Turn the ignition on.
    2. With the scan tool, navigate to Systems Tests and actuate the Diesel Exhaust Fluid Doser Pump Override Test.
    3. With the scan tool, View DTCs.

    Is the DTC active?

    Yes

    - Go To 2.

    NOTE: **If any of the following DTCs are active with this DTC; P20A0, P20A2, P20A3, P20FE, P2048, P2049 or P208B, perform the diagnostics for those DTCs before continuing with this test procedure.**

    No

    - Perform the INTERMITTENT CONDITION diagnostic procedure. Refer to **INTERMITTENT CONDITION - 6.7L** .
2. **CHECK THE DEF LINES AND FITTINGS FOR LEAKS OR RESTRICTIONS**
    1. Turn the ignition off.
    2. Visually inspect the DEF lines and fittings for signs of a leak.
    3. Remove the lines from the fittings at the DEF Supply Pump Assembly and DEF Injector and inspect the fittings for signs of crystallization or blockages.

    Were any leaks or blockages found?

    Yes

    - Repair or replace the leaking or blocked lines or fittings as necessary.
    - Perform the POWERTRAIN VERIFICATION TEST. Refer to **POWERTRAIN VERIFICATION TEST - 6.7L** .

    No

    - Replace the DEF Pump Assembly Filter.
    - Go To 3.
3. **CHECK THE DEF PUMP ASSEMBLY**
    1. Reconnect all of the DEF lines.
    2. Remove the DEF Injector from the Decomp Tube. Refer to **INJECTOR, DIESEL EXHAUST FLUID, REMOVAL** .

3. Place the DEF Injector in a container to capture the fluid sprayed.
4. Turn the ignition on.
5. With the scan tool, navigate to Systems Tests and actuate the Diesel Exhaust Fluid Doser Pump Override Test.

NOTE: **This Test will run for six minutes before timing out. The amount of flow may fluctuate through out the test, therefore the test must be allowed to run completely in order for the results to be accurate. The fluid should spray out as a mist. There should be no dripping from the holes in the DEF Injector at any time during the duration of the test procedure.**

6. Measure the amount of fluid sprayed after the test times out.

   Does the fluid sprayed measure between 85 ml and 115 ml?

   Yes

   - Repair complete.

   No

   - Replace the DEF Pump Assembly in accordance with the service information. Refer to **ASSEMBLY, DIESEL EXHAUST FLUID PUMP, REMOVAL** .
   - Perform the POWERTRAIN VERIFICATION TEST. Refer to **POWERTRAIN VERIFICATION TEST - 6.7L** .

P20EC-SCR NOX CATALYST - OVER TEMPERATURE BANK 1

For a complete wiring diagram, **refer to appropriate SYSTEM WIRING DIAGRAMS article** .

THEORY OF OPERATION

The Selective Catalytic Reduction (SCR) Catalyst is used in combination with the Diesel Exhaust Fluid system to reduce the amount of NOx gases produced during engine combustion. Excessive fuel or oil entering the exhaust system due to a failed engine component or Fuel Injector can cause the temperature to rise and will result in damage to the SCR Catalyst.

WHEN MONITORED:

Continuously with the ignition on.

SET CONDITION:

The Powertrain Control Module detects that the SCR Catalyst outlet temperature is above the maximum allowable temperature.

POSSIBLE CAUSES

Possible Causes
DEGRADED, DILUTED OR INCORRECT DIESEL EXHAUST FLUID
EXHAUST GAS TEMPERATURE SENSOR 1/4 FAILED IN RANGE
EXCESSIVE FUEL OR OIL INTRODUCED INTO THE EXHAUST SYSTEM
ENGINE MISFIRE
DEFECTIVE DOC/DPF CATALYST

Always perform the Pre-Diagnostic Troubleshooting procedure before proceeding. Refer to PRE-DIAGNOSTIC TROUBLESHOOTING PROCEDURE - 6.7L .

DIAGNOSTIC TEST

1. **CHECK THE OPERATION OF EXHAUST TEMPERATURE SENSORS**

   NOTE: Repair any fuel, emissions, or DEF system component DTCs before continuing with this diagnostic procedure.

   1. Start and idle the engine for 10 minutes.
   2. With the scan tool, read and compare the Exhaust Gas Temperature (EGT) Sensors.

      Do any of the EGT Sensors vary more than 43°F of the others?

      Yes

      - Go To 3.

      No

      - Go To 2.

2. **CHECK THE EXHAUST TEMPERATURE SENSOR FOR A SHORT TO ANOTHER CIRCUIT**

   NOTE: Perform this test on the EGT Sensor that was reading more than 43°F above or below the others.

   1. Turn the ignition off.
   2. Disconnect the Powertrain Control Module (PCM) C2 harness connector.
   3. Measure the resistance between the EGT Sensor Signal circuit and all other circuits in the PCM C2 harness connector.

      Was the resistance above 10k Ohms between the EGT Sensor Signal circuit and all other circuits in the PCM C2 harness connector?

      Yes

- Replace the Exhaust Gas Temperature Sensor in accordance with the service information.
- Perform the POWERTRAIN VERIFICATION TEST. Refer to **POWERTRAIN VERIFICATION TEST - 6.7L** .

No

- Repair the short between the Exhaust Gas Temperature Sensor circuit and the circuit that measured below 10k Ohms.
- Perform the POWERTRAIN VERIFICATION TEST. Refer to **POWERTRAIN VERIFICATION TEST - 6.7L** .

3. **CHECK THE DIESEL EXHAUST FLUID**
   1. Turn the ignition off.
   2. Collect a sample of diesel exhaust fluid from the system.
   3. Visually inspect the fluid for signs of contamination or debris.
   4. Test the quality of the fluid using litmus paper (supplied by parts) or by using the SPX DEF/UREA Refractometer 94-F-00K-108-456 or equivalent.

NOTE: **The diesel exhaust fluid should register approximately 9 ph with the litmus paper and 32.5 percent using a refractometer.**

Is the diesel exhaust fluid quality within specification and free of debris and contamination?

Yes

- Go To 4.

No

- Drain the diesel exhaust fluid from the tank and fill the system. If the fluid is contaminated, follow the cleaning procedure. Refer to **TANK, DIESEL EXHAUST FLUID, CLEANING** .
- Perform the POWERTRAIN VERIFICATION TEST. Refer to **POWERTRAIN VERIFICATION TEST - 6.7L** .

4. **CHECK FOR CYLINDER MISFIRE**
   1. Start the engine.
   2. With the scan tool, navigate to Systems Tests, and perform the Injector Kill System Test.

Were any cylinders found to be faulty or low?

Yes

- Perform the CHECKING ENGINE MISFIRE / RUNS ROUGH / PERFORMANCE TEST diagnostic procedure. Refer to **DIAGNOSIS AND TESTING, 6.7L** .
- Perform the POWERTRAIN VERIFICATION TEST. Refer to **POWERTRAIN**

VERIFICATION TEST - 6.7L .

No

- Go To 5.

5. **CHECK FOR EXCESSIVE ENGINE OIL BEING INTRODUCED INTO THE AFTERTREATMENT SYSTEM**
   1. Turn the ignition off.
   2. Remove the turbocharger outlet and inspect for signs of oil, fuel or moisture being introduced into the aftertreatment system from the engine.

      Was engine oil, fuel or moisture found in the turbocharger exhaust outlet?

      Yes

      - Locate the cause of possible diesel fuel or engine oil being carried from the engine into the exhaust system. Inspect the SCR Catalyst for possible damage.
      - Perform the POWERTRAIN VERIFICATION TEST. Refer to **POWERTRAIN VERIFICATION TEST - 6.7L** .

      No

      - Go To 6.

6. **CHECK THE DOC/DPF CATALYST FOR PLUGGING**
   1. Remove the DOC/DPF Catalyst and check the inlet side for signs of soot accumulation or face plugging.

      Does the DOC/DPF Catalyst show any evidence of face plugging or soot accumulation?

      Yes

      - If DTC P1451 is present, perform a scan tool initiated regeneration of the aftertreatment system. If DTC P1451 is not present, replace the DOC/DPF assembly in accordance with the service information.
      - Perform the POWERTRAIN VERIFICATION TEST. Refer to **POWERTRAIN VERIFICATION TEST - 6.7L** .

      No

      - Go To 7.

7. **CHECK THE DOC/DPF CATALYST FOR INTERNAL CRACKING**
   1. Inspect the outlet side of the DOC/DPF Catalyst for soot accumulation.

      Is there any soot accumulation in the outlet of the DOC/DPF Catalyst?

Yes

- Replace the DOC/DPF Catalyst in accordance with the service information. Refer to **FILTER, DIESEL PARTICULATE, REMOVAL** .
- Perform the POWERTRAIN VERIFICATION TEST. Refer to **POWERTRAIN VERIFICATION TEST - 6.7L** .

No

- Replace the DOC/DPF Catalyst outlet temperature sensor. Refer to **CATALYST, SELECTIVE CATALYTIC REDUCTION (SCR), REMOVAL** .
- Perform the POWERTRAIN VERIFICATION TEST. Refer to **POWERTRAIN VERIFICATION TEST - 6.7L** .

P20EE-SCR NOX CATALYST EFFICIENCY BELOW THRESHOLD - BANK 1

For a complete wiring diagram, **refer to appropriate SYSTEM WIRING DIAGRAMS article** .

THEORY OF OPERATION

The Selective Catalytic Reduction (SCR) Catalyst is used in combination with the Diesel Exhaust Fluid system to reduce the amount of NOx gases produced during engine combustion. Excessive fuel or oil entering the exhaust system due to a failed engine component or Fuel Injector can cause the temperature to rise and will result in damage to the SCR Catalyst. The Powertrain Control Module (PCM) monitors the NOx concentration in the engine's exhaust gases using an aftertreatment Intake NOx Sensor and an aftertreatment Outlet NOx Sensor. By comparing these two values, the PCM is able to determine the conversion efficiency of the SCR catalyst and dosing system. The PCM illuminates the MIL immediately when the monitor runs and fails.

WHEN MONITORED:

This monitor has to meet specific engine and aftertreatment conditions to run and complete. NOx sensor data is gathered over varying engine speeds and loads. When enough data has been gathered, the diagnostic will run, make a pass/fail decision, and begin to gather data again.

SET CONDITION:

The Powertrain Control Module detects that the NOx conversion across the SCR catalyst is lower than expected.

POSSIBLE CAUSES

Possible Causes
DEGRADED, DILUTED OR INCORRECT DIESEL EXHAUST FLUID
DIESEL EXHAUST FLUID DEPOSITS IN THE DECOMPOSITION TUBE
EXHAUST SYSTEM LEAKS
MALFUNCTIONING DEF DOSING SYSTEM

DEFECTIVE SCR CATALYST

Always perform the Pre-Diagnostic Troubleshooting procedure before proceeding. Refer to PRE-DIAGNOSTIC TROUBLESHOOTING PROCEDURE - 6.7L .

DIAGNOSTIC TEST

1. **ACTIVE DTC**

   NOTE: Troubleshoot all other active NOx Sensor and DEF Dosing System related fault codes before this fault.

   1. Turn the ignition on.
   2. With the scan tool, select View DTCs.

      Is the DTC active?

      Yes

      - Go To 2.

      No

      - Perform the INTERMITTENT CONDITION diagnostic procedure. Refer to **INTERMITTENT CONDITION - 6.7L** .

2. **CHECK THE DIESEL EXHAUST FLUID**
   1. Turn the ignition off.
   2. Collect a sample of diesel exhaust fluid from the system.
   3. Visually inspect the fluid for signs of contamination or debris.
   4. Test the quality of the fluid using litmus paper (supplied by parts) or by using the SPX DEF/UREA Refractometer 94-F-00K-108-456 or equivalent.

      NOTE: The diesel exhaust fluid should register approximately 9 ph with the litmus paper and 32.5 percent using a refractometer.

      Is the diesel exhaust fluid quality within specification and free of debris and contamination?

      Yes

      - Go To 3.

      No

      - Drain the diesel exhaust fluid from the tank and fill the system. If the fluid is contaminated, follow the cleaning procedure. Refer to **TANK, DIESEL EXHAUST FLUID,**

CLEANING .

- Perform the POWERTRAIN VERIFICATION TEST. Refer to **POWERTRAIN VERIFICATION TEST - 6.7L** .

3. **CHECK FOR DIESEL EXHAUST FLUID LEAK**
   1. Turn the ignition on.
   2. With the scan tool, navigate to Systems Tests and actuate the DEF Prime Test.

      NOTE: This will pressurize the system, making a leak easier to see.

   3. Inspect for signs of a Diesel Exhaust Fluid leak at:
      - DEF Tank connectors.
      - DEF Injector and Injector connectors.
      - DEF Heater Lines.
      - DEF Supply Pump Assembly.

      NOTE: Diesel exhaust fluid will form white deposits around leaky fittings.

      Were any leaks found?

      Yes

      - Repair or replace the faulty component in accordance with the service information.
      - Perform the POWERTRAIN VERIFICATION TEST. Refer to **POWERTRAIN VERIFICATION TEST - 6.7L** .

      No

      - Go To 4.

4. **CHECK THE EXHAUST SYSTEM FOR LEAKS**
   1. Visually inspect the entire exhaust system for signs of a leak.

      Were any exhaust leaks found?

      Yes

      - Perform the appropriate repair.
      - Perform the POWERTRAIN VERIFICATION TEST. Refer to **POWERTRAIN VERIFICATION TEST - 6.7L** .

      No

      - Go To 5.

5. **CHECK FOR DEPOSITS IN THE DECOMPOSITION TUBE**

1. Remove the DEF Injector from the Decomp Tube. Refer to **INJECTOR, DIESEL EXHAUST FLUID, REMOVAL** .
2. Visually inspect the Decomp Tube for diesel exhaust fluid deposits.

   Were any deposits found?

   Yes

   - Clean the deposits from the Decomp Tube.
   - Perform the POWERTRAIN VERIFICATION TEST. Refer to **POWERTRAIN VERIFICATION TEST - 6.7L** .

   No

   - Go To 6.

6. **CHECK THE DEF INJECTOR OPERATION**
   1. Reconnect the DEF Injector harness connector.
   2. Place the DEF Injector in a container to capture the fluid sprayed.
   3. Turn the ignition on.
   4. With the scan tool, navigate to Systems Tests and actuate the Diesel Exhaust Fluid Doser Pump Override Test.

      NOTE: **This Test will run for six minutes before timing out. The amount of flow may fluctuate through out the test, therefore the test must be allowed to run completely in order for the results to be accurate. The fluid should spray out as a mist. There should be no dripping from the holes in the DEF Injector at any time during the duration of the test procedure.**

   5. Measure the amount of fluid sprayed after the test times out

      Does the fluid sprayed measure between 85 ml and 115 ml?

      Yes

      - Replace the SCR Catalyst in accordance with the service information. Refer to **CATALYST, SELECTIVE CATALYTIC REDUCTION (SCR), REMOVAL** .
      - Perform the POWERTRAIN VERIFICATION TEST. Refer to **POWERTRAIN VERIFICATION TEST - 6.7L** .

      No

      - Replace the DEF Supply Pump Assembly Filter in accordance with the service information. Refer to **FILTER, DIESEL EXHAUST FLUID, REMOVAL** . Perform the Diesel Exhaust Fluid Doser Pump Override Test again. If the system passes, then the repair is complete. If

the system fails the test again, replace the DEF Supply Pump Assembly in accordance with the service information. Refer to **ASSEMBLY, DIESEL EXHAUST FLUID PUMP, REMOVAL** .

- Perform the POWERTRAIN VERIFICATION TEST. Refer to **POWERTRAIN VERIFICATION TEST - 6.7L** .

P20FE-(DIESEL EXHAUST FLUID) REDUCTANT METERING UNIT PERFORMANCE

For a complete wiring diagram, **refer to appropriate SYSTEM WIRING DIAGRAMS article** .

THEORY OF OPERATION

The Diesel Exhaust Fluid (DEF) Dosing Control Unit is used to control the operation and monitoring of the Diesel Exhaust Fluid system. The DEF Dosing Control Unit shares information with the Powertrain Control Module over the J1939 Data Link.

WHEN MONITORED:

Continuously with the ignition on.

SET CONDITION:

The DEF Dosing Control Unit reports an internal malfunction of the DEF Supply Pump Assembly to the PCM over the J1939 Data Link.

POSSIBLE CAUSES

Possible Causes
DEF SUPPLY PUMP ASSEMBLY

Always perform the Pre-Diagnostic Troubleshooting procedure before proceeding. Refer to PRE-DIAGNOSTIC TROUBLESHOOTING PROCEDURE - 6.7L .

DIAGNOSTIC TEST

1. **ACTIVE DTC**
    1. Ignition on, engine not running.
    2. With the scan tool, read DTCs.

    Is the DTC Active?

    Yes

    - Replace the DEF Supply Pump Assembly in accordance with the service information. Refer to **ASSEMBLY, DIESEL EXHAUST FLUID PUMP, REMOVAL** .
    - Perform the POWERTRAIN VERIFICATION TEST. Refer to **POWERTRAIN**

VERIFICATION TEST - 6.7L .

No

- Perform the INTERMITTENT CONDITION diagnostic procedure. Refer to **INTERMITTENT CONDITION - 6.7L** .

P20FF-(DIESEL EXHAUST FLUID) REDUCTANT CONTROL MODULE PERFORMANCE

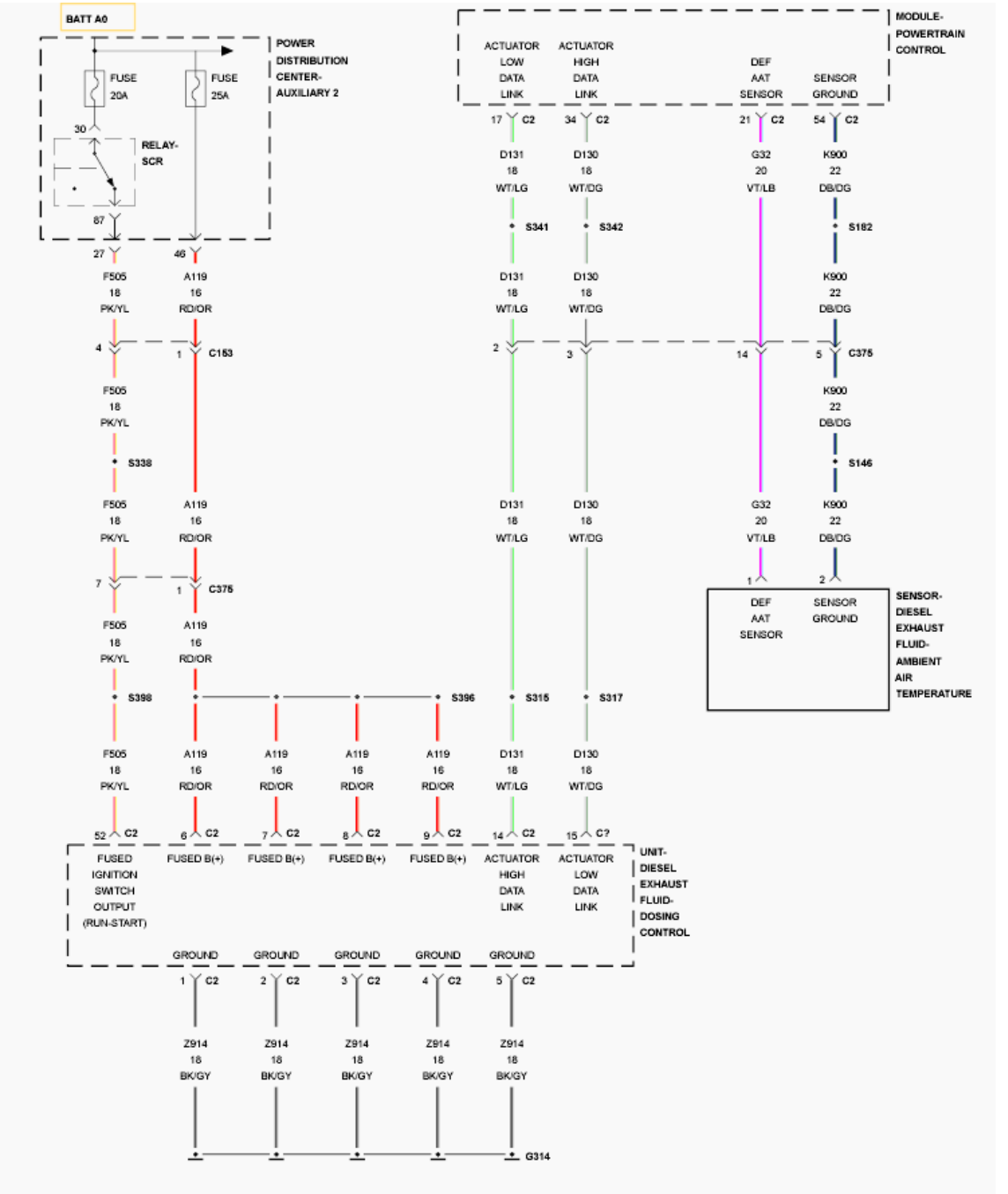

Fig. 138: Diesel Exhaust Fluid (DEF) Dosing Control Unit Wiring Diagram

Courtesy of CHRYSLER GROUP, LLC

For a complete wiring diagram, **refer to appropriate SYSTEM WIRING DIAGRAMS article** .

THEORY OF OPERATION

The Diesel Exhaust Fluid (DEF) Dosing Control Unit is used to control the operation and monitoring of the Diesel Exhaust Fluid system. The DEF Dosing Control Unit shares information with the Powertrain Control Module over the J1939 Data Link.

WHEN MONITORED:

Continuously with the ignition on.

SET CONDITION:

The DEF Dosing Control Unit reports an internal error to the PCM over the J1939 Data Link.

POSSIBLE CAUSES

Possible Causes
DEF DOSING CONTROL UNIT

Always perform the Pre-Diagnostic Troubleshooting procedure before proceeding. Refer to PRE-DIAGNOSTIC TROUBLESHOOTING PROCEDURE - 6.7L .

DIAGNOSTIC TEST

1. **ACTIVE DTC**
    1. Ignition on, engine not running.
    2. With the scan tool, read DTCs.

    Is the DTC Active?

    Yes

    - Replace the DEF Dosing Control Unit in accordance with the service information. Refer to **UNIT, DIESEL EXHAUST FLUID DOSING CONTROL, REMOVAL** .
    - Perform the POWERTRAIN VERIFICATION TEST. Refer to **POWERTRAIN VERIFICATION TEST - 6.7L** .

    No

    - Perform the INTERMITTENT CONDITION diagnostic procedure. Refer to **INTERMITTENT CONDITION - 6.7L** .

P2121-ACCELERATOR PEDAL POSITION SENSOR 1 PERFORMANCE

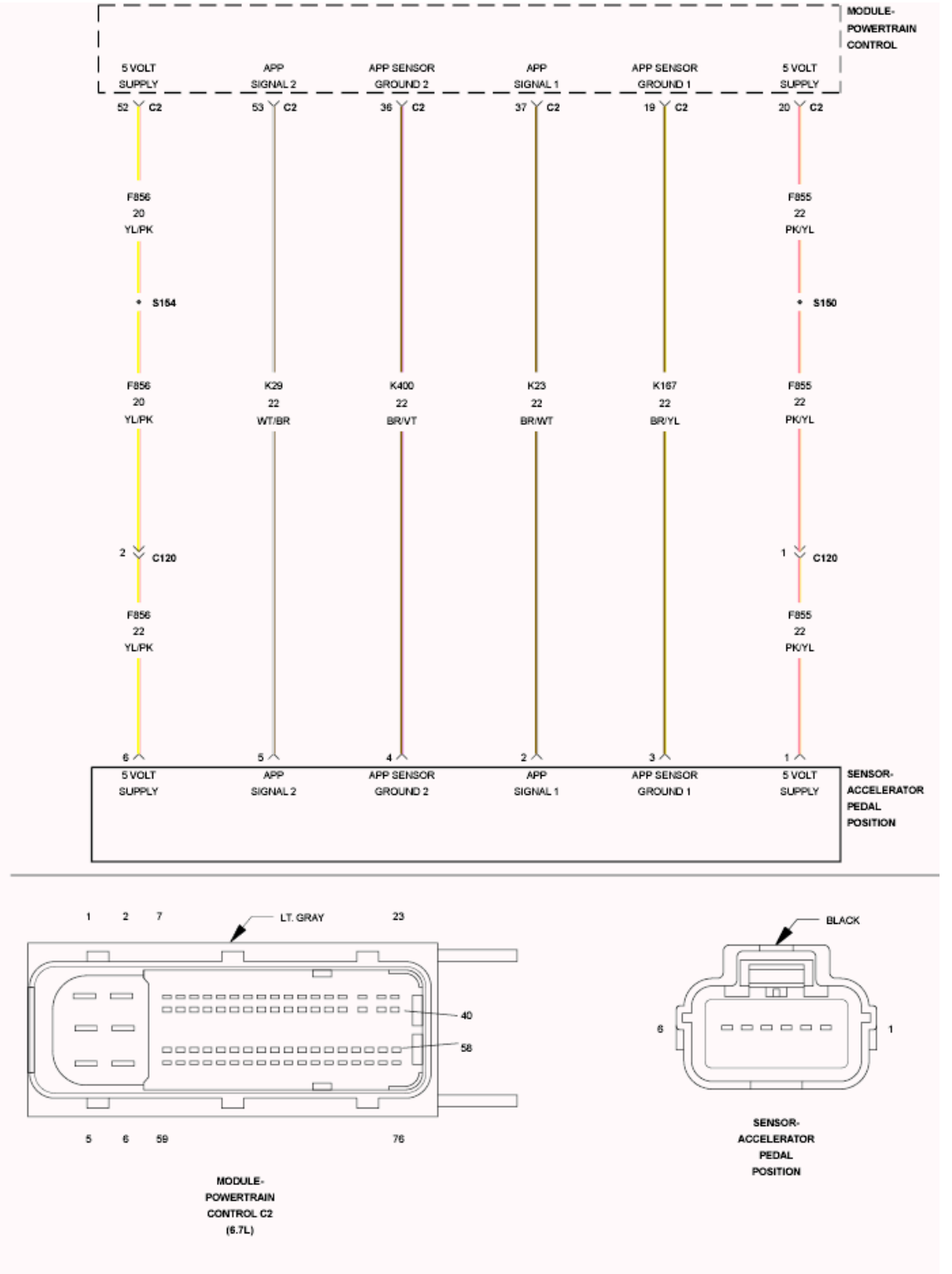

Fig. 139: Accelerator Pedal Position Sensor Circuit Schematic
Courtesy of CHRYSLER GROUP, LLC

For a complete wiring diagram, **refer to appropriate SYSTEM WIRING DIAGRAMS article** .

THEORY OF OPERATION

The throttle pedal produces two voltage signals proportional to the pedal position. The primary signal varies between 0 and 5.0 Volts and the secondary signal varies between 0 and 2.5 Volts. The Powertrain Control Module (PCM) uses the two signals to validate throttle pedal position to control engine fueling. The PCM illuminates the MIL lamp and ETC light solid immediately after the diagnostic runs and fails. Acceleration rate and engine output are limited. The PCM will turn off the MIL lamp after the diagnostic runs and passes in four consecutive drive cycles.

WHEN MONITORED:

Any time the Powertrain Control Module is powered up.

SET CONDITION:

The Powertrain Control Module (PCM) detected a conformance error between APPS 1 and APPS 2.

POSSIBLE CAUSES

Possible Causes
WIRING HARNESS OR CONNECTOR DAMAGED
APP SENSOR
POWERTRAIN CONTROL MODULE (PCM)

Always perform the Pre-Diagnostic Troubleshooting procedure before proceeding. Refer to PRE-DIAGNOSTIC TROUBLESHOOTING PROCEDURE - 6.7L .

DIAGNOSTIC TEST

1. **OTHER DTCS PRESENT**
    1. Using the scan tool, check for any additional APP Sensor fault codes.

       Do you have any additional APP Sensor faults?

       Yes

       - Troubleshoot other DTCs first,
       - Go To 2.

       No

       - Perform the INTERMITTENT CONDITION diagnostic procedure. Refer to **INTERMITTENT CONDITION - 6.7L** .
2. **APP SENSOR HARNESS**
    1. Verify that the APP Sensor harness connector is connected.
    2. Inspect the harness and the APP Sensor harness connector.

Are any pins damaged?

Yes

- Repair or replace the harness.
- Perform the POWERTRAIN VERIFICATION TEST. Refer to **POWERTRAIN VERIFICATION TEST - 6.7L** .

No

- Go To 3.

3. **CHECK THE APP SENSOR**
   1. Monitor the APPS 1 and APPS 2 voltage with the scan tool while depressing the accelerator pedal.

      Is the voltage transition shown on the scan tool smooth while depressing the accelerator pedal and is the voltage from APPS 1 twice as much +/- 3% as the voltage from APPS 2?

      Yes

      - Go To 4.

      No

      - Replace the APP Sensor.
      - Perform the POWERTRAIN VERIFICATION TEST. Refer to **POWERTRAIN VERIFICATION TEST - 6.7L** .

4. **CHECK THE (K23) APP SENSOR 1 SIGNAL CIRCUIT FOR AN OPEN/HIGH RESISTANCE**
   1. Disconnect the C2 PCM harness connector.
   2. Disconnect the APP Sensor harness connector.

      NOTE: Check connectors - Clean/repair as necessary.

   3. Measure the resistance of the (K23) APPS 1 Signal circuit between the APP Sensor harness connector and the PCM C2 harness connector.

      Is the resistance below 5.0 Ohms?

      Yes

      - Go To 5.

      No

      - Repair the (K23) APPS 1 Signal circuit for an open or high resistance.
      - Perform the POWERTRAIN VERIFICATION TEST. Refer to **POWERTRAIN**

VERIFICATION TEST - 6.7L .

5. **CHECK THE (F855) 5-VOLT SUPPLY CIRCUIT FOR AN OPEN/HIGH RESISTANCE**
    1. Measure the resistance of the (F855) 5-Volt Supply circuit between the APP Sensor connector and the PCM C2 connector.

       Is the resistance below 5.0 Ohms?

       Yes

       - Go To 6.

       No

       - Repair the (F855) 5-Volt Supply circuit for an open or high resistance.
       - Perform the POWERTRAIN VERIFICATION TEST. Refer to **POWERTRAIN VERIFICATION TEST - 6.7L** .
6. **CHECK THE (K23) APP SENSOR 1 SIGNAL CIRCUIT FOR A SHORT TO GROUND**

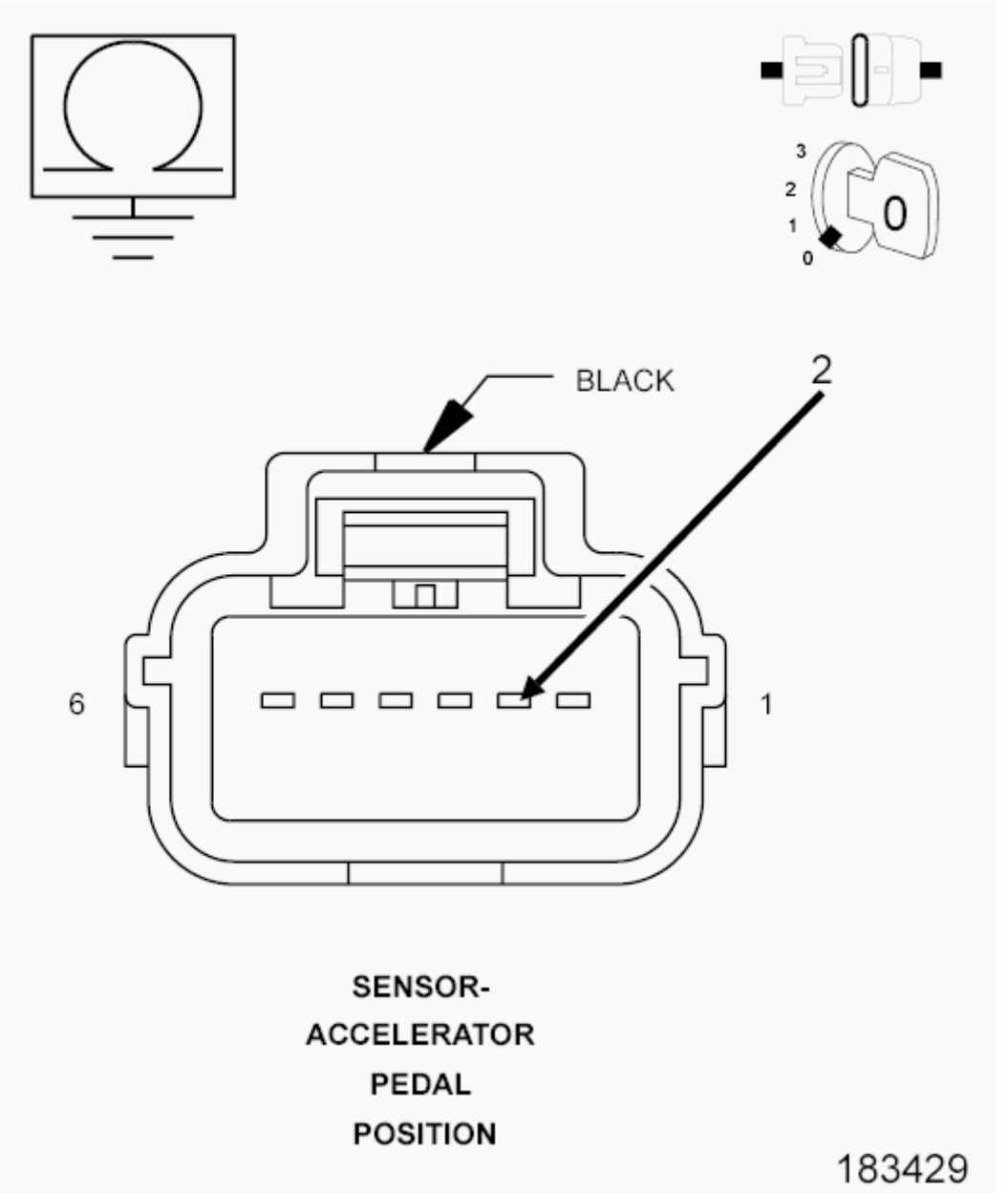

Fig. 140: Measuring Resistance Between Ground And (K23) APP Sensor No. 1 Signal Circuit In APP Sensor Harness Connector
Courtesy of CHRYSLER GROUP, LLC

1. Measure the resistance between ground and the APP Sensor 1 Signal circuit at the APP Sensor harness connector.

   Is the resistance above 10K Ohms?

   Yes

   - Go To 7.

No

- Repair the (K23) APP Sensor 1 Signal circuit for a short to ground.
- Perform the POWERTRAIN VERIFICATION TEST. Refer to **POWERTRAIN VERIFICATION TEST - 6.7L** .

7. **CHECK FOR THE (K23) APP SENSOR 1 SIGNAL CIRCUIT SHORTED TO ANOTHER CIRCUIT**
   1. Measure the resistance between the (K23) APP Sensor 1 Signal circuit and all other circuits in the PCM C2 connector.

      Is the resistance below 10K Ohms between the (K23) APPS 1 Signal circuit and any other circuit?

      Yes

      - Repair the short between the (K23) APP Sensor Signal circuit and the circuit that measured below 10k Ohms.
      - Perform the POWERTRAIN VERIFICATION TEST. Refer to **POWERTRAIN VERIFICATION TEST - 6.7L** .

      No

      - Go To 8.

8. **CHECK THE (F855) 5-VOLT SUPPLY CIRCUIT FOR A SHORT TO GROUND**

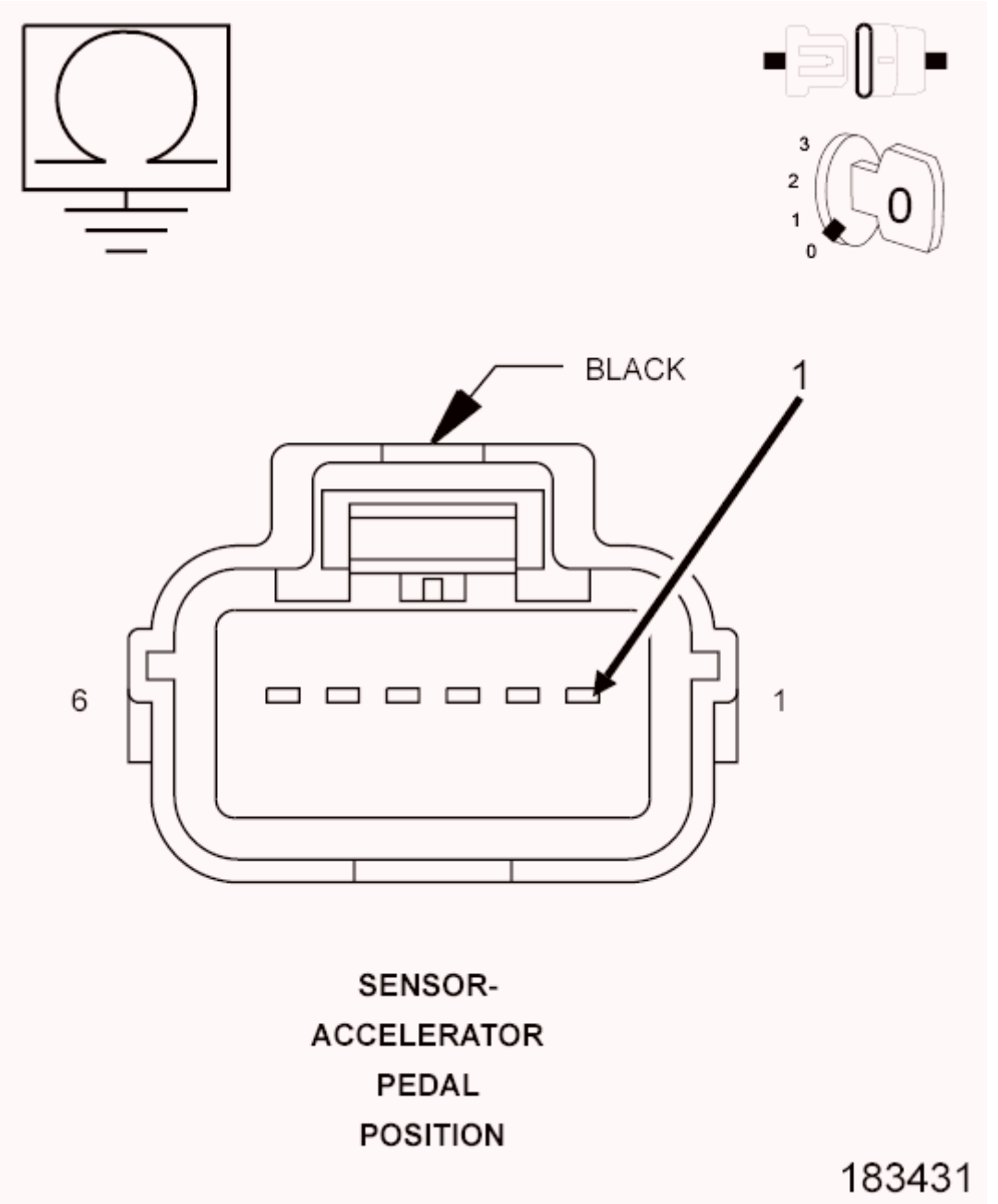

Fig. 141: Measuring Resistance Between Ground And (F855) 5-Volt Supply Circuit In APP Sensor Harness Connector
Courtesy of CHRYSLER GROUP, LLC

1. Measure the resistance between the ground and the (F855) 5-Volt Supply circuit at the APP Sensor harness connector.

   Is the resistance above 10k Ohms?

   Yes

- Repair the (F855) 5-Volt Supply circuit for a short to ground.
- Perform the POWERTRAIN VERIFICATION TEST. Refer to **POWERTRAIN VERIFICATION TEST - 6.7L** .

No

- Go To 9.

9. **CHECK FOR THE (F855) 5-VOLT SUPPLY CIRCUIT SHORTED TO ANOTHER CIRCUIT**
   1. Measure the resistance between the (F855) 5-Volt Supply circuit and all other circuits in PCM C2 harness connector.

      Is the resistance below 10K Ohms between the (F855) 5-Volt Supply circuit and any other circuit?

      Yes

      - Repair the short between the (F855) 5-Volt Supply circuit and the circuit that measured below 10k Ohms.
      - Perform the POWERTRAIN VERIFICATION TEST. Refer to **POWERTRAIN VERIFICATION TEST - 6.7L** .

      No

      - Go To 10.

10. **CHECK THE (K167) APP SENSOR 1 RETURN CIRCUIT FOR AN OPEN/HIGH RESISTANCE**
    1. Measure the resistance of the (K167) APP Sensor 1 Return circuit between the APP Sensor connector and the PCM C2 connector.

       Is the resistance below 5.0 Ohms?

       Yes

       - Go To 11.

       No

       - Repair the (K167) APP Sensor Return circuit for an open or high resistance.
       - Perform the POWERTRAIN VERIFICATION TEST. Refer to **POWERTRAIN VERIFICATION TEST - 6.7L** .

11. **CHECK FOR THE (K23) APP SENSOR 1 SIGNAL CIRCUIT SHORTED TO THE (F855) 5-VOLT SUPPLY CIRCUIT**

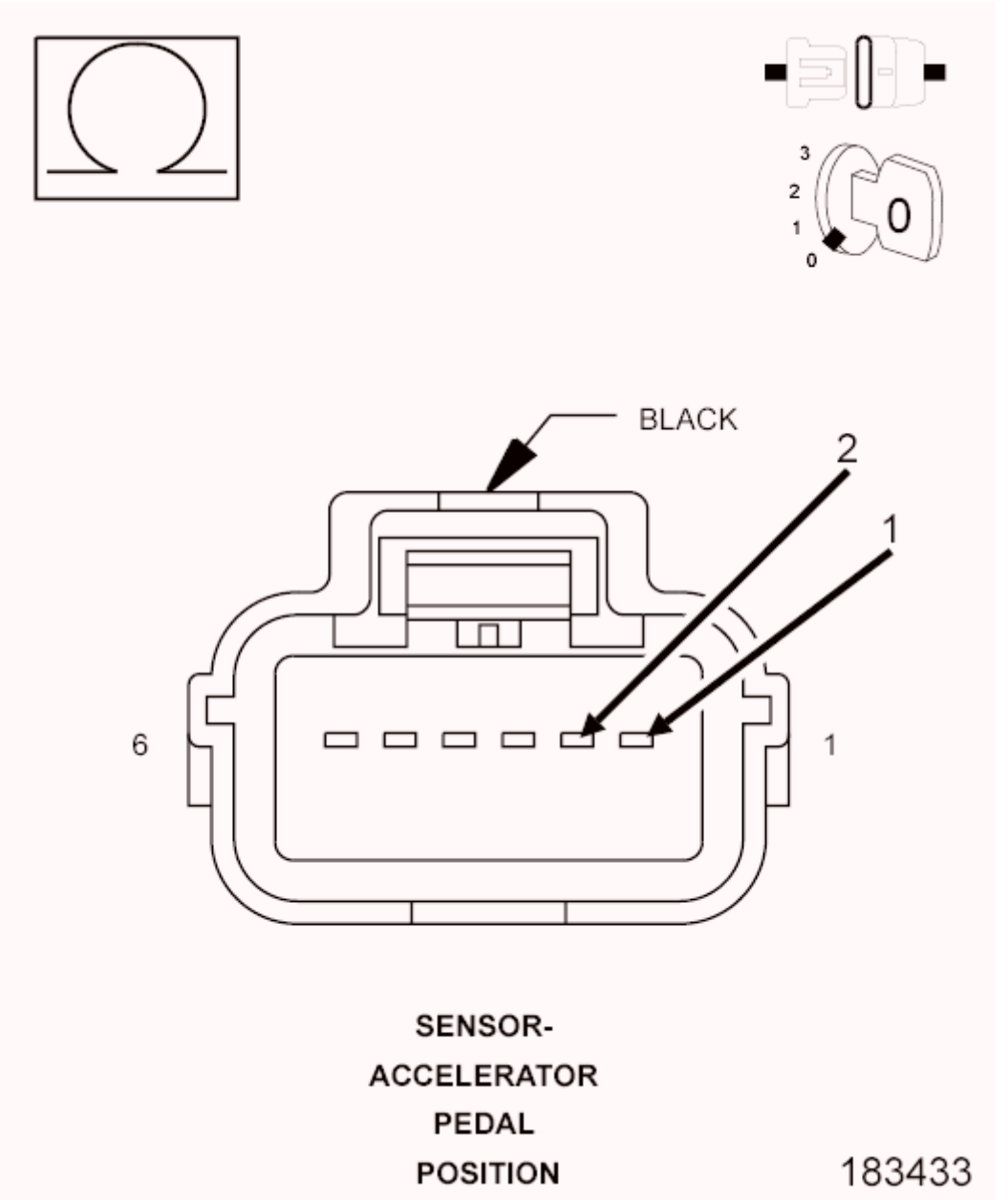

Fig. 142: Measuring Resistance Between (K23) APP Sensor No. 1 Signal Circuit And (F855) 5-Volt Supply Circuit In APP Sensor Harness Connector
Courtesy of CHRYSLER GROUP, LLC

1. Measure the resistance between the (K23) APP Sensor 1 Signal circuit and the (F855) 5-Volt Supply circuit at the APP Sensor harness connector.

   Is the resistance below 10k Ohms?

   Yes

   - Repair the short between the (K23) APP Sensor Signal circuit and the (F855) 5-Volt Supply

circuit.

- Perform the POWERTRAIN VERIFICATION TEST. Refer to **POWERTRAIN VERIFICATION TEST - 6.7L** .

No

- Go To 12.

12. **CHECK FOR THE (K167) APP SENSOR 1 RETURN CIRCUIT SHORTED TO ANOTHER CIRCUIT**
    1. Measure the resistance between the (K167) APP Sensor 1 Return circuit at and all other circuits in the PCM C2 harness connector.

       Is the resistance below 10k Ohms?

       Yes

       - Repair the short between the (K167) APP Sensor 1 Return circuit and the circuit that measured below 10k Ohms.
       - Perform the POWERTRAIN VERIFICATION TEST. Refer to **POWERTRAIN VERIFICATION TEST - 6.7L** .

       No

       - Go To 13.

13. **CHECK THE (K29) APP SENSOR 2 SIGNAL CIRCUIT FOR AN OPEN/HIGH RESISTANCE**
    1. Measure the resistance of the (K29) APP Sensor 2 Signal circuit between the APP Sensor harness connector and the PCM C2 harness connector.

       Is the resistance below 5.0 Ohms?

       Yes

       - Go To 14.

       No

       - Repair the (K29) APP Sensor 2 Signal circuit for an open or high resistance.
       - Perform the POWERTRAIN VERIFICATION TEST. Refer to **POWERTRAIN VERIFICATION TEST - 6.7L** .

14. **CHECK THE (F856) 5-VOLT SUPPLY CIRCUIT FOR AN OPEN/HIGH RESISTANCE**
    1. Measure the resistance of the (F856) 5-Volt Supply circuit between the APP Sensor harness connector and the PCM C2 connector.

       Is the resistance below 5.0 Ohms?

Yes

- Go To 15.

No

- Repair the (F856) 5-Volt Supply circuit for an open or high resistance.
- Perform the POWERTRAIN VERIFICATION TEST. Refer to **POWERTRAIN VERIFICATION TEST - 6.7L** .

15. **CHECK THE (K29) APP SENSOR 2 SIGNAL CIRCUIT FOR A SHORT TO GROUND**

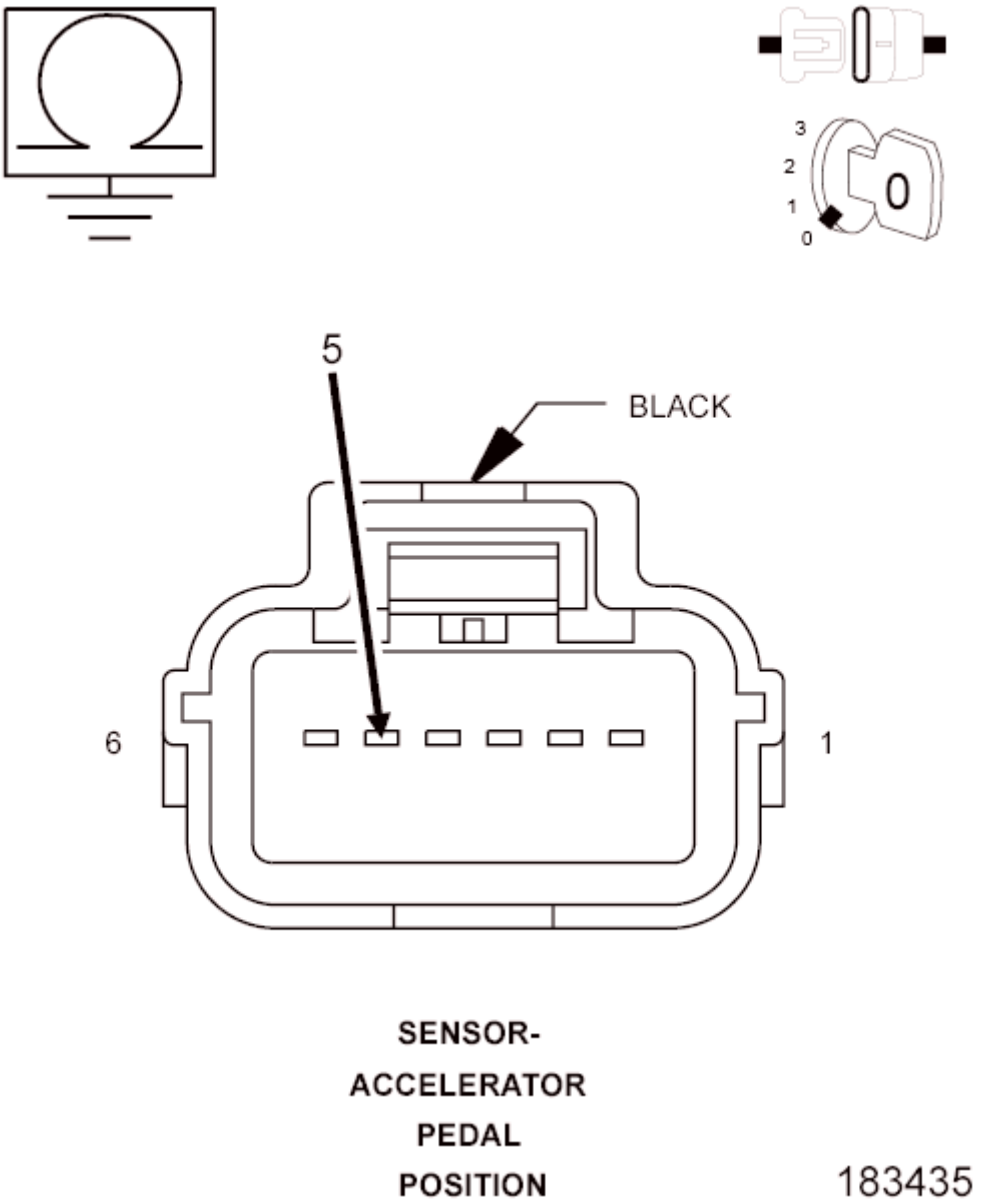

Fig. 143: Measuring Resistance Between Ground And (K29) APP Sensor No. 2 Signal Circuit In

APP Sensor Harness Connector
Courtesy of CHRYSLER GROUP, LLC

1. Measure the resistance between ground and the (K29) APP Sensor 2 Signal circuit at the APP Sensor harness connector.

   Is the resistance below 10k Ohms?

   Yes

   - Repair the (K29) APP Sensor 2 Signal circuit for a short to ground.
   - Perform the POWERTRAIN VERIFICATION TEST. Refer to **POWERTRAIN VERIFICATION TEST - 6.7L** .

   No

   - Go To 16.

16. **CHECK FOR THE (K29) APP SENSOR 2 SIGNAL CIRCUIT SHORTED TO ANOTHER CIRCUIT**
    1. Measure the resistance between the (K29) APP Sensor 2 Signal circuit and all other circuits in the PCM C2 harness connector.

       Is the resistance below 10k Ohms?

       Yes

       - Repair the short between the (K29) APP Sensor 2 Signal circuit and the circuit that measured below 10k Ohms.
       - Perform the POWERTRAIN VERIFICATION TEST. Refer to **POWERTRAIN VERIFICATION TEST - 6.7L** .

       No

       - Go To 17.

17. **CHECK THE (F856) 5-VOLT SUPPLY CIRCUIT FOR A SHORT TO GROUND**

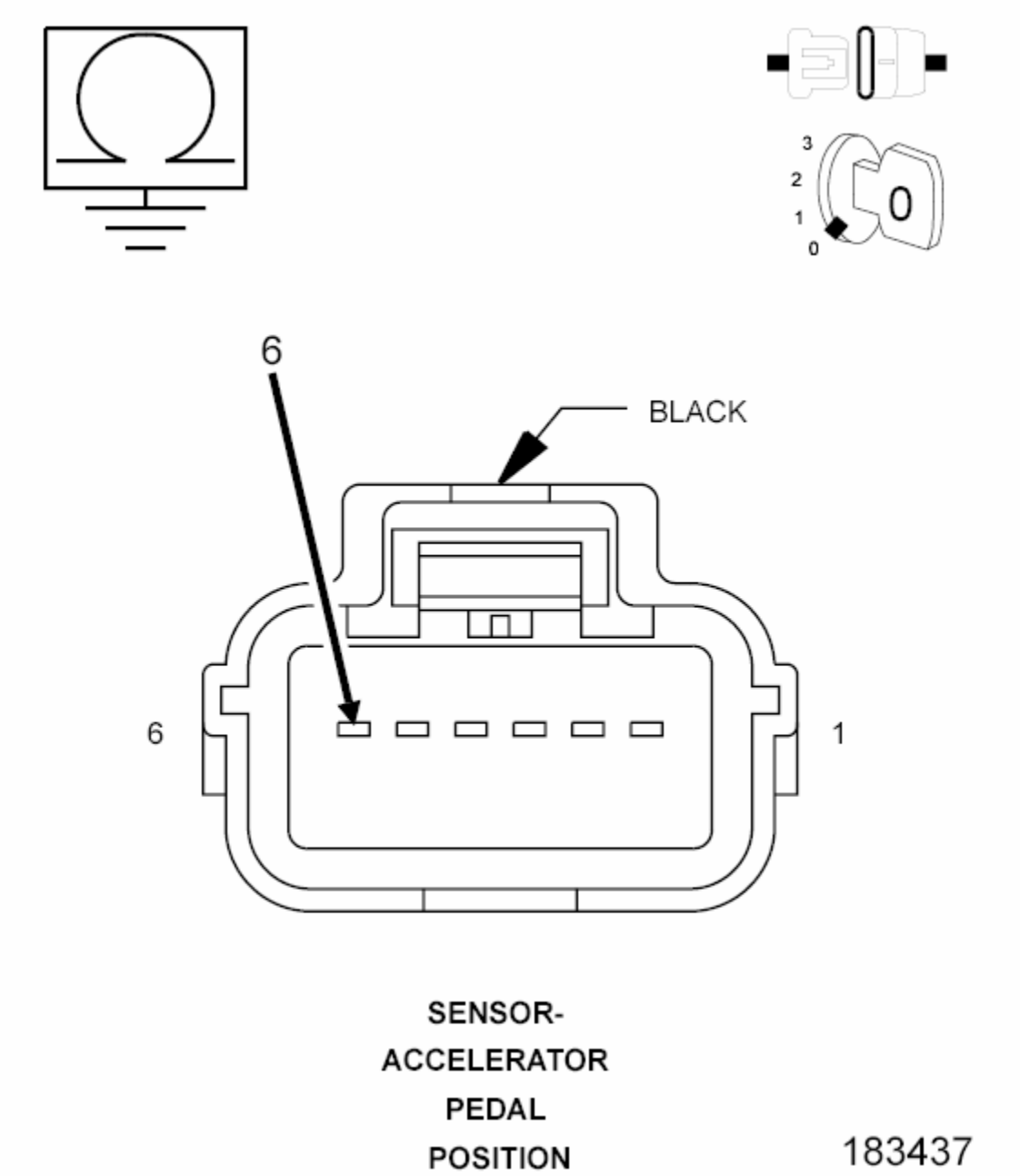

Fig. 144: Measuring Resistance Between Ground And (F856) 5-Volt Supply Circuit In APP Sensor Harness Connector
Courtesy of CHRYSLER GROUP, LLC

1. Measure the resistance between ground and the (F856) 5-Volt Supply circuit at the APP Sensor harness connector.

   Is the resistance below 10k Ohms?

   Yes

- Repair the (F856) 5-Volt Supply circuit for a short to ground.
- Perform the POWERTRAIN VERIFICATION TEST. Refer to **POWERTRAIN VERIFICATION TEST - 6.7L** .

No

- Go To 18.

18. **CHECK FOR THE (F856) 5-VOLT SUPPLY CIRCUIT SHORTED TO ANOTHER CIRCUIT**
    1. Measure the resistance between the (F856) 5-Volt Supply circuit and all other circuits in the PCM C2 harness connector.

    Is the resistance below 10k Ohms?

    Yes

    - Repair the short between the (F856) 5-Volt Supply circuit and the circuit that measured below 10k Ohms.
    - Perform the POWERTRAIN VERIFICATION TEST. Refer to **POWERTRAIN VERIFICATION TEST - 6.7L** .

    No

    - Go To 19.

19. **CHECK THE (K400) APP SENSOR 2 RETURN CIRCUIT FOR AN OPEN/HIGH RESISTANCE**
    1. Measure the resistance of the (K400) APP Sensor 2 Return circuit between the APP Sensor harness connector and the PCM C2 harness connector.

    Is the resistance below 5.0 Ohms?

    Yes

    - Go To 20.

    No

    - Repair the (K400) APP Sensor 2 Return circuit for an open or high resistance.
    - Perform the POWERTRAIN VERIFICATION TEST. Refer to **POWERTRAIN VERIFICATION TEST - 6.7L** .

20. **CHECK FOR THE (K29) APP SENSOR 2 SIGNAL CIRCUIT SHORTED TO THE (F856) 5-VOLT SUPPLY CIRCUIT**

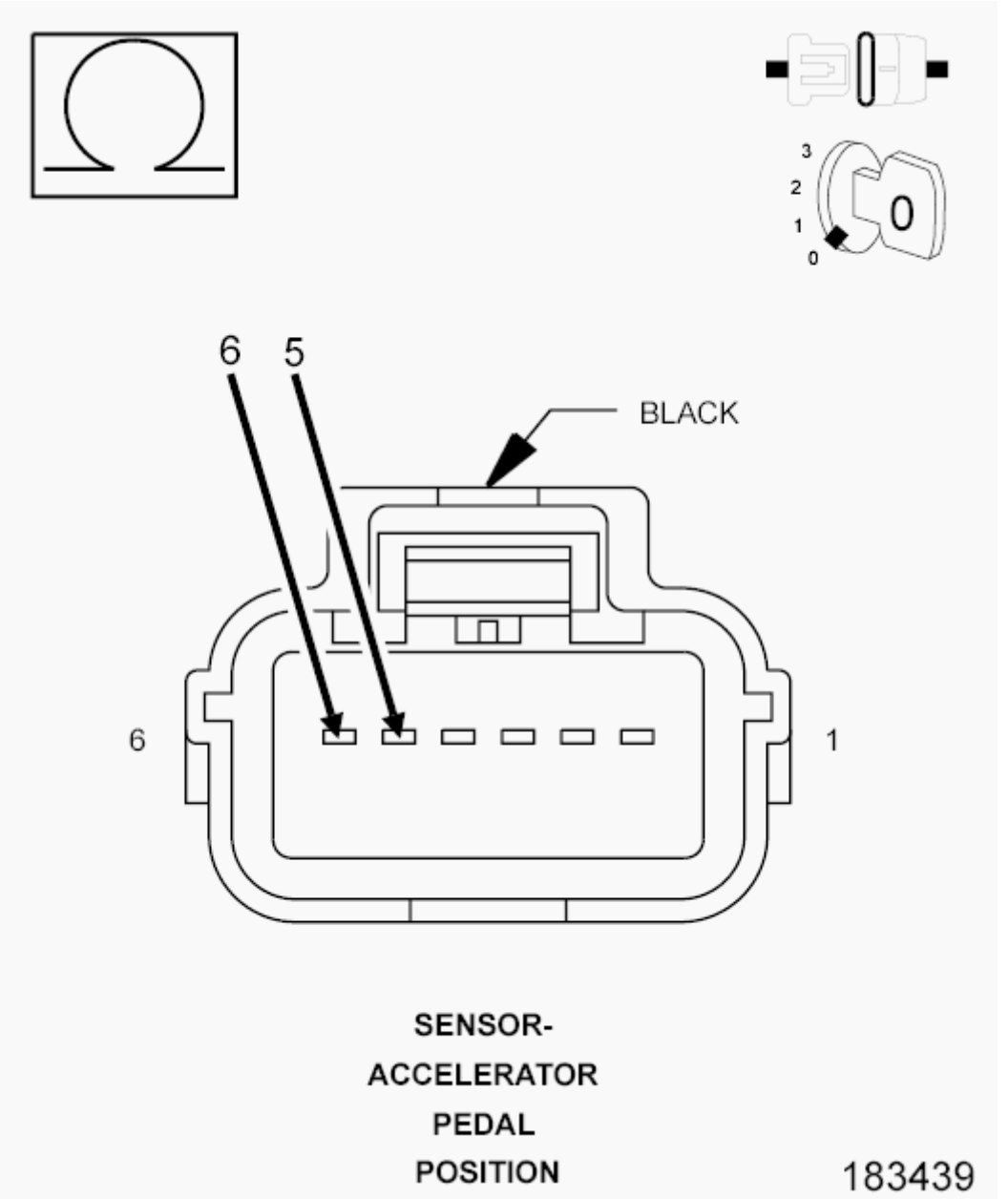

Fig. 145: Measuring Resistance Between (K29) APP Sensor No. 2 Signal Circuit And (F856) 5-Volt Supply Circuit In APP Sensor Harness Connector
Courtesy of CHRYSLER GROUP, LLC

1. Measure the resistance between the (K29) APP Sensor 2 Signal circuit and the (F856) 5-Volt Supply circuit in the APP Sensor harness connector.

   Is the resistance below 10k Ohms?

   Yes

   - Repair the short between the (K29) APP Sensor 2 Signal circuit and the (F856) 5-Volt

Supply circuit.

- Perform the POWERTRAIN VERIFICATION TEST. Refer to **POWERTRAIN VERIFICATION TEST - 6.7L** .

No

- Go To 21.

21. **CHECK FOR THE (K400) APP SENSOR 2 RETURN CIRCUIT SHORTED TO ANOTHER CIRCUIT**
    1. Measure the resistance between the (K400) APP Sensor 2 Return circuit and all other circuits in the PCM C2 harness connector.

       Is the resistance below 10k Ohms?

       Yes

       - Repair the short between the (K400) APP Sensor 2 Return circuit and the circuit that measured below 10k Ohms.
       - Perform the POWERTRAIN VERIFICATION TEST. Refer to **POWERTRAIN VERIFICATION TEST - 6.7L** .

       No

       - Go To 22.

22. **POWERTRAIN CONTROL MODULE**
    1. Reconnect the PCM connectors.
    2. Reconnect the APP Sensor connector.
    3. Turn Ignition on, engine off.
    4. While monitoring with the scan tool, disconnect the APP Sensor harness connector.

       Did a APP Sensor 1 and APP Sensor 2 voltage low DTC set?

       Yes

       - Go To 23.

       No

       - Replace the Powertrain Control Module in accordance with the service information.
       - Perform the POWERTRAIN VERIFICATION TEST. Refer to **POWERTRAIN VERIFICATION TEST - 6.7L** .

23. **APP SENSOR**
    1. Reconnect the APP Sensor harness connector.
    2. Monitor the APP Sensor 1 and APP Sensor 2 voltage with the scan tool while depressing the

accelerator pedal.

Is the voltage transition shown on the scan tool smooth while depressing the accelerator and is the voltage from APP Sensor 1 twice as much +/- 3% as the voltage from APP Sensor 2?

Yes

- Perform the INTERMITTENT CONDITION diagnostic procedure. Refer to **INTERMITTENT CONDITION - 6.7L** .

No

- Replace the APP Sensor in accordance with the service information.
- Perform the POWERTRAIN VERIFICATION TEST. Refer to **POWERTRAIN VERIFICATION TEST - 6.7L** .

P2122-ACCELERATOR PEDAL POSITION SENSOR 1 CIRCUIT LOW

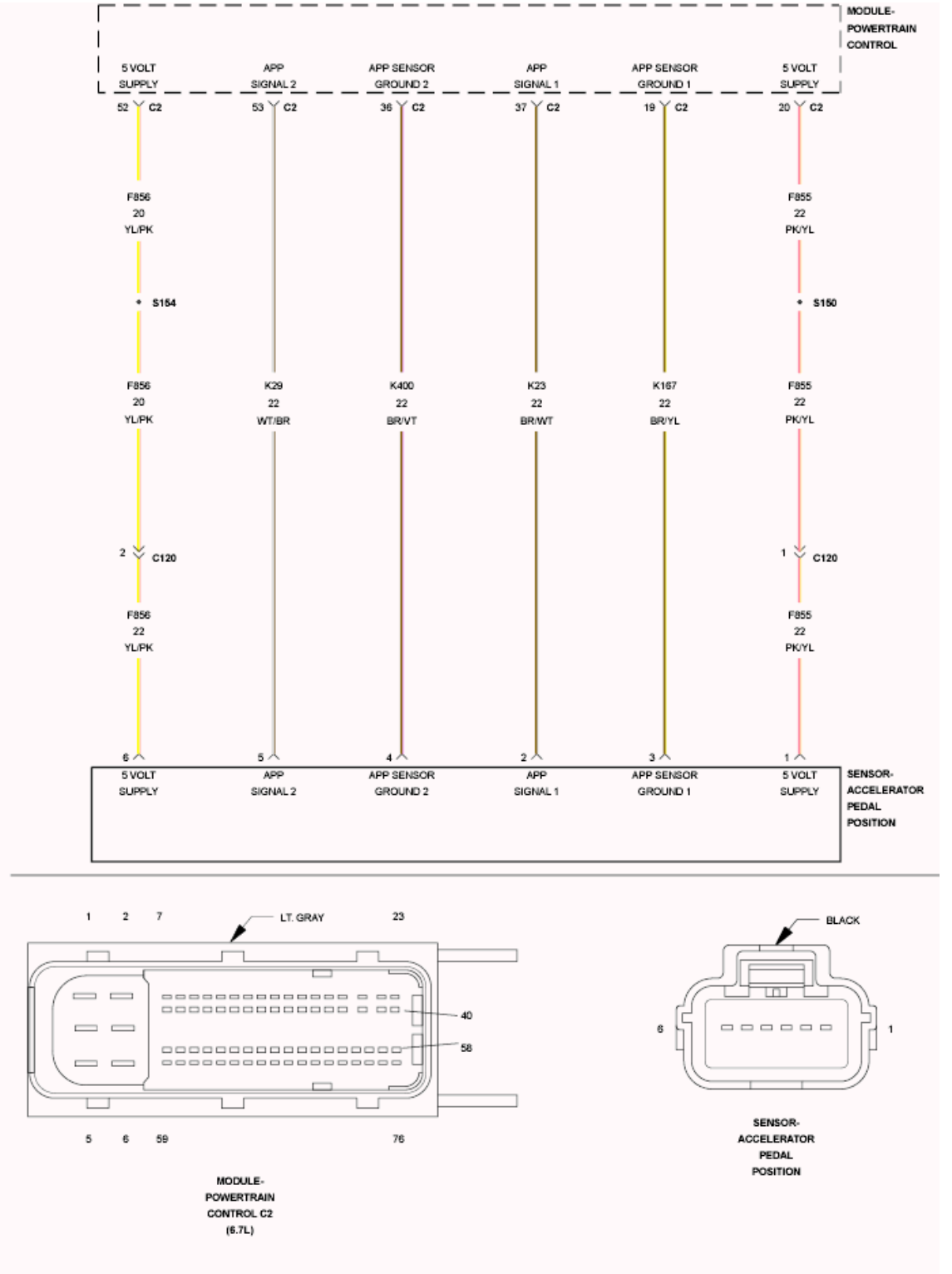

Fig. 146: Accelerator Pedal Position Sensor Circuit Schematic
Courtesy of CHRYSLER GROUP, LLC

For a complete wiring diagram, **refer to appropriate SYSTEM WIRING DIAGRAMS article** .

THEORY OF OPERATION

The throttle pedal produces two voltage signals proportional to the pedal movement. The primary signal varies between 0 and 5.0 Volts and the secondary signal varies between 0 and 2.5 Volts. The Powertrain Control Module (PCM) uses the two signals to validate throttle pedal position to control engine fueling. The PCM illuminates the MIL lamp and ETC light solid immediately after the diagnostic runs and fails. Acceleration rate and Engine output are limited. The PCM will turn off the MIL lamp after the diagnostic runs and passes in four consecutive drive cycles.

WHEN MONITORED:

Any time the Powertrain Control Module is powered up.

SET CONDITION:

When the APP Sensor No. 1 voltage is below 0.13 Volts for one second.

POSSIBLE CAUSES

Possible Causes
(F855) 5-VOLT SUPPLY CIRCUIT OPEN/HIGH RESISTANCE
(F855) 5-VOLT SUPPLY CIRCUIT SHORTED TO GROUND
(K23) APP SENSOR NO. 1 SIGNAL CIRCUIT OPEN/HIGH RESISTANCE
(K23) APP SENSOR NO. 1 SIGNAL CIRCUIT SHORTED TO GROUND
(K23) APP SENSOR NO. 1 SIGNAL CIRCUIT SHORTED TO THE (K167) APP SENSOR NO. 1 RETURN CIRCUIT
(K23) APP SENSOR NO. 1 SIGNAL CIRCUIT SHORTED TO THE (K400) APP SENSOR NO. 2 RETURN CIRCUIT
APP SENSOR
POWERTRAIN CONTROL MODULE (PCM)

Always perform the Pre-Diagnostic Troubleshooting procedure before proceeding. Refer to PRE-DIAGNOSTIC TROUBLESHOOTING PROCEDURE - 6.7L .

DIAGNOSTIC TEST

1. **CHECK THE APP SENSOR 1 VOLTAGE**

   NOTE: When this DTC is Active the engine speed, torque, and vehicle speed are limited to a Limp in mode.

   1. Ignition on, engine not running.
   2. With a scan tool, read the APP Sensor No. 1 voltage.

      Is the voltage below 0.13 of a Volt?

Yes

- Go To 2.

No

- Go To 11.

2. **CHECK THE (F855) 5-VOLT SUPPLY CIRCUIT**

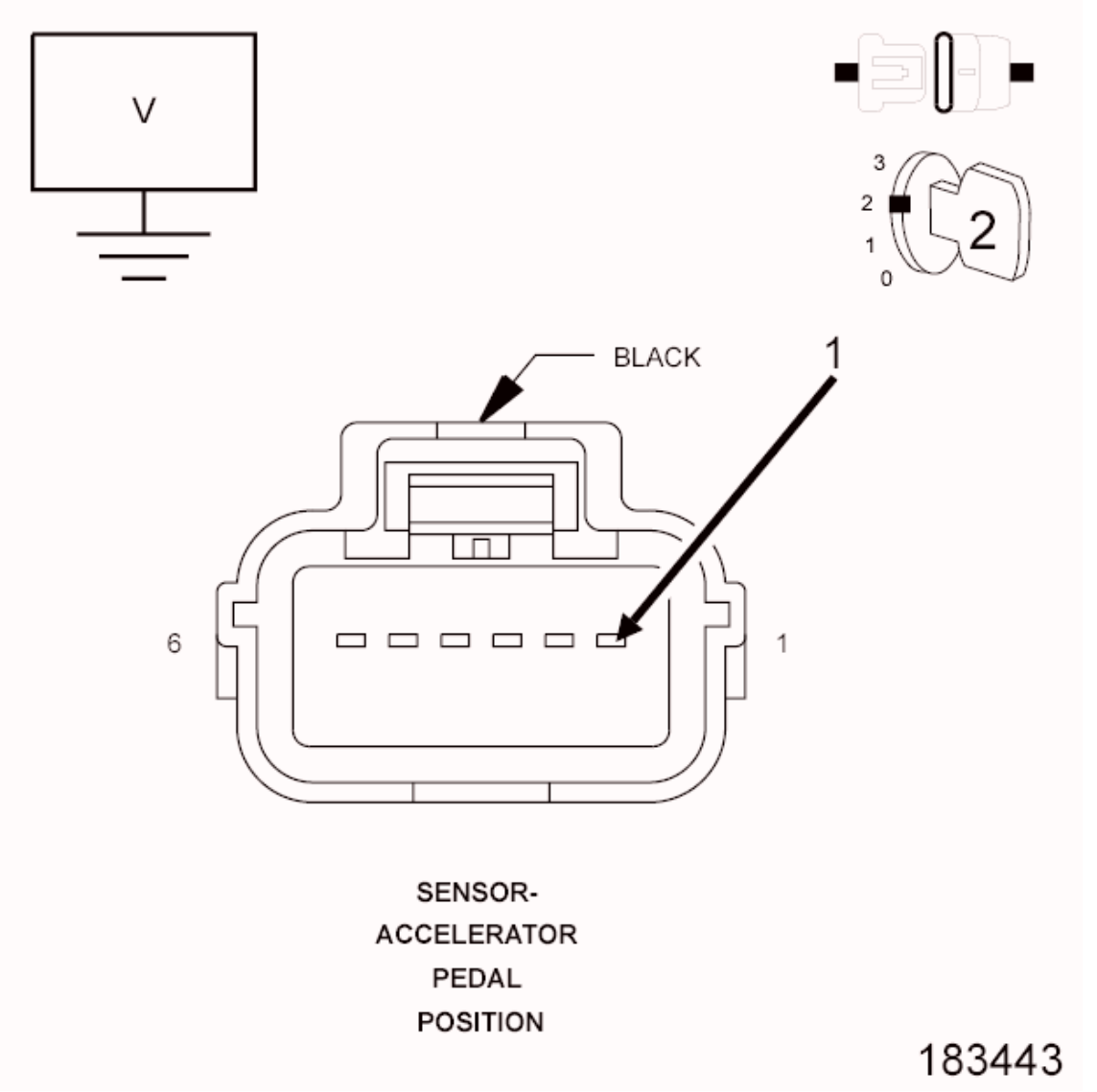

Fig. 147: Measuring Voltage On (F855) 5-Volt Supply Circuit In APP Sensor Harness Connector
Courtesy of CHRYSLER GROUP, LLC

1. Turn the ignition off.
2. Disconnect the APP Sensor harness connector.
3. Ignition on, engine not running.

4. Measure the voltage on the (F855) 5-Volt Supply circuit in the APP Sensor harness connector.

   Is the voltage between 4.65 and 5.36 Volts?

   Yes

   - Go To 3.

   No

   - Go To 8.

3. **CHECK THE ACCELERATOR PEDAL POSITION SENSOR**

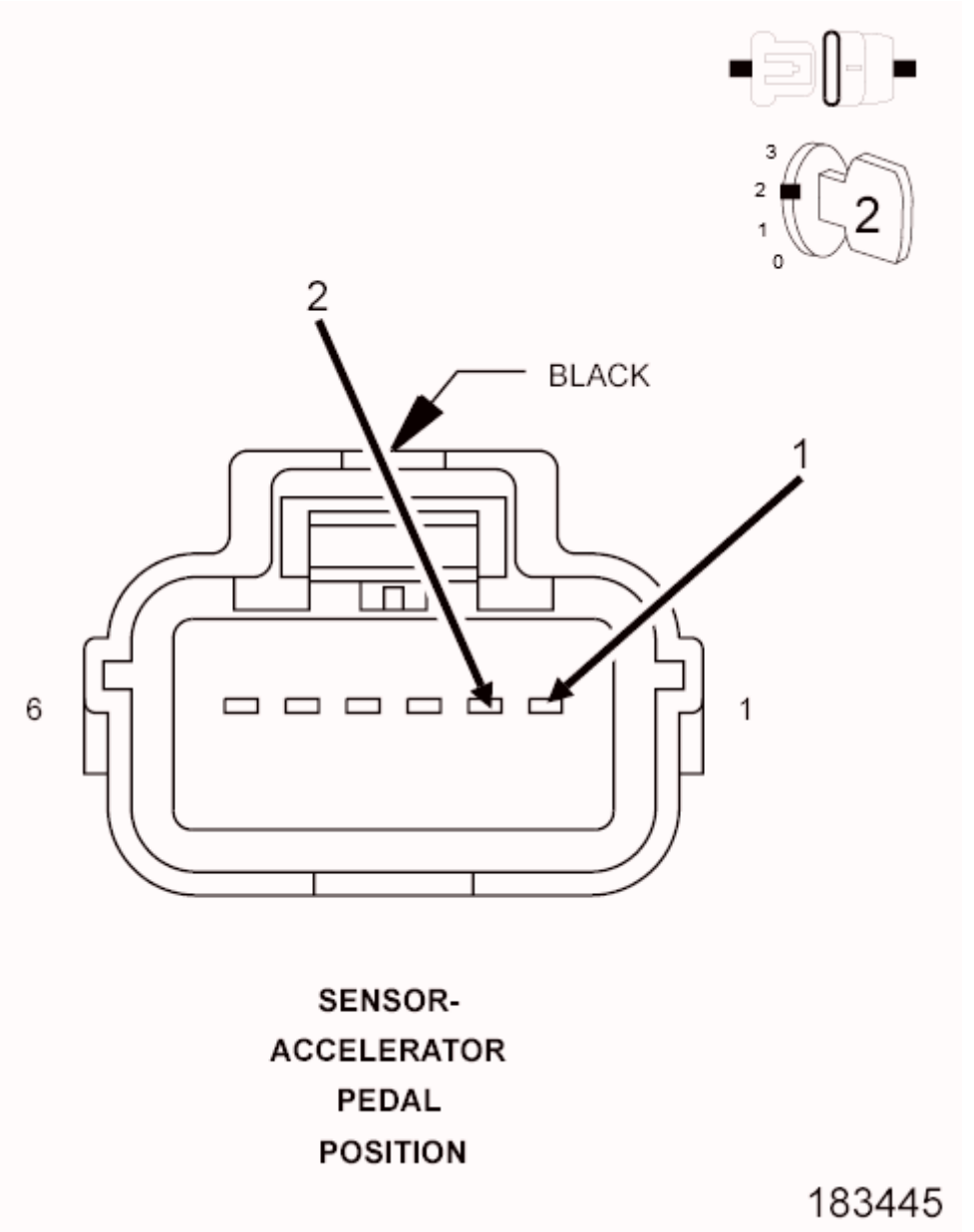

Fig. 148: Accelerator Pedal Position Sensor
Courtesy of CHRYSLER GROUP, LLC

1. Connect a jumper wire between the (F855) 5-Volt Supply circuit and the (K23) APP Sensor No. 1 Signal circuit in the APP Sensor harness connector.
2. With a scan tool, monitor the APP Sensor No. 1 voltage.

   Is the voltage reading between 4.65 and 5.36 Volts?

   Yes

   - Replace the APP Sensor Assembly in accordance with the Service Information. After installation is complete, use a scan tool and select the ETC RELEARN function to relearn the APPS values.
   - Perform the POWERTRAIN VERIFICATION TEST. Refer to **POWERTRAIN VERIFICATION TEST - 6.7L** .

   No

   - Go To 4.

4. **CHECK THE (K23) APP SENSOR NO. 1 SIGNAL CIRCUIT FOR AN OPEN/HIGH RESISTANCE**

   NOTE: Remove the jumper wire before continuing.

   1. Turn the ignition off.
   2. Disconnect the C2 PCM harness connector.
   3. Measure the resistance of the (K23) APP Sensor No. 1 Signal circuit from the APP Sensor harness connector to the C2 PCM harness connector.

      Is the resistance below 5.0 Ohms?

      Yes

      - Go To 5.

      No

      - Repair the (K23) APP Sensor No. 1 Signal circuit for an open or high resistance.
      - Perform the POWERTRAIN VERIFICATION TEST. Refer to **POWERTRAIN VERIFICATION TEST - 6.7L** .

5. **CHECK THE (K23) APP SENSOR NO. 1 SIGNAL CIRCUIT FOR A SHORT TO GROUND**

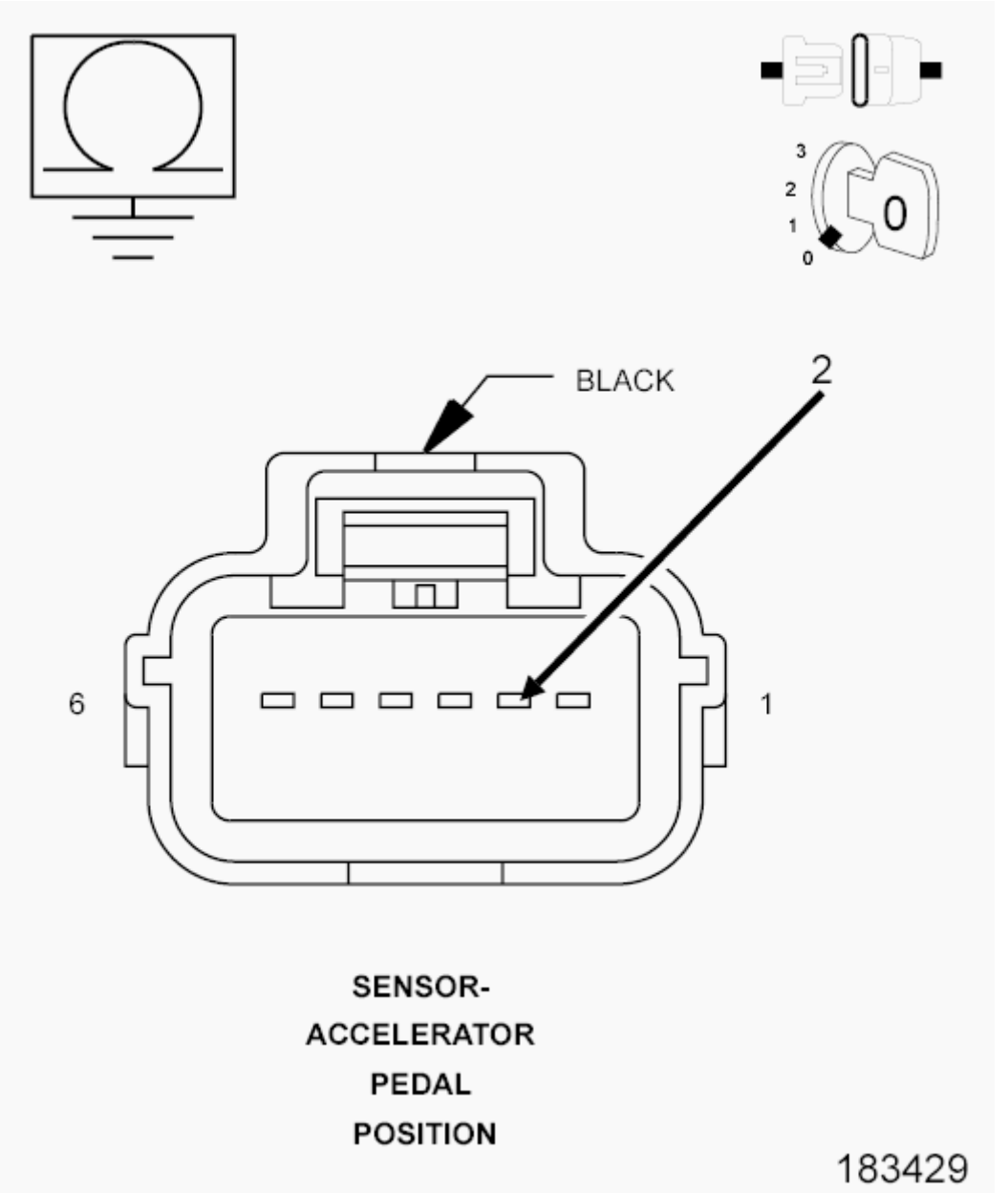

Fig. 149: Measuring Resistance Between Ground And (K23) APP Sensor No. 1 Signal Circuit In APP Sensor Harness Connector
Courtesy of CHRYSLER GROUP, LLC

1. Measure the resistance between ground and the (K23) APP Sensor No. 1 Signal circuit in the APP Sensor harness connector.

   Is the resistance below 10k Ohms?

   Yes

   - Repair the (K23) APP Sensor No. 1 Signal circuit for a short to ground.

- Perform the POWERTRAIN VERIFICATION TEST. Refer to **POWERTRAIN VERIFICATION TEST - 6.7L** .

No

- Go To 6.

6. **CHECK FOR THE (K23) APP SENSOR NO. 1 SIGNAL CIRCUIT SHORTED TO THE (K167) APP SENSOR NO. 1 RETURN CIRCUIT**

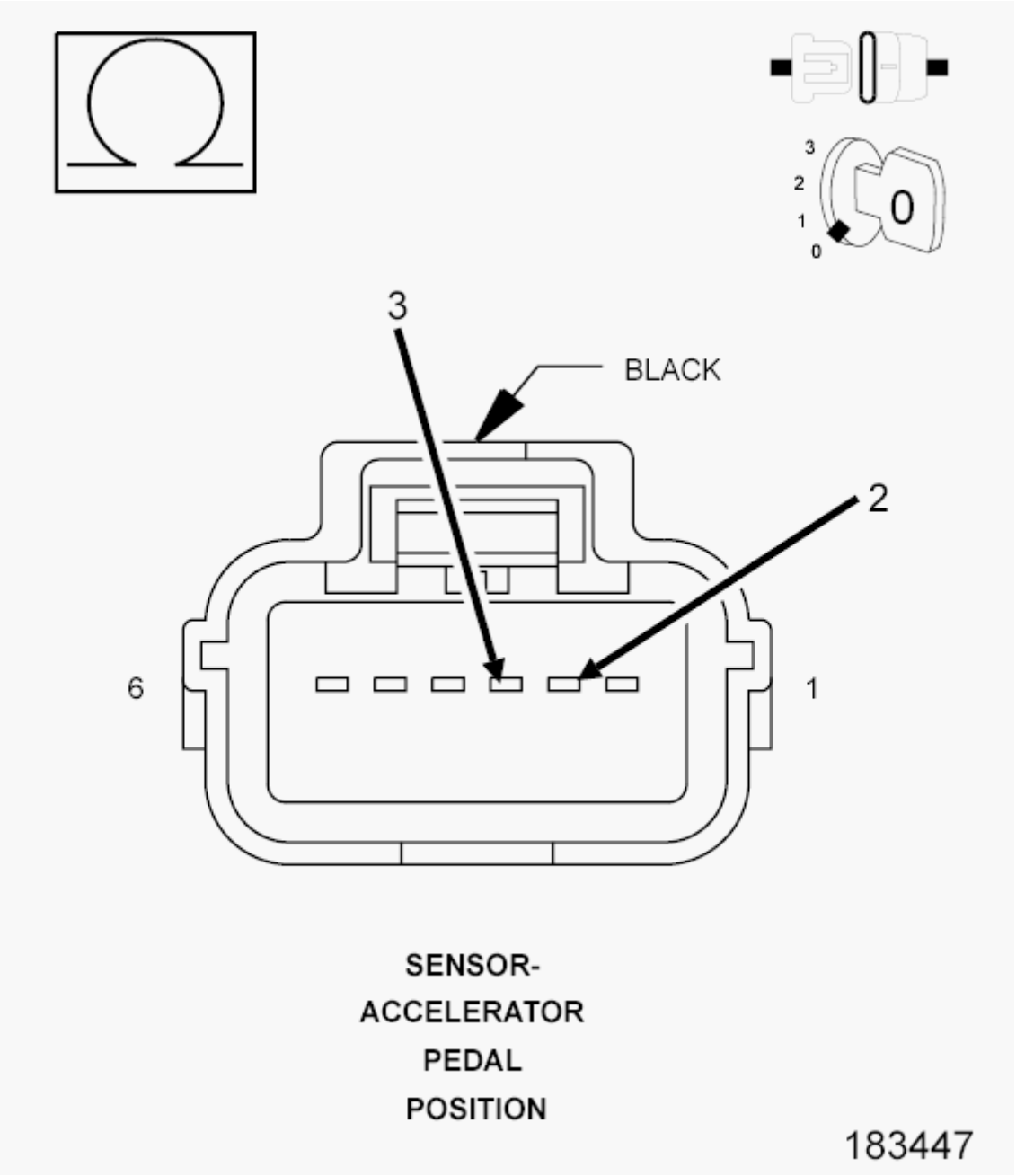

Fig. 150: Measuring Resistance Between (K23) APP Sensor No. 1 Signal Circuit And (K167) Sensor

No. 1 Return Circuit AT APP Sensor Harness Connector
Courtesy of CHRYSLER GROUP, LLC

1. Measure the resistance between the (K23) APP Sensor No. 1 Signal circuit and the (K167) Sensor No. 1 Return circuit at the APP Sensor harness connector.

   Is the resistance below 10k Ohms?

   Yes

   - Repair the short between the (K167) APP Sensor No. 1 Return circuit and the (K23) APP Sensor No. 1 Signal circuit.
   - Perform the POWERTRAIN VERIFICATION TEST. Refer to **POWERTRAIN VERIFICATION TEST - 6.7L** .

   No

   - Go To 7.

7. **CHECK FOR THE (K23) APP SENSOR NO. 1 SIGNAL CIRCUIT SHORTED TO THE (K400) APP SENSOR NO. 2 RETURN CIRCUIT**

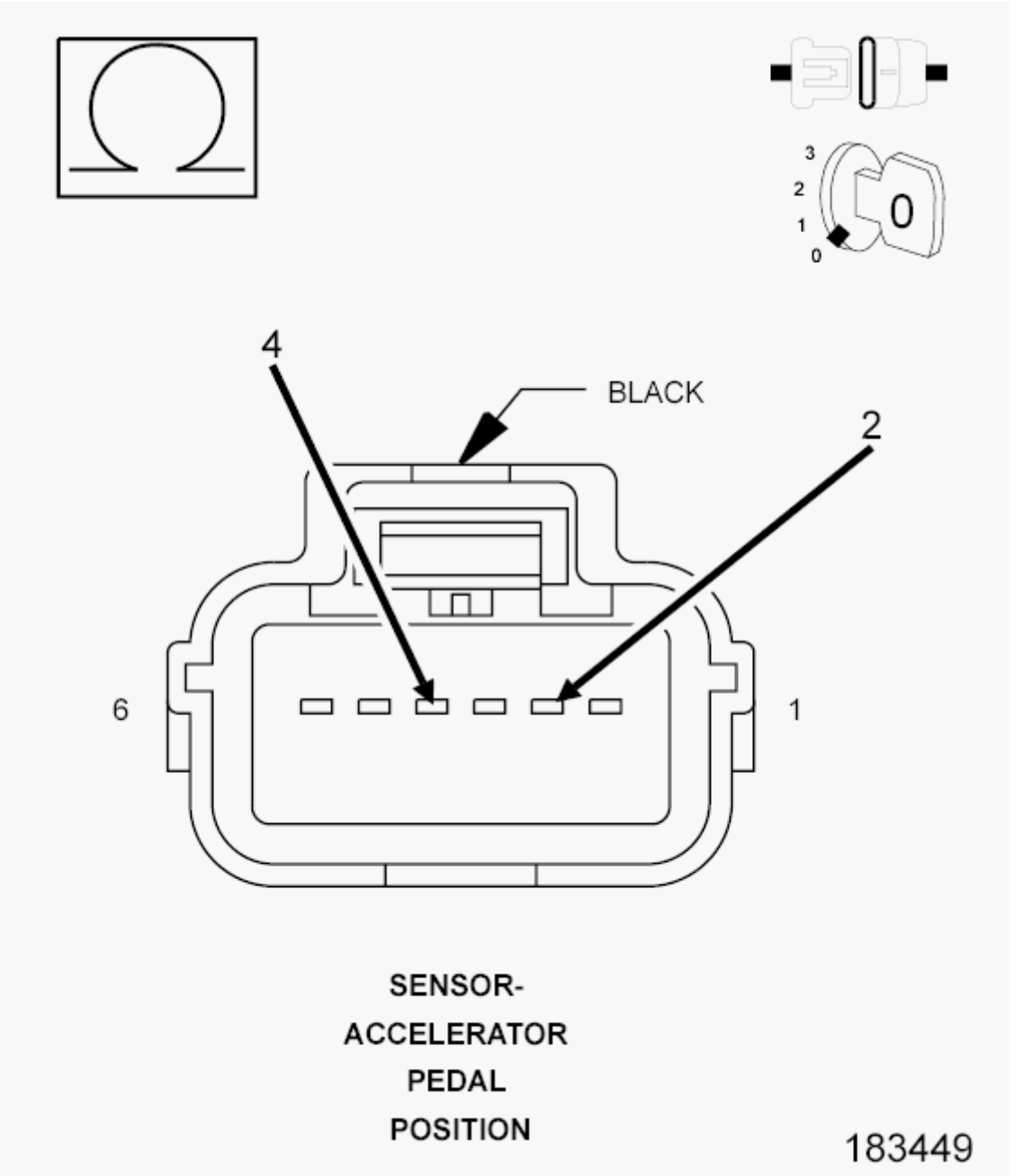

Fig. 151: Measuring Resistance Between (K23) APP Sensor No. 1 Signal Circuit And (K400) APP Sensor No. 2 Return Circuit In APP Sensor Harness Connector
Courtesy of CHRYSLER GROUP, LLC

1. Measure the resistance between the (K23) APP Sensor No. 1 Signal circuit and the (K400) Sensor No. 2 Return circuit in the APP Sensor harness connector.

   Is the resistance below 10k Ohms?

   Yes

- Repair the short between the (K400) APP Sensor No. 2 Return circuit and the (K23) APP Sensor No. 1 Signal circuit.
- Perform the POWERTRAIN VERIFICATION TEST. Refer to **POWERTRAIN VERIFICATION TEST - 6.7L** .

No

- Go To 10.

8. **CHECK THE (F855) 5-VOLT SUPPLY CIRCUIT FOR AN OPEN/HIGH RESISTANCE**
   1. Turn the ignition off.
   2. Disconnect the C2 PCM harness connector.
   3. Measure the resistance of the (F855) 5-Volt Supply circuit from the Sensor harness connector to the C2 PCM harness connector.

      Is the resistance below 5.0 Ohms?

      Yes

      - Go To 9.

      No

      - Repair the (F855) 5-Volt Supply circuit for an open or high resistance.
      - Perform the POWERTRAIN VERIFICATION TEST. Refer to **POWERTRAIN VERIFICATION TEST - 6.7L** .
9. **CHECK THE (F855) 5-VOLT SUPPLY CIRCUIT FOR A SHORT TO GROUND**

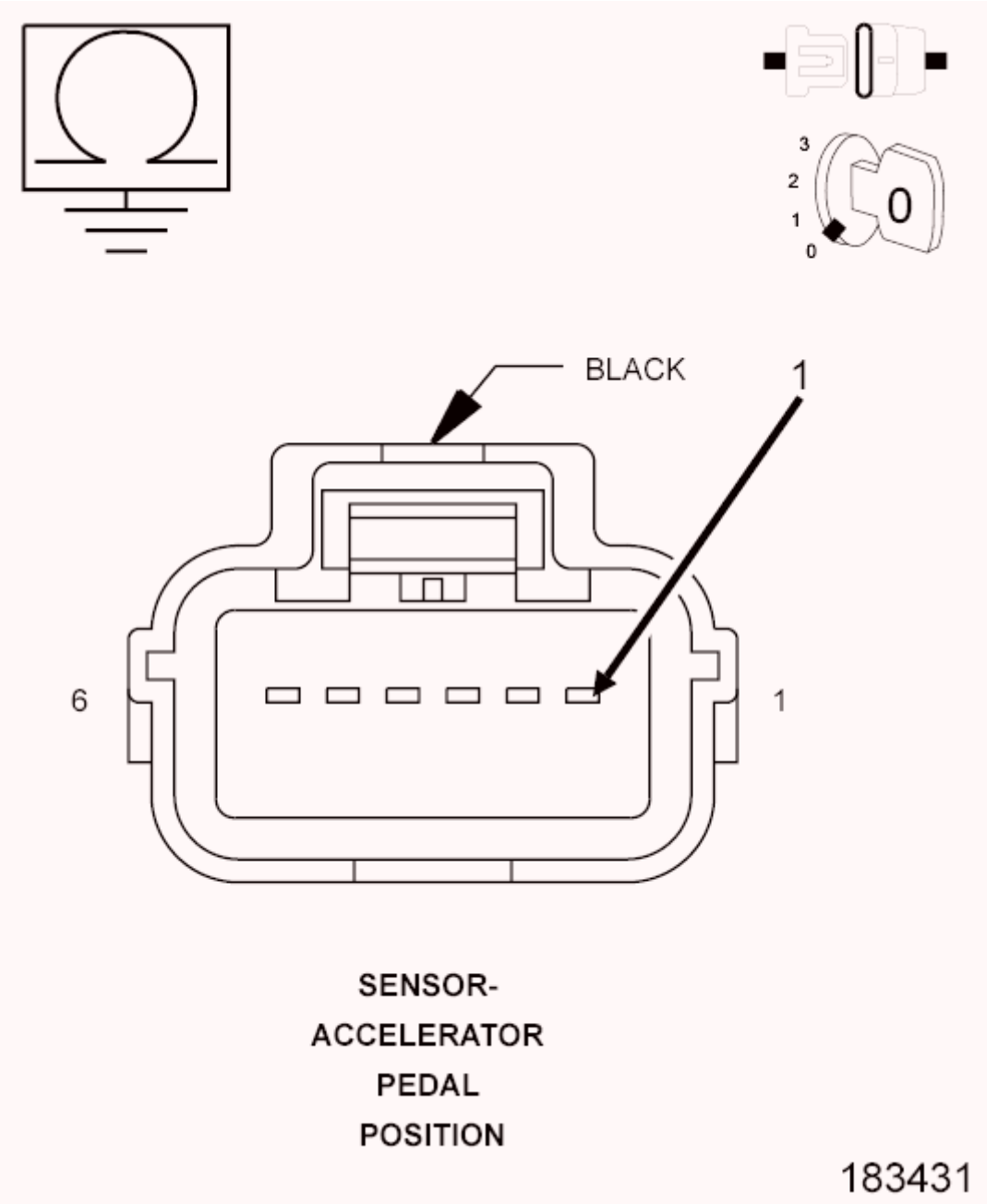

Fig. 152: Measuring Resistance Between Ground And (F855) 5-Volt Supply Circuit In APP Sensor Harness Connector
Courtesy of CHRYSLER GROUP, LLC

1. Measure the resistance between ground and the (F855) 5-Volt Supply circuit in the APP Sensor harness connector.

   Is the resistance below 10k Ohms?

   Yes

- Repair the (F855) 5-Volt Supply circuit or a short to ground.
- Perform the POWERTRAIN VERIFICATION TEST. Refer to **POWERTRAIN VERIFICATION TEST - 6.7L** .

No

- Go To 10.

10. **POWERTRAIN CONTROL MODULE**

NOTE: Before continuing, check the PCM harness connector terminals for corrosion, damage, or terminal push out. Repair as necessary.

1. Using the schematics as a guide, inspect the wire harness and connectors. Pay particular attention to all Power and Ground circuits.

   Were there any problems found?

   Yes

   - Repair as necessary.
   - Perform the POWERTRAIN VERIFICATION TEST. Refer to **POWERTRAIN VERIFICATION TEST - 6.7L** .

   No

   - Replace and program the Powertrain Control Module in accordance with the service information. Refer to **PCM - REMOVAL** , also see **PCM/ECM / TCM PROGRAMMING** .
   - Perform the POWERTRAIN VERIFICATION TEST. Refer to **POWERTRAIN VERIFICATION TEST - 6.7L** .

11. **APP SENSOR SWEEP**

1. Ignition on, engine not running.
2. With a scan tool, monitor the APP Sensor No. 1 voltage.
3. Slowly press the Accelerator pedal down.

   Does voltage start at approximately 0.45 Volts and go above 4.6 Volts with a smooth transition?

   Yes

   - Perform the INTERMITTENT CONDITION diagnostic procedure. Refer to **INTERMITTENT CONDITION - 6.7L** .

   No

   - Replace the APP Sensor Assembly in accordance with the Service Information. After

installation is complete, use a scan tool and select the ETC RELEARN function to relearn the APPS values.

- Perform the POWERTRAIN VERIFICATION TEST. Refer to **POWERTRAIN VERIFICATION TEST - 6.7L** .

P2123-ACCELERATOR PEDAL POSITION SENSOR 1 CIRCUIT HIGH

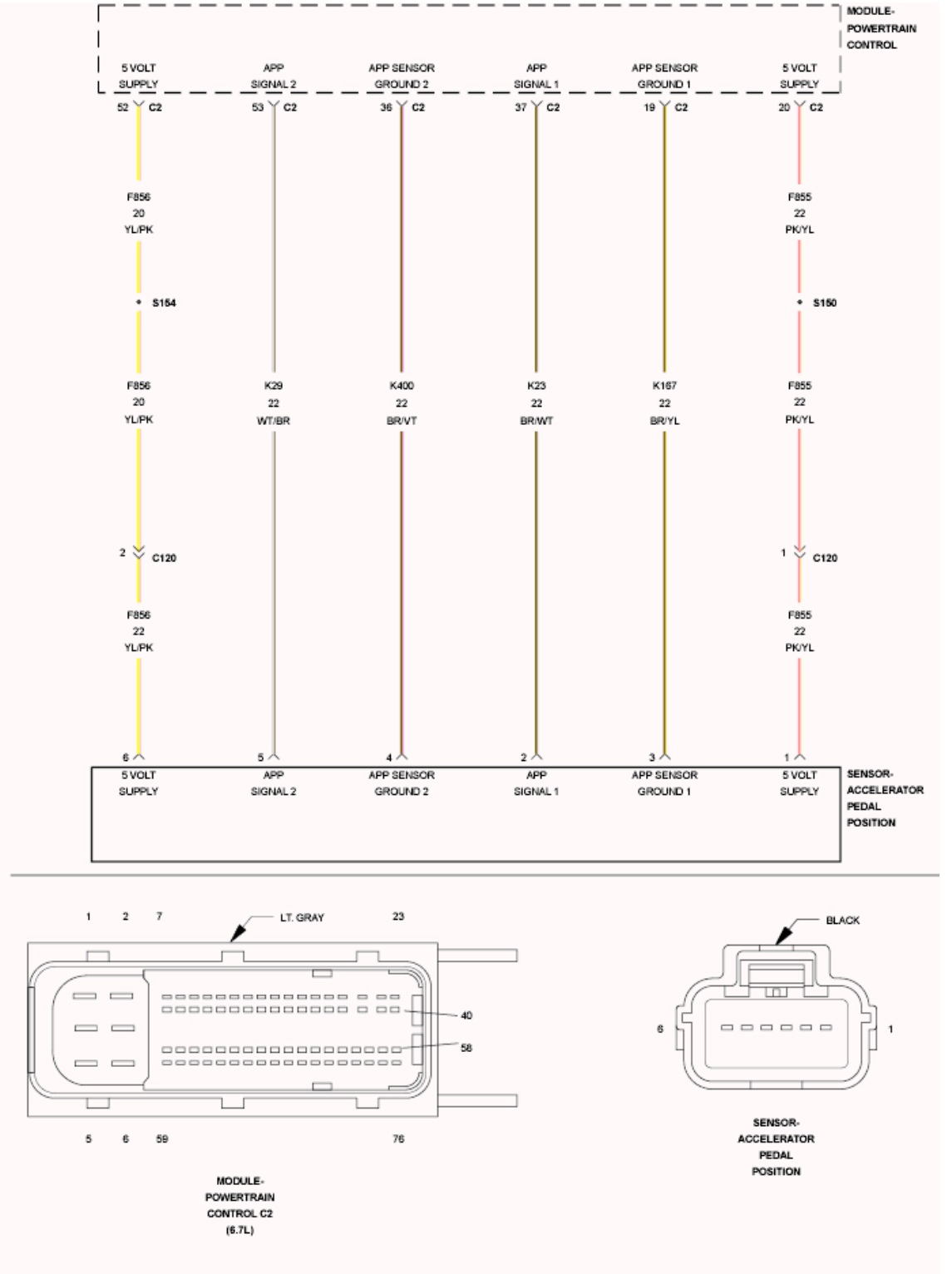

Fig. 153: Accelerator Pedal Position Sensor Circuit Schematic
Courtesy of CHRYSLER GROUP, LLC

For a complete wiring diagram, **refer to appropriate SYSTEM WIRING DIAGRAMS article** .

THEORY OF OPERATION

The throttle pedal produces two voltage signals proportional to the pedal movement. The primary signal varies between 0 and 5.0 Volts and the secondary signal varies between 0 and 2.5 Volts. The Powertrain Control Module (PCM) uses the two signals to validate throttle pedal position to control engine fueling. The PCM illuminates the MIL lamp and ETC light solid immediately after the diagnostic runs and fails. Acceleration rate and Engine output are limited. The PCM will turn off the MIL lamp after the diagnostic runs and passes in four consecutive drive cycles.

WHEN MONITORED:

Any time the Powertrain Control Module is powered up.

SET CONDITION:

When APP Sensor No. 1 voltage is above 4.82 Volts for one second.

POSSIBLE CAUSES

Possible Causes
(K23) APP SENSOR 1 SIGNAL CIRCUIT SHORTED TO BATTERY VOLTAGE
(K23) APP SENSOR 1 SIGNAL SHORTED TO THE (F855) 5-VOLT SUPPLY CIRCUIT
(K23) APP SENSOR 1 SIGNAL SHORTED TO THE (F856) 5-VOLT SUPPLY CIRCUIT
(K167) APP SENSOR 1 RETURN CIRCUIT OPEN
APP SENSOR
POWERTRAIN CONTROL MODULE (PCM)

Always perform the Pre-Diagnostic Troubleshooting procedure before proceeding. Refer to PRE-DIAGNOSTIC TROUBLESHOOTING PROCEDURE - 6.7L .

DIAGNOSTIC TEST

1. **APP SENSOR NO. 1 VOLTAGE ABOVE 4.82 VOLTS**

   NOTE: When this DTC is Active the engine speed, torque, and vehicle speed are limited to a Limp in mode.

   1. Ignition on, engine not running.
   2. With a scan tool, read the APP Sensor No. 1 voltage.

      Is the voltage above 4.82 volts?

      Yes

      - Go To 2.

No

- Go To 8.

2. **ACCELERATOR PEDAL POSITION SENSOR**
   1. Turn the Ignition off.
   2. Disconnect the APP Sensor harness connector.
   3. Ignition on, engine not running.
   4. With a scan tool, monitor the Accelerator Pedal Position Sensor voltage.

      Is the voltage above 0 Volts?

      Yes

      - Go To 3.

      No

      - Replace the APP Sensor Assembly in accordance with the Service Information. After installation is complete, use a scan tool and select the ETC RELEARN function to relearn the APPS values.
      - Perform the POWERTRAIN VERIFICATION TEST. Refer to **POWERTRAIN VERIFICATION TEST - 6.7L** .
3. **(K23) APP SENSOR NO. 1 SIGNAL CIRCUIT SHORTED TO BATTERY VOLTAGE**

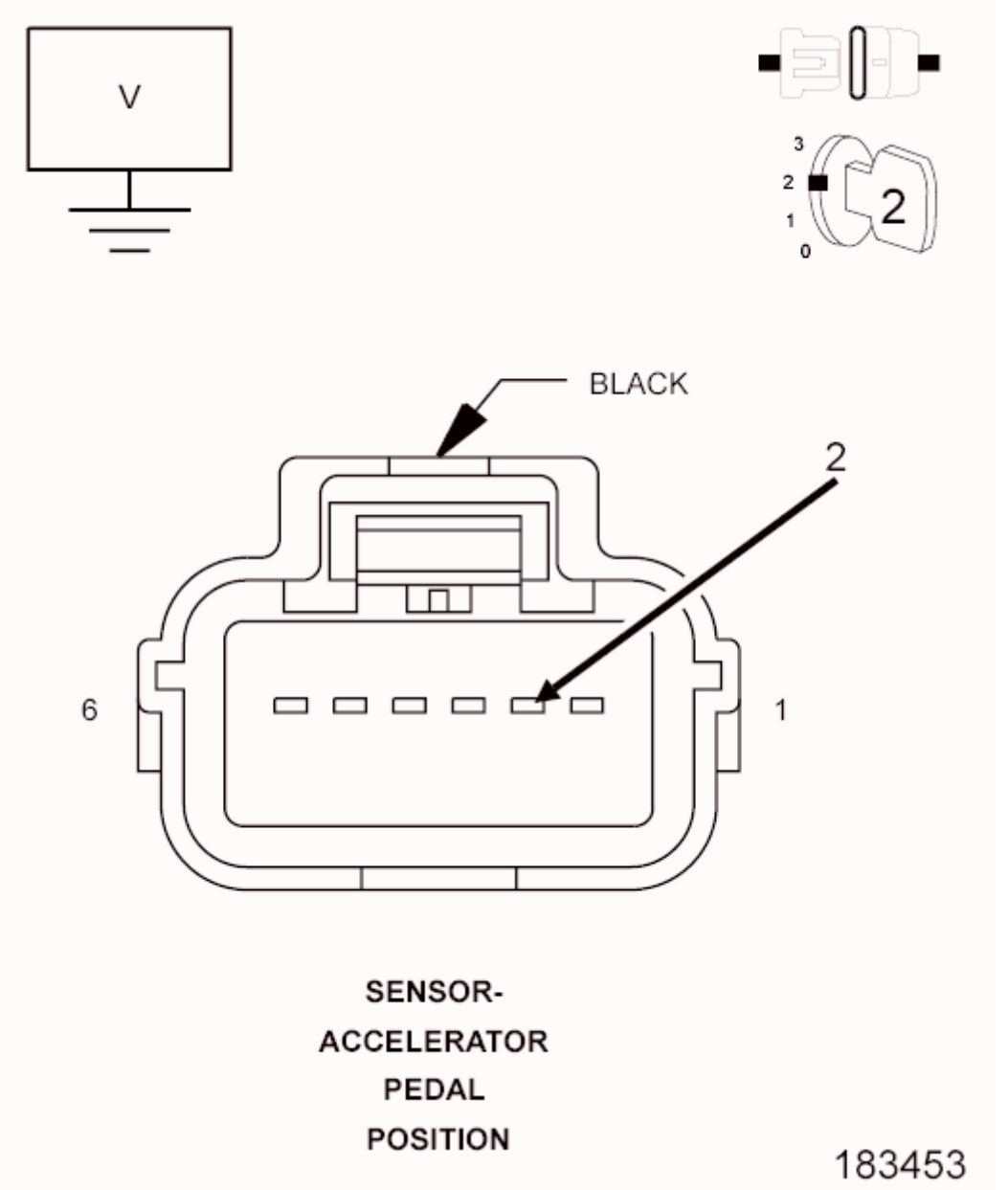

Fig. 154: Measuring Voltage On (K23) APP Sensor No. 1 Signal Circuit In APP Sensor Harness Connector
Courtesy of CHRYSLER GROUP, LLC

1. Turn the ignition off.
2. Disconnect the PCM C2 harness connectors.
3. Ignition on, engine not running.
4. Measure the voltage on the (K23) APP Sensor No. 1 Signal circuit in the APP Sensor harness connector.

   Is the voltage above 0 Volts?

Yes

- Repair the short to battery voltage in the (K23) APP Sensor No. 1 Signal circuit.
- Perform the POWERTRAIN VERIFICATION TEST. Refer to **POWERTRAIN VERIFICATION TEST - 6.7L** .

No

- Go To 4.

4. **(K23) APP SENSOR NO. 1 SIGNAL CIRCUIT SHORTED TO THE (F855) 5-VOLT SUPPLY CIRCUIT**

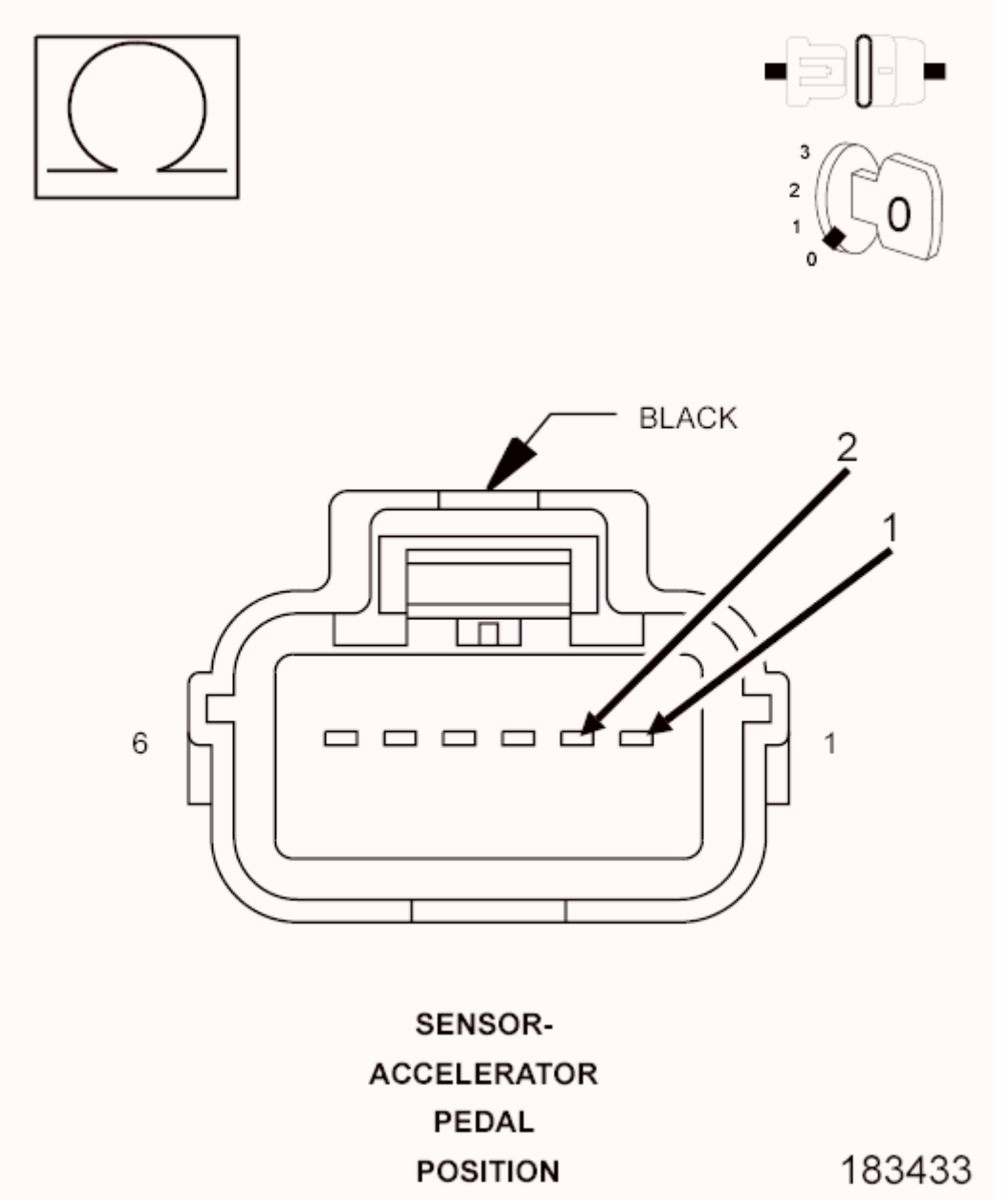

Fig. 155: Measuring Resistance Between (K23) APP Sensor No. 1 Signal Circuit And (F855) 5-Volt Supply Circuit In APP Sensor Harness Connector
Courtesy of CHRYSLER GROUP, LLC

1. Turn the ignition off.
2. Measure the resistance between the (K23) APP Sensor No. 1 Signal circuit and the (F855) 5-volt Supply circuit in the APP Sensor harness connector.

   Is the below 10k Ohms?

   Yes

   - Repair the short between the (K23) APP Sensor No. 1 Signal circuit and the (F855) 5-volt Supply circuit.
   - Perform the POWERTRAIN VERIFICATION TEST. Refer to **POWERTRAIN VERIFICATION TEST - 6.7L** .

   No

   - Go To 5.

5. **(K23) APP SENSOR NO. 1 SIGNAL CIRCUIT SHORTED TO THE (F856) 5-VOLT SUPPLY CIRCUIT**

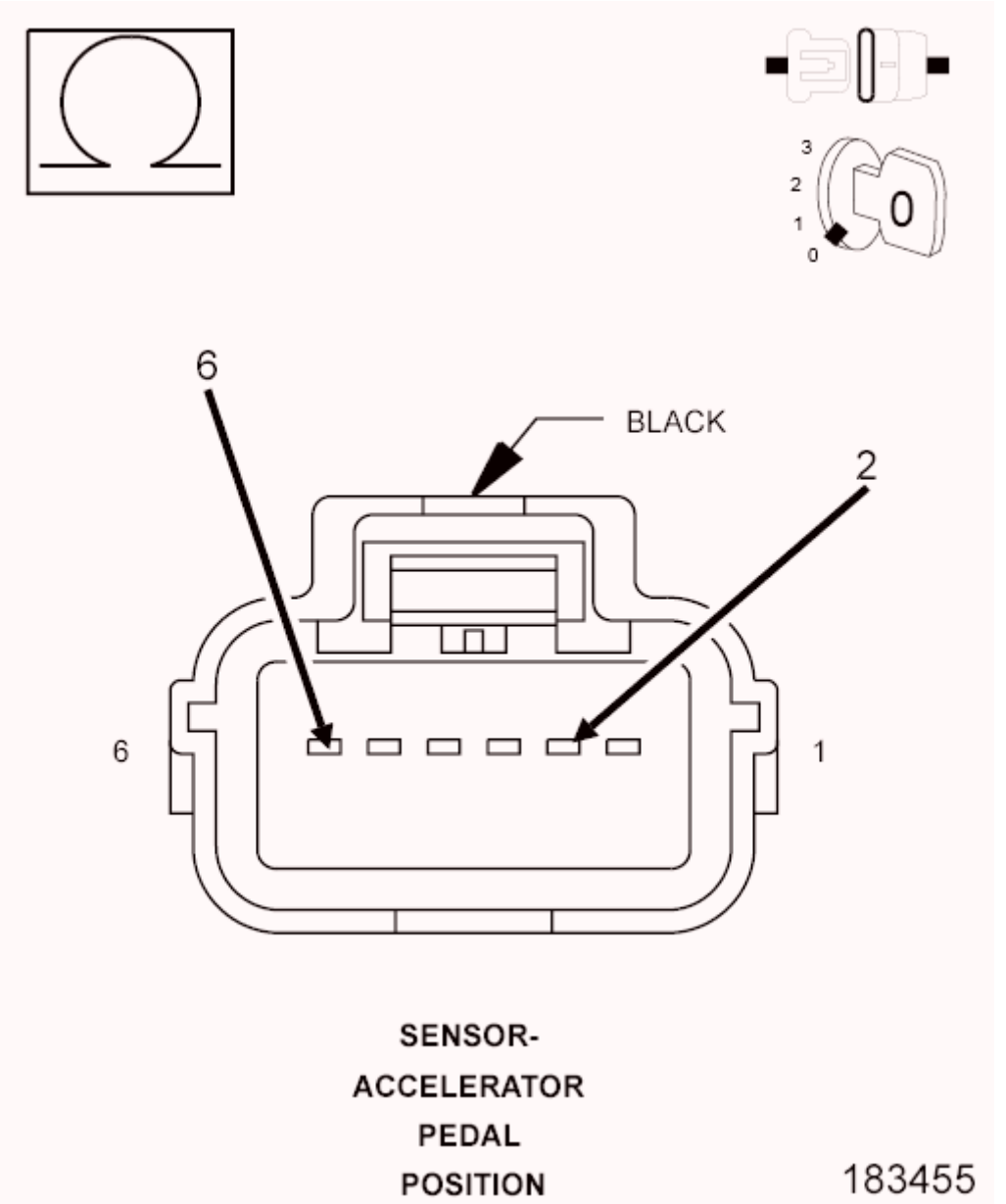

Fig. 156: Measuring Resistance Between (K23) APP Sensor No. 1 Signal Circuit And (F856) 5-Volt Supply Circuit In APP Sensor Harness Connector
Courtesy of CHRYSLER GROUP, LLC

1. Measure the resistance between the (K23) APP Sensor No. 1 Signal circuit and the (F856) 5-volt Supply circuit in the APP Sensor harness connector.

   Is the resistance below 10k Ohms?

   Yes

   - Repair the short between the (K23) APP Sensor No. 1 Signal circuit and the (F856) 5-volt Supply circuit.

- Perform the POWERTRAIN VERIFICATION TEST. Refer to **POWERTRAIN VERIFICATION TEST - 6.7L** .

No

- Go To 6.

6. **(K167) APP SENSOR NO. 1 RETURN CIRCUIT OPEN**
   1. Measure the resistance of the (K167) APP Sensor No. 1 Return circuit between the APP Sensor harness connector and the PCM C2 harness connector.

      Is the resistance below 10.0 Ohms?

      Yes

      - Go To 7.

      No

      - Repair the open or high resistance in the (K167) APP Sensor No. 1 Return circuit.
      - Perform the POWERTRAIN VERIFICATION TEST. Refer to **POWERTRAIN VERIFICATION TEST - 6.7L** .
7. **POWERTRAIN CONTROL MODULE (PCM)**

   NOTE: Before continuing, check the PCM harness connector terminals for corrosion, damage, or terminal push out. Repair as necessary.

   1. Using the schematics as a guide, inspect the wire harness and connectors. Pay particular attention to all Power and Ground circuits.

      Were there any problems found?

      Yes

      - Repair as necessary.
      - Perform the POWERTRAIN VERIFICATION TEST. Refer to **POWERTRAIN VERIFICATION TEST - 6.7L** .

      No

      - Replace and program the Powertrain Control Module in accordance with the service information. Refer to **PCM - REMOVAL** , also see **PCM/ECM / TCM PROGRAMMING** .
      - Perform the POWERTRAIN VERIFICATION TEST. Refer to **POWERTRAIN VERIFICATION TEST - 6.7L** .
8. **APP SENSOR NO. 1 SWEEP**

1. Ignition on, engine not running.
2. With a scan tool, monitor the Accelerator Pedal Position Sensor voltage.
3. Slowly press the Accelerator Pedal down.

   Does voltage start at approximately 0.45 of a volt and go above 4.6 volts with a smooth transition?

   Yes

   - Perform the INTERMITTENT CONDITION diagnostic procedure. Refer to **INTERMITTENT CONDITION - 6.7L** .

   No

   - Replace the APP Sensor Assembly in accordance with the Service Information. After installation is complete, use a scan tool and select the ETC RELEARN function to relearn the APPS values.
   - Perform the POWERTRAIN VERIFICATION TEST. Refer to **POWERTRAIN VERIFICATION TEST - 6.7L** .

P2127-ACCELERATOR PEDAL POSITION SENSOR 2 CIRCUIT LOW

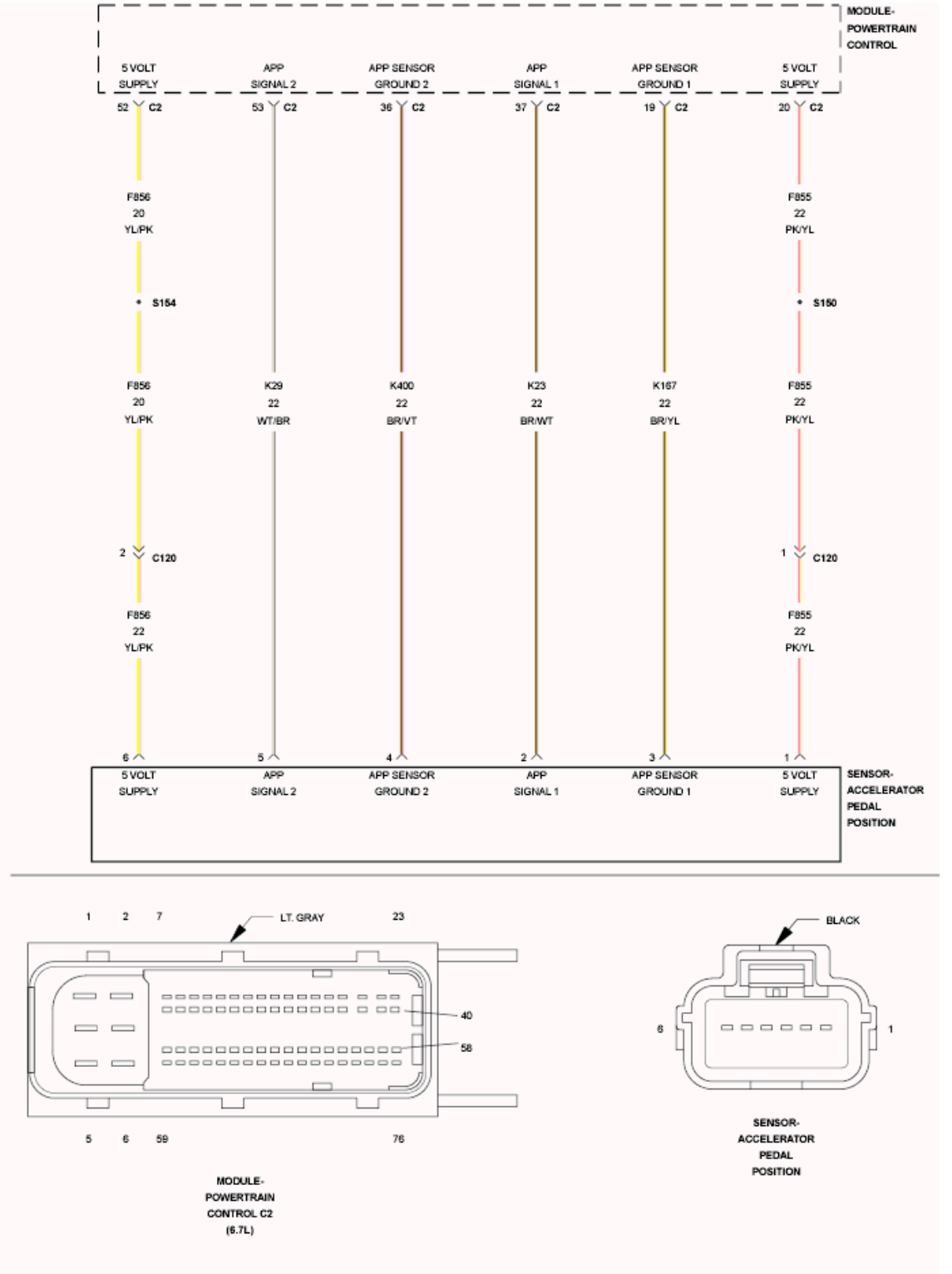

Fig. 157: Accelerator Pedal Position Sensor Circuit Schematic
Courtesy of CHRYSLER GROUP, LLC

For a complete wiring diagram, **refer to appropriate SYSTEM WIRING DIAGRAMS article** .

THEORY OF OPERATION

The throttle pedal produces two voltage signals proportional to the pedal movement. The primary signal varies between 0 and 5.0 Volts and the secondary signal varies between 0 and 2.5 Volts. The Powertrain Control Module uses the two signals to validate throttle pedal position to control engine fueling. The PCM illuminates the MIL lamp and ETC light solid immediately after the diagnostic runs and fails. Acceleration rate and Engine output are limited. The PCM will turn off the MIL lamp after the diagnostic runs and passes in four consecutive drive cycles.

WHEN MONITORED:

Any time the Powertrain Control Module is powered up.

SET CONDITION:

When the APP Sensor No. 2 voltage is below 0.05 Volts for one second.

POSSIBLE CAUSES

Possible Causes
(F856) 5-VOLT SUPPLY CIRCUIT OPEN/HIGH RESISTANCE
(F856) 5-VOLT SUPPLY CIRCUIT SHORTED TO GROUND
(K29) APP SENSOR 2 SIGNAL CIRCUIT OPEN/HIGH RESISTANCE
(K29) APP SENSOR 2 SIGNAL CIRCUIT SHORTED TO GROUND
(K29) APP SENSOR 2 SIGNAL CIRCUIT SHORTED TO THE (K167) APP SENSOR 1 RETURN CIRCUIT
(K29) APP SENSOR 2 SIGNAL CIRCUIT SHORTED TO THE (K400) APP SENSOR 2 RETURN CIRCUIT
APP SENSOR
POWERTRAIN CONTROL MODULE (PCM)

Always perform the Pre-Diagnostic Troubleshooting procedure before proceeding. Refer to PRE-DIAGNOSTIC TROUBLESHOOTING PROCEDURE - 6.7L .

DIAGNOSTIC TEST

1. **CHECK THE APP SENSOR BELOW VOLTAGE**

NOTE: **When this DTC is Active the engine speed, torque, and vehicle speed are limited to a Limp in mode.**

1. Ignition on, engine not running.
2. With a scan tool, read the APP Sensor No. 1 voltage.

NOTE: **Sensor No. 2 is pulled low by the PCM as part of its system testing. This test happens a couple of times a second. So you can expect to**

see voltages close to zero occasionally with a normal sensor.

Is the voltage consistently below 0.05 Volts?

Yes

- Go To 2.

No

- Go To 11.

2. **CHECK THE (F856) 5-VOLT SUPPLY CIRCUIT**

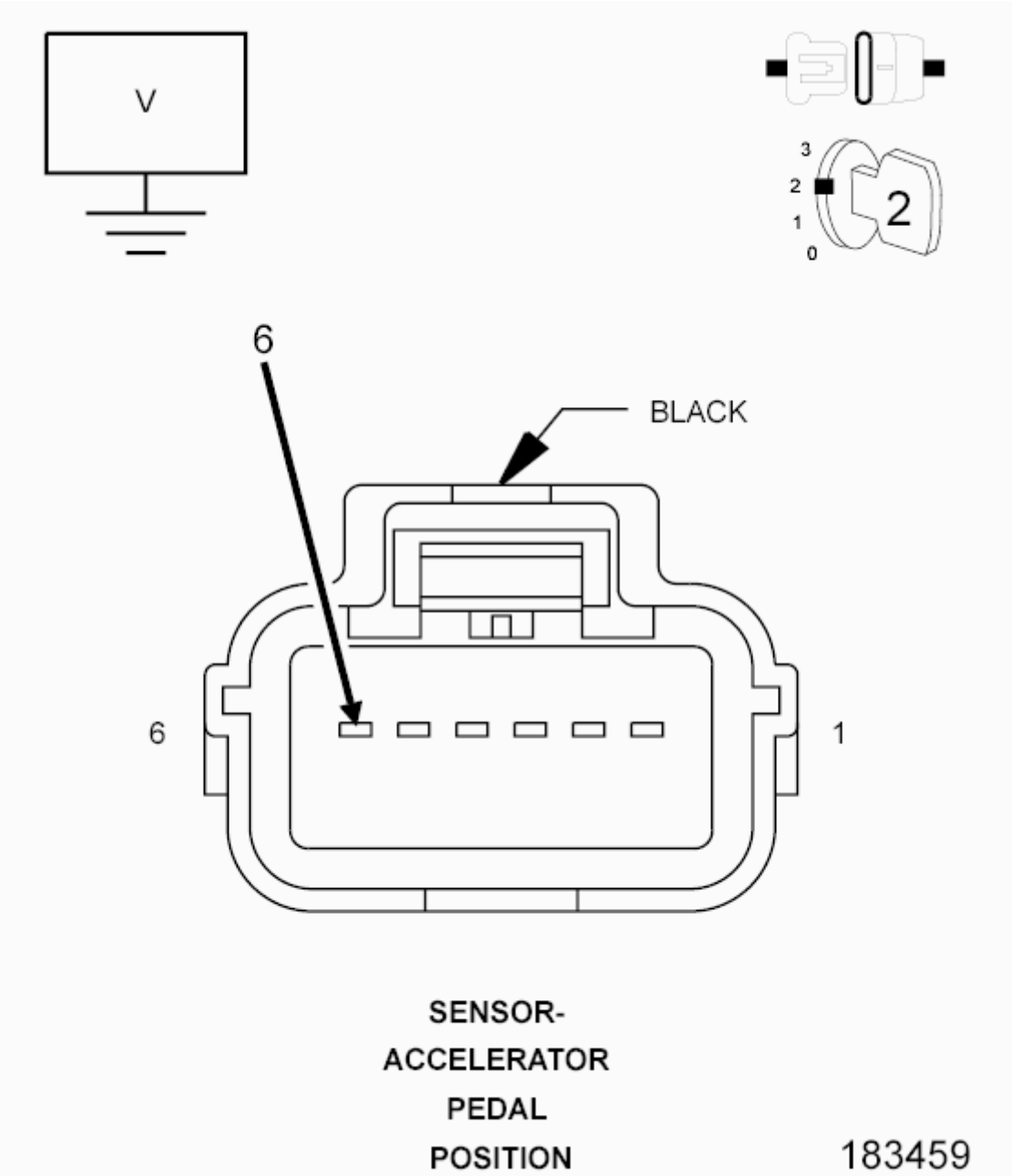

Fig. 158: Measuring Voltage On (F856) 5-Volt Supply Circuit In APP Sensor Harness Connector
Courtesy of CHRYSLER GROUP, LLC

1. Turn the ignition off.
2. Disconnect the APP Sensor harness connector.
3. Ignition on, engine not running.
4. Measure the voltage on the (F856) 5-Volt Supply circuit in the APP Sensor harness connector.

   Is the voltage between 4.65 and 5.36 Volts?

   Yes

- Go To 3.

No

- Go To 8.

3. **CHECK THE ACCELERATOR PEDAL POSITION SENSOR**

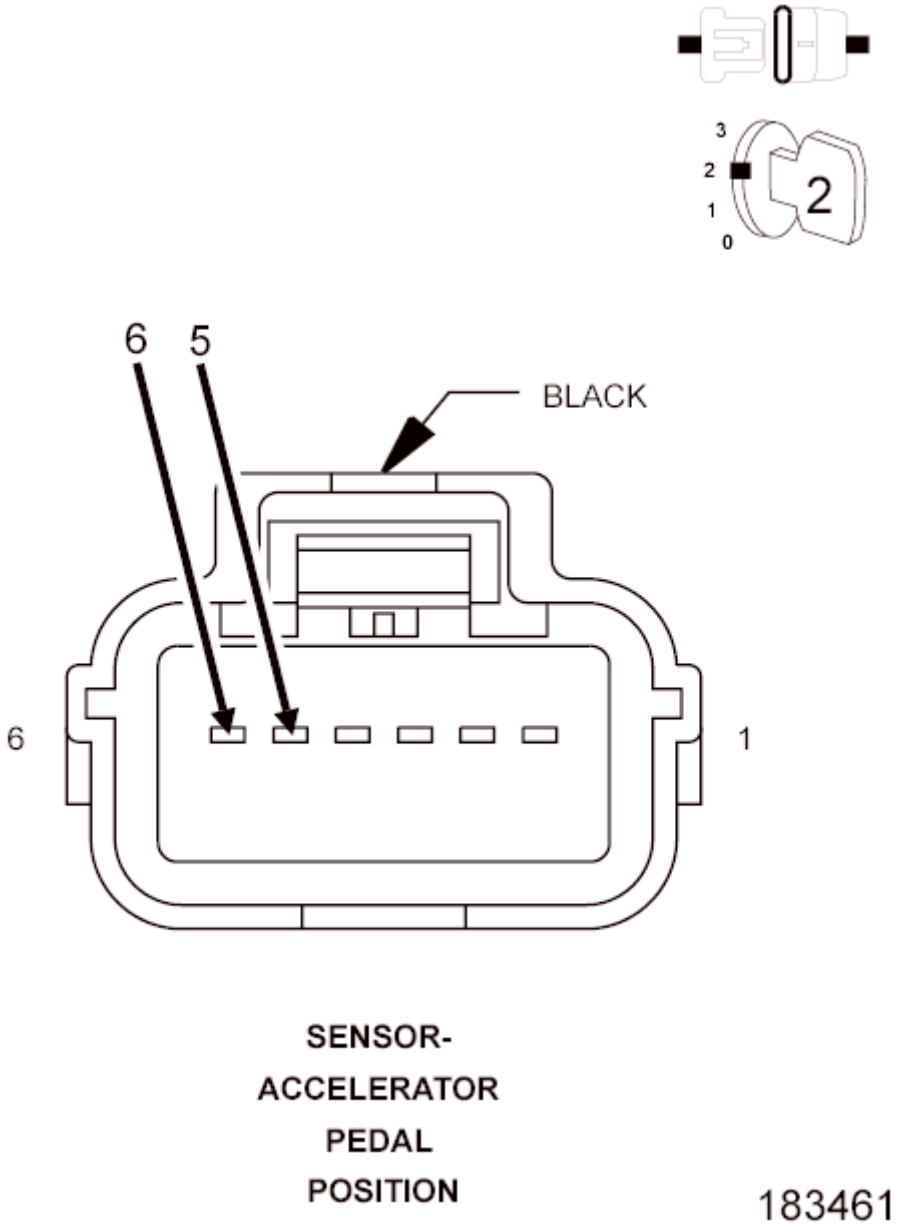

Fig. 159: Accelerator Pedal Position Sensor Harness Connector
Courtesy of CHRYSLER GROUP, LLC

1. Connect a jumper wire between the (F856) 5-Volt Supply circuit and the (K29) APP Sensor 2 Signal circuit in the Sensor harness connector.

2. With a scan tool, monitor the APP Sensor No. 2 voltage.

   Is the voltage between 4.65 and 5.36 Volts with the jumper wire installed?

   Yes

   - Replace the APP Sensor Assembly in accordance with the Service Information. After installation is complete, use a scan tool and select the ETC RELEARN function to relearn the APPS values.
   - Perform the POWERTRAIN VERIFICATION TEST. Refer to **POWERTRAIN VERIFICATION TEST - 6.7L** .

   No

   - Go To 4.

4. **CHECK THE (K29) APP SENSOR 2 SIGNAL CIRCUIT FOR AN OPEN/HIGH RESISTANCE**

   NOTE: Remove the jumper wire before continuing.

   1. Turn the ignition off.
   2. Disconnect the PCM C2 harness connector.
   3. Measure the resistance of the (K29) APP Sensor 2 Signal circuit from the APP Sensor harness connector to the PCM C2 harness connector.

      Is the resistance below 5.0 Ohms?

      Yes

      - Go To 5.

      No

      - Repair the (K29) APP Sensor 2 Signal circuit for an open or high resistance.
      - Perform the POWERTRAIN VERIFICATION TEST. Refer to **POWERTRAIN VERIFICATION TEST - 6.7L** .

5. **CHECK THE (K29) APP SENSOR 2 SIGNAL CIRCUIT FOR A SHORT TO GROUND**

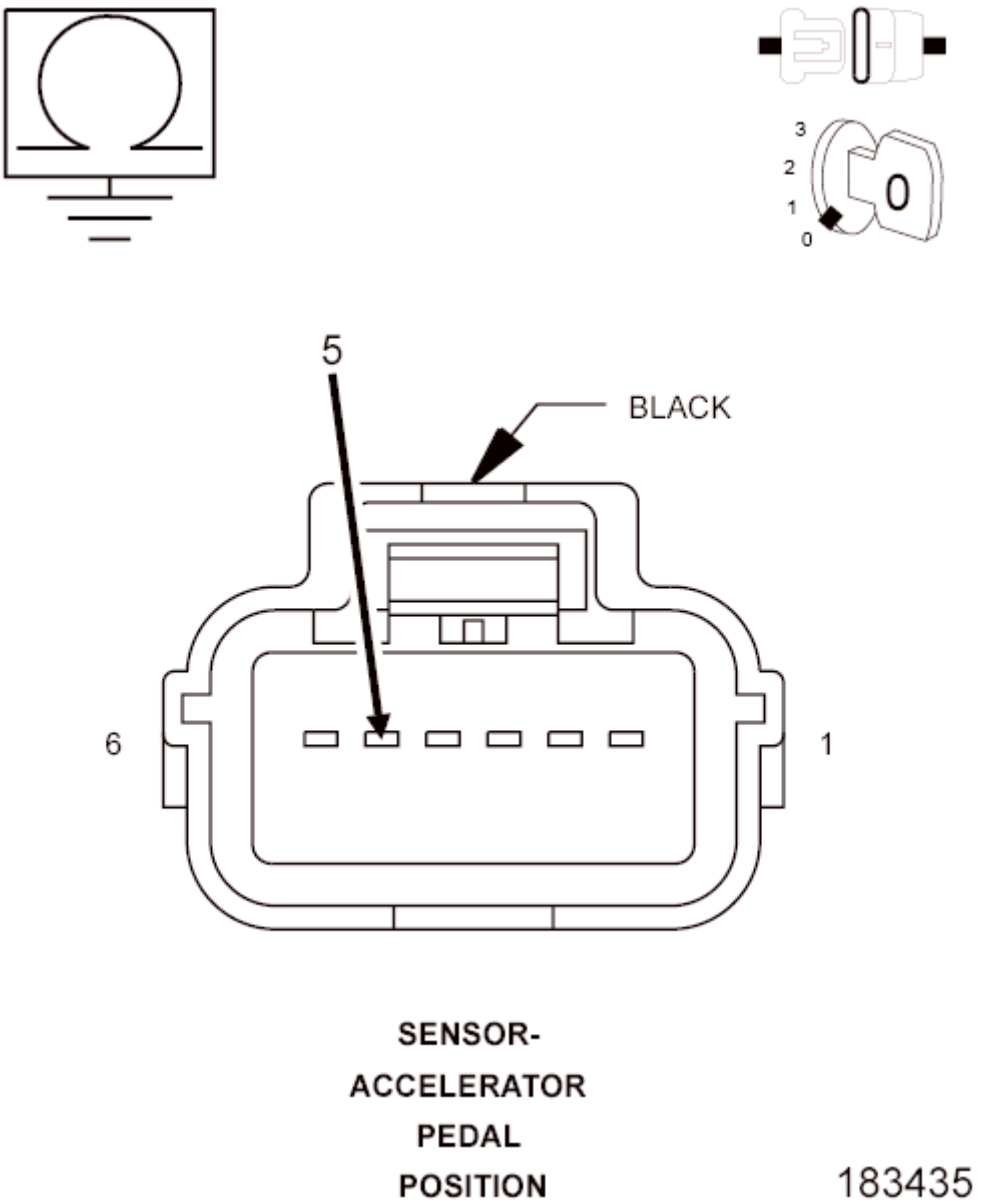

Fig. 160: Measuring Resistance Between Ground And (K29) APP Sensor No. 2 Signal Circuit In APP Sensor Harness Connector
Courtesy of CHRYSLER GROUP, LLC

1. Measure the resistance between ground and the (K29) APP Sensor 2 Signal circuit in the APP Sensor harness connector.

   Is the resistance below 10k Ohms?

   Yes

   - Repair the (K29) APP Sensor 2 Signal circuit for a short to ground.
   - Perform the POWERTRAIN VERIFICATION TEST. Refer to **POWERTRAIN**

VERIFICATION TEST - 6.7L .

No

- Go To 6.

6. **CHECK FOR THE (K29) APP SENSOR 2 SIGNAL CIRCUIT SHORTED TO THE (K400) APP SENSOR 2 RETURN CIRCUIT**

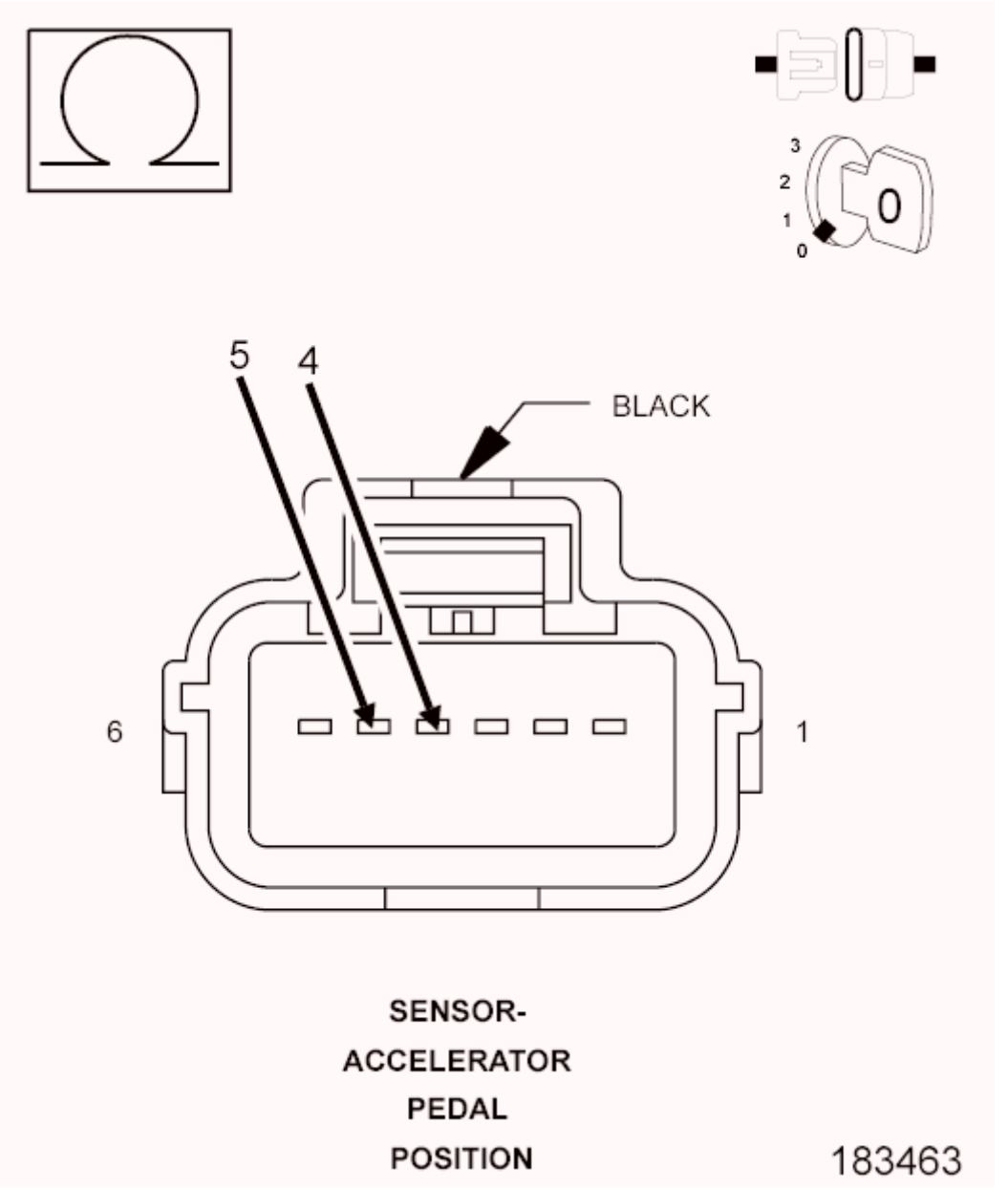

Fig. 161: Measuring Resistance Between (K29) APP Sensor No. 2 Signal Circuit And (K400) APP Sensor No. 2 Return Circuit In APP Sensor Harness Connector
Courtesy of CHRYSLER GROUP, LLC

1. Measure the resistance between the (K29) APP Sensor 2 Signal circuit and the (K400) Sensor 2

Return circuit in the APP Sensor harness connector.

Is the resistance below 10k Ohms?

Yes

- Repair the short between the (K400) APP Sensor 2 Return circuit and the (K29) APP Sensor 2 Signal circuit.
- Perform the POWERTRAIN VERIFICATION TEST. Refer to **POWERTRAIN VERIFICATION TEST - 6.7L** .

No

- Go To 7.

7. **CHECK FOR THE (K29) APP SENSOR 2 SIGNAL CIRCUIT SHORTED TO THE (K167) APP SENSOR 1 RETURN CIRCUIT**

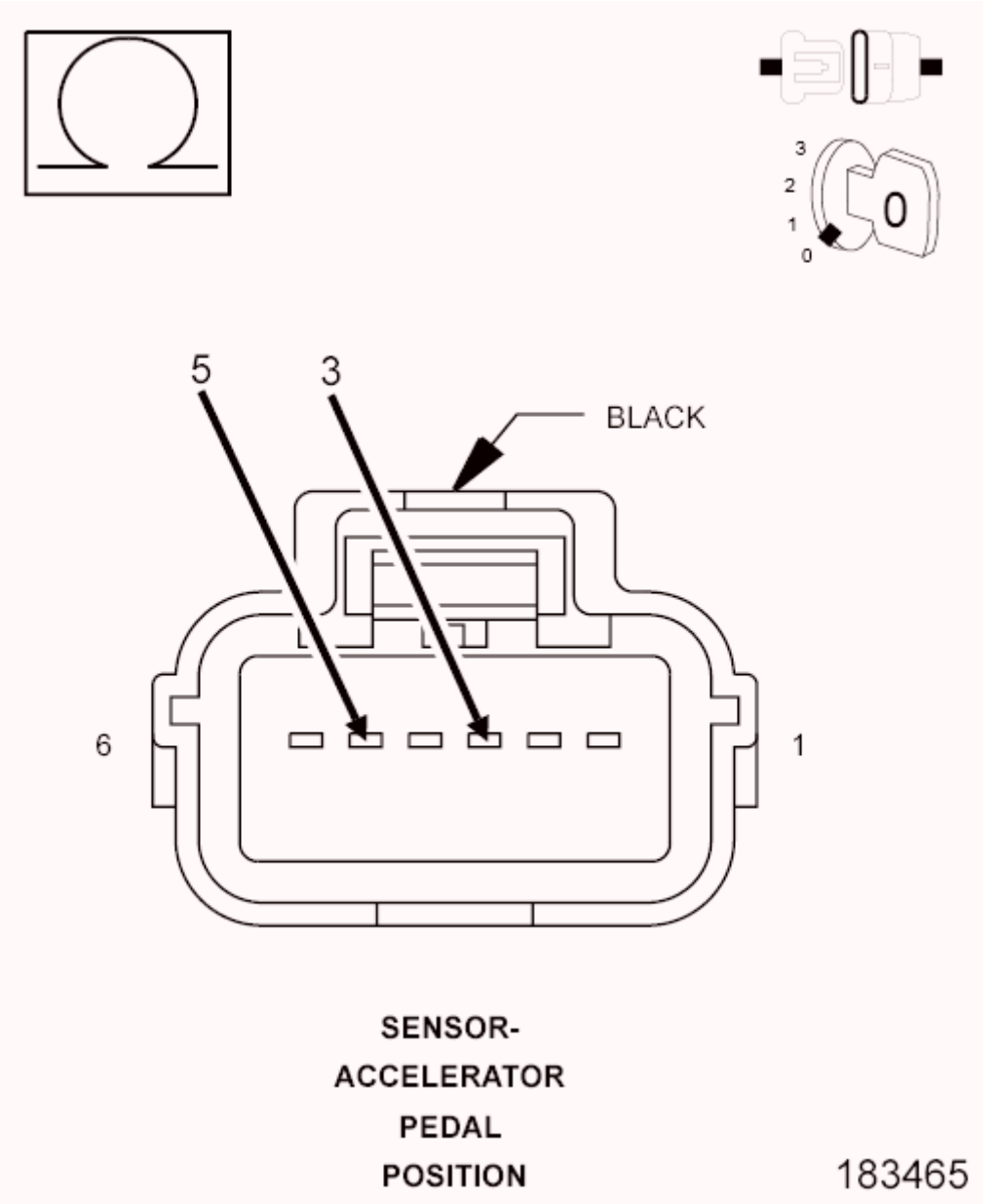

Fig. 162: Measuring Resistance Between (K29) APP Sensor No. 2 Signal Circuit And (K167) APP Sensor No. 1 Return Circuit In APP Sensor Harness Connector
Courtesy of CHRYSLER GROUP, LLC

1. Measure the resistance between the (K29) APP Sensor 2 Signal circuit and the (K167) Sensor 1 Return circuit in the APP Sensor harness connector.

   Is the resistance below 10k Ohms?

   Yes

   - Repair the short between the (K167) APP Sensor 1 Return circuit and the (K29) APP Sensor 2 Signal circuit.

- Perform the POWERTRAIN VERIFICATION TEST. Refer to **POWERTRAIN VERIFICATION TEST - 6.7L** .

No

- Go To 10.

8. **CHECK THE (F856) 5-VOLT SUPPLY CIRCUIT FOR AN OPEN/HIGH RESISTANCE**
   1. Turn the ignition off.
   2. Disconnect the C2 PCM harness connector.
   3. Measure the resistance of the (F856) 5-Volt Supply circuit between the APP Sensor harness connector to the C2 PCM harness connector.

   Is the resistance below 5.0 Ohms?

   Yes

   - Go To 9.

   No

   - Repair the (F856) 5-Volt Supply circuit for an open or high resistance.
   - Perform the POWERTRAIN VERIFICATION TEST. Refer to **POWERTRAIN VERIFICATION TEST - 6.7L** .
9. **CHECK THE (F856) 5-VOLT SUPPLY CIRCUIT FOR A SHORT TO GROUND**

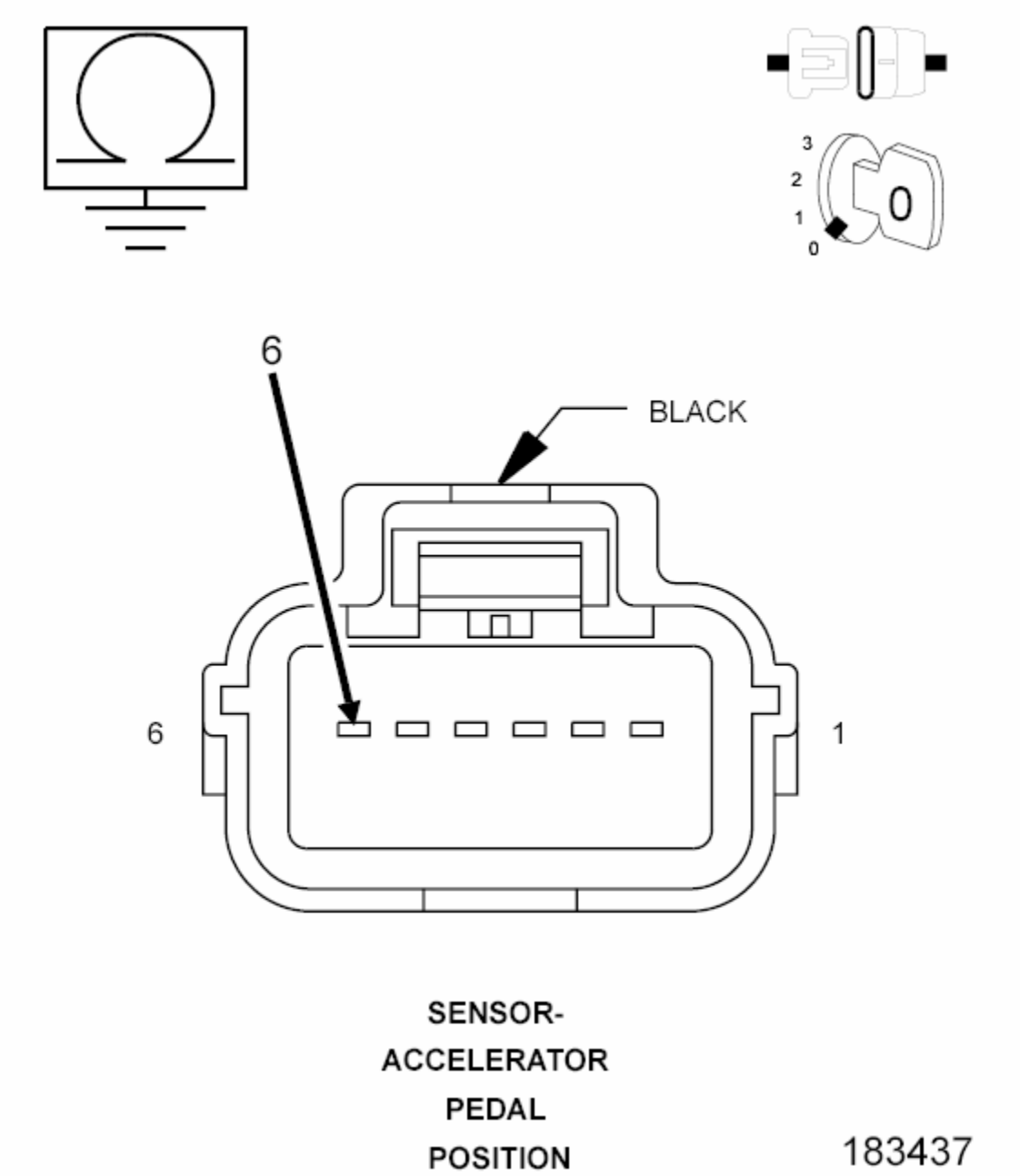

Fig. 163: Measuring Resistance Between Ground And (F856) 5-Volt Supply Circuit In APP Sensor Harness Connector
Courtesy of CHRYSLER GROUP, LLC

1. Measure the resistance between ground and the (F856) 5-Volt Supply circuit in the APP Sensor harness connector.

   Is the resistance below 10k Ohms?

   Yes

- Repair the (F856) 5-Volt Supply circuit for a short to ground.
- Perform the POWERTRAIN VERIFICATION TEST. Refer to **POWERTRAIN VERIFICATION TEST - 6.7L** .

No

- Go To 10.

10. **POWERTRAIN CONTROL MODULE**

NOTE: Before continuing, check the PCM harness connector terminals for corrosion, damage, or terminal push out. Repair as necessary.

1. Using the schematics as a guide, inspect the wire harness and connectors. Pay particular attention to all Power and Ground circuits.

   Were there any problems found?

   Yes

   - Repair as necessary.
   - Perform the POWERTRAIN VERIFICATION TEST. Refer to **POWERTRAIN VERIFICATION TEST - 6.7L** .

   No

   - Replace and program the Powertrain Control Module in accordance with the service information. Refer to **PCM - REMOVAL** , also see **PCM/ECM / TCM PROGRAMMING** .
   - Perform the POWERTRAIN VERIFICATION TEST. Refer to **POWERTRAIN VERIFICATION TEST - 6.7L** .

11. **APP SENSOR SWEEP**

1. Ignition on, engine not running.
2. With a scan tool, monitor the APP Sensor No. 2 voltage.
3. Slowly press the Accelerator pedal down.

   Does voltage start at approximately 0 Volts and go above 2.31 Volts with a smooth transition?

   Yes

   - Perform the INTERMITTENT CONDITION diagnostic procedure. Refer to **INTERMITTENT CONDITION - 6.7L** .

   No

   - Replace the APP Sensor Assembly in accordance with the Service Information. After

installation is complete, use a scan tool and select the ETC RELEARN function to relearn the APPS values.

- Perform the POWERTRAIN VERIFICATION TEST. Refer to **POWERTRAIN VERIFICATION TEST - 6.7L** .

P2128-ACCELERATOR PEDAL POSITION SENSOR 2 CIRCUIT HIGH

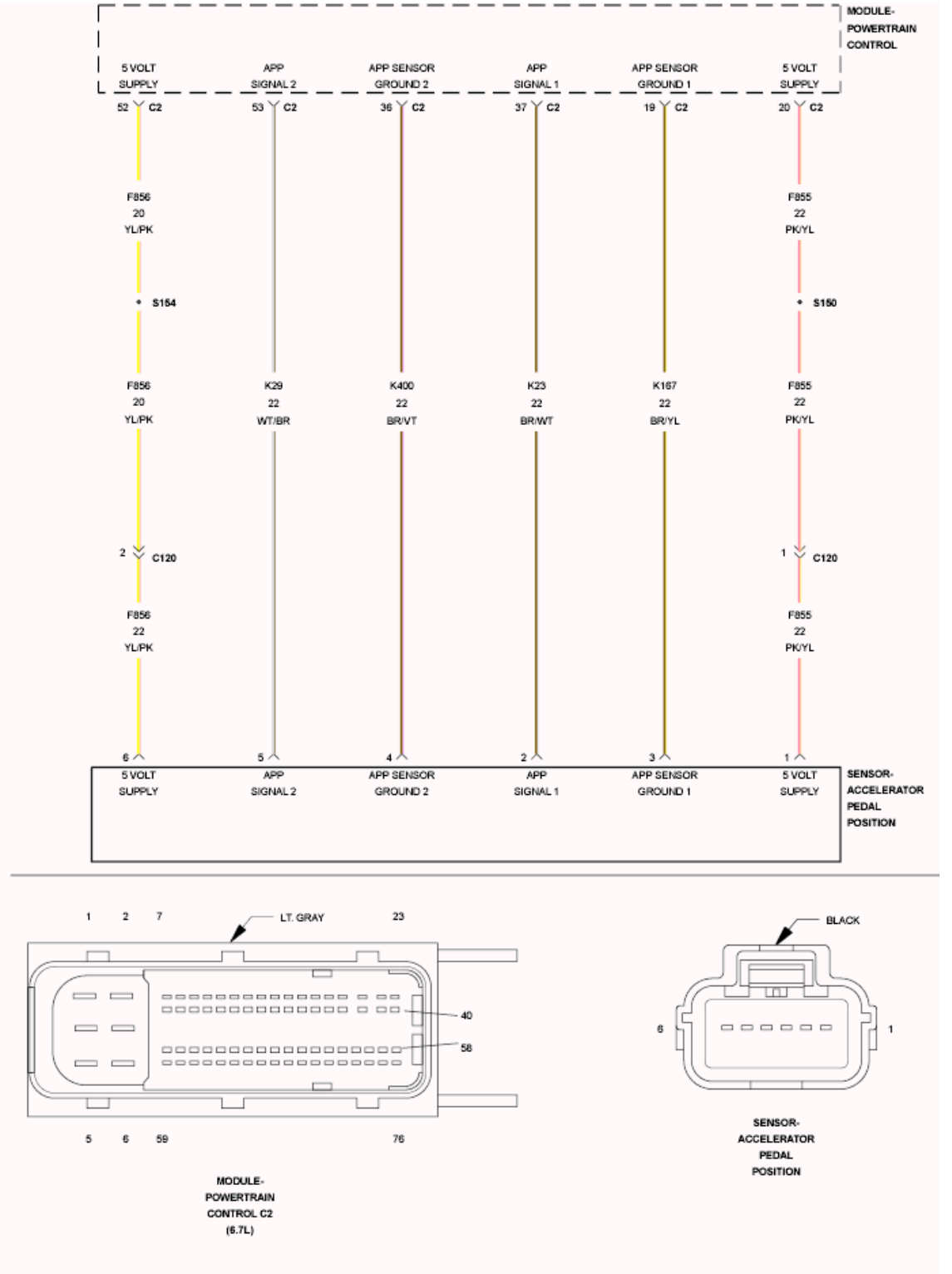

Fig. 164: Accelerator Pedal Position Sensor Circuit Schematic
Courtesy of CHRYSLER GROUP, LLC

For a complete wiring diagram, **refer to appropriate SYSTEM WIRING DIAGRAMS article** .

THEORY OF OPERATION

The throttle pedal produces two voltage signals proportional to the pedal movement. The primary signal varies between 0 and 5.0 Volts and the secondary signal varies between 0 and 2.5 Volts. The Powertrain Control Module (PCM) uses the two signals to validate throttle pedal position to control engine fueling. The PCM illuminates the MIL lamp and ETC light solid immediately after the diagnostic runs and fails. Acceleration rate and Engine output are limited. The PCM will turn off the MIL lamp after the diagnostic runs and passes in four consecutive drive cycles.

WHEN MONITORED:

Any time the Powertrain Control Module is powered up.

SET CONDITION:

When APP Sensor No. 2 voltage is above 2.5 Volts for one second.

POSSIBLE CAUSES

Possible Causes
(K29) APP SENSOR 2 SIGNAL CIRCUIT SHORTED TO BATTERY VOLTAGE
(K29) APP SENSOR 2 SIGNAL SHORTED TO THE (F856) 5-VOLT SUPPLY CIRCUIT
(K29) APP SENSOR 2 SIGNAL SHORTED TO THE (F855) 5-VOLT SUPPLY CIRCUIT
(K400) APP SENSOR 2 RETURN CIRCUIT OPEN
APP SENSOR
POWERTRAIN CONTROL MODULE (PCM)

Always perform the Pre-Diagnostic Troubleshooting procedure before proceeding. Refer to PRE-DIAGNOSTIC TROUBLESHOOTING PROCEDURE - 6.7L .

DIAGNOSTIC TEST

1. **APP SENSOR NO. 2 VOLTAGE ABOVE 2.5 VOLTS**

NOTE: When this DTC is Active the engine speed, torque, and vehicle speed are limited to a Limp in mode.

1. Ignition on, engine not running.
2. With a scan tool, read the APP Sensor No. 2 voltage.

NOTE: Diagnose any 5-Volt Supply DTCs before continuing.

Is the voltage above 2.5 Volts?

Yes

- Go To 2.

No

- Go To 8.

2. **CHECK THE ACCELERATOR PEDAL POSITION SENSOR**
    1. Turn the ignition off.
    2. Disconnect the APP Sensor harness connector.
    3. Ignition on, engine not running.
    4. With a scan tool, monitor the Accelerator Pedal Position Sensor voltage.

    Is the voltage above 0 Volts?

    Yes

    - Go To 3.

    No

    - Replace the APP Sensor Assembly in accordance with the Service Information. After installation is complete, use a scan tool and select the ETC RELEARN function to relearn the APPS values.
    - Perform the POWERTRAIN VERIFICATION TEST. Refer to **POWERTRAIN VERIFICATION TEST - 6.7L** .
3. **CHECK THE (K29) APP SENSOR 2 SIGNAL CIRCUIT FOR A SHORT TO BATTERY**

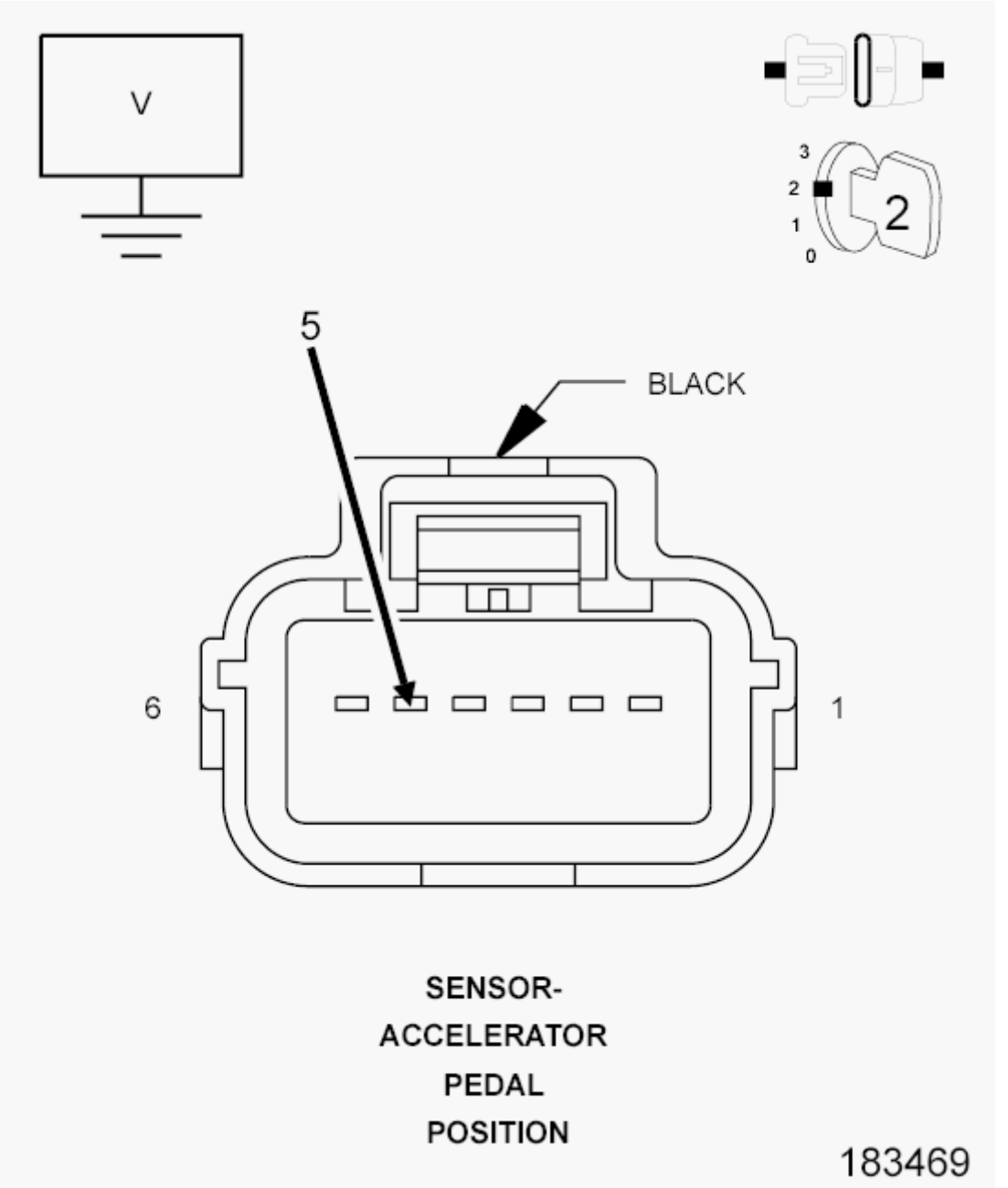

Fig. 165: Measuring Voltage On (K29) APP Sensor No. 2 Signal Circuit In APP Sensor Harness Connector
Courtesy of CHRYSLER GROUP, LLC

1. Turn the ignition off.
2. Disconnect the C2 PCM harness connector.
3. Ignition on, engine not running.
4. Measure the voltage on the (K29) APP Sensor 2 Signal circuit in the APP Sensor harness connector.

Is the voltage above 0 Volts?

Yes

- Repair the (K29) APP Sensor 2 Signal circuit for a short to voltage.
- Perform the POWERTRAIN VERIFICATION TEST. Refer to **POWERTRAIN VERIFICATION TEST - 6.7L** .

No

- Go To 4.

4. **CHECK FOR THE (K29) APP SENSOR 2 SIGNAL CIRCUIT SHORTED TO THE (F856) 5-VOLT SUPPLY CIRCUIT**

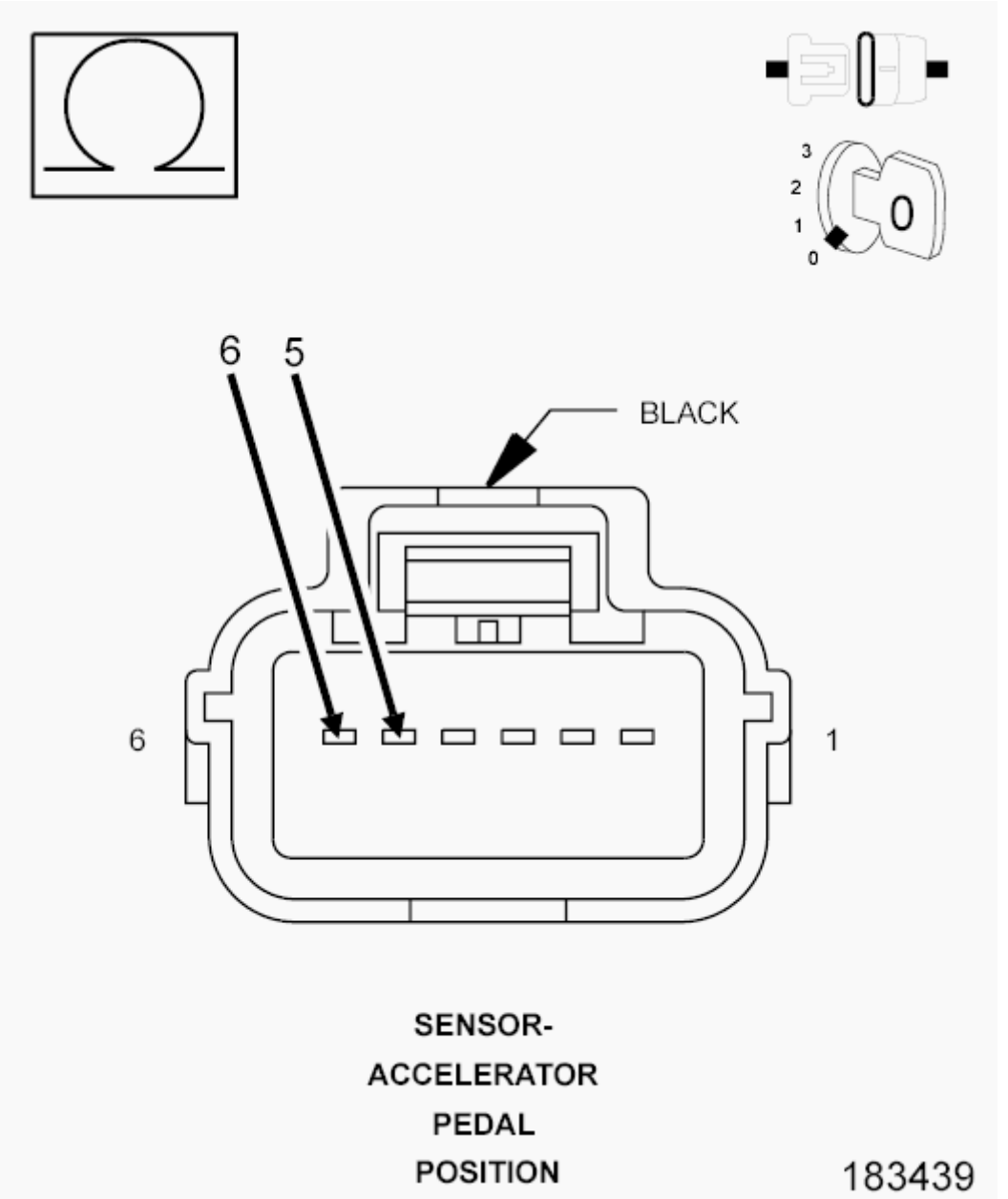

Fig. 166: Measuring Resistance Between (K29) APP Sensor No. 2 Signal Circuit And (F856) 5-Volt Supply Circuit In APP Sensor Harness Connector
Courtesy of CHRYSLER GROUP, LLC

1. Turn the ignition off.
2. Measure the resistance between the (K29) APP Sensor 2 Signal circuit and the (F856) 5-Volt Supply circuit in the APP Sensor harness connector.

   Is the resistance below 10k Ohms?

   Yes

- Repair the short between the (K29) APP Sensor 2 Signal circuit and the (F856) 5-Volt Supply circuit.
- Perform the POWERTRAIN VERIFICATION TEST. Refer to **POWERTRAIN VERIFICATION TEST - 6.7L** .

No

- Go To 5.

5. **CHECK FOR THE (K29) APP SENSOR 2 SIGNAL CIRCUIT SHORTED TO THE (F855) 5-VOLT SUPPLY CIRCUIT**

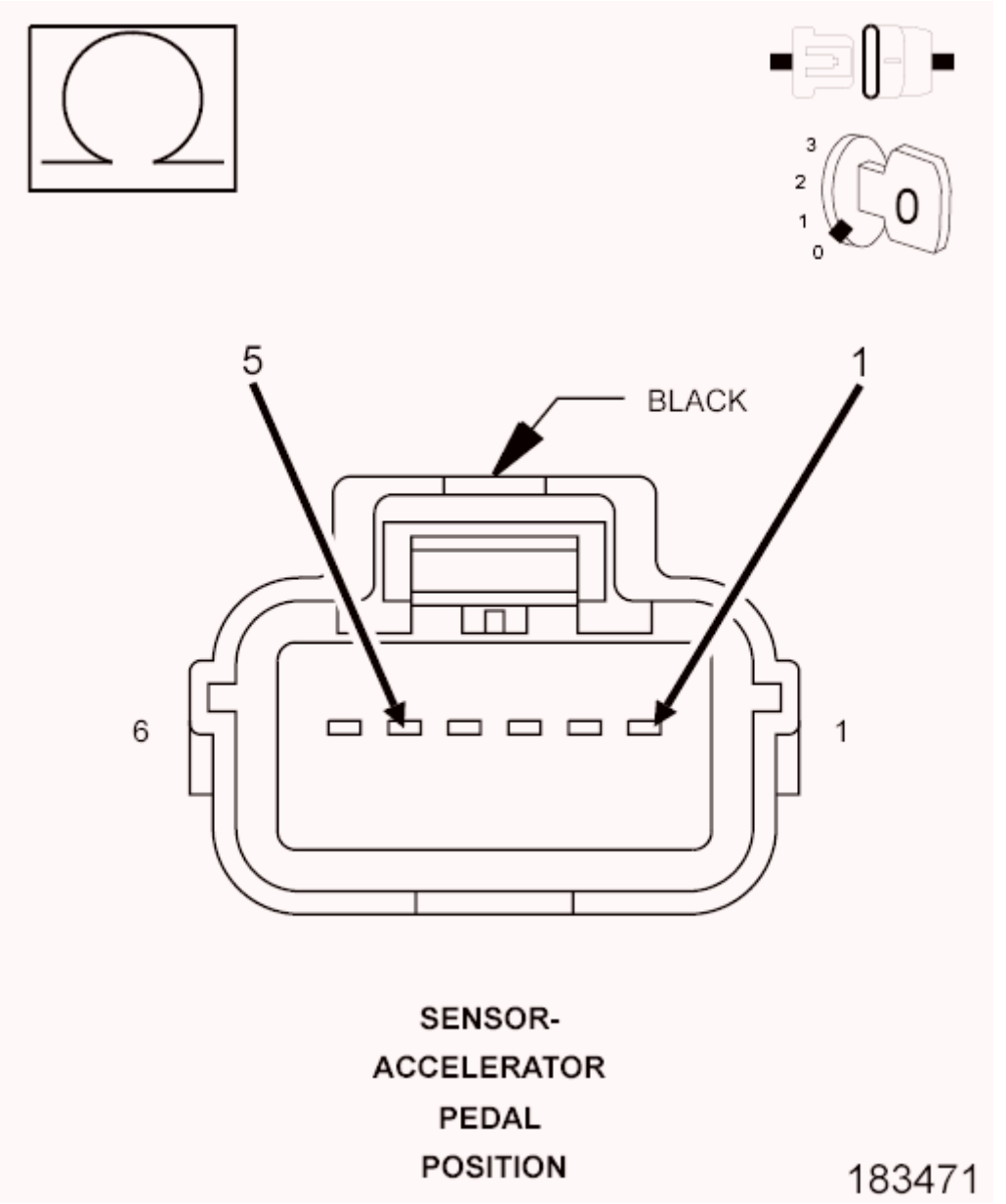

Fig. 167: Measuring Resistance Between (K29) APP Sensor No. 2 Signal Circuit And (F855) 5-Volt

Supply Circuit In APP Sensor Harness Connector
Courtesy of CHRYSLER GROUP, LLC

1. Measure the resistance between the (K29) APP Sensor 2 Signal circuit and the (F855) 5-Volt Supply circuit in the APP Sensor harness connector.

   Is the resistance below 10k Ohms?

   Yes

   - Repair the short between the (K29) APP Sensor 2 Signal circuit and the (F855) 5-Volt Supply circuit.
   - Perform the POWERTRAIN VERIFICATION TEST. Refer to **POWERTRAIN VERIFICATION TEST - 6.7L** .

   No

   - Go To 6.

6. **CHECK THE (K400) APP SENSOR 2 RETURN CIRCUIT FOR AN OPEN/HIGH RESISTANCE**
   1. Measure the resistance of the (K400) APP Sensor 2 Return circuit from the APP Sensor harness connector to the C2 PCM harness connector.

      Is the resistance below 5.0 Ohms?

      Yes

      - Go To 7.

      No

      - Repair the (K400) APP Sensor 2 Return circuit for an open or high resistance.
      - Perform the POWERTRAIN VERIFICATION TEST. Refer to **POWERTRAIN VERIFICATION TEST - 6.7L** .

7. **POWERTRAIN CONTROL MODULE**

   NOTE: Before continuing, check the PCM harness connector terminals for corrosion, damage, or terminal push out. Repair as necessary.

   1. Using the schematics as a guide, inspect the wire harness and connectors. Pay particular attention to all Power and Ground circuits.

      Were there any problems found?

      Yes

      - Repair as necessary.

- Perform the POWERTRAIN VERIFICATION TEST. Refer to **POWERTRAIN VERIFICATION TEST - 6.7L** .

No

- Replace and program the Powertrain Control Module in accordance with the service information. Refer to **PCM - REMOVAL** , also see **PCM/ECM / TCM PROGRAMMING** .
- Perform the POWERTRAIN VERIFICATION TEST. Refer to **POWERTRAIN VERIFICATION TEST - 6.7L** .

8. **APP SENSOR NO. 2 SWEEP**
   1. Ignition on, engine not running.
   2. With a scan tool, monitor the Accelerator Pedal Position Sensor voltage.
   3. Slowly press the Accelerator Pedal down.

   Does voltage start at approximately 0 Volts and go above 2.31 Volts with a smooth transition?

   Yes

   - Perform the INTERMITTENT CONDITION diagnostic procedure. Refer to **INTERMITTENT CONDITION - 6.7L** .

   No

   - Replace the APP Sensor Assembly in accordance with the Service Information. After installation is complete, use a scan tool and select the ETC RELEARN function to relearn the APPS values.
   - Perform the POWERTRAIN VERIFICATION TEST. Refer to **POWERTRAIN VERIFICATION TEST - 6.7L** .

P214A-SCR NOX CATALYST INLET TEMPERATURE TOO HIGH

For a complete wiring diagram, **refer to appropriate SYSTEM WIRING DIAGRAMS article** .

THEORY OF OPERATION

Selective Catalytic Reduction (SCR) is a technology that uses a urea based diesel exhaust fluid (DEF) and a catalytic converter to significantly reduce nitrous oxides (NOx) emissions. The system accomplishes this by injecting small quantities of diesel exhaust fluid (DEF) are injected into the exhaust system upstream of the catalyst, where it vaporizes and decomposes to form ammonia and carbon dioxide. The ammonia is the desired product which in conjunction to the SCR Catalyst, converts the NOx to harmless nitrogen and water. The Diesel Exhaust Fluid (DEF) Dosing Control Unit is used to control the operation and monitoring of the Diesel Exhaust Fluid system. The DEF Dosing Control Unit communicates with the Powertrain Control Module over the J1939 Data Link. The SCR system is equipped with two NOx Sensors and modules that are used to monitor the efficiency of the SCR Catalyst and diesel exhaust fluid system. The NOx Sensors and NOx Sensor Modules are calibrated to each other and must be replaced as an assembly. The two NOx Sensor and Module assemblies are

not interchangeable. The NOx Sensor Modules are smart devices that communicate with the Powertrain Control Module (PCM) over the J1939 Data Link. The NOx Sensor Modules perform their own internal diagnostics and report malfunctions back to the PCM.

WHEN MONITORED:

Continuously with the engine running and active regeneration of the Diesel Particulate Filter is not occurring.

SET CONDITION:

The Powertrain Control Module detects that Exhaust Gas Temperature (EGT) Sensor 1/3 is above 650°C (1202° F) for one minute.

POSSIBLE CAUSES

Possible Causes
EXHAUST GAS TEMPERATURE SENSOR 1/3 FAILED IN RANGE
ENGINE MISFIRE
EXCESSIVE FUEL OR OIL INTRODUCED INTO THE EXHAUST SYSTEM
DEFECTIVE DOC/DPF CATALYST

Always perform the Pre-Diagnostic Troubleshooting procedure before proceeding. Refer to PRE-DIAGNOSTIC TROUBLESHOOTING PROCEDURE - 6.7L .

DIAGNOSTIC TEST

1. **CHECK THE OPERATION OF EXHAUST TEMPERATURE SENSORS**

NOTE: **This fault will go inactive immediately after the SCR outlet temperature drops below the warning limit, and will likely be inactive when the vehicle is in the shop. For these reasons this troubleshooting tree must be used for both active and inactive fault codes.**

NOTE: **Repair any fuel, emissions, or DEF system component DTCs before continuing with this diagnostic procedure.**

1. Start and idle the engine for 10 minutes.
2. With the scan tool, read and compare the Exhaust Gas Temperature (EGT) Sensors.

   Do any of the EGT Sensors vary more than 43°F of the others?

   Yes

   - Go To 3.

   No

- Go To 2.

2. **CHECK THE EXHAUST TEMPERATURE SENSOR FOR A SHORT TO ANOTHER CIRCUIT**

NOTE: Perform this test on the EGT Sensor that was reading more than 43°F above or below the others.

1. Turn the ignition off.
2. Disconnect the Powertrain Control Module (PCM) C2 harness connector.
3. Measure the resistance between the EGT Sensor Signal circuit and all other circuits in the PCM C2 harness connector.

   Was the resistance above 10k Ohms between the EGT Sensor Signal circuit and all other circuits in the PCM C2 harness connector?

   Yes

   - Replace the Exhaust Gas Temperature Sensor in accordance with the service information. Refer to **SENSOR, EXHAUST TEMPERATURE, REMOVAL** .
   - Perform the POWERTRAIN VERIFICATION TEST. Refer to **POWERTRAIN VERIFICATION TEST - 6.7L** .

   No

   - Repair the short between the Exhaust Gas Temperature Sensor circuit and the circuit that measured below 10k Ohms.
   - Perform the POWERTRAIN VERIFICATION TEST. Refer to **POWERTRAIN VERIFICATION TEST - 6.7L** .

3. **CHECK FOR CYLINDER MISFIRE**

1. Start the engine.
2. With the scan tool, navigate to Systems Tests, and perform the Injector Kill system test.

   Were any cylinders found to be faulty or low?

   Yes

   - Perform the CHECKING ENGINE MISFIRE / RUNS ROUGH / PERFORMANCE TEST diagnostic procedure. Refer to **DIAGNOSIS AND TESTING, 6.7L** .
   - Perform the POWERTRAIN VERIFICATION TEST. Refer to **POWERTRAIN VERIFICATION TEST - 6.7L** .

   No

   - Go To 4.

4. **CHECK FOR EXCESSIVE ENGINE OIL BEING INTRODUCED INTO THE**

AFTERTREATMENT SYSTEM

1. Turn the ignition off.
2. Remove the turbocharger outlet and inspect for signs of oil, fuel or moisture being introduced into the aftertreatment system from the engine.

   Was engine oil, fuel or moisture found in the turbocharger exhaust outlet?

   Yes

   - Locate the cause of possible diesel fuel or engine oil being carried from the engine into the exhaust system. Inspect the SCR Catalyst for possible damage.
   - Perform the POWERTRAIN VERIFICATION TEST. Refer to **POWERTRAIN VERIFICATION TEST - 6.7L** .

   No

   - If DTC P1451 is present, perform a scan tool initiated regeneration of the aftertreatment system. If DTC P1451 is not present, replace the DOC/DPF assembly in accordance with the service information.
   - Perform the POWERTRAIN VERIFICATION TEST. Refer to **POWERTRAIN VERIFICATION TEST - 6.7L** .

P214B-SCR NOX CATALYST INLET TEMPERATURE TOO HIGH DURING PARTICULATE FILTER REGENERATION

For a complete wiring diagram, **refer to appropriate SYSTEM WIRING DIAGRAMS article** .

THEORY OF OPERATION

The Selective Catalytic Reduction (SCR) Catalyst is used in combination with the Diesel Exhaust Fluid system to reduce the amount of NOx gases produced during engine combustion. Excessive fuel or oil entering the exhaust system due to a failed engine component or Fuel Injector can cause the temperature to rise and will result in damage to the SCR Catalyst. The DEF Dosing Control Unit will turn on the MIL Lamp via the Powertrain Control Module (PCM) immediately after the monitor runs and fails, and diesel exhaust fluid injection is disabled.

WHEN MONITORED:

Continuously with the engine running and active regeneration of the DOC/DPF Catalyst is occurring.

SET CONDITION:

The Powertrain Control Module detects that Exhaust Gas Temperature (EGT) Sensor 1/3 is above 800°C (1472° F) for more than 20 seconds.

POSSIBLE CAUSES

Possible Causes
EXHAUST GAS TEMPERATURE SENSOR 1/3 FAILED IN RANGE
EXCESSIVE FUEL OR OIL INTRODUCED INTO THE EXHAUST SYSTEM
ENGINE MISFIRE
DEFECTIVE DOC/DPF CATALYST

Always perform the Pre-Diagnostic Troubleshooting procedure before proceeding. Refer to PRE-DIAGNOSTIC TROUBLESHOOTING PROCEDURE - 6.7L .

DIAGNOSTIC TEST

1. **CHECK THE OPERATION OF EXHAUST TEMPERATURE SENSORS**

NOTE: **This DTC will change to stored immediately after the exhaust temperature drops below the limit and will likely be stored when it enters the shop. For this reason, the diagnostic procedure should be performed for both active and inactive DTCs.**

NOTE: **Repair any fuel, emissions, or DEF system component DTCs before continuing with this diagnostic procedure.**

1. Start and idle the engine for 10 minutes.
2. With the scan tool, read and compare the Exhaust Gas Temperature (EGT) Sensors.

   Do any of the EGT Sensors vary more than 43°F of the others?

   Yes

   - Go To 2.

   No

   - Go To 3.

2. **CHECK THE EXHAUST TEMPERATURE SENSOR FOR A SHORT TO ANOTHER CIRCUIT**

NOTE: **Perform this test on the EGT Sensor that was reading more than 43°F above or below the others.**

1. Turn the ignition off.
2. Disconnect the Powertrain Control Module (PCM) C2 harness connector.
3. Measure the resistance between the EGT Sensor Signal circuit and all other circuits in the PCM C2 harness connector.

   Was the resistance above 10k Ohms between the EGT Sensor Signal circuit and all other circuits in

the PCM C2 harness connector?

Yes

- Replace the Exhaust Gas Temperature Sensor in accordance with the service information. Refer to **SENSOR, EXHAUST TEMPERATURE, REMOVAL** .
- Perform the POWERTRAIN VERIFICATION TEST. Refer to **POWERTRAIN VERIFICATION TEST - 6.7L** .

No

- Repair the short between the Exhaust Gas Temperature Sensor circuit and the circuit that measured below 10k Ohms.
- Perform the POWERTRAIN VERIFICATION TEST. Refer to **POWERTRAIN VERIFICATION TEST - 6.7L** .

3. **CHECK FOR CYLINDER MISFIRE**
   1. Start the engine.
   2. With the scan tool, navigate to Systems Tests, and perform the Injector Kill system test.

   Were any cylinders found to be faulty or low?

   Yes

   - Perform the CHECKING ENGINE MISFIRE / RUNS ROUGH / PERFORMANCE TEST diagnostic procedure. Refer to **DIAGNOSIS AND TESTING, 6.7L** .
   - Perform the POWERTRAIN VERIFICATION TEST. Refer to **POWERTRAIN VERIFICATION TEST - 6.7L** .

   No

   - Go To 4.
4. **CHECK FOR EXCESSIVE ENGINE OIL BEING INTRODUCED INTO THE AFTERTREATMENT SYSTEM**
   1. Turn the ignition off.
   2. Remove the turbocharger outlet and inspect for signs of oil, fuel or moisture being introduced into the aftertreatment system from the engine.

   Was engine oil, fuel or moisture found in the turbocharger exhaust outlet?

   Yes

   - Locate the cause of possible diesel fuel or engine oil being carried from the engine into the exhaust system. Inspect the SCR Catalyst for possible damage.
   - Perform the POWERTRAIN VERIFICATION TEST. Refer to **POWERTRAIN VERIFICATION TEST - 6.7L** .

No

- Go To 5.

5. **CHECK THE DOC/DPF CATALYST FOR PLUGGING**
   1. Remove the DOC/DPF Catalyst and check the inlet side for signs of soot accumulation or face plugging.

      Does the DOC/DPF Catalyst show any evidence of face plugging or soot accumulation?

      Yes

      - If DTC P1451 is present, perform a scan tool initiated regeneration of the aftertreatment system.
      - Perform the POWERTRAIN VERIFICATION TEST. Refer to **POWERTRAIN VERIFICATION TEST - 6.7L** .

      No

      - If DTC P1451 is not present, replace the DOC/DPF assembly in accordance with the service information. Refer to **FILTER, DIESEL PARTICULATE, REMOVAL** .
      - Perform the POWERTRAIN VERIFICATION TEST. Refer to **POWERTRAIN VERIFICATION TEST - 6.7L** .

P214C-SCR NOX CATALYST OUTLET TEMPERATURE TOO HIGH

For a complete wiring diagram, **refer to appropriate SYSTEM WIRING DIAGRAMS article** .

THEORY OF OPERATION

The Selective Catalytic Reduction (SCR) Catalyst is used in combination with the Diesel Exhaust Fluid system to reduce the amount of NOx gases produced during engine combustion. Excessive fuel or oil entering the exhaust system due to a failed engine component or Fuel Injector can cause the temperature to rise and will result in damage to the SCR Catalyst.

WHEN MONITORED:

Continuously with the engine running.

SET CONDITION:

The Powertrain Control Module detects that Exhaust Gas Temperature (EGT) Sensor 1/4 is above 650°C (1202° F) for one minute.

POSSIBLE CAUSES

Possible Causes

DEGRADED, DILUTED OR INCORRECT DIESEL EXHAUST FLUID
EXHAUST GAS TEMPERATURE SENSOR 1/4 FAILED IN RANGE
EXCESSIVE FUEL OR OIL INTRODUCED INTO THE EXHAUST SYSTEM
ENGINE MISFIRE
DEFECTIVE DOC/DPF CATALYST

Always perform the Pre-Diagnostic Troubleshooting procedure before proceeding. Refer to PRE-DIAGNOSTIC TROUBLESHOOTING PROCEDURE - 6.7L .

DIAGNOSTIC TEST

1. **CHECK THE OPERATION OF EXHAUST TEMPERATURE SENSORS**

   NOTE: Repair any fuel, emissions, or DEF system component DTCs before continuing with this diagnostic procedure.

   1. Start and idle the engine for 10 minutes.
   2. With the scan tool, read and compare the Exhaust Gas Temperature (EGT) Sensors.

      Do any of the EGT Sensors vary more than 43°F of the others?

      Yes

      - Go To 3.

      No

      - Go To 2.

2. **CHECK THE EXHAUST TEMPERATURE SENSOR FOR A SHORT TO ANOTHER CIRCUIT**

   NOTE: Perform this test on the EGT Sensor that was reading more than 43°F above or below the others.

   1. Turn the ignition off.
   2. Disconnect the Powertrain Control Module (PCM) C2 harness connector.
   3. Measure the resistance between the EGT Sensor Signal circuit and all other circuits in the PCM C2 harness connector.

      Was the resistance above 10k Ohms between the EGT Sensor Signal circuit and all other circuits in the PCM C2 harness connector?

      Yes

      - Replace the Exhaust Gas Temperature Sensor in accordance with the service information. Refer to **SENSOR, EXHAUST TEMPERATURE, REMOVAL** .

- Perform the POWERTRAIN VERIFICATION TEST. Refer to **POWERTRAIN VERIFICATION TEST - 6.7L** .

No

- Repair the short between the Exhaust Gas Temperature Sensor circuit and the circuit that measured below 10k Ohms.
- Perform the POWERTRAIN VERIFICATION TEST. Refer to **POWERTRAIN VERIFICATION TEST - 6.7L** .

3. **CHECK THE DIESEL EXHAUST FLUID**
   1. Turn the ignition off.
   2. Collect a sample of diesel exhaust fluid from the system.
   3. Visually inspect the fluid for signs of contamination or debris.

   Test the quality of the fluid using litmus paper (supplied by parts) or by using the SPX DEF/UREA Refractometer 94-F-00K-108-456 or equivalent.

   NOTE: The diesel exhaust fluid should register approximately 9 ph with the litmus paper and 32.5 percent using a refractometer.

   Is the diesel exhaust fluid quality within specification and free of debris and contamination?

   Yes

   - Go To 4.

   No

   - Drain the diesel exhaust fluid from the tank and fill the system. If the fluid is contaminated, perform the cleaning procedure. Refer to **TANK, DIESEL EXHAUST FLUID, CLEANING** .
   - Perform the POWERTRAIN VERIFICATION TEST. Refer to **POWERTRAIN VERIFICATION TEST - 6.7L** .

4. **CHECK FOR CYLINDER MISFIRE**
   1. Start the engine.
   2. With the scan tool, navigate to Systems Tests, and perform the Injector Kill system test.

   Were any cylinders found to be faulty or low?

   Yes

   - Perform the CHECKING ENGINE MISFIRE / RUNS ROUGH / PERFORMANCE TEST diagnostic procedure. Refer to **DIAGNOSIS AND TESTING, 6.7L** .
   - Perform the POWERTRAIN

VERIFICATION TEST - 6.7L .

No

- Go To 5.

5. **CHECK FOR EXCESSIVE ENGINE OIL BEING INTRODUCED INTO THE AFTERTREATMENT SYSTEM**
   1. Turn the ignition off.
   2. Remove the turbocharger outlet and inspect for signs of oil, fuel or moisture being introduced into the aftertreatment system from the engine.

      Was engine oil, fuel or moisture found in the turbocharger exhaust outlet?

      Yes

      - Locate the cause of possible diesel fuel or engine oil being carried from the engine into the exhaust system. Inspect the SCR Catalyst for possible damage.
      - Perform the POWERTRAIN VERIFICATION TEST. Refer to **POWERTRAIN VERIFICATION TEST - 6.7L** .

      No

      - Go To 6.

6. **CHECK THE DOC/DPF CATALYST FOR PLUGGING**
   1. Remove the DOC/DPF Catalyst and check the inlet side for signs of soot accumulation or face plugging.

      Does the DOC/DPF Catalyst show any evidence of face plugging or soot accumulation?

      Yes

      - If DTC P1451 is present, perform a scan tool initiated regeneration of the aftertreatment system.
      - Perform the POWERTRAIN VERIFICATION TEST. Refer to **POWERTRAIN VERIFICATION TEST - 6.7L** .

      No

      - If DTC P1451 is not present, replace the DOC/DPF assembly in accordance with the service information. Refer to **FILTER, DIESEL PARTICULATE, REMOVAL** .
      - Perform the POWERTRAIN VERIFICATION TEST. Refer to **POWERTRAIN VERIFICATION TEST - 6.7L** .

P214D-SCR NOX CATALYST OUTLET TEMPERATURE TOO HIGH DURING PARTICULATE FILTER REGENERATION

For a complete wiring diagram, **refer to appropriate SYSTEM WIRING DIAGRAMS article** .

THEORY OF OPERATION

The Selective Catalytic Reduction (SCR) Catalyst is used in combination with the Diesel Exhaust Fluid system to reduce the amount of NOx gases produced during engine combustion. Excessive fuel or oil entering the exhaust system due to a failed engine component or Fuel Injector can cause the temperature to rise and will result in damage to the SCR Catalyst. The DEF Dosing Control Unit will turn on the MIL Lamp via the Powertrain Control Module (PCM) immediately after the monitor runs and fails, and diesel exhaust fluid injection is disabled. The DEF Dosing Control Unit will turn off the MIL Lamp via the PCM immediately after the monitor runs and passes.

WHEN MONITORED:

Continuously with the engine running and active regeneration of the Diesel Particulate Filter is occurring.

SET CONDITION:

The Powertrain Control Module detects that Exhaust Gas Temperature (EGT) Sensor 1/4 is above 800°C (1472° F) for more than 20 seconds.

POSSIBLE CAUSES

Possible Causes
DEGRADED, DILUTED OR INCORRECT DIESEL EXHAUST FLUID
EXHAUST GAS TEMPERATURE SENSOR 1/4 FAILED IN RANGE
EXCESSIVE FUEL OR OIL INTRODUCED INTO THE EXHAUST SYSTEM
ENGINE MISFIRE
DEFECTIVE DOC/DPF CATALYST

Always perform the Pre-Diagnostic Troubleshooting procedure before proceeding. Refer to PRE-DIAGNOSTIC TROUBLESHOOTING PROCEDURE - 6.7L .

DIAGNOSTIC TEST

NOTE: **This DTC will change to stored immediately after the exhaust temperature drops below the limit and will likely be stored when it enters the shop. For this reason, the diagnostic procedure should be performed for both active and inactive DTCs.**

NOTE: **If there are DTCs present for the Fuel Injectors or Exhaust Gas Temperature Sensors, perform the diagnostics for those DTCs before proceeding with this test procedure.**

1. **CHECK THE DIESEL EXHAUST FLUID**
    1. Turn the ignition off.

2. Collect a sample of diesel exhaust fluid from the system.
3. Visually inspect the fluid for signs of contamination or debris.

   Test the quality of the fluid using litmus paper (supplied by parts) or by using the SPX DEF/UREA Refractometer 94-F-00K-108-456 or equivalent.

   NOTE: The diesel exhaust fluid should register approximately 9 ph with the litmus paper and 32.5 percent using a refractometer.

   Is the diesel exhaust fluid quality within specification and free of debris and contamination?

   Yes

   - Go To 2.

   No

   - Drain the diesel exhaust fluid from the tank and fill the system. If the fluid is contaminated, perform the cleaning procedure. Refer to **TANK, DIESEL EXHAUST FLUID, CLEANING** .
   - Perform the POWERTRAIN VERIFICATION TEST. Refer to **POWERTRAIN VERIFICATION TEST - 6.7L** .

2. **CHECK THE OPERATION OF EXHAUST TEMPERATURE SENSORS**
   1. Start and idle the engine for 10 minutes.
   2. With the scan tool, read and compare the Exhaust Gas Temperature (EGT) Sensors.

      Do any of the EGT Sensors vary more than 43°F of the others?

      Yes

      - Go To 3.

      No

      - Go To 4.

3. **CHECK THE EXHAUST TEMPERATURE SENSOR FOR A SHORT TO ANOTHER CIRCUIT**

   NOTE: Perform this test on the EGT Sensor that was reading more than 43°F above or below the others.

   1. Turn the ignition off.
   2. Disconnect the Powertrain Control Module (PCM) C2 harness connector.
   3. Measure the resistance between the EGT Sensor Signal circuit and all other circuits in the PCM C2 harness connector.

Was the resistance above 10k Ohms between the EGT Sensor Signal circuit and all other circuits in the PCM C2 harness connector?

Yes

- Replace the Exhaust Gas Temperature Sensor in accordance with the service information. Refer to **SENSOR, EXHAUST TEMPERATURE, REMOVAL** .
- Perform the POWERTRAIN VERIFICATION TEST. Refer to **POWERTRAIN VERIFICATION TEST - 6.7L** .

No

- Repair the short between the Exhaust Gas Temperature Sensor circuit and the circuit that measured below 10k Ohms.
- Perform the POWERTRAIN VERIFICATION TEST. Refer to **POWERTRAIN VERIFICATION TEST - 6.7L** .

4. **CHECK FOR CYLINDER MISFIRE**
   1. Start the engine.
   2. With the scan tool, navigate to Systems Tests, and perform the Injector Kill system test.

   Were any cylinders found to be faulty or low?

   Yes

   - Perform the CHECKING ENGINE MISFIRE / RUNS ROUGH / PERFORMANCE TEST diagnostic procedure. Refer to **DIAGNOSIS AND TESTING, 6.7L** .
   - Perform the POWERTRAIN VERIFICATION TEST. Refer to **POWERTRAIN VERIFICATION TEST - 6.7L** .

   No

   - Go To 5.

5. **CHECK FOR EXCESSIVE ENGINE OIL BEING INTRODUCED INTO THE AFTERTREATMENT SYSTEM**
   1. Turn the ignition off.
   2. Remove the turbocharger outlet and inspect for signs of oil, fuel or moisture being introduced into the aftertreatment system from the engine.

   Was engine oil, fuel or moisture found in the turbocharger exhaust outlet?

   Yes

   - Locate the cause of possible diesel fuel or engine oil being carried from the engine into the exhaust system. Inspect the SCR Catalyst for possible damage.
   - Perform the POWERTRAIN VERIFICATION TEST. Refer to **POWERTRAIN**

VERIFICATION TEST - 6.7L .

No

- Go To 6.

6. **CHECK THE DOC/DPF CATALYST FOR PLUGGING**
   1. Remove the DOC/DPF Catalyst and check the inlet side for signs of soot accumulation or face plugging.

      Does the DOC/DPF Catalyst show any evidence of face plugging or soot accumulation?

      Yes

      - If DTC P1451 is present, perform a scan tool initiated regeneration of the aftertreatment system.
      - Perform the POWERTRAIN VERIFICATION TEST. Refer to **POWERTRAIN VERIFICATION TEST - 6.7L** .

      No

      - If DTC P1451 is not present, replace the DOC/DPF assembly in accordance with the service information. Refer to **FILTER, DIESEL PARTICULATE, REMOVAL** .
      - Perform the POWERTRAIN VERIFICATION TEST. Refer to **POWERTRAIN VERIFICATION TEST - 6.7L** .

P21C2-(DIESEL EXHAUST FLUID) REDUCTANT LINE HEATER RELAY CONTROL CIRCUIT OPEN

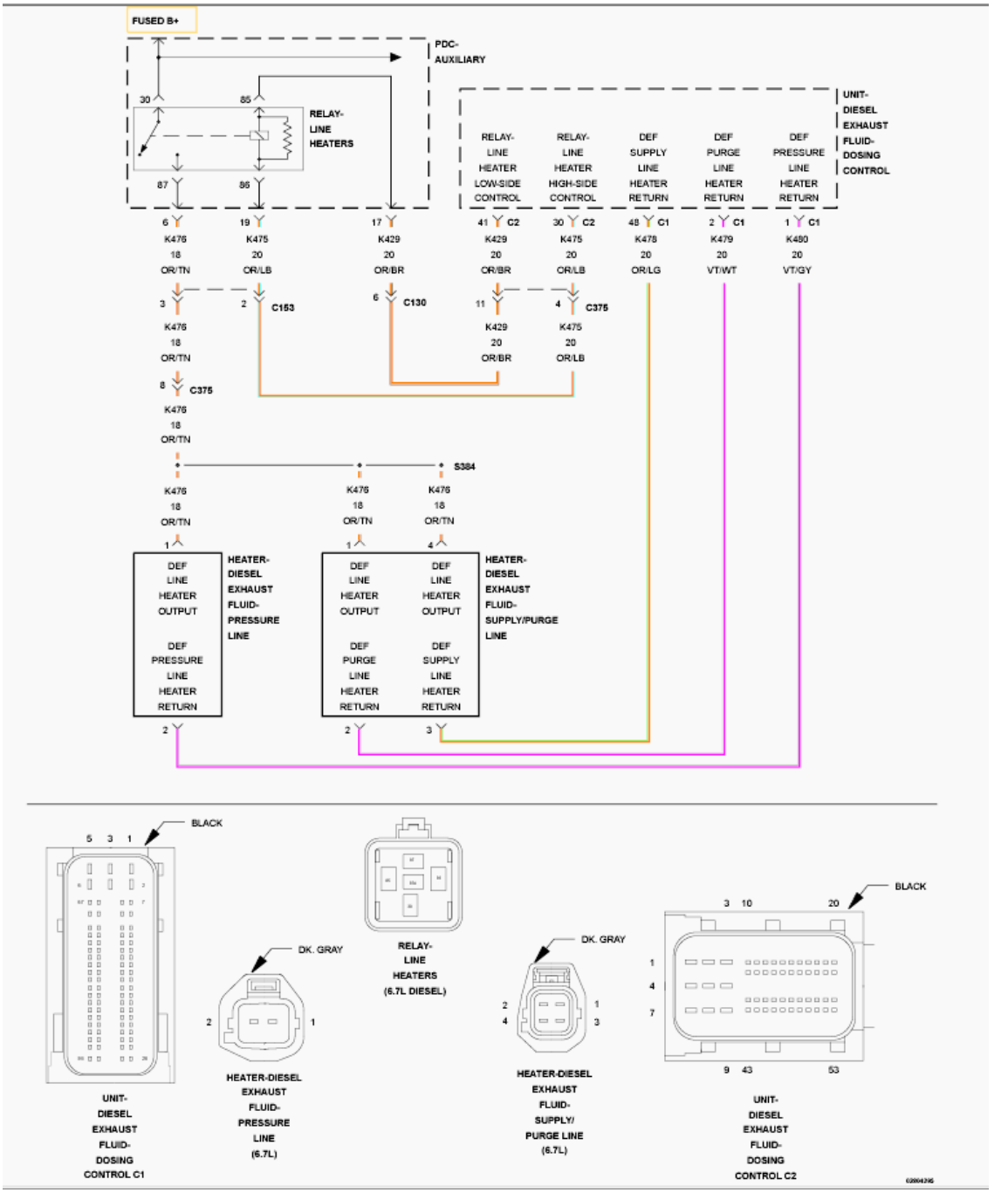

Fig. 168: Diesel Exhaust Fluid Reductant Line Heater Relay Control Circuit Wiring Diagram
Courtesy of CHRYSLER GROUP, LLC

For a complete wiring diagram, **refer to appropriate SYSTEM WIRING DIAGRAMS article** .

THEORY OF OPERATION

Each of the Diesel Exhaust Fluid (DEF) system hoses has a built in heater to warm the fluid in the lines. The three line heaters share a common power supply via the DEF Line Heater Relay which is controlled by the DEF Dosing Control Unit. The DEF Dosing Control Unit controls the heaters individually through the line heater

return circuits. The three line heater circuits are monitored at the return circuit. The DEF Dosing Unit Module will illuminate the MIL light via the Powertrain Control Module (PCM) immediately after the diagnostics runs and fails. The DEF Dosing Control Unit will turn off the MIL light via the PCM when the monitor runs and passes in three consecutive key cycles.

WHEN MONITORED:

Continuously with the ignition on.

SET CONDITION:

The DEF Dosing Control Unit detects that the DEF Line Heater Relay Control circuit is open.

POSSIBLE CAUSES

Possible Causes
(K475) DEF LINE HEATER RELAY SIGNAL CIRCUIT OPEN/HIGH RESISTANCE
(K429) DEF LINE HEATER RELAY CONTROL CIRCUIT OPEN/HIGH RESISTANCE
DEF LINE HEATER RELAY
DEF DOSING CONTROL UNIT

Always perform the Pre-Diagnostic Troubleshooting procedure before proceeding. Refer to PRE-DIAGNOSTIC TROUBLESHOOTING PROCEDURE - 6.7L .

NOTE: **The DEF Line Heater monitor runs when the DEF Line Heater Relay is commanded on. If the ambient temperature is too warm for the DEF Line Heaters to be turned on, the DTC will remain active and will not be able to be erased after repair is completed. Using the scan tool, navigate to Actuator Tests and actuate the Line Heater Relay test for the appropriate Line Heater to run the diagnostic and determine if the repair has been completed. If the repair is complete, the fault will move to stored and be able to be cleared with the scan tool.**

DIAGNOSTIC TEST

1. **ACTIVE DTC**
    1. Turn the ignition on.
    2. With the scan tool, View DTCs.

    Is the DTC active?

    Yes

    - Go To 2.

    No

- Perform the INTERMITTENT CONDITION diagnostic procedure. Refer to **INTERMITTENT CONDITION - 6.7L** .

2. **CHECK THE DEF LINE HEATER RELAY**
    1. With the scan tool, Erase DTCs.
    2. Turn the ignition off.
    3. Replace the DEF Line Heater Relay with a known good relay.
    4. Turn the ignition on.
    5. With the scan tool, navigate to Actuator Tests and actuate the Line Heater Relay.
    6. With the scan tool, View DTCs.

    Did the DTC return?

    Yes

    - Go To 2.

    No

    - Repair complete.
    - Perform the POWERTRAIN VERIFICATION TEST. Refer to **POWERTRAIN VERIFICATION TEST - 6.7L** .
3. **CHECK THE (K475) DEF LINE HEATER RELAY SIGNAL CIRCUIT FOR AN OPEN/HIGH RESISTANCE**

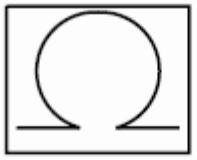

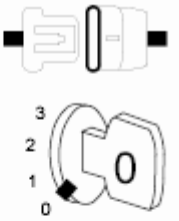

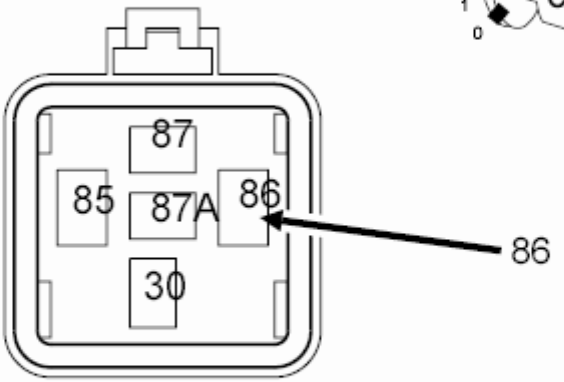

RELAY-
LINE
HEATERS
(6.7L DIESEL)

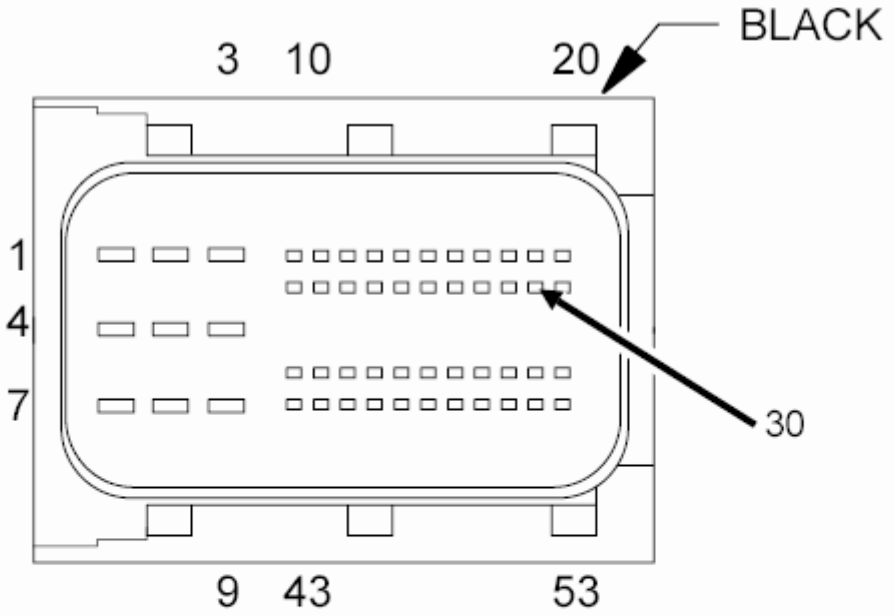

UNIT-
DIESEL
EXHAUST
FLUID-
DOSING
CONTROL C2

Fig. 169: Checking DEF Line Heater Relay Signal Circuit For An Open Or High Resistance
Courtesy of CHRYSLER GROUP, LLC

1. Stop actuation of the Line Heater Relay.
2. Turn the ignition off.
3. Remove the DEF Line Heater Relay.
4. Disconnect the DEF Dosing Control Unit C2 harness connector.
5. Measure the resistance of the (K475) DEF Line Heater Relay Signal circuit between the Line Heater Relay, terminal 86, and the DEF Dosing Control Unit C2 harness connector.

   Is the resistance below 5.0 Ohms?

   Yes

   - Go To 4.

   No

   - Repair the (K475) DEF Line Heater Relay Signal circuit for an open or high resistance.
   - Perform the POWERTRAIN VERIFICATION TEST. Refer to **POWERTRAIN VERIFICATION TEST - 6.7L** .

4. **CHECK THE (K429) DEF LINE HEATER RELAY CONTROL CIRCUIT FOR AN OPEN/HIGH RESISTANCE**

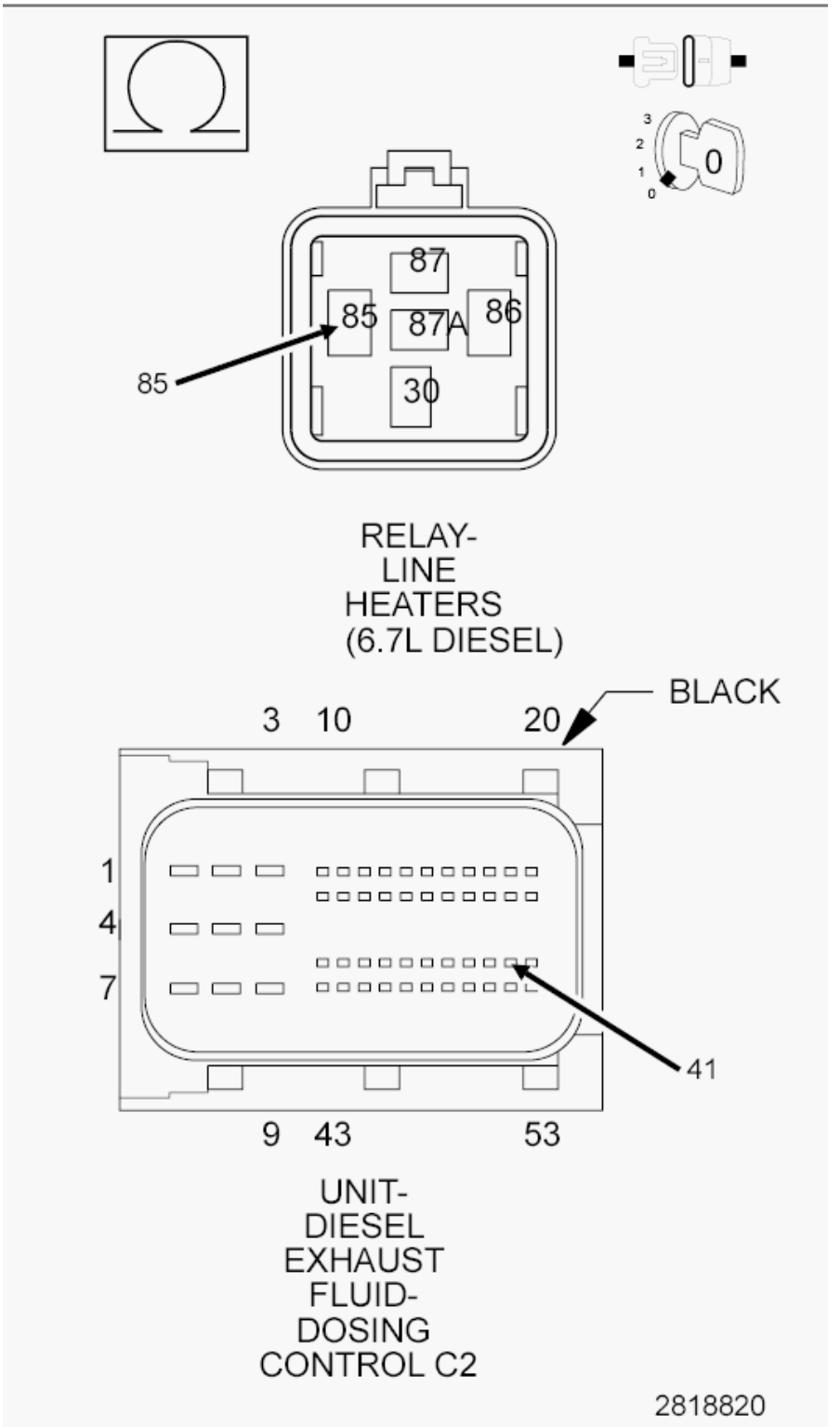

Fig. 170: Checking DEF Line Heater Relay Control Circuit For An Open Or High Resistance
Courtesy of CHRYSLER GROUP, LLC

1. Measure the resistance of the (K429) DEF Line Heater Relay Control circuit between the Line Heater Relay, terminal 85, and the DEF Dosing Control Unit C2 harness connector.

Is the resistance below 5.0 Ohms?

Yes

- Replace the DEF Dosing Control Unit in accordance with the service information. Refer to **UNIT, DIESEL EXHAUST FLUID DOSING CONTROL, REMOVAL** .
- Perform the POWERTRAIN VERIFICATION TEST. Refer to **POWERTRAIN VERIFICATION TEST - 6.7L** .

No

- Repair the (K429) DEF Line Heater Relay Control circuit for an open or high resistance.
- Perform the POWERTRAIN VERIFICATION TEST. Refer to **POWERTRAIN VERIFICATION TEST - 6.7L** .

P21C3-(DIESEL EXHAUST FLUID) REDUCTANT LINE HEATER RELAY CONTROL CIRCUIT LOW

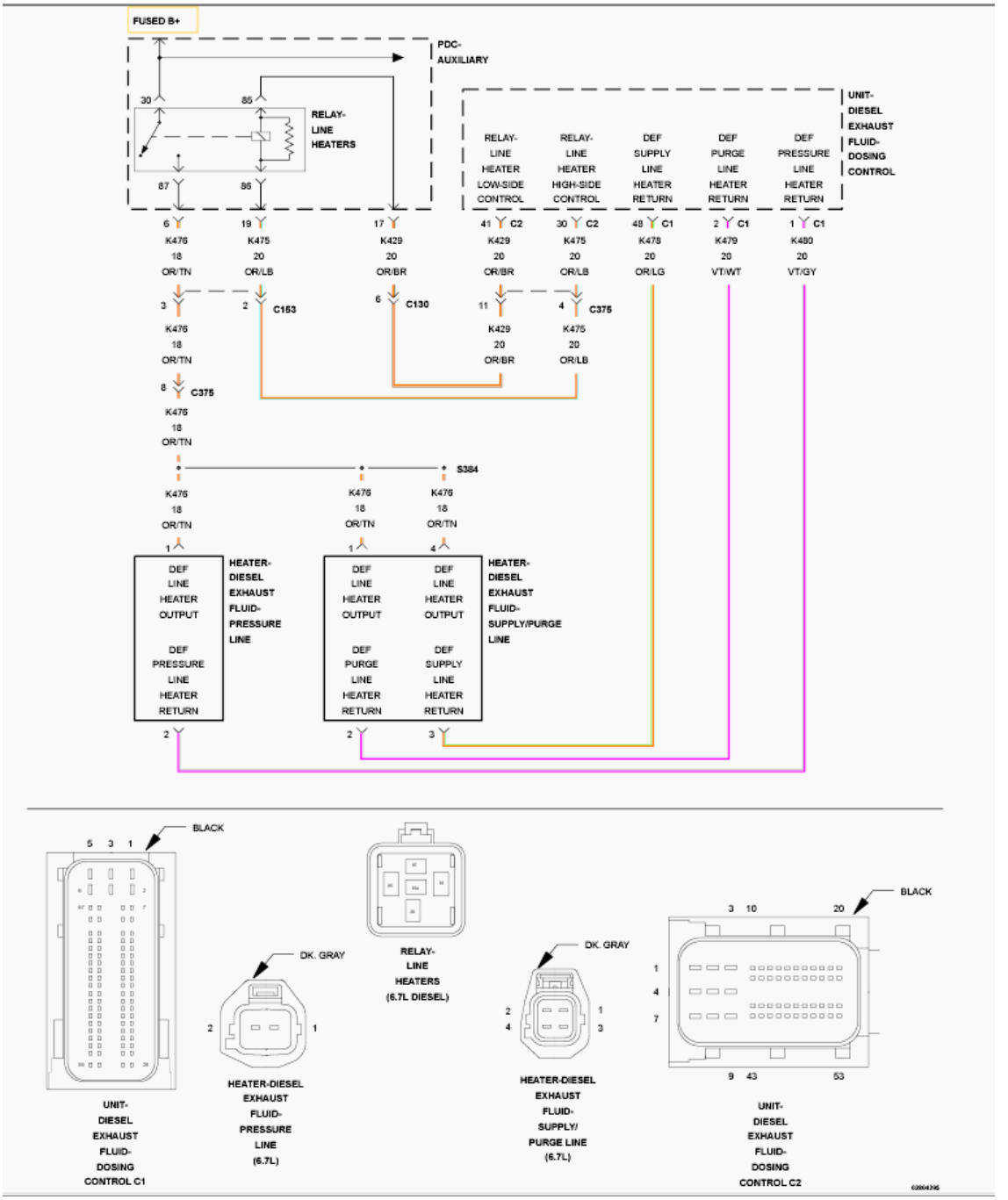

Fig. 171: Diesel Exhaust Fluid Reductant Line Heater Relay Control Circuit Wiring Diagram
Courtesy of CHRYSLER GROUP, LLC

For a complete wiring diagram, **refer to appropriate SYSTEM WIRING DIAGRAMS article** .

THEORY OF OPERATION

Each of the Diesel Exhaust Fluid (DEF) system hoses has a built in heater to warm the fluid in the lines. The three line heaters share a common power supply via the DEF Line Heater Relay which is controlled by the DEF Dosing Control Unit. The DEF Dosing Control Unit controls the heaters individually through the line heater

return circuits. The three line heater circuits are monitored at the return circuit. The DEF Dosing Control Unit will illuminate the MIL light via the Powertrain Control Module (PCM) immediately after the diagnostics runs and fails. The DEF Dosing Control Unit will turn off the MIL light via the PCM when the monitor runs and passes in three consecutive key cycles.

WHEN MONITORED:

The monitor runs when ignition is turned off. Fault will be active at the ignition on cycle.

SET CONDITION:

The DEF Dosing Control Unit detects that the DEF Line Heater Relay Control circuit voltage is below a calibrated value.

POSSIBLE CAUSES

Possible Causes
(K475) DEF LINE HEATER RELAY SIGNAL CIRCUIT SHORTED TO GROUND
(K429) DEF LINE HEATER RELAY CONTROL CIRCUIT SHORTED TO GROUND
DEF LINE HEATER RELAY
DEF DOSING CONTROL UNIT

Always perform the Pre-Diagnostic Troubleshooting procedure before proceeding. Refer to PRE-DIAGNOSTIC TROUBLESHOOTING PROCEDURE - 6.7L .

NOTE: **The DEF Line Heater monitor runs only when the DEF Line Heater Relay is commanded on. If the ambient temperature is too warm for the DEF Line Heaters to be turned on, the DTC will remain active and will not be able to be erased after repair is completed. Using the scan tool, navigate to Actuator Tests and actuate the Line Heater Relay test for the appropriate Line Heater to run the diagnostic and determine if the repair has been completed. If the repair is complete, the fault will move to stored and be able to be cleared with the scan tool.**

DIAGNOSTIC TEST

1. **ACTIVE DTC**
    1. Turn the ignition on.
    2. With the scan tool, View DTCs.

    Is the DTC active?

    Yes

    - Go To 2.

No

- Perform the INTERMITTENT CONDITION diagnostic procedure. Refer to **INTERMITTENT CONDITION - 6.7L** .

2. **CHECK THE DEF LINE HEATER RELAY**
   1. With the scan tool, Erase DTCs.
   2. Turn the ignition off.
   3. Replace the DEF Line Heater Relay with a known good relay.
   4. Turn the ignition on.
   5. With the scan tool, navigate to Actuator Tests and actuate the Line Heater Relay.
   6. With the scan tool, View DTCs.

   Did the DTC return?

   Yes

   - Go To 3.

   No

   - Repair complete.
   - Perform the POWERTRAIN VERIFICATION TEST. Refer to **POWERTRAIN VERIFICATION TEST - 6.7L** .

3. **CHECK THE (K475) DEF LINE HEATER RELAY SIGNAL CIRCUIT FOR A SHORT TO GROUND**

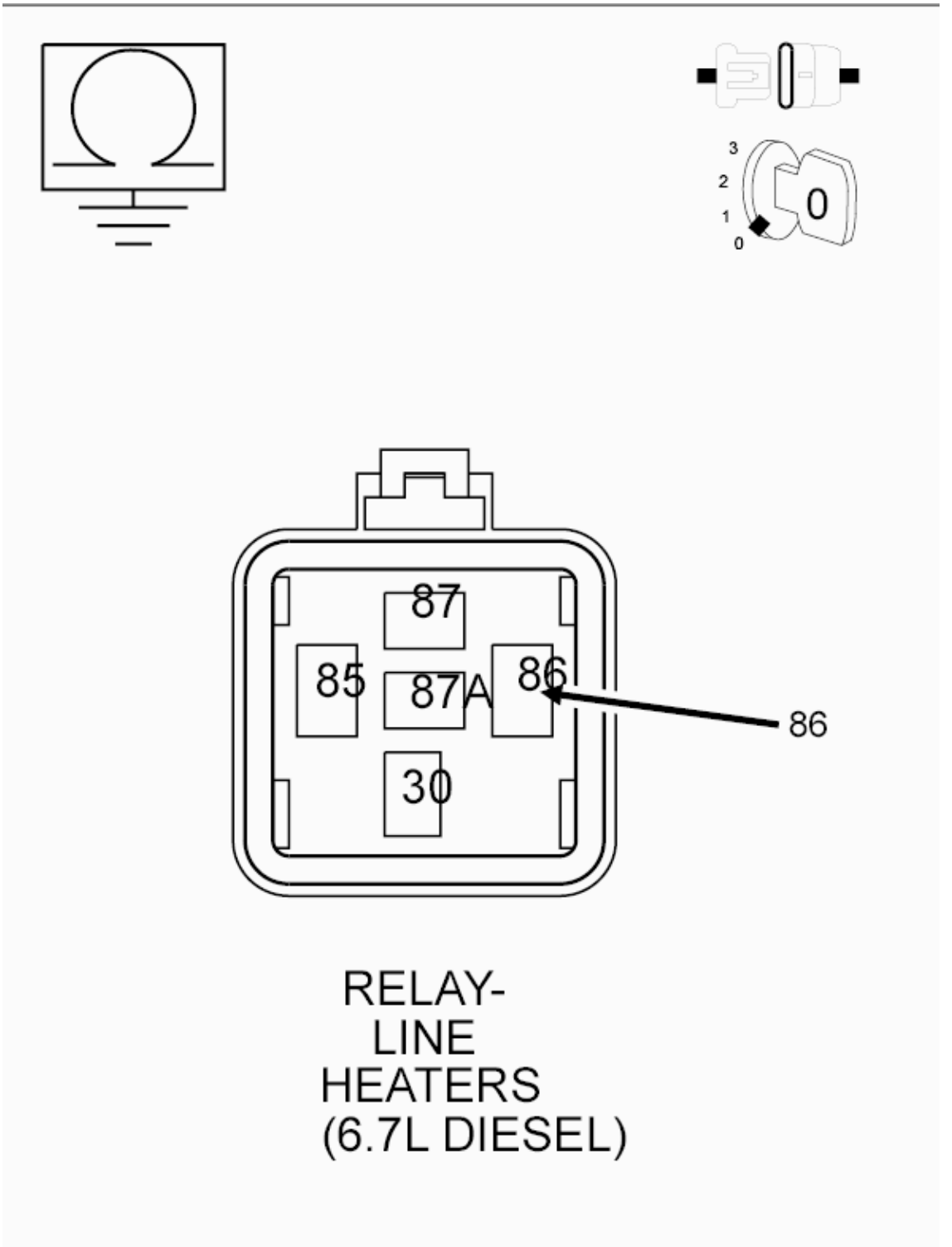

Fig. 172: Checking DEF Line Heater Relay Signal Circuit For A Short To Ground
Courtesy of CHRYSLER GROUP, LLC

1. Stop actuation of the Line Heater Relay.
2. Turn the ignition off.

3. Remove the DEF Line Heater Relay.
4. Disconnect the DEF Dosing Control Unit C2 harness connector.
5. Measure the resistance between ground and the (K475) DEF Line Heater Relay Signal circuit at the Line Heater Relay, terminal 86.

   Is the resistance above 10k Ohms?

   Yes

   - Go To 4.

   No

   - Repair the (K475) DEF Line Heater Relay Signal circuit for a short to ground.
   - Perform the POWERTRAIN VERIFICATION TEST. Refer to **POWERTRAIN VERIFICATION TEST - 6.7L** .

4. **CHECK THE (K429) DEF LINE HEATER RELAY CONTROL CIRCUIT FOR A SHORT TO GROUND**

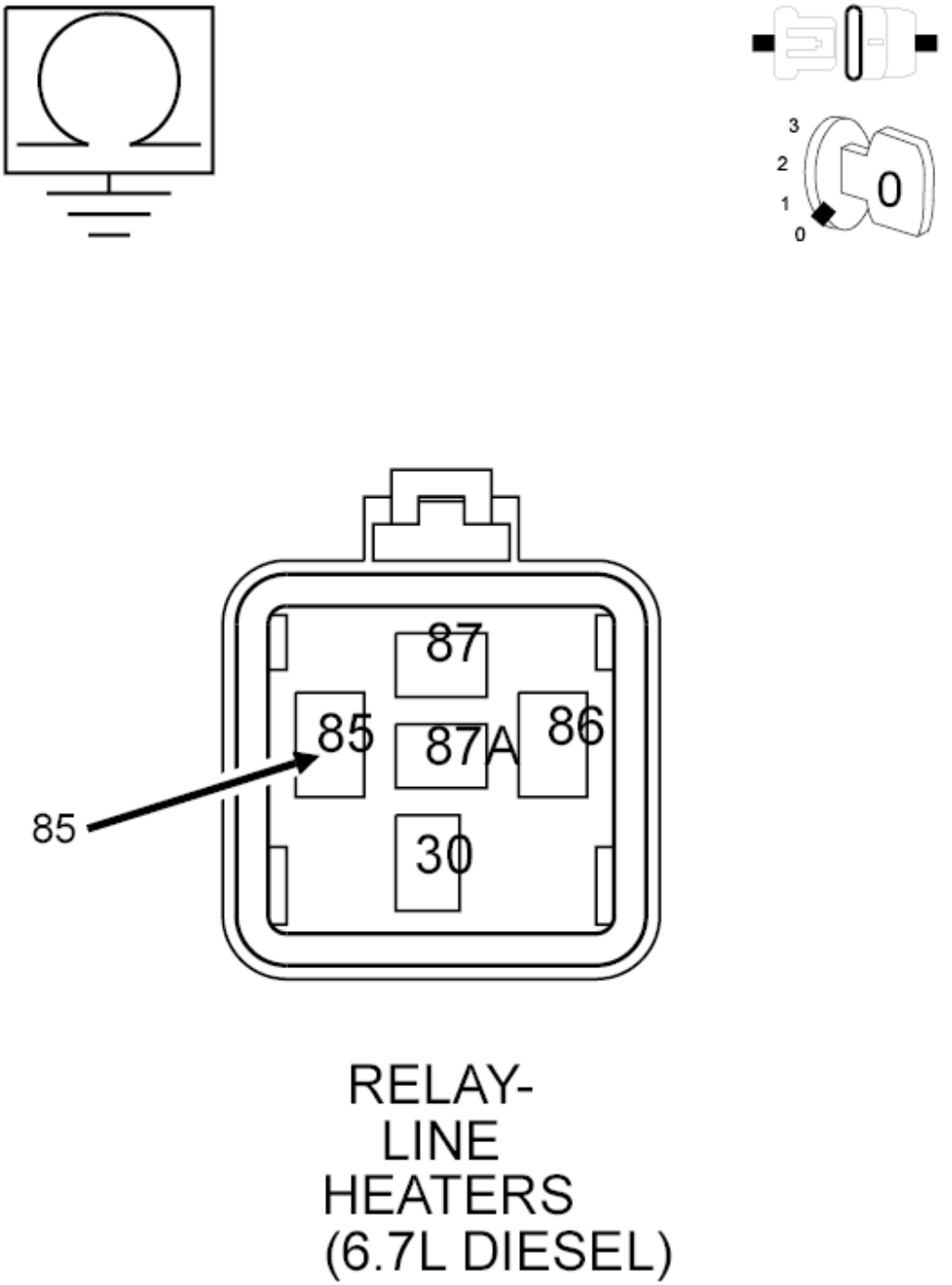

Fig. 173: Checking DEF Line Heater Relay Control Circuit For A Short To Ground
Courtesy of CHRYSLER GROUP, LLC

1. Measure the resistance between ground and the (K429) DEF Line Heater Relay Control circuit between the Line Heater Relay, terminal 85.

Is the resistance above 10k Ohms?

Yes

- Replace the DEF Dosing Control Unit in accordance with the service information. Refer to **UNIT, DIESEL EXHAUST FLUID DOSING CONTROL, REMOVAL** .
- Perform the POWERTRAIN VERIFICATION TEST. Refer to **POWERTRAIN VERIFICATION TEST - 6.7L** .

No

- Repair the (K429) DEF Line Heater Relay Control circuit for a short to ground.
- Perform the POWERTRAIN VERIFICATION TEST. Refer to **POWERTRAIN VERIFICATION TEST - 6.7L** .

Powertrain Control Module (PCM) - Electrical Diagnostics, 6.7L Diesel - 3500 Cab & Chassis, 4500 & 5500

DIAGNOSIS AND TESTING

P21C4-(DIESEL EXHAUST FLUID) REDUCTANT LINE HEATER RELAY CONTROL CIRCUIT HIGH

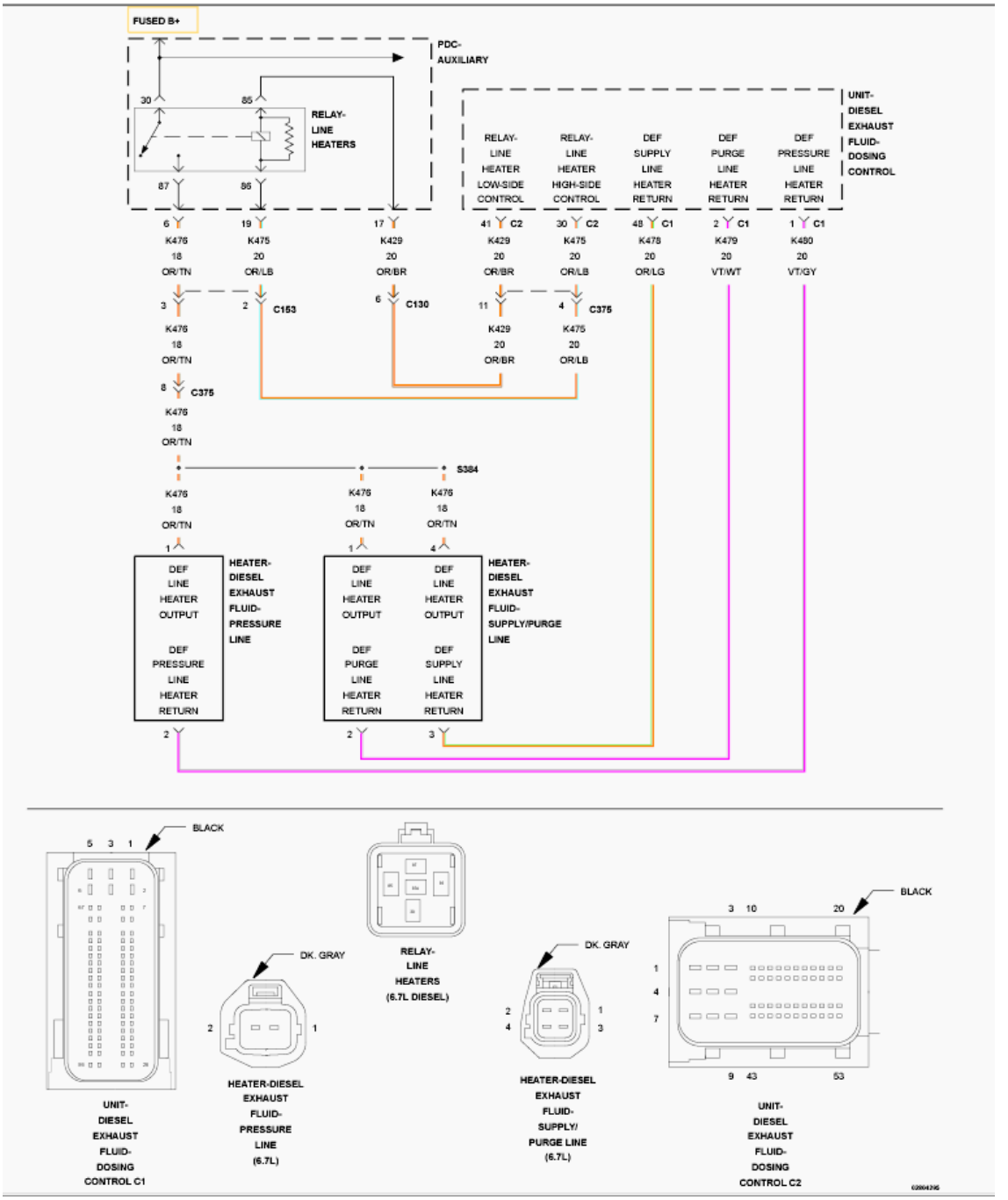

Fig. 1: Diesel Exhaust Fluid Reductant Line Heater Relay Control Circuit Wiring Diagram
Courtesy of CHRYSLER GROUP, LLC

For a complete wiring diagram, **refer to appropriate SYSTEM WIRING DIAGRAMS article** .

THEORY OF OPERATION

Each of the Diesel Exhaust Fluid (DEF) system hoses has a built in heater to warm the fluid in the lines. The three line heaters share a common power supply via the DEF Line Heater Relay which is controlled by the DEF Dosing Control Unit. The DEF Dosing Control Unit controls the heaters individually through the line heater

return circuits. The three line heater circuits are monitored at the return circuit. The DEF Dosing Control Unit will illuminate the MIL light via the Powertrain Control Module (PCM) immediately after the diagnostics runs and fails. The DEF Dosing Control Unit will turn off the MIL light via the PCM when the monitor runs and passes in three consecutive key cycles.

WHEN MONITORED:

Continuously with the ignition on.

SET CONDITION:

The DEF Dosing Control Unit detects that the DEF Line Heater Relay Control circuit voltage is above a calibrated value.

POSSIBLE CAUSES

Possible Causes
(K475) DEF LINE HEATER RELAY SIGNAL CIRCUIT SHORTED TO VOLTAGE
(K429) DEF LINE HEATER RELAY CONTROL CIRCUIT SHORTED TO VOLTAGE
DEF LINE HEATER RELAY
DEF DOSING CONTROL UNIT

Always perform the Pre-Diagnostic Troubleshooting procedure before proceeding. Refer to PRE-DIAGNOSTIC TROUBLESHOOTING PROCEDURE - 6.7L .

NOTE: **The DEF Line Heater monitor runs only when the DEF Line Heater Relay is commanded on. If the ambient temperature is too warm for the DEF Line Heaters to be turned on, the DTC will remain active and will not be able to be erased after repair is completed. Using the scan tool, navigate to Actuator Tests and actuate the Line Heater Relay test for the appropriate Line Heater to run the diagnostic and determine if the repair has been completed. If the repair is complete, the fault will move to stored and be able to be cleared with the scan tool.**

DIAGNOSTIC TEST

1. **ACTIVE DTC**
    1. Turn the ignition on.
    2. With the scan tool, View DTCs.

    Is the DTC active?

    Yes

    - Go To 2.

No

- Perform the INTERMITTENT CONDITION diagnostic procedure. Refer to **INTERMITTENT CONDITION - 6.7L** .

2. **CHECK THE DEF LINE HEATER RELAY**
   1. With the scan tool, Erase DTCs.
   2. Turn the ignition off.
   3. Replace the DEF Line Heater Relay with a known good relay.
   4. Turn the ignition on.
   5. With the scan tool, navigate to Actuator Tests and actuate the Line Heater Relay.
   6. With the scan tool, View DTCs.

   Did the DTC return?

   Yes

   - Go To 3.

   No

   - Repair complete.
   - Perform the POWERTRAIN VERIFICATION TEST. Refer to **POWERTRAIN VERIFICATION TEST - 6.7L** .

3. **CHECK FOR THE (K475) DEF LINE HEATER RELAY SIGNAL CIRCUIT SHORTED TO ANOTHER CIRCUIT**

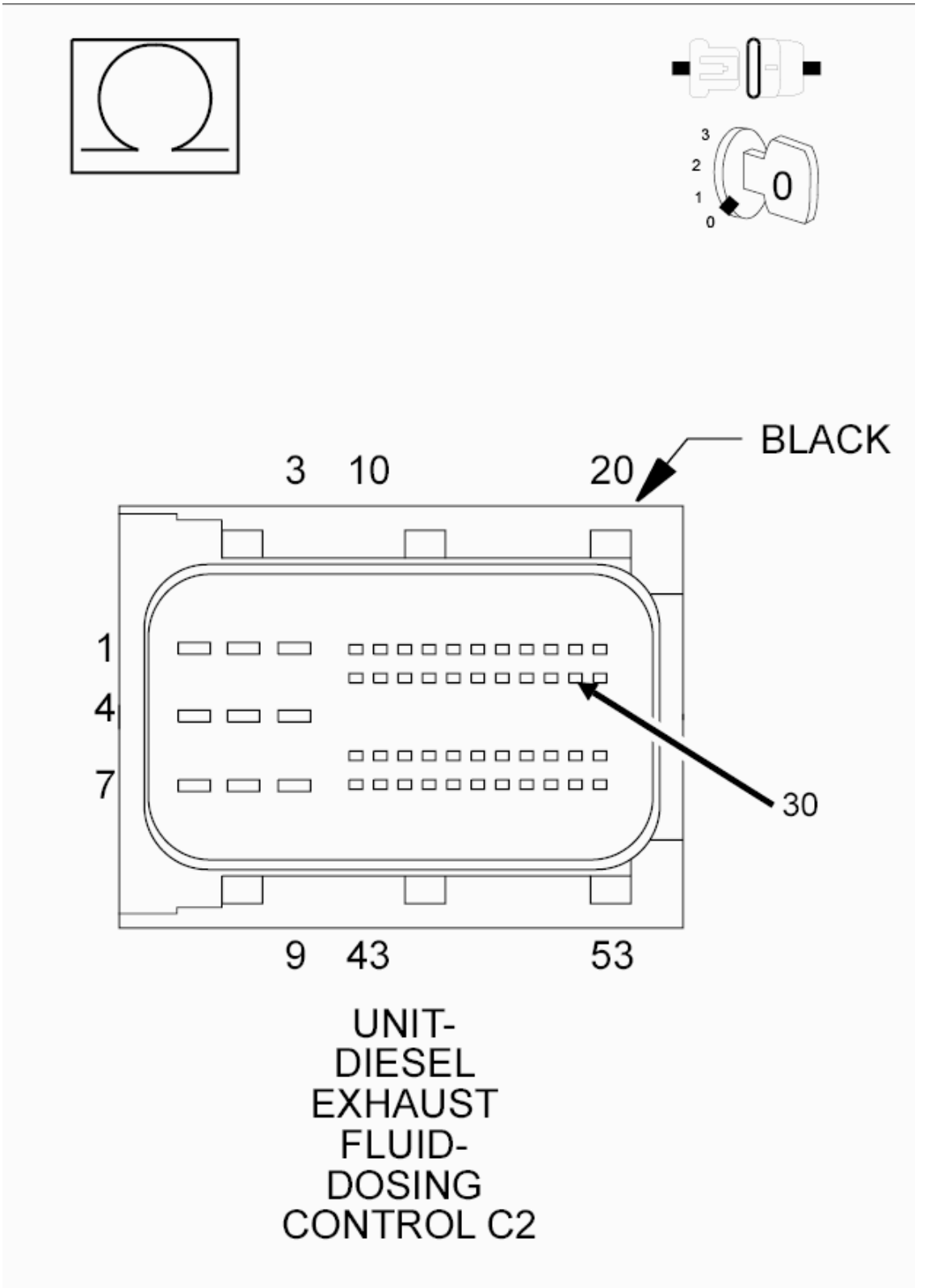

Fig. 2: Checking For DEF Line Heater Relay Signal Circuit For A Short
Courtesy of CHRYSLER GROUP, LLC

1. Stop actuation of the Line Heater Relay.
2. Turn the ignition off.
3. Remove the DEF Line Heater Relay.
4. Disconnect the DEF Dosing Control Unit C2 harness connector.
5. Measure the resistance between the (K475) DEF Line Heater Relay Signal circuit and all other circuits in the DEF Dosing Control Unit C2 harness connector.

   Is the resistance above 10k Ohms between the (K475) DEF Line Heater Relay Signal circuit and all other circuits?

   Yes

   - Go To 4.

   No

   - Repair the (K475) DEF Line Heater Relay Signal circuit for a short to the circuit that measured below 10k Ohms.
   - Perform the POWERTRAIN VERIFICATION TEST. Refer to **POWERTRAIN VERIFICATION TEST - 6.7L** .

4. **CHECK FOR THE (K429) DEF LINE HEATER RELAY CONTROL CIRCUIT SHORTED TO ANOTHER CIRCUIT**

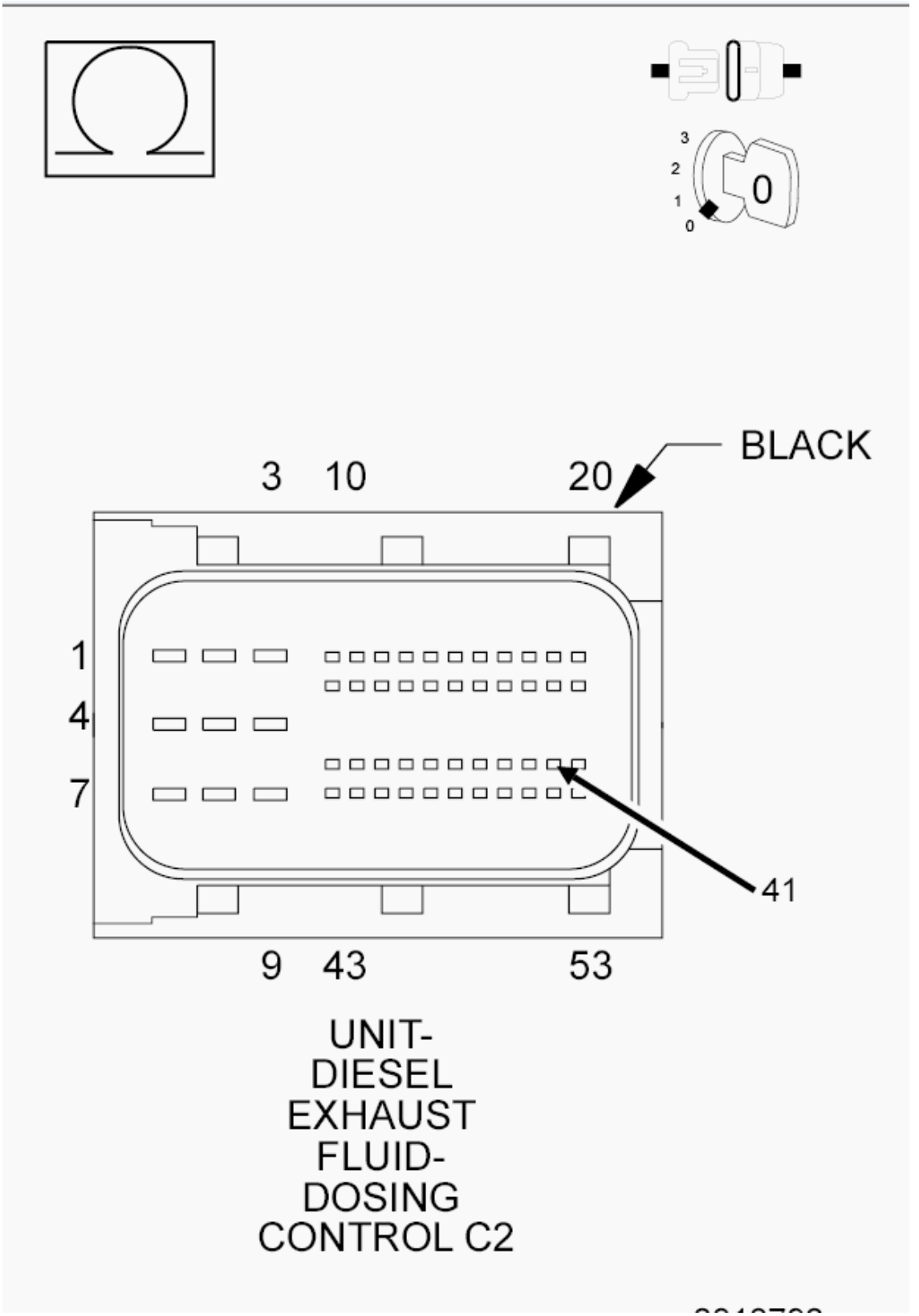

Fig. 3: Checking For DEF Line Heater Relay Control Circuit For A Short
Courtesy of CHRYSLER GROUP, LLC

1. Measure the resistance between the (K429) DEF Line Heater Relay Control circuit and all other circuits in the DEF Dosing Control Unit C2 harness connector.

   Is the resistance above 10k Ohms between the (K429) DEF Line Heater Relay Control circuit and all other circuits?

   Yes

   - Replace the DEF Dosing Control Unit in accordance with the service information. Refer to **UNIT, DIESEL EXHAUST FLUID DOSING CONTROL, REMOVAL** .
   - Perform the POWERTRAIN VERIFICATION TEST. Refer to **POWERTRAIN VERIFICATION TEST - 6.7L** .

   No

   - Repair the (K429) DEF Line Heater Relay Control circuit for a short to the circuit that measured below 10k Ohms.
   - Perform the POWERTRAIN VERIFICATION TEST. Refer to **POWERTRAIN VERIFICATION TEST - 6.7L** .

P2201-AFTERTREATMENT NOX SENSOR CIRCUIT PERFORMANCE - BANK 1 SENSOR 1

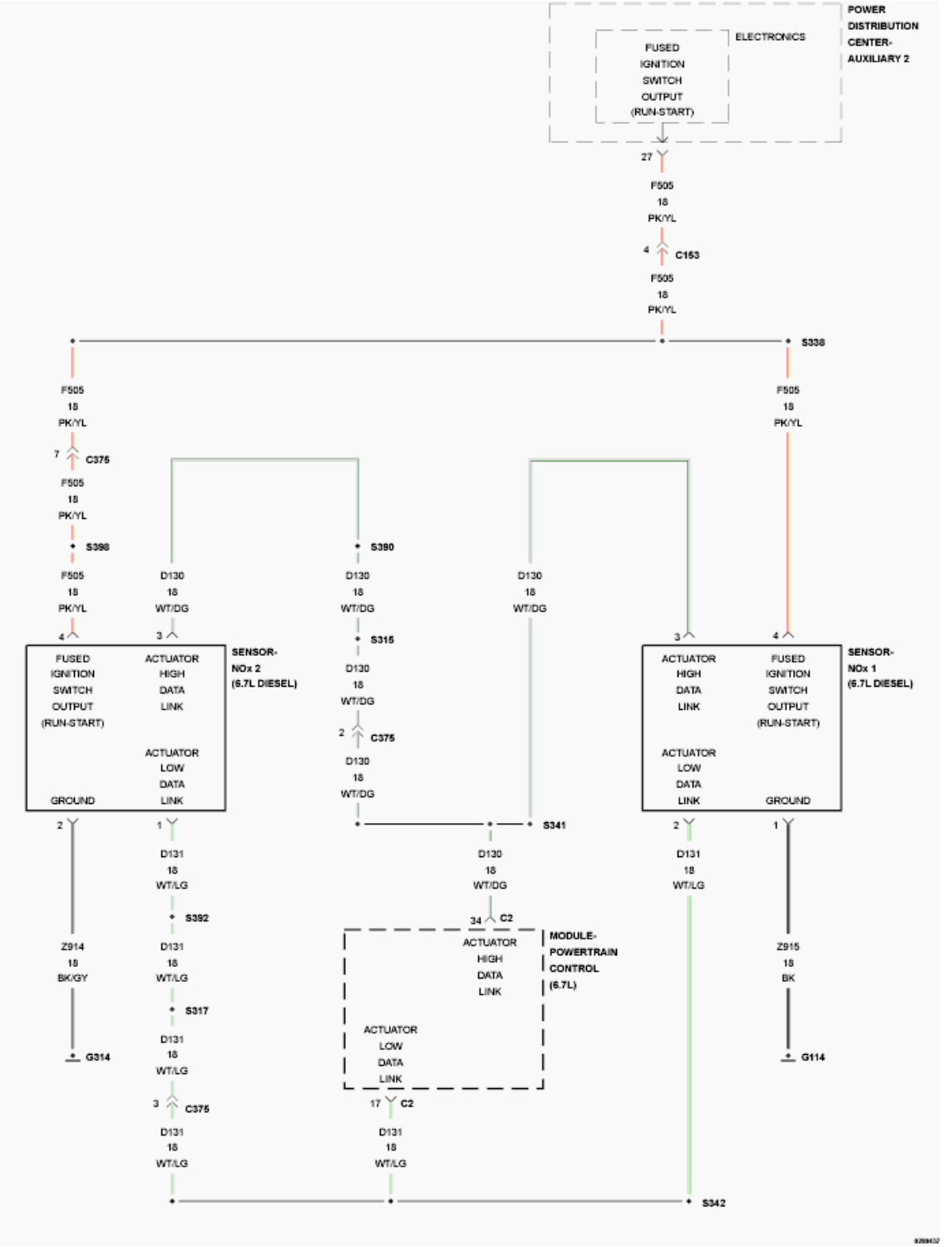

Fig. 4: NOx Sensors Wiring Diagram
Courtesy of CHRYSLER GROUP, LLC

For a complete wiring diagram, **refer to appropriate SYSTEM WIRING DIAGRAMS article** .

THEORY OF OPERATION

The aftertreatment system is equipped with two NOx Sensors and modules. The upstream NOx Sensor 1/1 is located before the SCR Catalyst and is permanently connected to a corresponding NOx Sensor Module mounted on the right frame rail. The downstream NOx Sensor 1/2 is located at the outlet of the SCR Catalyst and is permanently connected to a corresponding NOx Sensor Module also mounted on the right frame rail. The NOx Sensors and NOx Sensor Modules are calibrated to each other and must be replaced as an assembly. The two NOx Sensor and Module assemblies are not interchangeable. The NOx Sensor Modules are smart devices and communicate with the Powertrain Control Module (PCM) over the J1939 Data Link. The NOx Sensor Modules perform their own internal diagnostics and report malfunctions back to the PCM. The NOx Sensors are used to monitor the efficiency of the SCR Catalyst and dosing system. The PCM will illuminate the MIL lamp immediately after the monitor runs and fails. The PCM will turn off the MIL Lamp after the monitor runs and passes for three consecutive trips.

WHEN MONITORED:

This diagnostic monitor consists of two separate checks. The first check occurs when the engine exhaust temperature at NOx Sensor 1/1 is above 150°C (302°F), and the engine is in a decel condition with zero fueling. The second check occurs when the engine exhaust temperature at NOx Sensor 1/1 is above 150°C (302°F), and the calculated NOx value is changing.

SET CONDITION:

The Powertrain Control Module detects that the NOx Sensor 1/1 reading is not reading zero during decel condition with zero fueling for two consecutive trips or the PCM has detected that the NOx Sensor 1/1 reading is not changing with engine conditions for two consecutive trips.

POSSIBLE CAUSES

Possible Causes
EXCESSIVE FUEL OR OIL INTRODUCED INTO THE EXHAUST SYSTEM
NOx SENSOR 1/1 DRIFTED OUT OF RANGE

Always perform the Pre-Diagnostic Troubleshooting procedure before proceeding. Refer to PRE-DIAGNOSTIC TROUBLESHOOTING PROCEDURE - 6.7L .

DIAGNOSTIC TEST

1. **ACTIVE DTC**

NOTE: **If DTCs P2202, P229E, or P2209 are present, perform the diagnostic for those DTCs before continuing with this test procedure. Refer to P2202, P229E, or P2209.**

1. Start the engine, monitor Exhaust Gas Temperature Sensor 4 until it reaches 150°C (302°F).
2. Drive the vehicle at 50 MPH, ensure that it is not in DPF Regeneration mode.
3. Perform a zero fueling event (decel condition for 10 seconds, with foot off of accelerator pedal).
4. Repeat this condition three to five times.

5. With the scan tool check active DTCs.

   Is the DTC active?

   Yes

   - Go To 2.

   No

   - Perform the INTERMITTENT CONDITION diagnostic procedure. Refer to **INTERMITTENT CONDITION - 6.7L** .

2. **CHECK FOR EXCESSIVE ENGINE OIL BEING INTRODUCED INTO THE AFTERTREATMENT SYSTEM**
   1. Turn the ignition off.
   2. Remove the turbocharger outlet and inspect for signs of oil, fuel or moisture being introduced into the aftertreatment system from the engine.

      Was engine oil, fuel or moisture found in the turbocharger exhaust outlet?

      Yes

      - Locate the cause of possible diesel fuel or engine oil being carried from the engine into the exhaust system. Inspect the SCR Catalyst for possible damage.
      - Perform the POWERTRAIN VERIFICATION TEST. Refer to **POWERTRAIN VERIFICATION TEST - 6.7L** .

      No

      - Replace the NOx Sensor 1/1 in accordance with the service information.
      - Perform the POWERTRAIN VERIFICATION TEST. Refer to **POWERTRAIN VERIFICATION TEST - 6.7L** .

P2202-AFTERTREATMENT NOX SENSOR CIRCUIT - BANK 1 SENSOR 1

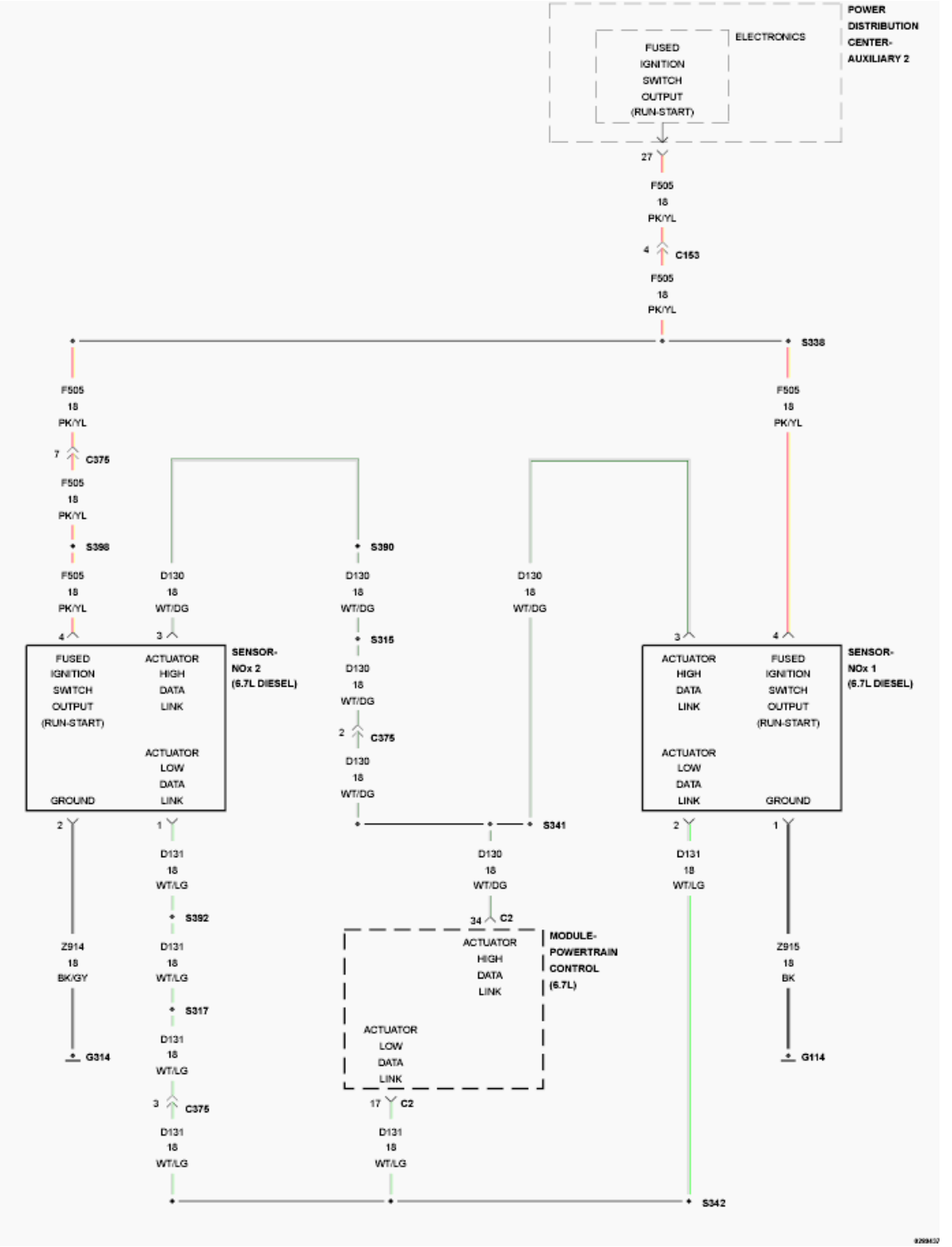

Fig. 5: NOx Sensors Wiring Diagram
Courtesy of CHRYSLER GROUP, LLC

For a complete wiring diagram, **refer to appropriate SYSTEM WIRING DIAGRAMS article** .

THEORY OF OPERATION

The aftertreatment system is equipped with two NOx Sensors and modules. The upstream NOx Sensor 1/1 is located before the SCR Catalyst and is permanently connected to a corresponding NOx Sensor Module mounted on the right frame rail. The downstream NOx Sensor 1/2 is located at the outlet of the SCR Catalyst and is permanently connected to a corresponding NOx Sensor Module also mounted on the right frame rail. The NOx Sensors and NOx Sensor Modules are calibrated to each other and must be replaced as an assembly. The two NOx Sensor and Module assemblies are not interchangeable. The NOx Sensor Modules are smart devices and communicate with the Powertrain Control Module (PCM) over the J1939 Data Link. The NOx Sensor Modules perform their own internal diagnostics and report malfunctions back to the PCM. The NOx Sensors are used to monitor the efficiency of the SCR Catalyst and dosing system.

WHEN MONITORED:

Continuously with engine running.

SET CONDITION:

The NOx Sensor 1/1 detects that the voltage supplied is above or below it's calibrated limits.

POSSIBLE CAUSES

Possible Causes
(F505) FUSED IGNITION SWITCH OUTPUT CIRCUIT OPEN/HIGH RESISTANCE
(F505) FUSED IGNITION SWITCH OUTPUT CIRCUIT SHORTED TO GROUND
(Z915) GROUND CIRCUIT OPEN/HIGH RESISTANCE
(F505) FUSED IGNITION SWITCH OUTPUT CIRCUIT SHORTED TO THE (Z915) GROUND CIRCUIT
FAULTY NOx SENSOR 1/1 INTERNAL HEATER
FAULTY NOx SENSOR 1/1

Always perform the Pre-Diagnostic Troubleshooting procedure before proceeding. Refer to PRE-DIAGNOSTIC TROUBLESHOOTING PROCEDURE - 6.7L .

DIAGNOSTIC TEST

1. **ACTIVE DTC**
    1. Turn the ignition on.
    2. With the scan tool, View DTCs.

    Is the DTC active?

    Yes

    - Go To 3.

    No

- Go To 2.

2. **CHECK THE NOx 1/1 SENSOR INTERNAL HEATER**
   1. Start the engine and allow it to idle for at least two minutes.
   2. With the scan tool, View DTCs.

   Is the DTC active?

   Yes

   - The NOx Sensor 1/1 internal heater has malfunctioned. Replace the NOx Sensor 1/1 in accordance with the service information. Refer to **SENSOR, NOX, REMOVAL** .

   No

   - Go To 3.

3. **CHECK THE NOx SENSOR 1/1 POWER AND GROUND CIRCUITS**
   1. Turn the ignition on, engine not running.
   2. Disconnect the NOx Sensor Module 1/1 harness connector.
   3. Measure the voltage across the (F505) Fused Ignition Switch Output circuit and the (Z915) Ground circuit at the NOx Sensor Module 1/1 harness connector.

   NOTE: Measure the voltage at key on, engine cranking, and at idle.

   Does the voltage read within 1.0 Volt of battery voltage?

   Yes

   - Replace the NOx Sensor 1/1 in accordance with the service information. Refer to **SENSOR, NOX, REMOVAL** .
   - Perform the POWERTRAIN VERIFICATION TEST. Refer to **POWERTRAIN VERIFICATION TEST - 6.7L** .

   No

   - Go To 4.

4. **CHECK FOR VOLTAGE AT THE (F505) FUSED IGNITION SWITCH OUTPUT CIRCUIT**
   1. Measure voltage between ground and the (F505) Fused Ignition Switch Output circuit of the NOx Sensor Module 1/1 harness connector.

   Does the voltage read within 1.0 Volt of battery voltage?

   Yes

   - Repair the (Z915) Ground circuit for an open or high resistance.

- Perform the POWERTRAIN VERIFICATION TEST. Refer to **POWERTRAIN VERIFICATION TEST - 6.7L** .

No

- Repair the (F505) Fused Ignition Switch Output circuit for an open or high resistance. If the fuse is found to be open, check the circuit for a short to the (Z915) Ground circuit or a short to chassis ground.
- Perform the POWERTRAIN VERIFICATION TEST. Refer to **POWERTRAIN VERIFICATION TEST - 6.7L** .

P2209-NOX SENSOR HEATER CIRCUIT PERFORMANCE - BANK 1 SENSOR 1

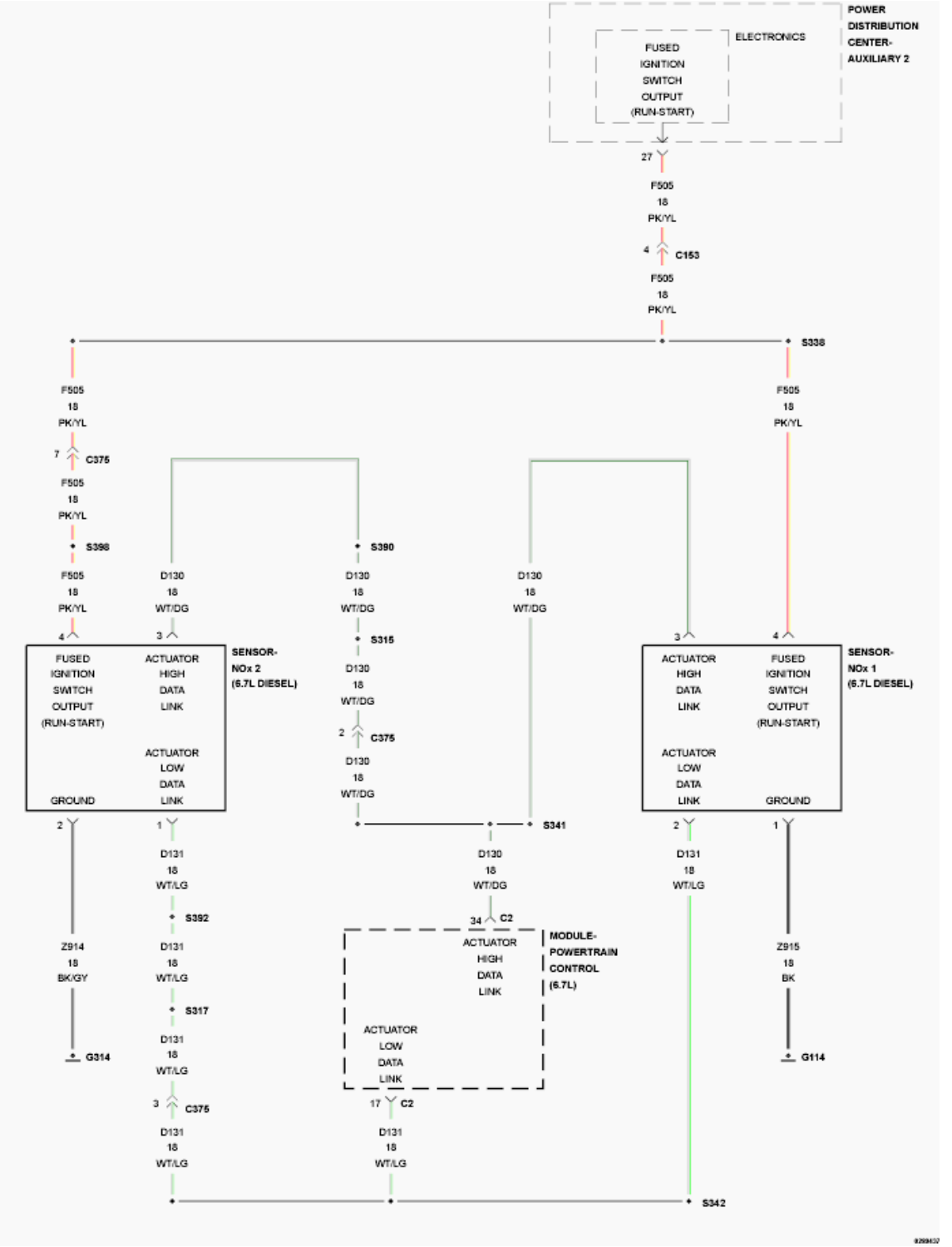

Fig. 6: NOx Sensors Wiring Diagram
Courtesy of CHRYSLER GROUP, LLC

For a complete wiring diagram, **refer to appropriate SYSTEM WIRING DIAGRAMS article** .

THEORY OF OPERATION

The aftertreatment system is equipped with two NOx Sensors and modules. The upstream NOx Sensor 1/1 is located before the SCR Catalyst and is permanently connected to a corresponding NOx Sensor Module mounted on the right frame rail. The downstream NOx Sensor 1/2 is located at the outlet of the SCR Catalyst and is permanently connected to a corresponding NOx Sensor Module also mounted on the right frame rail. The NOx Sensors and NOx Sensor Modules are calibrated to each other and must be replaced as an assembly. The two NOx Sensor and Module assemblies are not interchangeable. The NOx Sensor Modules are smart devices and communicate with the Powertrain Control Module (PCM) over the J1939 Data Link. The NOx Sensor Modules perform their own internal diagnostics and report malfunctions back to the PCM. The NOx Sensors are used to monitor the efficiency of the SCR Catalyst and dosing system. The PCM will illuminate the MIL lamp immediately after the monitor runs and fails. The PCM will turn off the MIL Lamp after the monitor runs and passes for three consecutive trips.

WHEN MONITORED:

When the engine is running and the exhaust temperature at NOx Sensor 1/1 is above 150°C (302°F).

SET CONDITION:

The Powertrain Control Module detects that the NOx Sensor heater is unable to maintain its normal operating temperature.

POSSIBLE CAUSES

Possible Causes
OTHER NOx SENSOR RELATED DTCS
NOx SENSOR 1/1

Always perform the Pre-Diagnostic Troubleshooting procedure before proceeding. Refer to PRE-DIAGNOSTIC TROUBLESHOOTING PROCEDURE - 6.7L .

DIAGNOSTIC TEST

1. **ACTIVE DTC**
    1. Ignition on, engine not running.
    2. With the scan tool check for active DTCs.

       Is the DTC active?

       Yes

       - Replace the NOx Sensor 1/1 in accordance with the service information. Refer to **SENSOR, NOX, REMOVAL** .

       NOTE: If DTCs P2202, P220A, or U029D are present, perform the diagnostic for those DTCs before replacing the NOx Sensor. Refer to P2202, P220A, or U029D.

No

- Perform the INTERMITTENT CONDITION diagnostic procedure. Refer to **INTERMITTENT CONDITION - 6.7L** .

P220A-NOX SENSOR SUPPLY CIRCUIT PERFORMANCE - BANK 1 SENSOR 1

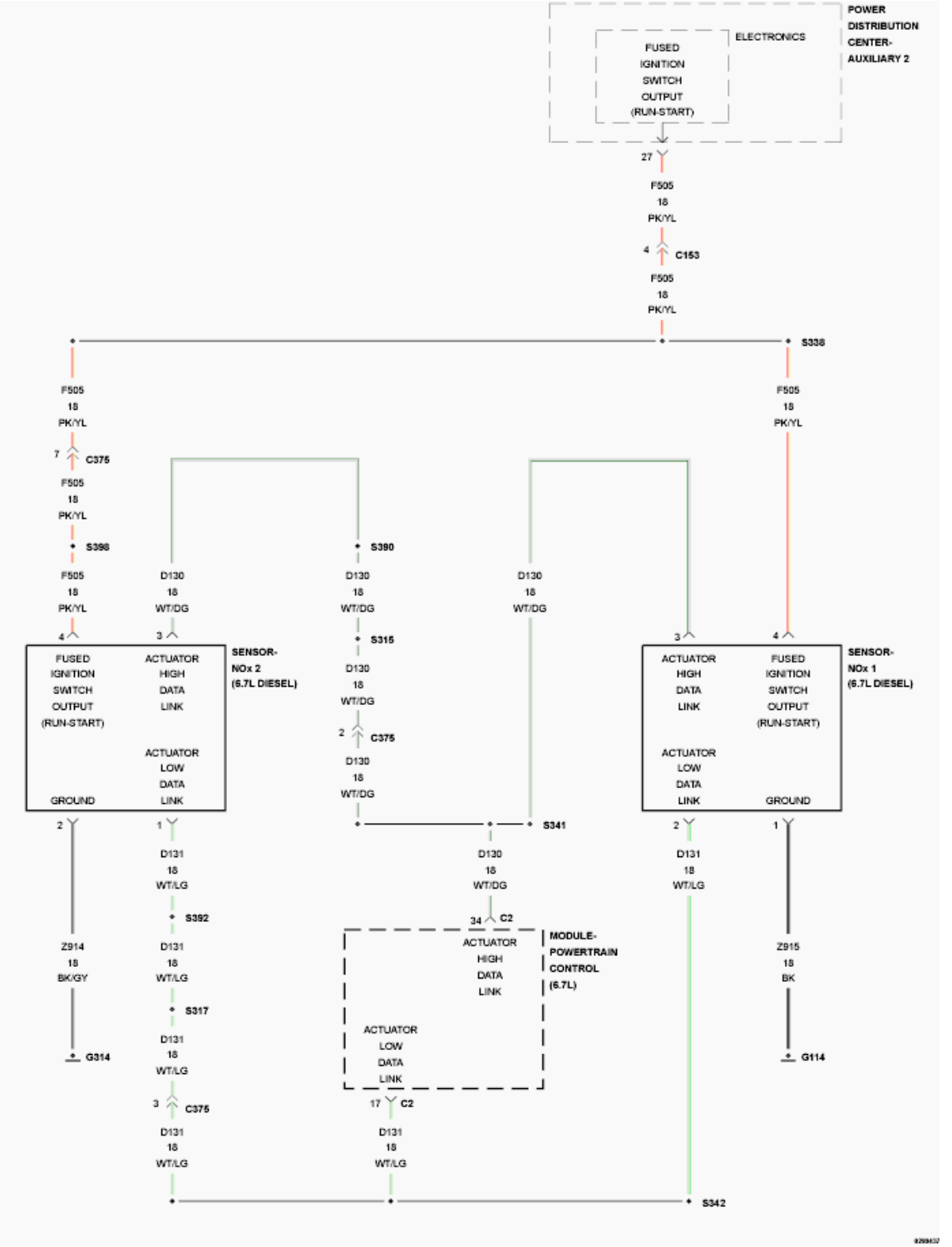

Fig. 7: NOx Sensors Wiring Diagram
Courtesy of CHRYSLER GROUP, LLC

For a complete wiring diagram, **refer to appropriate SYSTEM WIRING DIAGRAMS article** .

THEORY OF OPERATION

The aftertreatment system is equipped with two NOx Sensors and modules. The upstream NOx Sensor 1/1 is located before the DOC/DPF Catalyst and is permanently connected to a corresponding NOx Sensor Module mounted on the right frame rail. The downstream NOx Sensor 1/2 is located at the outlet of the DOC/DPF Catalyst and is permanently connected to a corresponding NOx Sensor Module also mounted on the right frame rail. The NOx Sensors and NOx Sensor Modules are calibrated to each other and must be replaced as an assembly. The two NOx Sensor and Module assemblies are not interchangeable. The NOx Sensor Modules are smart devices and communicate with the Powertrain Control Module (PCM) over the J1939 Data Link. The NOx Sensor Modules perform their own internal diagnostics and report malfunctions back to the PCM. The NOx Sensors are used to monitor the efficiency of the SCR Catalyst and dosing system. The PCM will illuminate the MIL lamp after the monitor runs and fails in two consecutive trips. The PCM will turn off the MIL Lamp after the monitor runs and passes for three consecutive trips.

WHEN MONITORED:

When the engine is running and the exhaust temperature at NOx Sensor 1/1 is above 150°C (302°F).

SET CONDITION:

The Powertrain Control Module detects that the voltage supply to the NOx Sensor Module 1/1 is above or below a calibrated threshold.

POSSIBLE CAUSES

Possible Causes
(F505) FUSED IGNITION SWITCH OUTPUT CIRCUIT OPEN/HIGH RESISTANCE
(F505) FUSED IGNITION SWITCH OUTPUT CIRCUIT SHORTED TO GROUND
(Z915) GROUND CIRCUIT OPEN/HIGH RESISTANCE
(F505) FUSED IGNITION SWITCH OUTPUT SHORTED TO THE (Z915) GROUND CIRCUIT
FAULTY NOx SENSOR 1/1

Always perform the Pre-Diagnostic Troubleshooting procedure before proceeding. Refer to PRE-DIAGNOSTIC TROUBLESHOOTING PROCEDURE - 6.7L .

DIAGNOSTIC TEST

1. **ACTIVE DTC**
    1. Start the engine and allow the DOC/DPF Catalyst intake temperature to reach 150°C (302°F).

        NOTE: This can be determined by reading the temperatures of the first three Exhaust Gas Temperature Sensors with the scan tool.

    2. With the scan tool check active DTCs.

        Is the DTC active?

        Yes

- Go To 2.

No

- Perform the INTERMITTENT CONDITION diagnostic procedure. Refer to **INTERMITTENT CONDITION - 6.7L** .

2. **CHECK THE NOx SENSOR 1/1 POWER AND GROUND CIRCUITS**
   1. Turn the ignition on, engine not running.
   2. Disconnect the NOx Sensor Module 1/1 harness connector.
   3. Measure the voltage across the (F505) Fused Ignition Switch Output circuit and the (Z915) Ground circuit at the NOx Sensor Module 1/1 harness connector.

   NOTE: Measure the voltage at key on, engine cranking, and at idle.

   Does the voltage read within 1.0 Volt of battery voltage?

   Yes

   - Replace the NOx Sensor 1/1 in accordance with the service information. Refer to **SENSOR, NOX, REMOVAL** .
   - Perform the POWERTRAIN VERIFICATION TEST. Refer to **POWERTRAIN VERIFICATION TEST - 6.7L** .

   No

   - Go To 3.

3. **CHECK FOR VOLTAGE AT THE (F505) FUSED IGNITION SWITCH OUTPUT CIRCUIT**
   1. Measure the voltage between ground and the (F505) Fused Ignition Switch Output circuit at the NOx Sensor Module 1/1 harness connector.

   Does the voltage read within 1.0 Volt of battery voltage?

   Yes

   - Repair the (Z915) Ground circuit for an open or high resistance.
   - Perform the POWERTRAIN VERIFICATION TEST. Refer to **POWERTRAIN VERIFICATION TEST - 6.7L** .

   No

   - Repair the (F505) Fused Ignition Switch Output circuit for an open or high resistance. If the fuse is found to be open, check the circuit for a short to the (Z915) Ground circuit or a short to chassis ground.
   - Perform the POWERTRAIN VERIFICATION TEST. Refer to **POWERTRAIN**

VERIFICATION TEST - 6.7L .

P220B-NOX SENSOR SUPPLY CIRCUIT PERFORMANCE - BANK 1 SENSOR 2

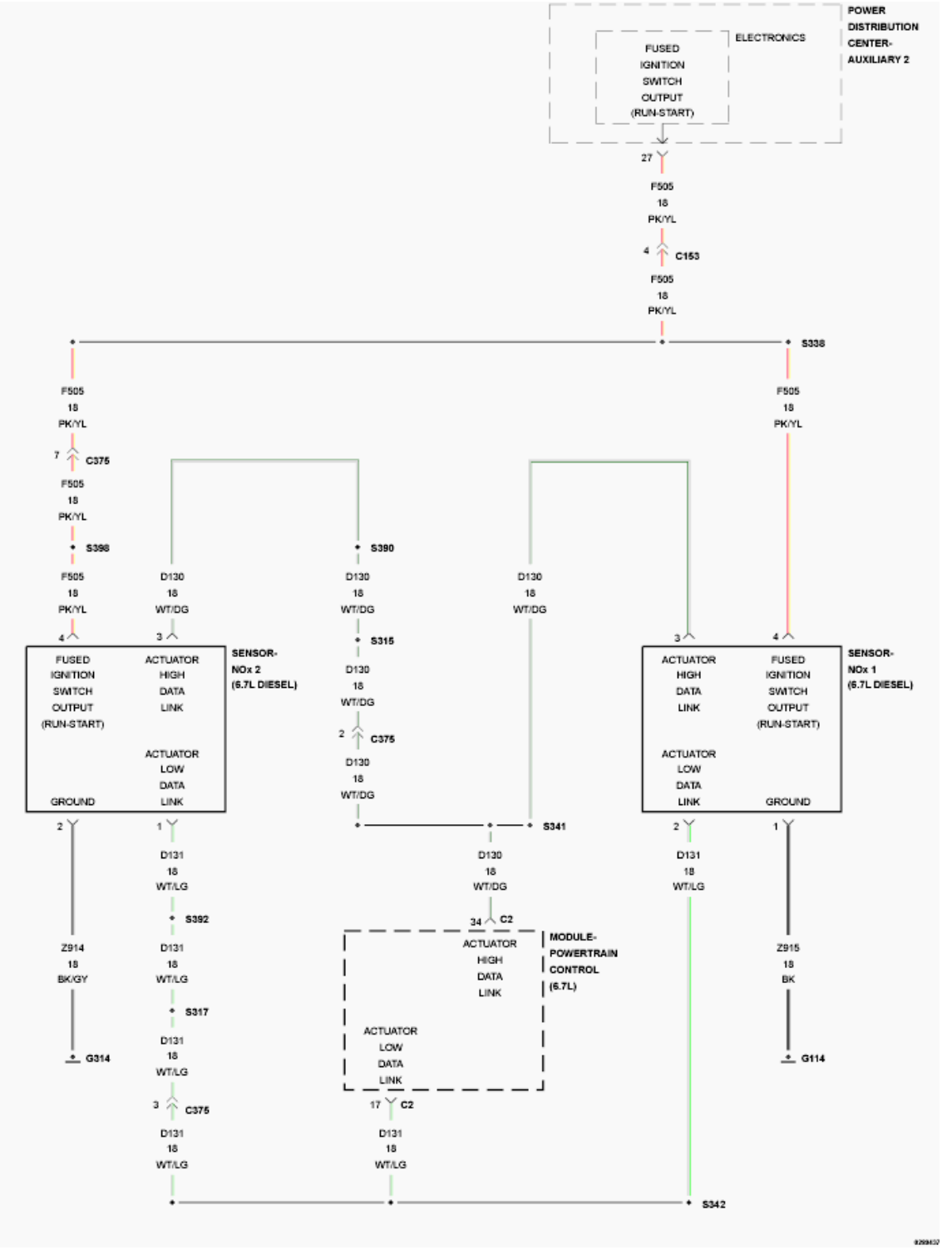

Fig. 8: NOx Sensors Wiring Diagram
Courtesy of CHRYSLER GROUP, LLC

For a complete wiring diagram, **refer to appropriate SYSTEM WIRING DIAGRAMS article** .

THEORY OF OPERATION

The aftertreatment system is equipped with two NOx Sensors and modules. The upstream NOx Sensor 1/1 is located before the DOC/DPF Catalyst and is permanently connected to a corresponding NOx Sensor Module mounted on the right frame rail. The downstream NOx Sensor 1/2 is located at the outlet of the DOC/DPF Catalyst and is permanently connected to a corresponding NOx Sensor Module also mounted on the right frame rail. The NOx Sensors and NOx Sensor Modules are calibrated to each other and must be replaced as an assembly. The two NOx Sensor and Module assemblies are not interchangeable. The NOx Sensor Modules are smart devices and communicate with the Powertrain Control Module (PCM) over the J1939 Data Link. The NOx Sensor Modules perform their own internal diagnostics and report malfunctions back to the PCM. The NOx Sensors are used to monitor the efficiency of the SCR Catalyst and dosing system. The PCM will illuminate the MIL lamp after the monitor runs and fails in two consecutive trips. The PCM will turn off the MIL Lamp after the monitor runs and passes for three consecutive trips.

WHEN MONITORED:

When the engine is running and the exhaust temperature at NOx Sensor 1/2 is above 150°C (302°F).

SET CONDITION:

The Powertrain Control Module detects that the voltage supply to the NOx Sensor Module 1/2 is above or below a calibrated threshold.

POSSIBLE CAUSES

Possible Causes
(F505) FUSED IGNITION SWITCH OUTPUT CIRCUIT OPEN/HIGH RESISTANCE
(F505) FUSED IGNITION SWITCH OUTPUT CIRCUIT SHORTED TO GROUND
(Z914) GROUND CIRCUIT OPEN/HIGH RESISTANCE
(F505) FUSED IGNITION SWITCH OUTPUT CIRCUIT SHORTED TO THE (Z914) GROUND CIRCUIT
FAULTY NOx SENSOR 1/2

Always perform the Pre-Diagnostic Troubleshooting procedure before proceeding. Refer to PRE-DIAGNOSTIC TROUBLESHOOTING PROCEDURE - 6.7L .

DIAGNOSTIC TEST

1. **ACTIVE DTC**
    1. Start the engine and allow the DOC/DPF Catalyst intake temperature to reach 150°C (302°F).

NOTE: **This can be determined by reading the temperature of the Exhaust Gas Temperature Sensor 4 with the scan tool.**

2. With the scan tool check active DTCs.

   Is the DTC active?

   Yes

   - Go To 2.

   No

   - Perform the INTERMITTENT CONDITION diagnostic procedure. Refer to **INTERMITTENT CONDITION - 6.7L** .

2. **CHECK THE NOx SENSOR 1/2 POWER AND GROUND CIRCUITS**
   1. Turn the ignition on, engine not running.
   2. Disconnect the NOx Sensor Module 1/2 harness connector.
   3. Measure the voltage across the (F505) Fused Ignition Switch Output circuit and the (Z914) Ground circuit at the NOx Sensor Module 1/2 harness connector.

      NOTE: Measure the voltage at key on, engine cranking, and at idle.

      Does the voltage read within 1.0 Volt of battery voltage?

      Yes

      - Replace the NOx Sensor 1/2 in accordance with the service information. Refer to **SENSOR, NOX, REMOVAL** .
      - Perform the POWERTRAIN VERIFICATION TEST. Refer to **POWERTRAIN VERIFICATION TEST - 6.7L** .

      No

      - Go To 3.

3. **CHECK FOR VOLTAGE AT THE (F505) FUSED IGNITION SWITCH OUTPUT CIRCUIT**
   1. Measure the voltage between ground and the (F505) Fused Ignition Switch Output circuit at the NOx Sensor Module 1/2 harness connector.

      Does the voltage read within 1.0 Volt of battery voltage?

      Yes

      - Repair the (Z914) Ground circuit for an open or high resistance.
      - Perform the POWERTRAIN VERIFICATION TEST. Refer to **POWERTRAIN VERIFICATION TEST - 6.7L** .

      No

- Repair the (F505) Fused Ignition Switch Output circuit for an open or high resistance. If the fuse is found to be open, check the circuit for a short to the (Z915) Ground circuit or a short to chassis ground.
- Perform the POWERTRAIN VERIFICATION TEST. Refer to **POWERTRAIN VERIFICATION TEST - 6.7L** .

P2227-BAROMETERIC PRESSURE SENSOR RATIONALITY

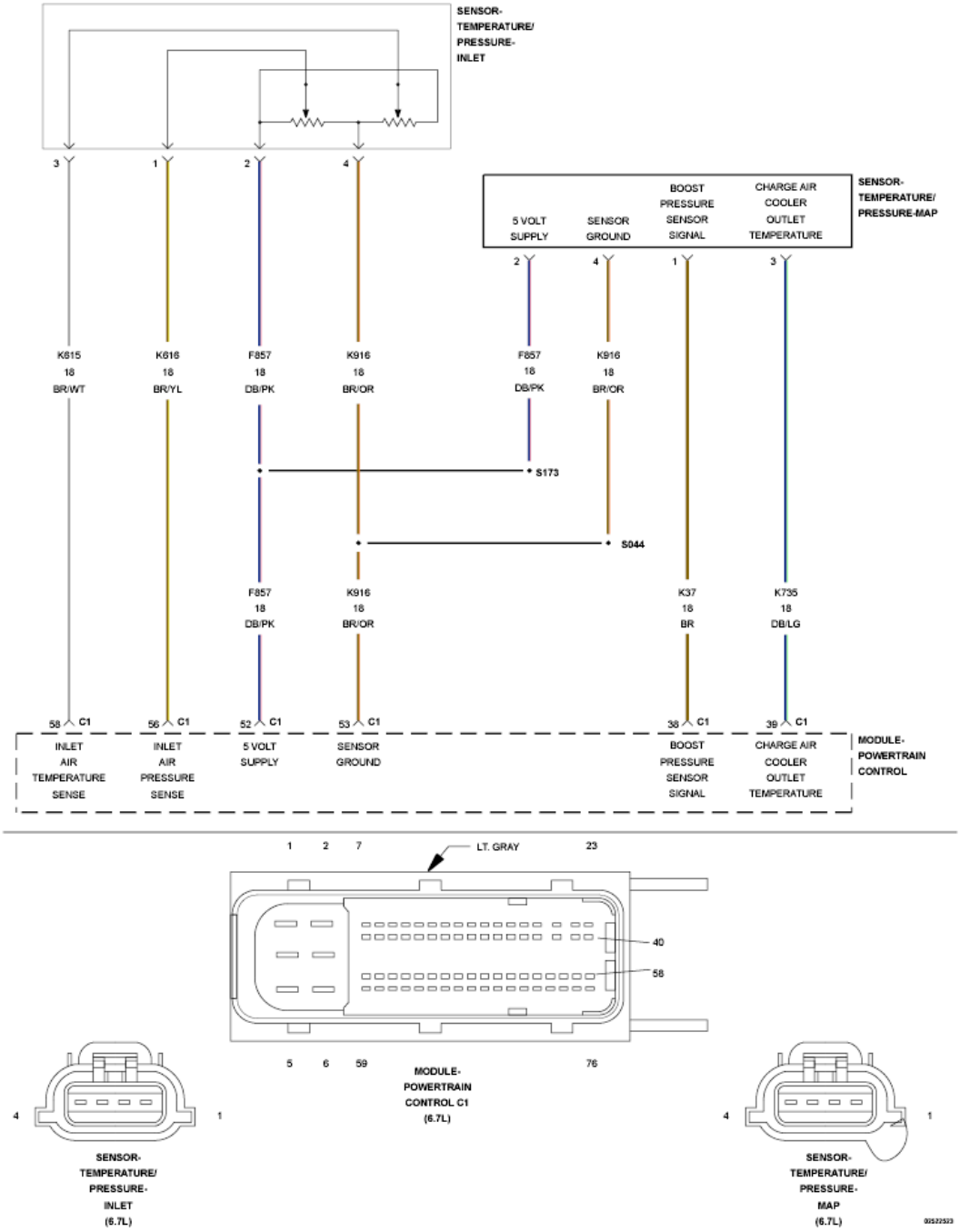

Fig. 9: Inlet Air Temperature Sensor Circuit Schematic

Courtesy of CHRYSLER GROUP, LLC

For a complete wiring diagram, **refer to appropriate SYSTEM WIRING DIAGRAMS article** .

THEORY OF OPERATION

The barometric pressure is measured by the Inlet Air Temperature/Pressure Sensor, which is located on the Air Cleaner Assembly. There is a key on check and a rationality check. At key on, the readings for the Intake Manifold Pressure Sensor, Exhaust Gas Pressure Sensor, and Inlet Air Pressure Sensor are compared. This fault code occurs if the inlet air pressure reading is different from the other two. During normal engine operation the rationality check verifies the inlet air pressure is reading an unreasonable value for a calibrated period of time then an error is recorded. The key-on portion of the rationality will light the MIL immediately after the diagnostic runs and fails. The rationality portion is a one trip fault. During this time the Powertrain Control Module (PCM) uses an estimated barometric pressure. The PCM turns off the MIL when the diagnostic runs and passes in four consecutive drive cycles.

WHEN MONITORED:

Key off.

SET CONDITION:

The Powertrain Control Module (PCM) detects that the key off value differs from the other pressure sensors by a calibrated amount.

POSSIBLE CAUSES

Possible Causes
INLET TEMPERATURE/PRESSURE SENSOR

Always perform the Pre-Diagnostic Troubleshooting procedure before proceeding. Refer to PRE-DIAGNOSTIC TROUBLESHOOTING PROCEDURE - 6.7L .

DIAGNOSTIC TEST

1. **INLET TEMPERATURE/PRESSURE SENSOR**
    1. Turn the ignition on.
    2. Wait five seconds after ignition is turned on, using the scan tool, check DTCs.

       Is P2227 Active or Stored?

       Active

       - Replace the Inlet Air Temperature/Pressure Sensor.
       - Perform the POWERTRAIN VERIFICATION TEST. Refer to **POWERTRAIN VERIFICATION TEST - 6.7L** .

Stored

- Go To 2.

2. **INTERMITTENT CONDITION**
   1. Erase the DTC with the scan tool.
   2. Start the engine and let it idle for 1 minute. With the scan tool in sensors, monitor the Inlet Air Pressure Sensor reading.

      Does the value change, indicating the sensor is not stuck?

      Yes

      - Perform the INTERMITTENT CONDITION diagnostic procedure. Refer to **INTERMITTENT CONDITION - 6.7L** .

      No

      - Replace the Inlet Air Temperature/Pressure Sensor in accordance with the service information.
      - Perform the POWERTRAIN VERIFICATION TEST. Refer to **POWERTRAIN VERIFICATION TEST - 6.7L** .

P2228-BAROMETRIC PRESSURE CIRCUIT LOW

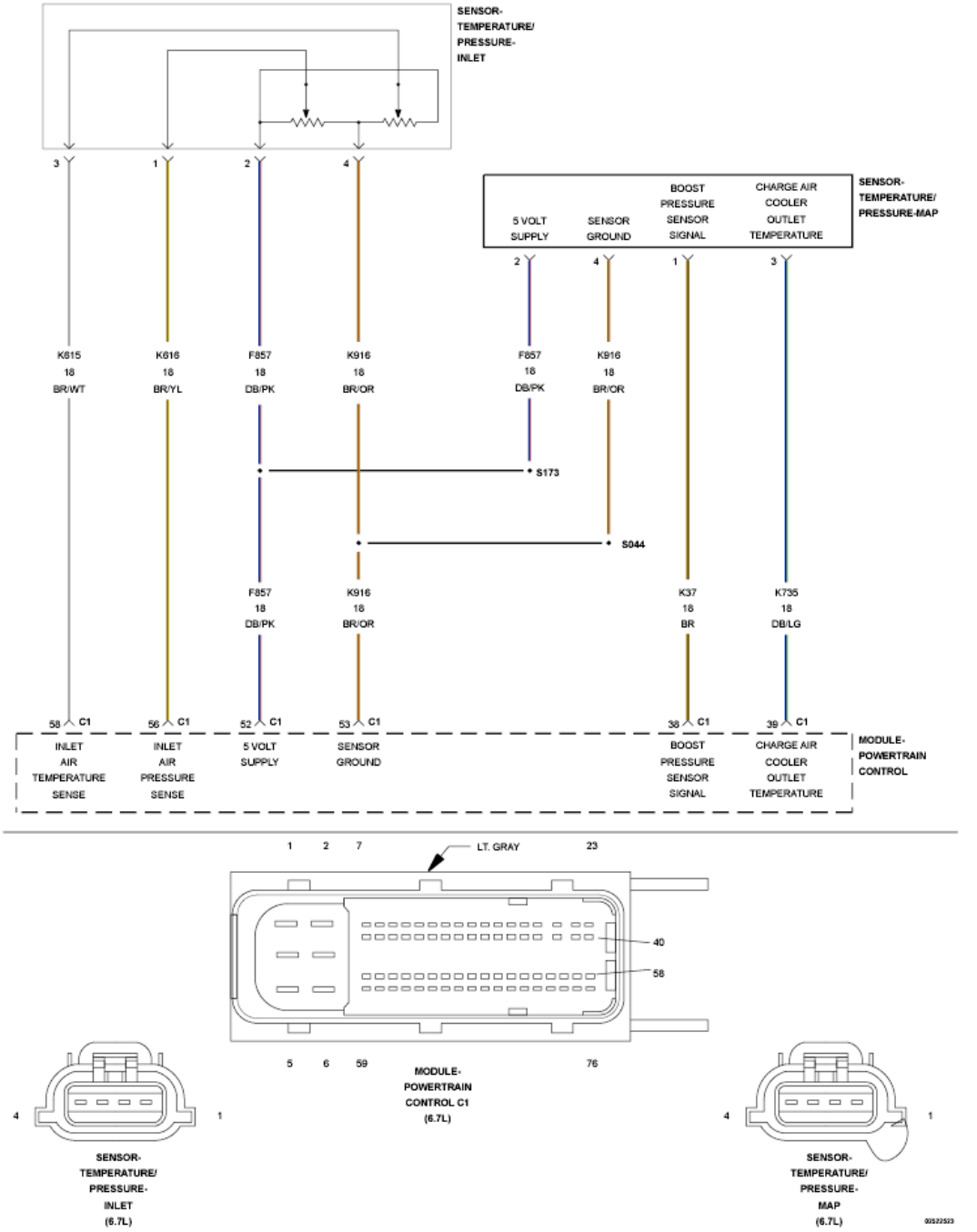

Fig. 10: Inlet Air Temperature Sensor Circuit Schematic
Courtesy of CHRYSLER GROUP, LLC

For a complete wiring diagram, **refer to appropriate SYSTEM WIRING DIAGRAMS article** .

THEORY OF OPERATION

The barometric pressure is measured by the Inlet Air Temperature/Pressure Sensor, which is located on the Air Cleaner Assembly. There is a key on check and a rationality check. At key on, the readings for the Intake Manifold Pressure Sensor, Exhaust Gas Pressure Sensor, and Inlet Air Pressure Sensor are compared. This fault

code occurs if the inlet air pressure reading is different from the other two. During normal engine operation the rationality check verifies the inlet air pressure is reading an unreasonable value for a calibrated period of time then an error is recorded. The key-on portion of the rationality will light the MIL immediately after the diagnostic runs and fails. The rationality portion is a one trip fault. During this time the Powertrain Control Module (PCM) uses an estimated barometric pressure. The PCM turns off the MIL when the diagnostic runs and passes in four consecutive drive cycles.

WHEN MONITORED:

Any time the PCM is powered up.

SET CONDITION:

The circuit voltage to the PCM falls below 0.23 Volts for one second.

POSSIBLE CAUSES

Possible Causes
(F857) 5-VOLT SUPPLY CIRCUIT OPEN OR SHORTED TO GROUND
(K616) INLET AIR PRESSURE SIGNAL CIRCUIT SHORTED TO GROUND
(K616) INLET AIR PRESSURE SIGNAL CIRCUIT SHORTED TO THE (K916) SENSOR GROUND CIRCUIT
(K616) INLET AIR PRESSURE SIGNAL CIRCUIT OPEN/HIGH RESISTANCE
INLET TEMPERATURE/PRESSURE SENSOR
POWERTRAIN CONTROL MODULE (PCM)

Always perform the Pre-Diagnostic Troubleshooting procedure before proceeding. Refer to PRE-DIAGNOSTIC TROUBLESHOOTING PROCEDURE - 6.7L .

DIAGNOSTIC TEST

1. **ACTIVE DTC**
    1. Turn the ignition on.
    2. With the scan tool, record all Freeze frame data.
    3. With the scan tool, erase DTCs.
    4. Turn the ignition off for 75 seconds.
    5. Turn the ignition on.
    6. With the scan tool, read DTCs.

    Did the DTC reset?

    Yes

    - Go To 2.

No

- Perform the INTERMITTENT CONDITION diagnostic procedure. Refer to **INTERMITTENT CONDITION - 6.7L** .

2. **CHECK THE (F857) 5-VOLT SUPPLY CIRCUIT FOR AN OPEN OR SHORT TO GROUND**
   1. The (F855) 5-Volt Supply circuit also supplies the MAP Sensor, Fuel Pressure Sensor, Exhaust Pressure Sensor, and Crankcase Pressure Sensor.

      Are DTCs present for the MAP Sensor, Fuel Pressure Sensor, Exhaust Pressure Sensor, and Crankcase Pressure Sensor in addition to this DTC?

      Yes

      - Repair the (F857) 5-Volt Supply circuit for an open or short to ground.
      - Perform the POWERTRAIN VERIFICATION TEST. Refer to **POWERTRAIN VERIFICATION TEST - 6.7L** .

      No

      - Go To 3.

3. **CHECK THE (K616) INLET AIR PRESSURE SIGNAL CIRCUIT FOR A SHORT TO GROUND**

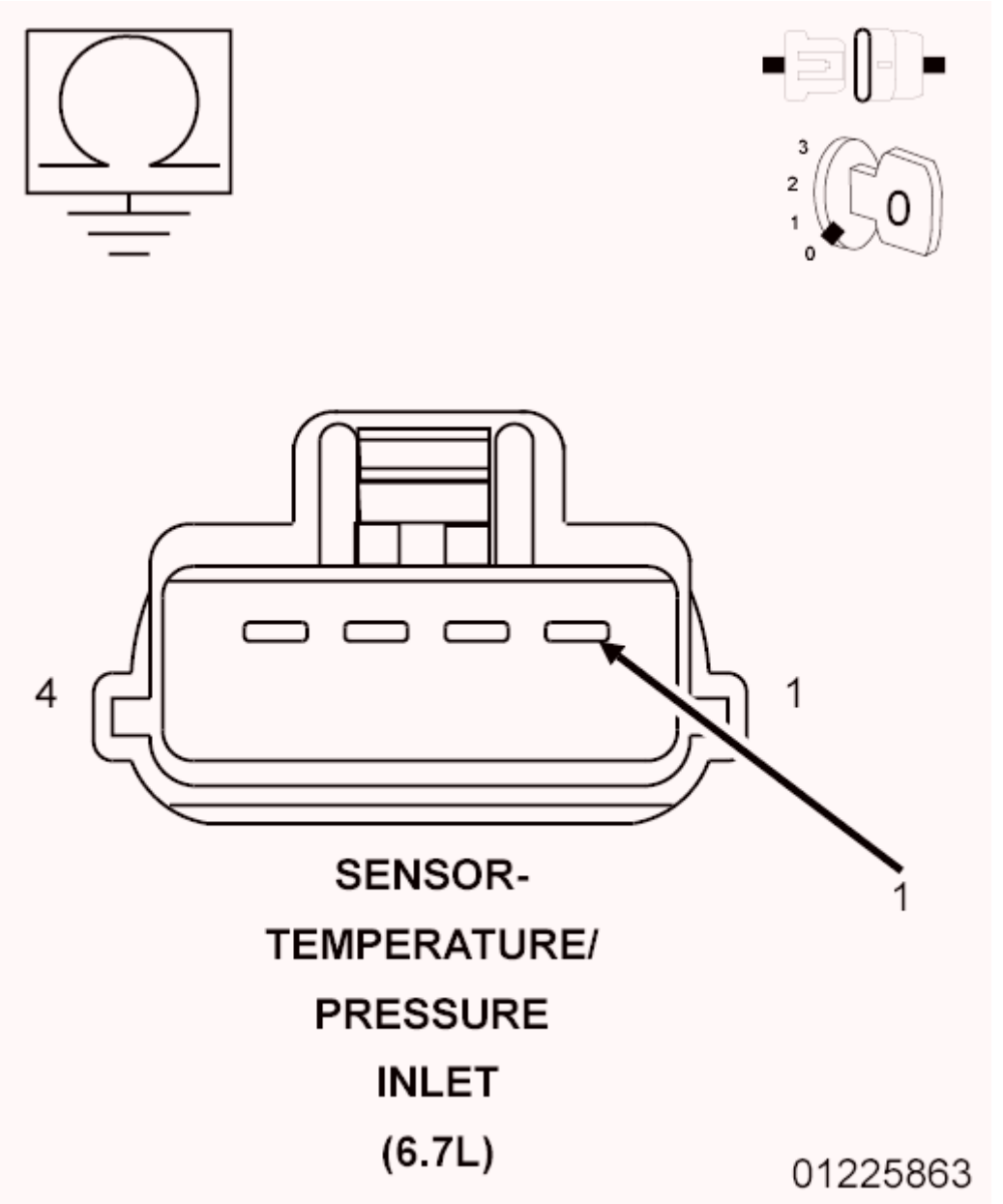

Fig. 11: Checking Inlet Air Pressure Signal Circuit For Short To Ground
Courtesy of CHRYSLER GROUP, LLC

1. Turn the ignition off.
2. Disconnect the Inlet Air Temperature/Pressure harness connector.
3. Measure the resistance between ground and the (K616) Inlet Air Pressure Signal circuit in the Inlet Air Temperature/Pressure Sensor harness connector.

   Is the resistance below 10k Ohms?

   Yes

- Repair the (K616) Inlet Air Pressure Signal circuit for a short to ground.
- Perform the POWERTRAIN VERIFICATION TEST. Refer to **POWERTRAIN VERIFICATION TEST - 6.7L** .

No

- Go To 4.

4. **CHECK FOR THE (K616) INLET AIR PRESSURE SIGNAL CIRCUIT SHORTED TO THE (K916) SENSOR GROUND CIRCUIT**

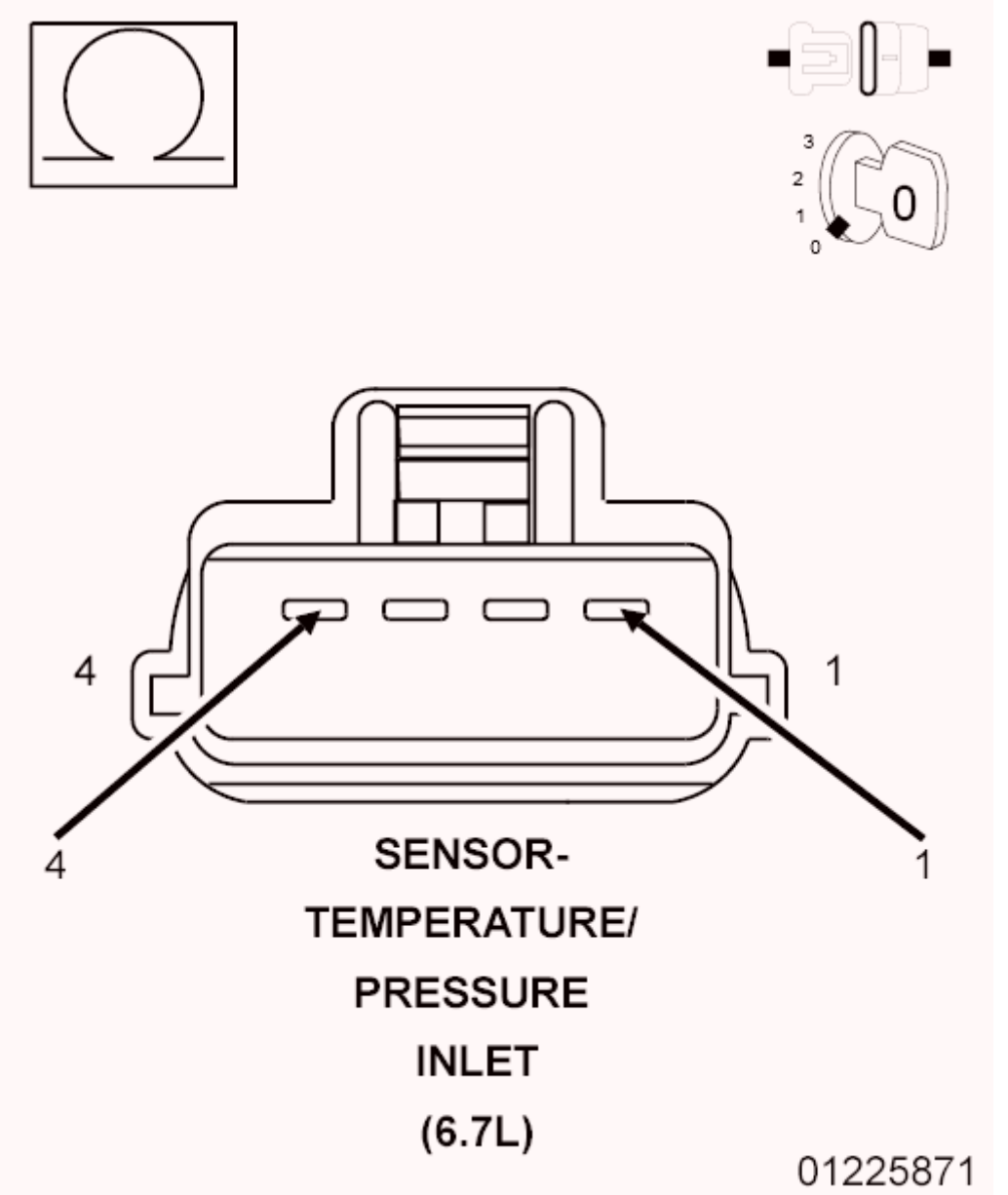

Fig. 12: Checking Inlet Air Pressure Signal Circuit For Short To Sensor Ground Circuit
Courtesy of CHRYSLER GROUP, LLC

1. Measure the resistance between the (K616) Inlet Air Pressure Signal circuit and (K916) Sensor Ground circuit at the Inlet Air Temperature/Pressure Sensor harness connector.

   Is the resistance below 10k Ohms?

   Yes

   - Repair the short between the (K616) Inlet Air Pressure Signal circuit and (K916) Sensor Ground circuit.
   - Perform the POWERTRAIN VERIFICATION TEST. Refer to **POWERTRAIN VERIFICATION TEST - 6.7L** .

   No

   - Go To 5.

5. **CHECK THE (K616) INLET AIR PRESSURE SIGNAL CIRCUIT FOR AN OPEN/HIGH RESISTANCE**

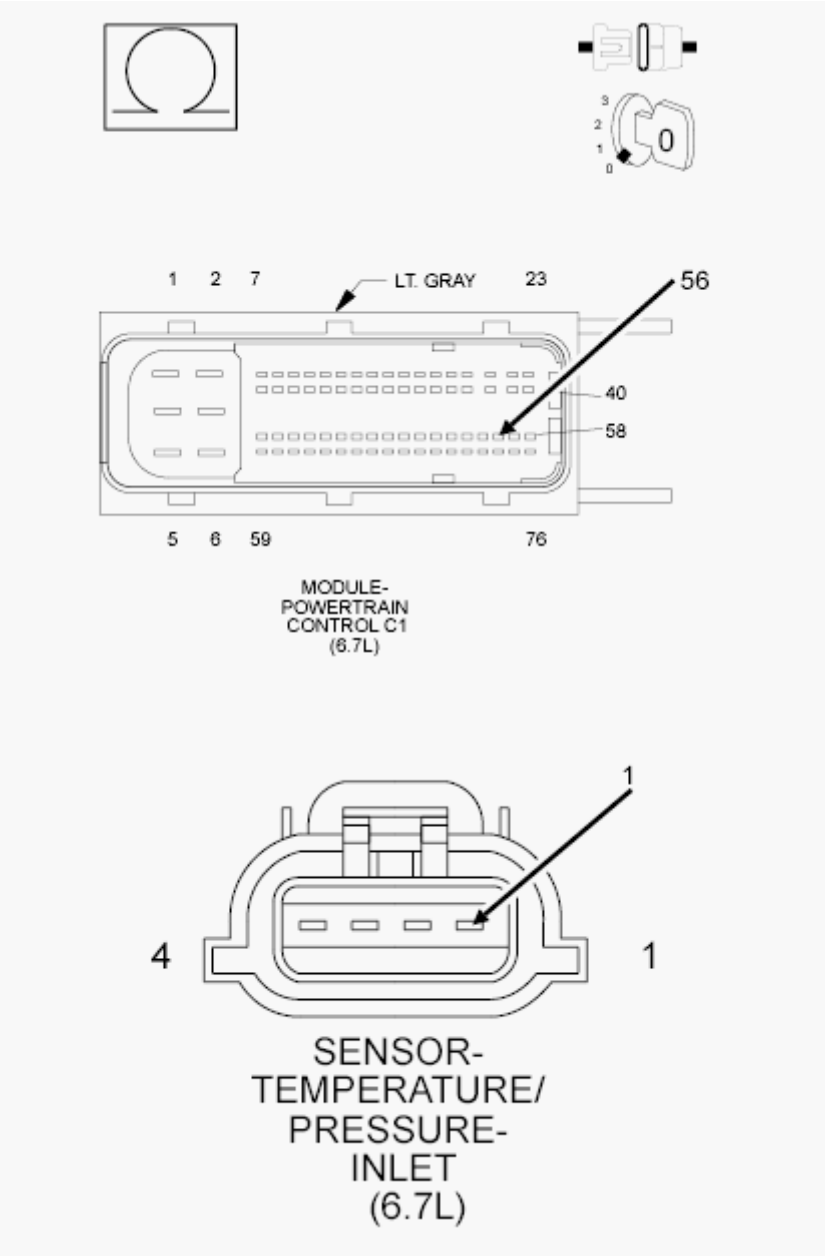

Fig. 13: Checking Inlet Air Pressure Signal Circuit For Open Or High Resistance
Courtesy of CHRYSLER GROUP, LLC

1. Disconnect the PCM C1 harness connector.
2. Measure the resistance of the (K616) Inlet Air Pressure Signal circuit between the PCM C1 harness connector and the Inlet Air Temperature/Pressure harness connector.

   Is the resistance below 5.0 Ohms?

   Yes

   - Go To 6.

No

- Repair the (K616) Inlet Air Pressure Signal circuit for an open or high resistance.
- Perform the POWERTRAIN VERIFICATION TEST. Refer to **POWERTRAIN VERIFICATION TEST - 6.7L** .

6. **CHECK THE INLET TEMPERATURE/PRESSURE SENSOR**
   1. Reconnect the PCM C1 harness connector.
   2. Turn the ignition on.
   3. While monitoring the scan tool, use a jumper to connect the (F855) 5-Volt Supply circuit to the (K616) Inlet Air Pressure Signal circuit at the Inlet Air Temperature/Pressure Sensor harness connector.

      Does the scan tool display DTC P2229 active?

      Yes

      - Replace the Inlet Temperature/Pressure Sensor.
      - Perform the POWERTRAIN VERIFICATION TEST. Refer to **POWERTRAIN VERIFICATION TEST - 6.7L** .

      No

      - Replace the Powertrain Control Module in accordance with the service information.
      - Perform the POWERTRAIN VERIFICATION TEST. Refer to **POWERTRAIN VERIFICATION TEST - 6.7L** .

P2229-BAROMETRIC PRESSURE CIRCUIT HIGH

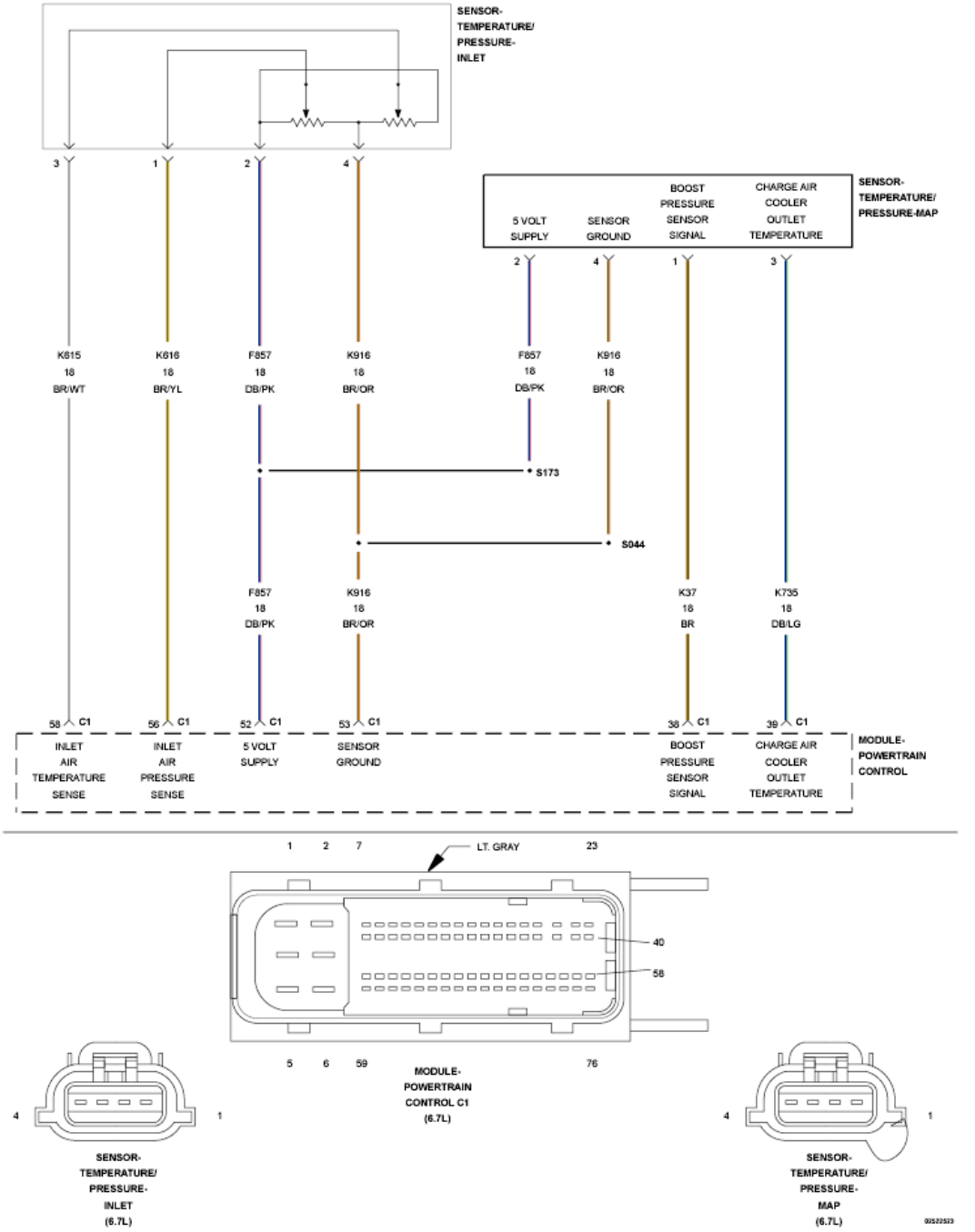

Fig. 14: Inlet Air Temperature Sensor Circuit Schematic
Courtesy of CHRYSLER GROUP, LLC

For a complete wiring diagram, **refer to appropriate SYSTEM WIRING DIAGRAMS article** .

THEORY OF OPERATION

The barometric pressure is measured by the Inlet Air Temperature/Pressure Sensor, which is located on the Air Cleaner Assembly. There is a key on check and a rationality check. At key on, the readings for the Intake Manifold Pressure Sensor, Exhaust Gas Pressure Sensor, and Inlet Air Pressure Sensor are compared. This fault

code occurs if the inlet air pressure reading is different from the other two. During normal engine operation the rationality check verifies the inlet air pressure is reading an unreasonable value for a calibrated period of time then an error is recorded. The key-on portion of the rationality will light the MIL immediately after the diagnostic runs and fails. The rationality portion is a one trip fault. During this time the Powertrain Control Module (PCM) uses an estimated barometric pressure. The PCM turns off the MIL when the diagnostic runs and passes in four consecutive drive cycles.

WHEN MONITORED:

Any time the PCM is powered up.

SET CONDITION:

The circuit voltage to the Powertrain Control Module (PCM) is above 4.85 Volts for one second.

POSSIBLE CAUSES

Possible Causes
(K616) INLET AIR PRESSURE SIGNAL CIRCUIT SHORTED TO VOLTAGE
(F857) 5-VOLT SUPPLY CIRCUIT SHORTED TO VOLTAGE
(K616) INLET AIR PRESSURE SIGNAL CIRCUIT SHORTED TO THE (F855) 5-VOLT SUPPLY
(K916) SENSOR GROUND CIRCUIT OPEN/HIGH RESISTANCE
INLET TEMPERATURE/PRESSURE SENSOR
POWERTRAIN CONTROL MODULE (PCM)

Always perform the Pre-Diagnostic Troubleshooting procedure before proceeding. Refer to PRE-DIAGNOSTIC TROUBLESHOOTING PROCEDURE - 6.7L .

DIAGNOSTIC TEST

1. **ACTIVE DTC**

   NOTE: If there are any 5-Volt supply DTCs present, repair those DTCs before proceeding.

   1. Turn the ignition on.
   2. With the scan tool, record all Freeze frame data.
   3. With the scan tool, erase DTCs.
   4. Turn the ignition off for 75 seconds.
   5. Turn the ignition on.
   6. With the scan tool, read DTCs.

   Did the DTC reset?

   Yes

- Go To 2.

No

- Perform the INTERMITTENT CONDITION diagnostic procedure. Refer to **INTERMITTENT CONDITION - 6.7L** .

2. **CHECK THE (K616) INLET AIR PRESSURE SIGNAL CIRCUIT FOR A SHORT TO VOLTAGE**

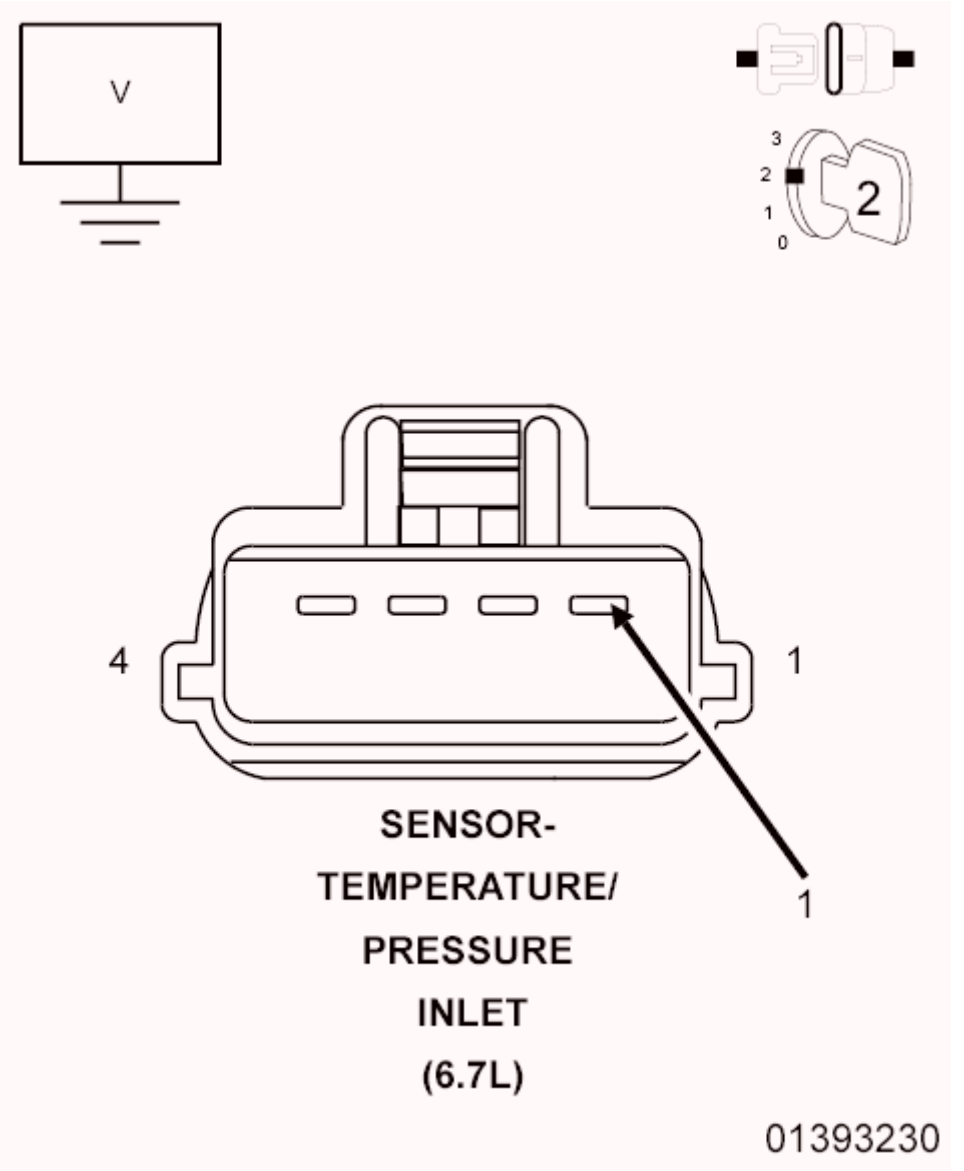

Fig. 15: Checking Inlet Air Pressure Signal Circuit For Short To Voltage
Courtesy of CHRYSLER GROUP, LLC

1. Turn the ignition off.
2. Disconnect the Inlet Air Temperature/Pressure Sensor harness connector.

NOTE: Check connectors - Clean/repair as necessary.

3. Turn the ignition on.
4. Measure the voltage on the (K616) Inlet Air Pressure Signal circuit at the Inlet Temperature/Pressure Sensor harness connector.

   Is the voltage above 5.1 Volts?

   Yes

   - Repair the (K616) Inlet Air Pressure Signal circuit for a short to voltage.
   - Perform the POWERTRAIN VERIFICATION TEST. Refer to **POWERTRAIN VERIFICATION TEST - 6.7L** .

   No

   - Go To 3.

3. **CHECK FOR THE (K616) INLET AIR PRESSURE SIGNAL CIRCUIT SHORTED TO THE (F855) 5-VOLT SUPPLY**

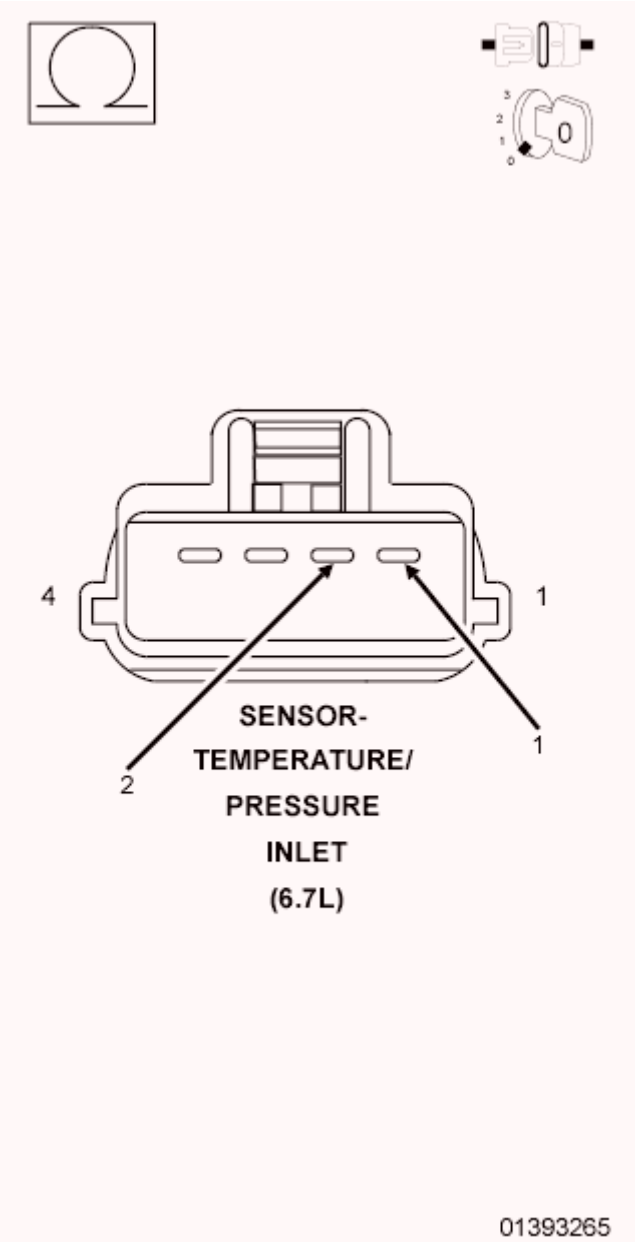

Fig. 16: Checking Inlet Air Pressure Signal Circuit For Short To 5-Volt Supply
Courtesy of CHRYSLER GROUP, LLC

1. Turn the ignition off.
2. Disconnect the PCM C1 harness connector.
3. Measure the resistance between the (K616) Inlet Air Pressure Signal circuit and the (F855) 5-Volt Supply circuit at the Inlet Air Temperature/Pressure Sensor harness connector.

   Is the resistance below 10k Ohms?

   Yes

- Repair the short between the (K616) Inlet Air Pressure Signal circuit and the (F855) 5-Volt Supply circuit.
- Perform the POWERTRAIN VERIFICATION TEST. Refer to **POWERTRAIN VERIFICATION TEST - 6.7L** .

No

- Go To 4.

4. **CHECK THE (K916) SENSOR GROUND CIRCUIT OPEN/HIGH RESISTANCE**

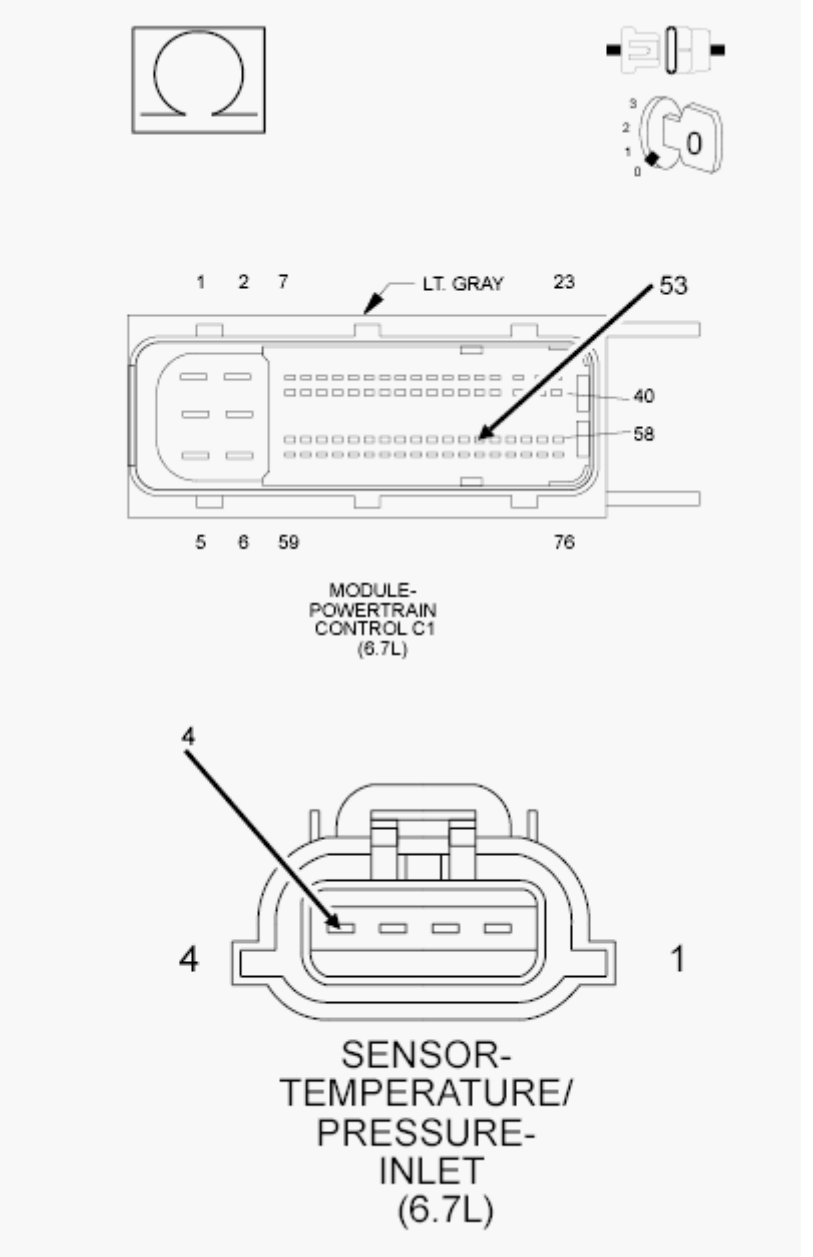

Fig. 17: Checking Inlet Air Temperature Sensor Ground Circuit For An Open Or High Resistance
Courtesy of CHRYSLER GROUP, LLC

1. Measure the resistance of the (K916) Sensor Ground circuit from the Inlet Temperature/Pressure Sensor harness connector to the PCM C1 harness connector.

   Is the resistance below 5.0 Ohms?

   Yes

   - Go To 5.

   No

   - Repair the (K916) Sensor Ground circuit for an open or high resistance.
   - Perform the POWERTRAIN VERIFICATION TEST. Refer to **POWERTRAIN VERIFICATION TEST - 6.7L** .

5. **CHECK THE INLET TEMPERATURE/PRESSURE SENSOR**
   1. Reconnect the PCM C1 harness connector.
   2. Reconnect the Inlet Temperature/Pressure Sensor harness connector.
   3. With the scan tool, erase DTCs.
   4. Turn the ignition off for 75 seconds.
   5. Turn the ignition on.
   6. While monitoring the scan tool, disconnect the Inlet Temperature/Pressure Sensor harness connector.

      Does DTC P2228 Barometric Pressure Sensor Low become active.

      Yes

      - Replace the Inlet Temperature/Pressure Sensor in accordance with the service information.
      - Perform the POWERTRAIN VERIFICATION TEST. Refer to **POWERTRAIN VERIFICATION TEST - 6.7L** .

      No

      - Replace and program the Powertrain Control Module in accordance with the service information. Refer to **PCM - REMOVAL** , also see **PCM/ECM / TCM PROGRAMMING** .
      - Perform the POWERTRAIN VERIFICATION TEST. Refer to **POWERTRAIN VERIFICATION TEST - 6.7L** .

P2262-TURBOCHARGER BOOST PRESSURE NOT DETECTED - MECHANICAL

For a complete wiring diagram, **refer to appropriate SYSTEM WIRING DIAGRAMS article** .

THEORY OF OPERATION

The Variable Geometry Turbocharger (VGT) is electronically activated by the Powertrain Turbo Actuator. The Electronic Turbo Actuator is a smart device and receives information via the J1939 BUS from the Powertrain Control Module (PCM). The Electronic Turbo Actuator performs its own diagnostics and reports failures back to the PCM using the J1939 BUS. The PCM then decodes the error message and converts it to a fault code. A mobile desoot should not be performed while investigating this fault. The PCM lights the MIL lamp immediately after the diagnostic runs and fails. The PCM will turn off the MIL lamp immediately after this diagnostic runs and passes in four consecutive drive cycles.

WHEN MONITORED:

Continuously with ignition on.

SET CONDITION:

The commanded position and the actual position do not match over a calibrated time.

POSSIBLE CAUSES

Possible Causes
ELECTRONIC TURBO ACTUATOR
TURBOCHARGER

Always perform the Pre-Diagnostic Troubleshooting procedure before proceeding. Refer to PRE-DIAGNOSTIC TROUBLESHOOTING PROCEDURE - 6.7L .

DIAGNOSTIC TEST

1. **INTERMITTENT CONNECTION**
    1. Turn ignition off.
    2. Disconnect the Electronic Turbo Actuator harness connector.

    NOTE: Check connectors - Clean/repair as necessary.

    Are any pins or damage done to the connector?

    Yes

    - Repair/replace harness.
    - Perform the POWERTRAIN VERIFICATION TEST. Refer to **POWERTRAIN VERIFICATION TEST - 6.7L** .

    No

    - Go To 2.
2. **ELECTRONIC TURBO ACTUATOR**

NOTE: It is important to drain engine coolant before Electronic Turbo Actuator removal.

1. Remove the Electronic Turbo Actuator from the turbocharger.
2. Inspect Electronic Turbo Actuator for a broken drive gear.

   Is the VGT actuator drive gear broken/damaged?

   Yes

   - Replace the Electronic Turbo Actuator in accordance with the service information.
   - Perform the POWERTRAIN VERIFICATION TEST. Refer to **POWERTRAIN VERIFICATION TEST - 6.7L** .

   No

   - Go To 3.

3. **TURBOCHARGER**
   1. Inspect the sector gear on the turbocharger for damage or broken teeth.
   2. Move the sector gear lever on the turbocharger bearing housing up and down from stop to stop.
   3. Check for smooth movement between the stops.

      NOTE: The actuator lever must move evenly and crisply as it is moved.

      Does the nozzle slide evenly from stop to stop and are the gear teeth undamaged?

      Yes

      - Replace the Electronic Turbo Actuator in accordance with the service information.
      - Perform the POWERTRAIN VERIFICATION TEST. Refer to **POWERTRAIN VERIFICATION TEST - 6.7L** .

      No

      - Replace the Turbocharger assembly in accordance with the service information.
      - Perform the POWERTRAIN VERIFICATION TEST. Refer to **POWERTRAIN VERIFICATION TEST - 6.7L** .

P2266-WATER IN FUEL SENSOR CIRCUIT LOW

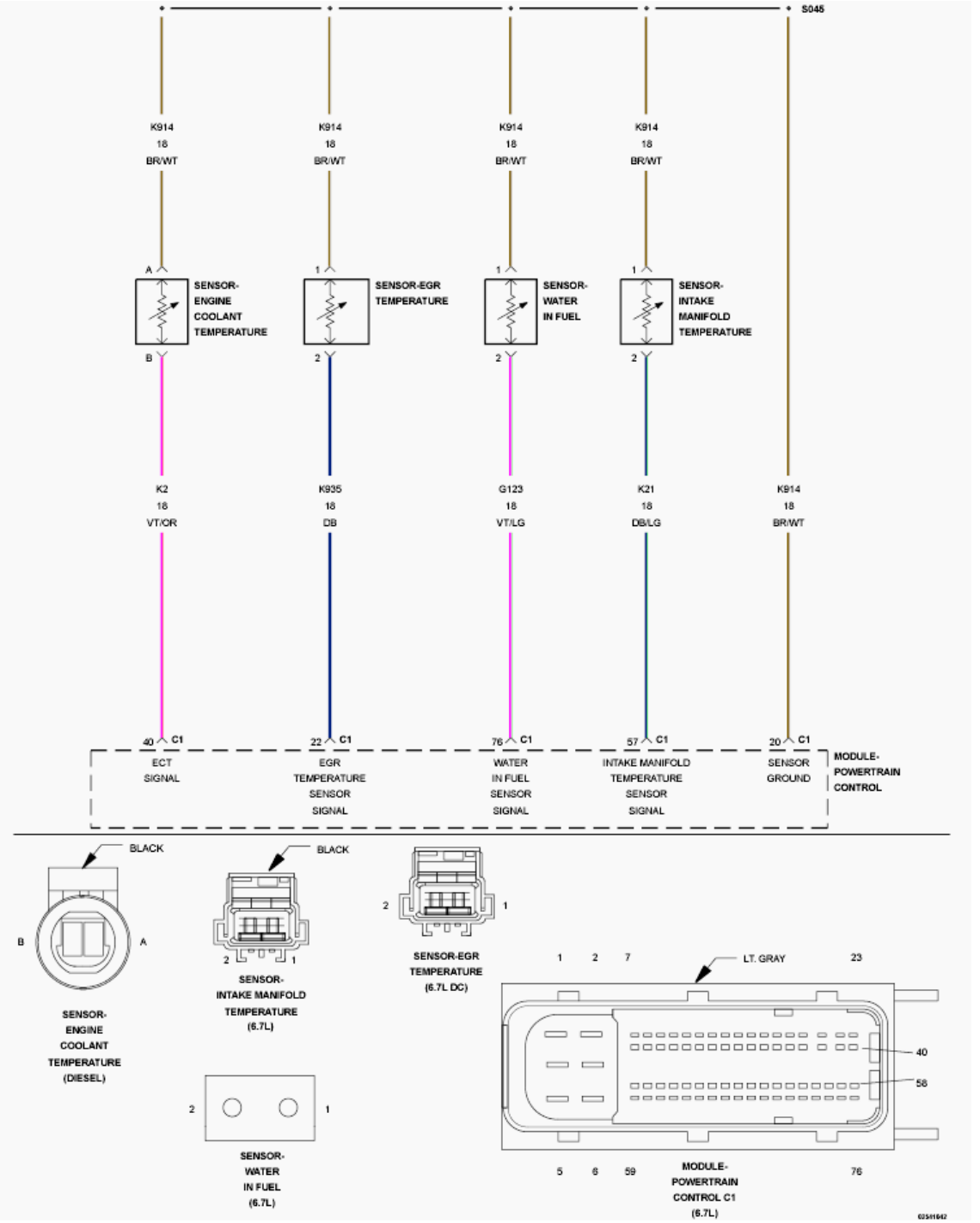

Fig. 18: Intake Manifold Temp, Engine Coolant Temp, EGR Temp, & Water In Fuel Sensor Circuit Schematic
Courtesy of CHRYSLER GROUP, LLC

For a complete wiring diagram, **refer to appropriate SYSTEM WIRING DIAGRAMS article** .

THEORY OF OPERATION

The Water-In-Fuel (WIF) sensor is attached to the fuel filter. The Powertrain Control Module (PCM) provides a 5-Volt reference signal to the water in fuel sensor. When the water collected in the fuel filter covers the sensor probes, the Water-In-Fuel sensor then pulls the 5-Volt reference voltage low indicating high water accumulation in the fuel filter.

WHEN MONITORED:

Ignition on.

SET CONDITION:

Low voltage detected at the WIF signal circuit at the Powertrain Control Module (PCM).

POSSIBLE CAUSES

Possible Causes
WATER IN FUEL SENSOR
(G123) WIF SIGNAL CIRCUIT SHORTED TO GROUND
(G123) WIF SIGNAL CIRCUIT SHORTED TO THE (K914) SENSOR GROUND CIRCUIT
POWERTRAIN CONTROL MODULE (PCM)

Always perform the Pre-Diagnostic Troubleshooting procedure before proceeding. Refer to PRE-DIAGNOSTIC TROUBLESHOOTING PROCEDURE - 6.7L .

DIAGNOSTIC TEST

1. **WATER IN FUEL SENSOR**
    1. Turn the ignition off.
    2. Disconnect the Water in Fuel Sensor harness connector.
    3. Ignition on, engine not running.

    NOTE: Check connectors - Clean/repair as necessary.

    4. Measure the voltage between the (G123) Water in Fuel Signal circuit and the (K914) Sensor ground circuit of the WIF Sensor harness connector.

    Is the voltage between 4.5 and 5.5 Volts?

    Yes

    - Replace the Water in Fuel Sensor in accordance with the service information.
    - Perform the POWERTRAIN VERIFICATION TEST. Refer to **POWERTRAIN VERIFICATION TEST - 6.7L** .

    No

- Go To 2.

2. **CHECK FOR THE (G123) WIF SIGNAL CIRCUIT SHORTED TO (K914) SENSOR GROUND CIRCUIT**
   1. Disconnect the PCM C1 harness connector.

      NOTE: Check connectors - Clean/repair as necessary.

   2. Measure the resistance between the (G123) WIF Sensor Signal circuit and the (K914) Sensor Ground circuit of the WIF Sensor harness connector.

      Is the resistance below 10k Ohms?

      Yes

      - Repair the short between the (G123) WIF Sensor Signal circuit and the (K914) Sensor Ground circuit.
      - Perform the POWERTRAIN VERIFICATION TEST. Refer to **POWERTRAIN VERIFICATION TEST - 6.7L** .

      No

      - Go To 3.

3. **CHECK THE (G123) WIF SENSOR SIGNAL CIRCUIT FOR A SHORT TO GROUND**
   1. Measure the resistance between ground and the (G123) WIF Sensor Signal circuit at the WIF Sensor harness connector.

      Is the resistance below 10k Ohms?

      Yes

      - Repair the (G123) WIF Sensor Signal for a short to ground.
      - Perform the POWERTRAIN VERIFICATION TEST. Refer to **POWERTRAIN VERIFICATION TEST - 6.7L** .

      No

      - Replace and program the Powertrain Control Module in accordance with the service information. Refer to **PCM - REMOVAL** , also see **PCM/ECM / TCM PROGRAMMING** .
      - Perform the POWERTRAIN VERIFICATION TEST. Refer to **POWERTRAIN VERIFICATION TEST - 6.7L** .

P2267-WATER IN FUEL SENSOR CIRCUIT HIGH

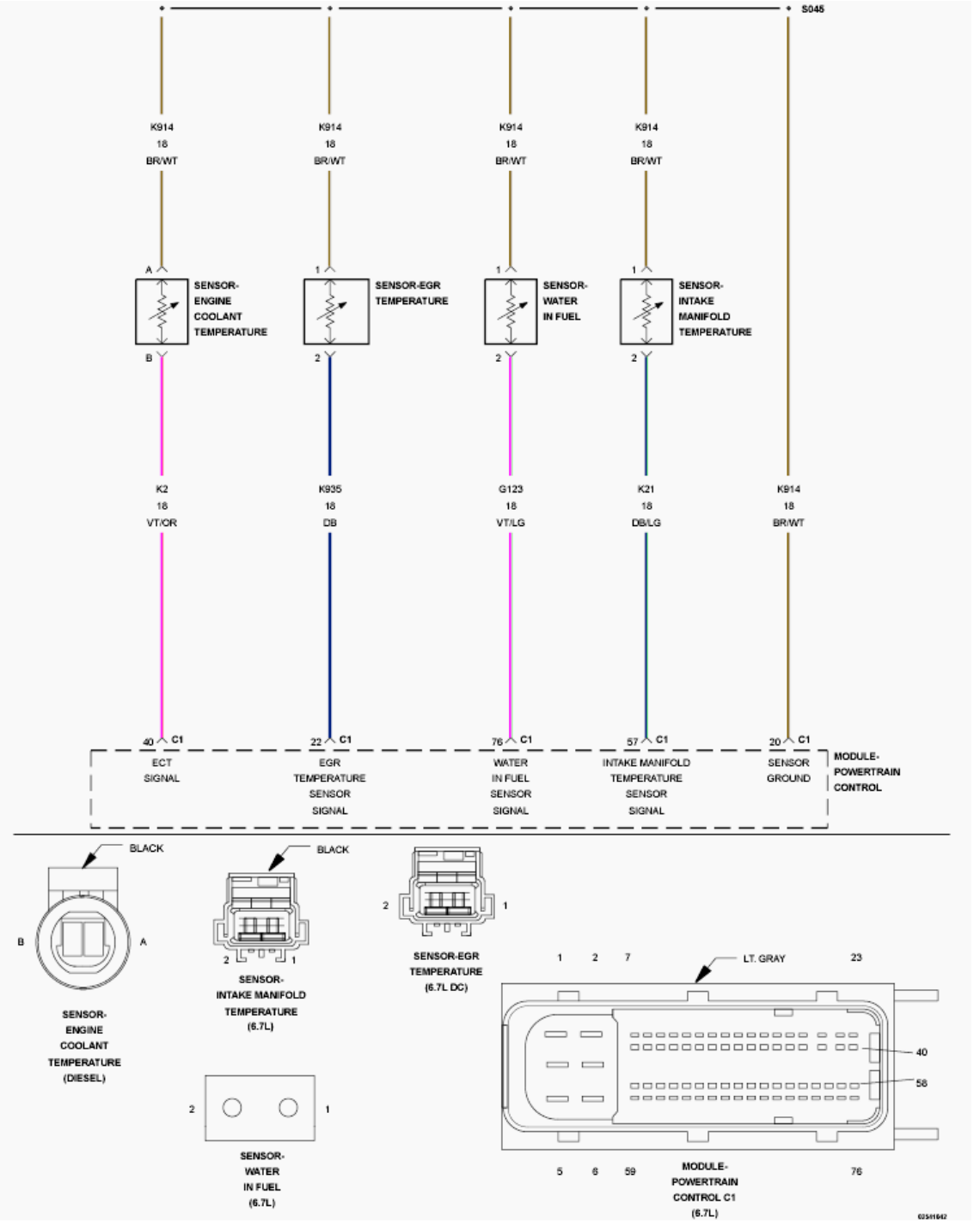

Fig. 19: Intake Manifold Temp, Engine Coolant Temp, EGR Temp, & Water In Fuel Sensor Circuit Schematic
Courtesy of CHRYSLER GROUP, LLC

For a complete wiring diagram, **refer to appropriate SYSTEM WIRING DIAGRAMS article** .

THEORY OF OPERATION

The Water-In-Fuel (WIF) sensor is attached to the bottom of the fuel filter. The Powertrain Control Module (PCM) provides a 5-Volt reference signal to the Water-In-Fuel sensor. When the water collected in the fuel filter covers the sensor probes, the Water-In-Fuel sensor then pulls the 5-Volt reference voltage low indicating high water accumulation in the fuel filter. The PCM illuminates the Water In Fuel lamp immediately after the diagnostic runs and fails. During this time water in fuel may cause white smoke, loss of power or hard starting. The Water In Fuel lamp will turn off once the water is drained from the filter.

WHEN MONITORED:

Ignition on.

SET CONDITION:

High voltage detected at the WIF Signal Circuit at the Powertrain Control Module (PCM).

POSSIBLE CAUSES

Possible Causes
(G123) WIF SIGNAL CIRCUIT SHORTED TO VOLTAGE (G123) WIF SIGNAL CIRCUIT OPEN/HIGH RESISTANCE
(K914) SENSOR GROUND CIRCUIT OPEN/HIGH RESISTANCE
WATER IN FUEL SENSOR POWERTRAIN CONTROL MODULE (PCM)

Always perform the Pre-Diagnostic Troubleshooting procedure before proceeding. Refer to PRE-DIAGNOSTIC TROUBLESHOOTING PROCEDURE - 6.7L .

DIAGNOSTIC TEST

1. **ACTIVE DTC**
    1. With the scan tool, read DTCs.

       Is the DTC active at this time?

       Yes

       - Go To 2.

       No

       - Perform the INTERMITTENT CONDITION diagnostic procedure. Refer to **INTERMITTENT CONDITION - 6.7L** .
2. **WATER IN FUEL SENSOR**
    1. Turn the ignition off.
    2. Disconnect the Water in Fuel Sensor.
    3. Turn the ignition on.

4. Using a scan tool monitor the Water in Fuel Sensor voltage.
5. Connect a jumper wire between the (G123) WIF Signal circuit and the (K914) Sensor ground circuit.

   Did the voltage display 5.0 Volts with the connector disconnected and drop close to 0 Volts when the jumper wire was installed?

   Yes

   - Replace the Water in Fuel Sensor in accordance with the service information.
   - Perform the POWERTRAIN VERIFICATION TEST. Refer to **POWERTRAIN VERIFICATION TEST - 6.7L** .

   No

   - Go To 3.

3. **CHECK THE (G123) WATER IN FUEL SENSOR FOR A SHORT TO VOLTAGE**
   1. Turn the ignition off.
   2. Disconnect the C1 PCM harness connector.
   3. Turn the ignition on.
   4. Measure the voltage on the (G123) WIF Signal circuit at the Water in Fuel Sensor harness connector.

      Is there any voltage present?

      Yes

      - Repair the (G123) WIF Signal circuit for a short to voltage.
      - Perform the POWERTRAIN VERIFICATION TEST. Refer to **POWERTRAIN VERIFICATION TEST - 6.7L** .

      No

      - Go To 4.

4. **CHECK THE (G123) WIF SIGNAL CIRCUIT FOR AN OPEN/HIGH RESISTANCE**
   1. Turn the ignition off.
   2. Measure the resistance on the (G123) WIF Signal circuit from the Water in Fuel Sensor harness connector to the C1 PCM harness connector.

      Is the resistance greater than 5.0 Ohms?

      Yes

      - Repair the (G123) WIF Signal circuit for an open or high resistance.

- Perform the POWERTRAIN VERIFICATION TEST. Refer to **POWERTRAIN VERIFICATION TEST - 6.7L** .

No

- Go To 5.

5. **CHECK THE (K914) SENSOR GROUND CIRCUIT FOR AN OPEN/HIGH RESISTANCE**
   1. Measure the resistance on the (K914) Sensor ground circuit from the Water in Fuel Sensor harness connector to the C1 PCM harness connector.

      Is the resistance greater than 5.0 Ohms?

      Yes

      - Repair the (K914) Sensor ground circuit for an open or high resistance.
      - Perform the POWERTRAIN VERIFICATION TEST. Refer to **POWERTRAIN VERIFICATION TEST - 6.7L** .

      No

      - Replace the Powertrain Control Module in accordance with the service information.
      - Perform the POWERTRAIN VERIFICATION TEST. Refer to **POWERTRAIN VERIFICATION TEST - 6.7L** .

P2269-WATER IN FUEL CONDITION

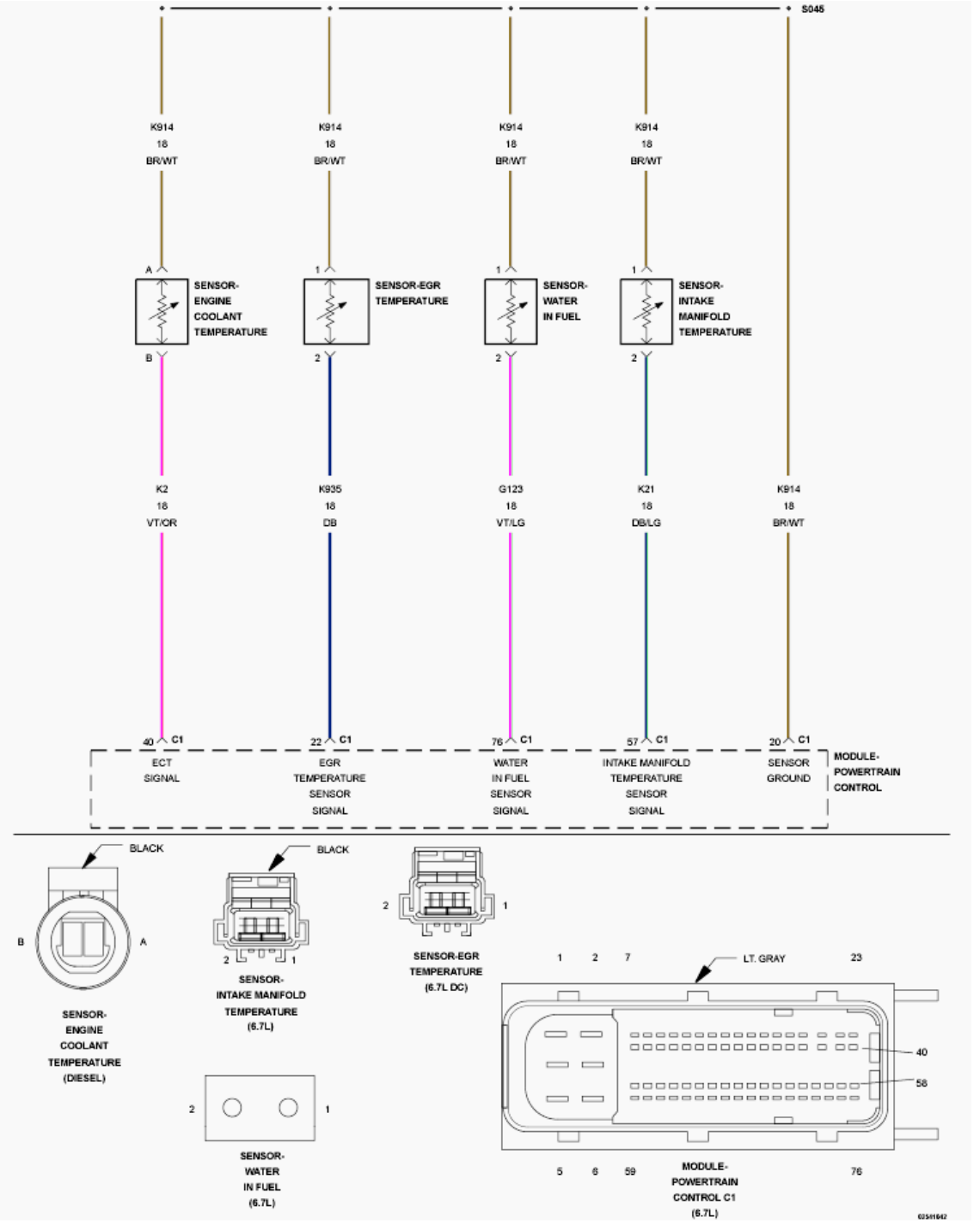

Fig. 20: Intake Manifold Temp, Engine Coolant Temp, EGR Temp, & Water In Fuel Sensor Circuit Schematic
Courtesy of CHRYSLER GROUP, LLC

For a complete wiring diagram, **refer to appropriate SYSTEM WIRING DIAGRAMS article** .

THEORY OF OPERATION

The Water-In-Fuel (WIF) sensor is attached to the fuel filter. The Powertrain Control Module (PCM) provides a 5-Volt reference signal to the water in fuel sensor. When the water collected in the fuel filter covers the sensor probes, the Water-In-Fuel sensor then pulls the 5-Volt reference voltage low indicating high water accumulation in the fuel filter.

WHEN MONITORED:

Any time the PCM is powered up.

SET CONDITION:

Water in fuel indicated from the WIF Sensor.

POSSIBLE CAUSES

Possible Causes
WATER IN FUEL WATER-IN-FUEL SENSOR
(G123) WIF SENSOR SIGNAL CIRCUIT SHORTED TO GROUND
POWERTRAIN CONTROL MODULE (PCM)

Always perform the Pre-Diagnostic Troubleshooting procedure before proceeding. Refer to PRE-DIAGNOSTIC TROUBLESHOOTING PROCEDURE - 6.7L .

DIAGNOSTIC TEST

1. **OTHER DTCS PRESENT**
    1. With the scan tool, read DTCs.

       Do you have any additional water in fuel DTCs?

       Yes

       - Repair other Water in fuel sensor DTCs first.
       - Perform the POWERTRAIN VERIFICATION TEST. Refer to **POWERTRAIN VERIFICATION TEST - 6.7L** .

       No

       - Go To 2.
2. **WATER IN FUEL**
    1. Turn the ignition off.
    2. Using the service publications as a guide, drain the water in fuel separator.

       Did the DTC become inactive after draining the water in fuel separator?

Yes

- Clear DTC, repair complete.
- Perform the POWERTRAIN VERIFICATION TEST. Refer to **POWERTRAIN VERIFICATION TEST - 6.7L** .

No

- Go To 3.

3. **CHECK THE WATER-IN-FUEL SENSOR**
   1. Disconnect the WIF Sensor harness connector.

      NOTE: Check connectors - Clean/repair as necessary.

   2. Turn the ignition on.
   3. Using the scan tool, read DTCs.

      Did DTC P2269 become active?

      Yes

      - Replace the Water-In-Fuel Sensor in accordance with the service information.
      - Perform the POWERTRAIN VERIFICATION TEST. Refer to **POWERTRAIN VERIFICATION TEST - 6.7L** .

      No

      - Go To 4.

4. **CHECK THE (G123) WIF SENSOR SIGNAL CIRCUIT FOR A SHORT TO GROUND**
   1. Turn the ignition off.
   2. Disconnect the PCM C1 harness connector.

      NOTE: Check connectors - Clean/repair as necessary.

   3. Measure the resistance between ground and the (G123) WIF Sensor Signal circuit at the WIF Sensor harness connector.

      Is the resistance below 10k Ohms?

      Yes

      - Repair the (G123) WIF Sensor Signal circuit for a short to ground.
      - Perform the POWERTRAIN VERIFICATION TEST. Refer to **POWERTRAIN VERIFICATION TEST - 6.7L** .

No

- Replace and program the Powertrain Control Module in accordance with the service information. Refer to **PCM - REMOVAL** , also see **PCM/ECM / TCM PROGRAMMING** .
- Perform the POWERTRAIN VERIFICATION TEST. Refer to **POWERTRAIN VERIFICATION TEST - 6.7L** .

P226B-TURBOCHARGER BOOST PRESSURE NOT RESPONDING

For a complete wiring diagram, **refer to appropriate SYSTEM WIRING DIAGRAMS article** .

THEORY OF OPERATION

The Variable Geometry Turbocharger (VGT) adjusts turbocharger performance by moving the position of the impeller nozzle, on the high-pressure (engine exhaust gas) side of the turbocharger assembly. Desired position of the actuator is commanded from the Powertrain Control Module (PCM). Actual position is sensed by the VGT, and reported back to the PCM as feedback. Discrepancy in position feedback sent to the module, and commanded position sent to the VGT by more than a prescribed amount will result in failure of device rationality diagnostics. Failure to properly actuate the VGT will result in poor engine performance. The PCM lights the MIL lamp after the diagnostic runs and fails in two drive cycles. The PCM will turn off the MIL lamp immediately after this diagnostic runs and passes in four consecutive drive cycles.

WHEN MONITORED:

When the engine is in regeneration of the aftertreatment system.

SET CONDITION:

Turbo position is not within the commanded position during desoot or the difference between charge flow and charge flow command is over the calibrated limit.

POSSIBLE CAUSES

Possible Causes
SOOT BUILD UP ON TURBOCHARGER
TURBOCHARGER ASSEMBLY

Always perform the Pre-Diagnostic Troubleshooting procedure before proceeding. Refer to PRE-DIAGNOSTIC TROUBLESHOOTING PROCEDURE - 6.7L .

NOTE: **If there are DTCs present with P2262, P226B, P226C, or P2563, address P2262, P226B, P226C, or P2563 before attempting to repair the other fault codes. If however, these DTCs are accompanied by DTC P0471, both DTCs should be addressed and repaired.**

DIAGNOSTIC TEST

1. **VEHICLE CONFIGURATION**
    1. The repair procedure is different depending on whether the vehicle is a Pick Up or Chassis Cab.

       Is the vehicle a Pick Up or Chassis Cab?

       Pick Up

       - Go To 2.

       Chassis Cab

       - Go To 4.
2. **OTHER DTCS PRESENT**
    1. Turn ignition on.
    2. With the scan tool, read DTCs.

       Are there any communication DTCs related to the J1939 Data link present?

       Yes

       - Diagnose and repair the communication DTCs before proceeding.
       - Perform the POWERTRAIN VERIFICATION TEST. Refer to **POWERTRAIN VERIFICATION TEST - 6.7L** .

       No

       - Go To 3.
3. **TURBOCHARGER CLEANING**

   NOTE: Do not erase the DTC before attempting to run the VG Turbocharger Cleaning procedure. The procedure can only run if the P2262, P226B, P226C, or P2563 are present (active, pending or stored).

    1. Reconnect the Turbo Actuator harness connector.
    2. Turn ignition on.
    3. With the scan tool, navigate to miscellaneous functions and initialize the VG Turbocharger Cleaning Procedure. Follow the directions on the scan tool completely.

       NOTE: When the procedure is initialized you will see one of two messages on the screen.

       Which message displayed on the tool?

       Turbo does not need to be cleaned;

- The Turbocharger does not need cleaning, or cleaning of the Turbocharger will not fix the stick condition. If DTC P2262, P226B, P226C, or P2563 are **active or pending** , replace the Turbocharger assembly. If the DTC is **stored** , erase the DTC. Perform the DIESEL AFTERTREATMENT VALIDATION - 6.7L procedure. Refer to **DIESEL AFTERTREATMENT VALIDATION- 6.7L** .

The engine must idle at 1, 500 RPM for 5 minutes prior to injecting the cleaner;

- The Turbocharger cleaning has initiated. Fasten the cleaning tool to the vehicle and follow the instructions on the screen completely. After the first attempt at cleaning is completed the test will run again automatically and determine if the Turbocharger has been cleaned. The scan tool can make up to three attempts to clean the Turbocharger before failing it. After the cleaning procedure has finished, the scan tool will display the results. If the scan tool displays VG Turbocharger cleaning was successful, the repair is complete. If the scan tool displays VG Turbocharger cleaning was unsuccessful, replace the Turbocharger assembly in accordance with the service information.
- Perform the DIESEL AFTERTREATMENT VALIDATION - 6.7L procedure. Refer to **DIESEL AFTERTREATMENT VALIDATION- 6.7L** .

4. **OTHER DTCS PRESENT**
   1. Turn ignition on.
   2. With the scan tool, read DTCs.

      Are there any communication DTCs related to the J1939 Data link present?

      Yes

      - Diagnose and repair those DTCs before replacing the Turbocharger assembly.

      No

      - Replace the Turbocharger assembly in accordance with the service information.
      - Perform the DIESEL AFTERTREATMENT VALIDATION - 6.7L procedure. Refer to **DIESEL AFTERTREATMENT VALIDATION- 6.7L** .

P226C-TURBOCHARGER BOOST CONTROL "A" SLOW RESPONSE

For a complete wiring diagram, **refer to appropriate SYSTEM WIRING DIAGRAMS article** .

THEORY OF OPERATION

The Variable Geometry Turbocharger (VGT) adjusts turbocharger performance by moving the position of the impeller nozzle, on the high-pressure (engine exhaust gas) side of the turbocharger assembly. Desired position of the actuator is commanded from the Powertrain Control Module (PCM). Actual position is sensed by the VGT, and reported back to the PCM as feedback. Discrepancy in position feedback sent to the module, and commanded position sent to the VGT by more than a prescribed amount will result in failure of device rationality diagnostics. Failure to properly actuate the VGT will result in poor engine performance. The PCM

lights the MIL lamp after the diagnostic runs and fails in two drive cycles. The PCM will turn off the MIL lamp immediately after this diagnostic runs and passes in four consecutive drive cycles.

WHEN MONITORED:

With the engine running.

SET CONDITION:

The Powertrain Control Module (PCM) detects that the VGT is slow in responding to it's commanded position.

POSSIBLE CAUSES

Possible Causes
TURBOCHARGER BOOST ACTUATOR
TURBOCHARGER

Always perform the Pre-Diagnostic Troubleshooting procedure before proceeding. Refer to PRE-DIAGNOSTIC TROUBLESHOOTING PROCEDURE - 6.7L .

DIAGNOSTIC TEST

1. **OTHER DTCS**
    1. Turn ignition on.
    2. With the scan tool, read DTCs.

       Are there any EGR Airflow Control Valve, Mass Air Flow Sensor, or Intake System leak related DTCs present, repair those DTCs before continuing?

       Yes

       - Repair those DTCs before proceeding.
       - Perform the POWERTRAIN VERIFICATION TEST. Refer to **POWERTRAIN VERIFICATION TEST - 6.7L** .

       No

       - Go To 2.
2. **TURBOCHARGER CLEANING**
    1. Perform the Turbocharger cleaning procedure. Refer to **TURBOCHARGER SYSTEM, CLEANING, 6.7L** .
    2. With the scan tool, erase DTCs.
    3. Turn the ignition off for 75 seconds.
    4. Start the engine and test drive the vehicle.
    5. With the scan tool. read DTCs.

Did DTC P226C return?

Yes

- Replace the Turbocharger in accordance with the service information.
- Perform the DIESEL AFTERTREATMENT VALIDATION - 6.7L procedure. Refer to **DIESEL AFTERTREATMENT VALIDATION- 6.7L** .

No

- Repair complete.
- Perform the DIESEL AFTERTREATMENT VALIDATION - 6.7L procedure. Refer to **DIESEL AFTERTREATMENT VALIDATION- 6.7L** .

P2280-AIR FLOW RESTRICTION / LEAK BETWEEN AIR CLEANER AND MAF

For a complete wiring diagram, **refer to appropriate SYSTEM WIRING DIAGRAMS article** .

THEORY OF OPERATION

This monitor can detect a severe restriction in the Air Filter or the inlet hose to the Airbox. This can cause a reduction in air flow large enough to cause damage to other engine components. This will cause the fault to be set. When this DTC is active, EGR flow is disabled.

WHEN MONITORED:

Continuously with engine running.

SET CONDITION:

The Powertrain Control Module (PCM) detects a rapid decrease in pressure from the Inlet Air Pressure Sensor on the Airbox.

POSSIBLE CAUSES

Possible Causes
DEBRIS BLOCKING THE INLET HOSE
SEVERELY RESTRICTED AIR FILTER

Always perform the Pre-Diagnostic Troubleshooting procedure before proceeding. Refer to PRE-DIAGNOSTIC TROUBLESHOOTING PROCEDURE - 6.7L .

DIAGNOSTIC TEST

1. **VISUAL INSPECTION**
    1. Turn ignition off.

2. Perform a visual inspection of the Inlet hose for debris, such as snow packing or dirt loading blocking the passage.

   Was a restriction found?

   Yes

   - Clean the debris from the passage way. Check and replace the Air Filter if necessary.
   - Perform the POWERTRAIN VERIFICATION TEST. Refer to **POWERTRAIN VERIFICATION TEST - 6.7L** .

   No

   - Replace the Air Filter.
   - Perform the POWERTRAIN VERIFICATION TEST. Refer to **POWERTRAIN VERIFICATION TEST - 6.7L** .

P2281-AIR LEAK BETWEEN MAF AND THROTTLE BODY

For a complete wiring diagram, **refer to appropriate SYSTEM WIRING DIAGRAMS article** .

THEORY OF OPERATION

This monitor can detect a large leak located anywhere between the Turbocharger outlet and the Intake Manifold. The monitor compares the estimated EGR flow to the actual EGR flow. If the actual EGR flow is much less than the estimated EGR flow, the fault will set. If the CAC hose is leaking or disconnected, the Turbocharger can still have enough exhaust flow that the compressor will draw air through the MAF. Charge Flow will be low since the flow is not reaching the Intake Manifold. This will cause the fault to be set.

WHEN MONITORED:

Continuously with engine running.

SET CONDITION:

The Powertrain Control Module (PCM) detects that the actual EGR flow is less than the estimated EGR flow by a calibrated value.

POSSIBLE CAUSES

Possible Causes
LARGE LEAK IN THE INTAKE SYSTEM BETWEEN THE TURBOCHARGER OUTLET AND THE INTAKE MANIFOLD

Always perform the Pre-Diagnostic Troubleshooting procedure before proceeding. Refer to PRE-DIAGNOSTIC TROUBLESHOOTING PROCEDURE - 6.7L .

DIAGNOSTIC TEST

1. **VISUAL INSPECTION**
    1. Turn ignition off.
    2. Perform a visual inspection of the Intake system for disconnected hoses or loose hose clamps between the Turbocharger and the Intake Manifold.

       Were any disconnected hoses or loose clamps found?

       Yes

       - Perform the appropriate repair.
       - Perform the POWERTRAIN VERIFICATION TEST. Refer to **POWERTRAIN VERIFICATION TEST - 6.7L** .

       No

       - Go To 2.
2. **CHECK THE INTAKE SYSTEM**
    1. Perform the INTAKE AIR SYSTEM PRESSURE TEST diagnostic procedure. Refer to **DIAGNOSIS AND TESTING, 6.7L** .

       Were any leaks found?

       Yes

       - Perform the appropriate repair.
       - Perform the POWERTRAIN VERIFICATION TEST. Refer to **POWERTRAIN VERIFICATION TEST - 6.7L** .

       No

       - Perform the INTERMITTENT CONDITION diagnostic procedure. Refer to **INTERMITTENT CONDITION - 6.7L** .

P2299-BRAKE PEDAL POSITION / ACCELERATOR PEDAL POSITION INCOMPATIBLE

For a complete wiring diagram, **refer to appropriate SYSTEM WIRING DIAGRAMS article** .

THEORY OF OPERATION

This diagnostic tests for a stuck throttle or throttle position sensor. The algorithm only runs when detected throttle position is above 8% and maintains a position within 2% for more than two seconds. If the brake pedal is pushed during that time, the diagnostic will fail. This fault will not occur if the brake pedal is applied first and then the throttle pedal is engaged. If this diagnostic runs and fails the Powertrain Control Module (PCM) will light a momentary ETC lamp. The ETC lamp will only be active when the condition exists. While the error is

active the customer will likely experience a throttle derate. The throttle position must be below 8% with both brake switches off in order for this error to reset.

WHEN MONITORED:

Engine running, throttle position maintained above 8% with less than a 2% deviation in two seconds.

SET CONDITION:

Brake pedal is depressed during the monitored conditions.

POSSIBLE CAUSES

Possible Causes
TWO FOOTED DRIVING
ACCELERATOR PEDAL POSITION SENSOR
BRAKE SWITCH
POWERTRAIN CONTROL MODULE (PCM)

Always perform the Pre-Diagnostic Troubleshooting procedure before proceeding. Refer to PRE-DIAGNOSTIC TROUBLESHOOTING PROCEDURE - 6.7L .

DIAGNOSTIC TEST

1. **OTHER DTCS**

   NOTE: The most likely causes of this DTC being set is for the operator of the vehicle to have one foot on the brake while driving or a misadjusted brake switch which is coming on intermittently.

   1. Ignition on, engine not running.
   2. With the scan tool, read DTCs.

      Are there DTCs for the accelerator pedal position sensors or brake switch present?

      Yes

      - Repair those DTCs before proceeding.

      No

      - Go To 2.
2. **PEDAL POSITION SENSOR OR BRAKE SWITCH**
   1. Start the engine.
   2. Use the scan tool to monitor accelerator pedal position.

3. Move throttle through a range of positions.
4. Also depress the brake pedal.
5. Monitor the brake position on the scan tool.

   Does the reported accelerator pedal position and brake position match actual position?

   Yes

   - Go To 3.

   No

   - Troubleshoot accelerator pedal position sensor or brake switch.

3. **TWO FOOTED DRIVING**
   1. Inform the customer that driving the vehicle with both feet can cause this condition.

      Is the owner a two footed driver?

      Yes

      - Repair complete.

      No

      - Go To 4.

4. **BRAKE SWITCH**
   1. Replace the brake switch.
   2. Ignition on, engine not running.
   3. With the scan tool, erase DTCs.
   4. Test drive the vehicle.
   5. With the scan tool, read DTCs.

      Did the DTC reset?

      Yes

      - Replace the Powertrain Control Module in accordance with the service information.
      - Perform the POWERTRAIN VERIFICATION TEST. Refer to **POWERTRAIN VERIFICATION TEST - 6.7L** .

      No

      - Repair complete.
      - Perform the POWERTRAIN VERIFICATION TEST. Refer to **POWERTRAIN**

VERIFICATION TEST - 6.7L .

P229E-AFTERTREATMENT NOX SENSOR CIRCUIT - BANK 1 SENSOR 2

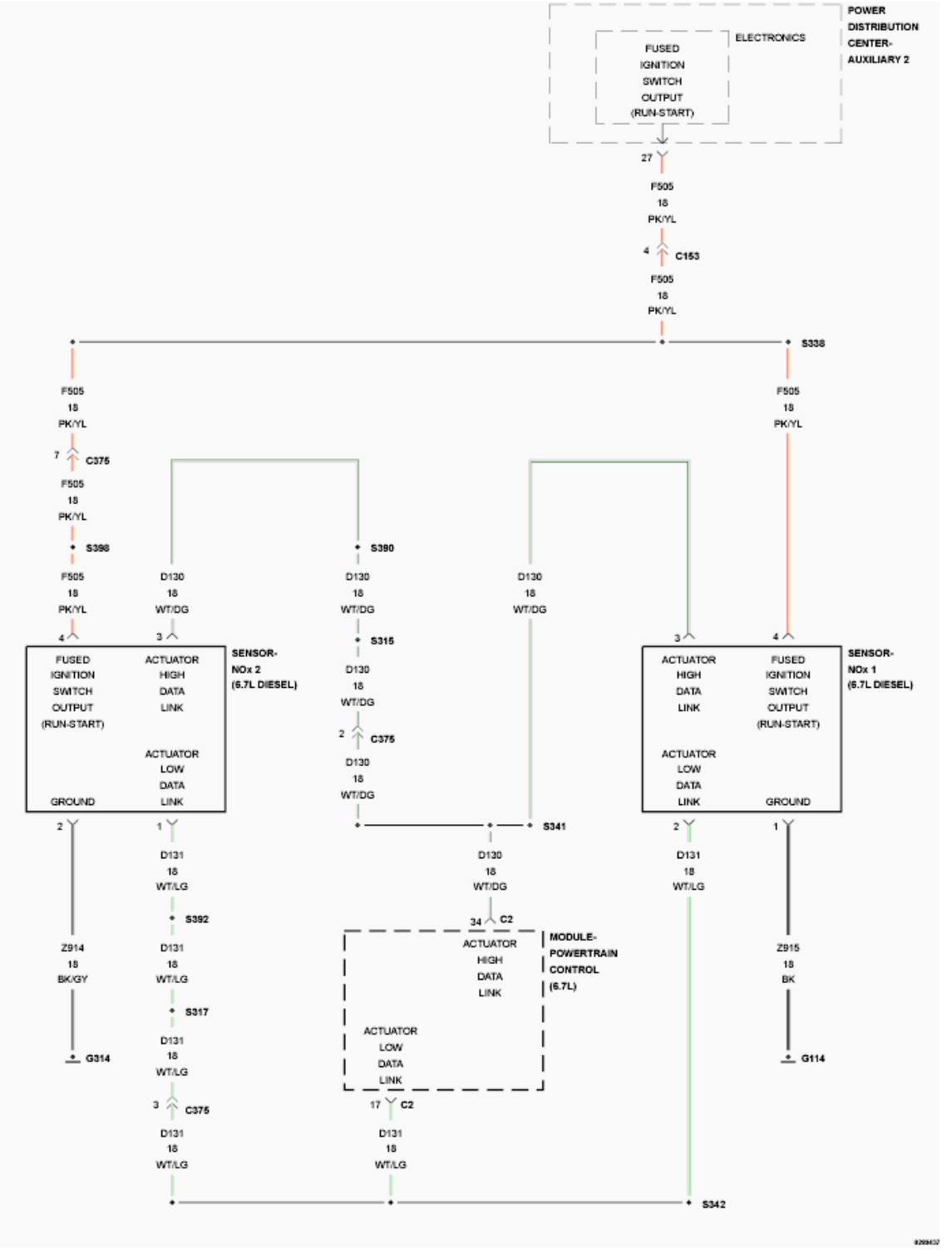

Fig. 21: NOx Sensors Wiring Diagram
Courtesy of CHRYSLER GROUP, LLC

For a complete wiring diagram, **refer to appropriate SYSTEM WIRING DIAGRAMS article** .

THEORY OF OPERATION

The aftertreatment system is equipped with two NOx Sensors and modules. The upstream NOx Sensor 1/1 is located before the SCR Catalyst and is permanently connected to a corresponding NOx Sensor Module mounted on the right frame rail. The downstream NOx Sensor 1/2 is located at the outlet of the SCR Catalyst and is permanently connected to a corresponding NOx Sensor Module also mounted on the right frame rail. The NOx Sensors and NOx Sensor Modules are calibrated to each other and must be replaced as an assembly. The two NOx Sensor and Module assemblies are not interchangeable. The NOx Sensor Modules are smart devices and communicate with the Powertrain Control Module (PCM) over the J1939 Data Link. The NOx Sensor Modules perform their own internal diagnostics and report malfunctions back to the PCM. The NOx Sensors are used to monitor the efficiency of the SCR Catalyst and dosing system. The PCM will illuminate the MIL lamp immediately after the monitor runs and fails. The PCM will turn off the MIL Lamp after the monitor runs and passes for three consecutive trips.

WHEN MONITORED:

Continuously with engine running.

SET CONDITION:

The NOx Sensor 1/2 detects that the voltage supplied is above or below it's calibrated limits.

POSSIBLE CAUSES

Possible Causes
(F505) FUSED IGNITION SWITCH OUTPUT CIRCUIT OPEN/HIGH RESISTANCE
(F505) FUSED IGNITION SWITCH OUTPUT CIRCUIT SHORTED TO GROUND
(Z914) GROUND CIRCUIT OPEN/HIGH RESISTANCE
(F505) FUSED IGNITION SWITCH OUTPUT CIRCUIT SHORTED TO THE (Z914) GROUND CIRCUIT
FAULTY NOx SENSOR 1/2 INTERNAL HEATER
FAULTY NOx SENSOR 1/2

Always perform the Pre-Diagnostic Troubleshooting procedure before proceeding. Refer to PRE-DIAGNOSTIC TROUBLESHOOTING PROCEDURE - 6.7L .

DIAGNOSTIC TEST

1. **ACTIVE DTC**
    1. Turn the ignition on.
    2. With the scan tool, View DTCs.

       Is the DTC active?

Yes

- Go To 3.

No

- Go To 2.

2. **CHECK THE NOx 1/2 SENSOR INTERNAL HEATER**
   1. Start the engine and allow it to idle for at least two minutes.
   2. With the scan tool, View DTCs.

   Is the DTC active?

   Yes

   - The NOx Sensor 1/2 internal heater has malfunctioned. Replace the NOx Sensor 1/2 in accordance with the service information. Refer to **SENSOR, NOX, REMOVAL** .

   No

   - Go To 3.

3. **CHECK THE NOx SENSOR 1/2 POWER AND GROUND CIRCUITS**
   1. Turn the ignition on, engine not running.
   2. Disconnect the NOx Sensor Module 1/2 harness connector.
   3. Measure the voltage across the (F505) Fused Ignition Switch Output circuit and the (Z914) Ground circuit at the NOx Sensor Module 1/2 harness connector.

   NOTE: Measure the voltage at key on, engine cranking, and at idle.

   Does the voltage read within 1.0 Volt of battery voltage?

   Yes

   - Replace the NOx Sensor 1/2 in accordance with the service information. Refer to **SENSOR, NOX, REMOVAL** .
   - Perform the POWERTRAIN VERIFICATION TEST. Refer to **POWERTRAIN VERIFICATION TEST - 6.7L** .

   No

   - Go To 4.

4. **CHECK FOR VOLTAGE AT THE (F505) FUSED IGNITION SWITCH OUTPUT CIRCUIT**
   1. Measure voltage between ground and the (F505) Fused Ignition Switch Output circuit of the NOx Sensor Module 1/2 harness connector.

Does the voltage read within 1.0 Volt of battery voltage?

Yes

- Repair the (Z914) Ground circuit for an open or high resistance.
- Perform the POWERTRAIN VERIFICATION TEST. Refer to **POWERTRAIN VERIFICATION TEST - 6.7L** .

No

- Repair the (F505) Fused Ignition Switch Output circuit for an open or high resistance. If the fuse is found to be open, check the circuit for a short to the (Z914) Ground circuit or a short to chassis ground.
- Perform the POWERTRAIN VERIFICATION TEST. Refer to **POWERTRAIN VERIFICATION TEST - 6.7L** .

P229F-AFTERTREATMENT NOX SENSOR CIRCUIT PERFORMANCE - BANK 1 SENSOR 2

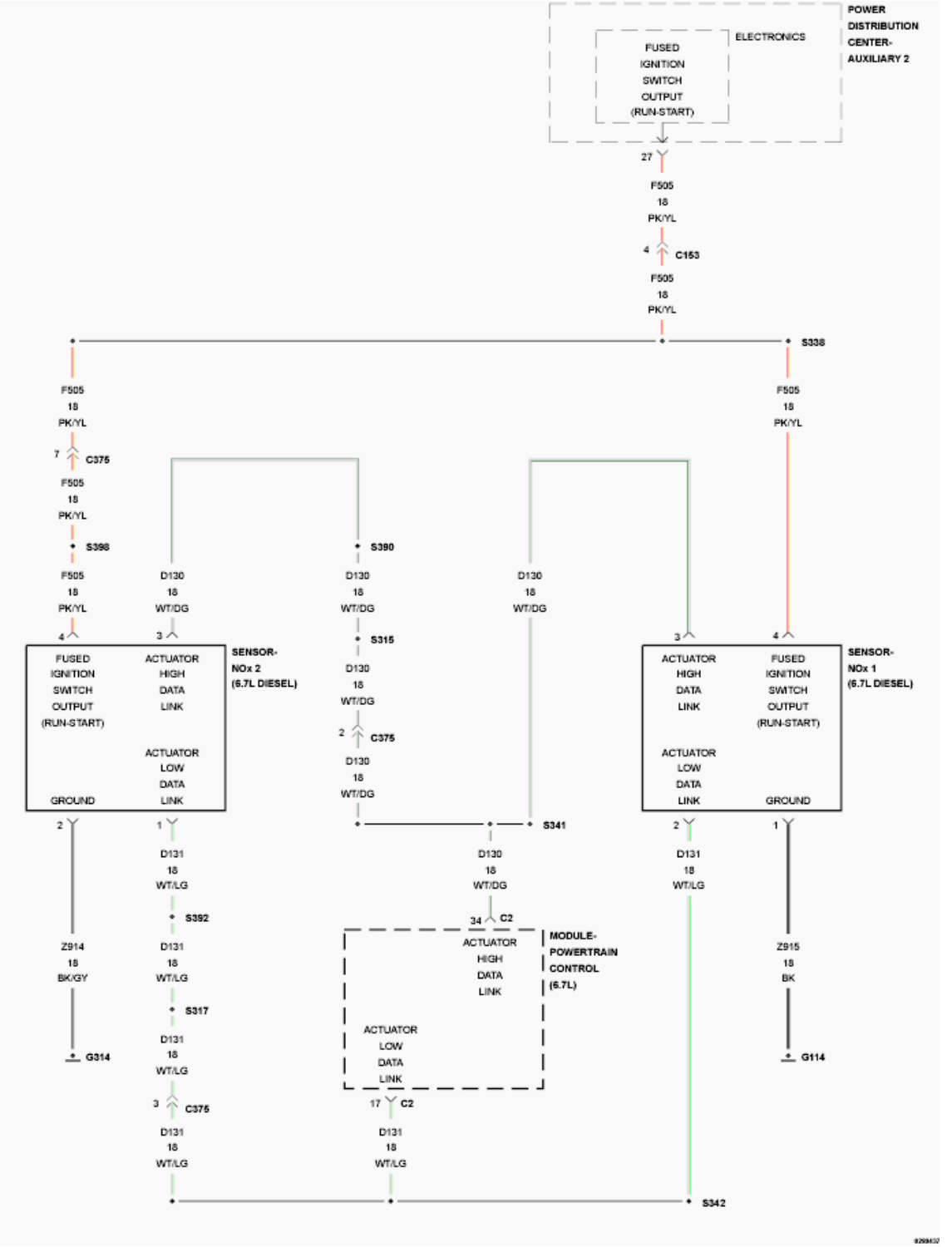

Fig. 22: NOx Sensors Wiring Diagram
Courtesy of CHRYSLER GROUP, LLC

For a complete wiring diagram, **refer to appropriate SYSTEM WIRING DIAGRAMS article** .

THEORY OF OPERATION

The aftertreatment system is equipped with two NOx Sensors and modules. The upstream NOx Sensor 1/1 is located before the SCR Catalyst and is permanently connected to a corresponding NOx Sensor Module mounted on the right frame rail. The downstream NOx Sensor 1/2 is located at the outlet of the SCR Catalyst and is permanently connected to a corresponding NOx Sensor Module also mounted on the right frame rail. The NOx Sensors and NOx Sensor Modules are calibrated to each other and must be replaced as an assembly. The two NOx Sensor and Module assemblies are not interchangeable. The NOx Sensor Modules are smart devices and communicate with the Powertrain Control Module (PCM) over the J1939 Data Link. The NOx Sensor Modules perform their own internal diagnostics and report malfunctions back to the PCM. The NOx Sensors are used to monitor the efficiency of the SCR Catalyst and dosing system. The PCM will illuminate the MIL lamp immediately after the monitor runs and fails. The PCM will turn off the MIL Lamp after the monitor runs and passes for three consecutive trips.

WHEN MONITORED:

This diagnostic monitor consists of two separate checks. The first check occurs when the engine exhaust temperature at NOx Sensor 1/2 is above 150°C (302°F), and the engine is in a decel condition and zero fueling. The second check occurs when the engine exhaust temperature at NOx Sensor 1/2 is above 150°C (302°F), and the calculated NOx value is changing.

SET CONDITION:

The Powertrain Control Module detects that the NOx Sensor 1/2 reading is not reading zero during decel condition and zero fueling for two consecutive trips or the PCM has detected that the NOx Sensor 1/2 reading is not changing with engine conditions for two consecutive trips.

POSSIBLE CAUSES

Possible Causes
ENGINE MISFIRE
EXCESSIVE FUEL OR OIL INTRODUCED INTO THE EXHAUST SYSTEM
FAULTY DEF INJECTOR
DIESEL EXHAUST FLUID CRYSTALLIZATION OR DEPOSITS
NOx SENSOR 1/2 DRIFTED OUT OF RANGE

Always perform the Pre-Diagnostic Troubleshooting procedure before proceeding. Refer to PRE-DIAGNOSTIC TROUBLESHOOTING PROCEDURE - 6.7L .

DIAGNOSTIC TEST

1. **ACTIVE DTC**

NOTE: **If DTCs P220B, P229E, or P22A7 are present, perform the diagnostic for those DTCs before continuing with this test procedure. Refer to P220B, P229E, or P22A7.**

1. Start the engine, monitor Exhaust Gas Temperature Sensor 4 until it reaches 150°C (302°F).

2. Drive the vehicle at 50 MPH, ensure that it is not in DPF Regeneration mode.
3. Perform a zero fueling event (decel condition for 10 seconds, with foot off of accelerator pedal).
4. Repeat this condition three to five times.
5. With the scan tool check active DTCs.

   Is the DTC active?

   Yes

   - Go To 2.

   No

   - Perform the INTERMITTENT CONDITION diagnostic procedure. Refer to **INTERMITTENT CONDITION - 6.7L** .

2. **CHECK FOR CYLINDER MISFIRE**
   1. Start the engine.
   2. With the scan tool, navigate to Systems Tests, and perform the Injector Kill System Test.

      Were any cylinders found to be faulty or low?

      Yes

      - Perform the CHECKING ENGINE MISFIRE / RUNS ROUGH / PERFORMANCE TEST diagnostic procedure. Refer to **DIAGNOSIS AND TESTING, 6.7L** .
      - Perform the POWERTRAIN VERIFICATION TEST. Refer to **POWERTRAIN VERIFICATION TEST - 6.7L** .

      No

      - Go To 3.

3. **CHECK FOR EXCESSIVE ENGINE OIL BEING INTRODUCED INTO THE AFTERTREATMENT SYSTEM**
   1. Turn the ignition off.
   2. Remove the turbocharger outlet and inspect for signs of oil, fuel or moisture being introduced into the aftertreatment system from the engine.

      Was engine oil, fuel or moisture found in the turbocharger exhaust outlet?

      Yes

      - Locate the cause of possible diesel fuel or engine oil being carried from the engine into the exhaust system. Inspect the SCR Catalyst for possible damage.
      - Perform the POWERTRAIN VERIFICATION TEST. Refer to **POWERTRAIN**

VERIFICATION TEST - 6.7L .

No

- Go To 4.

4. **CHECK THE DECOMPOSITION TUBE FOR DIESEL EXHAUST FLUID DEPOSITS**
   1. Remove the DEF Injector. Refer to **INJECTOR, DIESEL EXHAUST FLUID, REMOVAL** .
   2. Visually inspect the Decomposition Tube for signs of diesel exhaust fluid crystals or deposits.

      Were any deposits found?

      Yes

      - Remove the crystallization build up.
      - Perform the POWERTRAIN VERIFICATION TEST. Refer to **POWERTRAIN VERIFICATION TEST - 6.7L** .

      No

      - Go To 5.

5. **CHECK THE DEF INJECTOR**
   1. Reconnect the DEF Injector harness connector.
   2. Place the DEF Injector in a container to capture the fluid sprayed.
   3. Turn the ignition on.
   4. With the scan tool, navigate to Systems Tests and actuate the Diesel Exhaust Fluid Doser Pump Override Test.

      NOTE: **This Test will run for six minutes before timing out. The amount of flow may fluctuate through out the test, therefore the test must be allowed to run completely in order for the results to be accurate. The fluid should spray out as a mist. There should be no dripping from the holes in the DEF Injector at any time during the duration of the test procedure.**

   5. Measure the amount of fluid sprayed after the test times out.

      Does the fluid sprayed measure between 85 ml and 115 ml?

      Yes

      - Replace the NOx Sensor 1/2 in accordance with the service information.
      - Perform the POWERTRAIN VERIFICATION TEST. Refer to **POWERTRAIN VERIFICATION TEST - 6.7L** .

No

- Replace the DEF Injector in accordance with the service information. Refer to **INJECTOR, DIESEL EXHAUST FLUID, REMOVAL** .
- Perform the POWERTRAIN VERIFICATION TEST. Refer to **POWERTRAIN VERIFICATION TEST - 6.7L** .

P22A7-NOX SENSOR HEATER CIRCUIT PERFORMANCE - BANK 1 SENSOR 2

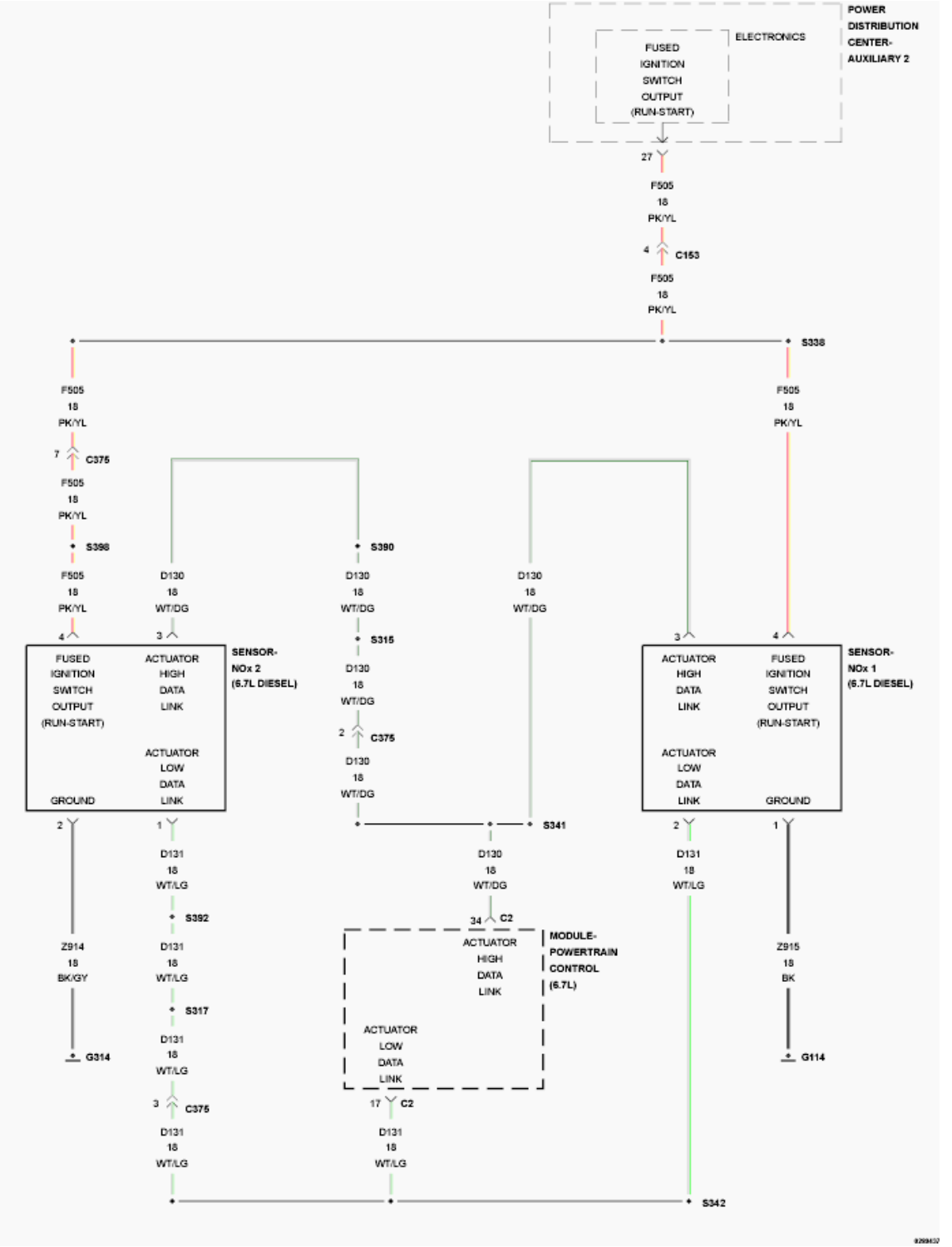

Fig. 23: NOx Sensors Wiring Diagram
Courtesy of CHRYSLER GROUP, LLC

For a complete wiring diagram, **refer to appropriate SYSTEM WIRING DIAGRAMS article** .

THEORY OF OPERATION

The aftertreatment system is equipped with two NOx Sensors and modules. The upstream NOx Sensor 1/1 is located before the SCR Catalyst and is permanently connected to a corresponding NOx Sensor Module mounted on the right frame rail. The downstream NOx Sensor 1/2 is located at the outlet of the SCR Catalyst and is permanently connected to a corresponding NOx Sensor Module also mounted on the right frame rail. The NOx Sensors and NOx Sensor Modules are calibrated to each other and must be replaced as an assembly. The two NOx Sensor and Module assemblies are not interchangeable. The NOx Sensor Modules are smart devices and communicate with the Powertrain Control Module (PCM) over the J1939 Data Link. The NOx Sensor Modules perform their own internal diagnostics and report malfunctions back to the PCM. The NOx Sensors are used to monitor the efficiency of the SCR Catalyst and dosing system. The PCM will illuminate the MIL lamp immediately after the monitor runs and fails. The PCM will turn off the MIL Lamp after the monitor runs and passes for three consecutive trips.

WHEN MONITORED:

When the engine is running and the exhaust temperature at NOx Sensor 1/2 is above 150°C (302°F).

SET CONDITION:

The Powertrain Control Module detects that the NOx Sensor heater is unable to maintain its normal operating temperature.

POSSIBLE CAUSES

Possible Causes
OTHER NOx SENSOR RELATED DTCS
NOx SENSOR 1/2

Always perform the Pre-Diagnostic Troubleshooting procedure before proceeding. Refer to PRE-DIAGNOSTIC TROUBLESHOOTING PROCEDURE - 6.7L .

DIAGNOSTIC TEST

1. **ACTIVE DTC**
    1. Ignition on, engine not running.
    2. With the scan tool check for active DTCs.

       Is the DTC active?

       Yes

       - Replace the NOx Sensor 1/2 in accordance with the service information. Refer to **SENSOR, NOX, REMOVAL** .

       NOTE: **If DTCs P1C56, P220B, P229E, P2470, or P2471 are active, perform the diagnostic for those DTCs before replacing the NOx Sensor. Refer to P1C56 , P220B, P229E, P2470 , or P2471 .**

No

- Perform the INTERMITTENT CONDITION diagnostic procedure. Refer to **INTERMITTENT CONDITION - 6.7L** .

P240F-EGR SLOW RESPONSE

For a complete wiring diagram, **refer to appropriate SYSTEM WIRING DIAGRAMS article** .

THEORY OF OPERATION

The EGR Valve position is monitored by the Powertrain Control Module (PCM). The purpose of this monitor is compare the EGR Valve actual position to position commanded by the PCM. If these values differ by a significant value for an extended period of time in two consecutive drive cycles, the PCM will turn on the MIL Light, and EGR flow will be disabled.

WHEN MONITORED:

Continuously with the ignition on, and no other EGR Valve DTCs present.

SET CONDITION:

The PCM detects a significant difference between the EGR actual position and commanded position for and extended period of time.

POSSIBLE CAUSES

Possible Causes
EGR VALVE FOULED
EGR VALVE

Always perform the Pre-Diagnostic Troubleshooting procedure before proceeding. Refer to PRE-DIAGNOSTIC TROUBLESHOOTING PROCEDURE - 6.7L .

DIAGNOSTIC TEST

1. **CHECK FOR ACTIVE DTC**

NOTE: **If other EGR related DTCs are present and active, repair those DTCs before proceeding.**

1. Start the engine and test drive the vehicle.
2. With the scan tool, View all active DTCs.

Is the DTC Active?

Yes

- Go To 2.

No

- Perform the INTERMITTENT CONDITION diagnostic procedure. Refer to **INTERMITTENT CONDITION - 6.7L** .

2. **CHECK THE EGR VALVE**
    1. With the scan tool, Erase DTCs.
    2. Turn the ignition off.
    3. Remove and clean the EGR valve with Mopar EGR Valve cleaner. Refer to **VALVE, EXHAUST GAS RECIRCULATION (EGR), 6.7L DIESEL, CLEANING** .
    4. Start the engine and test drive the vehicle.
    5. With the scan tool, View DTCs.

    Did the DTCs return?

    Yes

    - Replace the EGR Valve in accordance with the service information. Refer to **VALVE, EXHAUST GAS RECIRCULATION (EGR), 6.7L DIESEL, REMOVAL** .
    - Perform the POWERTRAIN VERIFICATION TEST. Refer to **POWERTRAIN VERIFICATION TEST - 6.7L** .

    No

    - Repair complete.
    - Perform the POWERTRAIN VERIFICATION TEST. Refer to **POWERTRAIN VERIFICATION TEST - 6.7L** .

P242B-EXHAUST GAS TEMP SENSOR CIRCUIT PERFORMANCE - BANK 1 SENSOR 3

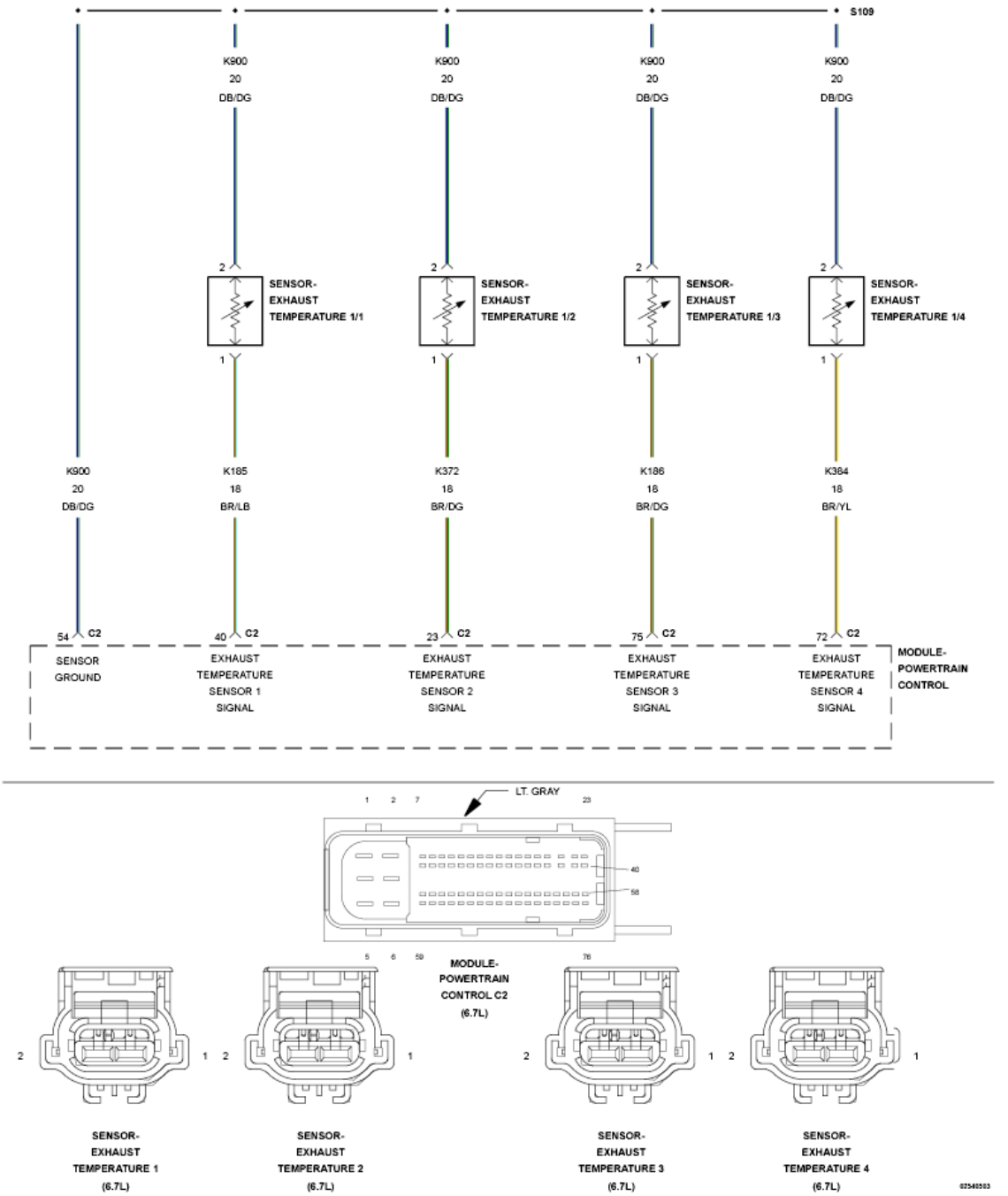

Fig. 24: Exhaust Gas Temperature Sensor Circuit Schematic
Courtesy of CHRYSLER GROUP, LLC

For a complete wiring diagram, **refer to appropriate SYSTEM WIRING DIAGRAMS article** .

THEORY OF OPERATION

The Exhaust Temperature Sensors are used by the Powertrain Control Module (PCM) to monitor the engine exhaust temperatures in the aftertreatment system. The Exhaust Temperature Sensors are thermistors and change resistance based on the temperature being measured. The Exhaust Temperature Sensors receive a 5-Volt

signal from the PCM and share a sensor ground. The PCM monitors the change in signal voltage and converts this to a temperature value. The PCM illuminates the MIL lamp when the monitor runs and fails in two consecutive trips. A default value will be used for the Exhaust Temperature Sensor 1/3 and active regeneration of the Diesel Particulate Filter will be disabled. The PCM will turn off the MIL lamp immediately after the diagnostic runs and passes. The PCM will turn off the MIL light immediately after the diagnostic runs and passes in four consecutive drive cycles.

WHEN MONITORED:

With the engine running.

SET CONDITION:

The Powertrain Control Module (PCM) detects that the Exhaust Temperature Sensor 1/3 reading is not increasing with engine operating temperature after engine startup.

POSSIBLE CAUSES

Possible Causes
EXHAUST TEMPERATURE SENSOR

Always perform the Pre-Diagnostic Troubleshooting procedure before proceeding. Refer to PRE-DIAGNOSTIC TROUBLESHOOTING PROCEDURE - 6.7L .

DIAGNOSTIC TEST

1. **OTHER DTCS PRESENT**
    1. Turn the ignition on.
    2. With the scan tool, read DTCs.

       Are either of the Exhaust Temperature Sensor 1/3 Low or High DTCs present?

       Yes

       - Repair the other DTCs before proceeding.
       - Perform the POWERTRAIN VERIFICATION TEST. Refer to **POWERTRAIN VERIFICATION TEST - 6.7L** .

       No

       - Go To 2.
2. **EXHAUST TEMPERATURE SENSOR 1/3**
    1. Remove the Exhaust Temperature Sensor 1/3 and reconnect the harness connector to the sensor. Monitor the scan tool, while heating the sensor with an external heat source (DO NOT USE OPEN FLAME).

Does the reading from the sensor increase at least 5°F on the scan tool?

Yes

- Perform the INTERMITTENT CONDITION diagnostic procedure. Refer to **INTERMITTENT CONDITION - 6.7L** .

No

- Replace the Exhaust Temperature Sensor 1/3 in accordance with the service information.
- Perform the POWERTRAIN VERIFICATION TEST. Refer to **POWERTRAIN VERIFICATION TEST - 6.7L** .

P242C-EXHAUST GAS TEMPERATURE SENSOR CIRCUIT LOW- BANK 1 SENSOR 3

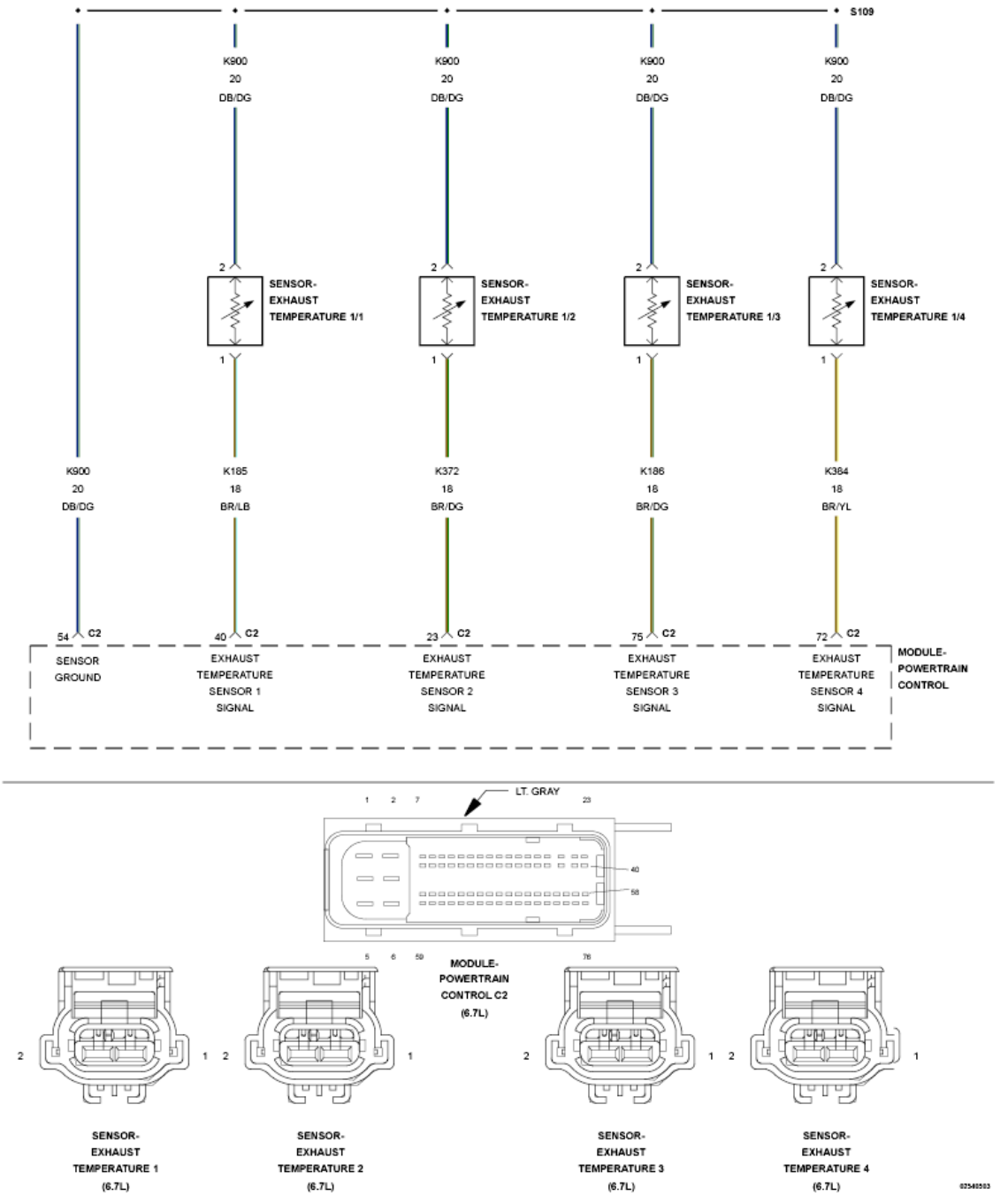

Fig. 25: Exhaust Gas Temperature Sensor Circuit Schematic
Courtesy of CHRYSLER GROUP, LLC

For a complete wiring diagram, **refer to appropriate SYSTEM WIRING DIAGRAMS article** .

THEORY OF OPERATION

The Exhaust Temperature Sensors are used by the Powertrain Control Module (PCM) to monitor the engine exhaust temperatures in the aftertreatment system. The Exhaust Temperature Sensors are thermistors and change resistance based on the temperature being measured. The Exhaust Temperature Sensors receive a 5-Volt

signal from the PCM and share a sensor ground. The PCM monitors the change in signal voltage and converts this to a temperature value. The PCM illuminates the MIL lamp when the monitor runs and fails in two consecutive trips. A default value will be used for the Exhaust Temperature Sensor 1/3 and active regeneration of the Diesel Particulate Filter will be disabled. The PCM will turn off the MIL lamp immediately after the diagnostic runs and passes. The PCM will turn off the MIL light immediately after the diagnostic runs and passes in four consecutive drive cycles.

WHEN MONITORED:

with the ignition on.

SET CONDITION:

The Exhaust Temperature Sensor Signal 1/3 circuit is below 0.08 Volts for two seconds.

POSSIBLE CAUSES

Possible Causes
(K186) EXHAUST GAS TEMPERATURE 1/3 SENSOR SIGNAL CIRCUIT SHORTED TO GROUND
(K186) EXHAUST GAS TEMPERATURE 1/3 SENSOR SIGNAL CIRCUIT SHORTED TO THE (K900) SENSOR GROUND CIRCUIT
EXHAUST GAS TEMPERATURE 1/3 SENSOR
POWERTRAIN CONTROL MODULE (PCM)

Always perform the Pre-Diagnostic Troubleshooting procedure before proceeding. Refer to PRE-DIAGNOSTIC TROUBLESHOOTING PROCEDURE - 6.7L .

DIAGNOSTIC TEST

1. **ACTIVE DTC**
    1. Turn the ignition on.
    2. With the scan tool, record all Freeze frame data.
    3. With the scan tool, erase DTCs.
    4. Turn the ignition off for 75 seconds.
    5. Turn the ignition on.
    6. With the scan tool, read DTCs.

    Did the DTC reset?

    Yes

    - Go To 2.

    No

- Perform the INTERMITTENT CONDITION diagnostic procedure. Refer to **INTERMITTENT CONDITION - 6.7L** .

2. **CHECK THE (K186) EXHAUST TEMPERATURE 1/3 SIGNAL CIRCUIT FOR A SHORT TO GROUND**

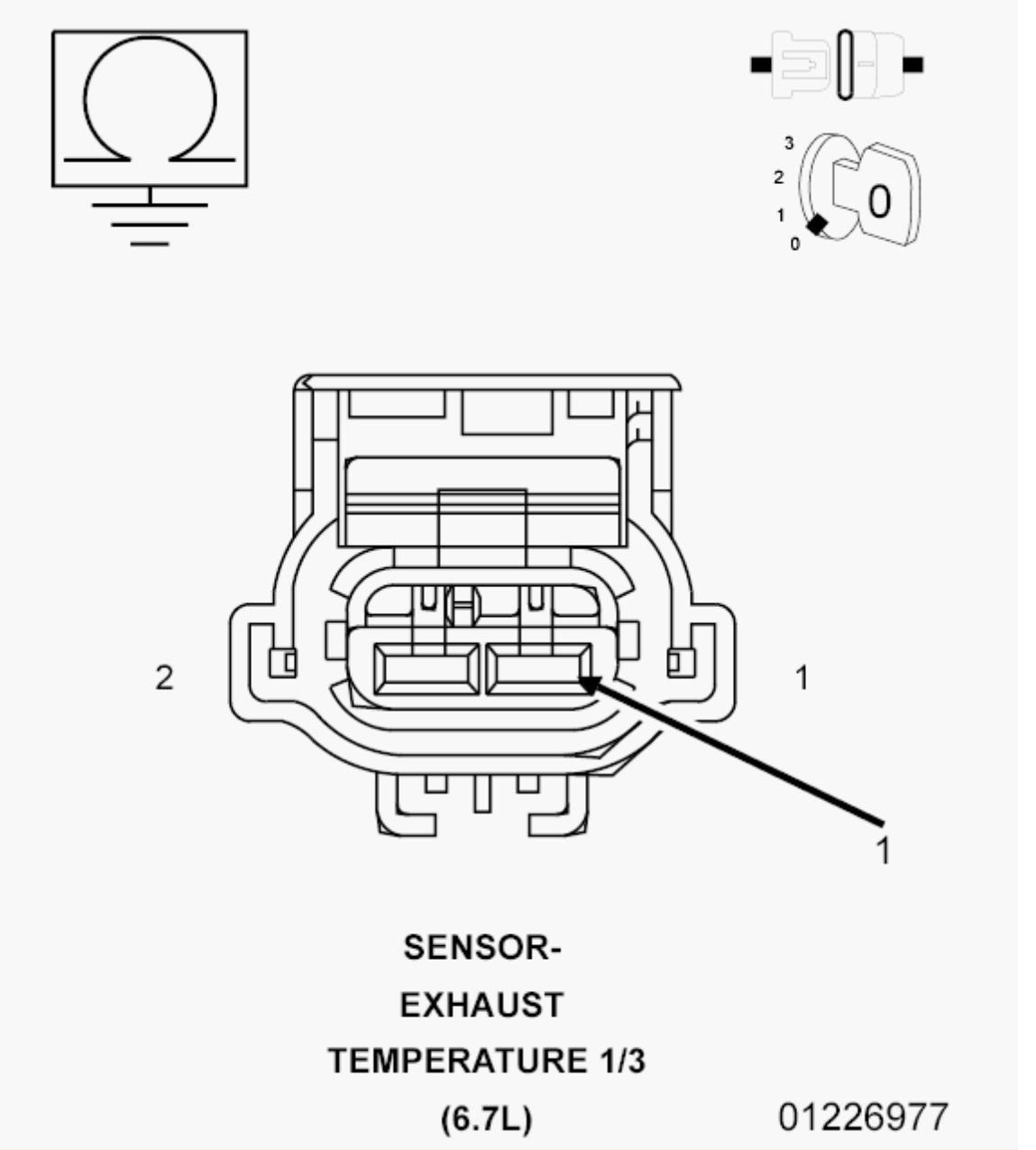

Fig. 26: Checking Exhaust Temperature 1/3 Signal Circuit For Short To Ground
Courtesy of CHRYSLER GROUP, LLC

1. Turn the ignition off.
2. Disconnect the Exhaust Gas Temperature Sensor 1/3 harness connector.
3. Disconnect the PCM C2 harness connector.

4. Measure the resistance between ground and the (K186) Exhaust Gas Temperature Sensor 1/2 Signal circuit at the sensor Exhaust Gas Temperature 1/2 harness connector.

   Is the resistance below 10k Ohms?

   Yes

   - Go To 3.

   No

   - Repair the (K186) Exhaust Gas Temperature Sensor 1/2 Signal circuit for a short to ground.
   - Perform the POWERTRAIN VERIFICATION TEST. Refer to **POWERTRAIN VERIFICATION TEST - 6.7L** .

3. **CHECK FOR THE (K186) EXHAUST TEMPERATURE 1/3 SIGNAL CIRCUIT SHORTED TO THE (K900) SENSOR GROUND**

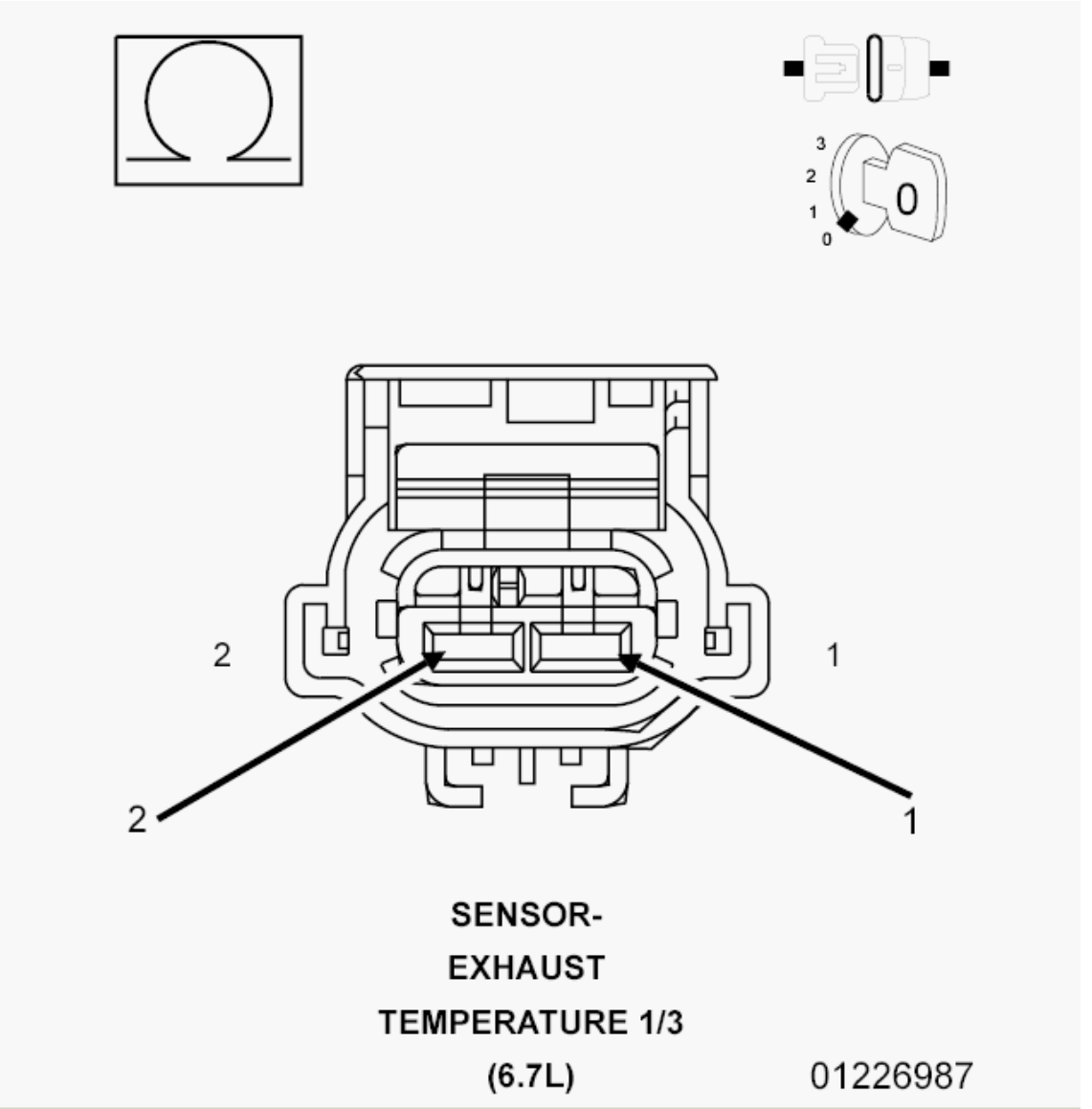

Fig. 27: Checking Exhaust Temperature 1/3 Signal Circuit For Short To Sensor Ground
Courtesy of CHRYSLER GROUP, LLC

1. Measure the resistance between the (K186) Exhaust Gas Temperature Sensor 1/3 Signal circuit and (K900) Sensor Ground circuit at the Exhaust Gas Temperature Sensor 1/3 harness connector.

   Is the resistance below 10k Ohms?

   Yes

   - Repair the short between the (K186) Exhaust Gas Temperature Sensor 1/3 Signal circuit and (K900) Sensor Ground circuit.
   - Perform the POWERTRAIN VERIFICATION TEST. Refer to **POWERTRAIN VERIFICATION TEST - 6.7L** .

No

- Go To 4.

4. **CHECK THE EXHAUST GAS TEMPERATURE SENSOR**
    1. Reconnect the Exhaust Gas Temperature Sensor 1/3 harness connector.
    2. Reconnect the PCM C2 harness connector.
    3. Turn the ignition on.
    4. With the scan tool, erase DTCs.
    5. Turn the ignition off for 75 seconds.
    6. Disconnect the Exhaust Gas Temperature Sensor 1/3 harness connector.
    7. Turn the ignition on.
    8. With the scan tool, read DTCs.

    Does the DTC P242D become active?

    Yes

    - Replace the Exhaust Gas Temperature Sensor 1/3 in accordance with the service information.
    - Perform the POWERTRAIN VERIFICATION TEST. Refer to **POWERTRAIN VERIFICATION TEST - 6.7L** .

    No

    - Replace the Powertrain Control Module in accordance with the service information.
    - Perform the POWERTRAIN VERIFICATION TEST. Refer to **POWERTRAIN VERIFICATION TEST - 6.7L** .

P242D-EXHAUST GAS TEMPERATURE SENSOR CIRCUIT HIGH - BANK 1 SENSOR 3

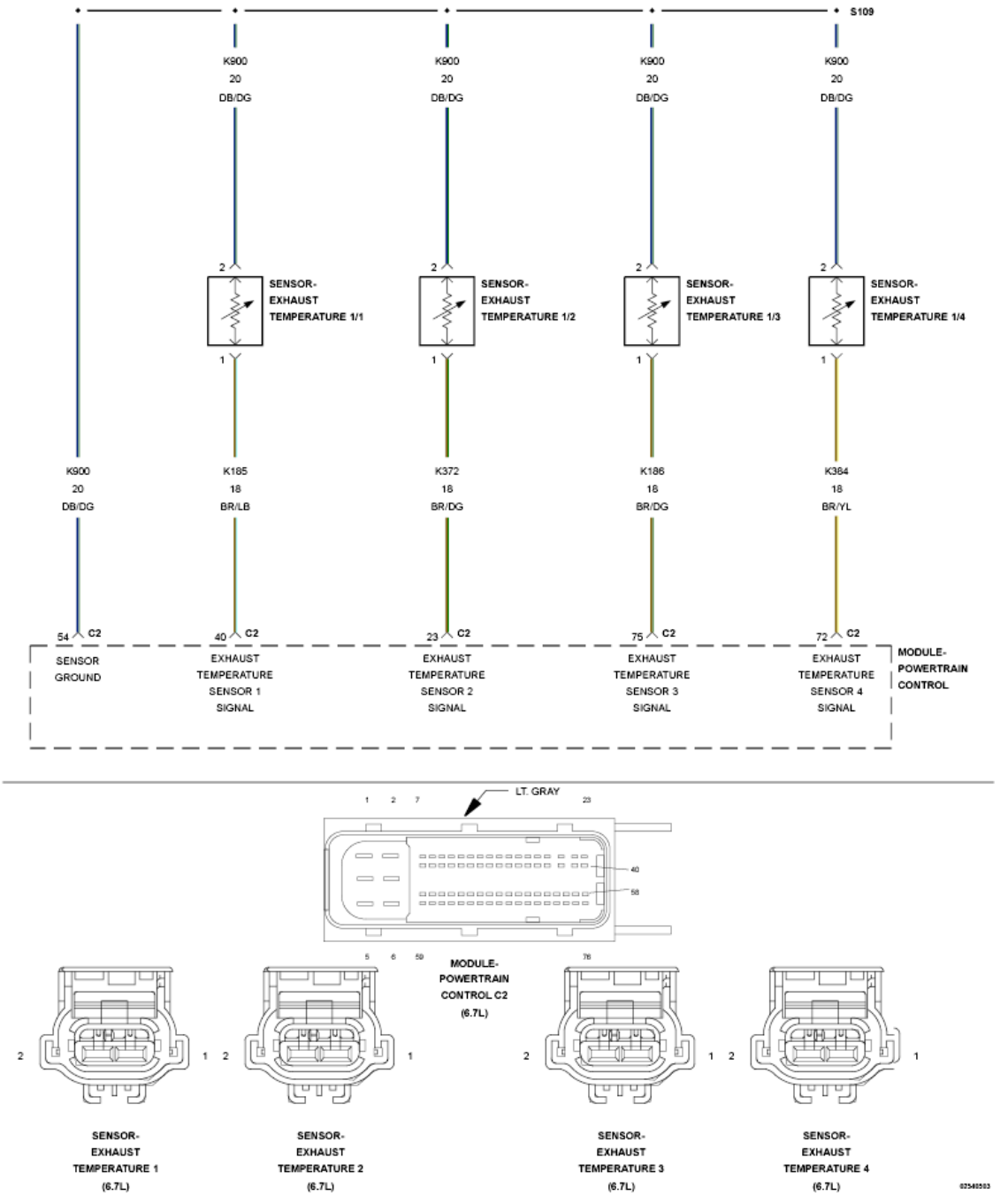

Fig. 28: Exhaust Gas Temperature Sensor Circuit Schematic
Courtesy of CHRYSLER GROUP, LLC

For a complete wiring diagram, **refer to appropriate SYSTEM WIRING DIAGRAMS article** .

THEORY OF OPERATION

The Exhaust Temperature Sensors are used by the Powertrain Control Module (PCM) to monitor the engine exhaust temperatures in the aftertreatment system. The Exhaust Temperature Sensors are thermistors and change resistance based on the temperature being measured. The Exhaust Temperature Sensors receive a 5-Volt

signal from the PCM and share a sensor ground. The PCM monitors the change in signal voltage and converts this to a temperature value. The PCM illuminates the MIL lamp when the monitor runs and fails in two consecutive trips. A default value will be used for the Exhaust Temperature Sensor 1/3 and active regeneration of the Diesel Particulate Filter will be disabled. The PCM will turn off the MIL lamp immediately after the diagnostic runs and passes. The PCM will turn off the MIL light immediately after the diagnostic runs and passes in four consecutive drive cycles.

WHEN MONITORED:

With the ignition on.

SET CONDITION:

The Powertrain Control Module (PCM) will set the fault if it detects that the Exhaust Temperature Sensor 1/3 Signal voltage is above 4.88 Volts for two seconds.

POSSIBLE CAUSES

Possible Causes
(K186) EXHAUST GAS TEMPERATURE SENSOR 1/3 SIGNAL CIRCUIT SHORTED TO VOLTAGE
(K186) EXHAUST GAS TEMPERATURE SENSOR 1/3 SIGNAL CIRCUIT OPEN/HIGH RESISTANCE
(K900) SENSOR GROUND CIRCUIT OPEN/HIGH RESISTANCE
EXHAUST GAS TEMPERATURE SENSOR
EXTREME COLD AMBIENT TEMPERATURE AT ENGINE START UP
POWERTRAIN CONTROL MODULE (PCM)

Always perform the Pre-Diagnostic Troubleshooting procedure before proceeding. Refer to PRE-DIAGNOSTIC TROUBLESHOOTING PROCEDURE - 6.7L .

DIAGNOSTIC TEST

1. **ACTIVE DTC**
    1. Turn the ignition on.
    2. With the scan tool, record all Freeze frame data.
    3. With the scan tool, erase DTCs.
    4. Turn the ignition off for 75 seconds.
    5. Turn the ignition on.
    6. With the scan tool, read DTCs.

    Did the DTC reset?

    Yes

- Go To 2.

No

- Perform the INTERMITTENT CONDITION diagnostic procedure. Refer to **INTERMITTENT CONDITION - 6.7L** .

2. **CHECK THE (K186) EXHAUST GAS TEMPERATURE 1/3 SIGNAL CIRCUIT FOR A SHORT TO VOLTAGE**

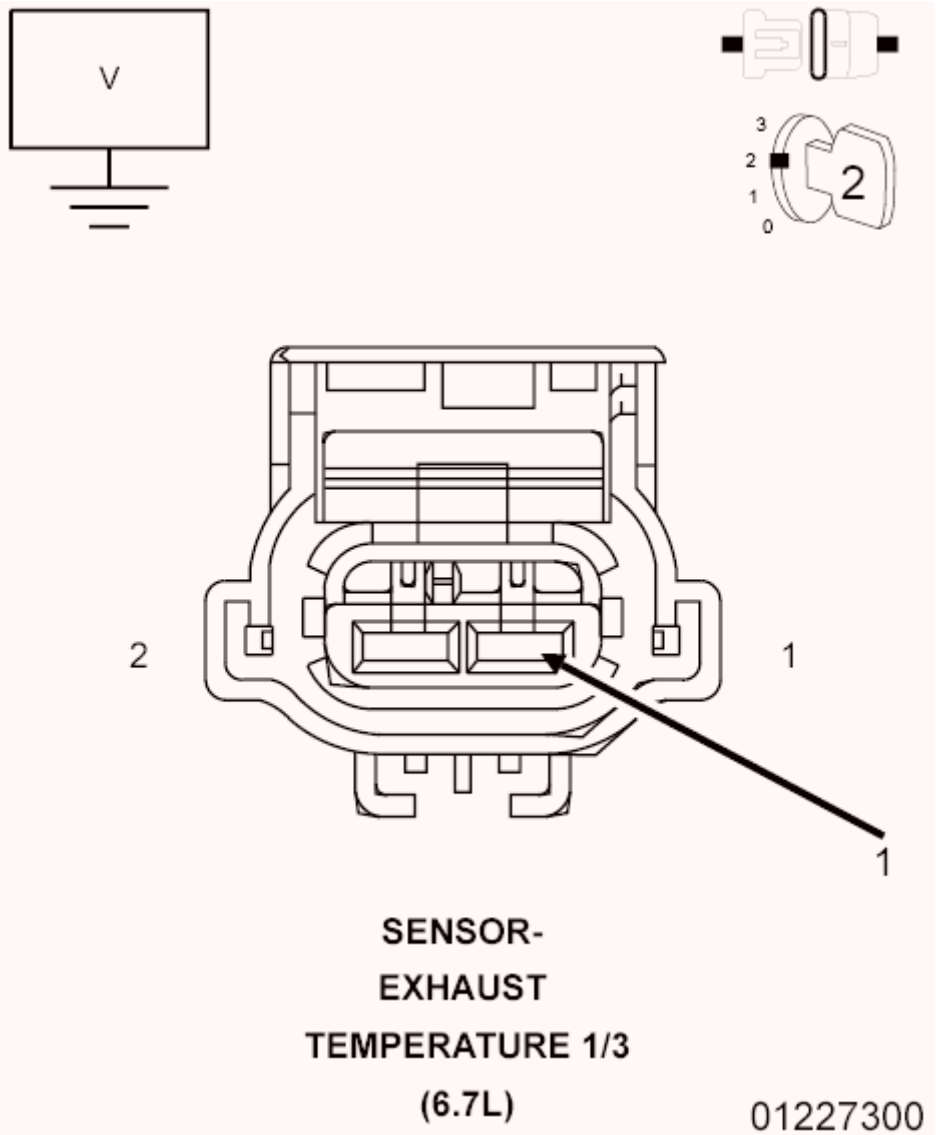

Fig. 29: Checking Exhaust Gas Temperature 1/3 Signal Circuit For Short To Voltage
Courtesy of CHRYSLER GROUP, LLC

1. Ignition on.
2. Disconnect the Exhaust Temperature Sensor 1/3 harness connector.

NOTE: Check connectors - Clean/repair as necessary.

3. Measure the voltage on the (K186) Exhaust Gas Temperature Sensor 1/3 Signal circuit at the Exhaust Temperature Sensor 1/3 harness connector.

   Is the voltage reading above 5.2 volts?

   Yes

   - Repair the (K186) Exhaust Gas Temperature Sensor 1/3 Signal circuit for a short to voltage.
   - Perform the POWERTRAIN VERIFICATION TEST. Refer to **POWERTRAIN VERIFICATION TEST - 6.7L** .

   No

   - Go To 3.

3. **CHECK THE (K186) EXHAUST GAS TEMPERATURE 1/3 SIGNAL CIRCUIT FOR AN OPEN/HIGH RESISTANCE**

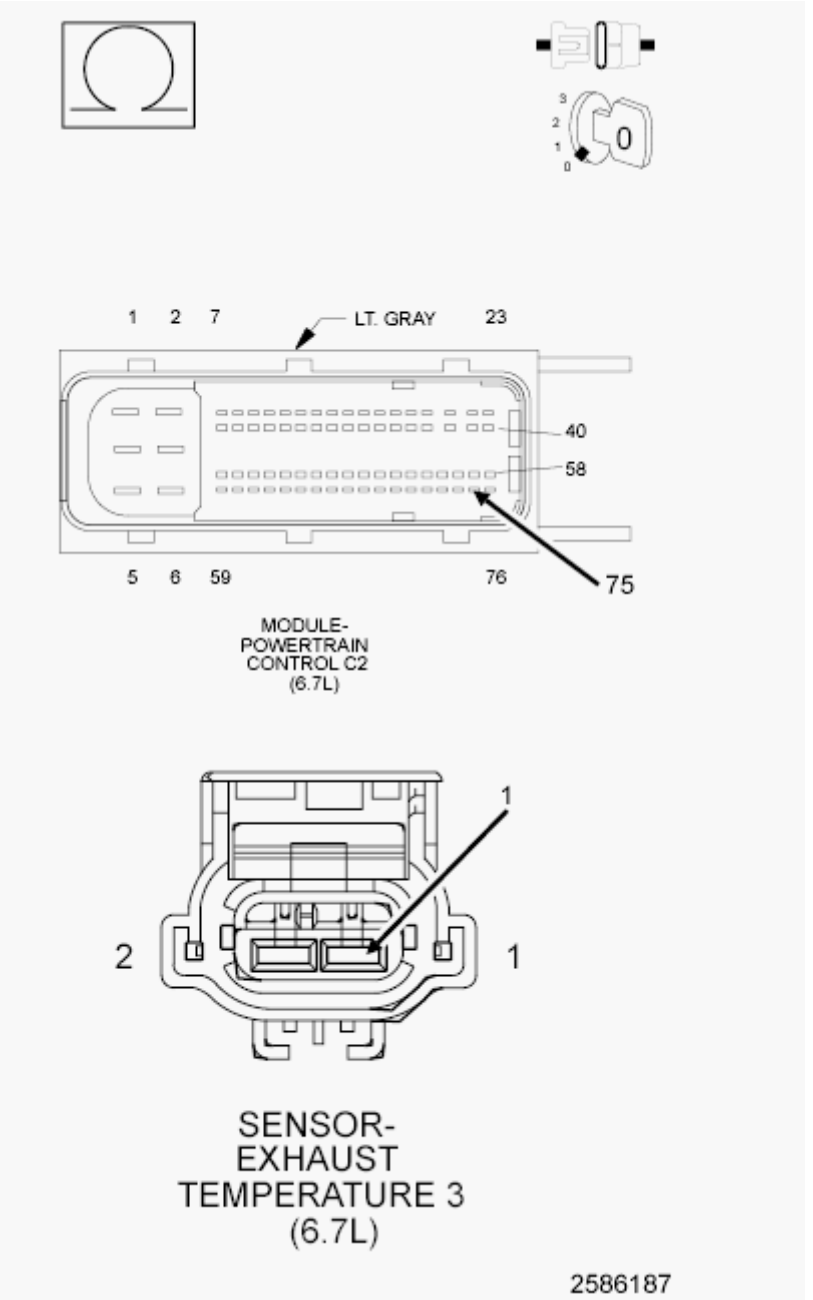

Fig. 30: Checking Exhaust Gas Temperature 1/3 Signal Circuit For Open Or High Resistance
Courtesy of CHRYSLER GROUP, LLC

1. Turn the ignition off.
2. Disconnect the PCM C2 harness connector.
3. Measure the resistance of the (K186) Exhaust Gas Temperature Sensor 1/3 Signal circuit between the Exhaust Gas Temperature Sensor 1/3 harness connector and the PCM C2 harness connector.

   Is the resistance below 5.0 Ohms?

   Yes

- Go To 4.

No

- Repair the (K186) Exhaust Temperature 1/3 Signal circuit for an open or high resistance.
- Perform the POWERTRAIN VERIFICATION TEST. Refer to **POWERTRAIN VERIFICATION TEST - 6.7L** .

4. **CHECK THE (K900) SENSOR GROUND CIRCUIT FOR AN OPEN/HIGH RESISTANCE**

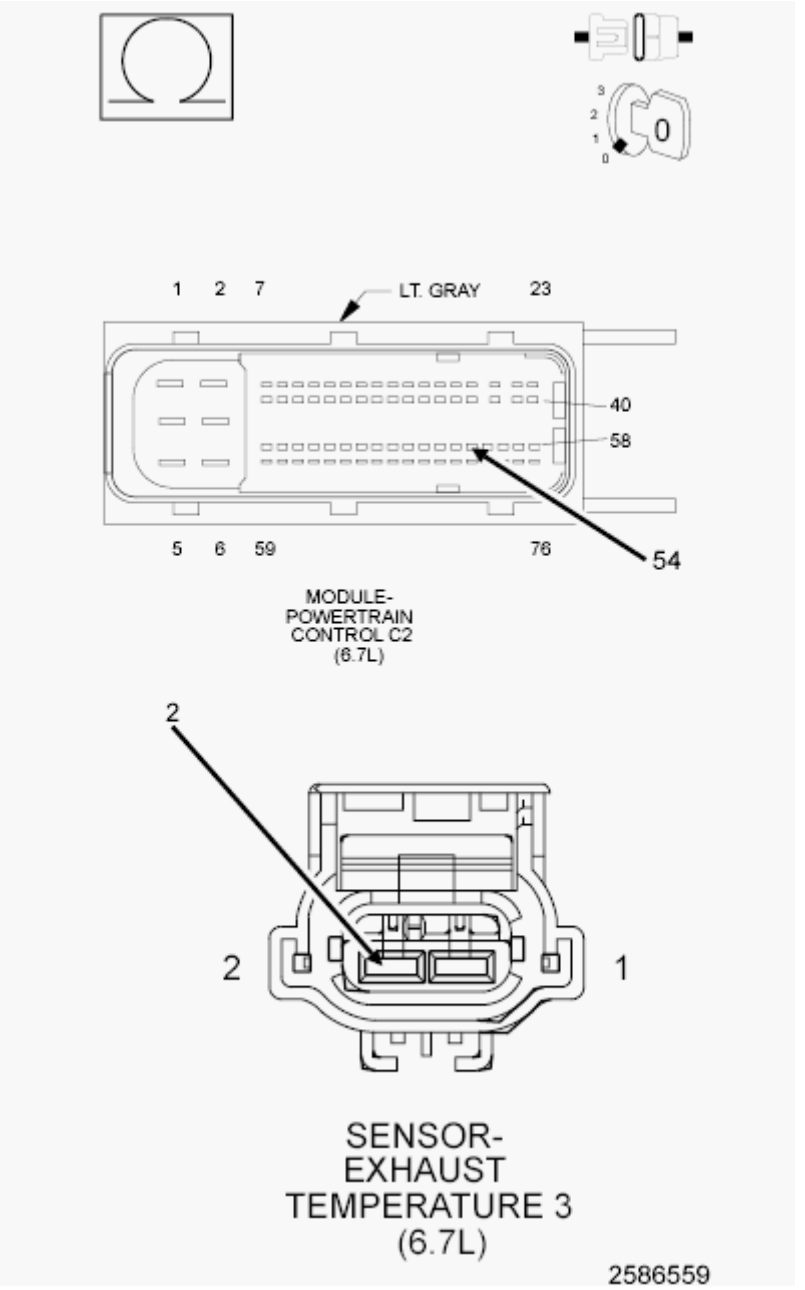

Fig. 31: Checking Exhaust Gas Temperature Sensor Ground Circuit For Open Or High Resistance
Courtesy of CHRYSLER GROUP, LLC

1. Measure the resistance of the (K900) Sensor ground circuit between the Exhaust Gas Temperature Sensor 1/3 harness connector and the PCM C2 harness connector.

   Is the resistance below 5.0 Ohms?

   Yes

   - Go To 5.

   No

   - Repair the (K900) Sensor ground circuit for an open or high resistance.
   - Perform the POWERTRAIN VERIFICATION TEST. Refer to **POWERTRAIN VERIFICATION TEST - 6.7L** .

5. **CHECK THE EXHAUST GAS TEMPERATURE SENSOR**
   1. Turn the ignition on.
   2. While monitoring the scan tool, connect a jumper across the Exhaust Gas Temperature Sensor 1/3 connector for at least five seconds.

      Does the DTC P242C become active?

      Yes

      - Replace the Exhaust Gas Temperature Sensor 1/3 in accordance with the service information.
      - Perform the POWERTRAIN VERIFICATION TEST. Refer to **POWERTRAIN VERIFICATION TEST - 6.7L** .

      No

      - Replace the Powertrain Control Module (PCM) in accordance with the service information.
      - Perform the POWERTRAIN VERIFICATION TEST. Refer to **POWERTRAIN VERIFICATION TEST - 6.7L** .

P242F-DIESEL PARTICULATE FILTER RESTRICTION - ASH ACCUMULATION

For a complete wiring diagram, **refer to appropriate SYSTEM WIRING DIAGRAMS article** .

THEORY OF OPERATION

The engine aftertreatment system monitors the soot load in the Diesel Particulate Filter. Under normal operating conditions, the Diesel Particulate Filter is self-cleaning, where soot is converted to ash. Under light load operating conditions, the driver may be notified via the vehicle's EVIC message center that it may be necessary to modify the vehicles driving routine in order to allow the Diesel Particulate Filter system to self clean. If the vehicle's EVIC message center notification is ignored, the vehicle will eventually de-rate the engine and set a DTC and MIL lamp, requiring service. The soot load in the Diesel Particulate Filter is estimated using the Exhaust Differential Pressure Sensor and the calculated soot output of the engine. This fault code can be

triggered if the application is not operating at a duty cycle high enough to actively regenerate the Diesel Particulate Filter. This fault code indicates that the exhaust temperatures exiting the Turbocharger are not high enough to actively regenerate the soot that is trapped in the Diesel Particulate Filter. It may be necessary to increase the duty cycle of the application in order to prevent plugging of the Diesel Particulate Filter. This fault will be triggered if the Powertrain Control Module (PCM) detects that the soot load of the Diesel Particulate Filter has surpassed the most severe level threshold. The PCM will illuminate the MIL lamp immediately when the diagnostic runs and fails. The driver will be notified via the vehicle's EVIC Message Center (CATALYST FULL: SERVICE REQD). The Powertrain Control Module (PCM) will also initiate a de-rate of engine power output in an effort to protect the vehicle aftertreatment system. The PCM will turn off the MIL lamp immediately after the soot load in the Diesel Particulate Filter has dropped below the severe level threshold and the DTC has been cleared.

WHEN MONITORED:

The diagnostic runs continuously when the engine is running.

SET CONDITION:

The Powertrain Control Module (PCM) detects that the ash load of the Diesel Particulate Filter has surpassed the most severe level threshold.

POSSIBLE CAUSES

Possible Causes
PROGRESSIVE DAMAGE TO THE AFTERTREATMENT SYSTEM FROM AN ENGINE FAILURE, INCLUDING BUT NOT LIMITED TO EXCESSIVE FUEL, OIL OR COOLANT IN THE AFTERTREATMENT SYSTEM MAY CONTRIBUTE TO A HIGH PRESSURE RELATED FAULT.
DIESEL PARTICULATE FILTER COULD BE PLUGGED WITH ACCUMULATED ASH.
OPERATING IN LIGHT LOAD CONDITIONS THAT PREVENT EXHAUST TEMPERATURES FROM BEING HIGH ENOUGH TO ACTIVELY REGENERATE THE DIESEL PARTICULATE FILTER.
TEMPERATURE SENSOR(S) FAILED IN-RANGE

Always perform the Pre-Diagnostic Troubleshooting procedure before proceeding. Refer to PRE-DIAGNOSTIC TROUBLESHOOTING PROCEDURE - 6.7L .

DIAGNOSTIC TEST

1. **INSPECT THE AFTERTREATMENT SYSTEM**

NOTE: **If there are any DTCs present for the Exhaust Temperature Sensors or Exhaust Differential Pressure Sensor, diagnose those DTCs before proceeding with this test procedure.**

NOTE: **DTC P242F is usually the result of a driveability or fuel system failure. This DTC indicates that the Diesel Particulate Filter may either be face plugged**

or filled with ash. If there are any other DTCs or driveability concerns present with this DTC, diagnose and repair those concerns before continuing with this test procedure. Not repairing the cause of the excess soot being generated will cause the Diesel Particulate Filter to fill with soot too often and fail prematurely.

1. Perform the AFTERTREATMENT INSPECTION GUIDELINE - 6.7L procedure. Refer to **DIAGNOSIS AND TESTING, 6.7L** .

   Was any internal damage found in the Diesel Particulate Filter?

   Yes

   - Replace the Diesel Particulate Filter and reset the regenerative timers with the scan tool. Remove and clean the EGR Valve. Refer to **VALVE, EXHAUST GAS RECIRCULATION (EGR), 6.7L DIESEL, CLEANING** . Perform the CHECKING ENGINE MISFIRE / RUNS ROUGH / PERFORMANCE test procedure. Refer to **DIAGNOSIS AND TESTING, 6.7L** .
   - Perform the DIESEL AFTERTREATMENT VALIDATION - 6.7L. Refer to **DIESEL AFTERTREATMENT VALIDATION- 6.7L** .

   No

   - Go To 2.

2. **VERIFY THE ESTIMATED SOOT LOAD**
   1. Ignition on, engine not running.
   2. With the scan tool, navigate to Data Display and read the Estimated Soot Load.

      Is the Estimated Soot Load Based on Delta Pressure above 37.0 grams (pick-up) 57.0 grams (cab chassis)?

      Yes

      - Go To 3.

      No

      - Erase DTCs and reset the regenerative timers with the scan tool.
      - Perform the DIESEL AFTERTREATMENT VALIDATION - 6.7L. Refer to **DIESEL AFTERTREATMENT VALIDATION- 6.7L** .

3. **CHECK FOR THE ESTIMATED SOOT LOAD ABOVE MAX SOOT LOAD**
   1. Ignition on, engine not running.
   2. With the scan tool, navigate to Data Display and read the Estimated Soot Load.

      Is the Estimated Soot Load Based on Delta Pressure above 75.0 grams (pick-up) 92.0 grams (cab

chassis)?

Yes

- Replace the Diesel Particulate Filter.
- Perform the DIESEL AFTERTREATMENT VALIDATION - 6.7L. Refer to **DIESEL AFTERTREATMENT VALIDATION- 6.7L** .

No

- Go To 4.

4. **STATIONERY REGENERATION**
   1. With the scan tool, erase DTCs, reset regenerative filter timers, and drive vehicle until P1451 resets (this will allow you to perform a stationary Desoot).

      NOTE: The vehicle will not allow the Stationery Desoot to run if the P242F DTC sets. For this reason, test drive the vehicle as close to the shop as possible in order to get back to the shop before the P242F DTC can set.

   2. Perform the scan tool initiated Stationary Desoot.
   3. After the Stationary Desoot is completed, erase the DTCs with the scan tool.
   4. Perform the DIESEL AFTERTREATMENT VALIDATION - 6.7L. Refer to **DIESEL AFTERTREATMENT VALIDATION- 6.7L** .

      Did a P1451, P2463, or P242F DTC set during the validation?

      Yes

      - Perform the CHECKING ENGINE MISFIRE / RUNS ROUGH / POOR PERFORMANCE test procedure. Refer to **DIAGNOSIS AND TESTING, 6.7L** .

      No

      - Repair complete.

P244A-DIESEL PARTICULATE FILTER DIFFERENTIAL PRESSURE TOO LOW

For a complete wiring diagram, **refer to appropriate SYSTEM WIRING DIAGRAMS article** .

THEORY OF OPERATION

This diagnostic checks to make sure that the Diesel Particulate Filter is present and functioning correctly. The Powertrain Control Module (PCM) uses the Exhaust Differential Pressure Sensor to monitor the pressure differential through the Diesel Particulate Filter. The PCM will set the fault if it detects that the Diesel Particulate Filter is not present in the aftertreatment/exhaust system. This DTC is a two trip fault. Active

regeneration of the Diesel Particulate Filter will be disabled. The PCM will turn off the MIL lamp immediately after the diagnostic runs and passes.

WHEN MONITORED:

This diagnostic runs when the engine is running, but not during active regeneration of the Diesel Particulate Filter.

SET CONDITION:

The Powertrain Control Module (PCM) will set the fault if it detects that the Diesel Particulate Filter is not present in the aftertreatment/exhaust system.

POSSIBLE CAUSES

Possible Causes
DIESEL PARTICULATE FILTER HAS BEEN REMOVED FROM THE VEHICLE
EXHAUST DIFFERENTIAL PRESSURE SENSOR TUBES ARE REVERSED AT THE DIESEL PARTICULATE FILTER
EXHAUST SYSTEM LEAK
DIESEL PARTICULATE FILTER IS CRACKED OR BROKEN INTERNALLY
EXHAUST DIFFERENTIAL PRESSURE SENSOR FAILED IN-RANGE

Always perform the Pre-Diagnostic Troubleshooting procedure before proceeding. Refer to PRE-DIAGNOSTIC TROUBLESHOOTING PROCEDURE - 6.7L .

DIAGNOSTIC TEST

1. **VISUAL INSPECTION**
    1. Inspect that the Diesel Particulate Filter has not been tampered with or removed.

       Tampering or removal of the aftertreatment system has been detected?

       Yes

       - Install the correct aftertreatment system for the vehicle.
       - Perform the DIESEL AFTERTREATMENT VALIDATION - 6.7L procedure. Refer to **DIESEL AFTERTREATMENT VALIDATION- 6.7L** .

       No

       - Go To 2.
2. **CHECK FOR THE DIESEL PARTICULATE FILTER DIFFERENTIAL PRESSURE HOSES REVERSED**
    1. Start the engine.

2. With the scan tool, monitor the soot filter delta pressure reading.
3. The delta pressure should have a positive pressure reading. A negative reading indicates the hoses are reversed.

   Is the Exhaust Differential Pressure Sensor reading a positive value?

   Yes

   - Go To 3.

   No

   - Reverse the Exhaust Differential Pressure Sensor hoses.
   - Perform the DIESEL AFTERTREATMENT VALIDATION - 6.7L procedure. Refer to **DIESEL AFTERTREATMENT VALIDATION- 6.7L** .

3. **CHECK FOR AN EXHAUST SYSTEM LEAK**
   1. Turn the ignition off.
   2. Perform the CHECKING THE EXHAUST SYSTEM FOR LEAKS diagnostic procedure. Refer to **DIAGNOSIS AND TESTING, 6.7L** .

      Were any exhaust leaks found?

      Yes

      - Repair the Exhaust System leak.
      - Perform the DIESEL AFTERTREATMENT VALIDATION - 6.7L procedure. Refer to **DIESEL AFTERTREATMENT VALIDATION- 6.7L** .

      No

      - Go To 4.

4. **PERFORM THE AFTERTREATMENT SYSTEM INSPECTION**
   1. Perform the AFTERTREATMENT INSPECTION GUIDELINE - 6.7L procedure. Refer to **DIAGNOSIS AND TESTING, 6.7L** .

      Does aftertreatment Diesel Particulate Filter show evidence of failure?

      Yes

      - Replace the Diesel Particulate Filter in accordance with the service information.
      - Perform the DIESEL AFTERTREATMENT VALIDATION - 6.7L procedure. Refer to **DIESEL AFTERTREATMENT VALIDATION- 6.7L** .

      No

- Replace the Exhaust Differential Pressure Sensor in accordance with the service information.
- Perform the DIESEL AFTERTREATMENT VALIDATION - 6.7L procedure. Refer to **DIESEL AFTERTREATMENT VALIDATION- 6.7L** .

P244D-EXHAUST TEMPERATURE TOO HIGH FOR PARTICULATE FILTER REGENERATION

For a complete wiring diagram, **refer to appropriate SYSTEM WIRING DIAGRAMS article** .

THEORY OF OPERATION

The Exhaust Temperature Sensors are used by the Powertrain Control Module (PCM) to monitor the engine exhaust temperatures in the aftertreatment system. The Exhaust Temperature Sensors are thermistors and change resistance based on the temperature being measured. The PCM provides a 5-Volt reference voltage to the sensor. The PCM monitors the voltage on the signal pin and converts this to a temperature value. When the exhaust gas temperature is cold, the sensor or thermistor resistance is high. The PCM signal voltage only pulls down a small amount through the sensor to ground. Therefore, the PCM senses a high signal voltage or low temperature. When the exhaust gas temperature is hot, the sensor resistance is low. The signal voltage pulls down a large amount. Therefore, the PCM senses a low signal voltage, or a high temperature. The PCM will illuminate the MIL lamp immediately when the diagnostic runs and fails. Active regeneration of the aftertreatment particulate filter will be disabled. This DTC fault is latched when set and can only be cleared by a scan tool.

WHEN MONITORED:

The monitor runs continuously when the engine is running.

SET CONDITION:

The Powertrain Control Module (PCM) detects that the Exhaust Temperature is greater than a calibrated temperature for a calibrated period of time.

POSSIBLE CAUSES

Possible Causes
EXCESSIVE FUEL ENTERING THE AFTERTREATMENT/EXHAUST SYSTEM
EXHAUST TEMPERATURE SENSOR FAILED IN-RANGE
EXCESSIVE ENGINE OIL BEING INTRODUCED INTO THE AFTERTREATMENT SYSTEM FROM THE ENGINE

Always perform the Pre-Diagnostic Troubleshooting procedure before proceeding. Refer to PRE-DIAGNOSTIC TROUBLESHOOTING PROCEDURE - 6.7L .

DIAGNOSTIC TEST

1. **FUEL INJECTOR**
    1. Ignition on, engine not running.

2. With the scan tool, read DTCs.

   Are any fuel injector DTCs Active?

   Yes

   - Repair any fuel injector DTCs before continuing.
   - Perform the POWERTRAIN VERIFICATION TEST. Refer to **POWERTRAIN VERIFICATION TEST - 6.7L** .

   No

   - Go To 2.

2. **EXHAUST TEMPERATURE**
   1. With the scan tool, read the Exhaust Temperature Sensors to determine the exhaust temperature.

      Is the temperature reading above 225°F?

      Yes

      - Go To 3.

      No

      - Go To 4.

3. **EXHAUST TEMPERATURE SENSORS**
   1. Start the engine.
   2. Raise the engine speed to 2500 RPMs for two minutes.

      Do the temperature readings of the Exhaust Temperature Sensors change in value at least 5°F?

      Yes

      - Go To 5.

      No

      - Replace the Exhaust Temperature Sensor that did not change in value by at least 5°F or is not updating.
      - Perform the POWERTRAIN VERIFICATION TEST. Refer to **POWERTRAIN VERIFICATION TEST - 6.7L** .

4. **EXHAUST TEMPERATURE SENSORS**
   1. Start the engine and allow it to idle for 10 minutes.
   2. With the scan tool, read the values of the Exhaust Temperature Sensors.

Do both temperature sensors read above 150°F and are the values of the temperature sensors updating?

Yes

- Go To 5.

No

- Replace the Exhaust Temperature Sensor that is not above 150°F or is not updating on the scan tool.
- Perform the POWERTRAIN VERIFICATION TEST. Refer to **POWERTRAIN VERIFICATION TEST - 6.7L** .

5. **INJECTOR RETURN FLOW TEST**
   1. Perform the INJECTOR RETURN FLOW TEST. Refer to **DIAGNOSIS AND TESTING, 6.7L** .

      Did the fuel injectors pass the test?

      Yes

      - Repair as necessary.
      - Perform the POWERTRAIN VERIFICATION TEST. Refer to **POWERTRAIN VERIFICATION TEST - 6.7L** .

      No

      - Go To 6.
6. **CHECK FOR EXCESSIVE ENGINE OIL BEING INTRODUCED INTO THE AFTERTREATMENT SYSTEM FROM THE ENGINE**
   1. Remove the turbocharger outlet and inspect for signs of oil, fuel or moisture being introduced into the aftertreatment system from the engine.

      Was engine oil, fuel or moisture found in the turbocharger exhaust outlet?

      Yes

      - Locate the cause of possible diesel fuel or engine oil being carried from the engine into the aftertreatment system. Inspect the aftertreatment for possible damage.
      - Perform the POWERTRAIN VERIFICATION TEST. Refer to **POWERTRAIN VERIFICATION TEST - 6.7L** .

      No

      - Go To 7.
7. **CHECK THE AFTERTREATMENT DIESEL PARTICULATE FILTER**

1. Remove and inspect the aftertreatment Diesel Particulate Filter.

   Does the Aftertreatment Diesel Particulate Filter show evidence of failure?

   Yes

   - Replace the aftertreatment Diesel Particulate Filter in accordance with the service information.
   - Perform the POWERTRAIN VERIFICATION TEST. Refer to **POWERTRAIN VERIFICATION TEST - 6.7L** .

   No

   - Perform the INTERMITTENT CONDITION diagnostic procedure. Refer to **INTERMITTENT CONDITION - 6.7L** .

P2453-DIESEL PARTICULATE FILTER PRESSURE SENSOR A CIRCUIT PERFORMANCE

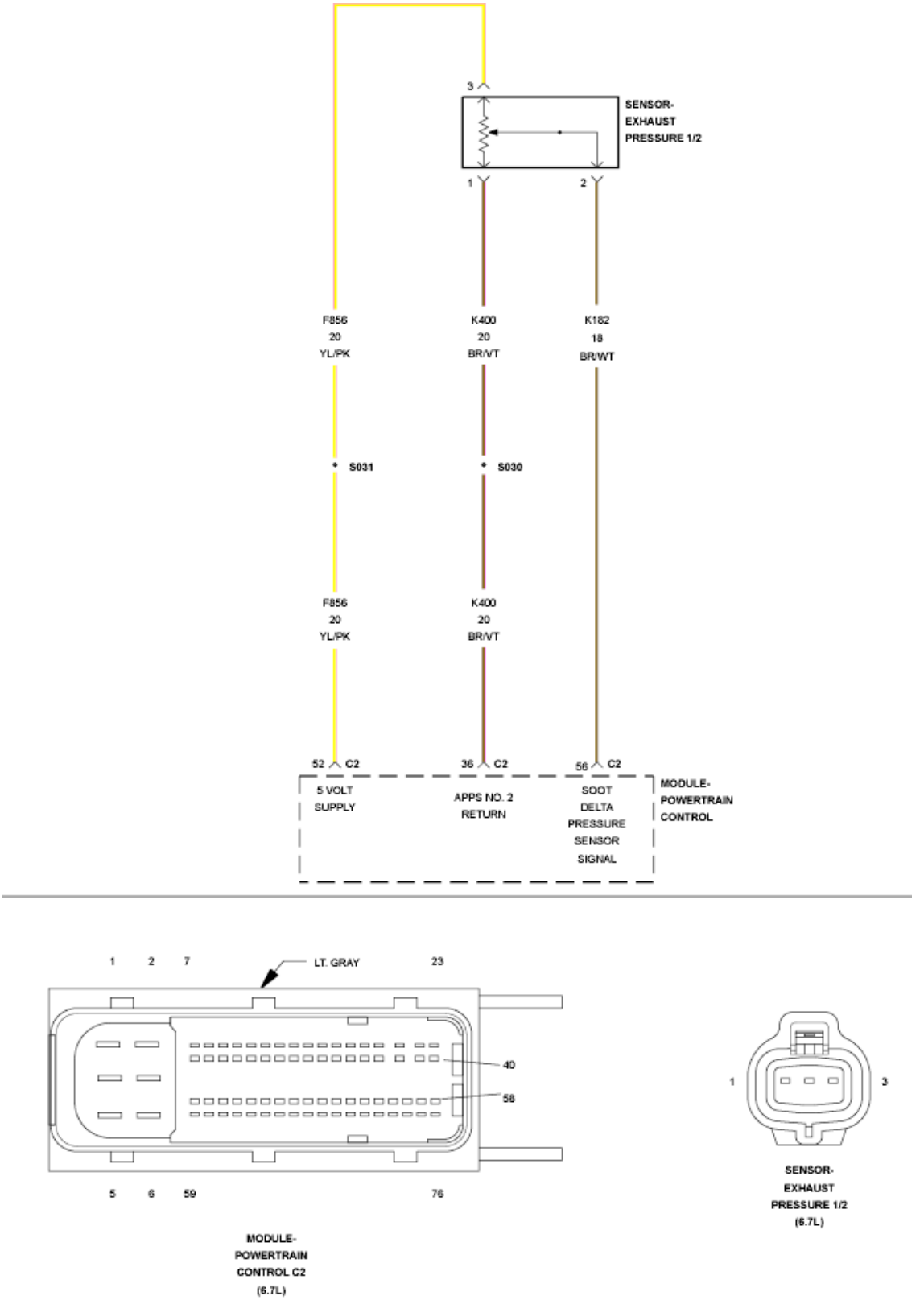

Fig. 32: Exhaust Pressure Sensor Circuit Schematic
Courtesy of CHRYSLER GROUP, LLC

For a complete wiring diagram, **refer to appropriate SYSTEM WIRING DIAGRAMS article** .

THEORY OF OPERATION

The Exhaust Differential Pressure Sensor (Exhaust Pressure Sensor 1/2) is used to detect the amount of soot and ash buildup inside the Diesel Particulate Filter. The Powertrain Control Module (PCM) provides a 5-Volt supply to the Exhaust Differential Pressure Sensor on the sensor supply circuit. The PCM also supplies a ground on the sensor return circuit. The Exhaust Differential Pressure Sensor provides a signal to the PCM. This sensor signal voltage changes based on the differential pressure across the Aftertreatment Diesel Particulate Filter. The PCM illuminates the MIL lamp immediately when the diagnostic runs and fails. A default value is used for the aftertreatment differential pressure reading when the fault is active. The PCM will turn off the MIL lamp immediately after the diagnostic runs and passes in four consecutive drive cycles.

WHEN MONITORED:

When the key is turned on.

SET CONDITION:

The Powertrain Control Module (PCM) does not see a change in pressure between key on and engine running.

POSSIBLE CAUSES

Possible Causes
AFTERTREATMENT DIESEL PARTICULATE FILTER IS CRACKED OR BROKEN
AFTERTREATMENT DIESEL PARTICULATE FILTER EXHAUST TUBES OR HOSES BROKEN
AFTERTREATMENT DIESEL PARTICULATE FILTER EXHAUST TUBES ARE REVERSED
EXHAUST SYSTEM LEAK
EXHAUST DIFFERENTIAL PRESSURE SENSOR FAILED IN-RANGE

Always perform the Pre-Diagnostic Troubleshooting procedure before proceeding. Refer to PRE-DIAGNOSTIC TROUBLESHOOTING PROCEDURE - 6.7L .

DIAGNOSTIC TEST

1. **OTHER DTCS**
    1. Ignition on, engine not running.
    2. With the scan tool, read DTCs.

    Is DTC P2454 or 2455 Active?

    Yes

    - Repair those DTCs before proceeding.

    No

- Go To 2.

2. **CHECK FOR AFTERTREATMENT SYSTEM LEAKS**
    1. Turn the ignition off.
    2. Visually inspect the Aftertreatment Diesel Particulate Filter system for leaks.

    Were any leaks found?

    Yes

    - Repair as necessary.
    - Perform the POWERTRAIN VERIFICATION TEST. Refer to **POWERTRAIN VERIFICATION TEST - 6.7L** .

    No

    - Go To 3.

3. **CHECK THE EXHAUST DIFFERENTIAL PRESSURE SENSOR LINES**
    1. Inspect the Exhaust Differential Pressure Sensor tubes and hoses.

    Were any leaks or blockages found?

    Yes

    - Repair as necessary.
    - Perform the POWERTRAIN VERIFICATION TEST. Refer to **POWERTRAIN VERIFICATION TEST - 6.7L** .

    No

    - Go To 4.

4. **CHECK FOR EXHAUST SYSTEM LEAK**
    1. Perform the CHECKING THE EXHAUST SYSTEM FOR LEAKS diagnostic procedure. Refer to **DIAGNOSIS AND TESTING, 6.7L** .

    Were any exhaust leaks found?

    Yes

    - Repair the Exhaust System leak.
    - Perform the POWERTRAIN VERIFICATION TEST. Refer to **POWERTRAIN VERIFICATION TEST - 6.7L** .

    No

- Replace the Exhaust Differential Pressure Sensor in accordance with the service information.
- Perform the POWERTRAIN VERIFICATION TEST. Refer to **POWERTRAIN VERIFICATION TEST - 6.7L** .

P2454-DIESEL PARTICULATE FILTER PRESSURE SENSOR A CIRCUIT LOW

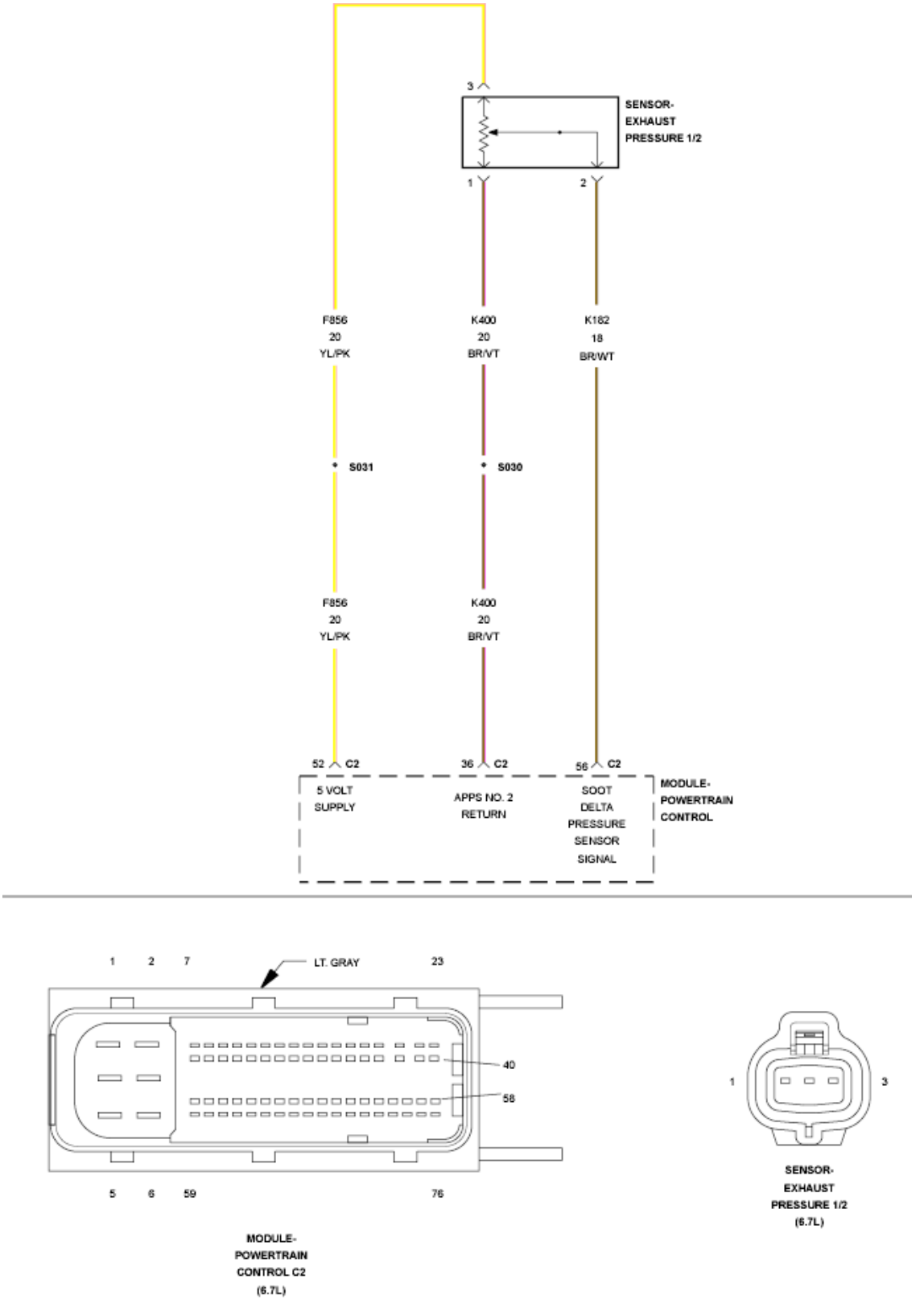

Fig. 33: Exhaust Pressure Sensor Circuit Schematic
Courtesy of CHRYSLER GROUP, LLC

For a complete wiring diagram, **refer to appropriate SYSTEM WIRING DIAGRAMS article** .

THEORY OF OPERATION

The Exhaust Differential Pressure Sensor (Exhaust Pressure Sensor 1/2) is used to detect the amount of soot and ash buildup inside the Diesel Particulate Filter. The Powertrain Control Module (PCM) provides a 5-Volt supply to the Exhaust Differential Pressure Sensor on the sensor supply circuit. The PCM also supplies a ground on the sensor return circuit. The Exhaust Differential Pressure Sensor provides a signal to the PCM on the Exhaust Differential Pressure Sensor Signal circuit. This sensor signal voltage changes based on the pressure differential across the Aftertreatment Diesel Particulate Filter. The PCM illuminates the MIL lamp immediately when the diagnostic runs and fails. A default value is used for the Aftertreatment Diesel Particulate Filter differential pressure reading. Active aftertreatment regeneration will be disabled. The PCM will turn off the MIL lamp immediately after the monitor runs and passes in four consecutive drive cycles.

WHEN MONITORED:

The monitor runs any time the PCM is powered up.

SET CONDITION:

The Powertrain Control Module (PCM) detects that the Exhaust Pressure Sensor 1/2 Signal voltage is less than 0.25 Volt for more than two seconds.

POSSIBLE CAUSES

Possible Causes
(K854) 5-VOLT SUPPLY CIRCUIT OPEN OR SHORTED TO GROUND
(K182) EXHAUST DIFFERENTIAL PRESSURE SENSOR SIGNAL CIRCUIT SHORTED TO GROUND
(K182) EXHAUST DIFFERENTIAL PRESSURE SENSOR SIGNAL CIRCUIT SHORTED TO THE (K400) APPS RETURN
EXHAUST DIFFERENTIAL PRESSURE SENSOR
POWERTRAIN CONTROL MODULE (PCM)

Always perform the Pre-Diagnostic Troubleshooting procedure before proceeding. Refer to PRE-DIAGNOSTIC TROUBLESHOOTING PROCEDURE - 6.7L .

DIAGNOSTIC TEST

1. **ACTIVE DTC**

NOTE: **If there are any 5-Volt supply DTCs present, repair those DTCs before proceeding with this test.**

1. Turn the ignition on.
2. With the scan tool, record all Freeze frame data.

3. With the scan tool, erase DTCs.
4. Turn the ignition off for 75 seconds.
5. Turn the ignition on.
6. With the scan tool, read DTCs.

   Did the DTC reset?

   Yes

   - Go To 2.

   No

   - Perform the INTERMITTENT CONDITION diagnostic procedure. Refer to **INTERMITTENT CONDITION - 6.7L** .

2. **CHECK THE (K182) EXHAUST DIFFERENTIAL PRESSURE SENSOR SIGNAL CIRCUIT FOR A SHORT TO GROUND**

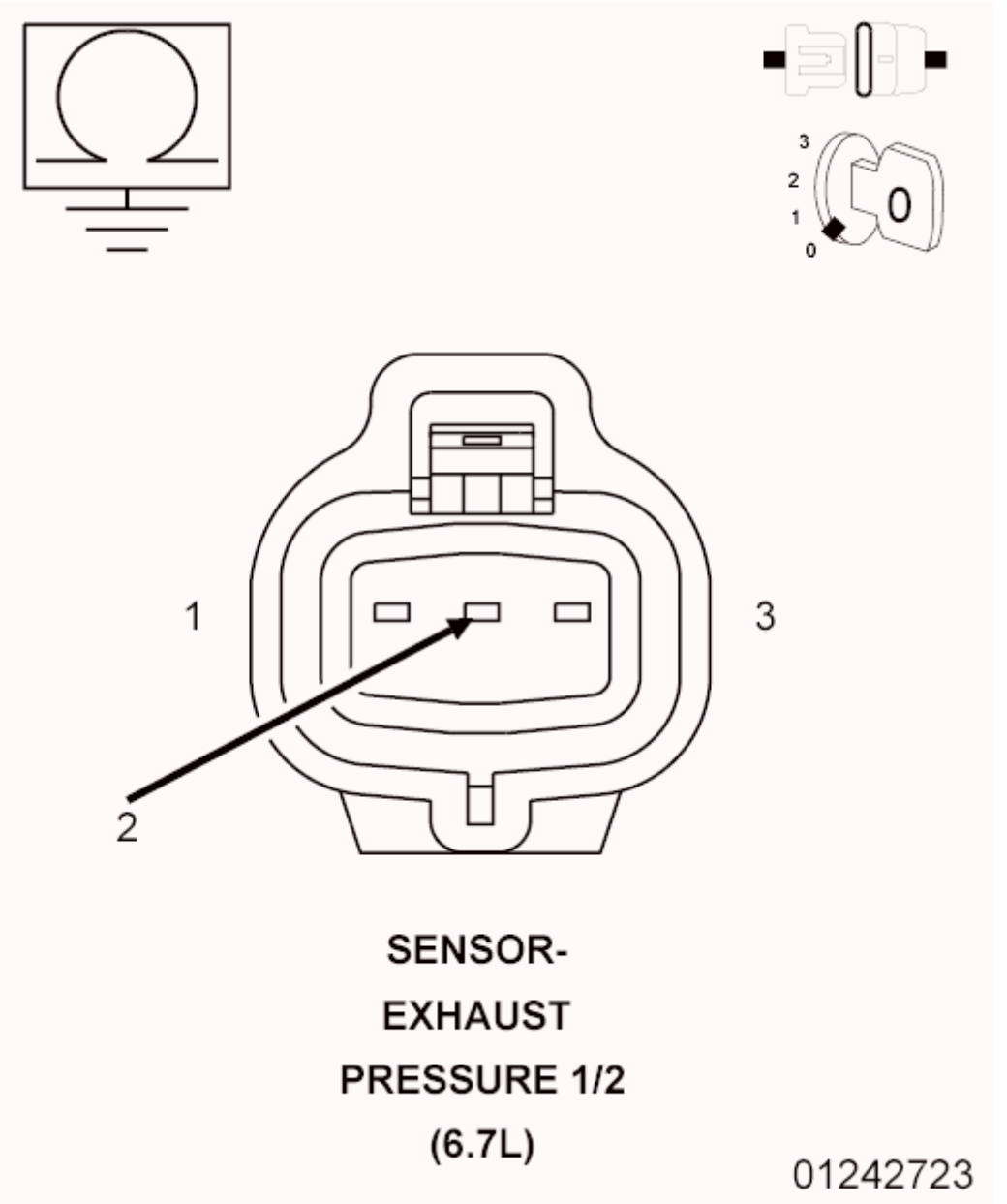

Fig. 34: Checking Exhaust Pressure Sensor 1/2 Signal Circuit For Short To Ground
Courtesy of CHRYSLER GROUP, LLC

1. Turn the ignition off.
2. Disconnect the Exhaust Differential Pressure Sensor harness connector.

   NOTE: Check connectors - Clean/repair as necessary.

3. Measure the resistance between ground and the (K182) Exhaust Differential Pressure Sensor Signal circuit at the Exhaust Differential Pressure Sensor harness connector.

   Is the resistance below 10k Ohms?

Yes

- Repair the (K182) Exhaust Differential Pressure Sensor Signal circuit for a short to ground.
- Perform the POWERTRAIN VERIFICATION TEST. Refer to **POWERTRAIN VERIFICATION TEST - 6.7L** .

No

- Go To 3.

3. **CHECK FOR THE (K182) EXHAUST DIFFERENTIAL PRESSURE SENSOR SIGNAL CIRCUIT SHORTED TO THE (K400) APPS RETURN CIRCUIT**

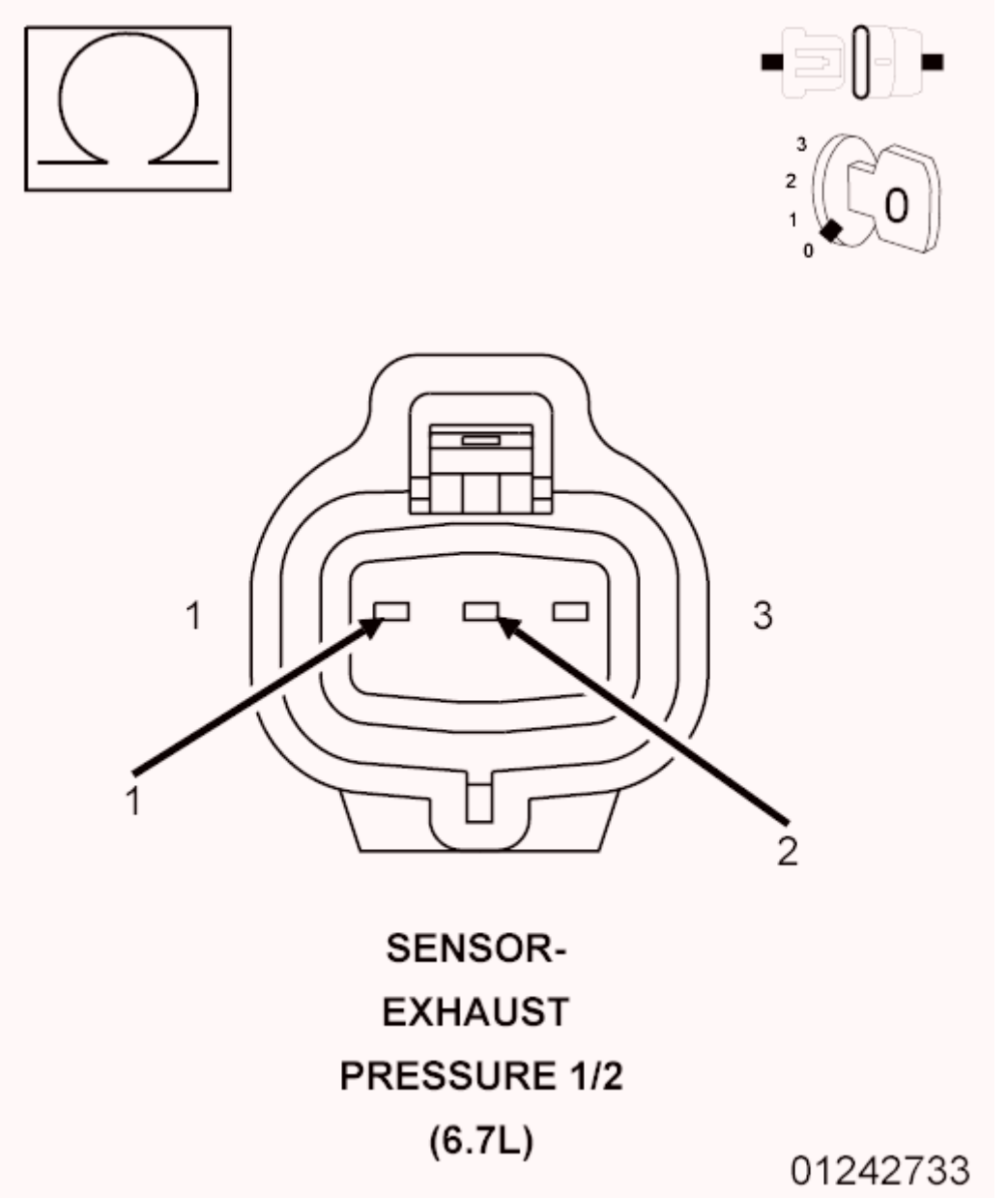

Fig. 35: Checking Exhaust Pressure Sensor 1/2 Signal Circuit For Short To APPS Return
Courtesy of CHRYSLER GROUP, LLC

1. Measure the resistance between the (K182) Exhaust Differential Pressure Sensor Signal circuit and the (K400) APPS Return circuit at the Exhaust Differential Pressure Sensor harness connector.

   Is the resistance below 10k Ohms?

   Yes

   - Repair the short between the (K182) Exhaust Differential Pressure Sensor Signal circuit and the (K400) APPS Return circuit.
   - Perform the POWERTRAIN VERIFICATION TEST. Refer to **POWERTRAIN VERIFICATION TEST - 6.7L** .

   No

   - Go To 4.

4. **CHECK THE EXHAUST DIFFERENTIAL PRESSURE SENSOR**
   1. Reconnect the Exhaust Differential Pressure Sensor harness connector.
   2. Ignition on, engine not running.
   3. With the scan tool, erase DTCs.
   4. While monitoring the scan tool, disconnect the Exhaust Differential Pressure Sensor harness connector.

      Did the DTC P2455 become active?

      Yes

      - Replace the Exhaust Differential Pressure Sensor in accordance with the service information.
      - Perform the POWERTRAIN VERIFICATION TEST. Refer to **POWERTRAIN VERIFICATION TEST - 6.7L** .

      No

      - Replace the Powertrain Control Module in accordance with the service information.
      - Perform the POWERTRAIN VERIFICATION TEST. Refer to **POWERTRAIN VERIFICATION TEST - 6.7L** .

P2455-DIESEL PARTICULATE FILTER PRESSURE SENSOR A CIRCUIT HIGH

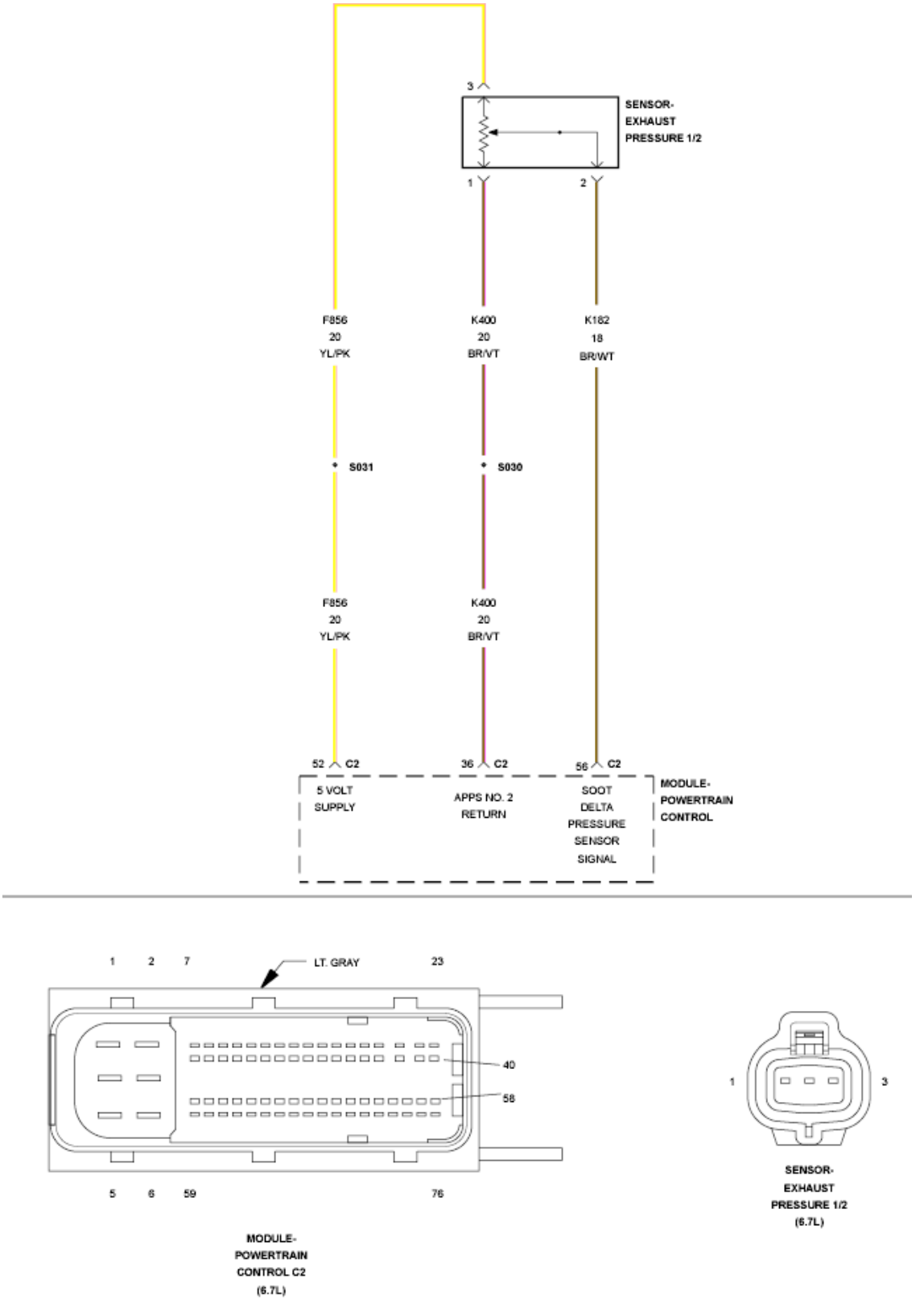

Fig. 36: Exhaust Pressure Sensor Circuit Schematic
Courtesy of CHRYSLER GROUP, LLC

For a complete wiring diagram, **refer to appropriate SYSTEM WIRING DIAGRAMS article** .

THEORY OF OPERATION

The Exhaust Differential Pressure Sensor (Exhaust Pressure Sensor 1/2) is used to detect the amount of soot and ash buildup inside the Diesel Particulate Filter. The Powertrain Control Module (PCM) provides a 5-Volt Supply to the Exhaust Differential Pressure Sensor. The PCM also supplies a ground on the sensor return circuit. The Exhaust Differential Pressure Sensor provides a signal to the PCM on the Exhaust Differential Pressure Sensor Signal circuit. This sensor signal voltage changes based on the pressure differential across the aftertreatment Diesel Particulate Filter. The PCM illuminates the MIL lamp immediately when the diagnostic runs and fails. A default value is used for the aftertreatment Diesel Particulate Filter differential pressure reading. Active aftertreatment regeneration will be disabled. The PCM will turn off the MIL lamp immediately after the diagnostic runs and passes.

WHEN MONITORED:

with the ignition on.

SET CONDITION:

The Powertrain Control Module (PCM) detects that the Exhaust Differential Pressure Sensor Signal voltage is greater than calibrated voltage for more than a calibrated duration.

POSSIBLE CAUSES

Possible Causes
(K854) 5-VOLT SUPPLY CIRCUIT SHORTED TO VOLTAGE
(K182) EXHAUST DIFFERENTIAL PRESSURE SENSOR SIGNAL CIRCUIT SHORTED TO VOLTAGE
(K182) EXHAUST DIFFERENTIAL PRESSURE SENSOR SIGNAL CIRCUIT SHORTED TO THE (K854) 5-VOLT SUPPLY CIRCUIT
(K182) EXHAUST DIFFERENTIAL PRESSURE SENSOR SIGNAL CIRCUIT OPEN
(K400) APPS RETURN CIRCUIT OPEN
EXHAUST DIFFERENTIAL PRESSURE SENSOR
POWERTRAIN CONTROL MODULE (PCM)

Always perform the Pre-Diagnostic Troubleshooting procedure before proceeding. Refer to PRE-DIAGNOSTIC TROUBLESHOOTING PROCEDURE - 6.7L .

DIAGNOSTIC TEST

1. **ACTIVE DTC**

NOTE: **If there are any 5-Volt supply DTCs present, repair those DTCs before proceeding with this test.**

1. Turn the ignition on.
2. With the scan tool, record all Freeze frame data.
3. With the scan tool, erase DTCs.
4. Turn the ignition off for 75 seconds.
5. Turn the ignition on.
6. With the scan tool, read DTCs.

Did the DTC reset?

Yes

- Go To 2.

No

- Perform the INTERMITTENT CONDITION diagnostic procedure. Refer to **INTERMITTENT CONDITION - 6.7L** .

2. **CHECK THE (K182) EXHAUST DIFFERENTIAL PRESSURE SENSOR SIGNAL CIRCUIT FOR A SHORT TO VOLTAGE**

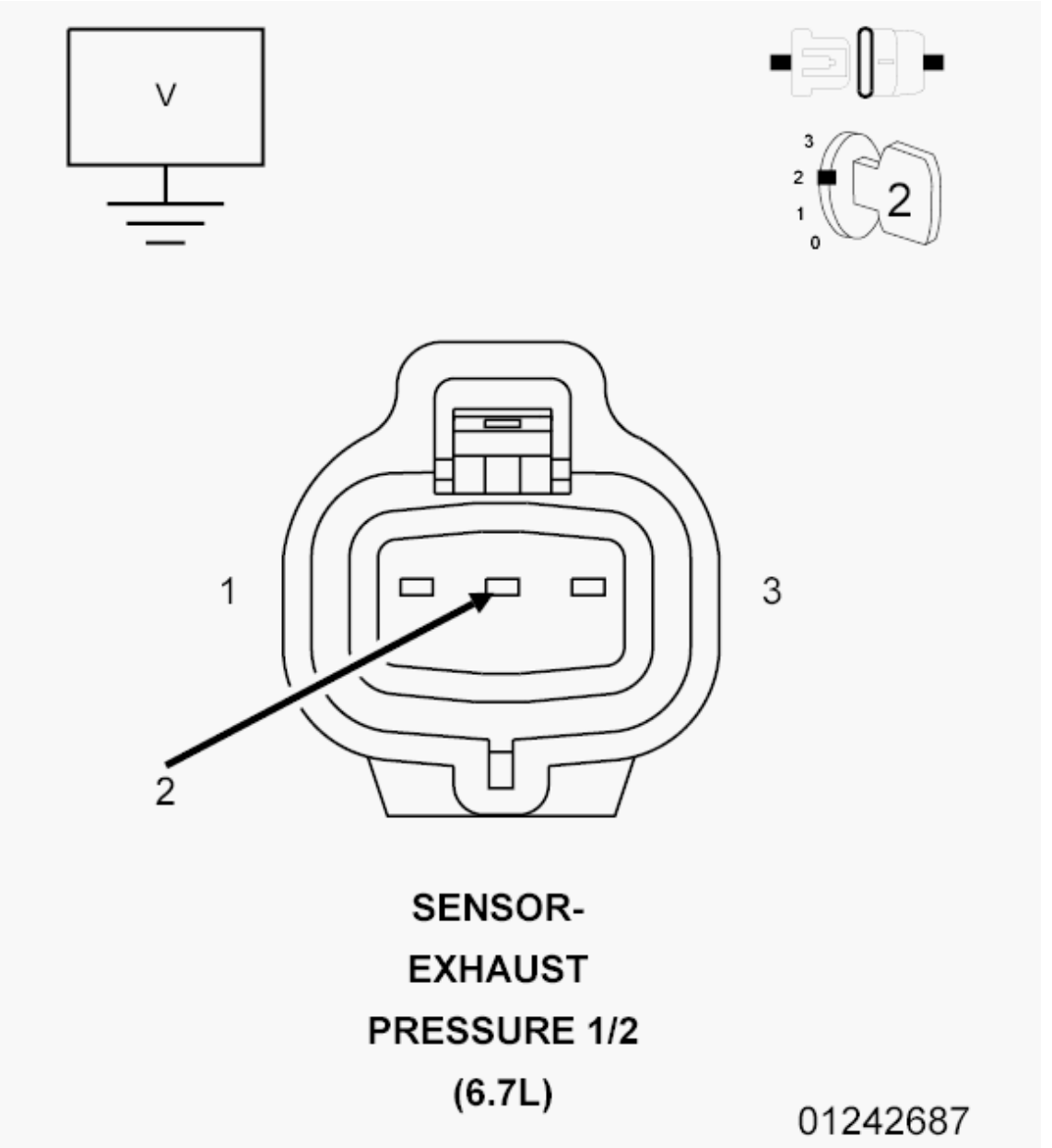

Fig. 37: Checking Exhaust Pressure Sensor 1/2 Signal Circuit For Short To Voltage
Courtesy of CHRYSLER GROUP, LLC

1. Turn the ignition off.
2. Disconnect the Exhaust Differential Pressure Sensor harness connector.

NOTE: Check connectors - Clean/repair as necessary.

3. Turn the ignition on.
4. Measure the voltage on the (K182) Exhaust Differential Pressure Sensor Signal circuit at the Exhaust Differential Pressure Sensor harness connector.

Is the voltage reading above 5.1 Volts?

Yes

- Repair the (K182) Exhaust Differential Pressure Sensor Signal circuit for a short to voltage.
- Perform the POWERTRAIN VERIFICATION TEST. Refer to **POWERTRAIN VERIFICATION TEST - 6.7L** .

No

- Go To 3.

3. **CHECK FOR THE (K182) EXHAUST DIFFERENTIAL PRESSURE SENSOR SIGNAL CIRCUIT SHORTED TO THE (K854) 5-VOLT SUPPLY CIRCUIT**

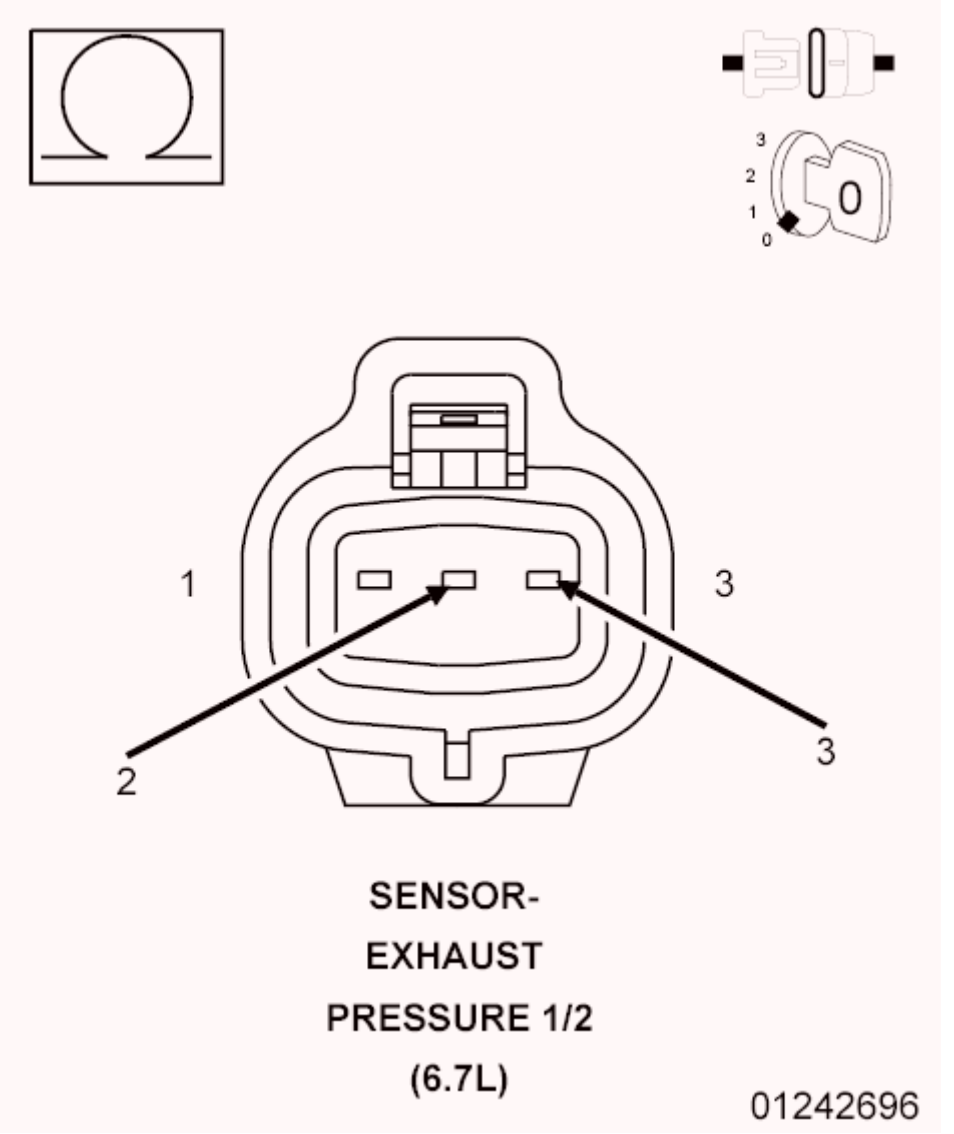

Fig. 38: Checking Exhaust Pressure Sensor 1/2 Signal Circuit For Short To 5-Volt Supply Circuit

Courtesy of CHRYSLER GROUP, LLC

1. Turn the ignition off.
2. Disconnect the PCM C2 harness connector.
3. Measure the resistance between the (K182) Exhaust Differential Pressure Sensor Signal circuit and the (K854) 5-Volt Supply circuit at the Exhaust Differential Pressure Sensor harness connector.

   Is the resistance below 10k Ohms?

   Yes

   - Repair the short between the (K182) Exhaust Differential Pressure Sensor Signal circuit and the (K854) 5-Volt Supply circuit.
   - Perform the POWERTRAIN VERIFICATION TEST. Refer to **POWERTRAIN VERIFICATION TEST - 6.7L** .

   No

   - Go To 4.

4. **CHECK THE (K182) EXHAUST DIFFERENTIAL PRESSURE SENSOR SIGNAL CIRCUIT FOR AN OPEN/HIGH RESISTANCE**
   1. Measure the resistance of the (K182) Exhaust Differential Pressure Sensor Signal circuit between the PCM C2 harness connector to the Exhaust Differential Pressure Sensor harness connector.

      Is the resistance below 5.0 Ohms?

      Yes

      - Repair the (K182) Exhaust Differential Pressure Sensor Signal circuit for an open or high resistance.
      - Perform the POWERTRAIN VERIFICATION TEST. Refer to **POWERTRAIN VERIFICATION TEST - 6.7L** .

      No

      - Go To 5.

5. **CHECK THE (K400) APPS RETURN CIRCUIT FOR AN OPEN/HIGH RESISTANCE**
   1. Measure the resistance of the (K400) APPS Return circuit between the PCM C2 harness connector to the Exhaust Differential Pressure Sensor harness connector.

      Is the resistance below 5.0 Ohms?

      Yes

      - Repair the (K400) APPS Return circuit for an open or high resistance.

- Perform the POWERTRAIN VERIFICATION TEST. Refer to **POWERTRAIN VERIFICATION TEST - 6.7L** .

No

- Go To 6.

6. **CHECK THE EXHAUST DIFFERENTIAL PRESSURE SENSOR**
   1. Reconnect the PCM C2 harness connector.
   2. Ignition on, engine not running.
   3. Leave the Exhaust Differential Pressure Sensor harness connector disconnected.
   4. While monitoring the scan tool, connect a jumper between the (K182) Exhaust Differential Pressure Sensor Signal circuit and the (K400) APPS Return circuit in the Exhaust Pressure Sensor 1/2 harness connector.

      Did the DTC P2454 Pressure Sensor Low become active?

      Yes

      - Replace the Exhaust Differential Pressure Sensor in accordance with the service information.
      - Perform the POWERTRAIN VERIFICATION TEST. Refer to **POWERTRAIN VERIFICATION TEST - 6.7L** .

      No

      - Replace the Powertrain Control Module in accordance with the service information.
      - Perform the POWERTRAIN VERIFICATION TEST. Refer to **POWERTRAIN VERIFICATION TEST - 6.7L** .

P2457-EXHAUST GAS RECIRCULATION COOLING SYSTEM PERFORMANCE

For a complete wiring diagram, **refer to appropriate SYSTEM WIRING DIAGRAMS article** .

THEORY OF OPERATION

This test will fail if the EGR Temperature is greater than a calibrated threshold for a calibrated period of time. This monitor protects the system from a failed EGR Cooler.

WHEN MONITORED:

With the engine running.

SET CONDITION:

Exhaust gas recirculation temperature sensor is reading higher than a calibrated value for more than five seconds.

POSSIBLE CAUSES

Possible Causes
COOLANT TEMP DTCS
EGR VALVE DTCS
ENGINE OR FUEL MODIFICATIONS THAT EXCEED OEM SPECIFICATIONS
FUEL SYSTEM DTCS
EGR TEMPERATURE SENSOR
EGR COOLER FOULING

Always perform the Pre-Diagnostic Troubleshooting procedure before proceeding. Refer to PRE-DIAGNOSTIC TROUBLESHOOTING PROCEDURE - 6.7L .

DIAGNOSTIC TEST

1. **OTHER DTCS**
   1. Ignition on, engine not running.
   2. With the scan tool, read DTCs.

      Are there any coolant temperature, fuel system or EGR Valve DTCs?

      Yes

      - Repair other DTCs before proceeding.
      - Perform the POWERTRAIN VERIFICATION TEST. Refer to **POWERTRAIN VERIFICATION TEST - 6.7L** .

      No

      - Go To 2.
2. **ACTIVE DTC**

   NOTE: If there are any 5-Volt supply DTCs present, repair those DTCs before proceeding with this test.

   1. Turn the ignition on.
   2. With the scan tool, record all Freeze frame data.
   3. With the scan tool, erase DTCs.
   4. Turn the ignition off for 30 seconds.
   5. Start the engine. It may be necessary to test drive the vehicle.
   6. With the scan tool, read DTCs.

      Did the DTC reset?

Yes

- Go To 3.

No

- Perform the INTERMITTENT CONDITION diagnostic procedure. Refer to **INTERMITTENT CONDITION - 6.7L** .

3. **CHECK FOR ENGINE OR FUEL MODIFICATIONS THAT EXCEED OEM SPECIFICATIONS**
   1. Inspect vehicle/engine for signs of Engine or Fuel modifications that exceed OEM specifications.

      Are there signs the customer installed a modification kit that exceed OEM specifications?

      Yes

      - Return vehicle to customer. Explain that modifying the engine hardware/software may cause the engine to run outside of its normal operating limits.

      No

      - Go To 4.

4. **CHECK THE EXHAUST GAS RECIRCULATION TEMPERATURE SENSOR**
   1. Turn the ignition off.
   2. Disconnect the EGR Temperature Sensor harness connector.

      NOTE: Check connectors - Clean/repair as necessary.

   3. Remove the Temperature Sensor and reconnect the wiring harness connector to the sensor.
   4. Turn the Ignition on, engine off.
   5. Monitor scan tool, while heating the sensor with an external heat source (DO NOT USE OPEN FLAME).

      Does the reading from the sensor increase at least 2.78° C (5° F) on the scan tool?

      Yes

      - Go To 5.

      No

      - Replace the EGR Temperature Sensor in accordance with the service information.
      - Perform the POWERTRAIN VERIFICATION TEST. Refer to **POWERTRAIN VERIFICATION TEST - 6.7L** .

5. **EGR COOLER**

1. Remove and clean the EGR Cooler with approved Mopar EGR system cleaner.
2. Reinstall the EGR Cooler.
3. With the scan tool, erase DTCs.
4. Turn the ignition off for 75 seconds.
5. Start the engine. It may be necessary to test drive the vehicle.
6. With the scan tool, read DTCs.

   Did the DTC reset?

   Yes

   - Replace the EGR Cooler in accordance with the service information.
   - Perform the POWERTRAIN VERIFICATION TEST. Refer to **POWERTRAIN VERIFICATION TEST - 6.7L** .

   No

   - Repair complete.

P2459-DIESEL PARTICULATE FILTER REGENERATION TOO FREQUENT

For a complete wiring diagram, **refer to appropriate SYSTEM WIRING DIAGRAMS article** .

THEORY OF OPERATION

The engine aftertreatment system monitors the soot load in the Diesel Particulate Filter. Under normal operating conditions the Diesel Particulate Filter is self-cleaning, where soot is converted to ash. The soot load in the aftertreatment Diesel Particulate Filter is estimated using the Exhaust Differential Pressure Sensor and the calculated soot output of the engine. The Powertrain Control Module (PCM) will set this fault if it detects that the time between two regeneration events is less than the calibrated time threshold. The PCM will illuminate the MIL lamp immediately when the diagnostic runs and fails. The driver will be notified via the vehicle's EVIC Message Center. The PCM will turn off the MIL lamp immediately after the soot load has dropped below the Moderately Severe Level Threshold.

WHEN MONITORED:

The diagnostic runs continuously when the engine is running.

SET CONDITION:

If between two Diesel Particular Filter regeneration events, the DPF soot loading rate is faster than the threshold or if the time between two regeneration events is less than the calibrated time threshold.

POSSIBLE CAUSES

Possible Causes

FUEL SYSTEM OR AIR HANDLING SYSTEM SENSOR FAILURE
BASE ENGINE FAILURE
FUEL SYSTEM FAILURE
AIR HANDLING SYSTEM FAILURE
DIESEL PARTICULATE FILTER RESTRICTED

Always perform the Pre-Diagnostic Troubleshooting procedure before proceeding. Refer to PRE-DIAGNOSTIC TROUBLESHOOTING PROCEDURE - 6.7L .

DIAGNOSTIC TEST

1. **OTHER RELATED DTCS**
   1. Turn the ignition on.
   2. With the scan tool, read DTCs.

      Were there any fuel system or air handling sensor DTCs present?

      Yes

      - If this DTC is present along with any fuel system or air handling system sensor DTCs, repair those DTCs before proceeding.
      - Perform the POWERTRAIN VERIFICATION TEST. Refer to **POWERTRAIN VERIFICATION TEST - 6.7L** .

      No

      - Go To 2.
2. **CHECK THE ENGINE PERFORMANCE**
   1. Perform the CHECKING ENGINE MISFIRE / RUNS ROUGH / PERFORMANCE TEST diagnostic procedure. Refer to **DIAGNOSIS AND TESTING, 6.7L** .

      Were any problems found?

      Yes

      - Perform the appropriate repair.
      - Perform the DIESEL AFTERTREATMENT VALIDATION - 6.7L procedure. Refer to **DIESEL AFTERTREATMENT VALIDATION- 6.7L** .

      No

      - Go To 3.
3. **CHECK FOR THE DIESEL PARTICULATE FILTER DAMAGED**
   1. Perform the AFTERTREATMENT INSPECTION GUIDELINE - 6.7L procedure. Refer to

DIAGNOSIS AND TESTING, 6.7L .

Was any internal damage found in the Diesel Particulate Filter?

Yes

- Replace the Diesel Particulate Filter in accordance with the service information.
- Perform the DIESEL AFTERTREATMENT VALIDATION - 6.7L procedure. Refer to **DIESEL AFTERTREATMENT VALIDATION- 6.7L** .

No

- Reinstall the exhaust and perform the INTERMITTENT CONDITION - 6.7L. Refer to **INTERMITTENT CONDITION - 6.7L** .

P2463-DIESEL PARTICULATE FILTER - SOOT ACCUMULATION

For a complete wiring diagram, **refer to appropriate SYSTEM WIRING DIAGRAMS article** .

THEORY OF OPERATION

The engine aftertreatment system monitors the soot load in the Diesel Particulate Filter. Under normal operating conditions the Diesel Particulate Filter is self-cleaning, where soot is converted to ash. The soot load in the Diesel Particulate Filter is estimated using the Exhaust Differential Pressure Sensor and the calculated soot output of the engine. This fault code can be triggered if the application is not operating at a duty cycle high enough to actively regenerate the Diesel Particulate Filter. It may be necessary to increase the duty cycle of the application in order to prevent excessive soot accumulation and plugging of the Diesel Particulate Filter. The Powertrain Control Module (PCM) will set this fault if it detects that the Diesel Particulate Filter is above the calibrated moderately severe threshold limit. The PCM will illuminate the MIL lamp immediately when the diagnostic runs and fails. The driver will be notified via the vehicle's EVIC Message Center. The PCM will turn off the MIL lamp immediately after the soot load has dropped below the Moderately Severe Level Threshold.

WHEN MONITORED:

The diagnostic runs continuously when the engine is running.

SET CONDITION:

The Powertrain Control Module (PCM) will set this fault if it detects that the soot load in the Diesel Particulate Filter is above the moderately severe level threshold limit.

POSSIBLE CAUSES

Possible Causes
DIESEL PARTICULATE FILTER PLUGGED
EXHAUST TEMPERATURES NOT HIGH ENOUGH TO ACTIVELY REGENERATE THE DIESEL PARTICULATE FILTER.

DAMAGE TO THE AFTERTREATMENT SYSTEM FROM AN ENGINE FAILURE
EXHAUST TEMPERATURE SENSORS FAILED IN-RANGE LOW
EXHAUST DIFFERENTIAL PRESSURE SENSOR FAILED IN-RANGE HIGH

Always perform the Pre-Diagnostic Troubleshooting procedure before proceeding. Refer to PRE-DIAGNOSTIC TROUBLESHOOTING PROCEDURE - 6.7L .

DIAGNOSTIC TEST

1. **ACTIVE OR STORED DTC**

NOTE: **DTC P2463 is usually the result of a driveability or fuel system failure. This DTC indicates that there is an excessive soot level in the Diesel Particulate Filter, and that the Diesel Particulate Filter needs to be regenerated. This can be caused by the customers driving habits, (not allowing the vehicle to actively regenerate the Diesel Particulate Filter on it's own), or due to a driveability concern causing excessive soot generation in the exhaust system. If there are any other DTCs or driveability concerns present with this DTC, diagnose and repair those concerns before continuing with this test procedure. Not repairing the cause of the excess soot being generated will cause the Diesel Particulate Filter to fill with soot too often, and this DTC to return prematurely.**

1. Ignition on, engine not running.
2. With the scan tool, read DTCs.

Is the DTC Active or Stored?

Active

- Perform a scan tool initiated Stationary Desoot. Refer to **FILTER, DIESEL PARTICULATE, STANDARD PROCEDURE** .

NOTE: **The Mobile Desoot procedure has been replaced by a scan tool initiated Stationary Desoot procedure. The scan tool initiated Stationary Desoot procedure can only be performed if the DTC is active and the PCM is at the latest software version.**

- Go To 2.

Stored

- The Diesel Particulate Filter has been regenerated with an active desoot initiated during normal driving conditions.
- Perform the DIESEL AFTERTREATMENT VALIDATION - 6.7L procedure. Refer to **DIESEL AFTERTREATMENT VALIDATION- 6.7L** .

2. **AFTERTREATMENT INSPECTION**
    1. Perform the AFTERTREATMENT INSPECTION GUIDELINE - 6.7L procedure. Refer to **DIAGNOSIS AND TESTING, 6.7L** .

       Did the Diesel Particulate Filter pass inspection?

       Yes

       - Repair complete. Reset DPF timer, ensure all other fault codes have been addressed.
       - Perform the DIESEL AFTERTREATMENT VALIDATION - 6.7L procedure. Refer to **DIESEL AFTERTREATMENT VALIDATION- 6.7L** .

       No

       - Replace the Diesel Particulate Filter in accordance with the service information.
       - Perform the DIESEL AFTERTREATMENT VALIDATION - 6.7L procedure. Refer to **DIESEL AFTERTREATMENT VALIDATION- 6.7L** .

P246F-EXHAUST GAS TEMP SENSOR CIRCUIT PERFORMANCE - BANK 1 SENSOR 4

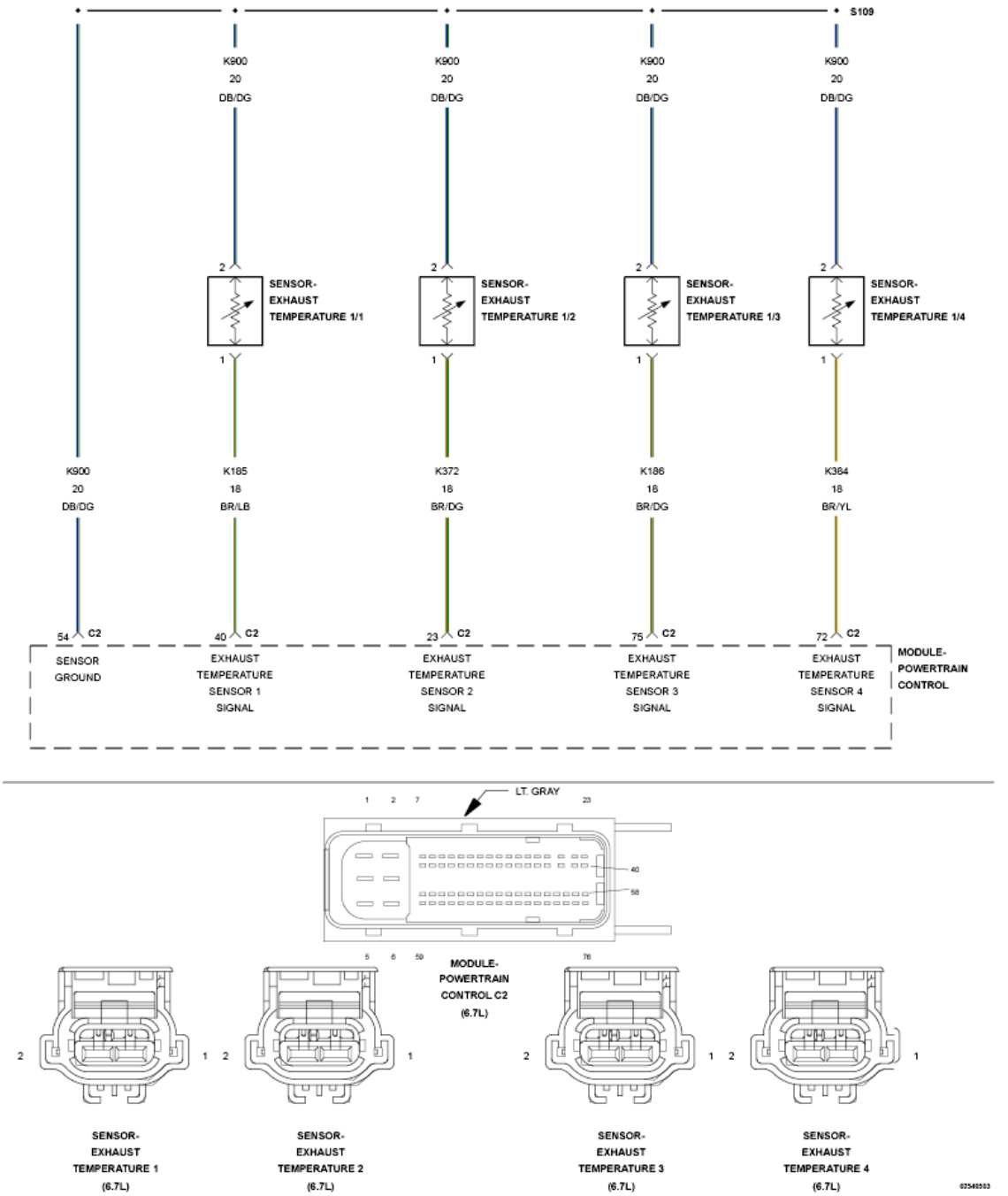

Fig. 39: Exhaust Gas Temperature Sensor Circuit Schematic
Courtesy of CHRYSLER GROUP, LLC

For a complete wiring diagram, **refer to appropriate SYSTEM WIRING DIAGRAMS article** .

THEORY OF OPERATION

The Exhaust Temperature Sensors are used by the Powertrain Control Module (PCM) to monitor the engine exhaust temperatures in the aftertreatment system. The Exhaust Temperature Sensors are thermistors and change resistance based on the temperature being measured. The Exhaust Temperature Sensors receive a 5-Volt

signal from the PCM and share a sensor ground. The PCM monitors the change in signal voltage and converts this to a temperature value. The PCM illuminates the MIL lamp immediately when the diagnostic runs and fails. A default value will be used for the Exhaust Temperature Sensor 1/3 and active regeneration of the diesel particulate filter will be disabled. The PCM will turn off the MIL lamp immediately after the diagnostic runs and passes.

WHEN MONITORED:

With the engine running.

SET CONDITION:

The Powertrain Control Module (PCM) detects that the Exhaust Temperature Sensor 1/4 reading is not increasing with engine operating temperature after engine startup.

POSSIBLE CAUSES

Possible Causes
EXHAUST TEMPERATURE SENSOR 1/4
WIRING HARNESS OR CONNECTION

Always perform the Pre-Diagnostic Troubleshooting procedure before proceeding. Refer to PRE-DIAGNOSTIC TROUBLESHOOTING PROCEDURE - 6.7L .

DIAGNOSTIC TEST

1. **OTHER DTCS PRESENT**
    1. Turn the ignition on.
    2. With the scan tool, read DTCs.

       Are either of the Exhaust Temperature Sensor 1/4 Low or High DTCs present?

       Yes

       - Repair the other DTCs before proceeding.
       - Perform the POWERTRAIN VERIFICATION TEST. Refer to **POWERTRAIN VERIFICATION TEST - 6.7L** .

       No

       - Go To 2.
2. **EXHAUST TEMPERATURE SENSOR 1/4**
    1. Remove the Exhaust Temperature Sensor 1/4 and reconnect the harness connector to the sensor. Monitor the scan tool, while heating the sensor with an external heat source (DO NOT USE OPEN FLAME).

Does the reading from the sensor increase at least 5°F on the scan tool?

Yes

- Perform the INTERMITTENT CONDITION diagnostic procedure. Refer to **INTERMITTENT CONDITION - 6.7L** .

No

- Replace the Exhaust Temperature Sensor 1/4 in accordance with the service information.
- Perform the POWERTRAIN VERIFICATION TEST. Refer to **POWERTRAIN VERIFICATION TEST - 6.7L** .

P2470-EXHAUST GAS TEMPERATURE SENSOR CIRCUIT LOW - BANK 1 SENSOR 4

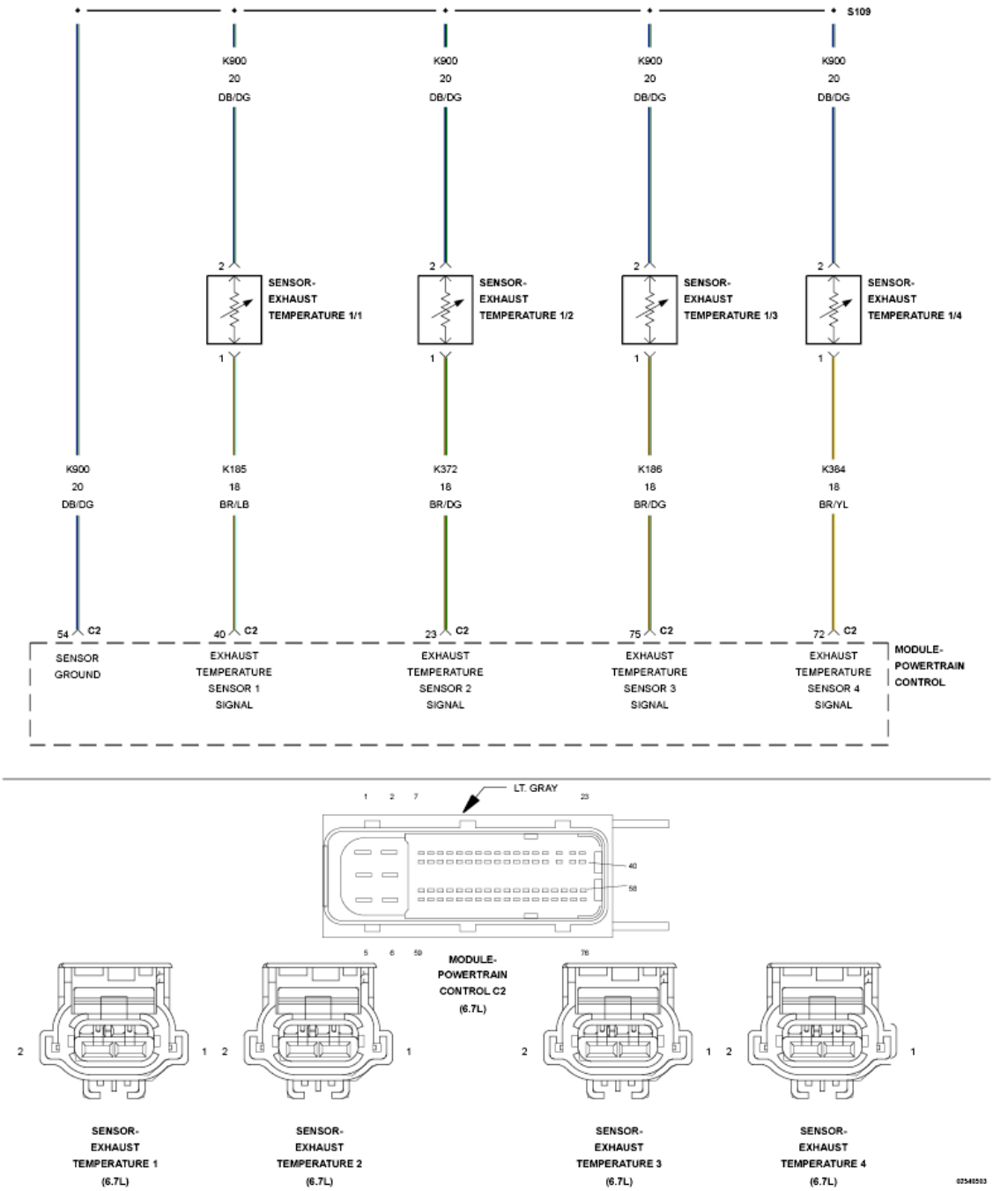

Fig. 40: Exhaust Gas Temperature Sensor Circuit Schematic
Courtesy of CHRYSLER GROUP, LLC

For a complete wiring diagram, **refer to appropriate SYSTEM WIRING DIAGRAMS article** .

THEORY OF OPERATION

The Exhaust Temperature Sensors are used by the Powertrain Control Module (PCM) to monitor the engine exhaust temperatures in the aftertreatment system. The Exhaust Temperature Sensors are thermistors and change resistance based on the temperature being measured. The Exhaust Temperature Sensors receive a 5-Volt

signal from the PCM and share a sensor ground. The PCM monitors the change in signal voltage and converts this to a temperature value. The PCM illuminates the MIL lamp immediately when the diagnostic runs and fails. A default value will be used for the Exhaust Temperature Sensor 1/4 and active regeneration of the diesel particulate filter will be disabled. The PCM will turn off the MIL lamp immediately after the diagnostic runs and passes.

WHEN MONITORED:

With the ignition on.

SET CONDITION:

The Exhaust Temperature Sensor Signal 1/4 circuit is below 0.25 of a Volt for 15.0 seconds.

POSSIBLE CAUSES

Possible Causes
(K384) EXHAUST GAS TEMPERATURE 1/4 SENSOR SIGNAL CIRCUIT SHORTED TO GROUND
(K384) EXHAUST GAS TEMPERATURE 1/4 SENSOR SIGNAL CIRCUIT SHORTED TO THE (K900) SENSOR GROUND CIRCUIT
EXHAUST GAS TEMPERATURE 1/4 SENSOR
POWERTRAIN CONTROL MODULE (PCM)

Always perform the Pre-Diagnostic Troubleshooting procedure before proceeding. Refer to PRE-DIAGNOSTIC TROUBLESHOOTING PROCEDURE - 6.7L .

DIAGNOSTIC TEST

1. **ACTIVE DTC**
    1. Turn the ignition on.
    2. With the scan tool, record all Freeze frame data.
    3. With the scan tool, erase DTCs.
    4. Turn the ignition off for 75 seconds.
    5. Turn the ignition on.
    6. With the scan tool, read DTCs.

    Did the DTC reset?

    Yes

    - Go To 2.

    No

    - Perform the INTERMITTENT CONDITION diagnostic procedure. Refer to

INTERMITTENT CONDITION - 6.7L .

2. **CHECK THE (K384) EXHAUST TEMPERATURE 1/4 SIGNAL CIRCUIT FOR A SHORT TO GROUND**

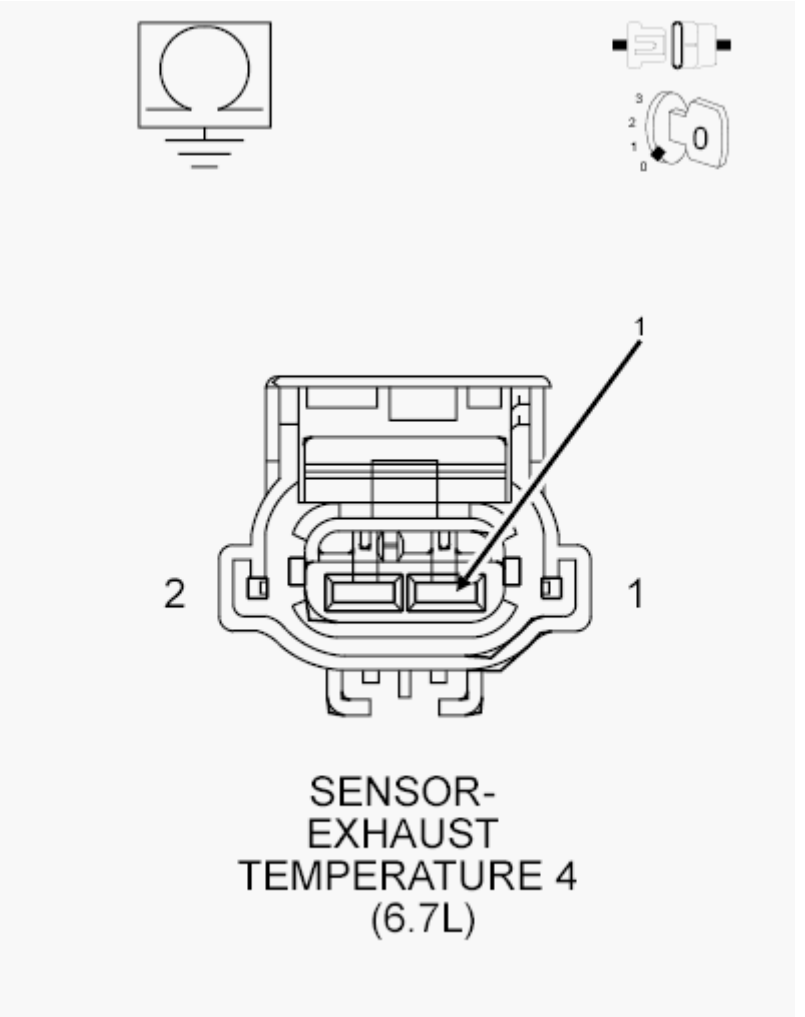

Fig. 41: Checking Exhaust Temperature 1/4 Signal Circuit For Short To Ground
Courtesy of CHRYSLER GROUP, LLC

1. Turn the ignition off.
2. Disconnect the Exhaust Gas Temperature Sensor 1/4 harness connector.
3. Disconnect the PCM C2 harness connector.
4. Measure the resistance between ground and the (K384) Exhaust Gas Temperature Sensor 1/4 Signal circuit at the sensor Exhaust Gas Temperature 1/4 harness connector.

   Is the resistance below 10k Ohms?

   Yes

   - Go To 3.

No

- Repair the short to ground in the (K384) Exhaust Gas Temperature Sensor 1/4 Signal circuit.
- Perform the POWERTRAIN VERIFICATION TEST. Refer to **POWERTRAIN VERIFICATION TEST - 6.7L** .

3. **CHECK FOR THE (K384) EXHAUST TEMPERATURE 1/4 SIGNAL CIRCUIT SHORTED TO THE (K900) SENSOR GROUND**

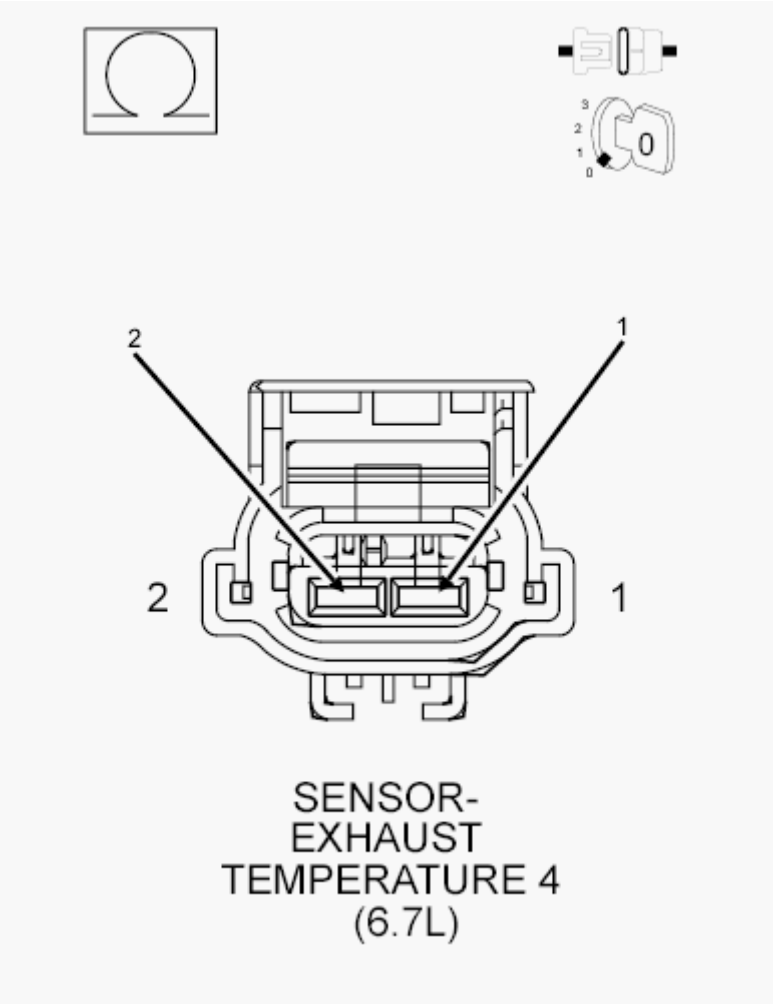

Fig. 42: Checking For Exhaust Temperature 1/4 Signal Circuit Shorted To Sensor Ground
Courtesy of CHRYSLER GROUP, LLC

1. Measure the resistance between the (K384) Exhaust Gas Temperature Sensor 1/4 Signal circuit and (K900) Sensor Ground circuit at the Exhaust Gas Temperature Sensor 1/4 harness connector.

   Is the resistance below 10k Ohms?

   Yes

   - Repair the short between the (K384) Exhaust Gas Temperature Sensor 1/4 Signal circuit and

(K900) Sensor Ground circuit.

- Perform the POWERTRAIN VERIFICATION TEST. Refer to **POWERTRAIN VERIFICATION TEST - 6.7L** .

No

- Go To 4.

4. **CHECK THE EXHAUST GAS TEMPERATURE SENSOR**
    1. Reconnect the Exhaust Gas Temperature Sensor 1/4 harness connector.
    2. Reconnect the PCM C2 harness connector.
    3. Turn the ignition on.
    4. With the scan tool, erase DTCs.
    5. Turn the ignition off for 75 seconds.
    6. Disconnect the Exhaust Gas Temperature Sensor 1/4 harness connector.
    7. Turn the ignition on.
    8. With the scan tool, read DTCs.

    Does the DTC P2471 become active?

    Yes

    - Replace the Exhaust Gas Temperature Sensor 1/4 in accordance with the service information.
    - Perform the POWERTRAIN VERIFICATION TEST. Refer to **POWERTRAIN VERIFICATION TEST - 6.7L** .

    No

    - Replace the Powertrain Control Module in accordance with the service information.
    - Perform the POWERTRAIN VERIFICATION TEST. Refer to **POWERTRAIN VERIFICATION TEST - 6.7L** .

P242D-EXHAUST GAS TEMPERATURE SENSOR CIRCUIT HIGH - BANK 1 SENSOR 4

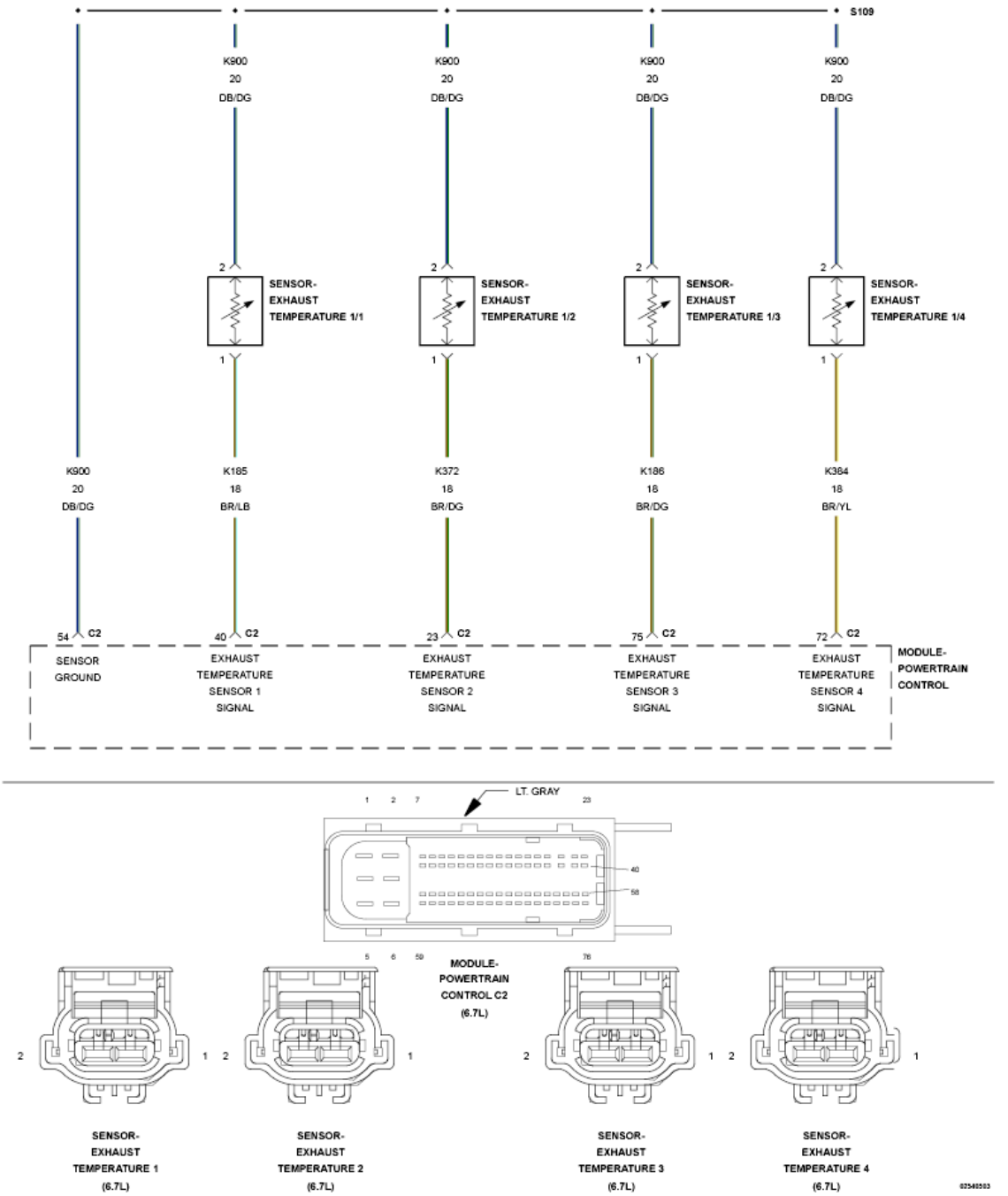

Fig. 43: Exhaust Gas Temperature Sensor Circuit Schematic
Courtesy of CHRYSLER GROUP, LLC

For a complete wiring diagram, **refer to appropriate SYSTEM WIRING DIAGRAMS article** .

THEORY OF OPERATION

The Exhaust Temperature Sensors are used by the Powertrain Control Module (PCM) to monitor the engine exhaust temperatures in the aftertreatment system. The Exhaust Temperature Sensors are thermistors and change resistance based on the temperature being measured. The Exhaust Temperature Sensors receive a 5-Volt

signal from the PCM and share a sensor ground. The PCM monitors the change in signal voltage and converts this to a temperature value. The PCM illuminates the MIL lamp immediately when the diagnostic runs and fails. A default value will be used for the Exhaust Temperature Sensor 1/4 and active regeneration of the Diesel Particulate Filter will be disabled. The PCM will turn off the MIL lamp immediately after the diagnostic runs and passes.

WHEN MONITORED:

With the ignition on.

SET CONDITION:

The Powertrain Control Module (PCM) will set the fault if it detects that the Exhaust Temperature Sensor 1/4 Signal voltage is greater than a calibrated voltage for more than a calibrated time.

POSSIBLE CAUSES

Possible Causes
(K384) EXHAUST GAS TEMPERATURE SENSOR 1/4 SIGNAL CIRCUIT SHORTED TO VOLTAGE
(K384) EXHAUST GAS TEMPERATURE SENSOR 1/4 SIGNAL CIRCUIT OPEN/HIGH RESISTANCE
(K900) SENSOR GROUND CIRCUIT OPEN/HIGH RESISTANCE
EXHAUST GAS TEMPERATURE SENSOR
POWERTRAIN CONTROL MODULE (PCM)

Always perform the Pre-Diagnostic Troubleshooting procedure before proceeding. Refer to PRE-DIAGNOSTIC TROUBLESHOOTING PROCEDURE - 6.7L .

DIAGNOSTIC TEST

1. **ACTIVE DTC**
    1. Turn the ignition on.
    2. With the scan tool, record all Freeze frame data.
    3. With the scan tool, erase DTCs.
    4. Turn the ignition off for 30 seconds.
    5. Turn the ignition on.
    6. With the scan tool, read DTCs.

    Did the DTC return?

    Yes

    - Go To 2.

No

- Perform the INTERMITTENT CONDITION diagnostic procedure. Refer to **INTERMITTENT CONDITION - 6.7L** .

2. **CHECK THE (K384) EXHAUST GAS TEMPERATURE 1/4 SIGNAL CIRCUIT FOR A SHORT TO VOLTAGE**
   1. Ignition on.
   2. Disconnect the Exhaust Temperature Sensor 1/4 harness connector.

      NOTE: Check connectors - Clean/repair as necessary.

   3. Measure the voltage on the (K384) Exhaust Gas Temperature Sensor 1/4 Signal circuit at the Exhaust Temperature Sensor 1/4 harness connector.

      Is the voltage reading above 5.2 Volts?

      Yes

      - Repair the short to voltage in the (K384) Exhaust Gas Temperature Sensor 1/4 Signal circuit.
      - Perform the POWERTRAIN VERIFICATION TEST. Refer to **POWERTRAIN VERIFICATION TEST - 6.7L** .

      No

      - Go To 3.

3. **CHECK THE (K384) EXHAUST GAS TEMPERATURE 1/4 SIGNAL CIRCUIT FOR AN OPEN/HIGH RESISTANCE**

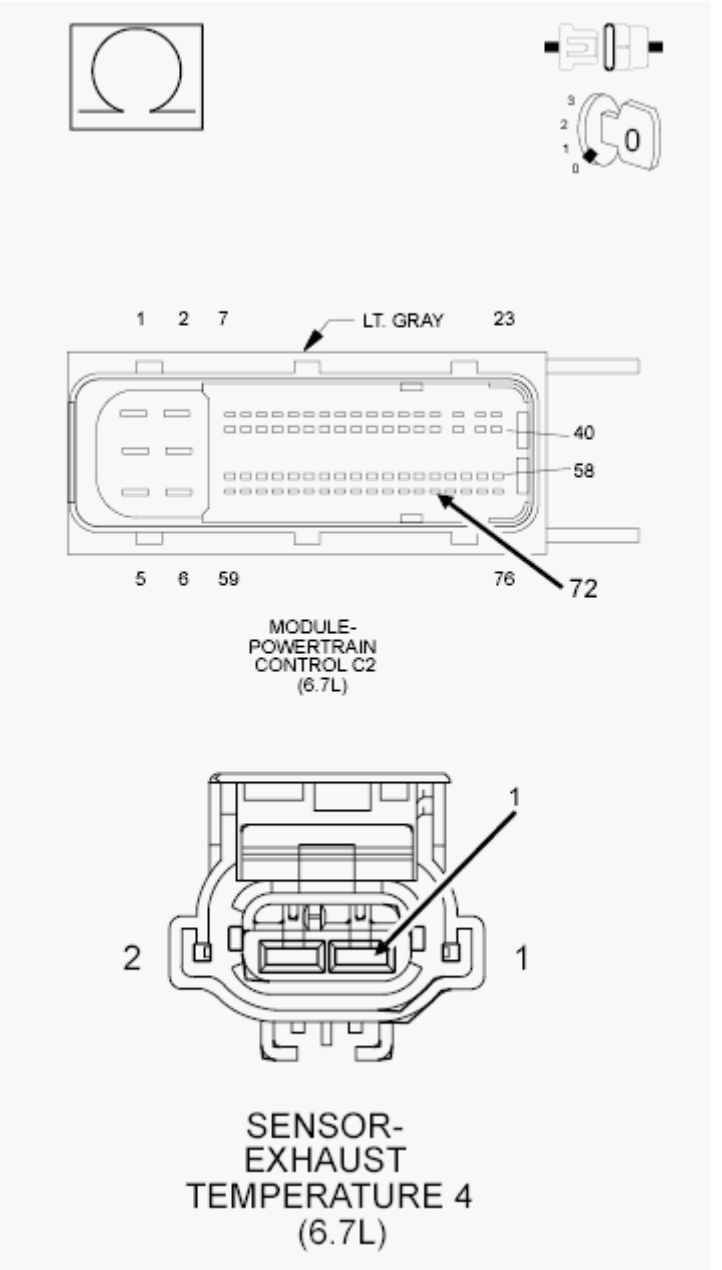

Fig. 44: Checking Exhaust Gas Temperature 1/4 Signal Circuit For Open Or High Resistance
Courtesy of CHRYSLER GROUP, LLC

1. Turn the ignition off.
2. Measure the resistance of the (K384) Exhaust Gas Temperature Sensor 1/4 Signal circuit between the Exhaust Gas Temperature Sensor 1/4 harness connector and the PCM C2 harness connector.

   Is the resistance below 5.0 Ohms?

   Yes

   - Go To 4.

No

- Repair the (K384) Exhaust Temperature 1/4 Signal circuit for an open or high resistance.
- Perform the POWERTRAIN VERIFICATION TEST. Refer to **POWERTRAIN VERIFICATION TEST - 6.7L** .

4. **CHECK THE (K900) SENSOR GROUND CIRCUIT FOR AN OPEN/HIGH RESISTANCE**

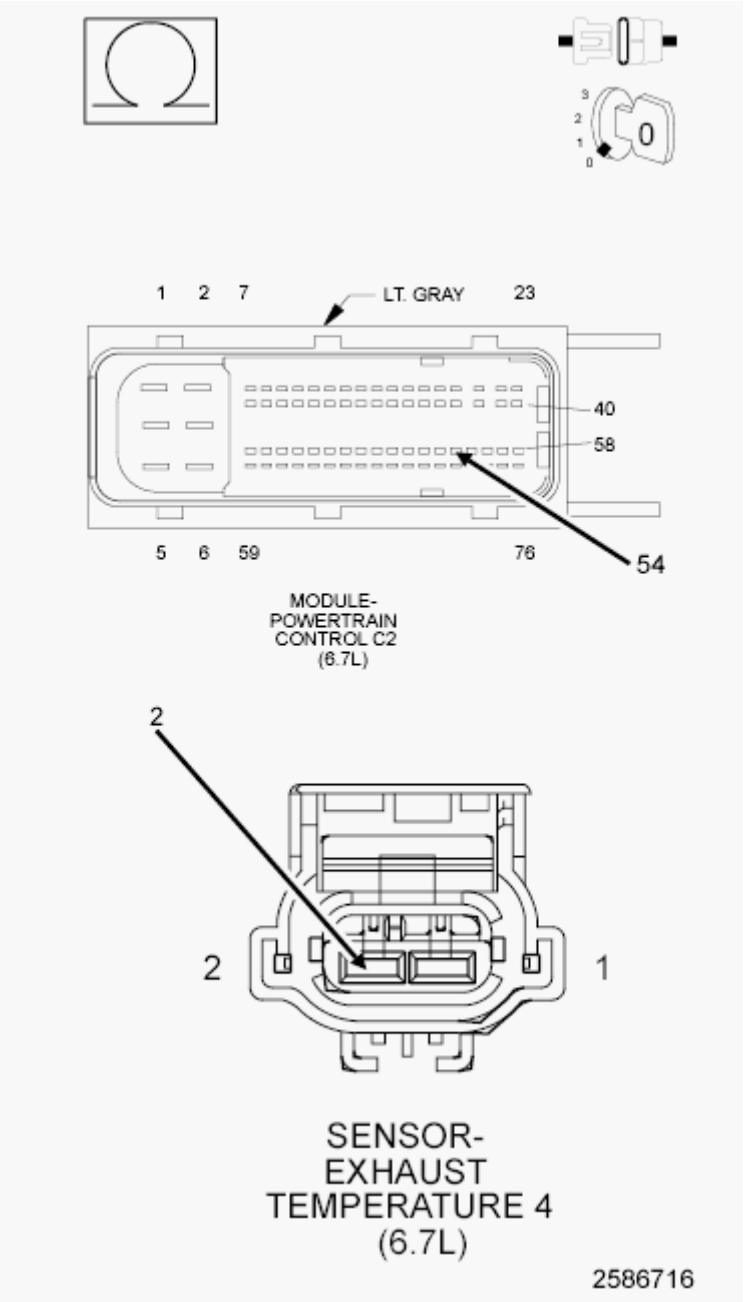

Fig. 45: Checking Exhaust Gas Temperature Sensor Ground Circuit For Open/High Resistance
Courtesy of CHRYSLER GROUP, LLC

1. Measure the resistance of the (K900) Sensor ground circuit between the Exhaust Gas Temperature

Sensor 1/4 harness connector and the PCM C2 harness connector.

Is the resistance below 5.0 Ohms?

Yes

- Go To 5.

No

- Repair the (K900) Sensor ground circuit for an open or high resistance.
- Perform the POWERTRAIN VERIFICATION TEST. Refer to **POWERTRAIN VERIFICATION TEST - 6.7L** .

5. **CHECK THE EXHAUST GAS TEMPERATURE SENSOR**
   1. Turn the ignition on.
   2. While monitoring the scan tool, connect a jumper across the Exhaust Gas Temperature Sensor 1/4 connector for at least five seconds.

      Does the DTC P2470 become active?

      Yes

      - Replace the Exhaust Gas Temperature Sensor 1/4 in accordance with the service information.
      - Perform the POWERTRAIN VERIFICATION TEST. Refer to **POWERTRAIN VERIFICATION TEST - 6.7L** .

      No

      - Replace the Powertrain Control Module in accordance with the service information.
      - Perform the POWERTRAIN VERIFICATION TEST. Refer to **POWERTRAIN VERIFICATION TEST - 6.7L** .

P249C-EXCESSIVE TIME TO ENTER CLOSED LOOP SCR REDUCTANT INJECTION CONTROL

For a complete wiring diagram, **refer to appropriate SYSTEM WIRING DIAGRAMS article** .

THEORY OF OPERATION

The engine aftertreatment system monitors the soot load in the aftertreatment DOC/DPF Catalyst. Under normal operating conditions the aftertreatment DOC/DPF Catalyst is self-cleaning, where soot is converted to ash. The soot load in the DOC/DPF Catalyst is estimated using the Exhaust Pressure Sensor and the calculated soot output of the engine. The Powertrain Control Module (PCM) will set this fault if it detects that the aftertreatment DOC/DPF Catalyst is plugged or that the differential pressure across the DOC/DPF Catalyst is above the calibrated moderately severe threshold limit. The PCM will illuminate the MIL lamp immediately when the diagnostic runs and fails. The driver will be notified via the vehicle's EVIC Message Center. The PCM will turn off the MIL lamp immediately after the soot load has dropped below the Moderately Severe Level

Threshold.

WHEN MONITORED:

The diagnostic runs when an active soot regeneration is requested, ambient air temperature is above a calibrated threshold, and engine speed and fueling are in the operating window where soot regeneration is allowed.

SET CONDITION:

If the time duration after an active soot regeneration is requested exceeds a calibrated threshold and the DOC/DPF Catalyst inlet temperature has not reached the lightoff temperature threshold to begin closed loop control.

POSSIBLE CAUSES

Possible Causes
EXHAUST TEMPERATURES NOT HIGH ENOUGH TO ACTIVELY REGENERATE THE AFTERTREATMENT DIESEL PARTICULATE FILTER SUE TO OPERATING IN LIGHT LOAD CONDITIONS
FUEL SYSTEM OR AIR HANDLING SYSTEM SENSOR FAILURE
EXHAUST TEMPERATURE SENSORS FAILED IN-RANGE LOW
BASE ENGINE FAILURE
FUEL SYSTEM FAILURE
AIR HANDLING SYSTEM FAILURE
DOC/DPF CATALYST PLUGGED

Always perform the Pre-Diagnostic Troubleshooting procedure before proceeding. Refer to PRE-DIAGNOSTIC TROUBLESHOOTING PROCEDURE - 6.7L .

DIAGNOSTIC TEST

1. **OTHER RELATED DTCS**
    1. Turn the ignition on.
    2. With the scan tool, read DTCs.

    Were there any fuel system or air handling sensor DTCs present?

    Yes

    - If this DTC is present along with any fuel system or air handling system sensor DTCs, repair those DTCs before proceeding.
    - Perform the POWERTRAIN VERIFICATION TEST. Refer to **POWERTRAIN VERIFICATION TEST - 6.7L** .

    No

- Go To 2.

2. **CHECK THE EXHAUST TEMPERATURE SENSORS**
    1. Turn the ignition off for 10 minutes to allow the Exhaust Temperature Sensors to stabilize.
    2. Turn the ignition on, engine not running.
    3. With the scan tool check the temperature values of the Exhaust Temperature Sensors.

    Are the Exhaust Temperature Sensors reading within 43°F of each other?

    Yes

    - Go To 3.

    No

    - Replace the Exhaust Temperature Sensor that is out of range as compared to the others.
    - Perform the POWERTRAIN VERIFICATION TEST. Refer to **POWERTRAIN VERIFICATION TEST - 6.7L** .

3. **CHECK THE ENGINE PERFORMANCE**
    1. Perform the CHECKING ENGINE MISFIRE / RUNS ROUGH / PERFORMANCE TEST diagnostic procedure. Refer to **DIAGNOSIS AND TESTING, 6.7L** .

    Were any problems found?

    Yes

    - Perform the appropriate repair.
    - Perform the POWERTRAIN VERIFICATION TEST. Refer to **POWERTRAIN VERIFICATION TEST - 6.7L** .

    No

    - If DTC P1451 is present, perform a scan tool initiated regeneration of the aftertreatment system. If DTC P1451 is not present, replace the DOC/DPF assembly in accordance with the service information.
    - Perform the POWERTRAIN VERIFICATION TEST. Refer to **POWERTRAIN VERIFICATION TEST - 6.7L** .

P249E-CLOSED LOOP SCR REDUCTANT INJECTION CONTROL AT LIMIT - FLOW TOO HIGH

For a complete wiring diagram, **refer to appropriate SYSTEM WIRING DIAGRAMS article** .

THEORY OF OPERATION

The Powertrain Control Module (PCM) uses the NOx Sensor 1/1 feedback along with engine operating and environmental conditions to calculate the diesel exhaust fluid dosing rate. The DEF Dosing Control Unit will

turn on the MIL Lamp via the PCM immediately after the monitor runs and fails. The DEF Dosing Control Unit will turn off the MIL Lamp via the PCM immediately after the monitor runs and passes.

WHEN MONITORED:

This monitor runs when the engine is running and diesel exhaust fluid dosing is being commanded.

SET CONDITION:

The DEF Dosing Control Unit detects that the NOx Sensor levels are higher than expected.

POSSIBLE CAUSES

Possible Causes
EGR SYSTEM LEAKS
ENGINE MISFIRE
AIR HANDLING SYSTEM FAILURE
FUEL SYSTEM FAILURE
DEF INJECTOR

Always perform the Pre-Diagnostic Troubleshooting procedure before proceeding. Refer to PRE-DIAGNOSTIC TROUBLESHOOTING PROCEDURE - 6.7L .

DIAGNOSTIC TEST

1. **OTHER RELATED DTCS**
    1. Turn the ignition on.
    2. With the scan tool, read DTCs.

    Were there any DTCs present for the EGR System, DEF Injector, NOx Sensors, DEF Pump Assembly or DEF Dosing Control Unit?

    Yes

    - If this DTC is present along with any DEF Injector, NOx Sensors, DEF Pump Assembly or DEF Dosing Control Unit, repair those DTCs before proceeding.
    - Perform the POWERTRAIN VERIFICATION TEST. Refer to **POWERTRAIN VERIFICATION TEST - 6.7L** .

    No

    - Go To 2.
2. **CHECK THE EGR SYSTEM FOR LEAKS**
    1. Turn the ignition off.
    2. Visually inspect the entire EGR system for soot streaking indicating a leak.

Were there any leaks found in the EGR system?

Yes

- Repair the EGR system in accordance with the service information.
- Perform the POWERTRAIN VERIFICATION TEST. Refer to **POWERTRAIN VERIFICATION TEST - 6.7L** .

No

- Go To 3.

3. **CHECK FOR CYLINDER MISFIRE**
   1. Start the engine.
   2. With the scan tool, navigate to Systems Tests, and perform the Injector Kill system test.

   Were any cylinders found to be faulty or low?

   Yes

   - Perform the CHECKING ENGINE MISFIRE / RUNS ROUGH / PERFORMANCE TEST diagnostic procedure. Refer to **DIAGNOSIS AND TESTING, 6.7L** .
   - Perform the POWERTRAIN VERIFICATION TEST. Refer to **POWERTRAIN VERIFICATION TEST - 6.7L** .

   No

   - Go To 4.

4. **CHECK THE ENGINE PERFORMANCE**
   1. Perform the CHECKING ENGINE MISFIRE / RUNS ROUGH / PERFORMANCE TEST diagnostic procedure. Refer to **DIAGNOSIS AND TESTING, 6.7L** .

   Were any problems found?

   Yes

   - Perform the appropriate repair.
   - Perform the POWERTRAIN VERIFICATION TEST. Refer to **POWERTRAIN VERIFICATION TEST - 6.7L** .

   No

   - Replace the DEF Injector in accordance with the service information. Refer to **INJECTOR, DIESEL EXHAUST FLUID, REMOVAL** .
   - Perform the POWERTRAIN VERIFICATION TEST. Refer to **POWERTRAIN VERIFICATION TEST - 6.7L** .

P249F-EXCESSIVE TIME TO ENTER CLOSED LOOP DPF REGENERATION CONTROL

For a complete wiring diagram, **refer to appropriate SYSTEM WIRING DIAGRAMS article** .

THEORY OF OPERATION

The engine aftertreatment system monitors the soot load in the DOC/DPF Catalyst. Under normal operating conditions the aftertreatment Diesel Particulate Filter is self-cleaning, where soot is converted to ash. The soot load in the aftertreatment DOC/DPF Catalyst is estimated using the Exhaust Pressure Sensor and the calculated soot output of the engine. The Powertrain Control Module (PCM) will set this fault if it detects that the aftertreatment DOC/DPF Catalyst is plugged or that the differential pressure across the DOC/DPF Catalyst is above the calibrated moderately severe threshold limit. The PCM will illuminate the MIL lamp immediately when the diagnostic runs and fails. The driver will be notified via the vehicle's EVIC Message Center. The PCM will turn off the MIL lamp immediately after the soot load has dropped below the Moderately Severe Level Threshold.

WHEN MONITORED:

This monitor runs when an active soot regeneration is requested, ambient air temperature is above a calibrated threshold, and engine speed and fueling are in the operating window where soot regeneration is allowed.

SET CONDITION:

If the time duration after an active soot regeneration is requested exceeds a calibrated threshold and the Diesel Oxidation Catalyst inlet temperature has not reached the lightoff temperature threshold to begin closed loop control.

POSSIBLE CAUSES

Possible Causes
EXHAUST TEMPERATURES NOT HIGH ENOUGH TO ACTIVELY REGENERATE THE AFTERTREATMENT DIESEL PARTICULATE FILTER DUE TO OPERATING IN LIGHT LOAD CONDITIONS
FUEL SYSTEM OR AIR HANDLING SYSTEM SENSOR FAILURE
EXHAUST TEMPERATURE SENSORS FAILED IN-RANGE LOW
ENGINE MISFIRES
FUEL SYSTEM FAILURE
AIR HANDLING SYSTEM FAILURE
DOC/DPF CATALYST PLUGGED

Always perform the Pre-Diagnostic Troubleshooting procedure before proceeding. Refer to PRE-DIAGNOSTIC TROUBLESHOOTING PROCEDURE - 6.7L .

DIAGNOSTIC TEST

1. **OTHER RELATED DTCS**

1. Turn the ignition on.
2. With the scan tool, read DTCs.

   Were there any fuel system or air handling sensor DTCs present?

   Yes

   - If this DTC is present along with any fuel system or air handling system sensor DTCs, repair those DTCs before proceeding.
   - Perform the POWERTRAIN VERIFICATION TEST. Refer to **POWERTRAIN VERIFICATION TEST - 6.7L** .

   No

   - Go To 2.

2. **CHECK THE EXHAUST TEMPERATURE SENSORS**
   1. Turn the ignition off for 10 minutes to allow the Exhaust Temperature Sensors to stabilize.
   2. Turn the ignition on, engine not running.
   3. With the scan tool check the temperature values of the Exhaust Temperature Sensors.

      Are the Exhaust Temperature Sensors reading within 43°F of each other?

      Yes

      - Go To 3.

      No

      - Replace the Exhaust Temperature Sensor that is out of range as compared to the others. Refer to **SENSOR, EXHAUST TEMPERATURE, REMOVAL** .
      - Perform the POWERTRAIN VERIFICATION TEST. Refer to **POWERTRAIN VERIFICATION TEST - 6.7L** .

3. **CHECK THE ENGINE PERFORMANCE**
   1. Perform the CHECKING ENGINE MISFIRE / RUNS ROUGH / PERFORMANCE TEST diagnostic procedure. Refer to **DIAGNOSIS AND TESTING, 6.7L** .

      Were any problems found?

      Yes

      - Perform the appropriate repair.
      - Perform the POWERTRAIN VERIFICATION TEST. Refer to **POWERTRAIN VERIFICATION TEST - 6.7L** .

No

- Go To 4.

4. **CHECK FOR THE DOC/DPF CATALYST DAMAGED**
   1. Separate the exhaust and inspect the DOC/DPF Catalyst for internal damage or signs of face plugging.

      Was any internal damage found in the DOC/DPF Catalyst?

      Yes

      - Replace the DOC/DPF Catalyst in accordance with the service information. Refer to **CATALYST, SELECTIVE CATALYTIC REDUCTION (SCR), REMOVAL** .
      - Perform the POWERTRAIN VERIFICATION TEST. Refer to **POWERTRAIN VERIFICATION TEST - 6.7L** .

      No

      - Replace the DOC/DPF Catalyst inlet temperature sensor.
      - Perform the POWERTRAIN VERIFICATION TEST. Refer to **POWERTRAIN VERIFICATION TEST - 6.7L** .

P24A0-CLOSED LOOP DPF REGENERATION CONTROL AT LIMIT - TEMPERATURE TOO LOW

For a complete wiring diagram, **refer to appropriate SYSTEM WIRING DIAGRAMS article** .

WHEN MONITORED:

The monitor runs when the DOC/DPF Catalyst temperature closed loop control is active and ambient air temperature is above a calibrated threshold.

SET CONDITION:

The Powertrain Control Module (PCM) will set this fault if it detects that the DOC/DPF Catalyst closed loop control fueling adjustment has reached it's maximum allowable fueling but is unable to reach the target regeneration temperature.

POSSIBLE CAUSES

Possible Causes
EXHAUST TEMPERATURES NOT HIGH ENOUGH TO ACTIVELY REGENERATE THE AFTERTREATMENT DIESEL PARTICULATE FILTER SUE TO OPERATING IN LIGHT LOAD CONDITIONS
FUEL OR EMISSION RELATED FAULTS
EXHAUST TEMPERATURE SENSORS FAILED IN-RANGE LOW

DOC/DPF CATALYST MISSING
DOC/DPF CATALYST DAMAGED

Always perform the Pre-Diagnostic Troubleshooting procedure before proceeding. Refer to PRE-DIAGNOSTIC TROUBLESHOOTING PROCEDURE - 6.7L .

DIAGNOSTIC TEST

1. **OTHER DTCS**
    1. Ignition on, engine not running.
    2. With the scan tool, read DTCs.

    Were there any fuel system or air handling sensor DTCs present?

    Yes

    - Repair other DTCs before proceeding.

    No

    - Go To 2.
2. **CHECK THE EXHAUST TEMPERATURE SENSORS**
    1. Turn the ignition off for 10 minutes to allow the Exhaust Temperature Sensors to stabilize.
    2. Turn the ignition on.
    3. With the scan tool check the temperature values of the Exhaust Temperature Sensors.

    Are the Exhaust Temperature Sensors reading within 43°F of each other?

    Yes

    - Go To 3.

    No

    - Replace the Exhaust Temperature Sensor that is out of range as compared to the others.
    - Perform the POWERTRAIN VERIFICATION TEST. Refer to **POWERTRAIN VERIFICATION TEST - 6.7L** .
3. **CHECK FOR THE DOC/DPF CATALYST MISSING**
    1. Visually inspect the aftertreatment exhaust system.

    Is the DOC/DPF Catalyst installed on the vehicle?

    Yes

- Go To 4.

No

- Replace the DOC/DPF Catalyst in accordance with the service information.
- Perform the POWERTRAIN VERIFICATION TEST. Refer to **POWERTRAIN VERIFICATION TEST - 6.7L** .

4. **CHECK FOR THE DOC/DPF CATALYST DAMAGED**
   1. Separate the exhaust and inspect the DOC/DPF Catalyst for internal damage or signs of face plugging.

      Was any internal damage found in the DOC/DPF Catalyst?

      Yes

      - Replace the aftertreatment DOC/DPF Catalyst in accordance with the service information. Refer to **CATALYST, SELECTIVE CATALYTIC REDUCTION (SCR), REMOVAL** .
      - Perform the POWERTRAIN VERIFICATION TEST. Refer to **POWERTRAIN VERIFICATION TEST - 6.7L** .

      No

      - Replace the DOC/DPF Catalyst outlet temperature sensor. Refer to **SENSOR, EXHAUST TEMPERATURE, REMOVAL** .
      - Perform the POWERTRAIN VERIFICATION TEST. Refer to **POWERTRAIN VERIFICATION TEST - 6.7L** .

P2503-CHARGING SYSTEM OUTPUT LOW

For a complete wiring diagram, **refer to appropriate SYSTEM WIRING DIAGRAMS article** .

THEORY OF OPERATION

There are two communication lines between the Powertrain Control Module (PCM) and Generator. Based on sensed battery voltage, the PCM commands the alternator to charge the batteries to a desired voltage. The max voltage the PCM will command the Generator to charge is 14.75 Volts. The PCM then receives feedback from the Generator on the voltage level it is charging the batteries. The PCM will not light a MIL lamp for this fault.

WHEN MONITORED:

While the engine is running.

SET CONDITION:

Battery voltage is less than 11.5 Volts for more than eight seconds. Battery voltage must exceed 12.0 Volts for more than five seconds for fault to become inactive.

POSSIBLE CAUSES

Possible Causes
GENERATOR (K20) GENERATOR FIELD CONTROL CIRCUIT SHORTED TO GROUND (K20) GENERATOR FIELD CONTROL CIRCUIT OPEN
POWERTRAIN CONTROL MODULE (PCM)

Always perform the Pre-Diagnostic Troubleshooting procedure before proceeding. Refer to PRE-DIAGNOSTIC TROUBLESHOOTING PROCEDURE - 6.7L .

DIAGNOSTIC TEST

1. **ACTIVE DTC**
   1. With the scan tool, read DTCs.

      Is DTC P065A active?

      Yes

      - Go To 2.

      No

      - Perform the INTERMITTENT CONDITION diagnostic procedure. Refer to **INTERMITTENT CONDITION - 6.7L** .
2. **CHECK THE GENERATOR**
   1. Turn the ignition off.
   2. Disconnect the Generator field harness connector.

      NOTE: Check connectors - Clean/repair as necessary.

   3. Measure the resistance between the Generator field terminals at the Generator.

      Is the resistance between 0.5 and 15.0 Ohms?

      Yes

      - Go To 3.

      No

      - Replace the Generator in accordance with the service information.
      - Perform the POWERTRAIN VERIFICATION TEST. Refer to **POWERTRAIN VERIFICATION TEST - 6.7L** .

3. **CHECK THE (K20) GENERATOR FIELD CONTROL CIRCUIT FOR A SHORT TO GROUND**
   1. Disconnect the PCM C1 harness connector.

      NOTE: Check connectors - Clean/repair as necessary.

   2. Measure the resistance between ground and the (K20) Generator Field Control circuit at the Generator field harness connector.

      Is the resistance below 10k Ohms?

      Yes

      - Repair the (K20) Generator Field Control circuit for a short to ground.
      - Perform the POWERTRAIN VERIFICATION TEST. Refer to **POWERTRAIN VERIFICATION TEST - 6.7L** .

      No

      - Go To 4.
4. **CHECK THE (K20) GENERATOR FIELD CONTROL CIRCUIT FOR AN OPEN/HIGH RESISTANCE**
   1. Measure the resistance between of the (K20) Generator Field Control circuit between the Generator field harness connector and the PCM C1 harness connector.

      Is the resistance below 5.0 Ohms?

      Yes

      - Go To 5.

      No

      - Repair the (K20) Generator Field Control circuit for an open or high resistance.
      - Perform the POWERTRAIN VERIFICATION TEST. Refer to **POWERTRAIN VERIFICATION TEST - 6.7L** .
5. **POWERTRAIN CONTROL MODULE**
   1. Measure and record the voltage between battery positive circuit of the PCM harness connector and the battery negative circuits of the PCM harness connector.
   2. Reconnect the PCM connectors.
   3. Using the scan tool, read battery voltage.
   4. Compare the voltage reading from the voltmeter with that of the scan tool.

      Are the readings within 3.0 Volts of each other?

Yes

- Perform the INTERMITTENT CONDITION diagnostic procedure. Refer to **INTERMITTENT CONDITION - 6.7L** .

No

- Replace and program the Powertrain Control Module in accordance with the service information. Refer to **PCM - REMOVAL** , also see **PCM/ECM / TCM PROGRAMMING** .
- Perform the POWERTRAIN VERIFICATION TEST. Refer to **POWERTRAIN VERIFICATION TEST - 6.7L** .

P2504-CHARGING SYSTEM OUTPUT HIGH

For a complete wiring diagram, **refer to appropriate SYSTEM WIRING DIAGRAMS article** .

THEORY OF OPERATION

There are two communication lines between the Powertrain Control Module (PCM) and Generator. Based on sensed battery voltage, the PCM commands the alternator to charge the batteries to a desired voltage. The max voltage the PCM will command the Generator to charge is 14.75 Volts. The PCM then receives feedback from the alternator on the voltage level it is charging the batteries. The PCM will not light a MIL lamp for this fault.

WHEN MONITORED:

While the engine is running.

SET CONDITION:

Battery voltage is less than 11.5 Volts for more than eight seconds. Battery voltage must exceed 12 Volts for more than five seconds for fault to become inactive.

POSSIBLE CAUSES

Possible Causes
DIRTY OR LOOSE CONNECTIONS
ADD-ON OR ACCESSORY WIRES AT BATTERY TERMINAL
HIGH RESISTANCE IN THE B+ CIRCUIT
HIGH RESISTANCE IN THE B+ CROSS OVER CABLE
HIGH RESISTANCE IN THE GROUND CIRCUIT
GENERATOR
POWERTRAIN CONTROL MODULE (PCM)

Always perform the Pre-Diagnostic Troubleshooting procedure before proceeding. Refer to PRE-DIAGNOSTIC TROUBLESHOOTING PROCEDURE - 6.7L .

DIAGNOSTIC TEST

1. **ACTIVE DTC**
    1. With the scan tool, read DTCs.

       Is DTC P065A active

       Yes

       - Go To 2.

       No

       - Perform the INTERMITTENT CONDITION diagnostic procedure. Refer to **INTERMITTENT CONDITION - 6.7L** .
2. **CHECK FOR DIRTY OR LOOSE CONNECTIONS**
    1. Visually inspect the positive and negative connections at the battery.
    2. Visually inspect the battery negative connections at the engine block.

       Are the connections tight and free of corrosion?

       Yes

       - Go To 3.

       No

       - Clean and/or tighten the connections.
       - Perform the POWERTRAIN VERIFICATION TEST. Refer to **POWERTRAIN VERIFICATION TEST - 6.7L** .
3. **CHECK FOR ADD-ON OR ACCESSORY WIRES AT BATTERY TERMINAL**
    1. Check for add-on or accessory wiring at positive (+) terminal of the battery.

       Are there any damaged wires at the battery?

       Yes

       - Remove defective or miss wired add-on or accessory wiring from battery.
       - Perform the POWERTRAIN VERIFICATION TEST. Refer to **POWERTRAIN VERIFICATION TEST - 6.7L** .

       No

       - Go To 4.
4. **CHECK FOR HIGH RESISTANCE IN THE B+ CIRCUIT**

1. Measure the voltage between the B+ post of the generator and the B+ post of the battery while the engine is running.

   Is the voltage above 0.4 Volts?

   Yes

   - Repair the high resistance in the B+ circuit from battery to the generator.
   - Perform the POWERTRAIN VERIFICATION TEST. Refer to **POWERTRAIN VERIFICATION TEST - 6.7L** .

   No

   - Go To 5.

5. **CHECK FOR HIGH RESISTANCE IN THE B+ CROSS OVER CABLE**
   1. Measure the voltage between the B+ post of the generator and the B+ post of the right side battery to the left side battery while the engine is running.

      Is the voltage above 0.4 Volts?

      Yes

      - Repair the high resistance in the B+ cross over cable from right side battery to left side battery.
      - Perform the POWERTRAIN VERIFICATION TEST. Refer to **POWERTRAIN VERIFICATION TEST - 6.7L** .

      No

      - Go To 6.

6. **CHECK FOR HIGH RESISTANCE IN THE GROUND CIRCUIT**
   1. Measure the voltage between the generator case and the B- post of the battery.

      Is the voltage above 0.1 Volts?

      Yes

      - Repair the high resistance in the ground circuit.
      - Perform the POWERTRAIN VERIFICATION TEST. Refer to **POWERTRAIN VERIFICATION TEST - 6.7L** .

      No

      - Go To 7.

7. **GENERATOR**

1. Turn the ignition off.
2. Disconnect the Generator field harness connector.

   NOTE: Check connectors - Clean/repair as necessary.

3. Measure the resistance between the generator field terminals at the generator.

   Is the resistance between 0.5 and 15.0 Ohms?

   Yes

   - Go To 8.

   No

   - Replace the Generator in accordance with the service information.
   - Perform the POWERTRAIN VERIFICATION TEST. Refer to **POWERTRAIN VERIFICATION TEST - 6.7L** .

8. **POWERTRAIN CONTROL MODULE (PCM)**
   1. Disconnect the PCM connectors.
   2. Measure and record the voltage between battery positive circuit of the PCM harness connector and the battery negative circuits of the PCM harness connector.
   3. Reconnect the PCM connectors.
   4. Use the scan tool to measure and record battery voltage.
   5. Compare the voltage reading from the voltmeter with that of the scan tool.

      Are the readings within 3.0 Volts of each other?

      Yes

      - Perform the INTERMITTENT CONDITION diagnostic procedure. Refer to **INTERMITTENT CONDITION - 6.7L** .

      No

      - Replace and program the Powertrain Control Module in accordance with the service information. Refer to **PCM - REMOVAL** , also see **PCM/ECM / TCM PROGRAMMING** .
      - Perform the POWERTRAIN VERIFICATION TEST. Refer to **POWERTRAIN VERIFICATION TEST - 6.7L** .

P2509-PCM/PCM POWER INPUT SIGNAL INTERMITTENT

For a complete wiring diagram, **refer to appropriate SYSTEM WIRING DIAGRAMS article** .

THEORY OF OPERATION

The Powertrain Control Module (PCM) receives a constant voltage from the batteries through the battery wires that are connected directly to the positive (+) battery post. The PCM receives switched battery input through the vehicle Ignition Switch wire when the vehicle is turned on. The PCM will illuminate the ETC lamp immediately after the diagnostic runs and fails. During the time the customer may experience some performance effects such as engine dying or hard starting. Fault information, trip information could be inaccurate.

WHEN MONITORED:

Continuous - key on or key off.

SET CONDITION:

Battery voltage was removed from the Powertrain Control Module (PCM) while it was powered on. This could be during engine operation, or after key off while the PCM was powering down. This powering down condition can last up to 10 minutes.

POSSIBLE CAUSES

Possible Causes
POOR CONNECTIONS AT THE BATTERIES BATTERIES DISCONNECTED WITHIN TEN MINUTES AFTER KEY OFF
LOW BATTERY VOLTAGE OPEN FUSED B+ TO PCM OPEN GROUND CIRCUIT BATTERY POSITIVE SHORTED TO OTHER CIRCUITS RETURN CIRCUIT SHORTED BATTERY POSITIVE SHORTED TO GROUND DEFECTIVE BATTERY

Always perform the Pre-Diagnostic Troubleshooting procedure before proceeding. Refer to PRE-DIAGNOSTIC TROUBLESHOOTING PROCEDURE - 6.7L .

DIAGNOSTIC TEST

NOTE: **It can take up to 10 minutes for the PCM to power down after the ignition is turned off. Disconnecting the batteries during this time will cause this DTC to set.**

1. **CHECK FOR POOR CONNECTIONS AT THE BATTERIES**
    1. Visually inspect the wiring at the battery for damaged wires, or corrosion.

       Are the connections tight and free of corrosion?

       Yes

- Go To 2.

No

- Repair the poor connections at the batteries.
- Perform the POWERTRAIN VERIFICATION TEST. Refer to **POWERTRAIN VERIFICATION TEST - 6.7L** .

2. **CHECK FOR LOW BATTERY VOLTAGE / DEFECTIVE BATTERY**
   1. Disconnect both batteries.

      NOTE: Keep the batteries disconnected through the entire test procedure.

   2. Perform a battery test using the midtronics battery tester.

      Do both batteries pass the midtronics battery test?

      Yes

      - Go To 3.

      No

      - Recharge or replace the battery(s).
      - Perform the POWERTRAIN VERIFICATION TEST. Refer to **POWERTRAIN VERIFICATION TEST - 6.7L** .

3. **CHECK THE PCM FUSED B+ CIRCUITS**
   1. Turn the ignition off.
   2. Disconnect the PCM harness connectors.
   3. Measure the resistance between the positive battery post and the three PCM supply circuits.

      Is the resistance below 5.0 Ohms?

      Yes

      - Go To 4.

      No

      - Repair the open fused B+ circuit to PCM.
      - Perform the POWERTRAIN VERIFICATION TEST. Refer to **POWERTRAIN VERIFICATION TEST - 6.7L** .

4. **CHECK THE PCM GROUND CIRCUITS**
   1. Measure the resistance between the negative battery post and the three PCM ground circuits.

Is the resistance less than 5.0 Ohms?

Yes

- Go To 5.

No

- Repair the open ground circuit.
- Perform the POWERTRAIN VERIFICATION TEST. Refer to **POWERTRAIN VERIFICATION TEST - 6.7L** .

5. **BATTERY POSITIVE SHORTED TO OTHER CIRCUITS**
    1. Measure the resistance between the three PCM supply circuits and all other circuits in the PCM harness connector, except other supply circuits.

       Is the resistance greater than 10k Ohms?

       Yes

       - Go To 6.

       No

       - Repair the battery circuit short to other circuits in engine harness.
       - Perform the POWERTRAIN VERIFICATION TEST. Refer to **POWERTRAIN VERIFICATION TEST - 6.7L** .
6. **RETURN CIRCUIT SHORTED**
    1. Measure the resistance between the three PCM return circuits and all other circuits in the PCM harness connector, except other return circuits.

       Is the resistance greater than 10k Ohms?

       Yes

       - Go To 7.

       No

       - Repair or replace the engine harness.
       - Perform the POWERTRAIN VERIFICATION TEST. Refer to **POWERTRAIN VERIFICATION TEST - 6.7L** .
7. **BATTERY POSITIVE SHORTED TO GROUND**
    1. Measure the resistance between the PCM B+ supply circuits and ground.

       Is the resistance greater than 10k Ohms?

Yes

- Perform the INTERMITTENT CONDITION diagnostic procedure. Refer to **INTERMITTENT CONDITION - 6.7L** .

No

- Repair Battery Positive circuit that is shorted to ground.
- Perform the POWERTRAIN VERIFICATION TEST. Refer to **POWERTRAIN VERIFICATION TEST - 6.7L** .

P2563-TURBOCHARGER BOOST CONTROL POSITION SENSOR PERFORMANCE

For a complete wiring diagram, **refer to appropriate SYSTEM WIRING DIAGRAMS article** .

THEORY OF OPERATION

The Variable Geometry Turbocharger (VGT) is electronically activated by the Turbo Actuator. The Turbo Actuator is a smart device that receives information via the CAN BUS from the Powertrain Control Module (PCM). The Turbo Actuator performs it's own diagnostics and reports failures back to the PCM using the CAN BUS. The PCM then decodes the error message and converts it to a fault code. This monitor is a two trip fault. The MIL lamp will turn off once the diagnostic runs and passes in four consecutive drive cycles.

WHEN MONITORED:

Key on, at initial start up. If the monitor fails at start up, it will run again after five minutes. One time per key cycle.

SET CONDITION:

Actual position not found.

POSSIBLE CAUSES

Possible Causes
SOOT BUILD UP ON THE TURBOCHARGER
TURBOCHARGER ASSEMBLY

Always perform the Pre-Diagnostic Troubleshooting procedure before proceeding. Refer to PRE-DIAGNOSTIC TROUBLESHOOTING PROCEDURE - 6.7L .

NOTE: **If there are DTCs present with P2262, P226B, P226C, or P2563, address P2262, P226B, P226C, or P2563 before attempting to repair the other fault codes. If however, these DTCs are accompanied by DTC P0471, both DTCs should be addressed and repaired.**

DIAGNOSTIC TEST

1. **VEHICLE CONFIGURATION**
    1. The repair procedure is different depending on whether the vehicle is a Pick Up or Chassis Cab.

       Is the vehicle a Pick Up or Chassis Cab?

       Pick Up

       - Go To 2.

       Chassis Cab

       - Go To 4.
2. **OTHER DTCS PRESENT**
    1. Turn ignition on.
    2. With the scan tool, read DTCs.

       Are there any communication DTCs related to the J1939 Datalink present?

       Yes

       - Diagnose and repair the communication DTCs before proceeding.
       - Perform the POWERTRAIN VERIFICATION TEST. Refer to **POWERTRAIN VERIFICATION TEST - 6.7L** .

       No

       - Go To 3.
3. **TURBOCHARGER CLEANING**

   NOTE: Do not erase the DTC before attempting to run the VG Turbocharger Cleaning procedure. The procedure can only run if the P2262, P226B, P226C, or P2563 are present (active, pending or stored).

    1. Reconnect the Turbo Actuator harness connector.
    2. Turn ignition on.
    3. With the scan tool, navigate to miscellaneous functions and initialize the VG Turbocharger Cleaning Procedure. Follow the directions on the scan tool completely.

       NOTE: When the procedure is initialized you will see one of two messages on the screen.

       Which message displayed on the tool?

       Turbo does not need to be cleaned;

- The Turbocharger does not need cleaning, or cleaning of the Turbocharger will not fix the stick condition. If DTC P2262, P226B, P226C, or P2563 are **active or pending** , replace the Turbocharger assembly. If the DTC is **stored** , erase the DTC. Perform the DIESEL AFTERTREATMENT VALIDATION - 6.7L procedure. Refer to **DIESEL AFTERTREATMENT VALIDATION- 6.7L** .

The engine must idle at 1, 500 RPM for 5 minutes prior to injecting the cleaner;

- The Turbocharger cleaning has initiated. Fasten the cleaning tool to the vehicle and follow the instructions on the screen completely. After the first attempt at cleaning is completed the test will run again automatically and determine if the Turbocharger has been cleaned. The scan tool can make up to three attempts to clean the Turbocharger before failing it. After the cleaning procedure has finished, the scan tool will display the results. If the scan tool displays VG Turbocharger cleaning was successful, the repair is complete. If the scan tool displays VG Turbocharger cleaning was unsuccessful, replace the Turbocharger assembly in accordance with the service information.
- Perform the DIESEL AFTERTREATMENT VALIDATION - 6.7L procedure. Refer to **DIESEL AFTERTREATMENT VALIDATION- 6.7L** .

4. **OTHER DTCS PRESENT**
   1. Turn ignition on.
   2. With the scan tool, read DTCs.

      Are there any communication DTCs related to the J1939 Datalink present?

      Yes

      - Diagnose and repair those DTCs before replacing the Turbocharger assembly.

      No

      - Replace the Turbocharger assembly in accordance with the service information.
      - Perform the DIESEL AFTERTREATMENT VALIDATION - 6.7L procedure. Refer to **DIESEL AFTERTREATMENT VALIDATION- 6.7L** .

P2579-TURBOCHARGER SPEED SENSOR CIRCUIT PERFORMANCE

For a complete wiring diagram, **refer to appropriate SYSTEM WIRING DIAGRAMS article** .

THEORY OF OPERATION

The Turbocharger Speed Sensor is a variable reluctance speed sensor. It consists of a coil of wire and an iron core. The target on the turbocharger shaft is a ground flat surface in the center of the shaft. As the flat surface on the turbocharger shaft spins past the speed sensor, a signal is generated. The Powertrain Control Module (PCM) interprets this signal and converts it to a turbocharger speed reading. This monitor is a two trip fault. The MIL lamp will turn off once the diagnostic runs and passes in four consecutive drive cycles.

WHEN MONITORED:

Engine running, turbo speed estimate is greater than a calibrated threshold.

SET CONDITION:

The Powertrain Control Module (PCM) calculates an estimated turbo speed. The fault is activated when the difference of speed between the Turbo Speed Sensor and the turbo speed estimate is greater than a calibrated value. The fault is also activated if the Turbo Speed Sensor reading goes above a calibrated limit.

POSSIBLE CAUSES

Possible Causes
HIGH RESISTANCE IN THE (K540) TURBO SPEED SENSOR SIGNAL CIRCUIT
HIGH RESISTANCE IN THE (K540) TURBO SPEED SENSOR SIGNAL CIRCUIT
INCORRECT BOOST PRESSURE SENSOR INSTALLED
TURBOCHARGER SPEED SENSOR

Always perform the Pre-Diagnostic Troubleshooting procedure before proceeding. Refer to PRE-DIAGNOSTIC TROUBLESHOOTING PROCEDURE - 6.7L .

DIAGNOSTIC TEST

1. **DTC ACTIVE**
    1. With vehicle in park/neutral, use the accelerator pedal to accelerate the engine speed to 3100-3200 RPM and hold the engine speed for at least 60 seconds.
    2. Return to idle for 60 seconds and then repeat.

       Does P2579 become active?

       Yes

       - Go To 2.

       No

       - Perform the INTERMITTENT CONDITION diagnostic procedure. Refer to **INTERMITTENT CONDITION - 6.7L** .
2. **INCORRECT BOOST PRESSURE SENSOR INSTALLED**
    1. The CAC/Boost Pressure Sensor and Intake Air Temperature/Intake Air Pressure Sensors are similar but have different part numbers. If the Boost Pressure Sensor was replaced with the wrong part, this DTC can be set.
    2. Verify the part number of the Boost Pressure Sensor.

       Is the Boost Pressure Sensor part number correct?

Yes

- Go To 3.

No

- Replace the Boost Pressure Sensor with the correct part.
- Perform the POWERTRAIN VERIFICATION TEST. Refer to **POWERTRAIN VERIFICATION TEST - 6.7L** .

3. **TURBOCHARGER SPEED SENSOR**
   1. Turn the ignition off.
   2. Disconnect the Turbocharger Speed Sensor harness connector.

      NOTE: Check connectors - Clean/repair as necessary.

   3. Measure the resistance of the Turbo Speed Sensor by probing (K540) Turbo Speed Sensor Signal circuit and the (K541) Turbo Speed Sensor ground circuit at the Turbocharger Speed Sensor.

      Is the resistance between 600 and 1600 Ohms?

      Yes

      - Go To 4.

      No

      - Replace the Turbocharger Speed Sensor in accordance with the service information.
      - Perform the POWERTRAIN VERIFICATION TEST. Refer to **POWERTRAIN VERIFICATION TEST - 6.7L** .

4. **CHECK FOR HIGH RESISTANCE IN THE (K540) TURBO SPEED SIGNAL CIRCUIT**
   1. Disconnect the PCM C1 harness connector.
   2. Measure the resistance of the (K540) Turbo Speed Sensor Signal circuit between the PCM C1 harness connector and the Turbocharger Speed Sensor harness connector.

      Is the resistance below 5.0 Ohms?

      Yes

      - Repair the (K540) Turbo Speed Sensor Signal circuit for an open or high resistance.
      - Perform the POWERTRAIN VERIFICATION TEST. Refer to **POWERTRAIN VERIFICATION TEST - 6.7L** .

      No

      - Go To 5.

5. **CHECK FOR HIGH RESISTANCE IN THE (K541) TURBO SPEED SENSOR RETURN CIRCUIT**
    1. Measure the resistance of the (K541) Turbo Speed Sensor Return circuit between the Turbo Speed Sensor harness connector and the PCM C1 harness connector.

       Is the resistance below 5.0 Ohms?

       Yes

       - Go To 6.

       No

       - Repair the (K540) Turbo Speed Sensor Signal circuit for an open or high resistance.
       - Perform the POWERTRAIN VERIFICATION TEST. Refer to **POWERTRAIN VERIFICATION TEST - 6.7L** .
6. **POWERTRAIN CONTROL MODULE**
    1. Reconnect the PCM C1 harness connector.
    2. Start the engine.
    3. With vehicle in park/neutral, use the accelerator pedal to accelerate the engine speed to 3100-3200 RPM and hold the engine speed for at least 60 seconds.
    4. Return to idle for 60 seconds and then repeat.

       Does DTC P2579 become active during engine operation?

       Yes

       - Replace the Powertrain Control Module in accordance with the Service Information.
       - Perform the POWERTRAIN VERIFICATION TEST. Refer to **POWERTRAIN VERIFICATION TEST - 6.7L** .

       No

       - The problem may have been corrected when the harness connections were re-connected. Be certain that the PCM and chassis grounds are in good condition.
       - Perform the INTERMITTENT CONDITION diagnostic procedure. Refer to **INTERMITTENT CONDITION - 6.7L** .

P2580-TURBOCHARGER SPEED SENSOR CIRCUIT LOW

For a complete wiring diagram, **refer to appropriate SYSTEM WIRING DIAGRAMS article** .

THEORY OF OPERATION

The Turbocharger Speed Sensor is a variable reluctance speed sensor. It consists of a coil of wire and an iron

core. The target on the turbocharger shaft is a ground flat surface in the center of the shaft. As the flat surface on the turbocharger shaft spins past the speed sensor, a signal is generated. The Powertrain Control Module (PCM) interprets this signal and converts it to a turbocharger speed reading. If this fault becomes active the PCM will light the MIL light immediately. During this time the PCM uses an estimated turbocharger speed. An engine power derate may be experienced. The PCM turns off the MIL when the diagnostic runs and passes in four consecutive drive cycles.

WHEN MONITORED:

While the engine is running, at significantly elevated boost levels.

SET CONDITION:

The Powertrain Control Module (PCM) detects turbocharger speed detected is less than a calibration limit for a calibrated amount of time.

POSSIBLE CAUSES

Possible Causes
(K540) TURBO SPEED SENSOR SIGNAL CIRCUIT SHORTED TO THE (K541) TURBO SPEED SENSOR RETURN CIRCUIT
(K540) TURBO SPEED SIGNAL SENSOR CIRCUIT SHORTED TO GROUND
(K540) TURBO SPEED SENSOR SIGNAL CIRCUIT OPEN/HIGH RESISTANCE
(K541) TURBO SPEED SENSOR RETURN CIRCUIT OPEN/HIGH RESISTANCE
(A209) FUSED B+ CIRCUIT
PCM GROUNDS
INLET AIR PRESSURE SENSOR
INTAKE MANIFOLD PRESSURE SENSOR
TURBOCHARGER SPEED SENSOR

Always perform the Pre-Diagnostic Troubleshooting procedure before proceeding. Refer to PRE-DIAGNOSTIC TROUBLESHOOTING PROCEDURE - 6.7L .

DIAGNOSTIC TEST

1. **OTHER DTCS**
    1. With the scan tool, read DTCs.

       Are any DTCs present for Inlet Air Pressure or Intake Manifold Pressure Sensors?

       Yes

       - Troubleshoot other DTCs first.

       No

- Go To 2.

2. **INTERMITTENT CONDITION**
   1. With vehicle in park/neutral, use the accelerator pedal to accelerate the engine speed to 3100-3200 RPM and hold the engine speed for at least 60 seconds.
   2. Return to idle for 60 seconds and then repeat.

   Does P2580 become active?

   Yes

   - Go To 3.

   No

   - Perform the INTERMITTENT CONDITION diagnostic procedure. Refer to **INTERMITTENT CONDITION - 6.7L** .

3. **CHECK THE TURBOCHARGER SPEED SENSOR**

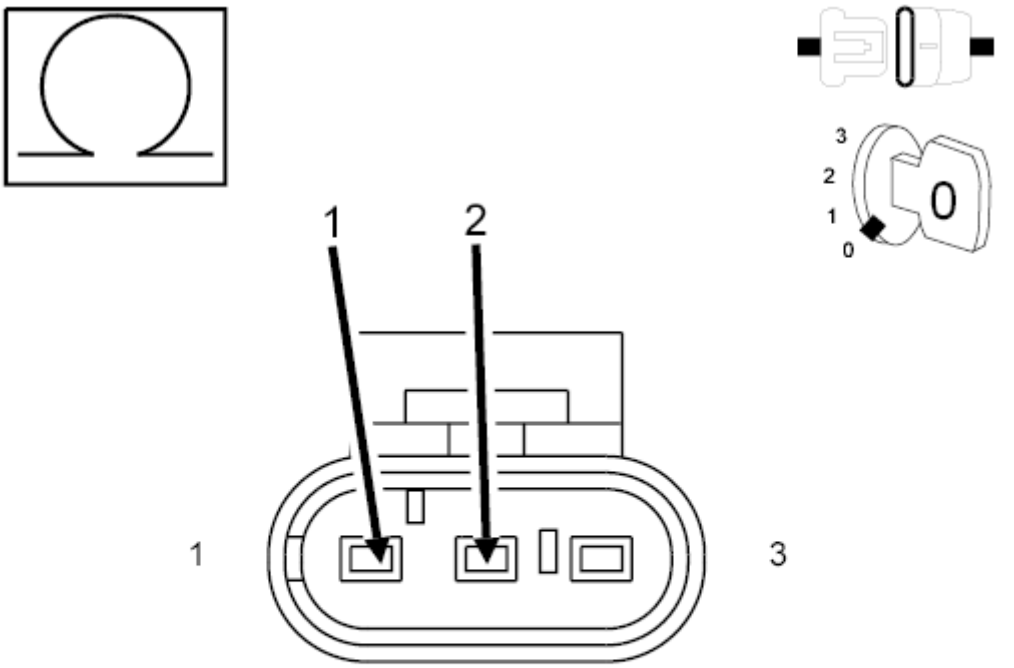

SENSOR-
TURBO SPEED
(6.7L)

Fig. 46: Checking Resistance Of Turbocharger Speed Sensor
Courtesy of CHRYSLER GROUP, LLC

1. Turn Ignition off.
2. Disconnect the Turbocharger Speed Sensor harness connector.

   NOTE: Check connectors - Clean/repair as necessary.

   NOTE: Check harness for cuts and tears - Replace/repair as necessary.

3. Measure the resistance of the Turbo Speed Sensor by probing (K540) Turbo Speed Signal circuit and the (K541) Turbo Speed Sensor Ground circuit at the Turbocharger Speed Sensor.

   Is the resistance between 600 and 1600 Ohms?

   Yes

   - Go To 4.

   No

   - Replace the Turbocharger Speed Sensor in accordance with the service information.
   - Perform the POWERTRAIN VERIFICATION TEST. Refer to **POWERTRAIN VERIFICATION TEST - 6.7L** .

4. **CHECK THE (K540) TURBO SPEED SENSOR SIGNAL CIRCUIT FOR AN OPEN/HIGH RESISTANCE**
   1. Disconnect the PCM C1 harness connector.

      NOTE: Check connectors - Clean/repair as necessary.

   2. Measure the resistance of the (K540) Turbo Speed Sensor Signal circuit between the Turbocharger Speed Sensor harness connector and the PCM C1 harness connector.

      Is the resistance below 5.0 Ohms?

      Yes

      - Go To

      No

      - Repair the (K540) Turbo Speed Sensor Signal circuit for an open or high resistance.
      - Perform the POWERTRAIN VERIFICATION TEST. Refer to **POWERTRAIN VERIFICATION TEST - 6.7L** .

5. **CHECK THE (K541) TURBO SPEED SENSOR RETURN CIRCUIT FOR AN OPEN/HIGH**

RESISTANCE

1. Disconnect the PCM C1 harness connector.

   NOTE: Check connectors - Clean/repair as necessary.

2. Measure the resistance of the (K541) Turbo Speed Sensor Return circuit between the Turbocharger Speed Sensor harness connector and the PCM C1 harness connector.

   Is the resistance below 5.0 Ohms?

   Yes

   - Go To 6.

   No

   - Repair the (K541) Turbo Speed Sensor Ground circuit for an open or high resistance.
   - Perform the POWERTRAIN VERIFICATION TEST. Refer to **POWERTRAIN VERIFICATION TEST - 6.7L** .

6. **CHECK THE (K540) TURBO SPEED SENSOR SIGNAL FOR A SHORT TO GROUND**

   1. Measure the resistance between ground and the (K540) Turbo Speed Signal circuit at the Turbocharger Speed Sensor harness connector.

      Is the resistance below 10k Ohms?

      Yes

      - Go To 7.

      No

      - Repair the short to ground in the (K540) Turbo Speed Signal circuit.
      - Perform the POWERTRAIN VERIFICATION TEST. Refer to **POWERTRAIN VERIFICATION TEST - 6.7L** .

7. **CHECK FOR THE (K540) TURBO SPEED SIGNAL CIRCUIT SHORTED TO THE (K541) TURBO SPEED SENSOR RETURN CIRCUIT**

   1. Measure the resistance between the (K540) Turbo Speed Signal circuit and the (K541) Turbo Speed Sensor Return circuit at the Turbocharger Speed Sensor harness connector.

      Is the resistance below 10k Ohms?

      Yes

      - Go To 8.

No

- Repair the short between the (K540) Turbo Speed Signal circuit and the (K541) Turbo Speed Sensor Return circuit.
- Perform the POWERTRAIN VERIFICATION TEST. Refer to **POWERTRAIN VERIFICATION TEST - 6.7L** .

8. **POWERTRAIN CONTROL MODULE**
    1. Reconnect the PCM C1 harness connector.
    2. Start the engine.
    3. With vehicle in park/neutral, use the accelerator pedal to accelerate the engine speed to 3100-3200 RPM and hold the engine speed for at least 60 seconds.
    4. Return to idle for 60 seconds and then repeat.

    Does DTC P2580 become active during engine operation?

    Yes

    - Replace the Powertrain Control Module in accordance with the service information.
    - Perform the POWERTRAIN VERIFICATION TEST. Refer to **POWERTRAIN VERIFICATION TEST - 6.7L** .

    No

    - The problem may exist in the Turbocharger Speed Sensor circuit or it may exist with other vehicle electronic components. The problem may have been corrected when the harness connections were reconnected. Be certain that the PCM and chassis grounds are in good condition.
    - Perform the INTERMITTENT CONDITION diagnostic procedure. Refer to **INTERMITTENT CONDITION - 6.7L** .

P2609-INTAKE AIR HEATER SYSTEM PERFORMANCE

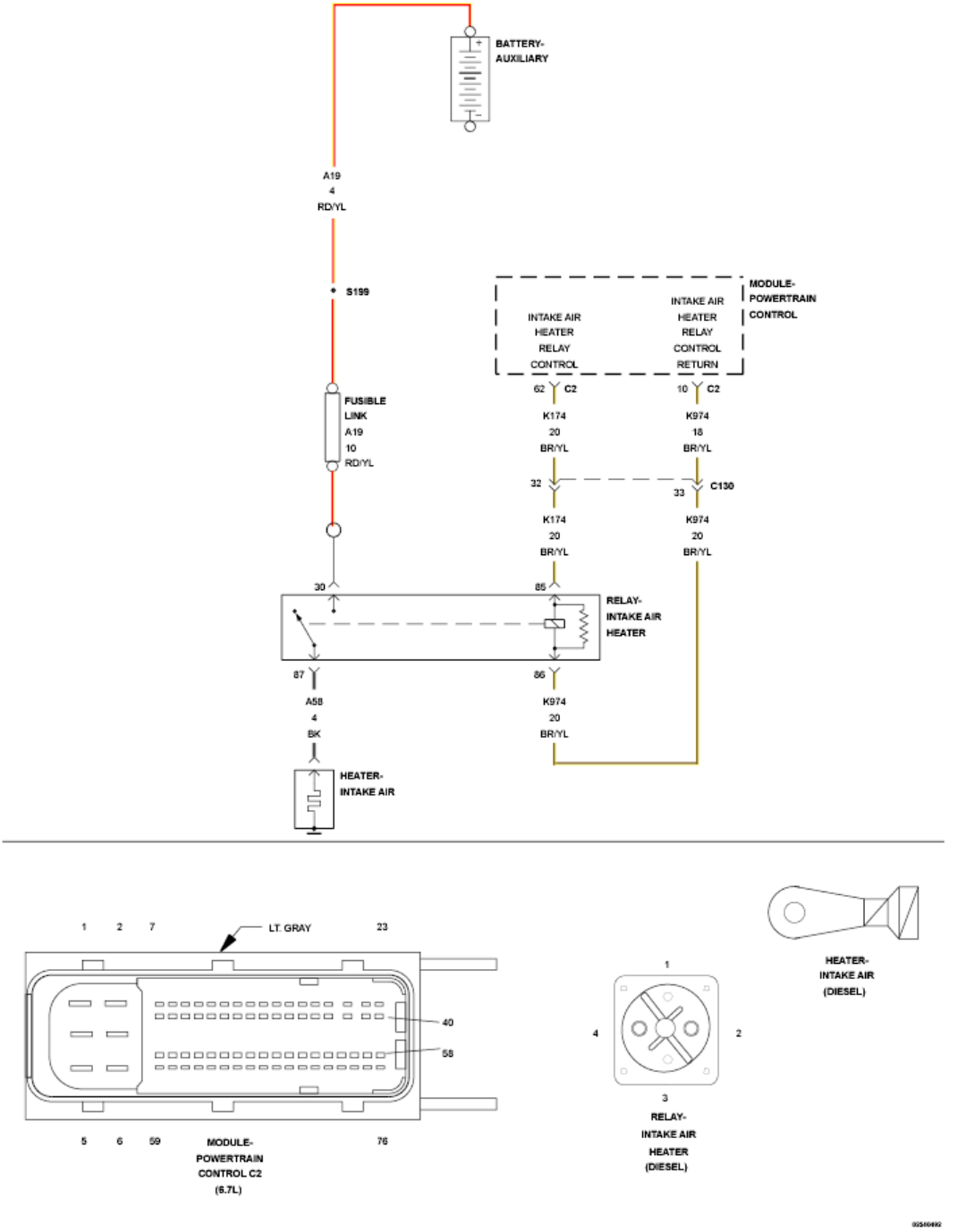

Fig. 47: Intake Air Heater System Circuit Schematic
Courtesy of CHRYSLER GROUP, LLC

For a complete wiring diagram, **refer to appropriate SYSTEM WIRING DIAGRAMS article** .

THEORY OF OPERATION

Heating the inlet air during cold temperatures will increase the fuel efficiency and improves system

performance. An Intake Air Heater is used for this purpose. The Intake Air Heater works in two phases, preheat phase (before engine starts) and post heat phase (after engine starts). Preheat phase typically heats the Intake Air Heater coil during the key-on for about 10 seconds to 30 seconds depending on inlet air temperature. The PCM controls Intake Air Heater operation with the Intake Air Heater Relay, which is located directly behind the air filter box under the fresh air hose. The Intake Air Heater Relay is not a typical type of relay due to the amount of current passing through it. The Intake Air Heater Relay visually resembles a solenoid in appearance. The Intake Air Heater monitor looks for a change in battery voltage as the heater is turned on and off during preheat, to indicate proper operation. The Intake Air Heater performance DTC is a two trip fault. The PCM will turn off the MIL lamp when the monitor runs and passes in 4 consecutive drive cycles.

WHEN MONITORED:

During the preheat cycle, while the wait to start lamp is illuminated.

SET CONDITION:

The Powertrain Control Module (PCM) monitors the battery system voltage and looks for a calibrated drop when the Intake Air Heater is commanded on. The fault is set if the PCM detects a voltage difference below the calibrated value when the Intake Air Heater circuit is commanded on and off during the preheat cycle at key on.

POSSIBLE CAUSES

Possible Causes
VEHICLE BEING JUMP STARTED OR CHARGED WITH AN EXTERNAL VOLTAGE SOURCE
(A19) AUXILIARY BATTERY CABLE OPEN/HIGH RESISTANCE (A58) INTAKE AIR HEATER CIRCUIT OPEN/HIGH RESISTANCE
INTAKE AIR HEATER RELAY INTAKE AIR HEATER

Always perform the Pre-Diagnostic Troubleshooting procedure before proceeding. Refer to PRE-DIAGNOSTIC TROUBLESHOOTING PROCEDURE - 6.7L .

DIAGNOSTIC TEST

1. **ACTIVE DTC**
    1. Ignition on, engine not running.
    2. With the scan tool check for active DTCs.

    Is the DTC active?

    Yes

    - Go To 2.

    No

- Perform the INTERMITTENT CONDITION diagnostic procedure. Refer to **INTERMITTENT CONDITION - 6.7L** .

2. **CHECK THE (A19) AUXILIARY BATTERY CIRCUIT FOR AN OPEN/HIGH RESISTANCE**

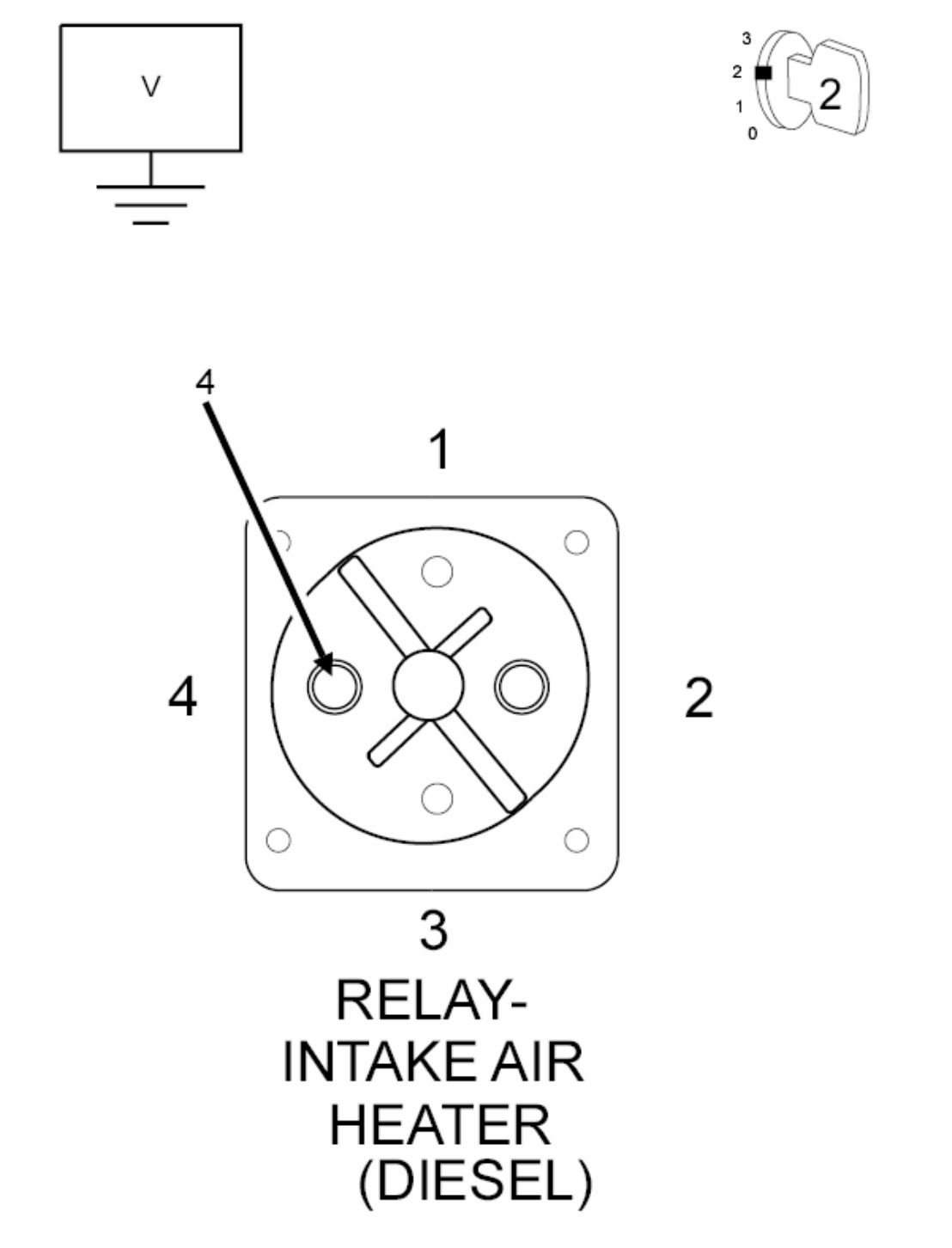

Fig. 48: Using 12-Volt Test Light Connected To Ground To Probe Auxiliary Battery Circuit At Intake Air Heater Relay

NOTE: A loose or poor Battery Ground Cable connection may cause this code to set.

1. Turn ignition on.
2. Using a voltmeter, probe the (A19) Auxiliary Battery circuit at the Intake Air Heater Relay terminal.

   NOTE: It is important for the circuit to be connected and carrying a load during testing. For best results, do not disconnect the circuit at any time during this test procedure.

3. Using a scan tool, actuate the Cold Start Aid Driver 1 Output circuit.

   NOTE: Set the actuation to toggle.

4. Monitor the reading on the voltmeter while the Intake Air Heater circuit is toggling on and off. **Monitor the circuit and let the actuation run until it times out.**

   NOTE: The meter should read equivalent to battery voltage during the entire actuation.

   Does the voltmeter read as described in the note above?

   Yes

   - Go To 3.

   No

   - Repair the (A19) Auxiliary Battery circuit for an open or high resistance. If the Fusible Link is found to be blown, check for a short to ground on the entire (A19) Auxiliary Battery circuit and (A58) Intake Air Heater circuit.
   - Perform the POWERTRAIN VERIFICATION TEST. Refer to **POWERTRAIN VERIFICATION TEST - 6.7L** .

3. **CHECK THE INTAKE AIR HEATER RELAY**

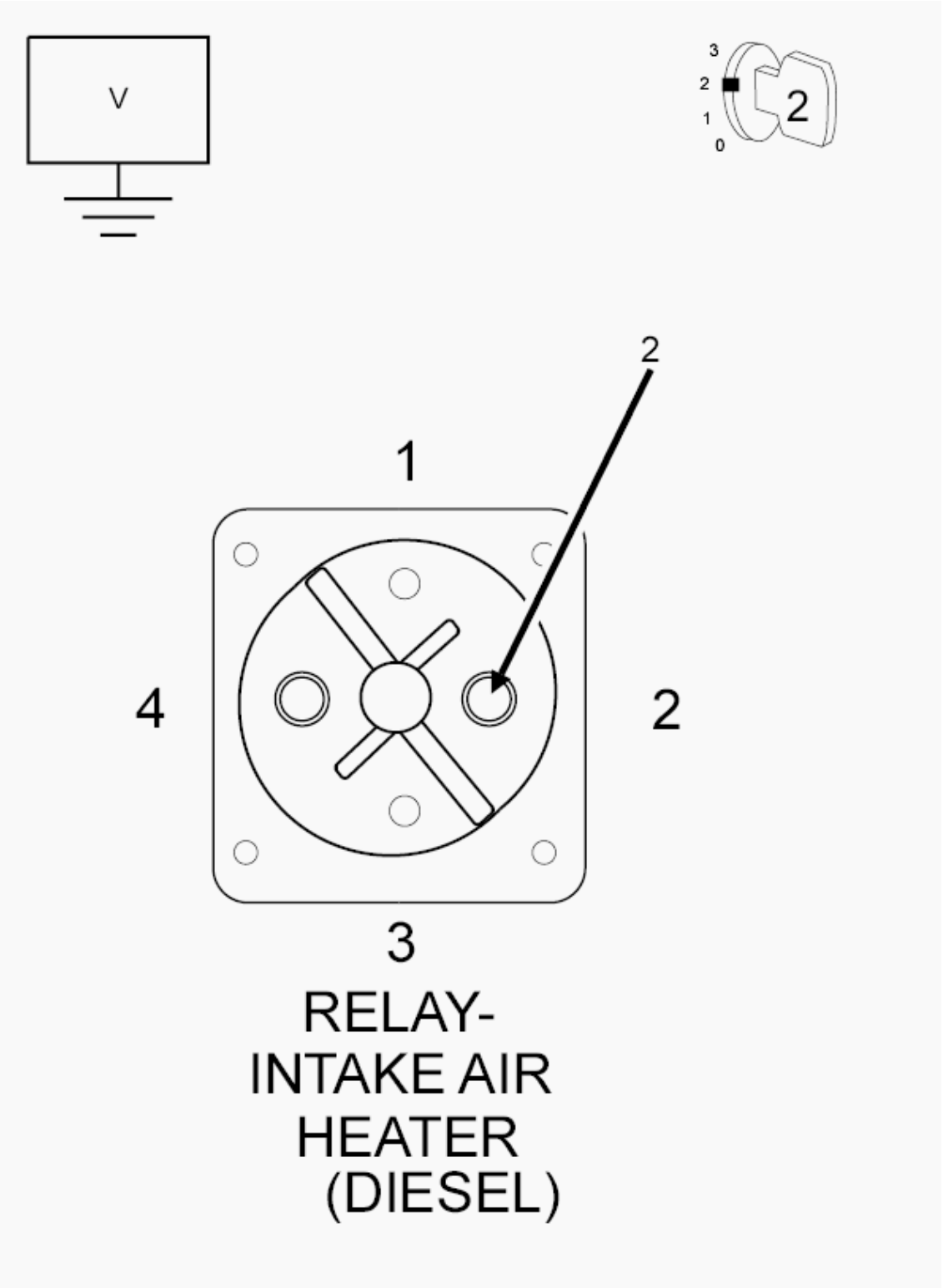

Fig. 49: Using 12-Volt Test Light Connected To Ground To Probe Intake Air Heater Circuit At Intake Air Heater Relay
Courtesy of CHRYSLER GROUP, LLC

CAUTION: Excessive actuation to the Intake Air Heater may overheat and damage the heater assembly. Allow the Intake Air heater to cool for five minutes between each actuation procedure to prevent any possible damage from overheating to occur to the Intake Air Heater.

1. Move the voltmeter to the (A58) Intake Air Heater circuit terminal on the Intake Air Heater Relay terminal.
2. Using a scan tool, actuate the Cold Start Aid Driver 1 Output circuit.

NOTE: Set the actuation to toggle.

3. Monitor the reading on the voltmeter while the Intake Air Heater circuit is toggling on and off. **Monitor the circuit and let the actuation run until it times out.**

NOTE: The meter should read equivalent to battery voltage when the circuit is toggled on, and near zero volts when the circuit is toggled off.

Does the voltmeter read as described in the note above?

Yes

- Go To 4.

No

- Replace the Intake Air Heater Relay in accordance with the service information.
- Perform the POWERTRAIN VERIFICATION TEST. Refer to **POWERTRAIN VERIFICATION TEST - 6.7L** .

4. **CHECK THE (A58) INTAKE AIR HEATER CIRCUIT FOR AN OPEN/HIGH RESISTANCE**

CAUTION: Excessive actuation to the Intake Air Heater may overheat and damage the heater assembly. Allow the Intake Air heater to cool for five minutes between each actuation procedure to prevent any possible damage from overheating to occur to the Intake Air Heater.

1. Move the voltmeter to the (A58) Intake Air Heater circuit connection at the Intake Air Heater.
2. Using a scan tool, actuate the Cold Start Aid Driver 1 Output circuit.

NOTE: Set the actuation to toggle.

3. Monitor the reading on the voltmeter while the Intake Air Heater circuit is toggling on and off. **Monitor the circuit and let the actuation run until it times out.**

NOTE: The meter should read equivalent to battery voltage when the circuit

is toggled on, and near zero volts when the circuit is toggled off.

Does the voltmeter read as described in the note above?

Yes

- Replace the Intake Air Heater in accordance with the service information.
- Perform the POWERTRAIN VERIFICATION TEST. Refer to **POWERTRAIN VERIFICATION TEST - 6.7L** .

No

- Repair the (A58) Intake Air Heater circuit for an open or high resistance.
- Perform the POWERTRAIN VERIFICATION TEST. Refer to **POWERTRAIN VERIFICATION TEST - 6.7L** .

P268C-CYLINDER 1 INJECTOR DATA INCOMPATIBLE

For a complete wiring diagram, **refer to appropriate SYSTEM WIRING DIAGRAMS article** .

THEORY OF OPERATION

Each Fuel Injector has a six digit alphanumeric correction code. The correction code is printed on the intake side of the injector and is used to identify the injector calibration. This code must be entered into the Powertrain Control Module (PCM) using a scan tool.

WHEN MONITORED:

With the ignition on.

SET CONDITION:

The Checksum calculation for the injector correction code failed.

POSSIBLE CAUSES

Possible Causes
INCORRECT FUEL INJECTOR CODE ENTERED FOR THAT CYLINDER

Always perform the Pre-Diagnostic Troubleshooting procedure before proceeding. Refer to PRE-DIAGNOSTIC TROUBLESHOOTING PROCEDURE - 6.7L .

DIAGNOSTIC TEST

1. **INCORRECT INJECTOR CODE ENTERED**
    1. Using the a scan tool view injector correction codes.

NOTE: **See service information for the location of the alphanumeric code on the injector.**

Do the six digits entered into the PCM match the alphanumeric code on the injector?

Yes

- Repair Complete

No

- Read the six digit alphanumeric code on the injector and enter it into the PCM using the scan tool. Key off and wait approximately 75 seconds. Key on, the fault should become stored if entered correctly.
- Perform the POWERTRAIN VERIFICATION TEST. Refer to **POWERTRAIN VERIFICATION TEST - 6.7L** .

P268D-CYLINDER 2 INJECTOR DATA INCOMPATIBLE

For a complete wiring diagram, **refer to appropriate SYSTEM WIRING DIAGRAMS article** .

THEORY OF OPERATION

Each Fuel Injector has a six digit alphanumeric correction code. The correction code is printed on the intake side of the injector and is used to identify the injector calibration. This code must be entered into the Powertrain Control Module (PCM) using a scan tool.

WHEN MONITORED:

With the ignition on.

SET CONDITION:

The Checksum calculation for the injector correction code failed.

POSSIBLE CAUSES

Possible Causes
INCORRECT FUEL INJECTOR CODE ENTERED FOR THAT CYLINDER

Always perform the Pre-Diagnostic Troubleshooting procedure before proceeding. Refer to PRE-DIAGNOSTIC TROUBLESHOOTING PROCEDURE - 6.7L .

DIAGNOSTIC TEST

1. **INCORRECT INJECTOR CODE ENTERED**
    1. Using the a scan tool view injector correction codes.

NOTE: **See service information for the location of the alphanumeric code on the injector.**

Do the six digits entered into the PCM match the alphanumeric code on the injector?

Yes

- Repair Complete.

No

- Read the six digit alphanumeric code on the injector and enter it into the PCM using the scan tool. Key off and wait approximately 75 seconds. Key on, the fault should move to stored if entered correctly.
- Perform the POWERTRAIN VERIFICATION TEST. Refer to **POWERTRAIN VERIFICATION TEST - 6.7L** .

P268E-CYLINDER 3 INJECTOR DATA INCOMPATIBLE

For a complete wiring diagram, **refer to appropriate SYSTEM WIRING DIAGRAMS article** .

THEORY OF OPERATION

Each Fuel Injector has a six digit alphanumeric correction code. The correction code is printed on the intake side of the injector and is used to identify the injector calibration. This code must be entered into the Powertrain Control Module (PCM) using a scan tool.

WHEN MONITORED:

With the ignition on.

SET CONDITION:

The Checksum calculation for the injector correction code failed.

POSSIBLE CAUSES

Possible Causes
INCORRECT FUEL INJECTOR CODE ENTERED FOR THAT CYLINDER

Always perform the Pre-Diagnostic Troubleshooting procedure before proceeding. Refer to PRE-DIAGNOSTIC TROUBLESHOOTING PROCEDURE - 6.7L .

DIAGNOSTIC TEST

1. **INCORRECT INJECTOR CODE ENTERED**
    1. Using the a scan tool view injector correction codes.

NOTE: **See service information for the location of the alphanumeric code on the injector.**

Do the six digits entered into the PCM match the alphanumeric code on the injector?

Yes

- Repair Complete.

No

- Read the six digit alphanumeric code on the injector and enter it into the PCM using the scan tool. Key off and wait approximately 75 seconds. Key on, the fault should move to stored if entered correctly.
- Perform the POWERTRAIN VERIFICATION TEST. Refer to **POWERTRAIN VERIFICATION TEST - 6.7L** .

P268F-CYLINDER 4 INJECTOR DATA INCOMPATIBLE

For a complete wiring diagram, **refer to appropriate SYSTEM WIRING DIAGRAMS article** .

THEORY OF OPERATION

Each Fuel Injector has a six digit alphanumeric correction code. The correction code is printed on the intake side of the injector and is used to identify the injector calibration. This code must be entered into the Powertrain Control Module (PCM) using a scan tool.

WHEN MONITORED:

with the ignition on.

SET CONDITION:

The Checksum calculation for the injector correction code failed.

POSSIBLE CAUSES

Possible Causes
INCORRECT FUEL INJECTOR CODE ENTERED FOR THAT CYLINDER

Always perform the Pre-Diagnostic Troubleshooting procedure before proceeding. Refer to PRE-DIAGNOSTIC TROUBLESHOOTING PROCEDURE - 6.7L .

DIAGNOSTIC TEST

1. **INCORRECT INJECTOR CODE ENTERED**
    1. Using the a scan tool view injector correction codes.

NOTE: **See service information for the location of the alphanumeric code on the injector.**

Do the six digits entered into the PCM match the alphanumeric code on the injector?

Yes

- Repair Complete.

No

- Read the six digit alphanumeric code on the injector and enter it into the PCM using the scan tool. Key off and wait approximately 75 seconds. Key on, the fault should move to stored if entered correctly.
- Perform the POWERTRAIN VERIFICATION TEST. Refer to **POWERTRAIN VERIFICATION TEST - 6.7L** .

P2690-CYLINDER 5 INJECTOR DATA INCOMPATIBLE

For a complete wiring diagram, **refer to appropriate SYSTEM WIRING DIAGRAMS article** .

THEORY OF OPERATION

Each Fuel Injector has a six digit alphanumeric correction code. The correction code is printed on the intake side of the injector and is used to identify the injector calibration. This code must be entered into the Powertrain Control Module (PCM) using a scan tool.

WHEN MONITORED:

With the ignition on.

SET CONDITION:

The Checksum calculation for the injector correction code failed.

POSSIBLE CAUSES

Possible Causes
INCORRECT FUEL INJECTOR CODE ENTERED FOR THAT CYLINDER

Always perform the Pre-Diagnostic Troubleshooting procedure before proceeding. Refer to PRE-DIAGNOSTIC TROUBLESHOOTING PROCEDURE - 6.7L .

DIAGNOSTIC TEST

1. **INCORRECT INJECTOR CODE ENTERED**
    1. Using the a scan tool view injector correction codes.

NOTE: **See service information for the location of the alphanumeric code on the injector.**

Do the six digits entered into the PCM match the alphanumeric code on the injector?

Yes

- Repair Complete.

No

- Read the six digit alphanumeric code on the injector and enter it into the PCM using the scan tool. Key off and wait approximately 75 seconds. Key on, the fault should move to stored if entered correctly.
- Perform the POWERTRAIN VERIFICATION TEST. Refer to **POWERTRAIN VERIFICATION TEST - 6.7L** .

P2691-CYLINDER 6 INJECTOR DATA INCOMPATIBLE

For a complete wiring diagram, **refer to appropriate SYSTEM WIRING DIAGRAMS article** .

THEORY OF OPERATION

Each Fuel Injector has a six digit alphanumeric correction code. The correction code is printed on the intake side of the injector and is used to identify the injector calibration. This code must be entered into the Powertrain Control Module (PCM) using a scan tool.

WHEN MONITORED:

With the ignition on.

SET CONDITION:

The Checksum calculation for the injector correction code failed.

POSSIBLE CAUSES

Possible Causes
INCORRECT FUEL INJECTOR CODE ENTERED FOR THAT CYLINDER

Always perform the Pre-Diagnostic Troubleshooting procedure before proceeding. Refer to PRE-DIAGNOSTIC TROUBLESHOOTING PROCEDURE - 6.7L .

DIAGNOSTIC TEST

1. **INCORRECT INJECTOR CODE ENTERED**
    1. Using the a scan tool view injector correction codes.

NOTE: **See service information for the location of the alphanumeric code on the injector.**

Do the six digits entered into the PCM match the alphanumeric code on the injector?

Yes

- Repair Complete.

No

- Read the six digit alphanumeric code on the injector and enter it into the PCM using the scan tool. Key off and wait approximately 75 seconds. Key on, the fault should move to stored if entered correctly.
- Perform the POWERTRAIN VERIFICATION TEST. Refer to **POWERTRAIN VERIFICATION TEST - 6.7L** .

P2BAC-NOX EXCEEDENCE - DEACTIVATION OF EGR

For a complete wiring diagram, **refer to appropriate SYSTEM WIRING DIAGRAMS article** .

THEORY OF OPERATION

The Powertrain Control Module (PCM) continuously monitors the engine's fault code status to determine if any fault codes critical to successful engine operation are active. The PCM will illuminate the MIL Lamp immediately after the diagnostic runs and fails. The DTC will become inactive as soon as all active critical fault codes have been repaired.

WHEN MONITORED:

Continuous with the engine running.

SET CONDITION:

The PCM detects that certain critical fault codes related to engine operation are active.

POSSIBLE CAUSES

Possible Causes
CRITICAL ENGINE PERFORMANCE DTCS PRESENT

Always perform the Pre-Diagnostic Troubleshooting procedure before proceeding. Refer to PRE-DIAGNOSTIC TROUBLESHOOTING PROCEDURE - 6.7L .

DIAGNOSTIC TEST

1. **CHECK FOR ACTIVE DTCS**

1. Turn the ignition on.
2. With the scan tool, View DTCs.

   Is the DTC active?

   Yes

   - This is an information only DTC and indicates an engine power derate has been implemented. Repair all other active DTCs present and this DTC will become inactive.
   - Perform the POWERTRAIN VERIFICATION TEST. Refer to **POWERTRAIN VERIFICATION TEST - 6.7L** .

   No

   - Perform the INTERMITTENT CONDITION diagnostic procedure. Refer to **INTERMITTENT CONDITION - 6.7L** .

U0001-CAN C BUS

For a complete wiring diagram, **refer to appropriate SYSTEM WIRING DIAGRAMS article** .

WHEN MONITORED:

Continuously with the ignition on. Battery voltage between 9.0 and 16.0 Volts. Engine run time greater than three seconds.

SET CONDITION:

The Powertrain Control Module (PCM) loses communication over the CAN C Bus circuit.

POSSIBLE CAUSES

Possible Causes
CAN C BUS OPEN OR SHORTED CONDITION POWERTRAIN CONTROL MODULE (PCM)

Always perform the Pre-Diagnostic Troubleshooting procedure before proceeding. Refer to PRE-DIAGNOSTIC TROUBLESHOOTING PROCEDURE - 6.7L .

DIAGNOSTIC TEST

1. **ACTIVE DTC**
   1. Ignition on, engine not running.
   2. With a scan tool, read TIPM DTCs.

      Is the DTC active at this time?

Yes

- **Refer to DIAGNOSIS AND TESTING** and perform the U0001 Can C Bus diagnostic procedure.

No

- **Refer to DIAGNOSIS AND TESTING** and perform the Stored Lost Communication DTCs diagnostic procedure.

U0101-LOST COMMUNICATION WITH TCM

For a complete wiring diagram, **refer to appropriate SYSTEM WIRING DIAGRAMS article** .

WHEN MONITORED:

With the ignition on. Battery voltage between 10.0 and 16.0 Volts.

SET CONDITION:

The Powertrain Control Module (PCM) doesn't receive a Bus Message from the Transmission Control Module for approximately two to five seconds.

POSSIBLE CAUSES

Possible Causes
CAN BUS FAILURE OPEN OR SHORTED CONDITION
DTCS RELATED TO BATTERY VOLTAGE, IGNITION, OR VIN MESSAGES
TRANSMISSION CONTROL MODULE
POWERTRAIN CONTROL MODULE

Always perform the Pre-Diagnostic Troubleshooting procedure before proceeding. Refer to PRE-DIAGNOSTIC TROUBLESHOOTING PROCEDURE - 6.7L .

DIAGNOSTIC TEST

1. **ACTIVE DTC**
    1. Ignition on, engine not running.
    2. With a scan tool, read ECM DTCs.

    Is the DTC active at this time?

    Yes

    - Perform the appropriate diagnostic procedure. Refer to **DIAGNOSIS AND TESTING** .

No

- Perform the INTERMITTENT CONDITION diagnostic procedure. Refer to **INTERMITTENT CONDITION - 6.7L** .

U010C-LOST COMMUNICATION WITH TURBOCHARGER/SUPERCHARGER CONTROL MODULE

For a complete wiring diagram, **refer to appropriate SYSTEM WIRING DIAGRAMS article** .

THEORY OF OPERATION

The Variable Geometry Turbocharger (VGT) is electronically activated by the Turbo Actuator. The Turbo Actuator is a smart device that receives information via the J1939 Datalink from the Powertrain Control Module (PCM). The Turbo Actuator performs its own diagnostics and reports failures back to the PCM over the J1939 Datalink.

WHEN MONITORED:

with the ignition on.

SET CONDITION:

The Powertrain Control Module (PCM) does not receive a message from the Turbo Actuator in a calibrated amount of time.

POSSIBLE CAUSES

Possible Causes
POWER SUPPLY TO TURBO ACTUATOR OPEN
POWER SUPPLY TO TURBO ACTUATOR SHORTED TO GROUND
(D130) J1939 DATALINK (+) CIRCUIT OPEN/HIGH RESISTANCE
(D131) J1939 DATALINK (-) CIRCUIT OPEN/HIGH RESISTANCE
(D130) J1939 DATALINK (+) CIRCUIT SHORTED TO BATTERY OR GROUND
(D131) J1939 DATALINK (-) CIRCUIT SHORTED TO BATTERY OR GROUND
J1939 DATALINK (+) CIRCUIT SHORTED TO ANOTHER CIRCUIT
J1939 DATALINK (-) CIRCUIT SHORTED TO ANOTHER CIRCUIT
J1939 DATALINK COMPONENT INTERNALLY SHORTED
TURBOCHARGER
POWERTRAIN CONTROL MODULE (PCM)

Always perform the Pre-Diagnostic Troubleshooting procedure before proceeding. Refer to PRE-DIAGNOSTIC TROUBLESHOOTING PROCEDURE - 6.7L .

DIAGNOSTIC TEST

1. **U010C ACTIVE**

   Is DTC U010C Active?

   Yes

   - Go To 2.

   No

   - Perform the INTERMITTENT CONDITION diagnostic procedure. Refer to **INTERMITTENT CONDITION - 6.7L** .

2. **OTHER DTCS**

   NOTE: Repair any Voltage Low DTCs before proceeding with this test procedure.

   NOTE: The J1939 Datalink is a BUS circuit which the PCM uses to communicate with the Turbo Actuator, DEF Dosing Control Unit, NOx Sensor 1/1 and NOx Sensor 1/2. If the J1939 Datalink is shorted or one of these components is internally shorted, communication will be lost and DTCs will set against ALL of these components.

   Are there lost communication DTCs present against All of the components listed in the note above?

   Yes

   - Go To 5.

   No

   - Go To 3.

3. **CHECK THE POWER SUPPLY TO TURBO ACTUATOR FOR AN OPEN**
   1. Turn the ignition off.
   2. Disconnect the Turbo Actuator harness connector.

      NOTE: Check connectors - Clean/repair as necessary.

   3. Ignition on, engine not running.
   4. Measure the voltage between the Turbo Actuator Power Supply circuit and the Turbo Actuator Return circuit at the Turbo Actuator harness connector.

      NOTE: Check the voltage at key-on and while cranking the engine.

      Is the voltage above 11.0 Volts?

Yes

- Go To 4.

No

- Repair/Replace the Smart Power Relay harness.
- Perform the POWERTRAIN VERIFICATION TEST. Refer to **POWERTRAIN VERIFICATION TEST - 6.7L** .

4. **CHECK THE J1939 DATALINK OPEN/HIGH RESISTANCE**
   1. Turn the ignition off.
   2. Disconnect both NOx Sensor Module harness connectors.
   3. Disconnect the DEF Dosing Control Unit C2 harness connector.
   4. Disconnect the PCM C2 harness connector.

   NOTE: Check connectors - Clean/repair as necessary.

   5. Measure the resistance of the J1939 Datalink (+) circuit between the Turbo Actuator harness connector and the PCM C2 harness connector.
   6. Measure the resistance of the J1939 Datalink (-) circuit between the Turbo Actuator harness connector and the PCM C2 harness connector.

   Is the resistance below 5.0 Ohms for both circuits?

   Yes

   - Replace the Turbocharger Assembly in accordance with the service information.
   - Perform the POWERTRAIN VERIFICATION TEST. Refer to **POWERTRAIN VERIFICATION TEST - 6.7L** .

   No

   - Repair the J1939 circuit that measured above 5.0 Ohms for an open or high resistance.
   - Perform the POWERTRAIN VERIFICATION TEST. Refer to **POWERTRAIN VERIFICATION TEST - 6.7L** .

5. **CHECK THE COMPONENTS ON THE J1939 DATALINK**

NOTE: Disconnect only one component at a time during this next step. If the DTCs for the components that are STILL CONNECTED change from active to stored, the component that was disconnected is faulty. If all of the DTCs remain active, then the disconnected component is not the problem. Reconnect each component before going on to the next one so that only one component is disconnected at a time.

1. Turn the ignition off.
2. Disconnect the Turbo Actuator harness connector. Cycle the ignition key on and off three times ending with the ignition on. Leave the ignition in the off position for 75 seconds each time.

   NOTE: Monitor the status of the DTCs for the remaining connected components with the scan tool.

3. Turn the ignition off and reconnect the Turbo Actuator harness connector.
4. Disconnect the NOx Sensor Module 1/1 harness connector. Cycle the ignition key on and off three times ending with the ignition on. Leave the ignition in the off position for 75 seconds each time.

   NOTE: Monitor the status of the DTCs for the remaining connected components with the scan tool.

5. Turn the ignition off and reconnect the NOx Sensor Module 1/1 harness connector.
6. Disconnect the NOx Sensor Module 1/2 harness connector. Cycle the ignition key on and off three times ending with the ignition on. Leave the ignition in the off position for 75 seconds each time.

   NOTE: Monitor the status of the DTCs for the remaining connected components with the scan tool.

7. Turn the ignition off and reconnect the NOx Sensor Module 1/2 harness connector.
8. Disconnect the DEF Dosing Control Unit C2 harness connector. Cycle the ignition key on and off three times ending with the ignition on. Leave the ignition in the off position for 75 seconds each time.

   NOTE: Monitor the status of the DTCs for the remaining connected components with the scan tool.

   Did the status of the DTCs change to stored for the components STILL CONNECTED when disconnecting any one of the components listed above?

   Yes

   - Replace the component that caused the DTC change from active to stored in accordance with the service information.
   - Perform the POWERTRAIN VERIFICATION TEST. Refer to **POWERTRAIN VERIFICATION TEST - 6.7L** .

   No

   - Go To 6.

6. **CHECK THE J1939 DATALINK FOR A SHORT TO GROUND**
   1. Turn the ignition off.

2. Disconnect the Turbo Actuator, NOx Sensor Modules, DEF Dosing Control Unit, and the PCM C2 harness connectors.
3. Measure the resistance between ground and the J1939 Datalink (+) circuit at the PCM C2 harness connector.
4. Measure the resistance between ground and the J1939 Datalink (-) circuit at the PCM C2 harness connector.

   Is the resistance above 10k Ohms for both circuits?

   Yes

   - Go To 7.

   No

   - Repair the J1939 circuit that measured below 10k Ohms for a short to ground.
   - Perform the POWERTRAIN VERIFICATION TEST. Refer to **POWERTRAIN VERIFICATION TEST - 6.7L** .

7. **CHECK THE J1939 DATALINK FOR A SHORT**
   1. Measure the resistance between the J1939 Datalink (+) circuit at the PCM C2 harness connector and all other circuits in the PCM C2 harness connector.
   2. Measure the resistance between the J1939 Datalink (-) circuit at the PCM C2 harness connector and all other circuits in the PCM C2 harness connector.

      NOTE: Disregard any resistance between 50 and 70 Ohms between the J1939 (+) and the J1939 Datalink (-) pins.

      Is the resistance above 10k Ohms for both measurements?

      Yes

      - Go To 8.

      No

      - Repair the J1939 circuit for a short circuit.
      - Perform the POWERTRAIN VERIFICATION TEST. Refer to **POWERTRAIN VERIFICATION TEST - 6.7L** .

8. **CHECK THE J1939 DATALINK CIRCUITS FOR AN OPEN/HIGH RESISTANCE**
   1. Measure the resistance of the J1939 Datalink (+) circuit between the Turbo Actuator harness connector and the PCM C2 harness connector.
   2. Measure the resistance of the J1939 Datalink (-) circuit between the Turbo Actuator harness connector and the PCM C2 harness connector.

Is the resistance below 5.0 Ohms for both circuits?

Yes

- Replace the Powertrain Control Module in accordance with the service information. Refer to **MODULE, POWERTRAIN CONTROL, 6.7L DIESEL, REMOVAL** .
- Perform the POWERTRAIN VERIFICATION TEST. Refer to **POWERTRAIN VERIFICATION TEST - 6.7L** .

No

- Repair the J1939 circuit for an open or high resistance.
- Perform the POWERTRAIN VERIFICATION TEST. Refer to **POWERTRAIN VERIFICATION TEST - 6.7L** .

U010E-LOST COMMUNICATION WITH DIESEL EXHAUST FLUID CONTROL UNIT

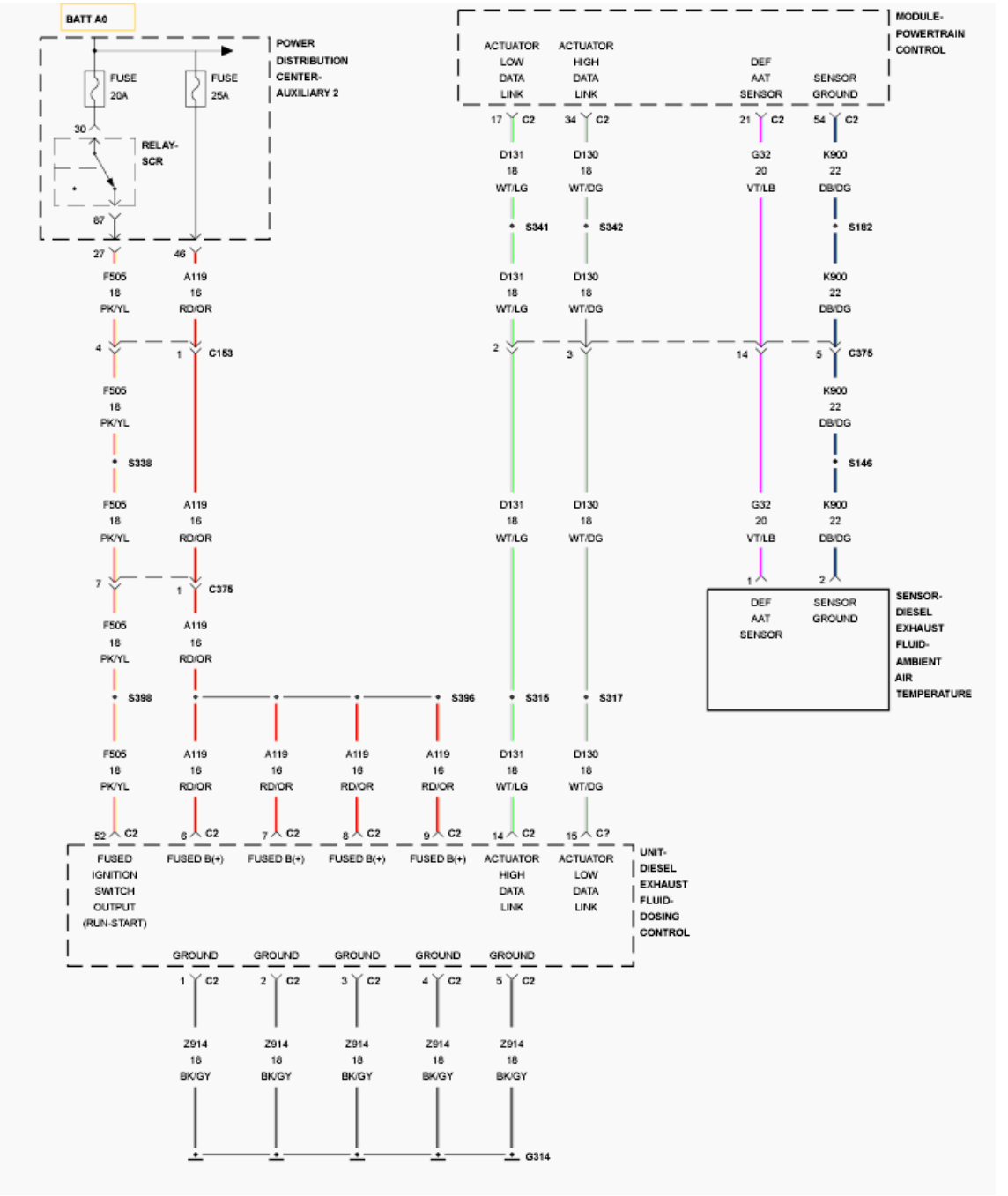

Fig. 50: Diesel Exhaust Fluid (DEF) Dosing Control Unit Wiring Diagram
Courtesy of CHRYSLER GROUP, LLC

For a complete wiring diagram, **refer to appropriate SYSTEM WIRING DIAGRAMS article** .

THEORY OF OPERATION

The Diesel Exhaust Fluid (DEF) Dosing Control Unit is used to control the operation and monitoring of the Diesel Exhaust Fluid system. The DEF Dosing Control Unit shares information with the Powertrain Control Module over the J1939 Data Link. The DEF Dosing Control Unit will illuminate the MIL light via the PCM

immediately after the diagnostics runs and fails. The DEF Dosing Control Unit will turn off the MIL light via the PCM when the monitor runs and passes in three consecutive key cycles.

WHEN MONITORED:

Continuously with the ignition on.

SET CONDITION:

Data link information between the DEF Dosing Control Unit and the Powertrain Control Module has been lost.

POSSIBLE CAUSES

Possible Causes
(A119) DEF DOSING CONTROL UNIT BATTERY SUPPLY CIRCUIT OPEN/HIGH RESISTANCE
(Z914) DEF DOSING CONTROL UNIT GROUND CIRCUIT OPEN/HIGH RESISTANCE
(F505) IGNITION FEED CIRCUIT OPEN/HIGH RESISTANCE
(F505) FUSED IGNITION SWITCH OUTPUT CIRCUIT SHORTED TO GROUND
(D130) J1939 DATALINK (+) CIRCUIT OPEN/HIGH RESISTANCE
(D131) J1939 DATALINK (-) CIRCUIT OPEN/HIGH RESISTANCE
(D130) J1939 DATALINK (+) CIRCUIT SHORTED TO BATTERY OR GROUND
(D131) J1939 DATALINK (-) CIRCUIT SHORTED TO BATTERY OR GROUND
J1939 DATALINK (+) CIRCUIT SHORTED TO ANOTHER CIRCUIT
J1939 DATALINK (-) CIRCUIT SHORTED TO ANOTHER CIRCUIT
J1939 DATALINK COMPONENT INTERNALLY SHORTED
DEF DOSING CONTROL UNIT
POWERTRAIN CONTROL MODULE (PCM)

Always perform the Pre-Diagnostic Troubleshooting procedure before proceeding. Refer to PRE-DIAGNOSTIC TROUBLESHOOTING PROCEDURE - 6.7L .

DIAGNOSTIC TEST

1. **U010E ACTIVE**
    1. Ignition on, engine not running.
    2. With the scan tool, read DTCs.

    Is DTC U010E Active?

    Yes

    - Go To 2.

    No

- Perform the INTERMITTENT CONDITION diagnostic procedure. Refer to **INTERMITTENT CONDITION - 6.7L** .

2. **OTHER DTCS**

NOTE: Repair any Voltage Low DTCs before proceeding with this test procedure.

NOTE: The J1939 Datalink is a BUS circuit which the PCM uses to communicate with the Turbo Actuator, DEF Dosing Control Unit, NOx Sensor 1/1 and NOx Sensor 1/2. If the J1939 Datalink is shorted or one of these components is internally shorted, communication will be lost and DTCs will set against ALL of these components.

Are there lost communication DTCs present against All of the components listed in the note above?

Yes

- Go To 7.

No

- Go To 3.

3. **CHECK THE (A119) DEF DOSING CONTROL UNIT BATTERY SUPPLY CIRCUIT FOR AN OPEN/HIGH RESISTANCE**
   1. Turn the ignition off.
   2. Disconnect the DEF Dosing Control Unit C2 harness connector.

      NOTE: Check connectors - Clean/repair as necessary.

   3. Measure the voltage of all of the (A119) DEF Dosing Control Unit Battery Supply circuits at the DEF Dosing Control Unit C2 harness connector.

      NOTE: Check the voltage at key-on and during engine cranking.

      Is the voltage within 1.0 Volt of battery voltage?

      Yes

      - Go To 4.

      No

      - Using the wiring diagram as a guide, repair the (A119) DEF Dosing Control Unit Battery Supply circuit.
      - Perform the POWERTRAIN VERIFICATION TEST. Refer to **POWERTRAIN**

VERIFICATION TEST - 6.7L .

4. **CHECK THE (F505) IGNITION FEED CIRCUIT FOR AN OPEN/HIGH RESISTANCE**
   1. Turn the ignition on, engine not running.
   2. Measure the voltage of all of the (F505) Ignition Feed circuits at the DEF Dosing Control Unit C2 harness connector.

      Is the voltage within 1.0 Volt of battery voltage?

      Yes

      - Go To 5.

      No

      - Using the wiring diagram as a guide, repair the (F505) Ignition Feed circuit.
      - Perform the POWERTRAIN VERIFICATION TEST. Refer to **POWERTRAIN VERIFICATION TEST - 6.7L** .
5. **CHECK THE (Z914) DEF DOSING CONTROL UNIT GROUND CIRCUIT FOR AN OPEN/HIGH RESISTANCE**
   1. Turn the ignition off.
   2. Measure the resistance between ground and the (Z914) DEF Dosing Control Ground circuits at the DEF Dosing Control Unit C2 harness connector.

      Is the resistance below 5.0 Ohms for all of the ground circuits?

      Yes

      - Go To 6.

      No

      - Using the wiring diagram as a guide, repair the (Z914) DEF Dosing Control Unit Ground circuit.
      - Perform the POWERTRAIN VERIFICATION TEST. Refer to **POWERTRAIN VERIFICATION TEST - 6.7L** .
6. **CHECK THE J1939 DATALINK CIRCUITS FOR AN OPEN/HIGH RESISTANCE**
   1. Disconnect the Turbo Actuator harness connector.
   2. Disconnect both NOx Sensor Module harness connectors.
   3. Disconnect the PCM C2 harness connector.

      NOTE: Check connectors - Clean/repair as necessary.

   4. Measure the resistance of the J1939 Datalink (+) circuit between the DEF Dosing Control Unit C2 harness connector and the PCM C2 harness connector.

5. Measure the resistance of the J1939 Datalink (-) circuit between the DEF Dosing Control Unit C2 harness connector and the PCM C2 harness connector.

   Is the resistance below 5.0 Ohms for both circuits?

   Yes

   - Replace the DEF Dosing Control Unit in accordance with the service information. Refer to **UNIT, DIESEL EXHAUST FLUID DOSING CONTROL, REMOVAL** .
   - Perform the POWERTRAIN VERIFICATION TEST. Refer to **POWERTRAIN VERIFICATION TEST - 6.7L** .

   No

   - Repair the J1939 circuit that measured above 5.0 Ohms for an open or high resistance.
   - Perform the POWERTRAIN VERIFICATION TEST. Refer to **POWERTRAIN VERIFICATION TEST - 6.7L** .

7. **CHECK THE COMPONENTS ON THE J1939 DATALINK**

NOTE: **Disconnect only one component at a time during this next step. If the DTCs for the components that are STILL CONNECTED change from active to stored, the component that was disconnected is faulty. If all of the DTCs remain active, then the disconnected component is not the problem. Reconnect each component before going on to the next one so that only one component is disconnected at a time.**

1. Turn the ignition off.
2. Disconnect the Turbo Actuator harness connector. Cycle the ignition key on and off 3 times ending with the ignition on. Leave the ignition in the off position for 75 seconds each time.

   NOTE: **Monitor the status of the DTCs for the remaining connected components with the scan tool.**

3. Turn the ignition off and reconnect the Turbo Actuator harness connector.
4. Disconnect the NOx Sensor Module 1/1 harness connector. Cycle the ignition key on and off 3 times ending with the ignition on. Leave the ignition in the off position for 75 seconds each time.

   NOTE: **Monitor the status of the DTCs for the remaining connected components with the scan tool.**

5. Turn the ignition off and reconnect the NOx Sensor Module 1/1 harness connector.
6. Disconnect the NOx Sensor Module 1/2 harness connector. Cycle the ignition key on and off 3 times ending with the ignition on. Leave the ignition in the off position for 75 seconds each time.

NOTE: **Monitor the status of the DTCs for the remaining connected components with the scan tool.**

7. Turn the ignition off and reconnect the NOx Sensor Module 1/2 harness connector.
8. Disconnect the DEF Dosing Control Unit C2 harness connector. Cycle the ignition key on and off 3 times ending with the ignition on. Leave the ignition in the off position for 75 seconds each time.

NOTE: **Monitor the status of the DTCs for the remaining connected components with the scan tool.**

Did the status of the DTCs change to stored for the components STILL CONNECTED when disconnecting any one of the components listed above?

Yes

- Replace the component that caused the DTC change from active to stored in accordance with the service information.
- Perform the POWERTRAIN VERIFICATION TEST. Refer to **POWERTRAIN VERIFICATION TEST - 6.7L** .

No

- Go To 8.

8. **CHECK THE J1939 DATALINK CIRCUITS FOR A SHORT TO GROUND**
   1. Turn the ignition off.
   2. Disconnect the Turbo Actuator, NOx Sensor Modules, DEF Dosing Control Unit, and the PCM C2 harness connectors.
   3. Measure the resistance between ground and the J1939 Datalink (+) circuit at the PCM C2 harness connector.
   4. Measure the resistance between ground and the J1939 Datalink (-) circuit at the PCM C2 harness connector.

   Is the resistance above 10k Ohms for both circuits?

   Yes

   - Go To 9.

   No

   - Repair the J1939 circuit that measured below 10k Ohms for a short to ground.
   - Perform the POWERTRAIN VERIFICATION TEST. Refer to **POWERTRAIN VERIFICATION TEST - 6.7L** .
9. **CHECK THE J1939 DATALINK CIRCUITS FOR A SHORT**

1. Measure the resistance between the J1939 Datalink (+) circuit at the PCM C2 harness connector and all other circuits in the PCM C2 harness connector.
2. Measure the resistance between the J1939 Datalink (-) circuit at the PCM C2 harness connector and all other circuits in the PCM C2 harness connector.

NOTE: Disregard any resistance between 50 and 70 Ohms between the J1939 (+) and the J1939 Datalink (-) pins.

Is the resistance above 10k Ohms for both measurements?

Yes

- Go To 10.

No

- Repair the J1939 circuit for a short circuit.
- Perform the POWERTRAIN VERIFICATION TEST. Refer to **POWERTRAIN VERIFICATION TEST - 6.7L** .

10. **CHECK THE J1939 DATALINK CIRCUITS FOR AN OPEN/HIGH RESISTANCE**
    1. Measure the resistance of the J1939 Datalink (+) circuit between the DEF Dosing Control Unit C2 harness connector and the PCM C2 harness connector.
    2. Measure the resistance of the J1939 Datalink (-) circuit between the DEF Dosing Control Unit C2 harness connector and the PCM C2 harness connector.

    Is the resistance below 5.0 Ohms for both circuits?

    Yes

    - Replace the Powertrain Control Module in accordance with the service information. Refer to **MODULE, POWERTRAIN CONTROL, 6.7L DIESEL, REMOVAL** .
    - Perform the POWERTRAIN VERIFICATION TEST. Refer to **POWERTRAIN VERIFICATION TEST - 6.7L** .

    No

    - Repair the J1939 circuit for an open or high resistance.
    - Perform the POWERTRAIN VERIFICATION TEST. Refer to **POWERTRAIN VERIFICATION TEST - 6.7L** .

U0121-LOST COMMUNICATION WITH ANTI-LOCK BRAKE MODULE

For a complete wiring diagram, **refer to appropriate SYSTEM WIRING DIAGRAMS article** .

WHEN MONITORED:

Ignition run time is greater than one second. Battery voltage between 9.0 and 16.0 Volts. Engine run time greater than three seconds.

SET CONDITION:

The Powertrain Control Module (PCM) doesn't receive an ABS message over the CAN C circuit for seven consecutive seconds.

POSSIBLE CAUSES

Possible Causes
CAN C BUS OPEN OR SHORTED CONDITION
ABS MODULE
TOTALLY INTEGRATED POWER MODULE (TIPM)
POWERTRAIN CONTROL MODULE (PCM)

DIAGNOSTIC TEST

1. **ACTIVE DTC**
    1. Ignition on, engine not running.
    2. With a scan tool, read PCM DTCs.

       Is the DTC active at this time?

       Yes

       - **Refer to DIAGNOSIS AND TESTING** and perform the U0121-Lost Communication with Anti-lock Brake Module diagnostic procedure.

       No

       - **Refer to DIAGNOSIS AND TESTING** and perform the Stored Lost Communication DTCs diagnostic procedure.

U0141-LOST COMMUNICATION WITH IPM (FCM/TIPM)

For a complete wiring diagram, **refer to appropriate SYSTEM WIRING DIAGRAMS article** .

WHEN MONITORED:

Continuously when the ignition is on.

The battery voltage between 10.0 and 16.0 Volts.

Ignition Off Draw (IOD) fuse installed.

Totally Integrated Power Module (TIPM) is configured correctly.

SET CONDITION:

Bus messages not received from the Totally Integrated Power Module (TIPM) for approximately two to five seconds.

POSSIBLE CAUSES

Possible Causes
CAN BUS CIRCUITS OPEN OR SHORTED
DTCS RELATED TO BATTERY VOLTAGE, IGNITION, OR VIN MESSAGES
TOTALLY INTEGRATED POWER MODULE POWER AND GROUND
TIPM NOT CONFIGURED CORRECTLY
TOTALLY INTEGRATED POWER MODULE (TIPM)
MODULE THAT SET THIS DTC

DIAGNOSTIC TEST

1. **VERIFY DTC IS ACTIVE**

   NOTE: Make sure the IOD fuse is installed and the battery is fully charged before proceeding.

   1. Turn the ignition on.
   2. With the scan tool, read active DTCs.

      Is this DTC active?

      Yes

      - **Refer to DIAGNOSIS AND TESTING** and perform the U0141-Lost Communication with IPM (FCM/TIPM) diagnostic procedure.

      No

      - **Refer to DIAGNOSIS AND TESTING** and perform the Stored Lost Communication DTCs diagnostic procedure.

U029D-LOST COMMUNICATION WITH NOX SENSOR "A"

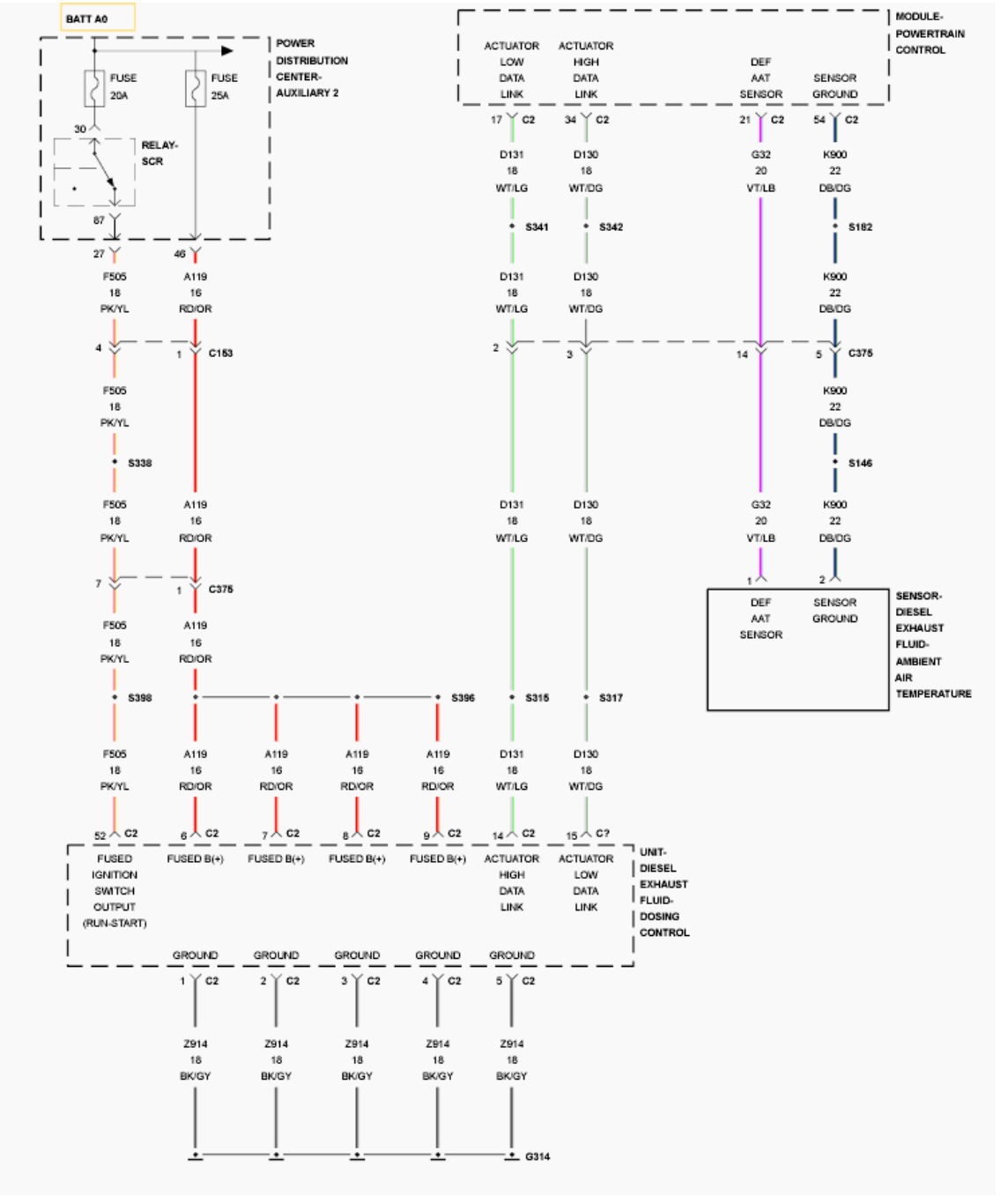

Fig. 51: Diesel Exhaust Fluid (DEF) Dosing Control Unit Wiring Diagram
Courtesy of CHRYSLER GROUP, LLC

For a complete wiring diagram, **refer to appropriate SYSTEM WIRING DIAGRAMS article** .

THEORY OF OPERATION

The aftertreatment system is equipped with two NOx Sensors and modules. The upstream NOx Sensor 1/1 is located before the SCR Catalyst and is permanently connected to a corresponding NOx Sensor Module mounted on the right frame rail. The downstream NOx Sensor 1/2 is located at the outlet of the SCR Catalyst and is

permanently connected to a corresponding NOx Sensor Module also mounted on the right frame rail. The NOx Sensors and NOx Sensor Modules are calibrated to each other and must be replaced as an assembly. The two NOx Sensor and Module assembles are not interchangeable. The NOx Sensor Modules are smart devices and communicate with the Powertrain Control Module (PCM) over the J1939 Data Link. The NOx Sensor Modules perform their own internal diagnostics and report malfunctions back to the PCM. The NOx Sensors are used to monitor the efficiency of the SCR Catalyst. The PCM will illuminate the MIL lamp immediately after the monitor runs and fails. The PCM will turn off the MIL Lamp after the monitor runs and passes for three consecutive trips.

WHEN MONITORED:

Continuously with the ignition on.

SET CONDITION:

The Powertrain Control Module (PCM) does not receive a message from the NOx Sensor 1/1 over the J1939 Data Link.

POSSIBLE CAUSES

Possible Causes
LOW BATTERY VOLTAGE
(F505) FUSED IGNITION SWITCH OUTPUT CIRCUIT OPEN/HIGH RESISTANCE
(F505) FUSED IGNITION SWITCH OUTPUT CIRCUIT SHORTED TO GROUND
(F505) FUSED IGNITION SWITCH OUTPUT CIRCUIT SHORTED TO THE (Z915) GROUND CIRCUIT
(Z915) GROUND CIRCUIT OPEN/HIGH RESISTANCE
(D130) J1939 DATALINK (+) CIRCUIT OPEN/HIGH RESISTANCE
(D131) J1939 DATALINK (-) CIRCUIT OPEN/HIGH RESISTANCE
(D130) J1939 DATALINK (+) CIRCUIT SHORTED TO BATTERY OR GROUND
(D131) J1939 DATALINK (-) CIRCUIT SHORTED TO BATTERY OR GROUND
J1939 DATALINK (+) CIRCUIT SHORTED TO ANOTHER CIRCUIT
J1939 DATALINK (-) CIRCUIT SHORTED TO ANOTHER CIRCUIT
J1939 DATALINK COMPONENT INTERNALLY SHORTED
FAULTY NOx SENSOR 1/1
POWERTRAIN CONTROL MODULE (PCM)

Always perform the Pre-Diagnostic Troubleshooting procedure before proceeding. Refer to PRE-DIAGNOSTIC TROUBLESHOOTING PROCEDURE - 6.7L .

DIAGNOSTIC TEST

1. **ACTIVE DTC**
    1. Ignition on, engine not running.
    2. With the scan tool, read DTCs.

Is DTC U029D Active?

Yes

- Go To 2.

No

- Perform the INTERMITTENT CONDITION diagnostic procedure. Refer to **INTERMITTENT CONDITION - 6.7L** .

2. **OTHER DTCS**

NOTE: **Repair any Voltage Low DTCs before proceeding with this test procedure.**

NOTE: **The J1939 Datalink is a BUS circuit which the PCM uses to communicate with the Turbo Actuator, DEF Dosing Control Unit, NOx Sensor 1/1 and NOx Sensor 1/2. If the J1939 Datalink is shorted or one of these components is internally shorted, communication will be lost and DTCs will set against ALL of these components.**

Are there lost communication DTCs present against All of the components listed in the note above?

Yes

- Go To 6.

No

- Go To 3.

3. **CHECK SYSTEM VOLTAGE**
   1. Check the Batteries and charging system for proper system voltage and operation.

      Is the system voltage normal?

      Yes

      - Go To 4.

      No

      - Diagnose and repair the Batteries and charging system before continuing.
      - Perform the POWERTRAIN VERIFICATION TEST. Refer to **POWERTRAIN VERIFICATION TEST - 6.7L** .

4. **CHECK THE NOx SENSOR 1/1 POWER AND GROUND CIRCUITS**
   1. Turn the ignition on, engine not running.

2. Disconnect the NOx Sensor Module 1/1 harness connector.
3. Measure the voltage across the (F505) Cluster Ignition Supply circuit and the (Z915) Ground circuit at the NOx Sensor Module 1/1 harness connector.

NOTE: Measure the voltage at key on, engine cranking, and at idle.

Does the voltage read within 1.0 Volt of battery voltage?

Yes

- Go To 5.

No

- Repair the (F505) Fused Ignition Switch Output circuit for an open or short to ground, or check the (Z915) Ground circuit for an open.
- Perform the POWERTRAIN VERIFICATION TEST. Refer to **POWERTRAIN VERIFICATION TEST - 6.7L** .

5. **CHECK THE J1939 DATALINK OPEN**
   1. Turn the ignition off.
   2. Disconnect the DEF NOx Sensor 1/2 harness connector.
   3. Disconnect the Turbo Actuator harness connector.
   4. Disconnect the PCM C2 harness connector.
   5. Disconnect the DEF Dosing Control Unit C2 harness connector.

NOTE: Check connectors - Clean/repair as necessary.

6. Measure the resistance of the J1939 Datalink (+) circuit between the DEF NOx Sensor 1/1 harness connector and the PCM C2 harness connector.
7. Measure the resistance of the J1939 Datalink (-) circuit between the DEF NOx Sensor 1/1 harness connector and the PCM C2 harness connector.

Is the resistance below 5.0 Ohms for both circuits?

Yes

- Replace the NOx Sensor 1/1 in accordance with the service information. Refer to **SENSOR, NOX, REMOVAL** .
- Perform the POWERTRAIN VERIFICATION TEST. Refer to **POWERTRAIN VERIFICATION TEST - 6.7L** .

No

- Repair the J1939 Datalink circuit that measured above 5.0 Ohms for an open or high

resistance.

- Perform the POWERTRAIN VERIFICATION TEST. Refer to **POWERTRAIN VERIFICATION TEST - 6.7L** .

6. **CHECK THE COMPONENTS ON THE J1939 DATALINK**

NOTE: Disconnect only one component at a time during this next step. If the DTCs for the components that are STILL CONNECTED change from active to stored, the component that was disconnected is faulty. If all of the DTCs remain active, then the disconnected component is not the problem. Reconnect each component before going on to the next one so that only one component is disconnected at a time.

1. Turn the ignition off.
2. Disconnect the Turbo Actuator harness connector. Cycle the ignition key on and off the three times ending with the ignition on. Leave the ignition in the off position for 75 seconds each time.

NOTE: Monitor the status of the DTCs for the remaining connected components with the scan tool.

3. Turn the ignition off and reconnect the Turbo Actuator harness connector.
4. Disconnect the NOx Sensor Module 1/1 harness connector. Cycle the ignition key on and off three times ending with the ignition on. Leave the ignition in the off position for 75 seconds each time.

NOTE: Monitor the status of the DTCs for the remaining connected components with the scan tool.

5. Turn the ignition off and reconnect the NOx Sensor Module 1/1 harness connector.
6. Disconnect the NOx Sensor Module 1/2 harness connector. Cycle the ignition key on and off three times ending with the ignition on. Leave the ignition in the off position for 75 seconds each time.

NOTE: Monitor the status of the DTCs for the remaining connected components with the scan tool.

7. Turn the ignition off and reconnect the NOx Sensor Module 1/2 harness connector.
8. Disconnect the DEF Dosing Control Unit C2 harness connector. Cycle the ignition key on and off three times ending with the ignition on. Leave the ignition in the off position for 75 seconds each time.

NOTE: Monitor the status of the DTCs for the remaining connected components with the scan tool.

Did the status of the DTCs change to stored for the components STILL CONNECTED when disconnecting any one of the components listed above?

Yes

- Replace the component that caused the DTC change from active to stored in accordance with the service information.
- Perform the POWERTRAIN VERIFICATION TEST. Refer to **POWERTRAIN VERIFICATION TEST - 6.7L** .

No

- Go To 7.

7. **CHECK THE J1939 DATALINK FOR A SHORT TO GROUND**
   1. Turn the ignition off.
   2. Disconnect the Turbo Actuator, NOx Sensor Modules, DEF Dosing Control Unit, and the PCM C2 harness connectors.
   3. Measure the resistance between ground and the J1939 Datalink (+) circuit at the PCM C2 harness connector.
   4. Measure the resistance between ground and the J1939 Datalink (-) circuit at the PCM C2 harness connector.

   Is the resistance above 10k Ohms for both circuits?

   Yes

   - Go To 8.

   No

   - Repair the J1939 Datalink circuit that did not measure above 10k Ohms for a short to ground.
   - Perform the POWERTRAIN VERIFICATION TEST. Refer to **POWERTRAIN VERIFICATION TEST - 6.7L** .

8. **CHECK THE J1939 DATALINK FOR A SHORT**
   1. Measure the resistance between the J1939 Datalink (+) circuit at the PCM C2 harness connector and all other circuits in the PCM C2 harness connector.
   2. Measure the resistance between the J1939 Datalink (-) circuit at the PCM C2 harness connector and all other circuits in the PCM C2 harness connector.

   NOTE: Disregard any resistance between 50 and 70 Ohms between the J1939 (+) and the J1939 Datalink (-) pins.

   Is the resistance above 10k Ohms for both measurements?

   Yes

   - Go To 9.

No

- Repair the J1939 Datalink circuit for a short to the circuit that did not measure above 10k Ohms.
- Perform the POWERTRAIN VERIFICATION TEST. Refer to **POWERTRAIN VERIFICATION TEST - 6.7L** .

9. **CHECK THE J1939 DATALINK CIRCUITS FOR AN OPEN/HIGH RESISTANCE**
   1. Measure the resistance of the J1939 Datalink (+) circuit between the NOx Sensor Module 1/1 harness connector and the PCM C2 harness connector.
   2. Measure the resistance of the J1939 Datalink (-) circuit between the NOx Sensor Module 1/1 harness connector and the PCM C2 harness connector.

   Is the resistance below 5.0 Ohms for both circuits?

   Yes

   - Replace the Powertrain Control Module in accordance with the service information. Refer to **MODULE, POWERTRAIN CONTROL, 6.7L DIESEL, REMOVAL** .
   - Perform the POWERTRAIN VERIFICATION TEST. Refer to **POWERTRAIN VERIFICATION TEST - 6.7L** .

   No

   - Repair the J1939 circuit for an open or high resistance.
   - Perform the POWERTRAIN VERIFICATION TEST. Refer to **POWERTRAIN VERIFICATION TEST - 6.7L** .

U029E-LOST COMMUNICATION WITH NOX SENSOR "B"

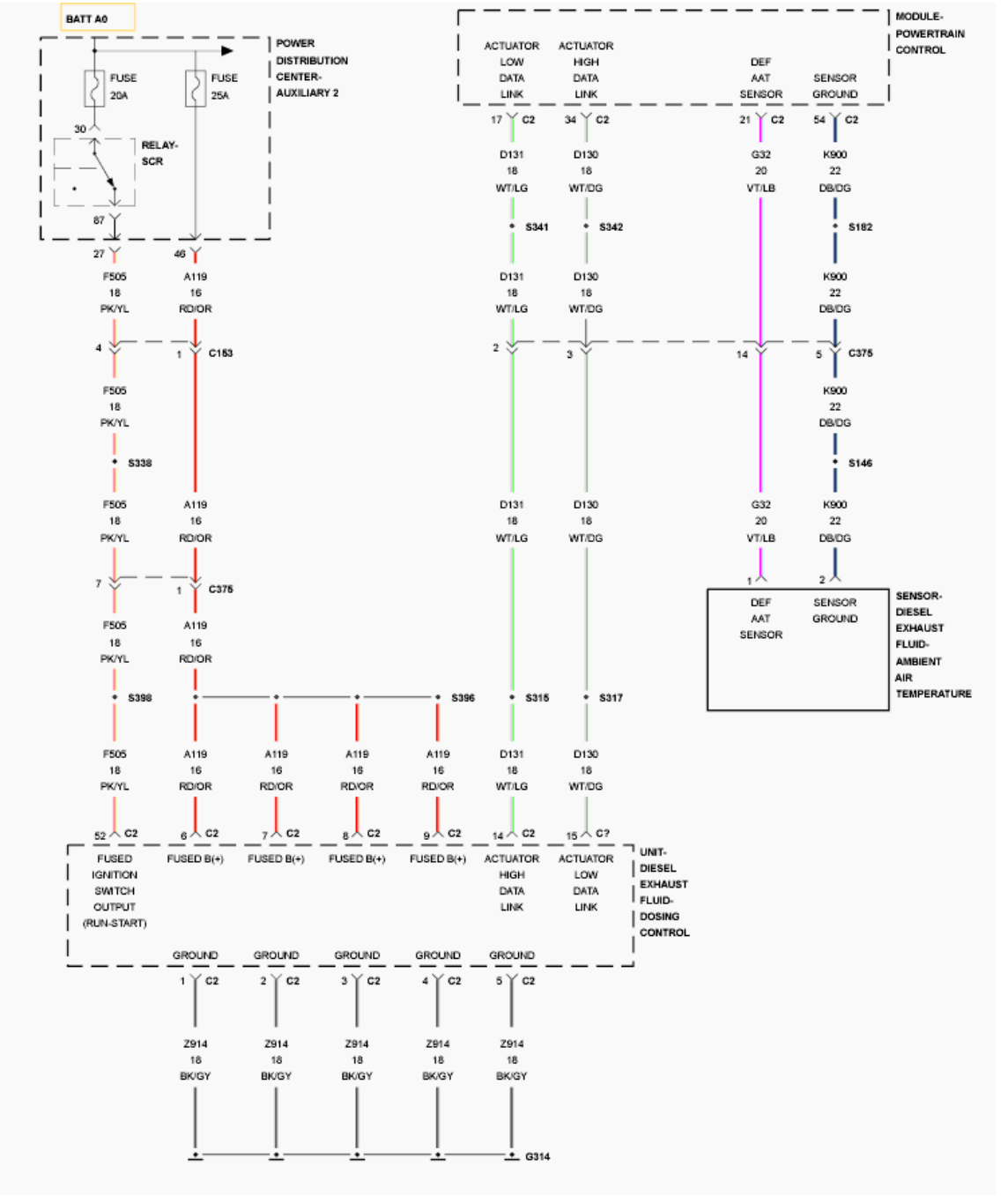

Fig. 52: Diesel Exhaust Fluid (DEF) Dosing Control Unit Wiring Diagram
Courtesy of CHRYSLER GROUP, LLC

For a complete wiring diagram, **refer to appropriate SYSTEM WIRING DIAGRAMS article** .

THEORY OF OPERATION

The aftertreatment system is equipped with two NOx Sensors and modules. The upstream NOx Sensor 1/1 is located before the SCR Catalyst and is permanently connected to a corresponding NOx Sensor Module mounted on the right frame rail. The downstream NOx Sensor 1/2 is located at the outlet of the SCR Catalyst and is

permanently connected to a corresponding NOx Sensor Module also mounted on the right frame rail. The NOx Sensors and NOx Sensor Modules are calibrated to each other and must be replaced as an assembly. The two NOx Sensor and Module assembles are not interchangeable. The NOx Sensor Modules are smart devices and communicate with the Powertrain Control Module (PCM) over the J1939 Data Link. The NOx Sensor Modules perform their own internal diagnostics and report malfunctions back to the PCM. The NOx Sensors are used to monitor the efficiency of the SCR Catalyst. The PCM will illuminate the MIL lamp immediately after the monitor runs and fails. The PCM will turn off the MIL Lamp after the monitor runs and passes for three consecutive trips.

WHEN MONITORED:

Continuously with the ignition on.

SET CONDITION:

The Powertrain Control Module (PCM) does not receive a message from the NOx Sensor 1/2 over the J1939 Data Link.

POSSIBLE CAUSES

Possible Causes
LOW BATTERY VOLTAGE
(F505) FUSED IGNITION SWITCH OUTPUT CIRCUIT OPEN/HIGH RESISTANCE
(F505) FUSED IGNITION SWITCH OUTPUT CIRCUIT SHORTED TO GROUND
(F505) FUSED IGNITION SWITCH OUTPUT CIRCUIT SHORTED TO THE (Z914) GROUND CIRCUIT
(Z914) GROUND CIRCUIT OPEN/HIGH RESISTANCE
(D130) J1939 DATALINK (+) CIRCUIT OPEN/HIGH RESISTANCE
(D131) J1939 DATALINK (-) CIRCUIT OPEN/HIGH RESISTANCE
(D130) J1939 DATALINK (+) CIRCUIT SHORTED TO BATTERY OR GROUND
(D131) J1939 DATALINK (-) CIRCUIT SHORTED TO BATTERY OR GROUND
J1939 DATALINK (+) CIRCUIT SHORTED TO ANOTHER CIRCUIT
J1939 DATALINK (-) CIRCUIT SHORTED TO ANOTHER CIRCUIT
J1939 DATALINK COMPONENT INTERNALLY SHORTED
FAULTY NOx SENSOR 1/2
POWERTRAIN CONTROL MODULE (PCM)

Always perform the Pre-Diagnostic Troubleshooting procedure before proceeding. Refer to PRE-DIAGNOSTIC TROUBLESHOOTING PROCEDURE - 6.7L .

DIAGNOSTIC TEST

1. **ACTIVE DTC**
    1. Ignition on, engine not running.
    2. With the scan tool, read DTCs.

Is DTC U029E Active?

Yes

- Go To 2.

No

- Perform the INTERMITTENT CONDITION diagnostic procedure. Refer to **INTERMITTENT CONDITION - 6.7L** .

2. **OTHER DTCS**

NOTE: **Repair any Voltage Low DTCs before proceeding with this test procedure.**

NOTE: **The J1939 Datalink is a BUS circuit which the PCM uses to communicate with the Turbo Actuator, DEF Dosing Control Unit, NOx Sensor 1/1 and NOx Sensor 1/2. If the J1939 Datalink is shorted or one of these components is internally shorted, communication will be lost and DTCs will set against ALL of these components.**

Are there lost communication DTCs present against All of the components listed in the note above?

Yes

- Go To 6.

No

- Go To 3.

3. **CHECK SYSTEM VOLTAGE**
   1. Check the Batteries and charging system for proper system voltage and operation.

      Is the system voltage normal?

      Yes

      - Go To 4.

      No

      - Diagnose and repair the Batteries and charging system before continuing.
      - Perform the POWERTRAIN VERIFICATION TEST. Refer to **POWERTRAIN VERIFICATION TEST - 6.7L** .

4. **CHECK THE NOx SENSOR 1/2 POWER AND GROUND CIRCUITS**
   1. Turn the ignition on, engine not running.

2. Disconnect the NOx Sensor Module 1/2 harness connector.
3. Measure the voltage across the (F505) Cluster Ignition Supply circuit and the (Z914) Ground circuit at the NOx Sensor Module 1/2 harness connector.

NOTE: Measure the voltage at key on, engine cranking, and at idle.

Does the voltage read within 1.0 Volt of battery voltage?

Yes

- Go To 5.

No

- Repair the (F505) Fused Ignition Switch Output circuit for an open or short to ground, or check the (Z914) Ground circuit for an open.
- Perform the POWERTRAIN VERIFICATION TEST. Refer to **POWERTRAIN VERIFICATION TEST - 6.7L** .

5. **CHECK THE J1939 DATALINK OPEN**
   1. Turn the ignition off.
   2. Disconnect the DEF NOx Sensor 1/1 harness connector.
   3. Disconnect the Turbo Actuator harness connector.
   4. Disconnect the PCM C2 harness connector.
   5. Disconnect the DEF Dosing Control Unit C2 harness connector.

NOTE: Check connectors - Clean/repair as necessary.

6. Measure the resistance of the J1939 Datalink (+) circuit between the DEF NOx Sensor 1/2 harness connector and the PCM C2 harness connector.
7. Measure the resistance of the J1939 Datalink (-) circuit between the DEF NOx Sensor 1/2 harness connector and the PCM C2 harness connector.

Is the resistance below 5.0 Ohms for both circuits?

Yes

- Replace the NOx Sensor 1/2 in accordance with the service information. Refer to **SENSOR, NOX, REMOVAL** .
- Perform the POWERTRAIN VERIFICATION TEST. Refer to **POWERTRAIN VERIFICATION TEST - 6.7L** .

No

- Repair the J1939 Datalink circuit that measured above 5.0 Ohms for an open or high

resistance.

- Perform the POWERTRAIN VERIFICATION TEST. Refer to **POWERTRAIN VERIFICATION TEST - 6.7L** .

6. **CHECK THE COMPONENTS ON THE J1939 DATALINK**

NOTE: Disconnect only one component at a time during this next step. If the DTCs for the components that are STILL CONNECTED change from active to stored, the component that was disconnected is faulty. If all of the DTCs remain active, then the disconnected component is not the problem. Reconnect each component before going on to the next one so that only one component is disconnected at a time.

1. Turn the ignition off.
2. Disconnect the Turbo Actuator harness connector. Cycle the ignition key on and off three times ending with the ignition on. Leave the ignition in the off position for 75 seconds each time.

NOTE: Monitor the status of the DTCs for the remaining connected components with the scan tool.

3. Turn the ignition off and reconnect the Turbo Actuator harness connector.
4. Disconnect the NOx Sensor Module 1/1 harness connector. Cycle the ignition key on and off three times ending with the ignition on. Leave the ignition in the off position for 75 seconds each time.

NOTE: Monitor the status of the DTCs for the remaining connected components with the scan tool.

5. Turn the ignition off and reconnect the NOx Sensor Module 1/1 harness connector.
6. Disconnect the NOx Sensor Module 1/2 harness connector. Cycle the ignition key on and off three times ending with the ignition on. Leave the ignition in the off position for 75 seconds each time.

NOTE: Monitor the status of the DTCs for the remaining connected components with the scan tool.

7. Turn the ignition off and reconnect the NOx Sensor Module 1/2 harness connector.
8. Disconnect the DEF Dosing Control Unit C2 harness connector. Cycle the ignition key on and off three times ending with the ignition on. Leave the ignition in the off position for 75 seconds each time.

NOTE: Monitor the status of the DTCs for the remaining connected components with the scan tool.

Did the status of the DTCs change to stored for the components STILL CONNECTED when disconnecting any one of the components listed above?

Yes

- Replace the component that caused the DTC change from active to stored in accordance with the service information.
- Perform the POWERTRAIN VERIFICATION TEST. Refer to **POWERTRAIN VERIFICATION TEST - 6.7L** .

No

- Go To 7.

7. **CHECK THE J1939 DATALINK FOR A SHORT TO GROUND**
   1. Turn the ignition off.
   2. Disconnect the Turbo Actuator, NOx Sensor Modules, DEF Dosing Control Unit, and the PCM C2 harness connectors.
   3. Measure the resistance between ground and the J1939 Datalink (+) circuit at the PCM C2 harness connector.
   4. Measure the resistance between ground and the J1939 Datalink (-) circuit at the PCM C2 harness connector.

   Is the resistance above 10k Ohms for both circuits?

   Yes

   - Go To 8.

   No

   - Repair the J1939 Datalink circuit that did not measure above 10k Ohms for a short to ground.
   - Perform the POWERTRAIN VERIFICATION TEST. Refer to **POWERTRAIN VERIFICATION TEST - 6.7L** .

8. **CHECK THE J1939 DATALINK FOR A SHORT**
   1. Measure the resistance between the J1939 Datalink (+) circuit at the PCM C2 harness connector and all other circuits in the PCM C2 harness connector.
   2. Measure the resistance between the J1939 Datalink (-) circuit at the PCM C2 harness connector and all other circuits in the PCM C2 harness connector.

   NOTE: Disregard any resistance between 50 and 70 Ohms between the J1939 (+) and the J1939 Datalink (-) pins.

   Is the resistance above 10k Ohms for both measurements?

   Yes

   - Go To 9.

No

- Repair the J1939 Datalink circuit for a short to the circuit that did not measure above 10k Ohms.
- Perform the POWERTRAIN VERIFICATION TEST. Refer to **POWERTRAIN VERIFICATION TEST - 6.7L** .

9. **CHECK THE J1939 DATALINK CIRCUITS FOR AN OPEN/HIGH RESISTANCE**
   1. Measure the resistance of the J1939 Datalink (+) circuit between the NOx Sensor Module 1/2 harness connector and the PCM C2 harness connector.
   2. Measure the resistance of the J1939 Datalink (-) circuit between the NOx Sensor Module 1/2 harness connector and the PCM C2 harness connector.

   Is the resistance below 5.0 Ohms for both circuits?

   Yes

   - Replace the Powertrain Control Module in accordance with the service information. Refer to **MODULE, POWERTRAIN CONTROL, 6.7L DIESEL, REMOVAL** .
   - Perform the POWERTRAIN VERIFICATION TEST. Refer to **POWERTRAIN VERIFICATION TEST - 6.7L** .

   No

   - Repair the J1939 circuit for an open or high resistance.
   - Perform the POWERTRAIN VERIFICATION TEST. Refer to **POWERTRAIN VERIFICATION TEST - 6.7L** .

U040F-INVALID DATA RECEIVED FROM REDUCTANT CONTROL MODULE

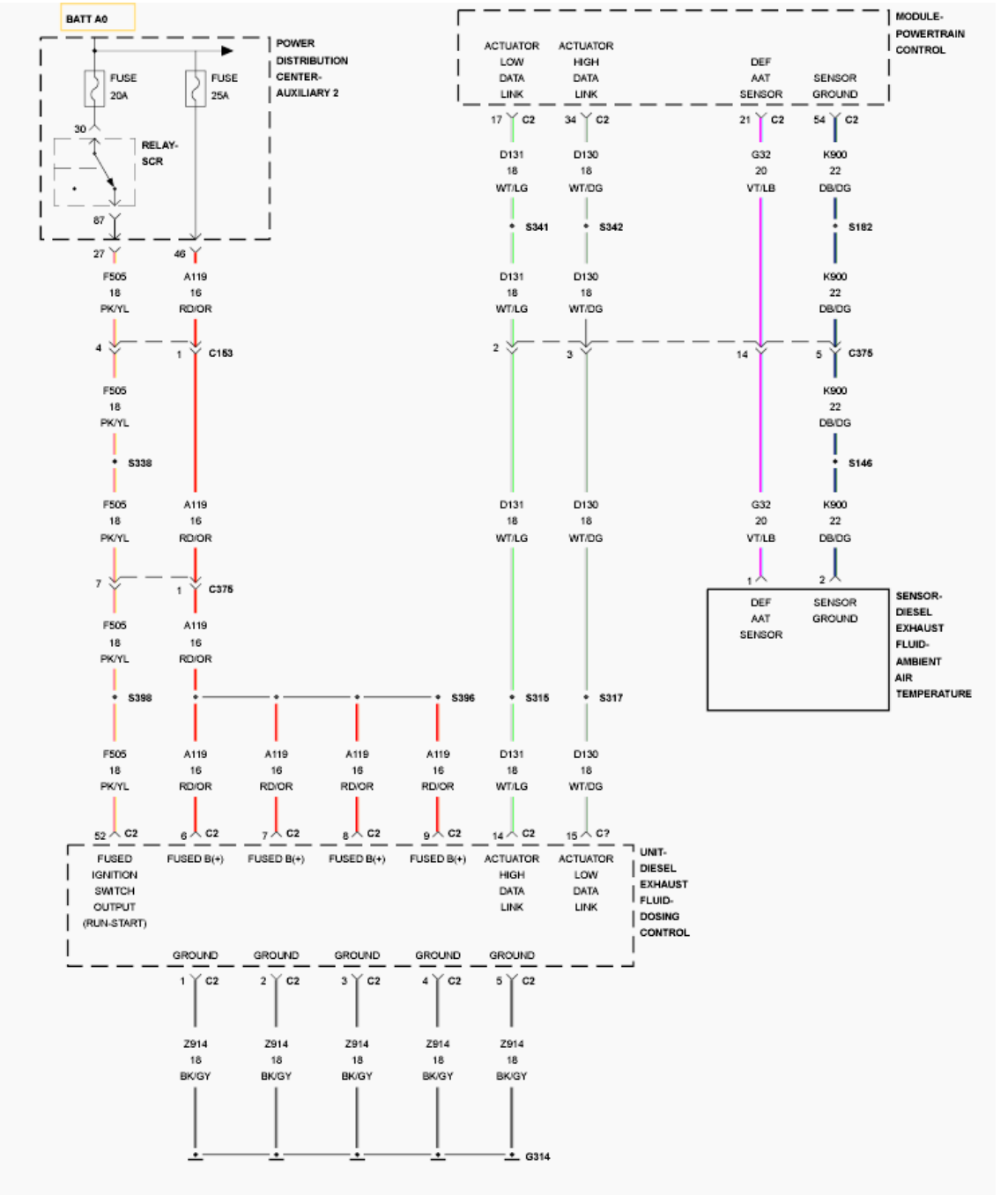

Fig. 53: Diesel Exhaust Fluid (DEF) Dosing Control Unit Wiring Diagram
Courtesy of CHRYSLER GROUP, LLC

For a complete wiring diagram, **refer to appropriate SYSTEM WIRING DIAGRAMS article** .

THEORY OF OPERATION

The Diesel Exhaust Fluid (DEF) Dosing Control Unit is used to control the operation and monitoring of the Diesel Exhaust Fluid system. The DEF Dosing Control Unit shares information with the Powertrain Control Module (PCM) over the J1939 Data Link. The DEF Dosing Control Unit will illuminate the MIL light via the

PCM immediately after the diagnostics runs and fails. The DEF Dosing Control Unit will turn off the MIL light via the PCM when the monitor runs and passes in three consecutive key cycles.

WHEN MONITORED:

Continuously with the ignition on.

SET CONDITION:

An unexpected data link message was sent from the PCM to the DEF Dosing Control Unit and was unable to be interpreted.

POSSIBLE CAUSES

Possible Causes
INCORRECT J1939 DATALINK TERMINATION RESISTANCE
DEF DOSING CONTROL UNIT
POWERTRAIN CONTROL MODULE (PCM)

Always perform the Pre-Diagnostic Troubleshooting procedure before proceeding. Refer to PRE-DIAGNOSTIC TROUBLESHOOTING PROCEDURE - 6.7L .

DIAGNOSTIC TEST

1. **OTHER DTCS**
    1. Ignition on, engine not running.
    2. With the scan tool, View DTCs.

    Is DTC U010E active?

    Yes

    - Perform the diagnostic procedure for U010E before continuing. Refer to **U010E-LOST COMMUNICATION WITH DIESEL EXHAUST FLUID CONTROL UNIT**.
    - Perform the POWERTRAIN VERIFICATION TEST. Refer to **POWERTRAIN VERIFICATION TEST - 6.7L** .

    No

    - Go To 2.
2. **U040F ACTIVE**

    Is DTC U040F active?

    Yes

- Go To 3.

No

- Perform the INTERMITTENT CONDITION diagnostic procedure. Refer to **INTERMITTENT CONDITION - 6.7L** .

3. **CHECK THE POWERTRAIN CONTROL MODULE**
   1. Turn the ignition off.
   2. Disconnect the DEF Dosing Control Unit harness connector.

      NOTE: Check connectors - Clean/repair as necessary.

   3. Ignition on, engine not running.
   4. With the scan tool, View DTCs.

      Is the DTC U010E active?

      Yes

      - Replace the DEF Dosing Control Unit in accordance with the service information. Refer to **UNIT, DIESEL EXHAUST FLUID DOSING CONTROL, REMOVAL** .
      - Perform the POWERTRAIN VERIFICATION TEST. Refer to **POWERTRAIN VERIFICATION TEST - 6.7L** .

      No

      - Replace the Powertrain Control Module in accordance with the service information. Refer to **MODULE, POWERTRAIN CONTROL, 6.7L DIESEL, REMOVAL** .
      - Perform the POWERTRAIN VERIFICATION TEST. Refer to **POWERTRAIN VERIFICATION TEST - 6.7L** .

U059E-INVALID DATA RECEIVED FROM NOX SENSOR "A"

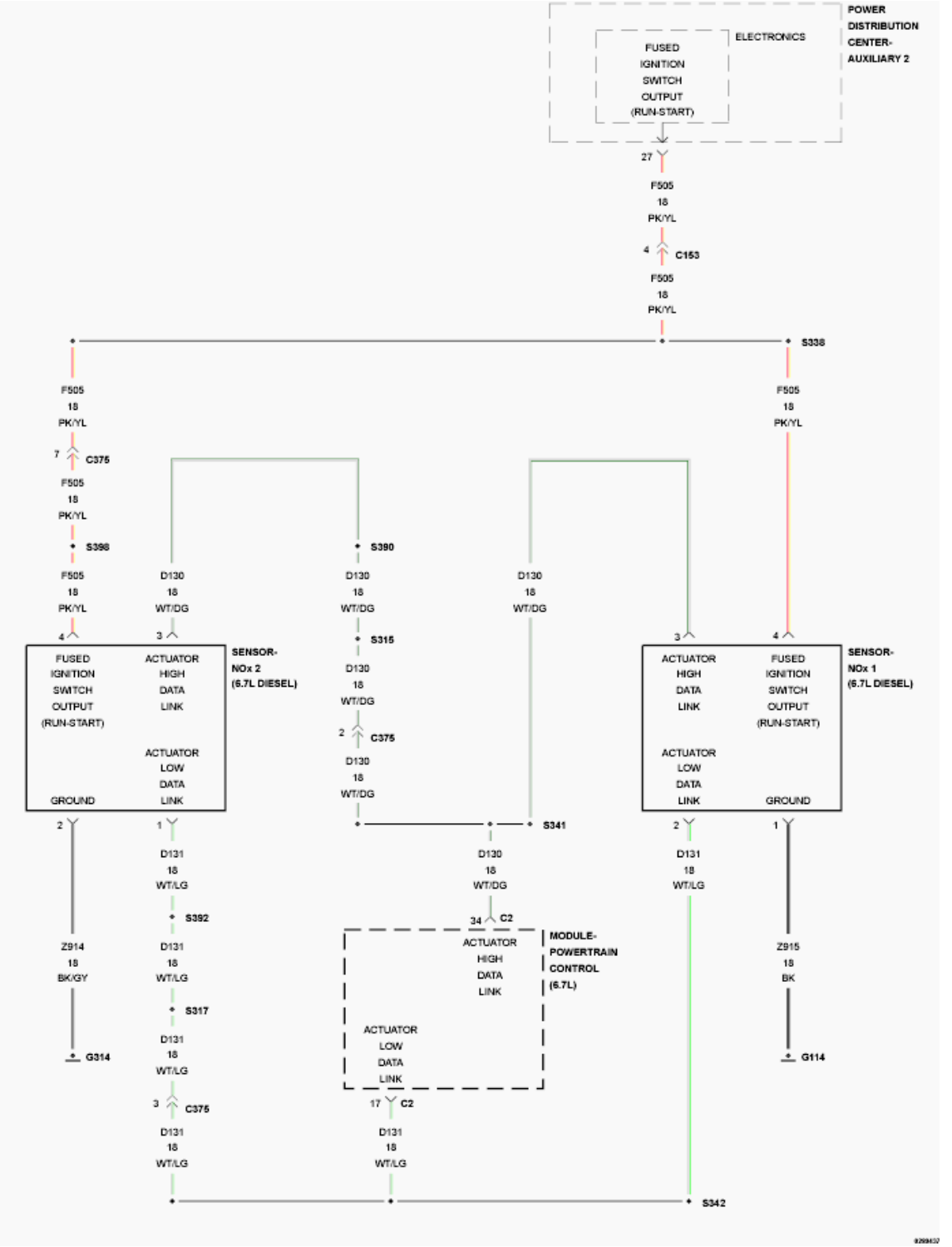

Fig. 54: NOx Sensors Wiring Diagram
Courtesy of CHRYSLER GROUP, LLC

For a complete wiring diagram, **refer to appropriate SYSTEM WIRING DIAGRAMS article** .

THEORY OF OPERATION

The aftertreatment system is equipped with two NOx Sensors and modules. The upstream NOx Sensor 1/1 is located before the SCR Catalyst and is permanently connected to a corresponding NOx Sensor Module mounted on the right frame rail. The downstream NOx Sensor 1/2 is located at the outlet of the SCR Catalyst and is permanently connected to a corresponding NOx Sensor Module also mounted on the right frame rail. The NOx Sensors and NOx Sensor Modules are calibrated to each other and must be replaced as an assembly. The two NOx Sensor and Module assemblies are not interchangeable. The NOx Sensor Modules are smart devices and communicate with the Powertrain Control Module (PCM) over the J1939 Data Link. The NOx Sensor Modules perform their own internal diagnostics and report malfunctions back to the PCM. The NOx Sensors are used to monitor the efficiency of the SCR Catalyst. The PCM will illuminate the MIL lamp immediately after the monitor runs and fails. The PCM will turn off the MIL Lamp after the monitor runs and passes for three consecutive trips.

WHEN MONITORED:

This monitor runs when the change rates of exhaust gas oxygen, NOx, exhaust pressure and exhaust flow are less than a calibrated threshold.

SET CONDITION:

Fault is set if the percentage of time we get the not valid bit is received for more than a calibrated time within a fixed time frame.

POSSIBLE CAUSES

Possible Causes
NOx SENSOR 1/1

Always perform the Pre-Diagnostic Troubleshooting procedure before proceeding. Refer to PRE-DIAGNOSTIC TROUBLESHOOTING PROCEDURE - 6.7L .

DIAGNOSTIC TEST

1. **ACTIVE DTC**
    1. Ignition on, engine not running.
    2. With the scan tool, read DTCs.

    Is the DTC active?

    Yes

    - Replace the NOx Sensor 1/1 in accordance with the service information. Refer to **SENSOR, NOX, REMOVAL** .
    - Perform the POWERTRAIN VERIFICATION TEST. Refer to **POWERTRAIN VERIFICATION TEST - 6.7L** .

    No

- Perform the INTERMITTENT CONDITION - 6.7L. Refer to **INTERMITTENT CONDITION - 6.7L** .

U059F-INVALID DATA RECEIVED FROM NOX SENSOR "B"

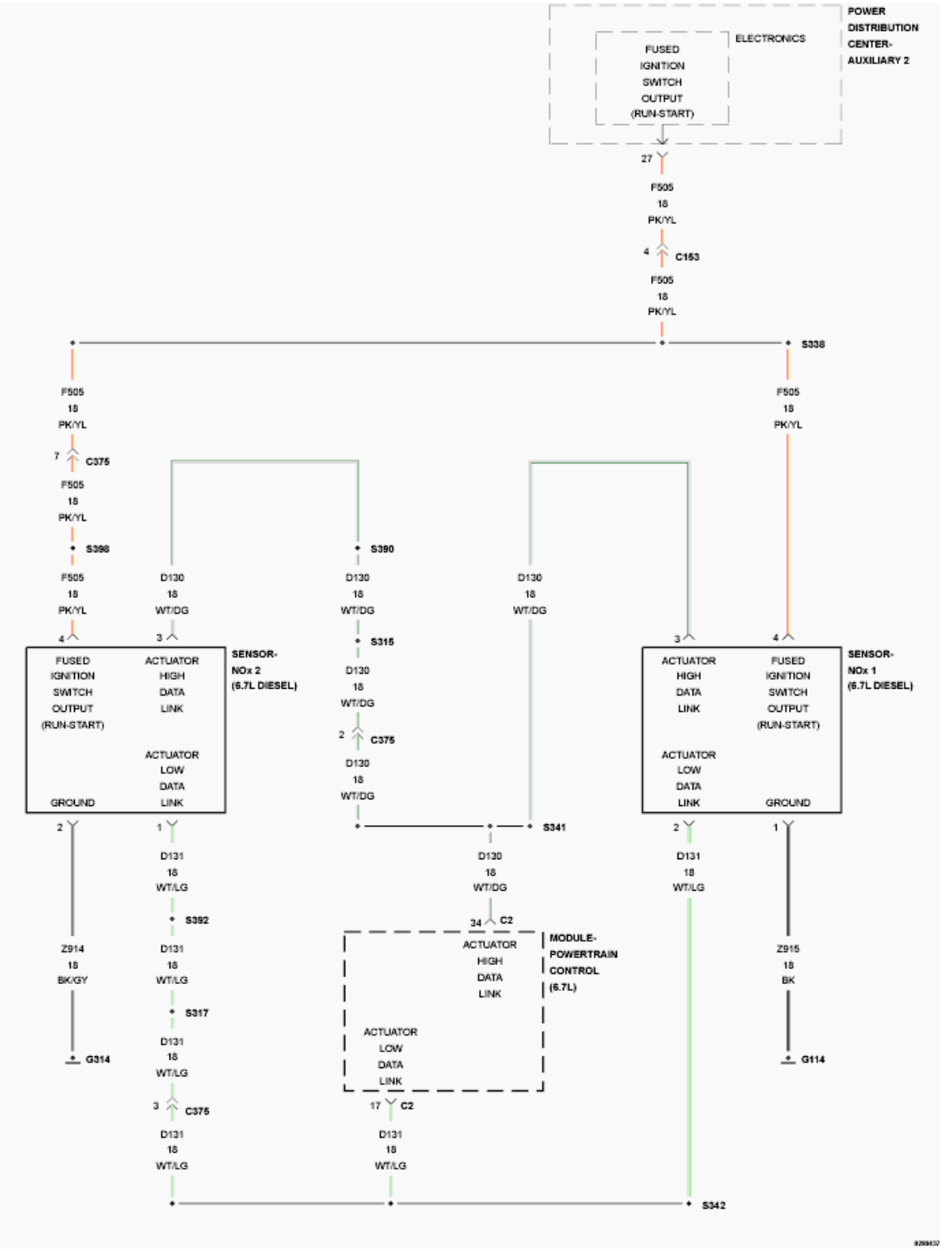

Fig. 55: NOx Sensors Wiring Diagram
Courtesy of CHRYSLER GROUP, LLC

For a complete wiring diagram, **refer to appropriate SYSTEM WIRING DIAGRAMS article** .

THEORY OF OPERATION

The aftertreatment system is equipped with two NOx Sensors and modules. The upstream NOx Sensor 1/1 is located before the SCR Catalyst and is permanently connected to a corresponding NOx Sensor Module mounted on the right frame rail. The downstream NOx Sensor 1/2 is located at the outlet of the SCR Catalyst and is permanently connected to a corresponding NOx Sensor Module also mounted on the right frame rail. The NOx Sensors and NOx Sensor Modules are calibrated to each other and must be replaced as an assembly. The two NOx Sensor and Module assemblies are not interchangeable. The NOx Sensor Modules are smart devices and communicate with the Powertrain Control Module (PCM) over the J1939 Data Link. The NOx Sensor Modules perform their own internal diagnostics and report malfunctions back to the PCM. The NOx Sensors are used to monitor the efficiency of the SCR Catalyst. The PCM will illuminate the MIL lamp immediately after the monitor runs and fails. The PCM will turn off the MIL Lamp after the monitor runs and passes for three consecutive trips.

WHEN MONITORED:

This monitor runs when the change rates of exhaust gas oxygen, NOx, exhaust pressure and exhaust flow are less than a calibrated threshold.

SET CONDITION:

Fault is set if the percentage of time we get the not valid bit is above a calibrated threshold within a fixed time frame.

POSSIBLE CAUSES

Possible Causes
NOx SENSOR 1/2

Always perform the Pre-Diagnostic Troubleshooting procedure before proceeding. Refer to PRE-DIAGNOSTIC TROUBLESHOOTING PROCEDURE - 6.7L .

DIAGNOSTIC TEST

1. **ACTIVE DTC**
    1. Ignition on, engine not running.
    2. With the scan tool, read DTCs.

       Is the DTC active?

       Yes

- Replace the NOx Sensor 1/2 in accordance with the service information. Refer to **SENSOR, NOX, REMOVAL** .
- Perform the POWERTRAIN VERIFICATION TEST. Refer to **POWERTRAIN VERIFICATION TEST - 6.7L** .

No

- Perform the INTERMITTENT CONDITION diagnostic procedure. Refer to **INTERMITTENT CONDITION - 6.7L** .

U11C1-LOST COMMUNICATION WITH DIESEL EXHAUST FLUID CONTROL UNIT

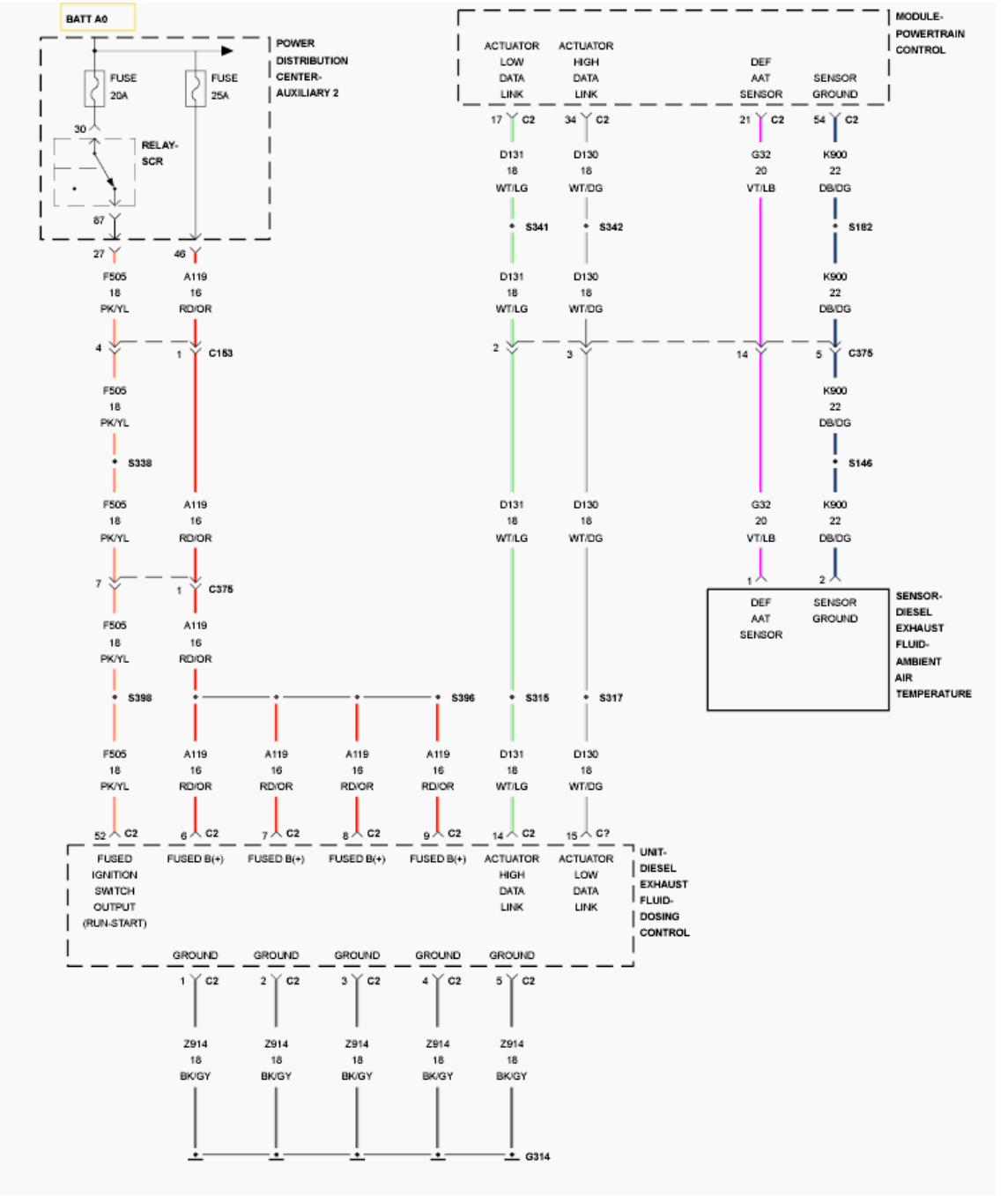

Fig. 56: Diesel Exhaust Fluid (DEF) Dosing Control Unit Wiring Diagram
Courtesy of CHRYSLER GROUP, LLC

For a complete wiring diagram, **refer to appropriate SYSTEM WIRING DIAGRAMS article** .

THEORY OF OPERATION

The Diesel Exhaust Fluid (DEF) Dosing Control Unit is used to control the operation and monitoring of the Diesel Exhaust Fluid system. The DEF Dosing Control Unit is the central control for the aftertreatment diesel exhaust fluid dosing system, and handles the dosing activity, tank level sensing, tank temperature sensing, line

heating, and tank heating. The DEF Dosing Control Unit shares information with the Powertrain Control Module over the J1939 Data Link. The DEF Dosing Control Unit will illuminate the MIL light via the PCM immediately after the diagnostics runs and fails and dosing of fluid into the exhaust system is disabled.

WHEN MONITORED:

Continuously with the ignition on.

SET CONDITION:

The DEF Dosing Control Unit is expecting a valid Data link message from the Powertrain Control Module, but the actual data received was unreadable or missing.

POSSIBLE CAUSES

Possible Causes
(D130) J1939 DATALINK (+) CIRCUIT SHORTED TO BATTERY OR GROUND
(D131) J1939 DATALINK (-) CIRCUIT SHORTED TO BATTERY OR GROUND
(D130) J1939 DATALINK (+) CIRCUIT OPEN/HIGH RESISTANCE
(D131) J1939 DATALINK (-) CIRCUIT OPEN/HIGH RESISTANCE
DEF DOSING CONTROL UNIT
POWERTRAIN CONTROL MODULE (PCM)

Always perform the Pre-Diagnostic Troubleshooting procedure before proceeding. Refer to PRE-DIAGNOSTIC TROUBLESHOOTING PROCEDURE - 6.7L .

DIAGNOSTIC TEST

1. **OTHER DTCS**
    1. Ignition on, engine not running.
    2. With the scan tool, read DTCs.

    Are there any other DEF system DTCs active?

    Yes

    - Repair all other DEF system DTCs before proceeding with this test procedure.
    - Perform the POWERTRAIN VERIFICATION TEST. Refer to **POWERTRAIN VERIFICATION TEST - 6.7L** .

    No

    - Go To 2.
2. **U11C1 ACTIVE**

Is DTC U11C1 active?

Yes

- Go To 3.

No

- Perform the INTERMITTENT CONDITION diagnostic procedure. Refer to **INTERMITTENT CONDITION - 6.7L** .

3. **CHECK THE J1939 DATALINK CIRCUITS FOR AN OPEN/HIGH RESISTANCE**
   1. Turn the ignition off.
   2. Disconnect the DEF Dosing Control Unit C2 harness connector.
   3. Disconnect the PCM C2 harness connector

      NOTE: Check connectors - Clean/repair as necessary.

   4. Measure the resistance of the J1939 Datalink (+) circuit between the DEF Dosing Control Unit C2 harness connector and the PCM C2 harness connector.
   5. Measure the resistance of the J1939 Datalink (-) circuit between the DEF Dosing Control Unit C2 harness connector and the PCM C2 harness connector.

      Is the resistance below 5.0 Ohms for both circuits?

      Yes

      - Go To 4.

      No

      - Repair the J1939 circuit for an open or high resistance.
      - Perform the POWERTRAIN VERIFICATION TEST. Refer to **POWERTRAIN VERIFICATION TEST - 6.7L** .

4. **CHECK THE J1939 DATALINK CIRCUITS FOR A SHORT**
   1. Measure the resistance between the J1939 Datalink (+) circuit at the PCM C2 harness connector and all other circuits in the PCM C1 harness connector.
   2. Measure the resistance between the J1939 Datalink (-) circuit at the PCM C2 harness connector and all other circuits in the PCM C1 harness connector.

      NOTE: Disregard any resistance between 50 and 70 Ohms between the J1939 (+) and the J1939 Datalink (-) pins.

      Is the resistance above 10k Ohms for both circuits?

Yes

- Go To 5.

No

- Repair the J1939 circuit for a short circuit.
- Perform the POWERTRAIN VERIFICATION TEST. Refer to **POWERTRAIN VERIFICATION TEST - 6.7L** .

5. **CHECK THE J1939 DATALINK CIRCUITS FOR A SHORT TO GROUND**
   1. Measure the resistance between ground and the J1939 Datalink (+) circuit at the PCM C1 harness connector.
   2. Measure the resistance between ground and the J1939 Datalink (-) circuit at the PCM C1 harness connector.

   Is the resistance above 10k Ohms for both circuits?

   Yes

   - Go To 6.

   No

   - Repair the J1939 circuit for a short to ground.
   - Perform the POWERTRAIN VERIFICATION TEST. Refer to **POWERTRAIN VERIFICATION TEST - 6.7L** .

6. **DEF DOSING CONTROL UNIT**
   1. Turn the ignition off.
   2. Reconnect the DEF Dosing Control Unit C2 harness connector.
   3. Reconnect the PCM C2 harness connector.
   4. Ignition on, engine not running.
   5. With the scan tool, read DTCs.

   Is DTC P010E active?

   Yes

   - Replace the DEF Dosing Control Unit in accordance with the service information. Refer to **UNIT, DIESEL EXHAUST FLUID DOSING CONTROL, REMOVAL** .
   - Perform the POWERTRAIN VERIFICATION TEST. Refer to **POWERTRAIN VERIFICATION TEST - 6.7L** .

   No

- Replace the Powertrain Control Module in accordance with the service information. Refer to **MODULE, POWERTRAIN CONTROL, 6.7L DIESEL, REMOVAL** .
- Perform the POWERTRAIN VERIFICATION TEST. Refer to **POWERTRAIN VERIFICATION TEST - 6.7L** .

U1403-IMPLAUSIBLE FUEL LEVEL SIGNAL RECEIVED

For a complete wiring diagram, **refer to appropriate SYSTEM WIRING DIAGRAMS article** .

THEORY OF OPERATION

The Totally Integrated Power Module (TIPM) isn't receiving a fuel volume signal over CAN B from the Cluster Module. The TIPM has to send the PCM a fuel volume signal over CAN C. The signal the TIPM sends over CAN C is implausible.

WHEN MONITORED:

Continuously with the ignition on.

SET CONDITION:

The fuel volume message the Powertrain Control Module (PCM) is receiving is implausible.

POSSIBLE CAUSES

Possible Causes
CAN B OPEN OR SHORTED
CLUSTER MODULE
TOTALLY INTEGRATED POWER MODULE (TIPM)
POWERTRAIN CONTROL MODULE (PCM)

Always perform the Pre-Diagnostic Troubleshooting procedure before proceeding. Refer to PRE-DIAGNOSTIC TROUBLESHOOTING PROCEDURE - 6.7L .

DIAGNOSTIC TEST

1. **ACTIVE DTC**
    1. Ignition on, engine not running.
    2. With a scan tool read DTCs.

    Is the DTC Active at this time?

    Yes

    - Go To 2.

No

- Perform the INTERMITTENT CONDITION diagnostic procedure. Refer to **INTERMITTENT CONDITION - 6.7L** .

2. **CAN B BUS HARDWARE DTCS ALSO ACTIVE**
   1. With a scan tool check for DTCs in the TIPM.

      Are any CAN B Hardware related DTCs active at this time?

      Yes

      - Perform the appropriate diagnostic procedure. Refer to **DIAGNOSIS AND TESTING** .
      - Perform the BODY VERIFICATION TEST. Refer to **STANDARD PROCEDURE** .

      No

      - Replace and program the Powertrain Control Module in accordance with the service information. Refer to **PCM - REMOVAL** , also see **PCM/ECM / TCM PROGRAMMING** .
      - Perform the POWERTRAIN VERIFICATION TEST. Refer to **POWERTRAIN VERIFICATION TEST - 6.7L** .

U1412-IMPLAUSIBLE VEHICLE SPEED SIGNAL RECEIVED

For a complete wiring diagram, **refer to appropriate SYSTEM WIRING DIAGRAMS article** .

THEORY OF OPERATION

The ABS Module sends vehicle speed information over the CAN C Bus circuit to the Powertrain Control Module (PCM).

WHEN MONITORED:

Continuously with the ignition on.

SET CONDITION:

The Powertrain Control Module (PCM) gets an implausible signal over the CAN C circuit from the ABS Module.

POSSIBLE CAUSES

Possible Causes
CAN C BUS CIRCUIT SHORTED
CAN C BUS CIRCUIT OPEN
ABS MODULE

Always perform the Pre-Diagnostic Troubleshooting procedure before proceeding. Refer to PRE-DIAGNOSTIC TROUBLESHOOTING PROCEDURE - 6.7L .

DIAGNOSTIC TEST

1. **ACTIVE DTC**
   1. Ignition on, engine not running.
   2. With a scan tool, read DTCs.

      Is the U1412-IMPLAUSIBLE VEHICLE SPEED SIGNAL RECEIVED active at this time?

      Yes

      - Go To 2.

      No

      - Perform the INTERMITTENT CONDITION diagnostic procedure. Refer to **INTERMITTENT CONDITION - 6.7L** .
2. **U0001-NO COMMUNICATION ON THE CAN C BUS CIRCUIT IS ACTIVE**
   1. Continue reading DTCs.

      Is the U0001-NO COMMUNICATION ON THE CAN C BUS CIRCUIT ACTIVE at this time?

      Yes

      - Perform the U0001-NO COMMUNICATION ON THE CAN C BUS CIRCUIT diagnostic procedure. Refer to **DIAGNOSIS AND TESTING** .

      No

      - Go To 3.
3. **ABS MODULE IS ACTIVE ON THE CAN C BUS**
   1. With the scan tool, select ECU View.
   2. Verify that the ABS Module active on the bus.

      Is the ABS Module active on the bus?

      Yes

      - Go To 4.

      No

- Perform the No Response from ABS diagnostic procedure. Refer to **DIAGNOSIS AND TESTING** .
- Perform the BODY VERIFICATION TEST. Refer to **STANDARD PROCEDURE** .

4. **ACTIVE DTCS IN THE TIPM**
   1. With the scan tool, select ECU View and select TIPM.
   2. With the scan tool, read active DTCs.

      Is the U0001-NO COMMUNICATION ON THE CAN C BUS CIRCUIT ACTIVE in the TIPM at this time?

      Yes

      - Replace the ABS Module in accordance with the service information.
      - Perform the ABS VERIFICATION TEST. Refer to **ABS VERIFICATION TEST** .

      No

      - Replace and program the Powertrain Control Module in accordance with the service information. Refer to **PCM - REMOVAL** , also see **PCM/ECM / TCM PROGRAMMING** .
      - Perform the POWERTRAIN VERIFICATION TEST. Refer to **POWERTRAIN VERIFICATION TEST - 6.7L** .

U1421-IMPLAUSIBLE IGNITION KEY OFF TIME RECEIVED

For a complete wiring diagram, **refer to appropriate SYSTEM WIRING DIAGRAMS article** .

THEORY OF OPERATION

This monitor checks if the timer that counts the ignition off time is stuck.

WHEN MONITORED:

With the ignition on.

SET CONDITION:

If the difference between coolant temperatures at the previous ignition off and next key on is greater than -12.2° C (10°F), and the ignition off time was less than two minutes, the Powertrain Control Module (PCM) increments a fail counter of one. If the fail counter reaches 16 counts, a DTC is set and MIL lamp turns on.

POSSIBLE CAUSES

Possible Causes
CAN C OPEN OR SHORTED

CLUSTER/CCN
TOTALLY INTEGRATED POWER MODULE (TIPM)
POWERTRAIN CONTROL MODULE (PCM)

Always perform the Pre-Diagnostic Troubleshooting procedure before proceeding. Refer to PRE-DIAGNOSTIC TROUBLESHOOTING PROCEDURE - 6.7L .

DIAGNOSTIC TEST

1. **ACTIVE DTC**

   NOTE: Low battery voltage as well or an IOD fuse which is missing or not pushed in completely can cause the DTC to set. Make sure that the battery is fully charged and Ignition Off Draw (IOD) fuse is properly installed before continuing.

   1. Ignition on, engine not running.
   2. With a scan tool clear DTCs.
   3. Turn the ignition off for 75 seconds.
   4. Turn the ignition on.
   5. With a scan tool read DTCs.

   Is the DTC active at this time?

   Yes

   - Go To 3.

   No

   - Perform the INTERMITTENT CONDITION diagnostic procedure. Refer to **INTERMITTENT CONDITION - 6.7L** .

2. **CHECKING THE PCM POWERS AND GROUNDS**
   1. Perform the CHECKING THE PCM POWERS AND GROUNDS diagnostic procedure. Refer to **DIAGNOSIS AND TESTING, 6.7L** .

   Were any problems found?

   Yes

   - Perform the appropriate repair.
   - Perform the POWERTRAIN VERIFICATION TEST. Refer to **POWERTRAIN VERIFICATION TEST - 6.7L** .

   No

- Go To 3.

3. **CHECKING FOR TSB/PCM FLASH UPDATES**
    1. Check for any Service Bulletins or PCM flash updates that may apply.

       Were any Service Bulletins or PCM flash updates found?

       Yes

       - Perform the appropriate repair.
       - Perform the POWERTRAIN VERIFICATION TEST. Refer to **POWERTRAIN VERIFICATION TEST - 6.7L** .

       No

       - Go To 4.

4. **CAN B BUS HARDWARE DTCS ALSO ACTIVE**
    1. With a scan tool check for DTCs in the TIPM.

       Are any CAN B Hardware related DTCs active at this time?

       Yes

       - Perform the appropriate diagnostic procedure. Refer to **DIAGNOSIS AND TESTING** .

       No

       - Replace and program the Powertrain Control Module in accordance with the service information. Refer to **PCM - REMOVAL** , also see **PCM/ECM / TCM PROGRAMMING** .
       - Perform the POWERTRAIN VERIFICATION TEST. Refer to **POWERTRAIN VERIFICATION TEST - 6.7L** .

U1601-ECU APPLICATION SOFTWARE CODE 1 MISSING OR CORRUPTED

For a complete wiring diagram, **refer to appropriate SYSTEM WIRING DIAGRAMS article** .

THEORY OF OPERATION

If the Powertrain Control Module (PCM) does not have a calibration installed, or has an unapproved calibration installed then the PCM will be in a ROM boot state. The PCM will have power but no approved software to allow the vehicle to be started and driven. No further diagnostics of the PCM will be available at this time. This code will be cleared when the PCM has the correct approved calibration installed.

WHEN MONITORED:

With the ignition on.

SET CONDITION:

The Powertrain Control Module (PCM) is in ROM boot mode.

POSSIBLE CAUSES

Possible Causes
POWERTRAIN CONTROL MODULE HAS NO SOFTWARE INSTALLED
SOFTWARE DOWNLOAD FAILED DURING THE DOWNLOAD PROCESS
POWERTRAIN CONTROL MODULE HAS UNAPRROVED SOFTWARE INSTALLED

Always perform the Pre-Diagnostic Troubleshooting procedure before proceeding. Refer to PRE-DIAGNOSTIC TROUBLESHOOTING PROCEDURE - 6.7L .

DIAGNOSTIC TEST

1. **NEW POWERTRAIN CONTROL MODULE**
    1. If the PCM was replaced and not programmed this DTC will set.
    2. With a scan tool clear DTCs.

    Has the PCM been replaced on this vehicle?

    Yes

    - Program the Powertrain Control Module (PCM) with the correct software.
    - Perform the POWERTRAIN VERIFICATION TEST. Refer to **POWERTRAIN VERIFICATION TEST - 6.7L** .

    No

    - Go To 2.
2. **DOWNLOAD FAILED**
    1. If the vehicle lost battery power or the scan tool was disconnected during programming, this DTC will set.

    Was a software download interrupted during the download process?

    Yes

    - Reprogram the Powertrain Control Module in accordance with the service information. Refer to **PCM/ECM / TCM PROGRAMMING** .
    - Perform the POWERTRAIN VERIFICATION TEST. Refer to **POWERTRAIN VERIFICATION TEST - 6.7L** .

    No

- Go To 3.

3. **UNAPPROVED SOFTWARE INSTALLED**
    1. Unapproved software programmed into the Powertrain Control Module is not a warrantable repair.

       If tests one and two do not apply, the vehicle has been programmed with unapproved software.

       Yes

       - Reprogram the Powertrain Control Module with the correct software. Refer to **PCM/ECM / TCM PROGRAMMING** .
       - Perform the POWERTRAIN VERIFICATION TEST. Refer to **POWERTRAIN VERIFICATION TEST - 6.7L** .

DIAGNOSIS AND TESTING

A/C CLUTCH COIL

The A/C clutch coil electrical circuit is controlled by the Powertrain Control Module (PCM) or Engine Control Module (ECM), depending on engine application, through the Totally Integrated Power Module (TIPM). See Wiring Information for complete HVAC wiring diagrams. Begin testing of a suspected A/C clutch coil problem by performing the preliminary checks.

PRELIMINARY CHECKS

1. Using a scan tool, check for Diagnostic Trouble Codes (DTCs) in the A/C-heater control, TIPM and PCM/ECM. Refer to **DIAGNOSIS AND TESTING** . If no DTCs are found, go to 2. If any DTCs are found, repair as required.
2. If the A/C clutch still will not engage, verify the refrigerant charge level by conducting the A/C Performance test. Refer to **DIAGNOSIS AND TESTING** . If the refrigerant charge level is OK, refer to **COIL RESISTANCE TEST**. If the refrigerant charge level is not OK, adjust the refrigerant charge as required. Refer to **COIL CURRENT DRAW TEST**.

COIL RESISTANCE TEST

1. Disconnect and isolate the negative battery cable.
2. Disconnect the wire harness connector from the A/C clutch coil connector.
3. Use an ohm meter and Back Probe Tool (special tool #6801, Terminal Probe) and measure the resistance of the A/C clutch coil at the coil connector terminals.
4. See A/C Clutch Coil Specifications table for acceptable A/C clutch coil resistance. Specifications apply for a work area temperature of 21° C (70° F).
    1. If the A/C clutch coil reading is below specifications, the coil is shorted and must be replaced.
    2. If the A/C clutch coil reading is above specifications, the coil is open and must be replaced.

COIL CURRENT DRAW TEST

1. Verify the battery state of charge.
2. Connect an ammeter (0 to 10 ampere scale selected) in series with the A/C clutch coil feed terminal using Back Probe Tool (special tool #6801, Terminal Probe). Connect a voltmeter (0 to 20 volt scale selected) to measure voltage across the battery and the A/C clutch coil.
3. With the A/C-heater control in the A/C mode and the blower motor at low speed, start the engine and allow it to run at a normal idle speed.
4. The A/C clutch should engage immediately and the clutch coil supply voltage should be within two volts of the battery voltage. If the clutch coil supply voltage is OK, go to 5. If the coil supply voltage is not within two volts of battery voltage, test the clutch coil feed circuit for excessive voltage drop and repair as

necessary.

5. See A/C Clutch Coil Specifications table for acceptable A/C clutch coil current draw. Specifications apply for a work area temperature of 21° C (70° F). If voltage is more than 12.5 volts, add electrical loads by turning on electrical accessories until voltage reads below 12.5 volts.
    1. If the A/C clutch coil current reading is zero, the coil is open and must be replaced.
    2. If the A/C clutch coil current reading is above specifications, the coil is shorted and must be replaced.

A/C CLUTCH COIL SPECIFICATIONS

Coil Resistance	Coil Current Draw
3.6 ± 0.2 ohms	3.2 - 3.3 amps @ 12V ± 0.5V @ 21° C (70° F)

DIAGNOSIS AND TESTING - BLOWER MOTOR RESISTOR

WARNING: **Disable the airbag system before attempting any steering wheel, steering column, or instrument panel component diagnosis or service. Disconnect and isolate the negative battery (ground) cable, then wait two minutes for the airbag system capacitor to discharge before performing further diagnosis or service. This is the only sure way to disable the airbag system. Failure to take the proper precautions may result in accidental airbag deployment and possible serious or fatal injury.**

NOTE: **See Wiring Information for circuit descriptions and diagrams. Wiring Information includes wiring diagrams, proper wire and connector repair procedures, further details on wire harness routing and retention, as well as pin-out and location views for the various wire harness connectors, splices and grounds.**

1. Disconnect and isolate the negative battery cable.
2. Disconnect the wire harness connector from the blower motor resistor. Refer to **RESISTOR, BLOWER MOTOR, REMOVAL** .
3. Using an ohmmeter, check for continuity between all of the blower motor resistor terminals. In each case there should be continuity. If OK, repair the wire harness circuits between the blower motor speed control and the blower motor resistor or blower motor as required. If not OK, replace the inoperative blower motor resistor.

DESCRIPTION

DESCRIPTION

A Manual Temperature Control (MTC) single zone or an Automatic Temperature Control (ATC) dual zone heating-air conditioning system is available on this model.

To maintain the performance level of the Heating, Ventilation and Air Conditioning (HVAC) system, the engine cooling system must be properly maintained. The use of a bug screen is not recommended. Any obstructions in front of the radiator or A/C condenser will reduce the performance of the A/C and engine cooling systems.

The engine cooling system includes the radiator, thermostat, radiator hoses and the engine coolant pump. Refer to **ENGINE COOLING SYSTEM** for more information before opening or attempting any service to the engine cooling system.

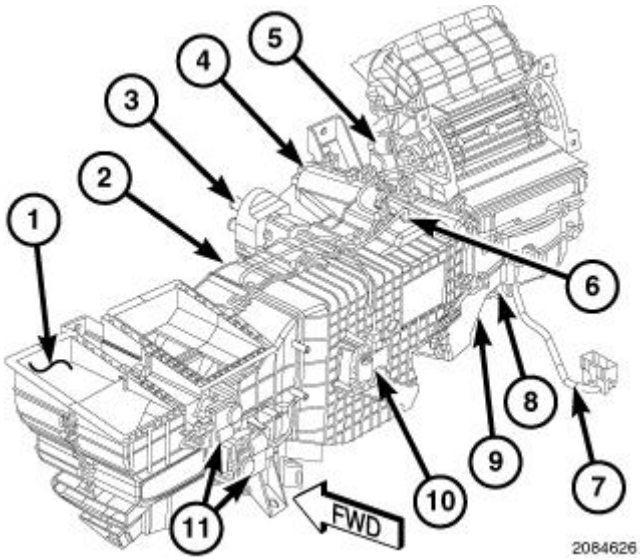

Fig. 1: HVAC Housing Assembly
Courtesy of CHRYSLER GROUP, LLC

NOTE: Dual zone system shown in illustration. Single zone system similar.

All vehicles are equipped with a common HVAC housing (1). The system combines air conditioning, heating, and ventilating capabilities in a single unit housing mounted within the passenger compartment under the instrument panel. The HVAC housing includes:

- Blend-air door(s) and actuator(s) (2 and 10)
- Heater core (3)

- A/C evaporator (4)
- Recirculation-air door and actuator (5)
- Evaporator temperature sensor (6)
- HVAC wire harness (7)
- Blower motor (8)
- Blower motor resistor or power module (9)
- Mode-air doors and actuators (11)

Based upon the system and mode selected, conditioned air can exit the HVAC housing through one or a combination of the three main housing outlets: defrost, panel or floor. The defrost and the panel outlets are located on the top of the housing and, the floor outlet is located on the bottom of the housing. Once the conditioned air exits the HVAC housing, it is further directed through molded plastic ducts to the various outlets within the vehicle interior. These outlets and their locations are as follows:

- **Defroster Outlet -** Four defroster outlets are located in the instrument panel top cover, near the base of the windshield.
- **Side Window Demister Outlets -** There are two side window demister outlets, one is located at each outboard end of the instrument panel top cover, near the belt line at the A-pillars.
- **Panel Outlets -** There are four panel outlets in the instrument panel, one located near each outboard end of the instrument panel facing the rear of the vehicle and two located near the top of the instrument panel center bezel.
- **Front Floor Outlets -** There are two front floor outlets, one located above each side of the floor panel center tunnel near the dash panel.
- **Rear Outlets -** On Crew Cab models there are two outlets located at the rear of the center front seat.

OPERATION

OPERATION

Both the Manual Temperature Control (MTC) single zone heating-A/C system and the Automatic Temperature Control (ATC) dual zone heating-A/C system are blend-air type systems. In a blend-air heating-A/C system, a blend-air door controls the amount of conditioned air that is allowed to flow through, or around the heater core. In the available dual zone system, two blend-air doors are used to provide completely independent side-to-side temperature control of the discharge air. The temperature control(s) determines the discharge air temperature(s) by operating the blend door actuator(s), which move the blend-air door(s). This design allows almost immediate control of output air temperature(s).

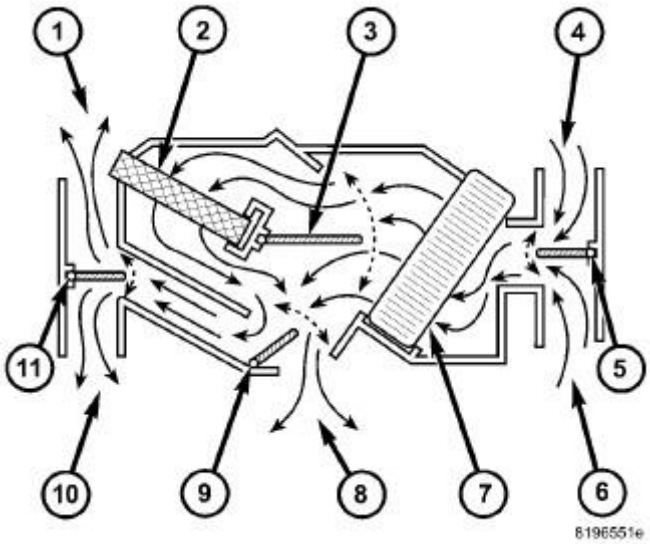

Fig. 2: Blend Air System Schematic
Courtesy of CHRYSLER GROUP, LLC

NOTE: Typical blend-air type HVAC system shown in illustration.

The heating-A/C system pulls outside (ambient) air through the fresh air intake (4) located at the cowl panel at the base of the windshield and into the air inlet housing above the Heating, Ventilation and Air Conditioning (HVAC) housing and passes through the A/C evaporator (7). Air flow is then directed either through or around the heater core (2). This is done by adjusting the position of the blend-air door(s) (3) with the temperature control(s) located on the A/C-heater control in the instrument panel. Air flow is then directed out the floor outlet (8), instrument panel outlet (10) or the defroster outlet (1) in various combinations by adjusting the position of the mode-air doors (9 and 11) using the mode control located on the A/C-heater control. The temperature and mode control uses electrical actuators to operate the air doors.

The velocity of the air flow out of the outlets can be adjusted with the blower speed control located on the A/C-heater control.

The fresh air intake can be shut off by pressing the Recirculation button on the A/C-heater control. This will operate the electrically actuated recirculation-air door (5), which closes off the fresh air intake. With the fresh air intake closed, the conditioned air within the vehicle is pulled back into the HVAC housing through the recirculation air intake (6) located within the passenger compartment.

The A/C compressor can be engaged by pressing the A/C (snowflake) button on the A/C-heater control. It will automatically engage when the mode control is set in any Mix to Defrost position. This will remove heat and humidity from the air before it is directed through or around the heater core. The mode control on the A/C-heater control is used to direct the conditioned air to the selected system outlets.

The defroster outlet receives airflow from the HVAC housing through the molded plastic defroster duct, which connects to the HVAC housing defroster outlet. The airflow from the defroster outlets is directed by fixed vanes in the defroster outlet grilles and cannot be adjusted. The defroster outlet grilles are integral to the instrument

panel top cover.

The side window demister outlets receive airflow from the HVAC housing through the molded plastic defroster duct and two molded plastic demister ducts. The airflow from the side window demister outlets is directed by fixed vanes in the demister outlet grilles and cannot be adjusted. The side window demister outlet grilles are integral to the instrument panel. The demisters direct air from the HVAC housing through the outlets located on the top corners of the instrument panel. The demisters operate when the mode control knob is positioned in the floor-defrost and defrost-only settings. Some air may be noticeable from the demister outlets when the mode control is in the bi-level to floor positions.

The panel outlets receive airflow from the HVAC housing through a molded plastic main panel duct, center panel duct and two end panel ducts. The two end panel ducts direct airflow to the left and right instrument panel outlets, while the center panel duct directs airflow to the two center panel outlets. Each of these outlets can be individually adjusted to direct the flow of air.

The floor outlets receive airflow from the HVAC housing through the floor distribution duct. The front floor outlets are integral to the molded plastic floor distribution duct, which is secured to the bottom of the housing. The floor outlets cannot be adjusted.

NOTE: **It is important to keep the air intake opening clear of debris. Leaf particles and other debris that is small enough to pass through the cowl opening screen can accumulate within the HVAC housing. The closed, warm, damp and dark environment created within the housing is ideal for the growth of certain molds, mildews and other fungi. Any accumulation of decaying plant matter provides an additional food source for fungal spores, which enter the housing with the fresh intake-air. Excess debris, as well as objectionable odors created by decaying plant matter and growing fungi can be discharged into the passenger compartment during heater-A/C operation if the air intake opening is not kept clear of debris.**

The A/C system is designed for non-CFC, R-134a refrigerant and uses an A/C expansion valve to meter the flow of refrigerant through the A/C evaporator. The A/C evaporator cools and dehumidifies the incoming air prior to blending it with the heated air. An evaporator temperature sensor is used to supply evaporator temperature input to the A/C-heater control to maintain minimum evaporator temperature and prevent evaporator freezing. The Powertrain Control Module (PCM) or Engine Control Module (ECM), depending on engine application, cycles the A/C clutch off and on as necessary to protect the A/C system from evaporator freezing and optimize A/C system performance.

DIAGNOSIS AND TESTING

A/C PERFORMANCE

The A/C system is designed to provide the passenger compartment with low temperature and low humidity air. The A/C evaporator, located in the HVAC housing is cooled to temperatures near the freezing point. As warm damp air passes over the fins of the A/C evaporator, the air transfers its heat to the refrigerant in the evaporator coils and the moisture in the air condenses on the evaporator fins. During periods of high heat and humidity, an A/C system will be more effective in the Recirculation mode (max-A/C). With the system in the Recirculation

mode, only air from the passenger compartment passes through the A/C evaporator. As the passenger compartment air dehumidifies, the A/C system performance levels rise.

Humidity has an important bearing on the temperature of the air delivered to the interior of the vehicle. It is important to understand the effect that humidity has on the performance of the A/C system. When humidity is high, the A/C evaporator has to perform a double duty. It must lower the air temperature, and it must lower the temperature of the moisture in the air that condenses on the evaporator fins. Condensing the moisture in the air transfers heat energy into the evaporator fins and coils. This reduces the amount of heat the A/C evaporator can absorb from the air. High humidity greatly reduces the ability of the A/C evaporator to lower the temperature of the air.

However, evaporator capacity used to reduce the amount of moisture in the air is not wasted. Wringing some of the moisture out of the air entering the vehicle adds to the comfort of the passengers. Although, an owner may expect too much from their A/C system on humid days. A performance test is the best way to determine whether the system is performing up to design standards. This test also provides valuable clues as to the possible cause of trouble with the A/C system. The ambient air temperature in the location where the vehicle will be tested must be a minimum of 21° C (70° F) for this test.

A/C PERFORMANCE TEST

WARNING: Refer to the applicable warnings and cautions for this system before performing the following operation. Refer to PLUMBING, WARNING and PLUMBING, CAUTION. Failure to follow the warnings and cautions may result in serious or fatal injury.

CAUTION: The use of an A/C recycling/charging station for purposes of determining the actual charge level of an A/C system is not recommend. Service recycling/charging stations do not reflect the correct amount of refrigerant charge in the A/C system after a single "reclaim" cycle. Tests have shown that it takes up to two or more "reclaim" cycles to remove all of the refrigerant charge, depending on the equipment being used. Use only the following procedure for determining the proper A/C system charge level.

NOTE: When connecting the service equipment coupling to the line fitting, verify that the valve of the coupling is fully closed. This will reduce the amount of effort required to make the connection.

NOTE: The work area ambient temperature must be above 21° C (70° F) and the evaporator temperature must be above 13° C (55° F) prior to conducting the A/C Performance Test.

1. Conduct the A/C System Performance Test (Cooldown Test) found within the HVAC System Test. Refer to appropriate Electrical Diagnostic article. . If no Diagnostic Trouble Codes (DTCs) are found in the A/C-heater control, Totally Integrated Power Module (TIPM), Powertrain Control Module (PCM) or Engine Control Module (ECM), depending on engine application, go to 2. If any DTCs are found, repair as required. Then, refer to 2.

2. Connect a tachometer and a manifold gauge set or an A/C recycling/charging station.
3. Operate the heating-A/C system under the following conditions.
   - Engine at 1, 000 rpm at operating temperature
   - Door and windows closed
   - Transmission in Park or Neutral with parking brake set (depending on transmission application)
   - A/C-heater controls set to recirculation mode (max A/C), full cool, panel mode, high blower and with A/C compressor engaged. If the A/C compressor does not engage, refer to **A/C SYSTEM DIAGNOSIS**.
4. Insert a thermometer in the driver side center panel air outlet and operate the A/C system until the thermometer temperature stabilizes.

NOTE: **This procedure requires the technician to know what the temperature and relative humidity is at the time of the test. The temperature must be combined with the relative humidity to calculate the apparent ambient temperature ("feels like" temperature), when the temperatures are above 21° C (70° F). Use the current ambient temperature and the relative humidity in your location. This information can be obtained from multiple sources, such as the internet or local news media.**

5. With the A/C clutch engaged, compare the air temperature at the center panel outlet and the A/C compressor discharge pressure (high side) to the A/C Performance Temperature and Pressure chart. The A/C clutch may cycle, depending upon the ambient temperature and humidity. If the A/C clutch cycles, use the readings obtained before the clutch disengaged (coldest temperature).

A/C PERFORMANCE TEMPERATURE AND PRESSURE

Ambient Air Temperature (Apparent)	**21° C (70° F)**	**27° C (80° F)**	**32° C (90° F)**	**38° C (100° F)**	**43° C (110° F)**
Air Temperature at Center Panel Outlet	7° C (45° F)	7° C (45° F)	13° C (55° F)	13° C (55° F)	18° C (64° F)
Compressor Inlet Pressure at Service Port (low Side)	138 to 207 kPa (20 to 30 psi)	172 to 241 kPa (25 to 35 psi)	207 to 276 kPa (30 to 40 psi)	241 to 310 kPa (35 to 45 psi)	276 to 345 kPa (40 to 50 psi)
Compressor Discharge Pressure at Service Port (High Side)	1034 to 1724 kPa (150 to 250 psi)	1379 to 2068 kPa (200 to 300 psi)	1724 to 2413 kPa (250 to 350 psi)	1999 to 2689 kPa (290 to 390 psi)	2413 to 2965 kPa (350 to 430 psi)

6. Refer to **A/C SYSTEM DIAGNOSIS** if the air outlet temperature fails to meet the specifications in the A/C Performance Temperature and Pressure chart, or if the A/C compressor discharge pressure is high.

A/C SYSTEM DIAGNOSIS

Condition	Possible Causes	Correction
Constant A/C compressor engagement and warm air from passenger vents	1. Low refrigerant system charge	1. Refer to **DIAGNOSIS AND TESTING - REFRIGERANT SYSTEM LEAKS**. Test the refrigerant system for leaks. Repair, evacuate and charge the refrigerant system as required.
Equal A/C system pressures, but the A/C clutch does not engage	1. No refrigerant in the refrigerant system	1. Refer to **DIAGNOSIS AND TESTING - REFRIGERANT SYSTEM LEAKS**. Test the refrigerant system for leaks. Repair, evacuate and charge the refrigerant system as required.
	2. Open fuse	2. Refer to appropriate Wiring Information. Check the fuse in the junction block. Repair the shorted circuit or component and replace the fuse as required.
	3. Inoperative A/C clutch coil	3. Refer to **COMPRESSOR, A/C**. Test the A/C clutch coil and replace as required.
	4. Improperly installed or inoperative Evaporator Temperature Sensor	4. Refer to **SENSOR, EVAPORATOR TEMPERATURE**. Correctly install or test and replace the sensor as required.
	5. Improperly installed or inoperative A/C pressure transducer	5. Refer to **TRANSDUCER, A/C PRESSURE**. Correctly install or test and replace the sensor as required.
	6. Inoperative A/C-heater control, TIPM or PCM/ECM	6. Refer to the appropriate Electrical Diagnostic Procedures for testing of the A/C-heater control, TIPM or PCM/ECM. Test the module and replace as required.
Normal A/C system pressures, but A/C Performance Test air temperatures at center panel outlet are too high	1. Excessive refrigerant oil in system	1. Refer to **OIL, REFRIGERANT**. Recover the refrigerant from the refrigerant system and inspect the refrigerant oil content. Restore the refrigerant oil to the proper level as required.
	2. Blend door inoperative or sealing improperly	2. Refer to **ACTUATOR, BLEND DOOR**. Inspect the blend door for proper operation and sealing and correct as required.
	3. Blend door actuator inoperative	3. Refer to **ACTUATOR, BLEND DOOR**. Refer to the appropriate Electrical Diagnostic Procedures for blend door actuator diagnosis. Repair or replace as required.
The low side A/C system pressure is normal or slightly low, and the high side A/C system pressure is too low	1. Low refrigerant system charge	1. Refer to **DIAGNOSIS AND TESTING - REFRIGERANT SYSTEM LEAKS**. Test the refrigerant system for leaks. Repair, evacuate and charge the refrigerant system as required.
	2. Refrigerant flow through	

	the A/C evaporator is restricted	2. Refer to **EVAPORATOR, A/C**. Replace the restricted evaporator as required.
	3. Inoperative A/C compressor	3. Refer to **COMPRESSOR, A/C**. Replace the A/C compressor as required.
The low side A/C system pressure is normal or slightly high, and the high side A/C system pressure is too high	1. A/C Condenser air flow restricted	1. Refer to **CONDENSER, A/C**. Check the A/C condenser for damaged fins, foreign objects obstructing air flow through the condenser fins, and missing or improperly installed air seals. Clean, repair or replace components as required.
	2. Refrigerant flow through the A/C receiver/drier is restricted	2. Refer to **DRIER, A/C RECEIVER**. Replace the restricted A/C receiver/drier as required.
	3. Inoperative cooling fan	3. Refer to **DIAGNOSIS AND TESTING** . Test the cooling fan and replace as required.
	4. Refrigerant system overcharged	4. Refer to **REFRIGERANT SYSTEM CHARGE**. Recover the refrigerant from the refrigerant system. Charge the refrigerant system to the proper level as required.
	5. Air in the refrigerant system	5. Refer to **DIAGNOSIS AND TESTING - REFRIGERANT SYSTEM LEAKS**. Test the refrigerant system for leaks. Repair, evacuate and charge the refrigerant system as required.
	6. Engine overheating	6. Refer to **ENGINE COOLING SYSTEM OVERHEATING** . Test the cooling system and repair as required.
The low side A/C system pressure is too high, and the high side A/C system pressure is too low	1. Accessory drive belt slipping	1. Refer to **ACCESSORY DRIVE** . Inspect the accessory drive belt condition and tension. Tighten or replace the accessory drive belt as required.
	2. Inoperative A/C expansion valve	2. Refer to **VALVE, A/C EXPANSION**. Test and replace the valve as required.
	3. Inoperative A/C compressor	3. Refer to **COMPRESSOR, A/C**. Replace the A/C compressor as required.
The low side A/C system pressure is too low, and the high side A/C system pressure is too high	1. Restricted refrigerant flow through the refrigerant lines	1. Refer to **LINE, A/C LIQUID** and **LINE, A/C SUCTION** and **LINE, A/C DISCHARGE**. Inspect the refrigerant lines for kinks, tight bends or improper routing. Correct the routing or replace the refrigerant line as required.
	2. Inoperative A/C expansion valve	2. Refer to **VALVE, A/C EXPANSION**. Test and replace the valve as required.
	3. Restricted refrigerant flow through the A/C condenser	3. Refer to **CONDENSER, A/C**. Replace the restricted A/C condenser as required.

HEATER PERFORMANCE

Before performing the following tests, refer to **ENGINE COOLING SYSTEM** for the procedures to check the engine coolant level and flow, engine coolant reserve/recovery system operation, accessory drive belt condition and tension, radiator air flow and the fan drive operation. Using a scan tool, check for any Diagnostic Trouble Codes (DTCs) in the A/C-heater control, Totally Integrated Power Module (TIPM), Powertrain Control Module (PCM) or Engine Control Module (ECM), depending on engine application. Repair as necessary. Refer to appropriate Electrical Diagnostic article. .

MAXIMUM HEATER OUTPUT: TEST AND ACTION

Engine coolant is provided to the heater system through two heater hoses. With the engine idling at normal operating temperature, set the temperature control to maximum heat position, the mode control to the floor position, and the blower motor control to the highest speed position. Using a test thermometer, check the temperature of the air being discharged from the floor outlets. Compare the test thermometer reading to the Heater Temperature Reference chart.

HEATER TEMPERATURE REFERENCE

Ambient Air Temperature	**16° C (60° F)**	**21° C (70° F)**	**26° C (80° F)**	**32° C (90° F)**
Minimum Air Temperature at Floor Outlet	62° C (144° F)	64° C (147° F)	65° C (150° F)	67° C (153° F)

Refer to **ENGINE COOLING SYSTEM** if the heater outlet air temperature is below the minimum specification. Both of the heater hoses should be hot to the touch. The coolant return heater hose should be slightly cooler than the coolant supply heater hose. If the return hose is much cooler than the supply hose, locate and repair the engine coolant flow obstruction in the cooling system.

OBSTRUCTED COOLANT FLOW

Possible locations or causes of obstructed coolant flow are as follows:

- Inoperative water pump.
- Inoperative thermostat.
- Pinched or kinked heater hoses.
- Improper heater hose routing.
- Plugged heater hoses or supply and return ports at the cooling system connections.
- Plugged heater core.

If proper coolant flow through the cooling system is verified, and heater outlet air temperature is low, a mechanical problem may exist.

MECHANICAL PROBLEMS

Possible locations or causes of insufficient heat due to mechanical problems are as follows:

- Obstructed cowl air intake.
- Obstructed heater system outlets.
- Blend-air door(s) or actuator(s) not functioning properly.
- Faulty blower motor system
- Inoperative A/C-heater control

TEMPERATURE CONTROL

If the heater outlet air temperature cannot be adjusted with the temperature control on the A/C-heater control, the following could require service:

- Inoperative A/C-heater control.
- Inoperative blend door actuator(s).
- Inoperative, obstructed or improperly installed blend-air door.
- Inoperative related wiring harness or connectors.
- Improper engine coolant temperature.

STANDARD PROCEDURE

STANDARD PROCEDURE - A/C EVAPORATOR CLEANING

Some vehicle operators may experience a musty odor from the A/C system, primarily at start up in hot and humid climates. This odor may be the result of microbial growth on the cooling coil. During normal A/C system operation, condensation forms in and around the A/C cooling coil. When airborne pollutants mix with this condensation, bacteria and fungi growth begins and odor may result.

If the vehicle operator experiences a musty odor when operating the A/C system, perform the following procedure.

> WARNING: **Always use eye protection, rubber gloves and protective clothing when performing the following procedure. Avoid continuous breathing of vapors from evaporator coil cleaning and sealing fluids. Avoid contact with skin and eyes. Failure to follow these instruction may result in possible serious or fatal injury.**

1. Remove the cowl panel cover. Refer to **COVER, COWL PANEL** .
2. Clean any dirt and debris that may be present at the HVAC fresh air inlet screen and at the top of the cowl panel.
3. Install the cowl panel cover.
4. Raise and support the vehicle.
5. Inspect the evaporator drain hose or tube (depending on application) for foreign material that may be blocking the drain and repair as necessary.
6. Once drain operation has been verified;

- when equipped with a rubber drain hose, temporarily pinch the drain hose closed using an appropriate pair of heater hose pliers.
- when equipped with a solid plastic drain tube, obtain an appropriate size rubber or plastic cap or plug and temporarily cap or plug the drain tube.

7. Lower the vehicle.
8. Place a protective cover over the front passenger side floor and seat area.
9. Remove the blower motor. Refer to **MOTOR, BLOWER, REMOVAL**.
10. Remove the blower motor resistor or power module, depending on application. Refer to **RESISTOR, BLOWER MOTOR, REMOVAL** or **MODULE, POWER, BLOWER MOTOR, REMOVAL**.
11. Clean any dirt and debris that may be present inside the HVAC blower motor housing and all readily accessible areas inside the HVAC housing. If necessary, use a vacuum with a small flexible hose, and take caution not to damage the evaporator core fins.
12. Using PSE Flex Spray Delivery Tool 534-62637 or equivalent, completely coat the entire surface of A/C evaporator with three bottles of Mopar® Cooling Coil Cleaner through the blower motor and power module or resistor openings. Be sure to use all of the coil cleaner in each container.
13. Allow the vehicle to sit for 30 minutes.
14. Raise and support the vehicle.

WARNING: **Excess cooling coil cleaner will drain from the evaporator housing when the clamp, cap or plug is removed from the evaporator drain hose or tube. Always use eye protection, rubber gloves and protective clothing. Avoid continuous breathing of vapors from evaporator coil cleaning fluid. Avoid contact with skin and eyes. Failure to follow these instruction may result in possible serious or fatal injury.**

15. Remove the previously installed clamp, cap or plug from the evaporator drain hose or tube and allow excess coil cleaner to drain from the HVAC housing.
16. Lower the vehicle.
17. Refill the three empty coil cleaner bottles with clean tap water.
18. Using PSE Flex Spray Delivery Tool 534-62637 or equivalent, completely rinse the entire surface of A/C evaporator with the three bottles of clean tap water through the blower motor and power module or resistor openings. Be sure to use all of the water in each container.
19. Install the blower motor. Refer to **MOTOR, BLOWER, INSTALLATION**.
20. Install the blower motor resistor or power module, depending on application. Refer to **RESISTOR, BLOWER MOTOR, INSTALLATION** or **MODULE, POWER, BLOWER MOTOR, INSTALLATION**.
21. Disconnect the wire harness connector from the A/C compressor to disable compressor operation. Refer to **COMPRESSOR, A/C, REMOVAL**.
22. Start the engine
23. Adjust all the windows so they are open approximately 8 mm (0.5 in.).
24. Set the A/C-heater controls to the following:

- air distribution to Panel and Recirculation mode
- temperature to full heat

25. Allow the vehicle to run for 20 minutes.
26. Turn the engine off.
27. Raise and support the vehicle.
28. Inspect the evaporator drain hose or tube (depending on application) for foreign material that may have blocked the drain during evaporator coil cleaning and repair as necessary.
29. Once drain operation has been verified;
    - when equipped with a rubber drain hose, temporarily pinch the drain hose closed using an appropriate pair of heater hose pliers.
    - when equipped with a solid plastic drain tube, obtain an appropriate size rubber or plastic cap or plug and temporarily cap or plug the drain tube.
30. Lower the vehicle.
31. Remove the blower motor. Refer to **MOTOR, BLOWER, REMOVAL**.
32. Remove the blower motor resistor or power module, depending on application. Refer to **RESISTOR, BLOWER MOTOR, REMOVAL** or **MODULE, POWER, BLOWER MOTOR, REMOVAL**.
33. Using PSE Flex Spray Delivery Tool 534-62637 or equivalent, completely coat the entire surface of A/C evaporator with one bottle of Mopar® Cooling Coil Coating through the blower motor and power module or resistor openings. Be sure to use all of the coil coating in the container.

NOTE: **Be sure to thoroughly clean out the spray delivery tool with warm water once coil coating is complete to prevent damage to the tool.**

34. Refill the empty bottles with clean warm tap water and completely rinse out the PSE Flex Spray Delivery Tool 534-62637, or equivalent.
35. Allow the vehicle to sit for 30 minutes.
36. Install the blower motor. Refer to **MOTOR, BLOWER, INSTALLATION**.
37. Install the blower motor resistor or power module, depending on application. Refer to **RESISTOR, BLOWER MOTOR, INSTALLATION** or **MODULE, POWER, BLOWER MOTOR, INSTALLATION**.
38. Raise and support the vehicle.

WARNING: **Excess cooling coil coating will drain from the evaporator housing when the clamp, cap or plug is removed from the evaporator drain hose or tube. Always use eye protection, rubber gloves and protective clothing. Avoid continuous breathing of vapors from evaporator coil sealing fluid. Avoid contact with skin and eyes. Failure to follow these instruction may result in possible serious or fatal injury.**

39. Remove the previously installed clamp, cap or plug from the evaporator drain hose or tube and allow excess coil coating to drain from the HVAC housing.

40. Lower the vehicle.
41. Start the engine
42. Adjust all the windows so they are open approximately 8 mm (0.5 in.).
43. Set the A/C-heater controls to the following:
    - air distribution to Panel and Recirculation mode
    - temperature to full heat
44. Allow the vehicle to run for 20 minutes.
45. Turn vehicle off.
46. Remove protective cover from front passenger side floor and seat area.
47. Connect the wire harness connector to the A/C compressor. Refer to **COMPRESSOR, A/C, INSTALLATION**.
48. Verify proper A/C-heater system operation.

SPECIFICATIONS

A/C SYSTEM

Item	Description	Notes
A/C Clutch Air Gap	0.35 - 0.60 mm (0.014 - 0.024 in.)	
A/C Clutch Coil Draw	3.2 - 3.3 amps	@ 12V ± 0.5V @ 21° C (70° F)
A/C Clutch Coil Resistance	3.6 ± 0.2 ohms	When measured across coil lead connector
Freeze-up Control	Evaporator Temperature Sensor	HVAC housing mounted
High psi Control	A/C pressure transducer	A/C discharge line mounted
R-134a Refrigerant Charge Capacity	3.7L/4.7L/5.7L engines - 0.624 kg (1 lb. 6 oz.) 6.7L engine w/auto trans - 0.624 kg (1 lb. 6 oz.) 6.7L engine w/man trans - 0.539 kg (1 lb. 3 oz.)	Use only ND-8 PAG oil

FASTENER TORQUE SPECIFICATIONS

Description	N.m	Ft. Lbs.	In. Lbs.
All Screws NOT Listed Below	1.1	-	10
A/C Compressor to Engine	Specific fastener placement and torque pattern is required. For more information, refer to **INSTALLATION**.		
A/C Condenser Bolts	2.2	-	20
A/C Compressor Clutch Plate Bolt	19	-	168
A/C Expansion Valve	11	-	97

Bolts			
A/C Heater Control Screws	2.2	-	20
Air Ducts to Instrument Panel Screws	2.2	-	20
Blower Motor Screws	1.7	-	15
HVAC Housing to Engine Side of Dash Panel Nuts	6.8	-	60
HVAC Housing to Floor Bracket Bolt	6.8	-	60
HVAC Housing to Passenger Side of Dash Panel Nuts	6.8	-	60
Refrigerant Lines Nuts/Bolts	23	17	-

SPECIAL TOOLS

SPECIAL TOOLS

	6801 - Terminal Probe (Originally Shipped In Kit Number(s) 10190.) 9764 - Pliers, A/C Snap Ring (Originally Shipped In Kit Number(s) 9909.) C-4755 - Trim Stick (Originally Shipped In Kit Number(s) 9299, 9299CC, 9299CC, 9300A-CAN.)

CONTROLS

ACTUATOR, BLEND DOOR

DESCRIPTION

DESCRIPTION

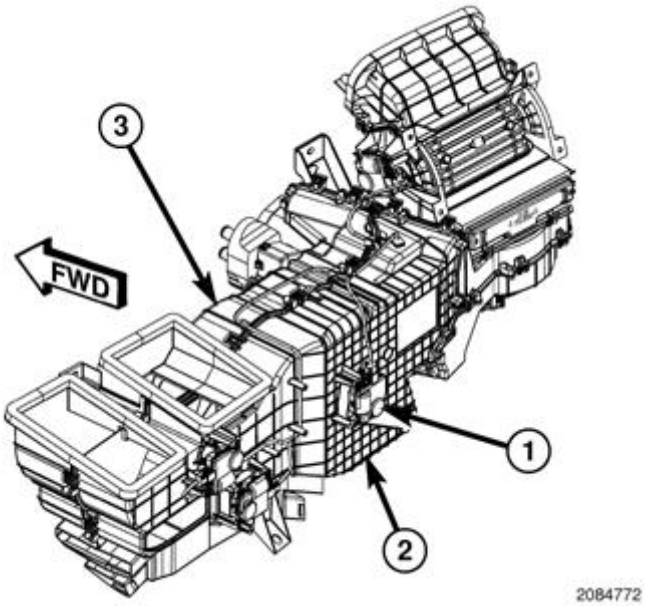

Fig. 3: Locating Blend Door Actuator
Courtesy of CHRYSLER GROUP, LLC

The blend door actuators are reversible, 12-volt direct current (DC), servo motors. Models with the single zone heating-A/C system have a single blend-air door, which is controlled by a single blend door actuator. Models with the dual zone system have two blend-air doors, which are controlled by two blend door actuators.

The blend door actuator (1) for the single zone heating-A/C system is located near the center of the HVAC housing (2), close to the instrument panel.

For the dual zone heating-A/C system, the same blend door actuator used for the single zone system becomes the driver side blend door actuator, which is mechanically connected to only the driver side blend-air door. A second separate blend door actuator (3) located at the front of the HVAC housing is mechanically connected to the passenger side blend-air door.

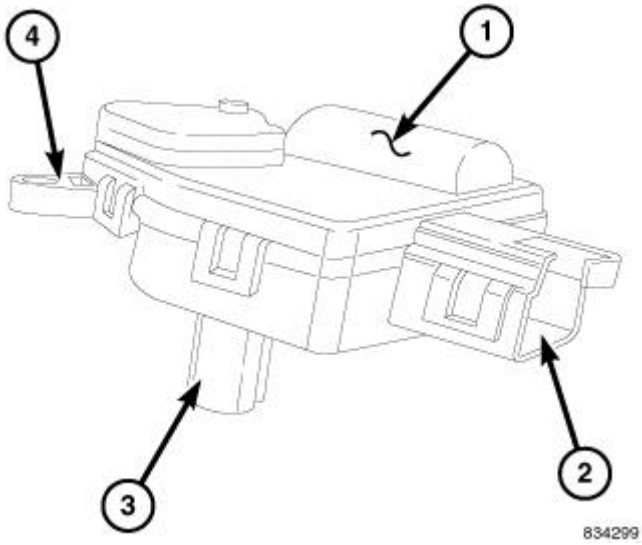

Fig. 4: Actuator
Courtesy of CHRYSLER GROUP, LLC

All actuators (1) are interchangeable with each other. Each actuator is contained within an identical black molded plastic housing with an integral wire connector receptacle (2). Each actuator also has an identical output shaft with splines (3) that connect it to the respective door linkage and three integral mounting tabs (4) that allow the actuator to be secured to the HVAC housing. The blend door actuators do not require mechanical indexing to the blend-air doors, as they are electronically calibrated by the A/C-heater control.

OPERATION

OPERATION

The blend door actuators are connected to the A/C-heater control through the vehicle electrical system by a dedicated two-wire lead and connector of the HVAC wire harness. The blend door actuator(s) can move the blend-air door(s) in two directions. When the A/C-heater control pulls the voltage on one side of the motor connection high and the other connection low, the blend-air door will move in one direction. When the A/C-heater control reverses the polarity of the voltage to the motor, the blend-air door moves in the opposite direction.

When the A/C-heater control makes the voltage to both connections high or both connections low, the blend-air door stops and will not move. The A/C-heater control uses a pulse-count positioning system to monitor the operation and relative position of the blend door actuator(s) and the blend-air door(s). The A/C-heater control learns the blend-air door stop positions during the calibration procedure and will store a diagnostic trouble code (DTC) for any problems it detects in the blend door actuator circuits.

The blend door actuators are diagnosed using a scan tool. Refer to appropriate Electrical Diagnostic article. .

The blend door actuators cannot be adjusted or repaired and must be replaced if inoperative or damaged.

REMOVAL

REMOVAL

WARNING: Disable the airbag system before attempting any steering wheel, steering column or instrument panel component diagnosis or service. Refer to WARNING . Disconnect and isolate the negative battery (ground) cable and wait two minutes for the airbag system capacitor to discharge before performing further diagnosis or service. This is the only sure way to disable the airbag system. Failure to follow these instructions may result in accidental airbag deployment and possible serious or fatal injury.

NOTE: The single zone heating-A/C system is equipped with a single blend door actuator. The dual zone system has two blend door actuators, one for the driver side blend-air door and one for the passenger side blend-air door.

SINGLE ZONE/DUAL ZONE DRIVER SIDE

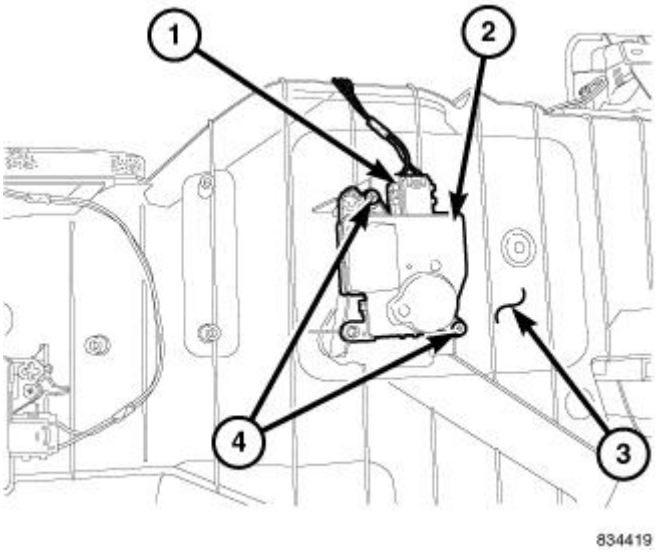

Fig. 5: Blend Door Actuator (Single Zone/Dual Zone Driver Side)
Courtesy of CHRYSLER GROUP, LLC

1. Disconnect and isolate the negative battery cable.
2. Remove the glove box. Refer to **GLOVE BOX, INSTRUMENT PANEL, REMOVAL** .
3. Disconnect the HVAC wire harness connector (1) from the blend door actuator (2) located at the rear of the HVAC housing (3).
4. Remove the two screws (4) that secure the blend door actuator to the HVAC housing and remove the actuator.

DUAL ZONE PASSENGER SIDE

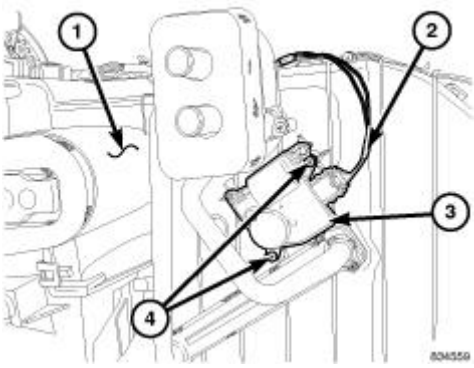

Fig. 6: Blend Door Actuator (Dual Zone Passenger Side)
Courtesy of CHRYSLER GROUP, LLC

1. Disconnect and isolate the negative battery cable.
2. Remove the HVAC housing (1) from the vehicle and place it on a workbench. Refer to **HOUSING, HVAC, REMOVAL**.
3. Disconnect the HVAC wire harness connector (2) from the blend door actuator (3) located at the front of the HVAC housing.

4. Remove the two screws (4) that secure the blend door actuator to the HVAC housing and remove the actuator.

INSTALLATION

INSTALLATION

NOTE: The single zone heating-A/C system is equipped with a single blend door actuator. The dual zone system has two blend door actuators, one for the driver side blend-air door and one for the passenger side blend-air door.

SINGLE ZONE/DUAL ZONE DRIVER SIDE

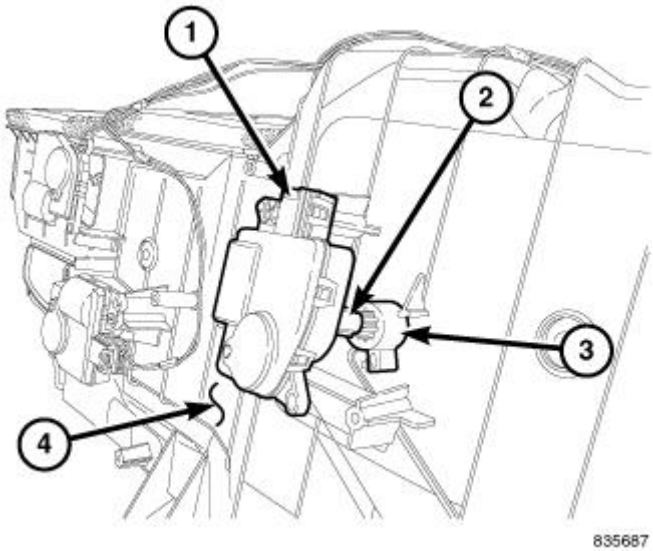

Fig. 7: Positioning Blend Door Actuator (Single Zone/Dual Zone Driver Side)
Courtesy of CHRYSLER GROUP, LLC

1. Position the blend door actuator (1) to the back of the HVAC housing (4). If necessary, rotate the actuator slightly to align the splines on the actuator output shaft (2) with those on the actuator coupler (3).

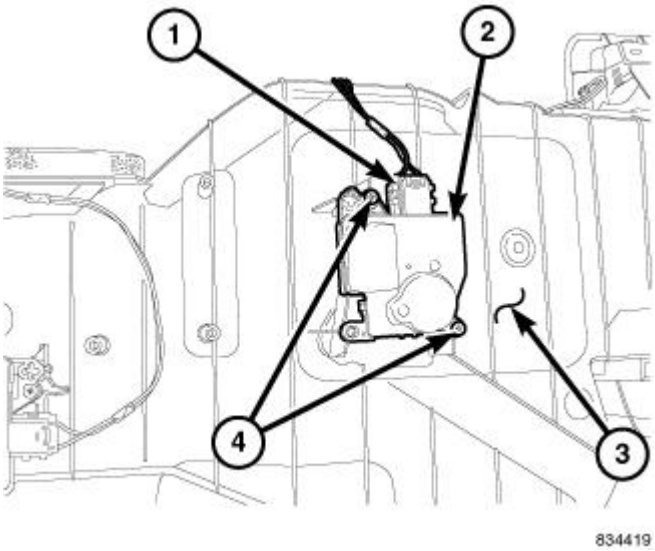

Fig. 8: Blend Door Actuator (Single Zone/Dual Zone Driver Side)
Courtesy of CHRYSLER GROUP, LLC

2. Install the two screws (4) that secure the blend door actuator (2) to the HVAC housing (3). Tighten the screws to 1.1 N.m (10 in. lbs.).
3. Connect the HVAC wire harness connector (1) to the blend door actuator.
4. Install the glove box. Refer to **GLOVE BOX, INSTRUMENT PANEL, INSTALLATION** .
5. Reconnect the negative battery cable.
6. Initiate the Actuator Calibration function using a scan tool. Refer to appropriate Electrical Diagnostic article. .

DUAL ZONE PASSENGER SIDE

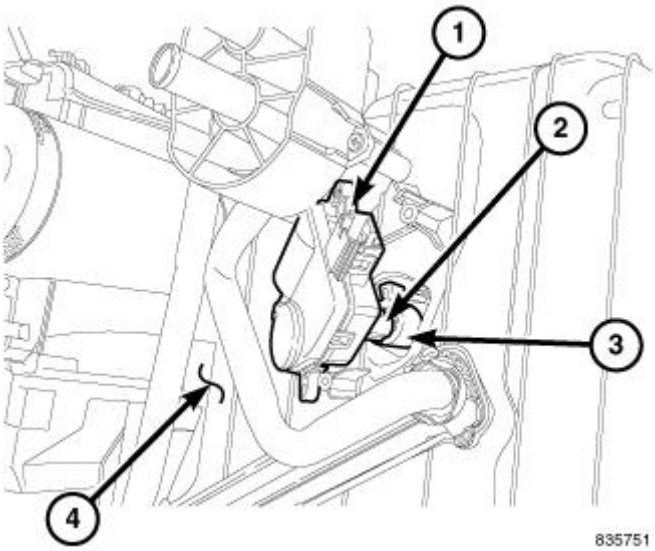

Fig. 9: Positioning Blend Door Actuator (Dual Zone Passenger Side)
Courtesy of CHRYSLER GROUP, LLC

1. Position the blend door actuator (1) to the front of the HVAC housing (4). If necessary, rotate the actuator slightly to align the splines on the actuator output shaft (2) with those on the actuator coupler (3).

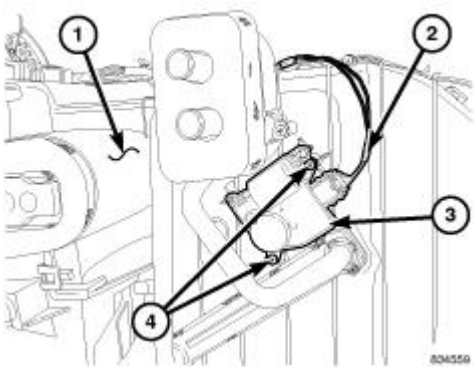

Fig. 10: Blend Door Actuator (Dual Zone Passenger Side)
Courtesy of CHRYSLER GROUP, LLC

2. Install the two screws (4) that secure the blend door actuator (3) to the HVAC housing (1). Tighten the screws to 1.1 N.m (10 in. lbs.).
3. Connect the HVAC wire harness connector (2) to the blend door actuator.
4. Install the HVAC housing. Refer to **HOUSING, HVAC, INSTALLATION**.
5. Reconnect the negative battery cable.
6. Initiate the Actuator Calibration function using a scan tool. Refer to appropriate Electrical Diagnostic article. .

ACTUATOR, MODE DOOR

DESCRIPTION

DESCRIPTION

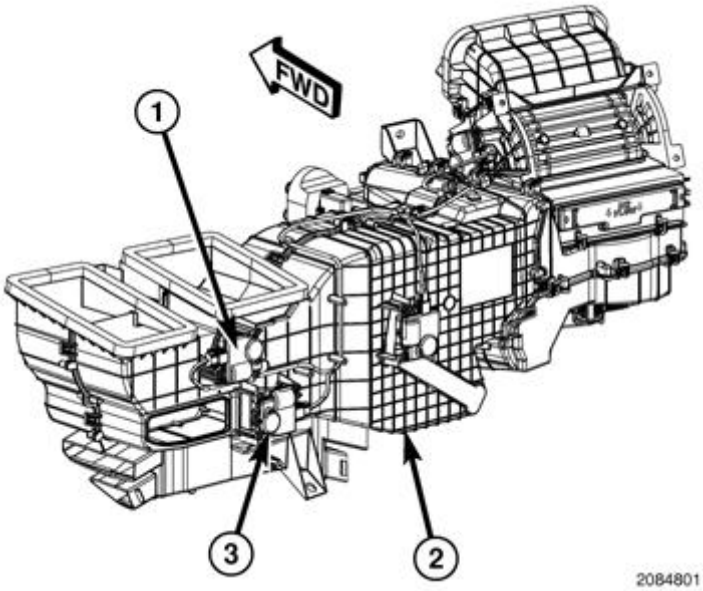

Fig. 11: Mode Door Actuator
Courtesy of CHRYSLER GROUP, LLC

The mode door actuators are reversible, 12-volt direct current (DC) servo motors. The heating-A/C systems on this vehicle use two mode door actuators. One for the defrost-air door and one for the panel/floor-air door.

Both the defrost door actuator (1) and the panel/floor door actuator (3) are located on the driver side end of the HVAC housing (2), close to the instrument panel.

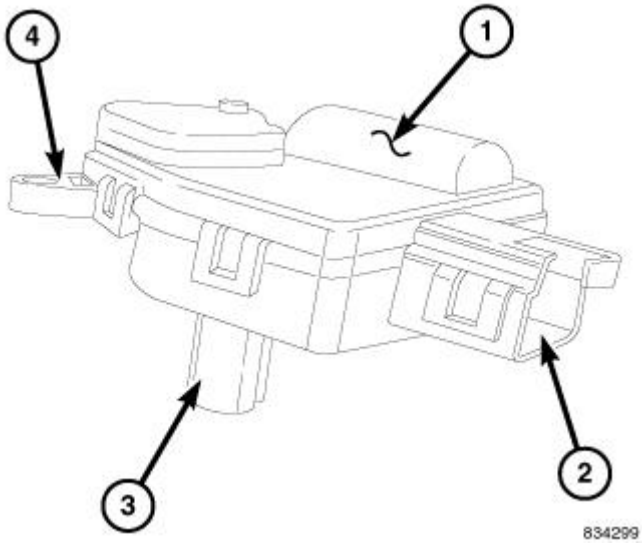

Fig. 12: Actuator
Courtesy of CHRYSLER GROUP, LLC

All actuators (1) are interchangeable with each other. Each actuator is contained within an identical black molded plastic housing with an integral wire connector receptacle (2). Each actuator also has an identical output shaft with splines (3) that connects it to its respective door linkage and three integral mounting tabs (4) that

allow the actuator to be secured to the HVAC housing. The mode door actuators do not require mechanical indexing to the mode-air doors, as they are electronically calibrated by the A/C-heater control.

OPERATION

OPERATION

The mode door actuators are connected to the A/C-heater control through the vehicle electrical system by dedicated two-wire leads and connectors of the HVAC wire harness. The mode door actuators can move the defrost-air door and the panel/floor-air door in two directions. When the A/C-heater control pulls the voltage on one side of the motor connection high and the other connection low, the mode-air door will move in one direction. When the A/C-heater control reverses the polarity of the voltage to the motor, the mode-air door moves in the opposite direction.

When the A/C-heater control makes the voltage to both connections high or both connections low, the mode-air door stops and will not move. The A/C-heater control uses a pulse-count positioning system to monitor the operation and relative position of the mode door actuators and the mode-air doors. The A/C-heater control learns the mode-air door stop positions during the Actuator Calibration procedure and will store a Diagnostic Trouble Code (DTC) for any problems it detects in the mode door actuator circuits.

The mode door actuators are diagnosed using a scan tool. Refer to appropriate Electrical Diagnostic article. .

The mode door actuators cannot be adjusted or repaired and must be replaced if inoperative or damaged.

REMOVAL

REMOVAL

WARNING: Disable the airbag system before attempting any steering wheel, steering column or instrument panel component diagnosis or service. Refer to WARNING . Disconnect and isolate the negative battery (ground) cable. Wait two minutes for the airbag system capacitor to discharge before performing further diagnosis or service. This is the only sure way to disable the airbag system. Failure to follow these instructions may result in possible serious or fatal injury.

NOTE: The heating-A/C system is equipped with two mode door actuators, one for the panel/floor-air door and one for the defrost-air door.

NOTE: Illustrations shown with instrument panel removed for clarity.

PANEL/FLOOR DOOR ACTUATOR

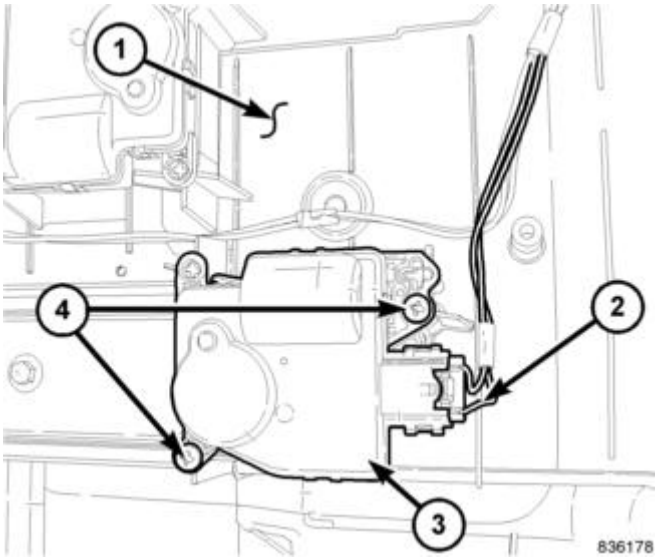

Fig. 13: Panel/Floor Door Actuator
Courtesy of CHRYSLER GROUP, LLC

1. Disconnect and isolate the negative battery cable.
2. Remove the instrument panel center bezel. Refer to **BEZEL, INSTRUMENT PANEL, CENTER, REMOVAL** .
3. When equipped with center floor console, remove radio. Refer to **RADIO, REMOVAL** .
4. When not equipped with center floor console, remove cupholder. Refer to **CUPHOLDER, INSTRUMENT PANEL, REMOVAL** .
5. Disconnect the HVAC wire harness (2) from the panel/floor door actuator (3).
6. Remove the two screws (4) that secure the panel/floor door actuator to the back of the HVAC housing (1) and remove the actuator.

DEFROST DOOR ACTUATOR

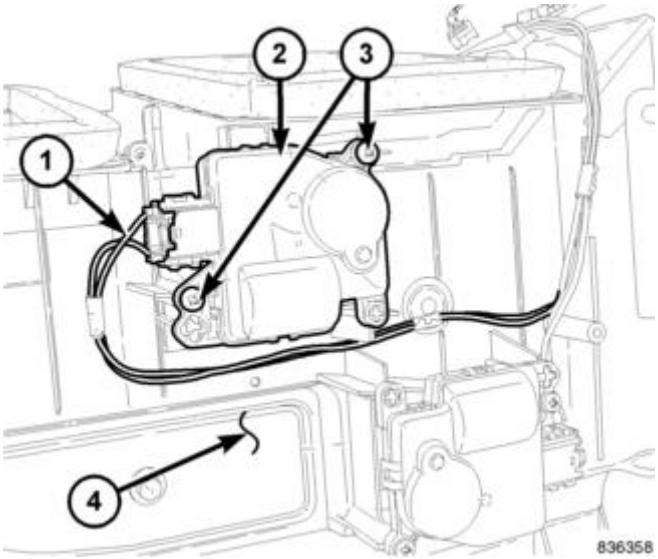

Fig. 14: Defrost Door Actuator
Courtesy of CHRYSLER GROUP, LLC

1. Disconnect and isolate the negative battery cable.
2. Remove the instrument panel center bezel. Refer to **BEZEL, INSTRUMENT PANEL, CENTER, REMOVAL** .
3. When equipped with center floor console, remove radio. Refer to **RADIO, REMOVAL** .
4. When not equipped with center floor console, remove cupholder. Refer to **CUPHOLDER, INSTRUMENT PANEL, REMOVAL** .
5. Disconnect the HVAC wire harness (1) from the defrost door actuator (2).
6. Remove the two screws (3) that secure the defrost door actuator to the back of the HVAC housing (4) and remove the actuator.

INSTALLATION

INSTALLATION

NOTE: **The heating-A/C system is equipped with two mode door actuators, one for the panel/floor-air door and one for the defrost-air door.**

NOTE: **Illustrations shown with instrument panel removed for clarity.**

PANEL/FLOOR DOOR ACTUATOR

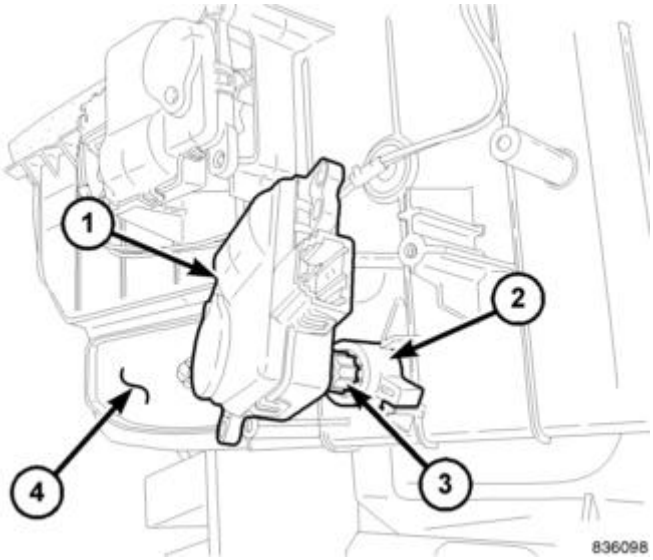

Fig. 15: Positioning Panel/Floor Door Actuator
Courtesy of CHRYSLER GROUP, LLC

1. Position the panel/floor door actuator (1) to the back of the HVAC housing (4). If necessary, rotate the actuator slightly to align the splines on the actuator output shaft (3) with those on the panel/floor door actuator coupler (2).

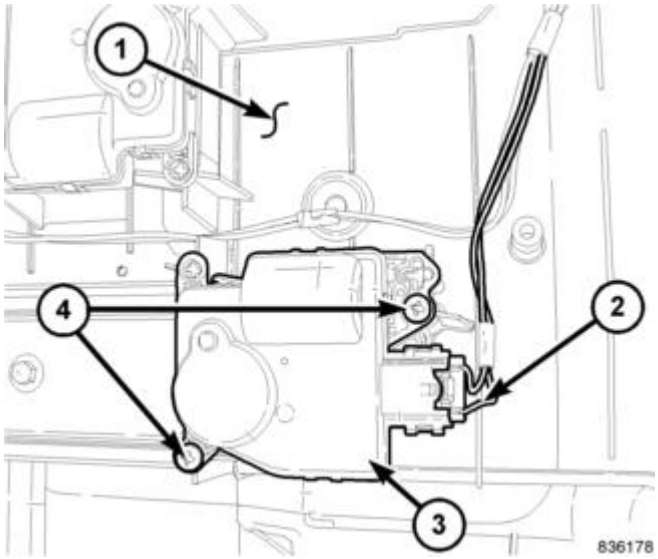

Fig. 16: Panel/Floor Door Actuator
Courtesy of CHRYSLER GROUP, LLC

2. Install the two screws (4) that secure the panel/floor door actuator (3) to the HVAC housing (1). Tighten the screws to 1.1 N.m (10 in. lbs.).
3. Connect the HVAC wire harness connector (2) to the panel/floor door actuator.
4. When equipped with center floor console, install the radio. Refer to **RADIO, INSTALLATION** .
5. When not equipped with center floor console, install the cupholder. Refer to **CUPHOLDER, INSTRUMENT PANEL, INSTALLATION** .
6. Install the instrument panel center bezel. Refer to **BEZEL, INSTRUMENT PANEL, CENTER, INSTALLATION** .
7. Reconnect the negative battery cable.
8. Initiate the Actuator Calibration function using a scan tool. Refer to appropriate Electrical Diagnostic article. .

DEFROST DOOR ACTUATOR

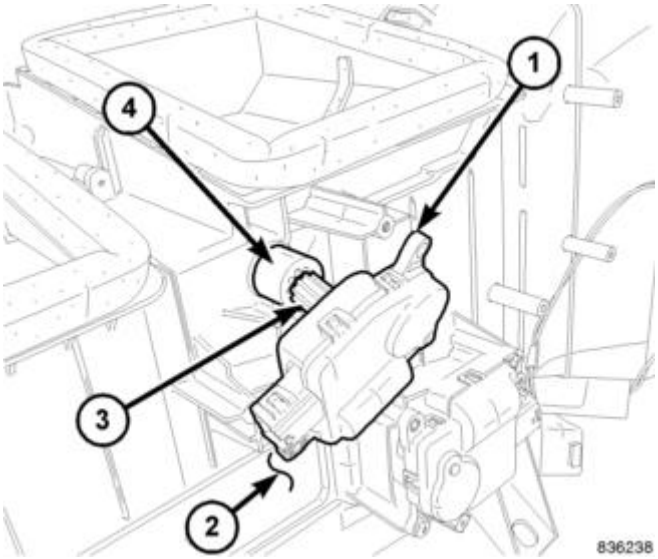

Fig. 17: Positioning Defrost Door Actuator
Courtesy of CHRYSLER GROUP, LLC

1. Position the defrost door actuator (1) to the back of the HVAC housing (2). If necessary, rotate the actuator slightly to align the splines on the actuator output shaft (3) with those on the defrost door actuator coupler (4).

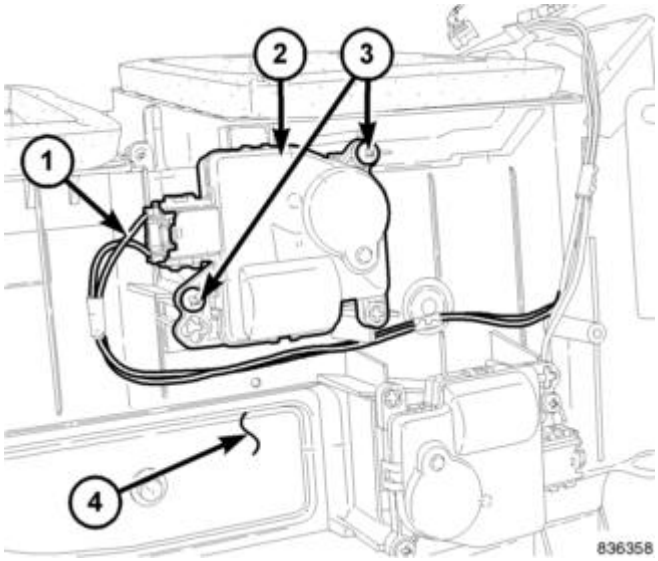

Fig. 18: Defrost Door Actuator
Courtesy of CHRYSLER GROUP, LLC

2. Install the two screws (3) that secure the defrost door actuator (2) to the HVAC housing (4). Tighten the screws to 1.1 N.m (10 in. lbs.).
3. Connect the HVAC wire harness connector (1) to the defrost door actuator.
4. When equipped with center floor console, install the radio. Refer to **RADIO, INSTALLATION** .
5. When not equipped with center floor console, install the cupholder. Refer to **CUPHOLDER, INSTRUMENT PANEL, INSTALLATION** .

6. Install the instrument panel center bezel. Refer to **BEZEL, INSTRUMENT PANEL, CENTER, INSTALLATION** .
7. Reconnect the negative battery cable.
8. Initiate the Actuator Calibration function using a scan tool. Refer to appropriate Electrical Diagnostic article. .

ACTUATOR, RECIRCULATION DOOR

DESCRIPTION

DESCRIPTION

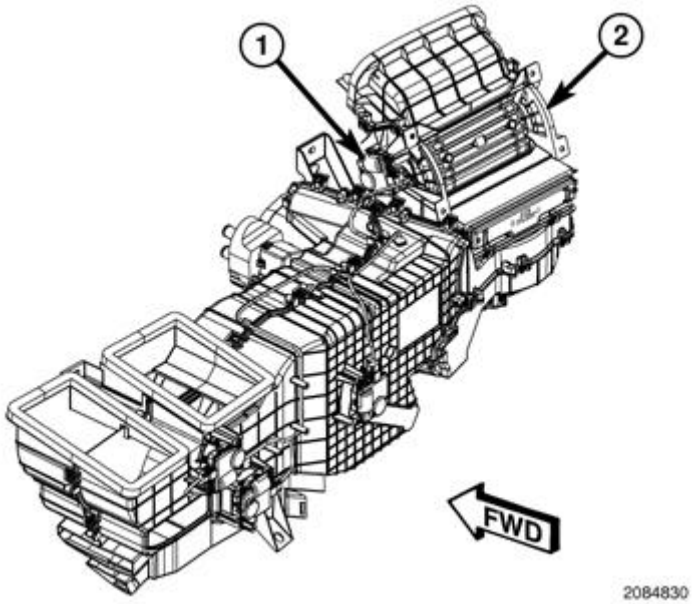

Fig. 19: Recirculation Door Actuator
Courtesy of CHRYSLER GROUP, LLC

The recirculation door actuator (1) is a reversible 12-volt direct current (DC) servo motor. The single recirculation door actuator is located on the inboard side of the air inlet housing (2).

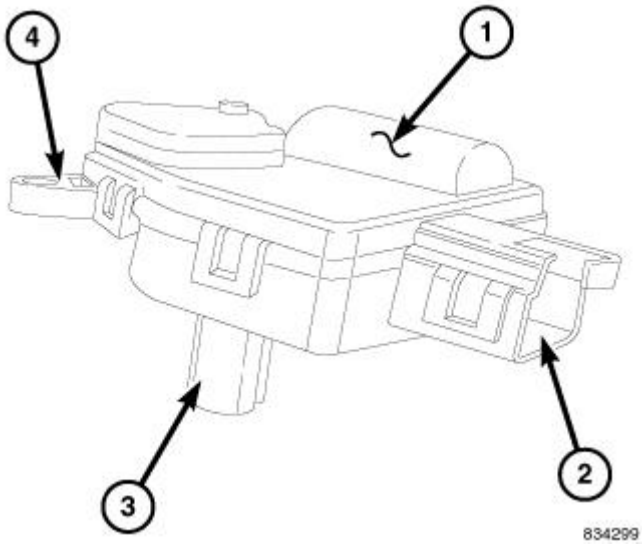

Fig. 20: Actuator
Courtesy of CHRYSLER GROUP, LLC

All actuators (1) are interchangeable with each other. Each actuator is contained within an identical black molded plastic housing with an integral wire connector receptacle (2). Each actuator also has an identical output shaft with splines (3) that connects it to its respective door linkage and three integral mounting tabs (4) that allow the actuator to be secured to the HVAC housing. The recirculation door actuator does not require mechanical indexing to the recirculation-air door, as it is electronically calibrated by the A/C-heater control.

OPERATION

OPERATION

The recirculation door actuator is connected to the heater-A/C control module through the vehicle electrical system by a dedicated two-wire lead and connector of the HVAC wire harness. The recirculation door actuator can move the recirculation-air door in two directions. When the A/C-heater control pulls the voltage on one side of the motor connection high and the other connection low, the recirculation-air door will move in one direction.

When the A/C-heater control makes the voltage to both connections high or both connections low, the recirculation-air door stops and will not move. The A/C-heater control uses a pulse-count positioning system to monitor the operation and relative position of the recirculation door actuator and the recirculation-air door. The A/C-heater control learns the recirculation-air door stop positions during the Actuator Calibration procedure and will store a Diagnostic Trouble Code (DTC) for any problems it detects in the recirculation door actuator circuits.

The recirculation door actuator is diagnosed using a scan tool. Refer to appropriate Electrical Diagnostic article.
.

The recirculation door actuator cannot be adjusted or repaired and must be replaced if inoperative or damaged.

REMOVAL

REMOVAL

WARNING: Disable the airbag system before attempting any steering wheel, steering column, or instrument panel component diagnosis or service. Refer to WARNING . Disconnect and isolate the battery negative (ground) cable, then wait two minutes for the airbag system capacitor to discharge before performing further diagnosis or service. This is the only sure way to disable the airbag system. Failure to follow these instructions may result in accidental airbag deployment and possible serious or fatal injury.

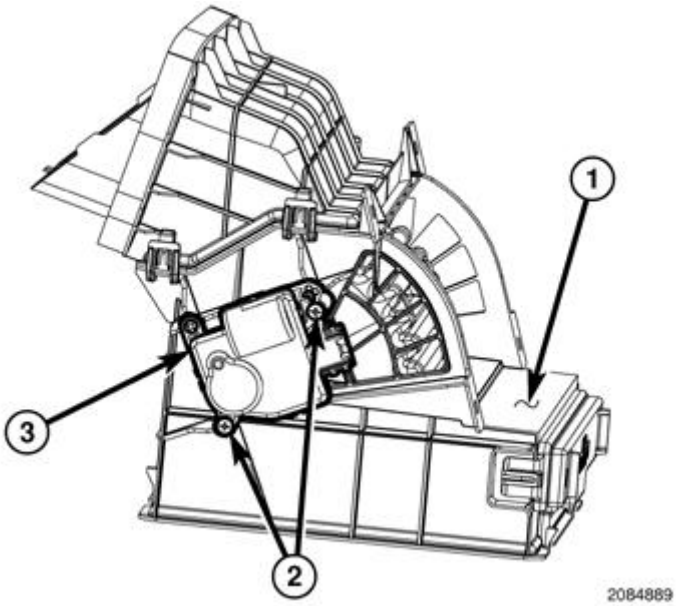

Fig. 21: HVAC Housing Assembly & Recirculation Door Actuator
Courtesy of CHRYSLER GROUP, LLC

1. Remove the HVAC housing assembly. Refer to **HOUSING, HVAC, REMOVAL**.
2. Remove the air inlet housing (1) and place it on a workbench. Refer to **HOUSING, HVAC, REMOVAL**.
3. Remove the two screws (2) that secure the recirculation door actuator (3) to the air inlet housing and remove the actuator.

INSTALLATION

INSTALLATION

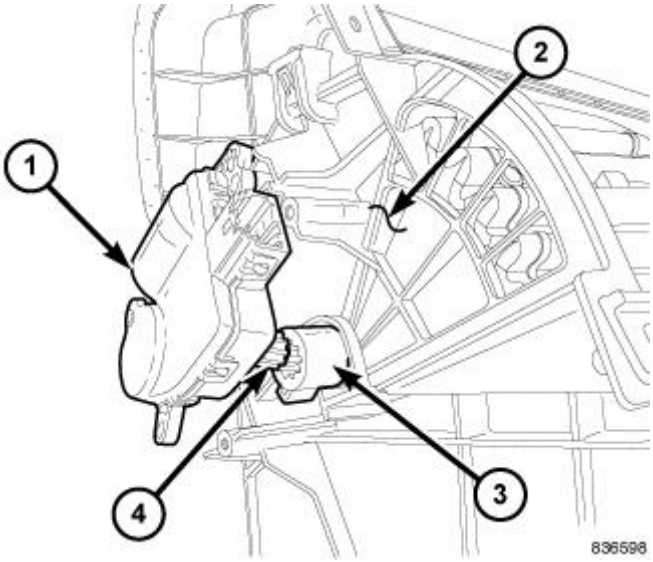

Fig. 22: Installing Recirculation Door Actuator
Courtesy of CHRYSLER GROUP, LLC

1. Install the recirculation door actuator (1) onto the side of the air inlet housing (2). If necessary, rotate the actuator slightly to align the splines on the actuator output shaft (4) with those in the recirculation door actuator coupler (3).

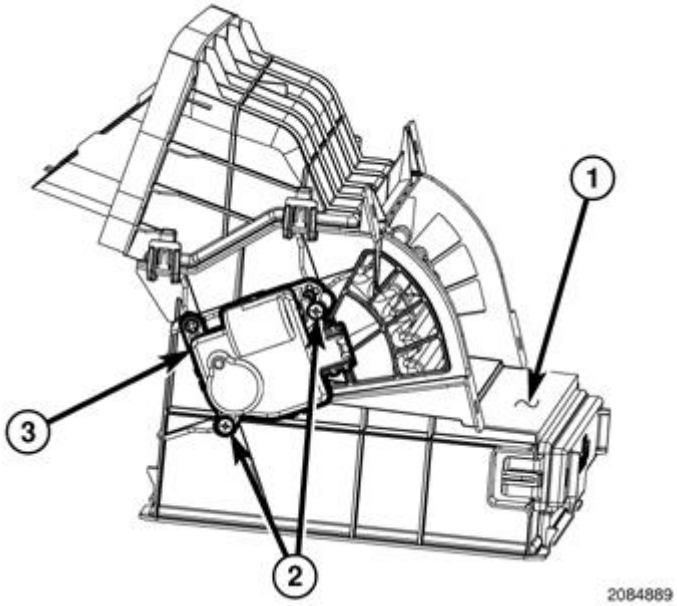

Fig. 23: HVAC Housing Assembly & Recirculation Door Actuator
Courtesy of CHRYSLER GROUP, LLC

2. Install the two screws (2) that secure the recirculation door actuator (3) to the air inlet housing (1). Tighten the screws to 1.1 N.m (10 in. lbs.).
3. Install the air inlet housing. Refer to **HOUSING, HVAC, INSTALLATION**.
4. Install the HVAC housing assembly. Refer to **HOUSING, HVAC, INSTALLATION**.

5. Initiate the Actuator Calibration function using a scan tool. Refer to appropriate Electrical Diagnostic article. .

CONTROL, A/C AND HEATER

DESCRIPTION

AUTOMATIC DUAL ZONE

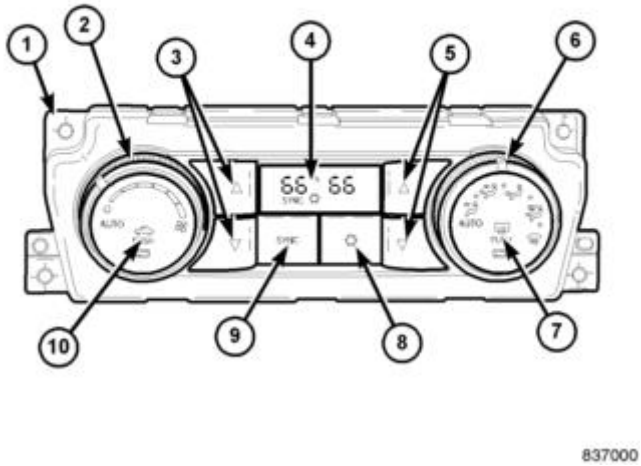

Fig. 24: Automatic Dual Zone Controls
Courtesy of CHRYSLER GROUP, LLC

The A/C-heater control (1) for the automatic temperature control (ATC) dual zone heating-A/C system allows both the driver and the front seat passenger the ability to individually regulate air temperature for their side of the vehicle. All controls are identified by ISO graphic symbols.

The dual zone A/C-heater control and integral computer is located in the instrument panel and contains:

- a rotary control for manual and automatic fan speed selection and turning the heating-A/C system off (2).
- push button controls for driver and front seat passenger temperature control of the discharged air (3 and 5).
- a vacuum-flourescent (VF) digital display (4).
- a rotary control for manual and automatic mode control of the discharged air (6).
- a push button rear window defogger/heated mirror on/off control (7). The push button contains an LED that illuminates when the rear window defogger/heated mirror system is in operation.
- a push button A/C on/off control (8). A Snowflake icon appears in the VF display when the A/C system is in operation.
- a push button synchronize control (9) that synchronizes the temperature of the driver and passenger comfort zones. SYNC appears in the VF display when the system is synchronized, whether under manual or automatic mode.

- a push button air recirculation control (10). The push button contains an LED that illuminates when the recirculation function is manually activated.

The A/C-heater control utilizes integrated circuitry and information carried on the controller area network (CAN) bus to monitor many sensors and switch inputs throughout the vehicle. In response to those inputs, the internal circuitry and programming of the A/C-heater control allows it to control the electronic functions and features of the ATC heating-A/C system.

Some of the inputs received by the A/C-heater control of the ATC heating-A/C system on the CAN bus are as follows:

- Dimming
- Refrigerant Pressure
- A/C Clutch Engage
- Vehicle Identification Number
- Vehicle Odometer
- Engine Coolant Temperature
- Ambient Air Temperature
- System Voltage
- Vehicle Speed
- Engine Speed

Some of the messages broadcasted by the A/C-heater control of the ATC heating-A/C system on the CAN bus are as follows:

- A/C Request
- A/C Select
- EBL Status
- Auto Headlamp Signal

The A/C-heater control for the ATC system is diagnosed using a scan tool. Refer to appropriate Electrical Diagnostic article. .

The A/C-heater control cannot be adjusted or repaired and must be replaced if inoperative or damaged.

MANUAL SINGLE ZONE

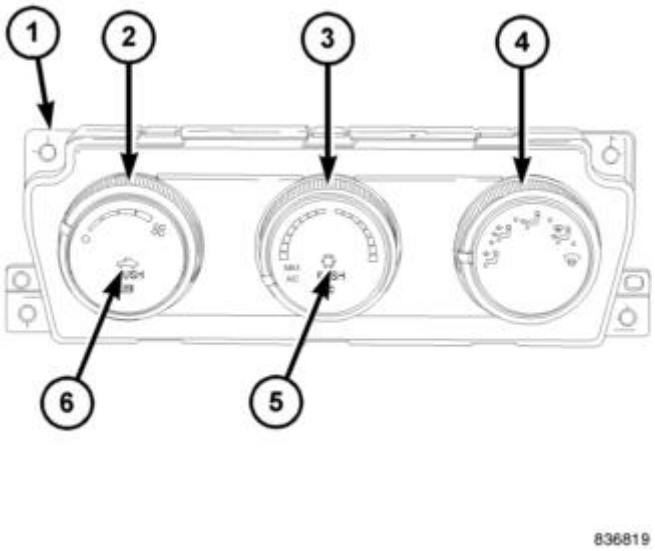

Fig. 25: Manual Single Zone Controls
Courtesy of CHRYSLER GROUP, LLC

The A/C-heater control (1) for the manual temperature control (MTC) single zone heating-A/C system allows one temperature setting for the entire vehicle. All controls are identified by ISO graphic symbols.

The A/C-heater control and integral computer is located in the instrument panel and contains:

- a rotary control for fan speed selection and turning the heating-A/C system off (2).
- a rotary control for temperature control of the discharged air (3).
- a rotary control for recirculation and mode control of the discharged air (4).
- a push button A/C on/off control (5). An LED in the button illuminates when the A/C system is in operation.
- a push button rear window/side mirror defogger on/off control (6) when equipped with optional rear heated window and/or heated mirrors. An LED in the button illuminates when the rear window/mirror defogger (EBL) system is in operation.

The A/C-heater control for the MTC system is diagnosed using a scan tool. Refer to appropriate Electrical Diagnostic article. .

The A/C-heater control cannot be adjusted or repaired and must be replaced if inoperative or damaged.

REMOVAL

REMOVAL

WARNING: **Disable the airbag system before attempting any steering wheel, steering column or instrument panel component diagnosis or service. Refer to WARNING . Disconnect and isolate the negative battery (ground) cable and wait two minutes for the airbag system capacitor to discharge before performing further diagnosis or service. This is the only sure way to**

disable the airbag system. Failure to follow these instructions may result in accidental airbag deployment and possible serious or fatal injury.

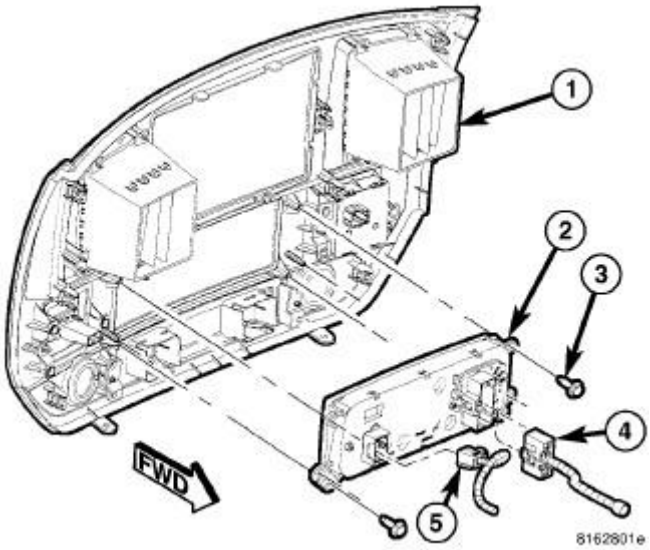

Fig. 26: A/C-Heater Control, Center Bezel & Harness Connectors
Courtesy of CHRYSLER GROUP, LLC

NOTE: Typical A/C-heater control shown in illustration.

1. Disconnect and isolate the negative battery cable.
2. Remove the center bezel (1) from the instrument panel and disconnect the wire harness connectors (4 and 5) from the back of the A/C-heater control (2). Refer to **BEZEL, INSTRUMENT PANEL, CENTER, REMOVAL** .

   NOTE: Take the proper precautions to protect the front face of the center bezel from cosmetic damage.

3. Place the center bezel on a workbench and remove the four screws (3) that secure the A/C-heater control to the center bezel and remove the control.

INSTALLATION

INSTALLATION

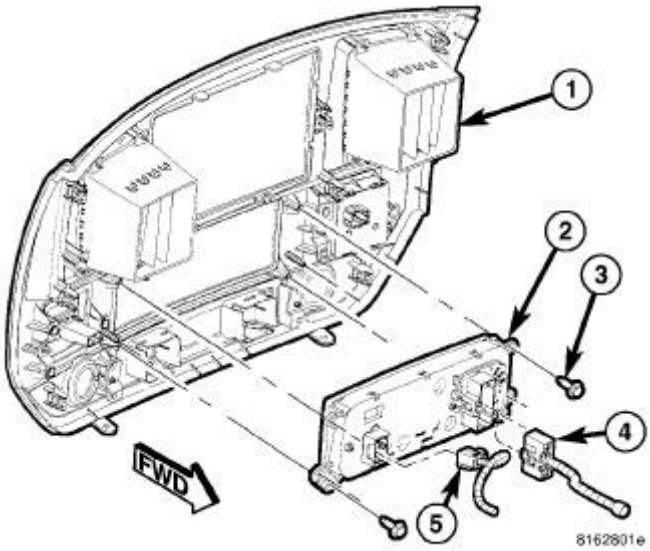

Fig. 27: A/C-Heater Control, Center Bezel & Harness Connectors
Courtesy of CHRYSLER GROUP, LLC

NOTE: Typical A/C-heater control shown in illustration.

1. Position the A/C-heater control (2) onto the back of the instrument panel center bezel (1).
2. Install the four screws (3) that secure the A/C-heater control to the center bezel. Tighten the screws to 2.2 N.m (20 in. lbs.).
3. Connect the wire harness connectors (4 and 5) to the back of the A/C-heater control and install the instrument panel center bezel. Refer to **BEZEL, INSTRUMENT PANEL, CENTER, INSTALLATION** .
4. Reconnect the negative battery cable.
5. Initiate the Actuator Calibration function using a scan tool. Refer to appropriate Electrical Diagnostic article. .

MODULE, POWER, BLOWER MOTOR

DESCRIPTION

DESCRIPTION

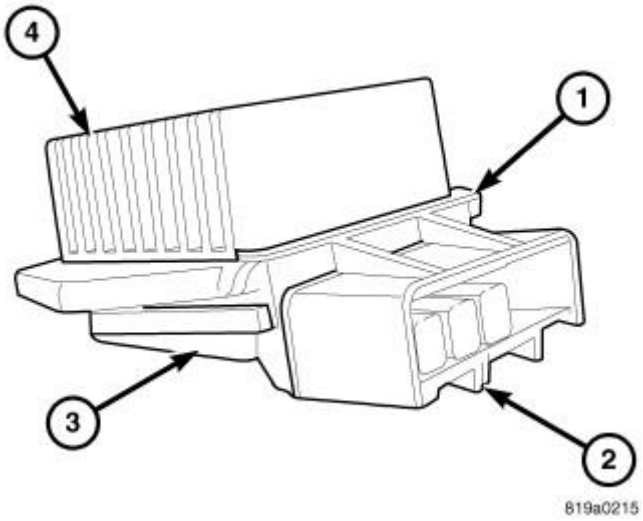

Fig. 28: Blower Motor Power Module
Courtesy of CHRYSLER GROUP, LLC

A blower motor power module is used on this model when equipped with the automatic temperature control (ATC) heating-A/C system. Models equipped with the manual temperature control (MTC) heating-A/C system use a blower motor resistor, instead of the blower motor power module. Refer to **RESISTOR, BLOWER MOTOR, DESCRIPTION**.

The blower motor power module is mounted to the bottom of the HVAC housing, on the passenger side of the vehicle. The blower motor power module consists of a molded plastic mounting plate (1) with an integral connector receptacle (2). Concealed behind the mounting plate is the power module electronic circuitry (3) and a finned aluminum heat sink (4). The blower motor power module is accessed for service from under the instrument panel.

OPERATION

OPERATION

The blower motor power module is connected to the vehicle electrical system through a dedicated lead and connector of the HVAC wire harness. A second lead and connector of the HVAC wire harness is connected to the blower motor. The blower motor power module allows the microprocessor-based automatic temperature control (ATC) A/C-heater control to calculate and provide infinitely variable blower motor speeds based upon either manual blower switch input or the ATC programming using a pulse width modulated (PWM) circuit strategy.

The PWM voltage is applied to a comparator circuit which compares the PWM signal voltage to the blower motor feedback voltage. The resulting output drives the power module circuitry, which provides a linear output voltage to change or maintain the desired blower speed.

The blower motor power module is diagnosed using a scan tool. Refer to appropriate Electrical Diagnostic article. .

The blower motor power module cannot be adjusted or repaired must be replaced if inoperative or damaged.

REMOVAL

REMOVAL

WARNING: Disable the airbag system before attempting any steering wheel, steering column or instrument panel component diagnosis or service. Refer to WARNING . Disconnect and isolate the negative battery (ground) cable, then wait two minutes for the airbag system capacitor to discharge before performing further diagnosis or service. This is the only sure way to disable the airbag system. Failure to follow these instructions may result in accidental airbag deployment and possible serious or fatal injury.

WARNING: The heat sink for the blower motor power module may get very hot during normal operation. If the blower motor was turned on prior to servicing the blower motor power module, wait five minutes to allow the heat sink to cool before performing diagnosis or service. Failure to follow these instructions may result in possible serious injury.

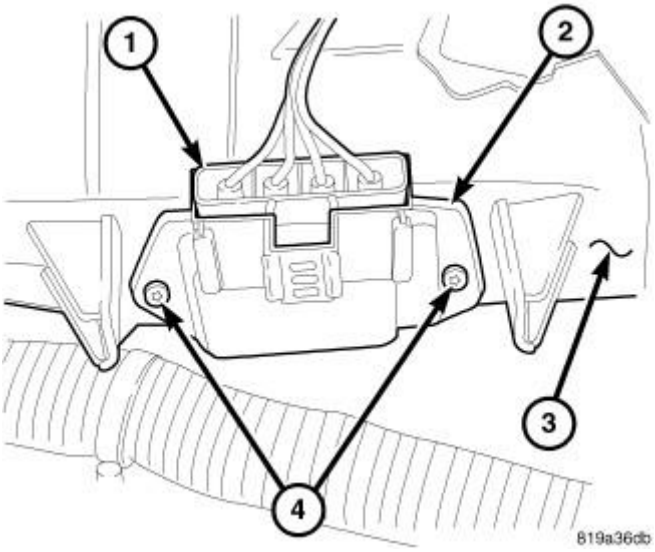

Fig. 29: Blower Motor Power Module & Screws
Courtesy of CHRYSLER GROUP, LLC

1. Disconnect and isolate the negative battery cable.
2. Disconnect the wire harness connector (1) from the blower motor power module (2) located at the bottom of the HVAC housing (3) on the passenger side of the vehicle.
3. Remove the two screws (4) that secure the blower motor power module to the HVAC housing and remove the power module.

INSTALLATION

INSTALLATION

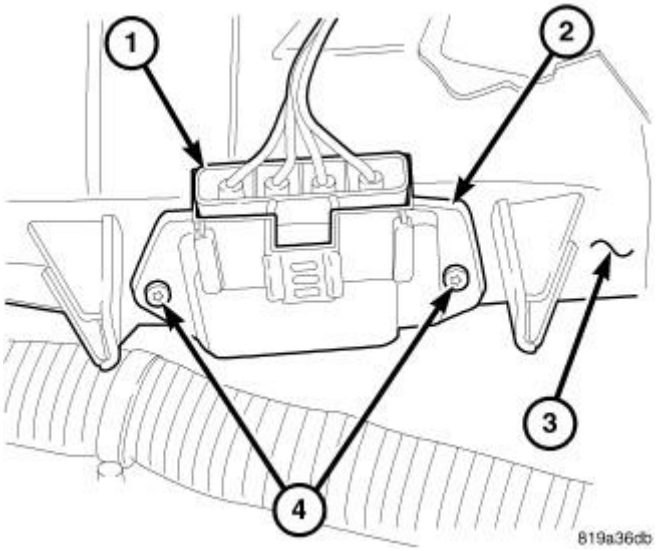

Fig. 30: Blower Motor Power Module & Screws
Courtesy of CHRYSLER GROUP, LLC

1. Position the blower motor power module (2) onto the bottom of the HVAC housing (3).
2. Install the two screws (4) that secure the blower motor power module to the HVAC housing. Tighten the screws to 1.1 N.m (10 in. lbs.).
3. Connect the wire harness connector (1) to the blower motor power module.
4. Reconnect the negative battery cable.

RESISTOR, BLOWER MOTOR

DESCRIPTION

DESCRIPTION

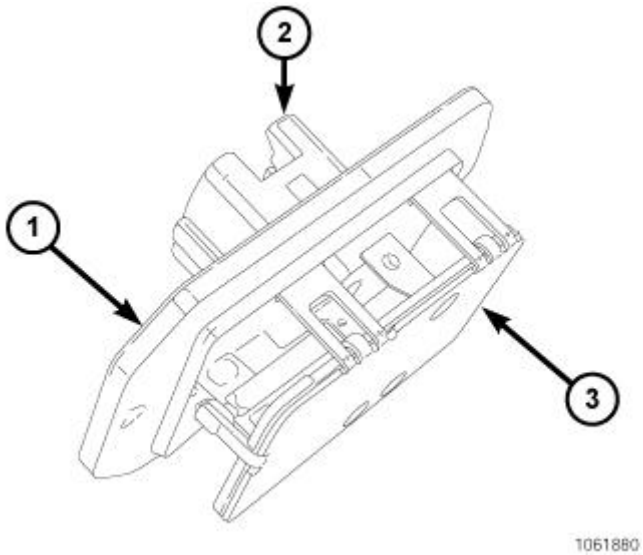

Fig. 31: Blower Motor Resistor
Courtesy of CHRYSLER GROUP, LLC

The blower motor resistor is mounted to the bottom of the HVAC housing, below the glove box. The blower motor resistor consists of a molded plastic mounting plate (1) with an integral wire connector receptacle (2). Behind the mounting plate are resistors contained within a metal heat sink (3).

OPERATION

OPERATION

The blower motor resistor is connected to the vehicle electrical system through a dedicated wire lead and connector of the HVAC wire harness. The blower motor resistor has multiple resistor wires, each of which will reduce the current flow through the blower motor to change the blower motor speed.

The blower motor control for the heating-A/C system directs the ground path for the blower motor through the correct resistor wire to obtain the selected speed. With the blower motor control in the lowest speed position, the ground path for the blower motor is applied through all of the resistor wires. Each higher speed selected with the blower motor control applies the blower motor ground path through fewer of the resistor wires, increasing the blower motor speed.

The blower motor resistor cannot be adjusted or repaired and must be replaced if inoperative or damaged.

DIAGNOSIS AND TESTING

DIAGNOSIS AND TESTING - BLOWER MOTOR RESISTOR

WARNING: **Disable the airbag system before attempting any steering wheel, steering column, or instrument panel component diagnosis or service. Refer to WARNING . Disconnect and isolate the negative battery (ground) cable, then wait two minutes for the airbag system capacitor to discharge before performing further diagnosis or service. This is the only sure way to**

disable the airbag system. Failure to take the proper precautions may result in accidental airbag deployment and possible serious or fatal injury.

NOTE: **Refer to appropriate Wiring Information for circuit descriptions and diagrams. Wiring Information includes wiring diagrams, proper wire and connector repair procedures, further details on wire harness routing and retention, as well as pin-out and location views for the various wire harness connectors, splices and grounds.**

1. Disconnect and isolate the negative battery cable.
2. Disconnect the wire harness connector from the blower motor resistor. Refer to **RESISTOR, BLOWER MOTOR, REMOVAL**.
3. Using an ohmmeter, check for continuity between all of the blower motor resistor terminals. In each case there should be continuity. If OK, repair the wire harness circuits between the blower motor speed control and the blower motor resistor or blower motor as required. If not OK, replace the inoperative blower motor resistor.

REMOVAL

REMOVAL

WARNING: **Disable the airbag system before attempting any steering wheel, steering column or instrument panel component diagnosis or service. Refer to WARNING . Disconnect and isolate the negative battery (ground) cable. Wait two minutes for the airbag system capacitor to discharge before performing further diagnosis or service. This is the only sure way to disable the airbag system. Failure to follow these instructions may result in possible serious or fatal injury.**

WARNING: **The blower motor resistor may get very hot during normal operation. If the blower motor was turned on prior to servicing the blower motor resistor, wait five minutes to allow the blower motor resistors to cool before performing diagnosis or service. Failure to take this precaution may result in possible serious injury.**

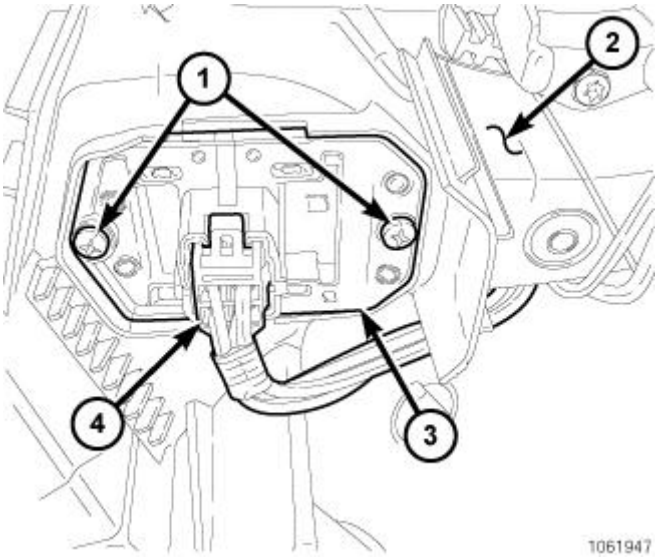

Fig. 32: Blower Motor Resistor, Connector & Screws
Courtesy of CHRYSLER GROUP, LLC

1. Disconnect and isolate the negative battery cable.
2. Reach under the passenger side of the instrument panel and disconnect the HVAC wire harness connector (4) from the blower motor resistor (3).
3. Remove the two screws (1) that secure the blower motor resistor to the HVAC housing (2) and remove the resistor.

INSTALLATION

INSTALLATION

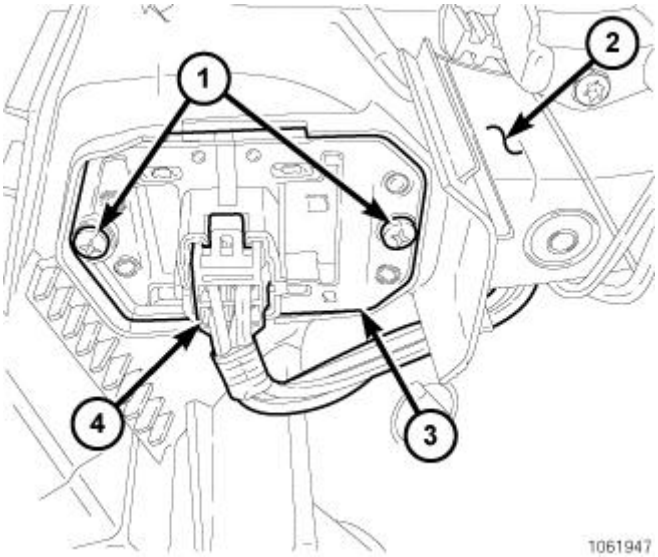

Fig. 33: Blower Motor Resistor, Connector & Screws
Courtesy of CHRYSLER GROUP, LLC

1. Position the blower motor resistor (3) into the HVAC housing (2).
2. Install the two screws (1) that secure the blower motor resistor to the HVAC housing. Tighten the screws to 1.1 N.m (10 in. lbs.).
3. Connect the HVAC wire harness connector (4) to the blower motor resistor.
4. Reconnect the negative battery cable.

SENSOR, AMBIENT TEMPERATURE

DESCRIPTION

DESCRIPTION

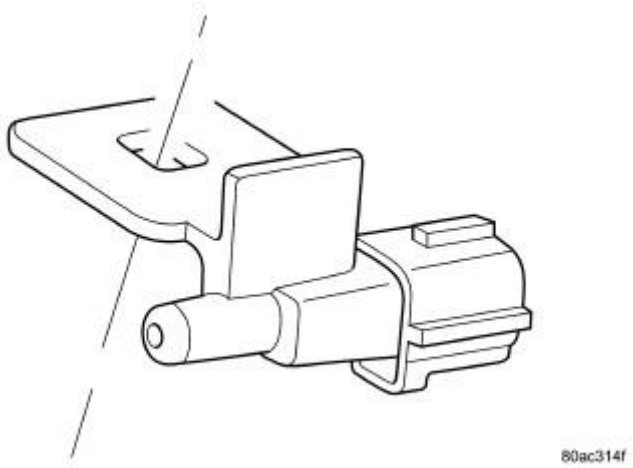

Fig. 34: Ambient Air Temperature Sensor
Courtesy of CHRYSLER GROUP, LLC

The ambient air temperature sensor is a variable resistor that monitors the air temperature outside of the vehicle. The ATC system uses the sensor data to maintain optimum cabin temperature levels. The ambient air temperature sensor is mounted inside the front fascia.

OPERATION

OPERATION

The ambient air temperature sensor is a variable resistor that operates on a 5-volt reference signal sent by the Totally Integrated Power Module (TIPM). The ambient air temperature sensor is connected to the TIPM through a two-wire lead and connector of the vehicle wire harness. The ambient air temperature sensor changes its internal resistance in response to changes in the outside air temperature, which either increases or decreases the reference signal voltage read by the TIPM. The TIPM converts and broadcasts the sensor data over the Controller Area Network (CAN) IHS bus, where it is read by the ATC A/C-heater control, Powertrain Control Module (PCM) or Engine Control Module (ECM), depending on engine application, and other vehicle control modules.

The ambient air temperature sensor is diagnosed using a scan tool. Refer to appropriate Electrical Diagnostic

article. .

The ambient air temperature sensor cannot be adjusted or repaired and must be replaced if inoperative or damaged.

SENSOR, EVAPORATOR TEMPERATURE

DESCRIPTION

DESCRIPTION

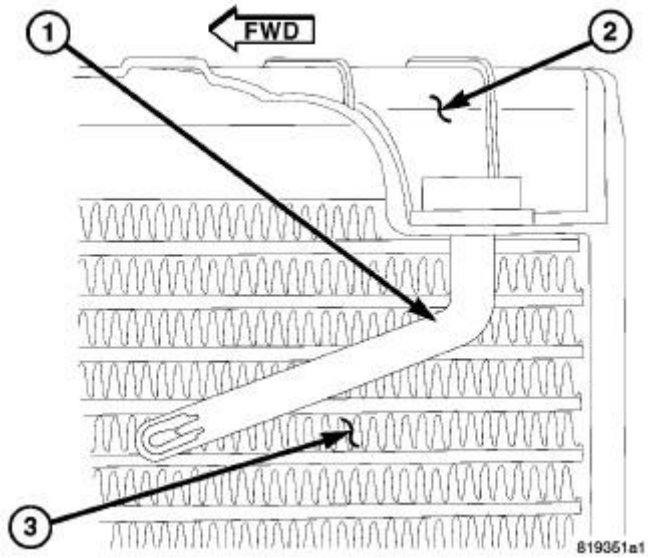

Fig. 35: Evaporator Temperature Sensor
Courtesy of CHRYSLER GROUP, LLC

NOTE: Cutaway of HVAC housing shown in illustration for clarity.

The evaporator temperature sensor (1) is an electrical thermistor located within a molded plastic case that is inserted into the top of the HVAC housing (2) to measure the temperature of the conditioned air downstream of the A/C evaporator (3). Two terminals within the connector receptacle connect the sensor to the vehicle electrical system through a wire lead and connector of the HVAC wire harness.

The external location of the evaporator temperature sensor allows the sensor to be removed or installed without disturbing the refrigerant in the A/C system.

OPERATION

OPERATION

The evaporator temperature sensor monitors the temperature of the conditioned air downstream of the A/C evaporator and supplies an input signal to the A/C-heater control. The A/C-heater control uses the evaporator temperature sensor input signal to optimize A/C system performance and to protect the A/C system from

evaporator freezing. The evaporator temperature sensor will change its internal resistance in response to the temperatures it monitors and is connected to the A/C-heater control through a sensor ground circuit and a 5-volt reference signal circuit. As the temperature of the A/C evaporator decreases, the internal resistance of the evaporator temperature sensor decreases.

The A/C-heater control uses the monitored voltage reading as an indication of evaporator temperature. The A/C-heater control is programmed to respond to this input by requesting the Powertrain Control Module (PCM) or Engine Control Module (ECM), depending on engine application, to cycle the A/C clutch as necessary to optimize A/C system performance and to protect the A/C system from evaporator freezing.

The evaporator temperature sensor is diagnosed using a scan tool. Refer to appropriate Electrical Diagnostic article. .

The evaporator temperature sensor cannot be adjusted or repaired and must be replaced if inoperative or damaged.

REMOVAL

REMOVAL

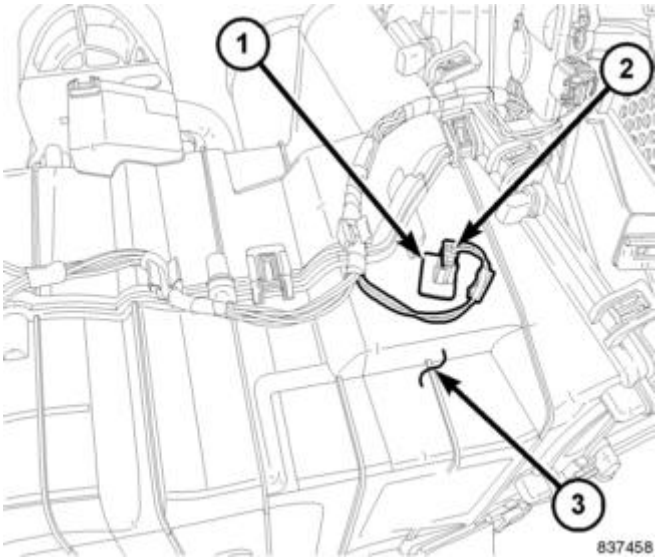

Fig. 36: Evaporator Temperature Sensor & Connector
Courtesy of CHRYSLER GROUP, LLC

NOTE: Illustration shown with instrument panel removed for clarity.

1. Disconnect and isolate the negative battery cable.
2. Remove the glove box from the instrument panel. Refer to **GLOVE BOX, INSTRUMENT PANEL, REMOVAL** .
3. Remove the storage bin from the instrument panel. Refer to **BIN, INSTRUMENT PANEL, REMOVAL** .
4. Disconnect the HVAC wire harness (2) from the evaporator temperature sensor (1) located on top of the

HVAC housing (3).

5. Pull the evaporator temperature sensor upward and forward and remove the sensor from the HVAC housing.

INSTALLATION

INSTALLATION

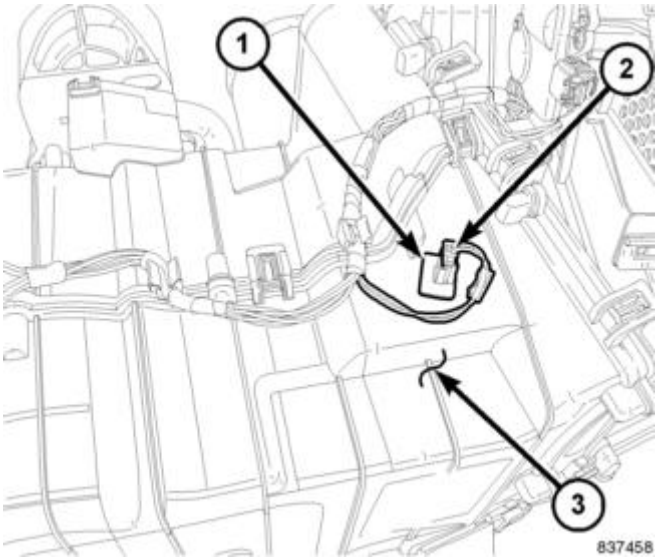

Fig. 37: Evaporator Temperature Sensor & Connector
Courtesy of CHRYSLER GROUP, LLC

NOTE: Illustration shown with instrument panel removed for clarity.

1. Install the evaporator temperature sensor (1) into the top of the HVAC housing (3). Make sure the sensor is fully engage to the housing.
2. Connect the HVAC wire harness (2) to the evaporator temperature sensor.
3. Install the storage bin. Refer to **BIN, INSTRUMENT PANEL, INSTALLATION** .
4. Install the glove box. Refer to **GLOVE BOX, INSTRUMENT PANEL, INSTALLATION** .
5. Reconnect the negative battery cable.

SENSOR, INFRARED TEMPERATURE

DESCRIPTION

DESCRIPTION

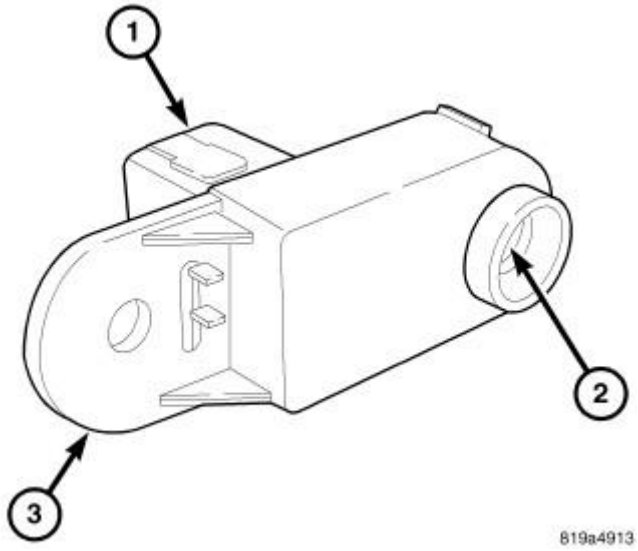

Fig. 38: Infrared Temperature Sensor
Courtesy of CHRYSLER GROUP, LLC

NOTE: Typical infrared sensor shown in illustration.

The infrared temperature sensor is located in the overhead console and consists of an infrared transducer concealed behind a clear lens (2) in a molded plastic housing with an integral mounting tab (3) and wire connector receptacle (1).

The infrared sensor is used only on models equipped with the automatic temperature control (ATC) heating-A/C system.

OPERATION

OPERATION

The infrared sensor detects thermal radiation emitted by the driver and front passenger seat occupants and surroundings and converts its data into a linear pulse width modulated (PWM) output signal which is read by the automatic temperature control (ATC) A/C-heater control. The ATC A/C-heater control uses the infrared sensor data as one of the inputs necessary to automatically control the interior cabin temperature levels. By using thermal radiation (surface temperature) measurement, rather than an air temperature measurement, the ATC heating-A/C system is able to adjust itself to the comfort level as perceived by the occupants. This allows the ATC system to compensate for other ambient conditions affecting comfort levels, such as solar heat gain or evaporative heat loss.

The ATC system logic responds to the infrared sensor message by calculating and adjusting the air flow temperature and air flow rate needed to properly obtain and maintain the selected comfort level temperature of the occupants. The A/C-heater control continually monitors the infrared sensor circuits, and will store diagnostic trouble codes (DTCs) for any problem it detects.

The infrared sensor is diagnosed using a scan tool. Refer to appropriate Electrical Diagnostic article. .

The infrared sensor cannot be adjusted or repaired and must be replaced if inoperative or damaged.

REMOVAL

REMOVAL

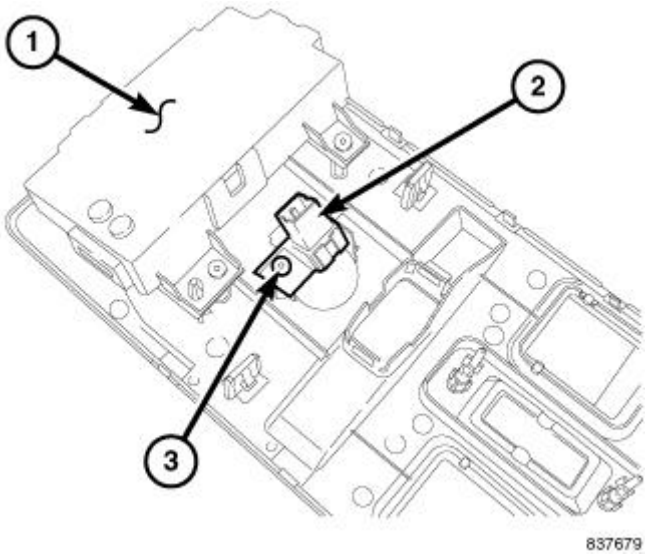

Fig. 39: Infrared Sensor & Screw
Courtesy of CHRYSLER GROUP, LLC

1. Disconnect and isolate the negative battery cable.
2. Remove the overhead console (1) and place it on a workbench. Refer to **CONSOLE, OVERHEAD, FRONT, REMOVAL** .
3. Remove the screw (3) that secures the infrared sensor (2) to the overhead console and remove the sensor.

INSTALLATION

INSTALLATION

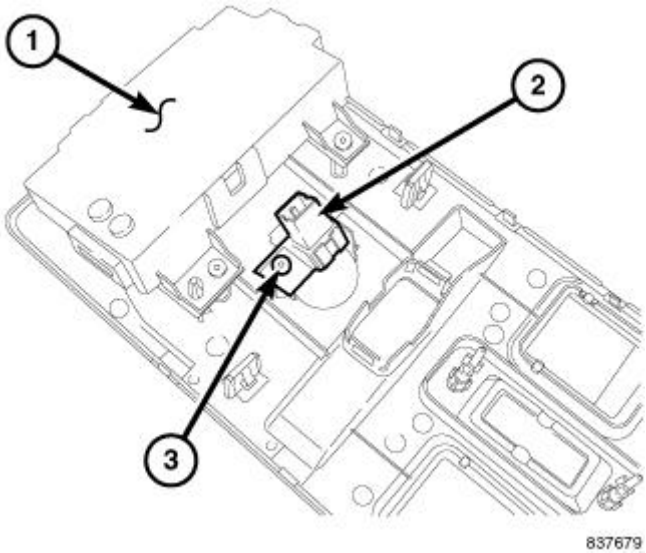

Fig. 40: Infrared Sensor & Screw
Courtesy of CHRYSLER GROUP, LLC

1. Position the infrared sensor (2) onto the overhead console (1).
2. Install the screw (3) that secures the infrared sensor to the overhead console. Tighten the screw to 1.1 N.m (10 in. lbs.).
3. Install the overhead console. Refer to **CONSOLE, OVERHEAD, FRONT, INSTALLATION** .
4. Reconnect the negative battery cable.

SENSOR, SUN

DESCRIPTION

DESCRIPTION

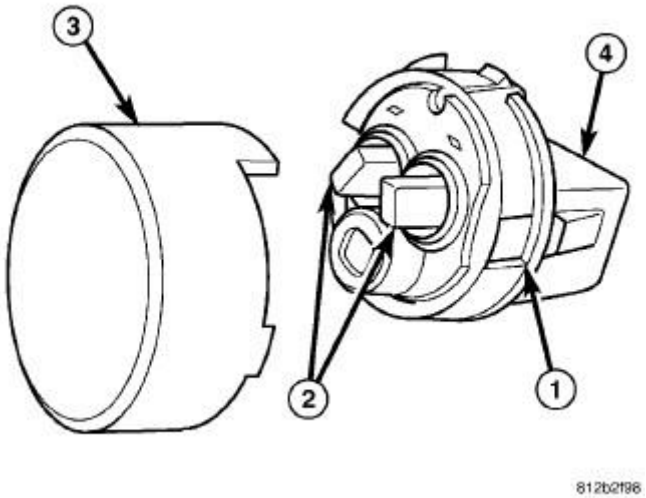

Fig. 41: Sun Sensor
Courtesy of CHRYSLER GROUP, LLC

NOTE: Typical sun sensor assembly shown in illustration.

The automatic temperature control (ATC) heating-A/C system uses a sun sensor assembly (1) to measure sun light intensity. The sun sensor assembly incorporates two sun sensors (2) within a molded plastic case which is mounted to the instrument panel and a clear lens (3) that protrudes through a trim panel located at the top of the instrument panel. The wire harness receptacle (4) connects the sun sensors to the vehicle electrical system through a wire lead and connector of the instrument panel wire harness.

OPERATION

OPERATION

The ATC dual-zone heating-A/C system uses two sun sensors to balance the system in response to side-to-side variations in sun light intensity. Passengers in sun and shadow require different functional settings because they experience very different temperatures. The sun sensor assembly provides data to the A/C heater control to help determine proper mode and blend-air door positions and blower motor speeds. The sun sensors are not thermistor type sensors, but rather photo diodes. For this reason the sun sensors responds to sun light intensity rather than temperature. The sun sensor assembly is also used to sense day and night conditions for automatic headlight control, if equipped.

The sun sensor is diagnosed using a scan tool. Refer to appropriate Electrical Diagnostic article. .

The sun sensor assembly cannot be adjusted or repaired and must be replaced if inoperative or damaged.

REMOVAL

REMOVAL

WARNING: Disable the airbag system before attempting any steering wheel, steering column or instrument panel component diagnosis or service. Refer to WARNING . Disconnect and isolate the negative battery (ground) cable, then wait two minutes for the airbag system capacitor to discharge before performing further diagnosis or service. This is the only sure way to disable the airbag system. Failure to follow these instructions may result in accidental airbag deployment and possible serious or fatal injury.

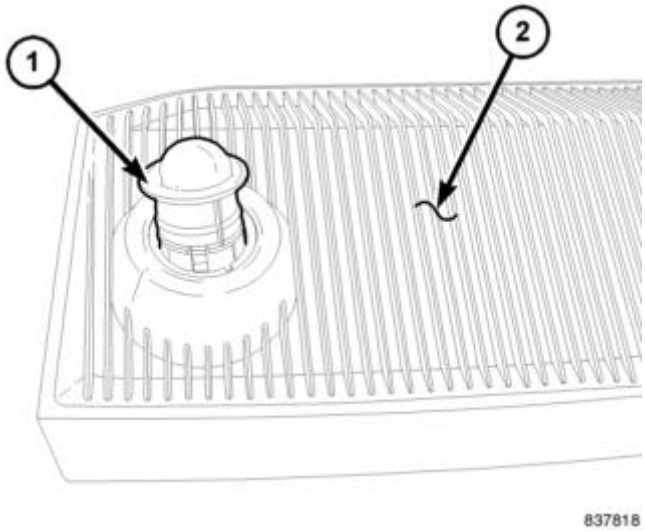

Fig. 42: Sun Sensor & Trim Panel
Courtesy of CHRYSLER GROUP, LLC

1. Disconnect and isolate the negative battery cable.
2. Remove the trim panel (2) that contains the sun sensor (1) from the top of the instrument panel using Trim Stick (special tool #C-4755, Trim Stick) or equivalent and disconnect the instrument panel wire harness connector from the sensor.
3. Using Trim Stick (special tool #C-4755, Trim Stick) or equivalent, gently pry on both sides of the sun sensor assembly and remove the sun sensor from the panel.

INSTALLATION

INSTALLATION

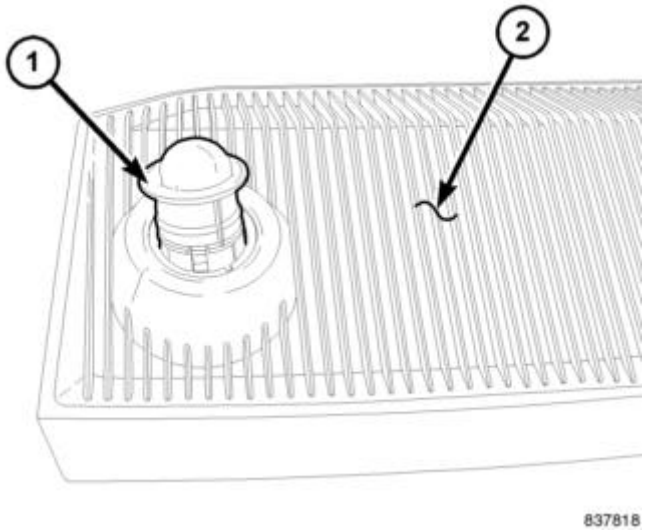

Fig. 43: Sun Sensor & Trim Panel
Courtesy of CHRYSLER GROUP, LLC

1. Align the tab on the sun sensor (1) with the opening in the panel (2).
2. Gently push the sun sensor into the panel until the sensor snap retainers are securely engaged.
3. Connect the instrument panel wire harness to the sun sensor and install the panel onto the instrument panel. Make sure the panel snap retainers are fully engaged.
4. Reconnect the negative battery cable.

TRANSDUCER, A/C PRESSURE

DESCRIPTION

DESCRIPTION

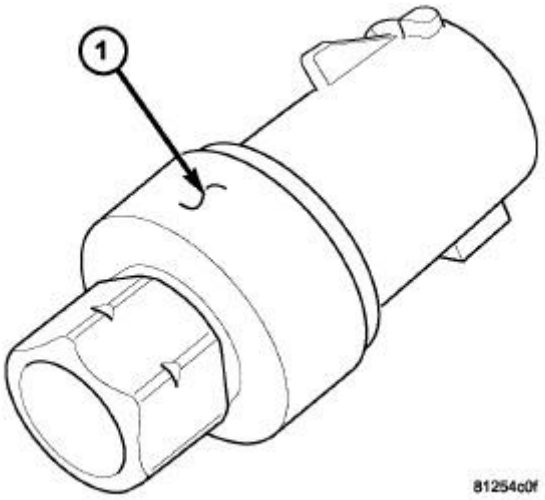

Fig. 44: A/C Pressure Transducer
Courtesy of CHRYSLER GROUP, LLC

The A/C pressure transducer (1) is a switch that is installed on a fitting located on the A/C discharge line. An internally threaded fitting on the A/C pressure transducer connects it to the externally threaded Schrader-type fitting on the A/C discharge line. A rubber O-ring seals the connection between the A/C pressure transducer and the discharge line fitting. The A/C pressure transducer is connected to the vehicle electrical system by a molded plastic connector with three terminals.

OPERATION

OPERATION

The A/C pressure transducer monitors the pressures in the high side of the A/C refrigerant system through its connection to a fitting on the A/C discharge line and its internal resistance changes in response to the pressures it monitors. The Powertrain Control Module (PCM) or Engine Control Module (ECM), depending on engine application, provides a five volt reference signal and a sensor ground to the A/C pressure transducer, then monitors the output voltage of the transducer on a sensor return circuit to determine refrigerant pressure. The

PCM/ECM is programmed to respond to this and other sensor inputs by controlling the operation of the A/C clutch and the radiator cooling fan to help optimize A/C system performance and to protect the system components from damage. The PCM/ECM will disengage the A/C clutch when high side pressure rises above 3172 kPa (460 psi) and re-engage the clutch when high side pressure drops below 1999 kPa (290 psi). The A/C pressure transducer will also disengage the A/C clutch if the high side pressure drops below 193 kPa (28 psi) and will re-engage the clutch when the high side pressure rises above 234 kPa (34 psi). If the refrigerant pressure rises above 1655 kPa (240 psi), the PCM/ECM will actuate the cooling fan. The A/C pressure transducer signal to the PCM/ECM also prevents the A/C clutch from engaging when ambient temperatures are below about 10° C (50° F), due to the pressure/temperature relationship of the refrigerant.

A Schrader-type valve in the A/C discharge line fitting permits the A/C pressure transducer to be removed or installed without disturbing the refrigerant in the A/C system.

The A/C pressure transducer is diagnosed using a scan tool. Refer to appropriate Electrical Diagnostic article. .

The A/C pressure transducer cannot be adjusted or repaired and must be replaced if inoperative or damaged.

REMOVAL

REMOVAL

NOTE: It is not necessary to discharge the refrigerant system to replace the A/C pressure transducer.

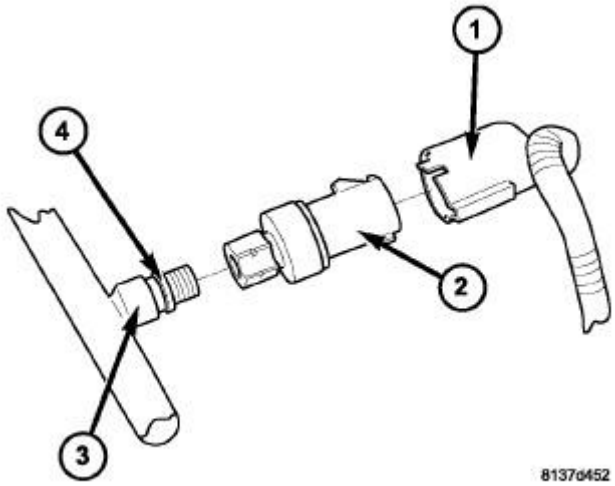

Fig. 45: A/C Pressure Transducer, Connector, Discharge Line & O-Ring
Courtesy of CHRYSLER GROUP, LLC

NOTE: Typical A/C pressure transducer and refrigerant line shown in illustration.

1. Disconnect and isolate the negative battery cable.

2. Disconnect the wire harness connector (1) from the A/C pressure transducer (2) located on the A/C discharge line (3).
3. Remove the A/C pressure transducer from the fitting on the A/C discharge line and remove and discard the O-ring seal.

INSTALLATION

INSTALLATION

NOTE: Use only the specified O-ring as it is made of special material for R-134a. Use only refrigerant oil of the type required for the A/C compressor.

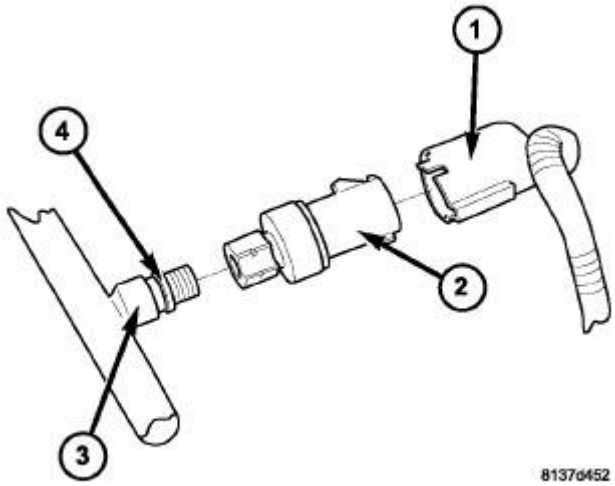

Fig. 46: A/C Pressure Transducer, Connector, Discharge Line & O-Ring
Courtesy of CHRYSLER GROUP, LLC

NOTE: Typical A/C pressure transducer and refrigerant line shown in illustration.

1. Lubricate a new rubber O-ring seal (4) with clean refrigerant oil and install it onto the discharge line fitting (3).
2. Install the A/C pressure transducer (2) onto the A/C discharge line. Tighten the A/C pressure transducer to 5.1 N.m (45 in. lbs.).
3. Connect the wire harness connector (1) to the A/C pressure transducer.
4. Reconnect the negative battery cable.

DISTRIBUTION

DUCT, DEFROSTER

REMOVAL

REMOVAL

WARNING: Disable the airbag system before attempting any steering wheel, steering column or instrument panel component diagnosis or service. Refer to WARNING . Disconnect and isolate the negative battery (ground) cable and wait two minutes for the airbag system capacitor to discharge before performing further diagnosis or service. This is the only sure way to disable the airbag system. Failure to follow these instructions may result in accidental airbag deployment and possible serious or fatal injury.

NOTE: Take the proper precautions to protect the instrument panel from cosmetic damage.

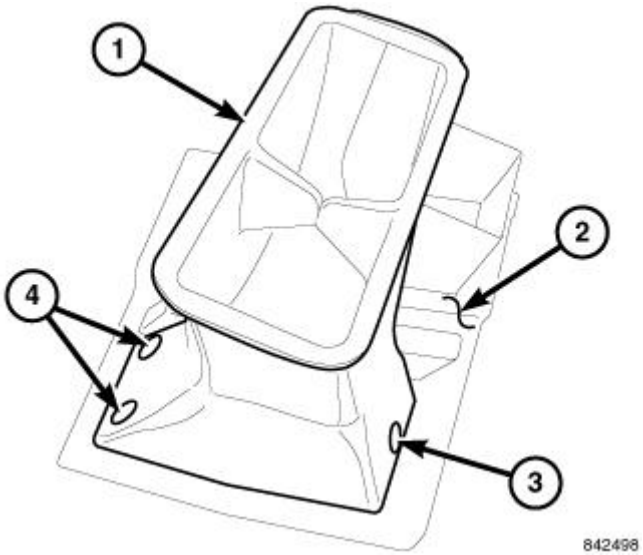

Fig. 47: Defroster Duct
Courtesy of CHRYSLER GROUP, LLC

1. Remove the instrument panel and place it on a workbench. Refer to **PANEL, INSTRUMENT, REMOVAL** .
2. Remove the instrument panel cover. Refer to **COVER, INSTRUMENT PANEL, REMOVAL** .
3. Remove the instrument panel ducts and place the center distribution duct on a workbench. Refer to **DUCT, INSTRUMENT PANEL, REMOVAL**.
4. Remove the three retainers (3 and 4) that secure the defroster duct (1) to the center distribution duct (2) and remove the defroster duct.

INSTALLATION

INSTALLATION

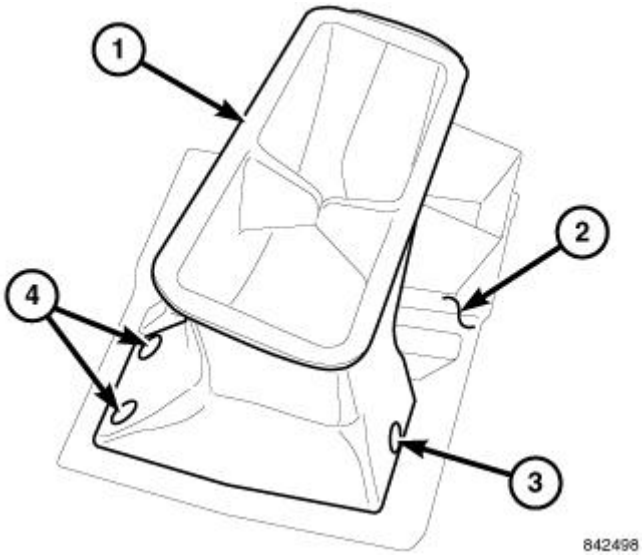

Fig. 48: Defroster Duct
Courtesy of CHRYSLER GROUP, LLC

1. Position the defroster duct (1) onto the center distribution duct (2).
2. Install the three retainers (3 and 4) that secure the defroster duct to the center distribution duct.
3. Install the instrument panel ducts onto the instrument panel support. Refer to **DUCT, INSTRUMENT PANEL, INSTALLATION**.
4. Install the instrument panel cover Refer to **COVER, INSTRUMENT PANEL, INSTALLATION** .
5. Install the instrument panel. Refer to **PANEL, INSTRUMENT, INSTALLATION** .

DUCT, FLOOR CONSOLE

REMOVAL

REMOVAL

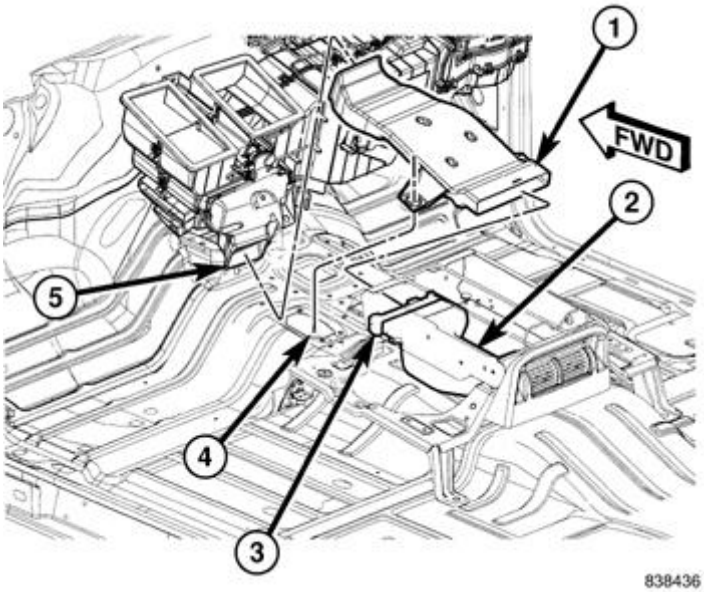

Fig. 49: Floor Console Duct
Courtesy of CHRYSLER GROUP, LLC

NOTE: Illustration shown with seat cushions removed for clarity.

NOTE: Automatic transmission model shown in illustration. Manual transmission model similar.

1. Remove the floor console. Refer to **CONSOLE, FLOOR, REMOVAL** .
2. Disengage the floor console duct (1) from the rear duct adapter (3) and slide the adapter rearward into the rear duct (2).
3. Disengage the floor console duct from the stud (4) on the floor panel.
4. Disengage the floor console duct from the rear floor distribution duct (5) and remove the console duct.

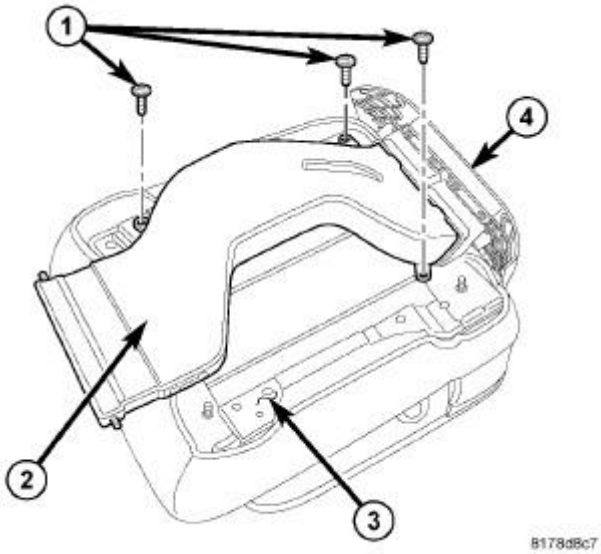

Fig. 50: Rear Duct, Push-Pin Retainers, & Center Seat Support
Courtesy of CHRYSLER GROUP, LLC

NOTE: Illustration shown with center front seat removed for clarity.

5. If required, remove the front seat. Refer to **SEAT, FRONT, REMOVAL** and **SEAT, FRONT CENTER, REMOVAL** .
6. Remove the three push-pin retainers (1) that secure the rear duct (2) to the bottom of the center seat support (3).
7. Disengage the rear duct from the rear outlet (4) and remove the rear duct.

INSTALLATION

INSTALLATION

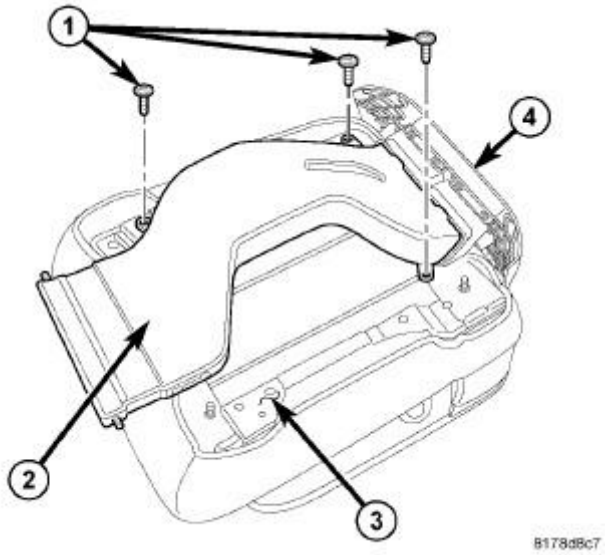

Fig. 51: Rear Duct, Push-Pin Retainers, & Center Seat Support
Courtesy of CHRYSLER GROUP, LLC

NOTE: Illustration shown with center front seat removed for clarity.

1. If removed, install the rear duct (2) onto the rear outlet (4). Make sure the duct is fully engaged to the outlet.
2. Install the three push-pin retainers (1) that secure the rear duct to the front seat support (3) and install the front seat. Refer to **SEAT, FRONT, INSTALLATION** and **SEAT, FRONT CENTER, INSTALLATION** .

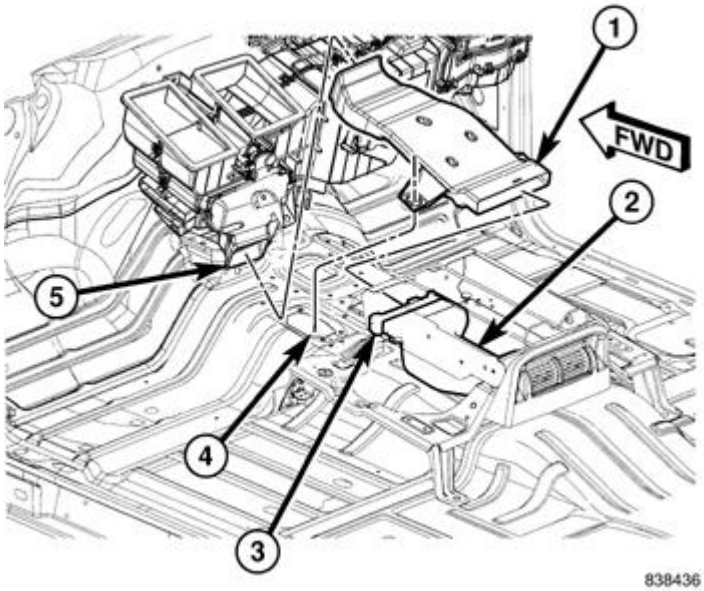

Fig. 52: Floor Console Duct
Courtesy of CHRYSLER GROUP, LLC

NOTE: **Illustration shown with seat cushions removed for clarity.**

NOTE: **Automatic transmission models shown in illustration. Manual transmission model similar.**

3. Install the floor console duct (1) onto the rear floor distribution duct (5). Make sure the ducts are fully engaged to each other.
4. Engage the floor console duct onto the stud (4).
5. Slide the rear duct adapter (3) forward and install the floor console duct onto the rear duct (2). Make sure the ducts are fully engaged to each other.
6. Install the floor console. Refer to **CONSOLE, FLOOR, INSTALLATION** .

DUCT, FLOOR DISTRIBUTION, REAR

REMOVAL

REMOVAL

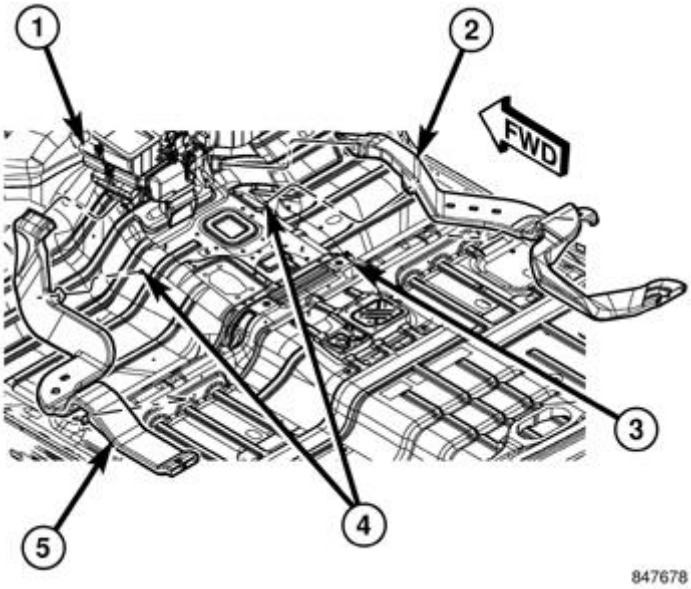

Fig. 53: Rear Floor Ducts
Courtesy of CHRYSLER GROUP, LLC

1. Remove the front seats. Refer to **SEAT, FRONT, REMOVAL** and **SEAT, FRONT CENTER, REMOVAL** .
2. Roll back the front carpet from under the instrument panel toward the rear of the vehicle. Refer to **CARPET, FLOOR, REMOVAL** .
3. Disengage the rear floor ducts (2 and 5) from the floor support bracket (3) and from the studs (4) located on the floor panel.
4. Disconnect the rear floor ducts from the HVAC housing (1) and remove the ducts.

INSTALLATION

INSTALLATION

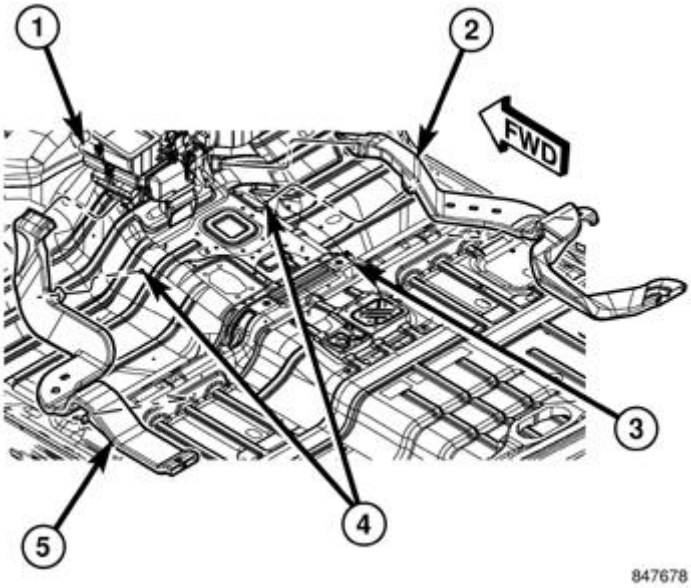

Fig. 54: Rear Floor Ducts
Courtesy of CHRYSLER GROUP, LLC

1. Connect the rear floor ducts (2 and 5) to the HVAC housing (1).
2. Engage the rear floor ducts to the studs (4) and the floor support bracket (3).
3. Reposition the front carpet. Refer to **CARPET, FLOOR, INSTALLATION** .
4. Install the front seats. Refer to **SEAT, FRONT, INSTALLATION** and **SEAT, FRONT CENTER, INSTALLATION** .

DUCT, INSTRUMENT PANEL

REMOVAL

REMOVAL

WARNING: **Disable the airbag system before attempting any steering wheel, steering column or instrument panel component diagnosis or service. Refer to WARNING . Disconnect and isolate the negative battery (ground) cable and wait two minutes for the airbag system capacitor to discharge before performing further diagnosis or service. This is the only sure way to disable the airbag system. Failure to follow these instructions may result in accidental airbag deployment and possible serious or fatal injury.**

NOTE: **Take the proper precautions to protect the instrument panel from cosmetic damage.**

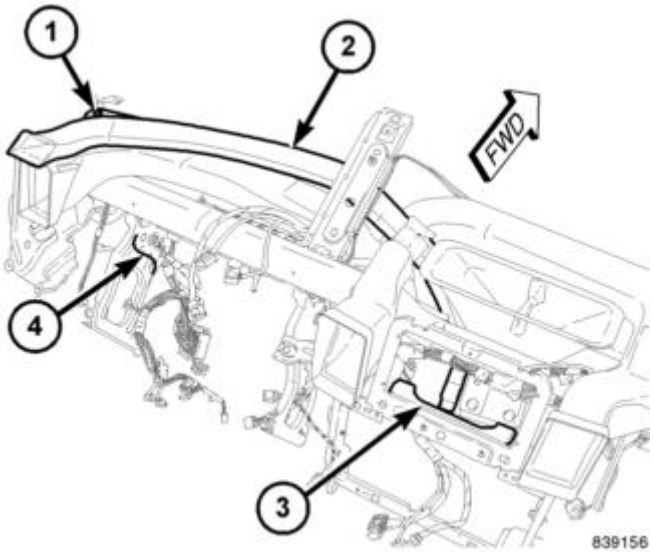

Fig. 55: Center Distribution & Driver Side Demister Duct
Courtesy of CHRYSLER GROUP, LLC

1. Remove the instrument panel and place it on a workbench. Refer to **PANEL, INSTRUMENT, REMOVAL** .
2. Remove the instrument panel cover. Refer to **COVER, INSTRUMENT PANEL, REMOVAL** .
3. Remove the retainer (1) that secures the driver side demister duct (2) to the end of the instrument panel support (4).
4. Disconnect the driver side demister duct from the center distribution duct (3) and remove the demister duct.

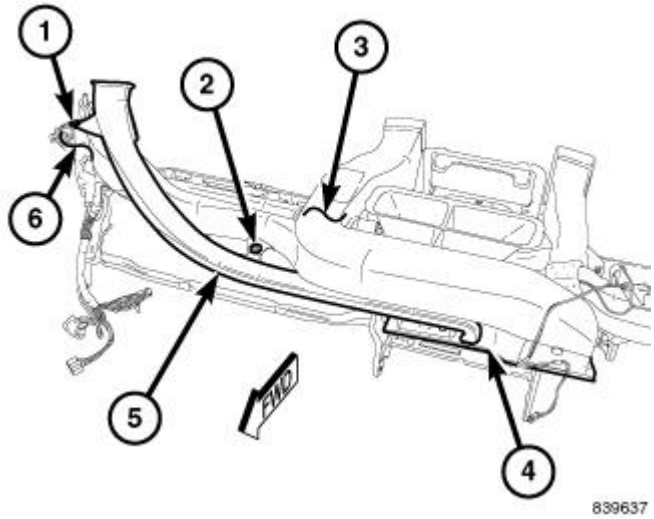

Fig. 56: Passenger Side Demister Duct & Passenger Side Instrument Panel Duct
Courtesy of CHRYSLER GROUP, LLC

5. Remove the retainer (1) that secures the passenger side demister duct (5) to the end instrument panel support (6).

6. Remove the retainer (2) that secures the passenger side demister duct to the passenger side instrument panel duct (3).
7. Disconnect the passenger side demister duct from the center distribution duct (4) and remove the demister duct.

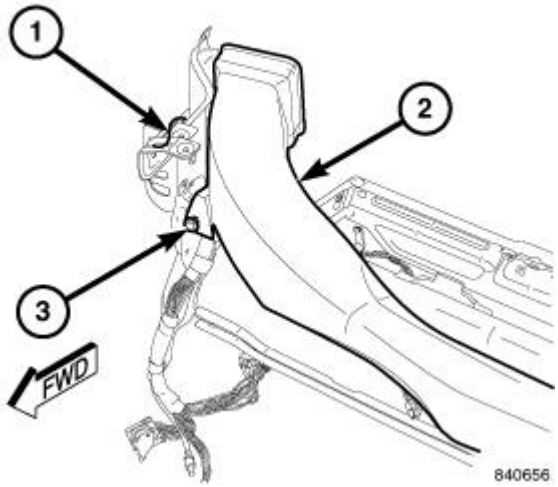

Fig. 57: Passenger Side Instrument Panel Duct & End Support
Courtesy of CHRYSLER GROUP, LLC

8. Remove the retainer (3) that secures the passenger side instrument panel duct (2) to the end of the instrument panel support (1).

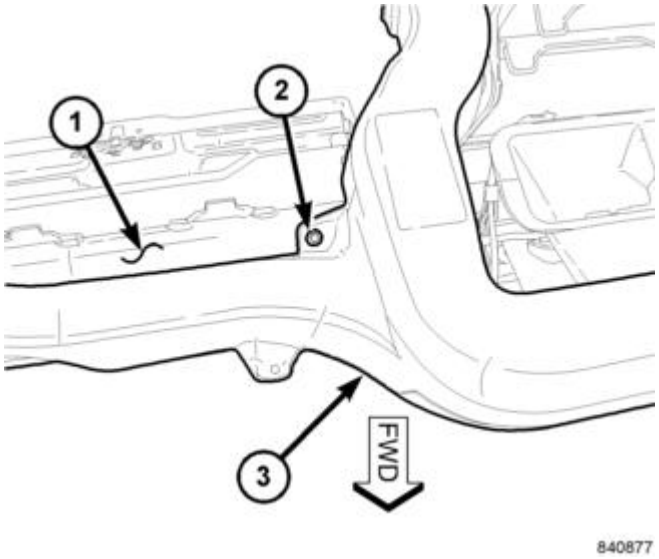

Fig. 58: Passenger Side Instrument Panel Duct & Middle Support
Courtesy of CHRYSLER GROUP, LLC

9. Remove the retainer (2) that secures the passenger side instrument panel duct (3) to the middle of the instrument panel support (1).

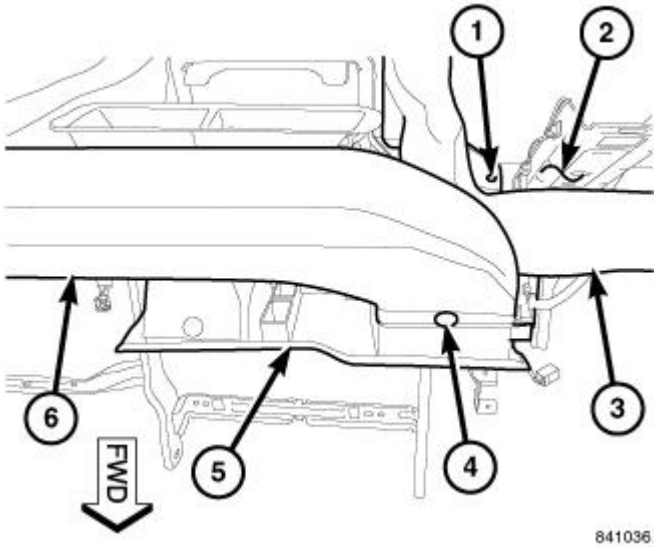

Fig. 59: Passenger/Driver Side Instrument Panel Duct
Courtesy of CHRYSLER GROUP, LLC

10. Remove the retainer (1) that secures the driver side instrument panel duct (3) to the middle of the instrument panel support (2).
11. Remove the retainer (4) that secures the passenger side instrument panel duct (6) to the middle of the center distribution duct (5).

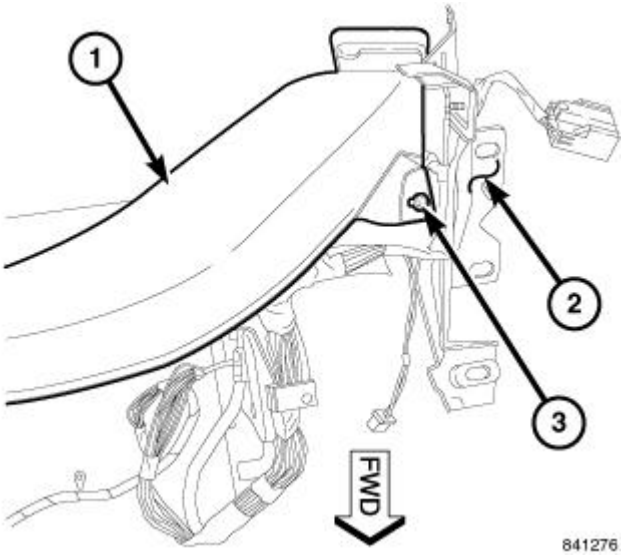

Fig. 60: Driver Side Instrument Panel Duct
Courtesy of CHRYSLER GROUP, LLC

12. Remove the retainer (3) that secures the driver side instrument panel duct (1) to the end of the instrument panel support (2).

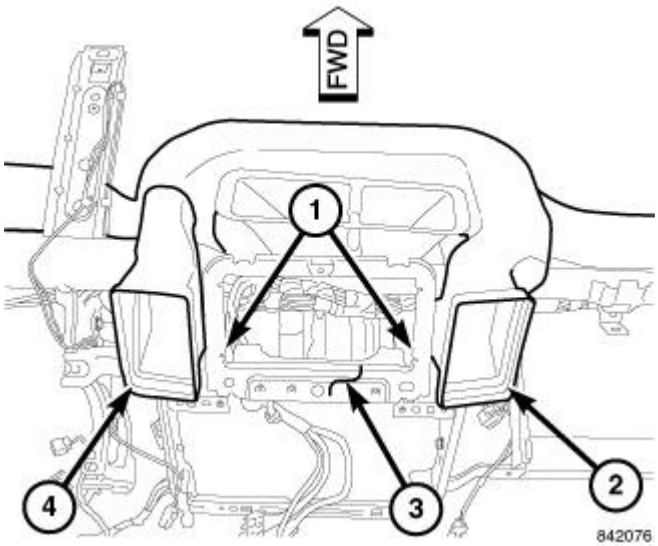

Fig. 61: Passenger & Driver Side Instrument Panel Duct
Courtesy of CHRYSLER GROUP, LLC

13. Remove the two retainers (1) that secure the passenger side instrument panel duct (2) and the driver side instrument panel duct (4) to the middle of the instrument panel support (3).
14. Remove the passenger side instrument panel duct.

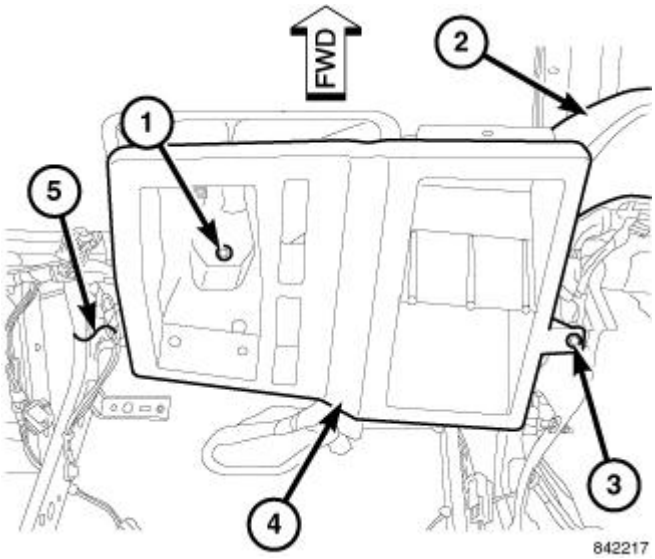

Fig. 62: Center Distribution Duct
Courtesy of CHRYSLER GROUP, LLC

15. Remove the two retainers (1 and 3) that secure the center distribution duct (4) to the middle of the instrument panel support (5).
16. Remove the driver side instrument panel duct (2) and the center distribution duct.

INSTALLATION

INSTALLATION

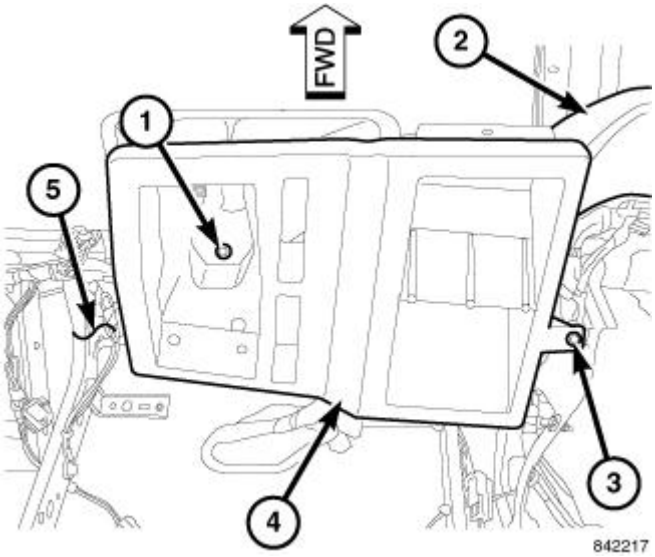

Fig. 63: Center Distribution Duct
Courtesy of CHRYSLER GROUP, LLC

1. Position the driver side instrument panel duct (2) and the center distribution duct (4) to the instrument panel support (5).
2. Install the two retainers (1 and 3) that secure the center distribution duct (4) to the middle of the instrument panel support.

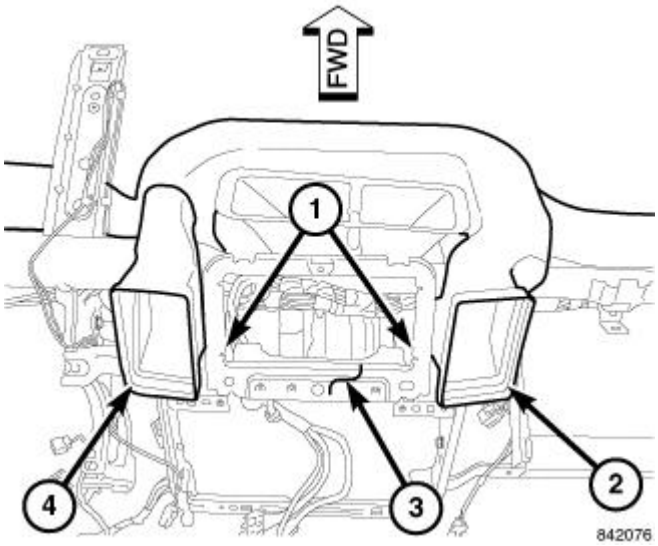

Fig. 64: Passenger & Driver Side Instrument Panel Duct
Courtesy of CHRYSLER GROUP, LLC

3. Position the passenger side instrument panel duct (2) the instrument panel support (3) and connect it to the center distribution duct.
4. Install the two retainers (1) that secure the passenger side instrument panel duct and the driver side

instrument panel duct (4) to the middle of the instrument panel support.

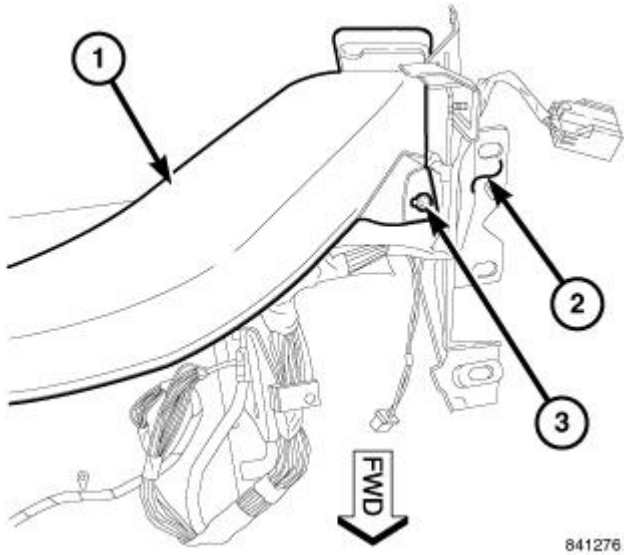

Fig. 65: Driver Side Instrument Panel Duct
Courtesy of CHRYSLER GROUP, LLC

5. Install the retainer (3) that secures the driver side instrument panel duct (1) to the end of the instrument panel support (2).

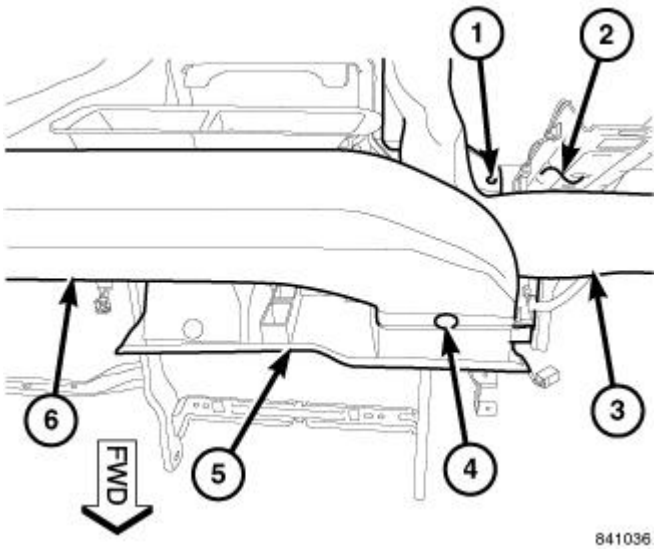

Fig. 66: Passenger/Driver Side Instrument Panel Duct
Courtesy of CHRYSLER GROUP, LLC

6. Install the retainer (1) that secures the driver side instrument panel duct (3) to the middle of the instrument panel support (2).
7. Install the retainer (4) that secures the passenger side instrument panel duct (6) to the middle of the center distribution duct (5).

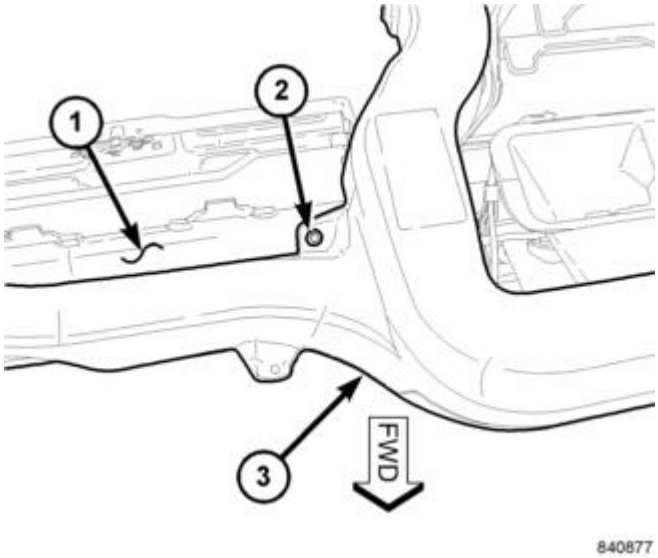

Fig. 67: Passenger Side Instrument Panel Duct & Middle Support
Courtesy of CHRYSLER GROUP, LLC

8. Install the retainer (2) that secures the passenger side instrument panel duct (3) to the middle of the instrument panel support (3).

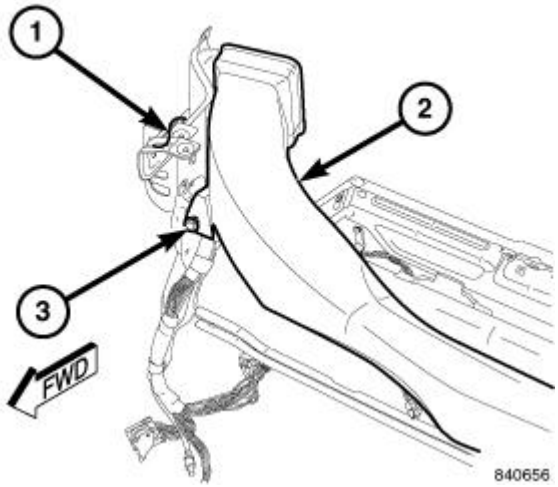

Fig. 68: Passenger Side Instrument Panel Duct & End Support
Courtesy of CHRYSLER GROUP, LLC

9. Install the retainer (3) that secures the passenger side instrument panel duct (2) to the end of the instrument panel support (1).

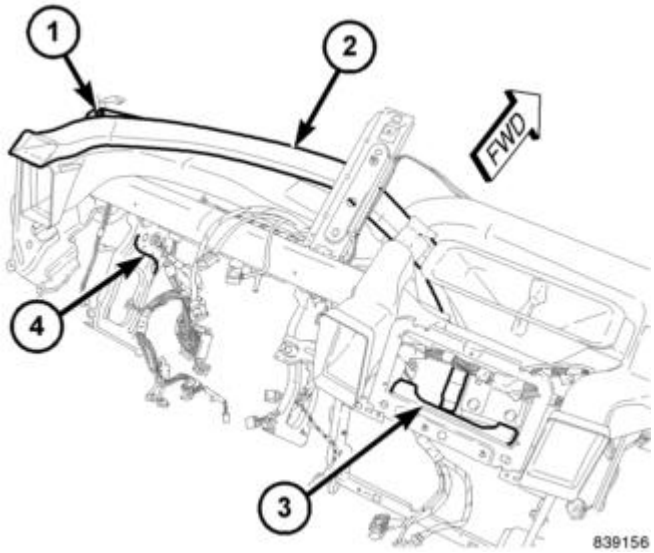

Fig. 69: Center Distribution & Driver Side Demister Duct
Courtesy of CHRYSLER GROUP, LLC

10. Position the driver side demister duct (2) to the instrument panel support (4) and connect it to the distribution duct (3).
11. Install the retainer (1) that secures the driver side demister duct to the instrument panel support.

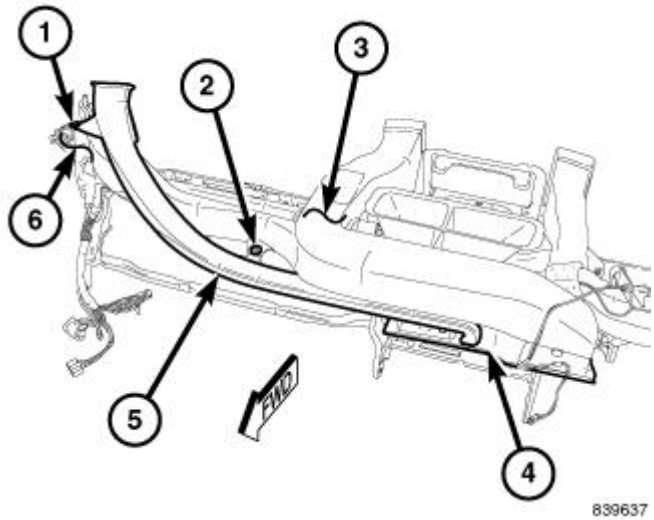

Fig. 70: Passenger Side Demister Duct & Passenger Side Instrument Panel Duct
Courtesy of CHRYSLER GROUP, LLC

12. Position the passenger side demister duct (5) to the instrument panel support (6) and connect it to the distribution duct (4).
13. Install the retainer (2) that secures the passenger side demister duct to the passenger side instrument panel duct (3).
14. Install the retainer (1) that secures the passenger side demister duct to the instrument panel support.

15. Install the instrument panel cover. Refer to **COVER, INSTRUMENT PANEL, INSTALLATION** .
16. Install the instrument panel. Refer to **PANEL, INSTRUMENT, INSTALLATION** .

DUCT, INSTRUMENT PANEL DEMISTER

REMOVAL

REMOVAL

WARNING: Disable the airbag system before attempting any steering wheel, steering column or instrument panel component diagnosis or service. Refer to WARNING . Disconnect and isolate the negative battery (ground) cable and wait two minutes for the airbag system capacitor to discharge before performing further diagnosis or service. This is the only sure way to disable the airbag system. Failure to follow these instructions may result in accidental airbag deployment and possible serious or fatal injury.

NOTE: Take the proper precautions to protect the instrument panel from cosmetic damage.

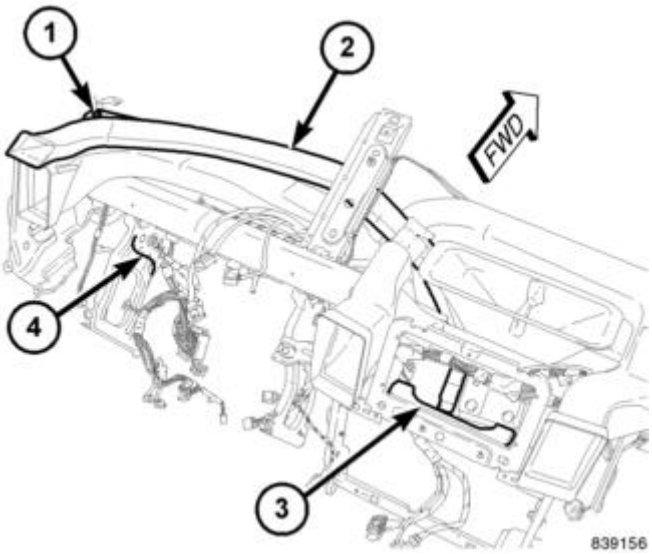

Fig. 71: Center Distribution & Driver Side Demister Duct
Courtesy of CHRYSLER GROUP, LLC

1. Remove the instrument panel and place it on a workbench. Refer to **PANEL, INSTRUMENT, REMOVAL** .
2. Remove the instrument panel cover. Refer to **COVER, INSTRUMENT PANEL, REMOVAL** .
3. Remove the retainer (1) that secures the driver side demister duct (2) to the instrument panel support (4).
4. Disconnect the driver side demister duct from the center distribution duct (3) and remove the duct.

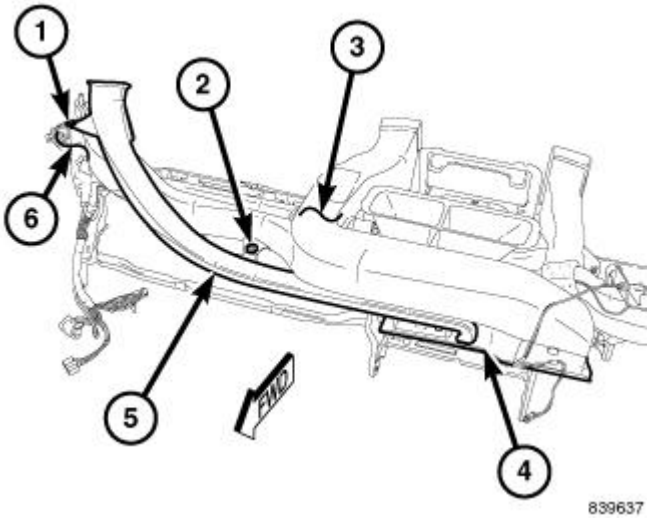

Fig. 72: Passenger Side Demister Duct & Passenger Side Instrument Panel Duct
Courtesy of CHRYSLER GROUP, LLC

5. Remove the retainer (1) that secures the passenger side demister duct (5) to the instrument panel support (6).
6. Remove the retainer (2) that secures the passenger side demister duct to the passenger side instrument panel duct (3).
7. Disconnect the passenger side demister duct from the center distribution duct (4) and remove the demister duct.

INSTALLATION

INSTALLATION

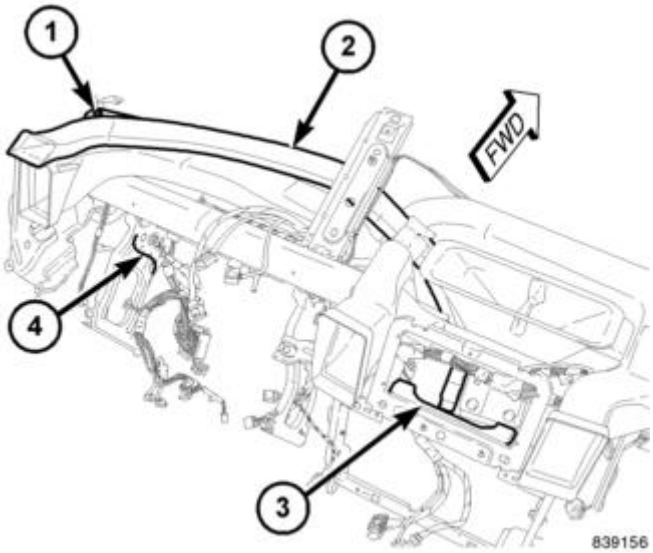

Fig. 73: Center Distribution & Driver Side Demister Duct
Courtesy of CHRYSLER GROUP, LLC

1. Position the driver side demister duct (2) to the instrument panel support (4) and connect it to the distribution duct (3).
2. Install the retainer (1) that secures the driver side demister duct to the instrument panel support.

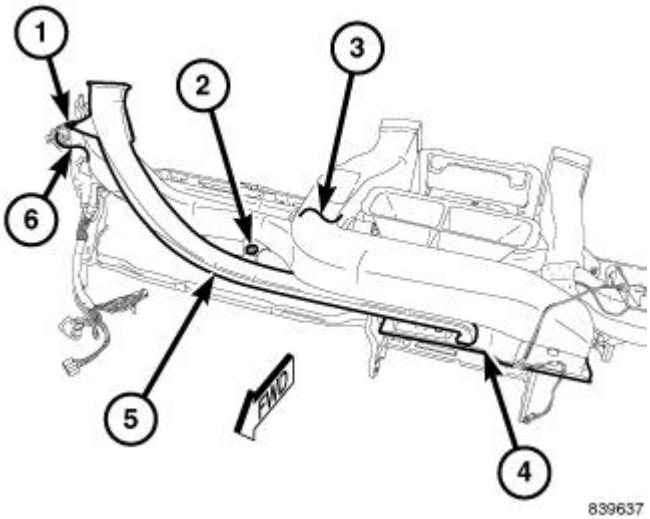

Fig. 74: Passenger Side Demister Duct & Passenger Side Instrument Panel Duct
Courtesy of CHRYSLER GROUP, LLC

3. Position the passenger side demister duct (5) to the instrument panel support (6) and connect it to the distribution duct (4).
4. Install the retainer (2) that secures the passenger side demister duct to the passenger side instrument panel duct (3).
5. Install the retainer (1) that secures the passenger side demister duct to the instrument panel support.
6. Install the instrument panel cover. Refer to **COVER, INSTRUMENT PANEL, INSTALLATION** .
7. Install the instrument panel. Refer to **PANEL, INSTRUMENT, INSTALLATION** .

HOUSING, HVAC

DESCRIPTION

DESCRIPTION

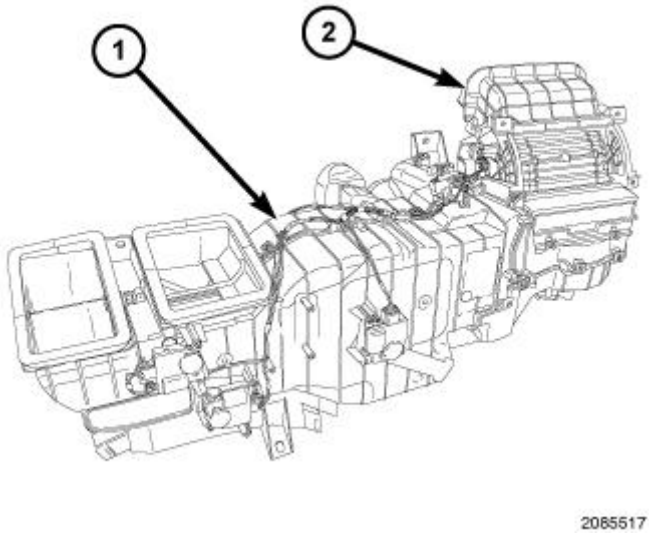

Fig. 75: HVAC & Air Inlet Housing Assembly
Courtesy of CHRYSLER GROUP, LLC

All models are equipped with a common HVAC housing assembly that combines A/C and heating capabilities into a single unit mounted behind the instrument panel in the passenger compartment. The HVAC housing assembly consists of the following:

- **HVAC housing** - The HVAC housing (1) consists of three pieces that are attached together by molded plastic retaining clips and screws. The HVAC housing contains the heater core, A/C evaporator and blend-air and mode-air doors, and has mounting provisions for the air-door actuators, floor console duct (when equipped with center floor console), blower motor, blower motor resistor or power module (depending on the control application), foam seals and the HVAC wire harness.
- **Air inlet housing** - The air inlet housing (2) is mounted to the right end of the HVAC housing and contains the recirculation-air door and has mounting provisions for the recirculation door actuator.

The heating-A/C system is a blend-air type system. The blend-air doors control the amount of conditioned air that is allowed to flow through or around the heater core. The dual zone heating A/C system uses two blend door actuators while the single zone system uses only one blend door actuator.

The A/C system is designed for the use of a non-CFC, R-134a refrigerant and uses an H-block type A/C expansion valve, evaporator and evaporator temperature sensor to cool and dehumidify the incoming air prior to blending it with the heated air. The temperature control(s) determines the discharge air temperature by operating the blend door actuator(s), which moves the blend-air door(s). This allows an almost immediate control of the output air temperature of the system. The mode door actuators operate the mode-air doors which direct the flow of the conditioned air out the various air outlets, depending on the mode selected. The recirculation door actuator operates the recirculation-air door which closes off the fresh air intake and recirculates the air already inside the vehicle. The blower motor controls the velocity of air flowing through the HVAC housing assembly by spinning the blower wheel within the HVAC housing at the selected speed by use of the blower motor resistor or power module (depending on application), which is located at the bottom of the HVAC housing. The electric door actuators, blower motor resistor or power module, blower motor and evaporator temperature sensor are connected to the vehicle electrical system by the HVAC wire harness.

The HVAC housing must be removed from the vehicle for service of the air inlet housing and disassembled for service of the heater core, A/C evaporator and the blend-air and mode-air doors.

REMOVAL

AIR INLET HOUSING

WARNING: Refer to the applicable warnings and cautions for this system before performing the following operation. Refer to PLUMBING, WARNING and PLUMBING, CAUTION. Failure to follow these instructions may result in possible serious or fatal injury.

WARNING: Disable the airbag system before attempting any steering wheel, steering column or instrument panel component diagnosis or service. Refer to WARNING . Disconnect and isolate the negative battery (ground) cable, then wait two minutes for the airbag system capacitor to discharge before performing further diagnosis or service. This is the only sure way to disable the airbag system. Failure to follow these instructions may result in accidental airbag deployment and possible serious or fatal injury.

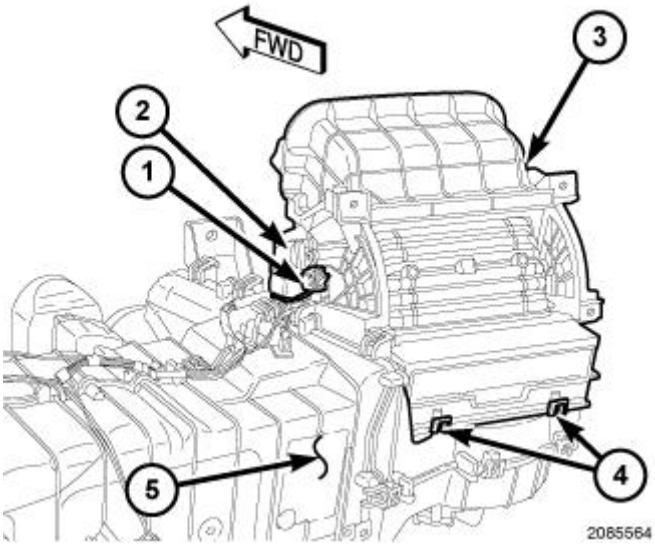

Fig. 76: Air Inlet Housing
Courtesy of CHRYSLER GROUP, LLC

1. Remove the HVAC housing assembly. Refer to **HOUSING, HVAC, REMOVAL**.
2. Disconnect the HVAC wire harness (1) from the recirculation door actuator (2).
3. Carefully disengage the two retaining tabs (4) that secure the rear of the air inlet housing (3) to the top of the HVAC housing (5).

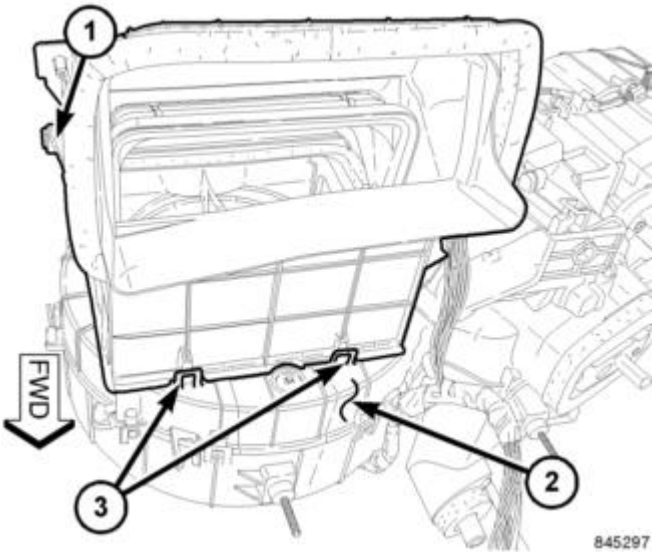

Fig. 77: Front Of The Air Inlet Housing
Courtesy of CHRYSLER GROUP, LLC

4. Carefully disengage the two retaining tabs (3) that secure the front of the air inlet housing (1) to the top of the HVAC housing (2) and remove the inlet housing.

NOTE: **If the foam seal on the air inlet housing is deformed or damaged, it must be replaced.**

5. If required, disassemble the air inlet housing. Refer to **HOUSING, HVAC, DISASSEMBLY**.

HVAC HOUSING ASSEMBLY

WARNING: **Refer to the applicable warnings and cautions for this system before performing the following operation. Refer to PLUMBING, WARNING and PLUMBING, CAUTION. Failure to follow these instructions may result in possible serious or fatal injury.**

WARNING: **Disable the airbag system before attempting any steering wheel, steering column or instrument panel component diagnosis or service. Refer to WARNING . Disconnect and isolate the negative battery (ground) cable, then wait two minutes for the airbag system capacitor to discharge before performing further diagnosis or service. This is the only sure way to disable the airbag system. Failure to follow these instructions may result in accidental airbag deployment and possible serious or fatal injury.**

NOTE: **The HVAC housing must be removed from the vehicle for service of the A/C evaporator, heater core, mode-air and blend-air doors and air inlet housing.**

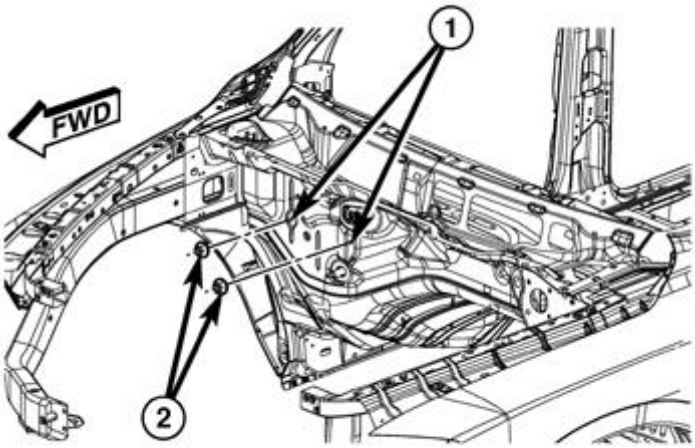

Fig. 78: HVAC Housing Engine Compartment Side Nuts & Studs
Courtesy of CHRYSLER GROUP, LLC

1. Disconnect and isolate the negative battery cable.
2. Recover the refrigerant from the refrigerant system. Refer to **PLUMBING, STANDARD PROCEDURE**.
3. Drain the engine cooling system. Refer to **STANDARD PROCEDURE** .
4. Disconnect the A/C liquid line and the A/C suction line from the A/C expansion valve. Refer to **LINE, A/C LIQUID, REMOVAL** and **REMOVAL**.
5. Disconnect the heater hoses from the heater core tubes.
6. If required, remove the Powertrain Control Module (PCM) to gain access to the two nuts (2) that secure the HVAC housing to the engine compartment side of the dash panel. Refer to **MODULE, POWERTRAIN CONTROL, REMOVAL** or **MODULE, POWERTRAIN CONTROL, 6.7L DIESEL [ETJ], REMOVAL** .
7. Remove the two nuts from the studs (1) that secure the HVAC housing to the engine compartment side of the dash panel.

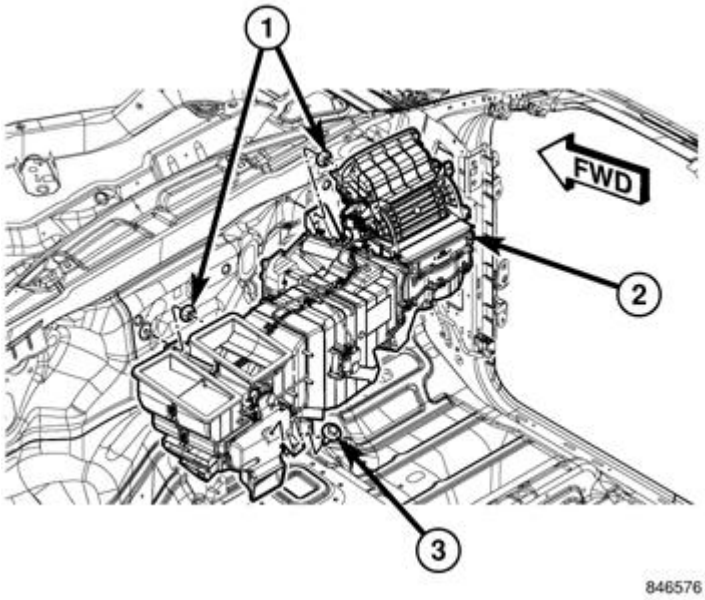

Fig. 79: HVAC Housing To Floor Bracket Nuts
Courtesy of CHRYSLER GROUP, LLC

8. If equipped with center floor console, remove the floor console duct. Refer to **DUCT, FLOOR CONSOLE, REMOVAL**.
9. Remove the instrument panel from the passenger compartment. Refer to **PANEL, INSTRUMENT, REMOVAL** .
10. If equipped, remove the rear floor ducts. Refer to **DUCT, FLOOR DISTRIBUTION, REAR, REMOVAL**.
11. Remove the bolt (3) that secures the HVAC housing (2) to the floor bracket.
12. Remove the two nuts (1) that secure the HVAC housing to the passenger compartment side of the dash panel.
13. Pull the HVAC housing assembly rearward and remove the housing assembly from the passenger compartment.

DISASSEMBLY

AIR INLET HOUSING

WARNING: **Disable the airbag system before attempting any steering wheel, steering column, or instrument panel component diagnosis or service. Refer to WARNING . Disconnect and isolate the battery negative (ground) cable, then wait two minutes for the airbag system capacitor to discharge before performing further diagnosis or service. This is the only sure way to disable the airbag system. Failure to follow these instructions may result in accidental airbag deployment and possible serious or fatal injury.**

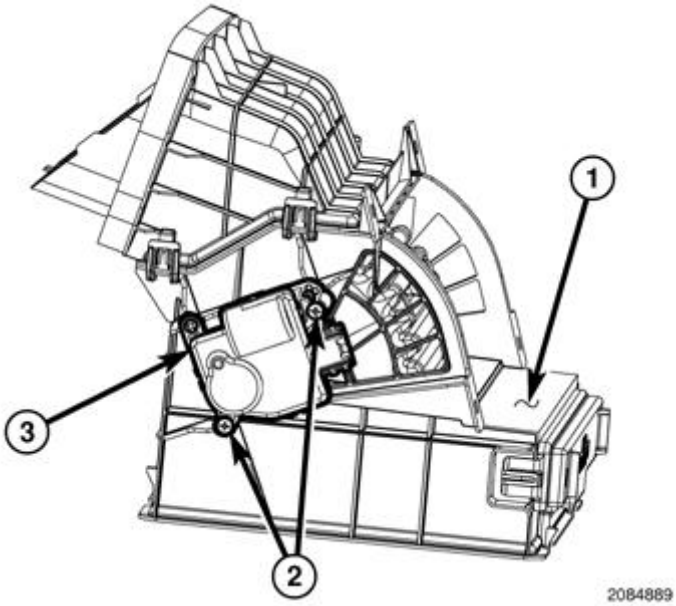

Fig. 80: HVAC Housing Assembly & Recirculation Door Actuator
Courtesy of CHRYSLER GROUP, LLC

1. Remove the HVAC housing assembly. Refer to **HOUSING, HVAC, REMOVAL**.
2. Remove the air inlet housing (1) and place it on a workbench. Refer to **HOUSING, HVAC, REMOVAL**.
3. Remove the two screws (2) that secure the recirculation door actuator (3) to the air inlet housing and remove the actuator.

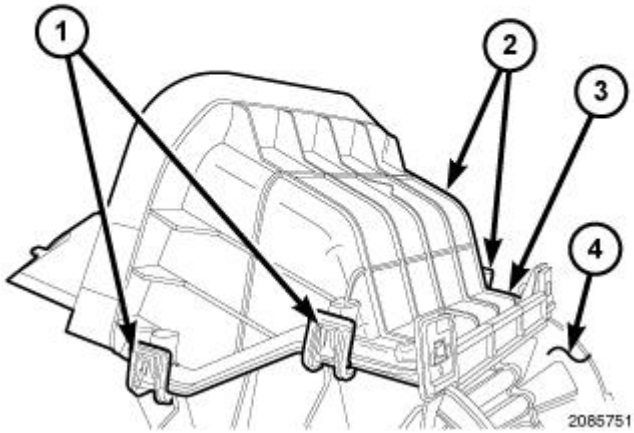

Fig. 81: Air Inlet Housing Retaining Tabs
Courtesy of CHRYSLER GROUP, LLC

NOTE: **If the seal on the air inlet is deformed or damaged, the seal must be replaced.**

4. Carefully disengage the four retaining tabs (1 and 2) that secure the air inlet (3) to the top of the air inlet housing (4) and remove the air inlet.

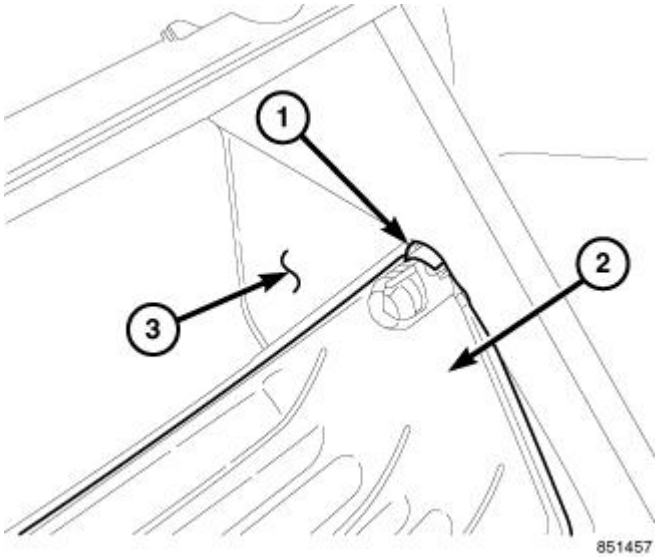

Fig. 82: Recirculation-Air Door
Courtesy of CHRYSLER GROUP, LLC

5. To remove the recirculation-air door (2) from the air inlet housing (3), first carefully release the actuator coupler retaining tab (1) located on the inside of the air inlet housing.

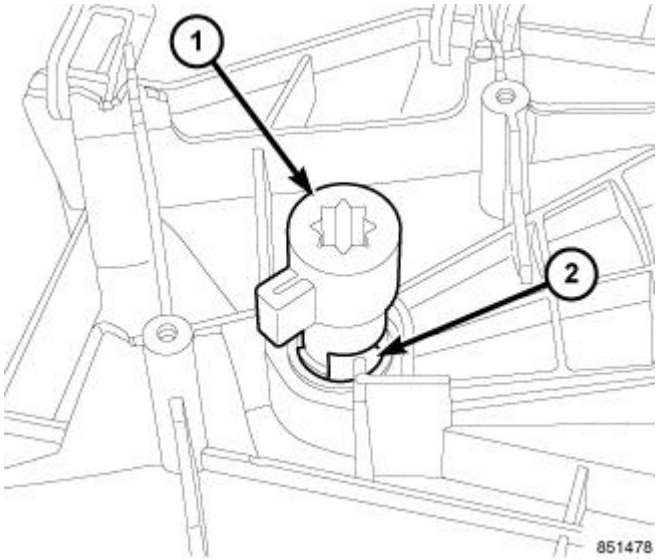

Fig. 83: Actuator Coupler
Courtesy of CHRYSLER GROUP, LLC

6. With the actuator coupler retaining tabs released, pull the actuator coupler (1) out of the recirculation-air door (2).

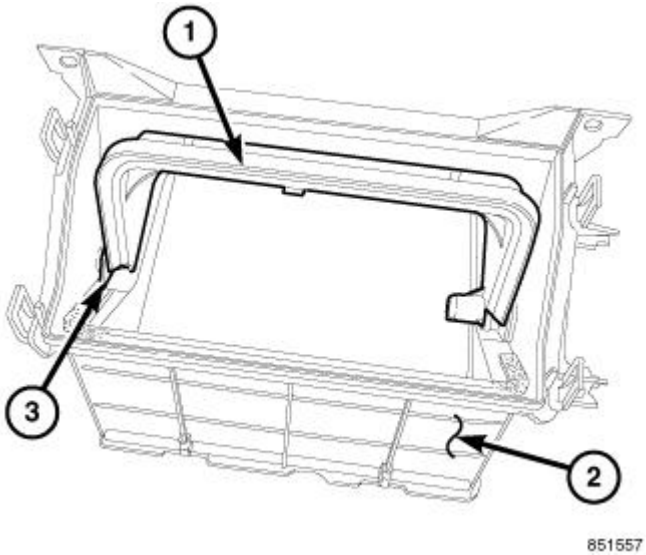

Fig. 84: Air Inlet Housing & Recirculation-Air Door
Courtesy of CHRYSLER GROUP, LLC

NOTE: **If the seals on the air door or air inlet housing are deformed or damaged, the air door or housing seal must be replaced.**

7. Disengage the door pivot shaft (3) from the air inlet housing (2) and carefully remove the recirculation-air door (1) from the housing.

HVAC HOUSING

NOTE: **The HVAC housing must be removed from the vehicle and disassembled for service of the A/C evaporator and the mode and blend-air doors.**

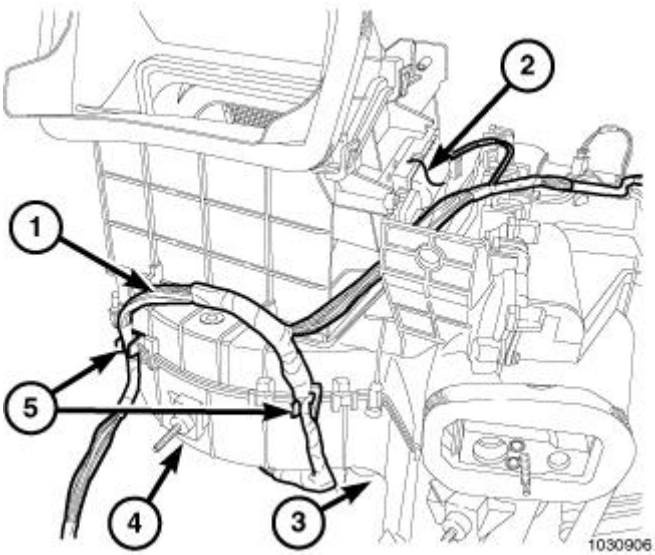

Fig. 85: HVAC Wiring Harness
Courtesy of CHRYSLER GROUP, LLC

1. Remove the HVAC housing and place it on a workbench. Refer to **HOUSING, HVAC, REMOVAL**.
2. Disconnect the HVAC wiring harness (1) from the recirculation door actuator (2), power module or blower resister (3) (depending on application) and the blower motor (4).
3. Disengage the HVAC wiring harness from the two retaining clips (5) and position the harness out of the way.

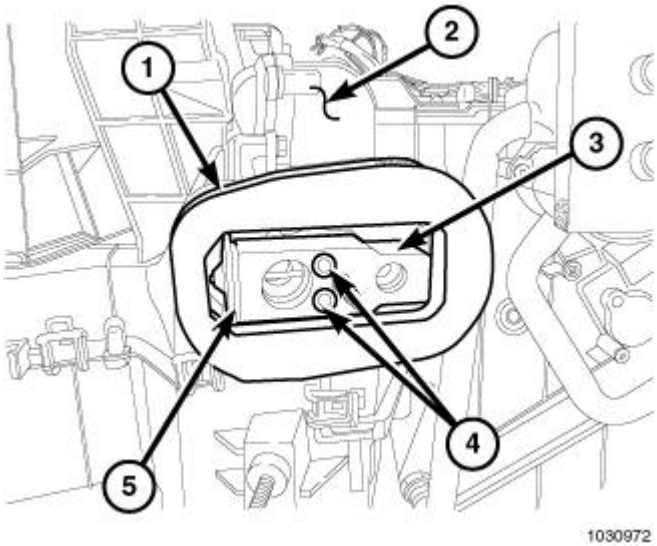

Fig. 86: Foam Seal
Courtesy of CHRYSLER GROUP, LLC

NOTE: If the foam seal is deformed or damaged, the seal must be replaced.

4. Remove the foam seal (1) from the front of the HVAC housing (2).
5. If required, remove the two bolts (4) that secure the A/C expansion valve (5) to the evaporator tube tapping block (3) and remove the valve.

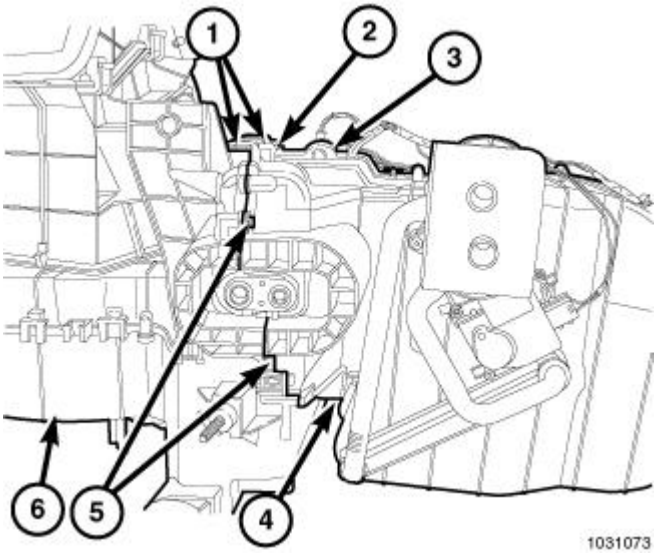

Fig. 87: Blower Motor & Evaporator Housing
Courtesy of CHRYSLER GROUP, LLC

6. Remove the three screws (2 and 5) that secure the blower motor and evaporator housing (6) to the HVAC housing (3).
7. Carefully disengage the nine retaining tabs (1 and 4) that secure the blower motor and evaporator housing the HVAC housing.
8. Carefully separate the blower motor and evaporator housing from the HVAC housing

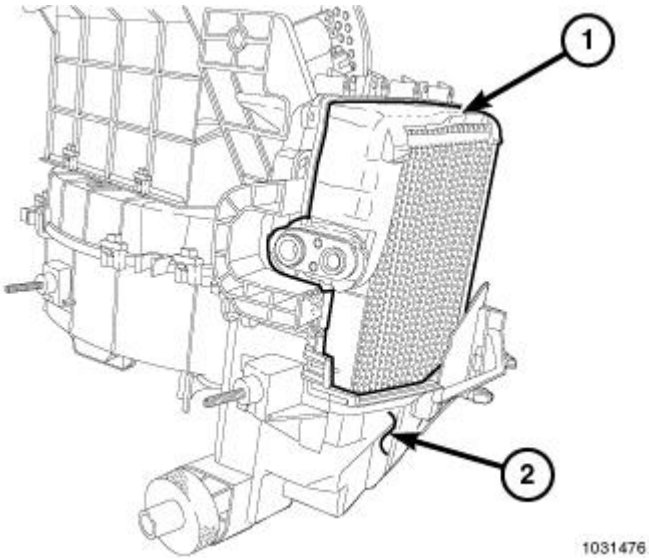

Fig. 88: A/C Evaporator & Housing
Courtesy of CHRYSLER GROUP, LLC

NOTE: **If the foam insulator around the A/C evaporator is deformed or damaged, the insulator must be replaced.**

9. If required, remove the A/C evaporator (1) from the blower motor and evaporator housing (2).
10. If the A/C evaporator is going to be reused, remove and discard the O-ring seals from the evaporator fittings and install plugs into, or tape over the evaporator ports.

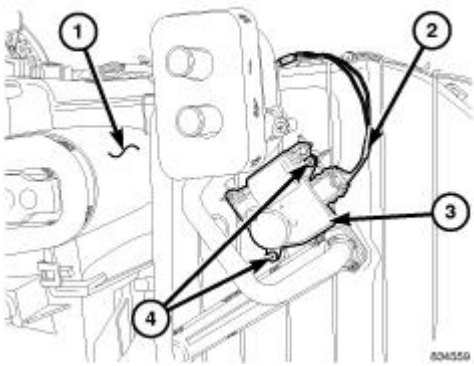

Fig. 89: Blend Door Actuator (Dual Zone Passenger Side)

Courtesy of CHRYSLER GROUP, LLC

11. If equipped with dual zone system, disconnect the HVAC wire harness connector (2) and remove the two screws (4) that secure the blend door actuator (3) to the front of the HVAC housing (1) and remove the actuator.

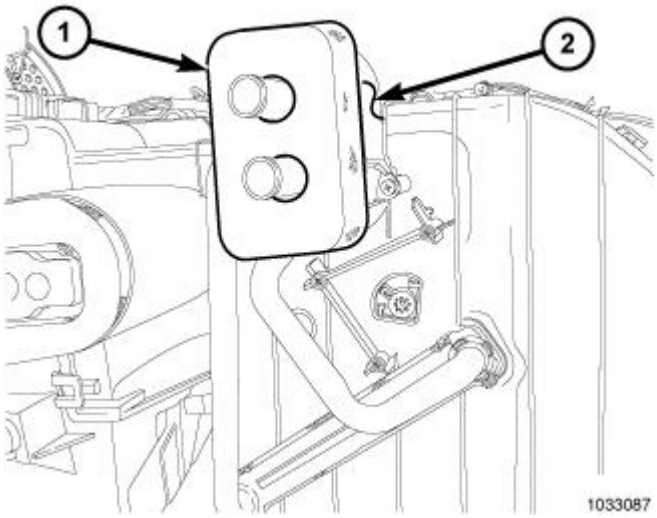

Fig. 90: HVAC Housing Seal
Courtesy of CHRYSLER GROUP, LLC

NOTE: If the foam seal is deformed or damaged, the seal must be replaced.

12. Remove the seal (1) from the flange (2) at the front of the HVAC housing.

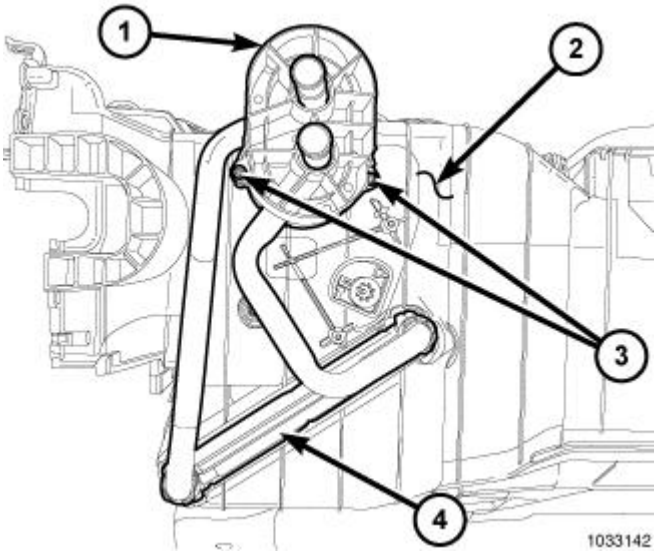

Fig. 91: HVAC Housing Flange
Courtesy of CHRYSLER GROUP, LLC

13. Remove the two screws (3) that secure the flange (1) to the front of the HVAC housing (2).
14. Carefully disengage the retaining tab that secures the flange to the HVAC housing and remove the flange.

NOTE: If the foam insulator around the A/C evaporator is deformed or damaged, the insulator must be replaced.

15. Carefully pull the heater core (4) out of the HVAC housing.
16. Inspect all foam seals and replace as required.

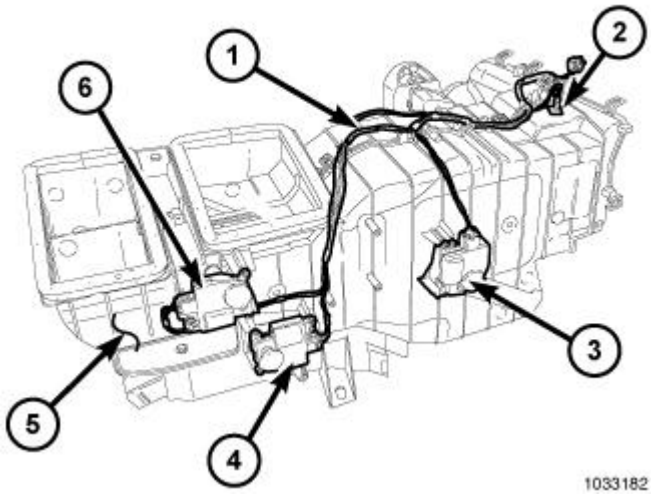

Fig. 92: HVAC Wire Harness To Evaporator Temperature Sensor, Blend Door Actuator & Mode Door Actuators
Courtesy of CHRYSLER GROUP, LLC

17. Disconnect the HVAC wire harness (1) from the evaporator temperature sensor (2), blend door actuator (3) and mode door actuators (4 and 6).
18. Remove the HVAC wire harness from the HVAC housing (5).
19. Remove the evaporator temperature sensor from the HVAC housing.
20. Remove the screws that secure the blend and mode door actuators to the HVAC housing and remove the actuators.

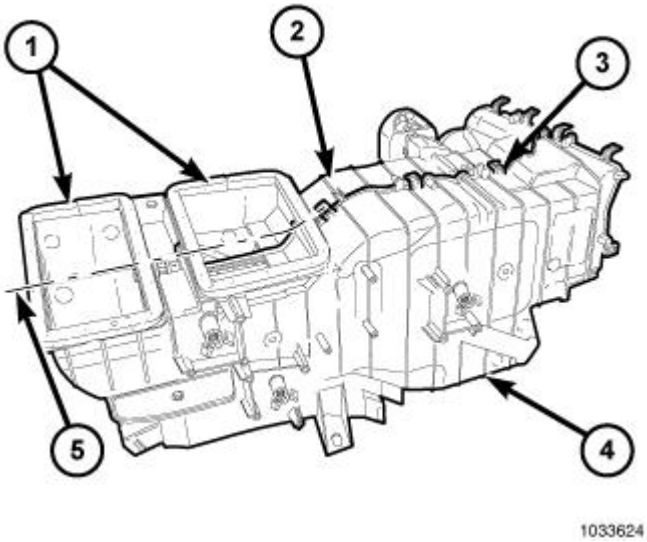

Fig. 93: HVAC Housing Parting Line
Courtesy of CHRYSLER GROUP, LLC

NOTE: If the foam seals on top of the HVAC housing are deformed or damaged, they must be replaced.

21. Carefully cut the foam seals (1) along the parting line (5) of the two halves of the HVAC housing (2 and 4).
22. Release the fourteen retaining tabs (3) that secure the two halves of the HVAC housing together and carefully separate the housing.

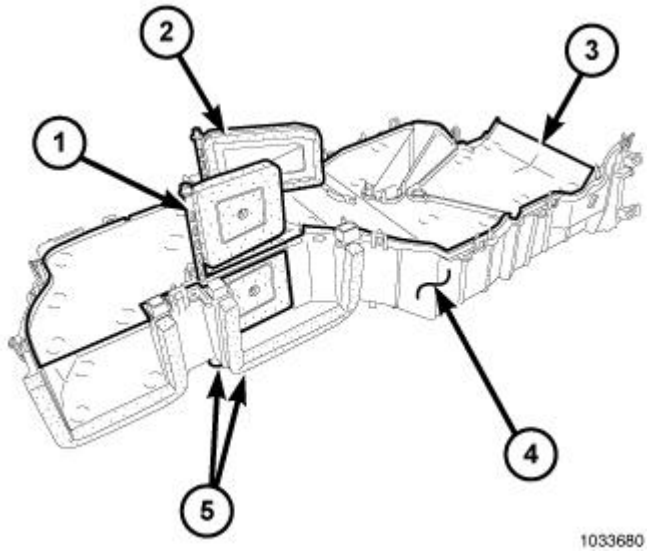

Fig. 94: Mode Air Doors
Courtesy of CHRYSLER GROUP, LLC

23. Carefully disengage the mode air doors (1 and 2) from the actuator couplers (5) by pulling the doors straight upward.

NOTE: **If a seal on an air door is deformed or damaged, the air door must be replaced.**

24. Remove the mode air doors and the center partition (3), if equipped, from the rear half of the HVAC housing (4).

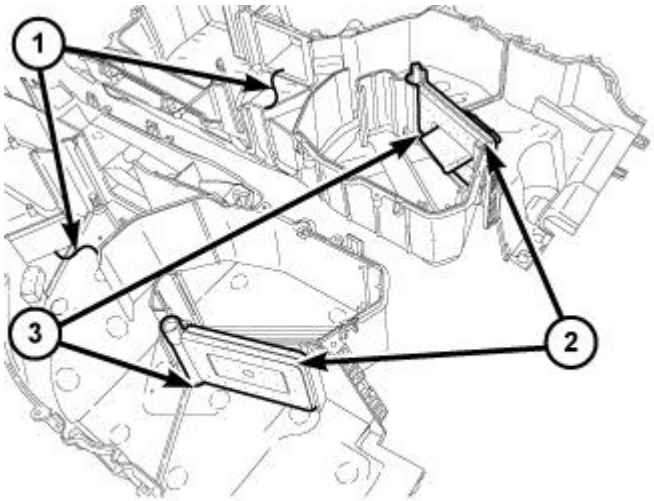

1033733

Fig. 95: Blend Air Doors
Courtesy of CHRYSLER GROUP, LLC

NOTE: **Dual zone system with two blend doors shown in illustration. Single zone system with one blend door similar.**

25. Carefully disengage the blend air door(s) (2), as equipped, from the actuator coupler(s) (3) by pulling the door(s) straight upward.

NOTE: **If a seal on an air door is deformed or damaged, the air door must be replaced.**

26. Remove the blend air door(s) from the HVAC housing (1).

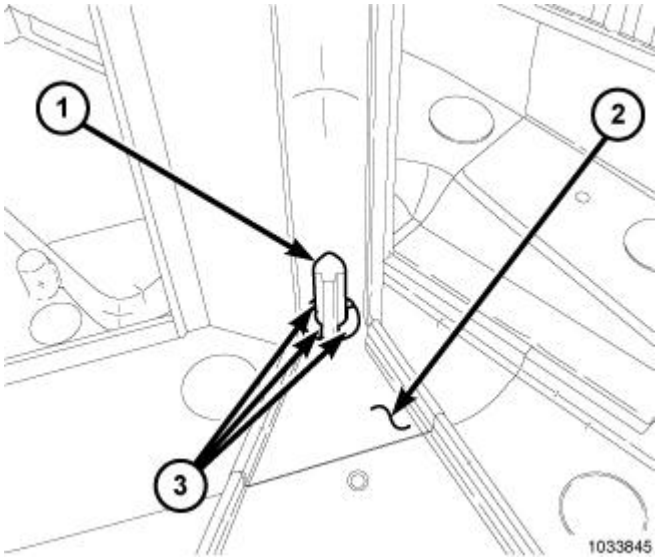

Fig. 96: Actuator Coupler
Courtesy of CHRYSLER GROUP, LLC

NOTE: Typical actuator coupler shown in illustration.

27. Remove the actuator coupler(s) (1) from the HVAC housing (2), as required. Carefully release the three retaining tabs (3) on each actuator coupler from the inside surface of the HVAC housing and push the coupler(s) out of the housing.

ASSEMBLY

AIR INLET HOUSING

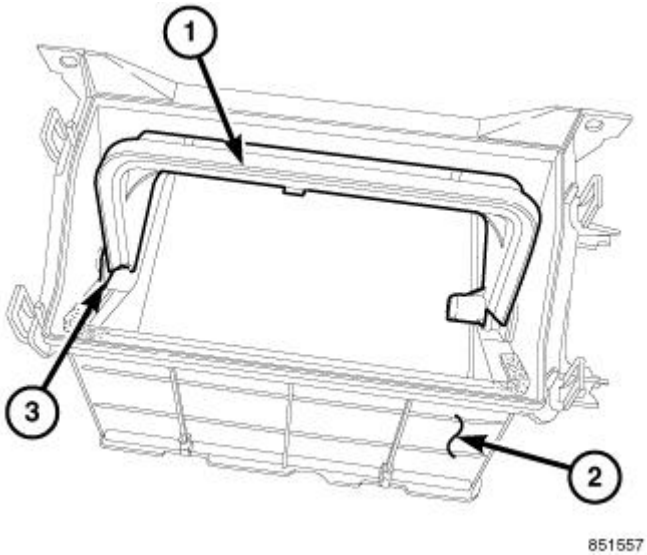

Fig. 97: Air Inlet Housing & Recirculation-Air Door
Courtesy of CHRYSLER GROUP, LLC

NOTE: **If the seals on the air door or air inlet housing are deformed or damaged, the air door or housing seal must be replaced.**

1. Position the recirculation-air door (1) into the air inlet housing (2).
2. Engage the door pivot shaft (3) to the opening in the air inlet housing.

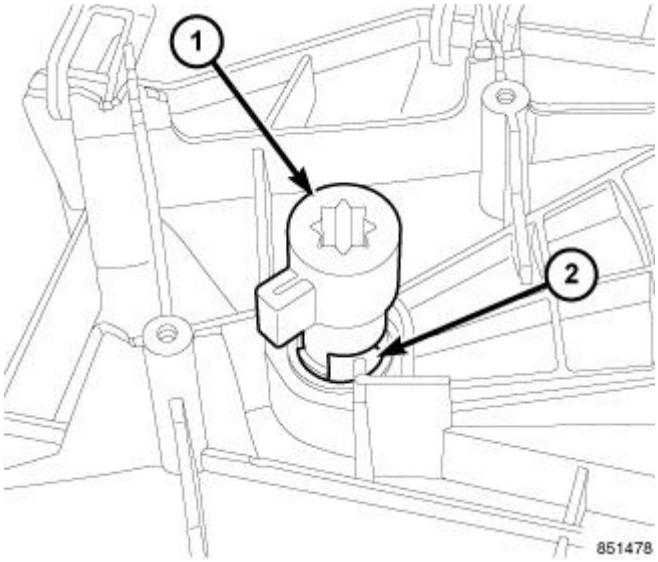

Fig. 98: Actuator Coupler
Courtesy of CHRYSLER GROUP, LLC

CAUTION: **Make sure that the recirculation-air door pivot shaft is properly seated in the pivot seat located in the air inlet housing.**

3. Align the actuator coupler (1) with the recirculation door pivot shaft (2) and install the coupler until the coupler retaining tab is fully engaged to the recirculation door. Be sure to install the coupler with the coupler arm located between the two stop tabs on the air inlet housing.

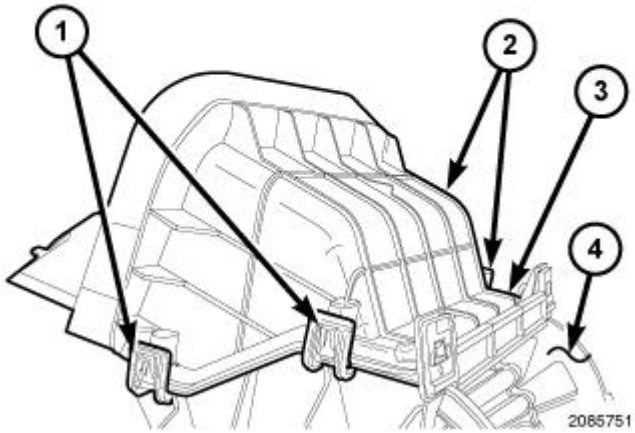

Fig. 99: Air Inlet Housing Retaining Tabs
Courtesy of CHRYSLER GROUP, LLC

NOTE: **If the seal on the air inlet is deformed or damaged, the seal must be replaced.**

4. Position the air inlet (3) to the top of the air inlet housing (4) and engage the four retaining tabs (1 and 2). Make sure the retaining tabs are fully engaged.

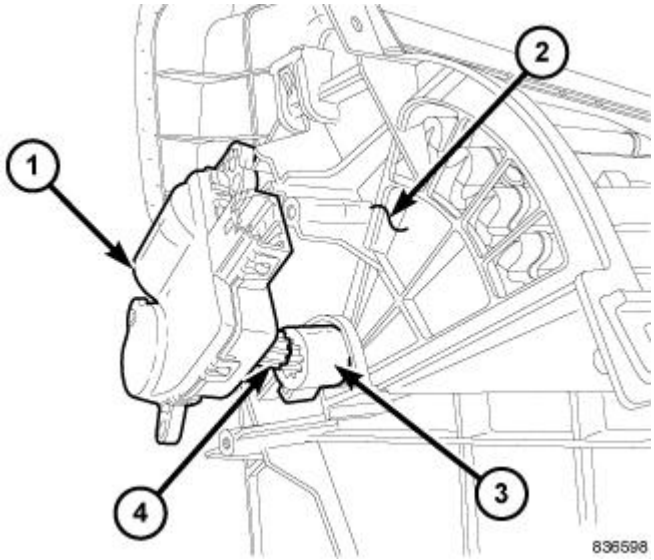

Fig. 100: Installing Recirculation Door Actuator
Courtesy of CHRYSLER GROUP, LLC

5. Install the recirculation door actuator (1) onto the side of the air inlet housing (2). If necessary, rotate the actuator slightly to align the splines on the actuator output shaft (4) with those in the recirculation door actuator coupler (3).

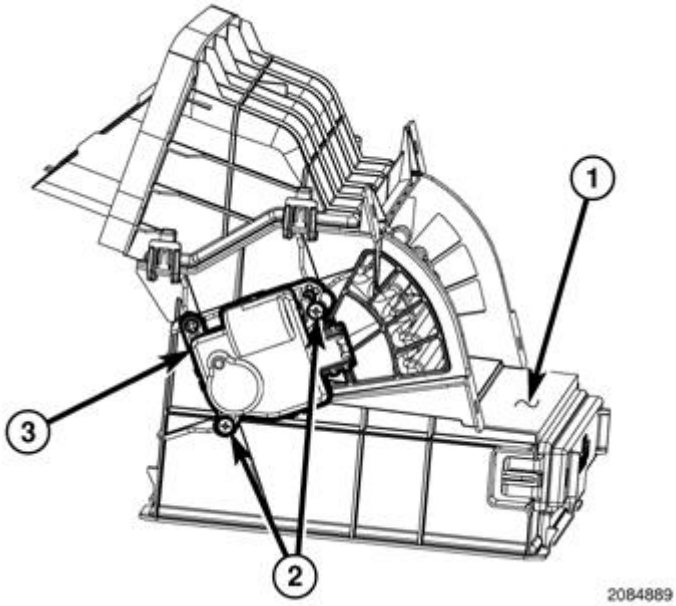

Fig. 101: HVAC Housing Assembly & Recirculation Door Actuator
Courtesy of CHRYSLER GROUP, LLC

6. Install the two screws (2) that secure the recirculation door actuator (3) to the air inlet housing (1). Tighten the screws to 1.1 N.m (10 in. lbs.).
7. Install the air inlet housing. Refer to **HOUSING, HVAC, INSTALLATION**.
8. Install the HVAC housing assembly. Refer to **HOUSING, HVAC, INSTALLATION**.

HVAC HOUSING

CAUTION: Be certain to adjust the refrigerant oil level when servicing the A/C refrigerant system. Refer to OIL, REFRIGERANT, STANDARD PROCEDURE. Failure to properly adjust the refrigerant oil level will prevent the A/C system from operating as designed and can cause serious A/C compressor damage.

NOTE: When replacing multiple A/C system components, refer to the Refrigerant Oil Capacities chart to determine how much oil should be added to the refrigerant system. Refer to OIL, REFRIGERANT, STANDARD PROCEDURE.

NOTE: If the A/C evaporator is being replaced, add 60 milliliters (2 fluid ounces) of refrigerant oil to the refrigerant system. Use only refrigerant oil of the type recommended for the A/C compressor in the vehicle.

NOTE: Replacement of the O-ring seals is required anytime the A/C expansion valve is removed from the A/C evaporator. Failure to replace the rubber O-ring seals may result in a refrigerant system leak.

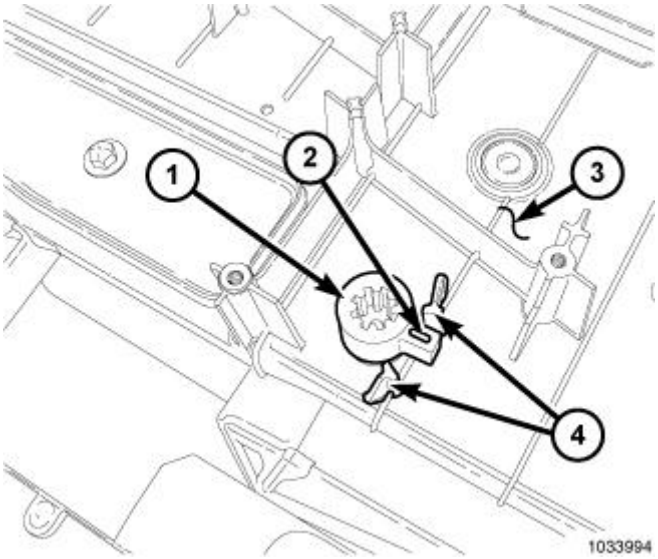

Fig. 102: Actuator Coupler
Courtesy of CHRYSLER GROUP, LLC

NOTE: Typical actuator coupler shown in illustration.

1. Install the actuator coupler(s) (1) into the HVAC housing (3), as required. Make sure the arm (2) on the coupler is positioned between the two stops (4) on the HVAC housing. Make sure the three retaining tabs on each actuator coupler are fully engaged to the inside surface of the HVAC housing.

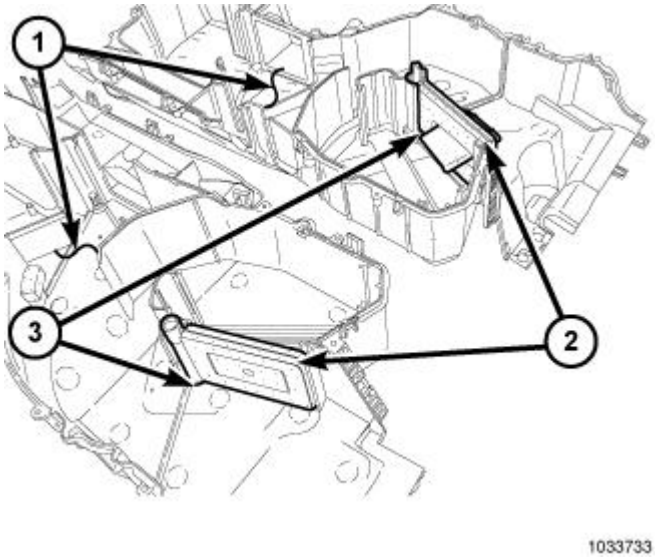

Fig. 103: Blend Air Doors
Courtesy of CHRYSLER GROUP, LLC

NOTE: Dual zone system with two blend doors shown in illustration. Single zone system with one blend door similar.

NOTE: **If a seal on an air door is deformed or damaged, the air door must be replaced.**

2. Install the blend air door(s) (2), as equipped, onto the actuator coupler(s) (3). Align the keyway in the blend air door pivot shaft with the key on the actuator coupler.

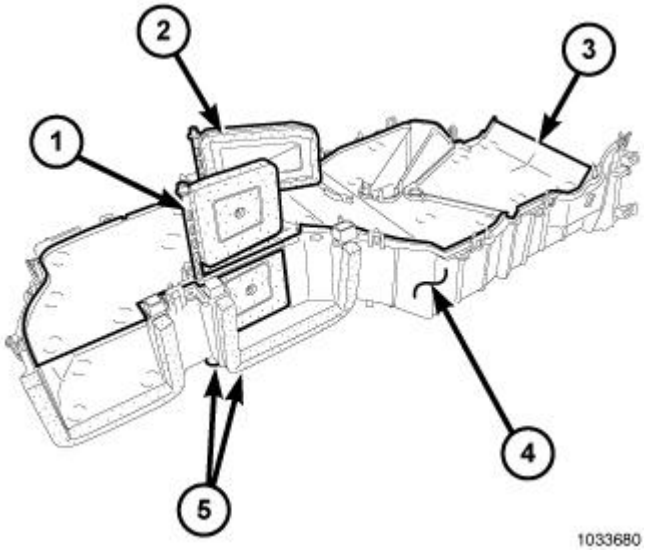

Fig. 104: Mode Air Doors
Courtesy of CHRYSLER GROUP, LLC

NOTE: **If a seal on an air door is deformed or damaged, the air door must be replaced.**

3. Install the mode air doors (1 and 2) and the center partition (3), if equipped, to the rear half of the HVAC housing (4). Align the keyways in the mode air door pivot shafts with the keys on the actuator couplers (5). Align the dowel pins on the center partition to the holes in the HVAC housing.

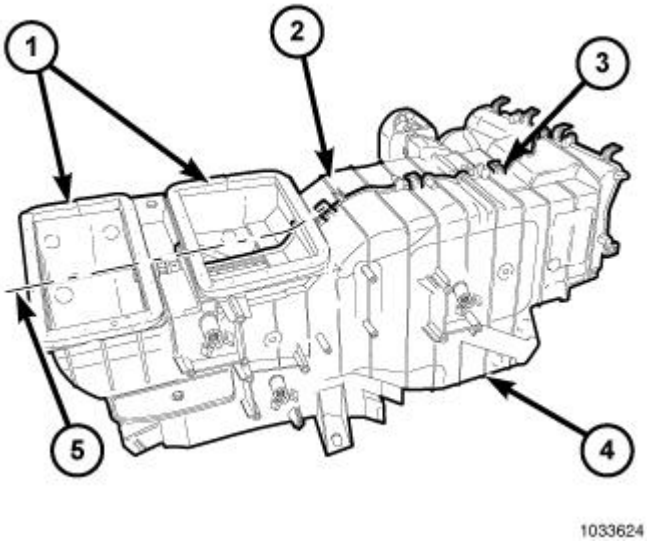

Fig. 105: HVAC Housing Parting Line
Courtesy of CHRYSLER GROUP, LLC

4. Align the pivot shafts of the air doors to the holes in the HVAC housing halves (2 and 4).
5. Align the dowel pins on the rear half of the HVAC housing to the holes in the front half of the HVAC housing and install the two halves of the housing together.
6. Carefully engage the fourteen retaining tabs (3). Make sure the retaining tabs are fully engaged.

NOTE: **If the foam seals on top of the HVAC housing are deformed or damaged, they must be replaced.**

7. Inspect the foam seals (1), especially along the parting line (5) and replace as required.

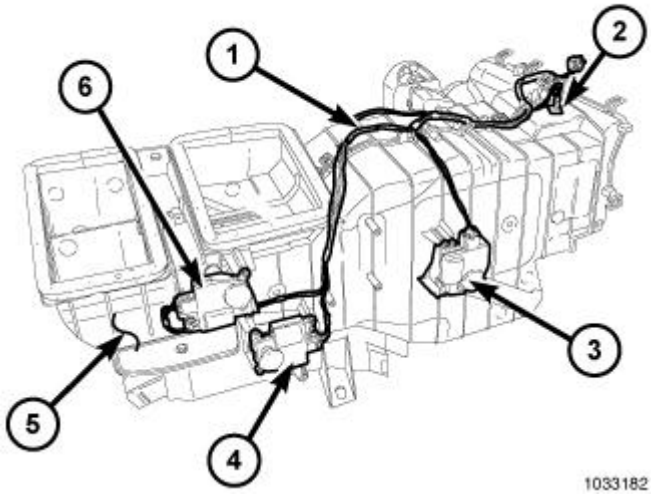

Fig. 106: HVAC Wire Harness To Evaporator Temperature Sensor, Blend Door Actuator & Mode Door Actuators
Courtesy of CHRYSLER GROUP, LLC

8. Install the blend and mode door actuators (3, 4 and 6) onto the HVAC housing (5). If necessary, rotate the actuators slightly to align the splines on the actuator output shaft with those on the actuator coupler.
9. Install the screws that secure the blend and mode door actuators to the HVAC housing. Tighten the screws to 1.1 N.m (10 in. lbs.).
10. Install the evaporator temperature sensor (2) onto the HVAC housing.
11. Connect the HVAC wire harness (1) to the evaporator temperature sensor and the blend and mode door actuators.
12. Install the HVAC wire harness onto the HVAC housing. Make sure the wiring harness is routed correctly and is fully engaged to the retaining clips.

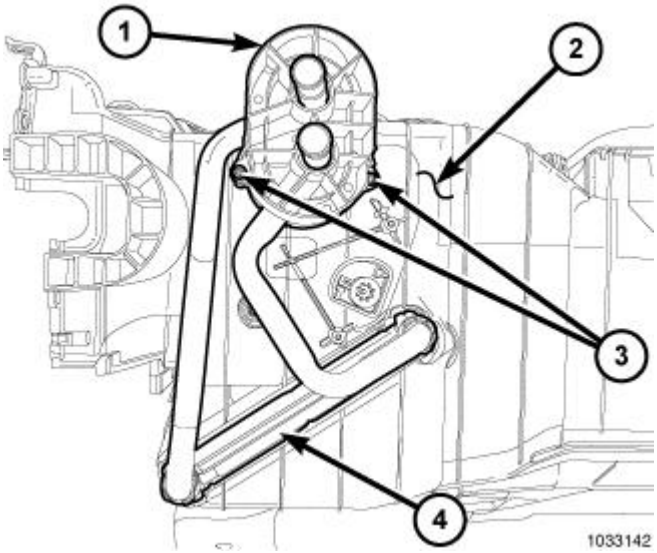

Fig. 107: HVAC Housing Flange
Courtesy of CHRYSLER GROUP, LLC

NOTE: **If the foam seals on the heater core are deformed or damaged, they must be replaced.**

13. Inspect the foam seals on the heater core (4) and replace as required.
14. Carefully install the heater core into the front of the HVAC housing (2).
15. Position the flange (1) onto the front of the HVAC housing. Make sure the retaining tab is fully engaged.
16. Install the two screws (3) that secure the flange to the HVAC housing. Tighten the screws to 1.1 N.m (10 in. lbs.).

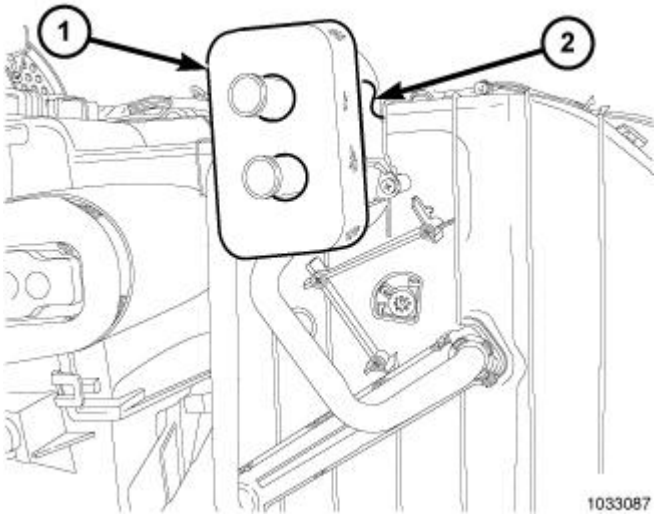

Fig. 108: HVAC Housing Seal
Courtesy of CHRYSLER GROUP, LLC

NOTE: **If the foam seal is deformed or damaged, the seal must be replaced.**

17. Install the foam seal (1) onto the flange (2) at the front of the HVAC housing.

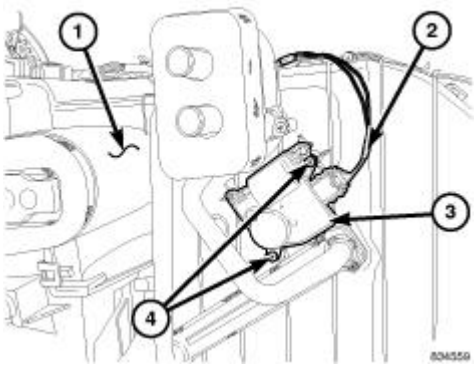

Fig. 109: Blend Door Actuator (Dual Zone Passenger Side)
Courtesy of CHRYSLER GROUP, LLC

18. If equipped with dual zone system, install the blend door actuator (3) onto the front of the HVAC housing (1). If necessary, rotate the actuator slightly to align the splines on the actuator output shaft with those on the actuator coupler.
19. Install the screws (4) that secure the blend door actuator to the HVAC housing. Tighten the screws to 1.1 N.m (10 in. lbs.).
20. Connect the HVAC wire harness connector (2) to the blend door actuator.

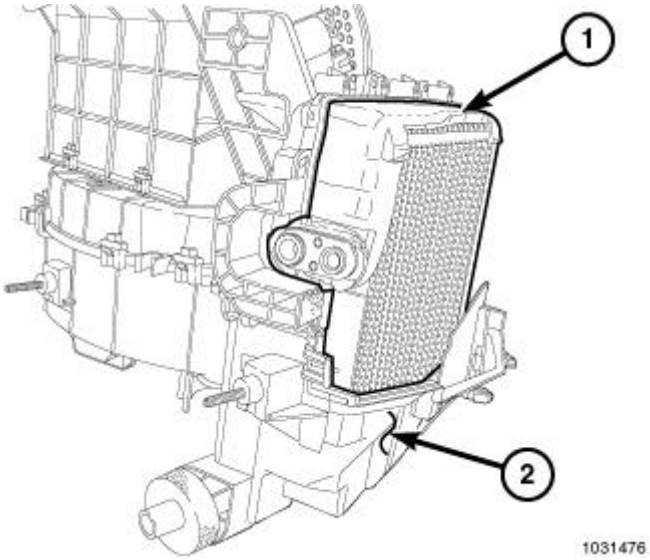

Fig. 110: A/C Evaporator & Housing
Courtesy of CHRYSLER GROUP, LLC

NOTE: **If the foam insulator around the A/C evaporator is deformed or damaged, the insulator must be replaced.**

21. Inspect the foam insulator on the A/C evaporator (1) and replace as required.
22. Carefully install the A/C evaporator into the blower motor and evaporator housing (2).

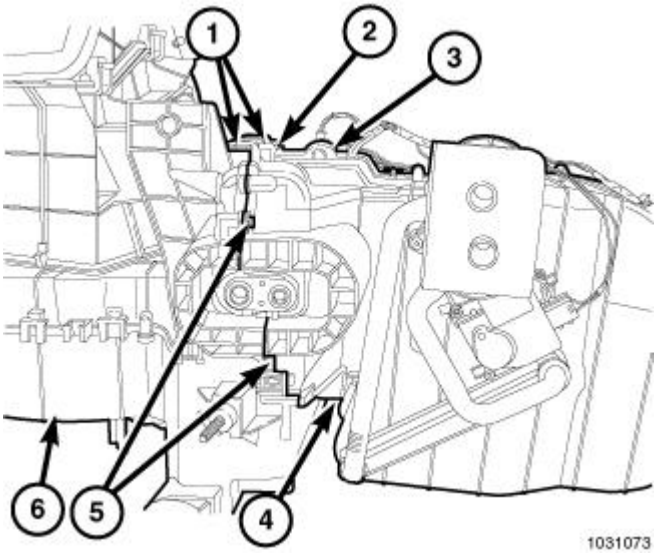

Fig. 111: Blower Motor & Evaporator Housing
Courtesy of CHRYSLER GROUP, LLC

23. Carefully install the blower motor and evaporator housing (6) onto the HVAC housing (3). Align the dowel pins to the holes in the housing.
24. Carefully engage the nine retaining tabs (1 and 4). Make sure the retaining tabs are fully engaged.
25. Install the three screws (2 and 5) that secure the blower motor and evaporator housing to the HVAC housing. Tighten the screws to 1.1 N.m (10 in. lbs.).

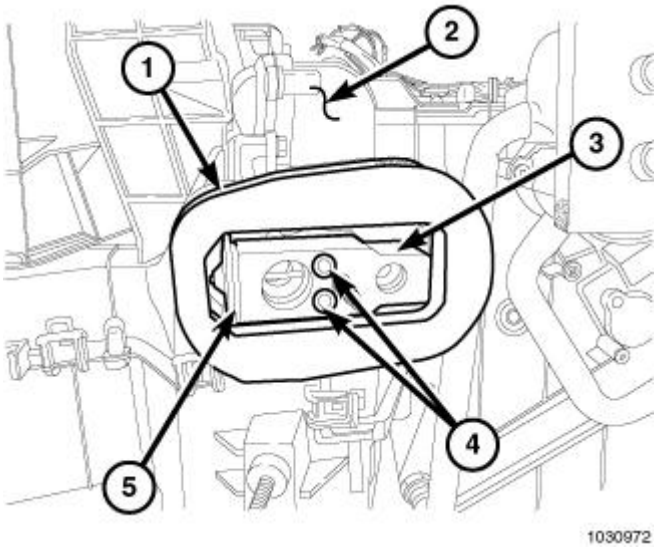

Fig. 112: Foam Seal
Courtesy of CHRYSLER GROUP, LLC

26. Remove the tape or plugs from the evaporator tube fittings.
27. Lubricate new O-ring seals with clean refrigerant oil and install them onto the evaporator tube fittings. Use only the specified O-ring seals as they are made of a special material for the R-134a system. Use only refrigerant oil of the type recommended for the A/C compressor in the vehicle.
28. Install the A/C expansion valve (5) onto the evaporator tube tapping block (3).
29. Install the two bolts (4) that secure the A/C expansion valve to the evaporator tube tapping block. Tighten the bolts to 11 N.m (97 in. lbs.).

NOTE: If the foam seal is deformed or damaged, the seal must be replaced.

30. Install the foam seal (1) onto the HVAC housing (2).

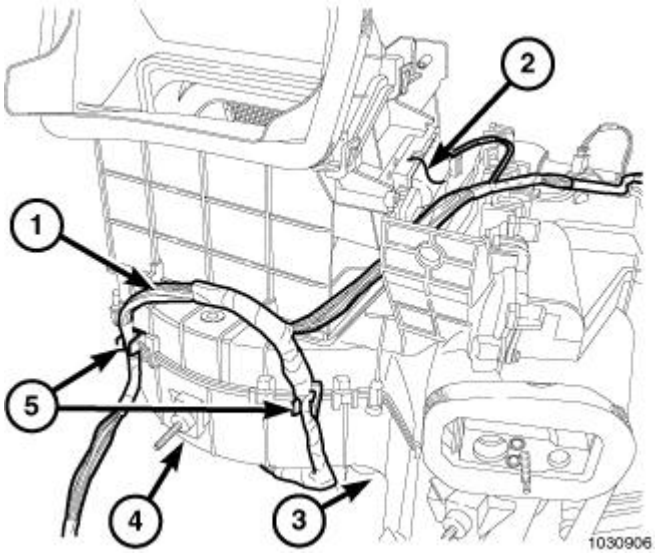

Fig. 113: HVAC Wiring Harness
Courtesy of CHRYSLER GROUP, LLC

31. Connect the HVAC wiring harness (1) to the recirculation door actuator (2), power module or blower resister (3) (depending on application) and the blower motor (4).
32. Engage the HVAC wiring harness to the two retaining clips (5). Make sure the wire harness is fully engaged to the retaining clips.
33. Install the HVAC housing. Refer to **HOUSING, HVAC, INSTALLATION**.

NOTE: If the heater core is being replaced, flush the cooling system. Refer to STANDARD PROCEDURE .

34. If the A/C evaporator is being replaced, add 60 milliliters (2 fluid ounces) of refrigerant oil to the refrigerant system. When replacing multiple A/C system components, refer to the Refrigerant Oil Capacities chart to determine how much oil should be added to the refrigerant system. Refer to **OIL, REFRIGERANT, STANDARD PROCEDURE**. Use only refrigerant oil of the type recommended for the A/C compressor in the vehicle.

INSTALLATION

AIR INLET HOUSING

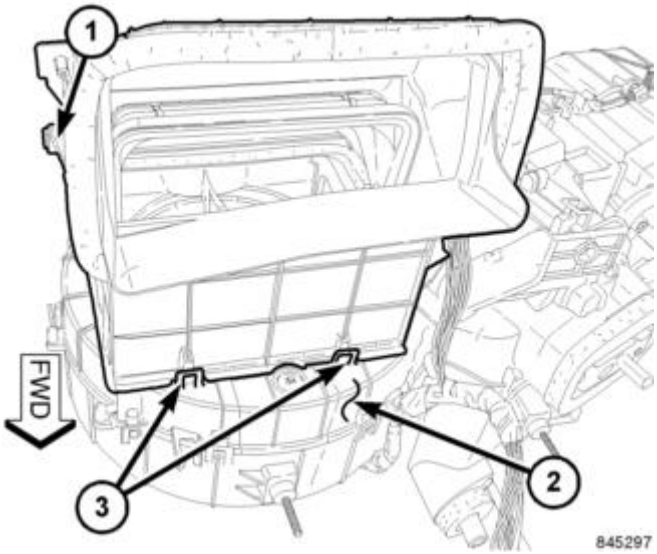

Fig. 114: Front Of The Air Inlet Housing
Courtesy of CHRYSLER GROUP, LLC

NOTE: **If the foam seal on the air inlet housing is deformed or damaged, it must be replaced.**

1. Position the air inlet housing (1) onto the top of the HVAC housing (2).
2. Engage the two retaining tabs (3) that secure the front of the air inlet housing to the HVAC housing.

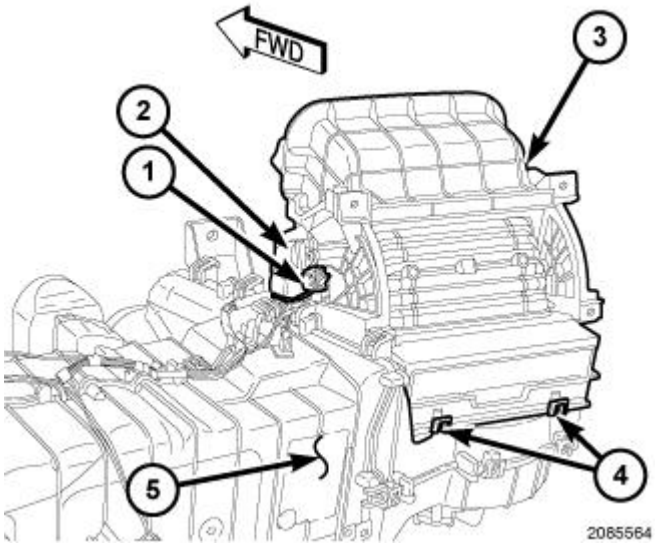

Fig. 115: Air Inlet Housing
Courtesy of CHRYSLER GROUP, LLC

3. Engage the two retaining tabs (4) that secure the rear of the air inlet housing (3) to the HVAC housing (5).
4. Connect the HVAC wire harness (1) to the recirculation door actuator (2).
5. Install the HVAC housing assembly. Refer to **HOUSING, HVAC, INSTALLATION**.

HVAC HOUSING ASSEMBLY

CAUTION: Be certain to adjust the refrigerant oil level when servicing the A/C refrigerant system. Refer to OIL, REFRIGERANT, STANDARD PROCEDURE. Failure to properly adjust the refrigerant oil level will prevent the A/C system from operating as designed and can cause serious A/C compressor damage.

NOTE: When replacing multiple A/C system components, refer to the Refrigerant Oil Capacities chart to determine how much oil should be added to the refrigerant system. Refer to OIL, REFRIGERANT, STANDARD PROCEDURE.

NOTE: If the A/C evaporator is being replaced, add 60 milliliters (2 fluid ounces) of refrigerant oil to the refrigerant system. Use only refrigerant oil of the type recommended for the A/C compressor in the vehicle.

NOTE: Replacement of the refrigerant line O-ring seals and gaskets is required anytime a refrigerant line is disconnected. Failure to replace the rubber O-ring seals and metal gaskets could result in a refrigerant system leak.

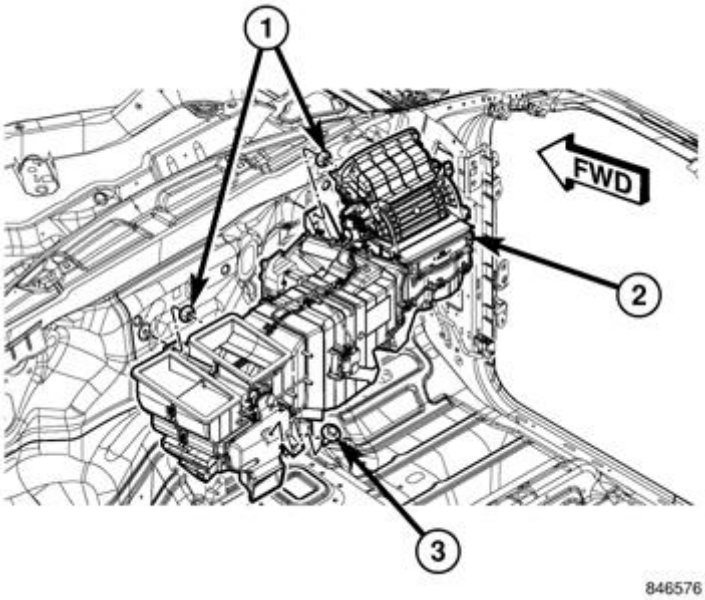

Fig. 116: HVAC Housing To Floor Bracket Nuts
Courtesy of CHRYSLER GROUP, LLC

1. Position the HVAC housing assembly (2) into the passenger compartment and over the studs on the dash panel, with the condensate drain tube in its proper location.
2. Install the two nuts (1) that secure the HVAC housing to the passenger compartment side of the dash panel. Tighten the nuts to 6.8 N.m (60 in. lbs.).
3. Install the bolt (3) that secures the HVAC housing to the floor bracket. Tighten the bolt to 6.8 N.m (60 in. lbs.).
4. If equipped, install the rear floor ducts. Refer to **DUCT, FLOOR DISTRIBUTION, REAR, INSTALLATION**.
5. Install the instrument panel assembly. Refer to **PANEL, INSTRUMENT, INSTALLATION** .
6. If equipped with center floor console, install the floor console duct. Refer to **DUCT, FLOOR CONSOLE, INSTALLATION**.

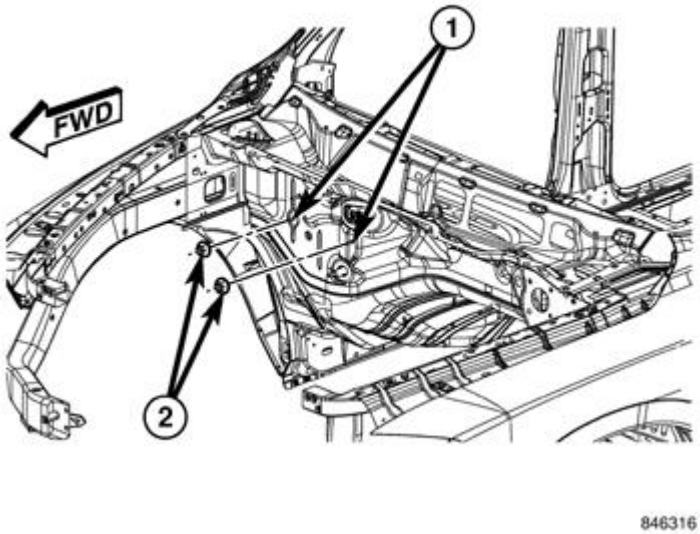

Fig. 117: HVAC Housing Engine Compartment Side Nuts & Studs
Courtesy of CHRYSLER GROUP, LLC

7. Install the two nuts (2) onto the two studs (1) that secure the HVAC housing to the engine compartment side of the dash panel. Tighten the nuts to 6.8 N.m (60 in. lbs.).
8. If removed, install the powertrain control module (PCM). Refer to **MODULE, POWERTRAIN CONTROL, INSTALLATION** or **MODULE, POWERTRAIN CONTROL, 6.7L DIESEL [ETJ], INSTALLATION** .
9. Connect the heater hoses to the heater core tubes.
10. Connect the A/C liquid line and the A/C suction line to the A/C expansion valve. Refer to **LINE, A/C LIQUID, INSTALLATION** and **INSTALLATION**.
11. Reconnect the negative battery cable.
12. If the heater core is being replaced, flush the cooling system. Refer to **STANDARD PROCEDURE** .
13. Refill the engine cooling system. Refer to **STANDARD PROCEDURE - FILLING** .
14. Evacuate the refrigerant system. Refer to **PLUMBING, STANDARD PROCEDURE**.

15. If the A/C evaporator is being replaced, add 60 milliliters (2 fluid ounces) of refrigerant oil to the refrigerant system. When replacing multiple A/C system components, refer to the Refrigerant Oil Capacities chart to determine how much oil should be added to the refrigerant system. Refer to **OIL, REFRIGERANT, STANDARD PROCEDURE**. Use only refrigerant oil of the type recommended for the A/C compressor in the vehicle.
16. Charge the refrigerant system. Refer to **PLUMBING, STANDARD PROCEDURE**.
17. Initiate the Actuator Calibration function using a scan tool. Refer to appropriate Electrical Diagnostic article. .

MOTOR, BLOWER

DESCRIPTION

DESCRIPTION

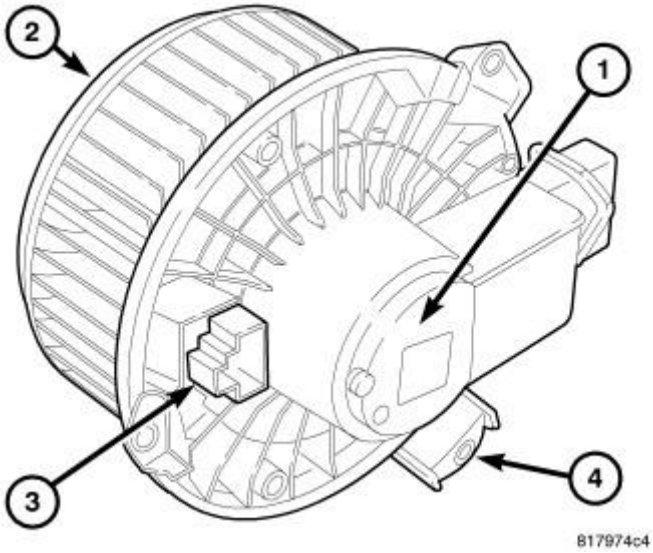

Fig. 118: Blower Motor
Courtesy of CHRYSLER GROUP, LLC

The blower motor (1) is used to control the velocity of air moving through the HVAC housing assembly by spinning the blower wheel (2) at the selected or programmed speed (depending on control system application).

The blower motor is a 12-volt, direct current (DC) motor that is mounted within a plastic housing that has integral wire harness connector (3), integral mounting tabs (4) and the squirrel cage-type blower wheel secured to the blower motor shaft. The blower wheel is positioned within the air inlet housing on the passenger side end of the HVAC housing assembly.

OPERATION

OPERATION

The blower motor is used to control the velocity of air moving through the HVAC housing assembly by spinning the blower wheel within the air inlet housing at the selected or programmed speed (depending on

control system application).

On the Manual Temperature Control (MTC) heating-A/C system, blower motor speed is controlled by regulating the path to ground through the blower control switch and the blower motor resistor. With the Automatic Temperature Control (ATC) heating-A/C system, blower motor speed is controlled by an electronic blower motor power module, which uses a pulse width modulated input from the A/C-heater control and a feedback signal from the blower motor to regulate the blower motor ground path. On both systems, the blower motor will operate whenever the ignition switch is in RUN and the blower motor control is in any position except Off. The blower motor receives battery current through the Totally Integrated Power Module (TIPM) whenever the ignition switch is in RUN.

The blower motor can be accessed for service from underneath the instrument panel.

NOTE: The blower motor is supplied with a 12V feed from the TIPM whenever the ignition switch is in RUN. Due to an open circuit condition within the blower motor control switch the TIPM is UNABLE to detect an OPEN circuit for the blower motor.

The blower motor control system is diagnosed using a scan tool. Refer to appropriate Electrical Diagnostic article. .

The blower motor and blower motor wheel are factory balanced as an assembly and cannot be adjusted or repaired and must be replaced if inoperative or damaged.

DIAGNOSIS AND TESTING

DIAGNOSIS AND TESTING - BLOWER MOTOR

WARNING: Disable the airbag system before attempting any steering wheel, steering column or instrument panel component diagnosis or service. Refer to WARNING . Disconnect and isolate the negative battery (ground) cable and wait two minutes for the airbag system capacitor to discharge before performing further diagnosis or service. This is the only sure way to disable the airbag system. Failure to follow these instructions may result in accidental airbag deployment and possible serious or fatal injury.

NOTE: The blower motor is supplied with a 12V fused feed from the TIPM, whenever the ignition switch is in the RUN position. Due to an open circuit condition within the blower motor control switch the TIPM is UNABLE to detect an OPEN circuit for the blower motor.

To determine if an open condition exists within the blower motor circuit wiring, it is necessary to disconnect the negative battery cable and check for continuity within the blower motor circuits using an ohmmeter. Refer to appropriate Wiring Information for circuit descriptions and diagrams.

OPERATION

Possible causes of an inoperative blower motor include:

- Open fuse
- Inoperative blower motor resistor
- Inoperative blower motor switch
- Inoperative blower motor
- Inoperative blower motor circuit wiring or wire harness connectors

NOISE

To determine if the blower motor is the source of the noise, simply switch the blower motor from Off to On. To verify that the blower motor is the source of the noise, unplug the blower motor wire harness connector and operate the heater-A/C system. If the noise goes away, possible causes include:

- Foreign material on fresh air inlet screen
- Foreign material in blower wheel
- Foreign material in HVAC housing
- Improper blower motor mounting
- Deformed or damaged blower wheel
- Worn blower motor bearings or brushes

VIBRATION

Possible causes of a blower motor vibration include:

- Improper blower motor mounting
- Foreign material in blower wheel
- Deformed or damaged blower wheel
- Worn blower motor bearings

REMOVAL

REMOVAL

NOTE: **The blower motor is located on the passenger side of the vehicle under the instrument panel. The blower motor can be removed from the vehicle without having to remove the HVAC housing assembly.**

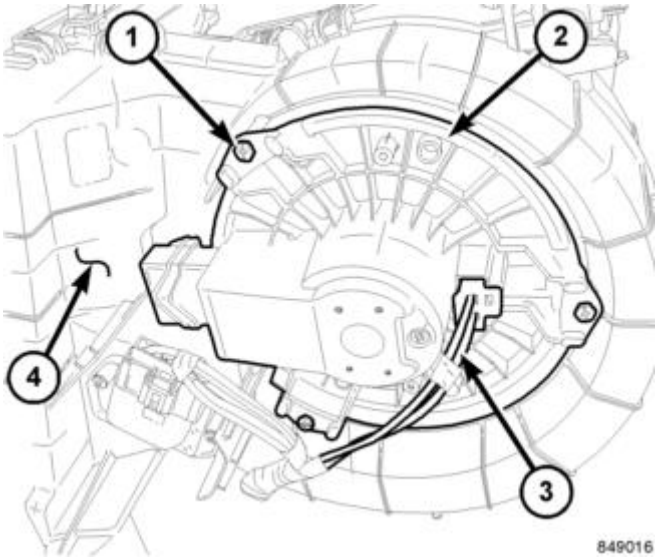

Fig. 119: Blower Motor & Screws
Courtesy of CHRYSLER GROUP, LLC

1. Disconnect and isolate the negative battery cable.
2. Disconnect the HVAC wire harness lead (3) from the blower motor (2).
3. Remove the three screws (1) that secure the blower motor to the bottom of the HVAC housing (4) and remove the blower motor.

INSTALLATION

INSTALLATION

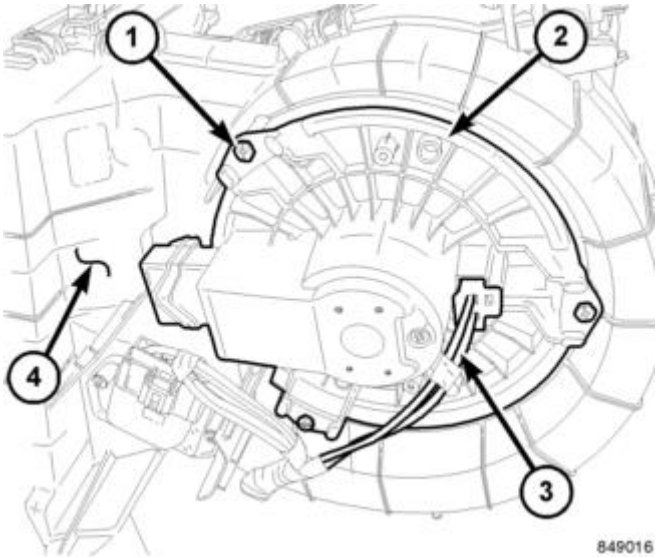

Fig. 120: Blower Motor & Screws
Courtesy of CHRYSLER GROUP, LLC

1. Position the blower motor (2) into the bottom of the HVAC housing (4).

2. Install the three screws (1) that secure the blower motor to the HVAC housing. Tighten the screws to 1.7 N.m (15 in. lbs.).
3. Connect the HVAC wire harness lead (3) to the blower motor.
4. Reconnect the negative battery cable.

OUTLET, AIR

REMOVAL

FRONT CENTER AIR OUTLETS

WARNING: Disable the airbag system before attempting any steering wheel, steering column or instrument panel component diagnosis or service. Refer to WARNING . Disconnect and isolate the negative battery (ground) cable and wait two minutes for the airbag system capacitor to discharge before performing further diagnosis or service. This is the only sure way to disable the airbag system. Failure to follow these instructions may result in accidental airbag deployment and possible serious or fatal injury.

NOTE: Take the proper precautions to protect the front face of the center bezel from cosmetic damage during this procedure.

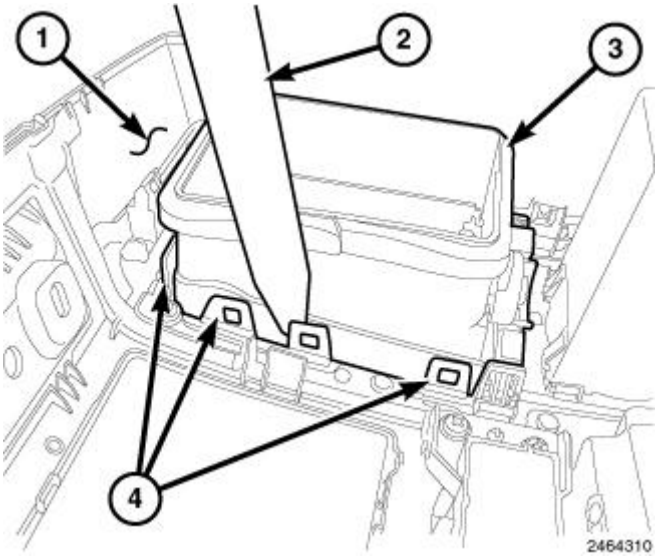

Fig. 121: Plastic Retaining Clips To Air Outlet
Courtesy of CHRYSLER GROUP, LLC

1. Disconnect and isolate the negative battery cable.
2. Remove the center bezel (1) from the instrument panel and place it on a workbench. Refer to **BEZEL, INSTRUMENT PANEL, CENTER, REMOVAL** .
3. Using Trim Stick (special tool #C-4755, Trim Stick) (2) or equivalent, carefully disengage the eight plastic retaining clips (4) that secure each air outlet (3) to the center bezel.

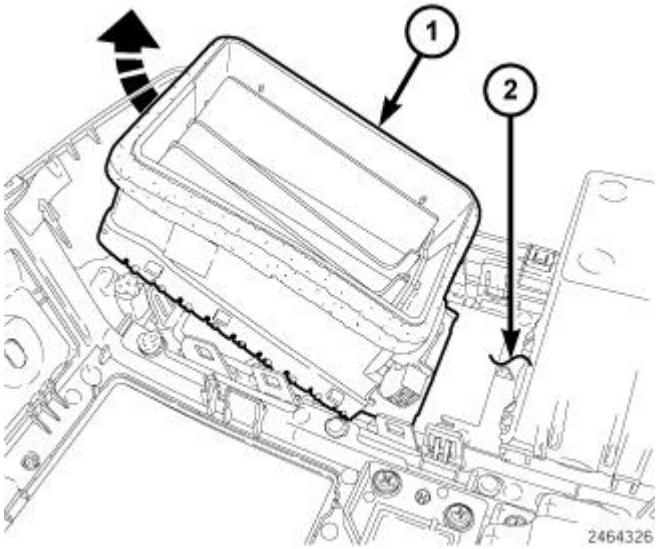

Fig. 122: Removing Air Outlet
Courtesy of CHRYSLER GROUP, LLC

4. Lift the top of each air outlet (1) rearward and upward to disengage the bottom of each outlet from the center bezel (2) and remove the outlet(s).

FRONT OUTER AIR OUTLETS

WARNING: **Disable the airbag system before attempting any steering wheel, steering column or instrument panel component diagnosis or service. Refer to WARNING . Disconnect and isolate the negative battery (ground) cable and wait two minutes for the airbag system capacitor to discharge before performing further diagnosis or service. This is the only sure way to disable the airbag system. Failure to follow these instructions may result in accidental airbag deployment and possible serious or fatal injury.**

NOTE: **The front outer instrument panel air outlets can be serviced separately. The center instrument panel air outlets are serviced with the instrument panel center bezel. Refer to BEZEL, INSTRUMENT PANEL, CENTER, REMOVAL .**

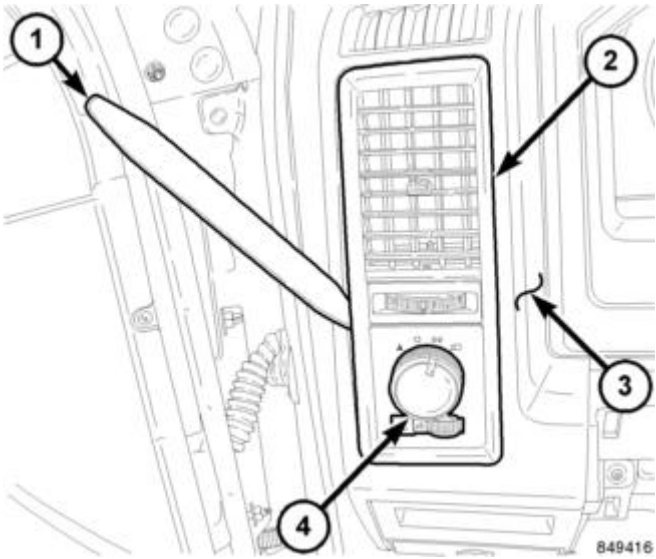

Fig. 123: Instrument Panel Air Outlet
Courtesy of CHRYSLER GROUP, LLC

NOTE: Driver side air outlet shown in illustration. Passenger side outlet similar.

1. Using Trim Stick (special tool #C-4755, Trim Stick) (1) or equivalent, carefully disengage the retaining tabs that secure each outer instrument panel air outlet (2) to the instrument panel cover (3) and remove the outlet.
2. If servicing the driver side air outlet, disconnect the head lamp switch wiring harness from the head lamp switch (4) and if required, remove the switch from the outlet bezel. Refer to **SWITCH, HEADLAMP, REMOVAL** .

REAR SEAT AIR OUTLETS

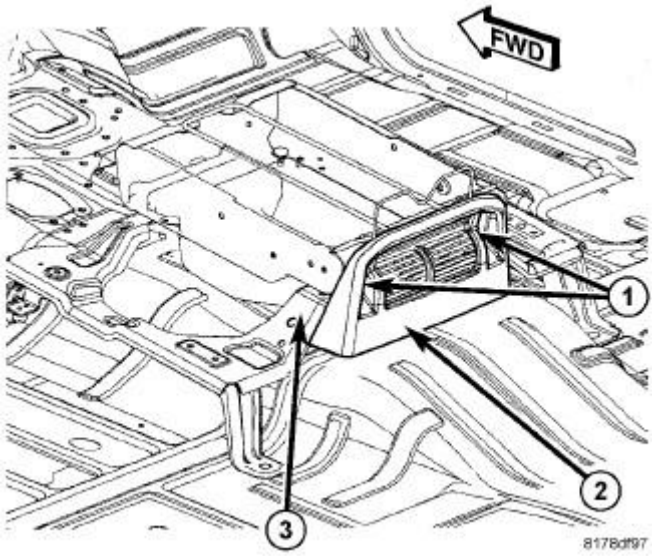

Fig. 124: Rear Air Outlet Housing

Courtesy of CHRYSLER GROUP, LLC

NOTE: Illustration shown with front seat cushions removed for clarity.

1. Remove the two screws (1) that secure the rear air outlet housing (2) to the rear of the front center seat support (3).
2. Remove the rear air outlet housing and place it on a workbench.

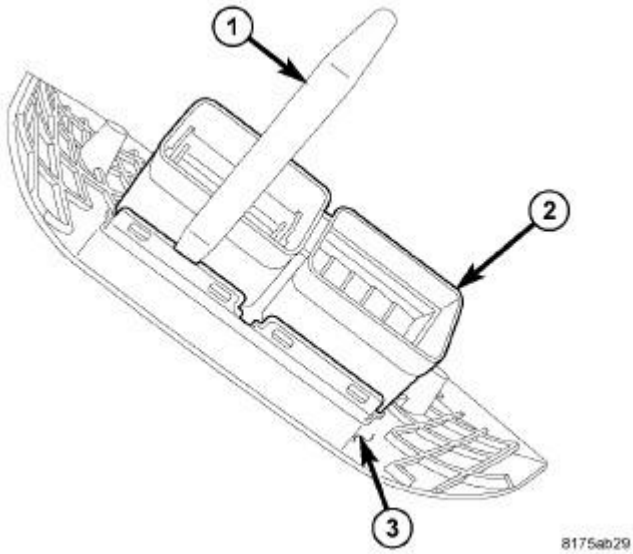

Fig. 125: Removing Rear Air Outlets
Courtesy of CHRYSLER GROUP, LLC

3. Using Tim Stick (special tool #C-4755, Trim Stick) or equivalent (1), disengage the retaining tabs that secure the rear air outlets (2) to the rear air outlet housing (3) and gently pry the outlets from the housing (3).

INSTALLATION

FRONT CENTER AIR OUTLETS

NOTE: Take the proper precautions to protect the front face of the center bezel from cosmetic damage during this procedure.

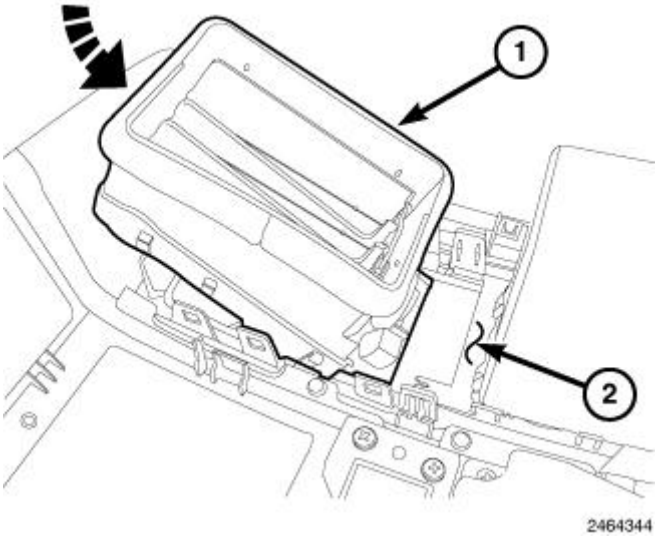

Fig. 126: Center Air Outlet
Courtesy of CHRYSLER GROUP, LLC

1. Position the center air outlet(s) (1) to the back of the instrument panel center bezel (2) and engage the bottom of each outlet to the center bezel.

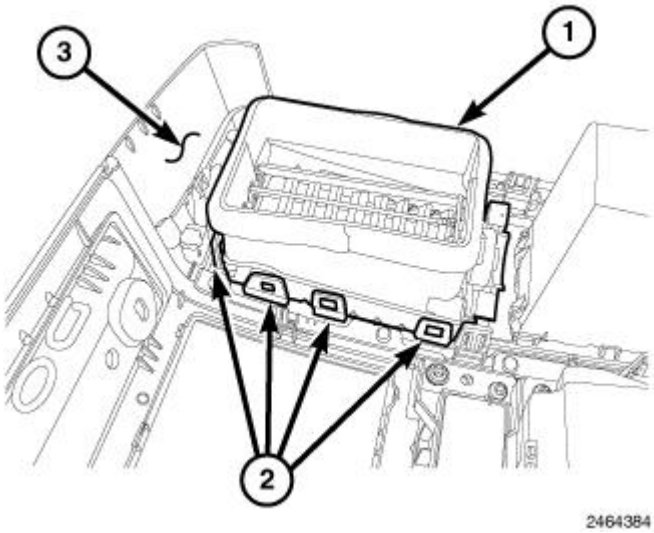

Fig. 127: Air Outlet Retaining Clips
Courtesy of CHRYSLER GROUP, LLC

2. Carefully engage the eight plastic retaining clips (2) that secure each air outlet (1) to the center bezel (3). Make sure the retaining clips are fully engaged.
3. Install the instrument panel center bezel. Refer to **BEZEL, INSTRUMENT PANEL, CENTER, INSTALLATION** .
4. Reconnect the negative battery cable.

FRONT OUTER AIR OUTLETS

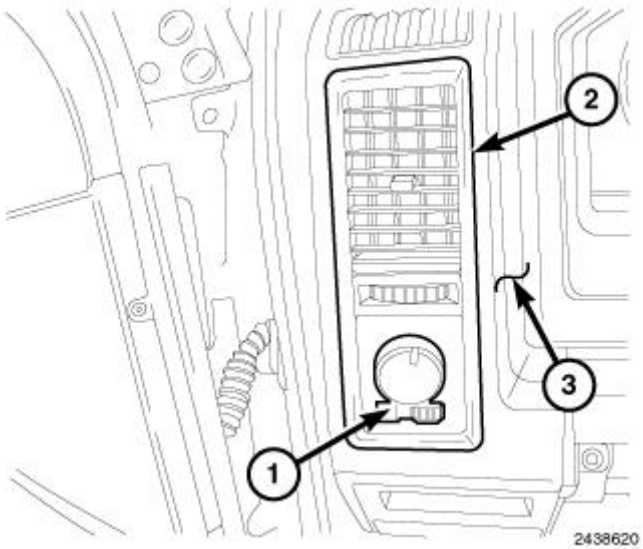

Fig. 128: Side Air Outlet
Courtesy of CHRYSLER GROUP, LLC

NOTE: Driver side air outlet shown in illustration. Passenger side outlet similar.

1. If required, install the head lamp switch (1) onto the air outlet (2). Refer to **SWITCH, HEADLAMP, INSTALLATION** .
2. If servicing the driver side air outlet, connect the head lamp switch wiring harness to the head lamp switch. Refer to **SWITCH, HEADLAMP, INSTALLATION** .
3. Position the air outlet to the opening in the instrument panel cover (3) and align the outlet to the instrument panel duct.
4. Engage the retaining tabs that secure each air outlet to the instrument panel cover. Make sure the retaining tabs are fully engaged.

REAR SEAT AIR OUTLETS

NOTE: The air outlets are retained into the air outlet housing by eight retaining tabs. The air outlets must be first installed onto the bottom set of retaining tabs, then the upper set of tabs can be engaged.

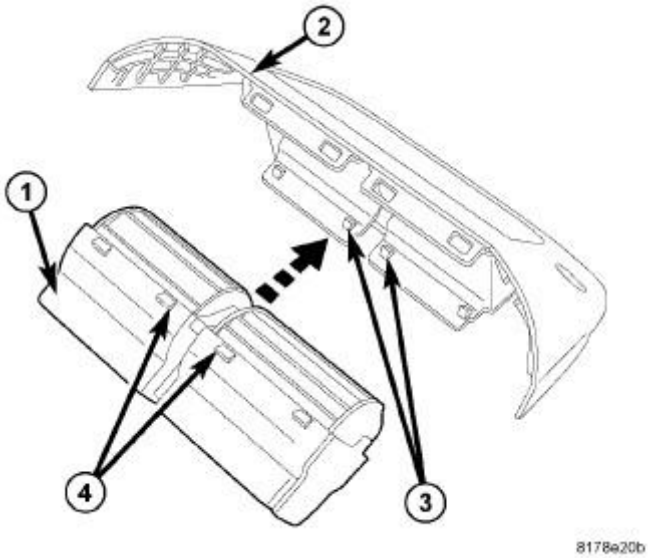

Fig. 129: Rear Air Outlets, Retaining Tabs & Housing
Courtesy of CHRYSLER GROUP, LLC

1. Position the rear air outlets (1) to the back of the rear air outlet housing (2) and engage the lower set of retaining tabs (3).
2. Gently engage the upper set of retaining tabs (4). Make sure all of the retaining tabs are fully seated.

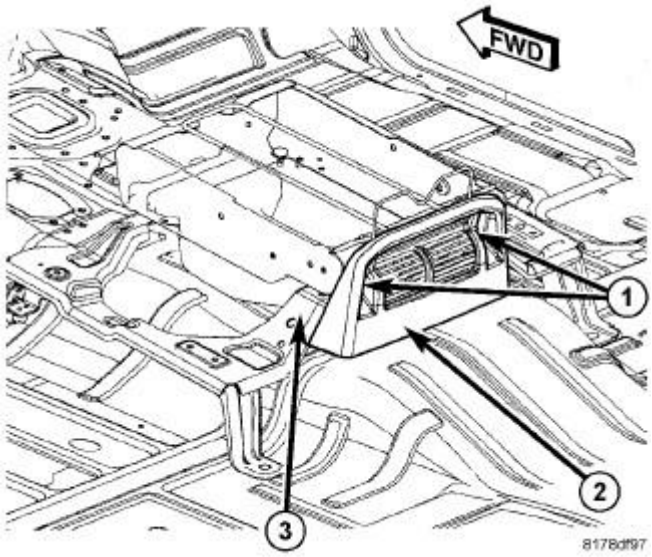

Fig. 130: Rear Air Outlet Housing
Courtesy of CHRYSLER GROUP, LLC

NOTE: Illustration shown with front seat cushions removed for clarity.

3. Position the rear air outlet housing (2) to the rear of the front center seat support (3).

4. Install the two screws (1) that secure the rear air outlet housing to the center seat support. Tighten the screws to 2.2 N.m (20 in. lbs.).

PLUMBING

WARNING

WARNING

WARNING: The A/C system contains refrigerant under high pressure. Repairs should only be performed by qualified service personnel. Serious or fatal injury may result from improper service procedures.

WARNING: Avoid breathing the refrigerant and refrigerant oil vapor or mist. Exposure may irritate the eyes, nose, and/or throat. Wear eye protection when servicing the A/C refrigerant system. Serious eye injury can result from direct contact with the refrigerant. If eye contact occurs, seek medical attention immediately.

WARNING: Do not expose the refrigerant to open flame. Poisonous gas is created when refrigerant is burned. An electronic leak detector is recommended. Serious or fatal injury may result from improper service procedures.

WARNING: If accidental A/C system discharge occurs, ventilate the work area before resuming service. Large amounts of refrigerant released in a closed work area will displace the oxygen and cause suffocation and serious or fatal injury.

WARNING: The evaporation rate of R-134a refrigerant at average temperature and altitude is extremely high. As a result, anything that comes in contact with the refrigerant will freeze. Always protect the skin or delicate objects from direct contact with the refrigerant.

WARNING: The R-134a service equipment or the vehicle refrigerant system should not be pressure tested or leak tested with compressed air. Some mixtures of air and R-134a have been shown to be combustible at elevated pressures. These mixtures are potentially dangerous, and may result in fire or explosion causing property damage and serious or fatal injury.

WARNING: The engine cooling system is designed to develop internal pressures up to 145 kPa (21 psi). Do not remove or loosen the coolant pressure cap, cylinder block drain plugs, radiator drain, radiator hoses, heater hoses, or hose clamps while the engine cooling system is hot and under pressure. Allow the vehicle to cool for a minimum of 15 minutes before opening the cooling system for service. Failure to observe this warning can result in

serious burns from the heated engine coolant.

CAUTION

CAUTION

CAUTION: Never add R-12 to a refrigerant system designed to use R-134a. Do not use R-12 equipment or parts on an R-134a A/C system. These refrigerants are not compatible and damage to the A/C system will result.

CAUTION: Never use R-12 refrigerant oil in an A/C system designed to use R-134a refrigerant oil. These refrigerant oils are not compatible and damage to the A/C system will result.

CAUTION: The use of A/C system sealers may result in damage to A/C refrigerant recovery/evacuation/recharging equipment and/or A/C system. Many federal, state/provincial and local regulations prohibit the recharge of A/C systems with known leaks. Chrysler LLC recommends the detection of A/C system leaks through the use of approved leak detectors and fluorescent leak detection dyes. Vehicles found with A/C system sealers should be treated as contaminated and replacement of the entire A/C refrigerant system is recommended. A/C systems found to be contaminated with A/C system sealers, A/C stop-leak products or seal conditioners voids the warranty for the A/C system.

CAUTION: Recover the refrigerant before opening any fitting or connection. Open the fittings with caution, even after the system has been discharged. Never open or loosen a connection before recovering the refrigerant.

CAUTION: If equipped, do not remove the secondary retention clip from any spring-lock coupler connection while the refrigerant system is under pressure. Recover the refrigerant before removing the secondary retention clip. Open the fittings with caution, even after the system has been discharged. Never open or loosen a connection before recovering the refrigerant.

CAUTION: The internal parts of the A/C system will remain stable as long as moisture-free refrigerant and refrigerant oil is used. Abnormal amounts of dirt, moisture or air can upset the chemical stability. This may cause operational troubles or even serious damage if present in more than very small quantities. Before disconnecting a component, clean the outside of the fittings thoroughly to prevent contamination from entering the refrigerant system. Keep service tools and the work area clean. Do not open the refrigerant system or uncap a replacement component until you are ready to service the system. Immediately after disconnecting a component from the refrigerant system, seal the open fittings with a cap or

plug. This will prevent contamination from entering the A/C system.

CAUTION: Refrigerant oil will absorb moisture from the atmosphere if left uncapped. Do not open a container of refrigerant oil until you are ready to use it. Replace the cap on the oil container immediately after using. Store refrigerant oil only in a clean, airtight, and moisture-free container.

CAUTION: Do not overcharge the refrigerant system. Overcharging will cause excessive compressor head pressure and can cause compressor noise and A/C system failure.

DIAGNOSIS AND TESTING

DIAGNOSIS AND TESTING - REFRIGERANT SYSTEM LEAKS

WARNING: R-134a service equipment or vehicle A/C system should not be pressure tested or leak tested with compressed air. Mixture of air and R-134a can be combustible at elevated pressures. These mixtures are potentially dangerous and may result in fire or explosion causing property damage and possible serious or fatal injury.

Avoid breathing A/C refrigerant and lubricant vapor or mist. Exposure may irritate eyes, nose and throat. Use only approved service equipment meeting SAE requirements to discharge an R-134a system. If accidental system discharge occurs, ventilate work area before resuming service.

NOTE: If the A/C system refrigerant charge is empty or low, a leak in the A/C system is likely. When searching for a refrigerant leak in the A/C system, use an electronic leak detector and refrigerant leak detection dye with an Ultra Violet (UV) light that is designed for R-134a refrigerant. It is important to use only high-quality refrigerant leak detection equipment to properly locate refrigerant system leaks, such as the equipment listed in the team PSE Service Equipment Catalog. Use only Chrysler approved R-134a leak detection dye, available through Mopar®.

1. Visually inspect all A/C lines, A/C fittings and A/C components under the hood for an oily residue. Oil residue can be an indicator of a leak location.
2. Connect a high-quality manifold gauge set or refrigerant recovery machine to the A/C system and determine if the static A/C system pressure is above or below 345 kPa (50 psi). Refer to **PLUMBING, STANDARD PROCEDURE**. If static A/C system pressure is less than 345 kPa (50 psi), refer to **SYSTEM EMPTY**. If static A/C system pressure is greater than 345 kPa (50 psi), refer to **SYSTEM LOW**.

SYSTEM EMPTY

1. Evacuate the refrigerant system to the lowest degree of vacuum possible (approximately -8 kPa (-26 in. Hg) or greater vacuum) for at least 30 minutes. Refer to **PLUMBING, STANDARD PROCEDURE**.

CAUTION: Use only Chrysler LLC approved R-134a leak detection dye. It is important to use only high-quality refrigerant leak detection equipment. Small leaks may not be found using low-budget equipment. Failure to follow these instructions may result in an incomplete diagnosis and possible remaining refrigerant leaks.

2. Prepare an R-134a dye injector with a Chrysler approved R-134a leak detection dye.
3. Prepare the vehicle specific amount of R-134a refrigerant. Refer to **REFRIGERANT, SPECIFICATIONS**.

NOTE: Anytime an R-134a leak detection dye has been added to the refrigerant system, a label indicating that dye has been added should be placed on the vehicle in plain view, for other technicians.

4. Dispense the leak detection dye and the correct amount of R-134a refrigerant into the evacuated refrigerant system. Refer to **PLUMBING, STANDARD PROCEDURE**.
5. Refer to **LEAK TEST**.

SYSTEM LOW

CAUTION: Use only Chrysler LLC approved R-134a leak detection dye. It is important to use only high-quality refrigerant leak detection equipment. Small leaks may not be found using low-budget equipment. Failure to follow these instructions may result in an incomplete diagnosis and possible remaining refrigerant leaks.

1. Prepare an R-134a dye injector with a Chrysler approved R-134a leak detection dye.

NOTE: Anytime an R-134a leak detection dye has been added to the refrigerant system, a label indicating that dye has been added should be placed on the vehicle in plain view, for other technicians.

2. Dispense the leak detection dye and 0.284 kilograms (10 ounces) of R-134a refrigerant into the evacuated refrigerant system. Refer to **PLUMBING, STANDARD PROCEDURE**.
3. Refer to **LEAK TEST**.

LEAK TEST

1. Position the vehicle in a wind-free work area. This will aid in detecting small leaks.
2. Operate the heating and A/C system with the engine at idle under the following conditions for at least 15 minutes.
   - Doors or windows open
   - Transmission in Park or Neutral with the parking brake set (depending on transmission application)
   - Front A/C and heater controls set to outside air, full cool, panel mode, high blower and A/C compressor engaged

- If equipped, rear A/C and heater controls set to full cool and high blower.

3. Shut the vehicle off and wait at least 5 minutes.

CAUTION: Use it is important to use only a high-quality Ultra Violet (UV) light when searching for a leak in the refrigerant system. Small leaks may not be found using budget equipment. Failure to follow these instructions may result in an incomplete diagnosis and possible remaining refrigerant leaks.

4. Begin searching for leaks using a high quality UV light to detect the fluorescent R-134a leak detection dye. Inspect all connections, plumbing fittings, brazed joints, hoses, hose crimps, service ports, compressor housing, pressure relief valve and A/C condenser for dye. Inspect the evaporator drain tube and condensate for presence of dye, which indicates a leak from the A/C evaporator.

WARNING: Use extreme care when working around a running engine. Keep hands and fingers clear of the radiator fan, accessory drive belt and all other moving components. Keep away when wearing loose clothing, jewelry or long hair that is not properly secured. Underhood components may become hot to the touch. Be careful not to come into contact with hot engine, A/C and engine cooling system components. Failure to follow these instructions may result in serious or fatal injury.

CAUTION: Use only an electronic leak detector designed for R-134a refrigerant. It is important to use only high-quality refrigerant leak detection equipment. Small leaks may not be found using budget equipment. Failure to follow these instructions may result in an incomplete diagnosis and possible remaining refrigerant leaks.

5. If a leak is not found with the R-134a detection dye, use a high-quality electronic R-134a leak detector and insert it into the evaporator drain tube, and into the instrument panel air outlets, to check for evaporator leaks. Check the evaporator tubes at the A/C expansion valve, for leaks not visible behind the valve. Check around the front of the A/C compressor, for compressor shaft seal leaks. Check between the A/C condenser and radiator for condenser leaks not previously visible.

STANDARD PROCEDURE

REFRIGERANT SYSTEM RECOVERY

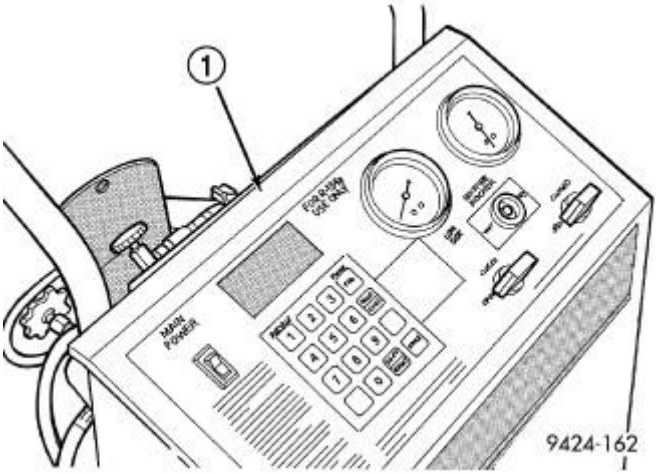

Fig. 131: Identifying R-134a Refrigerant Recovery/Recycling/Charging Station
Courtesy of CHRYSLER GROUP, LLC

The R-134a refrigerant must be recovered from the A/C system prior to performing any repairs that require disconnection of an A/C refrigerant line.

When recovering the A/C refrigerant system, use an R-134a refrigerant recovery/recycling/charging station (1) that meets SAE standard J2788. Per SAE standard J2788, refrigerant recovery stations must recover 95% of the refrigerant system within 30 minutes at 21.1° C (70° F) and be able to measure the amount of refrigerant removed from the system to an accuracy of 28 grams (1 oz.). Refer to the operating instructions supplied by the equipment manufacturer for proper care and use of this equipment.

NOTE: **A/C system should be tested prior to refrigerant recovery if the use of A/C system sealants are suspected. These sealants have the potential to clog refrigerant recovery equipment and cause vehicle A/C component damage. Various tool manufacturers make tool kits that detect A/C system sealants. Refer to the operating instructions supplied by the equipment manufacturer for proper care and use of this equipment.**

If sealants are detected in an A/C system, the system should be treated as contaminated and replacement of the entire A/C refrigerant system is recommended. A/C systems found to be contaminated with A/C system sealers, A/C stop-leak products or seal conditioners void the warranty for the A/C system.

RECOVERY PROCEDURE

WARNING: Review safety precautions and warnings before performing this procedure. Refer to PLUMBING, WARNING and PLUMBING, CAUTION. Failure to follow these instructions may result in serious or fatal injury.

CAUTION: Various aftermarket manufacturers produce A/C system sealants that are designed to stop A/C refrigerant system leaks. The use of A/C system sealants may result in damage to A/C refrigerant recovery/evacuation/recharging equipment and/or the vehicle A/C system

and are not recommended for use by Chrysler LLC.

CAUTION: A small amount of refrigerant oil is removed from the A/C system each time the refrigerant system is recovered and evacuated. Before charging the A/C system, you MUST replenish any oil lost during the recovery process. Refer to the equipment manufacturer instructions for more information.

1. If use of aftermarket A/C system sealant is suspected, the A/C system should be tested for sealant prior to refrigerant system recovery. Refer to the operating instructions supplied by the equipment manufacturer for proper use and care of this equipment.
2. Connect an R-134a refrigerant recovery/recycling/charging station that meets SAE standard J2788 to the refrigerant system.
3. Recover the A/C refrigerant system following the operating instructions supplied by the recovery/recycling/charging station manufacturer.
4. Disconnect the refrigerant recovery/recycling/charging station from the refrigerant system service ports.
5. Reinstall the caps onto the refrigerant system service ports.

REFRIGERANT SYSTEM EVACUATE

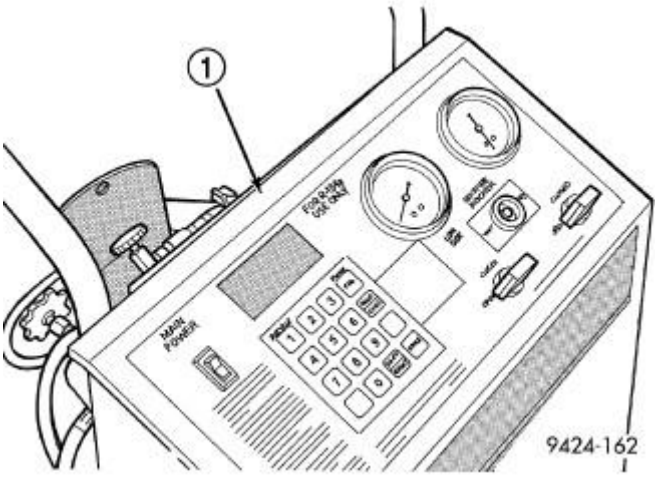

Fig. 132: Identifying R-134a Refrigerant Recovery/Recycling/Charging Station
Courtesy of CHRYSLER GROUP, LLC

If the A/C refrigerant system has been open to the atmosphere, it must be evacuated before the A/C system can be recharged with R-134a refrigerant.

NOTE: Special effort must be used to prevent moisture from entering the A/C system oil. Moisture in the oil is very difficult to remove and will cause a reliability problem with the A/C compressor.

Moisture and air in the A/C refrigerant system will raise the compressor head pressure above acceptable operating levels. This will reduce the performance of the A/C system and damage the A/C compressor.

Moisture will boil at near room temperature when exposed to vacuum. Always use an R-134a refrigerant recovery/recycling/charging station with a vacuum pump (1) that meets SAE standard J2788, or an R-134a compatible manifold gauge set and a stand-alone vacuum pump.

If an A/C compressor is left open to the atmosphere for an extended period of time, it is recommended that the refrigerant oil in the compressor be drained and replaced with new refrigerant oil to reduce the possibility of contaminating the refrigerant system. Refer to **OIL, REFRIGERANT, STANDARD PROCEDURE**.

EVACUATION PROCEDURE

WARNING: Review safety precautions and warnings before performing this procedure. Refer to PLUMBING, WARNING and PLUMBING, CAUTION. Failure to follow these instructions may result in serious or fatal injury.

CAUTION: A small amount of refrigerant oil is removed from the A/C system each time the refrigerant system is recovered and evacuated. Before charging the A/C system, you MUST replenish any oil lost during the recovery process. Refer to the equipment manufacturer instructions for more information.

1. Recover the refrigerant system. Refer to **PLUMBING, STANDARD PROCEDURE**.

NOTE: When connecting service equipment couplers to refrigerant line service ports, verify that the valve of each coupler is fully closed prior to connecting. This will reduce the amount of effort required to make the connections.

2. Connect an R-134a refrigerant recovery/recycling/charging station with a vacuum pump that meets SAE standard J2788 to the refrigerant system, or an R-134a compatible manifold gauge set and a stand-alone vacuum pump (depending on available equipment).
3. Open the refrigerant recovery/recycling/charging station or manifold gauge set valves and start the vacuum pump. The vacuum pump should run a minimum of 45 minutes prior to recharge to eliminate all moisture in system. When the low-side gauge reads to the lowest degree of vacuum possible (approximately -88 kPa (- 26 in. Hg) or greater) for 30 minutes, close all valves and turn off vacuum pump. If the refrigerant system fails to reach specified vacuum, the refrigerant system likely has a leak that must be corrected. If the refrigerant system maintains specified vacuum for at least 30 minutes, start the vacuum pump, open the valves and allow the refrigerant system to evacuate an additional 10 minutes.
4. Close the refrigerant recovery/recycling/charging station or manifold gauge set valves. Turn off and disconnect the vacuum pump.
5. Disconnect the refrigerant recovery/recycling/charging station or manifold gauge set from the refrigerant system service ports.
6. Reinstall the caps onto the refrigerant system service ports.

REFRIGERANT SYSTEM CHARGE

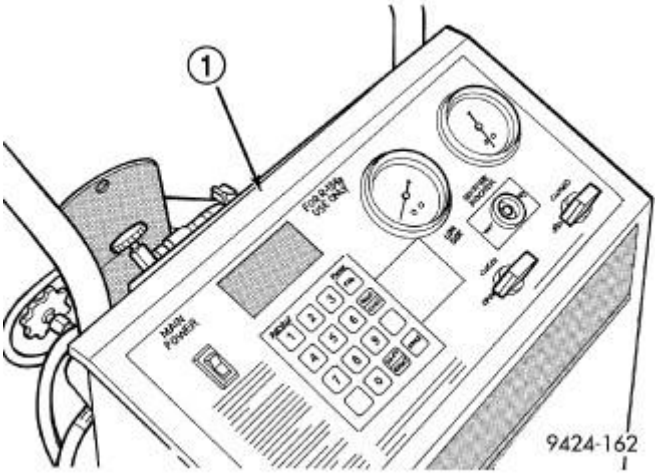

Fig. 133: Identifying R-134a Refrigerant Recovery/Recycling/Charging Station
Courtesy of CHRYSLER GROUP, LLC

After all A/C refrigerant system repairs have been completed and the refrigerant system has been evacuated, the A/C system can be recharged with R-134a refrigerant.

When charging the A/C system, use an R-134a refrigerant recovery/recycling/charging station (1) that meets SAE standard J2788. Per SAE standard J2788, refrigerant recovery stations must charge the system to an accuracy of 14 grams (0.5 oz.). Refer to the operating instructions supplied by the equipment manufacturer for proper care and use of this equipment.

CHARGING PROCEDURE

WARNING: Review safety precautions and warnings before performing this procedure. Refer to PLUMBING, WARNING and PLUMBING, CAUTION. Failure to follow these instructions may result in serious or fatal injury.

CAUTION: A small amount of refrigerant oil is removed from the A/C system each time the refrigerant system is recovered and evacuated. Before charging the A/C system, you MUST replenish any oil lost during the recovery process. Refer to the equipment manufacturer instructions for more information.

1. Recover and evacuate the refrigerant system. Refer to **PLUMBING, STANDARD PROCEDURE**.
2. Connect an R-134a refrigerant recovery/recycling/charging station that meets SAE standard J2788 to the refrigerant system.
3. When required, adjust the refrigerant oil level. Refer to **OIL, REFRIGERANT, STANDARD PROCEDURE**.

NOTE: A/C system refrigerant capacity can be found on the HVAC Specification Label, located in the engine compartment.

4. Measure the proper amount of refrigerant and heat it to 52° C (125° F) with the charging station. Refer to **REFRIGERANT, SPECIFICATIONS**. Refer to the operating instructions supplied by the equipment manufacturer for proper use of this equipment.
5. Open both the low and high side valves, then open the charge valve to allow the heated refrigerant to flow into the refrigerant system.
6. When the transfer of refrigerant has stopped, close the valves.

WARNING: Take care not to open the high side (high pressure) valve while performing Step 7. Failure to follow these instructions may result in possible serious or fatal injury.

7. Perform the following if all of the refrigerant charge did not transfer from the dispensing device.
   a. Open all of the windows in the vehicle.
   b. Set the heating and A/C system so that the A/C compressor is operating and the blower motor is operating at its lowest speed setting.
   c. Run the engine at a steady high idle (about 1400 rpm).
   d. If the A/C compressor does not operate, test the compressor control circuits and repair as required.
   e. Open the low side valve and the charge valve to allow the remaining refrigerant to flow into the refrigerant system.
   f. When the transfer of refrigerant has stopped, close the valves.
8. Disconnect the refrigerant recovery/recycling/charging station from the refrigerant system service ports.
9. Reinstall the caps onto the refrigerant system service ports.

COMPRESSOR, A/C

DESCRIPTION

A/C CLUTCH

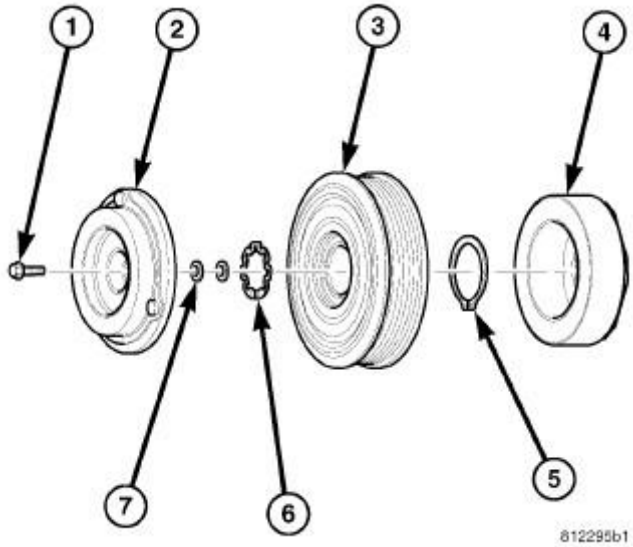

Fig. 134: A/C Compressor Clutch Components
Courtesy of CHRYSLER GROUP, LLC

NOTE: Typical A/C clutch assembly shown in illustration.

The A/C compressor clutch assembly consists of a stationary electromagnetic field coil (4), bearing and pulley assembly (3), shims (7) and a clutch plate (2) that is splined to the compressor shaft and secured by a bolt (1). These components provide the means to engage and disengage the A/C compressor from the engine accessory drive belt.

The A/C clutch bearing and pulley assembly is retained to the front of the compressor with a snap ring (6). The A/C clutch field coil is also retained to the front of the compressor using a snap ring (5).

A/C COMPRESSOR

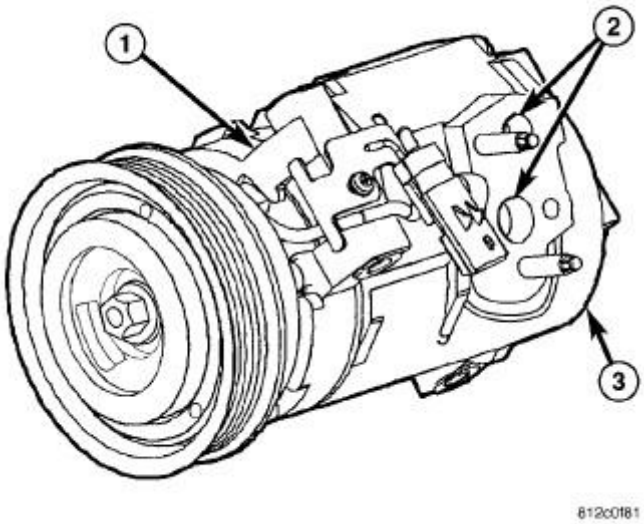

Fig. 135: A/C Compressor
Courtesy of CHRYSLER GROUP, LLC

NOTE: Typical Denso A/C compressor shown in illustration.

The A/C system on models equipped with the 3.7L and 4.7L engine use the Denso 10SRE15 A/C compressor (1). This A/C compressor has a fixed displacement of 150 cubic centimeters (9.2 cubic inches).

The A/C system on models equipped with the 5.7L engine use the Denso 10SRE18 A/C compressor. This A/C compressor has a fixed displacement of 180 cubic centimeters (11 cubic inches).

The A/C system on models equipped with the 6.7L diesel engine use the Denso 10S17 A/C compressor. This A/C compressor has a fixed displacement of 170 cubic centimeters (10.4 cubic inches).

All A/C compressors are ten cylinder, reciprocating swash plate type compressors with the suction and discharge ports (2) located on the compressor cylinder head (3) and have a label identifying the use of R-134a refrigerant.

HIGH PRESSURE RELIEF VALVE

A high pressure relief valve is located on the A/C compressor. This mechanical valve is designed to vent refrigerant from the A/C system to protect against damage to the A/C compressor and other A/C system components, caused by condenser air flow restriction or an overcharge of refrigerant.

OPERATION

A/C CLUTCH

The A/C compressor clutch components provide the means to engage and disengage the A/C compressor from the engine accessory drive belt. When the electromagnetic A/C clutch coil is energized, it magnetically draws the clutch plate into contact with the clutch pulley and drives the compressor shaft. When the A/C clutch coil is

not energized, the pulley freewheels on the clutch hub bearing, which is part of the pulley assembly.

A/C clutch engagement is controlled by the Powertrain Control Module (PCM) or Engine Control Module (ECM), depending on engine application. When the A/C-heater control is set to any A/C position, it sends a request signal on the CAN-B bus to the Totally Integrated Power Module (TIPM), which then transfers the request on the CAN-C Bus to the PCM/ECM, which determines if operating conditions are correct for A/C clutch engagement. When all operating conditions have been met, the PCM/ECM sends a signal on a dedicated hard-wired circuit back to the TIPM to energize the internal A/C clutch high side driver. When energized, the A/C clutch high side driver provides battery current to the A/C clutch coil.

The A/C clutch control system is diagnosed using a scan tool. Refer to appropriate Electrical Diagnostic article.
.

The A/C clutch components cannot be repaired and must be replaced if inoperative or damaged.

A/C COMPRESSOR

The A/C compressor is driven by the engine through an electric clutch, drive pulley and belt arrangement. The A/C compressor is lubricated by refrigerant oil that is circulated throughout the refrigerant system with the refrigerant.

The A/C compressor draws in low-pressure refrigerant vapor from the A/C evaporator through its suction port. It then compresses the refrigerant into a high-pressure, high-temperature refrigerant vapor, which is then pumped to the A/C condenser through the compressor discharge port.

CAUTION: Be certain to adjust the refrigerant system oil level when replacing an A/C compressor. Refer to OIL, REFRIGERANT, STANDARD PROCEDURE. Failure to properly adjust the refrigerant oil level can prevent the A/C system from operating as designed and can cause serious A/C compressor damage.

The A/C compressor cannot be repaired and must be replaced if inoperative or damaged. The compressor clutch, pulley and bearing assembly, and clutch field coil are available for service. If an internal failure of the A/C compressor has occurred, the A/C condenser must also be replaced. Refer to **CONDENSER, A/C, REMOVAL**.

HIGH PRESSURE RELIEF VALVE

The high pressure relief valve vents refrigerant from the A/C system when a discharge pressure of 3445 to 4135 kPa (500 to 600 psi) or above is reached. The high pressure relief valve closes with a minimum discharge pressure of 2756 kPa (400 psi) is reached.

The high pressure relief valve should not open when the A/C system is operating correctly. If the high pressure relief valve vents refrigerant, there is most likely a problem within the A/C refrigerant system. The high pressure relief valve vents only enough refrigerant to reduce the A/C system pressure, and then re-seats itself. If the high pressure relief valve vents refrigerant, refer to **DIAGNOSIS AND TESTING**.

The high pressure relief valve is factory-calibrated and cannot be adjusted or repaired, and must not be removed

or otherwise disturbed. The valve is only serviced as a part of the A/C compressor.

DIAGNOSIS AND TESTING

A/C CLUTCH COIL

The A/C clutch coil electrical circuit is controlled by the Powertrain Control Module (PCM) or Engine Control Module (ECM), depending on engine application, through the Totally Integrated Power Module (TIPM). Refer to appropriate Wiring Information for complete HVAC wiring diagrams. Begin testing of a suspected A/C clutch coil problem by performing the preliminary checks.

PRELIMINARY CHECKS

1. Using a scan tool, check for Diagnostic Trouble Codes (DTCs) in the A/C-heater control, TIPM and PCM/ECM. If no DTCs are found, go to 2. If any DTCs are found, repair as required.
2. If the A/C clutch still will not engage, verify the refrigerant charge level by conducting the A/C Performance test. Refer to **DIAGNOSIS AND TESTING**. If the refrigerant charge level is OK, refer to **COIL RESISTANCE TEST** and **COIL CURRENT DRAW TEST**. If the refrigerant charge level is not OK, adjust the refrigerant charge as required.

COIL RESISTANCE TEST

1. Disconnect and isolate the negative battery cable.
2. Disconnect the wire harness connector from the A/C clutch coil connector.
3. Use an ohm meter and Back Probe Tool (special tool #6801, Terminal Probe) and measure the resistance of the A/C clutch coil at the coil connector terminals.
4. Refer to **A/C CLUTCH COIL SPECIFICATIONS** for acceptable A/C clutch coil resistance. Specifications apply for a work area temperature of 21° C (70° F).
    1. If the A/C clutch coil reading is below specifications, the coil is shorted and must be replaced.
    2. If the A/C clutch coil reading is above specifications, the coil is open and must be replaced.

COIL CURRENT DRAW TEST

1. Verify the battery state of charge.
2. Connect an ammeter (0 to 10 ampere scale selected) in series with the A/C clutch coil feed terminal using Back Probe Tool (special tool #6801, Terminal Probe). Connect a voltmeter (0 to 20 volt scale selected) to measure voltage across the battery and the A/C clutch coil.
3. With the A/C-heater control in the A/C mode and the blower motor at low speed, start the engine and allow it to run at a normal idle speed.
4. The A/C clutch should engage immediately and the clutch coil supply voltage should be within two volts of the battery voltage. If the clutch coil supply voltage is OK, go to 5. If the coil supply voltage is not within two volts of battery voltage, test the clutch coil feed circuit for excessive voltage drop and repair as necessary.
5. Refer to **A/C CLUTCH COIL SPECIFICATIONS** for acceptable A/C clutch coil current draw. Specifications apply for a work area temperature of 21° C (70° F). If voltage is more than 12.5 volts, add electrical loads by turning on electrical accessories until voltage reads below 12.5 volts.

1. If the A/C clutch coil current reading is zero, the coil is open and must be replaced.
2. If the A/C clutch coil current reading is above specifications, the coil is shorted and must be replaced.

A/C CLUTCH COIL SPECIFICATIONS

Coil Resistance	Coil Current Draw
3.6 ± 0.2 ohms	3.2 - 3.3 amps @ 12V ± 0.5V @ 21° C (70° F)

A/C SYSTEM NOISE

When investigating an A/C system related noise, you must first know the conditions under which the noise occurs. These conditions include: weather, vehicle speed, transmission in gear or neutral, engine speed, engine temperature, and any other special conditions. Noises that develop during A/C operation can often be misleading. For example: What sounds like a failed front engine bearing or connecting rod, may be caused by loose bolts, nuts, mounting brackets or a loose compressor clutch assembly.

Drive belts are speed sensitive. At different engine speeds and depending upon drive belt tension, drive belts can develop noises that are mistaken for an A/C compressor noise. Improper drive belt tension can cause a misleading noise when the compressor clutch is engaged, which may not occur when the compressor clutch is disengaged. Check the accessory drive belt condition and tension before beginning this procedure. Refer to **ACCESSORY DRIVE** .

1. Select a quiet area for testing. Duplicate the complaint conditions as much as possible. Turn the A/C compressor On and Off several times to clearly identify the compressor noise. Listen to the A/C compressor while the clutch is engaged and disengaged. Probe the A/C compressor with an engine stethoscope or a long screwdriver with the handle held to your ear to better localize the source of the noise.
2. Loosen all of the compressor mounting hardware and retighten. Check the compressor clutch retainer. Be certain that the A/C clutch coil is mounted securely to the A/C compressor, and that the clutch plate and pulley are properly aligned and have the correct air gap. Refer to **COMPRESSOR, A/C, STANDARD PROCEDURE**.
3. To duplicate high-ambient temperature conditions (high head pressure), restrict the air flow through the A/C condenser. Install a manifold gauge set or a scan tool to be certain that the discharge pressure does not exceed 2760 kPa (400 psi).
4. Check the refrigerant system plumbing for incorrect routing, rubbing or interference, which can cause unusual noises. Also check the refrigerant lines and hoses for kinks or sharp bends that will restrict refrigerant flow, which can cause noises.
5. If the noise is from opening and closing of the high pressure relief valve, recover, evacuate and recharge the refrigerant system. Refer to **PLUMBING, STANDARD PROCEDURE**.
6. If the high pressure relief valve still does not seat properly, replace the A/C compressor. Refer to **COMPRESSOR, A/C, REMOVAL**.

STANDARD PROCEDURE

STANDARD PROCEDURE - A/C CLUTCH INSPECTION

NOTE: **The A/C clutch can be serviced in the vehicle. The refrigerant system can remain fully-charged during compressor clutch, pulley and bearing assembly, or coil replacement.**

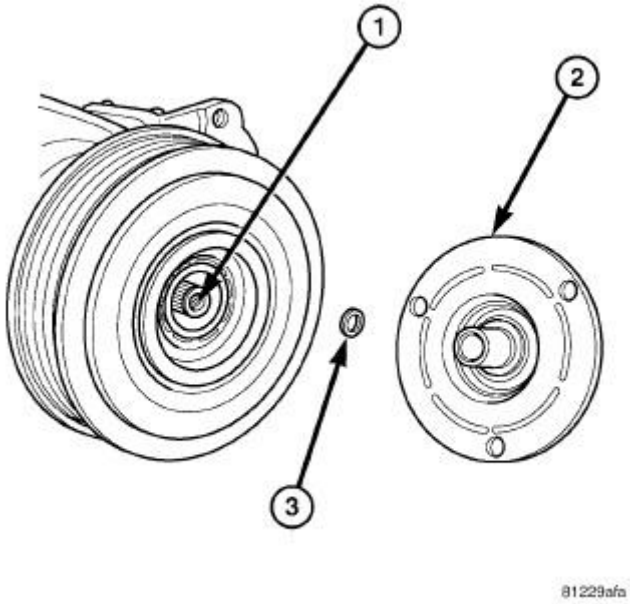

Fig. 136: Compressor Shaft, Clutch Plate & Shim
Courtesy of CHRYSLER GROUP, LLC

Examine the friction surfaces of the pulley and the clutch plate (2) for wear. The pulley and clutch plate should be replaced if there is excessive wear or scoring.

If the friction surfaces are oily, inspect the shaft and nose area of the A/C compressor (1) for refrigerant oil. If refrigerant oil is found, the compressor shaft seal is leaking and the A/C compressor must be replaced.

Check the pulley bearing for roughness or excessive leakage of grease. Replace the pulley and bearing assembly, if required.

REMOVAL

A/C CLUTCH

NOTE: **The compressor clutch assembly can be serviced with the refrigerant system fully-charged.**

NOTE: **Typical A/C compressor and clutch assembly shown in illustrations.**

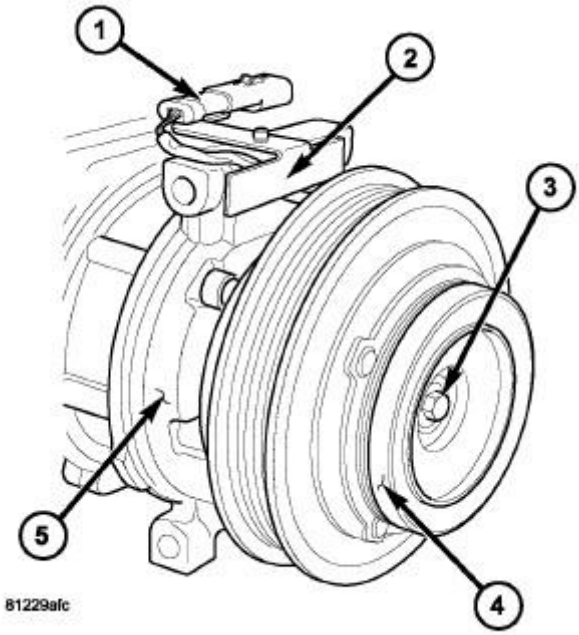

Fig. 137: A/C Compressor Shaft Bolt
Courtesy of CHRYSLER GROUP, LLC

1. Disconnect and isolate the negative battery cable.
2. Remove the accessory drive belt. Refer to **BELT, SERPENTINE, REMOVAL** .
3. Disconnect the engine wire harness from the compressor clutch field coil connector (1) located on the top of the A/C compressor (5).
4. Remove the fasteners that secure the A/C compressor to the engine and support the A/C compressor. Refer to **COMPRESSOR, A/C, REMOVAL**.
5. Carefully remove the compressor clutch coil connector and wire lead from the connector bracket (2).
6. Remove the compressor shaft bolt (3). A band-type oil filter wrench or a strap wrench may be used to hold the clutch plate (4) from rotating during bolt removal.

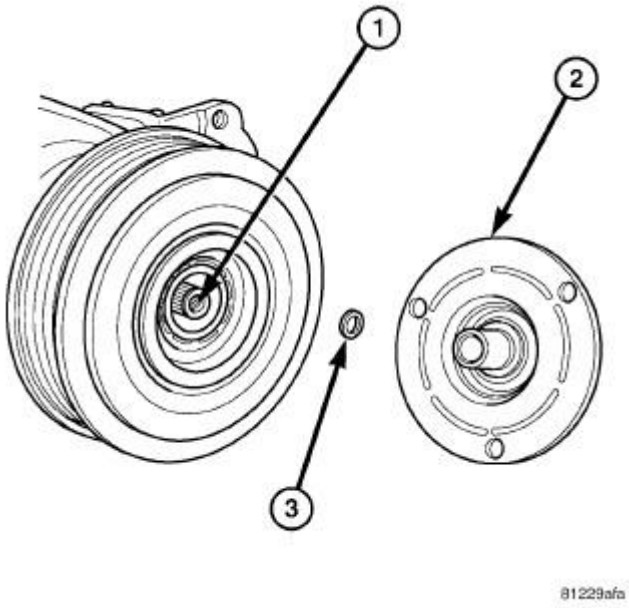

Fig. 138: Compressor Shaft, Clutch Plate & Shim
Courtesy of CHRYSLER GROUP, LLC

CAUTION: Do not pry between the clutch plate and the pulley and bearing assembly to remove the clutch plate from the compressor shaft as this may damage the clutch plate.

NOTE: Use care not to lose any clutch shim(s) during removal of the clutch plate, as they may be reused during the clutch plate installation process.

7. Tap the clutch plate (2) lightly with a plastic mallet to release it from the splines on the compressor shaft (1) and remove the clutch plate and shim(s) (3).

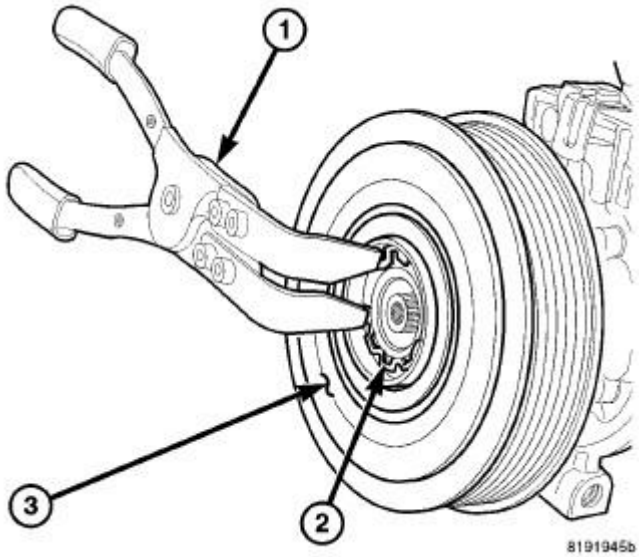

Fig. 139: Clutch Pulley & Snap Ring
Courtesy of CHRYSLER GROUP, LLC

8. Using A/C Snap Ring Pliers (special tool #9764, Pliers, A/C Snap Ring) (1) or equivalent, remove the snap ring (2) that secures the pulley and bearing assembly (3) to the front of the A/C compressor and remove the pulley and bearing assembly.

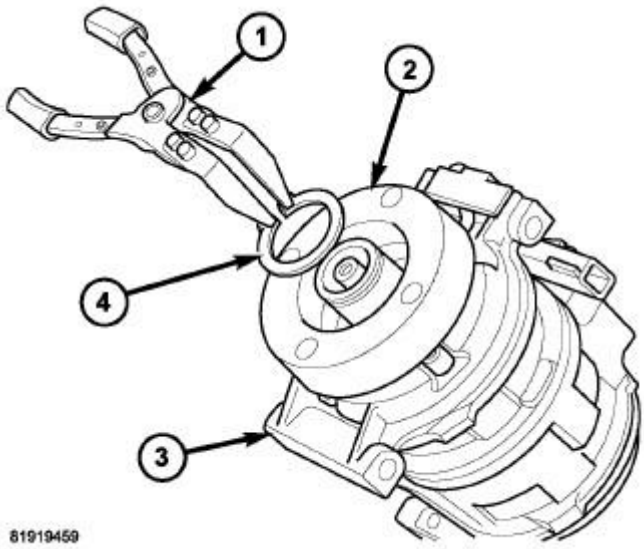

Fig. 140: Clutch Coil & Snap Ring
Courtesy of CHRYSLER GROUP, LLC

9. Using A/C Snap Ring Pliers (special tool #9764, Pliers, A/C Snap Ring) (1) or equivalent, remove the snap ring (4) that secures the compressor clutch coil (2) to the front of the A/C compressor (3) and remove the field coil.

WARNING: Refer to the applicable Warnings and Cautions for this system before performing the following operation. Refer to PLUMBING, WARNING and PLUMBING, CAUTION. Failure to follow these instructions may result in possible serious or fatal injury.

NOTE: The A/C compressor may be removed and repositioned without disconnecting the refrigerant lines or discharging the refrigerant system. Discharging is not necessary if servicing the compressor clutch, clutch coil, engine, engine cylinder head or the generator.

NOTE: 4.7L engine shown in illustrations. 3.7L engine similar.

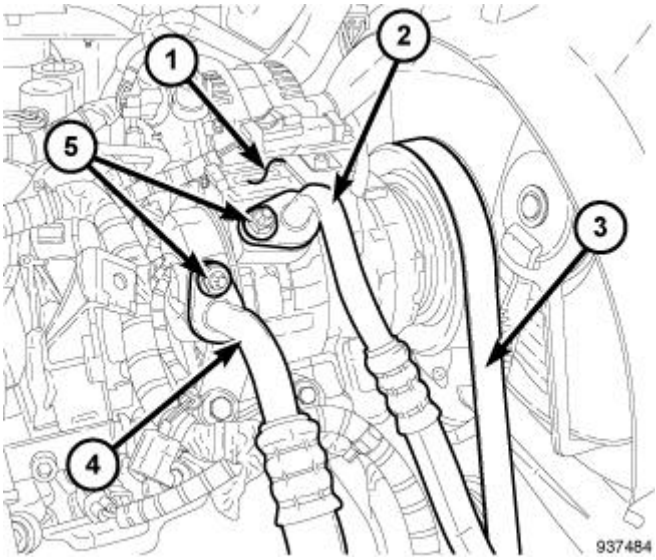

Fig. 141: A/C Discharge & Suction Lines To Compressor
Courtesy of CHRYSLER GROUP, LLC

1. Disconnect and isolate the negative battery cable.
2. Recover the refrigerant from the refrigerant system. Refer to **PLUMBING, STANDARD PROCEDURE**.
3. Remove the resonator. Refer to **BODY, AIR CLEANER, REMOVAL, 3.7L** or **BODY, AIR CLEANER, REMOVAL, 4.7L** .
4. Remove the accessory drive belt (3). Refer to **BELT, SERPENTINE, REMOVAL** .
5. Remove the nuts (5) that secure the A/C discharge line (2) and the A/C suction line (4) to the A/C compressor (1).
6. Disconnect the A/C discharge and suction lines from the A/C compressor and remove and discard the O-ring seals and gaskets.
7. Install plugs in, or tape over the opened refrigerant line fittings and the compressor ports.

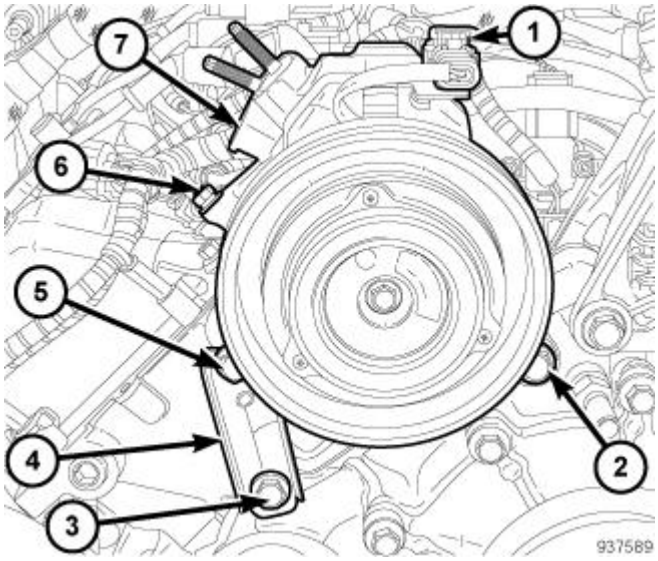

Fig. 142: A/C Compressor, Support Bracket & Bolts
Courtesy of CHRYSLER GROUP, LLC

8. Disconnect the engine wire harness connector (1) from the A/C compressor (7).
9. Loosen the bolt (3) that secures the support bracket (4) to the front of the engine.
10. Remove the three bolts (2, 5 and 6) that secure the A/C compressor to the engine and remove the compressor

5.7L ENGINE

WARNING: Refer to the applicable Warnings and Cautions for this system before performing the following operation. Refer to PLUMBING, WARNING and PLUMBING, CAUTION. Failure to follow these instructions may result in possible serious or fatal injury.

NOTE: The A/C compressor may be removed and repositioned without disconnecting the refrigerant lines or discharging the refrigerant system.

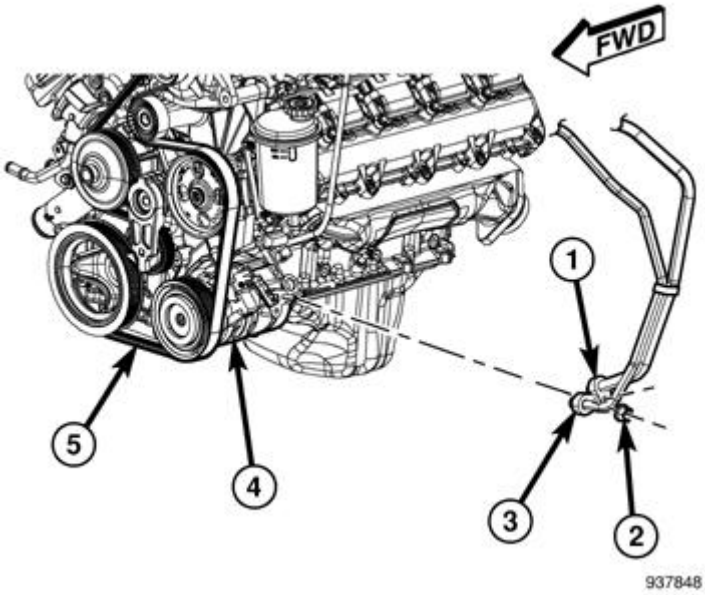

Fig. 143: A/C Compressor, Drive Belt & Suction/Discharge Lines
Courtesy of CHRYSLER GROUP, LLC

1. Disconnect and isolate the negative battery cable.
2. Recover the refrigerant from the refrigerant system. Refer to **PLUMBING, STANDARD PROCEDURE**.
3. Remove the accessory drive belt (5). Refer to **BELT, SERPENTINE, REMOVAL** .
4. Disengage the plastic refrigerant line bracket from the upper front of the engine. Refer to **LINE, A/C DISCHARGE, REMOVAL**.
5. Raise and support the vehicle.
6. Disconnect the engine wire harness connector from the A/C compressor (4).
7. Remove the nuts (2) that secure the A/C suction line (1) and the A/C discharge line (3) to the A/C compressor.
8. Disconnect the A/C suction and discharge lines from the A/C compressor and remove and discard the O-ring seals and gaskets.
9. Install plugs in, or tape over the opened refrigerant line fittings and compressor ports.

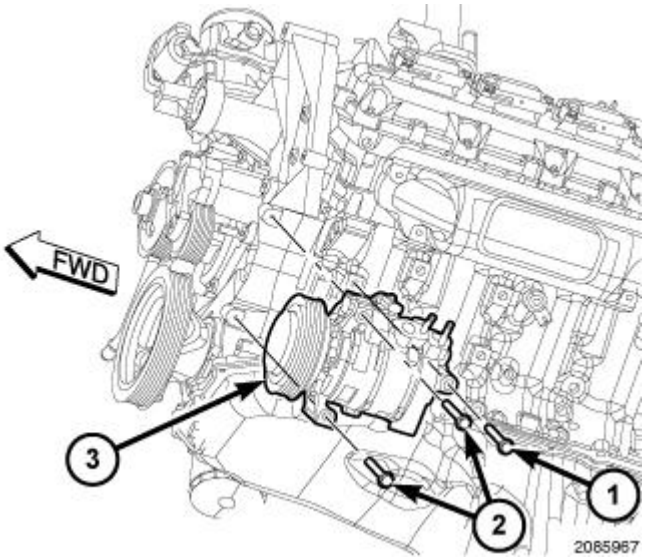

Fig. 144: A/C Compressor & Bolts
Courtesy of CHRYSLER GROUP, LLC

10. Remove the three bolt (1 and 2) that secure the A/C compressor (3) to the engine and remove the compressor.

6.7L DIESEL ENGINE

WARNING: Refer to the applicable warnings and cautions for this system before performing the following operation. Refer to PLUMBING, WARNING and PLUMBING, CAUTION. Failure to follow these instructions may result in possible serious or fatal injury.

NOTE: The A/C compressor may be removed and repositioned without disconnecting the refrigerant lines or discharging the refrigerant system. Discharging is not necessary if servicing the compressor clutch, clutch coil or engine.

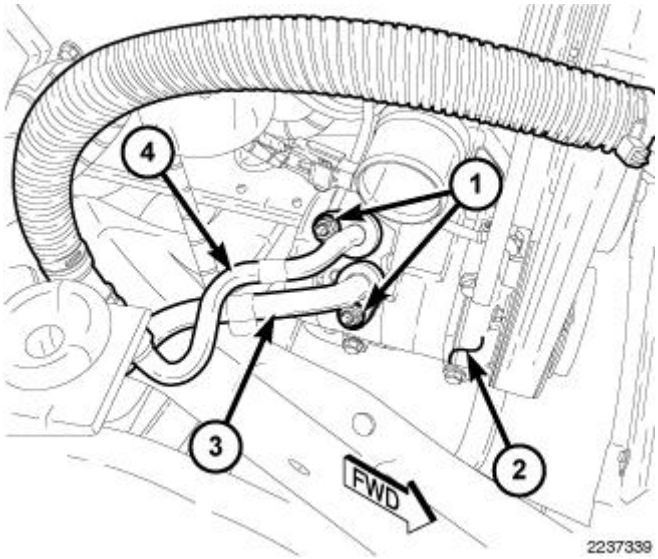

Fig. 145: Nuts, A/C Compressor, A/C Suction Line & A/C Discharge Line
Courtesy of CHRYSLER GROUP, LLC

NOTE: Illustration shown with lower radiator hose removed for clarity.

1. Disconnect and isolate the negative battery cable.
2. Recover the refrigerant from the refrigerant system. Refer to **PLUMBING, STANDARD PROCEDURE**.
3. Remove the air filter housing.
4. Remove the turbocharger outlet tube.
5. Remove the nuts (1) that secure the A/C suction line (3) and the A/C discharge line (4) to the A/C compressor (2).
6. Disconnect the A/C suction and discharge lines from the A/C compressor and remove and discard the O-ring seals and gaskets.
7. Install plugs in, or tape over the opened refrigerant line fittings and compressor ports.

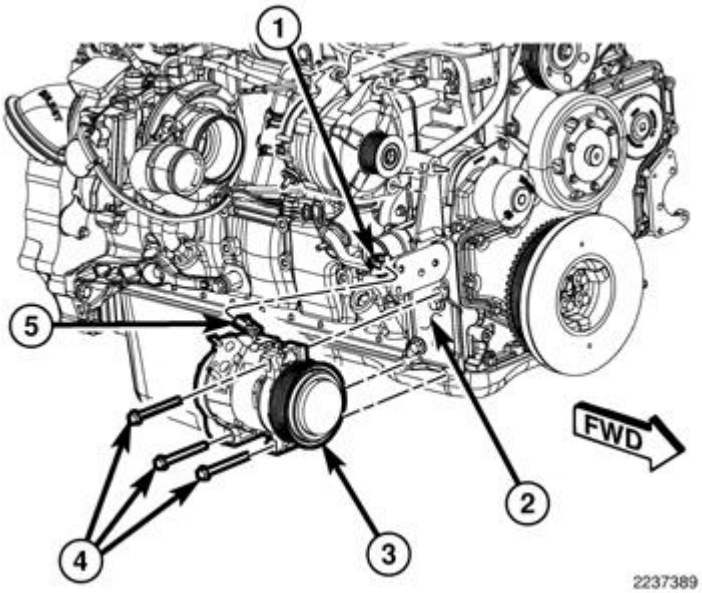

Fig. 146: A/C Compressor & Bolts (Diesel)
Courtesy of CHRYSLER GROUP, LLC

8. Remove the accessory drive belt. Refer to **BELT, SERPENTINE, REMOVAL** .
9. Disconnect the engine wire harness (1) from the A/C clutch coil connector (5).
10. Remove the three bolts (4) that secure the A/C compressor (3) to the mounting bracket (2) and remove the compressor.

INSTALLATION

A/C CLUTCH

NOTE: Typical A/C compressor and clutch assembly shown in illustrations.

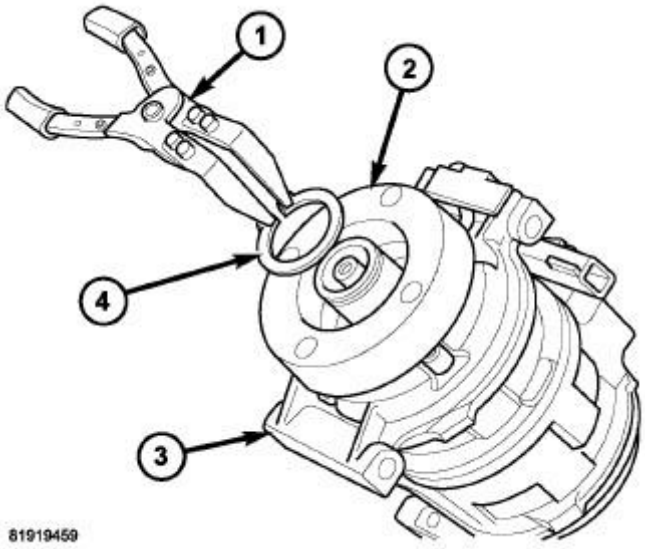

Fig. 147: Clutch Coil & Snap Ring
Courtesy of CHRYSLER GROUP, LLC

1. Align the dowel pin on the back of the compressor clutch coil (2) with the hole in the front of the A/C compressor (3) and position the coil onto the compressor. Be certain that the compressor clutch coil wire lead is properly routed so that it is not pinched between the A/C compressor and the coil.

CAUTION: The snap ring must be fully and properly seated in the groove or it will vibrate out, resulting in a clutch failure and severe damage to the A/C compressor.

NOTE: A new snap ring must be used to secure the compressor clutch field coil to the A/C compressor. The bevel side of the snap ring must face outward and both snap ring eyelets must be oriented to the right or to the left of the field coil dowel pin location on the A/C compressor.

2. Using A/C Snap Ring Pliers (special tool #9764, Pliers, A/C Snap Ring) (1) or equivalent, install the snap ring (4) that secures the compressor clutch coil to the front of the A/C compressor. Be certain that the snap ring is fully and properly seated in the groove and oriented correctly.

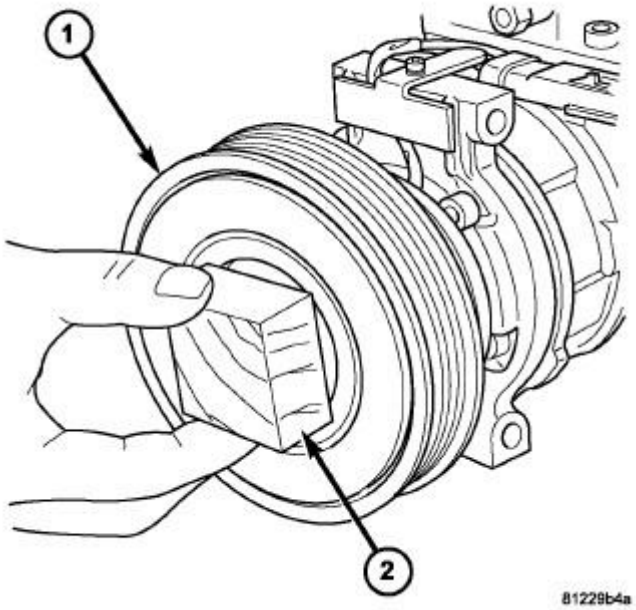

Fig. 148: Installing Pulley & Bearing Assembly
Courtesy of CHRYSLER GROUP, LLC

CAUTION: Be certain to position the A/C clutch coil wire lead so that it is not damaged during A/C compressor pulley and bearing installation.

CAUTION: When installing the pulley and bearing assembly, DO NOT mar the friction surfaces of the pulley or premature failure of the A/C clutch will result.

3. Install the pulley and bearing assembly (1) onto the front of the A/C compressor. If necessary, tap the pulley gently with a block of wood (2) placed on the pulley friction surface.

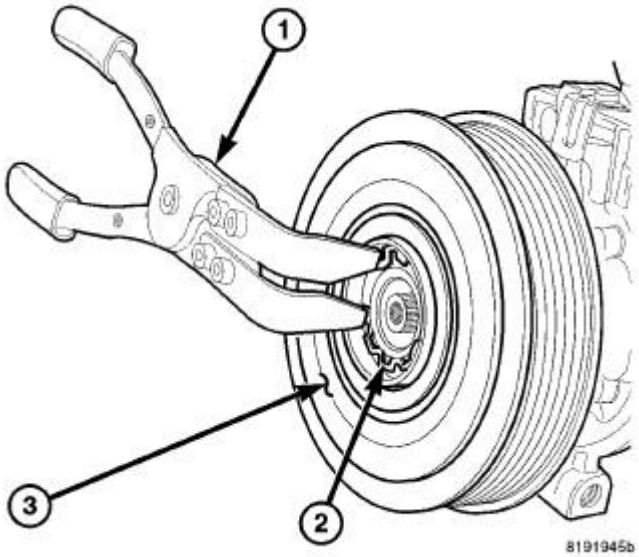

Fig. 149: Clutch Pulley & Snap Ring
Courtesy of CHRYSLER GROUP, LLC

CAUTION: The snap ring must be fully and properly seated in the groove or it will vibrate out, resulting in a clutch failure and severe damage to the A/C compressor.

NOTE: A new snap ring must be used to secure the pulley and bearing assembly to the A/C compressor. The bevel side of the snap ring must face outward.

4. Using A/C Snap Ring Pliers (special tool #9764, Pliers, A/C Snap Ring) (1) or equivalent, install the snap ring (2) that secures the pulley and bearing assembly (3) to the front of the A/C compressor. Be certain that the snap ring is fully and properly seated in the groove.

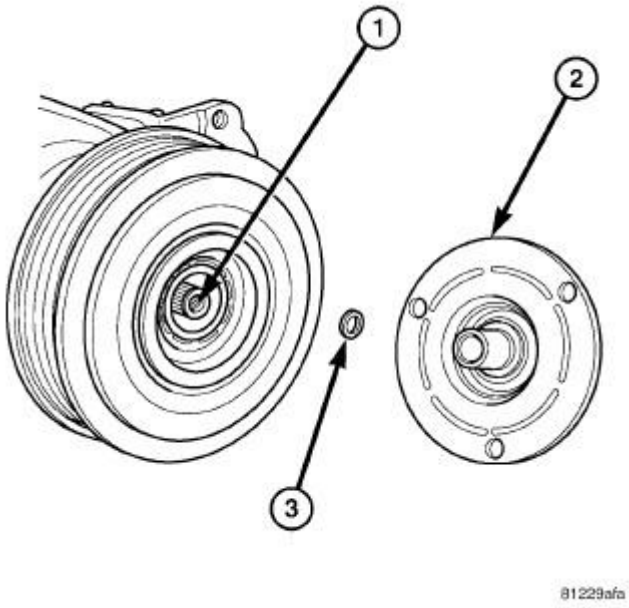

Fig. 150: Compressor Shaft, Clutch Plate & Shim
Courtesy of CHRYSLER GROUP, LLC

5. If the original clutch plate (2) and pulley and bearing assembly are to be reused, reinstall the original shim (s) (3) onto the compressor shaft (1). If a new clutch plate and pulley and bearing assembly are being used, install a trial stack of shims 2.54 mm (0.010 in.) thick onto the compressor shaft.

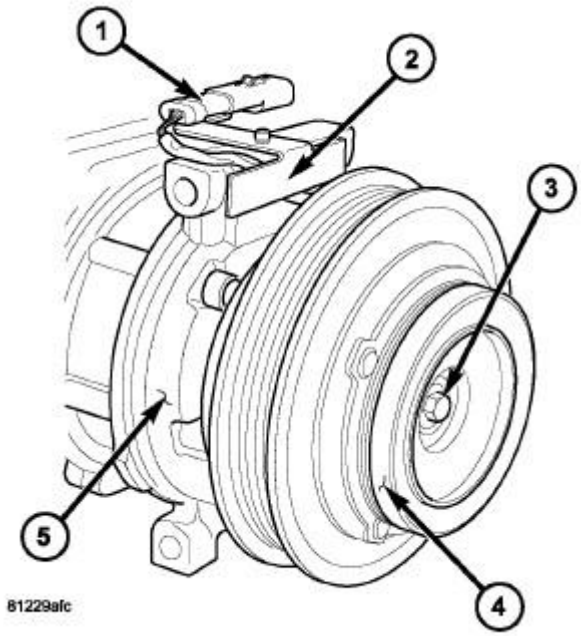

Fig. 151: A/C Compressor Shaft Bolt

Courtesy of CHRYSLER GROUP, LLC

6. Install the clutch plate (4) onto the front of the A/C compressor (5).
7. Install the compressor shaft bolt (3). Tighten the bolt to 19 N.m (168 in. lbs.).

NOTE: The shims may compress after tightening the shaft bolt. Check the air gap in four or more places to verify the air gap is correct. Spin the pulley before performing a final check of the air gap.

NOTE: On models with the clutch plate recessed into the pulley, use a 90° wire gap gauge to measure the clutch air gap. On other models, use a blade type feeler gauge to measure the air gap.

8. With the clutch plate assembled tight against the shim(s), measure the air gap between the clutch plate and the pulley and bearing assembly. The air gap should be between 0.35 - 0.60 mm (0.014 - 0.024 in.). If the air gap is not between specifications, add or subtract shims as needed until the correct air gap is obtained.

CAUTION: Be certain that the A/C clutch coil wire harness is properly routed so that it is not pinched between the A/C compressor and the coil connector bracket.

9. Carefully route the compressor clutch coil wire lead behind the connector bracket (2).
10. Install the compressor clutch coil connector (1) onto the connector bracket.
11. Position the A/C compressor to the engine and install the fasteners. Refer to **COMPRESSOR, A/C, INSTALLATION**.
12. Connect the engine wire harness to the compressor clutch coil connector.
13. Install the accessory drive belt. Refer to **BELT, SERPENTINE, INSTALLATION** .
14. Reconnect the negative battery cable.

3.7L/4.7L ENGINES

CAUTION: If the A/C compressor is being replaced, be certain to adjust the refrigerant system oil level. Refer to OIL, REFRIGERANT, STANDARD PROCEDURE. Failure to properly adjust the refrigerant oil level will prevent the A/C system from operating as designed and can cause serious A/C compressor damage.

CAUTION: The A/C condenser must be replaced if an internal failure of the A/C compressor has occurred. Failure to replace the A/C condenser can cause serious damage to the replacement A/C compressor. Refer to CONDENSER, A/C, REMOVAL.

NOTE: When replacing multiple A/C system components, refer to the Refrigerant Oil

Capacities chart to determine how much oil should be removed from the new A/C compressor. Refer to OIL, REFRIGERANT, STANDARD PROCEDURE.

NOTE: **Replacement of the refrigerant line O-ring seals and gaskets is required anytime a refrigerant line is disconnected. Failure to replace the rubber O-ring seals and metal gaskets could result in a refrigerant system leak.**

NOTE: **4.7L engine shown in illustrations. 3.7L engine similar.**

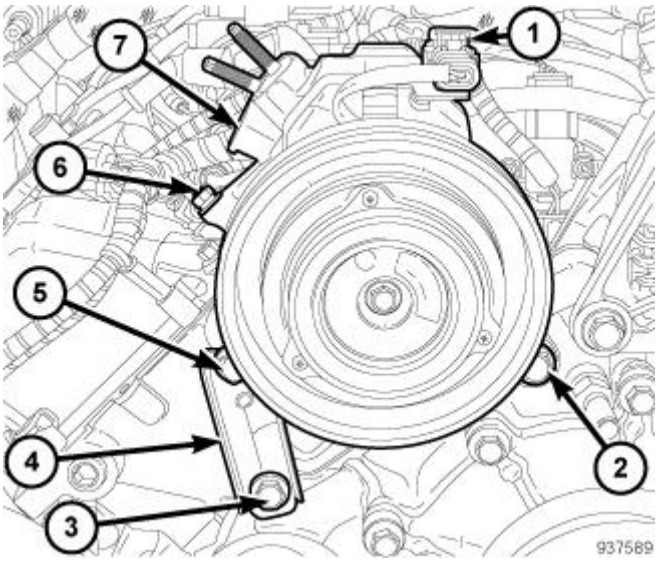

Fig. 152: A/C Compressor, Support Bracket & Bolts
Courtesy of CHRYSLER GROUP, LLC

1. If the A/C compressor (7) is being replaced, the refrigerant oil in the old compressor must be first drained and measured. Then the oil in the new A/C compressor must be drained. Finally, the new compressor must be refilled with the same amount of new refrigerant oil that was drained out of the old compressor. When replacing multiple A/C system components, refer to the Refrigerant Oil Capacities chart to determine how much oil should be added to the refrigerant system. Refer to **OIL, REFRIGERANT, STANDARD PROCEDURE**. Use only refrigerant oil of the type recommended for the A/C compressor in the vehicle.
2. Position the A/C compressor onto the engine.
3. Install and tighten the bolts in the following sequence:
    - Install bolt (2) and hand tighten.
    - Install bolt (5) and hand tighten.
    - Install bolt (6) and hand tighten.
    - Tighten bolt (2) to 40 N.m (30 ft. lbs.).
    - Tighten bolt (5) to 55 N.m (41 ft. lbs.).
    - Tighten bolt (6) to 55 N.m (41 ft. lbs.).
    - Tighten bolt (4) to 55 N.m (41 ft. lbs.).

4. Connect the engine wire harness connector (1) to the A/C compressor.

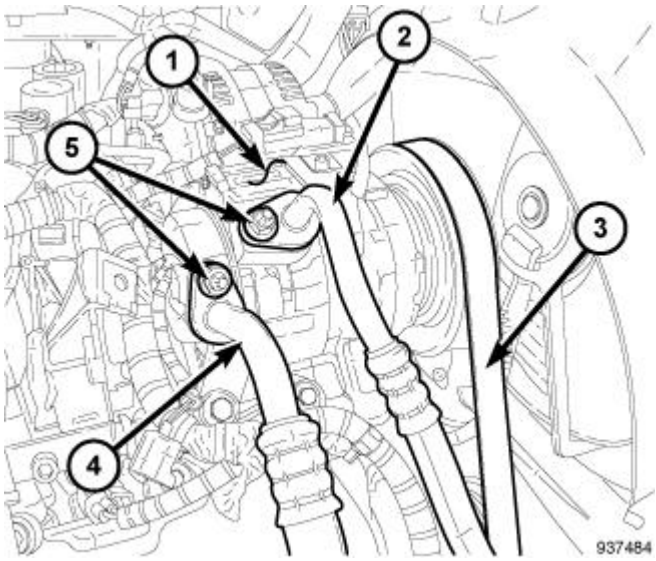

Fig. 153: A/C Discharge & Suction Lines To Compressor
Courtesy of CHRYSLER GROUP, LLC

5. Remove the tape or plugs from the opened refrigerant line fittings and the compressor ports.
6. Lubricate new O-ring seals with clean refrigerant oil and install them and new gaskets onto the refrigerant line fittings. Use only the specified O-ring seals as they are made of a special material for the R-134a system. Use only refrigerant oil of the type recommended for the A/C compressor in the vehicle.
7. Install the A/C discharge line (2) and the A/C suction line (4) onto the A/C compressor (1).
8. Install the nuts (5) that secure the refrigerant lines to the A/C compressor. Tighten the nuts to 23 N.m (17 ft. lbs.).
9. Install the accessory drive belt (3). Refer to **BELT, SERPENTINE, INSTALLATION** .
10. Install the resonator. Refer to **BODY, AIR CLEANER, INSTALLATION, 3.7L** or **BODY, AIR CLEANER, INSTALLATION, 4.7L** .
11. Reconnect the negative battery cable.
12. Evacuate and charge the refrigerant system. Refer to **PLUMBING, STANDARD PROCEDURE**.

5.7L ENGINE

CAUTION: If the A/C compressor is being replaced, be certain to adjust the refrigerant system oil level. Refer to OIL, REFRIGERANT, STANDARD PROCEDURE. Failure to properly adjust the refrigerant oil level will prevent the A/C system from operating as designed and can cause serious A/C compressor damage.

CAUTION: The A/C condenser must be replaced if an internal failure of the A/C compressor has occurred. Failure to replace the A/C condenser can cause serious damage to the replacement A/C compressor. Refer to

CONDENSER, A/C, REMOVAL.

NOTE: **When replacing multiple A/C system components, refer to the Refrigerant Oil Capacities chart to determine how much oil should be removed from the new A/C compressor. Refer to OIL, REFRIGERANT, STANDARD PROCEDURE.**

NOTE: **Replacement of the refrigerant line O-ring seals and gaskets is required anytime a refrigerant line is disconnected. Failure to replace the rubber O-ring seals and metal gaskets could result in a refrigerant system leak.**

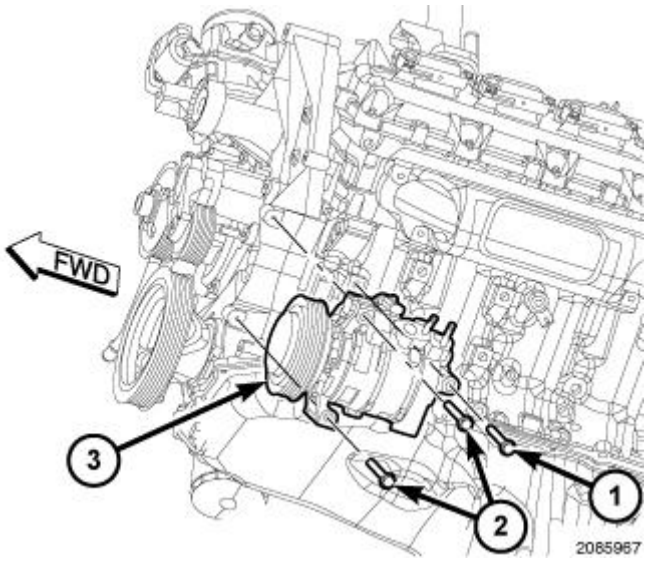

Fig. 154: A/C Compressor & Bolts
Courtesy of CHRYSLER GROUP, LLC

1. If the A/C compressor (3) is being replaced, the refrigerant oil in the old compressor must be first drained and measured. Then the oil in the new A/C compressor must be drained. Finally, the new compressor must be refilled with the same amount of new refrigerant oil that was drained out of the old compressor. When replacing multiple A/C system components, refer to the Refrigerant Oil Capacities chart to determine how much oil should be added to the refrigerant system. Refer to **OIL, REFRIGERANT, STANDARD PROCEDURE**. Use only refrigerant oil of the type recommended for the A/C compressor in the vehicle.
2. Position the A/C compressor to the engine.
3. If removed, install and securely tighten the two studs (3) that secure the A/C compressor to the engine.
4. Loosely install the three bolts (1 and 2) that secure the A/C compressor to the engine.
5. Tighten each of the bolts to 28 N.m (21 ft. lbs.) using the following sequence:
    - Upper bolt at front of compressor.
    - Lower bolt at front of compressor.
    - Bolt at rear of compressor.
6. Connect the engine wire harness connector to the A/C compressor.

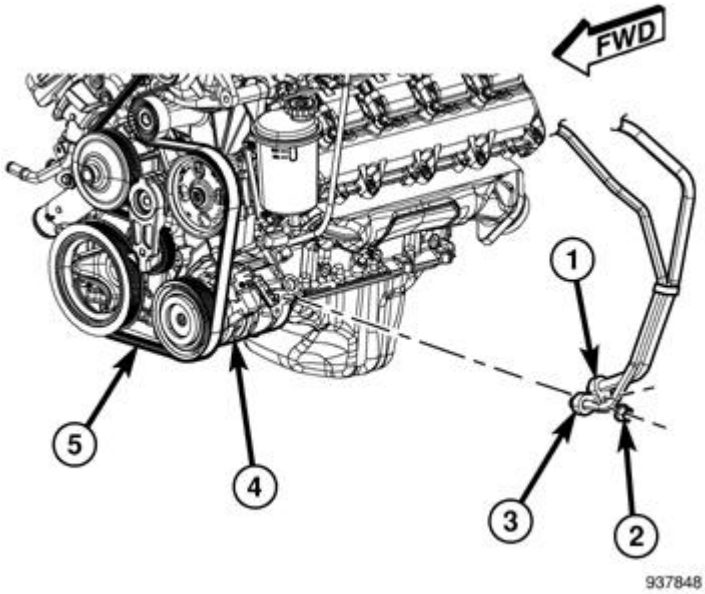

Fig. 155: A/C Compressor, Drive Belt & Suction/Discharge Lines
Courtesy of CHRYSLER GROUP, LLC

7. Remove the tape or plugs from the opened refrigerant line fittings and the compressor ports.
8. Lubricate new O-rings with clean refrigerant oil and install them and new gaskets onto the refrigerant line fittings. Use only the specified O-ring seals as they are made of a special material for the R-134a system. Use only refrigerant oil of the type recommended for the A/C compressor in the vehicle.
9. Install the A/C discharge line (3) and the A/C suction line (1) onto the A/C compressor (4).
10. Install the nuts (2) that secure the A/C discharge and suction lines to the A/C compressor. Tighten the nuts to 23 N.m (17 ft. lbs.).
11. Lower the vehicle.
12. Engage the plastic refrigerant line bracket to the upper front of the engine. Refer to **LINE, A/C DISCHARGE, INSTALLATION**.
13. Install the accessory drive belt (5). Refer to **BELT, SERPENTINE, INSTALLATION** .
14. Reconnect the negative battery cable.
15. Evacuate and charge the refrigerant system. Refer to **PLUMBING, STANDARD PROCEDURE**.

6.7L DIESEL ENGINE

CAUTION: If the A/C compressor is being replaced, be certain to adjust the refrigerant system oil level. Refer to OIL, REFRIGERANT, STANDARD PROCEDURE. Failure to properly adjust the refrigerant oil level will prevent the A/C system from operating as designed and can cause serious A/C compressor damage.

CAUTION: The A/C condenser must be replaced if an internal failure of the A/C compressor has occurred. Failure to replace the A/C condenser can cause serious damage to the replacement A/C compressor. Refer to

CONDENSER, A/C, REMOVAL.

NOTE: **When replacing multiple A/C system components, refer to the Refrigerant Oil Capacities chart to determine how much oil should be removed from the new A/C compressor. Refer to OIL, REFRIGERANT, STANDARD PROCEDURE.**

NOTE: **Replacement of the refrigerant line O-ring seals and gaskets is required anytime a refrigerant line is disconnected. Failure to replace the rubber O-ring seals and metal gaskets could result in a refrigerant system leak.**

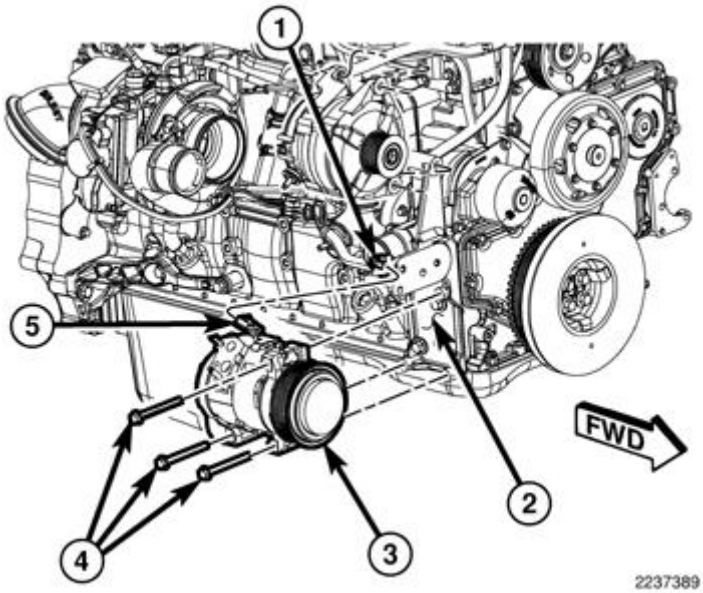

Fig. 156: A/C Compressor & Bolts (Diesel)
Courtesy of CHRYSLER GROUP, LLC

1. If the A/C compressor (2) is being replaced, the refrigerant oil in the old compressor must be first drained and measured. Then the oil in the new A/C compressor must be drained. Finally, the new compressor must be refilled with the same amount of new refrigerant oil that was drained out of the old compressor. When replacing multiple A/C system components, refer to the Refrigerant Oil Capacities chart to determine how much oil should be added to the refrigerant system. Refer to **OIL, REFRIGERANT, STANDARD PROCEDURE**. Use only refrigerant oil of the type recommended for the A/C compressor in the vehicle.
2. Position the A/C compressor (3) to the mounting bracket (2) and loosely install the three bolts (4) that secure the compressor to the bracket.
3. Tighten each of the bolts to 28 N.m (21 ft. lbs.) using the following sequence:
   - Upper bolt at front of compressor.
   - Lower bolt at front of compressor.
   - Bolt at rear of compressor.
4. Connect the engine wire harness (1) to the A/C clutch coil connector (5).
5. Install the accessory drive belt. Refer to **BELT, SERPENTINE, INSTALLATION** .

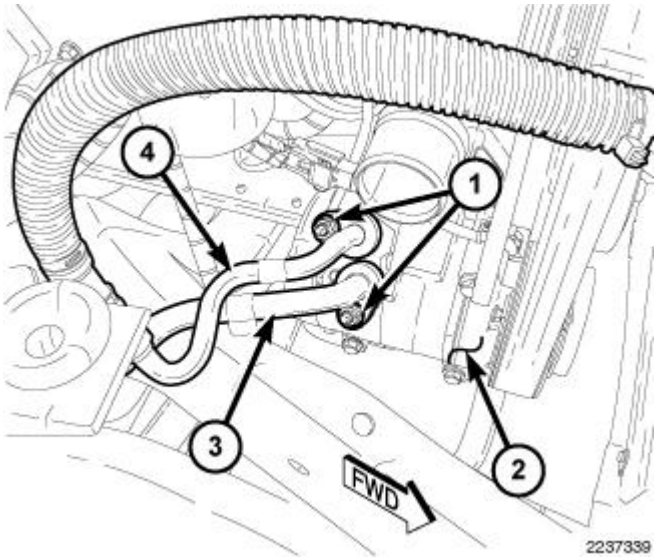

Fig. 157: Nuts, A/C Compressor, A/C Suction Line & A/C Discharge Line
Courtesy of CHRYSLER GROUP, LLC

NOTE: Illustration shown with lower radiator hose removed for clarity.

6. Remove the tape or plugs from the opened refrigerant line fittings and compressor ports.
7. Lubricate new O-ring seals with clean refrigerant oil and install them and new gaskets onto the refrigerant line fittings. Use only the specified O-ring seals as they are made of a special material for the R-134a system. Use only refrigerant oil of the type recommended for the A/C compressor in the vehicle.
8. Connect the A/C suction line (3) and A/C discharge line (4) to the A/C compressor (2).
9. Install the nuts (1) that secure the A/C suction and discharge lines to the A/C compressor. Tighten the nuts to 23 N.m (17 ft. lbs.).
10. Install the turbocharger outlet hose.
11. Install the air filter housing.
12. Reconnect the negative battery cable.
13. Evacuate and charge the refrigerant system. Refer to **PLUMBING, STANDARD PROCEDURE**.

CONDENSER, A/C

DESCRIPTION

DESCRIPTION

NOTE: Gasoline engine model A/C condenser shown in illustration. Diesel engine model similar.

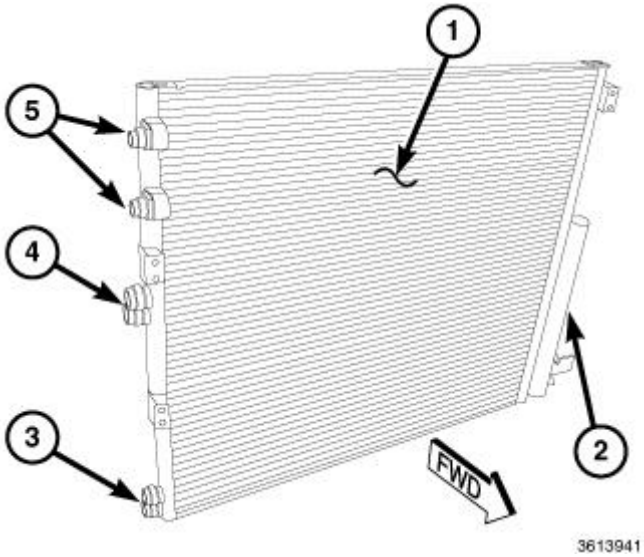

Fig. 158: A/C Condenser
Courtesy of CHRYSLER GROUP, LLC

The A/C condenser (1) is located at the front of the engine compartment, behind the grille. The A/C condenser is a heat exchanger that allows the high-pressure refrigerant gas being discharged by the A/C compressor to give up its heat to the air passing over the condenser fins, which causes the refrigerant to cool and change to a liquid state.

CAUTION: The A/C condenser must be replaced if an internal failure of the A/C compressor has occurred. Failure to replace the A/C condenser can cause serious damage to the replacement A/C compressor. Refer to CONDENSER, A/C, REMOVAL.

The A/C condenser has an integral A/C receiver/drier (2), tapping blocks for the A/C refrigerant lines (3 and 4) and connections for the integral automatic transmission cooler (5), when equipped.

OPERATION

OPERATION

When air passes through the fins of the A/C condenser, the high-pressure refrigerant gas within the A/C condenser gives up its heat. The refrigerant then condenses as it leaves the A/C condenser and becomes a high-pressure liquid. The volume of air flowing over the condenser fins is critical to the proper cooling performance of the A/C system. Therefore, it is important that there are no objects placed in front of the radiator grille openings at the front of the vehicle or foreign material on the condenser fins that might obstruct proper air flow. Also, any factory-installed air seals or shrouds must be properly reinstalled following radiator or A/C condenser service.

NOTE: Replacement of the refrigerant line O-ring seals and gaskets is required anytime a refrigerant line is disconnected. Failure to replace the rubber O-ring seals and metal gaskets could result in a refrigerant system leak.

The A/C condenser has no serviceable parts except for the O-ring seals and gaskets. The O-ring seals used on the connections are made from a special type of rubber not affected by R-134a refrigerant. The O-ring seals and gaskets must be replaced whenever a refrigerant line is disconnected from the A/C condenser.

The A/C condenser cannot be repaired and must be replaced if leaking or damaged.

REMOVAL

3.7L/4.7L/5.7L ENGINES

WARNING: Refer to the applicable Warnings and Cautions for this system before performing the following operation. Refer to PLUMBING, WARNING and PLUMBING, CAUTION. Failure to follow these instructions may result in possible serious or fatal injury.

NOTE: Illustration shown with radiator removed for clarity.

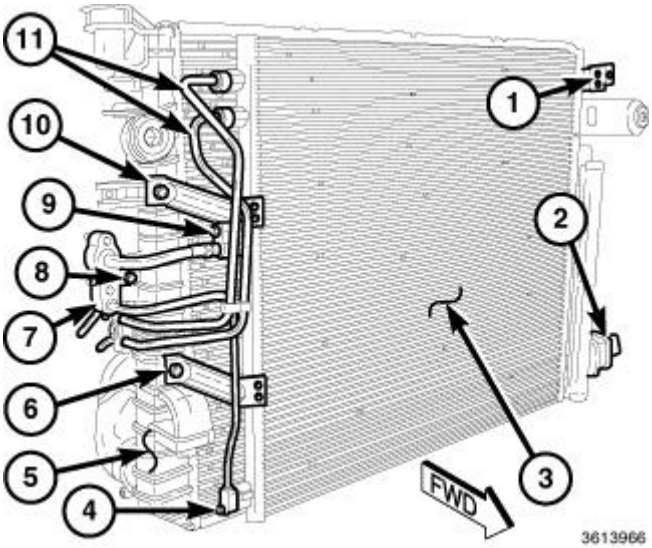

Fig. 159: A/C Condenser/Transmission Combination Cooler, Lines, Bolts & Brackets
Courtesy of CHRYSLER GROUP, LLC

1. Disconnect and isolate the negative battery cable.
2. Recover the refrigerant from the refrigerant system. Refer to **PLUMBING, STANDARD PROCEDURE**.
3. Remove the radiator closure panel. Refer to **PANEL, CLOSURE, RADIATOR, REMOVAL** .
4. Remove the grille. Refer to **GRILLE, REMOVAL** .
5. If equipped, disconnect the automatic transmission cooler lines (11) from the transmission cooler. Refer to **TUBES AND HOSES, TRANSMISSION OIL COOLER, STANDARD PROCEDURE** .
6. Remove the bolt (8) that secures the condenser jumper line tapping block (7) to the right side of the radiator (5).
7. Remove the bolts (4 and 9) that secure the refrigerant jumper lines to the A/C condenser (3).

8. Disconnect the jumper lines from the A/C condenser and remove and discard the dual plane seals.
9. Remove the three bolts that secure the condenser mounting brackets (1, 6 and 10) and remove the brackets.
10. Disengage the lower left condenser mounting bracket (2) from the radiator and remove the A/C condenser.
11. Install plugs in, or tape over the opened jumper line fittings and condenser ports.

6.7L DIESEL ENGINE

WARNING: Refer to the applicable Warnings and Cautions for this system before performing the following operation. Refer to PLUMBING, WARNING and PLUMBING, CAUTION. Failure to follow these instructions may result in possible serious or fatal injury.

NOTE: A/C condenser for manual transmission model shown in illustration with front fascia removed for clarity. Automatic transmission model similar.

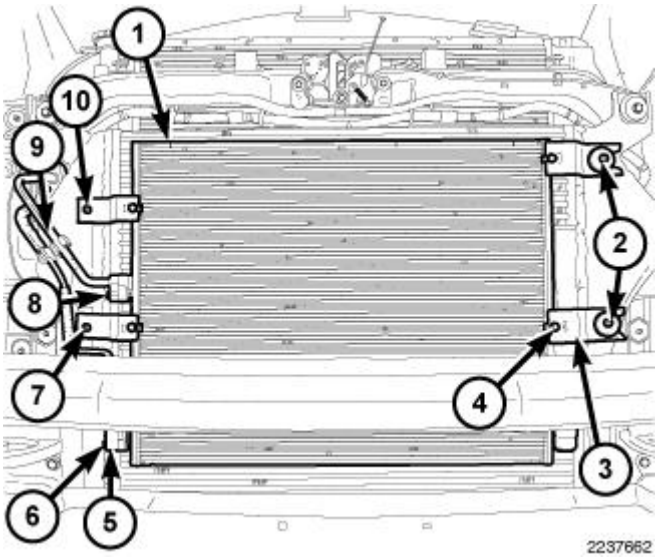

Fig. 160: A/C Condenser Securing Bolts
Courtesy of CHRYSLER GROUP, LLC

1. Recover the refrigerant from the refrigerant system. Refer to **PLUMBING, STANDARD PROCEDURE**.
2. Remove the grille.
3. If equipped, disconnect the automatic transmission cooler lines from the transmission fluid cooler fittings located at each end of the A/C condenser (1). Refer to **TUBES AND HOSES, TRANSMISSION OIL COOLER, STANDARD PROCEDURE** .
4. Remove the bolts (6 and 8) that secure the A/C liquid line (5) and the A/C discharge line (9) from the A/C condenser.
5. Disconnect the A/C liquid and discharge lines from the A/C condenser and remove and discard the O-ring

seals and gaskets.

6. Install plugs in, or tape over the opened refrigerant line fittings and condenser ports.
7. Remove the four bolts (2, 7 and 10) that secure the A/C condenser to the charge air cooler.
8. Remove the A/C condenser from the engine compartment.
9. If required, remove the four bolts (4) that secure the four retaining brackets (3) to the A/C condenser and remove the brackets. Replace the rubber isolators if necessary.

INSTALLATION

3.7L/4.7L/5.7L ENGINES

CAUTION: Be certain to adjust the refrigerant oil level when servicing the A/C refrigerant system. Refer to OIL, REFRIGERANT, STANDARD PROCEDURE. Failure to properly adjust the refrigerant oil level will prevent the A/C system from operating as designed and can cause serious A/C compressor damage.

CAUTION: The A/C condenser must be replaced if an internal failure of the A/C compressor has occurred. Failure to replace the A/C condenser can cause serious damage to the replacement A/C compressor. Refer to CONDENSER, A/C, REMOVAL.

NOTE: When replacing multiple A/C system components, refer to the Refrigerant Oil Capacities chart to determine how much oil should be added to the refrigerant system. Refer to OIL, REFRIGERANT, STANDARD PROCEDURE.

NOTE: If the A/C condenser is being replaced, add 30 milliliters (1 fluid ounce) of refrigerant oil to the refrigerant system. Use only refrigerant oil of the type recommended for the A/C compressor in the vehicle.

NOTE: Replacement of the refrigerant line O-ring seals and gaskets is required anytime a refrigerant line is disconnected. Failure to replace the rubber O-ring seals and metal gaskets could result in a refrigerant system leak.

NOTE: Illustration shown with radiator removed for clarity.

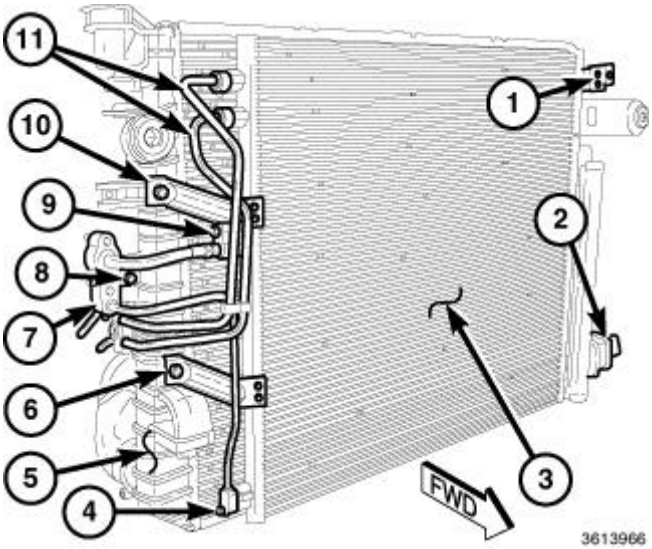

Fig. 161: A/C Condenser/Transmission Combination Cooler, Lines, Bolts & Brackets
Courtesy of CHRYSLER GROUP, LLC

1. Position the A/C condenser (3) to the front of the radiator (5) and engage the lower left condenser mounting bracket (2) to the radiator.
2. Install the condenser mounting brackets (1, 6 and 10) and retaining bolts. Tighten the bolts to 2.2 N.m (20 in. lbs.).
3. Remove the plugs or tape from the opened jumper line fittings and condenser ports.
4. Lubricate new dual plane seals with clean refrigerant oil and install them onto the jumper line fittings. Use only the specified seals as they are made of a special material for the R-134a system. Use only refrigerant oil of the type recommended for the A/C compressor in the vehicle.
5. Connect the jumper lines to the A/C condenser and install the bolts (4 and 9). Tighten the bolts to 23 N.m (17 ft. lbs.).
6. Install the bolt (8) that secures the condenser jumper line tapping block (7) to the radiator. Tighten the bolt securely.
7. If equipped, connect the automatic transmission cooler lines (11) to the transmission cooler. Refer to **TUBES AND HOSES, TRANSMISSION OIL COOLER, STANDARD PROCEDURE** .
8. Install the grille. Refer to **GRILLE, INSTALLATION** .
9. Install the radiator closure panel. Refer to **PANEL, CLOSURE, RADIATOR, INSTALLATION** .
10. Reconnect the negative battery cable.
11. If equipped, check and adjust the automatic transmission fluid level.
12. Evacuate the refrigerant system. Refer to **PLUMBING, STANDARD PROCEDURE**.
13. If the A/C condenser is being replaced, add 30 milliliters (1 fluid ounce) of refrigerant oil to the refrigerant system. When replacing multiple A/C system components, refer to the Refrigerant Oil Capacities chart to determine how much oil should be added to the refrigerant system. Refer to **OIL, REFRIGERANT, STANDARD PROCEDURE**. Use only refrigerant oil of the type recommended for the A/C compressor in the vehicle.
14. Charge the refrigerant system. Refer to **PLUMBING, STANDARD PROCEDURE**.

CAUTION: Be certain to adjust the refrigerant oil level when servicing the A/C refrigerant system. Refer to OIL, REFRIGERANT, STANDARD PROCEDURE. Failure to properly adjust the refrigerant oil level will prevent the A/C system from operating as designed and can cause serious A/C compressor damage.

CAUTION: The A/C condenser must be replaced if an internal failure of the A/C compressor has occurred. Failure to replace the A/C condenser can cause serious damage to the replacement A/C compressor. Refer to CONDENSER, A/C, REMOVAL.

NOTE: When replacing multiple A/C system components, refer to the Refrigerant Oil Capacities chart to determine how much oil should be added to the refrigerant system. Refer to OIL, REFRIGERANT, STANDARD PROCEDURE.

NOTE: If only the A/C condenser is being replaced, add 30 milliliters (1 fluid ounce) of refrigerant oil to the refrigerant system. Use only refrigerant oil of the type recommended for the A/C compressor in the vehicle.

NOTE: Replacement of the refrigerant line O-ring seals and gaskets is required anytime a refrigerant line is disconnected. Failure to replace the rubber O-ring seals and metal gaskets could result in a refrigerant system leak.

NOTE: A/C condenser for manual transmission model shown in illustration with front fascia removed for clarity. Automatic transmission model similar.

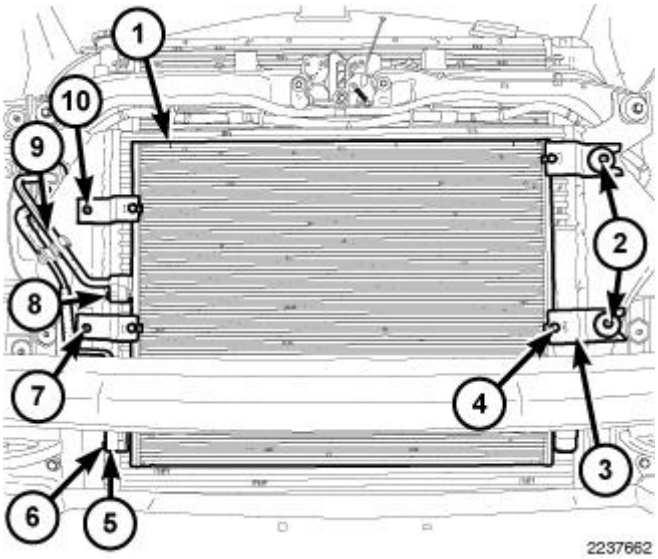

Fig. 162: A/C Condenser Securing Bolts
Courtesy of CHRYSLER GROUP, LLC

1. If removed, install the four retaining brackets (3), isolators and bolts (4) onto the A/C condenser (1). Tighten the bolts to 10.5 N.m (95 in. lbs.).
2. Position the A/C condenser into the engine compartment and install the four bolts (2, 7 and 10) that secure the A/C condenser to the charge air cooler. Tighten the bolts to 10.5 N.m (95 in. lbs.).
3. Remove the tape or plugs from the opened refrigerant line fittings and condenser ports.
4. Lubricate new rubber O-ring seals with clean refrigerant oil and install them and new gaskets onto the refrigerant line fittings. Use only the specified O-rings as they are made of a special material for the R-134a system. Use only refrigerant oil of the type recommended for the A/C compressor in the vehicle.
5. Connect the A/C liquid line (5) and A/C discharge line (9) to the A/C condenser and install the bolts (6 and 8). Tighten the bolts to 23 N.m (17 ft. lbs.).
6. If equipped, connect the automatic transmission cooler lines to the transmission fluid cooler fittings located at each end of the A/C condenser. Refer to **TUBES AND HOSES, TRANSMISSION OIL COOLER, STANDARD PROCEDURE** .
7. Install the grill.
8. Evacuate the refrigerant system. Refer to **PLUMBING, STANDARD PROCEDURE**.
9. If the A/C condenser is being replaced, add 30 milliliters (1 fluid ounce) of refrigerant oil to the refrigerant system. When replacing multiple A/C system components, refer to the Refrigerant Oil Capacities chart to determine how much oil should be added to the refrigerant system. Refer to **OIL, REFRIGERANT, STANDARD PROCEDURE**. Use only refrigerant oil of the type recommended for the A/C compressor in the vehicle.
10. Charge the refrigerant system. Refer to **PLUMBING, STANDARD PROCEDURE**.

CORE, HEATER

DESCRIPTION

DESCRIPTION

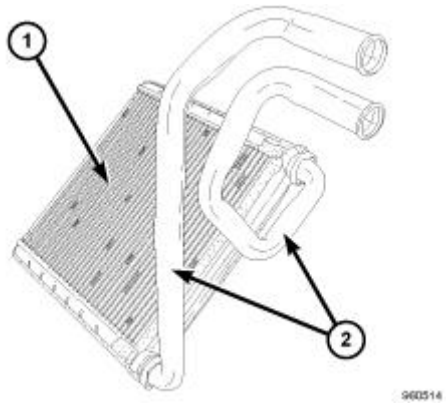

Fig. 163: Heater Core
Courtesy of CHRYSLER GROUP, LLC

The heater core (1) is a heat exchanger made of rows of tubes and fins and is located at the front of the HVAC housing. The heater core tubes (2) are attached to the front of the heater core and are secured to the HVAC housing by a flange.

The heater core can be serviced by removing the HVAC housing assembly from the vehicle.

OPERATION

OPERATION

Engine coolant is circulated through the heater hoses to the heater core at all times. As the coolant flows through the heater core, heat is removed from the engine and is transferred to the heater core tubes and fins. Air directed through the heater core picks up the heat from the heater core fins. The blend-air door(s) allows control of the heater output air temperature by regulating the amount of air flowing through the heater core. The blower motor speed controls the volume of air flowing through the HVAC housing.

The heater core cannot be repaired and must be replaced if restricted, leaking or damaged.

REMOVAL

REMOVAL

WARNING: Disable the airbag system before attempting any steering wheel, steering column or instrument panel component diagnosis or service. Refer to WARNING . Disconnect and isolate the negative battery (ground) cable, then wait two minutes for the airbag system capacitor to discharge before performing further diagnosis or service. This is the only sure way to disable the airbag system. Failure to follow these instructions may result in accidental airbag deployment and possible serious or fatal injury.

NOTE: Disassembly of the HVAC housing is not required to remove heater core.

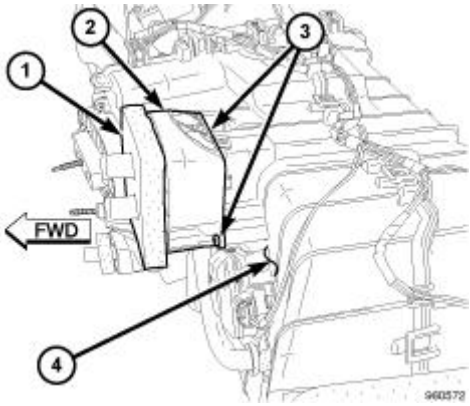

Fig. 164: HVAC Housing, Foam Seal, Flange & Screws
Courtesy of CHRYSLER GROUP, LLC

1. Remove the HVAC housing (4) and place it on a workbench. Refer to **HOUSING, HVAC, REMOVAL**.
2. Remove the foam seal (1) from the flange (2).
3. Remove the two screws (3) that secure the flange to the front of the HVAC housing.
4. Carefully disengage the retaining tab that secures the flange to the HVAC housing and remove the flange.

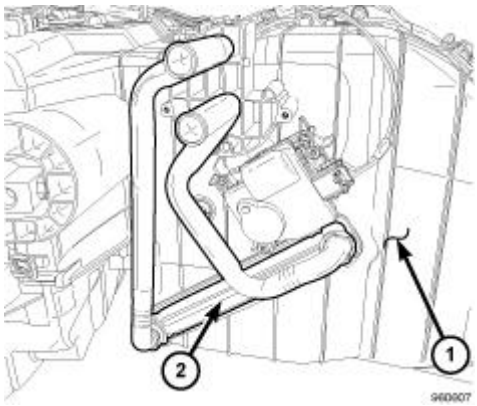

Fig. 165: HVAC Housing & Heater Core
Courtesy of CHRYSLER GROUP, LLC

5. Carefully pull the heater core (2) out of the front of the HVAC housing (1).
6. Inspect all foam seals and replace as required.

INSTALLATION

INSTALLATION

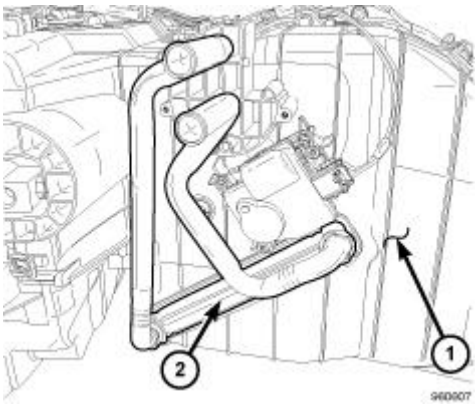

Fig. 166: HVAC Housing & Heater Core
Courtesy of CHRYSLER GROUP, LLC

NOTE: If the foam seals on the heater core are deformed or damaged, they must be replaced.

1. Inspect the foam seals on the heater core (2) and replace as required.
2. Carefully install the heater core into the front of the HVAC housing (1).

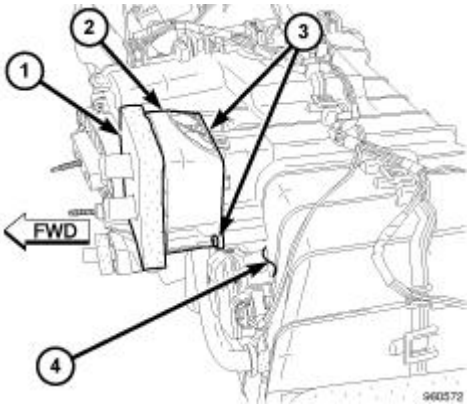

Fig. 167: HVAC Housing, Foam Seal, Flange & Screws
Courtesy of CHRYSLER GROUP, LLC

3. Position the flange (2) onto the front of the HVAC housing (4). Make sure the retaining tab is fully engaged.
4. Install the two screws (3) that secure the flange to the HVAC housing. Tighten the screws to 1.1 N.m (10 in. lbs.).
5. Install the foam seal (1) onto the flange.

NOTE: **If the heater core is being replaced, flush the cooling system. Refer to STANDARD PROCEDURE .**

6. Install the HVAC housing. Refer to **HOUSING, HVAC, INSTALLATION**.

CORE, SERVICE PORT VALVE

DESCRIPTION

DESCRIPTION

Two refrigerant system service ports are used to recover/recycle/evacuate/charge and test the A/C refrigerant system. Unique sizes are used on the service ports for the R-134a refrigerant system to ensure the system is not accidentally contaminated with R-12 refrigerant or service equipment used for R-12 refrigerant.

The high side service port is located on the A/C liquid line. The low side service port is located on the A/C suction line. Both the high side and low side A/C service port valve cores are serviceable.

Each of the service ports has a threaded plastic protective cap installed over it from the factory. After servicing the refrigerant system, always reinstall both of the service port caps.

An A/C pressure transducer is mounted on the A/C discharge line to monitor the high side A/C system pressures. Refer to **TRANSDUCER, A/C PRESSURE, DESCRIPTION**.

REMOVAL

REMOVAL

WARNING: Refer to the applicable warnings and cautions for this system before performing the following operation. Refer to PLUMBING, WARNING and PLUMBING, CAUTION. Failure to follow these instructions may result in serious or fatal injury.

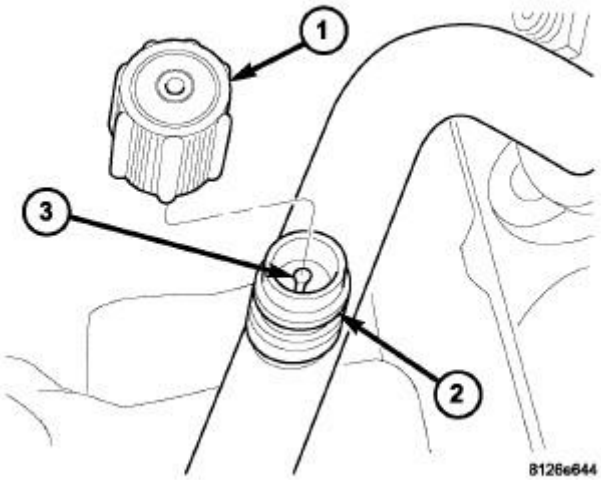

Fig. 168: A/C Service Port Components
Courtesy of CHRYSLER GROUP, LLC

NOTE: Typical A/C service port shown in illustration.

1. Remove the protective cap (1) from the service port (2).
2. Recover the refrigerant from the refrigerant system. Refer to **PLUMBING, STANDARD PROCEDURE**.
3. Using a Schrader-type valve core tool, remove the valve core (3) from the service port.
4. Install a plug in, or tape over the opened service port(s).

INSTALLATION

INSTALLATION

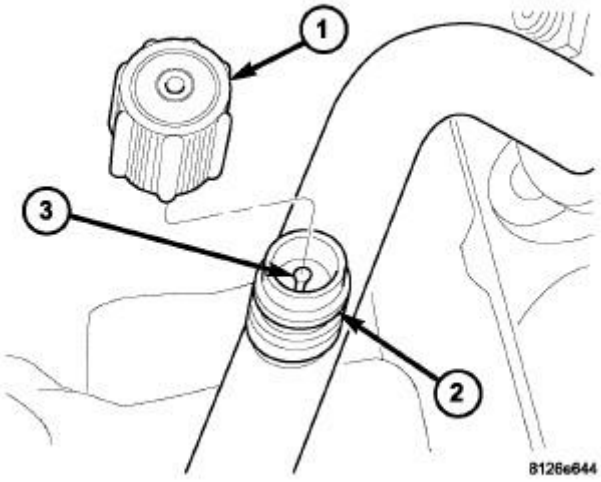

Fig. 169: A/C Service Port Components
Courtesy of CHRYSLER GROUP, LLC

NOTE: Typical A/C service port shown in illustration.

1. Lubricate the valve core (3) with clean refrigerant oil prior to installation. Use only refrigerant oil of the type recommended for the A/C compressor in the vehicle.
2. Remove the tape or plug from the service port (2).

CAUTION: Damage may result to a service port valve core if the valve core is not fully seated in the A/C service port. Such damage can result in a loss of refrigerant.

3. Install and tighten the valve core into the service port(s) using a Schrader type valve core tool.
4. Evacuate and charge the refrigerant system. Refer to **PLUMBING, STANDARD PROCEDURE**.

NOTE: The protective cap helps aid in service port sealing and helps protect the refrigerant system from contamination. Remember to always reinstall the protective cap onto the service port when refrigerant system service is complete.

5. Install the protective cap (1) onto the service port.

DRIER, A/C RECEIVER

DESCRIPTION

DESCRIPTION

NOTE: **Gasoline engine model A/C condenser shown in illustration. Diesel engine model similar.**

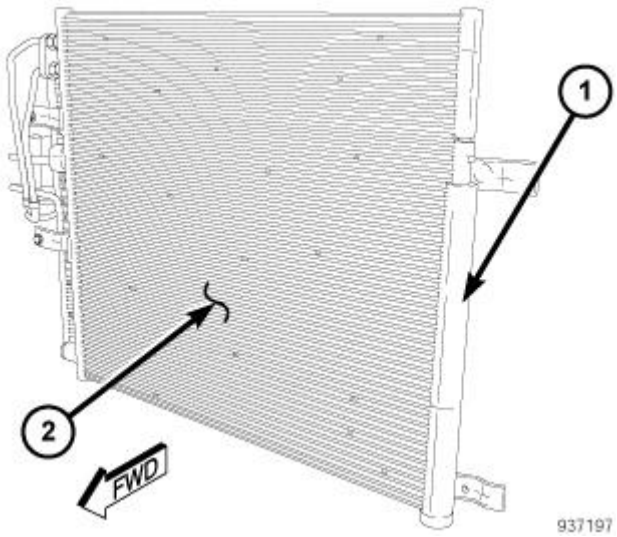

Fig. 170: A/C Receiver/Drier
Courtesy of CHRYSLER GROUP, LLC

The A/C receiver/drier (1) stores unnecessary refrigerant, filters the refrigerant, helps remove moisture from the refrigerant and retains any refrigerant vapor that may leave the A/C condenser (2) until it becomes a liquid. The A/C receiver/drier is on the high-side of the A/C system and is located on the left side of the A/C condenser.

CAUTION: The A/C condenser must be replaced if an internal failure of the A/C compressor has occurred. Failure to replace the A/C condenser can cause serious damage to the replacement A/C compressor. Refer to CONDENSER, A/C, REMOVAL.

The A/C receiver/drier is integral to the A/C condenser and must be replaced with the condenser as an assembly.

OPERATION

OPERATION

The A/C receiver/drier performs a filtering action to prevent foreign material that may be in the refrigerant from contaminating the A/C expansion valve and the A/C compressor. Refrigerant enters the A/C receiver/drier as a high-pressure, low temperature liquid. Desiccant inside the A/C receiver/drier absorbs any moisture which may have entered and become trapped within the refrigerant system. In addition, during periods of high demand operation of the A/C system, the A/C receiver/drier acts as a reservoir to store surplus refrigerant.

The A/C receiver/drier is integral to the A/C condenser and has no serviceable parts.

The A/C receiver/drier cannot be repaired and the A/C condenser must be replaced if the receiver/drier is leaking or damaged, or if an internal failure of the A/C compressor has occurred. Refer to **CONDENSER, A/C,**

REMOVAL.

EVAPORATOR, A/C

DESCRIPTION

DESCRIPTION

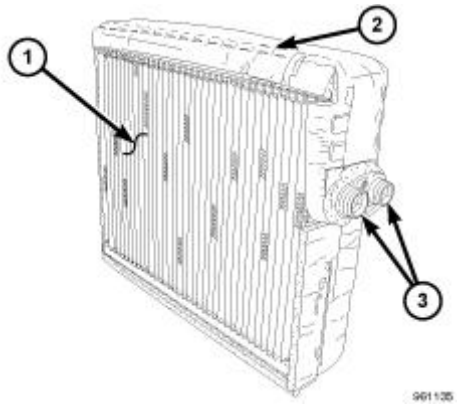

Fig. 171: A/C Evaporator
Courtesy of CHRYSLER GROUP, LLC

The A/C evaporator (1) for the heating-A/C system is located within the HVAC housing, behind the instrument panel. The A/C evaporator and insulator (2) are positioned in the HVAC housing so that all air entering the housing must pass over the evaporator fins before it is distributed through the heating-A/C system ducts and outlets. However, air passing over the evaporator fins will only be conditioned when the A/C compressor is engaged and circulating refrigerant through the A/C evaporator. The A/C expansion valve is attached directly to the evaporator inlet and outlet ports (3) and the connections are sealed by O-rings.

The A/C evaporator can be serviced by removing and partially disassembling the HVAC housing.

OPERATION

OPERATION

Refrigerant enters the A/C evaporator from the A/C expansion valve as a low-temperature, low-pressure mixture of liquid and gas. As air flows over the fins of the A/C evaporator, the humidity in the air condenses on the fins, and the heat from the air is absorbed by the refrigerant. Heat absorption causes the refrigerant to boil and vaporize. The refrigerant becomes a low-pressure gas when it leaves the A/C evaporator.

NOTE: **Replacement of the refrigerant line O-ring seals and gaskets is required anytime a refrigerant line or expansion valve is disconnected. Failure to replace the rubber O-ring seals and metal gaskets could result in a refrigerant system leak.**

The A/C evaporator has no serviceable parts except for the O-ring seals. The O-ring seals used on the connections are made from a special type of rubber not affected by R-134a refrigerant. The O-ring seals must be replaced whenever the A/C expansion valve is removed from the A/C evaporator.

The A/C evaporator cannot be repaired and must be replaced if leaking or damaged.

REMOVAL

REMOVAL

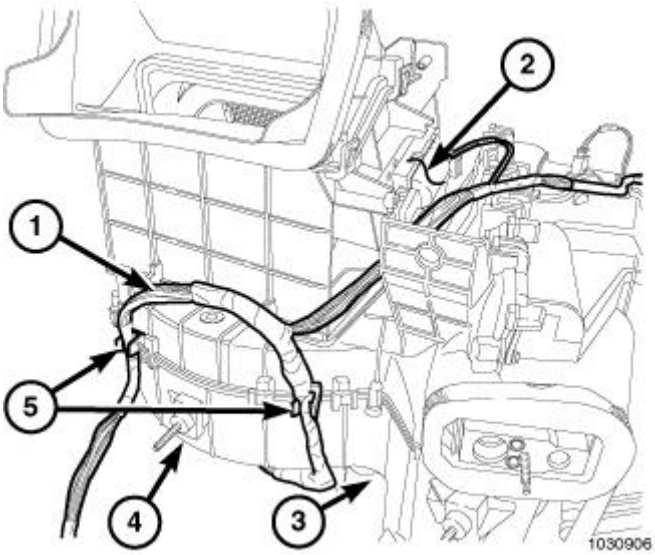

Fig. 172: HVAC Wiring Harness
Courtesy of CHRYSLER GROUP, LLC

1. Remove the HVAC housing and place it on a workbench. Refer to **HOUSING, HVAC, REMOVAL**.
2. Disconnect the HVAC wiring harness (1) from the recirculation door actuator (2), power module or blower resister (3) (depending on application) and the blower motor (4).
3. Disengage the HVAC wiring harness from the two retaining clips (5) and position the harness out of the way.

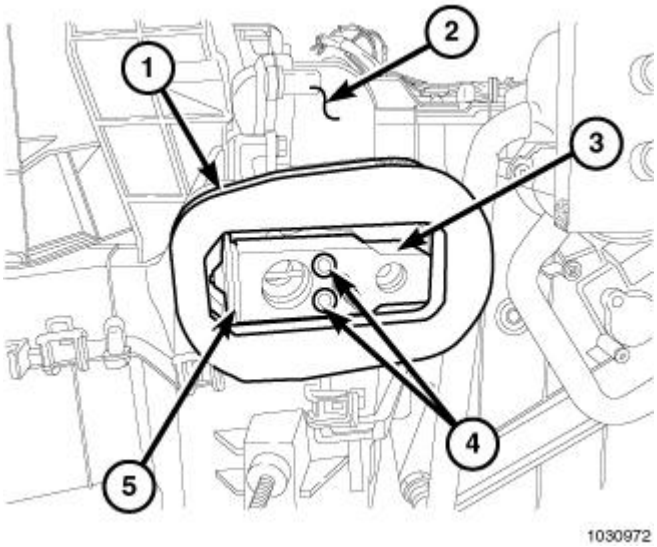

Fig. 173: Foam Seal

Courtesy of CHRYSLER GROUP, LLC

NOTE: If the foam seal is deformed or damaged, the seal must be replaced.

4. Remove the foam seal (1) from the front of the HVAC housing (2).
5. Remove the two bolts (4) that secure the A/C expansion valve (5) to the evaporator tube tapping block (3) and remove the valve.

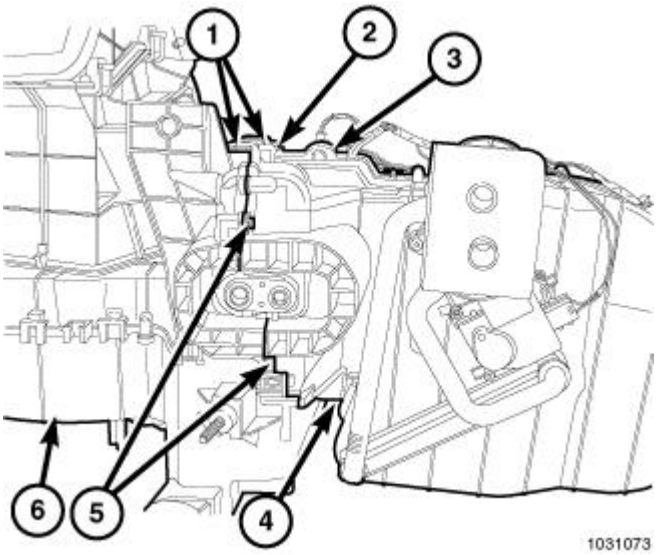

Fig. 174: Blower Motor & Evaporator Housing
Courtesy of CHRYSLER GROUP, LLC

6. Remove the three screws (2 and 5) that secure the blower motor and evaporator housing (6) to the HVAC housing (3).
7. Carefully disengage the nine retaining tabs (1 and 4) that secure the blower motor and evaporator housing the HVAC housing.
8. Carefully separate the blower motor and evaporator housing from the HVAC housing

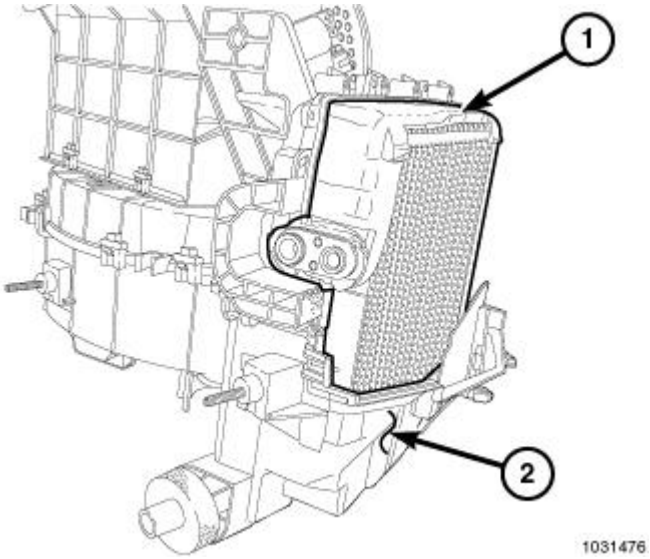

Fig. 175: A/C Evaporator & Housing
Courtesy of CHRYSLER GROUP, LLC

NOTE: If the foam insulator around the A/C evaporator is deformed or damaged, the insulator must be replaced.

9. Remove the A/C evaporator (1) from the blower motor and evaporator housing (2).
10. If the A/C evaporator is going to be reused, remove and discard the O-ring seals from the evaporator fittings and install plugs into, or tape over the evaporator ports.

INSTALLATION

INSTALLATION

CAUTION: Be certain to adjust the refrigerant oil level when servicing the A/C refrigerant system. Refer to OIL, REFRIGERANT, STANDARD PROCEDURE. Failure to properly adjust the refrigerant oil level will prevent the A/C system from operating as designed and can cause serious A/C compressor damage.

NOTE: When replacing multiple A/C system components, refer to the Refrigerant Oil Capacities chart to determine how much oil should be added to the refrigerant system. Refer to OIL, REFRIGERANT, STANDARD PROCEDURE.

NOTE: If the A/C evaporator is being replaced, add 60 milliliters (2 fluid ounces) of refrigerant oil to the refrigerant system. Use only refrigerant oil of the type recommended for the A/C compressor in the vehicle.

NOTE: Replacement of the O-ring seals is required anytime the A/C expansion valve is removed from the A/C evaporator. Failure to replace the rubber O-ring seals

may result in a refrigerant system leak.

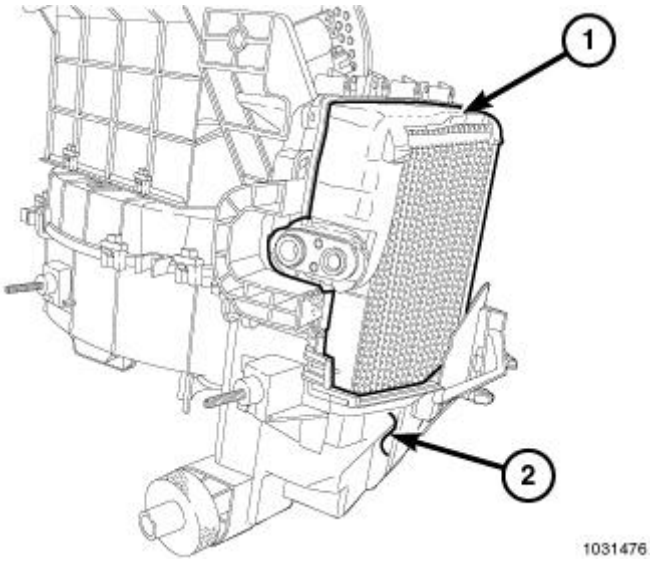

Fig. 176: A/C Evaporator & Housing
Courtesy of CHRYSLER GROUP, LLC

NOTE: **If the foam insulator around the A/C evaporator is deformed or damaged, the insulator must be replaced.**

1. Carefully install the A/C evaporator (1) into the blower motor and evaporator housing (2).

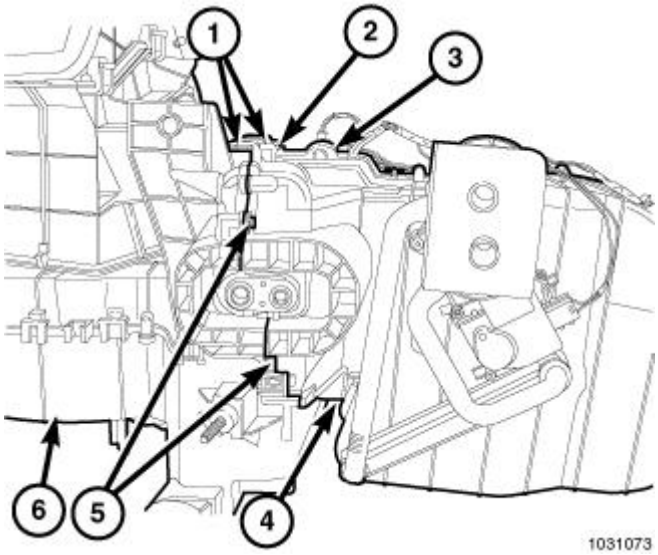

Fig. 177: Blower Motor & Evaporator Housing
Courtesy of CHRYSLER GROUP, LLC

2. Carefully install the blower motor and evaporator housing (6) onto the HVAC housing (3). Align the dowel pins to the holes in the housing.

3. Carefully engage the nine retaining tabs (1 and 4). Make sure the retaining tabs are fully engaged.
4. Install the three screws (2 and 5) that secure the blower motor and evaporator housing to the HVAC housing. Tighten the screws to 1.1 N.m (10 in. lbs.).

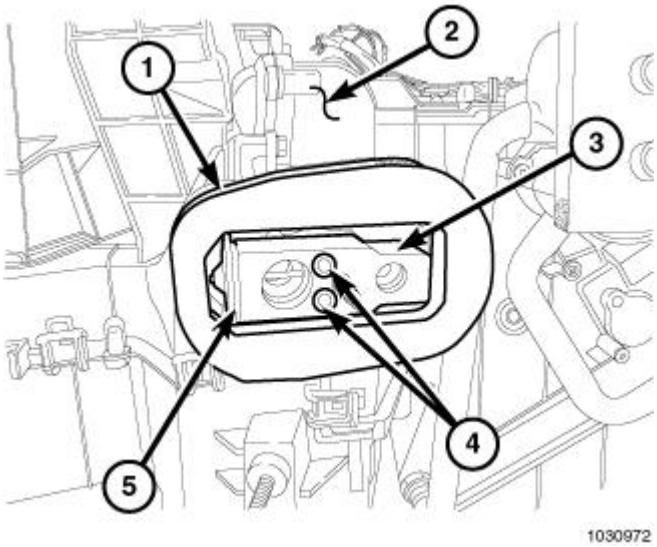

Fig. 178: Foam Seal
Courtesy of CHRYSLER GROUP, LLC

5. Remove the tape or plugs from the evaporator tube fittings.
6. Lubricate new O-ring seals with clean refrigerant oil and install them onto the evaporator tube fittings. Use only the specified O-ring seals as they are made of a special material for the R-134a system. Use only refrigerant oil of the type recommended for the A/C compressor in the vehicle.
7. Install the A/C expansion valve (5) onto the evaporator tube tapping block (3).
8. Install the two bolts (4) that secure the A/C expansion valve to the evaporator tube tapping block. Tighten the bolts to 11 N.m (97 in. lbs.).

NOTE: If the foam seal is deformed or damaged, the seal must be replaced.

9. Install the foam seal (1) onto the HVAC housing (2).

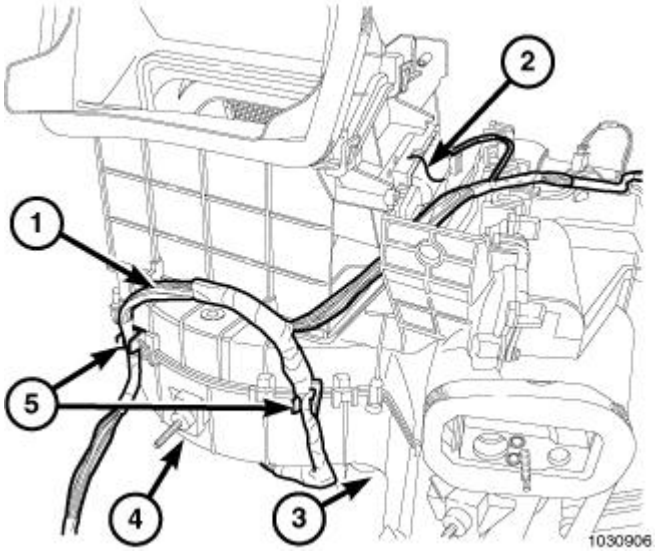

Fig. 179: HVAC Wiring Harness
Courtesy of CHRYSLER GROUP, LLC

10. Connect the HVAC wiring harness (1) to the recirculation door actuator (2), power module or blower resister (3) (depending on application) and the blower motor (4).
11. Engage the HVAC wiring harness to the two retaining clips (5). Make sure the wire harness is fully engaged to the retaining clips.
12. Install the HVAC housing. Refer to **HOUSING, HVAC, INSTALLATION**.
13. If the A/C evaporator is being replaced, add 60 milliliters (2 fluid ounces) of refrigerant oil to the refrigerant system. When replacing multiple A/C system components, refer to the Refrigerant Oil Capacities chart to determine how much oil should be added to the refrigerant system. Refer to **OIL, REFRIGERANT, STANDARD PROCEDURE**. Use only refrigerant oil of the type recommended for the A/C compressor in the vehicle.

LINE, A/C DISCHARGE

REMOVAL

3.7L/4.7L ENGINES

WARNING: Refer to the applicable Warnings and Cautions for this system before performing the following operation. Refer to PLUMBING, WARNING and PLUMBING, CAUTION. Failure to follow these instructions may result in possible serious or fatal injury.

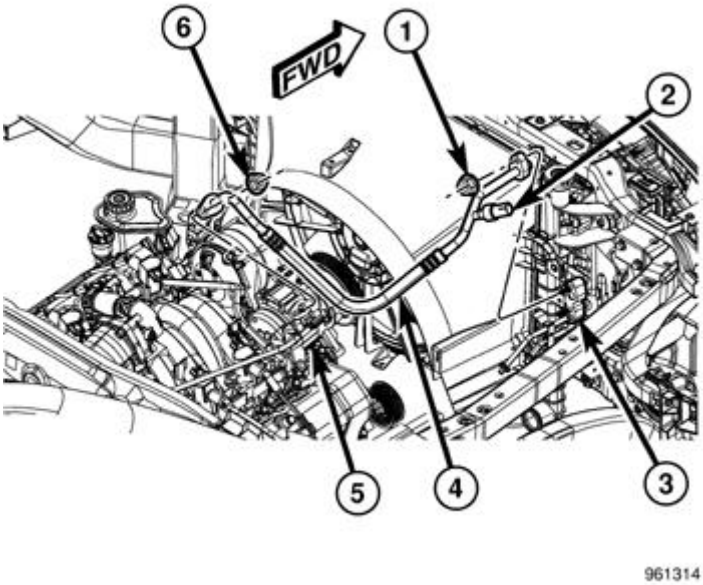

Fig. 180: A/C Discharge Line
Courtesy of CHRYSLER GROUP, LLC

NOTE: 4.7L engine shown in illustration. 3.7L engine similar.

1. Disconnect and isolate the negative battery cable.
2. Recover the refrigerant from the refrigerant system. Refer to **PLUMBING, STANDARD PROCEDURE**.
3. Disconnect the wire harness connector from the A/C pressure transducer (2).
4. Remove the nut (1) that secures the A/C discharge line (4) to the condenser jumper line tapping block (3).
5. Disconnect the A/C discharge line from the A/C condenser and remove and discard the O-ring seal and gasket.
6. Remove the nut (6) that secures the A/C discharge line to the A/C compressor (5).
7. Disconnect the A/C discharge line from the A/C compressor and remove and discard the O-ring seal and gasket.
8. Install plugs in, or tape over the opened refrigerant line fittings and the compressor and condenser jumper line ports.
9. If necessary, remove the A/C pressure transducer from the A/C discharge line. Refer to **TRANSDUCER, A/C PRESSURE, REMOVAL**.

5.7L ENGINE

WARNING: **Refer to the applicable Warnings and Cautions for this system before performing the following operation. Refer to PLUMBING, WARNING and PLUMBING, CAUTION. Failure to follow these instructions may result in possible serious or fatal injury.**

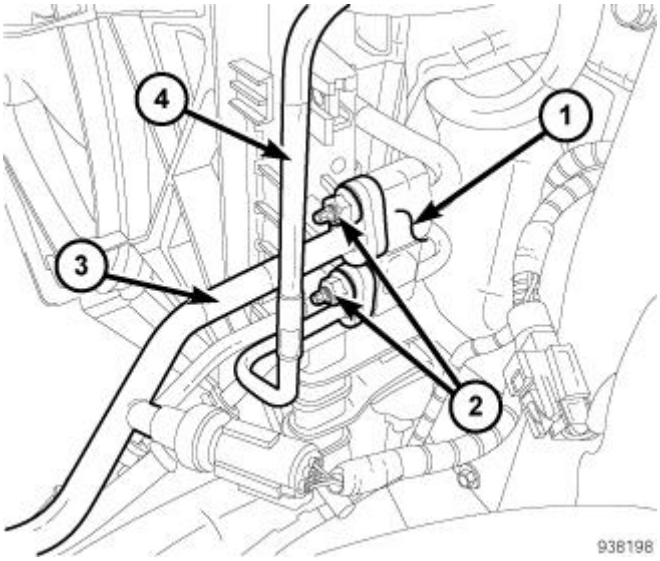

Fig. 181: A/C Discharge & Liquid Lines
Courtesy of CHRYSLER GROUP, LLC

1. Disconnect and isolate the negative battery cable.
2. Recover the refrigerant from the refrigerant system. Refer to **PLUMBING, STANDARD PROCEDURE**.
3. Remove the nut (2) that secures the A/C discharge line (3) to the condenser jumper line tapping block (1).
4. Disconnect the A/C discharge line from the condenser jumper line tapping block.

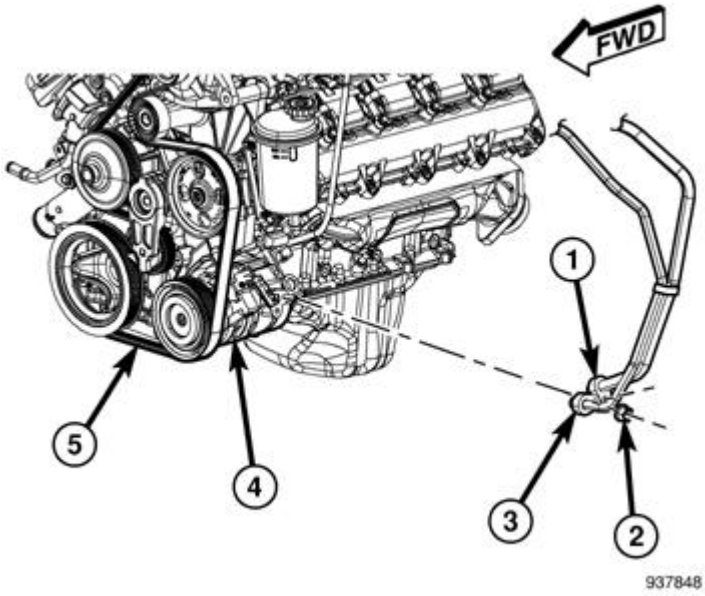

Fig. 182: A/C Compressor, Drive Belt & Suction/Discharge Lines
Courtesy of CHRYSLER GROUP, LLC

5. Remove the nut (2) that secures the A/C discharge line (3) to the A/C compressor (4).
6. Disconnect the A/C discharge line from the A/C compressor.

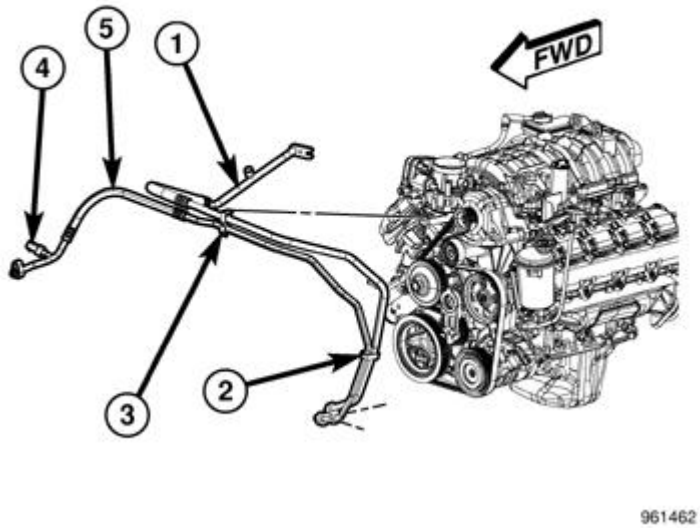

Fig. 183: Refrigerant Lines & Retaining Brackets
Courtesy of CHRYSLER GROUP, LLC

NOTE: Illustration shown with refrigerant lines removed for clarity.

7. Disconnect the wire harness connector from the A/C pressure transducer (4).
8. Remove the two plastic retaining brackets (2 and 3) that secure the A/C discharge line (5) to the A/C suction line (1) and to the upper front of the engine.
9. Remove the A/C discharge line from the engine compartment.
10. Remove and discard the O-ring seals and gaskets from the A/C discharge line and install plugs in, or tape over the opened discharge line fittings and the jumper line and compressor ports.
11. If necessary, remove the A/C pressure transducer from the A/C discharge line. Refer to **TRANSDUCER, A/C PRESSURE, REMOVAL**.

6.7L DIESEL ENGINE

WARNING: Refer to the applicable Warnings and Cautions for this system before performing the following operation. Refer to PLUMBING, WARNING and PLUMBING, CAUTION. Failure to follow these instructions may result in possible serious or fatal injury.

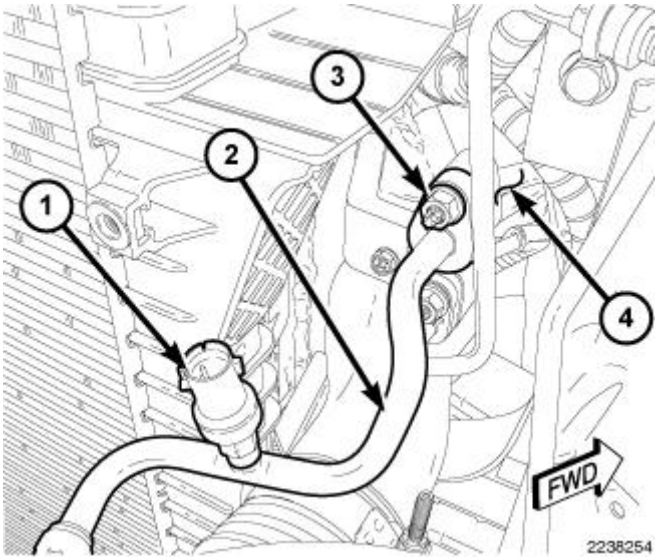

Fig. 184: A/C Discharge Line
Courtesy of CHRYSLER GROUP, LLC

1. Disconnect and isolate the negative battery cable.
2. Recover the refrigerant from the refrigerant system. Refer to **PLUMBING, STANDARD PROCEDURE**.
3. Remove the air filter housing.
4. Disconnect the wire harness connector from the A/C pressure transducer (1).
5. Remove the nut (3) that secures the A/C discharge line (2) to the condenser jumper line tapping block (4).
6. Disconnect the A/C discharge line from the condenser jumper line tapping block and remove and discard the O-ring seal and gasket.

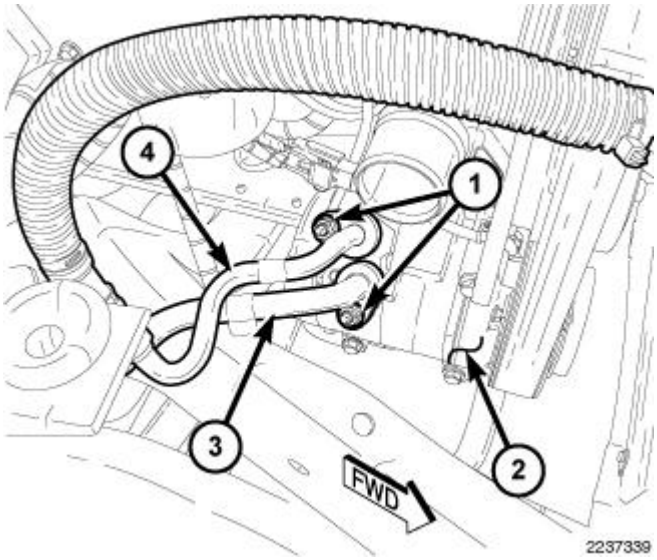

Fig. 185: Nuts, A/C Compressor, A/C Suction Line & A/C Discharge Line
Courtesy of CHRYSLER GROUP, LLC

NOTE: Illustration shown with lower radiator hose removed for clarity.

7. Remove the turbocharger outlet tube.
8. Remove the nut (1) that secures the A/C discharge line (4) to the A/C compressor (2).
9. Disconnect the A/C discharge line from the A/C compressor and remove and discard the O-ring seal and gasket.
10. Install plugs in, or tape over the opened discharge line fittings and the compressor and jumper line ports.
11. If necessary, remove the A/C pressure transducer from the A/C discharge line. Refer to **TRANSDUCER, A/C PRESSURE, REMOVAL**.

INSTALLATION

3.7L/4.7L ENGINES

CAUTION: Be certain to adjust the refrigerant oil level when servicing the A/C refrigerant system. Refer to OIL, REFRIGERANT, STANDARD PROCEDURE. Failure to properly adjust the refrigerant oil level will prevent the A/C system from operating as designed and can cause serious A/C compressor damage.

NOTE: When replacing multiple A/C system components, refer to the Refrigerant Oil Capacities chart to determine how much oil should be added to the refrigerant system. Refer to OIL, REFRIGERANT, STANDARD PROCEDURE.

NOTE: Replacement of the refrigerant line O-ring seals and gaskets is required anytime a refrigerant line is disconnected. Failure to replace the rubber O-ring seals and metal gaskets could result in a refrigerant system leak.

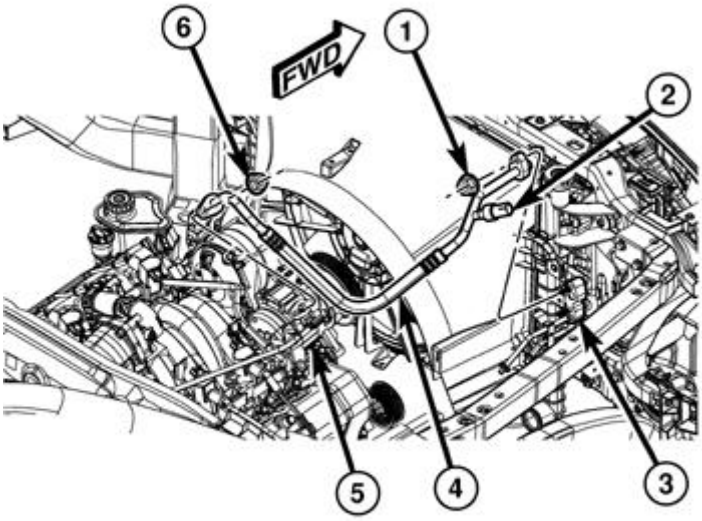

961314

Fig. 186: A/C Discharge Line
Courtesy of CHRYSLER GROUP, LLC

NOTE: 4.7L engine shown in illustration. 3.7L engine similar.

1. If removed, install the A/C pressure transducer (2) onto the A/C discharge line (4). Refer to **TRANSDUCER, A/C PRESSURE, INSTALLATION**.
2. Remove the tape or plugs from the opened discharge line fitting and the compressor and condenser jumper line ports.
3. Lubricate new O-ring seals with clean refrigerant oil and install them and new gaskets onto the discharge line fitting. Use only the specified O-ring seals as they are made of a special material for the R-134a system. Use only refrigerant oil of the type recommended for the A/C compressor in the vehicle.
4. Connect the A/C discharge line to the condenser jumper line tapping block (3) and install the nut (1). Tighten the nut to 23 N.m (17 ft. lbs.).
5. Connect the A/C discharge line to the A/C compressor (5) and install the nut (6). Tighten the nut to 23 N.m (17 ft. lbs.).
6. Connect the wire harness connector to the A/C pressure transducer.
7. Reconnect the negative battery cable.
8. Evacuate the refrigerant system. Refer to **PLUMBING, STANDARD PROCEDURE**.
9. Adjust the refrigerant oil level. Refer to **OIL, REFRIGERANT, STANDARD PROCEDURE**.
10. Charge the refrigerant system. Refer to **PLUMBING, STANDARD PROCEDURE**.

5.7L ENGINE

CAUTION: Be certain to adjust the refrigerant oil level when servicing the A/C refrigerant system. Refer to OIL, REFRIGERANT, STANDARD PROCEDURE. Failure to properly adjust the refrigerant oil level will prevent the A/C system from operating as designed and can cause serious A/C compressor damage.

NOTE: When replacing multiple A/C system components, refer to the Refrigerant Oil Capacities chart to determine how much oil should be added to the refrigerant system. Refer to OIL, REFRIGERANT, STANDARD PROCEDURE.

NOTE: Replacement of the refrigerant line O-ring seals and gaskets is required anytime a refrigerant line is disconnected. Failure to replace the rubber O-ring seals and metal gaskets could result in a refrigerant system leak.

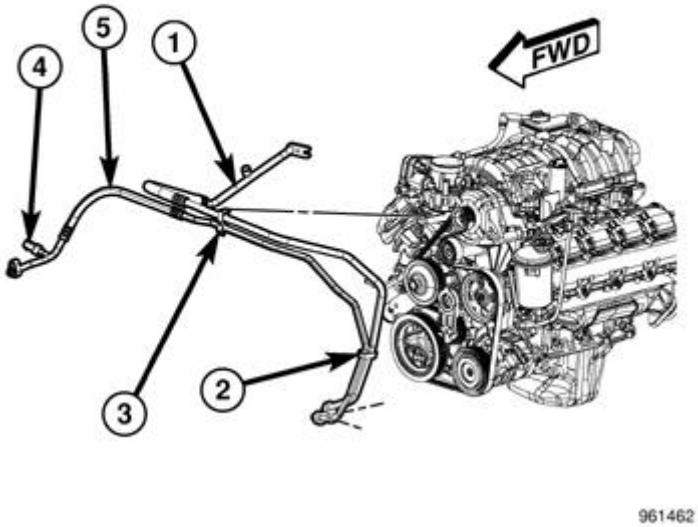

Fig. 187: Refrigerant Lines & Retaining Brackets
Courtesy of CHRYSLER GROUP, LLC

NOTE: Illustration shown with refrigerant lines removed for clarity.

1. If removed, install the A/C pressure transducer (4) onto the A/C discharge line (3). Refer to **TRANSDUCER, A/C PRESSURE, INSTALLATION**.
2. Remove the plugs or tape from the opened discharge line fittings and compressor and jumper line ports.
3. Lubricate new O-ring seals with clean refrigerant oil and install them and new gaskets onto the discharge line fittings. Use only the specified O-ring seals as they are made of a special material for the R-134a system. Use only refrigerant oil of the type recommended for the A/C compressor in the vehicle.
4. Position the A/C discharge line (5) into the engine compartment.
5. Install the two retaining brackets (2 and 3) that secure the A/C discharge line to the A/C suction line (1) and to the upper front of the engine.
6. Connect the wire harness connector to the A/C pressure transducer.

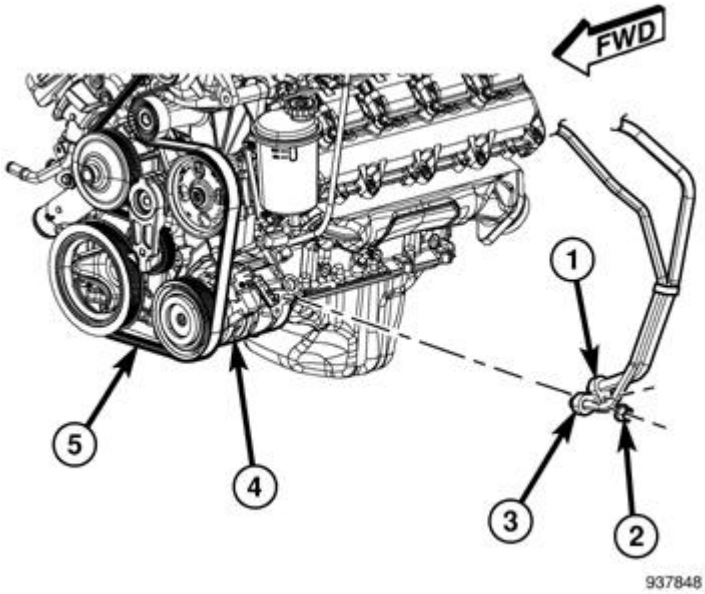

Fig. 188: A/C Compressor, Drive Belt & Suction/Discharge Lines
Courtesy of CHRYSLER GROUP, LLC

7. Connect the A/C discharge line (3) to the A/C compressor (4).
8. Install the nut (2) that secures the A/C discharge line to the A/C compressor. Tighten the nut to 23 N.m (17 ft. lbs.).

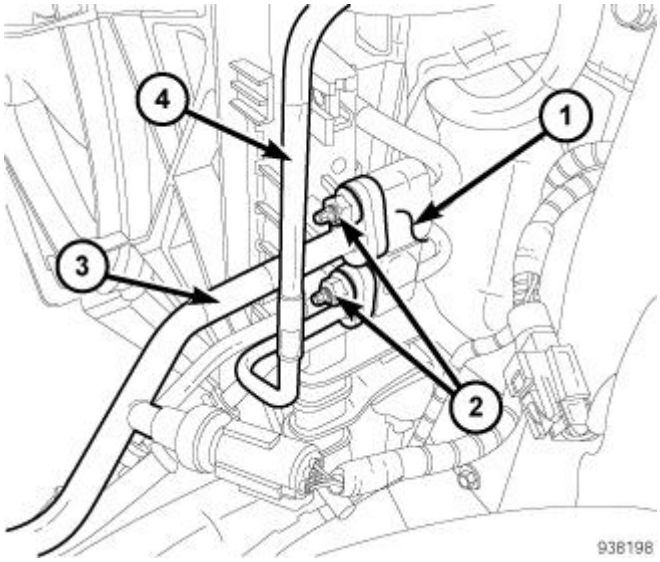

Fig. 189: A/C Discharge & Liquid Lines
Courtesy of CHRYSLER GROUP, LLC

9. Connect the A/C discharge line to the condenser jumper line tapping block (1) and install the nut (2). Tighten the nut to 23 N.m (17 ft. lbs.).
10. Reconnect the negative battery cable.
11. Evacuate the refrigerant system. Refer to **PLUMBING, STANDARD PROCEDURE**.

12. Adjust the refrigerant oil level. Refer to **OIL, REFRIGERANT, STANDARD PROCEDURE**.
13. Charge the refrigerant system. Refer to **PLUMBING, STANDARD PROCEDURE**.

6.7L DIESEL ENGINE

CAUTION: Be certain to adjust the refrigerant oil level when servicing the A/C refrigerant system. Refer to OIL, REFRIGERANT, STANDARD PROCEDURE. Failure to properly adjust the refrigerant oil level will prevent the A/C system from operating as designed and can cause serious A/C compressor damage.

NOTE: When replacing multiple A/C system components, refer to the Refrigerant Oil Capacities chart to determine how much oil should be added to the refrigerant system. Refer to OIL, REFRIGERANT, STANDARD PROCEDURE.

NOTE: Replacement of the refrigerant line O-ring seals and gaskets is required anytime a refrigerant line is disconnected. Failure to replace the rubber O-ring seals and metal gaskets could result in a refrigerant system leak.

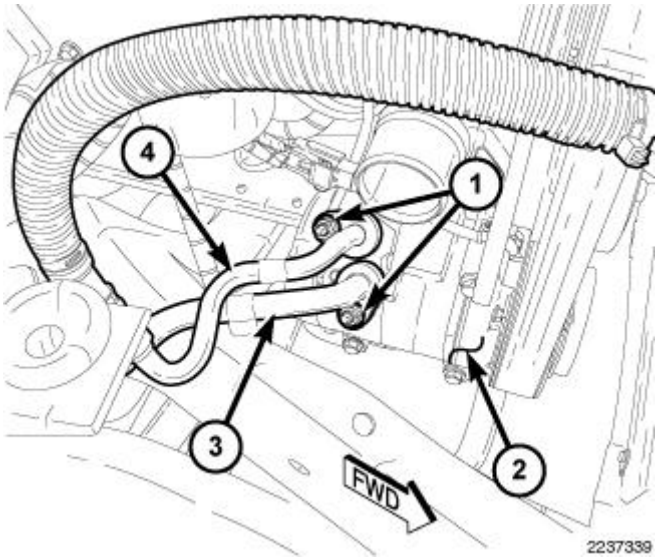

Fig. 190: Nuts, A/C Compressor, A/C Suction Line & A/C Discharge Line
Courtesy of CHRYSLER GROUP, LLC

NOTE: Illustration shown with lower radiator hose removed for clarity.

1. If removed, install the A/C pressure transducer onto the A/C discharge line (4). Refer to **TRANSDUCER, A/C PRESSURE, INSTALLATION**.
2. Remove the tape or plugs from the discharge line fittings and the compressor and jumper line ports.
3. Lubricate new O-ring seals with clean refrigerant oil and install them and new gaskets onto the discharge line fittings. Use only the specified O-ring seals as they are made of a special material for the R-134a system. Use only refrigerant oil of the type recommended for the A/C compressor in the vehicle.

4. Connect the A/C discharge line to the A/C compressor (2).
5. Install the nut (1) that secures the A/C discharge line to the A/C compressor. Tighten the nut to 23 N.m (17 ft. lbs.).
6. Install the turbocharger outlet hose.

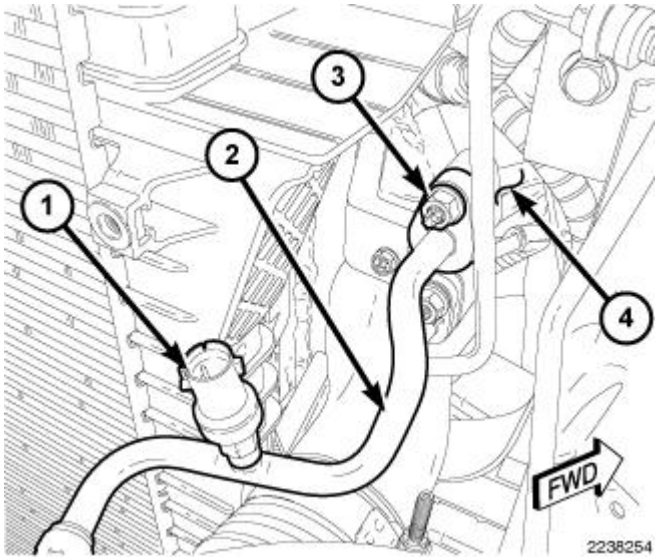

Fig. 191: A/C Discharge Line
Courtesy of CHRYSLER GROUP, LLC

7. Connect the A/C discharge line (2) to the condenser jumper line tapping block (4) and install the nut (3). Tighten the nut to 23 N.m (17 ft. lbs.).
8. Connect the wire harness connector to the A/C pressure transducer (1).
9. Reconnect the negative battery cable.
10. Install the air filter housing.
11. Evacuate the refrigerant system. Refer to **PLUMBING, STANDARD PROCEDURE**.
12. Adjust the refrigerant oil level. Refer to **OIL, REFRIGERANT, STANDARD PROCEDURE**.
13. Charge the refrigerant system. Refer to **PLUMBING, STANDARD PROCEDURE**.

LINE, A/C LIQUID

REMOVAL

REMOVAL

WARNING: Refer to the applicable warnings and cautions for this system before performing the following operation. Refer to PLUMBING, WARNING and PLUMBING, CAUTION. Failure to follow these instructions may result in serious or fatal injury.

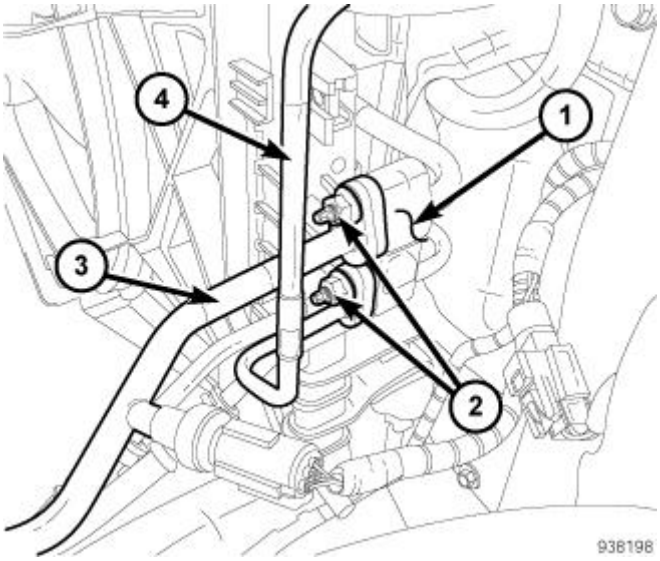

Fig. 192: A/C Discharge & Liquid Lines
Courtesy of CHRYSLER GROUP, LLC

1. Disconnect and isolate the negative battery cable.
2. Recover the refrigerant from the refrigerant system. Refer to **PLUMBING, STANDARD PROCEDURE**.
3. If equipped with a gasoline engine, remove the air filter housing and mounting bracket from the right side of the engine compartment.
4. If equipped with the 6.7L diesel engine, remove the battery and battery tray from the right side of the engine compartment.
5. Remove the nut (2) that secures the A/C liquid line (4) from the condenser jumper line tapping block (1).
6. Disconnect the A/C liquid line from the condenser jumper line tapping block and remove and discard the O-ring seal and gasket.
7. Install plugs in, or tape over the opened refrigerant line fitting and jumper line port.

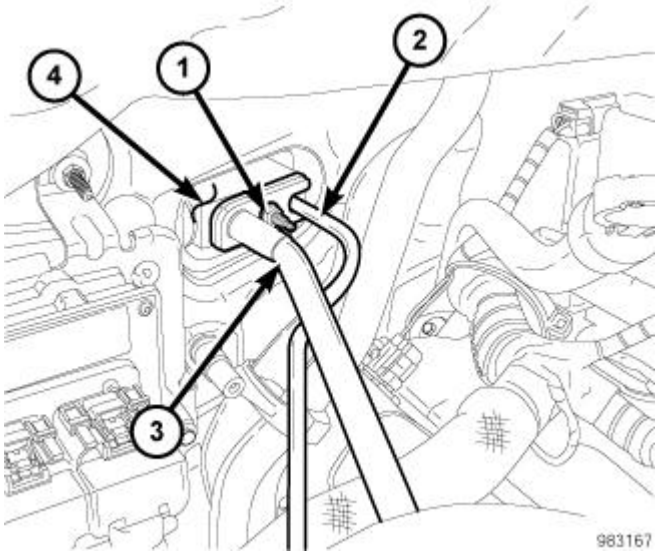

Fig. 193: A/C Expansion Valve & Lines
Courtesy of CHRYSLER GROUP, LLC

8. Remove the nut (1) that secures the A/C liquid line (2) and A/C suction line (3) to the A/C expansion valve (4).
9. Disconnect the A/C liquid and suction lines from the A/C expansion valve and remove and discard the O-ring seals.
10. Separate the A/C liquid line from the A/C suction line and install plugs in, or tape over the opened refrigerant line fittings and expansion valve ports.

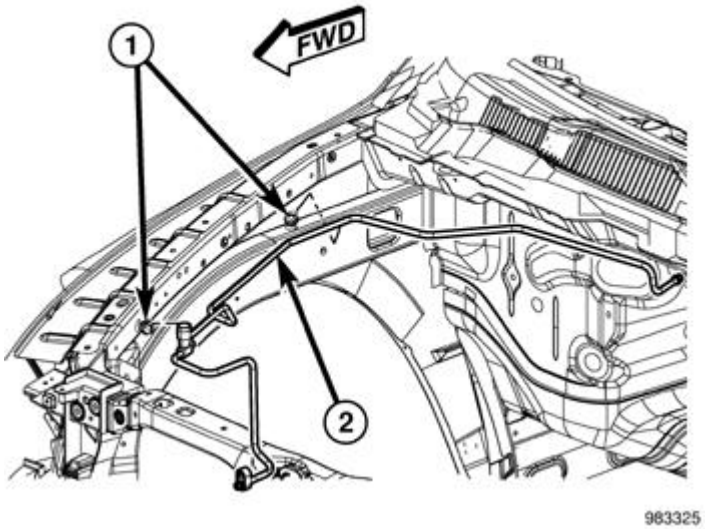

Fig. 194: A/C Liquid Line
Courtesy of CHRYSLER GROUP, LLC

11. Disengage the A/C liquid line (2) from the two retaining clips (1) and remove the liquid line.
12. If required, replace the two liquid line retaining clips.

INSTALLATION

INSTALLATION

CAUTION: Be certain to adjust the refrigerant oil level when servicing the A/C refrigerant system. Refer to OIL, REFRIGERANT, STANDARD PROCEDURE. Failure to properly adjust the refrigerant oil level will prevent the A/C system from operating as designed and can cause serious A/C compressor damage.

NOTE: When replacing multiple A/C system components, refer to the Refrigerant Oil Capacities chart to determine how much oil should be added to the refrigerant system. Refer to OIL, REFRIGERANT, STANDARD PROCEDURE.

NOTE: **Replacement of the refrigerant line O-ring seals and gaskets is required anytime a refrigerant line is disconnected. Failure to replace the rubber O-ring seals and metal gaskets could result in a refrigerant system leak.**

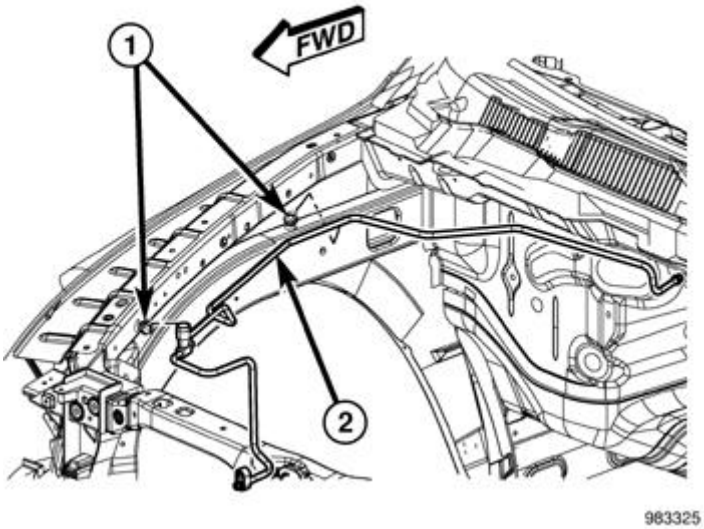

Fig. 195: A/C Liquid Line
Courtesy of CHRYSLER GROUP, LLC

1. Position the A/C liquid line (2) into the engine compartment and engage the liquid line to the two retaining clips (1). Make sure the retaining clips are fully engaged.

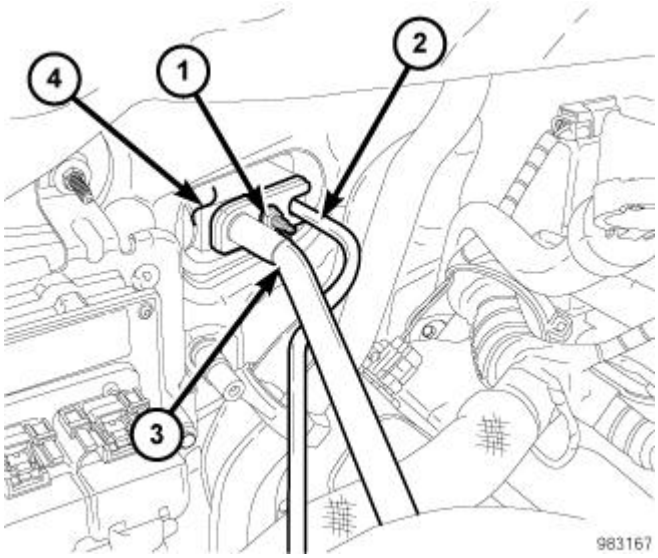

Fig. 196: A/C Expansion Valve & Lines
Courtesy of CHRYSLER GROUP, LLC

2. Remove the tape or plugs from the opened refrigerant line fittings and expansion valve ports.

3. Lubricate new O-ring seals with clean refrigerant oil and install them onto the refrigerant line fittings. Use only the specified O-ring seals as they are made of a special material for the R-134a system. Use only refrigerant oil of the type recommended for the A/C compressor in the vehicle.
4. Connect the A/C liquid line (2) and A/C suction line (3) to the A/C expansion valve (4).
5. Install the nut (1) that secures the A/C liquid and suction lines to the A/C expansion valve. Tighten the nut to 23 N.m (17 ft. lbs.).

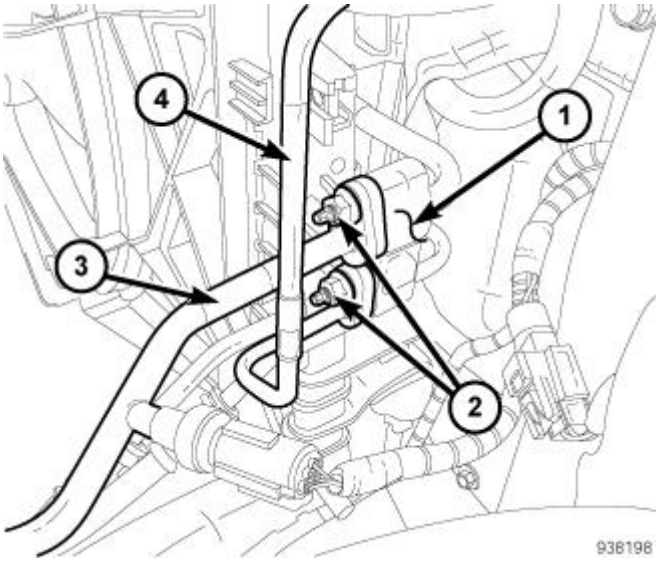

Fig. 197: A/C Discharge & Liquid Lines
Courtesy of CHRYSLER GROUP, LLC

6. Remove the tape or plugs from the opened liquid line fitting and condenser jumper line port.
7. Lubricate a new O-ring seal with clean refrigerant oil and install it and a new gasket onto the liquid line fitting. Use only the specified O-ring seal as it is made of a special material for the R-134a system. Use only refrigerant oil of the type recommended for the A/C compressor in the vehicle.
8. Connect the A/C liquid line (4) to the condenser jumper line tapping block (1).
9. Install the nut (2) that secures the A/C liquid line to the condenser jumper line tapping block. Tighten the nut to 23 N.m (17 ft. lbs.).
10. If equipped with the 6.7L diesel engine, install the battery tray and battery to the right side of the engine compartment.
11. If equipped with a gasoline engine, install the air filter housing mounting bracket and air filter housing to the right side of the engine compartment.
12. Reconnect the negative battery cable.
13. Evacuate the refrigerant system. Refer to **PLUMBING, STANDARD PROCEDURE**.
14. Adjust the refrigerant oil level. Refer to **OIL, REFRIGERANT, STANDARD PROCEDURE**.
15. Charge the refrigerant system. Refer to **PLUMBING, STANDARD PROCEDURE**.

LINE, A/C SUCTION

REMOVAL

3.7L/4.7L ENGINES

WARNING: Refer to the applicable warnings and cautions for this system before performing the following operation. Refer to PLUMBING, WARNING and PLUMBING, CAUTION. Failure to follow these instructions may result in serious or fatal injury.

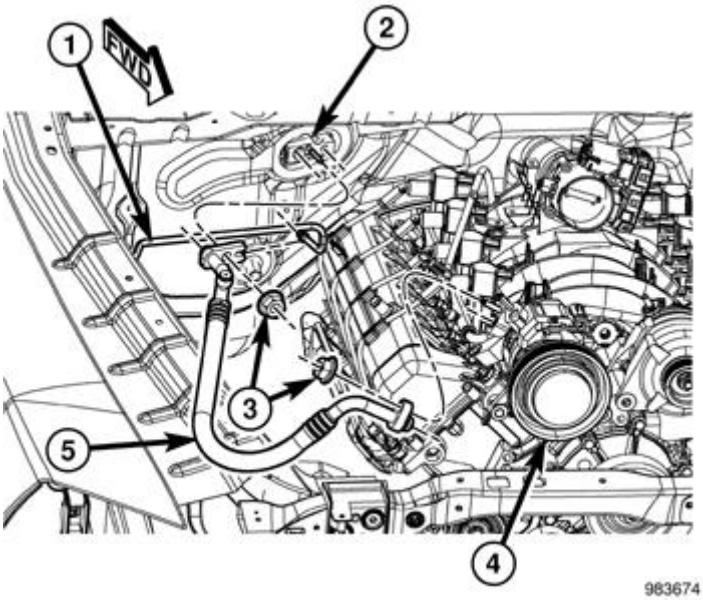

Fig. 198: A/C Liquid Line & Suction Line To A/C Expansion Valve
Courtesy of CHRYSLER GROUP, LLC

NOTE: 4.7L engine shown in illustration. 3.7L engine similar.

1. Disconnect and isolate the negative battery cable.
2. Recover the refrigerant from the refrigerant system. Refer to **PLUMBING, STANDARD PROCEDURE**.
3. Remove the air filter housing cover and resonator inlet tube. Refer to **BODY, AIR CLEANER, REMOVAL, 3.7L** or **BODY, AIR CLEANER, REMOVAL, 4.7L** .
4. Remove the nuts (3) that secures the A/C liquid line (1) and the A/C suction line (5) to the A/C expansion valve (2) and to the A/C compressor (4).
5. Disconnect the A/C suction line and the A/C liquid line from the A/C expansion valve and the A/C compressor.
6. Separate the A/C liquid line from the A/C suction line and remove and discard the O-ring seals and gaskets.
7. Install plugs in, or tape over the opened refrigerant line fittings and the expansion valve and compressor ports.

5.7L ENGINE

WARNING: Refer to the applicable warnings and cautions for this system before performing the following operation. Refer to PLUMBING, WARNING and PLUMBING, CAUTION. Failure to follow these instructions may result in serious or fatal injury.

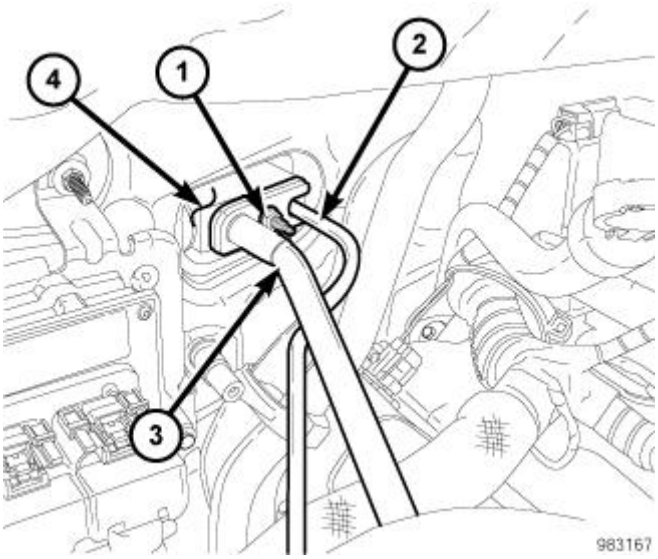

Fig. 199: A/C Expansion Valve & Lines
Courtesy of CHRYSLER GROUP, LLC

1. Disconnect and isolate the negative battery cable.
2. Recover the refrigerant from the refrigerant system. Refer to **PLUMBING, STANDARD PROCEDURE**.
3. Remove the air filter housing cover and engine air inlet tube. Refer to **BODY, AIR CLEANER, REMOVAL, 5.7L** .
4. Remove the nut (1) that secures the A/C liquid line (2) and A/C suction line (3) to the A/C expansion valve (4).
5. Disconnect the A/C liquid and suction lines from the A/C expansion valve and separate the lines from each other.

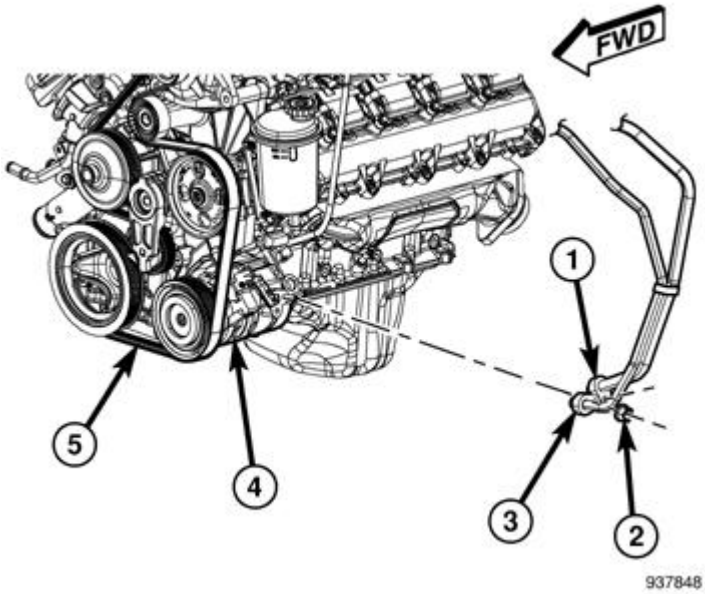

Fig. 200: A/C Compressor, Drive Belt & Suction/Discharge Lines
Courtesy of CHRYSLER GROUP, LLC

6. Remove the nut (2) that secures the A/C suction line (1) to the A/C compressor (4).
7. Disconnect the A/C suction line from the A/C compressor.

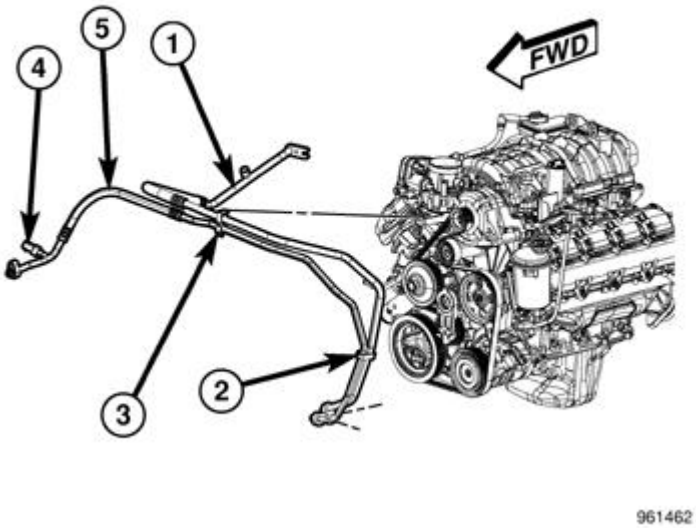

Fig. 201: Refrigerant Lines & Retaining Brackets
Courtesy of CHRYSLER GROUP, LLC

NOTE: Illustration shown with refrigerant lines removed for clarity.

8. Remove the two plastic retaining brackets (2 and 3) that secure the A/C suction line (1) to the A/C discharge line (5) and to the upper front of the engine.

9. Remove the A/C suction line from the engine compartment.
10. Remove and discard the O-ring seals and gaskets from the A/C suction line and install plugs in, or tape over the opened suction line fittings and the expansion valve and compressor ports.

6.7L DIESEL ENGINE

WARNING: Refer to the applicable warnings and cautions for this system before performing the following operation. Refer to PLUMBING, WARNING and PLUMBING, CAUTION. Failure to follow these instructions may result in serious or fatal injury.

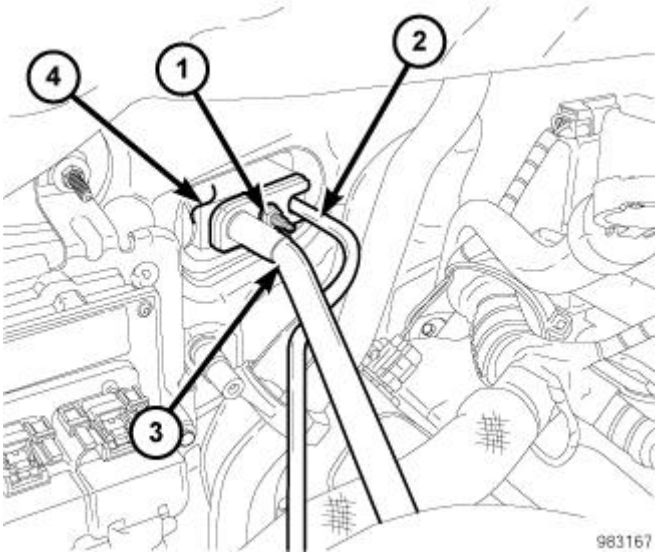

Fig. 202: A/C Expansion Valve & Lines
Courtesy of CHRYSLER GROUP, LLC

1. Disconnect and isolate the negative battery cable.
2. Recover the refrigerant from the refrigerant system. Refer to **PLUMBING, STANDARD PROCEDURE**.
3. Remove the air filter housing.
4. Remove the nut (1) that secures the A/C liquid line (2) and A/C suction line (3) to the A/C expansion valve (4).
5. Disconnect the A/C liquid and suction lines from the A/C expansion valve and remove and discard the O-ring seals.
6. Separate the A/C liquid line from the A/C suction line and install plugs in, or tape over the opened refrigerant line fittings and expansion valve ports.

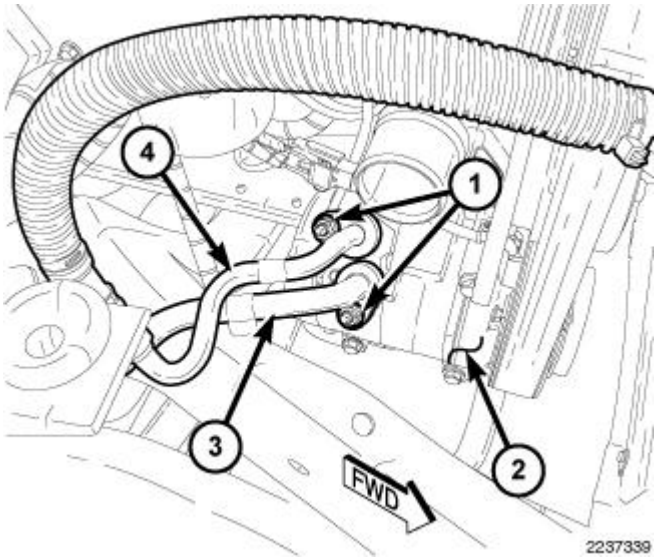

Fig. 203: Nuts, A/C Compressor, A/C Suction Line & A/C Discharge Line
Courtesy of CHRYSLER GROUP, LLC

NOTE: Illustration shown with lower radiator hose removed for clarity.

7. Remove the turbocharger outlet tube.
8. Remove the nut (1) that secures the A/C suction line (3) to the A/C compressor (2).
9. Disconnect the A/C suction line from the A/C compressor and remove and discard the O-ring seals and gaskets.
10. Install plugs in, or tape over the opened suction line fittings and compressor port.

INSTALLATION

3.7L/4.7L ENGINES

CAUTION: Be certain to adjust the refrigerant oil level when servicing the A/C refrigerant system. Refer to OIL, REFRIGERANT, STANDARD PROCEDURE. Failure to properly adjust the refrigerant oil level will prevent the A/C system from operating as designed and can cause serious A/C compressor damage.

NOTE: When replacing multiple A/C system components, refer to the Refrigerant Oil Capacities chart to determine how much oil should be added to the refrigerant system. Refer to OIL, REFRIGERANT, STANDARD PROCEDURE.

NOTE: Replacement of the refrigerant line O-ring seals and gaskets is required anytime a refrigerant line is disconnected. Failure to replace the rubber O-ring seals and metal gaskets could result in a refrigerant system leak.

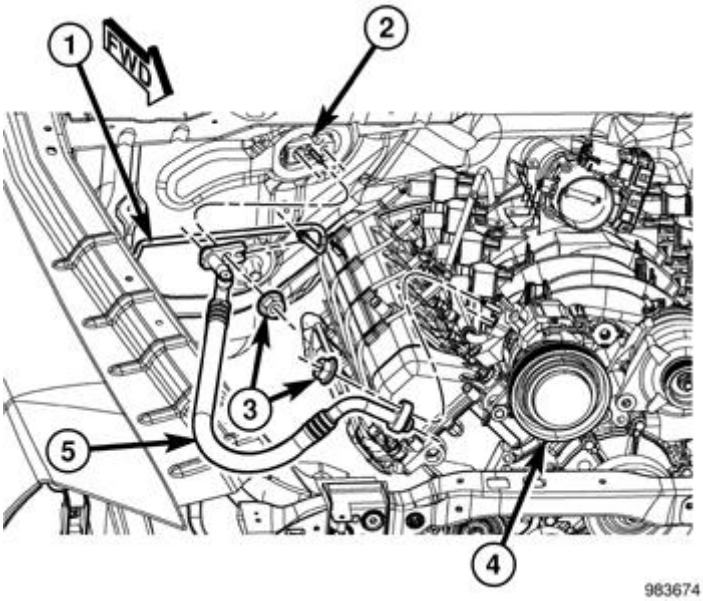

Fig. 204: A/C Liquid Line & Suction Line To A/C Expansion Valve
Courtesy of CHRYSLER GROUP, LLC

NOTE: 4.7L engine shown in illustration. 3.7L engine similar.

1. Remove the tape or plugs from the opened refrigerant line fittings and the expansion valve and compressor ports.
2. Lubricate new O-ring seals with clean refrigerant oil and install them and new gaskets onto the refrigerant line fitting. Use only the specified O-ring seals as they are made of a special material for the R-134a system. Use only refrigerant oil of the type recommended for the A/C compressor in the vehicle.
3. Connect the A/C liquid line (1) and the A/C suction line (5) to the A/C expansion valve (2).
4. Install the nut (3) that secures the A/C liquid and suction lines to the A/C expansion valve. Tighten the nut to 23 N.m (17 ft. lbs.).
5. Connect the A/C suction line to the A/C compressor (4).
6. Install the nut that secures the A/C suction line to the compressor. Tighten the nut to 23 N.m (17 ft. lbs.).
7. Install the air filter housing cover and resonator inlet tube. Refer to **BODY, AIR CLEANER, INSTALLATION, 3.7L** or **BODY, AIR CLEANER, INSTALLATION, 4.7L** .
8. Reconnect the negative battery cable.
9. Evacuate the refrigerant system. Refer to **PLUMBING, STANDARD PROCEDURE**.
10. Adjust the refrigerant oil level. Refer to **OIL, REFRIGERANT, STANDARD PROCEDURE**.
11. Charge the refrigerant system. Refer to **PLUMBING, STANDARD PROCEDURE**.

5.7L ENGINE

CAUTION: Be certain to adjust the refrigerant oil level when servicing the A/C refrigerant system. Refer to OIL, REFRIGERANT, STANDARD PROCEDURE. Failure to properly adjust the refrigerant oil level will

prevent the A/C system from operating as designed and can cause serious A/C compressor damage.

NOTE: **When replacing multiple A/C system components, refer to the Refrigerant Oil Capacities chart to determine how much oil should be added to the refrigerant system. Refer to OIL, REFRIGERANT, STANDARD PROCEDURE.**

NOTE: **Replacement of the refrigerant line O-ring seals and gaskets is required anytime a refrigerant line is disconnected. Failure to replace the rubber O-ring seals and metal gaskets could result in a refrigerant system leak.**

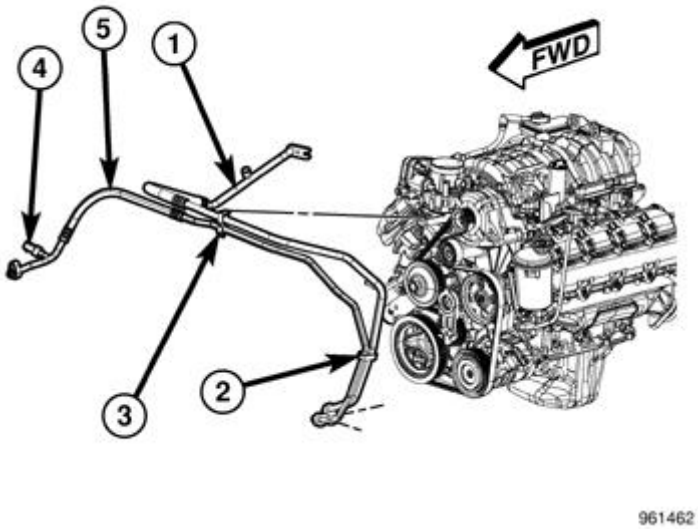

Fig. 205: Refrigerant Lines & Retaining Brackets
Courtesy of CHRYSLER GROUP, LLC

NOTE: **Illustration shown with refrigerant lines removed for clarity.**

1. Remove the plugs or tape from the opened suction line fittings and the expansion valve and compressor ports.
2. Lubricate new O-ring seals with clean refrigerant oil and install them and new gaskets onto the suction line fittings. Use only the specified O-ring seals as they are made of a special material for the R-134a system. Use only refrigerant oil of the type recommended for the A/C compressor in the vehicle.
3. Position the A/C suction line (1) into the engine compartment.
4. Install the two retaining brackets (2 and 3) that secure the A/C suction line (1) to the A/C discharge line (5) and to the upper front of the engine.

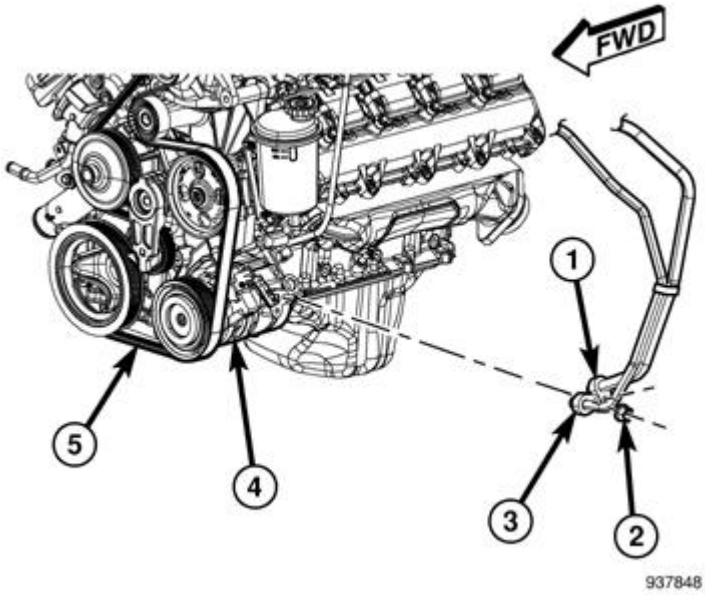

Fig. 206: A/C Compressor, Drive Belt & Suction/Discharge Lines
Courtesy of CHRYSLER GROUP, LLC

5. Connect the A/C suction line (1) to the A/C compressor (4).
6. Install the nut (2) that secures the A/C suction line to the A/C compressor. Tighten the nut to 23 N.m (17 ft. lbs.).

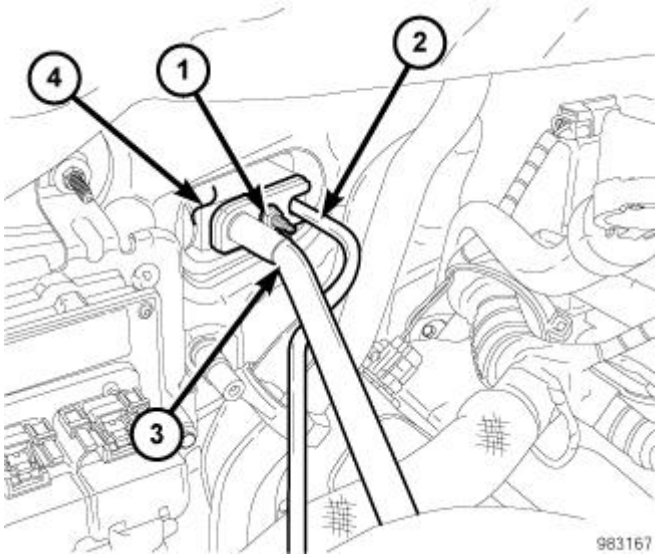

Fig. 207: A/C Expansion Valve & Lines
Courtesy of CHRYSLER GROUP, LLC

7. Connect the A/C liquid line (2) and the A/C suction line (3) to the A/C expansion valve (4).
8. Install the nut (1) that secures the A/C liquid and suction lines the A/C expansion valve. Tighten the nut to 23 N.m (17 ft. lbs.).
9. Install the air filter housing cover and engine air inlet tube. Refer to **BODY, AIR CLEANER,**

INSTALLATION, 5.7L .

10. Reconnect the negative battery cable.
11. Evacuate the refrigerant system. Refer to **PLUMBING, STANDARD PROCEDURE**.
12. Adjust the refrigerant oil level. Refer to **OIL, REFRIGERANT, STANDARD PROCEDURE**.
13. Charge the refrigerant system. Refer to **PLUMBING, STANDARD PROCEDURE**.

6.7L DIESEL ENGINE

CAUTION: Be certain to adjust the refrigerant oil level when servicing the A/C refrigerant system. Refer to OIL, REFRIGERANT, STANDARD PROCEDURE. Failure to properly adjust the refrigerant oil level will prevent the A/C system from operating as designed and can cause serious A/C compressor damage.

NOTE: When replacing multiple A/C system components, refer to the Refrigerant Oil Capacities chart to determine how much oil should be added to the refrigerant system. Refer to OIL, REFRIGERANT, STANDARD PROCEDURE.

NOTE: Replacement of the refrigerant line O-ring seals and gaskets is required anytime a refrigerant line is disconnected. Failure to replace the rubber O-ring seals and metal gaskets could result in a refrigerant system leak.

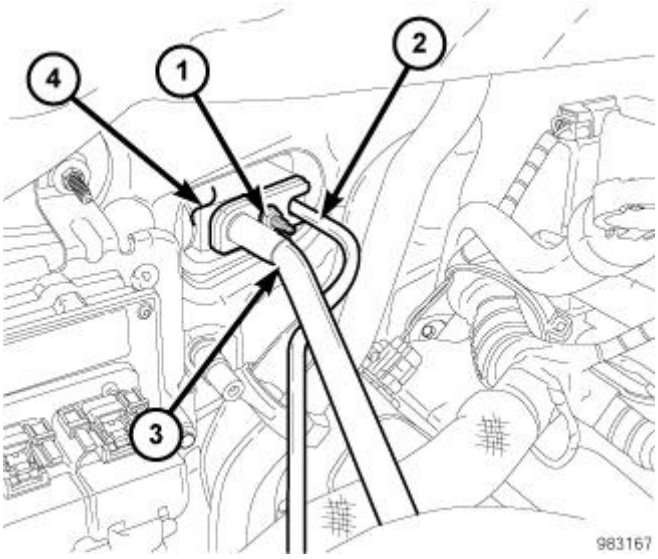

Fig. 208: A/C Expansion Valve & Lines
Courtesy of CHRYSLER GROUP, LLC

1. Position the A/C suction line (3) into the engine compartment.
2. Remove the tape or plugs from the opened refrigerant line fittings and expansion valve ports.
3. Lubricate new O-ring seals with clean refrigerant oil and install them onto the refrigerant line fittings. Use only the specified O-ring seals as they are made of a special material for the R-134a system. Use only refrigerant oil of the type recommended for the A/C compressor in the vehicle.

4. Connect the A/C liquid line (2) and A/C suction line to the A/C expansion valve (4).
5. Install the nut (1) that secures the A/C liquid and suction lines to the A/C expansion valve. Tighten the nut to 23 N.m (17 ft. lbs.).

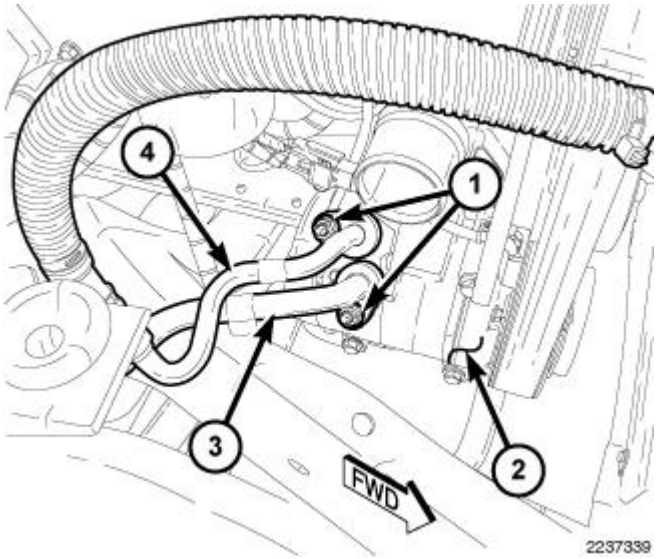

Fig. 209: Nuts, A/C Compressor, A/C Suction Line & A/C Discharge Line
Courtesy of CHRYSLER GROUP, LLC

NOTE: Illustration shown with lower radiator hose removed for clarity.

6. Remove the tape or plugs from the opened suction line fitting and compressor port.
7. Lubricate a new O-ring seal with clean refrigerant oil and install it and new gasket onto the suction line fitting. Use only the specified O-ring seal as it is made of a special material for the R-134a system. Use only refrigerant oil of the type recommended for the A/C compressor in the vehicle.
8. Connect the A/C suction line (3) to the A/C compressor (2).
9. Install the nut (1) that secures the A/C suction line to the A/C compressor. Tighten the nut to 23 N.m (17 ft. lbs.).
10. Install the turbocharger outlet hose.
11. Install the air filter housing.
12. Reconnect the negative battery cable.
13. Evacuate the refrigerant system. Refer to **PLUMBING, STANDARD PROCEDURE**.
14. Adjust the refrigerant oil level. Refer to **OIL, REFRIGERANT, STANDARD PROCEDURE**.
15. Charge the refrigerant system. Refer to **PLUMBING, STANDARD PROCEDURE**.

OIL, REFRIGERANT

STANDARD PROCEDURE

STANDARD PROCEDURE - REFRIGERANT OIL CAPACITY

When an A/C system is assembled at the factory, all components except the A/C compressor are refrigerant oil free. After the refrigerant system has been charged and operated, the refrigerant oil in the A/C compressor is dispersed throughout the refrigerant system. The A/C compressor, A/C condenser, A/C evaporator and A/C receiver/drier will each retain a significant amount of the needed refrigerant oil.

It is important to have the correct amount of refrigerant oil in the A/C system. This ensures proper lubrication of the A/C compressor. Too little oil will result in damage to the A/C compressor, while too much oil will reduce the cooling capacity of the A/C system and consequently result in higher discharge air temperatures.

CAUTION: Use only ND-8 PAG oil designed to work with R-134a refrigerant. The oil container should be kept tightly capped until ready for use and then tightly capped after use to prevent contamination from dirt and moisture. Refrigerant oil quickly absorbs moisture it comes in contact with. Special effort must be used to keep all R-134a system components moisture-free. Moisture in the refrigerant oil is very difficult to remove and will cause a reliability problem with the A/C compressor.

NOTE: Most reclaim/recycling equipment will measure the lubricant being removed during recovery. This amount of lubricant should be added back into the system. Refer to the reclaim/recycling equipment manufacturers instructions.

It will not be necessary to check the oil level in the A/C compressor or to add oil, unless there has been an oil loss. An oil loss may occur due to a rupture or leak from a refrigerant line, a connector fitting, a component, or a component seal. If a leak occurs, add 30 milliliters (1 fluid ounce) of refrigerant oil to the refrigerant system after the repair has been made. Refrigerant oil loss will be evident at the leak point by the presence of a wet, shiny surface around the leak.

Refrigerant oil must be added when an A/C compressor, A/C condenser or an A/C evaporator is replaced. Refer to **REFRIGERANT OIL CAPACITIES**.

The refrigerant oil level in a new A/C compressor must first be adjusted prior to compressor installation. Refer to **COMPRESSOR OIL DRAIN PROCEDURE**.

REFRIGERANT OIL CAPACITIES

Component Name	ml.	oz.
Total A/C System Fill	180	6
A/C Condenser	30	1
A/C Evaporator	60	2
A/C Compressor	Drain and measure the oil from the old compressor. Refer to **COMPRESSOR OIL DRAIN PROCEDURE**.	

COMPRESSOR OIL DRAIN PROCEDURE

CAUTION: Be certain to adjust the refrigerant system oil level when replacing an A/C compressor. Failure to properly drain and measure the refrigerant oil from

the A/C compressor can prevent the A/C system from operating as designed and cause serious compressor damage.

The A/C compressor is filled with refrigerant oil from the factory. Use the following procedure to drain and measure refrigerant oil from the A/C compressor.

1. Drain all of the refrigerant oil from the old A/C compressor into a clean measured container.
2. Drain all of the refrigerant oil from the new A/C compressor into a clean measured container.
3. Refill the new A/C compressor with the same amount of refrigerant oil that was drained out of the old compressor. Use only clean refrigerant oil of the type recommended for the A/C compressor in the vehicle.
4. Install the new A/C compressor onto the engine. Refer to **COMPRESSOR, A/C, INSTALLATION**.

REFRIGERANT

SPECIFICATIONS

REFRIGERANT CHARGE CAPACITY

REFRIGERANT CHARGE CAPACITY

Application	Capacity
3.7L/4.7L/5.7L engines	0.624 kg (1 lb. 6 oz.)
6.7L engine w/auto trans	0.624 kg (1 lb. 6 oz.)
6.7L engine w/man trans	0.539 kg (1 lb. 3 oz.)

VALVE, A/C EXPANSION

DESCRIPTION

DESCRIPTION

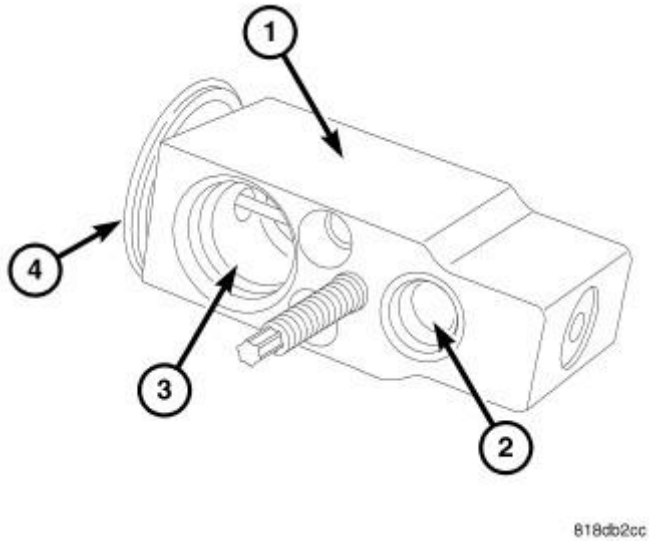

Fig. 210: A/C Expansion Valve
Courtesy of CHRYSLER GROUP, LLC

The A/C expansion valve controls the amount of refrigerant entering the A/C evaporator. The A/C expansion valve is of a thermostatic expansion valve (TXV) design and consists of an aluminum H-valve type body (1) with an inlet port (2), outlet port (3) and an integral thermal sensor (4).

The A/C expansion valve is located in the engine compartment at the dash panel, between the A/C refrigerant lines and the A/C evaporator.

OPERATION

OPERATION

The A/C expansion valve controls the high-pressure, low temperature liquid refrigerant from the A/C liquid line and converts it into a low-pressure, low-temperature mixture of liquid and gas before it enters the A/C evaporator. A mechanical sensor in the A/C expansion valve monitors the temperature and pressure of the refrigerant leaving the A/C evaporator through the A/C suction line, and adjusts the orifice size at the liquid line port to let the proper amount of refrigerant into the evaporator to meet the vehicle A/C cooling requirements. Controlling the refrigerant flow through the A/C evaporator ensures that none of the refrigerant leaving the A/C evaporator is still in a liquid state, which could damage the A/C compressor.

NOTE: **Replacement of the refrigerant line O-ring seals is required anytime a refrigerant line is disconnected from the expansion valve, or if the expansion valve is removed. Failure to replace the rubber O-ring seals may result in a refrigerant system leak.**

The A/C expansion valve is factory calibrated and cannot be adjusted or repaired and must be replaced if inoperative or damaged.

DIAGNOSIS AND TESTING

DIAGNOSIS AND TESTING - A/C EXPANSION VALVE

WARNING: **Refer to the applicable warnings and cautions for this system before performing the following operation. Refer to PLUMBING, WARNING and PLUMBING, CAUTION. Failure to follow these instructions may result in serious or fatal injury.**

NOTE: **The A/C expansion valve should only be tested following testing of the A/C compressor.**

NOTE: **Liquid CO^2 is required to test the A/C expansion valve. This material is available from most welding supply facilities. Liquid CO^2 is also available from companies which service and sell fire extinguishers.**

When testing the A/C expansion valve, the work area and the vehicle temperature must be 21° to 27°C (70° to 85°F). To test the expansion valve:

1. Connect a charging station or manifold gauge set to the refrigerant system service ports. Refer to **PLUMBING, STANDARD PROCEDURE**.
2. Verify the refrigerant system charge level by conducting the A/C Performance Test. Refer to **DIAGNOSIS AND TESTING**.
3. Close all doors, windows and vents to the passenger compartment.
4. Set the A/C-heater controls so that the A/C compressor is operating, the temperature control is in the highest temperature position, the mode-air doors is directing air output to the floor and the blower motor operating is operating at the highest speed.
5. Start the engine and allow it to idle. After the engine has reached normal operating temperature, allow the passenger compartment to heat up. This will create the need for maximum refrigerant flow into the A/C evaporator.
6. If the refrigerant charge is sufficient, the discharge (high pressure) gauge should read 827 kPa to 1655 kPa (120 psi to 240 psi). The suction (low pressure) gauge should read 207 kPa to 345 kPa (30 psi to 50 psi). If OK, go to 7. If not OK, replace the inoperative A/C expansion valve.

WARNING: Protect the skin and eyes from exposure to liquid CO^2 or personal injury can result.

7. If the suction (low pressure) gauge reads within the specified range, freeze the A/C expansion valve for 30 seconds using liquid CO^2 or another suitable super-cold material. **Do not spray R-134a or R-12 refrigerant on the A/C expansion valve for this test.** The suction (low pressure) gauge reading should drop by 69 kPa (10 psi). If OK, go to 8. If not OK, replace the inoperative A/C expansion valve. Refer to **VALVE, A/C EXPANSION, REMOVAL**.
8. Allow the A/C expansion valve to thaw. The suction (low pressure) gauge reading should stabilize at 207 kPa to 345 kPa (30 psi to 50 psi). If not OK, replace the inoperative A/C expansion valve. Refer to **VALVE, A/C EXPANSION, REMOVAL**.

REMOVAL

REMOVAL

WARNING: Refer to the applicable warnings and cautions for this system before performing the following operation. Refer to PLUMBING, WARNING and PLUMBING, CAUTION. Failure to follow these instructions may result in serious or fatal injury.

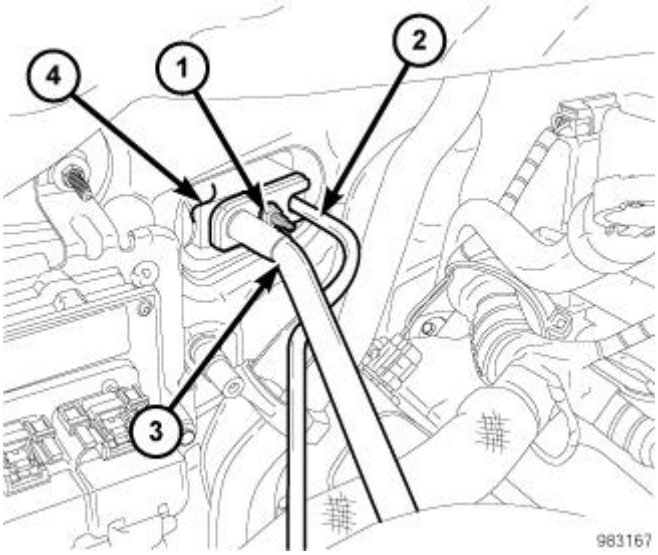

Fig. 211: A/C Expansion Valve & Lines
Courtesy of CHRYSLER GROUP, LLC

1. Disconnect and isolate the negative battery cable.
2. Recover the refrigerant from the refrigerant system. Refer to **PLUMBING, STANDARD PROCEDURE**.
3. Remove the nut (1) that secures the A/C liquid line (2) and A/C suction line (3) to the A/C expansion valve (4).
4. Disconnect the A/C liquid and suction lines and from the A/C expansion valve and position the refrigerant lines out of the way.
5. Remove the O-ring seals from the liquid and suction line fittings and discard.
6. Install plugs in, or tape over the opened liquid and suction line fittings.

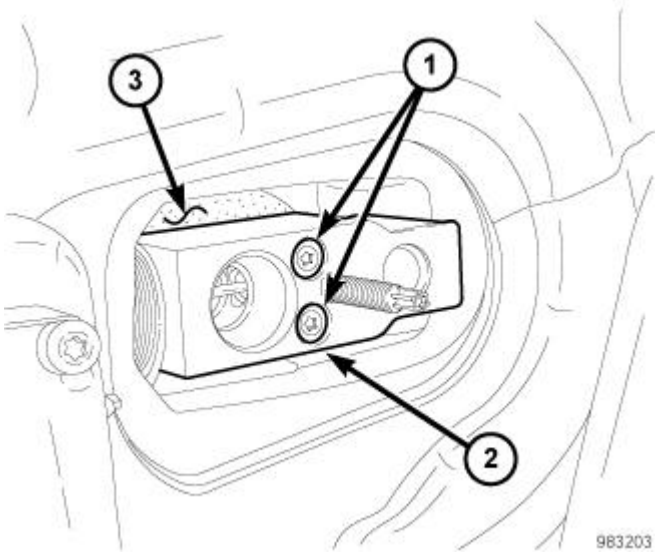

Fig. 212: A/C Expansion Valve Bolts
Courtesy of CHRYSLER GROUP, LLC

7. Remove the two bolts (1) that secure the A/C expansion valve (2) to the evaporator tube tapping block (3).
8. Remove the A/C expansion valve from the evaporator tube tapping block and remove and discard the O-ring seals.
9. Install plugs in, or tape over the opened evaporator tube fittings and all expansion valve ports.

INSTALLATION

INSTALLATION

CAUTION: Be certain to adjust the refrigerant oil level when servicing the A/C refrigerant system. Refer to OIL, REFRIGERANT, STANDARD PROCEDURE. Failure to properly adjust the refrigerant oil level will prevent the A/C system from operating as designed and can cause serious A/C compressor damage.

NOTE: When replacing multiple A/C system components, refer to the Refrigerant Oil Capacities chart to determine how much oil should be added to the refrigerant system. Refer to OIL, REFRIGERANT, STANDARD PROCEDURE.

NOTE: Replacement of the refrigerant line O-ring seals and gaskets is required anytime a refrigerant line is disconnected. Failure to replace the rubber O-ring seals and metal gaskets could result in a refrigerant system leak.

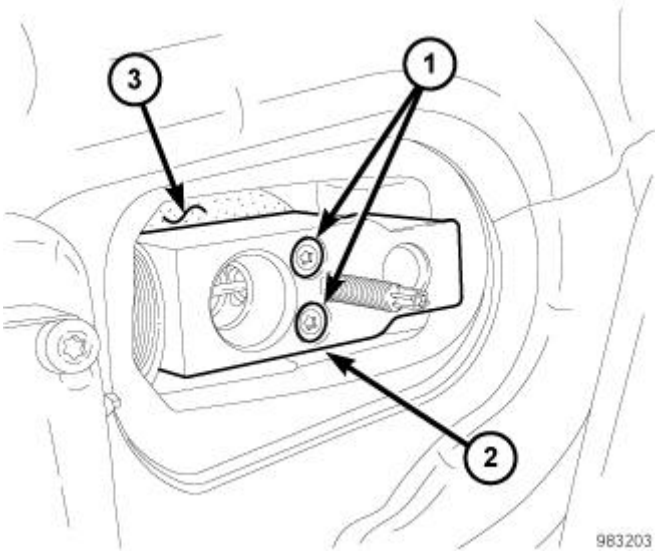

Fig. 213: A/C Expansion Valve Bolts
Courtesy of CHRYSLER GROUP, LLC

1. Remove the tape or plugs from the evaporator tube fittings and all of the expansion valve ports.
2. Lubricate new O-ring seals with clean refrigerant oil and install them onto the evaporator tube fittings. Use only the specified O-ring seals as they are made of a special material for the R-134a system. Use only

refrigerant oil of the type recommended for the A/C compressor in the vehicle.

3. Install the A/C expansion valve (2) onto the evaporator tube tapping block (3).
4. Install the two bolts (1) that secure the A/C expansion valve to the evaporator tube tapping block. Tighten the bolts to 11 N.m (97 in. lbs.).

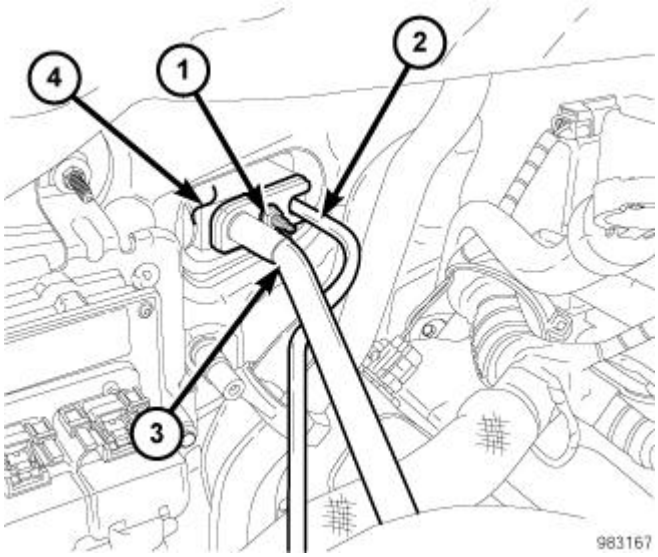

Fig. 214: A/C Expansion Valve & Lines
Courtesy of CHRYSLER GROUP, LLC

5. Remove the tape or plugs from the liquid and suction line fittings.
6. Lubricate new O-ring seals with clean refrigerant oil and install them onto the liquid and suction line fittings. Use only the specified O-ring seals as they are made of a special material for the R-134a system. Use only refrigerant oil of the type recommended for the A/C compressor in the vehicle.
7. Connect the A/C liquid line (2) and the A/C suction line (3) to the A/C expansion valve (4).
8. Install the nut (1) that secures the A/C liquid and suction lines the A/C expansion valve. Tighten the nut to 23 N.m (17 ft. lbs.).
9. Reconnect the negative battery cable.
10. Evacuate the refrigerant system. Refer to **PLUMBING, STANDARD PROCEDURE**.
11. Adjust the refrigerant oil level. Refer to **OIL, REFRIGERANT, STANDARD PROCEDURE**.
12. Charge the refrigerant system. Refer to **PLUMBING, STANDARD PROCEDURE**.

DIAGNOSTIC CODE INDEX

DIAGNOSTIC CODE INDEX

DTC	Description
B1000	A/C SWITCH REQUEST INPUT CIRCUIT/PERFORMANCE
B1009	RECIRCULATION SWITCH REQUEST INPUT CIRCUIT/PERFORMANCE
B1015	REAR DEFROST SWITCH REQUEST INPUT CIRCUIT/PERFORMANCE
B1031	EVAPORATOR TEMPERATURE SENSOR CIRCUIT LOW
B1032	EVAPORATOR TEMPERATURE SENSOR CIRCUIT HIGH
B1034	INFRARED TEMPERATURE SENSOR CIRCUIT LOW
B1035	INFRARED TEMPERATURE SENSOR CIRCUIT HIGH
B1040	PANEL MODE DOOR 1 CONTROL CIRCUIT/PERFORMANCE
B1043	PANEL MODE DOOR 1 CONTROL CIRCUIT OPEN
B1044	PANEL MODE DOOR 1 TRAVEL RANGE TOO SMALL
B1045	PANEL MODE DOOR 1 TRAVEL RANGE TOO LARGE
B1058	RECIRCULATION DOOR CONTROL CIRCUIT/PERFORMANCE
B105B	RECIRCULATION DOOR CONTROL CIRCUIT OPEN
B105C	RECIRCULATION DOOR TRAVEL RANGE TOO SMALL
B105D	RECIRCULATION DOOR TRAVEL RANGE TOO LARGE
B109B	PANEL MODE DOOR 2 CONTROL CIRCUIT/PERFORMANCE
B109E	PANEL MODE DOOR 2 CONTROL CIRCUIT OPEN
B109F	PANEL MODE DOOR 2 TRAVEL RANGE TOO SMALL
B10A0	PANEL MODE DOOR 2 TRAVEL RANGE TOO LARGE
B10A5	LEFT BLEND DOOR 1 CONTROL CIRCUIT OPEN
B10A6	LEFT BLEND DOOR 1 TRAVEL TOO SMALL
B10A7	LEFT BLEND DOOR 1 TRAVEL TOO LARGE
B10A8	LEFT BLEND DOOR ACTUATOR PERFORMANCE
B10AC	RIGHT BLEND DOOR CONTROL CIRCUIT OPEN
B10AD	RIGHT BLEND DOOR TRAVEL TOO SMALL
B10AE	RIGHT BLEND DOOR TRAVEL TOO LARGE
B10AF	RIGHT BLEND DOOR ACTUATOR PERFORMANCE
B10B2	A/C COOL DOWN TEST PERFORMANCE
B10E9	BLOWER MOTOR CONTROL CIRCUIT LOW
B10EA	BLOWER MOTOR CONTROL CIRCUIT HIGH
B1141	CLIMATE SYNC SWITCH PERFORMANCE
B1184	LEFT TEMP UP SWITCH REQUEST INPUT CIRCUIT/PERFORMANCE
B1185	LEFT TEMP DOWN SWITCH REQUEST INPUT CIRCUIT/PERFORMANCE
B1186	RIGHT TEMP UP SWITCH REQUEST INPUT CIRCUIT/PERFORMANCE

B1187	RIGHT TEMP DOWN SWITCH REQUEST INPUT CIRCUIT/PERFORMANCE
B1601	LEFT SOLAR SENSOR CIRCUIT LOW
B1602	LEFT SOLAR SENSOR CIRCUIT HIGH
B1604	RIGHT SOLAR SENSOR CIRCUIT LOW
B1605	RIGHT SOLAR SENSOR CIRCUIT HIGH
B1610	AMBIENT LIGHT SENSOR 1 INPUT CIRCUIT LOW
B1611	AMBIENT LIGHT SENSOR 1 INPUT CIRCUIT HIGH
B2214-00	(HVAC) CLIMATE CONTROL INTERNAL
B222A	VEHICLE LINE MISMATCH
U0010	CAN INTERIOR BUS
U0141	LOST COMMUNICATION WITH IPM (FCM/TIPM)
U0155	LOST COMMUNICATION WITH CLUSTER/CCN

DIAGNOSIS AND TESTING

B1000-A/C SWITCH REQUEST INPUT CIRCUIT/PERFORMANCE

For a complete wiring diagram, **refer to appropriate SYSTEM WIRING DIAGRAMS article** .

THEORY OF OPERATION

The HVAC A/C Heater Control contains various switches and knobs that are used to change the systems operation. Many of the switches are momentary switches which are normally open or in the Off position and the status changes when the switch button or knob is pushed or turned. An active DTC indicates that the switch is stuck in an On position. A stored DTC indicates that the switch was stuck in a On position for more than 60 seconds but has since returned to its normal state of Off.

WHEN MONITORED:

With the ignition on.

SET CONDITION:

If the A/C On/Off Control Switch is stuck in an On position for more than 60 seconds. This DTC has a de-maturing time of two seconds. If the DTC's status changes from active to stored, the DTC will stay in memory for 100 ignition cycles.

POSSIBLE CAUSES

Possible Causes
OBJECT HOLDING SWITCH IN AN ON POSITION A/C HEATER CONTROL

Always perform the HVAC Pre-Diagnostic Troubleshooting procedure before proceeding. Refer to HVAC PRE-DIAGNOSTIC TROUBLESHOOTING PROCEDURE.

DIAGNOSTIC TEST

1. **INSPECT FOR OBJECT HOLDING SWITCH IN AN ON POSITION**
    1. Inspect the A/C Heater Control for an object or debris holding the A/C On/Off Control Switch in an On position.

        NOTE: Using the scan tool you can read the On/Off status of the control switch.

        Is the A/C On/Off control switch being held in or stuck On?

        Yes

        - Clean or repair the A/C Heater Control as necessary. If you are unable to clean the switch to where the switch can work properly, replace and program the A/C Heater Control in accordance with the Service Information.
        - Perform HVAC VERIFICATION TEST. Refer to **HVAC VERIFICATION TEST**.

        No

        - Go To 2.
2. **A/C HEATER CONTROL**
    1. Turn the ignition on.
    2. With the scan tool, erase HVAC DTC's.
    3. Turn the ignition off for 10 seconds, and then turn the ignition on and wait a minimum of 60 seconds.
    4. With the scan tool, read HVAC DTC's.

        Does the scan tool display this DTC as Active or is the status of the switch reading On?

        Yes

        - Replace and program the A/C Heater Control in accordance with the Service Information.
        - Perform HVAC VERIFICATION TEST. Refer to **HVAC VERIFICATION TEST**.

        No

        - Test complete.
        - Perform HVAC VERIFICATION TEST. Refer to **HVAC VERIFICATION TEST**.

B1009-RECIRCULATION SWITCH REQUEST INPUT CIRCUIT/PERFORMANCE

For a complete wiring diagram, **refer to appropriate SYSTEM WIRING DIAGRAMS article** .

THEORY OF OPERATION

The HVAC A/C Heater Control contains various switches and knobs that are used to change the systems operation. Many of the switches are momentary switches which are normally open or in the Off position and the status changes when the switch button or knob is pushed or turned. An active DTC indicates that the switch is stuck in an On position. A stored DTC indicates that the switch was stuck in a On position for more than 60 seconds but has since returned to its normal state of Off.

WHEN MONITORED:

With the ignition on.

SET CONDITION:

If the Recirculation mode switch is stuck in a On position for more than 60 seconds. This DTC has a de-maturing time of two seconds. If the DTC's status changes from active to stored, the DTC will stay in memory for 100 ignition cycles.

POSSIBLE CAUSES

Possible Causes
OBJECT HOLDING SWITCH IN AN ON POSITION A/C HEATER CONTROL

Always perform the HVAC Pre-Diagnostic Troubleshooting procedure before proceeding. Refer to HVAC PRE-DIAGNOSTIC TROUBLESHOOTING PROCEDURE.

DIAGNOSTIC TEST

1. **INSPECT FOR OBJECT HOLDING SWITCH IN AN ON POSITION**
    1. Inspect the A/C Heater Control for an object or debris holding the Recirculation mode switch in an On position.

        NOTE: Using the scan tool you can read the On/Off status of the control switch.

        Is the Recirculation mode switch being held in or stuck On?

        Yes

        - Clean or repair the A/C Heater Control as necessary. If you are unable to clean the switch to where the switch can work properly, replace and program the A/C Heater Control in accordance with the Service Information.
        - Perform HVAC VERIFICATION TEST. Refer to **HVAC VERIFICATION TEST**.

        No

        - Go To 2.

2. **A/C HEATER CONTROL**
    1. Turn the ignition on.
    2. With the scan tool, erase HVAC DTC's.
    3. Turn the ignition off for 10 seconds, and then turn the ignition on and wait a minimum of 60 seconds.
    4. With the scan tool, read HVAC DTC's.

    Does the scan tool display this DTC as Active or is the status of the switch reading On?

    Yes

    - Replace and program the A/C Heater Control in accordance with the Service Information.
    - Perform HVAC VERIFICATION TEST. Refer to **HVAC VERIFICATION TEST**.

    No

    - Test complete.
    - Perform HVAC VERIFICATION TEST. Refer to **HVAC VERIFICATION TEST**.

B1015-REAR DEFROST SWITCH REQUEST INPUT CIRCUIT/PERFORMANCE

For a complete wiring diagram, **refer to appropriate SYSTEM WIRING DIAGRAMS article** .

THEORY OF OPERATION

The HVAC A/C Heater Control contains various switches and knobs that are used to change the systems operation. Many of the switches are momentary switches which are normally open or in the Off position and the status changes when the switch button or knob is pushed or turned. An active DTC indicates that the switch is stuck in an On position. A stored DTC indicates that the switch was stuck in a On position for more than 60 seconds but has since returned to its normal state of Off.

WHEN MONITORED:

With the ignition on.

SET CONDITION:

If the Electric Back light (EBL) Electronic Rear Defrost switch is stuck in an On position for more than 60 seconds. This DTC has a de-maturing time of two seconds. If the DTC's status changes from active to stored, the DTC will stay in memory for 100 ignition cycles.

POSSIBLE CAUSES

Possible Causes
OBJECT HOLDING SWITCH IN AN ON POSITION

A/C HEATER CONTROL

Always perform the HVAC Pre-Diagnostic Troubleshooting procedure before proceeding. Refer to HVAC PRE-DIAGNOSTIC TROUBLESHOOTING PROCEDURE.

DIAGNOSTIC TEST

1. **INSPECT FOR OBJECT HOLDING SWITCH IN AN ON POSITION**
   1. Inspect the A/C Heater Control for an object or debris holding the (EBL) Electronic Rear Defrost switch in an On position.

      NOTE: Using the scan tool you can read the On/Off status of the control switch.

      Is the (EBL) Electronic Rear Defrost switch being held in or stuck in an On?

      Yes

      - Clean or repair the A/C Heater Control as necessary. If you are unable to clean the switch to where the switch can work properly, replace and program the A/C Heater Control in accordance with the Service Information.
      - Perform HVAC VERIFICATION TEST. Refer to **HVAC VERIFICATION TEST**.

      No

      - Go To 2.
2. **A/C HEATER CONTROL**
   1. Turn the ignition on.
   2. With the scan tool, erase HVAC DTC's.
   3. Turn the ignition off for 10 seconds, and then turn the ignition on and wait a minimum of 60 seconds.
   4. With the scan tool, read HVAC DTC's.

      Does the scan tool display this DTC as Active or is the status of the switch reading On?

      Yes

      - Replace and program the A/C Heater Control in accordance with the Service Information.
      - Perform HVAC VERIFICATION TEST. Refer to **HVAC VERIFICATION TEST**.

      No

      - Test complete.
      - Perform HVAC VERIFICATION TEST. Refer to **HVAC VERIFICATION TEST**.

B1031-EVAPORATOR TEMPERATURE SENSOR CIRCUIT LOW

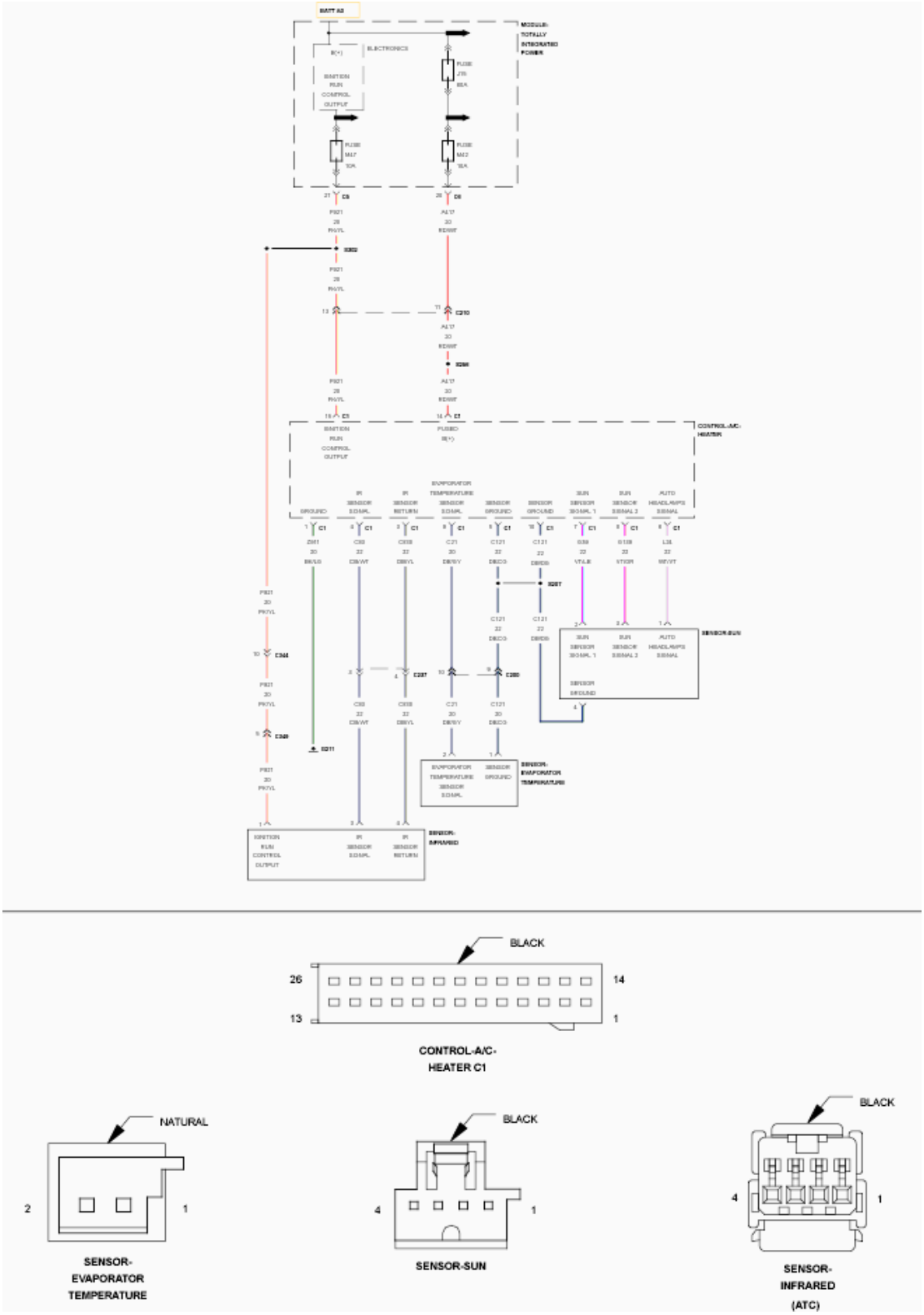

Fig. 1: Infrared Temperature Sensor, Evaporator Temperature Sensor & Sun Sensor Wiring Diagram

Courtesy of CHRYSLER GROUP, LLC

For a complete wiring diagram, **refer to appropriate SYSTEM WIRING DIAGRAMS article** .

WHEN MONITORED:

With the ignition on.

SET CONDITION:

The Evaporator Temperature Sensor voltage input to the A/C Heater Control is below 0.08 of a volt for a continuous period of 60 seconds. If the A/C Heater Control detects a valid voltage, the DTC will change from active to stored and will stay stored for 100 ignition cycles.

POSSIBLE CAUSES

Possible Causes
(C21) EVAPORATOR TEMPERATURE SENSOR SIGNAL CIRCUIT SHORT TO GROUND
(C21) EVAPORATOR TEMPERATURE SENSOR SIGNAL CIRCUIT SHORT TO (C121) SENSOR GROUND CIRCUIT
EVAPORATOR TEMPERATURE SENSOR
A/C HEATER CONTROL

Always perform the HVAC Pre-Diagnostic Troubleshooting procedure before proceeding. Refer to HVAC PRE-DIAGNOSTIC TROUBLESHOOTING PROCEDURE.

DIAGNOSTIC TEST

1. **CHECK IF THE DTC IS ACTIVE**
    1. Ignition on, engine not running.
    2. With the scan tool, read HVAC DTC's after 60 seconds.

       Is this DTC active?

       Yes

       - Go To 2.

       No

       - Go To 5.
2. **CHECK (C21) EVAPORATOR TEMPERATURE SENSOR SIGNAL CIRCUIT FOR A SHORT TO GROUND**

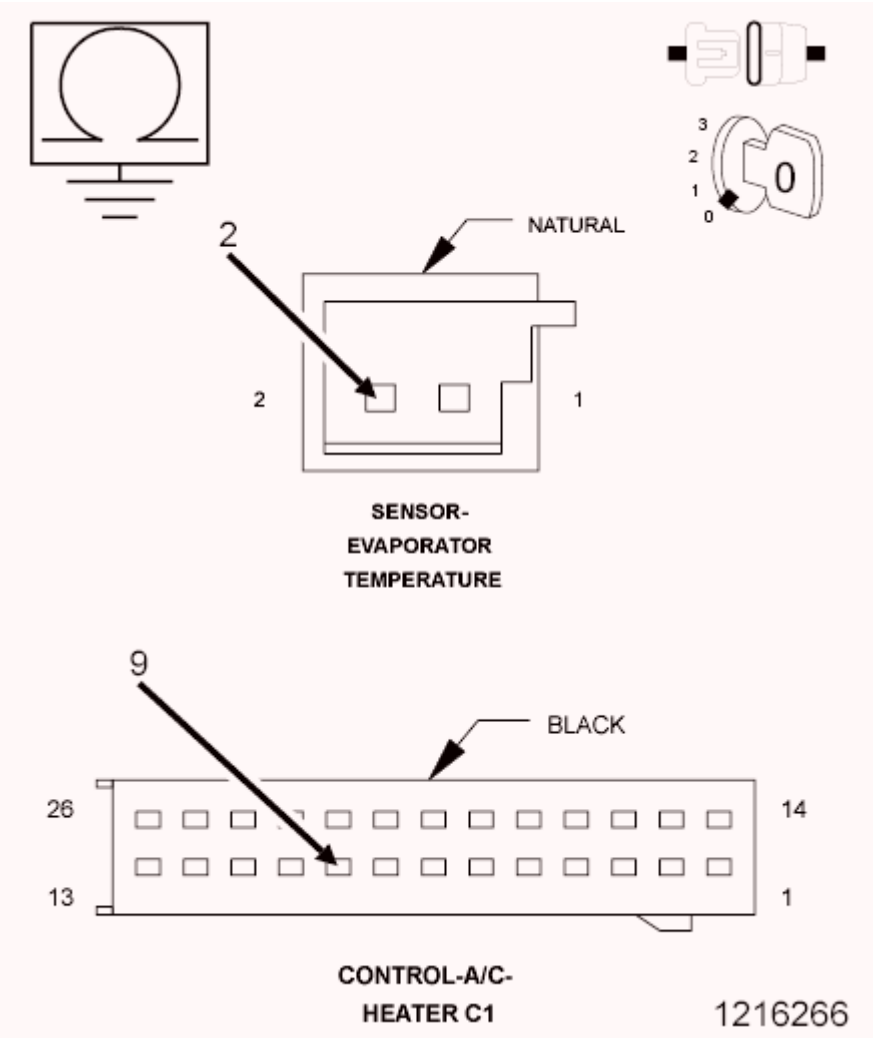

Fig. 2: Checking Evaporator Temperature Sensor Signal Circuit For A Short To Ground
Courtesy of CHRYSLER GROUP, LLC

1. Turn the ignition off.
2. Disconnect the A/C Heater Control C1 harness connector.
3. Disconnect the Evaporator Temperature Sensor harness connector.
4. Measure the resistance between ground and the (C21) Evaporator Temperature Sensor Signal circuit.

   Is the resistance below 100k Ohms?

   Yes

   - Repair the (C21) Evaporator Temperature Sensor Signal circuit for a short to ground.
   - Perform HVAC VERIFICATION TEST. Refer to **HVAC VERIFICATION TEST**.

   No

- Go To 3.

3. **CHECK (C21) EVAPORATOR TEMPERATURE SENSOR SIGNAL CIRCUIT FOR A SHORT TO THE (C121) SENSOR GROUND CIRCUIT**

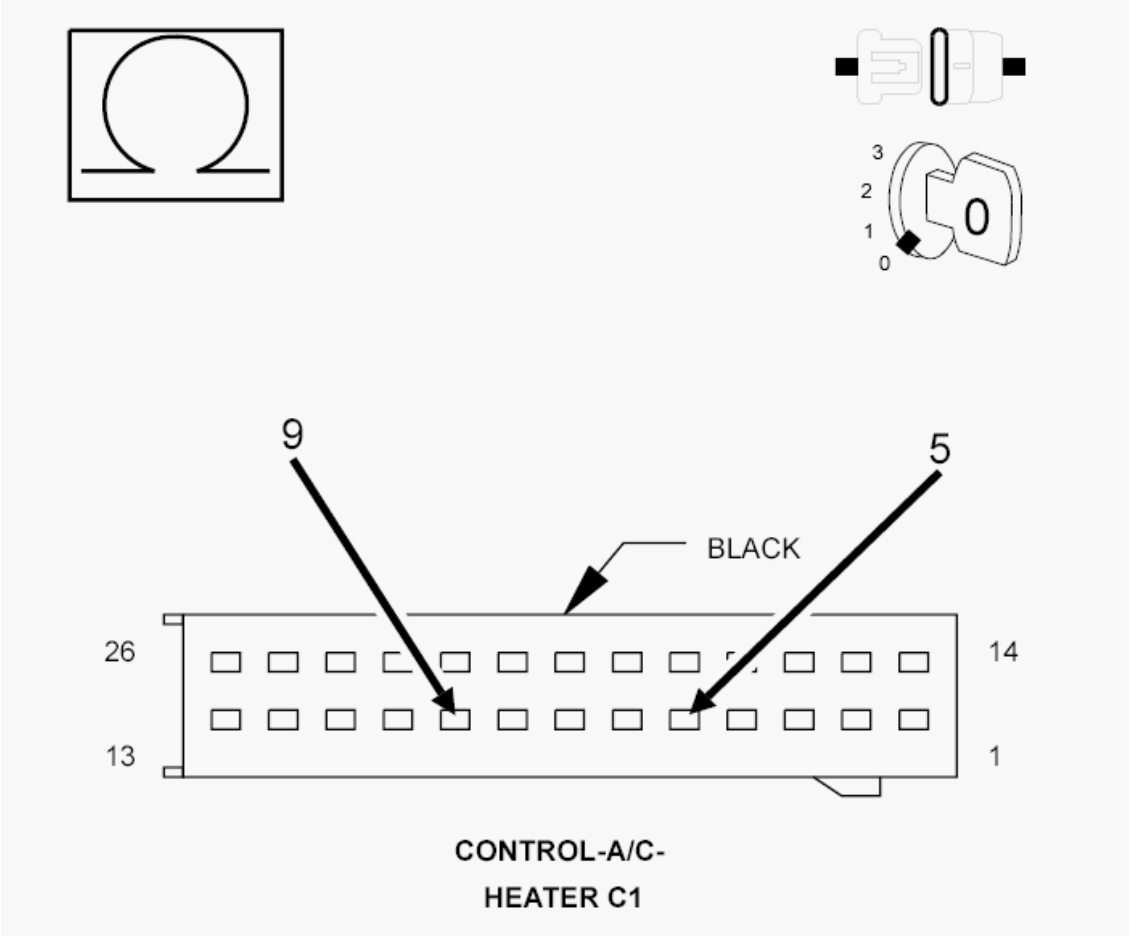

Fig. 3: Checking Evaporator Temperature Sensor Signal Circuit For A Short
Courtesy of CHRYSLER GROUP, LLC

1. Measure the resistance between the (C21) Evaporator Temperature Sensor Signal circuit and the (C121) Sensor Ground circuit.

   Is the resistance below 100k Ohms?

   Yes

   - Repair the (C21) Evaporator Temperature Sensor Signal circuit for a short to (C121) Sensor Ground circuit.
   - Perform HVAC VERIFICATION TEST. Refer to **HVAC VERIFICATION TEST**.

   No

- Go To 4.

4. **CHECK THE EVAPORATOR TEMPERATURE SENSOR**
    1. Replace the Evaporator Temperature Sensor in Accordance with the Service Information.
    2. Perform HVAC VERIFICATION TEST. Refer to **HVAC VERIFICATION TEST**.
    3. Cycle the ignition off for 30 seconds then back on and wait a minimum of 60 seconds.
    4. With the scan tool read HVAC DTC's.

    Does this DTC reset?

    Yes

    - Replace and program the A/C Heater Control in accordance with the Service Information.
    - Perform HVAC VERIFICATION TEST. Refer to **HVAC VERIFICATION TEST**.

    No

    - Test complete.

5. **CHECK THE WIRING AND CONNECTORS**
    1. The conditions necessary to set the DTC are not present at this time.
    2. Using the schematics as a guide, inspect the wiring and connectors specific to this circuit.
    3. Check for an intermittent condition by inspecting the related wiring harness for chafed, pierced, pinched, partially broken wires.
    4. Check the connectors for broken, bent, pushed out, spread, corroded, or contaminated terminals.
    5. Wiggle the wiring and connectors while checking for shorted and open circuits.
    6. With the scan tool, check the Environmental Data to help identify the conditions in which the DTC was set.

    Were there any problems found?

    Yes

    - Repair as necessary.
    - Perform HVAC VERIFICATION TEST. Refer to **HVAC VERIFICATION TEST**.

    No

    - Test complete.

B1032-EVAPORATOR TEMPERATURE SENSOR CIRCUIT HIGH

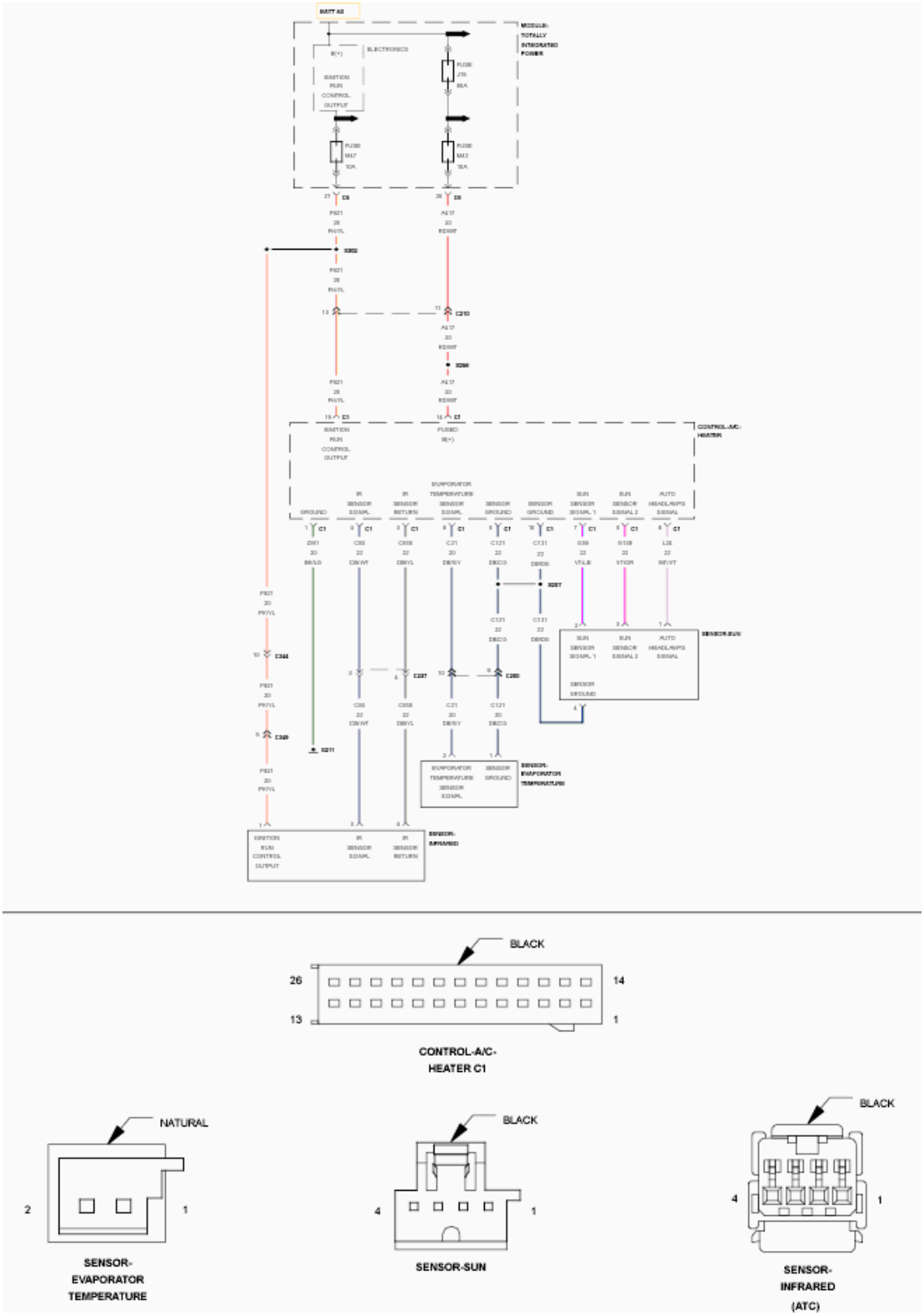

Fig. 4: Infrared Temperature Sensor, Evaporator Temperature Sensor & Sun Sensor Wiring Diagram
Courtesy of CHRYSLER GROUP, LLC

For a complete wiring diagram, **refer to appropriate SYSTEM WIRING DIAGRAMS article** .

THEORY OF OPERATION

The Evaporator Temperature Sensor resistance changes in conjunction to temperature. The sensor thermistor forms the lower half of a voltage divider and the upper half of the voltage divider is provided by a 9.09K pull up resistor to 5.0 volts.

WHEN MONITORED:

With the ignition on.

SET CONDITION:

The Evaporator Temperature Sensor voltage input to the A/C Heater Control is above 4.9 volts for a continuous period of 60 seconds. If the A/C Heater Control detects a valid voltage, the DTC will change from Active to Stored and will stay in the controllers memory for 100 ignition cycles.

POSSIBLE CAUSES

Possible Causes
(C21) EVAPORATOR TEMPERATURE SENSOR SIGNAL CIRCUIT SHORT TO VOLTAGE
(C21) EVAPORATOR TEMPERATURE SENSOR SIGNAL CIRCUIT OPEN
(C121) SENSOR GROUND CIRCUIT OPEN
EVAPORATOR TEMPERATURE SENSOR
A/C HEATER CONTROL

Always perform the HVAC Pre-Diagnostic Troubleshooting procedure before proceeding. Refer to HVAC PRE-DIAGNOSTIC TROUBLESHOOTING PROCEDURE.

DIAGNOSTIC TEST

1. **CHECK (C21) EVAPORATOR TEMPERATURE SENSOR SIGNAL CIRCUIT VOLTAGE**
    1. Ignition on, engine not running.
    2. With the scan tool, read HVAC DTC's after 60 seconds.

    Is this DTC active?

    Yes

    - Go To 2.

    No

    - Go To 7.
2. **CHECK THE (C21) EVAPORATOR TEMPERATURE SENSOR SIGNAL CIRCUIT VOLTAGE**

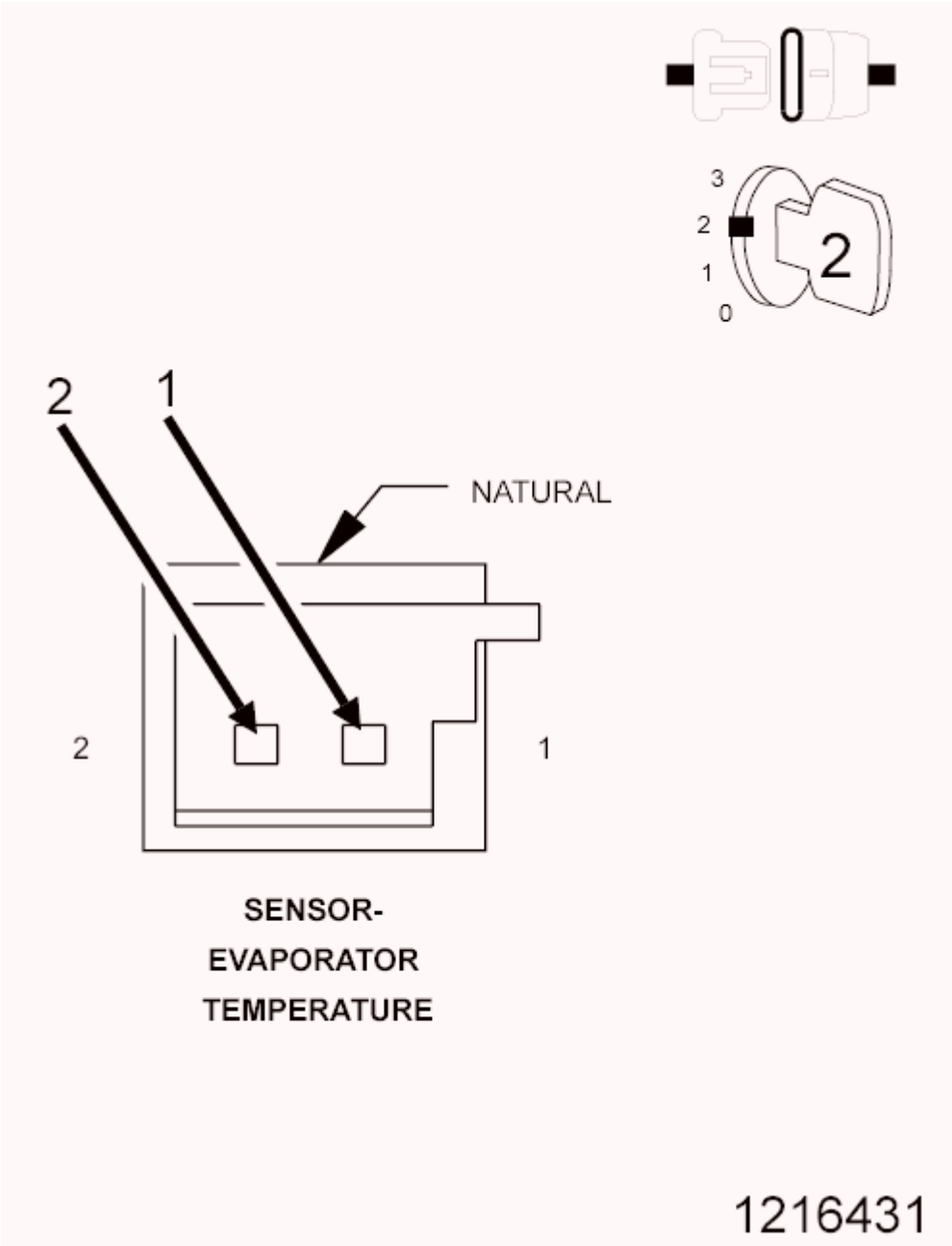

Fig. 5: Measuring Evaporator Temperature Sensor Signal Circuit Voltage
Courtesy of CHRYSLER GROUP, LLC

1. Turn the ignition off to the lock position.
2. Disconnect the Evaporator Temperature Sensor harness connector.

NOTE: **Due to the small terminal and pin size of the Evaporator Temperature Sensor and harness connector, make sure to not damage the terminals in this process.**

3. Connect a jumper wire between the (C21) Evaporator Temperature Sensor Signal circuit and the

(C121) Sensor Ground circuit in the Evaporator Temperature Sensor harness connector.

4. Ignition on, engine not running.
5. With the scan tool, read the Evaporator Temperature Sensor voltage.

   Is the voltage below 0.2 volts?

   Yes

   - Replace the Evaporator Temperature Sensor in accordance with the Service Information.
   - Perform HVAC VERIFICATION TEST. Refer to **HVAC VERIFICATION TEST**.

   No

   - Go To 3.

3. **CHECK THE (C21) EVAPORATOR TEMPERATURE SENSOR SIGNAL CIRCUIT FOR A SHORT TO VOLTAGE**

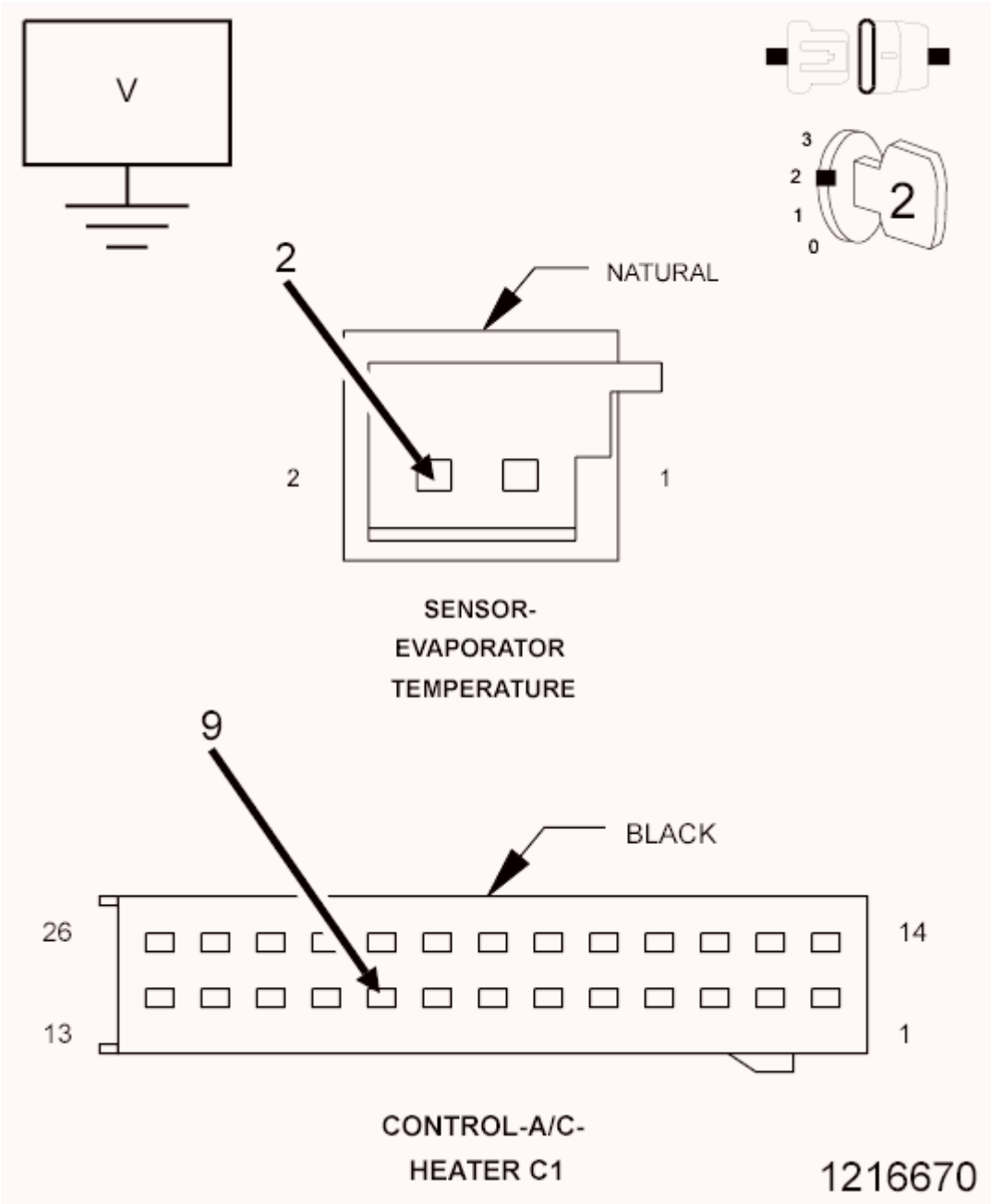

Fig. 6: Checking Evaporator Temperature Sensor Signal Circuit For A Short
Courtesy of CHRYSLER GROUP, LLC

1. Turn the ignition off to the lock position.
2. Disconnect the jumper wire from the previous step.
3. Disconnect the A/C Heater Control C1 harness connector.
4. Ignition on, engine not running.
5. Measure the voltage of the (C21) Evaporator Temperature Sensor Signal circuit

   Is voltage above 0.2 of a volt?

Yes

- Repair the (C21) Evaporator Temperature Sensor Signal circuit for a short to voltage.
- Perform HVAC VERIFICATION TEST. Refer to **HVAC VERIFICATION TEST**.

No

- Go To 4.

4. **CHECK THE (C21) EVAPORATOR TEMPERATURE SENSOR SIGNAL CIRCUIT FOR AN OPEN**

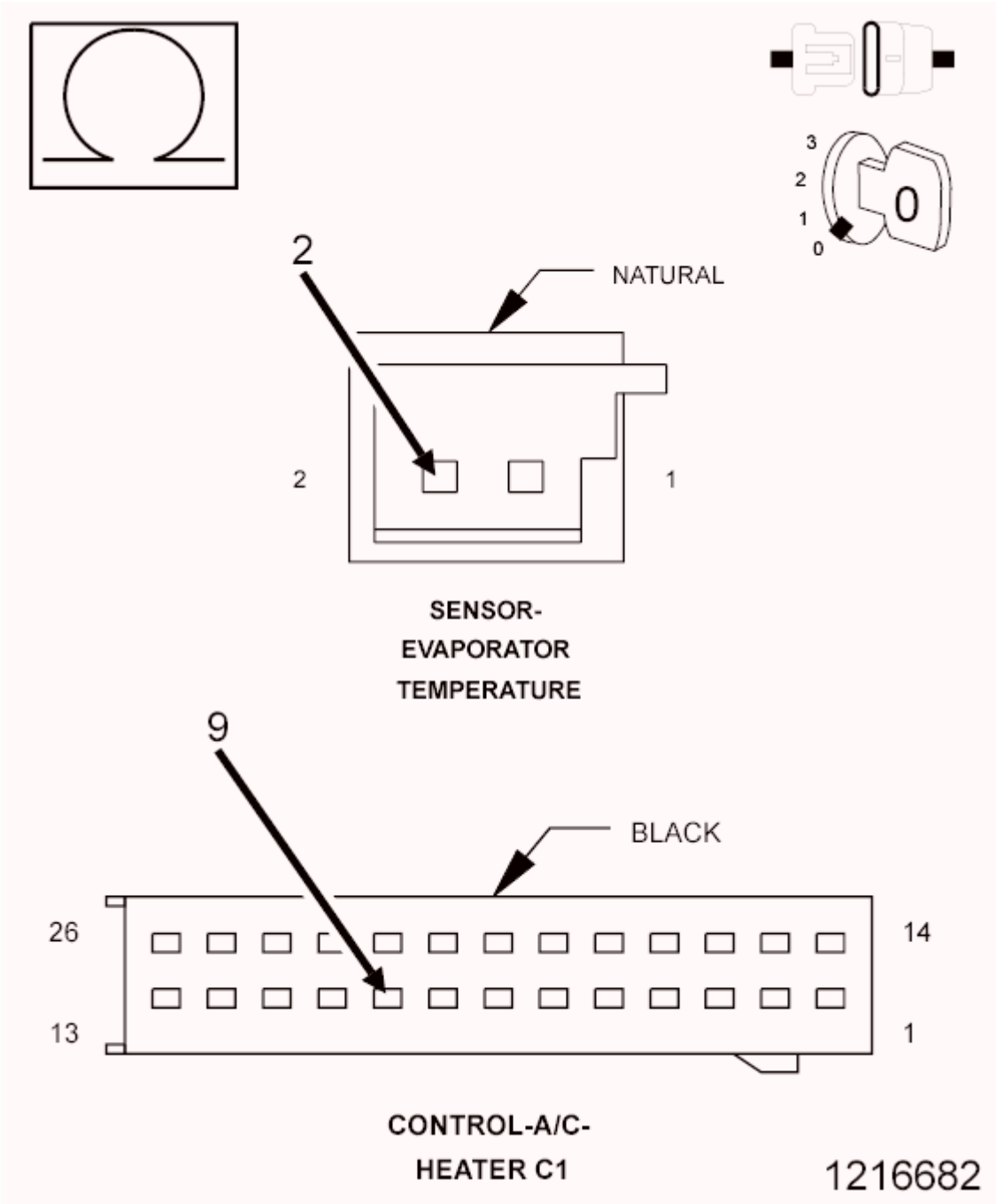

Fig. 7: Checking Evaporator Temperature Sensor Signal Circuit For An Open
Courtesy of CHRYSLER GROUP, LLC

1. Turn the ignition off to the lock position.
2. Measure the resistance of the (C21) Evaporator Temperature Sensor Signal circuit between the A/C Heater Control C1 harness connector and the Evaporator Temperature Sensor harness connector.

   Is the resistance above 1.0 Ohm?

Yes

- Repair the (C21) Evaporator Temperature Sensor Signal circuit for an open.
- Perform HVAC VERIFICATION TEST. Refer to **HVAC VERIFICATION TEST**.

No

- Go To 5.

5. **CHECK THE (C121) SENSOR GROUND CIRCUIT FOR AN OPEN**

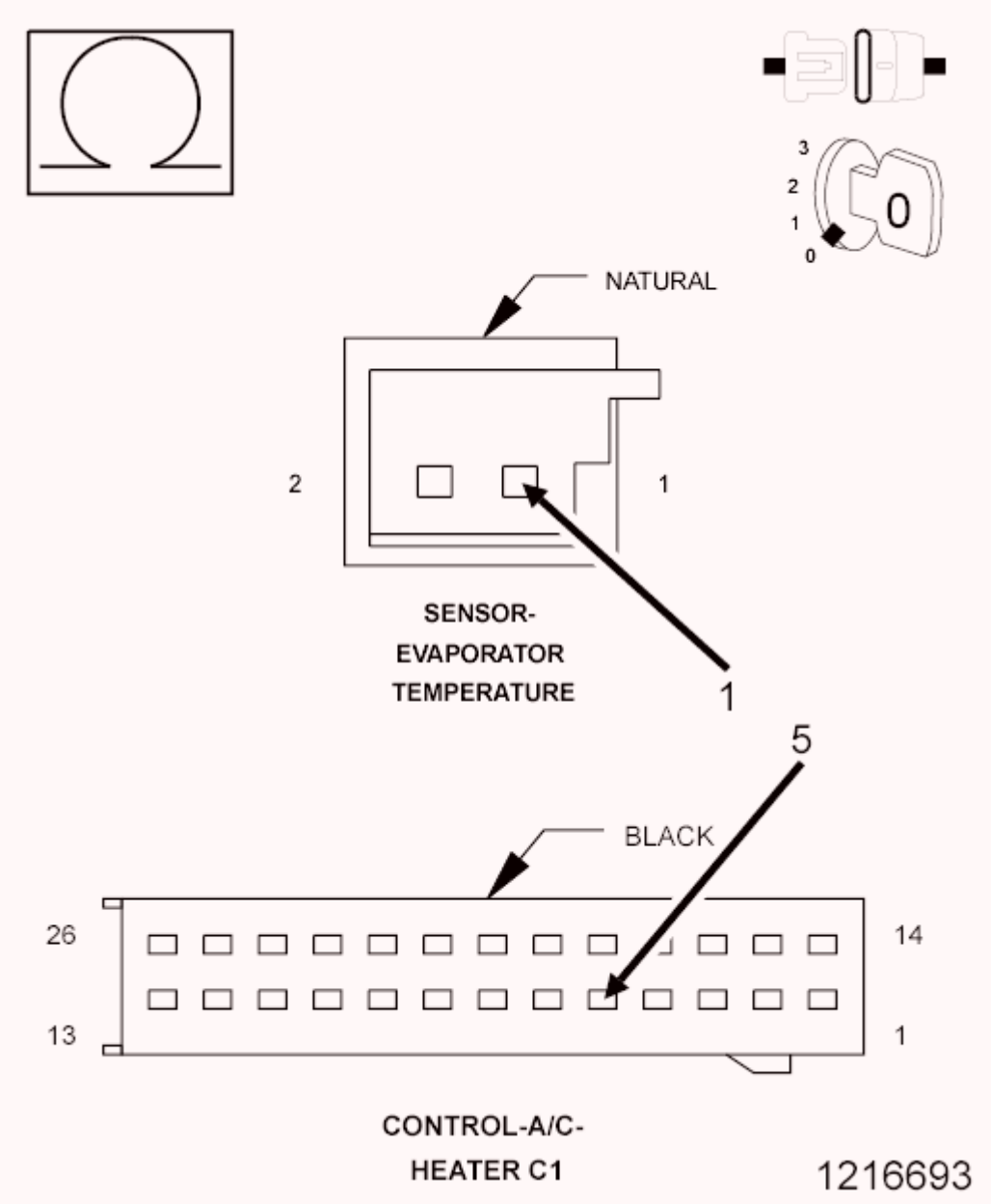

Fig. 8: Checking Evaporator Temperature Sensor Ground For An Open
Courtesy of CHRYSLER GROUP, LLC

1. Measure the resistance of the (C121) Sensor Ground circuits between the A/C Heater Control C1 harness connector and the Evaporator Temperature Sensor harness connector.

   NOTE: There are two C121 terminals in the A/C Heater Control C1 harness connector. Make sure to check both.

   Is the resistance above 1.0 Ohm?

   Yes

   - Repair the (C121) Sensor Ground circuit for an open.
   - Perform HVAC VERIFICATION TEST. Refer to **HVAC VERIFICATION TEST**.

   No

   - Go To 6.

6. **CHECK THE EVAPORATOR TEMPERATURE SENSOR**
   1. Replace the Evaporator Temperature Sensor in Accordance with the Service Information.
   2. Perform HVAC VERIFICATION TEST. Refer to **HVAC VERIFICATION TEST**.
   3. Cycle the ignition off for 30 seconds then back on and wait a minimum of 60 seconds.
   4. With the Scan tool read HVAC DTC's.

   Does this DTC reset?

   Yes

   - Replace and program the A/C Heater Control in accordance with the Service Information.
   - Perform HVAC VERIFICATION TEST. Refer to **HVAC VERIFICATION TEST**.

   No

   - Test complete.

7. **CHECK THE WIRING AND CONNECTORS**
   1. The conditions necessary to set the DTC are not present at this time.
   2. Using the schematics as a guide, inspect the wiring and connectors specific to this circuit.
   3. Check for an intermittent condition by inspecting the related wiring harness for chafed, pierced, pinched, partially broken wires.
   4. Check the connectors for broken, bent, pushed out, spread, corroded, or contaminated terminals.
   5. Wiggle the wiring and connectors while checking for shorted and open circuits.
   6. With the scan tool, check the Environmental Data to help identify the conditions in which the DTC was set.

   Were there any problems found?

Yes

- Repair as necessary.
- Perform HVAC VERIFICATION TEST. Refer to **HVAC VERIFICATION TEST**.

No

- Test complete.

B1034-INFRARED TEMPERATURE SENSOR CIRCUIT LOW

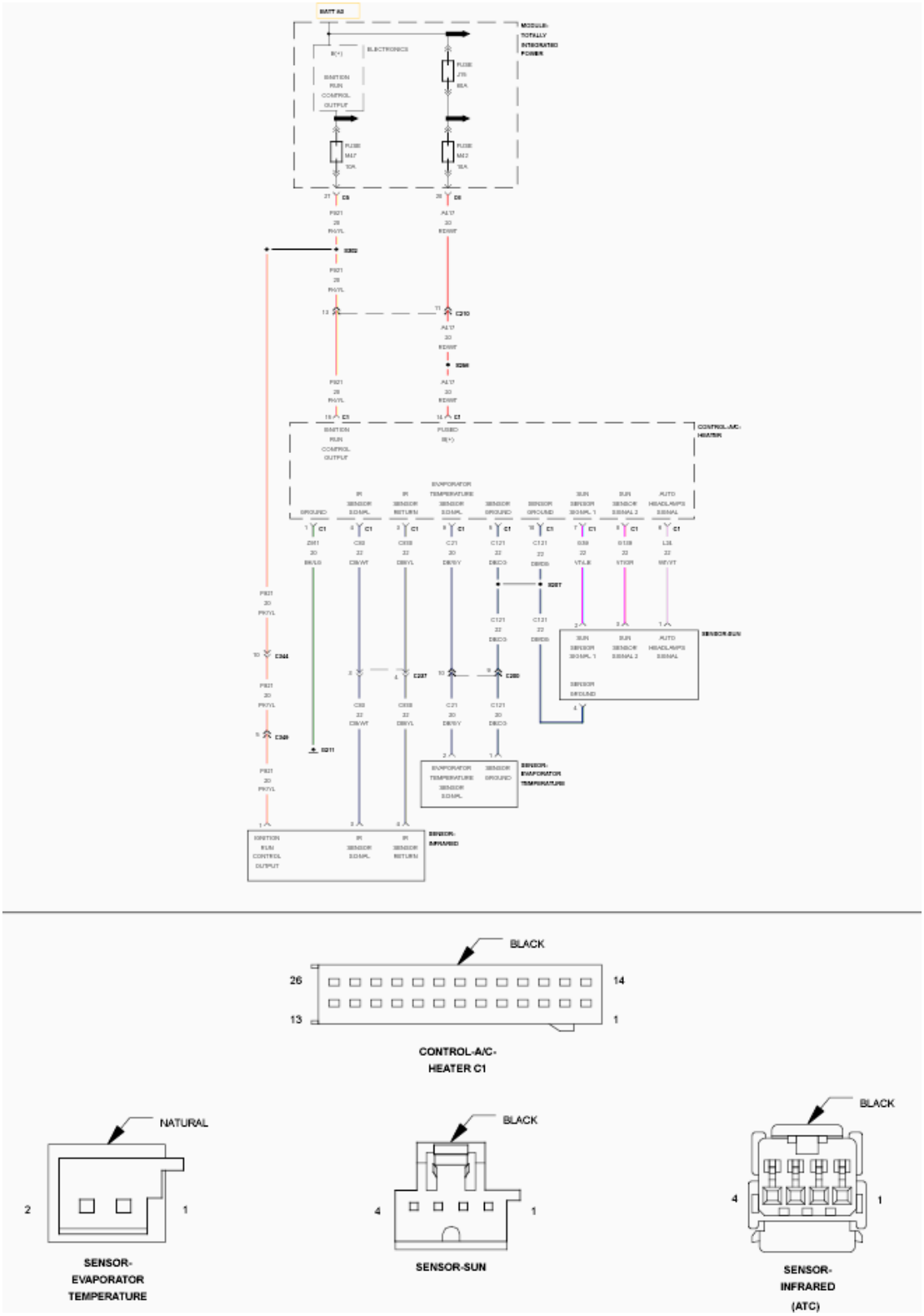

Fig. 9: Infrared Temperature Sensor, Evaporator Temperature Sensor & Sun Sensor Wiring Diagram
Courtesy of CHRYSLER GROUP, LLC

For a complete wiring diagram, **refer to appropriate SYSTEM WIRING DIAGRAMS article** .

WHEN MONITORED:

With the ignition on.

SET CONDITION:

The Infrared Temperature Sensor pulse with modulated (PWM) signal to the A/C Heater Control is less than 5% for a continuous period of 60 seconds. If the A/C Heater Control detects a valid PWM signal, the DTC will change from active to stored and will stay stored for 100 ignition cycles.

POSSIBLE CAUSES

Possible Causes
(F921) FUSED IGNITION RUN CONTROL OUTPUT CIRCUIT OPEN
(C83) IR SENSOR SIGNAL CIRCUIT SHORT TO GROUND
(C83) IR SENSOR SIGNAL CIRCUIT OPEN
INFRARED SENSOR
A/C HEATER CONTROL

Always perform the HVAC Pre-Diagnostic Troubleshooting procedure before proceeding. Refer to HVAC PRE-DIAGNOSTIC TROUBLESHOOTING PROCEDURE.

DIAGNOSTIC TEST

1. **CHECK IF DTC IS ACTIVE**
    1. Ignition on, engine not running.
    2. With the scan tool, read HVAC DTC's after a minimum of 60 seconds.

    Is this DTC active?

    Yes

    - Go To 2.

    No

    - Go To 6.
2. **CHECK THE (F921) FUSED IGNITION RUN CONTROL OUTPUT CIRCUIT FOR AN OPEN**

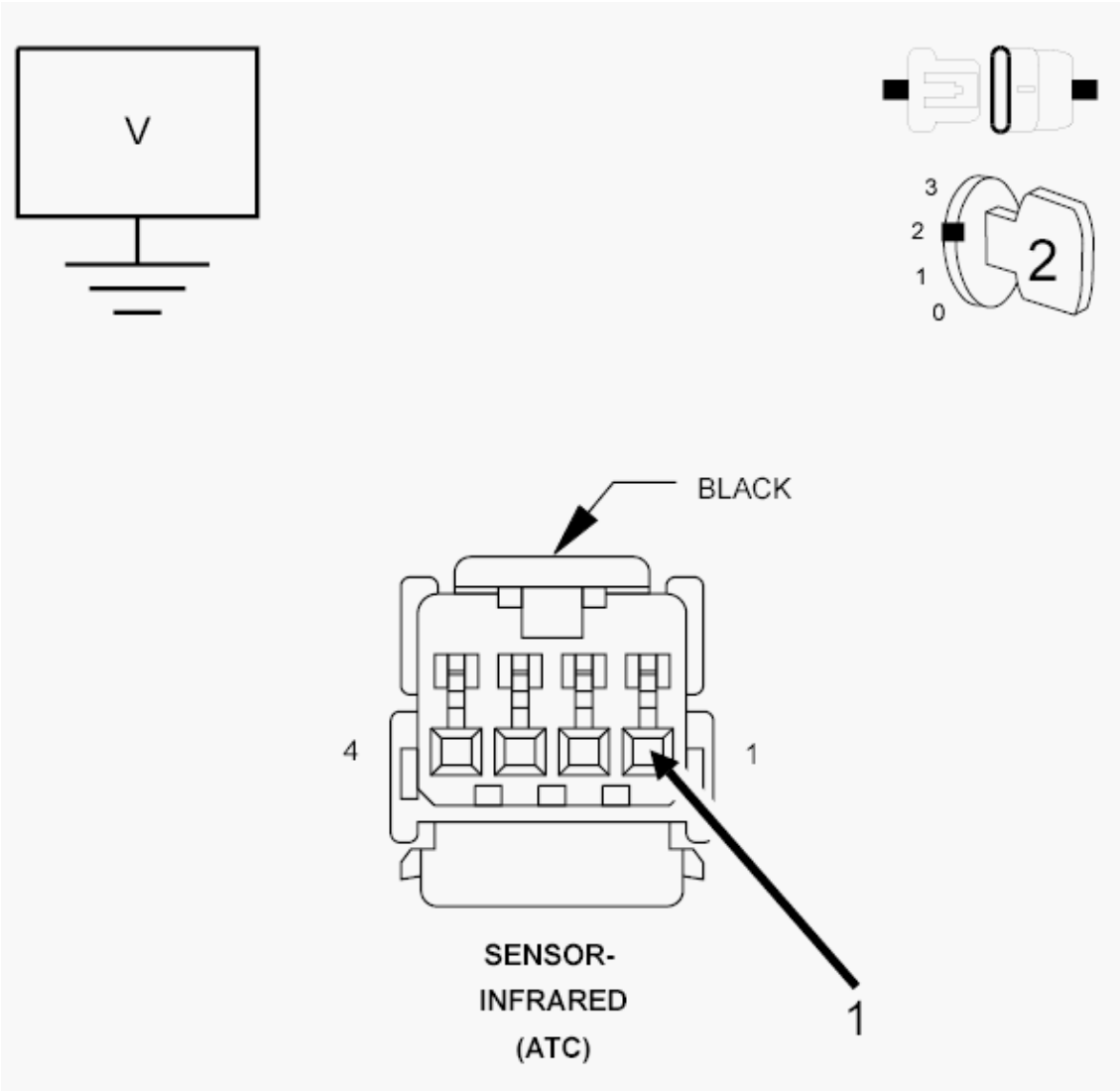

Fig. 10: Checking Fused Ignition Run Control Output Circuit For An Open
Courtesy of CHRYSLER GROUP, LLC

1. Turn the ignition off to the lock position.
2. Disconnect the Infrared Sensor harness connector.
3. Ignition on, engine not running.
4. With a test light connected to ground, check the (F921) Fused Ignition Run Control Output circuit.

NOTE: **The test light must illuminate brightly. Compare the brightness to that of a direct connection to the battery.**

Does the test light illuminate brightly?

Yes

- Go To 3.

No

- Repair the (F921) Fused Ignition Run Control Output circuit for an open.
- Perform HVAC VERIFICATION TEST. Refer to **HVAC VERIFICATION TEST**.

3. **CHECK THE (C83) IR SENSOR SIGNAL CIRCUIT FOR A SHORT TO GROUND**

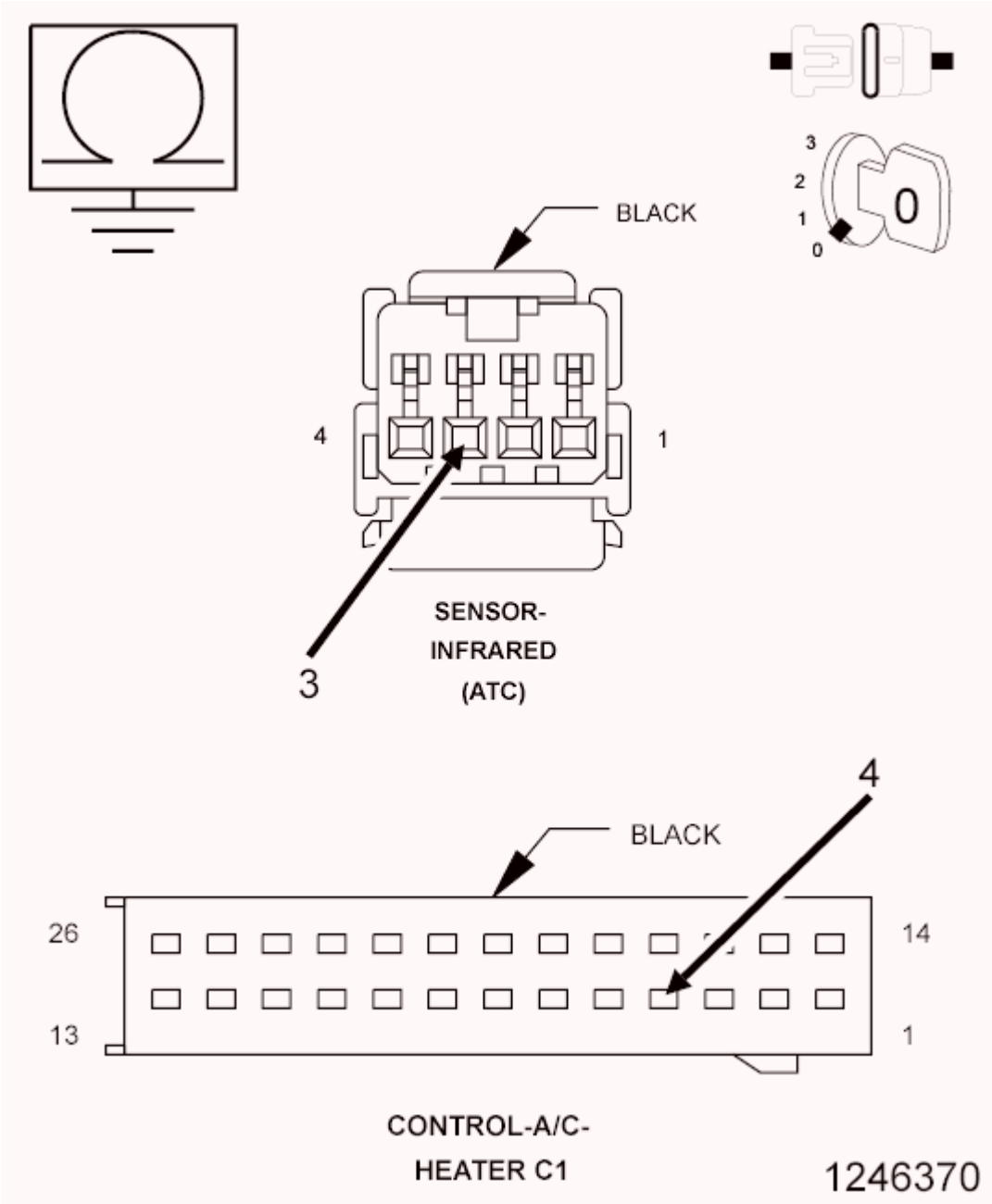

Fig. 11: Checking IR Sensor Signal Circuit For A Short
Courtesy of CHRYSLER GROUP, LLC

1. Turn the ignition off to the lock position.

2. Disconnect the A/C Heater Control C1 harness connector.
3. Measure the resistance between ground and the (C83) IR Sensor Signal circuit.

   Is the resistance below 100k Ohms?

   Yes

   - Repair the (C83) IR Sensor Signal circuit for a short to ground.
   - Perform HVAC VERIFICATION TEST. Refer to **HVAC VERIFICATION TEST**.

   No

   - Go To 4.

4. **CHECK THE (C83) IR SENSOR SIGNAL CIRCUIT FOR AN OPEN**

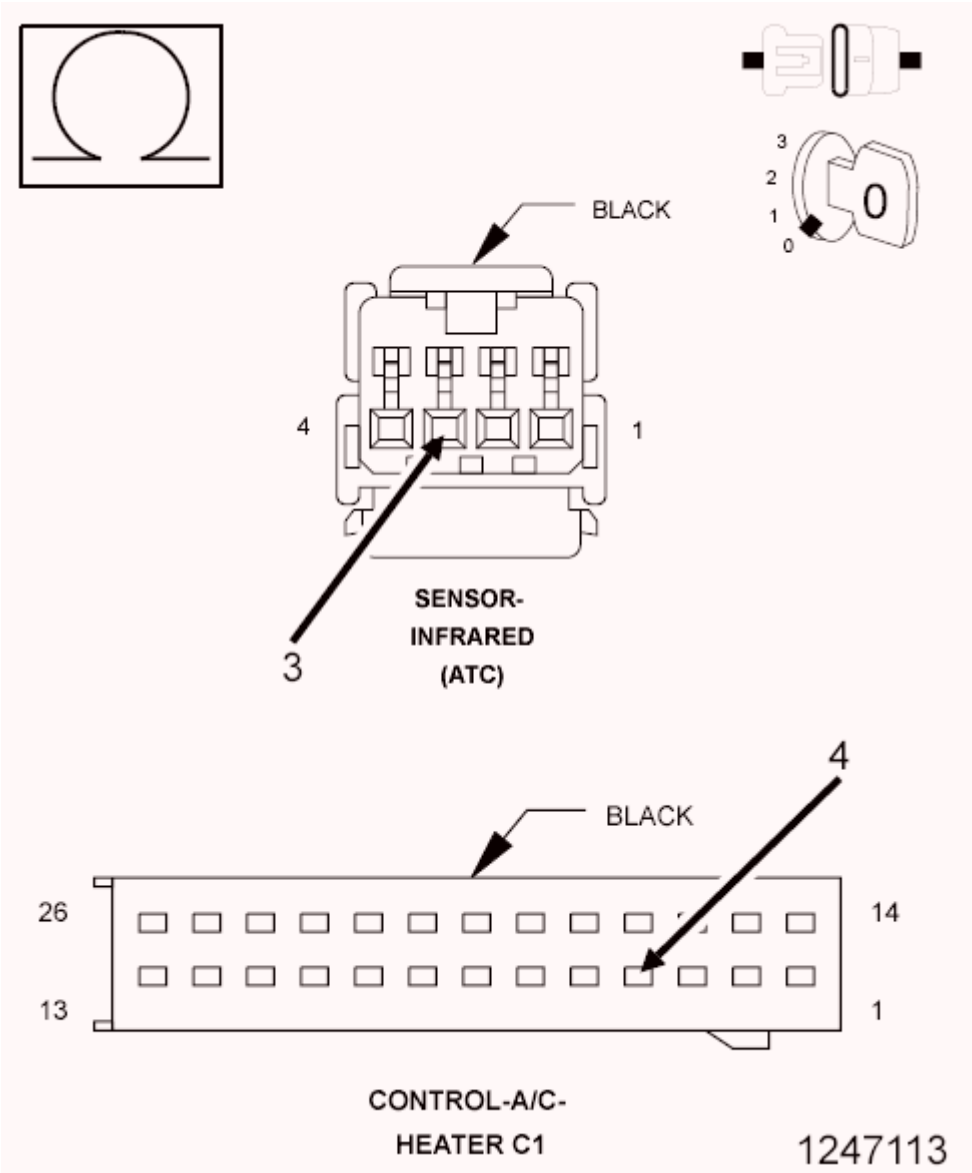

Fig. 12: Checking IR Sensor Signal Circuit For An Open
Courtesy of CHRYSLER GROUP, LLC

1. Measure the resistance of the (C83) IR Sensor Signal circuit between the A/C Heater Control C1 harness connector.

   Is the resistance below 100k Ohms?

   Yes

   - Repair the (C83) IR Sensor Signal circuit for an open.
   - Perform HVAC VERIFICATION TEST. Refer to **HVAC VERIFICATION TEST**.

   No

- Go To 5.

5. **CHECK THE INFRARED SENSOR**
    1. Replace the Infrared Sensor in accordance with the Service Information.
    2. Perform HVAC VERIFICATION TEST. Refer to **HVAC VERIFICATION TEST**.

    Did the DTC reset performing the HVAC Verification Test?

    Yes

    - Replace and program the A/C Heater Control in accordance with the Service Information.
    - Perform HVAC VERIFICATION TEST. Refer to **HVAC VERIFICATION TEST**.

    No

    - Test complete.

6. **CHECK THE WIRING AND CONNECTORS**
    1. The conditions necessary to set the DTC are not present at this time.
    2. Using the schematics as a guide, inspect the wiring and connectors specific to this circuit.
    3. Check for an intermittent condition by inspecting the related wiring harness for chafed, pierced, pinched, partially broken wires.
    4. Check the connectors for broken, bent, pushed out, spread, corroded, or contaminated terminals.
    5. Wiggle the wiring and connectors while checking for shorted and open circuits.
    6. With the scan tool, check the Environmental Data to help identify the conditions in which the DTC was set.

    Were there any problems found?

    Yes

    - Repair as necessary.
    - Perform HVAC VERIFICATION TEST. Refer to **HVAC VERIFICATION TEST**.

    No

    - Test complete.

B1035-INFRARED TEMPERATURE SENSOR CIRCUIT HIGH

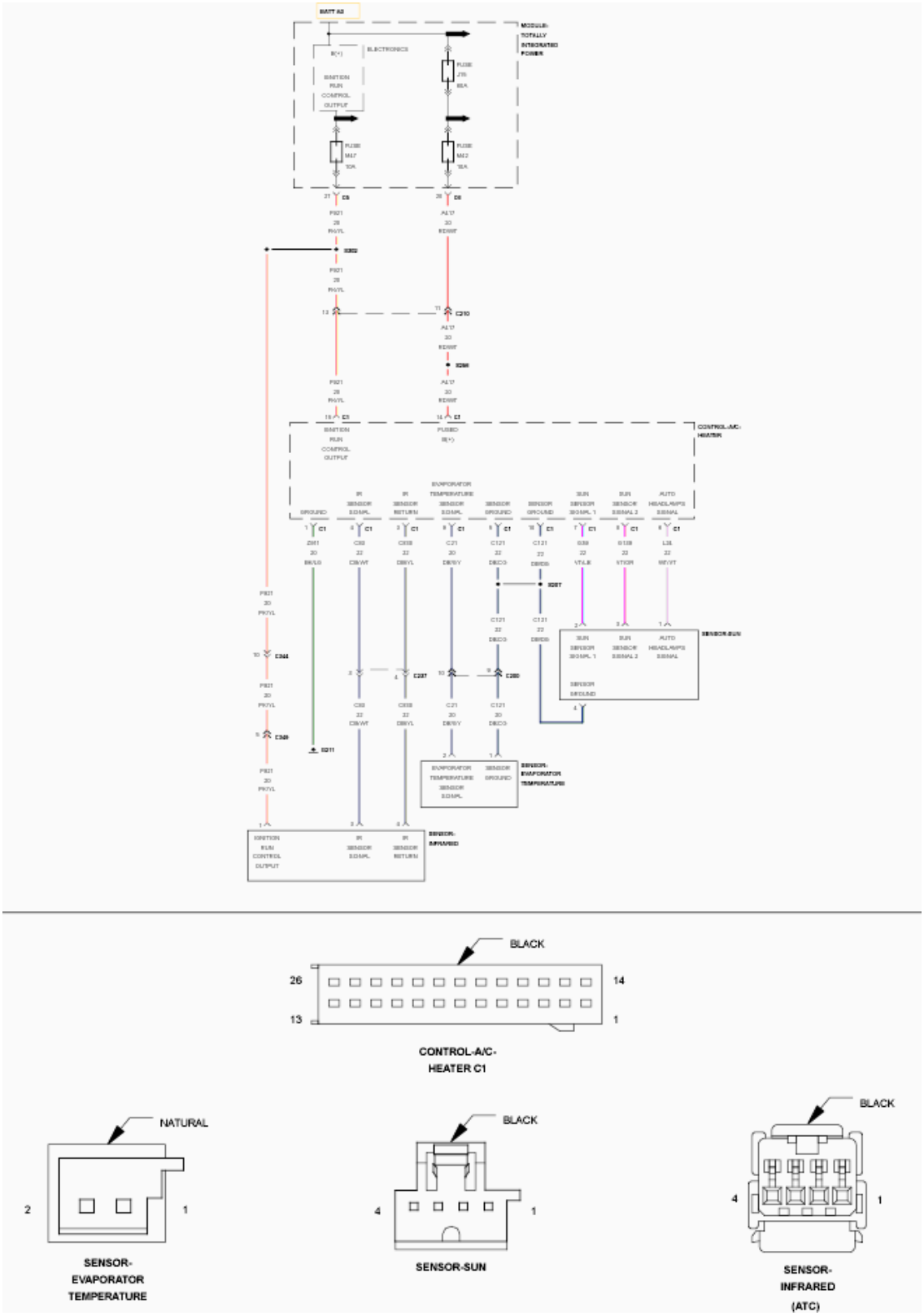

Fig. 13: Infrared Temperature Sensor, Evaporator Temperature Sensor & Sun Sensor Wiring Diagram
Courtesy of CHRYSLER GROUP, LLC

For a complete wiring diagram, **refer to appropriate SYSTEM WIRING DIAGRAMS article** .

WHEN MONITORED:

With the ignition on.

SET CONDITION:

The Infrared Temperature Sensor pulse with modulated (PWM) signal to the A/C Heater Control is greater than 95% for a continuous period of 60 seconds or more. If the A/C Heater Control detects a valid PWM signal, the DTC will change from active to stored and will stay stored for 100 ignition cycles.

POSSIBLE CAUSES

Possible Causes
(C83) IR SENSOR SIGNAL CIRCUIT SHORTED TO VOLTAGE
(C830) IR SENSOR RETURN CIRCUIT SHORTED TO VOLTAGE
(C830) IR SENSOR RETURN CIRCUIT OPEN
INFRARED TEMPERATURE SENSOR
A/C HEATER CONTROL

Always perform the HVAC Pre-Diagnostic Troubleshooting procedure before proceeding. Refer to HVAC PRE-DIAGNOSTIC TROUBLESHOOTING PROCEDURE.

DIAGNOSTIC TEST

1. **CHECK IF DTC IS ACTIVE**
    1. Ignition on, engine not running.
    2. With the scan tool, read HVAC DTC's after a minimum of 60 seconds.

    Is this DTC active?

    Yes

    - Go To 2.

    No

    - Go To 6.
2. **CHECK THE (C83) IR SENSOR SIGNAL CIRCUIT FOR A SHORT TO VOLTAGE**

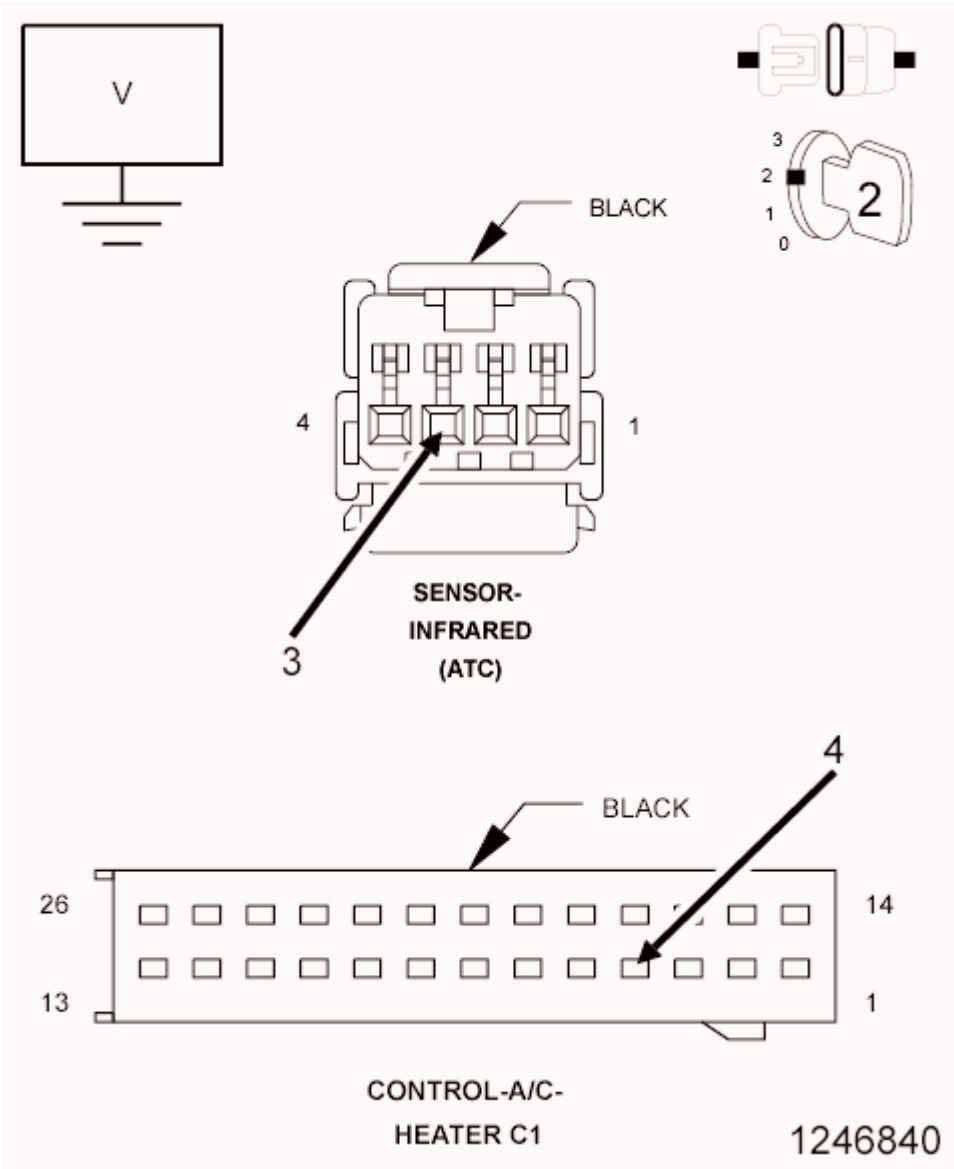

Fig. 14: Checking IR Sensor Signal Circuit For A Short
Courtesy of CHRYSLER GROUP, LLC

1. Turn the ignition off to the lock position.
2. Disconnect the A/C Heater Control C1 harness connector.
3. Disconnect the Infrared Sensor harness connector.
4. Ignition on, engine not running.
5. Measure the voltage of the (C83) IR Sensor Signal circuit.

   Is there any voltage present?

   Yes

   - Repair the (C83) IR Sensor Signal circuit for a short to voltage.

- Perform HVAC VERIFICATION TEST. Refer to **HVAC VERIFICATION TEST**.

No

- Go To 3.

3. **CHECK THE (C830) IR SENSOR RETURN CIRCUIT FOR A SHORT TO VOLTAGE**

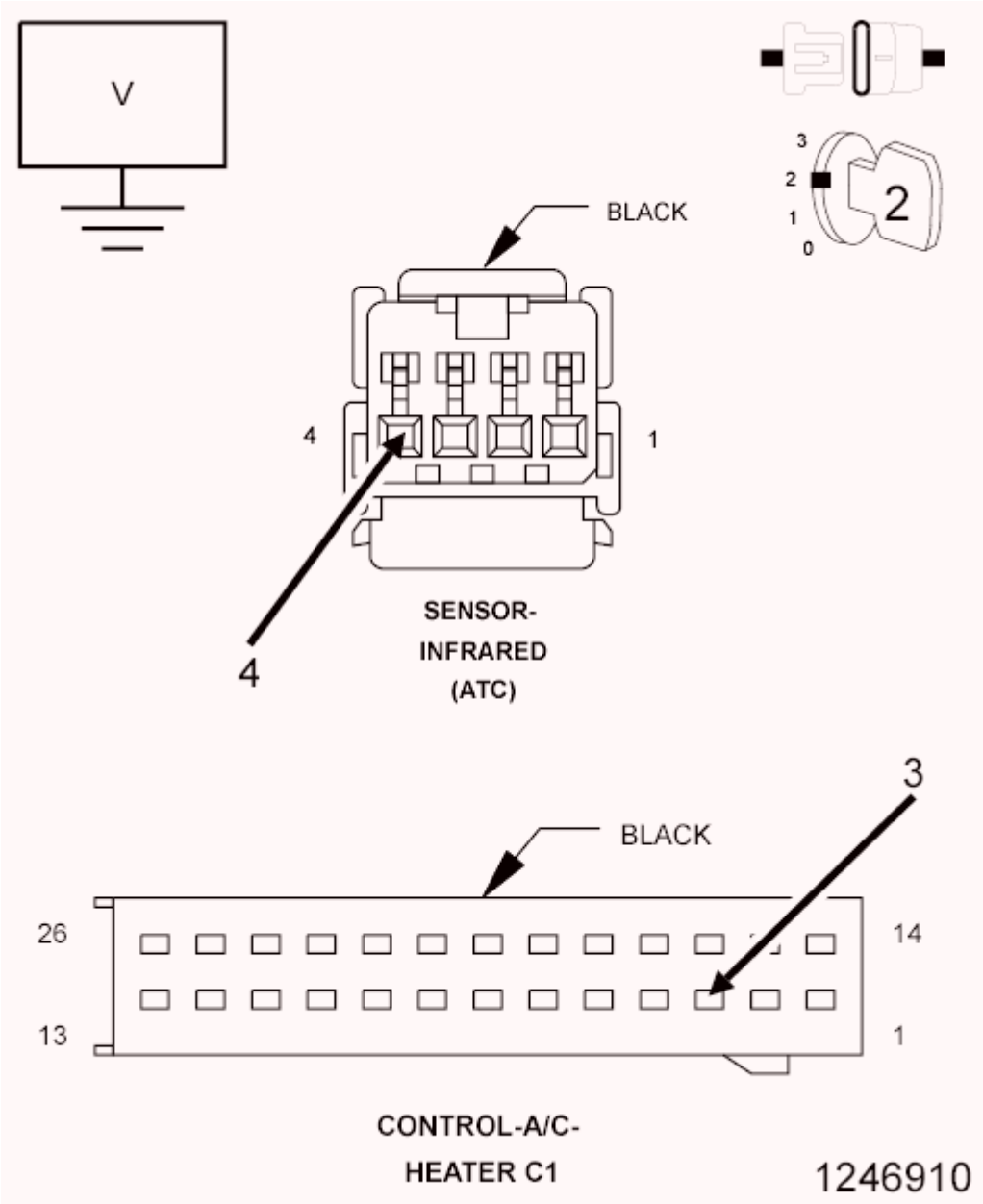

Fig. 15: Checking IR Sensor Return Circuit For A Short
Courtesy of CHRYSLER GROUP, LLC

1. Measure the voltage of the (C830) IR Sensor Return circuit.

Is there any voltage present?

Yes

- Repair the (C830) IR Sensor Return circuit for a short to voltage.
- Perform HVAC VERIFICATION TEST. Refer to **HVAC VERIFICATION TEST**.

No

- Go To 4.

4. **CHECK THE (C830) IR SENSOR RETURN CIRCUIT FOR AN OPEN**

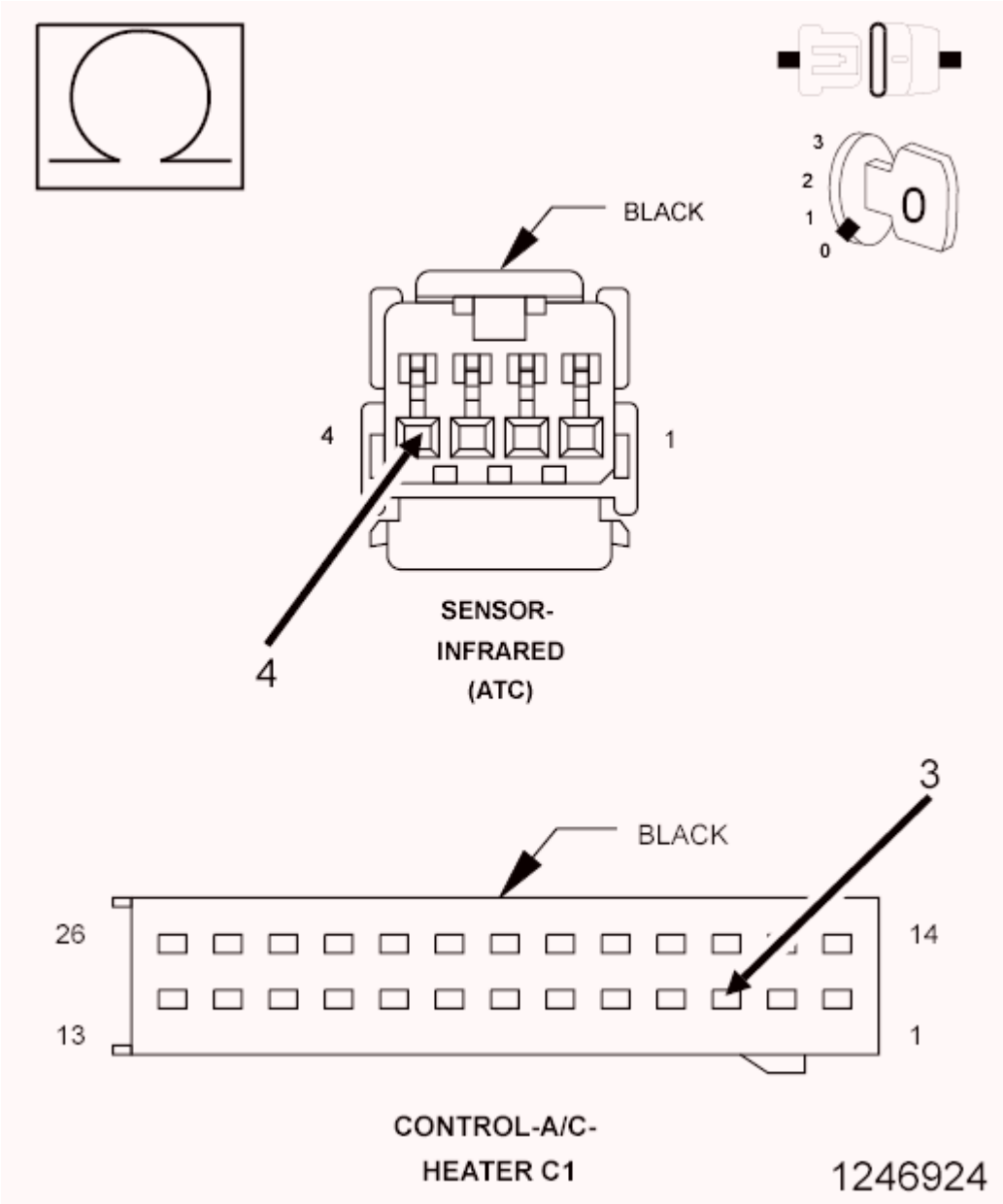

Fig. 16: Checking IR Sensor Return Circuit For An Open
Courtesy of CHRYSLER GROUP, LLC

1. Turn the ignition off to the lock position.
2. Measure the resistance of the (C830) IR Sensor Return circuit between the A/C Heater Control C1 harness connector and the Infrared Sensor harness connector.

   Is the resistance above 5.0 Ohms?

   Yes

   - Repair the (C830) IR Sensor Return circuit for an open.
   - Perform HVAC VERIFICATION TEST. Refer to **HVAC VERIFICATION TEST**.

   No

   - Go To 5.

5. **CHECK THE INFRARED SENSOR**
   1. Replace the Infrared Sensor in accordance with the Service Information.
   2. Perform HVAC VERIFICATION TEST. Refer to **HVAC VERIFICATION TEST**.

      Did the DTC reset performing the HVAC Verification Test?

      Yes

      - Replace and program the A/C Heater Control in accordance with the Service Information.
      - Perform HVAC VERIFICATION TEST. Refer to **HVAC VERIFICATION TEST**.

      No

      - Test complete.

6. **CHECK THE WIRING AND CONNECTORS**
   1. The conditions necessary to set the DTC are not present at this time.
   2. Using the schematics as a guide, inspect the wiring and connectors specific to this circuit.
   3. Check for an intermittent condition by inspecting the related wiring harness for chafed, pierced, pinched, partially broken wires.
   4. Check the connectors for broken, bent, pushed out, spread, corroded, or contaminated terminals.
   5. Wiggle the wiring and connectors while checking for shorted and open circuits.
   6. With the scan tool, check the Environmental Data to help identify the conditions in which the DTC was set.

      Were there any problems found?

      Yes

- Repair as necessary.
- Perform HVAC VERIFICATION TEST. Refer to **HVAC VERIFICATION TEST**.

No

- Test complete.

B1040-PANEL MODE DOOR 1 CONTROL CIRCUIT/PERFORMANCE

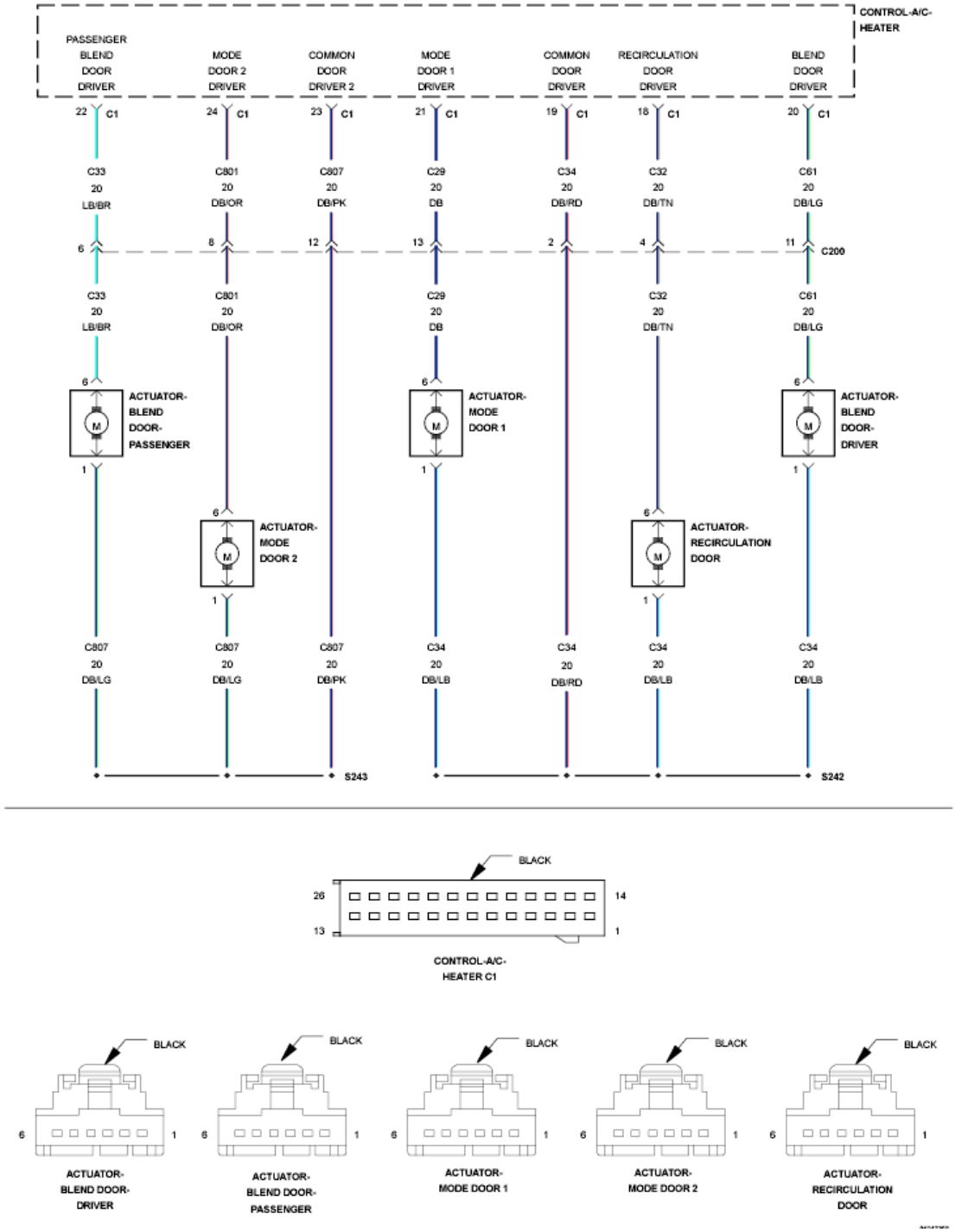

Fig. 17: Mode Door Control Wiring Diagram
Courtesy of CHRYSLER GROUP, LLC

For a complete wiring diagram, **refer to appropriate SYSTEM WIRING DIAGRAMS article** .

THEORY OF OPERATION

After the initial installation of the A/C Heater Control, the controller is calibrated to each individual blend/mode

door actuator. These calibrations are stored as in the number of pulses it takes to move the door from one stop to another. The A/C Heater Control drives the Door Actuators by the use of Door Driver circuit and a Common Door Driver circuit and monitors all door actuator pulses to detect door movement in both directions. Most of the door actuators share a common door driver circuit but each door actuator has its own unique driver circuit. Due to shared circuitry, similar DTC's can set at the same time for multiple actuators depending upon the type of circuit malfunction, its location, and the direction the actuator is moving when the malfunction is present.

WHEN MONITORED:

With the ignition on and an actuator movement is commanded by the A/C Heater Control.

SET CONDITION:

If an actuator move is commanded by the A/C Heater Control and there are no feedback pulses detected in that direction, the controller commands the actuator in the opposite direction. If feedback pulses are detected in only one direction this DTC will set. If the A/C Heater Control detects a valid pulse feedback in both directions, the DTC will change from Active to Stored and will stay in the controllers memory for 100 ignition cycles.

POSSIBLE CAUSES

Possible Causes
(C29) MODE DOOR 1 DRIVER CIRCUIT SHORTED TO VOLTAGE
(C29) MODE DOOR 1 DRIVER CIRCUIT SHORTED TO GROUND
(C34) COMMON DOOR DRIVER CIRCUIT SHORTED TO VOLTAGE
(C34) COMMON DOOR DRIVER CIRCUIT SHORTED TO GROUND
MODE DOOR 1 DOOR (PANEL/FLOOR) BINDING
MODE DOOR 1 ACTUATOR (PANEL/FLOOR)
A/C HEATER CONTROL

Always perform the HVAC Pre-Diagnostic Troubleshooting procedure before proceeding. Refer to HVAC PRE-DIAGNOSTIC TROUBLESHOOTING PROCEDURE.

DIAGNOSTIC TEST

1. **CHECK IF DTC IS ACTIVE**
    1. Ignition on, engine not running.
    2. With the scan tool, read HVAC DTC's.

    Is this DTC active?

    Yes

    - Go To 3.

    No

- Go To 2.

2. **PERFORM HVAC ACTUATOR CALIBRATION TEST**
    1. With the scan tool, perform the HVAC Actuator Calibration Test.

       Did this DTC change from Stored to Active while performing the HVAC Actuator Calibration Test?

       Yes

       - Go To 3.

       No

       - Go To 9.
3. **CHECK THE (C29) MODE DOOR 1 DRIVER CIRCUIT FOR A SHORT TO VOLTAGE**

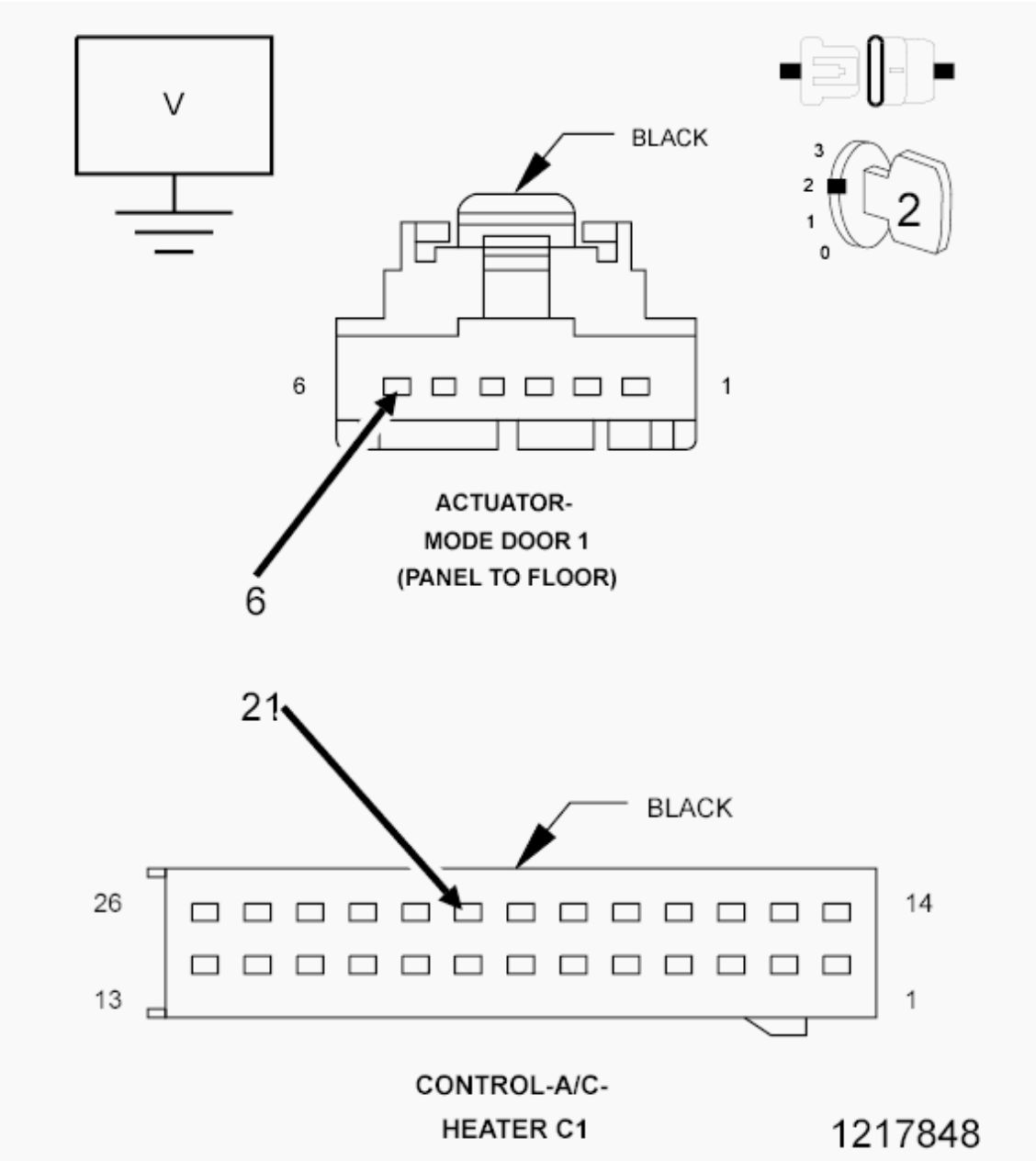

Fig. 18: Checking Mode Door Driver Circuit For A Short To Voltage
Courtesy of CHRYSLER GROUP, LLC

1. Turn the ignition off to the lock position.
2. Disconnect the A/C Heater Control C1 harness connector.
3. Disconnect the Mode Door 1 Actuator (Panel/Floor) harness connector.
4. Ignition on, engine not running.
5. Measure the voltage of the (C29) Mode Door 1 Driver circuit.

   Is there any voltage present?

Yes

- Repair the (C29) Mode Door 1 Driver circuit for a short to voltage.
- Perform HVAC VERIFICATION TEST. Refer to **HVAC VERIFICATION TEST**.

No

- Go To 4.

4. **CHECK THE (C34) COMMON DOOR DRIVER CIRCUIT FOR A SHORT TO VOLTAGE**

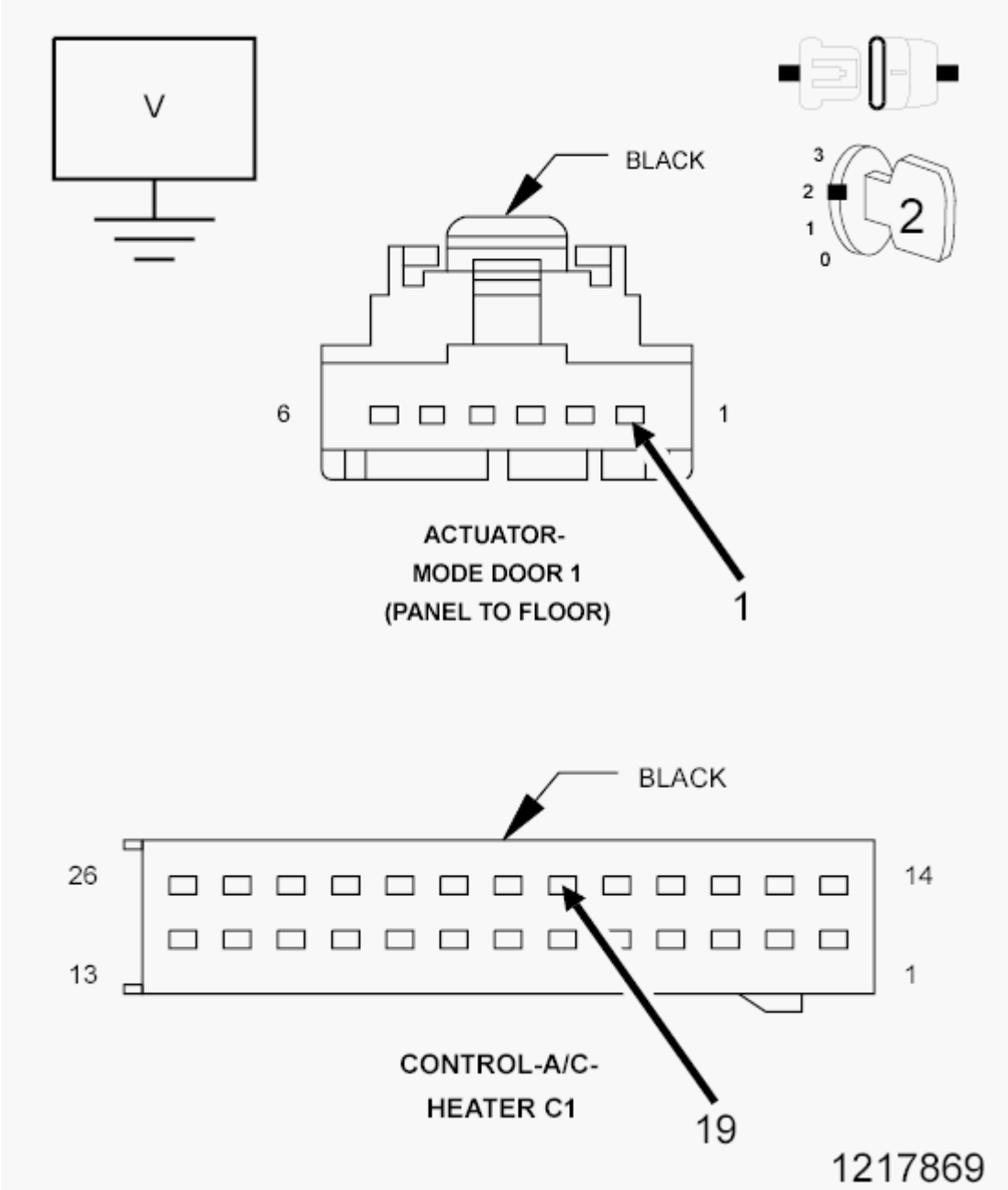

Fig. 19: Checking Common Door Driver Circuit For A Short To Voltage

Courtesy of CHRYSLER GROUP, LLC

1. Measure the voltage of the (C34) Common Door Driver circuit.

   Is there any voltage present?

   Yes

   - Repair the (C34) Common Door Driver circuit for a short to voltage.
   - Perform HVAC VERIFICATION TEST. Refer to **HVAC VERIFICATION TEST**.

   No

   - Go To 5.

5. **CHECK THE (C29) MODE DOOR 1 DRIVER CIRCUIT FOR A SHORT TO GROUND**

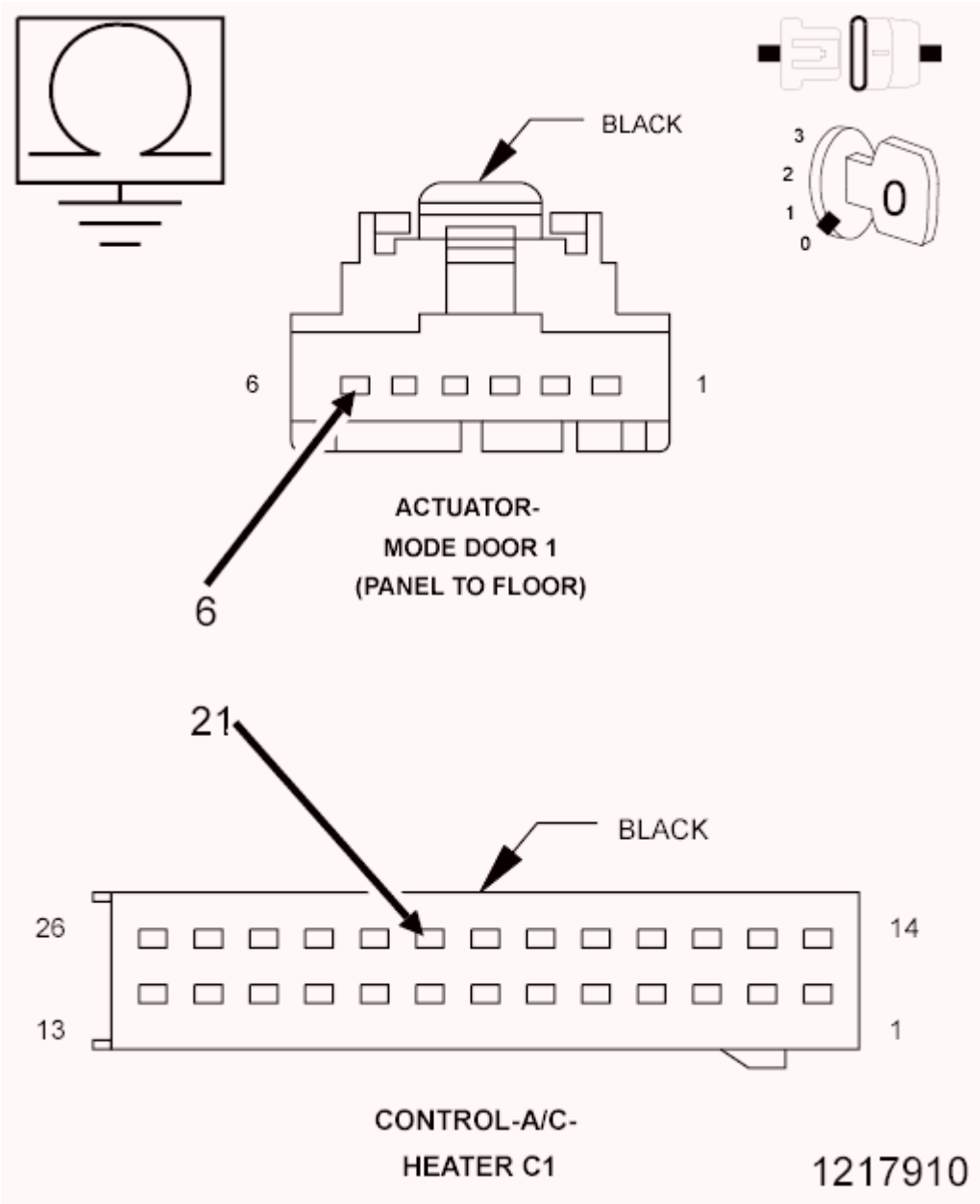

Fig. 20: Checking Recirculation Door Driver Circuit For A Short To Ground
Courtesy of CHRYSLER GROUP, LLC

1. Turn the ignition off to the lock position.
2. Measure the resistance between ground and the (C29) Mode Door 1 Driver circuit.

   Is the resistance below 100k Ohms?

   Yes

   - Repair the (C29) Mode Door 1 Driver circuit for a short to ground.
   - Perform HVAC VERIFICATION TEST. Refer to **HVAC VERIFICATION TEST**.

No

- Go To 6.

6. **CHECK THE (C34) COMMON DOOR DRIVER CIRCUIT FOR A SHORT TO GROUND**

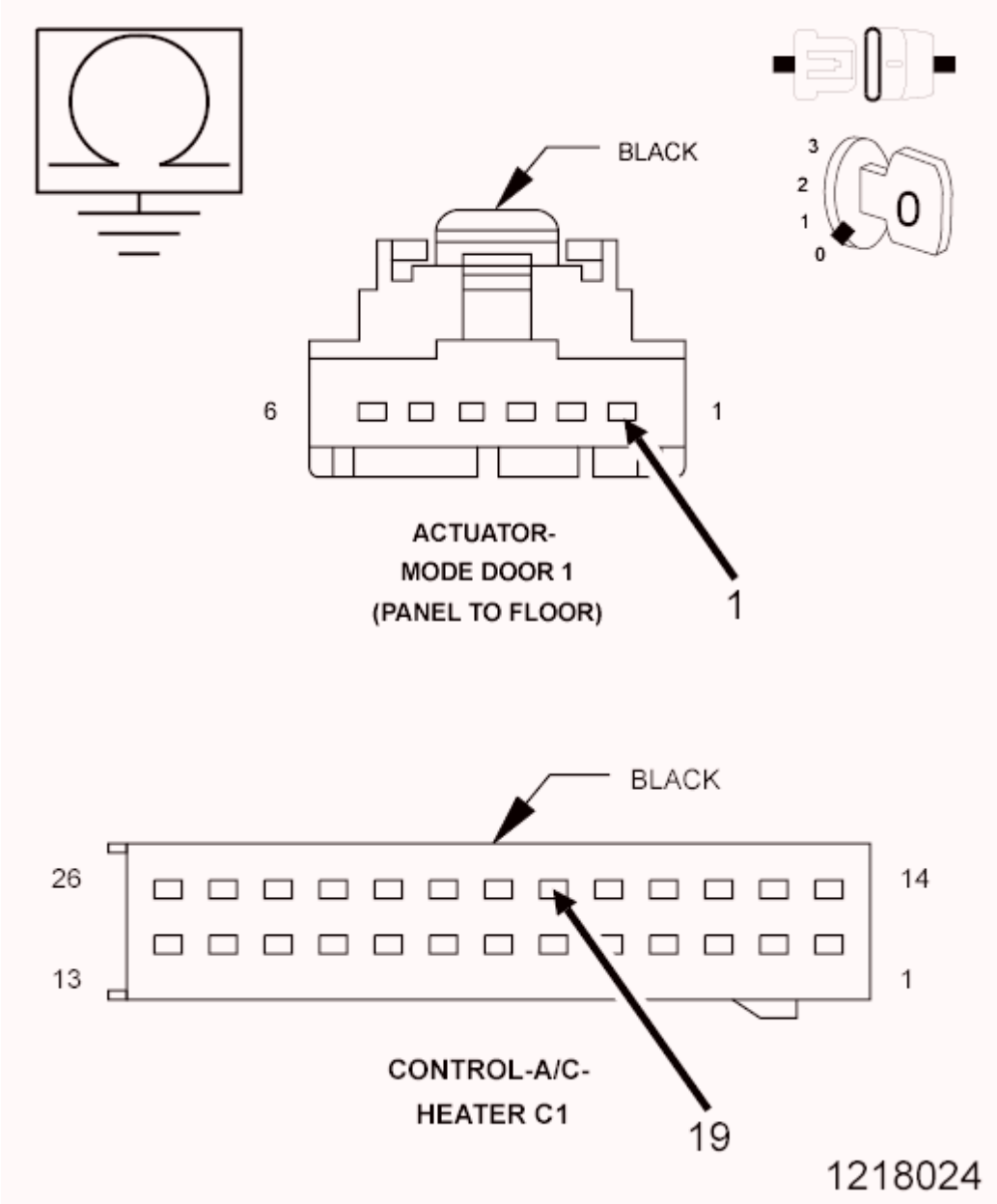

Fig. 21: Checking Common Door Driver Circuit For A Short To Ground
Courtesy of CHRYSLER GROUP, LLC

1. Measure the resistance between ground and the (C34) Common Door Driver circuit.

   Is the resistance below 100k Ohms?

Yes

- Repair the (C34) Common Door Driver circuit for a short to ground.
- Perform HVAC VERIFICATION TEST. Refer to **HVAC VERIFICATION TEST**.

No

- Go To 7.

7. **CHECK THE MODE DOOR 1 (PANEL/FLOOR)**
   1. Remove the Mode Door 1 Actuator (Panel/Floor) and check the Mode Door 1 (Panel/Floor) for binding and full travel.

      Were there any problems found?

      Yes

      - Repair or replace the Mode Door 1 (Panel/Floor) as necessary in accordance with the Service Information.
      - Perform HVAC VERIFICATION TEST. Refer to **HVAC VERIFICATION TEST**.

      No

      - Go To 8.

8. **CHECK THE MODE DOOR 1 ACTUATOR**
   1. Replace the Mode Door 1 Actuator (Panel/Floor) in accordance with the Service Information.
   2. With the scan tool, erase HVAC DTC's and perform the HVAC System Test.

      Did this DTC reset?

      Yes

      - Replace and program the A/C Heater Control in accordance with the Service Information.
      - Perform HVAC VERIFICATION TEST. Refer to **HVAC VERIFICATION TEST**.

      No

      - Test complete.
      - Perform HVAC VERIFICATION TEST. Refer to **HVAC VERIFICATION TEST**.

9. **CHECK THE WIRING AND CONNECTORS**
   1. The conditions necessary to set the DTC are not present at this time.
   2. Using the schematics as a guide, inspect the wiring and connectors specific to this circuit.
   3. Check for an intermittent condition by inspecting the related wiring harness for chafed, pierced, pinched, partially broken wires.
   4. Check the connectors for broken, bent, pushed out, spread, corroded, or contaminated terminals.

5. Wiggle the wiring and connectors while checking for shorted and open circuits.
6. With the scan tool, check the Environmental Data to help identify the conditions in which the DTC was set.

   Were there any problems found?

   Yes

   - Repair as necessary.
   - Perform HVAC VERIFICATION TEST. Refer to **HVAC VERIFICATION TEST**.

   No

   - Test complete.

B1043-PANEL MODE DOOR 1 CONTROL CIRCUIT OPEN

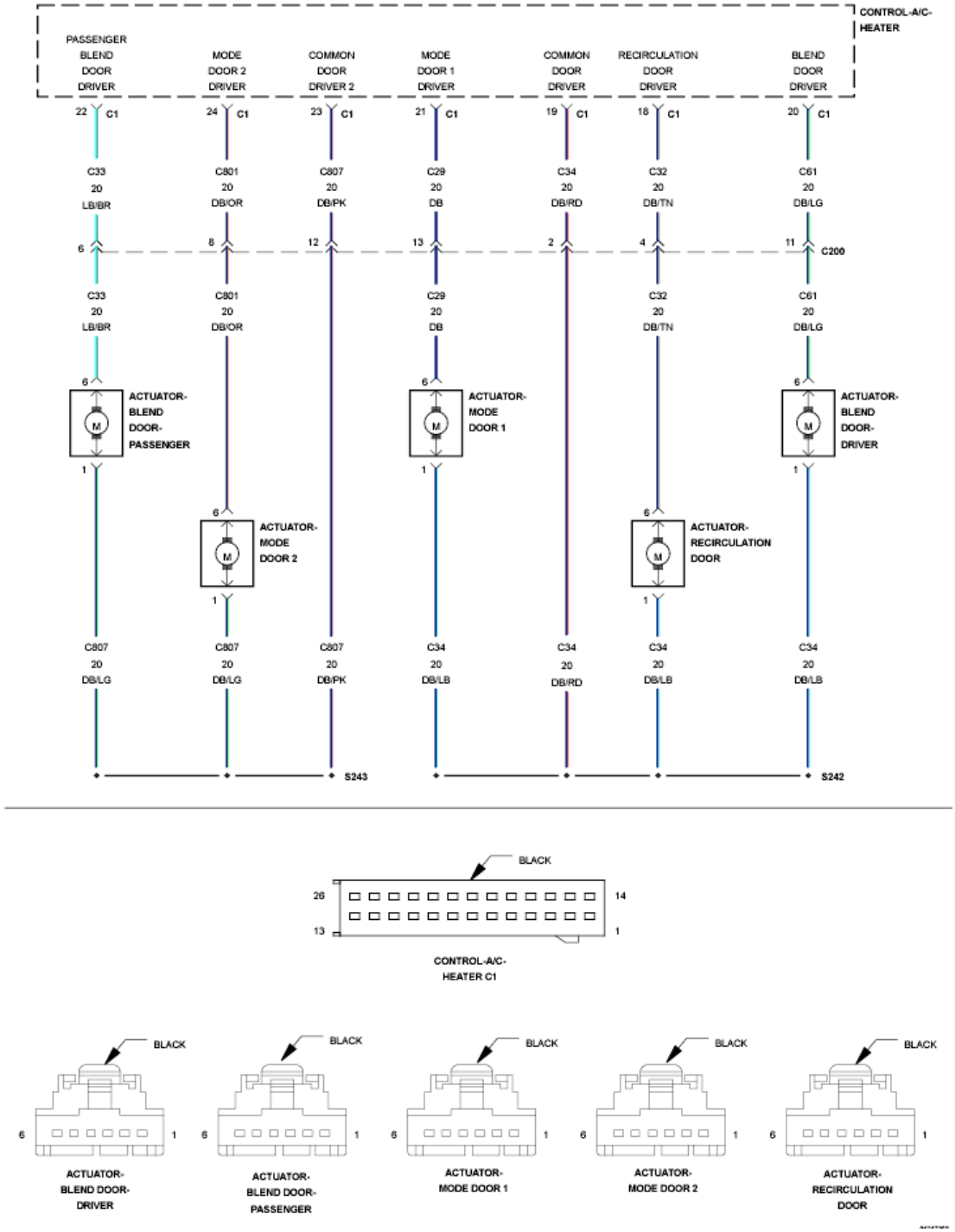

Fig. 22: Mode Door Control Wiring Diagram
Courtesy of CHRYSLER GROUP, LLC

For a complete wiring diagram, **refer to appropriate SYSTEM WIRING DIAGRAMS article** .

THEORY OF OPERATION

After the initial installation of the A/C Heater Control, the controller is calibrated to each individual blend/mode

door actuator. These calibrations are stored as in the number of pulses it takes to move the door from one stop to another. The A/C Heater Control drives the Door Actuators by the use of Door Driver circuit and a Common Door Driver circuit and monitors all door actuator pulses to detect door movement in both directions. Most of the door actuators share a common door driver circuit but each door actuator has its own unique driver circuit. Due to shared circuitry, similar DTC's can set at the same time for multiple actuators depending upon the type of circuit malfunction, its location, and the direction the actuator is moving when the malfunction is present.

WHEN MONITORED:

With the ignition on and an actuator movement is commanded by the A/C Heater Control.

SET CONDITION:

If an actuator move is commanded by the A/C Heater Control and there are no feedback pulses detected in that direction, the controller commands the actuator in the opposite direction. If no feedback pulses are detected in either direction this DTC will set. If the A/C Heater Control detects a valid pulse feedback in both directions, the DTC will change from Active to Stored and will stay in the controllers memory for 100 ignition cycles.

POSSIBLE CAUSES

Possible Causes
(C29) MODE DOOR 1 DRIVER CIRCUIT OPEN
(C34) COMMON DOOR DRIVER CIRCUIT OPEN
MODE DOOR 1 (PANEL/FLOOR) ACTUATOR
A/C HEATER CONTROL

Always perform the HVAC Pre-Diagnostic Troubleshooting procedure before proceeding. Refer to HVAC PRE-DIAGNOSTIC TROUBLESHOOTING PROCEDURE.

DIAGNOSTIC TEST

1. **CHECK FOR OTHER DTC's**
    1. Ignition on, engine not running.
    2. With the scan tool, read HVAC DTC's.

    Is there more than one Door Control - Circuit Open DTC present?

    Yes

    - Repair the (C34) Common Door Driver circuit for an open.

    NOTE: **Due to the common shared driver circuit, probable area of concern is the splice, or from the splice to the A/C Heater Control harness connector. Make sure to check all inline connectors.**

No

- Go To 2.

2. **CHECK IF DTC IS ACTIVE**
    1. Ignition on, engine not running.
    2. With the scan tool, read HVAC DTC's.

    Is this DTC active?

    Yes

    - Go To 4.

    No

    - Go To 3.

3. **PERFORM HVAC CALIBRATION ACTUATOR TEST**
    1. With the scan tool, perform the HVAC Calibration Actuator Test.

    Did this DTC change from Stored to Active while performing the HVAC Actuator Calibration Test?

    Yes

    - Go To 4.

    No

    - Go To 7.

4. **CHECK THE MODE DOOR 1 (PANEL/FLOOR) ACTUATOR**

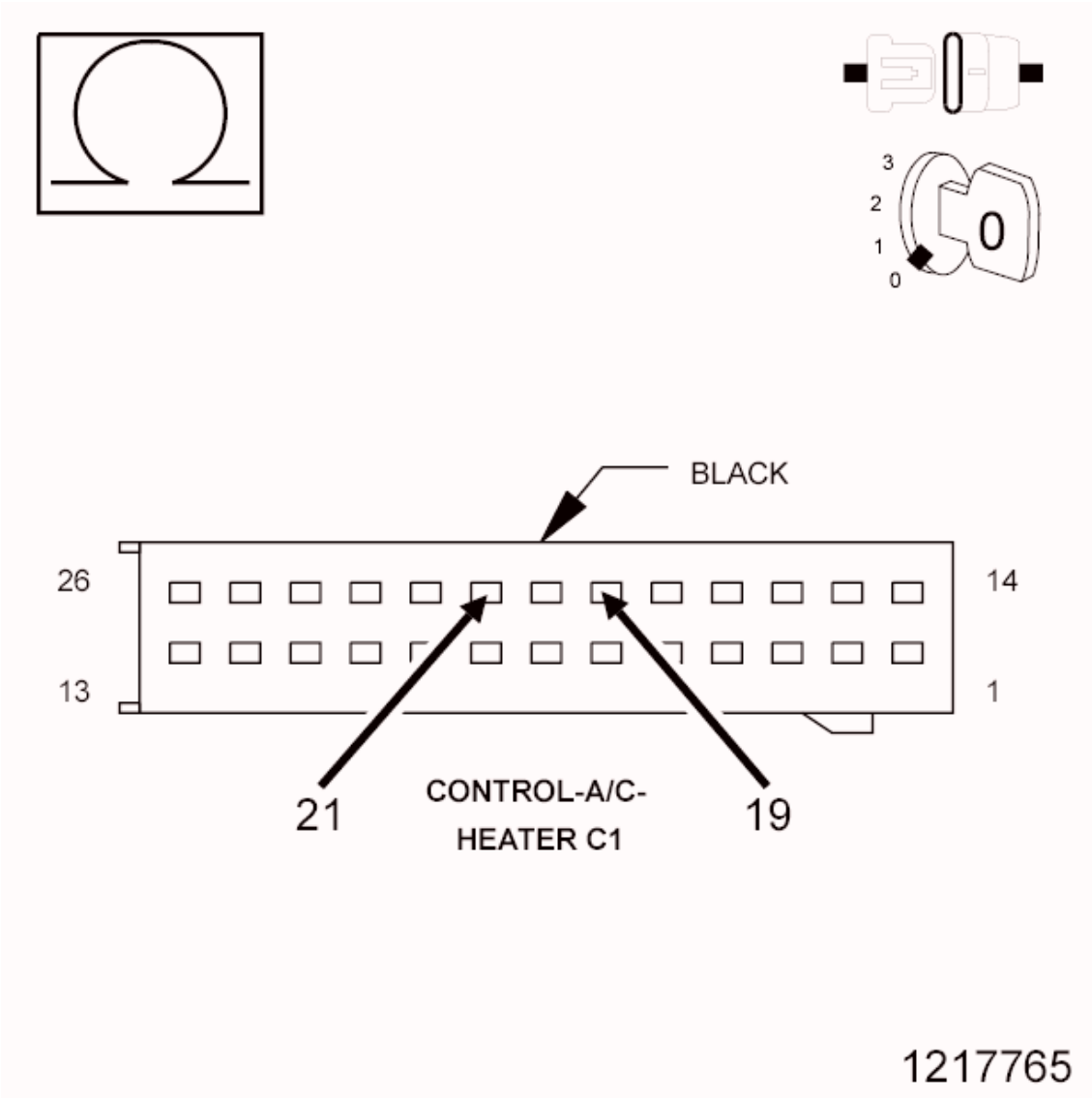

Fig. 23: Checking Mode Door 1 (Panel/Floor) Actuator
Courtesy of CHRYSLER GROUP, LLC

1. Turn the ignition off to the lock position.
2. Disconnect the A/C Heater Control C1 harness connector.
3. Measure the resistance between the (C29) Mode Door 1 Driver circuit and the (C34) Common Door Driver circuit.

   Is the resistance 38.0 Ohms (± 5.0 Ohms)?

   Yes

   - Replace and program the A/C Heater Control in accordance with the Service Information.
   - Perform HVAC VERIFICATION TEST. Refer to **HVAC VERIFICATION TEST**.

No

- Go To 5.

5. **CHECK THE (C29) MODE DOOR 1 DRIVER CIRCUIT FOR AN OPEN**

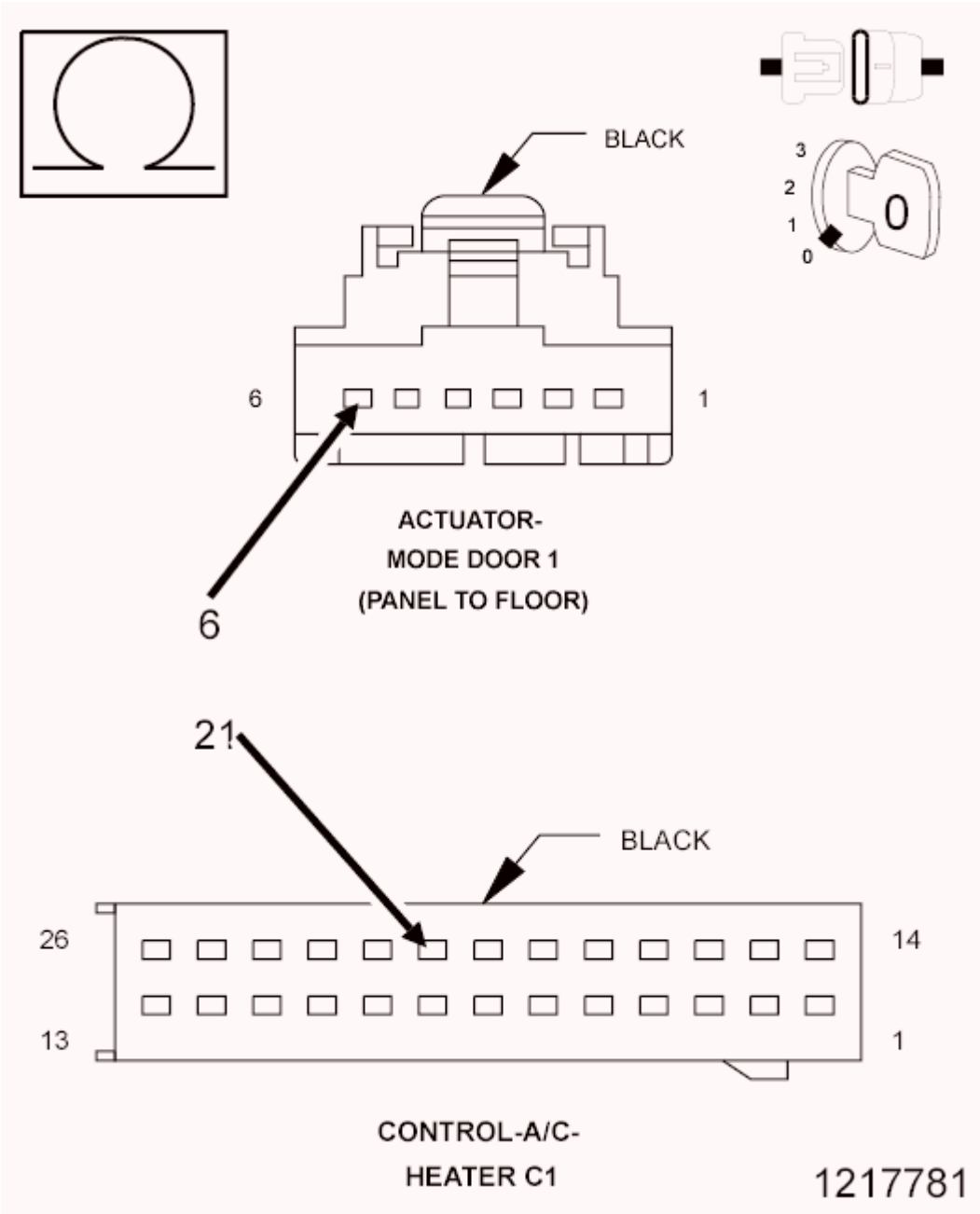

Fig. 24: Checking Mode Door Driver Circuit For An Open
Courtesy of CHRYSLER GROUP, LLC

1. Turn the ignition off to the lock position.
2. Disconnect the Mode Door 1 (Panel/Floor) Actuator harness connector.

3. Measure the resistance of the (C29) Mode Door 1 Driver circuit between the A/C Heater Control C1 harness connector and the Mode Door 1 (Panel/Floor) Actuator harness connector.

   Is the resistance above 5.0 Ohms?

   Yes

   - Repair the (C29) Mode Door 1 Driver circuit for an open.
   - Perform HVAC VERIFICATION TEST. Refer to **HVAC VERIFICATION TEST**.

   No

   - Go To 6.

6. **CHECK THE (C34) COMMON DOOR DRIVER CIRCUIT FOR AN OPEN**

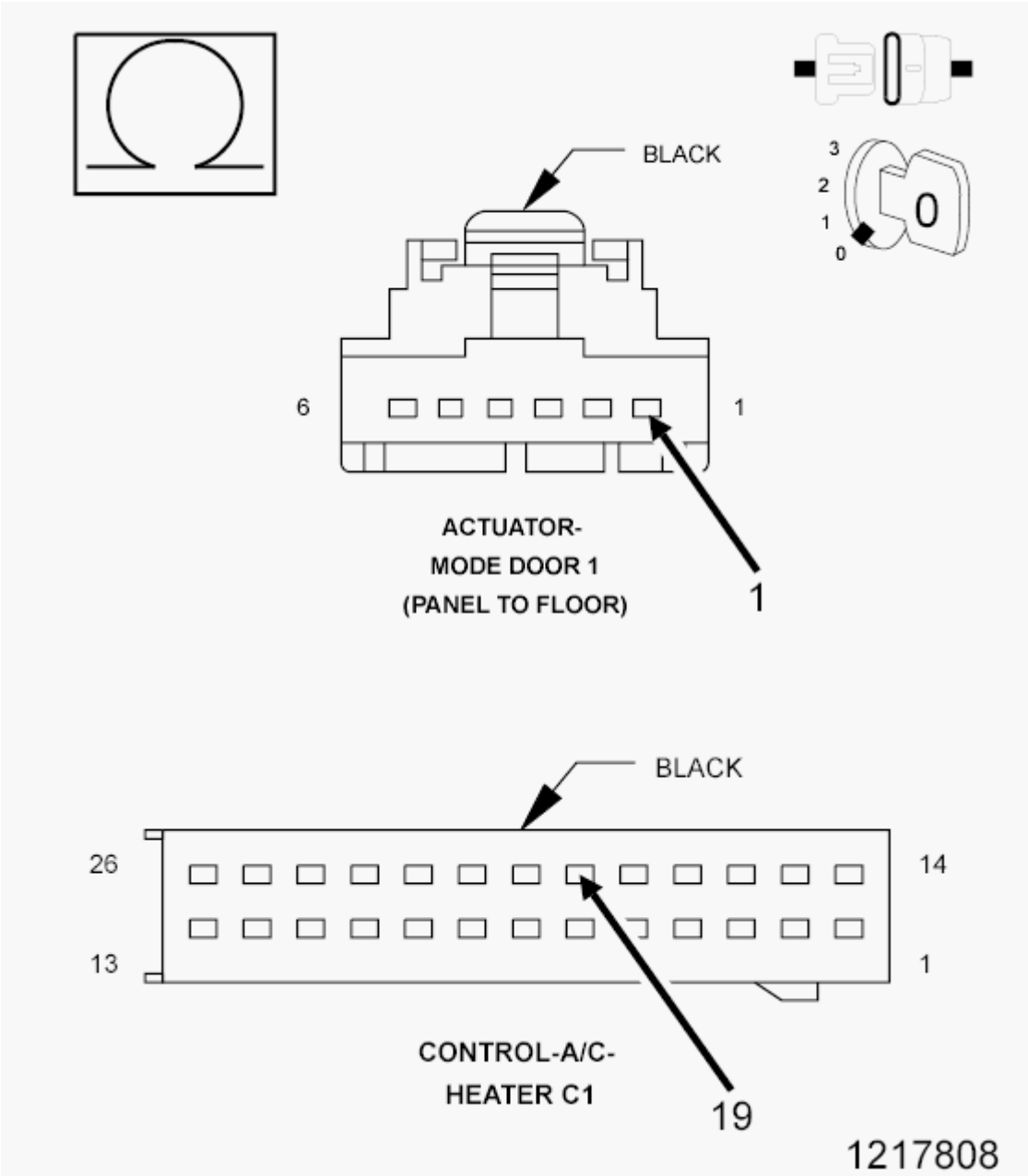

Fig. 25: Checking Mode Door Driver Circuit For An Open
Courtesy of CHRYSLER GROUP, LLC

1. Measure the resistance of the (C34) Common Door Driver circuit between the A/C Heater Control C1 harness connector and the Mode Door 1 Actuator harness connector.

   Is the resistance above 5.0 Ohms?

   Yes

   - Repair the (C34) Common Door Driver circuit for an open.

NOTE: **Probable location is the wiring harness splice or the wiring between the splice and the door actuator.**

- Perform HVAC VERIFICATION TEST. Refer to **HVAC VERIFICATION TEST**.

No

- Replace the Recirculation Door Actuator in accordance with the Service Information.
- Perform HVAC VERIFICATION TEST. Refer to **HVAC VERIFICATION TEST**.

7. **CHECK THE WIRING AND CONNECTORS**
   1. The conditions necessary to set the DTC are not present at this time.
   2. Using the schematics as a guide, inspect the wiring and connectors specific to this circuit.
   3. Check for an intermittent condition by inspecting the related wiring harness for chafed, pierced, pinched, partially broken wires.
   4. Check the connectors for broken, bent, pushed out, spread, corroded, or contaminated terminals.
   5. Wiggle the wiring and connectors while checking for shorted and open circuits.
   6. With the scan tool, check the Environmental Data to help identify the conditions in which the DTC was set.

   Were there any problems found?

   Yes

   - Repair as necessary.
   - Perform HVAC VERIFICATION TEST. Refer to **HVAC VERIFICATION TEST**.

   No

   - Test complete.

B1044-PANEL MODE DOOR 1 TRAVEL RANGE TOO SMALL

For a complete wiring diagram, **refer to appropriate SYSTEM WIRING DIAGRAMS article** .

WHEN MONITORED:

When ever an Actuator Calibration Test is performed

SET CONDITION:

The A/C Heater Control uses a pulse feedback to the controller to detect the total door movement range. If the amount of pulses required to move the door completely in both directions is less than what the controller has stored in its memory, this DTC will set. If an Actuator Calibration Test is performed and the A/C Heater Control detects a valid range of the door movement span in both directions, the DTC will change from Active to Stored and will stay in the controllers memory for 100 ignition cycles.

POSSIBLE CAUSES

Possible Causes
RELATED DTC's PRESENT
MODE DOOR 1 (PANEL/FLOOR) BINDING
MODE DOOR 1 (PANEL/FLOOR) ACTUATOR
A/C HEATER CONTROL

Always perform the HVAC Pre-Diagnostic Troubleshooting procedure before proceeding. Refer to HVAC PRE-DIAGNOSTIC TROUBLESHOOTING PROCEDURE.

DIAGNOSTIC TEST

1. **CHECK FOR RELATED DTC's**
    1. Ignition on, engine not running.
    2. With the scan tool, read HVAC DTC's.

    Are there any Door Control - Circuit Open or Door Control - Performance or Incorrect Operation DTC's present?

    Yes

    - Refer to **DIAGNOSIS AND TESTING** and perform the appropriate diagnostic procedure.

    No

    - Go To 2.
2. **CHECK IF DTC IS ACTIVE**
    1. Ignition on, engine not running.
    2. With the scan tool, read HVAC DTC's.

    Is this DTC active?

    Yes

    - Go To 4.

    No

    - Go To 3.
3. **PERFORM HVAC ACTUATOR CALIBRATION TEST**
    1. With the scan tool, perform the HVAC Actuator Calibration Test.

    Did this DTC change from Stored to Active while performing the HVAC Actuator Calibration Test?

Yes

- Go To 4.

No

- Go To 6.

4. **CHECK THE MODE DOOR 1 (PANEL/FLOOR)**
    1. Remove the Mode Door 1 (Panel/Floor) Actuator and check the Mode Door 1 (Panel/Floor) for binding and full travel.

       Were there any problems found?

       Yes

       - Repair or replace the Mode Door 1 (Panel/Floor) as necessary in accordance with the Service Information.
       - Perform HVAC VERIFICATION TEST. Refer to **HVAC VERIFICATION TEST**.

       No

       - Go To 5.

5. **CHECK THE MODE DOOR 1 (PANEL/FLOOR) ACTUATOR**
    1. Replace the Mode Door 1 (Panel/Floor) Actuator in accordance with the Service Information.
    2. Perform HVAC VERIFICATION TEST. Refer to **HVAC VERIFICATION TEST**.

       Did this DTC reset during or after the Verification Test?

       Yes

       - Replace and program the A/C Heater Control in accordance with the Service Information.
       - Perform HVAC VERIFICATION TEST. Refer to **HVAC VERIFICATION TEST**.

       No

       - Test complete.

6. **CHECK THE WIRING AND CONNECTORS**
    1. The conditions necessary to set the DTC are not present at this time.
    2. Using the schematics as a guide, inspect the wiring and connectors specific to this circuit.
    3. Check for an intermittent condition by inspecting the related wiring harness for chafed, pierced, pinched, partially broken wires.
    4. Check the connectors for broken, bent, pushed out, spread, corroded, or contaminated terminals.
    5. Wiggle the wiring and connectors while checking for shorted and open circuits.
    6. With the scan tool, check the Environmental Data to help identify the conditions in which the DTC

was set.

Were there any problems found?

Yes

- Repair as necessary.
- Perform HVAC VERIFICATION TEST. Refer to **HVAC VERIFICATION TEST**.

No

- Test complete.

B1045-PANEL MODE DOOR 1 TRAVEL RANGE TOO LARGE

For a complete wiring diagram, **refer to appropriate SYSTEM WIRING DIAGRAMS article** .

THEORY OF OPERATION

After the initial installation of the A/C Heater Control, the controller is calibrated to each individual blend/mode door actuator. These calibrations are stored as in the number of pulses it takes to move the door from one stop to another. The A/C Heater Control drives the Door Actuators by the use of Door Driver circuit and a Common Door Driver circuit and monitors all door actuator pulses to detect door movement in both directions. Most of the door actuators share a common door driver circuit but each door actuator has its own unique driver circuit. Due to shared circuitry, similar DTC's can set at the same time for multiple actuators depending upon the type of circuit malfunction, its location, and the direction the actuator is moving when the malfunction is present.

WHEN MONITORED:

When ever an Actuator Calibration Test is performed

SET CONDITION:

The A/C Heater Control uses a pulse feedback to the controller to detect the total door movement range. If the amount of pulses required to move the door completely in both directions is greater than what the controller has stored in its memory, this DTC will set. If an Actuator Calibration Test is performed and the A/C Heater Control detects a valid range of the door movement span in both directions, the DTC will change from Active to Stored and will stay in the controllers memory for 100 ignition cycles.

POSSIBLE CAUSES

Possible Causes
RELATED DTC's PRESENT
MODE DOOR 1 DOOR STOPS
MODE DOOR 1 (PANEL/FLOOR)
MODE DOOR 1 (PANEL/FLOOR) ACTUATOR
A/C HEATER CONTROL

Always perform the HVAC Pre-Diagnostic Troubleshooting procedure before proceeding. Refer to HVAC PRE-DIAGNOSTIC TROUBLESHOOTING PROCEDURE.

DIAGNOSTIC TEST

1. **CHECK FOR RELATED DTC's**
    1. Ignition on, engine not running.
    2. With the scan tool, read HVAC DTC's.

    Are there any Door Control - Circuit Open or Door Control - Performance or Incorrect Operation DTC's present?

    Yes

    - Refer to **DIAGNOSIS AND TESTING** and perform the appropriate diagnostic procedure.

    No

    - Go To 2.
2. **CHECK IF DTC IS ACTIVE**
    1. Ignition on, engine not running.
    2. With the scan tool, read HVAC DTC's.

    Is this DTC active?

    Yes

    - Go To 4.

    No

    - Go To 3.
3. **PERFORM HVAC ACTUATOR CALIBRATION TEST**
    1. With the scan tool, perform the HVAC Actuator Calibration Test.

    Did this DTC change from Stored to Active while performing the HVAC System Test?

    Yes

    - Go To 4.

    No

    - Go To 6.
4. **CHECK THE MODE DOOR 1 (PANEL/FLOOR)**

1. Remove the Mode Door 1 (Panel/Floor) Actuator and check the Mode Door 1 (Panel/Floor) stops, linkage (stripped or cracked) and door.

   Were there any problems found?

   Yes

   - Repair or replace the Mode Door 1 (Panel/Floor) as necessary in accordance with the Service Information.
   - Perform HVAC VERIFICATION TEST. Refer to **HVAC VERIFICATION TEST**.

   No

   - Go To 5.

5. **CHECK THE MODE DOOR 1 (PANEL/FLOOR) ACTUATOR**
   1. Replace the Mode Door 1 (Panel/Floor) Actuator in accordance with the Service Information.
   2. With the scan tool, erase HVAC DTC's and perform the HVAC Actuator Calibration Test.

      Did this DTC reset?

      Yes

      - Replace and program the A/C Heater Control in accordance with the Service Information.
      - Perform HVAC VERIFICATION TEST. Refer to **HVAC VERIFICATION TEST**.

      No

      - Test complete.
      - Perform HVAC VERIFICATION TEST. Refer to **HVAC VERIFICATION TEST**.

6. **CHECK THE WIRING AND CONNECTORS**
   1. The conditions necessary to set the DTC are not present at this time.
   2. Using the schematics as a guide, inspect the wiring and connectors specific to this circuit.
   3. Check for an intermittent condition by inspecting the related wiring harness for chafed, pierced, pinched, partially broken wires.
   4. Check the connectors for broken, bent, pushed out, spread, corroded, or contaminated terminals.
   5. Wiggle the wiring and connectors while checking for shorted and open circuits.
   6. With the scan tool, check the Environmental Data to help identify the conditions in which the DTC was set.

      Were there any problems found?

      Yes

      - Repair as necessary.

- Perform HVAC VERIFICATION TEST. Refer to **HVAC VERIFICATION TEST**.

No

- Test complete.

B1058-RECIRCULATION DOOR CONTROL CIRCUIT/PERFORMANCE

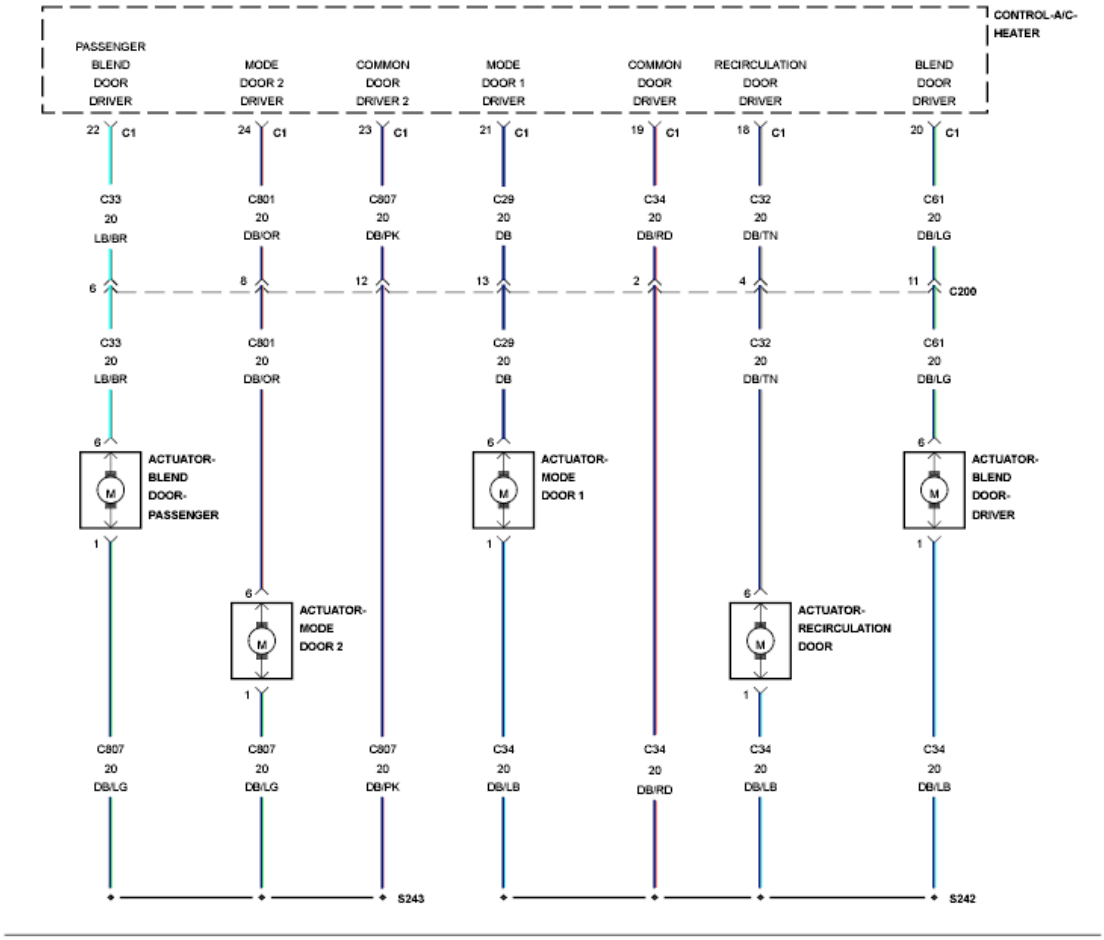

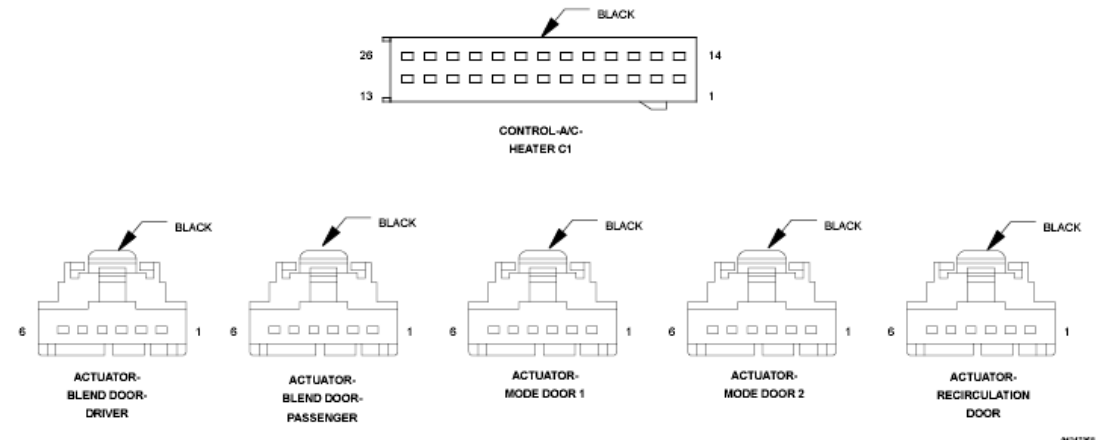

Fig. 26: Mode Door Control Wiring Diagram
Courtesy of CHRYSLER GROUP, LLC

For a complete wiring diagram, **refer to appropriate SYSTEM WIRING DIAGRAMS article** .

THEORY OF OPERATION

After the initial installation of the A/C Heater Control, the controller is calibrated to each individual blend/mode door actuator. These calibrations are stored as in the number of pulses it takes to move the door from one stop to another. The A/C Heater Control drives the Door Actuators by the use of Door Driver circuit and a Common Door Driver circuit and monitors all door actuator pulses to detect door movement in both directions. Most of the door actuators share a common door driver circuit but each door actuator has its own unique driver circuit. Due to shared circuitry, similar DTC's can set at the same time for multiple actuators depending upon the type of circuit malfunction, its location, and the direction the actuator is moving when the malfunction is present.

WHEN MONITORED:

With the ignition on and an actuator movement is commanded by the A/C Heater Control.

SET CONDITION:

If an actuator move is commanded by the A/C Heater Control and there are no feedback pulses detected in that direction, the controller commands the actuator in the opposite direction. If feedback pulses are detected in only one direction this DTC will set. If the A/C Heater Control detects a valid pulse feedback in both directions, the DTC will change from Active to Stored and will stay in the controllers memory for 100 ignition cycles.

POSSIBLE CAUSES

Possible Causes
(C32) RECIRCULATION DOOR DRIVER CIRCUIT SHORTED TO VOLTAGE
(C32) RECIRCULATION DOOR DRIVER CIRCUIT SHORTED TO GROUND
(C34) COMMON DOOR DRIVER CIRCUIT SHORTED TO VOLTAGE
(C34) COMMON DOOR DRIVER CIRCUIT SHORTED TO GROUND
RECIRCULATION DOOR BINDING
RECIRCULATION DOOR ACTUATOR
A/C HEATER CONTROL

Always perform the HVAC Pre-Diagnostic Troubleshooting procedure before proceeding. Refer to HVAC PRE-DIAGNOSTIC TROUBLESHOOTING PROCEDURE.

DIAGNOSTIC TEST

1. **CHECK IF DTC IS ACTIVE**
    1. Ignition on, engine not running.
    2. With the scan tool, read HVAC DTC's.

Is this DTC active?

Yes

- Go To 3.

No

- Go To 2.

2. **PERFORM HVAC ACTUATOR CALIBRATION TEST**
    1. With the scan tool, perform the HVAC Actuator Calibration Test.

       Did this DTC change from Stored to Active while performing the HVAC Actuator Calibration Test?

       Yes

       - Go To 3.

       No

       - Go To 9.
3. **CHECK THE (C32) RECIRCULATION DOOR DRIVER CIRCUIT FOR A SHORT TO VOLTAGE**

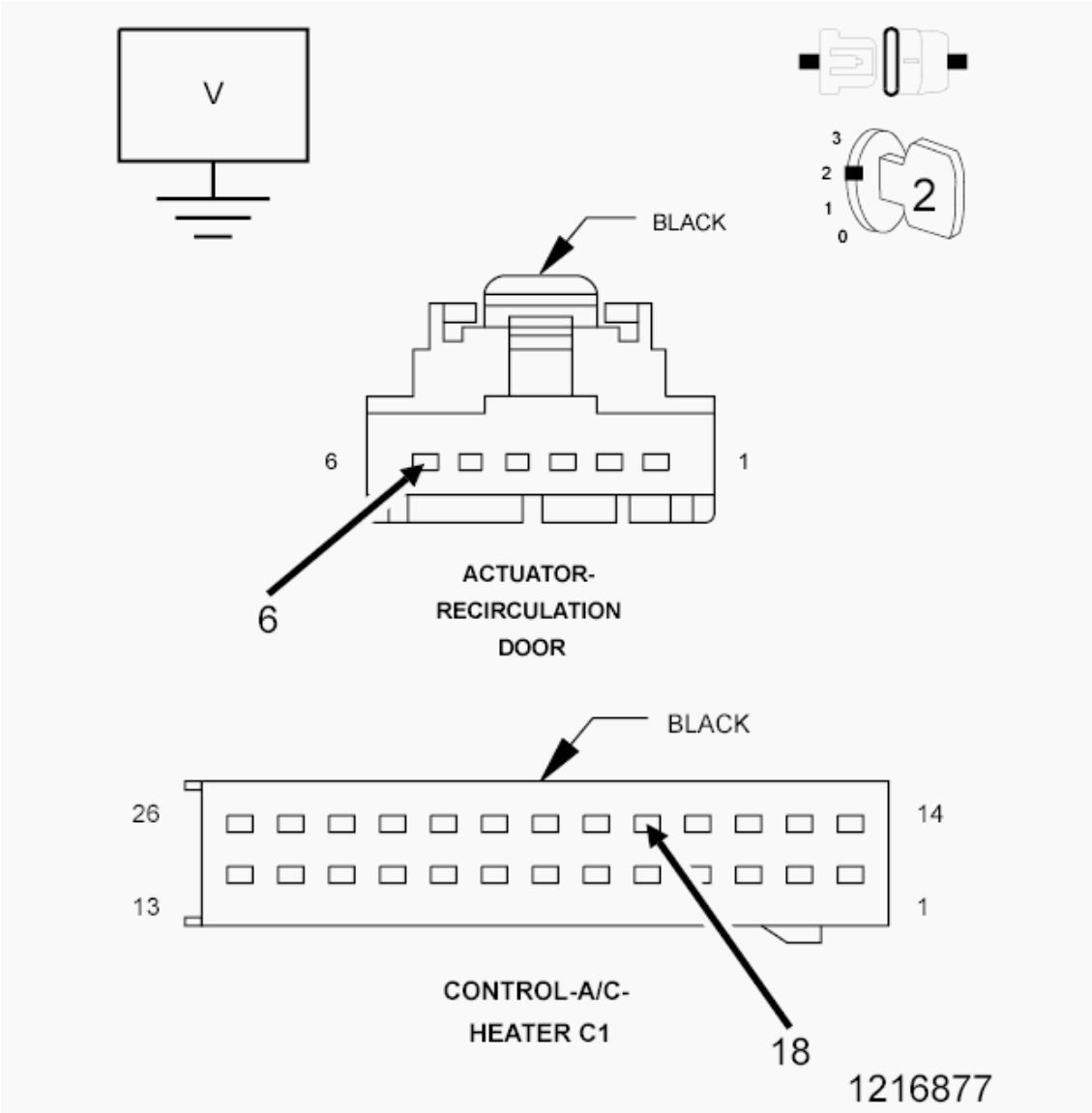

Fig. 27: Checking Recirculation Door Driver Circuit For A Short To Voltage
Courtesy of CHRYSLER GROUP, LLC

1. Turn the ignition off to the lock position.
2. Disconnect the A/C Heater Control C1 harness connector.
3. Disconnect the Recirculation Door Actuator harness connector.
4. Ignition on, engine not running.
5. Measure the voltage of the (C32) Recirculation Door Driver circuit.

   Is there any voltage present?

   Yes

   - Repair the (C32) Recirculation Door Driver circuit for a short to voltage.

- Perform HVAC VERIFICATION TEST. Refer to **HVAC VERIFICATION TEST**.

No

- Go To 4.

4. **CHECK THE (C34) COMMON DOOR DRIVER CIRCUIT FOR A SHORT TO VOLTAGE**

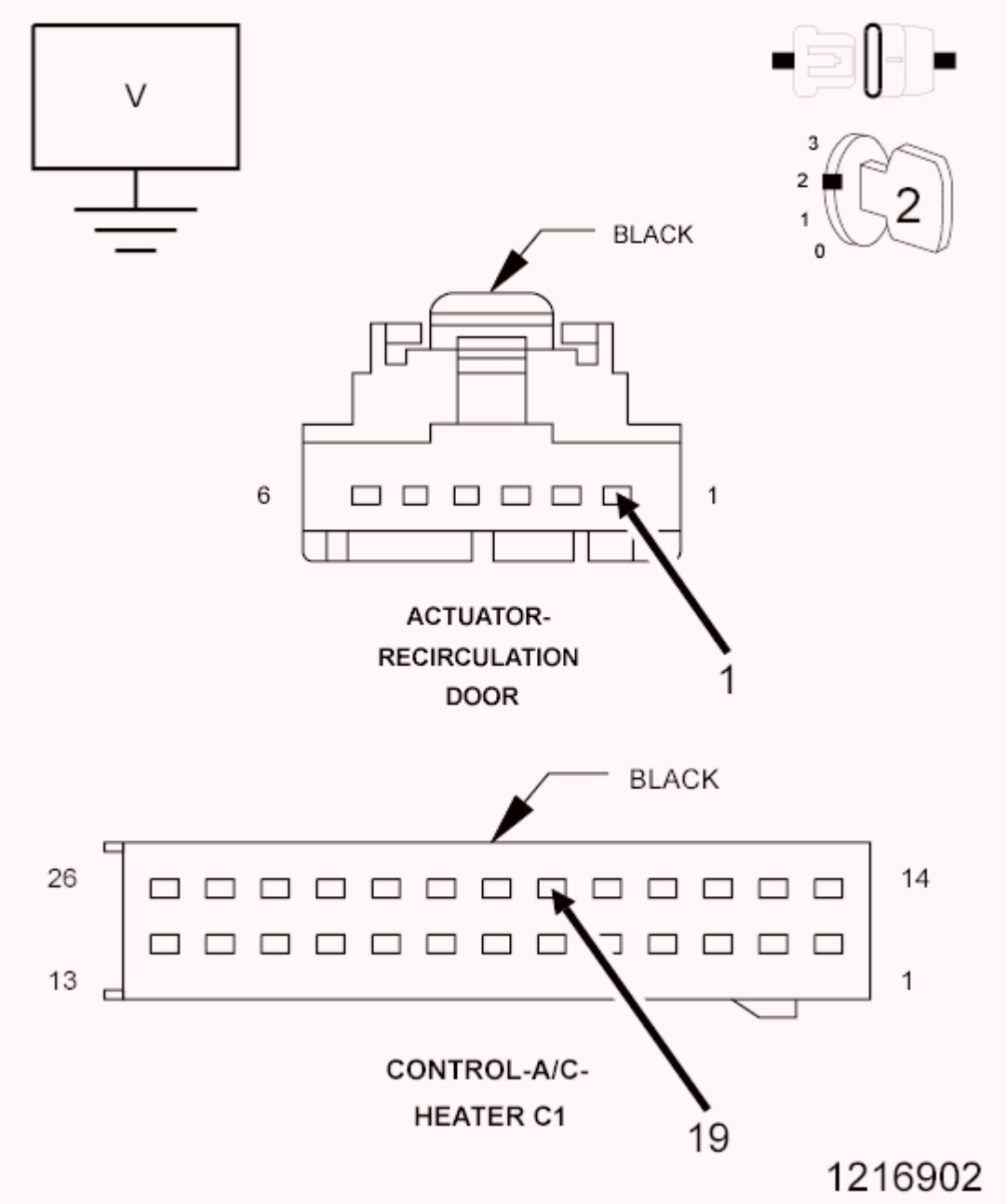

Fig. 28: Checking Common Door Driver Circuit For A Short To Voltage
Courtesy of CHRYSLER GROUP, LLC

1. Measure the voltage of the (C34) Common Door Driver circuit.

Is there any voltage present?

Yes

- Repair the (C34) Common Door Driver circuit for a short to voltage.
- Perform HVAC VERIFICATION TEST. Refer to **HVAC VERIFICATION TEST**.

No

- Go To 5.

5. **CHECK THE (C32) RECIRCULATION DOOR DRIVER CIRCUIT FOR A SHORT TO GROUND**

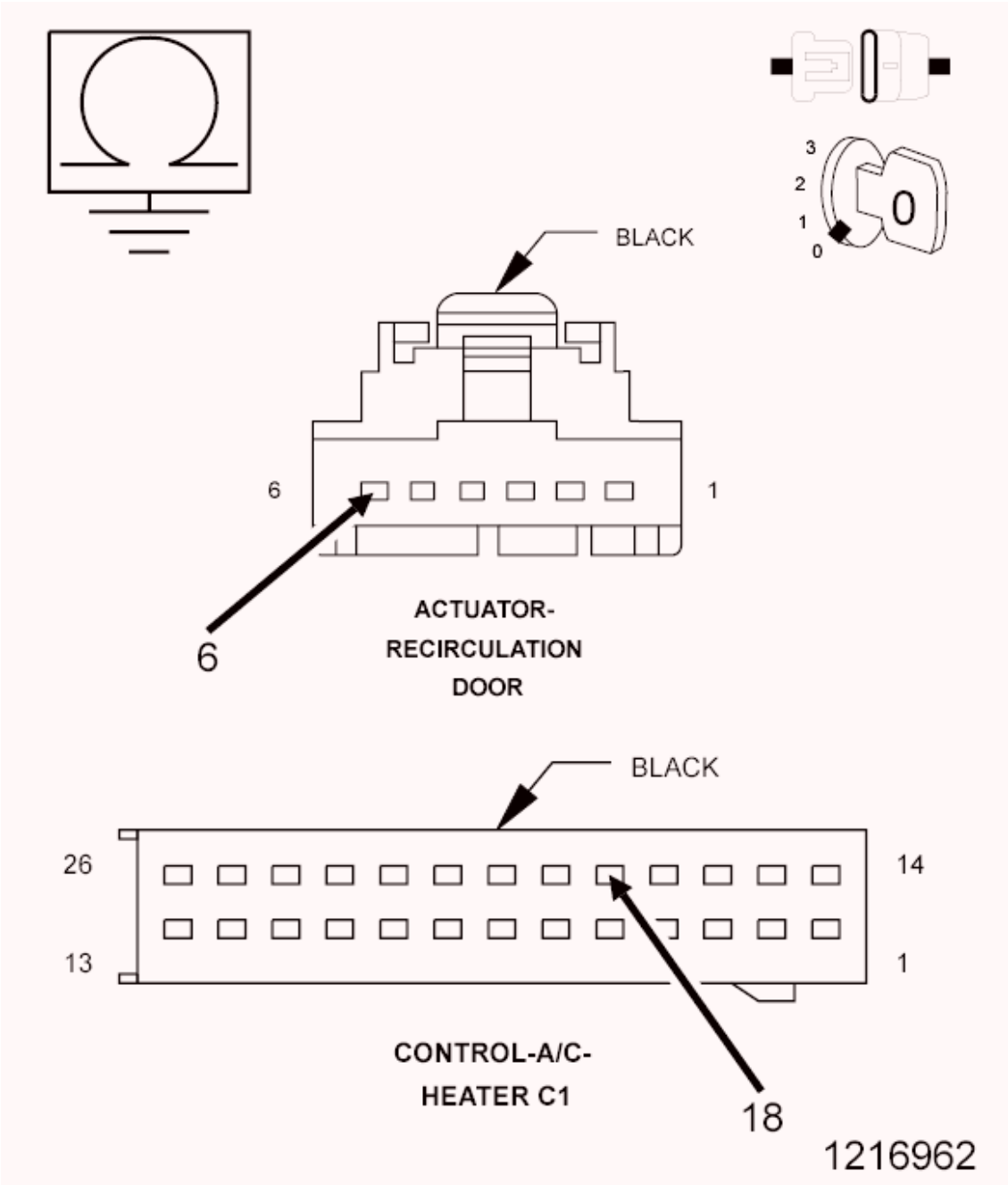

Fig. 29: Checking Recirculation Door Driver Circuit For A Short To Ground
Courtesy of CHRYSLER GROUP, LLC

1. Turn the ignition off to the lock position.
2. Measure the resistance between ground and the (C32) Recirculation Door Driver circuit.

   Is the resistance below 100k Ohms?

   Yes

- Repair the (C32) Recirculation Door Driver circuit for a short to ground.
- Perform HVAC VERIFICATION TEST. Refer to **HVAC VERIFICATION TEST**.

No

- Go To 6.

6. **CHECK THE (C34) COMMON DOOR DRIVER CIRCUIT FOR A SHORT TO GROUND**

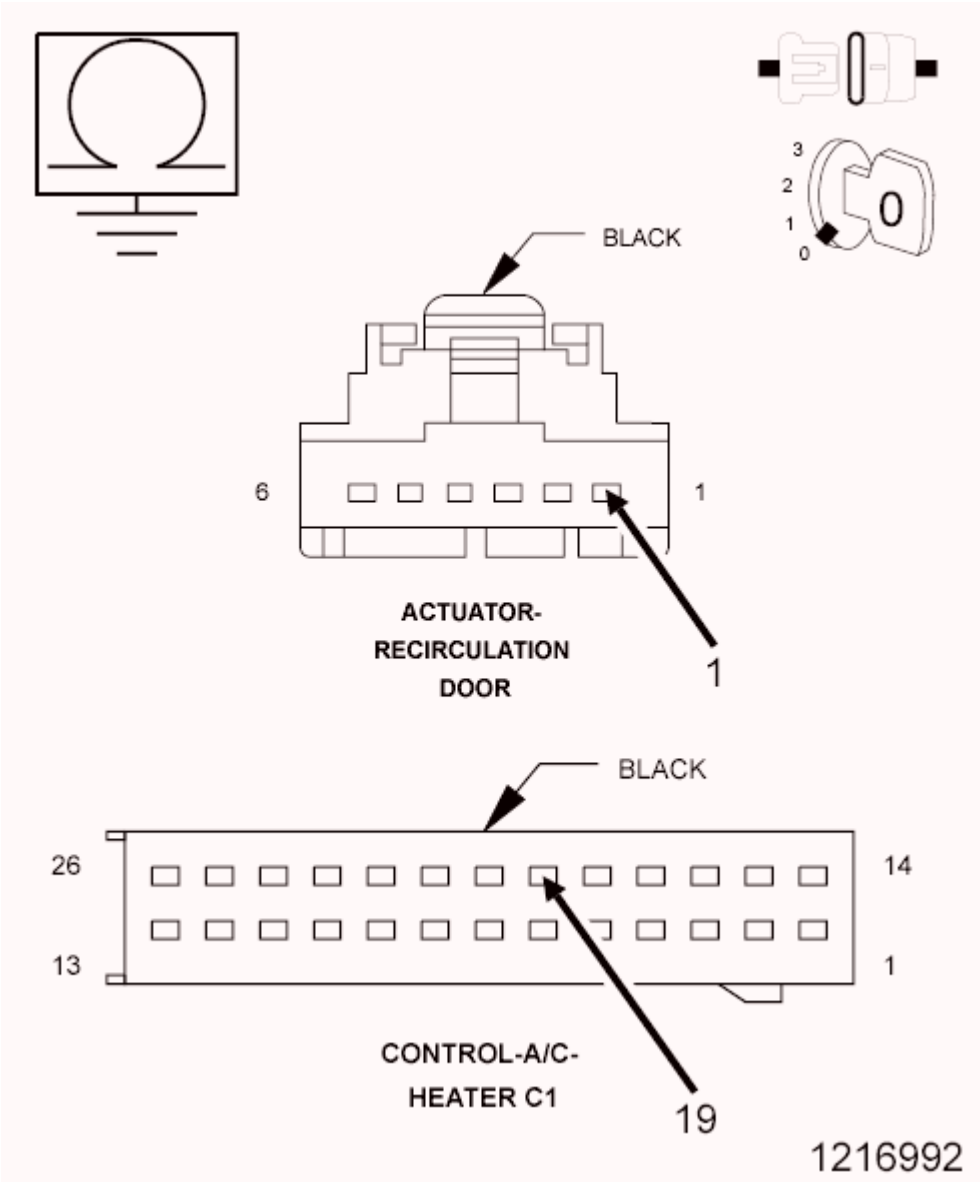

Fig. 30: Checking Common Door Driver Circuit For A Short To Ground
Courtesy of CHRYSLER GROUP, LLC

1. Measure the resistance between ground and the (C34) Common Door Driver circuit.

   Is the resistance below 100k Ohms?

Yes

- Repair the (C34) Common Door Driver circuit for a short to ground.
- Perform HVAC VERIFICATION TEST. Refer to **HVAC VERIFICATION TEST**.

No

- Go To 7.

7. **CHECK THE RECIRCULATION DOOR**
   1. Remove the Recirculation Door Actuator and check the Recirculation Door for binding and full travel.

      Were there any problems with the Recirculation Door movement?

      Yes

      - Repair or replace the Recirculation Door as necessary in accordance with the Service Information.
      - Perform HVAC VERIFICATION TEST. Refer to **HVAC VERIFICATION TEST**.

      No

      - Go To 8.

8. **CHECK THE RECIRCULATION DOOR ACTUATOR**
   1. Replace the Recirculation Door Actuator in accordance with the Service Information.
   2. With the scan tool, erase HVAC DTC's and perform the HVAC Actuator Calibration Test.

      Did this DTC reset?

      Yes

      - Replace and program the A/C Heater Control in accordance with the Service Information.
      - Perform HVAC VERIFICATION TEST. Refer to **HVAC VERIFICATION TEST**.

      No

      - Test complete.
      - Perform HVAC VERIFICATION TEST. Refer to **HVAC VERIFICATION TEST**.

9. **CHECK THE WIRING AND CONNECTORS**
   1. The conditions necessary to set the DTC are not present at this time.
   2. Using the schematics as a guide, inspect the wiring and connectors specific to this circuit.
   3. Check for an intermittent condition by inspecting the related wiring harness for chafed, pierced, pinched, partially broken wires.
   4. Check the connectors for broken, bent, pushed out, spread, corroded, or contaminated terminals.

5. Wiggle the wiring and connectors while checking for shorted and open circuits.
6. With the scan tool, check the Environmental Data to help identify the conditions in which the DTC was set.

   Were there any problems found?

   Yes

   - Repair as necessary.
   - Perform HVAC VERIFICATION TEST. Refer to **HVAC VERIFICATION TEST**.

   No

   - Test complete.

B105B-RECIRCULATION DOOR CONTROL CIRCUIT OPEN

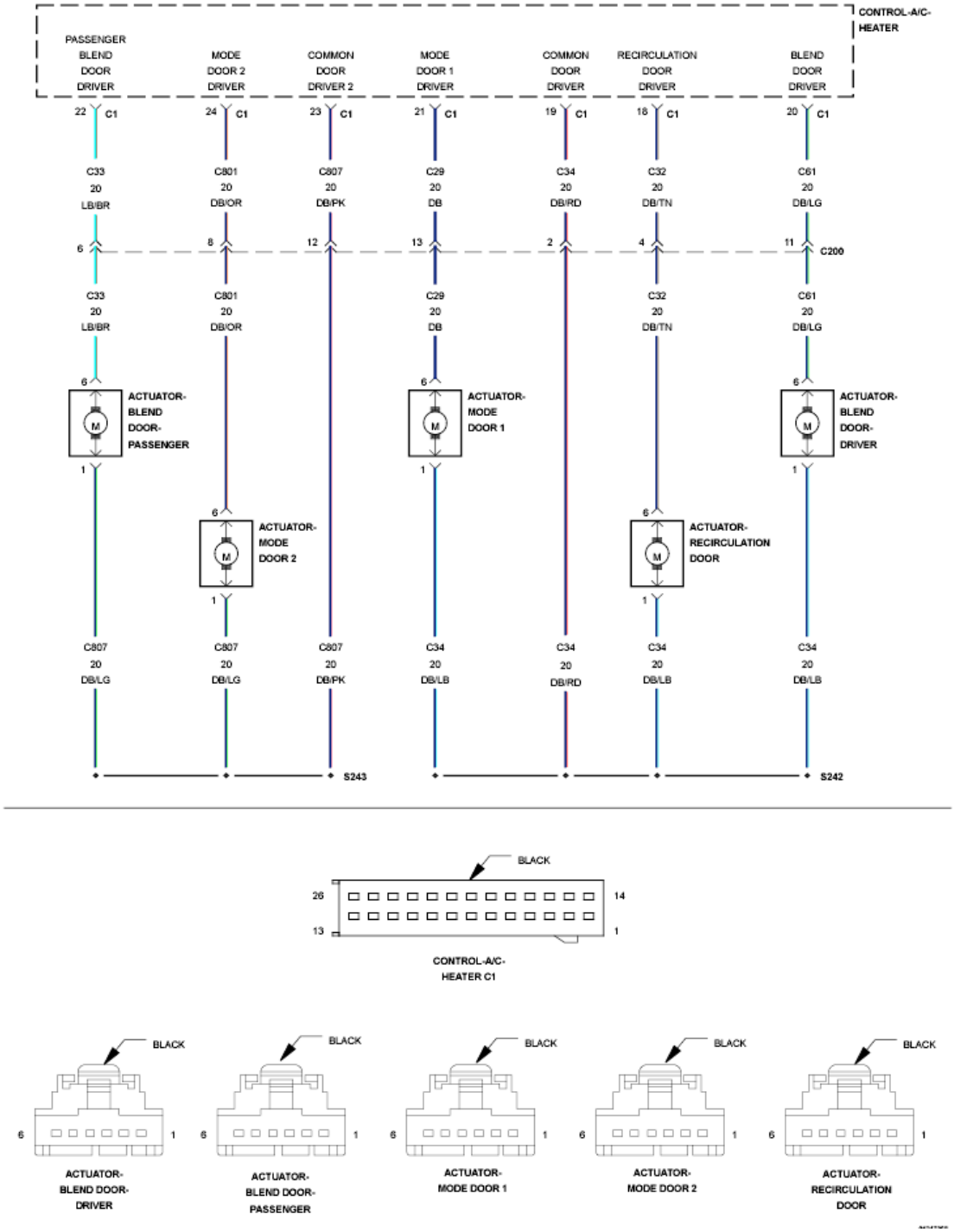

Fig. 31: Mode Door Control Wiring Diagram
Courtesy of CHRYSLER GROUP, LLC

For a complete wiring diagram, **refer to appropriate SYSTEM WIRING DIAGRAMS article** .

THEORY OF OPERATION

After the initial installation of the A/C Heater Control, the controller is calibrated to each individual blend/mode

door actuator. These calibrations are stored as in the number of pulses it takes to move the door from one stop to another. The A/C Heater Control drives the Door Actuators by the use of Door Driver circuit and a Common Door Driver circuit and monitors all door actuator pulses to detect door movement in both directions. Most of the door actuators share a common door driver circuit but each door actuator has its own unique driver circuit. Due to shared circuitry, similar DTC's can set at the same time for multiple actuators depending upon the type of circuit malfunction, its location, and the direction the actuator is moving when the malfunction is present.

WHEN MONITORED:

With the ignition on and an actuator movement is commanded by the A/C Heater Control.

SET CONDITION:

If an actuator move is commanded by the A/C Heater Control and there are no feedback pulses detected in that direction, the controller commands the actuator in the opposite direction. If no feedback pulses are detected in either direction this DTC will set. If the A/C Heater Control detects a valid pulse feedback in both directions, the DTC will change from Active to Stored and will stay in the controllers memory for 100 ignition cycles.

POSSIBLE CAUSES

Possible Causes
(C32) RECIRCULATION DOOR DRIVER CIRCUIT OPEN
(C34) COMMON DOOR DRIVER CIRCUIT OPEN
RECIRCULATION DOOR ACTUATOR
A/C HEATER CONTROL

Always perform the HVAC Pre-Diagnostic Troubleshooting procedure before proceeding. Refer to HVAC PRE-DIAGNOSTIC TROUBLESHOOTING PROCEDURE.

DIAGNOSTIC TEST

1. **CHECK FOR OTHER DTC's**
    1. Ignition on, engine not running.
    2. With the scan tool, read HVAC DTC's.

    Is there more than one Door Control - Circuit Open DTC present?

    Yes

    - Repair the (C34) Common Door Driver circuit for an open.

    NOTE: Due to the common shared driver circuit, probable area of concern is the splice, or from the splice to the A/C Heater Control harness connector. Make sure to check all inline connectors.

No

- Go To 2.

2. **CHECK IF DTC IS ACTIVE**
    1. Ignition on, engine not running.
    2. With the scan tool, read HVAC DTC's.

    Is this DTC active?

    Yes

    - Go To 4.

    No

    - Go To 3.

3. **PERFORM HVAC ACTUATOR CALIBRATION TEST**
    1. With the scan tool, perform the HVAC Actuator Calibration Test.

    Did this DTC change from Stored to Active while performing the HVAC Actuator Calibration Test?

    Yes

    - Go To 4.

    No

    - Go To 7.

4. **CHECK THE RECIRCULATION DOOR ACTUATOR**

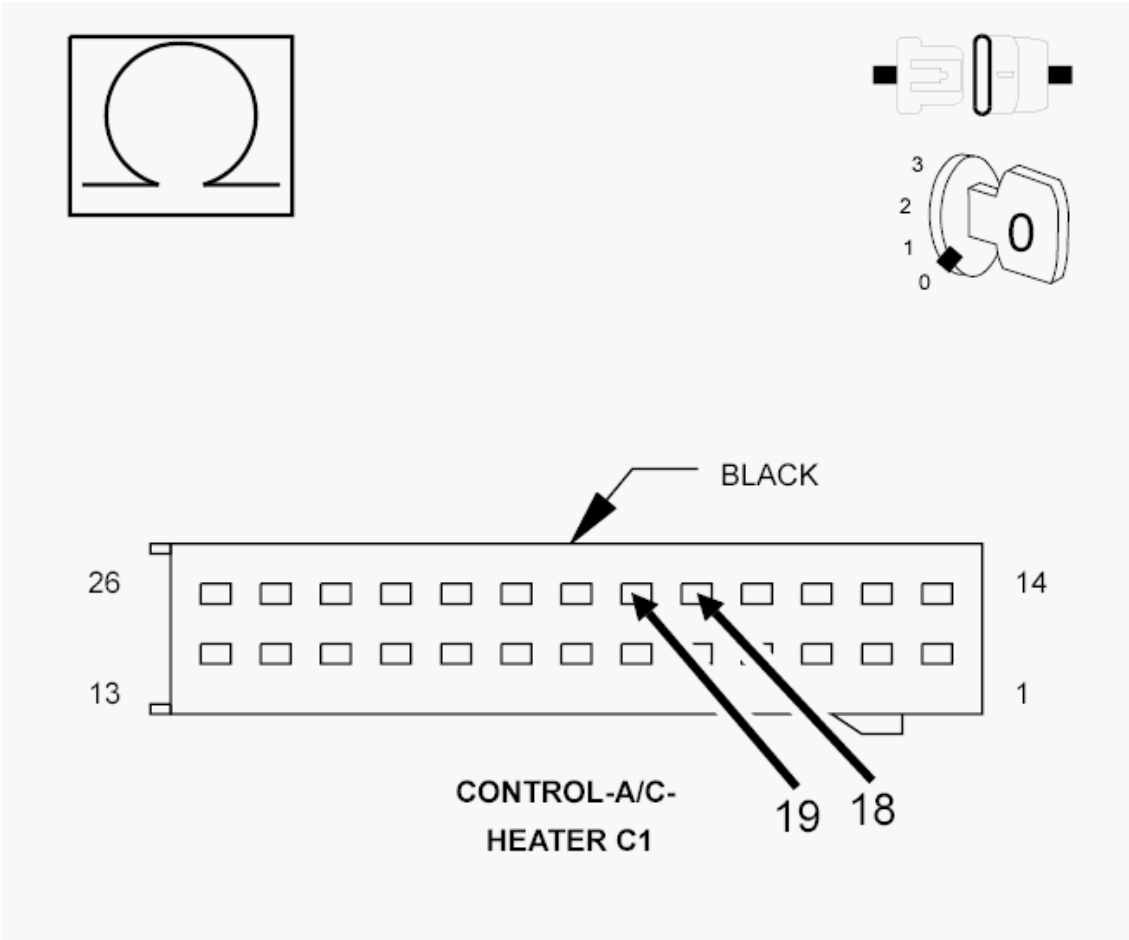

Fig. 32: Checking The Recirculation Door Actuator
Courtesy of CHRYSLER GROUP, LLC

1. Turn the ignition off to the lock position.
2. Disconnect the A/C Heater Control C1 harness connector.
3. Measure the resistance between the (C32) Recirculation Door Driver circuit and the (C34) Common Door Driver circuit.

   Is the resistance 38.0 Ohms (± 5.0 Ohms)?

   Yes

   - Replace and program the A/C Heater Control in accordance with the Service Information.
   - Perform HVAC VERIFICATION TEST. Refer to **HVAC VERIFICATION TEST**.

   No

   - Go To 5.

5. **CHECK THE (C32) RECIRCULATION DOOR DRIVER CIRCUIT FOR AN OPEN**

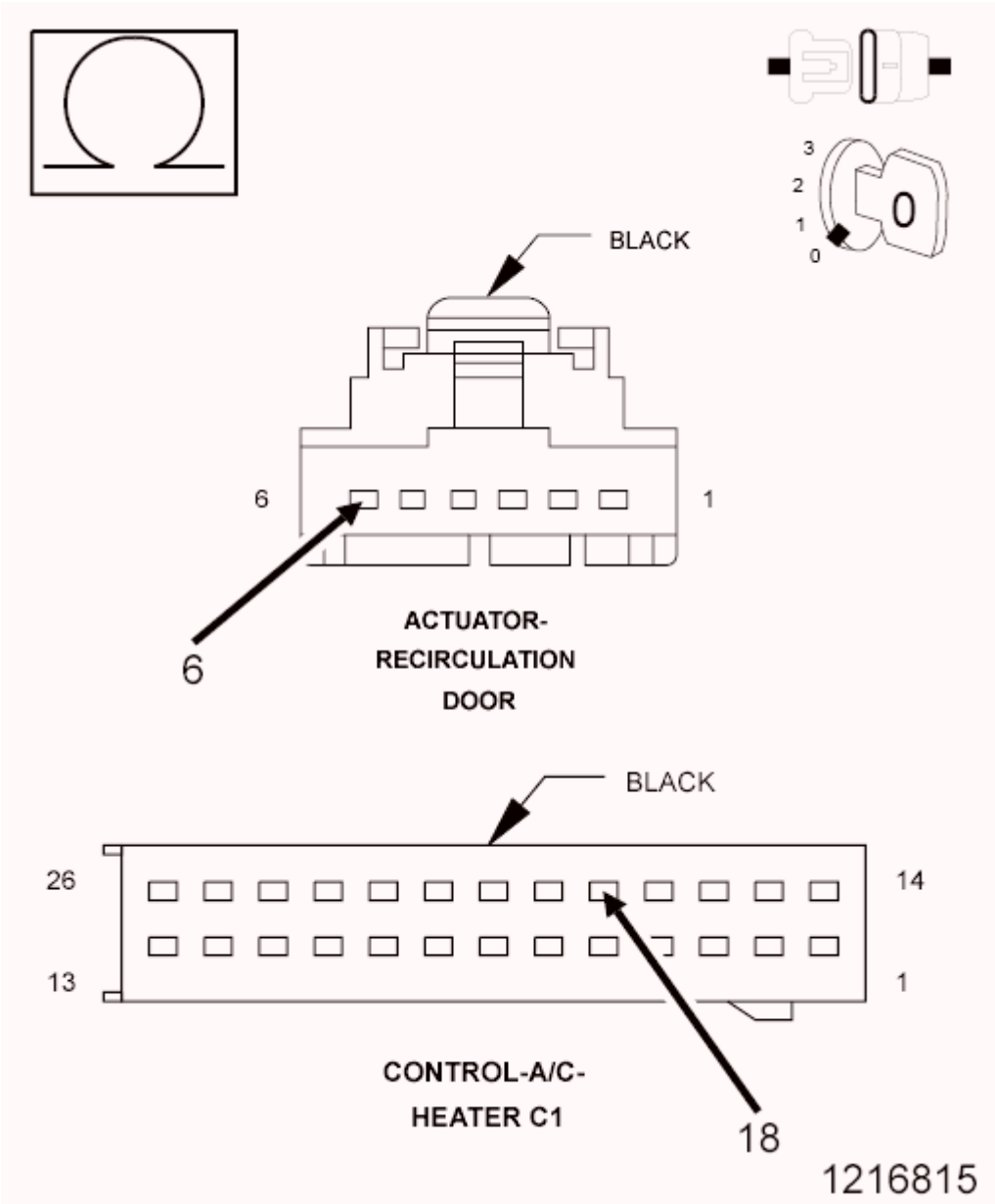

Fig. 33: Checking Recirculation Door Driver Circuit For An Open
Courtesy of CHRYSLER GROUP, LLC

1. Turn the ignition off to the lock position.
2. Disconnect the Recirculation Door Actuator harness connector.
3. Measure the resistance of the (C32) Recirculation Door Driver circuit between the A/C Heater Control C1 harness connector and the Recirculation Door Actuator harness connector.

   Is the resistance above 5.0 Ohms?

   Yes

   - Repair the (C32) Recirculation Door Driver circuit for an open.

- Perform HVAC VERIFICATION TEST. Refer to **HVAC VERIFICATION TEST**.

No

- Go To 6.

6. **CHECK THE (C34) COMMON DOOR DRIVER CIRCUIT FOR AN OPEN**

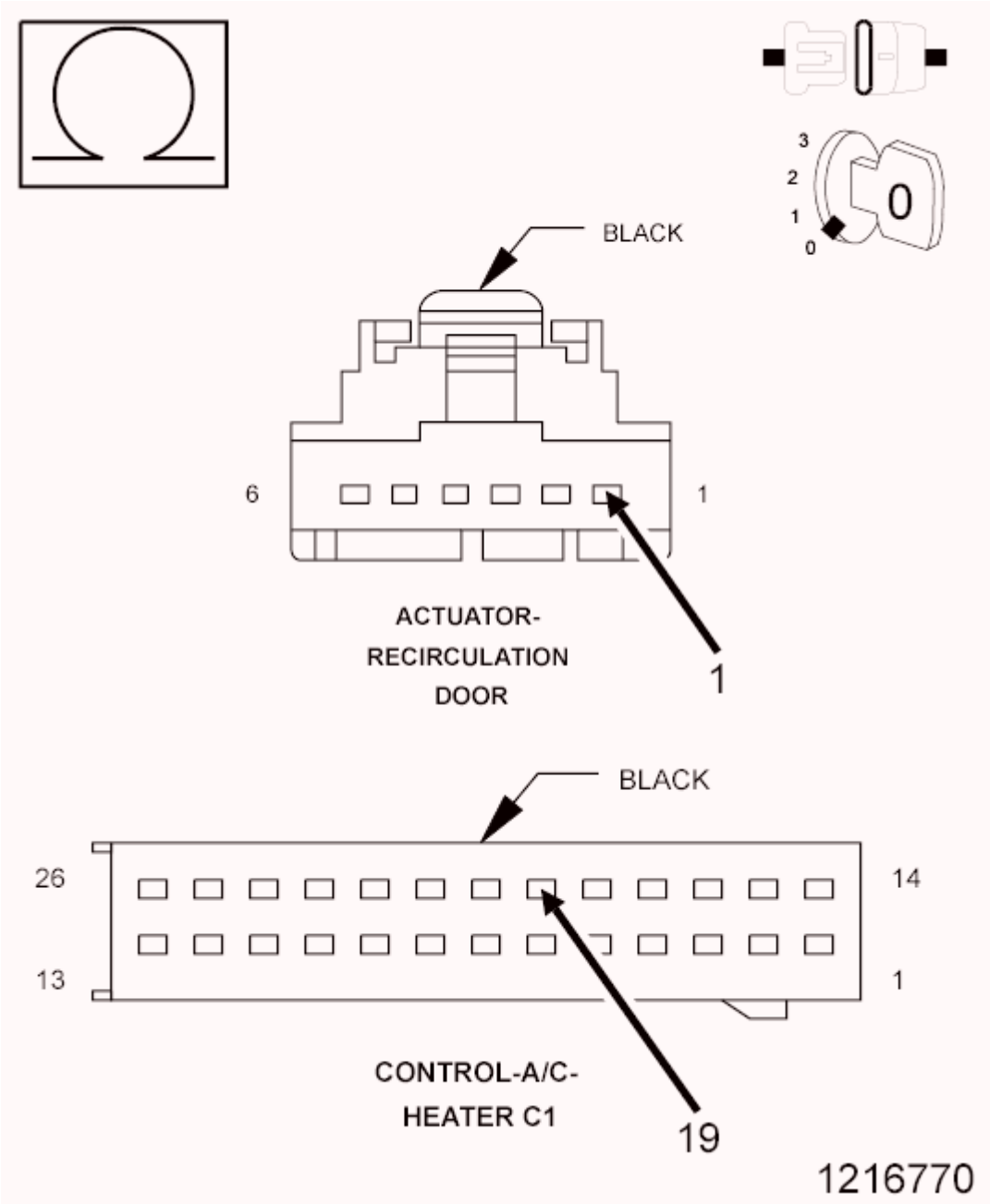

Fig. 34: Checking Common Door Driver Circuit For An Open
Courtesy of CHRYSLER GROUP, LLC

1. Measure the resistance of the (C34) Common Door Driver circuit between the A/C Heater Control

C1 harness connector and the Recirculation Door Actuator harness connector.

Is the resistance above 5.0 Ohms?

Yes

- Repair the (C34) Common Door Driver circuit for an open.

  NOTE: Probable location is the wiring harness splice or the wiring between the splice and the door actuator.

- Perform HVAC VERIFICATION TEST. Refer to **HVAC VERIFICATION TEST**.

No

- Replace the Recirculation Door Actuator in accordance with the Service Information.
- Perform HVAC VERIFICATION TEST. Refer to **HVAC VERIFICATION TEST**.

7. **CHECK THE WIRING AND CONNECTORS**
   1. The conditions necessary to set the DTC are not present at this time.
   2. Using the schematics as a guide, inspect the wiring and connectors specific to this circuit.
   3. Check for an intermittent condition by inspecting the related wiring harness for chafed, pierced, pinched, partially broken wires.
   4. Check the connectors for broken, bent, pushed out, spread, corroded, or contaminated terminals.
   5. Wiggle the wiring and connectors while checking for shorted and open circuits.
   6. With the scan tool, check the Environmental Data to help identify the conditions in which the DTC was set.

   Were there any problems found?

   Yes

   - Repair as necessary.
   - Perform HVAC VERIFICATION TEST. Refer to **HVAC VERIFICATION TEST**.

   No

   - Test complete.

B105C-RECIRCULATION DOOR TRAVEL RANGE TOO SMALL

For a complete wiring diagram, **refer to appropriate SYSTEM WIRING DIAGRAMS article** .

THEORY OF OPERATION

After the initial installation of the A/C Heater Control, the controller is calibrated to each individual blend/mode

door actuator. These calibrations are stored as in the number of pulses it takes to move the door from one stop to another. The A/C Heater Control drives the Door Actuators by the use of Door Driver circuit and a Common Door Driver circuit and monitors all door actuator pulses to detect door movement in both directions. Most of the door actuators share a common door driver circuit but each door actuator has its own unique driver circuit. Due to shared circuitry, similar DTC's can set at the same time for multiple actuators depending upon the type of circuit malfunction, its location, and the direction the actuator is moving when the malfunction is present.

WHEN MONITORED:

When ever an Actuator Calibration Test is performed.

SET CONDITION:

The A/C Heater Control uses a pulse feedback to the controller to detect the total door movement range. If the amount of pulses required to move the door completely in both directions is less than what the controller has stored in its memory, this DTC will set. If an Actuator Calibration Test is performed and the A/C Heater Control detects a valid range of the door movement span in both directions, the DTC will change from Active to Stored and will stay in the controllers memory for 100 ignition cycles.

POSSIBLE CAUSES

Possible Causes
RELATED DTC's PRESENT
RECIRCULATION DOOR BINDING
RECIRCULATION DOOR ACTUATOR
A/C HEATER CONTROL

Always perform the HVAC Pre-Diagnostic Troubleshooting procedure before proceeding. Refer to HVAC PRE-DIAGNOSTIC TROUBLESHOOTING PROCEDURE.

DIAGNOSTIC TEST

1. **CHECK FOR RELATED DTC's**
    1. Ignition on, engine not running.
    2. With the scan tool, read HVAC DTC's.

       Are there any Door Control - Circuit Open or Door Control - Performance or Incorrect Operation DTC's present?

       Yes

       - Refer to **DIAGNOSIS AND TESTING** and perform the appropriate diagnostic procedure.

       No

       - Go To 2.

2. **CHECK IF DTC IS ACTIVE**
    1. Ignition on, engine not running.
    2. With the scan tool, read HVAC DTC's.

    Is this DTC active?

    Yes

    - Go To 4.

    No

    - Go To 3.
3. **PERFORM HVAC ACTUATOR CALIBRATION TEST**
    1. With the scan tool, perform the HVAC Actuator Calibration Test.

    Did this DTC change from Stored to Active while performing the HVAC Actuator Calibration Test?

    Yes

    - Go To 4.

    No

    - Go To 6.
4. **CHECK THE RECIRCULATION DOOR**
    1. Remove the Recirculation Door Actuator and check the Recirculation Door for binding and full travel.

    Were there any problems found?

    Yes

    - Repair or replace the Recirculation Door as necessary in accordance with the Service Information.
    - Perform HVAC VERIFICATION TEST. Refer to **HVAC VERIFICATION TEST**.

    No

    - Go To 5.
5. **CHECK THE RECIRCULATION DOOR ACTUATOR**
    1. Replace the Recirculation Door Actuator in accordance with the Service Information.
    2. With the scan tool, erase HVAC DTC's and perform the HVAC Actuator Calibration Test.

Did this DTC reset?

Yes

- Replace and program the A/C Heater Control in accordance with the Service Information.
- Perform HVAC VERIFICATION TEST. Refer to **HVAC VERIFICATION TEST**.

No

- Test complete.
- Perform HVAC VERIFICATION TEST. Refer to **HVAC VERIFICATION TEST**.

6. **CHECK THE WIRING AND CONNECTORS**
   1. The conditions necessary to set the DTC are not present at this time.
   2. Using the schematics as a guide, inspect the wiring and connectors specific to this circuit.
   3. Check for an intermittent condition by inspecting the related wiring harness for chafed, pierced, pinched, partially broken wires.
   4. Check the connectors for broken, bent, pushed out, spread, corroded, or contaminated terminals.
   5. Wiggle the wiring and connectors while checking for shorted and open circuits.
   6. With the scan tool, check the Environmental Data to help identify the conditions in which the DTC was set.

   Were there any problems found?

   Yes

   - Repair as necessary.
   - Perform HVAC VERIFICATION TEST. Refer to **HVAC VERIFICATION TEST**.

   No

   - Test complete.

B105D-RECIRCULATION DOOR TRAVEL RANGE TOO LARGE

For a complete wiring diagram, **refer to appropriate SYSTEM WIRING DIAGRAMS article** .

THEORY OF OPERATION

After the initial installation of the A/C Heater Control, the controller is calibrated to each individual blend/mode door actuator. These calibrations are stored as in the number of pulses it takes to move the door from one stop to another. The A/C Heater Control drives the Door Actuators by the use of Door Driver circuit and a Common Door Driver circuit and monitors all door actuator pulses to detect door movement in both directions. Most of the door actuators share a common door driver circuit but each door actuator has its own unique driver circuit. Due to shared circuitry, similar DTC's can set at the same time for multiple actuators depending upon the type of circuit malfunction, its location, and the direction the actuator is moving when the malfunction is present.

WHEN MONITORED:

When ever an Actuator Calibration Test is performed.

SET CONDITION:

The A/C Heater Control uses a pulse feedback to the controller to detect the total door movement range. If the amount of pulses required to move the door completely in both directions is greater than what the controller has stored in its memory, this DTC will set. If an Actuator Calibration Test is performed and the A/C Heater Control detects a valid range of the door movement span in both directions, the DTC will change from Active to Stored and will stay in the controllers memory for 100 ignition cycles.

POSSIBLE CAUSES

Possible Causes
RELATED DTC's PRESENT
RECIRCULATION DOOR STOPS
RECIRCULATION DOOR
RECIRCULATION DOOR ACTUATOR
A/C HEATER CONTROL

Always perform the HVAC Pre-Diagnostic Troubleshooting procedure before proceeding. Refer to HVAC PRE-DIAGNOSTIC TROUBLESHOOTING PROCEDURE.

DIAGNOSTIC TEST

1. **CHECK FOR RELATED DTC's**
    1. Ignition on, engine not running.
    2. With the scan tool, read HVAC DTC's.

    Are there any Door Control - Circuit Open or Door Control - Performance or Incorrect Operation DTC's present?

    Yes

    - Refer to **DIAGNOSIS AND TESTING** and perform the appropriate diagnostic procedure.

    No

    - Go To 2.
2. **CHECK IF DTC IS ACTIVE**
    1. Ignition on, engine not running.
    2. With the scan tool, read HVAC DTC's.

    Is this DTC active?

Yes

- Go To 4.

No

- Go To 3.

3. **PERFORM HVAC ACTUATOR CALIBRATION TEST**
    1. With the scan tool, perform the HVAC Actuator Calibration Test.

       Did this DTC change from Stored to Active while performing the HVAC Actuator Calibration Test?

       Yes

       - Go To 4.

       No

       - Go To 6.
4. **CHECK THE RECIRCULATION DOOR**
    1. Remove the Recirculation Door Actuator and check the Recirculation Door stops, linkage (stripped or cracked) and door.

       Were there any problems found?

       Yes

       - Repair or replace the Recirculation Door as necessary in accordance with the Service Information.
       - Perform HVAC VERIFICATION TEST. Refer to **HVAC VERIFICATION TEST**.

       No

       - Go To 5.
5. **CHECK THE RECIRCULATION DOOR ACTUATOR**
    1. Replace the Recirculation Door Actuator in accordance with the Service Information.
    2. With the scan tool, erase HVAC DTC's and perform the HVAC Actuator Calibration Test.

       Did this DTC reset?

       Yes

       - Replace and program the A/C Heater Control in accordance with the Service Information.
       - Perform HVAC VERIFICATION TEST. Refer to **HVAC VERIFICATION TEST**.

No

- Test complete.
- Perform HVAC VERIFICATION TEST. Refer to **HVAC VERIFICATION TEST**.

6. **CHECK THE WIRING AND CONNECTORS**
    1. The conditions necessary to set the DTC are not present at this time.
    2. Using the schematics as a guide, inspect the wiring and connectors specific to this circuit.
    3. Check for an intermittent condition by inspecting the related wiring harness for chafed, pierced, pinched, partially broken wires.
    4. Check the connectors for broken, bent, pushed out, spread, corroded, or contaminated terminals.
    5. Wiggle the wiring and connectors while checking for shorted and open circuits.
    6. With the scan tool, check the Environmental Data to help identify the conditions in which the DTC was set.

    Were there any problems found?

    Yes

    - Repair as necessary.
    - Perform HVAC VERIFICATION TEST. Refer to **HVAC VERIFICATION TEST**.

    No

    - Test complete.

B109B-PANEL MODE DOOR 2 CONTROL CIRCUIT/PERFORMANCE

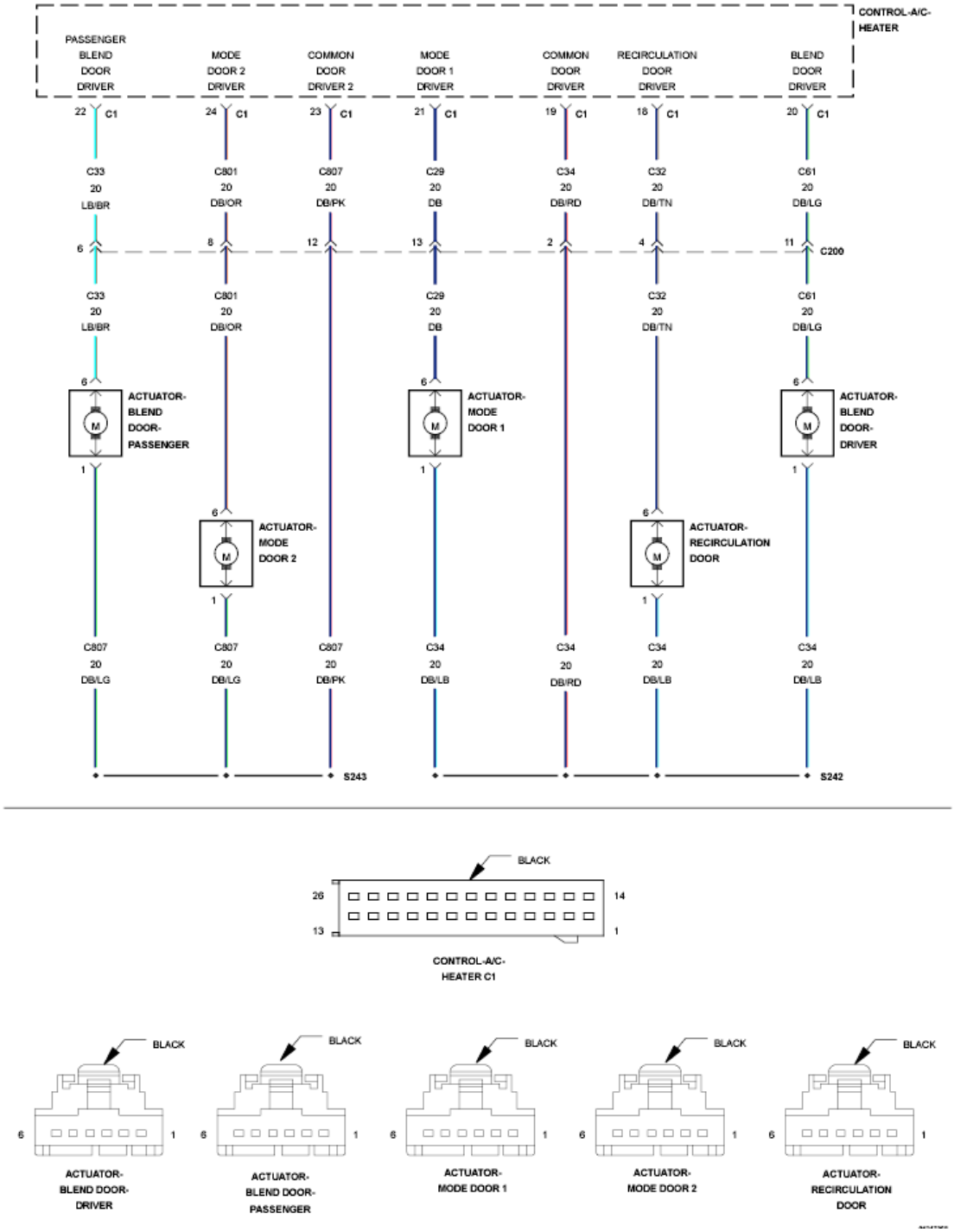

Fig. 35: Mode Door Control Wiring Diagram
Courtesy of CHRYSLER GROUP, LLC

For a complete wiring diagram, **refer to appropriate SYSTEM WIRING DIAGRAMS article** .

THEORY OF OPERATION

After the initial installation of the A/C Heater Control, the controller is calibrated to each individual blend/mode

door actuator. These calibrations are stored as in the number of pulses it takes to move the door from one stop to another. The A/C Heater Control drives the Door Actuators by the use of Door Driver circuit and a Common Door Driver circuit and monitors all door actuator pulses to detect door movement in both directions. Most of the door actuators share a common door driver circuit but each door actuator has its own unique driver circuit. Due to shared circuitry, similar DTC's can set at the same time for multiple actuators depending upon the type of circuit malfunction, its location, and the direction the actuator is moving when the malfunction is present.

WHEN MONITORED:

With the ignition on and an actuator movement is commanded by the A/C Heater Control.

SET CONDITION:

If an actuator move is commanded by the A/C Heater Control and there are no feedback pulses detected in that direction, the controller commands the actuator in the opposite direction. If feedback pulses are detected in only one direction this DTC will set. If the A/C Heater Control detects a valid pulse feedback in both directions, the DTC will change from Active to Stored and will stay in the controllers memory for 100 ignition cycles.

POSSIBLE CAUSES

Possible Causes
(C801) MODE DOOR 2 DRIVER CIRCUIT SHORT TO VOLTAGE
(C801) MODE DOOR 2 DRIVER CIRCUIT SHORT TO GROUND
(807) COMMON DOOR DRIVER 2 CIRCUIT SHORT TO VOLTAGE
(807) COMMON DOOR DRIVER 2 CIRCUIT SHORT TO GROUND
MODE DOOR 2 DOOR (DEFROST/FLOOR) BINDING
MODE DOOR 2 ACTUATOR (DEFROST/FLOOR)
A/C HEATER CONTROL

Always perform the HVAC Pre-Diagnostic Troubleshooting procedure before proceeding. Refer to HVAC PRE-DIAGNOSTIC TROUBLESHOOTING PROCEDURE.

DIAGNOSTIC TEST

1. **CHECK IF DTC IS ACTIVE**
    1. Ignition on, engine not running.
    2. With the scan tool, read HVAC DTC's.

    Is this DTC active?

    Yes

    - Go To 3.

    No

- Go To 2.

2. **PERFORM HVAC ACTUATOR CALIBRATION TEST**
    1. With the scan tool, perform the HVAC Actuator Calibration Test.

       Did this DTC change from Stored to Active while performing the HVAC Actuator Calibration Test?

       Yes

       - Go To 3.

       No

       - Go To 9.
3. **CHECK THE (C801) MODE DOOR 2 DRIVER CIRCUIT FOR A SHORT TO VOLTAGE**

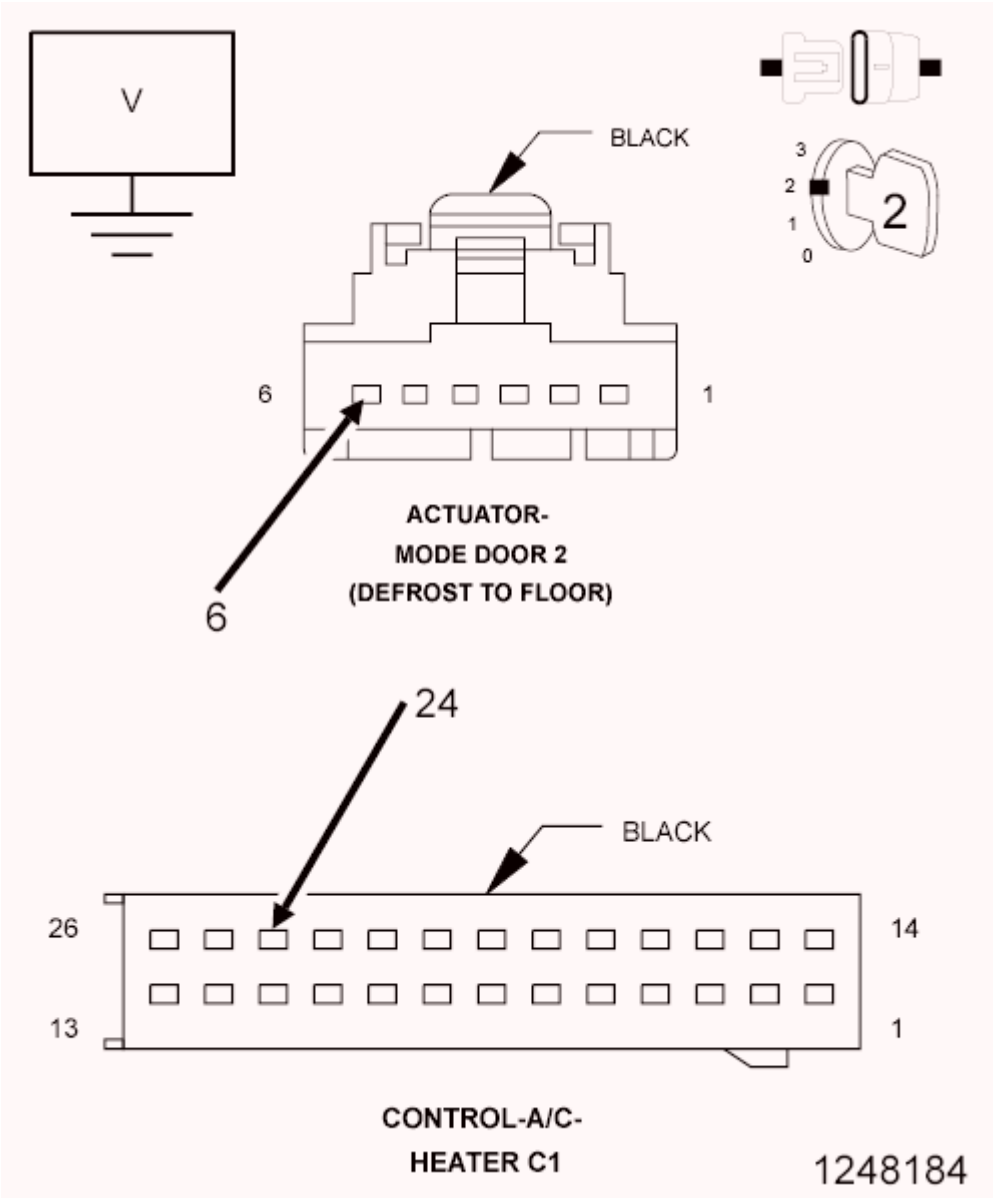

Fig. 36: Checking Mode Door 2 Driver Circuit For A Short To Voltage
Courtesy of CHRYSLER GROUP, LLC

1. Turn the ignition off to the lock position.
2. Disconnect the A/C Heater Control C1 harness connector.
3. Disconnect the Mode Door 2 Actuator (Defrost/Floor) harness connector.
4. Ignition on, engine not running.
5. Measure the voltage of the (C801) Mode Door 2 Driver circuit.

   Is there any voltage present?

   Yes

- Repair the (C801) Mode Door 2 Driver circuit for a short to voltage.
- Perform HVAC VERIFICATION TEST. Refer to **HVAC VERIFICATION TEST**.

No

- Go To 4.

4. **CHECK THE (807) COMMON DOOR DRIVER 2 CIRCUIT FOR A SHORT TO VOLTAGE**

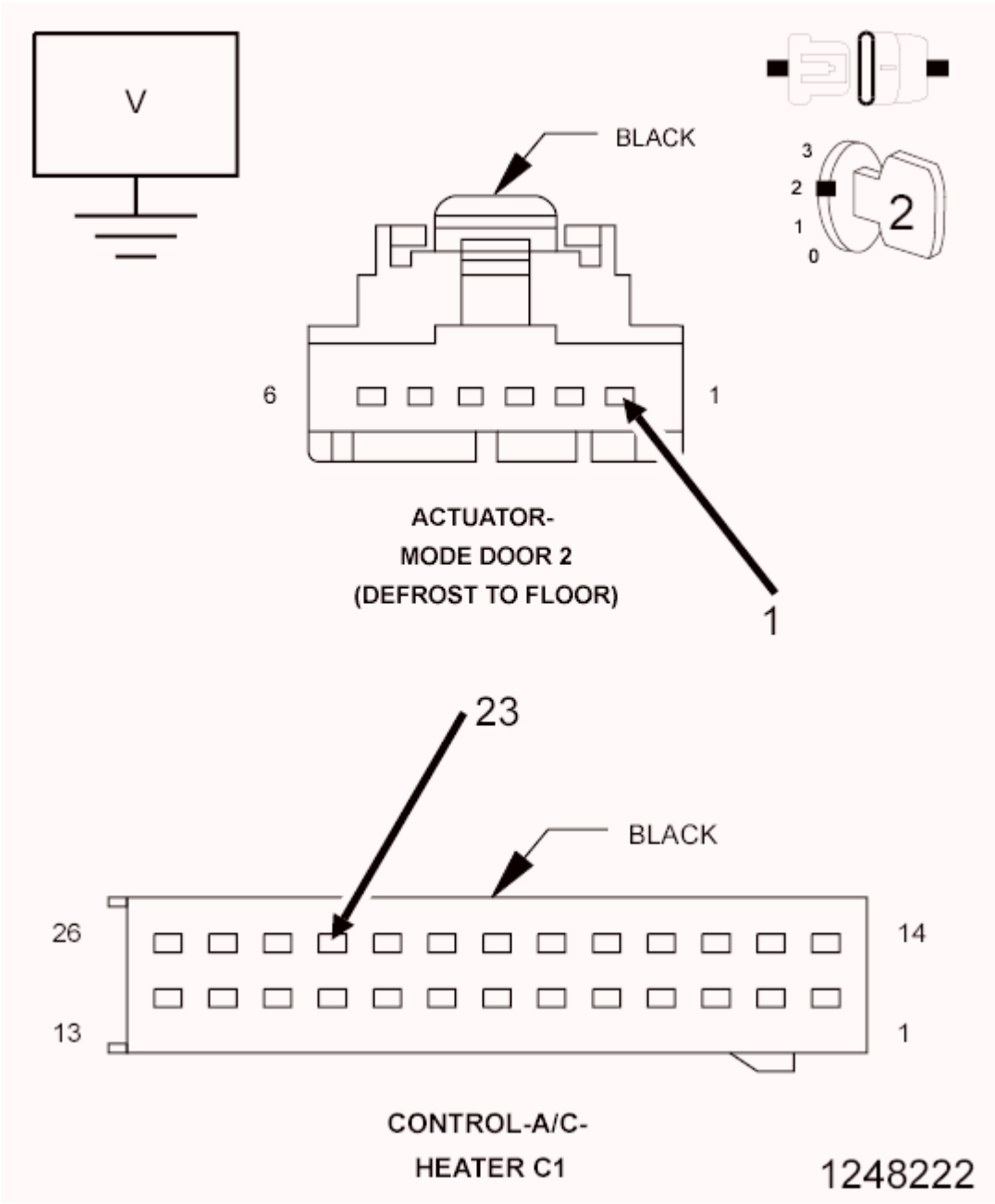

Fig. 37: Checking Common Door Driver 2 Circuit For A Short To Voltage
Courtesy of CHRYSLER GROUP, LLC

1. Measure the voltage of the (807) Common Door Driver 2 circuit.

   Is there any voltage present?

   Yes

   - Repair the (807) Common Door Driver 2 circuit for a short to voltage.
   - Perform HVAC VERIFICATION TEST. Refer to **HVAC VERIFICATION TEST**.

   No

   - Go To 5.

5. **CHECK THE (C801) MODE DOOR 2 DRIVER CIRCUIT FOR A SHORT TO GROUND**

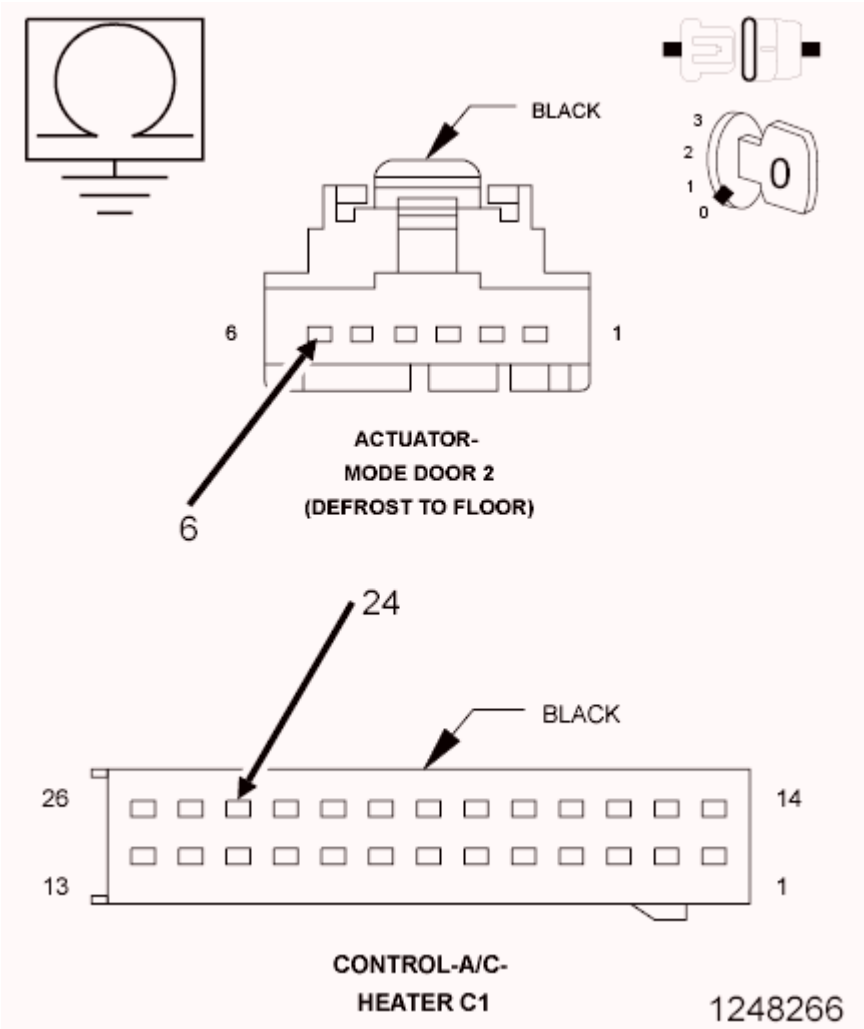

Fig. 38: Checking Mode Door 2 Driver Circuit For A Short To Ground
Courtesy of CHRYSLER GROUP, LLC

1. Turn the ignition off to the lock position.

2. Measure the resistance between ground and the (C801) Mode Door 2 Driver circuit.

   Is the resistance below 100k Ohms?

   Yes

   - Repair the (C801) Mode Door 2 Driver circuit for a short to ground.
   - Perform HVAC VERIFICATION TEST. Refer to **HVAC VERIFICATION TEST**.

   No

   - Go To 6.

6. **CHECK THE (807) COMMON DOOR DRIVER 2 CIRCUIT FOR A SHORT TO GROUND**

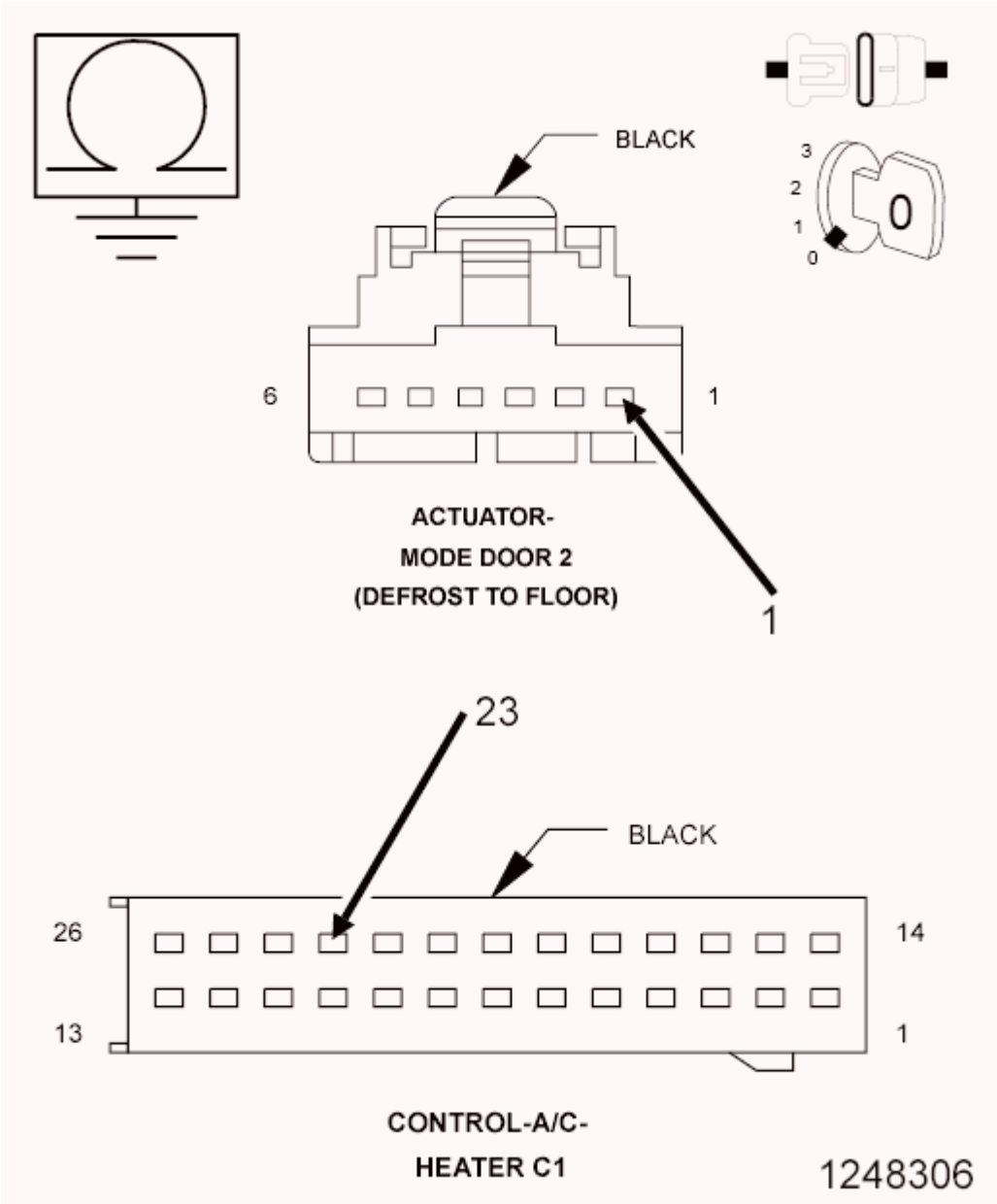

Fig. 39: Checking Common Door Driver 2 Circuit For A Short To Ground
Courtesy of CHRYSLER GROUP, LLC

1. Measure the resistance between ground and the (807) Common Door Driver 2 circuit.

   Is the resistance below 100k Ohms?

   Yes

   - Repair the (807) Common Door Driver 2 circuit for a short to ground.
   - Perform HVAC VERIFICATION TEST. Refer to **HVAC VERIFICATION TEST**.

   No

- Go To 7.

7. **CHECK THE MODE DOOR 2 (DEFROST/FLOOR)**
    1. Remove the Mode Door 2 Actuator and check the Mode Door 2 (Defrost/Floor) for binding and full travel.

       Were there any problems found?

       Yes

       - Repair or replace the Mode Door 2 (Defrost/Floor) as necessary in accordance with the Service Information.
       - Perform HVAC VERIFICATION TEST. Refer to **HVAC VERIFICATION TEST**.

       No

       - Go To 8.

8. **CHECK THE MODE DOOR 2 ACTUATOR**
    1. Replace the Mode Door 2 Actuator in accordance with the Service Information.
    2. With the scan tool, erase HVAC DTC's and perform the HVAC Actuator Calibration Test.

       Did this DTC reset?

       Yes

       - Replace and program the A/C Heater Control in accordance with the Service Information.
       - Perform HVAC VERIFICATION TEST. Refer to **HVAC VERIFICATION TEST**.

       No

       - Test complete.
       - Perform HVAC VERIFICATION TEST. Refer to **HVAC VERIFICATION TEST**.

9. **CHECK THE WIRING AND CONNECTORS**
    1. The conditions necessary to set the DTC are not present at this time.
    2. Using the schematics as a guide, inspect the wiring and connectors specific to this circuit.
    3. Check for an intermittent condition by inspecting the related wiring harness for chafed, pierced, pinched, partially broken wires.
    4. Check the connectors for broken, bent, pushed out, spread, corroded, or contaminated terminals.
    5. Wiggle the wiring and connectors while checking for shorted and open circuits.
    6. With the scan tool, check the Environmental Data to help identify the conditions in which the DTC was set.

       Were there any problems found?

Yes

- Repair as necessary.
- Perform HVAC VERIFICATION TEST. Refer to **HVAC VERIFICATION TEST**.

No

- Test complete.

B109E-PANEL MODE DOOR 2 CONTROL CIRCUIT OPEN

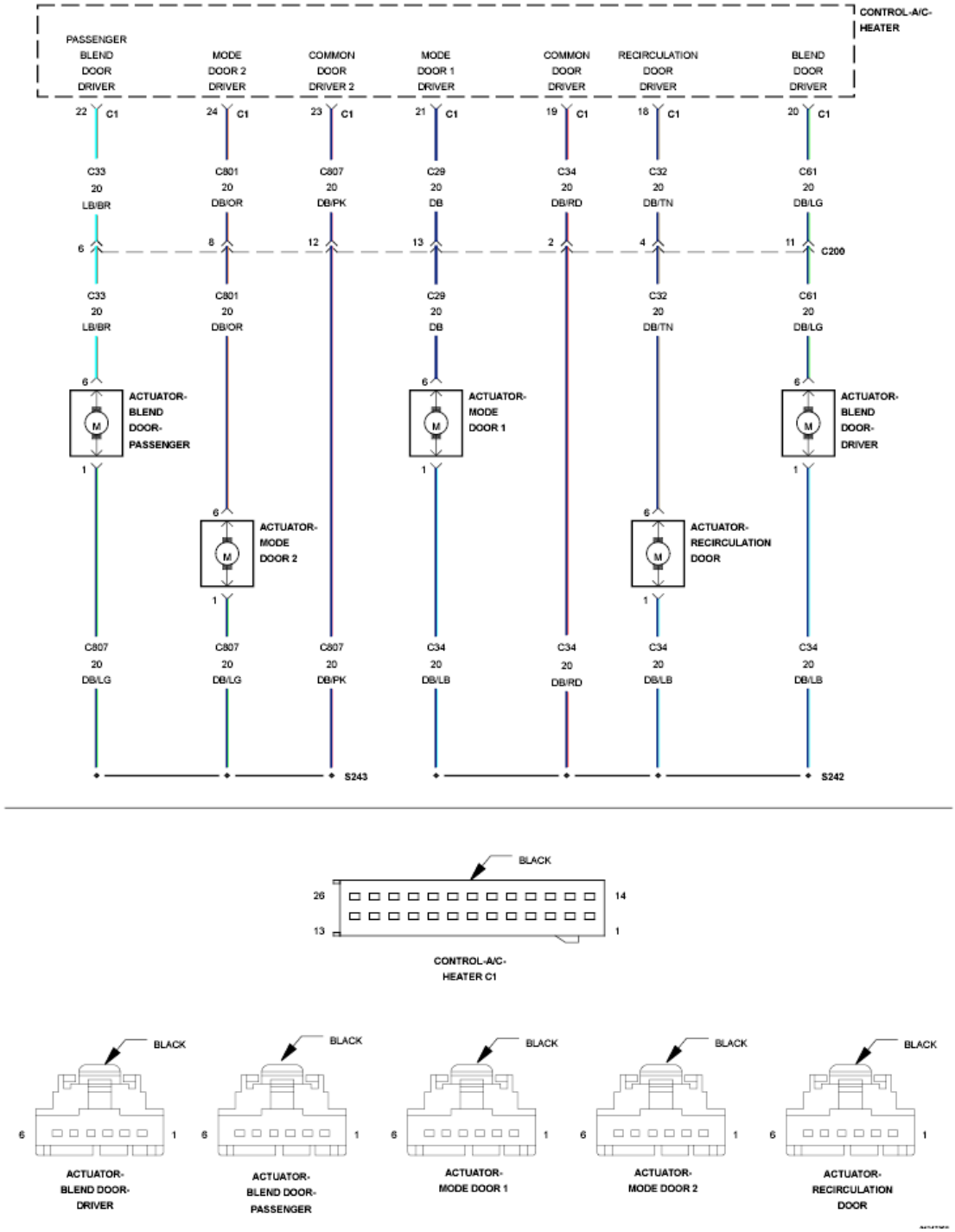

Fig. 40: Mode Door Control Wiring Diagram
Courtesy of CHRYSLER GROUP, LLC

For a complete wiring diagram, **refer to appropriate SYSTEM WIRING DIAGRAMS article** .

THEORY OF OPERATION

After the initial installation of the A/C Heater Control, the controller is calibrated to each individual blend/mode

door actuator. These calibrations are stored as in the number of pulses it takes to move the door from one stop to another. The A/C Heater Control drives the Door Actuators by the use of Door Driver circuit and a Common Door Driver circuit and monitors all door actuator pulses to detect door movement in both directions. Most of the door actuators share a common door driver circuit but each door actuator has its own unique driver circuit. Due to shared circuitry, similar DTC's can set at the same time for multiple actuators depending upon the type of circuit malfunction, its location, and the direction the actuator is moving when the malfunction is present.

WHEN MONITORED:

With the ignition on and an actuator movement is commanded by the A/C Heater Control.

SET CONDITION:

If an actuator move is commanded by the A/C Heater Control and there are no feedback pulses detected in that direction, the controller commands the actuator in the opposite direction. If no feedback pulses are detected in either direction this DTC will set. If the A/C Heater Control detects a valid pulse feedback in both directions, the DTC will change from Active to Stored and will stay in the controllers memory for 100 ignition cycles.

POSSIBLE CAUSES

Possible Causes
(C807) MODE DOOR 2 DRIVER CIRCUIT OPEN
(C801) COMMON DOOR DRIVER CIRCUIT OPEN
BLEND DOOR ACTUATOR (DRIVER)
A/C HEATER CONTROL

Always perform the HVAC Pre-Diagnostic Troubleshooting procedure before proceeding. Refer to HVAC PRE-DIAGNOSTIC TROUBLESHOOTING PROCEDURE.

DIAGNOSTIC TEST

1. **CHECK IF DTC IS ACTIVE**
    1. Ignition on, engine not running.
    2. With the scan tool, read HVAC DTC's.

    Is this DTC active?

    Yes

    - Go To 3.

    No

    - Go To 2.
2. **PERFORM HVAC ACTUATOR CALIBRATION TEST**
    1. With the scan tool, perform the HVAC Actuator Calibration Test.

Did this DTC change from Stored to Active while performing the HVAC Actuator Calibration Test?

Yes

- Go To 3.

No

- Go To 6.

3. **CHECK THE MODE DOOR 2 ACTUATOR**

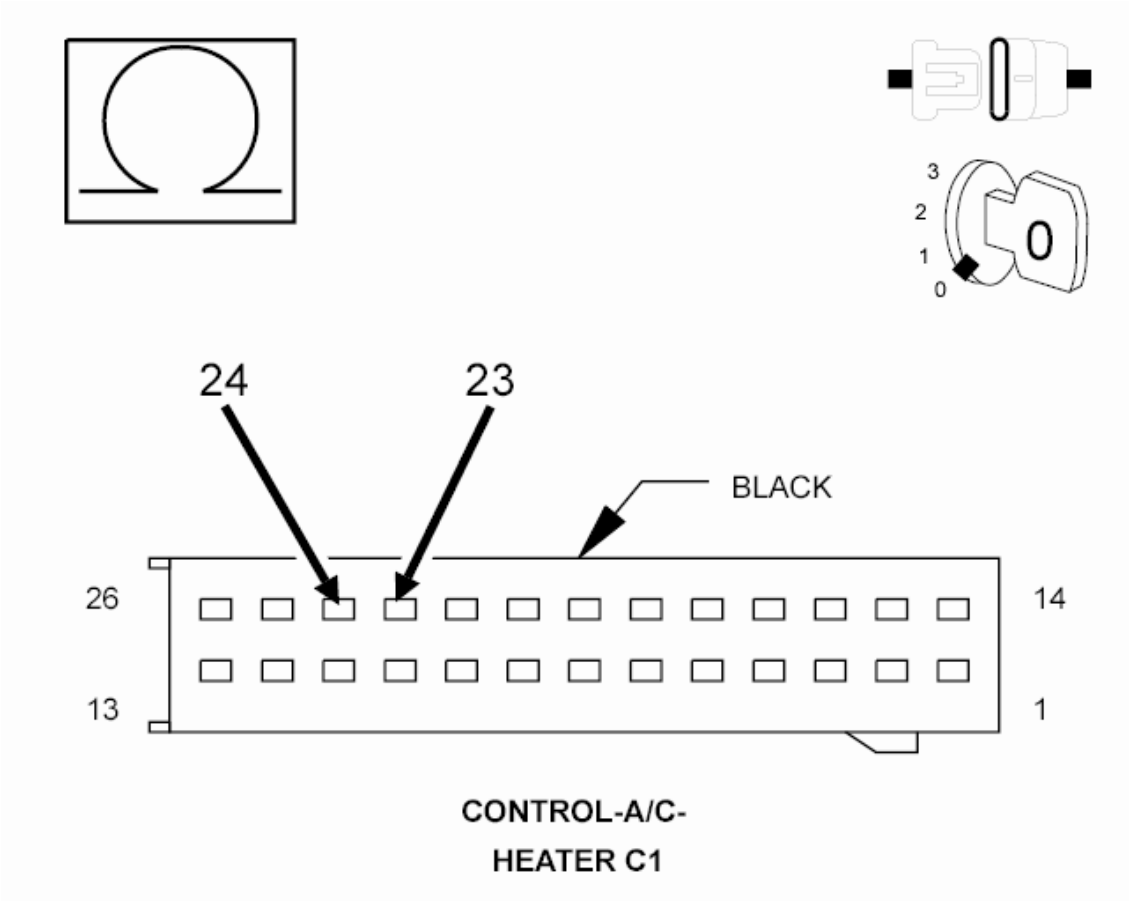

Fig. 41: Checking Mode Door 2 Actuator
Courtesy of CHRYSLER GROUP, LLC

1. Turn the ignition off to the lock position.
2. Disconnect the A/C Heater Control C1 harness connector.
3. Measure the resistance between the (C801) Mode Door 2 Driver circuit and the (C807) Common Door Driver circuit.

   Is the resistance 38.0 Ohms (± 5.0 Ohms)?

Yes

- Replace and program the A/C Heater Control in accordance with the Service Information.
- Perform HVAC VERIFICATION TEST. Refer to **HVAC VERIFICATION TEST**.

No

- Go To 4.

4. **CHECK THE (C801) MODE DOOR 2 DRIVER CIRCUIT FOR AN OPEN**

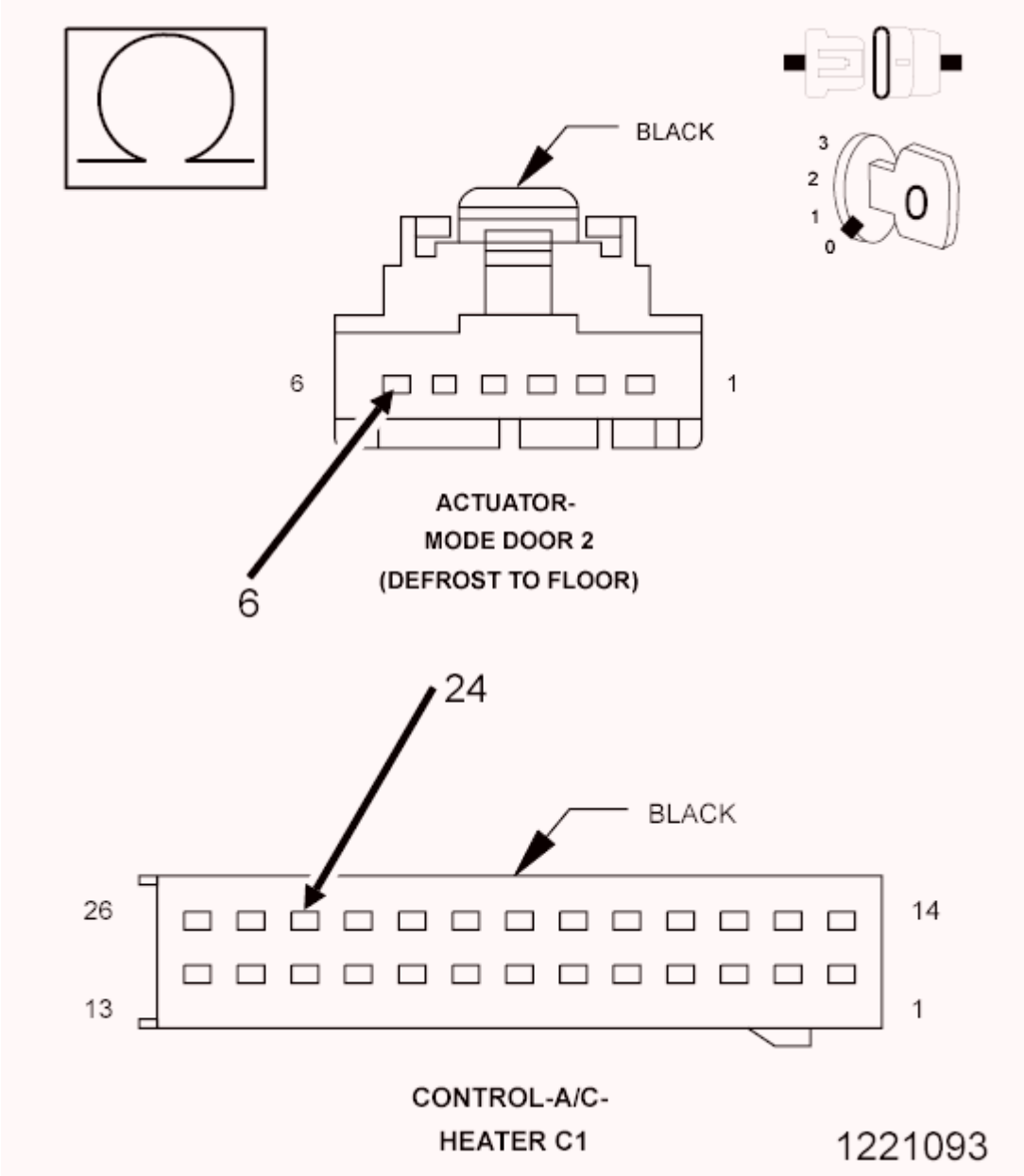

Fig. 42: Checking Mode Door 2 Driver Circuit For An Open
Courtesy of CHRYSLER GROUP, LLC

1. Turn the ignition off to the lock position.
2. Disconnect the Mode Door 2 (Defrost/Floor) Actuator harness connector.
3. Measure the resistance of the (C801) Mode Door 2 Driver circuit between the A/C Heater Control C1 harness connector and the Mode Door 2 (Defrost/Floor) Actuator harness connector.

   Is the resistance above 5.0 Ohms?

   Yes

   - Repair the (C801) Mode Door 2 Driver circuit for an open.
   - Perform HVAC VERIFICATION TEST. Refer to **HVAC VERIFICATION TEST**.

   No

   - Go To 5.

5. **CHECK THE (C807) COMMON DOOR DRIVER CIRCUIT FOR AN OPEN**

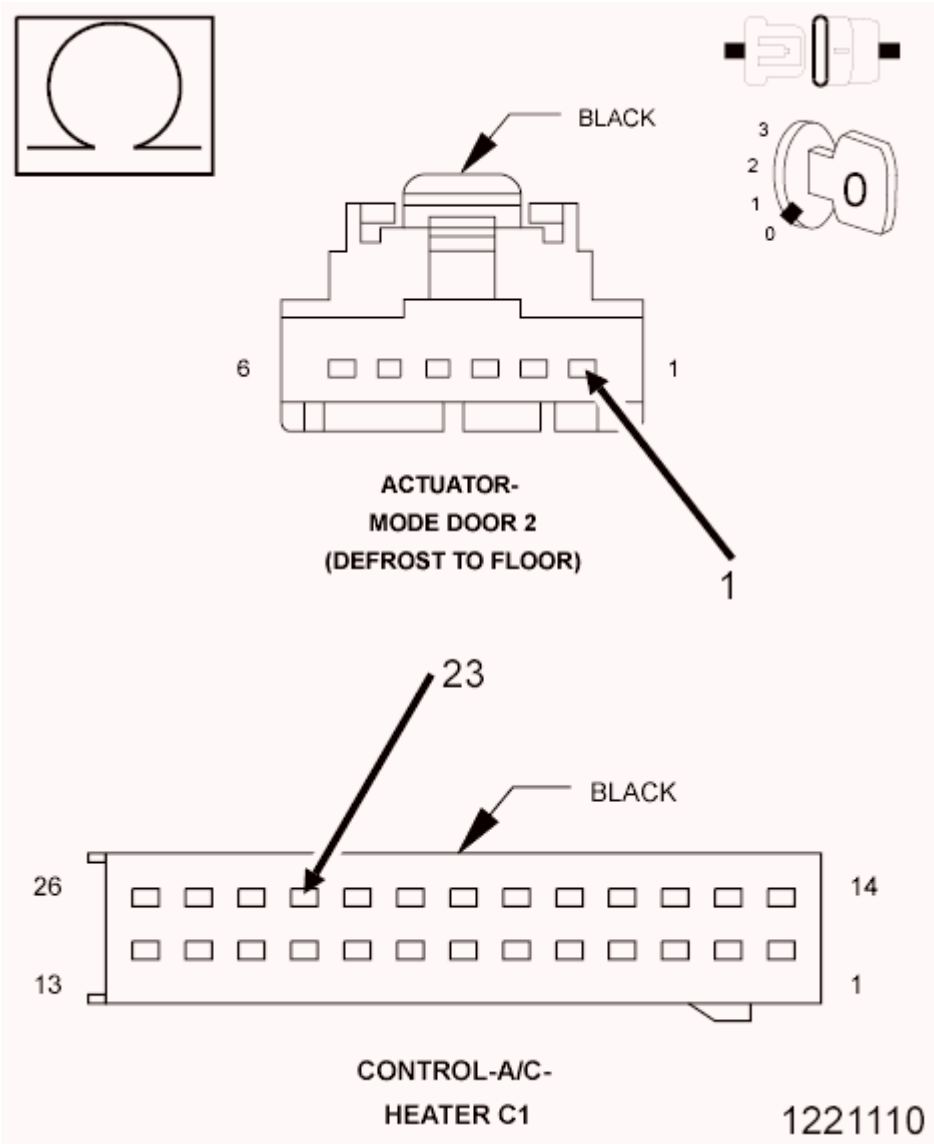

Fig. 43: Checking Common Door Driver Circuit For An Open
Courtesy of CHRYSLER GROUP, LLC

1. Measure the resistance of the (C807) Common Door Driver 2 circuit between the A/C Heater Control C1 harness connector and the Mode Door 2 (Defrost/Floor) Actuator harness connector.

   Is the resistance above 5.0 Ohms?

   Yes

   - Repair the (C807) Common Door Driver 2 circuit for an open.
   - Perform HVAC VERIFICATION TEST. Refer to **HVAC VERIFICATION TEST**.

   No

- Replace the Blend Door (Driver) Actuator in accordance with the Service Information.
- Perform HVAC VERIFICATION TEST. Refer to **HVAC VERIFICATION TEST**.

6. **CHECK THE WIRING AND CONNECTORS**
    1. The conditions necessary to set the DTC are not present at this time.
    2. With the scan tool, check the Environmental Data to help identify the conditions in which the DTC was set.
    3. Using the schematics as a guide, inspect the wiring and connectors specific to this circuit.
    4. Check for an intermittent condition by inspecting the related wiring harness for chafed, pierced, pinched, partially broken wires.
    5. Check the connectors for broken, bent, pushed out, spread, corroded, or contaminated terminals.
    6. Wiggle the wiring and connectors while checking for shorted and open circuits.

    Were there any problems found?

    Yes

    - Repair as necessary.
    - Perform HVAC VERIFICATION TEST. Refer to **HVAC VERIFICATION TEST**.

    No

    - Test complete.

B109F-PANEL MODE DOOR 2 TRAVEL RANGE TOO SMALL

For a complete wiring diagram, **refer to appropriate SYSTEM WIRING DIAGRAMS article** .

THEORY OF OPERATION

After the initial installation of the A/C Heater Control, the controller is calibrated to each individual blend/mode door actuator. These calibrations are stored as in the number of pulses it takes to move the door from one stop to another. The A/C Heater Control drives the Door Actuators by the use of Door Driver circuit and a Common Door Driver circuit and monitors all door actuator pulses to detect door movement in both directions. Most of the door actuators share a common door driver circuit but each door actuator has its own unique driver circuit. Due to shared circuitry, similar DTC's can set at the same time for multiple actuators depending upon the type of circuit malfunction, its location, and the direction the actuator is moving when the malfunction is present.

WHEN MONITORED:

When ever an Actuator Calibration Test is performed.

SET CONDITION:

The A/C Heater Control uses a pulse feedback to the controller to detect the total door movement range. If the amount of pulses required to move the door completely in both directions is less than what the controller has

stored in its memory, this DTC will set. If an Actuator Calibration Test is performed and the A/C Heater Control detects a valid range of the door movement span in both directions, the DTC will change from Active to Stored and will stay in the controllers memory for 100 ignition cycles.

POSSIBLE CAUSES

Possible Causes
RELATED DTC's PRESENT
MODE DOOR 2 (DEFROST/FLOOR) BINDING
MODE DOOR 2 (DEFROST/FLOOR) ACTUATOR
A/C HEATER CONTROL

Always perform the HVAC Pre-Diagnostic Troubleshooting procedure before proceeding. Refer to HVAC PRE-DIAGNOSTIC TROUBLESHOOTING PROCEDURE.

DIAGNOSTIC TEST

1. **CHECK FOR RELATED DTC's**
    1. Ignition on, engine not running.
    2. With the scan tool, read HVAC DTC's.

    Are there any Door Control - Circuit Open or Door Control - Performance or Incorrect Operation DTC's present?

    Yes

    - Refer to **DIAGNOSIS AND TESTING** and perform the appropriate diagnostic procedure.

    No

    - Go To 2.
2. **CHECK IF DTC IS ACTIVE**
    1. Ignition on, engine not running.
    2. With the scan tool, read HVAC DTC's.

    Is this DTC active?

    Yes

    - Go To 4.

    No

    - Go To 3.
3. **PERFORM HVAC ACTUATOR CALIBRATION TEST**

1. With the scan tool, perform the HVAC Actuator Calibration Test.

   Did this DTC change from Stored to Active while performing the HVAC Actuator Calibration Test?

   Yes

   - Go To 4.

   No

   - Go To 6.

4. **CHECK THE MODE DOOR 2 (DEFROST/FLOOR)**
   1. Remove the Mode Door 2 (Defrost/Floor) Actuator and check the Mode Door 2 for binding and full travel.

      Were there any problems found?

      Yes

      - Repair or replace the Mode Door 2 (Defrost/Floor) as necessary in accordance with the Service Information.
      - Perform HVAC VERIFICATION TEST. Refer to **HVAC VERIFICATION TEST**.

      No

      - Go To 5.

5. **CHECK THE MODE DOOR 2 (DEFROST/FLOOR) ACTUATOR**
   1. Replace the Mode Door 2 (Defrost/Floor) Actuator in accordance with the Service Information.
   2. With the scan tool, erase HVAC DTC's and perform the HVAC Actuator Calibration Test.

      Did this DTC reset?

      Yes

      - Replace and program the A/C Heater Control in accordance with the Service Information.
      - Perform HVAC VERIFICATION TEST. Refer to **HVAC VERIFICATION TEST**.

      No

      - Test complete.
      - Perform HVAC VERIFICATION TEST. Refer to **HVAC VERIFICATION TEST**.

6. **CHECK THE WIRING AND CONNECTORS**
   1. The conditions necessary to set the DTC are not present at this time.

2. Using the schematics as a guide, inspect the wiring and connectors specific to this circuit.
3. Check for an intermittent condition by inspecting the related wiring harness for chafed, pierced, pinched, partially broken wires.
4. Check the connectors for broken, bent, pushed out, spread, corroded, or contaminated terminals.
5. Wiggle the wiring and connectors while checking for shorted and open circuits.
6. With the scan tool, check the Environmental Data to help identify the conditions in which the DTC was set.

   Were there any problems found?

   Yes

   - Repair as necessary.
   - Perform HVAC VERIFICATION TEST. Refer to **HVAC VERIFICATION TEST**.

   No

   - Test complete.

B10A0-PANEL MODE DOOR 2 TRAVEL RANGE TOO LARGE

For a complete wiring diagram, **refer to appropriate SYSTEM WIRING DIAGRAMS article** .

THEORY OF OPERATION

After the initial installation of the A/C Heater Control, the controller is calibrated to each individual blend/mode door actuator. These calibrations are stored as in the number of pulses it takes to move the door from one stop to another. The A/C Heater Control drives the Door Actuators by the use of Door Driver circuit and a Common Door Driver circuit and monitors all door actuator pulses to detect door movement in both directions. Most of the door actuators share a common door driver circuit but each door actuator has its own unique driver circuit. Due to shared circuitry, similar DTC's can set at the same time for multiple actuators depending upon the type of circuit malfunction, its location, and the direction the actuator is moving when the malfunction is present.

WHEN MONITORED:

When ever an Actuator Calibration Test is performed.

SET CONDITION:

The A/C Heater Control uses a pulse feedback to the controller to detect the total door movement range. If the amount of pulses required to move the door completely in both directions is greater than what the controller has stored in its memory, this DTC will set. If an Actuator Calibration Test is performed and the A/C Heater Control detects a valid range of the door movement span in both directions, the DTC will change from Active to Stored and will stay in the controllers memory for 100 ignition cycles.

POSSIBLE CAUSES

Possible Causes
RELATED DTC's PRESENT
RECIRCULATION DOOR STOPS
MODE DOOR 2 (DEFROST/FLOOR)
MODE DOOR 2 (DEFROST/FLOOR) ACTUATOR
A/C HEATER CONTROL

Always perform the HVAC Pre-Diagnostic Troubleshooting procedure before proceeding. Refer to HVAC PRE-DIAGNOSTIC TROUBLESHOOTING PROCEDURE.

DIAGNOSTIC TEST

1. **CHECK FOR RELATED DTC's**
    1. Ignition on, engine not running.
    2. With the scan tool, read HVAC DTC's.

    Are there any Door Control - Circuit Open or Door Control - Performance or Incorrect Operation DTC's present?

    Yes

    - Refer to **DIAGNOSIS AND TESTING** and perform the appropriate diagnostic procedure.

    No

    - Go To 2.
2. **CHECK IF DTC IS ACTIVE**
    1. Ignition on, engine not running.
    2. With the scan tool, read HVAC DTC's.

    Is this DTC active?

    Yes

    - Go To 4.

    No

    - Go To 3.
3. **PERFORM HVAC ACTUATOR CALIBRATION TEST**
    1. With the scan tool, perform the HVAC Actuator Calibration Test.

    Did this DTC change from Stored to Active while performing the HVAC Actuator Calibration Test?

Yes

- Go To 4.

No

- Go To 6.

4. **CHECK THE MODE DOOR 2 (DEFROST/FLOOR)**
    1. Remove the Mode Door 2 (Defrost/Floor) Actuator and check the Mode Door 2 stops, linkage (stripped or cracked) and door.

    Were there any problems found?

    Yes

    - Repair or replace the Mode Door 2 (Defrost/Floor) as necessary in accordance with the Service Information.
    - Perform HVAC VERIFICATION TEST. Refer to **HVAC VERIFICATION TEST**.

    No

    - Go To 5.

5. **CHECK THE MODE DOOR 2 (DEFROST/FLOOR) ACTUATOR**
    1. Replace the Mode Door 2 (Defrost/Floor) Actuator in accordance with the Service Information.
    2. With the scan tool, erase HVAC DTC's and perform the HVAC Actuator Calibration Test.

    Did this DTC reset?

    Yes

    - Replace and program the A/C Heater Control in accordance with the Service Information.
    - Perform HVAC VERIFICATION TEST. Refer to **HVAC VERIFICATION TEST**.

    No

    - Test complete.
    - Perform HVAC VERIFICATION TEST. Refer to **HVAC VERIFICATION TEST**.

6. **CHECK THE WIRING AND CONNECTORS**
    1. The conditions necessary to set the DTC are not present at this time.
    2. Using the schematics as a guide, inspect the wiring and connectors specific to this circuit.
    3. Check for an intermittent condition by inspecting the related wiring harness for chafed, pierced, pinched, partially broken wires.
    4. Check the connectors for broken, bent, pushed out, spread, corroded, or contaminated terminals.
    5. Wiggle the wiring and connectors while checking for shorted and open circuits.

6. With the scan tool, check the Environmental Data to help identify the conditions in which the DTC was set.

   Were there any problems found?

   Yes

   - Repair as necessary.
   - Perform HVAC VERIFICATION TEST. Refer to **HVAC VERIFICATION TEST**.

   No

   - Test complete.

B10A5-LEFT BLEND DOOR 1 CONTROL CIRCUIT OPEN

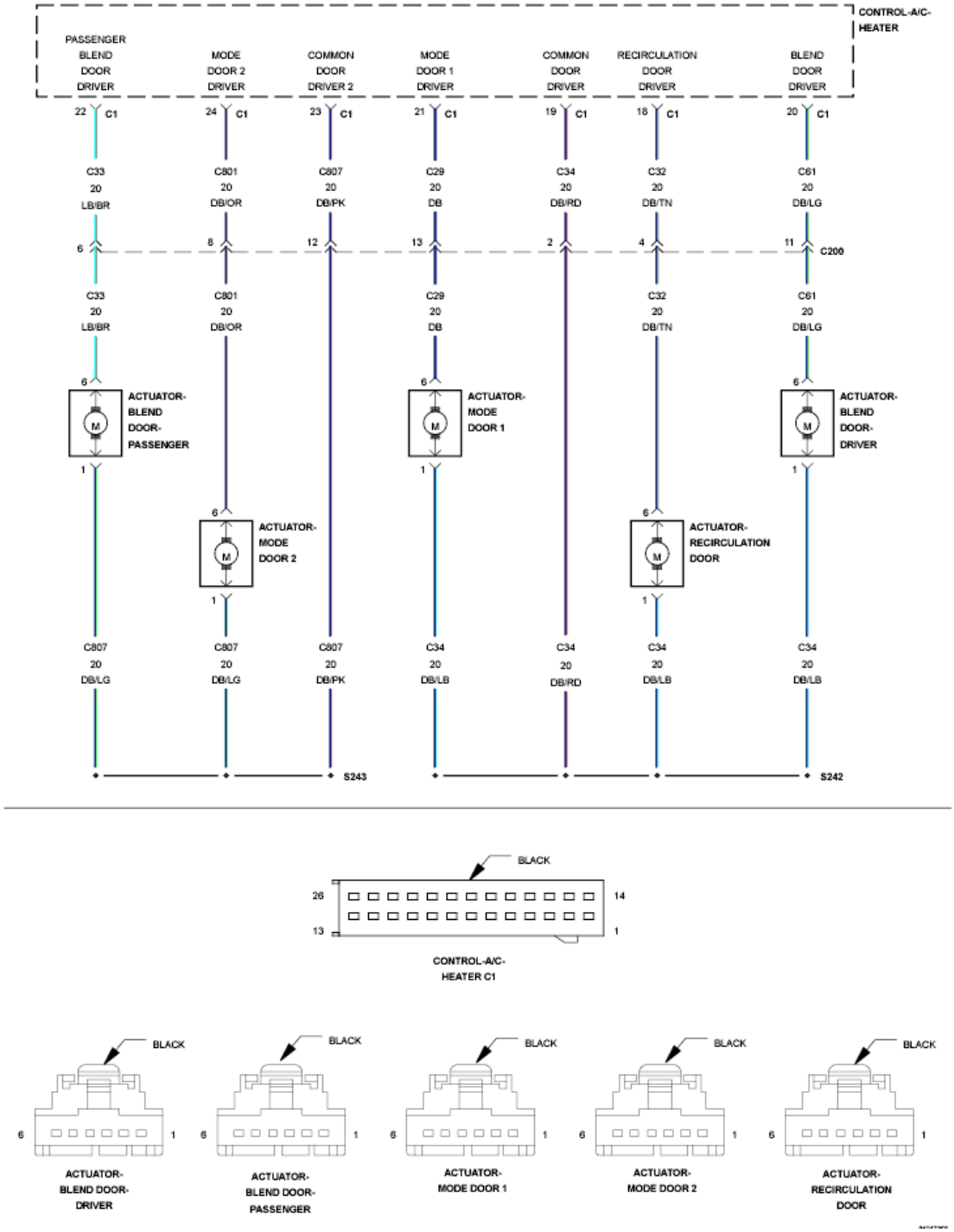

Fig. 44: Mode Door Control Wiring Diagram
Courtesy of CHRYSLER GROUP, LLC

For a complete wiring diagram, **refer to appropriate SYSTEM WIRING DIAGRAMS article** .

THEORY OF OPERATION

After the initial installation of the A/C Heater Control, the controller is calibrated to each individual blend/mode

door actuator. These calibrations are stored as in the number of pulses it takes to move the door from one stop to another. The A/C Heater Control drives the Door Actuators by the use of Door Driver circuit and a Common Door Driver circuit and monitors all door actuator pulses to detect door movement in both directions. Most of the door actuators share a common door driver circuit but each door actuator has its own unique driver circuit. Due to shared circuitry, similar DTC's can set at the same time for multiple actuators depending upon the type of circuit malfunction, its location, and the direction the actuator is moving when the malfunction is present.

WHEN MONITORED:

With the ignition on and an actuator movement is commanded by the A/C Heater Control.

SET CONDITION:

If an actuator move is commanded by the A/C Heater Control and there are no feedback pulses detected in that direction, the controller commands the actuator in the opposite direction. If no feedback pulses are detected in either direction this DTC will set. If the A/C Heater Control detects a valid pulse feedback in both directions, the DTC will change from Active to Stored and will stay in the controllers memory for 100 ignition cycles.

POSSIBLE CAUSES

Possible Causes
(C61) BLEND DOOR DRIVER CIRCUIT OPEN
(C34) COMMON DOOR DRIVER CIRCUIT OPEN
BLEND DOOR ACTUATOR (DRIVER)
A/C HEATER CONTROL

Always perform the HVAC Pre-Diagnostic Troubleshooting procedure before proceeding. Refer to HVAC PRE-DIAGNOSTIC TROUBLESHOOTING PROCEDURE.

DIAGNOSTIC TEST

1. **CHECK FOR OTHER DTC's**
    1. Ignition on, engine not running.
    2. With the scan tool, read HVAC DTC's.

    Is there more than one Door Control - Circuit Open DTC present?

    Yes

    - Repair the (C34) Common Door Driver circuit for an open.

    NOTE: **Due to the common shared driver circuit, probable area of concern is the splice, or from the splice to the A/C Heater Control harness connector. Make sure to check all inline connectors.**

No

- Go To 2.

2. **CHECK IF DTC IS ACTIVE**
    1. Ignition on, engine not running.
    2. With the scan tool, read HVAC DTC's.

    Is this DTC active?

    Yes

    - Go To 4.

    No

    - Go To 3.

3. **PERFORM HVAC ACTUATOR CALIBRATION TEST**
    1. With the scan tool, perform the HVAC Actuator Calibration Test.

    Did this DTC change from Stored to Active while performing the HVAC Actuator Calibration Test?

    Yes

    - Go To 4.

    No

    - Go To 7.

4. **CHECK THE BLEND DOOR ACTUATOR**

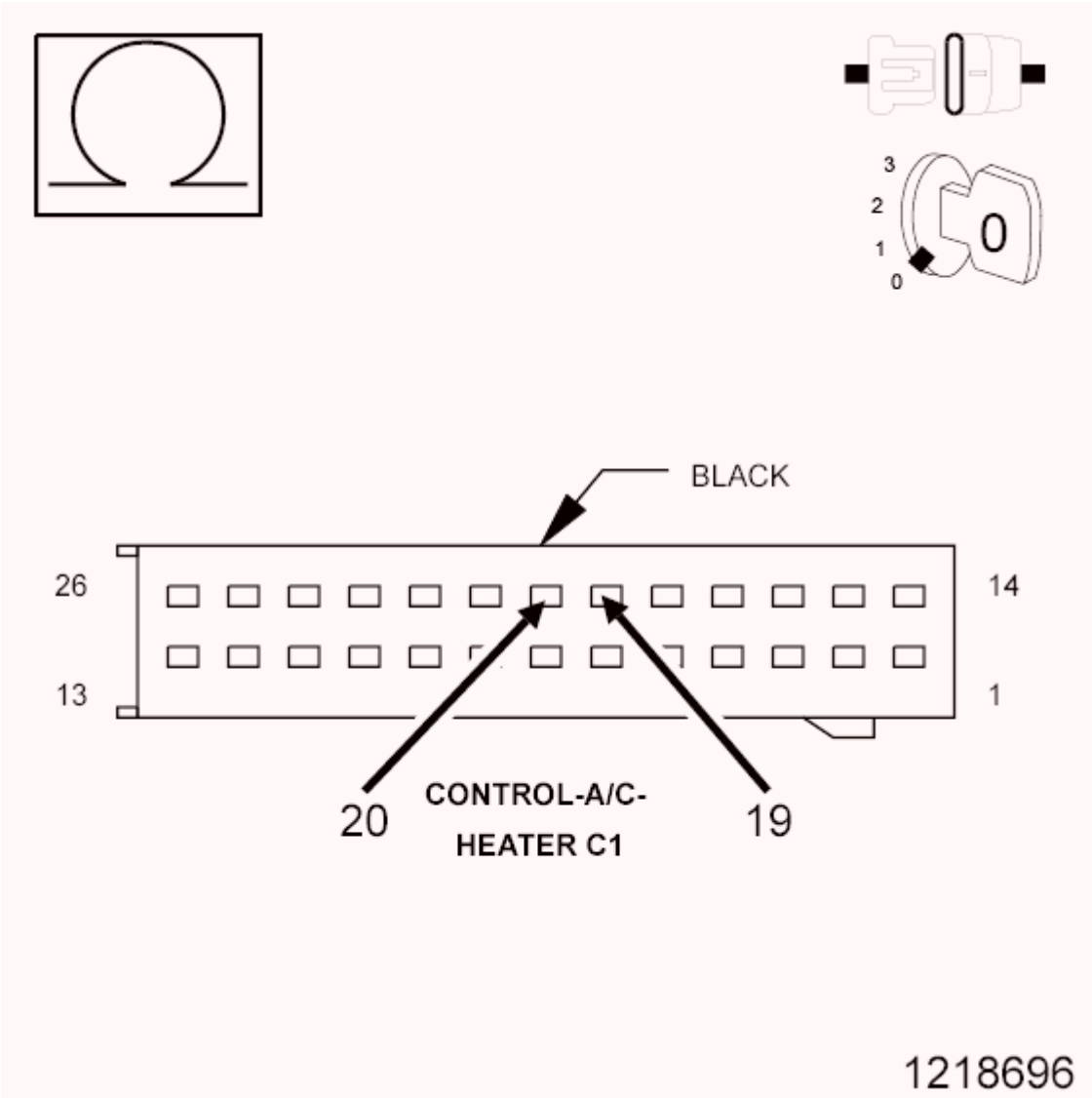

Fig. 45: Checking The Blend Door Actuator
Courtesy of CHRYSLER GROUP, LLC

1. Turn the ignition off to the lock position.
2. Disconnect the A/C Heater Control C1 harness connector.
3. Measure the resistance between the (C61) Blend Door Driver circuit and the (C34) Common Door Driver circuit.

   Is the resistance 38.0 Ohms (± 5.0 Ohms)?

   Yes

   - Replace and program the A/C Heater Control in accordance with the Service Information.
   - Perform HVAC VERIFICATION TEST. Refer to **HVAC VERIFICATION TEST**.

No

- Go To 5.

5. **CHECK THE (C61) BLEND DOOR DRIVER CIRCUIT FOR AN OPEN**

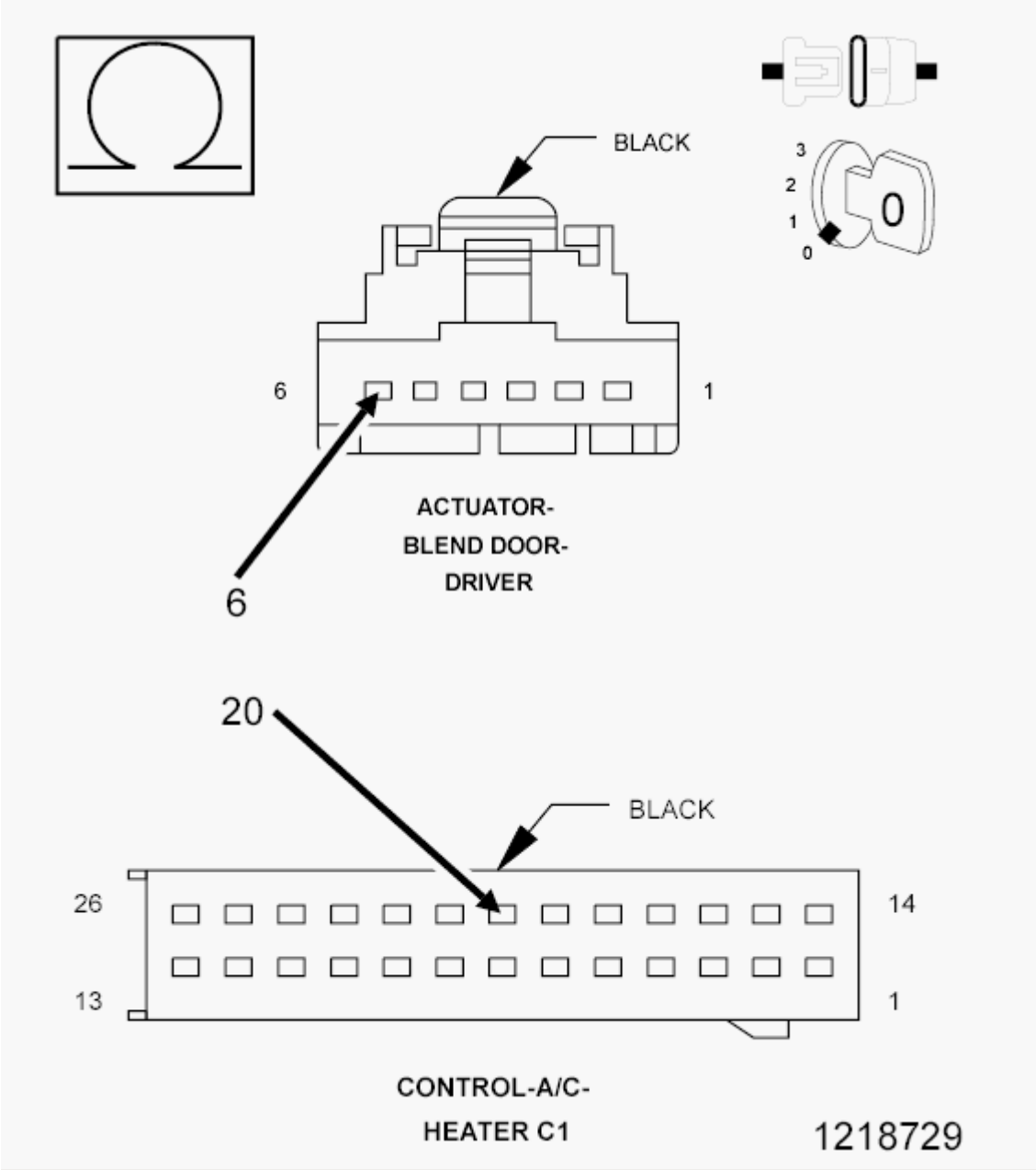

Fig. 46: Checking Blend Door Driver Circuit For An Open
Courtesy of CHRYSLER GROUP, LLC

1. Turn the ignition off to the lock position.
2. Disconnect the Blend Door Driver Actuator harness connector.
3. Measure the resistance of the (C61) Blend Door Driver circuit between the A/C Heater Control C1

harness connector and the Blend Door Actuator harness connector.

Is the resistance above 5.0 Ohms?

Yes

- Repair the (C61) Blend Door Driver circuit for an open.
- Perform HVAC VERIFICATION TEST. Refer to **HVAC VERIFICATION TEST**.

No

- Go To 6.

6. **CHECK THE (C34) COMMON DOOR DRIVER CIRCUIT FOR AN OPEN**

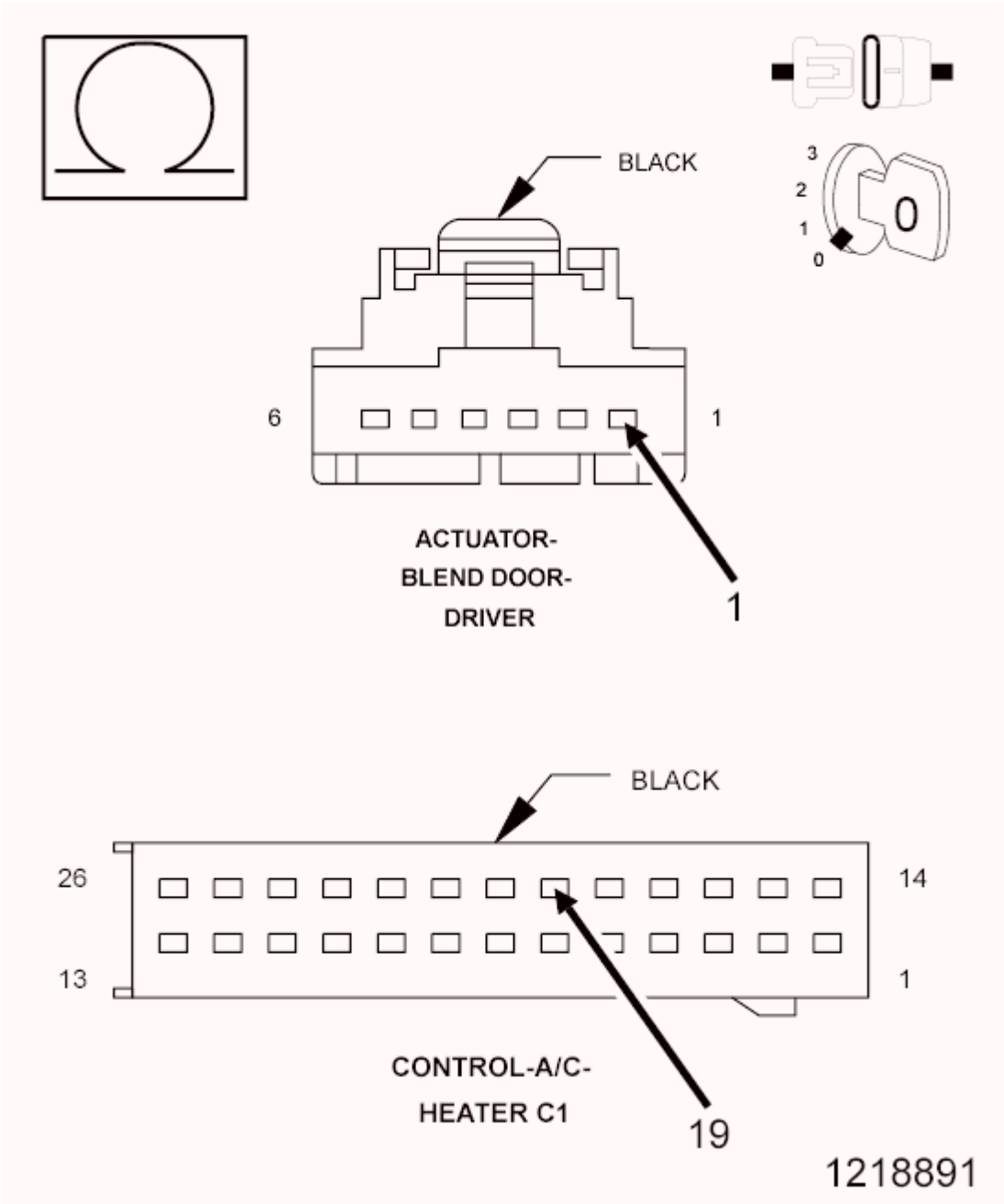

Fig. 47: Checking Common Door Driver Circuit For An Open
Courtesy of CHRYSLER GROUP, LLC

1. Measure the resistance of the (C34) Common Door Driver circuit between the A/C Heater Control C1 harness connector and the Blend Door Actuator harness connector.

   Is the resistance above 5.0 Ohms?

   Yes

   - Repair the (C34) Common Door Driver circuit for an open.

NOTE: **Probable location is the wiring harness splice or the wiring between the splice and the door actuator.**

- Perform HVAC VERIFICATION TEST. Refer to **HVAC VERIFICATION TEST**.

No

- Replace the Blend Door Actuator in accordance with the Service Information.
- Perform HVAC VERIFICATION TEST. Refer to **HVAC VERIFICATION TEST**.

7. **CHECK THE WIRING AND CONNECTORS**
   1. The conditions necessary to set the DTC are not present at this time.
   2. Using the schematics as a guide, inspect the wiring and connectors specific to this circuit.
   3. Check for an intermittent condition by inspecting the related wiring harness for chafed, pierced, pinched, partially broken wires.
   4. Check the connectors for broken, bent, pushed out, spread, corroded, or contaminated terminals.
   5. Wiggle the wiring and connectors while checking for shorted and open circuits.
   6. With the scan tool, check the Environmental Data to help identify the conditions in which the DTC was set.

   Were there any problems found?

   Yes

   - Repair as necessary.
   - Perform HVAC VERIFICATION TEST. Refer to **HVAC VERIFICATION TEST**.

   No

   - Test complete.

B10A6-LEFT BLEND DOOR 1 TRAVEL TOO SMALL

For a complete wiring diagram, **refer to appropriate SYSTEM WIRING DIAGRAMS article** .

THEORY OF OPERATION

After the initial installation of the A/C Heater Control, the controller is calibrated to each individual blend/mode door actuator. These calibrations are stored as in the number of pulses it takes to move the door from one stop to another. The A/C Heater Control drives the Door Actuators by the use of Door Driver circuit and a Common Door Driver circuit and monitors all door actuator pulses to detect door movement in both directions. Most of the door actuators share a common door driver circuit but each door actuator has its own unique driver circuit. Due to shared circuitry, similar DTC's can set at the same time for multiple actuators depending upon the type of circuit malfunction, its location, and the direction the actuator is moving when the malfunction is present.

WHEN MONITORED:

When ever an Actuator Calibration Test is performed.

SET CONDITION:

The A/C Heater Control uses a pulse feedback to the controller to detect the total door movement range. If the amount of pulses required to move the door completely in both directions is less than what the controller has stored in its memory, this DTC will set. If an Actuator Calibration Test is performed and the A/C Heater Control detects a valid range of the door movement span in both directions, the DTC will change from Active to Stored and will stay in the controllers memory for 100 ignition cycles.

POSSIBLE CAUSES

Possible Causes
RELATED DTC's PRESENT
BLEND DOOR BINDING
BLEND DOOR ACTUATOR
A/C HEATER CONTROL

Always perform the HVAC Pre-Diagnostic Troubleshooting procedure before proceeding. Refer to HVAC PRE-DIAGNOSTIC TROUBLESHOOTING PROCEDURE.

DIAGNOSTIC TEST

1. **CHECK FOR RELATED DTC's**
    1. Ignition on, engine not running.
    2. With the scan tool, read HVAC DTC's.

    Are there any Door Control - Circuit Open or Door Control - Performance or Incorrect Operation DTC's present?

    Yes

    - Refer to **DIAGNOSIS AND TESTING** and perform the appropriate diagnostic procedure.

    No

    - Go To 2.
2. **CHECK IF DTC IS ACTIVE**
    1. Ignition on, engine not running.
    2. With the scan tool, read HVAC DTC's.

    Is this DTC active?

    Yes

- Go To 4.

No

- Go To 3.

3. **PERFORM HVAC ACTUATOR CALIBRATION TEST**
    1. With the scan tool, perform the HVAC Actuator Calibration Test.

       Did this DTC change from Stored to Active while performing the HVAC Actuator Calibration Test?

       Yes

       - Go To 4.

       No

       - Go To 6.
4. **CHECK THE BLEND DOOR**
    1. Remove the Blend Door Actuator and check the Blend Door (Driver) for binding and full travel.

       Is there any problem with the Blend Door movement?

       Yes

       - Repair or replace the Blend Door as necessary in accordance with the Service Information.
       - Perform HVAC VERIFICATION TEST. Refer to **HVAC VERIFICATION TEST**.

       No

       - Go To 5.
5. **CHECK THE BLEND DOOR ACTUATOR**
    1. Replace the Blend Door Actuator in accordance with the Service Information.
    2. With the scan tool, erase HVAC DTC's and perform the HVAC Actuator Calibration Test.

       Did this DTC reset?

       Yes

       - Replace and program the A/C Heater Control in accordance with the Service Information.
       - Perform HVAC VERIFICATION TEST. Refer to **HVAC VERIFICATION TEST**.

       No

       - Test complete.

- Perform HVAC VERIFICATION TEST. Refer to **HVAC VERIFICATION TEST**.

6. **CHECK THE WIRING AND CONNECTORS**
    1. The conditions necessary to set the DTC are not present at this time.
    2. Using the schematics as a guide, inspect the wiring and connectors specific to this circuit.
    3. Check for an intermittent condition by inspecting the related wiring harness for chafed, pierced, pinched, partially broken wires.
    4. Check the connectors for broken, bent, pushed out, spread, corroded, or contaminated terminals.
    5. Wiggle the wiring and connectors while checking for shorted and open circuits.
    6. With the scan tool, check the Environmental Data to help identify the conditions in which the DTC was set.

    Were there any problems found?

    Yes

    - Repair as necessary.
    - Perform HVAC VERIFICATION TEST. Refer to **HVAC VERIFICATION TEST**.

    No

    - Test complete.

B10A7-LEFT BLEND DOOR 1 TRAVEL TOO LARGE

For a complete wiring diagram, **refer to appropriate SYSTEM WIRING DIAGRAMS article** .

THEORY OF OPERATION

After the initial installation of the A/C Heater Control, the controller is calibrated to each individual blend/mode door actuator. These calibrations are stored as in the number of pulses it takes to move the door from one stop to another. The A/C Heater Control drives the Door Actuators by the use of Door Driver circuit and a Common Door Driver circuit and monitors all door actuator pulses to detect door movement in both directions. Most of the door actuators share a common door driver circuit but each door actuator has its own unique driver circuit. Due to shared circuitry, similar DTC's can set at the same time for multiple actuators depending upon the type of circuit malfunction, its location, and the direction the actuator is moving when the malfunction is present.

WHEN MONITORED:

When ever an Actuator Calibration Test is performed.

SET CONDITION:

The A/C Heater Control uses a pulse feedback to the controller to detect the total door movement range. If the amount of pulses required to move the door completely in both directions is greater than what the controller has stored in its memory, this DTC will set. If an Actuator Calibration Test is performed and the A/C Heater

Control detects a valid range of the door movement span in both directions, the DTC will change from Active to Stored and will stay in the controllers memory for 100 ignition cycles.

POSSIBLE CAUSES

Possible Causes
RELATED DTC's PRESENT
BLEND DOOR STOPS
BLEND DOOR
BLEND DOOR ACTUATOR
A/C HEATER CONTROL

Always perform the HVAC Pre-Diagnostic Troubleshooting procedure before proceeding. Refer to HVAC PRE-DIAGNOSTIC TROUBLESHOOTING PROCEDURE.

DIAGNOSTIC TEST

1. **CHECK FOR RELATED DTC's**
    1. Ignition on, engine not running.
    2. With the scan tool, read HVAC DTC's.

    Are there any Door Control - Circuit Open or Door Control - Performance or Incorrect Operation DTC's present?

    Yes

    - Refer to **DIAGNOSIS AND TESTING** and perform the appropriate diagnostic procedure.

    No

    - Go To 2.
2. **CHECK IF DTC IS ACTIVE**
    1. Ignition on, engine not running.
    2. With the scan tool, read HVAC DTC's.

    Is this DTC active?

    Yes

    - Go To 4.

    No

    - Go To 3.
3. **PERFORM HVAC ACTUATOR CALIBRATION TEST**

1. With the scan tool, perform the HVAC Actuator Calibration Test.

   Did this DTC change from Stored to Active while performing the HVAC Actuator Calibration Test?

   Yes

   - Go To 4.

   No

   - Go To 6.

4. **CHECK THE BLEND DOOR**
   1. Remove the Blend Door Actuator (Driver) and check the Blend Door stops, linkage (stripped or cracked) and door.

      Was there any problems with the Blend Door or movement?

      Yes

      - Repair or replace the Blend Door as necessary in accordance with the Service Information.
      - Perform HVAC VERIFICATION TEST. Refer to **HVAC VERIFICATION TEST**.

      No

      - Go To 5.

5. **CHECK THE BLEND DOOR ACTUATOR**
   1. Replace the Blend Door Actuator in accordance with the Service Information.
   2. With the scan tool, erase HVAC DTC's and perform the HVAC Actuator Calibration Test.

      Did this DTC reset?

      Yes

      - Replace and program the A/C Heater Control in accordance with the Service Information.
      - Perform HVAC VERIFICATION TEST. Refer to **HVAC VERIFICATION TEST**.

      No

      - Test complete.
      - Perform HVAC VERIFICATION TEST. Refer to **HVAC VERIFICATION TEST**.

6. **CHECK THE WIRING AND CONNECTORS**
   1. The conditions necessary to set the DTC are not present at this time.
   2. Using the schematics as a guide, inspect the wiring and connectors specific to this circuit.

3. Check for an intermittent condition by inspecting the related wiring harness for chafed, pierced, pinched, partially broken wires.
4. Check the connectors for broken, bent, pushed out, spread, corroded, or contaminated terminals.
5. Wiggle the wiring and connectors while checking for shorted and open circuits.
6. With the scan tool, check the Environmental Data to help identify the conditions in which the DTC was set.

   Were there any problems found?

   Yes

   - Repair as necessary.
   - Perform HVAC VERIFICATION TEST. Refer to **HVAC VERIFICATION TEST**.

   No

   - Test complete.

B10A8-LEFT BLEND DOOR ACTUATOR PERFORMANCE

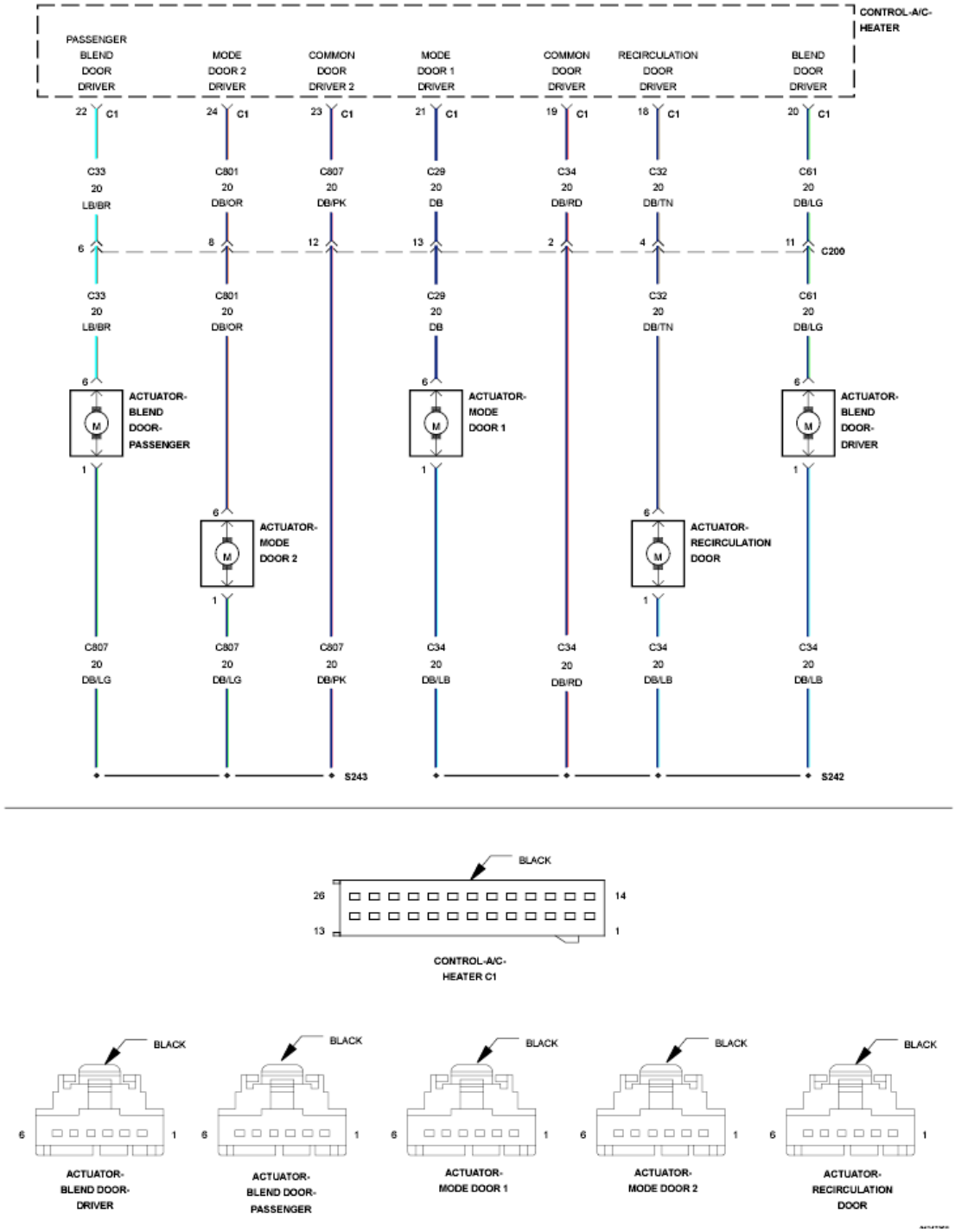

Fig. 48: Mode Door Control Wiring Diagram
Courtesy of CHRYSLER GROUP, LLC

For a complete wiring diagram, **refer to appropriate SYSTEM WIRING DIAGRAMS article** .

THEORY OF OPERATION

After the initial installation of the A/C Heater Control, the controller is calibrated to each individual blend/mode

door actuator. These calibrations are stored as in the number of pulses it takes to move the door from one stop to another. The A/C Heater Control drives the Door Actuators by the use of Door Driver circuit and a Common Door Driver circuit and monitors all door actuator pulses to detect door movement in both directions. Most of the door actuators share a common door driver circuit but each door actuator has its own unique driver circuit. Due to shared circuitry, similar DTC's can set at the same time for multiple actuators depending upon the type of circuit malfunction, its location, and the direction the actuator is moving when the malfunction is present.

WHEN MONITORED:

With the ignition on and an actuator movement is commanded by the A/C Heater Control.

SET CONDITION:

If an actuator move is commanded by the A/C Heater Control and there are no feedback pulses detected in that direction, the controller commands the actuator in the opposite direction. If feedback pulses are detected in only one direction this DTC will set. If the A/C Heater Control detects a valid pulse feedback in both directions, the DTC will change from Active to Stored and will stay in the controllers memory for 100 ignition cycles.

POSSIBLE CAUSES

Possible Causes
(C61) BLEND DOOR DRIVER CIRCUIT SHORTED TO VOLTAGE
(C61) BLEND DOOR DRIVER CIRCUIT SHORTED TO GROUND
(C34) COMMON DOOR DRIVER CIRCUIT SHORTED TO VOLTAGE
(C34) COMMON DOOR DRIVER CIRCUIT SHORTED TO GROUND
BLEND DOOR BINDING (DRIVER)
BLEND DOOR ACTUATOR (DRIVER)
A/C HEATER CONTROL

Always perform the HVAC Pre-Diagnostic Troubleshooting procedure before proceeding. Refer to HVAC PRE-DIAGNOSTIC TROUBLESHOOTING PROCEDURE.

DIAGNOSTIC TEST

1. **CHECK IF DTC IS ACTIVE**
    1. Ignition on, engine not running.
    2. With the scan tool, read HVAC DTC's.

    Is this DTC active?

    Yes

    - Go To 3.

    No

- Go To 2.

2. **PERFORM HVAC ACTUATOR CALIBRATION TEST**
    1. With the scan tool, perform the HVAC Actuator Calibration Test.

       Did this DTC change from Stored to Active while performing the HVAC Actuator Calibration Test?

       Yes

       - Go To 3.

       No

       - Go To 9.
3. **CHECK THE (C61) BLEND DOOR DRIVER CIRCUIT FOR A SHORT TO VOLTAGE**

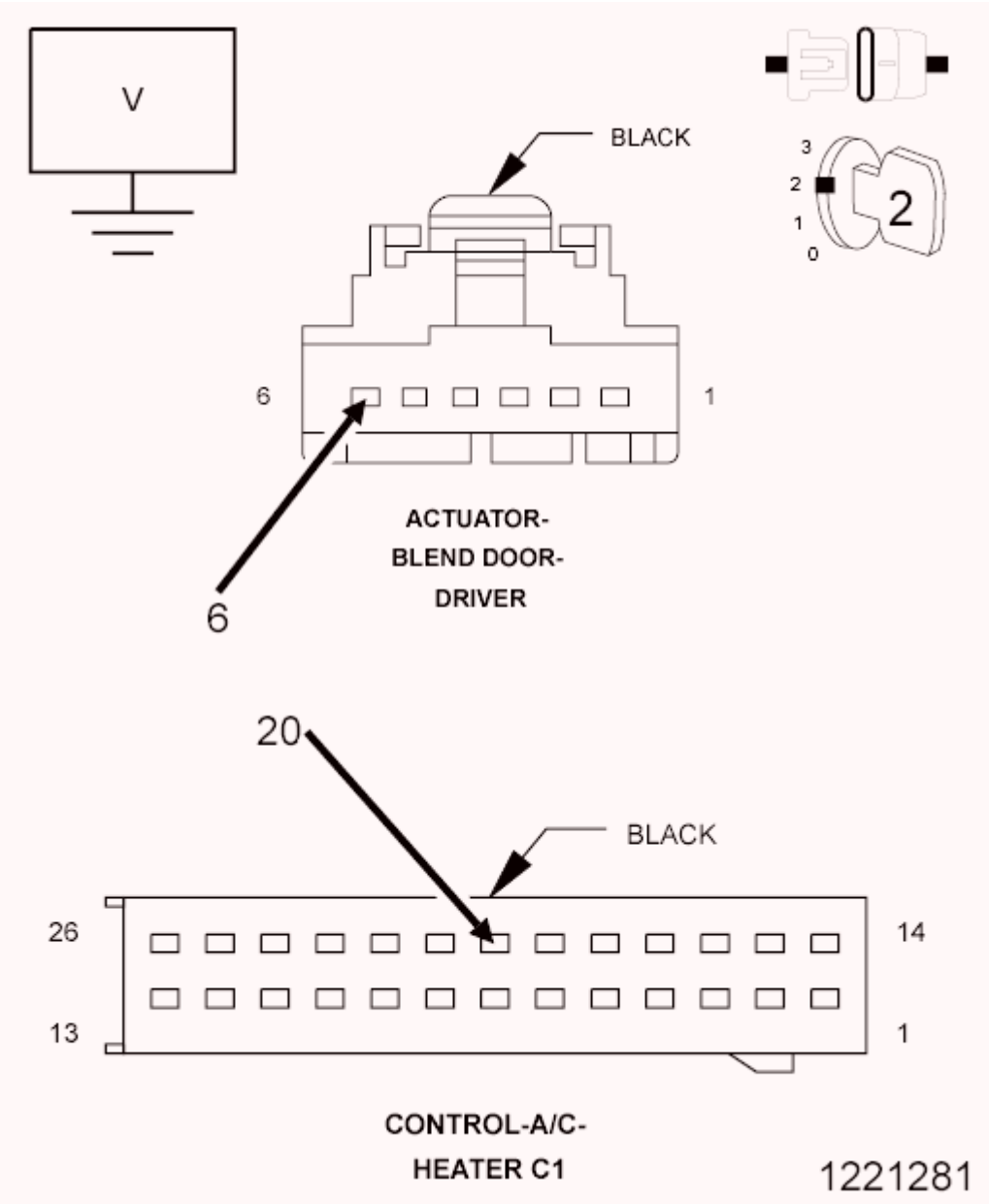

Fig. 49: Checking Blend Door Driver Circuit For A Short To Voltage
Courtesy of CHRYSLER GROUP, LLC

1. Turn the ignition off to the lock position.
2. Disconnect the A/C Heater Control C1 harness connector.
3. Disconnect the Blend Door Actuator harness connector.
4. Ignition on, engine not running.
5. Measure the voltage of the (C61) Blend Door Driver circuit.

   Is there any voltage present?

   Yes

- Repair the (C61) Blend Door Driver circuit for a short to voltage.
- Perform HVAC VERIFICATION TEST. Refer to **HVAC VERIFICATION TEST**.

No

- Go To 4.

4. **CHECK THE (C34) COMMON DOOR DRIVER CIRCUIT FOR A SHORT TO VOLTAGE**

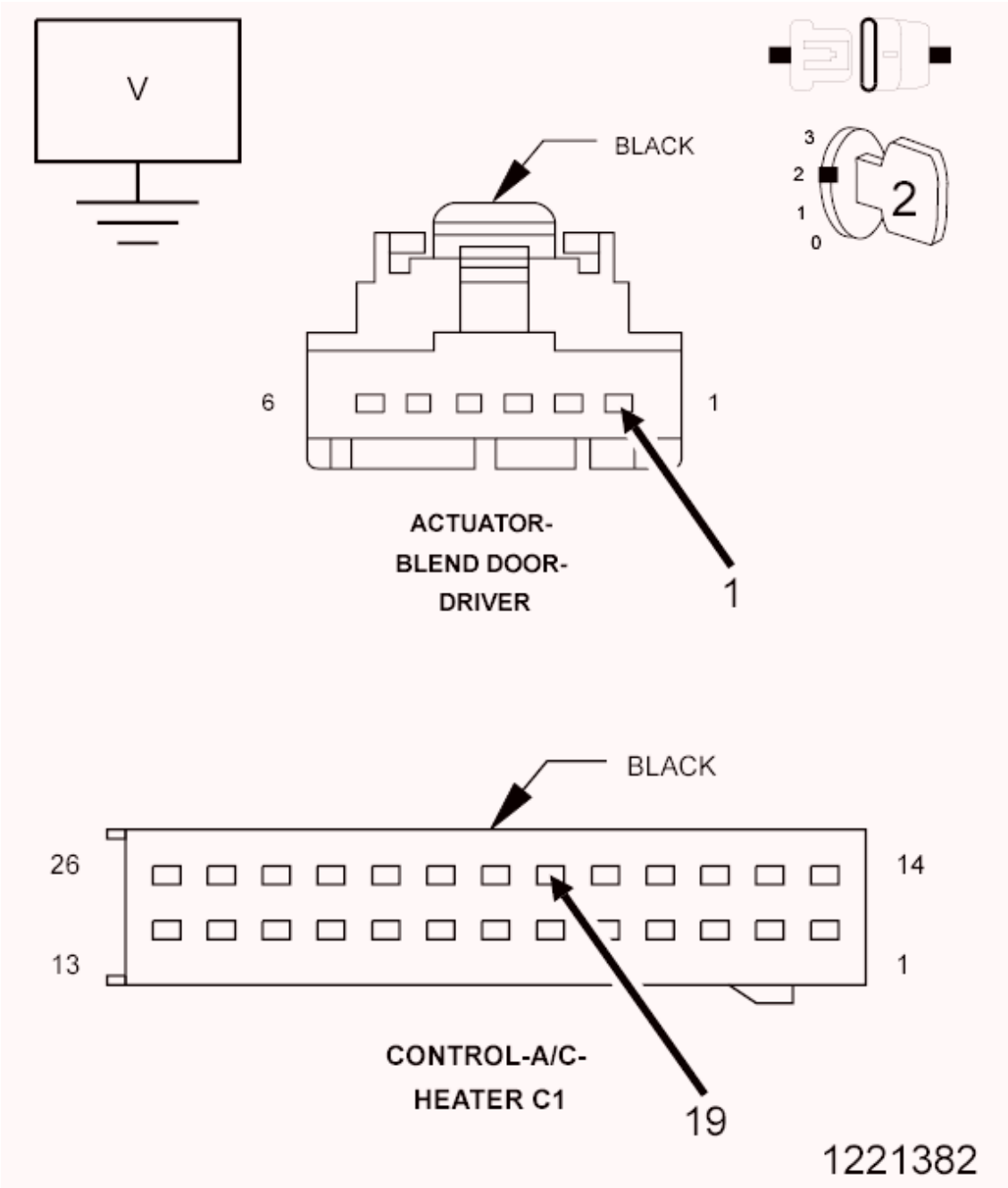

Fig. 50: Checking Common Door Driver Circuit For A Short To Voltage

Courtesy of CHRYSLER GROUP, LLC

1. Measure the voltage of the (C34) Common Door Driver circuit.

   Is there any voltage present?

   Yes

   - Repair the (C34) Common Door Driver circuit for a short to voltage.
   - Perform HVAC VERIFICATION TEST. Refer to **HVAC VERIFICATION TEST**.

   No

   - Go To 5.

5. **CHECK THE (C61) BLEND DOOR DRIVER CIRCUIT FOR A SHORT TO GROUND**

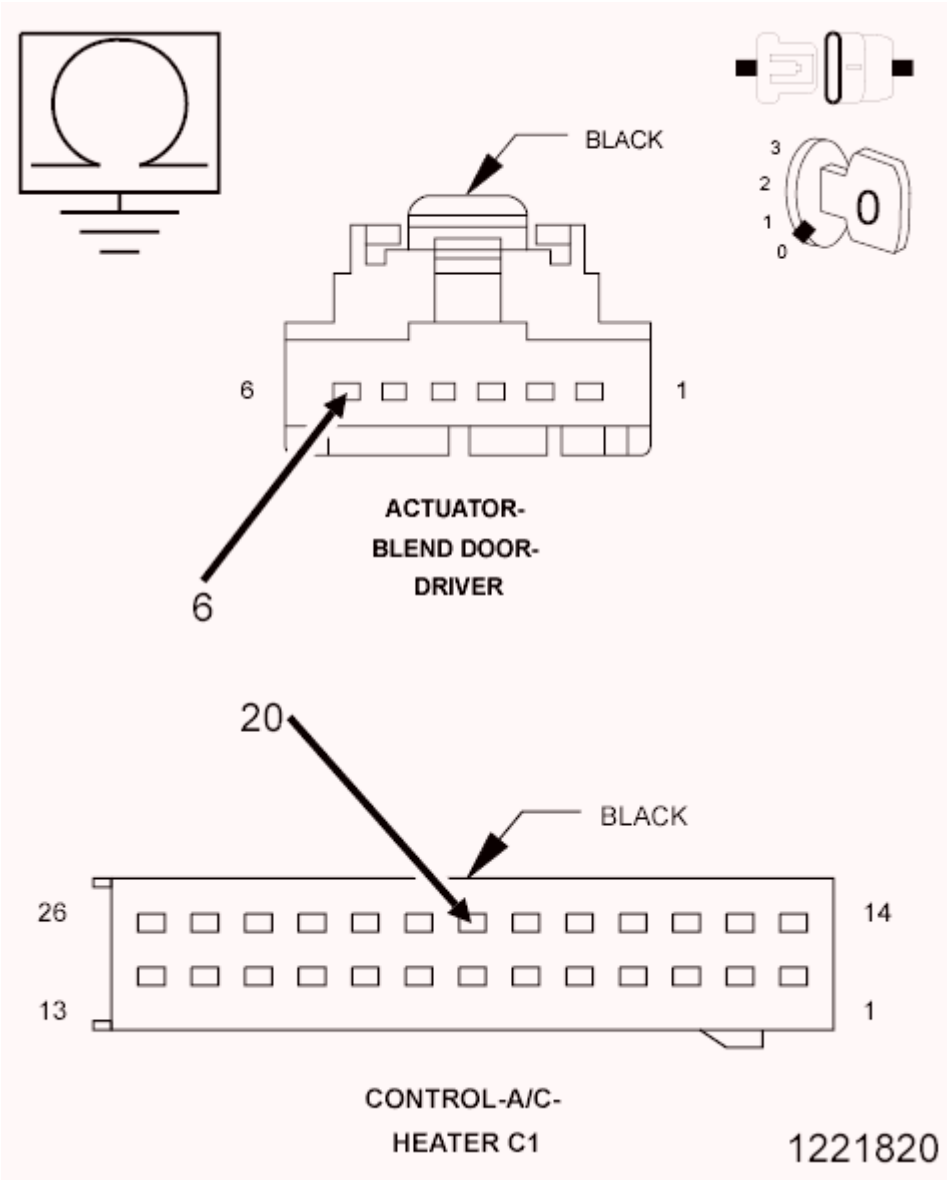

Fig. 51: Checking Blend Door Driver Circuit For A Short To Ground
Courtesy of CHRYSLER GROUP, LLC

1. Turn the ignition off to the lock position.
2. Measure the resistance between ground and the (C61) Blend Door Driver circuit.

   Is the resistance below 100k Ohms?

   Yes

   - Repair the (C61) Blend Door Driver circuit for a short to ground.
   - Perform HVAC VERIFICATION TEST. Refer to **HVAC VERIFICATION TEST**.

   No

- Go To 6.

6. **CHECK THE (C34) COMMON DOOR DRIVER CIRCUIT FOR A SHORT TO GROUND**

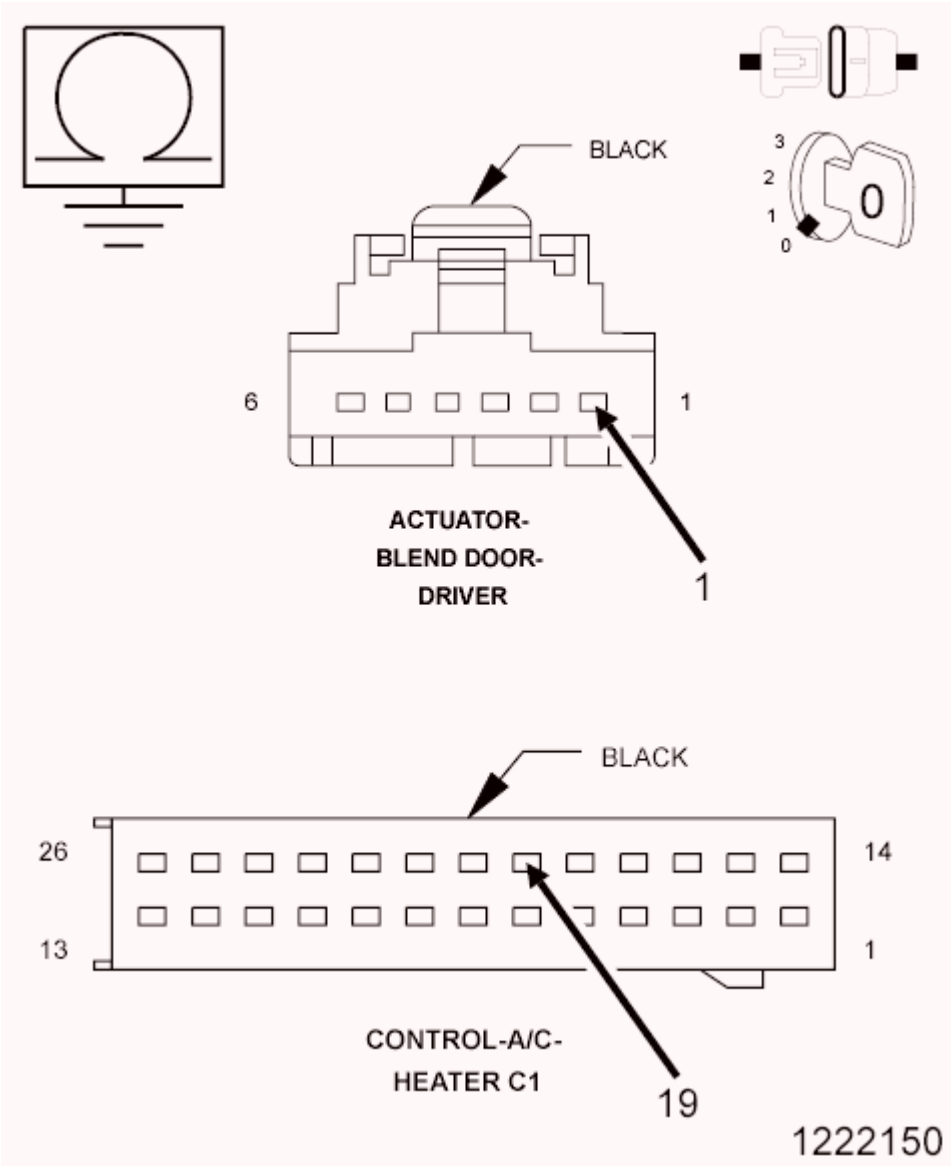

Fig. 52: Checking Common Door Driver Circuit For A Short To Ground
Courtesy of CHRYSLER GROUP, LLC

1. Measure the resistance between ground and the (C34) Common Door Driver circuit.

   Is the resistance below 100k Ohms?

   Yes

   - Repair the (C34) Common Door Driver circuit for a short to ground.
   - Perform HVAC VERIFICATION TEST. Refer to **HVAC VERIFICATION TEST**.

No

- Go To 7.

7. **CHECK THE BLEND DOOR**
    1. Remove the Blend Door Actuator (Driver) and check the Blend Door for binding and full travel.

    Were there any problems found?

    Yes

    - Repair or replace the Blend Door as necessary in accordance with the Service Information.
    - Perform HVAC VERIFICATION TEST. Refer to **HVAC VERIFICATION TEST**.

    No

    - Go To 8.

8. **CHECK THE BLEND DOOR ACTUATOR**
    1. Replace the Blend Door Actuator in accordance with the Service Information.
    2. With the scan tool, erase HVAC DTC's and perform the HVAC Actuator Calibration Test.

    Did this DTC reset?

    Yes

    - Replace and program the A/C Heater Control in accordance with the Service Information.
    - Perform HVAC VERIFICATION TEST. Refer to **HVAC VERIFICATION TEST**.

    No

    - Test complete.
    - Perform HVAC VERIFICATION TEST. Refer to **HVAC VERIFICATION TEST**.

9. **CHECK THE WIRING AND CONNECTORS**
    1. The conditions necessary to set the DTC are not present at this time.
    2. Using the schematics as a guide, inspect the wiring and connectors specific to this circuit.
    3. Check for an intermittent condition by inspecting the related wiring harness for chafed, pierced, pinched, partially broken wires.
    4. Check the connectors for broken, bent, pushed out, spread, corroded, or contaminated terminals.
    5. Wiggle the wiring and connectors while checking for shorted and open circuits.
    6. With the scan tool, check the Environmental Data to help identify the conditions in which the DTC was set.

    Were there any problems found?

Yes

- Repair as necessary.
- Perform HVAC VERIFICATION TEST. Refer to **HVAC VERIFICATION TEST**.

No

- Test complete.

B10AC-RIGHT BLEND DOOR CONTROL CIRCUIT OPEN

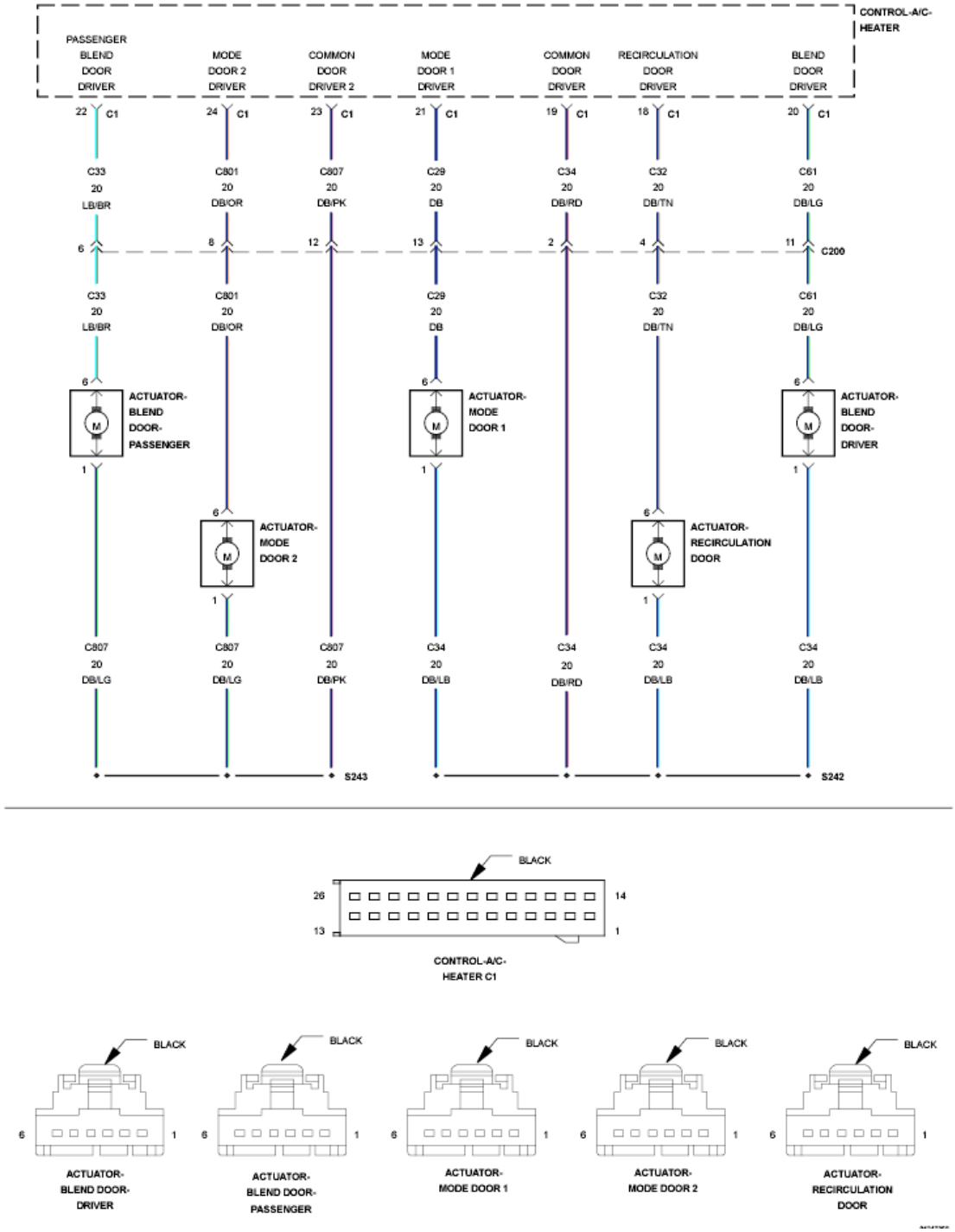

Fig. 53: Mode Door Control Wiring Diagram
Courtesy of CHRYSLER GROUP, LLC

For a complete wiring diagram, **refer to appropriate SYSTEM WIRING DIAGRAMS article** .

THEORY OF OPERATION

After the initial installation of the A/C Heater Control, the controller is calibrated to each individual blend/mode

door actuator. These calibrations are stored as in the number of pulses it takes to move the door from one stop to another. The A/C Heater Control drives the Door Actuators by the use of Door Driver circuit and a Common Door Driver circuit and monitors all door actuator pulses to detect door movement in both directions. Most of the door actuators share a common door driver circuit but each door actuator has its own unique driver circuit. Due to shared circuitry, similar DTC's can set at the same time for multiple actuators depending upon the type of circuit malfunction, its location, and the direction the actuator is moving when the malfunction is present.

WHEN MONITORED:

With the ignition on and an actuator movement is commanded by the A/C Heater Control.

SET CONDITION:

If an actuator move is commanded by the A/C Heater Control and there are no feedback pulses detected in that direction, the controller commands the actuator in the opposite direction. If no feedback pulses are detected in either direction this DTC will set. If the A/C Heater Control detects a valid pulse feedback in both directions, the DTC will change from Active to Stored and will stay in the controllers memory for 100 ignition cycles.

POSSIBLE CAUSES

Possible Causes
(C33) PASSENGER BLEND DOOR DRIVER CIRCUIT OPEN
(C807) COMMON DOOR DRIVER 2 CIRCUIT OPEN
BLEND DOOR ACTUATOR (DRIVER)
A/C HEATER CONTROL

Always perform the HVAC Pre-Diagnostic Troubleshooting procedure before proceeding. Refer to HVAC PRE-DIAGNOSTIC TROUBLESHOOTING PROCEDURE.

DIAGNOSTIC TEST

1. **CHECK FOR OTHER DTC's**
    1. Ignition on, engine not running.
    2. With the scan tool, read HVAC DTC's.

    Is there more than one Door Control - Circuit Open DTC present?

    Yes

    - Repair the (C807) Common Door Driver 2 circuit for an open.

    NOTE: **Due to the common shared driver circuit, probable area of concern is the splice, or from the splice to the A/C Heater Control harness connector. Make sure to check all inline connectors.**

No

- Go To 2.

2. **CHECK IF DTC IS ACTIVE**
    1. Ignition on, engine not running.
    2. With the scan tool, read HVAC DTC's.

    Is this DTC active?

    Yes

    - Go To 4.

    No

    - Go To 3.

3. **PERFORM HVAC ACTUATOR CALIBRATION TEST**
    1. With the scan tool, perform the HVAC Actuator Calibration Test.

    Did this DTC change from Stored to Active while performing the HVAC Actuator Calibration Test?

    Yes

    - Go To 4.

    No

    - Go To 7.

4. **CHECK THE BLEND DOOR ACTUATOR**

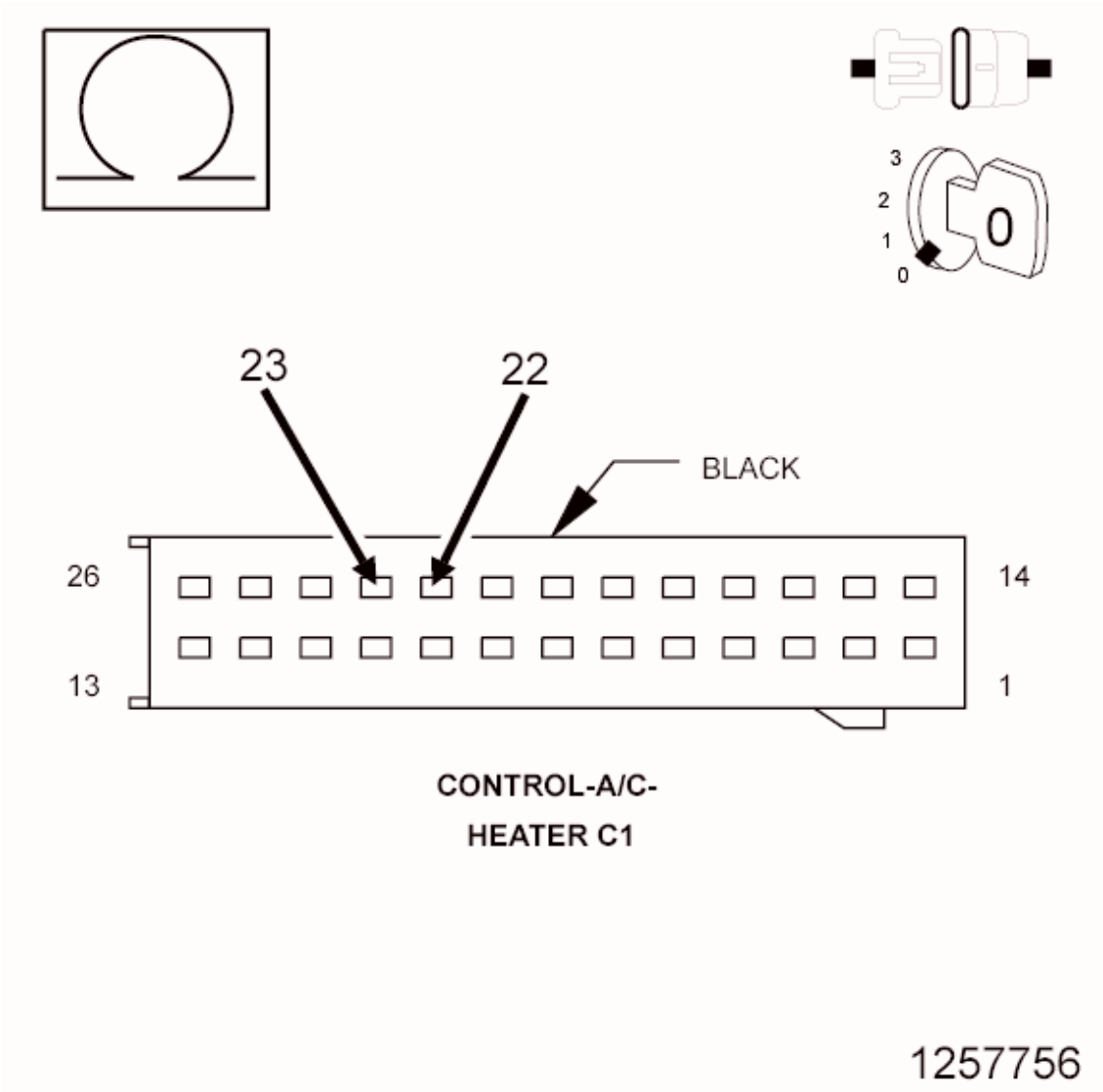

Fig. 54: Checking Blend Door Actuator
Courtesy of CHRYSLER GROUP, LLC

1. Turn the ignition off to the lock position.
2. Disconnect the A/C Heater Control C1 harness connector.
3. Measure the resistance between the (C33) Passenger Blend Door Driver circuit and the (C807) Common Door Driver 2 circuit.

   Is the resistance 38.0 Ohms (± 5.0 Ohms)?

   Yes

   - Replace and program the A/C Heater Control in accordance with the Service Information.
   - Perform HVAC VERIFICATION TEST. Refer to **HVAC VERIFICATION TEST**.

No

- Go To 5.

5. **CHECK THE (C33) PASSENGER BLEND DOOR DRIVER CIRCUIT FOR AN OPEN**

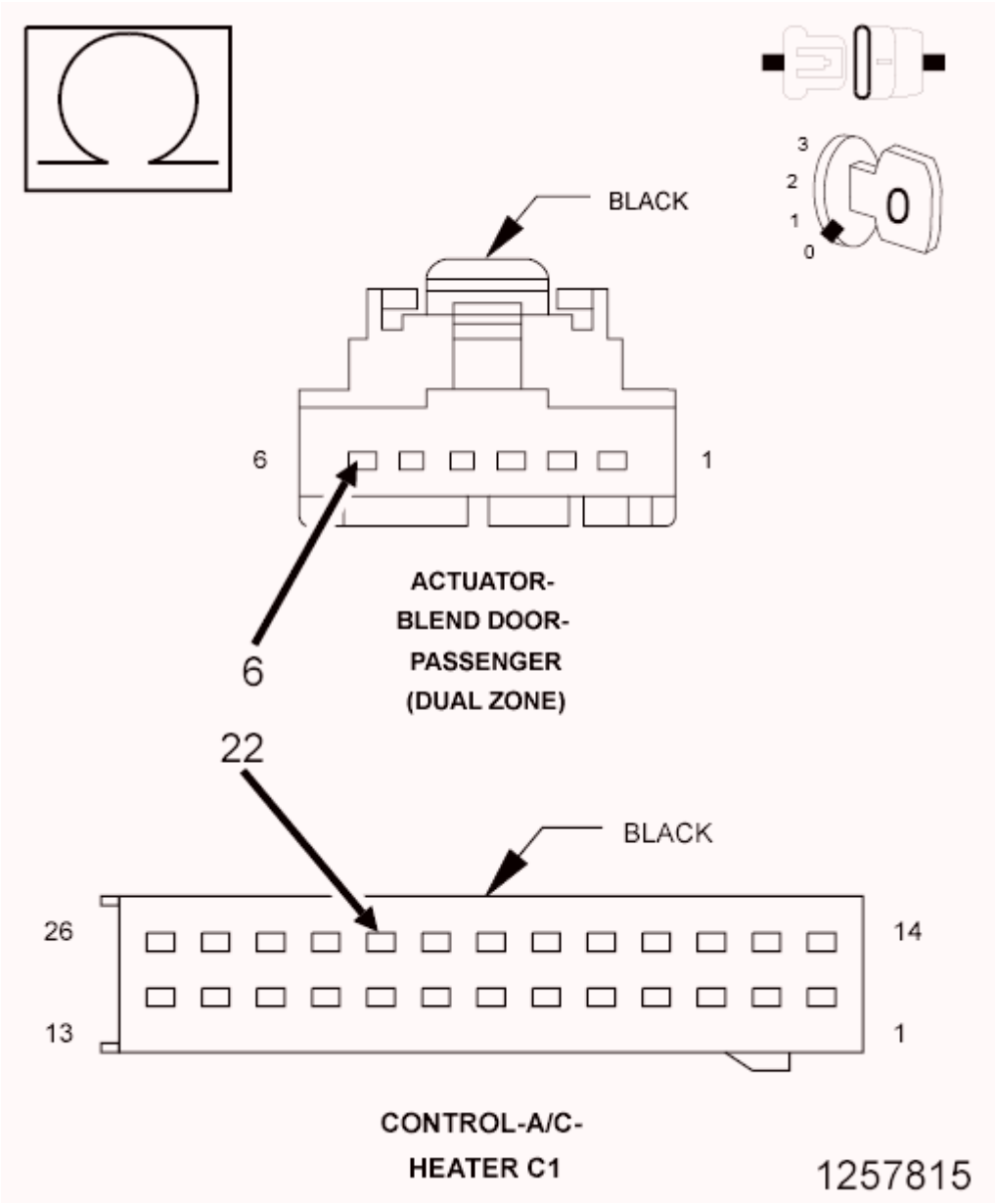

Fig. 55: Checking Passenger Blend Door Driver Circuit For An Open
Courtesy of CHRYSLER GROUP, LLC

1. Turn the ignition off to the lock position.
2. Disconnect the Passenger Blend Door Driver Actuator harness connector.
3. Measure the resistance of the (C33) Passenger Blend Door Driver circuit between the A/C Heater Control C1 harness connector and the Passenger Blend Door Actuator harness connector.

Is the resistance above 5.0 Ohms?

Yes

- Repair the (C33) Passenger Blend Door Driver circuit for an open.
- Perform HVAC VERIFICATION TEST. Refer to **HVAC VERIFICATION TEST**.

No

- Go To 6.

6. **CHECK THE (C807) COMMON DOOR DRIVER 2 CIRCUIT FOR AN OPEN**

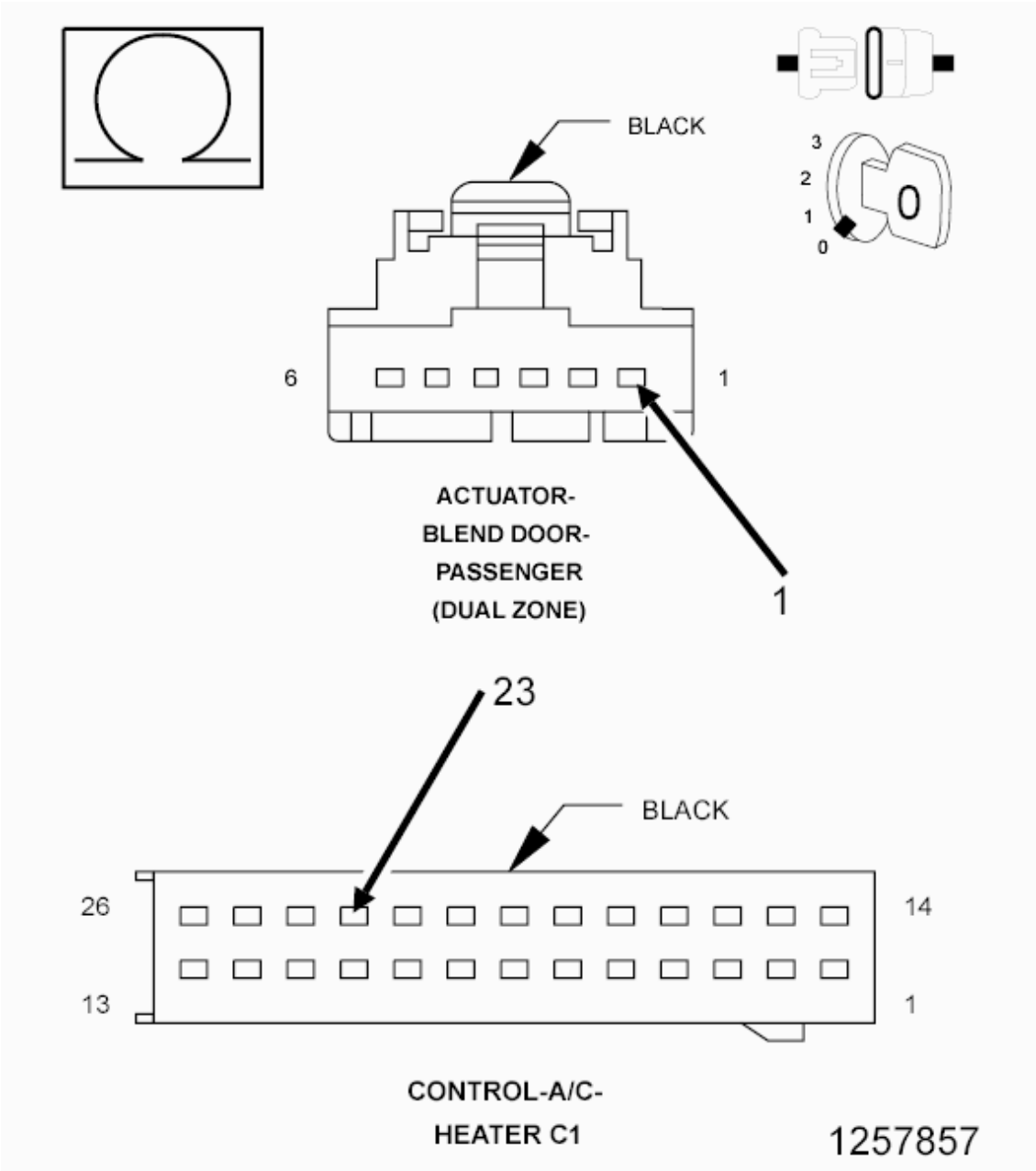

Fig. 56: Checking Common Door Driver 2 Circuit For An Open
Courtesy of CHRYSLER GROUP, LLC

1. Measure the resistance of the (C807) Common Door Driver 2 circuit between the A/C Heater Control C1 harness connector and the Passenger Blend Door Actuator harness connector.

   Is the resistance above 5.0 Ohms?

   Yes

   - Repair the (C807) Common Door Driver 2 circuit for an open.

NOTE: **Probable location is the wiring harness splice or the wiring between the splice and the door actuator.**

- Perform HVAC VERIFICATION TEST. Refer to **HVAC VERIFICATION TEST**.

No

- Replace the Passenger Blend Door Actuator in accordance with the Service Information.
- Perform HVAC VERIFICATION TEST. Refer to **HVAC VERIFICATION TEST**.

7. **CHECK THE WIRING AND CONNECTORS**
   1. The conditions necessary to set the DTC are not present at this time.
   2. Using the schematics as a guide, inspect the wiring and connectors specific to this circuit.
   3. Check for an intermittent condition by inspecting the related wiring harness for chafed, pierced, pinched, partially broken wires.
   4. Check the connectors for broken, bent, pushed out, spread, corroded, or contaminated terminals.
   5. Wiggle the wiring and connectors while checking for shorted and open circuits.
   6. With the scan tool, check the Environmental Data to help identify the conditions in which the DTC was set.

   Were there any problems found?

   Yes

   - Repair as necessary.
   - Perform HVAC VERIFICATION TEST. Refer to **HVAC VERIFICATION TEST**.

   No

   - Test complete.

B10AD-RIGHT BLEND DOOR TRAVEL TOO SMALL

For a complete wiring diagram, **refer to appropriate SYSTEM WIRING DIAGRAMS article** .

THEORY OF OPERATION

After the initial installation of the A/C Heater Control, the controller is calibrated to each individual blend/mode door actuator. These calibrations are stored as in the number of pulses it takes to move the door from one stop to another. The A/C Heater Control drives the Door Actuators by the use of Door Driver circuit and a Common Door Driver circuit and monitors all door actuator pulses to detect door movement in both directions. Most of the door actuators share a common door driver circuit but each door actuator has its own unique driver circuit. Due to shared circuitry, similar DTC's can set at the same time for multiple actuators depending upon the type of circuit malfunction, its location, and the direction the actuator is moving when the malfunction is present.

WHEN MONITORED:

When ever an Actuator Calibration Test is performed.

SET CONDITION:

The A/C Heater Control uses a pulse feedback to the controller to detect the total door movement range. If the amount of pulses required to move the door completely in both directions is less than what the controller has stored in its memory, this DTC will set. If an Actuator Calibration Test is performed and the A/C Heater Control detects a valid range of the door movement span in both directions, the DTC will change from Active to Stored and will stay in the controllers memory for 100 ignition cycles.

POSSIBLE CAUSES

Possible Causes
RELATED DTC's PRESENT
PASSENGER BLEND DOOR BINDING
PASSENGER BLEND DOOR ACTUATOR
A/C HEATER CONTROL

Always perform the HVAC Pre-Diagnostic Troubleshooting procedure before proceeding. Refer to HVAC PRE-DIAGNOSTIC TROUBLESHOOTING PROCEDURE.

DIAGNOSTIC TEST

1. **CHECK FOR RELATED DTC's**
    1. Ignition on, engine not running.
    2. With the scan tool, read HVAC DTC's.

    Are there any Door Control - Circuit Open or Door Control - Performance or Incorrect Operation DTC's present?

    Yes

    - Refer to **DIAGNOSIS AND TESTING** and perform the appropriate diagnostic procedure.

    No

    - Go To 2.
2. **CHECK IF DTC IS ACTIVE**
    1. Ignition on, engine not running.
    2. With the scan tool, read HVAC DTC's.

    Is this DTC active?

    Yes

- Go To 4.

No

- Go To 3.

3. **PERFORM HVAC ACTUATOR CALIBRATION TEST**
    1. With the scan tool, perform the HVAC Actuator Calibration Test.

       Did this DTC change from Stored to Active while performing the HVAC Actuator Calibration Test?

       Yes

       - Go To 4.

       No

       - Go To 6.
4. **CHECK THE PASSENGER BLEND DOOR**
    1. Remove the Passenger Blend Door Actuator and check the Passenger Blend Door for binding and full travel.

       Is there any problem with the Blend Door movement?

       Yes

       - Repair or replace the Passenger Blend Door as necessary in accordance with the Service Information.
       - Perform HVAC VERIFICATION TEST. Refer to **HVAC VERIFICATION TEST**.

       No

       - Go To 5.
5. **CHECK THE PASSENGER BLEND DOOR ACTUATOR**
    1. Replace the Passenger Blend Door Actuator in accordance with the Service Information.
    2. With the scan tool, erase HVAC DTC's and perform the HVAC Actuator Calibration Test.

       Did this DTC reset?

       Yes

       - Replace and program the A/C Heater Control in accordance with the Service Information.
       - Perform HVAC VERIFICATION TEST. Refer to **HVAC VERIFICATION TEST**.

       No

- Test complete.
- Perform HVAC VERIFICATION TEST. Refer to **HVAC VERIFICATION TEST**.

6. **CHECK THE WIRING AND CONNECTORS**
    1. The conditions necessary to set the DTC are not present at this time.
    2. Using the schematics as a guide, inspect the wiring and connectors specific to this circuit.
    3. Check for an intermittent condition by inspecting the related wiring harness for chafed, pierced, pinched, partially broken wires.
    4. Check the connectors for broken, bent, pushed out, spread, corroded, or contaminated terminals.
    5. Wiggle the wiring and connectors while checking for shorted and open circuits.
    6. With the scan tool, check the Environmental Data to help identify the conditions in which the DTC was set.

    Were there any problems found?

    Yes

    - Repair as necessary.
    - Perform HVAC VERIFICATION TEST. Refer to **HVAC VERIFICATION TEST**.

    No

    - Test complete.

B10AE-RIGHT BLEND DOOR TRAVEL TOO LARGE

For a complete wiring diagram, **refer to appropriate SYSTEM WIRING DIAGRAMS article** .

THEORY OF OPERATION

After the initial installation of the A/C Heater Control, the controller is calibrated to each individual blend/mode door actuator. These calibrations are stored as in the number of pulses it takes to move the door from one stop to another. The A/C Heater Control drives the Door Actuators by the use of Door Driver circuit and a Common Door Driver circuit and monitors all door actuator pulses to detect door movement in both directions. Most of the door actuators share a common door driver circuit but each door actuator has its own unique driver circuit. Due to shared circuitry, similar DTC's can set at the same time for multiple actuators depending upon the type of circuit malfunction, its location, and the direction the actuator is moving when the malfunction is present.

WHEN MONITORED:

When ever an Actuator Calibration Test is performed.

SET CONDITION:

The A/C Heater Control uses a pulse feedback to the controller to detect the total door movement range. If the amount of pulses required to move the door completely in both directions is greater than what the controller has

stored in its memory, this DTC will set. If an Actuator Calibration Test is performed and the A/C Heater Control detects a valid range of the door movement span in both directions, the DTC will change from Active to Stored and will stay in the controllers memory for 100 ignition cycles.

POSSIBLE CAUSES

Possible Causes
RELATED DTC's PRESENT
PASSENGER BLEND DOOR STOPS
PASSENGER BLEND DOOR
PASSENGER BLEND DOOR ACTUATOR
A/C HEATER CONTROL

Always perform the HVAC Pre-Diagnostic Troubleshooting procedure before proceeding. Refer to HVAC PRE-DIAGNOSTIC TROUBLESHOOTING PROCEDURE.

DIAGNOSTIC TEST

1. **CHECK FOR RELATED DTC's**
    1. Ignition on, engine not running.
    2. With the scan tool, read HVAC DTC's.

    Are there any Door Control - Circuit Open or Door Control - Performance or Incorrect Operation DTC's present?

    Yes

    - Refer to **DIAGNOSIS AND TESTING** and perform the appropriate diagnostic procedure.

    No

    - Go To 2.
2. **CHECK IF DTC IS ACTIVE**
    1. Ignition on, engine not running.
    2. With the scan tool, read HVAC DTC's.

    Is this DTC active?

    Yes

    - Go To 4.

    No

    - Go To 3.

3. **PERFORM HVAC ACTUATOR CALIBRATION TEST**
    1. With the scan tool, perform the HVAC Actuator Calibration Test.

       Did this DTC change from Stored to Active while performing the HVAC Actuator Calibration Test?

       Yes

       - Go To 4.

       No

       - Go To 6.
4. **CHECK THE PASSENGER BLEND DOOR**
    1. Remove the Passenger Blend Door Actuator and check the Passenger Blend Door stops, linkage (stripped or cracked) and door.

       Was there any problems with the Blend Door or movement?

       Yes

       - Repair or replace the Passenger Blend Door as necessary in accordance with the Service Information.
       - Perform HVAC VERIFICATION TEST. Refer to **HVAC VERIFICATION TEST**.

       No

       - Go To 5.
5. **CHECK THE PASSENGER BLEND DOOR ACTUATOR**
    1. Replace the Passenger Blend Door Actuator in accordance with the Service Information.
    2. With the scan tool, erase HVAC DTC's and perform the HVAC Actuator Calibration Test.

       Did this DTC reset?

       Yes

       - Replace and program the A/C Heater Control in accordance with the Service Information.
       - Perform HVAC VERIFICATION TEST. Refer to **HVAC VERIFICATION TEST**.

       No

       - Test complete.
       - Perform HVAC VERIFICATION TEST. Refer to **HVAC VERIFICATION TEST**.
6. **CHECK THE WIRING AND CONNECTORS**

1. The conditions necessary to set the DTC are not present at this time.
2. Using the schematics as a guide, inspect the wiring and connectors specific to this circuit.
3. Check for an intermittent condition by inspecting the related wiring harness for chafed, pierced, pinched, partially broken wires.
4. Check the connectors for broken, bent, pushed out, spread, corroded, or contaminated terminals.
5. Wiggle the wiring and connectors while checking for shorted and open circuits.
6. With the scan tool, check the Environmental Data to help identify the conditions in which the DTC was set.

   Were there any problems found?

   Yes

   - Repair as necessary.
   - Perform HVAC VERIFICATION TEST. Refer to **HVAC VERIFICATION TEST**.

   No

   - Test complete.

B10AF-RIGHT BLEND DOOR ACTUATOR PERFORMANCE

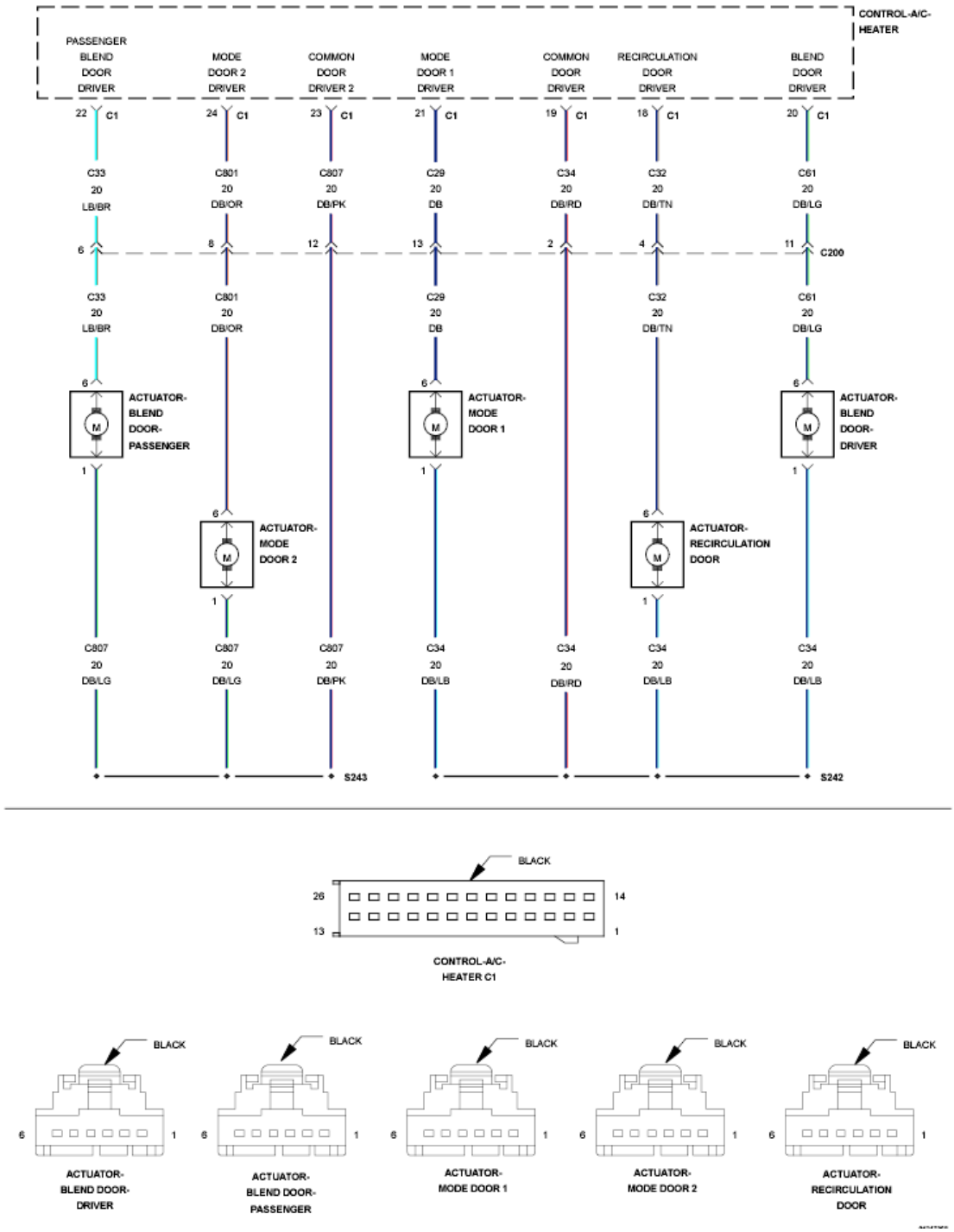

Fig. 57: Mode Door Control Wiring Diagram
Courtesy of CHRYSLER GROUP, LLC

For a complete wiring diagram, **refer to appropriate SYSTEM WIRING DIAGRAMS article** .

THEORY OF OPERATION

After the initial installation of the A/C Heater Control, the controller is calibrated to each individual blend/mode

door actuator. These calibrations are stored as in the number of pulses it takes to move the door from one stop to another. The A/C Heater Control drives the Door Actuators by the use of Door Driver circuit and a Common Door Driver circuit and monitors all door actuator pulses to detect door movement in both directions. Most of the door actuators share a common door driver circuit but each door actuator has its own unique driver circuit. Due to shared circuitry, similar DTC's can set at the same time for multiple actuators depending upon the type of circuit malfunction, its location, and the direction the actuator is moving when the malfunction is present.

WHEN MONITORED:

With the ignition on and an actuator movement is commanded by the A/C Heater Control.

SET CONDITION:

If an actuator move is commanded by the A/C Heater Control and there are no feedback pulses detected in that direction, the controller commands the actuator in the opposite direction. If feedback pulses are detected in only one direction this DTC will set. If the A/C Heater Control detects a valid pulse feedback in both directions, the DTC will change from Active to Stored and will stay in the controllers memory for 100 ignition cycles.

POSSIBLE CAUSES

Possible Causes
(C33) PASSENGER BLEND DOOR DRIVER CIRCUIT SHORTED TO VOLTAGE
(C33) PASSENGER BLEND DOOR DRIVER CIRCUIT SHORTED TO GROUND
(C807) COMMON DOOR DRIVER 2 CIRCUIT SHORTED TO VOLTAGE
(C807) COMMON DOOR DRIVER 2 CIRCUIT SHORTED TO GROUND
BLEND DOOR BINDING (PASSENGER)
BLEND DOOR ACTUATOR (PASSENGER)
A/C HEATER CONTROL

Always perform the HVAC Pre-Diagnostic Troubleshooting procedure before proceeding. Refer to HVAC PRE-DIAGNOSTIC TROUBLESHOOTING PROCEDURE.

DIAGNOSTIC TEST

1. **CHECK IF DTC IS ACTIVE**
    1. Ignition on, engine not running.
    2. With the scan tool, read HVAC DTC's.

    Is this DTC active?

    Yes

    - Go To 3.

    No

- Go To 2.

2. **PERFORM HVAC ACTUATOR CALIBRATION TEST**
    1. With the scan tool, perform the HVAC Actuator Calibration Test.

       Did this DTC change from Stored to Active while performing the HVAC Actuator Calibration Test?

       Yes

       - Go To 3.

       No

       - Go To 9.
3. **CHECK THE (C33) PASSENGER BLEND DOOR DRIVER CIRCUIT FOR A SHORT TO VOLTAGE**

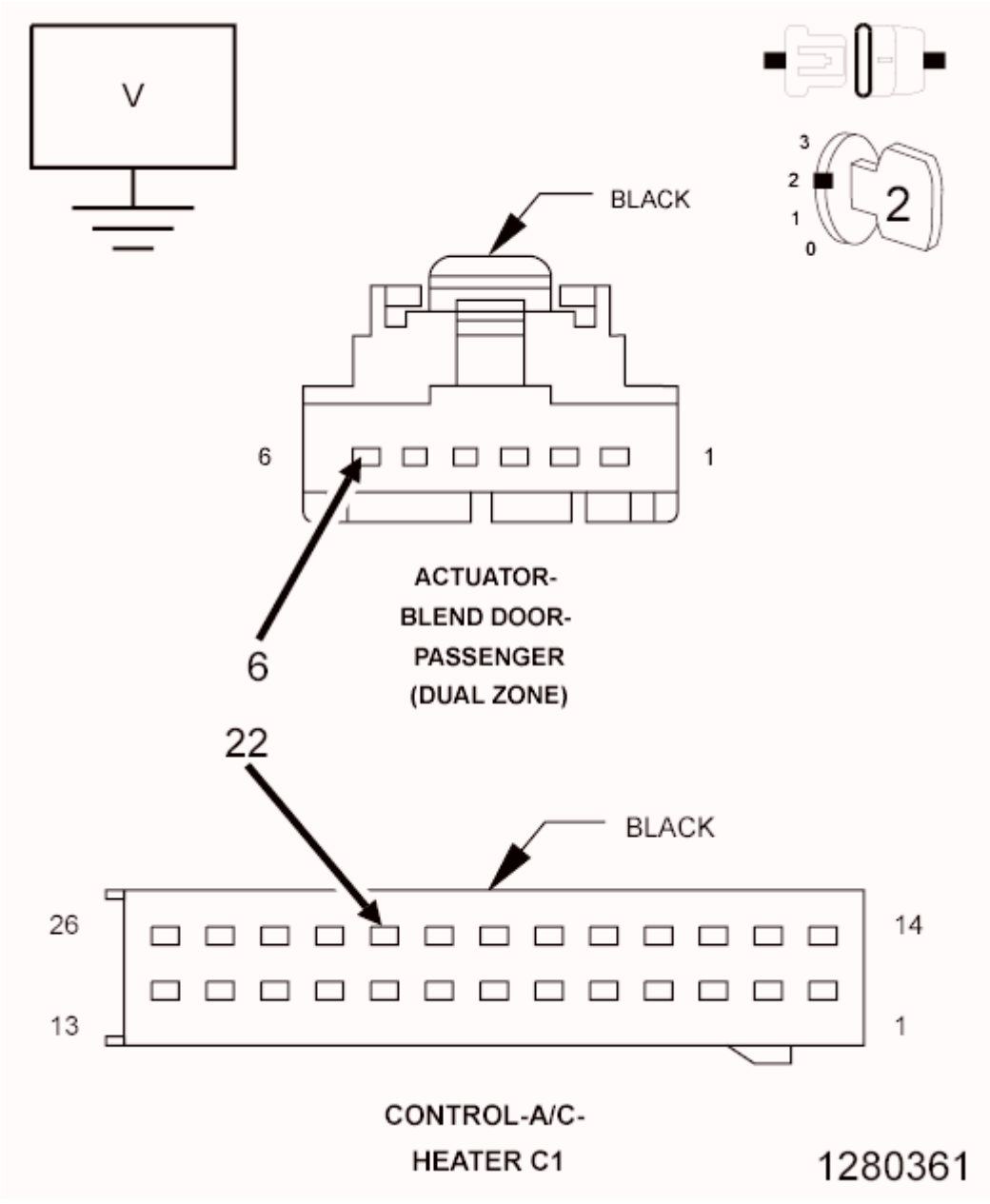

Fig. 58: Checking Passenger Blend Door Driver Circuit For A Short To Voltage
Courtesy of CHRYSLER GROUP, LLC

1. Turn the ignition off to the lock position.
2. Disconnect the A/C Heater Control C1 harness connector.
3. Disconnect the Passenger Blend Door Actuator harness connector.
4. Ignition on, engine not running.
5. Measure the voltage of the (C33) Passenger Blend Door Driver circuit.

   Is there any voltage present?

Yes

- Repair the (C33) Passenger Blend Door Driver circuit for a short to voltage.
- Perform HVAC VERIFICATION TEST. Refer to **HVAC VERIFICATION TEST**.

No

- Go To 4.

4. **CHECK THE (C807) COMMON DOOR DRIVER 2 CIRCUIT FOR A SHORT TO VOLTAGE**

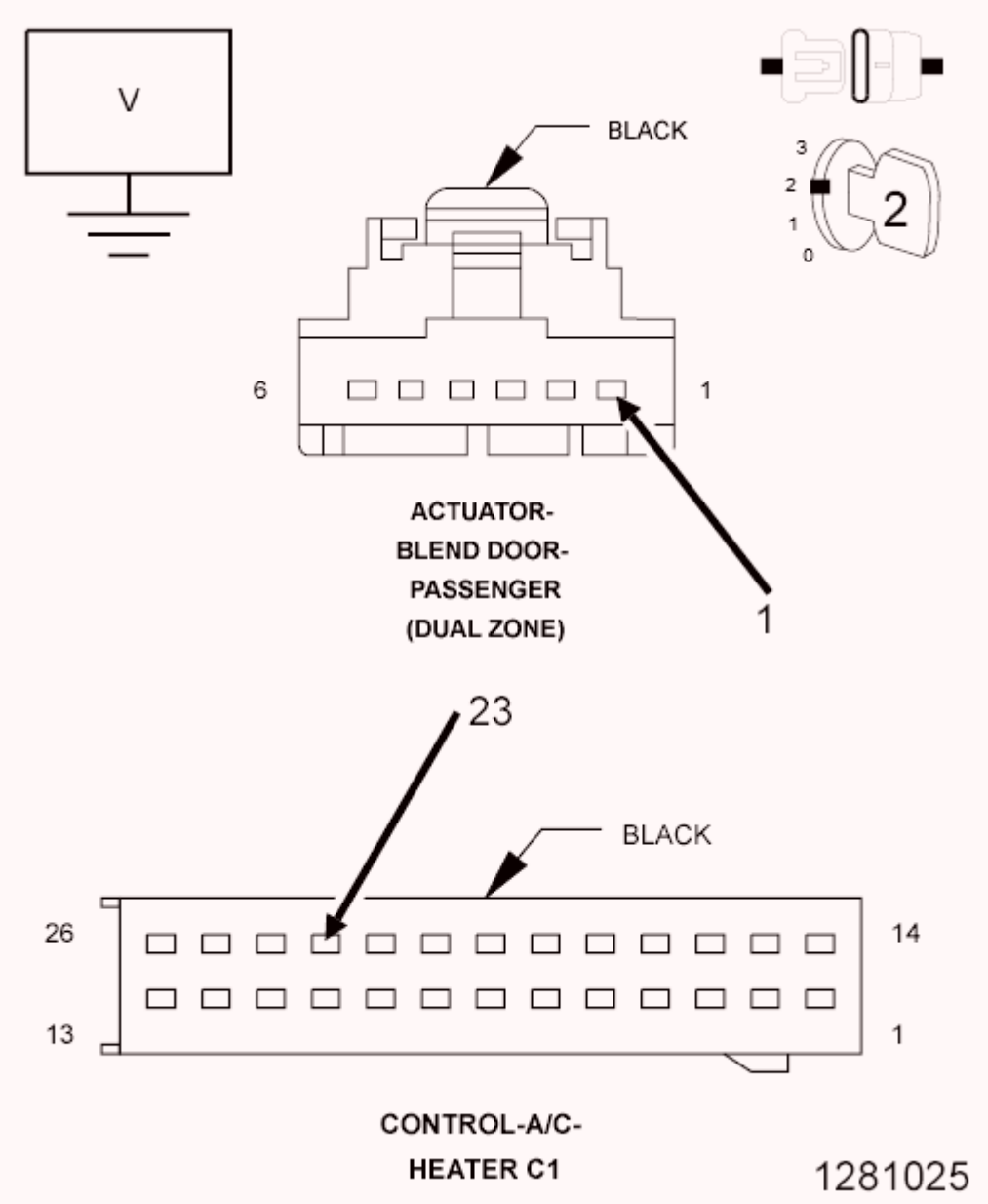

Fig. 59: Checking Common Door Driver 2 Circuit For A Short To Voltage
Courtesy of CHRYSLER GROUP, LLC

1. Measure the voltage of the (C807) Common Door Driver 2 circuit.

   Is there any voltage present?

   Yes

   - Repair the (C807) Common Door Driver 2 circuit for a short to voltage.
   - Perform HVAC VERIFICATION TEST. Refer to **HVAC VERIFICATION TEST**.

   No

   - Go To 5.

5. **CHECK THE (C33) PASSENGER BLEND DOOR DRIVER CIRCUIT FOR A SHORT TO GROUND**

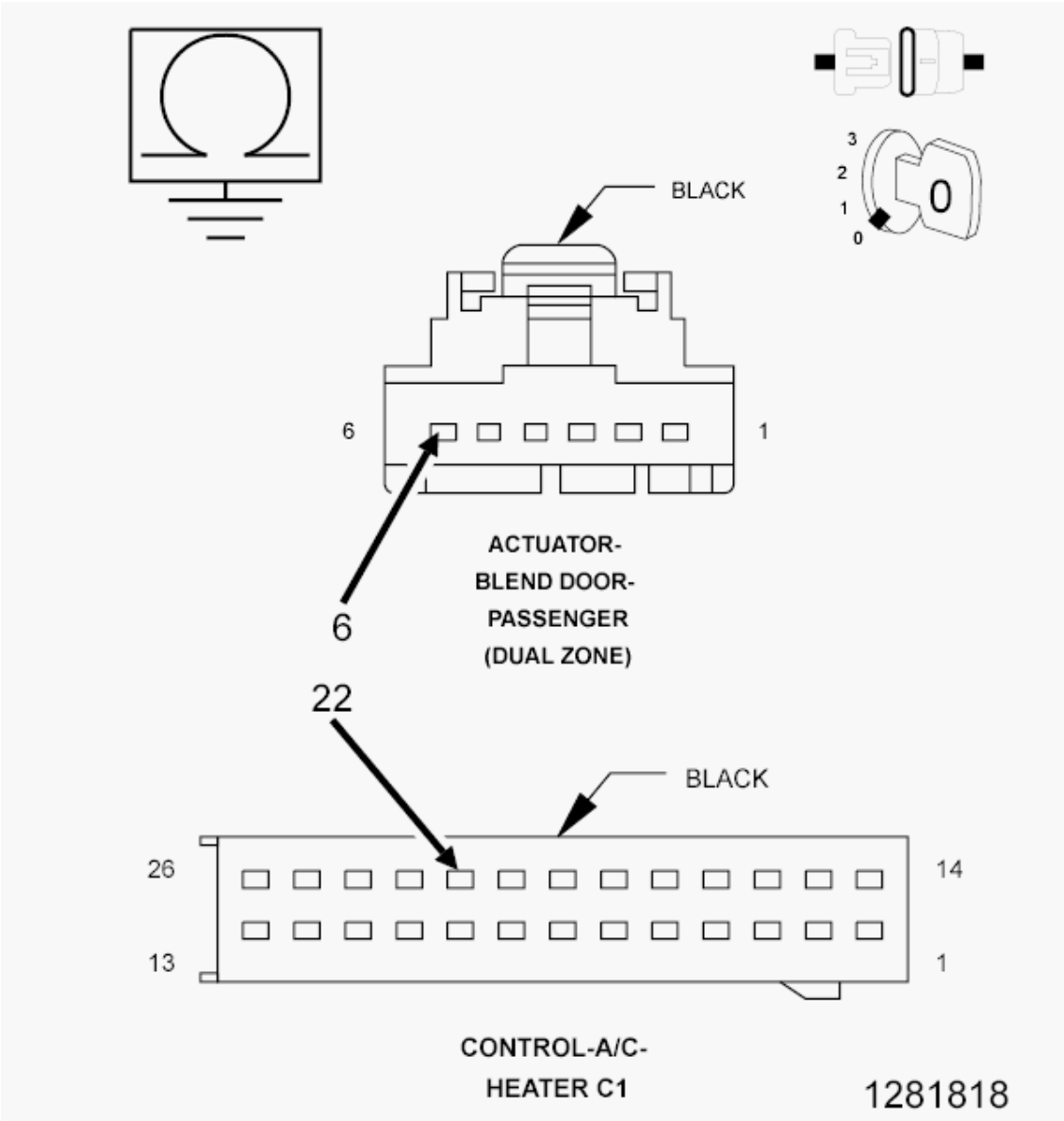

Fig. 60: Checking Passenger Blend Door Driver Circuit For A Short To Ground
Courtesy of CHRYSLER GROUP, LLC

1. Turn the ignition off to the lock position.
2. Measure the resistance between ground and the (C33) Passenger Blend Door Driver circuit.

   Is the resistance below 100k Ohms?

   Yes

   - Repair the (C33) Passenger Blend Door Driver circuit for a short to ground.
   - Perform HVAC VERIFICATION TEST. Refer to **HVAC VERIFICATION TEST**.

   No

- Go To 6.

6. **CHECK THE (C807) COMMON DOOR DRIVER 2 CIRCUIT FOR A SHORT TO GROUND**

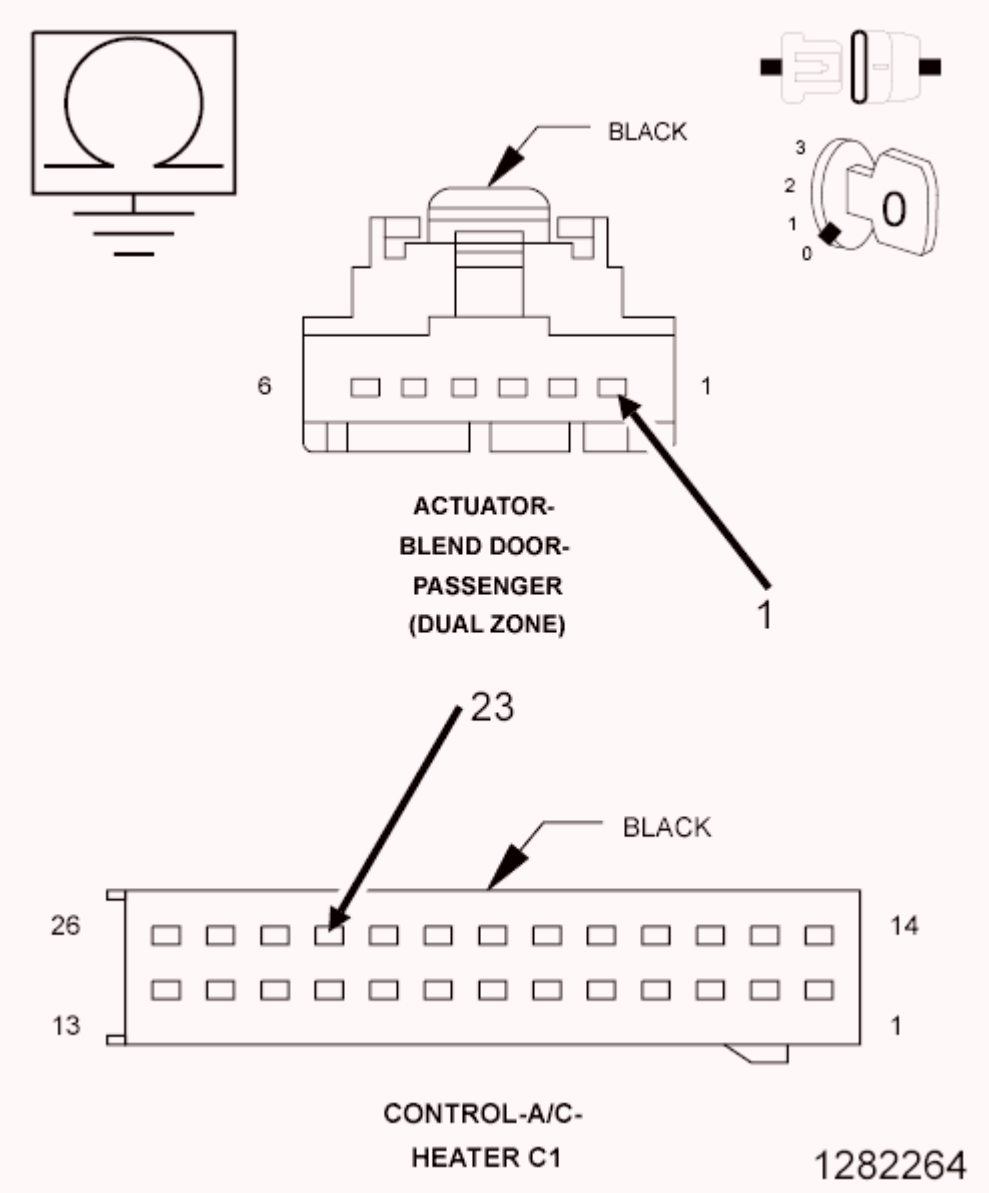

Fig. 61: Checking Common Door Driver 2 Circuit For A Short To Ground
Courtesy of CHRYSLER GROUP, LLC

1. Measure the resistance between ground and the (C807) Common Door Driver 2 circuit.

   Is the resistance below 100k Ohms?

   Yes

   - Repair the (C807) Common Door Driver 2 circuit for a short to ground.

- Perform HVAC VERIFICATION TEST. Refer to **HVAC VERIFICATION TEST**.

No

- Go To 7.

7. **CHECK THE BLEND DOOR**
   1. Remove the Passenger Blend Door Actuator and check the Passenger Blend Door for binding and full travel.

      Were there any problems found?

      Yes

      - Repair or replace the Passenger Blend Door as necessary in accordance with the Service Information.
      - Perform HVAC VERIFICATION TEST. Refer to **HVAC VERIFICATION TEST**.

      No

      - Go To 8.

8. **CHECK THE BLEND DOOR ACTUATOR**
   1. Replace the Passenger Blend Door Actuator in accordance with the Service Information.
   2. With the scan tool, erase HVAC DTC's and perform the HVAC Actuator Calibration Test.

      Did this DTC reset?

      Yes

      - Replace and program the A/C Heater Control in accordance with the Service Information.
      - Perform HVAC VERIFICATION TEST. Refer to **HVAC VERIFICATION TEST**.

      No

      - Test complete.
      - Perform HVAC VERIFICATION TEST. Refer to **HVAC VERIFICATION TEST**.

9. **CHECK THE WIRING AND CONNECTORS**
   1. The conditions necessary to set the DTC are not present at this time.
   2. Using the schematics as a guide, inspect the wiring and connectors specific to this circuit.
   3. Check for an intermittent condition by inspecting the related wiring harness for chafed, pierced, pinched, partially broken wires.
   4. Check the connectors for broken, bent, pushed out, spread, corroded, or contaminated terminals.
   5. Wiggle the wiring and connectors while checking for shorted and open circuits.
   6. With the scan tool, check the Environmental Data to help identify the conditions in which the DTC

was set.

Were there any problems found?

Yes

- Repair as necessary.
- Perform HVAC VERIFICATION TEST. Refer to **HVAC VERIFICATION TEST**.

No

- Test complete.

B10B2-A/C COOL DOWN TEST PERFORMANCE

For a complete wiring diagram, **refer to appropriate SYSTEM WIRING DIAGRAMS article** .

THEORY OF OPERATION

The A/C Heater Controller has software to enable it to perform an A/C Cool Down Test by a command using a scan tool. This test checks for evaporator temperature drop over a predetermined time. If the test fails, this DTC will set. However, certain test conditions are required to perform this test. Failure to run this test within those parameters can result in failure of the test.

WHEN MONITORED:

With ever an A/C Cooldown Test is performed.

SET CONDITION:

This DTC is set whenever the A/C Cooldown Test is performed and the desired temperature drop is not achieved by the system. The DTC will go to stored after a successful A/C Cooldown Test.

POSSIBLE CAUSES

Possible Causes
A/C SYSTEM WORKING IMPROPERLY

Always perform the HVAC Pre-Diagnostic Troubleshooting procedure before proceeding. Refer to HVAC PRE-DIAGNOSTIC TROUBLESHOOTING PROCEDURE.

DIAGNOSTIC TEST

1. **CONDITIONS FOR A/C COOLDOWN TEST**
    1. The following condition must be met before running the A/C Cooldown test.
        - No Powertrain Control Module (PCM) DTC's present

- Condenser cooling fan working properly
- No active HVAC evaporator temperature sensor, sun sensor, recirculation, mode, or blend door actuator DTC's present
- The refrigerant system must be fully charged
- The blower motor must operate correctly in all speeds
- The evaporator temperature must be above 12.7° C (55° F)
- The A/C compressor must be turned off
- Blower must be on high

Are all of the above conditions met before running the A/C Cooldown Test?

Yes

- Refer to the Service Information for additional Cooldown Test related diagnostic information and testing procedures and repair as necessary.

  NOTE: Run the Cooldown Test again after any repairs are performed.

- If the Cooldown Test passes, Perform HVAC VERIFICATION TEST. Refer to **HVAC VERIFICATION TEST**.

No

- Run the A/C Cooldown test again with the above test conditions.

B10E9-BLOWER MOTOR CONTROL CIRCUIT LOW

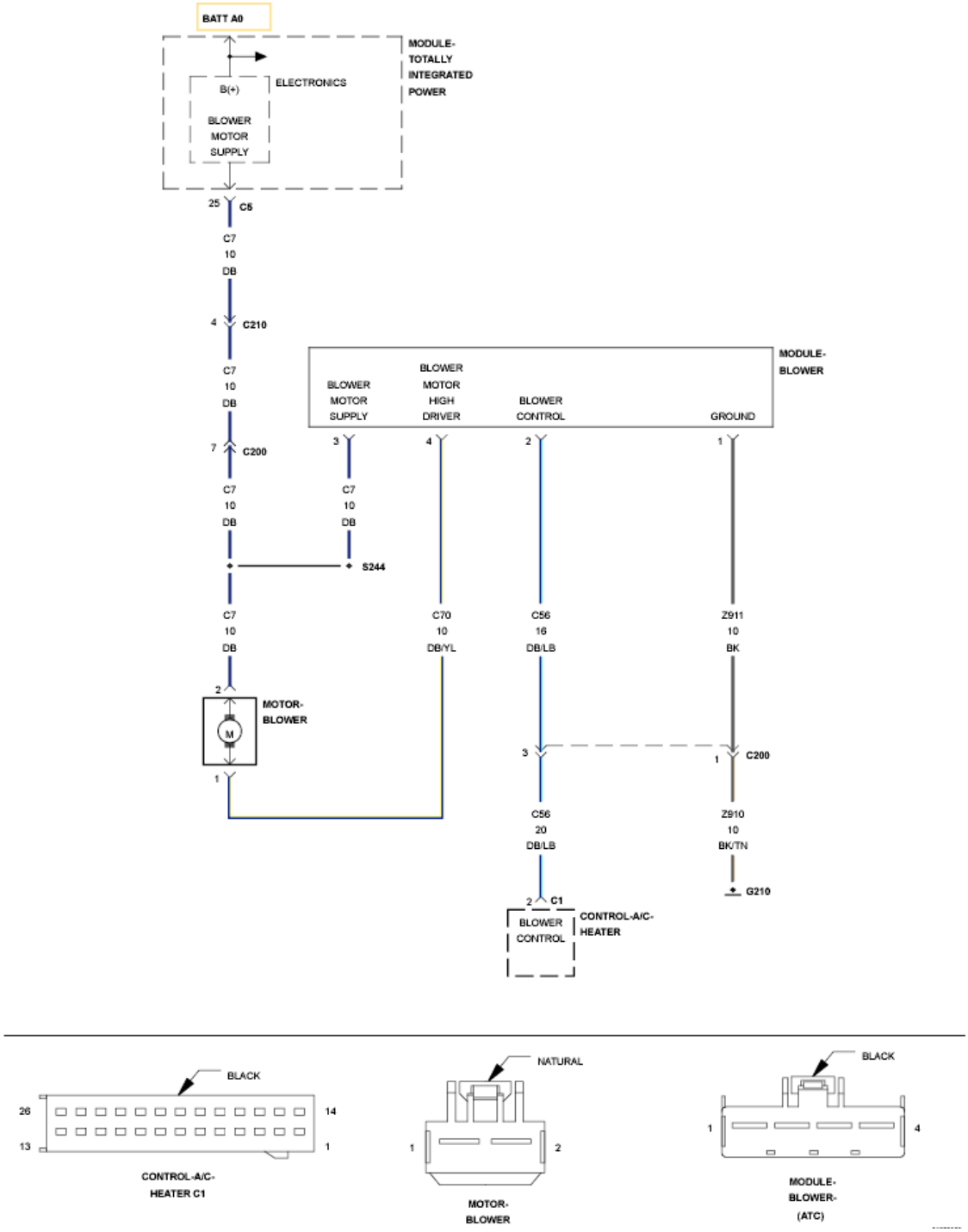

Fig. 62: Blower Motor Control Wiring Diagram
Courtesy of CHRYSLER GROUP, LLC

For a complete wiring diagram, **refer to the appropriate SYSTEM WIRING DIAGRAMS article** .

THEORY OF OPERATION

The A/C Heater Control constantly monitors the Blower Control circuit to the Blower Module for proper

operation. If the voltage on that circuit drops below or rises above a predetermined value, a DTC will set.

WHEN MONITORED:

With the ignition on.

SET CONDITION:

If the Blower Control circuit voltage is less than a calibrated value for the period of 30 seconds.

POSSIBLE CAUSES

Possible Causes
(C56) BLOWER CONTROL CIRCUIT SHORT TO GROUND
(C56) BLOWER CONTROL CIRCUIT OPEN
(Z911) GROUND CIRCUIT OPEN
BLOWER MODULE
A/C HEATER CONTROL

Always perform the HVAC Pre-Diagnostic Troubleshooting procedure before proceeding. Refer to HVAC PRE-DIAGNOSTIC TROUBLESHOOTING PROCEDURE.

DIAGNOSTIC TEST

1. **CHECK IF DTC IS ACTIVE**
    1. Ignition on, engine not running.
    2. With the scan tool, read HVAC DTC's.

    NOTE: It can take up to 30 seconds or more for this DTC to mature.

    Is this DTC active?

    Yes

    - Go To 2.

    No

    - Go To 6.
2. **CHECK THE (C56) BLOWER CONTROL CIRCUIT FOR A SHORT TO GROUND**

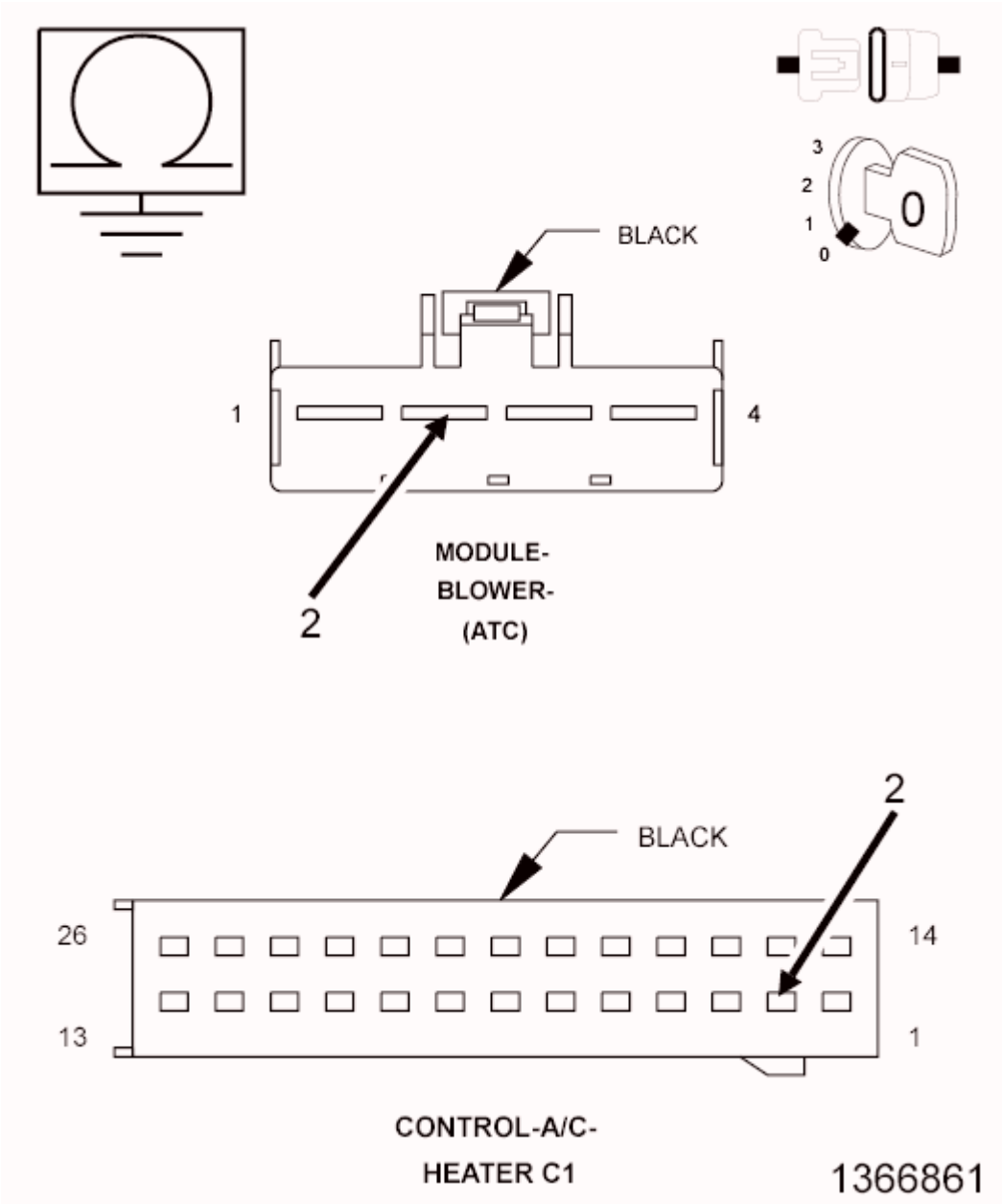

Fig. 63: Checking Blower Control Circuit For A Short To Ground
Courtesy of CHRYSLER GROUP, LLC

1. Turn the ignition off to the lock position.
2. Disconnect the Blower Module harness connector
3. Disconnect the A/C Heater Control harness connector.
4. Measure the resistance between ground and the (C56) Blower Control circuit.

   Is the resistance below 100k Ohms?

   Yes

- Repair the (C56) Blower Control circuit for an short to ground.
- Perform HVAC VERIFICATION TEST. Refer to **HVAC VERIFICATION TEST**.

No

- Go To 3.

3. **CHECK THE (C56) BLOWER CONTROL CIRCUIT FOR AN OPEN**

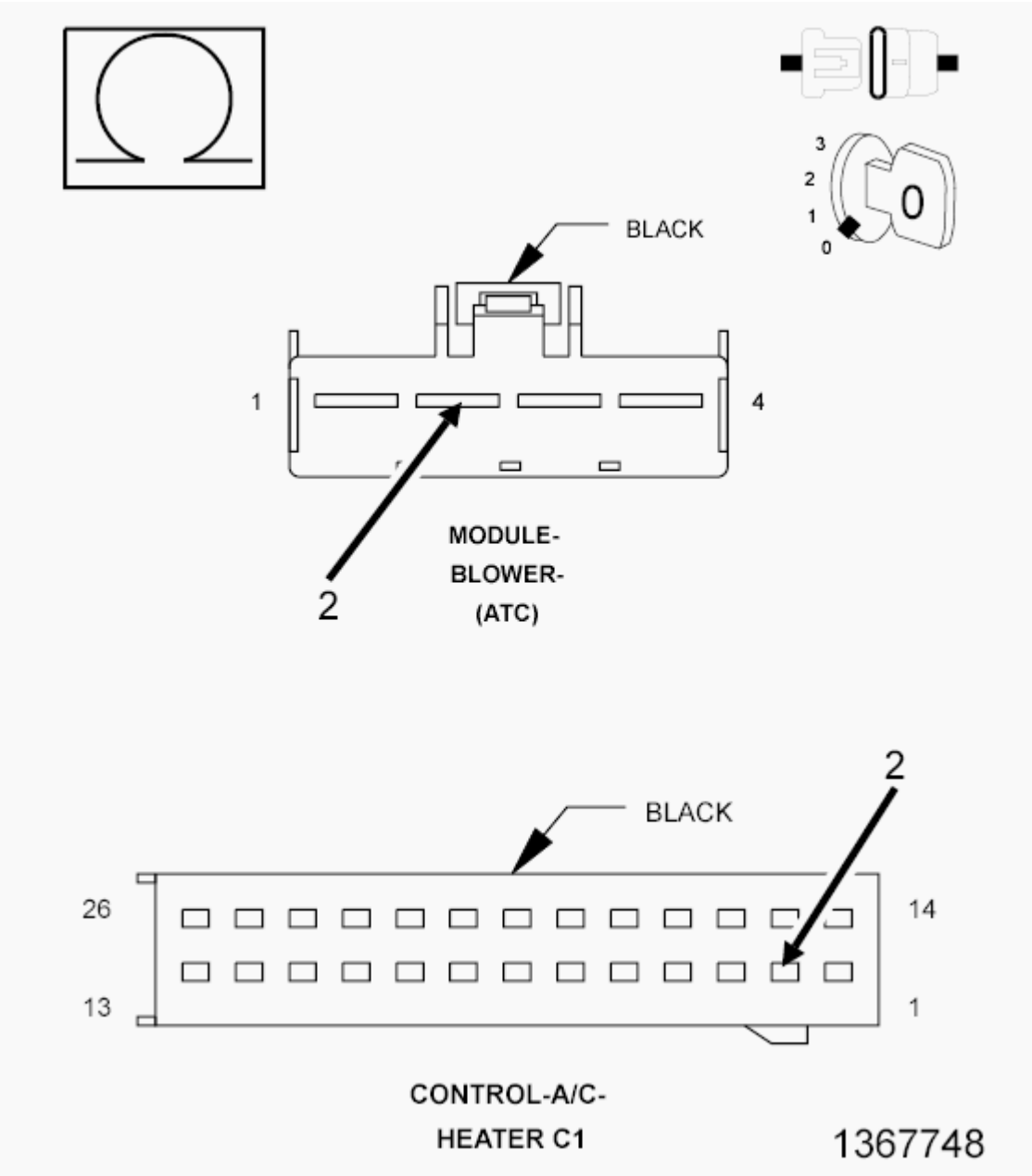

Fig. 64: Checking Blower Control Circuit For An Open
Courtesy of CHRYSLER GROUP, LLC

1. Turn the ignition off to the lock position.
2. Measure the resistance of the (C56) Blower Control circuit between the A/C Heater Control harness connector and the Blower Module harness connector.

   Is the resistance above 100k Ohms?

   Yes

   - Repair the (C56) Blower Control circuit for an open.
   - Perform HVAC VERIFICATION TEST. Refer to **HVAC VERIFICATION TEST**.

   No

   - Go To 4.

4. **CHECK THE (Z911) GROUND CIRCUIT FOR AN OPEN**

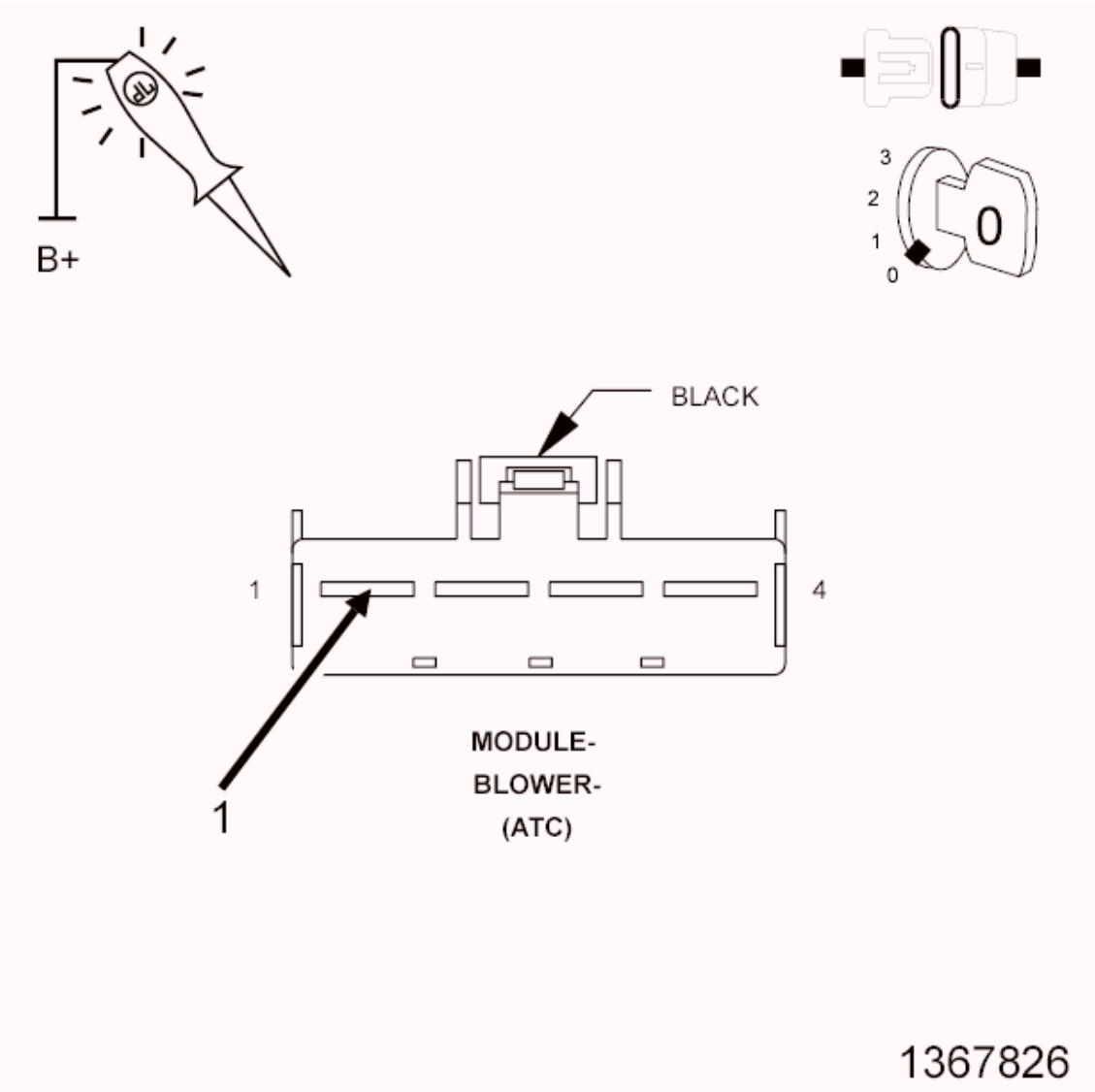

Fig. 65: Checking Ground Circuit For An Open
Courtesy of CHRYSLER GROUP, LLC

1. Using a 12-volt test light connected to 12-volts, check the (Z911) Ground circuit.

   NOTE: **The test light must illuminate brightly. Compare the brightness to that of a direct connection to the battery.**

   Does the test light illuminate brightly?

   Yes

   - Repair the (C56) Blower Control circuit for an open.
   - Perform HVAC VERIFICATION TEST. Refer to **HVAC VERIFICATION TEST**.

No

- Go To 5.

5. **CHECK THE BLOWER MODULE**
    1. Turn the ignition off to the lock position.
    2. Replace the Blower Module in accordance with the Service Information.
    3. Perform HVAC VERIFICATION TEST. Refer to **HVAC VERIFICATION TEST**.

    Did the DTC reset during or after the HVAC Verification Test?

    Yes

    - Replace and program the A/C Heater Control in accordance with the Service Information.
    - Perform HVAC VERIFICATION TEST. Refer to **HVAC VERIFICATION TEST**.

    No

    - Test complete.

6. **CHECK THE WIRING AND CONNECTORS**
    1. The conditions necessary to set the DTC are not present at this time.
    2. Using the schematics as a guide, inspect the wiring and connectors specific to this circuit.
    3. Check for an intermittent condition by inspecting the related wiring harness for chafed, pierced, pinched, partially broken wires.
    4. Check the connectors for broken, bent, pushed out, spread, corroded, or contaminated terminals.
    5. Wiggle the wiring and connectors while checking for shorted and open circuits.
    6. With the scan tool, check the Environmental Data to help identify the conditions in which the DTC was set.

    Were there any problems found?

    Yes

    - Repair as necessary.
    - Perform HVAC VERIFICATION TEST. Refer to **HVAC VERIFICATION TEST**.

    No

    - Test complete.

B10EA-BLOWER MOTOR CONTROL CIRCUIT HIGH

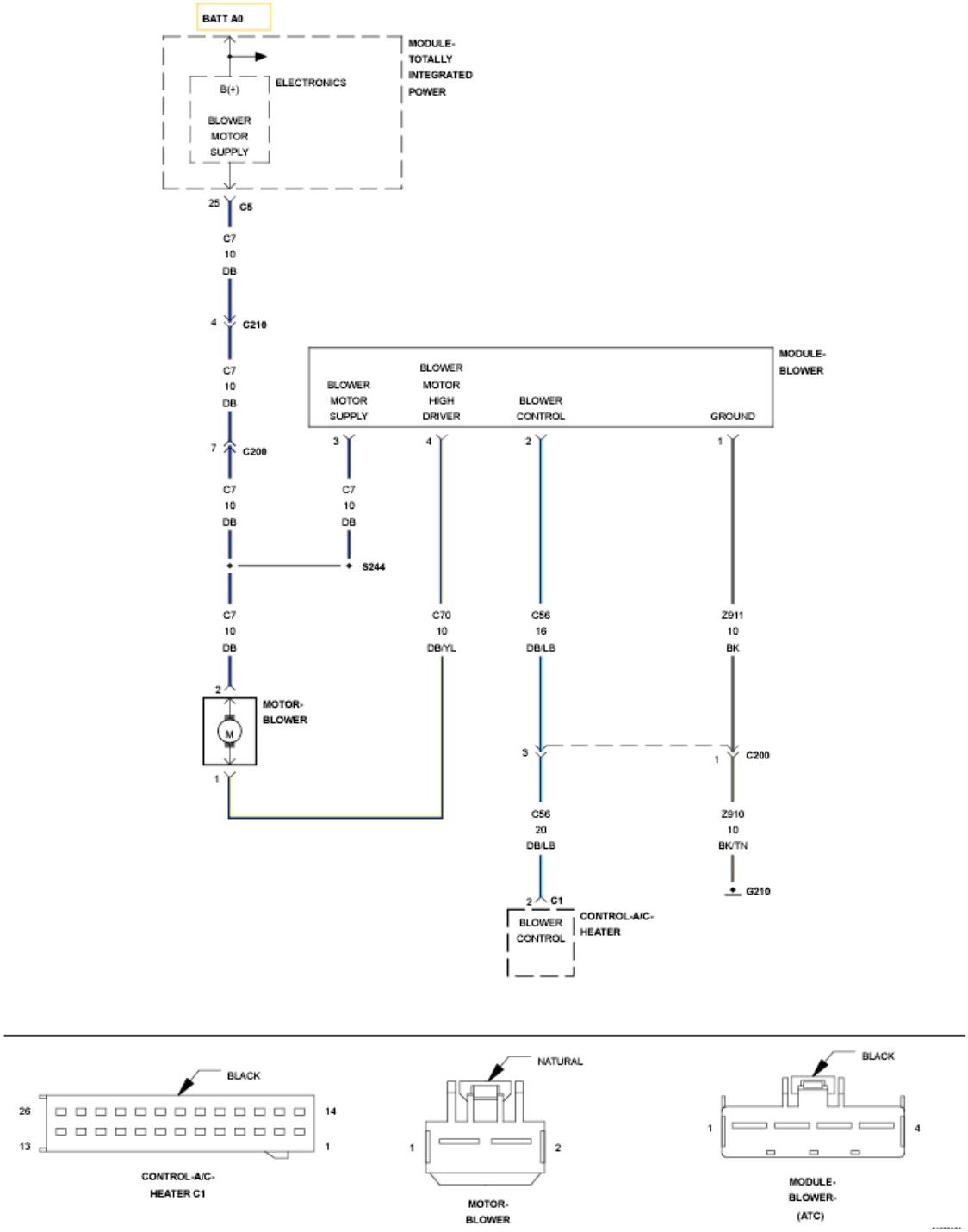

Fig. 66: Blower Motor Control Wiring Diagram
Courtesy of CHRYSLER GROUP, LLC

For a complete wiring diagram, **refer to the appropriate SYSTEM WIRING DIAGRAMS article** .

THEORY OF OPERATION

The A/C Heater Control constantly monitors the Blower Control circuit to the Blower Module for proper

operation. If the voltage on that circuit drops below or rises above a predetermined value, a DTC will set.

WHEN MONITORED:

With the ignition on.

SET CONDITION:

If the Blower Control circuit voltage is greater than a calibrated value for the period of 30 seconds.

POSSIBLE CAUSES

Possible Causes
(C56) BLOWER CONTROL CIRCUIT SHORT TO VOLTAGE
(C56) BLOWER CONTROL CIRCUIT OPEN
(Z911) GROUND CIRCUIT OPEN
BLOWER MODULE
A/C HEATER CONTROL

Always perform the HVAC Pre-Diagnostic Troubleshooting procedure before proceeding. Refer to HVAC PRE-DIAGNOSTIC TROUBLESHOOTING PROCEDURE.

DIAGNOSTIC TEST

1. **CHECK IF DTC IS ACTIVE**
    1. Ignition on, engine not running.
    2. With the scan tool, read HVAC DTC's.

    NOTE: It can take up to 30 seconds or more for this DTC to mature.

    Is this DTC active?

    Yes

    - Go To 2.

    No

    - Go To 6.
2. **CHECK THE (C56) BLOWER CONTROL CIRCUIT FOR A SHORT TO VOLTAGE**

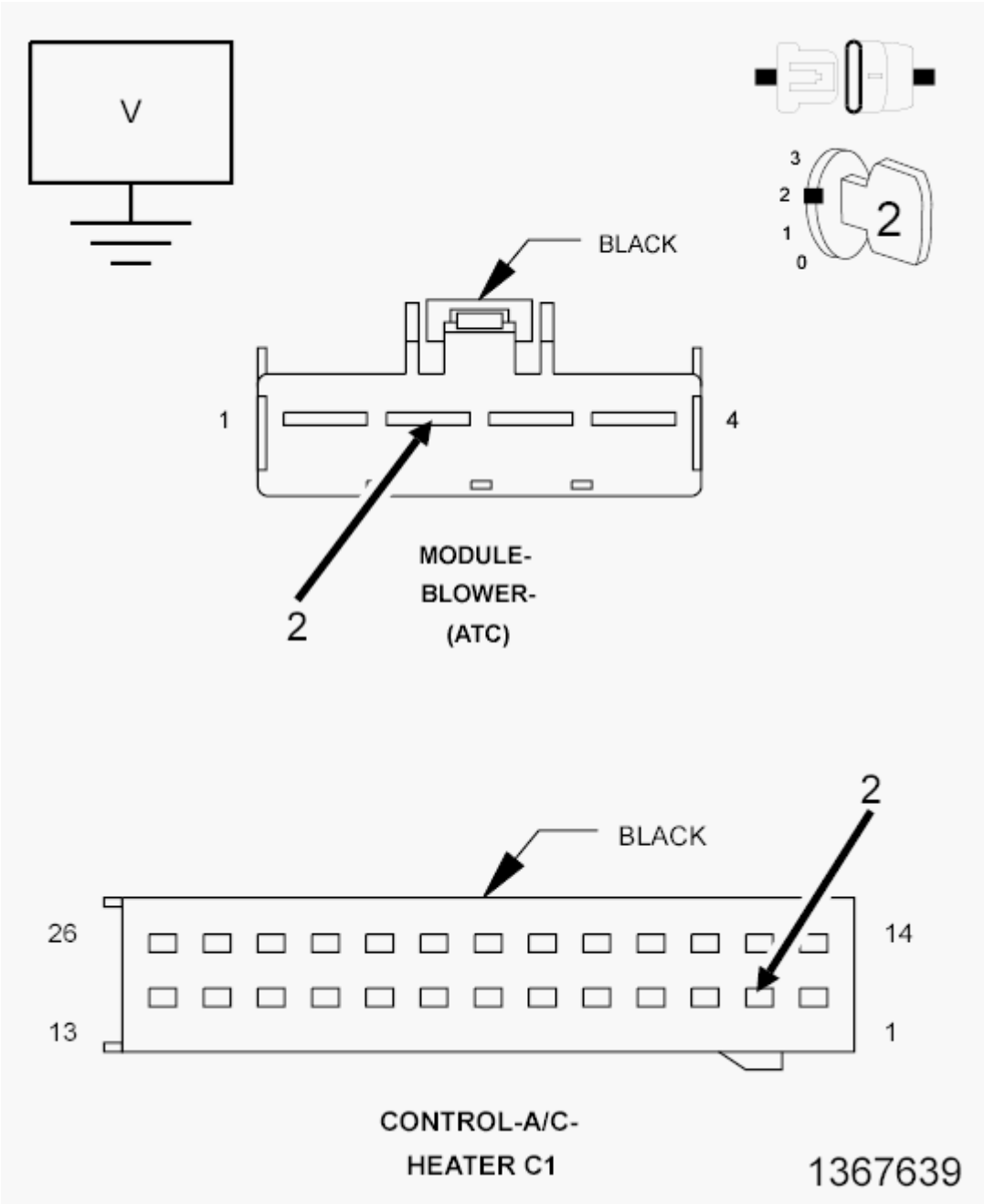

Fig. 67: Checking Blower Control Circuit For A Short To Voltage
Courtesy of CHRYSLER GROUP, LLC

1. Turn the ignition off to the lock position.
2. Disconnect the Blower Module harness connector.
3. Disconnect the A/C Heater Control harness connector.

NOTE: Check connectors - Clean/repair as necessary.

4. Ignition on, engine not running.

5. Check the voltage of the (C56) Blower Control circuit.

   Is there any voltage present?

   Yes

   - Repair the (C56) Blower Control circuit for an short to voltage.
   - Perform HVAC VERIFICATION TEST. Refer to **HVAC VERIFICATION TEST**.

   No

   - Go To 3.

3. **CHECK THE (C56) BLOWER CONTROL CIRCUIT FOR AN OPEN**

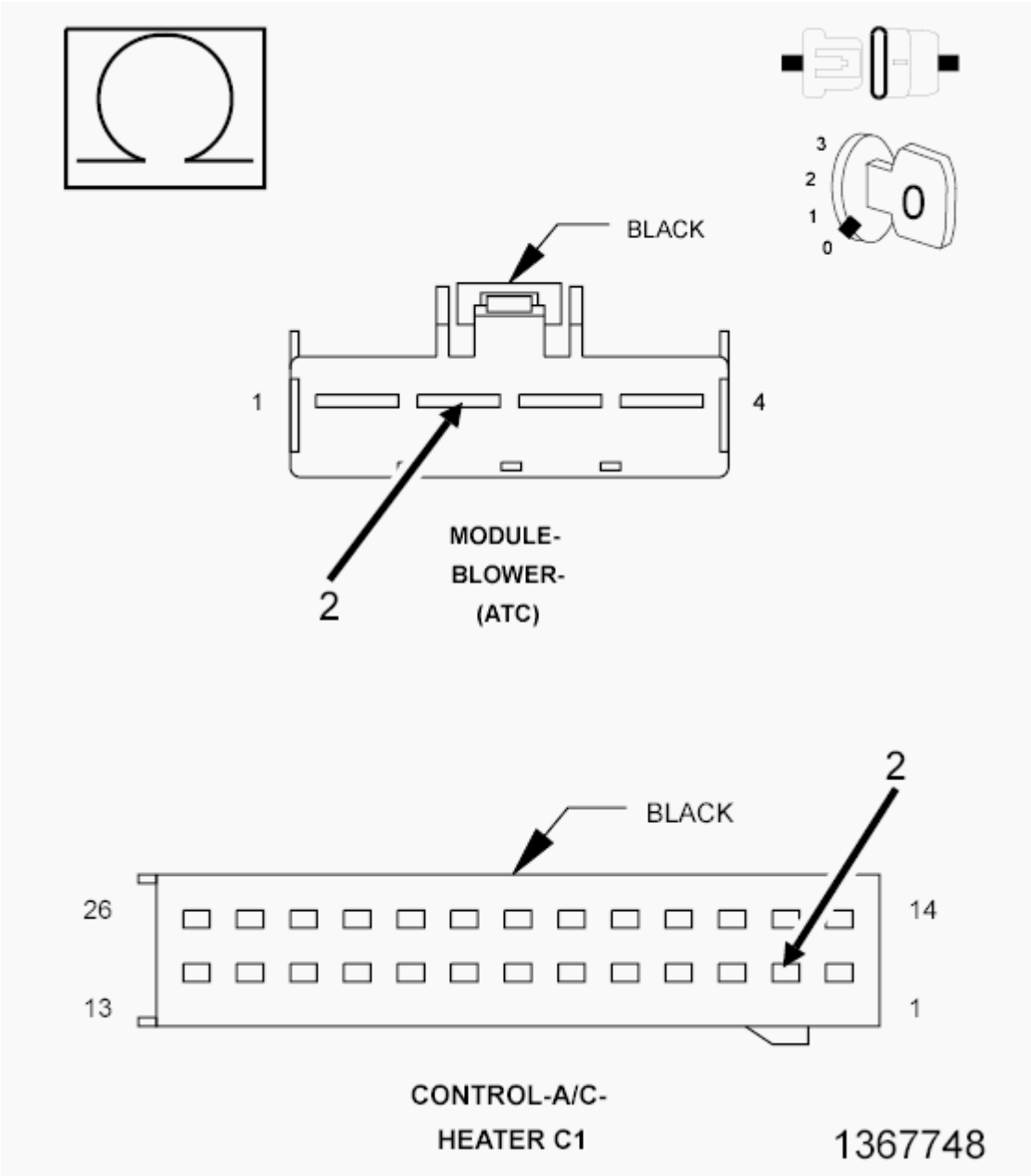

Fig. 68: Checking Blower Control Circuit For An Open
Courtesy of CHRYSLER GROUP, LLC

1. Turn the ignition off to the lock position.
2. Measure the resistance of the (C56) Blower Control circuit between the A/C Heater Control harness connector and the Blower Module harness connector.

   Is the resistance above 1.0 Ohm?

   Yes

   - Repair the (C56) Blower Control circuit for an open.

- Perform HVAC VERIFICATION TEST. Refer to **HVAC VERIFICATION TEST**.

No

- Go To 4.

4. **CHECK THE (Z911) GROUND CIRCUIT FOR AN OPEN**

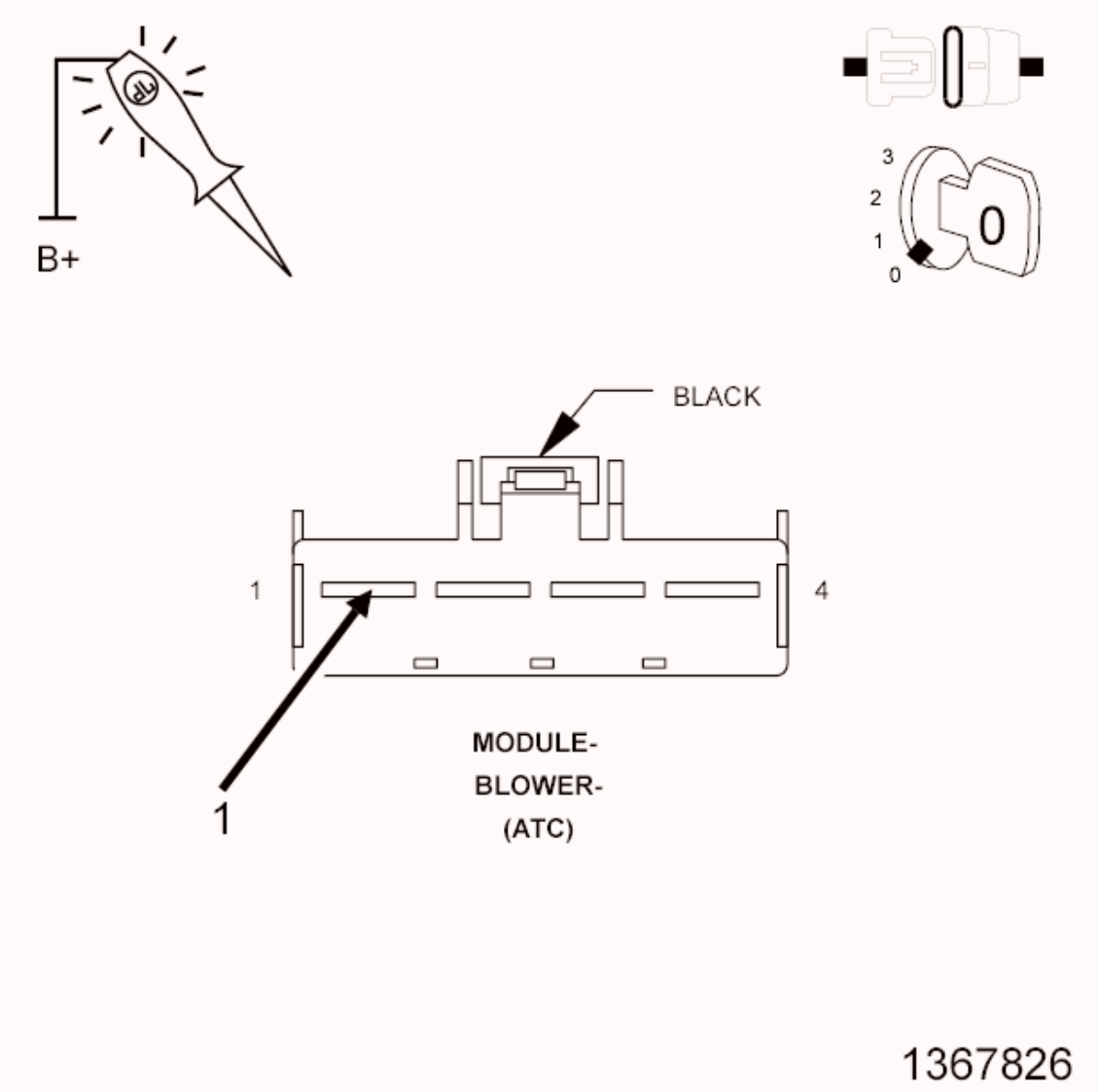

Fig. 69: Checking Ground Circuit For An Open
Courtesy of CHRYSLER GROUP, LLC

1. Using a 12-volt test light connected to 12-volts, check the (Z911) Ground circuit.

NOTE: **The test light must illuminate brightly. Compare the brightness to that of a direct connection to the battery.**

Does the test light illuminate brightly?

Yes

- Repair the (C56) Blower Control circuit for an open.
- Perform HVAC VERIFICATION TEST. Refer to **HVAC VERIFICATION TEST**.

No

- Go To 5.

5. **CHECK THE BLOWER MODULE**
   1. Turn the ignition off to the lock position.
   2. Replace the Blower Module in accordance with the Service Information.
   3. Perform HVAC VERIFICATION TEST. Refer to **HVAC VERIFICATION TEST**.

   Did the DTC reset during or after the HVAC Verification Test?

   Yes

   - Replace and program the A/C Heater Control in accordance with the Service Information.
   - Perform HVAC VERIFICATION TEST. Refer to **HVAC VERIFICATION TEST**.

   No

   - Test complete.

6. **CHECK THE WIRING AND CONNECTORS**
   1. The conditions necessary to set the DTC are not present at this time.
   2. Using the schematics as a guide, inspect the wiring and connectors specific to this circuit.
   3. Check for an intermittent condition by inspecting the related wiring harness for chafed, pierced, pinched, partially broken wires.
   4. Check the connectors for broken, bent, pushed out, spread, corroded, or contaminated terminals.
   5. Wiggle the wiring and connectors while checking for shorted and open circuits.
   6. With the scan tool, check the Environmental Data to help identify the conditions in which the DTC was set.

   Were there any problems found?

   Yes

   - Repair as necessary.
   - Perform HVAC VERIFICATION TEST. Refer to **HVAC VERIFICATION TEST**.

   No

- Test complete.

B1141-CLIMATE SYNC SWITCH PERFORMANCE

For a complete wiring diagram, **refer to appropriate SYSTEM WIRING DIAGRAMS article** .

THEORY OF OPERATION

The HVAC A/C Heater Control contains various switches and knobs that are used to change the systems operation. Many of the switches are momentary switches which are normally open or in the Off position and the status changes when the switch button or knob is pushed or turned. An active DTC indicates that the switch is stuck in an On position. A stored DTC indicates that the switch was stuck in a On position for more than 60 seconds but has since returned to its normal state of Off.

WHEN MONITORED:

With the ignition on.

SET CONDITION:

If the Sync Control Switch is stuck in an On position for more than 60 seconds. This DTC has a de-maturing time of two seconds. If the DTC's status changes from active to stored, the DTC will stay in memory for 100 ignition cycles.

POSSIBLE CAUSES

Possible Causes
OBJECT HOLDING SWITCH IN AN ON POSITION A/C HEATER CONTROL

Always perform the HVAC Pre-Diagnostic Troubleshooting procedure before proceeding. Refer to HVAC PRE-DIAGNOSTIC TROUBLESHOOTING PROCEDURE.

DIAGNOSTIC TEST

1. **INSPECT FOR OBJECT HOLDING SWITCH IN AN ON POSITION**
    1. Inspect the A/C Heater Control for an object or debris holding the Sync Control Switch in an On position.

        NOTE: Using the scan tool you can read the On/Off status of the control switch.

        Is the Sync Control Switch being held in or stuck On?

        Yes

- Clean or repair the A/C Heater Control as necessary. If you are unable to clean the switch to where the switch can work properly, replace and program the A/C Heater Control in accordance with the Service Information.
- Perform HVAC VERIFICATION TEST. Refer to **HVAC VERIFICATION TEST**.

No

- Go To 2.

2. **A/C HEATER CONTROL**
   1. Turn the ignition on.
   2. With the scan tool, erase HVAC DTC's.
   3. Turn the ignition off for 10 seconds, and then turn the ignition on and wait a minimum of 60 seconds.
   4. With the scan tool, read HVAC DTC's.

   Does the scan tool display this DTC as Active or is the status of the switch reading On?

   Yes

   - Replace and program the A/C Heater Control in accordance with the Service Information.
   - Perform HVAC VERIFICATION TEST. Refer to **HVAC VERIFICATION TEST**.

   No

   - Test complete.
   - Perform HVAC VERIFICATION TEST. Refer to **HVAC VERIFICATION TEST**.

B1184-LEFT TEMP UP SWITCH REQUEST INPUT CIRCUIT/PERFORMANCE

For a complete wiring diagram, **refer to appropriate SYSTEM WIRING DIAGRAMS article** .

THEORY OF OPERATION

The HVAC A/C Heater Control contains various switches and knobs that are used to change the systems operation. Many of the switches are momentary switches which are normally open or in the Off position and the status changes when the switch button or knob is pushed or turned. An active DTC indicates that the switch is stuck in an On position. A stored DTC indicates that the switch was stuck in a On position for more than 60 seconds but has since returned to its normal state of Off.

WHEN MONITORED:

With the ignition on.

SET CONDITION:

If the Left Temperature Up Control Switch is stuck in an On position for more than 60 seconds. This DTC has a de-maturing time of two seconds. If the DTC's status changes from active to stored, the DTC will stay in memory for 100 ignition cycles.

POSSIBLE CAUSES

Possible Causes
OBJECT HOLDING SWITCH IN AN ON POSITION A/C HEATER CONTROL

Always perform the HVAC Pre-Diagnostic Troubleshooting procedure before proceeding. Refer to HVAC PRE-DIAGNOSTIC TROUBLESHOOTING PROCEDURE.

DIAGNOSTIC TEST

1. **INSPECT FOR OBJECT HOLDING SWITCH IN AN ON POSITION**
    1. Inspect the A/C Heater Control for an object or debris holding the Left Temperature Up Control Switch in an On position.

        NOTE: Using the scan tool you can read the On/Off status of the control switch.

        Is the Left Temperature Up Control Switch being held in or stuck On?

        Yes

        - Clean or repair the A/C Heater Control as necessary. If you are unable to clean the switch to where the switch can work properly, replace and program the A/C Heater Control in accordance with the Service Information.
        - Perform HVAC VERIFICATION TEST. Refer to **HVAC VERIFICATION TEST**.

        No

        - Go To 2.
2. **A/C HEATER CONTROL**
    1. Turn the ignition on.
    2. With the scan tool, erase HVAC DTC's.
    3. Turn the ignition off for 10 seconds, and then turn the ignition on and wait a minimum of 60 seconds.
    4. With the scan tool, read HVAC DTC's.

        Does the scan tool display this DTC as Active or is the status of the switch reading On?

        Yes

- Replace and program the A/C Heater Control in accordance with the Service Information.
- Perform HVAC VERIFICATION TEST. Refer to **HVAC VERIFICATION TEST**.

No

- Test complete.
- Perform HVAC VERIFICATION TEST. Refer to **HVAC VERIFICATION TEST**.

B1185-LEFT TEMP DOWN SWITCH REQUEST INPUT CIRCUIT/PERFORMANCE

For a complete wiring diagram, **refer to appropriate SYSTEM WIRING DIAGRAMS article** .

THEORY OF OPERATION

The HVAC A/C Heater Control contains various switches and knobs that are used to change the systems operation. Many of the switches are momentary switches which are normally open or in the Off position and the status changes when the switch button or knob is pushed or turned. An active DTC indicates that the switch is stuck in an On position. A stored DTC indicates that the switch was stuck in a On position for more than 60 seconds but has since returned to its normal state of Off.

WHEN MONITORED:

With the ignition on.

SET CONDITION:

If the Left Temperature Down Control Switch is stuck in an On position for more than 60 seconds. This DTC has a de-maturing time of two seconds. If the DTC's status changes from active to stored, the DTC will stay in memory for 100 ignition cycles.

POSSIBLE CAUSES

Possible Causes
OBJECT HOLDING SWITCH IN AN ON POSITION A/C HEATER CONTROL

Always perform the HVAC Pre-Diagnostic Troubleshooting procedure before proceeding. Refer to HVAC PRE-DIAGNOSTIC TROUBLESHOOTING PROCEDURE.

DIAGNOSTIC TEST

1. **INSPECT FOR OBJECT HOLDING SWITCH IN AN ON POSITION**
    1. Inspect the A/C Heater Control for an object or debris holding the Left Temperature Down Control Switch in an On position.

NOTE: Using the scan tool you can read the On/Off status of the control

switch.

Is the Left Temperature Down Control Switch being held in or stuck On?

Yes

- Clean or repair the A/C Heater Control as necessary. If you are unable to clean the switch to where the switch can work properly, replace and program the A/C Heater Control in accordance with the Service Information.
- Perform HVAC VERIFICATION TEST. Refer to **HVAC VERIFICATION TEST**.

No

- Go To 2.

2. **A/C HEATER CONTROL**
   1. Turn the ignition on.
   2. With the scan tool, erase HVAC DTC's.
   3. Turn the ignition off for 10 seconds, and then turn the ignition on and wait a minimum of 60 seconds.
   4. With the scan tool, read HVAC DTC's.

   Does the scan tool display this DTC as Active or is the status of the switch reading On?

   Yes

   - Replace and program the A/C Heater Control in accordance with the Service Information.
   - Perform HVAC VERIFICATION TEST. Refer to **HVAC VERIFICATION TEST**.

   No

   - Test complete.
   - Perform HVAC VERIFICATION TEST. Refer to **HVAC VERIFICATION TEST**.

B1186-RIGHT TEMP UP SWITCH REQUEST INPUT CIRCUIT/PERFORMANCE

For a complete wiring diagram, **refer to appropriate SYSTEM WIRING DIAGRAMS article** .

THEORY OF OPERATION

The HVAC A/C Heater Control contains various switches and knobs that are used to change the systems operation. Many of the switches are momentary switches which are normally open or in the Off position and the status changes when the switch button or knob is pushed or turned. An active DTC indicates that the switch is stuck in an On position. A stored DTC indicates that the switch was stuck in a On position for more than 60 seconds but has since returned to its normal state of Off.

WHEN MONITORED:

With the ignition on.

SET CONDITION:

If the Right Temperature Up Control Switch is stuck in an On position for more than 60 seconds. This DTC has a de-maturing time of two seconds. If the DTC's status changes from active to stored, the DTC will stay in memory for 100 ignition cycles.

POSSIBLE CAUSES

Possible Causes
OBJECT HOLDING SWITCH IN AN ON POSITION A/C HEATER CONTROL

Always perform the HVAC Pre-Diagnostic Troubleshooting procedure before proceeding. Refer to HVAC PRE-DIAGNOSTIC TROUBLESHOOTING PROCEDURE.

DIAGNOSTIC TEST

1. **INSPECT FOR OBJECT HOLDING SWITCH IN AN ON POSITION**
    1. Inspect the A/C Heater Control for an object or debris holding the Right Temperature Up Control Switch in an On position.

        NOTE: Using the scan tool you can read the On/Off status of the control switch.

        Is the Right Temperature Up Control Switch being held in or stuck On?

        Yes

        - Clean or repair the A/C Heater Control as necessary. If you are unable to clean the switch to where the switch can work properly, replace and program the A/C Heater Control in accordance with the Service Information.
        - Perform HVAC VERIFICATION TEST. Refer to **HVAC VERIFICATION TEST**.

        No

        - Go To 2.
2. **A/C HEATER CONTROL**
    1. Turn the ignition on.
    2. With the scan tool, erase HVAC DTC's.
    3. Turn the ignition off for 10 seconds, and then turn the ignition on and wait a minimum of 60 seconds.

4. With the scan tool, read HVAC DTC's.

   Does the scan tool display this DTC as Active or is the status of the switch reading On?

   Yes

   - Replace and program the A/C Heater Control in accordance with the Service Information.
   - Perform HVAC VERIFICATION TEST. Refer to **HVAC VERIFICATION TEST**.

   No

   - Test complete.
   - Perform HVAC VERIFICATION TEST. Refer to **HVAC VERIFICATION TEST**.

B1187-RIGHT TEMP DOWN SWITCH REQUEST INPUT CIRCUIT/PERFORMANCE

For a complete wiring diagram, **refer to appropriate SYSTEM WIRING DIAGRAMS article** .

THEORY OF OPERATION

The HVAC A/C Heater Control contains various switches and knobs that are used to change the systems operation. Many of the switches are momentary switches which are normally open or in the Off position and the status changes when the switch button or knob is pushed or turned. An active DTC indicates that the switch is stuck in an On position. A stored DTC indicates that the switch was stuck in a On position for more than 60 seconds but has since returned to its normal state of Off.

WHEN MONITORED:

With the ignition on.

SET CONDITION:

If the Right Temperature Down Control Switch is stuck in an On position for more than 60 seconds. This DTC has a de-maturing time of two seconds. If the DTC's status changes from active to stored, the DTC will stay in memory for 100 ignition cycles.

POSSIBLE CAUSES

Possible Causes
OBJECT HOLDING SWITCH IN AN ON POSITION A/C HEATER CONTROL

Always perform the HVAC Pre-Diagnostic Troubleshooting procedure before proceeding. Refer to HVAC PRE-DIAGNOSTIC TROUBLESHOOTING PROCEDURE.

DIAGNOSTIC TEST

1. **INSPECT FOR OBJECT HOLDING SWITCH IN AN ON POSITION**
    1. Inspect the A/C Heater Control for an object or debris holding the Right Temperature Down Control Switch in an On position.

        NOTE: Using the scan tool you can read the On/Off status of the control switch.

        Is the Right Temperature Down Control Switch being held in or stuck On?

        Yes

        - Clean or repair the A/C Heater Control as necessary. If you are unable to clean the switch to where the switch can work properly, replace and program the A/C Heater Control in accordance with the Service Information.
        - Perform HVAC VERIFICATION TEST. Refer to **HVAC VERIFICATION TEST**.

        No

        - Go To 2.
2. **A/C HEATER CONTROL**
    1. Turn the ignition on.
    2. With the scan tool, erase HVAC DTC's.
    3. Turn the ignition off for 10 seconds, and then turn the ignition on and wait a minimum of 60 seconds.
    4. With the scan tool, read HVAC DTC's.

        Does the scan tool display this DTC as Active or is the status of the switch reading On?

        Yes

        - Replace and program the A/C Heater Control in accordance with the Service Information.
        - Perform HVAC VERIFICATION TEST. Refer to **HVAC VERIFICATION TEST**.

        No

        - Test complete.
        - Perform HVAC VERIFICATION TEST. Refer to **HVAC VERIFICATION TEST**.

B1601-LEFT SOLAR SENSOR CIRCUIT LOW

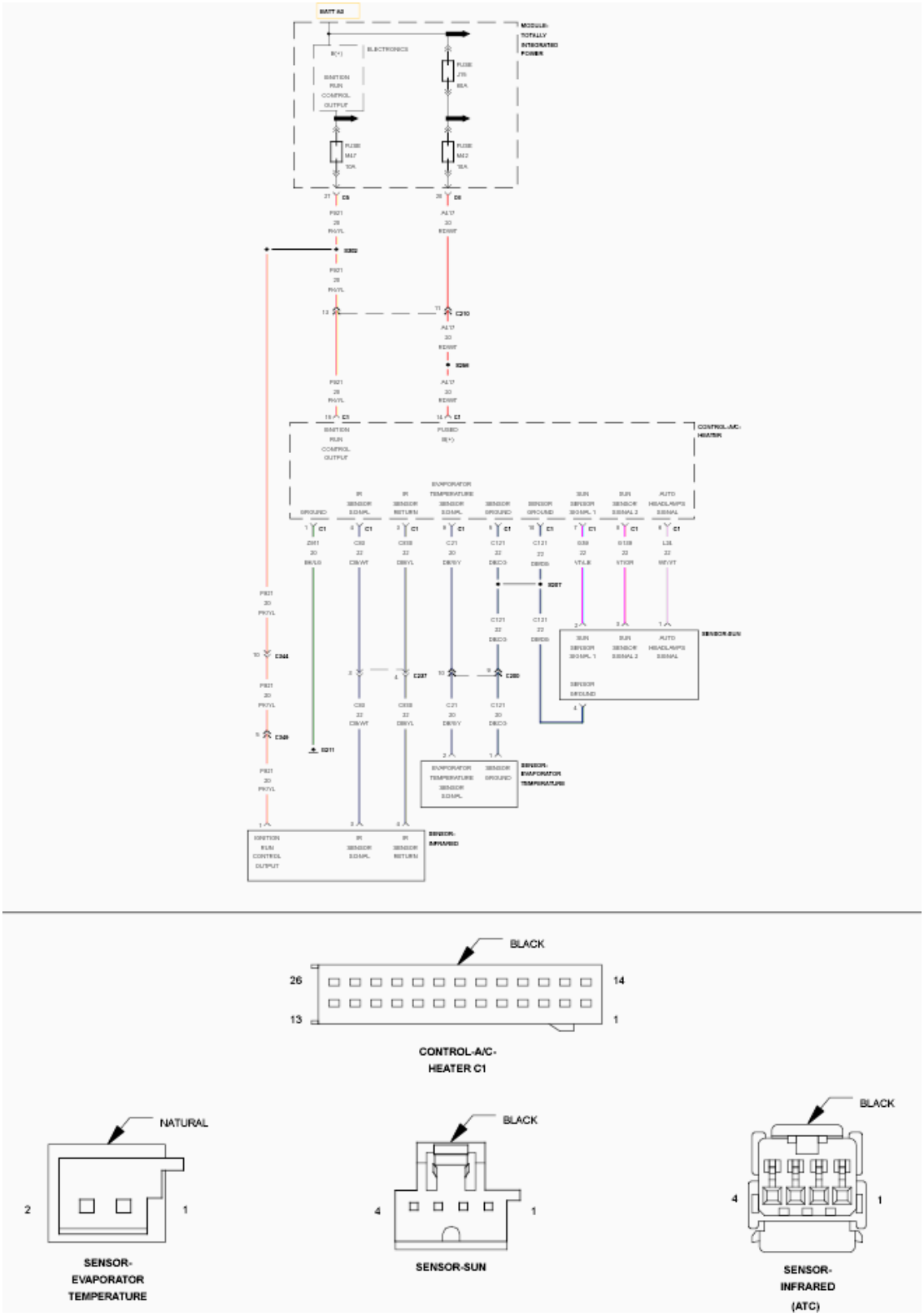

Fig. 70: Infrared Temperature Sensor, Evaporator Temperature Sensor & Sun Sensor Wiring Diagram
Courtesy of CHRYSLER GROUP, LLC

For a complete wiring diagram, **refer to appropriate SYSTEM WIRING DIAGRAMS article** .

WHEN MONITORED:

With the ignition on.

SET CONDITION:

If the Left Sun Sensor Signal input voltage is less than 0.16 of a volt for period of 30 seconds.

POSSIBLE CAUSES

Possible Causes
(G39) SUN SENSOR SIGNAL 1 CIRCUIT SHORTED TO GROUND
SUN SENSOR
A/C HEATER CONTROL

Always perform the HVAC Pre-Diagnostic Troubleshooting procedure before proceeding. Refer to HVAC PRE-DIAGNOSTIC TROUBLESHOOTING PROCEDURE.

DIAGNOSTIC TEST

1. **CHECK IF THE DTC IS ACTIVE**
    1. Ignition on, engine not running.
    2. With the scan tool, read HVAC DTC's.

    NOTE: It can take up to 30 seconds or more for this DTC to mature.

    Is this DTC active?

    Yes

    - Go To 2.

    No

    - Go To 4.
2. **CHECK (G39) SUN SENSOR SIGNAL 1 CIRCUIT FOR A SHORT TO GROUND**

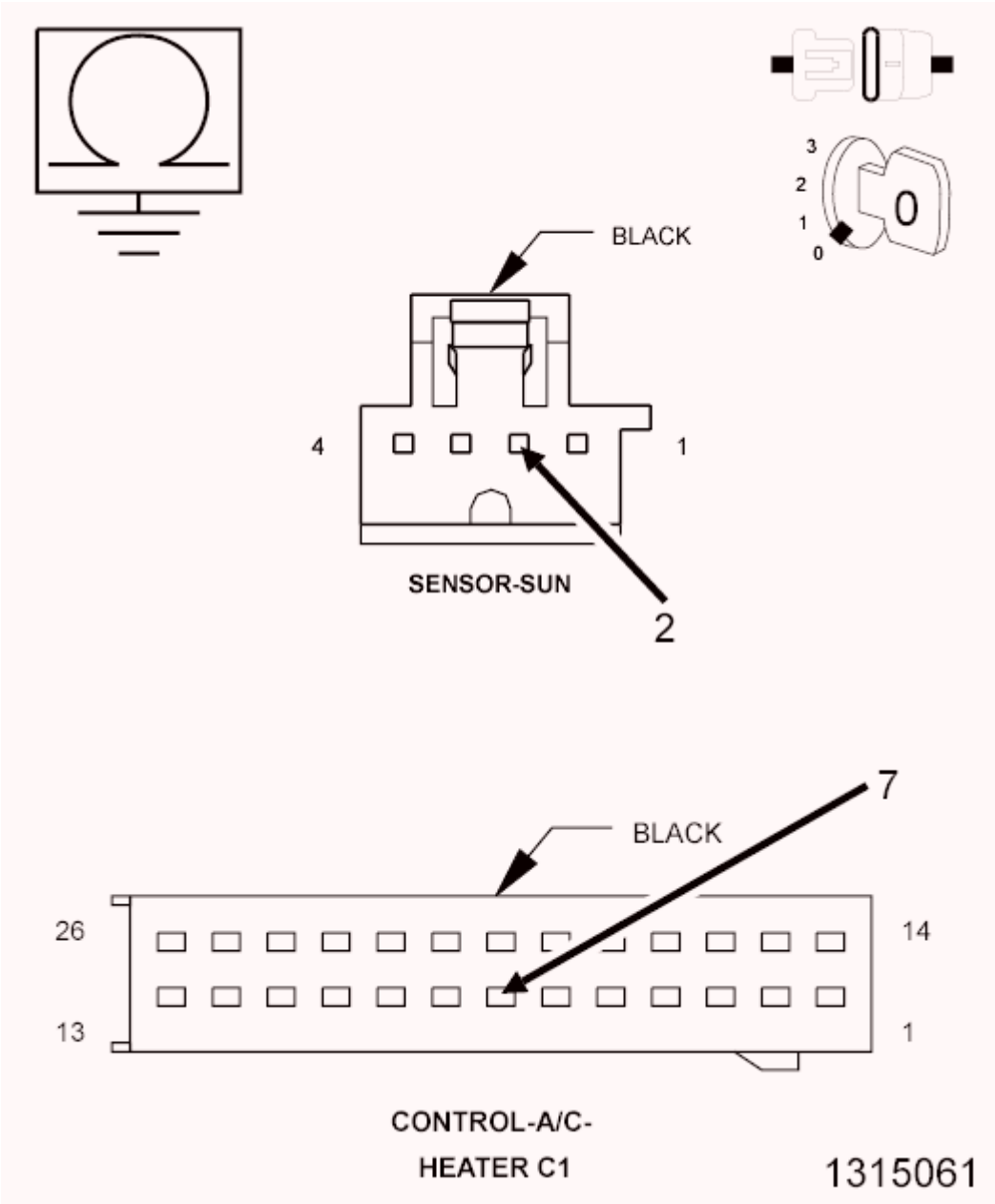

Fig. 71: Checking Sun Sensor Signal 1 Circuit For A Short To Ground
Courtesy of CHRYSLER GROUP, LLC

1. Turn the ignition off to the lock position.
2. Disconnect the A/C Heater Control C1 harness connector.
3. Disconnect the Sun Sensor harness connector.
4. Measure the resistance between ground and the (G39) Sun Sensor Signal 1 circuit.

   Is the resistance below 100k ohms?

   Yes

- Repair the (G39) Sun Sensor Signal 1 circuit for a short to ground.
- Perform HVAC VERIFICATION TEST. Refer to **HVAC VERIFICATION TEST**.

No

- Go To 3.

3. **CHECK THE SUN SENSOR AND A/C HEATER CONTROL**
   1. Replace the Sun Sensor in accordance with the Service Information.
   2. Perform HVAC VERIFICATION TEST. Refer to **HVAC VERIFICATION TEST**.

   Did this DTC reset while performing the HVAC Verification Test?

   Yes

   - Replace and program the A/C Heater Control in accordance with the Service Information.
   - Perform HVAC VERIFICATION TEST. Refer to **HVAC VERIFICATION TEST**.

   No

   - Test complete.

4. **CHECK THE WIRING AND CONNECTORS**
   1. The conditions necessary to set the DTC are not present at this time.
   2. Using the schematics as a guide, inspect the wiring and connectors specific to this circuit.
   3. Check for an intermittent condition by inspecting the related wiring harness for chafed, pierced, pinched, partially broken wires.
   4. Check the connectors for broken, bent, pushed out, spread, corroded, or contaminated terminals.
   5. Wiggle the wiring and connectors while checking for shorted and open circuits.
   6. With the scan tool, check the Environmental Data to help identify the conditions in which the DTC was set.

   Were there any problems found?

   Yes

   - Repair as necessary.
   - Perform HVAC VERIFICATION TEST. Refer to **HVAC VERIFICATION TEST**.

   No

   - Test complete.

B1602-LEFT SOLAR SENSOR CIRCUIT HIGH

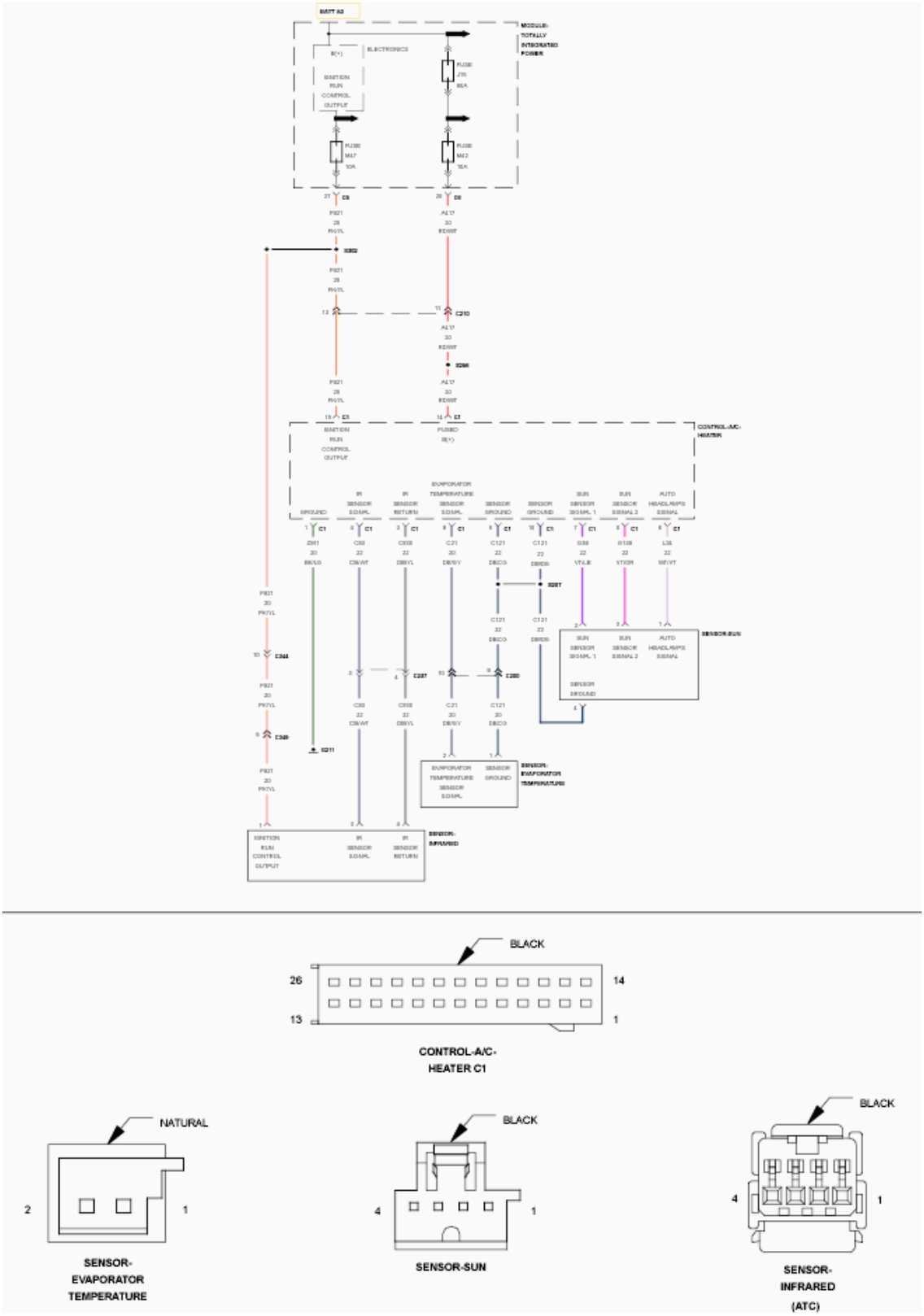

Fig. 72: Infrared Temperature Sensor, Evaporator Temperature Sensor & Sun Sensor Wiring Diagram
Courtesy of CHRYSLER GROUP, LLC

For a complete wiring diagram, **refer to the appropriate SYSTEM WIRING DIAGRAMS article** .

WHEN MONITORED:

With the ignition on.

SET CONDITION:

If the Left Sun Sensor Signal input voltage is greater than 4.90 volts for period of 30 seconds.

POSSIBLE CAUSES

Possible Causes
(G39) SUN SENSOR SIGNAL 1 CIRCUIT SHORT TO VOLTAGE
(G39) SUN SENSOR SIGNAL 1 CIRCUIT OPEN
(C121) SENSOR GROUND CIRCUIT OPEN
SUN SENSOR
A/C HEATER CONTROL

Always perform the HVAC Pre-Diagnostic Troubleshooting procedure before proceeding. Refer to HVAC PRE-DIAGNOSTIC TROUBLESHOOTING PROCEDURE.

DIAGNOSTIC TEST

1. **CHECK IF DTC IS ACTIVE**
    1. Ignition on, engine not running.
    2. With the scan tool, read HVAC DTC's.

    NOTE: It can take up to 30 seconds or more for this DTC to mature.

    Is this DTC active?

    Yes

    - Go To 2.

    No

    - Go To 6.
2. **CHECK THE (G39) SUN SENSOR SIGNAL 1 CIRCUIT FOR A SHORT TO VOLTAGE**

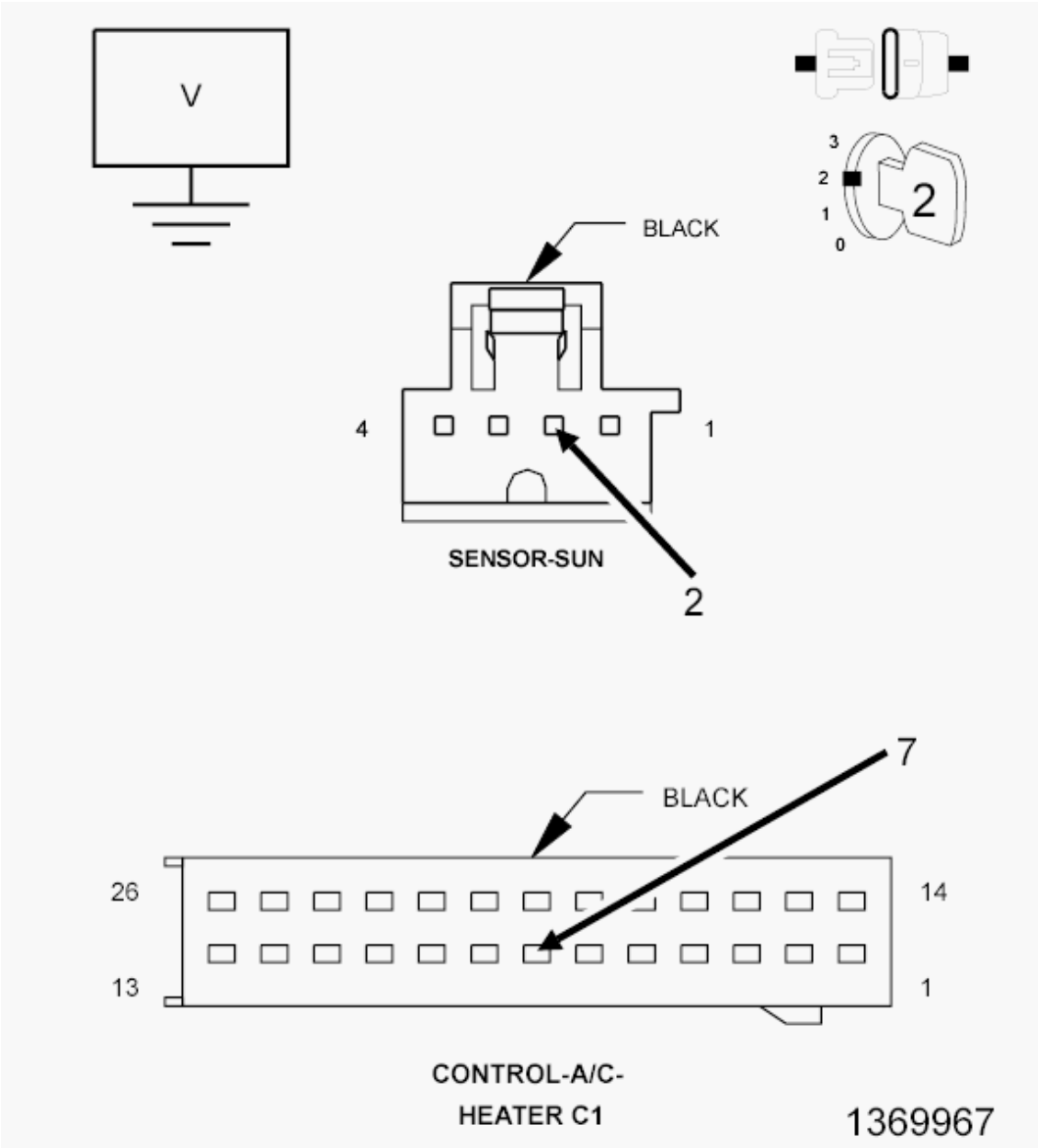

Fig. 73: Checking Sun Sensor Signal 1 Circuit For A Short To Voltage
Courtesy of CHRYSLER GROUP, LLC

1. Turn the ignition off to the lock position.
2. Disconnect the Sun Sensor harness connector.
3. Disconnect the A/C Heater Control harness connector.

NOTE: Check connectors - Clean/repair as necessary.

4. Ignition on, engine not running.
5. Check the voltage of the (G39) Sun Sensor Signal 1 circuit.

Is there any voltage present?

Yes

- Repair the (G39) Sun Sensor Signal 1 circuit for an short to voltage.
- Perform HVAC VERIFICATION TEST. Refer to **HVAC VERIFICATION TEST**.

No

- Go To 3.

3. **CHECK THE (G39) SUN SENSOR SIGNAL 1 CIRCUIT FOR AN OPEN**

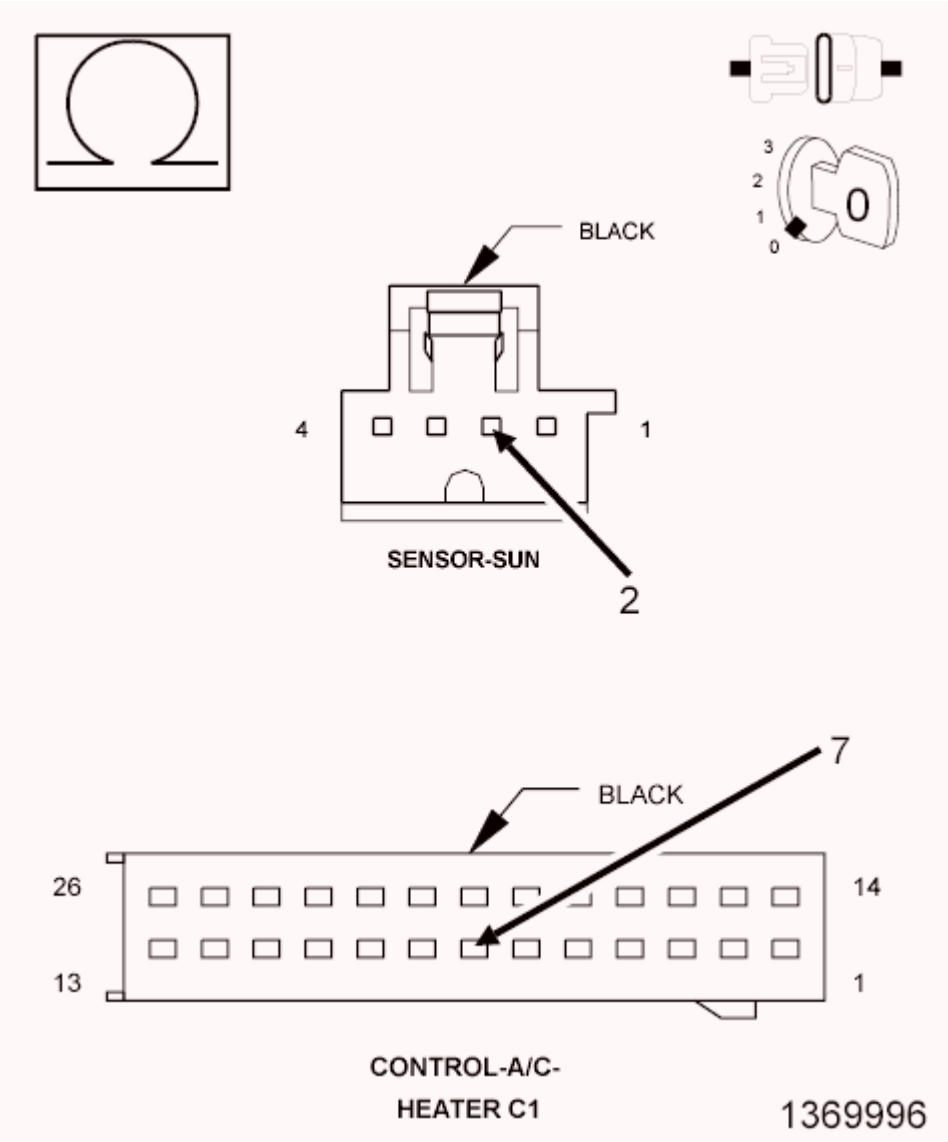

Fig. 74: Checking Sun Sensor Signal 1 Circuit For An Open
Courtesy of CHRYSLER GROUP, LLC

1. Turn the ignition off to the lock position.
2. Measure the resistance of the (G39) Sun Sensor Signal 1 circuit between the A/C Heater Control harness connector and the Sun Sensor harness connector.

   Is the resistance above 5.0 Ohms?

   Yes

   - Repair the (G39) Sun Sensor Signal 1 circuit for an open.
   - Perform HVAC VERIFICATION TEST. Refer to **HVAC VERIFICATION TEST**.

   No

   - Go To 4.

4. **CHECK THE (C121) SENSOR GROUND CIRCUIT FOR AN OPEN**

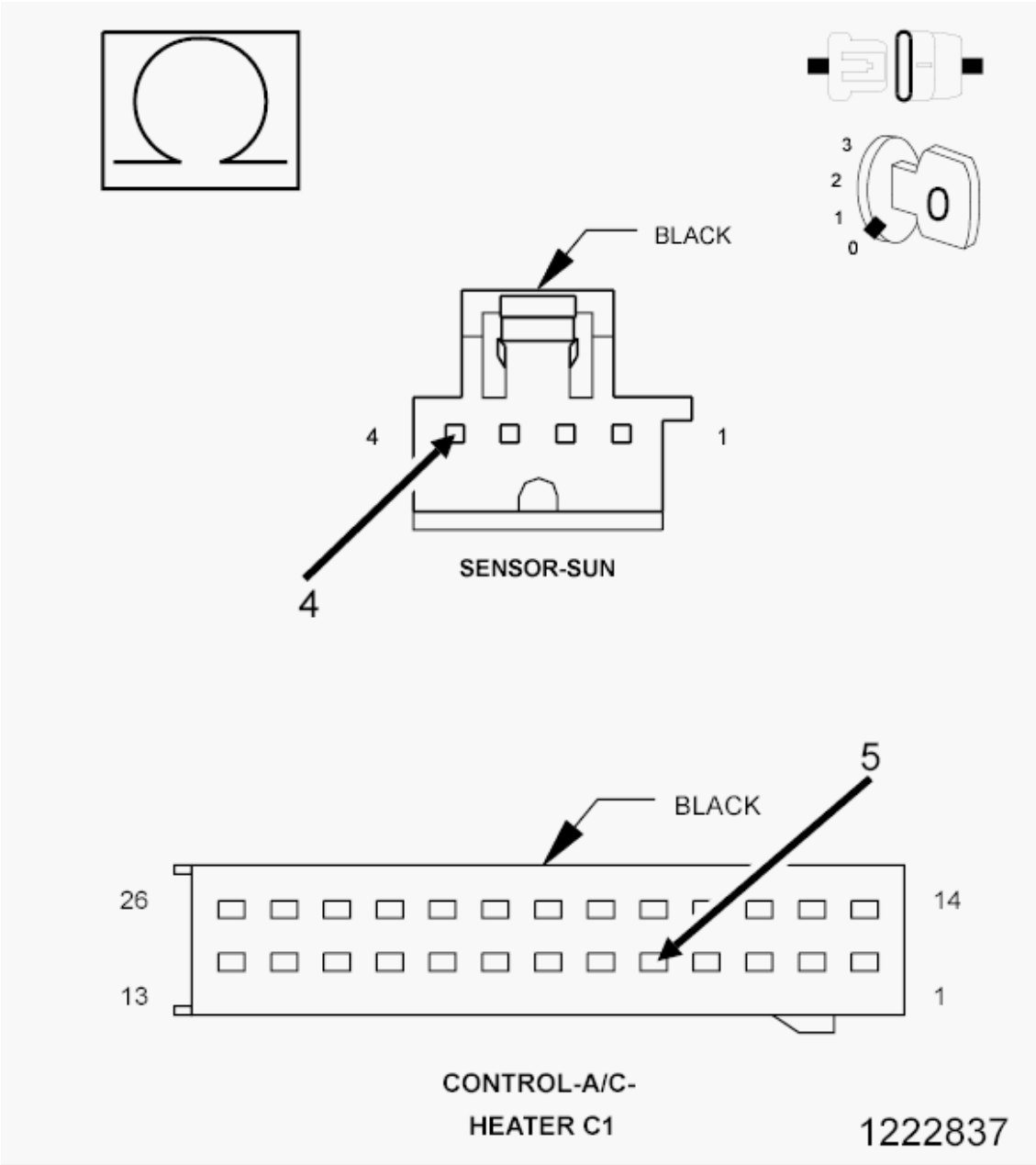

Fig. 75: Checking Sensor Ground Circuit For An Open
Courtesy of CHRYSLER GROUP, LLC

1. Measure the resistance of the (C121) Sensor Ground circuit between the A/C Heater Control C1 harness connector and the Sun Sensor harness connector.

   Is the resistance above 5.0 Ohms?

   Yes

   - Repair the (C121) Sensor Ground circuit for an open.
   - Perform HVAC VERIFICATION TEST. Refer to **HVAC VERIFICATION TEST**.

No

- Go To 5.

5. **CHECK THE SUN SENSOR AND A/C HEATER CONTROL**
   1. Turn the ignition off to the lock position.
   2. Replace the Sun Sensor in accordance with the Service Information.
   3. Perform HVAC VERIFICATION TEST. Refer to **HVAC VERIFICATION TEST**.

   Did the DTC reset during or after the HVAC Verification Test?

   Yes

   - Replace and program the A/C Heater Control in accordance with the Service Information.
   - Perform HVAC VERIFICATION TEST. Refer to **HVAC VERIFICATION TEST**.

   No

   - Test complete.

6. **CHECK THE WIRING AND CONNECTORS**
   1. The conditions necessary to set the DTC are not present at this time.
   2. Using the schematics as a guide, inspect the wiring and connectors specific to this circuit.
   3. Check for an intermittent condition by inspecting the related wiring harness for chafed, pierced, pinched, partially broken wires.
   4. Check the connectors for broken, bent, pushed out, spread, corroded, or contaminated terminals.
   5. Wiggle the wiring and connectors while checking for shorted and open circuits.
   6. With the scan tool, check the Environmental Data to help identify the conditions in which the DTC was set.

   Were there any problems found?

   Yes

   - Repair as necessary.
   - Perform HVAC VERIFICATION TEST. Refer to **HVAC VERIFICATION TEST**.

   No

   - Test complete.

B1604-RIGHT SOLAR SENSOR CIRCUIT LOW

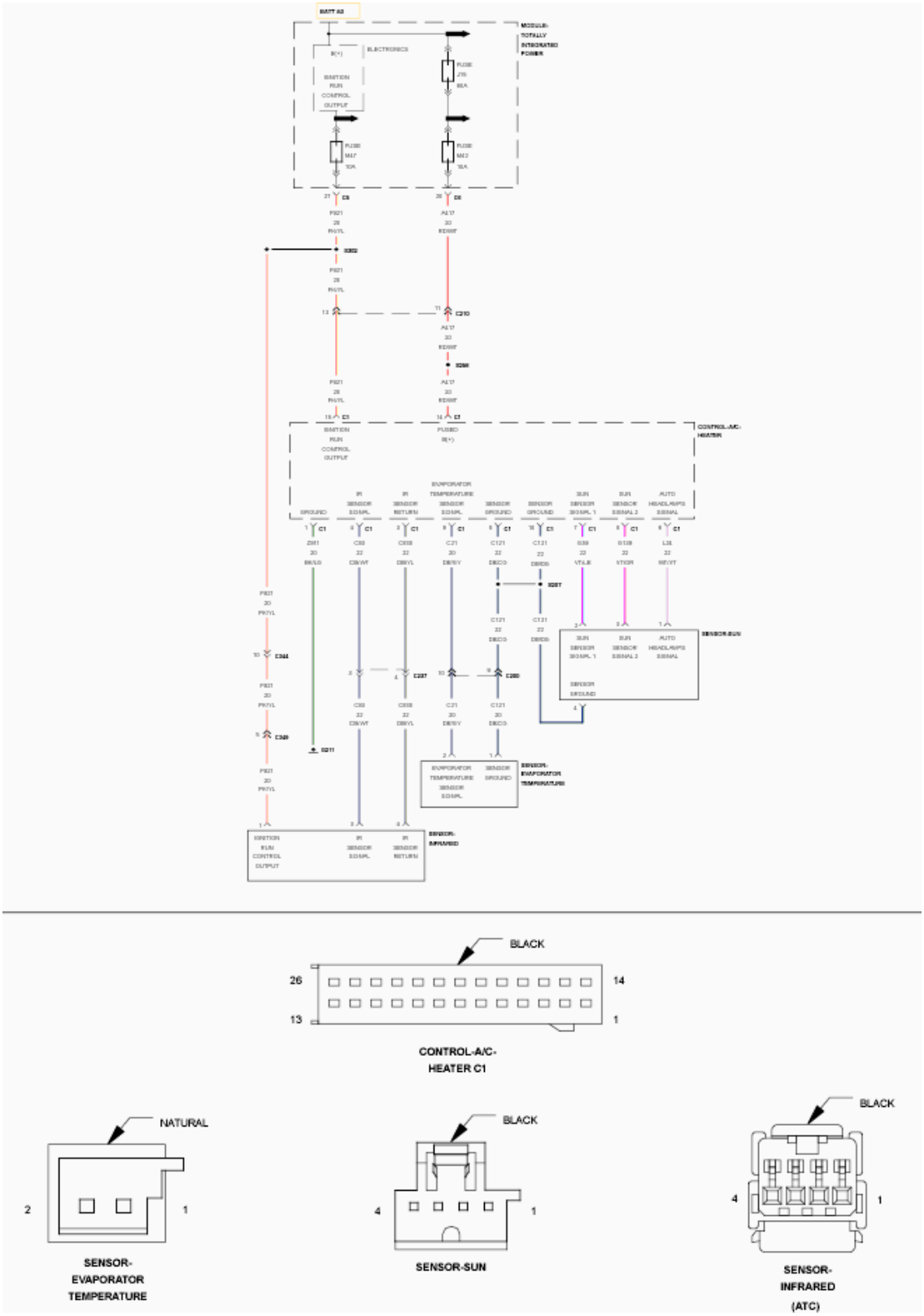

Fig. 76: Infrared Temperature Sensor, Evaporator Temperature Sensor & Sun Sensor Wiring Diagram
Courtesy of CHRYSLER GROUP, LLC

For a complete wiring diagram, **refer to the appropriate SYSTEM WIRING DIAGRAMS article** .

WHEN MONITORED:

With the ignition on.

SET CONDITION:

If the Right Sun Sensor Signal input voltage is less than 0.16 of a volt for period of 30 seconds.

POSSIBLE CAUSES

Possible Causes
(G139) SUN SENSOR SIGNAL 2 CIRCUIT SHORT TO GROUND
SUN SENSOR
A/C HEATER CONTROL

Always perform the HVAC Pre-Diagnostic Troubleshooting procedure before proceeding. Refer to HVAC PRE-DIAGNOSTIC TROUBLESHOOTING PROCEDURE.

DIAGNOSTIC TEST

1. **CHECK IF THE DTC IS ACTIVE**
    1. Ignition on, engine not running.
    2. With the scan tool, read HVAC DTC's.

    NOTE: It can take up to 30 seconds or more for this DTC to mature.

    Is this DTC active?

    Yes

    - Go To 2.

    No

    - Go To 4.
2. **CHECK (G139) SUN SENSOR SIGNAL 1 CIRCUIT FOR A SHORT TO GROUND**

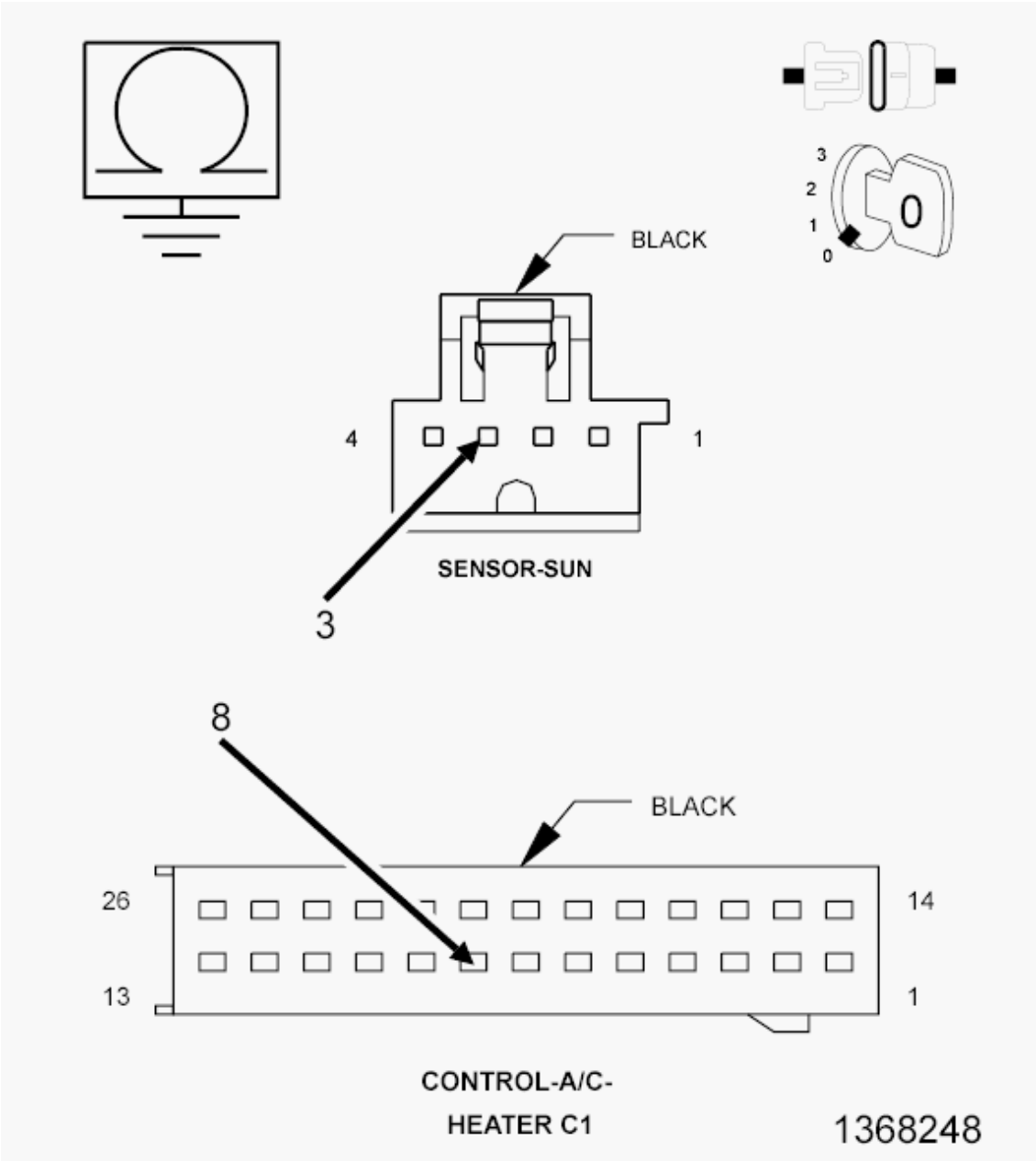

Fig. 77: Checking Sun Sensor Signal 1 Circuit For A Short To Ground
Courtesy of CHRYSLER GROUP, LLC

1. Turn the ignition off to the lock position.
2. Disconnect the A/C Heater Control C1 harness connector.
3. Disconnect the Sun Sensor harness connector.
4. Measure the resistance between ground and the (G139) Sun Sensor Signal 2 circuit.

   Is the resistance below 100k Ohms?

   Yes

- Repair the (G139) Sun Sensor Signal 2 circuit for a short to ground.
- Perform HVAC VERIFICATION TEST. Refer to **HVAC VERIFICATION TEST**.

No

- Go To 3.

3. **CHECK THE SUN SENSOR AND A/C HEATER CONTROL**
   1. Replace the Sun Sensor in accordance with the Service Information.
   2. Perform HVAC VERIFICATION TEST. Refer to **HVAC VERIFICATION TEST**.

   Did this DTC reset while performing the HVAC Verification Test?

   Yes

   - Replace and program the A/C Heater Control in accordance with the Service Information.
   - Perform HVAC VERIFICATION TEST. Refer to **HVAC VERIFICATION TEST**.

   No

   - Test complete.

4. **CHECK THE WIRING AND CONNECTORS**
   1. The conditions necessary to set the DTC are not present at this time.
   2. Using the schematics as a guide, inspect the wiring and connectors specific to this circuit.
   3. Check for an intermittent condition by inspecting the related wiring harness for chafed, pierced, pinched, partially broken wires.
   4. Check the connectors for broken, bent, pushed out, spread, corroded, or contaminated terminals.
   5. Wiggle the wiring and connectors while checking for shorted and open circuits.
   6. With the scan tool, check the Environmental Data to help identify the conditions in which the DTC was set.

   Were there any problems found?

   Yes

   - Repair as necessary.
   - Perform HVAC VERIFICATION TEST. Refer to **HVAC VERIFICATION TEST**.

   No

   - Test complete.

B1605-RIGHT SOLAR SENSOR CIRCUIT HIGH

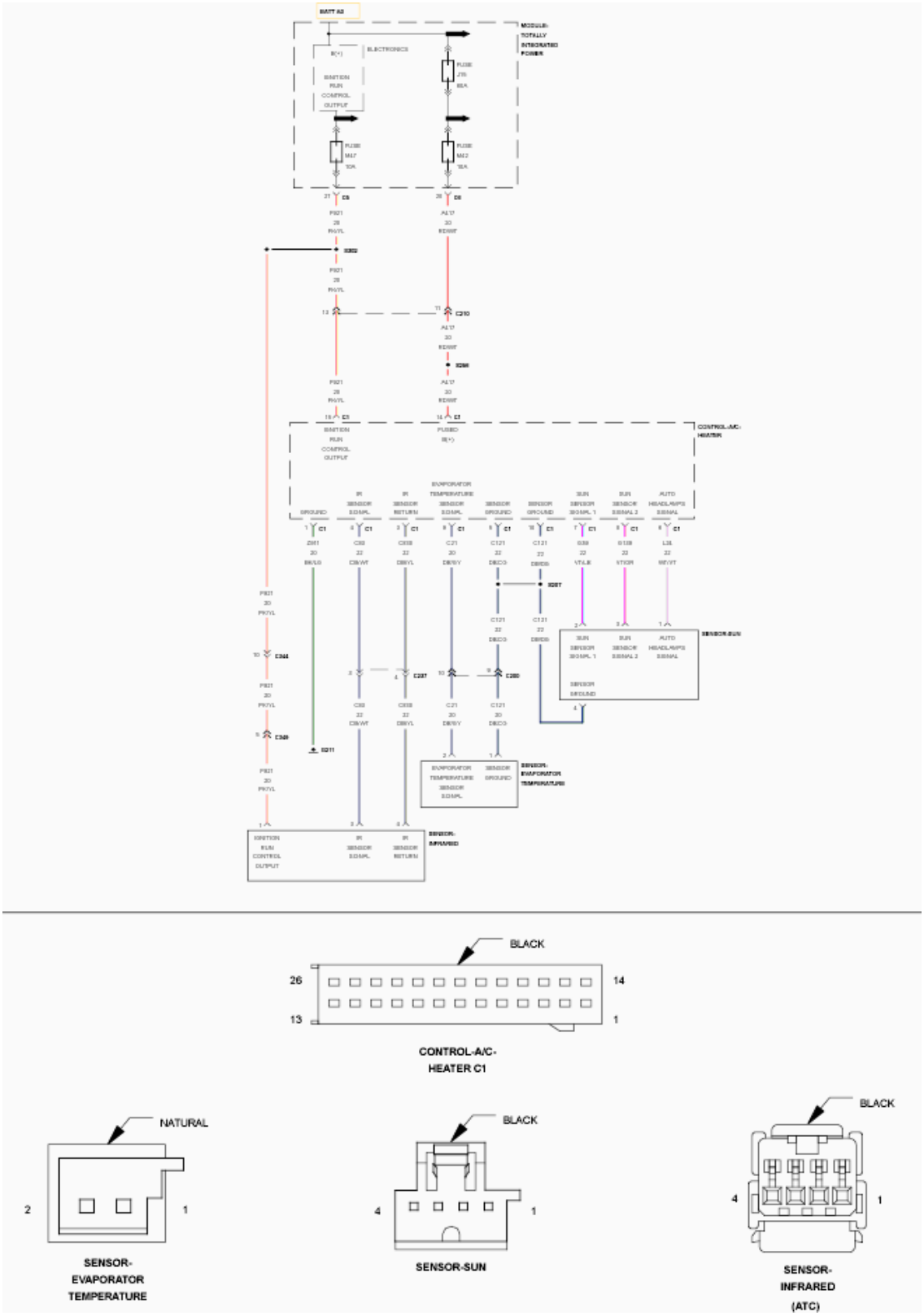

Fig. 78: Infrared Temperature Sensor, Evaporator Temperature Sensor & Sun Sensor Wiring Diagram
Courtesy of CHRYSLER GROUP, LLC

For a complete wiring diagram, **refer to the appropriate SYSTEM WIRING DIAGRAMS article** .

WHEN MONITORED:

With the ignition on.

SET CONDITION:

If the Right Sun Sensor Signal input voltage is greater than 4.90 volts for period of 30 seconds.

POSSIBLE CAUSES

Possible Causes
(G139) SUN SENSOR SIGNAL 2 CIRCUIT SHORT TO VOLTAGE
(G139) SUN SENSOR SIGNAL 2 CIRCUIT OPEN
(C121) SENSOR GROUND CIRCUIT OPEN
SUN SENSOR
A/C HEATER CONTROL

Always perform the HVAC Pre-Diagnostic Troubleshooting procedure before proceeding. Refer to HVAC PRE-DIAGNOSTIC TROUBLESHOOTING PROCEDURE.

DIAGNOSTIC TEST

1. **CHECK IF DTC IS ACTIVE**
    1. Ignition on, engine not running.
    2. With the scan tool, read HVAC DTC's.

    NOTE: It can take up to 30 seconds or more for this DTC to mature.

    Is this DTC active?

    Yes

    - Go To 2.

    No

    - Go To 6.
2. **CHECK THE (G139) SUN SENSOR SIGNAL 2 CIRCUIT FOR A SHORT TO VOLTAGE**

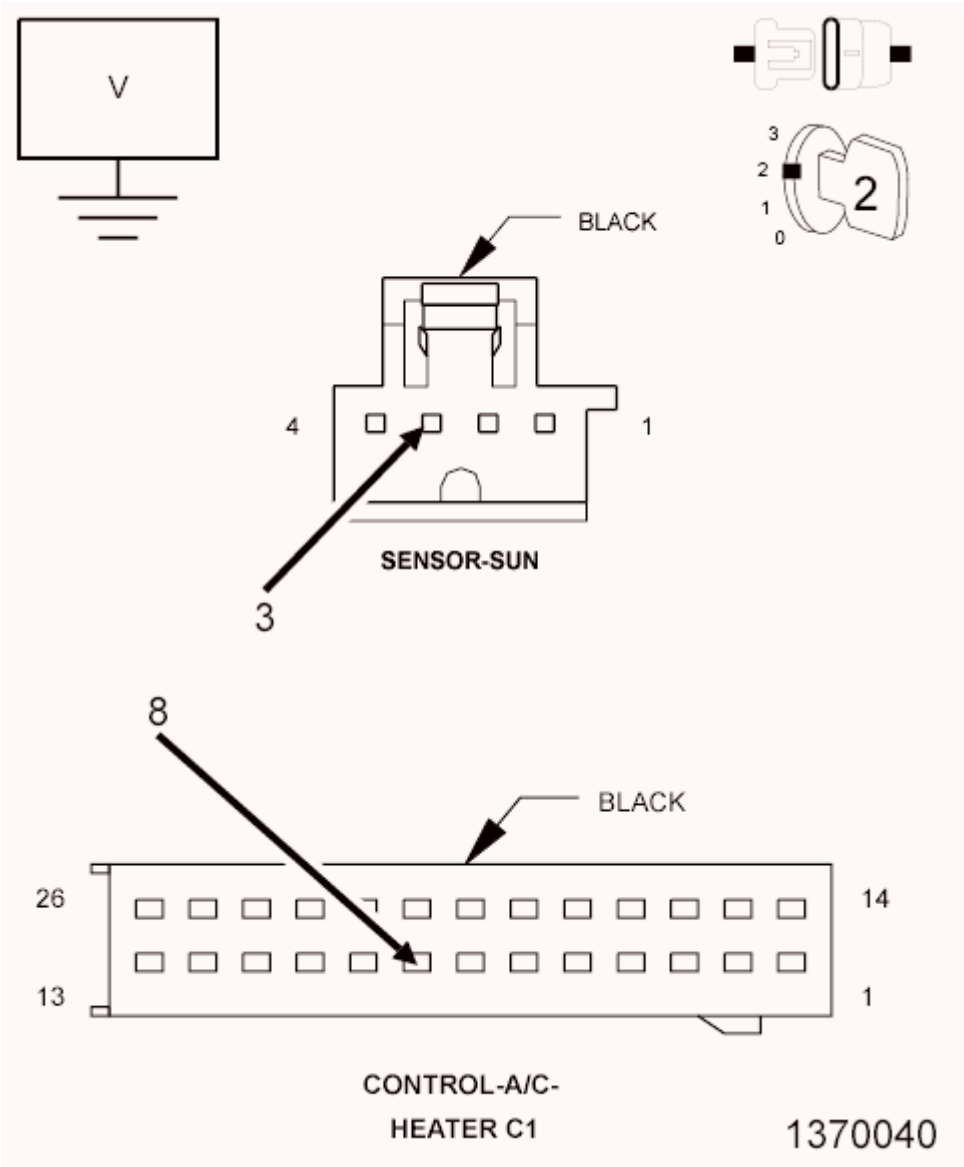

Fig. 79: Checking Sun Sensor Signal 2 Circuit For A Short To Voltage
Courtesy of CHRYSLER GROUP, LLC

1. Turn the ignition off to the lock position.
2. Disconnect the Sun Sensor harness connector.
3. Disconnect the A/C Heater Control harness connector.

NOTE: Check connectors - Clean/repair as necessary.

4. Ignition on, engine not running.
5. Check the voltage of the (G139) Sun Sensor Signal 2 circuit.

   Is there any voltage present?

Yes

- Repair the (G139) Sun Sensor Signal 2 circuit for an short to voltage.
- Perform HVAC VERIFICATION TEST. Refer to **HVAC VERIFICATION TEST**.

No

- Go To 3.

3. **CHECK THE (G139) SUN SENSOR SIGNAL 2 CIRCUIT FOR AN OPEN**

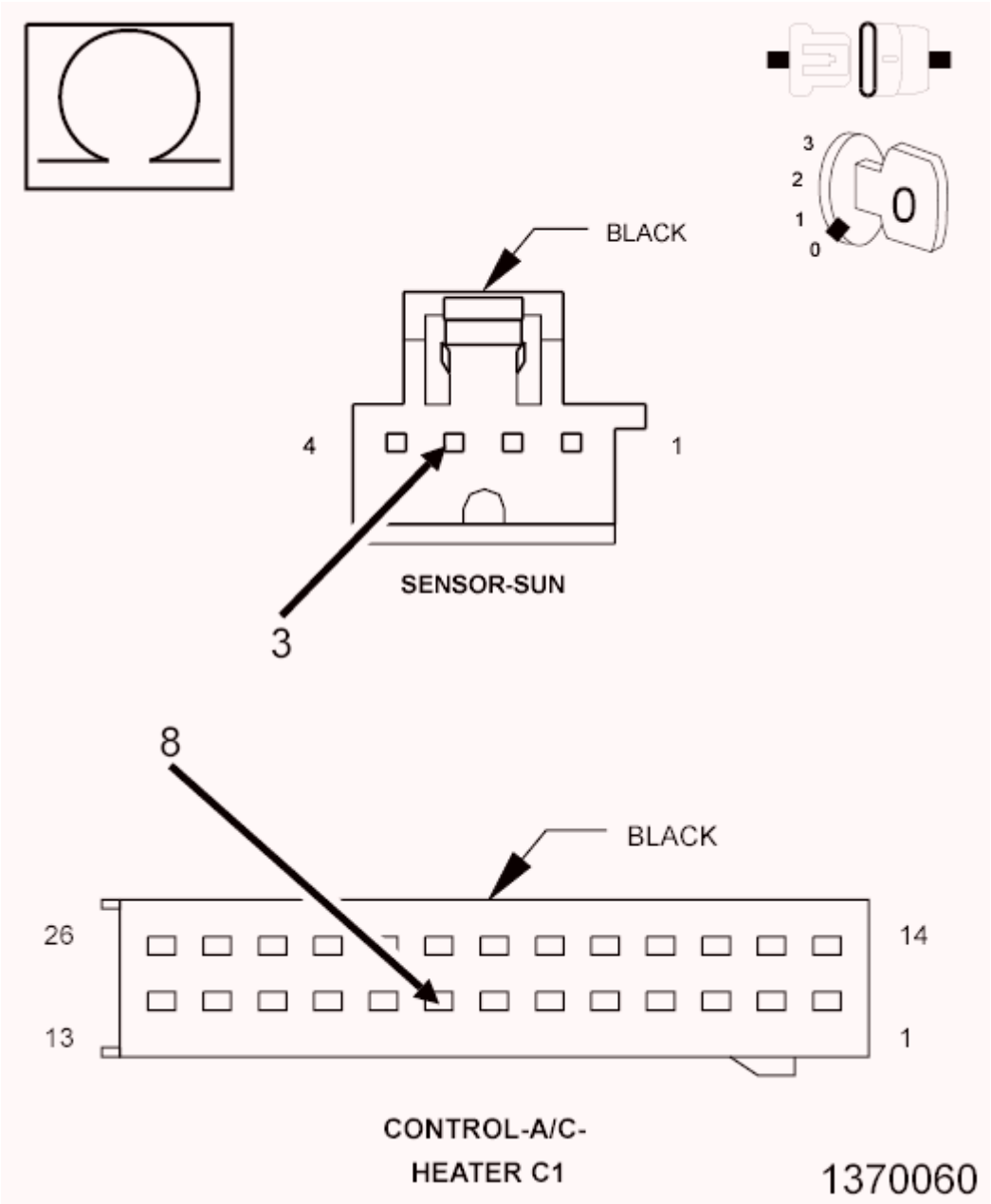

Fig. 80: Checking Sun Sensor Signal 2 Circuit For An Open
Courtesy of CHRYSLER GROUP, LLC

1. Turn the ignition off to the lock position.
2. Measure the resistance of the (G139) Sun Sensor Signal 2 circuit between the A/C Heater Control harness connector and the Sun Sensor harness connector.

   Is the resistance above 5.0 Ohms?

   Yes

   - Repair the (G139) Sun Sensor Signal 2 circuit for an open.
   - Perform HVAC VERIFICATION TEST. Refer to **HVAC VERIFICATION TEST**.

   No

   - Go To 4.

4. **CHECK THE (C121) SENSOR GROUND CIRCUIT FOR AN OPEN**

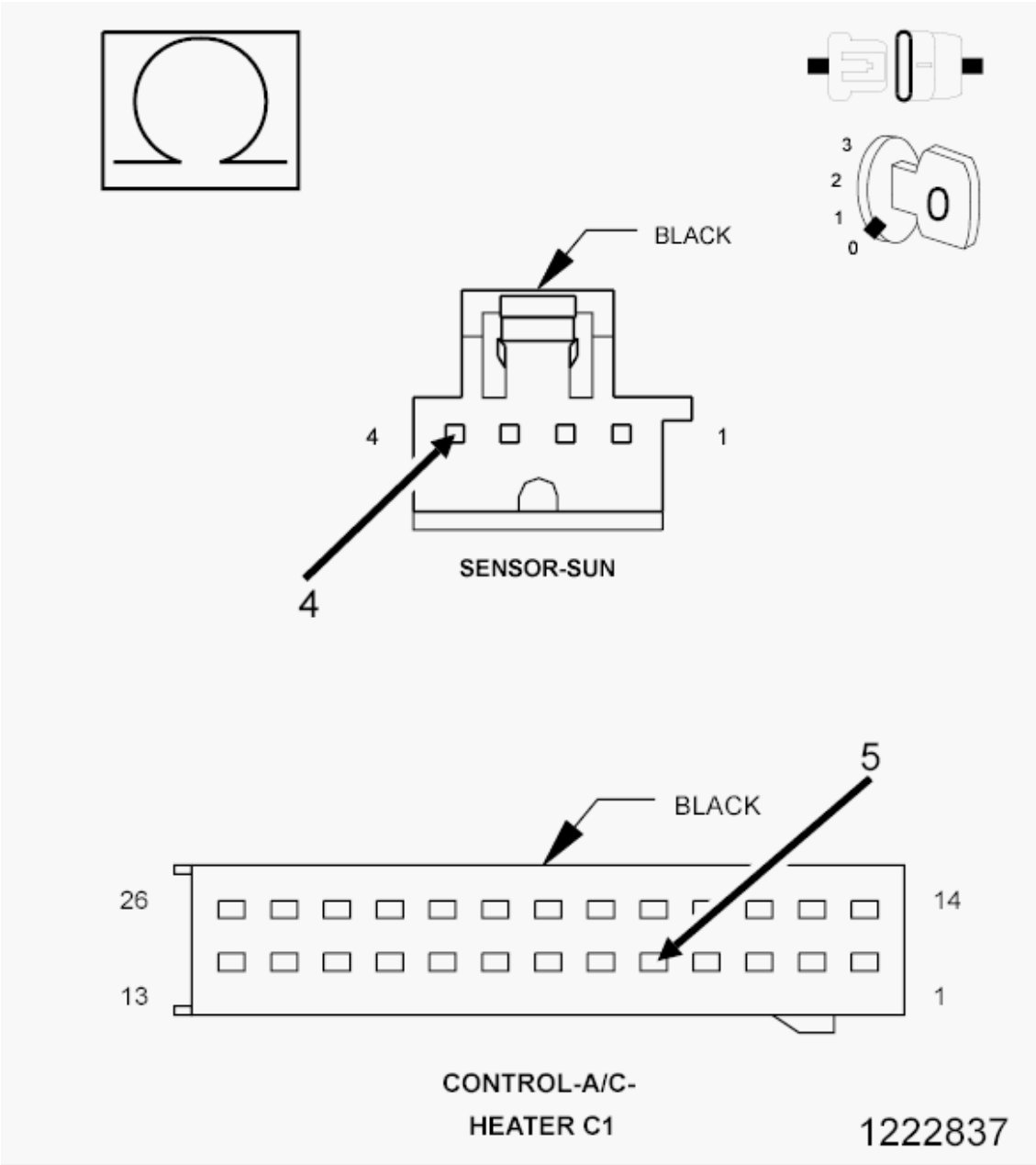

Fig. 81: Checking Sensor Ground Circuit For An Open
Courtesy of CHRYSLER GROUP, LLC

1. Measure the resistance of the (C121) Sensor Ground circuit between the A/C Heater Control C1 harness connector and the Sun Sensor harness connector.

   Is the resistance above 5.0 Ohms?

   Yes

   - Repair the (C121) Sensor Ground circuit for an open.
   - Perform HVAC VERIFICATION TEST. Refer to **HVAC VERIFICATION TEST**.

No

- Go To 5.

5. **CHECK THE SUN SENSOR AND A/C HEATER CONTROL**
   1. Turn the ignition off to the lock position.
   2. Replace the Sun Sensor in accordance with the Service Information.
   3. Perform HVAC VERIFICATION TEST. Refer to **HVAC VERIFICATION TEST**.

   Did the DTC reset during or after the HVAC Verification Test?

   Yes

   - Replace and program the A/C Heater Control in accordance with the Service Information.
   - Perform HVAC VERIFICATION TEST. Refer to **HVAC VERIFICATION TEST**.

   No

   - Test complete.

6. **CHECK THE WIRING AND CONNECTORS**
   1. The conditions necessary to set the DTC are not present at this time.
   2. Using the schematics as a guide, inspect the wiring and connectors specific to this circuit.
   3. Check for an intermittent condition by inspecting the related wiring harness for chafed, pierced, pinched, partially broken wires.
   4. Check the connectors for broken, bent, pushed out, spread, corroded, or contaminated terminals.
   5. Wiggle the wiring and connectors while checking for shorted and open circuits.
   6. With the scan tool, check the Environmental Data to help identify the conditions in which the DTC was set.

   Were there any problems found?

   Yes

   - Repair as necessary.
   - Perform HVAC VERIFICATION TEST. Refer to **HVAC VERIFICATION TEST**.

   No

   - Test complete.

B1610-AMBIENT LIGHT SENSOR 1 INPUT CIRCUIT LOW

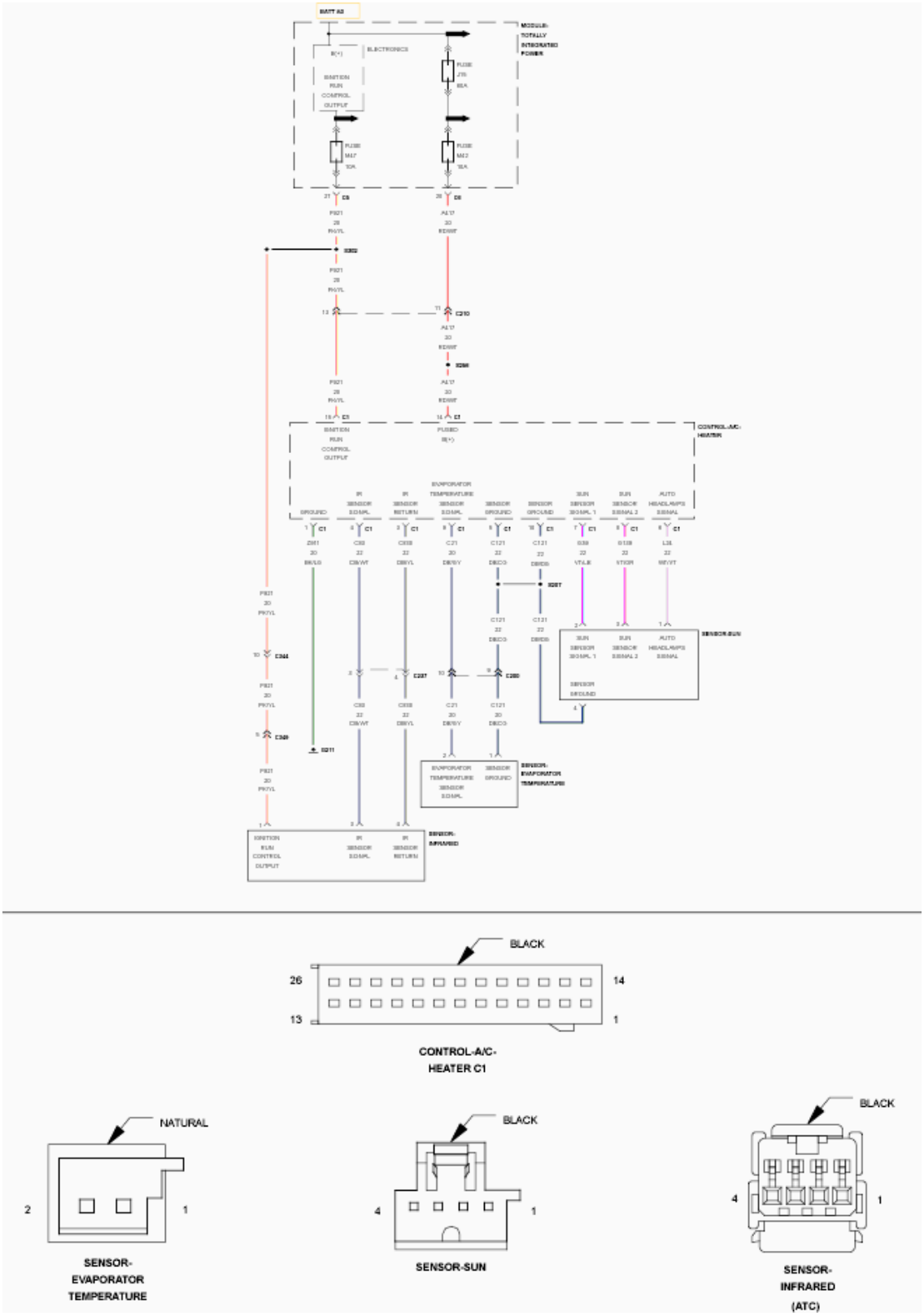

Fig. 82: Infrared Temperature Sensor, Evaporator Temperature Sensor & Sun Sensor Wiring Diagram
Courtesy of CHRYSLER GROUP, LLC

For a complete wiring diagram, **refer to the appropriate SYSTEM WIRING DIAGRAMS article** .

WHEN MONITORED:

With the ignition on.

SET CONDITION:

If the Twilight or Ambient Light Sensor input voltage is less than 0.16 of a volt for period of 30 seconds.

POSSIBLE CAUSES

Possible Causes
(L24) AUTO HEADLAMPS SIGNAL CIRCUIT SHORT TO GROUND
SUN SENSOR
A/C HEATER CONTROL

Always perform the HVAC Pre-Diagnostic Troubleshooting procedure before proceeding. Refer to HVAC PRE-DIAGNOSTIC TROUBLESHOOTING PROCEDURE.

DIAGNOSTIC TEST

1. **CHECK IF THE DTC IS ACTIVE**
    1. Ignition on, engine not running.
    2. With the scan tool, read HVAC DTC's.

    NOTE: It can take up to 30 seconds or more for this DTC to mature.

    Is this DTC active?

    Yes

    - Go To 2.

    No

    - Go To 4.
2. **CHECK THE (L24) AUTO HEADLAMPS SIGNAL CIRCUIT FOR A SHORT TO GROUND**

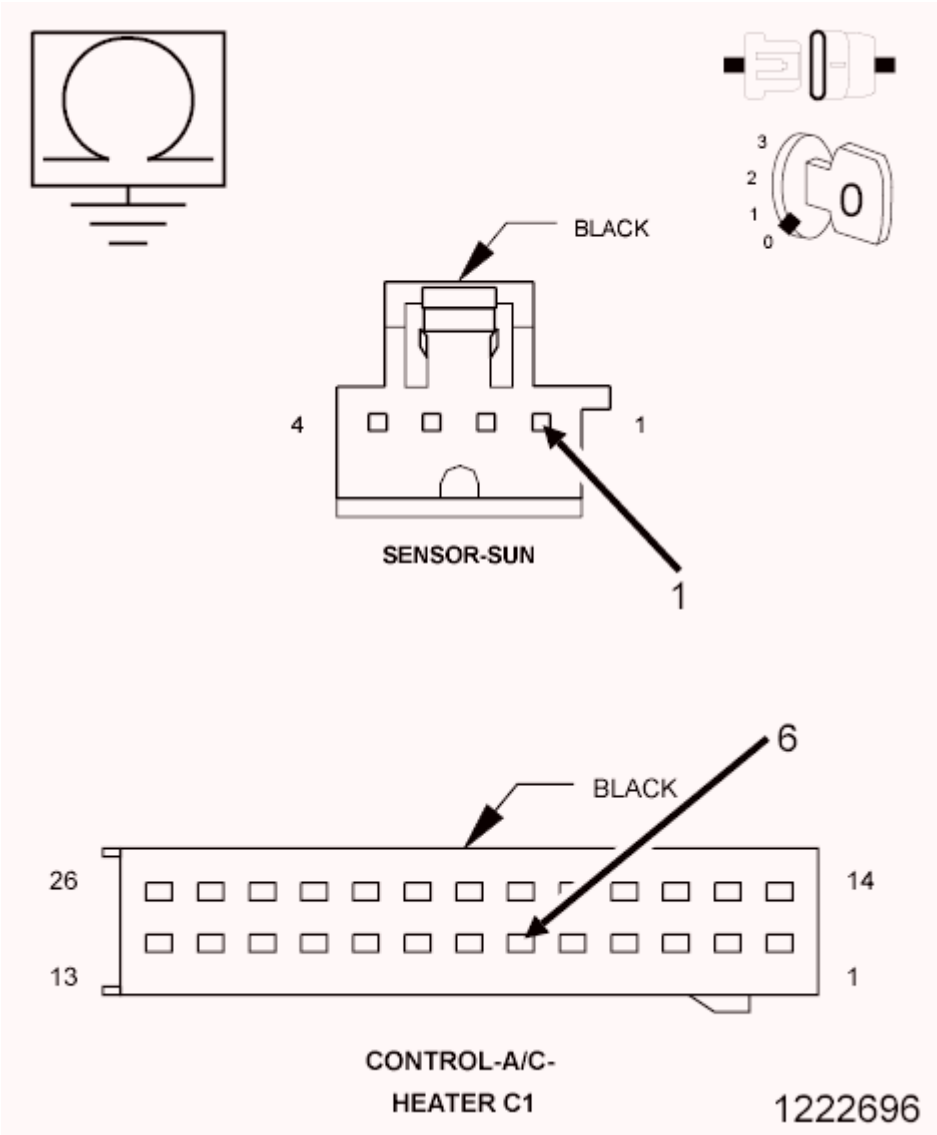

Fig. 83: Checking Auto Headlamps Signal Circuit For A Short To Ground
Courtesy of CHRYSLER GROUP, LLC

1. Turn the ignition off to the lock position.
2. Disconnect the A/C Heater Control C1 harness connector.
3. Disconnect the Sun Sensor harness connector.
4. Measure the resistance between ground and the (L24) Auto Headlamps Signal circuit.

   Is the resistance below 100k Ohms?

   Yes

   - Repair the (L24) Auto Headlamps Signal circuit for a short to ground.
   - Perform HVAC VERIFICATION TEST. Refer to **HVAC VERIFICATION TEST**.

No

- Go To 3.

3. **CHECK THE SUN SENSOR AND A/C HEATER CONTROL**
   1. Replace the Sun Sensor in accordance with the Service Information.
   2. Perform HVAC VERIFICATION TEST. Refer to **HVAC VERIFICATION TEST**.

   Did this DTC reset while performing the HVAC Verification Test?

   Yes

   - Replace and program the A/C Heater Control in accordance with the Service Information.
   - Perform HVAC VERIFICATION TEST. Refer to **HVAC VERIFICATION TEST**.

   No

   - Test complete.

4. **CHECK THE WIRING AND CONNECTORS**
   1. The conditions necessary to set the DTC are not present at this time.
   2. Using the schematics as a guide, inspect the wiring and connectors specific to this circuit.
   3. Check for an intermittent condition by inspecting the related wiring harness for chafed, pierced, pinched, partially broken wires.
   4. Check the connectors for broken, bent, pushed out, spread, corroded, or contaminated terminals.
   5. Wiggle the wiring and connectors while checking for shorted and open circuits.
   6. With the scan tool, check the Environmental Data to help identify the conditions in which the DTC was set.

   Were there any problems found?

   Yes

   - Repair as necessary.
   - Perform HVAC VERIFICATION TEST. Refer to **HVAC VERIFICATION TEST**.

   No

   - Test complete.

B1611-AMBIENT LIGHT SENSOR 1 INPUT CIRCUIT HIGH

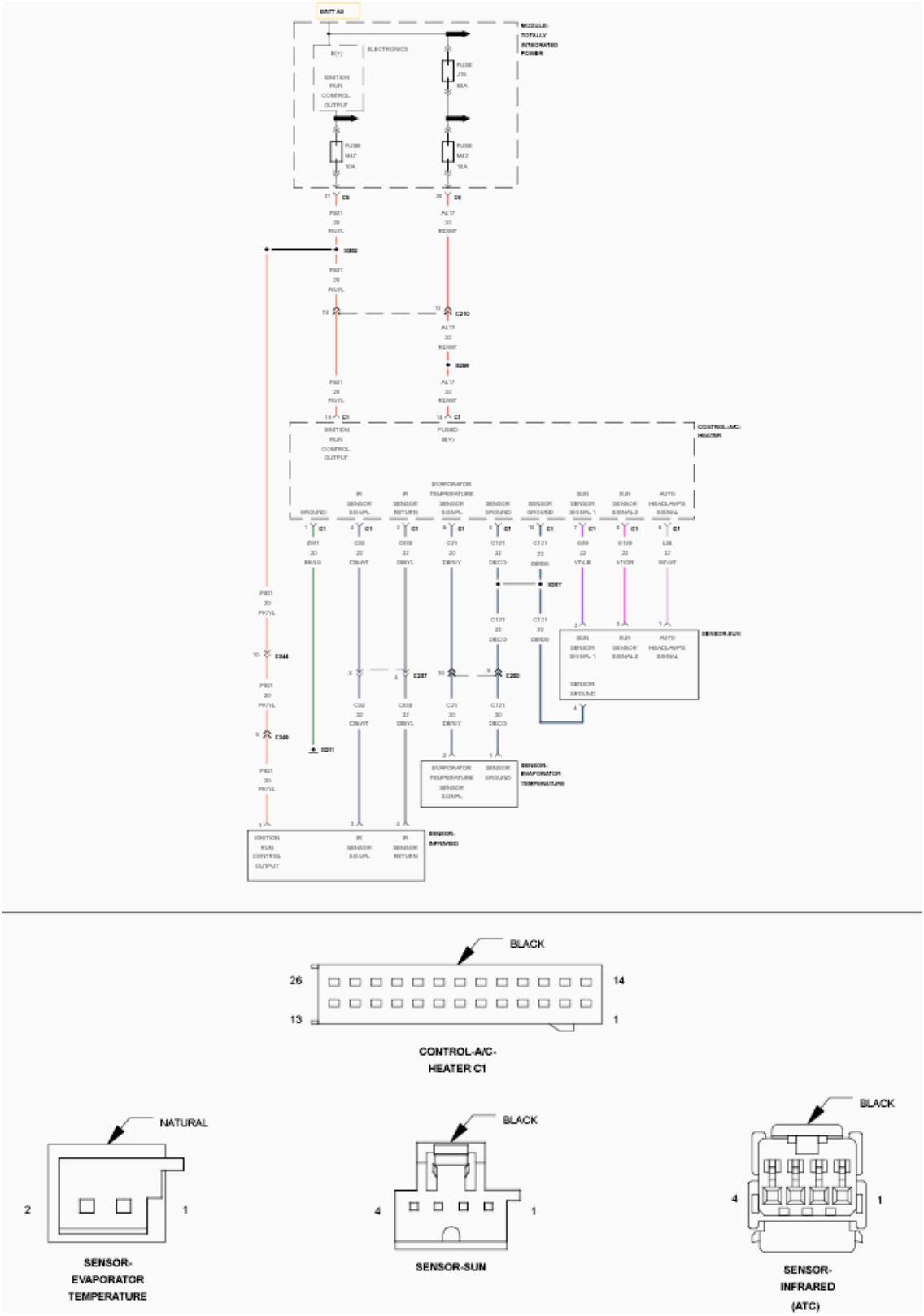

Fig. 84: Infrared Temperature Sensor, Evaporator Temperature Sensor & Sun Sensor Wiring Diagram
Courtesy of CHRYSLER GROUP, LLC

For a complete wiring diagram, **refer to the appropriate SYSTEM WIRING DIAGRAMS article** .

WHEN MONITORED:

With the ignition on.

SET CONDITION:

If the Twilight or Ambient Light Sensor input voltage is greater than 4.9 volts for period of 60 seconds.

POSSIBLE CAUSES

Possible Causes
(L24) AUTO HEADLAMPS SIGNAL CIRCUIT SHORT TO VOLTAGE
(L24) AUTO HEADLAMPS SIGNAL CIRCUIT SHORT OPEN
(C121) SENSOR GROUND CIRCUIT OPEN
SUN SENSOR
A/C HEATER CONTROL

Always perform the HVAC Pre-Diagnostic Troubleshooting procedure before proceeding. Refer to HVAC PRE-DIAGNOSTIC TROUBLESHOOTING PROCEDURE.

DIAGNOSTIC TEST

1. **CHECK IF THE DTC IS ACTIVE**
    1. Ignition on, engine not running.
    2. With the scan tool, read HVAC DTC's.

    NOTE: It can take up to 60 seconds or more for this DTC to mature.

    Is this DTC active?

    Yes

    - Go To 2.

    No

    - Go To 6.
2. **CHECK (L24) AUTO HEADLAMPS SIGNAL CIRCUIT FOR A SHORT TO VOLTAGE**

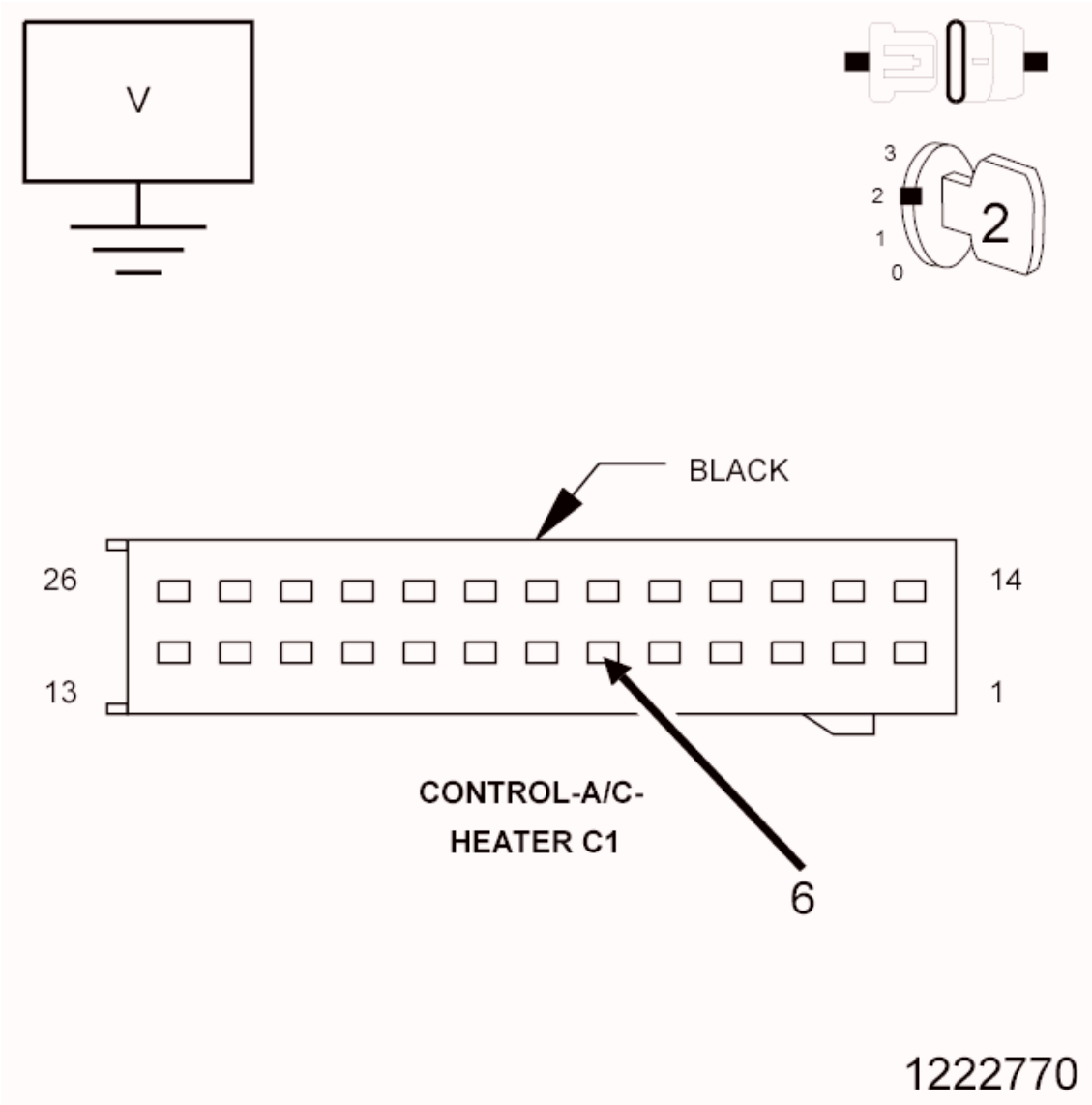

Fig. 85: Checking Auto Headlamps Signal Circuit For A Short To Voltage
Courtesy of CHRYSLER GROUP, LLC

1. Turn the ignition off.
2. Disconnect the A/C Heater Control C1 harness connector.
3. Ignition on, engine not running.
4. Measure the voltage of the (L24) Auto Headlamps Signal circuit.

   Is there any voltage present?

   Yes

   - Repair the (L24) Auto Headlamps Signal circuit for a short to voltage.
   - Perform HVAC VERIFICATION TEST. Refer to **HVAC VERIFICATION TEST**.

No

- Go To 3.

3. **CHECK (L24) AUTO HEADLAMPS SIGNAL CIRCUIT FOR AN OPEN**

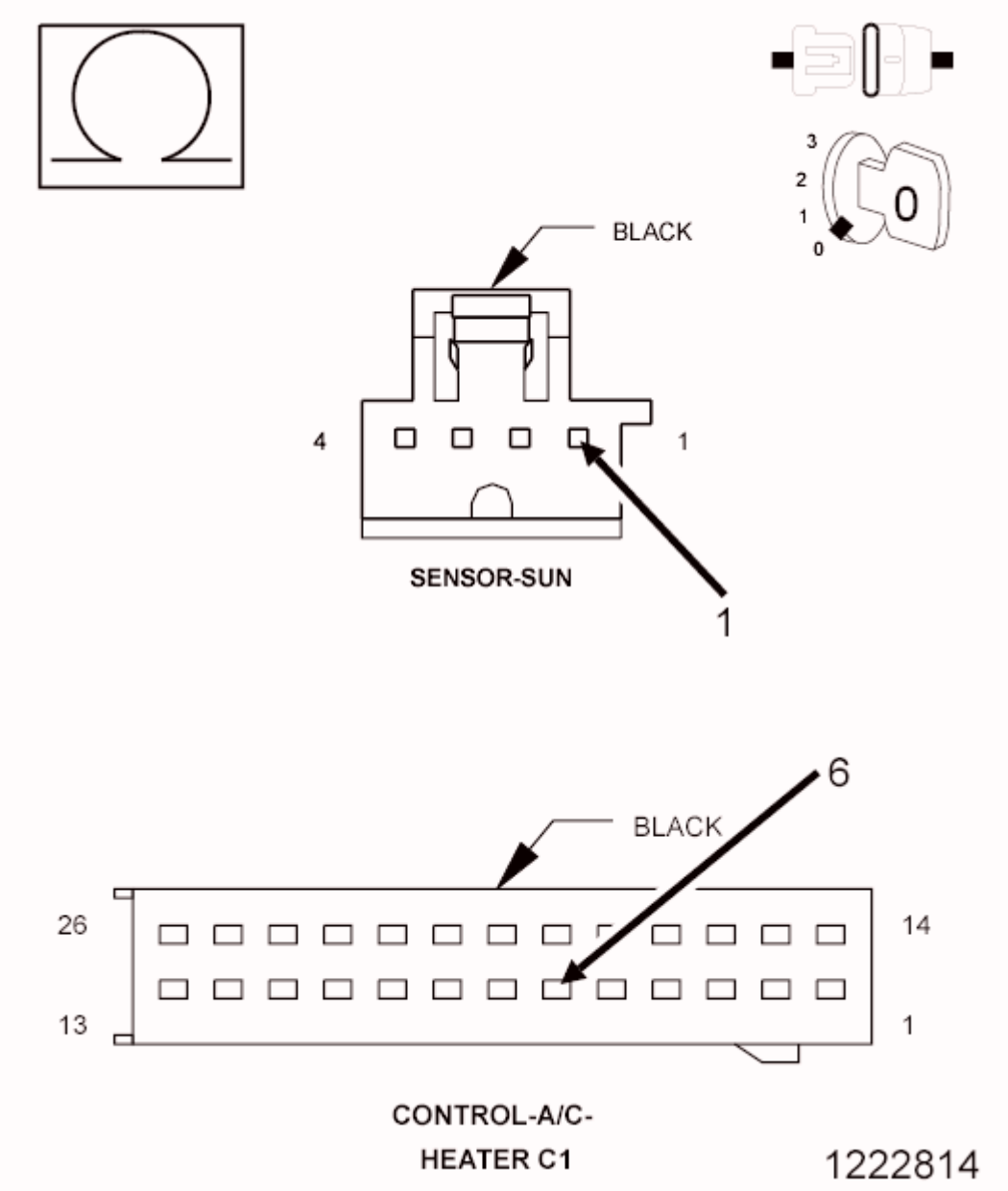

Fig. 86: Checking Auto Headlamps Signal Circuit For An Open
Courtesy of CHRYSLER GROUP, LLC

1. Turn the ignition off to the lock position.
2. Disconnect the Sun Sensor harness connector.
3. Measure the resistance of the (L24) Auto Headlamps Signal circuit between the A/C Heater Control C1 harness connector and the Sun Sensor harness connector.

Is the resistance below 5.0 Ohms?

Yes

- Go To 4.

No

- Repair the (L24) Auto Headlamps Signal circuit for an open.
- Perform HVAC VERIFICATION TEST. Refer to **HVAC VERIFICATION TEST**.

4. **CHECK (C121) SENSOR GROUND CIRCUIT FOR AN OPEN**

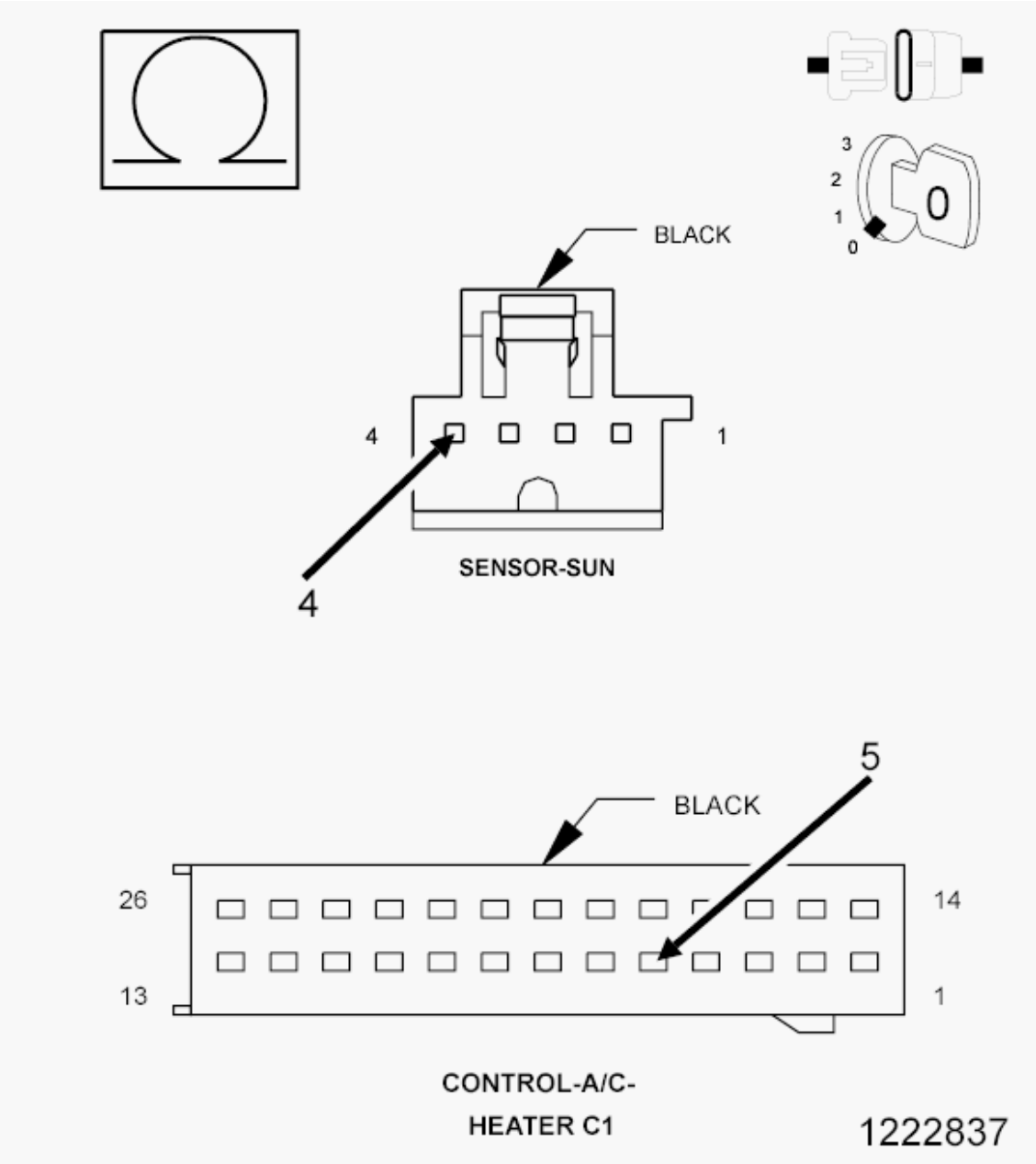

Fig. 87: Checking Sensor Ground Circuit For An Open
Courtesy of CHRYSLER GROUP, LLC

1. Measure the resistance of the (C121) Sensor Ground circuit between the A/C Heater Control C1 harness connector and the Sun Sensor harness connector.

   Is the resistance below 5.0 Ohms?

   Yes

   - Go To 5.

   No

   - Repair the (C121) Sensor Ground circuit for an open.
   - Perform HVAC VERIFICATION TEST. Refer to **HVAC VERIFICATION TEST**.

5. **CHECK THE SUN SENSOR A/C HEATER CONTROL**
   1. Replace the Sun Sensor in accordance with the Service Information.
   2. Perform HVAC VERIFICATION TEST. Refer to **HVAC VERIFICATION TEST**.

      Did this DTC reset while performing the HVAC Verification Test?

      Yes

      - Replace and program the A/C Heater Control in accordance with the Service Information.
      - Perform HVAC VERIFICATION TEST. Refer to **HVAC VERIFICATION TEST**.

      No

      - Test complete.

6. **CHECK THE WIRING AND CONNECTORS**
   1. The conditions necessary to set the DTC are not present at this time.
   2. Using the schematics as a guide, inspect the wiring and connectors specific to this circuit.
   3. Check for an intermittent condition by inspecting the related wiring harness for chafed, pierced, pinched, partially broken wires.
   4. Check the connectors for broken, bent, pushed out, spread, corroded, or contaminated terminals.
   5. Wiggle the wiring and connectors while checking for shorted and open circuits.
   6. With the scan tool, check the Environmental Data to help identify the conditions in which the DTC was set.

      Were there any problems found?

      Yes

- Repair as necessary.
- Perform HVAC VERIFICATION TEST. Refer to **HVAC VERIFICATION TEST**.

No

- Test complete.

B2214-00-(HVAC) CLIMATE CONTROL INTERNAL

For a complete wiring diagram **refer to the appropriate SYSTEM WIRING DIAGRAMS article** .

WHEN MONITORED:

With the ignition on.

SET CONDITION:

If the A/C Heater Control has an internal fault. This DTC has a maturing time of 5 seconds and a de-maturing time of 10 seconds. If the DTC's status changes from active to stored it will stay in memory for 100 ignition cycles.

POSSIBLE CAUSES

Possible Causes
A/C HEATER CONTROL

Always perform the HVAC Pre-Diagnostic Troubleshooting procedure before proceeding. Refer to HVAC PRE-DIAGNOSTIC TROUBLESHOOTING PROCEDURE.

DIAGNOSTIC TEST

1. **CHECK THE A/C HEATER CONTROL**

   Repair

   - Check for any controller software updates. If an update is available, reprogram the controller with the latest software. If no software updates are available, replace and program the A/C Heater Control in accordance with the Service Information.
   - Perform HVAC VERIFICATION TEST. Refer to **HVAC VERIFICATION TEST**.

B222A-VEHICLE LINE MISMATCH

For a complete wiring diagram, **refer to appropriate SYSTEM WIRING DIAGRAMS article** .

THEORY OF OPERATION

The A/C Heater Controller checks for vehicle configuration using communication over the BUS. If the stored

configuration does not match the configuration stored in the controller this DTC will set.

WHEN MONITORED:

With the ignition on.

SET CONDITION:

If the stored configuration does not match the configuration stored in the controller.

POSSIBLE CAUSES

Possible Causes
VEHICLE CONFIGURATION NOT STORED IN THE TOTALLY INTEGRATED POWER MODULE (TIPM) CONTROL MODULE INSTALLED IN INCORRECT VEHICLE A/C HEATER CONTROL

Always perform the HVAC Pre-Diagnostic Troubleshooting procedure before proceeding. Refer to HVAC PRE-DIAGNOSTIC TROUBLESHOOTING PROCEDURE.

DIAGNOSTIC TEST

1. **CHECK THE VEHICLE CONFIGURATION**

   NOTE: The DTC must be active and no BUS communication DTC's present before performing this test. If BUS communication DTC's are present, perform there respective test first. If the DTC is stored, erase the DTC and cycle the ignition. If the DTC resets and changes to active, then proceed.

   1. With the scan tool, check the vehicle configuration stored in the Totally Integrated Power Module (TIPM).
   2. With the scan tool, check the vehicle configuration stored in the A/C Heater Control (HVAC).

      Pick the answer that best describes your findings:

      TIPM has wrong or no vehicle configuration

      - With the scan tool, program the proper vehicle configuration in the TIPM.
      - Perform HVAC VERIFICATION TEST. Refer to **HVAC VERIFICATION TEST**.

      HVAC has wrong vehicle configuration but TIPM has correct configuration

      - Replace the A/C Heater Control in accordance with the Service Information.
      - Perform HVAC VERIFICATION TEST. Refer to **HVAC VERIFICATION TEST**.

HVAC and TIPM have proper calibration and the DTC is active in the HVAC

- Check if other modules such as the Powertrain Control Module (PCM) have the wrong configuration stored in the controller and reprogram or replace as necessary. If all other modules show the proper configuration, replace the A/C Heater Control in accordance with the Service Information.
- Perform HVAC VERIFICATION TEST. Refer to **HVAC VERIFICATION TEST**.

U0010-CAN INTERIOR BUS

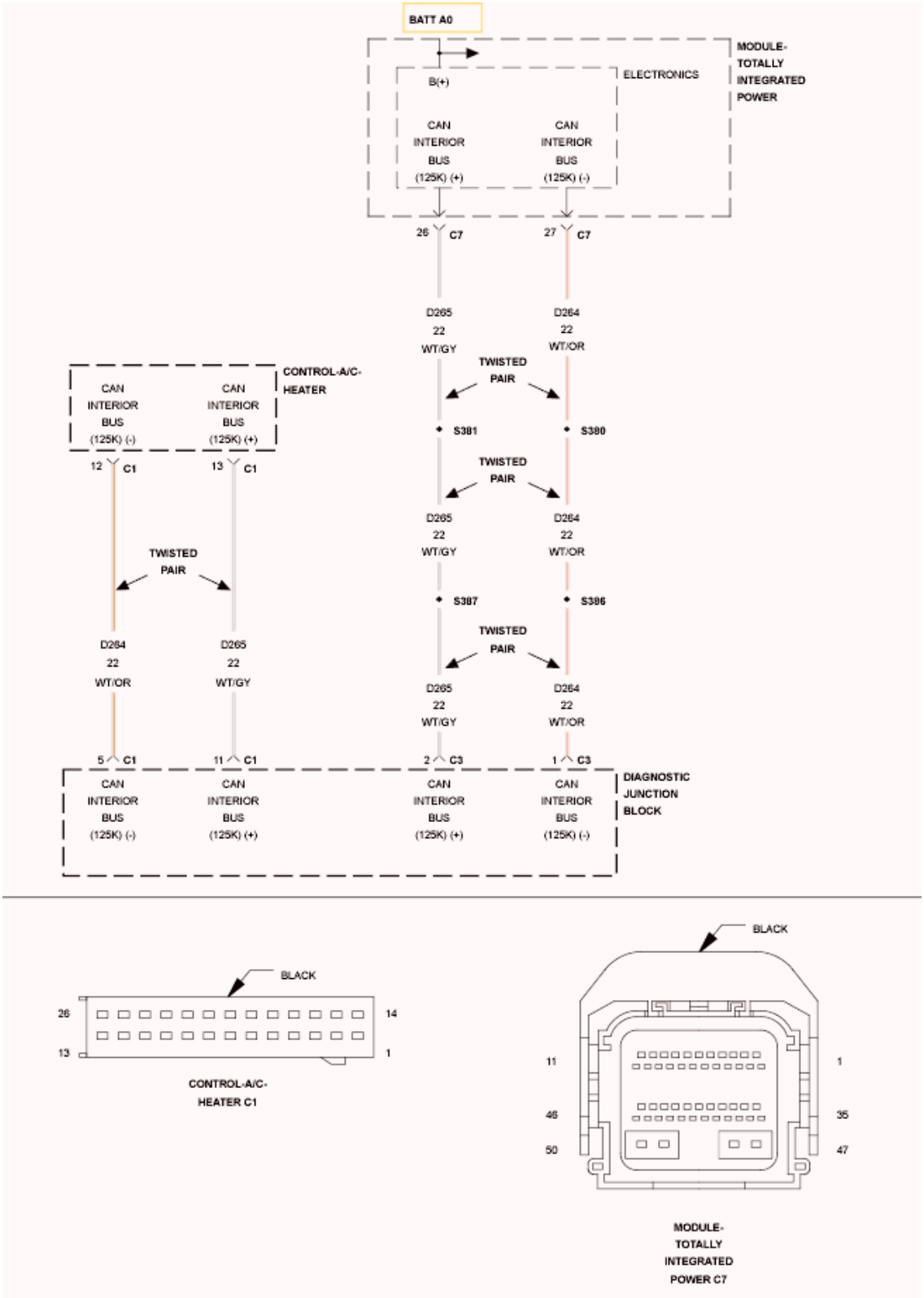

Fig. 88: CAN Interior Bus Circuit Wiring Diagram
Courtesy of CHRYSLER GROUP, LLC

For a complete wiring diagram, **refer to the appropriate SYSTEM WIRING DIAGRAMS article** .

WHEN MONITORED:

Continuously with the ignition on.

SET CONDITION:

If the CAN Interior Bus (+) or CAN Interior Bus (-) circuit is open, shorted to voltage, or shorted to ground.

POSSIBLE CAUSES

Possible Causes
ACTIVE CAN BUS DTC IN THE TOTALLY INTEGRATED POWER MODULE
(D265) CAN C INTERIOR BUS (125K) (+) CIRCUIT OPEN
(D264) CAN C INTERIOR BUS (125K) (-) CIRCUIT OPEN
(D265) CAN C INTERIOR BUS (125K) (+) CIRCUIT SHORT TO GROUND
(D264) CAN C INTERIOR BUS (125K) (-) CIRCUIT SHORT TO GROUND
A/C HEATER CONTROL

Always perform the HVAC Pre-Diagnostic Troubleshooting procedure before proceeding. Refer to HVAC PRE-DIAGNOSTIC TROUBLESHOOTING PROCEDURE.

DIAGNOSTIC TEST

1. **VERIFY THE DTC IS ACTIVE**
    1. Turn the ignition on.
    2. With the scan tool, read HVAC DTC's.

       Does the scan tool display this DTC as active?

       Yes

       - Go To 2.

       No

       - Go To 7.
2. **CHECK FOR ACTIVE CAN BUS RELATED DTC's IN THE TOTALLY INTEGRATED POWER MODULE (TIPM)**
    1. With the scan tool, read the Totally Integrated Power Module (TIPM) DTC's.

       Does the scan tool display any active CAN BUS related DTC's?

       Yes

- Refer to **TIPM - DIAGNOSIS AND TESTING** and perform the appropriate diagnostic procedure.

No

- Go To 3.

3. **CHECK (D265) CAN INTERIOR BUS (+) CIRCUIT FOR AN OPEN**

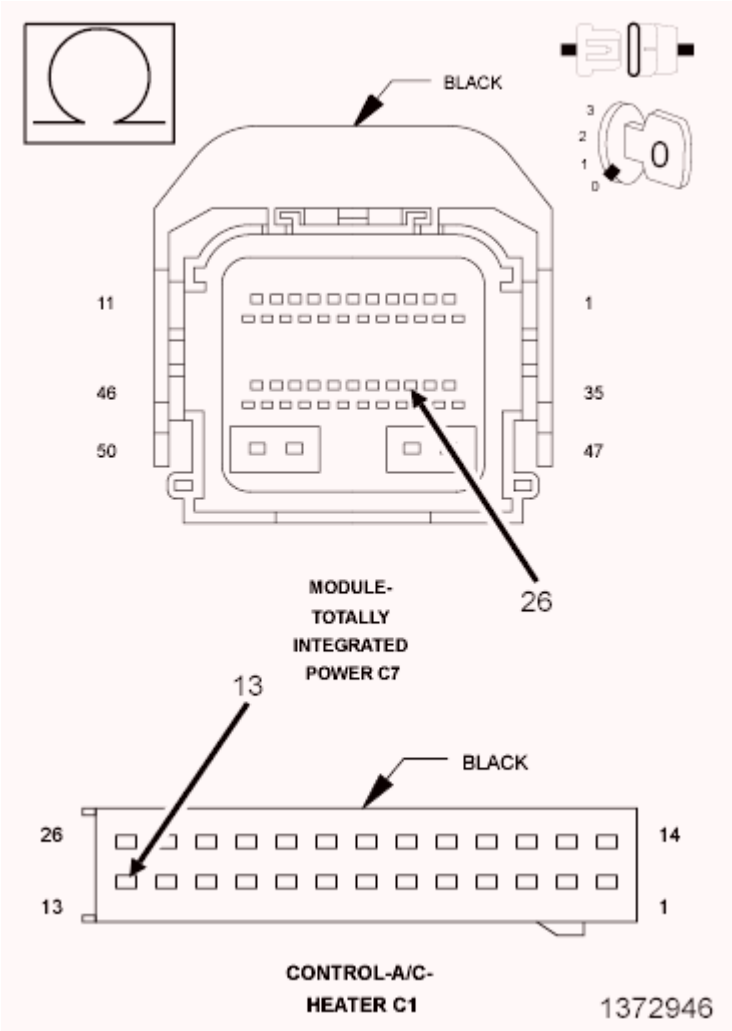

Fig. 89: Checking Can Interior Bus (+) Circuit For An Open
Courtesy of CHRYSLER GROUP, LLC

1. Turn the ignition off to the lock position.
2. Disconnect the negative battery cable.
3. Disconnect the A/C Heater Control C1 harness connector.
4. Disconnect the Totally Integrated Power Module (TIPM) C7 harness connector.
5. Measure the resistance of the (D265) CAN Interior Bus (125K) (+) circuit between the Totally Integrated Power Module (TIPM) C7 harness connector and the A/C Heater Control C1 harness

connector.

Is the resistance below 1.0 Ohm?

Yes

- Go To 4.

No

- Repair the (D265) CAN Interior Bus (125K) (+) circuit for an open.
- Perform HVAC VERIFICATION TEST. Refer to **HVAC VERIFICATION TEST**.

4. **CHECK (D264) CAN INTERIOR BUS (-) CIRCUIT FOR AN OPEN**

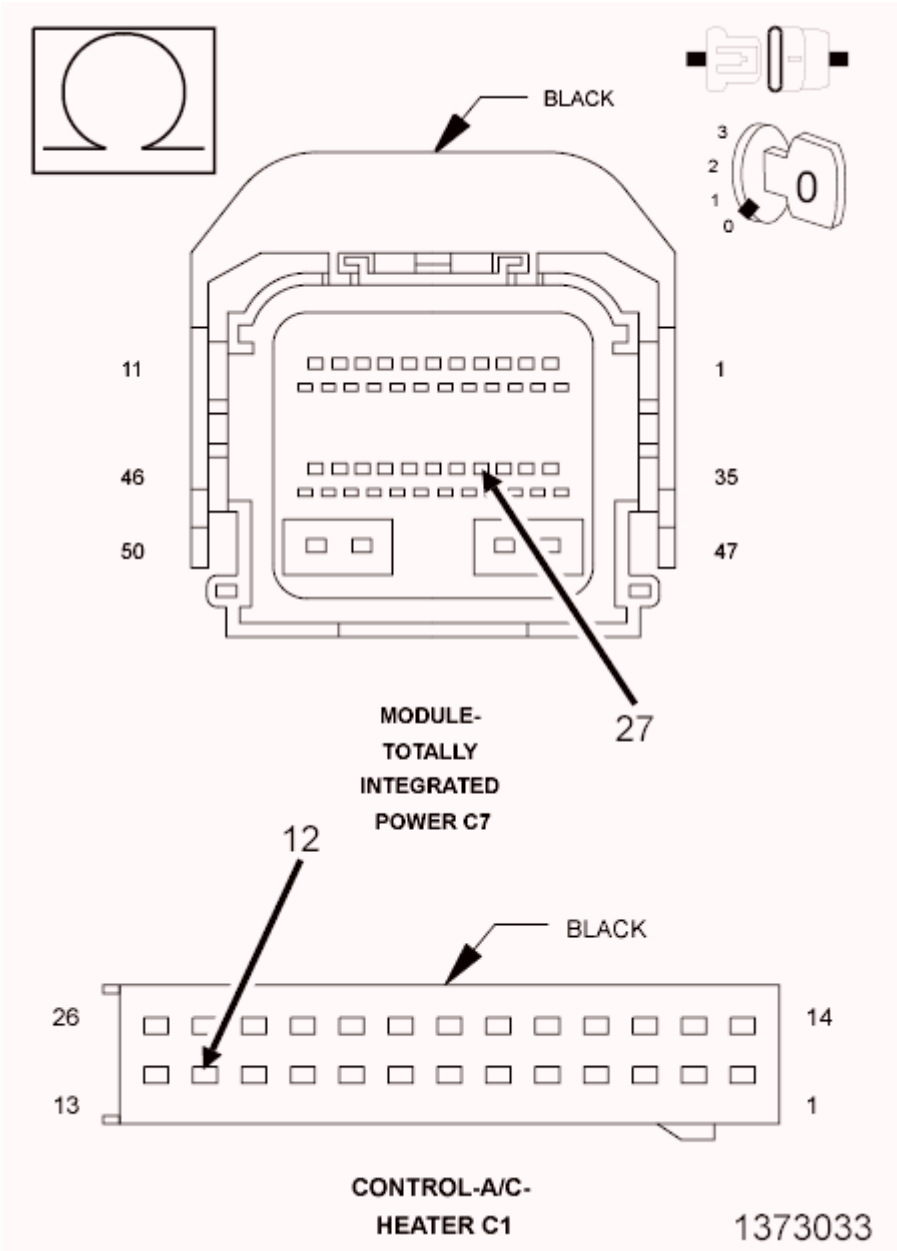

Fig. 90: Checking CAN Interior Bus (-) Circuit For An Open
Courtesy of CHRYSLER GROUP, LLC

1. Measure the resistance of the (D264) CAN Interior Bus (125K) (-) circuit between the Totally Integrated Power Module (TIPM) C7 connector and the A/C Heater Control C1 harness connector.

   Is the resistance below 1.0 Ohm?

   Yes

   - Go To 5.

   No

- Repair the (D264) CAN Interior Bus (125K) (-) circuit for an open.
- Perform HVAC VERIFICATION TEST. Refer to **HVAC VERIFICATION TEST**.

5. **CHECK (D265) CAN C INTERIOR BUS (125K) (+) CIRCUIT FOR A SHORT TO GROUND**

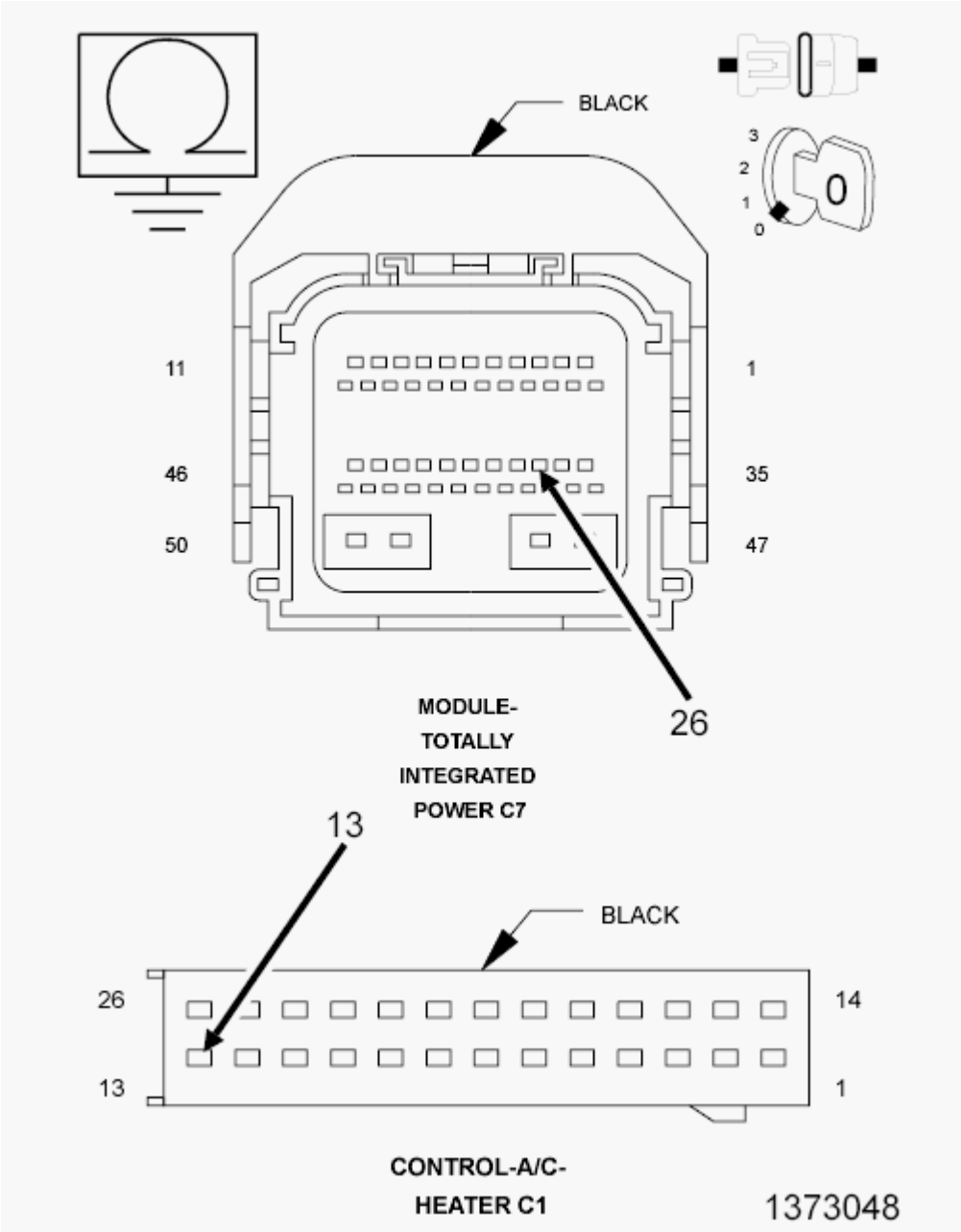

Fig. 91: Checking CAN C Interior Bus (125k) (+) Circuit For A Short To Ground
Courtesy of CHRYSLER GROUP, LLC

1. Measure the resistance between ground and the (D265) CAN C Interior Bus (125K) (+) circuit in the A/C Heater Control C1 harness connector.

   Is the resistance above 100k Ohms?

Yes

- Go To 6.

No

- Repair the (D265) CAN C Interior Bus (125K) (+) circuit for a short to ground.
- Perform HVAC VERIFICATION TEST. Refer to **HVAC VERIFICATION TEST**.

6. **CHECK (D264) CAN C INTERIOR BUS (-) CIRCUIT FOR A SHORT TO GROUND**

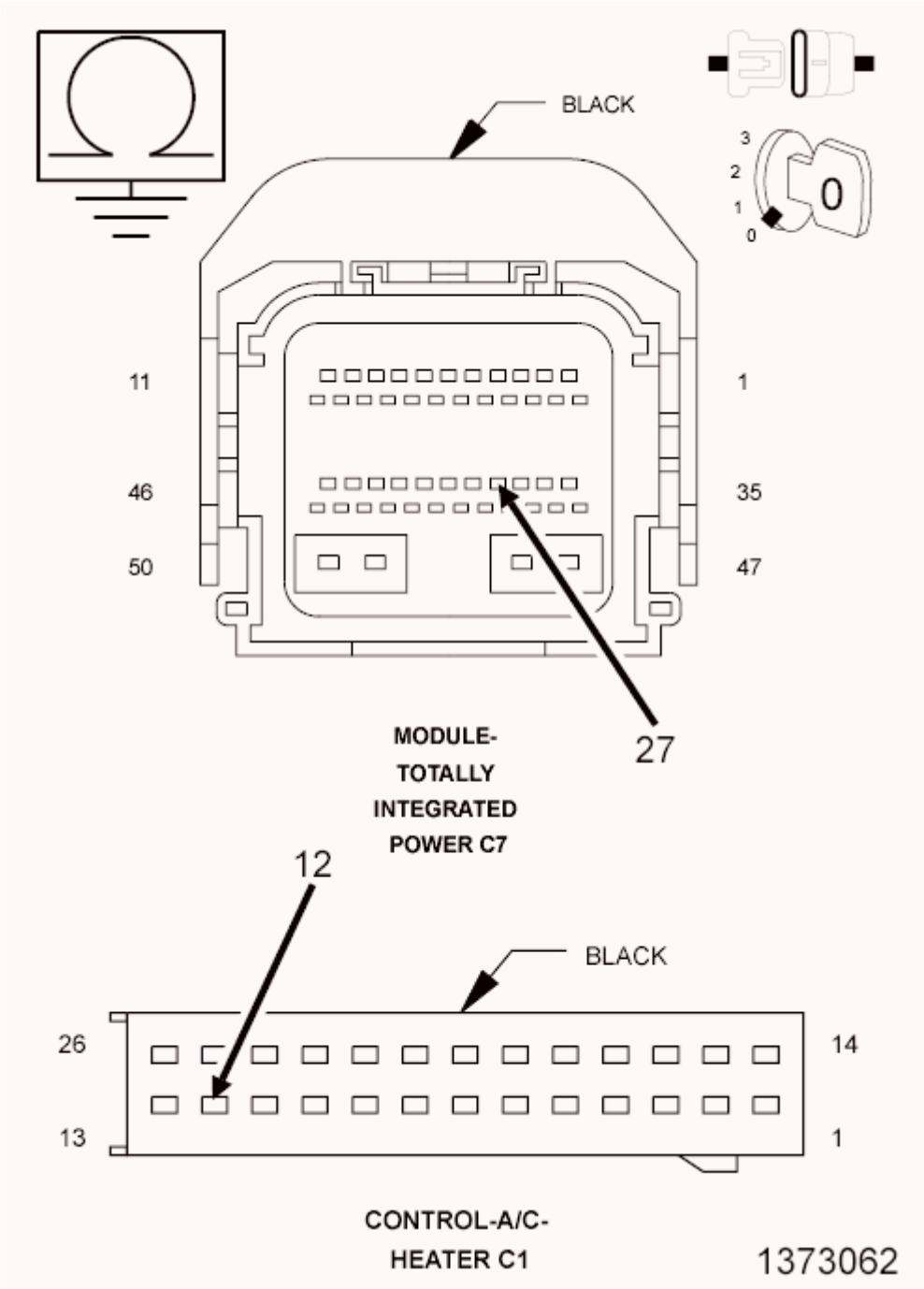

Fig. 92: Checking CAN C Interior Bus (-) Circuit For A Short To Ground
Courtesy of CHRYSLER GROUP, LLC

1. Measure the resistance between ground and the (D264) CAN C Interior Bus (125K) (-) circuit.

   Is the resistance above 100k Ohms?

   Yes

- Replace the A/C Heater Control in accordance with the Service Information.
- Perform HVAC VERIFICATION TEST. Refer to **HVAC VERIFICATION TEST**.

No

- Repair the (D264) CAN C Interior Bus (125K) (-) circuit for a short to ground.
- Perform HVAC VERIFICATION TEST. Refer to **HVAC VERIFICATION TEST**.

7. **CHECK THE WIRING AND CONNECTORS**
   1. The conditions necessary to set the DTC are not present at this time.
   2. Using the schematics as a guide, inspect the wiring and connectors specific to this circuit.
   3. Check for an intermittent condition by inspecting the related wiring harness for chafed, pierced, pinched, partially broken wires.
   4. Check the connectors for broken, bent, pushed out, spread, corroded, or contaminated terminals.
   5. Wiggle the wiring and connectors while checking for shorted and open circuits.
   6. With the scan tool, check the Environmental Data to help identify the conditions in which the DTC was set.

   Were there any problems found?

   Yes

   - Repair as necessary.
   - Perform HVAC VERIFICATION TEST. Refer to **HVAC VERIFICATION TEST**.

   No

   - Test complete.

U0141-LOST COMMUNICATION WITH IPM (FCM/TIPM)

For a complete wiring diagram, **refer to appropriate SYSTEM WIRING DIAGRAMS article** .

WHEN MONITORED:

Continuously when the ignition is on.

The battery voltage between 10.0 and 16.0 Volts.

Ignition Off Draw (IOD) fuse installed.

Totally Integrated Power Module (TIPM) is configured correctly.

SET CONDITION:

Bus messages not received from the Totally Integrated Power Module (TIPM) for approximately two to five

seconds.

POSSIBLE CAUSES

Possible Causes
CAN BUS CIRCUITS OPEN OR SHORTED
DTC's RELATED TO BATTERY VOLTAGE, IGNITION, OR VIN MESSAGES
TOTALLY INTEGRATED POWER MODULE POWER AND GROUND
TIPM NOT CONFIGURED CORRECTLY
TOTALLY INTEGRATED POWER MODULE (TIPM)
MODULE THAT SET THIS DTC

DIAGNOSTIC TEST

1. **VERIFY DTC IS ACTIVE**

   NOTE: Make sure the IOD fuse is installed and the battery is fully charged before proceeding.

   1. Turn the ignition on.
   2. With the scan tool, read active DTC's.

      Is this DTC active?

      Yes

      - **Refer to U0141-LOST COMMUNICATION WITH IPM (FCM/TIPM)** and perform the diagnostic procedure.

      No

      - **Refer to STORED LOST COMMUNICATION DTC's** and perform the diagnostic procedure.

U0155-LOST COMMUNICATION WITH CLUSTER/CCN

For a complete wiring diagram, **refer to appropriate SYSTEM WIRING DIAGRAMS article** .

WHEN MONITORED:

Continuously when the ignition is on.

The battery voltage is between 10 and 16 volts.

Ignition Off Draw (IOD) fuse installed.

Totally Integrated Power Module (TIPM) is configured correctly.

SET CONDITION:

Bus messages not received from the Instrument Cluster (CCN) for approximately two to five seconds.

POSSIBLE CAUSES

Possible Causes
CAN BUS CIRCUITS OPEN OR SHORTED
DTC's RELATED TO BATTERY VOLTAGE, IGNITION, OR VIN MESSAGES
INSTRUMENT CLUSTER POWER AND GROUND
TIPM NOT CONFIGURED CORRECTLY
INSTRUMENT CLUSTER (CCN)
MODULE THAT SET THIS DTC

DIAGNOSTIC TEST

1. **VERIFY THE DIAGNOSTIC TROUBLE CODE (DTC) IS ACTIVE**

   NOTE: Make sure the IOD fuse is installed and the battery is fully charged before proceeding.

   1. Turn the ignition on.
   2. With the scan tool, read active DTC's.

      Is this DTC active?

      Yes

      - **Refer to U0155-LOST COMMUNICATION WITH CLUSTER/CCN** and perform the diagnostic procedure.

      No

      - **Refer to STORED LOST COMMUNICATION DTC's** and perform the diagnostic procedure.

STANDARD PROCEDURE

STANDARD PROCEDURE - HVAC SYSTEM TEST

For a complete wiring diagram, **refer to appropriate SYSTEM WIRING DIAGRAMS article** .

THEORY OF OPERATION

The HVAC System Test provides a starting point in the diagnostic process by identifying the appropriate diagnostic procedure or system test to perform when diagnosing a given symptom, condition, or Diagnostic Trouble Code (DTC). It also provides a means for testing the entire HVAC system by utilizing the A/C Heater Control's On-Board System Tests. The HVAC System Tests can also assist in diagnosing stored DTC's.

DIAGNOSTIC TEST

1. **HVAC SYSTEM TEST**

   NOTE: Diagnose and repair all active DTC's before diagnosing and repairing stored DTC's. If active DTC's are present, refer to DIAGNOSIS AND TESTING and perform the appropriate diagnostic procedure.

   Make a selection based on the symptom, condition, or DTC that you want to diagnose.

   Scan Tool Indicates HVAC Not Active On Bus

   - Refer to **DIAGNOSIS AND TESTING** and perform the No Response from HVAC diagnostic procedure.

   Blower Motor Inoperative

   - Refer to **DIAGNOSIS AND TESTING** for Blower Motor diagnostic procedures.

   Actuator Calibration Test

   - Go To 4.

   A/C System Performance Test

   - Go To 2.
2. **A/C COOLDOWN TEST**

   The following are prerequisites of the A/C Cooldown Test. Verify that the:

   - Refrigerant system has an adequate charge. Check and repair as necessary before proceeding in accordance with the Service Information. Refer to **HVAC SERVICE INFORMATION - DIAGNOSIS AND TESTING** .
   - Blower motor operates correctly in all speeds. Diagnose and repair all blower related faults before proceeding.
   - Work area ambient temperature is above 16° C (60° F) before proceeding. Move the vehicle to a warmer work area if necessary.
   - Evaporator temperature is above 13° C (55° F) before proceeding.
   - A/C compressor is not running. If the compressor is running, turn the A/C off and allow the evaporator to warm up before proceeding.

NOTE: **Running the AC Cooldown test will cause the A/C status indicator to flash. One or more status messages will display on the scan tool after running the Cooldown Test. These messages will clear after paging back out of this test function. Therefore, it is important to note all messages before doing so.**

1. Start the engine.
2. Turn the Blower control to the high speed position.
3. With the scan tool in HVAC, select System Tests and then select Cooldown test. Allow the test to run to completion.

   Does the scan tool display a status message that indicates a fault has occurred?

   Yes

   - Refer to **DIAGNOSIS AND TESTING** and perform the appropriate diagnostic procedure.

   No

   - Go To 3.

3. **MODE SWITCH AND DOOR ACTUATOR CIRCUIT TEST**

NOTE: **If at anytime a DTC becomes active during this test, proceed to the conclusion question. If multiple DTC's are active, diagnose those that relate to a short circuit first.**

1. Start the engine and turn the Blower control to the low speed position.
2. Set the Blend control (single-zone) or Driver and Passenger Blend control (dual-zone) to the full cold position.
3. Monitor the scan tool for active HVAC DTC's while performing the following test steps.
   - If equipped, press the A/C mode switch on, wait 30 seconds, and then press it off.
   - If equipped, press the Recirculation mode switch on, wait 30 seconds, and then press it off.
   - If equipped, press the EBL mode switch on, wait 30 seconds, and then press it off.
   - Move the Blend control (single-zone) or Driver Blend control (dual-zone) from full cold to full hot, wait 30 seconds, and then move it back to full cold.
   - If equipped, move the Passenger Blend control from full cold to full hot, wait 30 seconds, and then moved it back to full cold.
   - Turn the Mode select control to the defrost position, wait 30 seconds, and then turn it to the panel position (dual-zone) or panel / recirculation position (single-zone). Wait 30 seconds before proceeding.

   Does the scan tool display any active DTC's?

   Yes

- Refer to **DIAGNOSIS AND TESTING** and perform the appropriate diagnostic procedure.

No

- Go To 4.

4. **ACTUATOR CALIBRATION TEST**
   1. Ignition on, engine not running.
   2. With the scan tool, select Actuator Calibration Test. When the test is complete, read HVAC DTC's.

      Does the scan tool display any DTC's?

      Yes

      - Refer to **DIAGNOSIS AND TESTING** and perform the appropriate diagnostic procedure.

      No

      - Test Complete.

HVAC PRE-DIAGNOSTIC TROUBLESHOOTING PROCEDURE

For a complete wiring diagram, **refer to appropriate SYSTEM WIRING DIAGRAMS article** .

Perform the following steps prior to any diagnostic procedure(s).

- Testing should only be performed with the battery fully charged to avoid false diagnosis.
- With the scan tool, read Powertrain Control Module (PCM) DTC's. If PCM DTC's are present, and perform the appropriate diagnostic procedure(s) before proceeding. Refer to **3.7L/4.7L/5.7L - DIAGNOSTIC CODE INDEX - NGC - 1500 & 2500** or **6.7L - DIAGNOSTIC CODE INDEX - 2500 & 3500** .
- With the scan tool, read Totally Integrated Power Module (TIPM) DTC's. If TIPM DTC's are present, and perform the appropriate diagnostic procedure(s) first before proceeding. Refer to **TIPM - DIAGNOSIS AND TESTING** .
- With the scan tool, read HVAC DTC's. Record all Stored, Active, and Pending DTC information.
- With the scan tool, read the Environmental Data. Use this data to identify the conditions in which the DTC was set.
- Refer to the When Monitored and Set Conditions for this DTC. DTC's can set at ignition on, at start up, or operating under specific conditions.
- Using the wiring diagram as a guide, inspect the wiring and connectors related to this circuit and clean/repair as necessary.
- Check for controller software updates. Some conditions can be corrected by upgrading the controller software.

NOTE: If the controller is updated with new software, with the scan tool, perform a

HVAC Actuator Calibration Test.

-
- Check for Service Information Tune-ups or Service Bulletins for any possible causes that may apply.

DIAGNOSTIC TEST

1. Did any of the above procedures repair the vehicle?

   Yes

   - Testing is complete.
   - Perform HVAC VERIFICATION TEST. Refer to **HVAC VERIFICATION TEST**.

   No

   - Refer to **DIAGNOSIS AND TESTING** and perform the appropriate diagnostic procedure.

HVAC VERIFICATION TEST

Perform the following procedures to verify that the repair(s) are valid.

1. Make sure that all accessories are turned off.
2. Make sure that the battery is fully charged.
3. Turn the ignition off to the lock position.
4. Disconnect all jumper wires and reconnect all previously disconnected components and connectors.
5. With the scan tool, record and erase all DTC's from ALL modules.
6. Turn the ignition off, remove the scan tool from the DLC (Data Link Connector). Open the door and close the door. Wait a minimum 30 seconds, then turn the ignition on. Reconnect the scan tool.

   NOTE: Disconnecting the scan tool and opening and closing the door will allow the controller to enter into sleep mode.

7. With the scan tool perform the HVAC Actuator Calibration Test.
8. Start and run the engine for two minutes while operating all functions of the system that caused the original concern.
9. With the scan tool, check for DTC's in all modules.

Is the original condition still present or are there any other HVAC DTC's present?

Yes

- Refer to **DIAGNOSIS AND TESTING** and perform the appropriate diagnostic procedure.

No

- Repair is complete.

DIAGNOSTIC CODE INDEX

DIAGNOSTIC CODE INDEX

DTC	Description
B1000-92	A/C SWITCH REQUEST INPUT - PERFORMANCE OR INCORRECT OPERATION
B1009-92	RECIRCULATION SWITCH REQUEST INPUT - PERFORMANCE OR INCORRECT OPERATION
B1015-12	REAR DEFROST SWITCH REQUEST INPUT CIRCUIT/PERFORMANCE
B1030-11	EVAPORATOR TEMPERATURE SENSOR - CIRCUIT SHORT TO GROUND
B1030-12	EVAPORATOR TEMPERATURE SENSOR - CIRCUIT SHORT TO BATTERY
B1058-13	RECIRCULATION DOOR CONTROL - CIRCUIT OPEN
B1058-92	RECIRCULATION DOOR CONTROL - PERFORMANCE OR INCORRECT OPERATION
B105C-00	RECIRCULATION DOOR TRAVEL RANGE TOO SMALL
B105D-00	RECIRCULATION DOOR TRAVEL RANGE TOO LARGE
B10B2-00	A/C COOL DOWN TEST PERFORMANCE
B11C2-13	FRONT MODE DOOR 1 CONTROL - CIRCUIT OPEN
B11C2-92	FRONT MODE DOOR 1 CONTROL - PERFORMANCE OR INCORRECT OPERATION
B11C3-00	FRONT MODE DOOR 1 TRAVEL RANGE TOO SMALL
B11C4-00	FRONT MODE DOOR 1 TRAVEL RANGE TOO LARGE
B11CB-13	MAIN/LEFT TEMPERATURE DOOR 1 CONTROL - CIRCUIT OPEN
B11CB-92	MAIN/LEFT TEMPERATURE DOOR 1 CONTROL - PERFORMANCE OR INCORRECT OPERATION
B11CC-00	MAIN/LEFT TEMPERATURE DOOR 1 TRAVEL TOO SMALL
B11CD-00	MAIN/LEFT TEMPERATURE DOOR 1 TRAVEL TOO LARGE
B160F-11	TWILIGHT/AMBIENT LIGHT SENSOR INPUT - CIRCUIT SHORT TO GROUND
B160F-12	TWILIGHT/AMBIENT LIGHT SENSOR INPUT - CIRCUIT SHORT TO BATTERY
B210A-84	SYSTEM VOLTAGE LOW - SIGNAL BELOW ALLOWABLE RANGE
B210B-85	SYSTEM VOLTAGE HIGH - SIGNAL ABOVE ALLOWABLE RANGE
B210D-84	BATTERY VOLTAGE LOW - SIGNAL BELOW ALLOWABLE RANGE
B210E-85	BATTERY VOLTAGE HIGH - SIGNAL ABOVE ALLOWABLE RANGE
B2214-00	(HVAC) CLIMATE CONTROL INTERNAL
B222A-00	VEHICLE LINE MISMATCH
U0010-00	CAN INTERIOR BUS
U0141	LOST COMMUNICATION WITH IPM (FCM/TIPM)

DIAGNOSIS AND TESTING

B1000-92-A/C SWITCH REQUEST INPUT - PERFORMANCE OR INCORRECT OPERATION

For a complete wiring diagram, **refer to appropriate SYSTEM WIRING DIAGRAMS article** .

THEORY OF OPERATION

The A/C On/Off control switch input to the controller changes when the switch is pushed inward. An active DTC indicates that the switch is stuck in a pushed position. A stored DTC indicates that the switch was stuck in a pushed position for more than 60 seconds but has since returned to its normal state.

WHEN MONITORED:

With the ignition on.

SET CONDITION:

If the A/C On/Off control switch is stuck in a pushed position for more than 60 seconds. This DTC has a de-maturing time of two seconds. If the DTC's status changes from active to stored, the DTC will stay in memory for 100 ignition cycles.

POSSIBLE CAUSES

Possible Causes
OBJECT HOLDING SWITCH IN A PUSHED POSITION A/C HEATER CONTROL

Always perform the HVAC Pre-Diagnostic Troubleshooting procedure before proceeding. Refer to HVAC PRE-DIAGNOSTIC TROUBLESHOOTING PROCEDURE.

DIAGNOSTIC TEST

1. **INSPECT FOR OBJECT HOLDING SWITCH IN A PUSHED POSITION**
    1. Inspect the A/C Heater Control for an object or debris holding the A/C On/Off control switch in a pushed position.

       Is the A/C On/Off control switch being held in?

       Yes

       - Clean or repair the A/C Heater Control as necessary.
       - Perform the HVAC VERIFICATION TEST. Refer to **HVAC VERIFICATION TEST**.

No

- Go To 2.

2. **A/C HEATER CONTROL**
    1. Turn the ignition on.
    2. With the scan tool, erase HVAC DTC's.
    3. Turn the ignition off for 10 seconds, and then turn the ignition on and wait a minimum of 60 seconds.
    4. With the scan tool, read HVAC DTC's.

    Does the scan tool display this DTC as Active?

    Yes

    - Replace and program the A/C Heater Control in accordance with the Service Information.
    - Perform the HVAC VERIFICATION TEST. Refer to **HVAC VERIFICATION TEST**.

    No

    - Test complete.
    - Perform the HVAC VERIFICATION TEST. Refer to **HVAC VERIFICATION TEST**.

B1009-92-RECIRCULATION SWITCH REQUEST INPUT - PERFORMANCE OR INCORRECT OPERATION

For a complete wiring diagram, **refer to appropriate SYSTEM WIRING DIAGRAMS article** .

THEORY OF OPERATION

The Recirculation mode switch input changes when the switch is pushed inward. An active DTC indicates that the switch is stuck in a pushed position. A stored DTC indicates that the switch was stuck in a pushed position for more than 60 seconds but has since returned to its normal state.

WHEN MONITORED:

With the ignition on.

SET CONDITION:

If the Recirculation mode switch is stuck in a pushed position for more than 60 seconds. This DTC has a maturing time of 60 seconds and a de-maturing time of two seconds. If the DTC's status changes from active to stored, the DTC will stay in memory for 100 ignition cycles.

POSSIBLE CAUSES

Possible Causes

OBJECT HOLDING SWITCH IN A PUSHED POSITION
A/C HEATER CONTROL

Always perform the HVAC Pre-Diagnostic Troubleshooting procedure before proceeding. Refer to HVAC PRE-DIAGNOSTIC TROUBLESHOOTING PROCEDURE.

DIAGNOSTIC TEST

1. **INSPECT FOR OBJECT HOLDING SWITCH IN A PUSHED POSITION**
   1. Inspect the A/C Heater Control for an object or debris holding the Recirculation mode switch in a pushed position.

      Is the Recirculation mode switch being held in?

      Yes

      - Repair or clean the A/C Heater Control as necessary.
      - Perform the HVAC VERIFICATION TEST. Refer to **HVAC VERIFICATION TEST**.

      No

      - Go To 2.
2. **A/C HEATER CONTROL**
   1. Turn the ignition on.
   2. With the scan tool, erase HVAC DTC's.
   3. Turn the ignition off for 10 seconds, and then turn the ignition on and wait a minimum of 60 seconds.
   4. With the scan tool, read HVAC DTC's.

      Does the scan tool display this DTC as Active?

      Yes

      - Replace and program the A/C Heater Control in accordance with the Service Information.
      - Perform the HVAC VERIFICATION TEST. Refer to **HVAC VERIFICATION TEST**.

      No

      - Test complete.
      - Perform the HVAC VERIFICATION TEST. Refer to **HVAC VERIFICATION TEST**.

B1015-12-REAR DEFROST SWITCH REQUEST INPUT CIRCUIT/PERFORMANCE

For a complete wiring diagram, **refer to appropriate SYSTEM WIRING DIAGRAMS article** .

THEORY OF OPERATION

The HVAC A/C Heater Control contains various switches and knobs that are used to change the systems operation. Many of the switches are momentary switches which are normally open or in the Off position and the status changes when the switch button or knob is pushed or turned. An active Diagnostic Trouble Code (DTC) indicates that the switch is stuck in an On position. A stored DTC indicates that the switch was stuck in a On position for more than 60 seconds but has since returned to its normal state of Off.

WHEN MONITORED:

With the ignition on.

SET CONDITION:

If the Electric Back light (EBL) Electronic Rear Defrost switch is stuck in an On position for more than 60 seconds. This DTC has a de-maturing time of two seconds. If the DTC's status changes from active to stored, the DTC will stay in memory for 100 ignition cycles.

POSSIBLE CAUSES

Possible Causes
OBJECT HOLDING SWITCH IN AN ON POSITION A/C HEATER CONTROL

Always perform the HVAC Pre-Diagnostic Troubleshooting procedure before proceeding. Refer to HVAC PRE-DIAGNOSTIC TROUBLESHOOTING PROCEDURE.

DIAGNOSTIC TEST

1. **INSPECT FOR OBJECT HOLDING SWITCH IN AN ON POSITION**
    1. Inspect the A/C Heater Control for an object or debris holding the (EBL) Electronic Rear Defrost switch in an On position.

        NOTE: Using the scan tool you can read the On/Off status of the control switch.

        Is the (EBL) Electronic Rear Defrost switch being held in or stuck in an On?

        Yes

        - Clean or repair the A/C Heater Control as necessary. If you are unable to clean the switch to where the switch can work properly, replace and program the A/C Heater Control in accordance with the Service Information.
        - Perform the HVAC VERIFICATION TEST. Refer to **HVAC VERIFICATION TEST**.

        No

- Go To 2.

2. **A/C HEATER CONTROL**
    1. Turn the ignition on.
    2. With the scan tool, erase HVAC DTC's.
    3. Turn the ignition off for 10 seconds, and then turn the ignition on and wait a minimum of 60 seconds.
    4. With the scan tool, read HVAC DTC's.

    Does the scan tool display this DTC as Active or is the status of the switch reading On?

    Yes

    - Replace and program the A/C Heater Control in accordance with the Service Information.
    - Perform the HVAC VERIFICATION TEST. Refer to **HVAC VERIFICATION TEST**.

    No

    - Test complete.
    - Perform the HVAC VERIFICATION TEST. Refer to **HVAC VERIFICATION TEST**.

B1030-11-EVAPORATOR TEMPERATURE SENSOR - CIRCUIT SHORT TO GROUND

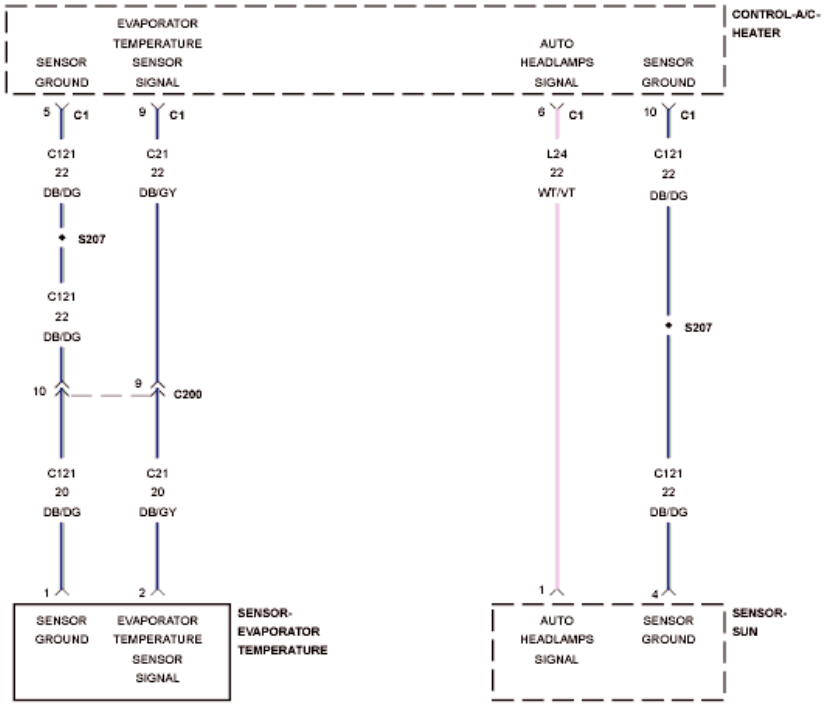

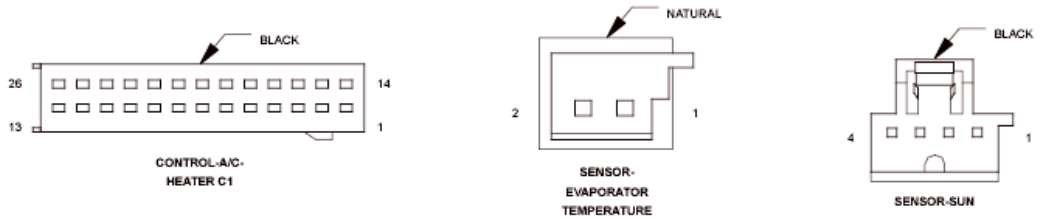

Fig. 1: Evaporator Temperature Sensor & Sun Sensor Wiring Diagram
Courtesy of CHRYSLER GROUP, LLC

For a complete wiring diagram, **refer to appropriate SYSTEM WIRING DIAGRAMS article** .

THEORY OF OPERATION

The Evaporator Temperature Sensor is a variable resistor that changes in conjunction with temperature, or otherwise known as a thermistor. The Evaporator Temperature Sensor is located in the HVAC housing

downstream of the A/C evaporator. The A/C Heater Control module monitors the evaporator temperature by monitoring the voltage change of the Evaporator Temperature Sensor Signal circuit. The sensor thermistor forms the lower half of a voltage divider and the upper half of the voltage divider is provided by a pull up resistor to 5.0 volts. If the monitored voltage drops below or rises above a predetermined voltage, a DTC will set.

WHEN MONITORED:

With the ignition on.

SET CONDITION:

The Evaporator Temperature Sensor voltage input to the A/C Heater Control is below a calibrated range for a continuous period of 30 seconds. If the A/C Heater Control detects a valid voltage, the DTC will change from active to stored and will stay stored for 100 ignition cycles.

POSSIBLE CAUSES

Possible Causes
(C21) EVAPORATOR TEMPERATURE SENSOR SIGNAL CIRCUIT SHORTED TO GROUND
(C21) EVAPORATOR TEMPERATURE SENSOR SIGNAL CIRCUIT SHORT TO THE (C121) SENSOR GROUND CIRCUIT
EVAPORATOR TEMPERATURE SENSOR
A/C HEATER CONTROL

Always perform the HVAC Pre-Diagnostic Troubleshooting procedure before proceeding. Refer to HVAC PRE-DIAGNOSTIC TROUBLESHOOTING PROCEDURE.

DIAGNOSTIC TEST

1. **CHECK (C21) EVAPORATOR TEMPERATURE SENSOR SIGNAL CIRCUIT VOLTAGE**
    1. Ignition on, engine not running.
    2. With the scan tool, read HVAC DTC's.

    NOTE: It can take up to 30 seconds or more for this DTC to mature.

    Is this DTC active?

    Yes

    - Go To 2.

    No

    - Go To 5.
2. **CHECK (C21) EVAPORATOR TEMPERATURE SENSOR SIGNAL CIRCUIT FOR A SHORT**

TO GROUND

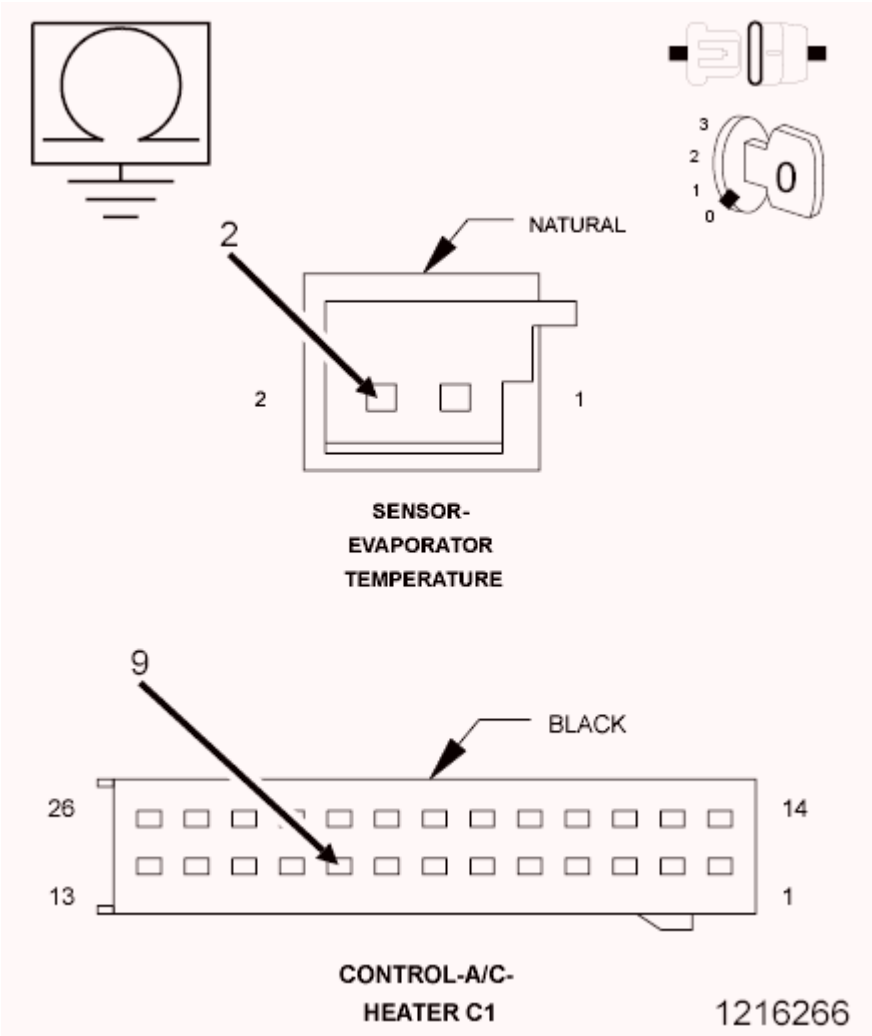

Fig. 2: Checking Evaporator Temperature Sensor Signal Circuit For A Short To Ground
Courtesy of CHRYSLER GROUP, LLC

1. Turn the ignition off.
2. Disconnect the A/C Heater Control C1 harness connector.
3. Disconnect the Evaporator Temperature Sensor harness connector.
4. Measure the resistance between ground and the (C21) Evaporator Temperature Sensor Signal circuit.

   Is the resistance below 100k Ohms?

   Yes

   - Repair the (C21) Evaporator Temperature Sensor Signal circuit for a short to ground.
   - Perform the HVAC VERIFICATION TEST. Refer to **HVAC VERIFICATION TEST**.

No

- Go To 3.

3. **CHECK (C21) EVAPORATOR TEMPERATURE SENSOR SIGNAL CIRCUIT FOR A SHORT TO (C121) SENSOR GROUND CIRCUIT**

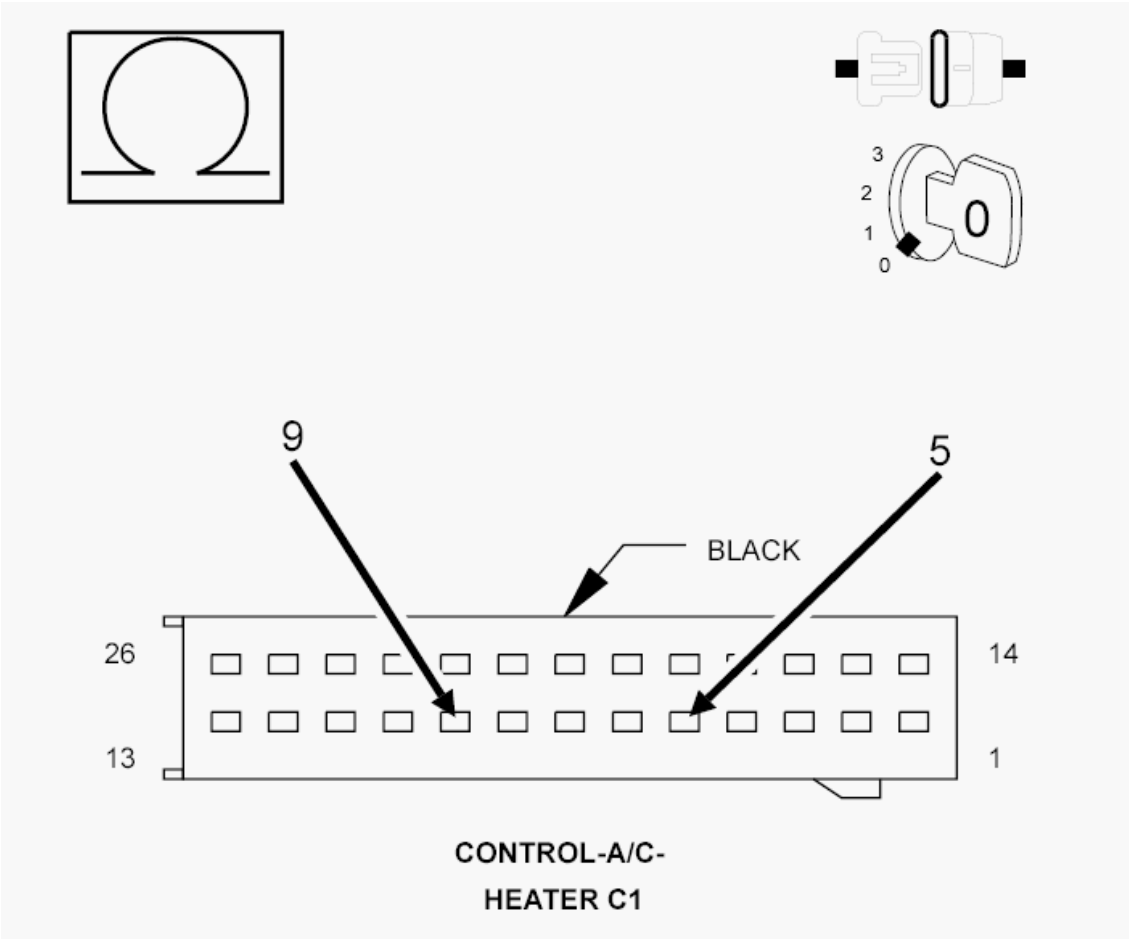

Fig. 3: Checking Evaporator Temperature Sensor Signal Circuit For A Short To Sensor Ground Circuit
Courtesy of CHRYSLER GROUP, LLC

1. Measure the resistance between the (C21) Evaporator Temperature Sensor Signal circuit and the (C121) Sensor Ground circuit.

   Is the resistance below 100k Ohms?

   Yes

   - Repair the (C21) Evaporator Temperature Sensor Signal circuit for a short to (C121) Sensor Ground circuit.
   - Perform the HVAC VERIFICATION TEST. Refer to **HVAC VERIFICATION TEST**.

No

- Go To 4.

4. **CHECK THE EVAPORATOR TEMPERATURE SENSOR**
   1. Replace the Evaporator Temperature Sensor in accordance with the Service Information.
   2. Perform the HVAC VERIFICATION TEST. Refer to **HVAC VERIFICATION TEST**.

   Does the DTC reset?

   Yes

   - Replace the A/C Heater Control in accordance with the Service Information.
   - Perform the HVAC VERIFICATION TEST. Refer to **HVAC VERIFICATION TEST**.

   No

   - Test complete.

5. **CHECK THE WIRING AND CONNECTORS**
   1. The conditions necessary to set the DTC are not present at this time.
   2. With the scan tool, check the Environmental Data to help identify the conditions in which the DTC was set.
   3. Using the schematics as a guide, inspect the wiring and connectors specific to this circuit.
   4. Check for an intermittent condition by inspecting the related wiring harness for chafed, pierced, pinched, or partially broken wires.
   5. Check the connectors for broken, bent, pushed out, spread, corroded, or contaminated terminals.
   6. Wiggle the wiring and connectors while checking for shorted and open circuits.

   Were there any problems found?

   Yes

   - Repair as necessary.
   - Perform the HVAC VERIFICATION TEST. Refer to **HVAC VERIFICATION TEST**.

   No

   - Test complete.

B1030-12-EVAPORATOR TEMPERATURE SENSOR - CIRCUIT SHORT TO BATTERY

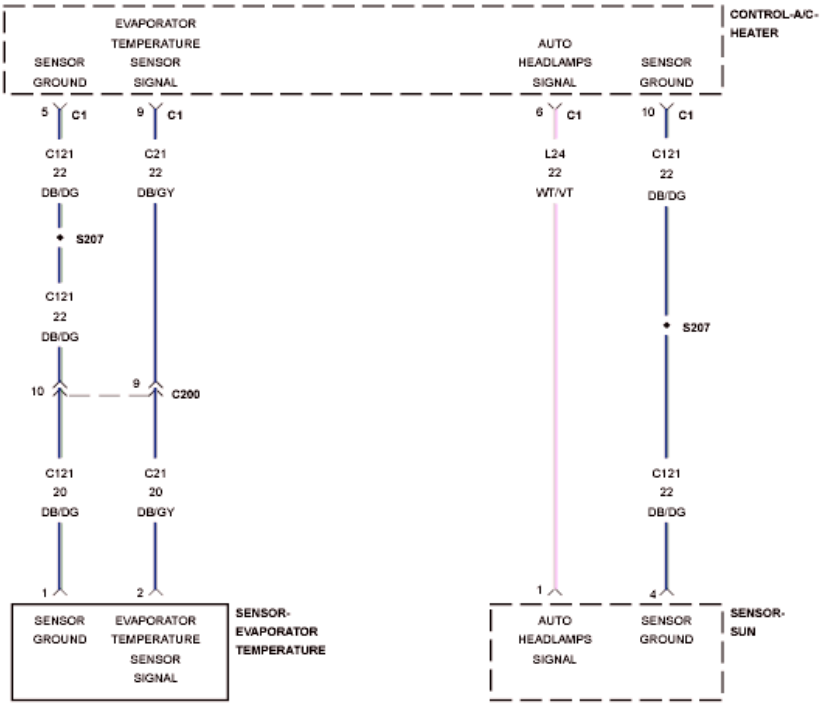

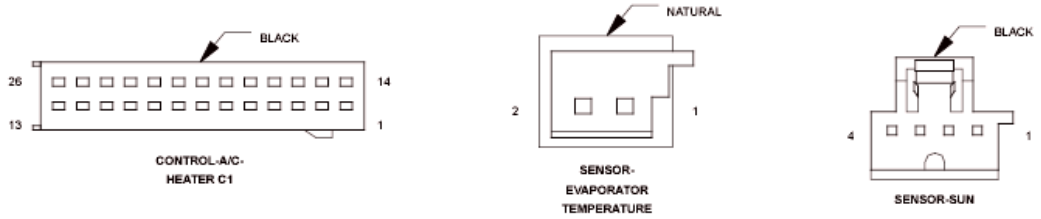

Fig. 4: Evaporator Temperature Sensor & Sun Sensor Wiring Diagram
Courtesy of CHRYSLER GROUP, LLC

For a complete wiring diagram, **refer to appropriate SYSTEM WIRING DIAGRAMS article** .

THEORY OF OPERATION

The Evaporator Temperature Sensor is a variable resistor that changes in conjunction with temperature, or otherwise known as a thermistor. The Evaporator Temperature Sensor is located in the HVAC housing

downstream of the A/C evaporator. The A/C Heater Control module monitors the evaporator temperature by monitoring the voltage change of the Evaporator Temperature Sensor Signal circuit. The sensor thermistor forms the lower half of a voltage divider and the upper half of the voltage divider is provided by a pull up resistor to 5.0 volts. If the monitored voltage drops below or rises above a predetermined voltage, a DTC will set.

WHEN MONITORED:

With the ignition on.

SET CONDITION:

The Evaporator Temperature Sensor voltage input to the A/C Heater Control is above a calibrated range for a continuous period of 30 seconds. If the A/C Heater Control detects a valid voltage, the DTC will change from Active to Stored and will stay in the controllers memory for 100 ignition cycles.

POSSIBLE CAUSES

Possible Causes
(C21) EVAPORATOR TEMPERATURE SENSOR SIGNAL CIRCUIT SHORTED TO VOLTAGE
(C21) EVAPORATOR TEMPERATURE SENSOR SIGNAL CIRCUIT OPEN
(C121) SENSOR GROUND CIRCUIT OPEN
EVAPORATOR TEMPERATURE SENSOR
A/C HEATER CONTROL

Always perform the HVAC Pre-Diagnostic Troubleshooting procedure before proceeding. Refer to HVAC PRE-DIAGNOSTIC TROUBLESHOOTING PROCEDURE.

DIAGNOSTIC TEST

1. **CHECK (C21) EVAPORATOR TEMPERATURE SENSOR SIGNAL CIRCUIT VOLTAGE**
    1. Ignition on, engine not running.
    2. With the scan tool, read HVAC DTC's.

    NOTE: It can take up to 30 seconds or more for this DTC to mature.

    Is this DTC active?

    Yes

    - Go To 2.

    No

    - Go To 6.
2. **CHECK THE (C21) EVAPORATOR TEMPERATURE SENSOR SIGNAL CIRCUIT VOLTAGE**

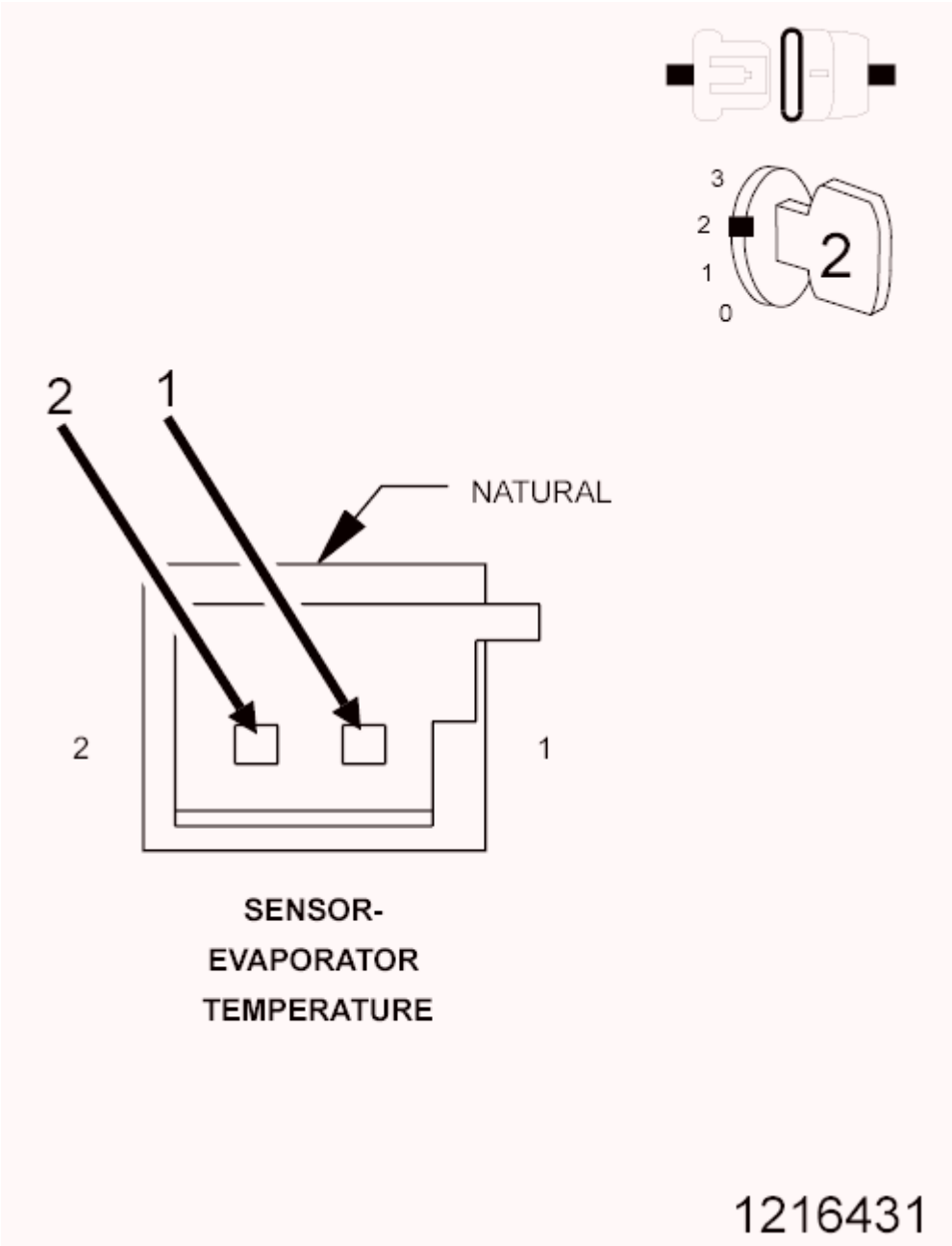

Fig. 5: Measuring Evaporator Temperature Sensor Signal Circuit Voltage
Courtesy of CHRYSLER GROUP, LLC

1. Turn the ignition off to the lock position.
2. Disconnect the Evaporator Temperature Sensor harness connector.

NOTE: **Due to the small terminal and pin size of the Evaporator Temperature Sensor and harness connector, make sure to not damage the terminals in this process.**

3. Connect a jumper wire between the (C21) Evaporator Temperature Sensor Signal circuit and the

(C121) Sensor Ground circuit in the Evaporator Temperature Sensor harness connector.

4. Ignition on, engine not running.
5. With the scan tool, read the Evaporator Temperature Sensor voltage.

   Is the voltage below 0.2 of a volt?

   Yes

   - Replace the Evaporator Temperature Sensor in accordance with the Service Information.
   - Perform the HVAC VERIFICATION TEST. Refer to **HVAC VERIFICATION TEST**.

   No

   - Go To 3.

3. **CHECK THE (C21) EVAPORATOR TEMPERATURE SENSOR SIGNAL CIRCUIT FOR A SHORT TO VOLTAGE**

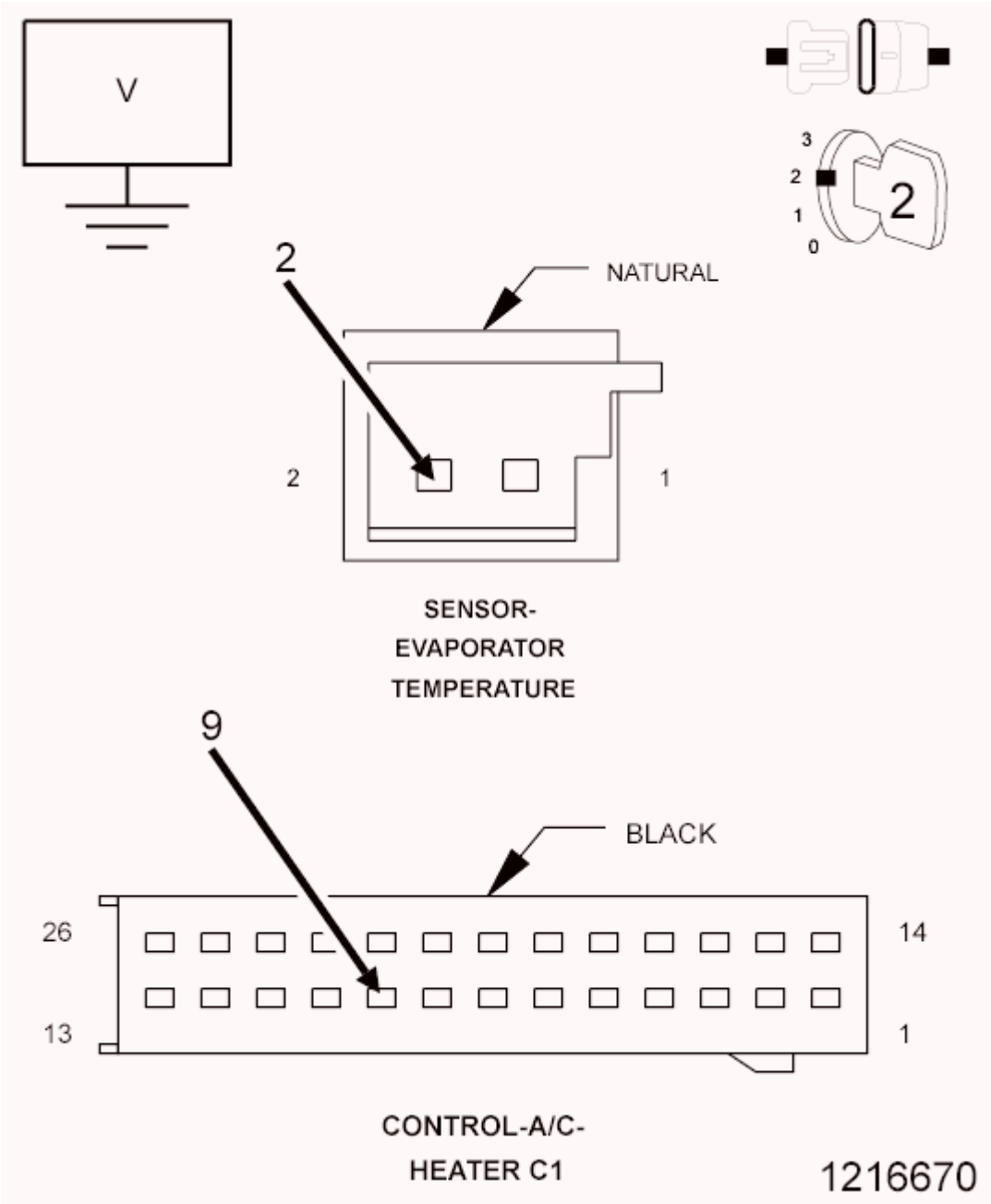

Fig. 6: Checking Evaporator Temperature Sensor Signal Circuit For A Short To Voltage
Courtesy of CHRYSLER GROUP, LLC

1. Turn the ignition off to the lock position.
2. Disconnect the jumper wire from the previous step.
3. Disconnect the A/C Heater Control C1 harness connector.
4. Ignition on, engine not running.
5. Measure the voltage of the (C21) Evaporator Temperature Sensor Signal circuit.

   Is voltage above 0.2 of a volt?

Yes

- Repair the (C21) Evaporator Temperature Sensor Signal circuit for a short to voltage.
- Perform the HVAC VERIFICATION TEST. Refer to **HVAC VERIFICATION TEST**.

No

- Go To 4.

4. **CHECK THE (C21) EVAPORATOR TEMPERATURE SENSOR SIGNAL CIRCUIT FOR AN OPEN**

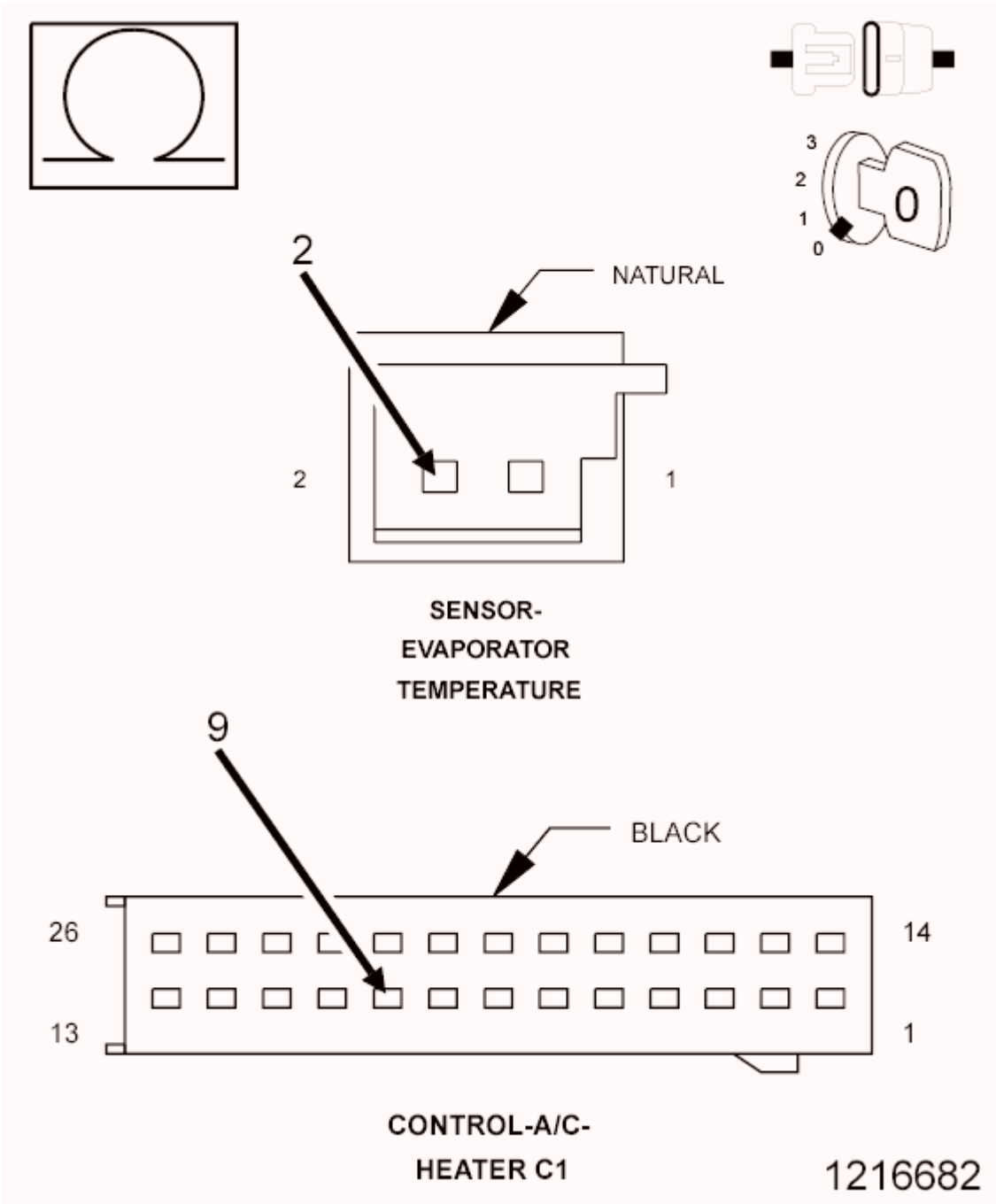

Fig. 7: Checking Evaporator Temperature Sensor Signal Circuit For An Open
Courtesy of CHRYSLER GROUP, LLC

1. Turn the ignition off to the lock position.
2. Measure the resistance of the (C21) Evaporator Temperature Sensor Signal circuit between the A/C Heater Control C1 harness connector and the Evaporator Temperature Sensor harness connector.

   Is the resistance above 1.0 Ohm?

Yes

- Repair the (C21) Evaporator Temperature Sensor Signal circuit for an open.
- Perform the HVAC VERIFICATION TEST. Refer to **HVAC VERIFICATION TEST**.

No

- Go To 5.

5. **CHECK THE (C121) SENSOR GROUND CIRCUIT FOR AN OPEN**

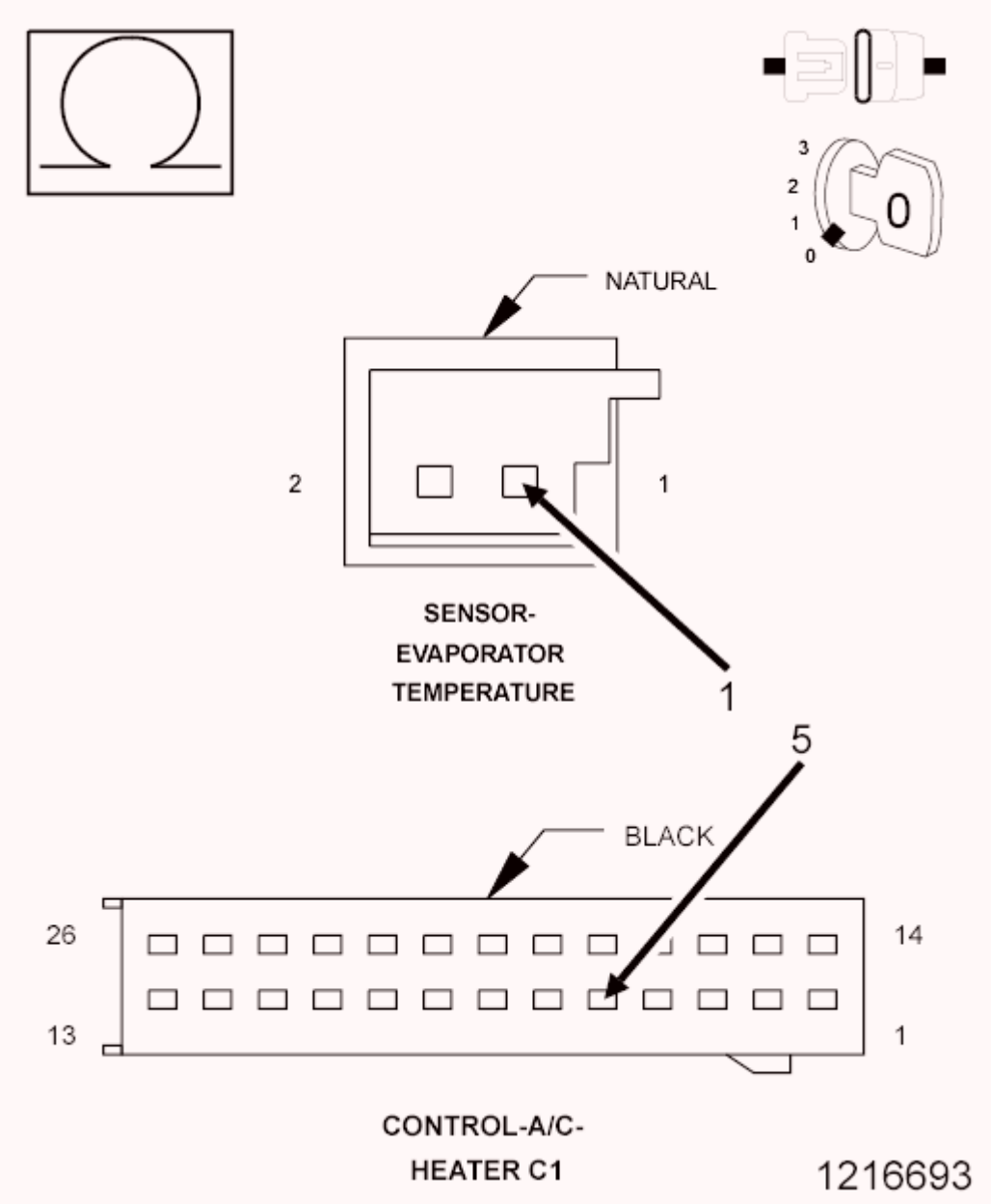

Fig. 8: Checking Evaporator Temperature Sensor Ground For An Open
Courtesy of CHRYSLER GROUP, LLC

1. Measure the resistance of the (C121) Sensor Ground circuit between the A/C Heater Control C1 harness connector and the Evaporator Temperature Sensor harness connector.

   Is the resistance above 1.0 Ohm?

   Yes

   - Repair the (C121) Sensor Ground circuit for an open.
   - Perform the HVAC VERIFICATION TEST. Refer to **HVAC VERIFICATION TEST**.

   No

   - Replace and program the A/C Heater Control in accordance with the Service Information.
   - Perform the HVAC VERIFICATION TEST. Refer to **HVAC VERIFICATION TEST**.

6. **CHECK THE WIRING AND CONNECTORS**
   1. The conditions necessary to set the DTC are not present at this time.
   2. With the scan tool, check the Environmental Data to help identify the conditions in which the DTC was set.
   3. Using the schematics as a guide, inspect the wiring and connectors specific to this circuit.
   4. Check for an intermittent condition by inspecting the related wiring harness for chafed, pierced, pinched, or partially broken wires.
   5. Check the connectors for broken, bent, pushed out, spread, corroded, or contaminated terminals.
   6. Wiggle the wiring and connectors while checking for shorted and open circuits.

   Were there any problems found?

   Yes

   - Repair as necessary.
   - Perform the HVAC VERIFICATION TEST. Refer to **HVAC VERIFICATION TEST**.

   No

   - Test complete.

B1058-13-RECIRCULATION DOOR CONTROL - CIRCUIT OPEN

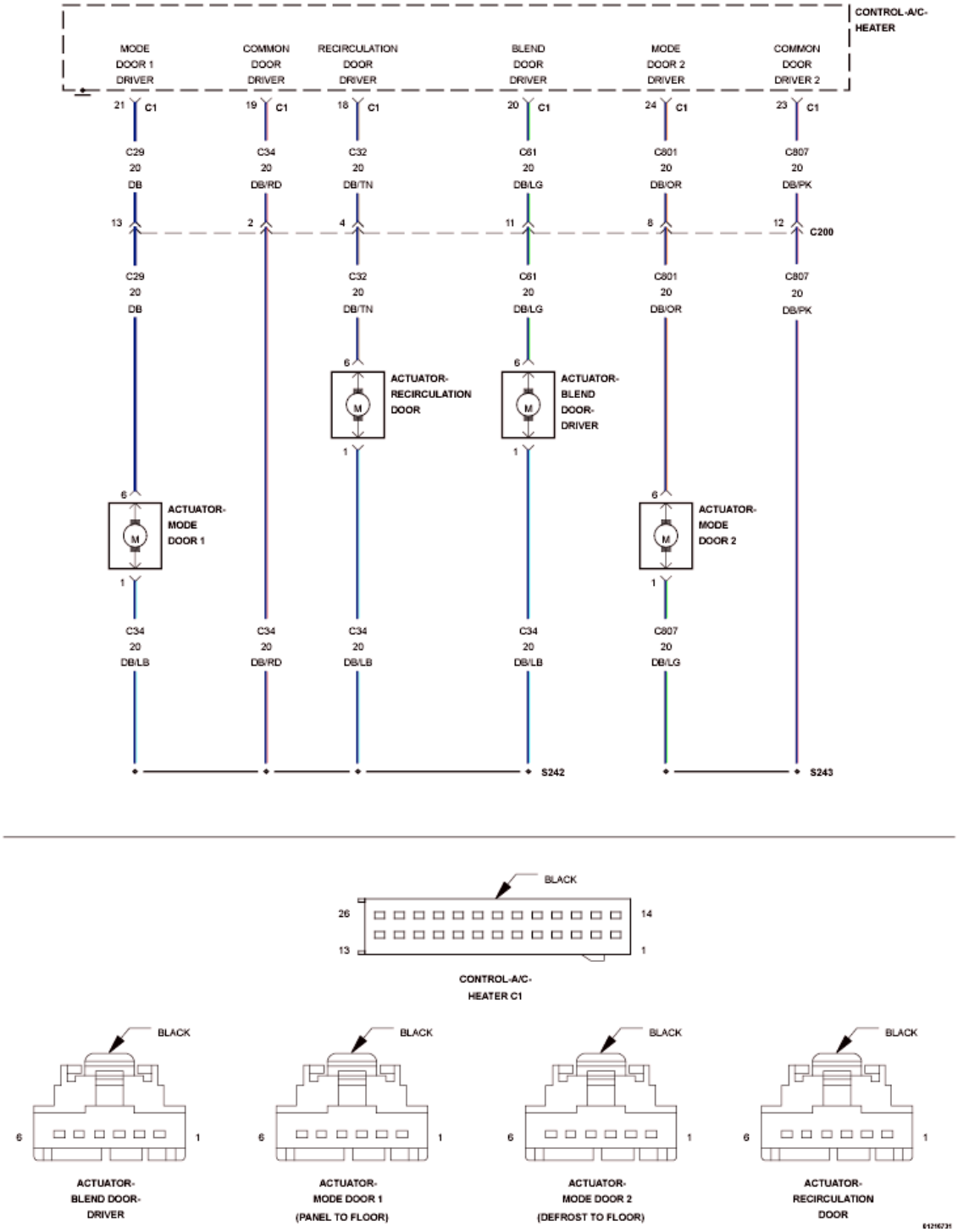

Fig. 9: Recirculation Door Control Wiring Diagram
Courtesy of CHRYSLER GROUP, LLC

For a complete wiring diagram, **refer to appropriate SYSTEM WIRING DIAGRAMS article** .

THEORY OF OPERATION

After the initial installation of the A/C Heater Control, the controller is calibrated to each individual blend/mode door actuator. These calibrations are stored as in the number of pulses it takes to move the door from one stop to another. The A/C Heater Control drives the Door Actuators by the use of Door Driver circuit and a Common Door Driver circuit and monitors all door actuator pulses to detect door movement in both directions. Most of the door actuators share a common door driver circuit but each door actuator has its own unique driver circuit. The Defrost Door Actuator does not share a common door driver circuit because defrost mode is used as a system default mode if there is a system malfunction. Due to shared circuitry, similar DTC's can set at the same time for multiple actuators depending upon the type of circuit malfunction, its location, and the direction the actuator is moving when the malfunction is present.

WHEN MONITORED:

With the ignition on and an actuator movement is commanded by the A/C Heater Control.

SET CONDITION:

If an actuator move is commanded by the A/C Heater Control and there are no feedback pulses detected in that direction, the controller commands the actuator in the opposite direction. If no feedback pulses are detected in either direction this DTC will set. If the A/C Heater Control detects a valid pulse feedback in both directions, the DTC will change from Active to Stored and will stay in the controllers memory for 100 ignition cycles.

POSSIBLE CAUSES

Possible Causes
(C32) RECIRCULATION DOOR DRIVER CIRCUIT OPEN
(C34) COMMON DOOR DRIVER CIRCUIT OPEN
RECIRCULATION DOOR ACTUATOR
A/C HEATER CONTROL

Always perform the HVAC Pre-Diagnostic Troubleshooting procedure before proceeding. Refer to HVAC PRE-DIAGNOSTIC TROUBLESHOOTING PROCEDURE.

DIAGNOSTIC TEST

1. **CHECK FOR OTHER DTC's**
    1. Ignition on, engine not running.
    2. With the scan tool, read HVAC DTC's.

    Is there more than one Door Control - Circuit Open DTC present?

    Yes

    - Repair the (C34) Common Door Driver circuit for an open.

    NOTE: Due to the common shared driver circuit, probable area of concern is the splice, or from the splice to the A/C Heater

Control harness connector. Make sure to check all inline connectors.

No

- Go To 2.

2. **CHECK IF DTC IS ACTIVE**
   1. Ignition on, engine not running.
   2. With the scan tool, read HVAC DTC's.

      Is this DTC active?

      Yes

      - Go To 4.

      No

      - Go To 3.

3. **PERFORM HVAC ACTUATOR CALIBRATION TEST**
   1. With the scan tool, perform the HVAC Actuator Calibration Test.

      Did this DTC change from Stored to Active while performing the HVAC Actuator Calibration Test?

      Yes

      - Go To 4.

      No

      - Go To 7.

4. **CHECK THE RECIRCULATION DOOR ACTUATOR**

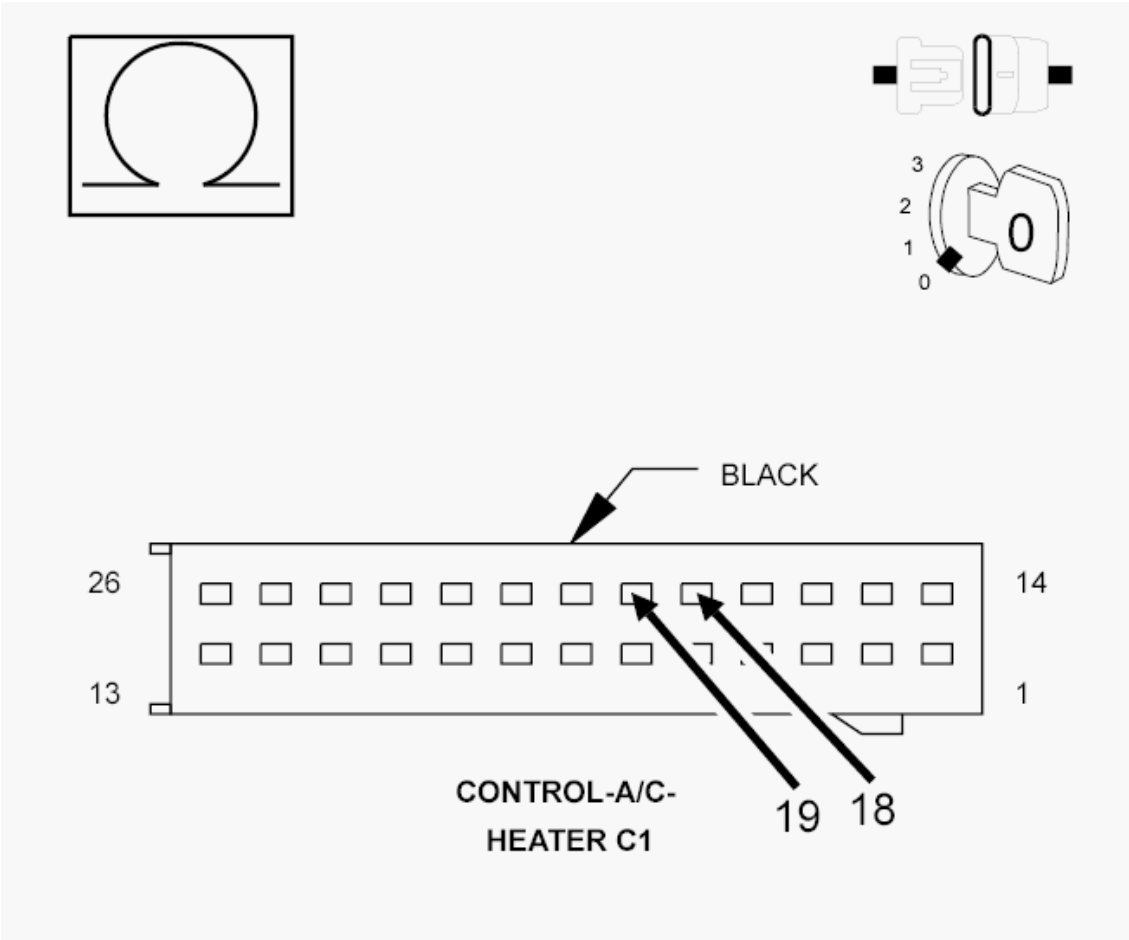

Fig. 10: Checking Recirculation Door Driver Circuit
Courtesy of CHRYSLER GROUP, LLC

1. Turn the ignition off to the lock position.
2. Disconnect the A/C Heater Control C1 harness connector.
3. Measure the resistance between the (C32) Recirculation Door Driver circuit and the (C34) Common Door Driver circuit.

   Is the resistance 38.0 Ohms (± 5.0 Ohms)?

   Yes

   - Replace and program the A/C Heater Control in accordance with the Service Information.
   - Perform the HVAC VERIFICATION TEST. Refer to **HVAC VERIFICATION TEST**.

   No

   - Go To 5.

5. **CHECK THE (C32) RECIRCULATION DOOR DRIVER CIRCUIT FOR AN OPEN**

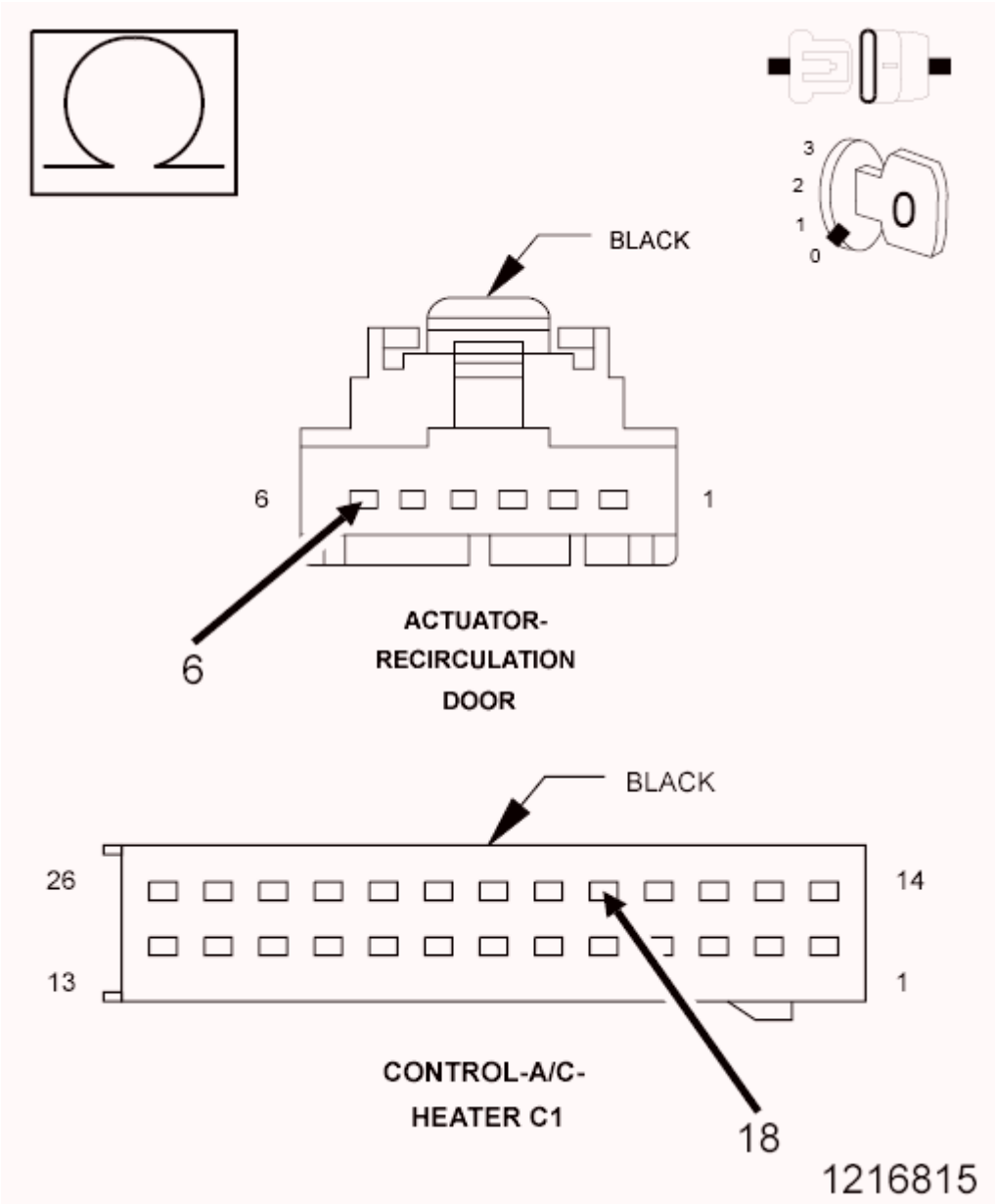

Fig. 11: Checking Recirculation Door Driver Circuit For An Open
Courtesy of CHRYSLER GROUP, LLC

1. Turn the ignition off to the lock position.
2. Disconnect the Recirculation Door Actuator harness connector.
3. Measure the resistance of the (C32) Recirculation Door Driver circuit between the A/C Heater Control C1 harness connector and the Recirculation Door Actuator harness connector.

   Is the resistance above 5.0 Ohms?

   Yes

   - Repair the (C32) Recirculation Door Driver circuit for an open.

- Perform the HVAC VERIFICATION TEST. Refer to **HVAC VERIFICATION TEST**.

No

- Go To 6.

6. **CHECK THE (C34) COMMON DOOR DRIVER CIRCUIT FOR AN OPEN**

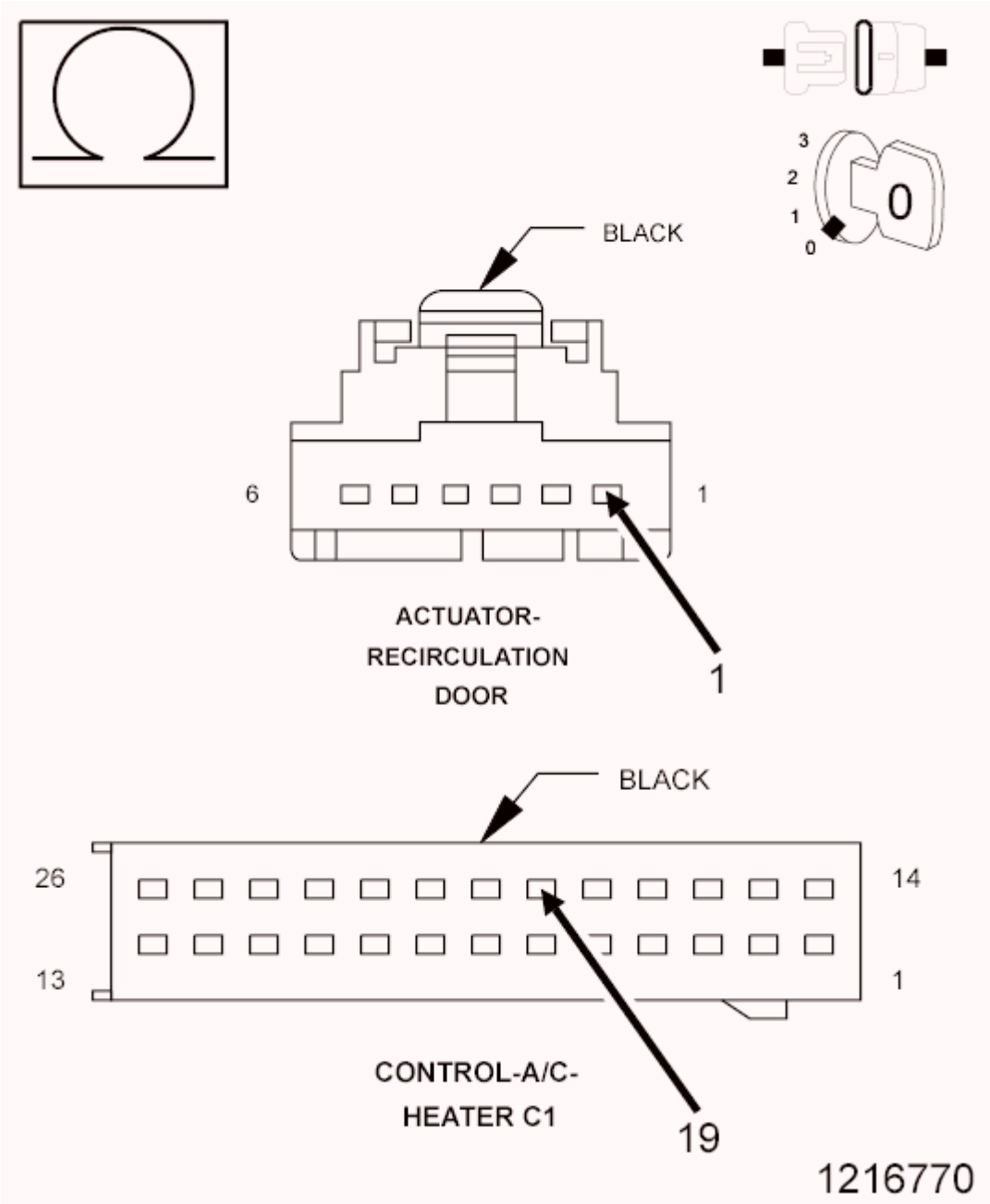

Fig. 12: Checking Common Door Driver Circuit For An Open
Courtesy of CHRYSLER GROUP, LLC

1. Measure the resistance of the (C34) Common Door Driver circuit between the A/C Heater Control

C1 harness connector and the Recirculation Door Actuator harness connector.

Is the resistance above 5.0 Ohms?

Yes

- Repair the (C34) Common Door Driver circuit for an open.

  NOTE: Probable location is the wiring harness splice or the wiring between the splice and the door actuator.

- Perform the HVAC VERIFICATION TEST. Refer to **HVAC VERIFICATION TEST**.

No

- Replace the Recirculation Door Actuator in accordance with the Service Information.
- Perform the HVAC VERIFICATION TEST. Refer to **HVAC VERIFICATION TEST**.

7. **CHECK THE WIRING AND CONNECTORS**
   1. The conditions necessary to set the DTC are not present at this time.
   2. With the scan tool, check the Environmental Data to help identify the conditions in which the DTC was set.
   3. Using the schematics as a guide, inspect the wiring and connectors specific to this circuit.
   4. Check for an intermittent condition by inspecting the related wiring harness for chafed, pierced, pinched, or partially broken wires.
   5. Check the connectors for broken, bent, pushed out, spread, corroded, or contaminated terminals.
   6. Wiggle the wiring and connectors while checking for shorted and open circuits.

   Were there any problems found?

   Yes

   - Repair as necessary.
   - Perform the HVAC VERIFICATION TEST. Refer to **HVAC VERIFICATION TEST**.

   No

   - Test complete.

B1058-92-RECIRCULATION DOOR CONTROL - PERFORMANCE OR INCORRECT OPERATION

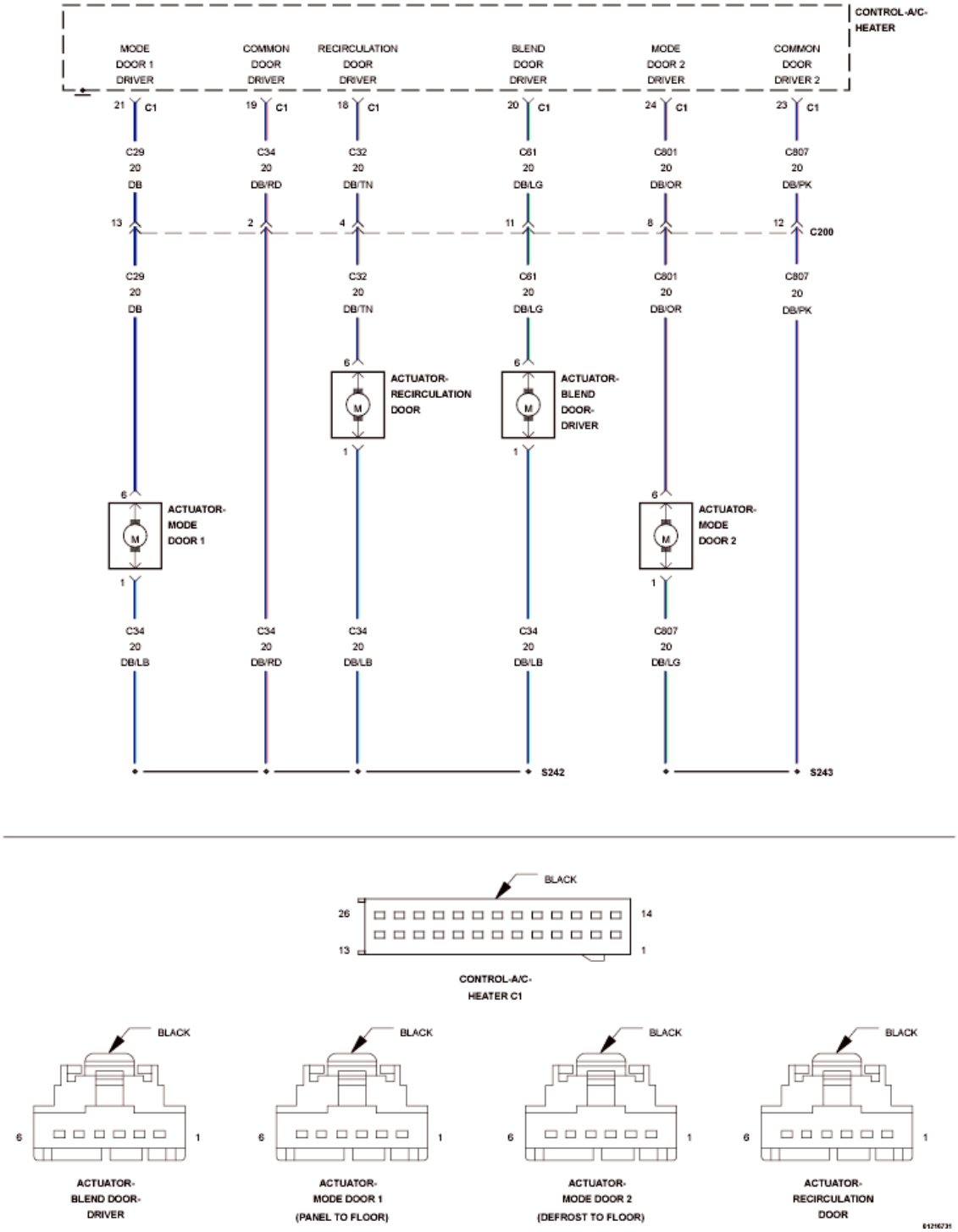

Fig. 13: Recirculation Door Control Wiring Diagram
Courtesy of CHRYSLER GROUP, LLC

For a complete wiring diagram, **refer to appropriate SYSTEM WIRING DIAGRAMS article** .

THEORY OF OPERATION

After the initial installation of the A/C Heater Control, the controller is calibrated to each individual blend/mode door actuator. These calibrations are stored as in the number of pulses it takes to move the door from one stop to another. The A/C Heater Control drives the Door Actuators by the use of Door Driver circuit and a Common Door Driver circuit and monitors all door actuator pulses to detect door movement in both directions. Most of the door actuators share a common door driver circuit but each door actuator has its own unique driver circuit. The Defrost Door Actuator does not share a common door driver circuit because defrost mode is used as a system default mode if there is a system malfunction. Due to shared circuitry, similar DTC's can set at the same time for multiple actuators depending upon the type of circuit malfunction, its location, and the direction the actuator is moving when the malfunction is present.

WHEN MONITORED:

With the ignition on and an actuator movement is commanded by the A/C Heater Control.

SET CONDITION:

If an actuator move is commanded by the A/C Heater Control and there are no feedback pulses detected in that direction, the controller commands the actuator in the opposite direction. If feedback pulses are detected in only one direction this DTC will set. If the A/C Heater Control detects a valid pulse feedback in both directions, the DTC will change from Active to Stored and will stay in the controllers memory for 100 ignition cycles.

POSSIBLE CAUSES

Possible Causes
(C32) RECIRCULATION DOOR DRIVER CIRCUIT SHORTED TO VOLTAGE
(C32) RECIRCULATION DOOR DRIVER CIRCUIT SHORTED TO GROUND
(C34) COMMON DOOR DRIVER CIRCUIT SHORTED TO VOLTAGE
(C34) COMMON DOOR DRIVER CIRCUIT SHORTED TO GROUND
RECIRCULATION DOOR BINDING
RECIRCULATION DOOR ACTUATOR
A/C HEATER CONTROL

Always perform the HVAC Pre-Diagnostic Troubleshooting procedure before proceeding. Refer to HVAC PRE-DIAGNOSTIC TROUBLESHOOTING PROCEDURE.

DIAGNOSTIC TEST

1. **CHECK IF DTC IS ACTIVE**
    1. Ignition on, engine not running.
    2. With the scan tool, read HVAC DTC's.

    NOTE: It can take up to 60 seconds or more for this DTC to mature.

    Is this DTC active?

    Yes

- Go To 3.

No

- Go To 2.

2. **PERFORM HVAC ACTUATOR CALIBRATION TEST**
   1. With the scan tool, perform the HVAC Actuator Calibration Test.

      Did this DTC change from Stored to Active while performing the HVAC Actuator Calibration Test?

      Yes

      - Go To 3.

      No

      - Go To 9.

3. **CHECK THE (C32) RECIRCULATION DOOR DRIVER CIRCUIT FOR A SHORT TO VOLTAGE**

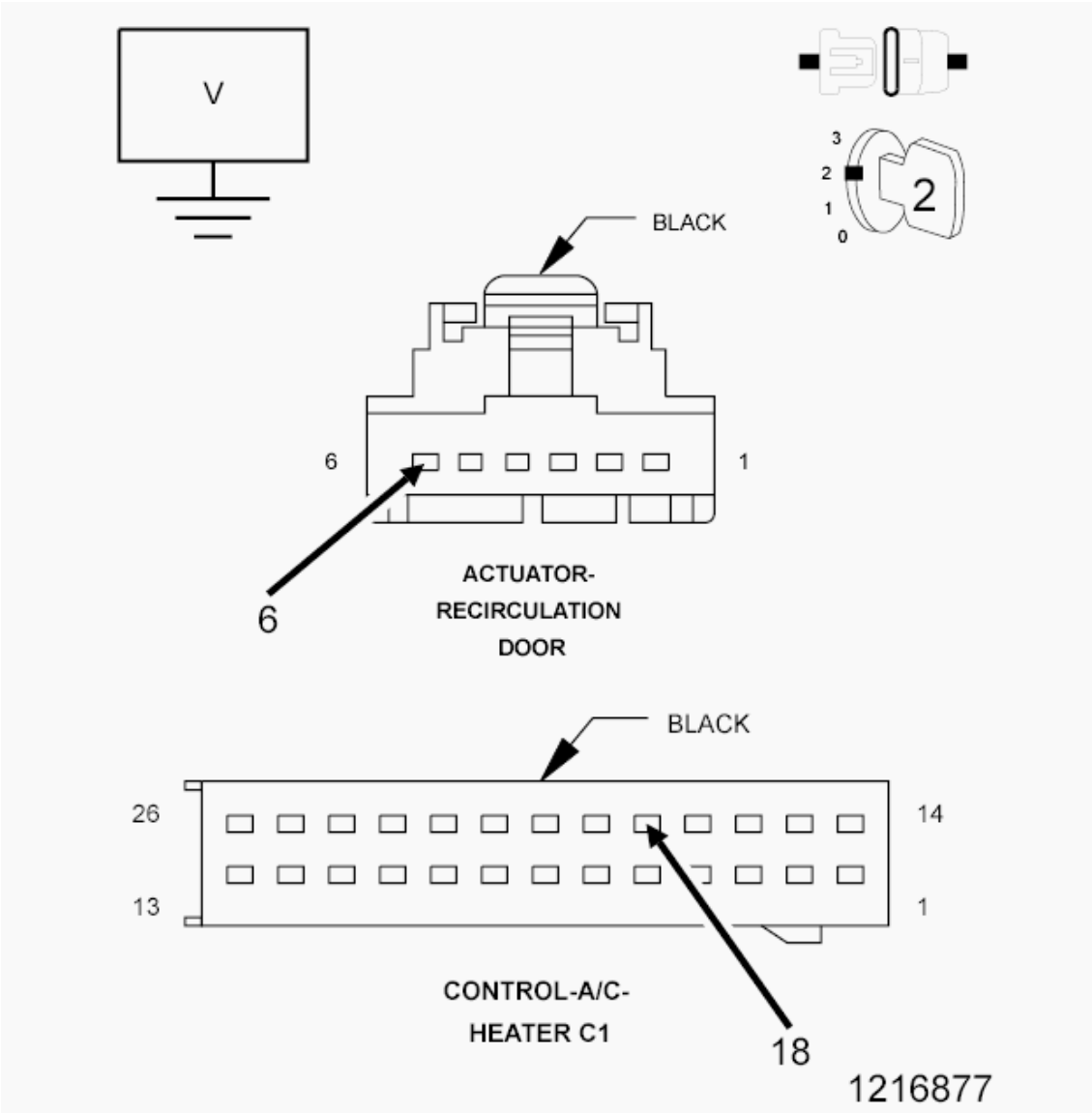

Fig. 14: Checking Recirculation Door Driver Circuit For A Short To Voltage
Courtesy of CHRYSLER GROUP, LLC

1. Turn the ignition off to the lock position.
2. Disconnect the A/C Heater Control C1 harness connector.
3. Disconnect the Recirculation Door Actuator harness connector.
4. Ignition on, engine not running.
5. Measure the voltage of the (C32) Recirculation Door Driver circuit.

   Is there any voltage present?

   Yes

   - Repair the (C32) Recirculation Door Driver circuit for a short to voltage.

- Perform the HVAC VERIFICATION TEST. Refer to **HVAC VERIFICATION TEST**.

No

- Go To 4.

4. **CHECK THE (C34) COMMON DOOR DRIVER CIRCUIT FOR A SHORT TO VOLTAGE**

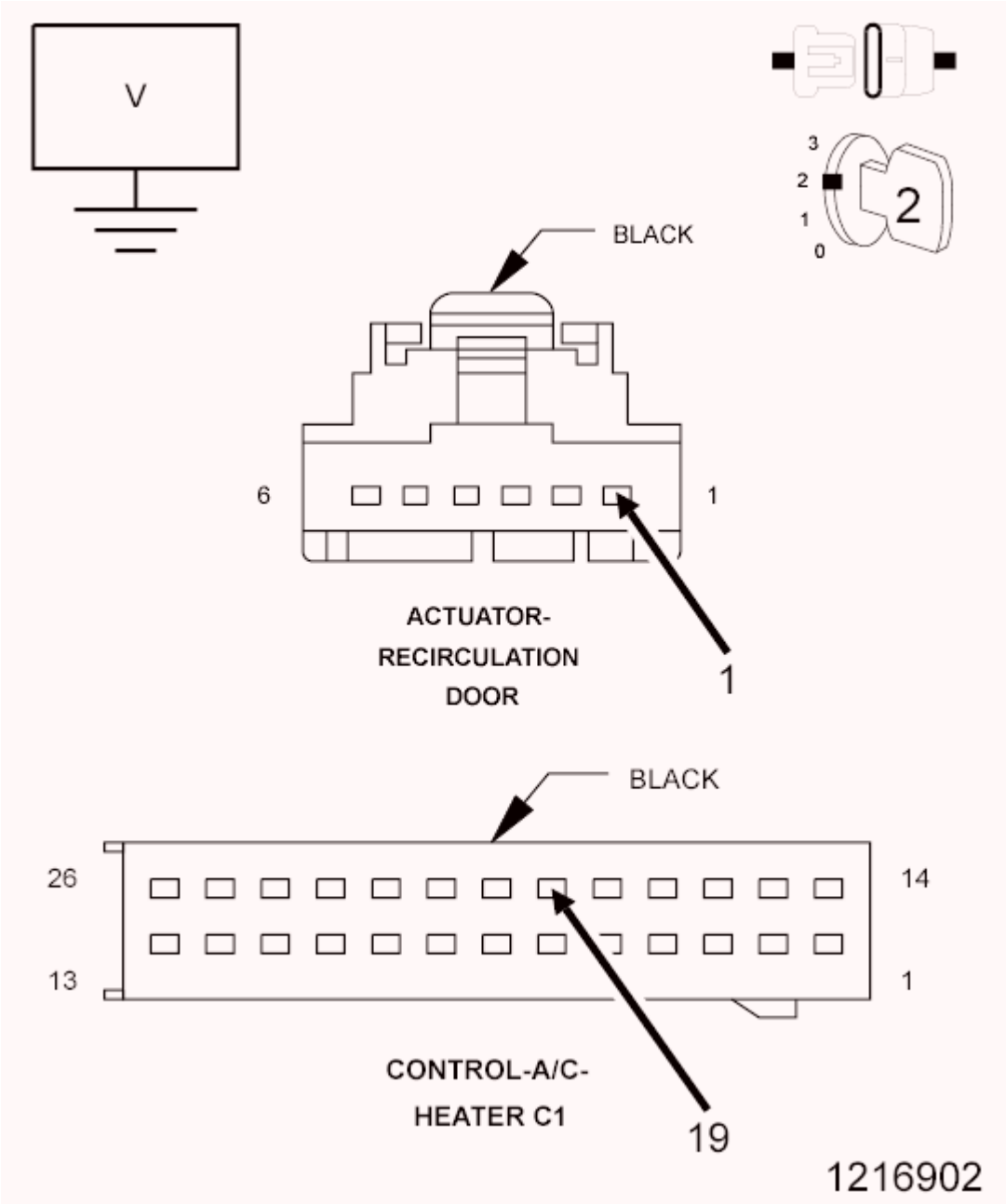

Fig. 15: Checking Common Door Driver Circuit For A Short To Voltage
Courtesy of CHRYSLER GROUP, LLC

1. Measure the voltage of the (C34) Common Door Driver circuit.

Is there any voltage present?

Yes

- Repair the (C34) Common Door Driver circuit for a short to voltage.
- Perform the HVAC VERIFICATION TEST. Refer to **HVAC VERIFICATION TEST**.

No

- Go To 5.

5. **CHECK THE (C32) RECIRCULATION DOOR DRIVER CIRCUIT FOR A SHORT TO GROUND**

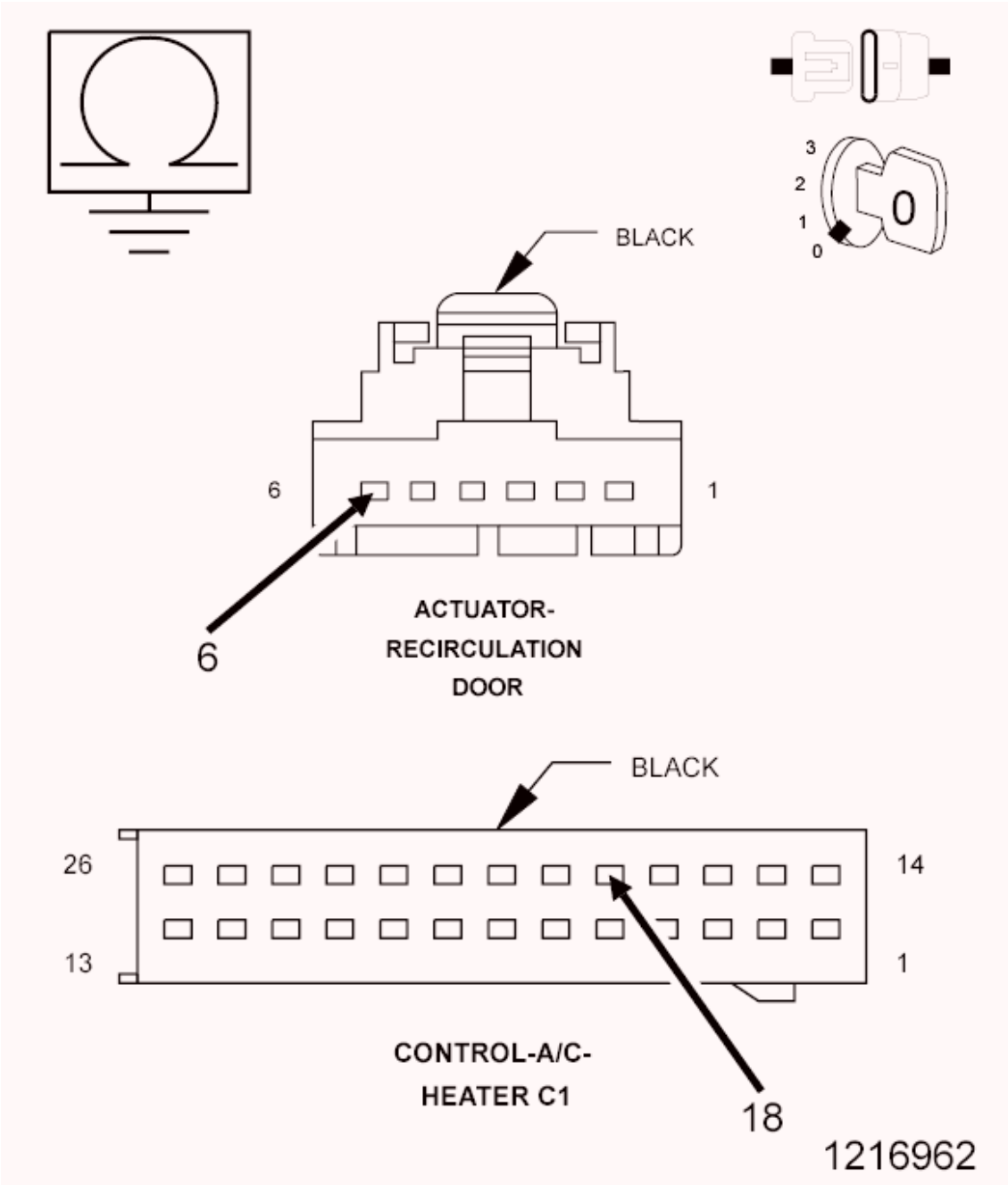

Fig. 16: Checking Recirculation Door Driver Circuit For A Short To Ground
Courtesy of CHRYSLER GROUP, LLC

1. Turn the ignition off to the lock position.
2. Measure the resistance between ground and the (C32) Recirculation Door Driver circuit.

   Is the resistance below 100k Ohms?

   Yes

- Repair the (C32) Recirculation Door Driver circuit for a short to ground.
- Perform the HVAC VERIFICATION TEST. Refer to **HVAC VERIFICATION TEST**.

No

- Go To 6.

6. **CHECK THE (C34) COMMON DOOR DRIVER CIRCUIT FOR A SHORT TO GROUND**

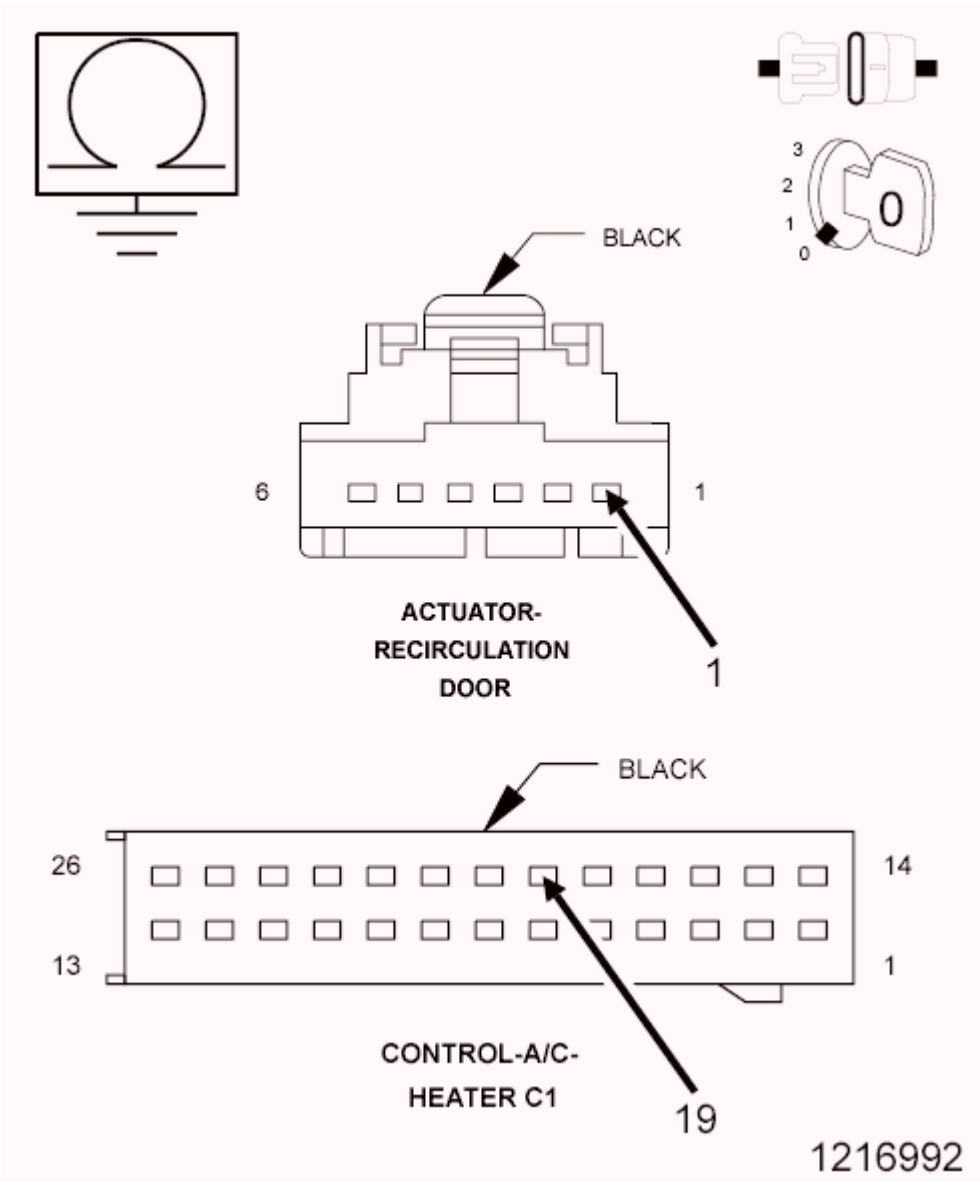

Fig. 17: Checking Common Door Driver Circuit For A Short To Ground
Courtesy of CHRYSLER GROUP, LLC

1. Measure the resistance between ground and the (C34) Common Door Driver circuit.

   Is the resistance below 100k Ohms?

Yes

- Repair the (C34) Common Door Driver circuit for a short to ground.
- Perform the HVAC VERIFICATION TEST. Refer to **HVAC VERIFICATION TEST**.

No

- Go To 7.

7. **CHECK THE RECIRCULATION DOOR**
   1. Remove the Recirculation Door Actuator and check the Recirculation Door for binding and full travel.

      Were there any problems with the Recirculation Door movement?

      Yes

      - Repair or replace the Recirculation Door as necessary in accordance with the Service Information.
      - Perform the HVAC VERIFICATION TEST. Refer to **HVAC VERIFICATION TEST**.

      No

      - Go To 8.

8. **CHECK THE RECIRCULATION DOOR ACTUATOR**
   1. Replace the Recirculation Door Actuator in accordance with the Service Information.
   2. With the scan tool, erase HVAC DTC's and perform the HVAC Actuator Calibration Test.

      Did this DTC reset?

      Yes

      - Replace and program the A/C Heater Control in accordance with the Service Information.
      - Perform the HVAC VERIFICATION TEST. Refer to **HVAC VERIFICATION TEST**.

      No

      - Test complete.
      - Perform the HVAC VERIFICATION TEST. Refer to **HVAC VERIFICATION TEST**.

9. **CHECK THE WIRING AND CONNECTORS**
   1. The conditions necessary to set the DTC are not present at this time.
   2. With the scan tool, check the Environmental Data to help identify the conditions in which the DTC was set.
   3. Using the schematics as a guide, inspect the wiring and connectors specific to this circuit.
   4. Check for an intermittent condition by inspecting the related wiring harness for chafed, pierced,

pinched, or partially broken wires.

5. Check the connectors for broken, bent, pushed out, spread, corroded, or contaminated terminals.
6. Wiggle the wiring and connectors while checking for shorted and open circuits.

Were there any problems found?

Yes

- Repair as necessary.
- Perform the HVAC VERIFICATION TEST. Refer to **HVAC VERIFICATION TEST**.

No

- Test complete.

B105C-00-RECIRCULATION DOOR TRAVEL RANGE TOO SMALL

For a complete wiring diagram, **refer to appropriate SYSTEM WIRING DIAGRAMS article** .

THEORY OF OPERATION

After the initial installation of the A/C Heater Control, the controller is calibrated to each individual blend/mode door actuator. These calibrations are stored as in the number of pulses it takes to move the door from one stop to another. The A/C Heater Control drives the Door Actuators by the use of Door Driver circuit and a Common Door Driver circuit and monitors all door actuator pulses to detect door movement in both directions. Most of the door actuators share a common door driver circuit but each door actuator has its own unique driver circuit. Due to shared circuitry, similar DTC's can set at the same time for multiple actuators depending upon the type of circuit malfunction, its location, and the direction the actuator is moving when the malfunction is present.

WHEN MONITORED:

When ever an Actuator Calibration Test is performed

SET CONDITION:

The A/C Heater Control uses a pulse feedback to the controller to detect the total door movement range. If the amount of pulses required to move the door completely in both directions is less than what the controller has stored in its memory, this DTC will set. If an Actuator Calibration Test is performed and the A/C Heater Control detects a valid range of the door movement span in both directions, the DTC will change from Active to Stored and will stay in the controllers memory for 100 ignition cycles.

POSSIBLE CAUSES

Possible Causes
RELATED DTC's PRESENT
RECIRCULATION DOOR BINDING

RECIRCULATION DOOR ACTUATOR
A/C HEATER CONTROL

Always perform the HVAC Pre-Diagnostic Troubleshooting procedure before proceeding. Refer to HVAC PRE-DIAGNOSTIC TROUBLESHOOTING PROCEDURE.

DIAGNOSTIC TEST

1. **CHECK FOR RELATED DTC's**
    1. Ignition on, engine not running.
    2. With the scan tool, read HVAC DTC's.

    Are there any Door Control - Circuit Open or Door Control - Performance or Incorrect Operation DTC's present?

    Yes

    - Refer to **DIAGNOSIS AND TESTING** and perform the appropriate diagnostic procedure.

    No

    - Go To 2.
2. **CHECK IF DTC IS ACTIVE**
    1. Ignition on, engine not running.
    2. With the scan tool, read HVAC DTC's.

    Is this DTC active?

    Yes

    - Go To 4.

    No

    - Go To 3.
3. **PERFORM HVAC ACTUATOR CALIBRATION TEST**
    1. With the scan tool, perform the HVAC Actuator Calibration Test.

    Did this DTC change from Stored to Active while performing the HVAC Actuator Calibration Test?

    Yes

    - Go To 4.

No

- Go To 6.

4. **CHECK THE RECIRCULATION DOOR**
   1. Remove the Recirculation Door Actuator and check the Recirculation Door for binding and full travel.

      Were there any problems found?

      Yes

      - Repair or replace the Recirculation Door as necessary in accordance with the Service Information.
      - Perform the HVAC VERIFICATION TEST. Refer to **HVAC VERIFICATION TEST**.

      No

      - Go To 5.

5. **CHECK THE RECIRCULATION DOOR ACTUATOR**
   1. Replace the Recirculation Door Actuator in accordance with the Service Information.
   2. With the scan tool, erase HVAC DTC's and perform the HVAC Actuator Calibration Test.

      Did this DTC reset?

      Yes

      - Replace and program the A/C Heater Control in accordance with the Service Information.
      - Perform the HVAC VERIFICATION TEST. Refer to **HVAC VERIFICATION TEST**.

      No

      - Test complete.
      - Perform the HVAC VERIFICATION TEST. Refer to **HVAC VERIFICATION TEST**.

6. **CHECK THE WIRING AND CONNECTORS**
   1. The conditions necessary to set the DTC are not present at this time.
   2. With the scan tool, check the Environmental Data to help identify the conditions in which the DTC was set.
   3. Using the schematics as a guide, inspect the wiring and connectors specific to this circuit.
   4. Check for an intermittent condition by inspecting the related wiring harness for chafed, pierced, pinched, or partially broken wires.
   5. Check the connectors for broken, bent, pushed out, spread, corroded, or contaminated terminals.
   6. Wiggle the wiring and connectors while checking for shorted and open circuits.

Were there any problems found?

Yes

- Repair as necessary.
- Perform the HVAC VERIFICATION TEST. Refer to **HVAC VERIFICATION TEST**.

No

- Test complete.

B105D-00-RECIRCULATION DOOR TRAVEL RANGE TOO LARGE

For a complete wiring diagram, **refer to appropriate SYSTEM WIRING DIAGRAMS article** .

THEORY OF OPERATION

After the initial installation of the A/C Heater Control, the controller is calibrated to each individual blend/mode door actuator. These calibrations are stored as in the number of pulses it takes to move the door from one stop to another. The A/C Heater Control drives the Door Actuators by the use of Door Driver circuit and a Common Door Driver circuit and monitors all door actuator pulses to detect door movement in both directions. Most of the door actuators share a common door driver circuit but each door actuator has its own unique driver circuit. Due to shared circuitry, similar DTC's can set at the same time for multiple actuators depending upon the type of circuit malfunction, its location, and the direction the actuator is moving when the malfunction is present.

WHEN MONITORED:

When ever an Actuator Calibration Test is performed

SET CONDITION:

The A/C Heater Control uses a pulse feedback to the controller to detect the total door movement range. If the amount of pulses required to move the door completely in both directions is greater than what the controller has stored in its memory, this DTC will set. If an Actuator Calibration Test is performed and the A/C Heater Control detects a valid range of the door movement span in both directions, the DTC will change from Active to Stored and will stay in the controllers memory for 100 ignition cycles.

POSSIBLE CAUSES

Possible Causes
RELATED DTC's PRESENT
RECIRCULATION DOOR STOPS
RECIRCULATION DOOR
RECIRCULATION DOOR ACTUATOR
A/C HEATER CONTROL

Always perform the HVAC Pre-Diagnostic Troubleshooting procedure before proceeding. Refer to

HVAC PRE-DIAGNOSTIC TROUBLESHOOTING PROCEDURE.

DIAGNOSTIC TEST

1. **CHECK FOR RELATED DTC's**
    1. Ignition on, engine not running.
    2. With the scan tool, read HVAC DTC's.

    Are there any Door Control - Circuit Open or Door Control - Performance or Incorrect Operation DTC's present?

    Yes

    - Refer to **DIAGNOSIS AND TESTING** and perform the appropriate diagnostic procedure.

    No

    - Go To 2.
2. **CHECK IF DTC IS ACTIVE**
    1. Ignition on, engine not running.
    2. With the scan tool, read HVAC DTC's.

    Is this DTC active?

    Yes

    - Go To 4.

    No

    - Go To 3.
3. **PERFORM HVAC ACTUATOR CALIBRATION TEST**
    1. With the scan tool, perform the HVAC Actuator Calibration Test.

    Did this DTC change from Stored to Active while performing the HVAC Actuator Calibration Test?

    Yes

    - Go To 4.

    No

    - Go To 6.
4. **CHECK THE RECIRCULATION DOOR**

1. Remove the Recirculation Door Actuator and check the Recirculation Door stops, linkage (stripped or cracked) and door.

   Were there any problems found?

   Yes

   - Repair or replace the Recirculation Door as necessary in accordance with the Service Information.
   - Perform the HVAC VERIFICATION TEST. Refer to **HVAC VERIFICATION TEST**.

   No

   - Go To 5.

5. **CHECK THE RECIRCULATION DOOR ACTUATOR**
   1. Replace the Recirculation Door Actuator in accordance with the Service Information.
   2. With the scan tool, erase HVAC DTC's and perform the HVAC Actuator Calibration Test.

      Did this DTC reset?

      Yes

      - Replace and program the A/C Heater Control in accordance with the Service Information.
      - Perform the HVAC VERIFICATION TEST. Refer to **HVAC VERIFICATION TEST**.

      No

      - Test complete.
      - Perform the HVAC VERIFICATION TEST. Refer to **HVAC VERIFICATION TEST**.

6. **CHECK THE WIRING AND CONNECTORS**
   1. The conditions necessary to set the DTC are not present at this time.
   2. With the scan tool, check the Environmental Data to help identify the conditions in which the DTC was set.
   3. Using the schematics as a guide, inspect the wiring and connectors specific to this circuit.
   4. Check for an intermittent condition by inspecting the related wiring harness for chafed, pierced, pinched, or partially broken wires.
   5. Check the connectors for broken, bent, pushed out, spread, corroded, or contaminated terminals.
   6. Wiggle the wiring and connectors while checking for shorted and open circuits.

      Were there any problems found?

      Yes

      - Repair as necessary.

- Perform the HVAC VERIFICATION TEST. Refer to **HVAC VERIFICATION TEST**.

No

- Test complete.

B10B2-00-A/C COOL DOWN TEST PERFORMANCE

For a complete wiring diagram, **refer to appropriate SYSTEM WIRING DIAGRAMS article** .

THEORY OF OPERATION

The A/C Heater Controller has software to enable it to perform an A/C Cool Down Test by a command using a scan tool. This test checks for evaporator temperature drop over a predetermined time. If the test fails, this DTC will set. However, certain test conditions are required to perform this test. Failure to run this test within those parameters can result in failure of the test.

WHEN MONITORED:

With ever an A/C Cooldown Test is performed.

SET CONDITION:

This DTC is set whenever the A/C Cooldown Test is performed and the desired temperature drop is not achieved by the system. The DTC will go to stored after a successful A/C Cooldown Test.

POSSIBLE CAUSES

Possible Causes
A/C SYSTEM WORKING IMPROPERLY

Always perform the HVAC Pre-Diagnostic Troubleshooting procedure before proceeding. Refer to HVAC PRE-DIAGNOSTIC TROUBLESHOOTING PROCEDURE.

DIAGNOSTIC TEST

1. **CONDITIONS FOR A/C COOLDOWN TEST**
    1. The following condition must be met before running the A/C Cooldown test.
        - No Powertrain Control Module (PCM) DTC's present.
        - Condenser cooling fan working properly.
        - No active HVAC evaporator temperature sensor, sun sensor, recirculation, mode, or blend door actuator DTC's present.
        - The refrigerant system must be fully charged.
        - The blower motor must operate correctly in all speeds.
        - The evaporator temperature must be above 12.7° C (55° F).

- The A/C compressor must be turned off.
- Blower must be on high.

Are all of the above conditions met before running the A/C Cooldown Test?

Yes

- Perform the appropriate Service Information related to cooldown test diagnostic information and testing repair procedures as necessary.

  NOTE: Run the Cooldown Test again after any repairs are performed.

- If the Cooldown Test passes, Perform the HVAC VERIFICATION TEST. Refer to **HVAC VERIFICATION TEST**.

No

- Run the A/C Cooldown test again with the above test conditions.

B11C2-13-FRONT MODE DOOR 1 CONTROL - CIRCUIT OPEN

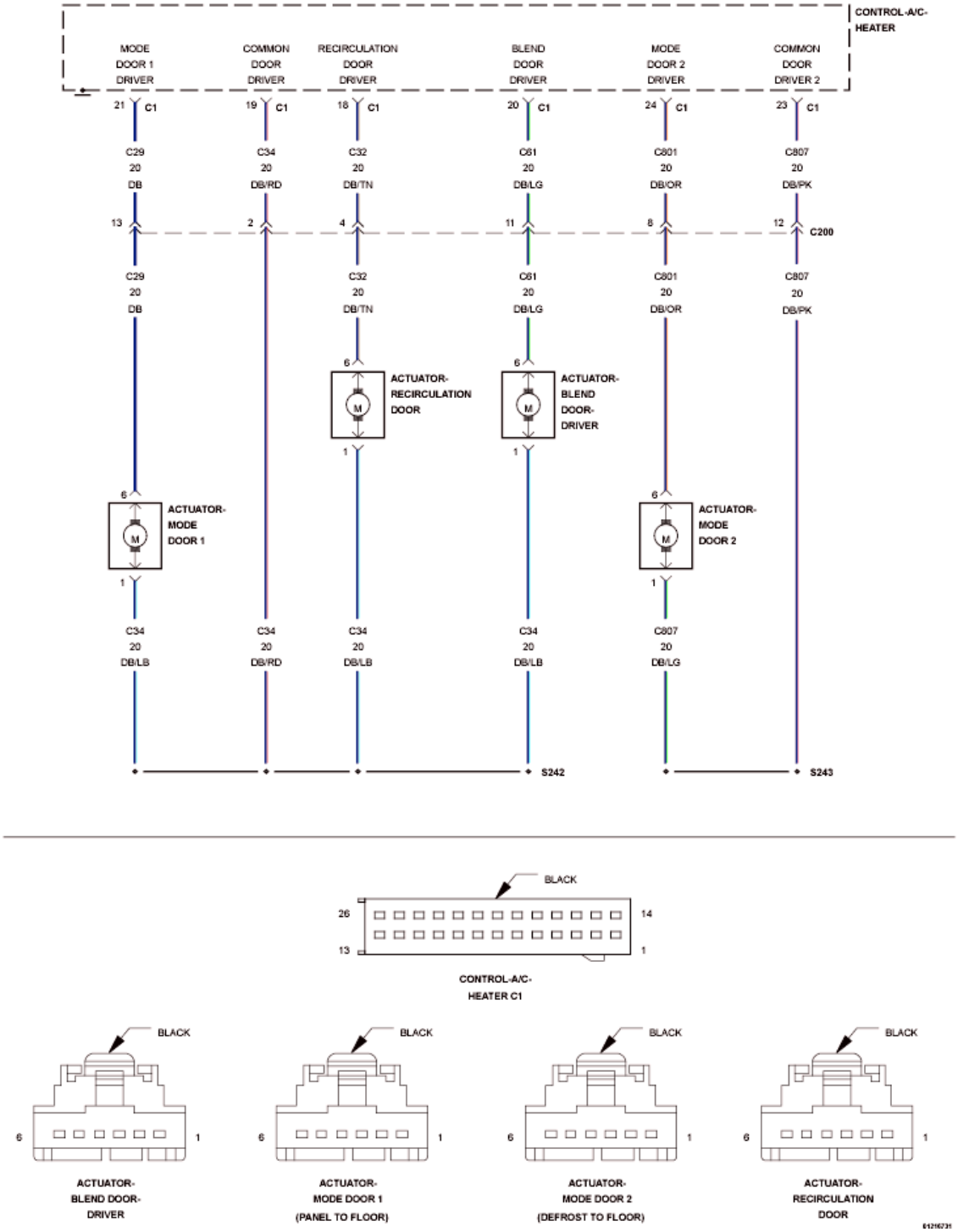

Fig. 18: Recirculation Door Control Wiring Diagram
Courtesy of CHRYSLER GROUP, LLC

For a complete wiring diagram, **refer to appropriate SYSTEM WIRING DIAGRAMS article** .

THEORY OF OPERATION

After the initial installation of the A/C Heater Control, the controller is calibrated to each individual blend/mode door actuator. These calibrations are stored as in the number of pulses it takes to move the door from one stop to another. The A/C Heater Control drives the Door Actuators by the use of Door Driver circuit and a Common Door Driver circuit and monitors all door actuator pulses to detect door movement in both directions. Most of the door actuators share a common door driver circuit but each door actuator has its own unique driver circuit. The Defrost Door Actuator does not share a common door driver circuit because defrost mode is used as a system default mode if there is a system malfunction. Due to shared circuitry, similar DTC's can set at the same time for multiple actuators depending upon the type of circuit malfunction, its location, and the direction the actuator is moving when the malfunction is present.

WHEN MONITORED:

With the ignition on and an actuator movement is commanded by the A/C Heater Control.

SET CONDITION:

If an actuator move is commanded by the A/C Heater Control and there are no feedback pulses detected in that direction, the controller commands the actuator in the opposite direction. If no feedback pulses are detected in either direction this DTC will set. If the A/C Heater Control detects a valid pulse feedback in both directions, the DTC will change from Active to Stored and will stay in the controllers memory for 100 ignition cycles.

POSSIBLE CAUSES

Possible Causes
(C29) MODE DOOR 1 DRIVER CIRCUIT OPEN
(C34) COMMON DOOR DRIVER CIRCUIT OPEN
MODE DOOR 1 (PANEL/FLOOR) ACTUATOR
A/C HEATER CONTROL

Always perform the HVAC Pre-Diagnostic Troubleshooting procedure before proceeding. Refer to HVAC PRE-DIAGNOSTIC TROUBLESHOOTING PROCEDURE.

DIAGNOSTIC TEST

1. **CHECK FOR OTHER DTC's**
    1. Ignition on, engine not running.
    2. With the scan tool, read HVAC DTC's.

    Is there more than one Door Control - Circuit Open DTC present?

    Yes

    - Repair the (C34) Common Door Driver circuit for an open.

    NOTE: Due to the common shared driver circuit, probable area of concern is the splice, or from the splice to the A/C Heater

Control harness connector. Make sure to check all inline connectors.

No

- Go To 2.

2. **CHECK IF DTC IS ACTIVE**
   1. Ignition on, engine not running.
   2. With the scan tool, read HVAC DTC's.

      Is this DTC active?

      Yes

      - Go To 4.

      No

      - Go To 3.

3. **PERFORM HVAC ACTUATOR CALIBRATION TEST**
   1. With the scan tool, perform the HVAC Actuator Calibration Test.

      Did this DTC change from Stored to Active while performing the HVAC Actuator Calibration Test?

      Yes

      - Go To 4.

      No

      - Go To 7.

4. **CHECK THE MODE DOOR 1 (PANEL/FLOOR) ACTUATOR**

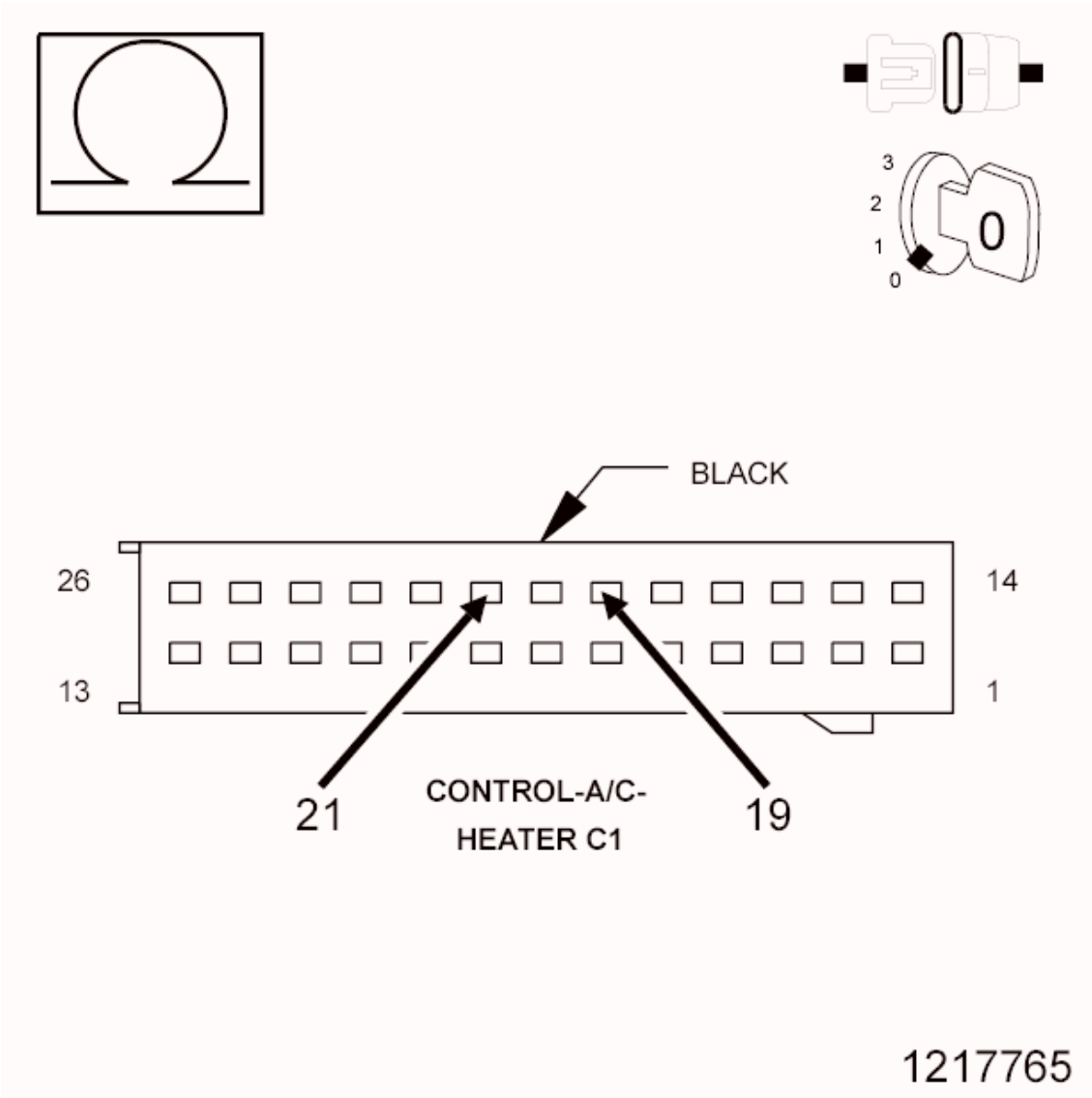

Fig. 19: Checking The Mode Door 1 (Panel/Floor) Actuator
Courtesy of CHRYSLER GROUP, LLC

1. Turn the ignition off to the lock position.
2. Disconnect the A/C Heater Control C1 harness connector.
3. Measure the resistance between the (C29) Mode Door 1 Driver circuit and the (C34) Common Door Driver circuit.

   Is the resistance 38.0 Ohms (± 5.0 Ohms)?

   Yes

   - Replace and program the A/C Heater Control in accordance with the Service Information.
   - Perform the HVAC VERIFICATION TEST. Refer to **HVAC VERIFICATION TEST**.

No

- Go To 5.

5. **CHECK THE (C29) MODE DOOR 1 DRIVER CIRCUIT FOR AN OPEN**

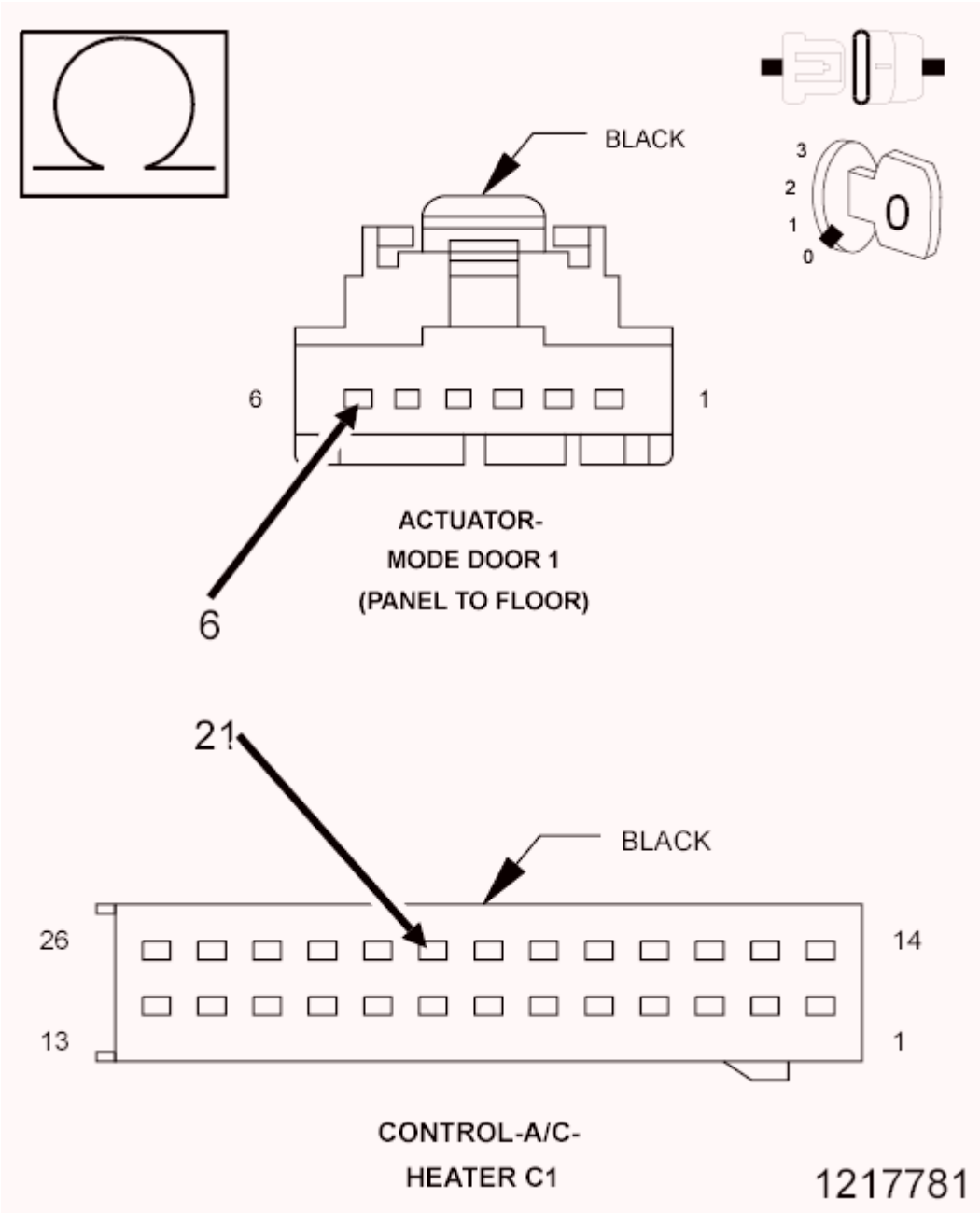

Fig. 20: Checking Mode Door Driver Circuit For An Open
Courtesy of CHRYSLER GROUP, LLC

1. Turn the ignition off to the lock position.
2. Disconnect the Mode Door 1 (Panel/Floor) Actuator harness connector.

3. Measure the resistance of the (C29) Mode Door 1 Driver circuit between the A/C Heater Control C1 harness connector and the Mode Door 1 (Panel/Floor) Actuator harness connector.

   Is the resistance above 5.0 Ohms?

   Yes

   - Repair the (C29) Mode Door 1 Driver circuit for an open.
   - Perform the HVAC VERIFICATION TEST. Refer to **HVAC VERIFICATION TEST**.

   No

   - Go To 6.

6. **CHECK THE (C34) COMMON DOOR DRIVER CIRCUIT FOR AN OPEN**

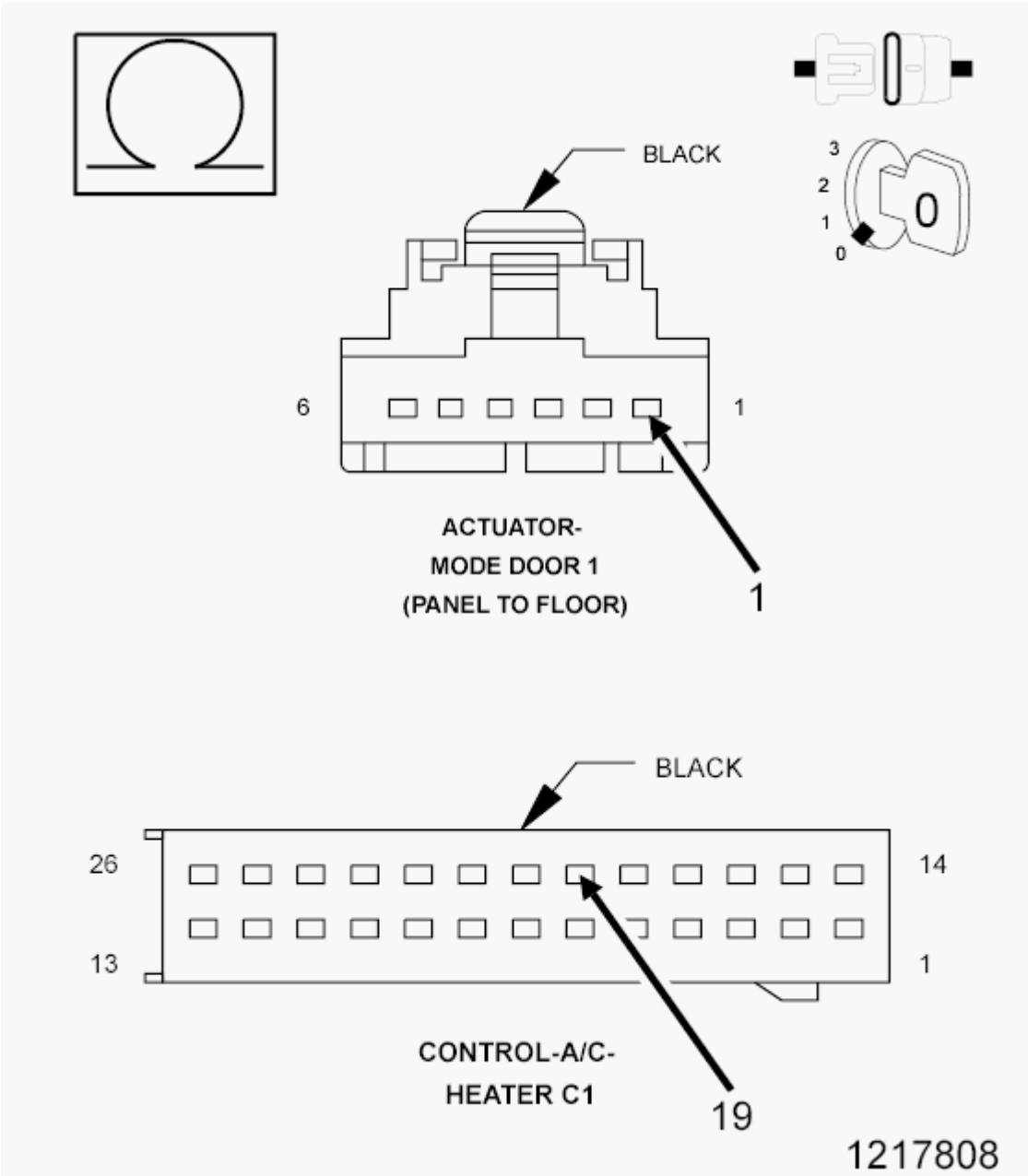

Fig. 21: Checking Mode Door Driver Circuit For An Open
Courtesy of CHRYSLER GROUP, LLC

1. Measure the resistance of the (C34) Common Door Driver circuit between the A/C Heater Control C1 harness connector and the Mode Door 1 Actuator harness connector.

   Is the resistance above 5.0 Ohms?

   Yes

   - Repair the (C34) Common Door Driver circuit for an open.

NOTE: **Probable location is the wiring harness splice or the wiring between the splice and the door actuator.**

- Perform the HVAC VERIFICATION TEST. Refer to **HVAC VERIFICATION TEST**.

No

- Replace the Recirculation Door Actuator in accordance with the Service Information.
- Perform the HVAC VERIFICATION TEST. Refer to **HVAC VERIFICATION TEST**.

7. **CHECK THE WIRING AND CONNECTORS**
   1. The conditions necessary to set the DTC are not present at this time.
   2. Using the schematics as a guide, inspect the wiring and connectors specific to this circuit.
   3. Check for an intermittent condition by inspecting the related wiring harness for chafed, pierced, pinched, partially broken wires.
   4. Check the connectors for broken, bent, pushed out, spread, corroded, or contaminated terminals.
   5. Wiggle the wiring and connectors while checking for shorted and open circuits.
   6. With the scan tool, check the Environmental Data to help identify the conditions in which the DTC was set.

   Were there any problems found?

   Yes

   - Repair as necessary.
   - Perform the HVAC VERIFICATION TEST. Refer to **HVAC VERIFICATION TEST**.

   No

   - Test complete.

B11C2-92-FRONT MODE DOOR 1 CONTROL - PERFORMANCE OR INCORRECT OPERATION

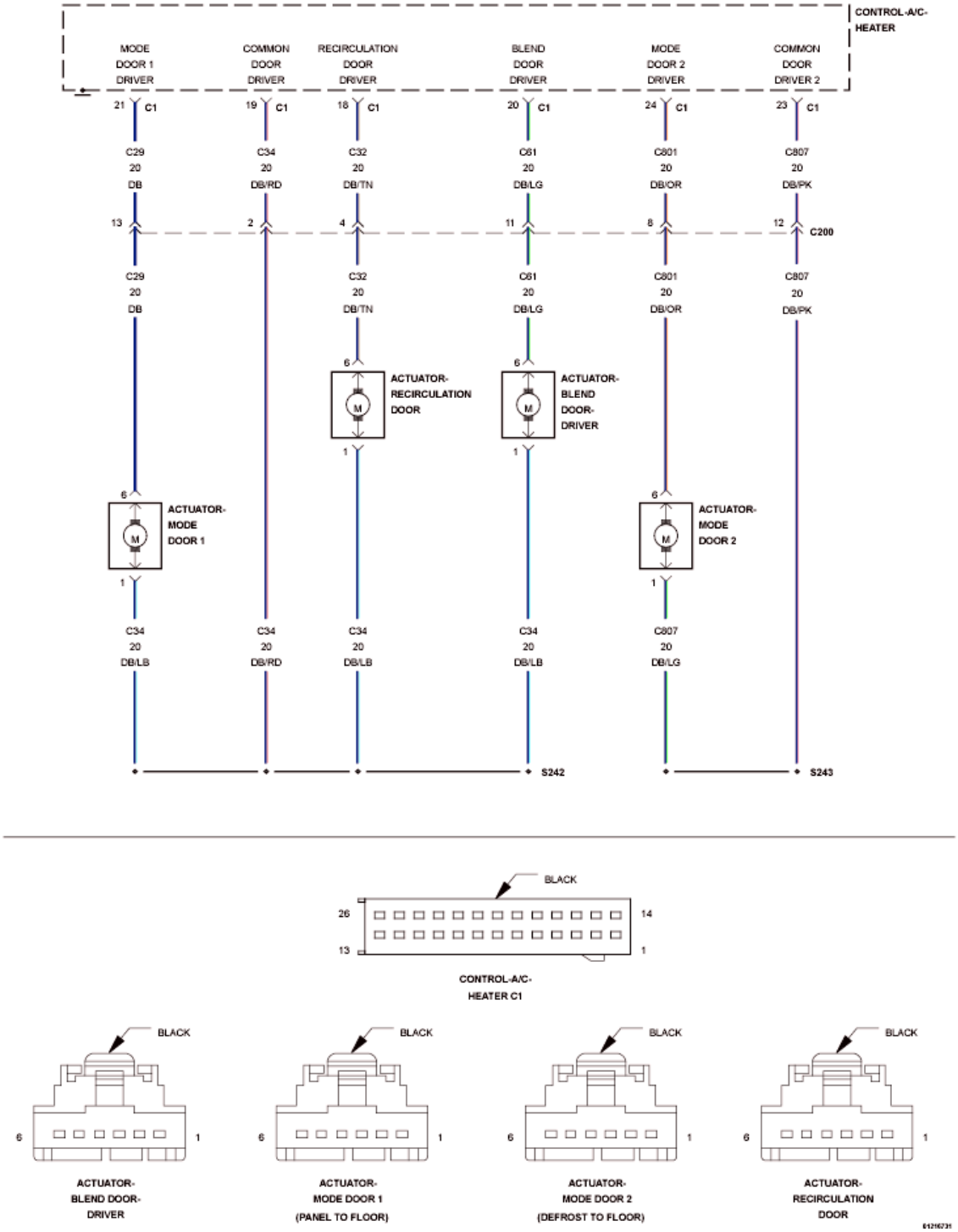

Fig. 22: Recirculation Door Control Wiring Diagram
Courtesy of CHRYSLER GROUP, LLC

For a complete wiring diagram, **refer to appropriate SYSTEM WIRING DIAGRAMS article** .

THEORY OF OPERATION

After the initial installation of the A/C Heater Control, the controller is calibrated to each individual blend/mode door actuator. These calibrations are stored as in the number of pulses it takes to move the door from one stop to another. The A/C Heater Control drives the Door Actuators by the use of Door Driver circuit and a Common Door Driver circuit and monitors all door actuator pulses to detect door movement in both directions. Most of the door actuators share a common door driver circuit but each door actuator has its own unique driver circuit. The Defrost Door Actuator does not share a common door driver circuit because defrost mode is used as a system default mode if there is a system malfunction. Due to shared circuitry, similar DTC's can set at the same time for multiple actuators depending upon the type of circuit malfunction, its location, and the direction the actuator is moving when the malfunction is present.

WHEN MONITORED:

With the ignition on and an actuator movement is commanded by the A/C Heater Control.

SET CONDITION:

If an actuator move is commanded by the A/C Heater Control and there are no feedback pulses detected in that direction, the controller commands the actuator in the opposite direction. If feedback pulses are detected in only one direction this DTC will set. If the A/C Heater Control detects a valid pulse feedback in both directions, the DTC will change from Active to Stored and will stay in the controllers memory for 100 ignition cycles.

POSSIBLE CAUSES

Possible Causes
(C29) MODE DOOR 1 DRIVER CIRCUIT SHORT TO VOLTAGE
(C29) MODE DOOR 1 DRIVER CIRCUIT SHORT TO GROUND
(C34) COMMON DOOR DRIVER CIRCUIT SHORT TO VOLTAGE
(C34) COMMON DOOR DRIVER CIRCUIT SHORT TO GROUND
MODE DOOR 1 DOOR (PANEL/FLOOR) BINDING
MODE DOOR 1 ACTUATOR (PANEL/FLOOR)
A/C HEATER CONTROL

Always perform the HVAC Pre-Diagnostic Troubleshooting procedure before proceeding. Refer to HVAC PRE-DIAGNOSTIC TROUBLESHOOTING PROCEDURE.

DIAGNOSTIC TEST

1. **CHECK IF DTC IS ACTIVE**
    1. Ignition on, engine not running.
    2. With the scan tool, read HVAC DTC's.

    NOTE: It can take up to 60 seconds or more for this DTC to mature.

    Is this DTC active?

    Yes

- Go To 3.

No

- Go To 2.

2. **PERFORM HVAC ACTUATOR CALIBRATION TEST**
    1. With the scan tool, perform the HVAC Actuator Calibration Test.

       Did this DTC change from Stored to Active while performing the HVAC Actuator Calibration Test?

       Yes

       - Go To 3.

       No

       - Go To 9.
3. **CHECK THE (C29) MODE DOOR 1 DRIVER CIRCUIT FOR A SHORT TO VOLTAGE**

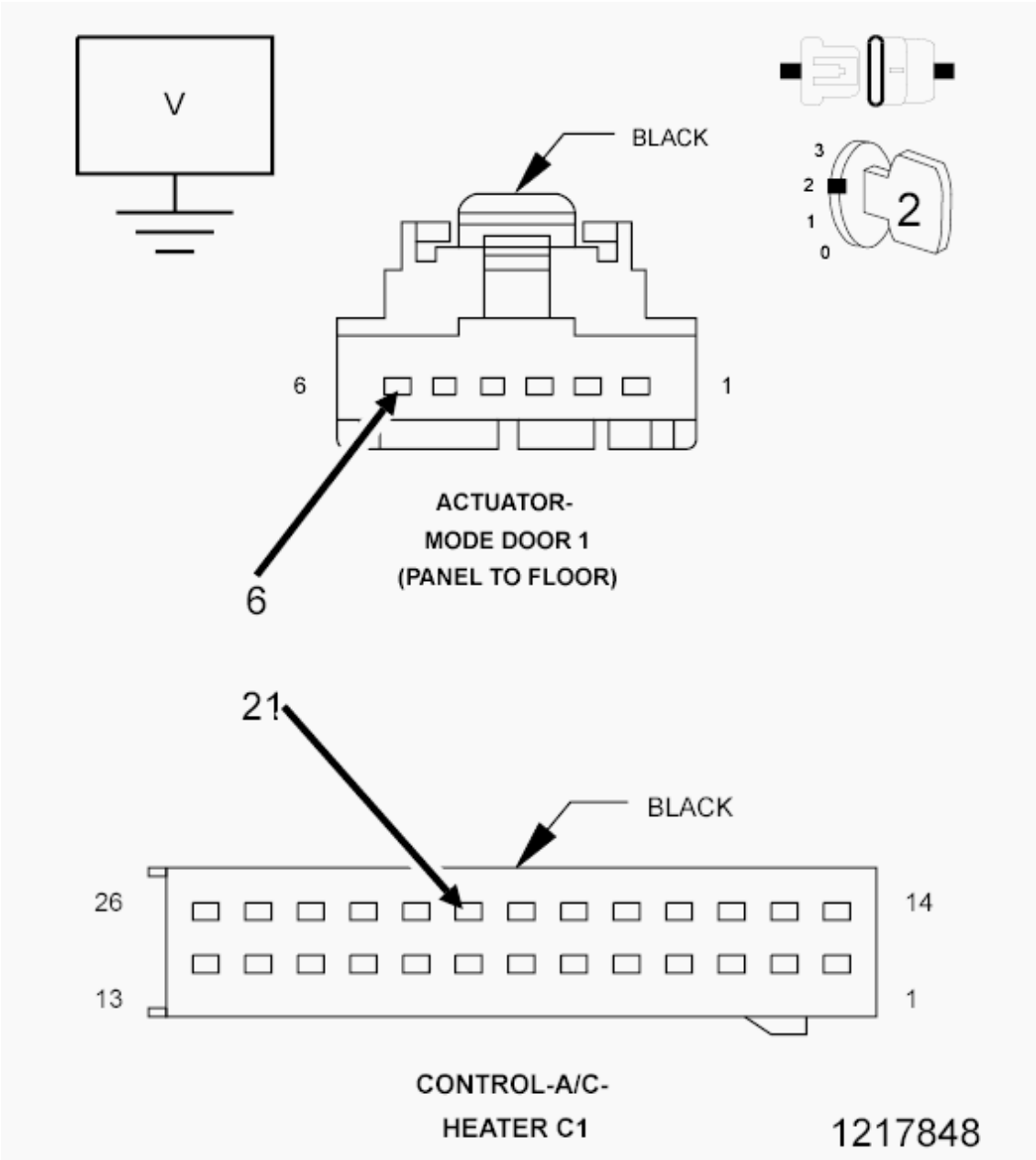

Fig. 23: Checking Mode Door Driver Circuit For A Short To Voltage
Courtesy of CHRYSLER GROUP, LLC

1. Turn the ignition off to the lock position.
2. Disconnect the A/C Heater Control C1 harness connector.
3. Disconnect the Mode Door 1 Actuator (Panel/Floor) harness connector.
4. Ignition on, engine not running.
5. Measure the voltage of the (C29) Mode Door 1 Driver circuit.

   Is there any voltage present?

Yes

- Repair the (C29) Mode Door 1 Driver circuit for a short to voltage.
- Perform the HVAC VERIFICATION TEST. Refer to **HVAC VERIFICATION TEST**.

No

- Go To 4.

4. **CHECK THE (C34) COMMON DOOR DRIVER CIRCUIT FOR A SHORT TO VOLTAGE**

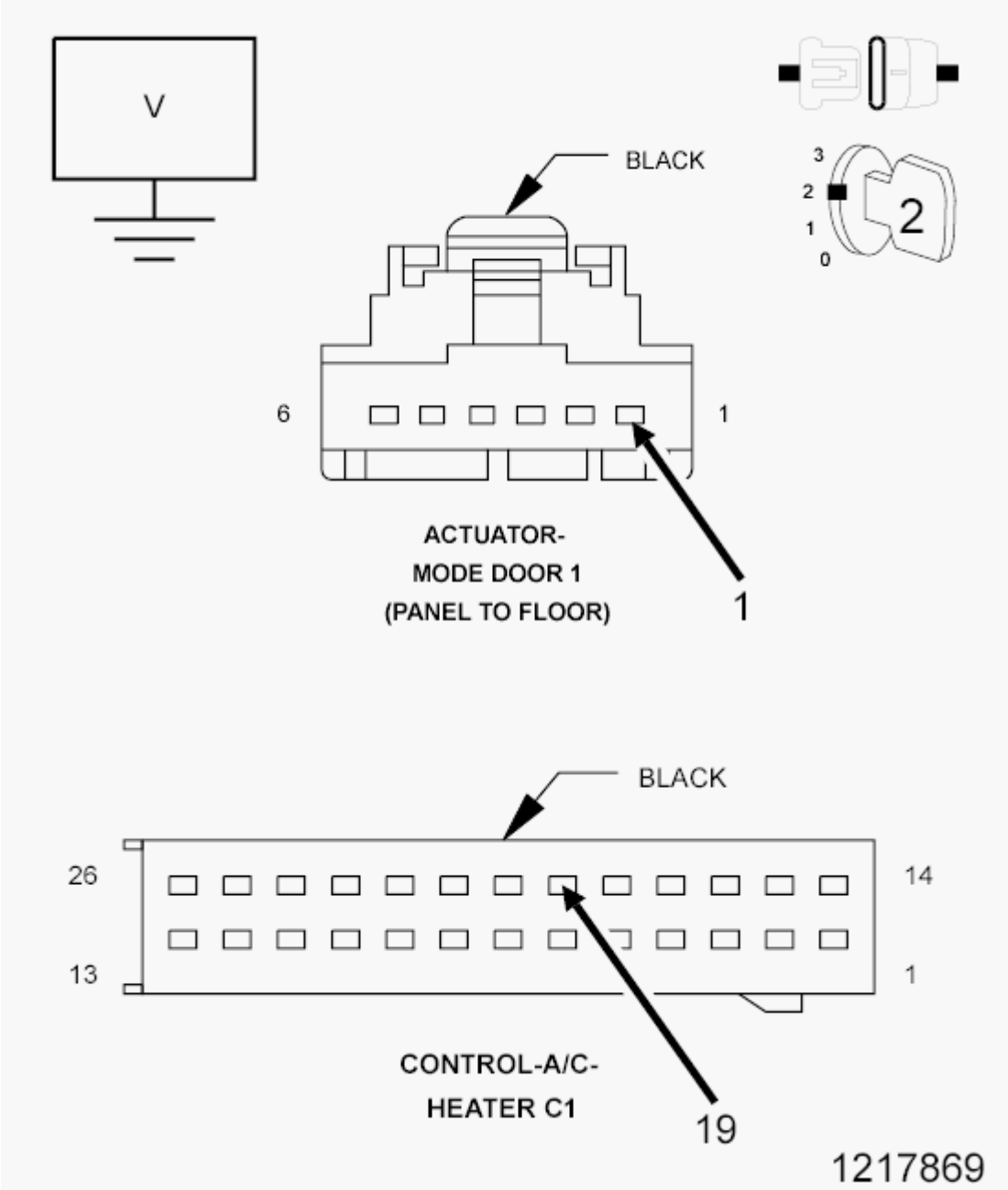

Fig. 24: Checking Common Door Driver Circuit For A Short To Voltage

Courtesy of CHRYSLER GROUP, LLC

1. Measure the voltage of the (C34) Common Door Driver circuit.

   Is there any voltage present?

   Yes

   - Repair the (C34) Common Door Driver circuit for a short to voltage.
   - Perform the HVAC VERIFICATION TEST. Refer to **HVAC VERIFICATION TEST**.

   No

   - Go To 5.

5. **CHECK THE (C29) MODE DOOR 1 DRIVER CIRCUIT FOR A SHORT TO GROUND**

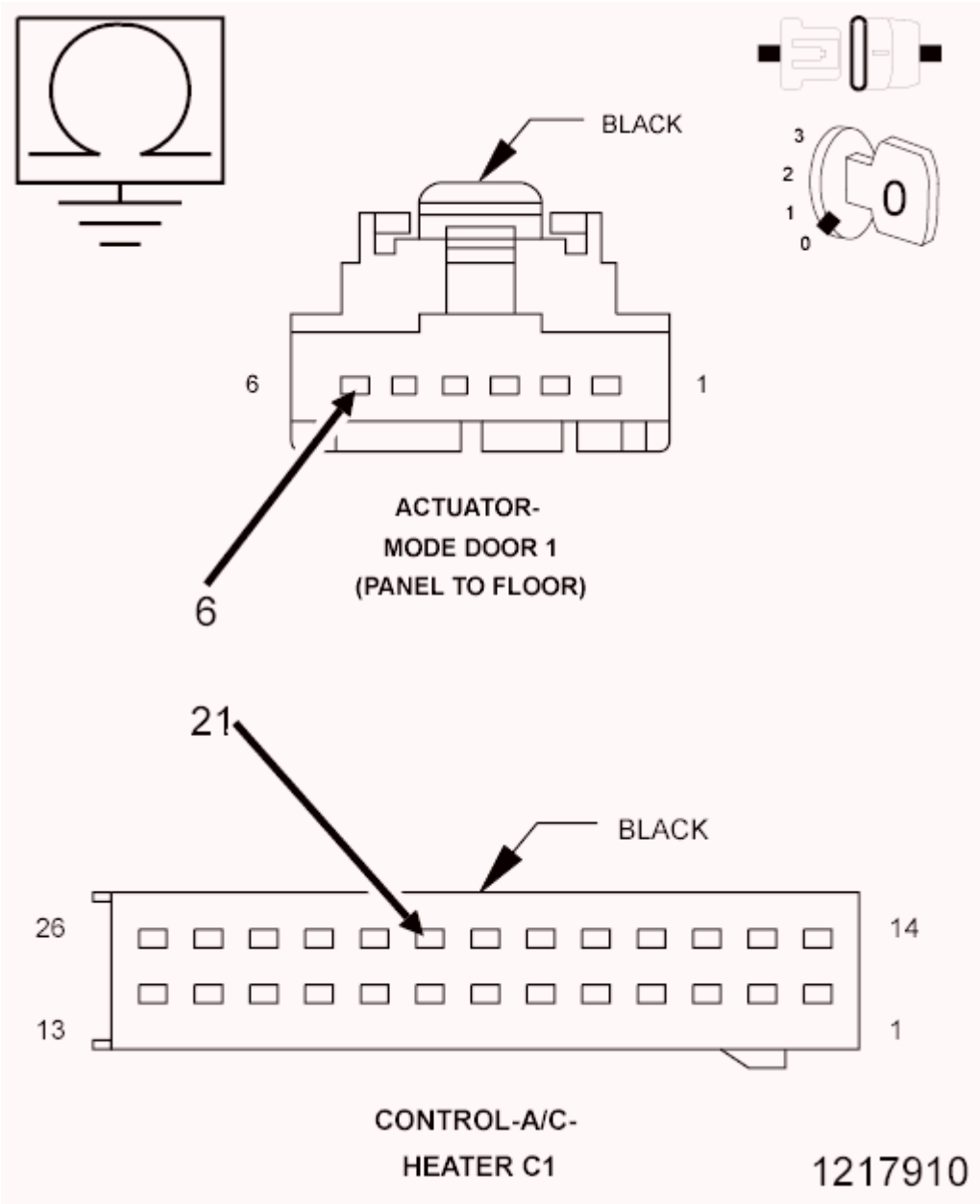

Fig. 25: Checking Recirculation Door Driver Circuit For A Short To Ground
Courtesy of CHRYSLER GROUP, LLC

1. Turn the ignition off to the lock position.
2. Measure the resistance between ground and the (C29) Mode Door 1 Driver circuit.

   Is the resistance below 100k Ohms?

   Yes

   - Repair the (C29) Mode Door 1 Driver circuit for a short to ground.
   - Perform the HVAC VERIFICATION TEST. Refer to **HVAC VERIFICATION TEST**.

No

- Go To 6.

6. **CHECK THE (C34) COMMON DOOR DRIVER CIRCUIT FOR A SHORT TO GROUND**

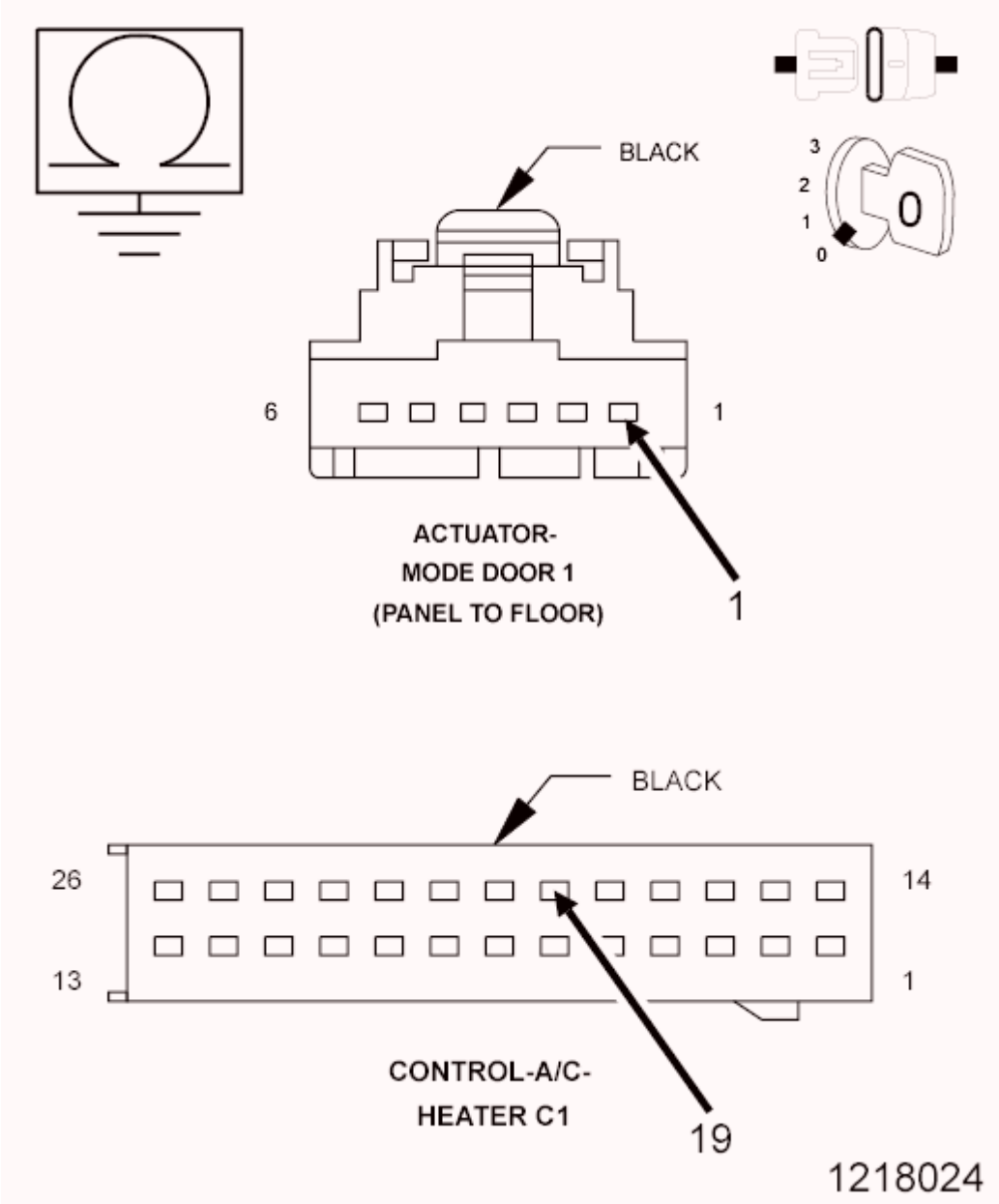

Fig. 26: Checking Common Door Driver Circuit For A Short To Ground
Courtesy of CHRYSLER GROUP, LLC

1. Measure the resistance between ground and the (C34) Common Door Driver circuit.

   Is the resistance below 100k Ohms?

Yes

- Repair the (C34) Common Door Driver circuit for a short to ground.
- Perform the HVAC VERIFICATION TEST. Refer to **HVAC VERIFICATION TEST**.

No

- Go To 7.

7. **CHECK THE MODE DOOR 1 (PANEL/FLOOR)**
   1. Remove the Mode Door 1 Actuator (Panel/Floor) and check the Mode Door 1 (Panel/Floor) for binding and full travel.

      Were there any problems found?

      Yes

      - Repair or replace the Mode Door 1 (Panel/Floor) as necessary in accordance with the Service Information.
      - Perform the HVAC VERIFICATION TEST. Refer to **HVAC VERIFICATION TEST**.

      No

      - Go To 8.

8. **CHECK THE MODE DOOR 1 ACTUATOR**
   1. Replace the Mode Door 1 Actuator (Panel/Floor) in accordance with the Service Information.
   2. With the scan tool, erase HVAC DTC's and perform the HVAC Actuator Calibration Test.

      Did this DTC reset?

      Yes

      - Replace and program the A/C Heater Control in accordance with the Service Information.
      - Perform the HVAC VERIFICATION TEST. Refer to **HVAC VERIFICATION TEST**.

      No

      - Test complete.
      - Perform the HVAC VERIFICATION TEST. Refer to **HVAC VERIFICATION TEST**.

9. **CHECK THE WIRING AND CONNECTORS**
   1. The conditions necessary to set the DTC are not present at this time.
   2. Using the schematics as a guide, inspect the wiring and connectors specific to this circuit.
   3. Check for an intermittent condition by inspecting the related wiring harness for chafed, pierced, pinched, partially broken wires.
   4. Check the connectors for broken, bent, pushed out, spread, corroded, or contaminated terminals.

5. Wiggle the wiring and connectors while checking for shorted and open circuits.
6. With the scan tool, check the Environmental Data to help identify the conditions in which the DTC was set.

   Were there any problems found?

   Yes

   - Repair as necessary.
   - Perform the HVAC VERIFICATION TEST. Refer to **HVAC VERIFICATION TEST**.

   No

   - Test complete.

B11C3-00-FRONT MODE DOOR 1 TRAVEL RANGE TOO SMALL

For a complete wiring diagram, **refer to appropriate SYSTEM WIRING DIAGRAMS article** .

WHEN MONITORED:

When ever an Actuator Calibration Test is performed.

SET CONDITION:

The A/C Heater Control uses a pulse feedback to the controller to detect the total door movement range. If the amount of pulses required to move the door completely in both directions is less than what the controller has stored in its memory, this DTC will set. If an Actuator Calibration Test is performed and the A/C Heater Control detects a valid range of the door movement span in both directions, the DTC will change from Active to Stored and will stay in the controllers memory for 100 ignition cycles.

POSSIBLE CAUSES

Possible Causes
RELATED DTC's PRESENT
MODE DOOR 1 (PANEL/FLOOR) BINDING
MODE DOOR 1 (PANEL/FLOOR) ACTUATOR
A/C HEATER CONTROL

Always perform the HVAC Pre-Diagnostic Troubleshooting procedure before proceeding. Refer to HVAC PRE-DIAGNOSTIC TROUBLESHOOTING PROCEDURE.

DIAGNOSTIC TEST

1. **CHECK FOR RELATED DTC's**
   1. Ignition on, engine not running.

2. With the scan tool, read HVAC DTC's.

   Are there any Door Control - Circuit Open or Door Control - Performance or Incorrect Operation DTC's present?

   Yes

   - Refer to **DIAGNOSIS AND TESTING** and perform the appropriate diagnostic procedure.

   No

   - Go To 2.

2. **CHECK IF DTC IS ACTIVE**
   1. Ignition on, engine not running.
   2. With the scan tool, read HVAC DTC's.

      Is this DTC active?

      Yes

      - Go To 4.

      No

      - Go To 3.

3. **PERFORM HVAC ACTUATOR CALIBRATION TEST**
   1. With the scan tool, perform the HVAC Actuator Calibration Test.

      Did this DTC change from Stored to Active while performing the HVAC Actuator Calibration Test?

      Yes

      - Go To 4.

      No

      - Go To 6.

4. **CHECK THE MODE DOOR 1 (PANEL/FLOOR)**
   1. Remove the Mode Door 1 (Panel/Floor) Actuator and check the Mode Door 1 (Panel/Floor) for binding and full travel.

      Were there any problems found?

      Yes

- Repair or replace the Mode Door 1 (Panel/Floor) as necessary in accordance with the Service Information.
- Perform the HVAC VERIFICATION TEST. Refer to **HVAC VERIFICATION TEST**.

No

- Go To 5.

5. **CHECK THE MODE DOOR 1 (PANEL/FLOOR) ACTUATOR**
   1. Replace the Mode Door 1 (Panel/Floor) Actuator in accordance with the Service Information.
   2. With the scan tool, erase HVAC DTC's and perform the HVAC Actuator Calibration Test.

      Did this DTC reset?

      Yes

      - Replace and program the A/C Heater Control in accordance with the Service Information.
      - Perform the HVAC VERIFICATION TEST. Refer to **HVAC VERIFICATION TEST**.

      No

      - Test complete.
      - Perform the HVAC VERIFICATION TEST. Refer to **HVAC VERIFICATION TEST**.

6. **CHECK THE WIRING AND CONNECTORS**
   1. The conditions necessary to set the DTC are not present at this time.
   2. Using the schematics as a guide, inspect the wiring and connectors specific to this circuit.
   3. Check for an intermittent condition by inspecting the related wiring harness for chafed, pierced, pinched, partially broken wires.
   4. Check the connectors for broken, bent, pushed out, spread, corroded, or contaminated terminals.
   5. Wiggle the wiring and connectors while checking for shorted and open circuits.
   6. With the scan tool, check the Environmental Data to help identify the conditions in which the DTC was set.

      Were there any problems found?

      Yes

      - Repair as necessary.
      - Perform the HVAC VERIFICATION TEST. Refer to **HVAC VERIFICATION TEST**.

      No

      - Test complete.

B11C4-00-FRONT MODE DOOR 1 TRAVEL RANGE TOO LARGE

For a complete wiring diagram, **refer to appropriate SYSTEM WIRING DIAGRAMS article** .

THEORY OF OPERATION

After the initial installation of the A/C Heater Control, the controller is calibrated to each individual blend/mode door actuator. These calibrations are stored as in the number of pulses it takes to move the door from one stop to another. The A/C Heater Control drives the Door Actuators by the use of Door Driver circuit and a Common Door Driver circuit and monitors all door actuator pulses to detect door movement in both directions. Most of the door actuators share a common door driver circuit but each door actuator has its own unique driver circuit. The Defrost Door Actuator does not share a common door driver circuit because defrost mode is used as a system default mode if there is a system malfunction. Due to shared circuitry, similar DTC's can set at the same time for multiple actuators depending upon the type of circuit malfunction, its location, and the direction the actuator is moving when the malfunction is present.

WHEN MONITORED:

When ever an Actuator Calibration Test is performed

SET CONDITION:

The A/C Heater Control uses a pulse feedback to the controller to detect the total door movement range. If the amount of pulses required to move the door completely in both directions is greater than what the controller has stored in its memory, this DTC will set. If an Actuator Calibration Test is performed and the A/C Heater Control detects a valid range of the door movement span in both directions, the DTC will change from Active to Stored and will stay in the controllers memory for 100 ignition cycles.

POSSIBLE CAUSES

Possible Causes
RELATED DTC's PRESENT
RECIRCULATION DOOR STOPS
MODE DOOR 1 (PANEL/FLOOR)
MODE DOOR 1 (PANEL/FLOOR) ACTUATOR
A/C HEATER CONTROL

Always perform the HVAC Pre-Diagnostic Troubleshooting procedure before proceeding. Refer to HVAC PRE-DIAGNOSTIC TROUBLESHOOTING PROCEDURE.

DIAGNOSTIC TEST

1. **CHECK FOR RELATED DTC's**
    1. Ignition on, engine not running.
    2. With the scan tool, read HVAC DTC's.

Are there any Door Control - Circuit Open or Door Control - Performance or Incorrect Operation DTC's present?

Yes

- Refer to **DIAGNOSIS AND TESTING** and perform the appropriate diagnostic procedure.

No

- Go To 2.

2. **CHECK IF DTC IS ACTIVE**
   1. Ignition on, engine not running.
   2. With the scan tool, read HVAC DTC's.

   Is this DTC active?

   Yes

   - Go To 4.

   No

   - Go To 3.

3. **PERFORM HVAC ACTUATOR CALIBRATION TEST**
   1. With the scan tool, perform the HVAC Actuator Calibration Test.

   Did this DTC change from Stored to Active while performing the HVAC Actuator Calibration Test?

   Yes

   - Go To 4.

   No

   - Go To 6.

4. **CHECK THE MODE DOOR 1 (PANEL/FLOOR)**
   1. Remove the Mode Door 1 (Panel/Floor) Actuator and check the Mode Door 1 (Panel/Floor) stops, linkage (stripped or cracked) and door.

   Were there any problems found?

   Yes

   - Repair or replace the Mode Door 1 (Panel/Floor) as necessary in accordance with the Service

Information.

- Perform the HVAC VERIFICATION TEST. Refer to **HVAC VERIFICATION TEST**.

No

- Go To 5.

5. **CHECK THE MODE DOOR 1 (PANEL/FLOOR) ACTUATOR**
   1. Replace the Mode Door 1 (Panel/Floor) Actuator in accordance with the Service Information.
   2. With the scan tool, erase HVAC DTC's and perform the HVAC Actuator Calibration Test.

   Did this DTC reset?

   Yes

   - Replace and program the A/C Heater Control in accordance with the Service Information.
   - Perform the HVAC VERIFICATION TEST. Refer to **HVAC VERIFICATION TEST**.

   No

   - Test complete.
   - Perform the HVAC VERIFICATION TEST. Refer to **HVAC VERIFICATION TEST**.

6. **CHECK THE WIRING AND CONNECTORS**
   1. The conditions necessary to set the DTC are not present at this time.
   2. Using the schematics as a guide, inspect the wiring and connectors specific to this circuit.
   3. Check for an intermittent condition by inspecting the related wiring harness for chafed, pierced, pinched, partially broken wires.
   4. Check the connectors for broken, bent, pushed out, spread, corroded, or contaminated terminals.
   5. Wiggle the wiring and connectors while checking for shorted and open circuits.
   6. With the scan tool, check the Environmental Data to help identify the conditions in which the DTC was set.

   Were there any problems found?

   Yes

   - Repair as necessary.
   - Perform the HVAC VERIFICATION TEST. Refer to **HVAC VERIFICATION TEST**.

   No

   - Test complete.

B11CB-13-MAIN/LEFT TEMPERATURE DOOR 1 CONTROL - CIRCUIT OPEN

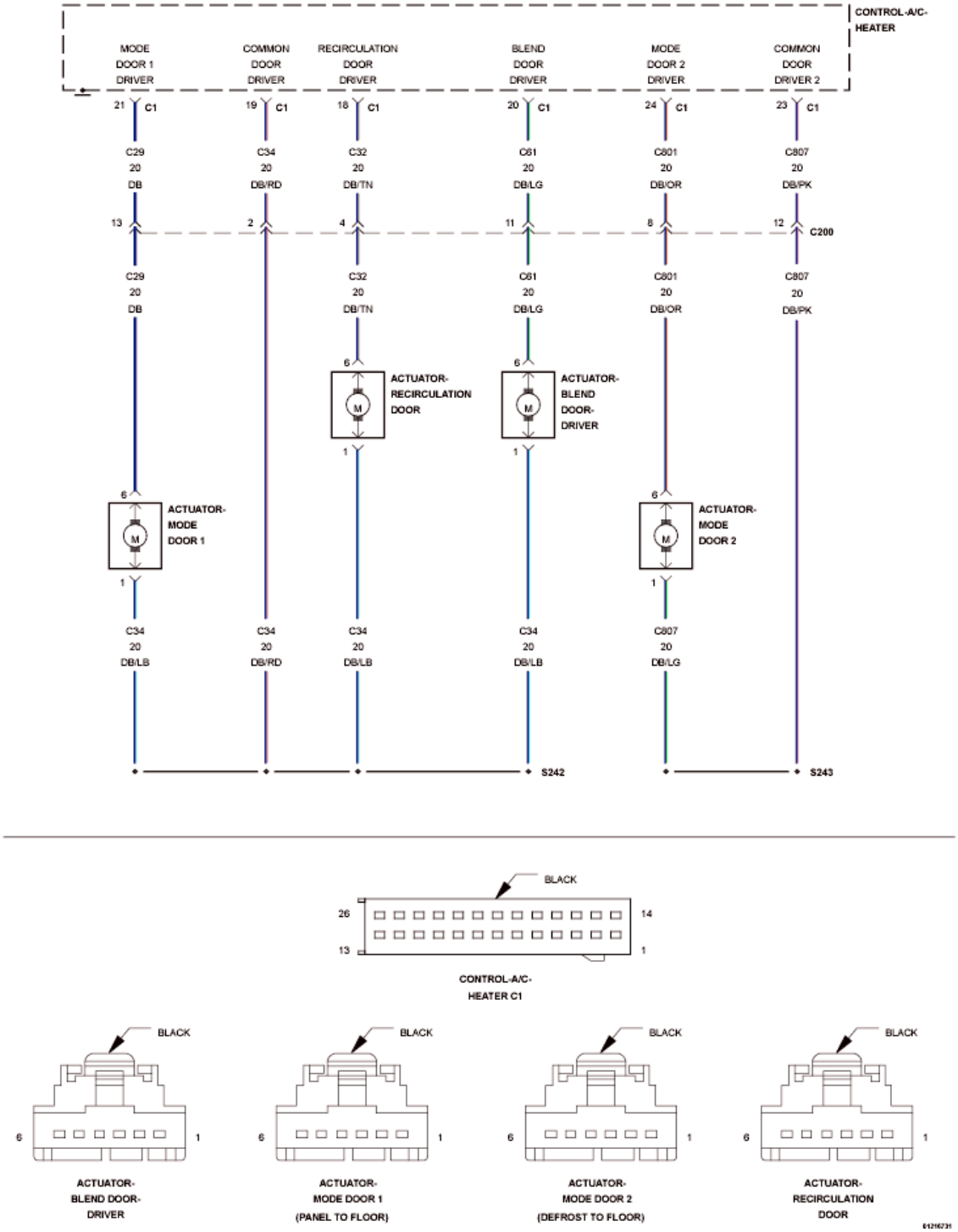

Fig. 27: Recirculation Door Control Wiring Diagram
Courtesy of CHRYSLER GROUP, LLC

For a complete wiring diagram, **refer to appropriate SYSTEM WIRING DIAGRAMS article** .

THEORY OF OPERATION

After the initial installation of the A/C Heater Control, the controller is calibrated to each individual blend/mode door actuator. These calibrations are stored as in the number of pulses it takes to move the door from one stop to another. The A/C Heater Control drives the Door Actuators by the use of Door Driver circuit and a Common Door Driver circuit and monitors all door actuator pulses to detect door movement in both directions. Most of the door actuators share a common door driver circuit but each door actuator has its own unique driver circuit. The Defrost Door Actuator does not share a common door driver circuit because defrost mode is used as a system default mode if there is a system malfunction. Due to shared circuitry, similar DTC's can set at the same time for multiple actuators depending upon the type of circuit malfunction, its location, and the direction the actuator is moving when the malfunction is present.

WHEN MONITORED:

With the ignition on and an actuator movement is commanded by the A/C Heater Control.

SET CONDITION:

If an actuator move is commanded by the A/C Heater Control and there are no feedback pulses detected in that direction, the controller commands the actuator in the opposite direction. If no feedback pulses are detected in either direction this DTC will set. If the A/C Heater Control detects a valid pulse feedback in both directions, the DTC will change from Active to Stored and will stay in the controllers memory for 100 ignition cycles.

POSSIBLE CAUSES

Possible Causes
(C61) BLEND DOOR DRIVER CIRCUIT OPEN
(C34) COMMON DOOR DRIVER CIRCUIT OPEN
BLEND DOOR ACTUATOR (DRIVER)
A/C HEATER CONTROL

Always perform the HVAC Pre-Diagnostic Troubleshooting procedure before proceeding. Refer to HVAC PRE-DIAGNOSTIC TROUBLESHOOTING PROCEDURE.

DIAGNOSTIC TEST

1. **CHECK FOR OTHER DTC's**
    1. Ignition on, engine not running.
    2. With the scan tool, read HVAC DTC's.

    Is there more than one Door Control - Circuit Open DTC present?

    Yes

    - Repair the (C34) Common Door Driver circuit for an open.

    NOTE: Due to the common shared driver circuit, probable area of concern is the splice, or from the splice to the A/C Heater

Control harness connector. Make sure to check all inline connectors.

No

- Go To 2.

2. **CHECK IF DTC IS ACTIVE**
   1. Ignition on, engine not running.
   2. With the scan tool, read HVAC DTC's.

      Is this DTC active?

      Yes

      - Go To 4.

      No

      - Go To 3.

3. **PERFORM HVAC ACTUATOR CALIBRATION TEST**
   1. With the scan tool, perform the HVAC Actuator Calibration Test.

      Did this DTC change from Stored to Active while performing the HVAC Actuator Calibration Test?

      Yes

      - Go To 4.

      No

      - Go To 7.

4. **CHECK THE BLEND DOOR ACTUATOR**

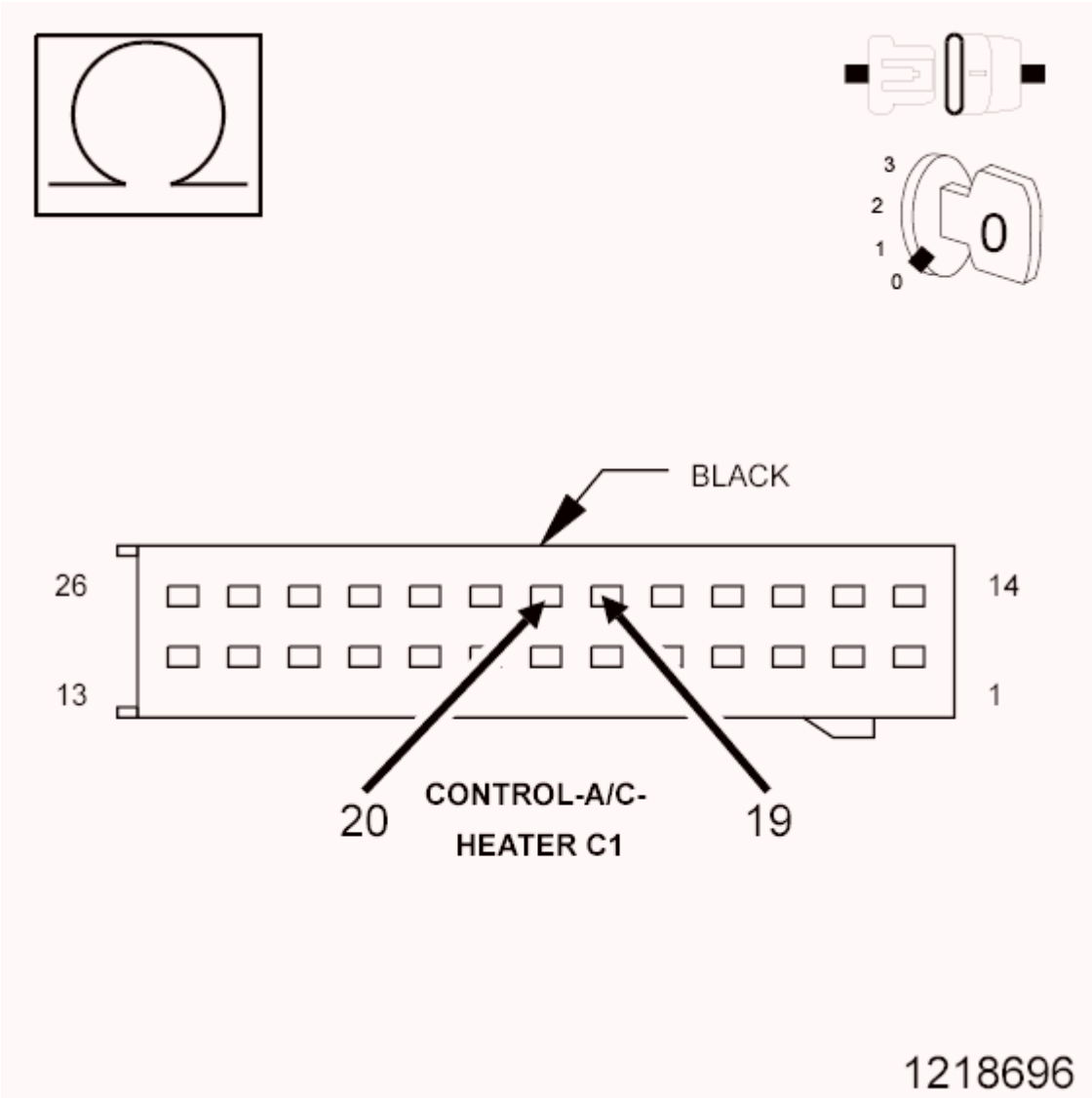

Fig. 28: Checking The Blend Door Actuator
Courtesy of CHRYSLER GROUP, LLC

1. Turn the ignition off to the lock position.
2. Disconnect the A/C Heater Control C1 harness connector.
3. Measure the resistance between the (C61) Blend Door Driver circuit and the (C34) Common Door Driver circuit.

   Is the resistance 38.0 Ohms (± 5.0 Ohms)?

   Yes

   - Replace and program the A/C Heater Control in accordance with the Service Information.
   - Perform the HVAC VERIFICATION TEST. Refer to **HVAC VERIFICATION TEST**.

No

- Go To 5.

5. **CHECK THE (C61) BLEND DOOR DRIVER CIRCUIT FOR AN OPEN**

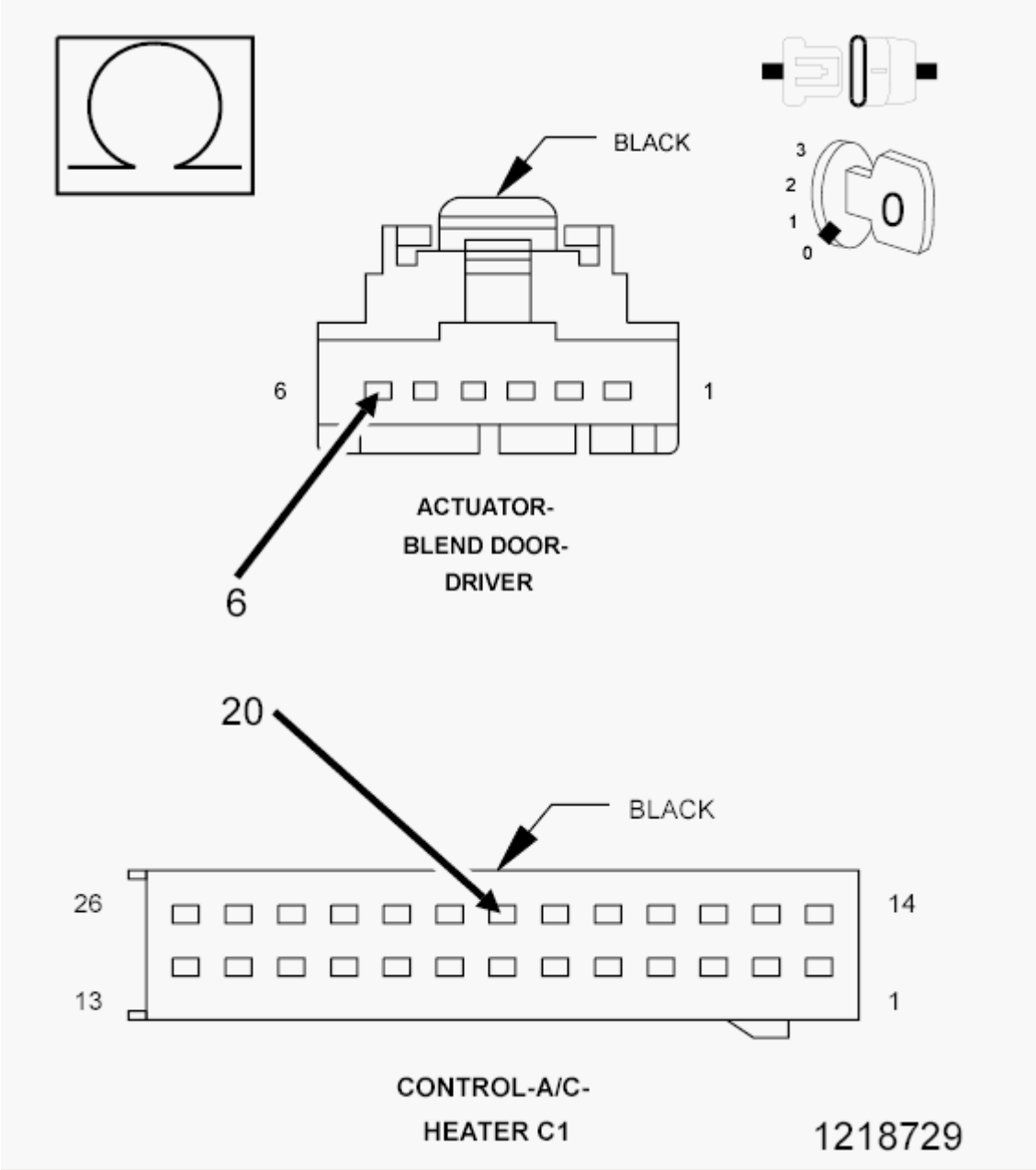

Fig. 29: Checking Blend Door Driver Circuit For An Open
Courtesy of CHRYSLER GROUP, LLC

1. Turn the ignition off to the lock position.
2. Disconnect the Blend Door Actuator harness connector.
3. Measure the resistance of the (C61) Blend Door Driver circuit between the A/C Heater Control C1

harness connector and the Blend Door Actuator harness connector.

Is the resistance above 5.0 Ohms?

Yes

- Repair the (C61) Blend Door Driver circuit for an open.
- Perform the HVAC VERIFICATION TEST. Refer to **HVAC VERIFICATION TEST**.

No

- Go To 6.

6. **CHECK THE (C34) COMMON DOOR DRIVER CIRCUIT FOR AN OPEN**

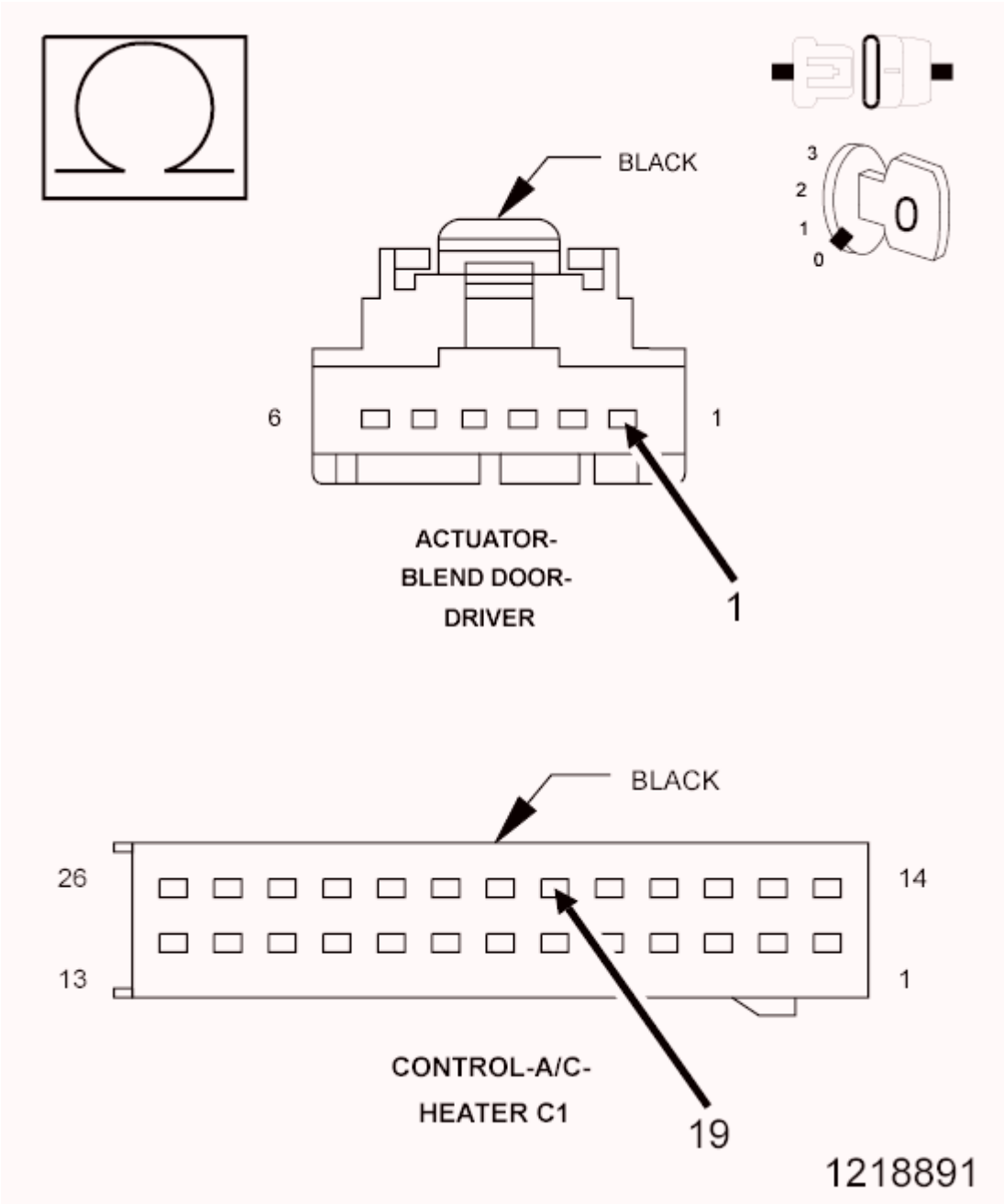

Fig. 30: Checking Common Door Driver Circuit For An Open
Courtesy of CHRYSLER GROUP, LLC

1. Measure the resistance of the (C34) Common Door Driver circuit between the A/C Heater Control C1 harness connector and the Blend Door Actuator harness connector.

   Is the resistance above 5.0 Ohms?

   Yes

   - Repair the (C34) Common Door Driver circuit for an open.

NOTE: **Probable location is the wiring harness splice or the wiring between the splice and the door actuator.**

- Perform the HVAC VERIFICATION TEST. Refer to **HVAC VERIFICATION TEST**.

No

- Replace the Blend Door Actuator (Driver) in accordance with the Service Information.
- Perform the HVAC VERIFICATION TEST. Refer to **HVAC VERIFICATION TEST**.

7. **CHECK THE WIRING AND CONNECTORS**
   1. The conditions necessary to set the DTC are not present at this time.
   2. Using the schematics as a guide, inspect the wiring and connectors specific to this circuit.
   3. Check for an intermittent condition by inspecting the related wiring harness for chafed, pierced, pinched, partially broken wires.
   4. Check the connectors for broken, bent, pushed out, spread, corroded, or contaminated terminals.
   5. Wiggle the wiring and connectors while checking for shorted and open circuits.
   6. With the scan tool, check the Environmental Data to help identify the conditions in which the DTC was set.

   Were there any problems found?

   Yes

   - Repair as necessary.
   - Perform the HVAC VERIFICATION TEST. Refer to **HVAC VERIFICATION TEST**.

   No

   - Test complete.

B11CB-92-MAIN/LEFT TEMPERATURE DOOR 1 CONTROL - PERFORMANCE OR INCORRECT OPERATION

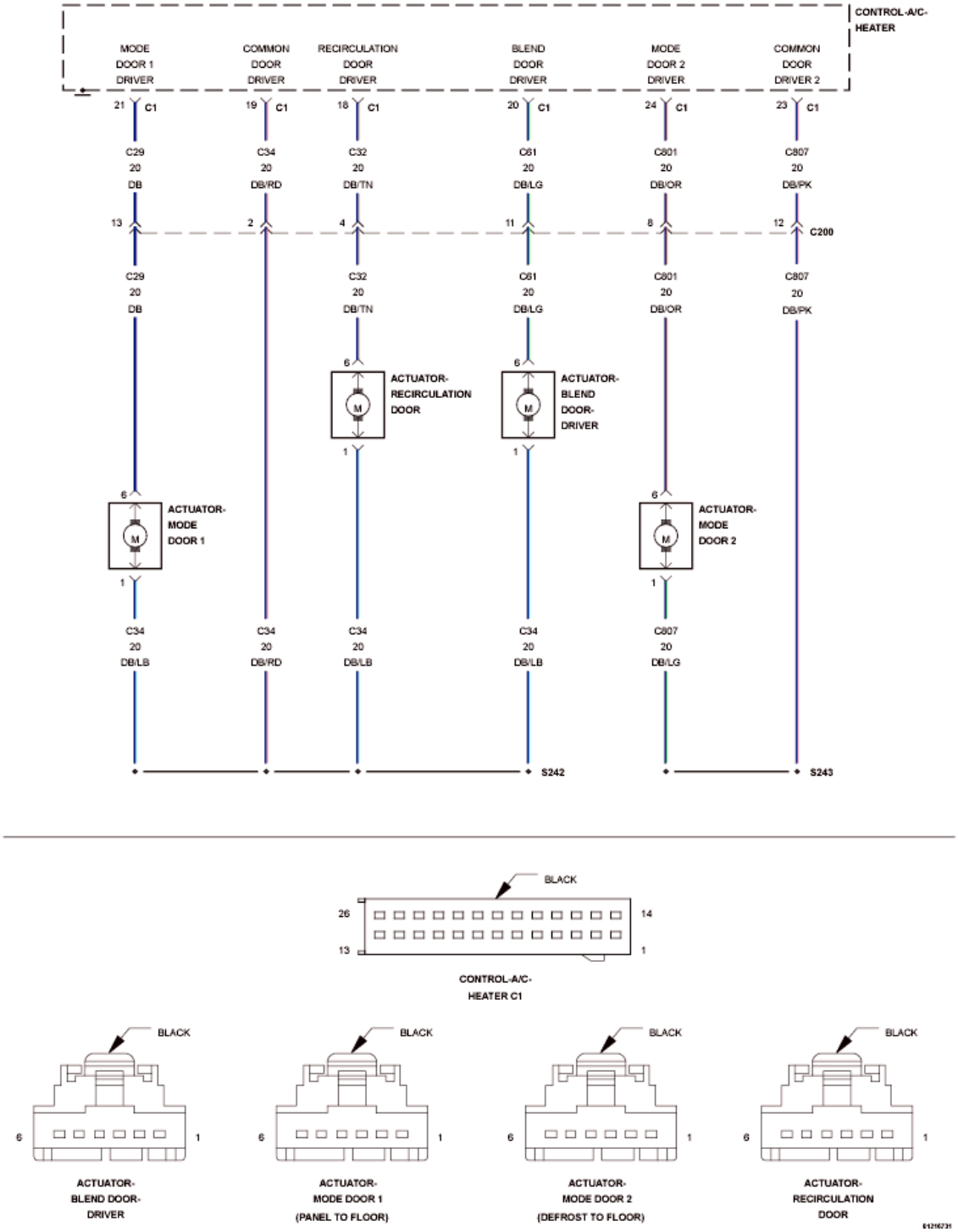

Fig. 31: Recirculation Door Control Wiring Diagram
Courtesy of CHRYSLER GROUP, LLC

For a complete wiring diagram, **refer to appropriate SYSTEM WIRING DIAGRAMS article** .

THEORY OF OPERATION

After the initial installation of the A/C Heater Control, the controller is calibrated to each individual blend/mode door actuator. These calibrations are stored as in the number of pulses it takes to move the door from one stop to another. The A/C Heater Control drives the Door Actuators by the use of Door Driver circuit and a Common Door Driver circuit and monitors all door actuator pulses to detect door movement in both directions. Most of the door actuators share a common door driver circuit but each door actuator has its own unique driver circuit. The Defrost Door Actuator does not share a common door driver circuit because defrost mode is used as a system default mode if there is a system malfunction. Due to shared circuitry, similar DTC's can set at the same time for multiple actuators depending upon the type of circuit malfunction, its location, and the direction the actuator is moving when the malfunction is present.

WHEN MONITORED:

With the ignition on and an actuator movement is commanded by the A/C Heater Control.

SET CONDITION:

If an actuator move is commanded by the A/C Heater Control and there are no feedback pulses detected in that direction, the controller commands the actuator in the opposite direction. If feedback pulses are detected in only one direction this DTC will set. If the A/C Heater Control detects a valid pulse feedback in both directions, the DTC will change from Active to Stored and will stay in the controllers memory for 100 ignition cycles.

POSSIBLE CAUSES

Possible Causes
(C61) BLEND DOOR DRIVER CIRCUIT SHORT TO VOLTAGE
(C61) BLEND DOOR DRIVER CIRCUIT SHORT TO GROUND
(C34) COMMON DOOR DRIVER CIRCUIT SHORT TO VOLTAGE
(C34) COMMON DOOR DRIVER CIRCUIT SHORT TO GROUND
BLEND DOOR BINDING
BLEND DOOR ACTUATOR
A/C HEATER CONTROL

Always perform the HVAC Pre-Diagnostic Troubleshooting procedure before proceeding. Refer to HVAC PRE-DIAGNOSTIC TROUBLESHOOTING PROCEDURE.

DIAGNOSTIC TEST

1. **CHECK IF DTC IS ACTIVE**
    1. Ignition on, engine not running.
    2. With the scan tool, read HVAC DTC's.

    NOTE: It can take up to 60 seconds or more for this DTC to mature.

    Is this DTC active?

    Yes

- Go To 3.

No

- Go To 2.

2. **PERFORM HVAC ACTUATOR CALIBRATION TEST**
    1. With the scan tool, perform the HVAC Actuator Calibration Test.

       Did this DTC change from Stored to Active while performing the HVAC Actuator Calibration Test?

       Yes

       - Go To 3.

       No

       - Go To 9.
3. **CHECK THE (C61) BLEND DOOR DRIVER CIRCUIT FOR A SHORT TO VOLTAGE**

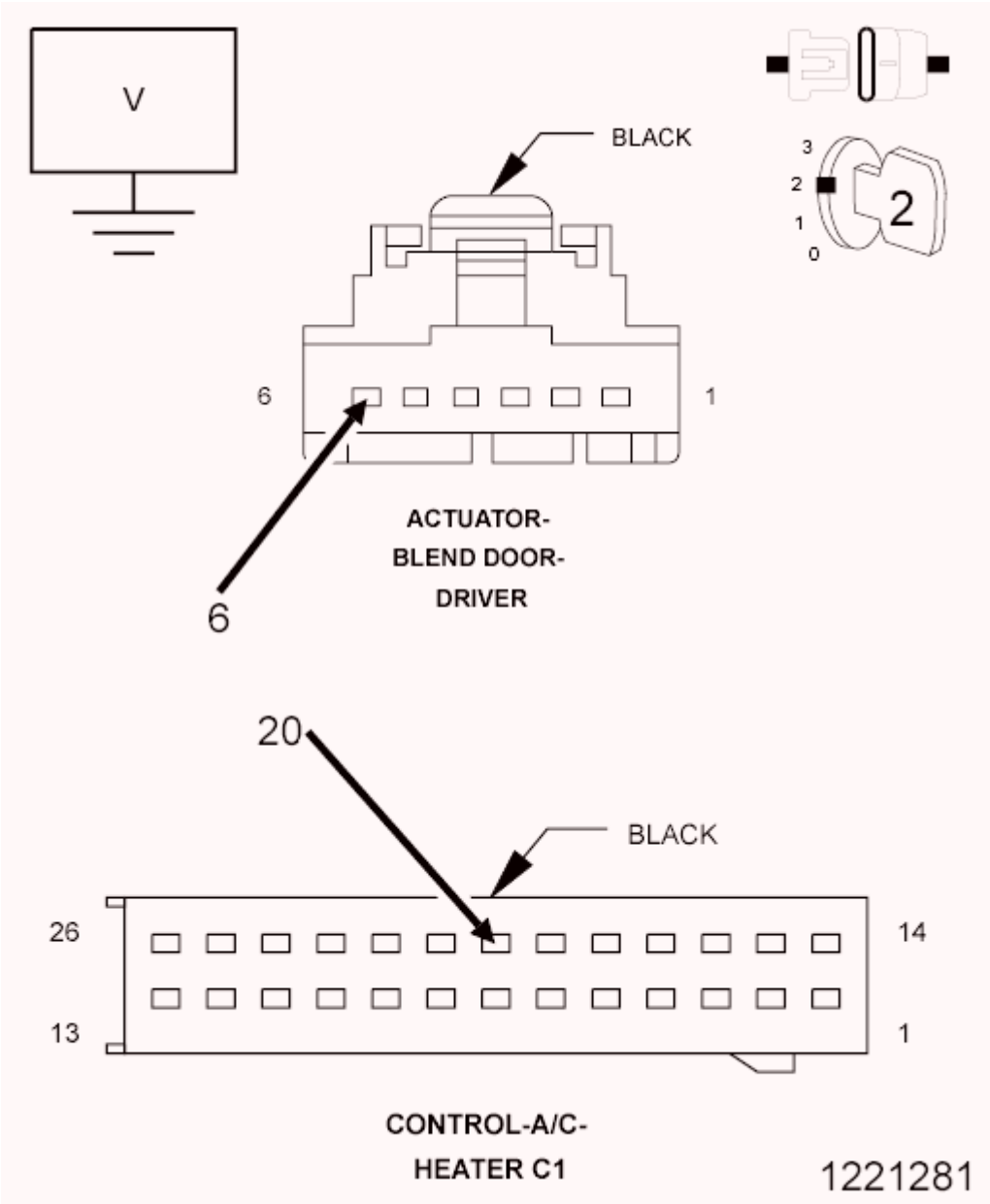

Fig. 32: Checking Blend Door Driver Circuit For A Short To Voltage
Courtesy of CHRYSLER GROUP, LLC

1. Turn the ignition off to the lock position.
2. Disconnect the A/C Heater Control C1 harness connector.
3. Disconnect the Blend Door Actuator harness connector.
4. Ignition on, engine not running.
5. Measure the voltage of the (C61) Blend Door Driver circuit.

   Is there any voltage present?

   Yes

- Repair the (C61) Blend Door Driver circuit for a short to voltage.
- Perform the HVAC VERIFICATION TEST. Refer to **HVAC VERIFICATION TEST**.

No

- Go To 4.

4. **CHECK THE (C34) COMMON DOOR DRIVER CIRCUIT FOR A SHORT TO VOLTAGE**

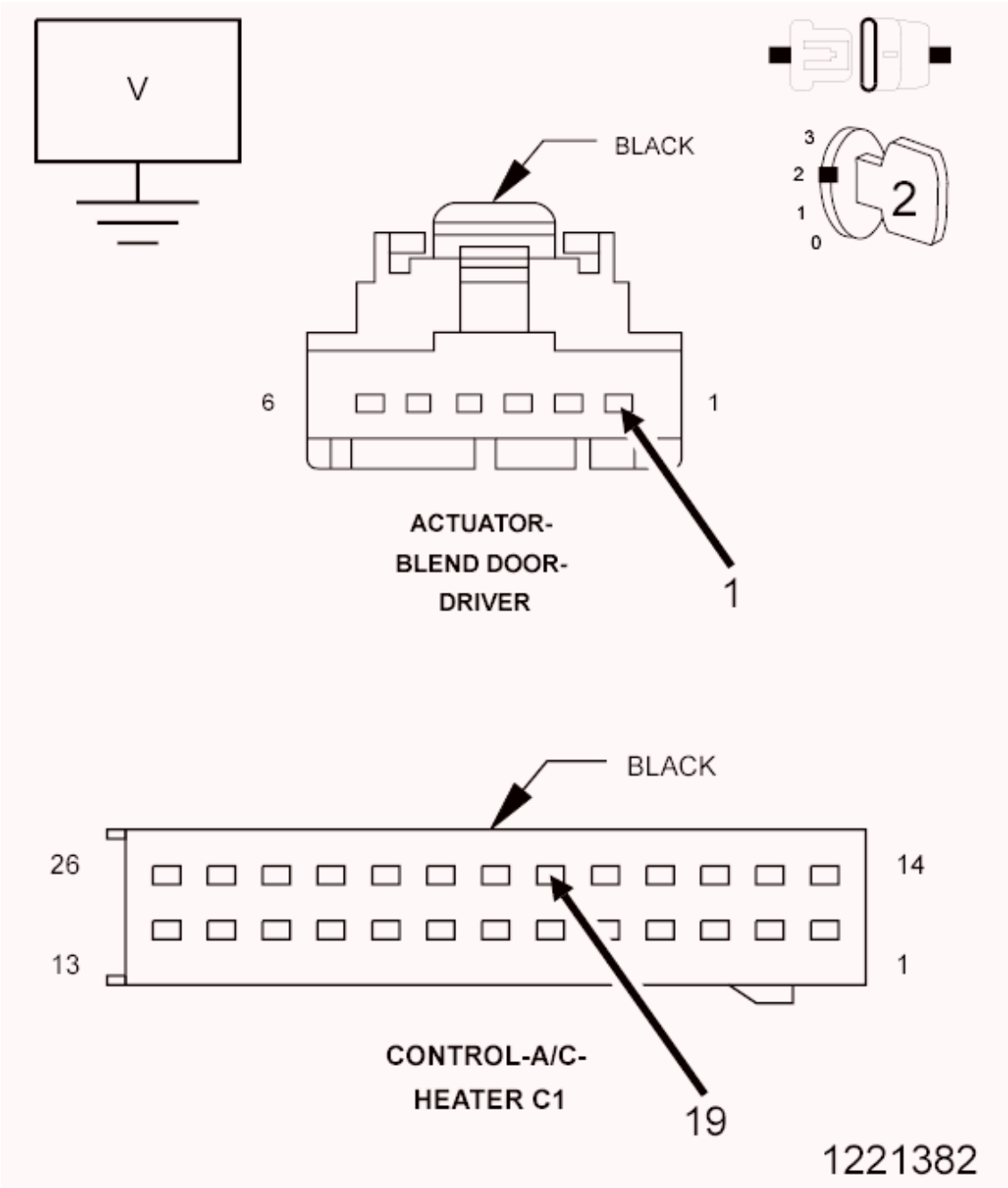

Fig. 33: Checking Common Door Driver Circuit For A Short To Voltage

Courtesy of CHRYSLER GROUP, LLC

1. Measure the voltage of the (C34) Common Door Driver circuit.

   Is there any voltage present?

   Yes

   - Repair the (C34) Common Door Driver circuit for a short to voltage.
   - Perform the HVAC VERIFICATION TEST. Refer to **HVAC VERIFICATION TEST**.

   No

   - Go To 5.

5. **CHECK THE (C61) BLEND DOOR DRIVER CIRCUIT FOR A SHORT TO GROUND**

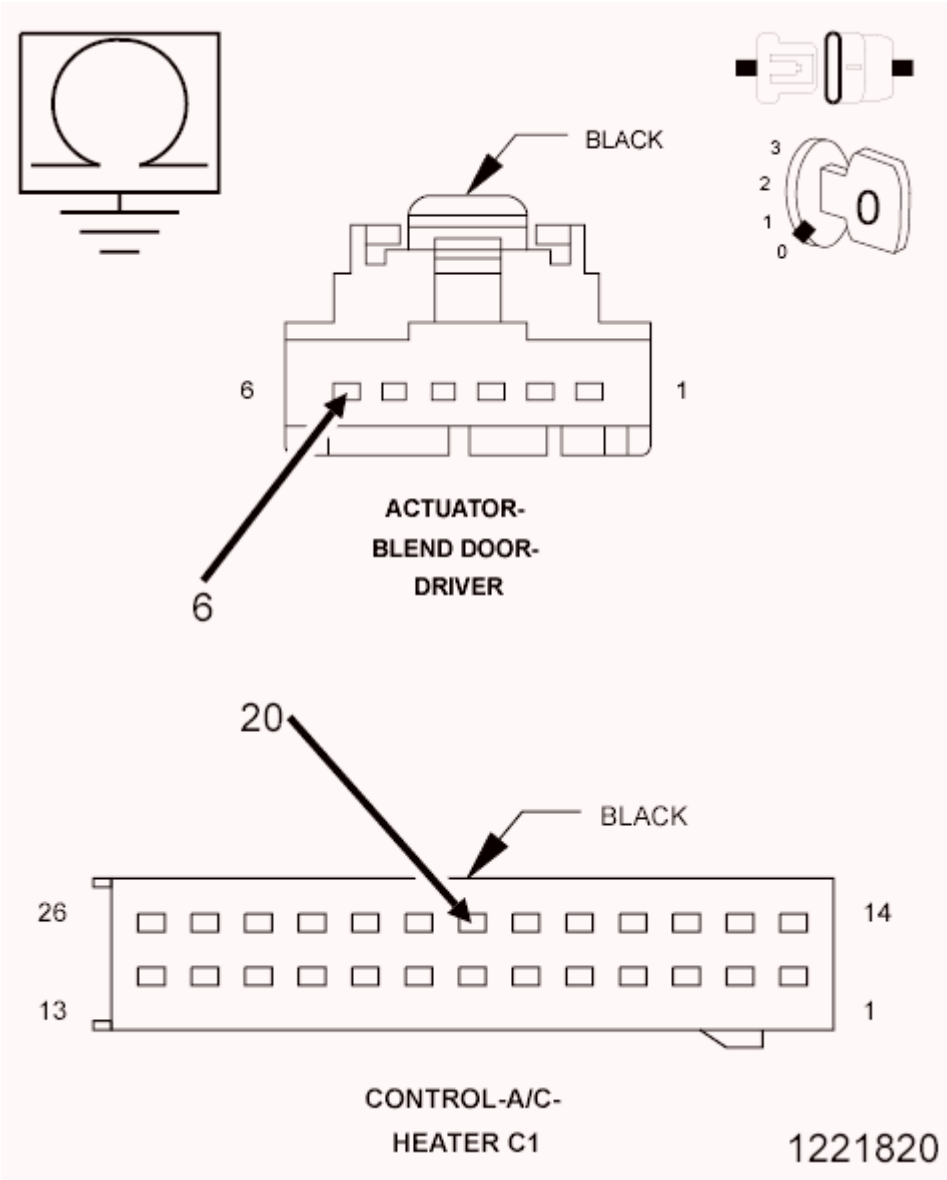

Fig. 34: Checking Blend Door Driver Circuit For A Short To Ground
Courtesy of CHRYSLER GROUP, LLC

1. Turn the ignition off to the lock position.
2. Measure the resistance between ground and the (C61) Blend Door Driver circuit.

   Is the resistance below 100k ohms?

   Yes

   - Repair the (C61) Blend Door Driver circuit for a short to ground.
   - Perform the HVAC VERIFICATION TEST. Refer to **HVAC VERIFICATION TEST**.

   No

- Go To 6.

6. **CHECK THE (C34) COMMON DOOR DRIVER CIRCUIT FOR A SHORT TO GROUND**

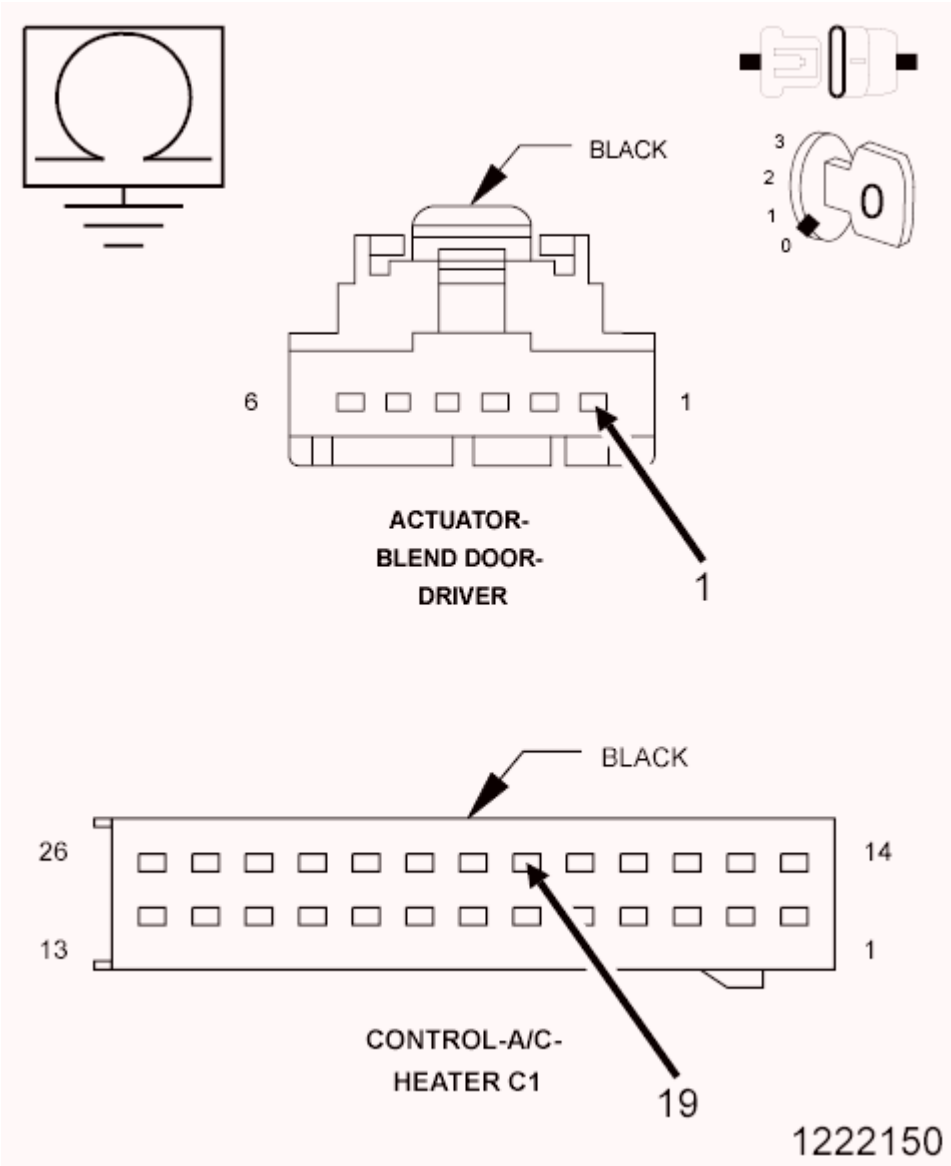

Fig. 35: Checking Common Door Driver Circuit For A Short To Ground
Courtesy of CHRYSLER GROUP, LLC

1. Measure the resistance between ground and the (C34) Common Door Driver circuit.

   Is the resistance below 100k ohms?

   Yes

   - Repair the (C34) Common Door Driver circuit for a short to ground.
   - Perform the HVAC VERIFICATION TEST. Refer to **HVAC VERIFICATION TEST**.

No

- Go To 7.

7. **CHECK THE BLEND DOOR**
   1. Remove the Blend Door Actuator and check the Blend Door for binding and full travel.

      Were there any problems found?

      Yes

      - Repair or replace the Blend Door as necessary in accordance with the Service Information.
      - Perform the HVAC VERIFICATION TEST. Refer to **HVAC VERIFICATION TEST**.

      No

      - Go To 8.

8. **CHECK THE BLEND DOOR ACTUATOR**
   1. Replace the Blend Door Actuator in accordance with the Service Information.
   2. With the scan tool, erase HVAC DTC's and perform the HVAC Actuator Calibration Test.

      Did this DTC reset?

      Yes

      - Replace and program the A/C Heater Control in accordance with the Service Information.
      - Perform the HVAC VERIFICATION TEST. Refer to **HVAC VERIFICATION TEST**.

      No

      - Test complete.
      - Perform the HVAC VERIFICATION TEST. Refer to **HVAC VERIFICATION TEST**.

9. **CHECK THE WIRING AND CONNECTORS**
   1. The conditions necessary to set the DTC are not present at this time.
   2. Using the schematics as a guide, inspect the wiring and connectors specific to this circuit.
   3. Check for an intermittent condition by inspecting the related wiring harness for chafed, pierced, pinched, partially broken wires.
   4. Check the connectors for broken, bent, pushed out, spread, corroded, or contaminated terminals.
   5. Wiggle the wiring and connectors while checking for shorted and open circuits.
   6. With the scan tool, check the Environmental Data to help identify the conditions in which the DTC was set.

      Were there any problems found?

Yes

- Repair as necessary.
- Perform the HVAC VERIFICATION TEST. Refer to **HVAC VERIFICATION TEST**.

No

- Test complete.

B11CC-00-MAIN/LEFT TEMPERATURE DOOR 1 TRAVEL TOO SMALL

For a complete wiring diagram, **refer to appropriate SYSTEM WIRING DIAGRAMS article** .

THEORY OF OPERATION

After the initial installation of the A/C Heater Control, the controller is calibrated to each individual blend/mode door actuator. These calibrations are stored as in the number of pulses it takes to move the door from one stop to another. The A/C Heater Control drives the Door Actuators by the use of Door Driver circuit and a Common Door Driver circuit and monitors all door actuator pulses to detect door movement in both directions. Most of the door actuators share a common door driver circuit but each door actuator has its own unique driver circuit. The Defrost Door Actuator does not share a common door driver circuit because defrost mode is used as a system default mode if there is a system malfunction. Due to shared circuitry, similar DTC's can set at the same time for multiple actuators depending upon the type of circuit malfunction, its location, and the direction the actuator is moving when the malfunction is present.

WHEN MONITORED:

When ever an Actuator Calibration Test is performed

SET CONDITION:

The A/C Heater Control uses a pulse feedback to the controller to detect the total door movement range. If the amount of pulses required to move the door completely in both directions is less than what the controller has stored in its memory, this DTC will set. If an Actuator Calibration Test is performed and the A/C Heater Control detects a valid range of the door movement span in both directions, the DTC will change from Active to Stored and will stay in the controllers memory for 100 ignition cycles.

POSSIBLE CAUSES

Possible Causes
RELATED DTC's PRESENT
BLEND DOOR BINDING
BLEND DOOR ACTUATOR
A/C HEATER CONTROL

Always perform the HVAC Pre-Diagnostic Troubleshooting procedure before proceeding. Refer to HVAC PRE-DIAGNOSTIC TROUBLESHOOTING PROCEDURE.

DIAGNOSTIC TEST

1. **CHECK FOR RELATED DTC's**
    1. Ignition on, engine not running.
    2. With the scan tool, read HVAC DTC's.

    Are there any Door Control - Circuit Open or Door Control - Performance or Incorrect Operation DTC's present?

    Yes

    - Refer to **DIAGNOSIS AND TESTING** and perform the appropriate diagnostic procedure.

    No

    - Go To 2.
2. **CHECK IF DTC IS ACTIVE**
    1. Ignition on, engine not running.
    2. With the scan tool, read HVAC DTC's.

    Is this DTC active?

    Yes

    - Go To 4.

    No

    - Go To 3.
3. **PERFORM HVAC ACTUATOR CALIBRATION TEST**
    1. With the scan tool, perform the HVAC Actuator Calibration Test.

    Did this DTC change from Stored to Active while performing the HVAC Actuator Calibration Test?

    Yes

    - Go To 4.

    No

    - Go To 6.
4. **CHECK THE BLEND DOOR**
    1. Remove the Blend Door Actuator and check the Blend Door for binding and full travel.

Is there any problem with the Blend Door movement?

Yes

- Repair or replace the Blend Door as necessary in accordance with the Service Information.
- Perform the HVAC VERIFICATION TEST. Refer to **HVAC VERIFICATION TEST**.

No

- Go To 5.

5. **CHECK THE BLEND DOOR ACTUATOR**
   1. Replace the Blend Door Actuator in accordance with the Service Information.
   2. With the scan tool, erase HVAC DTC's and perform the HVAC Actuator Calibration Test.

   Did this DTC reset?

   Yes

   - Replace and program the A/C Heater Control in accordance with the Service Information.
   - Perform the HVAC VERIFICATION TEST. Refer to **HVAC VERIFICATION TEST**.

   No

   - Test complete.
   - Perform the HVAC VERIFICATION TEST. Refer to **HVAC VERIFICATION TEST**.

6. **CHECK THE WIRING AND CONNECTORS**
   1. The conditions necessary to set the DTC are not present at this time.
   2. Using the schematics as a guide, inspect the wiring and connectors specific to this circuit.
   3. Check for an intermittent condition by inspecting the related wiring harness for chafed, pierced, pinched, partially broken wires.
   4. Check the connectors for broken, bent, pushed out, spread, corroded, or contaminated terminals.
   5. Wiggle the wiring and connectors while checking for shorted and open circuits.
   6. With the scan tool, check the Environmental Data to help identify the conditions in which the DTC was set.

   Were there any problems found?

   Yes

   - Repair as necessary.
   - Perform the HVAC VERIFICATION TEST. Refer to **HVAC VERIFICATION TEST**.

   No

- Test complete.

B11CD-00-MAIN/LEFT TEMPERATURE DOOR 1 TRAVEL TOO LARGE

For a complete wiring diagram, **refer to appropriate SYSTEM WIRING DIAGRAMS article** .

THEORY OF OPERATION

After the initial installation of the A/C Heater Control, the controller is calibrated to each individual blend/mode door actuator. These calibrations are stored as in the number of pulses it takes to move the door from one stop to another. The A/C Heater Control drives the Door Actuators by the use of Door Driver circuit and a Common Door Driver circuit and monitors all door actuator pulses to detect door movement in both directions. Most of the door actuators share a common door driver circuit but each door actuator has its own unique driver circuit. The Defrost Door Actuator does not share a common door driver circuit because defrost mode is used as a system default mode if there is a system malfunction. Due to shared circuitry, similar DTC's can set at the same time for multiple actuators depending upon the type of circuit malfunction, its location, and the direction the actuator is moving when the malfunction is present.

WHEN MONITORED:

When ever an Actuator Calibration Test is performed

SET CONDITION:

The A/C Heater Control uses a pulse feedback to the controller to detect the total door movement range. If the amount of pulses required to move the door completely in both directions is greater than what the controller has stored in its memory, this DTC will set. If an Actuator Calibration Test is performed and the A/C Heater Control detects a valid range of the door movement span in both directions, the DTC will change from Active to Stored and will stay in the controllers memory for 100 ignition cycles.

POSSIBLE CAUSES

Possible Causes
RELATED DTC's PRESENT
BLEND DOOR STOPS
BLEND DOOR
BLEND DOOR ACTUATOR
A/C HEATER CONTROL

Always perform the HVAC Pre-Diagnostic Troubleshooting procedure before proceeding. Refer to HVAC PRE-DIAGNOSTIC TROUBLESHOOTING PROCEDURE.

DIAGNOSTIC TEST

1. **CHECK FOR RELATED DTC's**
    1. Ignition on, engine not running.

2. With the scan tool, read HVAC DTC's.

   Are there any Door Control - Circuit Open or Door Control - Performance or Incorrect Operation DTC's present?

   Yes

   - Refer to **DIAGNOSIS AND TESTING** and perform the appropriate diagnostic procedure.

   No

   - Go To 2.

2. **CHECK IF DTC IS ACTIVE**
   1. Ignition on, engine not running.
   2. With the scan tool, read HVAC DTC's.

      Is this DTC active?

      Yes

      - Go To 4.

      No

      - Go To 3.

3. **PERFORM HVAC ACTUATOR CALIBRATION TEST**
   1. With the scan tool, perform the HVAC Actuator Calibration Test.

      Did this DTC change from Stored to Active while performing the HVAC Actuator Calibration Test?

      Yes

      - Go To 4.

      No

      - Go To 6.

4. **CHECK THE BLEND DOOR**
   1. Remove the Blend Door Actuator and check the Blend Door stops, linkage (stripped or cracked) and door.

      Was there any problems with the Blend Door or movement?

      Yes

- Repair or replace the Blend Door as necessary in accordance with the Service Information.
- Perform the HVAC VERIFICATION TEST. Refer to **HVAC VERIFICATION TEST**.

No

- Go To 5.

5. **CHECK THE BLEND DOOR ACTUATOR**
   1. Replace the Blend Door Actuator in accordance with the Service Information.
   2. With the scan tool, erase HVAC DTC's and perform the HVAC Actuator Calibration Test.

   Did this DTC reset?

   Yes

   - Replace and program the A/C Heater Control in accordance with the Service Information.
   - Perform the HVAC VERIFICATION TEST. Refer to **HVAC VERIFICATION TEST**.

   No

   - Test complete.
   - Perform the HVAC VERIFICATION TEST. Refer to **HVAC VERIFICATION TEST**.
6. **CHECK THE WIRING AND CONNECTORS**
   1. The conditions necessary to set the DTC are not present at this time.
   2. Using the schematics as a guide, inspect the wiring and connectors specific to this circuit.
   3. Check for an intermittent condition by inspecting the related wiring harness for chafed, pierced, pinched, partially broken wires.
   4. Check the connectors for broken, bent, pushed out, spread, corroded, or contaminated terminals.
   5. Wiggle the wiring and connectors while checking for shorted and open circuits.
   6. With the scan tool, check the Environmental Data to help identify the conditions in which the DTC was set.

   Were there any problems found?

   Yes

   - Repair as necessary.
   - Perform the HVAC VERIFICATION TEST. Refer to **HVAC VERIFICATION TEST**.

   No

   - Test complete.

B160F-11-TWILIGHT/AMBIENT LIGHT SENSOR INPUT - CIRCUIT SHORT TO GROUND

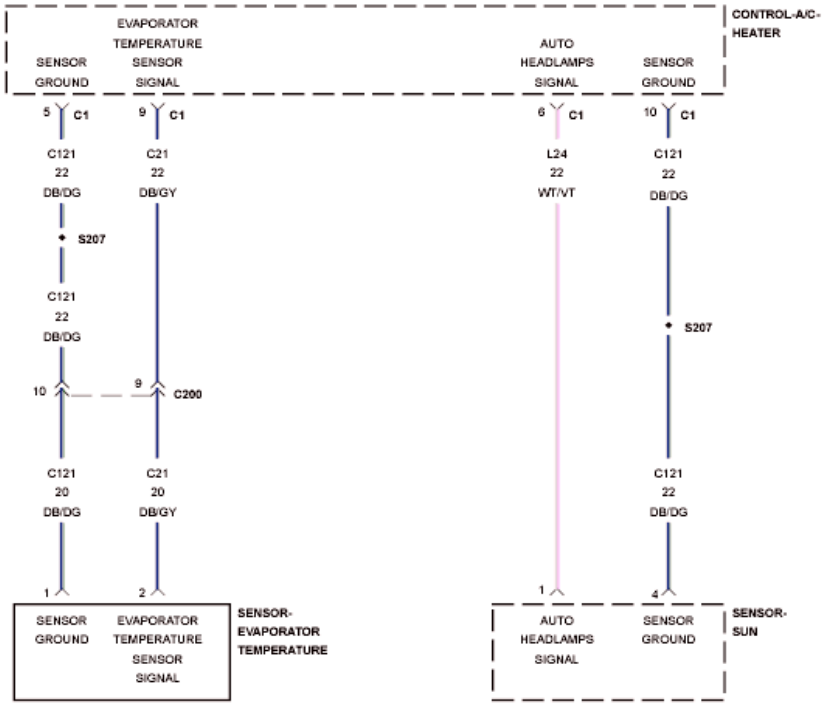

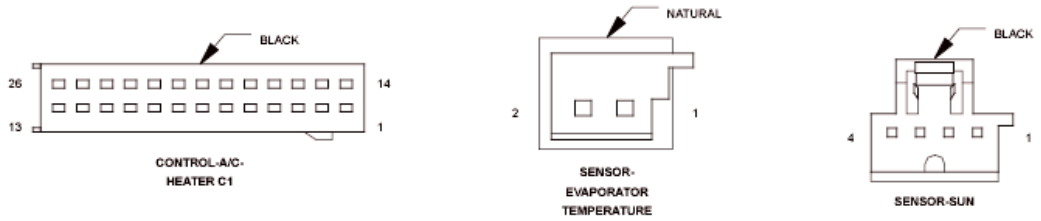

Fig. 36: Evaporator Temperature Sensor & Sun Sensor Wiring Diagram
Courtesy of CHRYSLER GROUP, LLC

For a complete wiring diagram, **refer to the Wiring Information** .

WHEN MONITORED:

With the ignition on.

SET CONDITION:

If the Twilight Light Sensor input voltage is less than 0.16 of a volt for period of 30 seconds.

POSSIBLE CAUSES

Possible Causes
(L24) AUTO HEADLAMPS SIGNAL CIRCUIT SHORT TO GROUND
SUN SENSOR
A/C HEATER CONTROL

Always perform the HVAC Pre-Diagnostic Troubleshooting procedure before proceeding. Refer to HVAC PRE-DIAGNOSTIC TROUBLESHOOTING PROCEDURE.

DIAGNOSTIC TEST

1. **CHECK IF THE DTC IS ACTIVE**
    1. Ignition on, engine not running.
    2. With the scan tool, read HVAC DTC's.

    NOTE: It can take up to 60 seconds or more for this DTC to mature.

    Is this DTC active?

    Yes

    - Go To 2.

    No

    - Go To 4.
2. **CHECK (L24) AUTO HEADLAMPS SIGNAL CIRCUIT FOR A SHORT TO GROUND**

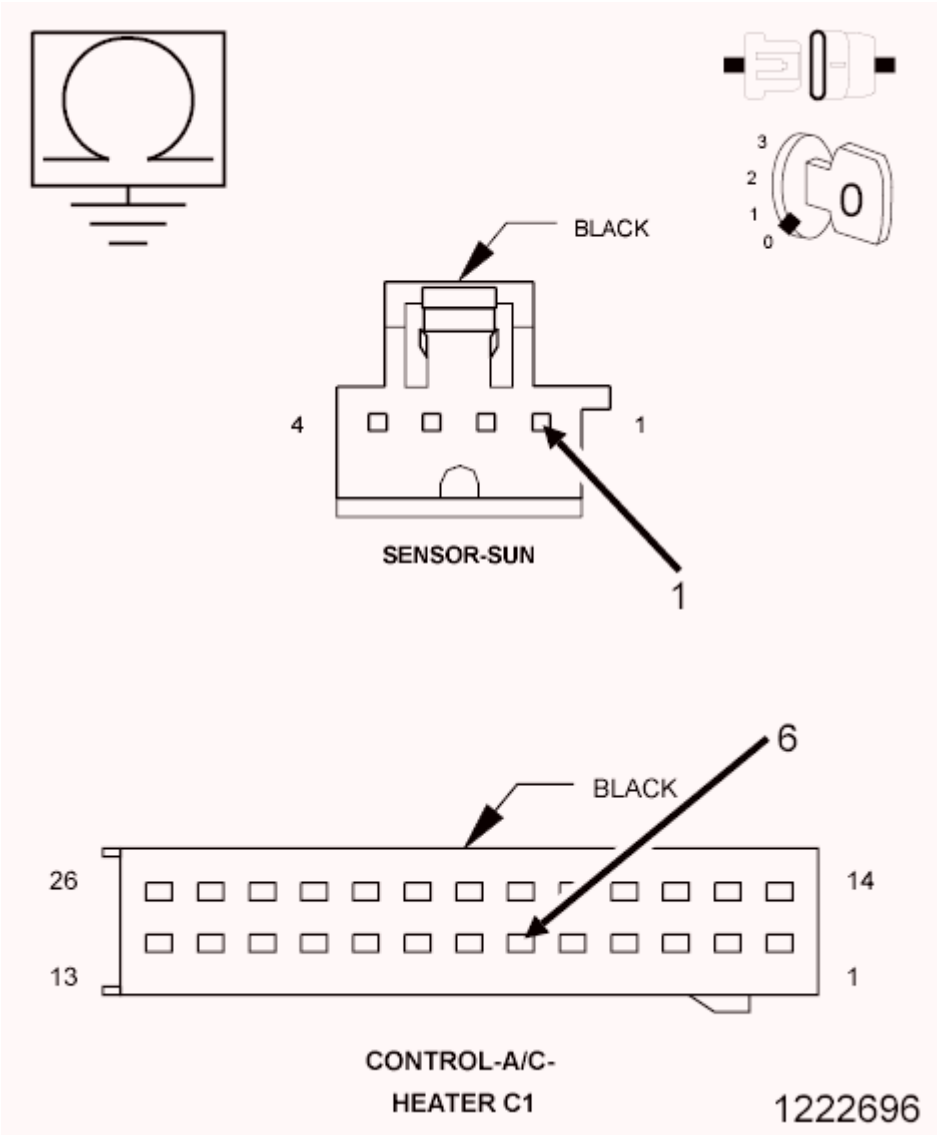

Fig. 37: Checking Auto Headlamps Signal Circuit For A Short To Ground
Courtesy of CHRYSLER GROUP, LLC

1. Turn the ignition off to the lock position.
2. Disconnect the A/C Heater Control C1 harness connector.
3. Disconnect the Sun Sensor harness connector.
4. Measure the resistance between ground and he (L24) Auto Headlamps Signal circuit.

   Is the resistance below 100k Ohms?

   Yes

   - Repair the (L24) Auto Headlamps Signal circuit for a short to ground.
   - Perform the HVAC VERIFICATION TEST. Refer to **HVAC VERIFICATION TEST**.

No

- Go To 3.

3. **CHECK SUN SENSOR AND A/C HEATER CONTROL**
   1. Replace the Sun Sensor in accordance with the Service Information.
   2. Perform the HVAC VERIFICATION TEST. Refer to **HVAC VERIFICATION TEST**.

   Did this DTC reset while performing the HVAC Verification Test?

   Yes

   - Replace and program the A/C Heater Control in accordance with the Service Information.
   - Perform the HVAC VERIFICATION TEST. Refer to **HVAC VERIFICATION TEST**.

   No

   - Test complete.

4. **CHECK THE WIRING AND CONNECTORS**
   1. The conditions necessary to set the DTC are not present at this time.
   2. Using the schematics as a guide, inspect the wiring and connectors specific to this circuit.
   3. Check for an intermittent condition by inspecting the related wiring harness for chafed, pierced, pinched, partially broken wires.
   4. Check the connectors for broken, bent, pushed out, spread, corroded, or contaminated terminals.
   5. Wiggle the wiring and connectors while checking for shorted and open circuits.
   6. With the scan tool, check the Environmental Data to help identify the conditions in which the DTC was set.

   Were there any problems found?

   Yes

   - Repair as necessary.
   - Perform the HVAC VERIFICATION TEST. Refer to **HVAC VERIFICATION TEST**.

   No

   - Test complete.

B160F-12-TWILIGHT/AMBIENT LIGHT SENSOR INPUT - CIRCUIT SHORT TO BATTERY

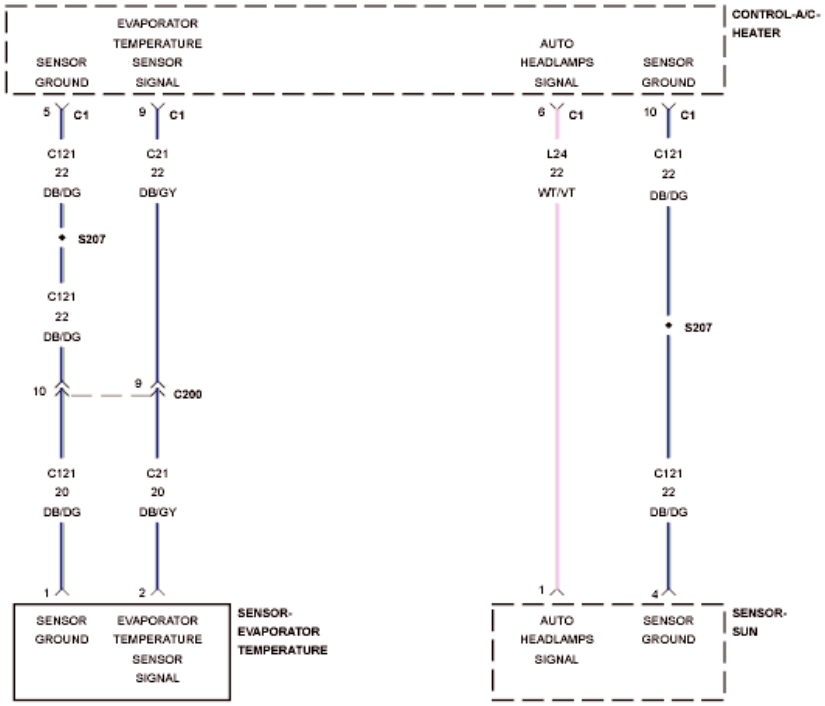

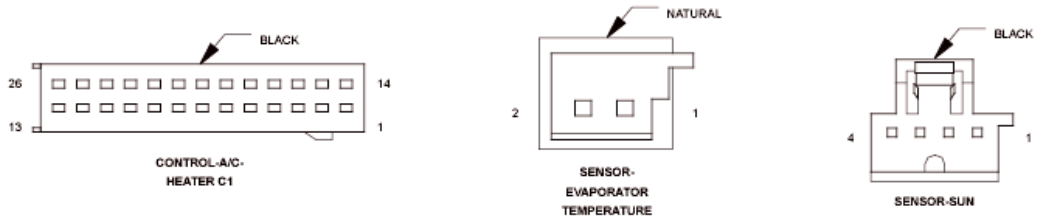

Fig. 38: Evaporator Temperature Sensor & Sun Sensor Wiring Diagram
Courtesy of CHRYSLER GROUP, LLC

For a complete wiring diagram, **refer to the Wiring Information** .

WHEN MONITORED:

With the ignition on.

SET CONDITION:

If the Twilight Light Sensor input voltage is greater than 4.9 volts for period of 30 seconds.

POSSIBLE CAUSES

Possible Causes
(L24) AUTO HEADLAMPS SIGNAL CIRCUIT SHORT TO VOLTAGE
(L24) AUTO HEADLAMPS SIGNAL CIRCUIT SHORT OPEN
(C121) SENSOR GROUND CIRCUIT OPEN
SUN SENSOR
A/C HEATER CONTROL

Always perform the HVAC Pre-Diagnostic Troubleshooting procedure before proceeding. Refer to HVAC PRE-DIAGNOSTIC TROUBLESHOOTING PROCEDURE.

DIAGNOSTIC TEST

1. **CHECK IF THE DTC IS ACTIVE**
    1. Ignition on, engine not running.
    2. With the scan tool, read HVAC DTC's.

    NOTE: It can take up to 60 seconds or more for this DTC to mature.

    Is this DTC active?

    Yes

    - Go To 2.

    No

    - Go To 6.
2. **CHECK (L24) AUTO HEADLAMPS SIGNAL CIRCUIT FOR A SHORT TO VOLTAGE**

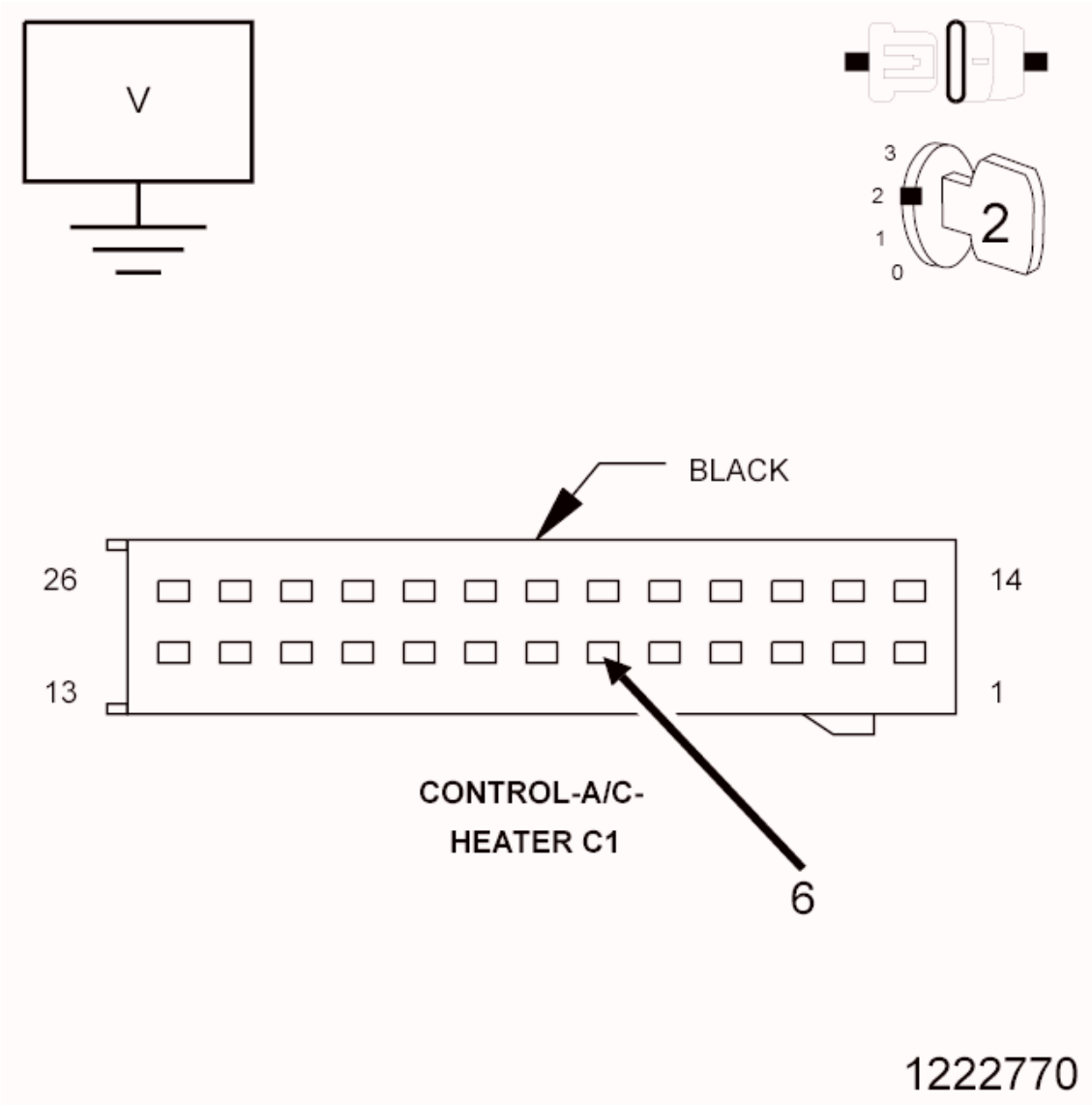

Fig. 39: Checking Auto Headlamps Signal Circuit For A Short To Voltage
Courtesy of CHRYSLER GROUP, LLC

1. Turn the ignition off.
2. Disconnect the A/C Heater Control C1 harness connector.
3. Ignition on, engine not running.
4. Measure the voltage of the (L24) Auto Headlamps Signal circuit.

   Is there any voltage present?

   Yes

   - Repair the (L24) Auto Headlamps Signal circuit for a short to voltage.
   - Perform the HVAC VERIFICATION TEST. Refer to **HVAC VERIFICATION TEST**.

No

- Go To 3.

3. **CHECK (L24) AUTO HEADLAMPS SIGNAL CIRCUIT FOR AN OPEN**

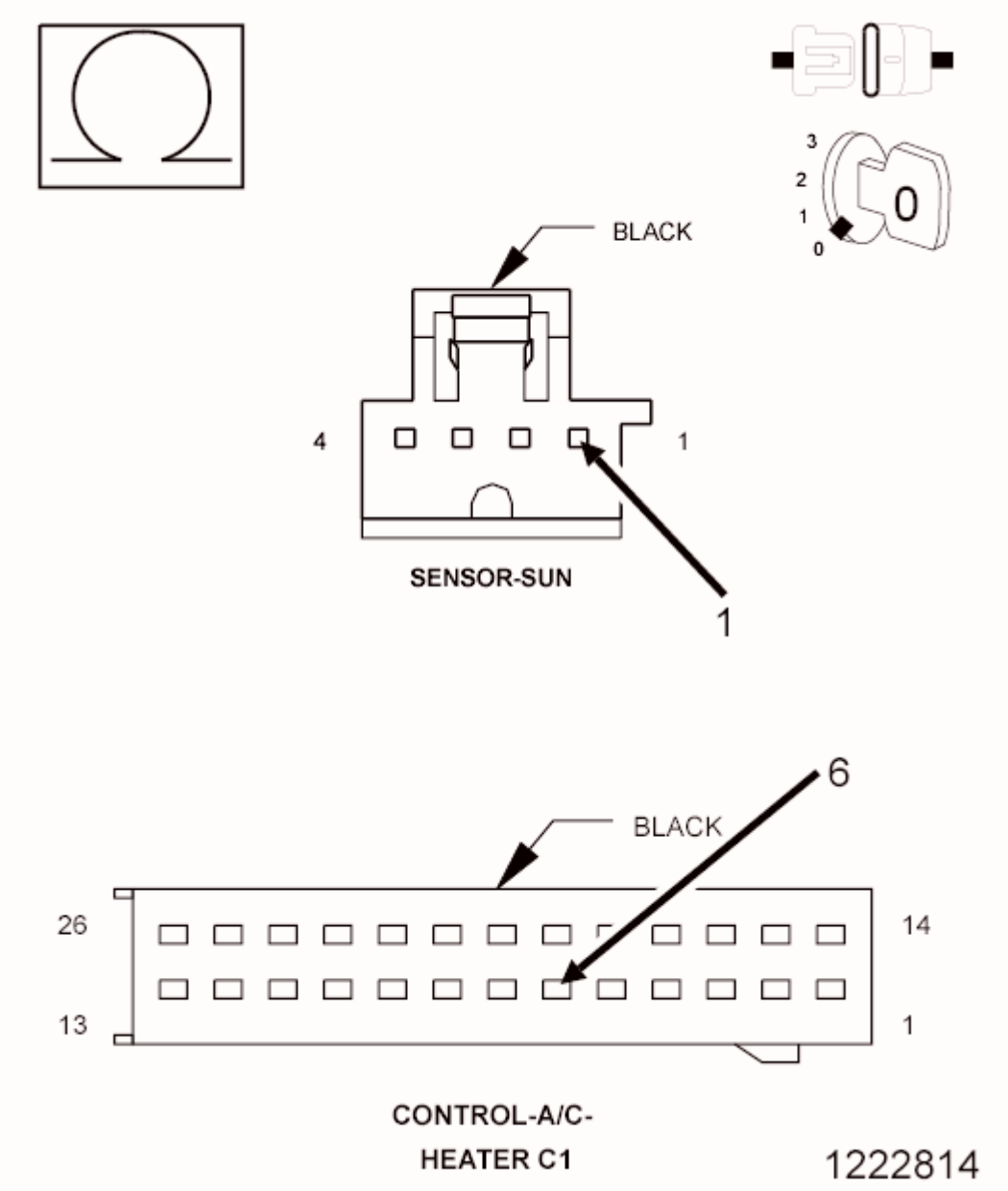

Fig. 40: Checking Auto Headlamps Signal Circuit For An Open
Courtesy of CHRYSLER GROUP, LLC

1. Turn the ignition off to the lock position.
2. Disconnect the Sun Sensor harness connector.
3. Measure the resistance of the (L24) Auto Headlamps Signal circuit between the A/C Heater Control C1 harness connector and the Sun Sensor harness connector.

Is the resistance below 5.0 Ohms?

Yes

- Go To 4.

No

- Repair the (L24) Auto Headlamps Signal circuit for an open.
- Perform the HVAC VERIFICATION TEST. Refer to **HVAC VERIFICATION TEST**.

4. **CHECK (C121) SENSOR GROUND CIRCUIT FOR AN OPEN**

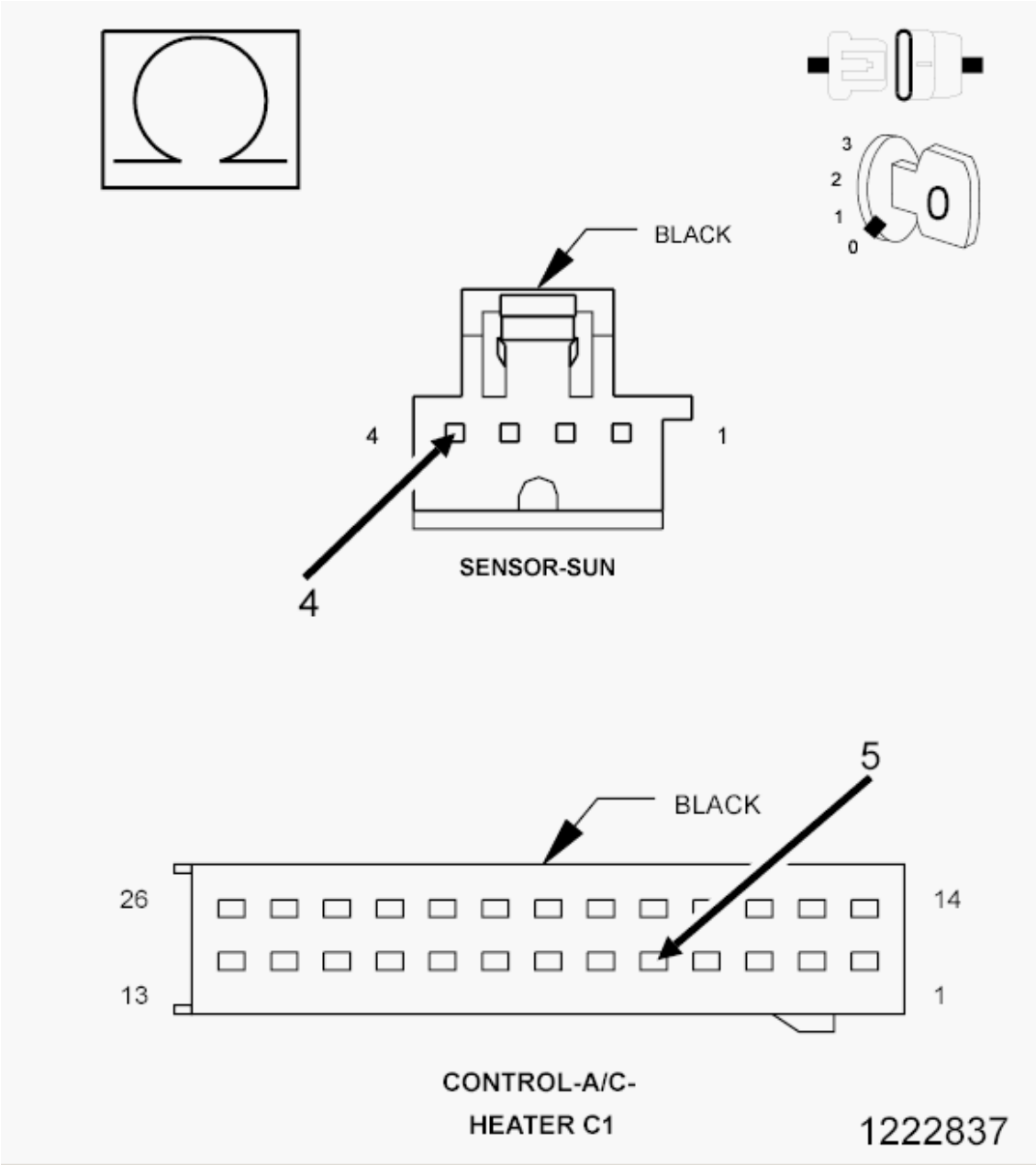

Fig. 41: Checking Sensor Ground Circuit For An Open
Courtesy of CHRYSLER GROUP, LLC

1. Measure the resistance of the (C121) Sensor Ground circuit between the A/C Heater Control C1 harness connector and the Sun Sensor harness connector.

   Is the resistance below 5.0 Ohms?

   Yes

   - Go To 5.

   No

   - Repair the (C121) Sensor Ground circuit for an open.
   - Perform the HVAC VERIFICATION TEST. Refer to **HVAC VERIFICATION TEST**.

5. **CHECK THE SUN SENSOR AND A/C HEATER CONTROL**
   1. Replace the Sun Sensor in accordance with the Service Information.
   2. Perform the HVAC VERIFICATION TEST. Refer to **HVAC VERIFICATION TEST**.

      Did this DTC reset while performing the HVAC Verification Test?

      Yes

      - Replace and program the A/C Heater Control in accordance with the Service Information.
      - Perform the HVAC VERIFICATION TEST. Refer to **HVAC VERIFICATION TEST**.

      No

      - Test complete.

6. **CHECK THE WIRING AND CONNECTORS**
   1. The conditions necessary to set the DTC are not present at this time.
   2. Using the schematics as a guide, inspect the wiring and connectors specific to this circuit.
   3. Check for an intermittent condition by inspecting the related wiring harness for chafed, pierced, pinched, partially broken wires.
   4. Check the connectors for broken, bent, pushed out, spread, corroded, or contaminated terminals.
   5. Wiggle the wiring and connectors while checking for shorted and open circuits.
   6. With the scan tool, check the Environmental Data to help identify the conditions in which the DTC was set.

      Were there any problems found?

      Yes

- Repair as necessary.
- Perform the HVAC VERIFICATION TEST. Refer to **HVAC VERIFICATION TEST**.

No

- Test complete.

B210A-84-SYSTEM VOLTAGE LOW - SIGNAL BELOW ALLOWABLE RANGE

For a complete wiring diagram, **refer to the Wiring Information** .

THEORY OF OPERATION

The A/C Heater Control constantly monitors battery and ignition voltage as well as battery voltage derived from BUS communication to ensure proper operation. If the voltage to the controller is out of range it could cause damage to the controller or its respective components. If the voltage of either circuit drops below or rises above a predetermined calibration a DTC will set.

WHEN MONITORED:

With the ignition on.

SET CONDITION:

If the controller system voltage or ignition voltage broadcast over the BUS is lower than monitored controller voltage the for period of 30 seconds.

POSSIBLE CAUSES

Possible Causes
RELATED TIPM DTC's PRESENT
RELATED CHARGING SYSTEM DTC's PRESENT
RELATED HVAC DTC's PRESENT
OTHER CONTROLLERS REPORTING UNDER VOLTAGE CONDITION
A/C HEATER CONTROL

Always perform the HVAC Pre-Diagnostic Troubleshooting procedure before proceeding. Refer to HVAC PRE-DIAGNOSTIC TROUBLESHOOTING PROCEDURE.

DIAGNOSTIC TEST

1. **CHECK FOR TIPM DTC's**
    1. Ignition on, engine not running.
    2. With the scan tool, read DTC's.

    Are there any Totally Integrated Power Module (TIPM) DTC's present?

Yes

- Refer to **TIPM - DIAGNOSIS AND TESTING** and perform the appropriate diagnostic procedure.

No

- Go To 2.

2. **CHECK FOR POWERTRAIN CONTROL MODULE DTC's**
   1. With the scan tool, read DTC's.

      Are there any Powertrain Control Module (PCM) charging system DTC's present?

      Yes

      - Refer to **5.7L - DIAGNOSTIC CODE INDEX - 3500 CAB & CHASSIS** or **6.7L - DIAGNOSTIC CODE INDEX - 3500 CAB & CHASSIS, 4500 & 5500** and perform the appropriate diagnostic procedure.

      No

      - Go To 3.

3. **CHECK FOR HVAC DTC's**
   1. With the scan tool, read HVAC DTC's.

      Is the DTC B210D-84-BATTERY VOLTAGE LOW - SIGNAL BELOW ALLOWABLE RANGE present also?

      Yes

      - Refer to **DIAGNOSIS AND TESTING** and perform the appropriate diagnostic procedure.

      No

      - Go To 4.

4. **CHECK IF THE DTC IS ACTIVE**
   1. With the scan tool, read HVAC DTC's.

      NOTE: It can take up to 30 seconds or more for this DTC to mature.

      Is this DTC active?

      Yes

      - Go To 5.

No

- Go To 6.

5. **CHECK IF OTHER CONTROLLERS ARE REPORTING AN OVER VOLTAGE CONDITION**
   1. With the scan tool read DTC's.

      Are any other controllers reporting an over voltage condition?

      Yes

      - Refer to **5.7L - DIAGNOSTIC CODE INDEX - 3500 CAB & CHASSIS** or **6.7L - DIAGNOSTIC CODE INDEX - 3500 CAB & CHASSIS, 4500 & 5500** and perform the appropriate diagnostic procedure.

      No

      - Replace and program the A/C Heater Control in accordance with the Service Information.
      - Perform the HVAC VERIFICATION TEST. Refer to **HVAC VERIFICATION TEST**.

6. **CHECK THE WIRING AND CONNECTORS**
   1. The conditions necessary to set the DTC are not present at this time.
   2. With the scan tool, check the Environmental Data to help identify the conditions in which the DTC was set.
   3. Using the schematics as a guide, inspect the wiring and connectors specific to this circuit.
   4. Check for an intermittent condition by inspecting the related wiring harness for chafed, pierced, pinched, partially broken wires.
   5. Check the connectors for broken, bent, pushed out, spread, corroded, or contaminated terminals.
   6. Wiggle the wiring and connectors while checking for shorted and open circuits.

      Were there any problems found?

      Yes

      - Repair as necessary.
      - Perform the HVAC VERIFICATION TEST. Refer to **HVAC VERIFICATION TEST**.

      No

      - Test complete.

B210B-85-SYSTEM VOLTAGE HIGH - SIGNAL ABOVE ALLOWABLE RANGE

For a complete wiring diagram, **refer to the Wiring Information** .

THEORY OF OPERATION

The A/C Heater Control constantly monitors battery and ignition voltage as well as battery voltage derived from BUS communication to ensure proper operation. If the voltage to the controller is out of range it could cause damage to the controller or its respective components. If the voltage of either circuit drops below or rises above a predetermined calibration a DTC will set.

WHEN MONITORED:

With the ignition on.

SET CONDITION:

If the controller system voltage or ignition voltage broadcast over the BUS is higher than monitored controller voltage the for period of 30 seconds.

POSSIBLE CAUSES

Possible Causes
RELATED TIPM DTC's PRESENT
RELATED CHARGING SYSTEM DTC's PRESENT
RELATED HVAC DTC's PRESENT
OTHER CONTROLLERS REPORTING OVER VOLTAGE CONDITION
A/C HEATER CONTROL

Always perform the HVAC Pre-Diagnostic Troubleshooting procedure before proceeding. Refer to HVAC PRE-DIAGNOSTIC TROUBLESHOOTING PROCEDURE.

DIAGNOSTIC TEST

1. **CHECK FOR TIPM DTC's**
    1. Ignition on, engine not running.
    2. With the scan tool, read DTC's.

       Are there any Totally Integrated Power Module (TIPM) DTC's present?

       Yes

       - Refer to **TIPM - DIAGNOSIS AND TESTING** and perform the appropriate diagnostic procedure.

       No

       - Go To 2.
2. **CHECK FOR POWERTRAIN CONTROL MODULE DTC's**
    1. With the scan tool, read DTC's.

       Are there any Powertrain Control Module (PCM) charging system DTC's present?

Yes

- Refer to **5.7L - DIAGNOSTIC CODE INDEX - 3500 CAB & CHASSIS** or **6.7L - DIAGNOSTIC CODE INDEX - 3500 CAB & CHASSIS, 4500 & 5500** and perform the appropriate diagnostic procedure.

No

- Go To 3.

3. **CHECK FOR HVAC DTC's**
   1. With the scan tool, read HVAC DTC's.

      Is the DTC B210E-85-BATTERY VOLTAGE HIGH - SIGNAL ABOVE ALLOWABLE RANGE present also?

      Yes

      - Refer to **DIAGNOSIS AND TESTING** and perform the appropriate diagnostic procedure.

      No

      - Go To 4.

4. **CHECK IF THE DTC IS ACTIVE**
   1. With the scan tool, read HVAC DTC's.

      NOTE: It can take up to 30 seconds or more for this DTC to mature.

      Is this DTC active?

      Yes

      - Go To 5.

      No

      - Go To 6.

5. **CHECK IF OTHER CONTROLLERS ARE REPORTING AN OVER VOLTAGE CONDITION**
   1. Ignition on, engine not running.
   2. With the scan tool read DTC's.

      Are any other controllers reporting an over voltage condition?

      Yes

      - Refer to **5.7L - DIAGNOSTIC CODE INDEX - 3500 CAB & CHASSIS** or **6.7L -**

DIAGNOSTIC CODE INDEX - 3500 CAB & CHASSIS, 4500 & 5500 and perform the appropriate diagnostic procedure.

No

- Replace and program the A/C Heater Control in accordance with the Service Information.
- Perform the HVAC VERIFICATION TEST. Refer to **HVAC VERIFICATION TEST**.

6. **CHECK THE WIRING AND CONNECTORS**
   1. The conditions necessary to set the DTC are not present at this time.
   2. With the scan tool, check the Environmental Data to help identify the conditions in which the DTC was set.
   3. Using the schematics as a guide, inspect the wiring and connectors specific to this circuit.
   4. Check for an intermittent condition by inspecting the related wiring harness for chafed, pierced, pinched, partially broken wires.
   5. Check the connectors for broken, bent, pushed out, spread, corroded, or contaminated terminals.
   6. Wiggle the wiring and connectors while checking for shorted and open circuits.

   Were there any problems found?

   Yes

   - Repair as necessary.
   - Perform the HVAC VERIFICATION TEST. Refer to **HVAC VERIFICATION TEST**.

   No

   - Test complete.

B210D-84-BATTERY VOLTAGE LOW - SIGNAL BELOW ALLOWABLE RANGE

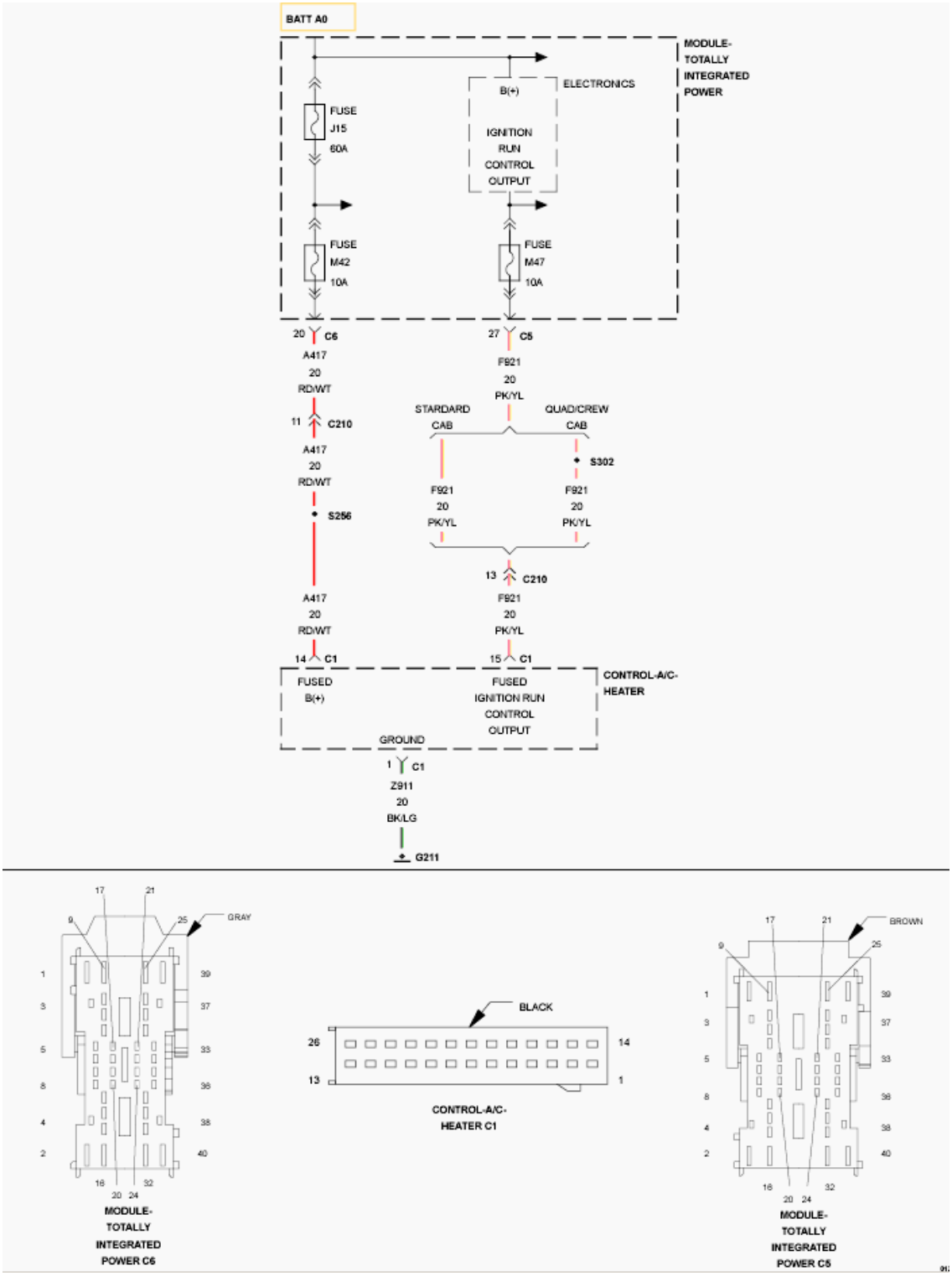

Fig. 42: HVAC Control Module Power Supply Wiring Diagram
Courtesy of CHRYSLER GROUP, LLC

For a complete wiring diagram, **refer to the Wiring Information** .

THEORY OF OPERATION

The A/C Heater Control constantly monitors battery and ignition voltage to ensure proper operation. If the voltage to the controller is out of range it could cause damage to the controller or its respective components. If the voltage of either circuit drops below or rises above a predetermined calibration a DTC will set.

WHEN MONITORED:

With the ignition on.

SET CONDITION:

If the controller battery voltage is lower than 8.0 volts for period of 30 seconds.

POSSIBLE CAUSES

Possible Causes
RELATED TIPM DTC's PRESENT
RELATED CHARGING SYSTEM DTC's PRESENT
(A417) FUSED B(+) CIRCUIT OPEN
(F921) FUSED IGNITION RUN CONTROL OUTPUT CIRCUIT OPEN
(Z911) GROUND CIRCUIT OPEN
A/C HEATER CONTROL

Always perform the HVAC Pre-Diagnostic Troubleshooting procedure before proceeding. Refer to HVAC PRE-DIAGNOSTIC TROUBLESHOOTING PROCEDURE.

DIAGNOSTIC TEST

1. **CHECK FOR TIPM DTC's**
    1. Ignition on, engine not running.
    2. With the scan tool, read DTC's.

    Are there any Totally Integrated Power Module (TIPM) DTC's present?

    Yes

    - Refer to **TIPM - DIAGNOSIS AND TESTING** and perform the appropriate diagnostic procedure.

    No

    - Go To 2.
2. **CHECK FOR CHARGING SYSTEM DTC's**
    1. With the scan tool, read DTC's.

Are there any Powertrain Control Module (PCM) charging system DTC's present?

Yes

- Refer to **5.7L - DIAGNOSTIC CODE INDEX - 3500 CAB & CHASSIS** or **6.7L - DIAGNOSTIC CODE INDEX - 3500 CAB & CHASSIS, 4500 & 5500** and perform the appropriate diagnostic procedure.

No

- Go To 3.

3. **CHECK IF THE DTC IS ACTIVE**
   1. With the scan tool, read HVAC DTC's.

      Is this DTC active?

      Yes

      - Go To 4.

      No

      - Go To 7.

4. **CHECK THE (A417) FUSED B(+) CIRCUIT FOR AN OPEN**

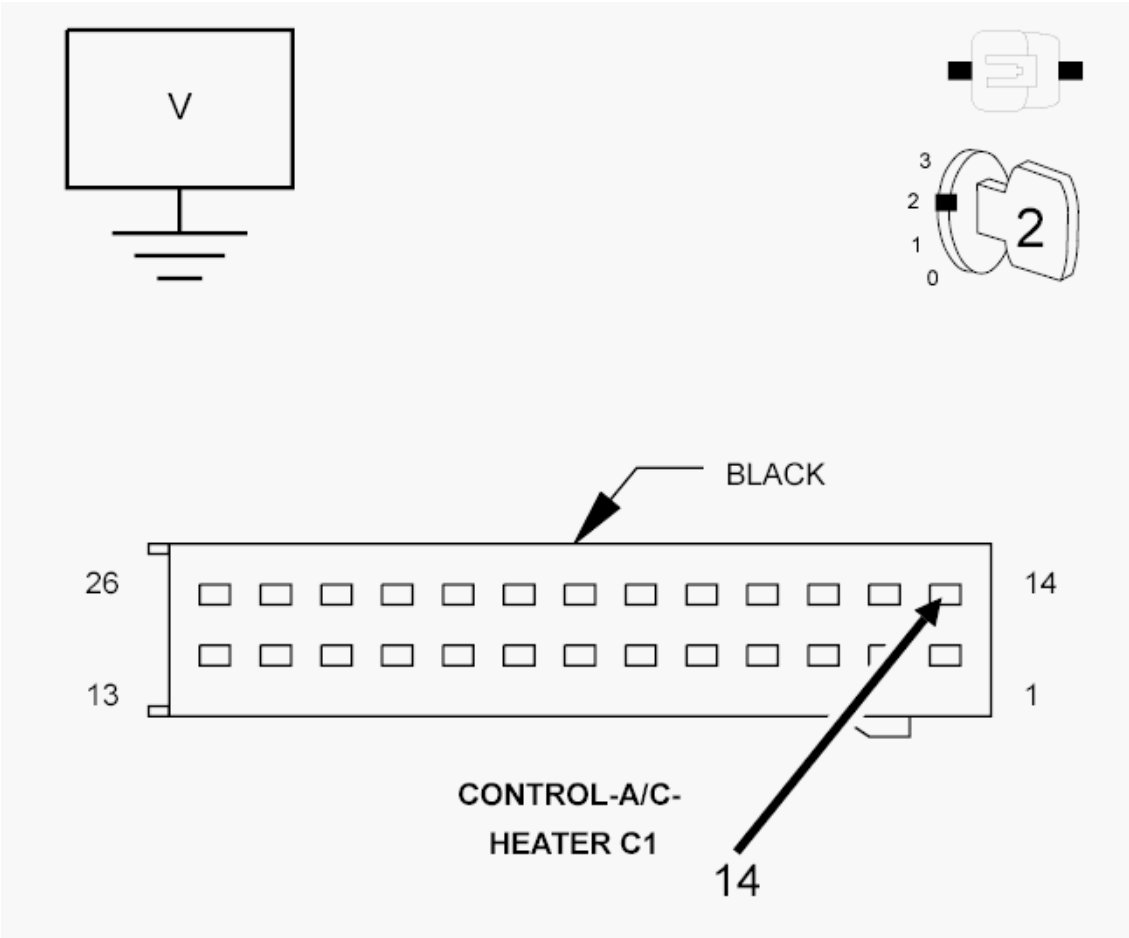

Fig. 43: Checking Fused B(+) Circuit For An Open
Courtesy of CHRYSLER GROUP, LLC

1. Ignition on, engine not running.
2. While back probing, measure the voltage of the (A417) Fused B(+) circuit in the A/C Heater Control harness connector.

   Is the voltage below 9.0 volts?

   Yes

   - Repair the (F921) Fused Ignition Run Control Output circuit for an open or high resistance.
   - Perform the HVAC VERIFICATION TEST. Refer to **HVAC VERIFICATION TEST**.

   No

   - Go To 5.

5. **CHECK (F921) FUSED IGNITION RUN CONTROL OUTPUT CIRCUIT FOR AN OPEN**

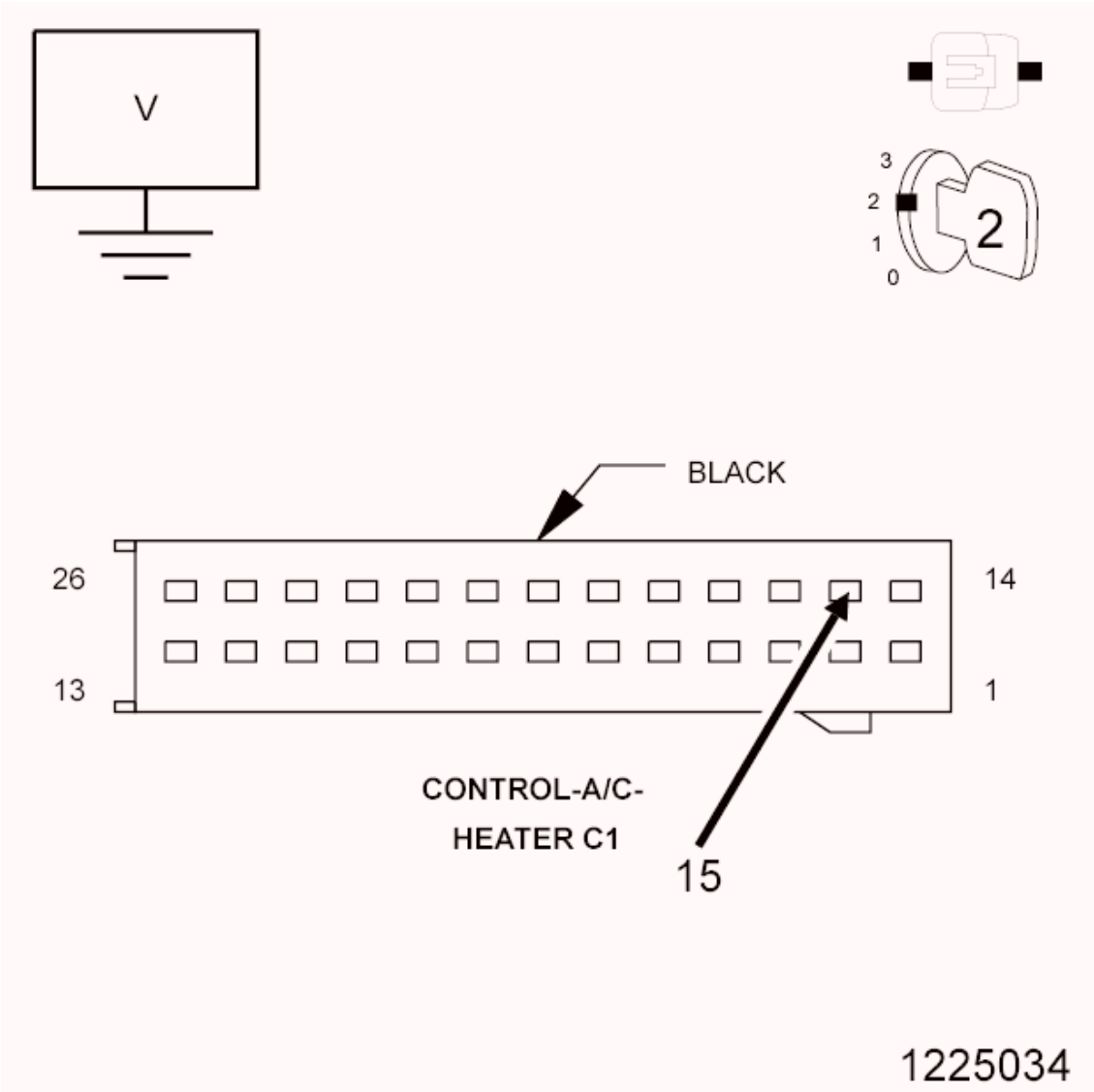

Fig. 44: Checking Fused Ignition Run Control Output Circuit For An Open
Courtesy of CHRYSLER GROUP, LLC

1. Ignition on, engine not running.
2. While back probing, measure the voltage of the (F921) Fused Ignition Run Control Output circuit in the A/C Heater Control harness connector.

   Is the voltage below 9.0 volts?

   Yes

   - Repair the (F921) Fused Ignition Run Control Output circuit for an open or high resistance.
   - Perform the HVAC VERIFICATION TEST. Refer to **HVAC VERIFICATION TEST**.

   No

- Go To 6.

6. **CHECK THE (Z911) GROUND CIRCUIT FOR AN OPEN**

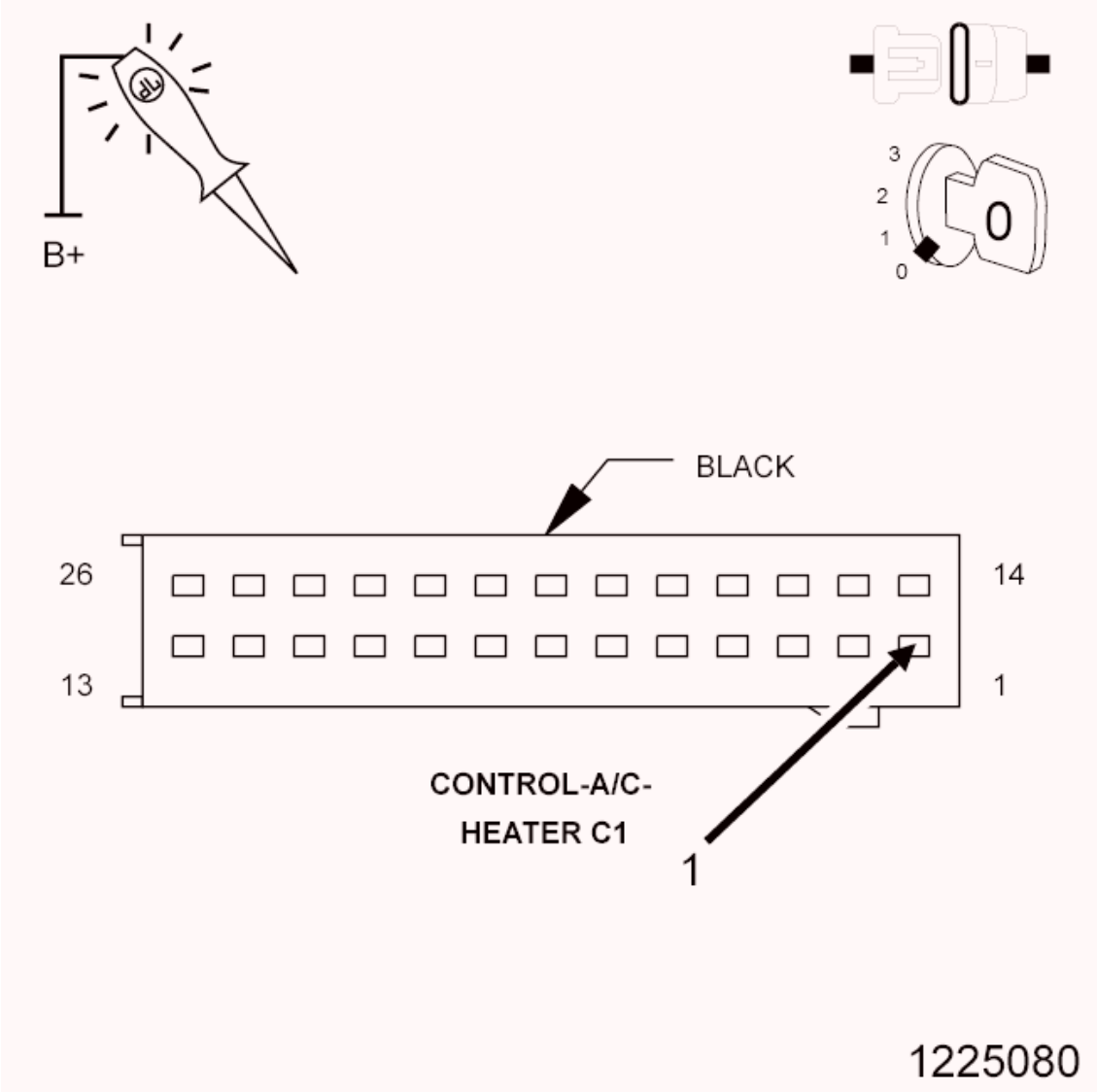

Fig. 45: Checking Ground Circuit For An Open
Courtesy of CHRYSLER GROUP, LLC

1. Turn the ignition off to the lock position.
2. Disconnect the A/C Heater Control harness connector.
3. Using a 12-volt test light connected to 12-volts, check the (Z911) Ground circuit.

NOTE: **The test light must illuminate brightly. Compare the brightness to that of a direct connection to the battery.**

Does the test light illuminate brightly?

Yes

- Replace and program the A/C Heater Control in accordance with the Service Information.
- Perform the HVAC VERIFICATION TEST. Refer to **HVAC VERIFICATION TEST**.

No

- Repair the (Z911) Ground circuit for an open.
- Perform the HVAC VERIFICATION TEST. Refer to **HVAC VERIFICATION TEST**.

7. **CHECK THE WIRING AND CONNECTORS**
    1. The conditions necessary to set the DTC are not present at this time.
    2. Using the schematics as a guide, inspect the wiring and connectors specific to this circuit.
    3. Check for an intermittent condition by inspecting the related wiring harness for chafed, pierced, pinched, partially broken wires.
    4. Check the connectors for broken, bent, pushed out, spread, corroded, or contaminated terminals.
    5. Wiggle the wiring and connectors while checking for shorted and open circuits.
    6. With the scan tool, check the Environmental Data to help identify the conditions in which the DTC was set.

    Were there any problems found?

    Yes

    - Repair as necessary.
    - Perform the HVAC VERIFICATION TEST. Refer to **HVAC VERIFICATION TEST**.

    No

    - Test complete.

B210E-85-BATTERY VOLTAGE HIGH - SIGNAL ABOVE ALLOWABLE RANGE

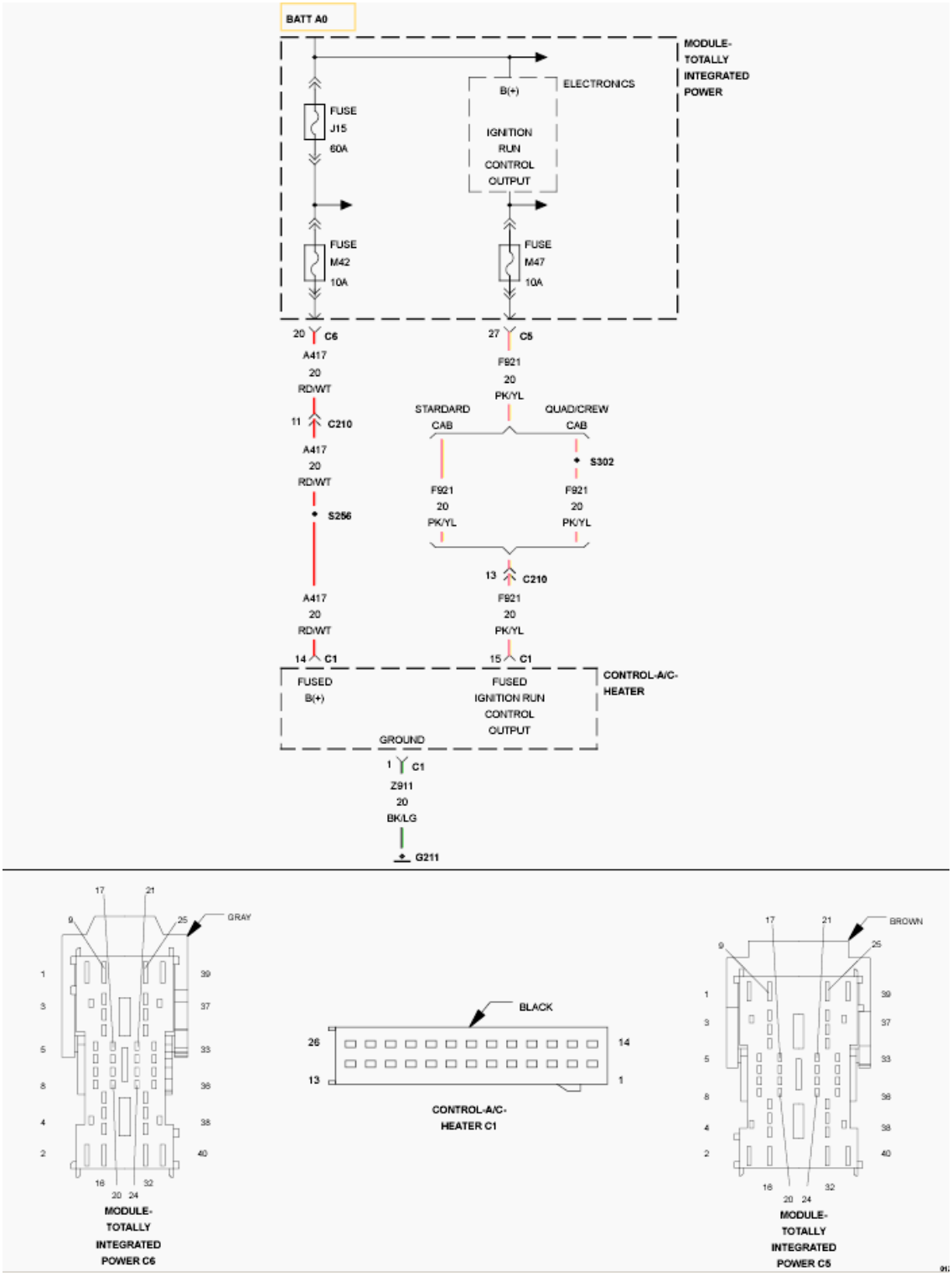

Fig. 46: HVAC Control Module Power Supply Wiring Diagram
Courtesy of CHRYSLER GROUP, LLC

For a complete wiring diagram, **refer to the Wiring Information** .

THEORY OF OPERATION

The A/C Heater Control constantly monitors battery and ignition voltage as well as battery voltage derived from BUS communication to ensure proper operation. If the voltage to the controller is out of range it could cause damage to the controller or its respective components. If the voltage of either circuit drops below or rises above a predetermined calibration a DTC will set.

WHEN MONITORED:

With the ignition on.

SET CONDITION:

If the controller battery voltage is higher than 17.0 volts for period of 30 seconds.

POSSIBLE CAUSES

Possible Causes
RELATED TIPM DTC's PRESENT
RELATED CHARGING SYSTEM DTC's PRESENT
(F921) FUSED IGNITION RUN CONTROL OUTPUT CIRCUIT SHORT TO VOLTAGE
A/C HEATER CONTROL

Always perform the HVAC Pre-Diagnostic Troubleshooting procedure before proceeding. Refer to HVAC PRE-DIAGNOSTIC TROUBLESHOOTING PROCEDURE.

DIAGNOSTIC TEST

1. **CHECK FOR TIPM DTC's**
    1. Ignition on, engine not running.
    2. With the scan tool, read DTC's.

       Are there any Totally Integrated Power Module (TIPM) DTC's present?

       Yes

       - Refer to **TIPM - DIAGNOSIS AND TESTING** and perform the appropriate diagnostic procedure.

       No

       - Go To 2.
2. **CHECK FOR CHARGING SYSTEM DTC's**
    1. With the scan tool, read DTC's.

       Are there any Powertrain Control Module (PCM) charging system DTC's present?

Yes

- Refer to **5.7L - DIAGNOSTIC CODE INDEX - 3500 CAB & CHASSIS** or **6.7L - DIAGNOSTIC CODE INDEX - 3500 CAB & CHASSIS, 4500 & 5500** and perform the appropriate diagnostic procedure.

No

- Go To 3.

3. **CHECK IF THE DTC IS ACTIVE**
   1. With the scan tool, read HVAC DTC's.

      NOTE: It can take up to 30 seconds or more for this DTC to mature.

      Is this DTC active?

      Yes

      - Go To 4.

      No

      - Go To 6.

4. **CHECK (F921) FUSED IGNITION RUN CONTROL OUTPUT CIRCUIT**

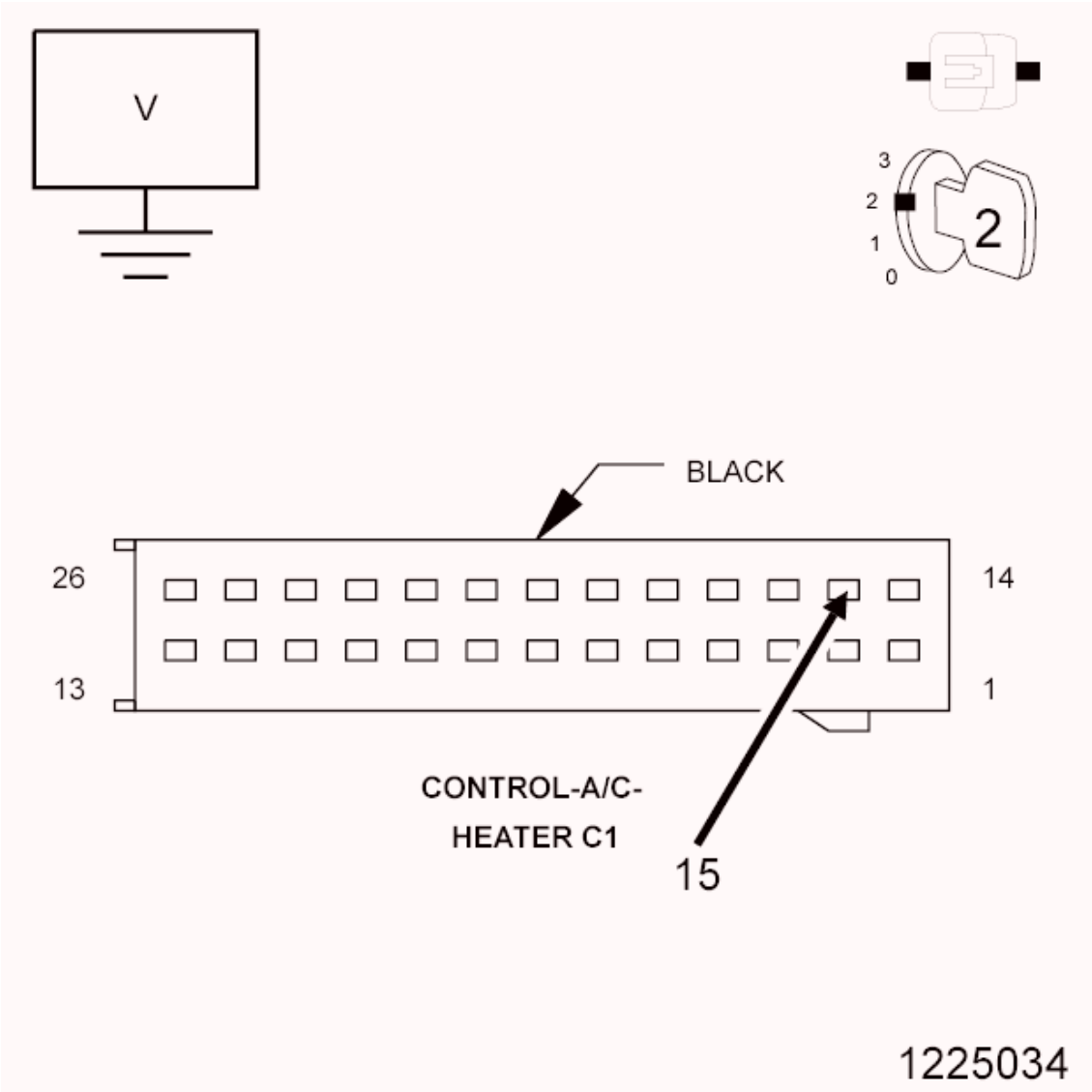

Fig. 47: Checking Fused Ignition Run Control Output Circuit For An Open
Courtesy of CHRYSLER GROUP, LLC

1. Ignition on, engine not running.
2. While back probing, measure the voltage of the (F921) Fused Ignition Run Control Output circuit in the A/C Heater Control harness connector.
3. With the scan tool, read HVAC voltage.

   Does the voltage between the measured voltage and the voltage on the scan tool match ± 0.5 of a volt?

   Yes

   - Replace and program the A/C Heater Control in accordance with the Service Information.
   - Perform the HVAC VERIFICATION TEST. Refer to **HVAC VERIFICATION TEST**.

No

- Go To 5.

5. **CHECK (F921) FUSED IGNITION RUN CONTROL OUTPUT CIRCUIT FOR A SHORT TO VOLTAGE**

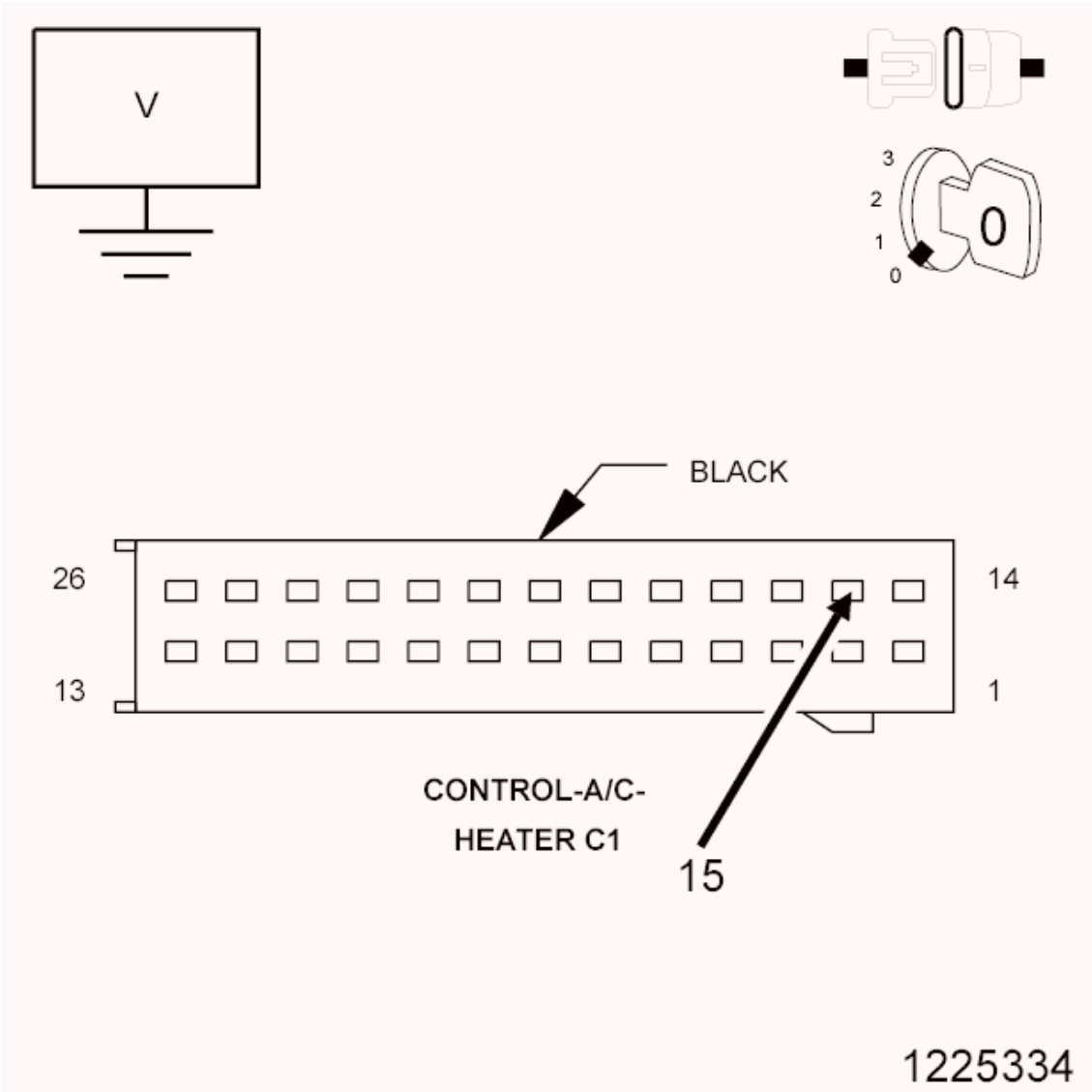

Fig. 48: Checking Fused Ignition Run Control Output Circuit For A Short To Voltage
Courtesy of CHRYSLER GROUP, LLC

1. Turn the ignition off to the lock position.
2. Disconnect the A/C Heater Control harness connector.
3. Measure the voltage of the (F921) Fused Ignition Run Control Output circuit in the A/C Heater Control harness connector.

   Is there any voltage present?

Yes

- Repair the (F921) Fused Ignition Run Control Output circuit for a short to voltage.
- Perform the HVAC VERIFICATION TEST. Refer to **HVAC VERIFICATION TEST**.

No

- Replace and program the A/C Heater Control in accordance with the Service Information.
- Perform the HVAC VERIFICATION TEST. Refer to **HVAC VERIFICATION TEST**.

6. **CHECK THE WIRING AND CONNECTORS**
   1. The conditions necessary to set the DTC are not present at this time.
   2. With the scan tool, check the Environmental Data to help identify the conditions in which the DTC was set.
   3. Using the schematics as a guide, inspect the wiring and connectors specific to this circuit.
   4. Check for an intermittent condition by inspecting the related wiring harness for chafed, pierced, pinched, partially broken wires.
   5. Check the connectors for broken, bent, pushed out, spread, corroded, or contaminated terminals.
   6. Wiggle the wiring and connectors while checking for shorted and open circuits.

   Were there any problems found?

   Yes

   - Repair as necessary.
   - Perform the HVAC VERIFICATION TEST. Refer to **HVAC VERIFICATION TEST**.

   No

   - Test complete.

B2214-00-(HVAC) CLIMATE CONTROL INTERNAL

For a complete wiring diagram **refer to the Wiring Information** .

WHEN MONITORED:

With the ignition on.

SET CONDITION:

If the A/C Heater Control has an internal fault. This DTC has a maturing time of five seconds and a de-maturing time of 10 seconds. If the DTC's status changes from active to stored it will stay in memory for 100 ignition cycles.

POSSIBLE CAUSES

Possible Causes
A/C HEATER CONTROL

Always perform the HVAC Pre-Diagnostic Troubleshooting procedure before proceeding. Refer to HVAC PRE-DIAGNOSTIC TROUBLESHOOTING PROCEDURE.

DIAGNOSTIC TEST

1. **CHECK THE A/C HEATER CONTROL**

   Repair

   - Check for any controller software updates. If an update is available, reprogram the controller with the latest software. If no software updates are available, replace and program the A/C Heater Control in accordance with the Service Information.
   - Perform the HVAC VERIFICATION TEST. Refer to **HVAC VERIFICATION TEST**.

B222A-00-VEHICLE LINE MISMATCH

For a complete wiring diagram, **refer to appropriate SYSTEM WIRING DIAGRAMS article** .

THEORY OF OPERATION

The A/C Heater Controller checks for vehicle configuration using communication over the BUS. If the stored configuration does not match the configuration stored in the controller this DTC will set.

WHEN MONITORED:

With the ignition on.

SET CONDITION:

If the stored configuration does not match the configuration stored in the controller.

POSSIBLE CAUSES

Possible Causes
VEHICLE CONFIGURATION NOT STORED IN THE TOTALLY INTEGRATED POWER MODULE (TIPM)
CONTROL MODULE INSTALLED IN INCORRECT VEHICLE
A/C HEATER CONTROL

Always perform the HVAC Pre-Diagnostic Troubleshooting procedure before proceeding. Refer to HVAC PRE-DIAGNOSTIC TROUBLESHOOTING PROCEDURE.

DIAGNOSTIC TEST

1. **CHECK THE VEHICLE CONFIGURATION**

NOTE: **The DTC must be active and no BUS communication DTC's present before performing this test. If BUS communication DTC's are present, perform there respective test first. If the DTC is stored, erase the DTC and cycle the ignition. If the DTC resets and changes to active, then proceed.**

1. With the scan tool, check the vehicle configuration stored in the Totally Integrated Power Module (TIPM).
2. With the scan tool, check the vehicle configuration stored in the A/C Heater Control (HVAC).

Pick the answer that best describes your findings:

TIPM has wrong or no vehicle configuration

- With the scan tool, program the proper vehicle configuration in the TIPM.
- Perform the HVAC VERIFICATION TEST. Refer to **HVAC VERIFICATION TEST**.

HVAC has wrong vehicle configuration but TIPM has correct configuration

- Replace the A/C Heater Control in accordance with the Service Information.
- Perform the HVAC VERIFICATION TEST. Refer to **HVAC VERIFICATION TEST**.

HVAC and TIPM have proper calibration and the DTC is active in the HVAC

- Check if other modules such as the Powertrain Control Module (PCM) have the wrong configuration stored in the controller and reprogram or replace as necessary. If all other modules show the proper configuration, replace the A/C Heater Control in accordance with the Service Information.
- Perform the HVAC VERIFICATION TEST. Refer to **HVAC VERIFICATION TEST**.

U0010-00-CAN INTERIOR BUS

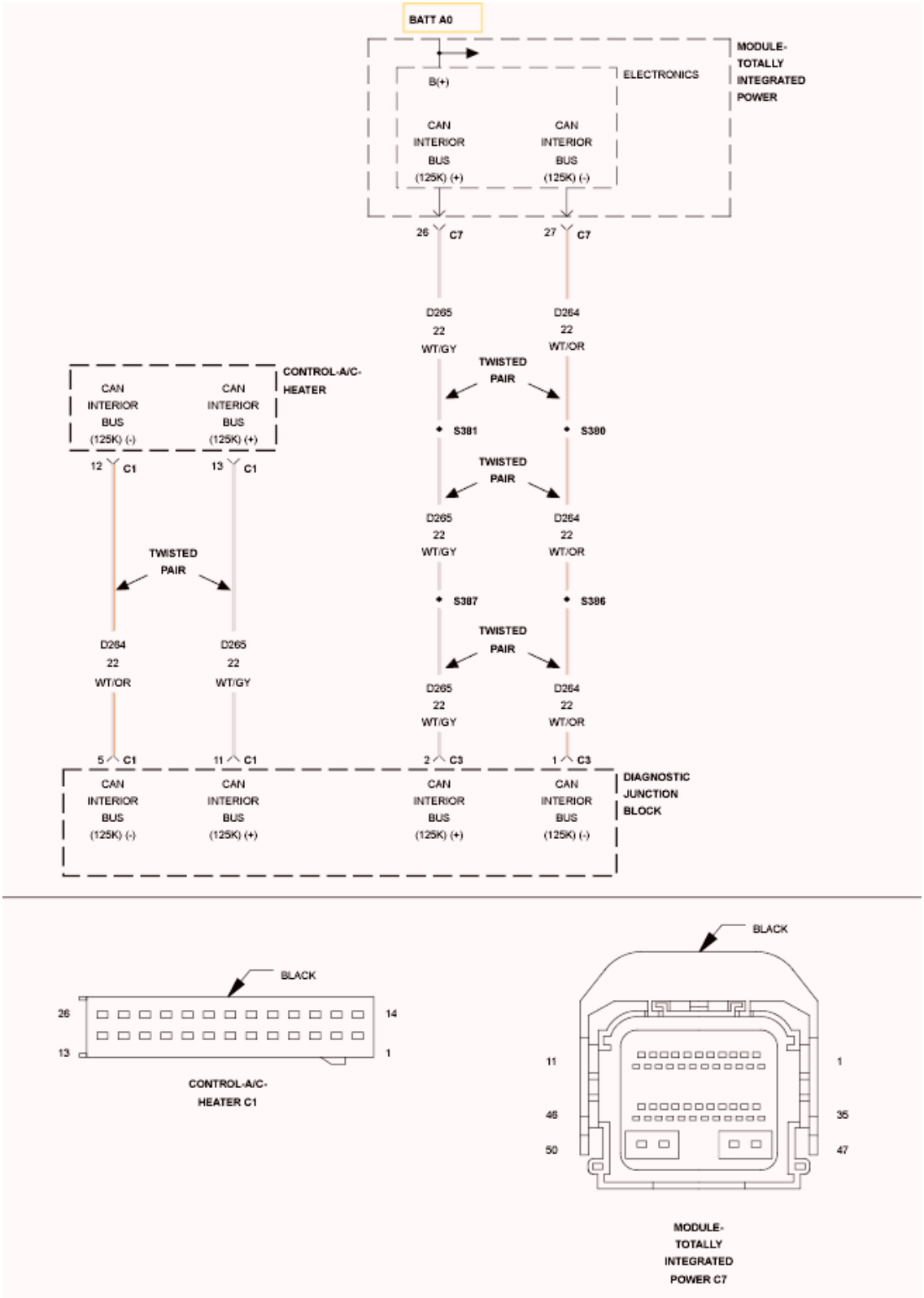

Fig. 49: CAN Interior Bus Circuit Wiring Diagram
Courtesy of CHRYSLER GROUP, LLC

For a complete wiring diagram, **refer to the Wiring Information** .

WHEN MONITORED:

Continuously with the ignition on.

SET CONDITION:

If the CAN Interior Bus (+) or CAN Interior Bus (-) circuit is open, shorted to voltage, or shorted to ground.

POSSIBLE CAUSES

Possible Causes
ACTIVE CAN BUS DTC IN THE TOTALLY INTEGRATED POWER MODULE
(D265) CAN C INTERIOR BUS (125K) (+) CIRCUIT OPEN
(D264) CAN C INTERIOR BUS (125K) (-) CIRCUIT OPEN
(D265) CAN C INTERIOR BUS (125K) (+) CIRCUIT SHORTED TO GROUND
(D264) CAN C INTERIOR BUS (125K) (-) CIRCUIT SHORTED TO GROUND
A/C HEATER CONTROL

Always perform the HVAC Pre-Diagnostic Troubleshooting procedure before proceeding. Refer to HVAC PRE-DIAGNOSTIC TROUBLESHOOTING PROCEDURE.

DIAGNOSTIC TEST

1. **VERIFY THE DTC IS ACTIVE**
    1. Turn the ignition on.
    2. With the scan tool, read HVAC DTC's.

       Does the scan tool display this DTC as active?

       Yes

       - Go To 2.

       No

       - Go To 7.
2. **CHECK FOR ACTIVE CAN BUS RELATED DTC's IN THE TOTALLY INTEGRATED POWER MODULE (TIPM)**
    1. With the scan tool, read the Totally Integrated Power Module (TIPM) DTC's.

       Does the scan tool display any active CAN BUS related DTC's?

       Yes

- Refer to **TIPM - DIAGNOSIS AND TESTING** and perform the appropriate diagnostic procedure.

No

- Go To 3.

3. **CHECK (D265) CAN INTERIOR BUS (+) CIRCUIT FOR AN OPEN**

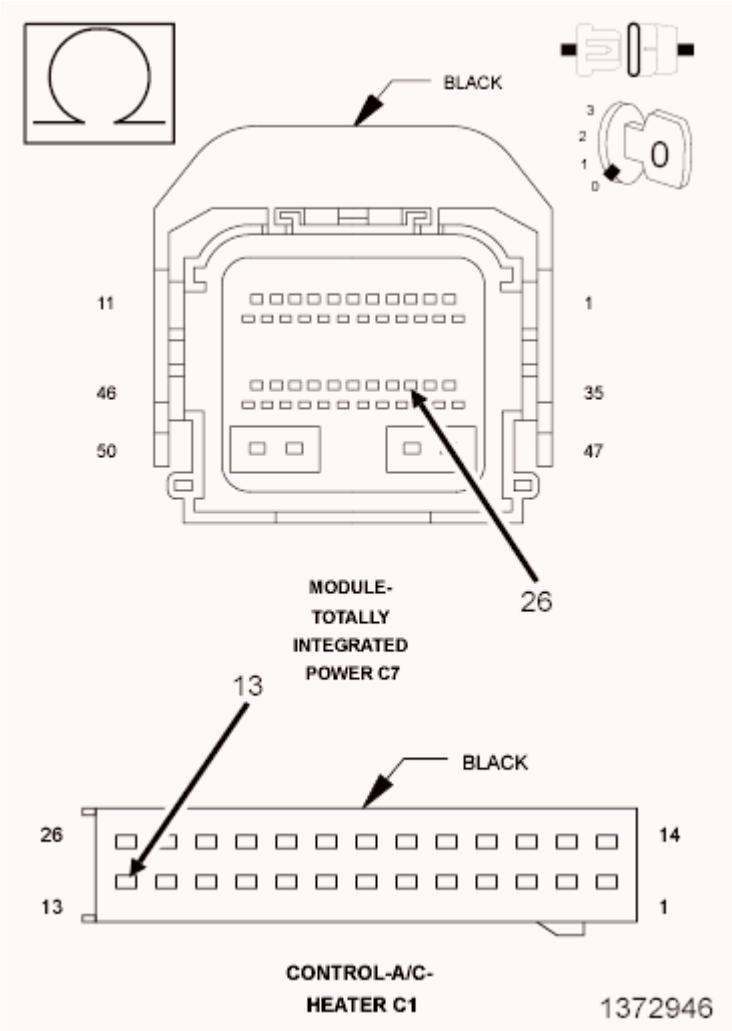

Fig. 50: Checking Can Interior Bus (+) Circuit For An Open
Courtesy of CHRYSLER GROUP, LLC

1. Turn the ignition off to the lock position.
2. Disconnect the negative battery cable.
3. Disconnect the A/C Heater Control C1 harness connector.
4. Disconnect the Totally Integrated Power Module (TIPM) C7 harness connector.
5. Measure the resistance of the (D265) CAN Interior Bus (125K) (+) circuit between the Totally Integrated Power Module (TIPM) C7 harness connector and the A/C Heater Control C1 harness

connector.

Is the resistance below 1.0 Ohm?

Yes

- Go To 4.

No

- Repair the (D265) CAN Interior Bus (125K) (+) circuit for an open.
- Perform the HVAC VERIFICATION TEST. Refer to **HVAC VERIFICATION TEST**.

4. **CHECK (D264) CAN INTERIOR BUS (-) CIRCUIT FOR AN OPEN**

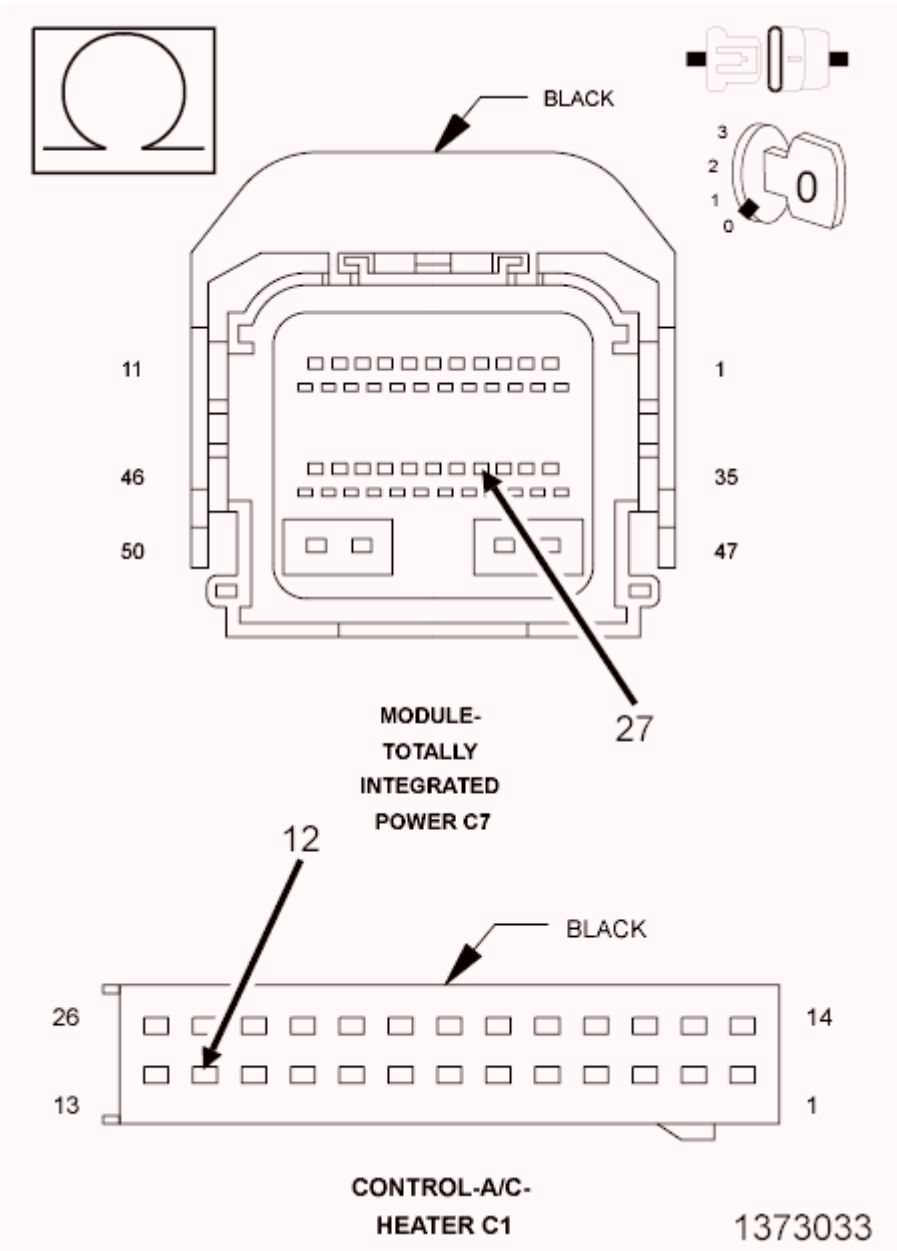

Fig. 51: Checking Can Interior Bus (-) Circuit For An Open
Courtesy of CHRYSLER GROUP, LLC

1. Measure the resistance of the (D264) CAN Interior Bus (125K) (-) circuit between the Totally Integrated Power Module (TIPM) C7 connector and the A/C Heater Control C1 harness connector.

   Is the resistance below 1.0 Ohm?

   Yes

   - Go To 5.

   No

- Repair the (D264) CAN Interior Bus (125K) (-) circuit for an open.
- Perform the HVAC VERIFICATION TEST. Refer to **HVAC VERIFICATION TEST**.

5. **CHECK (D265) CAN C INTERIOR BUS (125K) (+) CIRCUIT FOR A SHORT TO GROUND**

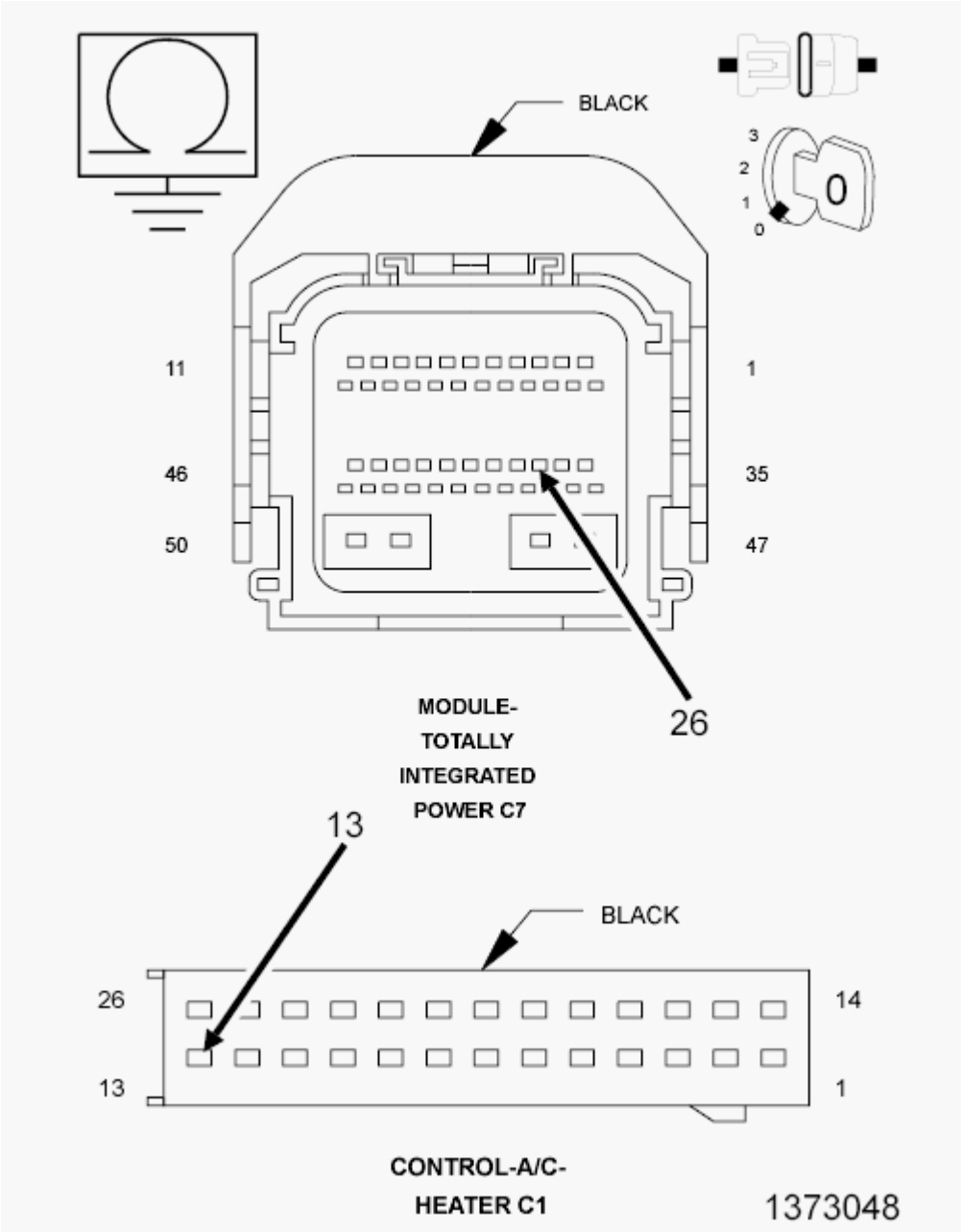

Fig. 52: Checking Can C Interior Bus (125K) (+) Circuit For A Short To Ground
Courtesy of CHRYSLER GROUP, LLC

1. Measure the resistance between ground and the (D265) CAN C Interior Bus (125K) (+) circuit in the A/C Heater Control C1 harness connector.

   Is the resistance above 100k Ohms?

Yes

- Go To 6.

No

- Repair the (D265) CAN C Interior Bus (125K) (+) circuit for a short to ground.
- Perform the HVAC VERIFICATION TEST. Refer to **HVAC VERIFICATION TEST**.

6. **CHECK (D264) CAN C INTERIOR BUS (-) CIRCUIT FOR A SHORT TO GROUND**

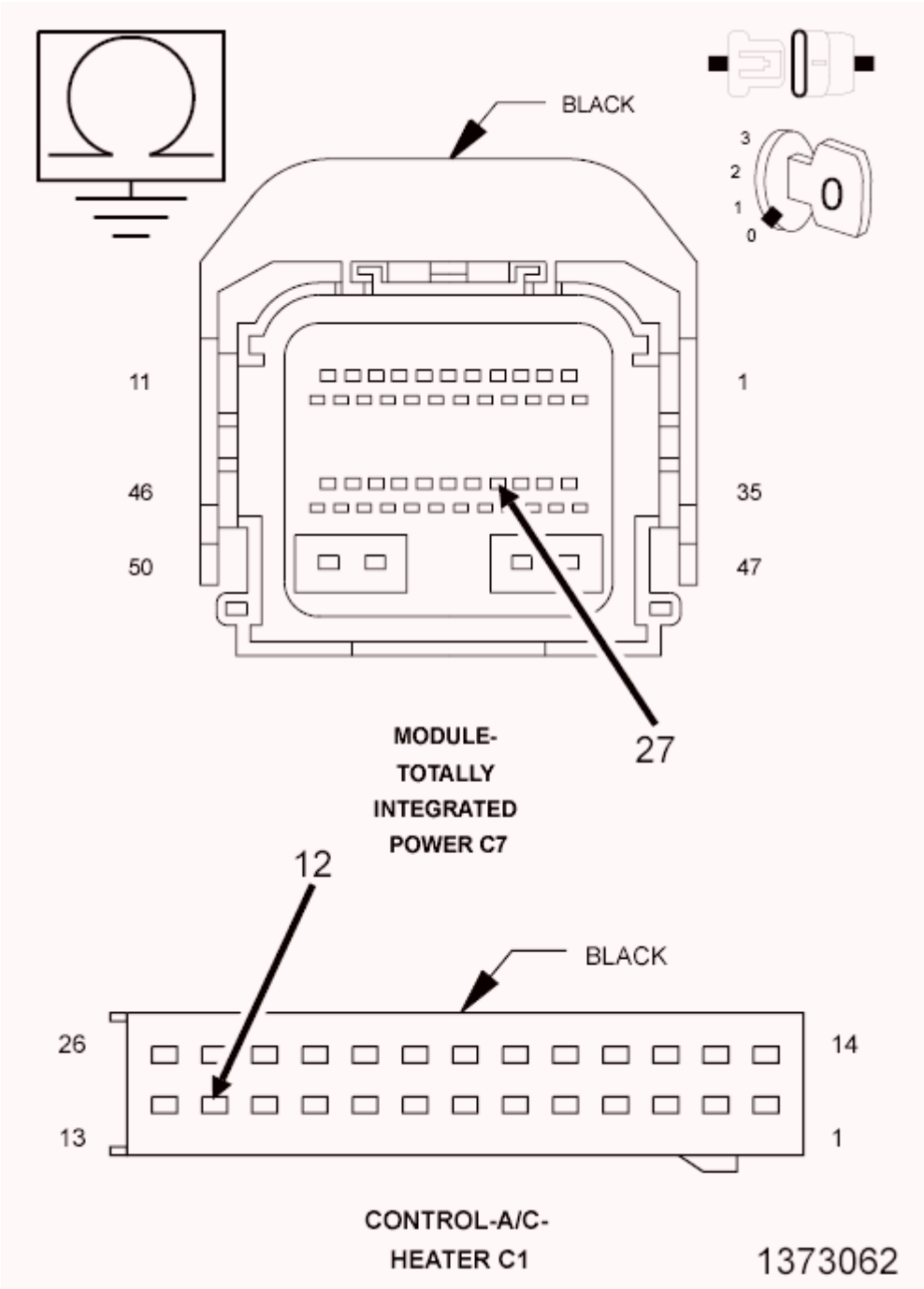

Fig. 53: Checking Can C Interior Bus (-) Circuit For A Short To Ground
Courtesy of CHRYSLER GROUP, LLC

1. Measure the resistance between ground and the (D264) CAN C Interior Bus (125K) (-) circuit.

   Is the resistance above 100k Ohms?

   Yes

- Replace the A/C Heater Control in accordance with the Service Information.
- Perform the HVAC VERIFICATION TEST. Refer to **HVAC VERIFICATION TEST**.

No

- Repair the (D264) CAN C Interior Bus (125K) (-) circuit for a short to ground.
- Perform the HVAC VERIFICATION TEST. Refer to **HVAC VERIFICATION TEST**.

7. **CHECK THE WIRING AND CONNECTORS**
   1. The conditions necessary to set the DTC are not present at this time.
   2. Using the schematics as a guide, inspect the wiring and connectors specific to this circuit.
   3. Check for an intermittent condition by inspecting the related wiring harness for chafed, pierced, pinched, partially broken wires.
   4. Check the connectors for broken, bent, pushed out, spread, corroded, or contaminated terminals.
   5. Wiggle the wiring and connectors while checking for shorted and open circuits.
   6. With the scan tool, check the Environmental Data to help identify the conditions in which the DTC was set.

   Were there any problems found?

   Yes

   - Repair as necessary.
   - Perform the HVAC VERIFICATION TEST. Refer to **HVAC VERIFICATION TEST**.

   No

   - Test complete.

U0141-LOST COMMUNICATION WITH IPM (FCM/TIPM)

For a complete wiring diagram, **refer to appropriate SYSTEM WIRING DIAGRAMS article** .

WHEN MONITORED:

Continuously when the ignition is on.

The battery voltage between 10.0 and 16.0 Volts.

Ignition Off Draw (IOD) fuse installed.

Totally Integrated Power Module (TIPM) is configured correctly.

SET CONDITION:

Bus messages not received from the Totally Integrated Power Module (TIPM) for approximately two to five

seconds.

POSSIBLE CAUSES

Possible Causes
CAN BUS CIRCUITS OPEN OR SHORTED
DTC's RELATED TO BATTERY VOLTAGE, IGNITION, OR VIN MESSAGES
TOTALLY INTEGRATED POWER MODULE POWER AND GROUND
TIPM NOT CONFIGURED CORRECTLY
TOTALLY INTEGRATED POWER MODULE (TIPM)
MODULE THAT SET THIS DTC

DIAGNOSTIC TEST

1. **VERIFY DTC IS ACTIVE**

   NOTE: Make sure the IOD fuse is installed and the battery is fully charged before proceeding.

   1. Turn the ignition on.
   2. With the scan tool, read active DTC's.

      Is this DTC active?

      Yes

      - **Refer to U0141-LOST COMMUNICATION WITH IPM (FCM/TIPM)** and perform the diagnostic procedure.

      No

      - **Refer to STORED LOST COMMUNICATION DTC's** and perform the diagnostic procedure.

U0155-LOST COMMUNICATION WITH CLUSTER/CCN

For a complete wiring diagram, **refer to appropriate SYSTEM WIRING DIAGRAMS article** .

WHEN MONITORED:

Continuously when the ignition is on.

The battery voltage is between 10 and 16 volts.

Ignition Off Draw (IOD) fuse installed.

Totally Integrated Power Module (TIPM) is configured correctly.

SET CONDITION:

Bus messages not received from the Instrument Cluster (CCN) for approximately two to five seconds.

POSSIBLE CAUSES

Possible Causes
CAN BUS CIRCUITS OPEN OR SHORTED
DTC's RELATED TO BATTERY VOLTAGE, IGNITION, OR VIN MESSAGES
INSTRUMENT CLUSTER POWER AND GROUND
TIPM NOT CONFIGURED CORRECTLY
INSTRUMENT CLUSTER (CCN)
MODULE THAT SET THIS DTC

DIAGNOSTIC TEST

1. **VERIFY THE DIAGNOSTIC TROUBLE CODE (DTC) IS ACTIVE**

   NOTE: Make sure the IOD fuse is installed and the battery is fully charged before proceeding.

   1. Turn the ignition on.
   2. With the scan tool, read active DTC's.

      Is this DTC active?

      Yes

      - **Refer to U0155-LOST COMMUNICATION WITH CLUSTER/CCN** and perform the diagnostic procedure.

      No

      - **Refer to STORED LOST COMMUNICATION DTC's** and perform the diagnostic procedure.

STANDARD PROCEDURE

STANDARD PROCEDURE - HVAC SYSTEM TEST

For a complete wiring diagram, **refer to appropriate SYSTEM WIRING DIAGRAMS article** .

THEORY OF OPERATION

The HVAC System Test provides a starting point in the diagnostic process by identifying the appropriate diagnostic procedure or system test to perform when diagnosing a given symptom, condition, or Diagnostic Trouble Code (DTC). It also provides a means for testing the entire HVAC system by utilizing the A/C Heater Control's On-Board System Tests. The HVAC System Tests can also assist in diagnosing stored DTC's.

DIAGNOSTIC TEST

1. **HVAC SYSTEM TEST**

   NOTE: Diagnose and repair all active DTC's before diagnosing and repairing stored DTC's. If active DTC's are present, refer to DIAGNOSIS AND TESTING and perform the appropriate diagnostic procedure.

   Make a selection based on the symptom, condition, or DTC that you want to diagnose.

   Scan Tool Indicates HVAC Not Active On Bus

   - Refer to **COMMUNICATION - DIAGNOSIS AND TESTING** and perform the No Response from HVAC diagnostic procedure.

   Blower Motor Inoperative

   - Refer to **HVAC NON DTC - DIAGNOSIS AND TESTING** for Blower Motor diagnostic procedures.

   Actuator Calibration Test

   - Go To 4.

   A/C System Performance Test

   - Go To 2.
2. **A/C COOLDOWN TEST**

   The following are prerequisites of the A/C Cooldown Test. Verify that the:

   - Refrigerant system has an adequate charge. Check and repair as necessary before proceeding in accordance with the Service Information. Refer to **HVAC SERVICE INFORMATION - DIAGNOSIS AND TESTING** .
   - Blower motor operates correctly in all speeds. Diagnose and repair all blower related faults before proceeding.
   - Work area ambient temperature is above 16° C (60° F) before proceeding. Move the vehicle to a warmer work area if necessary.
   - Evaporator temperature is above 13° C (55° F) before proceeding.
   - A/C compressor is not running. If the compressor is running, turn the A/C off and allow the evaporator to warm up before proceeding.

NOTE: **Running the AC Cooldown test will cause the A/C status indicator to flash. One or more status messages will display on the scan tool after running the Cooldown Test. These messages will clear after paging back out of this test function. Therefore, it is important to note all messages before doing so.**

1. Start the engine.
2. Turn the Blower control to the high speed position.
3. With the scan tool in HVAC, select System Tests and then select Cooldown test. Allow the test to run to completion.

   Does the scan tool display a status message that indicates a fault has occurred?

   Yes

   - Refer to **DIAGNOSIS AND TESTING** and perform the appropriate diagnostic procedure.

   No

   - Go To 3.

3. **MODE SWITCH AND DOOR ACTUATOR CIRCUIT TEST**

NOTE: **If at anytime a DTC becomes active during this test, proceed to the conclusion question. If multiple DTC's are active, diagnose those that relate to a short circuit first.**

1. Start the engine and turn the Blower control to the low speed position.
2. Set the Blend control (single-zone) or Driver and Passenger Blend control (dual-zone) to the full cold position.
3. Monitor the scan tool for active HVAC DTC's while performing the following test steps.
   - If equipped, press the A/C mode switch on, wait 30 seconds, and then press it off.
   - If equipped, press the Recirculation mode switch on, wait 30 seconds, and then press it off.
   - If equipped, press the EBL mode switch on, wait 30 seconds, and then press it off.
   - Move the Blend control (single-zone) or Driver Blend control (dual-zone) from full cold to full hot, wait 30 seconds, and then move it back to full cold.
   - If equipped, move the Passenger Blend control from full cold to full hot, wait 30 seconds, and then moved it back to full cold.
   - Turn the Mode select control to the defrost position, wait 30 seconds, and then turn it to the panel position (dual-zone) or panel / recirculation position (single-zone). Wait 30 seconds before proceeding.

   Does the scan tool display any active DTC's?

   Yes

- Refer to **DIAGNOSIS AND TESTING** and perform the appropriate diagnostic procedure.

No

- Go To 4.

4. **ACTUATOR CALIBRATION TEST**
   1. Ignition on, engine not running.
   2. With the scan tool, select Actuator Calibration Test. When the test is complete, read HVAC DTC's.

      Does the scan tool display any DTC's?

      Yes

      - Refer to **DIAGNOSIS AND TESTING** and perform the appropriate diagnostic procedure.

      No

      - Test Complete.

HVAC PRE-DIAGNOSTIC TROUBLESHOOTING PROCEDURE

For a complete wiring diagram, **refer to appropriate SYSTEM WIRING DIAGRAMS article** .

Perform the following steps prior to any diagnostic procedure(s).

- Testing should only be performed with the battery fully charged to avoid false diagnosis.
- With the scan tool, read Powertrain Control Module (PCM) DTC's. If PCM DTC's are present, refer to **5.7L - DIAGNOSTIC CODE INDEX - 3500 CAB & CHASSIS** or **6.7L - DIAGNOSTIC CODE INDEX - 3500 CAB & CHASSIS, 4500 & 5500** and perform the appropriate diagnostic procedure.
- With the scan tool, read Totally Integrated Power Module (TIPM) DTC's. If TIPM DTC's are present, and perform the appropriate diagnostic procedure(s) first before proceeding. Refer to **TIPM - DIAGNOSIS AND TESTING** .
- With the scan tool, read HVAC DTC's. Record all Stored, Active, and Pending DTC information.
- With the scan tool, read the Environmental Data. Use this data to identify the conditions in which the DTC was set.
- Refer to the When Monitored and Set Conditions for this DTC. DTC's can set at ignition on, at start up, or operating under specific conditions.
- Using the wiring diagram as a guide, inspect the wiring and connectors related to this circuit and clean/repair as necessary.
- Check for controller software updates. Some conditions can be corrected by upgrading the controller software.

NOTE: **If the controller is updated with new software, with the scan tool, perform a HVAC Actuator Calibration Test.**

-
- Check for Service Information Tune-ups or Service Bulletins for any possible causes that may apply.

DIAGNOSTIC TEST

1. Did any of the above procedures repair the vehicle?

   Yes

   - Testing is complete.
   - Perform the HVAC VERIFICATION TEST. Refer to **HVAC VERIFICATION TEST**.

   No

   - Refer to **DIAGNOSIS AND TESTING** and perform the appropriate diagnostic procedure.

HVAC VERIFICATION TEST

Perform the following procedures to verify that the repair(s) are valid.

1. Make sure that all accessories are turned off.
2. Make sure that the battery is fully charged.
3. Turn the ignition off to the lock position.
4. Disconnect all jumper wires and reconnect all previously disconnected components and connectors.
5. With the scan tool, record and erase all DTC's from ALL modules.
6. Turn the ignition off, remove the scan tool from the DLC (Data Link Connector). Open the door and close the door. Wait a minimum 30 seconds, then turn the ignition on. Reconnect the scan tool.

   NOTE: Disconnecting the scan tool and opening and closing the door will allow the controller to enter into sleep mode.

7. With the scan tool perform the HVAC Actuator Calibration Test.
8. Start and run the engine for two minutes while operating all functions of the system that caused the original concern.
9. With the scan tool, check for DTC's in all modules.

Is the original condition still present or are there any other HVAC DTC's present?

Yes

- Refer to **DIAGNOSIS AND TESTING** and perform the appropriate diagnostic procedure.

No

- Repair is complete.

DIAGNOSTIC CODE INDEX

DIAGNOSTIC CODE INDEX

DTC	Description
B10BB	LEFT HEATED SEAT SWITCH INPUT CIRCUIT STUCK
B10BC	RIGHT HEATED SEAT SWITCH INPUT CIRCUIT STUCK
B114C	LEFT REAR HEATED SEAT SWITCH STUCK
B1151	RIGHT REAR HEATED SEAT SWITCH STUCK
B127A	COMPASS PERFORMANCE
B1285	PARK ASSIST DISABLE SWITCH PERFORMANCE
B1286	COMPASS / TEMP BUTTON PERFORMANCE
B1287	RESET SWITCH PERFORMANCE
B1288	TRIP / TOGGLE SWITCH PERFORMANCE
B1427	REMOTE RADIO SWITCH INPUT CIRCUIT HIGH
B1428	REMOTE RADIO SWITCH INPUT CIRCUIT STUCK
B1502	STEERING WHEEL CONTROL DOWN SWITCH PERFORMANCE
B1503	STEERING WHEEL CONTROL RIGHT SWITCH PERFORMANCE
B1607	HEADLAMP SWITCH INPUT CIRCUIT LOW
B1608	HEADLAMP SWITCH INPUT CIRCUIT HIGH
B160A	PANEL DIMMER INPUT CIRCUIT LOW
B160B	PANEL DIMMER INPUT CIRCUIT HIGH
B1629	CARGO LAMP CONTROL CIRCUIT FOR AN OPEN
B168F	FRONT FOG LAMP SWITCH CIRCUIT STUCK
B169C	CARGO LAMP SWITCH STUCK
B17E3	TURN SIGNAL SWITCH PERFORMANCE
B2301	WIPER MODE SWITCH INPUT CIRCUIT LOW
B2307	WASHER SWITCH INPUT CIRCUIT LOW
B2339	HORN SWITCH STUCK
B238E	HI BEAM SWITCH CIRCUIT LOW
B2390	MIST SWITCH CIRCUIT LOW
B2394	FLASH TO PASS / OPTICAL HORN SWITCH CIRCUIT STUCK
C159C	TIRE PRESSURE LOAD SWITCH STUCK
C2312	TRAC/ESP OFF SWITCH STUCK
P0838	FOUR WHEEL DRIVE (4WD) SWITCH CIRCUIT LOW
P0839	FOUR WHEEL DRIVE (4WD) SWITCH CIRCUIT HIGH
P0853	OVERDRIVE / TOW SWITCH INPUT CIRCUIT STUCK
P0952	AUTOSTICK® INPUT CIRCUIT LOW - DS/DJ/D2
P0952	AUTOSTICK® INPUT CIRCUIT LOW - DD/DP

P0953	AUTOSTICK® INPUT CIRCUIT HIGH - DS/DJ/D2
P0953	AUTOSTICK® INPUT CIRCUIT HIGH - DD/DP
P1103	DC TO AC CONVERTER SWITCH STUCK
U0010	CAN INTERIOR BUS
U0141	LOST COMMUNICATION WITH IPM (FCM/TIPM)
U0159	LOST COMMUNICATION WITH PARKING ASSIST CONTROL MODULE
U0161	LOST COMMUNICATION WITH COMPASS MODULE
U0164	LOST COMMUNICATION WITH HVAC CONTROL MODULE
U0184	LOST COMMUNICATION WITH RADIO
U0197	LOST COMMUNICATION WITH HANDS FREE PHONE MODULE
U0208	LOST COMMUNICATION WITH HEATED SEAT CONTROL MODULE
U0209	LOST COMMUNICATION WITH MEMORY SEAT CONTROL MODULE
U1008	LIN 1 BUS
U1109	LOST COMMUNICATION WITH LIN STEERING WHEEL CONTROLS
U1149	LOST COMMUNICATION WITH MULTI-FUNCTION SWITCH
U1191	LOST COMMUNICATION WITH UPPER SWITCH BANK
U1192	LOST COMMUNICATION WITH LOWER SWITCH BANK

DIAGNOSIS AND TESTING

B10BB-LEFT HEATED SEAT SWITCH INPUT CIRCUIT STUCK

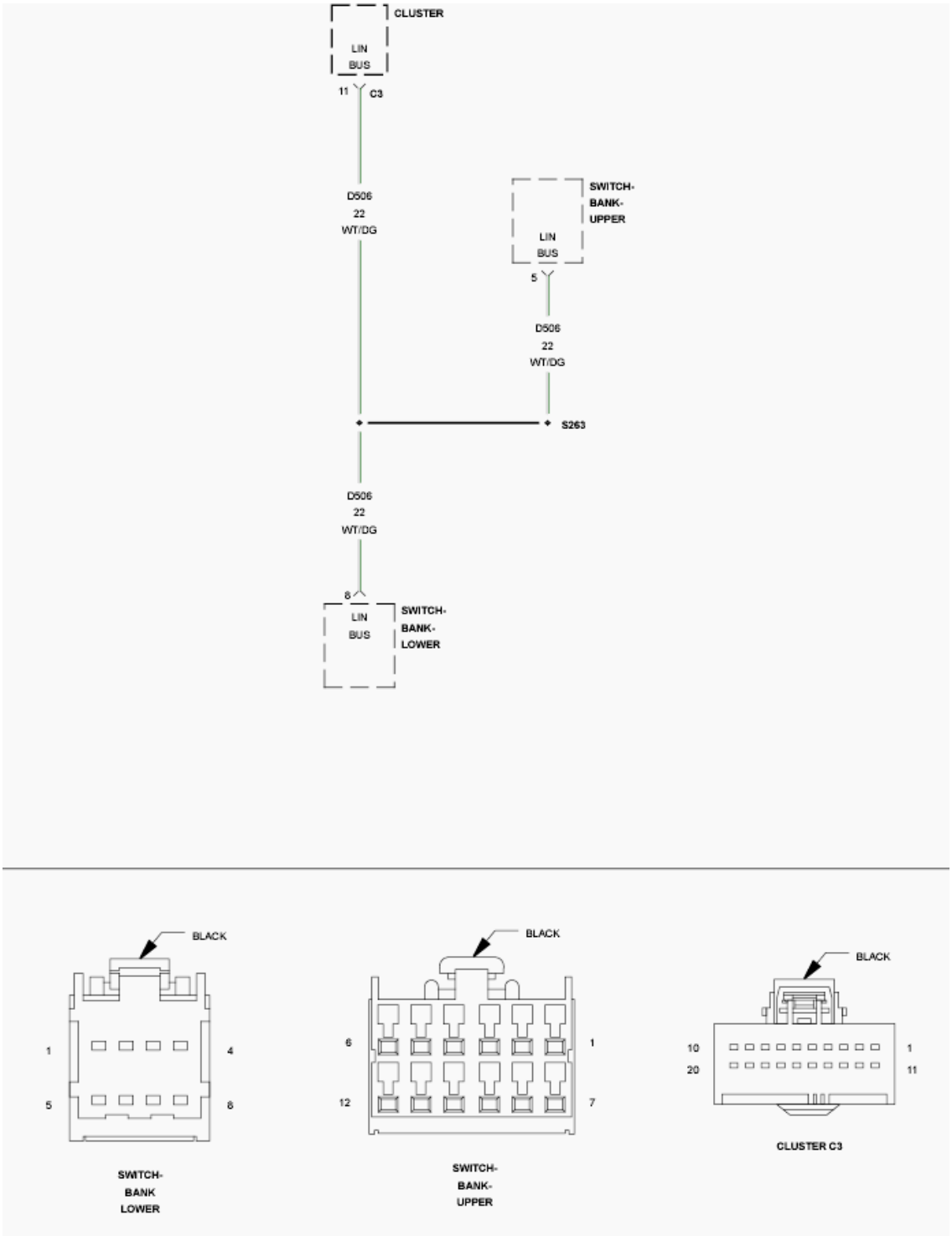

Fig. 1: Left Heated Seat Switch Input Wiring Diagram
Courtesy of CHRYSLER GROUP, LLC

For a complete wiring diagram, **refer to appropriate SYSTEM WIRING DIAGRAMS article** .

WHEN MONITORED:

With the ignition on.

SET CONDITION:

If the Cluster (CCN) senses the Left Heated Seat switch input for more than 20 seconds.

POSSIBLE CAUSES

Possible Causes
OBJECT HOLDING LEFT HEATED SEAT SWITCH IN A PUSHED POSITION
SUBSTANCE CAUSING LEFT HEATED SEAT SWITCH TO GET STUCK IN A PUSHED POSITION
SWITCH BANK

DIAGNOSTIC TEST

1. **INSPECT SWITCH BANK FOR DAMAGE**

   NOTE: Diagnose and repair all LIN Bus related DTCs before performing this test procedure.

   1. Turn the ignition off.
   2. Inspect the Switch Bank for damage.

      Is the Switch Bank damaged?

      Yes

      - Replace the Switch Bank in accordance with the Service Information.
      - Perform the BODY VERIFICATION TEST. Refer to **BODY VERIFICATION TEST** .

      No

      - Go To 2.
2. **INSPECT FOR OBJECT OR SUBSTANCE CAUSING LEFT HEATED SEAT SWITCH TO STAY OR STICK IN A PUSHED POSITION**
   1. Inspect the Left Heated Seat switch for anything that would cause it to stay or stick in a pushed position.

      Is anything present that would cause the Left Heated Seat switch to stay or stick in a pushed position?

      Yes

      - Repair as necessary.

- Perform the BODY VERIFICATION TEST. Refer to **BODY VERIFICATION TEST** .

No

- Go To 3.

3. **TEST FOR INTERMITTENT CONDITION**
   1. Turn the ignition on.
   2. Using a scan tool, record and erase Diagnostic Trouble Codes (DTCs).
   3. Press and release the Left Heated Seat switch several times and then wait 20 seconds.
   4. Using a scan tool, read DTCs.

   Does the scan tool display DTC B10BB-LEFT HEATED SEAT SWITCH INPUT CIRCUIT STUCK?

   Yes

   - Replace the Switch Bank in accordance with the Service Information.
   - Perform the BODY VERIFICATION TEST. Refer to **BODY VERIFICATION TEST** .

   No

   - The conditions that caused this code to set are not present at this time.
   - Perform the BODY VERIFICATION TEST. Refer to **BODY VERIFICATION TEST** .

B10BC-RIGHT HEATED SEAT SWITCH INPUT CIRCUIT STUCK

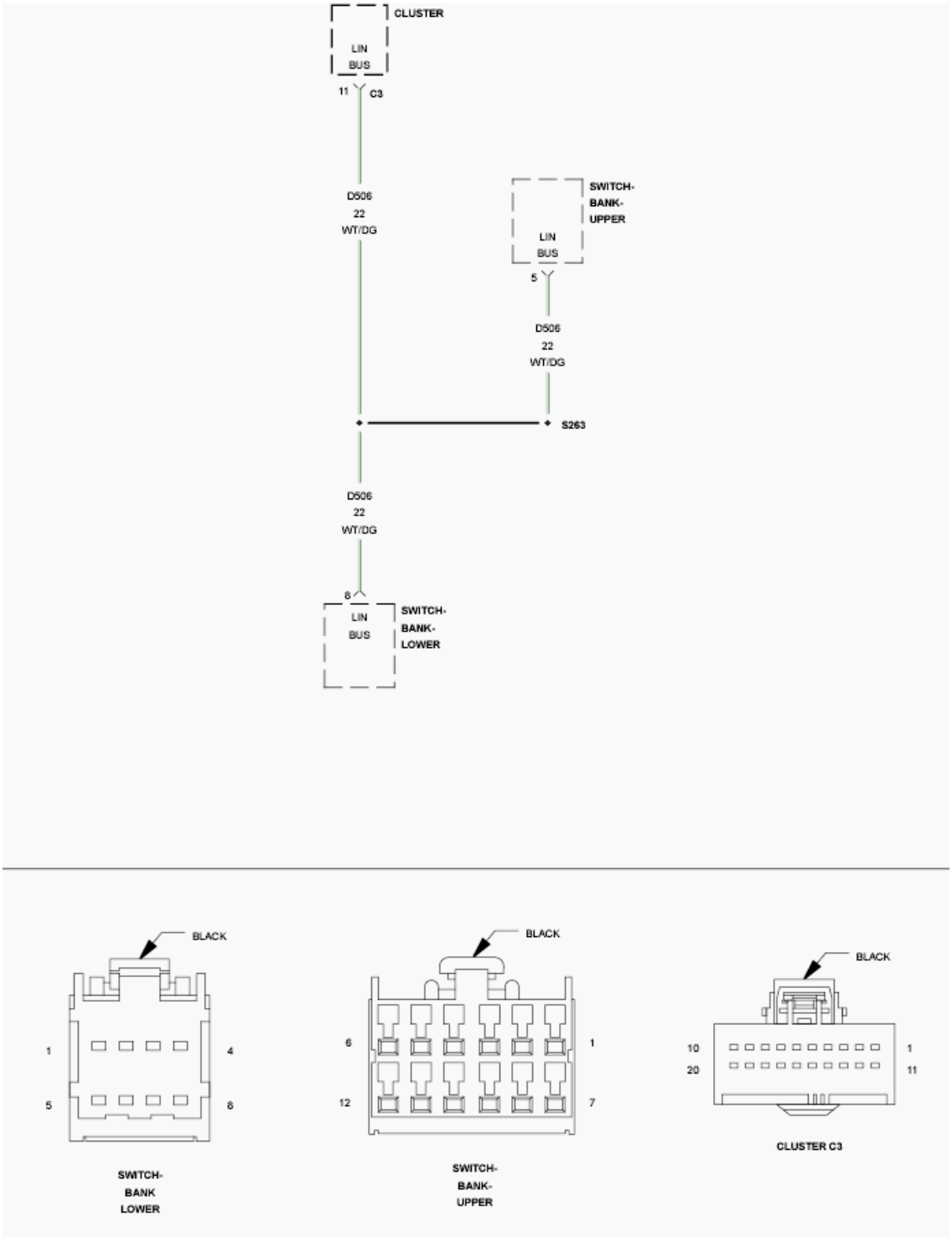

Fig. 2: Right Heated Seat Switch Input Wiring Diagram
Courtesy of CHRYSLER GROUP, LLC

For a complete wiring diagram, **refer to appropriate SYSTEM WIRING DIAGRAMS article** .

WHEN MONITORED:

With the ignition on.

SET CONDITION:

If the Cluster (CCN) senses the Right Heated Seat switch input for more than 20 seconds.

POSSIBLE CAUSES

Possible Causes
OBJECT HOLDING RIGHT HEATED SEAT SWITCH IN A PUSHED POSITION
SUBSTANCE CAUSING RIGHT HEATED SEAT SWITCH TO GET STUCK IN A PUSHED POSITION
SWITCH BANK

DIAGNOSTIC TEST

1. **INSPECT SWITCH BANK FOR DAMAGE**

   NOTE: Diagnose and repair all LIN Bus related DTCs before performing this test procedure.

   1. Turn the ignition off.
   2. Inspect the Switch Bank for damage.

      Is the Switch Bank damaged?

      Yes

      - Replace the Switch Bank in accordance with the Service Information.
      - Perform the BODY VERIFICATION TEST. Refer to **BODY VERIFICATION TEST** .

      No

      - Go To 2.
2. **INSPECT FOR OBJECT OR SUBSTANCE CAUSING RIGHT HEATED SEAT SWITCH TO STAY OR STICK IN A PUSHED POSITION**
   1. Inspect the Right Heated Seat switch for anything that would cause it to stay or stick in a pushed position.

      Is anything present that would cause the Right Heated Seat switch to stay or stick in a pushed position?

      Yes

      - Repair as necessary.

- Perform the BODY VERIFICATION TEST. Refer to **BODY VERIFICATION TEST** .

No

- Go To 3.

3. **TEST FOR INTERMITTENT CONDITION**
   1. Turn the ignition on.
   2. Using a scan tool, record and erase Diagnostic Trouble Codes (DTCs).
   3. Press and release the Right Heated Seat switch several times and then wait 20 seconds.
   4. Using a scan tool, read DTCs.

   Does the scan tool display DTC B10BC-RIGHT HEATED SEAT SWITCH INPUT CIRCUIT STUCK?

   Yes

   - Replace the Switch Bank in accordance with the Service Information.
   - Perform the BODY VERIFICATION TEST. Refer to **BODY VERIFICATION TEST** .

   No

   - The conditions that caused this code to set are not present at this time.
   - Perform the BODY VERIFICATION TEST. Refer to **BODY VERIFICATION TEST** .

B114C-LEFT REAR HEATED SEAT SWITCH STUCK

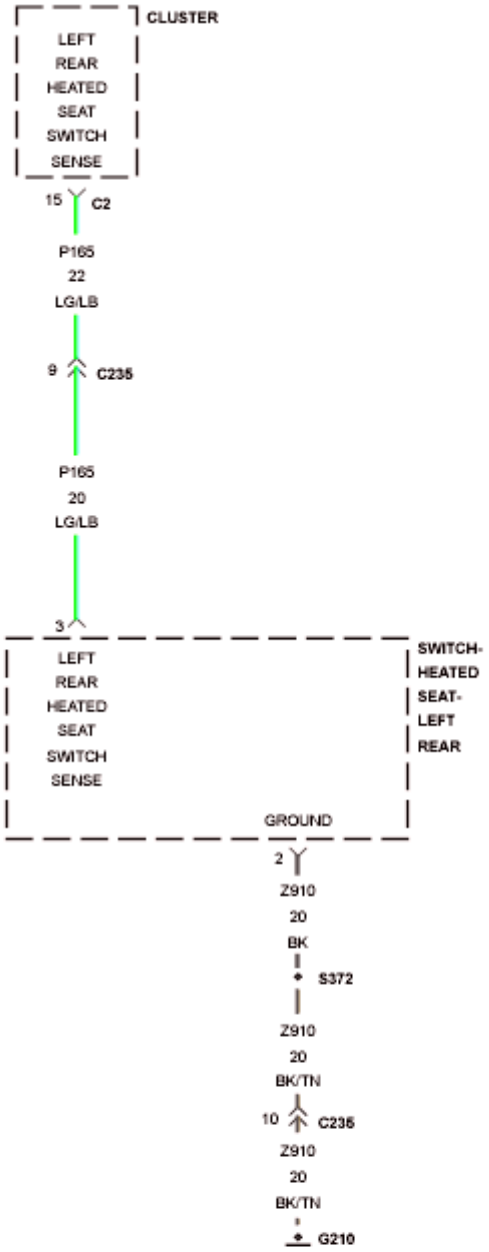
CLUSTER
LEFT REAR HEATED SEAT SWITCH SENSE
15
C2
P165
22
LG/LB
9
C235
P165
20
LG/LB
3
LEFT REAR HEATED SEAT SWITCH SENSE
SWITCH-HEATED SEAT-LEFT REAR
GROUND
2
Z910
20
BK
S372
Z910
20
BK/TN
10
C235
Z910
20
BK/TN
G210

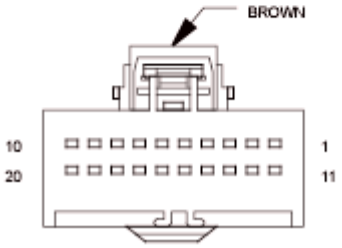
BROWN
10
20
1
11

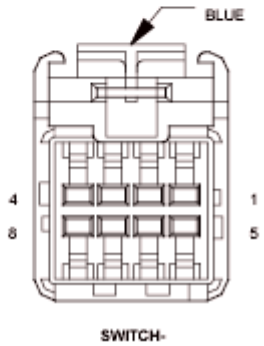
BLUE
4
8
1
5
SWITCH-

Fig. 3: Left Rear Heated Seat Switch Wiring Diagram
Courtesy of CHRYSLER GROUP, LLC

For a complete wiring diagram, **refer to appropriate SYSTEM WIRING DIAGRAMS article** .

WHEN MONITORED:

Ignition on, during the heated seat operation.

SET CONDITION:

If the Cluster (CCN) senses the (P165) Left Rear Heated Seat Switch Sense circuit is low for a predetermined amount of time.

POSSIBLE CAUSES

Possible Causes
(P165) LEFT REAR HEATED SEAT SWITCH SENSE CIRCUIT FOR A SHORT TO GROUND
(P165) LEFT REAR HEATED SEAT SWITCH SENSE CIRCUIT FOR A SHORT TO (Z910) GROUND CIRCUIT
LEFT REAR HEATED SEAT SWITCH
CLUSTER (CCN)

DIAGNOSTIC TEST

1. **TEST FOR INTERMITTENT CONDITION**
    1. Turn the ignition on.
    2. Using a scan tool, record and erase Diagnostic Trouble Codes (DTCs).
    3. Operate the Left Rear Heated Seat Switch in both positions several times.
    4. Using a scan tool, read DTCs.

    Does the scan tool display DTC B114C-LEFT REAR HEATED SEAT SWITCH STUCK?

    Yes

    - Go To 2.

    No

    - The conditions that caused this code to set are not present at this time. Using the wiring diagram/schematic as a guide, inspect the wiring and connectors.
    - Perform the BODY VERIFICATION TEST. Refer to **BODY VERIFICATION TEST** .
2. **CHECK FOR SHORTED LEFT REAR HEATED SEAT SWITCH**

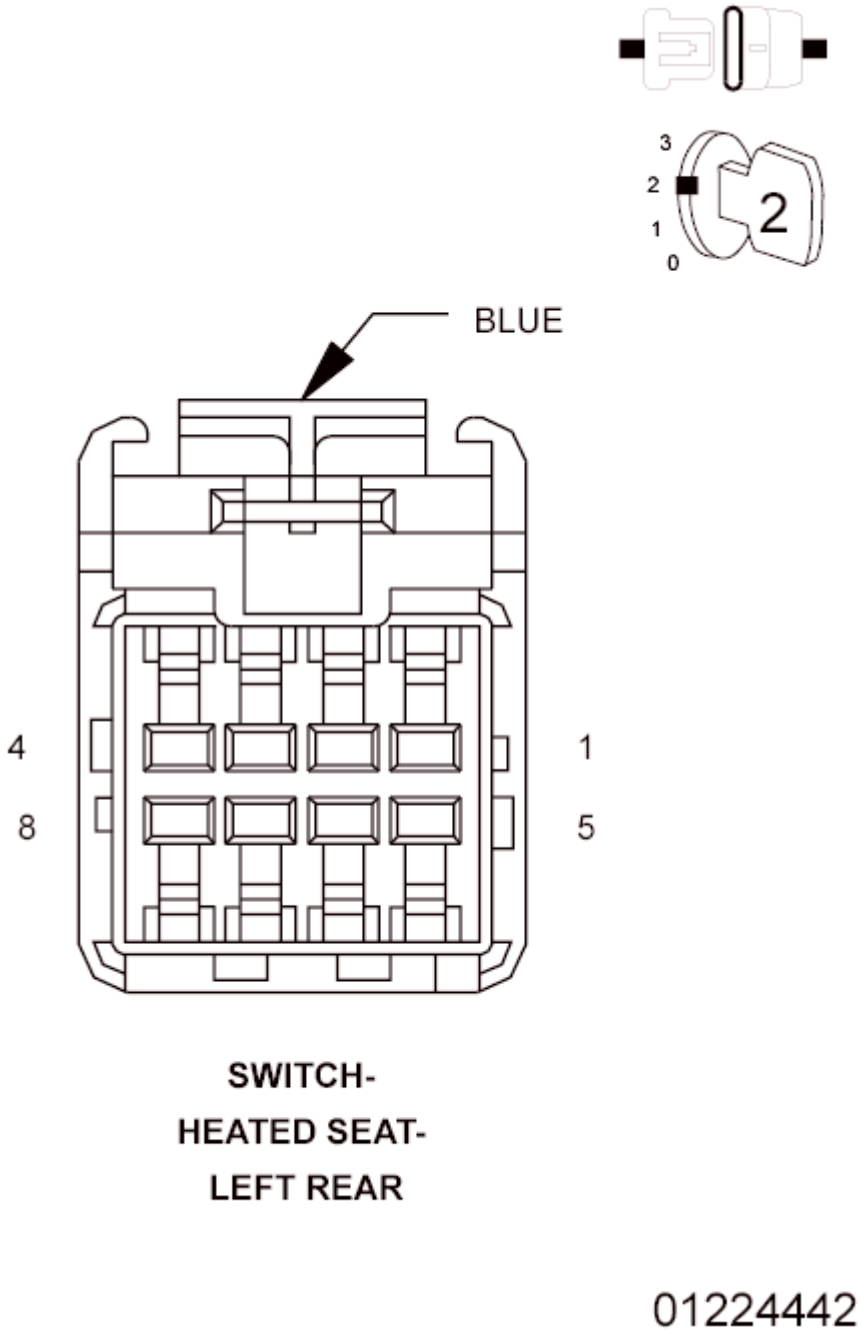

Fig. 4: Checking For Shorted Left Rear Heated Seat Switch
Courtesy of CHRYSLER GROUP, LLC

1. Turn the ignition off.
2. Disconnect the Left Rear Heated Seat Switch connector.

NOTE: Check connectors. Clean and repair as necessary.

3. Turn the ignition on.

4. With the scan tool in CCN, select Data Display and read the Left Rear Heated Seat state.

   Does the switch state display Not Set?

   Yes

   - Replace the Left Rear Heated Seat Switch in accordance with the Service Information.
   - Perform the BODY VERIFICATION TEST. Refer to **BODY VERIFICATION TEST** .

   No

   - Go To 3.

3. **CHECK (P165) LEFT REAR HEATED SEAT SWITCH SENSE CIRCUIT FOR A SHORT TO GROUND**

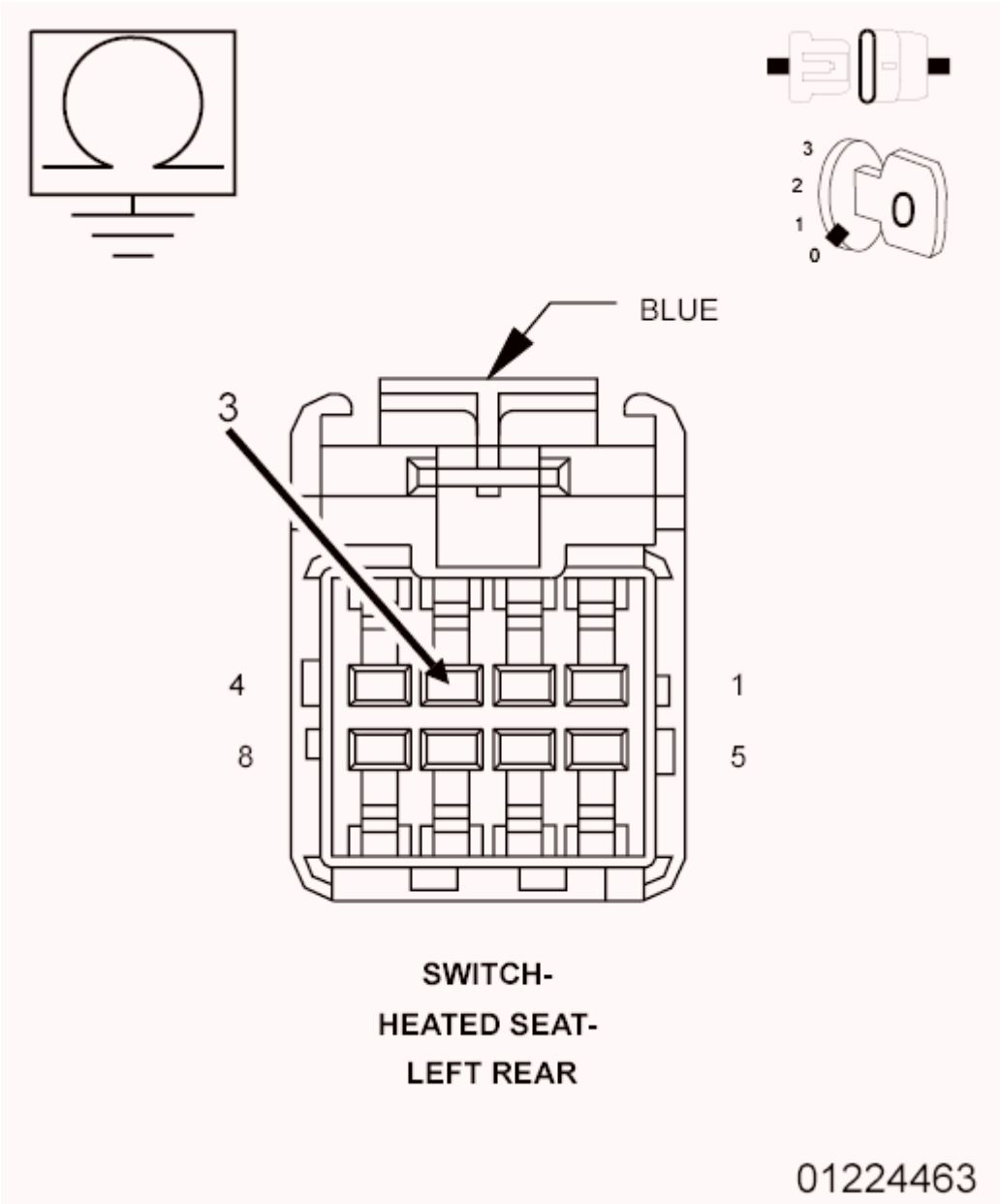

Fig. 5: Checking Left Rear Heated Seat Switch Sense Circuit For A Short To Ground
Courtesy of CHRYSLER GROUP, LLC

1. Turn the ignition off.
2. Disconnect the Cluster C2 connector.
3. Measure the resistance of the (P165) Left Rear Heated Seat Switch Sense circuit between ground and the Left Rear Heated Seat Switch connector.

   Is the resistance below 10K Ohms?

   Yes

- Repair the (P165) Left Rear Heated Seat Switch Sense circuit for a short to ground.
- Perform the BODY VERIFICATION TEST. Refer to **BODY VERIFICATION TEST** .

No

- Go To 4.

4. **CHECK (P165) LEFT REAR HEATED SEAT SWITCH SENSE CIRCUIT FOR A SHORT TO (Z910) GROUND CIRCUIT**

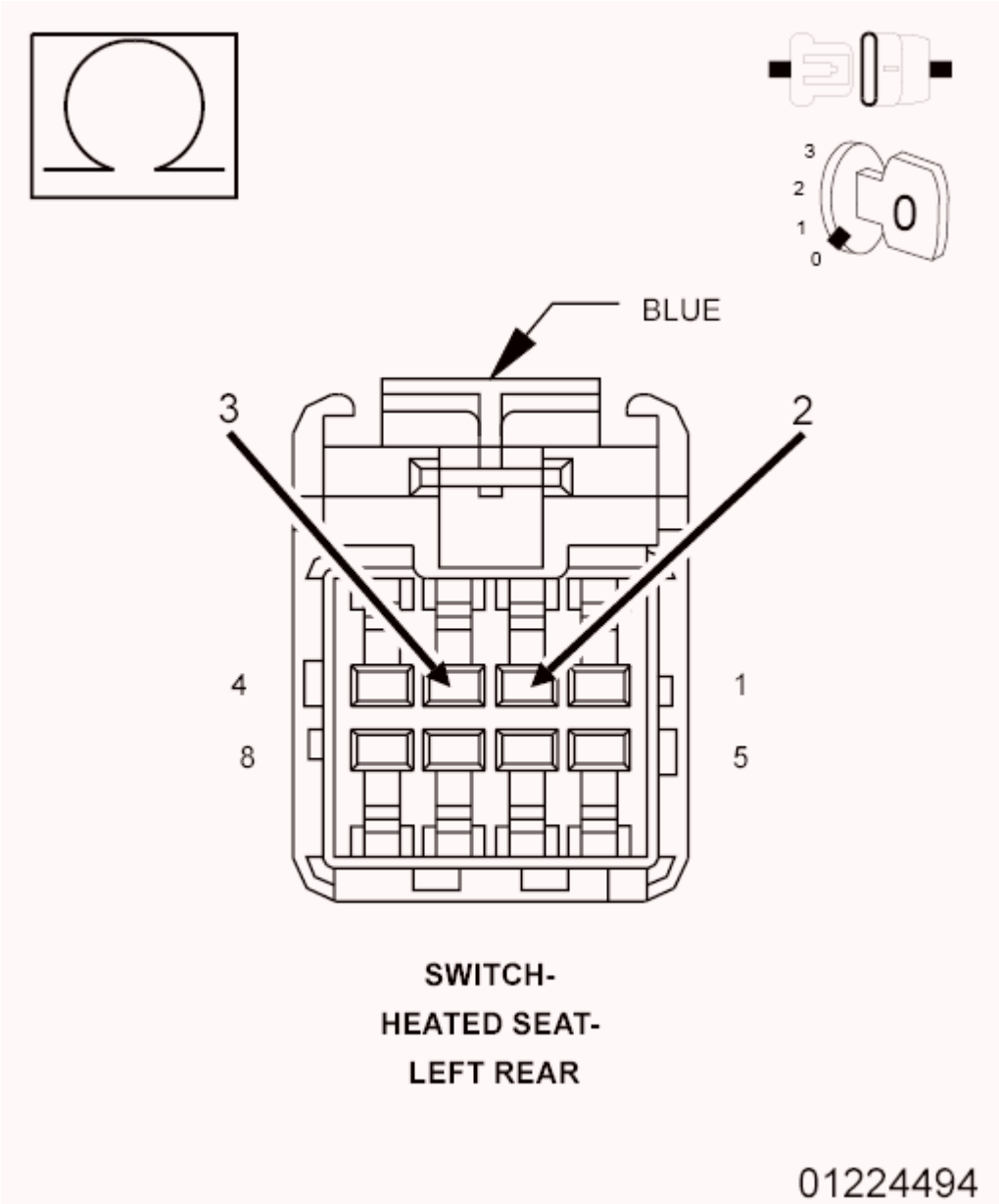

Fig. 6: Checking Left Rear Heated Seat Switch Sense Circuit For A Short To Ground Circuit
Courtesy of CHRYSLER GROUP, LLC

1. Measure the resistance between the (P165) Left Rear Heated Seat Switch Sense circuit and the (Z910) Ground circuit at the Left Rear Heated Seat Switch connector.

   Is the resistance below 10K Ohms?

   Yes

   - Repair the (P165) Left Rear Heated Seat Switch Sense circuit for a short to the (Z910) Ground circuit.
   - Perform the BODY VERIFICATION TEST. Refer to **BODY VERIFICATION TEST** .

   No

   - Replace the Cluster (CCN) in accordance with the Service Information.
   - Perform the BODY VERIFICATION TEST. Refer to **BODY VERIFICATION TEST** .

B1151-RIGHT REAR HEATED SEAT SWITCH STUCK

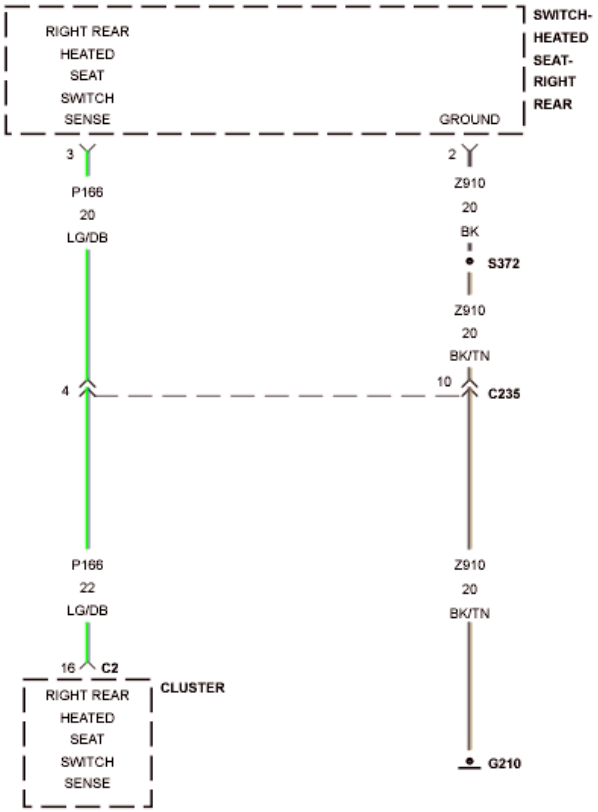

Fig. 7: Right Rear Heated Seat Switch Wiring Diagram
Courtesy of CHRYSLER GROUP, LLC

For a complete wiring diagram, **refer to appropriate SYSTEM WIRING DIAGRAMS article** .

WHEN MONITORED:

Ignition on, during the heated seat operation.

SET CONDITION:

If the Cluster (CCN) senses the (P166) Right Rear Heated Seat Switch Sense circuit is low for a predetermined amount of time.

POSSIBLE CAUSES

Possible Causes
(P166) RIGHT REAR HEATED SEAT SWITCH SENSE CIRCUIT FOR A SHORT TO GROUND
(P166) RIGHT REAR HEATED SEAT SWITCH SENSE CIRCUIT FOR A SHORT TO (Z910) GROUND CIRCUIT
RIGHT REAR HEATED SEAT SWITCH
CLUSTER (CCN)

DIAGNOSTIC TEST

1. **TEST FOR INTERMITTENT CONDITION**
    1. Turn the ignition on.
    2. Using a scan tool, record and erase Diagnostic Trouble Codes (DTCs).
    3. Operate the Right Rear Heated Seat Switch in both positions several times.
    4. Using a scan tool, read DTCs.

    Does the scan tool display DTC B1151-RIGHT REAR HEATED SEAT SWITCH STUCK?

    Yes

    - Go To 2.

    No

    - The conditions that caused this code to set are not present at this time. Using the wiring diagram/schematic as a guide, inspect the wiring and connectors.
    - Perform the BODY VERIFICATION TEST. Refer to **BODY VERIFICATION TEST** .
2. **CHECK FOR SHORTED RIGHT REAR HEATED SEAT SWITCH**

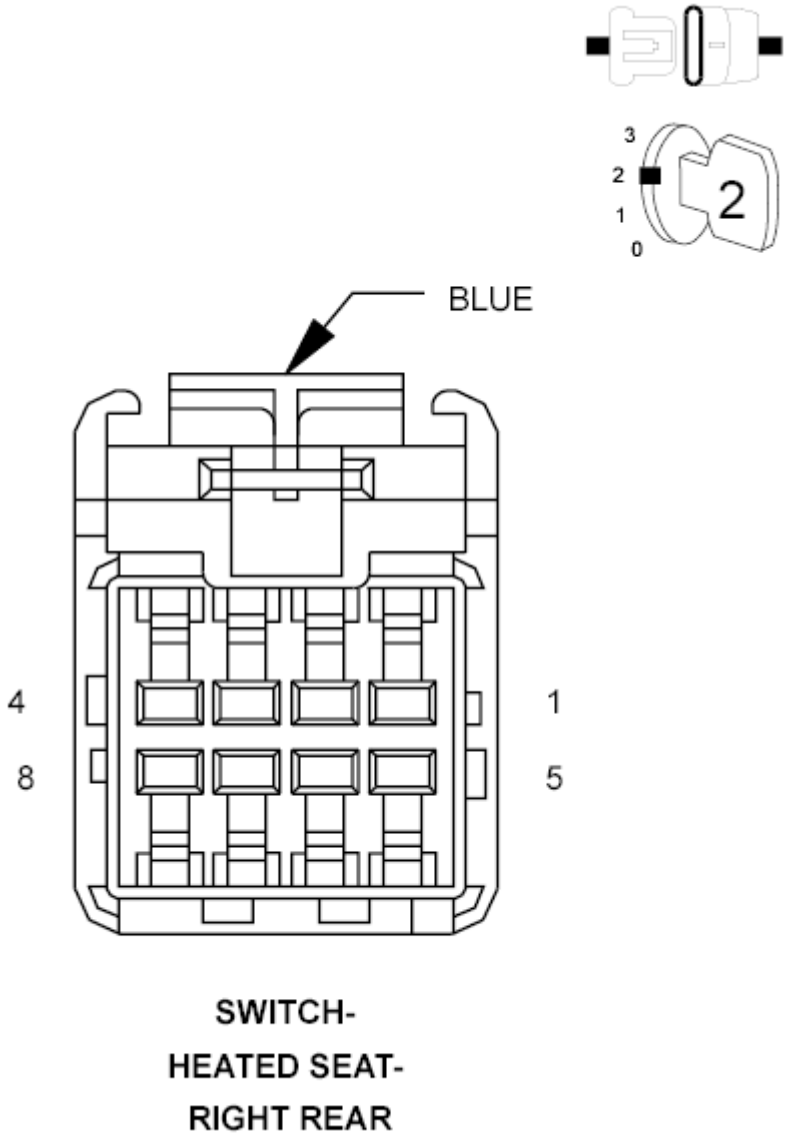

Fig. 8: Checking For Shorted Right Rear Heated Seat Switch
Courtesy of CHRYSLER GROUP, LLC

1. Turn the ignition off.
2. Disconnect the Right Rear Heated Seat Switch connector.

NOTE: Check connectors. Clean and repair as necessary.

3. Turn the ignition on.
4. With the scan tool in CCN, select Data Display and read the Right Rear Heated Seat state.

   Does the switch state display Not Set?

Yes

- Replace the Right Rear Heated Seat Switch in accordance with the Service Information.
- Perform the BODY VERIFICATION TEST. Refer to **BODY VERIFICATION TEST** .

No

- Go To 3.

3. **CHECK (P166) RIGHT REAR HEATED SEAT SWITCH SENSE CIRCUIT FOR A SHORT TO GROUND**

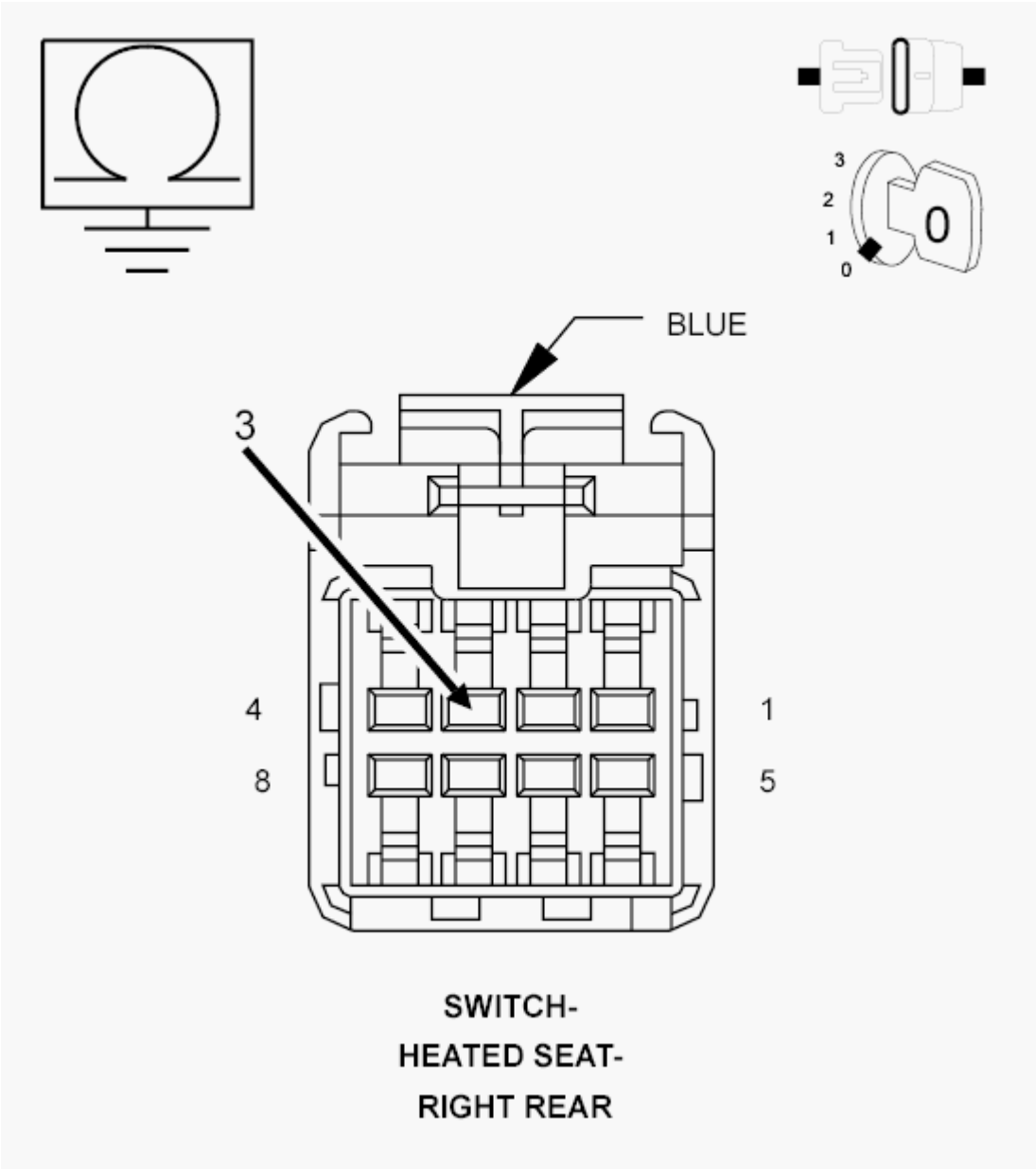

Fig. 9: Checking Right Rear Heated Seat Switch Sense Circuit For A Short To Ground

Courtesy of CHRYSLER GROUP, LLC

1. Turn the ignition off.
2. Disconnect the Cluster C2 connector.
3. Measure the resistance of the (P166) Right Rear Heated Seat Switch Sense circuit between ground and the Right Rear Heated Seat Switch connector.

   Is the resistance below 10K Ohms?

   Yes

   - Repair the (P166) Right Rear Heated Seat Switch Sense circuit for a short to ground.
   - Perform the BODY VERIFICATION TEST. Refer to **BODY VERIFICATION TEST** .

   No

   - Go To 4.

4. **CHECK (P166) RIGHT REAR HEATED SEAT SWITCH SENSE CIRCUIT FOR A SHORT TO (Z910) GROUND CIRCUIT**

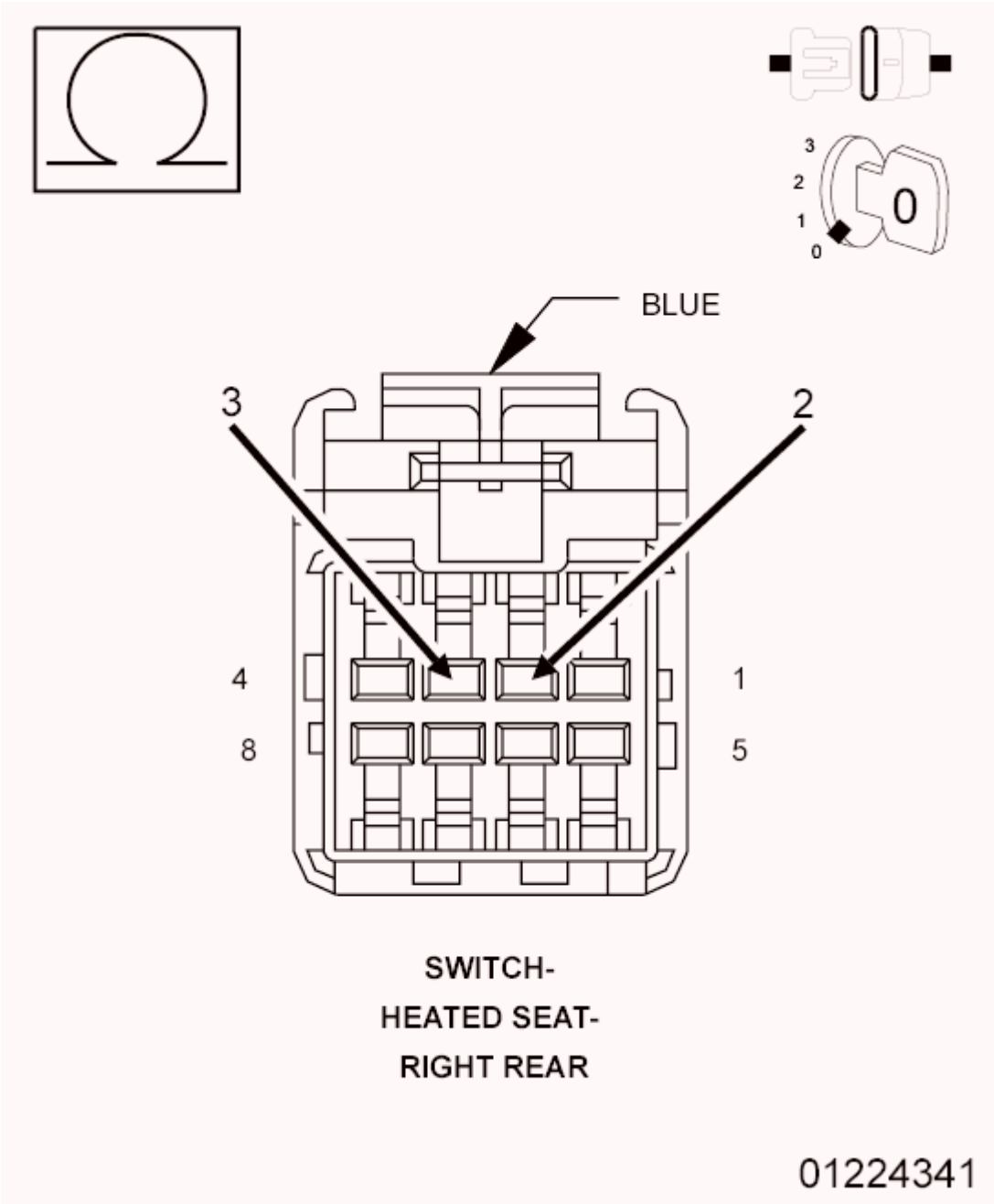

Fig. 10: Checking Right Rear Heated Seat Switch Sense Circuit For A Short To Ground Circuit
Courtesy of CHRYSLER GROUP, LLC

1. Measure the resistance between the (P166) Right Rear Heated Seat Switch Sense circuit and the (Z910) Ground circuit at the Right Rear Heated Seat Switch connector.

   Is the resistance below 10K Ohms?

   Yes

   - Repair the (P166) Right Rear Heated Seat Switch Sense circuit for a short to the (Z910)

Ground circuit.

- Perform the BODY VERIFICATION TEST. Refer to **BODY VERIFICATION TEST** .

No

- Replace the Cluster (CCN) in accordance with the Service Information.
- Perform the BODY VERIFICATION TEST. Refer to **BODY VERIFICATION TEST** .

B127A-COMPASS PERFORMANCE

For a complete wiring diagram, **refer to appropriate SYSTEM WIRING DIAGRAMS article** .

WHEN MONITORED:

With the ignition on.

SET CONDITION:

Internal Compass Module failure detected.

POSSIBLE CAUSES

Possible Causes
COMPASS MODULE

DIAGNOSTIC TEST

1. **CHECK FOR AN ACTIVE DTC**
    1. Turn the ignition on.
    2. With the scan tool, read DTCs.

    Does the scan tool display this DTC as active?

    Yes

    - Replace the Compass Module in accordance with the Service Information.
    - Perform the BODY VERIFICATION TEST. Refer to **BODY VERIFICATION TEST** .

    No

    - Test complete.

B1285-PARK ASSIST DISABLE SWITCH PERFORMANCE

For a complete wiring diagram, **refer to appropriate SYSTEM WIRING DIAGRAMS article** .

WHEN MONITORED:

With the ignition on.

SET CONDITION:

The Cluster detects the Park Assist Disable Switch active for greater than 20 seconds.

POSSIBLE CAUSES

Possible Causes
UPPER SWITCH BANK

DIAGNOSTIC TEST

1. **CHECK FOR AN ACTIVE DTC**
    1. Turn the ignition on.
    2. With the scan tool, read DTCs.

    Does the scan tool display this DTC as active?

    Yes

    - Replace the Upper Switch Bank in accordance with the Service Information.
    - Perform the BODY VERIFICATION TEST. Refer to **BODY VERIFICATION TEST** .

    No

    - Test complete.

B1286-COMPASS / TEMP BUTTON PERFORMANCE

For a complete wiring diagram, **refer to appropriate SYSTEM WIRING DIAGRAMS article** .

THEORY OF OPERATION

The Compass/Temp button is integral to the Left Steering Wheel Switch. The Left Steering Wheel Switch is hardwired to the Right Steering Wheel Switch (Speed Control Switch). The Right Steering Wheel Switch (Speed Control Switch) sends switch commands to the Cluster over the LIN Bus circuit. For more information concerning the Steering Wheel Switches, and. Refer to **SWITCH, EVIC CONTROL, OPERATION** . Refer to **OPERATION** .

WHEN MONITORED:

With the ignition on.

SET CONDITION:

The Cluster detects the Compass / Temp Button active for greater than 20 seconds.

POSSIBLE CAUSES

Possible Causes
LEFT STEERING WHEEL SWITCH

DIAGNOSTIC TEST

1. **CHECK FOR AN ACTIVE DTC**
    1. Turn the ignition on.
    2. With the scan tool, read DTCs.

    Does the scan tool display this DTC as active?

    Yes

    WARNING: Turn the ignition off disconnect the 12-volt battery and wait two minutes before proceeding. Failure to follow these instructions may result in possible serious or fatal injury.

    WARNING: Do not place an intact non-deployed airbag face down on a hard surface, the airbag propels into the air if accidentally deployed. Failure to follow these instructions may result in possible serious or fatal injury.

    NOTE: Check for a stuck Left Steering Wheel Control Switch.

    NOTE: Visually and physically inspect the wiring harness between the Left Steering Wheel Control Switch harness connector and the Right Steering Wheel Control Switch (Speed Control Switch) harness connector. Repair any damaged wires, connectors, and open/spread terminals. If harness is OK, proceed with test.

    -
    - Replace the Left Steering Wheel Switch in accordance with the Service Information. Refer to **SWITCH, EVIC CONTROL, REMOVAL** .
    - Perform the BODY VERIFICATION TEST. Refer to **BODY VERIFICATION TEST** .

    No

    - Test complete, the condition or conditions that originally set this DTC are not present at this time. Using the wiring diagrams as a guide, check all related splices and connectors for signs of water intrusion, corrosion, pushed out or bent terminals, and correct pin tension.

B1287-RESET SWITCH PERFORMANCE

For a complete wiring diagram, **refer to appropriate SYSTEM WIRING DIAGRAMS article** .

THEORY OF OPERATION

The Reset button is integral to the Left Steering Wheel Switch. The Left Steering Wheel Switch is hardwired to the Right Steering Wheel Switch (Speed Control Switch). The Right Steering Wheel Switch (Speed Control Switch) sends switch commands to the Cluster over the LIN Bus circuit. For more information concerning the Steering Wheel Switches, and. Refer to **SWITCH, EVIC CONTROL, OPERATION** . Refer to **OPERATION** .

WHEN MONITORED:

With the ignition on.

SET CONDITION:

The Cluster detects the Reset Switch active for greater than 20 seconds.

POSSIBLE CAUSES

Possible Causes
LEFT STEERING WHEEL SWITCH

DIAGNOSTIC TEST

1. **CHECK FOR AN ACTIVE DTC**
    1. Turn the ignition on.
    2. With the scan tool, read DTCs.

    Does the scan tool display this DTC as active?

    Yes

WARNING: Turn the ignition off disconnect the 12-volt battery and wait two minutes before proceeding. Failure to follow these instructions may result in possible serious or fatal injury.

WARNING: Do not place an intact non-deployed airbag face down on a hard surface, the airbag propels into the air if accidentally deployed. Failure to follow these instructions may result in possible serious or fatal injury.

NOTE: Check for a stuck Left Steering Wheel Control Switch.

NOTE: **Visually and physically inspect the wiring harness between the Left Steering Wheel Control Switch harness connector and the Right Steering Wheel Control Switch (Speed Control Switch) harness connector. Repair any damaged wires, connectors, and open/spread terminals. If harness is OK, proceed with test.**

-
- Replace the Left Steering Wheel Switch in accordance with the Service Information. Refer to **SWITCH, EVIC CONTROL, REMOVAL** .
- Perform the BODY VERIFICATION TEST. Refer to **BODY VERIFICATION TEST** .

No

- Test complete, the condition or conditions that originally set this DTC are not present at this time. Using the wiring diagrams as a guide, check all related splices and connectors for signs of water intrusion, corrosion, pushed out or bent terminals, and correct pin tension.

B1288-TRIP / TOGGLE SWITCH PERFORMANCE

For a complete wiring diagram, **refer to appropriate SYSTEM WIRING DIAGRAMS article** .

WHEN MONITORED:

With the ignition on.

SET CONDITION:

The Cluster detects the Trip / Toggle Switch active for greater than 20 seconds.

POSSIBLE CAUSES

Possible Causes
CLUSTER

DIAGNOSTIC TEST

1. **CHECK FOR AN ACTIVE DTC**
    1. Turn the ignition on.
    2. With the scan tool, read DTCs.

    Does the scan tool display this DTC as active?

    Yes

    - Replace the Cluster in accordance with the Service Information.
    - Perform the BODY VERIFICATION TEST. Refer to **BODY VERIFICATION TEST** .

No

- Test complete.

B1427-REMOTE RADIO SWITCH INPUT CIRCUIT HIGH

For a complete wiring diagram, **refer to appropriate SYSTEM WIRING DIAGRAMS article** .

THEORY OF OPERATION

The Remote Radio Switches are hardwired to the Right Steering Wheel Control Switch (Speed Control Switch). The Right Steering Wheel Switch (Speed Control Switch) sends switch commands to the Cluster over the LIN Bus circuit. For more information concerning the Remote Radio Switches. Refer to **SWITCH, REMOTE RADIO, OPERATION** .

WHEN MONITORED:

Continuously with the ignition on.

SET CONDITION:

The Cluster senses that the Remote Radio Switch Input circuit is open.

POSSIBLE CAUSES

Possible Causes
REMOTE RADIO SWITCH INPUT CIRCUIT FOR AN OPEN (FAULTY STEERING WHEEL WIRING HARNESS / CONNECTOR)
RIGHT STEERING WHEEL CONTROL SWITCH (SPEED CONTROL SWITCH)

DIAGNOSTIC TEST

1. **CHECK FOR AN ACTIVE DTC**
    1. Turn the ignition on.
    2. Press each Remote Radio Switch twice.
    3. With the scan tool, read DTCs

    Does the scan tool display this DTC as active?

    Yes

    WARNING: **Turn the ignition off disconnect the 12-volt battery and wait two minutes before proceeding. Failure to follow these instructions may result in possible serious or fatal injury.**

WARNING: Do not place an intact non-deployed airbag face down on a hard surface, the airbag propels into the air if accidentally deployed. Failure to follow these instructions may result in possible serious or fatal injury.

NOTE: Visually and physically inspect the wiring harness between the Remote Radio Switch harness connectors and the Right Steering Wheel Switch (Speed Control Switch) harness connector. Repair any damaged wires, connectors, and open/spread terminals. If harness is OK, proceed with test.

-
- Replace the Right Steering Wheel Control Switch (Speed Control Switch) in accordance with the Service Information. Refer to **SWITCH, SPEED CONTROL, REMOVAL** .
- Perform the BODY VERIFICATION TEST. Refer to **BODY VERIFICATION TEST** .

No

- Test complete, the condition or conditions that originally set this DTC are not present at this time. Using the wiring diagrams as a guide, check all related splices and connectors for signs of water intrusion, corrosion, pushed out or bent terminals, and correct pin tension.
- Perform the BODY VERIFICATION TEST. Refer to **BODY VERIFICATION TEST** .

B1428-REMOTE RADIO SWITCH INPUT CIRCUIT STUCK

For a complete wiring diagram, **refer to appropriate SYSTEM WIRING DIAGRAMS article** .

THEORY OF OPERATION

The Remote Radio Switches are hardwired to the Right Steering Wheel Control Switch (Speed Control Switch). The Right Steering Wheel Switch (Speed Control Switch) sends switch commands to the Cluster over the LIN Bus circuit. For more information concerning the Remote Radio Switches. Refer to **SWITCH, REMOTE RADIO, OPERATION** .

WHEN MONITORED:

Continuously with the ignition on.

SET CONDITION:

The Cluster senses that the Remote Radio Switch Input circuit is stuck for greater than 600 seconds.

POSSIBLE CAUSES

Possible Causes
REMOTE RADIO SWITCH INPUT CIRCUIT SHORTED (FAULTY STEERING WHEEL WIRING

HARNESS / CONNECTOR)
REMOTE RADIO SWITCH
RIGHT STEERING WHEEL CONTROL SWITCH (SPEED CONTROL SWITCH)

DIAGNOSTIC TEST

1. **CHECK FOR AN ACTIVE DTC**
    1. Turn the ignition on.
    2. Press each Remote Radio Switch twice.
    3. With the scan tool, read DTCs

    Does the scan tool display this DTC as active?

    Yes

    WARNING: Turn the ignition off disconnect the 12-volt battery and wait two minutes before proceeding. Failure to follow these instructions may result in possible serious or fatal injury.

    WARNING: Do not place an intact non-deployed airbag face down on a hard surface, the airbag propels into the air if accidentally deployed. Failure to follow these instructions may result in possible serious or fatal injury.

    NOTE: Check for a stuck Remote Radio Switch. Repair as necessary.

    NOTE: Visually and physically inspect the wiring harness between the Remote Radio Switch harness connectors and the Right Steering Wheel Switch (Speed Control Switch) harness connector. Repair any damaged wires, connectors, and open/spread terminals. If harness is OK, proceed with test.

    -
    - Replace the Right Steering Wheel Control Switch (Speed Control Switch) in accordance with the Service Information. Refer to **SWITCH, SPEED CONTROL, REMOVAL** .
    - Perform the BODY VERIFICATION TEST. Refer to **BODY VERIFICATION TEST** .

    No

    - Test complete, the condition or conditions that originally set this DTC are not present at this time. Using the wiring diagrams as a guide, check all related splices and connectors for signs of water intrusion, corrosion, pushed out or bent terminals, and correct pin tension.
    - Perform the BODY VERIFICATION TEST. Refer to **BODY VERIFICATION TEST** .

B1502-STEERING WHEEL CONTROL DOWN SWITCH PERFORMANCE

For a complete wiring diagram, **refer to appropriate SYSTEM WIRING DIAGRAMS article** .

THEORY OF OPERATION

The Steering Wheel Control Down Switch is integral to the Left Steering Wheel Switch. The Left Steering Wheel Switch is hardwired to the Right Steering Wheel Switch (Speed Control Switch). The Right Steering Wheel Switch (Speed Control Switch) sends switch commands to the Cluster over the LIN Bus circuit. For more information concerning the Steering Wheel Switches, and. Refer to **SWITCH, EVIC CONTROL, OPERATION** . Refer to **OPERATION** .

WHEN MONITORED:

With the ignition on.

SET CONDITION:

The Cluster detects the Steering Wheel Control Down Switch active for greater than 20 seconds.

POSSIBLE CAUSES

Possible Causes
LEFT STEERING WHEEL SWITCH

DIAGNOSTIC TEST

1. **CHECK FOR AN ACTIVE DTC**
    1. Turn the ignition on.
    2. With the scan tool, read DTCs.

    Does the scan tool display this DTC as active?

    Yes

WARNING: Turn the ignition off disconnect the 12-volt battery and wait two minutes before proceeding. Failure to follow these instructions may result in possible serious or fatal injury.

WARNING: Do not place an intact non-deployed airbag face down on a hard surface, the airbag propels into the air if accidentally deployed. Failure to follow these instructions may result in possible serious or fatal injury.

NOTE: Check for a stuck Left Steering Wheel Control Switch.

NOTE: **Visually and physically inspect the wiring harness between the Left Steering Wheel Control Switch harness connector and the Right Steering Wheel Control Switch (Speed Control Switch) harness connector. Repair any damaged wires, connectors, and open/spread terminals. If harness is OK, proceed with test.**

-
- Replace the Left Steering Wheel Switch in accordance with the Service Information. Refer to **SWITCH, EVIC CONTROL, REMOVAL** .
- Perform the BODY VERIFICATION TEST. Refer to **BODY VERIFICATION TEST** .

No

- Test complete, the condition or conditions that originally set this DTC are not present at this time. Using the wiring diagrams as a guide, check all related splices and connectors for signs of water intrusion, corrosion, pushed out or bent terminals, and correct pin tension.

B1503-STEERING WHEEL CONTROL RIGHT SWITCH PERFORMANCE

For a complete wiring diagram, **refer to appropriate SYSTEM WIRING DIAGRAMS article** .

THEORY OF OPERATION

The Steering Wheel Control Right Switch is integral to the Left Steering Wheel Switch. The Left Steering Wheel Switch is hardwired to the Right Steering Wheel Switch (Speed Control Switch). The Right Steering Wheel Switch (Speed Control Switch) sends switch commands to the Cluster over the LIN Bus circuit. For more information concerning the Steering Wheel Switches, and. Refer to **SWITCH, EVIC CONTROL, OPERATION** . Refer to **OPERATION** .

WHEN MONITORED:

With the ignition on.

SET CONDITION:

The Cluster detects the Steering Wheel Control Right Switch active for greater than 20 seconds.

POSSIBLE CAUSES

Possible Causes
LEFT STEERING WHEEL SWITCH

DIAGNOSTIC TEST

1. **CHECK FOR AN ACTIVE DTC**

NOTE: **Before proceeding with this diagnostic procedure, verify the Left and Right Steering Wheel Switch and Clockspring harness connectors are properly seated and verify proper pin terminal tension. A loose connection at any of these connectors may cause this DTC to set.**

1. Turn the ignition on.
2. With the scan tool, read DTCs.

Does the scan tool display this DTC as active?

Yes

WARNING: **Turn the ignition off disconnect the 12-volt battery and wait two minutes before proceeding. Failure to follow these instructions may result in possible serious or fatal injury.**

WARNING: **Do not place an intact non-deployed airbag face down on a hard surface, the airbag propels into the air if accidentally deployed. Failure to follow these instructions may result in possible serious or fatal injury.**

NOTE: **Check for a stuck Left Steering Wheel Control Switch.**

NOTE: **Visually and physically inspect the wiring harness between the Left Steering Wheel Control Switch harness connector and the Right Steering Wheel Control Switch (Speed Control Switch) harness connector. Repair any damaged wires, connectors, and open/spread terminals. If harness is OK, proceed with test.**

-
- Replace the Left Steering Wheel Switch in accordance with the Service Information. Refer to **SWITCH, EVIC CONTROL, REMOVAL** .
- Perform the BODY VERIFICATION TEST. Refer to **BODY VERIFICATION TEST** .

No

- Test complete, the condition or conditions that originally set this DTC are not present at this time. Using the wiring diagrams as a guide, check all related splices and connectors for signs of water intrusion, corrosion, pushed out or bent terminals, and correct pin tension.

B1607-HEADLAMP SWITCH INPUT CIRCUIT LOW

CLUSTER
HEADLAMP/
FOG LAMP
SWITCH
SIGNAL
6
C3
L116
22
WT
1
HEADLAMP/
FOG LAMP
SWITCH
SIGNAL
SWITCH-
HEADLAMP

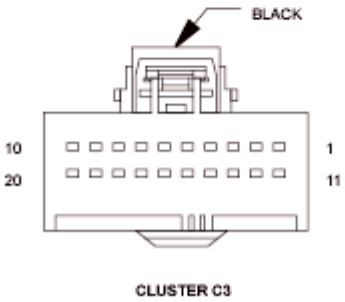
BLACK
10
20
1
11
CLUSTER C3

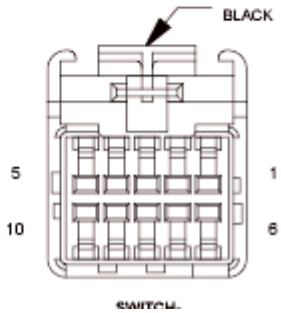
BLACK
5
10
1
6

Fig. 11: Headlamp Switch Input Wiring Diagram
Courtesy of CHRYSLER GROUP, LLC

For a complete wiring diagram, **refer to appropriate SYSTEM WIRING DIAGRAMS article** .

WHEN MONITORED:

With the ignition on.

SET CONDITION:

The Cluster detects a low condition in the Headlamp/fog lamp switch signal circuit.

POSSIBLE CAUSES

Possible Causes
HEADLAMP SWITCH
(L116) HEADLAMP / FOG LAMP SWITCH SIGNAL CIRCUIT FOR A SHORT TO GROUND
CLUSTER

DIAGNOSTIC TEST

1. **CHECK FOR ACTIVE DTC**
    1. Turn the ignition on.
    2. Turn the Headlamps on.
    3. With the scan tool, read the DTCs.

    Does the scan tool display this DTC as active?

    Yes

    - Go To 2.

    No

    - The condition that caused the symptom is currently not present. Inspect the related wiring for a possible intermittent condition. Look for any chafed, pierced, pinched, or partially broken wires.
    - Perform the BODY VERIFICATION TEST. Refer to **BODY VERIFICATION TEST** .
2. **HEADLAMP SWITCH**

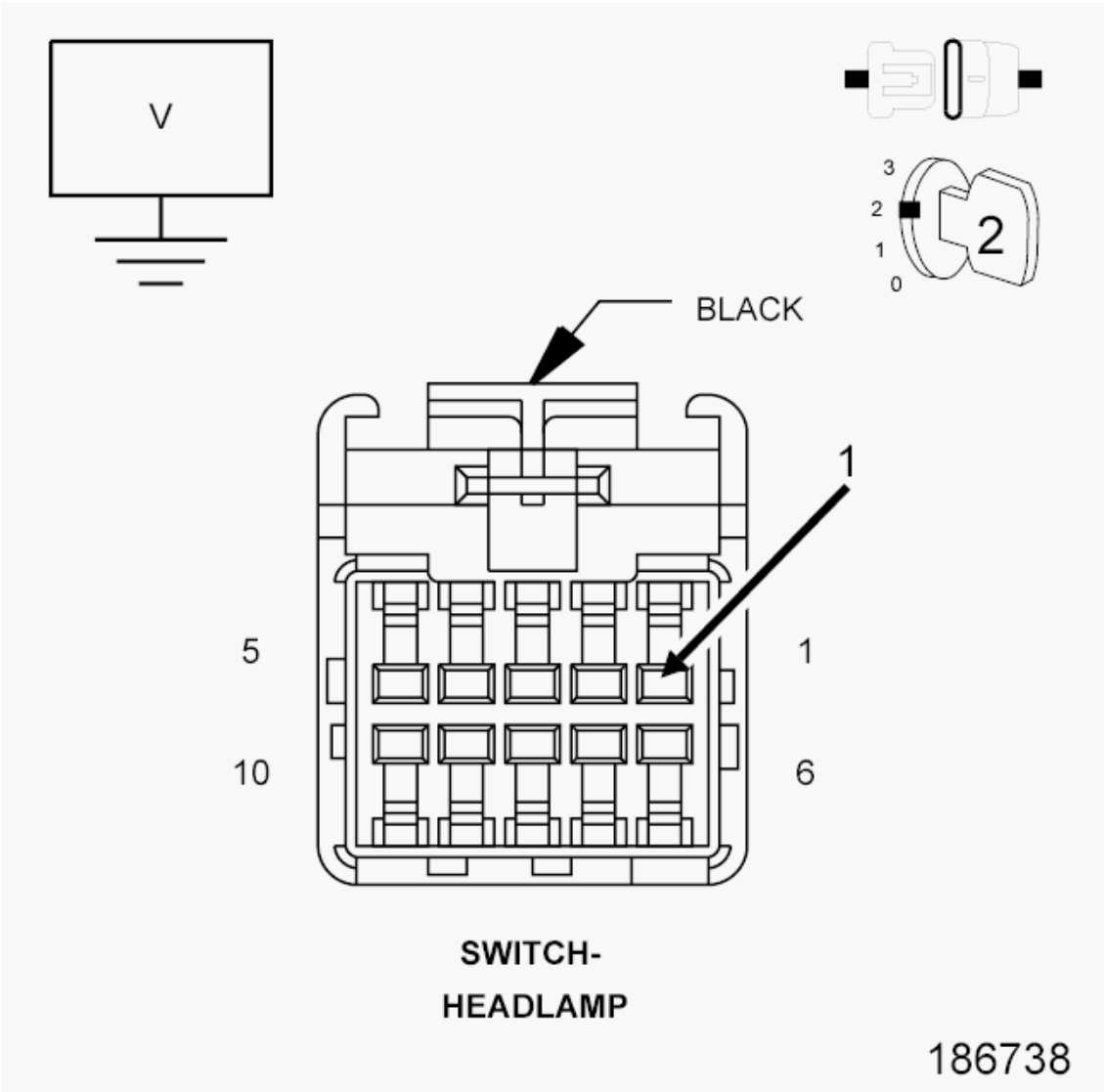

Fig. 12: Checking Headlamp/Fog Lamp Switch Signal Circuit
Courtesy of CHRYSLER GROUP, LLC

1. Disconnect the Headlamp Switch harness connector.
2. Turn the ignition on.
3. Measure the voltage of the (L116) Headlamp / Fog Lamp Switch Signal circuit.

   Does the voltage read 5.0 volts?

   Yes

   - Replace the Headlamp Switch in accordance with the Service Information.
   - Perform the BODY VERIFICATION TEST. Refer to **BODY VERIFICATION TEST** .

   No

- Go To 3.

3. **(L116) HEADLAMP / FOG LAMP SWITCH SIGNAL CIRCUIT FOR A SHORT TO GROUND**

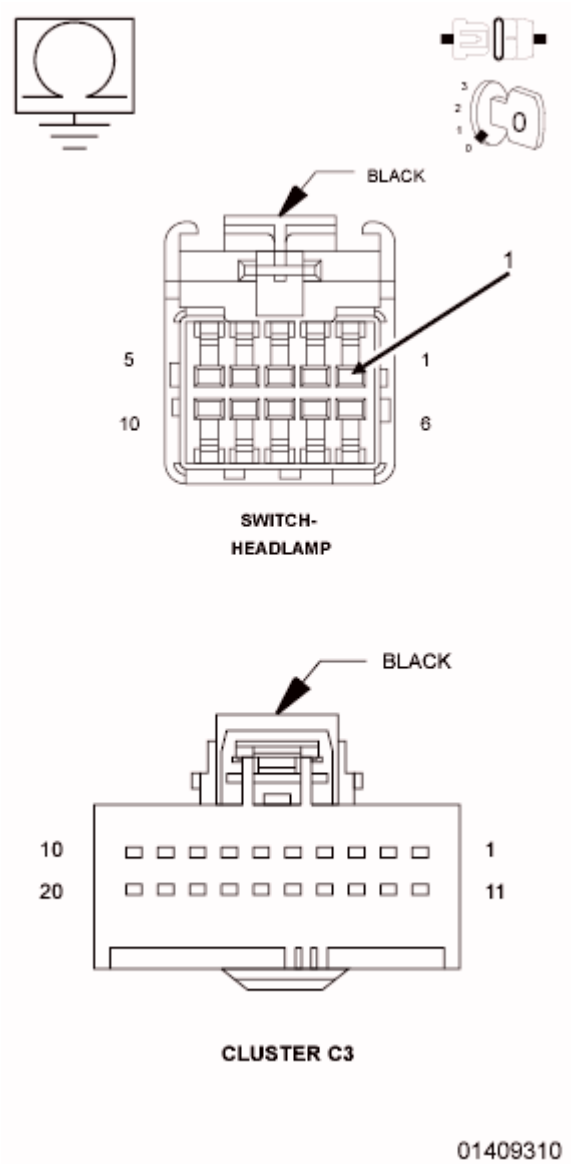

Fig. 13: Checking Headlamp / Fog Lamp Switch Signal Circuit For A Short To Ground
Courtesy of CHRYSLER GROUP, LLC

1. Turn the ignition off.
2. Disconnect the Headlamp Switch harness connector.
3. Disconnect the Instrument Cluster C3 harness connector.
4. Measure the resistance of the (L116) Headlamp Switch Signal circuit to ground.

   Is the resistance below 5.0 Ohms?

   Yes

- Repair short to ground on the (L116) Headlamp / Fog Lamp Switch Signal circuit.
- Perform the BODY VERIFICATION TEST. Refer to **BODY VERIFICATION TEST** .

No

- Replace the Cluster in accordance with the Service Information.
- Perform the BODY VERIFICATION TEST. Refer to **BODY VERIFICATION TEST** .

B1608-HEADLAMP SWITCH INPUT CIRCUIT HIGH

CLUSTER
HEADLAMP/
FOG LAMP
SWITCH
SIGNAL
6
C3
L116
22
WT
1
HEADLAMP/
FOG LAMP
SWITCH
SIGNAL
SWITCH-
HEADLAMP

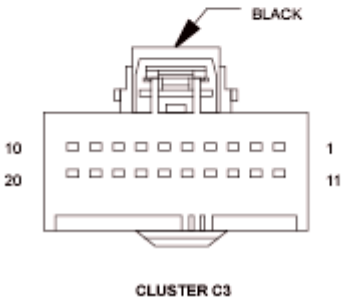
BLACK
10
20
1
11
CLUSTER C3

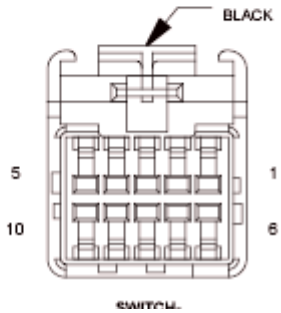
BLACK
5
10
1
6

Fig. 14: Headlamp Switch Input Wiring Diagram
Courtesy of CHRYSLER GROUP, LLC

For a complete wiring diagram, **refer to appropriate SYSTEM WIRING DIAGRAMS article** .

WHEN MONITORED:

With the ignition on.

SET CONDITION:

The Cluster detects a high condition in the Headlamp/fog lamp switch signal circuit.

POSSIBLE CAUSES

Possible Causes
(L116) HEADLAMP / FOG LAMP SWITCH SIGNAL CIRCUIT FOR AN OPEN OR SHORTED TO VOLTAGE
HEADLAMP SWITCH
CLUSTER

DIAGNOSTIC TEST

1. **CHECK FOR ACTIVE DTC**
    1. Turn the ignition on.
    2. Turn the Headlamps on.
    3. With the scan tool, read the DTCs.

    Does the scan tool display this DTC as active?

    Yes

    - Go To 2.

    No

    - The condition that caused the symptom is currently not present. Inspect the related wiring for a possible intermittent condition. Look for any chafed, pierced, pinched, or partially broken wires.
    - Perform the BODY VERIFICATION TEST. Refer to **BODY VERIFICATION TEST** .
2. **(L116) HEADLAMP / FOG LAMP SWITCH SIGNAL CIRCUIT FOR A SHORT TO VOLTAGE**

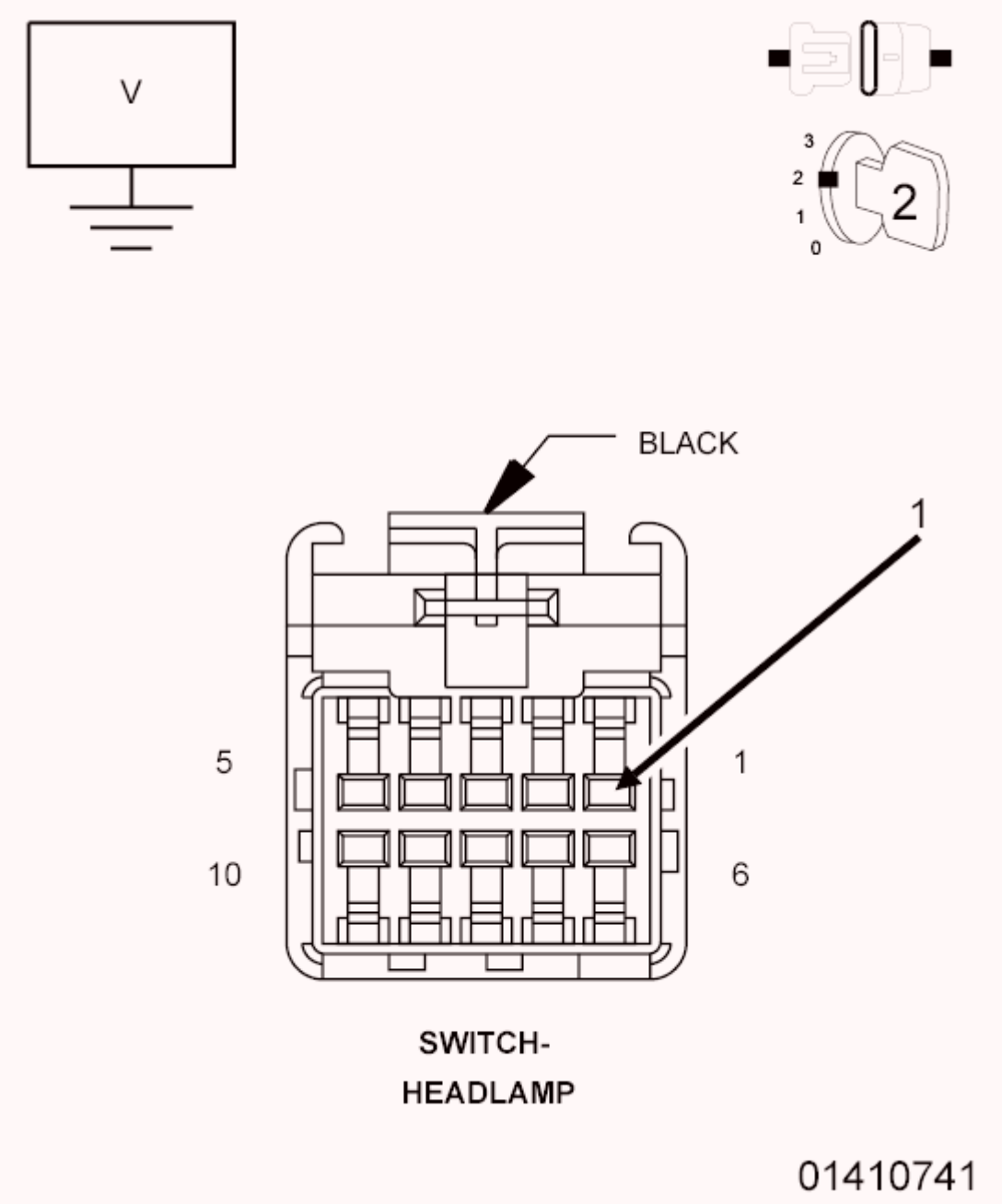

Fig. 15: Checking Headlamp / Fog Lamp Switch Signal Circuit For A Short To Voltage
Courtesy of CHRYSLER GROUP, LLC

1. Turn the ignition off.
2. Disconnect the Headlamp Switch harness connector.
3. Turn the ignition on.
4. Measure the voltage of the (L116) Headlamp / Fog Lamp Switch Signal circuit.

   Is the voltage above 10.0 volts?

Yes

- Repair the (L116) Headlamp / Fog Lamp Switch Signal circuit for a short to voltage.
- Perform the BODY VERIFICATION TEST. Refer to **BODY VERIFICATION TEST** .

No

- Go To 3.

3. **HEADLAMP SWITCH**

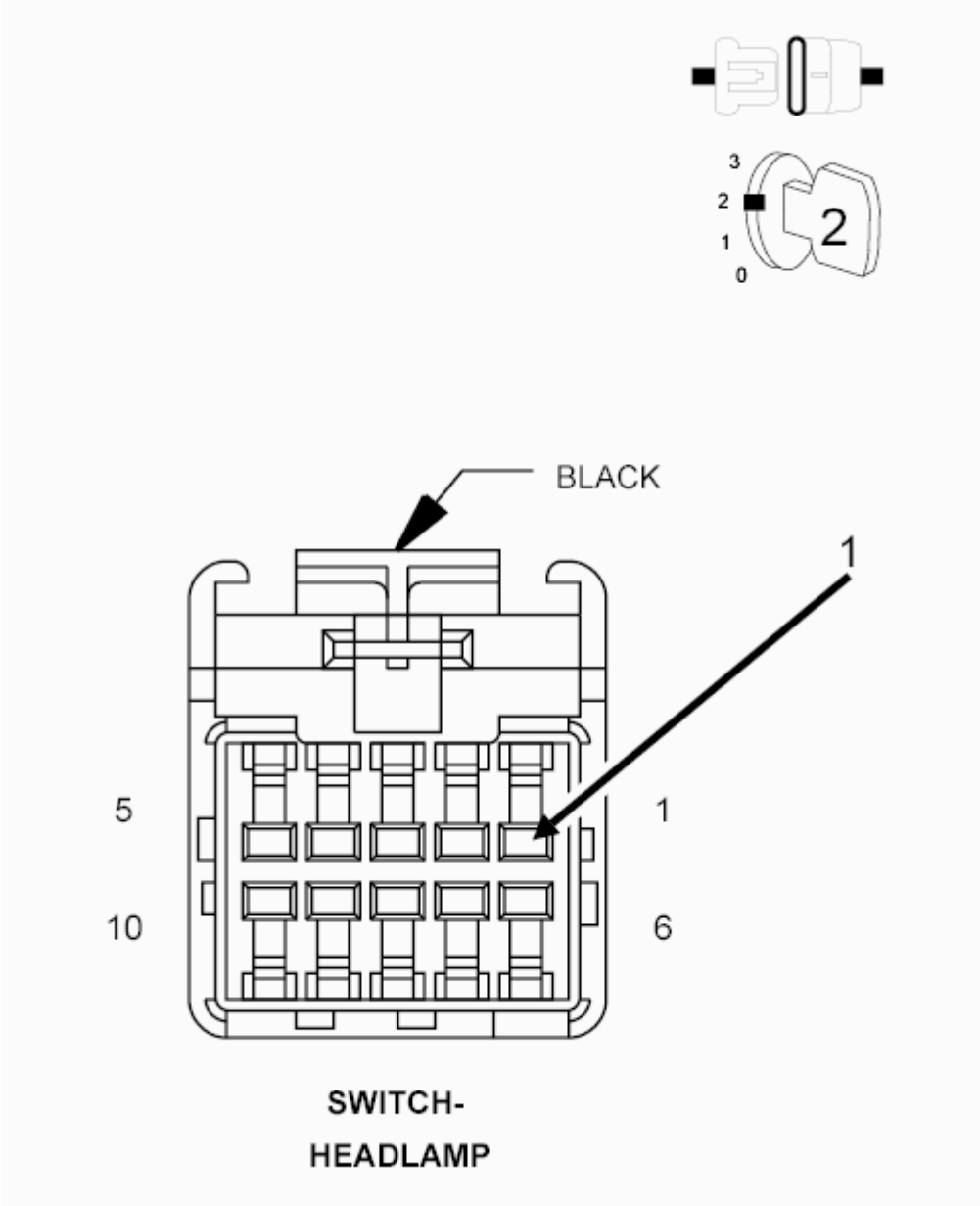

Fig. 16: Headlamp Switch Connector End View
Courtesy of CHRYSLER GROUP, LLC

1. Turn the ignition off.
2. Disconnect the Headlamp Switch harness connector.
3. Connect a jumper wire to the (L116) Headlamp / Fog Lamp Switch Signal circuit at the Headlamp Switch harness connector.
4. Turn the ignition on.
5. With the scan tool, read the DTCs.

   Does the scan tool display DTC: B1607-HEADLAMP SWITCH INPUT CIRCUIT LOW?

   Yes

   - Replace the Headlamp Switch in accordance with the Service Information.
   - Perform the BODY VERIFICATION TEST. Refer to **BODY VERIFICATION TEST** .

   No

   - Go To 4.

4. **(L116) HEADLAMP / FOG LAMP SWITCH SIGNAL CIRCUIT FOR AN OPEN**

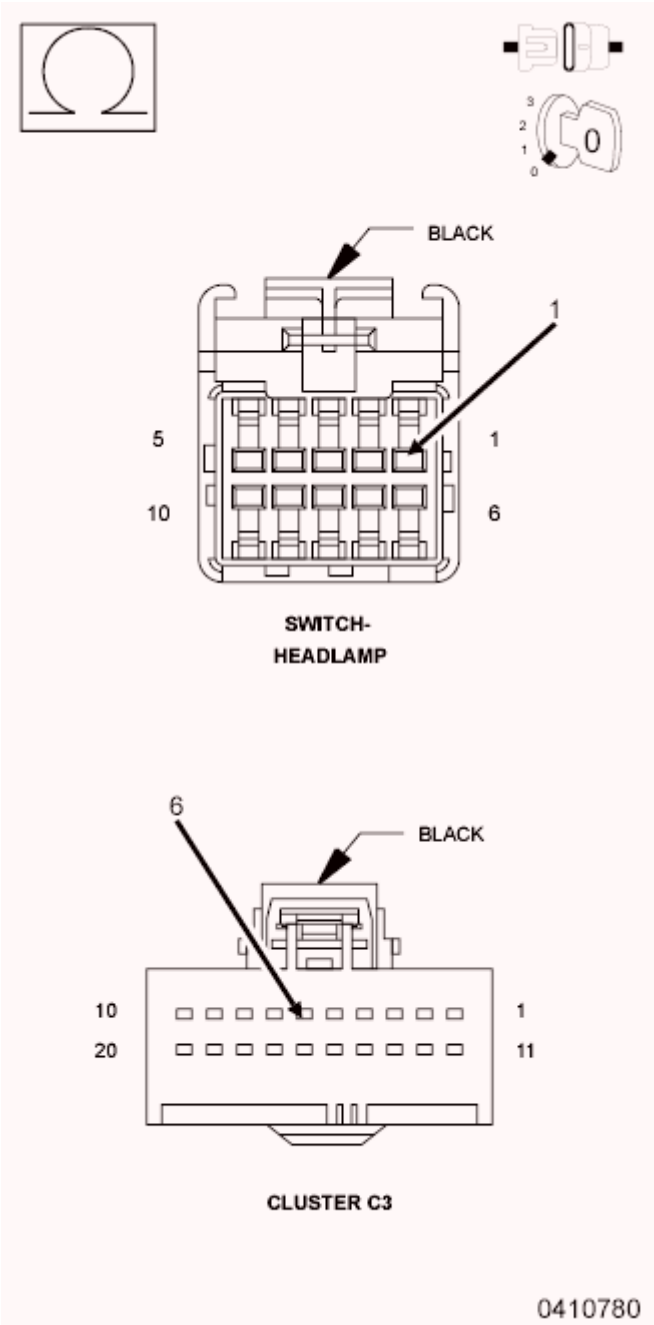

Fig. 17: Checking Headlamp / Fog Lamp Switch Signal Circuit For An Open
Courtesy of CHRYSLER GROUP, LLC

1. Turn the ignition off.
2. Disconnect the Headlamp Switch harness connector.
3. Disconnect the Cluster C3 harness connector.
4. Measure the resistance of the (L116) Headlamp / Fog Lamp Switch Signal circuit.

   Is the resistance below 5.0 Ohms?

Yes

- Replace the Cluster in accordance with the Service Information.
- Perform the BODY VERIFICATION TEST. Refer to **BODY VERIFICATION TEST** .

No

- Repair the (L116) Headlamp / Fog Lamp Switch Signal circuit for an open.
- Perform the BODY VERIFICATION TEST. Refer to **BODY VERIFICATION TEST** .

B160A-PANEL DIMMER INPUT CIRCUIT LOW

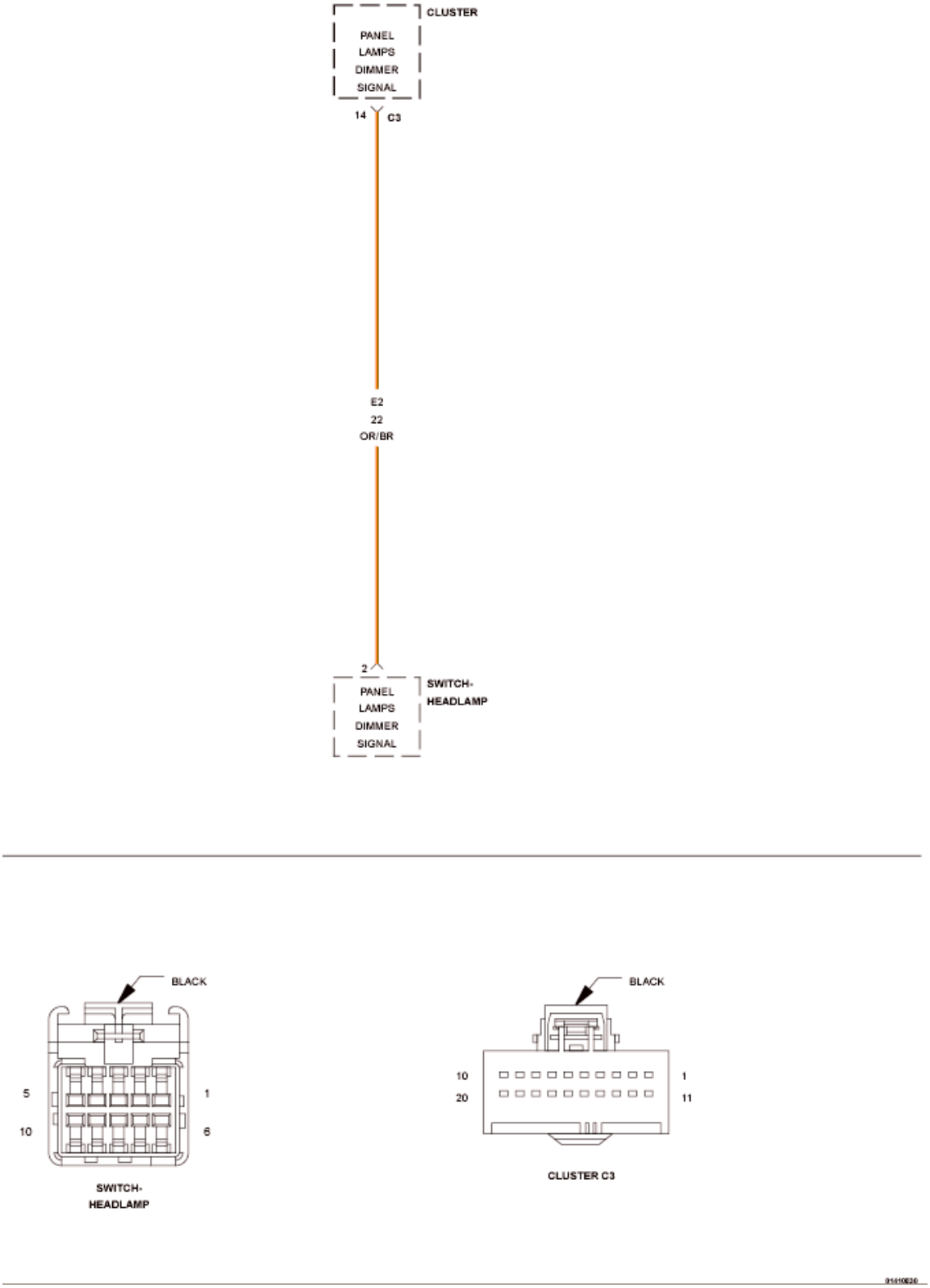

Fig. 18: Panel Dimmer Input Wiring Diagram
Courtesy of CHRYSLER GROUP, LLC

For a complete wiring diagram, **refer to appropriate SYSTEM WIRING DIAGRAMS article** .

WHEN MONITORED:

With the Cluster awake.

SET CONDITION:

Panel Dimmer Input less than 0.5 of a volt.

POSSIBLE CAUSES

Possible Causes
(E2) PANEL LAMPS DIMMER SIGNAL CIRCUIT FOR A SHORT TO GROUND
HEADLAMP SWITCH
CLUSTER

DIAGNOSTIC TEST

1. **CHECK FOR AN ACTIVE DTC**
    1. Turn the ignition on.
    2. With the scan tool, record and erase DTCs.
    3. Activate the Panel Dimmer Switch.
    4. Wait 30 seconds.
    5. With the scan tool, read DTCs.

    Is the DTC active?

    Yes

    - Go To 2.

    No

    - The condition that caused this code to set is not present at this time. Check for an intermittent condition by inspecting the related wiring harness for chafed, pierced, pinched, and partially broken wires. Also inspect the related connectors for broken, bent, pushed out, spread, corroded, or contaminated terminals.
    - Perform the BODY VERIFICATION TEST. Refer to **BODY VERIFICATION TEST** .
2. **CHECK OPERATION OF HEADLAMP SWITCH**
    1. Disconnect the Headlamp Switch harness connector.
    2. With the scan tool, read Cluster DTCs.

    Is the DTC active?

    Yes

- Go To 3.

No

- Replace the Headlamp Switch in accordance with the Service Information.
- Perform the BODY VERIFICATION TEST. Refer to **BODY VERIFICATION TEST** .

3. **CHECK THE (E2) PANEL LAMPS DIMMER SIGNAL CIRCUIT FOR A SHORT TO GROUND**

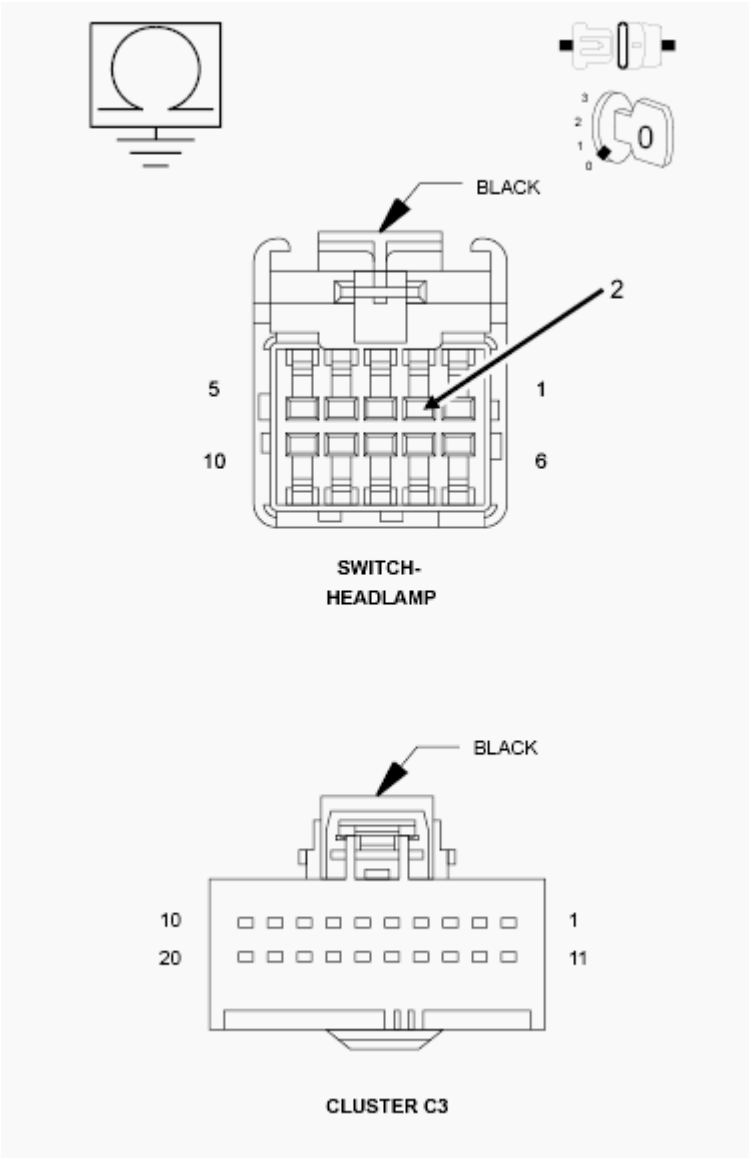

Fig. 19: Checking Panel Lamps Dimmer Signal Circuit For A Short To Ground
Courtesy of CHRYSLER GROUP, LLC

1. Turn the ignition off.
2. Disconnect the Cluster C3 harness connector.
3. Measure the resistance between ground and the (E2) Panel Lamps Dimmer Signal circuit.

Is the resistance below 10K Ohms?

Yes

- Repair the (E2) Panel Lamps Dimmer Signal circuit for a short to ground.
- Perform the BODY VERIFICATION TEST. Refer to **BODY VERIFICATION TEST** .

No

- Replace the Cluster in accordance with the Service Information.
- Perform the BODY VERIFICATION TEST. Refer to **BODY VERIFICATION TEST** .

B160B-PANEL DIMMER INPUT CIRCUIT HIGH

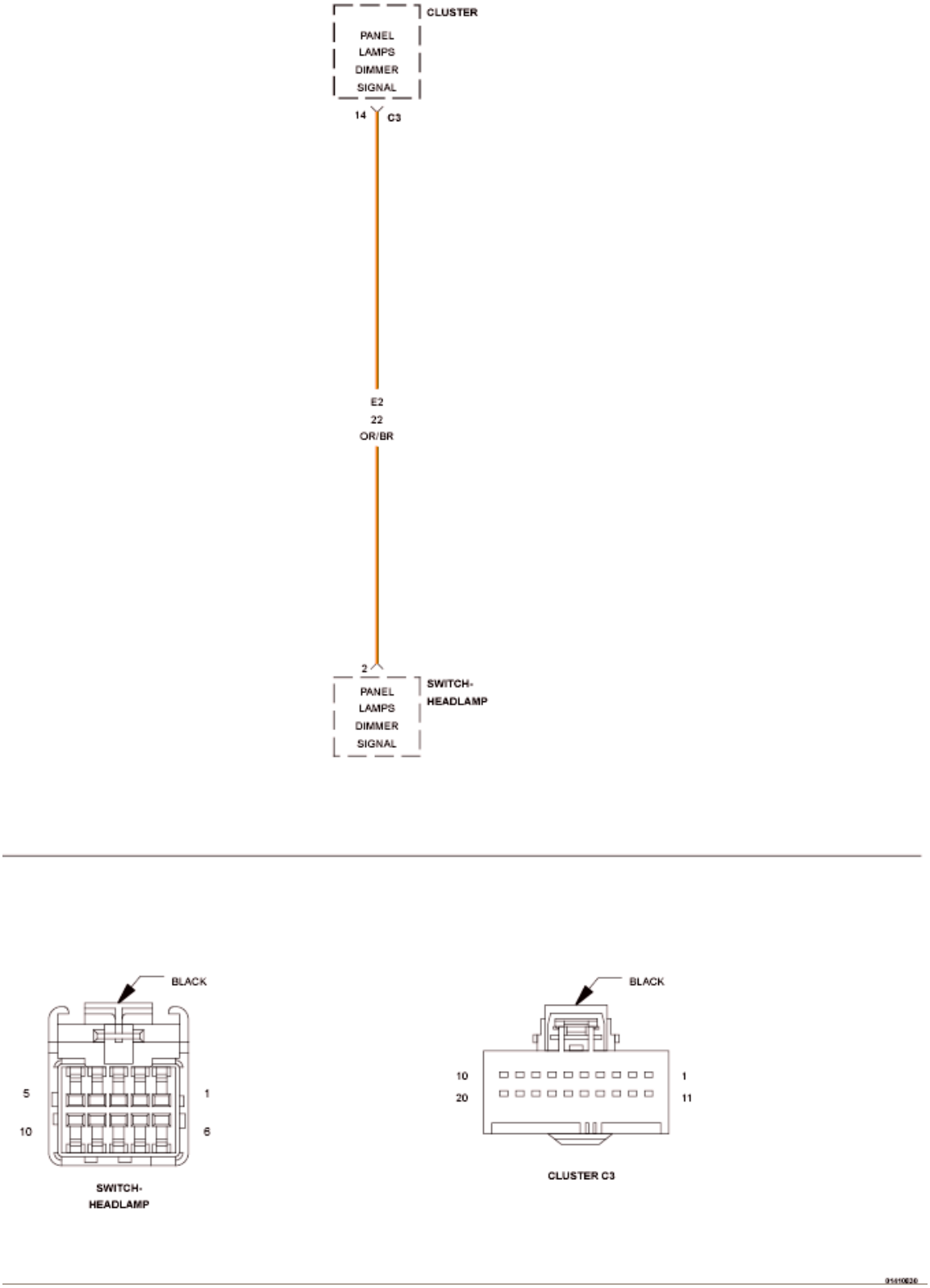

Fig. 20: Panel Dimmer Input Wiring Diagram
Courtesy of CHRYSLER GROUP, LLC

For a complete wiring diagram, **refer to appropriate SYSTEM WIRING DIAGRAMS article** .

WHEN MONITORED:

With the ignition on.

SET CONDITION:

Panel Dimmer signal is greater than 4.8 volts.

POSSIBLE CAUSES

Possible Causes
(E2) PANEL LAMPS DIMMER SIGNAL CIRCUIT FOR A SHORT TO VOLTAGE
(E2) PANEL LAMPS DIMMER SIGNAL CIRCUIT FOR AN OPEN
HEADLAMP SWITCH

DIAGNOSTIC TEST

1. **CHECK FOR AN ACTIVE DTC**
    1. Turn the ignition on.
    2. With the scan tool, record and erase DTCs.
    3. Activate the Panel Dimmer Switch.
    4. Wait 30 seconds.
    5. With the scan tool, read DTCs.

    Is the DTC active?

    Yes

    - Go To 2.

    No

    - The condition that caused this code to set is not present at this time. Check for an intermittent condition by inspecting the related wiring harness for chafed, pierced, pinched, and partially broken wires. Also inspect the related connectors for broken, bent, pushed out, spread, corroded, or contaminated terminals.
    - Perform the BODY VERIFICATION TEST. Refer to **BODY VERIFICATION TEST** .
2. **CHECK THE (E2) PANEL LAMPS DIMMER SIGNAL CIRCUIT FOR A SHORT TO VOLTAGE**

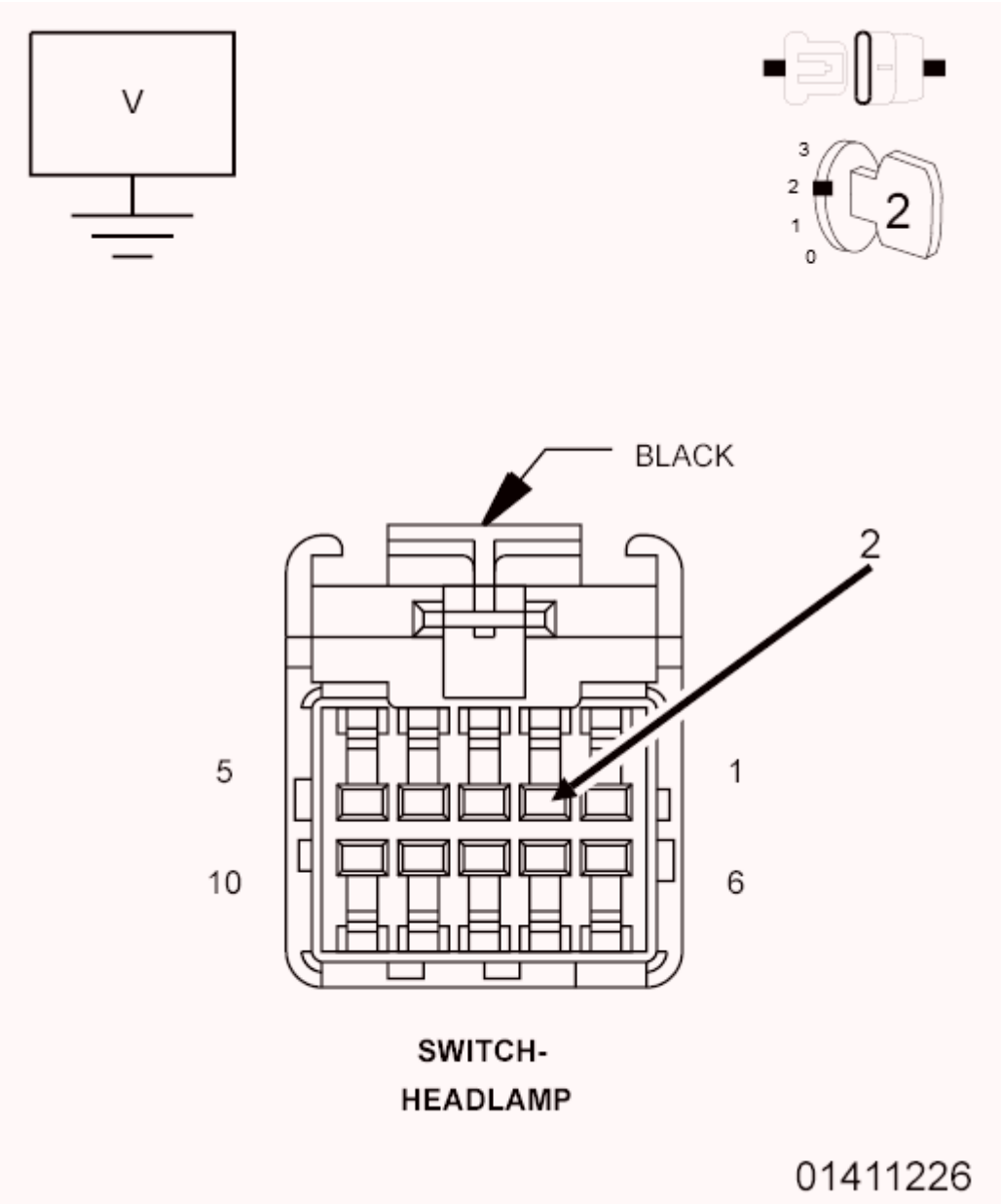

Fig. 21: Checking Panel Lamps Dimmer Signal Circuit For A Short To Voltage
Courtesy of CHRYSLER GROUP, LLC

1. Turn the ignition off.
2. Disconnect the Headlamp Switch harness connectors.
3. Turn the ignition on.
4. Measure the voltage on the (E2) Panel Lamps Dimmer Signal circuit.

   Is the voltage greater than 10.0 volts?

   Yes

- Repair the (E2) Panel Lamps Dimmer Signal circuit for a short to voltage.
- Perform the BODY VERIFICATION TEST. Refer to **BODY VERIFICATION TEST** .

No

- Go To 3.

3. **CHECK THE OPERATION OF THE PANEL LAMPS DIMMER SWITCH**

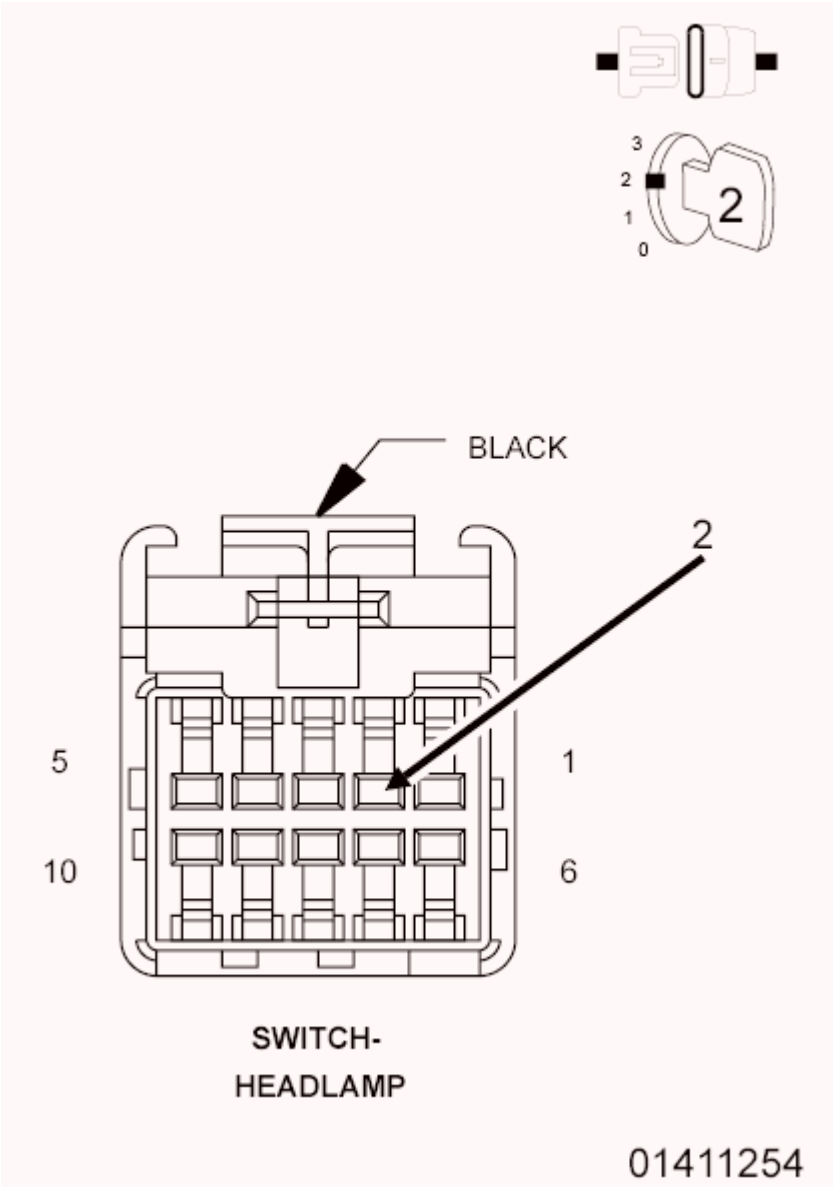

Fig. 22: Checking Operation Of The Panel Lamps Dimmer Switch
Courtesy of CHRYSLER GROUP, LLC

1. Turn the ignition off.
2. Connect a jumper wire at the Headlamp Switch harness connector between the (E2) Panel Lamps

Dimmer Signal circuit and ground.

3. Turn the ignition on.
4. With the scan tool, read DTCs.

Does the Scan tool display-B160A-PANEL DIMMER INPUT CIRCUIT LOW?

Yes

- Replace the Headlamp Switch in accordance with the Service Information.
- Perform the BODY VERIFICATION TEST. Refer to **BODY VERIFICATION TEST** .

No

- Go To 4.

4. **CHECK THE (E2) PANEL LAMPS DIMMER SIGNAL CIRCUIT FOR AN OPEN**

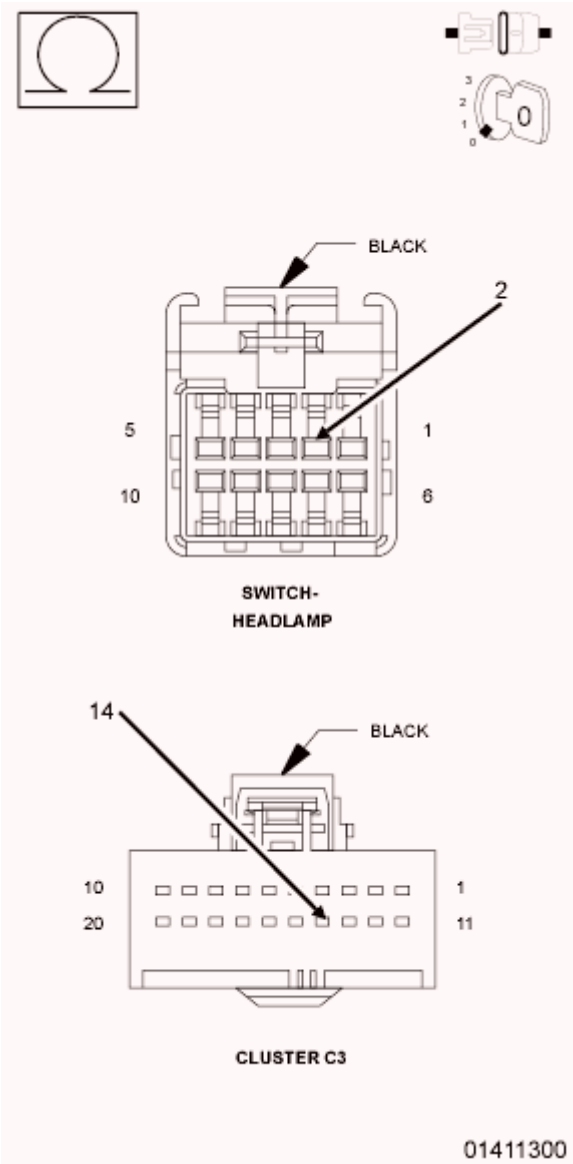

Fig. 23: Checking Panel Lamps Dimmer Signal Circuit For An Open
Courtesy of CHRYSLER GROUP, LLC

1. Turn the ignition off.
2. Disconnect the Cluster C3 harness connector.
3. Measure the resistance of the (E2) Panel Lamps Dimmer Signal circuit between the Cluster C3 harness connector and the Headlamp Switch harness connector.

   Is the resistance above 5.0 Ohms?

   Yes

   - Repair the (E2) Panel Lamps Dimmer Signal circuit for an open.
   - Perform the BODY VERIFICATION TEST. Refer to **BODY VERIFICATION TEST** .

No

- Replace the Cluster in accordance with the Service Information.
- Perform the BODY VERIFICATION TEST. Refer to **BODY VERIFICATION TEST** .

B1629-CARGO LAMP CONTROL CIRCUIT FOR AN OPEN

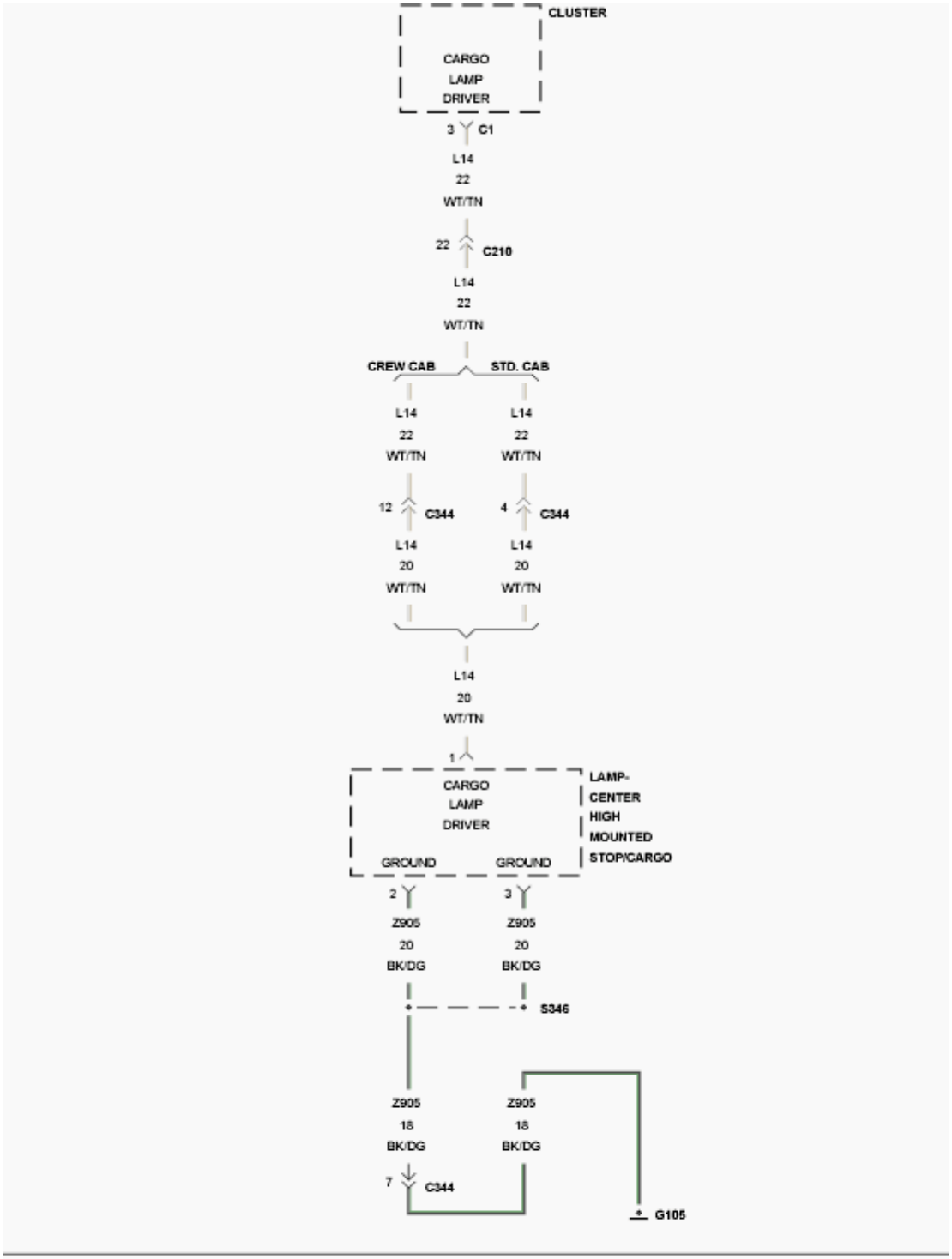
CLUSTER
CARGO
LAMP
DRIVER
3
C1
L14
22
WT/TN
22
C210
L14
22
WT/TN
CREW CAB
STD. CAB
L14
22
WT/TN
L14
22
WT/TN
12
C344
4
C344
L14
20
WT/TN
L14
20
WT/TN
L14
20
WT/TN
1
CARGO
LAMP
DRIVER
LAMP-
CENTER
HIGH
MOUNTED
STOP/CARGO
GROUND
GROUND
2
3
Z905
20
BK/DG
Z905
20
BK/DG
S346
Z905
18
BK/DG
Z905
18
BK/DG
7
C344
G105

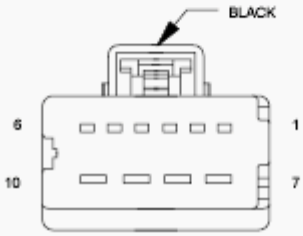
BLACK
6
1
10
7

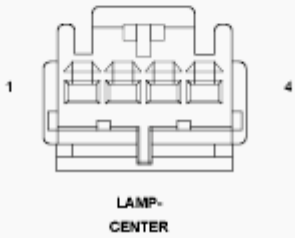
1
4
LAMP-
CENTER

Fig. 24: Cargo Lamp Control Wiring Diagram
Courtesy of CHRYSLER GROUP, LLC

For a complete wiring diagram, **refer to appropriate SYSTEM WIRING DIAGRAMS article** .

WHEN MONITORED:

With the ignition on, Cargo Lamp activated.

SET CONDITION:

The Cluster detects the Cargo Lamp Driver circuit is open.

POSSIBLE CAUSES

Possible Causes
(L14) CARGO LAMP DRIVER CIRCUIT FOR AN OPEN
CENTER HIGH MOUNTED STOP/CARGO LAMP
CLUSTER

DIAGNOSTIC TEST

1. **CHECK FOR AN ACTIVE DTC**
    1. Turn the ignition on.
    2. With the scan tool, read DTCs.

    Does the scan tool display this DTC as active?

    Yes

    - Go To 2.

    No

    - The condition that caused this code to set is not present at this time. Check for an intermittent condition by inspecting the related wiring harness for chafed, pierced, pinched, and partially broken wires. Also inspect the related connectors for broken, bent, pushed out, spread, corroded, or contaminated terminals.
    - Perform the BODY VERIFICATION TEST. Refer to **BODY VERIFICATION TEST** .
2. **CENTER HIGH MOUNTED STOP/CARGO LAMP**

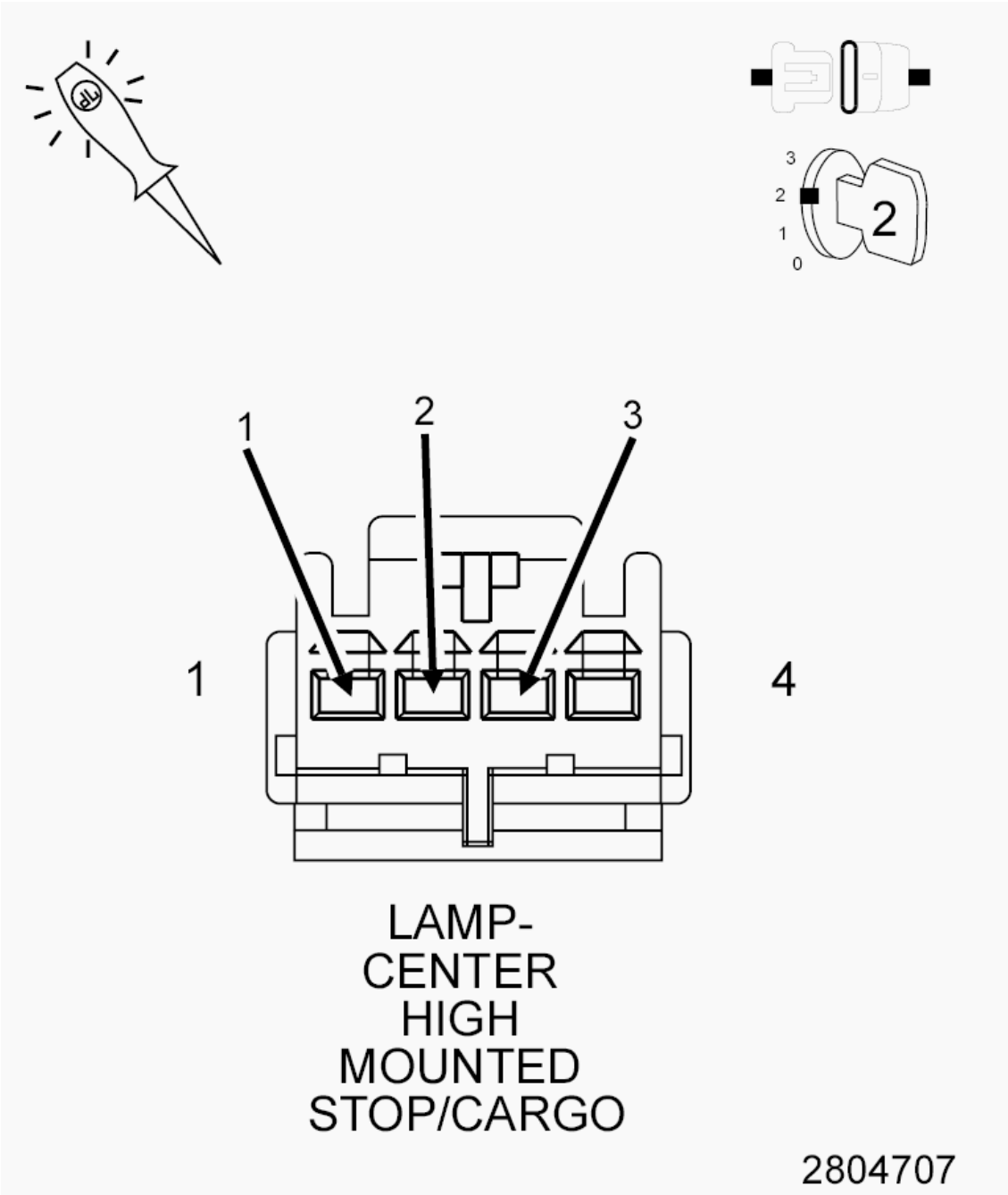

Fig. 25: Center High Mounted Stop/Cargo Lamp Connector End View
Courtesy of CHRYSLER GROUP, LLC

1. Disconnect the Center High Mounted Stop/Cargo Lamp harness connector.
2. Turn the Cargo Lamp on.
3. Using a test light, measure the voltage across the (L14) Cargo Lamp Driver circuit and (Z905) Ground circuits at the Center High Mounted Stop/Cargo Lamp harness connector.

   Does the test light illuminate?

Yes

- Replace the Cargo Lamp in accordance with the Service Information. Refer to **LAMP, CARGO, REMOVAL** .
- Perform the BODY VERIFICATION TEST. Refer to **BODY VERIFICATION TEST** .

No

- Go To 3.

3. **(Z905) GROUND CIRCUIT FOR AN OPEN**

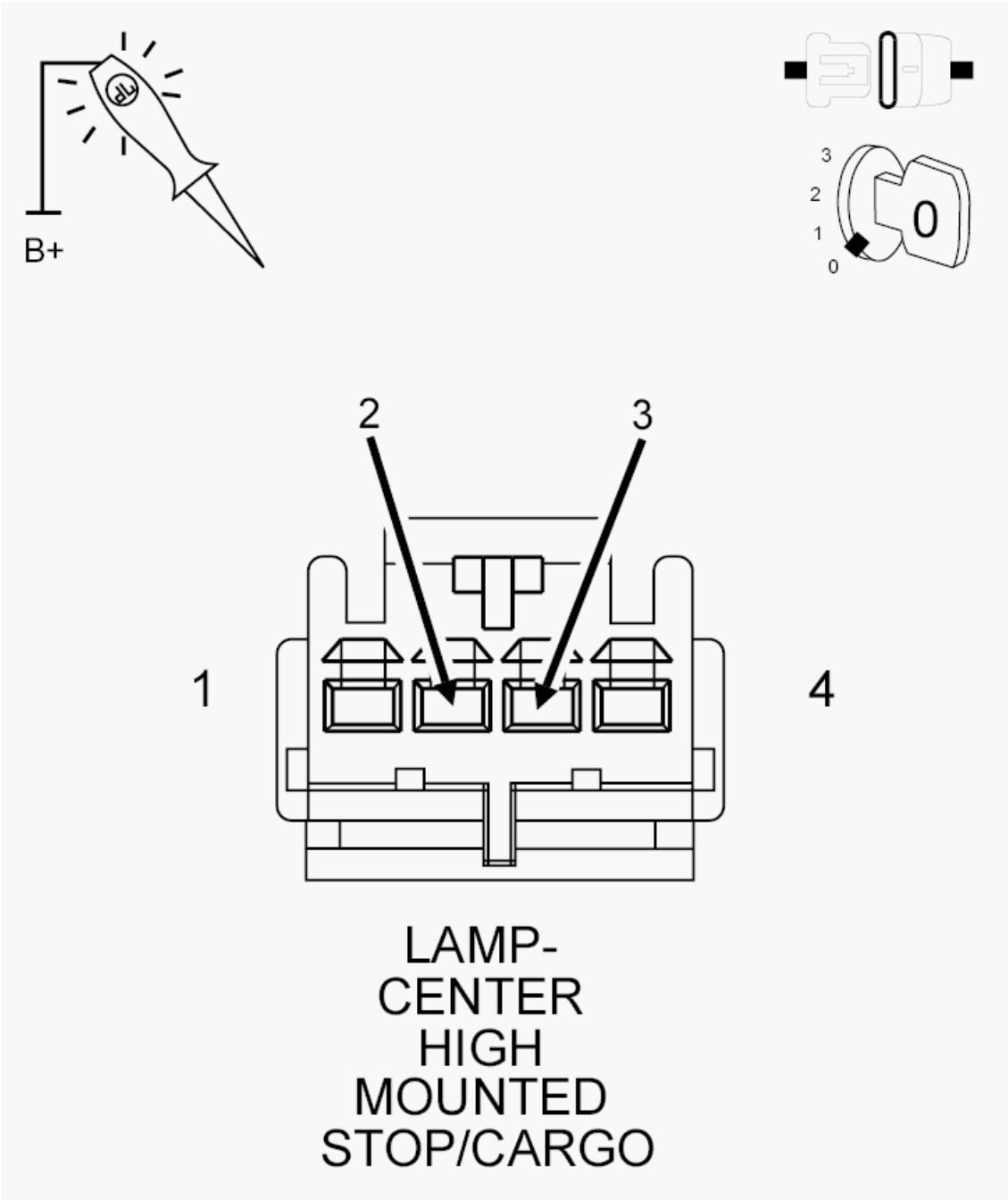

Fig. 26: Checking Ground Circuit For An Open
Courtesy of CHRYSLER GROUP, LLC

1. Turn the ignition off.
2. Using a test light connected to 12 volts, measure the resistance to ground of the (Z905) Ground circuit at the Center High Mounted Stop/Cargo Lamp harness connector.

   Does the test light illuminate?

   Yes

- Go To 4.

No

- Repair the open in the (Z905) Ground circuit.
- Perform the BODY VERIFICATION TEST. Refer to **BODY VERIFICATION TEST** .

4. **(L14) CARGO LAMP DRIVER CIRCUIT FOR AN OPEN**

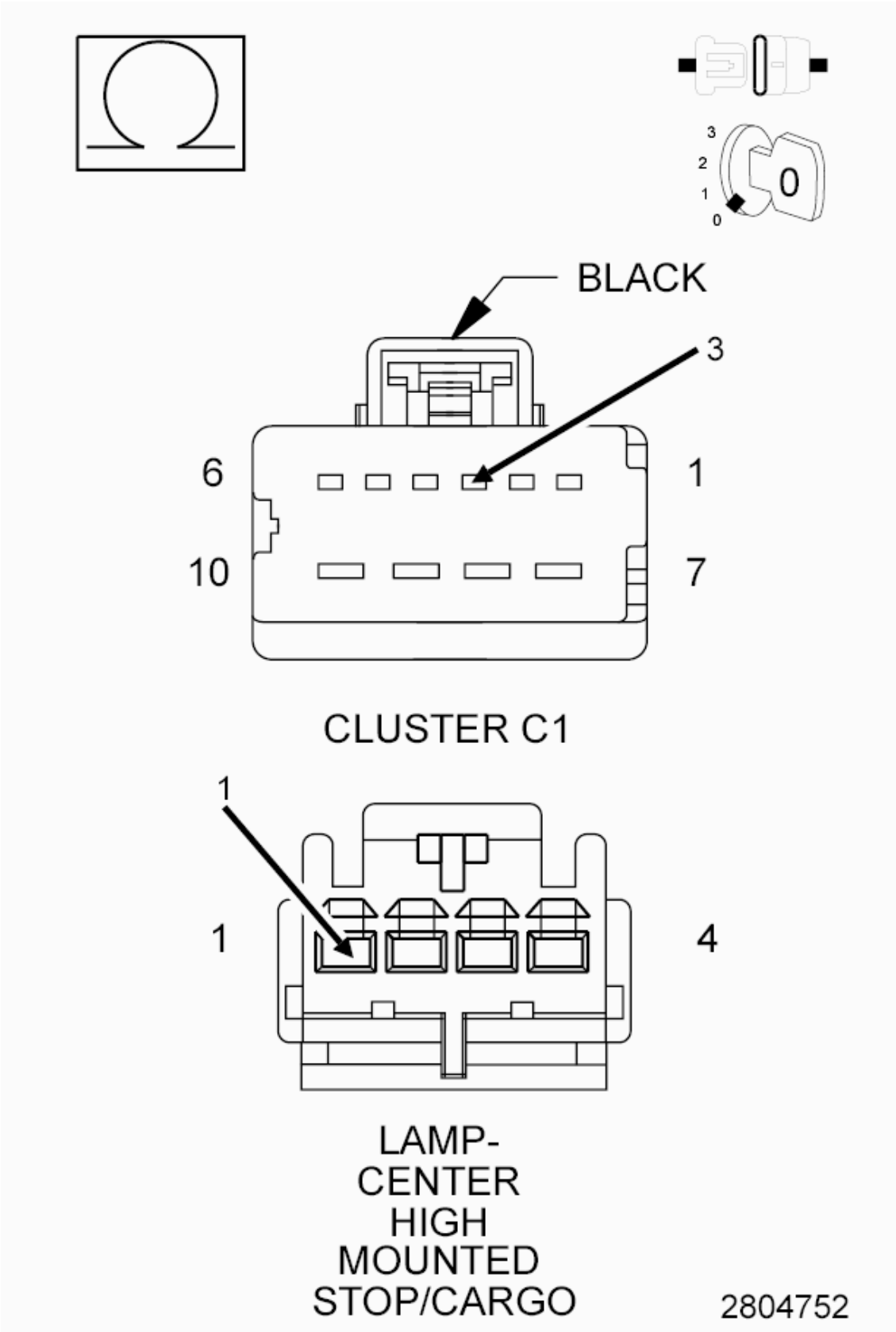

Fig. 27: Checking Cargo Lamp Driver Circuit For An Open

Courtesy of CHRYSLER GROUP, LLC

1. Disconnect the Cluster C1 harness connector.
2. Measure the resistance of the (L14) Cargo Lamp Driver circuit.

   Is the resistance below 5.0 Ohms?

   Yes

   - Replace the Cluster in accordance with the service information. Refer to **REMOVAL** .
   - Perform the BODY VERIFICATION TEST. Refer to **BODY VERIFICATION TEST** .

   No

   - Repair the open in the (L14) Cargo Lamp Driver circuit.
   - Perform the BODY VERIFICATION TEST. Refer to **BODY VERIFICATION TEST** .

B168F-FRONT FOG LAMP SWITCH CIRCUIT STUCK

For a complete wiring diagram, **refer to appropriate SYSTEM WIRING DIAGRAMS article** .

WHEN MONITORED:

With the ignition on.

SET CONDITION:

When the Cluster detects a Fog Lamp Switch Stuck message.

POSSIBLE CAUSES

Possible Causes
HEADLAMP SWITCH

DIAGNOSTIC TEST

1. **TEST FOR INTERMITTENT CONDITION**
   1. Turn the ignition on.
   2. Turn the Headlamps on.
   3. Operate the Fog Lamp Switch several times.
   4. Turn the ignition on and wait 30 seconds.
   5. Using the scan tool, read DTCs.

      Does the scan tool display: B168F-FRONT FOG LAMP SWITCH CIRCUIT STUCK?

Yes

- Replace the Headlamp Switch in accordance with the Service Information.
- Perform the BODY VERIFICATION TEST. Refer to **BODY VERIFICATION TEST** .

No

- Test complete, the condition or conditions that originally set this DTC are not present at this time. Using the wiring diagrams as a guide, check all related splices and connectors for signs of water intrusion, corrosion, pushed out or bent terminals, and correct pin tension.

B169C-CARGO LAMP SWITCH STUCK

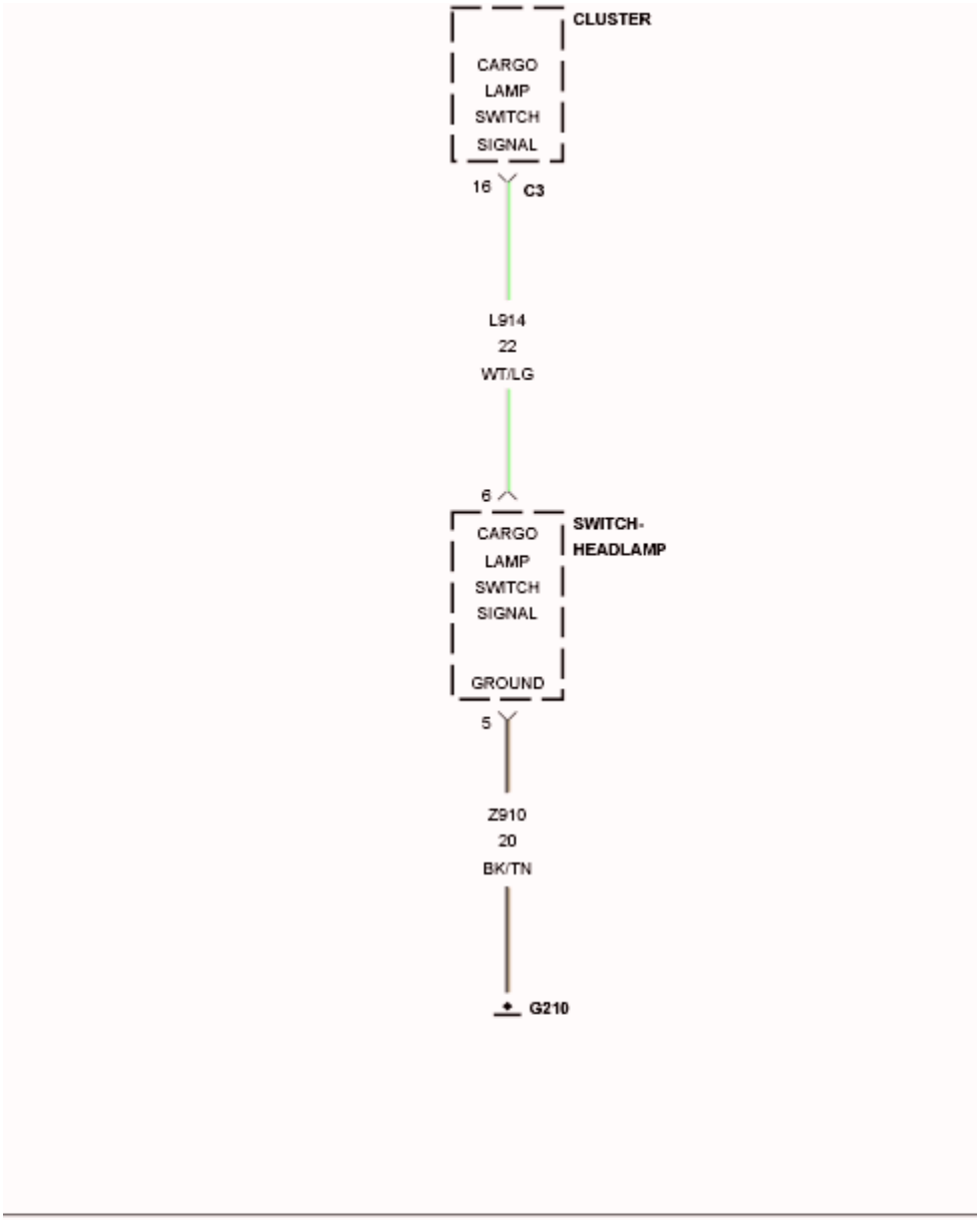
CLUSTER
CARGO
LAMP
SWITCH
SIGNAL
16
C3
L914
22
WT/LG
6
SWITCH-
HEADLAMP
CARGO
LAMP
SWITCH
SIGNAL
GROUND
5
Z910
20
BK/TN
G210
BLACK
10
20
1
11
CLUSTER C3
BLACK
5
10
1
6
SWITCH-
HEADLAMP

Fig. 28: Cargo Lamp Switch Wiring Diagram
Courtesy of CHRYSLER GROUP, LLC

For a complete wiring diagram, **refer to appropriate SYSTEM WIRING DIAGRAMS article** .

WHEN MONITORED:

With the Cargo Lamps on.

SET CONDITION:

When the Cluster detects a low condition on the Cargo Lamp Return circuit.

POSSIBLE CAUSES

Possible Causes
(L914) CARGO LAMP SWITCH SIGNAL CIRCUIT FOR A SHORT TO GROUND
(L914) CARGO LAMP SWITCH SIGNAL CIRCUIT FOR A SHORT TO THE (Z910) GROUND CIRCUIT
HEADLAMP SWITCH
CLUSTER

DIAGNOSTIC TEST

1. **CHECK FOR AN ACTIVE DTC**
    1. Turn the ignition on.
    2. Operate the Cargo Lamp Switch several times.
    3. With the scan tool, read DTCs.

    Does the scan tool display this DTC as active?

    Yes

    - Go To 2.

    No

    - The conditions that caused this code to set are not present at this time. Using the wiring diagram/schematic as a guide, inspect the wiring and connectors.
    - Perform the BODY VERIFICATION TEST. Refer to **BODY VERIFICATION TEST** .
2. **HEADLAMP SWITCH SHORTED**
    1. With the scan tool, erase DTCs.
    2. Disconnect the Headlamp Switch connector.
    3. With the scan tool, read DTCs.

Does the scan tool display this DTC as active?

Yes

- Go To 3.

No

- Replace the Headlamp Switch in accordance with the Service Information.
- Perform the BODY VERIFICATION TEST. Refer to **BODY VERIFICATION TEST** .

3. **(L914) CARGO LAMP SWITCH RETURN CIRCUIT FOR A SHORT TO GROUND**

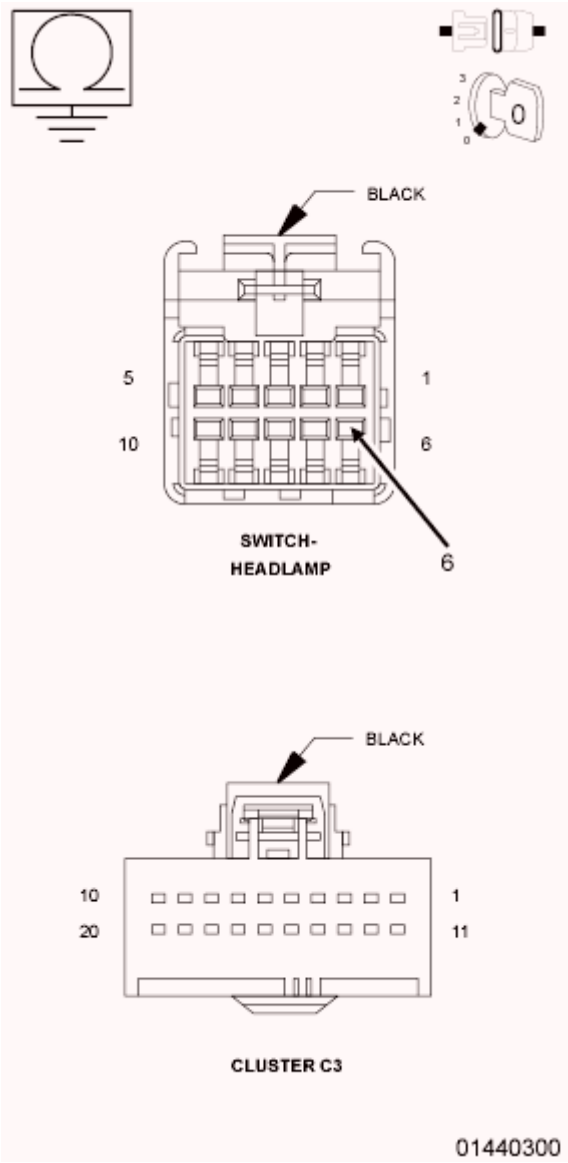

Fig. 29: Checking Cargo Lamp Switch Return Circuit For A Short To Ground
Courtesy of CHRYSLER GROUP, LLC

1. Turn the ignition off.
2. Disconnect the Cluster C3 harness connector.
3. Measure the resistance between ground and the (L914) Cargo Lamp Switch Return circuit.

   Is the resistance below 5 Ohms?

   Yes

   - Repair the (L914) Cargo Lamp Switch Return circuit for a short to ground.
   - Perform the BODY VERIFICATION TEST. Refer to **BODY VERIFICATION TEST** .

   No

   - Go To 4.

4. **(L914) CARGO LAMP SWITCH RETURN CIRCUIT SHORT TO THE (Z910) GROUND CIRCUIT**

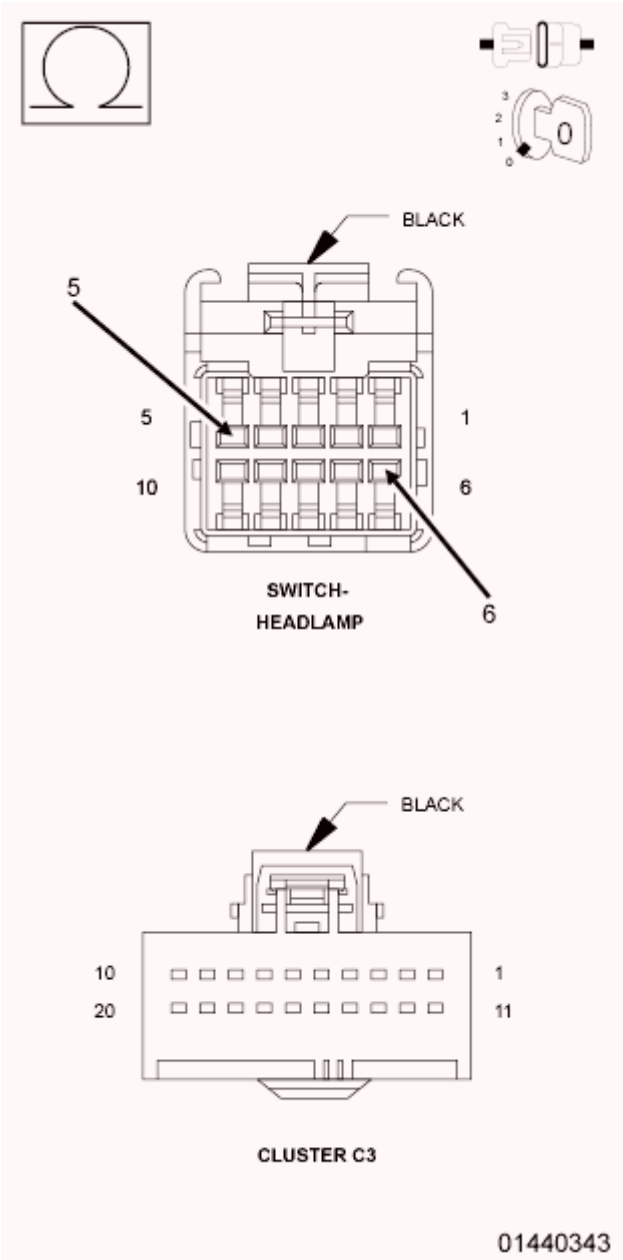

Fig. 30: Checking Cargo Lamp Switch Return Circuit Short To The Ground Circuit
Courtesy of CHRYSLER GROUP, LLC

1. Measure the resistance between the (L914) Cargo Lamp Switch Return circuit and the (Z407) Ground circuit.

   Is the resistance below 5 Ohms?

   Yes

   - Repair the (L914) Cargo Lamp Switch Return circuit for a short to the (Z407) ground circuit.
   - Perform the BODY VERIFICATION TEST. Refer to **BODY VERIFICATION TEST** .

No

- Replace the Cluster in accordance with the Service Information.
- Perform the BODY VERIFICATION TEST. Refer to **BODY VERIFICATION TEST** .

B17E3-TURN SIGNAL SWITCH PERFORMANCE

For a complete wiring diagram, **refer to appropriate SYSTEM WIRING DIAGRAMS article** .

WHEN MONITORED:

With the ignition on.

SET CONDITION:

The Cluster detects the Turn Signal function inoperative.

POSSIBLE CAUSES

Possible Causes
MULTIFUNCTION SWITCH

DIAGNOSTIC TEST

1. **CHECK FOR AN ACTIVE DTC**

NOTE: **Before proceeding with this diagnostic procedure, verify the Multifunction Switch and Clockspring harness connectors are properly seated and verify proper pin terminal tension. A loose connection at any of these connectors may cause this DTC to set.**

1. Turn the ignition on.
2. Actuate the left and right turn signals with the Multifunction Switch.
3. With the scan tool, read DTCs.

Does the scan tool display this DTC as Active?

Yes

- Replace the Multifunction Switch in accordance with the Service Information.
- Perform the BODY VERIFICATION TEST. Refer to **BODY VERIFICATION TEST** .

No

- Test complete, the condition or conditions that originally set this DTC are not present at this time. Using the wiring diagrams as a guide, check all related splices and connectors for signs

of water intrusion, corrosion, pushed out or bent terminals, and correct pin tension.

B2301-WIPER MODE SWITCH INPUT CIRCUIT LOW

For a complete wiring diagram, **refer to appropriate SYSTEM WIRING DIAGRAMS article** .

WHEN MONITORED:

With the ignition on.

SET CONDITION:

The Cluster detects the Wiper Mode Switch Input circuit voltage is less than the expected value.

POSSIBLE CAUSES

Possible Causes
MULTIFUNCTION SWITCH

DIAGNOSTIC TEST

1. **CHECK FOR AN ACTIVE DIAGNOSTIC TROUBLE CODE (DTC)**

   NOTE: Before proceeding with this diagnostic procedure, verify the Multifunction Switch and Clockspring harness connectors are properly seated and verify proper pin terminal tension. A loose connection at any of these connectors may cause this DTC to set.

   1. Turn the ignition on.
   2. Turn the Wipers on and off three times.
   3. Using the scan tool, read DTCs.

   Does the scan tool display this DTC as active?

   Yes

   - Replace the Multifunction Switch in accordance with the Service Information. Refer to **SWITCH, MULTIFUNCTION, REMOVAL** .
   - Perform the BODY VERIFICATION TEST. Refer to **BODY VERIFICATION TEST** .

   No

   - Test complete, the condition or conditions that originally set this DTC are not present at this time. Using the wiring diagrams as a guide, check all related splices and connectors for signs of water intrusion, corrosion, pushed out or bent terminals, and correct pin tension.

B2307-WASHER SWITCH INPUT CIRCUIT LOW

For a complete wiring diagram, **refer to appropriate SYSTEM WIRING DIAGRAMS article** .

WHEN MONITORED:

With the ignition on.

SET CONDITION:

When the Cluster detects a low condition on the Washer Switch Input Circuit.

POSSIBLE CAUSES

Possible Causes
MULTIFUNCTION SWITCH

DIAGNOSTIC TEST

1. **CHECK FOR AN ACTIVE DIAGNOSTIC TROUBLE CODE (DTC)**

   NOTE: Before proceeding with this diagnostic procedure, verify the Multifunction Switch and Clockspring harness connectors are properly seated and verify proper pin terminal tension. A loose connection at any of these connectors may cause this DTC to set.

   1. Turn the ignition on.
   2. Actuate the Washer Switch.
   3. Using the scan tool, read DTCs.

   Does the scan tool display this DTC as active?

   Yes

   - Replace the Multifunction Switch in accordance with the Service Information. Refer to **SWITCH, MULTIFUNCTION, REMOVAL** .
   - Perform the BODY VERIFICATION TEST. Refer to **BODY VERIFICATION TEST** .

   No

   - Test complete, the condition or conditions that originally set this DTC are not present at this time. Using the wiring diagrams as a guide, check all related splices and connectors for signs of water intrusion, corrosion, pushed out or bent terminals, and correct pin tension.

B2339-HORN SWITCH STUCK

For a complete wiring diagram, **refer to appropriate SYSTEM WIRING DIAGRAMS article** .

THEORY OF OPERATION

The Horn Switch is connected to the Right Steering Switch. The switching status is transferred to the Cluster by way of the LIN bus, a serial sub-bus. The Cluster converts the data to a CAN Bus signal and sends the message to the corresponding module on the bus.

WHEN MONITORED:

Continuously with the ignition on.

SET CONDITION:

The Cluster senses that the Horn Switch is pressed for greater than 45 seconds.

POSSIBLE CAUSES

Possible Causes
HORN SWITCH
RIGHT STEERING WHEEL SWITCH (SPEED CONTROL SWITCH)

DIAGNOSTIC TEST

1. **CHECK FOR AN ACTIVE DTC**
    1. Turn the ignition on.
    2. With the scan tool, read DTCs.

    Does the scan tool display this DTC as active?

    Yes

WARNING: **Turn the ignition off disconnect the 12-volt battery and wait two minutes before proceeding. Failure to follow these instructions may result in possible serious or fatal injury.**

WARNING: **Do not place an intact non-deployed airbag face down on a hard surface, the airbag propels into the air if accidentally deployed. Failure to follow these instructions may result in possible serious or fatal injury.**

NOTE: **Visually and physically inspect the wiring harness between the Horn Switch harness connector and the Right Steering Wheel Switch (Speed Control Switch) harness connector. Repair any damaged wires, connectors, and open/spread terminals. If**

harness is OK, proceed with test.

-
- Replace the Right Steering Wheel Switch (Speed Control Switch) in accordance with the Service Information. Refer to **SWITCH, SPEED CONTROL, REMOVAL** .
- Perform the BODY VERIFICATION TEST. Refer to **BODY VERIFICATION TEST** .

No

- Test complete, the condition or conditions that originally set this DTC are not present at this time. Using the wiring diagrams as a guide, check all related splices and connectors for signs of water intrusion, corrosion, pushed out or bent terminals, and correct pin tension.
- Perform the BODY VERIFICATION TEST. Refer to **BODY VERIFICATION TEST** .

B238E-HI BEAM SWITCH CIRCUIT LOW

For a complete wiring diagram, **refer to appropriate SYSTEM WIRING DIAGRAMS article** .

WHEN MONITORED:

With the ignition on.

SET CONDITION:

The Cluster detects the High Beam function inoperative.

POSSIBLE CAUSES

Possible Causes
MULTIFUNCTION SWITCH

DIAGNOSTIC TEST

1. **CHECK FOR AN ACTIVE DTC**

NOTE: **Before proceeding with this diagnostic procedure, verify the Multifunction Switch and Clockspring harness connectors are properly seated and verify proper pin terminal tension. A loose connection at any of these connectors may cause this DTC to set.**

1. Turn the ignition on.
2. Actuate the High Beams with the Multifunction Switch.
3. With the scan tool, read DTCs.

Does the scan tool display this DTC as Active?

Yes

- Replace the Multifunction Switch in accordance with the Service Information. Refer to **SWITCH, MULTIFUNCTION, REMOVAL** .
- Perform the BODY VERIFICATION TEST. Refer to **BODY VERIFICATION TEST** .

No

- Test complete, the condition or conditions that originally set this DTC are not present at this time. Using the wiring diagrams as a guide, check all related splices and connectors for signs of water intrusion, corrosion, pushed out or bent terminals, and correct pin tension.

B2390-MIST SWITCH CIRCUIT LOW

For a complete wiring diagram, **refer to appropriate SYSTEM WIRING DIAGRAMS article** .

WHEN MONITORED:

With the ignition on.

SET CONDITION:

The Cluster detects the Mist function inoperative.

POSSIBLE CAUSES

Possible Causes
MULTIFUNCTION SWITCH

DIAGNOSTIC TEST

1. **CHECK FOR AN ACTIVE DTC**

NOTE: **Before proceeding with this diagnostic procedure, verify the Multifunction Switch and Clockspring harness connectors are properly seated and verify proper pin terminal tension. A loose connection at any of these connectors may cause this DTC to set.**

1. Turn the ignition on.
2. Actuate the Mist function with the Multifunction Switch.
3. With the scan tool, read DTCs.

Does the scan tool display this DTC as Active?

Yes

- Replace the Multifunction Switch in accordance with the Service Information. Refer to **SWITCH, MULTIFUNCTION, REMOVAL** .
- Perform the BODY VERIFICATION TEST. Refer to **BODY VERIFICATION TEST** .

No

- Test complete, the condition or conditions that originally set this DTC are not present at this time. Using the wiring diagrams as a guide, check all related splices and connectors for signs of water intrusion, corrosion, pushed out or bent terminals, and correct pin tension.

B2394-FLASH TO PASS / OPTICAL HORN SWITCH CIRCUIT STUCK

For a complete wiring diagram, **refer to appropriate SYSTEM WIRING DIAGRAMS article** .

WHEN MONITORED:

With the ignition on.

SET CONDITION:

The Cluster detects the Flash to Pass / Optical Horn function inoperative.

POSSIBLE CAUSES

Possible Causes
MULTIFUNCTION SWITCH

DIAGNOSTIC TEST

1. **CHECK FOR AN ACTIVE DTC**

NOTE: **Before proceeding with this diagnostic procedure, verify the Multifunction Switch and Clockspring harness connectors are properly seated and verify proper pin terminal tension. A loose connection at any of these connectors may cause this DTC to set.**

1. Turn the ignition on.
2. Actuate the Optical Horn with the Multifunction Switch.
3. With the scan tool, read DTCs.

Does the scan tool display this DTC as Active?

Yes

- Replace the Multifunction Switch in accordance with the Service Information. Refer to **SWITCH, MULTIFUNCTION, REMOVAL** .

- Perform the BODY VERIFICATION TEST. Refer to **BODY VERIFICATION TEST** .

No

- Test complete, the condition or conditions that originally set this DTC are not present at this time. Using the wiring diagrams as a guide, check all related splices and connectors for signs of water intrusion, corrosion, pushed out or bent terminals, and correct pin tension.

C159C-TIRE PRESSURE LOAD SWITCH STUCK

For a complete wiring diagram, **refer to appropriate SYSTEM WIRING DIAGRAMS article** .

WHEN MONITORED:

With the ignition on.

SET CONDITION:

The Cluster detects the Tire Pressure Load (Light Load) Switch active for greater than 20 seconds.

POSSIBLE CAUSES

Possible Causes
UPPER SWITCH BANK

DIAGNOSTIC TEST

1. **CHECK FOR AN ACTIVE DTC**
    1. Turn the ignition on.
    2. Press the Tire Pressure Load (Light Load) Switch several times.
    3. With the scan tool, read DTCs.

    Does the scan tool display this DTC as active?

    Yes

    - Replace the Upper Switch Bank in accordance with the Service Information.
    - Perform the BODY VERIFICATION TEST. Refer to **BODY VERIFICATION TEST** .

    No

    - Test complete, the condition or conditions that originally set this DTC are not present at this time. Using the wiring diagrams as a guide, check all related splices and connectors for signs of water intrusion, corrosion, pushed out or bent terminals, and correct pin tension.

C2312-TRAC/ESP OFF SWITCH STUCK

For a complete wiring diagram, **refer to appropriate SYSTEM WIRING DIAGRAMS article** .

WHEN MONITORED:

With the ignition on.

SET CONDITION:

The Cluster detects the TRAC/ESP Off Switch active for greater than 20 seconds.

POSSIBLE CAUSES

Possible Causes
UPPER SWITCH BANK

DIAGNOSTIC TEST

1. **CHECK FOR AN ACTIVE DTC**
    1. Turn the ignition on.
    2. With the scan tool, read DTCs.

    Does the scan tool display this DTC as active?

    Yes

    - Replace the Upper Switch Bank in accordance with the Service Information.
    - Perform the BODY VERIFICATION TEST. Refer to **BODY VERIFICATION TEST** .

    No

    - Test complete.

P0838-FOUR WHEEL DRIVE (4WD) SWITCH CIRCUIT LOW

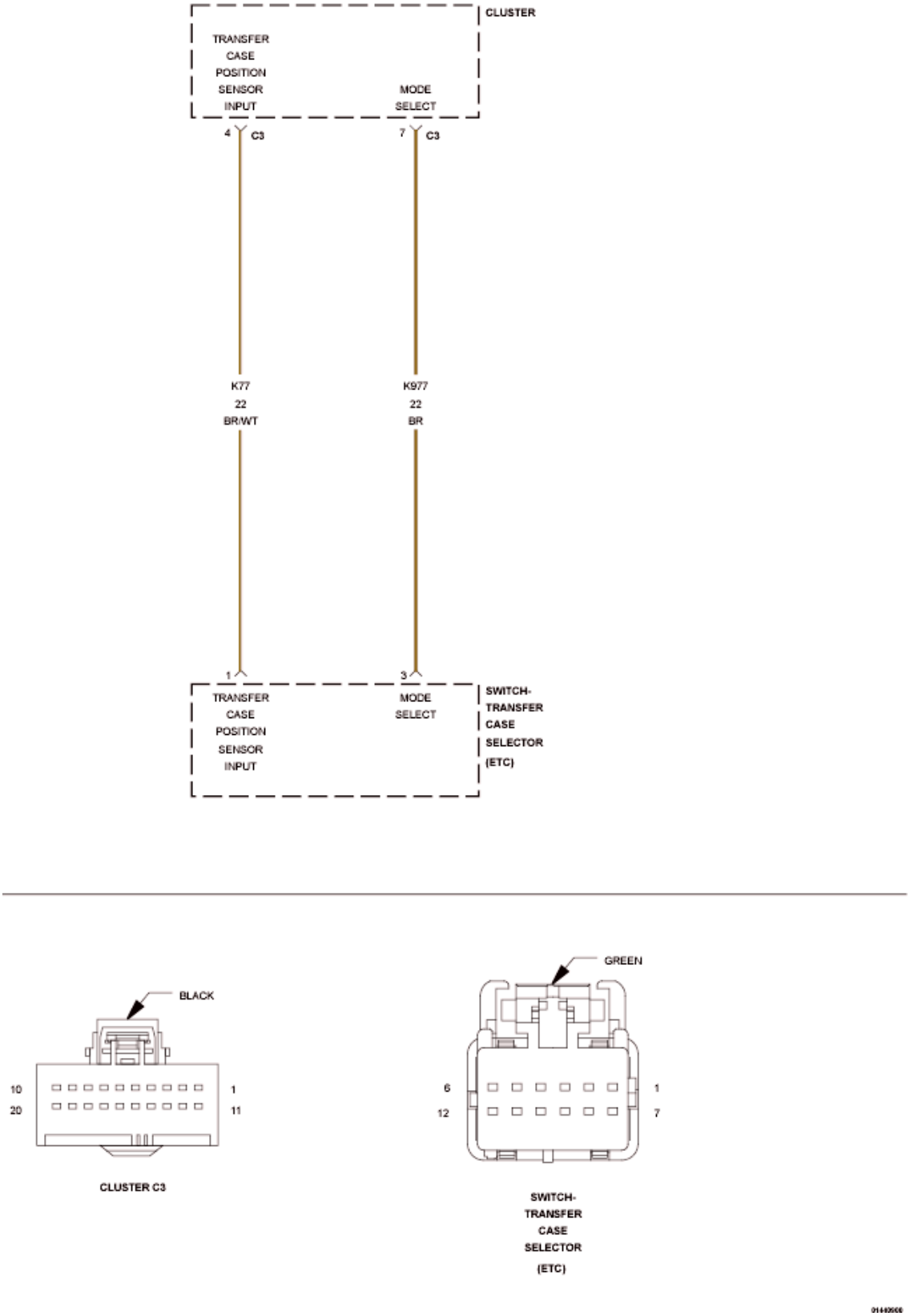

Fig. 31: Four Wheel Drive (4WD) Switch Wiring Diagram
Courtesy of CHRYSLER GROUP, LLC

For a complete wiring diagram, **refer to appropriate SYSTEM WIRING DIAGRAMS article** .

WHEN MONITORED:

With the ignition on.

SET CONDITION:

The (K77) Transfer Case Position Sensor Input circuit is shorted to ground.

POSSIBLE CAUSES

Possible Causes
(K77) TRANSFER CASE POSITION SENSOR INPUT CIRCUIT FOR A SHORT TO GROUND
TRANSFER CASE SELECTOR SWITCH
CLUSTER

DIAGNOSTIC TEST

1. **CHECK FOR ACTIVE DTC**
    1. Turn the ignition on.
    2. With the scan tool, read Cluster DTCs.

       Does the scan tool display this DTC as active?

       Yes

       - Go To 2.

       No

       - The condition that caused this code to set is not present at this time. Check for an intermittent condition by inspecting the related wiring harness for chafed, pierced, pinched, and partially broken wires. Also inspect the related connectors for broken, bent, pushed out, spread, corroded, or contaminated terminals.
       - Perform the BODY VERIFICATION TEST. Refer to **BODY VERIFICATION TEST** .
2. **TRANSFER CASE SELECTOR SWITCH**
    1. Turn the ignition off.
    2. Disconnect the Transfer Case Selector Switch harness connector.
    3. Turn the ignition on.
    4. With the scan tool, read Cluster DTCs.

       Does the scan tool display DTC: P0838-FOUR WHEEL DRIVE (4WD) SWITCH CIRCUIT LOW as active?

Yes

- Go To 3.

No

- Replace the Transfer Case Selector Switch in accordance with the Service Information.
- Perform the BODY VERIFICATION TEST. Refer to **BODY VERIFICATION TEST** .

3. **(K77) TRANSFER CASE POSITION SENSOR INPUT CIRCUIT FOR A SHORT TO GROUND**

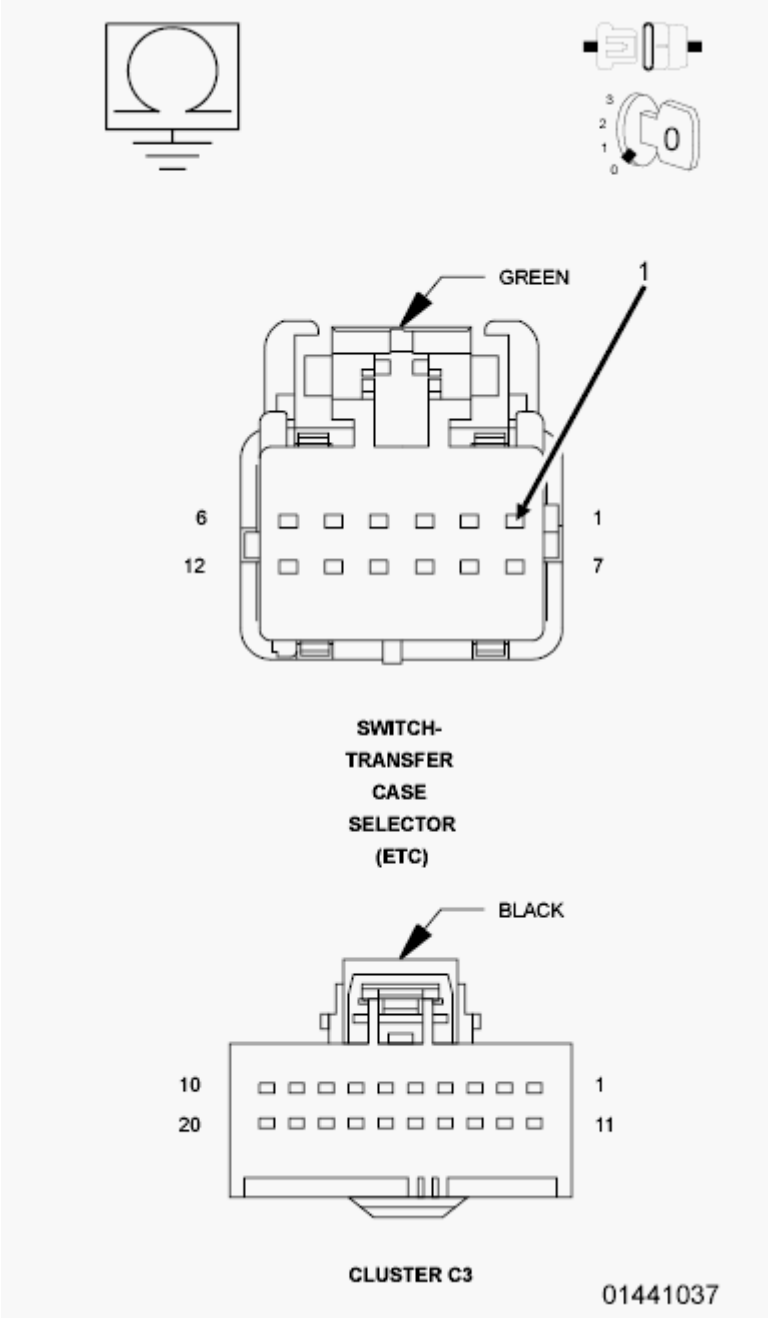

Fig. 32: Checking Transfer Case Position Sensor Input Circuit For A Short To Ground
Courtesy of CHRYSLER GROUP, LLC

1. Turn the ignition off.
2. Disconnect the Cluster C3 harness connector.
3. Measure the resistance between ground and the (K77) Transfer Case Position Sensor Input circuit.

   Is the resistance less than 5.0 Ohms?

   Yes

   - Repair the (K77) Transfer Case Position Sensor Input circuit for a short to ground.
   - Perform the BODY VERIFICATION TEST. Refer to **BODY VERIFICATION TEST** .

   No

   - Replace the Cluster in accordance with the Service Information.
   - Perform the BODY VERIFICATION TEST. Refer to **BODY VERIFICATION TEST** .

P0839-FOUR WHEEL DRIVE (4WD) SWITCH CIRCUIT HIGH

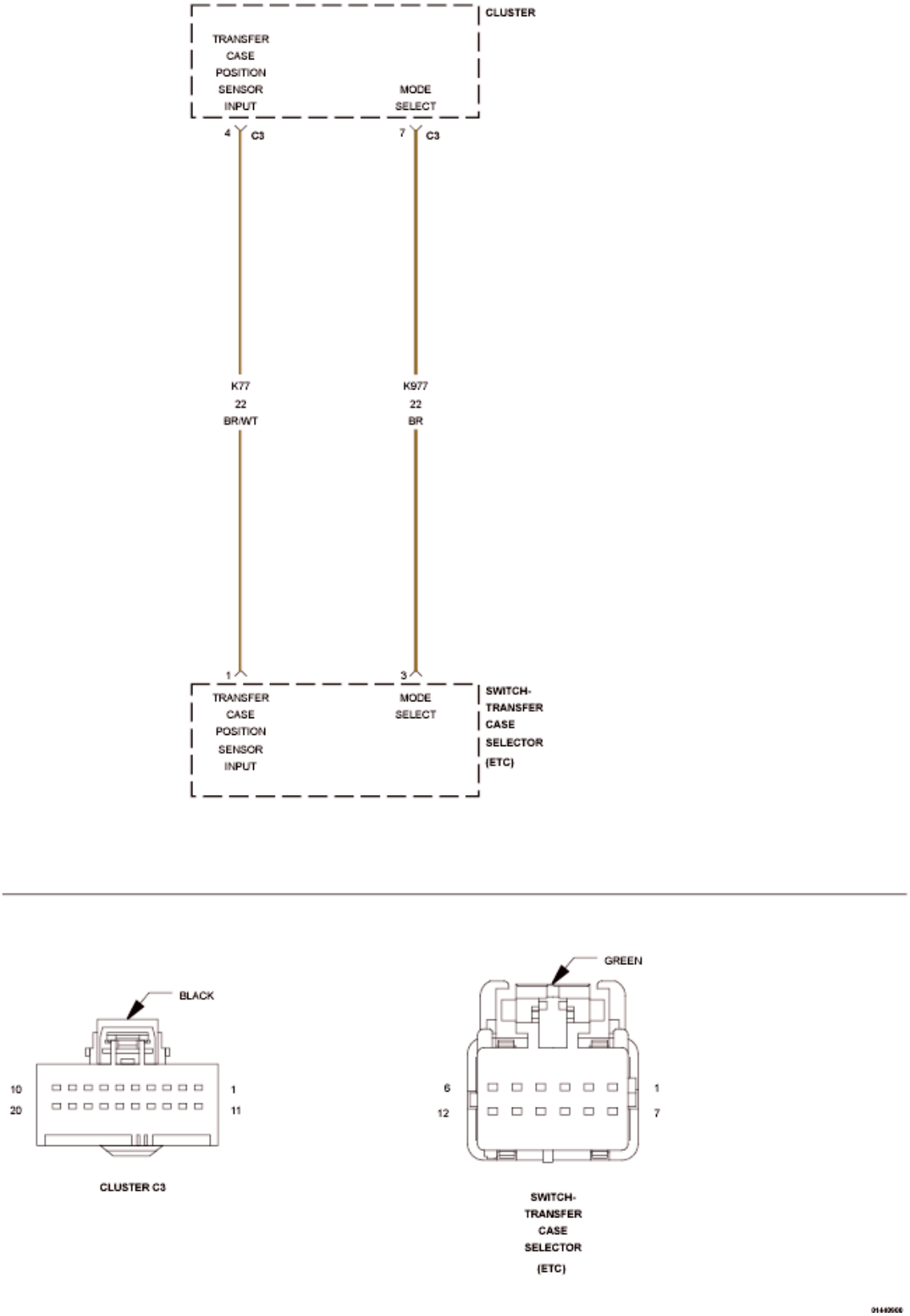

Fig. 33: Four Wheel Drive (4WD) Switch Wiring Diagram
Courtesy of CHRYSLER GROUP, LLC

For a complete wiring diagram, **refer to appropriate SYSTEM WIRING DIAGRAMS article** .

WHEN MONITORED:

With the ignition on.

SET CONDITION:

The (K77) Transfer Case Position Sensor Input circuit is shorted to voltage.

POSSIBLE CAUSES

Possible Causes
(K77) TRANSFER CASE POSITION SENSOR INPUT CIRCUIT FOR A SHORT TO VOLTAGE
TRANSFER CASE SELECTOR SWITCH
CLUSTER

DIAGNOSTIC TEST

1. **CHECK FOR ACTIVE DTC**
    1. Turn the ignition on.
    2. With the scan tool, read Cluster DTCs.

       Does the scan tool display this DTC as active?

       Yes

       - Go To 2.

       No

       - The condition that caused this code to set is not present at this time. Check for an intermittent condition by inspecting the related wiring harness for chafed, pierced, pinched, and partially broken wires. Also inspect the related connectors for broken, bent, pushed out, spread, corroded, or contaminated terminals.
       - Perform the BODY VERIFICATION TEST. Refer to **BODY VERIFICATION TEST** .
2. **TRANSFER CASE SELECTOR SWITCH**

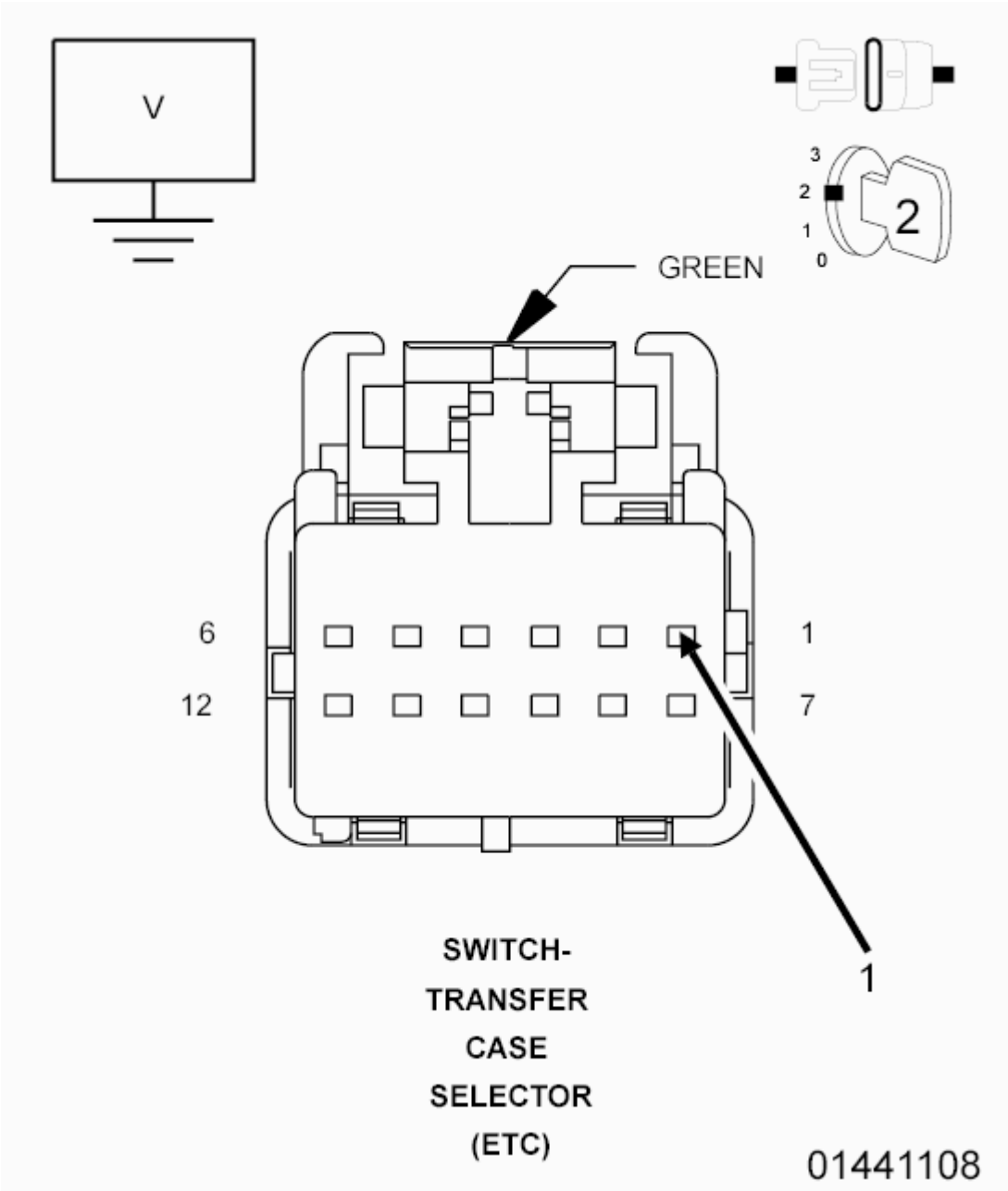

Fig. 34: Measuring Voltage Of Transfer Case Selector Switch
Courtesy of CHRYSLER GROUP, LLC

1. Turn the ignition off.
2. Disconnect the Transfer Case Selector Switch harness connector.
3. Turn the ignition on.
4. Measure the voltage of the (K77) Transfer Case Position Sensor Input circuit.

   Is the voltage above 5.5 volts?

   Yes

- Go To 3.

No

- Replace the Transfer Case Selector Switch in accordance with the Service Information.
- Perform the BODY VERIFICATION TEST. Refer to **BODY VERIFICATION TEST** .

3. **(K77) TRANSFER CASE POSITION SENSOR INPUT CIRCUIT FOR A SHORT TO VOLTAGE**

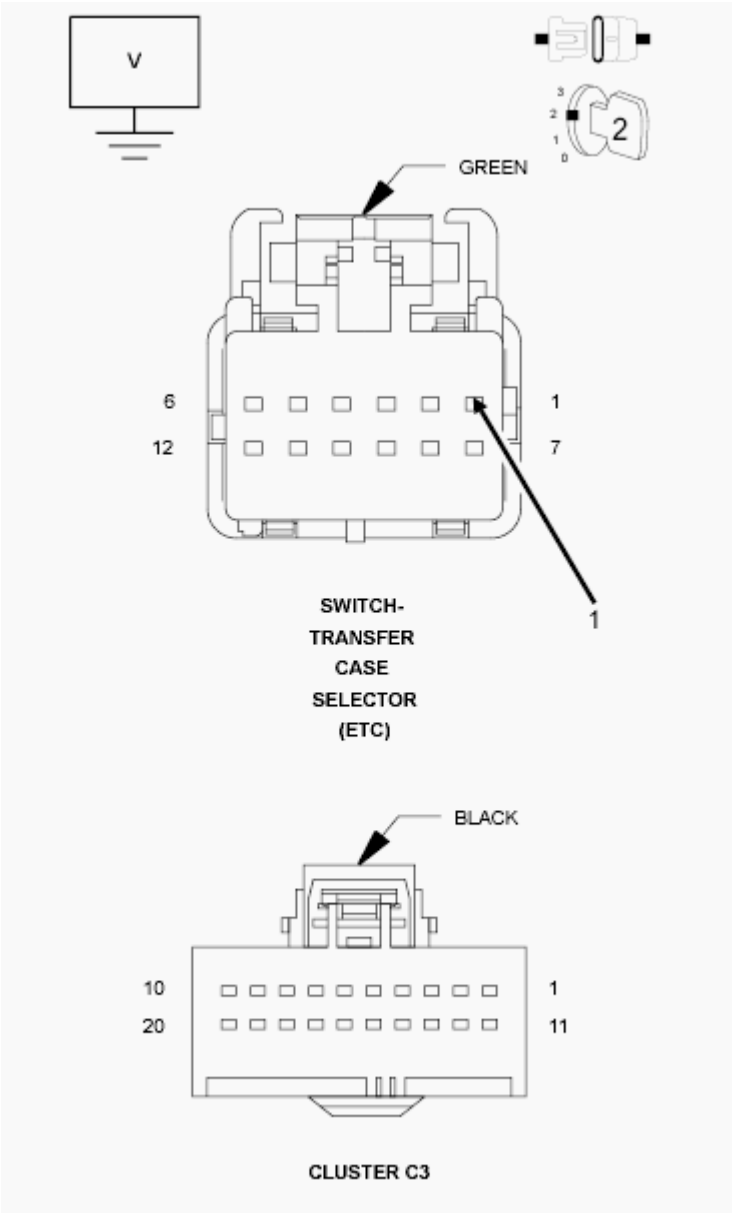

Fig. 35: Checking Transfer Case Position Sensor Input Circuit For A Short To Voltage
Courtesy of CHRYSLER GROUP, LLC

1. Turn the ignition off.
2. Disconnect the Cluster C3 harness connector.

3. Turn the ignition on.
4. Measure the voltage of the (K77) Transfer Case Position Sensor Input circuit at the Transfer Case Selector Switch harness connector.

   Is the voltage above 0.2 of a volt?

   Yes

   - Repair the (K77) Transfer Case Position Sensor Input circuit for a short to voltage.
   - Perform the BODY VERIFICATION TEST. Refer to **BODY VERIFICATION TEST** .

   No

   - Replace the Cluster in accordance with the Service Information.
   - Perform the BODY VERIFICATION TEST. Refer to **BODY VERIFICATION TEST** .

P0853-OVERDRIVE / TOW SWITCH INPUT CIRCUIT STUCK

For a complete wiring diagram, **refer to appropriate SYSTEM WIRING DIAGRAMS article** .

WHEN MONITORED:

With the ignition on.

SET CONDITION:

The Cluster detects the Overdrive / Tow Switch function inoperative.

POSSIBLE CAUSES

Possible Causes
UPPER SWITCH BANK

DIAGNOSTIC TEST

1. **CHECK FOR AN ACTIVE DTC**
   1. Turn the ignition on.
   2. Actuate the Overdrive / Tow Switch.
   3. With the scan tool, read DTCs.

      Does the scan tool display this DTC as Active?

      Yes

      - Replace the Upper Switch Bank in accordance with the Service Information.

- Perform the BODY VERIFICATION TEST. Refer to **BODY VERIFICATION TEST** .

No

- Test complete.

P0952-AUTOSTICK® INPUT CIRCUIT LOW - DS/DJ/D2

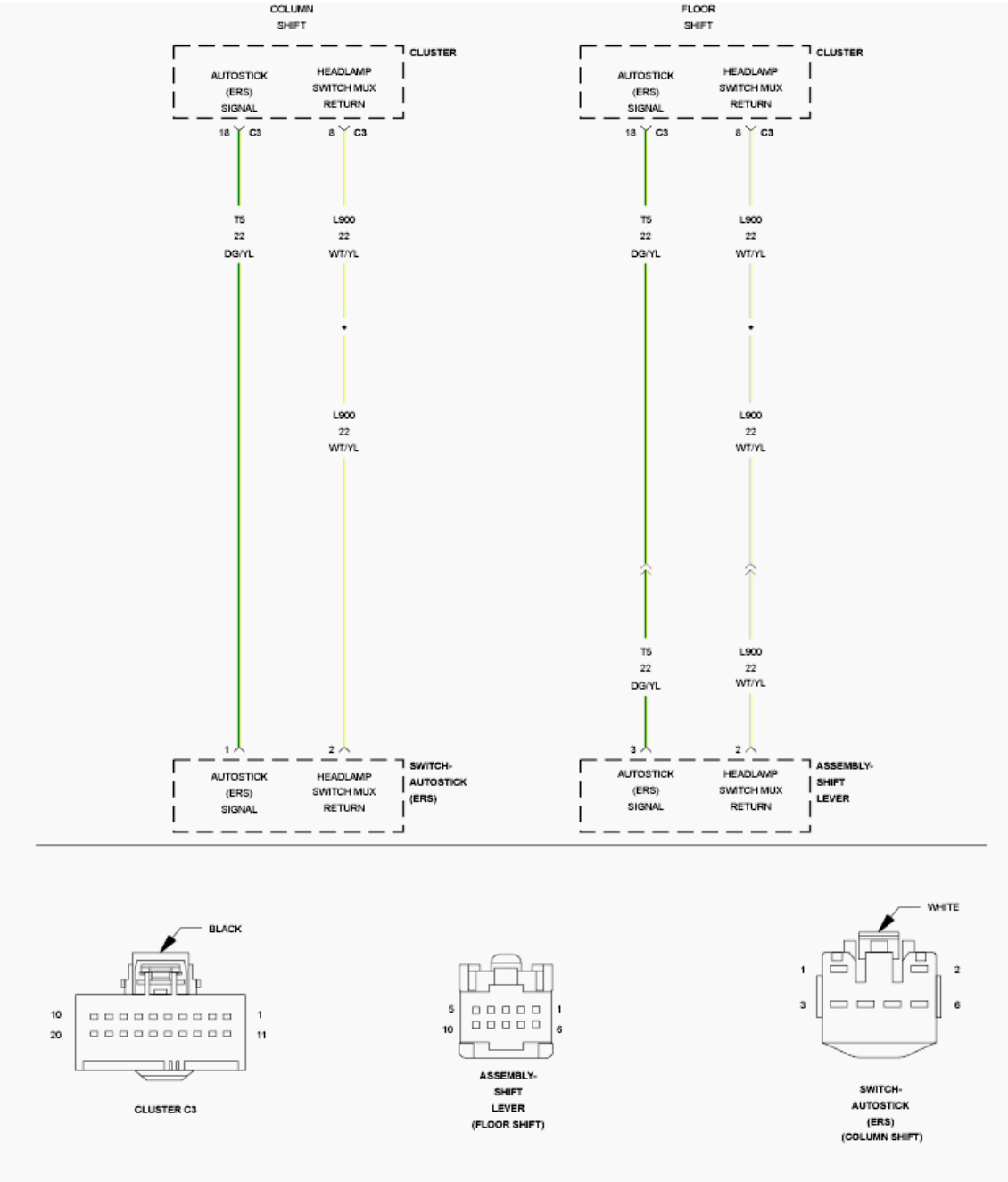

Fig. 36: Autostick® Input Wiring Diagram
Courtesy of CHRYSLER GROUP, LLC

For a complete wiring diagram, **refer to appropriate SYSTEM WIRING DIAGRAMS article** .

WHEN MONITORED:

With the ignition on.

SET CONDITION:

The Cluster detects a voltage below 0.35 volts for the period of 5.0 seconds on the AutoStick® (ERS) Signal circuit.

POSSIBLE CAUSES

Possible Causes
(T5) AUTOSTICK® (ERS) SIGNAL CIRCUIT FOR A SHORT TO GROUND
CHECK THE (T5) AUTOSTICK® (ERS) SIGNAL CIRCUIT FOR A SHORT TO THE (L900) HEADLAMP SWITCH MUX RETURN CIRCUIT
SHIFT LEVER ASSEMBLY (FLOOR SHIFT)
AUTOSTICK® (ERS) SWITCH (COLUMN SHIFT)
CLUSTER

DIAGNOSTIC TEST

1. **CHECK FOR AN ACTIVE DTC**
    1. Turn the ignition on.
    2. With the scan tool, read DTCs.

    Does the scan tool display this DTC as active?

    Yes

    - Go To 2.

    No

    - Test complete, the condition or conditions that originally set this DTC are not present at this time. Using the wiring diagrams as a guide, check all related splices and connectors for signs of water intrusion, corrosion, pushed out or bent terminals, and correct pin tension.
    - Perform the BODY VERIFICATION TEST. Refer to **BODY VERIFICATION TEST** .
2. **SHIFT LEVER ASSEMBLY (FLOOR SHIFT) / AUTOSTICK® (ERS) SWITCH (COLUMN SHIFT)**
    1. Turn the ignition off.
    2. Disconnect the Shift Lever Assembly (Floor Shift) harness connector.
    3. Disconnect the AutoStick® (ERS) Switch (Column Shift) harness connector.
    4. Turn the ignition on.

5. With the scan tool, read DTCs.

   Does the scan tool display this DTC as active?

   Yes

   - Go To 3.

   No

   - Replace the Shift Lever Assembly (Floor Shift) / AutoStick® (ERS) Switch (Column Shift) in accordance with the Service Information.
   - Perform the BODY VERIFICATION TEST. Refer to **BODY VERIFICATION TEST** .

3. **CHECK THE (T5) AUTOSTICK® (ERS) SIGNAL CIRCUIT FOR A SHORT TO THE (L900) HEADLAMP SWITCH MUX RETURN CIRCUIT**

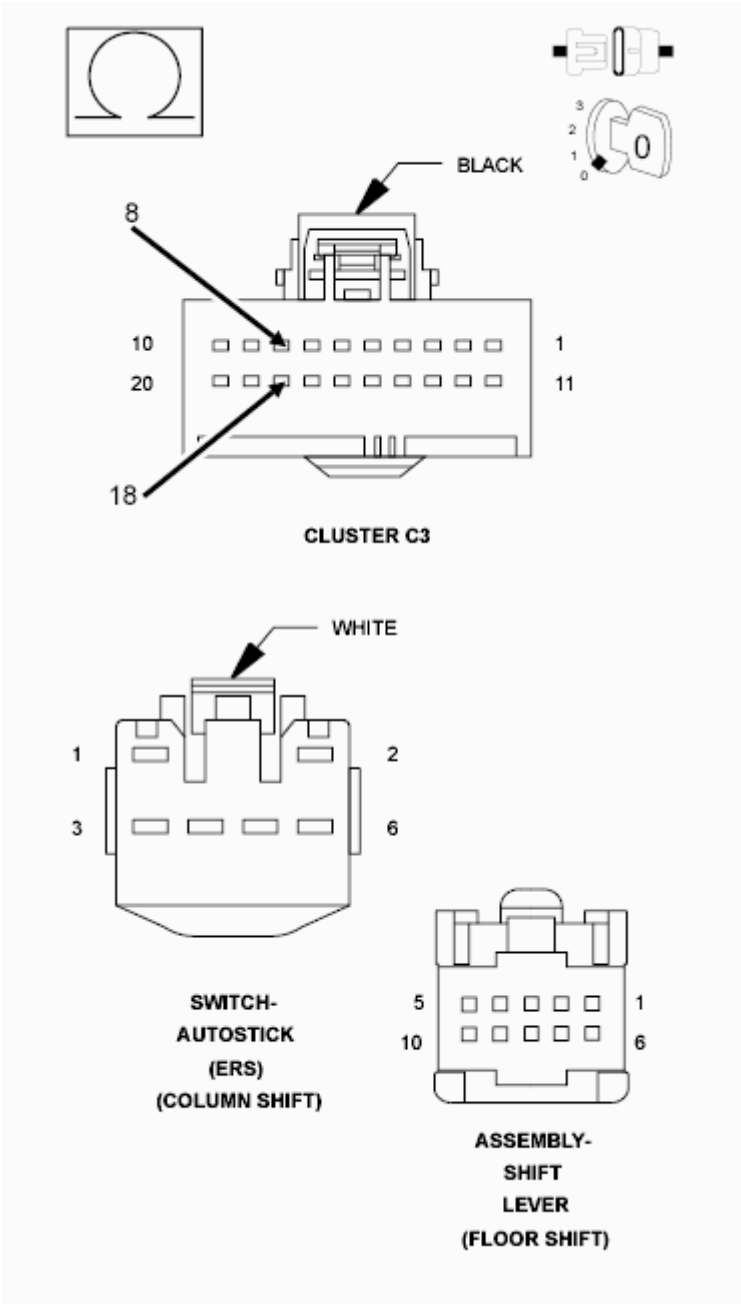

Fig. 37: Checking Autostick® (ERS) Signal Circuit For Short To Headlamp Switch MUX Return Circuit
Courtesy of CHRYSLER GROUP, LLC

1. Turn the ignition off.
2. Disconnect the Cluster C3 harness connector.
3. Measure the resistance between the (T5) AutoStick® (ERS) Signal circuit and the (L900) Headlamp Switch Mux Return circuit.

   Is the resistance below 5.0 Ohms?

Yes

- Repair the (T5) AutoStick® (ERS) Signal circuit for a short to the (L900) Headlamp Switch Mux Return circuit.
- Perform the BODY VERIFICATION TEST. Refer to **BODY VERIFICATION TEST** .

No

- Go To 4.

4. **CHECK THE (T5) AUTOSTICK® (ERS) SIGNAL CIRCUIT FOR A SHORT TO GROUND**

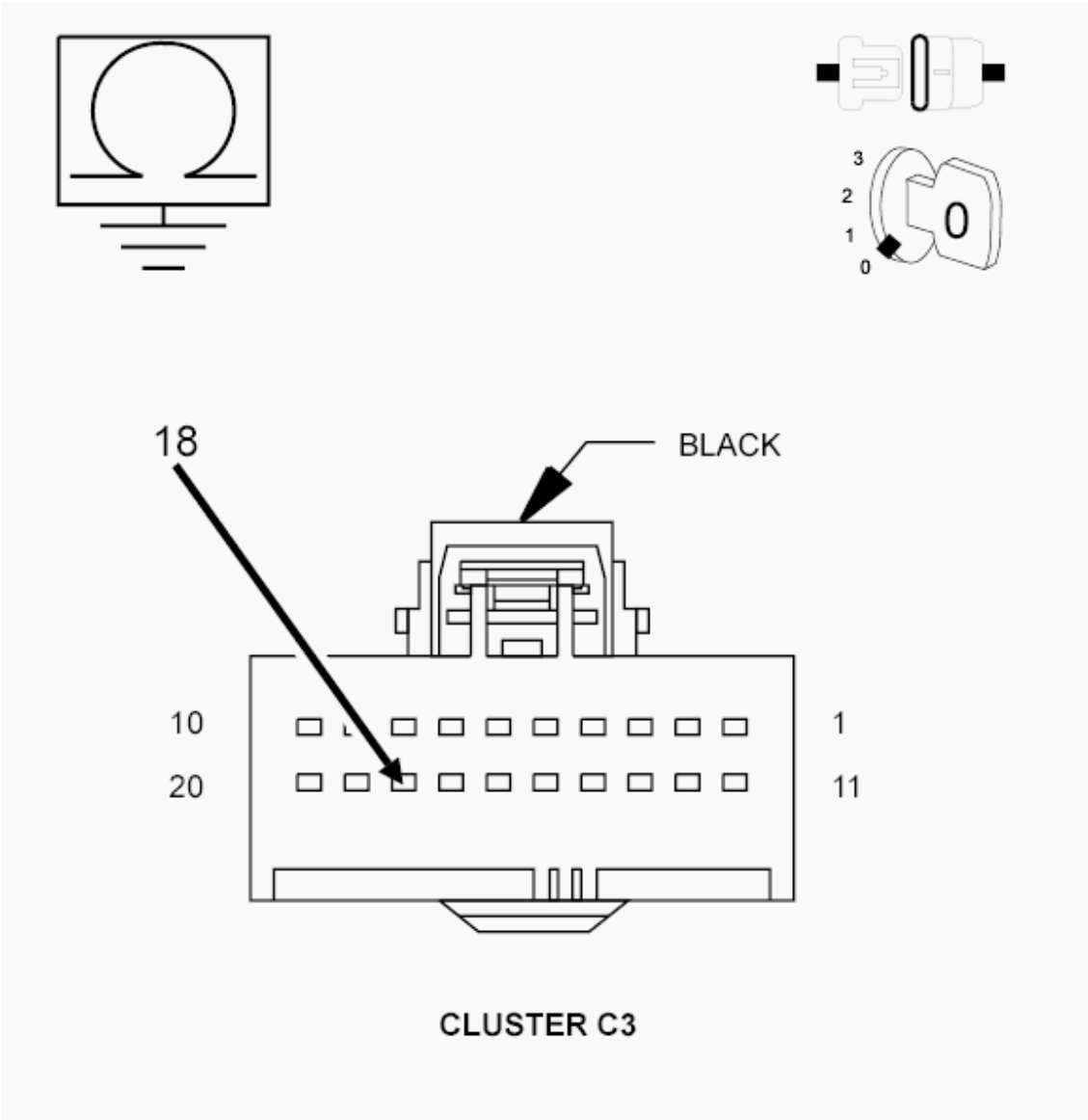

Fig. 38: Checking Autostick® (ERS) Signal Circuit For Short To Ground
Courtesy of CHRYSLER GROUP, LLC

1. Measure the resistance between ground and the (T5) AutoStick® (ERS) Signal circuit.

   Is the resistance below 5.0 Ohms?

   Yes

   - Repair the (T5) AutoStick® (ERS) Signal circuit for a short to ground.
   - Perform the BODY VERIFICATION TEST. Refer to **BODY VERIFICATION TEST** .

   No

   - Replace the Cluster in accordance with the Service Information.
   - Perform the BODY VERIFICATION TEST. Refer to **BODY VERIFICATION TEST** .

P0952-AUTOSTICK® INPUT CIRCUIT LOW - DD/DP

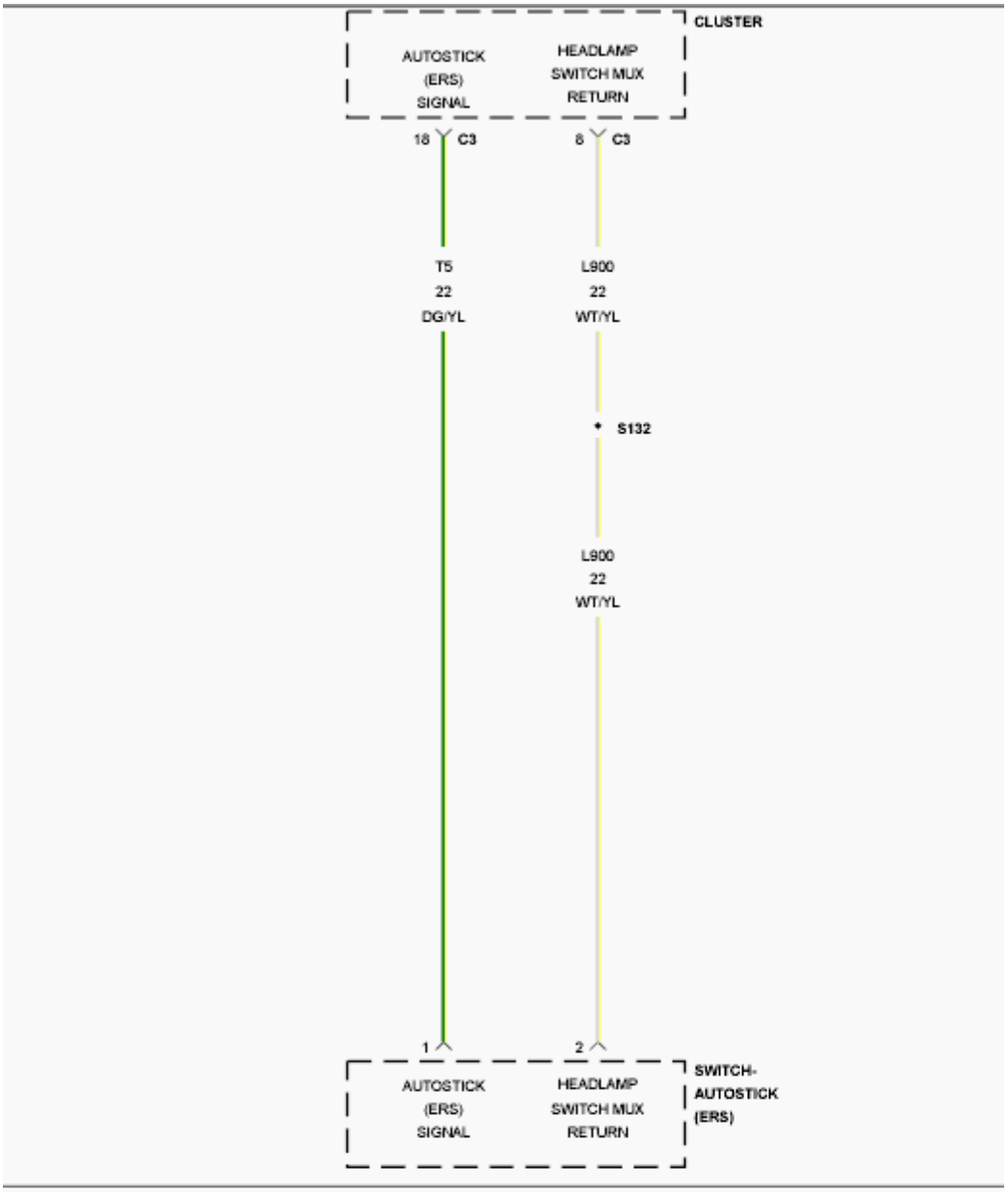

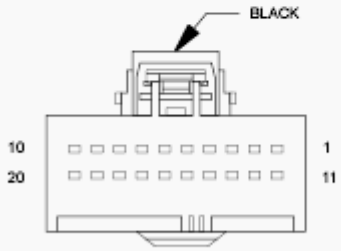

CLUSTER C3

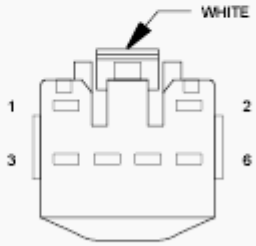

SWITCH-AUTOSTICK (ERS) (COLUMN SHIFT)

Fig. 39: Autostick® Input Wiring Diagram
Courtesy of CHRYSLER GROUP, LLC

For a complete wiring diagram, **refer to appropriate SYSTEM WIRING DIAGRAMS article** .

WHEN MONITORED:

With the ignition on.

SET CONDITION:

The Cluster detects a voltage below 0.35 of a volt for the period of 5.0 seconds on the AutoStick® (ERS) Signal circuit.

POSSIBLE CAUSES

Possible Causes
(T5) AUTOSTICK® (ERS) SIGNAL CIRCUIT FOR A SHORT TO GROUND
CHECK THE (T5) AUTOSTICK® (ERS) SIGNAL CIRCUIT FOR A SHORT TO THE (L900) HEADLAMP SWITCH MUX RETURN CIRCUIT
AUTOSTICK® (ERS) SWITCH
CLUSTER

DIAGNOSTIC TEST

1. **CHECK FOR AN ACTIVE DTC**
    1. Turn the ignition on.
    2. With the scan tool, read DTCs.

    Does the scan tool display this DTC as active?

    Yes

    - Go To 2.

    No

    - Test complete, the condition or conditions that originally set this DTC are not present at this time. Using the wiring diagrams as a guide, check all related splices and connectors for signs of water intrusion, corrosion, pushed out or bent terminals, and correct pin tension.
    - Perform the BODY VERIFICATION TEST. Refer to **BODY VERIFICATION TEST** .
2. **AUTOSTICK® (ERS) SWITCH**
    1. Turn the ignition off.
    2. Disconnect the AutoStick® (ERS) Switch harness connector.
    3. Turn the ignition on.

4. With the scan tool, read DTCs.

   Does the scan tool display DTC: P0593-AUTOSTICK® Input Circuit High?

   Yes

   - Replace the AutoStick® (ERS) Switch in accordance with the Service Information.
   - Perform the BODY VERIFICATION TEST. Refer to **BODY VERIFICATION TEST** .

   No

   - Go To 3.

3. **CHECK THE (T5) AUTOSTICK® (ERS) SIGNAL CIRCUIT FOR A SHORT TO THE (L900) HEADLAMP SWITCH MUX RETURN CIRCUIT**

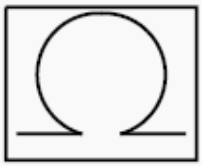

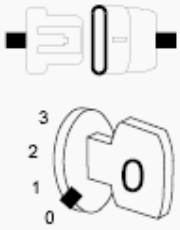

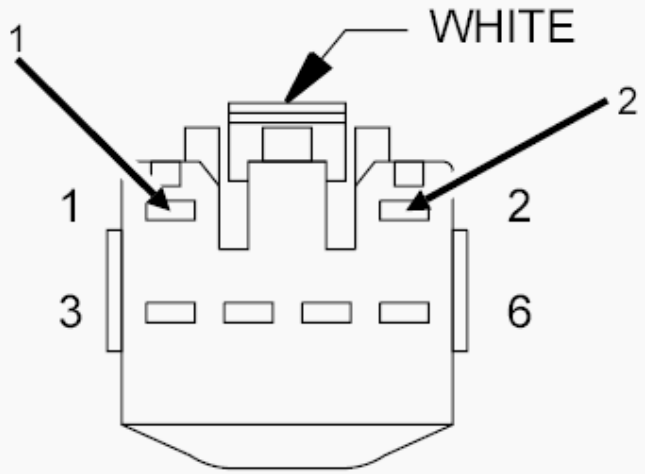

SWITCH-
AUTOSTICK
(ERS)
(COLUMN SHIFT)

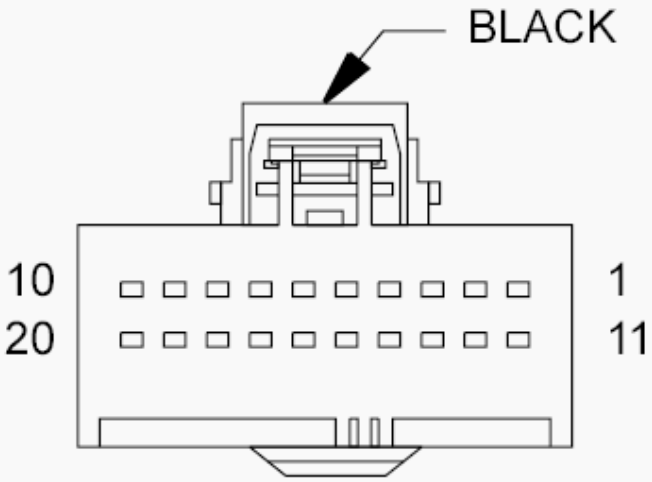

CLUSTER C3

2813388

Fig. 40: Check The Autostick® (R) (ERS) Signal Circuit For A Short To The Headlamp Switch MUX Return Circuit
Courtesy of CHRYSLER GROUP, LLC

1. Turn the ignition off.
2. Disconnect the Cluster C3 harness connector.
3. Measure the resistance between the (T5) AutoStick® (ERS) Signal circuit and the (L900) Headlamp Switch Mux Return circuit.

   Is the resistance below 5.0 Ohms?

   Yes

   - Repair the (T5) AutoStick® (ERS) Signal circuit for a short to the (L900) Headlamp Switch Mux Return circuit.
   - Perform the BODY VERIFICATION TEST. Refer to **BODY VERIFICATION TEST** .

   No

   - Go To 4.

4. **CHECK THE (T5) AUTOSTICK® (ERS) SIGNAL CIRCUIT FOR A SHORT TO GROUND**

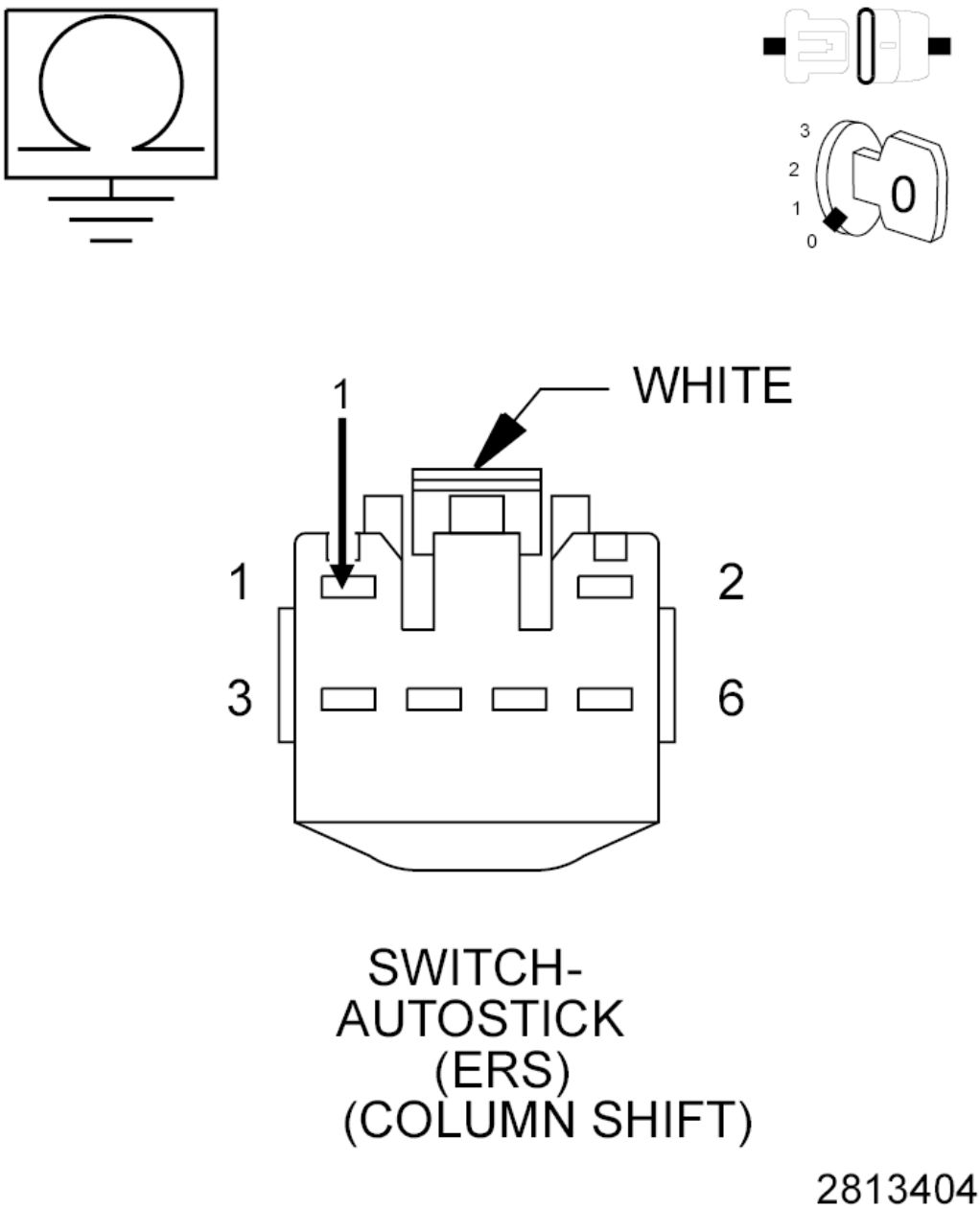

Fig. 41: Check The Autostick® (ERS) Signal Circuit For A Short To Ground
Courtesy of CHRYSLER GROUP, LLC

1. Measure the resistance between ground and the (T5) AutoStick® (ERS) Signal circuit.

   Is the resistance below 5.0 Ohms?

   Yes

   - Repair the (T5) AutoStick® (ERS) Signal circuit for a short to ground.
   - Perform the BODY VERIFICATION TEST. Refer to **BODY VERIFICATION TEST** .

No

- Replace the Cluster in accordance with the Service Information.
- Perform the BODY VERIFICATION TEST. Refer to **BODY VERIFICATION TEST** .

P0953-AUTOSTICK® INPUT CIRCUIT HIGH - DS/DJ/D2

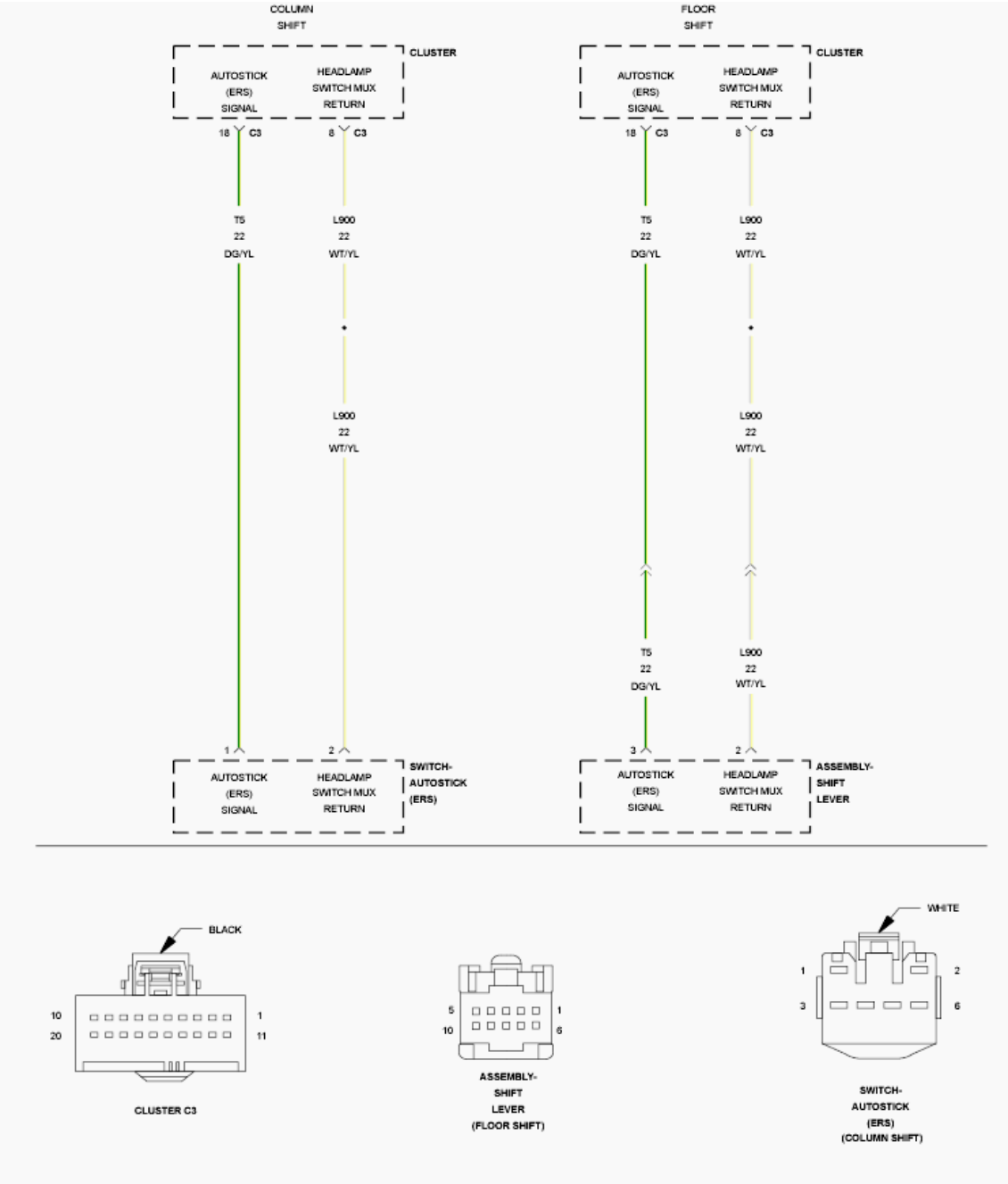

Fig. 42: Autostick® Input Wiring Diagram
Courtesy of CHRYSLER GROUP, LLC

For a complete wiring diagram, **refer to appropriate SYSTEM WIRING DIAGRAMS article** .

WHEN MONITORED:

With the ignition on.

SET CONDITION:

The Cluster detects a voltage above 5.0 volts for the period of 5.0 seconds on the AutoStick® (ERS) Signal circuit.

POSSIBLE CAUSES

Possible Causes
(T5) AUTOSTICK® (ERS) SIGNAL CIRCUIT FOR A SHORT TO VOLTAGE
(T5) AUTOSTICK® (ERS) SIGNAL CIRCUIT FOR AN OPEN
(L900) HEADLAMP SWITCH MUX RETURN CIRCUIT FOR AN OPEN
SHIFT LEVER ASSEMBLY (FLOOR SHIFT)
AUTOSTICK® (ERS) SWITCH (COLUMN SHIFT)
CLUSTER

DIAGNOSTIC TEST

1. **CHECK FOR AN ACTIVE DTC**
    1. Turn the ignition on.
    2. With the scan tool, read DTCs.

    Does the scan tool display this DTC as active?

    Yes

    - Go To 2.

    No

    - Test complete, the condition or conditions that originally set this DTC are not present at this time. Using the wiring diagrams as a guide, check all related splices and connectors for signs of water intrusion, corrosion, pushed out or bent terminals, and correct pin tension.
2. **(T5) AUTOSTICK® (ERS) SIGNAL CIRCUIT FOR A SHORT TO VOLTAGE**

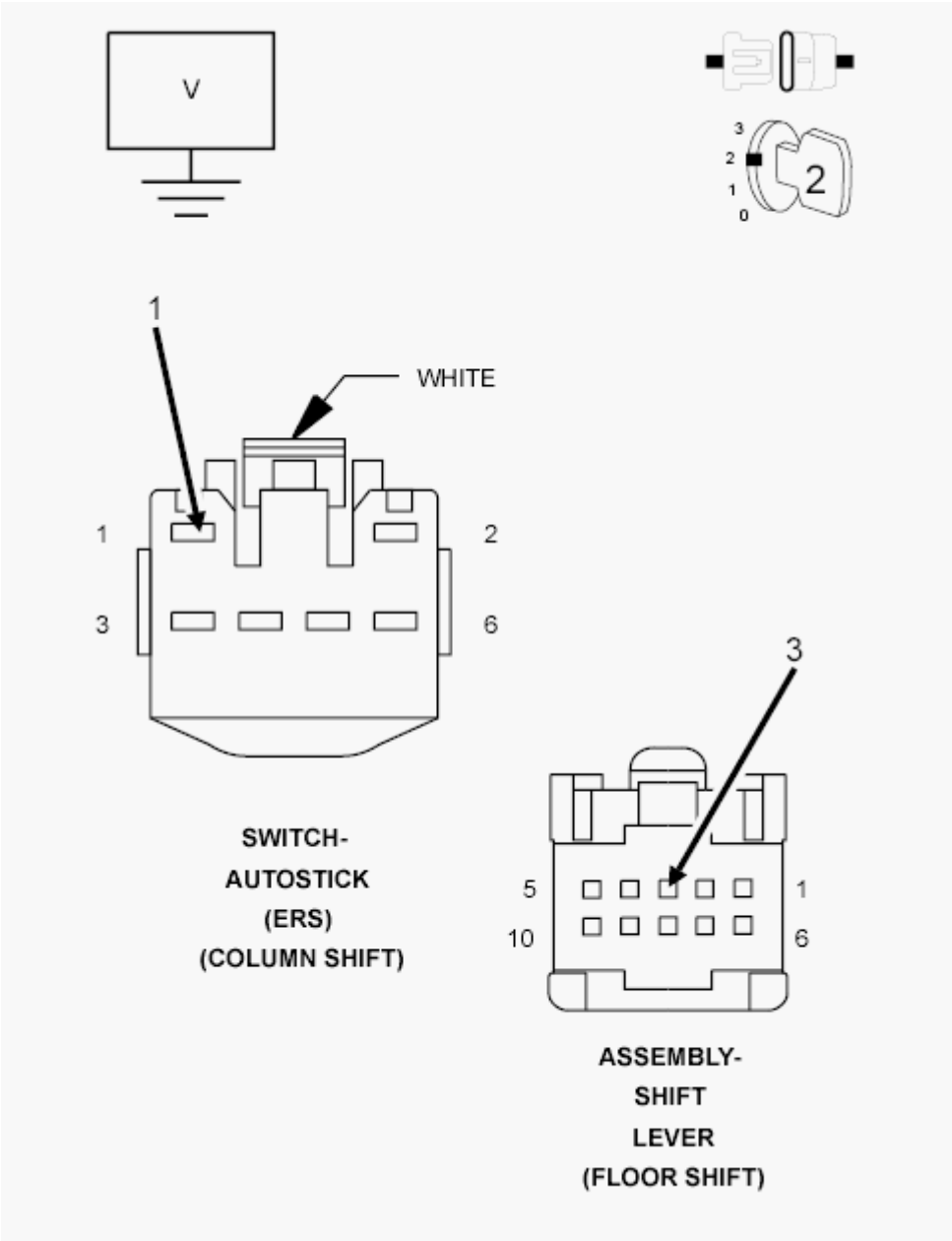

Fig. 43: Checking Autostick® (ERS) Signal Circuit For Short To Voltage
Courtesy of CHRYSLER GROUP, LLC

1. Turn the ignition off.
2. Disconnect the Shift Lever Assembly (Floor Shift) harness connector.
3. Disconnect the AutoStick® (ERS) Switch (Column Shift) harness connector.
4. Turn the ignition on.
5. Measure the voltage of the (T5) AutoStick® (ERS) Signal circuit.

   Is the voltage above 5.0 volts?

Yes

- Repair the short to voltage in the (T5) AutoStick® (ERS) Signal circuit.
- Perform the BODY VERIFICATION TEST. Refer to **BODY VERIFICATION TEST** .

No

- Go To 3.

3. **SHIFT LEVER ASSEMBLY (FLOOR SHIFT) / AUTOSTICK® (ERS) SWITCH (COLUMN SHIFT)**
   1. Turn the ignition off.
   2. Connect a fused jumper wire between the (T5) AutoStick® (ERS) Signal circuit and the (L900) Headlamp Switch MUX Return circuit in the Shift Lever Assembly / AutoStick® (ERS) Switch harness connector.
   3. Turn the ignition on.
   4. With the scan tool, read DTCs.

   Does the scan tool display this DTC as active?

   Yes

   - Go To 4.

   No

   - Replace the Shift Lever Assembly (Floor Shift) / AutoStick® (ERS) Switch (Column Shift) in accordance with the Service Information.
   - Perform the BODY VERIFICATION TEST. Refer to **BODY VERIFICATION TEST** .
4. **(T5) AUTOSTICK® (ERS) SIGNAL CIRCUIT FOR AN OPEN**

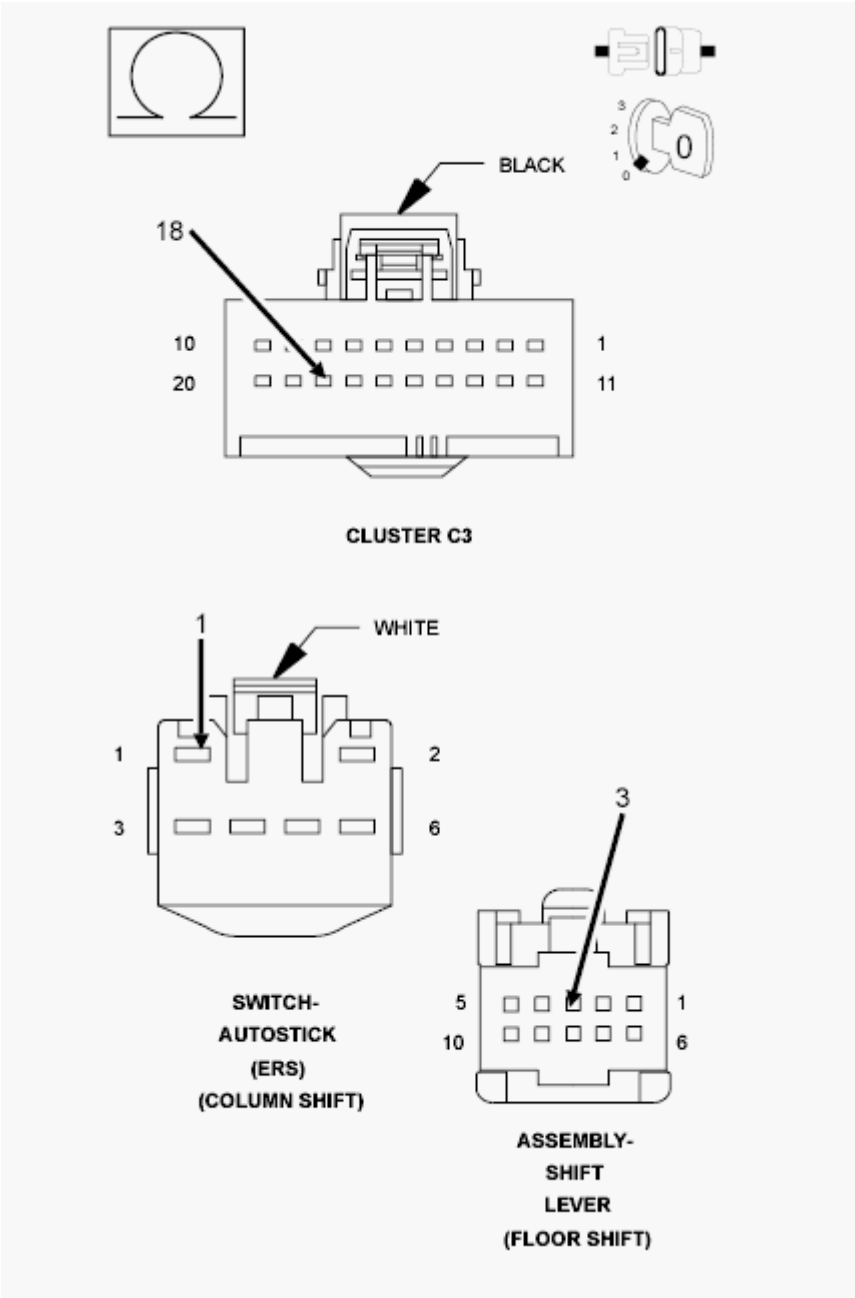

Fig. 44: Checking Autostick® (ERS) Signal Circuit For Open
Courtesy of CHRYSLER GROUP, LLC

1. Turn the ignition off.
2. Disconnect the Cluster C3 harness connector.
3. Measure the resistance of the (T5) AutoStick® (ERS) Signal circuit.

   Is the resistance above 10.0 Ohms?

   Yes

- Repair the open in the (T5) AutoStick® (ERS) Signal circuit.
- Perform the BODY VERIFICATION TEST. Refer to **BODY VERIFICATION TEST** .

No

- Go To 5.

5. **(L900) HEADLAMP SWITCH MUX RETURN CIRCUIT FOR AN OPEN**

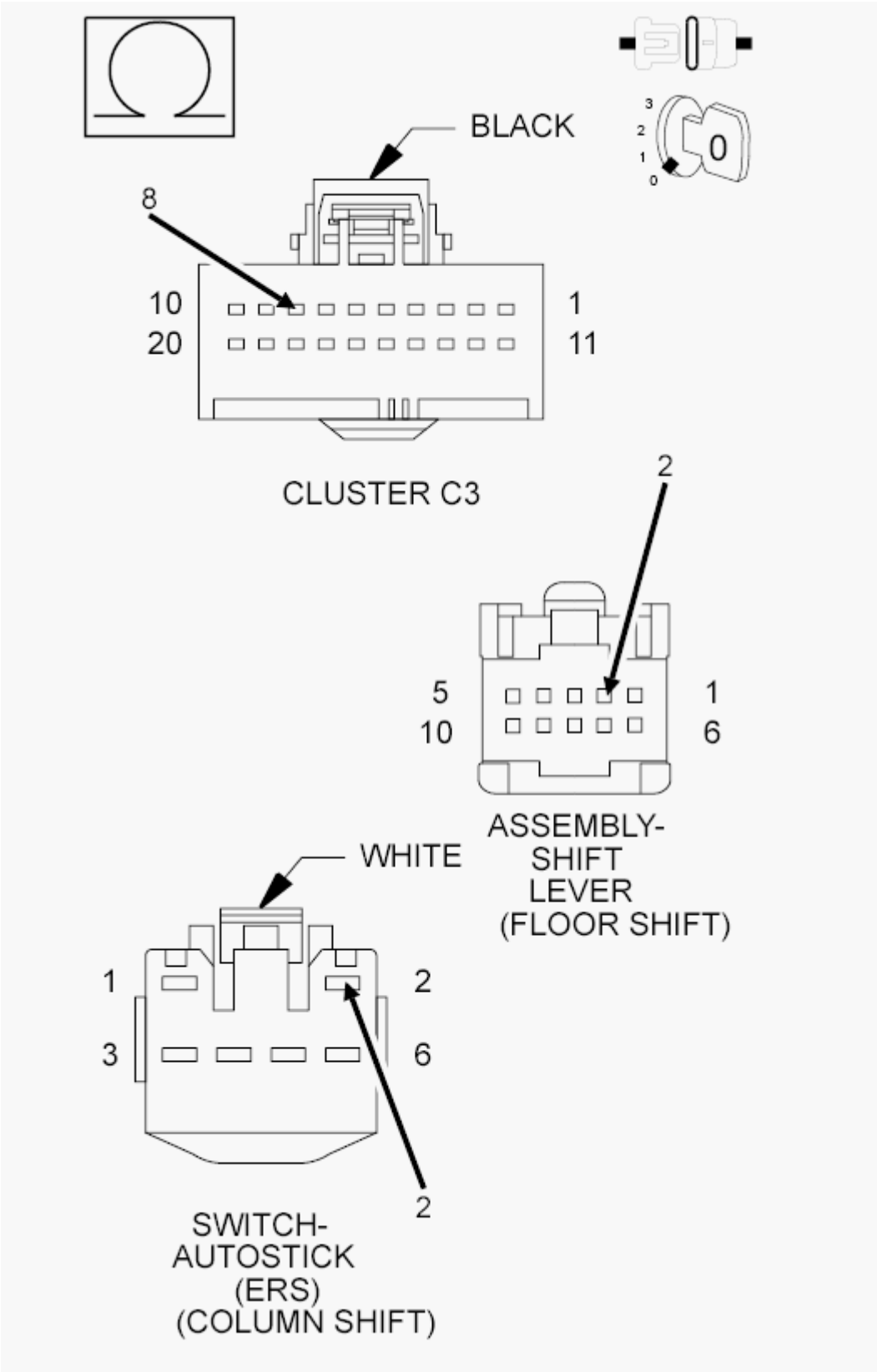

Fig. 45: Checking Headlamp Switch MUX Return Circuit For Open
Courtesy of CHRYSLER GROUP, LLC

1. Measure the resistance of the (L900) Headlamp Switch MUX Return circuit.

   Is the resistance above 10.0 Ohms?

   Yes

   - Repair the open in the (L900) Headlamp Switch MUX Return circuit.
   - Perform the BODY VERIFICATION TEST. Refer to **BODY VERIFICATION TEST** .

   No

   - Replace the Cluster in accordance with the Service Information.
   - Perform the BODY VERIFICATION TEST. Refer to **BODY VERIFICATION TEST** .

P0953-AUTOSTICK® INPUT CIRCUIT HIGH - DD/DP

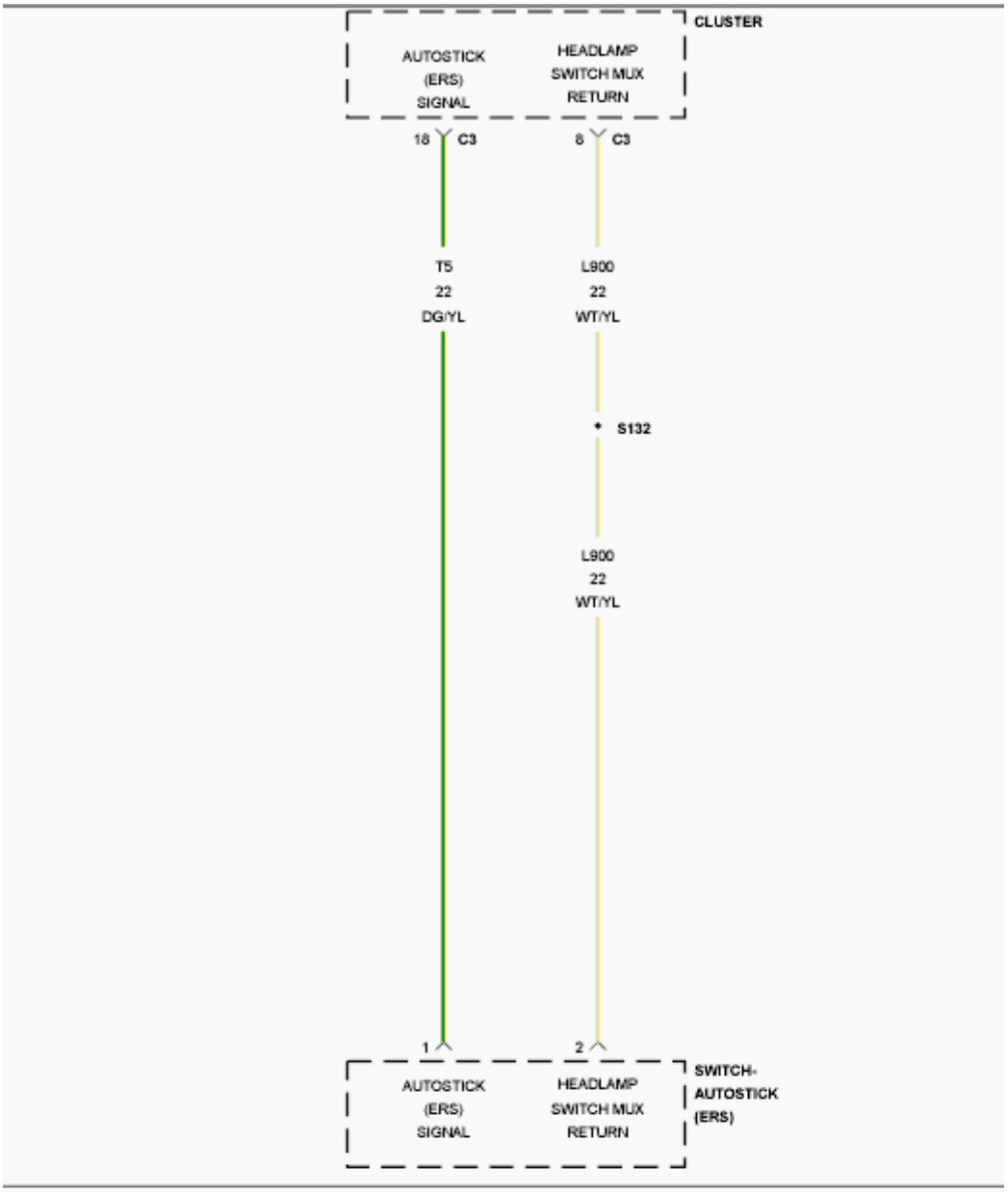

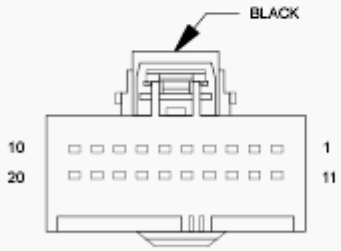

CLUSTER C3

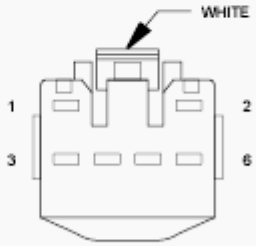

SWITCH-AUTOSTICK (ERS) (COLUMN SHIFT)

Fig. 46: Autostick® Input Wiring Diagram
Courtesy of CHRYSLER GROUP, LLC

For a complete wiring diagram, **refer to appropriate SYSTEM WIRING DIAGRAMS article** .

WHEN MONITORED:

With the ignition on.

SET CONDITION:

The Cluster detects a voltage above 5.0 volts for the period of 5.0 seconds on the AutoStick® (ERS) Signal circuit.

POSSIBLE CAUSES

Possible Causes
(T5) AUTOSTICK® (ERS) SIGNAL CIRCUIT FOR A SHORT TO VOLTAGE
(T5) AUTOSTICK® (ERS) SIGNAL CIRCUIT FOR AN OPEN
(L900) HEADLAMP SWITCH MUX RETURN CIRCUIT FOR AN OPEN
AUTOSTICK® (ERS) SWITCH
CLUSTER

DIAGNOSTIC TEST

1. **CHECK FOR AN ACTIVE DTC**
    1. Turn the ignition on.
    2. With the scan tool, read DTCs.

    Does the scan tool display this DTC as active?

    Yes

    - Go To 2.

    No

    - Test complete, the condition or conditions that originally set this DTC are not present at this time. Using the wiring diagrams as a guide, check all related splices and connectors for signs of water intrusion, corrosion, pushed out or bent terminals, and correct pin tension.
2. **(T5) AUTOSTICK® (ERS) SIGNAL CIRCUIT FOR A SHORT TO VOLTAGE**

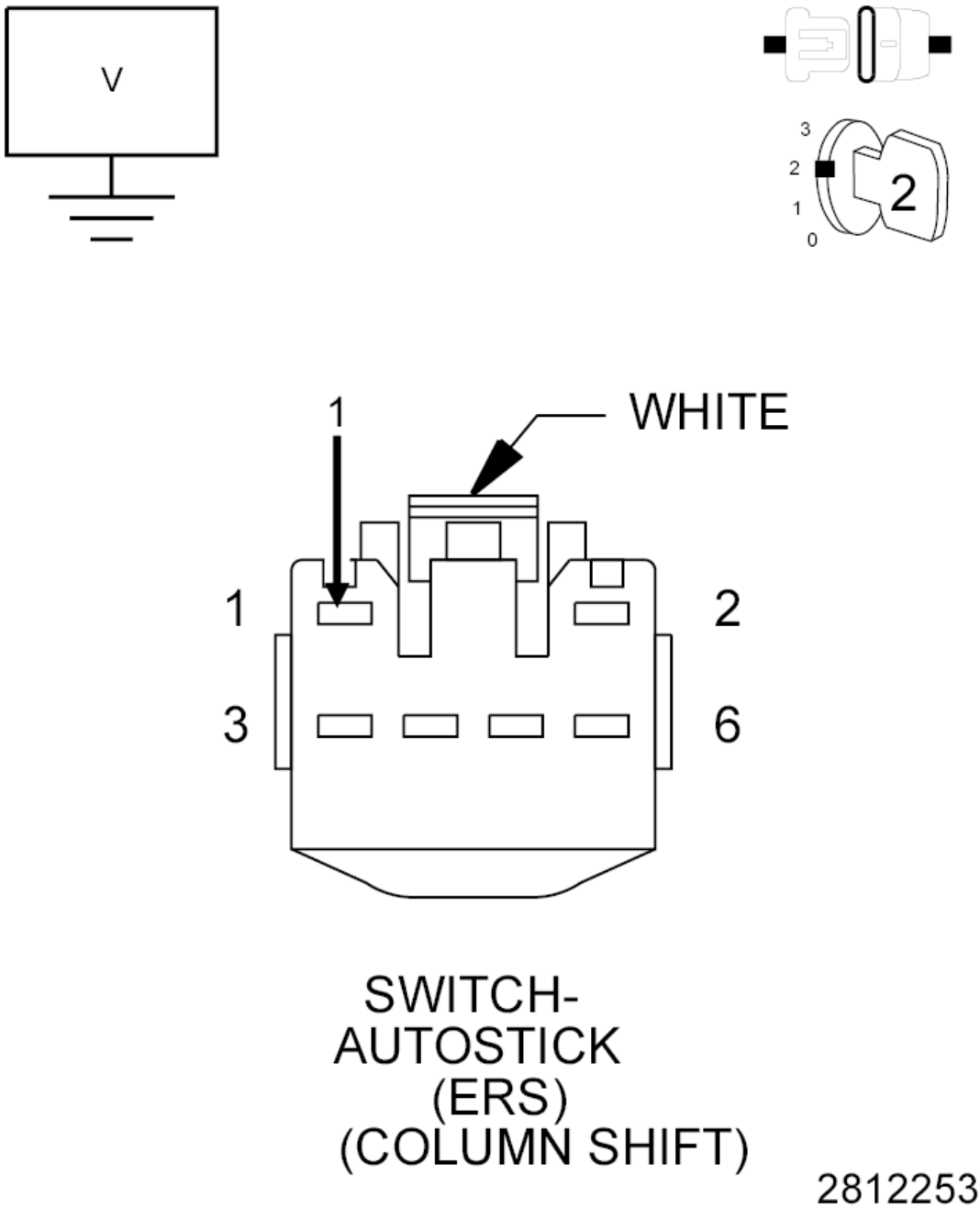

Fig. 47: Autostick® (ERS) Signal Circuit For A Short To Voltage
Courtesy of CHRYSLER GROUP, LLC

1. Turn the ignition off.
2. Disconnect the AutoStick® (ERS) Switch harness connector.
3. Turn the ignition on.
4. Measure the voltage of the (T5) AutoStick® (ERS) Signal circuit.

Is the voltage above 5.0 volts?

Yes

- Repair the short to voltage in the (T5) AutoStick® (ERS) Signal circuit.
- Perform the BODY VERIFICATION TEST. Refer to **BODY VERIFICATION TEST** .

No

- Go To 3.

3. **AUTOSTICK® (ERS) SWITCH**

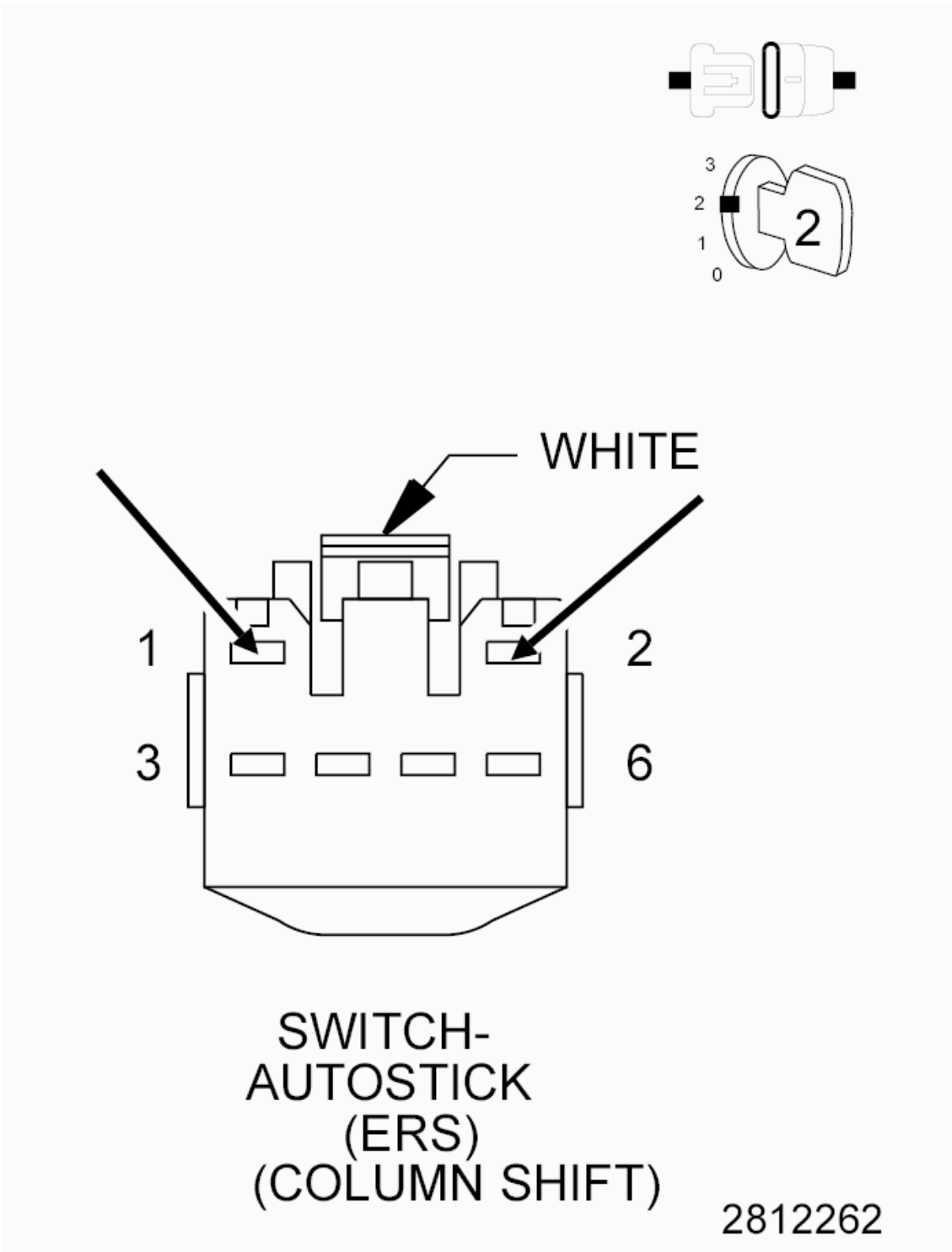

Fig. 48: Autostick® (ERS) Switch Connector End View
Courtesy of CHRYSLER GROUP, LLC

1. Turn the ignition off.
2. Connect a fused jumper wire between the (T5) AutoStick® (ERS) Signal circuit and the (L900) Headlamp Switch MUX Return circuit in the AutoStick® (ERS) Switch harness connector.

3. Turn the ignition on.
4. With the scan tool, read DTCs.

   Does the scan tool display this DTC as active?

   Yes

   - Go To 4.

   No

   - Replace the AutoStick® (ERS) Switch in accordance with the Service Information. Refer to **LEVER, GEARSHIFT, REMOVAL** .
   - Perform the BODY VERIFICATION TEST. Refer to **BODY VERIFICATION TEST** .

4. **(T5) AUTOSTICK® (ERS) SIGNAL CIRCUIT FOR AN OPEN**

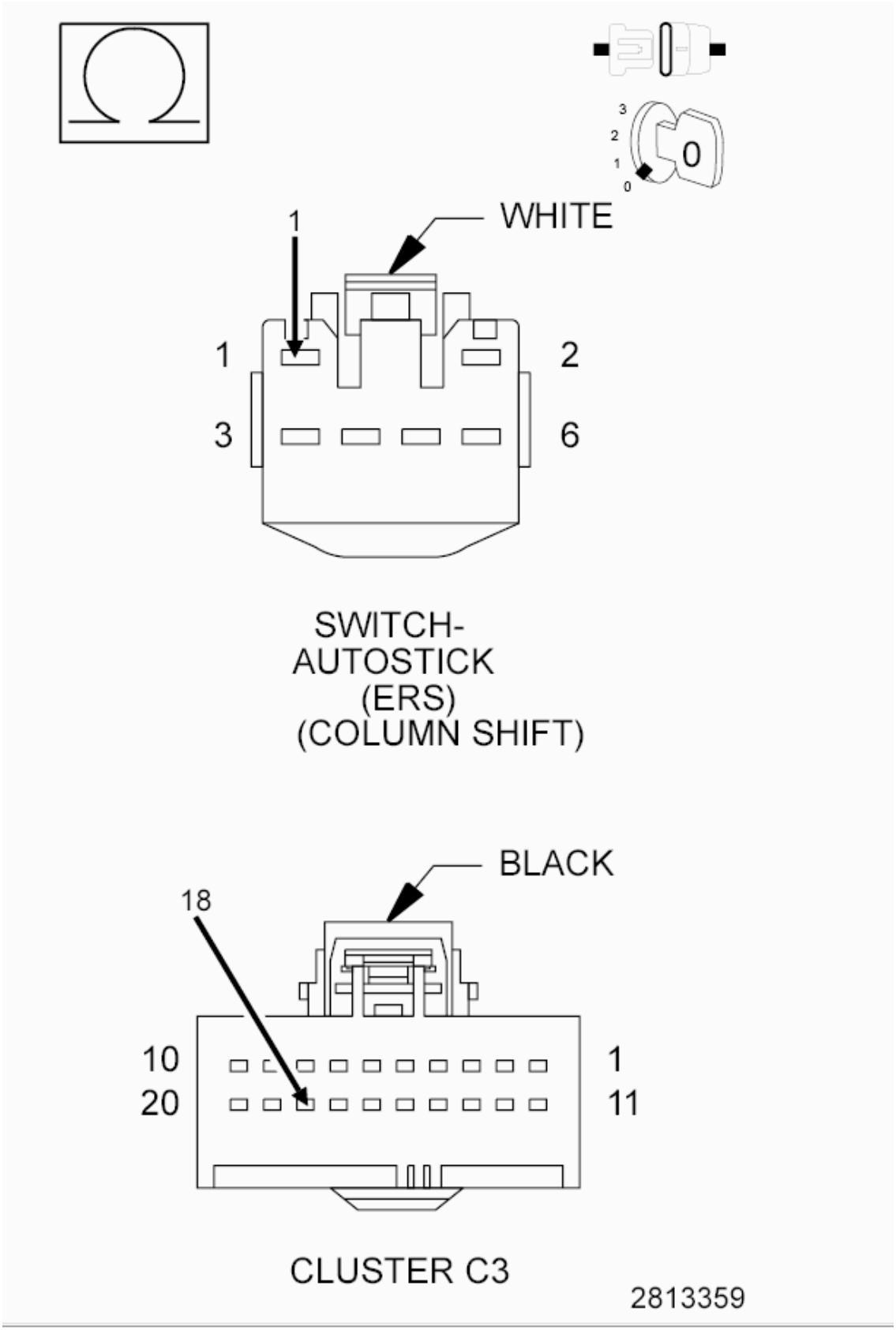

Fig. 49: Autostick® (ERS) Signal Circuit For An Open

Courtesy of CHRYSLER GROUP, LLC

1. Turn the ignition off.
2. Disconnect the Cluster C3 harness connector.
3. Measure the resistance of the (T5) AutoStick® (ERS) Signal circuit.

   Is the resistance above 10.0 Ohms?

   Yes

   - Repair the open in the (T5) AutoStick® (ERS) Signal circuit.
   - Perform the BODY VERIFICATION TEST. Refer to **BODY VERIFICATION TEST** .

   No

   - Go To 5.

5. **(L900) HEADLAMP SWITCH MUX RETURN CIRCUIT FOR AN OPEN**

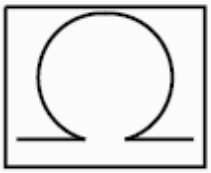

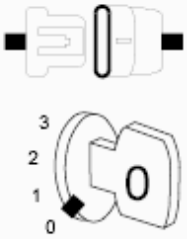

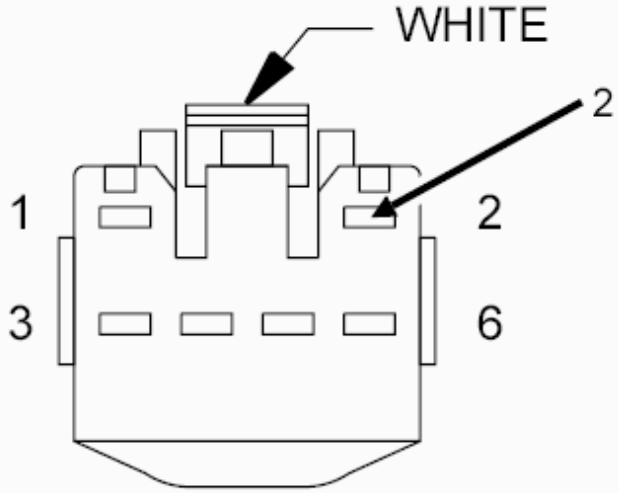

SWITCH-
AUTOSTICK
(ERS)
(COLUMN SHIFT)

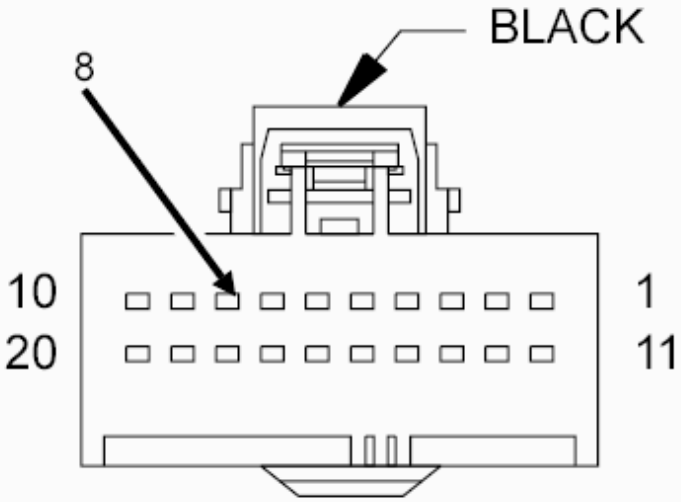

CLUSTER C3

Fig. 50: Checking Headlamp Switch Mux Return Circuit For An Open
Courtesy of CHRYSLER GROUP, LLC

1. Measure the resistance of the (L900) Headlamp Switch MUX Return circuit.

   Is the resistance above 10.0 Ohms?

   Yes

   - Repair the open in the (L900) Headlamp Switch MUX Return circuit.
   - Perform the BODY VERIFICATION TEST. Refer to **BODY VERIFICATION TEST** .

   No

   - Replace the Cluster in accordance with the Service Information.
   - Perform the BODY VERIFICATION TEST. Refer to **BODY VERIFICATION TEST** .

P1103-DC TO AC CONVERTER SWITCH STUCK

For a complete wiring diagram, **refer to appropriate SYSTEM WIRING DIAGRAMS article** .

WHEN MONITORED:

With the ignition on.

SET CONDITION:

If the Cluster senses the Inverter switch input for more than 20 seconds.

POSSIBLE CAUSES

Possible Causes
OBJECT HOLDING INVERTER SWITCH IN A PUSHED POSITION
SUBSTANCE CAUSING INVERTER SWITCH TO GET STUCK IN A PUSHED POSITION
SWITCH BANK

DIAGNOSTIC TEST

1. **INSPECT SWITCH BANK FOR DAMAGE**

   NOTE: Diagnose and repair all LIN Bus related DTCs before performing this test procedure.

   1. Turn the ignition off.
   2. Inspect the Switch Bank for damage.

Is the Switch Bank damaged?

Yes

- Replace the Switch Bank in accordance with the Service Information.
- Perform the BODY VERIFICATION TEST. Refer to **BODY VERIFICATION TEST** .

No

- Go To 2.

2. **INSPECT FOR OBJECT OR SUBSTANCE CAUSING INVERTER SWITCH TO STAY OR STICK IN A PUSHED POSITION**
   1. Inspect the Inverter switch for anything that would cause it to stay or stick in a pushed position.

      Is anything present that would cause the Inverter switch to stay or stick in a pushed position?

      Yes

      - Repair as necessary.
      - Perform the BODY VERIFICATION TEST. Refer to **BODY VERIFICATION TEST** .

      No

      - Go To 3.

3. **TEST FOR INTERMITTENT CONDITION**
   1. Turn the ignition on.
   2. Using a scan tool, record and erase Diagnostic Trouble Codes (DTCs).
   3. Press and release the Inverter switch several times and then wait 20 seconds.
   4. Using a scan tool, read DTCs.

      Does the scan tool display DTC P1103-DC TO AC CONVERTER SWITCH STUCK?

      Yes

      - Replace the Switch Bank in accordance with the Service Information.
      - Perform the BODY VERIFICATION TEST. Refer to **BODY VERIFICATION TEST** .

      No

      - Test complete, the condition or conditions that originally set this DTC are not present at this time. Using the wiring diagrams as a guide, check all related splices and connectors for signs of water intrusion, corrosion, pushed out or bent terminals, and correct pin tension.
      - Perform the BODY VERIFICATION TEST. Refer to **BODY VERIFICATION TEST** .

U0010-CAN INTERIOR BUS

For a complete wiring diagram, **refer to appropriate SYSTEM WIRING DIAGRAMS article** .

WHEN MONITORED:

Continuously when the ignition is on.

Battery voltage between 10 and 16 volts.

Ignition Off Draw (IOD) fuse installed.

SET CONDITION:

The controller detects a short to ground on the CAN Interior Bus (125K) (+) circuit or a short to voltage on the CAN Interior Bus (125K) (-) circuit.

POSSIBLE CAUSES

Possible Causes
(D265) CAN INTERIOR BUS(+) (125k) CIRCUIT FOR A SHORT TO VOLTAGE
(D264) CAN INTERIOR BUS(-) (125k) CIRCUIT FOR A SHORT TO GROUND
(D264) CAN INTERIOR BUS(-) (125k) CIRCUIT FOR A SHORT TO THE (D265) CAN INTERIOR BUS(+) (125k) CIRCUIT
TOTALLY INTEGRATED POWER MODULE (TIPM)
ANY CAN INTERIOR BUS MODULE

DIAGNOSTIC TEST

1. **VERIFY DIAGNOSTIC TROUBLE CODE (DTC) IS ACTIVE**

   NOTE: Make sure the IOD fuse is installed and battery voltage is between 10 and 16 volts before proceeding.

   1. Using the scan tool, read active DTCs.

      Is this DTC active?

      Yes

      - **Refer to U0010-CAN INTERIOR BUS** and perform the diagnostic procedure.

      No

      - **Refer to STORED LOST COMMUNICATION DTCS** and perform the diagnostic procedure.

U0141-LOST COMMUNICATION WITH IPM (FCM/TIPM)

For a complete wiring diagram, **refer to appropriate SYSTEM WIRING DIAGRAMS article** .

WHEN MONITORED:

Continuously when the ignition is on.

Battery voltage between 10 and 16 volts.

Ignition Off Draw (IOD) fuse installed.

Totally Integrated Power Module (TIPM) is configured correctly.

SET CONDITION:

Bus messages not received from the TIPM for approximately two to five seconds.

POSSIBLE CAUSES

Possible Causes
CAN BUS CIRCUITS OPEN OR SHORTED
DTCS RELATED TO BATTERY VOLTAGE, IGNITION, OR VIN MESSAGES
TIPM NOT CONFIGURED CORRECTLY
TOTALLY INTEGRATED POWER MODULE (TIPM)
TIPM POWER AND GROUND
MODULE THAT SET THIS DTC

DIAGNOSTIC TEST

1. **VERIFY DIAGNOSTIC TROUBLE CODE (DTC) IS ACTIVE**

   NOTE: Make sure the IOD fuse is installed and battery voltage is between 10 and 16 volts before proceeding.

   1. With the scan tool, read active Cluster DTCs.

      Is this DTC active?

      Yes

      - Refer to **U0141-LOST COMMUNICATION WITH IPM (FCM/TIPM)** and perform the diagnostic procedure.

      No

- Refer to **STORED LOST COMMUNICATION DTCS** and perform the diagnostic procedure.

U0159-LOST COMMUNICATION WITH PARKING ASSIST CONTROL MODULE

For a complete wiring diagram, **refer to appropriate SYSTEM WIRING DIAGRAMS article** .

WHEN MONITORED:

Continuously when the ignition is on.

Battery voltage between 10 and 16 volts.

Ignition Off Draw (IOD) fuse installed.

Totally Integrated Power Module (TIPM) is configured correctly.

SET CONDITION:

Bus messages not received from the Park Assist Module for approximately two to five seconds.

POSSIBLE CAUSES

Possible Causes
CAN BUS CIRCUITS OPEN OR SHORTED
DTCS RELATED TO BATTERY VOLTAGE, IGNITION, OR VIN MESSAGES
TIPM NOT CONFIGURED CORRECTLY
PARK ASSIST CONTROL MODULE
PARK ASSIST CONTROL MODULE POWER AND GROUND
MODULE THAT SET THIS DTC

DIAGNOSTIC TEST

1. **VERIFY DIAGNOSTIC TROUBLE CODE (DTC) IS ACTIVE**

   NOTE: Make sure the IOD fuse is installed and battery voltage is between 10 and 16 volts before proceeding.

   1. With the scan tool, read active Cluster DTCs.

      Is this DTC active?

      Yes

      - Refer to **U0159-LOST COMMUNICATION WITH PARK ASSIST MODULE (PTS)** and perform the diagnostic procedure.

No

- Refer to **STORED LOST COMMUNICATION DTCS** and perform the diagnostic procedure.

U0161-LOST COMMUNICATION WITH COMPASS MODULE

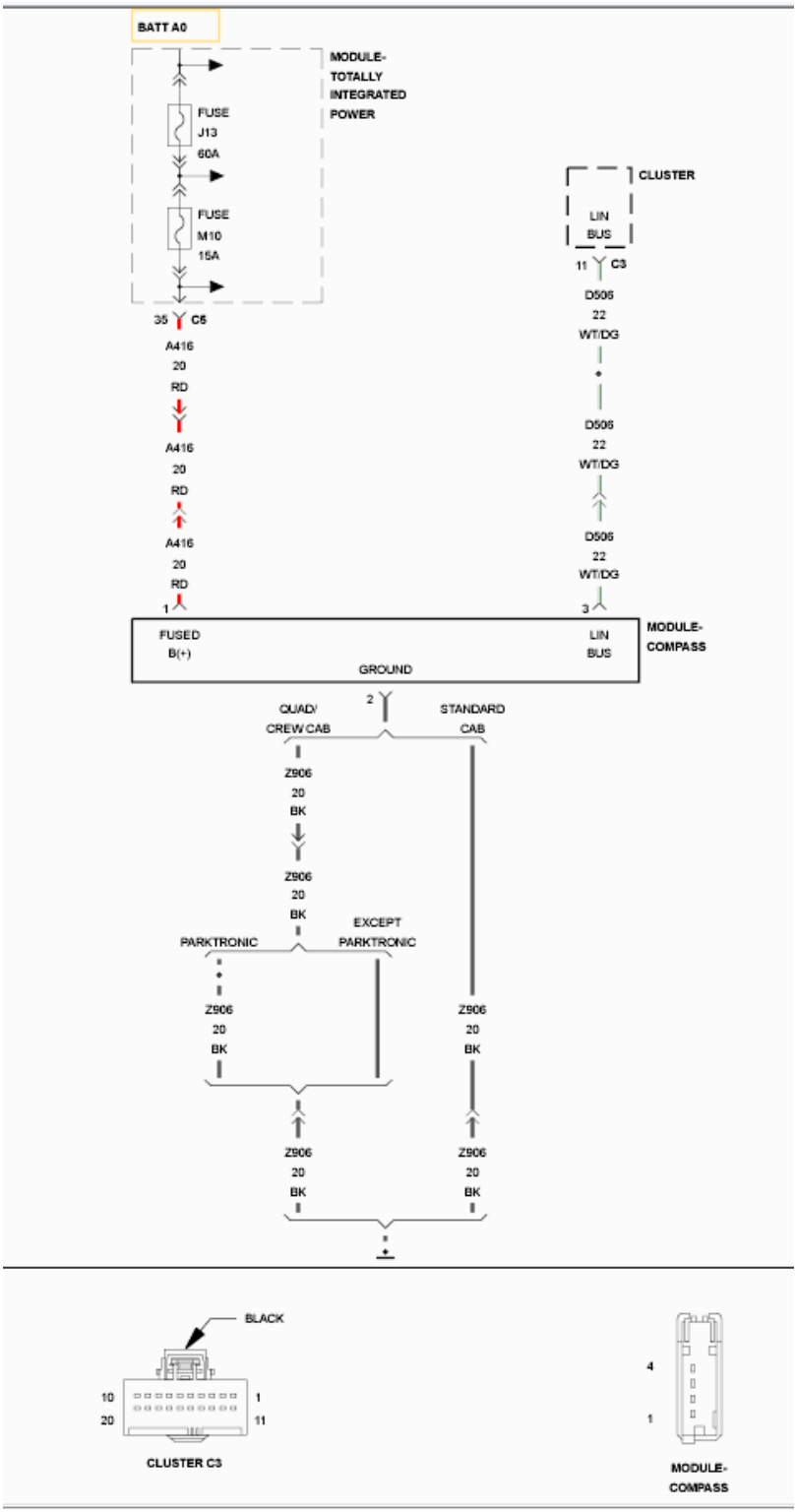

Fig. 51: Compass Module Wiring Diagram
Courtesy of CHRYSLER GROUP, LLC

For a complete wiring diagram, **refer to appropriate SYSTEM WIRING DIAGRAMS article** .

WHEN MONITORED:

With the ignition on.

SET CONDITION:

The Cluster does not receive information from the Compass Module.

POSSIBLE CAUSES

Possible Causes
(D506) LIN BUS CIRCUIT FOR AN OPEN
(A416) FUSED B(+) CIRCUIT FOR AN OPEN
(Z906) GROUND CIRCUIT FOR AN OPEN
COMPASS MODULE
CLUSTER

DIAGNOSTIC TEST

1. **CHECK FOR AN ACTIVE DTC**
    1. Turn the ignition on.
    2. With the scan tool, record and erase DTCs.
    3. Wait 30 seconds.
    4. With the scan tool, read DTCs.

    Does the scan tool display this DTC as active?

    Yes

    - Go To 2.

    No

    - The condition that caused this code to set is not present at this time. Check for an intermittent condition by inspecting the related wiring harness for chaffed, pierced, pinched, and partially broken wires. Also inspect the related connectors for broken, bent, pushed out, spread, corroded, or contaminated terminals.
    - Perform the BODY VERIFICATION TEST. Refer to **BODY VERIFICATION TEST** .
2. **(D506) LIN BUS CIRCUIT FOR AN OPEN**

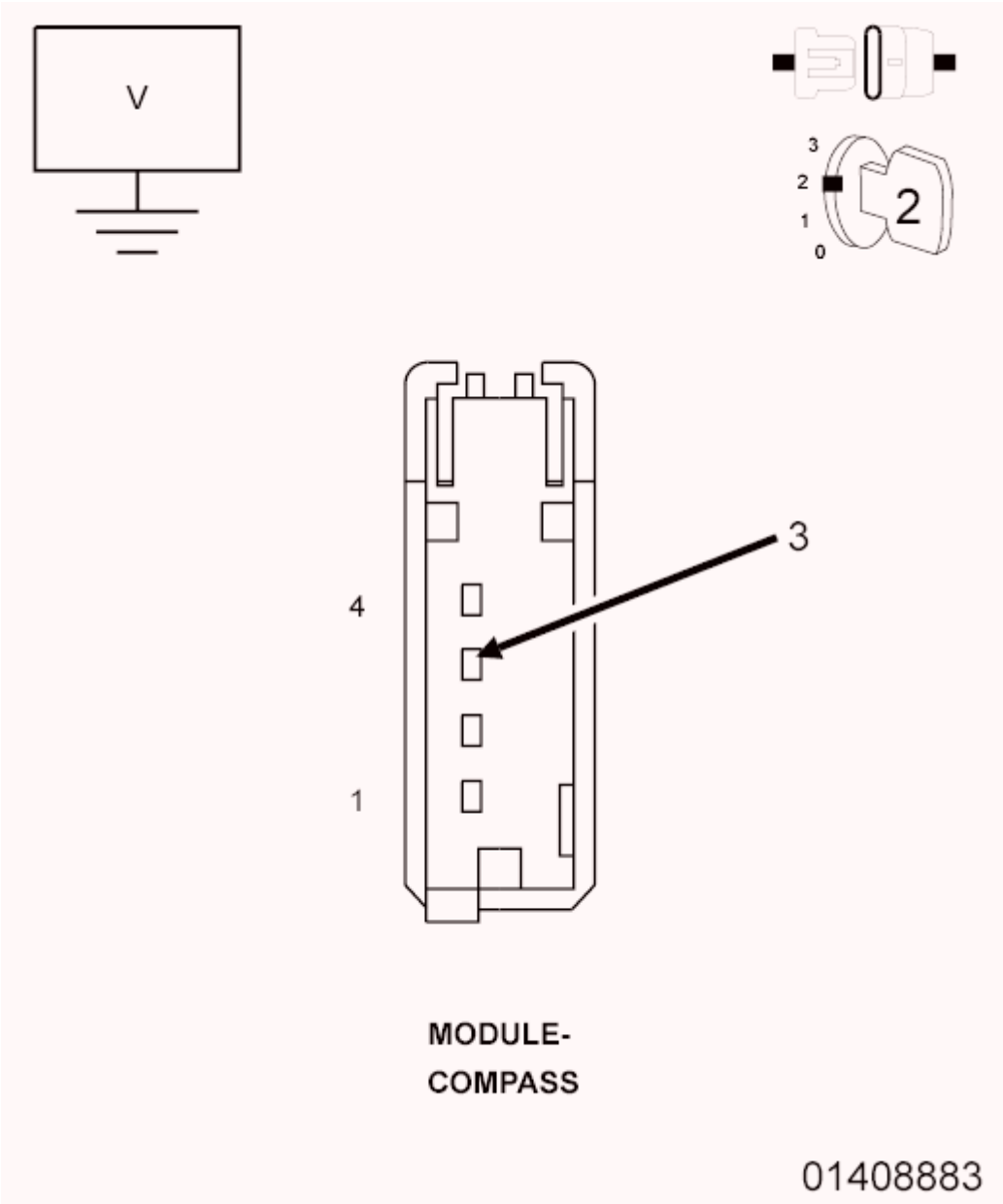

Fig. 52: Checking Lin Bus Circuit For An Open
Courtesy of CHRYSLER GROUP, LLC

1. Turn the ignition off.
2. Disconnect the Compass Module harness connector.
3. Turn the ignition on.
4. Measure the voltage of the (D506) LIN BUS circuit.

   Is the voltage above 5 volts?

   Yes

- Go To 4.

No

- Go To 3.

3. **(D506) LIN BUS CIRCUIT FOR AN OPEN**

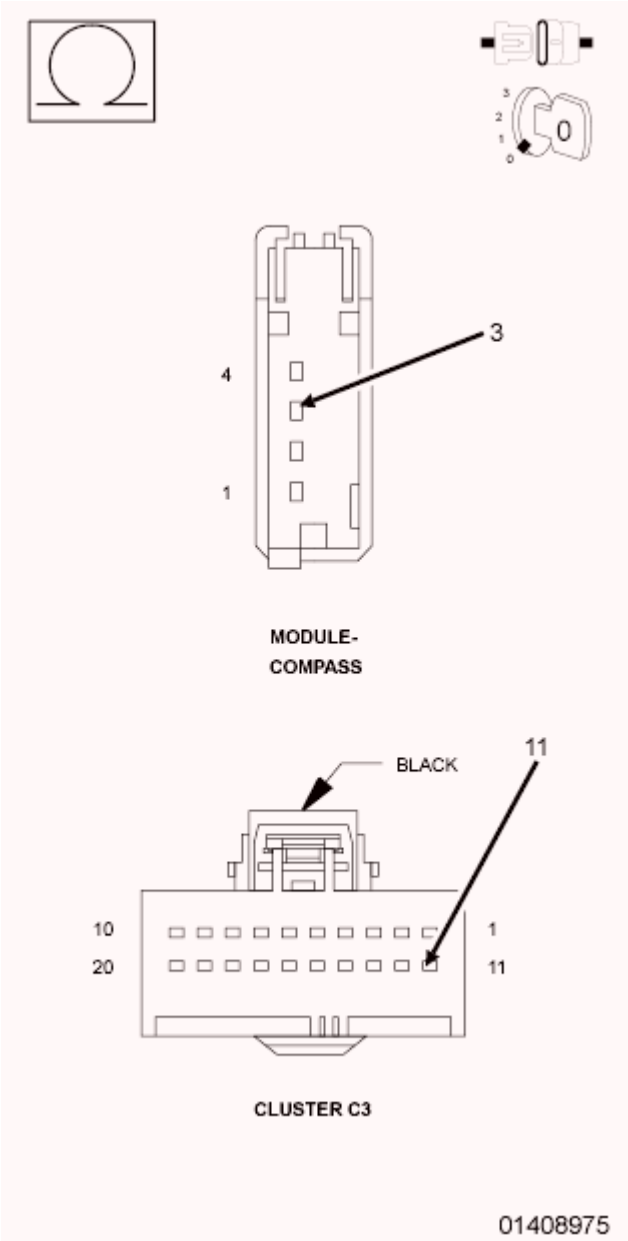

Fig. 53: Checking Lin Bus Circuit For An Open
Courtesy of CHRYSLER GROUP, LLC

1. Turn the ignition off.
2. Disconnect the Cluster C3 harness connector.

3. Measure the resistance of the (D506) LIN BUS circuit.

   Is the resistance below 10K Ohms?

   Yes

   - Replace the Cluster in accordance with the Service Information.
   - Perform the BODY VERIFICATION TEST. Refer to **BODY VERIFICATION TEST** .

   No

   - Repair the (D506) LIN BUS circuit for an open.
   - Perform the BODY VERIFICATION TEST. Refer to **BODY VERIFICATION TEST** .

4. **(A416) FUSED B(+) CIRCUIT FOR AN OPEN**

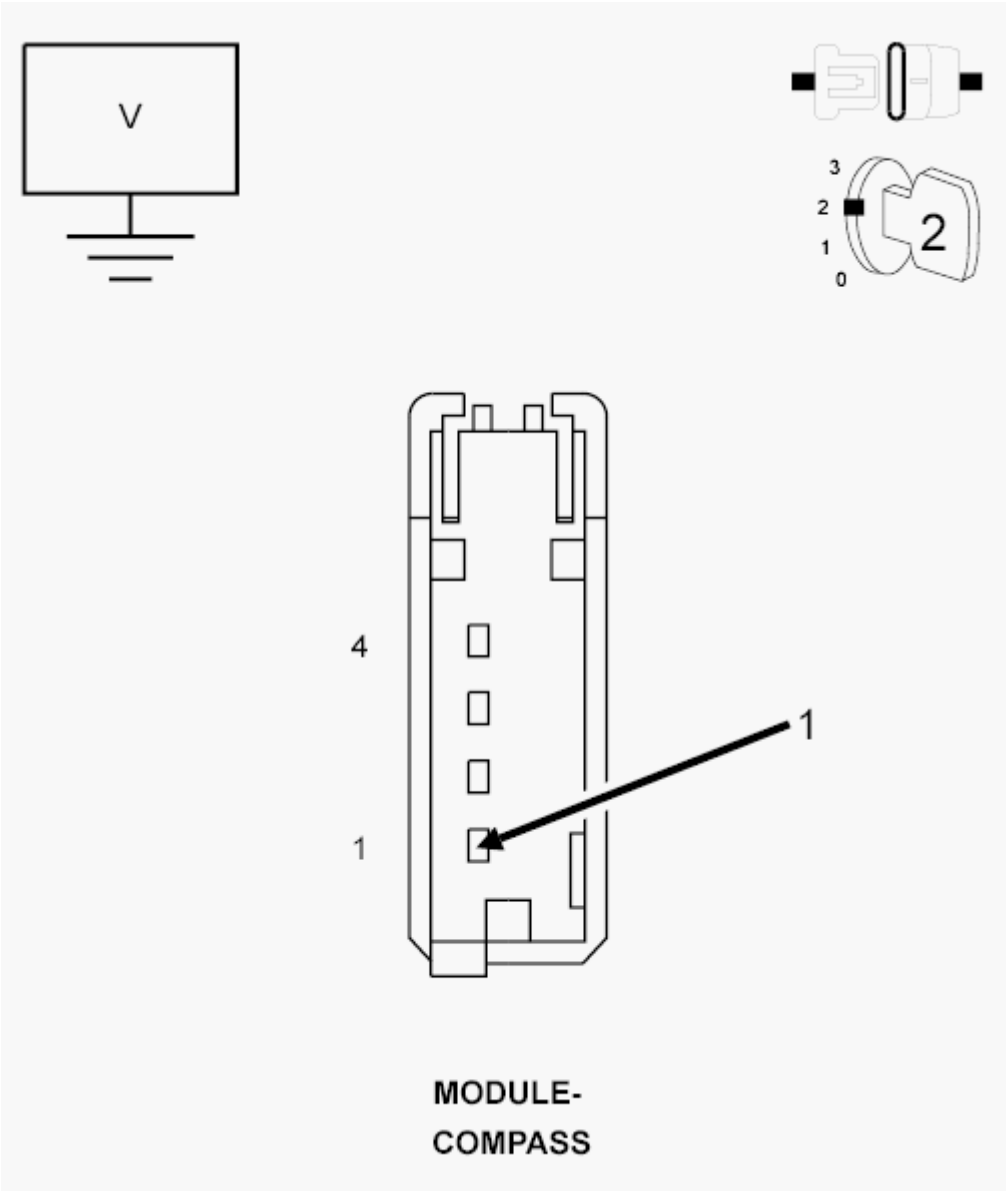

Fig. 54: Checking Fused B(+) Circuit For An Open
Courtesy of CHRYSLER GROUP, LLC

1. Turn the ignition on.
2. Measure the voltage of the (A416) Fused B(+) circuit.

   Is the voltage above 10 volts?

   Yes

   - Go To 5.

   No

- Repair the (A416) Fused B(+) circuit for an open. Inspect the related fuse. If the fuse is open, check the circuit for a short to ground.
- Perform the BODY VERIFICATION TEST. Refer to **BODY VERIFICATION TEST** .

5. **(Z906) GROUND CIRCUIT FOR AN OPEN**

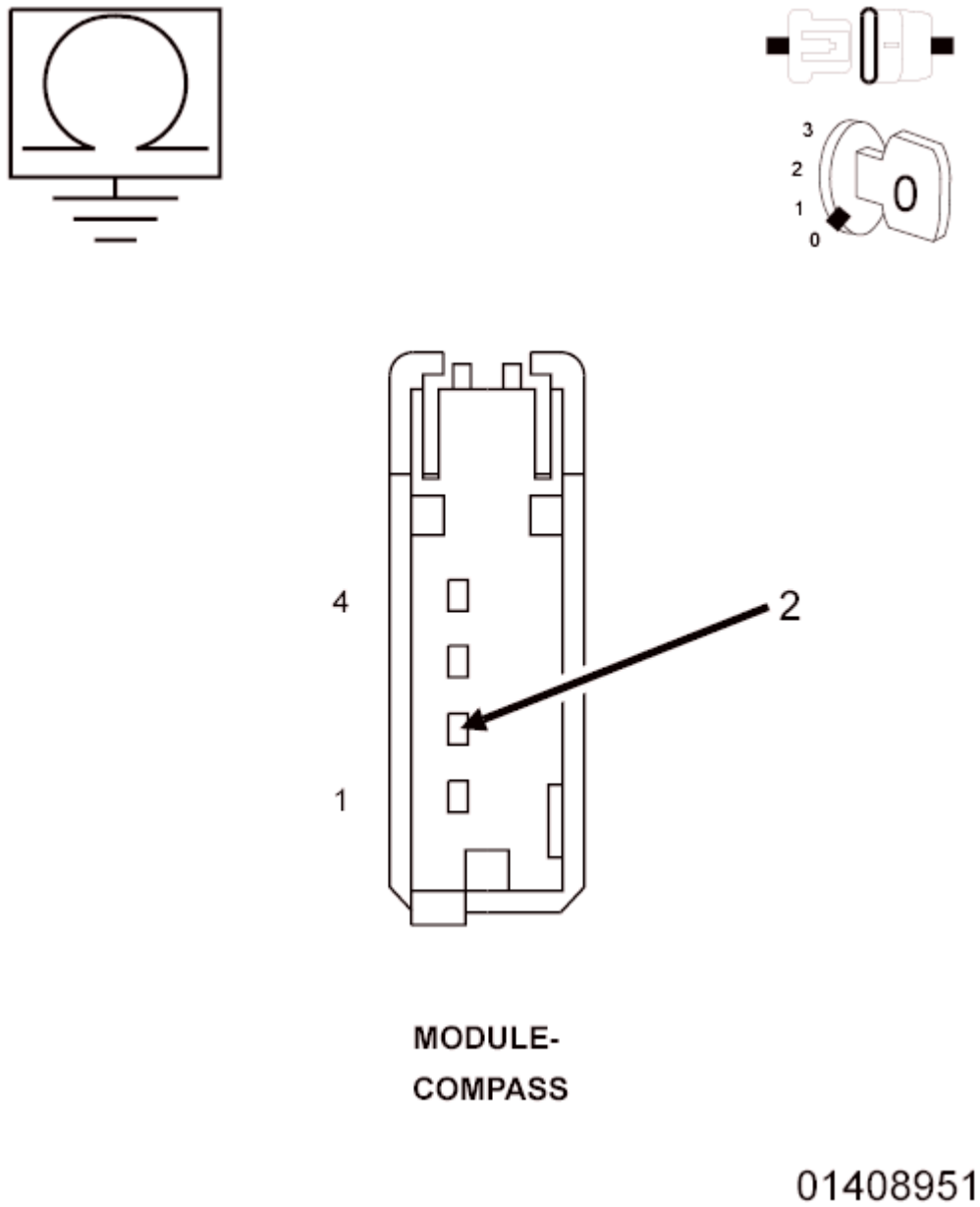

Fig. 55: Checking Ground Circuit For An Open
Courtesy of CHRYSLER GROUP, LLC

1. Turn the ignition off.
2. Measure the resistance between ground and the (Z906) Ground circuit.

Is the resistance below 10K Ohms?

Yes

- Replace the Compass Module in accordance with the Service Information.
- Perform the BODY VERIFICATION TEST. Refer to **BODY VERIFICATION TEST** .

No

- Repair the (Z906) ground circuit for an open.
- Perform the BODY VERIFICATION TEST. Refer to **BODY VERIFICATION TEST** .

U0164-LOST COMMUNICATION WITH HVAC CONTROL MODULE

For a complete wiring diagram, **refer to appropriate SYSTEM WIRING DIAGRAMS article** .

WHEN MONITORED:

Continuously when the ignition is on.

Battery voltage between 10 and 16 volts.

Ignition Off Draw (IOD) fuse installed.

Totally Integrated Power Module (TIPM) is configured correctly.

SET CONDITION:

Bus messages not received from the HVAC Control Module for approximately two to five seconds.

POSSIBLE CAUSES

Possible Causes
CAN BUS CIRCUITS OPEN OR SHORTED
DTCS RELATED TO BATTERY VOLTAGE, IGNITION, OR VIN MESSAGES
TIPM NOT CONFIGURED CORRECTLY
HVAC CONTROL MODULE
HVAC CONTROL MODULE POWER AND GROUND
MODULE THAT SET THIS DTC

DIAGNOSTIC TEST

1. **VERIFY DIAGNOSTIC TROUBLE CODE (DTC) IS ACTIVE**

NOTE: **Make sure the IOD fuse is installed and battery voltage is between 10 and 16 volts before proceeding.**

1. With the scan tool, read active Cluster DTCs.

   Is this DTC active?

   Yes

   - Refer to **U0164-LOST COMMUNICATION WITH HVAC CONTROL MODULE** and perform the diagnostic procedure.

   No

   - Refer to **STORED LOST COMMUNICATION DTCS** and perform the diagnostic procedure.

U0184-LOST COMMUNICATION WITH RADIO

For a complete wiring diagram, **refer to appropriate SYSTEM WIRING DIAGRAMS article** .

WHEN MONITORED:

Continuously when the ignition is on.

Battery voltage between 10 and 16 volts.

Ignition Off Draw (IOD) fuse installed.

Totally Integrated Power Module (TIPM) is configured correctly.

SET CONDITION:

Bus messages not received from the Radio for approximately two to five seconds.

POSSIBLE CAUSES

Possible Causes
CAN BUS CIRCUITS OPEN OR SHORTED
DTCS RELATED TO BATTERY VOLTAGE, IGNITION, OR VIN MESSAGES
TIPM NOT CONFIGURED CORRECTLY
RADIO
RADIO POWER AND GROUND
MODULE THAT SET THIS DTC

DIAGNOSTIC TEST

1. **VERIFY DIAGNOSTIC TROUBLE CODE (DTC) IS ACTIVE**

NOTE: **Make sure the IOD fuse is installed and battery voltage is between 10 and 16 volts before proceeding.**

1. With the scan tool, read active Cluster DTCs.

   Is this DTC active?

   Yes

   - Refer to **U0184-LOST COMMUNICATION WITH RADIO** and perform the diagnostic procedure.

   No

   - Refer to **STORED LOST COMMUNICATION DTCS** and perform the diagnostic procedure.

U0197-LOST COMMUNICATION WITH HANDS FREE PHONE MODULE

For a complete wiring diagram, **refer to appropriate SYSTEM WIRING DIAGRAMS article** .

WHEN MONITORED:

Continuously when the ignition is on.

Battery voltage between 10 and 16 volts.

Ignition Off Draw (IOD) fuse installed.

Totally Integrated Power Module (TIPM) is configured correctly.

SET CONDITION:

Bus messages not received from the Hands Free Phone Module (HFM) for approximately two to five seconds.

POSSIBLE CAUSES

Possible Causes
CAN BUS CIRCUITS OPEN OR SHORTED
DTCS RELATED TO BATTERY VOLTAGE, IGNITION, OR VIN MESSAGES
TIPM NOT CONFIGURED CORRECTLY
HANDS FREE PHONE MODULE (HFM)
HFM POWER AND GROUND
MODULE THAT SET THIS DTC

DIAGNOSTIC TEST

1. **VERIFY DIAGNOSTIC TROUBLE CODE (DTC) IS ACTIVE**

NOTE: Make sure the IOD fuse is installed and battery voltage is between 10 and 16 volts before proceeding.

1. With the scan tool, read active Cluster DTCs.

   Is this DTC active?

   Yes

   - Refer to **U0197-LOST COMMUNICATION WITH HANDS FREE PHONE MODULE (HFM)** and perform the diagnostic procedure.

   No

   - Refer to **STORED LOST COMMUNICATION DTCS** and perform the diagnostic procedure.

U0208-LOST COMMUNICATION WITH HEATED SEAT CONTROL MODULE

For a complete wiring diagram, **refer to appropriate SYSTEM WIRING DIAGRAMS article** .

WHEN MONITORED:

Continuously when the ignition is on.

Battery voltage between 10 and 16 volts.

Ignition Off Draw (IOD) fuse installed.

Totally Integrated Power Module (TIPM) is configured correctly.

SET CONDITION:

Bus messages not received from the Heated Seat Control Module (HSM) for approximately two to five seconds.

POSSIBLE CAUSES

Possible Causes
CAN BUS CIRCUITS OPEN OR SHORTED
DTCS RELATED TO BATTERY VOLTAGE, IGNITION, OR VIN MESSAGES
TIPM NOT CONFIGURED CORRECTLY
HEATED SEAT CONTROL MODULE
HEATED SEAT CONTROL MODULE POWER AND GROUND
MODULE THAT SET THIS DTC

DIAGNOSTIC TEST

1. **VERIFY DIAGNOSTIC TROUBLE CODE (DTC) IS ACTIVE**

   NOTE: Make sure the IOD fuse is installed and battery voltage is between 10 and 16 volts before proceeding.

   1. With the scan tool, read active Cluster DTCs.

      Is this DTC active?

      Yes

      - Refer to **U0208-LOST COMMUNICATION WITH HEATED SEAT CONTROL MODULE** and perform the diagnostic procedure.

      No

      - Refer to **STORED LOST COMMUNICATION DTCS** and perform the diagnostic procedure.

U0209-LOST COMMUNICATION WITH MEMORY SEAT CONTROL MODULE

For a complete wiring diagram,**refer to appropriate SYSTEM WIRING DIAGRAMS article** .

WHEN MONITORED:

Continuously when the ignition is on.

Battery voltage between 10 and 16 volts.

Ignition Off Draw (IOD) fuse installed.

Totally Integrated Power Module (TIPM) is configured correctly.

SET CONDITION:

Bus messages not received from the Memory Seat Control Module for approximately two to five seconds.

POSSIBLE CAUSES

Possible Causes
CAN BUS CIRCUITS OPEN OR SHORTED
DTCS RELATED TO BATTERY VOLTAGE, IGNITION, OR VIN MESSAGES
TIPM NOT CONFIGURED CORRECTLY
MEMORY SEAT CONTROL MODULE

MEMORY SEAT CONTROL MODULE POWER AND GROUND
MODULE THAT SET THIS DTC

DIAGNOSTIC TEST

1. **VERIFY DIAGNOSTIC TROUBLE CODE (DTC) IS ACTIVE**

   NOTE: Make sure the IOD fuse is installed and battery voltage is between 10 and 16 volts before proceeding.

   1. With the scan tool, read active Cluster DTCs.

      Is this DTC active?

      Yes

      - Refer to **U0209-LOST COMMUNICATION WITH MEMORY SEAT CONTROL MODULE (MSMD)** and perform the diagnostic procedure.

      No

      - Refer to **STORED LOST COMMUNICATION DTCS** and perform the diagnostic procedure.

U1008-LIN 1 BUS

For a complete wiring diagram, **refer to appropriate SYSTEM WIRING DIAGRAMS article** .

WHEN MONITORED:

With the ignition on.

SET CONDITION:

LIN 1 Bus Performance.

POSSIBLE CAUSES

Possible Causes
(D506) LIN BUS CIRCUIT FOR AN OPEN
(D506) LIN BUS CIRCUIT FOR A SHORT TO GROUND
SHORTED LIN BUS COMPONENT
CLUSTER

DIAGNOSTIC TEST

1. **CHECK FOR AN ACTIVE DTC**
    1. Turn the ignition on.
    2. With the scan tool, read DTCs.

    Does the scan tool display this DTC as active?

    Yes

    - Go To 2.

    No

    - Test complete, the condition or conditions that originally set this DTC are not present at this time. Using the wiring diagrams as a guide, check all related splices and connectors for signs of water intrusion, corrosion, pushed out or bent terminals, and correct pin tension.
2. **SHORTED COMPONENT**

    NOTE: After disconnecting each component, check DTCs with the scan tool.

    1. Turn the ignition on.
    2. Disconnect the Upper Switch Bank harness connector.
    3. Disconnect the Lower Switch Bank harness connector.
    4. Disconnect the Compass Module harness connector.
    5. Disconnect the Multifunction Switch harness connector.
    6. Disconnect the Right Steering Wheel Switch (Speed Control Switch) harness connector.

    With each component disconnected, did the DTC U1008-LIN 1 BUS change from active to stored?

    Yes

    - Replace the component that caused the DTC U1008-LIN 1 BUS change from active to stored.
    - Perform the BODY VERIFICATION TEST. Refer to **BODY VERIFICATION TEST** .

    No

    - Go To 3.
3. **(D506) LIN BUS CIRCUIT FOR AN OPEN**

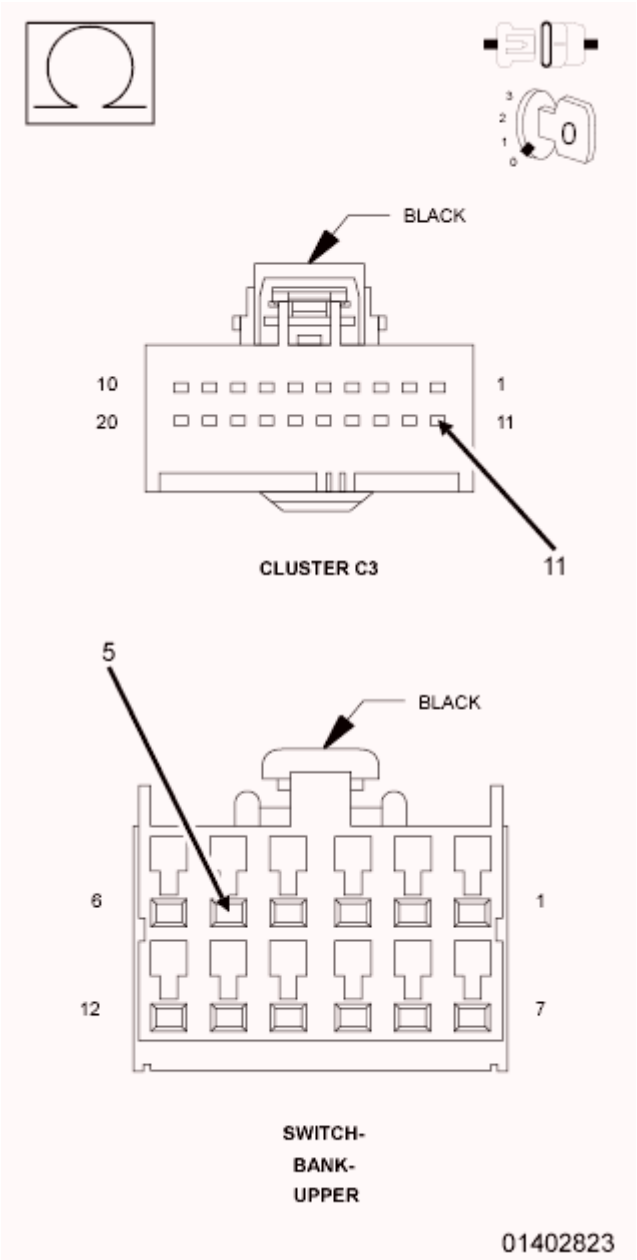

Fig. 56: Checking Lin Bus Circuit For An Open
Courtesy of CHRYSLER GROUP, LLC

1. Turn the ignition off.
2. Disconnect the Cluster C3 harness connector.
3. Disconnect the Upper Switch Bank harness connector.
4. Measure the resistance of the (D506) LIN Bus circuit.

   Is the resistance above 10K Ohms?

   Yes

- Repair the (D506) LIN Bus circuit for an open.
- Perform the BODY VERIFICATION TEST. Refer to **BODY VERIFICATION TEST** .

No

- Go To 4.

4. **(D506) LIN BUS CIRCUIT FOR A SHORT TO GROUND**

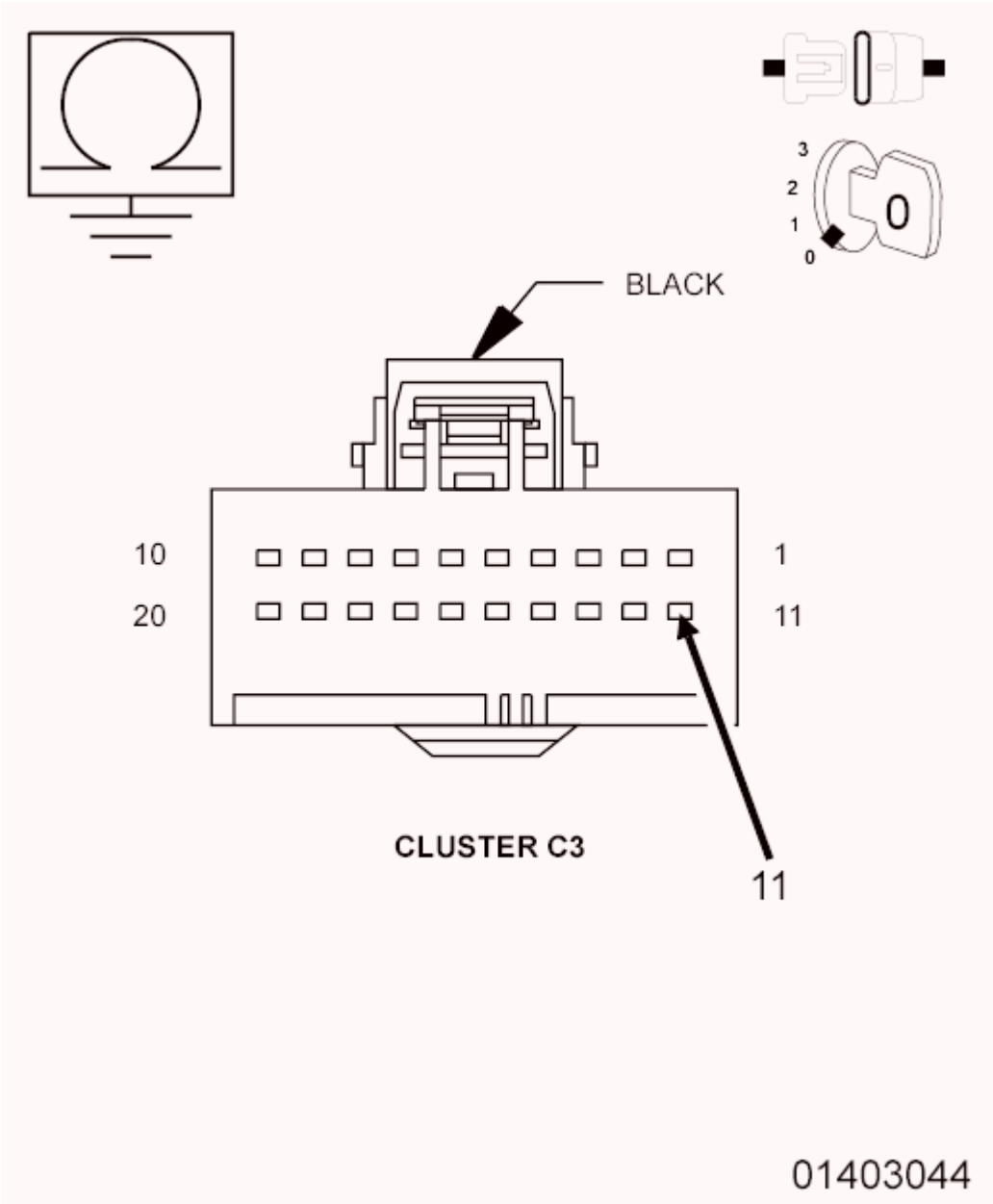

Fig. 57: Checking Lin Bus Circuit For A Short To Ground
Courtesy of CHRYSLER GROUP, LLC

1. Turn the ignition off.

2. Measure the resistance to ground on the (D506) LIN Bus circuit.

   Is the resistance below 10K Ohms?

   Yes

   - Repair the (D506) LIN Bus circuit for a short to ground.
   - Perform the BODY VERIFICATION TEST. Refer to **BODY VERIFICATION TEST** .

   No

   - Replace the Cluster in accordance with the Service Information. Refer to **REMOVAL** .
   - Perform the BODY VERIFICATION TEST. Refer to **BODY VERIFICATION TEST** .

U1109-LOST COMMUNICATION WITH LIN STEERING WHEEL CONTROLS

For a complete wiring diagram, **refer to appropriate SYSTEM WIRING DIAGRAMS article** .

WHEN MONITORED:

With the ignition on.

SET CONDITION:

The Cluster does not receive information from the Steering Wheel Controls.

POSSIBLE CAUSES

Possible Causes
(A909) FUSED B (+) CIRCUIT FOR AN OPEN
(Z911) GROUND CIRCUIT FOR AN OPEN
(D506) LIN BUS CIRCUIT FOR AN OPEN
RIGHT STEERING WHEEL SWITCH
CLOCKSPRING
CLUSTER

DIAGNOSTIC TEST

1. **CHECK FOR AN ACTIVE DTC**

   NOTE: **Before proceeding with this diagnostic procedure, verify the Clockspring harness connectors are properly seated and verify proper pin terminal tension. A loose connection at any of these connectors may cause this DTC to set.**

1. Turn the ignition on.
2. With the scan tool, read DTCs.

   Does the scan tool display this DTC as active?

   Yes

   - Go To 2.

   No

   - Test complete, the condition or conditions that originally set this DTC are not present at this time. Using the wiring diagrams as a guide, check all related splices and connectors for signs of water intrusion, corrosion, pushed out or bent terminals, and correct pin tension.

2. **(A909) FUSED B (+) CIRCUIT FOR AN OPEN**
   1. Turn the ignition off.
   2. Disconnect the Right Steering Wheel Switch harness connector.
   3. Turn the ignition on.
   4. Measure the voltage of the (A909) Fused B (+) circuit.

      Is the voltage above 10.0 volts?

      Yes

      - Go To 3.

      No

      - Using the Wiring Information as a guide, repair the (A909) Fused B (+) circuit for an open. Inspect the related fuse. If the fuse is open, check the circuit for a short to ground.
      - Perform the BODY VERIFICATION TEST. Refer to **BODY VERIFICATION TEST** .

3. **(Z911) GROUND CIRCUIT FOR AN OPEN**
   1. Turn the ignition off.
   2. Measure the resistance between ground and the (Z911) Ground circuit at the Right Steering Wheel Switch harness connector.

      Is the resistance below 10K Ohms?

      Yes

      - Go To 4.

      No

- Using the Wiring Information as a guide, repair the (Z911) Ground circuit for an open.
- Perform the BODY VERIFICATION TEST. Refer to **BODY VERIFICATION TEST** .

4. **RIGHT STEERING WHEEL SWITCH**
    1. Turn the ignition on.
    2. Measure the voltage of the (D506) LIN BUS circuit at the Right Steering Wheel Switch harness connector.

    Is the voltage above 5 volts?

    Yes

    - Replace the Right Steering Wheel Switch in accordance with the Service Information. Refer to **SWITCH, SPEED CONTROL, REMOVAL** .
    - Perform the BODY VERIFICATION TEST. Refer to **BODY VERIFICATION TEST** .

    No

    - Go To 5.

5. **(D506) LIN BUS CIRCUIT FOR AN OPEN BETWEEN THE CLOCKSPRING AND RIGHT STEERING WHEEL SWITCH**
    1. Turn the ignition off.
    2. Disconnect the Clockspring C8 harness connector.
    3. Measure the resistance of the (D506) LIN BUS circuit between the Clockspring C8 and Right Steering Wheel Switch harness connectors.

    Is the resistance below 10K Ohms?

    Yes

    - Go To 6.

    No

    - Repair the (D506) LIN BUS circuit for an open.
    - Perform the BODY VERIFICATION TEST. Refer to **BODY VERIFICATION TEST** .

6. **CLOCKSPRING**
    1. Disconnect the Clockspring C2 harness connector.
    2. Turn the ignition on.
    3. Measure the voltage of the (D506) LIN BUS circuit at the Clockspring C2 harness connector.

    Is the voltage above 5 volts?

    Yes

- Replace the Clockspring in accordance with the Service Information. Refer to **CLOCKSPRING, REMOVAL** .
- Perform the BODY VERIFICATION TEST. Refer to **BODY VERIFICATION TEST** .

No

- Go To 7.

7. **(D506) LIN BUS CIRCUIT FOR AN OPEN BETWEEN THE CLUSTER AND THE CLOCKSPRING**
   1. Turn the ignition off.
   2. Disconnect the Cluster C3 harness connector.
   3. Measure the resistance of the (D506) LIN BUS circuit between the Clockspring C2 and Cluster C3 harness connectors.

      Is the resistance below 10K Ohms?

      Yes

      - Replace the Cluster in accordance with the Service Information. Refer to **REMOVAL** .
      - Perform the BODY VERIFICATION TEST. Refer to **BODY VERIFICATION TEST** .

      No

      - Repair the (D506) LIN BUS circuit for an open.
      - Perform the BODY VERIFICATION TEST. Refer to **BODY VERIFICATION TEST** .

U1149-LOST COMMUNICATION WITH MULTI-FUNCTION SWITCH

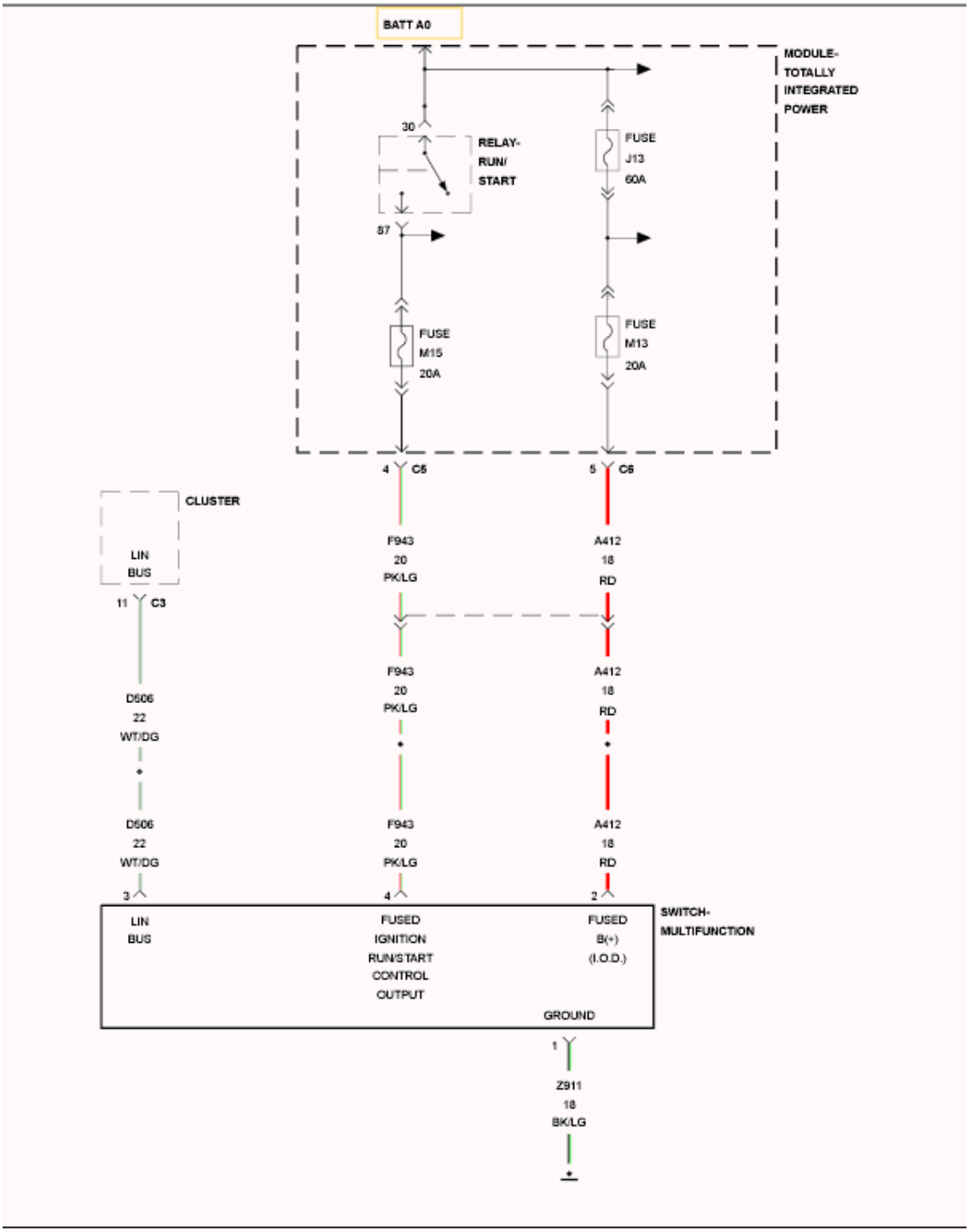
BATT A0
MODULE-
TOTALLY
INTEGRATED
POWER
30
RELAY-
RUN/
START
87
FUSE
J13
60A
FUSE
M15
20A
FUSE
M13
20A
4
C5
5
C6
CLUSTER
LIN
BUS
11
C3
F943
20
PK/LG
A412
18
RD
D506
22
WT/DG
3
4
2
SWITCH-
MULTIFUNCTION
LIN
BUS
FUSED
IGNITION
RUN/START
CONTROL
OUTPUT
FUSED
B(+)
(I.O.D.)
GROUND
1
Z911
18
BK/LG

BLACK
10
20
1
11
CLUSTER C3
NATURAL
4
1
SWITCH-
MULTIFUNCTION

Fig. 58: Multi-Function Switch Wiring Diagram
Courtesy of CHRYSLER GROUP, LLC

For a complete wiring diagram, **refer to appropriate SYSTEM WIRING DIAGRAMS article** .

WHEN MONITORED:

With the ignition on.

SET CONDITION:

The Cluster does not receive any LIN Bus messages from the Multifunction Switch.

POSSIBLE CAUSES

Possible Causes
(D506) LIN BUS CIRCUIT FOR AN OPEN
(F943) FUSED IGNITION RUN/START CONTROL OUTPUT CIRCUIT FOR AN OPEN
(A412) FUSED B(+) (I.O.D.) CIRCUIT FOR AN OPEN
(Z911) GROUND CIRCUIT FOR AN OPEN
MULTIFUNCTION SWITCH

DIAGNOSTIC TEST

1. **CHECK FOR AN ACTIVE DTC**

NOTE: **Before proceeding with this diagnostic process, verify the proper connection of the Multifunction Switch harness connector. A loose connection at this connector will cause this DTC to set.**

1. Turn the ignition off.
2. Gently pull the Multifunction Switch connector harness to verify the locking tab is fully engaged. If the connector locking tab is not fully engaged, push to seat the connector locking tab.
3. Turn the ignition on.
4. Wait 30 seconds.
5. With the scan tool, read DTCs.

Does the scan tool display this DTC as active?

Yes

- Go To 2.

No

- The condition that caused this code to set is not present at this time. Check for an intermittent condition by inspecting the related wiring harness for chafed, pierced, pinched, and partially broken wires. Also inspect the related connectors for broken, bent, pushed out, spread, corroded, or contaminated terminals.
- Perform the BODY VERIFICATION TEST. Refer to **BODY VERIFICATION TEST** .

2. **(D506) LIN BUS CIRCUIT FOR AN OPEN**

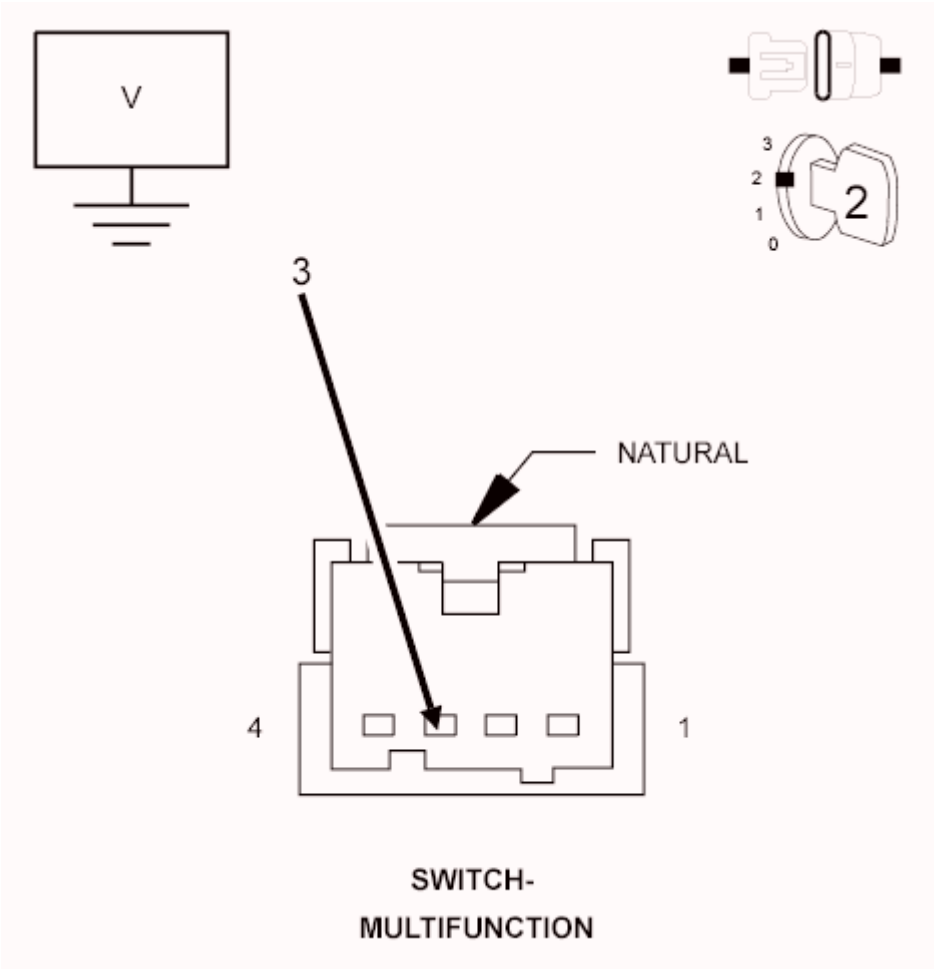

Fig. 59: Checking Lin Bus Circuit For An Open
Courtesy of CHRYSLER GROUP, LLC

1. Turn the ignition off.
2. Disconnect the Multifunction Switch harness connector.
3. Turn the ignition on.
4. Measure the voltage of the (D506) LIN BUS circuit.

   Is the voltage above 5 volts?

   Yes

- Go To 3.

No

- Repair the (D506) LIN BUS circuit for an open
- Perform the BODY VERIFICATION TEST. Refer to **BODY VERIFICATION TEST** .

3. **(F943) FUSED IGNITION RUN/START CONTROL OUTPUT CIRCUIT FOR AN OPEN**

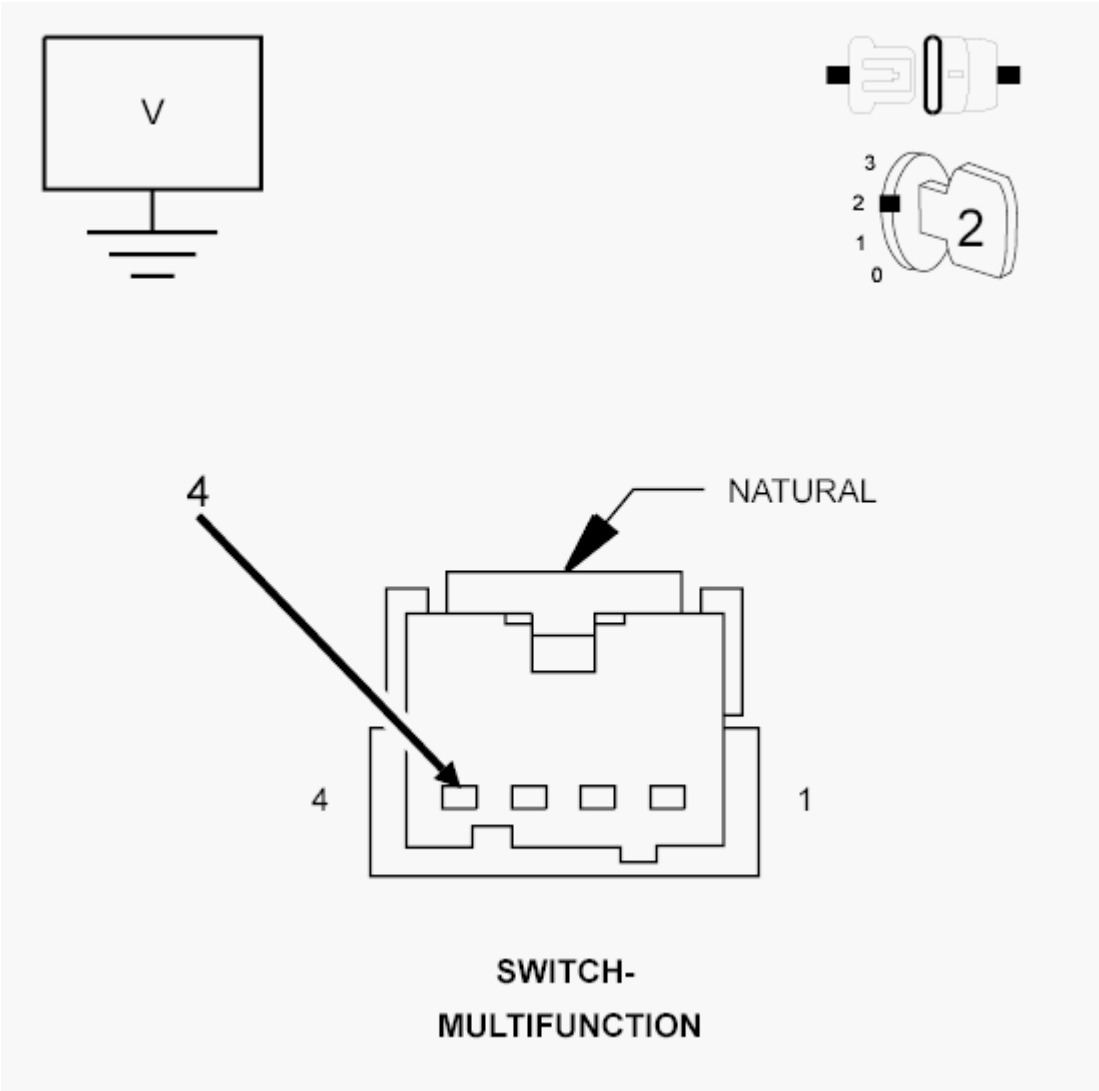

Fig. 60: Checking Fused Ignition Run/Start Control Output Circuit For An Open
Courtesy of CHRYSLER GROUP, LLC

1. Measure the voltage of the (F943) Fused Ignition Run/Start Control Output circuit.

   Is the voltage above 10 volts?

   Yes

- Go To 4.

No

- Repair the (F943) Fused Ignition Run/Start Control Output circuit for an open. Inspect the related fuse. If the fuse is open, check the circuit for a short to ground.
- Perform the BODY VERIFICATION TEST. Refer to **BODY VERIFICATION TEST** .

4. **(A412) FUSED B(+) (I.O.D.) CIRCUIT FOR AN OPEN**

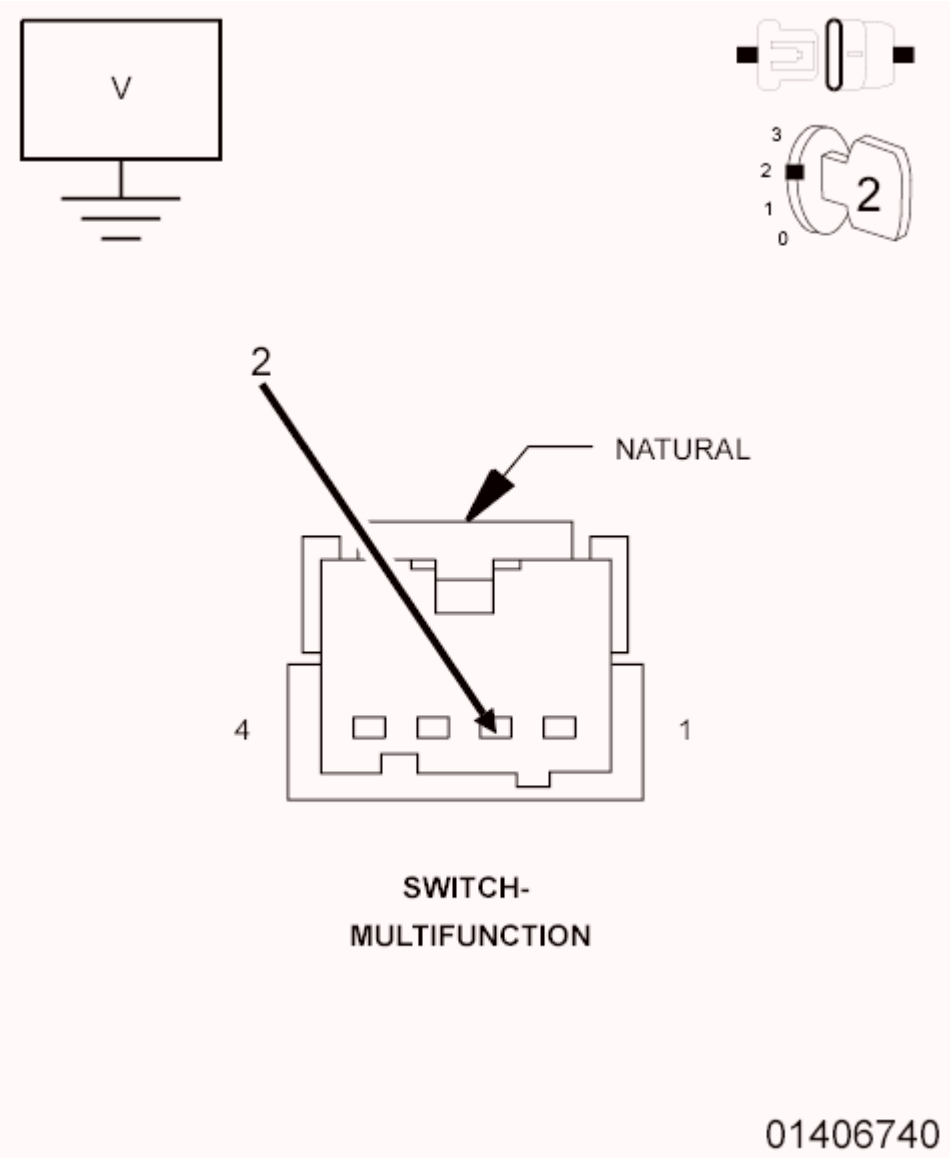

Fig. 61: Checking Fused B(+) (I.O.D.) Circuit For An Open
Courtesy of CHRYSLER GROUP, LLC

1. Measure the voltage of the (A412) Fused B(+) (I.O.D.) circuit.

Is the voltage above 10 volts?

Yes

- Go To 5.

No

- Repair the (A412) Fused B(+) (I.O.D.) circuit for an open. Inspect the related fuse. If the fuse is open, check the circuit for a short to ground.
- Perform the BODY VERIFICATION TEST. Refer to **BODY VERIFICATION TEST** .

5. **(Z911) GROUND CIRCUIT FOR AN OPEN**

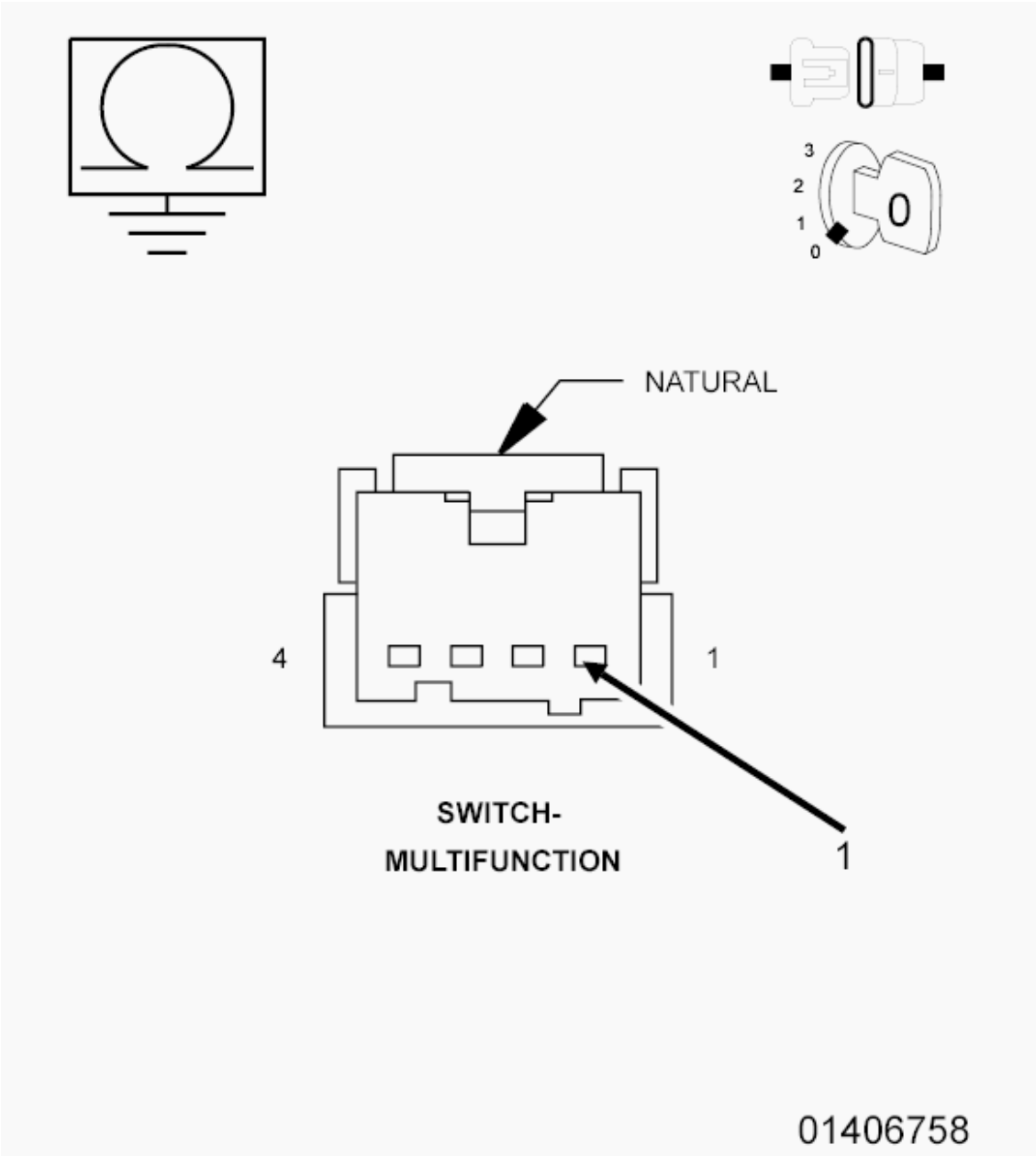

Fig. 62: Checking Ground Circuit For An Open
Courtesy of CHRYSLER GROUP, LLC

1. Turn the ignition off.
2. Measure the resistance between ground and the (Z911) Ground circuit.

   Is the resistance below 10K Ohms?

   Yes

   - Replace the Multifunction Switch in accordance with the Service Information.
   - Perform the BODY VERIFICATION TEST. Refer to **BODY VERIFICATION TEST** .

No

- Repair the (Z911) Ground circuit for an open.
- Perform the BODY VERIFICATION TEST. Refer to **BODY VERIFICATION TEST** .

U1191-LOST COMMUNICATION WITH UPPER SWITCH BANK

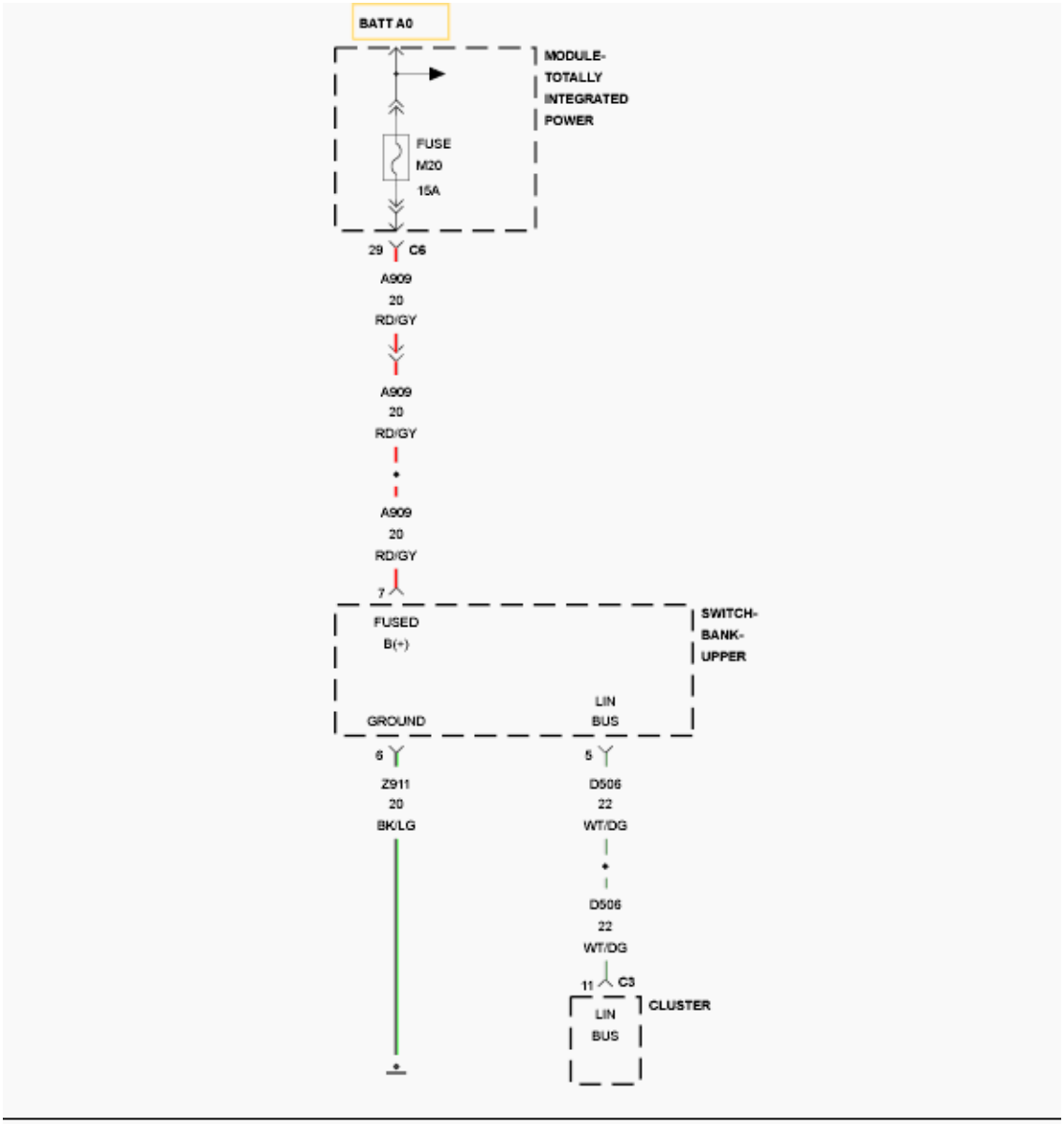
BATT A0
MODULE-
TOTALLY
INTEGRATED
POWER
FUSE
M20
15A
29
C6
A909
20
RD/GY
A909
20
RD/GY
A909
20
RD/GY
7
FUSED
B(+)
SWITCH-
BANK-
UPPER
GROUND
LIN
BUS
6
5
Z911
20
BK/LG
D506
22
WT/DG
D506
22
WT/DG
11
C3
CLUSTER
LIN
BUS

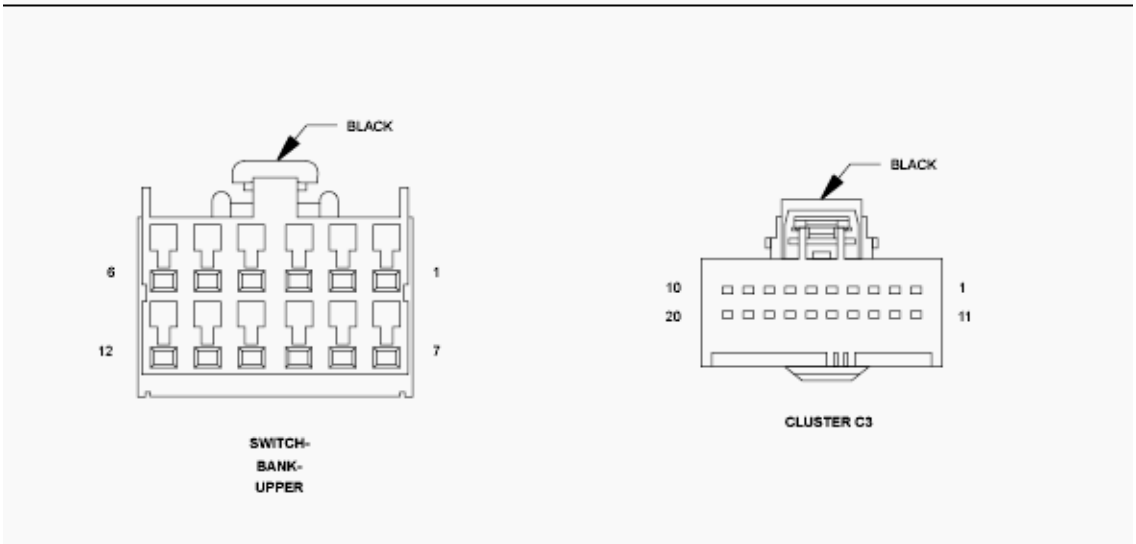
BLACK
6
1
12
7
SWITCH-
BANK-
UPPER
BLACK
10
1
20
11
CLUSTER C3

Fig. 63: Upper Switch Bank Wiring Diagram
Courtesy of CHRYSLER GROUP, LLC

For a complete wiring diagram, **refer to appropriate SYSTEM WIRING DIAGRAMS article** .

WHEN MONITORED:

With the ignition on.

SET CONDITION:

The Cluster does not receive information from the Upper Switch Bank.

POSSIBLE CAUSES

Possible Causes
(D506) LIN BUS CIRCUIT FOR AN OPEN
(A909) FUSED B+ CIRCUIT FOR AN OPEN
(Z911) GROUND CIRCUIT FOR AN OPEN
UPPER SWITCH BANK
CLUSTER

DIAGNOSTIC TEST

1. **CHECK FOR AN ACTIVE DTC**
    1. Turn the ignition on.
    2. With the scan tool, record and erase DTCs.
    3. Wait 30 seconds.
    4. With the scan tool, read DTCs.

    Does the scan tool display this DTC as active?

    Yes

    - Go To 2.

    No

    - The condition that caused this code to set is not present at this time. Check for an intermittent condition by inspecting the related wiring harness for chafed, pierced, pinched, and partially broken wires. Also inspect the related connectors for broken, bent, pushed out, spread, corroded, or contaminated terminals.
    - Perform the BODY VERIFICATION TEST. Refer to **BODY VERIFICATION TEST** .
2. **(D506) LIN BUS CIRCUIT FOR AN OPEN**

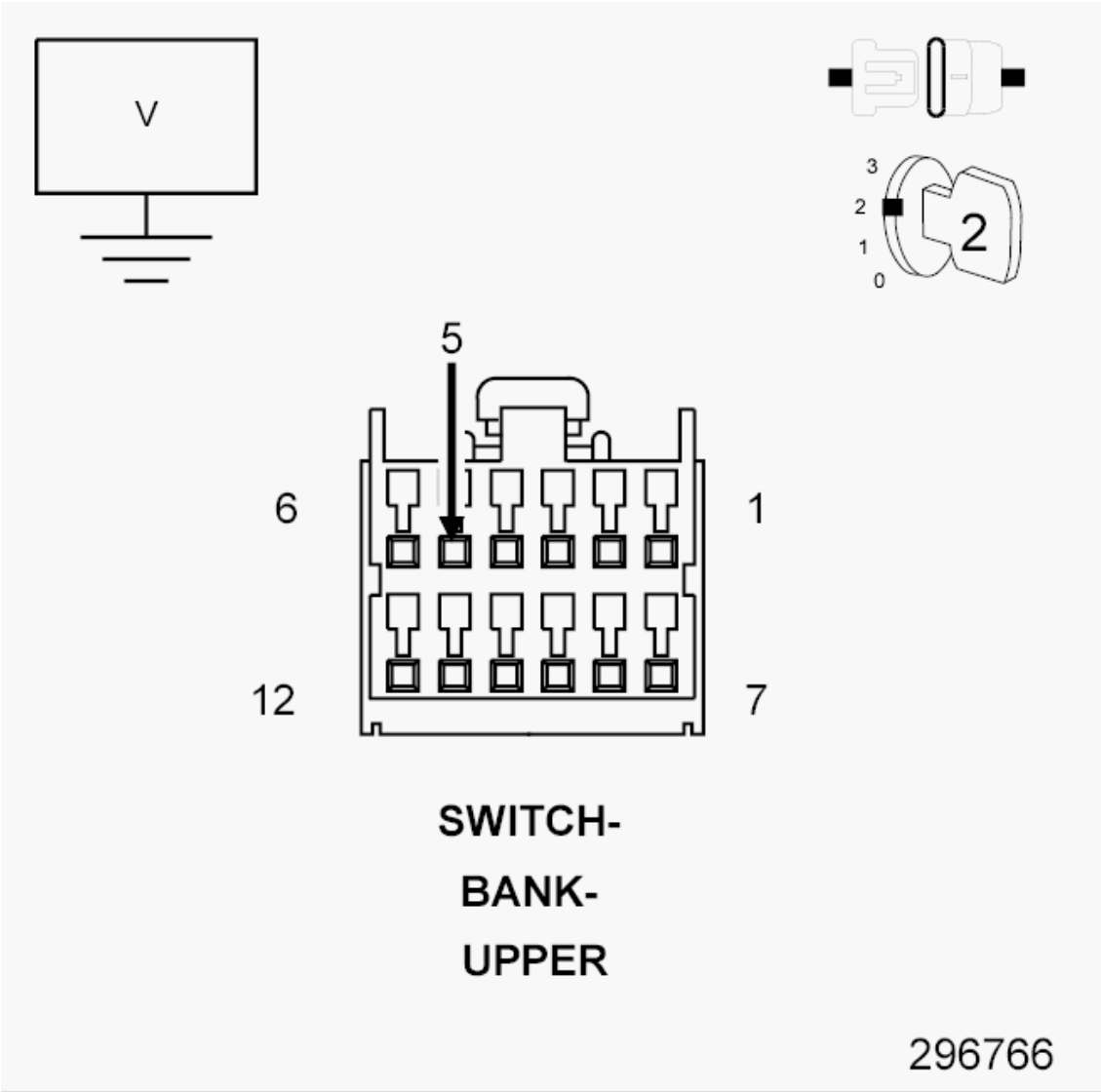

Fig. 64: Checking Lin Bus Circuit For An Open
Courtesy of CHRYSLER GROUP, LLC

1. Turn the ignition off.
2. Disconnect the Upper Switch Bank harness connector.
3. Turn the ignition on.
4. Measure the voltage of the (D506) LIN BUS circuit.

   Is the voltage above 5 volts?

   Yes

   - Go To 4.

   No

- Go To 3.

3. **(D506) LIN BUS CIRCUIT FOR AN OPEN**

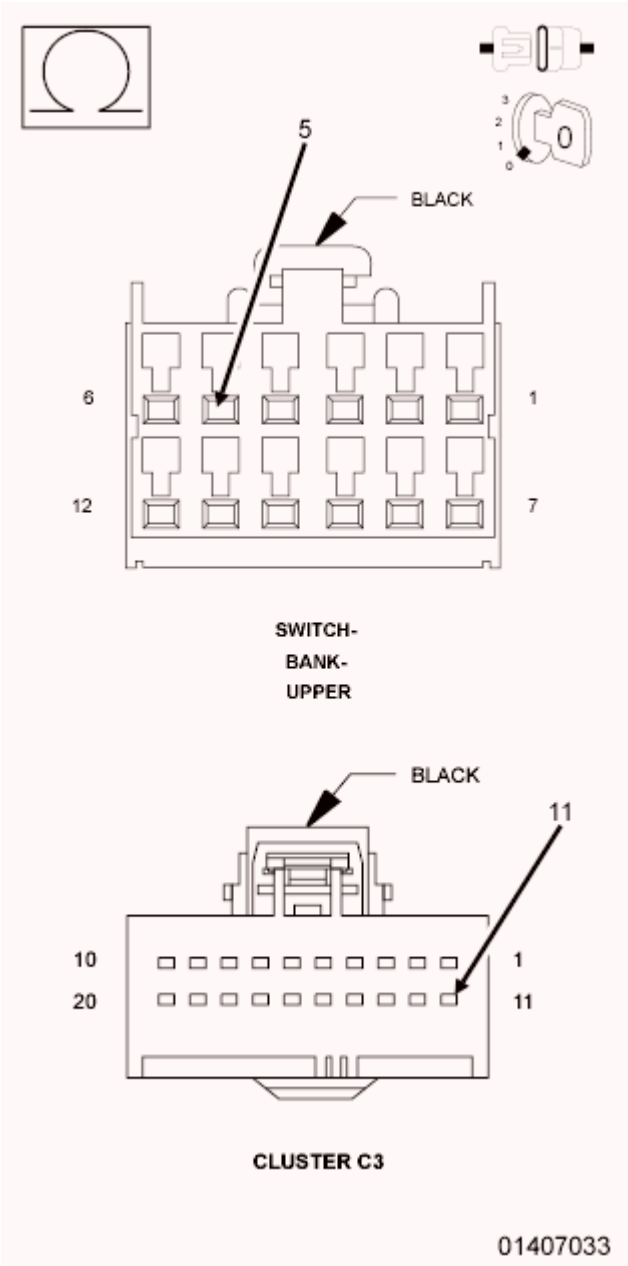

Fig. 65: Checking Lin Bus Circuit For An Open
Courtesy of CHRYSLER GROUP, LLC

1. Turn the ignition off.
2. Disconnect the Instrument Cluster C3 harness connector.
3. Measure the resistance of the (D506) LIN BUS circuit between the Cluster C3 and the Upper Switch Bank harness connectors.

Is the resistance below 10K Ohms?

Yes

- Replace the Cluster in accordance with the Service Information.
- Perform the BODY VERIFICATION TEST. Refer to **BODY VERIFICATION TEST** .

No

- Repair the (D506) LIN BUS circuit for an open.
- Perform the BODY VERIFICATION TEST. Refer to **BODY VERIFICATION TEST** .

4. **(A909) FUSED B+ CIRCUIT FOR AN OPEN**

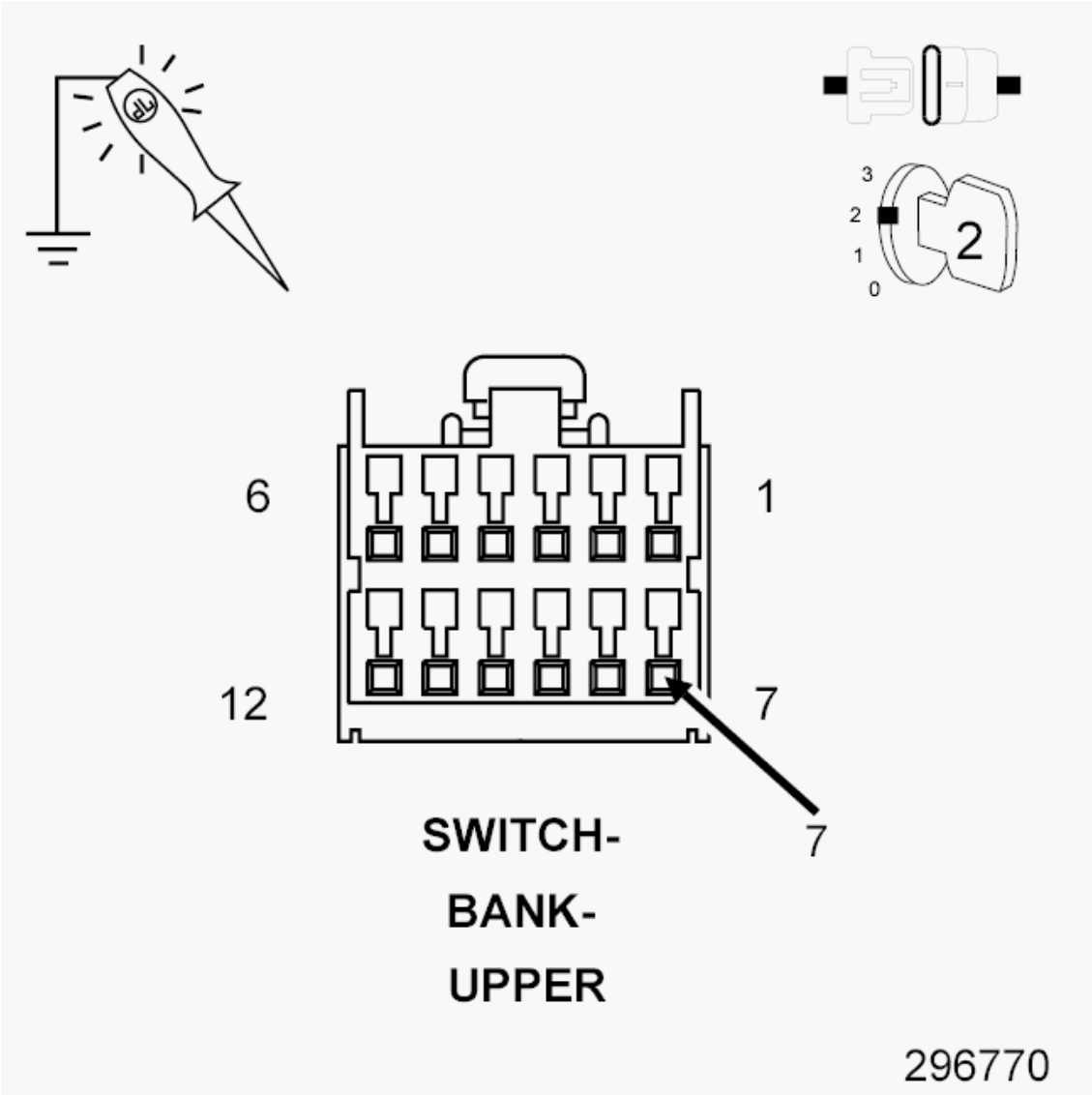

Fig. 66: Checking Fused B+ Circuit For An Open
Courtesy of CHRYSLER GROUP, LLC

1. Turn the ignition on.
2. Using a 12-volt test light connected to ground, check the (A909) Fused B+ circuit at the Upper Switch Bank harness connector.

   Does the test light illuminate brightly?

   Yes

   - Go To 5.

   No

   - Repair the (A909) Fused B+ circuit for an open. Inspect the related fuse. If the fuse is open, check the circuit for a short to ground.
   - Perform the BODY VERIFICATION TEST. Refer to **BODY VERIFICATION TEST** .

5. **(Z911) GROUND CIRCUIT FOR AN OPEN**

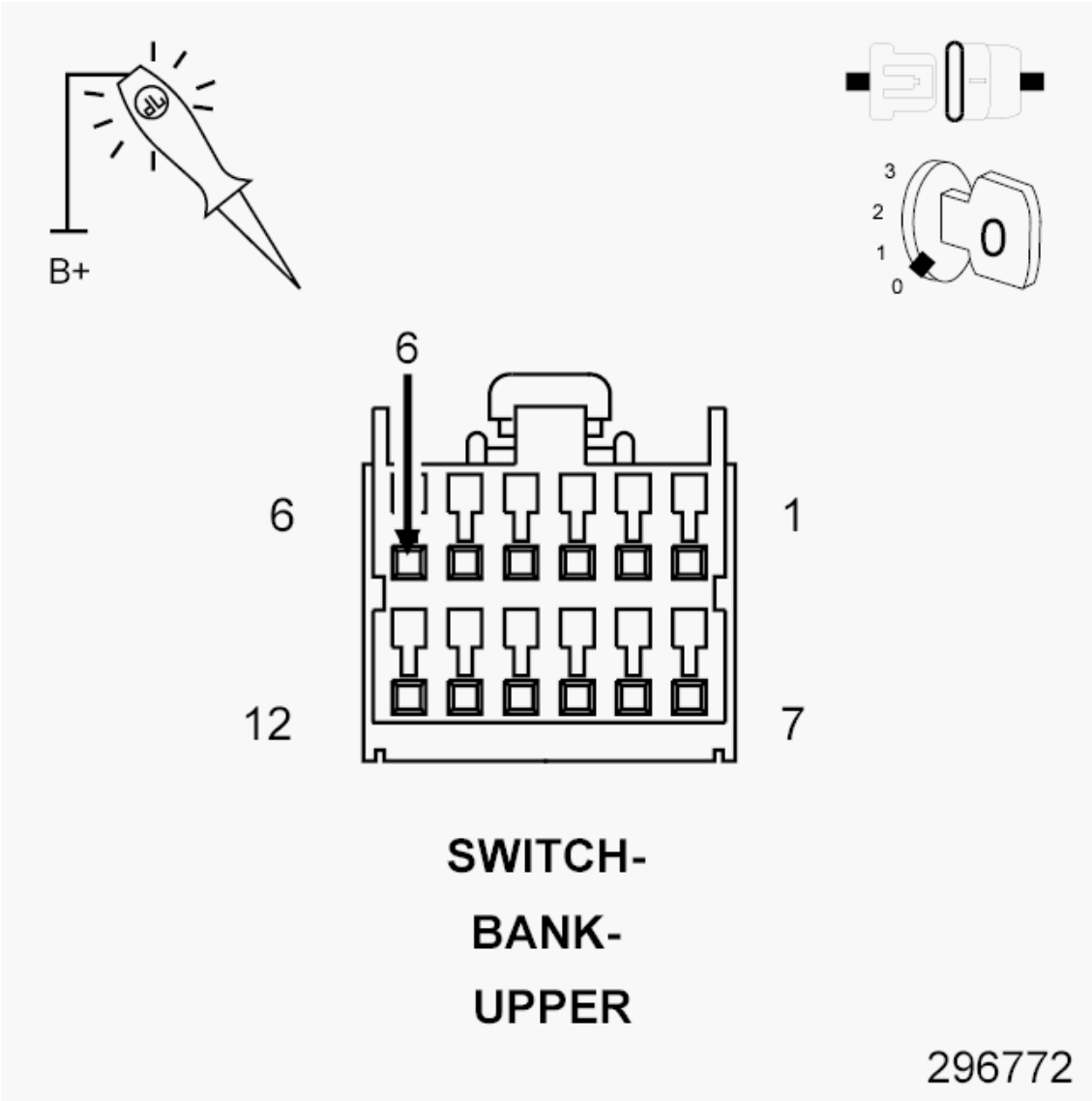

Fig. 67: Checking Ground Circuit For An Open
Courtesy of CHRYSLER GROUP, LLC

1. Turn the ignition off.
2. Using a 12-volt test light connected to 12-volts, check the (Z911) Ground circuit at the Upper Switch Bank harness connector.

   Does the test light illuminate brightly?

   Yes

   - Replace the Upper Switch Bank in accordance with the Service Information.
   - Perform the BODY VERIFICATION TEST. Refer to **BODY VERIFICATION TEST** .

   No

- Repair the (Z911) ground circuit for an open.
- Perform the BODY VERIFICATION TEST. Refer to **BODY VERIFICATION TEST** .

U1192-LOST COMMUNICATION WITH LOWER SWITCH BANK

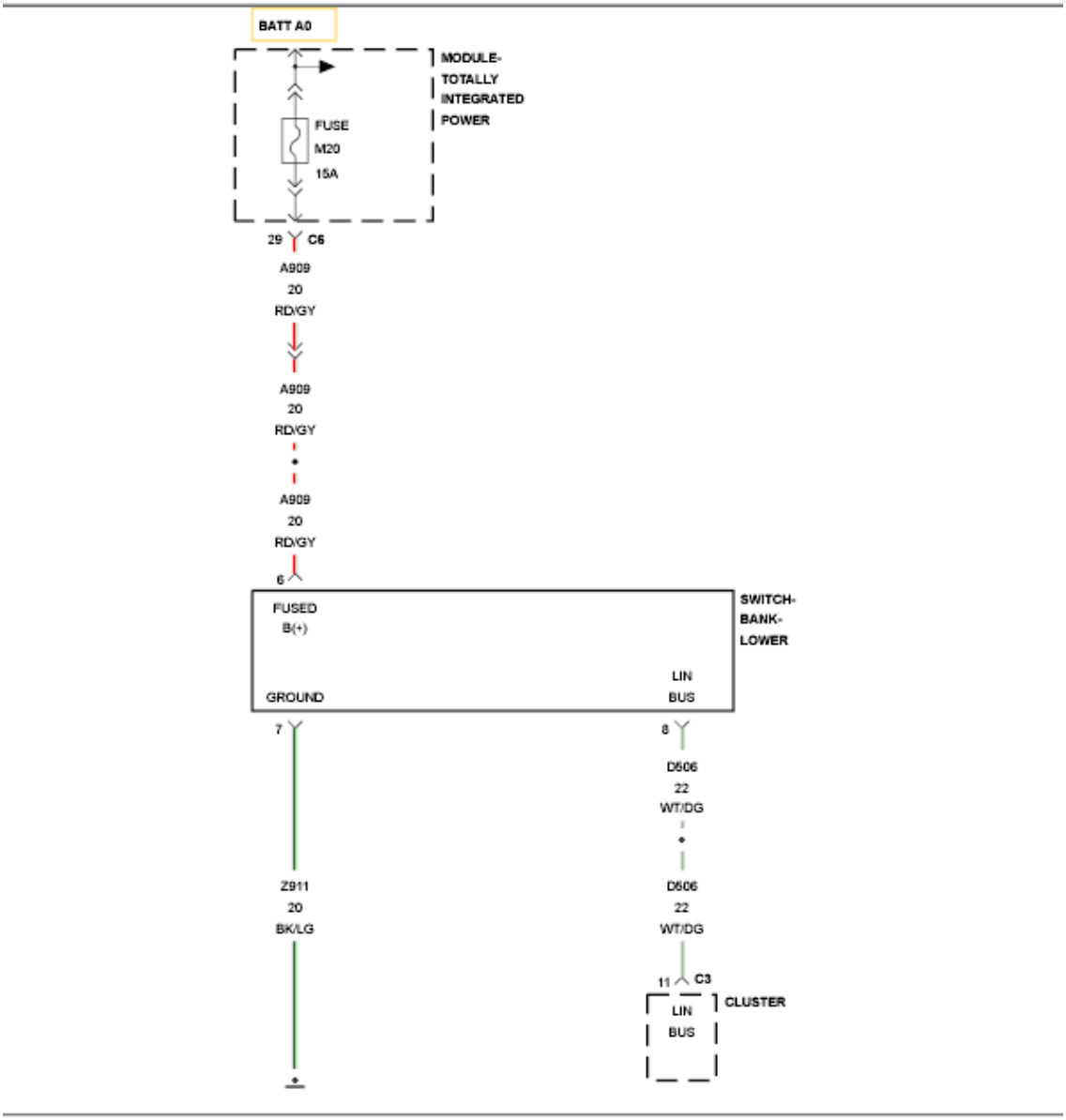

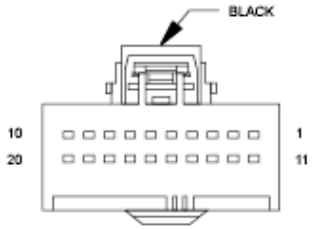

CLUSTER C3

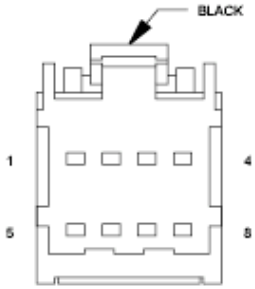

SWITCH-
BANK
LOWER

Fig. 68: Lower Switch Bank Wiring Diagram
Courtesy of CHRYSLER GROUP, LLC

For a complete wiring diagram, **refer to appropriate SYSTEM WIRING DIAGRAMS article** .

WHEN MONITORED:

With the ignition on.

SET CONDITION:

The Cluster does not receive information from the Lower Switch Bank.

POSSIBLE CAUSES

Possible Causes
(D506) LIN BUS CIRCUIT FOR AN OPEN
(A909) FUSED B+ CIRCUIT FOR AN OPEN
(Z911) GROUND CIRCUIT FOR AN OPEN
LOWER SWITCH BANK
CLUSTER

DIAGNOSTIC TEST

1. **CHECK FOR AN ACTIVE DTC**
    1. Turn the ignition on.
    2. With the scan tool, record and erase DTCs.
    3. Wait 30 seconds.
    4. With the scan tool, read DTCs.

    Does the scan tool display this DTC as active?

    Yes

    - Go To 2.

    No

    - The condition that caused this code to set is not present at this time. Check for an intermittent condition by inspecting the related wiring harness for chafed, pierced, pinched, and partially broken wires. Also inspect the related connectors for broken, bent, pushed out, spread, corroded, or contaminated terminals.
    - Perform the BODY VERIFICATION TEST. Refer to **BODY VERIFICATION TEST** .
2. **(D506) LIN BUS CIRCUIT FOR AN OPEN**

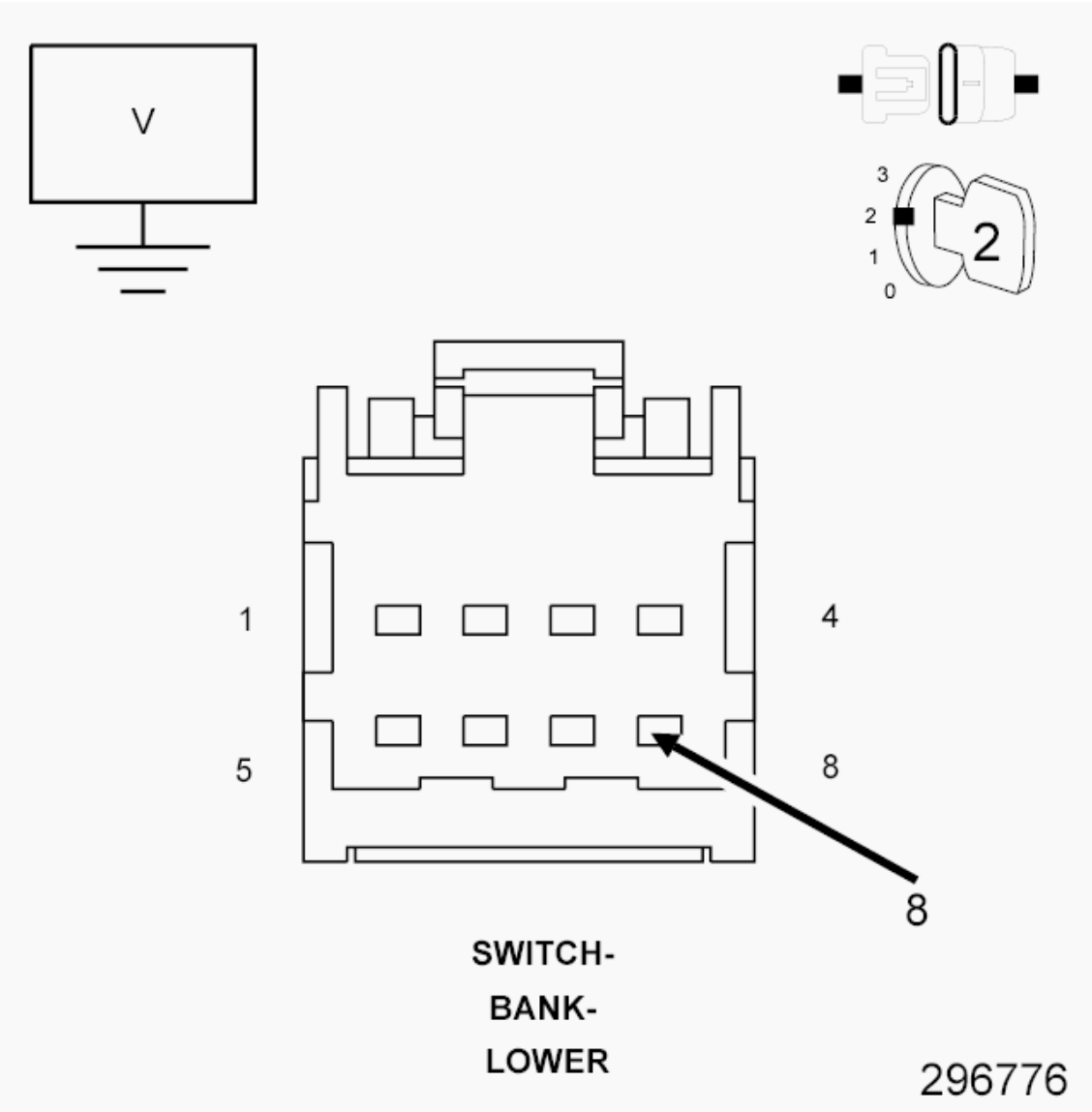

Fig. 69: Checking Lin Bus Circuit For An Open
Courtesy of CHRYSLER GROUP, LLC

1. Turn the ignition off.
2. Disconnect the Lower Switch Bank harness connector.
3. Turn the ignition on.
4. Measure the voltage of the (D506) LIN BUS circuit.

   Is the voltage above 5 volts?

   Yes

   - Go To 4.

   No

- Go To 3.

3. **(D506) LIN BUS CIRCUIT FOR AN OPEN**

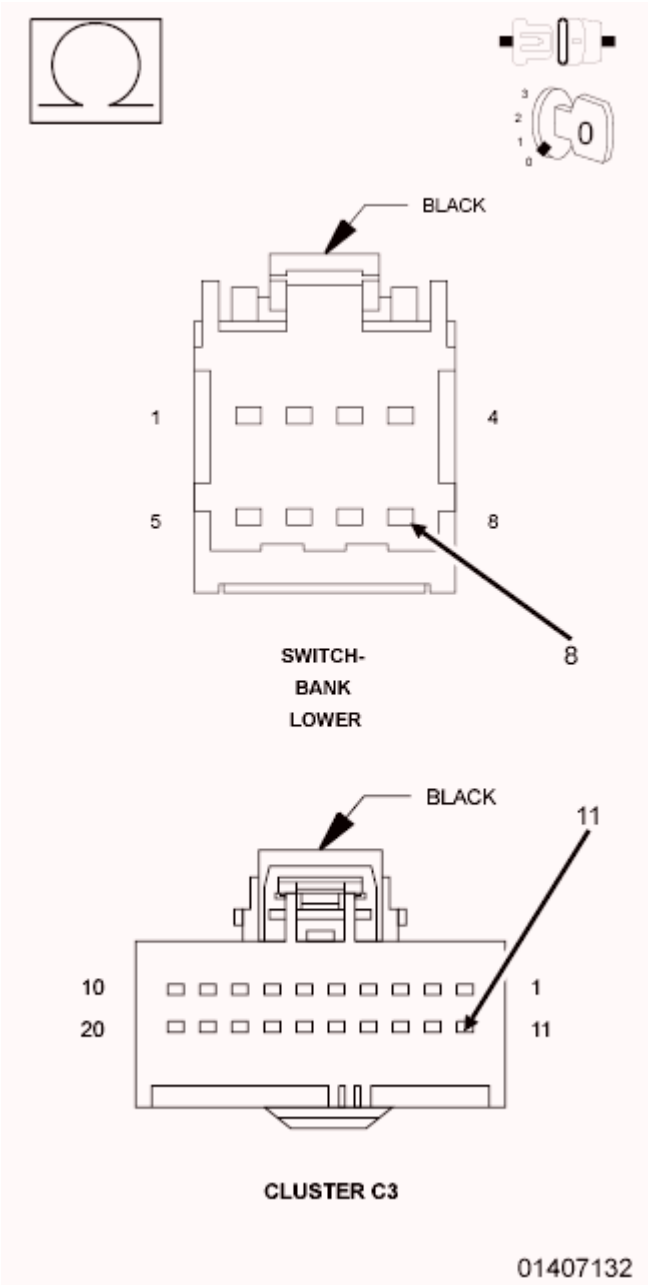

Fig. 70: Checking Lin Bus Circuit For An Open
Courtesy of CHRYSLER GROUP, LLC

1. Turn the ignition off.
2. Disconnect the Instrument Cluster C3 harness connector.
3. Measure the resistance of the (D506) LIN BUS circuit between the Cluster C3 and the Lower Switch Bank harness connectors.

Is the resistance below 10K Ohms?

Yes

- Replace the Cluster in accordance with the Service Information.
- Perform the BODY VERIFICATION TEST. Refer to **BODY VERIFICATION TEST** .

No

- Repair the (D506) LIN BUS circuit for an open.
- Perform the BODY VERIFICATION TEST. Refer to **BODY VERIFICATION TEST** .

4. **(A909) FUSED B+ CIRCUIT FOR AN OPEN**

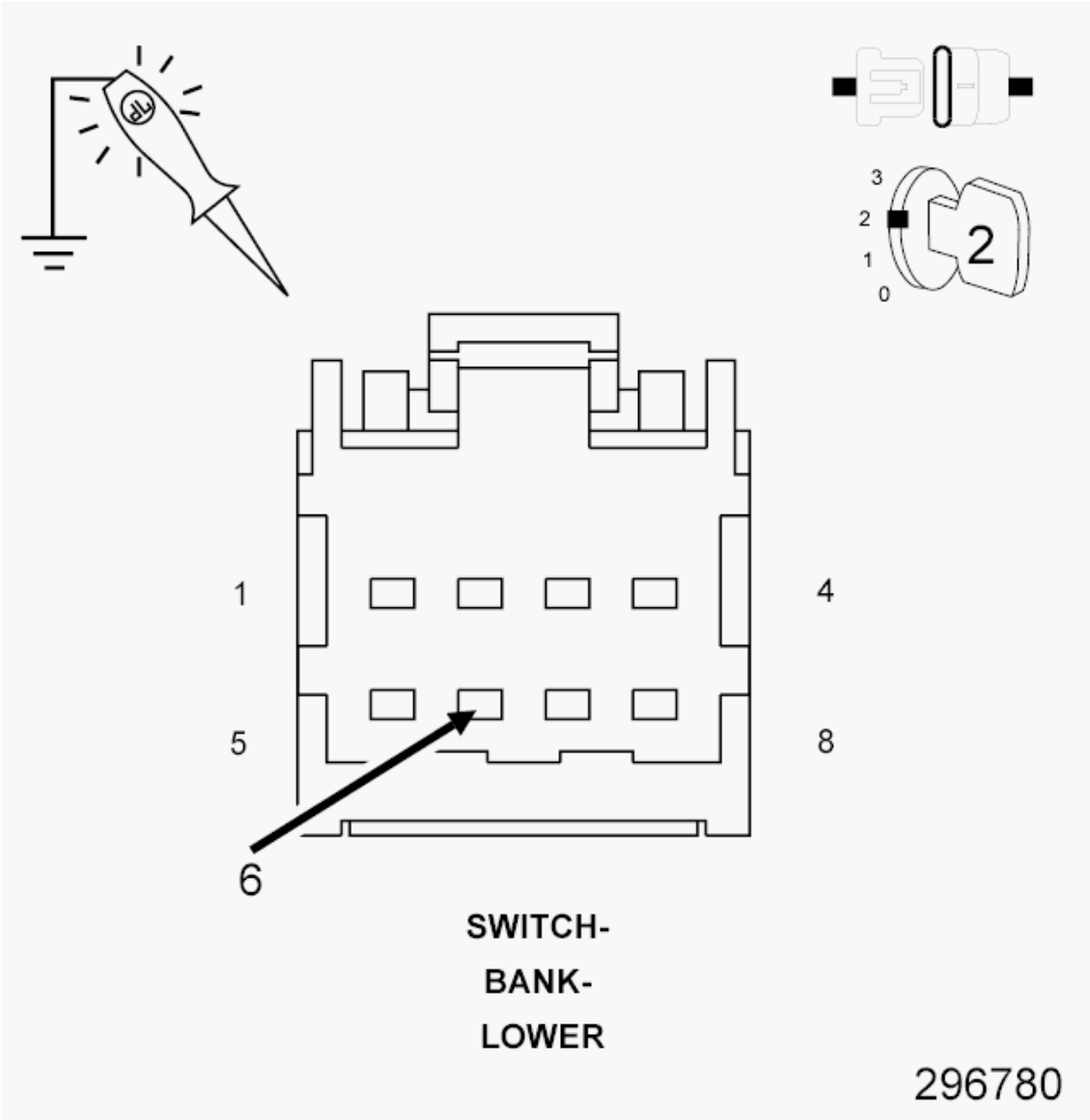

Fig. 71: Checking Fused B+ Circuit For An Open

Courtesy of CHRYSLER GROUP, LLC

1. Turn the ignition on.
2. Using a 12-volt test light connected to ground, check the (A909) Fused B+ circuit at the Lower Switch Bank harness connector.

   Does the test light illuminate brightly?

   Yes

   - Go To 5.

   No

   - Repair the (A909) Fused B+ circuit for an open.
   - Perform the BODY VERIFICATION TEST. Refer to **BODY VERIFICATION TEST** .

5. **(Z911) GROUND CIRCUIT FOR AN OPEN**

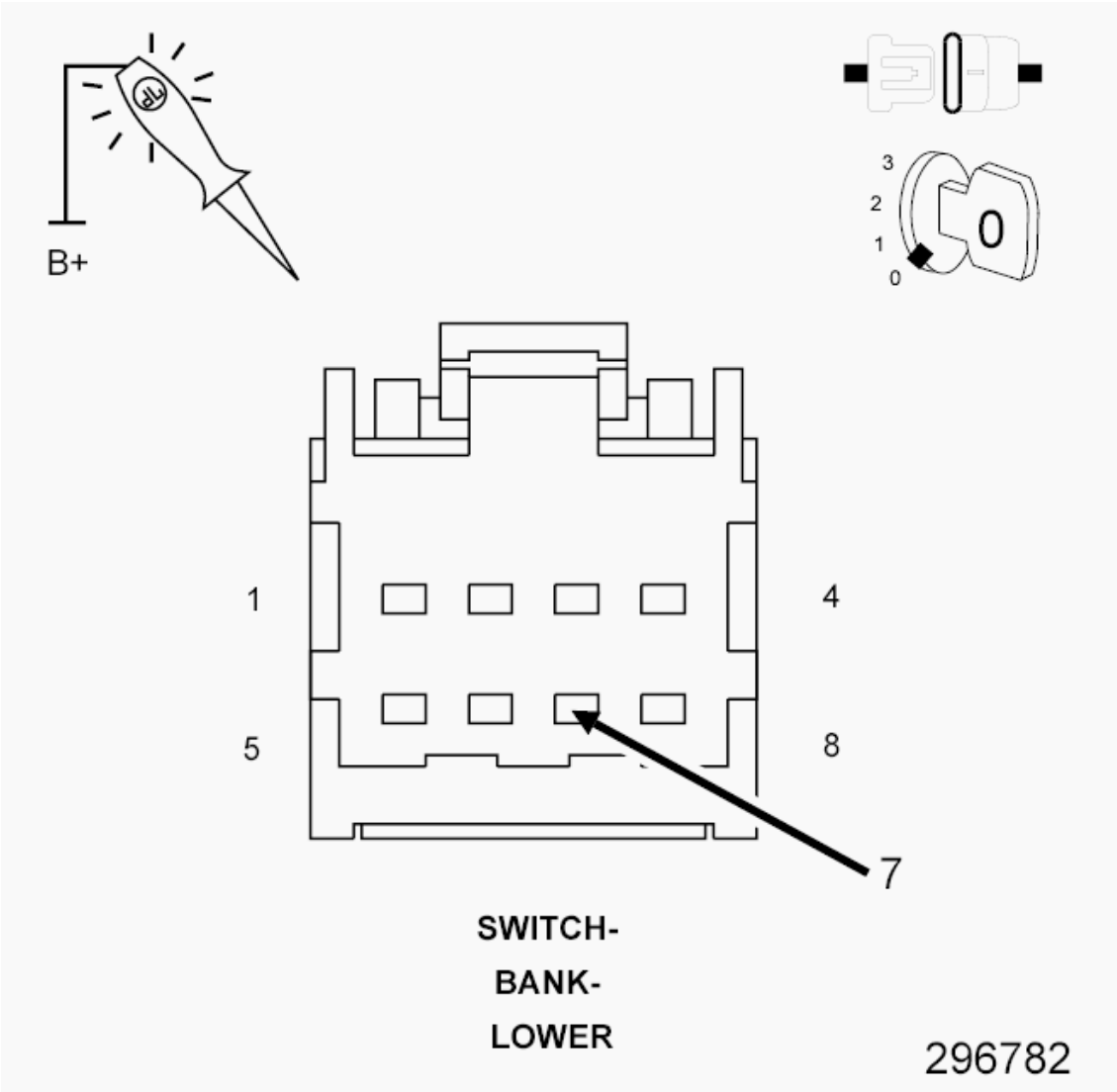

Fig. 72: Checking Ground Circuit For An Open
Courtesy of CHRYSLER GROUP, LLC

1. Turn the ignition off.
2. Using a 12-volt test light connected to 12-volts, check the (Z911) Ground circuit at the Lower Switch Bank harness connector.

   Does the test light illuminate brightly?

   Yes

   - Replace the Lower Switch Bank in accordance with the Service Information.
   - Perform the BODY VERIFICATION TEST. Refer to **BODY VERIFICATION TEST** .

   No

- Repair the (Z911) ground circuit for an open.
- Perform the BODY VERIFICATION TEST. Refer to **BODY VERIFICATION TEST** .

DIAGNOSIS AND TESTING

DIAGNOSIS AND TESTING - LAMPS/LIGHTING - EXTERIOR

WARNING: To avoid serious or fatal injury on vehicles equipped with airbags, disable the Supplemental Restraint System (SRS) before attempting any steering wheel, steering column, airbag, seat belt tensioner, impact sensor or instrument panel component diagnosis or service. Disconnect and isolate the battery negative (ground) cable, then wait two minutes for the system capacitor to discharge before performing further diagnosis or service. This is the only sure way to disable the SRS. Failure to take the proper precautions could result in accidental airbag deployment.

NOTE: When diagnosing the exterior lighting circuits, remember that high generator output can burn out bulbs rapidly and repeatedly; and, that dim or flickering bulbs can be caused by low generator output or poor battery condition. If one of these symptoms is a problem on the vehicle, be certain to diagnose the battery and charging system, then repair as necessary.

NOTE: A good ground is necessary for proper lighting operation. If a lighting problem is being diagnosed that involves multiple symptoms, systems, or components, the problem can often be traced to a loose, corroded, or open ground.

The lamps and the hard wired circuits between components related to the exterior lighting system may be diagnosed using conventional diagnostic tools and procedures. Refer to the appropriate wiring information. The wiring information includes wiring diagrams, proper wire and connector repair procedures, details of wire harness routing and retention, connector pin-out information and location views for the various wire harness connectors, splices and grounds.

However, conventional diagnostic methods will not prove conclusive in the diagnosis of the electronic controls or communication between modules and other devices that provide some features of the exterior lighting system. The most reliable, efficient, and accurate means to diagnose the exterior lighting system or the electronic controls and communication related to exterior lighting system operation requires the use of a diagnostic scan tool. Refer to the appropriate diagnostic information.

BACKUP LAMPS

CONDITION	POSSIBLE CAUSES	CORRECTION
BACKUP LAMP DOES NOT ILLUMINATE	1. Ineffective or missing bulb.	1. Test and replace backup lamp bulb if required.
	2. Ineffective ground circuit.	2. Test and repair open backup lamp ground circuit if required.

	3. Ineffective feed circuit.	3. Test and repair open backup lamp feed circuit if required.
	4. Ineffective switch.	4. Test and replace backup lamp switch (manual transmission) or transmission range sensor (automatic transmission) if required.
	5. Ineffective TIPM inputs or outputs.	5. Use a diagnostic scan tool to test the TIPM inputs and outputs. Refer to the appropriate diagnostic information.
BACKUP LAMP DOES NOT EXTINGUISH	1. Ineffective feed circuit.	1. Test and repair shorted backup lamp feed circuit if required.
	2. Ineffective switch.	2. Test and replace backup lamp switch (manual transmission) or transmission range sensor (automatic transmission) if required.
	3. Ineffective TIPM inputs or outputs.	3. Use a diagnostic scan tool to test the TIPM inputs and outputs. Refer to the appropriate diagnostic information.

BRAKE LAMPS

CONDITION	POSSIBLE CAUSES	CORRECTION
BRAKE LAMP DOES NOT ILLUMINATE	1. Ineffective or missing bulb.	1. Test and replace brake lamp bulb if required.
	2. Ineffective ground circuit.	2. Test and repair open brake lamp ground circuit if required.
	3. Ineffective fuse.	3. Test and replace the fuse in the TIPM if required.
	4. Ineffective feed circuit.	4. Test and repair open brake lamp switch output circuit or stop lamp output circuit if required.
	5. Ineffective switch.	5. Test and replace brake lamp switch if required.
	6. Ineffective TIPM inputs or outputs.	6. Use a diagnostic scan tool to test the TIPM inputs and outputs. Refer to the appropriate diagnostic information.
	7. Ineffective stop lamp inhibit relay.	7. test and replace stop lamp inhibit relay if required.
BRAKE LAMP DOES NOT EXTINGUISH	1. Ineffective feed circuit.	1. Test and repair shorted brake lamp switch output circuit or stop lamp output circuit if required.
	2. Improperly adjusted switch.	2. Adjust the brake lamp switch if required.
	3. Ineffective switch.	3. Test and replace brake lamp switch if required.

	4. Ineffective TIPM inputs or outputs.	4. Use a diagnostic scan tool to test the TIPM inputs and outputs. Refer to the appropriate diagnostic information.

DAYTIME RUNNING LAMPS

NOTE: **Before performing the following tests, determine whether the headlamp low and high beams operate. If the headlamp low and high beams are also ineffective, diagnose and repair that problem before attempting to repair the Daytime Running Lamps.**

CONDITION	POSSIBLE CAUSES	CORRECTION
DAYTIME RUNNING LAMPS WILL NOT ILLUMINATE	1. Incorrect TIPM programming. 2. Automatic transmission in PARK position. 3. Parking brake applied. 4. Engine not running. 5. Ineffective TIPM inputs or outputs.	1. Use a diagnostic scan tool to check and configure TIPM if required. 2. Place the transmission gear selector lever in any position except PARK. 3. Release the parking brake. 4. Start the engine. 5. Use a diagnostic scan tool to test the TIPM inputs and outputs. Refer to the appropriate diagnostic information.

FRONT FOG LAMPS

NOTE: **The front fog lamps are designed to operate ONLY while the headlamp low beams are illuminated. If the headlamp low beams do not illuminate, diagnose and repair that problem before attempting to repair the front fog lamp system. Refer to the appropriate diagnostic information.**

CONDITION	POSSIBLE CAUSES	CORRECTION
FRONT FOG LAMP DOES NOT ILLUMINATE	1. Ineffective or missing bulb.	1. Test and replace front fog lamp bulb if required.
	2. Ineffective ground circuit.	2. Test and repair open front fog lamp ground circuit if required.
	3. Ineffective feed circuit.	3. Test and repair open front fog lamp feed circuit if required.
	4. Ineffective switch.	4. Test and replace headlamp switch if required.
	5. Ineffective EMIC (CCN) inputs or outputs.	5. Use a diagnostic scan tool to test the EMIC (CCN) inputs and outputs. Refer to the appropriate diagnostic information.
	6. Ineffective TIPM inputs or outputs.	6. Use a diagnostic scan tool to test the TIPM inputs and outputs. Refer to the appropriate diagnostic information.
FRONT FOG LAMP DOES	1. Ineffective feed circuit.	1. Test and repair shorted front fog lamp

NOT EXTINGUISH		feed circuit if required.
	2. Ineffective switch.	2. Test and replace headlamp switch if required.
	3. Ineffective EMIC (CCN) inputs or outputs.	3. Use a diagnostic scan tool to test the EMIC (CCN) inputs and outputs. Refer to the appropriate diagnostic information.
	4. Ineffective TIPM inputs or outputs.	4. Use a diagnostic scan tool to test the TIPM inputs and outputs. Refer to the appropriate diagnostic information.

HAZARD WARNING LAMPS

NOTE: **The hazard switch is integral to the upper instrument panel switch pod, which provides a hard wired output to the TIPM. Before performing any of the following tests, confirm whether the left and right turn signals operate satisfactorily. Then determine whether the other functions of the upper instrument panel switch pod are operational. If the turn signals are ineffective or operate improperly, or if the other instrument panel switch pod functions are ineffective, diagnose and repair those problems before attempting to repair the hazard warning lamps system.**

CONDITION	POSSIBLE CAUSES	CORRECTION
HAZARD WARNING LAMPS DO NOT FLASH	1. Ineffective upper instrument panel switch pod. 2. Ineffective TIPM inputs or outputs.	1. Test and replace upper instrument panel switch pod if required. 2. Use a diagnostic scan tool to test the TIPM inputs and outputs. Refer to the appropriate diagnostic information.
HAZARD WARNING LAMPS DO NOT STOP FLASHING	1. Ineffective upper instrument panel switch pod. 2. Ineffective TIPM inputs or outputs.	1. Test and replace upper instrument panel switch pod if required. 2. Use a diagnostic scan tool to test the TIPM inputs and outputs. Refer to the appropriate diagnostic information.

HEADLAMPS

NOTE: **As part of the exterior lighting fail-safe feature, upon ignition ON all exterior park lamps and the headlamp low beams will illuminate regardless of the headlamp switch position if the EMIC (CCN) cannot detect an input from the headlamp switch, or if there is a loss of data bus communication. Diagnose and repair those problems before attempting to repair the headlamp system. The TIPM will store a Diagnostic Trouble Code (DTC) for an open or shorted headlamp circuit. In addition, for automatic headlamps the air conditioning - heater control must be able to receive the hard wired input from the sun sensor on the top of the instrument panel and must be able to communicate with the TIPM over the CAN data bus. Refer to the appropriate diagnostic information.**

CONDITION	POSSIBLE CAUSES	CORRECTION
HEADLAMP DOES NOT ILLUMINATE	1. Ineffective or missing bulb.	1. Test and replace headlamp bulb if required.
	2. Ineffective ground circuit.	2. Test and repair open headlamp ground circuit if required.
	3. Ineffective feed circuit.	3. Test and repair open headlamp low beam or high beam feed circuit if required.
	4. Ineffective switch.	4. Test and replace headlamp switch if required.
	5. Ineffective EMIC (CCN) inputs or outputs.	5. Use a diagnostic scan tool to test the EMIC (CCN) inputs and outputs. Refer to the appropriate diagnostic information.
	6. Ineffective TIPM inputs or outputs.	6. Use a diagnostic scan tool to test the TIPM inputs and outputs. Refer to the appropriate diagnostic information.
HEADLAMP DOES NOT EXTINGUISH	1. Ineffective feed circuit.	1. Test and repair shorted headlamp low beam or high beam feed circuit if required.
	2 Ineffective switch.	2. Test and replace headlamp switch if required.
	3. Ineffective EMIC (CCN) inputs or outputs.	3. Use a diagnostic scan tool to test the EMIC (CCN) inputs and outputs. Refer to the appropriate diagnostic information.
	4. Ineffective TIPM inputs or outputs.	4. Use a diagnostic scan tool to test the TIPM inputs and outputs. Refer to the appropriate diagnostic information.
HEADLAMPS ILLUMINATE WITH IGNITION ON AND HEADLAMP SWITCH OFF (FAIL-SAFE OPERATION)	1. Ineffective circuits between headlamp switch and EMIC (CCN).	1. Test and repair open headlamp switch mux and return circuits if required.
	2. Ineffective switch.	2. Test and replace headlamp switch if required.
	3. Loss of data bus communication.	3. Use a diagnostic scan tool to test the data bus. Refer to the appropriate diagnostic information.
	4. Ineffective EMIC (CCN) inputs or outputs.	4. Use a diagnostic scan tool to test the EMIC (CCN) inputs and outputs. Refer to the appropriate diagnostic information.
HEADLAMPS WILL NOT SWITCH FROM HIGH TO LOW BEAMS, OR FROM LOW TO HIGH BEAMS	1. Ineffective LIN bus circuits between multi-function switch (SCM) and EMIC (CCN).	1. Test and repair open LIN bus circuits if required.
	2. Ineffective multi-function switch (SCM).	2. Use a diagnostic scan tool to test the EMIC (CCN) inputs and outputs. Refer to the appropriate diagnostic information.
		1. Use a diagnostic scan tool to check and

AUTO HEADLAMPS INEFFECTIVE	1. Incorrect TIPM configuration.	correct the TIPM configuration settings if required. Refer to the appropriate diagnostic information.
	2. Ineffective circuits between sun load sensor and air conditioner - heater control.	2. Test and repair sun sensor and sun sensor return circuits if required.
	3. Ineffective sun load sensor.	3. Test and replace sun load sensor if required.
	4. Ineffective TIPM inputs or outputs.	5. Use a diagnostic scan tool to test the TIPM inputs and outputs. Refer to the appropriate diagnostic information.

PARK LAMPS

NOTE: **As part of the exterior lighting fail-safe feature, upon ignition ON all exterior park lamps and the headlamp low beams will illuminate regardless of the headlamp switch position if the instrument cluster cannot detect an input from the headlamp switch, or if there is a loss of data bus communication between the EMIC (CCN) and the TIPM. Diagnose and repair those problems before attempting to repair the Park Lamps.**

CONDITION	POSSIBLE CAUSES	CORRECTION
PARK LAMP DOES NOT ILLUMINATE	1. Ineffective or missing fuse.	1. Test and replace park lamp fuse if required.
	2. Ineffective or missing bulb.	2. Test and replace park lamp bulb if required.
	3. Ineffective ground circuit.	3. Test and repair open park lamp ground circuit if required.
	4. Ineffective feed circuit.	4. Test and repair open park lamp feed circuit if required.
	5. Ineffective switch.	5. Test and replace headlamp switch if required.
	6. Ineffective EMIC (CCN) inputs or outputs.	6. Use a diagnostic scan tool to test the EMIC (CCN) inputs and outputs. Refer to the appropriate diagnostic information.
	7. Ineffective TIPM inputs or outputs.	7. Use a diagnostic scan tool to test the TIPM inputs and outputs. Refer to the appropriate diagnostic information.
PARK LAMP DOES NOT EXTINGUISH	1. Ineffective feed circuit.	1. Test and repair shorted park lamp feed circuit if required.
	2. Ineffective switch.	2. Test and replace headlamp switch if required.
	3. Ineffective EMIC (CCN) inputs or outputs.	3. Use a diagnostic scan tool to test the EMIC (CCN) inputs and outputs. Refer to the appropriate diagnostic information.

	4. Ineffective TIPM inputs or outputs.	4. Use a diagnostic scan tool to test the TIPM inputs and outputs. Refer to the appropriate diagnostic information.

TURN SIGNAL LAMPS

NOTE: **The turn signal switch is integral to the multi-function switch/SCM, which communicates with the EMIC/CCN over the LIN data bus. Before performing any of the following tests, determine whether the other functions of the multi-function switch/SCM are operational. If the other multi-function switch/SCM functions are ineffective, diagnose and repair that problem before attempting to repair the Turn Signal Lamps.**

CONDITION	POSSIBLE CAUSES	CORRECTION
ONE TURN SIGNAL LAMP DOES NOT ILLUMINATE	1. Ineffective or missing bulb.	1. Test and replace turn signal bulb if required.
	2. Ineffective ground circuit.	2. Test and repair open ground circuit if required.
	3. Ineffective feed circuit.	3. Test and repair open right or left turn signal feed circuit if required.
	4. Ineffective TIPM inputs or outputs.	4. Use a diagnostic scan tool to test the TIPM inputs and outputs. Refer to the appropriate diagnostic information.
ALL RIGHT SIDE OR ALL LEFT SIDE TURN SIGNAL LAMPS (OR BOTH SIDES) DO NOT FLASH	1. Ineffective feed circuit.	1. Test and repair open right or left turn signal feed circuit if required.
	2. Ineffective EMIC (CCN) inputs or outputs.	2. Use a diagnostic scan tool to test the EMIC (CCN) inputs and outputs. Refer to the appropriate diagnostic information.
	3. Ineffective TIPM inputs or outputs.	3. Use a diagnostic scan tool to test the TIPM inputs and outputs. Refer to the appropriate diagnostic information.
ALL RIGHT SIDE OR ALL LEFT SIDE TURN SIGNALS FLASH TOO RAPIDLY (MORE THAN 100 FLASHES PER MINUTE)	1. Ineffective or missing bulb.	1. Test and replace turn signal bulb if required.
	2. Ineffective ground circuit.	2. Test and repair open ground circuit if required.
	3. Ineffective feed circuit.	3. Test and repair open right or left turn signal feed circuit if required.
TURN SIGNALS DO NOT AUTOMATICALLY CANCEL	1. Ineffective cancel cam.	1. Inspect and replace the turn signal cancel cam (clockspring) if required.
	2. Ineffective cancel actuator.	2. Inspect and replace the turn signal cancel actuator (multi-function switch/SCM) if required.

DIAGNOSIS AND TESTING - HAZARD SWITCH

WARNING: To avoid serious or fatal injury on vehicles equipped with airbags, disable the Supplemental Restraint System (SRS) before attempting any steering wheel, steering column, airbag, seat belt tensioner, impact sensor or instrument panel component diagnosis or service. Disconnect and isolate the battery negative (ground) cable, then wait two minutes for the system capacitor to discharge before performing further diagnosis or service. This is the only sure way to disable the SRS. Failure to take the proper precautions could result in accidental airbag deployment.

The hazard switch as well as the hard wired inputs and outputs of the upper instrument panel switch pod may be diagnosed using conventional diagnostic tools and procedures. Refer to the appropriate wiring information.

1. Remove the center bezel and the upper switch pod from the instrument panel as a unit. Refer to **BEZEL, INSTRUMENT PANEL, CENTER, REMOVAL** and/or **BEZEL, INSTRUMENT PANEL, DRIVER SIDE, REMOVAL** .
2. Using a multi-meter, test the continuity between the ground terminal and the hazard switch sense terminal of the switch. There should be continuity when the hazard switch push button is in its latched (lowered) position, and no continuity when the push button is in its unlatched (raised) position.
3. If the switch fails either of the continuity tests, replace the ineffective upper instrument panel switch pod as required.

DIAGNOSIS AND TESTING - HEADLAMP SWITCH

WARNING: To avoid serious or fatal injury on vehicles equipped with airbags, disable the Supplemental Restraint System (SRS) before attempting any steering wheel, steering column, airbag, seat belt tensioner, impact sensor or instrument panel component diagnosis or service. Disconnect and isolate the battery negative (ground) cable, then wait two minutes for the system capacitor to discharge before performing further diagnosis or service. This is the only sure way to disable the SRS. Failure to take the proper precautions could result in accidental airbag deployment.

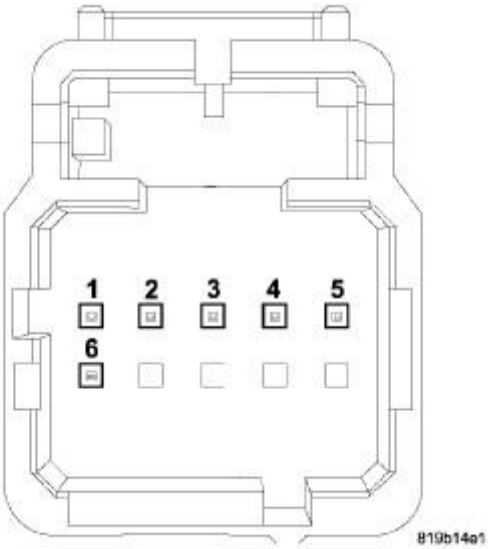

Fig. 1: Headlamp Switch Connector End View
Courtesy of CHRYSLER GROUP, LLC

1. Remove the headlamp switch from the instrument panel. Refer to **SWITCH, HEADLAMP, REMOVAL** .
2. Disconnect the instrument panel wire harness connector from the back of the headlamp switch.
3. Using an ohmmeter, test the resistance or continuity between the terminals of the switch as shown in the Headlamp Switch Tests table below.

HEADLAMP SWITCH TESTS	
SWITCH POSITION (PINS)	***RESISTANCE RANGE (OHMS)**
AUTO (1 and 3)	4028.0 - 4457.0
OFF (1 and 3)	1938.0 - 2147.0
PARK (1 and 3)	1073.5 - 1191.5
HEADLAMP (1 and 3)	627.0 - 698.0
FOG LAMP - AUTO (1 and 3)	266.8 - 299.9
FOG LAMP - OFF (1 and 3)	249.0 - 280.2
FOG LAMP - PARK (1 and 3)	225.6 - 254.4
FOG LAMP - HEADLAMP (1 and 3)	196.3 - 221.9
DOME DEFEAT (2 and 3)	14121.2 - 15612.7
PANEL DIMMER 1 (2 and 3)	5476.26 - 6057.7
PANEL DIMMER 2 (2 and 3)	2911.2 - 3222.7
PANEL DIMMER 3 (2 and 3)	1771.2 - 1962.7
PANEL DIMMER 4 (2 and 3)	1125.2 - 1248.7

PANEL DIMMER 5 (2 and 3)	726.2 - 807.7
PANEL DIMMER 6 (2 and 3)	469.7 - 524.2
PARADE MODE	296.4 - 332.6
DOME ON (2 and 3)	166.2 - 188.7
CARGO (3 and 6)	MOMENTARY CONTINUITY
SWITCH ILLUMINATION (4 and 5)	LEDs - SET MULTIMETER TO DIODE MODE - CONNECT PIN 4 TO PLUS (+), CONNECT PIN 5 TO MINUS (-) - LEDs SHOULD BARELY GLOW
*All resistance values are plus or minus 5%.	

4. If the switch fails any of the tests, replace the ineffective headlamp switch as required.

DIAGNOSIS AND TESTING - PARK BRAKE SWITCH

WARNING: To avoid serious or fatal injury on vehicles equipped with airbags, disable the Supplemental Restraint System (SRS) before attempting any steering wheel, steering column, airbag, seat belt tensioner, impact sensor or instrument panel component diagnosis or service. Disconnect and isolate the battery negative (ground) cable, then wait two minutes for the system capacitor to discharge before performing further diagnosis or service. This is the only sure way to disable the SRS. Failure to take the proper precautions could result in accidental airbag deployment.

NOTE: If the brake indicator stays ON with the ignition switch in the ON position and the park brake released, or comes ON while driving, the brake system must be diagnosed and repaired prior to performing the following tests. Refer to BASE BRAKES, SERVICE INFORMATION - DIAGNOSIS AND TESTING . If no brake system problem is found, the following procedures will help to locate a shorted or open park brake switch sense circuit, or an ineffective park brake switch.

INDICATOR BULB TEST

INDICATOR ILLUMINATES DURING BULB TEST, BUT DOES NOT WHEN PARK BRAKE APPLIED

1. Disconnect and isolate the battery negative cable. Disconnect the body wire harness connector for the park brake switch from the switch terminal. Apply the parking brake. Check for continuity between the park brake switch terminal and a good ground. There should be continuity. If OK, go to 2. If not OK, replace the ineffective park brake switch.
2. Disconnect the instrument panel wire harness connector (Connector C2) for the instrument cluster from the cluster connector receptacle. Check for continuity between the park brake switch sense circuit cavities of the body wire harness connector for the park brake switch and the instrument panel wire harness connector for the instrument cluster. There should be continuity. If not OK, repair the open park brake

switch sense circuit between the park brake switch and the instrument cluster as required.

INDICATOR REMAINS ILLUMINATED - BRAKE SYSTEM CHECKS OKAY

1. Disconnect and isolate the battery negative cable. Disconnect the body wire harness connector for the park brake switch from the switch terminal. Check for continuity between the terminal of the park brake switch and a good ground. There should be no continuity with the park brake released, and continuity with the park brake applied. If OK, go to 2. If not OK, replace the ineffective park brake switch.
2. Disconnect the instrument panel wire harness connector (Connector C2) for the instrument cluster from the cluster connector receptacle. Check for continuity between the park brake switch sense circuit cavity of the body wire harness connector for the park brake switch and a good ground. There should be no continuity. If not OK, repair the shorted park brake switch sense circuit between the park brake switch and the instrument cluster as required.

DIAGNOSIS AND TESTING

DIAGNOSIS AND TESTING - INTERIOR LIGHTING INOPERATIVE

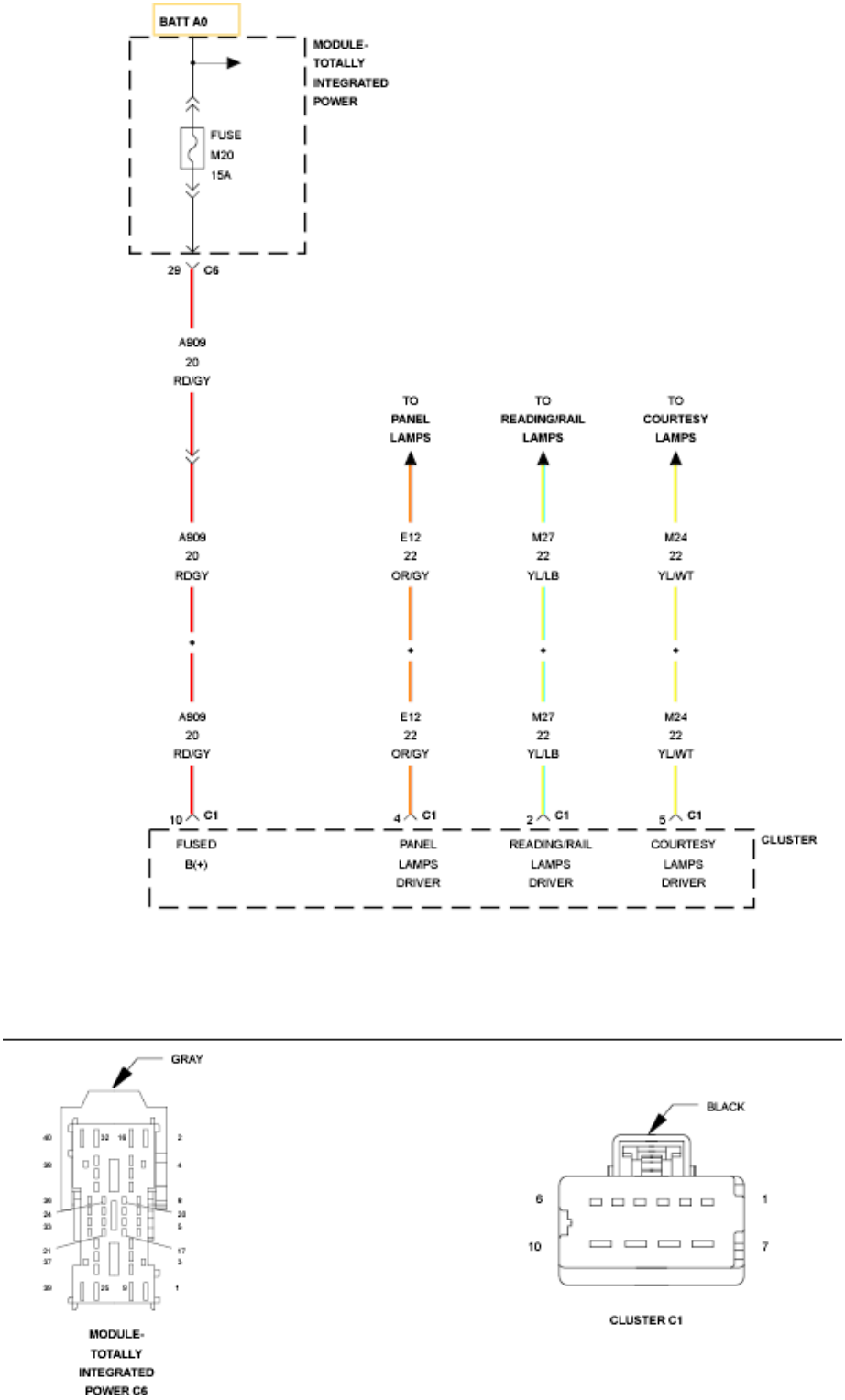

Fig. 1: Courtesy, Panel & Reading/Rail Lamps Circuit Schematic
Courtesy of CHRYSLER GROUP, LLC

For a complete wiring diagram, **refer to appropriate SYSTEM WIRING DIAGRAMS article** .

THEORY OF OPERATION

The (E12) Panel Lamps Driver Circuit, (M24) Courtesy Lamps Driver Circuit, and the (M27) Reading/Rail Lamps Driver Circuit all share an internal voltage feed from the Cluster. The (A909) Fused B(+) circuit supplies the voltage for these circuits. A short to ground on the (E12), (M24), or (M27) circuits, or the components they feed, will cause the entire interior lighting system to fail.

Possible Causes
(E12) PANEL LAMPS DRIVER CIRCUIT SHORTED TO GROUND
(M24) COURTESY LAMPS DRIVER CIRCUIT SHORTED TO GROUND
(M27) READING/RAIL LAMPS DRIVER CIRCUIT SHORTED TO GROUND
CLUSTER

DIAGNOSTIC TEST

1. **VERIFY INTERIOR LIGHTING INOPERATIVE**
    1. Turn the ignition on.
    2. Actuate the interior lights.

    Is the interior lighting inoperative?

    Yes

    - Go To 2.

    No

    - Test complete, the condition or conditions that originally set this DTC are not present at this time. Using the wiring diagrams as a guide, check all related splices and connectors for signs of water intrusion, corrosion, pushed out or bent terminals, and correct pin tension.
    - Refer to **STANDARD PROCEDURE** and perform the BODY VERIFICATION TEST.
2. **(E12) PANEL LAMPS DRIVER CIRCUIT SHORTED TO GROUND**

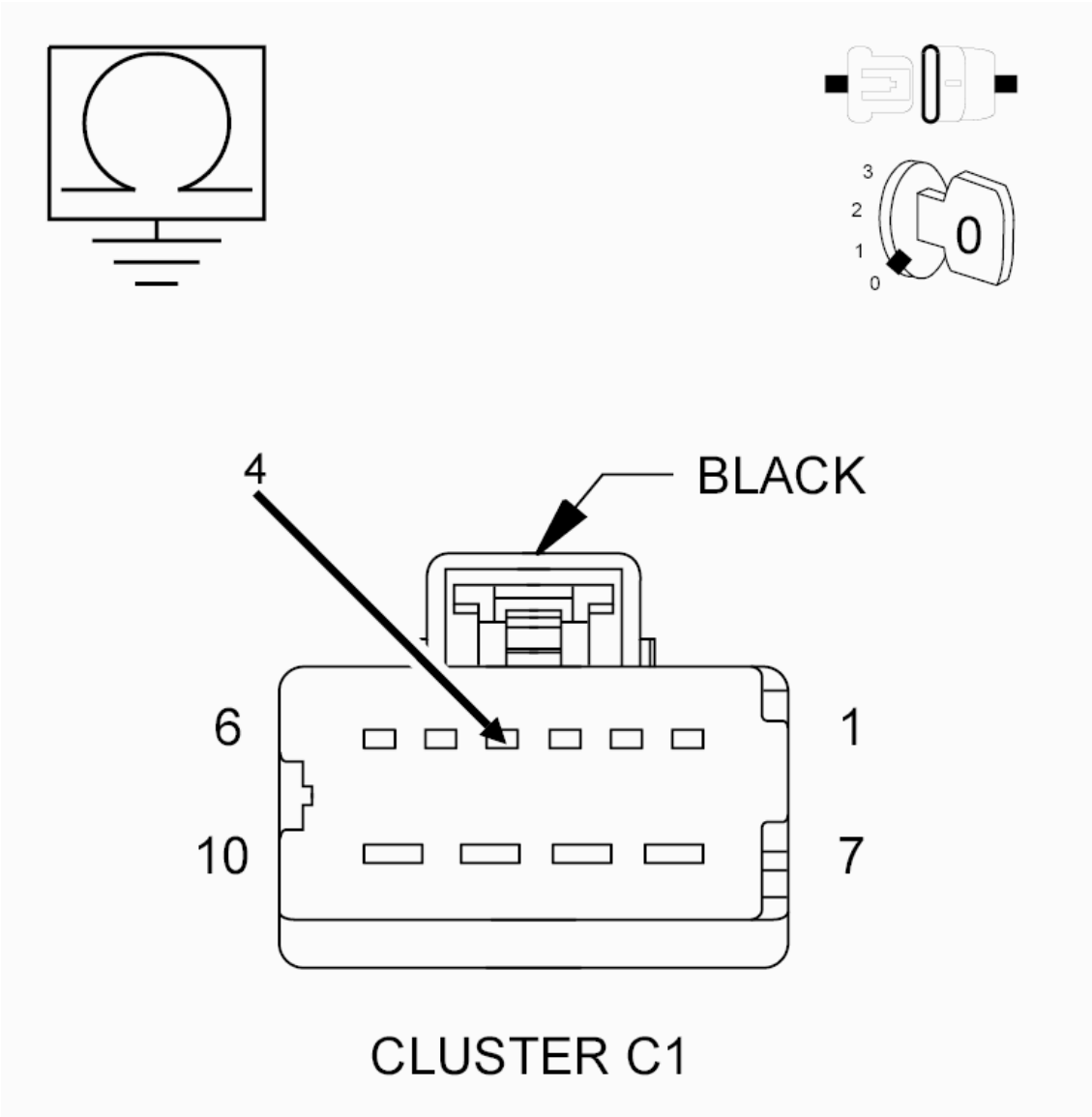

Fig. 2: Checking Panel Lamps Driver Circuit For Short To Ground
Courtesy of CHRYSLER GROUP, LLC

1. Turn the ignition off.
2. Disconnect the Cluster C1 harness connector.
3. Measure the resistance between ground and the (E12) Panel Lamps Driver circuit.

   Is the resistance below 5.0 Ohms?

   Yes

   - Using the Wiring Information as a guide, diagnose the short to ground in the (E12) Panel Lamps Driver circuit.
   - Refer to **STANDARD PROCEDURE** and perform the BODY VERIFICATION TEST.

No

- Go To 3.

3. **(M24) COURTESY LAMPS DRIVER CIRCUIT SHORTED TO GROUND**

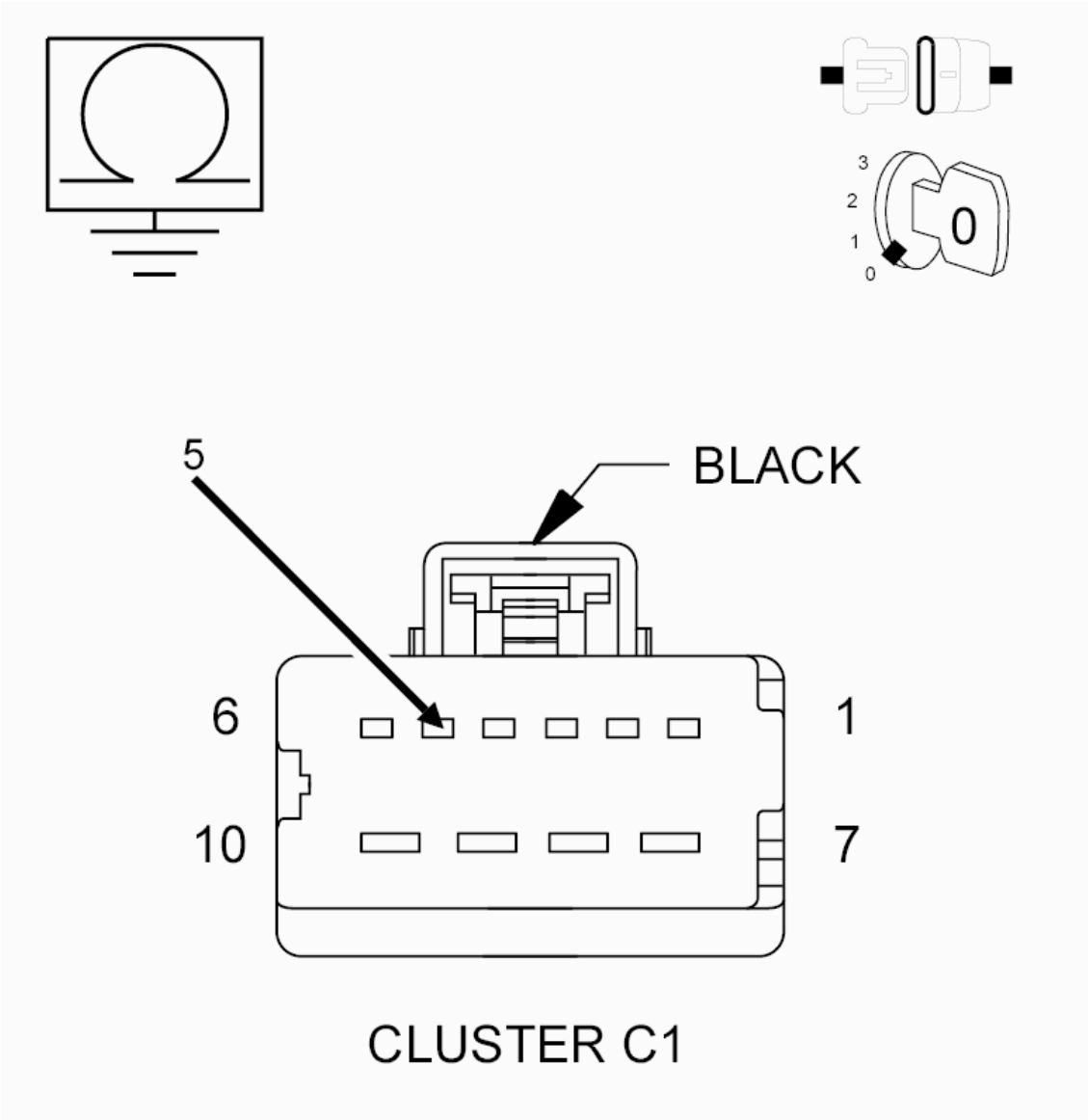

Fig. 3: Checking Courtesy Lamps Driver Circuit For Short To Ground
Courtesy of CHRYSLER GROUP, LLC

1. Measure the resistance between ground and the (M24) Courtesy Lamps Driver circuit.

   Is the resistance below 5.0 Ohms?

   Yes

   - Using the Wiring Information as a guide, diagnose the short to ground in the (M24) Courtesy

Lamps Driver circuit.

- Refer to **STANDARD PROCEDURE** and perform the BODY VERIFICATION TEST.

No

- Go To 4.

4. **(M27) READING/RAIL LAMPS DRIVER CIRCUIT SHORTED TO GROUND**

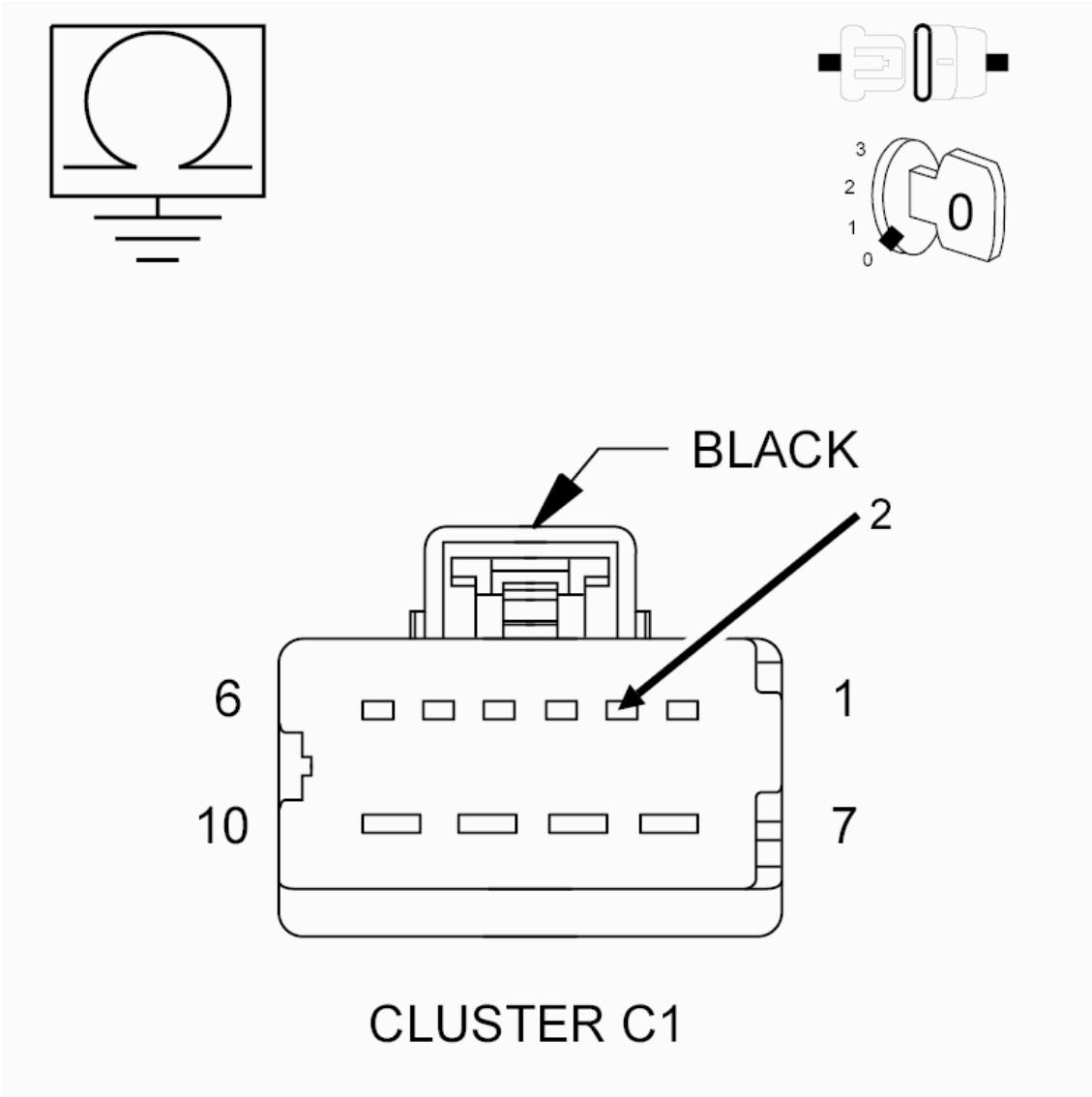

Fig. 4: Checking Reading/Rail Lamps Driver Circuit For Short To Ground
Courtesy of CHRYSLER GROUP, LLC

1. Measure the resistance between ground and the (M27) Reading/Rail Lamps Driver circuit.

   Is the resistance below 5.0 Ohms?

Yes

- Using the Wiring Information as a guide, diagnose the short to ground in the (M27) Reading/Rail Lamps Driver circuit.
- Refer to **STANDARD PROCEDURE** and perform the BODY VERIFICATION TEST.

No

- Replace the Cluster in accordance with the Service Information.
- Refer to **STANDARD PROCEDURE** and perform the BODY VERIFICATION TEST.

WARNING

WARNING

WARNING: **To avoid serious or fatal injury eye protection should be used when servicing any glass components.**

CAUTION: **Do not contaminate the glass of halogen bulbs with fingerprints or allow contact with other possibly oily surfaces. Reduced bulb life will result.**

CAUTION: **Do not use bulbs with higher candle power than indicated in the Bulb Application table. Refer to SPECIFICATIONS. In addition, do not use fuses, circuit breakers or relays having greater amperage value than indicated on the fuse panel or in the Owner's Manual. Damage to lamps, lenses, wiring and other related electrical components can result.**

DESCRIPTION

DESCRIPTION

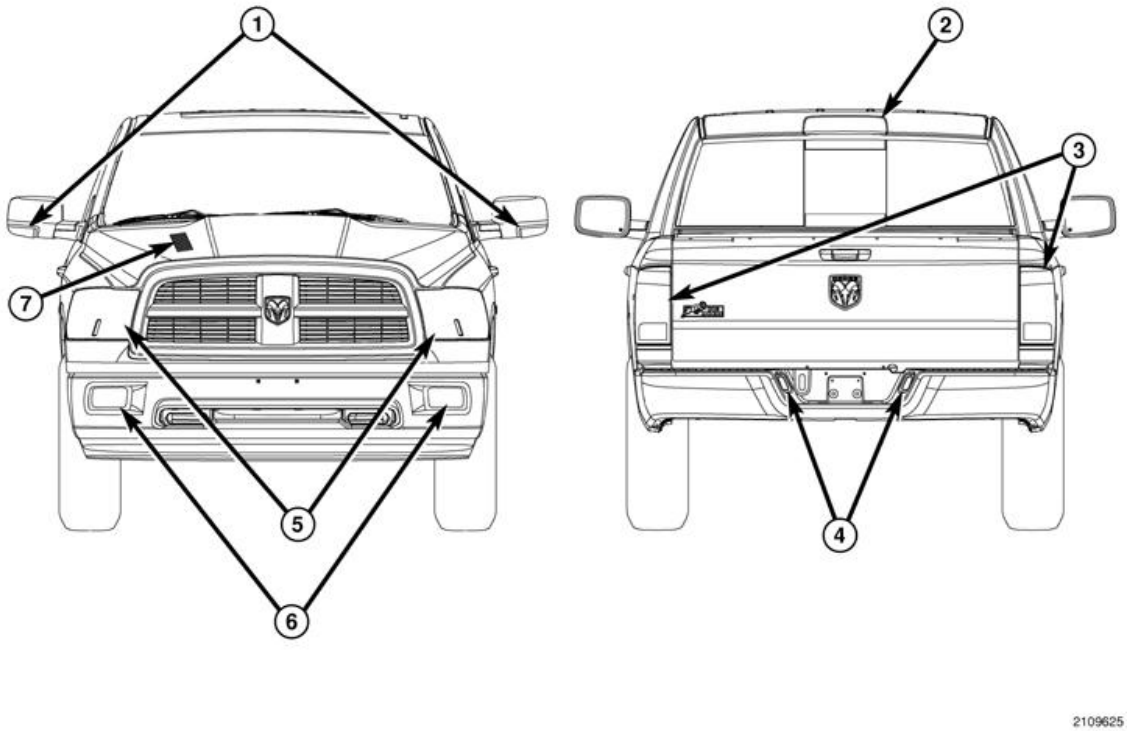

Fig. 1: Locating Exterior Lighting
Courtesy of CHRYSLER GROUP, LLC

The exterior lighting system for this vehicle includes the following exterior lamp units:

- **Cab Clearance Lamps** - Vehicles equipped with this option have five individual amber clearance lamp units mounted across the roof panel just rearward of the upper windshield header.
- **Center High Mounted Stop Lamp (2)** - A standard equipment Center High Mounted Stop Lamp (CHMSL) is centered on the cab roof header panel just above the glass opening at the rear of the cab. On vehicles so equipped, this CHMSL also incorporates two integral cargo lamps, one located at each outboard side of the CHMSL.
- **Front Fog Lamps (6)** - Vehicles equipped with this option have a fog lamp unit mounted near each outboard end of the front bumper support, behind the lower portion of the front fascia.
- **Front Lamp Units (5)** - Standard equipment dual headlamps include a front lamp unit with a single, dual-filament headlamp bulb mounted to the front of each front fender panel on either side of the grille opening. Optional quad headlamps replace both of the standard equipment front lamp units with those that each contain two, single-filament headlamp bulbs.
- **License Plate Lamps (4)** - A standard equipment rear license plate lamp unit is mounted to each outboard vertical surface of the license plate tub formation in the center of the rear bumper on vehicles with a pickup bed. On cab and chassis vehicles the license plate lamp function is integral to the left rear lamp unit.
- **Outside Mirror Lamps (1)** - Vehicles equipped with the signal mirror option, but not the extended (trailer towing) mirrors have a combined signal and puddle lamp unit integral to the lower forward facing surface of each outside rear view mirror. On vehicles equipped with the signal mirror option and extended (trailer towing) outside rear view mirrors, there are two lamp units in each mirror. One puddle lamp is

located in the lower surface of each fixed mirror arm, while one signal lamp located in the upper outboard forward facing corner of each mirror head when the mirror is in the horizontal position. When the mirror head is moved to the vertical position, the signal lamp moves to the lower outboard forward facing corner of each mirror.

- **Rear Fender Marker Lamps** - Vehicles equipped with a pickup bed and dual rear wheels have four individual rear fender marker lamp units mounted to the rear fenders. An amber lamp is located forward of each rear wheel opening and a red lamp is located rearward of each rear wheel opening.
- **Rear Lamp Units (3)** - A standard equipment rear lamp unit is mounted to the rear of each quarter panel on either side of the tailgate opening of vehicles with a pickup bed. On cab and chassis vehicles a rear lamp unit is mounted on the outboard side of each frame rail near the rear of the vehicle.
- **Tailgate Marker Lamp** - Vehicles equipped with a pickup bed and dual rear wheels have a single red tailgate marker lamp unit mounted to the center of the tailgate sill panel below the tailgate and above the rear bumper.
- **Underhood Lamp (7)** - Vehicles equipped with this option have a single underhood lamp unit with an integral automatic mechanical (non-mercury) switch. The lamp and switch unit is mounted to the underside of the inner hood reinforcement above the right side of the engine compartment.

These exterior lighting lamp units and their controls are combined to provide the following exterior lighting features:

- **Automatic Headlamps** - Vehicles with the automatic headlamps option are equipped with a unique headlamp switch that includes an **A** (Automatic) position and have a sun load sensor located on the top of the instrument panel to sense ambient light levels. When the **A** position of the headlamp switch is selected while the engine is running, the headlamps are turned ON and OFF automatically as ambient light levels dictate.
- **Backup Lamps** - The backup (or reverse) lamps include a bulb, reflector and lens that are integral to each rear lamp unit.
- **Brake Lamps** - The brake (or stop) lamps include a bulb, reflector and lens that are integral to each rear lamp unit, and the CHMSL bulb and lens.
- **Daytime Running Lamps** - Vehicles manufactured for sale in Canada illuminate the high beam headlamp bulb in each front lamp unit at a reduced intensity to serve as the Daytime Running Lamps (DRL).
- **Exterior Lamp Fail-Safe Operation** - The ElectroMechanical Instrument Cluster (EMIC) (also known as the Cab Compartment Node/CCN) and the Totally Integrated Power Module (TIPM) provide a fail-safe feature which will automatically turn ON the low beam headlamps and all park lamps when the ignition switch is in the ON position and there is no detected input from the headlamp switch, or when there is no communication over the Controller Area Network (CAN) data bus.
- **Exterior Lamp Load Shedding** - The TIPM provides a battery saver feature which will automatically turn OFF all exterior lamps that remain ON with the ignition switch in the LOCK position after a timed interval of about eight minutes.
- **Front Fog Lamps** - The optional front fog lamps include the bulb, reflector and lens of each adjustable front fog lamp unit.
- **Hazard Warning Lamps** - The hazard warning lamps include the bulbs, reflectors and lenses of each lamp in the right and left, front and rear turn signal circuits.
- **Headlamp Delay** - On vehicles equipped with automatic headlamps, the low or high beam headlamps

remain illuminated for 90 seconds after the ignition switch has been turned to the OFF position. If the vehicle is equipped with the optional Electronic Vehicle Information Center (EVIC), the delay interval is customer-programmable for 0, 30, 60 or 90 seconds.

- **Headlamps** - Standard dual headlamps include a single, dual-filament halogen bulb, an adjustable reflector and a clear lens integral to each front lamp unit. Optional quad headlamps include two single-filament halogen bulbs, an adjustable reflector and a clear lens integral to each front lamp unit.
- **Optical Horn** - Also known as flash-to-pass, the beam selection function of the multi-function switch control stalk has a momentary intermediate position that allows the headlamp high beams to be flashed momentarily, without changing the headlamp beam selection.
- **Park Lamps** - The park lamps include the park and side marker bulbs, reflectors and lenses integral to each front and rear lamp unit as well as the bulbs and lenses of the rear license plate lamps.
- **Puddle Lamps** - Vehicles equipped with the optional outside mirror signal lamps have dedicated clear Light-Emitting Diode (LED) units integral to each mirror that are activated by the door modules based upon door ajar switch inputs to illuminate the area outside below each front door whenever a door is opened.
- **Turn Signal Lamps** - The turn signal lamps include the turn signal bulbs, reflectors and lenses that are integral to the right and left front and rear lamp units. On vehicles equipped with the optional outside mirror signal lamps there are several dedicated amber LED units integral to each mirror signal lamp unit that are also activated by the turn signal circuits for the same side of the vehicle.

Other components of the exterior lighting system for this vehicle include:

- **Backup Lamp Switch** - A plunger-type backup lamp switch is installed through the transmission housing of vehicles equipped with a manual transmission and is actuated by the shifter mechanism within the transmission when REVERSE gear is selected. On vehicles with an automatic transmission, a Transmission Range Sensor (TRS) performs the backup lamp switch function.
- **Brake Lamp Switch** - A plunger-type brake lamp switch is located on the steering column support bracket under the instrument panel and is actuated by the brake pedal arm when the brake pedal is depressed.
- **Clockspring** - The clockspring includes an integral turn signal cancel cam, which provides automatic turn signal cancellation as the steering wheel is rotated back to its centered position following a vehicle turning maneuver. The clockspring is located near the top of the steering column, directly beneath the steering wheel. Refer to **CLOCKSPRING, DESCRIPTION** .
- **Hazard Switch** - A latching push button-actuated hazard switch is integral to the upper instrument panel switch pod located just below the radio and above the air conditioning and heater controls in the center stack area of the instrument panel.
- **Headlamp Switch** - A headlamp switch is located on the left side of the instrument panel, below the left instrument panel vent outboard of the steering column. The headlamp switch includes a rotary knob to turn the park lamps and headlamps ON or OFF and, if the vehicle is so equipped, a push button switch for selecting the cargo lamps. The rotary knob is pushed inward for selecting the optional front fog lamps on vehicles so equipped. The headlamp switch also features a horizontal thumbwheel for selecting the panel lamps dimming level, a PARADE mode to illuminate all Vacuum Fluorescent Display (VFD) units at full brightness for visibility when driving in daylight with the exterior lighting turned ON, and for interior lighting control.
- **Instrument Cluster** - The ElectroMechanical Instrument Cluster (EMIC) is also known as the Cab

Compartment Node (CCN) in this vehicle. The EMIC/CCN is located in the instrument panel above the steering column opening, directly in front of the driver. Refer to **DESCRIPTION** .

- **Multi-Function Switch** - The multi-function switch is located on the steering column, just below the steering wheel. A control stalk that extends from the left side of the switch is used to select the turn signal lamps (right or left) and to select the headlamp beam (low, high or optical horn).
- **Park Brake Switch** - A park brake switch is located on the park brake pedal mechanism on the cowl side inner panel below the instrument panel, to the left of the steering column.
- **Stop Lamp Inhibit Relay** - A stop lamp inhibit relay (also known as a brake lamp activation relay or trailer tow damping relay) is located in a connector on the left front fender hydroform load beam within the engine compartment.
- **Totally Integrated Power Module** - The Totally Integrated Power Module (TIPM) is located in the engine compartment, near the battery. Refer to **DESCRIPTION** .
- **Trailer Tow Wiring** - Vehicles with a factory-installed trailer towing package have a trailer tow wire harness with a combination 4-way and heavy duty 7-way trailer tow connector installed in the rear bumper near the trailer hitch receiver. This package also includes an electric trailer brake wiring provision that terminates at a connector located on top of the large body harness connection bracket under the instrument panel to the left of the steering column. An electric trailer brake pigtail harness and an instruction card are available through MOPAR® to ease installation of most aftermarket electric trailer brake controllers.
- **Upper Instrument Panel Switch Pod** - A latching push button-actuated hazard switch is integral to the upper instrument panel switch bank located just below the radio and above the air conditioning and heater controls in the center stack area of the instrument panel. Refer to **POD, SWITCH, DESCRIPTION** .

Hard wired circuitry connects the exterior lighting system components to the electrical system of the vehicle. These hard wired circuits are integral to several wire harnesses, which are routed throughout the vehicle and retained by many different methods. These circuits may be connected to each other, to the vehicle electrical system and to the exterior lighting components through the use of a combination of soldered splices, splice block connectors, and many different types of wire harness terminal connectors and insulators. Refer to the appropriate wiring information. The wiring information includes wiring diagrams, proper wire and connector repair procedures, further details on wire harness routing and retention, as well as pin-out and location views for the various wire harness connectors, splices and grounds.

OPERATION

OPERATION

Following are paragraphs that briefly describe the operation of each of the major exterior lighting systems. The lamps and the hard wired circuits between components related to the exterior lighting system may be diagnosed using conventional diagnostic tools and procedures. Refer to the appropriate wiring information. The wiring information includes wiring diagrams, proper wire and connector repair procedures, details of wire harness routing and retention, connector pin-out information and location views for the various wire harness connectors, splices and grounds.

However, conventional diagnostic methods will not prove conclusive in the diagnosis of the exterior lighting system or the electronic controls or communication between modules and other devices that provide some features of the exterior lighting system. The most reliable, efficient, and accurate means to diagnose the exterior

lighting system or the electronic controls and communication related to exterior lighting system operation requires the use of a diagnostic scan tool. Refer to the appropriate diagnostic information.

AUTOMATIC HEADLAMPS

The optional automatic headlamp system includes the headlamp switch on the instrument panel, the ElectroMechanical Instrument Cluster (EMIC) (also known as the Cab Compartment Node/CCN), the Totally Integrated Power Module (TIPM), the ignition switch (also known as the Wireless Ignition Node/WIN), the A/C - heater control unit and the sun load sensor on the top of the instrument panel.

The TIPM energizes the sun load sensor to provide an ambient light level input to the A/C - heater control whenever the electronic **ignition switch status** messages received from the WIN over the Controller Area Network (CAN) data bus indicate the ignition ON position is selected. The A/C - heater control responds to the sun sensor input by sending the appropriate electronic **light level** messages back to the TIPM over the CAN data bus. When the **A** (Automatic) position is selected with the headlamp switch, the EMIC responds to this input by sending an electronic **lighting request** message to the TIPM over the CAN data bus.

With the engine running, the TIPM responds to these messages by automatically controlling a pulse width modulated voltage output to the selected headlamp bulb filaments through the right and left low or high beam driver circuits to illuminate the headlamps. The TIPM also remembers which beams (low or high) were selected when the headlamps were last turned OFF, and energizes those beams and lamps again the next time it turns the headlamps ON.

BACKUP LAMPS

The backup (or reverse) lamps have a path to ground at all times through a takeout and eyelet terminal of the body wire harness that is secured by a ground screw the body sheet metal or the frame. On vehicles with a manual transmission, the backup lamp switch provides a hard wired input to the TIPM, and the TIPM provides battery voltage to the backup lamps on the backup lamp feed circuit whenever the electronic **ignition switch status** messages received from the WIN over the CAN data bus indicate the ignition ON position is selected and the backup lamp switch input indicates the REVERSE position is selected with the transmission shift linkage.

On vehicles with an automatic transmission, the Powertrain Control Module (PCM) continually monitors a hard wired multiplex input from the Transmission Range Sensor (TRS), then sends the proper electronic **transmission gear selector status** messages to other electronic modules over the CAN data bus. Whenever the electronic **ignition switch status** messages indicate the ignition ON position is selected and the TIPM receives an electronic message indicating the status of the transmission gear selector is REVERSE, it provides a battery voltage output to the backup lamps on the backup lamp feed circuit.

BRAKE LAMPS

The brake (or stop) lamps each have a path to ground at all times through a takeout and eyelet terminal of the body wire harness that is secured by a ground screw to the body sheet metal or the frame. The Center High Mounted Stop Lamp (CHMSL) has a path to ground at all times through a different takeout and eyelet terminal of the body wire harness that is secured by a ground screw to the left cowl side inner panel within the passenger compartment. The TIPM and the CHMSL receive battery voltage on the brake lamp switch feed circuit when the brake lamp switch is closed by the brake pedal arm. The brake lamps are then controlled by the TIPM through High Side Drivers (HSD) on the left and right rear turn driver circuits. A stop lamp inhibit relay (also

known as a brake lamp activation relay or trailer tow damping relay) is used by the Controller Antilock Brake (CAB) to mitigate undesirable brake lamp operation when the CAB activates various brake hydraulic circuits as part of its Traction Control System (TCS) and Trailer Sway Control (TSC) functions. The brake lamp function of the trailer tow wiring is also controlled by an output from the TIPM based upon a hard wired input from the brake lamp switch.

DAYTIME RUNNING LAMPS

Vehicles manufactured for sale in Canada illuminate the high beam filament of both headlamps at a reduced intensity when the engine is running, the parking brake is released and the exterior lamps are turned OFF. The TIPM must be programmed appropriately for this feature to be enabled. Once enabled, anytime the TIPM receives electronic messages over the CAN data bus from the PCM indicating the engine is running and from the EMIC indicating the status of the headlamp switch exterior lighting input is OFF and that the parking brake is released, the TIPM provides a pulse width modulated voltage output to the proper headlamp bulb filaments through the right and left high beam feed circuits to produce illumination at a reduced intensity.

FRONT FOG LAMPS

Vehicles equipped with optional front fog lamps include a front fog lamp switch integral to the headlamp switch on the instrument panel. The front fog lamps have a path to ground at all times through their connection to the Front End Module (FEM) wire harness. The FEM wire harness has takeouts with eyelet terminals that are secured by ground screws to the left inner fender support within the engine compartment. The EMIC monitors a hard wired multiplex input from the headlamp switch to determine whether the fog lamps are selected, then sends electronic **fog lamp switch request** messages to the TIPM over the CAN data bus.

When the TIPM receives a **fog lamp switch request** message it then controls front fog lamp operation by providing a battery voltage output to the fog lamps through the right and left front fog lamp control circuits. The TIPM also sends the appropriate electronic message back to the EMIC to illuminate or extinguish the front fog lamp indicator. The TIPM will automatically de-energize the front fog lamps any time the headlamp high beams are selected.

The TIPM also provides a battery saver (load shedding) feature for the front fog lamps, which will turn these lamps OFF if they are left ON for more than about eight minutes after the electronic **ignition switch status** messages from the WIN transition to LOCK, if there is a charging system failure or if the electrical system voltage falls below about 11.75 volts for more than about 30 seconds.

Each front fog lamp includes an integral adjustment thumbwheel to be used for static aiming of the fog lamp beams.

HAZARD WARNING LAMPS

The hazard warning system includes the EMIC, the TIPM and the hazard switch in the upper switch pod located in the center stack area of the instrument panel, below the radio and above the air conditioner and heater controls. The hazard switch provides a hard wired input to the TIPM. When the TIPM receives an input from the hazard switch it controls hazard warning system operation and flash rate by controlling battery voltage outputs through high side drivers on the front and rear, right and left turn signal feed circuits.

The TIPM also sends the appropriate electronic messages back to the EMIC over the CAN data bus to control

the illumination and flash rate of the right and left turn signal indicators, as well as to control the click rate of an electromechanical relay soldered onto the EMIC electronic circuit board that emulates the sound emitted by a conventional hazard warning flasher.

HEADLAMPS

The headlamp system includes the SCM, the EMIC, the TIPM, the headlamp switch on the instrument panel and the multi-function switch on the steering column. The headlamp bulbs have a path to ground at all times through their connection to the FEM wire harness. The FEM wire harness has takeouts with eyelet terminals that are secured by ground screws to the left inner fender support within the engine compartment. The TIPM will store a Diagnostic Trouble Code (DTC) for any shorts or opens in the headlamp circuits.

The EMIC monitors a hard wired multiplex input from the headlamp switch to determine the status of the headlamp switch. The SCM monitors a hard wired multiplex input to determine the status of the multi-function switch and whether the headlamp high or low beams are selected. The SCM then sends the appropriate electronic **headlamp beam select switch status** messages to the EMIC over the Local Interface Network (LIN) data bus. The EMIC then sends the appropriate electronic **headlamp request** and **headlamp beam request** messages to the TIPM over the CAN data bus. The TIPM responds to these messages by providing a Pulse Width Modulated (PWM) voltage output to the headlamps through high side drivers on the right and left low and high beam feed circuits to illuminate the selected headlamp filaments. The TIPM also sends the appropriate electronic messages to the EMIC to control the illumination of the high beam indicator.

When the optical horn feature is selected, the low beams will shut OFF about 200 milliseconds after the high beams are activated. The TIPM also remembers which beams (LOW or HIGH) were selected when the headlamps were last turned OFF, and energizes those beams again the next time the headlamps are turned ON. The TIPM provides a battery saver (load shedding) feature for the headlamps, which will turn these lamps OFF if they are left ON for more than about eight minutes after the electronic **ignition switch status** messages from the WIN transition to LOCK.

The SCM and the EMIC each provide a fail-safe feature for the headlamps, which will cause the TIPM to turn the low beam headlamps ON automatically if there is no input available from the headlamp switch or the multi-function switch. The TIPM also provides a fail-safe feature for the headlamps that will turn the headlamps ON automatically whenever a loss of CAN bus communication is detected while the electronic **ignition switch status** messages from the WIN indicate the ignition ON position is selected.

Each headlamp includes an integral reflector adjustment screw to be used for static aiming of the headlamps.

HEADLAMP DELAY

The headlamp delay feature includes the headlamp switch, the EMIC, the WIN and the TIPM. On vehicles equipped with an optional Electronic Vehicle Information Center (EVIC), this feature has customer programmable delay intervals of 0 seconds (disabled), 30 seconds, 60 seconds and 90 seconds. If the headlamp switch remains in the headlamp ON position until the electronic **ignition switch status** messages from the WIN indicate the ignition OFF position is selected, then the headlamps will remain illuminated until after the selected delay interval has elapsed. The park lamps will not stay ON during the headlamp delay interval. The default delay interval is 90 seconds, but can be reprogrammed by the customer using the customer programmable features function of the EVIC, if the vehicle is so equipped.

PARK LAMPS

The park lamps system includes the EMIC, the TIPM and the headlamp switch on the instrument panel. The front park lamp and side marker lamp bulbs each have a path to ground at all times through their connection to the FEM wire harness. The FEM wire harness has takeouts with eyelet terminals that are secured by ground screws to the left inner fender support within the engine compartment. The rear park lamp, side marker lamp and license plate lamp bulbs have a path to ground at all times through a takeout and eyelet terminal of the body wire harness that is secured by a ground screw to the body sheet metal or the frame.

The EMIC monitors a hard wired multiplex input from the headlamp switch, then sends the appropriate electronic **headlamp switch status** messages to the TIPM over the CAN data bus. The TIPM responds to these messages by providing a battery voltage output to the appropriate lamp bulbs through high side drivers on the front and rear, right and left park lamp feed circuits.

The TIPM provides a battery saver (load shedding) feature for the park lamps, which will turn these lamps OFF if they are left ON for more than about eight minutes after the electronic **ignition switch status** messages from the WIN indicate the ignition LOCK position is selected. The EMIC provides a fail-safe feature for the park lamps, which will send an electronic message to the TIPM to turn these lamps ON automatically if it detects no input from the headlamp switch. The TIPM also provides a fail-safe feature for the park lamps that will turn the headlamps and park lamps ON automatically whenever a loss of CAN bus communication is detected when the electronic **ignition switch status** messages from the WIN indicate the ignition ON position is selected.

TRAILER TOW WIRING

In addition to the trailer tow wiring provisions, the TIPM in all vehicles includes dedicated trailer tow battery, trailer tow park lamp, and both right and left trailer tow stop/turn feed output circuits. When the TIPM receives the appropriate inputs for normal park, turn signal, hazard warning or brake lamp operation, it responds by providing battery voltage through the appropriate trailer tow wiring feed circuits to synchronize the illumination and flash rate of the trailer park, brake and turn signal lamps with those of the tow vehicle.

TURN SIGNAL LAMPS

The turn signal lamps system includes the multi-function switch on the steering column, the SCM, the EMIC and the TIPM. The front turn signal lamp bulbs each have a path to ground at all times through their connection to the FEM wire harness. The FEM wire harness has takeouts with eyelet terminals that are secured by ground screws to the left inner fender support within the engine compartment. The rear turn signal lamp bulbs have a path to ground at all times through a takeout and eyelet terminal of the body wire harness that is secured by a ground screw to the body sheet metal or the frame. On vehicles with the optional outside rear view mirror lamp modules, the lamp modules receive a path to ground from their respective driver or passenger door module.

The SCM monitors a hard wired multiplex input from the multi-function switch to determine the status of the turn signal switch, then sends the appropriate electronic **turn signal switch status** messages to the EMIC over the LIN data bus. Then the EMIC relays an electronic **turn signal request** message to the TIPM over the CAN data bus. The TIPM responds to these messages by controlling a battery voltage output and the flash rate for either the right or left turn signal lamps through high side drivers on the appropriate front and rear, right or left turn signal feed circuits. The TIPM also sends the appropriate electronic messages back to the EMIC to control the illumination and flash rate of the right or left turn signal indicators, as well as to control the click rate of an electromechanical relay soldered onto the EMIC electronic circuit board that emulates the sound emitted by a

conventional turn signal flasher. On vehicles with the optional outside rear view mirror lamp modules, the EMIC also sends the appropriate electronic messages over the LIN bus to the driver and passenger door modules to control the illumination and flash rate of those lamps.

The EMIC also provides a **turn signal ON warning** that will generate repetitive chimes to indicate that a turn signal has been active continuously for 1.6 kilometers (1 mile) with the vehicle speed greater than 22 kilometers-per-hour (15 miles-per-hour). Vehicles built for markets other than the United States and Canada have a revised distance threshold of 4 kilometers (2.49 miles) for this feature. The chime will continue until the turn signal input becomes inactive or until the vehicle speed message indicates that the speed is less than 22 kilometers-per-hour (15 miles-per-hour), whichever occurs first.

DIAGNOSIS AND TESTING

DIAGNOSIS AND TESTING - LAMPS/LIGHTING - EXTERIOR

WARNING: **To avoid serious or fatal injury on vehicles equipped with airbags, disable the Supplemental Restraint System (SRS) before attempting any steering wheel, steering column, airbag, seat belt tensioner, impact sensor or instrument panel component diagnosis or service. Refer to WARNING . Disconnect and isolate the battery negative (ground) cable, then wait two minutes for the system capacitor to discharge before performing further diagnosis or service. This is the only sure way to disable the SRS. Failure to take the proper precautions could result in accidental airbag deployment.**

NOTE: **When diagnosing the exterior lighting circuits, remember that high generator output can burn out bulbs rapidly and repeatedly; and, that dim or flickering bulbs can be caused by low generator output or poor battery condition. If one of these symptoms is a problem on the vehicle, be certain to diagnose the battery and charging system, then repair as necessary.**

NOTE: **A good ground is necessary for proper lighting operation. If a lighting problem is being diagnosed that involves multiple symptoms, systems, or components, the problem can often be traced to a loose, corroded, or open ground.**

The lamps and the hard wired circuits between components related to the exterior lighting system may be diagnosed using conventional diagnostic tools and procedures. Refer to the appropriate wiring information. The wiring information includes wiring diagrams, proper wire and connector repair procedures, details of wire harness routing and retention, connector pin-out information and location views for the various wire harness connectors, splices and grounds.

However, conventional diagnostic methods will not prove conclusive in the diagnosis of the electronic controls or communication between modules and other devices that provide some features of the exterior lighting system. The most reliable, efficient, and accurate means to diagnose the exterior lighting system or the electronic controls and communication related to exterior lighting system operation requires the use of a diagnostic scan tool. Refer to the appropriate diagnostic information.

BACKUP LAMPS

CONDITION	POSSIBLE CAUSES	CORRECTION
BACKUP LAMP DOES NOT ILLUMINATE	1. Ineffective or missing bulb.	1. Test and replace backup lamp bulb if required.
	2. Ineffective ground circuit.	2. Test and repair open backup lamp ground circuit if required.
	3. Ineffective feed circuit.	3. Test and repair open backup lamp feed circuit if required.
	4. Ineffective switch.	4. Test and replace backup lamp switch (manual transmission) or transmission range sensor (automatic transmission) if required.
	5. Ineffective TIPM inputs or outputs.	5. Use a diagnostic scan tool to test the TIPM inputs and outputs. Refer to the appropriate diagnostic information.
BACKUP LAMP DOES NOT EXTINGUISH	1. Ineffective feed circuit.	1. Test and repair shorted backup lamp feed circuit if required.
	2. Ineffective switch.	2. Test and replace backup lamp switch (manual transmission) or transmission range sensor (automatic transmission) if required.
	3. Ineffective TIPM inputs or outputs.	3. Use a diagnostic scan tool to test the TIPM inputs and outputs. Refer to the appropriate diagnostic information.

BRAKE LAMPS

CONDITION	POSSIBLE CAUSES	CORRECTION
BRAKE LAMP DOES NOT ILLUMINATE	1. Ineffective or missing bulb.	1. Test and replace brake lamp bulb if required.
	2. Ineffective ground circuit.	2. Test and repair open brake lamp ground circuit if required.
	3. Ineffective fuse.	3. Test and replace the fuse in the TIPM if required.
	4. Ineffective feed circuit.	4. Test and repair open brake lamp switch output circuit or stop lamp output circuit if required.
	5. Ineffective switch.	5. Test and replace brake lamp switch if required.
	6. Ineffective TIPM inputs or outputs.	6. Use a diagnostic scan tool to test the TIPM inputs and outputs. Refer to the appropriate diagnostic information.
	7. Ineffective stop lamp inhibit relay.	7. test and replace stop lamp inhibit relay if required.

BRAKE LAMP DOES NOT EXTINGUISH	1. Ineffective feed circuit.	1. Test and repair shorted brake lamp switch output circuit or stop lamp output circuit if required.
	2. Improperly adjusted switch.	2. Adjust the brake lamp switch if required.
	3. Ineffective switch.	3. Test and replace brake lamp switch if required.
	4. Ineffective TIPM inputs or outputs.	4. Use a diagnostic scan tool to test the TIPM inputs and outputs. Refer to the appropriate diagnostic information.

DAYTIME RUNNING LAMPS

NOTE: **Before performing the following tests, determine whether the headlamp low and high beams operate. If the headlamp low and high beams are also ineffective, diagnose and repair that problem before attempting to repair the Daytime Running Lamps.**

CONDITION	POSSIBLE CAUSES	CORRECTION
DAYTIME RUNNING LAMPS WILL NOT ILLUMINATE	1. Incorrect TIPM programming.	1. Use a diagnostic scan tool to check and configure TIPM if required.
	2. Automatic transmission in PARK position.	2. Place the transmission gear selector lever in any position except PARK.
	3. Parking brake applied.	3. Release the parking brake.
	4. Engine not running.	4. Start the engine.
	5. Ineffective TIPM inputs or outputs.	5. Use a diagnostic scan tool to test the TIPM inputs and outputs. Refer to the appropriate diagnostic information.

FRONT FOG LAMPS

NOTE: **The front fog lamps are designed to operate ONLY while the headlamp low beams are illuminated. If the headlamp low beams do not illuminate, diagnose and repair that problem before attempting to repair the front fog lamp system. Refer to the appropriate diagnostic information.**

CONDITION	POSSIBLE CAUSES	CORRECTION
FRONT FOG LAMP DOES NOT ILLUMINATE	1. Ineffective or missing bulb.	1. Test and replace front fog lamp bulb if required.
	2. Ineffective ground circuit.	2. Test and repair open front fog lamp ground circuit if required.
	3. Ineffective feed circuit.	3. Test and repair open front fog lamp feed circuit if required.
	4. Ineffective switch.	4. Test and replace headlamp switch if required.

	5. Ineffective EMIC (CCN) inputs or outputs.	5. Use a diagnostic scan tool to test the EMIC (CCN) inputs and outputs. Refer to the appropriate diagnostic information.
	6. Ineffective TIPM inputs or outputs.	6. Use a diagnostic scan tool to test the TIPM inputs and outputs. Refer to the appropriate diagnostic information.
FRONT FOG LAMP DOES NOT EXTINGUISH	1. Ineffective feed circuit.	1. Test and repair shorted front fog lamp feed circuit if required.
	2. Ineffective switch.	2. Test and replace headlamp switch if required.
	3. Ineffective EMIC (CCN) inputs or outputs.	3. Use a diagnostic scan tool to test the EMIC (CCN) inputs and outputs. Refer to the appropriate diagnostic information.
	4. Ineffective TIPM inputs or outputs.	4. Use a diagnostic scan tool to test the TIPM inputs and outputs. Refer to the appropriate diagnostic information.

HAZARD WARNING LAMPS

NOTE: **The hazard switch is integral to the upper instrument panel switch pod, which provides a hard wired output to the TIPM. Before performing any of the following tests, confirm whether the left and right turn signals operate satisfactorily. Then determine whether the other functions of the upper instrument panel switch pod are operational. If the turn signals are ineffective or operate improperly, or if the other instrument panel switch pod functions are ineffective, diagnose and repair those problems before attempting to repair the hazard warning lamps system.**

CONDITION	POSSIBLE CAUSES	CORRECTION
HAZARD WARNING LAMPS DO NOT FLASH	1. Ineffective upper instrument panel switch pod. 2. Ineffective TIPM inputs or outputs.	1. Test and replace upper instrument panel switch pod if required. 2. Use a diagnostic scan tool to test the TIPM inputs and outputs. Refer to the appropriate diagnostic information.
HAZARD WARNING LAMPS DO NOT STOP FLASHING	1. Ineffective upper instrument panel switch pod. 2. Ineffective TIPM inputs or outputs.	1. Test and replace upper instrument panel switch pod if required. 2. Use a diagnostic scan tool to test the TIPM inputs and outputs. Refer to the appropriate diagnostic information.

HEADLAMPS

NOTE: **As part of the exterior lighting fail-safe feature, upon ignition ON all exterior park lamps and the headlamp low beams will illuminate regardless of the headlamp switch position if the EMIC (CCN) cannot detect an input from the**

headlamp switch, or if there is a loss of data bus communication. Diagnose and repair those problems before attempting to repair the headlamp system. The TIPM will store a Diagnostic Trouble Code (DTC) for an open or shorted headlamp circuit. In addition, for automatic headlamps the air conditioning - heater control must be able to receive the hard wired input from the sun sensor on the top of the instrument panel and must be able to communicate with the TIPM over the CAN data bus. Refer to the appropriate diagnostic information.

CONDITION	POSSIBLE CAUSES	CORRECTION
HEADLAMP DOES NOT ILLUMINATE	1. Ineffective or missing bulb.	1. Test and replace headlamp bulb if required.
	2. Ineffective ground circuit.	2. Test and repair open headlamp ground circuit if required.
	3. Ineffective feed circuit.	3. Test and repair open headlamp low beam or high beam feed circuit if required.
	4. Ineffective switch.	4. Test and replace headlamp switch if required.
	5. Ineffective EMIC (CCN) inputs or outputs.	5. Use a diagnostic scan tool to test the EMIC (CCN) inputs and outputs. Refer to the appropriate diagnostic information.
	6. Ineffective TIPM inputs or outputs.	6. Use a diagnostic scan tool to test the TIPM inputs and outputs. Refer to the appropriate diagnostic information.
HEADLAMP DOES NOT EXTINGUISH	1. Ineffective feed circuit.	1. Test and repair shorted headlamp low beam or high beam feed circuit if required.
	2 Ineffective switch.	2. Test and replace headlamp switch if required.
	3. Ineffective EMIC (CCN) inputs or outputs.	3. Use a diagnostic scan tool to test the EMIC (CCN) inputs and outputs. Refer to the appropriate diagnostic information.
	4. Ineffective TIPM inputs or outputs.	4. Use a diagnostic scan tool to test the TIPM inputs and outputs. Refer to the appropriate diagnostic information.
HEADLAMPS ILLUMINATE WITH IGNITION ON AND HEADLAMP SWITCH OFF (FAIL-SAFE OPERATION)	1. Ineffective circuits between headlamp switch and EMIC (CCN).	1. Test and repair open headlamp switch mux and return circuits if required.
	2. Ineffective switch.	2. Test and replace headlamp switch if required.
	3. Loss of data bus communication.	3. Use a diagnostic scan tool to test the data bus. Refer to the appropriate diagnostic information.
	4. Ineffective EMIC (CCN) inputs or outputs.	4. Use a diagnostic scan tool to test the EMIC (CCN) inputs and outputs. Refer to

		the appropriate diagnostic information.
HEADLAMPS WILL NOT SWITCH FROM HIGH TO LOW BEAMS, OR FROM LOW TO HIGH BEAMS	1. Ineffective LIN bus circuits between multi-function switch (SCM) and EMIC (CCN).	1. Test and repair open LIN bus circuits if required.
	2. Ineffective multi-function switch (SCM).	2. Use a diagnostic scan tool to test the EMIC (CCN) inputs and outputs. Refer to the appropriate diagnostic information.
AUTO HEADLAMPS INEFFECTIVE	1. Incorrect TIPM configuration. 2. Ineffective circuits between sun load sensor and air conditioner - heater control. 3. Ineffective sun load sensor. 4. Ineffective TIPM inputs or outputs.	1. Use a diagnostic scan tool to check and correct the TIPM configuration settings if required. Refer to the appropriate diagnostic information. 2. Test and repair sun sensor and sun sensor return circuits if required. 3. Test and replace sun load sensor if required. 5. Use a diagnostic scan tool to test the TIPM inputs and outputs. Refer to the appropriate diagnostic information.

PARK LAMPS

NOTE: **As part of the exterior lighting fail-safe feature, upon ignition ON all exterior park lamps and the headlamp low beams will illuminate regardless of the headlamp switch position if the instrument cluster cannot detect an input from the headlamp switch, or if there is a loss of data bus communication between the EMIC (CCN) and the TIPM. Diagnose and repair those problems before attempting to repair the Park Lamps.**

CONDITION	POSSIBLE CAUSES	CORRECTION
PARK LAMP DOES NOT ILLUMINATE	1. Ineffective or missing fuse.	1. Test and replace park lamp fuse if required.
	2. Ineffective or missing bulb.	2. Test and replace park lamp bulb if required.
	3. Ineffective ground circuit.	3. Test and repair open park lamp ground circuit if required.
	4. Ineffective feed circuit.	4. Test and repair open park lamp feed circuit if required.
	5. Ineffective switch.	5. Test and replace headlamp switch if required.
	6. Ineffective EMIC (CCN) inputs or outputs.	6. Use a diagnostic scan tool to test the EMIC (CCN) inputs and outputs. Refer to the appropriate diagnostic information.
	7. Ineffective TIPM inputs or outputs.	7. Use a diagnostic scan tool to test the TIPM inputs and outputs. Refer to the

		appropriate diagnostic information.
PARK LAMP DOES NOT EXTINGUISH	1. Ineffective feed circuit.	1. Test and repair shorted park lamp feed circuit if required.
	2. Ineffective switch.	2. Test and replace headlamp switch if required.
	3. Ineffective EMIC (CCN) inputs or outputs.	3. Use a diagnostic scan tool to test the EMIC (CCN) inputs and outputs. Refer to the appropriate diagnostic information.
	4. Ineffective TIPM inputs or outputs.	4. Use a diagnostic scan tool to test the TIPM inputs and outputs. Refer to the appropriate diagnostic information.

TURN SIGNAL LAMPS

NOTE: **The turn signal switch is integral to the multi-function switch/SCM, which communicates with the EMIC/CCN over the LIN data bus. Before performing any of the following tests, determine whether the other functions of the multi-function switch/SCM are operational. If the other multi-function switch/SCM functions are ineffective, diagnose and repair that problem before attempting to repair the Turn Signal Lamps.**

CONDITION	POSSIBLE CAUSES	CORRECTION
ONE TURN SIGNAL LAMP DOES NOT ILLUMINATE	1. Ineffective or missing bulb.	1. Test and replace turn signal bulb if required.
	2. Ineffective ground circuit.	2. Test and repair open ground circuit if required.
	3. Ineffective feed circuit.	3. Test and repair open right or left turn signal feed circuit if required.
	4. Ineffective TIPM inputs or outputs.	4. Use a diagnostic scan tool to test the TIPM inputs and outputs. Refer to the appropriate diagnostic information.
ALL RIGHT SIDE OR ALL LEFT SIDE TURN SIGNAL LAMPS (OR BOTH SIDES) DO NOT FLASH	1. Ineffective feed circuit.	1. Test and repair open right or left turn signal feed circuit if required.
	2. Ineffective EMIC (CCN) inputs or outputs.	2. Use a diagnostic scan tool to test the EMIC (CCN) inputs and outputs. Refer to the appropriate diagnostic information.
	3. Ineffective TIPM inputs or outputs.	3. Use a diagnostic scan tool to test the TIPM inputs and outputs. Refer to the appropriate diagnostic information.
ALL RIGHT SIDE OR ALL LEFT SIDE TURN SIGNALS FLASH TOO RAPIDLY (MORE THAN 100 FLASHES PER MINUTE)	1. Ineffective or missing bulb.	1. Test and replace turn signal bulb if required.
	2. Ineffective ground circuit.	2. Test and repair open ground circuit if required.
	3. Ineffective feed circuit.	3. Test and repair open right or left turn signal feed circuit if required.

TURN SIGNALS DO NOT AUTOMATICALLY CANCEL	1. Ineffective cancel cam.	1. Inspect and replace the turn signal cancel cam (clockspring) if required.
	2. Ineffective cancel actuator.	2. Inspect and replace the turn signal cancel actuator (multi-function switch/SCM) if required.

STANDARD PROCEDURE

STANDARD PROCEDURE - FRONT LAMP AIMING

VEHICLE PREPARATION FOR LAMP ALIGNMENT

1. Check for and correct any burnt out bulbs.
2. Repair or replace any ineffective, worn or damaged body or suspension components that could hinder proper lamp alignment.
3. Verify proper tire inflation pressures.
4. Remove any accumulations of mud, snow or ice from the vehicle underbody and clean the front lamp lenses.
5. Verify that there is no load in the vehicle (cargo or passengers), except for the driver.
6. The fuel tank should be FULL. Add 2.94 kilograms (6.5 pounds) of weight over the fuel tank for each estimated gallon of missing fuel.
7. Verify correct vehicle suspension height.

LAMP ALIGNMENT SCREEN PREPARATION

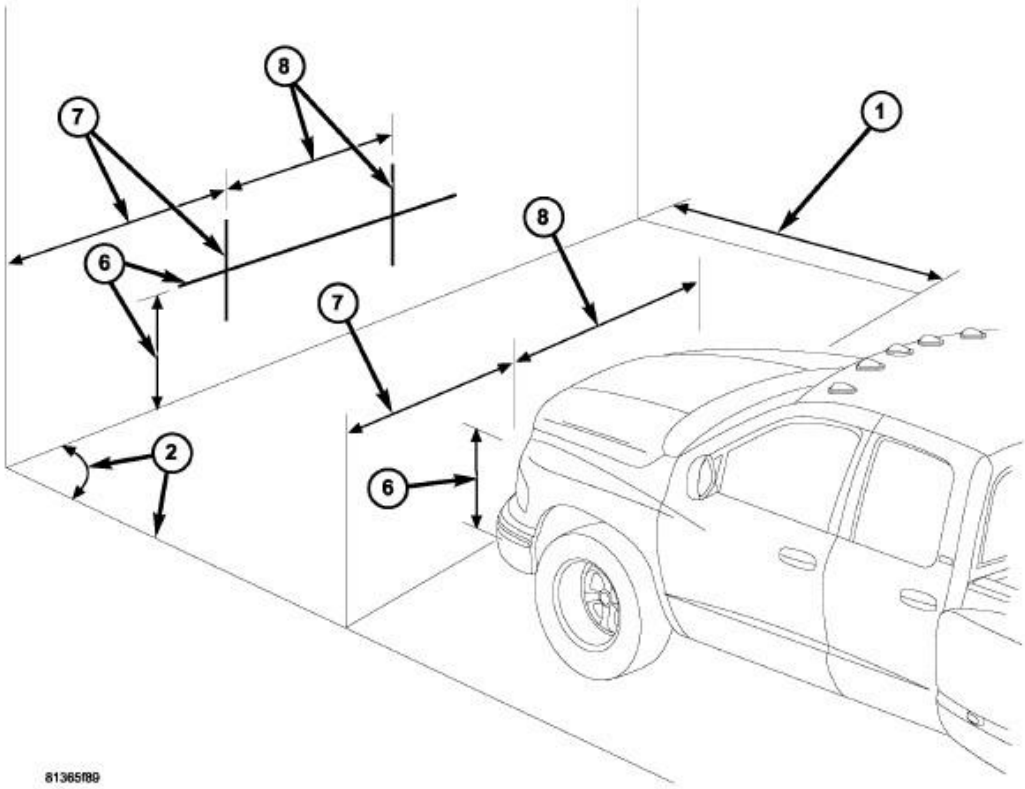

Fig. 2: Preparing Lamp Alignment Screen
Courtesy of CHRYSLER GROUP, LLC

The procedure that follows will prepare a suitable front lamp alignment screen.

1. Tape a line on a level floor 7.62 meters (25 feet) away from and parallel to the flat wall that will be used as the lamp alignment screen. The level floor will be used as the horizontal zero reference.
2. An adjacent wall or floor member that is perpendicular to the alignment screen can be used as the vertical zero reference. If there is no adjacent wall or floor member that is perpendicular to the screen, tape a second line on the floor perpendicular to both the alignment screen and the first line, and outboard of either side of where the vehicle will be positioned. This will be used as the vertical zero reference.
3. Position the vehicle so that the side of the vehicle is parallel to the vertical zero reference, and so that the front of the lamp lenses are in the vertical plane of the parallel line taped on the floor 7.62 meters (25 feet) away from the screen.
4. Rock the vehicle side-to-side three times to allow the suspension to stabilize.
5. Jounce the front suspension three times by pushing downward on the front bumper and releasing.
6. Measure the distance between the optical center of one of the lamps being aimed (head or fog) and the floor (horizontal zero reference). Transfer this measurement to the alignment screen with a piece of tape placed horizontally to the floor. This line will be used as the lamp horizontal reference.
7. Measure the distance between the vertical zero reference and the optical center of the nearest lamp being

aimed (head or fog). Transfer this measurement to the alignment screen with a piece of tape placed vertically across the appropriate (head or fog) lamp horizontal reference. This is the centerline reference for the first lamp.

8. Measure the distance on center between the first and the second lamp being aimed. Transfer this measurement to the alignment screen with a second piece of tape placed vertically across the appropriate (head or fog) lamp horizontal reference. This is the centerline reference for the second lamp.

HEADLAMP ALIGNMENT

NOTE: Due to the linear nature of the headlamp cutoff, a properly aimed low beam headlamp will project the top edge of the high intensity pattern 2.5 centimeters (1 inch) below the headlamp horizontal reference line on the alignment screen. No horizontal (right/left) adjustment is required for this headlamp beam pattern. The high beam pattern will be correct when the low beams are properly aimed.

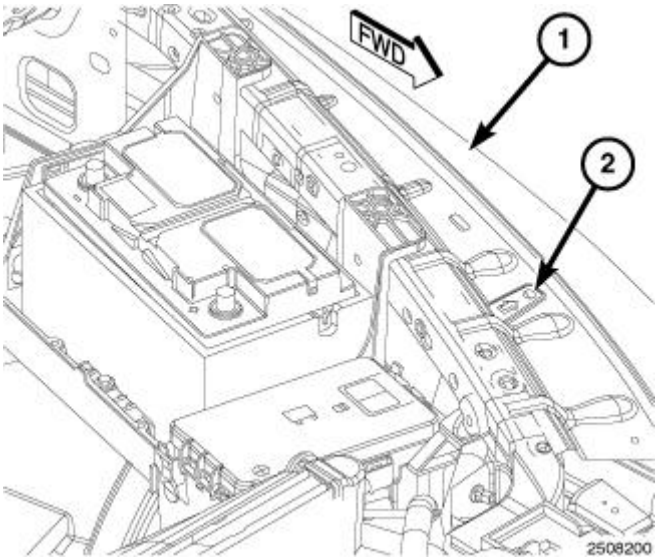

Fig. 3: Locating Vertical Adjustment Screw
Courtesy of CHRYSLER GROUP, LLC

1. The vertical adjustment screw for each headlamp is accessible through a hole located in a raised rectangular formation (2), with a raised arrow pointing to it. These features are stamped into the sheet metal of each front fender (1) ledge near the front of the vehicle.

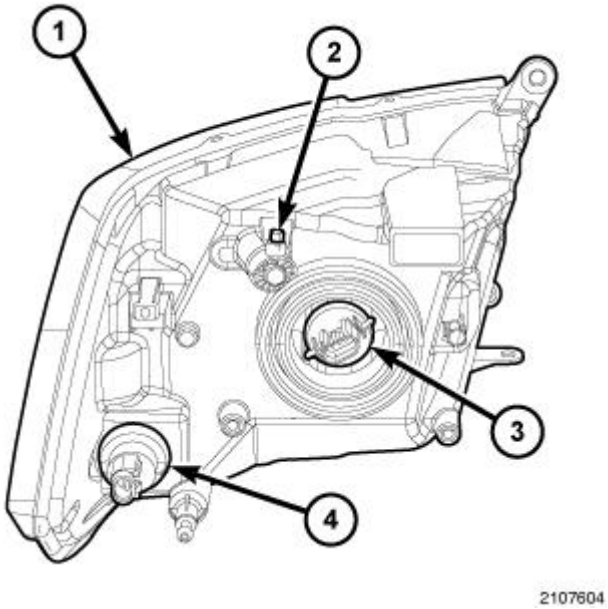

Fig. 4: Dual Headlamp Unit & Bulbs
Courtesy of CHRYSLER GROUP, LLC

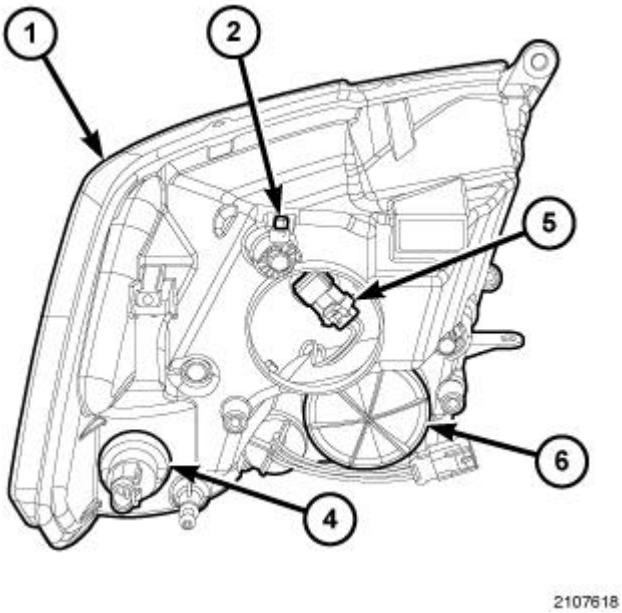

Fig. 5: Quad Headlamps, Access Covers & Connectors
Courtesy of CHRYSLER GROUP, LLC

2. Turn the headlamps ON and select the LOW beams.
3. Rotate the headlamp vertical adjustment screw (2) on the back of each front lamp unit (1) to adjust the beam height as required.

FOG LAMP ALIGNMENT

NOTE: **A properly aimed front fog lamp will project a pattern on the alignment screen 10 centimeters (4 inches) below the fog lamp centerline and straight ahead of the lamp.**

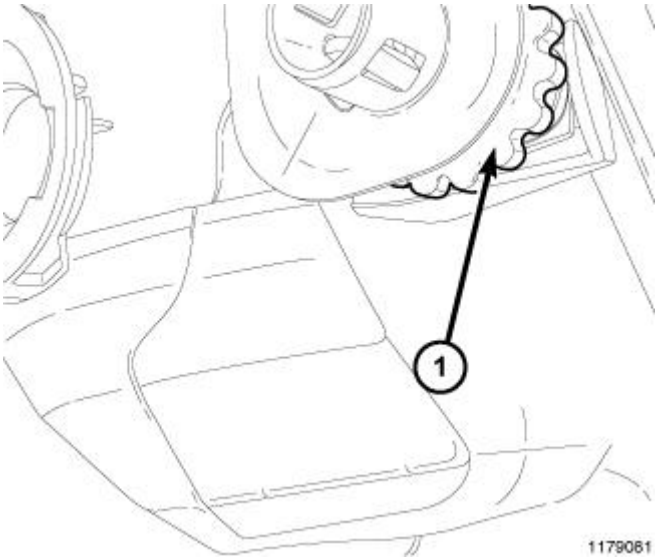

Fig. 6: Thumbwheel Screw
Courtesy of CHRYSLER GROUP, LLC

1. Turn the fog lamps ON.
2. Rotate the thumbwheel screw (1) located behind the bumper on the back of each fog lamp unit to adjust the beam height as required.

SPECIFICATIONS

SPECIFICATIONS

BULB APPLICATION TABLE

LAMP	BULB
BACKUP	921 (W16W)
BRAKE	3157K
CARGO	921 (W16W)
CENTER HIGH MOUNTED STOP	921 (W16W)
FOG	9145 (H10)
FRONT PARK	3157K (DUAL HEADLAMP / 3157NA (QUAD HEADLAMP)
FRONT SIDE MARKER	3157K (DUAL HEADLAMP / 3157NA (QUAD HEADLAMP)
FRONT TURN SIGNAL	3157K (DUAL HEADLAMP / 3157NA (QUAD HEADLAMP)
HEADLAMP (DUAL HEADLAMP)	9008 (H13)

HEADLAMP (QUAD HEADLAMP)	H11 LOW BEAM / 9005 HIGH BEAM
LICENSE	194
REAR PARK	3157K
REAR SIDE MARKER	3157K
REAR TAIL	3157K
REAR TURN SIGNAL	3157K
UNDERHOOD	561

TORQUE SPECIFICATIONS

DESCRIPTION	N.m	Ft. Lbs.	In. Lbs.
CHMSL Mounting Screws	2.5	-	24
Fog Lamp Bracket Mounting Screws	8	-	71
Rear Lamp Unit Mounting Screws	2.5	-	21
Park Brake Switch Mounting Screw	2.5	-	24
Front Lamp Unit Mounting Screws	7	-	65

CAM, TURN SIGNAL CANCEL

DESCRIPTION

DESCRIPTION

The turn signal cancel cam is concealed within the clockspring case on the steering column. The turn signal cancel cam consists of integral eccentrics on the outer circumference of the molded plastic clockspring rotor. The clockspring mechanism provides turn signal cancellation as well as a constant electrical connection between the horn switch, driver airbag, speed control switches, and remote radio switches on the steering wheel and the instrument panel wire harness on the steering column. The housing of the clockspring is secured to the steering column and remains stationary. The rotor of the clockspring, including the turn signal cancel cam lobes rotate with the steering wheel.

The turn signal cancel cam is serviced as a unit with the clockspring and cannot be repaired. If ineffective or damaged, the entire clockspring unit must be replaced. Refer to **CLOCKSPRING, REMOVAL** .

OPERATION

OPERATION

When the multi-function switch control stalk is moved to a latched turn signal ON position, a turn signal cancel actuator is extended from the inside surface of the switch housing through a small rectangular opening on the left side of the clockspring case toward the turn signal cancel cam. As the steering wheel is rotated to complete

the turn, one of the cam eccentrics will contact the actuator, automatically cancelling the turn signal event and releasing the latched multi-function switch control stalk to the neutral or OFF position.

CONNECTOR, TRAILER TOW

REMOVAL

REMOVAL

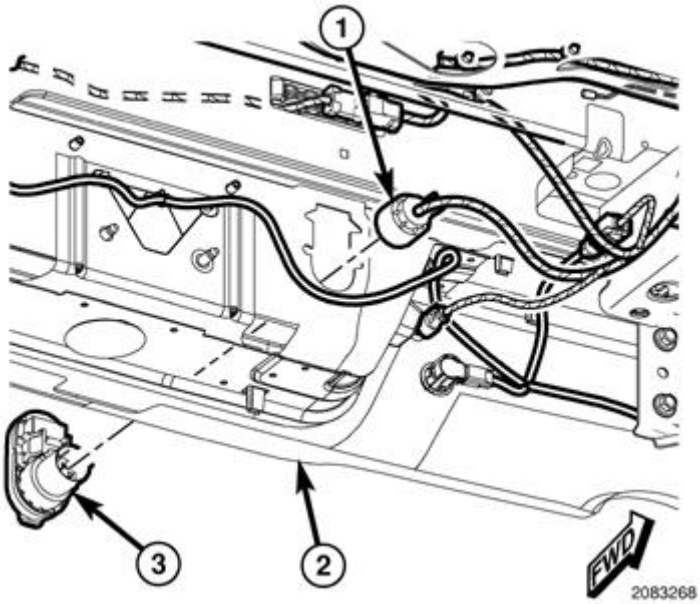

Fig. 7: Trailer Tow Connectors
Courtesy of CHRYSLER GROUP, LLC

1. Disconnect and isolate the battery negative cable.
2. Reach behind the center of the rear bumper (2) to access and disconnect the connector (1) of the body wire harness from the combined 4-way and 7-way trailer tow connector (3).

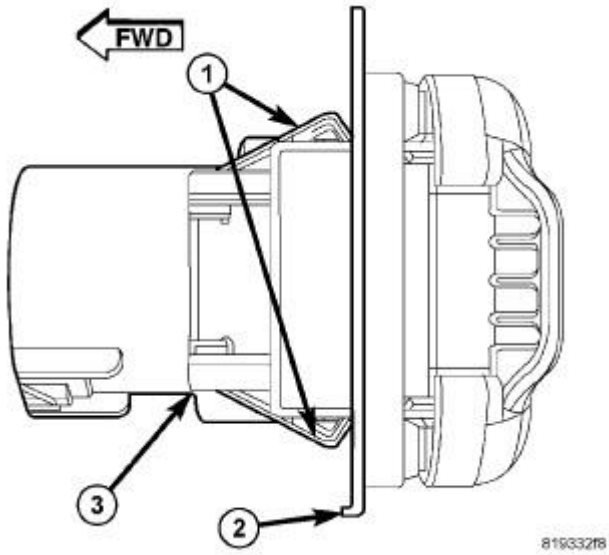

Fig. 8: Trailer Tow Connector Clips
Courtesy of CHRYSLER GROUP, LLC

3. Reach behind the center of the rear bumper to compress each of the two spring clips (1) on the trailer tow connector housing (3) far enough to push the housing out through the face of the bumper.
4. Remove the trailer tow connector from the face of the rear bumper.

INSTALLATION

INSTALLATION

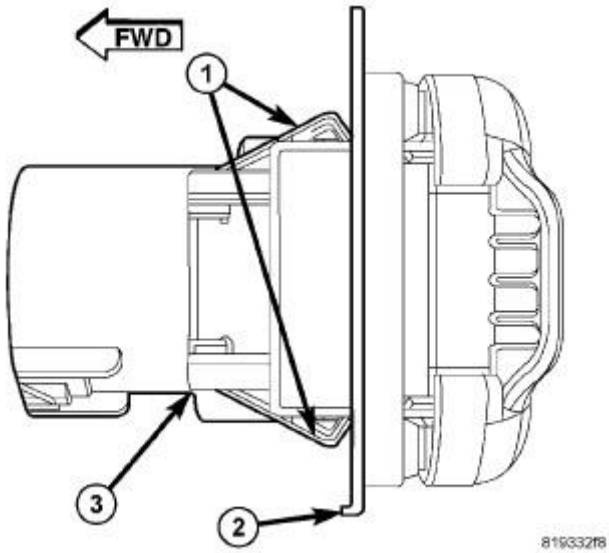

Fig. 9: Trailer Tow Connector Clips
Courtesy of CHRYSLER GROUP, LLC

1. Insert the trailer tow connector (3) into the mounting hole of the rear bumper with the 7-pin connector oriented toward the bottom of the bumper.
2. Using hand pressure, press the connector firmly and evenly into the bumper until both spring clips (1) on the connector housing snap into place on the back side of the bumper (2).

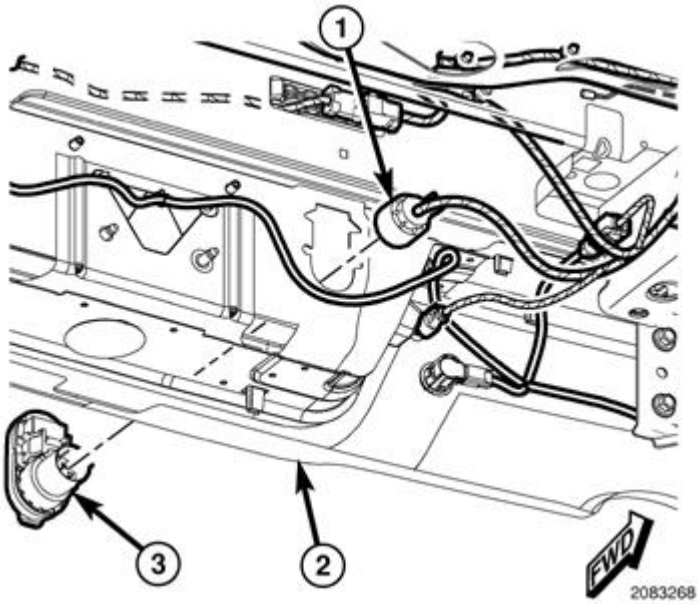

Fig. 10: Trailer Tow Connectors
Courtesy of CHRYSLER GROUP, LLC

3. Reach behind the bumper (2) to access and reconnect the connector (1) of the body wire harness to the connector receptacle on the back of the trailer tow connector housing (3).
4. Reconnect the battery negative cable.

LAMP, CAB

REMOVAL

BULB

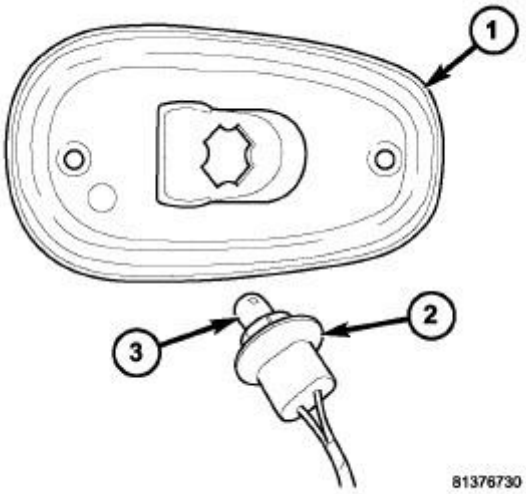

Fig. 11: Cab Clearance Lamp Bulb
Courtesy of CHRYSLER GROUP, LLC

1. Disconnect and isolate the battery negative cable.
2. Remove the cab clearance lamp (1) from the roof panel.
3. Pull the base of the bulb (3) straight out of the socket (2).

LAMP

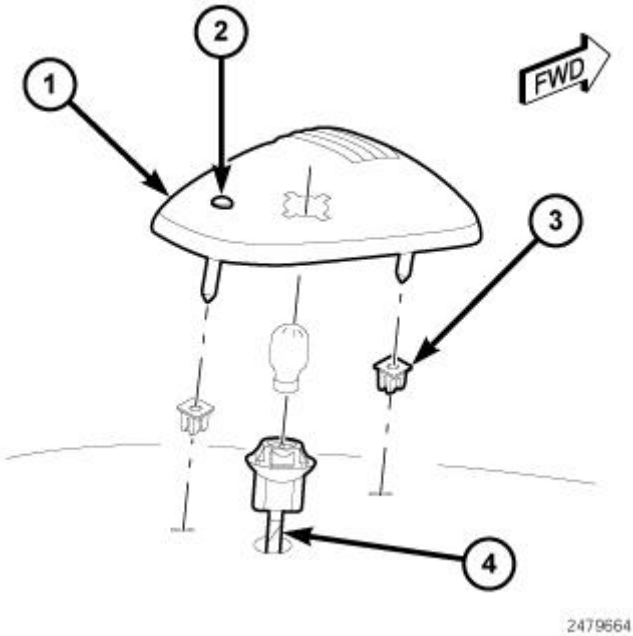

Fig. 12: Molded Gasket, Socket, Plastic Nuts & Screws
Courtesy of CHRYSLER GROUP, LLC

1. Disconnect and isolate the battery negative cable.
2. Remove the two screws (2) that secure the cab clearance lamp lens/housing and the molded gasket (1) to the outer roof panel.
3. Pull the lamp away from the roof panel far enough to access the socket (4) on the underside of the lamp lens/housing.
4. Firmly grasp the lamp socket on the underside of the lamp housing and rotate it counterclockwise about 30 degrees to unlock it.
5. Pull the socket and bulb straight out from the keyed opening in the housing.
6. Remove the cab clearance lamp lens/housing from the roof panel.
7. Remove the two plastic nuts (3) from the holes in the roof panel and discard.

INSTALLATION

BULB

CAUTION: Always use the correct bulb size and type for replacement. An incorrect bulb size or type may overheat and cause damage to the lamp, the socket or the lamp wiring.

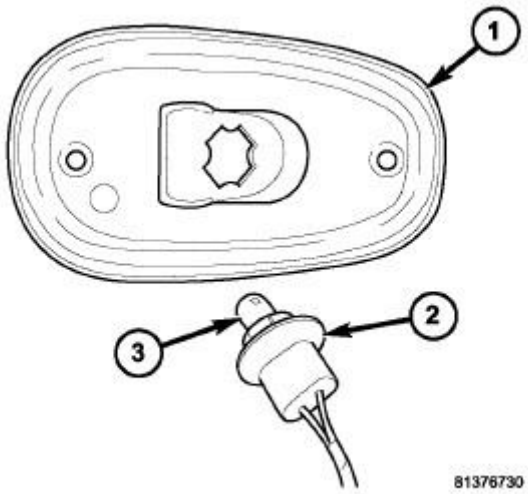

Fig. 13: Cab Clearance Lamp Bulb
Courtesy of CHRYSLER GROUP, LLC

1. Align the base of the bulb (3) with the socket (2).
2. Push the bulb straight into the socket until the base is firmly seated.
3. Reinstall the cab clearance lamp (1) onto the roof panel.
4. Reconnect the battery negative cable.

LAMP

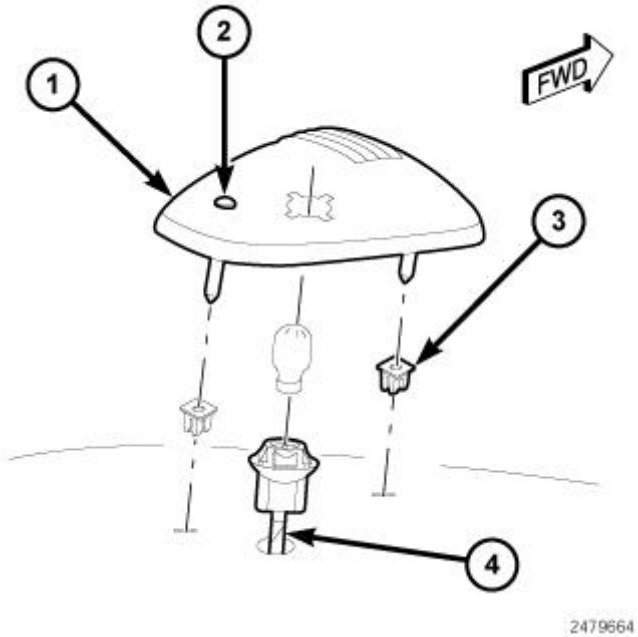

Fig. 14: Molded Gasket, Socket, Plastic Nuts & Screws
Courtesy of CHRYSLER GROUP, LLC

1. Install two new plastic nuts (3) into the holes in the roof panel. Always use new plastic nuts.
2. Position the molded gasket (1) to the underside of the cab clearance lamp.
3. Align the socket and bulb (4) with the keyed opening on the underside of the cab clearance lamp lens/housing.
4. Insert the socket and bulb into the housing until the socket is firmly seated.
5. Rotate the socket clockwise about 30 degrees to lock it into place.
6. Position the cab clearance lamp to the outer roof panel. Be certain that the lamp is oriented with the bulb facing forward in the vehicle and the molded lamp gasket is properly positioned.
7. Install and tighten the two screws (2) that secure the lamp lens/housing to the roof panel. Tighten the screws securely.
8. Reconnect the battery negative cable.

LAMP, CENTER HIGH MOUNTED STOP

REMOVAL

BULB

NOTE: **The Center High Mounted Stop Lamp (CHMSL) may house up to three bulbs. The center bulb is the CHMSL bulb and illuminates through a red lens, while on vehicles so equipped the two outboard bulbs are for the cargo lamps and illuminate through clear lenses. The bulb types and service procedures are identical for all three of these bulbs.**

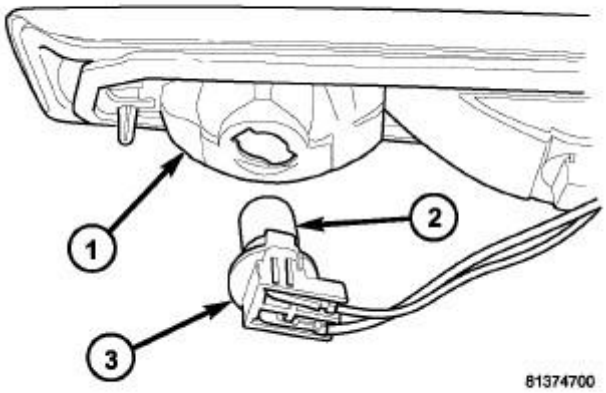

Fig. 15: Stop Lamp/Cargo Lamp Bulb
Courtesy of CHRYSLER GROUP, LLC

1. Disconnect and isolate the battery negative cable.
2. Remove the two screws that secure the CHMSL to the rear cab roof header panel.
3. Pull the CHMSL lens and housing (1) away from the header panel far enough to access the lamp wiring and bulb sockets (3) on the back of the lamp.
4. Firmly grasp the center socket on the back of the lamp housing and rotate it counterclockwise about 30 degrees to unlock it.
5. Pull the socket and bulb straight out from the keyed opening in the housing.
6. Pull the base of the bulb (2) straight out of the socket.

LAMP

NOTE: **The Center High Mounted Stop Lamp (CHMSL) for this vehicle may incorporate two integral cargo lamps. The center bulb is the CHMSL bulb and illuminates through a red lens, while the two outboard bulbs are for the cargo lamps and illuminate through clear lenses.**

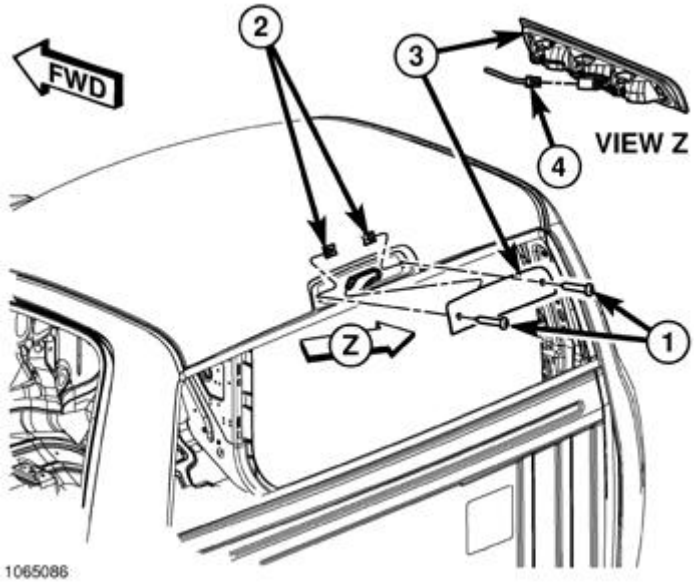

Fig. 16: Center High Mounted Stop Lamp
Courtesy of CHRYSLER GROUP, LLC

1. Disconnect and isolate the battery negative cable.
2. Remove the two screws (1) that secure the Center High Mounted Stop Lamp (CHMSL) (3) to the rear roof header panel.
3. Pull the CHMSL away from the opening in the roof header far enough to access and disconnect the headliner wire harness connector (4) from the pigtail connector on the back of the lamp housing.
4. Remove the CHMSL from the roof header.

INSTALLATION

BULB

CAUTION: Always use the correct bulb size and type for replacement. An incorrect bulb size or type may overheat and cause damage to the lamp, the socket or the lamp wiring.

NOTE: The Center High Mounted Stop Lamp (CHMSL) may house up to three bulbs. The center bulb is the CHMSL bulb and illuminates through a red lens, while on vehicles so equipped the two outboard bulbs are for the cargo lamps and illuminate through clear lenses. The bulb types and service procedures are identical for all three of these bulbs.

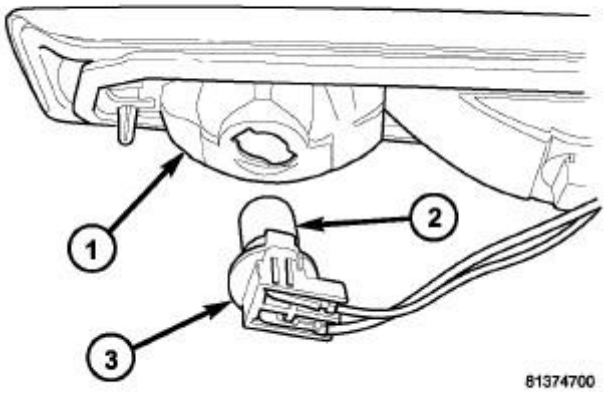

Fig. 17: Stop Lamp/Cargo Lamp Bulb
Courtesy of CHRYSLER GROUP, LLC

1. Align the base of the CHMSL bulb (2) with the socket (3).
2. Push the bulb straight into the socket until the base is firmly seated.
3. Align the socket and bulb with the keyed opening on the back of CHMSL housing (1).
4. Insert the socket and bulb into the housing until the socket is firmly seated.
5. Rotate the socket clockwise about 30 degrees to lock it into place.
6. Position the CHMSL into the opening in the rear cab roof header panel.
7. Install and tighten the two screws that secure the CHMSL to the rear roof header inner panel. Install the screw on the right side of the lamp first, followed by the screw on the left side of the lamp. Tighten the screws to 2.5 N.m (24 in. lbs.).
8. Reconnect the battery negative cable.

LAMP

NOTE: **The Center High Mounted Stop Lamp (CHMSL) for this vehicle may incorporate two integral cargo lamps. The center bulb is the CHMSL bulb and illuminates through a red lens, while the two outboard bulbs are for the cargo lamps and illuminate through clear lenses.**

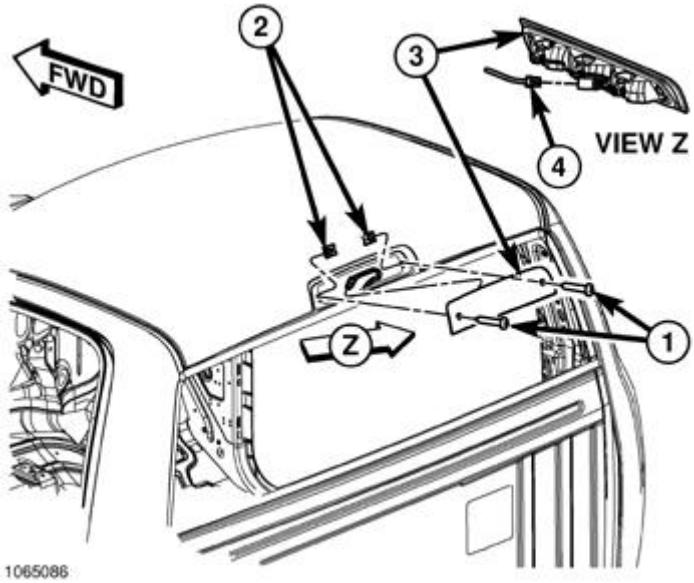

Fig. 18: Center High Mounted Stop Lamp
Courtesy of CHRYSLER GROUP, LLC

1. Check to be certain that the two U-nuts (2) are in good condition and properly positioned on the rear roof header panel.
2. Position the Center High Mounted Stop Lamp (CHMSL) (3) near the rear roof header panel opening.
3. Reconnect the headliner wire harness connector (4) to the pigtail connector on the back of the CHMSL housing.
4. Install and tighten the two screws (1) that secure the CHMSL to the rear roof header inner panel. Install the screw on the right side of the lamp first, followed by the screw on the left side of the lamp. Tighten the screws to 2.5 N.m (24 in. lbs.).
5. Reconnect the battery negative cable.

LAMP, FOG

REMOVAL

BULB

CAUTION: Do not contaminate the bulb glass by touching it with your fingers or by allowing it to contact other oily surfaces. Shortened bulb life will result.

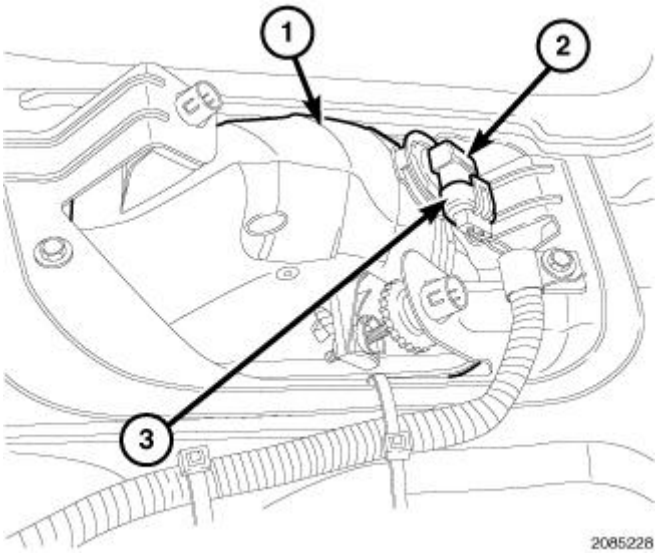

Fig. 19: Fog Lamp Harness Connector
Courtesy of CHRYSLER GROUP, LLC

1. Disconnect and isolate the battery negative cable.
2. Reach under and behind the front bumper or fascia to access the back of the fog lamp housing (1) on the back of the bumper or fascia.
3. Disconnect the fog lamp jumper wire harness connector (3) from the fog lamp bulb (2) connector receptacle.
4. Firmly grasp the bulb on the back of the housing and rotate it counterclockwise about 30 degrees to unlock it.
5. Pull the bulb straight out from the keyed opening in the housing.

LAMP

EXCEPT SPORT

NOTE: **The fog lamps are secured within one of two mounting brackets. One bracket is secured to the bumper or fascia with two mounting screws and the other by three mounting screws. Other than the number of mounting screws, the two lamps are identical.**

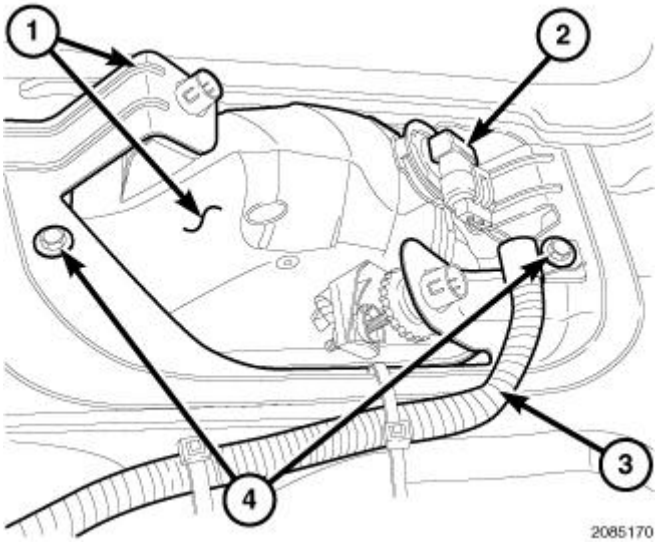

Fig. 20: Two Mounting Screws
Courtesy of CHRYSLER GROUP, LLC

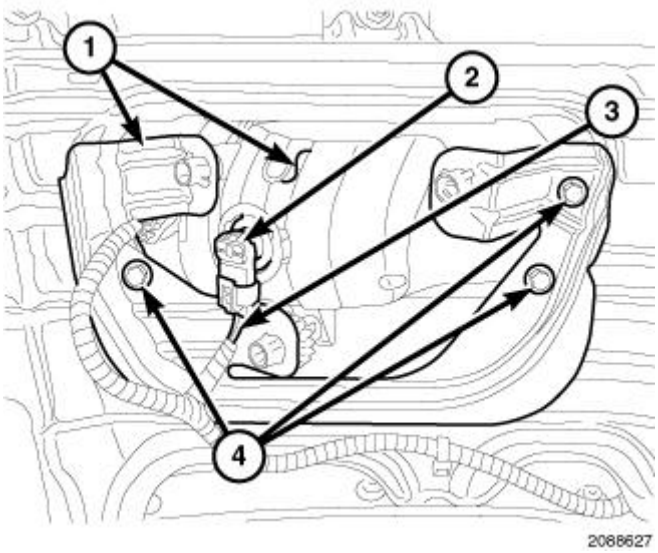

Fig. 21: Three Mounting Screws
Courtesy of CHRYSLER GROUP, LLC

NOTE: The front fog lamp, the fog lamp mounting bracket and the fog lamp adjuster are serviced only as a complete unit. Only the fog lamp bulb is available for separate service replacement.

1. Disconnect and isolate the battery negative cable.
2. Raise and support the vehicle.
3. Reach under and behind the front bumper to access and disconnect the fog lamp jumper wire harness (3) connector from the fog lamp bulb (2) connector receptacle.
4. Remove the two or three screws (4) that secure the fog lamp and mounting bracket (1) to the back of the

front bumper.

5. Remove the fog lamp and mounting bracket from the back of the front bumper as a unit.

SPORT

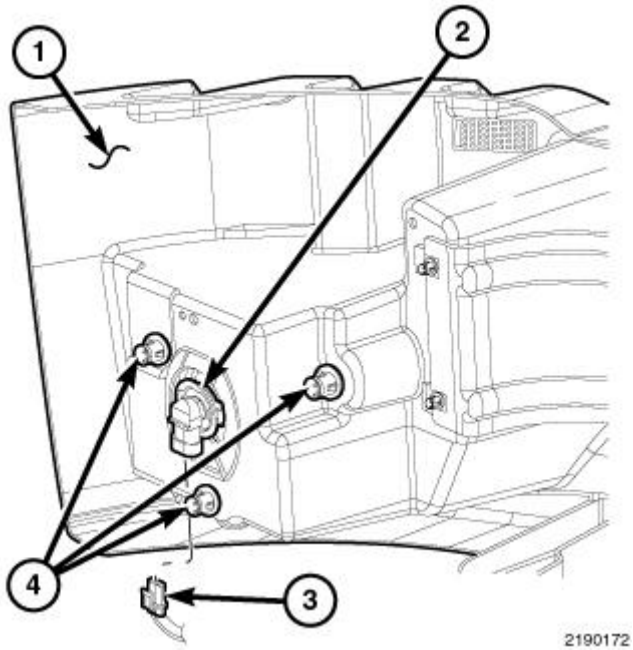

Fig. 22: Front Fog Lamp (Sport Model)
Courtesy of CHRYSLER GROUP, LLC

NOTE: **The front fog lamp, the fog lamp mounting bracket and the fog lamp adjuster are serviced only as a complete unit. Only the fog lamp bulb is available for separate service replacement. On Sport models the fog lamp mounting bracket is not used. The mounting bracket of the service replacement fog lamp is removed from the fog lamp and discarded, then the fog lamp is mounted directly to the front energy absorber.**

1. Disconnect and isolate the battery negative cable.
2. Raise and support the vehicle.
3. Remove the front fascia from the face of the front energy absorber (1). Refer to **FASCIA, FRONT, REMOVAL** .
4. Reach under and behind the front energy absorber to access and disconnect the fog lamp jumper wire harness connector (3) from the fog lamp (2) bulb connector receptacle.
5. Slide a 15 millimeter socket over each of the retainer grommets (4) one at a time to compress the legs of the grommets far enough to push them out through the face of the front energy absorber.
6. Remove the fog lamp and retainers as a unit from the fog lamp receptacle on the face of the front energy absorber.

INSTALLATION

BULB

CAUTION: Always use the correct bulb size and type for replacement. An incorrect bulb size or type may overheat and cause damage to the lamp, the socket or the lamp wiring.

CAUTION: Do not contaminate the bulb glass by touching it with your fingers or by allowing it to contact other oily surfaces. Shortened bulb life will result.

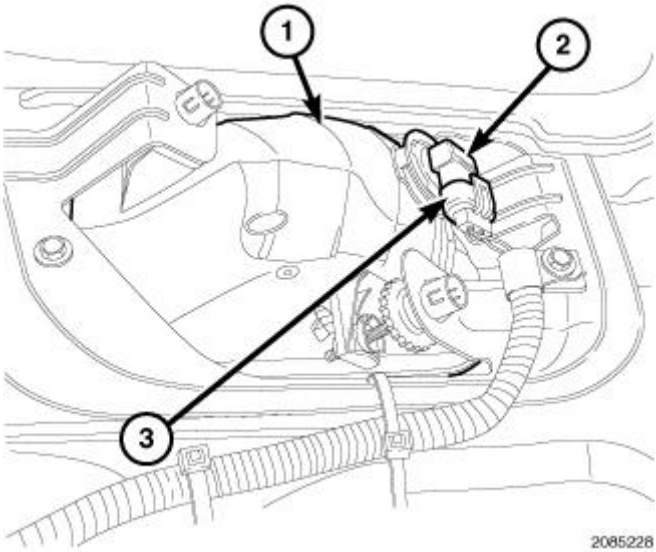

Fig. 23: Fog Lamp Harness Connector
Courtesy of CHRYSLER GROUP, LLC

1. Align the fog lamp bulb (2) with the keyed opening on the back of the fog lamp housing (1).
2. Insert the bulb into the housing until it is firmly seated.
3. Rotate the bulb clockwise about 30 degrees to lock it into place. The bulb connector receptacle should be pointed straight downward.
4. Reconnect the fog lamp jumper wire harness connector (3) to the fog lamp bulb connector receptacle.
5. Reconnect the battery negative cable.

LAMP

EXCEPT SPORT

NOTE: The fog lamps are secured within one of two mounting brackets. One bracket is secured to the bumper or fascia with two mounting screws and the other by three mounting screws. Other than the number of mounting screws, the two lamps are identical.

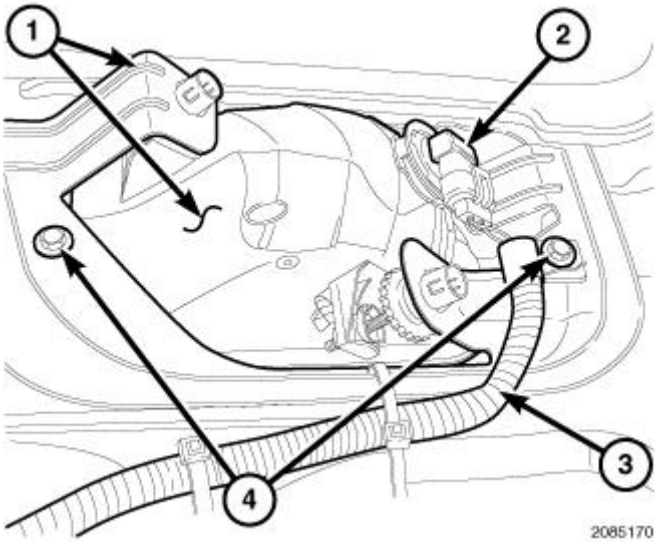

Fig. 24: Two Mounting Screws
Courtesy of CHRYSLER GROUP, LLC

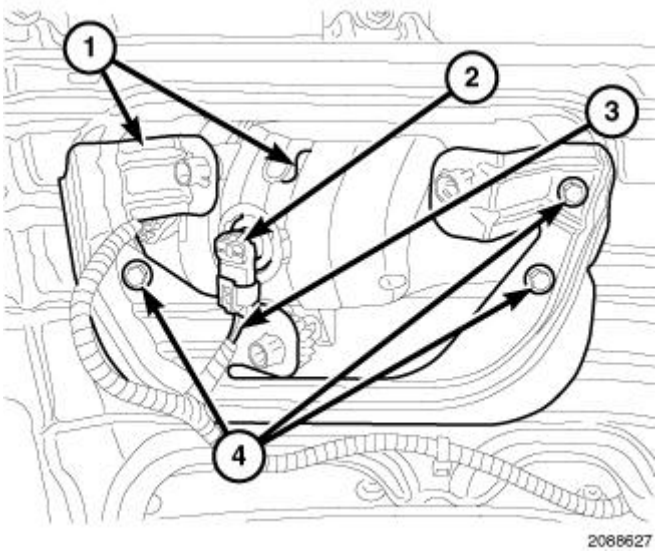

Fig. 25: Three Mounting Screws
Courtesy of CHRYSLER GROUP, LLC

NOTE: The front fog lamp, the fog lamp mounting bracket and the fog lamp adjuster are serviced only as a complete unit. Only the fog lamp bulb is available for separate service replacement.

1. Position the fog lamp and mounting bracket (1) to the back of the front bumper as a unit.
2. Install and tighten the two or three screws (4) that secure the fog lamp and mounting bracket to the back of the front bumper. Tighten the screws to 8 N.m (71 in. lbs.).
3. Reconnect the fog lamp jumper wire harness (3) connector to the fog lamp bulb (2) connector receptacle.
4. Lower the vehicle.

5. Reconnect the battery negative cable.
6. Confirm proper fog lamp alignment. Refer to **STANDARD PROCEDURE**.

SPORT

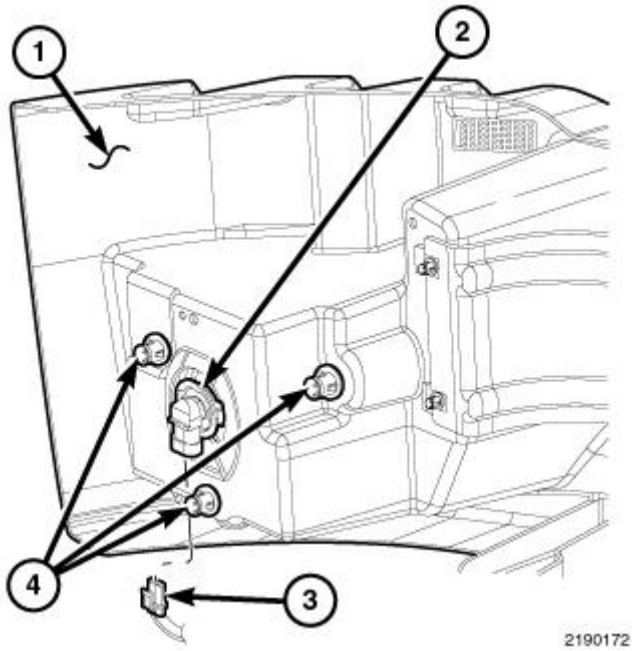

Fig. 26: Front Fog Lamp (Sport Model)
Courtesy of CHRYSLER GROUP, LLC

NOTE: **The front fog lamp, the fog lamp mounting bracket and the fog lamp adjuster are serviced only as a complete unit. Only the fog lamp bulb is available for separate service replacement. On Sport models the fog lamp mounting bracket is not used. The mounting bracket of the service replacement fog lamp is removed from the fog lamp and discarded, then the fog lamp is mounted directly to the front energy absorber.**

1. Position the fog lamp (2) and retainer grommets (4) as a unit to the fog lamp seat on the face of the front energy absorber (1).
2. Align the three fog lamp retainer grommets with the mounting holes in the fog lamp seat of the front energy absorber.
3. Using hand pressure, press firmly and evenly on the fog lamp lens until the legs of all three grommet retainers snap into place on the back side of the front energy absorber.
4. Reconnect the fog lamp jumper wire harness connector (3) to the fog lamp bulb connector receptacle.
5. Lower the vehicle.
6. Reinstall the front fascia over the face of the front energy absorber. Refer to **FASCIA, FRONT, INSTALLATION** .
7. Reconnect the battery negative cable.
8. Confirm proper fog lamp alignment. Refer to **STANDARD PROCEDURE**.

LAMP, LICENSE PLATE

REMOVAL

BULB

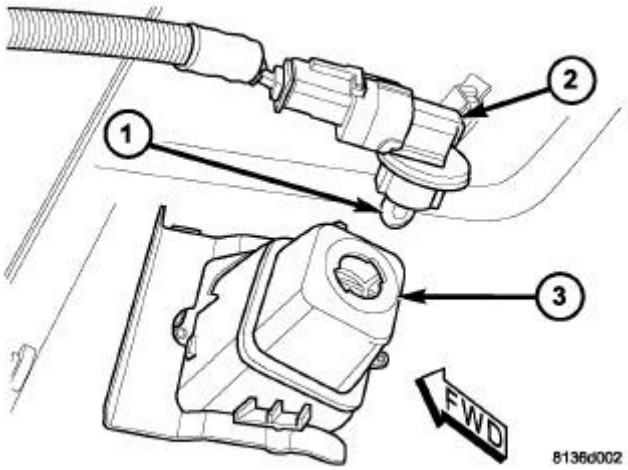

Fig. 27: License Plate Lamp Bulb
Courtesy of CHRYSLER GROUP, LLC

NOTE: **This procedure is for vehicles with a pick-up bed only. On cab and chassis vehicles the license plate lamp is integral to the left rear lamp unit. The park/brake/turn signal bulb within the left rear lamp unit provides illumination for the license plate lamp function on all cab and chassis vehicles.**

1. Disconnect and isolate the battery negative cable.
2. Reach under the rear bumper near the center to access the back of either of the two license plate lamp housings (3).
3. Firmly grasp the socket (2) on the back of the housing and rotate it counterclockwise about 30 degrees to unlock it.
4. Pull the socket and bulb (1) straight out from the keyed opening in the housing.
5. Pull the base of the bulb straight out of the socket.

LAMP

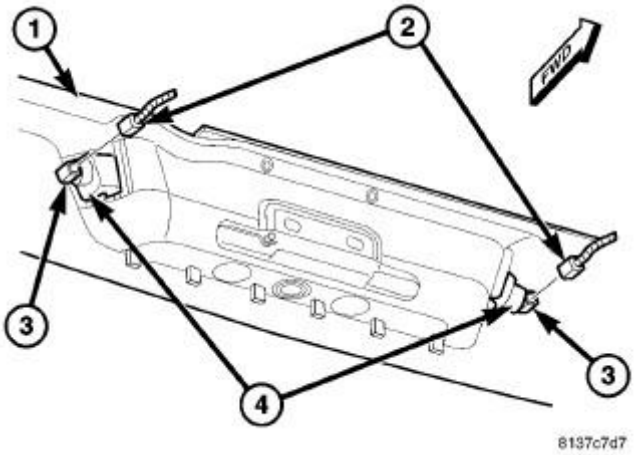

Fig. 28: License Plate Lamp Harness Connector
Courtesy of CHRYSLER GROUP, LLC

NOTE: **This procedure is for vehicles with a pick-up bed only. On cab and chassis vehicles the license plate lamp is integral to the left rear lamp unit. The park/brake/turn signal bulb within the left rear lamp unit provides illumination for the license plate lamp function on all cab and chassis vehicles.**

1. Disconnect and isolate the battery negative cable.
2. Reach under and behind the rear bumper or fascia (1) near the center to access the back of either of the two license plate lamp housings (4).
3. Disconnect the wire harness connector (2) from the license plate bulb socket (3).

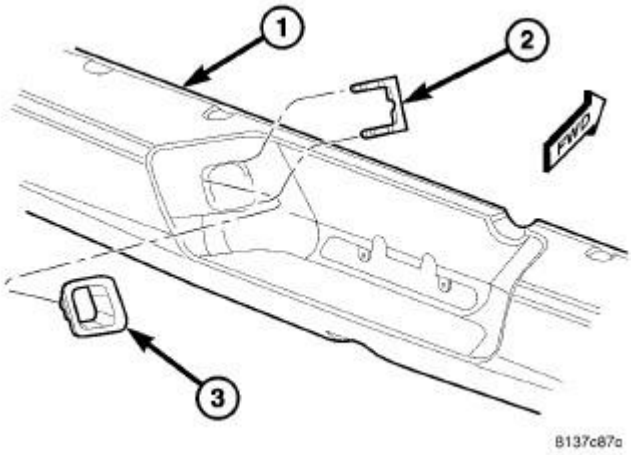

Fig. 29: License Plate Lamp Retaining Clip & Housing
Courtesy of CHRYSLER GROUP, LLC

4. Remove the stamped metal retaining clip (2) that secures the license plate lamp housing (3) from the back of the rear bumper or fascia (1).

5. Push the license plate lamp unit out through the mounting hole to the outer face of the rear bumper or fascia.

INSTALLATION

BULB

CAUTION: Always use the correct bulb size and type for replacement. An incorrect bulb size or type may overheat and cause damage to the lamp, the socket or the lamp wiring.

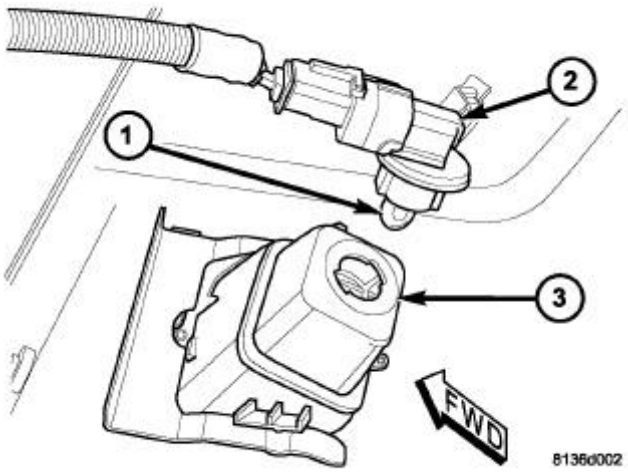

Fig. 30: License Plate Lamp Bulb
Courtesy of CHRYSLER GROUP, LLC

NOTE: This procedure is for vehicles with a pick-up bed only. On cab and chassis vehicles the license plate lamp is integral to the left rear lamp unit. The park/brake/turn signal bulb within the left rear lamp unit provides illumination for the license plate lamp function on all cab and chassis vehicles.

1. Align the base of the bulb (1) with the license plate lamp socket (2).
2. Push the bulb straight into the socket until the base is firmly seated.
3. Align the socket and bulb with the keyed opening on the back of the license plate lamp housing (3).
4. Insert the socket and bulb into the housing until the socket is firmly seated.
5. Rotate the socket clockwise about 30 degrees to lock it into place.
6. Reconnect the battery negative cable.

LAMP

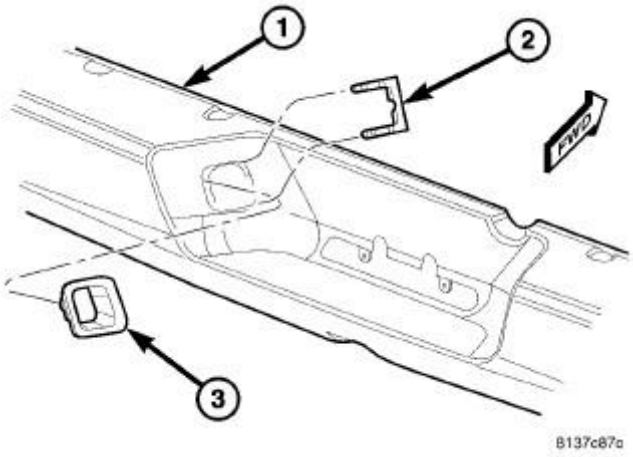

Fig. 31: License Plate Lamp Retaining Clip & Housing
Courtesy of CHRYSLER GROUP, LLC

NOTE: **This procedure is for vehicles with pick-up beds only. On cab and chassis vehicles the license plate lamp is integral to the left rear lamp unit. The park/brake/turn signal bulb within the left rear lamp unit provides illumination for the license plate lamp function on all cab and chassis vehicles.**

1. Position the license plate lamp unit (3) through the mounting hole from the outer face of the rear bumper or fascia (1).
2. Reach under and behind the rear bumper or fascia (1) near the center to install the stamped metal retaining clip (2) that secures the license plate lamp housing to the back of the rear bumper or fascia.

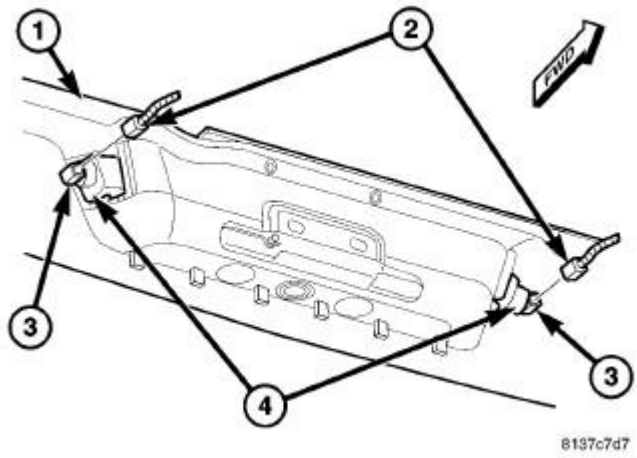

Fig. 32: License Plate Lamp Harness Connector
Courtesy of CHRYSLER GROUP, LLC

3. Reconnect the wire harness connector (2) to the license plate bulb socket (3).
4. Reconnect the battery negative cable.

LAMP, MIRROR

REMOVAL

EXCEPT TRAILER TOWING EXTENDED

NOTE: **The Light Emitting Diode (LED) units and printed circuit board for these lamps are serviced only as a unit with the lamp and lens assembly. If any part of these lamps is damaged or ineffective, the entire lamp assembly must be replaced.**

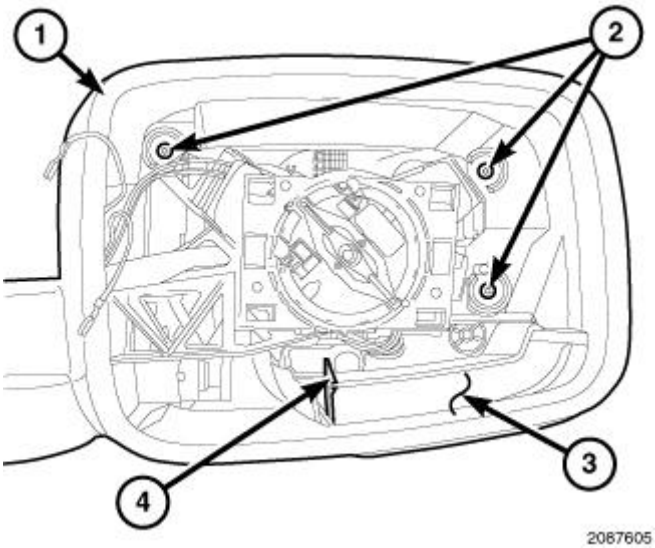

Fig. 33: Mirror Housing, Latch Tab & Screws
Courtesy of CHRYSLER GROUP, LLC

1. Disconnect and isolate the battery negative cable.
2. Remove the mirror glass and case from the mirror housing (1). Refer to **MIRROR, OUTSIDE REARVIEW, REMOVAL** and **MIRROR, OUTSIDE REARVIEW, GLASS, REMOVAL** .
3. Remove the three screws (2) that secure the front cover of the mirror to the mirror housing.
4. Locate the latch tab (4) on the lamp housing (3) within the lower, outboard side of the mirror housing.

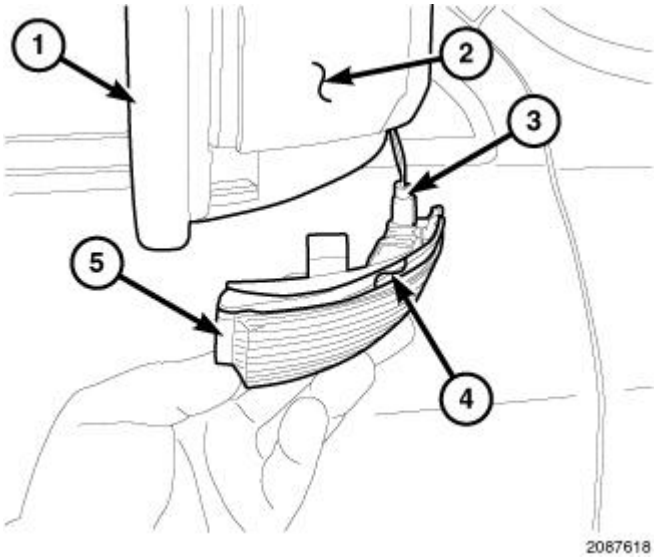

Fig. 34: Mirror Lamp Housing, Rear Flange & Weather Seal
Courtesy of CHRYSLER GROUP, LLC

5. Using a trim stick or another suitable wide flat-bladed tool, pry gently and evenly at the parting line on the outboard side of the mirror between the mirror housing (1) and the front cover to separate them far enough to disengage the lamp rear flange (5) from the lower rim of the mirror housing.
6. It may be necessary on some vehicles to gently pry between the forward flange of the lamp housing and the mirror front cover to release the strip of adhesive-backed foam weather seal (4) affixed to the forward flange of the lamp from the inside edge of the mirror front cover.
7. Reach inside the lamp housing and depress the latch on the lamp housing toward the vehicle to disengage and lower the lamp assembly from between the mirror housing and the front cover.
8. Pull the lamp assembly away from the mirror housing far enough to access and disconnect the mirror wire harness connector (3) from the lamp connector receptacle and remove the lamp.

TRAILER TOWING EXTENDED

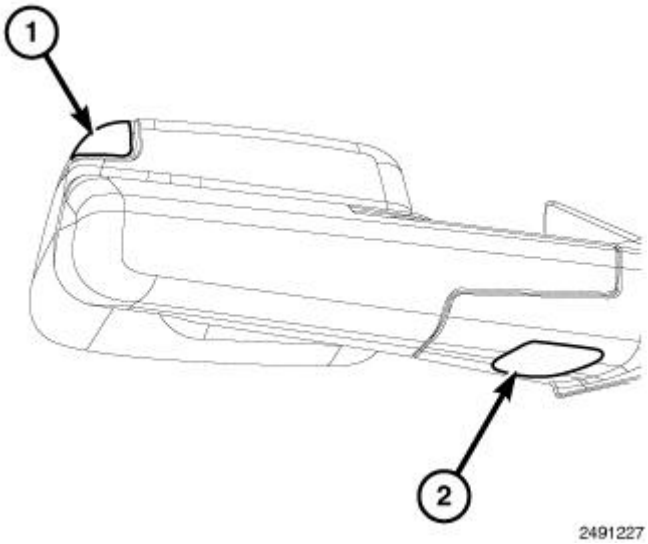

Fig. 35: Identifying Signal Lamp & Puddle Lamp
Courtesy of CHRYSLER GROUP, LLC

NOTE: **The optional extended arm (trailer towing) mirrors equipped with mirror lamps have two Light Emitting Diode (LED) lamp units: A signal lamp (1) located on the mirror head, and a puddle lamp (2) located on the underside of the fixed (door) half of the mirror arm.**

PUDDLE LAMP

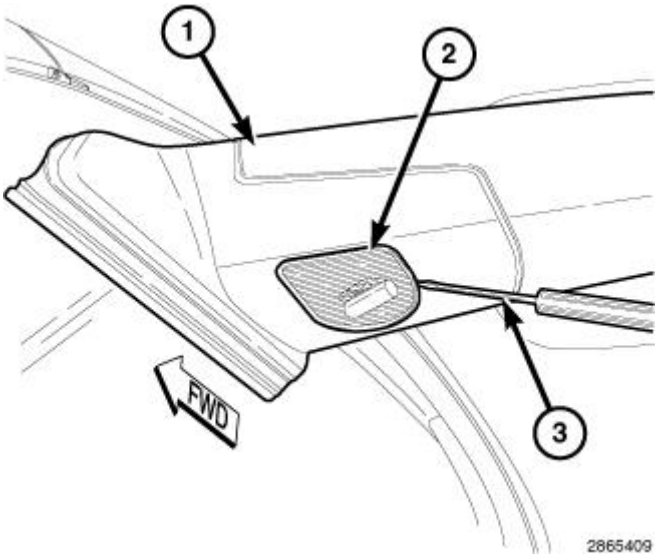

Fig. 36: Identifying Puddle Lamp Lens & Mirror Arm
Courtesy of CHRYSLER GROUP, LLC

1. Disconnect and isolate the battery negative cable.
2. Using a small flat-bladed screw driver (3), carefully pry between the outboard side of the puddle lamp lens (2) and the underside of the fixed (door) half of the mirror arm (1) to unsnap the lamp from the arm.

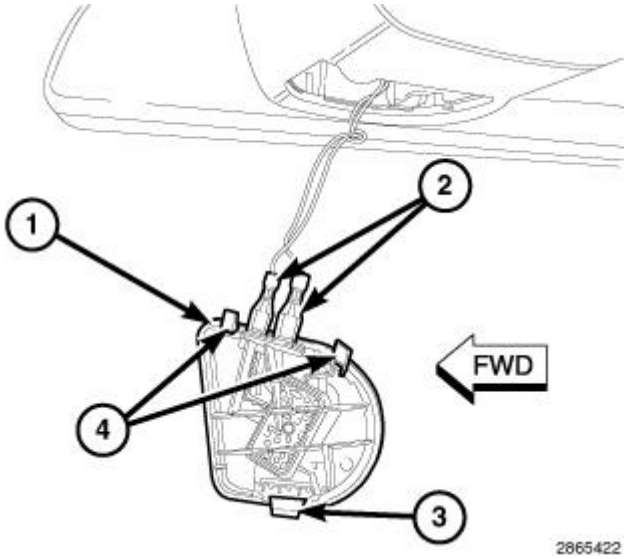

Fig. 37: Identifying Puddle Lamp, Mirror Wire Harness Connectors & Latch Feature
Courtesy of CHRYSLER GROUP, LLC

3. Disengage the two hooks (4) on the inboard side of the puddle lamp (1) from the inboard side of the lamp opening in the mirror arm.
4. Pull the lamp away from the mirror arm far enough to access and disconnect the two mirror wire harness connectors (2) from the two terminals of the puddle lamp.
5. Remove the puddle lamp from the mirror.

SIGNAL LAMP

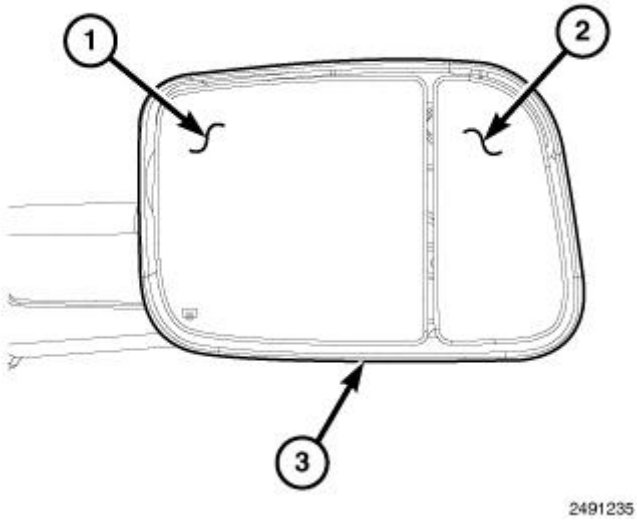

Fig. 38: Convex Mirror Glass, & Flat Mirror Glass
Courtesy of CHRYSLER GROUP, LLC

1. Disconnect and isolate the battery negative cable.
2. If it isn't already so, move the mirror head to the horizontal position (3).

3. Remove the convex mirror glass and case (2) from the mirror housing, leaving the flat mirror glass and case (1) undisturbed. Refer to **MIRROR, OUTSIDE REARVIEW, REMOVAL** and **MIRROR, OUTSIDE REARVIEW, GLASS, REMOVAL** .

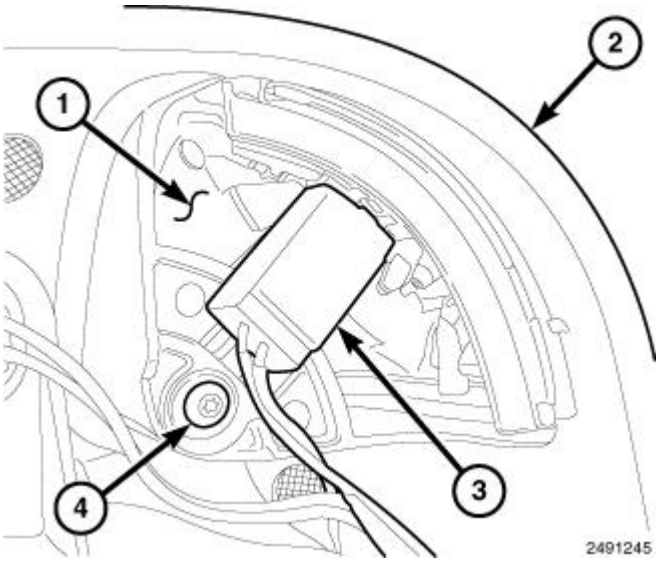

Fig. 39: Identifying Signal Lamp, Mirror Housing & Mirror Wire Harness Connector
Courtesy of CHRYSLER GROUP, LLC

4. Disconnect the mirror wire harness connector (3) from the signal lamp (1) connector receptacle.
5. Remove the screw (4) that secures the lamp to the mirror housing (2).
6. Separate and remove the signal lamp from the outside of the mirror housing. It may be necessary on some vehicles to gently pry between the lamp lens and the mirror housing to release the adhesive-backed foam weather seal that seals the lamp to the mirror housing.

INSTALLATION

EXCEPT TRAILER TOWING EXTENDED

NOTE: The Light Emitting Diode (LED) units and printed circuit board for these lamps are serviced only as a unit with the lamp and lens assembly. If any part of these lamps is damaged or ineffective, the entire lamp assembly must be replaced.

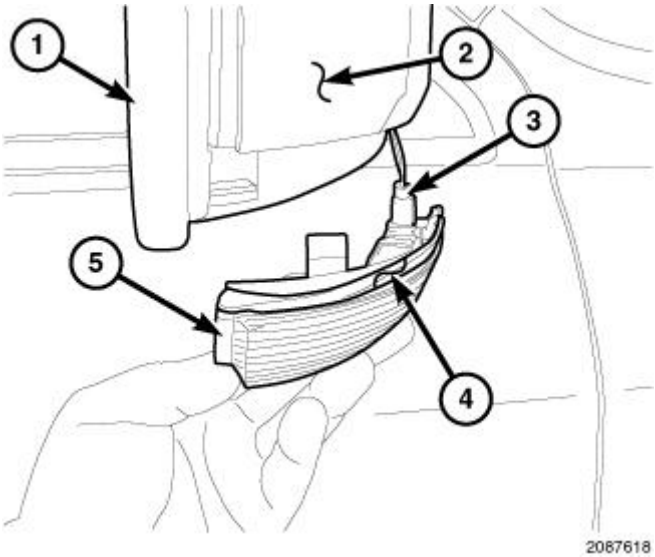

Fig. 40: Mirror Lamp Housing, Rear Flange & Weather Seal
Courtesy of CHRYSLER GROUP, LLC

1. Position the lamp assembly close enough to the bottom of the mirror housing (1) to access and reconnect the mirror wire harness connector (3) to the lamp connector receptacle.
2. Position the lamp assembly to the bottom of the mirror housing with the forward flange (4) engaged behind the mirror front cover (2) and the rear flange (5) engaged in the lower rim of the mirror housing.

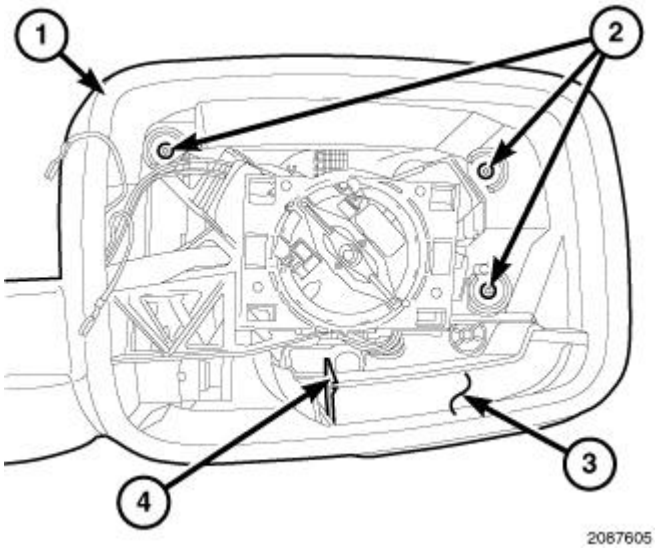

Fig. 41: Mirror Housing, Latch Tab & Screws
Courtesy of CHRYSLER GROUP, LLC

3. Using hand pressure, push the lamp assembly upward into the mirror housing (1) far enough to engage the latch tab (4) on the lamp housing (3) with the slot in the lower, outboard side of the mirror housing.
4. Position the front cover to the mirror housing.
5. Install and tighten the three screws (2) that secure the front cover to the mirror housing. Tighten the screws securely.

6. Reinstall the mirror glass and case into the mirror housing. Refer to **MIRROR, OUTSIDE REARVIEW, INSTALLATION** and **MIRROR, OUTSIDE REARVIEW, GLASS, INSTALLATION** .

TRAILER TOWING EXTENDED

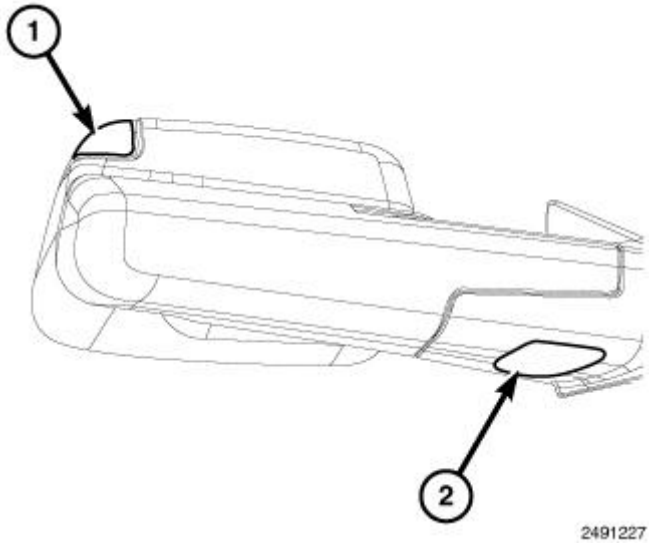

Fig. 42: Identifying Signal Lamp & Puddle Lamp
Courtesy of CHRYSLER GROUP, LLC

NOTE: **The optional extended arm (trailer towing) mirrors equipped with mirror lamps have two Light Emitting Diode (LED) lamp units: A signal lamp (1) located on the mirror head, and a puddle lamp (2) located on the underside of the fixed (door) half of the mirror arm.**

PUDDLE LAMP

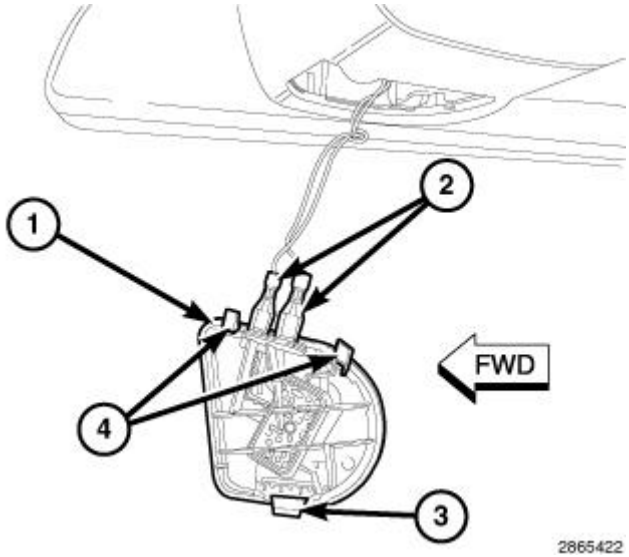

Fig. 43: Identifying Puddle Lamp, Mirror Wire Harness Connectors & Latch Feature
Courtesy of CHRYSLER GROUP, LLC

1. Position the puddle lamp (1) near the lamp opening on the underside of the fixed (door) half of the mirror arm.
2. Reconnect the two mirror wire harness connectors (2) to the two terminals of the puddle lamp. Be certain to connect small connector to the small lamp terminal and the large connector to the large lamp terminal.
3. Engage the two hooks (4) on the inboard side of the puddle lamp into the inboard side of the lamp opening in the mirror arm.
4. Using hand pressure, push the outboard side of the lamp up into the opening in the mirror arm until the latch feature (3) snaps into place.
5. Reconnect the battery negative cable.

SIGNAL LAMP

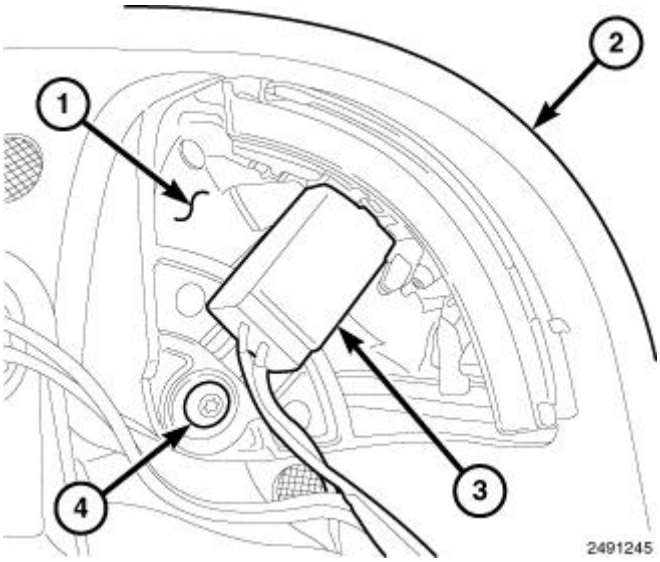

Fig. 44: Identifying Signal Lamp, Mirror Housing & Mirror Wire Harness Connector
Courtesy of CHRYSLER GROUP, LLC

1. Position the signal lamp (1) into the mirror housing (2) from the outside of the housing.
2. Install and tighten the screw (4) that secures the lamp to the mirror housing. Tighten the screws securely.
3. Reconnect the mirror wire harness connector (3) to the lamp connector receptacle.

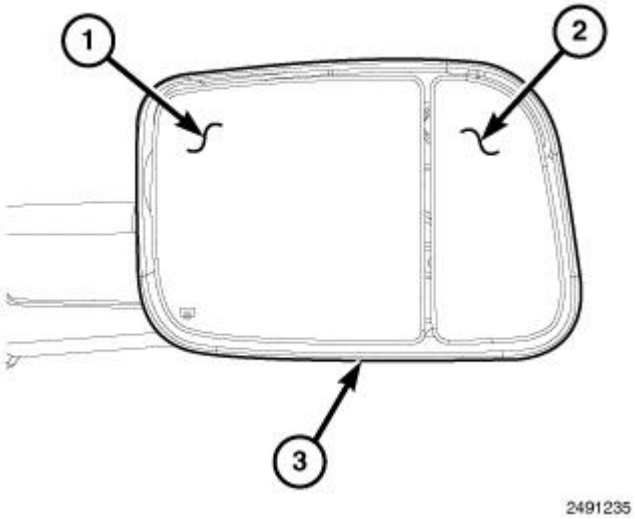

Fig. 45: Convex Mirror Glass, & Flat Mirror Glass
Courtesy of CHRYSLER GROUP, LLC

4. Reinstall the convex mirror glass and case (2) into the mirror housing (3). Refer to **MIRROR, OUTSIDE REARVIEW, INSTALLATION** and **MIRROR, OUTSIDE REARVIEW, GLASS, INSTALLATION** .

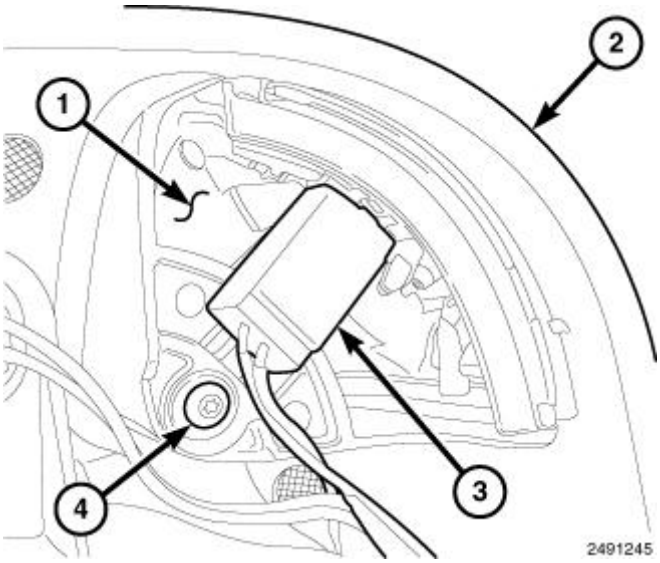

Fig. 46: Identifying Signal Lamp, Mirror Housing & Mirror Wire Harness Connector
Courtesy of CHRYSLER GROUP, LLC

1. Position the signal lamp (1) into the mirror housing (2) from the outside of the housing.
2. Install and tighten the screw (4) that secures the lamp to the mirror housing. Tighten the screws securely.
3. Reconnect the mirror wire harness connector (3) to the lamp connector receptacle.

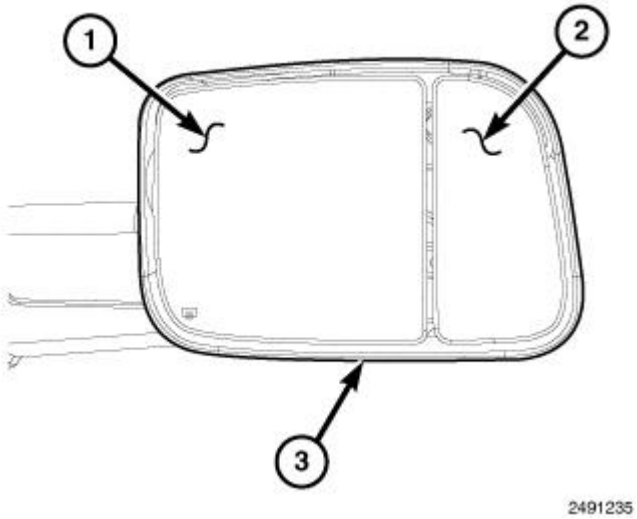

Fig. 47: Convex Mirror Glass, & Flat Mirror Glass
Courtesy of CHRYSLER GROUP, LLC

4. Reinstall the convex mirror glass and case (2) into the mirror housing (3). Refer to **MIRROR, OUTSIDE REARVIEW, INSTALLATION** and **MIRROR, OUTSIDE REARVIEW, GLASS, INSTALLATION** .

LAMP, SIDE MARKER

REMOVAL

BULB - REAR FENDER

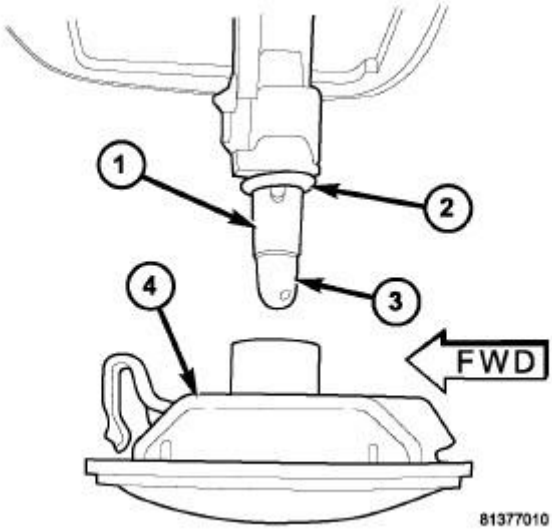

Fig. 48: Rear Fender Marker Lamp Lens/Housing
Courtesy of CHRYSLER GROUP, LLC

NOTE: **These lamps are used on vehicles with a pick-up bed and dual rear wheels only. A lamp with an amber lens is located on the rear fender ahead of each rear wheel opening, and a lamp with a red lens is located on the rear fender behind each rear wheel opening. The bulb types and service procedures are identical for all four of these lamps.**

1. Disconnect and isolate the battery negative cable.
2. Using hand pressure, press the rear edge of the rear fender marker lamp lens/housing (4) toward the front of the vehicle against the spring pressure of the retaining clip, then pull the rear edge of the lamp outward to disengage it from the mounting hole in the rear fender.
3. Pull the lamp out from the rear fender far enough to access the bulb socket (1) on the back of the lamp lens/housing.
4. Firmly grasp the bulb socket on the back of the lamp lens/housing and rotate it counterclockwise about 30 degrees to unlock it.
5. Pull the socket and bulb straight out from the keyed opening in the housing.
6. Pull the base of the bulb (3) straight out of the socket.

LAMP - REAR FENDER

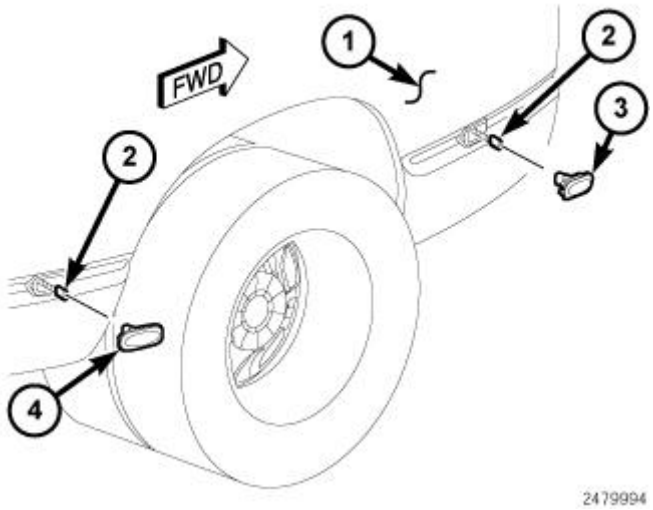

Fig. 49: Amber Lens, Red Lens, Fender & Connectors
Courtesy of CHRYSLER GROUP, LLC

NOTE: **These lamps are used on vehicles with a pick-up bed and dual rear wheels only. A lamp with an amber lens (3) is located on the rear fender (1) ahead of each rear wheel opening, and a lamp with a red lens (4) is located on the rear fender behind each rear wheel opening. The service procedures are identical for all four of these lamps.**

1. Disconnect and isolate the battery negative cable.
2. Using hand pressure, press the rear edge of the rear fender marker lamp lens/housing (3 or 4) toward the

front of the vehicle against the spring pressure of the integral retaining clip feature, then pull the rear edge of the lamp outward to disengage it from the mounting hole in the rear fender (1).

3. Pull the marker lamp out from the rear fender far enough to access and disconnect the wire harness connector (2) from the connector receptacle of the bulb socket on the back of the lamp lens/housing.
4. Remove the marker lamp from the rear fender.

BULB - TAILGATE

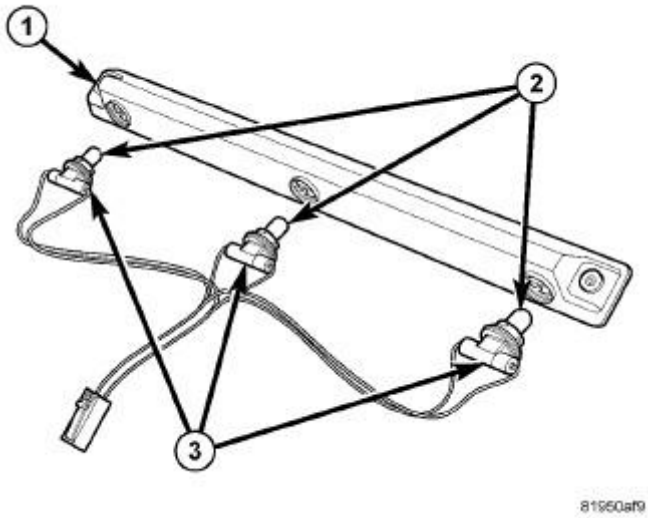

Fig. 50: Tailgate Marker Lamp Lens/Housing
Courtesy of CHRYSLER GROUP, LLC

NOTE: **This lamp is used on vehicles with a pick-up bed and dual rear wheels only. A lamp with a red lens and containing three bulbs is located on the rearward facing surface of the pick-up bed sill below the tailgate. The bulb types and service procedures are identical for all three of these bulbs.**

1. Disconnect and isolate the battery negative cable.
2. Remove the two screws that secure the outboard ends of the tailgate marker lamp lens/housing (1) to the rearward facing surface of the sill panel.
3. Pull the marker lamp out from the sill panel far enough to access the sockets (3) on the bottom of the lamp housing.
4. Firmly grasp the marker lamp socket on the bottom of the lamp housing and rotate it counterclockwise about 30 degrees to unlock it.
5. Pull the socket and bulb (2) straight out from the keyed opening in the housing.
6. Pull the base of the bulb straight out of the socket.

LAMP - TAILGATE

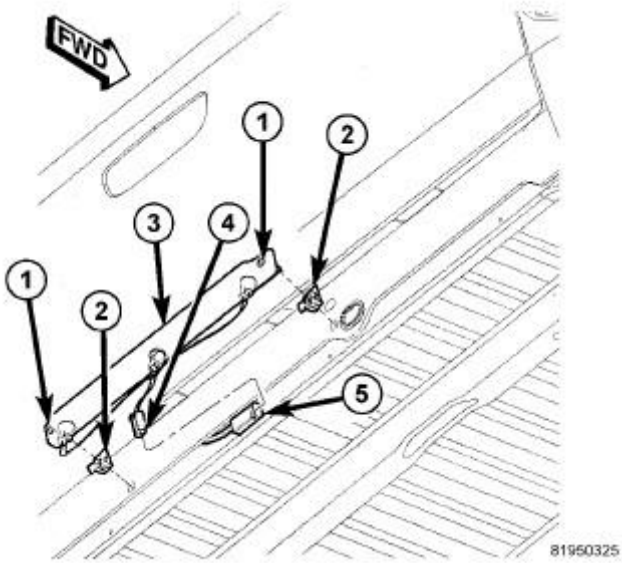

Fig. 51: Tailgate Marker Lamp
Courtesy of CHRYSLER GROUP, LLC

NOTE: **This lamp is used on vehicles with a pick-up bed and dual rear wheels only. This lamp has a red lens, contains three bulbs and is located on the rearward facing surface of the pick-up bed sill panel below the tailgate.**

1. Disconnect and isolate the battery negative cable.
2. Reach under and behind the rear bumper near the center to access and disconnect the tailgate marker lamp (3) pigtail wire connector (4) from the wire harness connector (5).
3. Remove the two screws (1) that secure the tailgate marker lamp to the outer sill panel.
4. Remove the lamp from the sill panel.

INSTALLATION

BULB - REAR FENDER

CAUTION: **Always use the correct bulb size and type for replacement. An incorrect bulb size or type may overheat and cause damage to the lamp, the socket or the lamp wiring.**

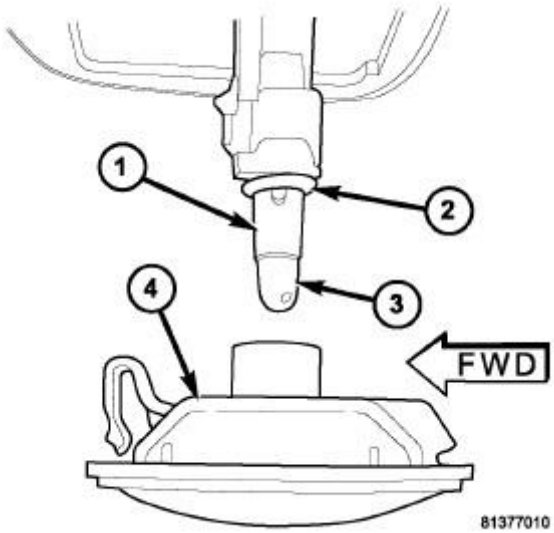

Fig. 52: Rear Fender Marker Lamp Lens/Housing
Courtesy of CHRYSLER GROUP, LLC

NOTE: **These lamps are used on vehicles with a pick-up bed and dual rear wheels only. A lamp with an amber lens is located on the rear fender ahead of each rear wheel opening, and a lamp with a red lens is located on the rear fender behind each rear wheel opening. The bulb types and service procedures are identical for all four of these lamps.**

1. Align the base of the bulb (3) with the socket (1).
2. Push the bulb straight into the socket until the base is firmly seated.
3. Be certain that a rubber O-ring seal (2) is properly installed and in good condition around the base of the bulb socket.
4. Align the socket and bulb with the keyed opening on the back of the rear fender marker lamp lens/housing (4).
5. Insert the socket and bulb into the housing until the socket is firmly seated.
6. Rotate the socket clockwise about 30 degrees to lock it into place.
7. Engage the front edge of the marker lamp into the front edge of the mounting hole in the rear fender.
8. Using hand pressure, press the rear edge of the marker lamp lens/housing toward the front of the vehicle against the spring pressure of the retaining clip, then push the rear edge of the lamp into the rear of the mounting hole in the rear fender.
9. Reconnect the battery negative cable.

LAMP - REAR FENDER

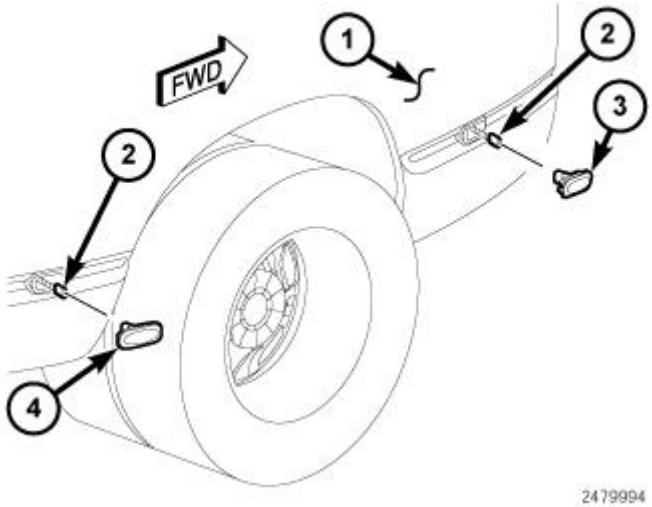

Fig. 53: Amber Lens, Red Lens, Fender & Connectors
Courtesy of CHRYSLER GROUP, LLC

NOTE: These lamps are used on vehicles with a pick-up bed and dual rear wheels only. A lamp with an amber lens (3) is located on the rear fender (1) ahead of each rear wheel opening, and a lamp with a red lens (4) is located on the rear fender behind each rear wheel opening. The service procedures are identical for all four of these lamps.

1. Position the rear fender marker lamp (3 or 4) close enough to the mounting hole to access and reconnect the wire harness connector (2) to the connector receptacle of the bulb socket on the back of the lamp lens/housing.
2. Engage the integral retaining clip feature on the front edge of the marker lamp into the front edge of the mounting hole in the rear fender (1).
3. Using hand pressure, press the rear edge of the marker lamp lens/housing toward the front of the vehicle against the spring pressure of the retaining clip, then push the rear edge of the lamp into the rear of the mounting hole in the rear fender.
4. Reconnect the battery negative cable.

BULB - TAILGATE

CAUTION: Always use the correct bulb size and type for replacement. An incorrect bulb size or type may overheat and cause damage to the lamp, the socket or the lamp wiring.

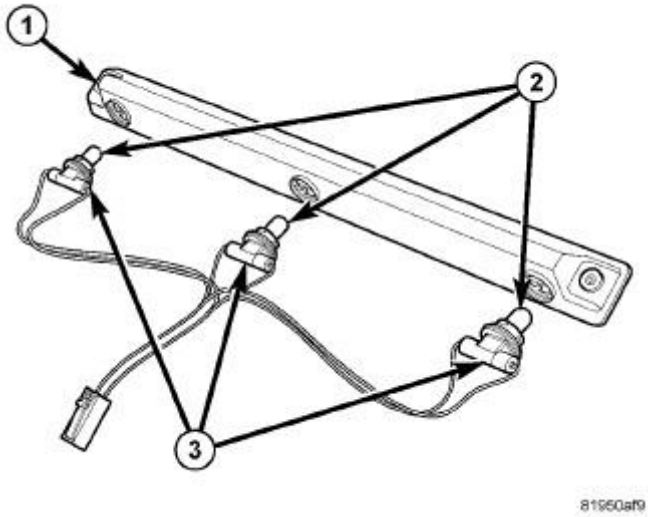

Fig. 54: Tailgate Marker Lamp Lens/Housing
Courtesy of CHRYSLER GROUP, LLC

NOTE: **This lamp is used on vehicles with a pick-up bed and dual rear wheels only. A lamp with a red lens and containing three bulbs is located on the rearward facing surface of the pick-up bed sill below the tailgate. The bulb types and service procedures are identical for all three of these bulbs.**

1. Align the base of the bulb (2) with the socket (3).
2. Push the bulb straight into the socket until the base is firmly seated.
3. Align the socket and bulb with the keyed opening on the bottom of the tailgate marker lamp lens/housing (1).
4. Insert the socket and bulb into the housing until the socket is firmly seated.
5. Rotate the socket clockwise about 30 degrees to lock it into place.
6. Position the marker lamp to the outer surface of the sill panel.
7. Install and tighten the two screws that secure the marker lamp lens/housing to the tailgate panel. Tighten the screws to 2 N.m (20 in. lbs.).
8. Reconnect the battery negative cable.

LAMP - TAILGATE

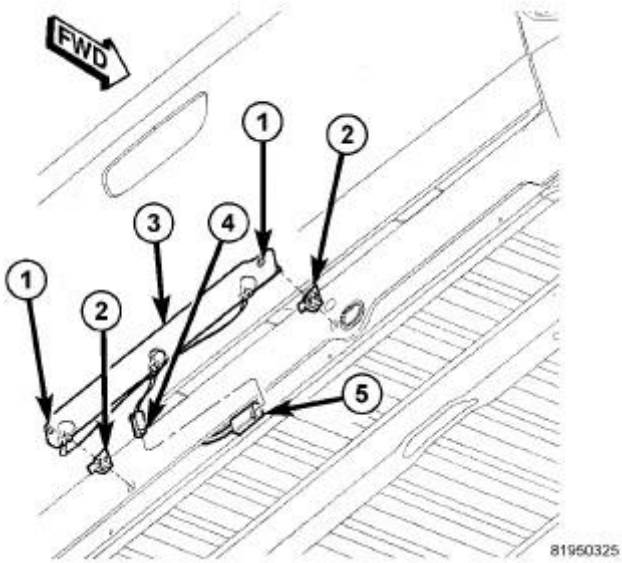

Fig. 55: Tailgate Marker Lamp
Courtesy of CHRYSLER GROUP, LLC

NOTE: **This lamp is used on vehicles with a pick-up bed and dual rear wheels only. This lamp has a red lens, contains three bulbs and is located on the rearward facing surface of the pick-up bed sill panel below the tailgate.**

1. Check to be certain that the two spring nuts (2) are properly installed and in good condition in the outer sill panel.
2. Position the marker lamp (3) to the outer sill panel.
3. Install and tighten the two screws (1) that secure the marker lamp lens/housing to the sill panel. Tighten the screws to 2 N.m (20 in. lbs.).
4. Reach under and behind the rear bumper near the center to access and reconnect the tailgate marker lamp pigtail wire connector (4) to the wire harness connector (5).
5. Reconnect the battery negative cable.

LAMP, TAIL STOP TURN

REMOVAL

BRACKET - CAB AND CHASSIS

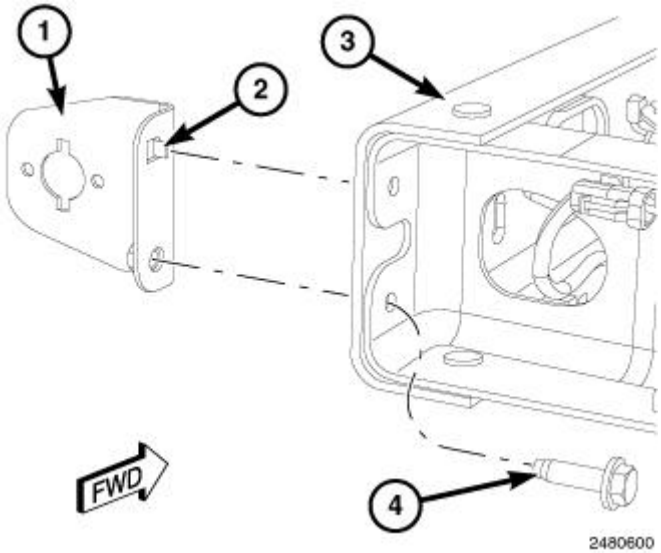

Fig. 56: Identifying Tail Lamp Bracket, Outer Frame Rail & Anti-Rotation Tab
Courtesy of CHRYSLER GROUP, LLC

1. Disconnect and isolate the battery negative cable.
2. Remove the tail lamp from the lamp bracket (1).
3. Remove the screw (4) that secures the bracket to the outside of the frame rail (3).
4. Remove the bracket from the frame.

BULB - CAB AND CHASSIS

NOTE: **The rear lamp unit contains two bulbs: the park/turn signal/brake/license plate, and the backup. The service procedures for each bulb are the same, only the bulb sizes and types may differ.**

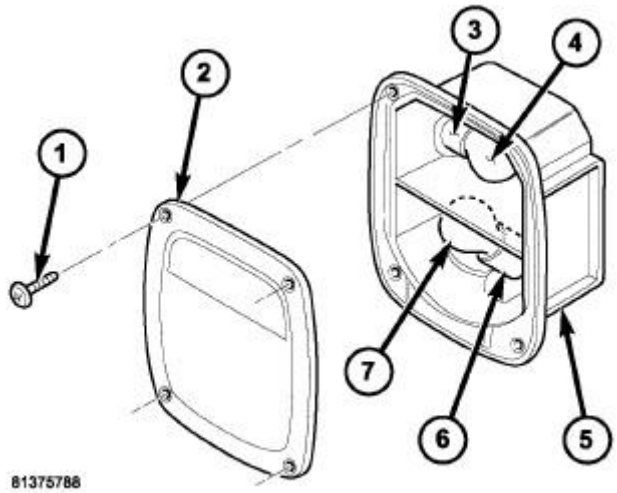

Fig. 57: Tail/Stop/Turn Lamp Bulb - Cab & Chassis
Courtesy of CHRYSLER GROUP, LLC

1. Disconnect and isolate the battery negative cable.
2. Remove the four screws (1) that secure the lens (2) to the rear lamp unit housing (5).
3. Push the backup lamp bulb (4), or the park/turn signal/brake/license plate bulb (7) slightly into its socket (3) or (6), then rotate the bulb counterclockwise about 30 degrees to unlock it.
4. Pull the base of the bulb straight out of the socket.

LAMP - CAB AND CHASSIS

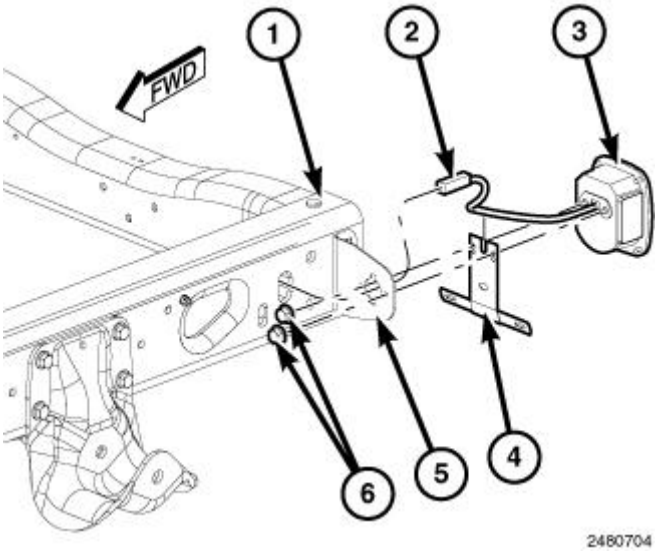

Fig. 58: Identifying Rear Lamp Unit, Lamp Mounting Bracket & License Plate Mounting Bracket
Courtesy of CHRYSLER GROUP, LLC

1. Disconnect and isolate the battery negative cable.
2. Disconnect the rear lamp unit pigtail wire connector (2) from the chassis wire harness connector for the rear lamp at the back of the rear frame crossmember (1).
3. Disengage the rear lamp unit pigtail wire and connector from the rear frame rail.
4. Remove the two nuts (6) that secure the studs on the rear lamp unit housing (3) to the lamp mounting bracket (5) on the rear frame rail.
5. For the left side lamp only, remove the license plate mounting bracket (4) from the rear lamp unit studs.
6. Remove the rear lamp unit from the mounting bracket while feeding the pigtail wire and connector through the bracket.

BULB

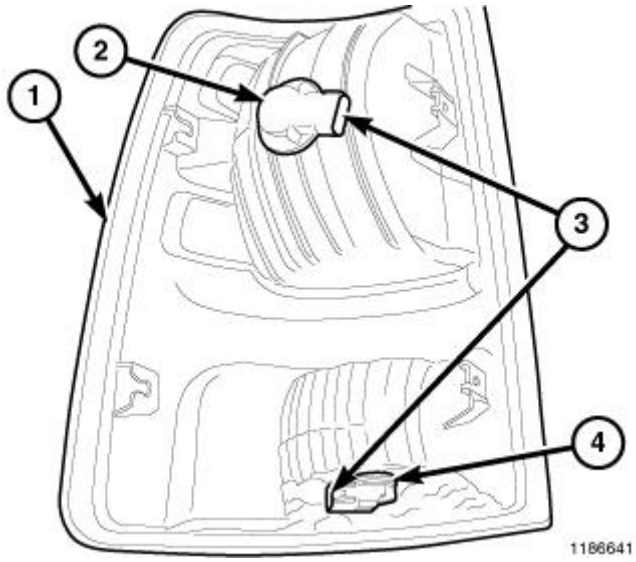

Fig. 59: Rear Lamp Unit, Bulb Socket & Connector
Courtesy of CHRYSLER GROUP, LLC

NOTE: **The rear lamp unit contains two bulbs: park/stop/turn signal/side marker and backup. The service procedures for each bulb are the same, only the bulb sizes and types may differ.**

1. Disconnect and isolate the battery negative cable.
2. Remove the rear lamp unit (1) from the end of the box side panel. Refer to **LAMP, TAIL STOP TURN, REMOVAL**.
3. Disconnect the chassis wire harness connector (3) from the park/stop/turn signal/side marker bulb socket (2) on the back, or the backup (4) bulb socket on the bottom of the lamp housing.
4. Firmly grasp the socket on the lamp housing and rotate it counterclockwise about 30 degrees to unlock it.
5. Pull the socket and bulb straight out from the keyed opening in the housing.
6. Pull the base of the bulb straight out of the socket.

LAMP

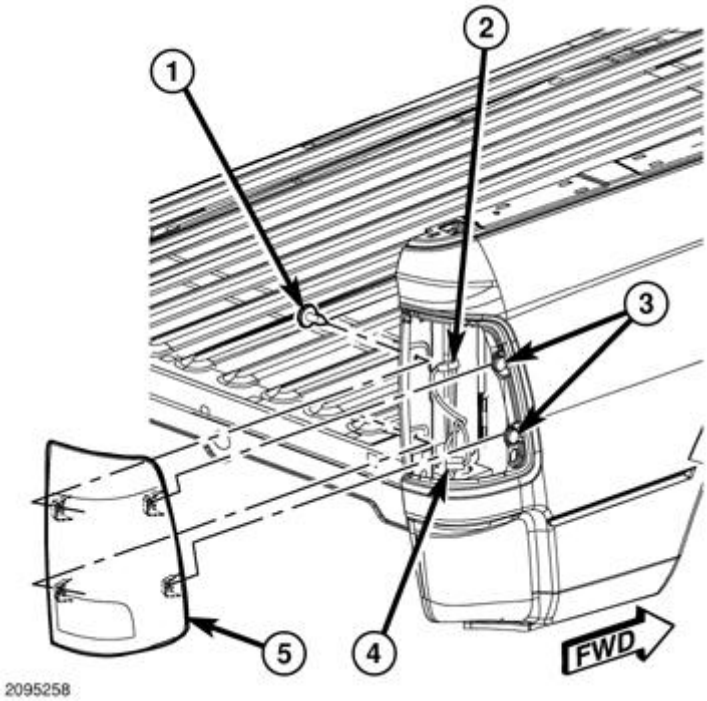

Fig. 60: Rear Lamp Unit, Connectors & Screws
Courtesy of CHRYSLER GROUP, LLC

1. Disconnect and isolate the battery negative cable.
2. Lower the tailgate to access and remove the two screws (1) that secure the rear lamp unit (5) to the side jamb of the tailgate opening.
3. Pull the outboard side of the rear lamp unit rearward far enough to unsnap the two receptacles on the outboard side of the lamp housing from the two plastic snap post retainers (3) in the outer box side panel.
4. Pull the lamp away from the vehicle far enough to access and disconnect the two wire harness connectors (2 and 4) from the two bulb sockets on the back and bottom of the lamp housing.
5. Remove the lamp from the lamp opening of the outer box side panel.

INSTALLATION

BRACKET - CAB AND CHASSIS

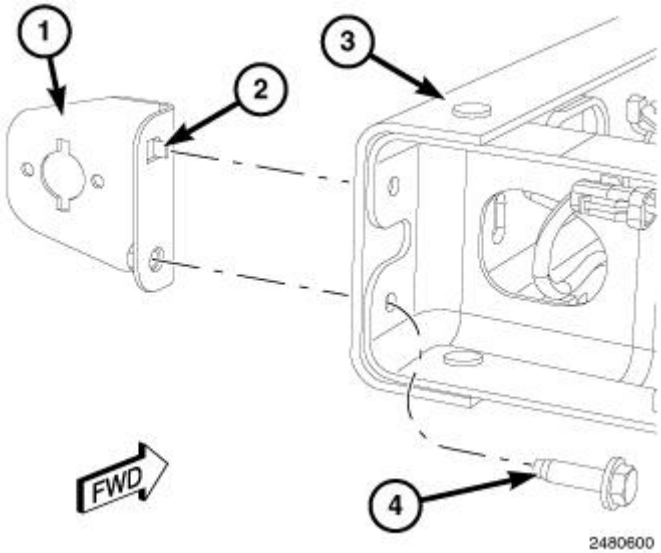

Fig. 61: Identifying Tail Lamp Bracket, Outer Frame Rail & Anti-Rotation Tab
Courtesy of CHRYSLER GROUP, LLC

1. Position the tail lamp bracket (1) to the outer frame rail (3). Be certain to engage the anti-rotation tab (2) in the frame clearance hole (upper hole - left side, or lower hole - right side).
2. Install and tighten the screw (4) that secures the bracket to the frame. Tighten the screw to 55 N.m (41 ft. lbs.).
3. Reinstall the tail lamp onto the bracket.
4. Reconnect the battery negative cable.

BULB - CAB AND CHASSIS

CAUTION: Always use the correct bulb size and type for replacement. An incorrect bulb size or type may overheat and cause damage to the lamp, the socket or the lamp wiring.

NOTE: The rear lamp unit contains two bulbs: the park/turn signal/brake/license plate, and the backup. The service procedures for each bulb are the same, only the bulb sizes and types may differ.

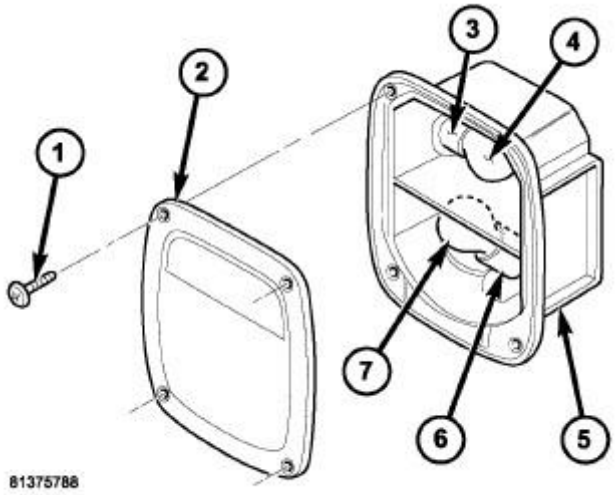

Fig. 62: Tail/Stop/Turn Lamp Bulb - Cab & Chassis
Courtesy of CHRYSLER GROUP, LLC

1. Align the base of the backup lamp bulb (4), or the park/turn signal/brake/license plate lamp bulb (7) with its socket (3) or (6).
2. Push the bulb straight into the socket until the base is firmly seated, then rotate the bulb clockwise about 30 degrees to lock it into place.
3. Position the lens (2) to the rear lamp unit housing (5).
4. Install and tighten the four screws (1) that secure the lens to the housing. Tighten the screws to 2 N.m (20 in. lbs.).
5. Reconnect the battery negative cable.

LAMP - CAB AND CHASSIS

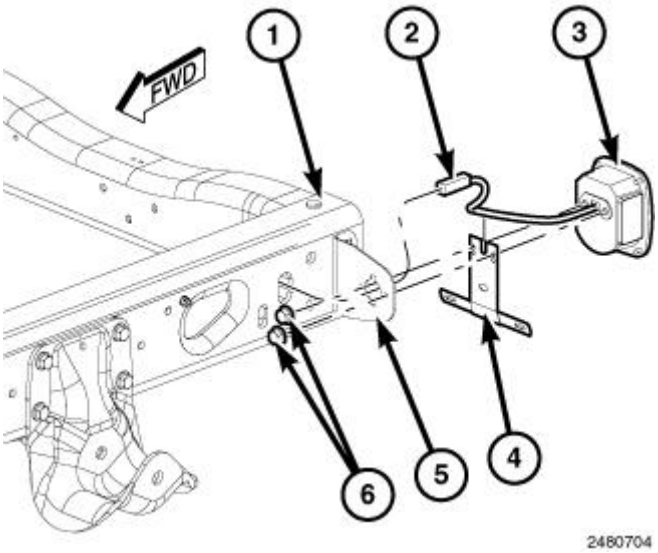

Fig. 63: Identifying Rear Lamp Unit, Lamp Mounting Bracket & License Plate Mounting Bracket
Courtesy of CHRYSLER GROUP, LLC

1. Feed the pigtail wire and connector (2) of the rear lamp unit (3) through the lamp mounting bracket (5) and position the lamp studs through the mounting holes in the bracket.
2. For the left side lamp only, position the license plate mounting bracket (4) onto the rear lamp unit studs.
3. Install and tighten the two nuts (6) that secure the rear lamp unit housing to the mounting bracket. Tighten the nuts to 10 N.m (7 ft. lbs.).
4. Reconnect the rear lamp unit pigtail wire connector to the chassis wire harness connector for the rear lamp at the back of the frame rear crossmember (1).
5. Engage the rear lamp connector retainer into the rear frame crossmember.
6. Reconnect the battery negative cable.

BULB

CAUTION: Always use the correct bulb size and type for replacement. An incorrect bulb size or type may overheat and cause damage to the lamp, the socket or the lamp wiring.

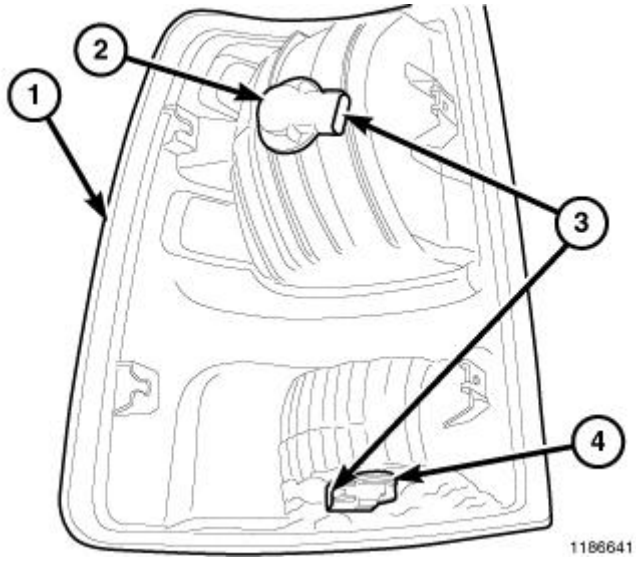

Fig. 64: Rear Lamp Unit, Bulb Socket & Connector
Courtesy of CHRYSLER GROUP, LLC

NOTE: The rear lamp unit contains two bulbs: park/stop/turn signal/side marker and backup. The service procedures for each bulb are the same, only the bulb sizes and types may differ.

1. Align the base of the bulb with the park/stop/turn signal/side marker (2) or the backup (4) bulb socket.
2. Push the bulb straight into the socket until the base is firmly seated.
3. Align the socket and bulb with the keyed opening on the back or bottom of the rear lamp unit housing (1).

4. Insert the socket and bulb into the housing until the socket is firmly seated.
5. Rotate the socket clockwise about 30 degrees to lock it into place.
6. Reconnect the chassis wire harness connector (3) to the bulb socket.
7. Reinstall the rear lamp unit onto the end of the box side panel. Refer to **LAMP, TAIL STOP TURN, INSTALLATION**.
8. Reconnect the battery negative cable.

LAMP

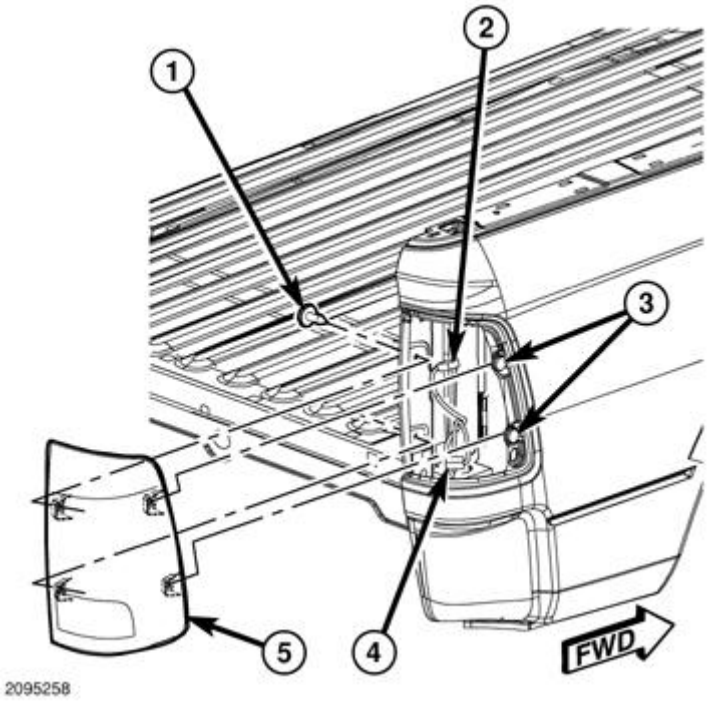

Fig. 65: Rear Lamp Unit, Connectors & Screws
Courtesy of CHRYSLER GROUP, LLC

1. Check to be certain that the two plastic snap post retainers (3) are in good condition and properly installed in the outer box side panel. If a retainer is removed, it must be replaced with a new retainer.
2. Check to be certain that the two U-nuts are in good condition and properly installed on the inboard side of the rear lamp unit housing.
3. Position the rear lamp unit (5) to the lamp opening of the outer box side panel.
4. Reconnect the two wire harness connectors (2 and 4) to the two bulb sockets on the back and bottom of the lamp housing.
5. Align the two receptacles on the outboard side of the rear lamp housing with the two plastic snap post retainers in the outer box side panel.
6. Using hand pressure, push firmly and evenly on the outboard side of the lamp until both receptacles are fully engaged over the snap post retainers.
7. Starting with the upper screw first, install and tighten the two screws (1) that secure the rear lamp unit to the side jamb of the tailgate opening. Tighten the screws to 2.5 N.m (21 in. lbs.).

8. Reconnect the battery negative cable.

LAMP, UNDERHOOD

REMOVAL

BULB

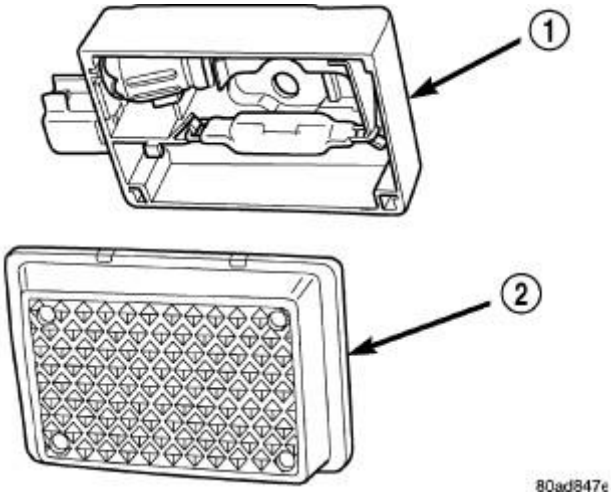

Fig. 66: Underhood Lamp
Courtesy of CHRYSLER GROUP, LLC

1. Disconnect and isolate the battery negative cable.
2. Insert a small flat bladed tool in the access slot between the underhood lamp housing (1) and the lamp lens (2).
3. Gently pry the lens until it unsnaps from the lamp housing.

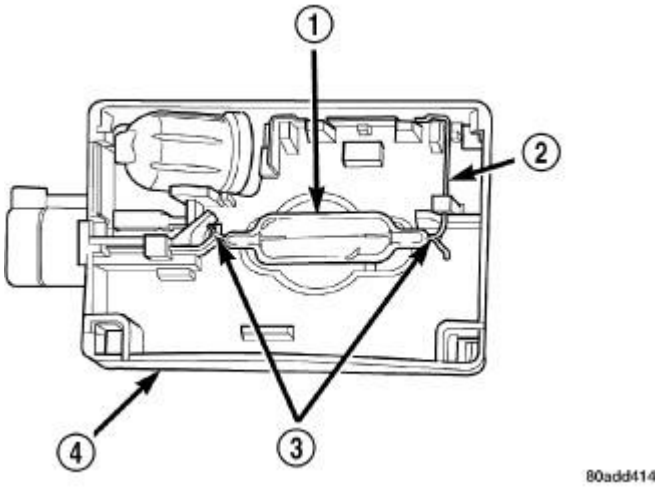

Fig. 67: Underhood Lamp Bulb Holder
Courtesy of CHRYSLER GROUP, LLC

4. Depress the bulb holder (2) inward far enough to disengage the terminal loops (3) of the bulb (1) and remove the bulb from the lamp housing (4).

LAMP

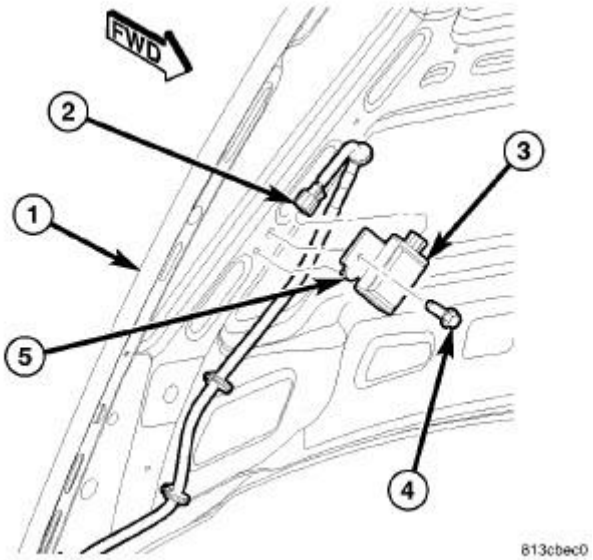

Fig. 68: Underhood Lamp Housing
Courtesy of CHRYSLER GROUP, LLC

1. Disconnect and isolate the battery negative cable.
2. From the underside of the hood, remove the push-in retainers that secure the hood silencer pad to the inner hood (1) reinforcement as necessary to access the underhood lamp connection to the underhood lamp jumper wire harness (2).
3. Disconnect the underhood jumper wire harness connector from the underhood lamp (3) connector receptacle.
4. Remove the bulb from the underhood lamp. Refer to **LAMP, UNDERHOOD, REMOVAL**.
5. Remove the blind rivet (4) that secures the underhood lamp mounting bracket to the inner hood reinforcement (1).
6. Remove the underhood lamp and bracket from the inner hood reinforcement as a unit.

INSTALLATION

BULB

CAUTION: Always use the correct bulb size and type for replacement. An incorrect bulb size or type may overheat and cause damage to the lamp, the socket or the lamp wiring.

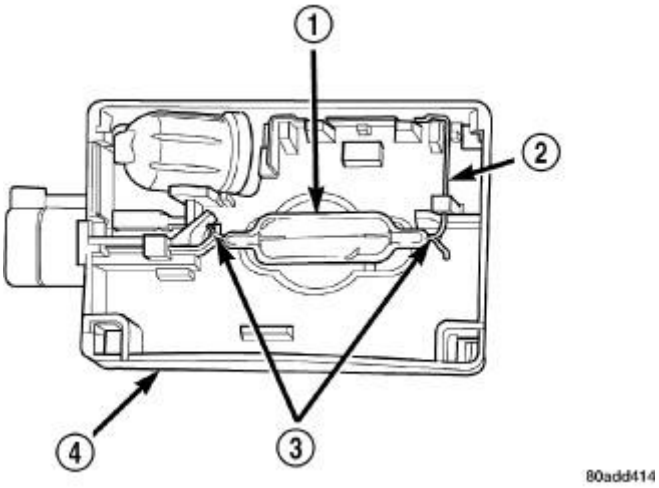

Fig. 69: Underhood Lamp Bulb Holder
Courtesy of CHRYSLER GROUP, LLC

1. Engage one of the terminal loops (3) of the bulb (1) over the bulb holder closest to the connector receptacle of the underhood lamp housing (4).
2. Depress the other bulb holder (2) inward far enough to engage the remaining bulb terminal loop.

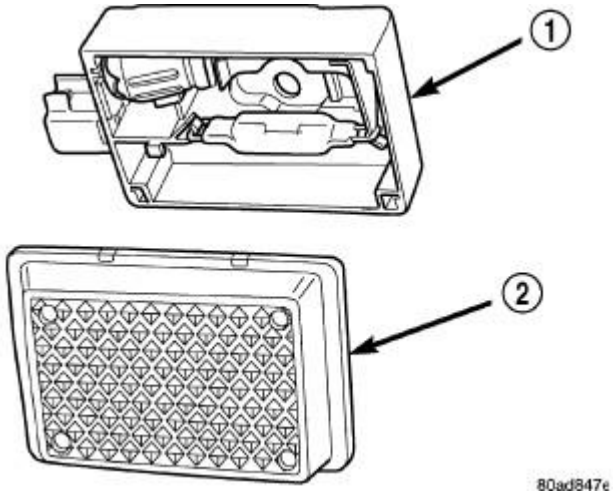

Fig. 70: Underhood Lamp
Courtesy of CHRYSLER GROUP, LLC

3. Position the lens (2) over the lamp housing and use hand pressure to press the lens firmly and evenly onto the housing until it snaps into place.
4. Reconnect the battery negative cable.

LAMP

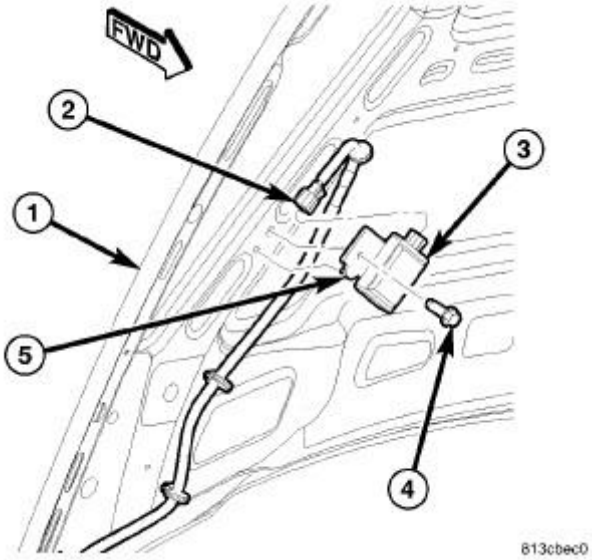

Fig. 71: Underhood Lamp Housing
Courtesy of CHRYSLER GROUP, LLC

1. Position the underhood lamp and bracket (3) to the inner hood (1) reinforcement as a unit. Be certain that the locating tab (5) on the bracket is engaged into the locating hole in the inner hood reinforcement.
2. Install a new blind rivet to secure the underhood lamp mounting bracket to the inner hood reinforcement.
3. Reinstall the bulb into the underhood lamp. Refer to **LAMP, UNDERHOOD, INSTALLATION**.
4. Reconnect the underhood jumper wire harness connector (2) to the underhood lamp connector receptacle.
5. Reinstall the removed push-in retainers that secure the hood silencer pad to the inner hood reinforcement.
6. Reconnect the battery negative cable.

RELAY, STOP LAMP INHIBIT

DESCRIPTION

DESCRIPTION

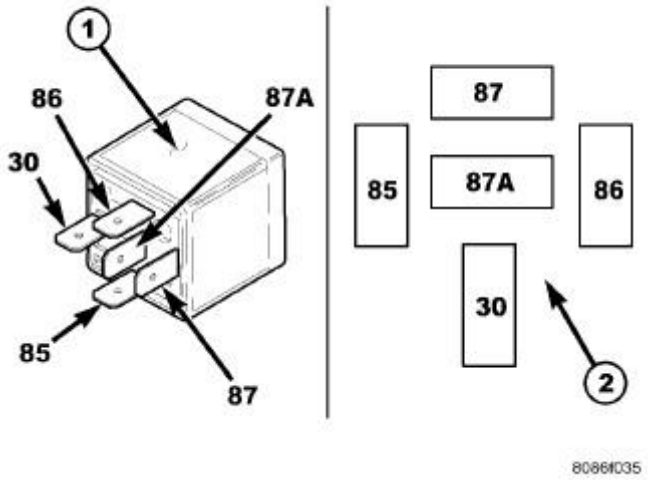

Fig. 72: Stop Lamp Inhibit Relay
Courtesy of CHRYSLER GROUP, LLC

A stop lamp inhibit relay (also known as the brake lamp activation relay or trailer tow damping relay) is part of the Electronic Stability Program (ESP)/Traction Control System (TCS)/Brake Assist System (BAS)/Trailer Sway Control (TCS) package on this vehicle. The stop lamp inhibit relay is a conventional International Standards Organization (ISO) relay. Relays conforming to the ISO specifications have common physical dimensions, current capacities, terminal patterns (2), and terminal functions. The relay is contained within a small, square, molded plastic housing (1) and is connected to all of the required inputs and outputs through five integral male spade-type terminals that extend from the relay base plate.

The stop lamp inhibit relay is located in a connector on the underside of the left front fender hydroform load beam in the engine compartment.

The stop lamp inhibit relay cannot be adjusted or repaired and, if ineffective or damaged, the unit must be replaced.

OPERATION

OPERATION

The stop lamp inhibit relay (also known as a brake lamp activation relay or trailer tow damping relay) is used by the Controller Antilock Brake (CAB) to mitigate undesirable brake lamp operation when the CAB activates various brake hydraulic circuits as part of its Traction Control System (TCS) and Trailer Sway Control (TSC) functions. This relay is an electromechanical switch that uses a low current input from the Controller Antilock Brake (CAB) to interrupt a high current output from the brake lamp switch to the brake lamps. Within the relay is an electromagnetic coil, a movable contact and two fixed contact points. A resistor is connected in parallel with the coil, and helps to dissipate voltage spikes and electromagnetic interference that can be generated as the field of the relay coil collapses.

The movable common supply contact point is held against the fixed normally closed contact point by spring

pressure. When the relay coil is energized, an electromagnetic field is produced by the coil windings. This field draws the movable contact away from the normally closed contact, and holds it against the normally open contact. When the relay coil is de-energized, spring pressure returns the movable contact back against the normally closed contact.

The inputs and outputs of the stop lamp inhibit relay include:

- **Common Supply Terminal (30) -** The common feed terminal is connected to a fused B(+) circuit at all times.
- **Coil Ground Terminal (85) -** The coil ground terminal is connected to a control output of the CAB through a stop lamp inhibit relay control circuit. The CAB controls brake lamp operation by controlling a ground path through this circuit.
- **Coil Battery Terminal (86) -** The coil battery terminal is connected to a fused ignition switch output (run-start) circuit at all times.
- **Normally Open Terminal (87) -** The normally open terminal is connected to the brake lamps through a brake lamp switch output circuit and will provide battery voltage whenever the relay is energized.
- **Normally Closed Terminal (87A) -** The normally closed terminal is not connected to any circuit in this application, but will have battery voltage present whenever the relay is not energized.

The stop lamp inhibit relay as well as the hard wired inputs and outputs of the relay may be diagnosed using conventional diagnostic tools and procedures. Refer to the appropriate wiring information.

SWITCH, BACKUP LAMP

DESCRIPTION

DESCRIPTION

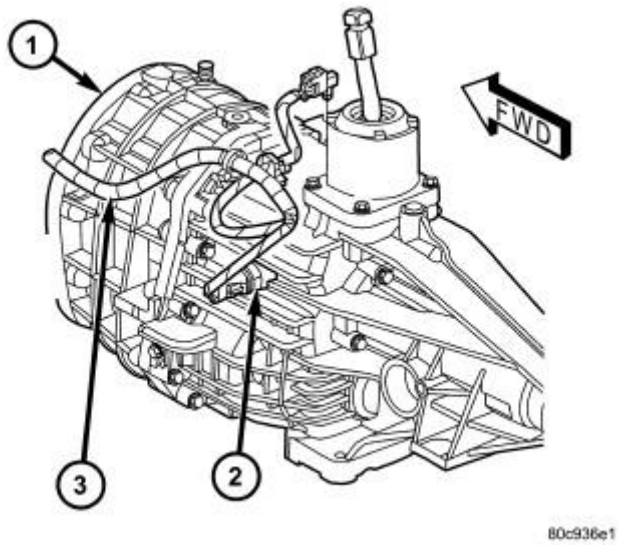

Fig. 73: Backup Lamp Switch

Courtesy of CHRYSLER GROUP, LLC

Vehicles equipped with a manual transmission have a normally open, spring-loaded plunger type backup lamp switch (2). Vehicles with an optional electronic automatic transmission have a Transmission Range Sensor (TRS) that is used to perform several functions, including that of the backup lamp switch.

The backup lamp switch is located in a hole on the side of the manual transmission housing. The switch has a spring-loaded plunger on the end of the switch inserted into the transmission. An integral connector receptacle at the end of the switch opposite the plunger connects the switch to the vehicle electrical system through a take out and connector of the engine wire harness. When installed, only the switch connector is visible on the outside of the transmission housing.

The TRS may be a separate component, or it may be an integral part of an electronic automatic transmission solenoid pack or of a transmission gear selector module. The specific TRS details vary by the model of the transmission installed in the vehicle. The TRS is described in further detail elsewhere in this service information. Refer to the appropriate diagnostic information for the automatic transmission type installed in the vehicle.

The backup lamp switch cannot be adjusted or repaired and, if ineffective or damaged, the entire switch unit must be replaced.

OPERATION

OPERATION

The backup lamp switch controls a ground signal input to the Totally Integrated Power Module (TIPM) through the backup lamp switch signal circuit. Based upon the state of this input, the TIPM uses a high side driver to control the flow of battery voltage to the backup lamp bulbs through an output on the backup lamp feed circuit.

The switch plunger is mechanically actuated by the gearshift mechanism within the transmission, which will depress the switch plunger and close the switch contacts whenever the REVERSE gear has been selected. The switch has a path to ground at all times, while the TIPM is programmed to provide an output to the backup lamps whenever the ignition switch is in the ON position.

The backup lamp switch as well as the hard wired inputs and outputs of the switch may be diagnosed using conventional diagnostic tools and procedures. Refer to the appropriate wiring information.

SWITCH, HAZARD WARNING

DESCRIPTION

DESCRIPTION

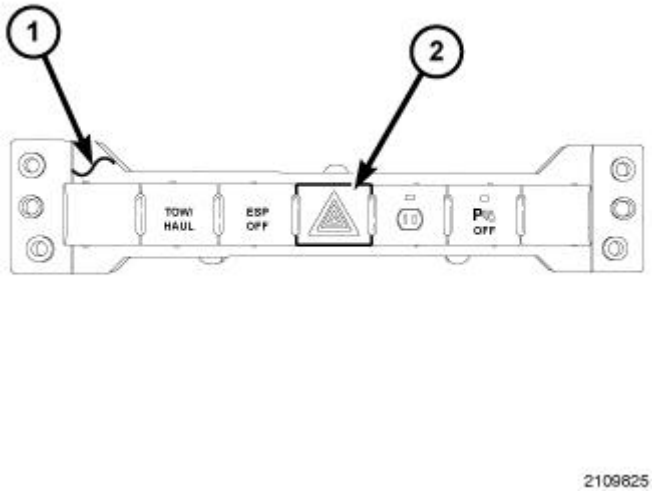

Fig. 74: Hazard Switch
Courtesy of CHRYSLER GROUP, LLC

The hazard switch (2) is integral to the upper instrument panel switch pod (1), which is secured to the instrument panel center bezel just below the radio and above the heater and air conditioner controls. A red, stencil-like International Control and Display Symbol icon for **Hazard Warning** identifies the hazard switch button. The remainder of the hazard switch circuitry is concealed within the instrument panel switch pod.

The hazard switch button has panel lamps dimmer controlled illumination for night visibility. The switch button unlatches to a slightly raised position when the hazard warning system is activated and the icon on the switch button will illuminate at an increased intensity while the turn signals and turn signal indicators are flashing. The switch button latches to a lowered position flush with the other push buttons in the switch pod when the hazard warning is deactivated.

All of the circuitry and components of the hazard switch are contained within a molded black plastic instrument panel switch pod housing. A single connector receptacle is integral to the back of the switch pod housing. The switch is connected to the vehicle electrical system through a dedicated take out and connector of the instrument panel wire harness.

The hazard switch cannot be adjusted or repaired and, if ineffective or damaged, the entire upper instrument panel switch pod unit must be replaced. Refer to **POD, SWITCH, REMOVAL** .

OPERATION

OPERATION

The hazard switch features a push-push type latching push button. The hazard switch receives a clean ground on one terminal through a takeout of the instrument panel wire harness with an eyelet terminal secured by a screw to the instrument panel support structure. Whenever the hazard switch is in its latched and lowered position, the hazard warning system is selected and the upper instrument panel switch pod circuitry sends a hard wired output to the Totally Integrated Power Module (TIPM).

When the TIPM receives a hazard switch input on the hazard switch sense circuit it controls hazard warning system operation and flash rate by controlling battery voltage outputs through high side drivers on the right and left, front and rear turn signal driver circuits. The TIPM also sends the appropriate electronic messages to the ElectroMechanical Instrument Cluster (EMIC) (also known as the Cab Compartment Node/CCN) to control the illumination and flash rate of the right and left turn signal indicators, as well as to control the click rate of an electromechanical relay soldered onto the EMIC electronic circuit board that emulates the sound emitted by a conventional hazard warning flasher. The EMIC sends messages to the switch pod over the Local Interface Network (LIN) data bus to control the illumination of the hazard switch push button.

The hazard switch as well as the hard wired inputs and outputs of the switch may be diagnosed using conventional diagnostic tools and procedures. Refer to the appropriate wiring information. However, conventional diagnostic methods will not prove conclusive in the diagnosis of the electronic controls and communication between other modules and devices that provide some features of the hazard warning system. The most reliable, efficient, and accurate means to diagnose the hazard switch or the electronic controls and communication related to hazard warning system operation requires the use of a diagnostic scan tool. Refer to the appropriate diagnostic information.

DIAGNOSIS AND TESTING

DIAGNOSIS AND TESTING - HAZARD SWITCH

WARNING: To avoid serious or fatal injury on vehicles equipped with airbags, disable the Supplemental Restraint System (SRS) before attempting any steering wheel, steering column, airbag, seat belt tensioner, impact sensor or instrument panel component diagnosis or service. Refer to WARNING . Disconnect and isolate the battery negative (ground) cable, then wait two minutes for the system capacitor to discharge before performing further diagnosis or service. This is the only sure way to disable the SRS. Failure to take the proper precautions could result in accidental airbag deployment.

The hazard switch as well as the hard wired inputs and outputs of the upper instrument panel switch pod may be diagnosed using conventional diagnostic tools and procedures. Refer to the appropriate wiring information.

1. Remove the center bezel and the upper switch pod from the instrument panel as a unit. Refer to **BEZEL, INSTRUMENT PANEL, CENTER, REMOVAL** .
2. Using a multi-meter, test the continuity between the ground terminal and the hazard switch sense terminal of the switch. There should be continuity when the hazard switch push button is in its latched (lowered) position, and no continuity when the push button is in its unlatched (raised) position.
3. If the switch fails either of the continuity tests, replace the ineffective upper instrument panel switch pod as required.

SWITCH, HEADLAMP

DESCRIPTION

DESCRIPTION

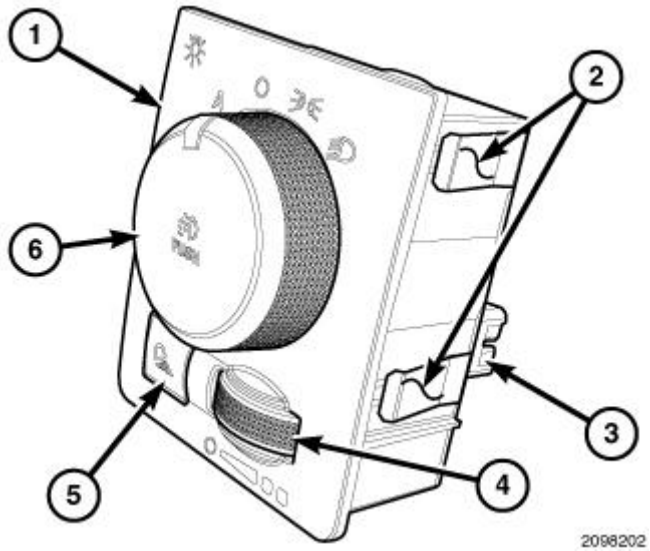

Fig. 75: Headlamp Switch
Courtesy of CHRYSLER GROUP, LLC

The headlamp switch (1) is located on the instrument panel, in a mounting hole below the left instrument panel vent to the left of the steering column. Two different switches are used. The standard switch features a four-position rotary knob (6) for exterior lighting control, a thumbwheel (4) for panel lamps dimming and interior lighting control, and a momentary push button (5) for cargo lamp control. An optional switch has a momentary PUSH function added to the rotary knob for front fog lamp control.

Each of these switches is constructed of molded plastic. The rotary knob is molded plastic and knurled around its circumference to ease operator control. The thumbwheel is also plastic and knurled. On vehicles with optional fog lamps the rotary knob also has the text **PUSH** and an International Control and Display Symbol icon for **Front Fog Light** applied to it. The cargo lamp push button is plastic with a smooth finish and the International Control and Display Symbol icon for **Work Light** applied to it. The switch face plate is also labeled with graphics and icons to clearly identify the many functions of the rotary knob and thumbwheel.

The switch housing is secured within the mounting hole of the left instrument panel vent bezel by four spring steel retention clips (2), two on each side. The back of the switch housing has an integral connector receptacle (3) containing terminal pins that connect the switch to the vehicle electrical system through a dedicated take out and connector of the instrument panel wire harness. Two panel dimmer controlled Light Emitting Diode (LED) units soldered to the circuit board within the switch provide back lighting for visibility at night, but are not serviceable.

The headlamp switch cannot be repaired and, if ineffective or damaged, it must be replaced.

OPERATION

OPERATION

The headlamp switch uses two resistor multiplexed outputs and one conventional output to control the many functions and features it provides. The switch receives a clean ground from the ElectroMechanical Instrument Cluster (EMIC) (also known as the Cab Compartment Node/CCN) on a headlamp switch MUX return circuit. It

then provides outputs to the EMIC on a headlamp/fog lamp switch signal circuit to control exterior lighting functions, on a panel lamps dimmer signal circuit to control panel dimmer and interior lighting functions, and on a cargo lamp switch signal circuit to control the cargo lamps.

The switch illumination circuit receives a path to ground at all times through the left instrument panel ground circuit. The illumination level is controlled by a Pulse-Width Modulated (PWM) output received from the EMIC on a panel lamps driver circuit. The EMIC controls this output based upon the panel lamps dimmer signal circuit input from the headlamp switch.

The headlamp switch operates as follows:

- **Cargo Lamps Control -** The cargo lamp push button on the headlamp switch is depressed to activate or deactivate the cargo lamps. The headlamp switch provides an output to the EMIC, and the EMIC responds by providing the appropriate cargo lighting control outputs through its cargo lamp driver circuit.
- **Front Fog Lamps Control -** For vehicles so equipped, the rotary knob on the headlamp switch is depressed to activate or deactivate the optional front fog lamps. The headlamp switch provides the appropriate resistor multiplexed output to the EMIC over the headlamp/fog lamp switch signal circuit, and the EMIC reads and responds to this input by sending electronic **fog lamp switch status** messages to the Totally Integrated Power Module (TIPM) over the Controller Area Network (CAN) data bus. The TIPM responds by energizing or de-energizing the right and left front fog lamp control circuits through internal High Side Drivers (HSD) and by sending an electronic confirmation message back to the EMIC, which controls the front fog lamp indicator as appropriate.
- **Exterior Lighting Control -** The rotary knob on the headlamp switch is rotated to a detent position to activate or deactivate the exterior lighting. The headlamp switch provides the appropriate resistor multiplexed output to the EMIC over the headlamp/fog lamp switch signal circuit, and the EMIC reads and responds to this input by sending electronic **exterior lighting switch status** messages to the TIPM over the CAN data bus. The TIPM responds by energizing or de-energizing the right and left park lamp feed circuits and the right and left high or low beam driver circuits through internal HSDs and by sending an electronic confirmation message back to the EMIC, which controls the high beam indicator as appropriate. The TIPM also remembers which headlamp beams were last selected with the multi-function switch, and energizes those beams by default the next time the headlamps are turned ON. If the vehicle is equipped with optional automatic headlamps and the **A** (Automatic) position is selected, the TIPM also monitors an electronic **ambient light level** message received over the CAN data bus from the A/C-heater control module based upon a hard wired input from the sun sensor to turn the exterior lighting ON and OFF automatically while the ignition switch is in the ON position.
- **Interior Lighting Control -** The thumbwheel on the headlamp switch is rotated to the dome DEFEAT, dome ON, PARADE mode, or one of the six panel dimmer detent positions to control the interior courtesy/dome and panel lamps. The headlamp switch provides the appropriate resistor multiplexed output to the EMIC over the panel lamps dimmer signal circuit. The EMIC reads and responds to this input by providing the appropriate control outputs through internal HSDs over the courtesy lamps, panel lamps and reading lamps driver circuits, and by sending appropriate electronic **dimming level** messages to other electronic modules over the CAN data bus.

The headlamp switch as well as the hard wired inputs and outputs of the switch may be diagnosed using conventional diagnostic tools and procedures. Refer to the appropriate wiring information.

DIAGNOSIS AND TESTING

DIAGNOSIS AND TESTING - HEADLAMP SWITCH

WARNING: To avoid serious or fatal injury on vehicles equipped with airbags, disable the Supplemental Restraint System (SRS) before attempting any steering wheel, steering column, airbag, seat belt tensioner, impact sensor or instrument panel component diagnosis or service. Refer to WARNING . Disconnect and isolate the battery negative (ground) cable, then wait two minutes for the system capacitor to discharge before performing further diagnosis or service. This is the only sure way to disable the SRS. Failure to take the proper precautions could result in accidental airbag deployment.

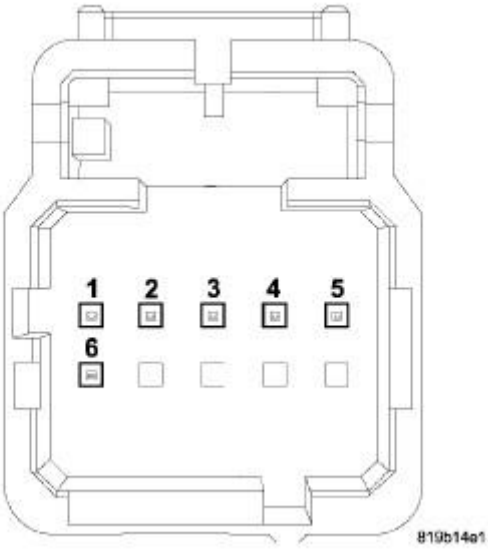

Fig. 76: Headlamp Switch Terminal Identification
Courtesy of CHRYSLER GROUP, LLC

1. Remove the headlamp switch from the instrument panel. Refer to **SWITCH, HEADLAMP, REMOVAL**.
2. Disconnect the instrument panel wire harness connector from the back of the headlamp switch.
3. Using an ohmmeter, test the resistance or continuity between the terminals of the switch as shown in the Headlamp Switch Tests table.

HEADLAMP SWITCH TESTS	
SWITCH POSITION (PINS)	***RESISTANCE RANGE (OHMS)**
AUTO (1 and 3)	4028.0 - 4457.0
OFF (1 and 3)	1938.0 - 2147.0
PARK (1 and 3)	1073.5 - 1191.5
HEADLAMP (1 and 3)	627.0 - 698.0
FOG LAMP - AUTO (1 and	

3)	266.8 - 299.9
FOG LAMP - OFF (1 and 3)	249.0 - 280.2
FOG LAMP - PARK (1 and 3)	225.6 - 254.4
FOG LAMP - HEADLAMP (1 and 3)	196.3 - 221.9
DOME DEFEAT (2 and 3)	14121.2 - 15612.7
PANEL DIMMER 1 (2 and 3)	5476.26 - 6057.7
PANEL DIMMER 2 (2 and 3)	2911.2 - 3222.7
PANEL DIMMER 3 (2 and 3)	1771.2 - 1962.7
PANEL DIMMER 4 (2 and 3)	1125.2 - 1248.7
PANEL DIMMER 5 (2 and 3)	726.2 - 807.7
PANEL DIMMER 6 (2 and 3)	469.7 - 524.2
PARADE MODE	296.4 - 332.6
DOME ON (2 and 3)	166.2 - 188.7
CARGO (3 and 6)	MOMENTARY CONTINUITY
SWITCH ILLUMINATION (4 and 5)	LEDs - SET MULTIMETER TO DIODE MODE - CONNECT PIN 4 TO PLUS (+), CONNECT PIN 5 TO MINUS (-) - LEDs SHOULD BARELY GLOW
*All resistance values are plus or minus 5%.	

4. If the switch fails any of the tests, replace the ineffective headlamp switch as required.

REMOVAL

REMOVAL

WARNING: To avoid serious or fatal injury on vehicles equipped with airbags, disable the Supplemental Restraint System (SRS) before attempting any steering wheel, steering column, airbag, seat belt tensioner, impact sensor or instrument panel component diagnosis or service. Refer to WARNING . Disconnect and isolate the battery negative (ground) cable, then wait two minutes for the system capacitor to discharge before performing further diagnosis or service. This is the only sure way to disable the SRS. Failure to take the proper precautions could result in accidental airbag deployment.

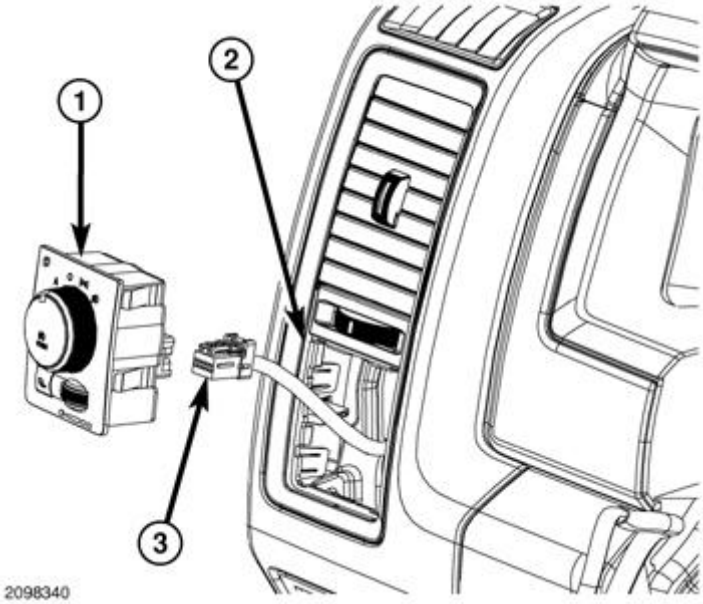

Fig. 77: Headlamp Switch Connector
Courtesy of CHRYSLER GROUP, LLC

1. Disconnect and isolate the battery negative cable.
2. Using a trim stick or another suitable wide flat-bladed tool, gently and evenly pry around the perimeter of the headlamp switch (1) face plate toward the rear of the vehicle. Once the retention force of the four metal spring clips (two on each side) on the switch housing has been overcome, the switch will come out from the mounting hole in the lower end of the left instrument panel vent bezel (2).
3. Pull the switch out of the mounting hole far enough to access and disconnect the instrument panel wire harness connector (3) from the connector receptacle on the back of the switch housing.
4. Remove the headlamp switch from the instrument panel.

INSTALLATION

INSTALLATION

WARNING: **To avoid serious or fatal injury on vehicles equipped with airbags, disable the Supplemental Restraint System (SRS) before attempting any steering wheel, steering column, airbag, seat belt tensioner, impact sensor or instrument panel component diagnosis or service. Refer to WARNING . Disconnect and isolate the battery negative (ground) cable, then wait two minutes for the system capacitor to discharge before performing further diagnosis or service. This is the only sure way to disable the SRS. Failure to take the proper precautions could result in accidental airbag deployment.**

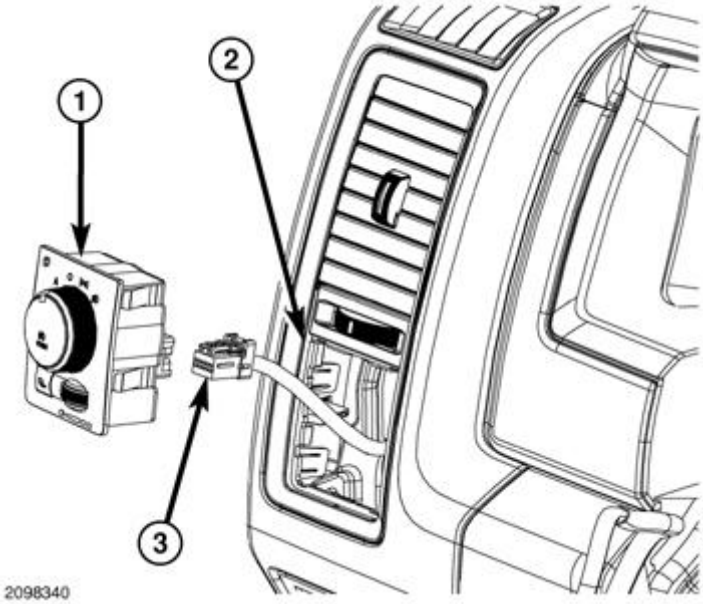

Fig. 78: Headlamp Switch Connector
Courtesy of CHRYSLER GROUP, LLC

1. Position the headlamp switch (1) close enough to the switch mounting hole in the lower end of the left instrument panel vent bezel (2) to reconnect the instrument panel wire harness connector (3) to the connector receptacle on the back of the switch housing.
2. Position the switch in the center of the switch mounting hole of the bezel.
3. Using hand pressure, press the switch firmly and evenly into the mounting hole until it is fully seated. An indication that the switch is fully seated will be a light audible click as each of the four metal spring clips (two on each side) spring into place behind the bezel mounting hole.
4. Reconnect the battery negative cable.

SWITCH, MULTIFUNCTION

DESCRIPTION

DESCRIPTION

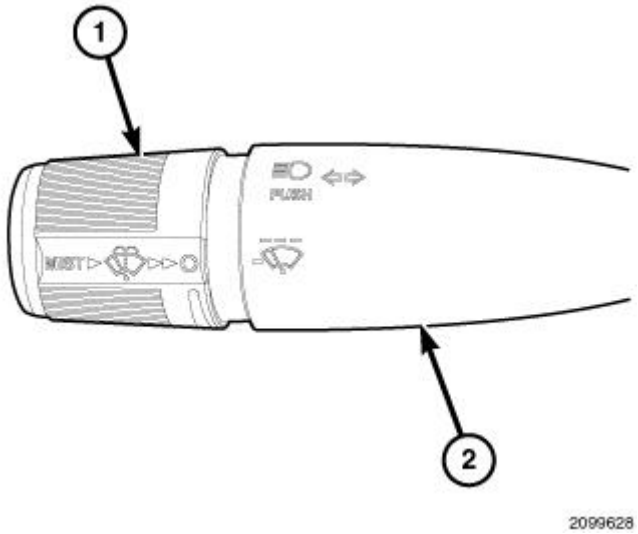

Fig. 79: Multi-Function Switch
Courtesy of CHRYSLER GROUP, LLC

The multi-function switch is located on the left side of the steering column, just below the steering wheel. This switch provides the primary controls for the wiper and washer systems, the turn signals and headlamp beam selection. The only visible components of the switch are the control stalk (2) and control knob (1) that extend through the steering column shrouds on the left side of the column. The remainder of the switch including its mounting provisions, its electrical connection, and the turn signal cancel actuator are concealed beneath the shrouds.

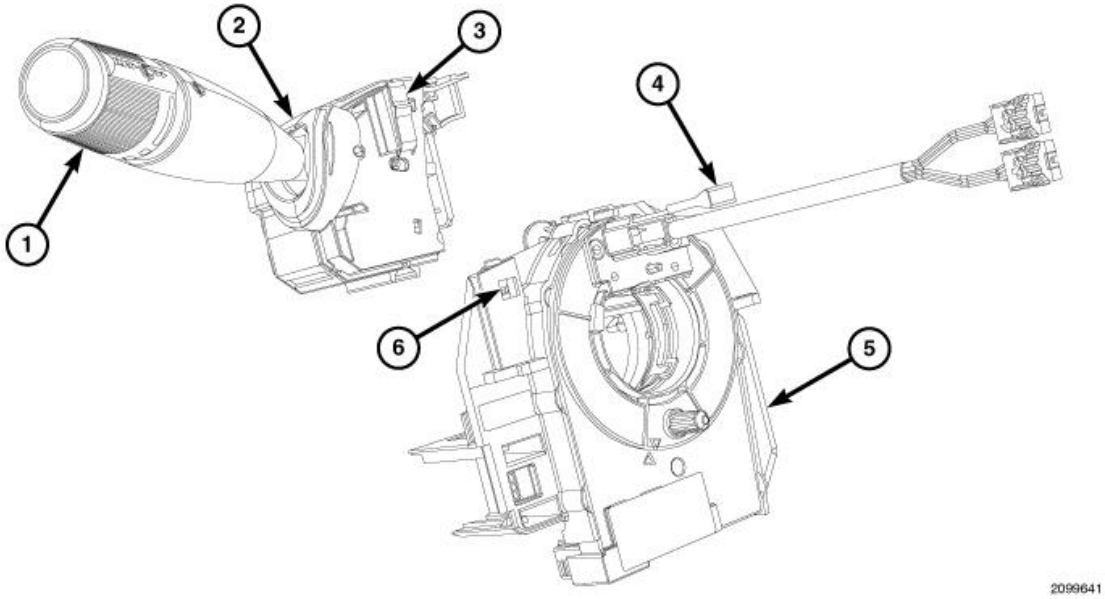

Fig. 80: Multi-Function Switch Assembly
Courtesy of CHRYSLER GROUP, LLC

The switch housing (2) and controls (1) are constructed of molded black plastic. Each of the switch controls has white International Control and Display Symbol graphics applied to it, which clearly identify its many

functions. A single integral latch feature (3) and slide tabs on the switch housing engage channels and a striker that are integral to the left side of the mounting bracket that is integral to the clockspring (5) to secure the switch to the steering column.

The Steering Control Module (SCM) is an electronic circuit board and microprocessor internal to the multi-function switch housing. The switch outputs are internally connected directly to the SCM. An integral connector receptacle on the back of the switch housing connects the switch through the SCM to the vehicle electrical system through a dedicated take out and connector of the instrument panel wire harness.

The multi-function switch provides the vehicle operator with a control interface for the following functions:

- **Headlamp Beam Selection** - The multi-function switch control stalk provides detent switching for selection of the headlamp HIGH or LOW beams.
- **Headlamp Optical Horn** - The multi-function switch control stalk includes momentary switching of the headlamp high beam circuits to provide an optical horn feature (sometimes referred to as flash-to-pass), which allows the vehicle operator to momentarily flash the headlamp high beams as an optical signalling device.
- **Turn Signal Control** - The multi-function switch control stalk provides both momentary non-detent (lane change) switching or detent switching with automatic cancellation for both the left and right turn signals.
- **Washer Control** - The multi-function switch control knob provides a momentary WASH position for washer system operation.
- **Wiper Control** - The multi-function switch control knob provides detent switching for two continuous wipe switch positions, LOW speed or HIGH speed and an intermittent wipe mode with five DELAY interval positions. The control knob also has a momentary MIST or pulse wipe feature switch position.

The multi-function switch cannot be adjusted or repaired. If any function of the switch is ineffective, or if the switch is damaged, the entire switch unit must be replaced. The clockspring with the multi-function switch mounting bracket, Steering Angle Sensor/SAS and the heated steering wheel contact (if equipped), the multi-function switch (with the internal SCM) and the optional adjustable pedal switch (7) are each available for separate service replacement.

OPERATION

OPERATION

The multi-function switch uses resistor multiplexing to control the many functions and features it provides using a minimal number of hard wired circuits. The switch receives clean grounds from the Steering Control Module (SCM) internal to the switch housing, then provides resistor multiplexed return outputs to the SCM to indicate the selected switch positions. The SCM then sends electronic **switch status** messages over a Local Interface Network (LIN) data bus to the ElectroMechanical Instrument Cluster (EMIC) (also known as the Cab Compartment Node/CCN), and the EMIC relays electronic **switch request** messages over the Controller Area Network (CAN) data bus to other electronic modules in the vehicle.

If the SCM detects no inputs from the multi-function switch, it transmits an electronic **Signal Not Available (SNA)** status message over the LIN data bus. The SNA status signals the EMIC to request other electronic modules to implement a fail-safe or default mode of operation. For the exterior lighting system, the multi-

function switch fail-safe mode automatically selects LOW beams when the headlamps are turned ON. For the wiper system, the multi-function switch fail-safe mode will maintain the last selected wiper system operation for the remainder of the current ignition cycle, after which the wiper system will default to OFF.

Some of the hard wired input and output circuits for the multi-function switch and SCM unit may be diagnosed using conventional diagnostic tools and procedures. Refer to the appropriate wiring information. However, the most reliable, efficient and accurate means to diagnose this component requires the use of a diagnostic scan tool. Refer to the appropriate diagnostic information.

Following are descriptions of how the multi-function switch is operated to control the functions and features it provides:

- **Headlamp Beam Selection** - The headlamp high beams are selected when the multi-function switch control stalk is pushed forward to the high beam selection detent position. The low beams are selected when the control stalk is pulled rearward to the low beam selection detent position. The SCM reads the resistor multiplexed input from the multi-function switch and sends an electronic **beam select switch status** message over the LIN data bus to the EMIC, which relays an electronic **beam select switch request** message over the CAN data bus to other electronic modules in the vehicle.
- **Headlamp Optical Horn** - The headlamp optical horn is selected each time the multi-function switch control stalk is pulled fully rearward to a momentary position. The headlamp HIGH beams will remain illuminated for as long as the control stalk is held in this momentary position and the LOW beams will be restored when the control stalk is released. The SCM reads the resistor multiplexed input from the multi-function switch and sends an electronic **beam select switch status** message over the LIN data bus to the EMIC, which relays an electronic **beam select switch request** message over the CAN data bus to other electronic modules in the vehicle.
- **Turn Signal Control** - The turn signals are requested when the multi-function switch control stalk is moved downward (LEFT signal) or upward (RIGHT signal). The control stalk has a detent position in each direction that provides turn signals with automatic cancellation, and an intermediate, momentary position in each direction that automatically provides three turn signal blinks as a LANE CHANGE feature when the control stalk is tapped or will energize the turn signals for as long as the control stalk is held in the momentary position. When the control stalk is moved to a detent turn signal switch position, a cancel actuator extends from the multi-function switch housing through an opening in the side of the clockspring case toward the center of the steering column. A turn signal cancel cam that is integral to the clockspring rotor rotates with the steering wheel and the cam lobes contact the cancel actuator when it is extended from the multi-function switch. When the steering wheel is rotated during a turning maneuver, one of the turn signal cancel cam lobes will contact the turn signal cancel actuator. The cancel actuator latches against the cancel cam rotation in the direction opposite that which is signaled. If the LEFT turn signal detent is selected, the lobes of the cancel cam will ratchet past the cancel actuator when the steering wheel is rotated to the left, but will unlatch the cancel actuator as the steering wheel rotates to the right and returns to center, which will cancel the turn signal event and release the control stalk from the detent so it returns to the neutral OFF position. The SCM reads the resistor multiplexed input from the multi-function switch and sends an electronic **turn signal switch status** message over the LIN data bus to the EMIC, which relays an electronic **turn signal switch request** message over the CAN data bus to other electronic modules in the vehicle.
- **Washer Control** - The control knob on the end of the multi-function switch control stalk is depressed toward the steering column to the momentary second detent position to activate the washer pump/motor in the WASH mode. The washer pump/motor will continue to operate for as long as the control knob is

held in this position. The SCM reads the resistor multiplexed input from the multi-function switch and sends an electronic **washer switch status** message over the LIN data bus to the EMIC, which relays an electronic **washer switch request** message over the CAN data bus to other electronic modules in the vehicle.

- **Wiper Control** - The control knob on the end of the multi-function switch control stalk is rotated to one of the two continuous wiper detents, to one of five intermittent wiper detents, or to the OFF position to select the WIPER mode. The SCM reads the input from the multi-function switch and sends electronic **wiper switch status** messages over the LIN data bus to the EMIC, which relays an electronic **wiper switch request** message over the CAN data bus to other electronic modules in the vehicle.
- **Wiper Mist Mode** - The control knob on the end of the multi-function switch control stalk is depressed toward the steering column to the momentary first detent position to activate the wiper MIST mode. The wiper motor will continue to operate, one complete cycle at a time, for as long as the control knob is held in this position. The SCM reads the resistor multiplexed input from the multi-function switch and sends an electronic **wiper switch status** message over the LIN data bus to the EMIC, which relays an electronic **wiper switch request** message over the CAN data bus to other electronic modules in the vehicle.

REMOVAL

REMOVAL

WARNING: **To avoid serious or fatal injury on vehicles equipped with airbags, disable the Supplemental Restraint System (SRS) before attempting any steering wheel, steering column, airbag, seat belt tensioner, impact sensor or instrument panel component diagnosis or service. Refer to WARNING . Disconnect and isolate the battery negative (ground) cable, then wait two minutes for the system capacitor to discharge before performing further diagnosis or service. This is the only sure way to disable the SRS. Failure to take the proper precautions could result in accidental airbag deployment.**

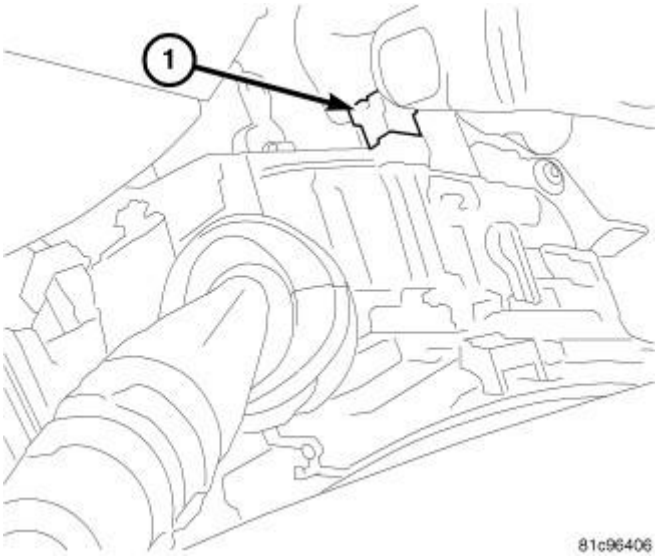

Fig. 81: Multi-Function Switch Harness Connector

Courtesy of CHRYSLER GROUP, LLC

1. Disconnect and isolate battery negative cable.
2. Remove the upper and lower shrouds from the steering column. Refer to **SHROUD, STEERING COLUMN, REMOVAL** .
3. Disconnect the instrument panel wire harness connector (1) from the connector receptacle on the back of the multi-function switch housing.

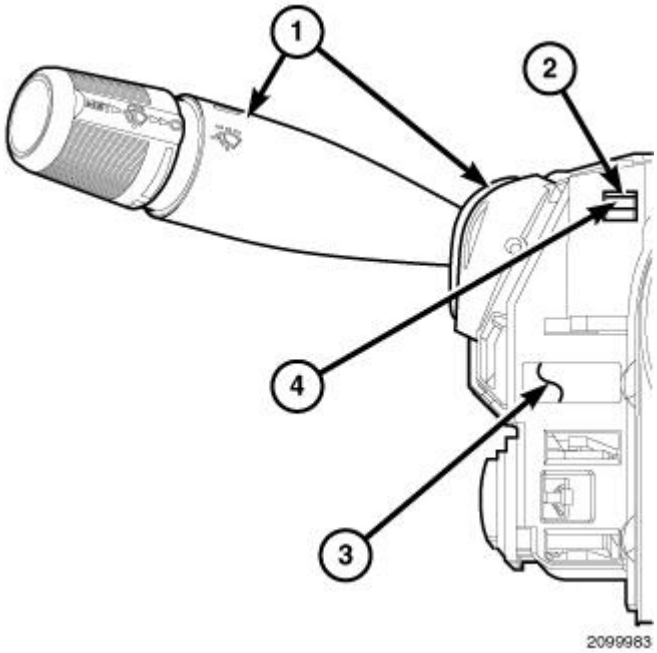

Fig. 82: Multi-Function Switch Latch & Tab
Courtesy of CHRYSLER GROUP, LLC

4. Working through the access window (2) of the mounting bracket (3) integral to the left side of the clockspring, depress the tab (4) of the latch feature integral to the multi-function switch (1) housing far enough to disengage the latch.
5. While holding the latch disengaged, slide the switch upward and out of the receptacle in the mounting bracket.

INSTALLATION

INSTALLATION

WARNING: **To avoid serious or fatal injury on vehicles equipped with airbags, disable the Supplemental Restraint System (SRS) before attempting any steering wheel, steering column, airbag, seat belt tensioner, impact sensor or instrument panel component diagnosis or service. Refer to WARNING . Disconnect and isolate the battery negative (ground) cable, then wait two minutes for the system capacitor to discharge before performing further diagnosis or service. This is the only sure way to disable the SRS. Failure**

to take the proper precautions could result in accidental airbag deployment.

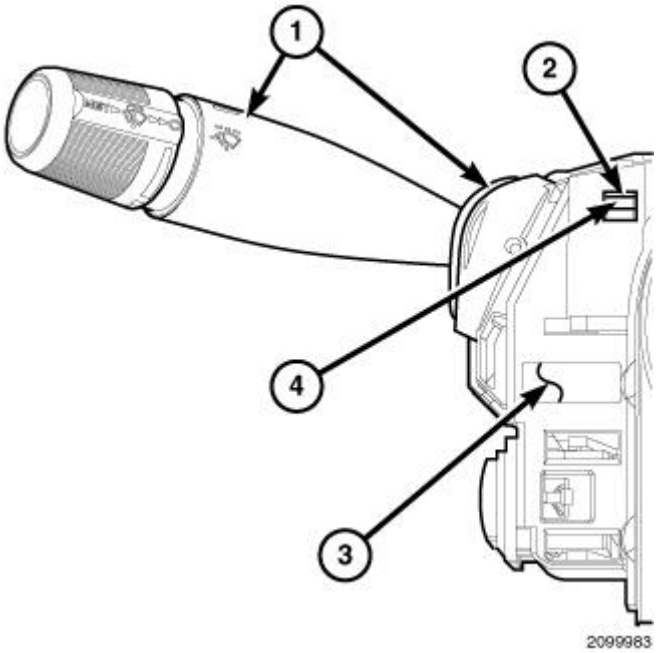

Fig. 83: Multi-Function Switch Latch & Tab
Courtesy of CHRYSLER GROUP, LLC

1. Position the multi-function switch (1) housing over the receptacle in the mounting bracket (3) integral to the left side of the clockspring.
2. Slide the switch downward into the mounting bracket receptacle until it is fully seated and the tab (4) of the latch feature integral to the switch housing engages the access window (2) of the bracket.

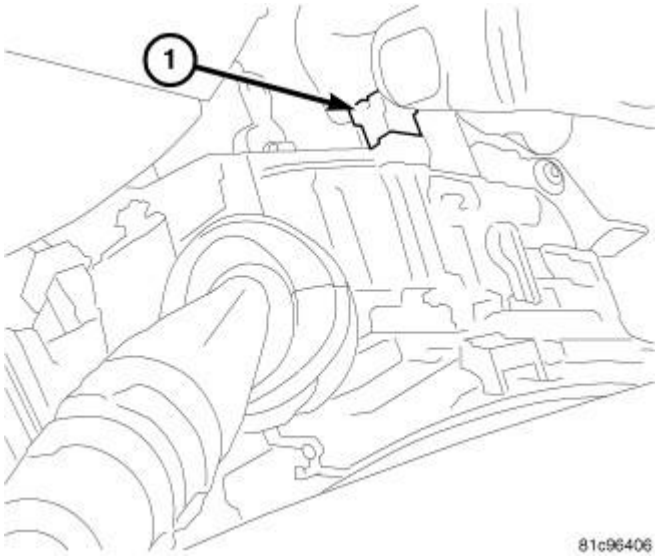

Fig. 84: Multi-Function Switch Harness Connector
Courtesy of CHRYSLER GROUP, LLC

3. Reconnect the instrument panel wire harness connector (1) to the connector receptacle on the back of the multi-function switch housing.
4. Reinstall the upper and lower shrouds onto the steering column. Refer to **SHROUD, STEERING COLUMN, INSTALLATION** .
5. Reconnect the battery negative cable.

SWITCH, PARKING BRAKE

DESCRIPTION

DESCRIPTION

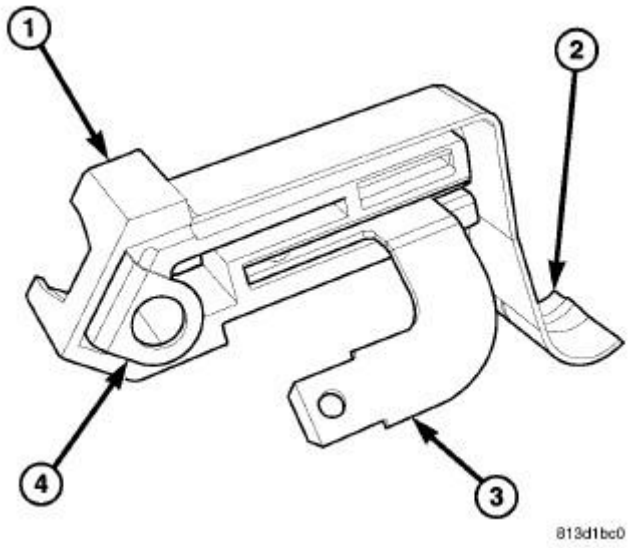

Fig. 85: Identifying Park Brake Switch
Courtesy of CHRYSLER GROUP, LLC

The park brake switch (1) is located on the park brake lever mechanism on the left cowl side inner panel below the instrument panel, outboard of the steering column. This switch includes a spade-type output terminal (3) that connects the switch to the vehicle electrical system through a dedicated take out and connector of the body wire harness. The output terminal is integral to the stationary contact within a molded plastic insulator.

A locating tab on the insulator engages a slot in the park brake lever mechanism for positive switch location. External to the insulator is a movable leaf contact with an integral grounding lug (4) on one end and an integral actuating lever and follower (2) on the opposite end. The switch is secured to and grounded by a single screw to the park brake lever mechanism.

The park brake switch cannot be adjusted or repaired and, if ineffective or damaged, it must be replaced.

OPERATION

OPERATION

The park brake switch is a normally closed, mechanically actuated leaf contact switch that is operated by the park brake lever mechanism. The switch is grounded through its mounting to the park brake lever mechanism and provides a ground input to the ElectroMechanical Instrument Cluster (EMIC) (also known as the Cab Compartment Node/CCN) on a park brake switch sense circuit whenever the park brake is applied, and opens this circuit whenever the park brake is released. The park brake switch sense input to the EMIC is used as a logic input by the EMIC for control of the brake indicator and may also be used as a logic input for other electronic features in the vehicle.

The park brake switch as well as the hard wired inputs and outputs of the switch may be diagnosed using conventional diagnostic tools and procedures. Refer to the appropriate wiring information.

DIAGNOSIS AND TESTING

DIAGNOSIS AND TESTING - PARK BRAKE SWITCH

WARNING: To avoid serious or fatal injury on vehicles equipped with airbags, disable the Supplemental Restraint System (SRS) before attempting any steering wheel, steering column, airbag, seat belt tensioner, impact sensor or instrument panel component diagnosis or service. Refer to WARNING . Disconnect and isolate the battery negative (ground) cable, then wait two minutes for the system capacitor to discharge before performing further diagnosis or service. This is the only sure way to disable the SRS. Failure to take the proper precautions could result in accidental airbag deployment.

NOTE: If the brake indicator stays ON with the ignition switch in the ON position and the park brake released, or comes ON while driving, the brake system must be diagnosed and repaired prior to performing the following tests. Refer to DIAGNOSIS AND TESTING . If no brake system problem is found, the following procedures will help to locate a shorted or open park brake switch sense circuit, or an ineffective park brake switch.

INDICATOR ILLUMINATES DURING BULB TEST, BUT DOES NOT WHEN PARK BRAKE APPLIED

1. Disconnect and isolate the battery negative cable. Disconnect the body wire harness connector for the park brake switch from the switch terminal. Apply the parking brake. Check for continuity between the park brake switch terminal and a good ground. There should be continuity. If OK, refer to 2. If not OK, replace the ineffective park brake switch.
2. Disconnect the instrument panel wire harness connector (Connector C2) for the instrument cluster from the cluster connector receptacle. Check for continuity between the park brake switch sense circuit cavities of the body wire harness connector for the park brake switch and the instrument panel wire harness connector for the instrument cluster. There should be continuity. If not OK, repair the open park brake switch sense circuit between the park brake switch and the instrument cluster as required.

INDICATOR REMAINS ILLUMINATED - BRAKE SYSTEM CHECKS OKAY

1. Disconnect and isolate the battery negative cable. Disconnect the body wire harness connector for the

park brake switch from the switch terminal. Check for continuity between the terminal of the park brake switch and a good ground. There should be no continuity with the park brake released, and continuity with the park brake applied. If OK, refer to 2. If not OK, replace the ineffective park brake switch.

2. Disconnect the instrument panel wire harness connector (Connector C2) for the instrument cluster from the cluster connector receptacle. Check for continuity between the park brake switch sense circuit cavity of the body wire harness connector for the park brake switch and a good ground. There should be no continuity. If not OK, repair the shorted park brake switch sense circuit between the park brake switch and the instrument cluster as required.

REMOVAL

REMOVAL

WARNING: To avoid serious or fatal injury on vehicles equipped with airbags, disable the Supplemental Restraint System (SRS) before attempting any steering wheel, steering column, airbag, seat belt tensioner, impact sensor or instrument panel component diagnosis or service. Refer to WARNING . Disconnect and isolate the battery negative (ground) cable, then wait two minutes for the system capacitor to discharge before performing further diagnosis or service. This is the only sure way to disable the SRS. Failure to take the proper precautions could result in accidental airbag deployment.

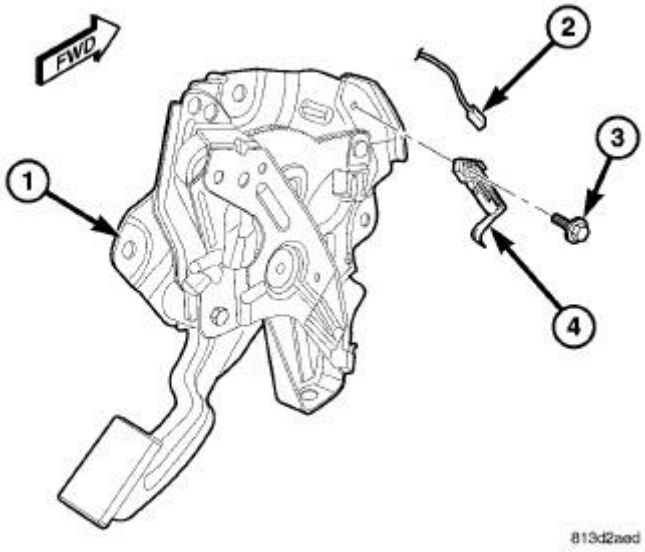

Fig. 86: Park Brake Switch, Connector & Screw
Courtesy of CHRYSLER GROUP, LLC

1. Disconnect and isolate the battery negative cable.
2. Apply the parking brake.
3. Reach under the left end of the instrument panel to access and disconnect the body wire harness connector (2) from the terminal of the park brake switch (4) located on the park brake lever mechanism

(1) on the left cowl side inner panel.

4. Remove the screw (3) that secures the park brake switch to the park brake lever mechanism.
5. Remove the switch from the park brake lever mechanism.

INSTALLATION

INSTALLATION

WARNING: To avoid serious or fatal injury on vehicles equipped with airbags, disable the Supplemental Restraint System (SRS) before attempting any steering wheel, steering column, airbag, seat belt tensioner, impact sensor or instrument panel component diagnosis or service. Refer to WARNING . Disconnect and isolate the battery negative (ground) cable, then wait two minutes for the system capacitor to discharge before performing further diagnosis or service. This is the only sure way to disable the SRS. Failure to take the proper precautions could result in accidental airbag deployment.

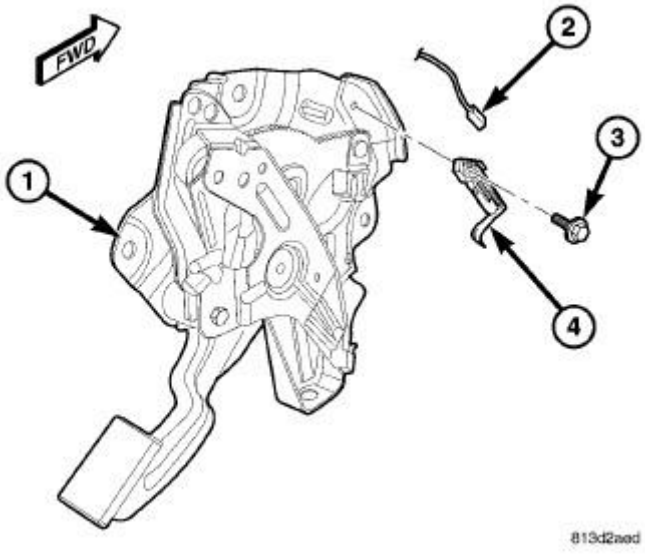

Fig. 87: Park Brake Switch, Connector & Screw
Courtesy of CHRYSLER GROUP, LLC

1. Reach under the left end of the instrument panel to position the park brake switch (4) onto the park brake lever mechanism (1) on the left cowl side inner panel. Be certain to engage the locating pin on the back of the switch insulator into the locating slot in the lever mechanism bracket.
2. Install and tighten the screw (3) that secures the park brake switch to the park brake lever mechanism. Tighten the screw to 2.5 N.m (24 in. lbs.).
3. Reconnect the body wire harness connector (2) to the terminal of the park brake switch.
4. Reconnect the battery negative cable.
5. Turn the ignition switch to the ON position and check for proper brake indicator operation with the

parking brake applied, then release the parking brake and check that the brake indicator extinguishes.

SWITCH, STOP LAMP

DESCRIPTION

DESCRIPTION

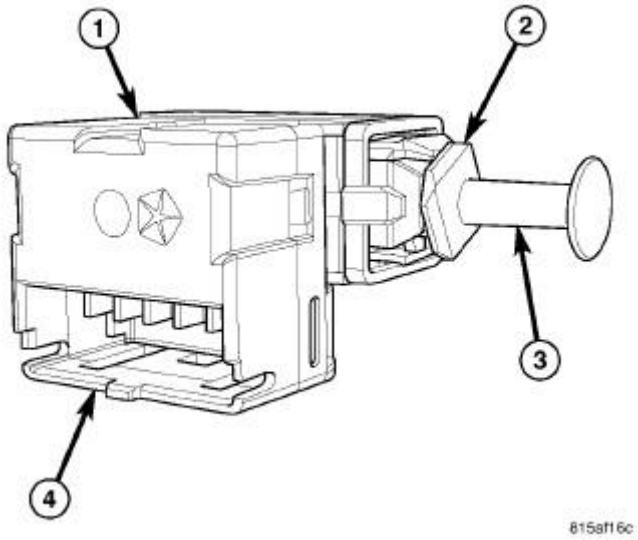

Fig. 88: Stop Lamp Switch Components
Courtesy of CHRYSLER GROUP, LLC

The brake (or stop) lamp switch (1) is a three circuit, spring-loaded plunger actuated switch that is secured to the brake pedal support bracket under the instrument panel on the driver side of the vehicle. The molded plastic switch housing has an integral connector receptacle (4) containing six terminal pins. The switch is connected to the vehicle electrical system through a dedicated take out of the instrument panel wire harness.

The switch plunger (3) extends through a mounting collar (2) on one end of the switch housing. The plunger has a telescoping self-adjustment feature that is activated after the switch is installed by the brake pedal moving upward to its normal at-rest position. The telescoping plunger can be pulled outward from the switch housing to repeat the self-adjustment procedure if necessary.

This brake lamp switch cannot be repaired. If the switch is damaged or ineffective it must be replaced with a new unit.

OPERATION

OPERATION

The brake (or stop) lamp switch controls three independent circuits. These circuits are described as follows:

- **Brake Lamp Switch Circuit** - A normally open brake lamp switch circuit receives a battery voltage

input, and supplies this battery voltage to the Center High Mounted Stop Lamp (CHMSL) and the Totally Integrated Power Module (TIPM) on a brake lamp switch output circuit only when the brake pedal is depressed (brake lamp switch plunger released).

- **Brake Lamp Switch Signal Circuit -** A normally closed brake lamp switch signal circuit receives a direct path to ground, and supplies this ground input to the Powertrain Control Module (PCM) on a brake signal 1 circuit only when the brake pedal is released (brake lamp switch plunger is depressed).
- **Speed Control Circuit -** A normally closed speed control circuit receives a battery voltage input from the Totally Integrated Power Module (TIPM) on an ignition run/start control output circuit, and supplies this battery voltage to the PCM on a brake signal 2 circuit only when the brake pedal is released (brake lamp switch plunger is depressed).

The PCM sends electronic **brake lamp switch status** messages to other electronic modules in the vehicle over the Controller Area Network (CAN) data bus for use as an additional logic input for controlling many other vehicle functions and features.

The brake lamp switch as well as the hard wired inputs and outputs of the switch may be diagnosed using conventional diagnostic tools and procedures. Refer to the appropriate wiring information. However, conventional diagnostic methods will not prove conclusive in the diagnosis of the electronic controls and communication that provide some features related to brake lamp switch operation. The most reliable, efficient and accurate means to diagnose the electronic controls and communication related to brake lamp switch operation requires the use of a diagnostic scan tool. Refer to the appropriate diagnostic information.

DIAGNOSIS AND TESTING

DIAGNOSIS AND TESTING - STOP LAMP SWITCH

WARNING: **To avoid serious or fatal injury on vehicles equipped with airbags, disable the Supplemental Restraint System (SRS) before attempting any steering wheel, steering column, airbag, seat belt tensioner, impact sensor or instrument panel component diagnosis or service. Refer to WARNING . Disconnect and isolate the battery negative (ground) cable, then wait two minutes for the system capacitor to discharge before performing further diagnosis or service. This is the only sure way to disable the SRS. Failure to take the proper precautions could result in accidental airbag deployment.**

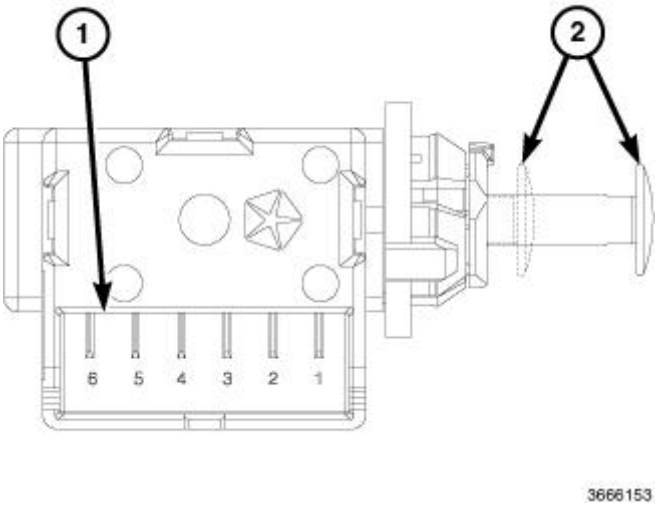

Fig. 89: Stop Lamp Switch Terminal Pins
Courtesy of CHRYSLER GROUP, LLC

1. Disconnect and isolate the battery negative cable.
2. Disconnect the instrument panel wire harness connector from the brake lamp switch.
3. Using an ohmmeter, perform the continuity tests at the terminal pins (1) in the brake lamp switch connector receptacle as shown in the Brake Lamp Switch Tests table.

BRAKE LAMP SWITCH TESTS	
PLUNGER POSITION (2)	**CONTINUITY BETWEEN**
Released (Extended)	Pins 1 and 2
Compressed (Depressed)	Pins 3 and 4, 5 and 6

4. If the switch fails any of the continuity tests, replace the ineffective brake lamp switch as required.

ADJUSTMENTS

ADJUSTMENT

WARNING: To avoid serious or fatal injury on vehicles equipped with airbags, disable the Supplemental Restraint System (SRS) before attempting any steering wheel, steering column, airbag, seat belt tensioner, impact sensor or instrument panel component diagnosis or service. Refer to WARNING . Disconnect and isolate the battery negative (ground) cable, then wait two minutes for the system capacitor to discharge before performing further diagnosis or service. This is the only sure way to disable the SRS. Failure

to take the proper precautions could result in accidental airbag deployment.

1. Disconnect and isolate the battery negative cable.
2. Depress and hold the brake pedal in the depressed position.
3. Pull the brake lamp switch plunger all the way out of the switch housing to its fully extended position.
4. Release the brake pedal. The pedal will set the plunger to the correct position as the pedal pushes the plunger into the switch housing. The switch plunger will make a light audible ratcheting noise as it self-adjusts.
5. Reconnect the battery negative cable.

REMOVAL

REMOVAL

WARNING: **To avoid serious or fatal injury on vehicles equipped with airbags, disable the Supplemental Restraint System (SRS) before attempting any steering wheel, steering column, airbag, seat belt tensioner, impact sensor or instrument panel component diagnosis or service. Refer to WARNING . Disconnect and isolate the battery negative (ground) cable, then wait two minutes for the system capacitor to discharge before performing further diagnosis or service. This is the only sure way to disable the SRS. Failure to take the proper precautions could result in accidental airbag deployment.**

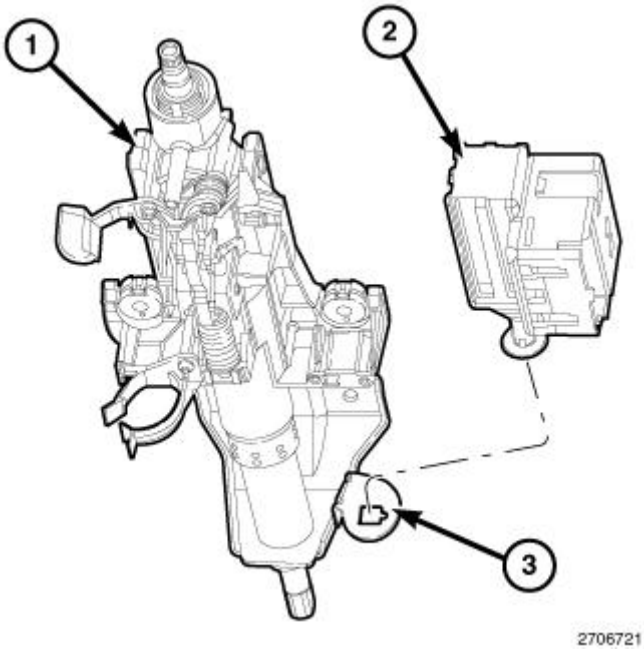

Fig. 90: Identifying Brake Lamp Switch, Switch Mounting Bracket & Lower Steering Column
Courtesy of CHRYSLER GROUP, LLC

1. Disconnect and isolate the battery negative cable.
2. Locate the brake lamp switch (2) in the mounting bracket (3) on the lower steering column (1) support bracket.
3. Depress and hold the brake pedal in the depressed position.
4. Disconnect the instrument panel wire harness connector from the brake lamp switch.
5. Rotate the brake lamp switch housing clockwise about 30 degrees to align the switch locking collar with the keyed square hole in the switch mounting bracket.
6. Pull the switch straight back from the keyed hole to remove it from the bracket.
7. Release the brake pedal.

INSTALLATION

INSTALLATION

WARNING: To avoid serious or fatal injury on vehicles equipped with airbags, disable the Supplemental Restraint System (SRS) before attempting any steering wheel, steering column, airbag, seat belt tensioner, impact sensor or instrument panel component diagnosis or service. Refer to WARNING . Disconnect and isolate the battery negative (ground) cable, then wait two minutes for the system capacitor to discharge before performing further diagnosis or service. This is the only sure way to disable the SRS. Failure to take the proper precautions could result in accidental airbag deployment.

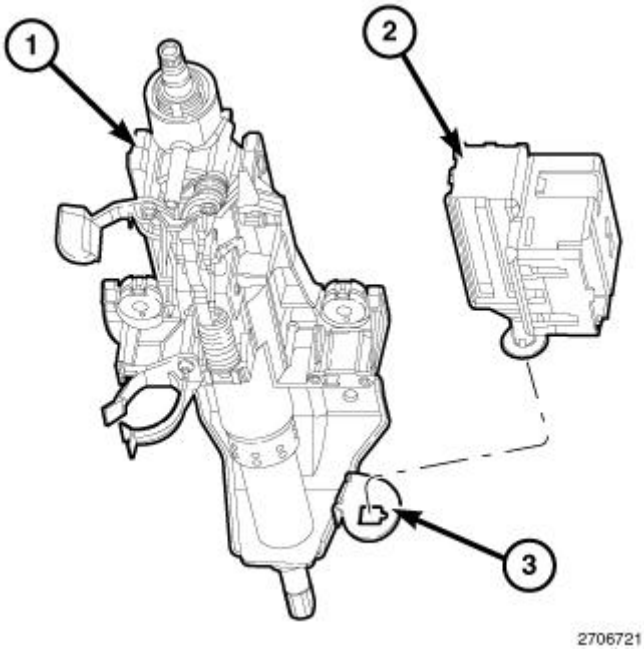

Fig. 91: Identifying Brake Lamp Switch, Switch Mounting Bracket & Lower Steering Column
Courtesy of CHRYSLER GROUP, LLC

1. Be certain that the brake lamp switch (2) plunger is pulled all the way out of the switch housing to its fully extended position.
2. Depress and hold the brake pedal in the depressed position.
3. Align the keyed locking collar on the brake lamp switch with the keyed square hole in the switch mounting bracket (3) on the lower steering column (1) support bracket.
4. Insert the brake lamp switch locking collar through the keyed hole in the switch mounting bracket until the switch housing is firmly seated against the bracket.
5. Rotate the switch housing clockwise about 30 degrees to engage the locking collar with the switch mounting bracket.
6. Release the brake pedal. The pedal will set the plunger to the correct position as the pedal pushes the plunger into the switch housing. The switch plunger will make a light audible ratcheting noise as it self-adjusts.
7. Reconnect the instrument panel wire harness connector to the brake lamp switch.
8. Reconnect the battery negative cable.

UNIT, FRONT LAMP

STANDARD PROCEDURE

STANDARD PROCEDURE - FRONT LAMP UNIT MOISTURE CLEARING

Some occasional moisture accumulation inside a vented front lamp unit is normal and appears as a fogging on the inside of the lamp lens, similar to the fog that sometimes appears on the inside of a windshield. This condition is caused by rapidly changing temperature and humidity levels between the air internal and external to the lamp, and will usually dissipate once the temperature and humidity conditions have been allowed to stabilize. Accelerated removal of such moisture may be accomplished by activating the headlamps on HIGH beam for about 15 minutes.

However, water droplets larger than 1 millimeter (0.039 inch) in size accumulated on the inside of the lamp lens, water droplets visible on most internal lamp surfaces or large quantities of water within the lamp indicates a problem with the lamp sealing that has allowed excessive amounts of water to enter the lamp. Once such excessive moisture has entered the lamp, it will always be present and will never disappear. A lamp with permanent internal moisture should be replaced.

REMOVAL

BULB - HEADLAMP

DUAL HEADLAMPS

CAUTION: Do not contaminate the bulb glass by touching it with your fingers or by allowing it to contact other oily surfaces. Shortened bulb life will result.

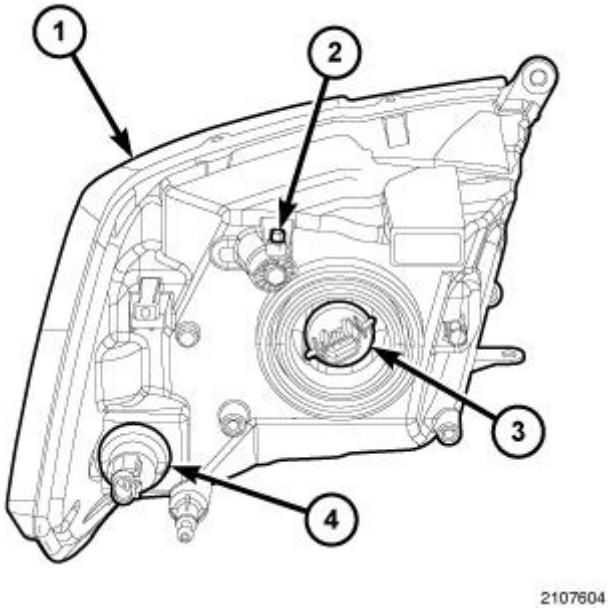

Fig. 92: Dual Headlamp Unit & Bulbs
Courtesy of CHRYSLER GROUP, LLC

1. Remove the front lamp unit (1) from the vehicle.
2. Firmly grasp the headlamp bulb (3) in the reflector through the opening on the back of the front lamp unit housing and rotate it counterclockwise about 30 degrees to unlock it.
3. Pull the bulb straight out from the keyed opening in the reflector.

QUAD HEADLAMPS

CAUTION: Do not contaminate the bulb glass by touching it with your fingers or by allowing it to contact other oily surfaces. Shortened bulb life will result.

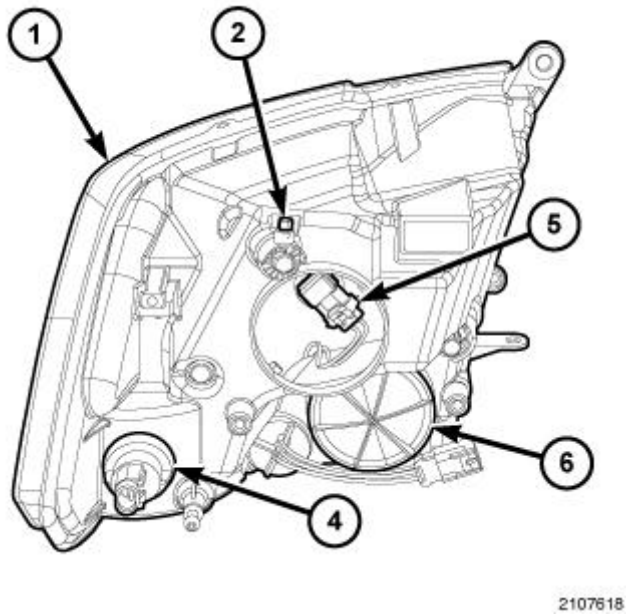

Fig. 93: Quad Headlamps, Access Covers & Connectors
Courtesy of CHRYSLER GROUP, LLC

NOTE: **There are access covers (6) installed over both headlamp bulb access holes in the quad front lamp unit housing. The illustration shows the cover for the low beam bulb removed for reference; however, both covers MUST be reinstalled prior to returning the vehicle to service.**

1. Remove the front lamp unit (1) from the vehicle. Refer to **UNIT, FRONT LAMP, REMOVAL**.
2. Rotate the appropriate low beam (upper) or high beam (lower) access cover (6) on the back of the front lamp unit housing counterclockwise to unlock and remove it.
3. Firmly grasp the appropriate headlamp bulb (5) in the reflector through the opening on the back of the front lamp unit housing and rotate it counterclockwise about 30 degrees to unlock it.
4. Pull the bulb straight out from the keyed opening in the reflector far enough to access and disconnect the front lamp unit pigtail wire harness connector from the bulb connector receptacle.
5. Remove the headlamp bulb from the lamp.

BULB - PARK/TURN SIGNAL/SIDE MARKER

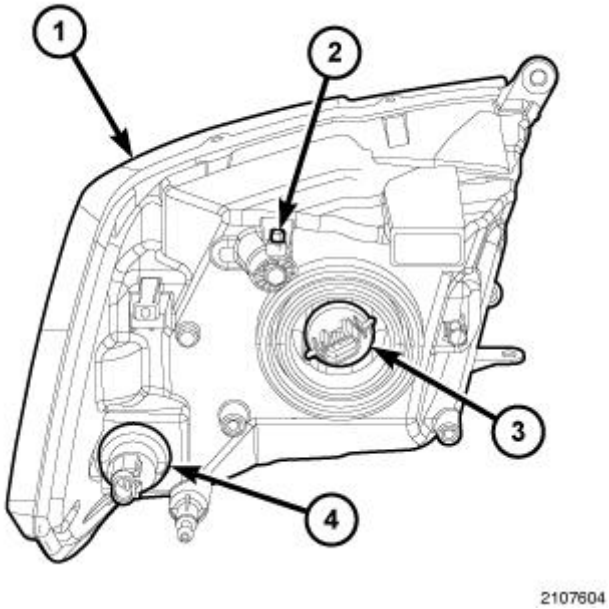

Fig. 94: Dual Headlamp Unit & Bulbs
Courtesy of CHRYSLER GROUP, LLC

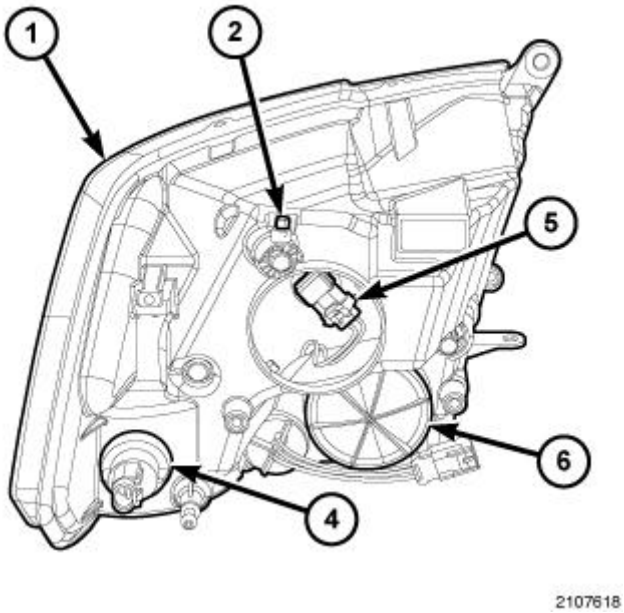

Fig. 95: Quad Headlamps, Access Covers & Connectors
Courtesy of CHRYSLER GROUP, LLC

1. Remove the front lamp unit (1) from the vehicle. Refer to **UNIT, FRONT LAMP, REMOVAL**.
2. Firmly grasp the park/turn signal/side marker bulb socket (4) on the back of the front lamp unit housing and rotate it counterclockwise about 30 degrees to unlock it.
3. Pull the socket and bulb straight out from the keyed opening in the housing.

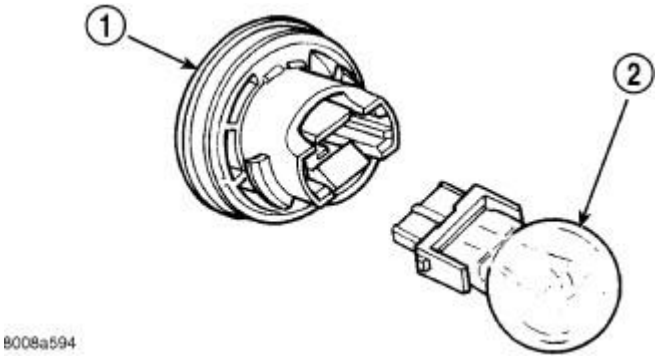

Fig. 96: Light Bulb & Socket
Courtesy of CHRYSLER GROUP, LLC

4. Pull the base of the bulb (2) straight out of the socket (1).

LAMP

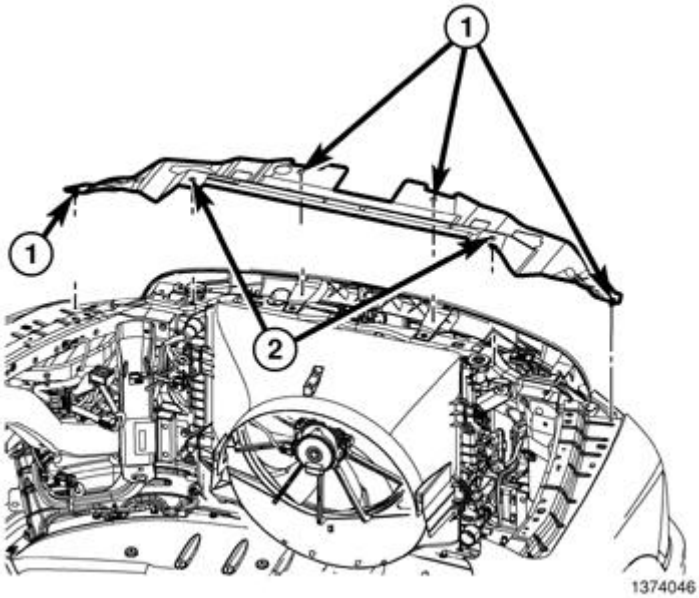

Fig. 97: Upper Radiator Seal & Plastic Rivets
Courtesy of CHRYSLER GROUP, LLC

1. Disconnect and isolate the battery negative cable.
2. Remove the four plastic push-in fasteners (1) that secure the upper radiator seal to the grille support and both fender ledges.
3. Remove the two plastic push-pin rivets (2) that secure the upper radiator seal to the radiator.
4. Remove the upper radiator seal from the vehicle.

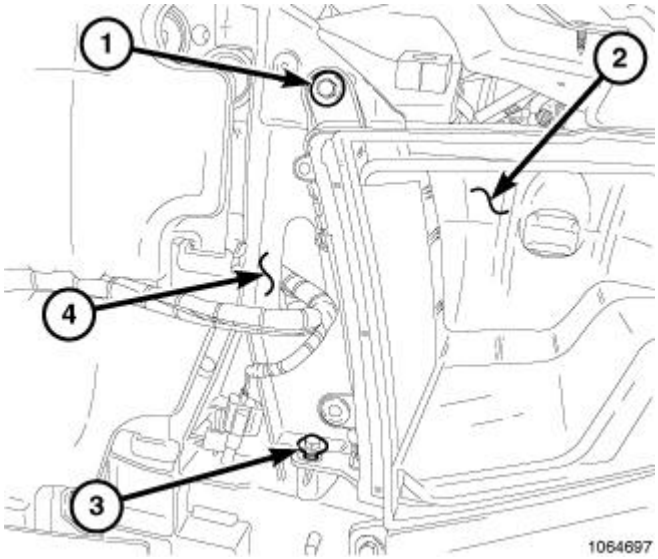

Fig. 98: Front Lamp Unit & Screws
Courtesy of CHRYSLER GROUP, LLC

NOTE: **It is not necessary to remove the grille from the front of the vehicle to service the front lamp units. The illustration shows the grille removed only to assist in clearly identifying the locations of the front lamp unit mounting provisions.**

5. Remove the screw (1) that secures the upper mounting tab of the front lamp unit (2) to the Front End Module (FEM) carrier (also known as the radiator closure) (4).
6. Using a socket with a magnetic insert or with a small piece of butyl tape inserted, reach down between the grille and the FEM carrier to access, remove and retrieve the screw (3) that secures the lower mounting tab of the front lamp unit.

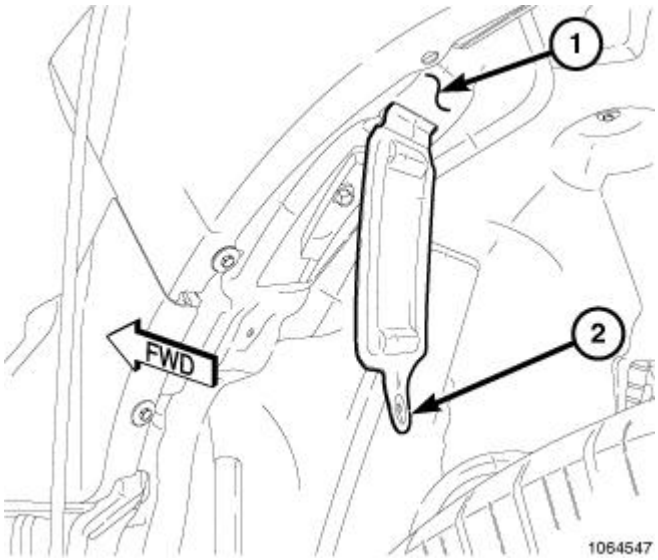

Fig. 99: Access Panel
Courtesy of CHRYSLER GROUP, LLC

7. Remove the fastener that secures the tab at the bottom of the access panel (2) to the front of the front wheel house splash shield (1).

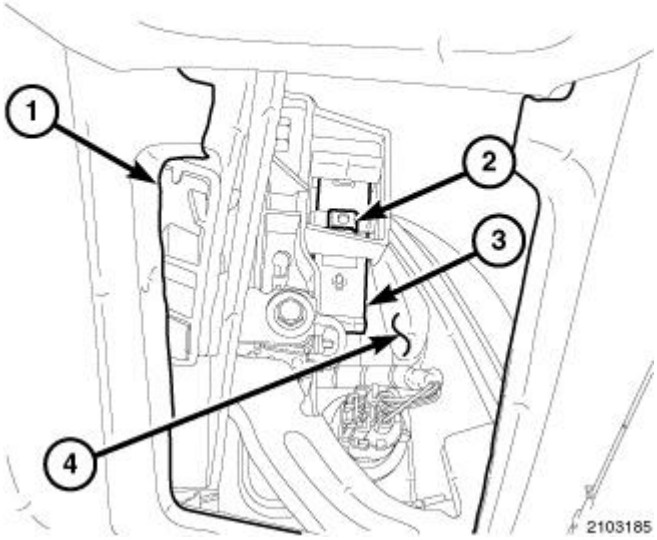

Fig. 100: Front Lamp Unit Housing & Slide Lock
Courtesy of CHRYSLER GROUP, LLC

NOTE: The illustration shows the back of right front lamp unit and slide lock with the slide lock in the locked position.

8. Reach through the access opening (1) of the wheel house splash shield and lift the slide lock (3) upward far enough to disengage it from the lock post (2) integral to the back of the front lamp unit housing (4).

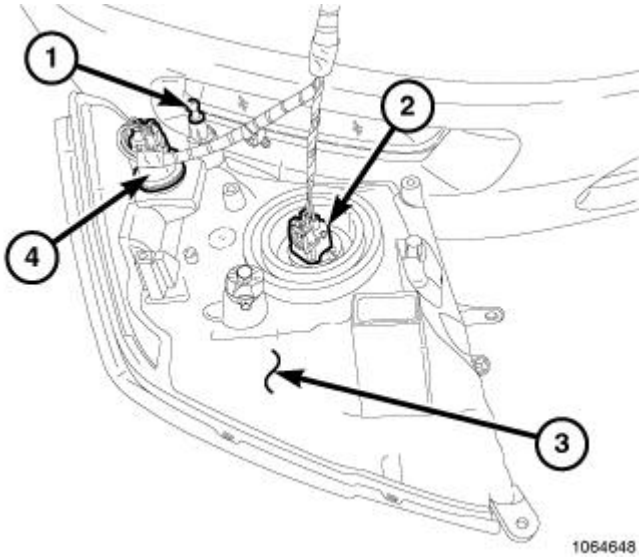

Fig. 101: Park/Turn Signal Bulb Socket & Headlamp Bulb

Courtesy of CHRYSLER GROUP, LLC

9. From the front of the vehicle, grasp the outboard edge of the front lamp unit firmly and pull it straight forward to disengage the ball stud (1) from the plastic grommet in the FEM carrier.
10. Pull the lamp away from the front of the vehicle far enough to access and disconnect the two wire harness connections from the park/turn signal bulb socket (4) and either the headlamp bulb (2) on vehicles with dual headlamps, or from the headlamp pigtail wire harness on vehicles with quad headlamps (not shown in illustration).
11. Remove the front lamp unit from the vehicle.

INSTALLATION

BULB - HEADLAMP

DUAL HEADLAMPS

CAUTION: Always use the correct bulb size and type for replacement. An incorrect bulb size or type may overheat and cause damage to the lamp, the socket or the lamp wiring.

CAUTION: Do not contaminate the bulb glass by touching it with your fingers or by allowing it to contact other oily surfaces. Shortened bulb life will result.

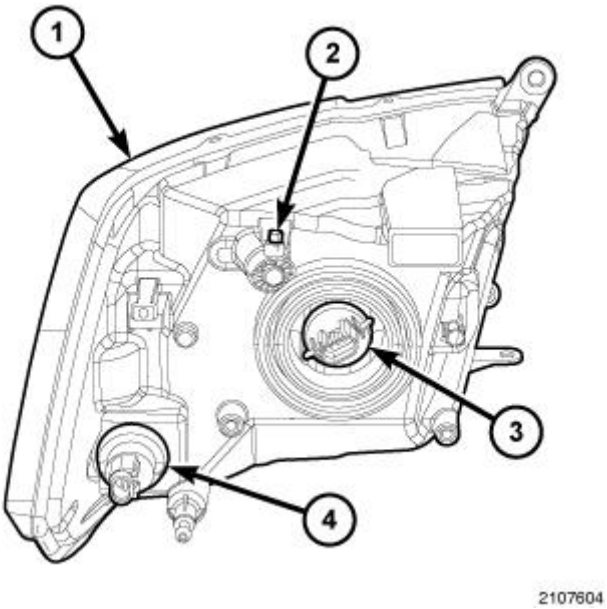

Fig. 102: Dual Headlamp Unit & Bulbs
Courtesy of CHRYSLER GROUP, LLC

1. Align the headlamp bulb (3) with the keyed opening in the front lamp unit (1) reflector through the opening on the back of the lamp housing.

2. Insert the bulb into the keyed opening in the reflector until it is firmly seated.
3. Rotate the bulb clockwise about 30 degrees to lock it into place.
4. Reinstall the front lamp unit onto the vehicle. Refer to **UNIT, FRONT LAMP, INSTALLATION**.

QUAD HEADLAMPS

CAUTION: Always use the correct bulb size and type for replacement. An incorrect bulb size or type may overheat and cause damage to the lamp, the socket or the lamp wiring.

CAUTION: Do not contaminate the bulb glass by touching it with your fingers or by allowing it to contact other oily surfaces. Shortened bulb life will result.

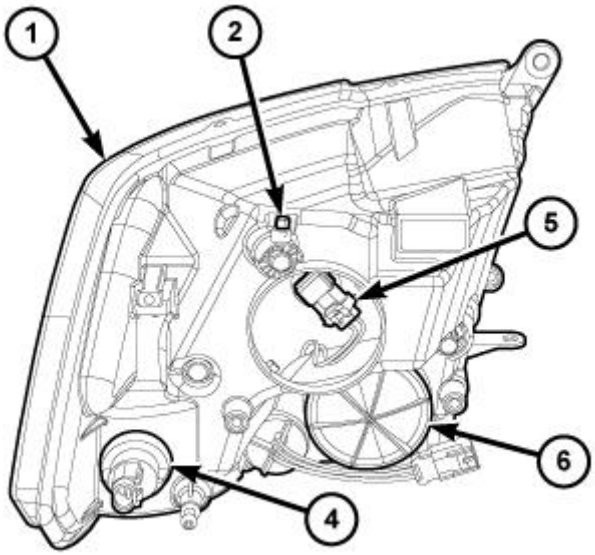

2107618

Fig. 103: Quad Headlamps, Access Covers & Connectors
Courtesy of CHRYSLER GROUP, LLC

NOTE: There are access covers (6) installed over both headlamp bulb access holes in the quad front lamp unit housing. The illustration shows the cover for the low beam bulb removed for reference; however, both covers MUST be reinstalled prior to returning the vehicle to service.

1. Position the headlamp bulb (5) close enough to the appropriate low beam (upper) or high beam (lower) opening of the front lamp unit housing (1) to access and reconnect the front lamp unit pigtail wire harness connector to the bulb connector receptacle.
2. Align the headlamp bulb with the appropriate low beam (upper) or high beam (lower) keyed opening in the front lamp unit reflector.
3. Insert the bulb into the reflector until it is firmly seated.

4. Rotate the bulb clockwise about 30 degrees to lock it into place.
5. Align the access cover (6) with the appropriate low beam (upper) or high beam (lower) opening in the front lamp unit housing.
6. Insert the access cover into the housing until it is firmly seated.
7. Rotate the access cover clockwise to lock it into place.
8. Reinstall the front lamp unit onto the vehicle. Refer to **UNIT, FRONT LAMP, INSTALLATION**.

BULB - PARK/TURN SIGNAL/SIDE MARKER

CAUTION: Always use the correct bulb size and type for replacement. An incorrect bulb size or type may overheat and cause damage to the lamp, the socket or the lamp wiring.

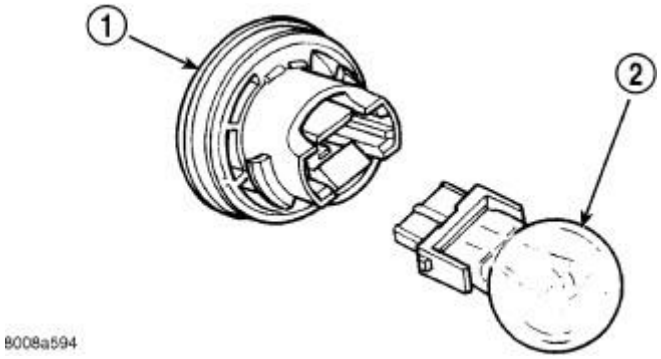

Fig. 104: Light Bulb & Socket
Courtesy of CHRYSLER GROUP, LLC

1. Align the base of the bulb (2) with the park/turn signal bulb socket (1).
2. Push the bulb straight into the socket until the base is firmly seated.

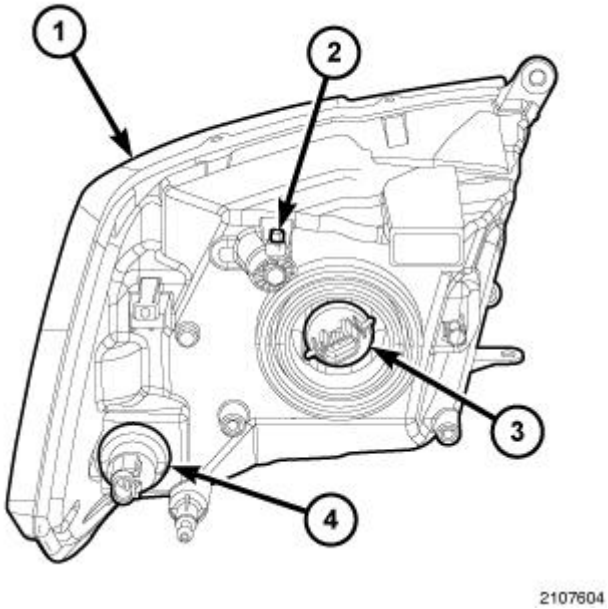

Fig. 105: Dual Headlamp Unit & Bulbs
Courtesy of CHRYSLER GROUP, LLC

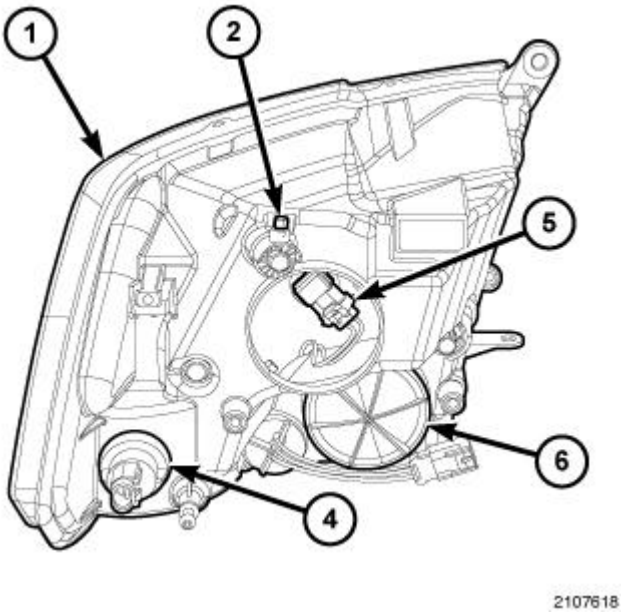

Fig. 106: Quad Headlamps, Access Covers & Connectors
Courtesy of CHRYSLER GROUP, LLC

3. Align the socket and bulb (4) with the keyed opening on the back of the front lamp unit housing (1).
4. Insert the socket and bulb into the housing until the socket is firmly seated.
5. Rotate the socket clockwise about 30 degrees to lock it into place.
6. Reinstall the front lamp unit onto the vehicle. Refer to **UNIT, FRONT LAMP, INSTALLATION**.

LAMP

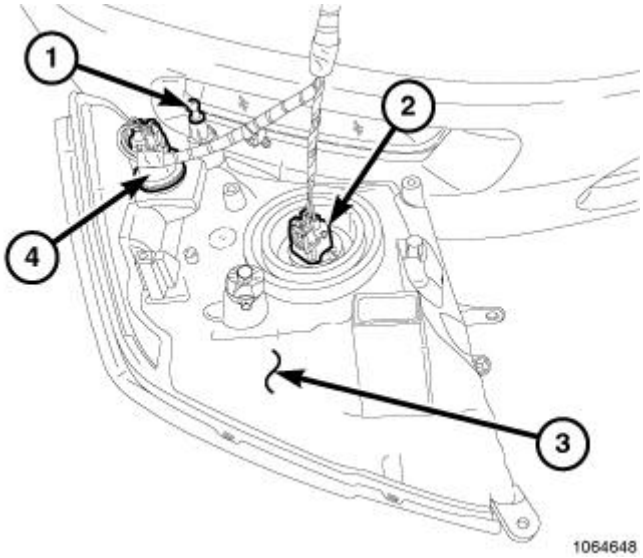

Fig. 107: Park/Turn Signal Bulb Socket & Headlamp Bulb
Courtesy of CHRYSLER GROUP, LLC

1. Check to be certain that the plastic grommet that receives the ball stud (1) on the lower outboard corner of the front lamp unit housing (3) is in good condition and properly installed in the Front End Module (FEM) carrier (also known as the radiator closure panel) and that the slide lock is in the unlocked (fully upward) position.
2. Position the lamp close enough to the front of the vehicle to access and reconnect the two wire harness connections to the park/turn signal bulb socket (4) and either the headlamp bulb (2) on vehicles with dual headlamps, or to the headlamp pigtail wire harness on vehicles with quad headlamps (not shown in illustration).
3. Rearrange the wire harnesses as necessary to prevent them from becoming pinched between the back of the lamp housing and the FEM carrier.
4. Insert the mounting tabs on the inboard side of the lamp between the outboard edge of the grille and the FEM carrier.
5. Position the outboard side of the lamp to the fender and the FEM carrier.
6. Using hand pressure, push the outboard side of the lamp firmly and evenly rearward until the ball stud on the back of the lower outboard corner of the lamp snaps into the plastic grommet in the FEM carrier.

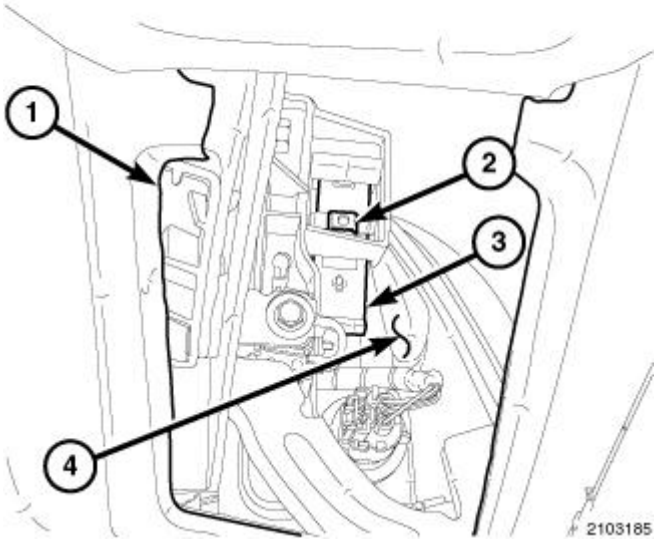

Fig. 108: Front Lamp Unit Housing & Slide Lock
Courtesy of CHRYSLER GROUP, LLC

NOTE: The illustration shows the back of right front lamp unit and slide lock with the slide lock in the locked position.

7. Reach through the access opening (1) of the wheel house splash shield and pull the slide lock (3) downward far enough to fully engage it over the lock post (2) integral to the back of the front lamp unit housing (4).

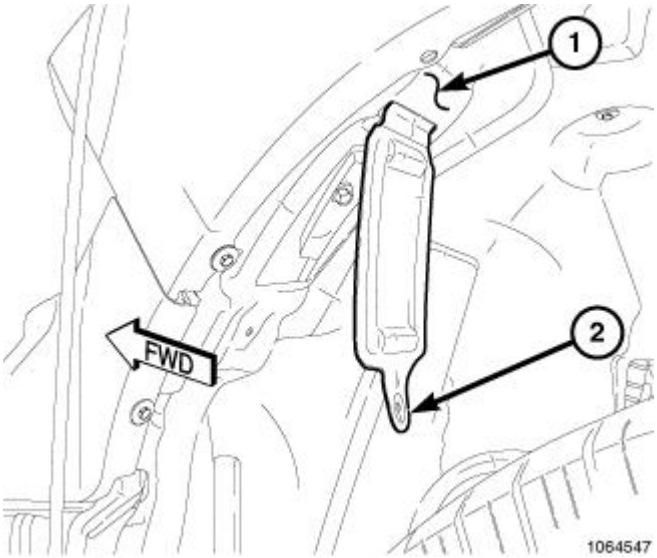

Fig. 109: Access Panel
Courtesy of CHRYSLER GROUP, LLC

8. Position the access panel (2) to the front of the front wheel house splash shield (1) and reinstall the fastener to secure the tab at the bottom of the panel.

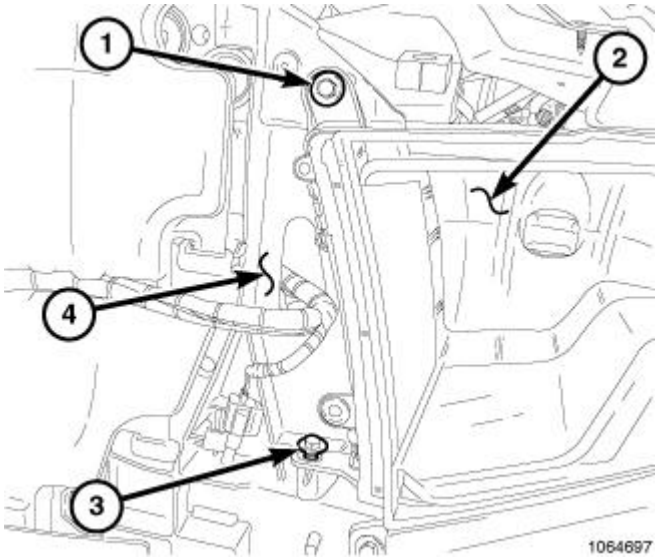

Fig. 110: Front Lamp Unit & Screws
Courtesy of CHRYSLER GROUP, LLC

NOTE: **It is not necessary to remove the grille from the front of the vehicle to service the front lamp units. The illustration shows the grille removed only to assist in clearly identifying the locations of the front lamp unit mounting provisions.**

9. Using a socket with a magnetic insert or with a small piece of butyl tape inserted, reach down between the grille and the FEM carrier (4) to position and loosely install the screw (3) that secures the lower mounting tab of the front lamp unit to the FEM carrier.
10. Loosely install the screw (1) that secures the upper mounting tab of the front lamp unit (2).
11. Align the gaps between the lamp and the grille as well as between the lamp and the fender, then tighten the two screws that secure the inboard side of the lamp. Tighten the screws to 7 N.m (65 in. lbs.).

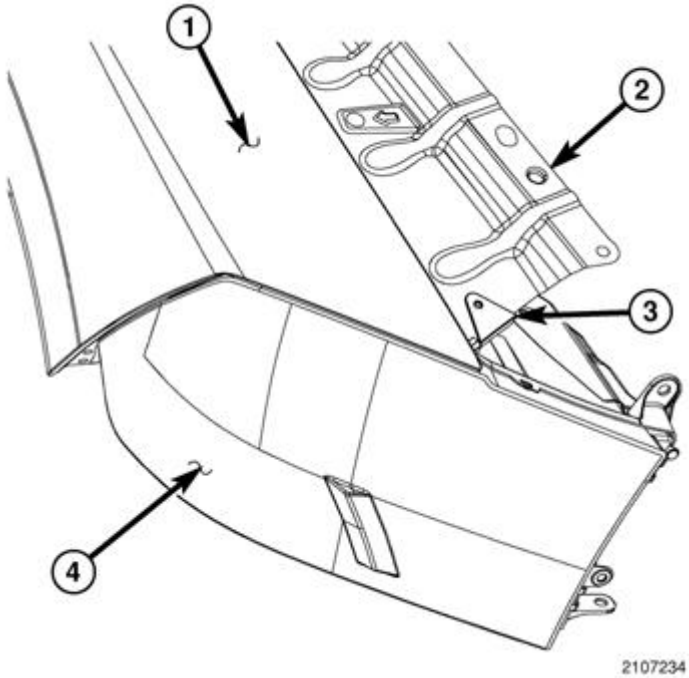

Fig. 111: Fender Bumper, Fender Ledge, Fender & Front Lamp Unit
Courtesy of CHRYSLER GROUP, LLC

12. Check to be certain the fender bumper (3) is in good condition and properly installed on the forward edge of the fender ledge (2) between the fender (1) and the top of the front lamp unit (4) housing.

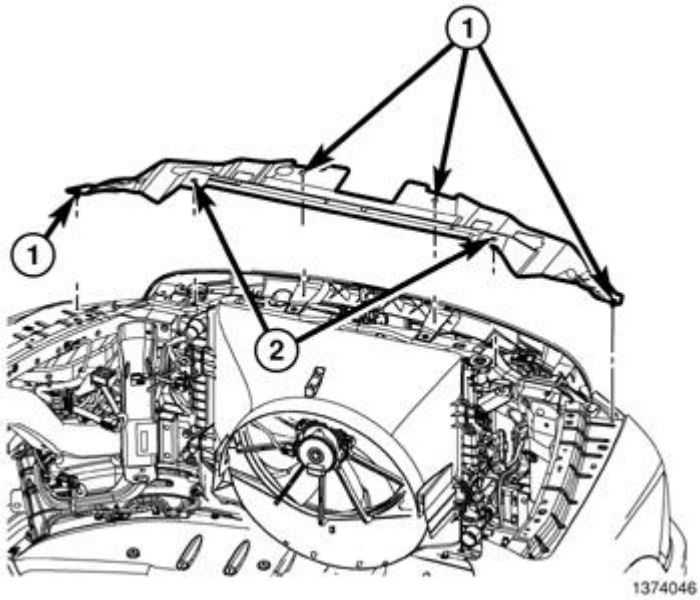

Fig. 112: Upper Radiator Seal & Plastic Rivets
Courtesy of CHRYSLER GROUP, LLC

13. Position the upper radiator seal over the cooling module in the vehicle.
14. Reinstall the two plastic push-in fasteners (1) that secure the upper radiator seal to the grille support.

15. Reinstall the two plastic push-pin rivets (2) that secure the upper radiator seal to the radiator.
16. Reinstall the two plastic push-in fasteners that secure the upper radiator seal and the fender bumpers to both fender ledges.
17. Reconnect the battery negative cable.
18. Confirm proper headlamp alignment. Refer to **STANDARD PROCEDURE**.

WIRING, TRAILER TOW

DESCRIPTION

DESCRIPTION

Vehicles equipped with a factory-installed trailer tow package include an electric trailer brake wiring provision that terminates at a four pin connector located near the top of the large body harness connector bracket under the instrument panel to the left of the steering column. An Electric Brake Kit is available from MOPAR® that includes a trailer brake pigtail harness that mates to the connector and an instruction card for ease of connecting an aftermarket electric trailer brake controller.

Refer to the appropriate wiring information. The wiring information includes wiring diagrams, proper wire and connector repair procedures, further details on wire harness routing and retention, as well as pin-out and location views for the various wire harness connectors, splices and grounds.

OPERATION

OPERATION

If an aftermarket electric trailer brake controller is used, the electric brake kit available through MOPAR® includes a pigtail wire harness and instruction card to make installation easier. The connection (4-way connector) for the harness is located under the instrument panel to the left of the steering column near the top of the large body harness connector bracket. Refer to the appropriate wiring information.

The battery line of this pigtail harness may be used to charge the trailer battery. However, a battery isolation unit is not supplied and the trailer battery may discharge the vehicle battery when the engine is not running. The battery line is protected by a fuse or a circuit breaker. Refer to the owners manual in the vehicle glove box for type, location, and ampere rating of this circuit protection device.

The trailer tow wiring circuits and connections may be diagnosed using conventional diagnostic tools and procedures. Refer to the appropriate wiring information.

WARNING

WARNING

WARNING: To avoid serious or fatal injury eye protection should be used when servicing any glass components.

CAUTION: Do not use bulbs with higher candle power than indicated in the Bulb Application table. Refer to SPECIFICATIONS. In addition, do not use fuses, circuit breakers or relays having greater amperage value than indicated on the fuse panel or in the Owner's Manual. Damage to lamps, lenses, wiring and other related electrical components can result.

DESCRIPTION

DESCRIPTION

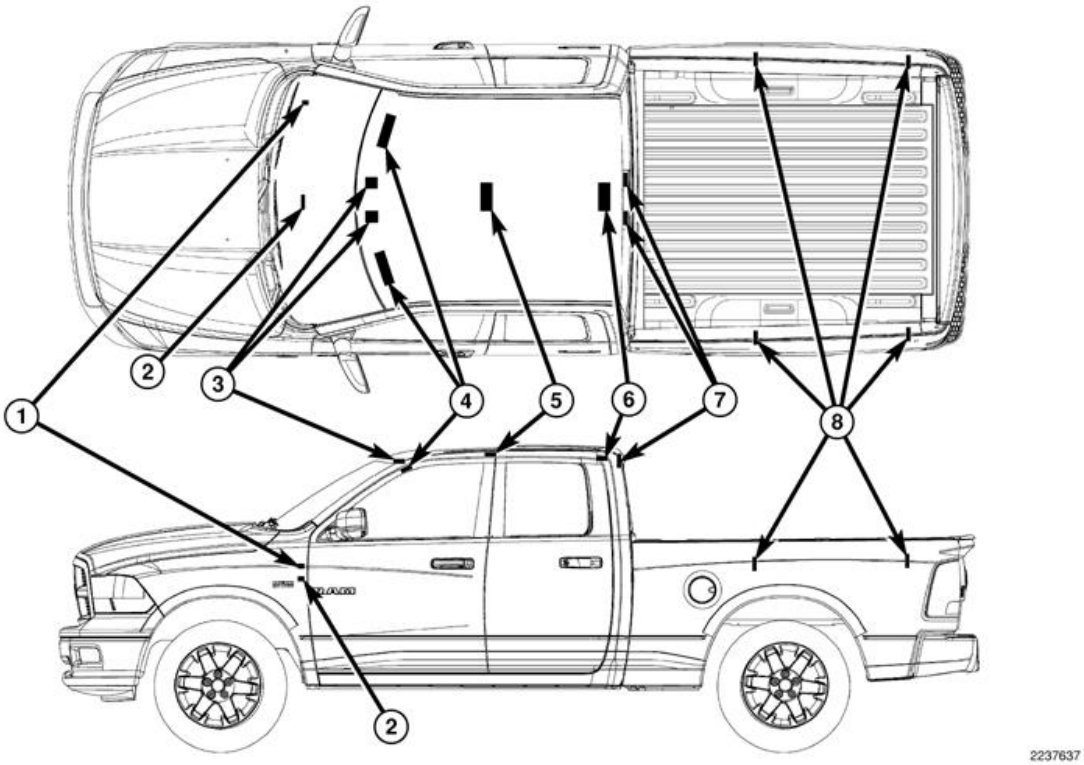

Fig. 1: Locating Interior Lighting System Components
Courtesy of CHRYSLER GROUP, LLC

The interior lighting system for this vehicle includes incandescent lighting on several separate circuits. The lamps in the interior lighting system include:

- **Cargo Lamps (7) -** The standard equipment cargo lamps are integral to the Center High Mounted Stop Lamp (CHMSL) located on the roof rear header above the rear glass on the back of the cab. One cargo lamp bulb is behind a clear lens on each outboard side of the center red lens of the CHMSL. The cargo lamps are manually activated or deactivated by depressing the momentary cargo lamps push button of the headlamp switch on the instrument panel to illuminate the cargo area of the pickup box. The cargo lamps will also be activated for approximately 30 seconds when the Remote Keyless Entry (RKE) transmitter UNLOCK button is depressed, as part of the Illuminated Entry feature.
- **Center Bezel Lamp (2) -** An optional center bezel lamp with a replaceable bulb is located on the underside of an opening in the instrument panel center bezel to illuminate the center console forward storage bin and is supplied voltage by the park lamp circuit to illuminate whenever the exterior lighting is turned ON.
- **Front Dome or Dome/Reading Lamp (Standard Cab Except With Overhead Console) (6) -** On standard cab the dome lamp is centered front to rear in the headliner. The standard (base) dome lamp has a single bulb and is switched by the door ajar switches or the interior lighting thumbwheel of the headlamp switch. The optional dome/reading lamp is mounted in the same location but includes an integral switch that is actuated by depressing the lamp lens.
- **Front Dome or Dome/Reading Lamp (Quad or Crew Cab Except With Overhead Console) (3) -** On quad cab or crew cab the front dome lamp is centered front to rear in the headliner. The standard (base) dome lamp has a single bulb and is switched by the door ajar switches or the interior lighting thumbwheel of the headlamp switch. The optional dome/reading lamp is mounted in the same location but also includes an integral switch that is actuated by depressing the lamp lens.
- **Front Dome/Reading Lamps (With Overhead Console) (5) -** In vehicles equipped with an optional overhead console there are two dome/reading lamps that are integral to the overhead console, which is centered in the headliner near the windshield header. The overhead console lamps are switched by the door ajar switches or the interior lighting thumbwheel of the headlamp switch, but also have switches that are individually actuated by depressing their respective lamp lenses.
- **Glove Box Lamp (1) -** An optional glove box lamp with an integral switch is located at the upper left corner of the instrument panel upper glove box bin and illuminates whenever the upper glove box door is opened.
- **Rear Dome or Dome/Reading Lamp (Quad or Crew Cab Only) (6) -** The rear dome lamp on quad cab and crew cab includes a single bulb and is switched by the door ajar switches or the interior lighting thumbwheel of the headlamp switch. This lamp is centered in the headliner near the back of the cab. The optional dome/reading lamp is mounted in the same location but includes an integral switch that is actuated by depressing the lamp lens.
- **Storage Bin Lamps (8) -** In vehicles equipped with the optional Rambox storage bins there are two lamps located in each storage bin that are controlled by a plunger-type switch that is automatically activated to turn the lamps ON when the storage bin cover is opened, and turn them OFF again when the storage bin cover is closed. Each storage bin also has a push button switch at the rear of the bin that allows the lamps to be manually toggled ON and OFF while the storage bin cover is open.
- **Vanity Lamps (4) -** An optional single intensity vanity lamp is located on one side of a covered mirror on both the right and left sun visors, and is controlled by an integral vanity mirror cover-actuated switch.

Most controls on the instrument panel and elsewhere in the interior of the vehicle are illuminated by the panel

lamps dimmer circuit for night visibility. All have miniature incandescent bulbs, Light-Emitting Diode (LED) units or a combination of the two lighting types that are soldered to internal circuit boards and are not serviceable.

Other components of the interior lighting system for this vehicle include:

- **Door Ajar Switches** - A door ajar switch is integral to the door latch mechanism of each front and rear door.
- **Headlamp Switch** - A headlamp switch is located on the left side of the instrument panel, below and outboard of the steering column. The headlamp switch includes a horizontal thumbwheel for selecting the panel lamps dimming level and for interior lighting control. A PARADE position of the thumbwheel illuminates all display units at full brightness for visibility when driving in daylight with the exterior lighting turned ON. There are also detent positions to turn ON all interior courtesy lighting, and a DEFEAT position that overrides door ajar switch control of interior lighting. Refer to **SWITCH, HEADLAMP, DESCRIPTION** .
- **Instrument Cluster** - The ElectroMechanical Instrument Cluster (EMIC) is also known as the Cab Compartment Node (CCN) in this vehicle. The EMIC/CCN is located in the instrument panel above the steering column opening, directly in front of the driver. Refer to **DESCRIPTION** .
- **Totally Integrated Power Module** - The Totally Integrated Power Module (TIPM) is located in the engine compartment, near the battery. Refer to **DESCRIPTION** .

Hard wired circuitry connects the interior lighting system components to the electrical system of the vehicle. These hard wired circuits are integral to several wire harnesses, which are routed throughout the vehicle and retained by many different methods. These circuits may be connected to each other, to the vehicle electrical system and to the interior lighting components through the use of a combination of soldered splices, splice block connectors, and many different types of wire harness terminal connectors and insulators. Refer to the appropriate wiring information. The wiring information includes wiring diagrams, proper wire and connector repair procedures, further details on wire harness routing and retention, as well as pin-out and location views for the various wire harness connectors, splices and grounds.

OPERATION

OPERATION

The lamps of the interior lighting system can be divided into general classifications based upon the circuit that controls their operation: The courtesy lamp circuit, the reading lamps circuit and the panel lamps dimmer circuit. The optional center bezel lamp is actually controlled by a park lamps output of the Totally Integrated Power Module (TIPM), which energizes this circuit at a fixed intensity whenever the exterior lighting is illuminated. The optional Rambox storage bin lamps are controlled by a fused B(+) output that also originates from the TIPM. Following are paragraphs that briefly describe the operation of the courtesy lamps, reading lamps and panel lamps dimmer interior lighting circuits.

The lamps and the hard wired circuits between components related to the interior lighting system may be diagnosed using conventional diagnostic tools and procedures. Refer to the appropriate wiring information. The wiring information includes wiring diagrams, proper wire and connector repair procedures, details of wire harness routing and retention, connector pin-out information and location views for the various wire harness connectors, splices and grounds.

However, conventional diagnostic methods will not prove conclusive in the diagnosis of the interior lighting system or the electronic controls or communication between modules and other devices that provide some features of the interior lighting system. The most reliable, efficient, and accurate means to diagnose the interior lighting system or the electronic controls and communication related to interior lighting system operation requires the use of a diagnostic scan tool. Refer to the appropriate diagnostic information.

COURTESY LAMP CIRCUIT

Depending upon the selected vehicle options, the courtesy lamp circuit may include the dome and dome/reading lamps located in the headliner near the windshield as well as between the front and rear seating, the cargo lamps located near the center of the rear roof header, the glove box lamp in the upper glove box bin in the instrument panel, and the vanity lamps located in the sun visors. The lamps in the courtesy lamp circuit are provided with a path to ground at all times. The ElectroMechanical Instrument Cluster (EMIC) (also known as the Cab Compartment Node/CCN) controls the output of battery voltage for the courtesy lamps in this circuit based upon hard wired inputs from the headlamp switch and electronic message inputs from the ignition switch (also known as the Wireless Ignition Node/WIN) and the TIPM.

After all of the ajar switch inputs to the TIPM transition to open and the EMIC receives the appropriate electronic **door ajar switch status** messages from the TIPM over the Controller Area Network (CAN) data bus, the EMIC will keep the courtesy lamps illuminated for about 30 seconds, then fade the lamps to OFF (theater dimming) over about 3 seconds. The EMIC also provides courtesy lamp operation based upon a resistor multiplexed input from the interior lighting thumbwheel on the headlamp switch, and provides an Illuminated Entry feature in response to certain electronic **ignition switch status** message inputs received from the WIN and the Occupant Restraint Controller (ORC) over the CAN data bus. A resistor multiplexed courtesy lamp DEFEAT input from the interior lighting thumbwheel of the headlamp switch will cause the EMIC to override normal courtesy lamp operation.

The EMIC provides a battery saver (load shedding) feature for all courtesy lamps, which will automatically turn these lamps OFF if they are left ON for more than about 10 minutes after the electronic **ignition switch status** message transitions to OFF, or about 15 minutes in the case of the cargo lamps.

READING LAMP CIRCUIT

For those lamps on the courtesy lamp circuit with independent switching such as the standard or optional map/reading lamps, the optional vanity lamps and the glove box lamp, the EMIC also provides a battery voltage output to those switches through a separate reading lamp circuit. The EMIC provides a battery saver (load shedding) feature for the reading lamp circuit as well as the courtesy lamp circuit, which will automatically turn these lamps OFF if they are left ON for more than about 10 minutes after the electronic **ignition switch status** message transitions to OFF.

PANEL LAMPS DIMMER CIRCUIT

The panel lamps dimmer circuit actually includes several circuits. These circuits control the back lighting illumination and dimming level of the headlamp switch, the heater-air conditioner controls, the instrument panel switch pods, the four-wheel drive selector switch and the automatic transmission gear selector bezel lamp. All lamps in the panel lamps dimmer circuits are provided a path to ground at all times through a hard wired ground circuit. These lamps are illuminated by a 12-volt Pulse Width Modulated (PWM) output of the EMIC through several panel lamps dimmer circuits.

This shared PWM output synchronizes the selected illumination intensity level of all the lamps in the panel lamps dimmer circuits. The EMIC uses hard wired inputs from the rotary exterior lighting control knob and interior lighting thumbwheel of the headlamp switch to determine when the exterior lighting is turned ON and the dimming level selection. Then the EMIC provides the appropriate PWM outputs through the panel lamps dimmer circuits as well as electronic **dimming level** messages over the CAN data bus to other electronic modules in the vehicle.

The EMIC, the instrument panel switch pods and the radio use the electronic **dimming level** messages to control the illumination intensity of their own back lighting, controls and display units. In addition, when the interior lighting thumbwheel of the headlamp switch is moved to the PARADE (or funeral) mode detent position, all of the electronic display units are illuminated at their full intensity levels for increased visibility when the vehicle is driven during daylight hours with the exterior lighting turned ON. The PARADE mode has no effect on the illumination intensity of incandescent panel lamps.

DIAGNOSIS AND TESTING

DIAGNOSIS AND TESTING - LAMPS/LIGHTING - INTERIOR

WARNING: **To avoid serious or fatal injury on vehicles equipped with airbags, disable the Supplemental Restraint System (SRS) before attempting any steering wheel, steering column, airbag, seat belt tensioner, impact sensor or instrument panel component diagnosis or service. Refer to WARNING . Disconnect and isolate the battery negative (ground) cable, then wait two minutes for the system capacitor to discharge before performing further diagnosis or service. This is the only sure way to disable the SRS. Failure to take the proper precautions could result in accidental airbag deployment.**

NOTE: **When diagnosing the interior lighting circuits, remember that high generator output can burn out bulbs rapidly and repeatedly; and, that dim or flickering bulbs can be caused by low generator output or poor battery condition. If one of these symptoms is a problem on the vehicle, be certain to diagnose the battery and charging system, then repair as necessary.**

NOTE: **A good ground is necessary for proper lighting operation. If a lighting problem is being diagnosed that involves multiple symptoms, systems, or components, the problem can often be traced to a loose, corroded, or open ground.**

The hard wired circuits between components related to the operation of the interior lighting system may be diagnosed using conventional diagnostic tools and procedures. Refer to the appropriate wiring information. The wiring information includes wiring diagrams, proper wire and connector repair procedures, details of wire harness routing and retention, connector pin-out information and location views for the various wire harness connectors, splices and grounds.

However, conventional diagnostic methods will not prove conclusive in the diagnosis of the interior lighting system or the electronic controls or communication between modules and other devices that provide some

features of the interior lighting system. The most reliable, efficient, and accurate means to diagnose the interior lighting system or the electronic controls and communication related to interior lighting system operation requires the use of a diagnostic scan tool. Refer to the appropriate diagnostic information.

COURTESY AND READING LAMP CIRCUITS

CONDITION	POSSIBLE CAUSES	CORRECTION
A SINGLE LAMP IN THE COURTESY LAMP CIRCUIT DOES NOT ILLUMINATE	1. Ineffective or missing bulb.	1. Test and replace the courtesy lamp bulb if required.
	2. Ineffective lamp switch.	2. Test and replace a dome lamp switch, dome/reading lamp switch, glove box lamp switch or vanity lamp switch if required.
	3. Ineffective ground circuit.	3. Test and repair the open ground circuit if required.
	4. Ineffective feed circuit.	4. Test and repair the open feed circuit if required.
ALL LAMPS IN THE COURTESY LAMP CIRCUIT DO NOT ILLUMINATE	1. Courtesy DEFEAT feature turned ON.	1. Turn courtesy DEFEAT feature OFF.
	2. Ineffective ground circuit.	2. Test and repair the open ground circuit if required.
	3. Ineffective or missing fuse.	3. Test and replace the fuse if required.
	4. Ineffective courtesy lamp control circuit.	4. Test and repair the courtesy lamp control circuit if required.
	5. Ineffective headlamp switch.	5. Test and replace the headlamp switch if required.
	6. Ineffective ElectroMechanical Instrument Cluster (EMIC) inputs or outputs.	6. Use a diagnostic scan tool to test the EMIC inputs and outputs. Refer to the appropriate diagnostic information.
	7. Ineffective Totally Integrated Power Module (TIPM) inputs or outputs.	7. Use a diagnostic scan tool to test the TIPM inputs and outputs. Refer to the appropriate diagnostic information.
A SINGLE LAMP IN THE COURTESY LAMP CIRCUIT DOES NOT EXTINGUISH	1. Ineffective lamp switch.	1. Test and replace a dome lamp switch, dome/reading lamp switch, glove box lamp switch or vanity lamp switch if required.
ALL LAMPS IN THE COURTESY LAMP CIRCUIT DO NOT EXTINGUISH	1. Ineffective ajar switch.	1. Test and replace a door ajar switch if required.
	2. Ineffective ajar switch sense circuit.	2. Test and repair the shorted ajar switch sense circuit if required.
	3. Ineffective EMIC inputs or outputs.	3. Use a diagnostic scan tool to test the EMIC inputs and outputs. Refer to the appropriate diagnostic information.
	4. Ineffective TIPM inputs or	4. Use a diagnostic scan tool to test the

	outputs.	TIPM inputs and outputs. Refer to the appropriate diagnostic information.

PANEL LAMPS DIMMER CIRCUIT

NOTE: **As part of the exterior lighting failsafe feature, upon ignition ON all of the panel lamps dimmer circuit lamps will illuminate at full intensity and the exterior park lamps and headlamp low beams will illuminate regardless of the headlamp switch position if the instrument cluster cannot detect an input from the headlamp switch, or if there is a loss of data bus communication.**

CONDITION	POSSIBLE CAUSES	CORRECTION
A SINGLE LAMP DOES NOT ILLUMINATE	1. Ineffective or missing bulb.	1. Test and replace the lamp bulb if required.
	2. Ineffective ground circuit.	2. Test and repair the open lamp ground circuit if required.
	3. Ineffective feed circuit.	3. Test and repair the open lamp feed circuit if required.
A SINGLE LAMP DOES NOT EXTINGUISH	1. Ineffective feed circuit.	1. Test and repair the shorted lamp feed circuit if required.
ALL LAMPS DO NOT ILLUMINATE	1. Ineffective headlamp switch.	1. Test and replace the headlamp switch if required.
	2. Ineffective ElectroMechanical Instrument Cluster (EMIC) inputs or outputs.	2. Use a diagnostic scan tool to test the EMIC inputs and outputs. Refer to the appropriate diagnostic information.
ALL LAMPS ILLUMINATE AT FULL INTENSITY AT IGNITION ON	1. Loss of data bus communication.	1. Use a diagnostic scan tool to test the data bus. Refer to the appropriate diagnostic information.

SPECIFICATIONS

SPECIFICATIONS

COURTESY LAMPS

BULB APPLICATION TABLE

LAMP	BULB
CARGO LAMP	912
DOME LAMP (NON-SWITCHED OR SWITCHED)	578
FRONT DOME/READING WITH OVERHEAD CONSOLE	212-2
GLOVE BOX LAMP	194
RAMBOX STORAGE BIN LAMP	194

VANITY LAMP	37

TORQUE SPECIFICATIONS

DESCRIPTION	N.m	Ft. Lbs.	In. Lbs.
CHMSL Mounting Screws	2	-	20

LAMP, BEZEL, CENTER

REMOVAL

BULB

WARNING: To avoid serious or fatal injury on vehicles equipped with airbags, disable the Supplemental Restraint System (SRS) before attempting any steering wheel, steering column, airbag, seat belt tensioner, impact sensor or instrument panel component diagnosis or service. Refer to WARNING . Disconnect and isolate the battery negative (ground) cable, then wait two minutes for the system capacitor to discharge before performing further diagnosis or service. This is the only sure way to disable the SRS. Failure to take the proper precautions could result in accidental airbag deployment.

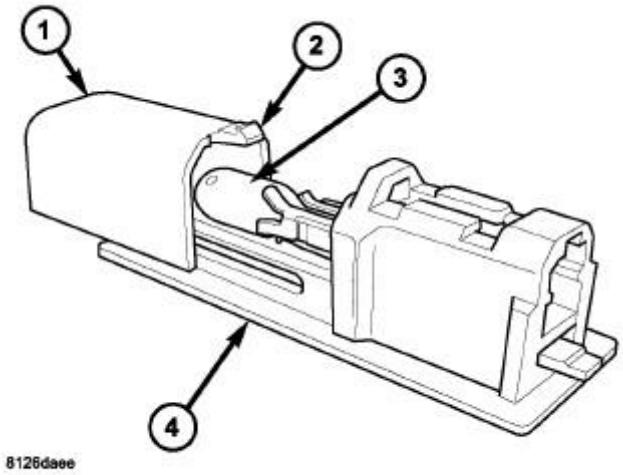

Fig. 2: Center Bezel Lamp Bulb
Courtesy of CHRYSLER GROUP, LLC

1. Disconnect and isolate the battery negative cable.
2. Remove the center bezel lamp unit (4) from the instrument panel center bezel. Refer to **LAMP, BEZEL, CENTER, REMOVAL**.

3. Depress the latch tab (2) and slide the hood (1) off of the end of the lamp housing.
4. Pull the base of the bulb (3) straight out of the bulb holder within the lamp housing.

LAMP

WARNING: To avoid serious or fatal injury on vehicles equipped with airbags, disable the Supplemental Restraint System (SRS) before attempting any steering wheel, steering column, airbag, seat belt tensioner, impact sensor or instrument panel component diagnosis or service. Refer to WARNING . Disconnect and isolate the battery negative (ground) cable, then wait two minutes for the system capacitor to discharge before performing further diagnosis or service. This is the only sure way to disable the SRS. Failure to take the proper precautions could result in accidental airbag deployment.

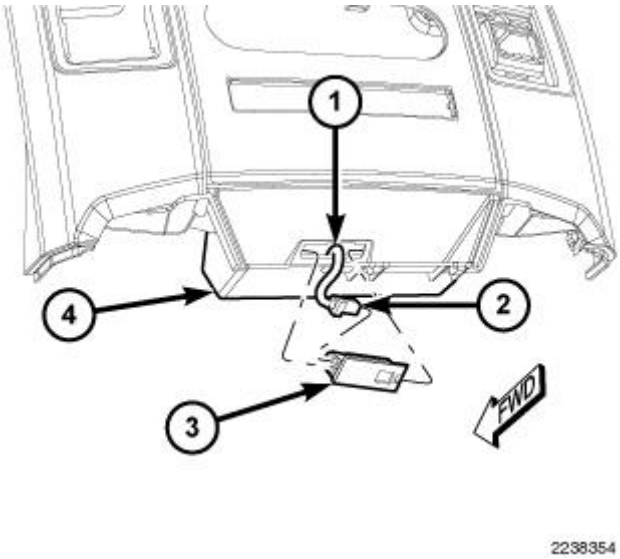

Fig. 3: Center Bezel Lamp Unit
Courtesy of CHRYSLER GROUP, LLC

1. Disconnect and isolate the battery negative cable.
2. The center bezel lamp unit (3) is located on the instrument panel center bezel (4), in the roof of the bezel opening located over the center floor console forward storage bin. Reach into the bin and use a small thin-bladed screwdriver to depress the tab of the lamp latch feature on the end of the lamp housing nearest the lens.
3. Pull the lamp down and toward the right to disengage the fixed lamp retainer from the mounting hole of the center bezel.
4. Disconnect the instrument panel wire harness (1) connector (2) from the lamp connector receptacle.
5. Remove the lamp unit from the center bezel.

INSTALLATION

BULB

WARNING: To avoid serious or fatal injury on vehicles equipped with airbags, disable the Supplemental Restraint System (SRS) before attempting any steering wheel, steering column, airbag, seat belt tensioner, impact sensor or instrument panel component diagnosis or service. Refer to WARNING . Disconnect and isolate the battery negative (ground) cable, then wait two minutes for the system capacitor to discharge before performing further diagnosis or service. This is the only sure way to disable the SRS. Failure to take the proper precautions could result in accidental airbag deployment.

CAUTION: Always use the correct bulb size and type for replacement. An incorrect bulb size or type may overheat and cause damage to the lamp, the socket or the lamp wiring.

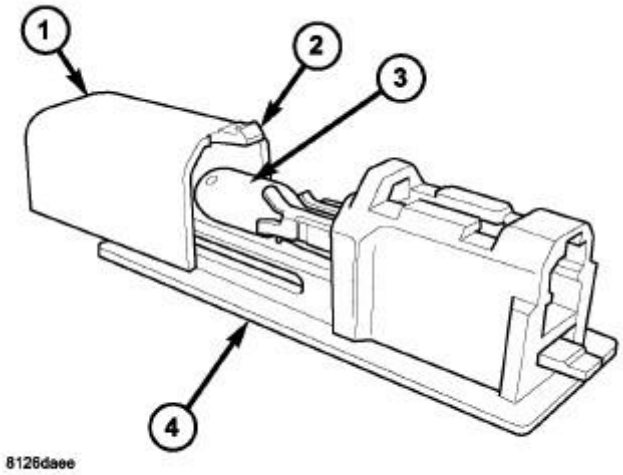

Fig. 4: Center Bezel Lamp Bulb
Courtesy of CHRYSLER GROUP, LLC

1. Align the base of the center bezel lamp bulb (3) with the bulb holder within the lamp housing (4).
2. Push the bulb straight into the bulb holder until the base is firmly seated.
3. Slide the hood (1) over the end of the lamp housing until the latch tab (2) snaps into place.
4. Reinstall the lamp unit into the instrument panel center bezel. Refer to **LAMP, BEZEL, CENTER, INSTALLATION**.
5. Reconnect the battery negative cable.

LAMP

WARNING: To avoid serious or fatal injury on vehicles equipped with airbags, disable

the Supplemental Restraint System (SRS) before attempting any steering wheel, steering column, airbag, seat belt tensioner, impact sensor or instrument panel component diagnosis or service. Refer to WARNING . Disconnect and isolate the battery negative (ground) cable, then wait two minutes for the system capacitor to discharge before performing further diagnosis or service. This is the only sure way to disable the SRS. Failure to take the proper precautions could result in accidental airbag deployment.

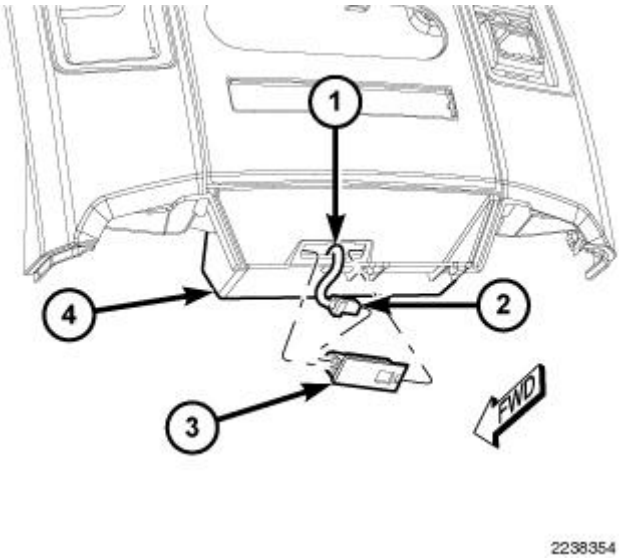

Fig. 5: Center Bezel Lamp Unit
Courtesy of CHRYSLER GROUP, LLC

1. Position the center bezel lamp unit (3) through the lower opening of the instrument panel center bezel (4) over the center floor console forward storage bin.
2. Reconnect the instrument panel wire harness (1) connector (2) to the lamp connector receptacle.
3. Engage the fixed lamp retainer with the left edge of the mounting hole in the roof of the center bezel opening.
4. Push the right end of the lamp upward until the lamp latch feature on the end of the lamp housing nearest the lens snaps into the mounting hole.
5. Reconnect the battery negative cable.

LAMP, CARGO

REMOVAL

REMOVAL

NOTE: The Center High Mounted Stop Lamp (CHMSL) may house up to three bulbs. The center bulb is the CHMSL bulb and illuminates through a red lens, while on vehicles so equipped the two outboard bulbs are for the cargo lamps and

illuminate through clear lenses. The bulb types and service procedures are identical for all three of these bulbs.

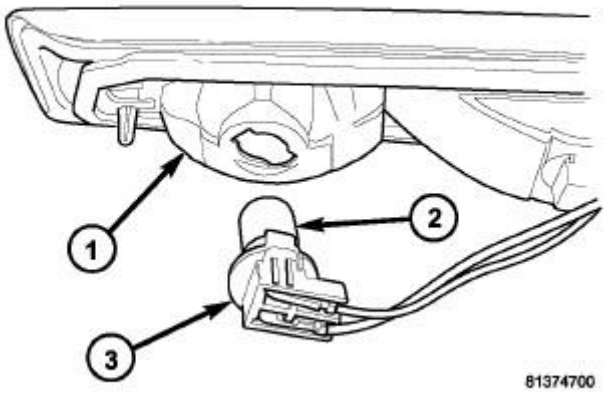

Fig. 6: Removing/Installing Stop Lamp/Cargo Lamp Bulb
Courtesy of CHRYSLER GROUP, LLC

1. Disconnect and isolate the battery negative cable.
2. Remove the two screws that secure the CHMSL to the rear cab roof header panel.
3. Pull the CHMSL lens and housing (1) away from the header panel far enough to access the lamp wiring and bulb sockets on the back of the lamp.
4. Firmly grasp either outboard socket (3) on the back of the lamp housing and rotate it counterclockwise about 30 degrees to unlock it.
5. Pull the socket and bulb straight out from the keyed opening in the housing.
6. Pull the base of the bulb (2) straight out of the socket.

INSTALLATION

INSTALLATION

CAUTION: Always use the correct bulb size and type for replacement. An incorrect bulb size or type may overheat and cause damage to the lamp, the socket or the lamp wiring.

NOTE: The Center High Mounted Stop Lamp (CHMSL) may house up to three bulbs. The center bulb is the CHMSL bulb and illuminates through a red lens, while on vehicles so equipped the two outboard bulbs are for the cargo lamps and illuminate through clear lenses. The bulb types and service procedures are identical for all three of these bulbs.

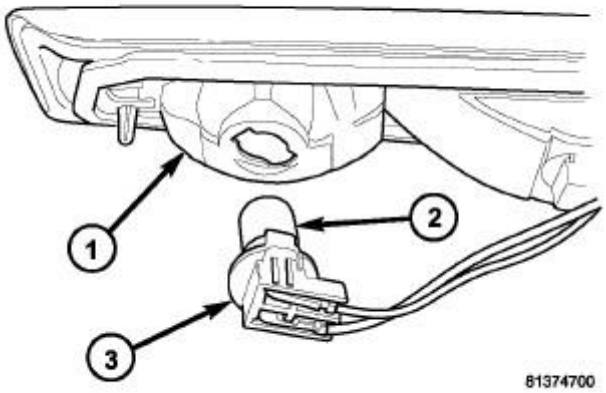

Fig. 7: Removing/Installing Stop Lamp/Cargo Lamp Bulb
Courtesy of CHRYSLER GROUP, LLC

1. Align the base of the bulb (2) with the socket (3).
2. Push the bulb straight into the socket until the base is firmly seated.
3. Align the socket and bulb with either keyed outboard opening on the back of CHMSL housing (1).
4. Insert the socket and bulb into the housing until the socket is firmly seated.
5. Rotate the socket clockwise about 30 degrees to lock it into place.
6. Position the CHMSL into the opening in the rear cab roof header panel.
7. Install and tighten the two screws (passenger side first) that secure the CHMSL to the header panel. Tighten the screws to 2 N.m (20 in. lbs.).
8. Reconnect the battery negative cable.

LAMP, DOME

REMOVAL

BULB

NOTE: **There are two types of single lamp dome lamps available in this vehicle: one with a switch that is activated by depressing the lamp lens, and one without a switch. The bulb types and service procedures are identical for both of these lamps.**

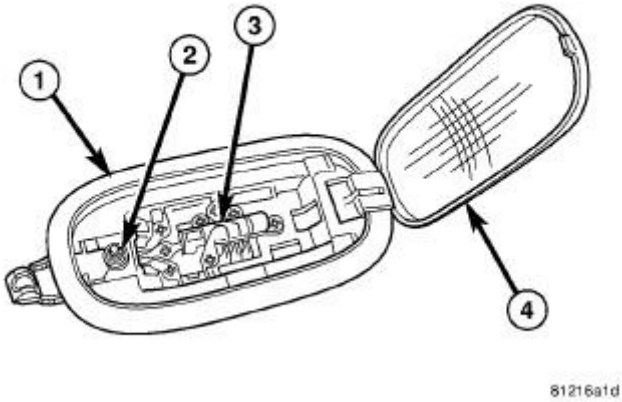

Fig. 8: Dome Lamp Bulb (Rear)
Courtesy of CHRYSLER GROUP, LLC

1. Disconnect and isolate the battery negative cable.
2. Insert the tip of a small flat-bladed screwdriver into the notch on one side of the dome lamp between the lens (4) and the lamp housing (1).
3. Gently pry the notched edge of the lens downward until it unsnaps from the housing.
4. Swing the notched end of the lens downward far enough to access the bulb (3).
5. Carefully unsnap the bulb from the two bulb holders within the dome lamp housing.

LAMP

NOTE: **There are two types of single lamp dome lamps available in this vehicle: one with a switch that is activated by depressing the lamp lens, and one without a switch. The bulb types and service procedures are identical for both of these lamps.**

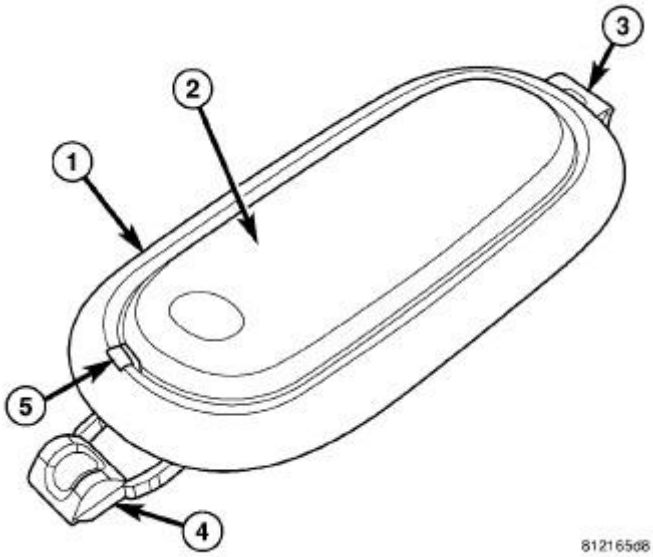

Fig. 9: Dome Lamp Unit, Housing, Hinge, Lens & Notch
Courtesy of CHRYSLER GROUP, LLC

1. Disconnect and isolate the battery negative cable.
2. Insert the tip of a small flat bladed screwdriver into the notch (5) between the lens (2) and the housing (1) on one side of the dome lamp unit.
3. Gently pry the end of the lens outward until it unsnaps from the housing.
4. Swing the lens outward until it is perpendicular to the housing.
5. Pull the lens hinge/retainer end (3) of the housing outward slightly from the headliner, then slide the exposed end of the housing away from the mounting hole far enough to disengage the fixed retainer (4) on the notched end from the headliner.
6. Pull the lamp away from the headliner mounting hole far enough to access and disconnect the wire harness connector from the back of the lamp.
7. Remove the lamp from the vehicle.

INSTALLATION

BULB

CAUTION: Always use the correct bulb size and type for replacement. An incorrect bulb size or type may overheat and cause damage to the lamp, the socket or the lamp wiring.

NOTE: There are two types of single lamp dome lamps available in this vehicle: one with a switch that is activated by depressing the lamp lens, and one without a switch. The bulb types and service procedures are identical for both of these lamps.

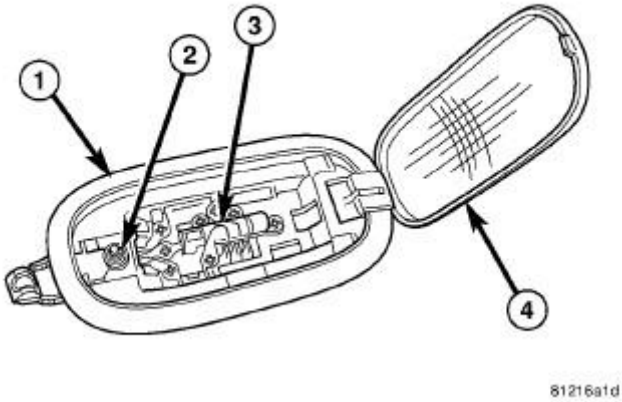

Fig. 10: Dome Lamp Bulb (Rear)
Courtesy of CHRYSLER GROUP, LLC

1. Align the ends of the bulb (3) with the two bulb holders within the dome lamp housing (1).
2. Carefully press the bulb firmly and evenly into the bulb holders until it snaps into place.
3. Swing the notched end of the lens (4) up into position against the housing, then press upward on the lens firmly and evenly until it snaps into the housing.
4. Reconnect the battery negative cable.

LAMP

NOTE: **There are two types of single lamp dome lamps available in this vehicle: one with a switch that is activated by depressing the lamp lens, and one without a switch. The bulb types and service procedures are identical for both of these lamps.**

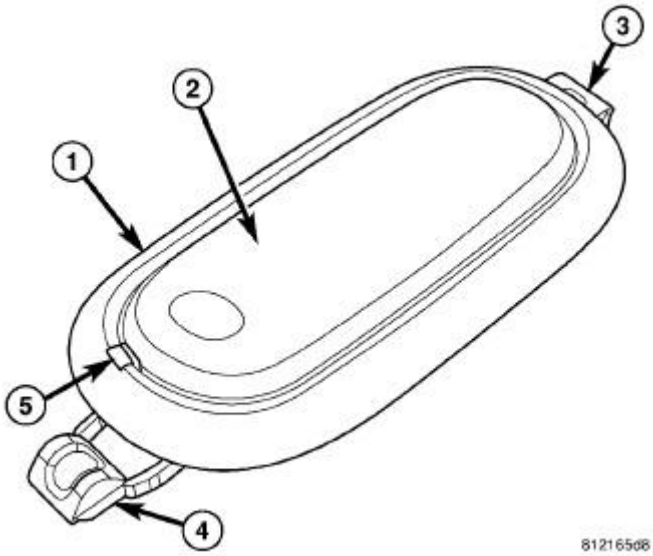

Fig. 11: Dome Lamp Unit, Housing, Hinge, Lens & Notch
Courtesy of CHRYSLER GROUP, LLC

1. Position the dome lamp unit (1) to the mounting hole in the headliner.
2. Reconnect the wire harness connector to the connector on the back of the lamp.
3. Insert the fixed retainer on the notched end (4) of the lamp housing up into one side of the mounting hole in the headliner.
4. Slide the notched end of the housing into the mounting hole far enough to engage the lens hinge/retainer (3) into the opposite side of the hole in the headliner.
5. Gently and evenly press the lens hinge/retainer end of the lamp into the mounting hole until the bezel of the lamp housing is flush with the headliner.
6. Swing the notched end of the lamp lens (2) into position against the lamp housing, then press on the lens firmly and evenly until it snaps into the housing.
7. Reconnect the battery negative cable.

LAMP, GLOVE BOX

REMOVAL

BULB

WARNING: **To avoid serious or fatal injury on vehicles equipped with airbags, disable the Supplemental Restraint System (SRS) before attempting any steering wheel, steering column, airbag, seat belt tensioner, impact sensor or instrument panel component diagnosis or service. Refer to WARNING . Disconnect and isolate the battery negative (ground) cable, then wait two minutes for the system capacitor to discharge before performing further diagnosis or service. This is the only sure way to disable the SRS. Failure to take the proper precautions could result in accidental airbag deployment.**

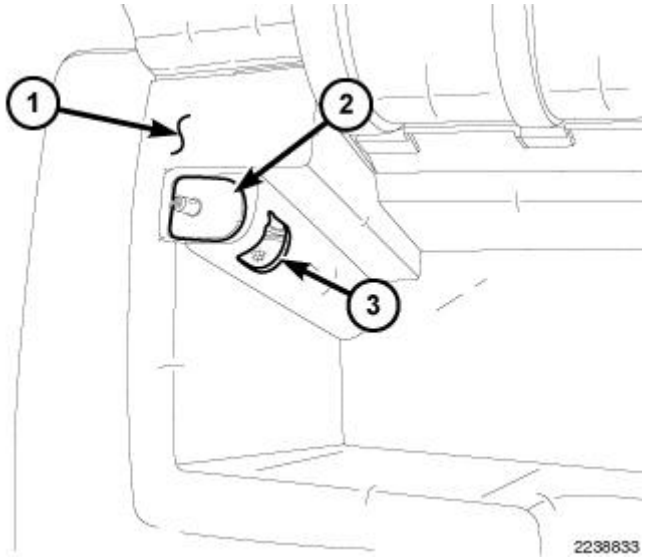

Fig. 12: Glove Box Bin & Window
Courtesy of CHRYSLER GROUP, LLC

1. Disconnect and isolate the battery negative cable.
2. Open the upper glove box door.
3. Reach through the window (3) in the upper glove box bin (1) to access the bulb located in the bulb holder integral to the glove box lamp and switch unit (2).
4. Pull the base of the bulb straight out of the bulb holder and through the bin window.

LAMP/SWITCH

WARNING: **To avoid serious or fatal injury on vehicles equipped with airbags, disable the Supplemental Restraint System (SRS) before attempting any steering wheel, steering column, airbag, seat belt tensioner, impact sensor or instrument panel component diagnosis or service. Refer to WARNING . Disconnect and isolate the battery negative (ground) cable, then wait two minutes for the system capacitor to discharge before performing further diagnosis or service. This is the only sure way to disable the SRS. Failure to take the proper precautions could result in accidental airbag deployment.**

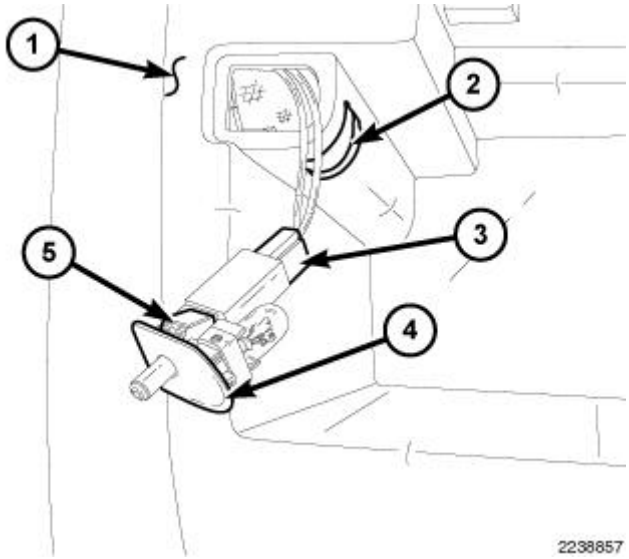

Fig. 13: Glove Box Lamp & Switch Unit
Courtesy of CHRYSLER GROUP, LLC

1. Disconnect and isolate the battery negative cable.
2. Open the upper glove box door.
3. Reach through the window (2) in the upper glove box bin (1) forward of the glove box lamp and switch unit (4) to access and depress one of the retaining latches (5) on the top or the bottom of the switch housing.
4. While holding the retaining latch depressed, push the glove box lamp and switch unit out through the mounting hole in the face of the bin.
5. Disconnect the instrument panel wire harness connector (3) from the glove box lamp and switch connector receptacle.
6. Remove the lamp and switch unit from the upper glove box bin.

INSTALLATION

BULB

WARNING: To avoid serious or fatal injury on vehicles equipped with airbags, disable the Supplemental Restraint System (SRS) before attempting any steering wheel, steering column, airbag, seat belt tensioner, impact sensor or instrument panel component diagnosis or service. Refer to WARNING . Disconnect and isolate the battery negative (ground) cable, then wait two minutes for the system capacitor to discharge before performing further diagnosis or service. This is the only sure way to disable the SRS. Failure to take the proper precautions could result in accidental airbag deployment.

CAUTION: Always use the correct bulb size and type for replacement. An incorrect bulb size or type may overheat and cause damage to the lamp, the socket

or the lamp wiring.

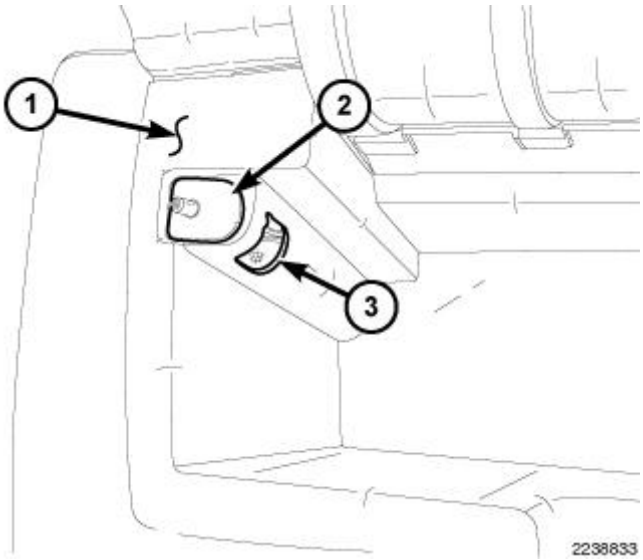

Fig. 14: Glove Box Bin & Window
Courtesy of CHRYSLER GROUP, LLC

1. Position the bulb through the window (3) in the upper glove box bin (1) and align the base of the bulb with the bulb holder integral to the glove box lamp and switch unit (2).
2. Push the bulb straight into the bulb holder until the base is firmly seated.
3. Close the upper glove box door.
4. Reconnect the battery negative cable.

LAMP/SWITCH

WARNING: **To avoid serious or fatal injury on vehicles equipped with airbags, disable the Supplemental Restraint System (SRS) before attempting any steering wheel, steering column, airbag, seat belt tensioner, impact sensor or instrument panel component diagnosis or service. Refer to WARNING . Disconnect and isolate the battery negative (ground) cable, then wait two minutes for the system capacitor to discharge before performing further diagnosis or service. This is the only sure way to disable the SRS. Failure to take the proper precautions could result in accidental airbag deployment.**

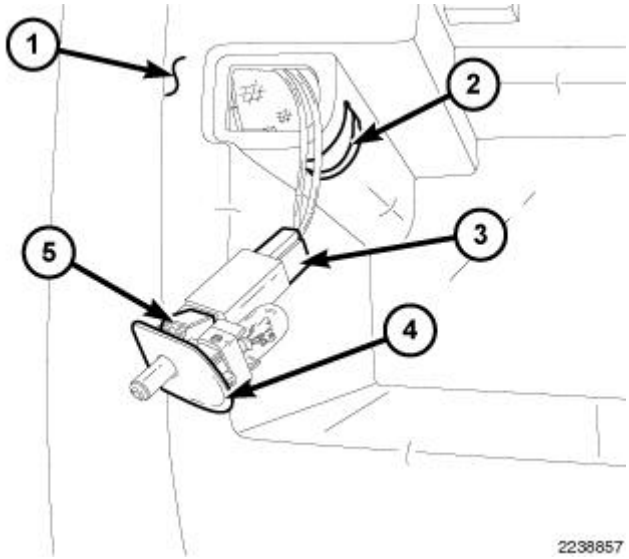

Fig. 15: Glove Box Lamp & Switch Unit
Courtesy of CHRYSLER GROUP, LLC

1. Position the glove box lamp and switch unit (4) into the upper glove box bin (1).
2. Reconnect the instrument panel wire harness connector (3) to the switch connector receptacle.
3. Feed the wire harness back through the switch mounting hole of the upper glove box bin.
4. Align the lamp and switch unit with the mounting hole in the bin.
5. Using hand pressure, push the lamp and switch unit firmly and evenly into the mounting hole until it is fully seated and both retaining latches (5) are engaged.
6. Close the upper glove box door.
7. Reconnect the battery negative cable.

LAMP, READING

REMOVAL

REMOVAL

NOTE: **On vehicles equipped with an optional overhead console the standard front dome lamp is replaced by two combination dome and reading lamps that are integral to the console housing. Each of these lamps is controlled by the door ajar switches on the courtesy lamp circuit, but also are independently controlled by a switch that is activated by depressing the lamp lens. The bulb types and service procedures are identical for both of these lamps.**

NOTE: **The overhead console reading lamp switches and bulb holders are serviced as a unit with the overhead console wire harness.**

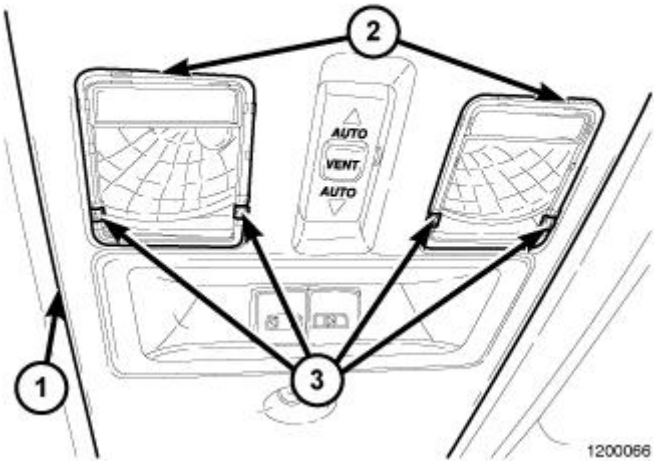

Fig. 16: Overhead Console, Switch Tab & Pivot Tabs
Courtesy of CHRYSLER GROUP, LLC

1. Disconnect and isolate the battery negative cable.
2. Using a small thin-bladed screwdriver, gently pry near the front of the lamp lens between each side and the overhead console housing (1) to unsnap the pivot tabs (3) on the lens from the pivots in the lamp housing.
3. With the lens disengaged from both pivots, pull the lens forward far enough to disengage the switch tab (2) on the rear edge of the lens from the slot in the rear of the overhead console lamp housing.
4. Remove the lens from the housing.

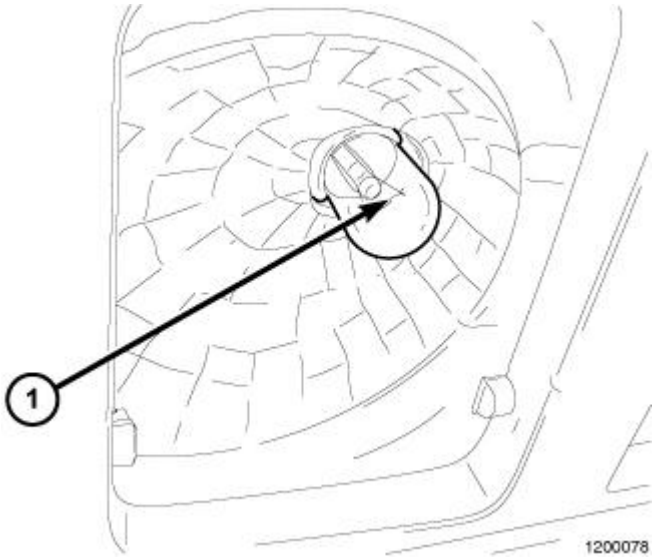

Fig. 17: Bulb
Courtesy of CHRYSLER GROUP, LLC

5. Firmly grasp the bulb (1) and pull it straight out of the socket.

INSTALLATION

INSTALLATION

CAUTION: Always use the correct bulb size and type for replacement. An incorrect bulb size or type may overheat and cause damage to the lamp, the socket or the lamp wiring.

NOTE: On vehicles equipped with an optional overhead console the standard front dome lamp is replaced by two combination dome and reading lamps that are integral to the console housing. Each of these lamps is controlled by the door ajar switches on the courtesy lamp circuit, but also are independently controlled by a switch that is activated by depressing the lamp lens. The bulb types and service procedures are identical for both of these lamps.

NOTE: The overhead console reading lamp switches and bulb holders are serviced as a unit with the overhead console wire harness.

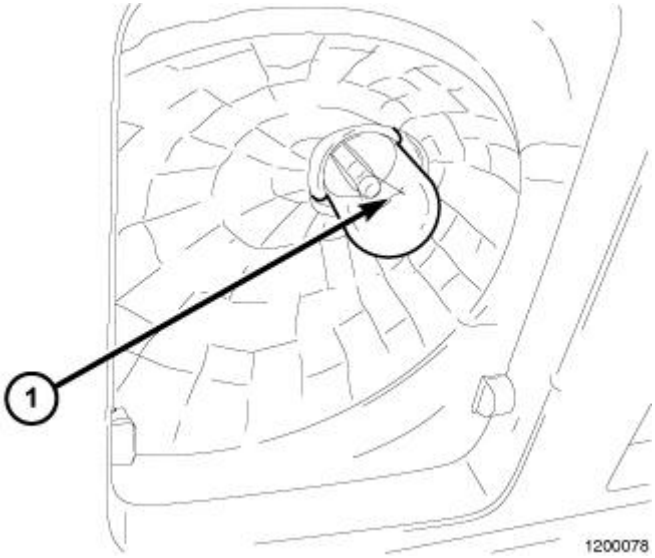

Fig. 18: Bulb
Courtesy of CHRYSLER GROUP, LLC

1. Align the base of the overhead console reading lamp bulb (1) with the socket.
2. Push the bulb straight into the socket until the base is firmly seated.

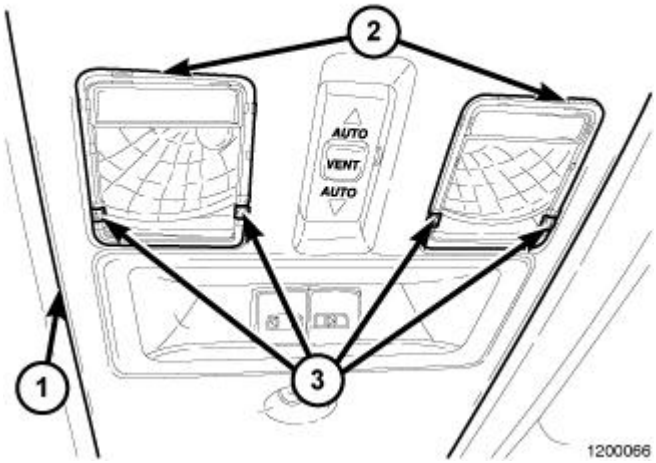

Fig. 19: Overhead Console, Switch Tab & Pivot Tabs
Courtesy of CHRYSLER GROUP, LLC

3. Position the lens switch tab (2) into the slot in the rear of the overhead console (1) lamp housing opening.
4. Align the pivot tabs (3) on each side of the lens with the pivots within the overhead console lamp housing.
5. Press firmly and evenly on the lens over both pivot locations until both pivot tabs snap back onto the pivots within the housing.
6. Reconnect the battery negative cable.

LAMP, STORAGE BOX

DESCRIPTION

DESCRIPTION

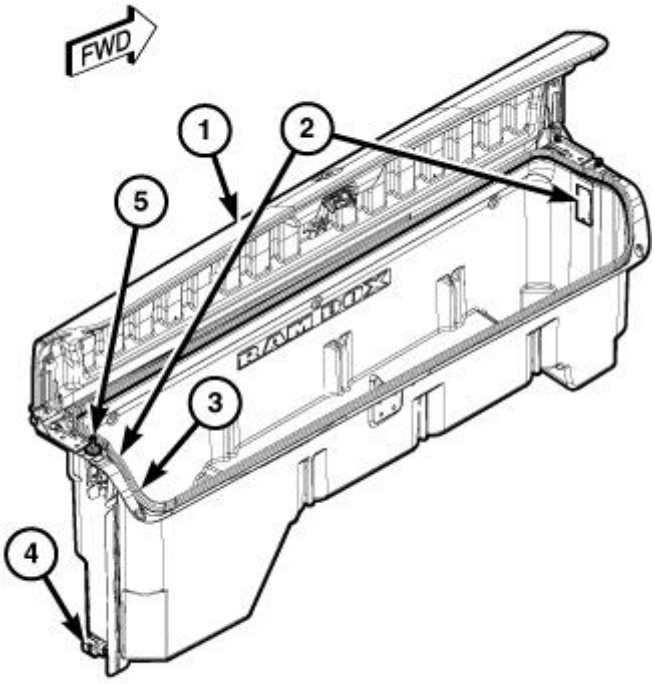

2268366

Fig. 20: Box Storage Bins Components
Courtesy of CHRYSLER GROUP, LLC

Two RamBox storage bins (1), one located in each bed rail of the pickup box, are an integral part of the RamBox storage and organization option for this vehicle. Each storage bin has integral interior lighting features that include the following components:

- **Ajar Switch (5)** - A normally closed, single pole, spring-loaded, plunger-type ajar switch located in the rear flange of each bin is automatically actuated by the bin lid. This is the same self-adjusting switch used to monitor the hood for the Vehicle Theft Security System (VTSS) on vehicles manufactured for certain export markets where it is required, and can be distinguished from the switch used for the optional remote start system by a color-coded retainer ring around the switch plunger. The VTSS and RamBox switches have a dark brown retainer ring, while the remote start switch has a white retainer ring.
- **Lamps (2)** - Each storage bin has two interior lamps, one in each end panel of the bin. Each of these lamps includes a sealed, non-removable lens and has an integral interlocking tab mounting feature on one end and an integral latch feature at the opposite end that are used to secure the lamps in the mounting holes in the end panels of each bin. The lamps are illuminated with an incandescent bulb that can be accessed for service from the inside of the bin.
- **On/Off Switch (3)** - The interior lighting of each bin can be manually controlled using a push-button ON/OFF toggle switch with a plunger sealed beneath a rubber button or boot located in the rear end panel of each bin.
- **Wire Harness** - A wire harness concealed on the outside of each bin connects each of the lamps and switches to each other. A connector (4) on the underside of the bin near the base of the rear end panel

connects each bin wire harness to the vehicle electrical system through a take out and connector of the body wire harness.

The storage bin lamps, their incandescent bulbs, the ajar switch and the rubber button (or boot) for the manual ON/OFF switch are each available for individual service replacement. The manual ON/OFF switch is serviced only as a unit with the storage bin wire harness. If the ON/OFF switch is damaged or ineffective, the entire storage bin wire harness must be replaced.

OPERATION

OPERATION

The storage bin lamps have a path to ground at all times through a takeout and eyelet terminal of the body wire harness that is secured to the body sheet metal. The ajar switch for each bin receives battery current at all times through a fuse in the Totally Integrated Power Module (TIPM). These connections allow the storage bin lighting to be operational regardless of the ignition switch or interior lighting switch positions. The storage bin lighting is turned ON automatically to illuminate the interior of the storage bin each time the lid of the storage bin is opened, and is turned OFF automatically each time the storage bin lid is closed. The underside of the storage bin lid actuates the plunger-type ajar switch.

The ajar switch also enables the manual ON/OFF toggle switch. When the storage bin lid is opened, the toggle switch button or boot can be depressed once to turn the storage bin lighting OFF, and can be depressed a second time to turn the storage bin lighting ON. Regardless of the manual ON/OFF toggle switch selection, the lighting will be OFF when the storage bin lid is closed.

The components and circuits of the RamBox storage bin lighting may be diagnosed using conventional diagnostic tools and procedures. Refer to the appropriate wiring information.

REMOVAL

BULB

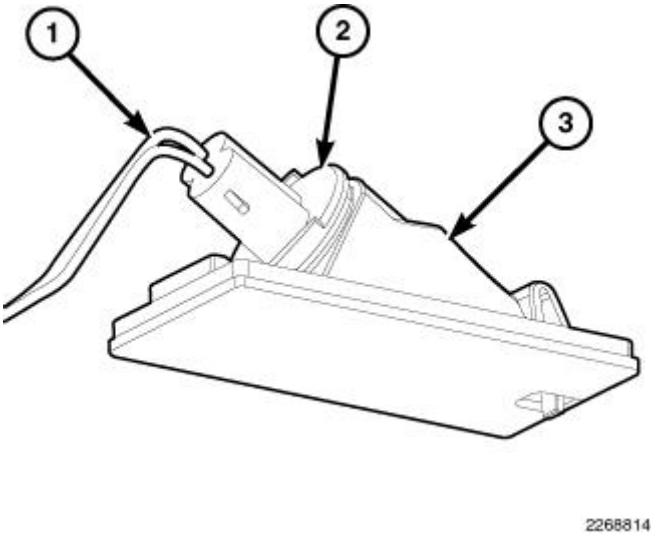

Fig. 21: Lamp Assembly

Courtesy of CHRYSLER GROUP, LLC

1. Remove the lamp (3) from the mounting hole in the end panel of the storage bin.
2. Pull the lamp into the storage bin far enough to access the lamp wiring (1) and bulb socket (2) on the top of the lamp housing.
3. Firmly grasp the socket and rotate it counterclockwise about 30 degrees to unlock it.
4. Pull the socket and bulb straight out from the keyed opening in the lamp housing.
5. Pull the base of the bulb straight out of the socket.

BUTTON

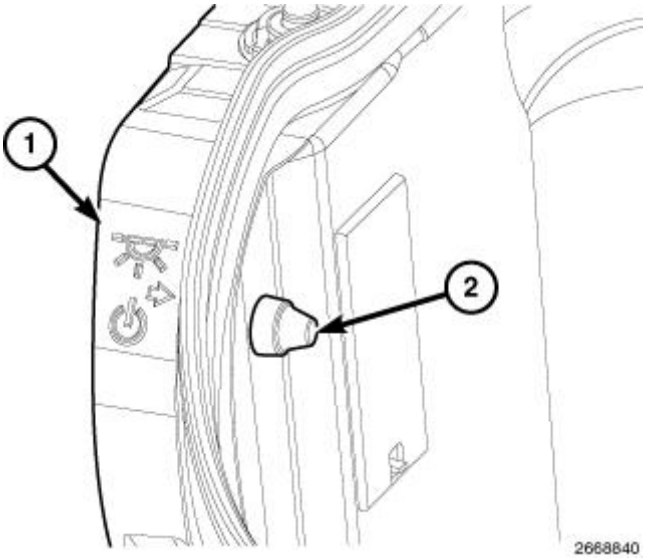

Fig. 22: On/Off Switch Button
Courtesy of CHRYSLER GROUP, LLC

NOTE: **The ON/OFF switch button (or boot) can be serviced without removing the storage bin from the vehicle. However, the button also secures the switch to the bin end panel. Any time the button is removed from the switch, the switch can be easily pushed out of its mounting hole, which may require the storage bin be removed from the vehicle to access the switch and reposition it into the mounting hole. Once the switch button has been loosened or removed, a short piece of mechanic's wire wrapped once around the base of the threaded switch sleeve can help to ensure the switch remains properly positioned in the mounting hole until the switch button can be reinstalled.**

1. Firmly grasp the outer circumference of the ON/OFF switch button (2) as close to the storage bin end panel (1) as possible.
2. Rotate the button counterclockwise to unscrew it from the threaded switch sleeve.
3. Remove the button from the switch.

LAMP

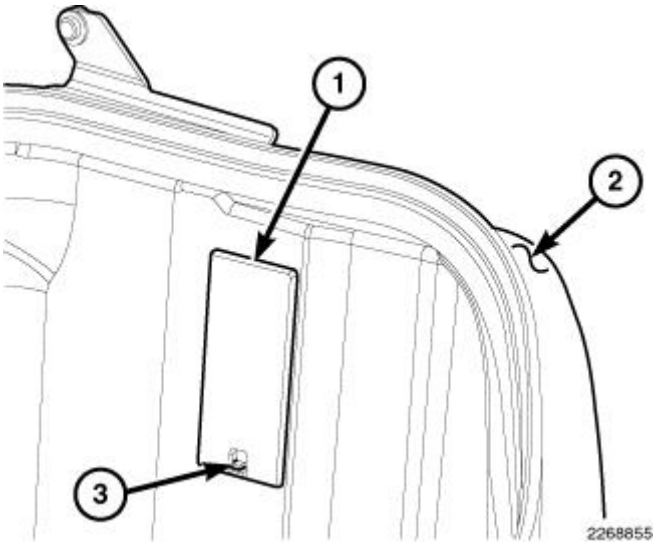

Fig. 23: Storage Bin Lamp & Tab
Courtesy of CHRYSLER GROUP, LLC

1. Disconnect and isolate the battery negative cable.
2. Open the storage bin lid to locate the lamp (1) on the front or rear end panel (2) of the bin.
3. Lift the lamp latch tab (3) upward while pulling the bottom of the lamp away from the bin end panel.
4. Pull the bottom of the lamp out of the mounting hole in the bin far enough to pull it downward to disengage the lamp interlocking tab mounting feature from the upper edge of the mounting hole.
5. Pull the lamp out of the mounting hole far enough to access the lamp wiring and bulb socket on the top of the lamp housing.
6. Firmly grasp the socket and rotate it counterclockwise about 30 degrees to unlock it.
7. Pull the socket and bulb straight out from the keyed opening in the lamp housing.
8. Remove the lamp from the storage bin.

SWITCH

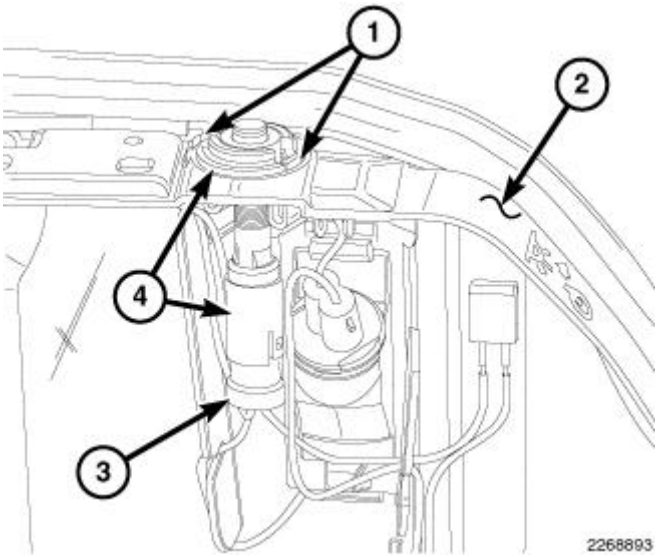

Fig. 24: Storage Bin Ajar Switch, Connector & Tabs
Courtesy of CHRYSLER GROUP, LLC

1. Disconnect and isolate the battery negative cable.
2. Remove the storage bin from the vehicle. Refer to **BIN, STORAGE** .
3. Disconnect the storage bin wire harness connector (3) from the ajar switch (4) connector receptacle.
4. From the top of the rear storage bin ledge (2), squeeze the two ajar switch latch tabs (1) together and pull the switch upward out of the mounting hole.
5. Remove the ajar switch from the storage bin.

INSTALLATION

BULB

CAUTION: Always use the correct bulb size and type for replacement. An incorrect bulb size or type may overheat and cause damage to the lamp, the socket or the lamp wiring.

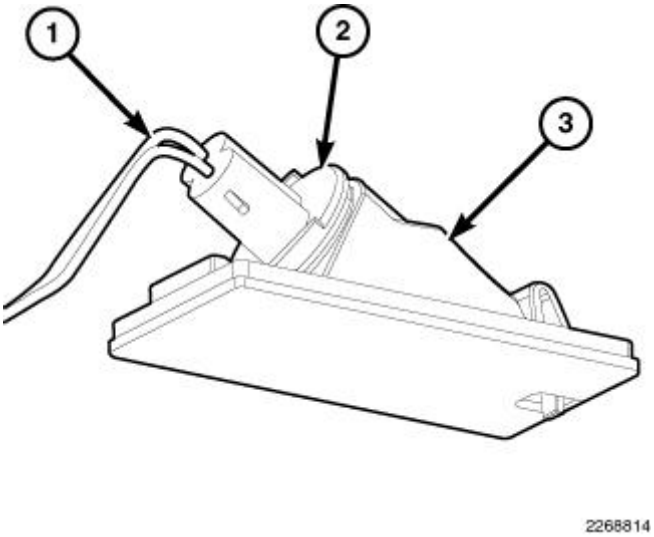

Fig. 25: Lamp Assembly
Courtesy of CHRYSLER GROUP, LLC

1. Align the base of the storage bin lamp bulb with the socket (2).
2. Push the bulb straight into the socket until the base is firmly seated.
3. Align the socket and bulb with the keyed opening on the top of the storage bin lamp housing (3).
4. Insert the bulb and socket into the housing until the socket is firmly seated.
5. Rotate the socket clockwise about 30 degrees to lock it into place.
6. Reinstall the lamp into the mounting hole in the end panel of the storage bin. Refer to **LAMP, STORAGE BOX, INSTALLATION**.

BUTTON

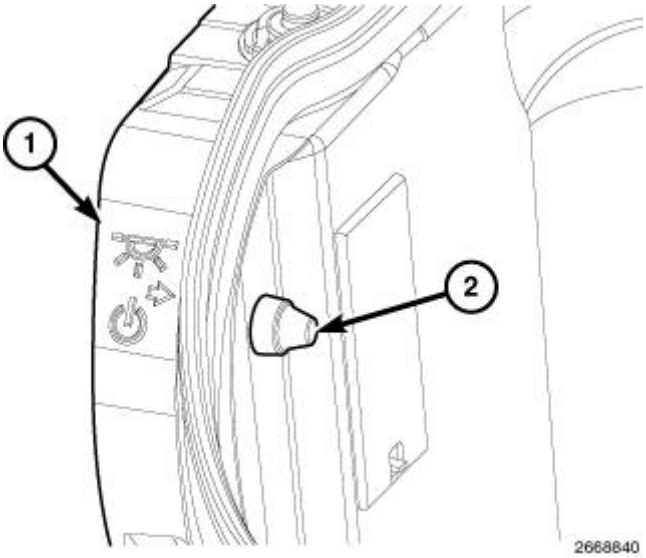

Fig. 26: On/Off Switch Button
Courtesy of CHRYSLER GROUP, LLC

NOTE: **The ON/OFF switch button (or boot) can be serviced without removing the storage bin from the vehicle. However, the button also secures the switch to the bin end panel. Any time the button is removed from the switch, the switch can be easily pushed out of its mounting hole, which may require the storage bin be removed from the vehicle to access the switch and reposition it into the mounting hole. Once the switch button has been loosened or removed, a short piece of mechanic's wire wrapped once around the base of the threaded switch sleeve can help to ensure the switch remains properly positioned in the mounting hole until the switch button can be reinstalled.**

1. Position the button (2) over the threaded sleeve of the ON/OFF switch button on the storage bin end panel (1).
2. Rotate the button clockwise to screw it onto the threaded switch sleeve.
3. Tighten the button securely.

LAMP

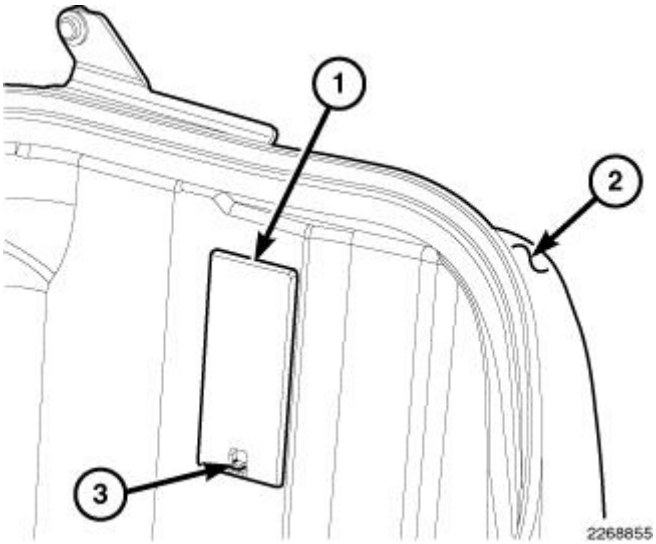

Fig. 27: Storage Bin Lamp & Tab
Courtesy of CHRYSLER GROUP, LLC

1. Position the lamp (1) into the storage bin (2).
2. Align the socket and bulb with the keyed opening on the top of the lamp housing.
3. Insert the bulb and socket into the housing until the socket is firmly seated.
4. Rotate the socket clockwise about 30 degrees to lock it into place.
5. Engage the lamp interlocking tab mounting feature at the top of the lamp housing with the upper edge of the mounting hole in the storage bin end panel.
6. Lift the lamp upward while pushing the bottom of the lamp firmly and evenly into the mounting hole until the lamp latch feature (3) snaps into place.
7. Reconnect the battery negative cable.

SWITCH

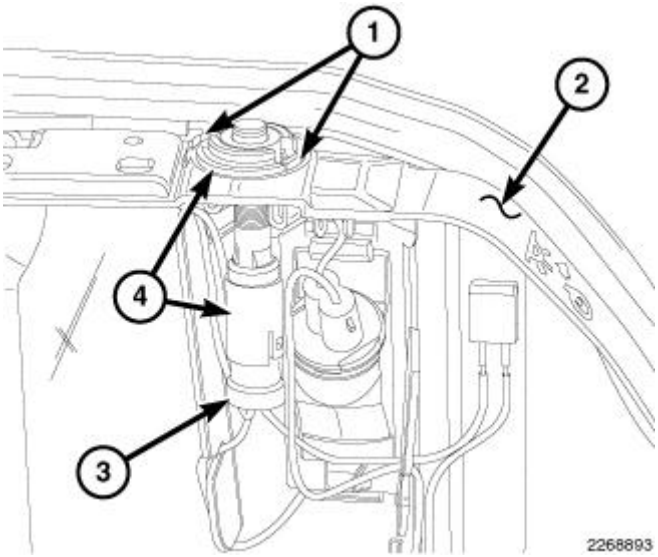

Fig. 28: Storage Bin Ajar Switch, Connector & Tabs
Courtesy of CHRYSLER GROUP, LLC

1. Position the ajar switch (4) to the mounting hole in the rear storage bin ledge (2).
2. Insert the switch into the mounting hole until the two integral switch latch tabs (1) lock it into place.
3. Reconnect the storage bin wire harness connector (3) to the switch connector receptacle.
4. Reinstall the storage bin into the vehicle. Refer to **INSTALLATION** .
5. Reconnect the battery negative cable.

LAMP, VANITY

REMOVAL

REMOVAL

NOTE: **Vehicles equipped with optional vanity lamps have a mirror with a single lamp that is integral to each sun visor. Each lamp is independently controlled by an integral switch that is automatically actuated by the mirror cover. The bulb types and service procedures are identical for each of these lamps.**

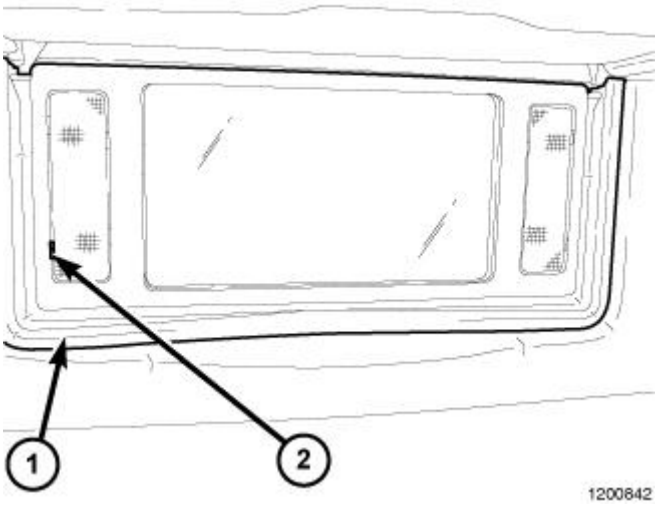

Fig. 29: Vanity Lamp
Courtesy of CHRYSLER GROUP, LLC

1. Disconnect and isolate the battery negative cable.
2. Insert a small flat-bladed screwdriver on either side near the top or the bottom between the vanity lamp lens (2) and the lamp housing of the sun visor (1).
3. Carefully pry the lens outward until it unsnaps from the lamp housing.

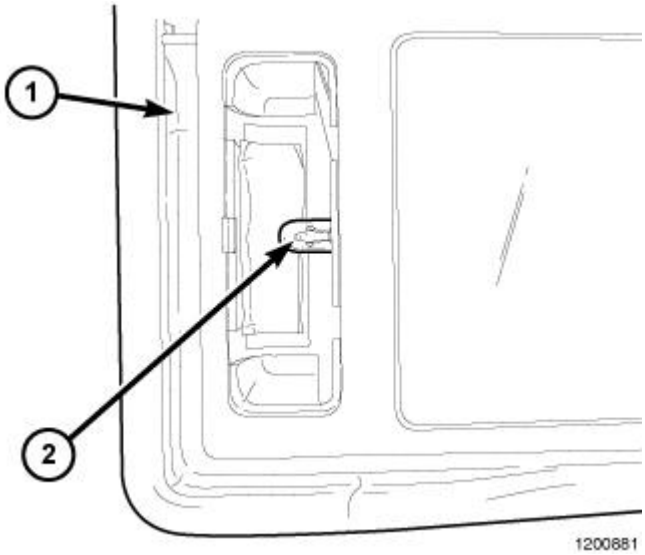

Fig. 30: Vanity Lamp Bulb
Courtesy of CHRYSLER GROUP, LLC

4. Using small needle-nose pliers, carefully grasp the bulb (2) and pull the base out of the lamp socket.

INSTALLATION

INSTALLATION

CAUTION: Always use the correct bulb size and type for replacement. An incorrect bulb size or type may overheat and cause damage to the lamp, the socket or the lamp wiring.

NOTE: Vehicles equipped with optional vanity lamps have a mirror with a single lamp that is integral to each sun visor. Each lamp is independently controlled by an integral switch that is automatically actuated by the mirror cover. The bulb types and service procedures are identical for each of these lamps.

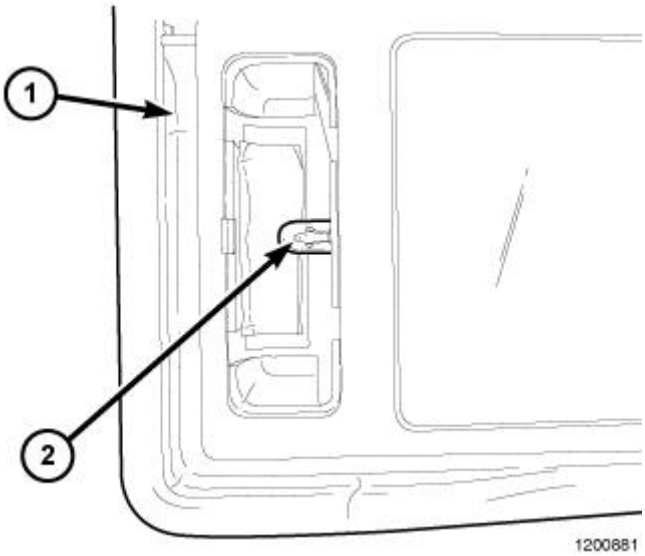

Fig. 31: Vanity Lamp Bulb
Courtesy of CHRYSLER GROUP, LLC

1. Using small needle-nose pliers, carefully grasp the vanity lamp bulb (2) and align the base of the bulb with the socket in the lamp housing of the sun visor (1).
2. Push the bulb straight into the socket until the base is fully seated.

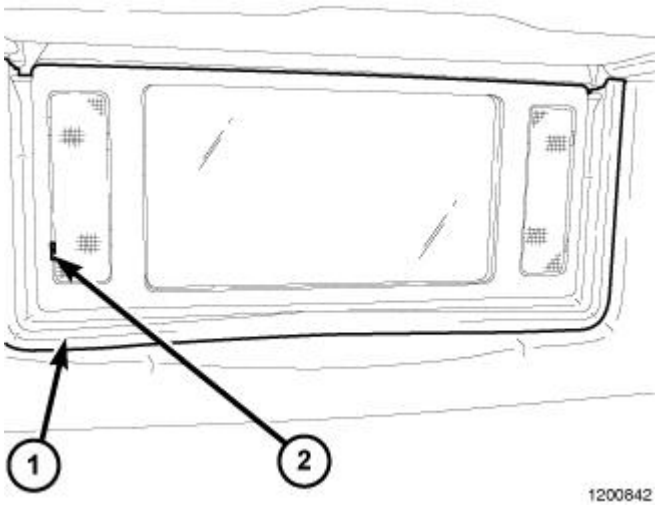

Fig. 32: Vanity Lamp
Courtesy of CHRYSLER GROUP, LLC

3. Insert one tab on the top or the bottom of the lens (2) into the appropriate slot at the top or bottom of the lamp housing.
4. Flex the lens far enough to engage the loose tab into its slot in the lamp housing.
5. Reconnect the battery negative cable.

SWITCH, DOOR AJAR

DESCRIPTION

DESCRIPTION

This vehicle has up to four door ajar switches, one for each door. Each switch is concealed within and integral to its respective door latch unit. The switches are momentary leaf contact-type units that are actuated by the mechanisms internal to the door latch. A short pigtail wire and connector on each door latch connects the door ajar switch to the vehicle electrical system through its respective door wire harness.

The door ajar switches cannot be adjusted or repaired and, if ineffective or damaged, the door latch unit must be replaced. Refer to **LATCH, DOOR, REMOVAL** or **LATCH, DOOR, REMOVAL** .

OPERATION

OPERATION

The door ajar switches are actuated by the mechanisms internal to the door latch. When a door is closed and properly latched, its door ajar switch is an open circuit. When a door is open or only partially latched, the door ajar switch is a closed circuit. The door ajar switches are hard wired in series between a body ground and the Totally Integrated Power Module (TIPM).

The TIPM reads the hard wired door ajar switch inputs through internal pull-ups, then uses these inputs to control many electronic functions and features of the vehicle. The TIPM also sends the proper electronic **door ajar switch status** messages to other electronic modules in the vehicle over the Controller Area Network (CAN) data bus.

The door ajar switches as well as the hard wired inputs and outputs of the switches may be diagnosed using conventional diagnostic tools and procedures. Refer to the appropriate wiring information. However, conventional diagnostic methods will not prove conclusive in the diagnosis of the electronic controls or communication between modules related to door ajar switch operation. The most reliable, efficient and accurate means to diagnose the door ajar switches requires the use of a diagnostic scan tool. Refer to the appropriate diagnostic information.

OIL CHANGE REQUIRED MESSAGE

OIL CHANGE REQUIRED MESSAGE RESET INDEX

Models	Reset Procedure
Dakota	Oil Change Required Message Reset - Procedure 1
Pickup	Oil Change Required Message Reset - Procedure 1

OIL CHANGE REQUIRED MESSAGE RESET - PROCEDURE 1

NOTE: **The message can be temporarily turned off by pressing and releasing the Menu button in instrument cluster.**

1. To reset oil change indicator after performing scheduled maintenance, turn ignition on, with engine off.
2. Fully depress accelerator pedal slowly 3 times within 10 seconds.
3. Turn the ignition switch to the "LOCK" position.
4. If indicator message illuminates when engine is started, repeat reset procedure.

TIRE PRESSURE MONITOR SYSTEM (TPMS)

NOTE: **To determine the appropriate reset procedure, refer to TPMS RESET INDEX. Only vehicles listed in this index have a TPMS reset.**

TPMS RESET INDEX

Models	Reset Procedure
Dakota	TPMS Reset - Procedure 1
Pickup 1500/2500 (1)	TPMS Reset - Procedure 2
(1) 3500 models are not equipped with TPMS.	

TPMS RESET - PROCEDURE 1

The TPMS will not turn off the indicator lamp until the tire pressure is at or above the Low Pressure (lamp) OFF threshold. See **Fig. 1**. The system will automatically update and the TPM indicator lamp will extinguish once the updated tire pressures have been received.

NOTE: **If a tire pressure sensor has been replaced, the TPM system needs to relearn tire pressure sensor IDs.**

Wireless Control Module (WCM): The WCM automatically learns and stores new sensor IDs while driving "within 10 minutes continuously above 15 m.p.h. (24 Km/h)" after a sensor has been replaced. The learning

sequence will initiate when the vehicle has been stopped for more then 20 minutes.

A new sensor ID can also be programmed directly into the WCM by using an RKE-TPM Analyzer in conjunction with a Scan Tool. Scan each TPM sensor at each road wheel, and store each Sensor ID in the correct location. (LEFT FRONT, LEFT REAR, RIGHT FRONT, and RIGHT REAR) Connect the TPM-RKE Analyzer Tool to the Scan Tool. Then follow the programming steps outlined in the diagnostic Scan Tool for "Program Tire Pressure Sensor ID w/ TPM Tool"

For further information, refer to the Owners Manual or the Appropriate Diagnostic Information.

TPMS RESET - PROCEDURE 2

There are two tire pressure monitoring systems available, a base system and a premium system. The base system does not specify how many tires are low or where they are located. The premium system does indicate which tire is low. Sensor types are the Tire Pressure Monitoring (TPM) module for the 2500 series, or the Wireless Ignition Node (WIN) for the 1500 series.

Base Tire Pressure Monitoring System:

The TPMS will not turn off the indicator lamp until the tire pressure is at or above the Low Pressure (lamp) OFF threshold. See **Fig. 1**. The system will automatically update and the TPM indicator lamp will extinguish once the updated tire pressures have been received.

Premium Tire Pressure Monitoring System:

If the TPMS detects that the tire pressure in any road tire is going low, beyond the Low Pressure (lamp) ON threshold (see **Fig. 1**), a chime will sound and the indicator lamp will turn on. In addition to the chime and lamp, a graphic display of the pressure value(s) and position of the low tire(s) will flash in the Electronic Vehicle Information Center (EVIC). Once pressure in the suspect tire(s) raises above the Low Pressure (lamp) OFF Threshold (see **Fig. 1**), and the TPM module receives a valid transmission from the sensor the lamp will go out. If a system fault is detected due to a missing sensor signal, in addition to a chime and a indicator lamp flashing, a "Check TPM System" text message will be displayed in the instrument cluster, and the tire pressure graphic display will display "- -" in place of the pressure value. After the flash sequence the TPM indicator lamp will remain illuminated. The system will return to normal once the TPM module receives a valid transmission from that sensor location. If a system fault is detected, the indicator lamp will flash on/off for 75 seconds and then remain on solid.

Base and Premium Systems:

NOTE: If a tire pressure sensor has been replaced, the TPM system needs to relearn tire pressure sensor IDs.

The WIN or TPM automatically learns and stores the sensor IDs while driving "within 10-20 minutes continuously above 15 mph (24 km/h)" after a sensor has been replaced. The learning sequence will initiate after the vehicle has been stopped for more than 20 minutes.

A new sensor ID can also be programmed directly into the WIN or TPM module by using a RKE-TPM

Analyzer in conjunction with a Scan Tool. Once the new sensor ID has been programmed, the vehicle will need to be driven above 15 mph until the fault is no longer active (lamp extinguishes) and display is updated (for up to 20 minutes).

NOTE: **To determine the pressure thresholds for a vehicle, refer to the Tire Inflation Pressure (Placard) Label found on the Driver's B-Pillar, then apply the placard pressure to the table in Fig. 1.**

To determine the pressure thresholds for a vehicle, refer to the Tire Inflation Pressure (Placard) Label found on the Driver's B-Pillar, then apply the placard pressure to the following table:

Placard Pressure (cold) (PSI)	Low Pressure ON Threshold (PSI)	Low Pressure OFF Threshold (PSI)
28	22	28
29	23	29
30	24	30
31	25	31
32	25	32
33	26	33
34	27	34
35	28	35
36	29	36
37	29	37
38	30	38
39	31	39
40	32	40
41	33	41
42	34	42
43	35	43
44	35	44
45	36	45
46	37	46
47	38	47
48	38	48
49	39	49
50	40	50
51	41	51
55	44	55
60	48	60
65	52	65
70	56	70
75	60	75

Fig. 1: TPM Threshold Pressures Table
Courtesy of CHRYSLER

CAPACITIES AND RECOMMENDED FLUIDS

DESCRIPTION

A/C REFRIGERANT

The refrigerant used in this air conditioning system is a HydroFluoroCarbon (HFC), type R-134a. Unlike R-12, which is a ChloroFluoroCarbon (CFC), R-134a refrigerant does not contain ozone-depleting chlorine. R-134a refrigerant is a nontoxic, nonflammable, clear and colorless liquefied gas.

CAUTION: R-134a refrigerant is not compatible with R-12 refrigerant in an A/C system. Even a small amount of R-12 refrigerant added to an R-134a refrigerant system will cause A/C compressor failure.

The A/C refrigerant system is filled-for-life at the factory and requires no regular maintenance. Although not required at specific intervals, the charge level should be checked if system performance deteriorates or if a noise or leak is suspected. Refer to **DIAGNOSIS AND TESTING** .

AUTOMATIC TRANSMISSION FLUID

AUTOMATIC TRANSMISSION

NOTE: Refer to appropriate service information for fluid level checking procedures.

Mopar® ATF +4, Automatic Transmission Fluid is the recommended fluid for Chrysler automatic transmissions.

Dexron II fluid IS NOT recommended. Clutch chatter can result from the use of improper fluid.

Mopar® ATF +4, Automatic Transmission Fluid when new is red in color. The ATF is dyed red so it can be identified from other fluids used in the vehicle such as engine oil or antifreeze. The red color is not permanent and is not an indicator of fluid condition. As the vehicle is driven, the ATF will begin to look darker in color and may eventually become brown. **This is normal.** ATF+4 also has a unique odor that may change with age. Consequently, odor and color cannot be used to indicate the fluid condition or the need for a fluid change.

FLUID ADDITIVES

Chrysler strongly recommends against the addition of any fluids to the transmission, other than those automatic transmission fluids listed above. Exceptions to this policy are the use of special dyes to aid in detecting fluid leaks.

Various "special" additives and supplements exist that claim to improve shift feel and/or quality. These additives and others also claim to improve converter clutch operation and inhibit overheating, oxidation,

varnish, and sludge. These claims have not been supported to the satisfaction of Chrysler and these additives **must not be used.** The use of transmission "sealers" should also be avoided, since they may adversely affect the integrity of transmission seals.

BRAKE FLUID

The brake fluid used in this vehicle must conform to DOT 3 specifications and SAE J1703 standards. No other type of brake fluid is recommended or approved for usage in the vehicle brake system. Use only Mopar brake fluid or an equivalent from a tightly sealed container.

CAUTION: Never use reclaimed brake fluid or fluid from a container which has been left open. An open container of brake fluid will absorb moisture from the air and contaminate the fluid.

CAUTION: Never use any type of a petroleum-based fluid in the brake hydraulic system. Use of such type fluids will result in seal damage of the vehicle brake hydraulic system causing a failure of the vehicle brake system. Petroleum based fluids would be items such as engine oil, transmission fluid, power steering fluid, etc.

ENGINE COOLANT

WARNING: Antifreeze is an ethylene-glycol base coolant and is harmful if swallowed or inhaled. If swallowed, drink two glasses of water and induce vomiting. If inhaled, move to fresh air area. Seek medical attention immediately. Do not store in open or unmarked containers. Wash skin and clothing thoroughly after coming in contact with ethylene-glycol. Keep out of reach of children. Dispose of glycol base coolant properly, contact your dealer or government agency for location of collection center in your area. Do not open a cooling system when the engine is at operating temperature or hot under pressure, personal injury can result. Avoid radiator cooling fan when engine compartment related service is performed, personal injury can result.

CAUTION: Use of Propylene-Glycol based coolants is not recommended, as they provide less freeze protection and less corrosion protection.

The cooling system is designed around the coolant. The coolant must accept heat from engine metal, in the cylinder head area near the exhaust valves and engine block. Then coolant carries the heat to the radiator where the tube/fin radiator can transfer the heat to the air.

The use of aluminum cylinder blocks, cylinder heads, and water pumps requires special corrosion protection. Mopar® Antifreeze/Coolant, 5 Year/100, 000 Mile Formula (MS-9769), or the equivalent ethylene-glycol base coolant with organic corrosion inhibitors (called HOAT, for Hybrid Organic Additive Technology) is recommended. This coolant offers the best engine cooling without corrosion when mixed with 50% ethylene-glycol and 50% distilled water to obtain a freeze point of -37°C (-35°F). If it loses color or becomes

contaminated, drain, flush, and replace with fresh properly mixed coolant solution.

CAUTION: Mopar® Antifreeze/Coolant, 5 Year/100, 000 Mile Formula (MS-9769) may not be mixed with any other type of antifreeze. Mixing of coolants other than specified (non-HOAT or other HOAT) may result in engine damage that may not be covered under the new vehicle warranty, and decreased corrosion protection.

COOLANT PERFORMANCE

The required ethylene-glycol and water mixture depends upon climate and vehicle operating conditions. The coolant performance of various mixtures follows:

Pure Water- Water can absorb more heat than a mixture of water and ethylene-glycol. This is for purpose of heat transfer only. Water also freezes at a higher temperature and allows corrosion.

100 percent Ethylene-Glycol - The corrosion inhibiting additives in ethylene-glycol need the presence of water to dissolve. Without water, additives form deposits in system. These act as insulation causing temperature to rise to as high as 149°C (300°F). This temperature is hot enough to melt plastic. The increased temperature can result in sever engine damage. In addition, 100 percent ethylene-glycol freezes at -22°C (-8°F).

50/50 Ethylene-Glycol and Water - Is the recommended mixture, it provides protection against freezing to -37°C (-34°F). The antifreeze concentration **must always** be a minimum of 44 percent, year-round in all climates. If percentage is lower, engine parts may be eroded by cavitation. Maximum protection against freezing is provided with a 68 percent antifreeze concentration, which prevents freezing down to -67.7°C (-90° F). A higher percentage will freeze at a warmer temperature. Also, a higher percentage of antifreeze can cause the engine to overheat because specific heat of antifreeze is lower than that of water.

CAUTION: Richer antifreeze mixtures cannot be measured with normal field equipment and can cause problems associated with 100 percent ethylene-glycol.

ENGINE OIL

WARNING: New or used engine oil can be irritating to the skin. Avoid prolonged or repeated skin contact with engine oil. Contaminants in used engine oil, caused by internal combustion, can be hazardous to your health. Thoroughly wash exposed skin with soap and water. Do not wash skin with gasoline, diesel fuel, thinner, or solvents, health problems can result. Do not pollute, dispose of used engine oil properly. Contact your dealer or government agency for location of collection center in your area.

Only lubricants bearing designations defined by the following organization should be used.

- Society of Automotive Engineers (SAE)
- American Petroleum Institute (API)

- National Lubricating Grease Institute (NLGI)
- Association des Constructeurs Europ e ens d' Automobiles (European Automobile Manufacturers Association) (ACEA)

API SERVICE GRADE CERTIFIED

Use an engine oil that is API Certified. MOPAR® provides engine oils, that meet or exceed this requirement.

SAE VISCOSITY

Fig. 1: Identifying Engine Oil Viscosity Label
Courtesy of CHRYSLER GROUP, LLC

An SAE viscosity grade is used to specify the viscosity of engine oil. Use only engine oils with multiple viscosities such as 5W-20 or 5W-30. These are specified with a dual SAE viscosity grade which indicates the cold-to-hot temperature viscosity range. Select an engine oil that is best suited to your particular temperature range and variation. **For 3.7L/4.7L engines SAE 5W-20 engine oil is recommended for all operating temperatures. For 5.7L engines SAE 5W-20 engine oil is recommended for all operating temperatures. These engine oils improve low temperature starting and vehicle fuel economy. Refer to your engine oil filler cap for the recommended engine oil viscosity for your vehicle. Vehicles with 5.7L engines equipped with Multiple Displacement System (MDS) must use SAE 5W-20 oil. Failure to do so may result in improper operation of the Multiple Displacement System (MDS). Refer to Multi Displacement System under Starting and Operating for details. Refer to the engine oil filler cap for the recommended engine oil viscosity for each vehicle.**

ACEA CATEGORIES

For countries that use the ACEA European Oil Categories for Service Fill Oils, use engine oils that meet the requirements of ACEA A1/B1, A2/B2, or A3/B3.

ENERGY CONSERVING OIL

An Energy Conserving type oil is recommended for gasoline engines. The designation of ENERGY CONSERVING is located on the label of an engine oil container.

CONTAINER IDENTIFICATION

9400-9

Fig. 2: Identifying American Petroleum Institute Certified Symbol
Courtesy of CHRYSLER GROUP, LLC

Standard engine oil identification notations have been adopted to aid in the proper selection of engine oil. The identifying notations are located on the front label of engine oil plastic bottles and the top of engine oil cans. Refer to **Fig. 2**.

This symbol means that the oil has been certified by the American Petroleum Institute (API). DiamlerChrysler only recommend API Certified engine oils. Use Mopar® engine oil or equivalent.

SYNTHETIC ENGINE OILS

There are a number of engine oils being promoted as either synthetic or semi-synthetic. If you chose to use such a product, use **only** those oils that meet the American Petroleum Institute (API) and SAE viscosity standard. Follow the service schedule that describes your driving type.

ENGINE OIL ADDITIVES/SUPPLEMENTS

The manufacturer **does not recommend** the addition of any engine oil additives/supplements to the specified engine oil. Engine oil additives/supplements should not be used to enhance engine oil performance. Engine oil additives/supplements should not be used to extend engine oil change intervals. No additive is known to be safe for engine durability and can degrade emission components. Additives can contain undesirable materials that harm the long term durability of engines by:

- Doubling the level of phosphorus in the engine oil. The ILSAC (International Lubricant Standard Approval Committee) GF-2 and GF-3 standards require that engine oil contain no more than 0.10% phosphorus to protect the vehicles emissions performance. Addition of engine oil additives/supplements can poison, from the added sulfur and phosphorus, catalysts and hinder efforts to guarantee emissions performance to 80, 000 miles.
- Altering the viscosity characteristics of the engine oil so that it no longer meets the requirements of the specified viscosity grade.
- Creating potential for an undesirable additive compatibility interaction in the engine crankcase. Generally it is not desirable to mix additive packages from different suppliers in the crankcase; there have been reports of low temperature engine failures caused by additive package incompatibility with such mixtures.

ENGINE OIL - DIESEL ENGINES

Use only Low Ash Diesel Engine Oil meeting standard **MIL-2104C** or API Classification **CJ-4/SM (5.9L), or CJ-4 (6.7L), or higher** that meets Cummins CES 20081 Standards.

Low ash diesel engine oil is REQUIRED for the 6.7L engine, use MOPAR ® MaxPro15W40 6700 Diesel DPF diesel engine oil, or equivalent.

SAE VISCOSITY GRADE

Fig. 3: API Rating Wrap Figure
Courtesy of CHRYSLER GROUP, LLC

CAUTION: Low viscosity oils must have the proper API quality or the CCMC G5 designation.

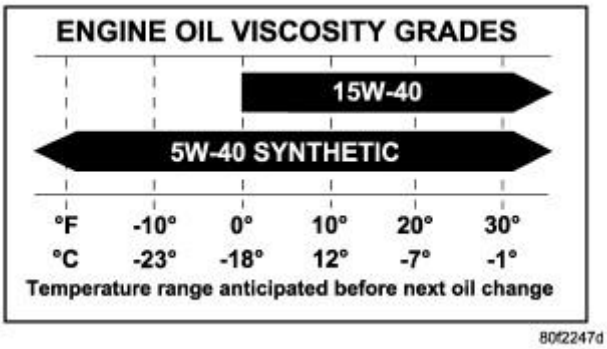

Fig. 4: Diesel Oil Viscosity Chart
Courtesy of CHRYSLER GROUP, LLC

To assure of properly formulated engine oils, it is recommended that SAE Grade 15W-40 engine oils that meet Chrysler material standard MS-10902, be used in accordance to ACEA B3, B4 specification. European Grade 15W-40 oils that meet Association des Constructeurs Europ e ens d' Automobiles (European Automobile Manufacturers Association) (ACEA) specifications, are also acceptable.

Synthetic oils of the SAE 5W-40 grade number are required when minimum temperatures consistently fall below -18° C (0° F).

ACEA CATEGORIES

For countries that use the ACEA European Oil Categories for Service Fill Oils, use engine oils that meet the requirements of ACEA A1/B1, A2/B2, or A3/B3.

FLUID TYPES

When service is required, Chrysler Group LLC recommends that only Mopar® brand parts, lubricants and chemicals be used. Mopar® provides the best engineered products for servicing Chrysler Group LLC vehicles.

Only lubricants bearing designations defined by the following organization should be used to service a Chrysler Group LLC vehicle:

- Society of Automotive Engineers (SAE)
- American Petroleum Institute (API)
- National Lubricating Grease Institute (NLGI)
- European Automobile Manufacturers Association (ACEA)

API QUALITY CLASSIFICATION

9400-9

Fig. 5: Identifying American Petroleum Institute Certified Symbol
Courtesy of CHRYSLER GROUP, LLC

This symbol on the front of an oil container means that the oil has been certified by the American Petroleum Institute (API) to meet all the lubrication requirements specified by Chrysler Group LLC.

GEAR LUBRICANTS

SAE ratings also apply to multigrade gear lubricants. In addition, API classification defines the lubricant's usage, such as API GL-5 and SAE 75W-90.

LUBRICANT RECOMMENDATIONS

CHASSIS

Component	Fluid, Lubricant, or Genuine Part
Steering Linkage AND	Mopar® Multi-Purpose Lubricant NLGI Grade 2 EP, GC-LB

Suspension components (Link Coil Suspension), Prop Shafts AND Yokes, Wheel Bearings	

BODY

Component	Fluid, Lubricant, and Genuine Part
Hinges:	
Door AND Hood	Mopar® Engine Oil
Swing Gate	Mopar® Multi-Purpose Lube NLGI Grade 2 EP, GC-LB
Latches: Door, Hood/Safety Catch, Swing Gate	Mopar® Multi-Purpose Lube NLGI Grade 2 EP, GC-LB
Seat Regulator AND Track	Mopar® Multi-Purpose Lube NLGI Grade 2 EP, GC-LB
Lock Cylinders	Mopar® Lock Cylinder Lube

POWER STEERING FLUID

Mopar® ATF +4, Automatic Transmission Fluid is required in the power steering system. Substitute fluids can induce power steering system failure.

Mopar® ATF +4, Automatic Transmission Fluid when new is red in color. The ATF is dyed red so it can be identified from other fluids used in the vehicle such as engine oil or antifreeze. The red color is not permanent and is not an indicator of fluid condition. As the vehicle is driven, the ATF will begin to look darker in color and may eventually become brown. **This is normal.** ATF+4 also has a unique odor that may change with age. Consequently, odor and color cannot be used to indicate the fluid condition or the need for a fluid change.

TRANSFER CASE - ALL EXCEPT BW 44-44

Recommended lubricant for the NV271, NV243, and NV273 transfer cases is Mopar® ATF +4, Automatic Transmission Fluid.

TRANSFER CASE - BW 44-44

Recommended lubricant for the BW 44-44 transfer case is Mopar® Transfer Case Lubricant or equivalent.

OPERATION

OPERATION

The automatic transmission fluid is selected based upon several qualities. The fluid must provide a high level of protection for the internal components by providing a lubricating film between adjacent metal components. The fluid must also be thermally stable so that it can maintain a consistent viscosity through a large temperature range. If the viscosity stays constant through the temperature range of operation, transmission operation and shift feel will remain consistent. Transmission fluid must also be a good conductor of heat. The fluid must absorb heat from the internal transmission components and transfer that heat to the transmission case.

SPECIFICATIONS

FLUIDS, LUBRICANTS AND GENUINE PARTS

ENGINE

Description	Type	Part Number	Capacities	
			U.S.	Metric
Cooling System				
? Engine Coolant (3.7L and 4.7L Engines)	MOPAR® Antifreeze/Coolant 5 Year/100, 000 Mile Formula HOAT (Hybrid Organic Additive Technology)	1 Gallon - 05066386AA	14 Quarts	13 Liters
? Engine Coolant (5.7L Engines)	MOPAR® Antifreeze/Coolant 5 Year/100, 000 Mile Formula HOAT (Hybrid Organic Additive Technology)	1 Gallon - 05066386AA	16 Quarts	15 Liters
? Engine Coolant (6.7L HO Diesel Engines)	MOPAR® Antifreeze/Coolant 5 Year/100, 000 Mile Formula HOAT (Hybrid Organic Additive Technology)	1 Gallon - 05066386AA	22.6 Quarts	21.4 Liters
Engine Oil with Filter				
Engine Oil (3.7L Engines)	Use API Certified SAE 5W-20 Engine Oil, meeting the requirements of Chrysler Material Standard MS-6395. Refer to your engine oil filler cap for correct SAE grade.	1 Quart - 04761872AC 5 Quarts - 04761851AD	5 Quarts	4.7 Liters
?? Engine Oil (4.7L Engines)	MOPAR® API Certified SAE 5W-20 engine oil, meeting the requirements of Chrysler Material Standard MS-6395.	1 Quart - 04761872AC 5 Quarts - 04761851AD	6 Quarts	5.7 Liters
?? Engine Oil (5.7L Engines)	MOPAR® API Certified SAE 5W-20 engine oil, meeting the requirements of Chrysler Material Standard MS-6395.	1 Quart - 04761872AC 5 Quarts - 04761851AD	7 Quarts	6.6 Liters
Engine Oil (6.7L HO Diesel Engines)	In ambient temperatures below 0°F (-18° C), 5W-40 **synthetic** engine oil that meets Chrysler Materials Standard MS-10902 and the API CJ-4 engine oil category is required. In ambient temperatures above 0°F (-18° C), 15W-40 engine oil that meets Chrysler Materials Standard MS-10902 and the API CJ-4 engine oil category is required.	1 Quart - 68024966AA 1 Gallon - 68024967AA	12 Quarts	11.4 Liters
Engine Oil Filter	MOPAR® Engine Oil Filter	04884899AB	N/A	N/A
Engine Oil Filter (6.7L HO Diesel Engines)	MOPAR® Engine Oil Filter	05083285AA	N/A	N/A
Fuel (approximate)				
Fuel Selection (3.7L	87 Octane Regular Cab Shortbed/Crew Quad Cab Models	N/A	26 Gallons	98 Liters

and 4.7L Engines)	87 Octane Regular Cab Longbed/Crew Quad Cab Models (Optional)	N/A	32 Gallons	121 Liters
Fuel Selection (5.7L Engine)	87 Octane Acceptable - 89 Octane Recommended Regular Cab Shortbed/Crew Quad Cab Models	N/A	26 Gallons	98 Liters
	87 Octane Acceptable - 89 Octane Recommended Regular Cab Longbed/Crew Quad Cab Models (Optional)	N/A	32 Gallons	121 Liters
???? Fuel Selection (6.7L HO Diesel Engines)	2500/3500 (Shortbed) Models	N/A	34 Gallons	129 Liters
	2500/3500 (Longbed) Models	N/A	35 Gallons	132 Liters
Diesel Exhaust Fluid (DEF)				
6.7L Diesel Engine	UREA	N/A	8 Gallons	30 Liters
A/C Refrigerant System				
3.7L/4.7L/5.7L Engines	R-134a	82300101AB	1 Pound, 6 Ounces	0.624 Kilograms
6.7L Engine w/Auto Trans	R-134a	82300101AB	1 Pound, 6 Ounces	0.624 Kilograms
6.7L Engine w/Man Trans	R-134a	82300101AB	1 Pound, 3 Ounces	0.539 Kilograms

? System fill capacity includes heater and coolant recovery bottle filled to MAX level.

?? SAE 5W-30 engine oil approved to MB 229.31 or MB 229.51 may be used when SAE 5W-20 engine oil is not available.

??? For 2500/3500 trucks operating under a gross combined weight rating **greater** than 14, 000 lbs/(6, 350 kg.) Use API Certified SAE 5W-30 Engine Oil, meeting the requirements of Chrysler Material Standard MS-6395.

???? Use good quality diesel fuel from a reputable supplier in your vehicle. Federal law requires that you must fuel this vehicle with Ultra Low Sulfur Highway Diesel fuel (15 ppm Sulfur maximum) and prohibits the use of Low Sulfur Highway Diesel fuel (500 ppm Sulfur maximum) to avoid damage to the emissions control system. For most year-round service, No. 2 diesel fuel meeting ASTM specification D-975 Grade S15 will provide good performance. If the vehicle is exposed to extreme cold (below 20°F or -7°C), or is required to operate at colder-than-normal conditions for prolonged periods, use climatized No. 2 diesel fuel or dilute the No. 2 diesel fuel with 50% No. 1 diesel fuel. This will provide better protection from fuel gelling or wax-plugging of the fuel filters.
This vehicle is fully compatible with biodiesel blends up to 5% biodiesel meeting ASTM specification D-975.

CAUTION:

Nominal refill capacities are shown. A variation may be observed from vehicle to vehicle due to manufacturing tolerance and refill procedure.

SPARK PLUGS

Description	Type	Part Number	Gap	
			U.S.	Metric
Spark Plugs (3.7L Engine)	NGK® Nickel Spark Plug	56028356AA (ZFR6F-11G)	0.044 in	1.10 mm
Spark Plugs (4.7L Engine)	BOSCH® Nickel Yttrium Spark Plug (intake side)	05149050AB (FR9 TE2)	0.039 in	1.00 mm
	BOSCH® Iridium / Platinum Spark Plug (exhaust side)	05149888AA (FR8 T1332)	0.050 in	1.27 mm
Spark Plugs (5.7L Engine)	NGK® Yttrium Spark Plug	05149177AB (LZFR5C-11G)	0.043 in	01.10 mm

TRANSMISSION

Description	Type	Part Number	Capacities	
			U.S.	Metric
Automatic				
42RLE - Service Fill	MOPAR® ATF+4 Automatic Transmission Fluid	1 Quart - 05013457AA	4.0 Quarts	3.8 Liters
		1 Gallon - 05013458AA		
? 42RLE - Overhaul Fill	MOPAR® ATF+4 Automatic Transmission Fluid	1 Quart - 05013457AA	8.8 Quarts	8.3 Liters
		1 Gallon - 05013458AA		
545RFE - Service Fill	MOPAR® ATF+4 Automatic Transmission Fluid	1 Quart - 05013457AA	4X2 - 5.5 Quarts	4X2 - 5.2 Liters
		1 Gallon - 05013458AA	4X4 -6.5 Quarts	4X4 - 6.2 Liters
? 545RFE - Overhaul Fill	MOPAR® ATF+4 Automatic Transmission Fluid	1 Quart - 05013457AA	14.8-16.9 Quarts	14-16 Liters
		1 Gallon - 05013458AA		
65RFE - Service Fill	MOPAR® ATF+4 Automatic Transmission Fluid	1 Quart - 05013457AA	4X2 - 5.5 Quarts	4X2 - 5.2 Liters
		1 Gallon - 05013458AA		
		1 Quart - 05013457AA	4X4 -6.5 Quarts	4X4 - 6.2 Liters
		1 Gallon - 05013458AA		
? 65RFE - Overhaul Fill	MOPAR® ATF+4 Automatic Transmission Fluid	1 Quart - 05013457AA	14.8-16.9 Quarts	14-16 Liters
		1 Gallon - 05013458AA		
		1 Quart -		

66RFE - Service Fill	MOPAR® ATF+4 Automatic Transmission Fluid	05013457AA 1 Gallon - 05013458AA	4X2 - 5.5 Quarts	4X2 - 5.2 Liters
		1 Quart - 05013457AA 1 Gallon - 05013458AA	4X4 -6.5 Quarts	4X4 - 6.2 Liters
? 66RFE - Overhaul Fill	MOPAR® ATF+4 Automatic Transmission Fluid	1 Quart - 05013457AA 1 Gallon - 05013458AA	14.8-16.9 Quarts	14-16 Liters
? 68RFE - Overhaul Fill	MOPAR® ATF+4 Automatic Transmission Fluid	1 Quart - 05013457AA 1 Gallon - 05013458AA	16.4-17.5 Quarts	15.6-16.6 Liters
AS68RC - Service Fill (Ram Trucks only)	MOPAR® AS68RC ATF Automatic Transmission Fluid	1 Quart - 05189966AA 1 Gallon - 05189977AA	7.2 Quarts	6.8 Liters
?/?? AS68RC - Overhaul Fill (Ram Trucks only)	MOPAR® AS68RC ATF Automatic Transmission Fluid	1 Quart - 05189966AA 1 Gallon - 05189977AA	13.74 Quarts	13 Liters
Manual				
G56	MOPAR® ATF+4 Automatic Transmission Fluid	1 Quart - 05013457AA 1 Gallon - 05013458AA	5 Quarts	4.7 Liters
GETRAG 238	MOPAR® ATF+4 Automatic Transmission Fluid	1 Quart - 05013457AA 1 Gallon - 05013458AA	4.6 Pints	2.2 Liters
? Dry fill capacity. Depending on type and size of internal cooler, length and inside diameter of cooler lines, or use of an auxiliary cooler, these figures may vary. Refer to the appropriate service information for the correct procedures.				
CAUTION: **Nominal refill capacities are shown. A variation may be observed from vehicle to vehicle due to manufacturing tolerance and refill procedure.**				

TRANSFER CASE

Description	Type	Part Number	Capacities	
			U.S.	Metric
? NV243	MOPAR® ATF+4 Automatic Transmission Fluid	1 Quart - 05013457AA 1 Gallon - 05013458AA	3.4 Pints	1.6 Liters

? NV271	MOPAR® ATF+4 Automatic Transmission Fluid	1 Quart - 05013457AA 1 Gallon - 05013458AA	4.0 Pints	1.9 Liters
? NV273	MOPAR® ATF+4 Automatic Transmission Fluid	1 Quart - 05013457AA 1 Gallon - 05013458AA	4.0 Pints	1.9 Liters
BW 44-44	MOPAR® Transfer Case Lubricant	1 Quart - 68089195AA	3.0 Pints	1.4 Liters
BW 44-45	MOPAR® Transfer Case Lubricant	1 Quart - 68089195AA	3.0 Pints	1.4 Liters
BW 44-46	MOPAR® Transfer Case Lubricant	1 Quart - 68089195AA	3.8 Pints	1.8 Liters
BW 44-47	MOPAR® Transfer Case Lubricant	1 Quart - 68089195AA	3.8 Pints	1.8 Liters
? Approximate dry fill or fill to bottom edge of fill plug hole.				

CAUTION:

Nominal refill capacities are shown. A variation may be observed from vehicle to vehicle due to manufacturing tolerance and refill procedure.

CHASSIS

Description	Type	Part Number	Capacities	
			U.S.	Metric
Corporate Axles				
8.25 Rear Axle	MOPAR® Synthetic Gear Lubricant SAE 75W-140	1 Quart - 04874469AA	4.39 Pints	2.08 Liters
? 8.25 Rear Axle (ANTI-SPIN)	MOPAR® Synthetic Gear Lubricant SAE 75W-140	1 Quart - 04874469AA	4.43 Pints	2.1 Liters
C213R Rear Axle	MOPAR® Synthetic Gear Lubricant SAE 75W-140	1 Quart - 04874469AA	4.37 Pints	2.07 Liters
? C213RE Rear Axle (ANTI-SPIN)	MOPAR® Synthetic Gear Lubricant SAE 75W-140	1 Quart - 04874469AA	4.73 Pints	2.24 Liters
Dana Axles				
186 FBI Front Axle	MOPAR® Synthetic Gear Lubricant SAE 80W-90	1 Quart - 04874468AA	2.11 Pints	1.0 Liters
186 FIA Front Axle	MOPAR® Synthetic Gear Lubricant SAE 80W-90	1 Quart - 04874468AA	2.26 Pints	1.24 Liters
216 FBI Front Axle (ANTI-SPIN)	MOPAR® Synthetic Gear Lubricant SAE 80W-90	1 Quart - 04874468AA	2.74 Pints	1.3 Liters
???? 226 RBI Rear Axle	MOPAR® Synthetic Gear Lubricant SAE 80W-90	1 Quart - 04874468AA	4.75 Pints	2.25 Liters
?/???? 226 RBI Rear Axle (ANTI-SPIN)	MOPAR® Synthetic Gear Lubricant SAE 80W-90	1 Quart - 04874468AA	4.75 Pints	2.25 Liters
226 RIA Rear Axle (ANTI-SPIN)	MOPAR® Synthetic Gear Lubricant SAE 75W-90	1 Quart - 05010320AA	2.85 Pints	1.35 Liters
302 RBI Rear Axle	MOPAR® Synthetic Gear Lubricant SAE 75W-90	1 Quart - 05010320AA	13.94 Pints	6.6 Liters
302 RBI Rear Axle (ANTI-SPIN)	MOPAR® Synthetic Gear Lubricant SAE 75W-90	1 Quart - 05010320AA	13.94 Pints	6.6 Liters
American Axles				

9.25 Front Axle	MOPAR® Synthetic Gear Lubricant SAE 75W-90	1 Quart - 05102232AA	4.64 Pints	2.2 Liters
9.25 Front Axle (ANTI-SPIN)	MOPAR® Synthetic Gear Lubricant SAE 75W-90	1 Quart - 05102232AA	4.22 Pints	2.0 Liters
10.5 Rear Axle	MOPAR® Synthetic Gear Lubricant SAE 75W-90	1 Quart - 05102232AA	5.28 Pints	2.5 Liters
10.5 Rear Axle (ANTI-SPIN)	MOPAR® Synthetic Gear Lubricant SAE 75W-90	1 Quart - 05102232AA	5.28 Pints	2.5 Liters
11.5 Rear Axle	MOPAR® Synthetic Gear Lubricant SAE 75W-90	1 Quart - 05102232AA	8.8 Pints	4.2 Liters
11.5 Rear Axle (ANTI-SPIN)	MOPAR® Synthetic Gear Lubricant SAE 75W-90	1 Quart - 05102232AA	8.45 Pints	4.0 Liters
Magna Axles				
275 FBI Front Axle	MOPAR® Synthetic Gear Lubricant SAE 75W-90	1 Quart - 05010320AA	10.77 Pints	5.1 Liters
ZF Axles				
215FD Front Axle	Mopar® Gear and Axle Lubricant 75W-85	1 Quart - 05136035AA	2.3 Pints	1.1 Liters
C235 Rear Axle	MOPAR® Synthetic Gear Lubricant SAE 75W-140	1 Quart - 04874469AA	4.64 Pints	2.2 Liters
? C235 Rear Axle (ANTI-SPIN)	MOPAR® Synthetic Gear Lubricant SAE 75W-140	1 Quart - 04874469AA	4.43 Pints	2.1 Liters
Chassis Systems				
?? Brake Master Cylinder	MOPAR® Brake Fluid DOT 3, SAE J1703.	12 oz. Bottle - 04318080AB 32 oz. Bottle - 04318081AB	N/A	N/A
??? Power Steering Reservoir	MOPAR® Power Steering Fluid +4	1 Quart - 05013457AA	N/A	N/A
? Limited-Slip Rear Axles require the addition of 118 ml (4 oz.) MOPAR® Limited Slip Additive.				
?? If MOPAR® Brake Fluid DOT 3 is not available, then MOPAR® Brake and Clutch Fluid DOT 4 (P/N 04549625AC), is acceptable.				
??? If MOPAR® Power Steering Fluid +4 is not available, then MOPAR® ATF +4 Automatic Transmission Fluid (P/N 05166226AA), is acceptable.				
???? If equipped with Trailer Tow package use MOPAR® Synthetic Gear Lubricant, SAE 75W-140				
CAUTION: **Nominal refill capacities are shown. A variation may be observed from vehicle to vehicle due to manufacturing tolerance and refill procedure.**				

FUSE LOCATIONS AND TYPES

SPECIFICATIONS

FUSE LOCATIONS AND TYPES

UNDERHOOD FUSES (TOTALLY INTEGRATED POWER MODULE)

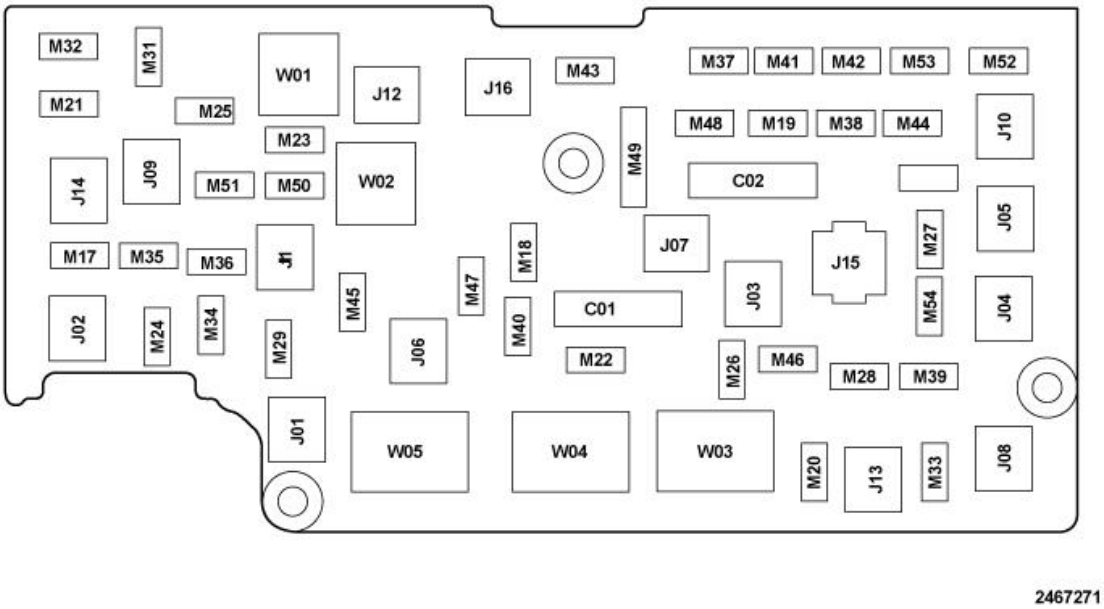

Fig. 6: Totally Integrated Power Module (TIPM)
Courtesy of CHRYSLER GROUP, LLC

The Totally Integrated Power Module (TIPM) is located in the engine compartment near the battery. This center contains cartridge fuses and mini fuses. A description of each fuse and component may be stamped on the inside cover, otherwise the cavity number of each fuse is stamped on the inside cover that corresponds to the following chart.

CAVITY	CARTRIDGE FUSE	MINI FUSE	DESCRIPTION
J01	40 Amp Green		Trailer Tow
J02	30 Amp Pink		Electric Brake
J03	30 Amp Pink		Diesel Powertrain Control Module - If Equipped
J04	25 Amp Natural		Driver Door Node
J05	25 Amp Natural		Passenger Door Node
J06	40 Amp Green		Antilock Brakes Pump/Stability Control System
J07	30 Amp Pink		Antilock Brakes Valve/Stability Control System
J08	40 Amp Green		Power Seat
J10	30 Amp Pink		Sway Bar Module - If Equipped
J11	30 Amp Pink		Transfer Case Module
J12	30 Amp Pink		Rear Defroster
J13	60 Amp Yellow		Main Ignition Off Draw (IOD) Fuse
J14	20 Amp Blue		Trailer Tow Lamps/Park Lamps
J15	40 Amp Green		Front Blower
J17	40 Amp Green		Starter Motor Solenoid

J18	20 Amp Blue		Powertrain Control Module Transmission Range
J19	60 Amp Yellow		Rad Fan Motor HI/Rad Fan Motor Low
J20	30 Amp Pink		Front Wiper Ground/Low/High
J21	20 Amp Blue		Washer Control
J22	25 Amp Natural		Sunroof Module
M1		15 Amp Blue	Stop Switch Lamp
M5		25 Amp Natural	115V AC Inverter
M6		20 Amp Yellow	Power Outlet (Instrument Panel or Front Console)/Rain Sensor
M7		20 Amp Yellow	Power Outlet (Rear Console or Center Seat)
M8		20 Amp Yellow	Front Heated Seat & Steering Wheel
M9		20 Amp Yellow	Rear Heated Seats
M10		15 Amp Blue	Hands Free Module/Vanity Lamp/Universal Garage Door Opener Module
M11		10 Amp Red	Climate Control System
M12		30 Amp Green	Radio/Amplifier
M13		20 Amp Yellow	Main #2 Instrument Cluster/Wireless Control Module/ITM/Siren/Multifunction Switch (Steering Column Module)
M14		20 Amp Yellow	Back Up Camera (Domestic Only)
M15		20 Amp Yellow	Power Seat Module(s)/Audio Telematics/Daytime Running Lights Relay/Instrument Cluster/Transfer Case Module
M16		10 Amp Red	Airbag Module
M18		15 Amp Blue	Center Stop Lamp
M19		25 Amp Natural	Automatic Shutdown 1 and 2
M20		15 Amp Blue	Instrument Cluster Interior Lighting /Sw Steering Wheel/Sw Bank
M21		20 Amp Yellow	Automatic Shutdown 3
M22		10 Amp Red	Horns (Low/High) - Right
M23		10 Amp Red	Horns (Low/High) - Left
M25		20 Amp Yellow	Fuel Pump Motor/Diesel Lift Pump - If Equipped
M26		10 Amp Red	Driver's Door Switch
M27		10 Amp Red	Ignition Switch
M28		15 Amp Blue	Powertrain Control Module
M29		10 Amp Red	Tire Pressure Monitor
M30		15 Amp Blue	J1962 Diag Connector
M31		20 Amp Yellow	Back-Up Lamps
M32		10 Amp Red	Airbag Module
M33		10 Amp Red	Powertrain Control Module
M34		10 Amp Red	Park Assist Module/Climate Control System

			Module/IR Sensor/Compass Module
M35		15 Amp Blue	Left Front & Rear Parklamps
M36		20 Amp Yellow	Power Outlet (Instrument Panel or Center Console)
M37		10 Amp Red	Antilock Brakes/Stability Control System Module/Stoplamp Switch
M38		25 Amp Natural	All Door Lock & Unlock
CB1			25A Circuit Breaker - Bat - Memory Seat
CB2			25A Circuit Breaker - IGN R/ACC-Power Window
W01			Relay - ASD #1, 2, 3
W02			Relay - Starter Solenoid
W03			Relay - Frt Wiper On/Off
W04			Relay - Radiator Fan #1
W05			Relay - Radiator Fan #2

CAUTION:

- **When installing the Integrated Power Module cover, it is important to ensure the cover is properly positioned and fully latched. Failure to do so may allow water to get into the Integrated Power Module, and possibly result in a electrical system failure.**
- **When replacing a blown fuse, it is important to use only a fuse having the correct amperage rating. The use of a fuse with a rating other than indicated may result in a dangerous electrical system overload. If a properly rated fuse continues to blow, it indicates a problem in the circuit that must be corrected.**

UNDERHOOD FUSES (POWER DISTRIBUTION CENTER - UREA)

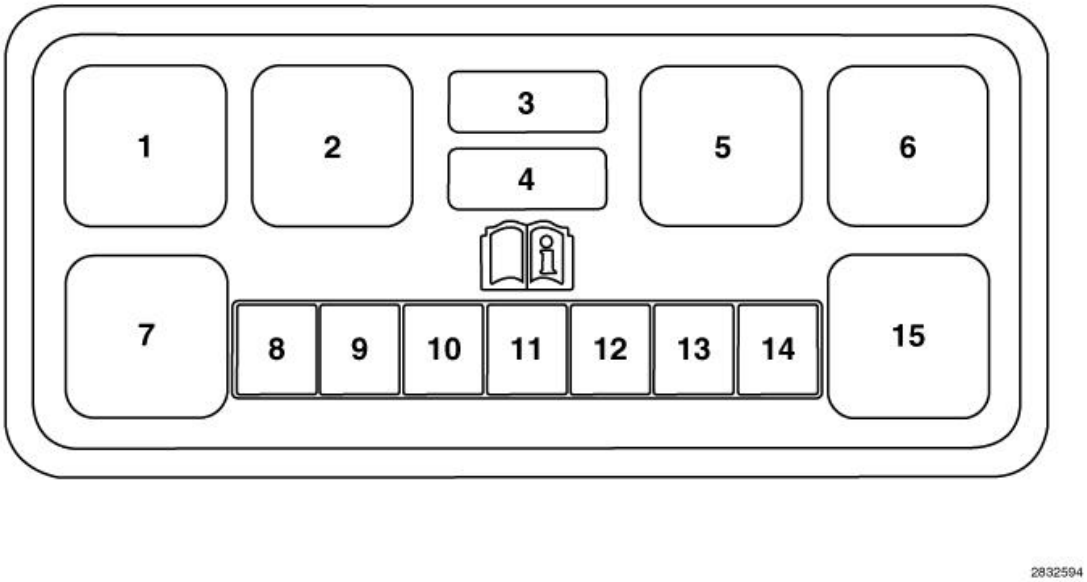

Fig. 7: Upfitter Power Distribution Center (PDC)
Courtesy of CHRYSLER GROUP, LLC

The Upfitter Power Distribution Center (PDC) is located in the engine compartment near the TIPM. This center contains fuses and relays. A description of each fuse and component may be stamped on the inside cover, otherwise the cavity number of each fuse is stamped on the inside cover that corresponds to the following chart.

CAVITY	CARTRIDGE FUSE	RELAY	DESCRIPTION
2	-	Mini ISO	Line Heaters
7	-	Mini ISO	Fuel Heater
15	-	Mini ISO	NOX Sensors
8	20 Amp Blue	-	Fuel Heater
10	20 Amp Blue	-	Line Heaters
11	25 Amp Natural	-	DCU B+
14	40 Amp Green	-	NOX Sensors

CAUTION:

- **When installing the PDC cover, it is important to ensure the cover is properly positioned and fully latched. Failure to do so may allow water to get into the PDC, and possibly result in a electrical system failure.**
- **When replacing a blown fuse, it is important to use only a fuse having the correct amperage rating. The use of a fuse with a rating other than indicated may result in a dangerous electrical system overload. If a properly rated fuse continues to blow, it indicates a problem in the circuit that must be corrected.**

UNDERHOOD FUSES (POWER DISTRIBUTION CENTER - UPFITTER)

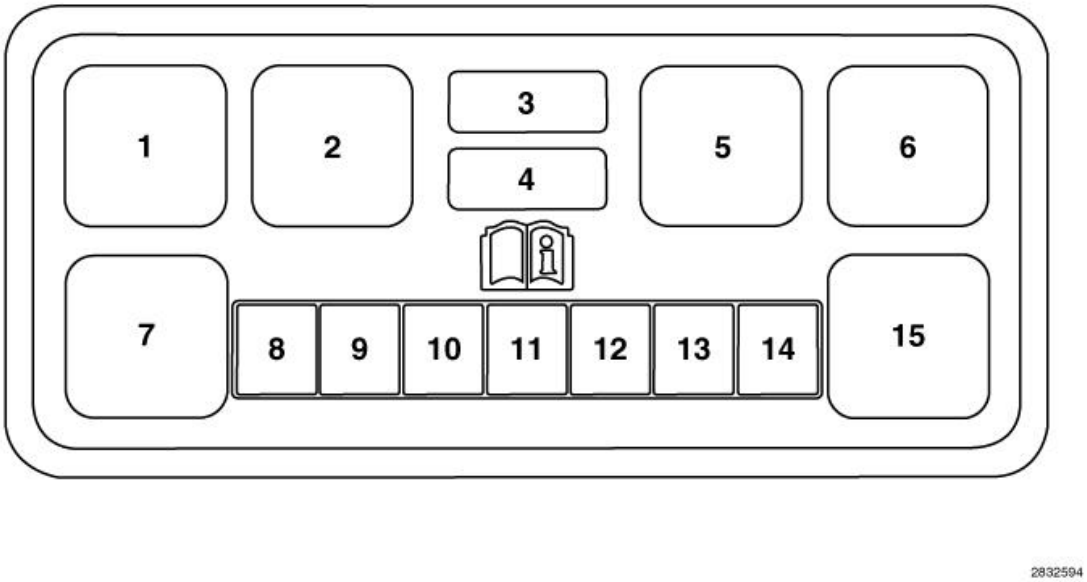

Fig. 8: Upfitter Power Distribution Center (PDC)
Courtesy of CHRYSLER GROUP, LLC

The UREA Power Distribution Center (PDC) is located in the right side of the engine next to the fender near the cowl panel. This center contains cartridge fuses and mini fuses. A description of each fuse and component may be stamped on the inside cover, otherwise the cavity number of each fuse is stamped on the inside cover that corresponds to the following chart.

CAVITY	CARTRIDGE FUSE	MINI FUSE	RELAY	DESCRIPTION
1	-	-	Mini ISO	Aux SW4
2	-	-	Mini ISO	Aux SW3
5	-	-	Mini ISO	Aux SW2
6	-	-	Mini ISO	Aux SW1
7	-	-	Mini ISO	PTO
15	-	-	Mini ISO	Run Only
8	20 Amp Blue	-	-	PTO
9	25 Amp Natural	-	-	Aux SW4
10	20 Amp Blue	-	-	Aux SW1
11	25 Amp Natural	-	-	B+
12	40 Amp Green	-	-	Aux SW2
13	25 Amp Natural	-	-	Aux SW3
14	20 Amp Blue	-	-	Run Only
3	-	5 Amp Tan	-	Switchable

CAUTION:

- **When installing the PDC cover, it is important to ensure the cover is properly positioned and fully latched. Failure to do so may allow water to get into the PDC, and possibly result in a electrical system failure.**
- **When replacing a blown fuse, it is important to use only a fuse having the correct amperage rating. The use of a fuse with a rating other than indicated may result in a dangerous electrical system overload. If a properly rated fuse continues to blow, it indicates a problem in the circuit that must be corrected.**

HOISTING

STANDARD PROCEDURE

STANDARD PROCEDURE - HOISTING

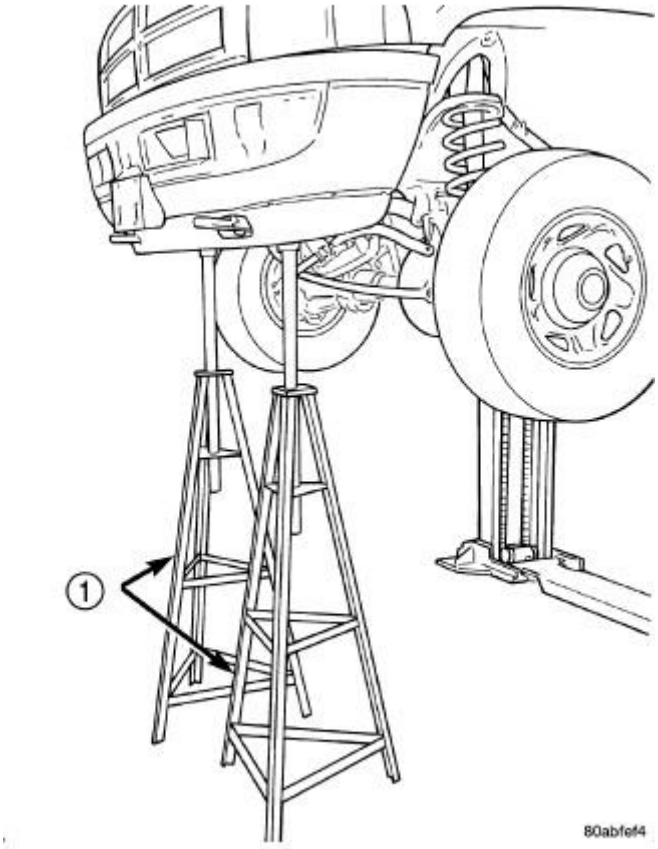

Fig. 9: Safety Stands
Courtesy of CHRYSLER GROUP, LLC

1 - SAFETY STANDS

Refer to the Owner's Manual for emergency vehicle lifting procedures.

WARNING: The hoisting and jack lifting points provided are for a complete vehicle. When a chassis or drivetrain component is removed from a vehicle, the center of gravity is altered making some hoisting conditions unstable. Properly support or secure vehicle to hoisting device when these conditions exist.

FLOOR JACK

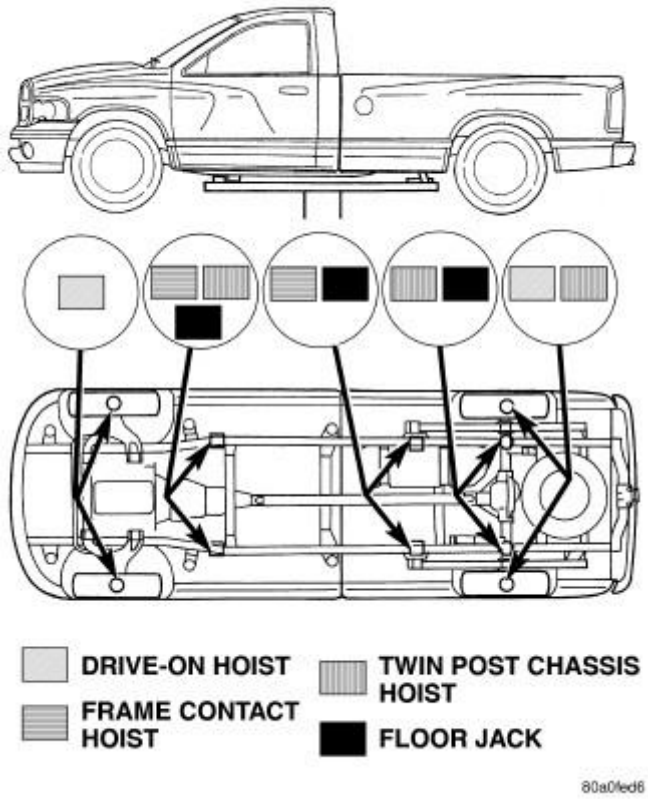

Fig. 10: Vehicle Lifting Locations
Courtesy of CHRYSLER GROUP, LLC

When properly positioned, a floor jack can be used to lift a vehicle. Support the vehicle in the raised position with jack stands at the front and rear ends of the frame rails.

CAUTION: Do not lift vehicle with a floor jack positioned under:

- **An axle tube.**
- **A body side sill.**
- **A steering linkage component.**

- **A drive shaft.**
- **The engine or transmission oil pan.**
- **The fuel tank.**
- **A front suspension arm.**

NOTE: Use the correct rear frame rail lifting locations only.

HOIST

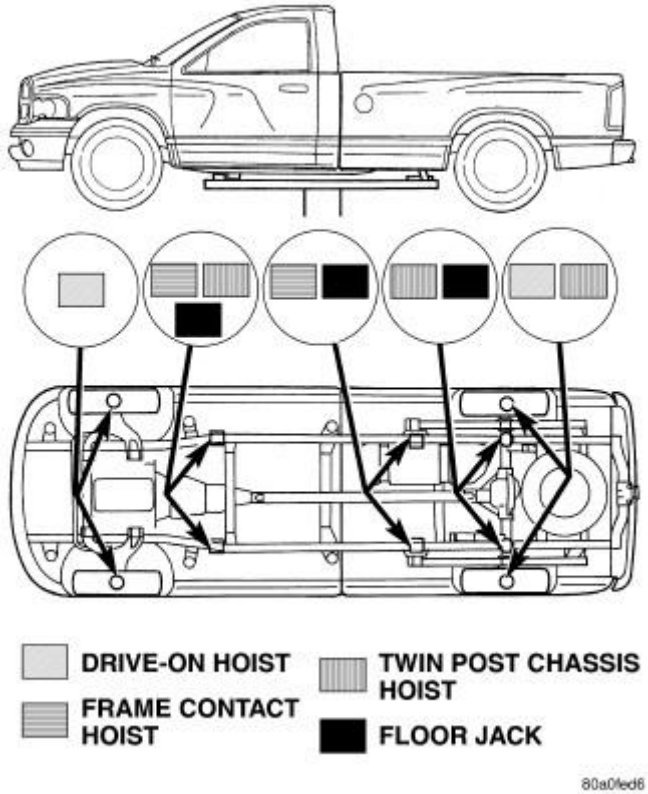

Fig. 11: Vehicle Lifting Locations
Courtesy of CHRYSLER GROUP, LLC

A vehicle can be lifted with:

- A single-post, frame-contact hoist.
- A twin-post, chassis hoist.
- A ramp-type, drive-on hoist.

JUMP STARTING

STANDARD PROCEDURE

STANDARD PROCEDURE - JUMP STARTING

WARNING: review all safety precautions and warnings in the battery system service information. Refer to BATTERY, STANDARD PROCEDURE .

- **Do not jump start a frozen battery, personal injury can result.**
- **If equipped, do not jump start when maintenance free battery indicator dot is yellow or bright color.**
- **Do not jump start a vehicle when the battery fluid is below the top of lead plates.**
- **Do not allow jumper cable clamps to touch each other when connected to a booster source.**
- **Do not use open flame near battery.**
- **Remove metallic jewelry worn on hands or wrists to avoid injury by accidental arcing of battery current.**
- **When using a high output boosting device, do not allow battery voltage to exceed 16 volts. Refer to instructions provided with device being used.**

Failure to follow these instructions may result in personal injury.

CAUTION: When using another vehicle as a booster, do not allow vehicles to touch. Electrical systems can be damaged on either vehicle.

TO JUMP START A DISABLED VEHICLE:

1. Raise hood on disabled vehicle and visually inspect engine compartment for:
   - Battery cable clamp condition, clean if necessary.
   - Frozen battery.
   - Yellow or bright color test indicator, if equipped.
   - Low battery fluid level.
   - Generator drive belt condition and tension.
   - Fuel fumes or leakage, correct if necessary.

CAUTION: If the cause of starting problem on disabled vehicle is severe, damage to booster vehicle charging system can result.

2. When using another vehicle as a booster source, park the booster vehicle within cable reach. Turn off all accessories, set the parking brake, place the automatic transmission in PARK or the manual transmission in NEUTRAL and turn the ignition OFF.

3. On disabled vehicle, place gear selector in park or neutral and set park brake. Turn off all accessories.
4. Connect jumper cables to booster battery. RED clamp to positive terminal (+). BLACK clamp to negative terminal (-). DO NOT allow clamps at opposite end of cables to touch, electrical arc will result. Review all warnings in this procedure.
5. On disabled vehicle, connect RED jumper cable clamp to positive (+) terminal. Connect BLACK jumper cable clamp to engine ground as close to the ground cable attaching point as possible.
6. Start the engine in the vehicle which has the booster battery, let the engine idle a few minutes, then start the engine in the vehicle with the discharged battery.

CAUTION: Do not crank starter motor on disabled vehicle for more than 15 seconds, starter will overheat and could fail.

7. Allow battery in disabled vehicle to charge to at least 12.4 volts (75% charge) before attempting to start engine. If engine does not start within 15 seconds, stop cranking engine and allow starter to cool (15 min.), before cranking again.

DISCONNECT CABLE CLAMPS AS FOLLOWS:

- Disconnect BLACK cable clamp from engine ground on disabled vehicle.
- When using a Booster vehicle, disconnect BLACK cable clamp from battery negative terminal. Disconnect RED cable clamp from battery positive terminal.
- Disconnect RED cable clamp from battery positive terminal on disabled vehicle.

MAINTENANCE SCHEDULES

DESCRIPTION

MAINTENANCE SCHEDULES - 1500/2500/3500 STANDARD CHASSIS - GASOLINE

OIL CHANGE INDICATOR SYSTEM

The oil change indicator system will remind you that it is time to take your vehicle in for scheduled maintenance.

On Electronic Vehicle Information Center (EVIC) equipped vehicles, "Oil Change Required" will be displayed in the EVIC and a single chime will sound, indicating that an oil change is necessary.

On Non-EVIC equipped vehicles, "Change Oil" will flash in the instrument cluster odometer and a single chime will sound, indicating that an oil change is necessary.

Based on engine operation conditions the oil change indicator message will illuminate. This means that service is required for your vehicle. Have your vehicle serviced as soon as possible, within the next 500 miles (805 km).

NOTE:

- **The oil change indicator message will not monitor the time since the last oil change. Change your vehicle's oil if it has been six months since your**

last oil change even if the oil change indicator message is NOT illuminated.

- **Change your engine oil more often if you drive your vehicle off-road for an extended period of time.**
- **Under no circumstances should oil change intervals exceed 8, 000 miles (13 000 km) or six months, whichever comes first.**

OIL CHANGE INDICATOR- RESET

The vehicle is equipped with an engine oil change indicator system. The "Oil Change Required" message flashes in the EVIC display for approximately ten seconds after a single chime has sounded, to indicate the next scheduled oil change interval. The engine oil change indicator system is duty cycle based, which means the engine oil change interval may fluctuate depending upon your personal driving style.

Unless reset, this message continues to display each time you turn the ignition switch to the ON/RUN position. To turn off the message temporarily, press and release the Menu button. To reset the oil change indicator system (after performing the scheduled maintenance) perform the following procedure:

1. Turn the ignition switch to the "ON" position. Do not start the engine.
2. Fully press the accelerator pedal slowly three times within ten seconds.
3. Turn the ignition switch to the "LOCK" position.

NOTE: If the indicator message illuminates when you start the vehicle, the oil change indicator system did not reset. If necessary, repeat this procedure.

At Each Stop for Fuel

- Check the engine oil level about five minutes after a fully warmed engine is shut off. Checking the oil level while the vehicle is on level ground will improve the accuracy of the oil level reading. Add oil only when the level is at or below the ADD or MIN mark.
- Check the windshield washer solvent and add if required.

Once a Month

- Check tire pressure and look for unusual wear or damage.
- Inspect the battery and clean and tighten the terminals as required.
- Check the fluid levels of the coolant reservoir, brake master cylinder, and transmission and add as needed.
- Check all lights and other electrical items for correct operation.

At Each Oil Change

- Change the engine oil filter.
- Inspect the brake hoses and lines.

CAUTION:

- **Failure to perform the required maintenance items may result in damage to the vehicle.**
- **Proper operation of four-wheel drive vehicles depends on tires of equal size, type and circumference on each wheel. Any difference in tire size can cause damage to the transfer case. Tire rotation schedule should be followed to balance tire wear.**

REQUIRED MAINTENANCE INTERVALS

NOTE: **** Vehicles built with the 4.7L engine are equipped with sixteen spark plugs. One set is located on the top of the engine under the coils and the second set is located on the side of the engine.**

The spark plugs located under the coils are a standard plug and must be changed every 48, 000 miles (78 000 km).

The spark plugs located on the side of the engine are a premium plug and must be changed every 96, 000 miles (156 000 km).

Perform Maintenance Every (Where time and mileage are listed, follow the interval that occurs first.)			Maintenance Items
Miles	Kilometers	Months	
8000	13000	6	• Change the engine oil and engine oil filter. • Rotate the tires, rotate at the first sign of irregular wear, even if it occurs before 8, 000 miles (13 000 km). • Lube the front drive shaft fitting (2500/3500 (4x4) models only).
16000	26000	12	• Change the engine oil and engine oil filter. • Rotate the tires, rotate at the first sign of irregular wear, even if it occurs before 16, 000 miles (26 000 km). • If using your vehicle for any of the following: Dusty or off-road conditions. Inspect the engine air cleaner filter; replace if necessary. • Lube the front drive shaft fitting (2500/3500 (4x4) models only). • Inspect the brake linings, replace if necessary. • Inspect exhaust system. Perform the first inspection at 16, 000 miles (26 000 km) or 12 months. • Inspect the front suspension, tie rod ends and boot seals for cracks or leaks and all parts for damage,

			wear, improper looseness or end play; replace if necessary.
24000	39000	18	• Change the engine oil and engine oil filter. • Rotate the tires, rotate at the first sign of irregular wear, even if it occurs before 24, 000 miles (39 000 km). • Lube the front drive shaft fitting (2500/3500 (4x4) models only). • Inspect the CV joints. • Inspect exhaust system. • Inspect the front and rear axle fluid, change if using your vehicle for police, taxi, fleet, off-road or frequent trailer towing.
32000	52000	24	• Change the engine oil and engine oil filter. • Rotate the tires, rotate at the first sign of irregular wear, even if it occurs before 32, 000 miles (52 000 km). • Replace the engine air cleaner filter. • Replace the spark plugs (3.7L and 5.7L Engines). • Lube the front drive shaft fitting (2500/3500 (4x4) models only). • Adjust parking brake on vehicles equipped with four-wheel disc brakes. • Inspect the transfer case fluid. • Inspect the brake linings, replace if necessary. • Inspect the front suspension, tie rod ends and boot seals for cracks or leaks and all parts for damage, wear, improper looseness or end play; replace if necessary.
40000	65000	30	• Change the engine oil and engine oil filter. • Rotate the tires, rotate at the first sign of irregular wear, even if it occurs before 40, 000 miles (65 000 km). • Lube the front drive shaft fitting (2500/3500 (4x4) models only).
48000	78000	36	• Change the engine oil and engine oil filter. • Rotate the tires, rotate at the first sign of irregular wear, even if it occurs before 48, 000 miles (78 000 km). • If using your vehicle for any of the following: Dusty or off-road conditions. Inspect the engine air cleaner

			filter; replace if necessary. • Replace the top row of spark plugs (4.7L Engine).** • Lube the front drive shaft fitting (2500/3500 (4x4) models only). • Inspect the brake linings, replace if necessary. • Inspect the CV joints. • Inspect exhaust system. • Inspect the front suspension, tie rod ends and boot seals for cracks or leaks and all parts for damage, wear, improper looseness or end play; replace if necessary. • Inspect the front and rear axle fluid, change if using your vehicle for police, taxi, fleet, off-road or frequent trailer towing.
56000	91000	42	• Change the engine oil and engine oil filter. • Rotate the tires, rotate at the first sign of irregular wear, even if it occurs before 56, 000 miles (91 000 km). • Lube the front drive shaft fitting (2500/3500 (4x4) models only).
64000	104000	48	• Change the engine oil and engine oil filter. • Rotate the tires, rotate at the first sign of irregular wear, even if it occurs before 64, 000 miles (104 000 km). • Replace the engine air cleaner filter. • Replace the ignition cables (3.7L Engine). • Replace the spark plugs (3.7L and 5.7L Engines). • Lube the front drive shaft fitting (2500/3500 (4x4) models only). • Inspect the brake linings; replace if necessary. • Adjust parking brake on vehicles equipped with four-wheel disc brakes. • Change the automatic transmission fluid and filter(s) if using your vehicle for any of the following: police, taxi, fleet, or frequent trailer towing. • Change the transfer case fluid if using your vehicle for any of the following: police, taxi, fleet, or frequent trailer towing. • Inspect the front suspension, tie rod ends and boot seals for cracks or leaks and all parts for damage, wear, improper looseness or end play; replace if necessary.

72000	117000	54	• Change the engine oil and engine oil filter. • Rotate the tires, rotate at the first sign of irregular wear, even if it occurs before 72, 000 miles (117 000 km). • Lube the front drive shaft fitting (2500/3500 (4x4) models only). • Inspect the CV joints. • Inspect exhaust system. • Inspect the front and rear axle fluid, change if using your vehicle for police, taxi, fleet, off-road or frequent trailer towing.
80000	130000	60	• Change the engine oil and engine oil filter. • Rotate the tires, rotate at the first sign of irregular wear, even if it occurs before 80, 000 miles (130 000 km). • If using your vehicle for any of the following: Dusty or off-road conditions. Inspect the engine air cleaner filter; replace if necessary. • Lube the front drive shaft fitting (2500/3500 (4x4) models only). • Flush and replace the engine coolant if not done at 104, 000 miles (169 000 km). • Inspect the brake linings, replace if necessary. • Inspect the front suspension, tie rod ends and boot seals for cracks or leaks and all parts for damage, wear, improper looseness or end play; replace if necessary.
88000	143000	66	• Change the engine oil and engine oil filter. • Rotate the tires, rotate at the first sign of irregular wear, even if it occurs before 88, 000 miles (143 000 km). • Lube the front drive shaft fitting (2500/3500 (4x4) models only).
96000	156000	72	• Change the engine oil and engine oil filter. • Rotate the tires, rotate at the first sign of irregular wear, even if it occurs before 96, 000 miles (156 000 km). • Replace the engine air cleaner filter. • Replace the ignition cables (4.7L Engine). • Replace the top row and side row of spark plugs (4.7L Engine).**

			• Replace the spark plugs (3.7L and 5.7L Engines). • Inspect and replace PCV valve if necessary. • Lube the front drive shaft fitting (2500/3500 (4x4) models only). • Adjust parking brake on vehicles equipped with four-wheel disc brakes. • Inspect the transfer case fluid. • Inspect the brake linings, replace if necessary. • Inspect the CV joints. • Inspect exhaust system. • Inspect the front suspension, tie rod ends and boot seals for cracks or leaks and all parts for damage, wear, improper looseness or end play; replace if necessary. • Inspect the front and rear axle fluid, change if using your vehicle for police, taxi, fleet, off-road or frequent trailer towing.
104000	169000	78	• Change the engine oil and engine oil filter. • Rotate the tires, rotate at the first sign of irregular wear, even if it occurs before 104, 000 miles (169 000 km). • Lube the front drive shaft fitting (2500/3500 (4x4) models only). • Flush and replace the engine coolant if not done at 60 months.
112000	182000	84	• Change the engine oil and engine oil filter. • Rotate the tires, rotate at the first sign of irregular wear, even if it occurs before 112, 000 miles (182 000 km). • If using your vehicle for any of the following: Dusty or off-road conditions. Inspect the engine air cleaner filter; replace if necessary. • Lube the front drive shaft fitting (2500/3500 (4x4) models only). • Inspect the brake linings, replace if necessary. • Inspect the front suspension, tie rod ends and boot seals for cracks or leaks and all parts for damage, wear, improper looseness or end play; replace if necessary.
120000	195000	90	• Change the engine oil and engine oil filter. • Rotate the tires, rotate at the first sign of irregular

			wear, even if it occurs before 120, 000 miles (195 000 km). • Lube the front drive shaft fitting (2500/3500 (4x4) models only). • Inspect the CV joints. • Inspect exhaust system. • Inspect the front and rear axle fluid, change if using your vehicle for police, taxi, fleet, off-road or frequent trailer towing. • Change the automatic transmission fluid and filter(s). • Replace the accessory drive belt(s).
128000	208000	96	• Change the engine oil and engine oil filter. • Rotate the tires, rotate at the first sign of irregular wear, even if it occurs before 128, 000 miles (208 000 km). • Replace the engine air cleaner filter. • Replace the ignition cables (3.7L Engine). • Replace the spark plugs (3.7L and 5.7L Engines). • Lube the front drive shaft fitting (2500/3500 (4x4) models only). • Adjust parking brake on vehicles equipped with four-wheel disc brakes. • Change the transfer case fluid. • Inspect the brake linings, replace if necessary. • Inspect the front suspension, tie rod ends and boot seals for cracks or leaks and all parts for damage, wear, improper looseness or end play; replace if necessary.
136000	221000	102	• Change the engine oil and engine oil filter. • Rotate the tires, rotate at the first sign of irregular wear, even if it occurs before 136, 000 miles (221 000 km). • Lube the front drive shaft fitting (2500/3500 (4x4) models only).
144000	234000	108	• Change the engine oil and engine oil filter. • Rotate the tires, rotate at the first sign of irregular wear, even if it occurs before 144, 000 miles (234 000 km). • If using your vehicle for any of the following: Dusty or off-road conditions. Inspect the engine air cleaner filter; replace if necessary.

			• Replace the top row of spark plugs (4.7L Engine). ** • Lube the front drive shaft fitting (2500/3500 (4x4) models only). • Inspect the brake linings, replace if necessary. • Inspect the CV joints. • Inspect exhaust system. • Inspect the front suspension, tie rod ends and boot seals for cracks or leaks and all parts for damage, wear, improper looseness or end play; replace if necessary. • Inspect the front and rear axle fluid, change if using your vehicle for police, taxi, fleet, off-road or frequent trailer towing.
152000	247000	114	• Change the engine oil and engine oil filter. • Rotate the tires, rotate at the first sign of irregular wear, even if it occurs before 152, 000 miles (247 000 km). • Lube the front drive shaft fitting (2500/3500 (4x4) models only).

WARNING:

- **You can be badly injured working on or around a motor vehicle. Do only service work for which you have the knowledge and the right equipment. If you have any doubt about your ability to perform a service job, take your vehicle to a competent mechanic.**
- **Failure to properly inspect and maintain your vehicle could result in a component malfunction and effect vehicle handling and performance. This could cause an accident**

Failure to follow these instructions may result in possible serious or fatal injury.

MAINTENANCE SCHEDULES - CAB CHASSIS - 5.7L GAS ENGINE

OIL CHANGE INDICATOR SYSTEM

The oil change indicator system will remind you that it is time to take your vehicle in for scheduled maintenance.

On Electronic Vehicle Information Center (EVIC) equipped vehicles, "Oil Change Required" will be displayed in the EVIC and a single chime will sound, indicating that an oil change is necessary.

On Non-EVIC equipped vehicles, "Change Oil" will flash in the instrument cluster odometer and a single chime will sound, indicating that an oil change is necessary.

Based on engine operation conditions the oil change indicator message will illuminate. This means that service is required for your vehicle. Have your vehicle serviced as soon as possible, within the next 500 miles (805 km).

NOTE:

- **The oil change indicator message will not monitor the time since the last oil change. Change your vehicle's oil if it has been six months since your last oil change even if the oil change indicator message is NOT illuminated.**
- **Change your engine oil more often if you drive your vehicle off-road for an extended period of time.**
- **Under no circumstances should oil change intervals exceed 8, 000 miles (13 000 km) or six months, whichever comes first.**

OIL CHANGE INDICATOR- RESET

The vehicle is equipped with an engine oil change indicator system. The "Oil Change Required" message flashes in the EVIC display for approximately ten seconds after a single chime has sounded, to indicate the next scheduled oil change interval. The engine oil change indicator system is duty cycle based, which means the engine oil change interval may fluctuate depending upon your personal driving style.

Unless reset, this message continues to display each time you turn the ignition switch to the ON/RUN position. To turn off the message temporarily, press and release the Menu button. To reset the oil change indicator system (after performing the scheduled maintenance) perform the following procedure:

1. Turn the ignition switch to the "ON" position. Do not start the engine.
2. Fully press the accelerator pedal slowly three times within ten seconds.
3. Turn the ignition switch to the "LOCK" position.

NOTE: **If the indicator message illuminates when you start the vehicle, the oil change indicator system did not reset. If necessary, repeat this procedure.**

At Each Stop for Fuel

- Check the engine oil level about five minutes after a fully warmed engine is shut off. Checking the oil level while the vehicle is on level ground will improve the accuracy of the oil level reading. Add oil only when the level is at or below the ADD or MIN mark.
- Check the windshield washer solvent and add if required.

Once a Month

- Check tire pressure and look for unusual wear or damage.
- Inspect the battery and clean and tighten the terminals as required.
- Check the fluid levels of the coolant reservoir, brake master cylinder, power steering and transmission and add as needed.
- Check all lights and other electrical items for correct operation.

At Each Oil Change

- Change the engine oil filter.
- Inspect the brake hoses and lines.

CAUTION:

- **Failure to perform the required maintenance items may result in damage to the vehicle.**
- **Proper operation of four-wheel drive vehicles depends on tires of equal size, type and circumference on each wheel. Any difference in tire size can cause damage to the transfer case. Tire rotation schedule should be followed to balance tire wear.**

REQUIRED MAINTENANCE INTERVALS

Perform Maintenance Every (Where time and mileage are listed, follow the interval that occurs first.)			Maintenance Items
Miles	Kilometers	Months	
8000	13000	6	• Change the engine oil and engine oil filter. • Rotate the tires, rotate at the first sign of irregular wear, even if it occurs before 8, 000 miles (13 000 km). • Lube the front drive shaft fitting (4x4 only).
16000	26000	12	• Change the engine oil and engine oil filter. • Rotate the tires, rotate at the first sign of irregular wear, even if it occurs before 16, 000 miles (26 000 km). • If using your vehicle for any of the following: Dusty or off-road conditions. Inspect the engine air cleaner filter; replace if necessary. • Lube the front drive shaft fitting (4x4 only). • Inspect the brake linings, replace if necessary. • Inspect exhaust system. Perform the first inspection at 16, 000 miles (26 000 km) or 12 months. • Inspect the front suspension, tie rod ends and boot seals for cracks or leaks and all parts for damage, wear, improper looseness or end play; replace if necessary.
24000	39000	18	• Change the engine oil and engine oil filter. • Rotate the tires, rotate at the first sign of irregular wear, even if it occurs before 24, 000 miles (39 000 km).

			• Lube the front drive shaft fitting (4x4 only). • Inspect the CV joints. • Inspect exhaust system. • Inspect the front and rear axle fluid, change if using your vehicle for police, taxi, fleet, off-road or frequent trailer towing.
32000	52000	24	• Change the engine oil and engine oil filter. • Rotate the tires, rotate at the first sign of irregular wear, even if it occurs before 32, 000 miles (52 000 km). • Replace the engine air cleaner filter. • Replace the spark plugs. • Lube the front drive shaft fitting (4x4 only). • Adjust parking brake on vehicles equipped with four-wheel disc brakes. • Inspect the transfer case fluid. • Inspect the brake linings, replace if necessary. • Inspect the front suspension, tie rod ends and boot seals for cracks or leaks and all parts for damage, wear, improper looseness or end play; replace if necessary.
40000	65000	30	• Change the engine oil and engine oil filter. • Rotate the tires, rotate at the first sign of irregular wear, even if it occurs before 40, 000 miles (65 000 km). • Lube the front drive shaft fitting (4x4 only).
48000	78000	36	• Change the engine oil and engine oil filter. • Rotate the tires, rotate at the first sign of irregular wear, even if it occurs before 48, 000 miles (78 000 km). • If using your vehicle for any of the following: Dusty or off-road conditions. Inspect the engine air cleaner filter; replace if necessary. • Lube the front drive shaft fitting (4x4 only). • Inspect the brake linings, replace if necessary. • Inspect the CV joints. • Inspect exhaust system. • Inspect the front suspension, tie rod ends and boot seals for cracks or leaks and all parts for damage, wear, improper looseness or end play; replace if necessary.

			• Inspect the front and rear axle fluid, change if using your vehicle for police, taxi, fleet, off-road or frequent trailer towing.
56000	91000	42	• Change the engine oil and engine oil filter. • Rotate the tires, rotate at the first sign of irregular wear, even if it occurs before 56, 000 miles (91 000 km). • Lube the front drive shaft fitting (4x4 only).
64000	104000	48	• Change the engine oil and engine oil filter. • Rotate the tires, rotate at the first sign of irregular wear, even if it occurs before 64, 000 miles (104 000 km). • Replace the engine air cleaner filter. • Replace the spark plugs. • Lube the front drive shaft fitting (4x4 only). • Inspect the brake linings; replace if necessary. • Adjust parking brake on vehicles equipped with four-wheel disc brakes. • Change the automatic transmission fluid and filter(s) if using your vehicle for any of the following: police, taxi, fleet, snow plowing, or frequent trailer towing. • Change the transfer case fluid if using your vehicle for any of the following: police, taxi, fleet, or frequent trailer towing. • Inspect the front suspension, tie rod ends and boot seals for cracks or leaks and all parts for damage, wear, improper looseness or end play; replace if necessary.
72000	117000	54	• Change the engine oil and engine oil filter. • Rotate the tires, rotate at the first sign of irregular wear, even if it occurs before 72, 000 miles (117 000 km). • Lube the front drive shaft fitting (4x4 only). • Inspect the CV joints. • Inspect exhaust system. • Inspect the front and rear axle fluid, change if using your vehicle for police, taxi, fleet, off-road or frequent trailer towing.
80000	130000	60	• Change the engine oil and engine oil filter. • Rotate the tires, rotate at the first sign of irregular wear, even if it occurs before 80, 000 miles (130 000

			km). • If using your vehicle for any of the following: Dusty or off-road conditions. Inspect the engine air cleaner filter; replace if necessary. • Lube the front drive shaft fitting (4x4 only). • Flush and replace the engine coolant if not done at 104, 000 miles (169 000 km). • Inspect the brake linings, replace if necessary. • Inspect the front suspension, tie rod ends and boot seals for cracks or leaks and all parts for damage, wear, improper looseness or end play; replace if necessary.
88000	143000	66	• Change the engine oil and engine oil filter. • Rotate the tires, rotate at the first sign of irregular wear, even if it occurs before 88, 000 miles (143 000 km). • Lube the front drive shaft fitting (4x4 only).
96000	156000	72	• Change the engine oil and engine oil filter. • Rotate the tires, rotate at the first sign of irregular wear, even if it occurs before 96, 000 miles (156 000 km). • Replace the engine air cleaner filter. • Replace the spark plugs. • Inspect and replace PCV valve if necessary. • Lube the front drive shaft fitting (4x4 only). • Adjust parking brake on vehicles equipped with four-wheel disc brakes. • Inspect the transfer case fluid. • Inspect the brake linings, replace if necessary. • Inspect the CV joints. • Inspect exhaust system. • Inspect the front suspension, tie rod ends and boot seals for cracks or leaks and all parts for damage, wear, improper looseness or end play; replace if necessary. • Inspect the front and rear axle fluid, change if using your vehicle for police, taxi, fleet, off-road or frequent trailer towing.
104000	169000	78	• Change the engine oil and engine oil filter. • Rotate the tires, rotate at the first sign of irregular wear, even if it occurs before 104, 000 miles (169

			000 km). • Lube the front drive shaft fitting (4x4 only). • Flush and replace engine coolant at 104, 000 miles (169, 00 km) or 60 months (whichever occurs first). • Flush and replace power steering fluid.
112000	182000	84	• Change the engine oil and engine oil filter. • Rotate the tires, rotate at the first sign of irregular wear, even if it occurs before 112, 000 miles (182 000 km). • If using your vehicle for any of the following: Dusty or off-road conditions. Inspect the engine air cleaner filter; replace if necessary. • Lube the front drive shaft fitting (4x4 only). • Inspect the brake linings, replace if necessary. • Inspect the front suspension, tie rod ends and boot seals for cracks or leaks and all parts for damage, wear, improper looseness or end play; replace if necessary.
120000	195000	90	• Change the engine oil and engine oil filter. • Rotate the tires, rotate at the first sign of irregular wear, even if it occurs before 120, 000 miles (195 000 km). • Lube the front drive shaft fitting (4x4 only). • Inspect the CV joints. • Inspect exhaust system. • Inspect the front and rear axle fluid, change if using your vehicle for police, taxi, fleet, off-road or frequent trailer towing. • Change the automatic transmission fluid and filter(s). • Replace the accessory drive belt(s).
128000	208000	96	• Change the engine oil and engine oil filter. • Rotate the tires, rotate at the first sign of irregular wear, even if it occurs before 128, 000 miles (208 000 km). • Replace the engine air cleaner filter. • Replace the spark plugs. • Lube the front drive shaft fitting (4x4 only). • Adjust parking brake on vehicles equipped with four-wheel disc brakes. • Change the transfer case fluid.

			• Inspect the brake linings, replace if necessary. • Inspect the front suspension, tie rod ends and boot seals for cracks or leaks and all parts for damage, wear, improper looseness or end play; replace if necessary.
136000	221000	102	• Change the engine oil and engine oil filter. • Rotate the tires, rotate at the first sign of irregular wear, even if it occurs before 136, 000 miles (221 000 km). • Lube the front drive shaft fitting (4x4 only).
144000	234000	108	• Change the engine oil and engine oil filter. • Rotate the tires, rotate at the first sign of irregular wear, even if it occurs before 144, 000 miles (234 000 km). • If using your vehicle for any of the following: Dusty or off-road conditions. Inspect the engine air cleaner filter; replace if necessary. • Lube the front drive shaft fitting (4x4 only). • Inspect the brake linings, replace if necessary. • Inspect the CV joints. • Inspect exhaust system. • Inspect the front suspension, tie rod ends and boot seals for cracks or leaks and all parts for damage, wear, improper looseness or end play; replace if necessary. • Inspect the front and rear axle fluid, change if using your vehicle for police, taxi, fleet, off-road or frequent trailer towing.
152000	247000	114	• Change the engine oil and engine oil filter. • Rotate the tires, rotate at the first sign of irregular wear, even if it occurs before 152, 000 miles (247 000 km). • Lube the front drive shaft fitting (4x4 only).

WARNING:

- **You can be badly injured working on or around a motor vehicle. Do only service work for which you have the knowledge and the right equipment. If you have any doubt about your ability to perform a service job, take your vehicle to a competent mechanic.**
- **Failure to properly inspect and maintain your vehicle could result in a component malfunction and effect vehicle handling and performance. This could cause an accident**

Failure to follow these instructions may result in possible serious or fatal injury.

MAINTENANCE SCHEDULES - 1500/2500/3500 STANDARD CHASSIS - MIDDLE EAST

OIL CHANGE INDICATOR SYSTEM

On Electronic Vehicle Information Center (EVIC) equipped vehicles "Oil Change Required" will be displayed in the EVIC and a single chime will sound, indicating that an oil change is necessary.

On Non-EVIC equipped vehicles "Change Oil" will flash in the instrument cluster odometer and a single chime will sound, indicating that an oil change is necessary.

The oil change indicator message will illuminate approximately 7, 000 miles (11 200 km) after the most recent oil change was performed. Have your vehicle serviced as soon as possible, within 500 miles (800 km). However, an earlier oil change at 3, 000 miles (5, 000 km) may be required if the vehicle is operated under "Severe Duty Conditions" later in this service information.

NOTE:

- **The oil change indicator message will not monitor the time since the last oil change. Change your vehicle's oil if it has been 6 months since your last oil change even if the oil change indicator message is NOT illuminated.**
- **Change your engine oil more often if you drive your vehicle off-road for an extended period of time.**
- **Under no circumstances should oil change intervals exceed 7, 500 miles (12 000 km) or 6 months, whichever comes first.**

OIL CHANGE INDICATOR- RESET

The vehicle is equipped with an engine oil change indicator system. The "Oil Change Required" message flashes in the EVIC display for approximately ten seconds after a single chime has sounded, to indicate the next scheduled oil change interval. The engine oil change indicator system is duty cycle based, which means the engine oil change interval may fluctuate depending upon your personal driving style.

Unless reset, this message continues to display each time you turn the ignition switch to the ON/RUN position. To turn off the message temporarily, press and release the Menu button. To reset the oil change indicator system (after performing the scheduled maintenance) perform the following procedure:

1. Turn the ignition switch to the "ON" position. Do not start the engine.
2. Fully press the accelerator pedal slowly three times within ten seconds.
3. Turn the ignition switch to the "LOCK" position.

NOTE: **If the indicator message illuminates when you start the vehicle, the oil change indicator system did not reset. If necessary, repeat this procedure.**

At Each Stop for Fuel

- Check the engine oil level about five minutes after a fully warmed engine is shut off. Checking the oil level while the vehicle is on level ground will improve the accuracy of the oil level reading. Add oil only when the level is at or below the ADD or MIN mark.
- Check the windshield washer solvent and add if required.

Once a Month

- Check tire pressure and look for unusual wear or damage.
- Inspect the battery and clean and tighten the terminals as required.
- Check the fluid levels of the coolant reservoir, brake master cylinder, and transmission and add as needed.
- Check all lights and other electrical items for correct operation.

At Each Oil Change

- Change the engine oil filter.
- Inspect the brake hoses and lines.

CAUTION:

- **Failure to perform the required maintenance items may result in damage to the vehicle.**
- **Proper operation of four-wheel drive vehicles depends on tires of equal size, type and circumference on each wheel. Any difference in tire size can cause damage to the transfer case. Tire rotation schedule should be followed to balance tire wear.**

REQUIRED MAINTENANCE INTERVALS

NOTE: **** Vehicles built with the 4.7L engine are equipped with sixteen spark plugs. One set is located on the top of the engine under the coils and the second set is located on the side of the engine.**

The spark plugs located under the coils are a standard plug and must be changed every 30, 000 miles (48 000 km).

The spark plugs located on the side of the engine are a premium plug and must be changed every 105, 000 miles (168 000 km).

SEVERE DUTY CONDITIONS

++ Change the engine oil and engine oil filter at every 3, 000 miles (5 000 km) or 3 months if using your vehicle under any of the following severe duty conditions:

- Stop and go driving.
- Driving in dusty conditions.

- Short trips of less than 10 miles (16 km).
- Trailer towing.
- Taxi, police, or delivery service (commercial service).
- Off-road or desert operation.

Perform Maintenance Every (Where time and mileage are listed, follow the interval that occurs first.)			**Maintenance Items**
Miles	**Kilometers**	**Months**	
7500	12000	6	• Change the engine oil and engine oil filter.++ • Rotate tires. • Lube the front drive shaft fitting (2500/3500 (4x4) models only).
15000	24000	12	• Change the engine oil and engine oil filter.++ • Rotate tires. • If using your vehicle for any of the following: Dusty or off-road conditions. Inspect the engine air cleaner filter, replace if necessary. • Lube the front drive shaft fitting (2500/3500 (4x4) models only). • Inspect the brake linings, replace if necessary. • Inspect the front suspension, tie rod ends and boot seals for cracks or leaks and all parts for damage, wear, improper looseness or end play; replace if necessary. • Inspect the CV joints. Perform the first inspection at 15, 000 miles (24 000 km) or 12 months. • Inspect exhaust system. Perform the first inspection at 15, 000 miles (24 000 km) or 12 months.
22500	36000	18	• Change the engine oil and engine oil filter.++ • Rotate tires. • Lube the front drive shaft fitting (2500/3500 (4x4) models only). • Inspect the front & rear axle fluid, change if using your vehicle for police, taxi, fleet, off-road or frequent trailer towing.
30000	48000	24	• Change the engine oil and engine oil filter.++ • Rotate tires. • Replace the engine air cleaner filter. • **Replace the spark plugs (5.7L Engine).**

			• Lube the front drive shaft fitting (2500/3500 (4x4) models only). • Inspect the brake linings, replace if necessary. • Adjust parking brake on vehicles equipped with four-wheel disc brakes. • Inspect the CV joints. • Inspect exhaust system. • Inspect the front suspension, tie rod ends and boot seals for cracks or leaks and all parts for damage, wear, improper looseness or end play; replace if necessary. • Inspect the transfer case fluid.
37500	60000	30	• Change the engine oil and engine oil filter.++ • Rotate tires. • Lube the front drive shaft fitting (2500/3500 (4x4) models only).
45000	72000	36	• Change the engine oil and engine oil filter.++ • Rotate tires. • If using your vehicle for any of the following: Dusty or off-road conditions. Inspect the engine air cleaner filter, replace if necessary. • **Replace the top row of spark plugs (4.7L Engine).**** • Lube the front drive shaft fitting (2500/3500 (4x4) models only). • Inspect the brake linings, replace if necessary. • Inspect the front & rear axle fluid, change if using your vehicle for police, taxi, fleet, off-road or frequent trailer towing.
52500	84000	42	• Change the engine oil and engine oil filter.++ • Rotate tires. • Lube the front drive shaft fitting (2500/3500 (4x4) models only).
60000	96000	48	• Change the engine oil and engine oil filter.++ • Rotate tires. • Replace the engine air cleaner filter. • **Replace the spark plugs (5.7L Engines).** • Lube the front drive shaft fitting (2500/3500 (4x4) models only). • Inspect the brake linings, replace if necessary.

			• Adjust parking brake on vehicles equipped with four-wheel disc brakes. • Inspect the CV joints. • Inspect exhaust system. • Inspect the front suspension, tie rod ends and boot seals, replace if necessary. • Change the automatic transmission fluid and filters if using your vehicle for any of the following: police, taxi, fleet, snow plowing or frequent trailer towing. • Change the transfer case fluid if using your vehicle for any of the following: police, taxi, fleet, off-road or frequent trailer towing.
67500	108000	54	• Change the engine oil and engine oil filter.++ • Rotate tires. • Lube the front drive shaft fitting (2500/3500 (4x4) models only). • Inspect the front & rear axle fluid, change if using your vehicle for police, taxi, fleet, off-road or frequent trailer towing.
75000	120000	60	• Change the engine oil and engine oil filter.++ • Rotate tires. • If using your vehicle for any of the following: Dusty or off-road conditions. Inspect the engine air cleaner filter, replace if necessary. • Lube the front drive shaft fitting (2500/3500 (4x4) models only). • Inspect the brake linings, replace if necessary. • Flush and replace the engine coolant at 60 months if not done at 105, 000 miles (168 000 km).
82500	132000	66	• Change the engine oil and engine oil filter.++ • Rotate tires. • Lube the front drive shaft fitting (2500/3500 (4x4) models only).
90000	144000	72	• Change the engine oil and engine oil filter.++ • Rotate tires. • Replace the engine air cleaner filter. • **Replace the top row and side row of spark plugs (4.7L Engine).**** • **Replace the ignition cables (4.7L Engine).** • **Replace the spark plugs (5.7L Engine).**

			• **Inspect and replace PCV valve if necessary.+** • Lube the front drive shaft fitting (2500/3500 (4x4) models only). • Inspect the brake linings, replace if necessary. • Adjust parking brake on vehicles equipped with four-wheel disc brakes. • Inspect the front & rear axle fluid, change if using your vehicle for police, taxi, fleet, off-road or frequent trailer towing. • Inspect the CV joints. • Inspect exhaust system. • Inspect the front suspension, tie rod ends and boot seals, replace if necessary. • Inspect the transfer case fluid.
97500	156000	78	• Change the engine oil and engine oil filter.++ • Rotate tires. • Lube the front drive shaft fitting (2500/3500 (4x4) models only).
105000	168000	84	• Change the engine oil and engine oil filter.++ • Rotate tires. • If using your vehicle for any of the following: Dusty or off-road conditions. Inspect the engine air cleaner filter, replace if necessary. • Lube the front drive shaft fitting (2500/3500 (4x4) models only). • Flush the engine coolant if not done at 60 months. • Inspect the brake linings, replace if necessary.
112500	180000	90	• Change the engine oil and engine oil filter.++ • Rotate tires. • Lube the front drive shaft fitting (2500/3500 (4x4) models only). • Inspect the front & rear axle fluid, change if using your vehicle for police, taxi, fleet, off-road or frequent trailer towing.
120000	192000	96	• Change the engine oil and engine oil filter.++ • Rotate tires. • Replace the engine air cleaner filter. • **Replace the spark plugs (5.7L Engine).** • Lube the front drive shaft fitting (2500/3500 (4x4) models only).

			• Inspect the brake linings, replace if necessary. • Adjust parking brake on vehicles equipped with four-wheel disc brakes. • Inspect the CV joints. • Inspect exhaust system. • Inspect the front suspension, tie rod ends and boot seals, replace if necessary. • Change the automatic transmission fluid, main sump filter, and spin-on cooler return filter (if equipped). • Change the transfer case fluid if using your vehicle for any of the following: police, taxi, fleet, off-road or frequent trailer towing. • Replace accessory drive belt(s).
127500	204000	102	• Change the engine oil and engine oil filter.++ • Rotate tires. • Lube the front drive shaft fitting (2500/3500 (4x4) models only).
135000	216000	108	• Change the engine oil and engine oil filter.++ • Rotate tires. • If using your vehicle for any of the following: Dusty or off-road conditions. Inspect the engine air cleaner filter, replace if necessary. • **Replace the top row of spark plugs (4.7L Engine).**** • Lube the front drive shaft fitting (2500/3500 (4x4) models only). • Inspect the front & rear axle fluid, change if using your vehicle for police, taxi, fleet, off-road or frequent trailer towing. • Inspect the brake linings, replace if necessary.
142500	228000	114	• Change the engine oil and engine oil filter.++ • Rotate tires. • Lube the front drive shaft fitting (2500/3500 (4x4) models only).
150000	240000	120	• Change the engine oil and engine oil filter.++ • Rotate tires. • Replace the engine air cleaner filter. • **Replace the spark plugs (5.7L Engine).** • Lube the front drive shaft fitting (2500/3500 (4x4) models only).

			• Inspect the brake linings, replace if necessary. • Adjust parking brake on vehicles equipped with four-wheel disc brakes. • Inspect the CV joints. • Inspect exhaust system. • Inspect the front suspension, tie rod ends and boot seals, replace if necessary. • Inspect the transfer case fluid.

+ This maintenance is recommended by the manufacturer to the owner, but is not required to maintain emissions warranty.

WARNING:

- **You can be badly injured working on or around a motor vehicle. Do only service work for which you have the knowledge and the right equipment. If you have any doubt about your ability to perform a service job, take your vehicle to a competent mechanic.**
- **Failure to properly inspect and maintain your vehicle could result in a component malfunction and effect vehicle handling and performance. This could cause an accident**

Failure to follow these instructions may result in possible serious or fatal injury.

INSPECTION

INSPECTION

The following steps outline the dealer inspection procedure required every 5 years for vehicles covered under the terms of the Lifetime Powertrain Warranty. Refer to the appropriate warranty information for additional terms and coverages applicable to the Lifetime Powertrain Warranty.

1. Lift the vehicle on a suitable hoist.
2. Check all Powertrain components for leaks or physical damage. Note any concerns.
3. Lower the vehicle and check the level and condition of the engine oil.
4. Connect a diagnostic scan tool and check for any Diagnostic Trouble Codes (DTC).

NEW VEHICLE PREPARATION INSTRUCTIONS

STANDARD PROCEDURE

STANDARD PROCEDURE - NEW VEHICLE PREPARATION

NEW VEHICLE PREP INSTRUCTIONS

VEHICLE READINESS	
DESCRIPTION	**ACTION**
Keep All Protective Transit Film and Wheel Covers & Films on vehicle until sold, or up to 180 Days	Keep All Protective Transit Film and Wheel Covers & Films on vehicle until sold, or up to 180 Days.
Install Ignition Off Draw (IOD) Fuse	Locate and install/connect Ignition Off Draw fuse or connector.
Place vehicle into Customer Mode (if no IOD fuse)	Simultaneously press the "Front Defrost" and "List/Enter" buttons and hold for five (5) seconds. The EVIC display will update once the vehicle goes into customer mode.
Inflate tire pressure to maximum side wall pressure (except heavy duty trucks)	Increase the tire pressure to maximum sidewall pressure if vehicle is going into lot storage.
Install all "Shipped Loose" items	Install all "Shipped Loose" items
Install Front License Plate Bracket (if required)	Install Front License Plate Bracket
Install Roof Rack	Install Roof Rack
Install Antenna	Install Antenna
Install Wheel Center Caps	Install Wheel Center Caps
Reset Tire Pressure Light Load Switch (if equipped)	If vehicle is going into storage and tire pressure is being set to maximum, switch the tire pressure light load setting to "maximum load" using the button on the instrument panel.
UNDERHOOD	
DESCRIPTION	**ACTION**
Hood Latch and Safety Catch - Adjust as Needed	Verify the operation of the hood release system including the inside hood release lever and the outside hood secondary safety catch. Adjust if necessary. The safety catch prevents the hood from going to the full open position until it is manually released. To test the safety catch, unlatch the hood with the interior hood release lever and attempt to raise the hood without operating the safety catch.
Battery State-of-Charge - document voltage	Check the battery state of charge by connecting a digital voltmeter at the jump-start locations. The battery voltage should be at least 12.4 volts. If charging is necessary, follow the service information procedures and recharge the battery. Record voltage on New Vehicle Prep (NVP) form.
Loose Attachments, Routing and Clearance	Inspect the following for routing, loose attachments, connections, and clearance. Reroute and tighten as required: Brake Lines, Fuel Lines, Power Steering Hoses, Vacuum Hoses, Clutch Lines, Refrigerant Lines, Wiring, Belts.
All Fluid Levels	Refer to the owner's manual or service information for proper fluid level inspection locations.
No Fluid Leaks present	Visually inspect the underhood area to make sure absence of fluid leaks. Check clamps for tightness an full

	engagement.
UNDER VEHICLE	
DESCRIPTION	**ACTION**
No Fluid Leaks present	Raise the vehicle on an appropriate hoist and check the following: Loose Attachments, Routing Clearance and Damage, Absence of Fluid Leaks. Refer to **HOISTING** for proper lift points. Check clamps for tightness and full engagement.
Loose Attachments, Routing, Clearance, Damage	Raise the vehicle on an appropriate hoist and check the following: Loose Attachments, Routing Clearance and Damage, Absence of Fluid Leaks. Refer to **HOISTING** for proper lift points. Check clamps for tightness and full engagement.
ROAD TEST	
DESCRIPTION	**ACTION**
Perform Road Test, Mileage: Before _____ After	Record mileage before and after road test.
Engine Starts with All Keys	Start vehicle with all sets of keys.
All Warning Lights and Gauges / No DTCs	Verify all warning lights and gauges are operating properly, and no fault codes exist.
Keyless Go	Make sure vehicle starts with push button, when key is inside vehicle.
Engine Starts Only in Park & Neutral	Verify engine will only start while automatic transmission is in park or neutral.
Engine Starts Only with Clutch Depressed	Verify engine will only start when clutch is depressed on manual transmission vehicles.
Service and Parking Brakes	Apply the service brakes while the car is in motion. Be sure the brake operation is smooth and positive. Make sure the vehicle stops in a straight line and without pulling to one side. Make sure there is no shudder or vibration when braking. Make sure that the parking brake is easy to operate. Make sure the parking brake does not drag.
Brake Transmission Shift Interlock	Make sure that the vehicle will only start when the brake is depressed on vehicles with automatic transmission.
Clutch / Manual Transmission Shifting	Check for smooth shifting. Make sure shift lever operates easily and smoothly. Check for proper synchronization. The gears should not grind.
Automatic Transmission Shifting	Make sure that the park lock mechanism holds the vehicle. With the vehicle on a grade, put the automatic transmission in park and slowly release the service brake to check the operation of the park mechanism. Make sure the shift lever operates easily and smoothly. Check for smooth shifting. Check for proper upshifting and downshifting.
Autostick	Verify that Autostick feature allows proper shifting through the gears.

ROAD TEST	
DESCRIPTION	**ACTION**
Engine Performance - Cold	The engine should: start properly, idle smoothly and at proper speed, be free from stumbling or hesitation, produce sufficient power, be free of unusual noises, operate within the proper temperature range, and stop when the ignition key is shut off or stop button is depressed.
Engine Performance - Warm	The engine should: start properly, idle smoothly and at proper speed, be free from stumbling or hesitation, produce sufficient power, be free of unusual noises, operate within the proper temperature range, and stop when the ignition key is shut off or stop button is depressed.
Steering and Handling	Check that the power assist works properly. Make sure that the steering wheel does not vibrate abnormally at idle or road speed. Make sure that the steering wheel is centered when traveling in a straight line. Check that the vehicle does not drift to either side on flat road surfaces. Make sure that the vehicle does not vibrate or shake abnormally.
Noise, Vibration, Squeaks, or Rattles	Check that the vehicle is free of noise, vibrations, squeaks, or rattles. Tighten any loose fasteners.
Heater / Defrost - Front	Check the heater operation after the vehicle has reached operating temperature. Operate blower motor at all speeds. Operate the system in all modes. Check for hot air at all appropriate outlets. Check for temperature control operation.
Air Conditioning	Make sure that the A/C system cools properly. Operate blower motor at all speeds. Check for cool air at all temperature outlets. Operate the system in all modes.
Rear Heater and Air Conditioning	Check the rear heater and A/C for proper operation.
Defrost - Rear	Make sure that the electric heated rear defroster operates correctly. Turn on and feel for warmth.
Blindspot Monitoring System (if equipped)	While on road test, verify that the visual warning indicators located on the side view mirrors are operating properly when an object is within the detection zone.
Cruise Control (if equipped)	Check the "on/off" switch. Check the "set" operation. Check the "resume" function. Check the "accelerate" and "decelerate" function. Check the "cancel" button. Check the brake/clutch release function. If equipped, verify operation of Adaptive Cruise Control function.
Set Compass Variance / Calculation (if equipped)	For information regarding compass setting procedures, refer to **STANDARD PROCEDURE** .
ROAD TEST	
DESCRIPTION	**ACTION**
	With vehicle in four wheel drive, press the sway bar switch to activate the system. Verify that the "Sway Bar Indicator

Electronic Sway Bar Disconnect (if equipped)	Light" is illuminated. **WARNING:** **Do not exceed 18 MPH / 29 KMPH while the front sway bar is disconnected. Failure to follow these instructions may result in possible serious or fatal injury.**
Transfer Case (if equipped)	Shift the transfer case through all ranges to make sure all shifting is smooth and operates properly.
Load Leveling Air Suspension (if equipped)	Use the terrain select switch to change the ride height during normal driving conditions. Cycle through each selection and verify proper operation of the air suspension system.
Tire Pressure Monitoring System	Verify that Tire Pressure Monitoring Indicator Light is not illuminated when tires are above minimum inflation recommendations. Make sure that indicator lamp is not flashing/chiming.
Park Assist (if equipped)	Put vehicle in reverse and slowly back up toward an object. Verify that Park Assist warning icon, lights and chimes operate properly as object is approached.
Back-Up Camera (if equipped)	Put vehicle in reverse, verify that screen provides a clear and visible image from rear of vehicle.
INTERIOR	
DESCRIPTION	**ACTION**
Visually Inspect Interior Parts for Damage, Fit, etc.	From the interior of the vehicle, open and close all doors to make sure ease of operation. Fully open and close the glove box to make sure proper operation. Fully open and close the console door to make sure proper operation. Check interior panels for proper fit and free from damage.
All Interior Lamps and Horn	Operate and visually inspect all interior lights and switches, including: Dome/Map lamps, and if equipped the following: vanity mirror lamps, glove box lamps, ash tray lamp, cigar lighter lamp, radio lamps, door mounted lamps, illuminated entry system. Make sure that the horn operates properly.
Rear View Mirror	Check that the rearview mirror's day/night function Is operating properly.
Front and Rear Wipers and Washers	Activate front windshield wipers, and if equipped, rear window wipers and check for proper operation at all speeds. Activate the front and if equipped, the rear washer. Check the spray pattern for proper operation and aim. Check the intermittent wipe feature for proper operation.
All interior Door Locks including Child Locks	Check all interior door locks for proper operation, including rear child safety door locks if equipped. Place in the unlocked position.
INTERIOR	

DESCRIPTION	ACTION
Steering Wheel Mounted Controls	Check all steering wheel controls for proper operation.
Memory Mirror / Seat	Verify the proper operation of the memory mirror and seat system.
Cigar Lighter	Check cigar lighter for proper operation.
Power Windows and Window Lock Switch	Fully open and close all power windows to make sure proper operation and sealing. Make sure that the windows operate properly at each door. Verify that window lock button is operating properly.
Power Adjustable Pedals (if equipped)	Check the adjustable pedals for proper operation by pressing the switch on the steering column.
Outside Power Mirrors	Check power mirrors for proper operation.
Heated Mirrors (if equipped)	Check power heated mirrors for proper operation.
Power Folding Mirrors (if equipped)	Check power folding mirrors for proper operation.
Seats and Seat Belts - All Adjustments	Check for correct installation and operation of seat and shoulder belts, and retractors. Check that the restraint system safety labels regarding the use of seatbelts and airbags are in place. Fully cycle the seats for proper adjustments and verify that each seat is securely mounted. Fold down and latch the rear seats. Pull forward to check that the latches operate correctly. Check for proper head restraint operation.
Convertible Top (If equipped)	Cycle the convertible top. Check and adjust alignment as required. In cold weather, allow the top to reach room temperature before cycling.
FIAT Cabrio Top (if equipped)	Cycle the convertible top. Check and adjust alignment as required. In cold weather, allow the top to reach room temperature before cycling.
Skyslider (if equipped)	Cycle the Skyslider roof. Check and adjust alignment as required.
Power Sunroof (if equipped)	Cycle sunroof. Make sure that the sunroof opens and closes easily. Verify proper operation of one touch open/close feature if equipped.
Set Clock(s)	Set all clocks to correct time. Refer to Owner's Manual for information regarding clock setting procedures.
Audio System	Turn the radio on and check reception in both AM and FM modes. Check that the CD player operates properly. Check for good sound quality from all speakers.
Satellite Radio (if equipped)	Turn on satellite radio and verify reception.
Disable Front Seat Video (if equipped)	Use the scantool to disable front seat video while vehicle not in park.
Video System (if equipped)	Test the DVD player to make sure that a DVD will load properly and display on the screen.
Satellite Streaming Video (if equipped)	Satellite Streaming Video.
Wireless Headphones / Video Remote (if	Check for proper operation of the Wireless Headphones /

equipped)	Video Remote.
INTERIOR	
DESCRIPTION	**ACTION**
Heated Steering Wheel (if equipped)	Verify that heated steering wheel is functioning properly.
Rear Sliding Window (if equipped)	Check for proper operation of the manual or power rear sliding window.
Power Outlet(s)	Check all power outlets for proper operation.
Integrated Child Seat / Belt	Check the child restraints and child seats for proper operation.
Place tire changing instruction sheet in left rear quarter panel storage compartment (RT only)	Place tire changing instruction sheet in left rear quarter panel storage compartment (RT only).
Storage bins properly seated around the spare tire (WK only)	Verify that storage bins are properly seated.
Power folding Headrests (if equipped)	Verify proper operation of power folding third row head restraints by pressing the power folding switch located on the instrument panel switch bank.
Heated Seats (if equipped)	Check for proper operation of heated seats on all power levels, on all equipped seats.
Power Cooled Seats (if equipped)	Check for proper operation of ventilated seats on all power levels, on all equipped seats.
Heated / Cooled Cup Holders (if equipped)	Check for proper operation of the heated and cooled and cooled cupholders.
Cargo Compartment Cover (if equipped)	Check the rear cargo compartment cover is operating properly.
Vinyl Floor Covering (if equipped)	Verify properly equipped.
EXTERIOR	
DESCRIPTION	**ACTION**
Inspect Body and Paint for Damage and Fit/ Finish	Inspect the body exterior for damage, loose or missing items. During the inspection, make sure that no vehicle damage occurred from the time the vehicle was received and the beginning of the New Vehicle Preparation.
Exterior Lamps - Headlamps, Turn Signals, Hazards, Park/Tail/License Plate, Trunk Lights, etc.	Operate and visually inspect the following: Headlamps (High/Low Beams), turn signals, hazard warning flashers, parking/tail/license plate lamps, reverse/back up lamps, fog lamps, stop lamps including center mounted stop lamp, daytime running lamps (if equipped), clearance lamps, cargo bed lamps, any other lamps.
Lock and Unlock all doors with all mechanical keys	Verify all doors lock and unlock with all mechanical keys.
EXTERIOR	
DESCRIPTION	**ACTION**
	Open each door/liftgate/tailgate from the outside to check outside door handle operation. Check the door detent.

Doors, Liftgate and Tailgate - Adjust Strikers as Needed	Partially close all doors to check the open-door detent. Close all doors/liftgates/tailgates to check the operation of latches and strikers. Adjust strikers as required. Verify liftgate/tailgate ease of operation.
Power Liftgate - Inspect for fit and operation (if equipped)	Verify all modes of operation of the power liftgate, including operating the liftgate using the inside switches and the Remote Keyless Entry transmitter.
Power Sliding Door - Inspect for Fit and Operation (if equipped)	Verify all modes of operation of the power sliding door, including operating the sliding door using the inside switches and the Remote Keyless Entry transmitter.
Security Alarm Test (if equipped)	Lock doors using the Remote Keyless Entry Transmitter. Verify the operation of the Vehicle Security System warning lamp.
Passive Entry (if equipped)	Verify that the Keyless Enter-N-Go feature is operating properly, by grabbing the door handle of the locked vehicle, while the Remote Keyless Entry transmitter key is within 5 feet of the vehicle. The door should unlock automatically.
Remote Keyless Entry (if equipped)	Verify that doors unlock properly using all key FOBS.
Remote Start (if equipped)	Verify that engine starts with all keys when using Remote Keyless Entry Transmitter.
Top (Wrangler)	For Wrangler equipped with soft top, verify opening and closing operation. For Hard/Soft Top, verify top fits and is seated properly.
VEHICLE STORAGE	
DESCRIPTION	**ACTION**
Keep all protective transit film, wheel covers and films on vehicle until sold	Keep all protective transit film, wheel covers and films on vehicle until sold.
Inflate tire pressure to maximum side wall pressure	Inflate tire pressure to maximum side wall pressure (except heavy duty trucks.)
Put Vehicle into Ship Mode (if no IOD fuse)	Simultaneously press the "Front Defrost" and "List/Enter" buttons and hold for five (5) seconds. The EVIC display will update once the vehicle goes into ship mode.
Remove ignition off draw (IOD) Fuse	Remove fuse before storing vehicle to conserve battery.
FINAL DETAIL & INSPECTION	
DESCRIPTION	**ACTION**
Perform all incomplete recalls and RRTs	Perform all incomplete recalls and RRTs.
Remove interior and exterior Transportation Protective Covers	Remove exterior protective coatings/coverings from vehicle, remove interior protective covers, grease markings on door jambs, unnecessary labels, etc.
Inspect paint and body, touch up as needed	Make sure that the body is free from paint chips or scratches. Touch up any chips/scratches using thin layers of paint. Make sure that the body is free from dings and dents.
Install IOD Fuse or put vehicle into Customer Mode	Install fuse or place vehicle into customer mode prior to delivery.

Test and record battery state of charge	Check the battery state of charge by connecting a digital voltmeter at the jump-start locations. The battery voltage should be at least 12.4 volts. If charging is necessary, follow the service information procedures and recharge the battery. Record voltage on New Vehicle Prep (NVP) form.
Adjust tire pressures including spare to door placard	Adjust tire pressures including spare to door placard.
Reset Tire Pressure Light Load Switch (if equipped)	Reset the Tire Pressure Light Load Switch back to the "Light Load" setting using the switch on the instrument panel.
Top off Diesel Exhaust Fluid reservoir	Fill the Diesel Exhaust Fluid Reservoir located behind the cab on the driver's side of truck (clearly marked in blue) with Mopar Diesel Exhaust Fluid prior to customer delivery.
Wash and clean vehicle exterior	Wash the entire vehicle. Clean the tire sidewalls and wheel/wheel covers (use non - acidic wheel cleaner). Clean exterior/interior glass surfaces.
Clean vehicle interior	Inspect the interior trim, seats, carpeting, and moldings. Clean as necessary.
Fill Fuel Tank with specified grade	Fill fuel tank with the specified grade of fuel. Refer to owner's manual or information tag behind the fuel filler.

TOWING

STANDARD PROCEDURE

STANDARD PROCEDURE - VEHICLE TOWING

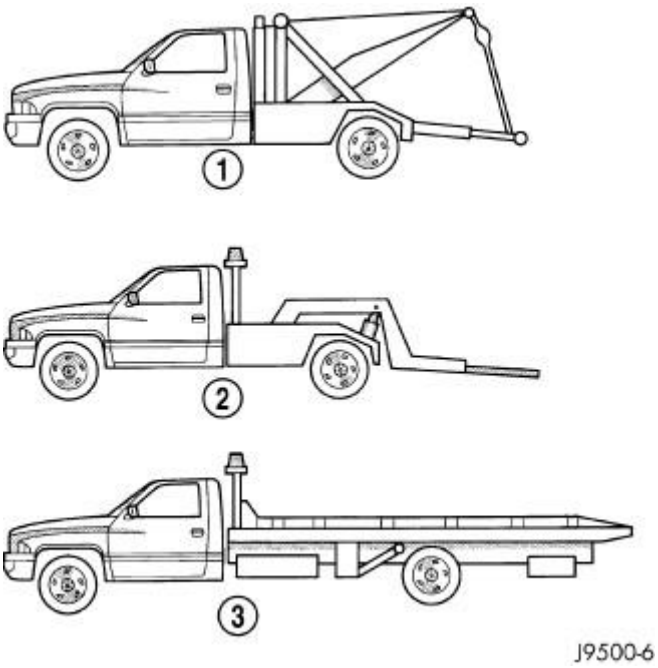

Fig. 12: Tow Vehicles With Approved Equipment
Courtesy of CHRYSLER GROUP, LLC

1 - SLING TYPE
2 - WHEEL LIFT
3 - FLAT BED

A vehicle equipped with SAE approved sling-type towing equipment can be used to tow all vehicles. When towing a 4WD vehicle using a wheel-lift towing device, use tow dollies under the opposite end of the vehicle. A vehicle with flat-bed device can also be used to transport a disabled vehicle.

A wooden crossbeam may be required for proper connection when using the sling-type, front-end towing method.

SAFETY PRECAUTIONS

CAUTION: The following safety precautions must be observed when towing a vehicle:

- Secure loose and protruding parts.
- Always use a safety chain system that is independent of the lifting and towing equipment.
- Do not allow towing equipment to contact the disabled vehicle's fuel tank.
- Do not allow anyone under the disabled vehicle while it is lifted by the towing device.
- Do not allow passengers to ride in a vehicle being towed.
- Always observe state and local laws regarding towing regulations.
- Do not tow a vehicle in a manner that could jeopardize the safety of the operator, pedestrians or other motorists.
- Do not attach tow chains, T-hooks, J-hooks, or a tow sling to a bumper, steering linkage, drive shafts or a non-reinforced frame hole.
- Do not tow a heavily loaded vehicle. Damage to the cab, cargo box or frame may result. Use a flatbed device to transport a loaded vehicle.

GROUND CLEARANCE

CAUTION: If vehicle is towed with wheels removed, install lug nuts to retain brake drums or rotors.

A towed vehicle should be raised until lifted wheels are a minimum 100 mm (4 in) from the ground. Be sure there is adequate ground clearance at the opposite end of the vehicle, especially when towing over rough terrain or steep rises in the road. If necessary, remove the wheels from the lifted end of the vehicle and lower the vehicle closer to the ground, to increase the ground clearance at the opposite end of the vehicle. Install lug nuts on wheel attaching studs to retain brake drums or rotors.

RAMP ANGLE

If a vehicle with flat-bed towing equipment is used, the approach ramp angle should not exceed 15 degrees.

TOWING WHEN KEYS ARE NOT AVAILABLE

When the vehicle is locked and keys are not available, use a flat bed hauler. A Wheel-lift or Sling-type device can be used on 4WD vehicles provided **all the wheels are lifted off the ground using tow dollies.**

TWO WHEEL DRIVE TOWING - REAR END LIFTED

CAUTION: Do not use steering column lock to secure steering wheel during towing operation.

2WD vehicles can be towed with the front wheels on the surface for extended distances at speeds not exceeding 48 km/h (30 mph).

1. Attach wheel lift device to rear wheels.
2. Place the transmission in neutral.
3. Raise vehicle to towing position.
4. Attach safety chains. Route chains so not to interfere with tail pipe when vehicle is lifted.
5. Turn the ignition switch to the OFF position to unlock the steering wheel.

CAUTION: Do not use steering column lock to secure steering wheel during towing operation.

6. Secure steering wheel in straight ahead position with a clamp device designed for towing.
7. Place transmission in park.

TWO WHEEL DRIVE TOWING - FRONT END LIFTED

CAUTION: Towing is allowed ONLY if the driveshaft is removed. Towing with the rear wheels on the ground while the driveshaft is connected can result in severe transmission damage which is not covered under the Limited Warranty.

FOUR-WHEEL-DRIVE VEHICLE TOWING

Chrysler Corporation recommends that a vehicle be transported on a flat-bed device. A Wheel-lift or Sling-type device can be used provided **all the wheels are lifted off the ground using tow dollies.**

WARNING: When towing a disabled vehicle and the drive wheels are secured in a wheel lift or tow dollies, ensure the transmission is in the park position (automatic transmission) or a forward drive gear (manual transmission).

CAUTION: Many vehicles are equipped with air dams, spoilers, and/or ground effect

panels. To avoid component damage, a wheel-lift towing vehicle or a flat-bed hauling vehicle is recommended.

DIAGNOSTIC CODE INDEX

DIAGNOSTIC CODE INDEX

DTC	Description
B0001-11	DRIVER FRONTAL SQUIB 1 CONTROL - CIRCUIT SHORT TO GROUND
B0001-12	DRIVER FRONTAL SQUIB 1 CONTROL - CIRCUIT SHORT TO BATTERY
B0001-13	DRIVER FRONTAL SQUIB 1 CONTROL - CIRCUIT OPEN
B0001-2B	DRIVER FRONTAL SQUIB 1 CONTROL - WIRES SHORTED TOGETHER
B0002-11	DRIVER FRONTAL SQUIB 2 CONTROL - CIRCUIT SHORT TO GROUND
B0002-12	DRIVER FRONTAL SQUIB 2 CONTROL - CIRCUIT SHORT TO BATTERY
B0002-13	DRIVER FRONTAL SQUIB 2 CONTROL - CIRCUIT OPEN
B0002-2B	DRIVER FRONTAL SQUIB 2 CONTROL - WIRES SHORTED TOGETHER
B0010-11	PASSENGER FRONTAL SQUIB 1 CONTROL - CIRCUIT SHORT TO GROUND
B0010-12	PASSENGER FRONTAL SQUIB 1 CONTROL - CIRCUIT SHORT TO BATTERY
B0010-13	PASSENGER FRONTAL SQUIB 1 CONTROL - CIRCUIT OPEN
B0010-2B	PASSENGER FRONTAL SQUIB 1 CONTROL - WIRES SHORTED TOGETHER
B0011-11	PASSENGER FRONTAL SQUIB 2 CONTROL - CIRCUIT SHORT TO GROUND
B0011-12	PASSENGER FRONTAL SQUIB 2 CONTROL - CIRCUIT SHORT TO BATTERY
B0011-13	PASSENGER FRONTAL SQUIB 2 CONTROL - CIRCUIT OPEN
B0011-2B	PASSENGER FRONTAL SQUIB 2 CONTROL - WIRES SHORTED TOGETHER
B0021-11	LEFT CURTAIN DEPLOYMENT SQUIB 1 - CIRCUIT SHORT TO GROUND
B0021-12	LEFT CURTAIN DEPLOYMENT SQUIB 1 - CIRCUIT SHORT TO BATTERY
B0021-13	LEFT CURTAIN DEPLOYMENT SQUIB 1 - CIRCUIT OPEN
B0021-2B	LEFT CURTAIN DEPLOYMENT SQUIB 1 - WIRES SHORTED TOGETHER
B0029-11	RIGHT CURTAIN DEPLOYMENT SQUIB 1 - CIRCUIT SHORT TO GROUND
B0029-12	RIGHT CURTAIN DEPLOYMENT SQUIB 1 - CIRCUIT SHORT TO BATTERY
B0029-13	RIGHT CURTAIN DEPLOYMENT SQUIB 1 - CIRCUIT OPEN
B0029-2B	RIGHT CURTAIN DEPLOYMENT SQUIB 1 - WIRES SHORTED TOGETHER
B0050-11	DRIVER SEATBELT SENSOR - CIRCUIT SHORT TO GROUND
B0050-12	DRIVER SEATBELT SENSOR - CIRCUIT SHORT TO BATTERY
B0050-13	DRIVER SEATBELT SENSOR - CIRCUIT OPEN
B0090-49	LEFT FRONTAL RESTRAINTS SENSOR - INTERNAL ELECTRONIC FAILURE

B0095-49	RIGHT FRONTAL ACCELERATION SENSOR - INTERNAL ELECTRONIC FAILURE
B0091-49	LEFT SIDE ACCELERATION SENSOR 1 - INTERNAL ELECTRONIC FAILURE
B0092-49	LEFT SIDE ACCELERATION SENSOR 2 - INTERNAL ELECTRONIC FAILURE
B009A-49	LEFT SIDE SATELLITE SENSOR 4 - INTERNAL ELECTRONIC FAILURE
B0096-49	RIGHT SIDE ACCELERATION SENSOR 1 - INTERNAL ELECTRONIC FAILURE
B0097-49	RIGHT SIDE ACCELERATION SENSOR 2 - INTERNAL ELECTRONIC FAILURE
B009D-49	RIGHT SIDE SATELLITE SENSOR 4 - INTERNAL ELECTRONIC FAILURE
B1BA5-00	AIRBAG SQUIB CONFIGURATION MISMATCH -
B1BC7-00	DEPLOYMENT DATA RECORD FULL -
B007E-11	DRIVER SEATBELT RETRACTOR PRETENSIONER DEPLOYMENT CONTROL - CIRCUIT SHORT TO GROUND
B007E-12	DRIVER SEATBELT RETRACTOR PRETENSIONER DEPLOYMENT CONTROL - CIRCUIT SHORT TO BATTERY
B007E-13	DRIVER SEATBELT RETRACTOR PRETENSIONER DEPLOYMENT CONTROL - CIRCUIT OPEN
B007E-2B	DRIVER SEATBELT RETRACTOR PRETENSIONER DEPLOYMENT CONTROL - WIRES SHORTED TOGETHER
B007F-11	PASSENGER SEATBELT RETRACTOR PRETENSIONER DEPLOYMENT CONTROL - CIRCUIT SHORT TO GROUND
B007F-12	PASSENGER SEATBELT RETRACTOR PRETENSIONER DEPLOYMENT CONTROL - CIRCUIT SHORT TO BATTERY
B007F-13	PASSENGER SEATBELT RETRACTOR PRETENSIONER DEPLOYMENT CONTROL - CIRCUIT OPEN
B007F-2B	PASSENGER SEATBELT RETRACTOR PRETENSIONER DEPLOYMENT CONTROL - WIRES SHORTED TOGETHER
B2199-16	BATTERY VOLTAGE - CIRCUIT VOLTAGE BELOW THRESHOLD
B2199-17	BATTERY VOLTAGE - CIRCUIT VOLTAGE ABOVE THRESHOLD
B212C-13	IGNITION RUN/START INPUT - CIRCUIT OPEN
B212D-13	IGNITION RUN ONLY INPUT-CIRCUIT OPEN
B210F-00	LOSS OF BATTERY VOLTAGE
B2207-00	OCCUPANT RESTRAINT CONTROLLER INTERNAL 1
B2208-00	OCCUPANT RESTRAINT CONTROLLER INTERNAL 2
B2209-00	OCCUPANT RESTRAINT CONTROLLER INTERNAL 3
B220A-00	OCCUPANT RESTRAINT CONTROLLER INTERNAL 4
B220B-00	OCCUPANT RESTRAINT CONTROLLER FIRING STORED ENERGY
B223B-00	VEHICLE CONFIGURATION MISMATCH -
B222A-00	VEHICLE LINE MISMATCH -
B2722-00	ORC UNLOCKED-ALL DEPLOYMENT DISABLED

U0001-00	CAN C BUS
U0002-00	CAN C BUS OFF PERFORMANCE
U0141-00	LOST COMMUNICATION WITH IPM (FCM/TIPM)
U0170-00	LOST COMMUNICATION W/ UP-FRONT LEFT SATELLITE SENSOR
U0171-00	LOST COMMUNICATION W/ UP-FRONT RIGHT SATELLITE SENSOR
U0172-00	LOST COMMUNICATION W/ LEFT SIDE SATELLITE SENSOR 1
U0173-00	LOST COMMUNICATION W/ LEFT SIDE SATELLITE SENSOR 2
U0175-00	LOST COMMUNICATION W/ RIGHT SIDE SATELLITE SENSOR 1
U0176-00	LOST COMMUNICATION W/ RIGHT SIDE SATELLITE SENSOR 2
U11AD-00	LOST COMMUNICATION W/ LEFT SIDE SATELLITE SENSOR 4
U11B0-00	LOST COMMUNICATION W/ RIGHT SIDE SATELLITE SENSOR 4
U1414-00	IMPLAUSIBLE/MISSING ECU NETWORK CONFIGURATION DATA -
U1415-00	IMPLAUSIBLE/MISSING VEHICLE CONFIGURATION DATA -

DIAGNOSIS AND TESTING

B0001-11-DRIVER FRONTAL SQUIB 1 CONTROL - CIRCUIT SHORT TO GROUND

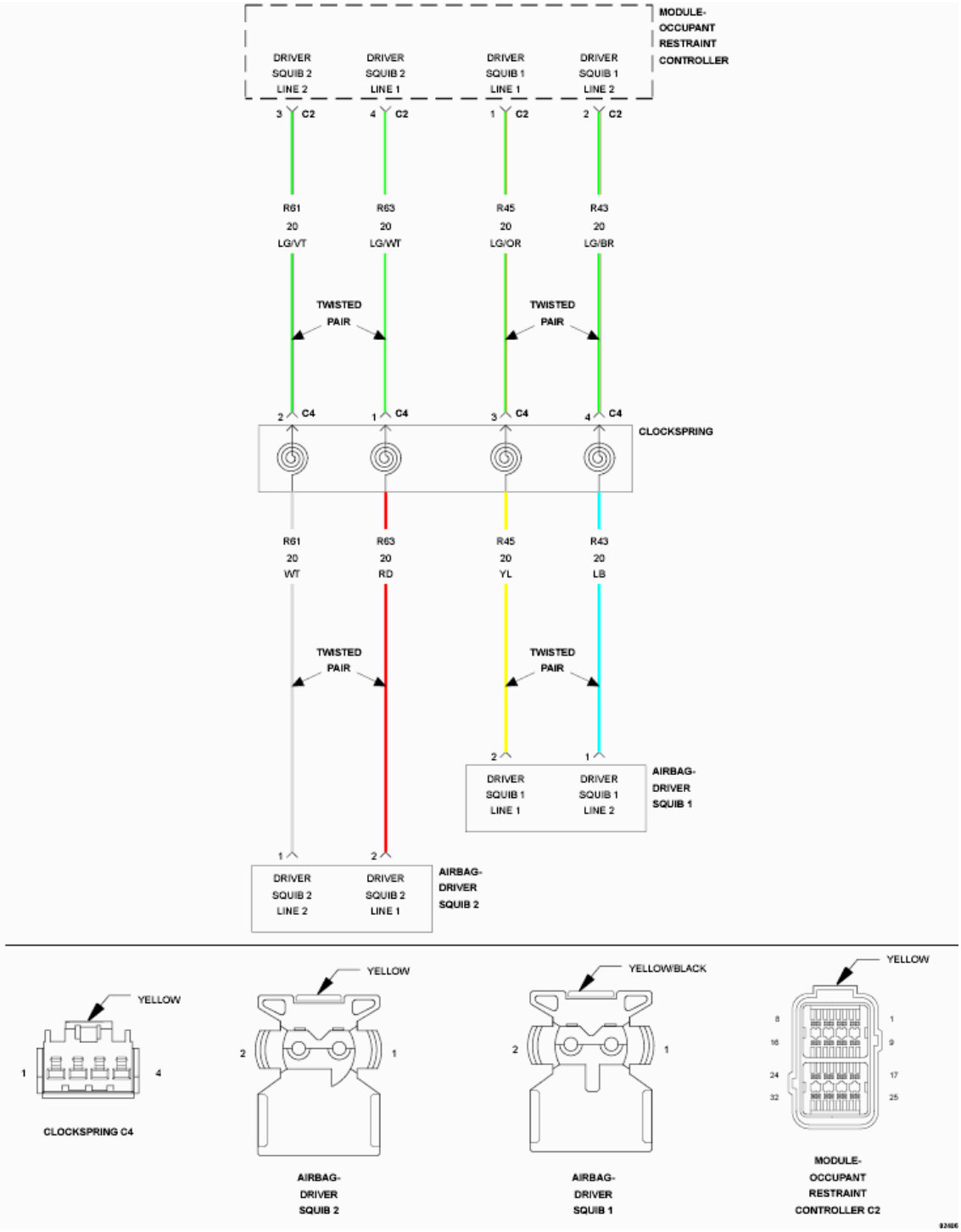

Fig. 1: Squib Control Circuit Wiring Diagram
Courtesy of CHRYSLER GROUP, LLC

For a complete wiring diagram, **refer to appropriate SYSTEM WIRING DIAGRAMS article** .

THEORY OF OPERATION

When powered, the Occupant Restraint Controller (ORC) sends a test current to the squibs to verify the integrity of the squib and wiring. These circuits are maintained in a floating configuration at the ORC (connected to neither power or ground) as protection against inadvertent deployment. Use of the Supplemental Restraints System (SRS) Load Tool Kit (special tool #8443A, SRS Load Tool) in the tests below substitutes a suspect squib with a known good component. The use of the SRS Load Tool Adaptor provides a test point as well as a method for opening the shorting bar connections within the ORC harness connector.

WHEN MONITORED:

The ORC Module sends out a 40 mA diagnostic current on each squib voltage supply circuit at power up, and every 100 ms thereafter while the ignition is on.

SET CONDITION:

This Diagnostic Trouble Code (DTC) sets when the ORC detects a short to ground on the driver airbag squib circuit for more than 2.5 seconds. This DTC transitions from active to stored when the ORC sees a recovery from a short to ground for greater than 2.5 seconds.

POSSIBLE CAUSES

Possible Causes
(R43) DRIVER SQUIB 1 LINE 2 CIRCUIT SHORTED TO GROUND
(R45) DRIVER SQUIB 1 LINE 1 CIRCUIT SHORTED TO GROUND
CLOCKSPRING
DRIVER AIRBAG
OCCUPANT RESTRAINT CONTROLLER (ORC) MODULE

Always perform the Pre-Diagnostic Troubleshooting procedure before proceeding. Refer to STANDARD PROCEDURE.

DIAGNOSTIC TEST

1. **VERIFY ACTIVE DTC**

   NOTE: Make Sure the battery is fully charged.

   1. Turn the ignition on.
   2. With the scan tool, read the ORC DTCs.

      Does the scan tool display active B0001-11-DRIVER FRONTAL SQUIB 1 CONTROL - CIRCUIT SHORT TO GROUND DTC?

      Yes

      - Go To 2.

No

- Refer to **STANDARD PROCEDURE** and perform the RESTRAINTS SYSTEM INTERMITTENT TEST.

2. **CHECK FOR SHORTED SQUIB CIRCUITS IN DRIVER AIRBAG**

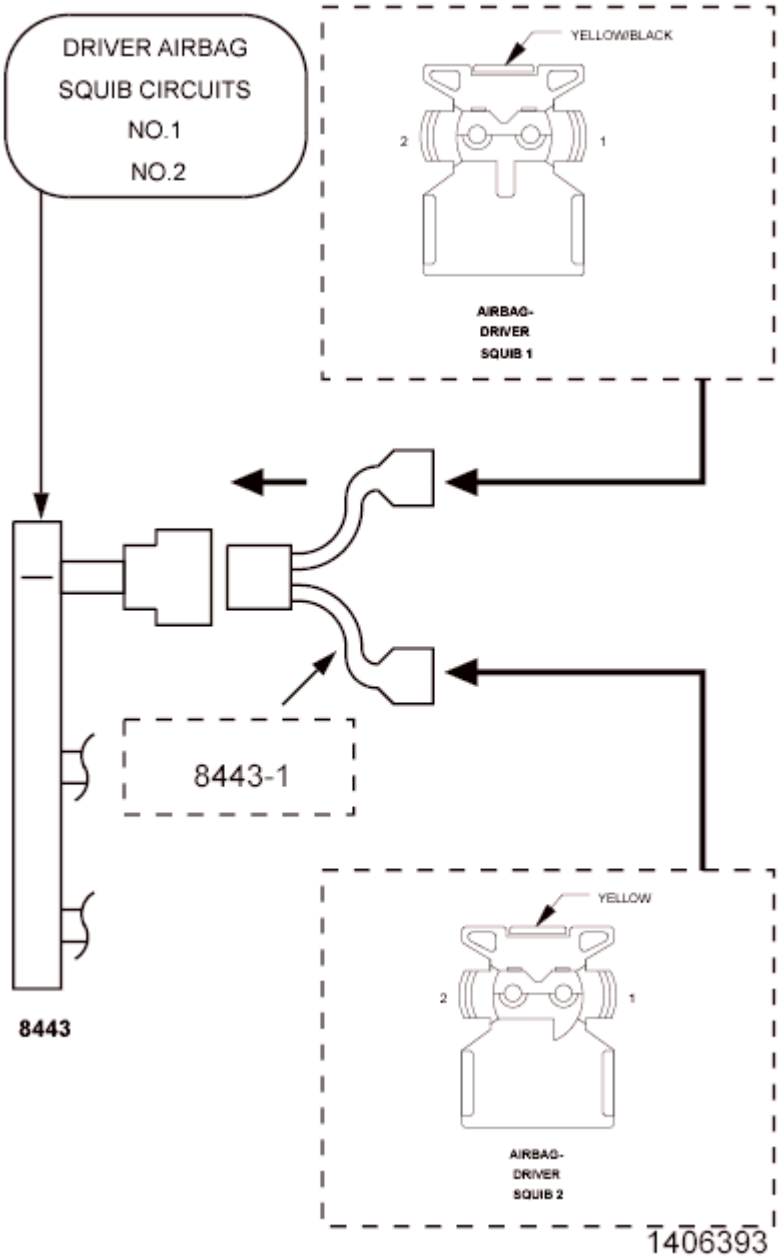

Fig. 2: Driver Airbag Squib Circuits No. 1/No. 2 Connectors
Courtesy of CHRYSLER GROUP, LLC

WARNING: **Turn the ignition off, disconnect the 12-volt battery and wait two minutes before proceeding. Failure to follow these instructions may result in possible serious or fatal injury.**

1. Disconnect the Driver Airbag Squib harness connectors.

   WARNING: Do not place an intact non-deployed airbag face down on a hard surface, the airbag propels into the air if accidentally deployed. Failure to follow these instructions may result in possible serious or fatal injury.

   NOTE: Check connectors. Clean and repair as necessary.

2. Connect the SRS Load Tool Kit (special tool #8443A, SRS Load Tool) and the SRS Load Tool Jumper (special tool #8443-1, Jumpers, 2 Pin) to the Driver Airbag Squib harness connectors.

   WARNING: Turn the ignition on, then reconnect the 12-volt battery and wait two minutes before proceeding. Failure to follow these instructions may result in possible serious or fatal injury.

3. With the scan tool, read the ORC DTCs.

   Does the scan tool display active B0001-11-DRIVER FRONTAL SQUIB 1 CONTROL - CIRCUIT SHORT TO GROUND DTC?

   Yes

   - Go To 3.

   No

   WARNING: Turn the ignition off, disconnect the 12-volt battery and wait two minutes before proceeding. Failure to follow these instructions may result in possible serious or fatal injury.

   -
   - Replace the Driver Airbag in according to the Service Information.
   - Refer to **STANDARD PROCEDURE** and perform the RESTRAINTS SYSTEM VERIFICATION TEST.

3. **CHECK CLOCKSPRING SQUIB CIRCUITS FOR A SHORT TO GROUND**

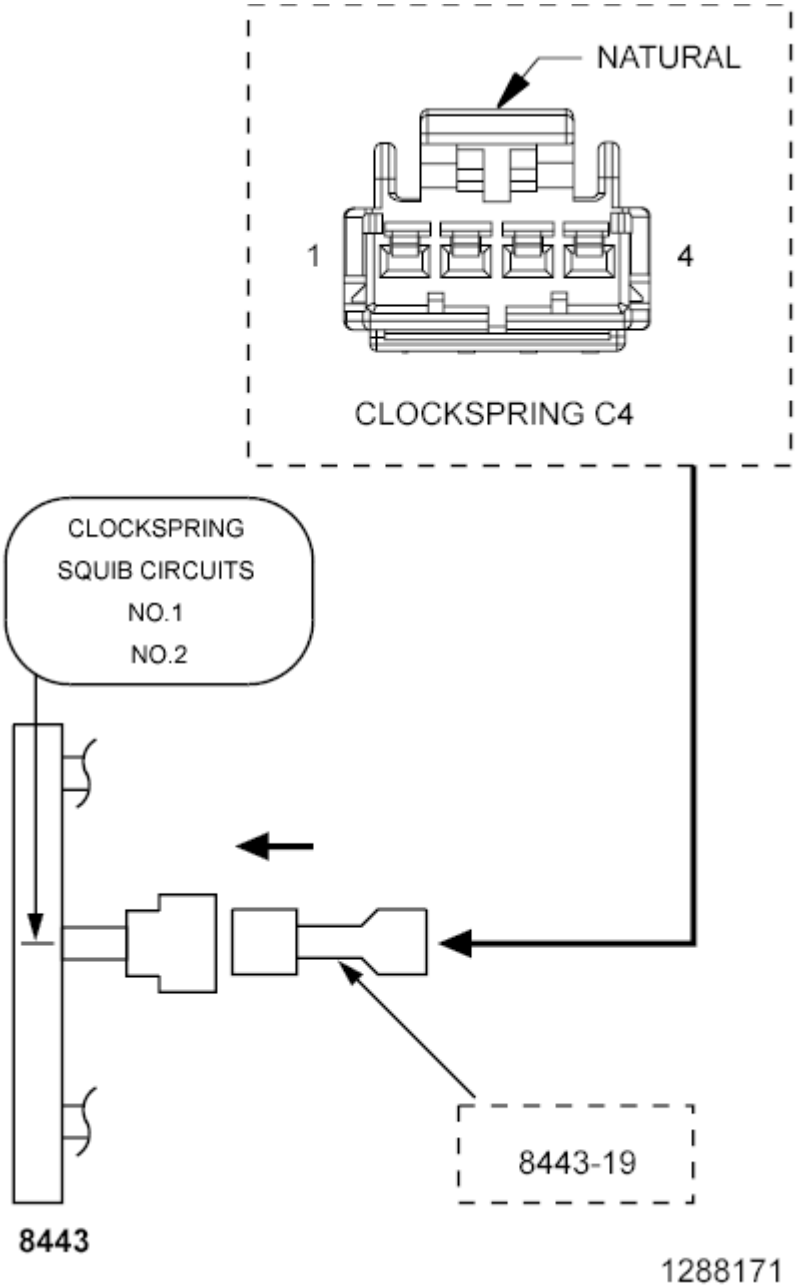

Fig. 3: Checking Clockspring Squib Circuit
Courtesy of CHRYSLER GROUP, LLC

WARNING: **Turn the ignition off, disconnect the 12-volt battery and wait two minutes before proceeding. Failure to follow these instructions may result in possible serious or fatal injury.**

1. Disconnect the SRS Load Tool Kit (special tool #8443A, SRS Load Tool) and Jumper from the Driver Airbag Squib harness connectors.
2. Disconnect the Clockspring C4 harness connector.

NOTE: **Check connectors. Clean and repair as necessary.**

3. Connect the SRS Load Tool Kit (special tool #8443A, SRS Load Tool) and the SRS Load Tool Jumper (special tool #8443-19, 4 Pin Jumper) to the Clockspring C4 harness connector.

WARNING: **Turn the ignition on, then reconnect the 12-volt battery and wait two minutes before proceeding. Failure to follow these instructions may result in possible serious or fatal injury.**

4. With the scan tool, read the ORC DTCs.

   Does the scan tool display active B0001-11-DRIVER FRONTAL SQUIB 1 CONTROL - CIRCUIT SHORT TO GROUND DTC?

   Yes

   - Go To 4.

   No

WARNING: **Turn the ignition off, disconnect the 12-volt battery and wait two minutes before proceeding. Failure to follow these instructions may result in possible serious or fatal injury.**

-
- Replace the Clockspring in according to the Service Information.
- Refer to **STANDARD PROCEDURE** and perform the RESTRAINTS SYSTEM VERIFICATION TEST.

4. **CHECK (R43, R45) DRIVER SQUIB 1 CIRCUITS FOR A SHORT TO GROUND**

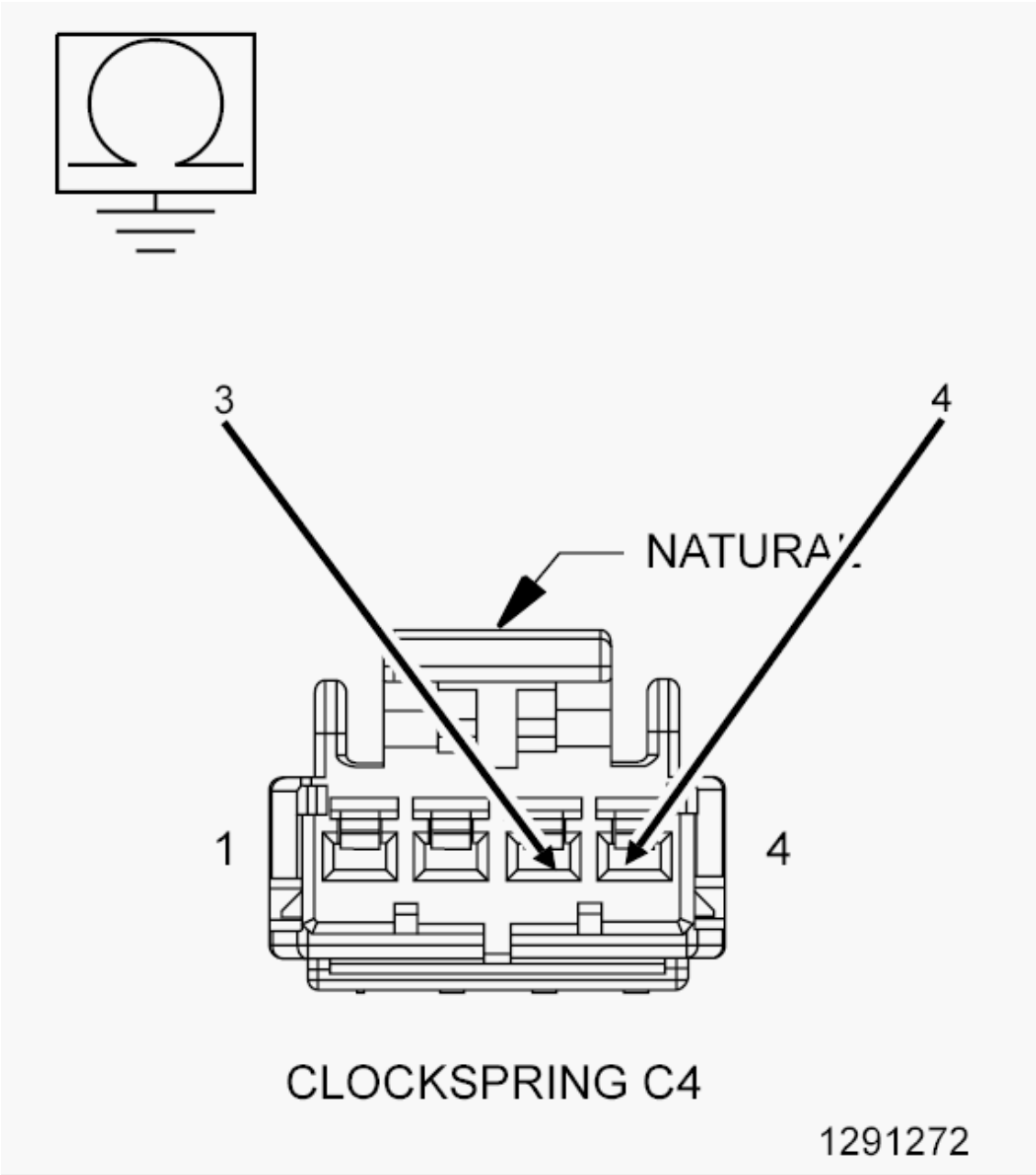

Fig. 4: Checking Driver Squib 1 Circuit For A Short To Ground
Courtesy of CHRYSLER GROUP, LLC

WARNING: Turn the ignition off disconnect the 12-volt battery and wait two minutes before proceeding. Failure to follow these instructions may result in possible serious or fatal injury.

1. Disconnect the SRS Load Tool Kit (special tool #8443A, SRS Load Tool) and Jumper from the Clockspring C4 harness connector.
2. Disconnect the ORC harness connectors.

NOTE: Check connectors. Clean and repair as necessary.

3. Connect the SRS Load Tool Adaptor (special tool #8443-24, 32-Way Adapter) to the ORC C2 harness connector.
4. Measure the resistance of the (R43) Driver Squib 1 Line 2 circuit between the Clockspring C4 harness connector cavity 4 and ground.
5. Measure the resistance of the (R45) Driver Squib 1 Line 1 circuit between the Clockspring C4 harness connector cavity 3 and ground

Is the resistance below 10K Ohms for either measurement?

Yes

- Repair the (R43, R45) Driver Airbag Squib 1 circuits for a short to ground.
- Refer to **STANDARD PROCEDURE** and perform the RESTRAINTS SYSTEM VERIFICATION TEST.

No

WARNING: If the Occupant Restraint Controller (ORC) is dropped at any time, it must be replaced. Failure to follow these instructions may result in possible serious or fatal injury.

-
- Replace the ORC module according to the Service Information.
- Refer to **STANDARD PROCEDURE** and perform the RESTRAINTS SYSTEM VERIFICATION TEST.

B0001-12-DRIVER FRONTAL SQUIB 1 CONTROL - CIRCUIT SHORT TO BATTERY

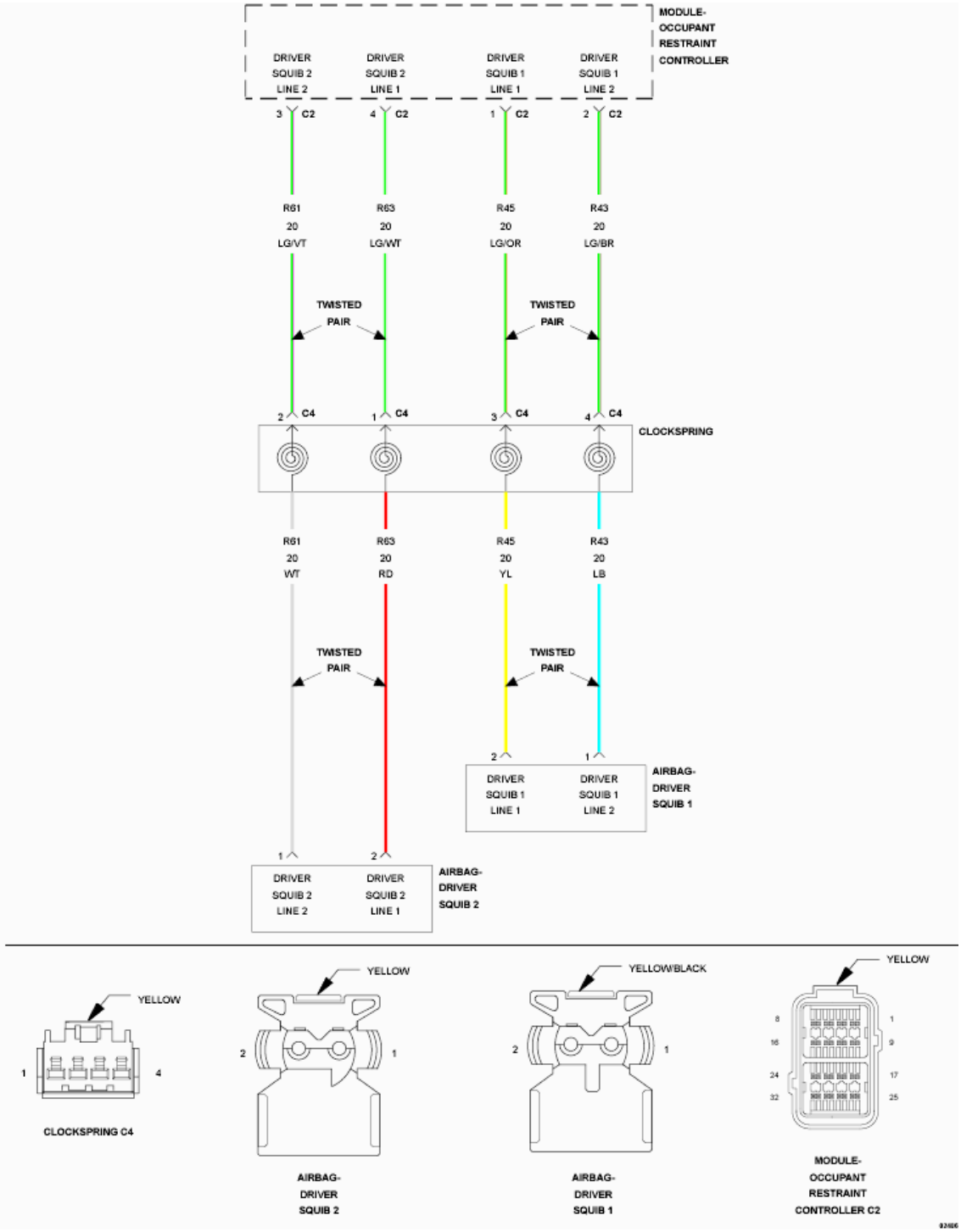

Fig. 5: Squib Control Circuit Wiring Diagram
Courtesy of CHRYSLER GROUP, LLC

For a complete wiring diagram, **refer to appropriate SYSTEM WIRING DIAGRAMS article** .

THEORY OF OPERATION

When powered, the Occupant Restraint Controller (ORC) sends a test current to the squibs to verify the integrity of the squib and wiring. These circuits are maintained in a "floating" configuration at the ORC (connected to neither power or ground) as protection against inadvertent deployment. Use of the Supplemental Restraints System (SRS) Load Tool Kit (special tool #8443A, SRS Load Tool) in the tests below substitutes a suspect squib with a known good component. The use of the SRS Load Tool Adaptor tool provides a test point as well as a method for opening the shorting bar connections within the ORC harness connector.

WHEN MONITORED:

The ORC sends out a 40 mA diagnostic current on each squib voltage supply circuit at power up and every 100 ms thereafter while the ignition is on.

SET CONDITION:

This Diagnostic Trouble Code (DTC) sets when the ORC detects a short to voltage on the squib circuit for more than 2.5 seconds. This DTC transitions from active to stored when the ORC sees a recovery from a short to voltage for greater than 2.5 seconds.

POSSIBLE CAUSES

Possible Causes
(R43) DRIVER SQUIB 1 LINE 2 CIRCUIT SHORTED TO VOLTAGE
(R45) DRIVER SQUIB 1 LINE 1 CIRCUIT SHORTED TO VOLTAGE
CLOCKSPRING
DRIVER AIRBAG
OCCUPANT RESTRAINT CONTROLLER (ORC)

Always perform the Pre-Diagnostic Troubleshooting procedure before proceeding. Refer to STANDARD PROCEDURE.

DIAGNOSTIC TEST

1. **VERIFY ACTIVE DTC**

   NOTE: Make sure the battery is fully charged.

   1. Turn the ignition on.
   2. With the scan tool, read ORC DTCs.

      Does the scan tool display active B0001-12-DRIVER FRONTAL SQUIB 1 CONTROL - CIRCUIT SHORT TO BATTERY DTC?

      Yes

      - Go To 2.

No

- Refer to **STANDARD PROCEDURE** and perform the RESTRAINTS SYSTEM INTERMITTENT TEST.

2. **CHECK FOR SHORTED SQUIB CIRCUITS IN DRIVER AIRBAG**

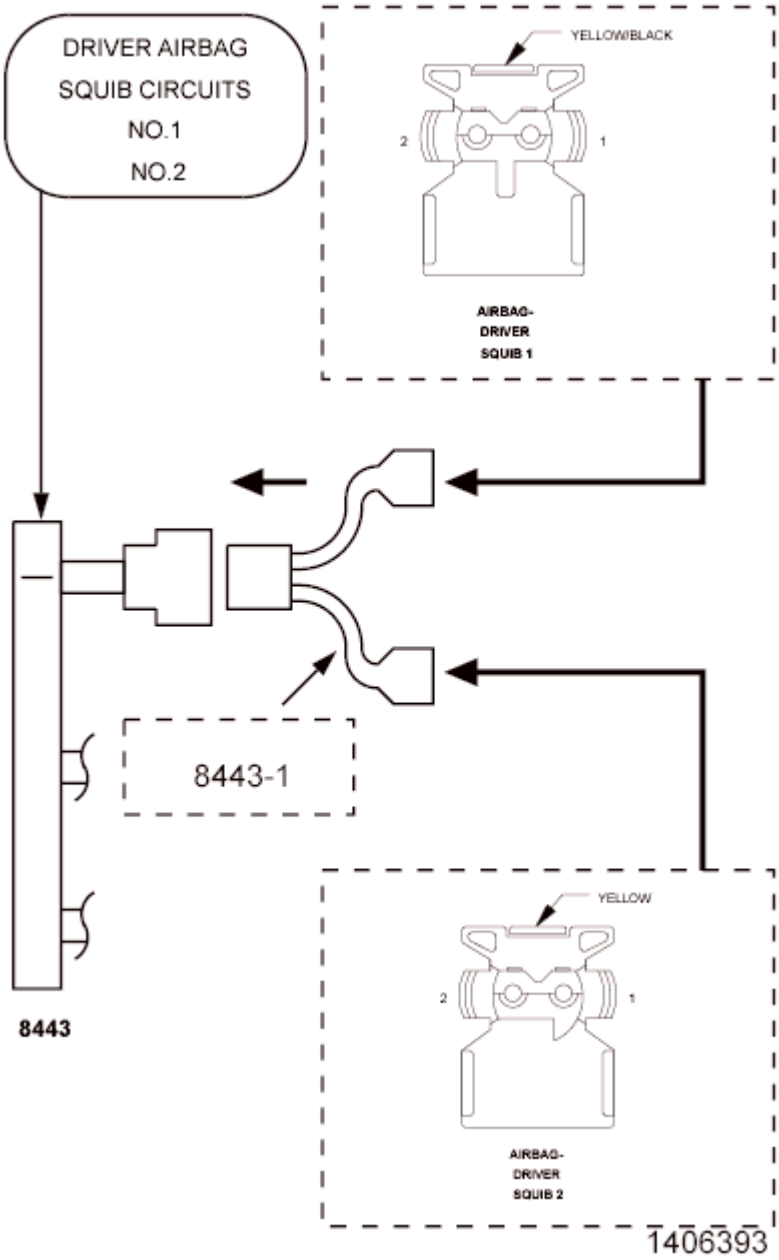

Fig. 6: Driver Airbag Squib Circuits No. 1/No. 2 Connectors
Courtesy of CHRYSLER GROUP, LLC

WARNING: **Turn the ignition off, disconnect the 12-volt battery and wait two minutes before proceeding. Failure to follow these instructions may result in possible serious or fatal injury.**

1. Disconnect the Driver Airbag Squib harness connectors.

   NOTE: Check connectors - Clean and repair as necessary.

2. Connect the SRS Load Tool Kit (special tool #8443A, SRS Load Tool) and the SRS Load Tool Jumper (special tool #8443-1, Jumpers, 2 Pin) to the Driver Airbag Squib harness connectors.

   WARNING: Turn the ignition on, then reconnect the 12-volt battery and wait two minutes before proceeding. Failure to follow these instructions may result in possible serious or fatal injury.

3. With the scan tool, read the ORC DTCs.

   Does the scan tool display active B0001-12-DRIVER FRONTAL SQUIB 1 CONTROL - CIRCUIT SHORT TO BATTERY DTC?

   Yes

   - Go To 3.

   No

   WARNING: Turn the ignition off disconnect the 12-volt battery and wait two minutes before proceeding. Failure to follow these instructions may result in possible serious or fatal injury.

   -
   - Replace the Driver Airbag in accordance with the Service Information.
   - Refer to **STANDARD PROCEDURE** and perform the RESTRAINTS SYSTEM VERIFICATION TEST.

3. **CHECK THE CLOCKSPRING SQUIB CIRCUITS FOR A SHORT TO VOLTAGE**

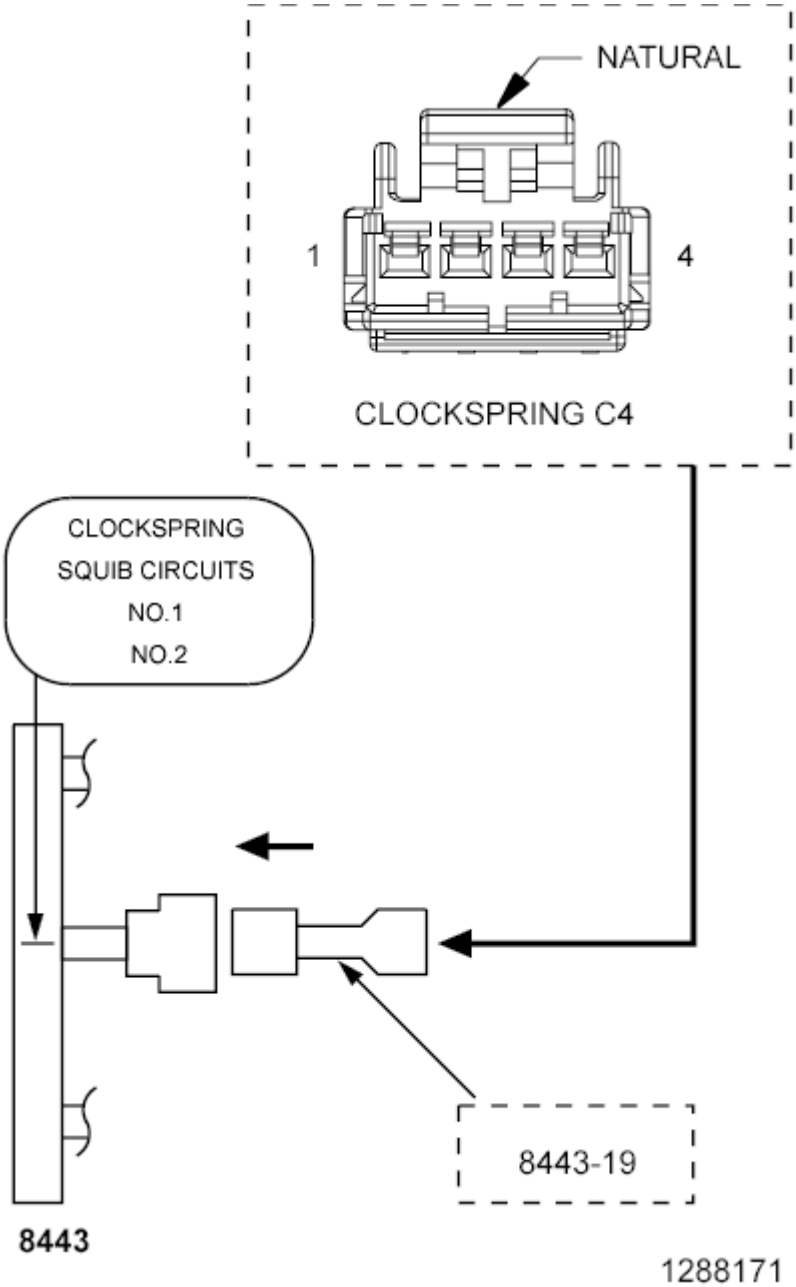

Fig. 7: Checking Clockspring Squib Circuit
Courtesy of CHRYSLER GROUP, LLC

WARNING: **Turn the ignition off, disconnect the 12-volt battery and wait two minutes before proceeding. Failure to follow these instructions may result in possible serious or fatal injury.**

1. Disconnect the SRS Load Tool Kit (special tool #8443A, SRS Load Tool) and Jumper from the Driver Airbag Squib harness connectors.
2. Disconnect the Clockspring C4 harness connector.

NOTE: **Check connectors - Clean and repair as necessary.**

3. Connect the SRS Load Tool Kit (special tool #8443A, SRS Load Tool) and the SRS Load Tool Jumper (special tool #8443-19, 4 Pin Jumper) to the Clockspring C4 harness connector.

WARNING: **Turn the ignition on, then reconnect the 12-volt battery and wait two minutes before proceeding. Failure to follow these instructions may result in possible serious or fatal injury.**

4. With the scan tool, read the ORC DTCs.

   Does the scan tool display active B0001-12-DRIVER FRONTAL SQUIB 1 CONTROL - CIRCUIT SHORT TO BATTERY DTC?

   Yes

   - Go To 4.

   No

WARNING: **Turn the ignition off, disconnect the 12-volt battery and wait two minutes before proceeding. Failure to follow these instructions may result in possible serious or fatal injury.**

-
- Replace the Clockspring in accordance with the Service Information.
- Refer to **STANDARD PROCEDURE** and perform the RESTRAINTS SYSTEM VERIFICATION TEST.

4. **CHECK (R43, R45) DRIVER SQUIB 1 CIRCUITS FOR A SHORT TO VOLTAGE**

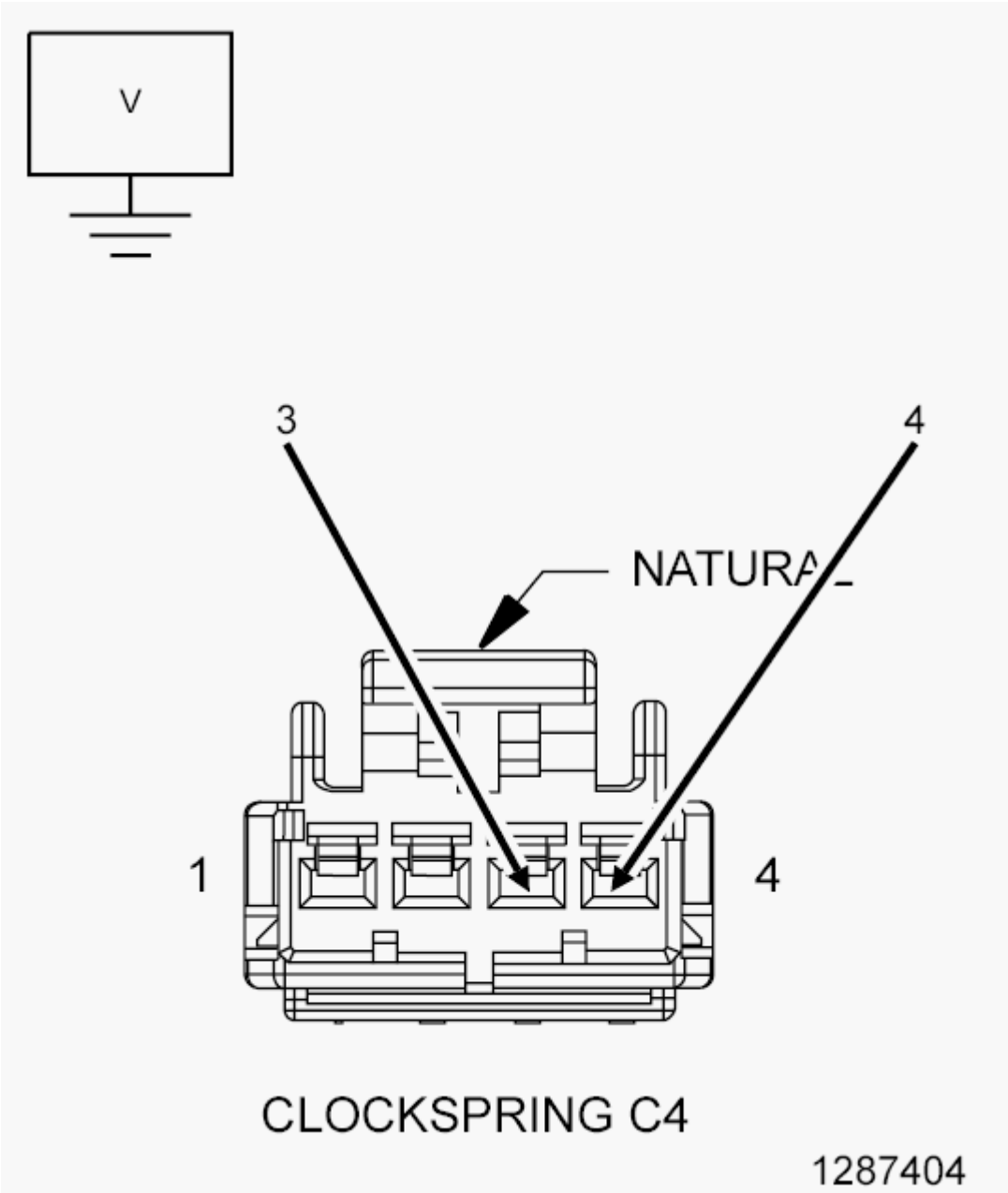

Fig. 8: Checking Driver Squib 1 Circuit
Courtesy of CHRYSLER GROUP, LLC

WARNING: Turn the ignition off, disconnect the 12-volt battery and wait two minutes before proceeding. Failure to follow these instructions may result in possible serious or fatal injury.

1. Disconnect the SRS Load Tool Kit (special tool #8443A, SRS Load Tool) and Jumper from the Clockspring C4 harness connector.
2. Disconnect the ORC harness connectors.

NOTE: **Check connectors - Clean and repair as necessary.**

3. Connect the SRS Load Tool Adaptor (special tool #8443-24, 32-Way Adapter) to the ORC C2 harness connector.

WARNING: **Turn the ignition on, then reconnect the 12-volt battery and wait two minutes before proceeding. Failure to follow these instructions may result in possible serious or fatal injury.**

4. Measure the voltage of the (R43) Driver Squib 1 Line 2 circuit between the Clockspring C4 harness connector cavity 4 and ground.
5. Measure the voltage of the (R45) Driver Squib 1 Line 1 circuit between the Clockspring C4 harness connector cavity 3 and ground.

Is there any voltage present for either measurement?

Yes

WARNING: **Turn the ignition off, disconnect the 12-volt battery and wait two minutes before proceeding. Failure to follow these instructions may result in possible serious or fatal injury.**

-
- Repair the (R43, R45) Driver Squib 1 circuits for a short to voltage.
- Refer to **STANDARD PROCEDURE** and perform the RESTRAINTS SYSTEM VERIFICATION TEST.

No

WARNING: **Turn the ignition off, disconnect the 12-volt battery and wait two minutes before proceeding. Failure to follow these instructions may result in possible serious or fatal injury.**

WARNING: **If the Occupant Restraint Controller (ORC) is dropped at any time, it must be replaced. Failure to follow these instructions may result in possible serious or fatal injury.**

-
-
- Replace the ORC in accordance with the Service Information.
- Refer to **STANDARD PROCEDURE** and perform the RESTRAINTS SYSTEM VERIFICATION TEST.

B0001-13-DRIVER FRONTAL SQUIB 1 CONTROL - CIRCUIT OPEN

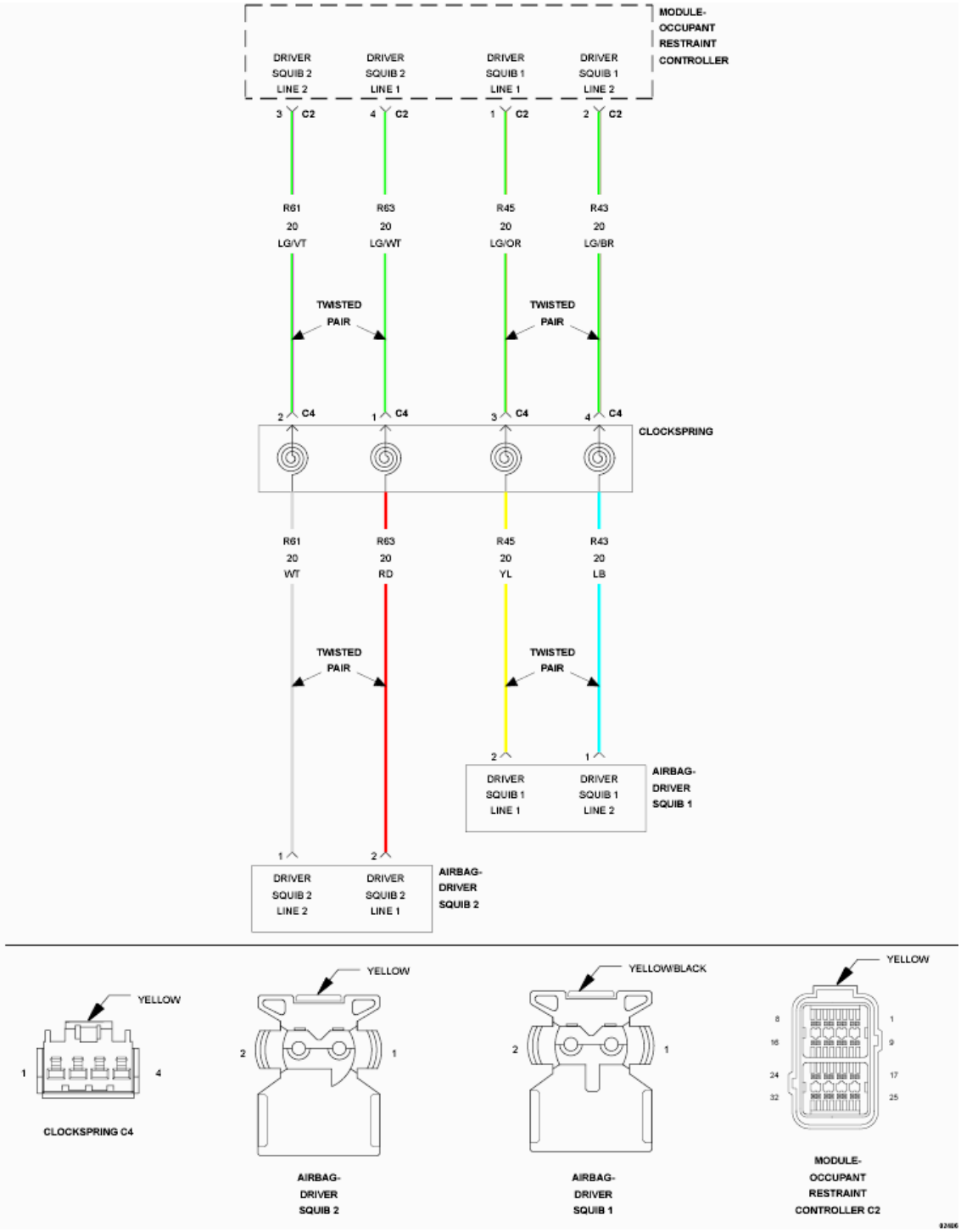

Fig. 9: Squib Control Circuit Wiring Diagram
Courtesy of CHRYSLER GROUP, LLC

For a complete wiring diagram, **refer to appropriate SYSTEM WIRING DIAGRAMS article** .

THEORY OF OPERATION

When powered, the Occupant Restraint Controller (ORC) sends a test current to the squibs to verify the integrity of the squib and wiring. These circuits are maintained in a "floating" configuration at the ORC (connected to neither power or ground) as protection against inadvertent deployment. Use of the Supplemental Restraints System (SRS) Load Tool Kit (special tool #8443A, SRS Load Tool) in the tests below substitutes a suspect squib with a known good component. The use of the SRS Load Tool Adaptor provides a test point as well as a method for opening the shorting bar connections within the ORC harness connector.

WHEN MONITORED:

The ORC sends out a 40 mA diagnostic current on each squib voltage supply circuit at power up and every 100 ms thereafter while the ignition is on.

SET CONDITION:

This Diagnostic Trouble Code (DTC) sets when the ORC detects an open or high resistance on the squib 1 circuit for more than 2.5 seconds. This DTC transitions from active to stored when the ORC sees a recovery from an open condition for greater than 2.5 seconds.

POSSIBLE CAUSES

Possible Causes
(R43) DRIVER SQUIB 1 LINE 2 CIRCUIT OPEN
(R45) DRIVER SQUIB 1 LINE 1 CIRCUIT OPEN
CLOCKSPRING
DRIVER AIRBAG
OCCUPANT RESTRAINT CONTROLLER (ORC)

Always perform the Pre-Diagnostic Troubleshooting procedure before proceeding. Refer to STANDARD PROCEDURE.

DIAGNOSTIC TEST

1. **VERIFY ACTIVE DTC**

   NOTE: Make sure the battery is fully charged.

   1. Turn the ignition on.
   2. With the scan tool, read ORC DTCs.

      Does the scan tool display active B0001-13-DRIVER FRONTAL SQUIB 1 CONTROL - CIRCUIT OPEN DTC?

      Yes

- Go To 2.

No

- Refer to **STANDARD PROCEDURE** and perform the RESTRAINTS SYSTEM INTERMITTENT TEST.

2. **CHECK DRIVER AIRBAG SQUIB CIRCUITS FOR OPEN CIRCUITS**

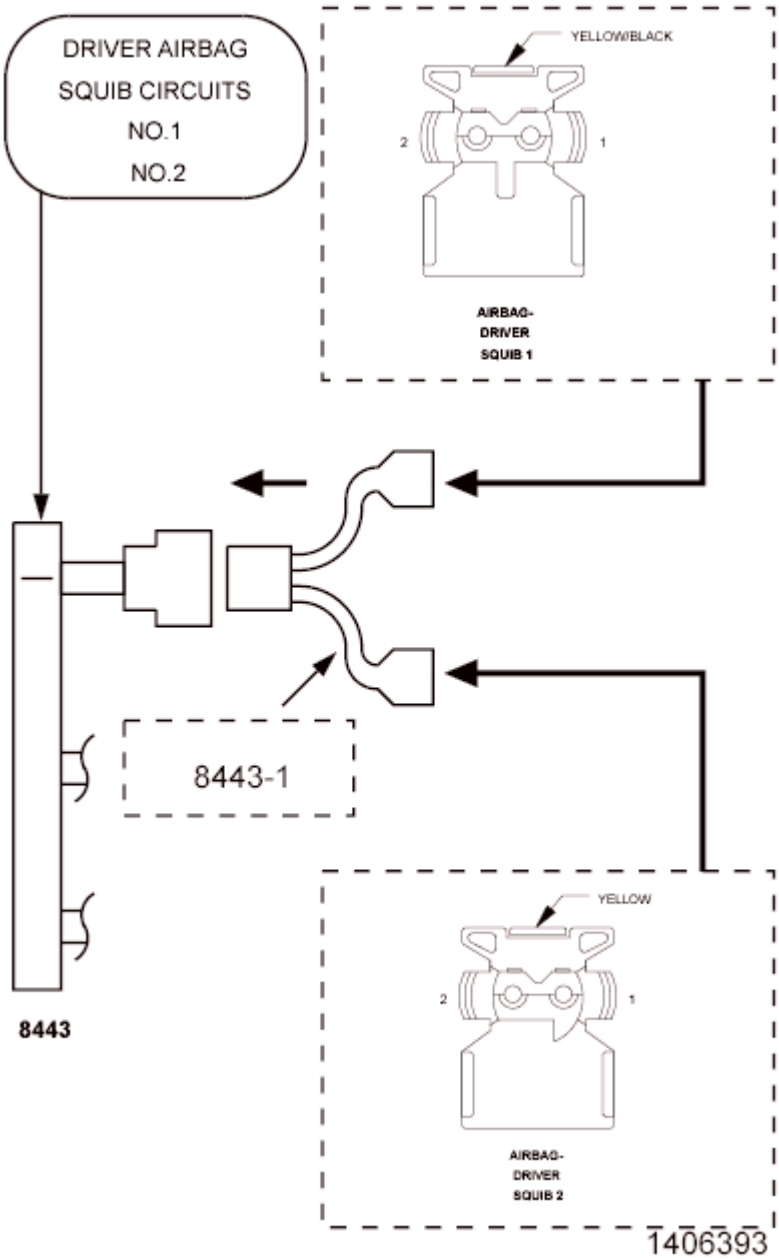

Fig. 10: Driver Airbag Squib Circuits No. 1/No. 2 Connectors
Courtesy of CHRYSLER GROUP, LLC

WARNING: Turn the ignition off disconnect the 12-volt battery and wait two minutes before proceeding. Failure to follow these instructions may result in possible serious or fatal injury.

1. Disconnect the Driver Airbag Squib harness connectors.

   WARNING: Do not place an intact non-deployed airbag face down on a hard surface, the airbag propels into the air if accidentally deployed. Failure to follow these instructions may result in possible serious or fatal injury.

   NOTE: Check connectors - Clean and repair as necessary.

2. Connect the SRS Load Tool Kit (special tool #8443A, SRS Load Tool) and the SRS Load Tool Jumper (special tool #8443-1, Jumpers, 2 Pin) to the Driver Airbag Squib harness connectors.

   WARNING: Turn the ignition on, then reconnect the 12-volt battery and wait two minutes before proceeding. Failure to follow these instructions may result in possible serious or fatal injury.

3. With the scan tool, read the ORC DTCs.

   Does the scan tool display active B0001-13-DRIVER FRONTAL SQUIB 1 CONTROL - CIRCUIT OPEN DTC?

   Yes

   - Go To 3.

   No

   WARNING: Turn the ignition off, disconnect the 12-volt battery and wait two minutes before proceeding. Failure to follow these instructions may result in possible serious or fatal injury.

   -
   - Replace the Driver Airbag in accordance with the Service Information.
   - Refer to **STANDARD PROCEDURE** and perform the RESTRAINTS SYSTEM VERIFICATION TEST.

3. **CHECK THE CLOCKSPRING SQUIB CIRCUITS FOR AN OPEN**

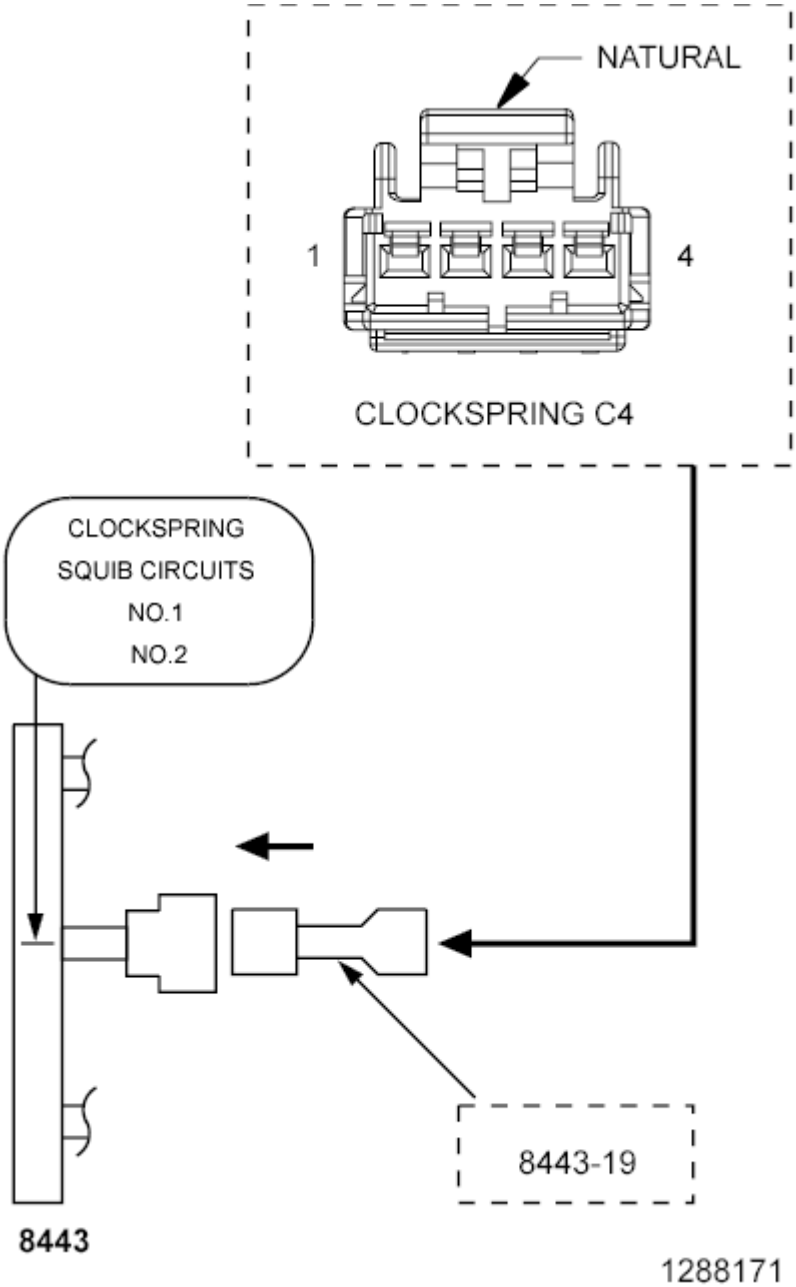

Fig. 11: Checking Clockspring Squib Circuit
Courtesy of CHRYSLER GROUP, LLC

WARNING: **Turn the ignition off, disconnect the 12-volt battery and wait two minutes before proceeding. Failure to follow these instructions may result in possible serious or fatal injury.**

1. Disconnect the SRS Load Tool Kit (special tool #8443A, SRS Load Tool) and Jumper from the Driver Airbag Squib harness connectors.
2. Disconnect the Clockspring C4 harness connector.

NOTE: **Check connectors - Clean and repair as necessary.**

Connect the SRS Load Tool Kit and the SRS Load Tool Jumper (special tool #8443-19, 4 Pin Jumper) to the Clockspring C4 harness connector.

WARNING: **Turn the ignition on, then reconnect the 12-volt battery and wait two minutes before proceeding. Failure to follow these instructions may result in possible serious or fatal injury.**

3. With the scan tool, read the ORC DTCs.

   Does the scan tool display active B0001-13-DRIVER FRONTAL SQUIB 1 CONTROL - CIRCUIT OPEN DTC?

   Yes

   - Go To 4.

   No

   WARNING: **Turn the ignition off, disconnect the 12-volt battery and wait two minutes before proceeding. Failure to follow these instructions may result in possible serious or fatal injury.**

   -
   - Replace the Clockspring in accordance with the Service Information.
   - Refer to **STANDARD PROCEDURE** and perform the RESTRAINTS SYSTEM VERIFICATION TEST.

4. **CHECK (R43, R45) DRIVER SQUIB 1 CIRCUITS FOR AN OPEN OR HIGH RESISTANCE**

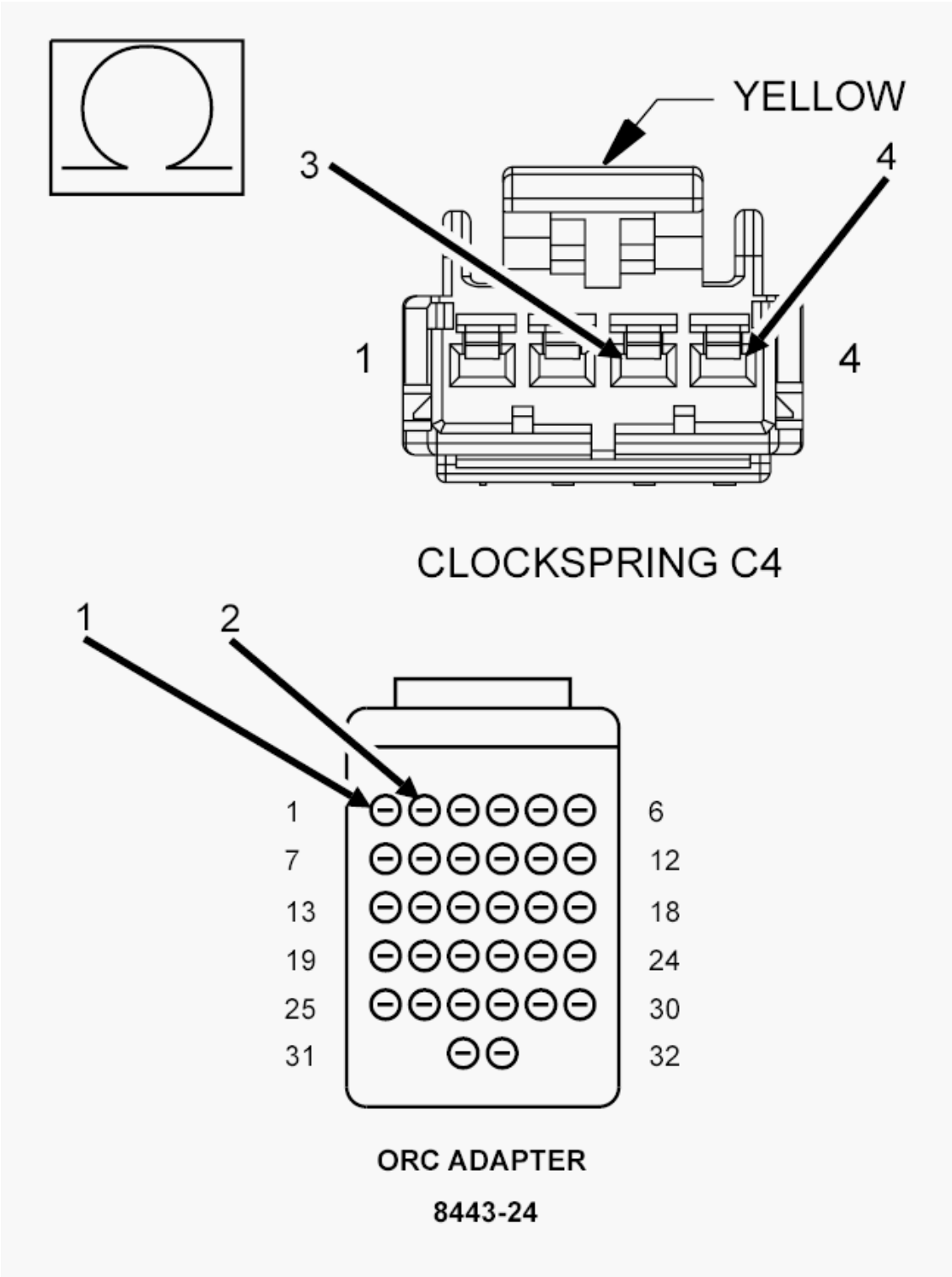

Fig. 12: Checking Driver Squib 1 Circuits For An Open Or High Resistance
Courtesy of CHRYSLER GROUP, LLC

WARNING: Turn the ignition off, disconnect the 12-volt battery and wait two minutes before proceeding. Failure to follow these instructions may

result in possible serious or fatal injury.

1. Disconnect the SRS Load Tool Kit (special tool #8443A, SRS Load Tool) and the Jumper from the Clockspring C4 harness connector.
2. Disconnect the ORC harness connectors.

NOTE: Check connectors - Clean and repair as necessary.

3. Connect the SRS Load Tool Adapter (special tool #8443-24, 32-Way Adapter) to the ORC C2 harness connector.
4. Measure the resistance of the (R43) Driver Squib 1 Line 2 circuit between the appropriate terminals of the Clockspring C4 harness connector and the SRS Load Tool Adaptor (special tool #8443-24, 32-Way Adapter).
5. Measure the resistance of the (R45) Driver Squib 1 Line 1 circuit between the appropriate terminals of the Clockspring C4 harness connector and the SRS Load Tool Adaptor (special tool #8443-24, 32-Way Adapter).

Is the resistance below 1.0 Ohms on both circuits?

Yes

WARNING: **If the Occupant Restraint Controller (ORC) is dropped at any time, it must be replaced. Failure to follow these instructions may result in possible serious or fatal injury.**

-
- Replace the ORC in accordance with the Service Information.
- Refer to **STANDARD PROCEDURE** and perform the RESTRAINTS SYSTEM VERIFICATION TEST.

No

- Repair the (R43, R45) Driver Squib 1 circuits for an open or high resistance.
- Refer to **STANDARD PROCEDURE** and perform the RESTRAINTS SYSTEM VERIFICATION TEST.

B0001-2B-DRIVER FRONTAL SQUIB 1 CONTROL - WIRES SHORTED TOGETHER

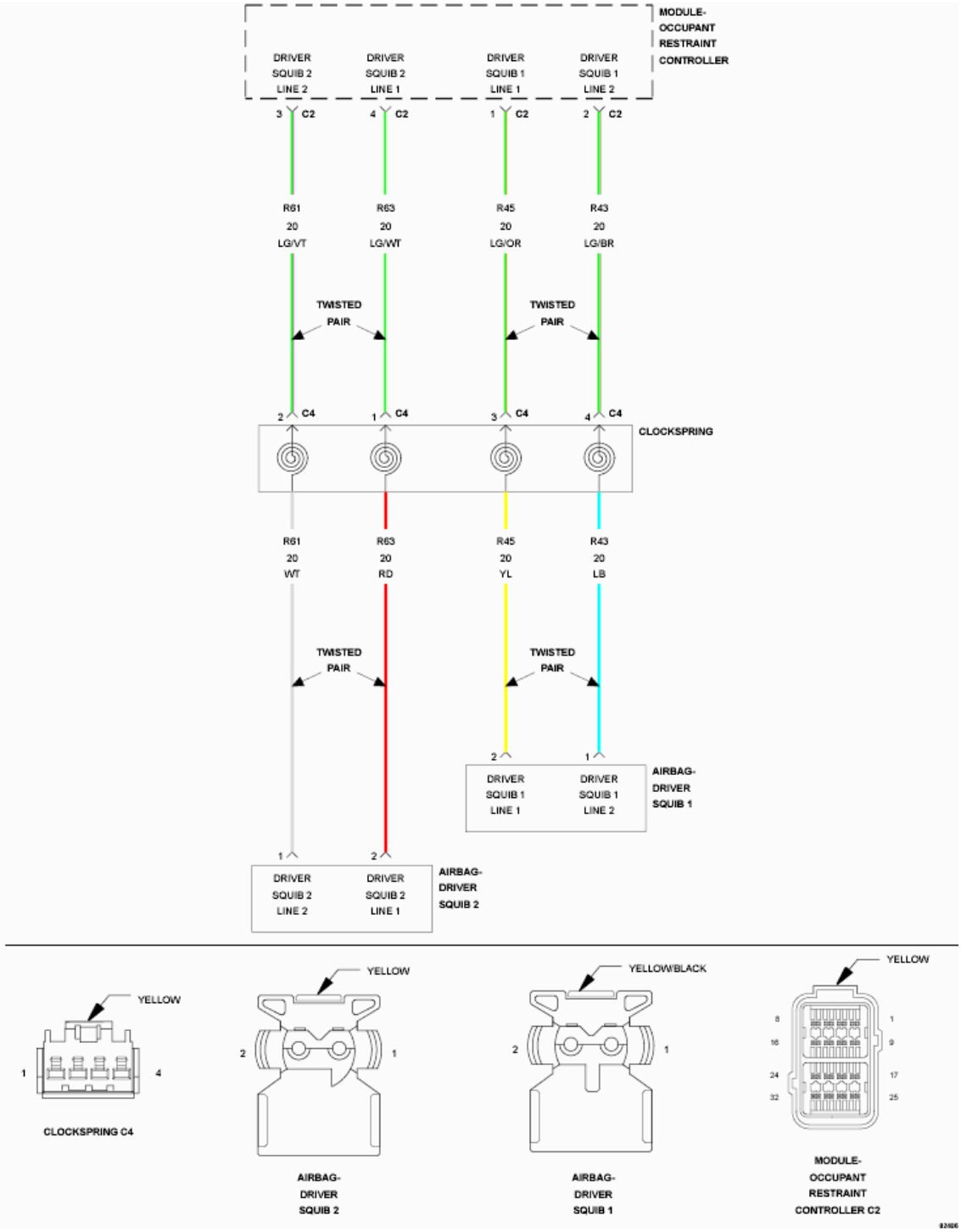

Fig. 13: Squib Control Circuit Wiring Diagram
Courtesy of CHRYSLER GROUP, LLC

For a complete wiring diagram, **refer to appropriate SYSTEM WIRING DIAGRAMS article** .

THEORY OF OPERATION

When powered, the Occupant Restraint Controller (ORC) sends a test current to the squibs to verify the integrity of the squib and wiring. These circuits are maintained in a "floating" configuration at the ORC (connected to neither power nor ground) as protection against inadvertent deployment. Use of the Supplemental Restraints System (SRS) Load Tool Kit (special tool #8443A, SRS Load Tool) in the tests below substitutes a suspect squib with a known good component. The use of the SRS Load Tool Adaptor provides a test point as well as a method for opening the shorting bar connections within the ORC harness connector.

WHEN MONITORED:

The ORC sends out a 40 mA diagnostic current on each squib voltage supply circuit at power up and every 100 ms thereafter while the ignition is on.

SET CONDITION:

This Diagnostic Trouble Code (DTC) sets when the ORC detects both circuits of the same squib are shorted together for more than 2.5 seconds. This DTC transitions from active to stored when the ORC sees a recovery from a shorted together condition for greater than 2.5 seconds.

POSSIBLE CAUSES

Possible Causes
(R43) DRIVER SQUIB 1 LINE 2 CIRCUIT SHORTED TO THE (R45) DRIVER SQUIB 1 LINE 1 CIRCUIT
CLOCKSPRING
DRIVER AIRBAG
OCCUPANT RESTRAINT CONTROLLER (ORC)

Always perform the Pre-Diagnostic Troubleshooting procedure before proceeding. Refer to STANDARD PROCEDURE.

DIAGNOSTIC TEST

1. **VERIFY ACTIVE DTC**

   NOTE: Make sure the battery is fully charged.

   1. Turn the ignition on.
   2. With the scan tool, read the ORC DTCs.

      Does the scan tool display active B0001-2B-DRIVER FRONTAL SQUIB 1 CONTROL - WIRES SHORTED TOGETHER DTC?

      Yes

      - Go To 2.

No

- Refer to **STANDARD PROCEDURE** and perform the RESTRAINTS SYSTEM INTERMITTENT TEST.

2. **CHECK DRIVER AIRBAG SQUIB 1 CIRCUITS FOR SHORT TOGETHER**

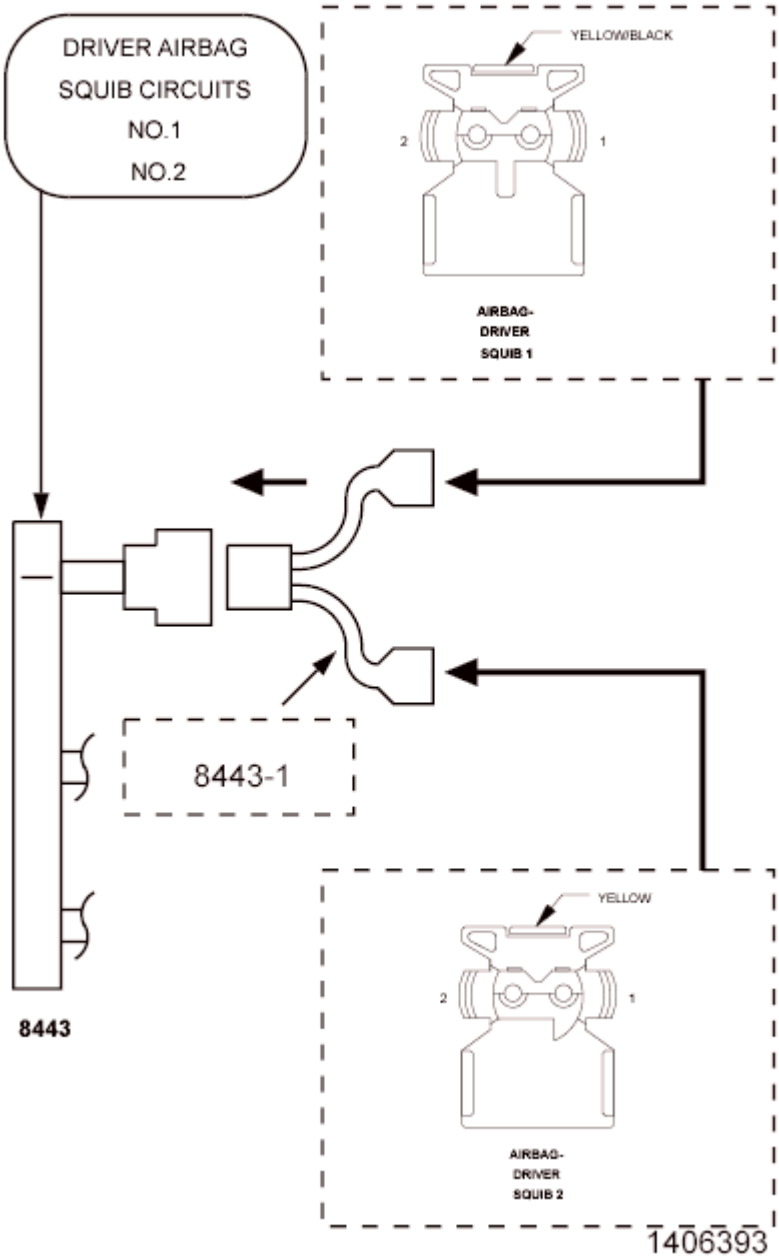

Fig. 14: Driver Airbag Squib Circuits No. 1/No. 2 Connectors
Courtesy of CHRYSLER GROUP, LLC

WARNING: Turn the ignition off, disconnect the 12-volt battery and wait two minutes before proceeding. Failure to follow these instructions may result in possible serious or fatal injury.

1. Disconnect the Driver Airbag Squib harness connectors.

   WARNING: Do not place an intact non-deployed airbag face down on a hard surface, the airbag propels into the air if accidentally deployed. Failure to follow these instructions may result in possible serious or fatal injury.

   NOTE: Check connectors - Clean and repair as necessary.

2. Connect the SRS Load Tool Kit (special tool #8443A, SRS Load Tool) and the SRS Load Tool Jumper (special tool #8443-1, Jumpers, 2 Pin) to the Driver Airbag Squib harness connectors.

   WARNING: Turn the ignition on, then reconnect the 12-volt battery and wait two minutes before proceeding. Failure to follow these instructions may result in possible serious or fatal injury.

3. With the scan tool, read the ORC DTCs.

   Does the scan tool display active B0001-2B-DRIVER FRONTAL SQUIB 1 CONTROL - WIRES SHORTED TOGETHER DTC?

   Yes

   - Go To 3.

   No

   WARNING: Turn the ignition off, disconnect the 12-volt battery and wait two minutes before proceeding. Failure to follow these instructions may result in possible serious or fatal injury.

   -
   - Replace the Driver Airbag in accordance with the Service Information.
   - Refer to **STANDARD PROCEDURE** and perform the RESTRAINTS SYSTEM VERIFICATION TEST.

3. **CHECK THE CLOCKSPRING SQUIB CIRCUITS FOR A SHORT TOGETHER**

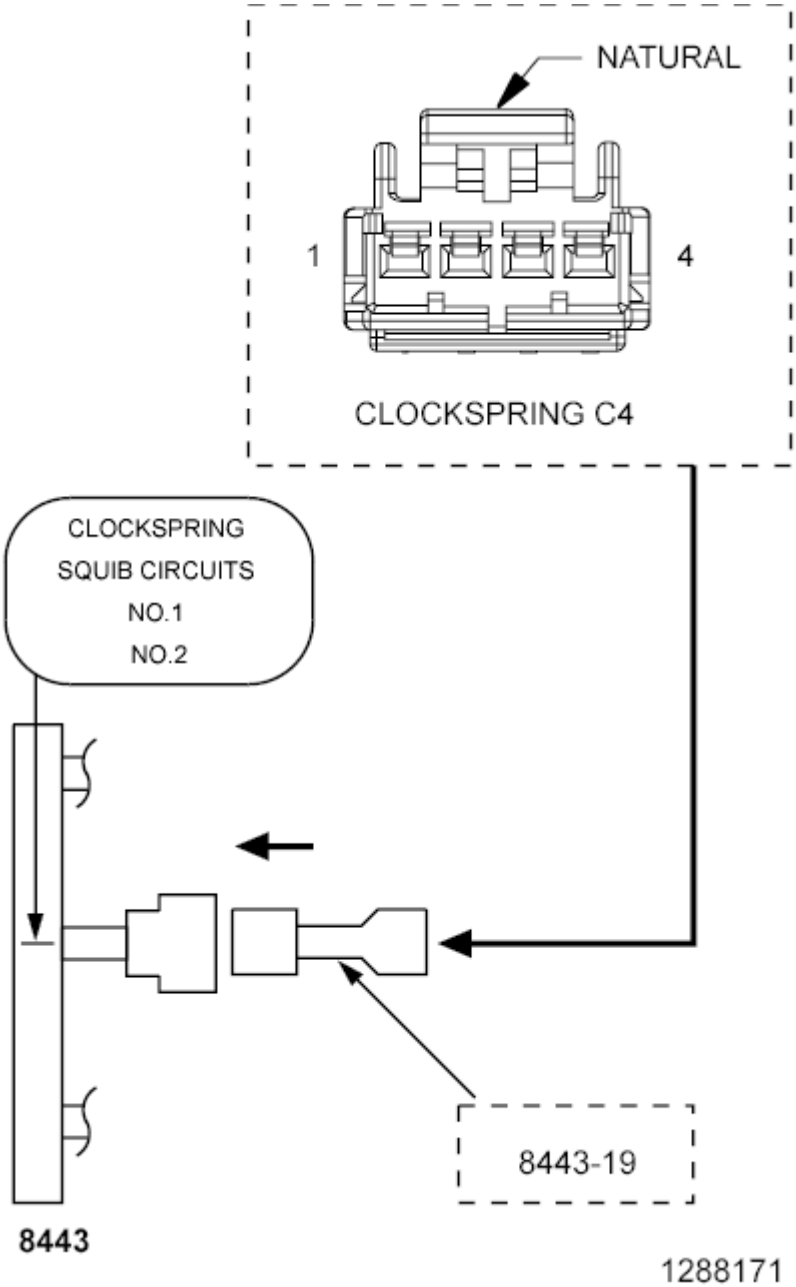

Fig. 15: Checking Clockspring Squib Circuit
Courtesy of CHRYSLER GROUP, LLC

WARNING: **Turn the ignition off, disconnect the 12-volt battery and wait two minutes before proceeding. Failure to follow these instructions may result in possible serious or fatal injury.**

1. Disconnect the SRS Load Tool Kit (special tool #8443A, SRS Load Tool) and Jumper from the Driver Airbag Squib harness connectors.
2. Disconnect the Clockspring C4 harness connector.

NOTE: **Check connectors - Clean and repair as necessary.**

3. Connect the SRS Load Tool Kit (special tool #8443A, SRS Load Tool) and SRS Load Tool Jumper (special tool #8443-19, 4 Pin Jumper) to the Clockspring C4 harness connector.

   WARNING: **Turn the ignition on, then reconnect the 12-volt battery and wait two minutes before proceeding. Failure to follow these instructions may result in possible serious or fatal injury.**

4. With the scan tool, read the ORC DTCs.

   Does the scan tool display active B0001-2B-DRIVER FRONTAL SQUIB 1 CONTROL - WIRES SHORTED TOGETHER DTC?

   Yes

   - Go To 4.

   No

   WARNING: **Turn the ignition off, disconnect the 12-volt battery and wait two minutes before proceeding. Failure to follow these instructions may result in possible serious or fatal injury.**

   -
   - Replace the Clockspring in accordance with the Service Information.
   - Refer to **STANDARD PROCEDURE** and perform the RESTRAINTS SYSTEM VERIFICATION TEST.

4. **CHECK (R43) DRIVER SQUIB 1 LINE 2 CIRCUIT FOR A SHORT TO (R45) DRIVER SQUIB 1 LINE 1 CIRCUIT**

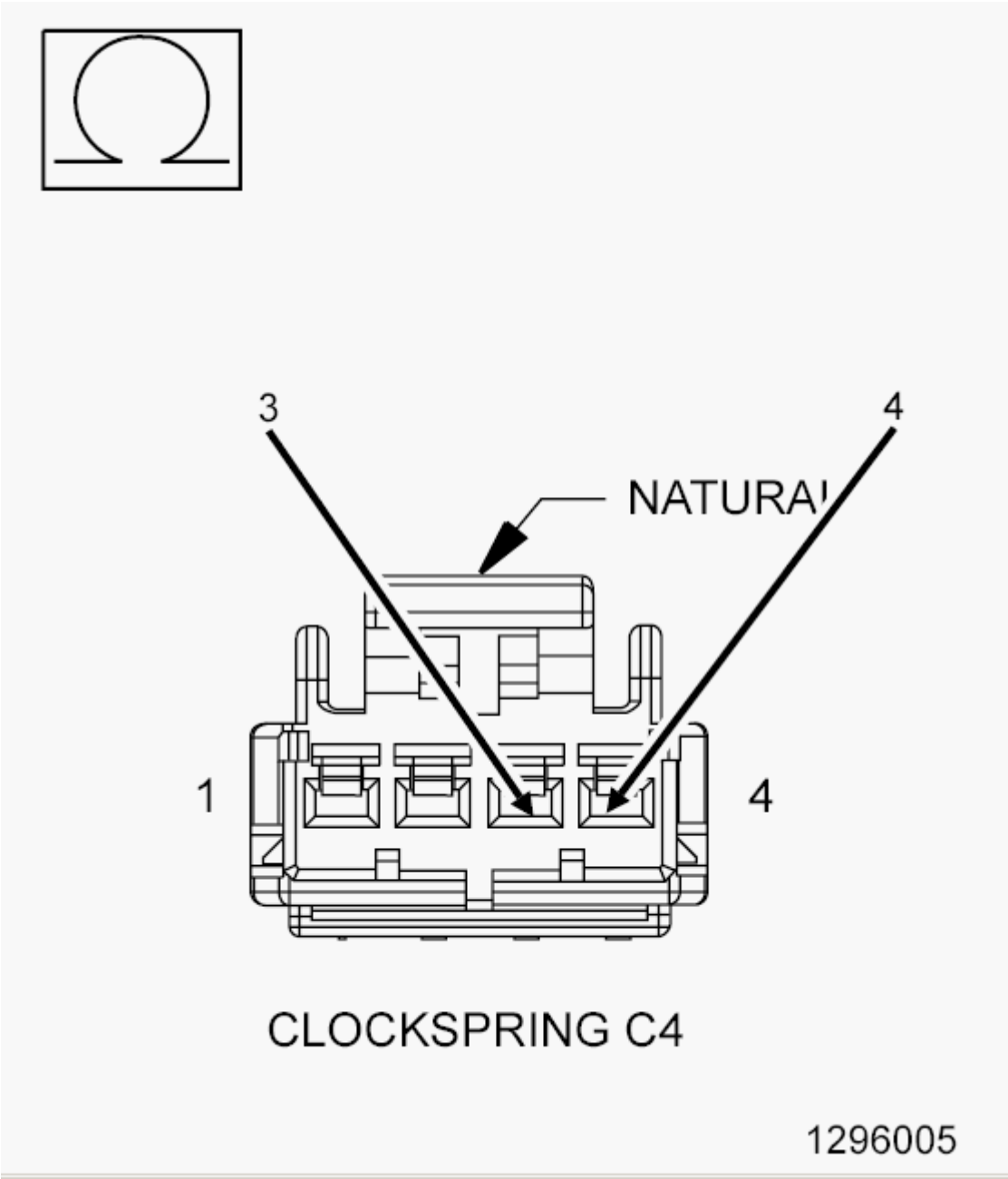

Fig. 16: Checking Driver Squib 1 Line 2 Circuit
Courtesy of CHRYSLER GROUP, LLC

WARNING: Turn the ignition off, disconnect the 12-volt battery and wait two minutes before proceeding. Failure to follow these instructions may result in possible serious or fatal injury.

1. Disconnect the SRS Load Tool Kit (special tool #8443A, SRS Load Tool) and Jumper from the Clockspring harness connector.
2. Disconnect the ORC harness connectors.

NOTE: Check connectors - Clean and repair as necessary.

3. Connect the SRS Load Tool Adaptor (special tool #8443-24, 32-Way Adapter) to the ORC C2 harness connector.
4. Measure the resistance between the (R43) Driver Squib 1 Line 2 circuit cavity 4 and the (R45) Driver Squib 1 Line 1 circuit cavity 3 at the Clockspring C4 harness connector.

   Is the resistance below 5.0 Ohms?

   Yes

   - Repair the (R43) Driver Squib 1 Line 2 circuit for a short to the (R45) Driver Squib 1 Line 1 circuit.
   - Refer to **STANDARD PROCEDURE** and perform the RESTRAINTS SYSTEM VERIFICATION TEST.

   No

   WARNING: **If the Occupant Restraint Controller (ORC) is dropped at any time, it must be replaced. Failure to follow these instructions may result in possible serious or fatal injury.**

   -
   - Replace the ORC in accordance with the Service Information.
   - Refer to **STANDARD PROCEDURE** and perform the RESTRAINTS SYSTEM VERIFICATION TEST.

B0002-11-DRIVER FRONTAL SQUIB 2 CONTROL - CIRCUIT SHORT TO GROUND

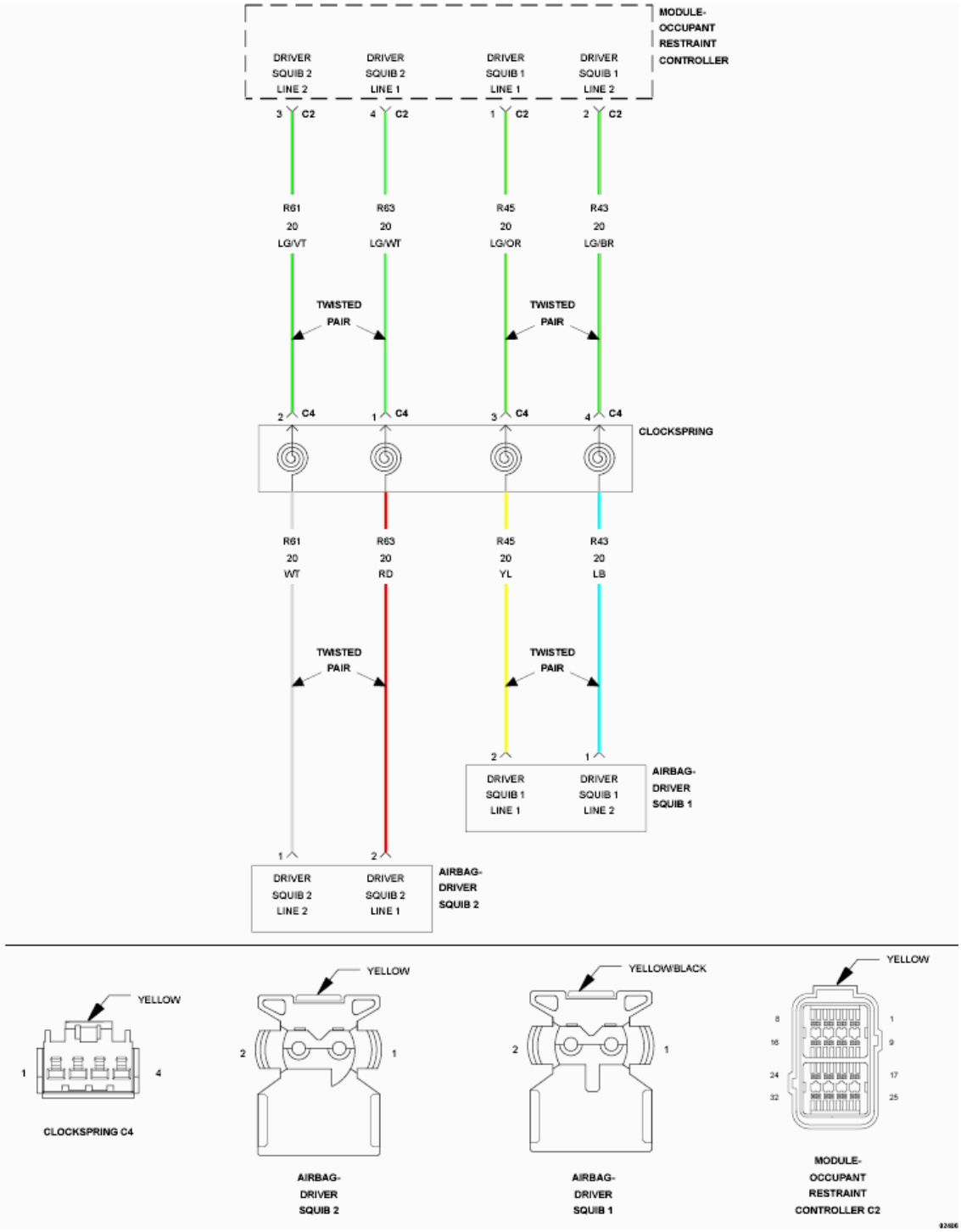

Fig. 17: Squib Control Circuit Wiring Diagram
Courtesy of CHRYSLER GROUP, LLC

For a complete wiring diagram, **refer to appropriate SYSTEM WIRING DIAGRAMS article** .

THEORY OF OPERATION

When powered, the Occupant Restraint Controller (ORC) sends a test current to the squibs to verify the integrity of the squib and wiring. These circuits are maintained in a "floating" configuration at the ORC (connected to neither power nor ground) as protection against inadvertent deployment. Use of the Supplemental Restraints System (SRS) Load Tool Kit (special tool #8443A, SRS Load Tool) in the tests below substitutes a suspect squib with a known good component. The use of the SRS Load Tool Adaptor provides a test point as well as a method for opening the shorting bar connections within the ORC harness connector.

WHEN MONITORED:

The ORC sends out a 40 mA diagnostic current on each squib voltage supply circuit at power up and every 100 ms thereafter while the ignition is on.

SET CONDITION:

This Diagnostic Trouble Codes (DTC) sets when the ORC detects a short to ground on the squib circuit for more than 2.5 seconds. This DTC transitions from active to stored when the ORC sees a recovery from a short to ground condition for greater than 2.5 seconds.

POSSIBLE CAUSES

Possible Causes
(R63) DRIVER SQUIB 2 LINE 1 CIRCUIT SHORTED TO GROUND
(R61) DRIVER SQUIB 2 LINE 2 CIRCUIT SHORTED TO GROUND
CLOCKSPRING
DRIVER AIRBAG
OCCUPANT RESTRAINT CONTROLLER (ORC)

Always perform the Pre-Diagnostic Troubleshooting procedure before proceeding. Refer to STANDARD PROCEDURE.

DIAGNOSTIC TEST

1. **VERIFY ACTIVE DTC**

   NOTE: Make sure the battery is fully charged.

   1. Turn the ignition on.
   2. With the scan tool, read the ORC DTCs.

      Does the scan tool display an active B0002-11-DRIVER FRONTAL SQUIB 2 CONTROL - CIRCUIT SHORT TO GROUND DTC?

      Yes

      - Go To 2.

No

- Refer to **STANDARD PROCEDURE** and perform the RESTRAINTS SYSTEM INTERMITTENT TEST.

2. **CHECK DRIVER AIRBAG SQUIB 2 CIRCUITS FOR SHORT TO GROUND**

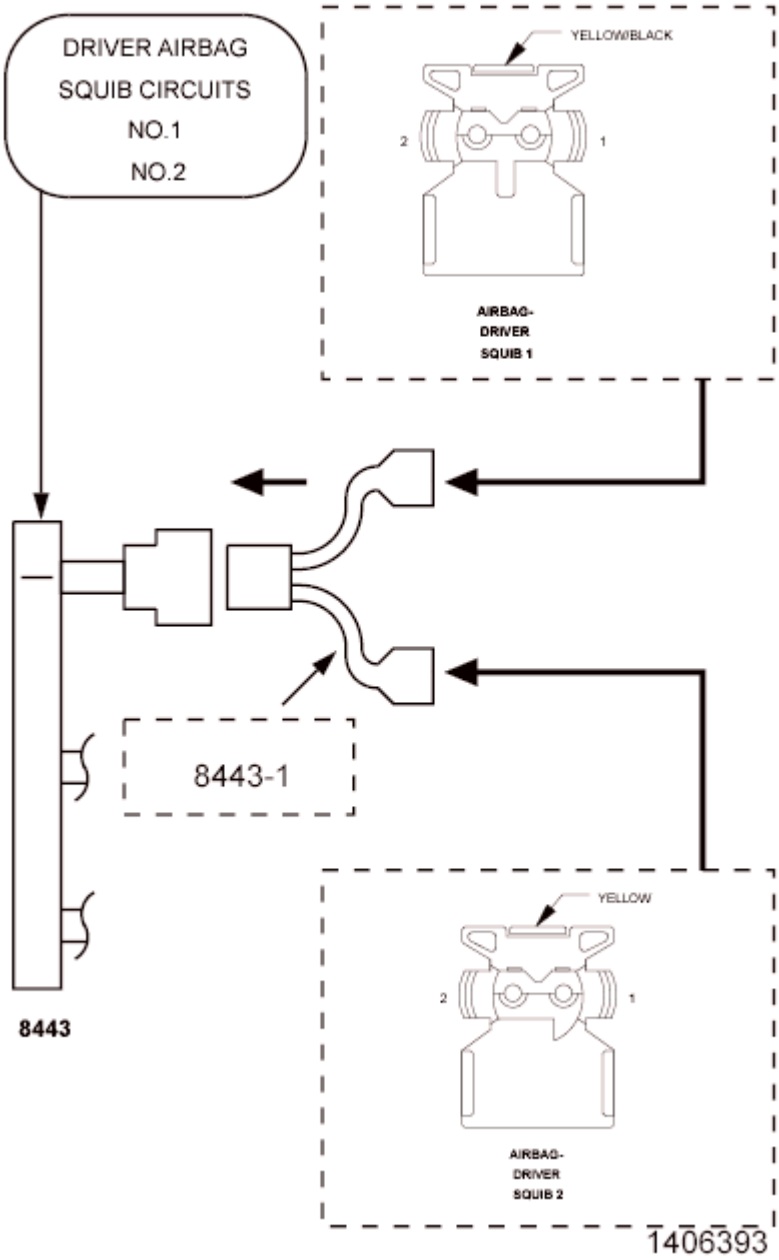

Fig. 18: Driver Airbag Squib Circuits No. 1/No. 2 Connectors
Courtesy of CHRYSLER GROUP, LLC

WARNING: Turn the ignition off, disconnect the 12-volt battery and wait two minutes before proceeding. Failure to follow these instructions may result in possible serious or fatal injury.

1. Disconnect the Driver Airbag Squib harness connectors.

   WARNING: Do not place an intact non-deployed airbag face down on a hard surface, the airbag propels into the air if accidentally deployed. Failure to follow these instructions may result in possible serious or fatal injury.

   NOTE: Check connectors - Clean and repair as necessary.

2. Connect the SRS Load Tool Kit (special tool #8443A, SRS Load Tool) and the SRS Load Tool Jumper (special tool #8443-1, Jumpers, 2 Pin) to the Driver Airbag Squib harness connectors.

   WARNING: Turn the ignition on, then reconnect the 12-volt battery and wait two minutes before proceeding. Failure to follow these instructions may result in possible serious or fatal injury.

3. With the scan tool, read the ORC DTCs.

   Does the scan tool display active B0002-11-DRIVER FRONTAL SQUIB 2 CONTROL - CIRCUIT SHORT TO GROUND DTC?

   Yes

   - Go To 3.

   No

   WARNING: Turn the ignition off, disconnect the 12-volt battery and wait two minutes before proceeding. Failure to follow these instructions may result in possible serious or fatal injury.

   -
   - Replace the Driver Airbag in accordance with the Service Information.
   - Refer to **STANDARD PROCEDURE** and perform the RESTRAINTS SYSTEM VERIFICATION TEST.

3. **CHECK CLOCKSPRING SQUIB CIRCUITS FOR A SHORT TO GROUND**

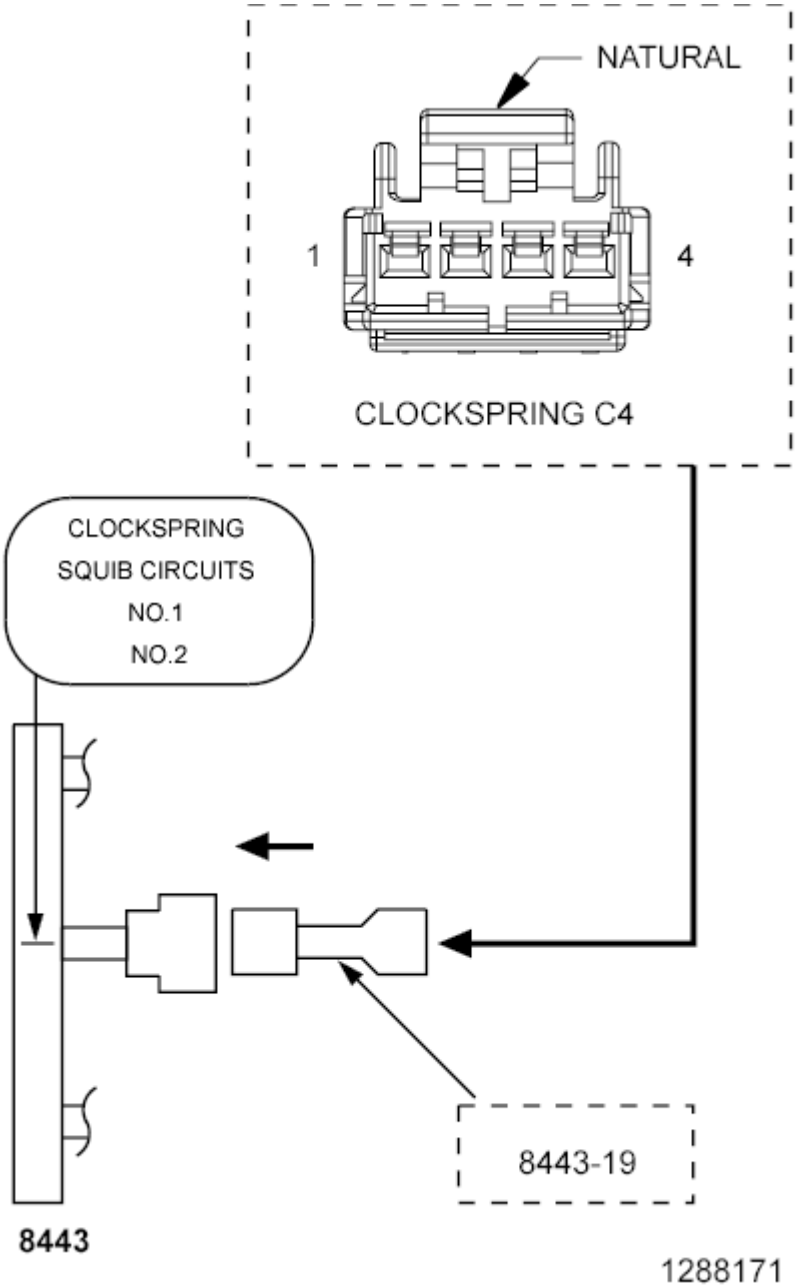

Fig. 19: Checking Clockspring Squib Circuit
Courtesy of CHRYSLER GROUP, LLC

WARNING: **Turn the ignition off, disconnect the 12-volt battery and wait two minutes before proceeding. Failure to follow these instructions may result in possible serious or fatal injury.**

1. Disconnect the SRS Load Tool Kit (special tool #8443A, SRS Load Tool) and Jumper from the Driver Airbag Squib harness connectors.
2. Disconnect the Clockspring C4 harness connector.

NOTE: **Check connectors - Clean and repair as necessary.**

3. Connect the SRS Load Tool Kit (special tool #8443A, SRS Load Tool) and the SRS Load Tool Jumper (special tool #8443-19, 4 Pin Jumper) to the Clockspring C4 harness connector.

WARNING: **Turn the ignition on, then reconnect the 12-volt battery and wait two minutes before proceeding. Failure to follow these instructions may result in possible serious or fatal injury.**

4. With the scan tool, read the ORC DTCs.

   Does the scan tool display active B0002-11-DRIVER FRONTAL SQUIB 2 CONTROL - CIRCUIT SHORT TO GROUND DTC?

   Yes

   - Go To 4.

   No

WARNING: **Turn the ignition off, disconnect the 12-volt battery and wait two minutes before proceeding. Failure to follow these instructions may result in possible serious or fatal injury.**

-
- Replace the Clockspring in accordance with the Service Information.
- Refer to **STANDARD PROCEDURE** and perform the RESTRAINTS SYSTEM VERIFICATION TEST.

4. **CHECK (R63, R61) DRIVER SQUIB 2 CIRCUITS FOR A SHORT TO GROUND**

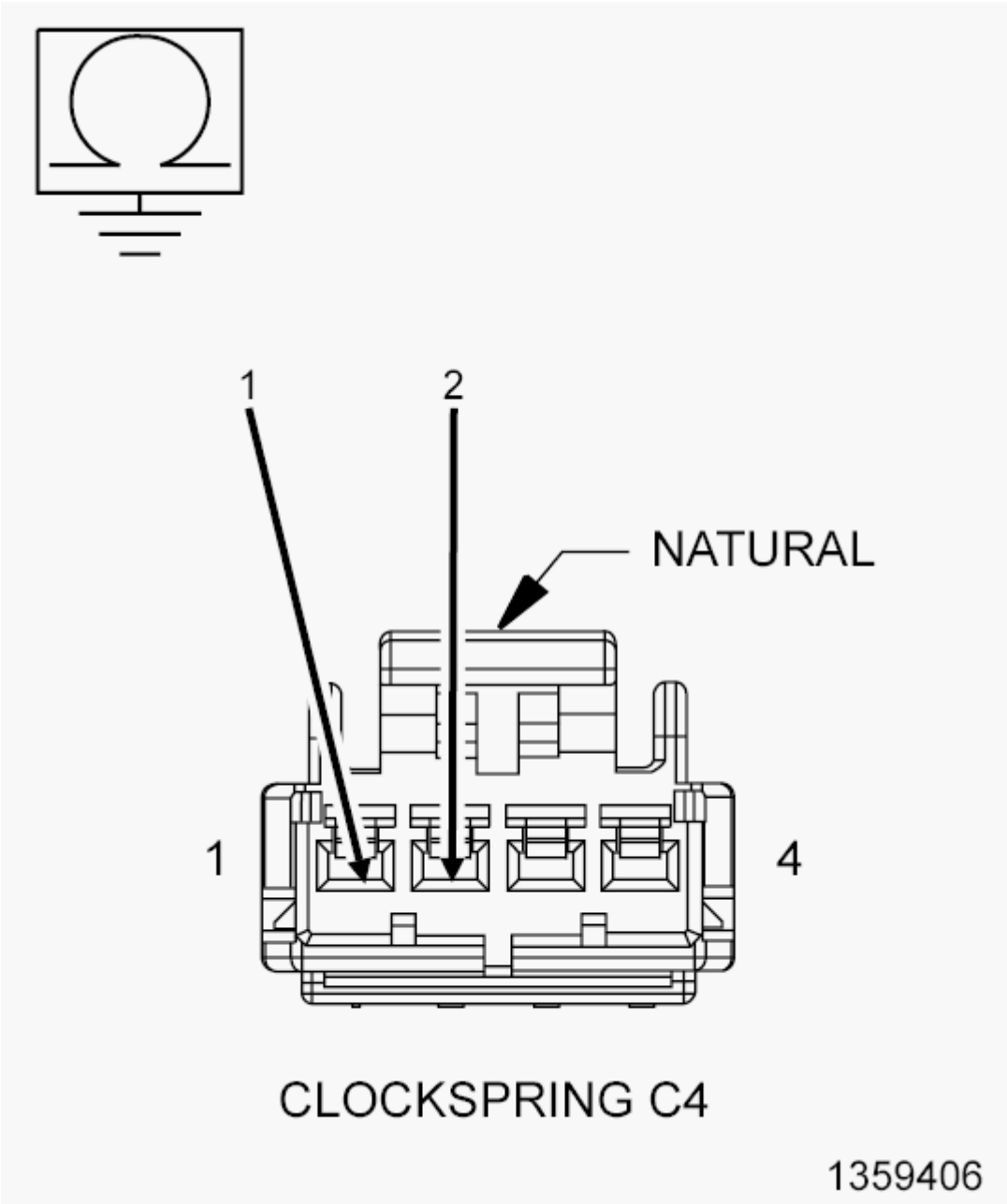

Fig. 20: Checking Driver Squib 2 Circuit
Courtesy of CHRYSLER GROUP, LLC

WARNING: **Turn the ignition off, disconnect the 12-volt battery and wait two minutes before proceeding. Failure to follow these instructions may result in possible serious or fatal injury.**

1. Disconnect the SRS Load Tool Kit (special tool #8443A, SRS Load Tool) and Jumper from the Clockspring C4 harness connector.
2. Disconnect the ORC harness connectors.

NOTE: Check connectors - Clean and repair as necessary.

3. Connect the SRS Load Tool Adaptor (special tool #8443-24, 32-Way Adapter) to the ORC C2 harness connector.
4. Measure the resistance of the (R63) Driver Squib 2 Line 1 circuit between the Clockspring C4 harness connector cavity 1 and ground.
5. Measure the resistance of the (R61) Driver Squib 2 Line 2 circuit between the Clockspring C4 harness connector cavity 2 and ground.

Is the resistance below 10K Ohms for either measurement?

Yes

- Repair the (R63, R61) Driver Squib 2 circuits for a short to ground.
- Refer to **STANDARD PROCEDURE** and perform the RESTRAINTS SYSTEM VERIFICATION TEST.

No

WARNING: **If the Occupant Restraint Controller (ORC) is dropped at any time, it must be replaced. Failure to follow these instructions may result in possible serious or fatal injury.**

-
- Replace the ORC in accordance with the Service Information.
- Refer to **STANDARD PROCEDURE** and perform the RESTRAINTS SYSTEM VERIFICATION TEST.

B0002-12-DRIVER FRONTAL SQUIB 2 CONTROL - CIRCUIT SHORT TO BATTERY

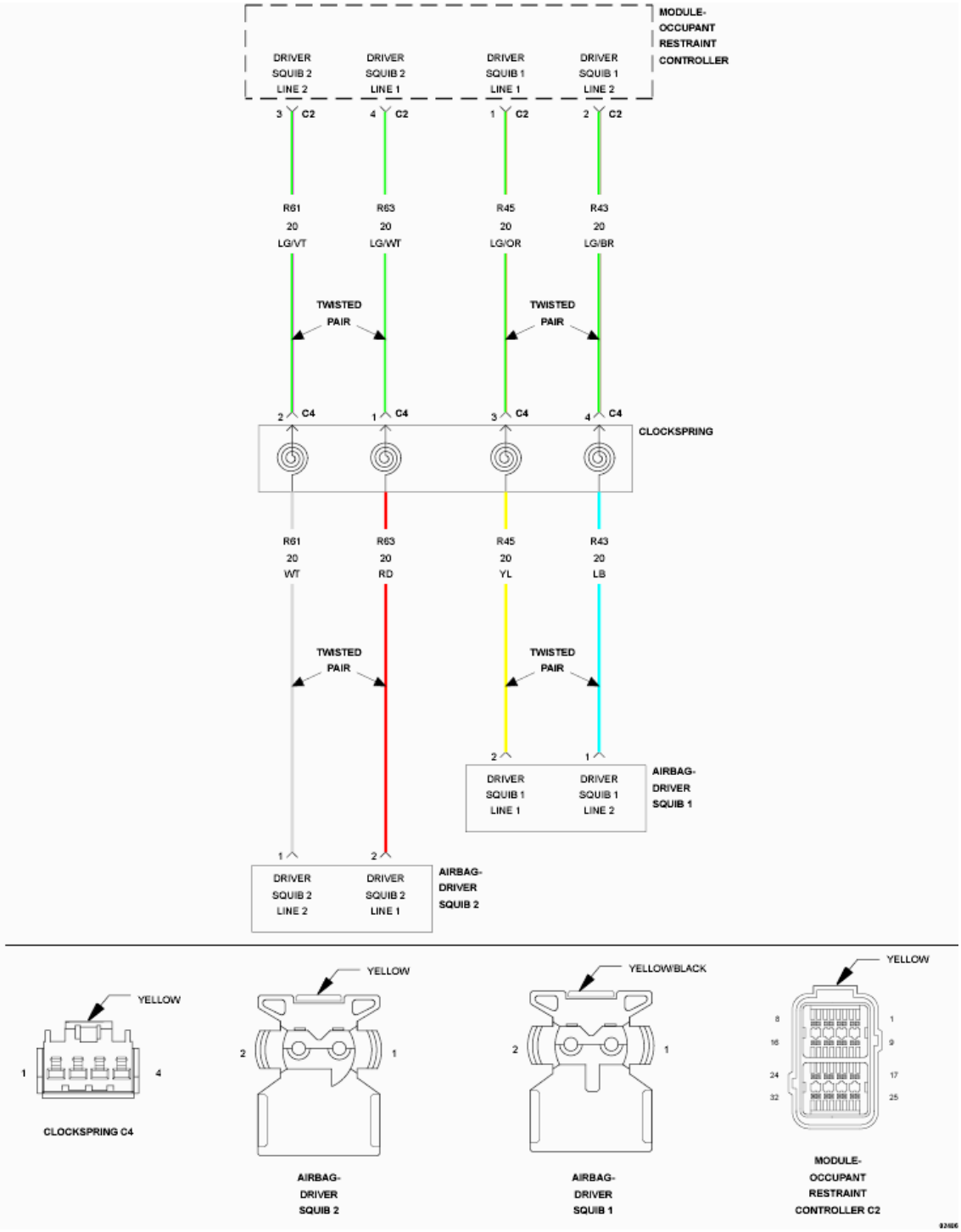

Fig. 21: Squib Control Circuit Wiring Diagram
Courtesy of CHRYSLER GROUP, LLC

For a complete wiring diagram, **refer to appropriate SYSTEM WIRING DIAGRAMS article** .

THEORY OF OPERATION

When powered, the Occupant Restraint Controller (ORC) sends a test current to the squibs to verify the integrity of the squib and wiring. These circuits are maintained in a "floating" configuration at the ORC (connected to neither power nor ground) as protection against inadvertent deployment. Use of the Supplemental Restraints System (SRS) Load Tool Kit (special tool #8443A, SRS Load Tool) in the tests below substitutes a suspect squib with a known good component. The use of the SRS Load Tool Adaptor provides a test point as well as a method for opening the shorting bar connections within the ORC harness connector.

WHEN MONITORED:

The ORC sends out a 40 mA diagnostic current on each squib voltage supply circuit at power up and every 100 ms thereafter while the ignition is on.

SET CONDITION:

This Diagnostic Trouble Codes (DTC) sets when the ORC detects a short to voltage on the squib circuit for more than 2.5 seconds. This DTC transitions from active to stored when the ORC sees a recovery from a short to voltage condition for greater than 2.5 seconds.

POSSIBLE CAUSES

Possible Causes
(R63) DRIVER SQUIB 2 LINE 1 CIRCUIT SHORTED TO VOLTAGE
(R61) DRIVER SQUIB 2 LINE 2 CIRCUIT SHORTED TO VOLTAGE
CLOCKSPRING
DRIVER AIRBAG
OCCUPANT RESTRAINT CONTROLLER (ORC)

Always perform the Pre-Diagnostic Troubleshooting procedure before proceeding. Refer to STANDARD PROCEDURE.

DIAGNOSTIC TEST

1. **VERIFY ACTIVE DTC**

   NOTE: Make sure the battery is fully charged.

   1. Turn the ignition on.
   2. With the scan tool, read ORC DTCs.

      Does the scan tool display active B0002-12-DRIVER FRONTAL SQUIB 2 CONTROL - CIRCUIT SHORT TO BATTERY DTC?

      Yes

      - Go To 2.

No

- Refer to **STANDARD PROCEDURE** and perform the RESTRAINTS SYSTEM INTERMITTENT TEST.

2. **CHECK DRIVER AIRBAG SQUIB 2 CIRCUITS FOR SHORT TO VOLTAGE**

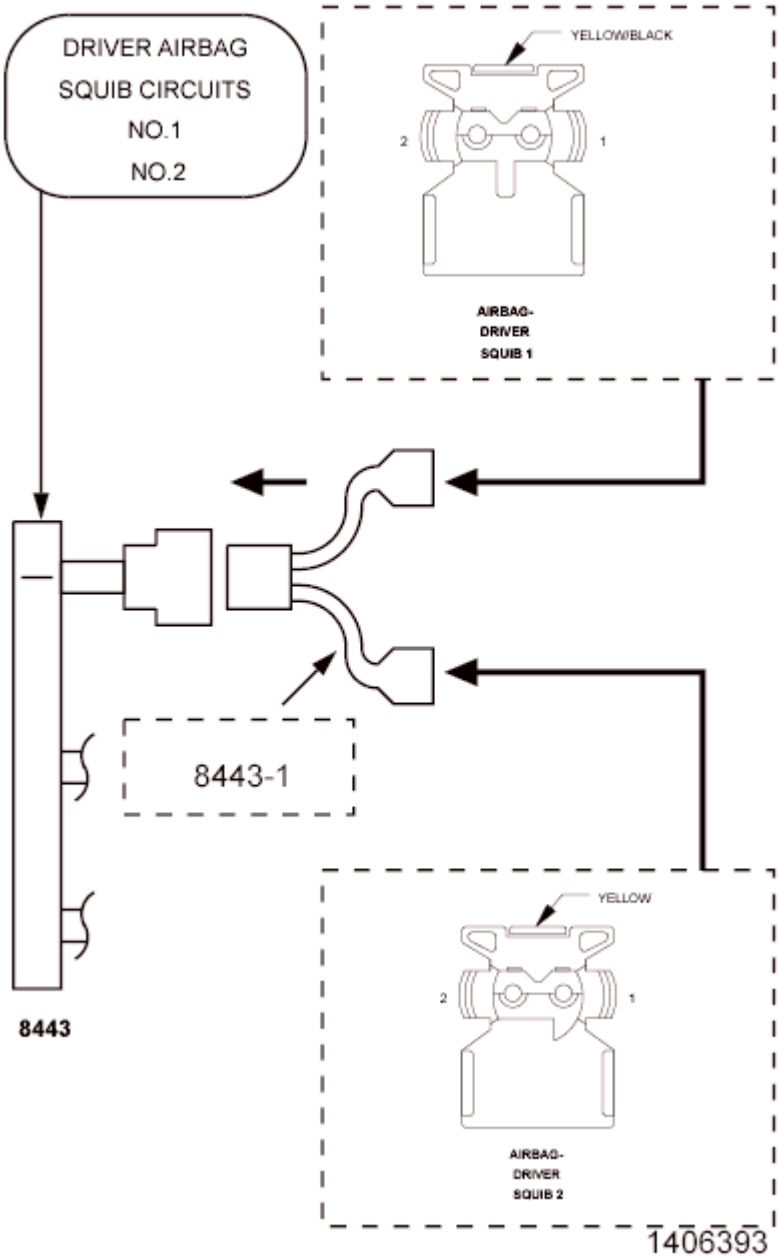

Fig. 22: Driver Airbag Squib Circuits No. 1/No. 2 Connectors
Courtesy of CHRYSLER GROUP, LLC

WARNING: Turn the ignition off, disconnect the 12-volt battery and wait two minutes before proceeding. Failure to follow these instructions may result in possible serious or fatal injury.

1. Disconnect the Driver Airbag Squib harness connectors.

WARNING: Do not place an intact non-deployed airbag face down on a hard surface, the airbag propels into the air if accidentally deployed. Failure to follow these instructions may result in possible serious or fatal injury.

NOTE: Check connectors - Clean and repair as necessary.

WARNING: Turn the ignition on, then reconnect the 12-volt battery and wait two minutes before proceeding. Failure to follow these instructions may result in possible serious or fatal injury.

2. Connect the SRS Load Tool Kit (special tool #8443A, SRS Load Tool) and the SRS Load Tool Jumper (special tool #8443-1, Jumpers, 2 Pin) to the Driver Airbag Squib harness connectors.
3. With the scan tool, read the ORC DTCs.

   Does the scan tool display active B0002-12-DRIVER FRONTAL SQUIB 2 CONTROL - CIRCUIT SHORT TO BATTERY DTC?

   Yes

   - Go To 3.

   No

WARNING: Turn the ignition off, disconnect the 12-volt battery and wait two minutes before proceeding. Failure to follow these instructions may result in possible serious or fatal injury.

-
- Replace the Driver Airbag in accordance with the Service Information.
- Refer to **STANDARD PROCEDURE** and perform the RESTRAINTS SYSTEM VERIFICATION TEST.

3. **CHECK CLOCKSPRING SQUIB CIRCUITS FOR A SHORT TO VOLTAGE**

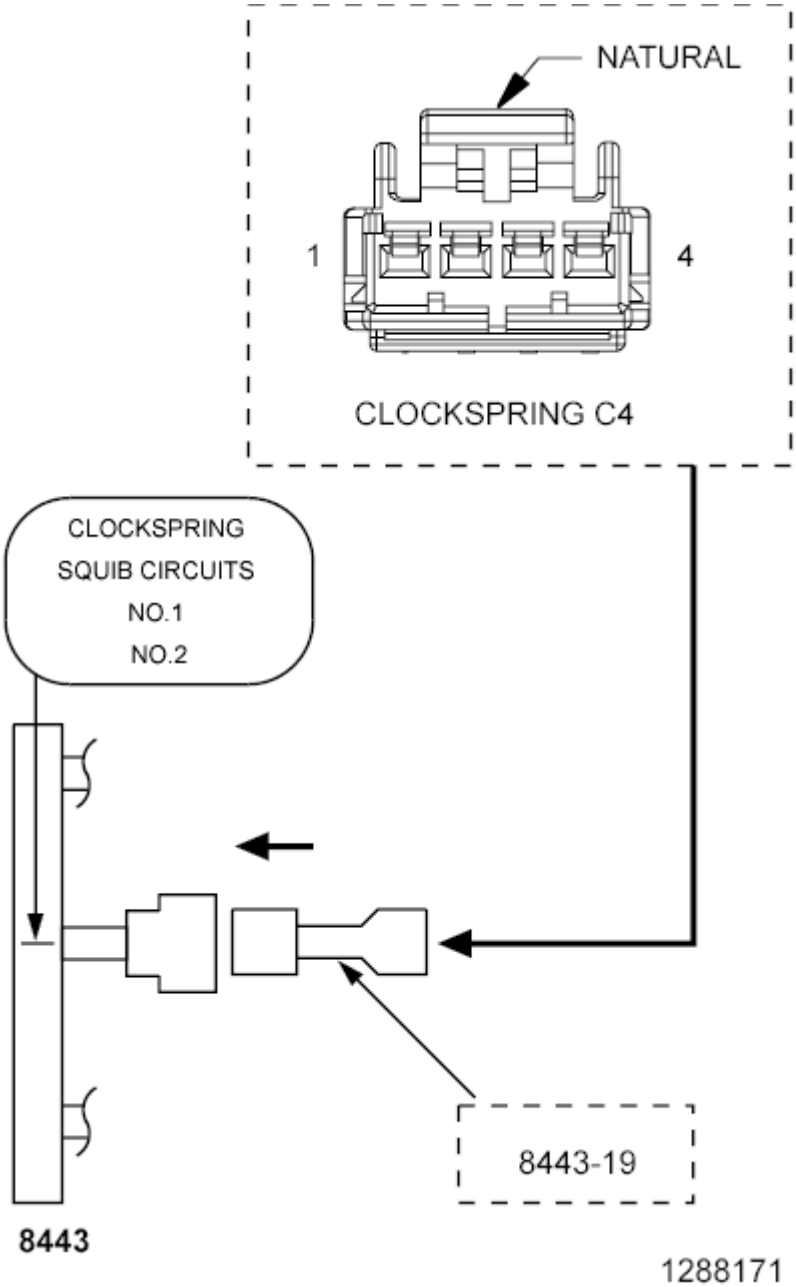

Fig. 23: Checking Clockspring Squib Circuit
Courtesy of CHRYSLER GROUP, LLC

WARNING: **Turn the ignition off, disconnect the 12-volt battery and wait two minutes before proceeding. Failure to follow these instructions may result in possible serious or fatal injury.**

1. Disconnect the SRS Load Tool Kit (special tool #8443A, SRS Load Tool) and Jumper from the Driver Airbag Squib harness connectors.
2. Disconnect the Clockspring C4 harness connector.

NOTE: **Check connectors - Clean and repair as necessary.**

3. Connect the SRS Load Tool Kit (special tool #8443A, SRS Load Tool) and the SRS Load Tool Jumper (special tool #8443-19, 4 Pin Jumper) to the Clockspring C4 harness connector.

WARNING: **Turn the ignition on, then reconnect the 12-volt battery and wait two minutes before proceeding. Failure to follow these instructions may result in possible serious or fatal injury.**

4. With the scan tool, read the ORC DTCs.

   Does the scan tool display active B0002-12-DRIVER FRONTAL SQUIB 2 CONTROL - CIRCUIT SHORT TO BATTERY DTC?

   Yes

   - Go To 4.

   No

WARNING: **Turn the ignition off, disconnect the 12-volt battery and wait two minutes before proceeding. Failure to follow these instructions may result in possible serious or fatal injury.**

-
- Replace the Clockspring in accordance with the Service Information.
- Refer to **STANDARD PROCEDURE** and perform the RESTRAINTS SYSTEM VERIFICATION TEST.

4. **CHECK (R61, R63) DRIVER SQUIB 2 CIRCUITS FOR A SHORT TO VOLTAGE**

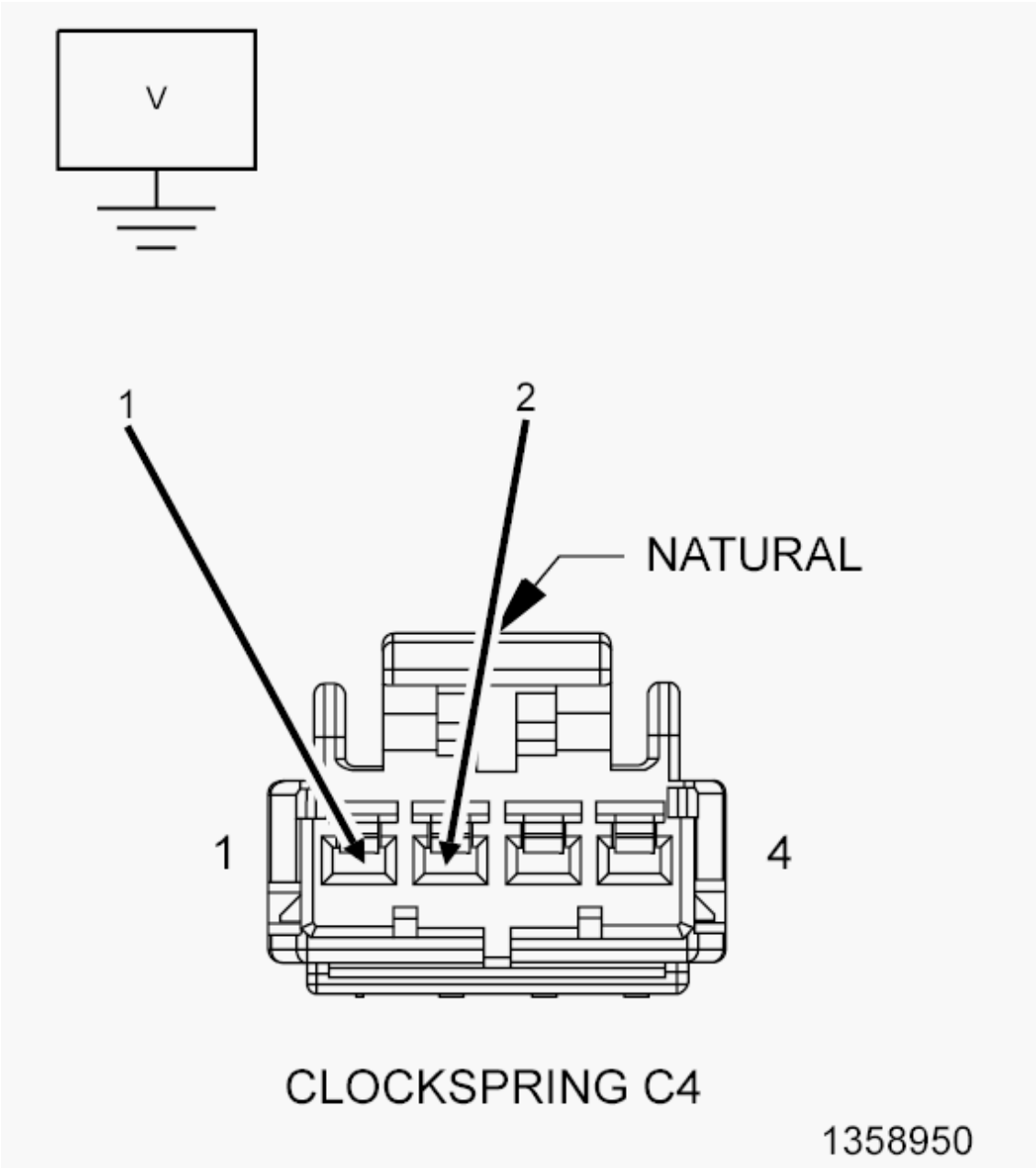

Fig. 24: Checking Driver Squib 2 Circuit
Courtesy of CHRYSLER GROUP, LLC

WARNING: Turn the ignition off, disconnect the 12-volt battery and wait two minutes before proceeding. Failure to follow these instructions may result in possible serious or fatal injury.

1. Disconnect the SRS Load Tool Kit (special tool #8443A, SRS Load Tool) and Jumper from the Clockspring C4 harness connector.
2. Disconnect the ORC harness connectors.

NOTE: **Check connectors - Clean and repair as necessary.**

3. Connect the SRS Load Tool Adaptor (special tool #8443-24, 32-Way Adapter) to the ORC C2 harness connector.

WARNING: **Turn the ignition on, then reconnect the 12-volt battery and wait two minutes before proceeding. Failure to follow these instructions may result in possible serious or fatal injury.**

4. Measure the voltage of the (R63) Driver Squib 2 Line 1 circuit between the Clockspring C4 harness connector cavity 1 and ground.
5. Measure the voltage of the (R61) Driver Squib 2 Line 2 circuit between the Clockspring C4 harness connector cavity 2 and ground.

Is there any voltage present?

Yes

WARNING: **Turn the ignition off, disconnect the 12-volt battery and wait two minutes before proceeding. Failure to follow these instructions may result in possible serious or fatal injury.**

-
- Repair the (R63, R61) Driver Squib 2 circuits for a short to voltage.
- Refer to **STANDARD PROCEDURE** and perform the RESTRAINTS SYSTEM VERIFICATION TEST.

No

WARNING: **Turn the ignition off, disconnect the 12-volt battery and wait two minutes before proceeding. Failure to follow these instructions may result in possible serious or fatal injury.**

WARNING: **If the Occupant Restraint Controller (ORC) is dropped at any time, it must be replaced. Failure to follow these instructions may result in possible serious or fatal injury.**

-
-
- Replace the ORC in accordance with the Service Information.
- Refer to **STANDARD PROCEDURE** and perform the RESTRAINTS SYSTEM VERIFICATION TEST.

B0002-13-DRIVER FRONTAL SQUIB 2 CONTROL - CIRCUIT OPEN

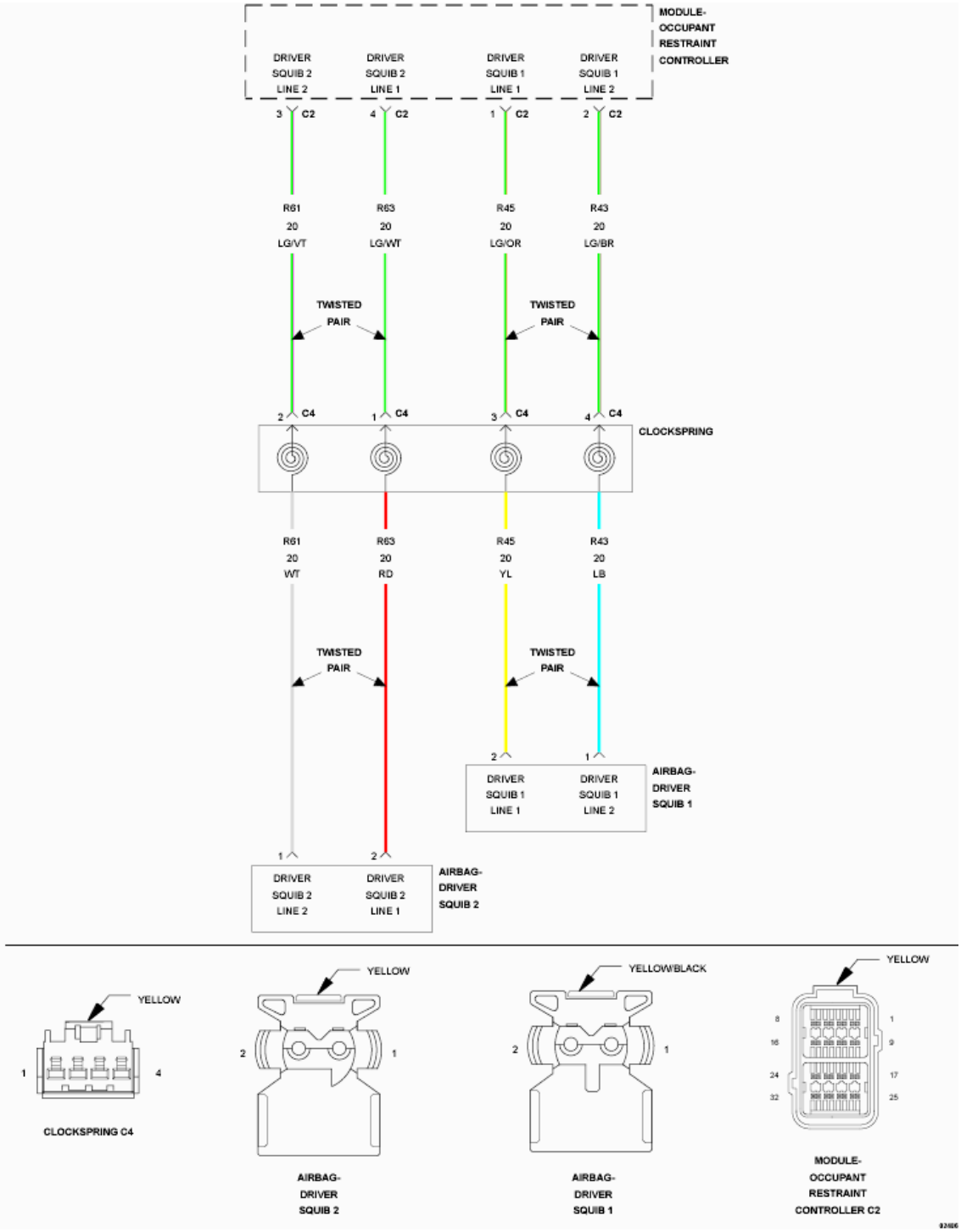

Fig. 25: Squib Control Circuit Wiring Diagram
Courtesy of CHRYSLER GROUP, LLC

For a complete wiring diagram, **refer to appropriate SYSTEM WIRING DIAGRAMS article** .

THEORY OF OPERATION

When powered, the Occupant Restraint Controller (ORC) sends a test current to the squibs to verify the integrity of the squib and wiring. These circuits are maintained in a "floating" configuration at the ORC (connected to neither power nor ground) as protection against inadvertent deployment. Use of the Supplemental Restraints System (SRS) Load Tool Kit (special tool #8443A, SRS Load Tool) in the tests below substitutes a suspect squib with a known good component. The use of the SRS Load Tool Adaptor provides a test point as well as a method for opening the shorting bar connections within the ORC harness connector.

WHEN MONITORED:

The ORC sends out a 40 mA diagnostic current on each squib voltage supply circuit at power up and every 100 ms thereafter while the ignition is on.

SET CONDITION:

This DTC sets when the ORC detects an open or high resistance on the squib circuit for more than 2.5 seconds. This Diagnostic Trouble Code (DTC) transitions from active to stored when the ORC sees a recovery from an open or high resistance condition for greater than 2.5 seconds.

POSSIBLE CAUSES

Possible Causes
(R63) DRIVER SQUIB 2 LINE 1 CIRCUIT OPEN
(R61) DRIVER SQUIB 2 LINE 2 CIRCUIT OPEN
CLOCKSPRING
DRIVER AIRBAG
OCCUPANT RESTRAINT CONTROLLER (ORC)

Always perform the Pre-Diagnostic Troubleshooting procedure before proceeding. Refer to STANDARD PROCEDURE.

DIAGNOSTIC TEST

1. **VERIFY ACTIVE DTC**

   NOTE: Make sure the battery is fully charged.

   1. Turn the ignition on.
   2. With the scan tool, read ORC DTCs.

      Does the scan tool display an active B0002-13-DRIVER FRONTAL SQUIB 2 CONTROL - CIRCUIT OPEN DTC?

      Yes

- Go To 2.

NO

- Refer to **STANDARD PROCEDURE** and perform the RESTRAINTS SYSTEM INTERMITTENT TEST.

2. **CHECK DRIVER AIRBAG SQUIB 2 CIRCUITS FOR OPEN OR HIGH RESISTANCE**

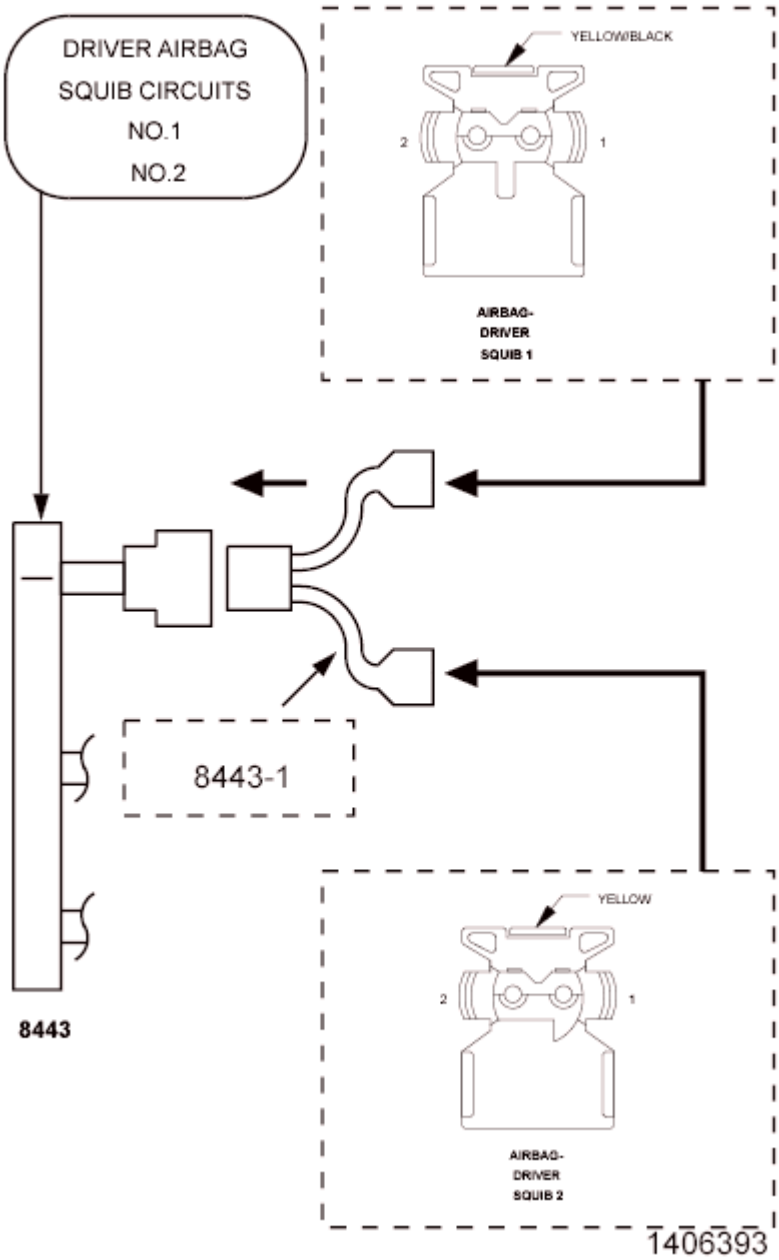

Fig. 26: Driver Airbag Squib Circuits No. 1/No. 2 Connectors
Courtesy of CHRYSLER GROUP, LLC

WARNING: Turn the ignition off, disconnect the 12-volt battery and wait two minutes before proceeding. Failure to follow these instructions may result in possible serious or fatal injury.

1. Disconnect the Driver Airbag Squib harness connectors.

WARNING: Do not place an intact non-deployed airbag face down on a hard surface, the airbag propels into the air if accidentally deployed. Failure to follow these instructions may result in possible serious or fatal injury.

NOTE: Check connectors - Clean and repair as necessary.

2. Connect the SRS Load Tool Kit (special tool #8443A, SRS Load Tool) and the SRS Load Tool Jumper (special tool #8443-1, Jumpers, 2 Pin) to the Driver Airbag Squib harness connectors.

WARNING: Turn the ignition on, then reconnect the 12-volt battery and wait two minutes before proceeding. Failure to follow these instructions may result in possible serious or fatal injury.

3. With the scan tool, read the ORC DTCs.

Does the scan tool display active B0002-13-DRIVER FRONTAL SQUIB 2 CONTROL - CIRCUIT OPEN DTC?

Yes

- Go To 3.

No

WARNING: Turn the ignition off, disconnect the 12-volt battery and wait two minutes before proceeding. Failure to follow these instructions may result in possible serious or fatal injury.

-
- Replace the Driver Airbag in accordance with the Service Information.
- Refer to **STANDARD PROCEDURE** and perform the RESTRAINTS SYSTEM VERIFICATION TEST.

3. **CHECK CLOCKSPRING SQUIB CIRCUITS FOR AN OPEN OR HIGH RESISTANCE**

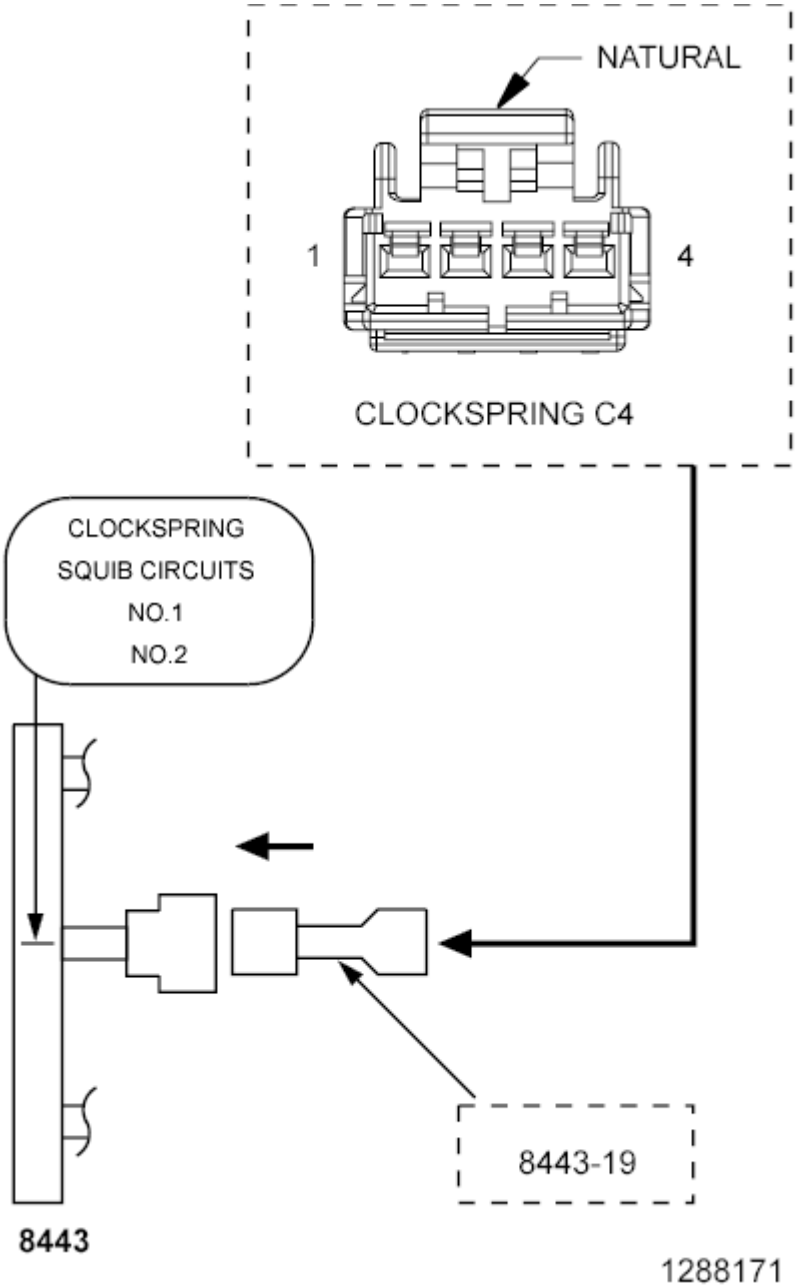

Fig. 27: Checking Clockspring Squib Circuit
Courtesy of CHRYSLER GROUP, LLC

WARNING: **Turn the ignition off, disconnect the 12-volt battery and wait two minutes before proceeding. Failure to follow these instructions may result in possible serious or fatal injury.**

1. Disconnect the SRS Load Tool Kit (special tool #8443A, SRS Load Tool) and the Jumper from the Driver Airbag Squib harness connectors.
2. Disconnect the Clockspring C4 harness connector.

NOTE: Check connectors - Clean and repair as necessary.

3. Connect the SRS Load Tool Kit (special tool #8443A, SRS Load Tool) and the SRS Load Tool Jumper (special tool #8443-19, 4 Pin Jumper) to the Clockspring C4 harness connector.

WARNING: Turn the ignition on, then reconnect the 12-volt battery and wait two minutes before proceeding. Failure to follow these instructions may result in possible serious or fatal injury.

4. With the scan tool, read the ORC DTCs.

   Does the scan tool display active B0002-13-DRIVER FRONTAL SQUIB 2 CONTROL - CIRCUIT OPEN DTC?

   Yes

   - Go To 4.

   No

WARNING: Turn the ignition off, disconnect the 12-volt battery and wait two minutes before proceeding. Failure to follow these instructions may result in possible serious or fatal injury.

-
- Replace the Clockspring in accordance with the Service Information.
- Refer to **STANDARD PROCEDURE** and perform the RESTRAINTS SYSTEM VERIFICATION TEST.

4. **CHECK (R61, R63) DRIVER SQUIB 2 CIRCUITS FOR AN OPEN**

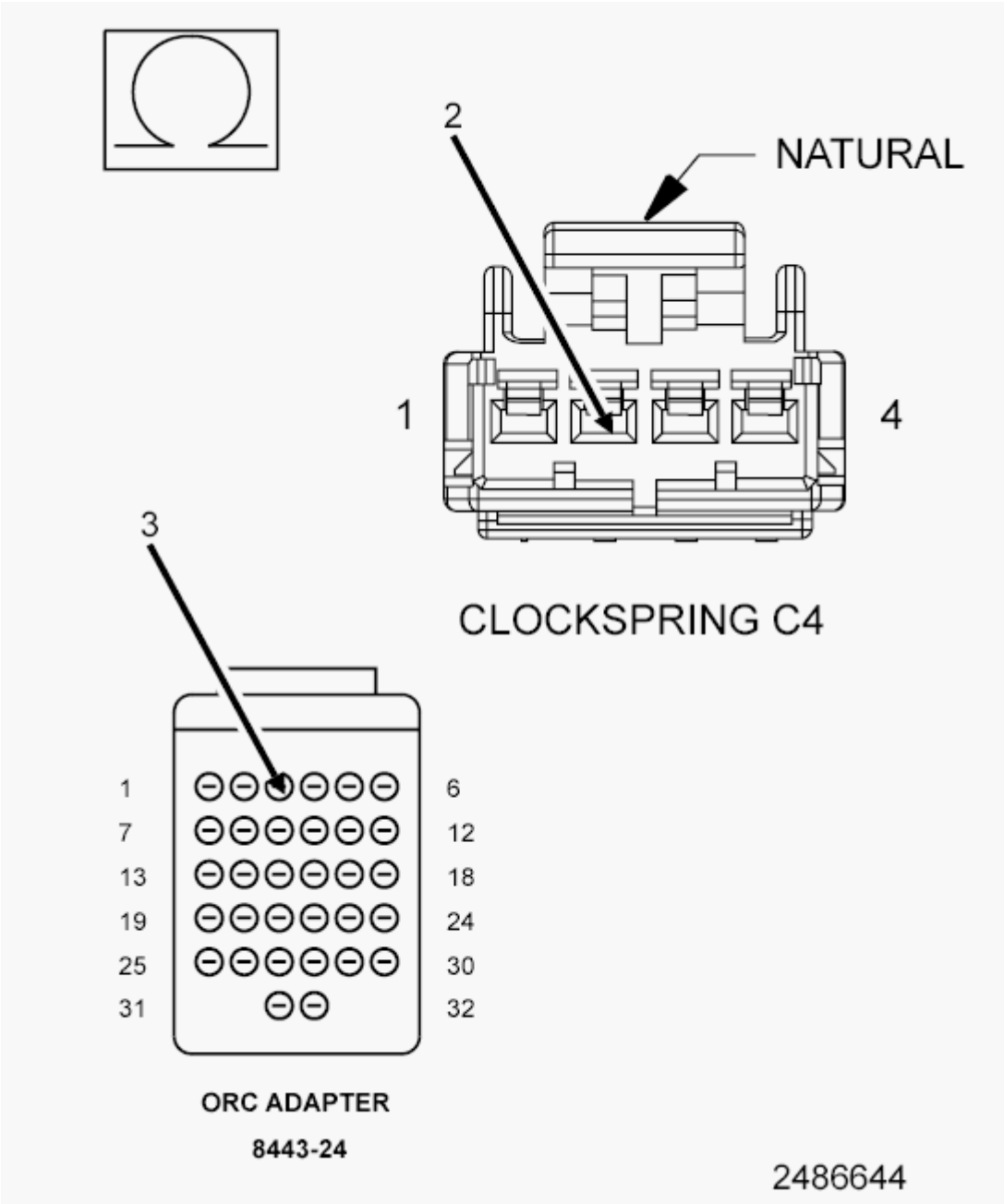

Fig. 28: Checking Driver Squib 2 (Line 2) Circuits For Open
Courtesy of CHRYSLER GROUP, LLC

WARNING: **Turn the ignition off, disconnect the 12-volt battery and wait two minutes before proceeding. Failure to follow these instructions may result in possible serious or fatal injury.**

1. Disconnect the SRS Load Tool Kit (special tool #8443A, SRS Load Tool) and the Jumper from the Clockspring C4 harness connector.
2. Disconnect the ORC harness connectors.

NOTE: Check connectors - Clean and repair as necessary.

3. Connect the SRS Load Tool Adapter (special tool #8443-24, 32-Way Adapter) to the ORC C2 harness connector.

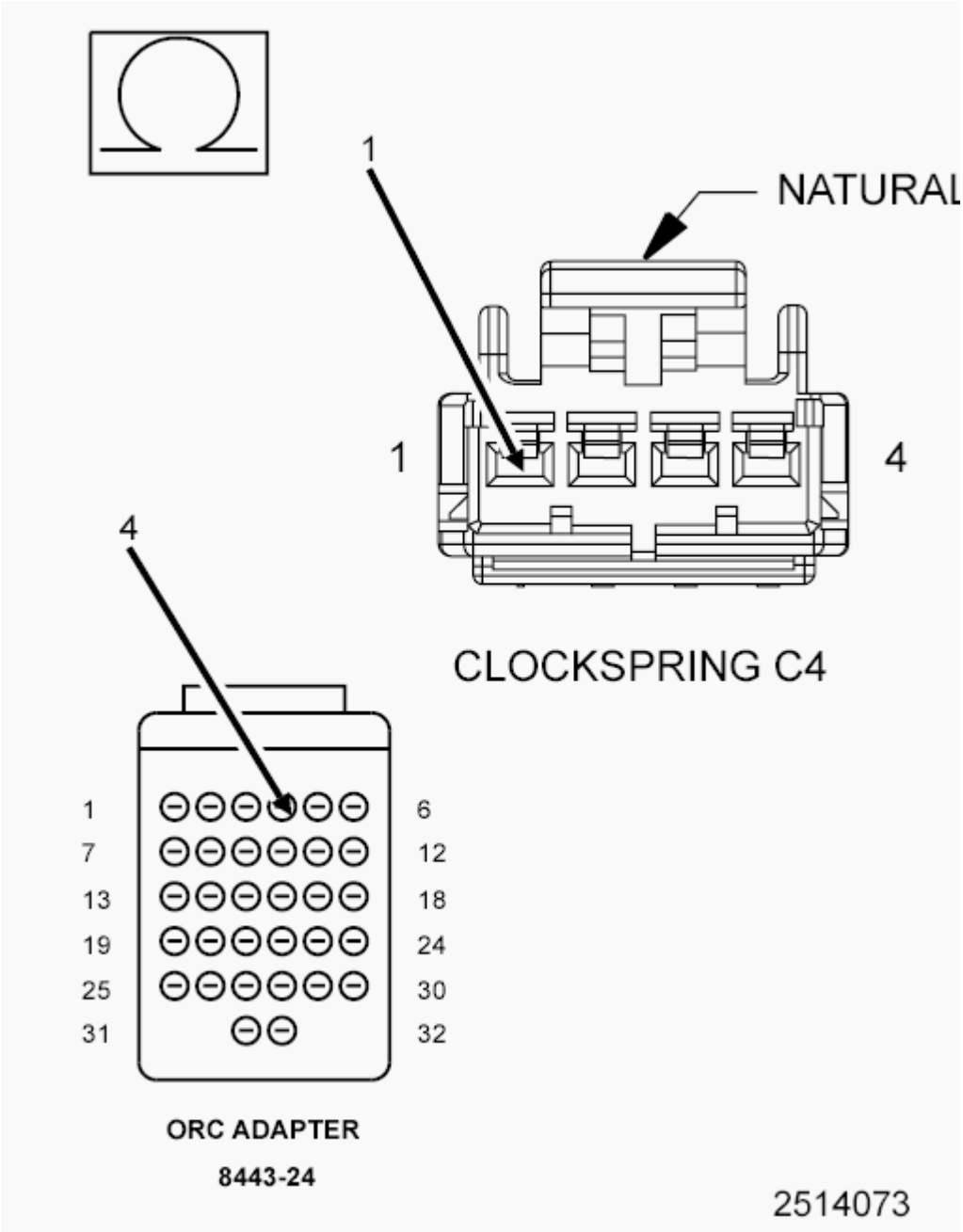

Fig. 29: Checking Driver Squib 2 (Line 1) Circuits For Open
Courtesy of CHRYSLER GROUP, LLC

4. Measure the resistance of the (R63) Driver Squib 2 Line 1 circuit between the Clockspring C4 harness connector cavity 1 and the SRS Load Tool Adaptor (special tool #8443-24, 32-Way Adapter) cavity 4.

5. Measure the resistance of the (R61) Driver Squib 2 Line 2 circuit between the Clockspring C4 harness connector cavity 2 and the SRS Load Tool Adaptor (special tool #8443-24, 32-Way Adapter) cavity 3.

   Is the resistance below 1.0 Ohms on both circuits?

   Yes

   WARNING: If the Occupant Restraint Controller (ORC) is dropped at any time, it must be replaced. Failure to follow these instructions may result in possible serious or fatal injury.

   -
   - Replace the ORC in accordance with the Service Information.
   - Refer to **STANDARD PROCEDURE** and perform the RESTRAINTS SYSTEM VERIFICATION TEST.

   No

   - Repair the open (R63, R61) Driver Squib 2 Line 1 circuits.
   - Refer to **STANDARD PROCEDURE** and perform the RESTRAINTS SYSTEM VERIFICATION TEST.

B0002-2B-DRIVER FRONTAL SQUIB 2 CONTROL - WIRES SHORTED TOGETHER

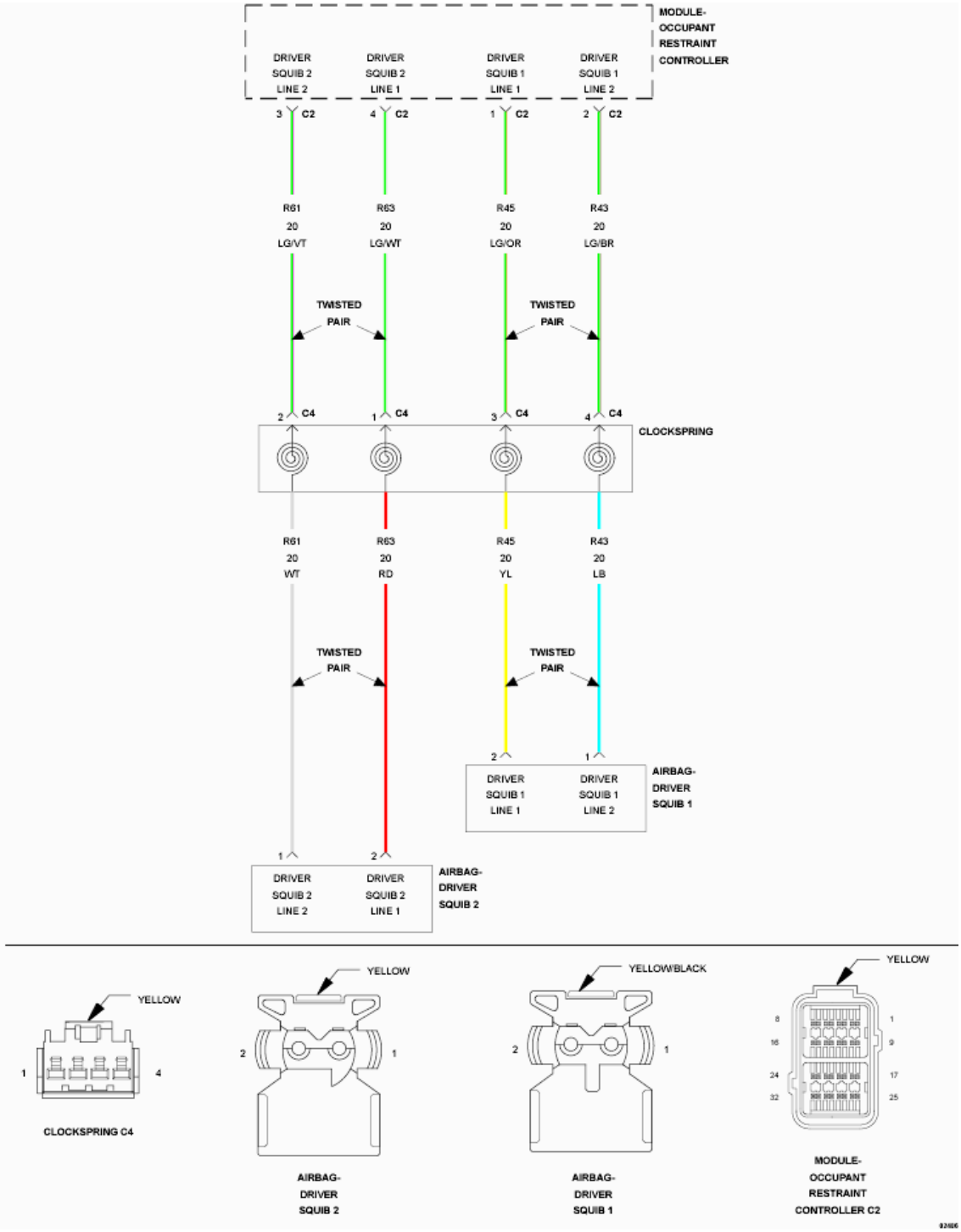

Fig. 30: Squib Control Circuit Wiring Diagram
Courtesy of CHRYSLER GROUP, LLC

For a complete wiring diagram, **refer to appropriate SYSTEM WIRING DIAGRAMS article** .

THEORY OF OPERATION

When powered, the Occupant Restraint Controller (ORC) sends a test current to the squibs to verify the integrity of the squib and wiring. These circuits are maintained in a "floating" configuration at the ORC (connected to neither power nor ground) as protection against inadvertent deployment. Use of the Supplemental Restraints System (SRS) Load Tool Kit (special tool #8443A, SRS Load Tool) in the tests below substitutes a suspect squib with a known good component. The use of the SRS Load Tool Adaptor provides a test point as well as a method for opening the shorting bar connections within the ORC harness connector.

WHEN MONITORED:

The ORC sends out a 40 mA diagnostic current on each squib voltage supply circuit at power up and every 100 ms thereafter while the ignition is on.

SET CONDITION:

This Diagnostic Trouble Code (DTC) sets when the ORC detects both circuits of the same squib are shorted together for more than 2.5 seconds. This DTC transitions from active to stored when the ORC sees a recovery from a shorted together condition for greater than 2.5 seconds.

POSSIBLE CAUSES

Possible Causes
(R63) DRIVER SQUIB 2 LINE 1 CIRCUIT SHORTED TO THE (R61) DRIVER SQUIB 2 LINE 2 CIRCUIT
CLOCKSPRING
DRIVER AIRBAG
OCCUPANT RESTRAINT CONTROLLER (ORC)

Always perform the Pre-Diagnostic Troubleshooting procedure before proceeding. Refer to STANDARD PROCEDURE.

DIAGNOSTIC TEST

1. **VERIFY ACTIVE DTC**

   NOTE: Make sure the battery is fully charged.

   1. Turn the ignition on.
   2. With the scan tool, read the ORC DTCs.

      Does the scan tool display active B0002-2B-DRIVER FRONTAL SQUIB 2 CONTROL - WIRES SHORTED TOGETHER DTC?

      Yes

      - Go To 2.

No

- Refer to **STANDARD PROCEDURE** and perform the RESTRAINTS SYSTEM INTERMITTENT TEST.

2. **CHECK DRIVER SQUIB 2 CIRCUITS FOR SHORT TOGETHER**

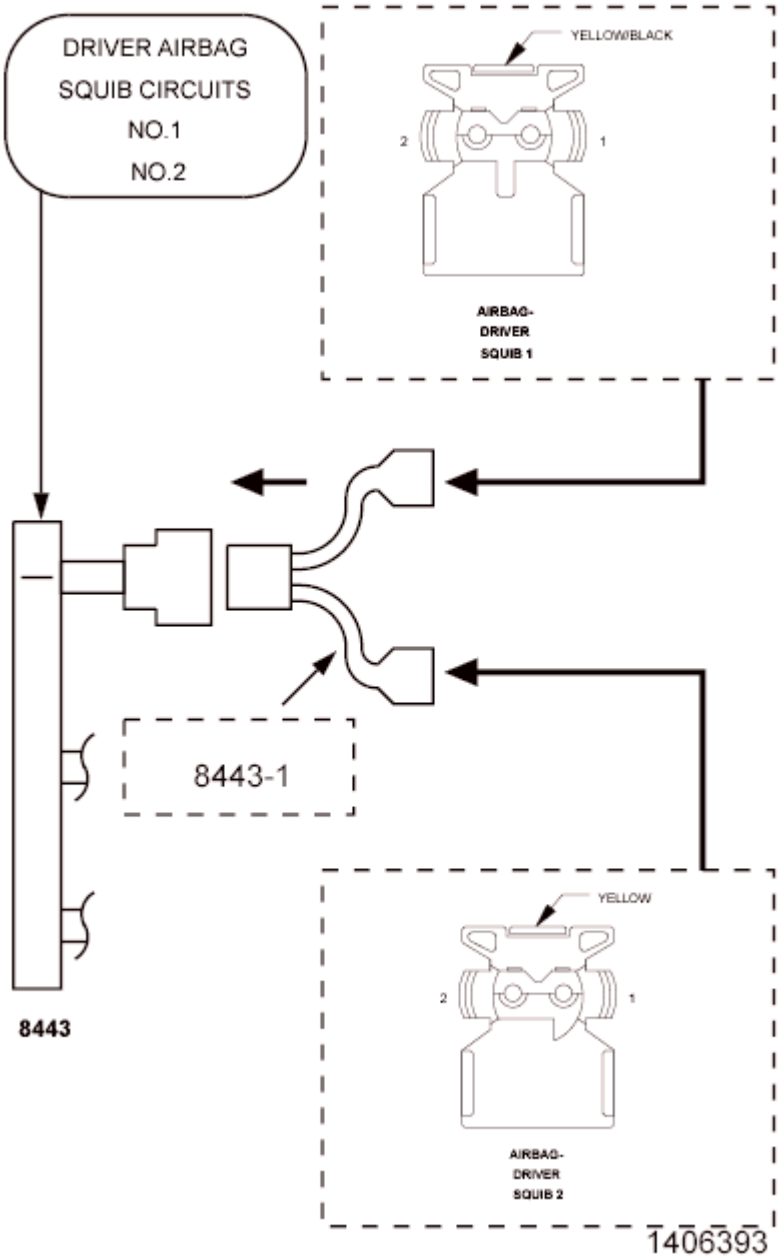

Fig. 31: Driver Airbag Squib Circuits No. 1/No. 2 Connectors
Courtesy of CHRYSLER GROUP, LLC

WARNING: **Turn the ignition off, disconnect the 12-volt battery and wait two minutes before proceeding. Failure to follow these instructions may result in possible serious or fatal injury.**

WARNING: Do not place an intact non-deployed airbag face down on a hard surface, the airbag propels into the air if accidentally deployed. Failure to follow these instructions may result in possible serious or fatal injury.

1. Disconnect the Driver Airbag Squib harness connectors.

   NOTE: Check connectors - Clean and repair as necessary.

2. Connect the SRS Load Tool Kit (special tool #8443A, SRS Load Tool) and the SRS Load Tool Jumper (special tool #8443-1, Jumpers, 2 Pin) to the Driver Airbag Squib harness connectors.

   WARNING: Turn the ignition on, then reconnect the 12-volt battery and wait two minutes before proceeding. Failure to follow these instructions may result in possible serious or fatal injury.

3. With the scan tool, read the ORC DTCs.

   Does the scan tool display active B0002-2B-DRIVER FRONTAL SQUIB 2 CONTROL - WIRES SHORTED TOGETHER DTC?

   Yes

   - Go To 3.

   No

   WARNING: Turn the ignition off, disconnect the 12-volt battery and wait two minutes before proceeding. Failure to follow these instructions may result in possible serious or fatal injury.

   -
   - Replace the Driver Airbag in accordance with the Service Information.
   - Refer to **STANDARD PROCEDURE** and perform the RESTRAINTS SYSTEM VERIFICATION TEST.

3. **CHECK THE CLOCKSPRING SQUIB CIRCUITS FOR A SHORT TOGETHER**

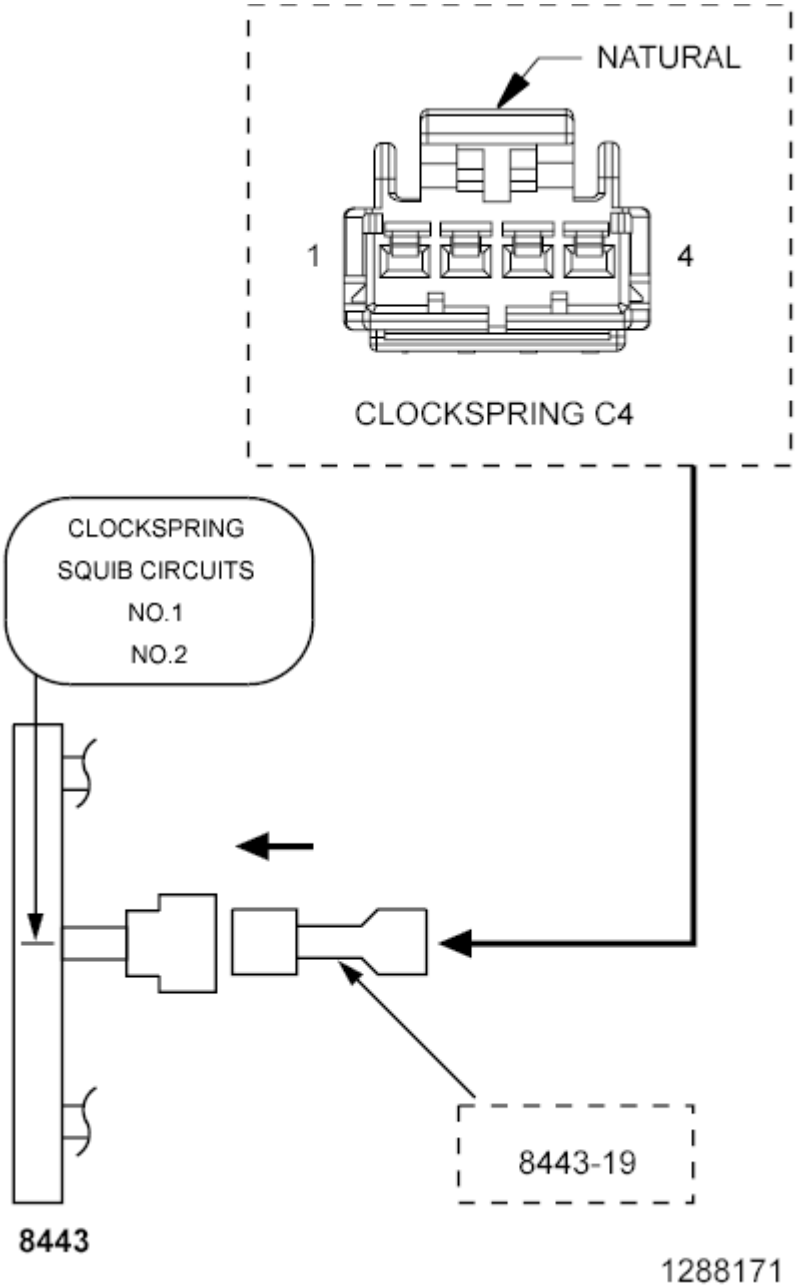

Fig. 32: Checking Clockspring Squib Circuit
Courtesy of CHRYSLER GROUP, LLC

WARNING: **Turn the ignition off, disconnect the 12-volt battery and wait two minutes before proceeding. Failure to follow these instructions may result in possible serious or fatal injury.**

1. Disconnect the SRS Load Tool Kit (special tool #8443A, SRS Load Tool) and Jumper from the Driver Airbag Squib harness connectors.
2. Disconnect the Clockspring C4 harness connector.

NOTE: **Check connectors - Clean and repair as necessary.**

3. Connect the SRS Load Tool Kit (special tool #8443A, SRS Load Tool) and the SRS Load Tool Jumper (special tool #8443-19, 4 Pin Jumper) to the Clockspring C4 harness connector.

   WARNING: **Turn the ignition on, then reconnect the 12-volt battery and wait two minutes before proceeding. Failure to follow these instructions may result in possible serious or fatal injury.**

4. With the scan tool, read the ORC DTCs.

   Does the scan tool display active B0002-2B-DRIVER FRONTAL SQUIB 2 CONTROL - WIRES SHORTED TOGETHER DTC?

   Yes

   - Go To 4.

   No

   - Replace the Clockspring in accordance with the Service Information.
   - Refer to **STANDARD PROCEDURE** and perform the RESTRAINTS SYSTEM VERIFICATION TEST.

4. **CHECK (R63) DRIVER SQUIB 2 LINE 1 CIRCUIT FOR A SHORT TO (R61) DRIVER SQUIB 2 LINE 2 CIRCUIT**

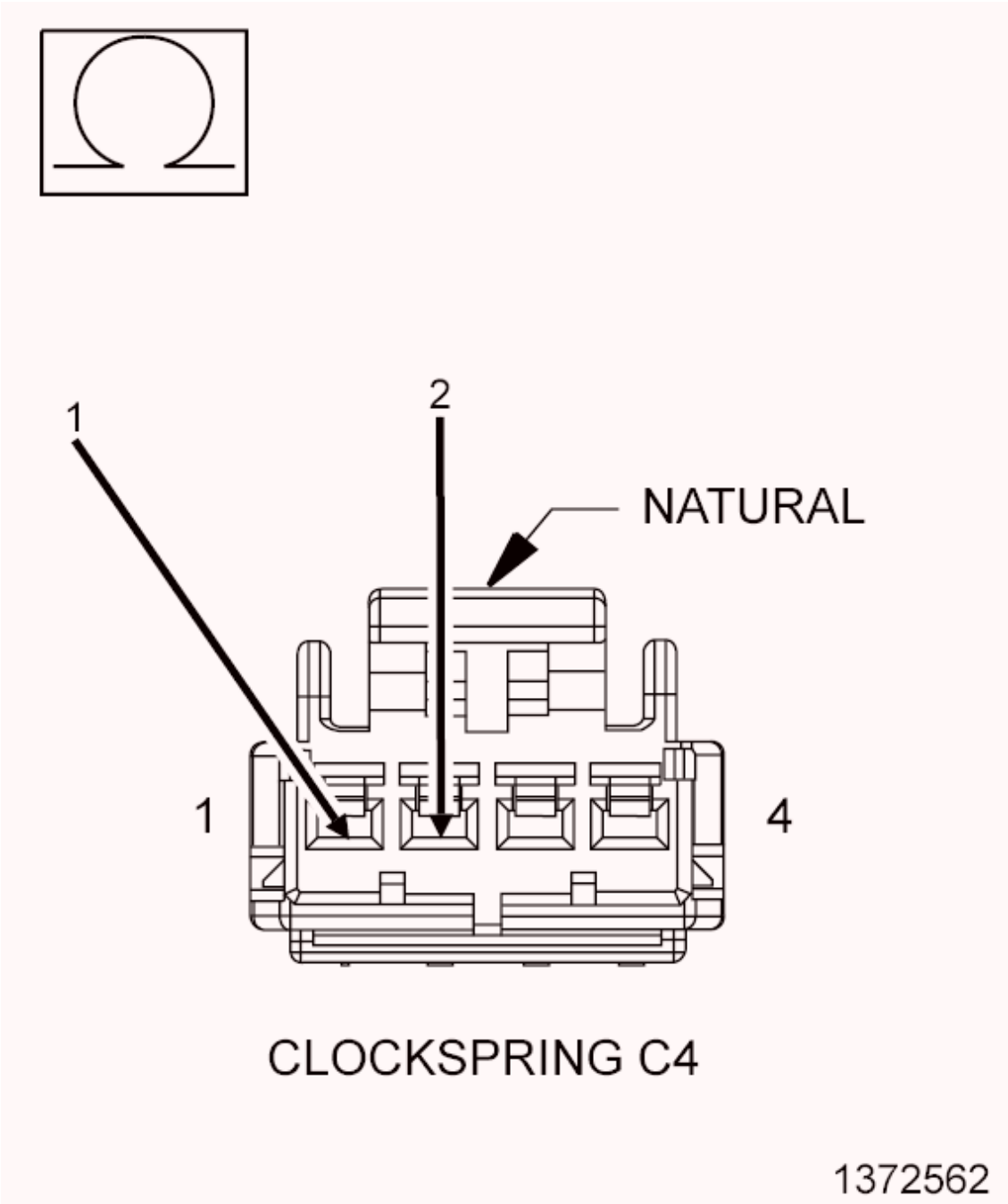

Fig. 33: Checking Driver Squib 2 Line 1 Circuit
Courtesy of CHRYSLER GROUP, LLC

WARNING: **Turn the ignition off, disconnect the 12-volt battery and wait two minutes before proceeding. Failure to follow these instructions may result in possible serious or fatal injury.**

1. Disconnect the SRS Load Tool Kit (special tool #8443A, SRS Load Tool) and Jumper from the Clockspring C4 harness connector.

2. Disconnect the ORC harness connectors.

NOTE: Check connectors - Clean and repair as necessary.

3. Connect the SRS Load Tool Adapter (special tool #8443-24, 32-Way Adapter) to the ORC C2 harness connector.
4. Measure the resistance between the (R63) Driver Squib 2 Line 1 circuit cavity 1 and the (R61) Driver Squib 2 Line 2 circuit cavity 2 at the Clockspring C4 harness connector.

   Is the resistance below 5.0 Ohms?

   Yes

   - Repair the (R63) Driver Squib 2 Line 1 circuit for a short to the (R61) Driver Squib 2 Line 2 circuit.
   - Refer to **STANDARD PROCEDURE** and perform the RESTRAINTS SYSTEM VERIFICATION TEST.

   No

   WARNING: If the Occupant Restraint Controller (ORC) is dropped at any time, it must be replaced. Failure to follow these instructions may result in possible serious or fatal injury.

   -
   - Replace the ORC in accordance with the Service Information.
   - Refer to **STANDARD PROCEDURE** and perform the RESTRAINTS SYSTEM VERIFICATION TEST.

B0010-11-PASSENGER FRONTAL SQUIB 1 CONTROL - CIRCUIT SHORT TO GROUND

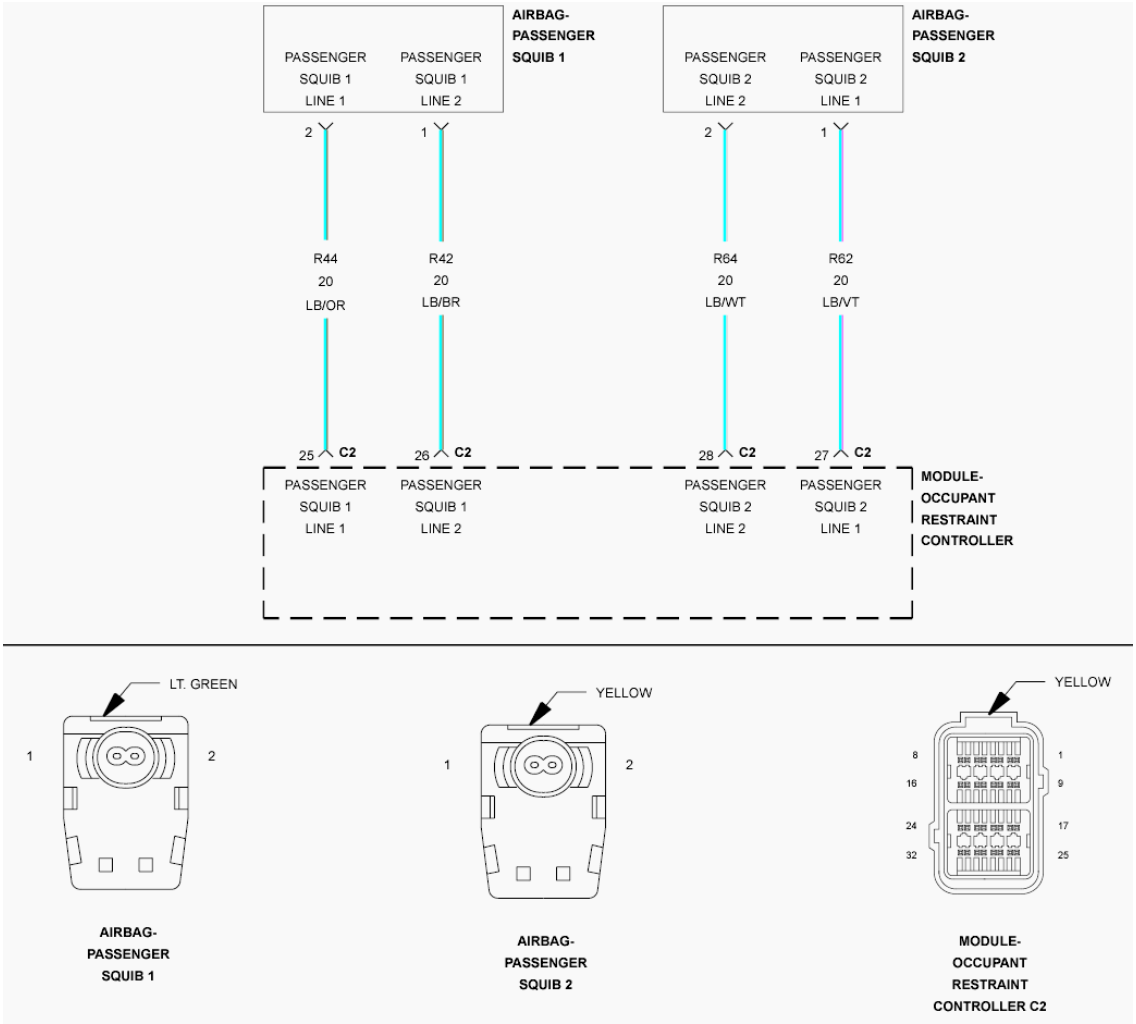

Fig. 34: Passenger Squib Control Circuit Wiring Diagram
Courtesy of CHRYSLER GROUP, LLC

For a complete wiring diagram, **refer to appropriate SYSTEM WIRING DIAGRAMS article** .

THEORY OF OPERATION

When powered, the Occupant Restraint Controller (ORC) sends a test current to the squibs to verify the integrity of the squib and wiring. These circuits are maintained in a "floating" configuration at the ORC (connected to neither power nor ground) as protection against inadvertent deployment. Use of the Supplemental Restraints System (SRS) Load Tool Kit (special tool #8443A, SRS Load Tool) in the tests below substitutes a suspect squib with a known good component. The use of the SRS Load Tool Adapter provides a test point as well as a method for opening the shorting bar connections within the ORC harness connector.

WHEN MONITORED:

The ORC sends out a 40 mA diagnostic current on each squib voltage supply circuit at power up and every 100 ms thereafter while the ignition is on.

SET CONDITION:

This Diagnostic Trouble Code (DTC) sets when the ORC detects a short to ground on the squib circuit for more than 2.5 seconds. This DTC transitions from active to stored when the ORC sees a recovery from a short to ground condition for greater than 2.5 seconds.

POSSIBLE CAUSES

Possible Causes
(R42) PASSENGER SQUIB 1 LINE 2 CIRCUIT SHORTED TO GROUND
(R44) PASSENGER SQUIB 1 LINE 1 CIRCUIT SHORTED TO GROUND
PASSENGER AIRBAG
OCCUPANT RESTRAINT CONTROLLER (ORC)

Always perform the Pre-Diagnostic Troubleshooting procedure before proceeding. Refer to STANDARD PROCEDURE.

DIAGNOSTIC TEST

1. **VERIFY ACTIVE DTC**

   NOTE: Make sure the battery is fully charged.

   1. Turn the ignition on.
   2. With the scan tool, read ORC DTCs.

      Does the scan tool display active B0010-11-PASSENGER FRONTAL SQUIB 1 CONTROL - CIRCUIT SHORT TO GROUND DTC?

      Yes

      - Go To 2.

      No

      - Refer to **STANDARD PROCEDURE** and perform the RESTRAINTS SYSTEM INTERMITTENT TEST.

2. **CHECK PASSENGER AIRBAG SQUIB FOR SHORT TO GROUND**

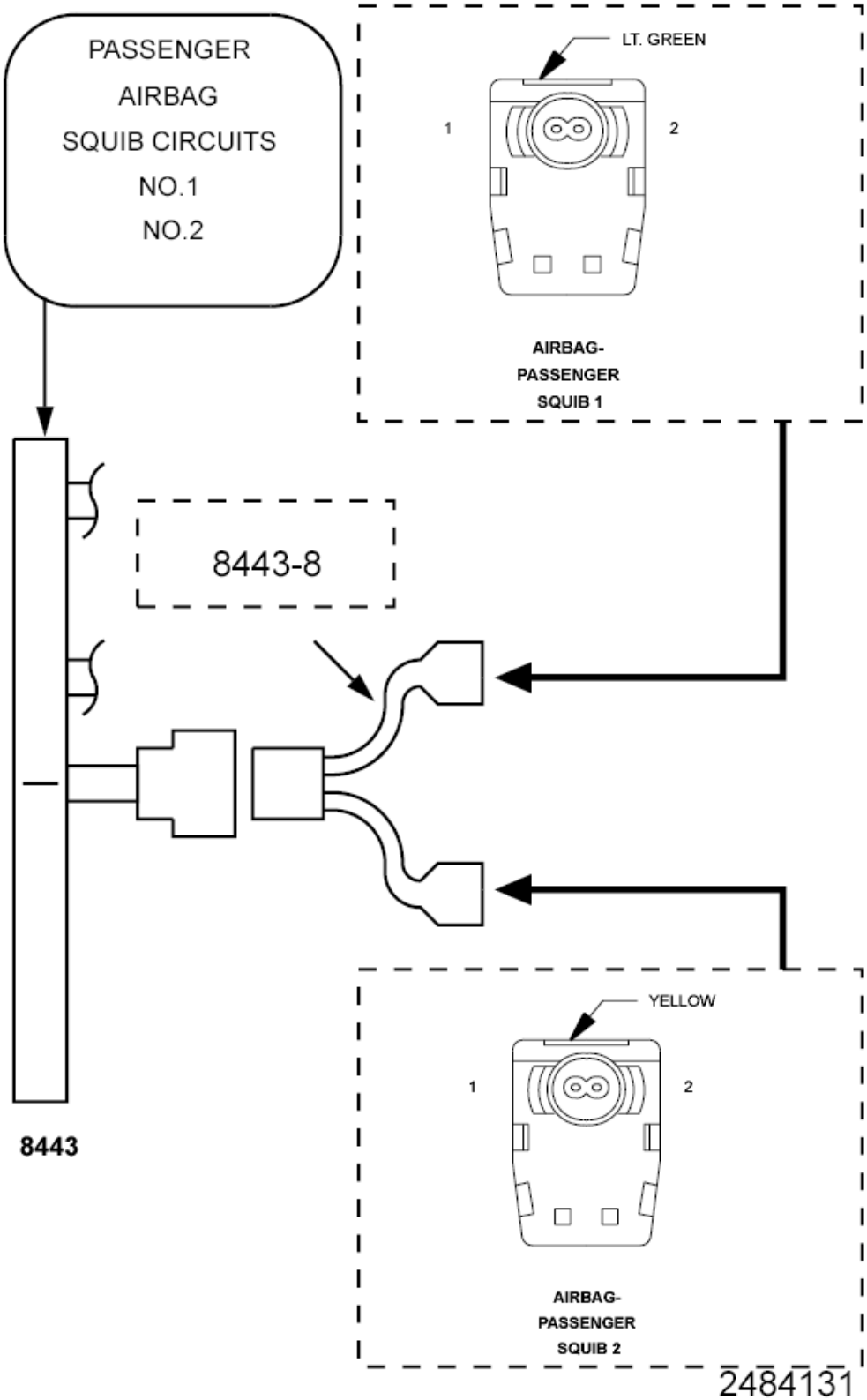

Fig. 35: Checking Passenger Airbag Squib For Short To Ground
Courtesy of CHRYSLER GROUP, LLC

WARNING: Turn the ignition off, disconnect the 12-volt battery and wait two minutes before proceeding. Failure to follow these instructions may result in possible serious or fatal injury.

1. Disconnect the Passenger Airbag Squib harness connectors.

WARNING: Do not place an intact non-deployed airbag face down on a hard surface, the airbag propels into the air if accidentally deployed. Failure to follow these instructions may result in possible serious or fatal injury.

NOTE: Check connectors - Clean and repair as necessary.

2. Connect the SRS Load Tool Kit (special tool #8443A, SRS Load Tool) and SRS Load Tool Jumper (special tool #8443-8, Jumper, SRS Load) to the Passenger Airbag Squib harness connectors.

WARNING: Turn the ignition on, then reconnect the 12-volt battery and wait two minutes before proceeding. Failure to follow these instructions may result in possible serious or fatal injury.

3. With the scan tool, read the ORC DTCs.

Does the scan tool display active B0010-11-PASSENGER FRONTAL SQUIB 1 CONTROL - CIRCUIT SHORT TO GROUND DTC?

Yes

- Go To 3.

No

WARNING: Turn the ignition off, disconnect the 12-volt battery and wait two minutes before proceeding. Failure to follow these instructions may result in possible serious or fatal injury.

-
- Replace the Passenger Airbag in accordance with the Service Information.
- Refer to **STANDARD PROCEDURE** and perform the RESTRAINTS SYSTEM VERIFICATION TEST.

3. **CHECK (R42, R44) PASSENGER SQUIB 1 CIRCUITS FOR A SHORT TO GROUND**

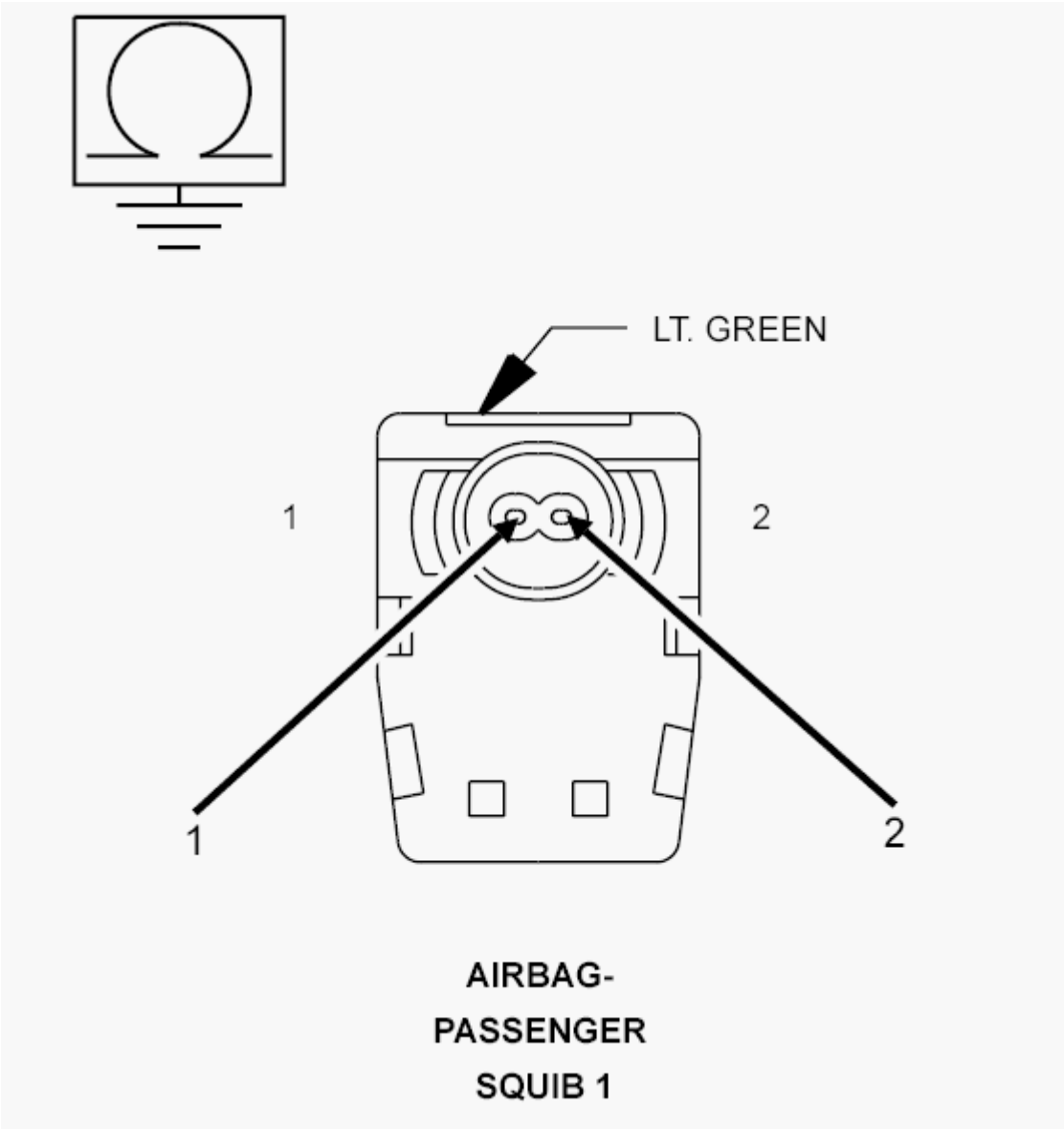

Fig. 36: Checking Passenger Squib 1 Circuits For A Short To Ground
Courtesy of CHRYSLER GROUP, LLC

WARNING: **Turn the ignition off, disconnect the 12-volt battery and wait two minutes before proceeding. Failure to follow these instructions may result in possible serious or fatal injury.**

1. Disconnect the SRS Load Tool Kit (special tool #8443A, SRS Load Tool) and Jumper from the Passenger Airbag Squib harness connectors.
2. Disconnect the ORC harness connectors.

NOTE: Check connectors - Clean and repair as necessary.

3. Connect the SRS Load Tool Adapter (special tool #8443-24, 32-Way Adapter) to the ORC C2

harness connector.

4. Measure the resistance of the (R42) Passenger Squib 1 Line 2 circuit between the Passenger Airbag Squib 1 harness connector cavity 1 and ground.
5. Measure the resistance of the (R44) Passenger Squib 1 Line 1 circuit between and the Passenger Airbag Squib 1 harness connector cavity 2 and ground.

Is the resistance below 10K Ohms for either measurement?

Yes

- Repair the (R42, R44) Passenger Squib 1 circuits for a short to ground.
- Refer to **STANDARD PROCEDURE** and perform the RESTRAINTS SYSTEM VERIFICATION TEST.

No

WARNING: **If the Occupant Restraint Controller (ORC) is dropped at any time, it must be replaced. Failure to follow these instructions may result in possible serious or fatal injury.**

-
- Replace the ORC in accordance with the Service Information.
- Refer to **STANDARD PROCEDURE** and perform the RESTRAINTS SYSTEM VERIFICATION TEST.

B0010-12-PASSENGER FRONTAL SQUIB 1 CONTROL - CIRCUIT SHORT TO BATTERY

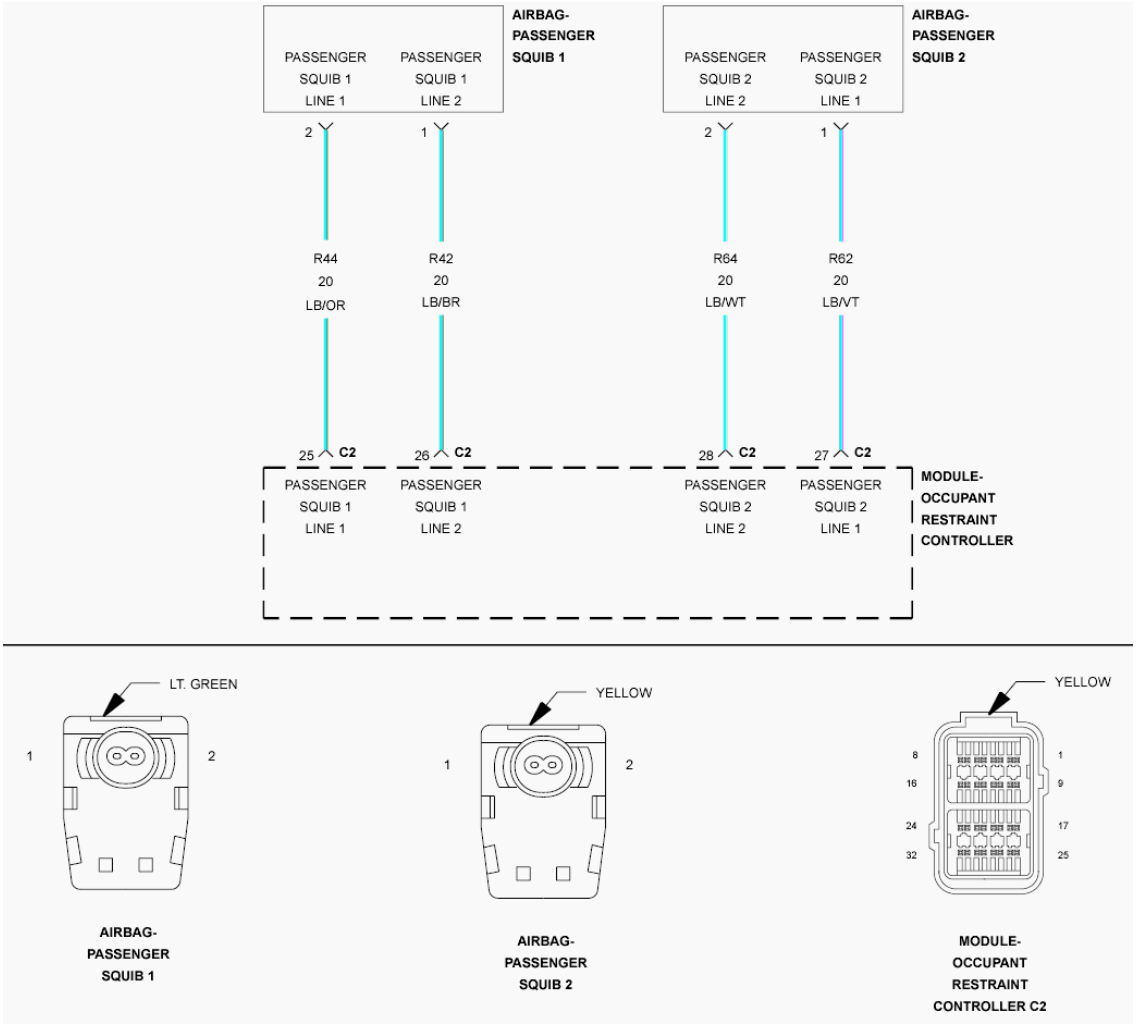

Fig. 37: Passenger Squib Control Circuit Wiring Diagram
Courtesy of CHRYSLER GROUP, LLC

For a complete wiring diagram, **refer to appropriate SYSTEM WIRING DIAGRAMS article** .

THEORY OF OPERATION

When powered, the Occupant Restraint Controller (ORC) sends a test current to the squibs to verify the integrity of the squib and wiring. These circuits are maintained in a "floating" configuration at the ORC (connected to neither power or ground) as protection against inadvertent deployment. Use of the Supplemental Restraints System (SRS) Load Tool kit (special tool #8443A, SRS Load Tool) in the tests below substitutes a suspect squib with a known good component. The use of the SRS Load Tool Adapter provides a test point as well as a method for opening the shorting bar connections within the ORC harness connector.

WHEN MONITORED:

The ORC sends out a 40 mA diagnostic current on each squib voltage supply circuit at power up and every 100 ms thereafter while the ignition is on.

SET CONDITION:

This Diagnostic Trouble Code (DTC) sets when the ORC detects a short to voltage on the squib circuit for more than 2.5 seconds. This DTC transitions from active to stored when the ORC sees a recovery from a short to voltage for greater than 2.5 seconds.

POSSIBLE CAUSES

Possible Causes
(R42) PASSENGER SQUIB 1 LINE 2 CIRCUIT SHORTED TO VOLTAGE
(R44) PASSENGER SQUIB 1 LINE 1 CIRCUIT SHORTED TO VOLTAGE
PASSENGER AIRBAG
OCCUPANT RESTRAINT CONTROLLER (ORC)

Always perform the Pre-Diagnostic Troubleshooting procedure before proceeding. Refer to STANDARD PROCEDURE.

DIAGNOSTIC TEST

1. **VERIFY ACTIVE DTC**

   NOTE: Make sure the battery is fully charged.

   1. Turn the ignition on.
   2. With the scan tool, read ORC DTCs.

      Does the scan tool display active B0010-12-PASSENGER FRONTAL SQUIB 1 CONTROL - CIRCUIT SHORT TO BATTERY DTC?

      Yes

      - Go To 2.

      No

      - Refer to **STANDARD PROCEDURE** and perform the RESTRAINTS SYSTEM INTERMITTENT TEST.

2. **CHECK PASSENGER AIRBAG SQUIB CIRCUITS FOR SHORT TO VOLTAGE**

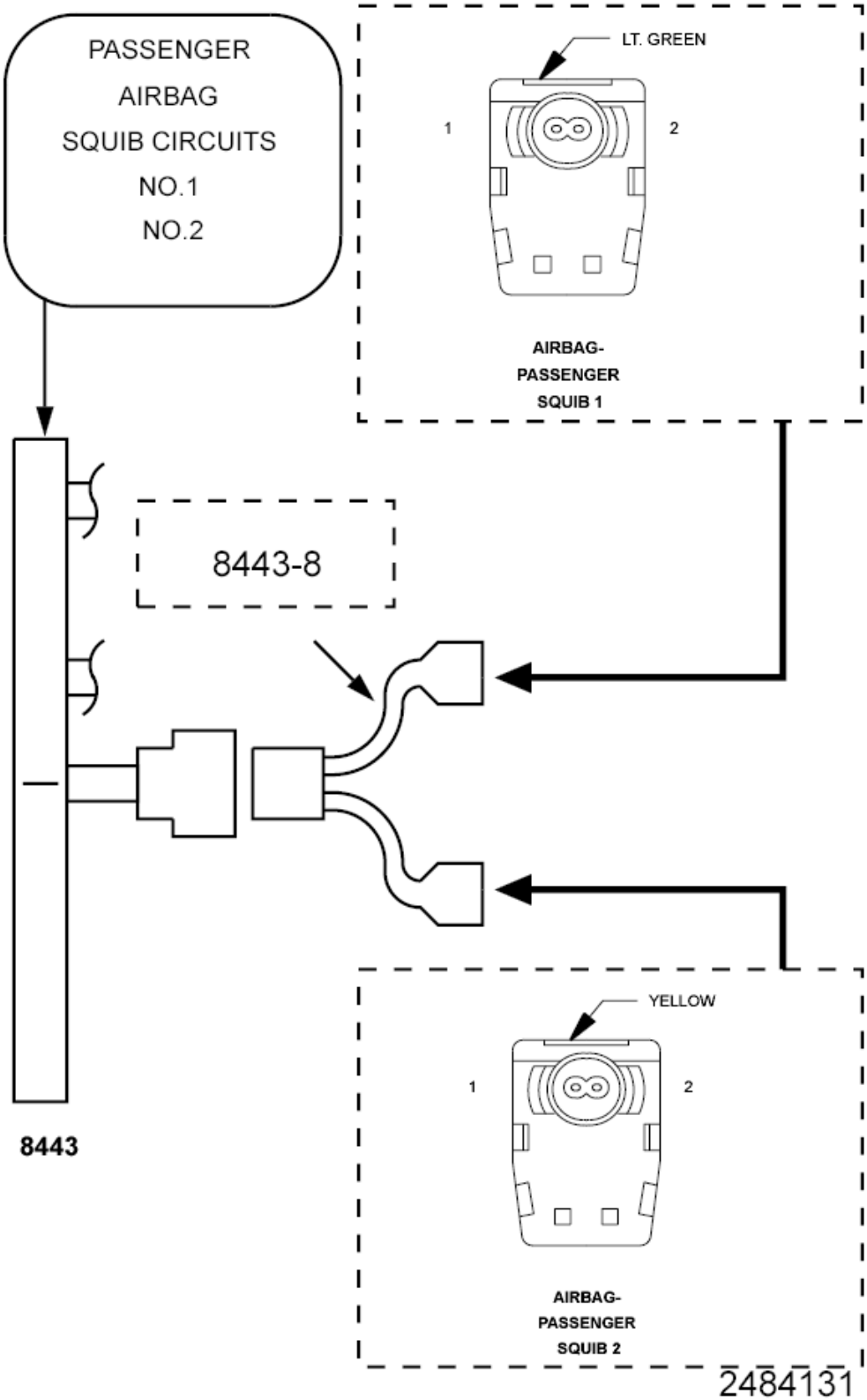

Fig. 38: Checking Passenger Airbag Squib For Short To Voltage
Courtesy of CHRYSLER GROUP, LLC

WARNING: Turn the ignition off, disconnect the 12-volt battery and wait two minutes before proceeding. Failure to follow these instructions may result in possible serious or fatal injury.

1. Disconnect the Passenger Airbag Squib harness connectors.

WARNING: Do not place an intact non-deployed airbag face down on a hard surface, the airbag propels into the air if accidentally deployed. Failure to follow these instructions may result in possible serious or fatal injury.

NOTE: Check connectors - Clean and repair as necessary.

2. Connect the SRS Load Tool Kit (special tool #8443-24, 32-Way Adapter) and SRS Load Tool Jumper (special tool #8443-8, Jumper, SRS Load) to the Passenger Airbag Squib harness connectors.

WARNING: Turn the ignition on, then reconnect the 12-volt battery and wait two minutes before proceeding. Failure to follow these instructions may result in possible serious or fatal injury.

3. With the scan tool, read the ORC DTCs.

Does the scan tool display active B0010-12-PASSENGER FRONTAL SQUIB 1 CONTROL - CIRCUIT SHORT TO BATTERY DTC?

Yes

- Go To 3.

No

WARNING: Turn the ignition off, disconnect the 12-volt battery and wait two minutes before proceeding. Failure to follow these instructions may result in possible serious or fatal injury.

-
- Replace the Passenger Airbag in accordance with the Service Information.
- Refer to **STANDARD PROCEDURE** and perform the RESTRAINTS SYSTEM VERIFICATION TEST.

3. **CHECK (R42, R44) PASSENGER SQUIB 1 CIRCUITS FOR A SHORT TO VOLTAGE**

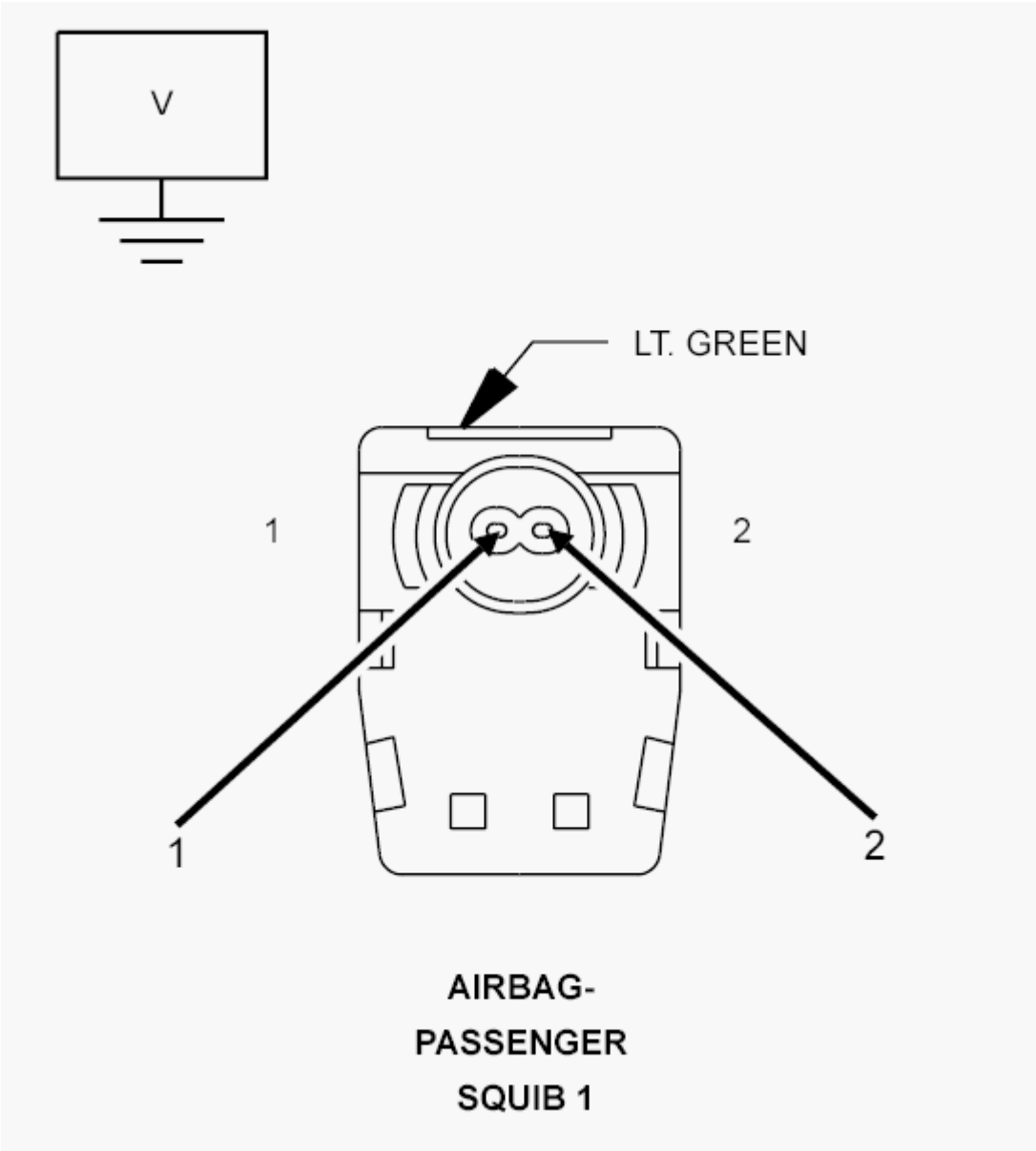

Fig. 39: Checking Passenger Squib 1 Circuits For A Short To Voltage
Courtesy of CHRYSLER GROUP, LLC

WARNING: **Turn the ignition off, disconnect the 12-volt battery and wait two minutes before proceeding. Failure to follow these instructions may result in possible serious or fatal injury.**

1. Disconnect the SRS Load Tool Kit (special tool #8443A, SRS Load Tool) and Jumper from the Passenger Airbag Squib harness connectors.
2. Disconnect the ORC harness connectors.

NOTE: **Check connectors - Clean and repair as necessary.**

3. Connect the SRS Load Tool Adapter (special tool #8443-24, 32-Way Adapter) to the ORC C2 harness connector.

WARNING: Turn the ignition on, then reconnect the 12-volt battery and wait two minutes before proceeding. Failure to follow these instructions may result in possible serious or fatal injury.

4. Measure the voltage of the (R42) Passenger Squib 1 Line 2 circuit between the Passenger Airbag Squib 1 harness connector cavity 1 and ground.
5. Measure the voltage of the (R44) Passenger Squib 1 Line 1 circuit between the Passenger Airbag Squib 1 harness connector cavity 2 and ground.

Is there any voltage present for either measurement?

Yes

WARNING: Turn the ignition off, disconnect the 12-volt battery and wait two minutes before proceeding. Failure to follow these instructions may result in possible serious or fatal injury.

-
- Repair the (R42, R44) Passenger Squib 1 circuits for a short to voltage.
- Refer to **STANDARD PROCEDURE** and perform the RESTRAINTS SYSTEM VERIFICATION TEST.

No

WARNING: Turn the ignition off, disconnect the 12-volt battery and wait two minutes before proceeding. Failure to follow these instructions may result in possible serious or fatal injury.

WARNING: If the Occupant Restraint Controller (ORC) is dropped at any time, it must be replaced. Failure to follow these instructions may result in possible serious or fatal injury.

-
-
- Replace the ORC in accordance with the Service Information.
- Refer to **STANDARD PROCEDURE** and perform the RESTRAINTS SYSTEM VERIFICATION TEST.

B0010-13-PASSENGER FRONTAL SQUIB 1 CONTROL - CIRCUIT OPEN

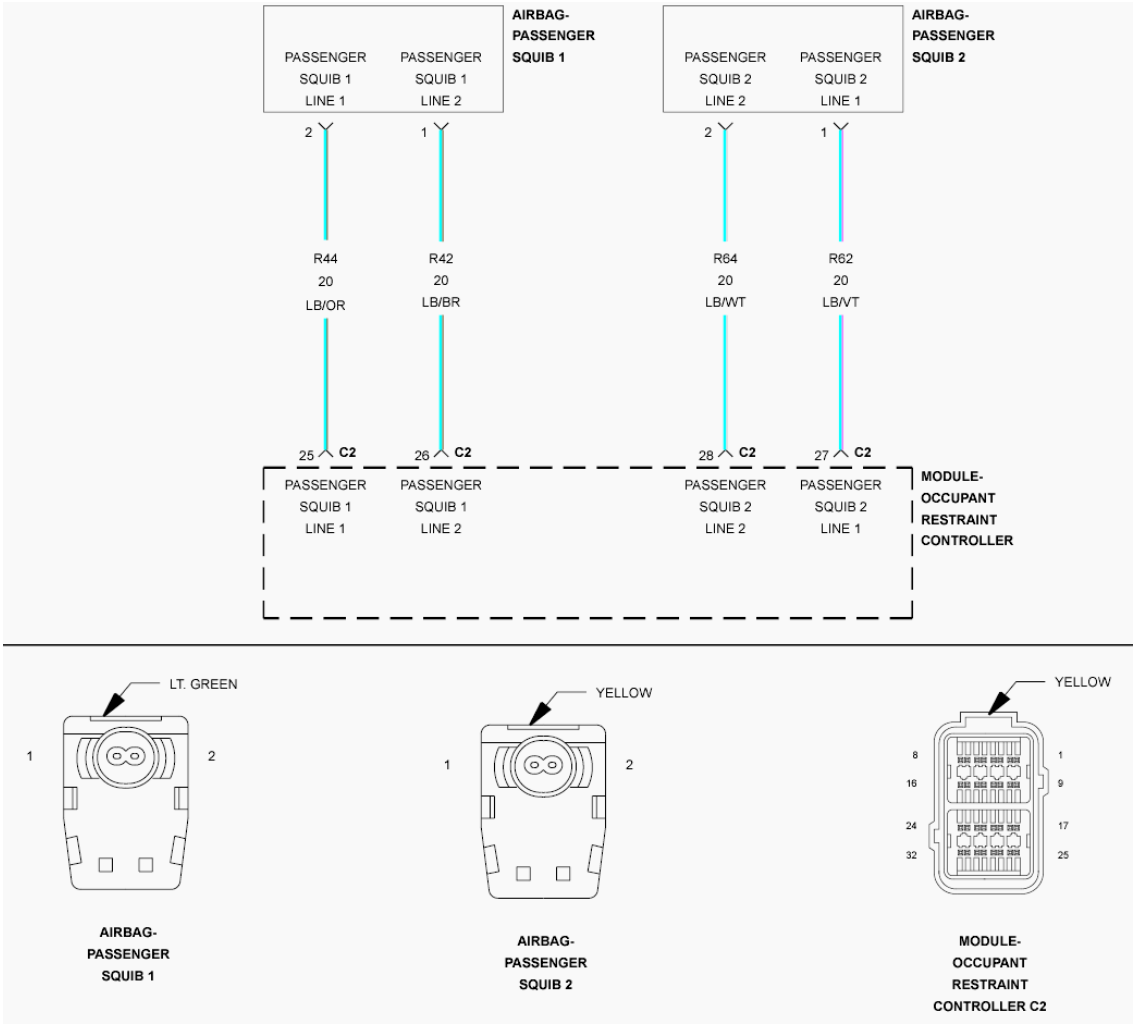

Fig. 40: Passenger Squib Control Circuit Wiring Diagram
Courtesy of CHRYSLER GROUP, LLC

For a complete wiring diagram, **refer to appropriate SYSTEM WIRING DIAGRAMS article** .

THEORY OF OPERATION

When powered, the Occupant Restraint Controller (ORC) sends a test current to the squibs to verify the integrity of the squib and wiring. These circuits are maintained in a "floating" configuration at the ORC (connected to neither power nor ground) as protection against inadvertent deployment. Use of the Supplemental Restraints System (SRS) load Tool Kit (special tool #8443A, SRS Load Tool) in the tests below substitutes a suspect squib with a known good component. The use of the SRS Load Tool Adapter provides a test point as well as a method for opening the shorting bar connections within the ORC harness connector.

WHEN MONITORED:

The ORC sends out a 40 mA diagnostic current on each squib voltage supply circuit at power up and every 100 ms thereafter while the ignition is on.

SET CONDITION:

This Diagnostic Trouble Code (DTC) sets when the ORC detects an open or high resistance on the squib circuit for more than 2.5 seconds. This DTC transitions from active to stored when the ORC sees a recovery from an open condition for greater than 2.5 seconds.

POSSIBLE CAUSES

Possible Causes
(R42) PASSENGER SQUIB 1 LINE 2 CIRCUIT OPEN
(R44) PASSENGER SQUIB 1 LINE 1 CIRCUIT OPEN
PASSENGER AIRBAG
OCCUPANT RESTRAINT CONTROLLER (ORC)

Always perform the Pre-Diagnostic Troubleshooting procedure before proceeding. Refer to STANDARD PROCEDURE.

DIAGNOSTIC TEST

1. **VERIFY ACTIVE DTC**

   NOTE: Make sure the battery is fully charged.

   1. Turn the ignition on.
   2. With the scan tool, read ORC DTCs

      Does the scan tool display active B0010-13-PASSENGER FRONTAL SQUIB 1 CONTROL - CIRCUIT OPEN DTC?

      Yes

      - Go To 2.

      No

      - Refer to **STANDARD PROCEDURE** and perform the RESTRAINTS SYSTEM INTERMITTENT TEST.

2. **CHECK FOR OPEN PASSENGER AIRBAG SQUIB CIRCUITS**

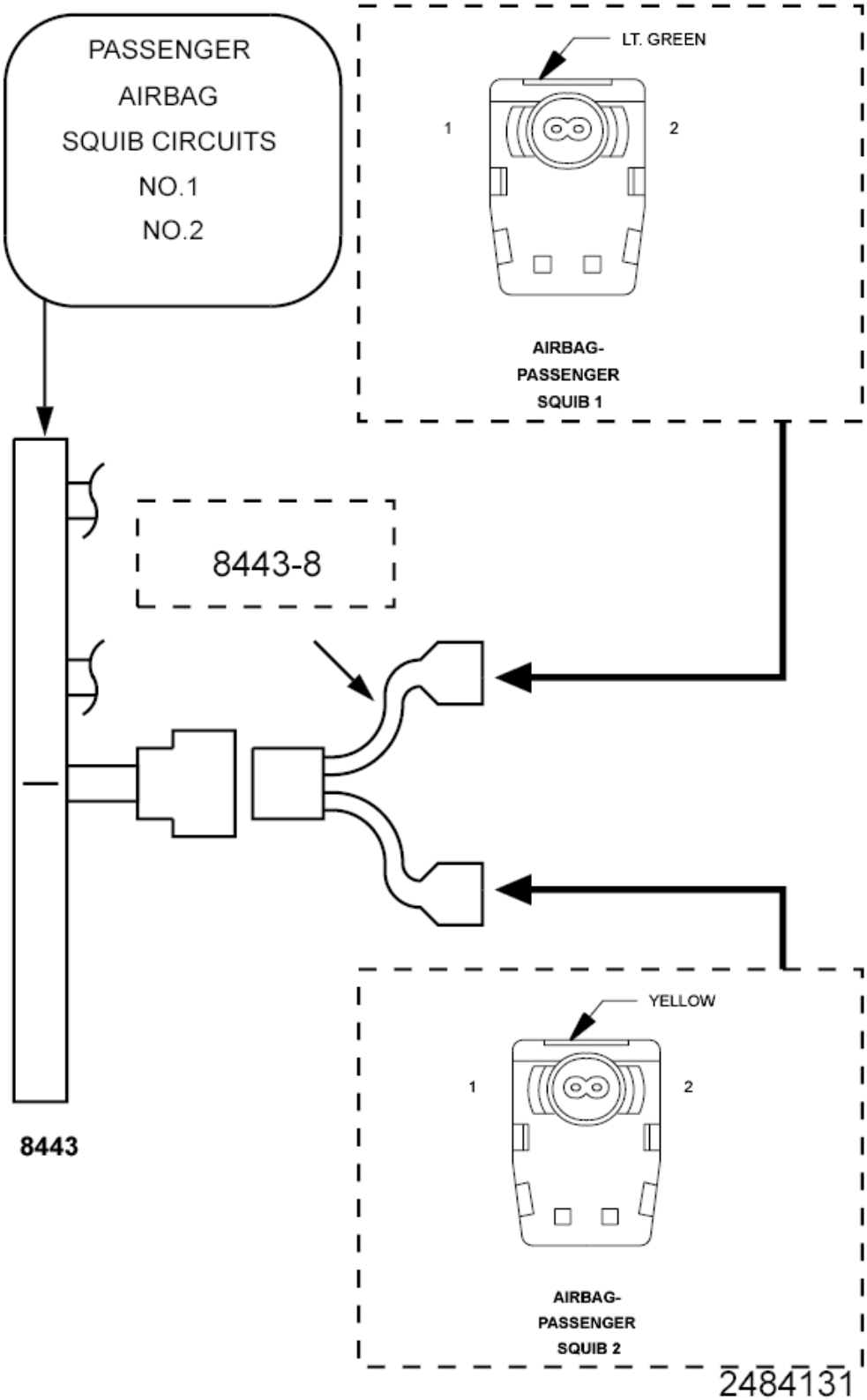

Fig. 41: Checking Passenger Airbag Squib Circuits For Open
Courtesy of CHRYSLER GROUP, LLC

WARNING: Turn the ignition off, disconnect the 12-volt battery and wait two minutes before proceeding. Failure to follow these instructions may result in possible serious or fatal injury.

1. Disconnect the Passenger Airbag Squib harness connectors.

WARNING: Do not place an intact non-deployed airbag face down on a hard surface, the airbag propels into the air if accidentally deployed. Failure to follow these instructions may result in possible serious or fatal injury.

NOTE: Check connectors - Clean and repair as necessary.

2. Connect the SRS Load Tool Kit (special tool #8443A, SRS Load Tool) and SRS Load Tool Jumper (special tool #8443-8, Jumper, SRS Load) to the Passenger Airbag Squib harness connectors.

WARNING: Turn the ignition on, then reconnect the 12-volt battery and wait two minutes before proceeding. Failure to follow these instructions may result in possible serious or fatal injury.

3. With the scan tool, read the ORC DTCs.

Does the scan tool display active B0010-13-PASSENGER FRONTAL SQUIB 1 CONTROL - CIRCUIT OPEN DTC?

Yes

- Go To 3.

No

WARNING: Turn the ignition off, disconnect the 12-volt battery and wait two minutes before proceeding. Failure to follow these instructions may result in possible serious or fatal injury.

-
- Replace the Passenger Airbag in accordance with the Service Information.
- Refer to **STANDARD PROCEDURE** and perform the RESTRAINTS SYSTEM VERIFICATION TEST.

3. **CHECK (R42, R64) PASSENGER SQUIB 1 CIRCUITS FOR AN OPEN**

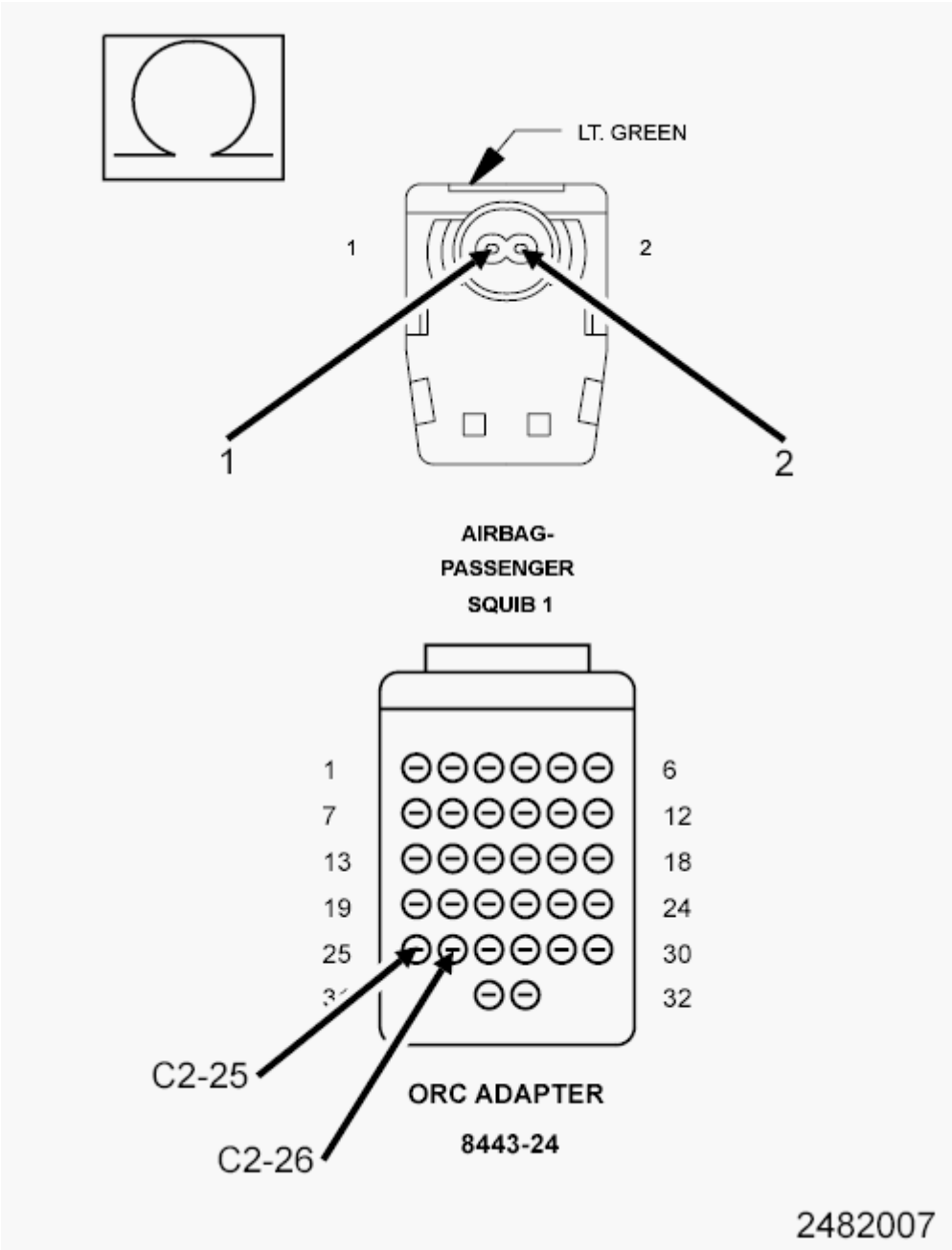

Fig. 42: Checking Passenger Squib 1 Circuits For Open
Courtesy of CHRYSLER GROUP, LLC

WARNING: Turn the ignition off, disconnect the 12-volt battery and wait two minutes before proceeding. Failure to follow these instructions may result in possible serious or fatal injury.

1. Disconnect the SRS Load Tool Kit (special tool #8443A, SRS Load Tool) and Jumper from the Passenger Airbag Squib harness connectors.
2. Disconnect the ORC harness connectors.

NOTE: Check connectors - Clean and repair as necessary.

3. Connect the SRS Load Tool Adapter (special tool #8443-24, 32-Way Adapter) to the ORC C2 harness connector.
4. Measure the resistance of the (R42) Passenger Squib 1 Line 2 circuit cavity 1 between the Passenger Airbag Squib 1 harness connector and the SRS Load Tool Adapter (special tool #8443-24, 32-Way Adapter) cavity 26.
5. Measure the resistance of the (R44) Passenger Squib 1 Line 1 circuit cavity 2 between the Passenger Airbag Squib 1 harness connector and the SRS Load Tool Adapter (special tool #8443-24, 32-Way Adapter) cavity 25.

Is the resistance below 1.0 Ohms on both circuits?

Yes

WARNING: **If the Occupant Restraint Controller (ORC) is dropped at any time, it must be replaced. Failure to follow these instructions may result in possible serious or fatal injury.**

-
- Replace the ORC in accordance with the Service Information.
- Refer to **STANDARD PROCEDURE** and perform the RESTRAINTS SYSTEM VERIFICATION TEST.

No

- Repair the (R42, R44) Passenger Squib 1 circuits for an open or high resistance.
- Refer to **STANDARD PROCEDURE** and perform the RESTRAINTS SYSTEM VERIFICATION TEST.

B0010-2B-PASSENGER FRONTAL SQUIB 1 CONTROL - WIRES SHORTED TOGETHER

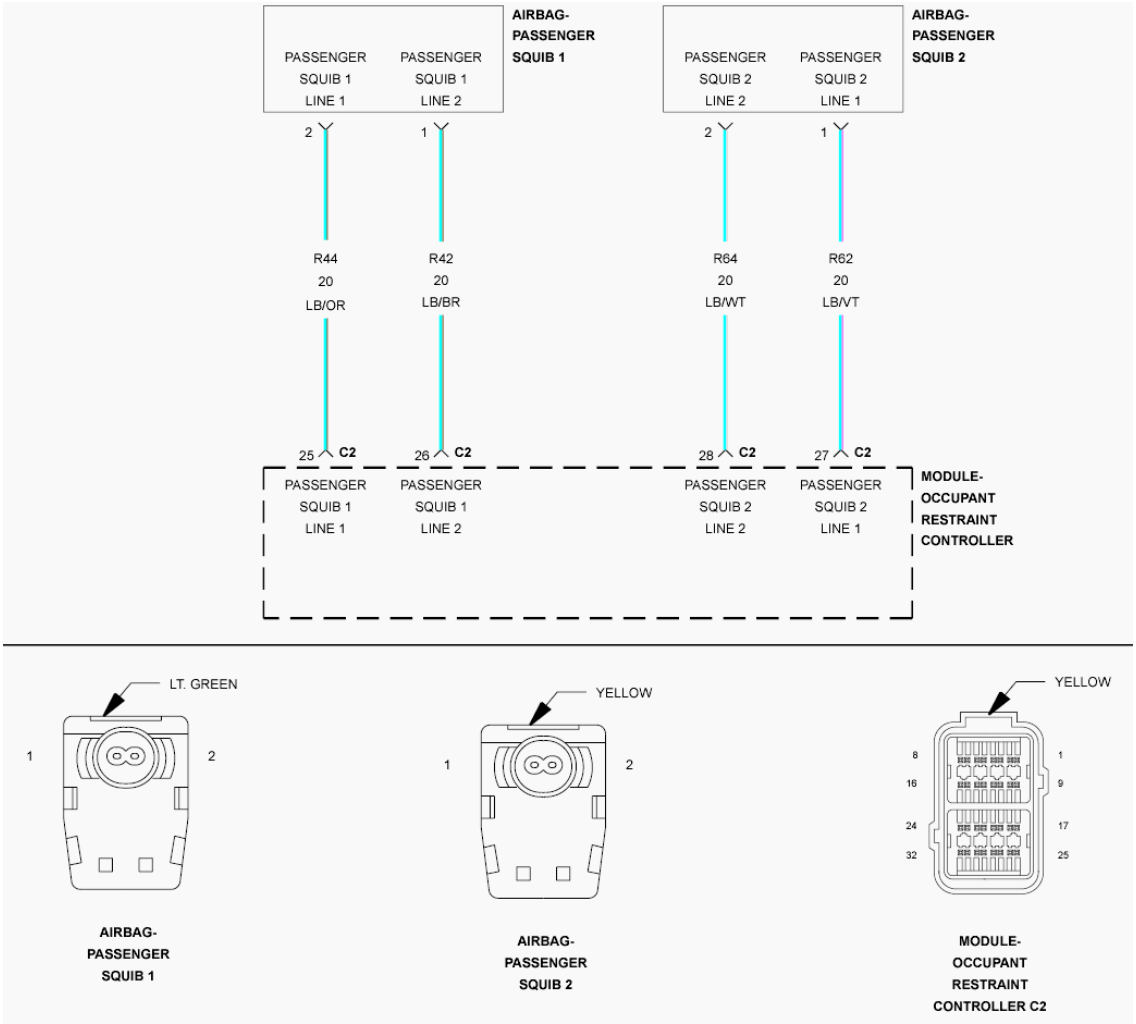

Fig. 43: Passenger Squib Control Circuit Wiring Diagram
Courtesy of CHRYSLER GROUP, LLC

For a complete wiring diagram, **refer to appropriate SYSTEM WIRING DIAGRAMS article** .

THEORY OF OPERATION

When powered, the Occupant Restraint Controller (ORC) sends a test current to the squibs to verify the integrity of the squib and wiring. These circuits are maintained in a "floating" configuration at the ORC (connected to neither power nor ground) as protection against inadvertent deployment. Use of the Supplemental Restraints System (SRS) load Tool in the tests below substitutes a suspect squib with a known good component. The use of the SRS Load Tool Adapter provides a test point as well as a method for opening the shorting bar connections within the ORC harness connector.

WHEN MONITORED:

The ORC sends out a 40 mA diagnostic current on each squib voltage supply circuit at power up and every 100 ms thereafter while the ignition is on.

SET CONDITION:

This Diagnostic Trouble Code (DTC) sets when the ORC detects both circuits of the same squib are shorted together for more than 2.5 seconds. This DTC transitions from active to stored when the ORC sees a recovery from a shorted together condition for greater than 2.5 seconds.

POSSIBLE CAUSES

Possible Causes
(R42) PASSENGER SQUIB 1 LINE 2 CIRCUIT SHORTED TO THE (R44) PASSENGER SQUIB 1 LINE 1 CIRCUIT
PASSENGER AIRBAG
OCCUPANT RESTRAINT CONTROLLER (ORC)

Always perform the Pre-Diagnostic Troubleshooting procedure before proceeding. Refer to STANDARD PROCEDURE.

DIAGNOSTIC TEST

1. **VERIFY ACTIVE DTC**

   NOTE: Make sure the battery is fully charged.

   1. Turn the ignition on.
   2. With the scan tool, read ORC DTCs.

      Does the scan tool display active B0010-2B-PASSENGER FRONTAL SQUIB 1 CONTROL - WIRES SHORTED TOGETHER DTC?

      Yes

      - Go To 2.

      No

      - Refer to **STANDARD PROCEDURE** and perform the RESTRAINTS SYSTEM INTERMITTENT TEST.

2. **CHECK PASSENGER AIRBAG SQUIB FOR CIRCUITS SHORT TOGETHER**

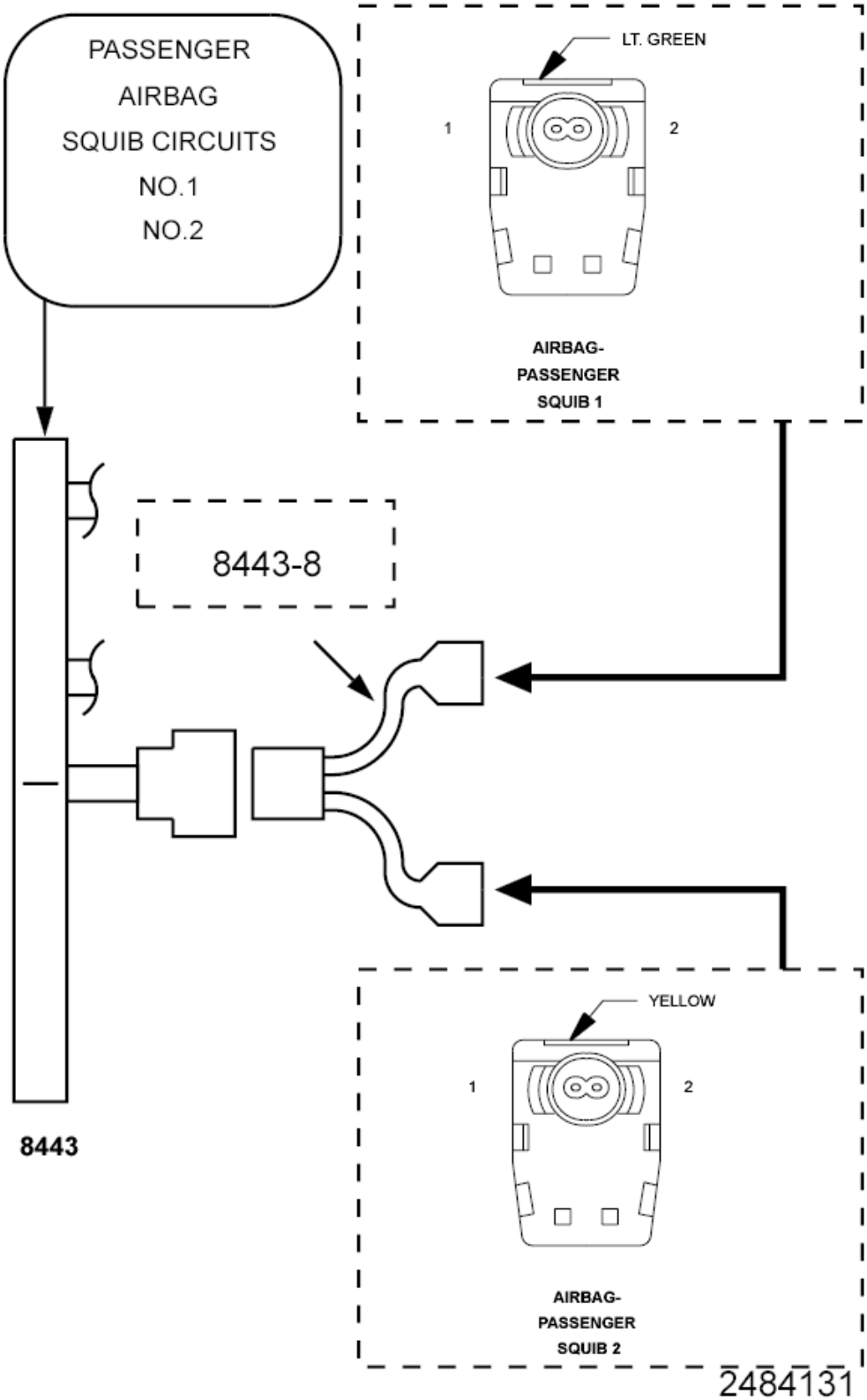

Fig. 44: Checking Passenger Airbag Squib For Short To Voltage
Courtesy of CHRYSLER GROUP, LLC

WARNING: Turn the ignition off, disconnect the 12-volt battery and wait two minutes before proceeding. Failure to follow these instructions may result in possible serious or fatal injury.

1. Disconnect the Passenger Airbag Squib harness connectors.

WARNING: Do not place an intact non-deployed airbag face down on a hard surface, the airbag propels into the air if accidentally deployed. Failure to follow these instructions may result in possible serious or fatal injury.

NOTE: Check connectors - Clean and repair as necessary.

2. Connect the SRS Load Tool Kit (special tool #8443A, SRS Load Tool) and SRS Load Tool Jumper (special tool #8443-8, Jumper, SRS Load) to the Passenger Airbag Squib harness connectors.

WARNING: Turn the ignition on, then reconnect the 12-volt battery and wait two minutes before proceeding. Failure to follow these instructions may result in possible serious or fatal injury.

3. With the scan tool, read the ORC DTCs.

Does the scan tool display active B0010-2B-PASSENGER FRONTAL SQUIB 1 CONTROL - WIRES SHORTED TOGETHER DTC?

Yes

- Go To 3.

No

WARNING: Turn the ignition off, disconnect the 12-volt battery and wait two minutes before proceeding. Failure to follow these instructions may result in possible serious or fatal injury.

-
- Replace the Passenger Airbag in accordance with the Service Information.
- Refer to **STANDARD PROCEDURE** and perform the RESTRAINTS SYSTEM VERIFICATION TEST.

3. **CHECK (R42) PASSENGER SQUIB 1 LINE 2 CIRCUIT FOR A SHORT TO (R44) PASSENGER SQUIB 1 LINE 1 CIRCUIT**

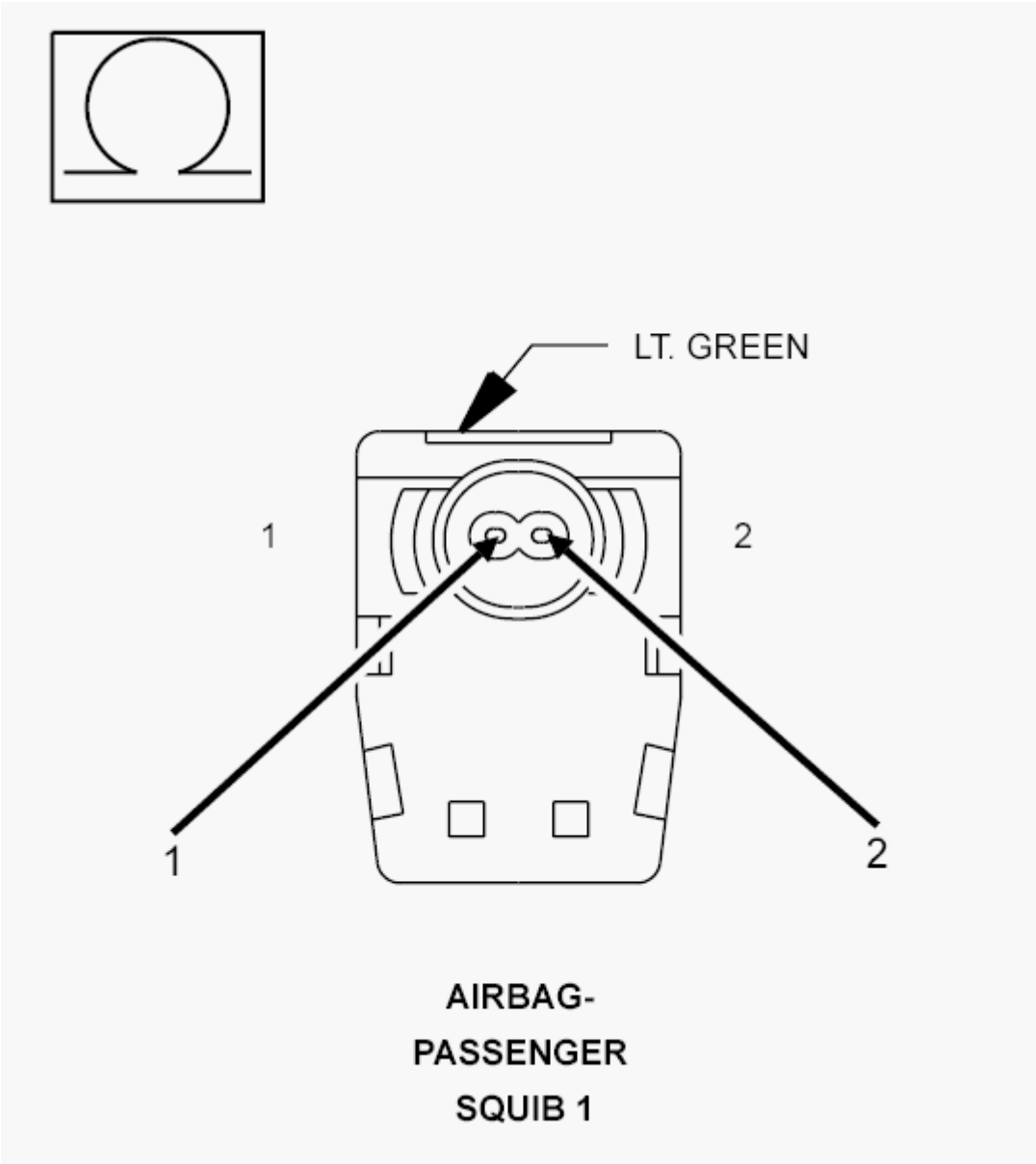

Fig. 45: Checking Passenger Squib Line Circuits
Courtesy of CHRYSLER GROUP, LLC

WARNING: **Turn the ignition off, disconnect the 12-volt battery and wait two minutes before proceeding. Failure to follow these instructions may result in possible serious or fatal injury.**

1. Disconnect the SRS Load Tool Kit (special tool #8443A, SRS Load Tool) and Jumper from the Passenger Airbag Squib 1 and 2 harness connectors.
2. Disconnect the ORC harness connectors.

NOTE: **Check connectors - Clean and repair as necessary.**

3. Connect the SRS Load Tool Adapter (special tool #8443-24, 32-Way Adapter) to the ORC C2 harness connector.
4. Measure the resistance between the (R42) Passenger Squib 1 Line 2 circuit cavity 1 and the (R44) Passenger Squib 1 Line 1 circuit cavity 2 at the Passenger Airbag Squib 1 harness connector.

   Is the resistance below 10K Ohms?

   Yes

   - Repair the (R42) Passenger Squib 1 Line 2 circuit for a short to the (R44) Passenger Squib 1 Line 1 circuit.
   - Refer to **STANDARD PROCEDURE** and perform the RESTRAINTS SYSTEM VERIFICATION TEST.

   No

   WARNING: **If the Occupant Restraint Controller (ORC) is dropped at any time, it must be replaced. Failure to follow these instructions may result in possible serious or fatal injury.**

   -
   - Replace the ORC in accordance with the Service Information.
   - Refer to **STANDARD PROCEDURE** and perform the RESTRAINTS SYSTEM VERIFICATION TEST.

B0011-11-PASSENGER FRONTAL SQUIB 2 CONTROL - CIRCUIT SHORT TO GROUND

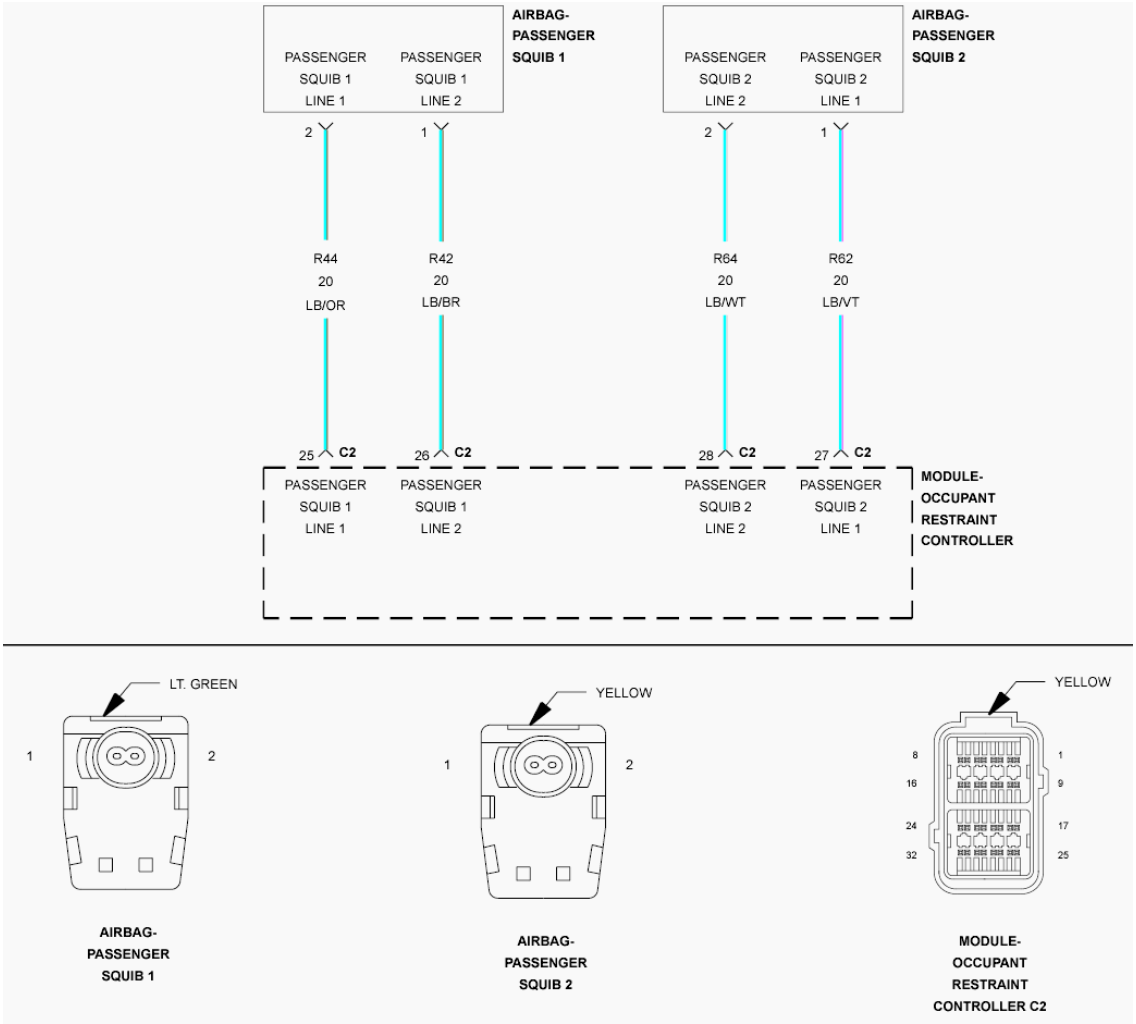

Fig. 46: Passenger Squib Control Circuit Wiring Diagram
Courtesy of CHRYSLER GROUP, LLC

For a complete wiring diagram, **refer to appropriate SYSTEM WIRING DIAGRAMS article** .

THEORY OF OPERATION

When powered the Occupant Restraint Controller (ORC) sends a test current to the squibs to verify the integrity of the squib and wiring. These circuits are maintained in a "floating" configuration at the ORC (connected to neither power or ground) as protection against inadvertent deployment. Use of the Supplemental Restraints System (SRS) Load Tool Kit (special tool #8443A, SRS Load Tool) in the tests below substitutes a suspect squib with a known good component. The use of the SRS Load Tool Adapter provides a test point as well as a method for opening the shorting bar connections within the ORC harness connector.

WHEN MONITORED:

The ORC sends out a 40 mA diagnostic current on each squib voltage supply circuit at power up and every 100 ms thereafter while the ignition is on. With the ignition on, the Occupant Restraint Controller (ORC) monitors the resistance of the Passenger Squib 2 circuits.

SET CONDITION:

This Diagnostic Trouble Code (DTC) sets when the ORC detects a short to ground on the squib circuit for more than 2.5 seconds. This DTC transitions from active to stored when the ORC sees a recovery from a short to ground for greater than 2.5 seconds.

POSSIBLE CAUSES

Possible Causes
(R64) PASSENGER SQUIB 2 LINE 1 CIRCUIT SHORTED TO GROUND
(R62) PASSENGER SQUIB 2 LINE 2 CIRCUIT SHORTED TO GROUND
PASSENGER AIRBAG
OCCUPANT RESTRAINT CONTROLLER (ORC)

Always perform the Pre-Diagnostic Troubleshooting procedure before proceeding. Refer to STANDARD PROCEDURE.

DIAGNOSTIC TEST

1. **VERIFY ACTIVE DTC**

   NOTE: Make sure the battery is fully charged.

   1. Turn the ignition on.
   2. With the scan tool, read ORC DTCs.

      Does the scan tool display active B0011-11-PASSENGER FRONTAL SQUIB 2 CONTROL - CIRCUIT SHORT TO GROUND?

      Yes

      - Go To 2.

      No

      - Refer to **STANDARD PROCEDURE** and perform the RESTRAINTS SYSTEM INTERMITTENT TEST.

2. **CHECK PASSENGER AIRBAG SQUIB CIRCUITS FOR SHORT TO GROUND**

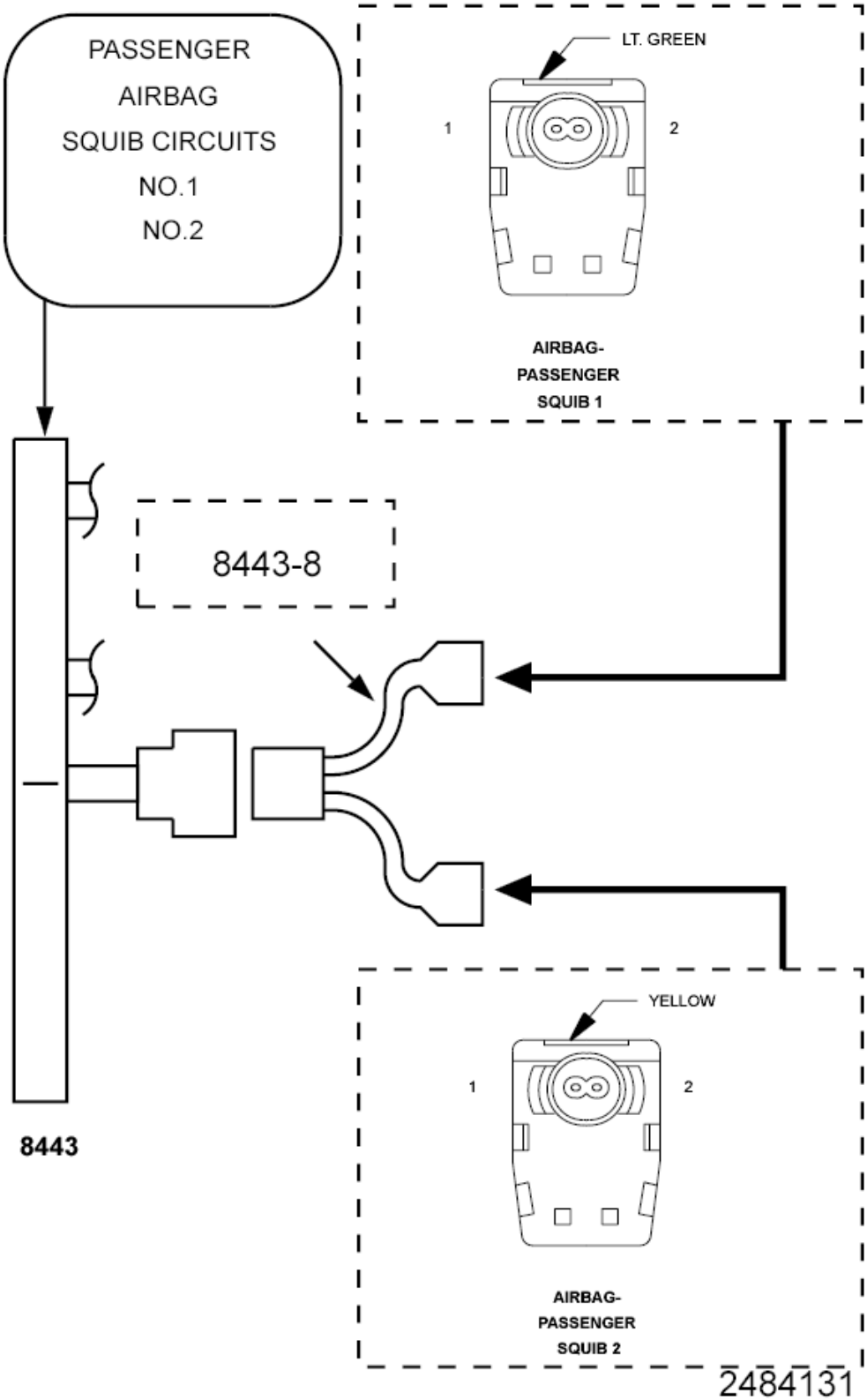

Fig. 47: Checking Passenger Airbag Squib For Short To Ground
Courtesy of CHRYSLER GROUP, LLC

WARNING: Turn the ignition off, disconnect the 12-volt battery and wait two minutes before proceeding. Failure to follow these instructions may result in possible serious or fatal injury.

1. Disconnect the Passenger Airbag Squib harness connectors.

WARNING: Do not place an intact non-deployed airbag face down on a hard surface, the airbag propels into the air if accidentally deployed. Failure to follow these instructions may result in possible serious or fatal injury.

NOTE: Check connectors - Clean and repair as necessary.

2. Connect the SRS Load Tool Kit (special tool #8443A, SRS Load Tool) and SRS Load Tool Jumper (special tool #8443-8, Jumper, SRS Load) to the Passenger Airbag Squib harness connectors.

WARNING: Turn the ignition on, then reconnect the 12-volt battery and wait two minutes before proceeding. Failure to follow these instructions may result in possible serious or fatal injury.

3. With the scan tool, read the ORC DTCs.

Does the scan tool display active B0011-11-PASSENGER FRONTAL SQUIB 2 CONTROL - CIRCUIT SHORT TO GROUND DTC?

Yes

- Go To 3.

No

WARNING: Turn the ignition off, disconnect the 12-volt battery and wait two minutes before proceeding. Failure to follow these instructions may result in possible serious or fatal injury.

-
- Replace the Passenger Airbag in accordance with the Service Information.
- Refer to **STANDARD PROCEDURE** and perform the RESTRAINTS SYSTEM VERIFICATION TEST.

3. **CHECK (R62, R64) PASSENGER SQUIB 2 CIRCUITS FOR A SHORT TO GROUND**

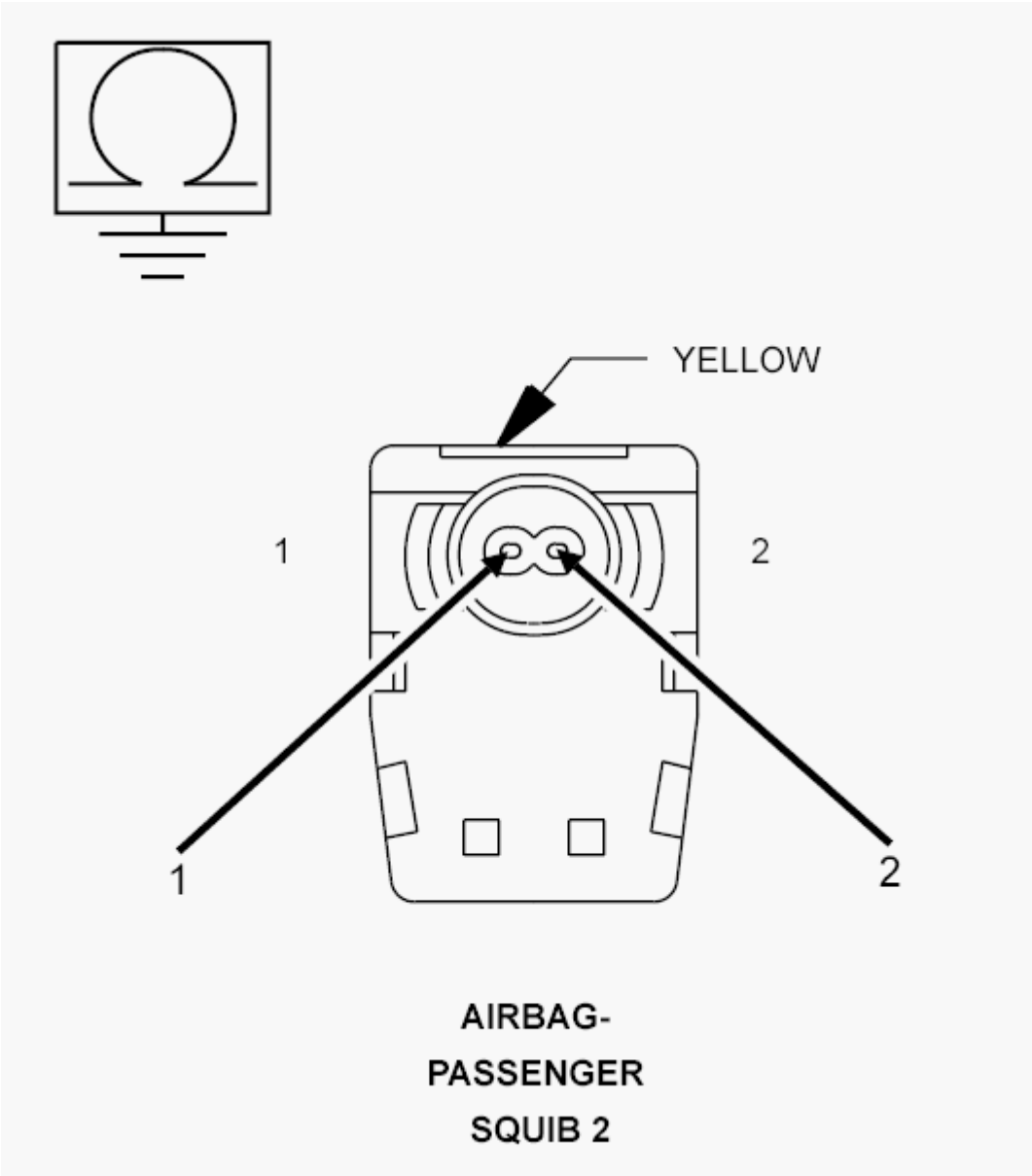

Fig. 48: Checking Passenger Squib 2 Circuits For Short To Ground
Courtesy of CHRYSLER GROUP, LLC

WARNING: **Turn the ignition off, disconnect the 12-volt battery and wait two minutes before proceeding. Failure to follow these instructions may result in possible serious or fatal injury.**

1. Disconnect the SRS Load Tool Kit (special tool #8443A, SRS Load Tool) and Jumper from the Passenger Airbag Squib harness connectors.
2. Disconnect the ORC harness connectors.

NOTE: **Check connectors - Clean and repair as necessary.**

3. Connect the SRS Load Tool Adapter (special tool #8443-24, 32-Way Adapter) to the ORC C2 harness connector.
4. Measure the resistance of the (R64) Passenger Squib circuit between the Passenger Airbag Squib 2 harness connector cavity 2 and ground.
5. Measure the resistance of the (R62) Passenger Squib 2 Line 2 circuit between the Passenger Airbag Squib 2 harness connector cavity 1 and ground.

   Is the resistance below 10K Ohms on either measurement?

   Yes

   - Repair the (R62, R64) Passenger Squib 2 circuits for a short to ground.
   - Refer to **STANDARD PROCEDURE** and perform the RESTRAINTS SYSTEM VERIFICATION TEST.

   No

   WARNING: **If the Occupant Restraint Controller (ORC) is dropped at any time, it must be replaced. Failure to follow these instructions may result in possible serious or fatal injury.**

   -
   - Replace the ORC in accordance with the Service Information.
   - Refer to **STANDARD PROCEDURE** and perform the RESTRAINTS SYSTEM VERIFICATION TEST.

B0011-12-PASSENGER FRONTAL SQUIB 2 CONTROL - CIRCUIT SHORT TO BATTERY

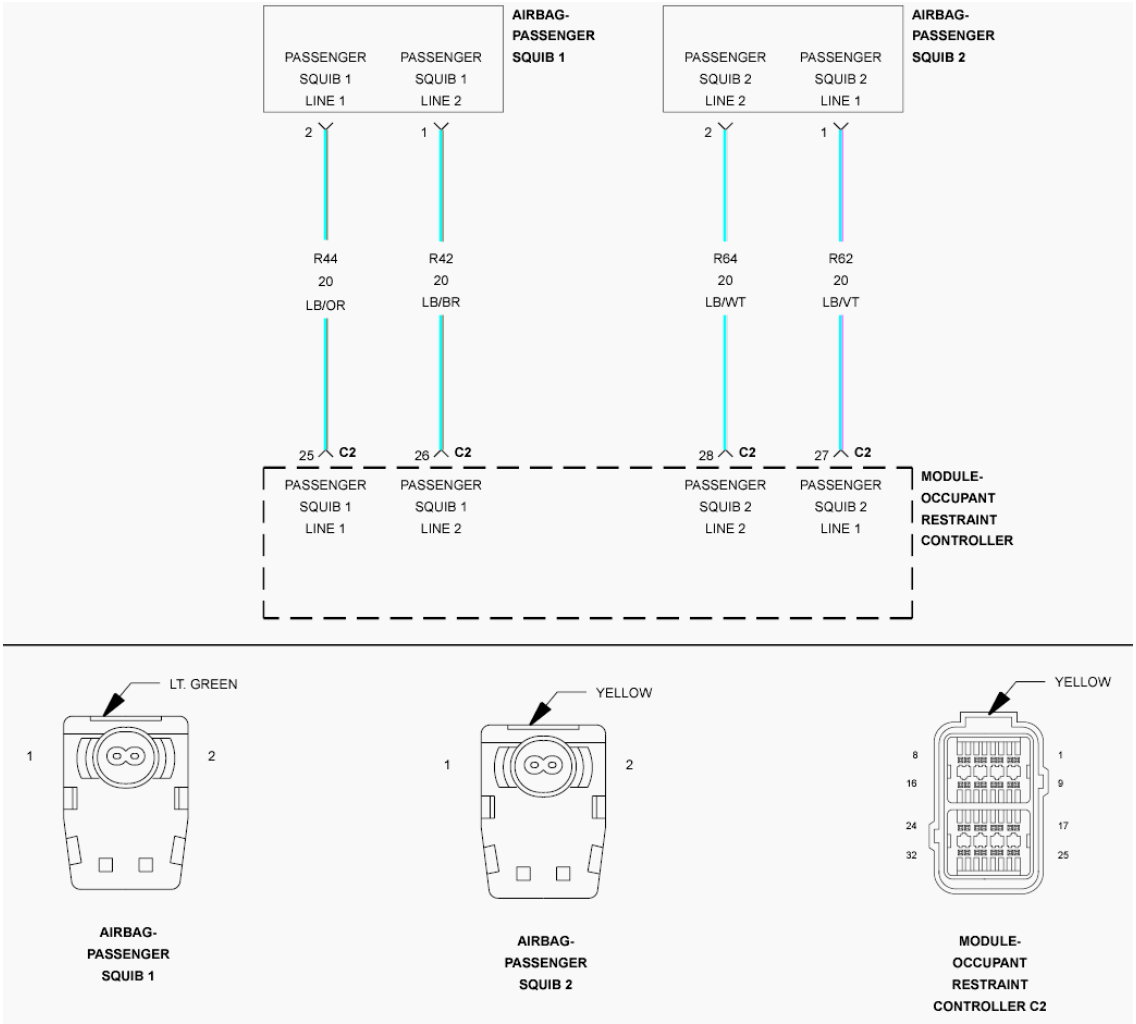

Fig. 49: Passenger Squib Control Circuit Wiring Diagram
Courtesy of CHRYSLER GROUP, LLC

For a complete wiring diagram, **refer to appropriate SYSTEM WIRING DIAGRAMS article** .

THEORY OF OPERATION

When powered, the Occupant Restraint Controller (ORC) sends a test current to the squibs to verify the integrity of the squib and wiring. These circuits are maintained in a "floating" configuration at the ORC (connected to neither power nor ground) as protection against inadvertent deployment. Use of the Supplemental Restraints System (SRS) Load Tool Kit (special tool #8443A, SRS Load Tool) in the tests below substitutes a suspect squib with a known good component. The use of the SRS Load Tool Adapter provides a test point as well as a method for opening the shorting bar connections within the ORC harness connector.

WHEN MONITORED:

The ORC sends out a 40 mA diagnostic current on each squib voltage supply circuit at power up and every 100 ms thereafter while the ignition is on.

SET CONDITION:

This Diagnostic Trouble Code (DTC) sets when the ORC detects a short to voltage on the squib circuit for more than 2.5 seconds. This DTC transitions from active to stored when the ORC sees a recovery from a short to voltage for greater than 2.5 seconds.

POSSIBLE CAUSES

Possible Causes
(R64) PASSENGER SQUIB 2 LINE 1 CIRCUIT SHORTED TO VOLTAGE
(R62) PASSENGER SQUIB 2 LINE 2 CIRCUIT SHORTED TO VOLTAGE
PASSENGER AIRBAG
OCCUPANT RESTRAINT CONTROLLER (ORC)

Always perform the Pre-Diagnostic Troubleshooting procedure before proceeding. Refer to STANDARD PROCEDURE.

DIAGNOSTIC TEST

1. **VERIFY ACTIVE DTC**

   NOTE: Make sure the battery is fully charged.

   1. Turn the ignition on.
   2. With the scan tool, read ORC DTCs.

      Does the scan tool display active B0011-12-PASSENGER FRONTAL SQUIB 2 CONTROL - CIRCUIT SHORT TO BATTERY DTC?

      Yes

      - Go To 2.

      No

      - Refer to **STANDARD PROCEDURE** and perform the RESTRAINTS SYSTEM INTERMITTENT TEST.

2. **CHECK PASSENGER AIRBAG SQUIB FOR SHORT TO VOLTAGE**

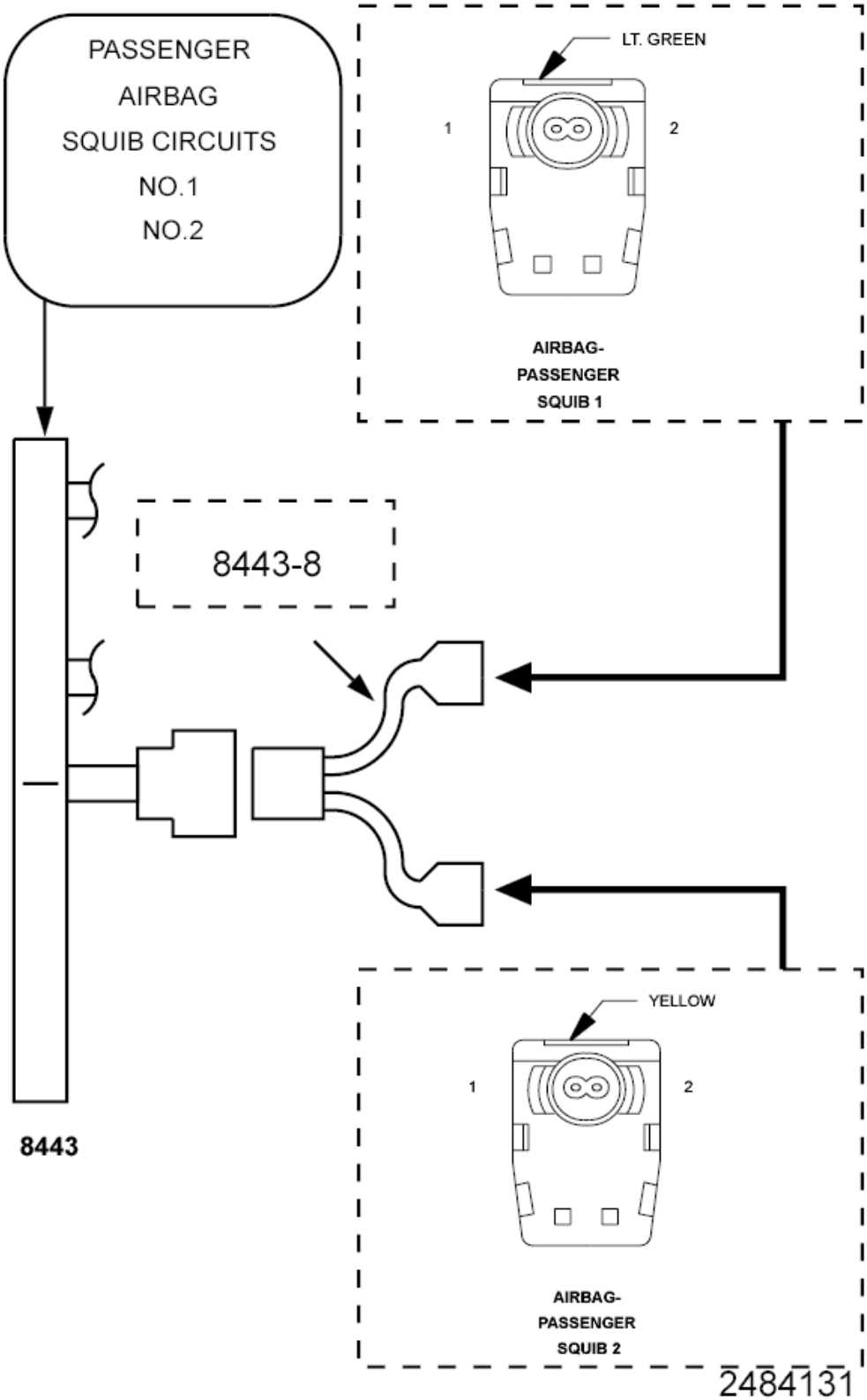

Fig. 50: Checking Passenger Airbag Squib For Short To Voltage
Courtesy of CHRYSLER GROUP, LLC

WARNING: Turn the ignition off, disconnect the 12-volt battery and wait two minutes before proceeding. Failure to follow these instructions may result in possible serious or fatal injury.

1. Disconnect the Passenger Airbag Squib harness connectors.

WARNING: Do not place an intact non-deployed airbag face down on a hard surface, the airbag propels into the air if accidentally deployed. Failure to follow these instructions may result in possible serious or fatal injury.

NOTE: Check connectors - Clean and repair as necessary.

2. Connect the SRS Load Tool Kit (special tool #8443A, SRS Load Tool) and SRS Load Tool Jumper (special tool #8443-8, Jumper, SRS Load) to the Passenger Airbag Squib harness connectors.

WARNING: Turn the ignition on, then reconnect the 12-volt battery and wait two minutes before proceeding. Failure to follow these instructions may result in possible serious or fatal injury.

3. With the scan tool, read the ORC DTCs.

Does the scan tool display active B0011-12-PASSENGER FRONTAL SQUIB 2 CONTROL - CIRCUIT SHORT TO BATTERY DTC?

Yes

- Go To 3.

No

WARNING: Turn the ignition off, disconnect the 12-volt battery and wait two minutes before proceeding. Failure to follow these instructions may result in possible serious or fatal injury.

-
- Replace the Passenger Airbag in accordance with the Service Information.
- Refer to **STANDARD PROCEDURE** and perform the RESTRAINTS SYSTEM VERIFICATION TEST.

3. **CHECK (R62, R64) PASSENGER SQUIB 2 CIRCUITS FOR A SHORT TO VOLTAGE**

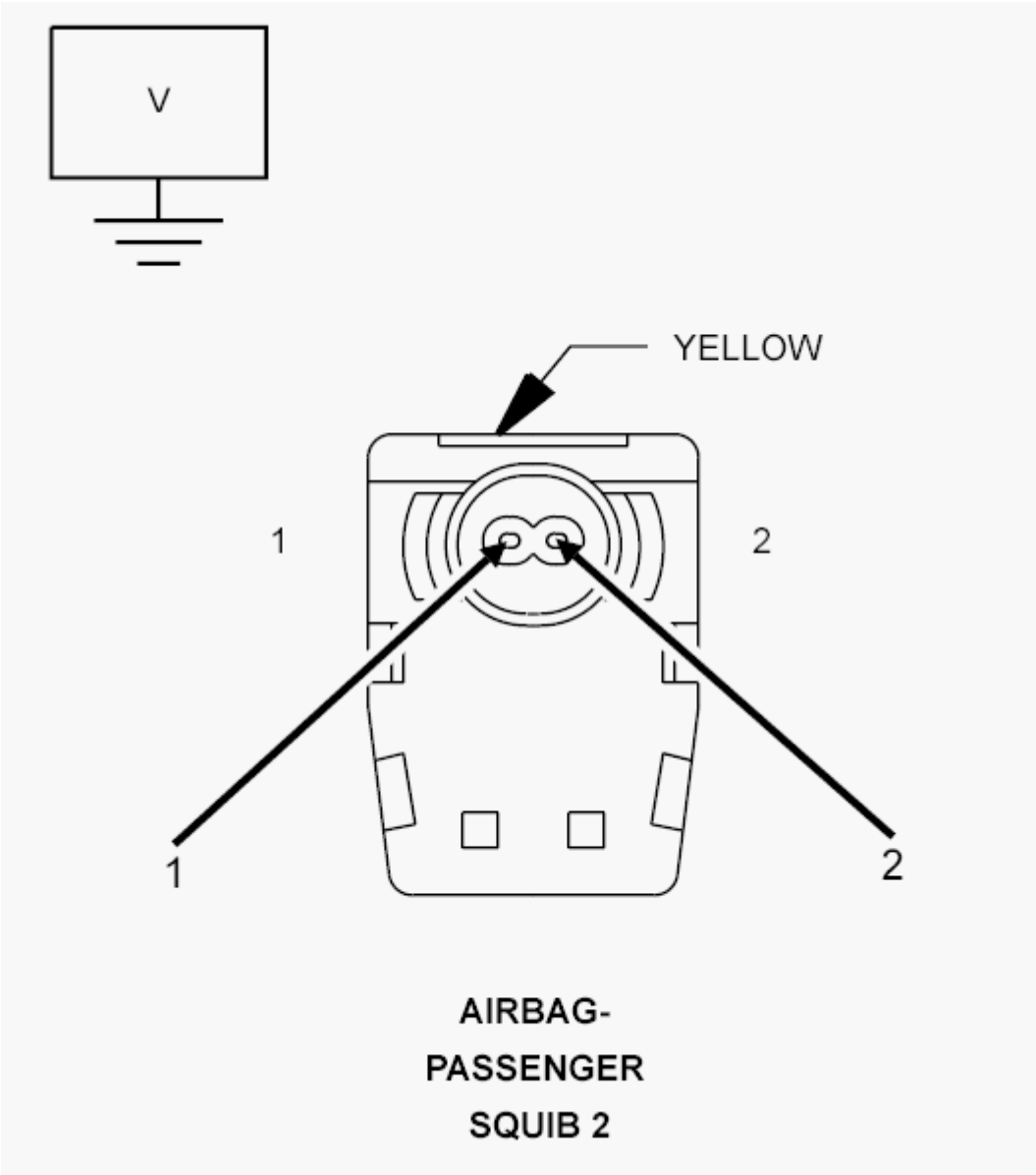

Fig. 51: Checking Passenger Squib 2 Circuits For A Short To Voltage
Courtesy of CHRYSLER GROUP, LLC

WARNING: Turn the ignition off, disconnect the 12-volt battery and wait two minutes before proceeding. Failure to follow these instructions may result in possible serious or fatal injury.

1. Disconnect the SRS Load Tool Kit (special tool #8443A, SRS Load Tool) and Jumper from the Passenger Airbag Squib harness connectors.
2. Disconnect the ORC harness connectors.

NOTE: Check connectors - Clean and repair as necessary.

3. Connect the SRS Load Tool Adapter (special tool #8443-24, 32-Way Adapter) to the ORC C2 harness connector.

WARNING: Turn the ignition on, then reconnect the 12-volt battery and wait two minutes before proceeding. Failure to follow these instructions may result in possible serious or fatal injury.

4. Measure the voltage of the (R64) Passenger Squib 2 Line 1 circuit between the Passenger Airbag Squib 2 harness connector cavity 2 and ground.
5. Measure the voltage of the (R62) Passenger Squib 2 Line 2 circuit between the Passenger Airbag Squib 2 harness connector cavity 1 and ground.

Is there any voltage present for either measurement?

Yes

WARNING: Turn the ignition off, disconnect the 12-volt battery and wait two minutes before proceeding. Failure to follow these instructions may result in possible serious or fatal injury.

-
- Repair the (R62, R64) Passenger Squib 2 circuits for a short to voltage.
- Refer to **STANDARD PROCEDURE** and perform the RESTRAINTS SYSTEM VERIFICATION TEST.

No

WARNING: Turn the ignition off, disconnect the 12-volt battery and wait two minutes before proceeding. Failure to follow these instructions may result in possible serious or fatal injury.

WARNING: If the Occupant Restraint Controller (ORC) is dropped at any time, it must be replaced. Failure to follow these instructions may result in possible serious or fatal injury.

-
-
- Replace the ORC in accordance with the Service Information.
- Refer to **STANDARD PROCEDURE** and perform the RESTRAINTS SYSTEM VERIFICATION TEST.

B0011-13-PASSENGER FRONTAL SQUIB 2 CONTROL - CIRCUIT OPEN

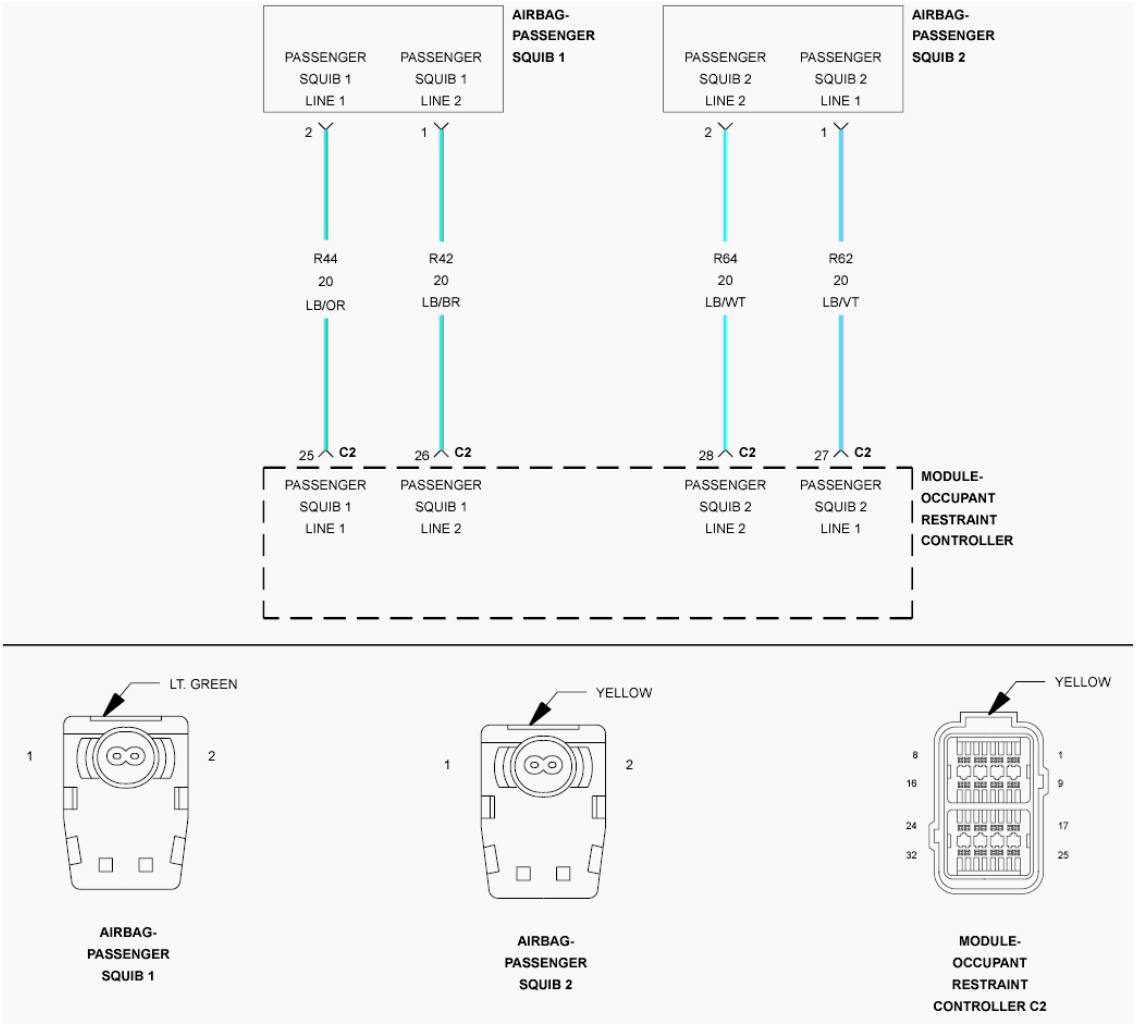

Fig. 52: Passenger Squib Control Circuit Wiring Diagram
Courtesy of CHRYSLER GROUP, LLC

For a complete wiring diagram, **refer to appropriate SYSTEM WIRING DIAGRAMS article** .

THEORY OF OPERATION

When powered, the Occupant Restraint Controller (ORC) sends a test current to the squibs to verify the integrity of the squib and wiring. These circuits are maintained in a "floating" configuration at the ORC (connected to neither power nor ground) as protection against inadvertent deployment. Use of the Supplemental Restraints System (SRS) Load Tool in the tests below substitutes a suspect squib with a known good component. The use of the SRS Load Tool Adapter provides a test point as well as a method for opening the shorting bar connections within the ORC harness connector.

WHEN MONITORED:

The ORC sends out a 40 mA diagnostic current on each squib voltage supply circuit at power up and every 100 ms thereafter while the ignition is on.

SET CONDITION:

This Diagnostic Trouble Code (DTC) sets when the ORC detects an open or high resistance on the squib circuit for more than 2.5 seconds. This DTC transitions from active to stored when the ORC sees a recovery from an open condition for greater than 2.5 seconds.

POSSIBLE CAUSES

Possible Causes
(R64) PASSENGER SQUIB 2 LINE 1 CIRCUIT OPEN
(R62) PASSENGER SQUIB 2 LINE 2 CIRCUIT OPEN
PASSENGER AIRBAG
OCCUPANT RESTRAINT CONTROLLER (ORC)

Always perform the Pre-Diagnostic Troubleshooting procedure before proceeding. Refer to STANDARD PROCEDURE.

DIAGNOSTIC TEST

1. **VERIFY ACTIVE DTC**

   NOTE: Make sure the battery is fully charged.

   1. Turn the ignition on.
   2. With the scan tool, read ORC DTCs.

      Does the scan tool display active B0011-13-PASSENGER FRONTAL SQUIB 2 CONTROL - CIRCUIT OPEN DTC?

      Yes

      - Go To 2.

      No

      - Refer to **STANDARD PROCEDURE** and perform the RESTRAINTS SYSTEM INTERMITTENT TEST.

2. **CHECK PASSENGER AIRBAG SQUIB OPEN CIRCUITS**

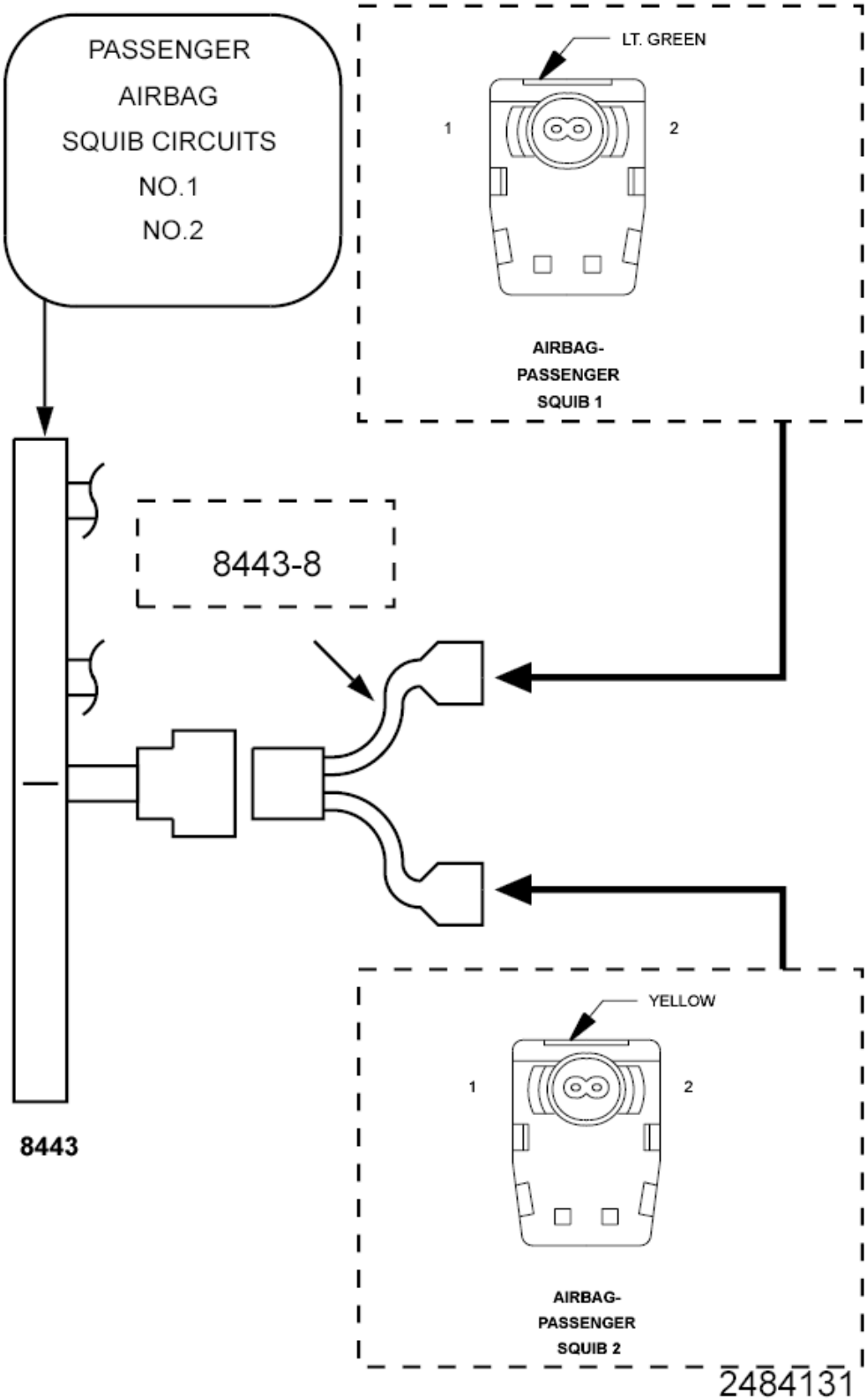

Fig. 53: Checking Passenger Airbag Squib Circuits For Open
Courtesy of CHRYSLER GROUP, LLC

WARNING: Turn the ignition off, disconnect the 12-volt battery and wait two minutes before proceeding. Failure to follow these instructions may result in possible serious or fatal injury.

1. Disconnect the Passenger Airbag Squib harness connectors.

   WARNING: Do not place an intact non-deployed airbag face down on a hard surface, the airbag propels into the air if accidentally deployed. Failure to follow these instructions may result in possible serious or fatal injury.

   NOTE: Check connectors - Clean and repair as necessary

   Connect the SRS Load Tool Kit (special tool #8443A, SRS Load Tool) and SRS Load Tool Jumper (special tool #8443-8, Jumper, SRS Load) to the Passenger Airbag Squib harness connectors.

   WARNING: Turn the ignition on, then reconnect the 12-volt battery and wait two minutes before proceeding. Failure to follow these instructions may result in possible serious or fatal injury.

2. With the scan tool, read the ORC DTCs.

   Does the scan tool display active B0011-13-PASSENGER FRONTAL SQUIB 2 CONTROL - CIRCUIT OPEN DTC ?

   Yes

   - Go To 3.

   No

   WARNING: Turn the ignition off, disconnect the 12-volt battery and wait two minutes before proceeding. Failure to follow these instructions may result in possible serious or fatal injury.

   -
   - Replace the Passenger Airbag in accordance with the Service Information.
   - Refer to **STANDARD PROCEDURE** and perform the RESTRAINTS SYSTEM VERIFICATION TEST.

3. **CHECK (R62, R64) PASSENGER SQUIB 2 CIRCUITS FOR AN OPEN**

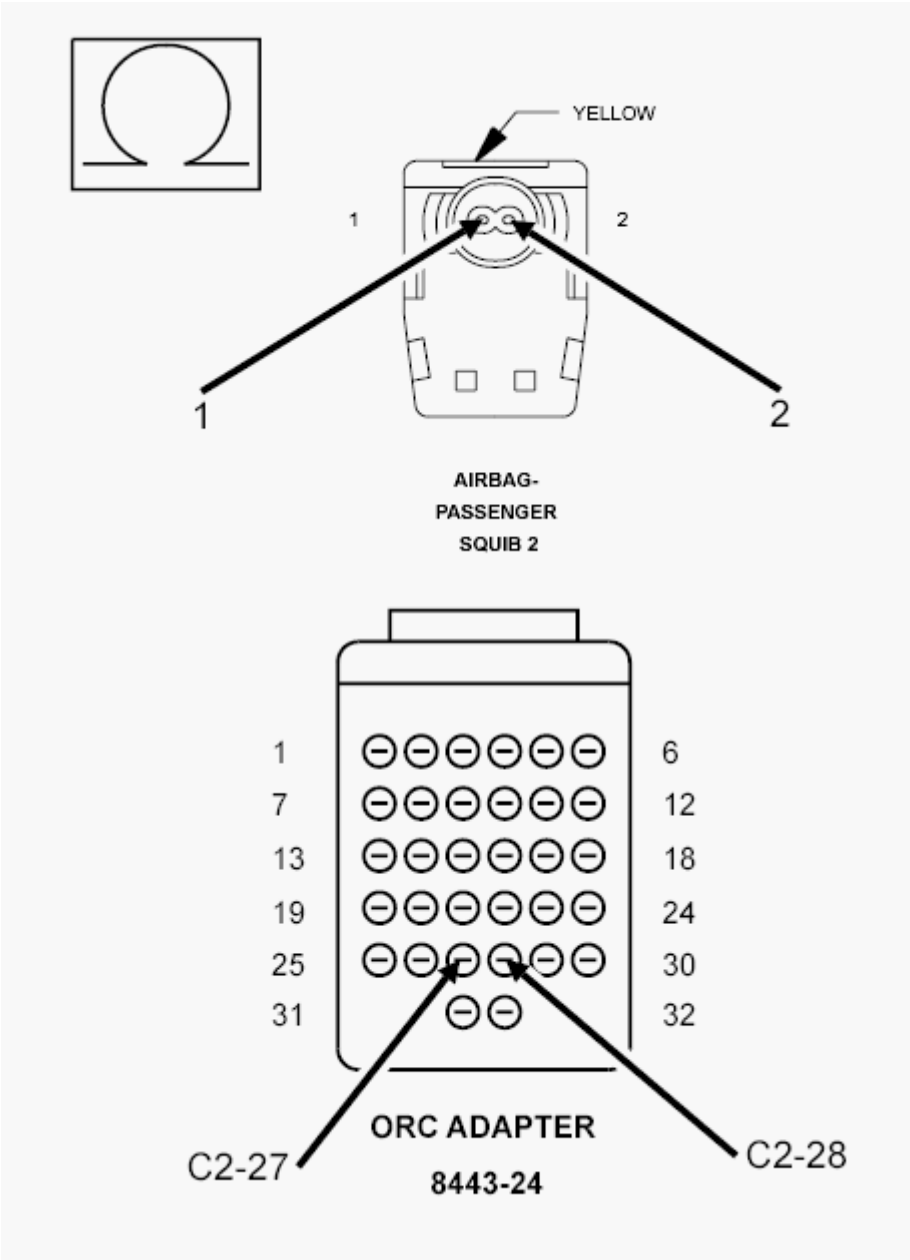

Fig. 54: Checking Passenger Squib 2 Circuits For Open
Courtesy of CHRYSLER GROUP, LLC

WARNING: **Turn the ignition off, disconnect the 12-volt battery and wait two minutes before proceeding. Failure to follow these instructions may result in possible serious or fatal injury.**

1. Disconnect the SRS Load Tool Kit (special tool #8443A, SRS Load Tool) and Jumper from the Passenger Airbag Squib harness connectors.
2. Disconnect the ORC harness connectors.

NOTE: Check connectors - Clean and repair as necessary.

3. Connect the SRS Load Tool Adapter (special tool #8443-24, 32-Way Adapter) to the ORC C2 harness connector.
4. Measure the resistance of the (R64) Passenger Squib 2 Line 1 circuit between the Passenger Airbag Squib 2 harness connector cavity 2 and the SRS Load Tool Adapter (special tool #8443-24, 32-Way Adapter) cavity 28.
5. Measure the resistance of the (R62) Passenger Squib 2 Line 2 circuit between the Passenger Airbag Squib 2 harness connector cavity 1 and the SRS Load Tool Adapter (special tool #8443-24, 32-Way Adapter) cavity 27.

Is the resistance below 1.0 Ohms on both circuits?

Yes

WARNING: **If the Occupant Restraint Controller (ORC) is dropped at any time, it must be replaced. Failure to follow these instructions may result in possible serious or fatal injury.**

-
- Replace the ORC in accordance with the Service Information.
- Refer to **STANDARD PROCEDURE** and perform the RESTRAINTS SYSTEM VERIFICATION TEST.

No

- Repair the (R62, R64) Passenger Squib 2 circuits for an open or high resistance.
- Refer to **STANDARD PROCEDURE** and perform the RESTRAINTS SYSTEM VERIFICATION TEST.

B0011-2B-PASSENGER FRONTAL SQUIB 2 CONTROL - WIRES SHORTED TOGETHER

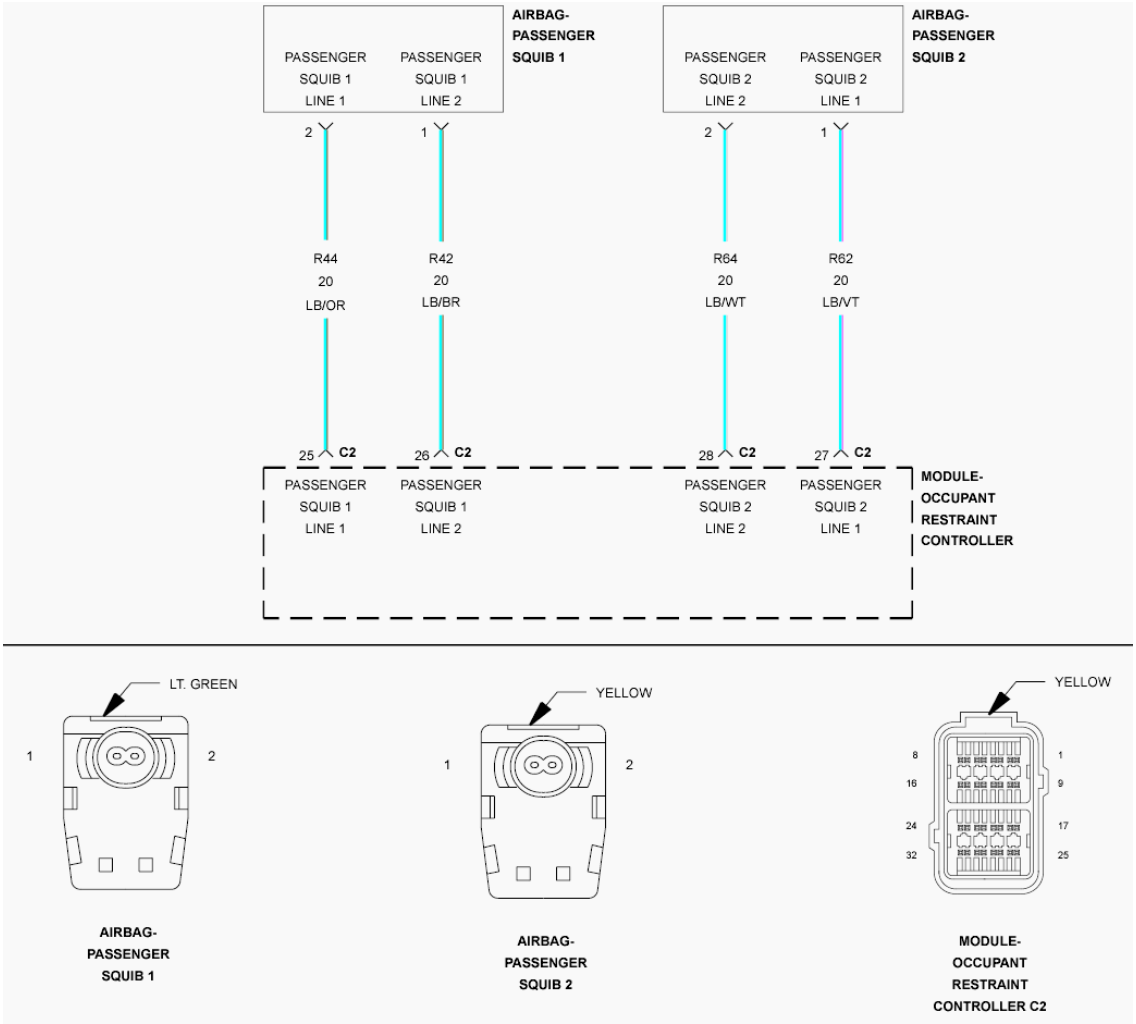

Fig. 55: Passenger Squib Control Circuit Wiring Diagram
Courtesy of CHRYSLER GROUP, LLC

For a complete wiring diagram, **refer to appropriate SYSTEM WIRING DIAGRAMS article** .

THEORY OF OPERATION

When powered, the Occupant Restraint Controller (ORC) sends a test current to the squibs to verify the integrity of the squib and wiring. These circuits are maintained in a "floating" configuration at the ORC (connected to neither power nor ground) as protection against inadvertent deployment. Use of the Supplemental Restraints System (SRS) Load Tool Kit (special tool #8443A, SRS Load Tool) in the tests below substitutes a suspect squib with a known good component. The use of the SRS Load Tool Adapter provides a test point as well as a method for opening the shorting bar connections within the ORC harness connector.

WHEN MONITORED:

The ORC sends out a 40 mA diagnostic current on each squib voltage supply circuit at power up, and every 100 ms thereafter while the ignition is on.

SET CONDITION:

This Diagnostic Trouble Code (DTC) sets when the ORC detects both circuits of the same squib are shorted together for more than 2.5 seconds. This DTC transitions from active to stored when the ORC sees a recovery from a shorted together condition for greater than 2.5 seconds.

POSSIBLE CAUSES

Possible Causes
(R64) PASSENGER SQUIB 2 LINE 1 CIRCUIT SHORTED TO THE (R62) PASSENGER SQUIB 2 LINE 2 CIRCUIT
PASSENGER AIRBAG SQUIB
OCCUPANT RESTRAINT CONTROLLER (ORC)

Always perform the Pre-Diagnostic Troubleshooting procedure before proceeding. Refer to STANDARD PROCEDURE.

DIAGNOSTIC TEST

1. **VERIFY ACTIVE DTC**

   NOTE: Make sure the battery is fully charged.

   1. Turn the ignition on.
   2. With the scan tool, read ORC DTCs.

      Does the scan tool display active B0011-2B-PASSENGER FRONTAL SQUIB 2 CONTROL - WIRES SHORTED TOGETHER DTC?

      Yes

      - Go To 2.

      No

      - Refer to **STANDARD PROCEDURE** and perform the RESTRAINTS SYSTEM INTERMITTENT TEST.

2. **CHECK PASSENGER AIRBAG SQUIB FOR CIRCUITS SHORT TOGETHER**

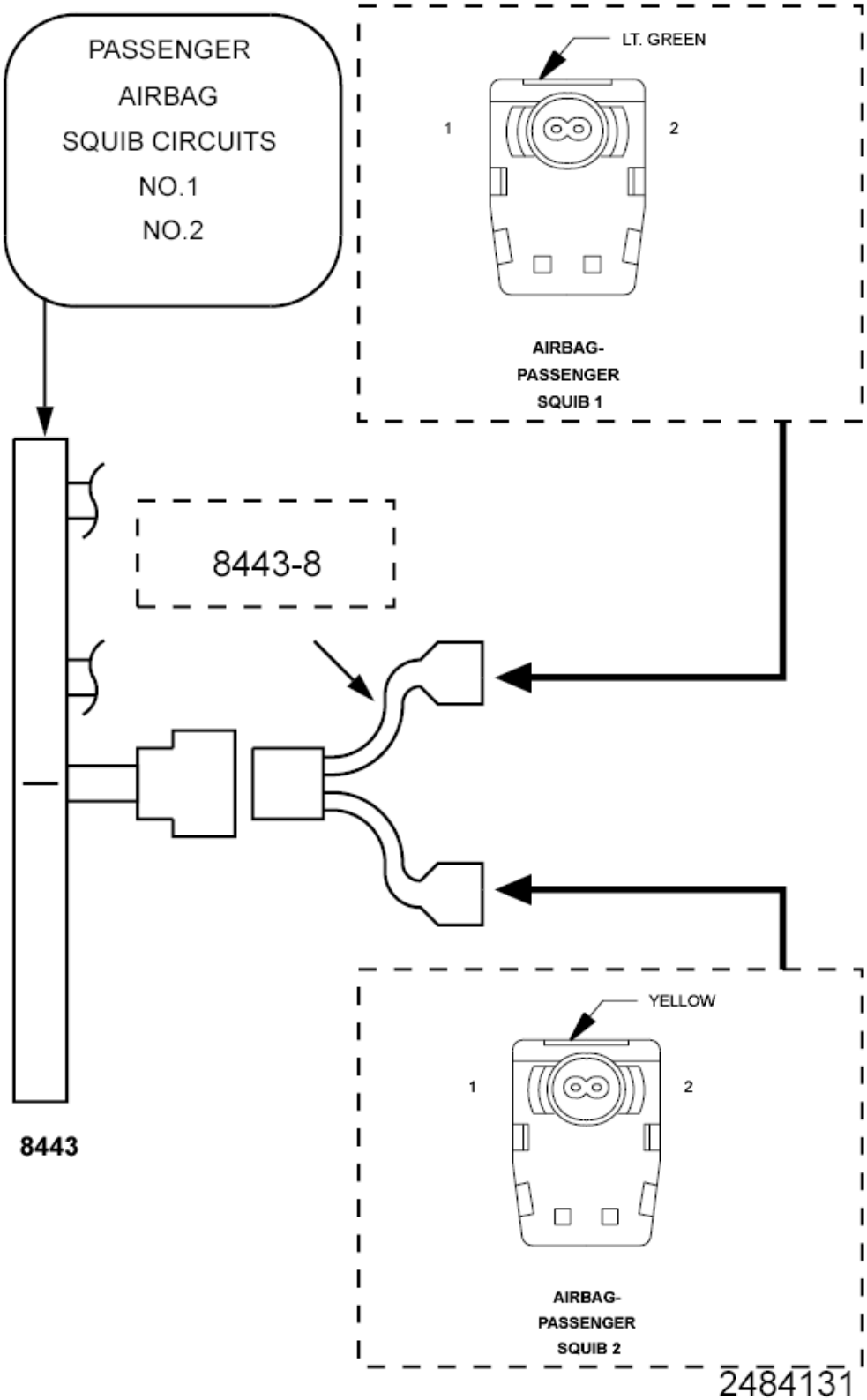

Fig. 56: Checking Passenger Airbag Squib Circuits For Short
Courtesy of CHRYSLER GROUP, LLC

WARNING: Turn the ignition off, disconnect the 12-volt battery and wait two minutes before proceeding. Failure to follow these instructions may result in possible serious or fatal injury.

1. Disconnect the Passenger Airbag Squib harness connectors.

WARNING: Do not place an intact non-deployed airbag face down on a hard surface, the airbag propels into the air if accidentally deployed. Failure to follow these instructions may result in possible serious or fatal injury.

NOTE: Check connectors. Clean and repair as necessary.

2. Connect the SRS Load Tool Kit (special tool #8443A, SRS Load Tool) and SRS Load Tool Jumper (special tool #8443-8, Jumper, SRS Load) to the Passenger Airbag Squib harness connectors.

WARNING: Turn the ignition on, then reconnect the 12-volt battery and wait two minutes before proceeding. Failure to follow these instructions may result in possible serious or fatal injury.

3. With using a scan tool, read the ORC DTCs.

Does the scan tool display active B0011-2B-PASSENGER FRONTAL SQUIB 2 CONTROL - WIRES SHORTED TOGETHER DTC?

Yes

- Go To 3.

No

WARNING: Turn the ignition off, disconnect the 12-volt battery and wait two minutes before proceeding. Failure to follow these instructions may result in possible serious or fatal injury.

-
- Replace the Passenger Airbag in according to the Service Information.
- Refer to **STANDARD PROCEDURE** and perform the RESTRAINTS SYSTEM VERIFICATION TEST.

3. **CHECK (R64) PASSENGER SQUIB 2 LINE 1 CIRCUIT FOR A SHORT TO (R62) PASSENGER SQUIB 2 LINE 2 CIRCUIT**

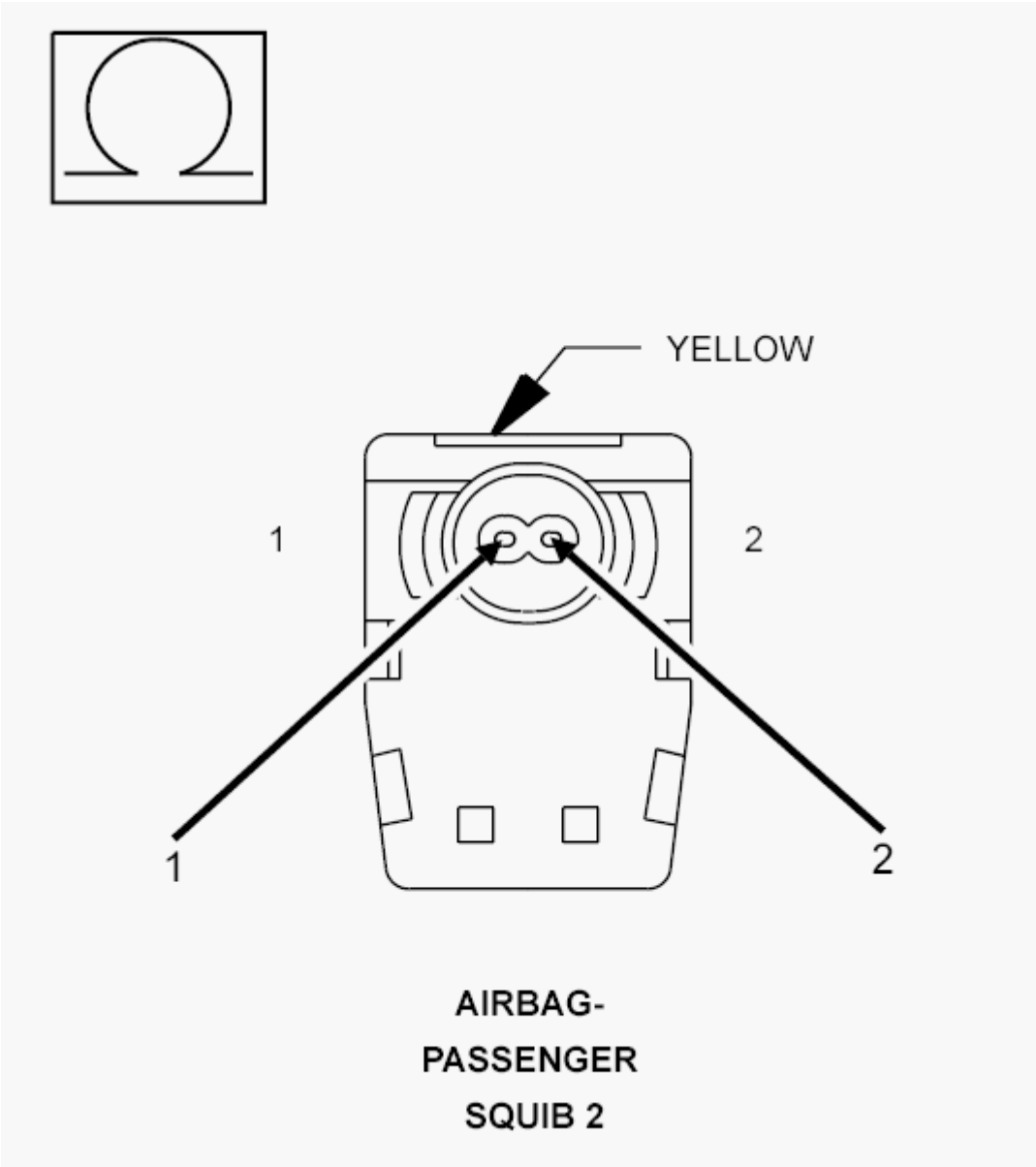

Fig. 57: Checking Passenger Squib Line Circuits
Courtesy of CHRYSLER GROUP, LLC

WARNING: **Turn the ignition off, disconnect the 12-volt battery and wait two minutes before proceeding. Failure to follow these instructions may result in possible serious or fatal injury.**

1. Disconnect the SRS Load Tool Kit (special tool #8443A, SRS Load Tool) and Jumper from the Passenger Airbag Squib harness connectors.
2. Disconnect the ORC harness connectors.

NOTE: **Check connectors - Clean and repair as necessary.**

3. Connect the SRS Load Tool Adapter (special tool #8443-24, 32-Way Adapter) to the ORC C2 harness connector.
4. Measure the resistance between the (R64) Passenger Squib 2 Line 1 circuit cavity 2 and the (R62) Passenger Squib 2 Line 2 circuit cavity 1 at the Passenger Airbag Squib 2 harness connector.

   Is the resistance below 10K Ohms?

   Yes

   - Repair the (R64) Passenger Squib 2 Line 1 circuit for a short to the (R62) Passenger Squib 2 Line 2 circuit.
   - Refer to **STANDARD PROCEDURE** and perform the RESTRAINTS SYSTEM VERIFICATION TEST.

   No

   WARNING: **If the Occupant Restraint Controller (ORC) is dropped at any time, it must be replaced. Failure to follow these instructions may result in possible serious or fatal injury.**

   -
   - Replace the ORC in accordance with the Service Information.
   - Refer to **STANDARD PROCEDURE** and perform the RESTRAINTS SYSTEM VERIFICATION TEST.

B0021-11-LEFT CURTAIN DEPLOYMENT SQUIB 1 - CIRCUIT SHORT TO GROUND

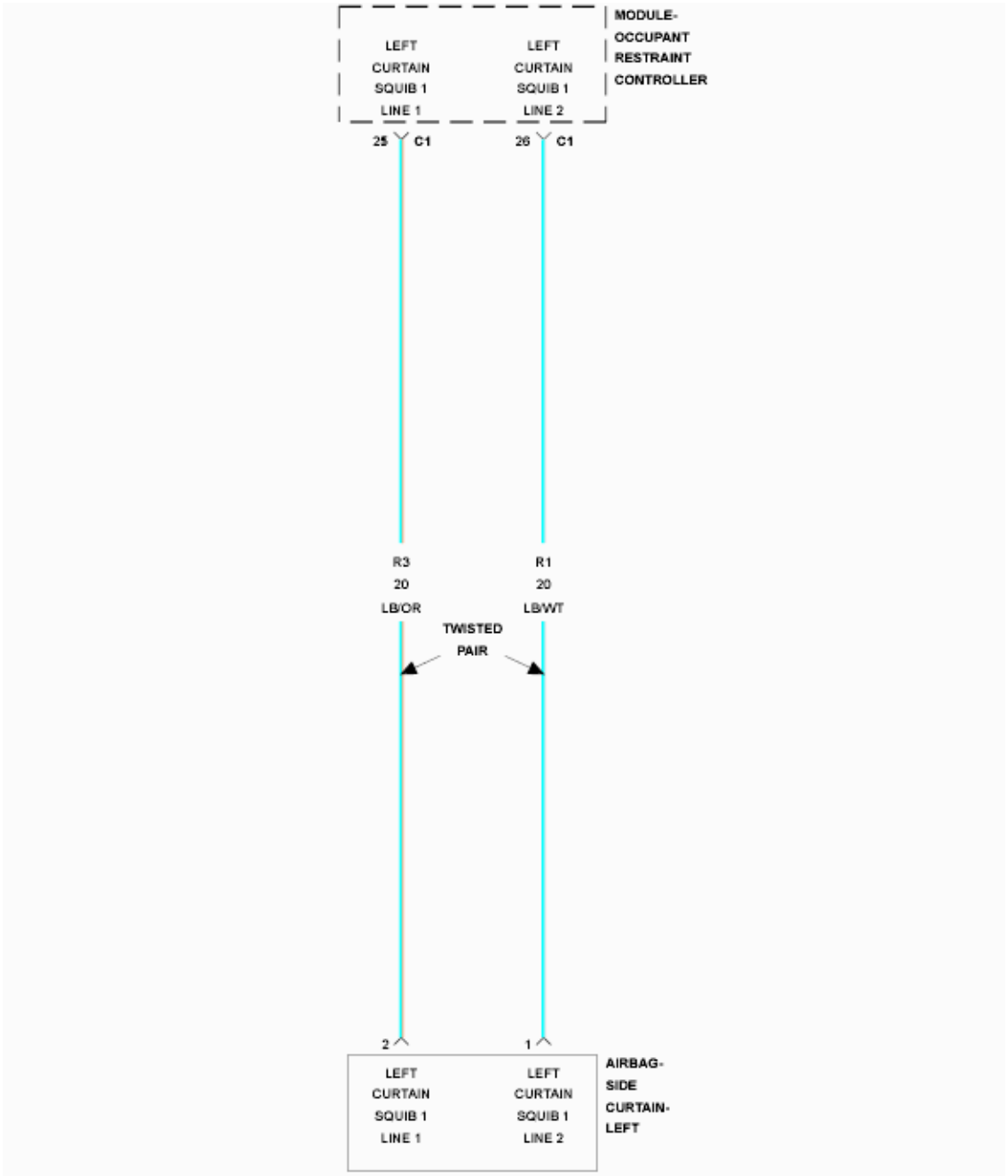
MODULE-
OCCUPANT
RESTRAINT
CONTROLLER
LEFT
CURTAIN
SQUIB 1
LINE 1
LEFT
CURTAIN
SQUIB 1
LINE 2
25
C1
26
C1
R3
20
LB/OR
R1
20
LB/WT
TWISTED
PAIR
2
1
LEFT
CURTAIN
SQUIB 1
LINE 1
LEFT
CURTAIN
SQUIB 1
LINE 2
AIRBAG-
SIDE
CURTAIN-
LEFT

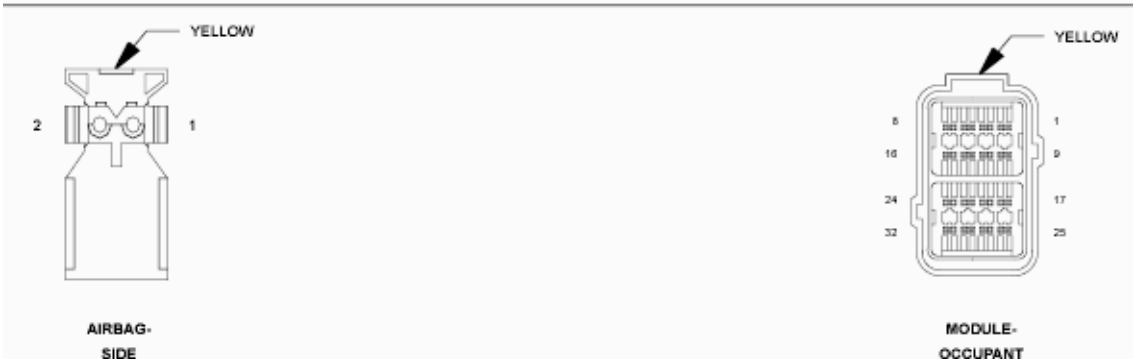
YELLOW
2
1
AIRBAG-
SIDE
YELLOW
8
1
16
9
24
17
32
25
MODULE-
OCCUPANT

Fig. 58: Left Curtain Squib Circuit Wiring Diagram
Courtesy of CHRYSLER GROUP, LLC

For a complete wiring diagram, **refer to appropriate SYSTEM WIRING DIAGRAMS article** .

THEORY OF OPERATION

When powered, the Occupant Restraint Controller (ORC) sends a test current to the squibs to verify the integrity of the squib and wiring. These circuits are maintained in a "floating" configuration at the ORC (connected to neither power nor ground) as protection against inadvertent deployment. Use of the Supplemental Restraints System (SRS) Load Tool Kit (special tool #8443A, SRS Load Tool) in the tests below substitutes a suspect squib with a known good component. The use of the SRS Load Tool Adapter provides a test point as well as a method for opening the shorting bar connections within the ORC harness connector.

WHEN MONITORED:

The ORC sends out a 40 mA diagnostic current on each squib voltage supply circuit at power up and every 100 ms thereafter while the ignition is on. With the ignition on, the Occupant Restraint Controller (ORC) monitors the resistance of the Left Side Curtain Squib 1 circuits.

SET CONDITION:

This Diagnostic Trouble Code (DTC) sets when the ORC detects a short to ground on the squib circuit for more than 2.5 seconds. This DTC transitions from active to stored when the ORC sees a recovery from a short to ground condition for greater than 2.5 seconds. The ORC has detected low resistance of the Left Side Curtain Squib 1 circuits.

POSSIBLE CAUSES

Possible Causes
(R3) LEFT SIDE CURTAIN SQUIB 1 LINE 1 CIRCUIT SHORTED TO GROUND
(R1) LEFT SIDE CURTAIN SQUIB 1 LINE 2 CIRCUIT SHORTED TO GROUND
LEFT SIDE CURTAIN AIRBAG
OCCUPANT RESTRAINT CONTROLLER (ORC)

Always perform the Pre-Diagnostic Troubleshooting procedure before proceeding. Refer to STANDARD PROCEDURE.

DIAGNOSTIC TEST

1. **VERIFY ACTIVE DTC**

   NOTE: Make sure the battery is fully charged.

   1. Turn the ignition on.
   2. With the scan tool, read ORC DTCs.

Does the scan tool display active B0021-11-LEFT CURTAIN DEPLOYMENT SQUIB 1 - CIRCUIT SHORT TO GROUND DTC?

Yes

- Go To 2.

No

- Refer to **STANDARD PROCEDURE** and perform the RESTRAINTS SYSTEM INTERMITTENT TEST.

2. **CHECK LEFT SIDE CURTAIN AIRBAG CIRCUITS FOR SHORT TO GROUND**

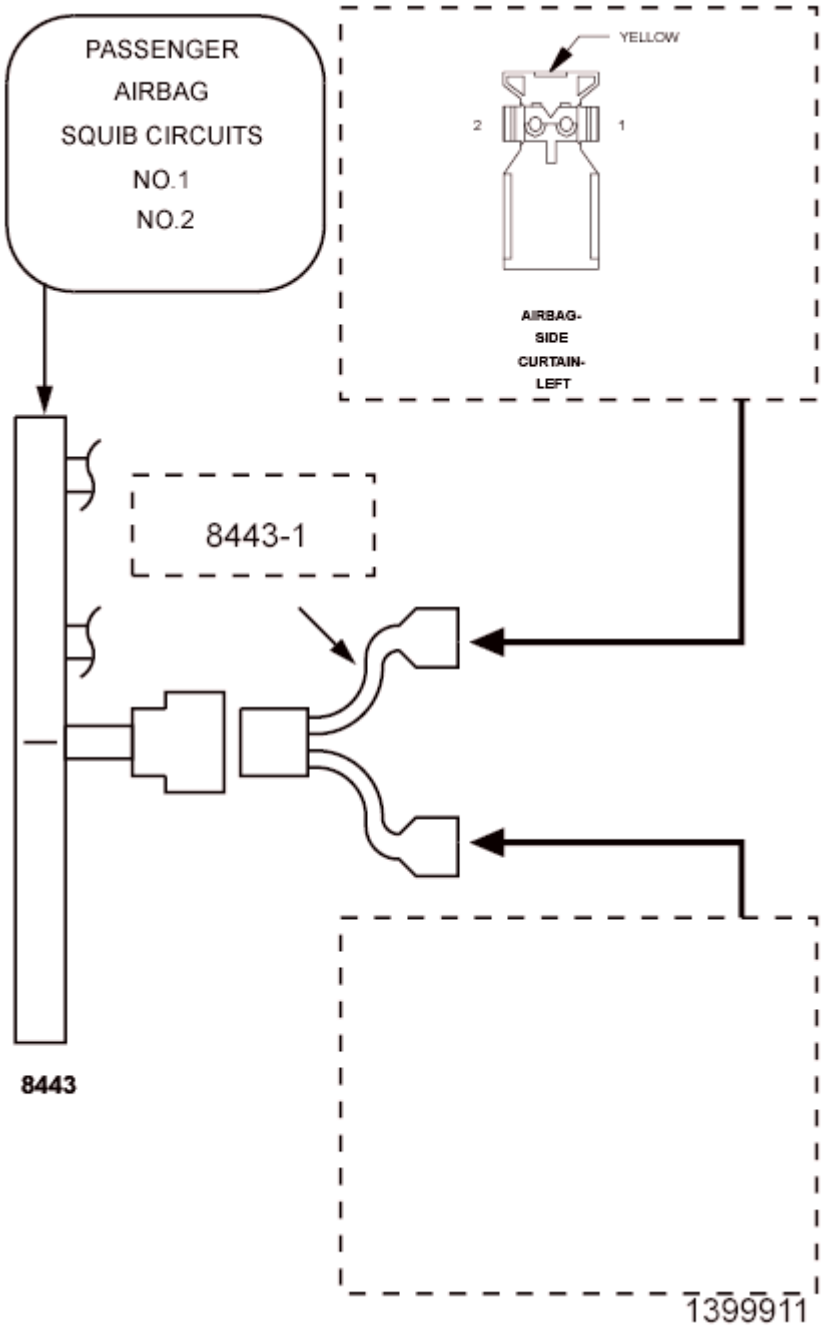

Fig. 59: Checking Left Side Curtain Airbag Circuit
Courtesy of CHRYSLER GROUP, LLC

WARNING: **Turn the ignition off, disconnect the 12-volt battery and wait two minutes before proceeding. Failure to follow these instructions may result in possible serious or fatal injury.**

1. Disconnect the Left Side Curtain Airbag harness connector.

WARNING: **Do not place an intact non-deployed airbag face down on a**

hard surface, the airbag propels into the air if accidentally deployed. Failure to follow these instructions may result in possible serious or fatal injury.

NOTE: Check connectors - Clean and repair as necessary.

2. Connect the SRS Load Tool Kit (special tool #8443A, SRS Load Tool) and SRS Load Tool Jumper (special tool #8443-1, Jumpers, 2 Pin) to the Left Side Curtain Airbag harness connector.

   WARNING: **Turn the ignition on, then reconnect the 12-volt battery and wait two minutes before proceeding. Failure to follow these instructions may result in possible serious or fatal injury.**

3. With the scan tool, read the ORC DTCs.

   Does the scan tool display active B0021-11-LEFT CURTAIN DEPLOYMENT SQUIB 1 - CIRCUIT SHORT TO GROUND DTC?

   Yes

   - Go To 3.

   No

   WARNING: **Turn the ignition off, disconnect the 12-volt battery and wait two minutes before proceeding. Failure to follow these instructions may result in possible serious or fatal injury.**

   -
   - Replace the Left Side Curtain Airbag in accordance with the Service Information.
   - Refer to **STANDARD PROCEDURE** and perform the RESTRAINTS SYSTEM VERIFICATION TEST.

3. **CHECK (R1, R3) LEFT CURTAIN SQUIB 1 CIRCUITS FOR A SHORT TO GROUND**

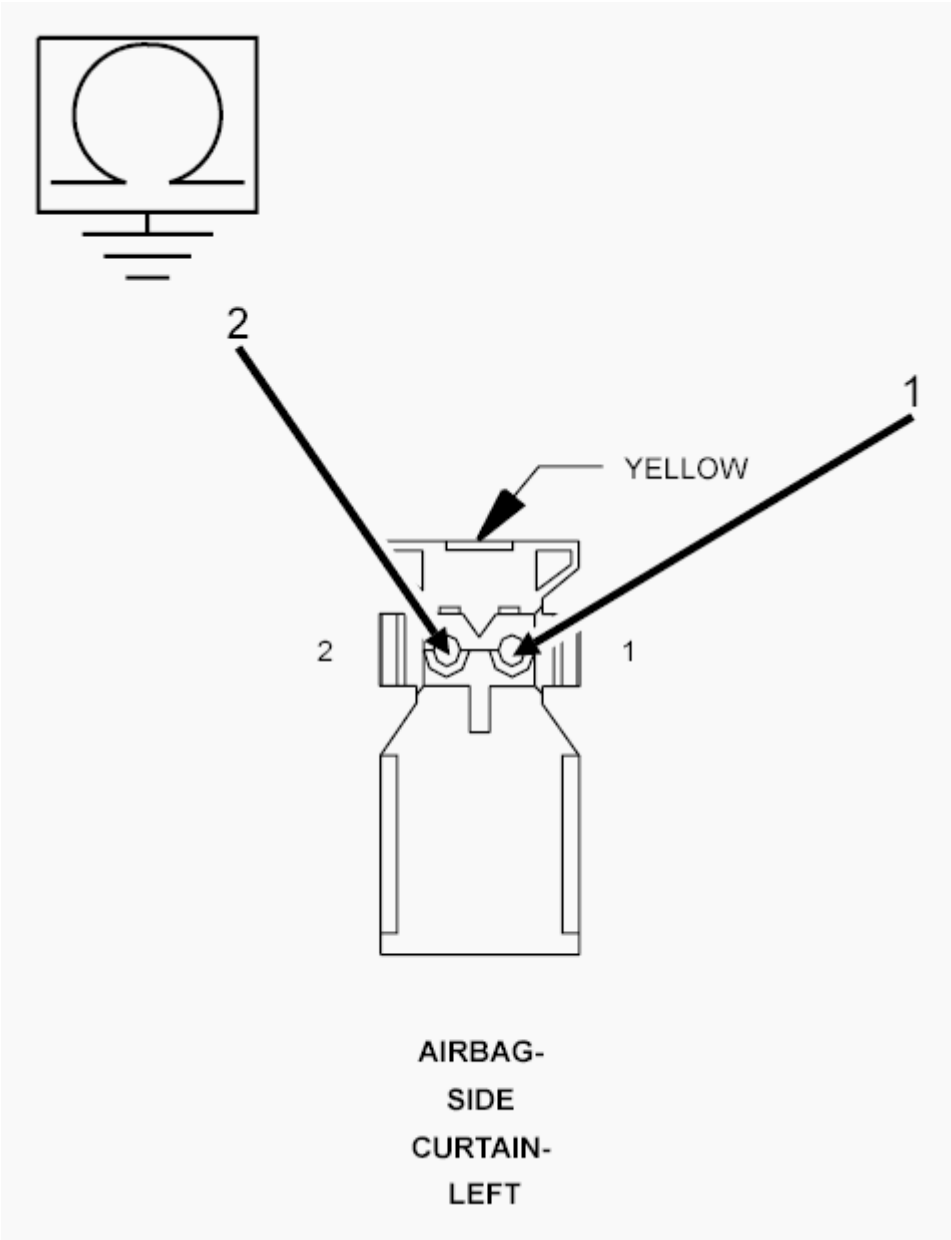

Fig. 60: Checking Left Curtain Squib 1 Circuits
Courtesy of CHRYSLER GROUP, LLC

WARNING: Turn the ignition off, disconnect the 12-volt battery and wait two minutes before proceeding. Failure to follow these instructions may result in possible serious or fatal injury.

1. Disconnect the SRS Load Tool Kit (special tool #8443A, SRS Load Tool) and Jumper from the Left Side Curtain Airbag harness connector.
2. Disconnect the ORC harness connectors.

NOTE: Check connectors - Clean and repair as necessary.

3. Connect the SRS Load Tool Adapter (special tool #8443-24, 32-Way Adapter) to the ORC C1 harness connector.
4. Measure the resistance of the (R3) Left Curtain Squib 1 Line 1 circuit between the Left Side Curtain Airbag harness connector cavity 2 and ground.
5. Measure the resistance of the (R1) Left Curtain Squib 1 Line 2 circuit between the Left Side Curtain Airbag harness connector cavity 1 and ground.

   Is the resistance below 10K Ohms on either circuit?

   Yes

   - Repair the Left Curtain Squib 1 circuits for a short to ground.
   - Refer to **STANDARD PROCEDURE** and perform the RESTRAINTS SYSTEM VERIFICATION TEST.

   No

   WARNING: **If the Occupant Restraint Controller (ORC) is dropped at any time, it must be replaced. Failure to follow these instructions may result in possible serious or fatal injury.**

   -
   - Replace the ORC in accordance with the Service Information.
   - Refer to **STANDARD PROCEDURE** and perform the RESTRAINTS SYSTEM VERIFICATION TEST.

B0021-12-LEFT CURTAIN DEPLOYMENT SQUIB 1 - CIRCUIT SHORT TO BATTERY

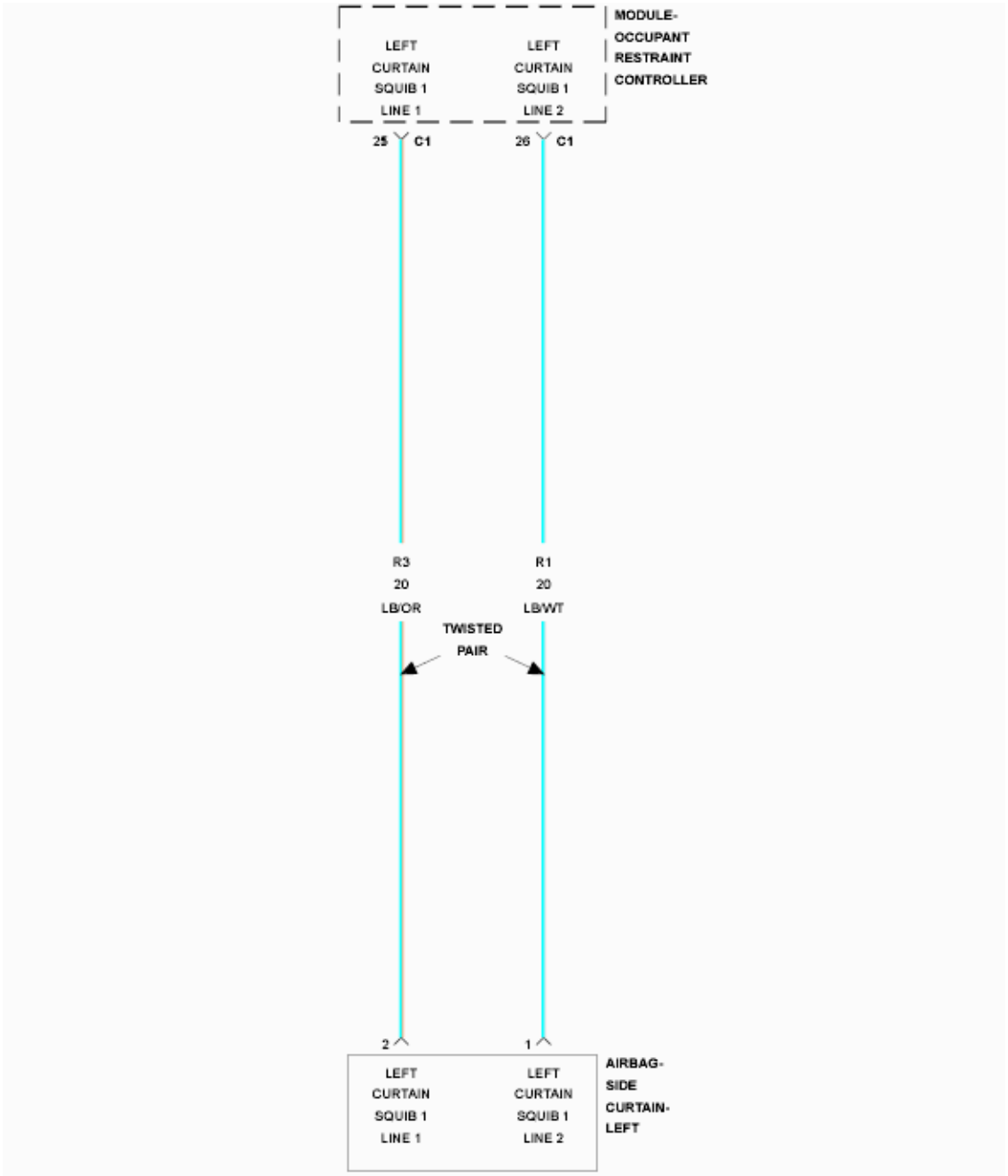
MODULE-
OCCUPANT
RESTRAINT
CONTROLLER
LEFT
CURTAIN
SQUIB 1
LINE 1
LEFT
CURTAIN
SQUIB 1
LINE 2
25
C1
26
C1
R3
20
LB/OR
R1
20
LB/WT
TWISTED
PAIR
2
1
LEFT
CURTAIN
SQUIB 1
LINE 1
LEFT
CURTAIN
SQUIB 1
LINE 2
AIRBAG-
SIDE
CURTAIN-
LEFT

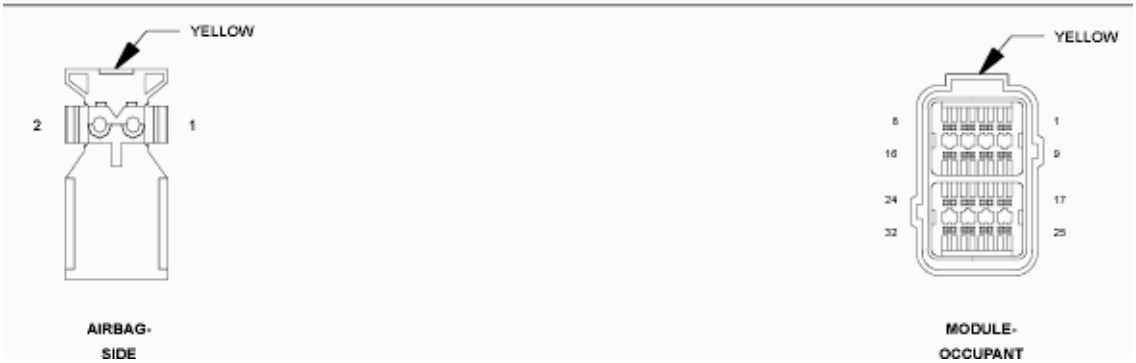
YELLOW
2
1
AIRBAG-
SIDE
YELLOW
8
1
16
9
24
17
32
25
MODULE-
OCCUPANT

Fig. 61: Left Curtain Squib Circuit Wiring Diagram
Courtesy of CHRYSLER GROUP, LLC

For a complete wiring diagram, **refer to appropriate SYSTEM WIRING DIAGRAMS article** .

THEORY OF OPERATION

When powered, the Occupant Restraint Controller (ORC) sends a test current to the squibs to verify the integrity of the squib and wiring. These circuits are maintained in a "floating" configuration at the ORC (connected to neither power nor ground) as protection against inadvertent deployment. Use of the Supplemental Restraints System (SRS) Load Tool in the tests below substitutes a suspect squib with a known good component. The use of the SRS Load Tool Adapter provides a test point as well as a method for opening the shorting bar connections within the ORC harness connector.

WHEN MONITORED:

The ORC sends out a 40 mA diagnostic current on each squib voltage supply circuit at power up and every 100 ms thereafter while the ignition is on.

SET CONDITION:

This Diagnostic Trouble Code (DTC) sets when the ORC detects a short to voltage on the left side squib circuit for more than 2.5 seconds. This DTC transitions from active to stored when the ORC sees a recovery from a short to voltage for greater than 2.5 seconds.

POSSIBLE CAUSES

Possible Causes
(R3) LEFT CURTAIN SQUIB LINE 1 CIRCUIT SHORTED TO VOLTAGE
(R1) LEFT CURTAIN SQUIB LINE 2 CIRCUIT SHORTED TO VOLTAGE
LEFT SIDE CURTAIN AIRBAG
OCCUPANT RESTRAINT CONTROLLER (ORC)

Always perform the Pre-Diagnostic Troubleshooting procedure before proceeding. Refer to STANDARD PROCEDURE.

DIAGNOSTIC TEST

1. **VERIFY ACTIVE DTC**

   NOTE: Make sure the battery is fully charged.

   1. Turn the ignition on.
   2. With the scan tool, read ORC DTCs.

      Does the scan tool display active B0021-12-LEFT CURTAIN DEPLOYMENT SQUIB 1 -

CIRCUIT SHORT TO BATTERY DTC?

Yes

- Go To 2.

No

- Refer to **STANDARD PROCEDURE** and perform the RESTRAINTS SYSTEM INTERMITTENT TEST.

2. **CHECK LEFT SIDE CURTAIN AIRBAG FOR SHORT TO VOLTAGE**

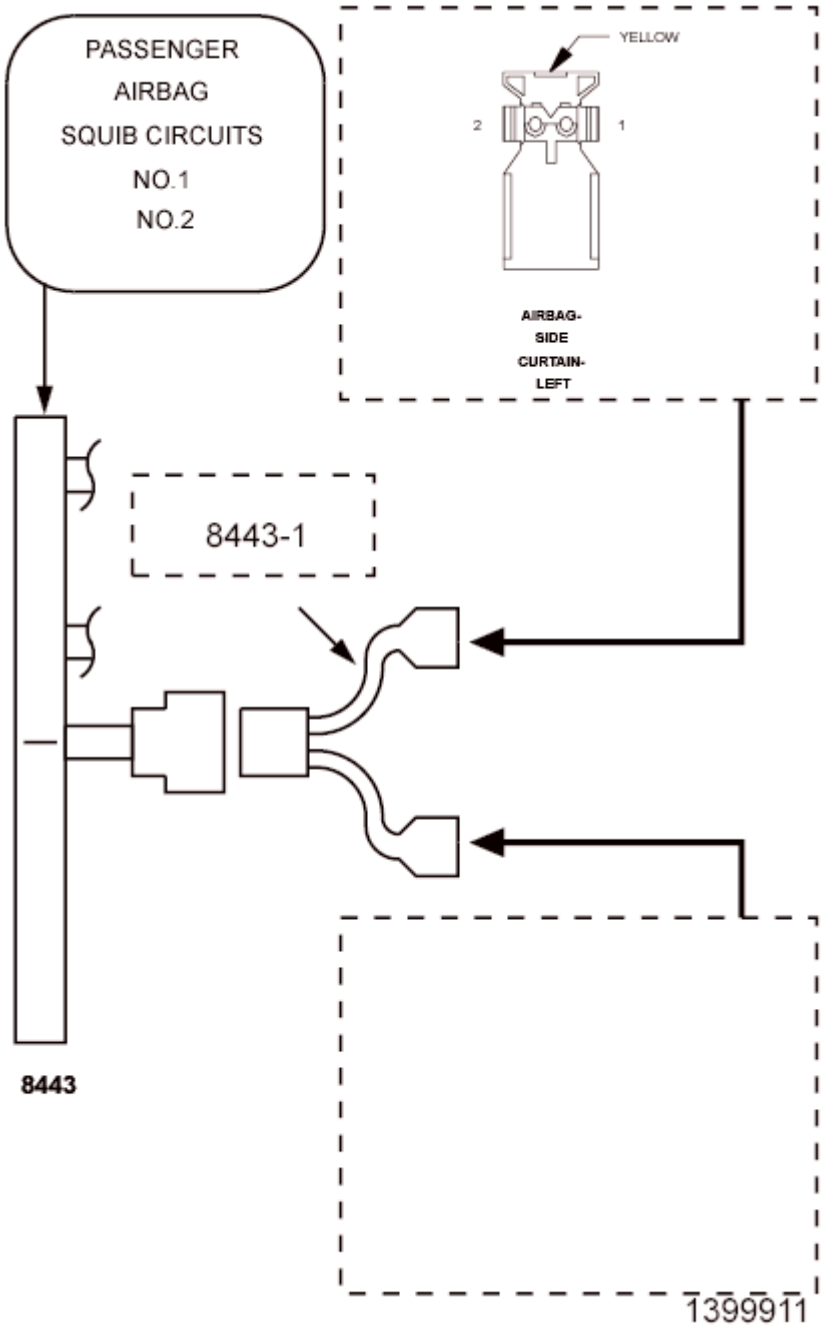

Fig. 62: Checking Left Side Curtain Airbag Circuit
Courtesy of CHRYSLER GROUP, LLC

WARNING: **Turn the ignition off, disconnect the 12-volt battery and wait two minutes before proceeding. Failure to follow these instructions may result in possible serious or fatal injury.**

1. Disconnect the Left Side Curtain Airbag harness connector.

NOTE: Check connectors - Clean and repair as necessary.

2. Connect the SRS Load Tool Kit (special tool #8443A, SRS Load Tool) and SRS Load Tool Jumper (special tool #8443-1, Jumpers, 2 Pin) to the Left Side Curtain Airbag harness connector.

   WARNING: Turn the ignition on, then reconnect the 12-volt battery and wait two minutes before proceeding. Failure to follow these instructions may result in possible serious or fatal injury.

3. With the scan tool, read the ORC DTCs.

   Does the scan tool display active B0021-12-LEFT CURTAIN DEPLOYMENT SQUIB 1 - CIRCUIT SHORT TO BATTERY DTC ?

   Yes

   - Go To 3.

   No

   WARNING: Turn the ignition off, disconnect the 12-volt battery and wait two minutes before proceeding. Failure to follow these instructions may result in possible serious or fatal injury.

   -
   - Replace the Left Side Curtain Airbag in accordance with the Service Information.
   - Refer to **STANDARD PROCEDURE** and perform the RESTRAINTS SYSTEM VERIFICATION TEST.

3. **CHECK (R1, R3) LEFT CURTAIN SQUIB 1 CIRCUITS FOR A SHORT TO VOLTAGE**

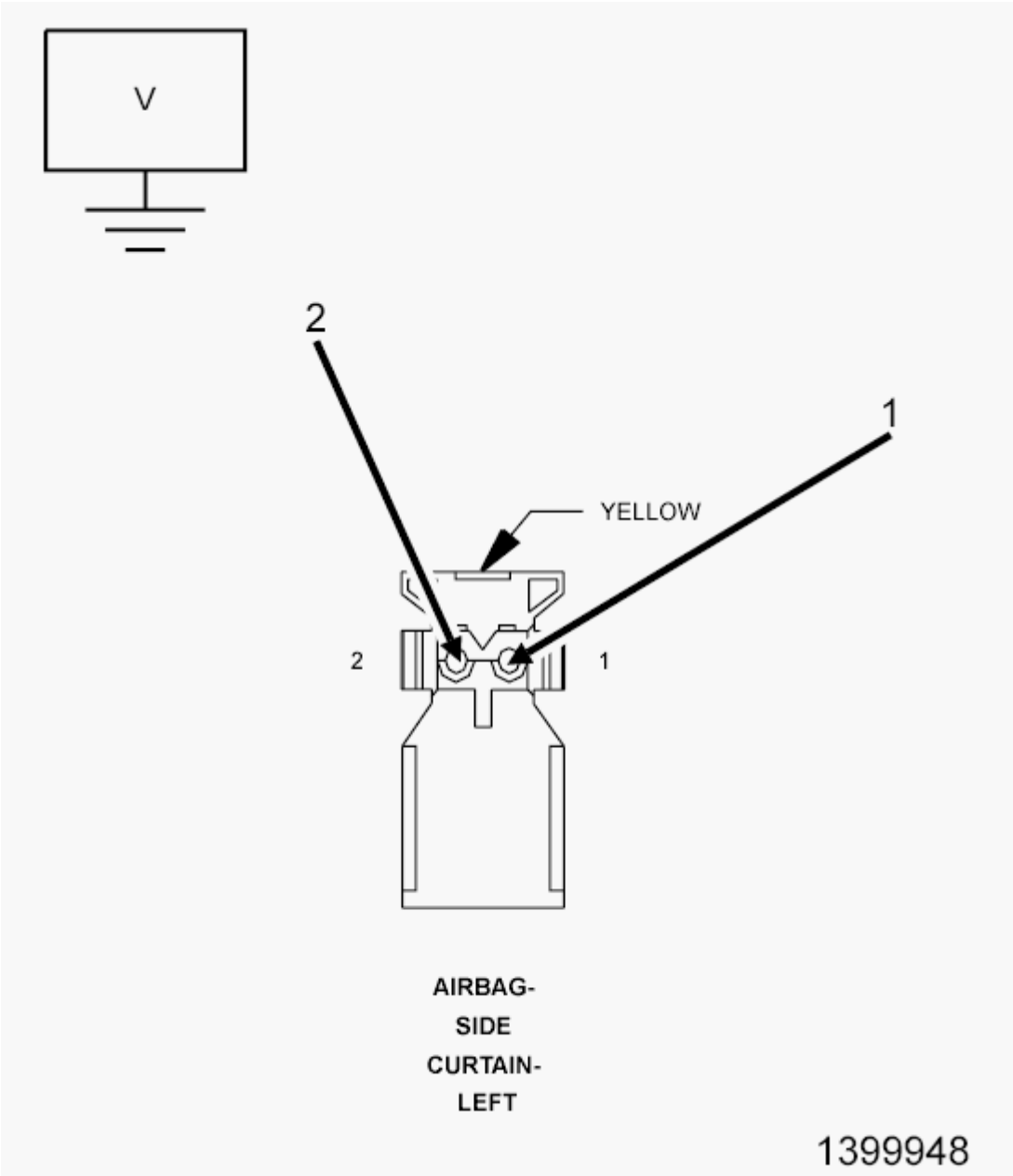

Fig. 63: Checking Left Curtain Squib 1 Circuit
Courtesy of CHRYSLER GROUP, LLC

WARNING: Turn the ignition off, disconnect the 12-volt battery and wait two minutes before proceeding. Failure to follow these instructions may result in possible serious or fatal injury.

1. Disconnect the SRS Load Tool Kit (special tool #8443A, SRS Load Tool) and Jumper from the Left Side Curtain Airbag harness connector.
2. Disconnect the ORC harness connectors.

NOTE: **Check connectors - Clean and repair as necessary.**

3. Connect the SRS Load Tool Adaptor (special tool #8443-24, 32-Way Adapter) to the ORC C1 harness connector.

WARNING: **Turn the ignition on, then reconnect the 12-volt battery and wait two minutes before proceeding. Failure to follow these instructions may result in possible serious or fatal injury.**

4. Measure the voltage of the (R3) Left Curtain Squib 1 Line 1 circuit between the Left Side Curtain Airbag harness connector cavity 2 and ground.
5. Measure the voltage of the (R1) Left Curtain Squib 1 Line 2 circuit between the Left Side Curtain Airbag harness connector cavity 1 and ground.

Is there any voltage present for either measurement?

Yes

WARNING: **Turn the ignition off, disconnect the 12-volt battery and wait two minutes before proceeding. Failure to follow these instructions may result in possible serious or fatal injury.**

-
- Repair the Left Side Curtain Squib 1 circuits for a short to voltage.
- Refer to **STANDARD PROCEDURE** and perform the RESTRAINTS SYSTEM VERIFICATION TEST.

No

WARNING: **Turn the ignition off, disconnect the 12-volt battery and wait two minutes before proceeding. Failure to follow these instructions may result in possible serious or fatal injury.**

WARNING: **If the Occupant Restraint Controller (ORC) is dropped at any time, it must be replaced. Failure to follow these instructions may result in possible serious or fatal injury.**

-
-
- Replace the ORC in accordance with the Service Information.
- Refer to **STANDARD PROCEDURE** and perform the RESTRAINTS SYSTEM VERIFICATION TEST.

B0021-13-LEFT CURTAIN DEPLOYMENT SQUIB 1 - CIRCUIT OPEN

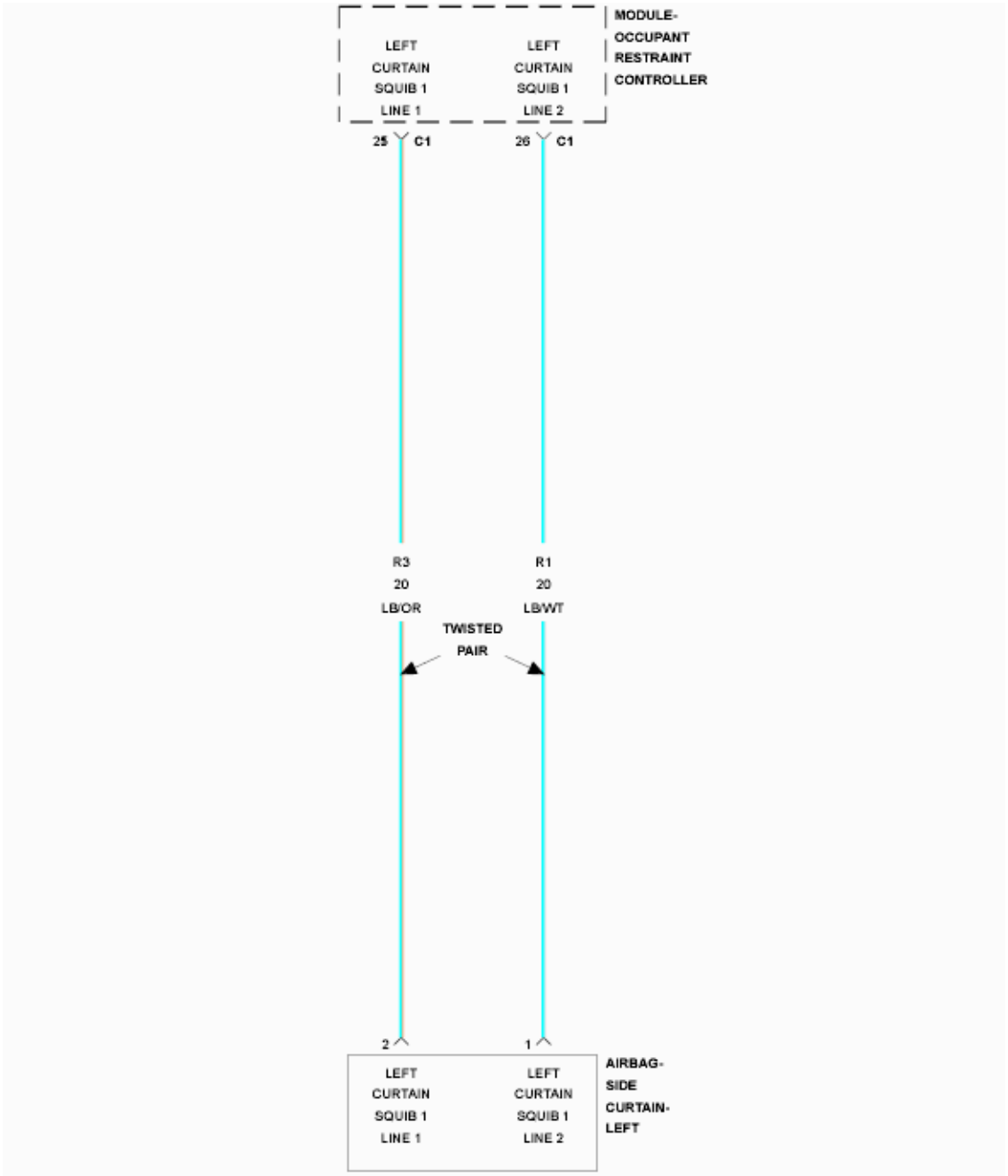
MODULE-
OCCUPANT
RESTRAINT
CONTROLLER
LEFT
CURTAIN
SQUIB 1
LINE 1
LEFT
CURTAIN
SQUIB 1
LINE 2
25
C1
26
C1
R3
20
LB/OR
R1
20
LB/WT
TWISTED
PAIR
2
1
LEFT
CURTAIN
SQUIB 1
LINE 1
LEFT
CURTAIN
SQUIB 1
LINE 2
AIRBAG-
SIDE
CURTAIN-
LEFT

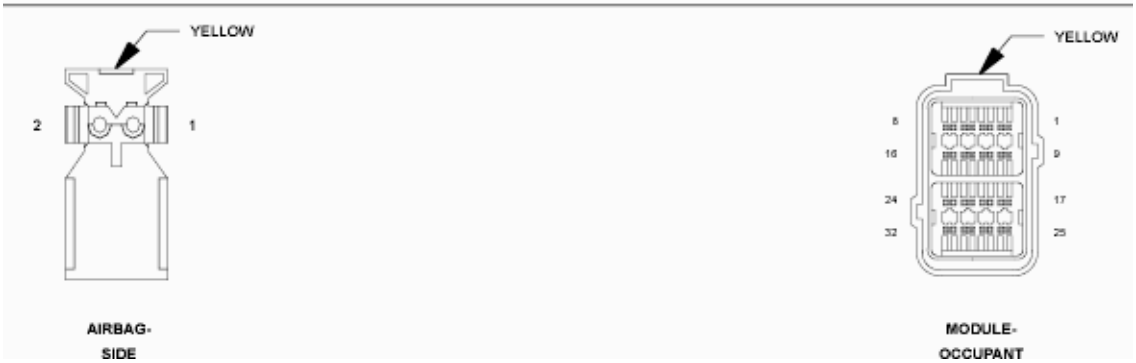
YELLOW
2
1
AIRBAG-
SIDE
YELLOW
8
1
16
9
24
17
32
25
MODULE-
OCCUPANT

Fig. 64: Left Curtain Squib Circuit Wiring Diagram
Courtesy of CHRYSLER GROUP, LLC

For a complete wiring diagram, **refer to appropriate SYSTEM WIRING DIAGRAMS article** .

THEORY OF OPERATION

When powered, the Occupant Restraint Controller (ORC) sends a test current to the squibs to verify the integrity of the squib and wiring. These circuits are maintained in a "floating" configuration at the ORC (connected to neither power nor ground) as protection against inadvertent deployment. Use of the Supplemental Restraints System (SRS) Load Tool Kit (special tool #8443A, SRS Load Tool) in the tests below substitutes a suspect squib with a known good component. The use of the SRS Load Tool Adapter provides a test point as well as a method for opening the shorting bar connections within the ORC harness connector.

WHEN MONITORED:

The ORC sends out a 40 mA diagnostic current on each squib voltage supply circuit at power up and every 100 ms thereafter while the ignition is on.

SET CONDITION:

This Diagnostic Trouble Code (DTC) sets when the ORC detects an open or high resistance on the left squib circuit for more than 2.5 seconds. This DTC transitions from active to stored when the ORC sees a recovery from an open condition for greater than 2.5 seconds.

POSSIBLE CAUSES

Possible Causes
(R3) LEFT CURTAIN SQUIB LINE 1 CIRCUIT OPEN
(R1) LEFT CURTAIN SQUIB LINE 2 CIRCUIT OPEN
LEFT SIDE CURTAIN AIRBAG
OCCUPANT RESTRAINT CONTROLLER (ORC)

Always perform the Pre-Diagnostic Troubleshooting procedure before proceeding. Refer to STANDARD PROCEDURE.

DIAGNOSTIC TEST

1. **VERIFY ACTIVE DTC**

   NOTE: Make sure the battery is fully charged.

   1. Turn the ignition on.
   2. With the scan tool, read ORC DTCs.

      Does the scan tool display active B0021-13-LEFT CURTAIN DEPLOYMENT SQUIB 1 -

CIRCUIT OPEN DTC?

Yes

- Go To 2.

No

- Refer to **STANDARD PROCEDURE** and perform the RESTRAINTS SYSTEM INTERMITTENT TEST.

2. **CHECK LEFT SIDE CURTAIN AIRBAG FOR OPEN CIRCUITS**

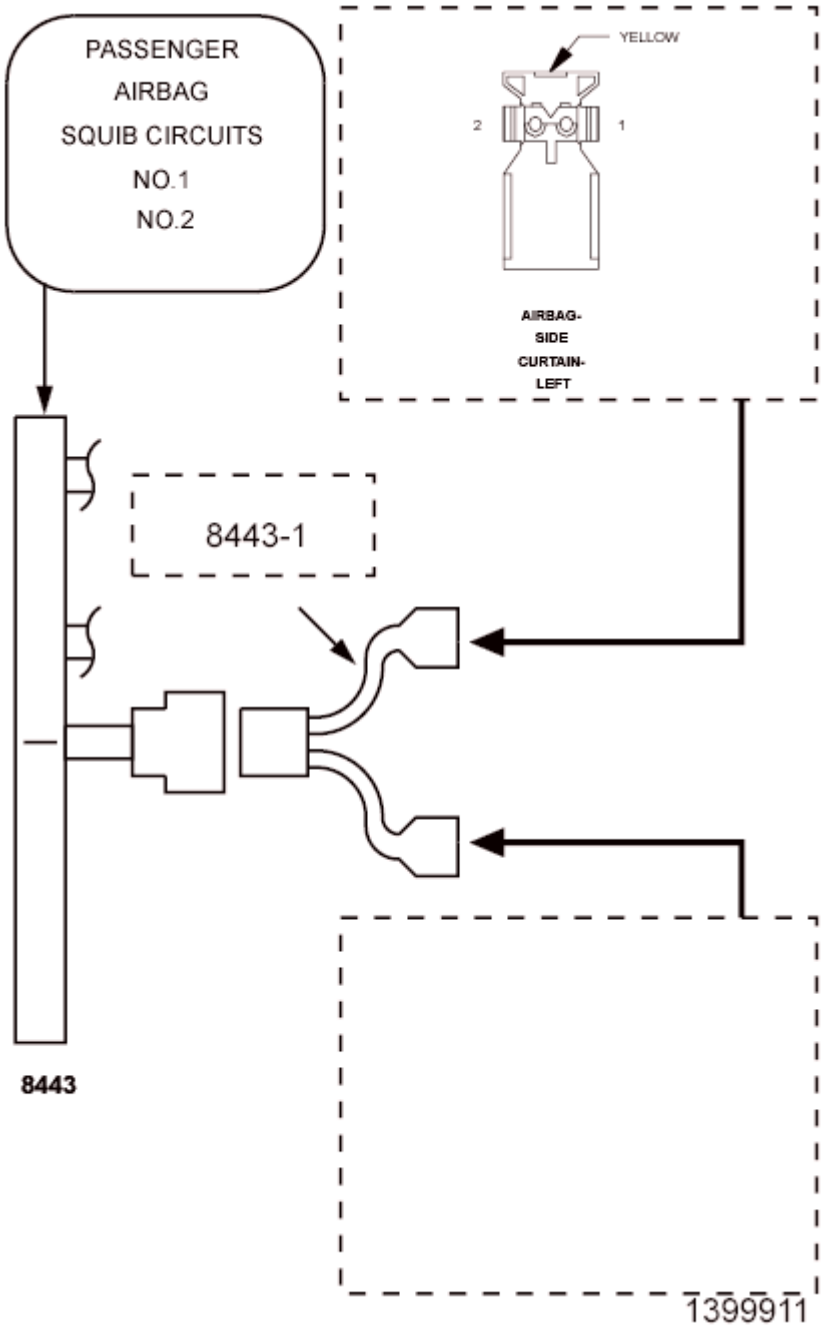

Fig. 65: Checking Left Side Curtain Airbag Circuit
Courtesy of CHRYSLER GROUP, LLC

WARNING: **Turn the ignition off, disconnect the 12-volt battery and wait two minutes before proceeding. Failure to follow these instructions may result in possible serious or fatal injury.**

1. Disconnect the Left Side Curtain Airbag harness connector.

WARNING: **To avoid serious or fatal injury, do not place an intact**

undeployed curtain airbag face down on a hard surface, the airbag will propel into the air if accidentally deployed.

NOTE: Check connectors - Clean and repair as necessary.

2. Connect the SRS Load Tool Kit (special tool #8443A, SRS Load Tool) and SRS Load Tool Jumper (special tool #8443-1, Jumpers, 2 Pin) to the Left Side Curtain Airbag harness connector.

WARNING: Turn the ignition on, then reconnect the 12-volt battery and wait two minutes before proceeding. Failure to follow these instructions may result in possible serious or fatal injury.

3. With the scan tool, read the ORC DTCs.

   Does the scan tool display active B0021-13-LEFT CURTAIN DEPLOYMENT SQUIB 1 - CIRCUIT OPEN DTC?

   Yes

   - Go To 3.

   No

WARNING: Turn the ignition off, disconnect the 12-volt battery and wait two minutes before proceeding. Failure to follow these instructions may result in possible serious or fatal injury.

-
- Replace the Left Side Curtain Airbag in accordance with the Service Information.
- Refer to **STANDARD PROCEDURE** and perform the RESTRAINTS SYSTEM VERIFICATION TEST.

3. **CHECK (R1, R3) LEFT CURTAIN SQUIB 1 CIRCUITS FOR AN OPEN**

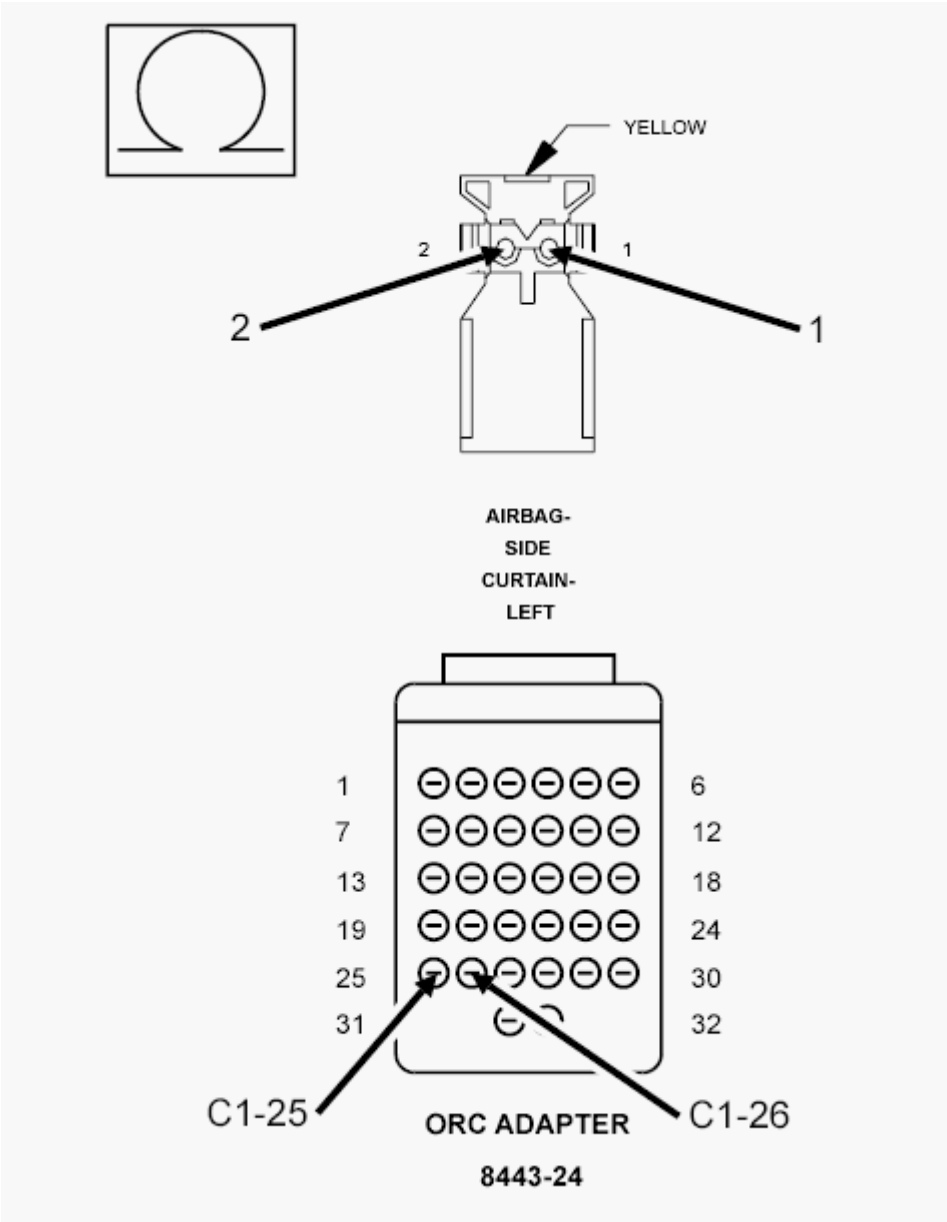

Fig. 66: Checking Left Curtain Squib 1 Circuits For Open
Courtesy of CHRYSLER GROUP, LLC

WARNING: **Turn the ignition off, disconnect the 12-volt battery and wait two minutes before proceeding. Failure to follow these instructions may result in possible serious or fatal injury.**

1. Disconnect the SRS Load Tool Kit (special tool #8443A, SRS Load Tool) and Jumper from the Left Side Curtain Airbag harness connector.
2. Disconnect the ORC harness connectors.

NOTE: **Check connectors - Clean and repair as necessary.**

3. Connect the SRS Load Tool Adaptor (special tool #8443-24, 32-Way Adapter) to the ORC C1 harness connector.
4. Measure the resistance of the (R3) Left Curtain Squib 1 Line 1 circuit between the Left Side Curtain Airbag harness connector cavity 2 and the SRS Load Tool Adaptor (special tool #8443-24, 32-Way Adapter) cavity 25.
5. Measure the resistance of the (R1) Left Curtain Squib 1 Line 2 circuit between the Left Side Curtain Airbag harness connector cavity 1 and the SRS Load Tool Adaptor (special tool #8443-24, 32-Way Adapter) cavity 26.

Is the resistance below 1.0 Ohms on both circuits?

Yes

WARNING: **If the Occupant Restraint Controller (ORC) is dropped at any time, it must be replaced. Failure to follow these instructions may result in possible serious or fatal injury.**

-
- Replace the ORC in accordance with the Service Information.
- Refer to **STANDARD PROCEDURE** and perform the RESTRAINTS SYSTEM VERIFICATION TEST.

No

- Repair the (R1, R3) Left Curtain Squib 1 circuits for an open.
- Refer to **STANDARD PROCEDURE** and perform the RESTRAINTS SYSTEM VERIFICATION TEST.

B0021-2B-LEFT CURTAIN DEPLOYMENT SQUIB 1 - WIRES SHORTED TOGETHER

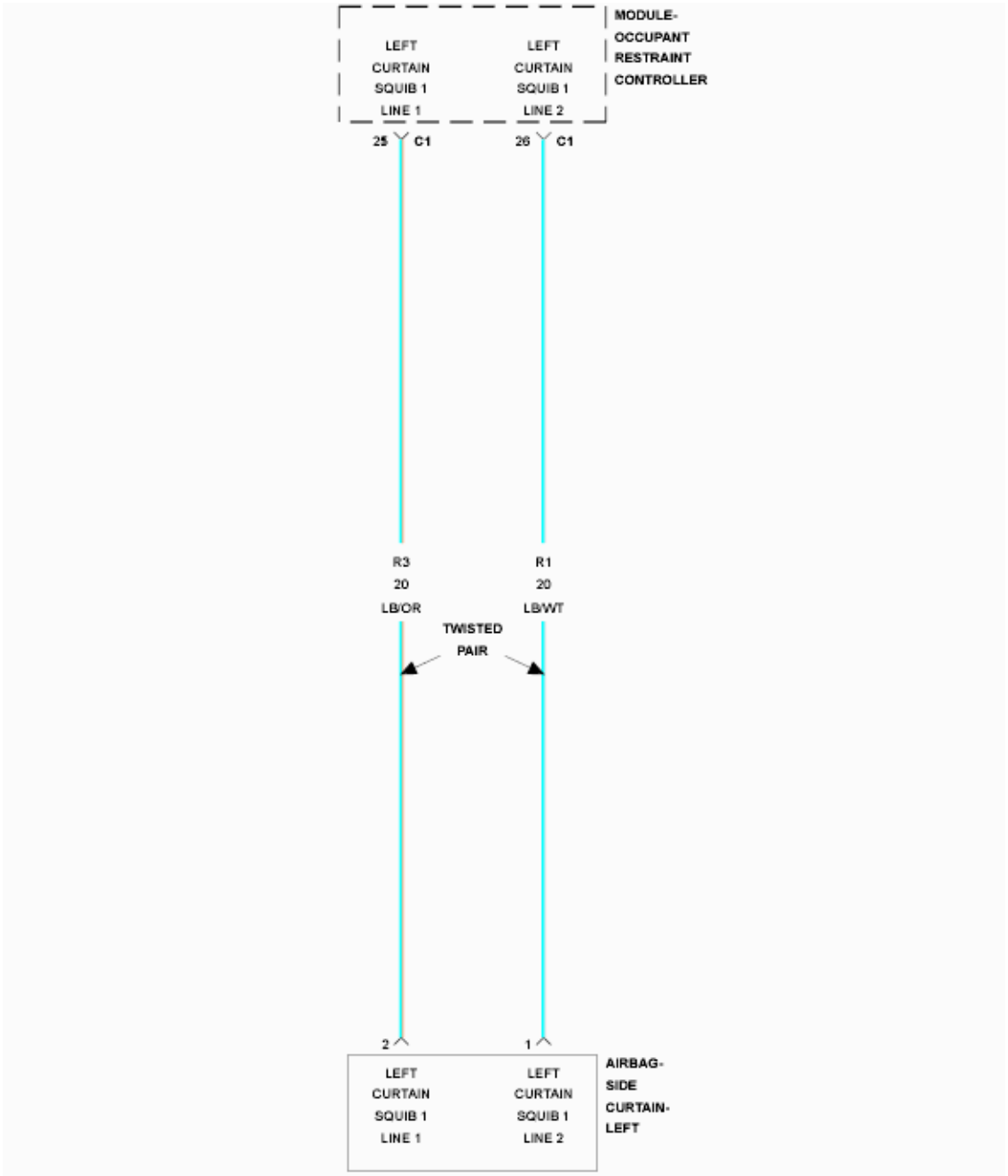
MODULE-
OCCUPANT
RESTRAINT
CONTROLLER
LEFT
CURTAIN
SQUIB 1
LINE 1
LEFT
CURTAIN
SQUIB 1
LINE 2
25
C1
26
C1
R3
20
LB/OR
R1
20
LB/WT
TWISTED
PAIR
2
1
LEFT
CURTAIN
SQUIB 1
LINE 1
LEFT
CURTAIN
SQUIB 1
LINE 2
AIRBAG-
SIDE
CURTAIN-
LEFT

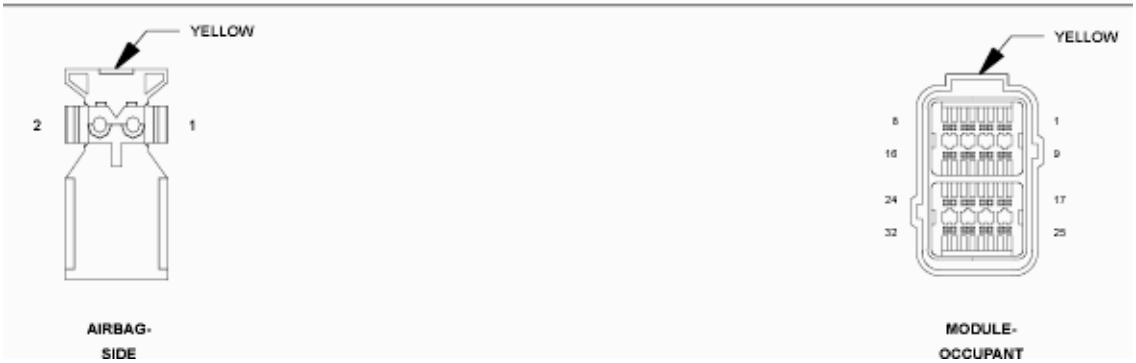
YELLOW
2
1
AIRBAG-
SIDE
YELLOW
8
1
16
9
24
17
32
25
MODULE-
OCCUPANT

Fig. 67: Left Curtain Squib Circuit Wiring Diagram
Courtesy of CHRYSLER GROUP, LLC

For a complete wiring diagram, **refer to appropriate SYSTEM WIRING DIAGRAMS article** .

THEORY OF OPERATION

When powered, the Occupant Restraint Controller (ORC) sends a test current to the squibs to verify the integrity of the squib and wiring. These circuits are maintained in a "floating" configuration at the ORC (connected to neither power nor ground) as protection against inadvertent deployment. Use of the Supplemental Restraints System (SRS) Load Tool Kit (special tool #8443A, SRS Load Tool) in the tests below substitutes a suspect squib with a known good component. The use of the SRS Load Tool Adapter provides a test point as well as a method for opening the shorting bar connections within the ORC harness connector.

WHEN MONITORED:

The ORC sends out a 40 mA diagnostic current on each squib voltage supply circuit at power up and every 500 ms thereafter while the ignition is on.

SET CONDITION:

This Diagnostic Trouble Code (DTC) sets when the ORC detects both circuits of the same squib are shorted together for more than 2.5 seconds. This DTC transitions from active to stored when the ORC sees a recovery from a shorted together condition for greater than 2.5 seconds.

POSSIBLE CAUSES

Possible Causes
(R3) LEFT CURTAIN SQUIB LINE 1 CIRCUIT SHORTED TO THE (R1) LEFT CURTAIN SQUIB LINE 2 CIRCUIT
LEFT SIDE CURTAIN AIRBAG
OCCUPANT RESTRAINT CONTROLLER (ORC)

Always perform the Pre-Diagnostic Troubleshooting procedure before proceeding. Refer to STANDARD PROCEDURE.

DIAGNOSTIC TEST

1. **VERIFY ACTIVE DTC**

   NOTE: Make sure the battery is fully charged.

   1. Turn the ignition on.
   2. With the scan tool, read the ORC DTCs.

      Does the scan tool display active B0021-2B-LEFT CURTAIN DEPLOYMENT SQUIB 1 - WIRES SHORTED TOGETHER DTC?

Yes

- Go To 2.

No

- Refer to **STANDARD PROCEDURE** and perform the RESTRAINTS SYSTEM INTERMITTENT TEST.

2. **CHECK LEFT SIDE CURTAIN AIRBAG FOR SHORT CIRCUITS**

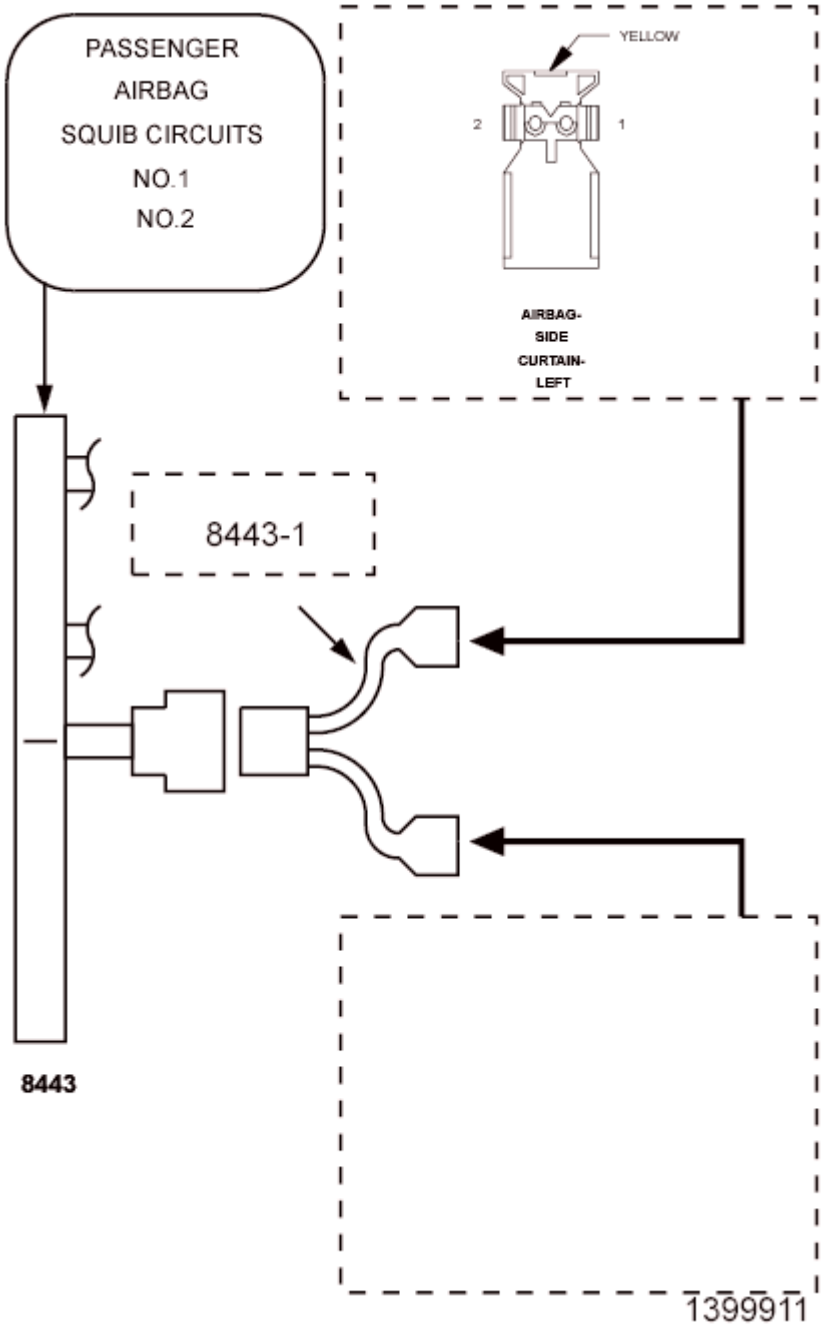

Fig. 68: Checking Left Side Curtain Airbag Circuit
Courtesy of CHRYSLER GROUP, LLC

WARNING: **Turn the ignition off, disconnect the 12-volt battery and wait two minutes before proceeding. Failure to follow these instructions may result in possible serious or fatal injury.**

1. Disconnect the Left Side Curtain Airbag harness connector.

WARNING: **Do not place an intact non-deployed airbag face down on a hard surface, the airbag propels into the air if accidentally deployed. Failure to follow these instructions may result in possible serious or fatal injury.**

NOTE: **Check connectors - Clean and repair as necessary.**

2. Connect the SRS Load Tool Kit (special tool #8443A, SRS Load Tool) and SRS Load Tool Jumper (special tool #8443-1, Jumpers, 2 Pin) to the Left Side Curtain Airbag harness connector.

WARNING: **Turn the ignition on, then reconnect the 12-volt battery and wait two minutes before proceeding. Failure to follow these instructions may result in possible serious or fatal injury.**

3. With the scan tool, read the ORC DTCs.

Does the scan tool display active B0021-2B-LEFT CURTAIN DEPLOYMENT SQUIB 1 - WIRES SHORTED TOGETHER DTC?

Yes

- Go To 3.

No

WARNING: **Turn the ignition off, disconnect the 12-volt battery and wait two minutes before proceeding. Failure to follow these instructions may result in possible serious or fatal injury.**

-
- Replace the Left Side Curtain Airbag in accordance with the Service Information.
- Refer to **STANDARD PROCEDURE** and perform the RESTRAINTS SYSTEM VERIFICATION TEST.

3. **CHECK (R3) LEFT CURTAIN SQUIB 1 LINE 1 CIRCUIT FOR A SHORT TO (R1) LEFT CURTAIN SQUIB 1 LINE 2 CIRCUIT**

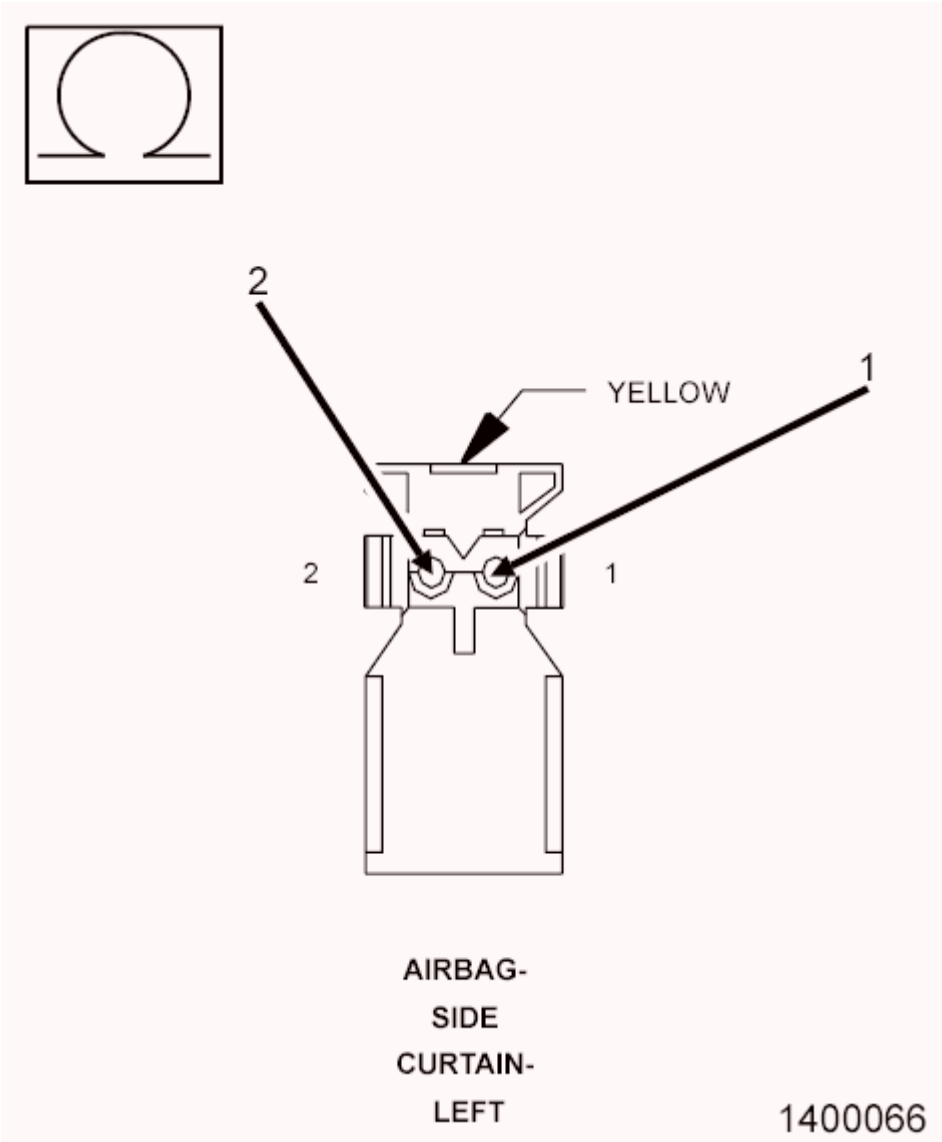

Fig. 69: Checking Left Curtain Squib 1 Line 1 Circuit
Courtesy of CHRYSLER GROUP, LLC

WARNING: Turn the ignition off, disconnect the 12-volt battery and wait two minutes before proceeding. Failure to follow these instructions may result in possible serious or fatal injury.

1. Disconnect the SRS Load Tool Kit (special tool #8443A, SRS Load Tool) and Jumper from the Left Side Curtain Airbag harness connector.
2. Disconnect the ORC harness connectors.

NOTE: Check connectors - Clean and repair as necessary.

3. Connect the SRS Load Tool Adaptor (special tool #8443-24, 32-Way Adapter) to the ORC C1 harness connector.

4. Measure the resistance between the (R3) Left Curtain Squib 1 Line 1 circuit cavity 2 and the (R1) Left Curtain Squib 1 Line 2 circuit cavity 1 at the Left Side Curtain Airbag harness connector.

   Is the resistance below 5.0 Ohms?

   Yes

   - Repair the (R3) Left Curtain Squib 1 Line 1 circuit for a short to the (R1) Left Curtain Squib 1 Line 2 circuit.
   - Refer to **STANDARD PROCEDURE** and perform the RESTRAINTS SYSTEM VERIFICATION TEST.

   No

   WARNING: **If the Occupant Restraint Controller (ORC) is dropped at any time, it must be replaced. Failure to follow these instructions may result in possible serious or fatal injury.**

   -
   - Replace the ORC in accordance with the Service Information.
   - Refer to **STANDARD PROCEDURE** and perform the RESTRAINTS SYSTEM VERIFICATION TEST.

B0029-11-RIGHT CURTAIN DEPLOYMENT SQUIB 1 - CIRCUIT SHORT TO GROUND

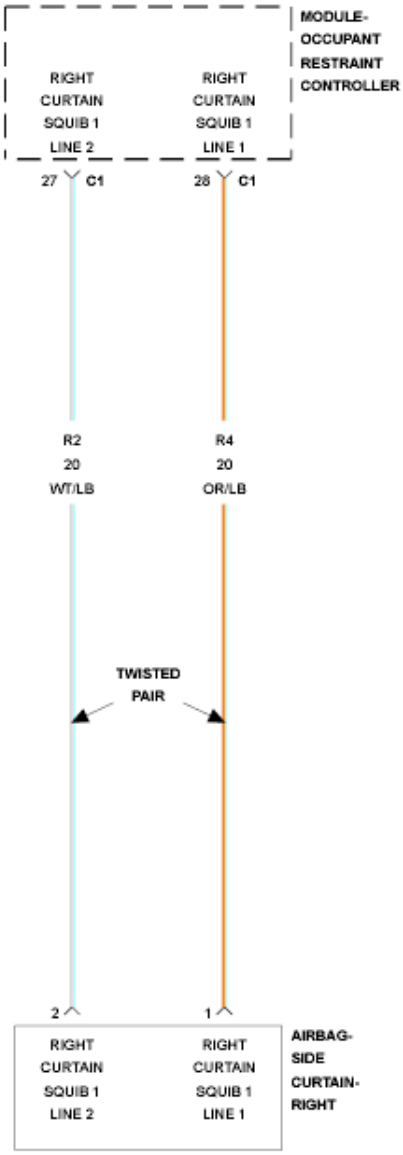

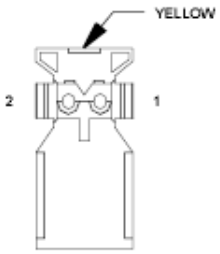

AIRBAG-
SIDE
CURTAIN-
RIGHT

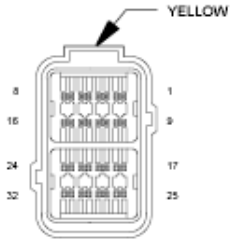

MODULE-
OCCUPANT
RESTRAINT

Fig. 70: Right Curtain Squib Circuit Wiring Diagram
Courtesy of CHRYSLER GROUP, LLC

For a complete wiring diagram, **refer to appropriate SYSTEM WIRING DIAGRAMS article** .

THEORY OF OPERATION

When powered, the Occupant Restraint Controller (ORC) sends a test current to the squibs to verify the integrity of the squib and wiring. These circuits are maintained in a "floating" configuration at the ORC (connected to neither power nor ground) as protection against inadvertent deployment. Use of the Supplemental Restraints System (SRS) Load Tool Kit (special tool #8443A, SRS Load Tool) in the tests below substitutes a suspect squib with a known good component. The use of the SRS Load Tool Adapter provides a test point as well as a method for opening the shorting bar connections within the ORC harness connector.

WHEN MONITORED:

The ORC sends out a 40 mA diagnostic current on each squib voltage supply circuit at power up and every 500 ms thereafter while the ignition is on. With the ignition on, the Occupant Restraint Controller (ORC) monitors the resistance of the Right Side Curtain Squib 1 circuits.

SET CONDITION:

This Diagnostic Trouble Code (DTC) sets when the ORC detects a short to ground on the right squib circuit for more than 2.5 seconds. This DTC transitions from active to stored when the ORC sees a recovery from a short to ground condition for greater than 2.5 seconds. The ORC has detected low resistance of the Right Side Curtain Squib 1 circuits.

POSSIBLE CAUSES

Possible Causes
(R4) RIGHT CURTAIN SQUIB LINE 1 CIRCUIT SHORTED TO GROUND
(R2) RIGHT CURTAIN SQUIB LINE 2 CIRCUIT SHORTED TO GROUND
RIGHT SIDE CURTAIN AIRBAG
OCCUPANT RESTRAINT CONTROLLER (ORC)

Always perform the Pre-Diagnostic Troubleshooting procedure before proceeding. Refer to STANDARD PROCEDURE.

DIAGNOSTIC TEST

1. **VERIFY ACTIVE DTC**

NOTE: Make sure the battery is fully charged.

1. Turn the ignition on.
2. With the scan tool, read ORC DTCs.

Does the scan tool display active B0029-11-RIGHT CURTAIN DEPLOYMENT SQUIB 1 - CIRCUIT SHORT TO GROUND DTC?

Yes

- Go To 2.

No

- Refer to **STANDARD PROCEDURE** and perform the RESTRAINTS SYSTEM INTERMITTENT TEST.

2. **CHECK RIGHT SIDE CURTAIN AIRBAG FOR SHORT CIRCUITS**

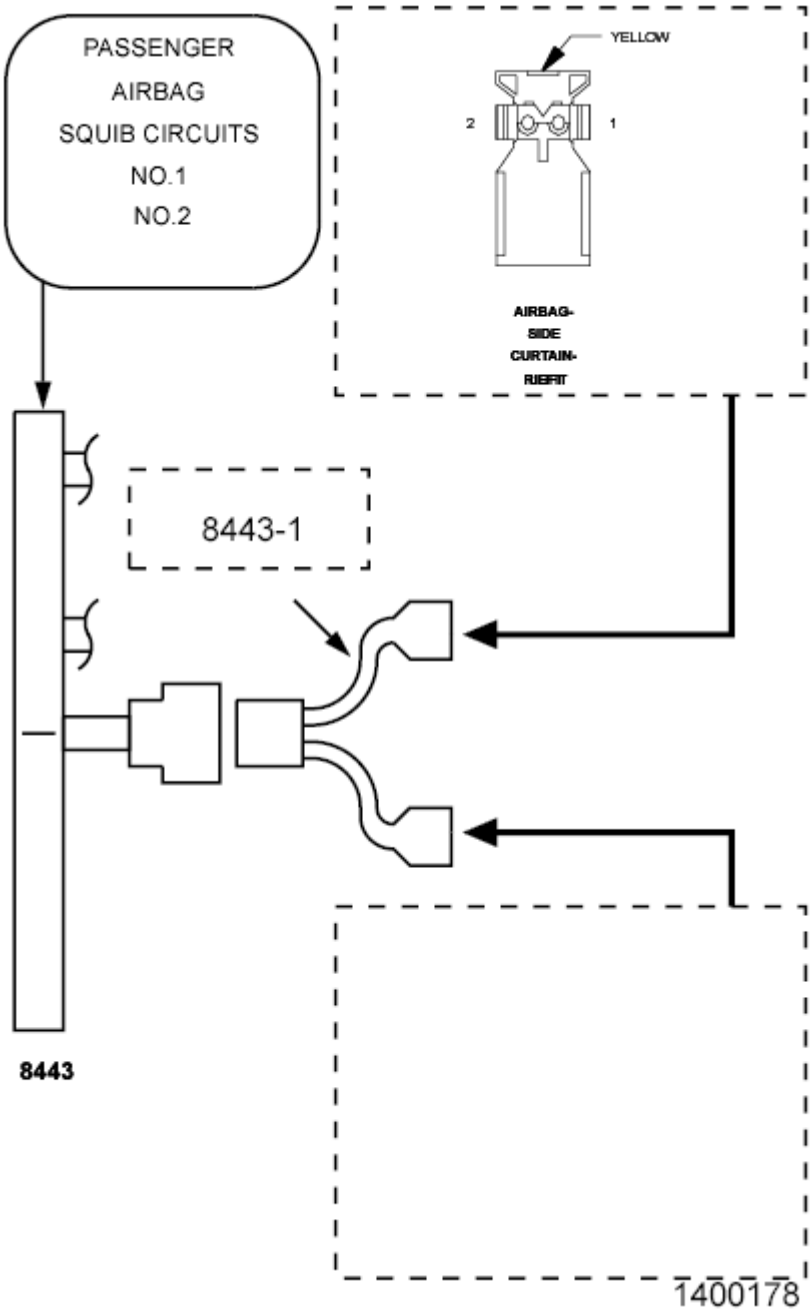

Fig. 71: Checking Right Side Curtain Airbag Squib Circuit
Courtesy of CHRYSLER GROUP, LLC

WARNING: **Turn the ignition off, disconnect the 12-volt battery and wait two minutes before proceeding. Failure to follow these instructions may result in possible serious or fatal injury.**

1. Disconnect the Right Side Curtain Airbag harness connector.

WARNING: **Do not place an intact non-deployed airbag face down on a**

hard surface, the airbag propels into the air if accidentally deployed. Failure to follow these instructions may result in possible serious or fatal injury.

NOTE: Check connectors - Clean and repair as necessary.

2. Connect the SRS Load Tool Kit (special tool #8443A, SRS Load Tool) and SRS Load Tool Jumper (special tool #8443-1, Jumpers, 2 Pin) to the Right Side Curtain Airbag harness connector.

   WARNING: **Turn the ignition on, then reconnect the 12-volt battery and wait two minutes before proceeding. Failure to follow these instructions may result in possible serious or fatal injury.**

3. With the scan tool, read the ORC DTCs.

   Does the scan tool display active B0029-11-RIGHT CURTAIN DEPLOYMENT SQUIB 1 - CIRCUIT SHORT TO GROUND DTC?

   Yes

   - Go To 3.

   No

   WARNING: **Turn the ignition off, disconnect the 12-volt battery and wait two minutes before proceeding. Failure to follow these instructions may result in possible serious or fatal injury.**

   -
   - Replace the Right Side Curtain Airbag in accordance with the Service Information.
   - Refer to **STANDARD PROCEDURE** and perform the RESTRAINTS SYSTEM VERIFICATION TEST.

3. **CHECK (R2, R4) RIGHT CURTAIN SQUIB 1 CIRCUITS FOR A SHORT TO GROUND**

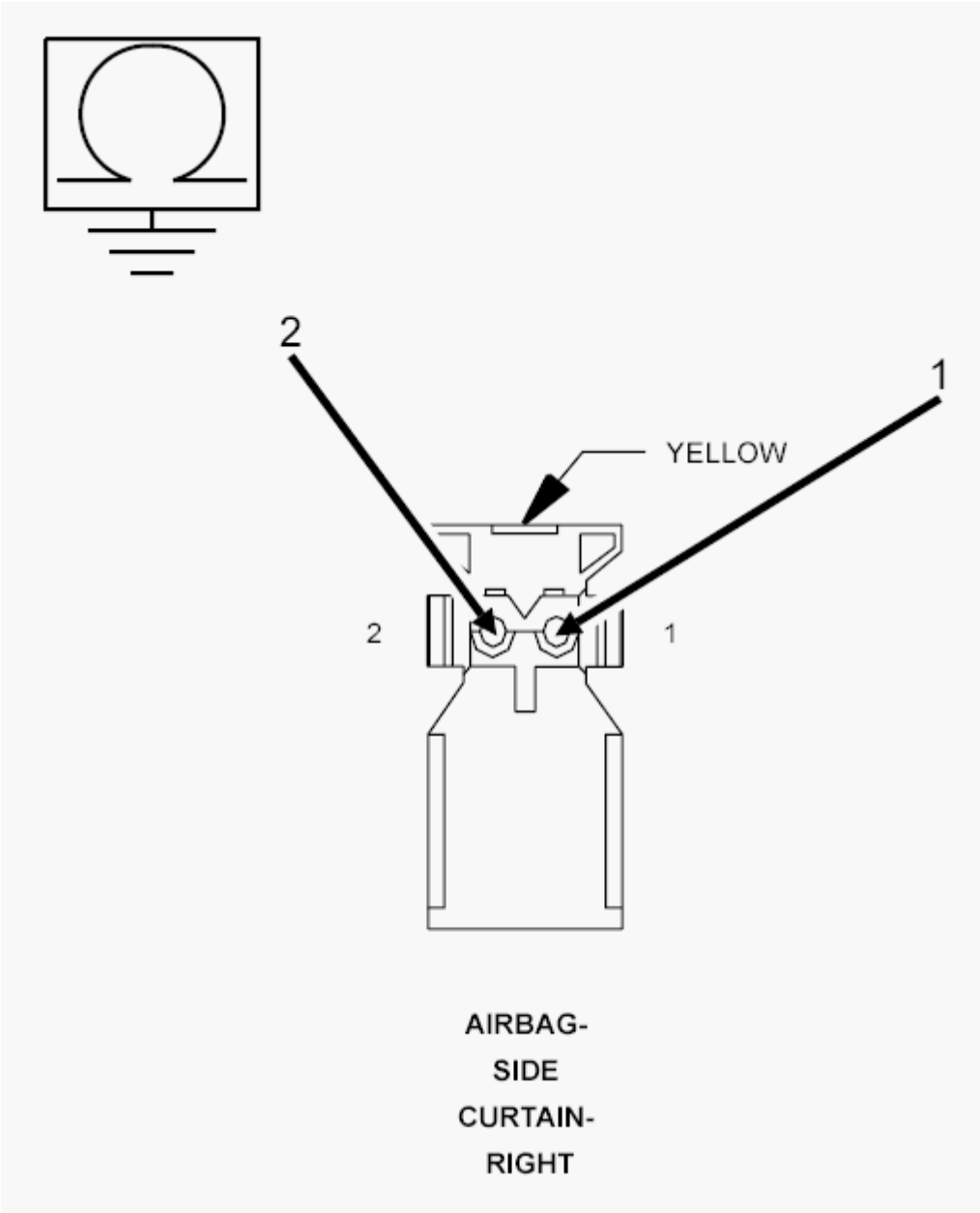

Fig. 72: Checking Right Curtain Squib 1 Circuit
Courtesy of CHRYSLER GROUP, LLC

WARNING: Turn the ignition off, disconnect the 12-volt battery and wait two minutes before proceeding. Failure to follow these instructions may result in possible serious or fatal injury.

1. Disconnect the SRS Load Tool Kit (special tool #8443A, SRS Load Tool) and Jumper from the Right Side Curtain Airbag harness connector.
2. Disconnect the ORC harness connectors.

NOTE: Check connectors - Clean and repair as necessary.

3. Connect the SRS Load Tool Adapter (special tool #8443-24, 32-Way Adapter) to the ORC C1 harness connector.
4. Measure the resistance of the (R4) Right Curtain Squib 1 Line 1 circuit between the Right Side Curtain Airbag harness connector cavity 1 and ground.
5. Measure the resistance of the (R2) Right Curtain Squib 1 Line 2 circuit between the Right Side Curtain Airbag harness connector cavity 2.

   Is the resistance below 10K Ohms on either circuit?

   Yes

   - Repair the Right Curtain Squib 1 circuits for a short to ground.
   - Refer to **STANDARD PROCEDURE** and perform the RESTRAINTS SYSTEM VERIFICATION TEST.

   No

   WARNING: **If the Occupant Restraint Controller (ORC) is dropped at any time, it must be replaced. Failure to follow these instructions may result in possible serious or fatal injury.**

   -
   - Replace the ORC in accordance with the Service Information.
   - Refer to **STANDARD PROCEDURE** and perform the RESTRAINTS SYSTEM VERIFICATION TEST.

B0029-12-RIGHT CURTAIN DEPLOYMENT SQUIB 1 - CIRCUIT SHORT TO BATTERY

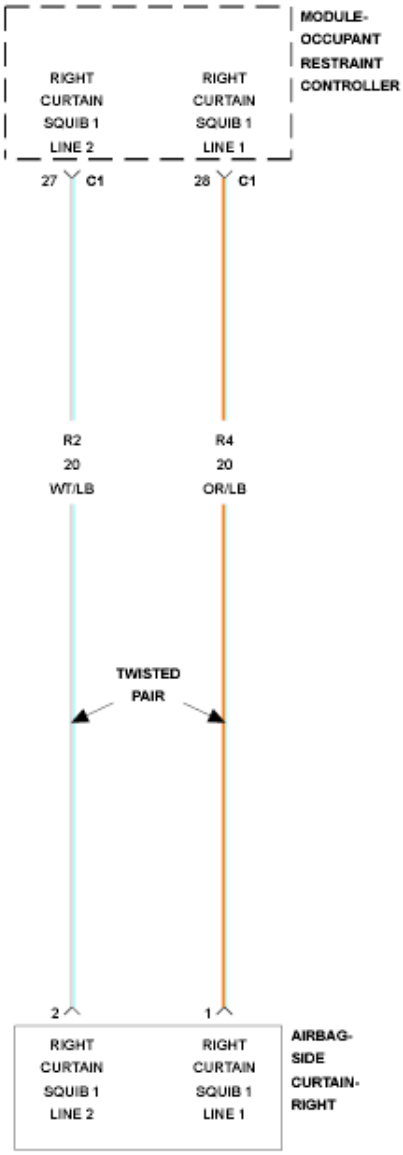

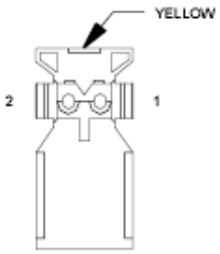

AIRBAG-
SIDE
CURTAIN-
RIGHT

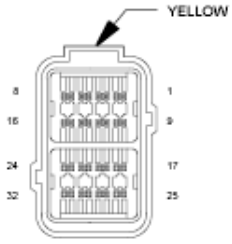

MODULE-
OCCUPANT
RESTRAINT

Fig. 73: Right Curtain Squib Circuit Wiring Diagram
Courtesy of CHRYSLER GROUP, LLC

For a complete wiring diagram, **refer to appropriate SYSTEM WIRING DIAGRAMS article** .

THEORY OF OPERATION

When powered, the Occupant Restraint Controller (ORC) sends a test current to the squibs to verify the integrity of the squib and wiring. These circuits are maintained in a "floating" configuration at the ORC (connected to neither power nor ground) as protection against inadvertent deployment. Use of the Supplemental Restraints System (SRS) Load Tool Kit (special tool #8443A, SRS Load Tool) in the tests below substitutes a suspect squib with a known good component. The use of the SRS Load Tool Adapter provides a test point as well as a method for opening the shorting bar connections within the ORC harness connector.

WHEN MONITORED:

The ORC sends out a 40 mA diagnostic current on each squib voltage supply circuit at power up and every 100 ms thereafter while the ignition is on. With the ignition on, the ORC monitors the voltage on the Right Side Curtain Squib 1 circuits.

SET CONDITION:

This Diagnostic Trouble Code (DTC) sets when the ORC detects a short to voltage on the Right Side Curtain Squib 1 circuit for more than 2.5 seconds. This DTC transitions from active to stored when the ORC sees a recovery from a short to voltage for greater than 2.5 seconds.

POSSIBLE CAUSES

Possible Causes
(R4) RIGHT CURTAIN SQUIB 1 LINE 1 CIRCUIT SHORTED TO VOLTAGE
(R2) RIGHT CURTAIN SQUIB 1 LINE 2 CIRCUIT SHORTED TO VOLTAGE
RIGHT SIDE CURTAIN AIRBAG
OCCUPANT RESTRAINT CONTROLLER (ORC)

Always perform the Pre-Diagnostic Troubleshooting procedure before proceeding. Refer to STANDARD PROCEDURE.

DIAGNOSTIC TEST

1. **VERIFY ACTIVE DTC**

   NOTE: Ensure the battery is fully charged.

   1. Turn the ignition on.
   2. Select Active or Stored DTC.

Does the scan tool display active B0029-12-RIGHT CURTAIN DEPLOYMENT SQUIB 1 - CIRCUIT SHORT TO BATTERY DTC?

Yes

- Go To 2.

No

- Refer to **STANDARD PROCEDURE** and perform the RESTRAINTS SYSTEM INTERMITTENT TEST.

2. **CHECK RIGHT SIDE CURTAIN AIRBAG FOR SHORT TO VOLTAGE**

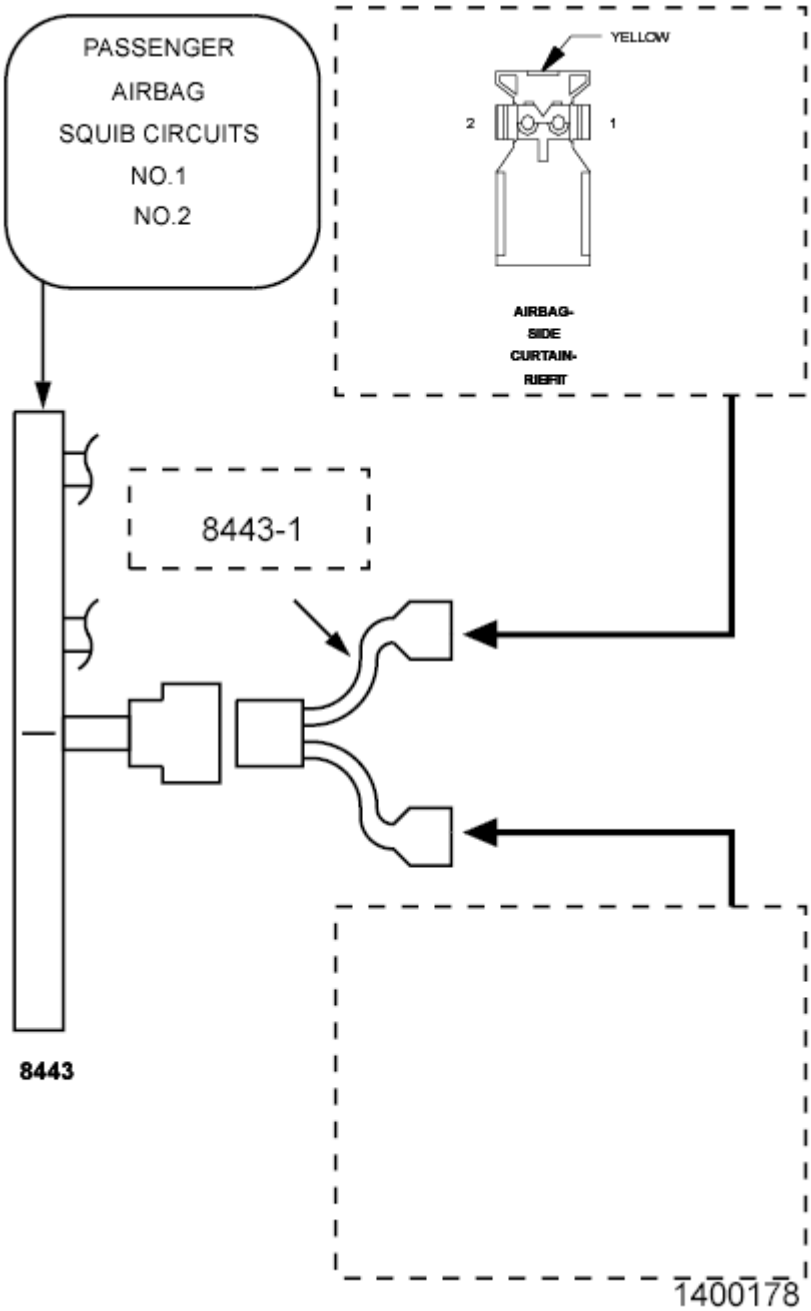

Fig. 74: Checking Right Side Curtain Airbag Squib Circuit
Courtesy of CHRYSLER GROUP, LLC

WARNING: **Turn the ignition off, disconnect the 12-volt battery and wait two minutes before proceeding. Failure to follow these instructions may result in possible serious or fatal injury.**

1. Disconnect the Right Side Curtain Airbag harness connector.

WARNING: **Do not place an intact non-deployed airbag face down on a**

hard surface, the airbag propels into the air if accidentally deployed. Failure to follow these instructions may result in possible serious or fatal injury.

NOTE: Check connectors - Clean and repair as necessary.

2. Connect the SRS Load Tool Kit (special tool #8443A, SRS Load Tool) and SRS Load Tool Jumper (special tool #8443-1, Jumpers, 2 Pin) to the Right Side Curtain Airbag harness connector.

   WARNING: **Turn the ignition on, then reconnect the 12-volt battery and wait two minutes before proceeding. Failure to follow these instructions may result in possible serious or fatal injury.**

3. With the scan tool, read the ORC DTCs.

   Does the scan tool display active B0029-12-RIGHT CURTAIN DEPLOYMENT SQUIB 1 - CIRCUIT SHORT TO BATTERY DTC?

   Yes

   - Go To 3.

   No

   WARNING: **Turn the ignition off, disconnect the 12-volt battery and wait two minutes before proceeding. Failure to follow these instructions may result in possible serious or fatal injury.**

   -
   - Replace the Right Side Curtain Airbag in accordance with the Service Information.
   - Refer to **STANDARD PROCEDURE** and perform the RESTRAINTS SYSTEM VERIFICATION TEST.

3. **CHECK (R2, R4) RIGHT CURTAIN SQUIB 1 CIRCUITS FOR A SHORT TO VOLTAGE**

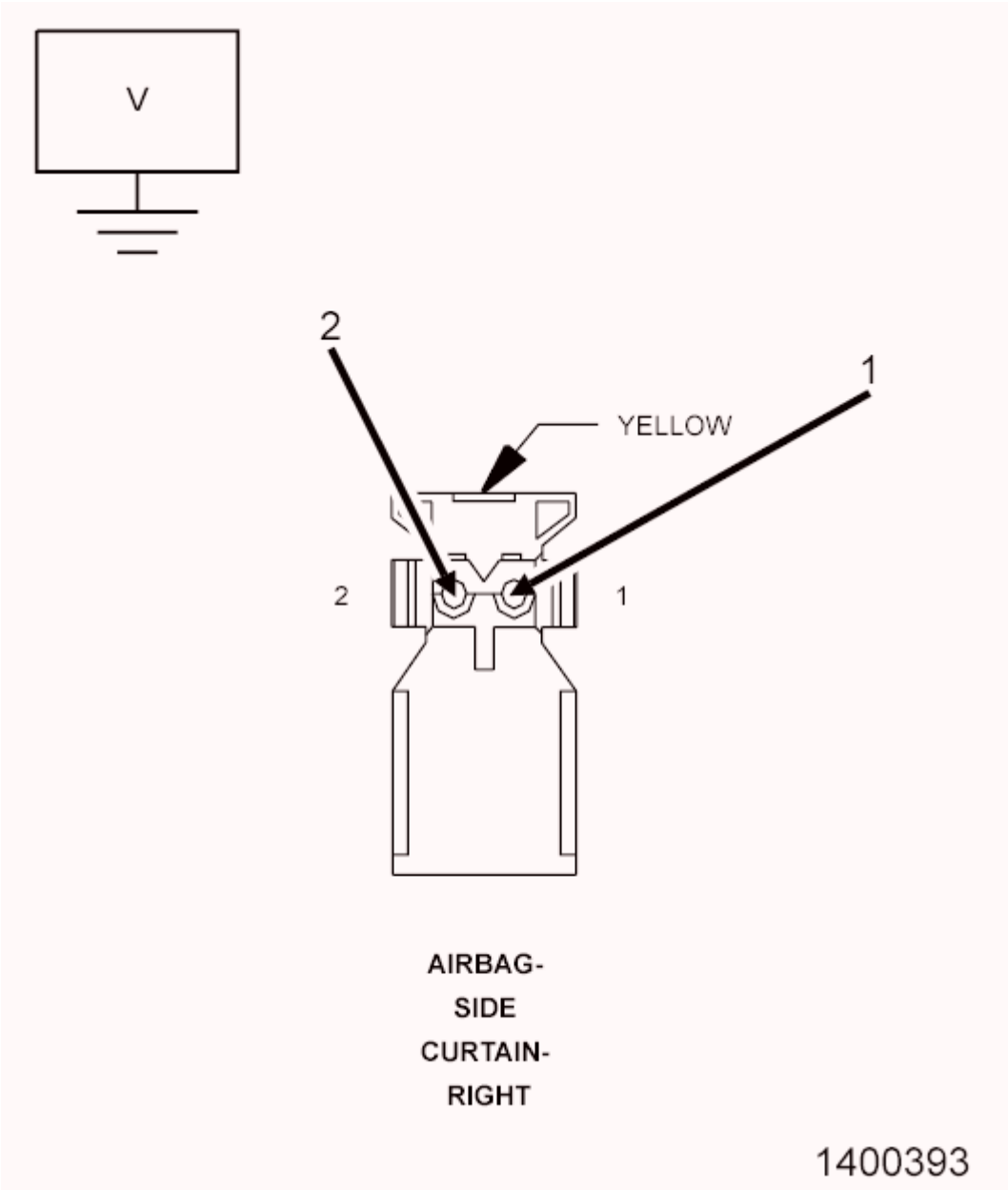

Fig. 75: Checking Right Curtain Squib 1 Circuit
Courtesy of CHRYSLER GROUP, LLC

WARNING: Turn the ignition off, disconnect the 12-volt battery and wait two minutes before proceeding. Failure to follow these instructions may result in possible serious or fatal injury.

1. Disconnect the SRS Load Tool Kit (special tool #8443A, SRS Load Tool) and Jumper from the Right Side Curtain Airbag harness connector.
2. Disconnect the ORC harness connectors.

NOTE: Check connectors - Clean and repair as necessary.

3. Connect the SRS Load Tool Adaptor (special tool #8443-24, 32-Way Adapter) to the ORC C1 harness connector.

WARNING: Turn the ignition on, then reconnect the 12-volt battery and wait two minutes before proceeding. Failure to follow these instructions may result in possible serious or fatal injury.

4. Measure the voltage of the (R4) Right Curtain Squib 1 Line 1 circuit between the Right Side Curtain Airbag harness connector cavity 1 and ground.
5. Measure the voltage of the (R2) Right Curtain Squib 1 Line 2 circuit between the Right Side Curtain Airbag harness connector cavity 2 and ground.

Is there any voltage present for either measurement?

Yes

WARNING: Turn the ignition off, disconnect the 12-volt battery and wait two minutes before proceeding. Failure to follow these instructions may result in possible serious or fatal injury.

-
- Repair the Right Curtain Squib 1 circuits for a short to voltage.
- Refer to **STANDARD PROCEDURE** and perform the RESTRAINTS SYSTEM VERIFICATION TEST.

No

WARNING: Turn the ignition off, disconnect the 12-volt battery and wait two minutes before proceeding. Failure to follow these instructions may result in possible serious or fatal injury.

WARNING: If the Occupant Restraint Controller (ORC) is dropped at any time, it must be replaced. Failure to follow these instructions may result in possible serious or fatal injury.

-
-
- Replace the ORC in accordance with the Service Information.
- Refer to **STANDARD PROCEDURE** and perform the RESTRAINTS SYSTEM VERIFICATION TEST.

B0029-13-RIGHT CURTAIN DEPLOYMENT SQUIB 1 - CIRCUIT OPEN

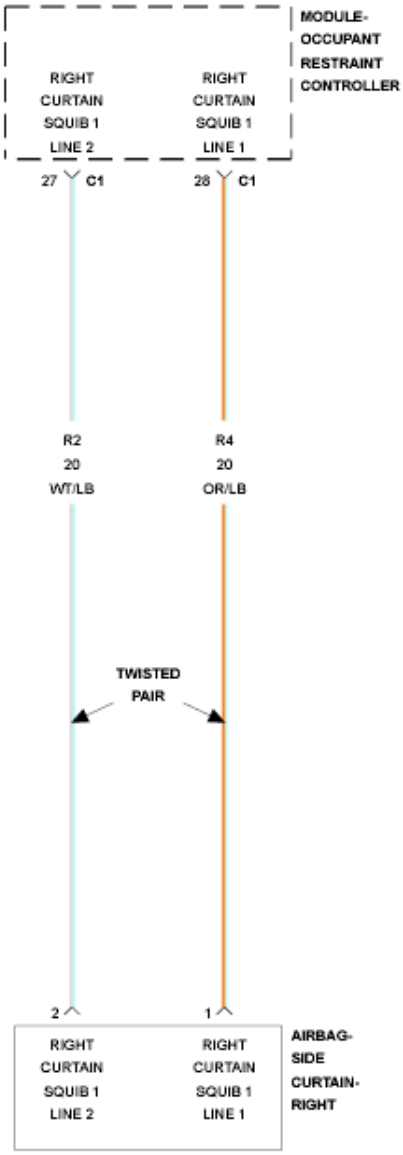

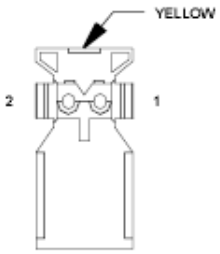

AIRBAG-
SIDE
CURTAIN-
RIGHT

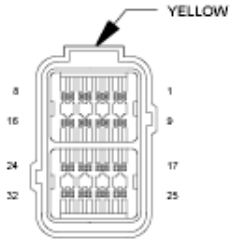

MODULE-
OCCUPANT
RESTRAINT

Fig. 76: Right Curtain Squib Circuit Wiring Diagram
Courtesy of CHRYSLER GROUP, LLC

For a complete wiring diagram, **refer to appropriate SYSTEM WIRING DIAGRAMS article** .

THEORY OF OPERATION

When powered, the Occupant Restraint Controller (ORC) sends a test current to the squibs to verify the integrity of the squib and wiring. These circuits are maintained in a "floating" configuration at the ORC (connected to neither power nor ground) as protection against inadvertent deployment. Use of the Supplemental Restraints System (SRS) Load Tool Kit (special tool #8443A, SRS Load Tool) in the tests below substitutes a suspect squib with a known good component. The use of the SRS Load Tool Adapter provides a test point as well as a method for opening the shorting bar connections within the ORC harness connector.

WHEN MONITORED:

The ORC sends out a 40 mA diagnostic current on each squib voltage supply circuit at power up and every 100 ms thereafter while the ignition is on.

SET CONDITION:

This Diagnostic Trouble Code (DTC) sets when the ORC detects an open or high resistance on the squib circuit for more than 2.5 seconds. This DTC transitions from active to stored when the ORC sees a recovery from an open condition for greater than 2.5 seconds.

POSSIBLE CAUSES

Possible Causes
(R4) RIGHT CURTAIN SQUIB 1 LINE 1 CIRCUIT OPEN
(R2) RIGHT CURTAIN SQUIB 1 LINE 2 CIRCUIT OPEN
RIGHT SIDE CURTAIN AIRBAG
OCCUPANT RESTRAINT CONTROLLER (ORC)

Always perform the Pre-Diagnostic Troubleshooting procedure before proceeding. Refer to STANDARD PROCEDURE.

DIAGNOSTIC TEST

1. **VERIFY ACTIVE DTC**

   NOTE: Make sure the battery is fully charged.

   1. Turn the ignition on.
   2. With the scan tool, read ORC DTCs.

      Does the scan tool display active B0029-13-RIGHT CURTAIN DEPLOYMENT SQUIB 1 -

CIRCUIT OPEN DTC?

Yes

- Go To 2.

No

- Refer to **STANDARD PROCEDURE** and perform the RESTRAINTS SYSTEM INTERMITTENT TEST.

2. **CHECK RIGHT SIDE CURTAIN AIRBAG FOR OPEN SQUIB CIRCUITS**

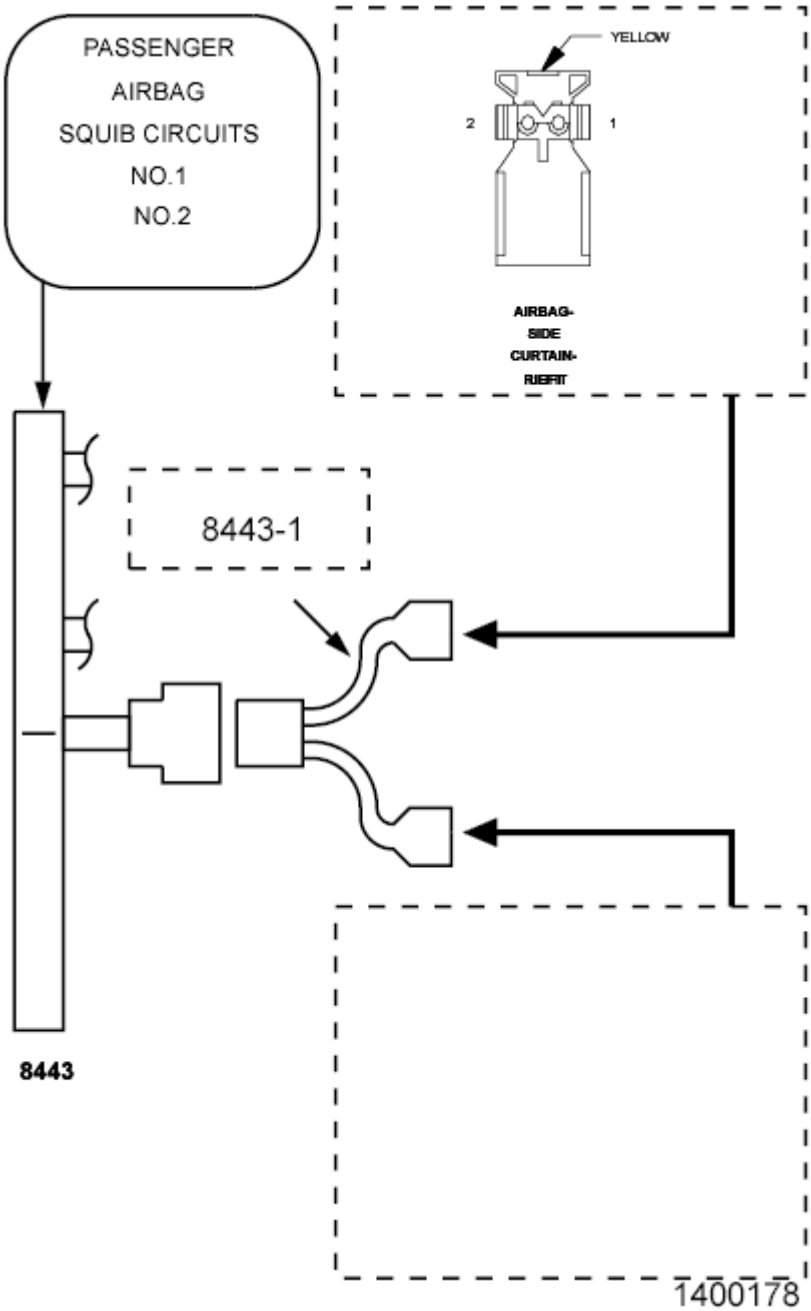

Fig. 77: Checking Right Side Curtain Airbag Squib Circuit
Courtesy of CHRYSLER GROUP, LLC

WARNING: **Turn the ignition off, disconnect the 12-volt battery and wait two minutes before proceeding. Failure to follow these instructions may result in possible serious or fatal injury.**

1. Disconnect the Right Side Curtain Airbag harness connector.

WARNING: **To avoid serious or fatal injury, do not place an intact**

undeployed curtain airbag face down on a hard surface, the airbag will propel into the air if accidentally deployed.

NOTE: Check connectors - Clean and repair as necessary.

2. Connect the SRS Load Tool Kit (special tool #8443A, SRS Load Tool) and SRS Load Tool Jumper (special tool #8443-1, Jumpers, 2 Pin) to the Right Side Curtain Airbag harness connector.

   WARNING: **Turn the ignition on, then reconnect the 12-volt battery and wait two minutes before proceeding. Failure to follow these instructions may result in possible serious or fatal injury.**

3. With the scan tool, read the ORC DTCs.

   Does the scan tool display active B0029-13-RIGHT CURTAIN DEPLOYMENT SQUIB 1 - CIRCUIT OPEN DTC?

   Yes

   - Go To 3.

   No

   WARNING: **Turn the ignition off, disconnect the 12-volt battery and wait two minutes before proceeding. Failure to follow these instructions may result in possible serious or fatal injury.**

   -
   - Replace the Right Side Curtain Airbag in accordance with the Service Information.
   - Refer to **STANDARD PROCEDURE** and perform the RESTRAINTS SYSTEM VERIFICATION TEST.

3. **CHECK (R2, R4) RIGHT CURTAIN SQUIB 1 CIRCUITS FOR AN OPEN**

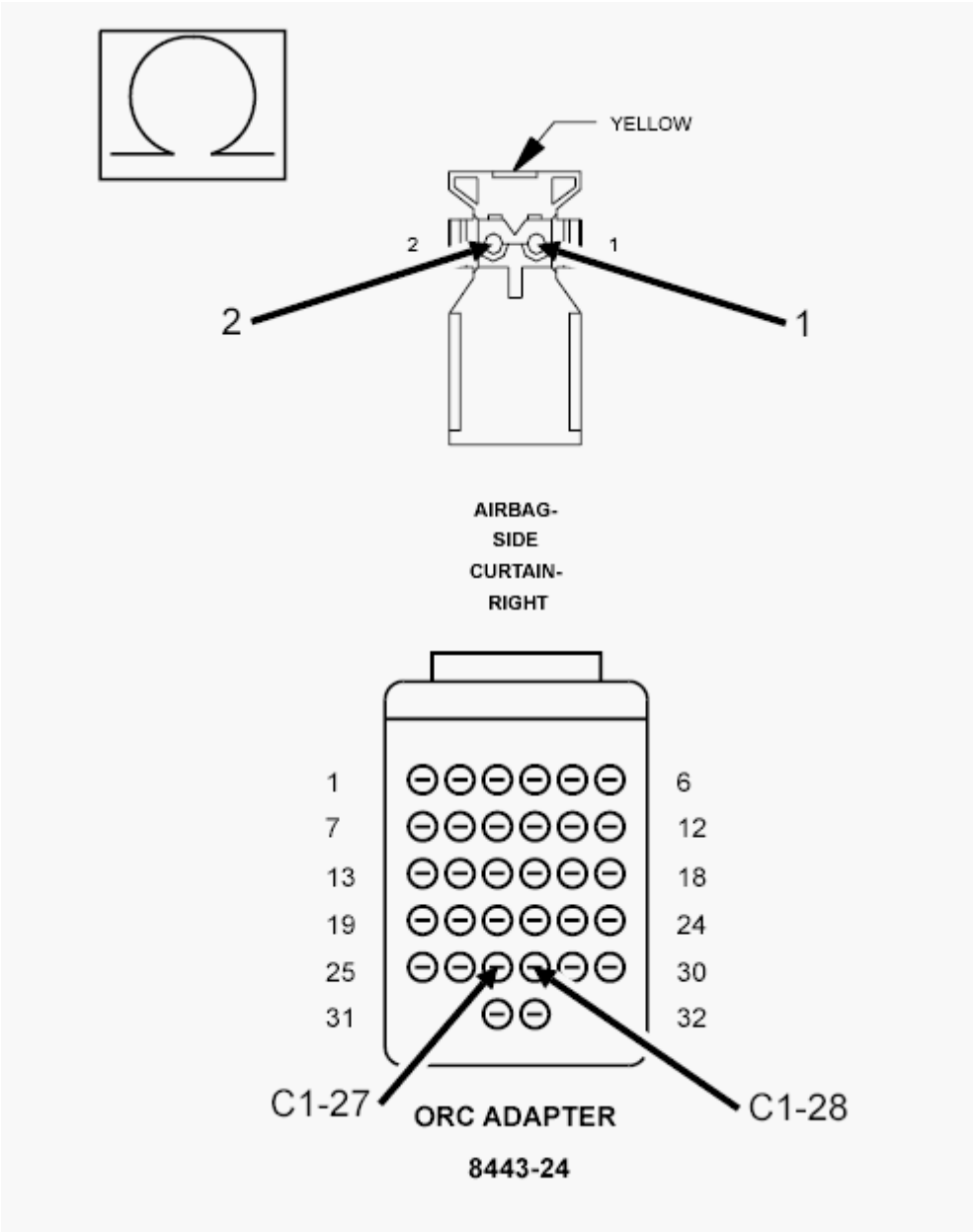

Fig. 78: Checking Right Curtain Squib 1 Circuits For Open
Courtesy of CHRYSLER GROUP, LLC

WARNING: **Turn the ignition off, disconnect the 12-volt battery and wait two minutes before proceeding. Failure to follow these instructions may result in possible serious or fatal injury.**

1. Disconnect the SRS Load Tool Kit (special tool #8443A, SRS Load Tool) and Jumper from the Right Side Curtain Airbag harness connector.
2. Disconnect the ORC harness connectors.

NOTE: **Check connectors - Clean and repair as necessary.**

3. Connect the SRS Load Tool Adaptor (special tool #8443-24, 32-Way Adapter) to the ORC C1 harness connector.
4. Measure the resistance of the (R4) Right Curtain Squib 1 Line 1 circuit between the Right Side Curtain Airbag harness connector cavity 1 and the SRS Load Tool Adaptor (special tool #8443-24, 32-Way Adapter) cavity 28.
5. Measure the resistance of the (R2) Right Curtain Squib 1 Line 2 circuit between the Right Side Curtain Airbag harness connector cavity 2 and the SRS Load Tool Adaptor (special tool #8443-24, 32-Way Adapter) cavity 27.

Is the resistance below 1.0 Ohm on both circuits?

Yes

WARNING: **If the Occupant Restraint Controller (ORC) is dropped at any time, it must be replaced. Failure to follow these instructions may result in possible serious or fatal injury.**

-
- Replace the ORC in accordance with the Service Information.
- Refer to **STANDARD PROCEDURE** and perform the RESTRAINTS SYSTEM VERIFICATION TEST.

No

- Repair the (R2, R4) Right Curtain Squib 1 circuit for an open.
- Refer to **STANDARD PROCEDURE** and perform the RESTRAINTS SYSTEM VERIFICATION TEST.

B0029-2B-RIGHT CURTAIN DEPLOYMENT SQUIB 1 - WIRES SHORTED TOGETHER

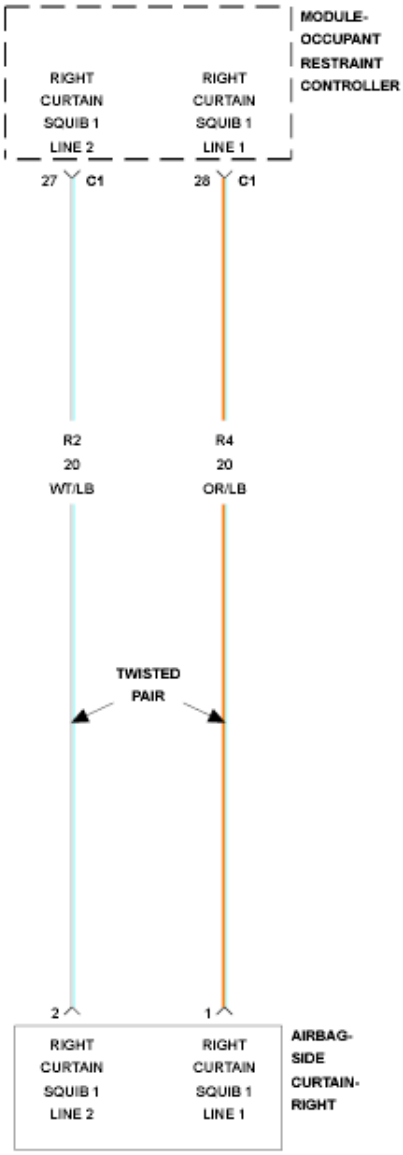

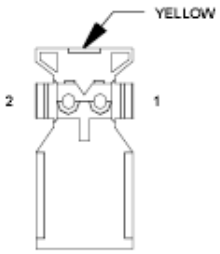

AIRBAG-
SIDE
CURTAIN-
RIGHT

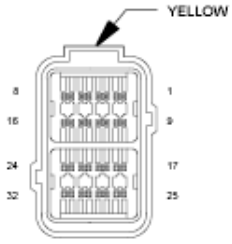

MODULE-
OCCUPANT
RESTRAINT

Fig. 79: Right Curtain Squib Circuit Wiring Diagram
Courtesy of CHRYSLER GROUP, LLC

For a complete wiring diagram, **refer to appropriate SYSTEM WIRING DIAGRAMS article** .

THEORY OF OPERATION

When powered, the Occupant Restraint Controller (ORC) sends a test current to the squibs to verify the integrity of the squib and wiring. These circuits are maintained in a floating configuration at the ORC (connected to neither power nor ground) as protection against inadvertent deployment. Use of the Supplemental Restraints System (SRS) Load Tool Kit (special tool #8443A, SRS Load Tool) in the tests below substitutes a suspect squib with a known good component. The use of the SRS Load Tool Adapter provides a test point as well as a method for opening the shorting bar connections within the ORC harness connector.

WHEN MONITORED:

The ORC sends out a 40 mA diagnostic current on each squib voltage supply circuit at power up and every 100 ms thereafter while the ignition is on.

SET CONDITION:

This Diagnostic Trouble Code (DTC) sets when the ORC detects both circuits of the Right Side Curtain Squib 1 are shorted together for more than 2.5 seconds. This DTC transitions from active to stored when the ORC sees a recovery from a shorted together condition for greater than 2.5 seconds.

POSSIBLE CAUSES

Possible Causes
(R4) RIGHT CURTAIN SQUIB LINE 1 CIRCUIT SHORTED TO THE (R2) RIGHT CURTAIN SQUIB LINE 2 CIRCUIT
RIGHT SIDE CURTAIN AIRBAG
OCCUPANT RESTRAINT CONTROLLER (ORC)

Always perform the Pre-Diagnostic Troubleshooting procedure before proceeding. Refer to STANDARD PROCEDURE .

DIAGNOSTIC TEST

1. **VERIFY ACTIVE DTC**

   NOTE: Make sure the battery is fully charged.

   1. Turn the ignition on.
   2. With the scan tool, read the ORC DTCs.

      Does the scan tool display active B0029-2B-RIGHT CURTAIN DEPLOYMENT SQUIB 1 - WIRES SHORTED TOGETHER DTC?

Yes

- Go To 2.

No

- Refer to **STANDARD PROCEDURE** and perform the RESTRAINTS SYSTEM INTERMITTENT TEST.

2. **CHECK RIGHT SIDE CURTAIN AIRBAG FOR SHORT SQUIB CIRCUITS**

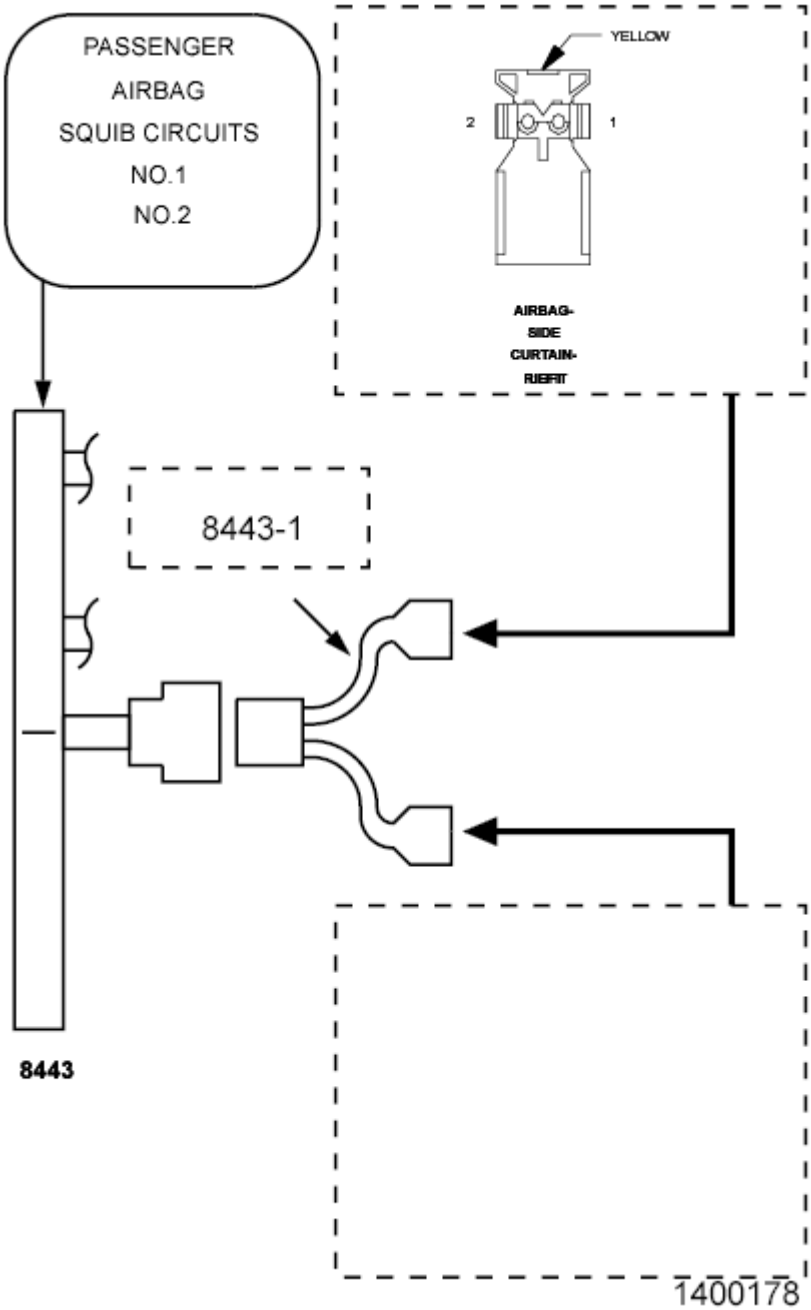

Fig. 80: Checking Right Side Curtain Airbag Squib Circuit
Courtesy of CHRYSLER GROUP, LLC

WARNING: **Turn the ignition off, disconnect the 12-volt battery and wait two minutes before proceeding. Failure to follow these instructions may result in possible serious or fatal injury.**

1. Disconnect the Right Side Curtain Airbag harness connector.

   WARNING: **Do not place an intact non-deployed airbag face down on a hard surface, the airbag propels into the air if accidentally deployed. Failure to follow these instructions may result in possible serious or fatal injury.**

   NOTE: Check connectors - Clean and repair as necessary.

2. Connect the SRS Load Tool Kit (special tool #8443A, SRS Load Tool) and SRS Load Tool Jumper (special tool #8443-1, Jumpers, 2 Pin) to the Right Side Curtain Airbag harness connector.

   WARNING: **Turn the ignition on, then reconnect the 12-volt battery and wait two minutes before proceeding. Failure to follow these instructions may result in possible serious or fatal injury.**

3. With the scan tool, read the ORC DTCs.

   Does the scan tool display active B0029-2B-RIGHT CURTAIN DEPLOYMENT SQUIB 1 - WIRES SHORTED TOGETHER DTC?

   Yes

   - Go To 3.

   No

   WARNING: **Turn the ignition off, disconnect the 12-volt battery and wait two minutes before proceeding. Failure to follow these instructions may result in possible serious or fatal injury.**

   -
   - Replace the Right Side Curtain Airbag in accordance with the Service Information.
   - Refer to **STANDARD PROCEDURE** and perform the RESTRAINTS SYSTEM VERIFICATION TEST.

3. **CHECK (R4) RIGHT CURTAIN SQUIB 1 LINE 1 CIRCUIT FOR A SHORT TO (R2) RIGHT CURTAIN SQUIB 1 LINE 2 CIRCUIT**

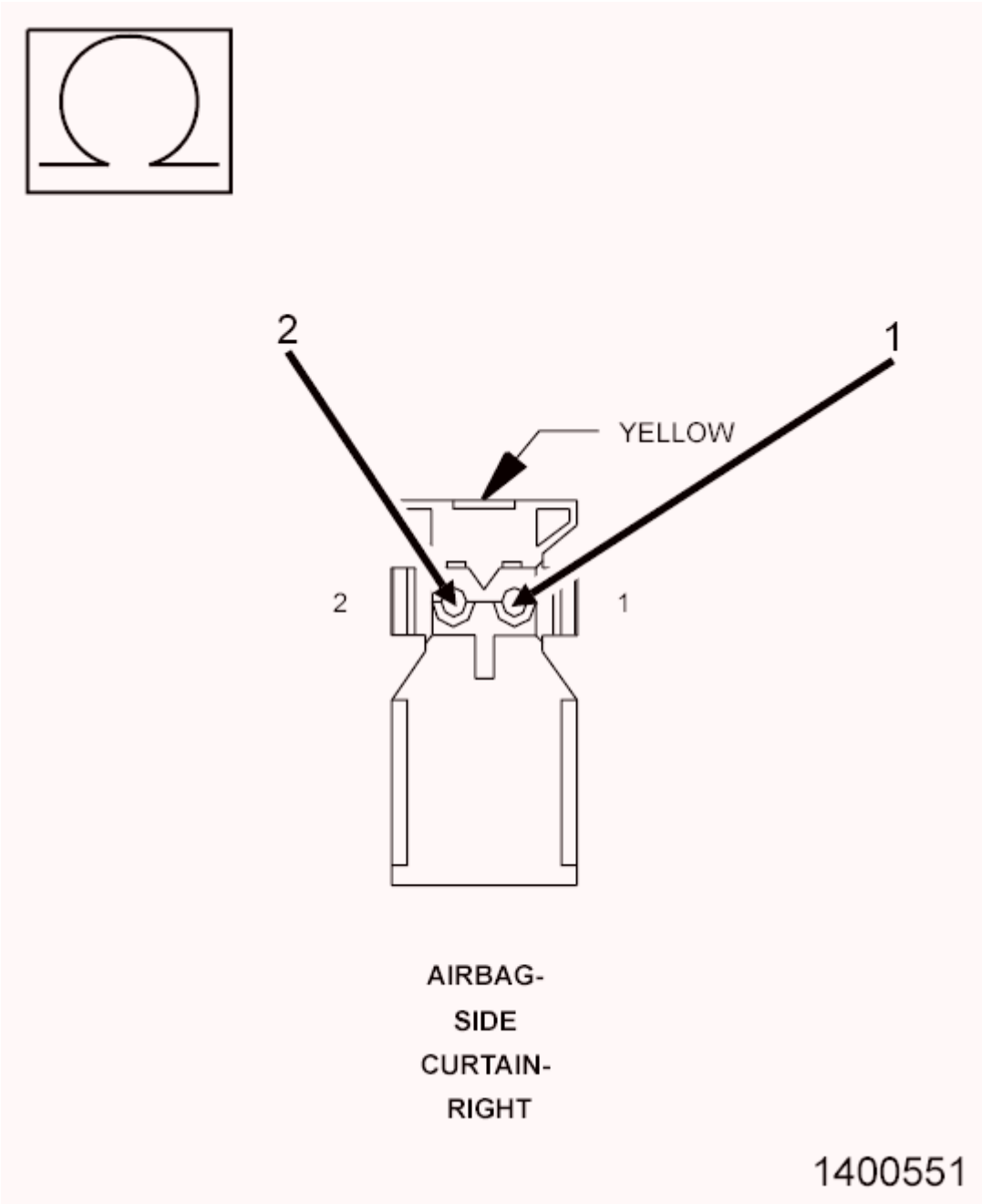

Fig. 81: Checking Right Curtain Squib 1 Line 1 Circuit
Courtesy of CHRYSLER GROUP, LLC

WARNING: **Turn the ignition off, disconnect the 12-volt battery and wait two minutes before proceeding. Failure to follow these instructions may result in possible serious or fatal injury.**

1. Disconnect the SRS Load Tool Kit (special tool #8443A, SRS Load Tool) and Jumper from the Right Side Curtain Airbag harness connector.
2. Disconnect the ORC harness connectors.

NOTE: Check connectors - Clean and repair as necessary.

3. Connect the SRS Load Tool Adaptor (special tool #8443-24, 32-Way Adapter) to the ORC C1 harness connector.
4. Measure the resistance between the (R4) Right Curtain Squib 1 Line 1 circuit cavity 1 and the (R2) Right Curtain Squib 1 Line 2 circuit cavity 2 at the Right Side Curtain Airbag harness connector.

   Is the resistance below 5.0 Ohms?

   Yes

   - Repair the (R4) Right Curtain Squib 1 Line 1 circuit for a short to the (R2) Right Curtain Squib 1 Line 2 circuit.
   - Refer to **STANDARD PROCEDURE** and perform the RESTRAINTS SYSTEM VERIFICATION TEST.

   No

   WARNING: **If the Occupant Restraint Controller (ORC) is dropped at any time, it must be replaced. Failure to follow these instructions may result in possible serious or fatal injury.**

   -
   - Replace the ORC in accordance with the Service Information.
   - Refer to **STANDARD PROCEDURE** and perform the RESTRAINTS SYSTEM VERIFICATION TEST.

B0050-11-DRIVER SEATBELT SENSOR - CIRCUIT SHORT TO GROUND

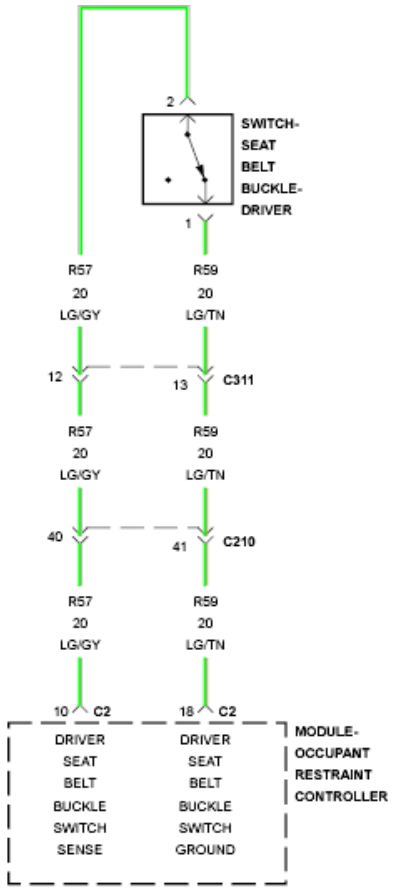

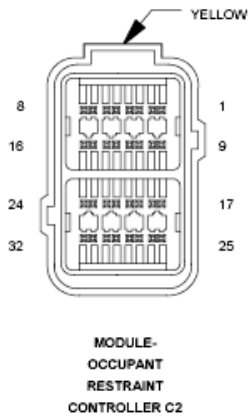

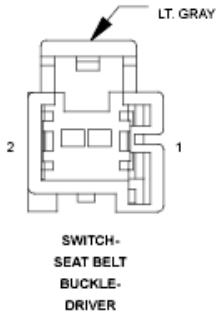

Fig. 82: Driver Seatbelt Sensor Circuit Wiring Diagram
Courtesy of CHRYSLER GROUP, LLC

For a complete wiring diagram, **refer to appropriate SYSTEM WIRING DIAGRAMS article** .

THEORY OF OPERATION

When powered, the Occupant Restraint Controller (ORC) sends a test current across the Driver Seat Belt Switch circuits every 60 ms to verify the integrity of the switch and wiring. The DTC will set if the circuits are shorted together or to ground for 2.5 seconds and the code will transitions from active to stored when the current return to normal range for five seconds.

WHEN MONITORED:

While the ignition on and the Occupant Restraint Controller (ORC) is configured for a Driver Seat Belt Switch, the ORC checks the switch input current ranges.

SET CONDITION:

If the ORC detects the passenger seat belt buckle switch circuits shorted to ground.

POSSIBLE CAUSES

Possible Causes
(R57) DRIVER SEAT BELT SWITCH SENSE CIRCUIT SHORTED TO GROUND
(R59) DRIVER SEAT BELT SWITCH GROUND CIRCUIT SHORTED TO GROUND
DRIVER SEAT BELT BUCKLE SWITCH
OCCUPANT RESTRAINT CONTROLLER (ORC)

Always perform the Pre-Diagnostic Troubleshooting procedure before proceeding. Refer to STANDARD PROCEDURE.

DIAGNOSTIC TEST

1. **VERIFY ACTIVE DTC**

   NOTE: Make sure the battery is fully charged.

   1. Turn the ignition on.
   2. With the scan tool, read ORC DTCs.

      Does the scan tool display active B0050-11-DRIVER SEATBELT SENSOR - CIRCUIT SHORT TO GROUND DTC?

      Yes

      - Go To 2.

      No

      - Refer to **STANDARD PROCEDURE** and perform the RESTRAINTS SYSTEM

INTERMITTENT TEST.

2. **CHECK DRIVER SEAT BELT SWITCH CIRCUITS FOR A SHORT TO GROUND**

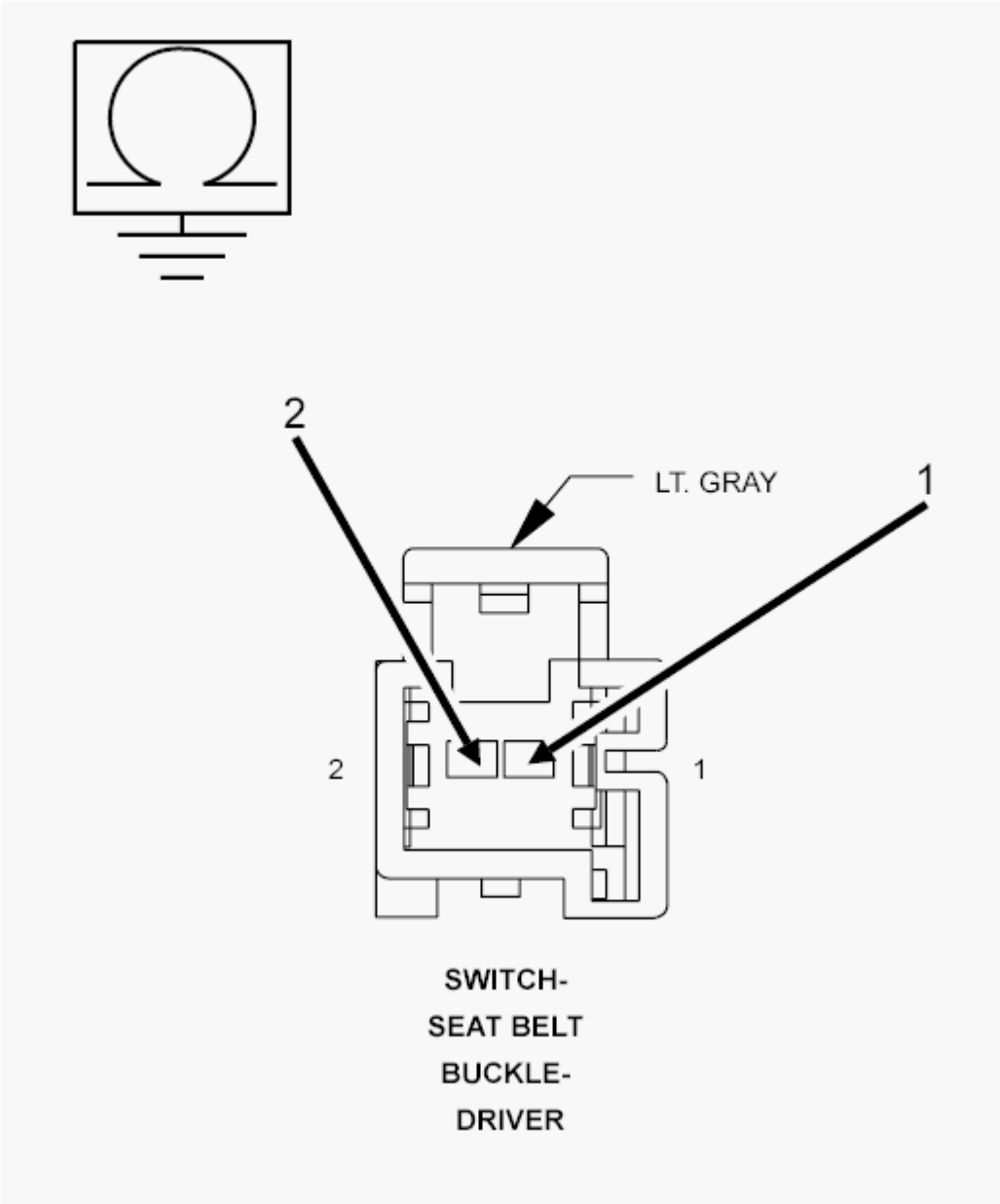

Fig. 83: Checking Driver Seat Belt Switch Circuit For A Short To Ground
Courtesy of CHRYSLER GROUP, LLC

WARNING: Turn the ignition off, disconnect the 12-volt battery and wait two minutes before proceeding. Failure to follow these instructions may result in possible serious or fatal injury.

1. Disconnect the Driver Seat Belt Buckle Switch harness connector.
2. Disconnect the ORC harness connectors.

NOTE: Check connectors - Clean and repair as necessary.

3. Connect the SRS Load Tool Adapter (special tool #8443-24, 32-Way Adapter) to the ORC C2 harness connectors.
4. Measure the resistance of the (R57) Driver Seat Belt Buckle Switch Sense circuit between the Driver Seat Belt Buckle Switch harness connector cavity 2 and ground.
5. Measure the resistance of the (R59) Driver Seat Belt Buckle Switch Ground circuit between the Driver Seat Belt Switch harness connector cavity 1 and ground.

Is the resistance below 10k Ohms on any of these circuits?

Yes

- Repair the (R57) or (R59) Driver Seat Belt Buckle Switch circuits for a short to ground.
- Refer to **STANDARD PROCEDURE** and perform the RESTRAINTS SYSTEM VERIFICATION TEST.

No

- Go To 4.

3. **CHECK DRIVER SEAT BELT SWITCH CIRCUITS FOR A SHORT TO GROUND**

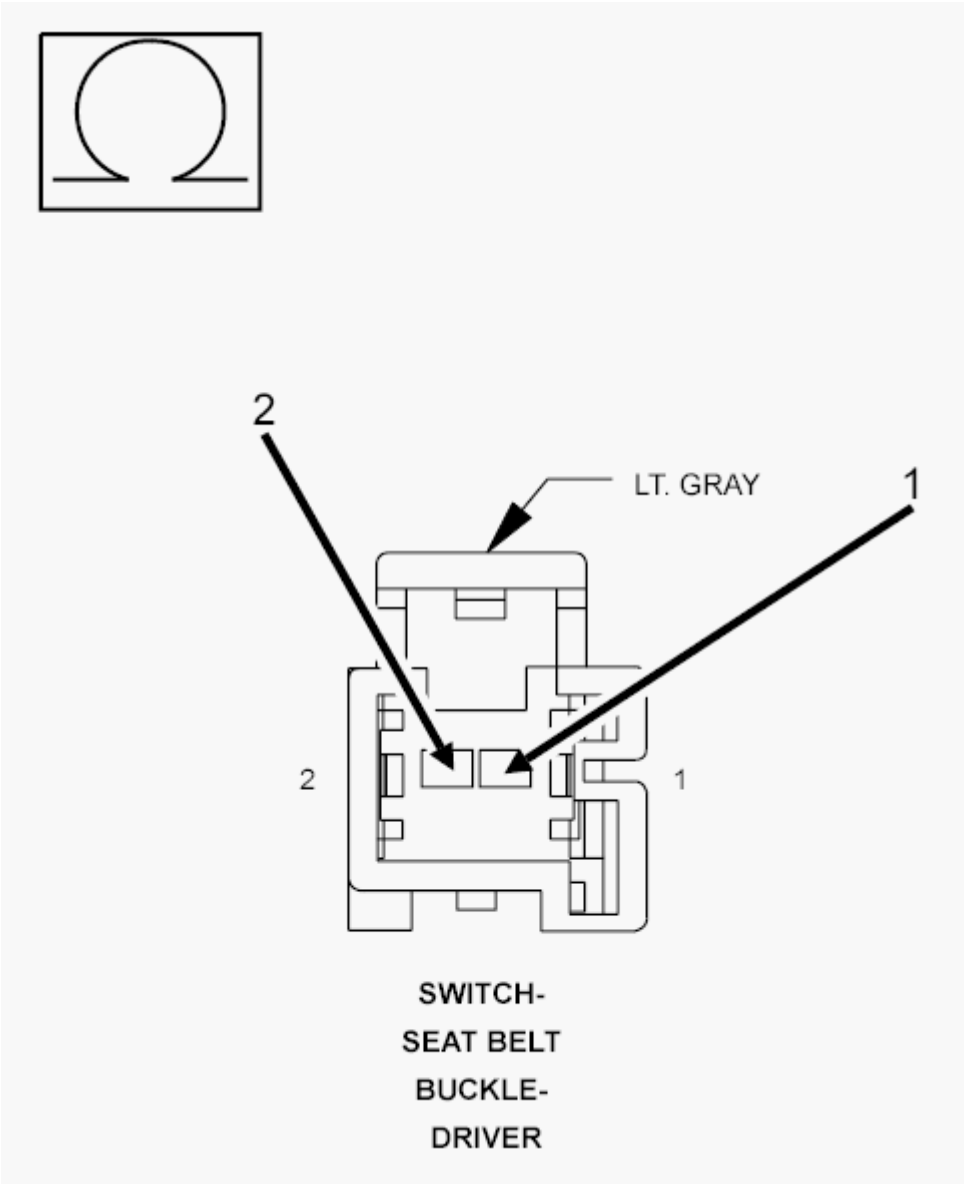

Fig. 84: Checking Driver Seat Belt Switch Circuit For A Short To Ground
Courtesy of CHRYSLER GROUP, LLC

1. Measure the resistance between the (R57) Driver Seat Belt Buckle Switch Sense circuit and (R59) Driver Seat Belt Buckle Switch Ground circuit at the Driver Seat Belt Buckle Switch harness connector.

   Is the resistance below 10k Ohms on any of these circuits?

   Yes

   - Repair the (R57) Driver Seat Belt Buckle Switch Sense circuit for a short to the (R59) Driver Seat Belt Buckle Switch Ground circuit.
   - Refer to **STANDARD PROCEDURE** and perform the RESTRAINTS SYSTEM

VERIFICATION TEST.

No

- Go To 4.

4. **CHECK OPERATION OF THE DRIVER SEAT BELT SWITCH**
   1. Replace the Driver Seat Belt Buckle Switch.
   2. Reconnect the vehicle body harness connector to the Driver Seat Belt Buckle Switch.
   3. Remove any special tools or jumper wires and reconnect all previously disconnected components - except the Battery.

      WARNING: **Turn the ignition on, then reconnect the 12-volt battery and wait two minutes before proceeding. Failure to follow these instructions may result in possible serious or fatal injury.**

   4. Connect the scan tool to the Data Link Connector - use the most current software available.
   5. Use the scan tool and erase the stored codes in all airbag system modules.
   6. Turn the Ignition OFF, and wait 15 seconds before turning the Ignition ON.
   7. Wait one minute, and read active DTCs and if there are none present read the stored DTCs.

   Does the scan tool display active B0050-11-DRIVER SEATBELT SENSOR - CIRCUIT SHORT TO GROUND DTC?

   Yes

   WARNING: **Turn the ignition off, disconnect the 12-volt battery and wait two minutes before proceeding. Failure to follow these instructions may result in possible serious or fatal injury.**

   WARNING: **If the Occupant Restraint Controller (ORC) is dropped at any time, it must be replaced. Failure to follow these instructions may result in possible serious or fatal injury.**

   -
   -
   - Replace the ORC in accordance with Service Instructions.
   - Refer to **STANDARD PROCEDURE** and perform the RESTRAINTS SYSTEM VERIFICATION TEST.

   No

   - Repair is complete.
   - Refer to **STANDARD PROCEDURE** and perform the RESTRAINTS SYSTEM VERIFICATION TEST.

B0050-12-DRIVER SEATBELT SENSOR - CIRCUIT SHORT TO BATTERY

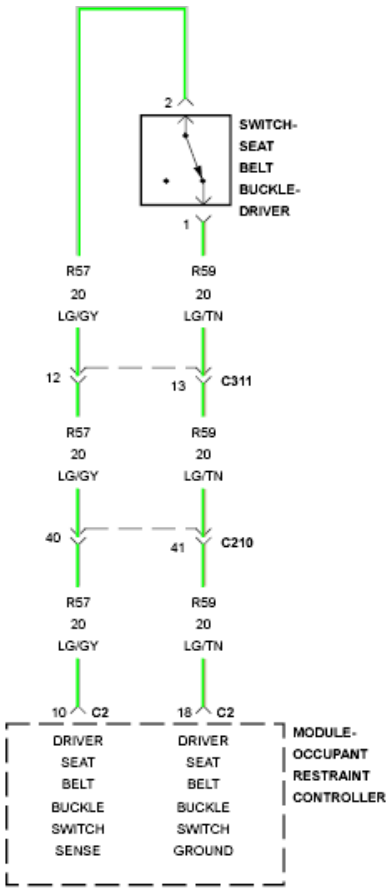

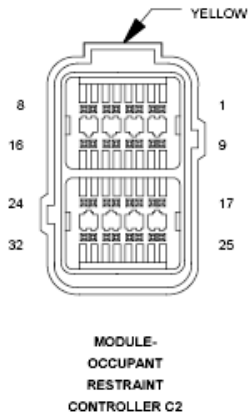

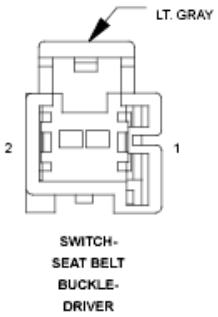

Fig. 85: Driver Seatbelt Sensor Circuit Wiring Diagram
Courtesy of CHRYSLER GROUP, LLC

For a complete wiring diagram, **refer to appropriate SYSTEM WIRING DIAGRAMS article** .

THEORY OF OPERATION

When powered, the Occupant Restraint Controller (ORC) sends a test current across the Driver Seat Belt Buckle Switch circuits every 60 ms to verify the integrity of the switch and wiring. The DTC will set if the circuits are shorted to battery for 2.5 seconds and the code will transitions from active to stored when the current return to normal range for five seconds.

WHEN MONITORED:

With the ignition on and the Occupant Restraint Controller (ORC) configured for a Driver Seat Belt Buckle Switch. The ORC monitors the switch input current ranges.

SET CONDITION:

If the ORC detects a short to voltage on the Driver Seat Belt Buckle Switch circuits.

POSSIBLE CAUSES

Possible Causes
(R57) DRIVER SEAT BELT BUCKLE SWITCH SENSE CIRCUIT SHORTED TO VOLTAGE
(R59) DRIVER SEAT BELT BUCKLE SWITCH GROUND CIRCUIT SHORTED TO VOLTAGE
DRIVER SEAT BELT BUCKLE SWITCH
OCCUPANT RESTRAINT CONTROLLER (ORC)

Always perform the Pre-Diagnostic Troubleshooting procedure before proceeding. Refer to STANDARD PROCEDURE.

DIAGNOSTIC TEST

1. **VERIFY ACTIVE DTC**

   NOTE: Make sure the battery is fully charged.

   1. Turn the ignition on.
   2. With the scan tool, read ORC DTC.

      Does the scan tool display active B0050-12-DRIVER SEATBELT SENSOR - CIRCUIT SHORT TO BATTERY DTC?

      Yes

      - Go To 2.

      No

- Refer to **STANDARD PROCEDURE** and perform the RESTRAINTS SYSTEM INTERMITTENT TEST.

2. **CHECK DRIVER SEAT BELT BUCKLE SWITCH SHORT TO VOLTAGE**

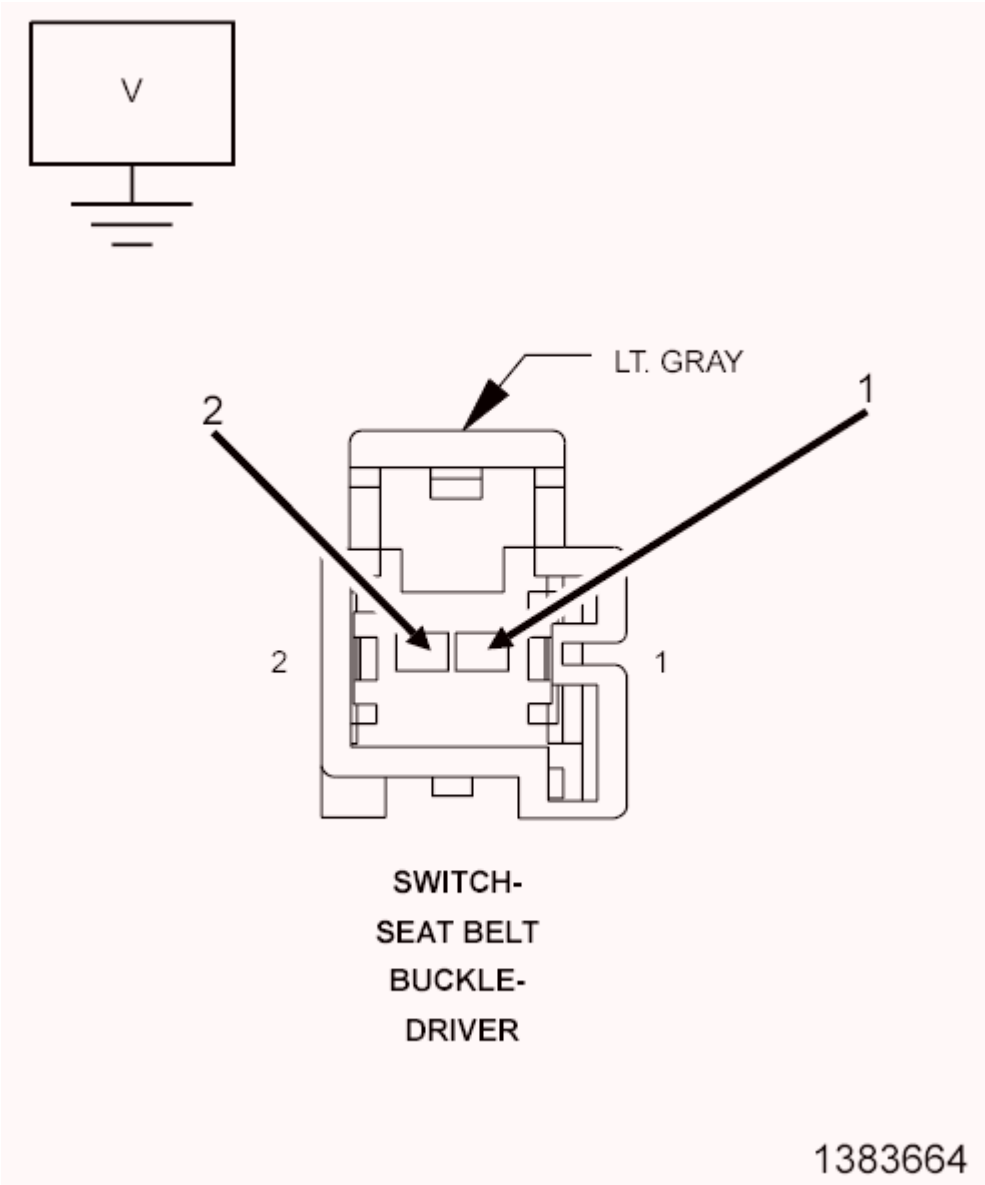

Fig. 86: Checking Driver Seat Belt Buckle Switch For Short To Voltage
Courtesy of CHRYSLER GROUP, LLC

WARNING: **Turn the ignition off, disconnect the 12-volt battery and wait two minutes before proceeding. Failure to follow these instructions may result in possible serious or fatal injury.**

1. Disconnect the Driver Seat Belt Buckle Switch harness connector.
2. Disconnect the ORC harness connectors.

NOTE: **Check connectors - Clean and repair as necessary.**

3. Connect the SRS Load Tool Adapter (special tool #8443-24, 32-Way Adapter) to the ORC harness connectors.

WARNING: **Turn the ignition on, then reconnect the 12-volt battery and wait two minutes before proceeding. Failure to follow these instructions may result in possible serious or fatal injury.**

4. Measure the voltage on the (R57) Driver Seat Belt Buckle Switch Sense circuit between the Driver Seat Belt Buckle Switch harness connector cavity 2 and ground.
5. Measure the voltage on the (R59) Driver Seat Belt Buckle Switch Ground circuit between the Driver Seat Belt Buckle Switch harness connector cavity 1 and ground.

Is there a short to voltage on any of these circuits?

Yes

WARNING: **Turn the ignition off, disconnect the 12-volt battery and wait two minutes before proceeding. Failure to follow these instructions may result in possible serious or fatal injury.**

-
- Repair the (R57, R59) Driver Seat Belt Buckle Switch circuit for a short to voltage.
- Refer to **STANDARD PROCEDURE** and perform the RESTRAINTS SYSTEM VERIFICATION TEST.

No

- Go To 3.

3. **CHECK OPERATION OF THE DRIVER SEAT BUCKLE BELT SWITCH**

WARNING: **Turn the ignition off, disconnect the 12-volt battery and wait two minutes before proceeding. Failure to follow these instructions may result in possible serious or fatal injury.**

1. Replace the Driver Seat Belt Buckle Switch.
2. Reconnect the vehicle body harness connector to the Driver Seat Belt Buckle Switch.
3. Remove any special tools or jumper wires and reconnect all previously disconnected components - except the Battery.

WARNING: **Turn the ignition on, then reconnect the 12-volt battery and wait two minutes before proceeding. Failure to follow these**

instructions may result in possible serious or fatal injury.

4. Connect the scan tool to the Data Link Connector - use the most current software available.
5. Use the scan tool and erase the stored DTCs.
6. Turn the Ignition OFF, and wait 15 seconds before turning the Ignition ON.
7. Wait one minute, and read active DTCs and if there are none present read the stored DTCs.

Does the scan tool display active B0050-12-DRIVER SEATBELT SENSOR - CIRCUIT SHORT TO BATTERY DTC?

Yes

WARNING: **Turn the ignition off, disconnect the 12-volt battery and wait two minutes before proceeding. Failure to follow these instructions may result in possible serious or fatal injury.**

WARNING: **If the Occupant Restraint Controller (ORC) is dropped at any time, it must be replaced. Failure to follow these instructions may result in possible serious or fatal injury.**

-
-
- Replace the ORC in accordance with Service Instructions.
- Refer to **STANDARD PROCEDURE** and perform the RESTRAINTS SYSTEM VERIFICATION TEST.

No

- Repair is complete.
- Refer to **STANDARD PROCEDURE** and perform the RESTRAINTS SYSTEM VERIFICATION TEST.

B0050-13-DRIVER SEATBELT SENSOR - CIRCUIT OPEN

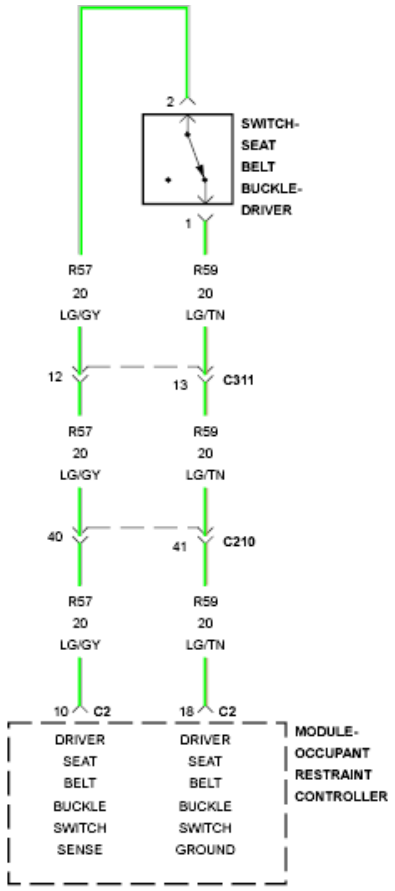

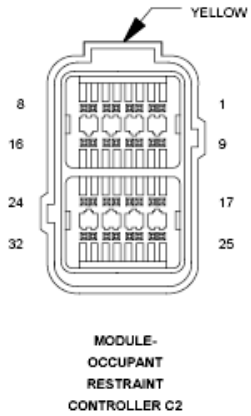

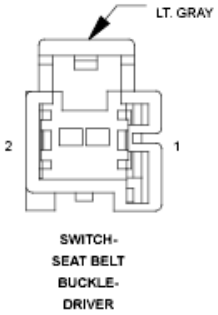

Fig. 87: Driver Seatbelt Sensor Circuit Wiring Diagram
Courtesy of CHRYSLER GROUP, LLC

For a complete wiring diagram, **refer to appropriate SYSTEM WIRING DIAGRAMS article** .

THEORY OF OPERATION

When powered, the Occupant Restraint Controller (ORC) sends a test current across the Driver Seat Belt Buckle Switch circuits every 60 ms to verify the integrity of the switch and wiring. The DTC will set if the circuits are open for 2.5 seconds and the code will transitions from active to stored when the current return to normal range for 5 seconds.

WHEN MONITORED:

The ORC checks the Driver Seat Belt Buckle Switch input current when the ignition ON and the Occupant Restraint Controller (ORC) configured for a Driver Seat Belt Buckle Switch.

SET CONDITION:

The DTC will set if the ORC detects an open on the Driver Seat Belt Buckle Switch circuits.

POSSIBLE CAUSES

Possible Causes
(R57) DRIVER SEAT BELT BUCKLE SWITCH SENSE CIRCUIT OPEN
(R59) DRIVER SEAT BELT BUCKLE SWITCH GROUND CIRCUIT OPEN
DRIVER SEAT BELT BUCKLE SWITCH
OCCUPANT RESTRAINT CONTROLLER (ORC)

Always perform the Pre-Diagnostic Troubleshooting procedure before proceeding. Refer to STANDARD PROCEDURE.

DIAGNOSTIC TEST

1. **VERIFY ACTIVE DTC**

   NOTE: Ensure the battery is fully charged.

   1. Turn the ignition on.
   2. With the scan tool, read ORC DTC.

      Does the scan tool display active B0050-13-DRIVER SEATBELT SENSOR - CIRCUIT OPEN DTC?

      Yes

      - Go To 2.

      No

      - Refer to **STANDARD PROCEDURE** and perform the RESTRAINTS SYSTEM

INTERMITTENT TEST.

2. **VERIFY WIRING**

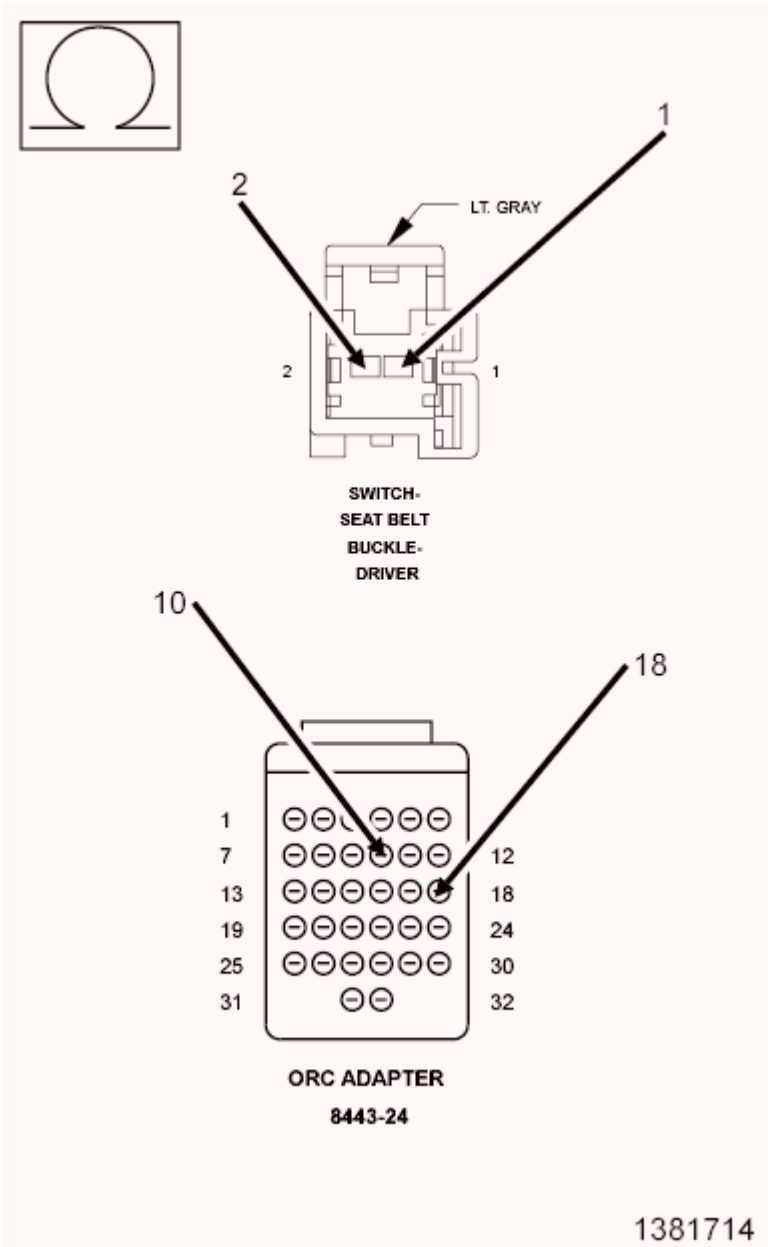

Fig. 88: Measuring Resistance Of Driver Seat Belt Buckle Switch Sense Circuit
Courtesy of CHRYSLER GROUP, LLC

WARNING: **Turn the ignition off, disconnect the 12-volt battery and wait two minutes before proceeding. Failure to follow these instructions may result in possible serious or fatal injury.**

1. Disconnect the Driver Seat Belt Buckle Switch harness connector.
2. Disconnect the ORC harness connectors.

NOTE: **Check connectors - Clean and repair as necessary.**

3. Connect the SRS Load Tool Adapter (special tool #8443-24, 32-Way Adapter) to the ORC C2 harness connector.
4. Measure the resistance of the (R57) Driver Seat Belt Buckle Switch Sense circuit between the Driver Seat Belt Buckle Switch harness connector cavity 2 and the SRS Load Tool Adapter (special tool #8443-24, 32-Way Adapter) cavity 10.
5. Measure the resistance of the (R59) Driver Seat Belt Buckle Switch Ground circuit between the Driver Seat Belt Buckle Switch harness connector cavity 1 and SRS Load Tool Adapter (special tool #8443-24, 32-Way Adapter) cavity 18.

   Is the resistance greater than 1.0 Ohms on any of these circuits?

   Yes

   - Repair the (R57, R59) Driver Seat Belt Buckle Switch circuits for an open.
   - Refer to **STANDARD PROCEDURE** and perform the RESTRAINTS SYSTEM VERIFICATION TEST.

   No

   - Go To 3.

3. **VERIFY OPEN SWITCH**
   1. Replace the Driver Seat Belt Buckle Switch.
   2. Reconnect the vehicle body harness connector to the Driver Seat Belt Buckle Switch.
   3. Remove any special tools or jumper wires and reconnect all previously disconnected components - except the Battery.

      WARNING: Turn the ignition on, then reconnect the 12-volt battery and wait two minutes before proceeding. Failure to follow these instructions may result in possible serious or fatal injury.

   4. Connect the scan tool to the Data Link Connector - use the most current software available.
   5. Use the scan tool and erase the stored DTCs.
   6. Turn the Ignition OFF, and wait 15 seconds before turning the Ignition ON.
   7. Wait one minute, and read active DTCs and if there are none present read the stored DTCs.

      Does the scan tool display active B0050-13-DRIVER SEATBELT SENSOR - CIRCUIT OPEN DTC?

      Yes

      WARNING: Turn the ignition off, disconnect the 12-volt battery and wait two minutes before proceeding. Failure to follow

these instructions may result in possible serious or fatal injury.

WARNING: **If the Occupant Restraint Controller (ORC) is dropped at any time, it must be replaced. Failure to follow these instructions may result in possible serious or fatal injury.**

-
-
- Replace the ORC in accordance with Service Instructions.
- Refer to **STANDARD PROCEDURE** and perform the RESTRAINTS SYSTEM VERIFICATION TEST.

No

- Repair is complete.
- Refer to **STANDARD PROCEDURE** and perform the RESTRAINTS SYSTEM VERIFICATION TEST.

B0090-49-LEFT FRONTAL RESTRAINTS SENSOR - INTERNAL ELECTRONIC FAILURE

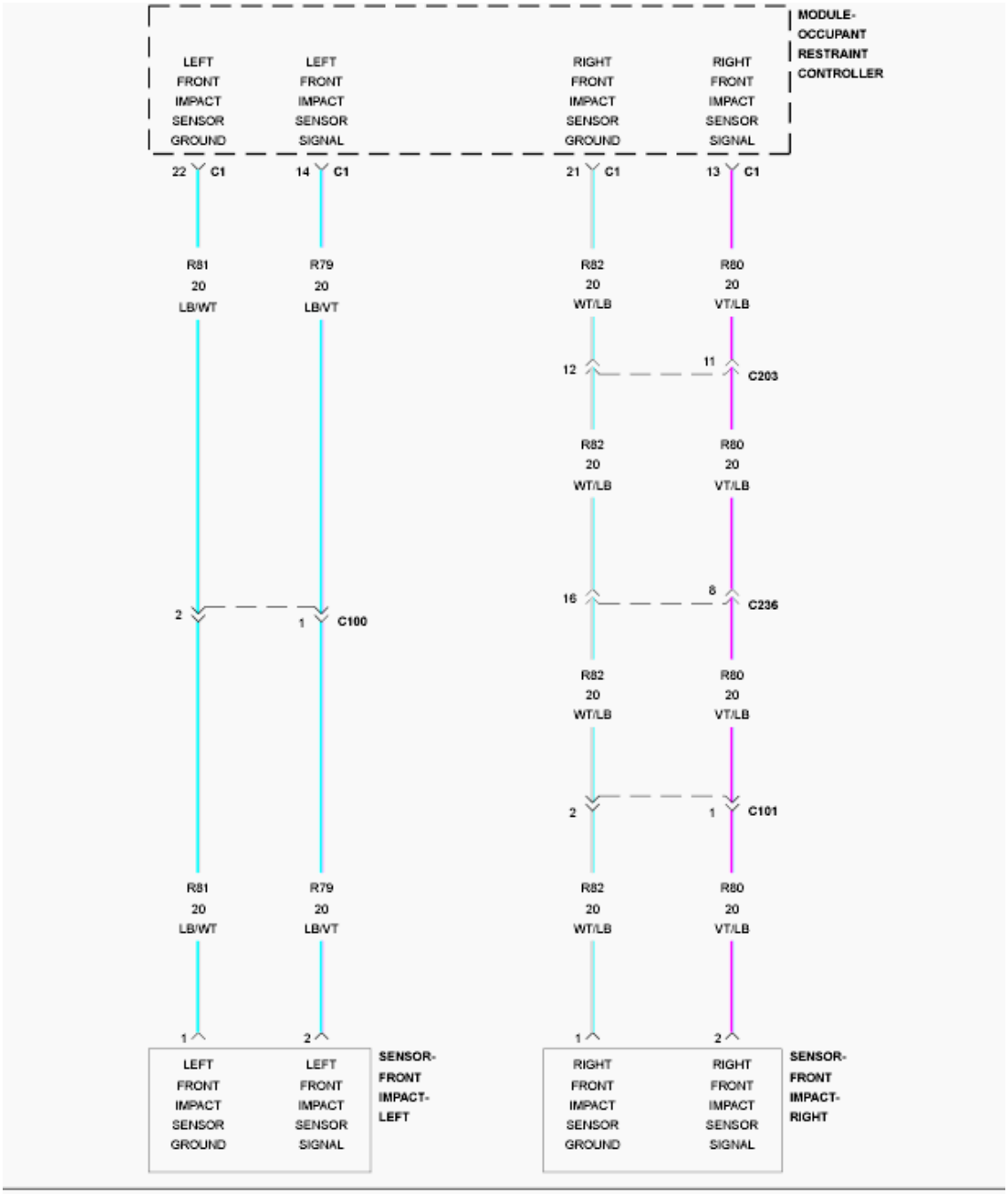
MODULE-
OCCUPANT
RESTRAINT
CONTROLLER
LEFT FRONT IMPACT SENSOR GROUND
LEFT FRONT IMPACT SENSOR SIGNAL
RIGHT FRONT IMPACT SENSOR GROUND
RIGHT FRONT IMPACT SENSOR SIGNAL
22 C1
14 C1
21 C1
13 C1
R81 20 LB/WT
R79 20 LB/VT
R82 20 WT/LB
R80 20 VT/LB
12
11
C203
R82 20 WT/LB
R80 20 VT/LB
16
8
C236
2
1
C100
R82 20 WT/LB
R80 20 VT/LB
2
1
C101
R81 20 LB/WT
R79 20 LB/VT
R82 20 WT/LB
R80 20 VT/LB
1
2
1
2
LEFT FRONT IMPACT SENSOR GROUND
LEFT FRONT IMPACT SENSOR SIGNAL
SENSOR-
FRONT
IMPACT-
LEFT
RIGHT FRONT IMPACT SENSOR GROUND
RIGHT FRONT IMPACT SENSOR SIGNAL
SENSOR-
FRONT
IMPACT-
RIGHT

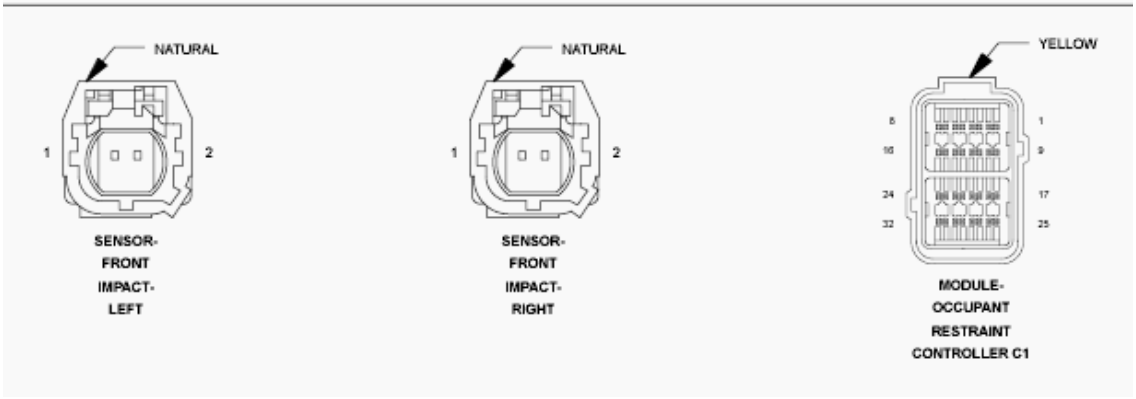
NATURAL
1
2
SENSOR-
FRONT
IMPACT-
LEFT
NATURAL
1
2
SENSOR-
FRONT
IMPACT-
RIGHT
YELLOW
8
1
16
9
24
17
32
25
MODULE-
OCCUPANT
RESTRAINT
CONTROLLER C1

Fig. 89: Front Impact Sensor Circuit Wiring Diagram
Courtesy of CHRYSLER GROUP, LLC

For a complete wiring diagram, **refer to appropriate SYSTEM WIRING DIAGRAMS article** .

THEORY OF OPERATION

The location of this left front impact sensor is in the Left Crush Zone of the engine compartment. Refer to **SENSOR, IMPACT, DESCRIPTION** . Impact sensors perform internal self-tests and communicate the sensors status using power supplied by the Occupant Restraint Controller (ORC). The sensor communicates this internal failure message using the sensor signal circuit. If the scan tool shows this DTC has a Stored history of setting then the left front impact sensor is to be replaced.

WHEN MONITORED:

Impact sensors perform the self-test for internal circuitry at power up during the initialization process, and continuously through the ignition cycle every 10 ms.

SET CONDITION:

This DTC sets when the ORC receives notification of a self-test failure within the impact sensor. Once set, this DTC is latched for the entire ignition cycle.

POSSIBLE CAUSES

Possible Causes
LEFT FRONT IMPACT SENSOR

Always perform the Pre-Diagnostic Troubleshooting procedure before proceeding. Refer to STANDARD PROCEDURE.

DIAGNOSTIC TEST

NOTE: **If the scan tool shows this DTC has a Stored history of setting then the left front impact sensor is to be replaced.**

NOTE: **Make sure the battery is fully charged.**

1. **VERIFY ACTIVE DTC**
    1. Turn the ignition ON.
    2. With the scan tool, read ORC DTCs.

    Does the scan tool display active B0090-49-LEFT FRONTAL RESTRAINTS SENSOR - INTERNAL ELECTRONIC FAILURE DTC or did the DTC set the Stored history setting?

    Yes

WARNING: Turn the ignition off, disconnect the 12-volt battery and wait two minutes before proceeding. Failure to follow these instructions may result in possible serious or fatal injury.

-
- Replace the Left Front Impact Sensor in accordance with the Service Information. Refer to **SENSOR, IMPACT, REMOVAL** .
- Refer to **STANDARD PROCEDURE** and perform the RESTRAINT SYSTEM VERIFICATION TEST.

No (Did not set a active or stored DTC B0090-49- LEFT FRONTAL SENSOR - INTERNAL ELECTRONIC FAILURE)

- Refer to **STANDARD PROCEDURE** and perform the RESTRAINTS SYSTEM INTERMITTENT TEST.

B0095-49-RIGHT FRONTAL ACCELERATION SENSOR - INTERNAL ELECTRONIC FAILURE

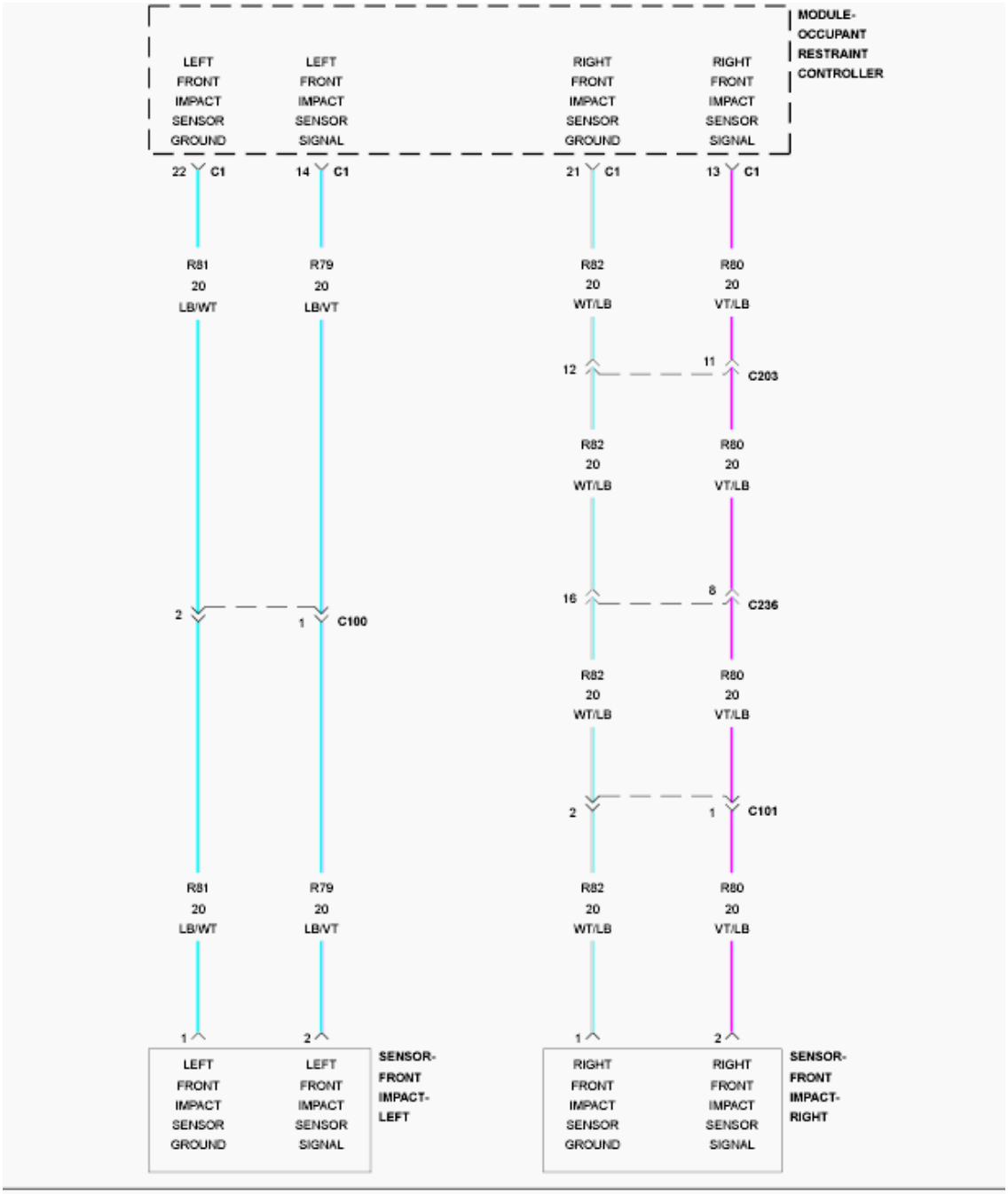
MODULE-
OCCUPANT
RESTRAINT
CONTROLLER
LEFT FRONT IMPACT SENSOR GROUND
LEFT FRONT IMPACT SENSOR SIGNAL
RIGHT FRONT IMPACT SENSOR GROUND
RIGHT FRONT IMPACT SENSOR SIGNAL
22 C1
14 C1
21 C1
13 C1
R81 20 LB/WT
R79 20 LB/VT
R82 20 WT/LB
R80 20 VT/LB
12
11
C203
R82 20 WT/LB
R80 20 VT/LB
16
8
C236
2
1
C100
R82 20 WT/LB
R80 20 VT/LB
2
1
C101
R81 20 LB/WT
R79 20 LB/VT
R82 20 WT/LB
R80 20 VT/LB
1
2
1
2
LEFT FRONT IMPACT SENSOR GROUND
LEFT FRONT IMPACT SENSOR SIGNAL
SENSOR-
FRONT
IMPACT-
LEFT
RIGHT FRONT IMPACT SENSOR GROUND
RIGHT FRONT IMPACT SENSOR SIGNAL
SENSOR-
FRONT
IMPACT-
RIGHT

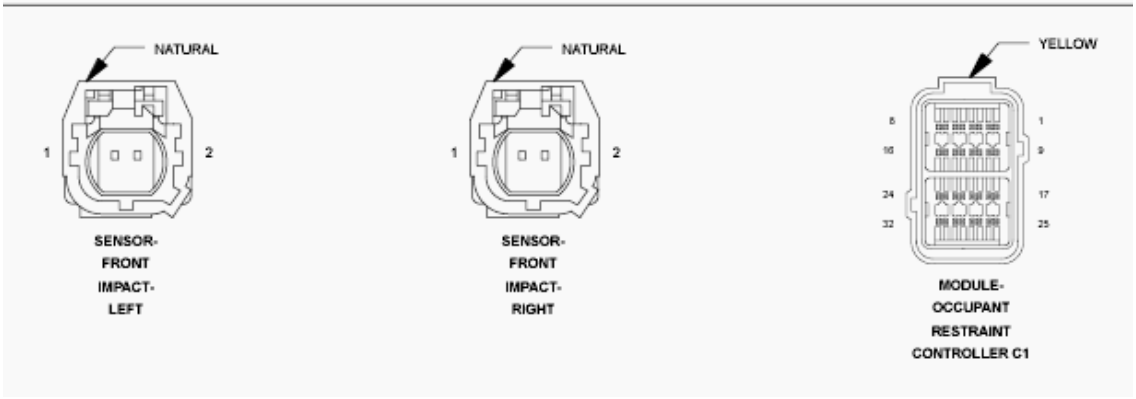
NATURAL
1
2
SENSOR-
FRONT
IMPACT-
LEFT
NATURAL
1
2
SENSOR-
FRONT
IMPACT-
RIGHT
YELLOW
8
1
16
9
24
17
32
25
MODULE-
OCCUPANT
RESTRAINT
CONTROLLER C1

Fig. 90: Front Impact Sensor Circuit Wiring Diagram
Courtesy of CHRYSLER GROUP, LLC

For a complete wiring diagram, **refer to appropriate SYSTEM WIRING DIAGRAMS article** .

THEORY OF OPERATION

The location of this right front impact sensor is in the Right Crush Zone of the engine compartment. Refer to **SENSOR, IMPACT, DESCRIPTION** . Impact sensors perform internal self-tests and communicate the sensors status using power supplied by the Occupant Restraint Controller (ORC). The sensor communicates this internal failure message using the sensor signal circuit. If the scan tool shows this DTC has a Stored history of setting then the right front impact sensor is to be replaced.

WHEN MONITORED:

Impact sensors perform the self-test for internal circuitry at power up during the initialization process, and continuously through the ignition cycle every 10 ms.

SET CONDITION:

This DTC sets when the ORC receives notification of a self-test failure within the impact sensor. Once set, this DTC is latched for the entire ignition cycle.

POSSIBLE CAUSES

Possible Causes
RIGHT FRONT IMPACT SENSOR

Always perform the Pre-Diagnostic Troubleshooting procedure before proceeding. Refer to STANDARD PROCEDURE.

DIAGNOSTIC TEST

NOTE: **If the scan tool shows this DTC has a Stored history of setting then the right front impact sensor is to be replaced.**

NOTE: **Make sure the battery is fully charged.**

1. **VERIFY ACTIVE DTC**
    1. Turn the ignition on.
    2. With the scan tool, read ORC DTCs.

    Does the scan tool display an active B0095-49-RIGHT FRONTAL ACCELERATION SENSOR - INTERNAL ELECTRONIC FAILURE DTC or shows a setting history in stored?

    Yes

WARNING: Turn the ignition off, disconnect the 12-volt battery and wait two minutes before proceeding. Failure to follow these instructions may result in possible serious or fatal injury.

-
- Replace the Right Front Impact Sensor in accordance with the Service Information. Refer to **SENSOR, IMPACT, REMOVAL** .
- Refer to **STANDARD PROCEDURE** and perform the RESTRAINT SYSTEM VERIFICATION TEST.

No (Did not set a active or stored DTC B0095-49- RIGHT FRONTAL SENSOR - INTERNAL ELECTRONIC FAILURE)

- Refer to **STANDARD PROCEDURE** and perform the RESTRAINTS SYSTEM INTERMITTENT TEST.

B0091-49-LEFT SIDE ACCELERATION SENSOR 1 - INTERNAL ELECTRONIC FAILURE

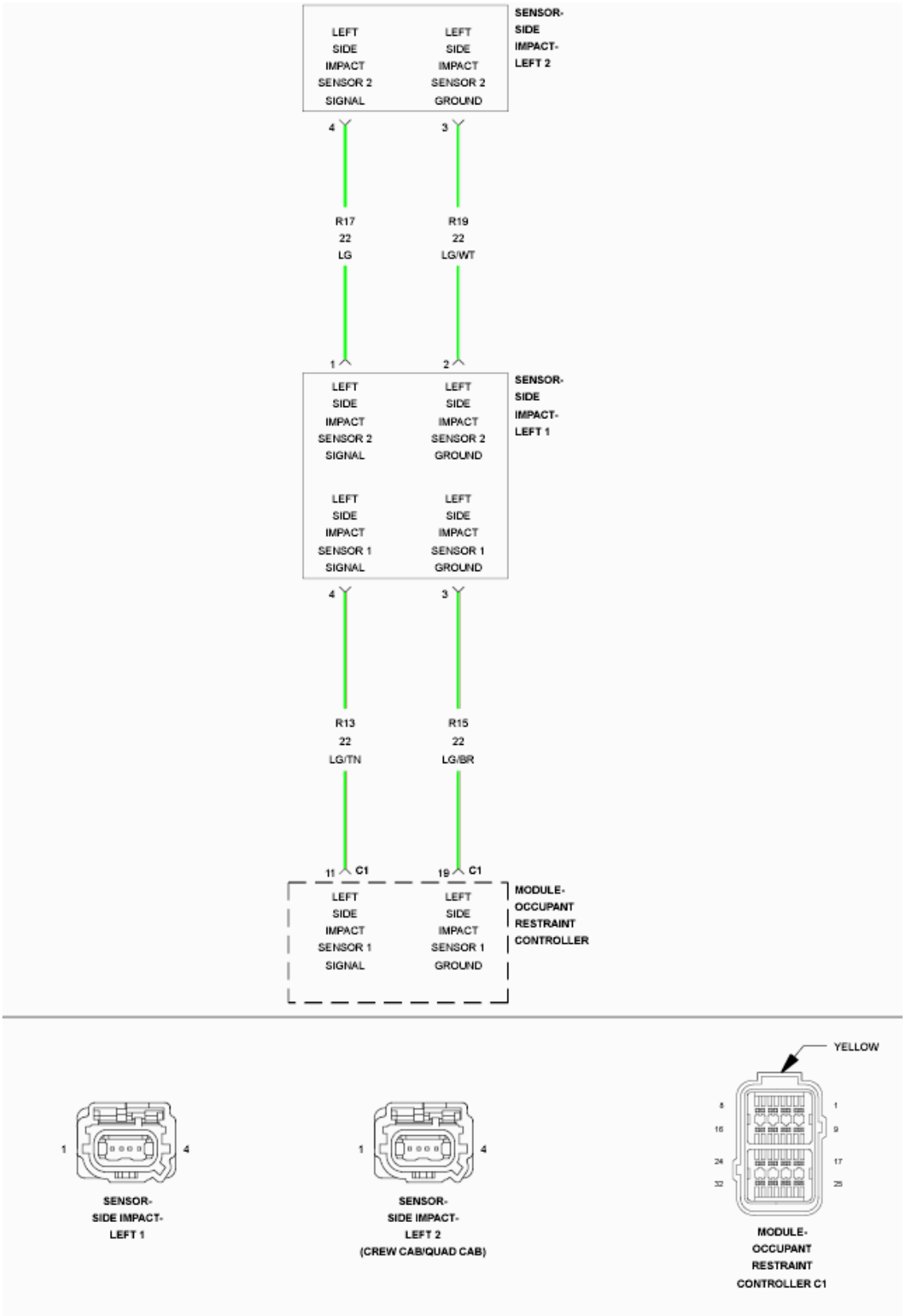

Fig. 91: Left Side Impact Sensor Circuit Wiring Diagram

Courtesy of CHRYSLER GROUP, LLC

For a complete wiring diagram, **refer to appropriate SYSTEM WIRING DIAGRAMS article** .

THEORY OF OPERATION

The location of this left side impact sensor 1 is located in the Left B-pillar just past the first row seating. Refer to **SENSOR, IMPACT, DESCRIPTION** . Impact sensors perform internal self-tests and communicate the sensors status using power supplied by the Occupant Restraint Controller (ORC). The sensor communicates this internal failure message using the sensor signal circuit. If the scan tool shows this DTC has a Stored history of setting then the left side impact sensor is to be replaced.

WHEN MONITORED:

Impact sensors perform the self-test for internal circuitry at power up during the initialization process, and continuously through the ignition cycle every 10 ms.

SET CONDITION:

This DTC sets when the ORC receives notification of a self-test failure within the impact sensor. Once set, this DTC is latched for the entire ignition cycle.

POSSIBLE CAUSES

Possible Causes
LEFT SIDE IMPACT SENSOR 1

Always Perform the Pre-Diagnostic Troubleshooting procedure before proceeding. Refer to STANDARD PROCEDURE.

DIAGNOSTIC TEST

NOTE: **If the scan tool shows this DTC has a Stored history of setting then the left side impact sensor is to be replaced.**

NOTE: **Make sure the battery is fully charged.**

1. **VERIFY ACTIVE DTC**
    1. Turn the ignition on.
    2. With the scan tool, read ORC DTCs.

    Does the scan tool display active B0091-49-LEFT SIDE ACCELERATION SENSOR 1 - INTERNAL ELECTRONIC FAILURE DTC or shows a setting history in stored?

    Yes

WARNING: Turn the ignition off, disconnect the 12-volt battery and wait two minutes before proceeding. Failure to follow these instructions may result in possible serious or fatal injury.

-
- Replace the Left Side Impact Sensor 1 in accordance with the Service Information. Refer to **SENSOR, IMPACT, REMOVAL** .
- Refer to **STANDARD PROCEDURE** and perform the RESTRAINT SYSTEM VERIFICATION TEST.

No (Did not set a active or stored DTC B0091-49- LEFT SIDE SATELLITE SENSOR 1- INTERNAL ELECTRONIC FAILURE)

- Refer to **STANDARD PROCEDURE** and perform the RESTRAINTS SYSTEM INTERMITTENT TEST.

B0092-49-LEFT SIDE ACCELERATION SENSOR 2 - INTERNAL ELECTRONIC FAILURE

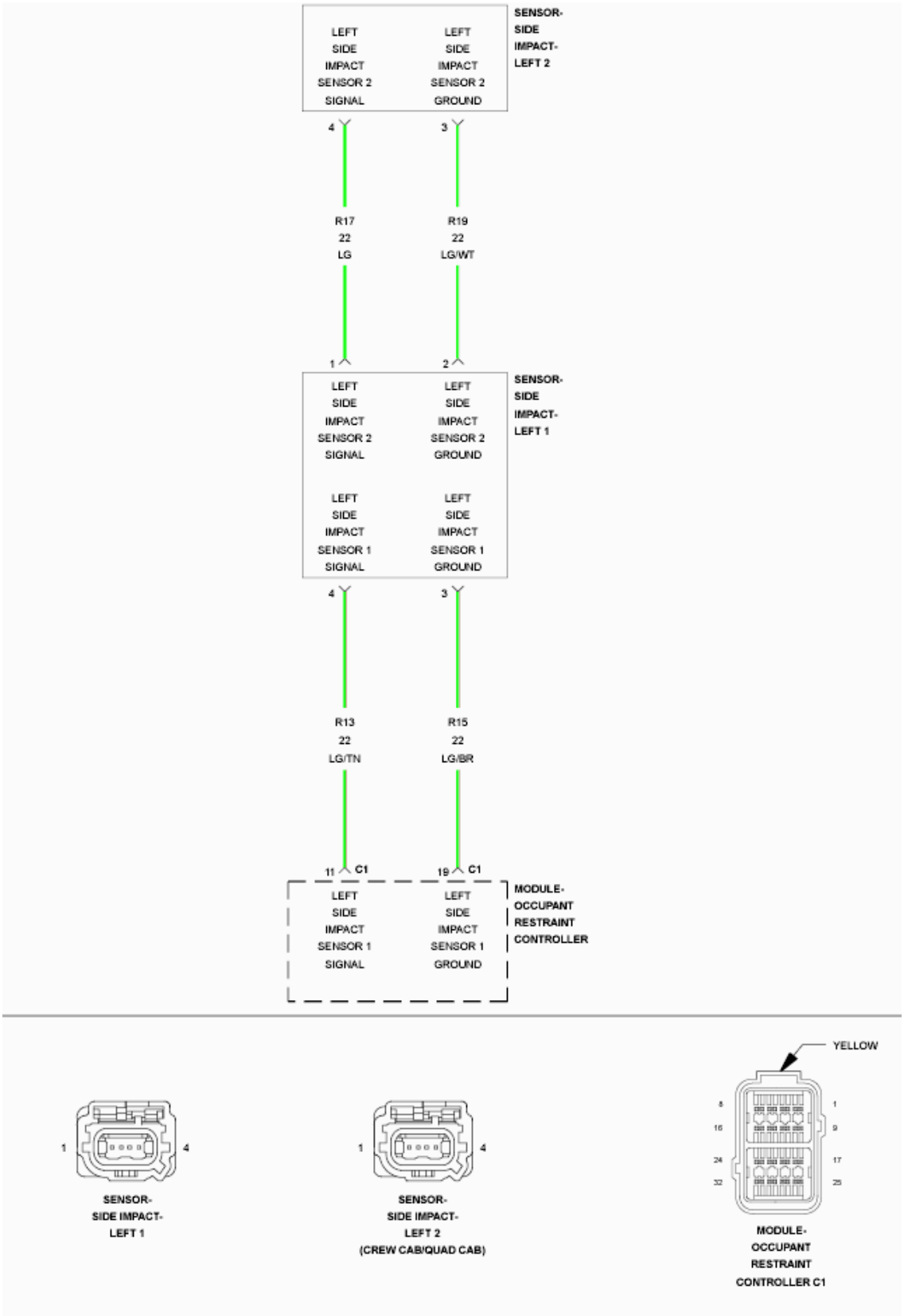

Fig. 92: Left Side Impact Sensor Circuit Wiring Diagram

Courtesy of CHRYSLER GROUP, LLC

For a complete wiring diagram, **refer to appropriate SYSTEM WIRING DIAGRAMS article** .

THEORY OF OPERATION

The location of this left side impact sensor 2 is located in the Left C-pillar just past the second row seating. Refer to **SENSOR, IMPACT, DESCRIPTION** . Impact sensors perform internal self-tests and communicate the sensors status using power supplied by the Occupant Restraint Controller (ORC). The sensor communicates this internal failure message using the sensor signal circuit. If the scan tool shows this DTC has a Stored history of setting then the left side impact sensor is to be replaced.

WHEN MONITORED:

Impact sensors perform the self-test for internal circuitry at power up during the initialization process, and continuously through the ignition cycle every 10 ms.

SET CONDITION:

This Diagnostic Trouble Code (DTC) will sets if the ORC receives an internal failure message from the Impact Sensor. The DTC will be latched on for the duration of the ignition cycle.

POSSIBLE CAUSES

Possible Causes
LEFT SIDE IMPACT SENSOR 2

Always perform the Pre-Diagnostic Troubleshooting procedure before proceeding. Refer to STANDARD PROCEDURE.

DIAGNOSTIC TEST

NOTE: **If the scan tool shows this DTC has a Stored history of setting then the left side impact sensor is to be replaced.**

NOTE: **Make sure the battery is fully charged.**

1. **VERIFY ACTIVE DTC**
    1. Turn the ignition on.
    2. With the scan tool, read ORC DTCs.

    Does the scan tool display an active B0092-49-LEFT SIDE ACCELERATION SENSOR 2 - INTERNAL ELECTRONIC FAILURE DTC or shows a setting history in stored?

    Yes

WARNING: Turn the ignition off, disconnect the 12-volt battery and wait two minutes before proceeding. Failure to follow these instructions may result in possible serious or fatal injury.

-
- Replace the Left Side Impact Sensor 2 in accordance with the Service Information. Refer to **SENSOR, IMPACT, REMOVAL** .
- Refer to **STANDARD PROCEDURE** and perform the RESTRAINT SYSTEM VERIFICATION TEST.

No (Did not set a active or stored DTC B0092-49- LEFT SIDE SATELLITE SENSOR 2- INTERNAL ELECTRONIC FAILURE)

- Refer to **STANDARD PROCEDURE** and perform the RESTRAINTS SYSTEM INTERMITTENT TEST.

B009A-49-LEFT SIDE SATELLITE SENSOR 4 - INTERNAL ELECTRONIC FAILURE

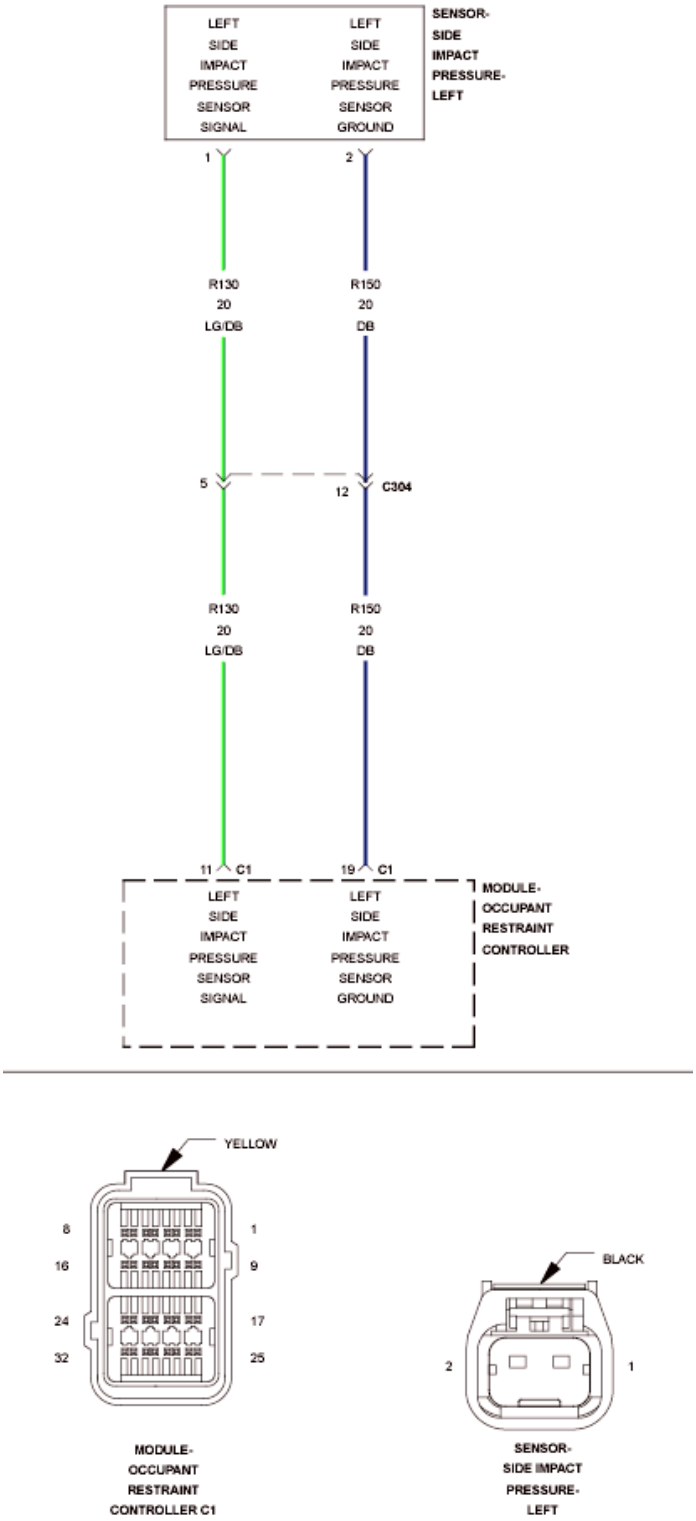

Fig. 93: Left Side Satellite Sensor Circuit Wiring Diagram
Courtesy of CHRYSLER GROUP, LLC

For a complete wiring diagram, **refer to appropriate SYSTEM WIRING DIAGRAMS article** .

THEORY OF OPERATION

The location of this left side impact sensor (pressure sensor) 4 is located in the Left Front Door. Refer to **SENSOR, IMPACT, DESCRIPTION** . Impact sensors perform internal self-tests and communicate the sensors status using power supplied by the Occupant Restraint Controller (ORC). The sensor communicates this internal failure message using the sensor signal circuit. If the scan tool shows this DC has a Stored history of setting then the left side impact sensor is to be replaced.

WHEN MONITORED:

Impact sensors perform the self-test for internal circuitry at power up during the initialization process, and continuously through the ignition cycle every 10 ms.

SET CONDITION:

This DC sets when the ORC receives notification of a self-test failure within the impact sensor. Once set, this DTC is latched for the entire ignition cycle.

POSSIBLE CAUSES

Possible Causes
LEFT SIDE IMPACT PRESSURE SENSOR (SENSOR 4)

Always perform the Pre-Diagnostic Troubleshooting procedure before proceeding. Refer to STANDARD PROCEDURE.

DIAGNOSTIC TEST

NOTE: **If the scan tool shows this DTC has a Stored history of setting then the left side impact sensor is to be replaced.**

NOTE: **Make sure the battery is fully charged.**

1. **VERIFY ACTIVE DTC**
    1. Turn the ignition on.
    2. With the scan tool, read ORC DTCs.

    Does the scan tool display active B009A-49-LEFT SIDE SATELLITE SENSOR 4 - INTERNAL ELECTRONIC FAILURE DTC or shows a setting history in stored?

    Yes

WARNING: **Turn the ignition off, disconnect the 12-volt battery and wait two minutes before proceeding. Failure to follow these instructions may result in possible serious or fatal injury.**

-
- Replace the Left Side Impact Pressure Sensor in accordance with the Service Information. Refer to **SENSOR, IMPACT, REMOVAL** .
- Refer to **STANDARD PROCEDURE** and perform the RESTRAINT SYSTEM VERIFICATION TEST.

No (Did not set a active or stored DTC B009A-49-LEFT SIDE SATELLITE SENSOR 4-INTERNAL ELECTRONIC FAILURE).

- Refer to **STANDARD PROCEDURE** and perform the RESTRAINTS SYSTEM INTERMITTENT TEST.

B0096-49-RIGHT SIDE ACCELERATION SENSOR 1 - INTERNAL ELECTRONIC FAILURE

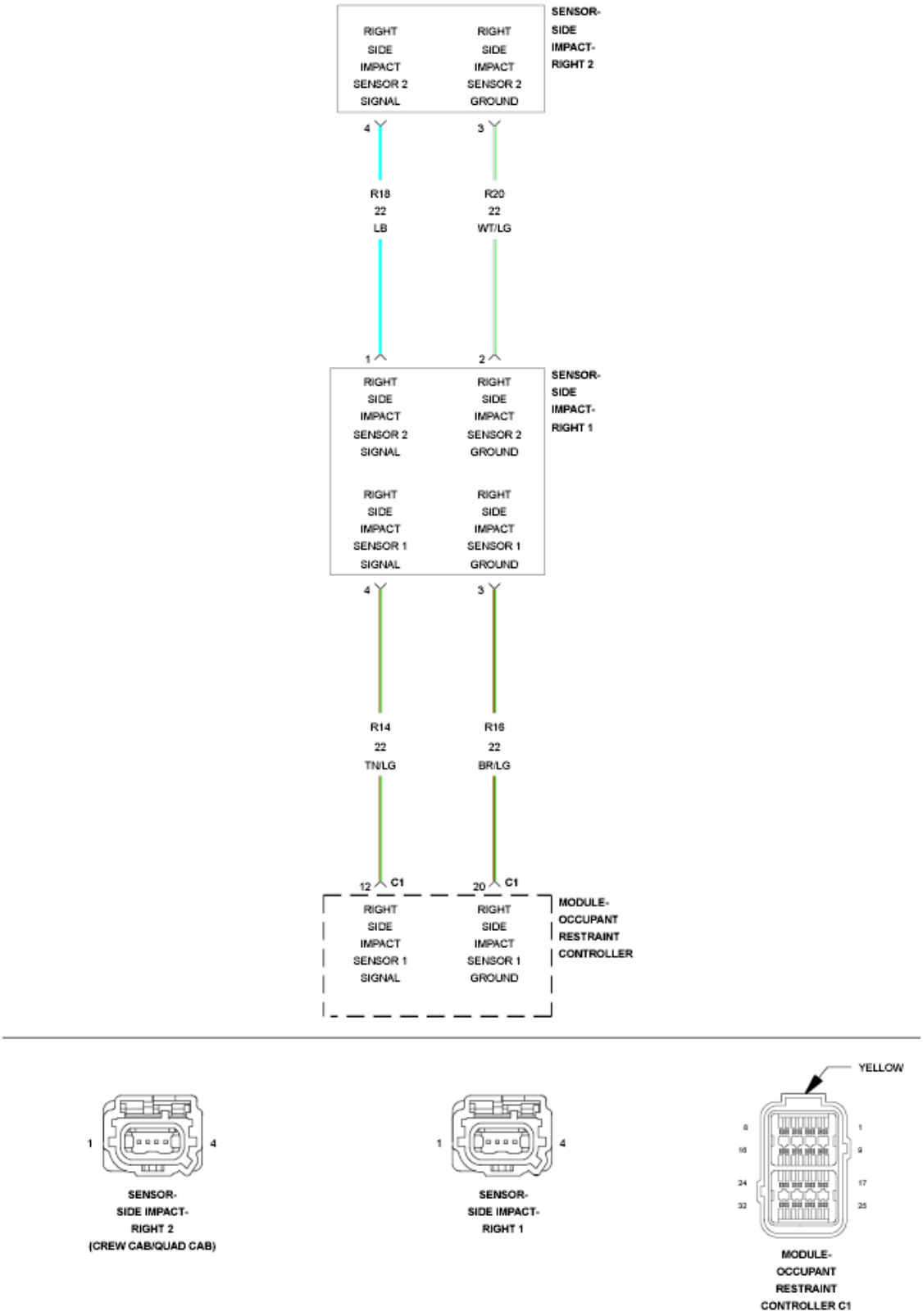

Fig. 94: Right Side Impact Sensor Circuit Wiring Diagram
Courtesy of CHRYSLER GROUP, LLC

For a complete wiring diagram, **refer to appropriate SYSTEM WIRING DIAGRAMS article** .

THEORY OF OPERATION

The location of this right side impact sensor 1 is located in the Right B-pillar just past first row seating. Refer to **SENSOR, IMPACT, DESCRIPTION** . Impact sensors perform internal self-tests and communicate the sensors status using power supplied by the Occupant Restraint Controller (ORC). The sensor communicates this internal failure message using the sensor signal circuit. If the scan tool shows this DTC has a Stored history of setting then the right side impact sensor is to be replaced.

WHEN MONITORED:

Impact sensors perform the self-test for internal circuitry at power up during the initialization process, and continuously through the ignition cycle every 10 ms.

SET CONDITION:

This DTC sets when the ORC receives notification of a self-test failure within the impact sensor. Once set, this DTC is latched for the entire ignition cycle.

POSSIBLE CAUSES

Possible Causes
RIGHT SIDE IMPACT SENSOR 1

Always Perform the Pre-Diagnostic Troubleshooting procedure before proceeding. Refer to STANDARD PROCEDURE.

DIAGNOSTIC TEST

NOTE: **If the scan tool shows this DTC has a Stored history of setting then the right side impact sensor is to be replaced.**

NOTE: **Make sure the battery is fully charged.**

1. **VERIFY ACTIVE DTC**
   1. Turn the ignition on.
   2. With the scan tool, read ORC DTCs.

      Does the scan tool display active B0096-49-RIGHT SIDE ACCELERATION SENSOR 1 - INTERNAL ELECTRONIC FAILURE DTC or shows a setting history in stored?

      Yes

WARNING: **Turn the ignition off, disconnect the 12-volt battery and wait two minutes before proceeding. Failure to follow**

these instructions may result in possible serious or fatal injury.

-
- Replace the Right Side Impact Sensor 1 in accordance with the Service Information. Refer to **SENSOR, IMPACT, REMOVAL** .
- Refer to **STANDARD PROCEDURE** and perform the RESTRAINT SYSTEM VERIFICATION TEST.

No (Did not set a active or stored DTC B0096-49-RIGHT SIDE SATELLITE SENSOR 1-INTERNAL ELECTRONIC FAILURE)

- Refer to **STANDARD PROCEDURE** and perform the RESTRAINTS SYSTEM INTERMITTENT TEST.

B0097-49-RIGHT SIDE ACCELERATION SENSOR 2 - INTERNAL ELECTRONIC FAILURE

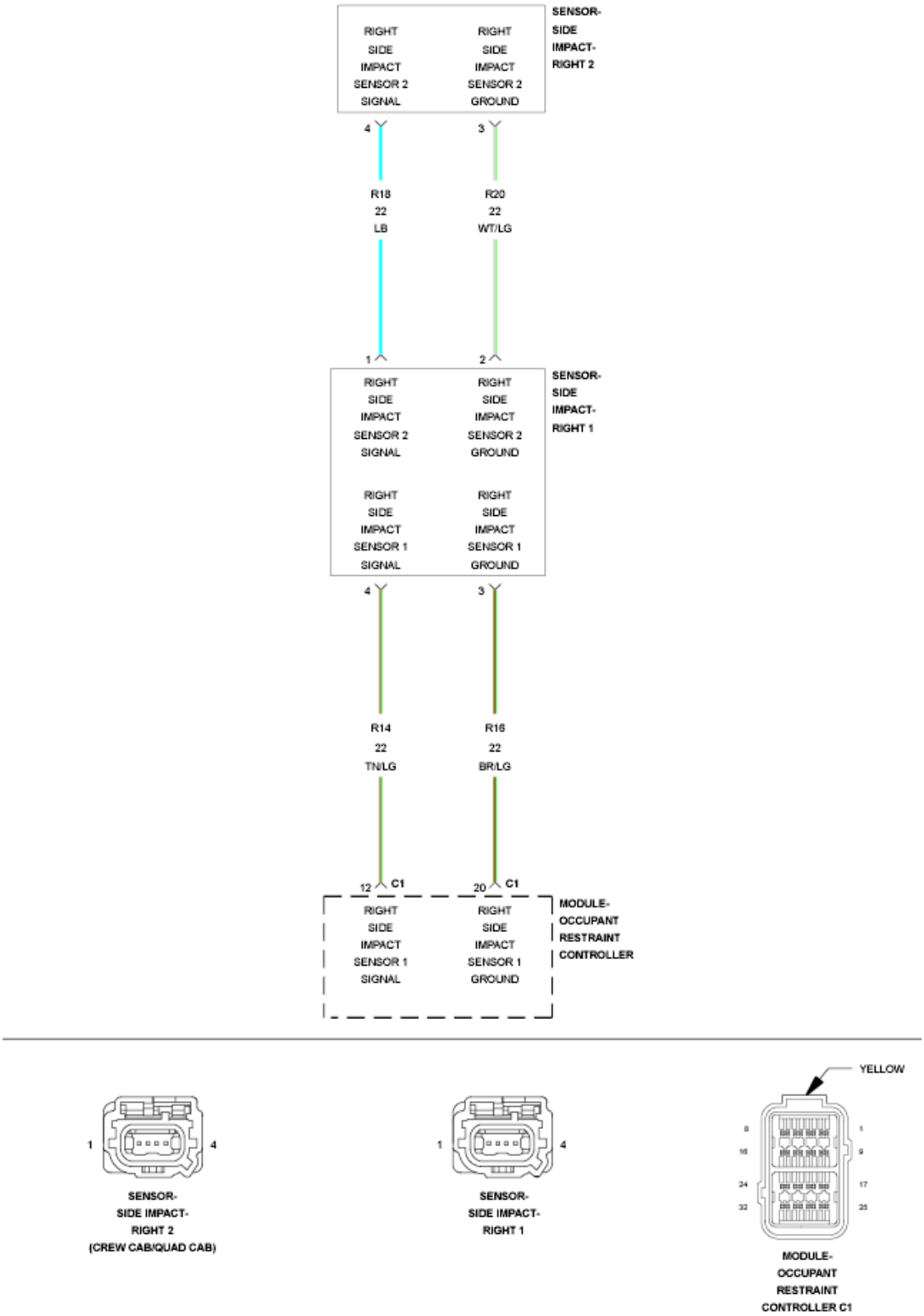

Fig. 95: Right Side Impact Sensor Circuit Wiring Diagram
Courtesy of CHRYSLER GROUP, LLC

For a complete wiring diagram, **refer to appropriate SYSTEM WIRING DIAGRAMS article** .

THEORY OF OPERATION

The location of this right side impact sensor 2 is located in the Right C-pillar just past second row seating. Refer to **SENSOR, IMPACT, DESCRIPTION** . Impact sensors perform internal self-tests and communicate the sensors status using power supplied by the Occupant Restraint Controller (ORC). The sensor communicates this internal failure message using the sensor signal circuit. If the scan tool shows this DTC has a Stored history of setting then the right side impact sensor is to be replaced.

WHEN MONITORED:

Impact sensors perform the self-test for internal circuitry at power up during the initialization process, and continuously through the ignition cycle every 10 ms.

SET CONDITION:

This DTC sets when the ORC receives notification of a self-test failure within the impact sensor. Once set, this DTC is latched for the entire ignition cycle.

POSSIBLE CAUSES

Possible Causes
RIGHT SIDE IMPACT SENSOR 2

Always perform the Pre-Diagnostic Troubleshooting procedure before proceeding. Refer to STANDARD PROCEDURE.

DIAGNOSTIC TEST

NOTE: **If the scan tool shows this DTC has a Stored history of setting then the right side impact sensor is to be replaced.**

NOTE: **Make sure the battery is fully charged.**

1. **VERIFY ACTIVE DTC**
    1. Turn the ignition on.
    2. With the scan tool, read ORC DTCs.

    Does the scan tool display active B0097-49-RIGHT SIDE ACCELERATION SENSOR 2 - INTERNAL ELECTRONIC FAILURE DTC or shows a setting history in stored?

    Yes

WARNING: **Turn the ignition off, disconnect the 12-volt battery and wait two minutes before proceeding. Failure to follow**

these instructions may result in possible serious or fatal injury.

-
- Replace the Right Side Impact Sensor 2 in accordance with the Service Information. Refer to **SENSOR, IMPACT, REMOVAL** .
- Refer to **STANDARD PROCEDURE** and perform the RESTRAINT SYSTEM VERIFICATION TEST.

No (Did not set a active or stored DTC B0097-49-RIGHT SIDE SATELLITE SENSOR 2-INTERNAL ELECTRONIC FAILURE).

- Refer to **STANDARD PROCEDURE** and perform the RESTRAINTS SYSTEM INTERMITTENT TEST.

B009D-49-RIGHT SIDE SATELLITE SENSOR 4 - INTERNAL ELECTRONIC FAILURE

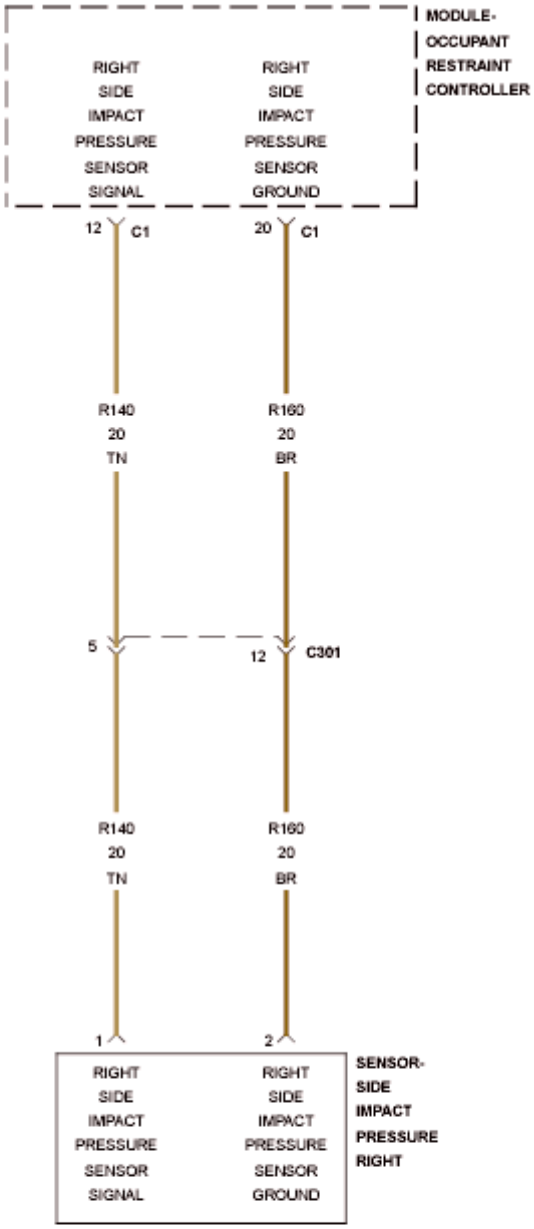

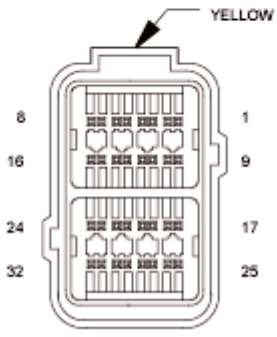

MODULE-

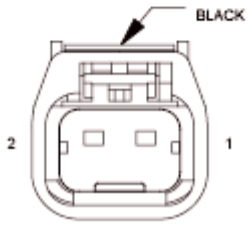

SENSOR-

Fig. 96: Right Side Satellite Circuit Wiring Diagram
Courtesy of CHRYSLER GROUP, LLC

For a complete wiring diagram, **refer to appropriate SYSTEM WIRING DIAGRAMS article** .

THEORY OF OPERATION

The location of this right side impact sensor (pressure sensor) 4 is located in the Right Front Door. Refer to **SENSOR, IMPACT, DESCRIPTION** . Impact sensors perform internal self-tests and communicate the sensors status using power supplied by the Occupant Restraint Controller (ORC). The sensor communicates this internal failure message using the sensor signal circuit. If the scan tool shows this DTC has a Stored history of setting then the right side impact sensor is to be replaced.

WHEN MONITORED:

Impact sensors perform the self-test for internal circuitry at power up during the initialization process, and continuously through the ignition cycle every 10 ms.

SET CONDITION:

This DTC sets when the ORC receives notification of a self-test failure within the impact sensor. Once set, this DTC is latched for the entire ignition cycle.

POSSIBLE CAUSES

Possible Causes
RIGHT SIDE IMPACT PRESSURE SENSOR (SENSOR 4)

Always perform the Pre-Diagnostic Troubleshooting procedure before proceeding. Refer to STANDARD PROCEDURE.

DIAGNOSTIC TEST

NOTE: **If the scan tool shows this DTC has a Stored history of setting then the right side impact sensor is to be replaced.**

NOTE: **Make sure the battery is fully charged.**

1. **VERIFY ACTIVE DTC**
    1. Turn the ignition on.
    2. With the scan tool, read ORC DTCs.

    Does the scan tool display active B009D-49-RIGHT SIDE SATELLITE SENSOR 4 - INTERNAL ELECTRONIC FAILURE DTC or shows a setting history in stored?

    Yes

WARNING: Turn the ignition off, disconnect the 12-volt battery and wait two minutes before proceeding. Failure to follow these instructions may result in possible serious or fatal injury.

-
- Replace the Right Side Impact Pressure Sensor in accordance with the Service Information. Refer to **SENSOR, IMPACT, REMOVAL** .
- Refer to **STANDARD PROCEDURE** and perform the RESTRAINT SYSTEM VERIFICATION TEST.

No (Did not set a active or stored DTC B009D-49-RIGHT SIDE SATELLITE SENSOR 4-INTERNAL ELECTRONIC FAILURE)

- Refer to **STANDARD PROCEDURE** and perform the RESTRAINTS SYSTEM INTERMITTENT TEST.

B1BA5-00-AIRBAG SQUIB CONFIGURATION MISMATCH -

For a complete wiring diagram, **refer to appropriate SYSTEM WIRING DIAGRAMS article** .

THEORY OF OPERATION

When powered, the Occupant Restraint Controller (ORC) sends a test current to the Squibs. During this test, the squibs discovered are checked for agreement with the pre-programmed vehicle configuration of squib circuits assigned to the ORC.

WHEN MONITORED:

The ORC checks its feature configuration for a stored airbag and tensioner configuration at power-up and initialization.

SET CONDITION:

This Diagnostic Trouble Code (DTC) sets when the ORC detects a 2 consecutive message mismatches between the Vehicle Configuration and the ORC configuration. Once set, this DTC is latched for the entire power cycle.

POSSIBLE CAUSES

Possible Causes
POWERTRAIN CONTROL MODULE (PCM)
OCCUPANT RESTRAINT CONTROLLER (ORC)

Always perform the Pre-Diagnostic Troubleshooting procedure before proceeding. Refer to STANDARD PROCEDURE.

DIAGNOSTIC TEST

1. **VERIFY ACTIVE DTC**

   NOTE: Ensure the battery is fully charged.

   1. Turn the ignition on.
   2. With the scan tool, read ORC DTCs.

      Does the scan tool display active B1BA5-00-AIRBAG SQUIB CONFIGURATION MISMATCH - DTC?

      Yes

      - Go To 2.

      No

      - Refer to **STANDARD PROCEDURE** and perform the RESTRAINTS SYSTEM INTERMITTENT TEST.
2. **VERIFY ORC PART NUMBER**
   1. With the scan tool, read the ORC part number.

      Is the part number correct for the vehicle?

      Yes

      - Go To 3.

      No

      WARNING: Turn the ignition off, disconnect the 12-volt battery and wait two minutes before proceeding. Failure to follow these instructions may result in possible serious or fatal injury.

      WARNING: If the Occupant Restraint Controller (ORC) is dropped at any time, it must be replaced. Failure to follow these instructions may result in possible serious or fatal injury.

      -
      -
      - Replace the ORC in accordance with Service Information.
      - Refer to **STANDARD PROCEDURE** and perform the RESTRAINTS SYSTEM VERIFICATION TEST.
3. **CHECK THE VIN WITH THE SCAN TOOL**
   1. With the scan tool, read the VIN.

2. Compare the vehicle VIN to the ORC VIN.

   Is the correct VIN displayed?

   Yes

   - Go To 4.

   No

   - Replace the PCM in accordance with Service Information.
   - Refer to **STANDARD PROCEDURE** for 3.7L/4.7L/5.7L or **STANDARD PROCEDURE** for 6.7L and perform the POWERTRAIN VERIFICATION TEST.

4. **VERIFY TIPM CONFIGURATION**
   1. With the scan tool, read the TIPM configuration.

      Does the TIPM configuration match the vehicle equipment?

      Yes

      WARNING: **Turn the ignition off, disconnect the 12-volt battery and wait two minutes before proceeding. Failure to follow these instructions may result in possible serious or fatal injury.**

      WARNING: **If the Occupant Restraint Controller (ORC) is dropped at any time, it must be replaced. Failure to follow these instructions may result in possible serious or fatal injury.**

      -
      -
      - Replace the ORC in accordance with Service Information.
      - Refer to **STANDARD PROCEDURE** and perform the RESTRAINTS SYSTEM VERIFICATION TEST.

      No

      - Re-configure or replace the TIPM in accordance with Service Information.
      - Refer to **STANDARD PROCEDURE** and perform the BODY VERIFICATION TEST.

B1BC7-00-DEPLOYMENT DATA RECORD FULL -

For a complete wiring diagram, **refer to appropriate SYSTEM WIRING DIAGRAMS article** .

THEORY OF OPERATION

When powered, the Occupant Restraint Controller (ORC) performs an internal self test. The repair of this fault condition does not involve any external circuitry and centers on verifying the integrity of the module's internal memory.

WHEN MONITORED:

The ORC checks its internal memory for the number of recorded deployment events once at every power up, during the initialization process and after any deployment.

SET CONDITION:

This Diagnostic Trouble Code (DTC) sets when the ORC detects the third airbag deployment event. Once set, this DTC is latched permanently.

POSSIBLE CAUSES

Possible Causes
OCCUPANT RESTRAINT CONTROLLER (ORC)

Always perform the Pre-Diagnostic Troubleshooting procedure before proceeding. Refer to STANDARD PROCEDURE.

DIAGNOSTIC TEST

1. **VERIFY ACTIVE DTC**
    1. Turn the ignition ON.
    2. With the scan tool, read ORC active DTCs.

    Does the scan tool display an active B1BC7-00-DEPLOYMENT DATA RECORD FULL - DTC?

    Yes

    WARNING: **Turn the ignition off, disconnect the 12-volt battery and wait two minutes before proceeding. Failure to follow these instructions may result in possible serious or fatal injury.**

    WARNING: **If the Occupant Restraint Controller (ORC) is dropped at any time, it must be replaced. Failure to follow these instructions may result in possible serious or fatal injury.**

    -
    -
    - Replace the ORC in accordance with the service information.
    - Refer to **STANDARD PROCEDURE** and perform the RESTRAINTS SYSTEM VERIFICATION TEST.

No

- Refer to **STANDARD PROCEDURE** and perform the RESTRAINTS SYSTEM VERIFICATION TEST.

B007E-11-DRIVER SEATBELT RETRACTOR PRETENSIONER DEPLOYMENT CONTROL - CIRCUIT SHORT TO GROUND

For a complete wiring diagram, **refer to Wiring Information** .

THEORY OF OPERATION

When powered, the Occupant Restraint Controller (ORC) sends a test current to the squibs to verify the integrity of the squib and wiring. These circuits are maintained in a "floating" configuration at the ORC (connected to neither power nor ground) as protection against inadvertent deployment. Use of the Supplemental Restraints System (special tool #8443A, SRS Load Tool) in the tests below substitutes a suspect squib with a known good component. The SRS Load Tool (special tool #8443-24, 32-Way Adapter) provides a test point as well as a method for opening the shorting bar connections within the ORC harness connector.

WHEN MONITORED:

The ORC sends out a 40 mA diagnostic current on each squib voltage supply circuit at power up and every 100 ms thereafter while the ignition is on. The ORC then monitors the data return wire to determine the state of the circuit.

SET CONDITION:

This Diagnostic Trouble Code (DTC) sets when the ORC detects a short to ground on the squib circuit for more than 2.5 seconds. This DTC transitions from active to stored when the ORC sees a recovery from a short to ground for greater than 2.5 seconds.

POSSIBLE CAUSES

Possible Causes
(R503) DRIVER SEAT BELT RETRACTOR TENSIONER LINE 2 CIRCUIT SHORTED TO GROUND
(R505) DRIVER SEAT BELT RETRACTOR TENSIONER LINE 1 CIRCUIT SHORTED TO GROUND
DRIVER SEAT BELT RETRACTOR TENSIONER
OCCUPANT RESTRAINT CONTROLLER (ORC)

Always perform the Pre-Diagnostic Troubleshooting procedure before proceeding. Refer to STANDARD PROCEDURE.

DIAGNOSTIC TEST

1. **VERIFY ACTIVE DTC**

NOTE: Make sure the battery is fully charged.

1. Turn the ignition on.
2. With the scan tool, read ORC DTCs.

   Does the scan tool display an active B007E-11-DRIVER SEATBELT RETRACTOR PRETENSIONER DEPLOYMENT CONTROL - CIRCUIT SHORT TO GROUND DTC?

   Yes

   - Go To 2.

   No

   - Refer to **STANDARD PROCEDURE** and perform the RESTRAINTS SYSTEM INTERMITTENT TEST.

2. **CHECK DRIVER SEAT BELT RETRACTOR TENSIONER SHORT TO GROUND**

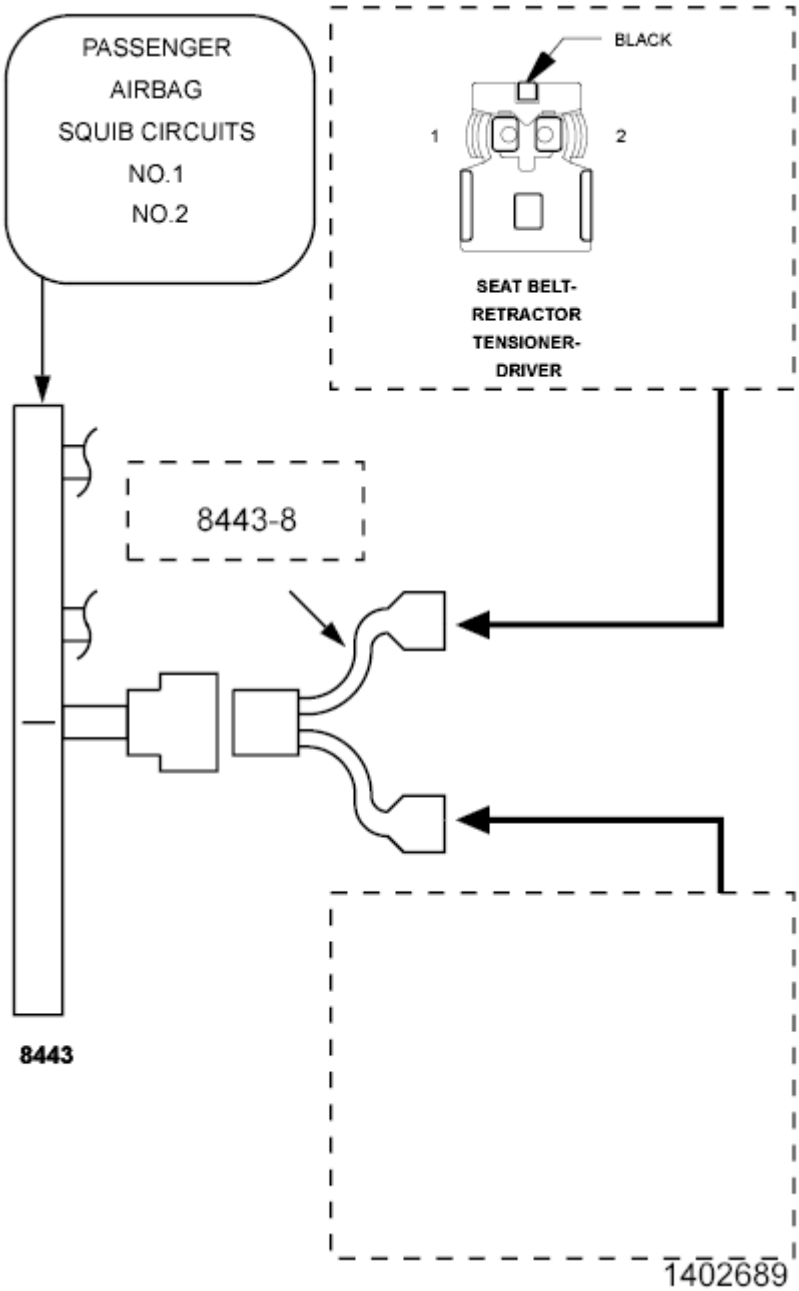

Fig. 97: Checking Driver Seat Belt Retractor Tensioner Circuit
Courtesy of CHRYSLER GROUP, LLC

WARNING: Turn the ignition off, disconnect the 12-volt battery and wait two minutes before proceeding. Failure to follow these instructions may result in possible serious or fatal injury.

1. Disconnect the Driver Seat Belt Retractor Tensioner harness connector.

NOTE: Check connectors - Clean and repair as necessary.

2. Connect the (special tool #8443A, SRS Load Tool) and (special tool #8443-8, Jumper, SRS Load) to the Driver Seat Belt Retractor Tensioner harness connector.

WARNING: Turn the ignition on, then reconnect the 12-volt battery and wait two minutes before proceeding. Failure to follow these instructions may result in possible serious or fatal injury.

3. With the scan tool, read the ORC DTCs.

   Does the scan tool display an active B007E-11-DRIVER SEATBELT RETRACTOR PRETENSIONER DEPLOYMENT CONTROL - CIRCUIT SHORT TO GROUND DTC?

   Yes

   - Go To 3.

   No

   WARNING: Turn the ignition off, disconnect the 12-volt battery and wait two minutes before proceeding. Failure to follow these instructions may result in possible serious or fatal injury.

   -
   - Replace the Driver Seat Belt Retractor Tensioner in accordance with the Service Information. Refer to **RETRACTOR, SEAT BELT, REMOVAL** .
   - Refer to **STANDARD PROCEDURE** and perform the RESTRAINTS SYSTEM VERIFICATION TEST.

3. **CHECK (R503, R505) DRIVER SEAT BELT RETRACTOR TENSIONER CIRCUITS FOR A SHORT TO GROUND**

WARNING: Turn the ignition off, disconnect the 12-volt battery and wait two minutes before proceeding. Failure to follow these instructions may result in possible serious or fatal injury.

1. Disconnect the (special tool #8443A, SRS Load Tool) and (special tool #8443-8, Jumper, SRS Load) from the Driver Seat Belt Retractor Tensioner harness connector.
2. Disconnect the ORC harness connectors.

NOTE: Check connectors - Clean and repair as necessary.

3. Connect the (special tool #8443-24, 32-Way Adapter) to the ORC C1 harness connector.
4. Measure the resistance of the (R505) Driver Seat Belt Retractor Tensioner Line 1 circuit between the SRS Load Tool connector C1 cavity 1 and ground.

5. Measure the resistance of the (R503) Driver Seat Belt Retractor Tensioner Line 2 circuit between the SRS Load Tool connector C1 cavity 2 and ground.

   Is the resistance below 10K Ohms on either circuit?

   Yes

   - Repair the Driver Seat Belt Retractor Tensioner circuits for a short to ground.
   - Refer to **STANDARD PROCEDURE** and perform the RESTRAINTS SYSTEM VERIFICATION TEST.

   No

   WARNING: **If the Occupant Restraint Controller (ORC) is dropped at any time, it must be replaced. Failure to follow these instructions may result in possible serious or fatal injury.**

   -
   - Replace the ORC in accordance with the Service Information. Refer to **CONTROLLER, OCCUPANT RESTRAINT, REMOVAL** .
   - Refer to **STANDARD PROCEDURE** and perform the RESTRAINTS SYSTEM VERIFICATION TEST.

B007E-12-DRIVER SEATBELT RETRACTOR PRETENSIONER DEPLOYMENT CONTROL - CIRCUIT SHORT TO BATTERY

For a complete wiring diagram, **refer to appropriate SYSTEM WIRING DIAGRAMS article** .

THEORY OF OPERATION

When powered, the Occupant Restraint Controller (ORC) sends a test current to the squibs to verify the integrity of the squib and wiring. These circuits are maintained in a "floating" configuration at the ORC (connected to neither power nor ground) as protection against inadvertent deployment. Use of the Supplemental Restraints System (special tool #8443A, SRS Load Tool) in the tests below substitutes a suspect squib with a known good component. The SRS Load Tool (special tool #8443-24, 32-Way Adapter) provides a test point as well as a method for opening the shorting bar connections within the ORC harness connector.

WHEN MONITORED:

The ORC sends out a 40 mA diagnostic current on each squib voltage supply circuit at power up and every 100 ms thereafter while the ignition is on. The ORC then monitors the data return wire to determine the state of the circuit.

SET CONDITION:

This Diagnostic Trouble Code (DTC) sets when the ORC detects a short to voltage on the squib circuit for more

than 2.5 seconds. This DTC transitions from active to stored when the ORC sees a recovery from a short to voltage for greater than 2.5 seconds.

POSSIBLE CAUSES

Possible Causes
(R503) DRIVER SEAT BELT RETRACTOR TENSIONER LINE 2 CIRCUIT SHORTED TO VOLTAGE
(R505) DRIVER SEAT BELT RETRACTOR TENSIONER LINE 1 CIRCUIT SHORTED TO VOLTAGE
DRIVER SEAT BELT RETRACTOR TENSIONER
OCCUPANT RESTRAINT CONTROLLER (ORC)

Always perform the Pre-Diagnostic Troubleshooting procedure before proceeding. Refer to STANDARD PROCEDURE.

DIAGNOSTIC TEST

1. **VERIFY ACTIVE DTC**

   NOTE: Make sure the battery is fully charged.

   1. Turn the ignition on.
   2. With the scan tool, read ORC DTCs.

      Does the scan tool display active B007E-12-DRIVER SEATBELT RETRACTOR PRETENSIONER DEPLOYMENT CONTROL - CIRCUIT SHORT TO BATTERY DTC?

      Yes

      - Go To 2.

      No

      - Refer to **STANDARD PROCEDURE** and perform the RESTRAINTS SYSTEM INTERMITTENT TEST.

2. **CHECK DRIVER SEAT BELT RETRACTOR TENSIONER FOR A SHORT TO BATTERY**

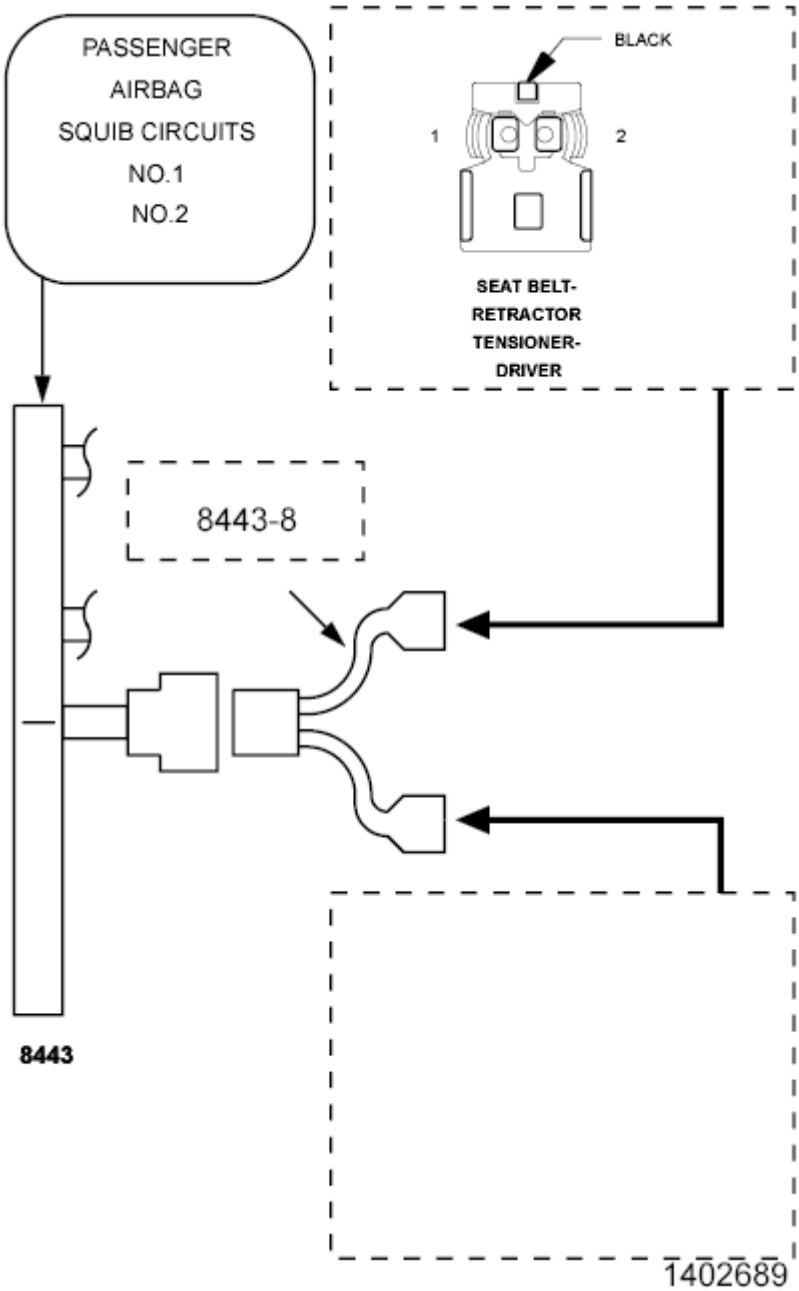

Fig. 98: Checking Driver Seat Belt Retractor Tensioner Circuit
Courtesy of CHRYSLER GROUP, LLC

WARNING: **Turn the ignition off, disconnect the 12-volt battery and wait two minutes before proceeding. Failure to follow these instructions may result in possible serious or fatal injury.**

1. Disconnect the Driver Seat Belt Retractor Tensioner harness connector.

NOTE: Check connectors - Clean and repair as necessary.

2. Connect the (special tool #8443A, SRS Load Tool) and the (special tool #8443-8, Jumper, SRS Load) to the Driver Seat Belt Retractor Tensioner harness connector.

WARNING: Turn the ignition on, then reconnect the 12-volt battery and wait two minutes before proceeding. Failure to follow these instructions may result in possible serious or fatal injury.

3. With the scan tool, read the ORC DTCs.

   Does the scan tool display active B007E-12-DRIVER SEATBELT RETRACTOR PRETENSIONER DEPLOYMENT CONTROL - CIRCUIT SHORT TO BATTERY DTC?

   Yes

   - Go To 3.

   No

WARNING: Turn the ignition off, disconnect the 12-volt battery and wait two minutes before proceeding. Failure to follow these instructions may result in possible serious or fatal injury.

-
- Replace the Driver Seat Belt Retractor Tensioner in accordance with the Service Information. Refer to **RETRACTOR, SEAT BELT, REMOVAL** .
- Refer to **STANDARD PROCEDURE** and perform the RESTRAINTS SYSTEM VERIFICATION TEST.

3. **CHECK (R503, R505) DRIVER SEAT BELT RETRACTOR TENSIONER CIRCUITS FOR A SHORT TO BATTERY**

WARNING: Turn the ignition off, disconnect the 12-volt battery and wait two minutes before proceeding. Failure to follow these instructions may result in possible serious or fatal injury.

1. Disconnect the (special tool #8443A, SRS Load Tool) and the Jumper from the Driver Seat Belt Retractor Tensioner harness connector.
2. Disconnect the ORC harness connectors. Refer to **CONTROLLER, OCCUPANT RESTRAINT, REMOVAL** .

NOTE: Check connectors - Clean and repair as necessary.

3. Connect the (special tool #8443-24, 32-Way Adapter) Adaptor to the ORC C1 harness connector.

WARNING: Turn the ignition on, then reconnect the 12-volt battery and wait two minutes before proceeding. Failure to follow these instructions may result in possible serious or fatal injury.

4. Measure the voltage of the (R505) Driver Seat Belt Retractor Tensioner Line 1 circuit between the (special tool #8443-24, 32-Way Adapter) connector C1 cavity 1 and ground.
5. Measure the voltage of the (R503) Driver Seat Belt Retractor Tensioner Line 2 circuit between the (special tool #8443-24, 32-Way Adapter) connector C1 cavity 2 and ground.

Is there any voltage present on either circuit?

Yes

WARNING: Turn the ignition off, disconnect the 12-volt battery and wait two minutes before proceeding. Failure to follow these instructions may result in possible serious or fatal injury.

-
- Repair the Driver Seat Belt Retractor Tensioner circuits with voltage present.
- Refer to **STANDARD PROCEDURE** and perform the RESTRAINTS SYSTEM VERIFICATION TEST.

No

WARNING: Turn the ignition off, disconnect the 12-volt battery and wait two minutes before proceeding. Failure to follow these instructions may result in possible serious or fatal injury.

WARNING: If the Occupant Restraint Controller (ORC) is dropped at any time, it must be replaced. Failure to follow these instructions may result in possible serious or fatal injury.

-
-
- Replace the ORC in accordance with the Service Information. Refer to **CONTROLLER, OCCUPANT RESTRAINT, REMOVAL** .
- Refer to **STANDARD PROCEDURE** and perform the RESTRAINTS SYSTEM VERIFICATION TEST.

B007E-13-DRIVER SEATBELT RETRACTOR PRETENSIONER DEPLOYMENT CONTROL - CIRCUIT OPEN

For a complete wiring diagram, **refer to appropriate SYSTEM WIRING DIAGRAMS article** .

THEORY OF OPERATION

When powered, the Occupant Restraint Controller (ORC) sends a test current to the squibs to verify the integrity of the squib and wiring. These circuits are maintained in a "floating" configuration at the ORC (connected to neither power nor ground) as protection against inadvertent deployment. Use of the Supplemental Restraints System (special tool #8443A, SRS Load Tool) in the tests below substitutes a suspect squib with a known good component. The SRS Load Tool Adapter provides a test point as well as a method for opening the shorting bar connections within the ORC harness connector.

WHEN MONITORED:

The ORC sends out a 40 mA diagnostic current on each squib voltage supply circuit at power up and every 100 ms thereafter while the ignition is on. The ORC then monitors the data return wire to determine the state of the circuit.

SET CONDITION:

This Diagnostic Trouble Code (DTC) sets when the ORC detects an open on the squib circuit for more than 2.5 seconds. This DTC transitions from active to stored when the ORC sees a recovery from an open condition for greater than 2.5 seconds.

POSSIBLE CAUSES

Possible Causes
(R503) DRIVER SEAT BELT RETRACTOR TENSIONER LINE 2 CIRCUIT OPEN
(R505) DRIVER SEAT BELT RETRACTOR TENSIONER LINE 1 CIRCUIT OPEN
DRIVER SEAT BELT RETRACTOR TENSIONER
OCCUPANT RESTRAINT CONTROLLER (ORC)

Always perform the Pre-Diagnostic Troubleshooting procedure before proceeding. Refer to STANDARD PROCEDURE.

DIAGNOSTIC TEST

1. **VERIFY ACTIVE DTC**

   NOTE: Make sure the battery is fully charged.

   1. Turn the ignition on.
   2. With the scan tool, read ORC DTCs.

      Does the scan tool display active B007E-13-DRIVER SEATBELT RETRACTOR PRETENSIONER DEPLOYMENT CONTROL - CIRCUIT OPEN DTC?

      Yes

- Go To 2.

No

- Refer to **STANDARD PROCEDURE** and perform the RESTRAINTS SYSTEM INTERMITTENT TEST.

2. **CHECK DRIVER SEAT BELT RETRACTOR TENSIONER OPEN**

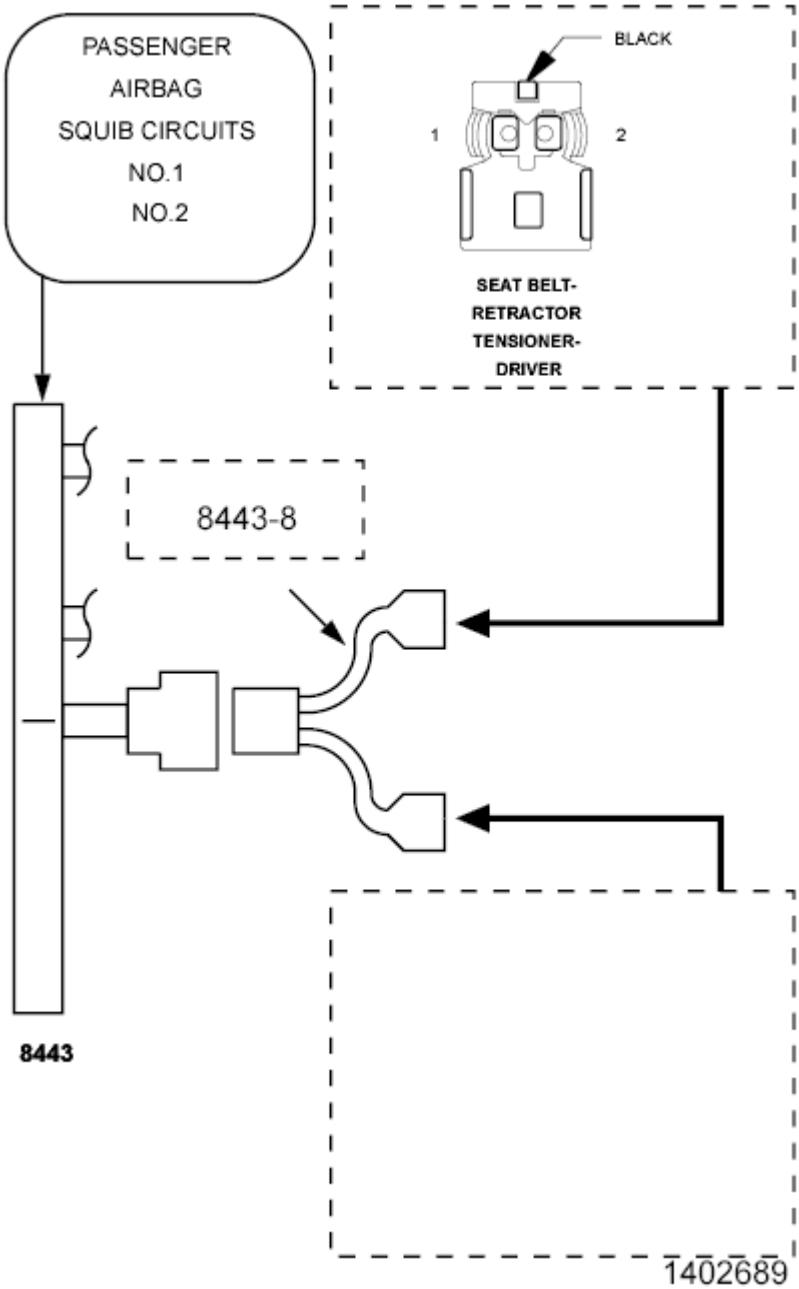

Fig. 99: Checking Driver Seat Belt Retractor Tensioner Circuit
Courtesy of CHRYSLER GROUP, LLC

WARNING: Turn the ignition off, disconnect the 12-volt battery and wait two minutes before proceeding. Failure to follow these instructions may result in possible serious or fatal injury.

1. Disconnect the Driver Seat Belt Retractor Tensioner harness connector.

NOTE: Check connectors - Clean and repair as necessary.

2. Connect the (special tool #8443A, SRS Load Tool) and the (special tool #8443-8, Jumper, SRS Load) to the Driver Seat Belt Retractor Tensioner harness connector.

WARNING: Turn the ignition on, then reconnect the 12-volt battery and wait two minutes before proceeding. Failure to follow these instructions may result in possible serious or fatal injury.

3. With the scan tool, read the ORC DTCs.

Does the scan tool display B007E-13-DRIVER SEATBELT RETRACTOR PRETENSIONER DEPLOYMENT CONTROL - CIRCUIT OPEN DTC ?

Yes

- Go To 3.

No

WARNING: Turn the ignition off, disconnect the 12-volt battery and wait two minutes before proceeding. Failure to follow these instructions may result in possible serious or fatal injury.

-
- Replace the Driver Seat Belt Retractor Tensioner in accordance with the Service Information. Refer to **RETRACTOR, SEAT BELT, REMOVAL** .
- Refer to **STANDARD PROCEDURE** and perform the RESTRAINTS SYSTEM VERIFICATION TEST.

3. **CHECK (R503, R505) DRIVER SEAT BELT RETRACTOR TENSIONER CIRCUITS FOR AN OPEN**

WARNING: Turn the ignition off, disconnect the 12-volt battery and wait two minutes before proceeding. Failure to follow these instructions may result in possible serious or fatal injury.

1. Disconnect the (special tool #8443A, SRS Load Tool) and Jumper from the Driver Seat Belt Retractor Tensioner harness connector.

2. Disconnect the ORC harness connectors.

NOTE: Check connectors - Clean and repair as necessary.

3. Connect the (special tool #8443-24, 32-Way Adapter) to the ORC C1 harness connector.
4. Measure the resistance of the (R505) Driver Seat Belt Retractor Tensioner Line 1 circuit between the Driver Seat Belt Retractor Tensioner harness connector cavity 2 and the (special tool #8443-24, 32-Way Adapter) connector C1 cavity 1.
5. Measure the resistance of the (R503) Driver Seat Belt Retractor Tensioner Line 2 circuit between the Driver Seat Belt Retractor Tensioner harness connector cavity 1 and the (special tool #8443-24, 32-Way Adapter) connector C1 cavity 2.

Is the resistance below 1.0 Ohms?

Yes

WARNING: **If the Occupant Restraint Controller (ORC) is dropped at any time, it must be replaced. Failure to follow these instructions may result in possible serious or fatal injury.**

-
- Replace the ORC in accordance with Service Information. Refer to **CONTROLLER, OCCUPANT RESTRAINT, REMOVAL** .
- Refer to **STANDARD PROCEDURE** and perform the RESTRAINTS SYSTEM VERIFICATION TEST.

No

- Repair the (R503, R505) Driver Seat Belt Retractor Tensioner circuits for an open or high resistance.
- Refer to **STANDARD PROCEDURE** and perform the RESTRAINTS SYSTEM VERIFICATION TEST.

B007E-2B-DRIVER SEATBELT RETRACTOR PRETENSIONER DEPLOYMENT CONTROL - WIRES SHORTED TOGETHER

For a complete wiring diagram, **refer to appropriate SYSTEM WIRING DIAGRAMS article** .

THEORY OF OPERATION

When powered, the Occupant Restraint Controller (ORC) sends a test current to the squibs to verify the integrity of the squib and wiring. These circuits are maintained in a "floating" configuration at the ORC (connected to neither power nor ground) as protection against inadvertent deployment. Use of the Supplemental Restraints System (special tool #8443A, SRS Load Tool) in the tests below substitutes a suspect squib with a known good component. The SRS Load Tool (special tool #8443-24, 32-Way Adapter) provides a test point as

well as a method for opening the shorting bar connections within the ORC harness connectors.

WHEN MONITORED:

The ORC sends out a 40 mA diagnostic current on each squib voltage supply circuit at power up and every 100 ms thereafter while the ignition is on. The ORC then monitors the data return wire to determine the state of the circuit.

SET CONDITION:

This Diagnostic Trouble Code (DTC) sets when the ORC detects both circuits of the same squib are shorted together for more than 2.5 seconds. This DTC transitions from active to stored when the ORC sees a recovery from the shorted together condition for greater than 2.5 seconds.

POSSIBLE CAUSES

Possible Causes
(R503) DRIVER SEAT BELT RETRACTOR TENSIONER LINE 2 CIRCUIT SHORTED TO THE (R505) DRIVER SEAT BELT RETRACTOR TENSIONER LINE 1 CIRCUIT
DRIVER SEAT BELT RETRACTOR TENSIONER
OCCUPANT RESTRAINT CONTROLLER (ORC)

Always perform the Pre-Diagnostic Troubleshooting procedure before proceeding. Refer to STANDARD PROCEDURE.

DIAGNOSTIC TEST

1. **VERIFY ACTIVE DTC**

   NOTE: Make sure the battery is fully charged.

   1. Turn the ignition on.
   2. With the scan tool, read ORC DTCs.

      Does the scan tool display active B007E-2B-DRIVER SEATBELT RETRACTOR PRETENSIONER DEPLOYMENT CONTROL - WIRES SHORTED TOGETHER DTC?

      Yes

      - Go To 2.

      No

      - Refer to **STANDARD PROCEDURE** and perform the RESTRAINTS SYSTEM INTERMITTENT TEST.

2. **CHECK DRIVER SEAT BELT RETRACTOR TENSIONER FOR CIRCUITS SHORT**

TOGETHER

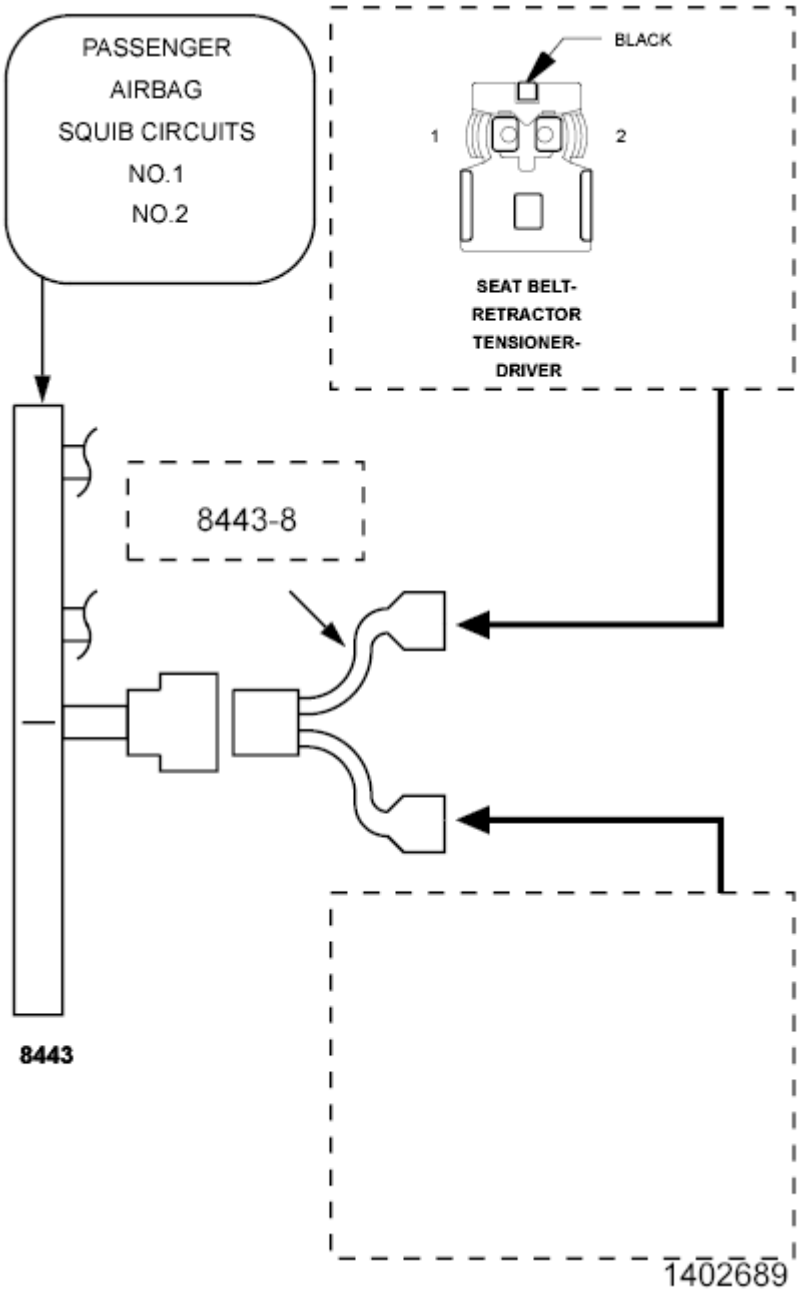

Fig. 100: Checking Driver Seat Belt Retractor Tensioner Circuit
Courtesy of CHRYSLER GROUP, LLC

WARNING: **Turn the ignition off, disconnect the 12-volt battery and wait two minutes before proceeding. Failure to follow these instructions may result in possible serious or fatal injury.**

1. Disconnect the Driver Seat Belt Retractor Tensioner harness connector.

NOTE: **Check connectors - Clean and repair as necessary.**

2. Connect the (special tool #8443A, SRS Load Tool) and the (special tool #8443-8, Jumper, SRS Load) to the Driver Seat Belt Retractor Tensioner harness connector.

   WARNING: **Turn the ignition on, then reconnect the 12-volt battery and wait two minutes before proceeding. Failure to follow these instructions may result in possible serious or fatal injury.**

3. With the scan tool, read the ORC DTCs.

   Does the scan tool display active B007E-2B-DRIVER SEATBELT RETRACTOR PRETENSIONER DEPLOYMENT CONTROL - WIRES SHORTED TOGETHER DTC?

   Yes

   - Go To 3.

   No

   WARNING: **Turn the ignition off, disconnect the 12-volt battery and wait two minutes before proceeding. Failure to follow these instructions may result in possible serious or fatal injury.**

   -
   - Replace the Driver Seat Belt Retractor Tensioner in accordance with the Service Information. Refer to **RETRACTOR, SEAT BELT, REMOVAL** .
   - Refer to **STANDARD PROCEDURE** and perform the RESTRAINTS SYSTEM VERIFICATION TEST.

3. **CHECK (R505) DRIVER SEAT BELT RETRACTOR TENSIONER LINE 1 CIRCUIT FOR A SHORT TO (R503) DRIVER SEAT BELT RETRACTOR TENSIONER LINE 2 CIRCUIT**

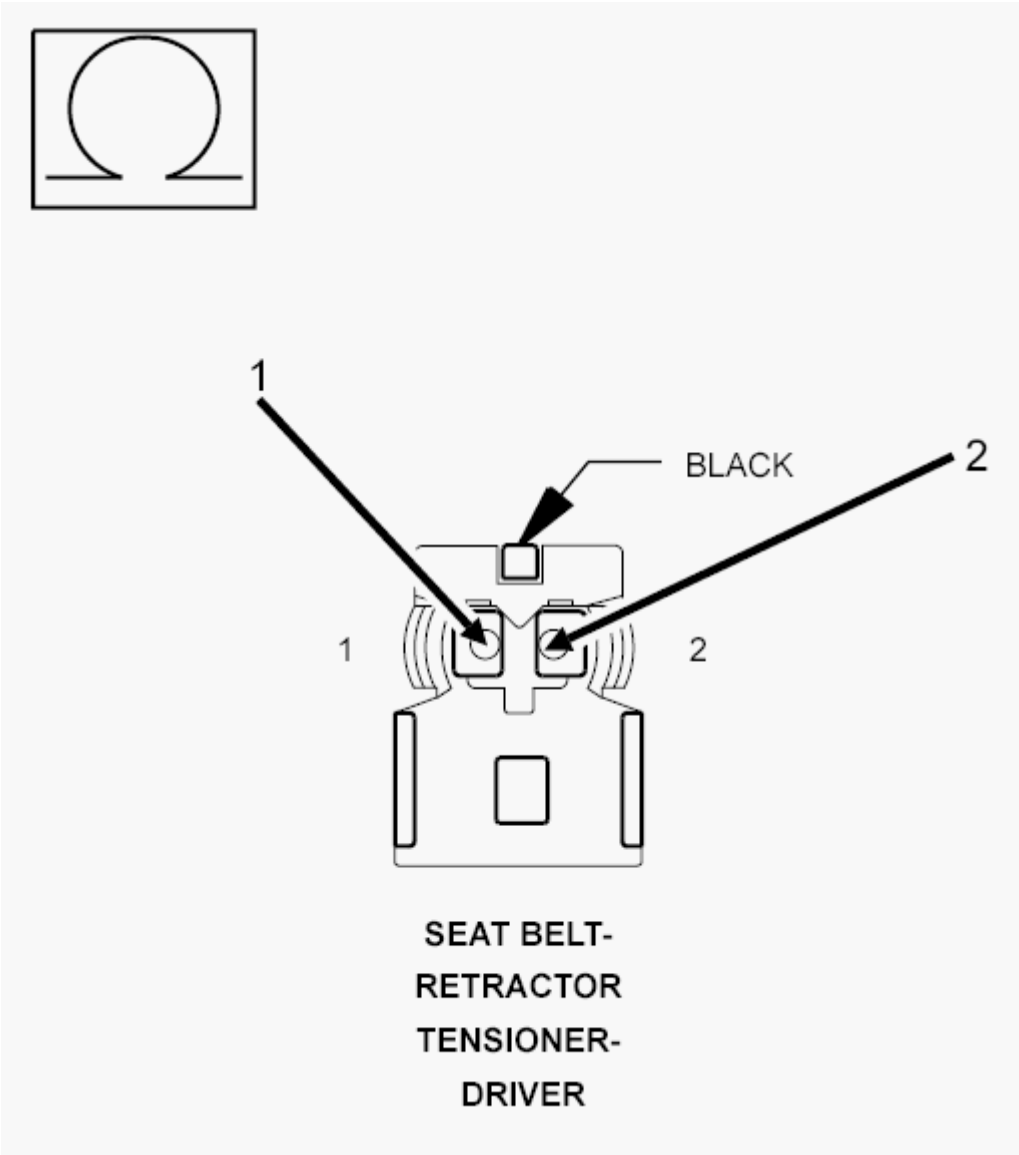

Fig. 101: Checking Driver Seat Belt Retractor Tensioner Line 1 Circuit
Courtesy of CHRYSLER GROUP, LLC

WARNING: **Turn the ignition off, disconnect the 12-volt battery and wait two minutes before proceeding. Failure to follow these instructions may result in possible serious or fatal injury.**

1. Disconnect the (special tool #8443A, SRS Load Tool) and the Jumper from the Driver Seat Belt Retractor Tensioner harness connector.
2. Disconnect the ORC harness connectors.

NOTE: Check connectors - Clean and repair as necessary.

3. Connect the SRS Load Tool (special tool #8443-24, 32-Way Adapter) to the ORC C1 harness

connector.

4. Measure the resistance between the (R505) Driver Seat Belt Retractor Tensioner Line 1 circuit cavity 2 and the (R503) Driver Seat Belt Retractor Tensioner Line 2 circuit cavity 1 at the Driver Seat Belt Retractor Tensioner harness connector.

   Is the resistance below 5.0 Ohms?

   Yes

   - Repair the (R505) Driver Seat Belt Retractor Tensioner Line 1 circuit for a short to the (R503) Driver Seat Belt Retractor Tensioner Line 2 circuit.
   - Refer to **STANDARD PROCEDURE** and perform the RESTRAINTS SYSTEM VERIFICATION TEST.

   No

   WARNING: **If the Occupant Restraint Controller (ORC) is dropped at any time, it must be replaced. Failure to follow these instructions may result in possible serious or fatal injury.**

   -
   - Replace the ORC in accordance with Service Information. Refer to **CONTROLLER, OCCUPANT RESTRAINT, REMOVAL** .
   - Refer to **STANDARD PROCEDURE** and perform the RESTRAINTS SYSTEM VERIFICATION TEST.

B007F-11-PASSENGER SEATBELT RETRACTOR PRETENSIONER DEPLOYMENT CONTROL - CIRCUIT SHORT TO GROUND

For a complete wiring diagram, **refer to appropriate SYSTEM WIRING DIAGRAMS article** .

THEORY OF OPERATION

When powered, the Occupant Restraint Controller (ORC) sends a test current to the squibs to verify the integrity of the squib and wiring. These circuits are maintained in a "floating" configuration at the ORC (connected to neither power nor ground) as protection against inadvertent deployment. Use of the Supplemental Restraints System (special tool #8443A, SRS Load Tool) in the tests below substitutes a suspect squib with a known good component. The use of the SRS Load Tool (special tool #8443-24, 32-Way Adapter) provides a test point as well as a method for opening the shorting bar connections within the ORC harness connector.

WHEN MONITORED:

The ORC sends out a 40 mA diagnostic current on each squib voltage supply circuit at power up and every 100 ms thereafter while the ignition is on. The ORC then monitors the data return wire to determine the state of the circuit.

SET CONDITION:

This Diagnostic Trouble Code (DTC) sets when the ORC detects a short to ground on the squib circuit for more than 2.5 seconds. This DTC transitions from active to stored when the ORC sees a recovery from a short to ground for greater than 2.5 seconds.

POSSIBLE CAUSES

Possible Causes
(R504) PASSENGER SEAT BELT RETRACTOR TENSIONER LINE 2 CIRCUIT SHORTED TO GROUND
(R506) PASSENGER SEAT BELT RETRACTOR TENSIONER LINE 1 CIRCUIT SHORTED TO GROUND
PASSENGER SEAT BELT TENSIONER
OCCUPANT RESTRAINT CONTROLLER (ORC)

Always perform the Pre-Diagnostic Troubleshooting procedure before proceeding. Refer to STANDARD PROCEDURE.

DIAGNOSTIC TEST

1. **VERIFY ACTIVE DTC**

   NOTE: Make sure the battery is fully charged.

   1. Turn the ignition on.
   2. With the scan tool, read ORC DTCs.

      Does the scan tool display active B007F-11-PASSENGER SEATBELT RETRACTOR PRETENSIONER DEPLOYMENT CONTROL - CIRCUIT SHORT TO GROUND DTC?

      Yes

      - Go To 2.

      No

      - Refer to **STANDARD PROCEDURE** and perform the RESTRAINTS SYSTEM INTERMITTENT TEST.

2. **CHECK PASSENGER SEAT BELT RETRACTOR TENSIONER FOR A SHORT TO GROUND**

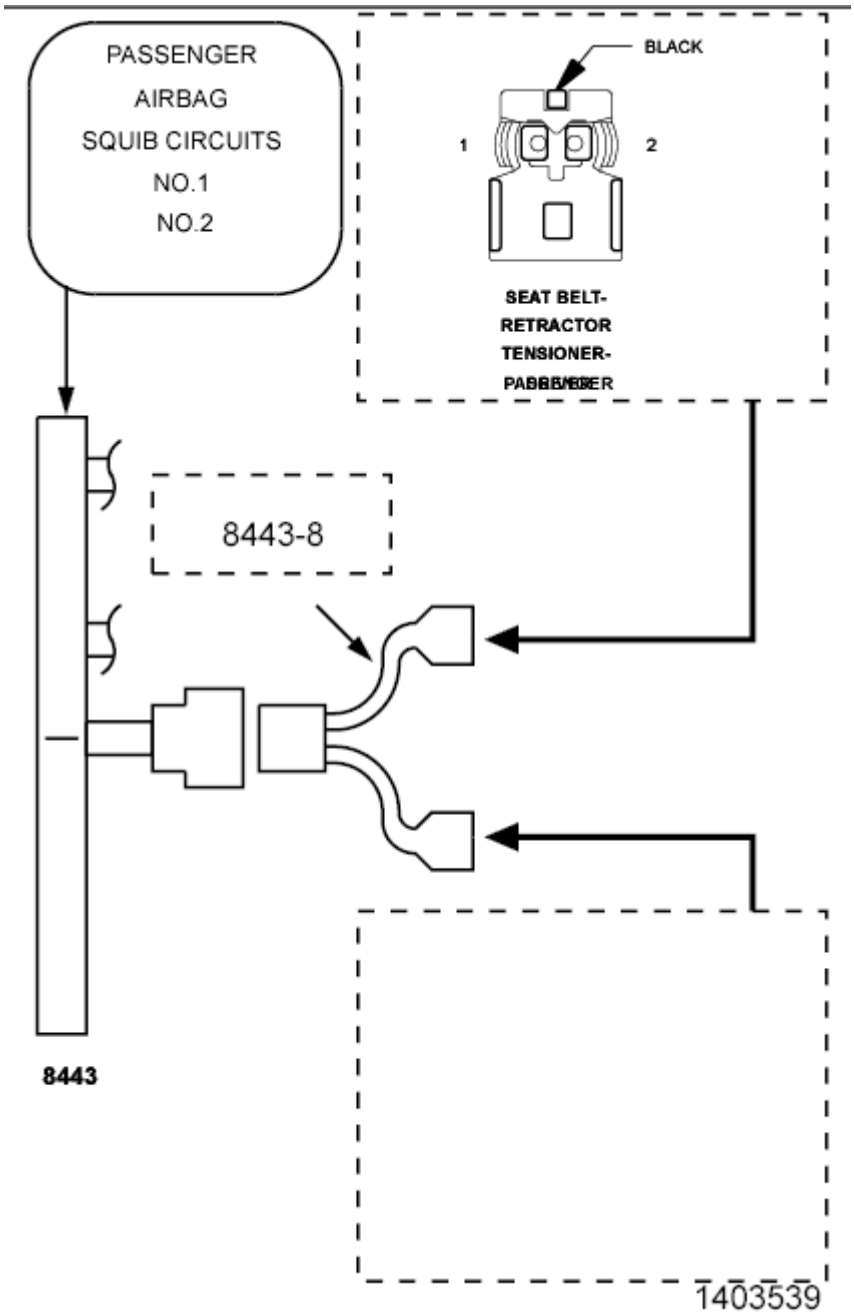

Fig. 102: Checking Passenger Seat Belt Retractor Tensioner Circuit
Courtesy of CHRYSLER GROUP, LLC

WARNING: **Turn the ignition off, disconnect the 12-volt battery and wait two minutes before proceeding. Failure to follow these instructions may result in possible serious or fatal injury.**

1. Disconnect the Passenger Seat Belt Retractor Tensioner harness connector.

NOTE: Check connectors - Clean and repair as necessary.

2. Connect the (special tool #8443A, SRS Load Tool) and the (special tool #8443-8, Jumper, SRS Load) to the Passenger Seat Belt Retractor Tensioner harness connector.

WARNING: Turn the ignition on, then reconnect the 12-volt battery and wait two minutes before proceeding. Failure to follow these instructions may result in possible serious or fatal injury.

3. With the scan tool, read the ORC DTCs.

   Does the scan tool display active B007F-11-PASSENGER SEATBELT RETRACTOR PRETENSIONER DEPLOYMENT CONTROL - CIRCUIT SHORT TO GROUND DTC?

   Yes

   - Go To 3.

   No

WARNING: Turn the ignition off, disconnect the 12-volt battery and wait two minutes before proceeding. Failure to follow these instructions may result in possible serious or fatal injury.

-
- Replace the Passenger Seat Belt Retractor Tensioner in accordance with the Service Information.
- Refer to **STANDARD PROCEDURE** and perform the RESTRAINTS SYSTEM VERIFICATION TEST.

3. **CHECK (R504, R506) PASSENGER SEAT BELT RETRACTOR TENSIONER CIRCUITS FOR A SHORT TO GROUND**

WARNING: Turn the ignition off, disconnect the 12-volt battery and wait two minutes before proceeding. Failure to follow these instructions may result in possible serious or fatal injury.

1. Disconnect the (special tool #8443A, SRS Load Tool) and Jumper from the Passenger Seat Belt Retractor Tensioner harness connector.
2. Disconnect the ORC harness connectors.

NOTE: Check connectors - Clean and repair as necessary.

3. Connect the SRS Load Tool (special tool #8443-24, 32-Way Adapter) to the ORC C1 harness connector.
4. Measure the resistance of the (R506) Passenger Seat Belt Retractor Tensioner Line 1 circuit

between the (special tool #8443-24, 32-Way Adapter) connector C1 cavity 4 and ground.

5. Measure the resistance of the (R504) Passenger Seat Belt Retractor Tensioner Line 2 circuit between the (special tool #8443-24, 32-Way Adapter) connector C1 cavity 3 and ground.

   Is the resistance below 10K Ohms on either circuit?

   Yes

   - Repair the Passenger Seat Belt Retractor Tensioner circuits for a short to ground.
   - Refer to **STANDARD PROCEDURE** and perform the RESTRAINTS SYSTEM VERIFICATION TEST.

   No

   WARNING: If the Occupant Restraint Controller (ORC) is dropped at any time, it must be replaced. Failure to follow these instructions may result in possible serious or fatal injury.

   -
   - Replace the ORC in accordance with the Service Information. Refer to **CONTROLLER, OCCUPANT RESTRAINT, REMOVAL** .
   - Refer to **STANDARD PROCEDURE** and perform the RESTRAINTS SYSTEM VERIFICATION TEST.

B007F-12-PASSENGER SEATBELT RETRACTOR PRETENSIONER DEPLOYMENT CONTROL - CIRCUIT SHORT TO BATTERY

For a complete wiring diagram, **refer to Wiring Information** .

THEORY OF OPERATION

When powered, the Occupant Restraint Controller (ORC) sends a test current to the squibs to verify the integrity of the squib and wiring. These circuits are maintained in a "floating" configuration at the ORC (connected to neither power nor ground) as protection against inadvertent deployment. Use of the Supplemental Restraints System (special tool #8443A, SRS Load Tool) in the tests below substitutes a suspect squib with a known good component. The use of the SRS Load Tool (special tool #8443-24, 32-Way Adapter) provides a test point as well as a method for opening the shorting bar connections within the ORC harness connector.

WHEN MONITORED:

The ORC sends out a 40 mA diagnostic current on each squib voltage supply circuit at power up and every 100 ms thereafter while the ignition is on. The ORC then monitors the data return wire to determine the state of the circuit.

SET CONDITION:

This Diagnostic Trouble Code (DTC) sets when the ORC detects a short to voltage on the squib circuit for more than 2.5 seconds. This DTC transitions from active to stored when the ORC sees a recovery from a short to voltage for greater than 2.5 seconds.

POSSIBLE CAUSES

Possible Causes
(R504) PASSENGER SEAT BELT RETRACTOR TENSIONER LINE 2 CIRCUIT SHORTED TO VOLTAGE
(R506) PASSENGER SEAT BELT RETRACTOR TENSIONER LINE 1 CIRCUIT SHORTED TO VOLTAGE
PASSENGER SEAT BELT RETRACTOR TENSIONER
OCCUPANT RESTRAINT CONTROLLER (ORC)

Always perform the Pre-Diagnostic Troubleshooting procedure before proceeding. Refer to STANDARD PROCEDURE.

DIAGNOSTIC TEST

1. **VERIFY ACTIVE DTC**

   NOTE: Make sure the battery is fully charged.

   1. Turn the ignition on.
   2. With the scan tool, read ORC DTCs.

      Does the scan tool display active B007F-12-PASSENGER SEATBELT RETRACTOR PRETENSIONER DEPLOYMENT CONTROL - CIRCUIT SHORT TO BATTERY DTC?

      Yes

      - Go To 2.

      No

      - Refer to **STANDARD PROCEDURE** and perform the RESTRAINTS SYSTEM INTERMITTENT TEST.

2. **CHECK PASSENGER SEAT BELT RETRACTOR TENSIONER FOR A SHORT TO VOLTAGE**

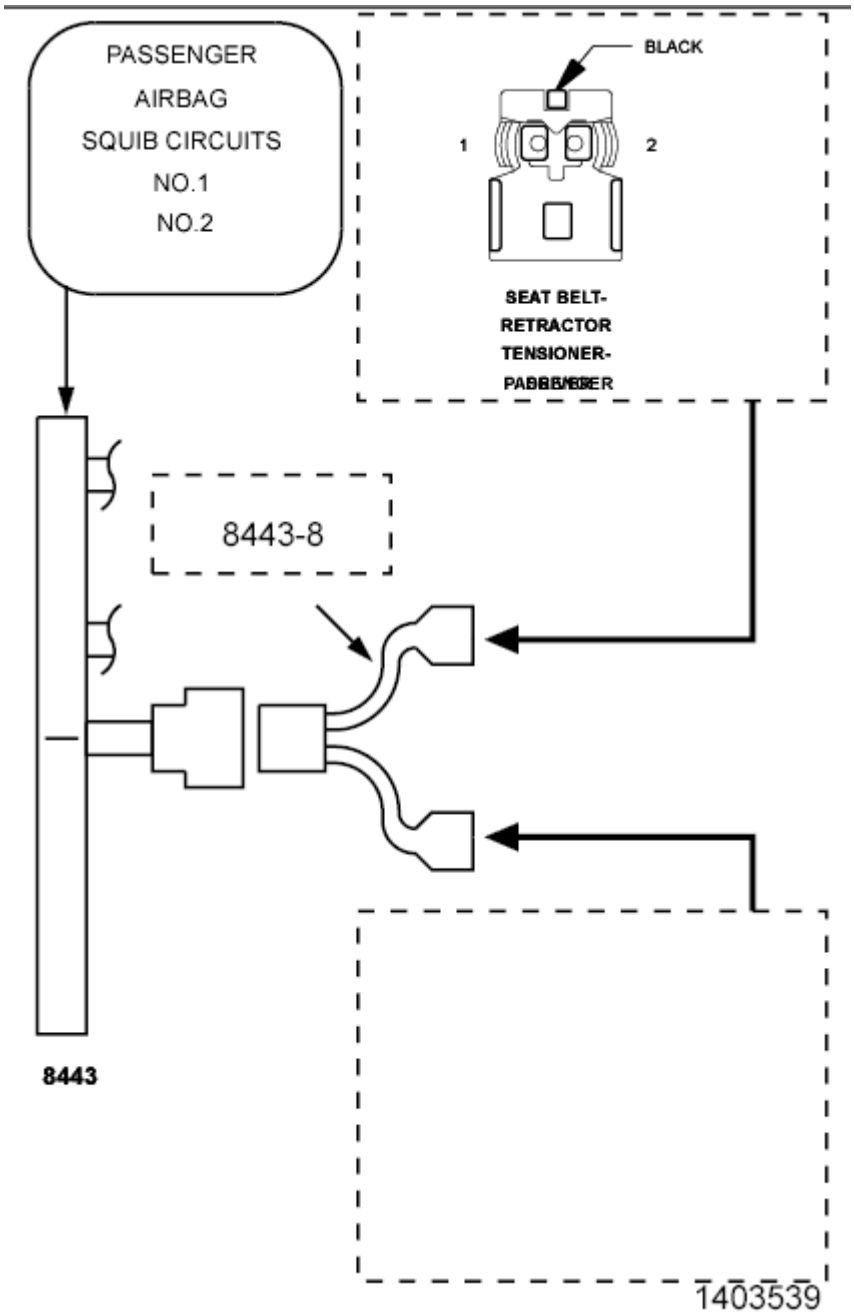

Fig. 103: Checking Passenger Seat Belt Retractor Tensioner Circuit
Courtesy of CHRYSLER GROUP, LLC

WARNING: **Turn the ignition off, disconnect the 12-volt battery and wait two minutes before proceeding. Failure to follow these instructions may result in possible serious or fatal injury.**

1. Disconnect the Passenger Seat Belt Retractor Tensioner harness connector.

NOTE: Check connectors - Clean and repair as necessary.

2. Connect the (special tool #8443A, SRS Load Tool) and (special tool #8443-8, Jumper, SRS Load) to the Passenger Seat Belt Retractor Tensioner harness connector.

WARNING: Turn the ignition on, then reconnect the 12-volt battery and wait two minutes before proceeding. Failure to follow these instructions may result in possible serious or fatal injury.

3. With the scan tool, read the ORC DTCs.

   Does the scan tool display active B007F-12-PASSENGER SEATBELT RETRACTOR PRETENSIONER DEPLOYMENT CONTROL - CIRCUIT SHORT TO BATTERY DTC?

   Yes

   - Go To 3.

   No

WARNING: Turn the ignition off, disconnect the 12-volt battery and wait two minutes before proceeding. Failure to follow these instructions may result in possible serious or fatal injury.

-
- Replace the Passenger Seat Belt Retractor Tensioner in accordance with the Service Information. Refer to **RETRACTOR, SEAT BELT, REMOVAL** .
- Refer to **STANDARD PROCEDURE** and perform the RESTRAINTS SYSTEM VERIFICATION TEST.

3. **CHECK (R504, R506) PASSENGER SEAT BELT RETRACTOR TENSIONER CIRCUITS FOR A SHORT TO VOLTAGE**

WARNING: Turn the ignition off, disconnect the 12-volt battery and wait two minutes before proceeding. Failure to follow these instructions may result in possible serious or fatal injury.

1. Disconnect the (special tool #8443A, SRS Load Tool) and (special tool #8443-8, Jumper, SRS Load) from the Passenger Seat Belt Retractor Tensioner harness connector.
2. Disconnect the ORC harness connectors.

NOTE: Check connectors - Clean and repair as necessary.

3. Connect the (special tool #8443-24, 32-Way Adapter) to the ORC C1 harness connectors.

WARNING: Turn the ignition on, then reconnect the 12-volt battery and wait

two minutes before proceeding. Failure to follow these instructions may result in possible serious or fatal injury.

4. Measure the voltage of the (R506) Passenger Seat Belt Retractor Tensioner Line 1 circuit between the SRS Load Tool Adapter connector C1 cavity 4 and ground.
5. Measure the voltage of the (R504) Passenger Seat Belt Retractor Tensioner Line 2 circuit between the SRS Load Tool Adapter connector C1 cavity 3 and ground.

Is there any voltage present on either circuit?

Yes

WARNING: **Turn the ignition off, disconnect the 12-volt battery and wait two minutes before proceeding. Failure to follow these instructions may result in possible serious or fatal injury.**

-
- Repair the Passenger Seat Belt Retractor Tensioner circuits for a short to voltage.
- Refer to **STANDARD PROCEDURE** and perform the RESTRAINTS SYSTEM VERIFICATION TEST.

No

WARNING: **Turn the ignition off, disconnect the 12-volt battery and wait two minutes before proceeding. Failure to follow these instructions may result in possible serious or fatal injury.**

WARNING: **If the Occupant Restraint Controller (ORC) is dropped at any time, it must be replaced. Failure to follow these instructions may result in possible serious or fatal injury.**

-
-
- Replace the ORC in accordance with the Service Information. Refer to **CONTROLLER, OCCUPANT RESTRAINT, REMOVAL** .
- Refer to **STANDARD PROCEDURE** and perform the RESTRAINTS SYSTEM VERIFICATION TEST.

B007F-13-PASSENGER SEATBELT RETRACTOR PRETENSIONER DEPLOYMENT CONTROL - CIRCUIT OPEN

THEORY OF OPERATION

When powered, the Occupant Restraint Controller (ORC) sends a test current to the squibs to verify the

integrity of the squib and wiring. These circuits are maintained in a "floating" configuration at the ORC (connected to neither power nor ground) as protection against inadvertent deployment. Use of the Supplemental Restraints System (special tool #8443A, SRS Load Tool) in the tests below substitutes a suspect squib with a known good component. The use of the SRS Load Tool (special tool #8443-24, 32-Way Adapter) provides a test point as well as a method for opening the shorting bar connections within the ORC harness connector.

WHEN MONITORED:

The ORC sends out a 40 mA diagnostic current on each squib voltage supply circuit at power up and every 100 ms thereafter while the ignition is in on. The ORC then monitors the data return wire to determine the state of the circuit.

SET CONDITION:

This Diagnostic Trouble Code (DTC) sets when the ORC detects an open on the squib circuit for more than 2.5 seconds. This DTC transitions from active to stored when the ORC sees a recovery from an open condition for greater than 2.5 seconds.

POSSIBLE CAUSES

Possible Causes
(R504) PASSENGER SEAT BELT RETRACTOR TENSIONER LINE 2 CIRCUIT OPEN
(R506) PASSENGER SEAT BELT RETRACTOR TENSIONER LINE 1 CIRCUIT OPEN
PASSENGER SEAT BELT RETRACTOR TENSIONER
OCCUPANT RESTRAINT CONTROLLER (ORC)

Always perform the Pre-Diagnostic Troubleshooting procedure before proceeding. Refer to STANDARD PROCEDURE.

DIAGNOSTIC TEST

1. **VERIFY ACTIVE DTC**

   NOTE: Make sure the battery is fully charged.

   1. Turn the ignition on.
   2. With the scan tool, read ORC DTCs.

      Does the scan tool display active B007F-13-PASSENGER SEATBELT RETRACTOR PRETENSIONER DEPLOYMENT CONTROL - CIRCUIT OPEN DTC?

      Yes

      - Go To 2.

      No

- Refer to **STANDARD PROCEDURE** and perform the RESTRAINT SYSTEM INTERMITTENT TEST.

2. **CHECK FOR PASSENGER SEAT BELT RETRACTOR TENSIONER CIRCUIT OPEN**

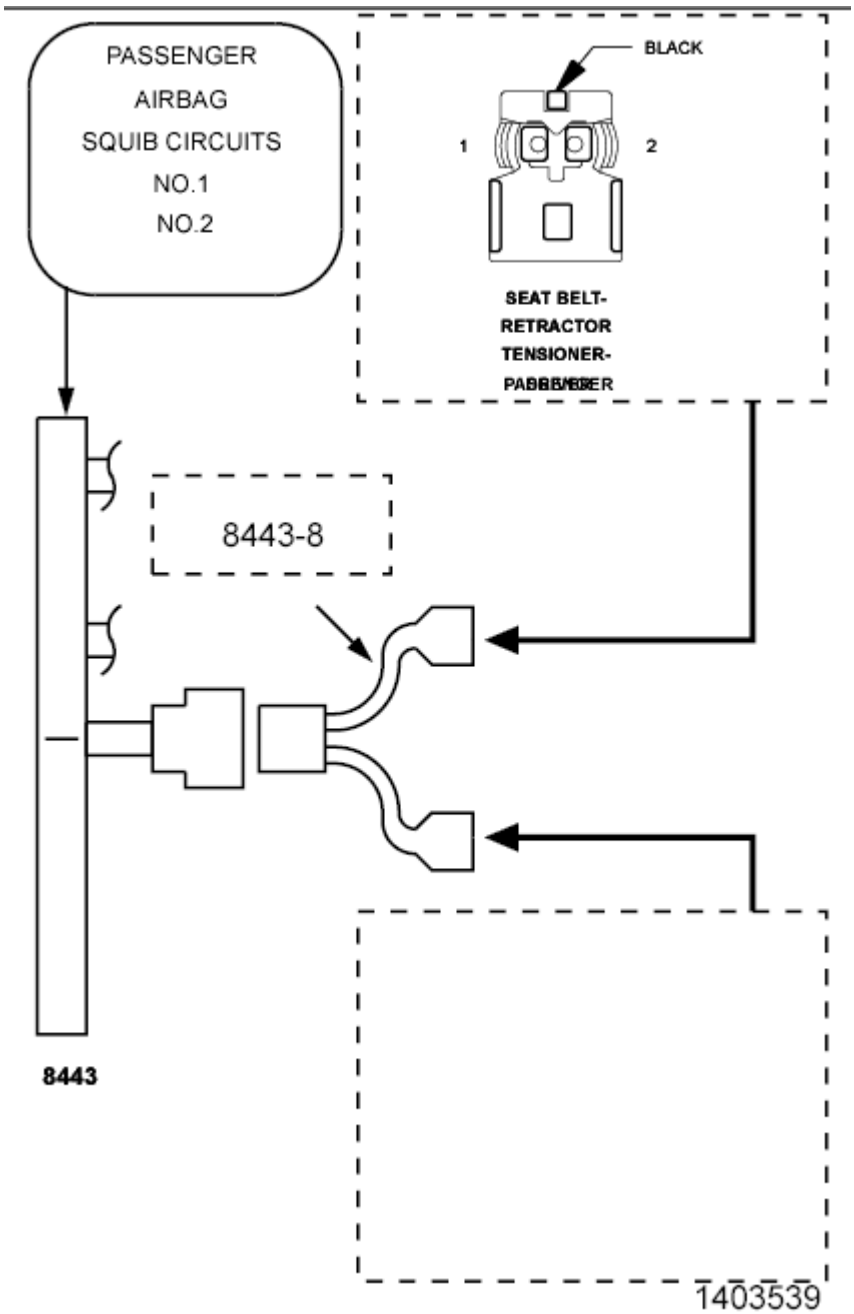

Fig. 104: Checking Passenger Seat Belt Retractor Tensioner Circuit
Courtesy of CHRYSLER GROUP, LLC

WARNING: **Turn the ignition off, disconnect the 12-volt battery and wait two minutes before proceeding. Failure to follow these instructions may result in possible serious or fatal injury.**

1. Disconnect the Passenger Seat Belt Retractor Tensioner harness connector.

   NOTE: Check connectors - Clean and repair as necessary.

2. Connect the (special tool #8443A, SRS Load Tool) and the (special tool #8443-8, Jumper, SRS Load) to the Passenger Seat Belt Retractor Tensioner harness connector.

   WARNING: Turn the ignition on, then reconnect the 12-volt battery and wait two minutes before proceeding. Failure to follow these instructions may result in possible serious or fatal injury.

3. With the scan tool, read the active ORC DTCs.

   Does the scan tool display active B007F-13-PASSENGER SEATBELT RETRACTOR PRETENSIONER DEPLOYMENT CONTROL - CIRCUIT OPEN DTC?

   Yes

   - Go To 3.

   No

   WARNING: Turn the ignition off, disconnect the 12-volt battery and wait two minutes before proceeding. Failure to follow these instructions may result in possible serious or fatal injury.

   -
   - Replace the Passenger Seat Belt Retractor Tensioner in accordance with the Service Information. Refer to **RETRACTOR, SEAT BELT, REMOVAL** .
   - Refer to **STANDARD PROCEDURE** and perform the RESTRAINTS SYSTEM VERIFICATION TEST.

3. **CHECK (R504, R506) PASSENGER SEAT BELT RETRACTOR TENSIONER CIRCUITS FOR AN OPEN**

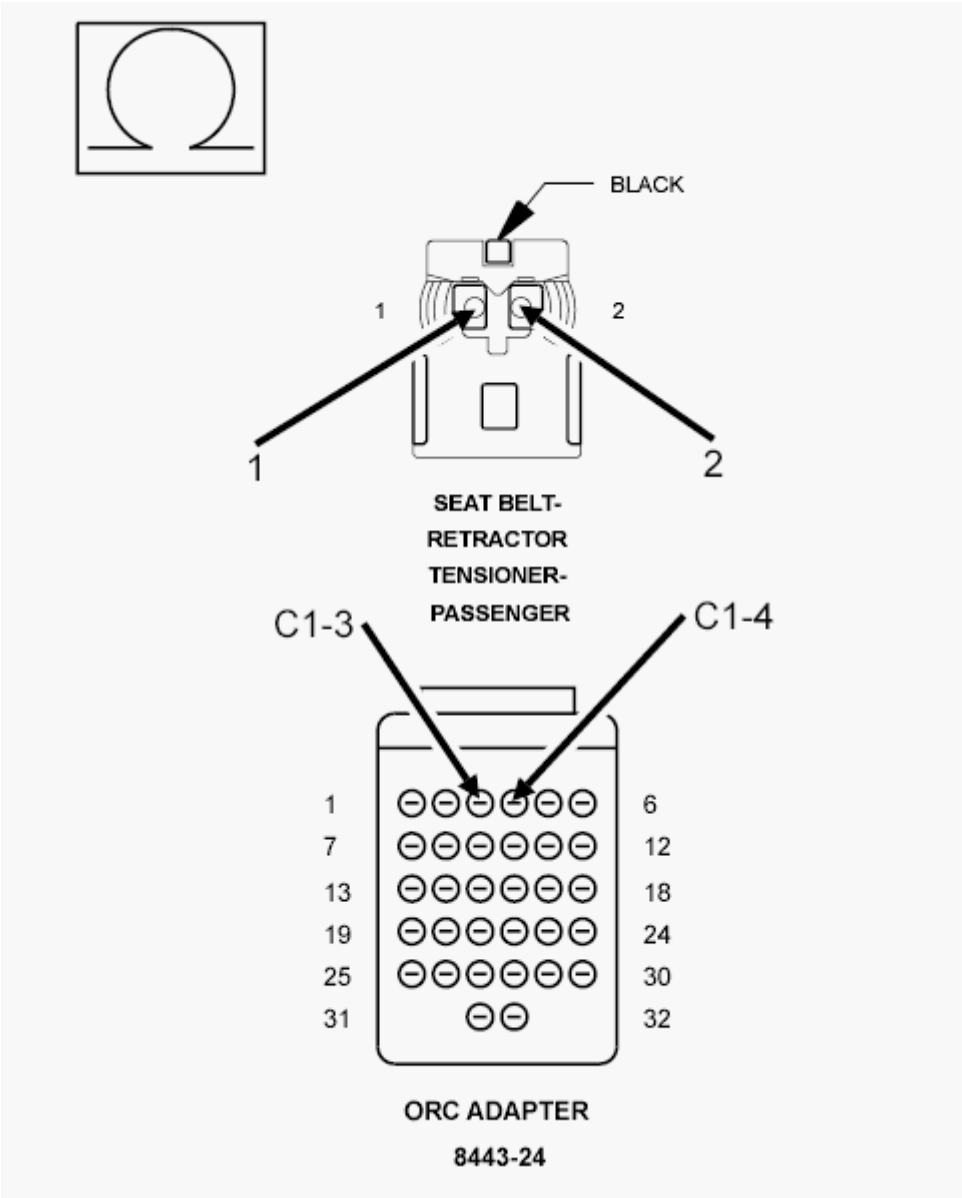

Fig. 105: Checking Passenger Seat Belt Retractor Tensioner Circuit For Open
Courtesy of CHRYSLER GROUP, LLC

WARNING: Turn the ignition off, disconnect the 12-volt battery and wait two minutes before proceeding. Failure to follow these instructions may result in possible serious or fatal injury.

1. Disconnect the (special tool #8443A, SRS Load Tool) and (special tool #8443-8, Jumper, SRS Load) from the Passenger Seat Belt Retractor Tensioner harness connector.
2. Disconnect the ORC harness connectors.

NOTE: Check connectors - Clean and repair as necessary.

3. Connect the (special tool #8443-24, 32-Way Adapter) to the ORC C1 harness connectors.
4. Measure the resistance of the (R506) Passenger Seat Belt Retractor Tensioner Line 1 circuit between the Passenger Seat Belt Retractor Tensioner harness connector cavity 2 and the (special tool #8443-24, 32-Way Adapter) cavity 4.
5. Measure the resistance of the (R504) Passenger Seat Belt Retractor Tensioner Line 2 circuit between the Passenger Seat Belt Retractor Tensioner harness connector cavity 1 and the (special tool #8443-24, 32-Way Adapter) cavity 3.

   Is the resistance below 1.0 Ohms on both circuits?

   Yes

   WARNING: **If the Occupant Restraint Controller (ORC) is dropped at any time, it must be replaced. Failure to follow these instructions may result in possible serious or fatal injury.**

   -
   - Replace the ORC in accordance with Service Information. Refer to **CONTROLLER, OCCUPANT RESTRAINT, REMOVAL** .
   - Refer to **STANDARD PROCEDURE** and perform the RESTRAINTS SYSTEM VERIFICATION TEST.

   No

   - Repair the (R506) Passenger Seat Belt Retractor Tensioner Line 1 circuit.
   - Refer to **STANDARD PROCEDURE** and perform the RESTRAINTS SYSTEM VERIFICATION TEST.

B007F-2B-PASSENGER SEATBELT RETRACTOR PRETENSIONER DEPLOYMENT CONTROL - WIRES SHORTED TOGETHER

For a complete wiring diagram, **refer to Wiring Information** .

THEORY OF OPERATION

When powered, the Occupant Restraint Controller (ORC) sends a test current to the squibs to verify the integrity of the squib and wiring. These circuits are maintained in a "floating" configuration at the ORC (connected to neither power nor ground) as protection against inadvertent deployment. Use of the Supplemental Restraints System (special tool #8443A, SRS Load Tool) in the tests below substitutes a suspect squib with a known good component. The use of the SRS Load Tool Adapter (special tool #8443-24, 32-Way Adapter) provides a test point as well as a method for opening the shorting bar connections within the ORC harness connector.

WHEN MONITORED:

The ORC sends out a 40 mA diagnostic current on each squib voltage supply circuit at power up and every 100

ms thereafter while the ignition is in on. The ORC then monitors the data return wire to determine the state of the circuit.

SET CONDITION:

This Diagnostic Trouble Code (DTC) sets when the ORC detects both circuits of the same squib are shorted together for more than 2.5 seconds. This DTC transitions from active to stored when the ORC sees a recovery from the shorted together condition for greater than 2.5 seconds.

POSSIBLE CAUSES

Possible Causes
(R504) PASSENGER SEAT BELT RETRACTOR TENSIONER LINE 2 CIRCUIT SHORTED TO THE (R506) PASSENGER SEAT BELT RETRACTOR TENSIONER LINE 1
PASSENGER SEAT BELT RETRACTOR TENSIONER
OCCUPANT RESTRAINT CONTROLLER (ORC)

Always perform the Pre-Diagnostic Troubleshooting procedure before proceeding. Refer to STANDARD PROCEDURE.

DIAGNOSTIC TEST

1. **VERIFY ACTIVE DTC**

   NOTE: Make sure the battery is fully charged.

   1. Turn the ignition on.
   2. With the scan tool, read ORC DTCs.

      Does the scan tool display active B007F-2B-PASSENGER SEATBELT RETRACTOR PRETENSIONER DEPLOYMENT CONTROL - WIRES SHORTED TOGETHER DTC?

      Yes

      - Go To 2.

      No

      - Refer to **STANDARD PROCEDURE** and perform the RESTRAINTS SYSTEM INTERMITTENT TEST.

2. **CHECK PASSENGER SEAT BELT RETRACTOR TENSIONER CIRCUITS SHORT TO TOGETHER**

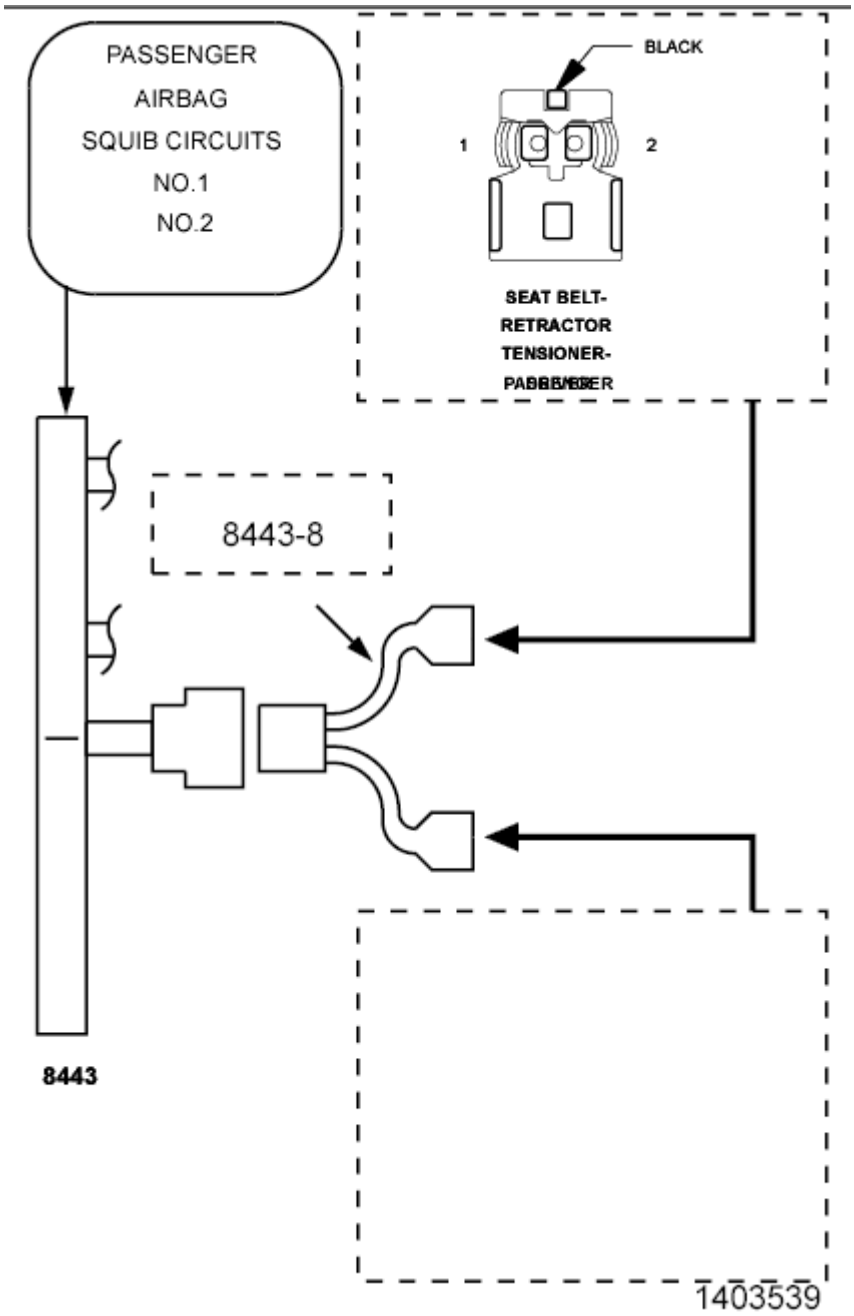

Fig. 106: Checking Passenger Seat Belt Retractor Tensioner Circuit
Courtesy of CHRYSLER GROUP, LLC

WARNING: **Turn the ignition off, disconnect the 12-volt battery and wait two minutes before proceeding. Failure to follow these instructions may result in possible serious or fatal injury.**

1. Disconnect the Passenger Seat Belt Tensioner harness connector.

NOTE: Check connectors - Clean and repair as necessary.

2. Connect the (special tool #8443A, SRS Load Tool) and the (special tool #8443-8, Jumper, SRS Load) to the Passenger Seat Belt Tensioner Retractor harness connector.

   WARNING: Turn the ignition on, then reconnect the 12-volt battery and wait two minutes before proceeding. Failure to follow these instructions may result in possible serious or fatal injury.

3. With the scan tool, read the ORC DTCs.

   Does the scan tool display active B007F-2B-PASSENGER SEATBELT RETRACTOR PRETENSIONER DEPLOYMENT CONTROL - WIRES SHORTED TOGETHER DTC?

   Yes

   - Go To 3.

   No

   WARNING: Turn the ignition off, disconnect the 12-volt battery and wait two minutes before proceeding. Failure to follow these instructions may result in possible serious or fatal injury.

   -
   - Replace the Passenger Seat Belt Retractor Tensioner in accordance with the Service Information. Refer to **RETRACTOR, SEAT BELT, REMOVAL** .
   - Refer to **STANDARD PROCEDURE** and perform the RESTRAINTS SYSTEM VERIFICATION TEST.

3. **CHECK (R506) PASSENGER SEAT BELT RETRACTOR TENSIONER LINE 1 CIRCUIT FOR A SHORT TO (R504) PASSENGER SEAT BELT RETRACTOR TENSIONER LINE 2 CIRCUIT**

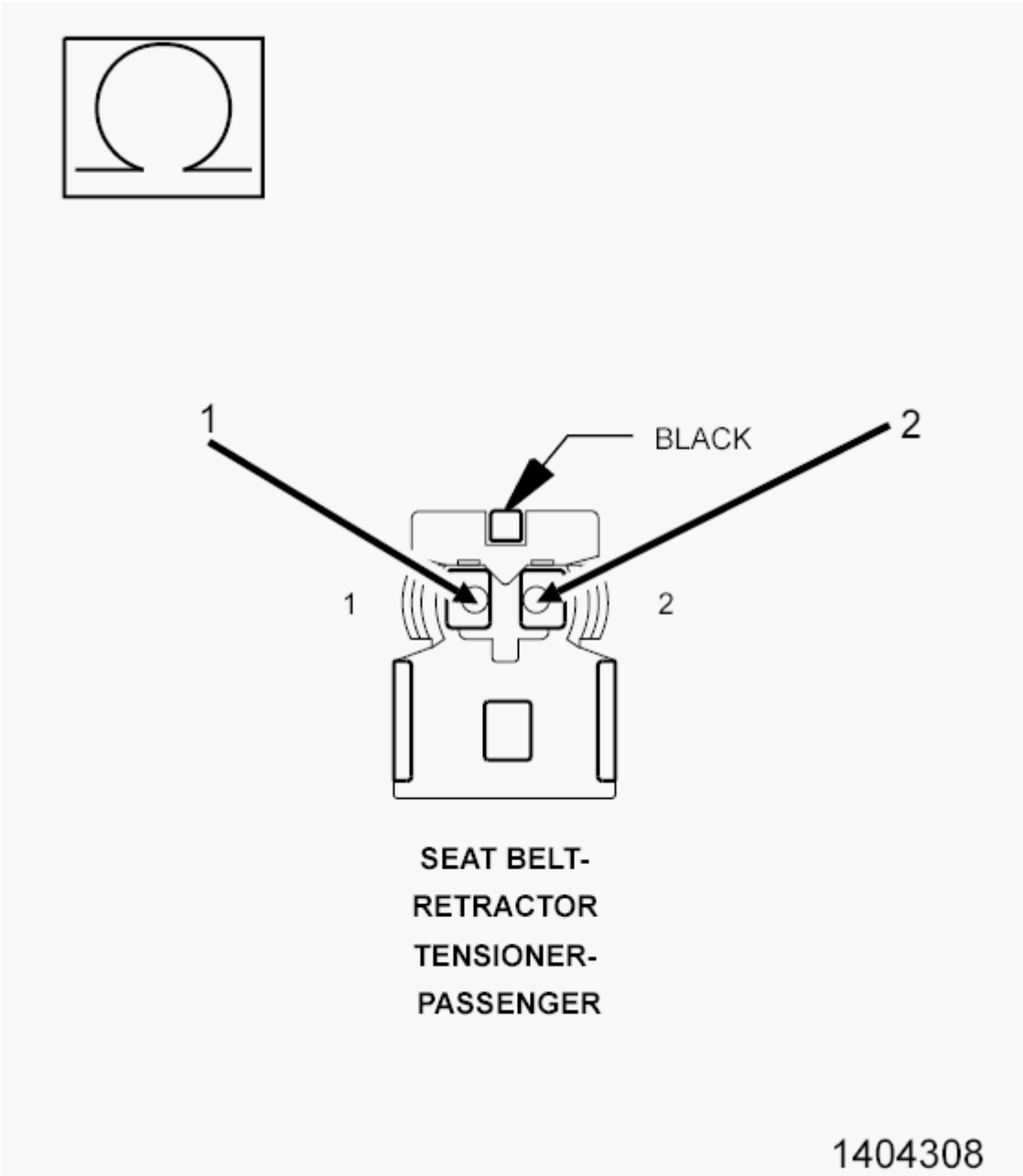

Fig. 107: Checking Passenger Seat Belt Retractor Tensioner Circuit
Courtesy of CHRYSLER GROUP, LLC

WARNING: **Turn the ignition off, disconnect the 12-volt battery and wait two minutes before proceeding. Failure to follow these instructions may result in possible serious or fatal injury.**

1. Disconnect the (special tool #8443A, SRS Load Tool) and the Jumper from the Passenger Seat Belt Tensioner Retractor harness connector.
2. Disconnect the ORC harness connectors.

NOTE: Check connectors - Clean and repair as necessary.

3. Connect the SRS Load Tool (special tool #8443-24, 32-Way Adapter) to the ORC C1 harness connector.
4. Measure the resistance between the (R506) Passenger Seat Belt Retractor Tensioner Line 1 circuit cavity 2 and the (R504) Passenger Seat Belt Retractor Tensioner Line 2 circuit cavity 1 at the Passenger Seat Belt Tensioner harness connector.

   Is the resistance below 5.0 Ohms?

   Yes

   - Repair the (R506) Passenger Seat Belt Retractor Tensioner Line 1 circuit for a short to the (R504) Passenger Seat Belt Retractor Tensioner Line 2 circuit.
   - Refer to **STANDARD PROCEDURE** and perform the RESTRAINTS SYSTEM VERIFICATION TEST.

   No

   WARNING: **If the Occupant Restraint Controller (ORC) is dropped at any time, it must be replaced. Failure to follow these instructions may result in possible serious or fatal injury.**

   -
   - Replace the ORC in accordance with Service Information. Refer to **CONTROLLER, OCCUPANT RESTRAINT, REMOVAL** .
   - Refer to **STANDARD PROCEDURE** and perform the RESTRAINTS SYSTEM VERIFICATION TEST.

B2199-16-BATTERY VOLTAGE - CIRCUIT VOLTAGE BELOW THRESHOLD

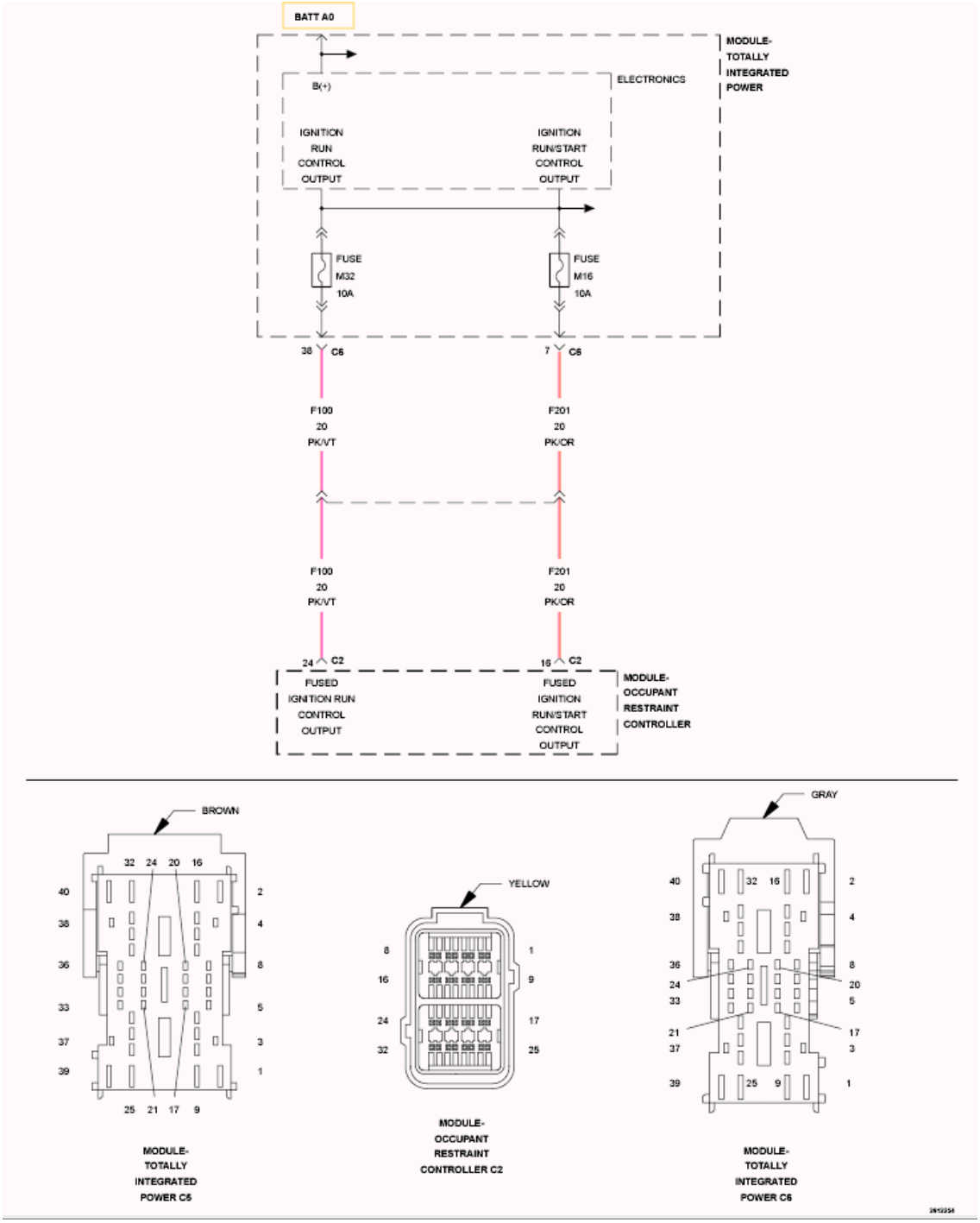

Fig. 108: Occupant Restraint Controller Circuit Wiring Diagram
Courtesy of CHRYSLER GROUP, LLC

For a complete wiring diagram, **refer to appropriate SYSTEM WIRING DIAGRAMS article** .

THEORY OF OPERATION

The Occupant Restraint Controller (ORC) receives fused ignition voltage from the Totally Integrated Power

Module (TIPM). The ORC is equipped with two voltage sources the F100 and F201 circuit. These circuits power the ORC and the capacitors used to initiate the squib deployment circuits in the event of collision detection.

WHEN MONITORED:

The ORC continuously monitors the voltage on the F100 and F201 supply circuits. The ORC monitors the power circuits at a rate of every 10 ms.

SET CONDITION:

The ORC will set this DTC when the voltage on both supply circuits are below 9 ± 0.5 volts for more than 15 seconds. The DTC changes from Active to Stored when voltage returns to normal level and the power feed circuit voltages goes above 10 ± 0.5 volts for 5 seconds.

POSSIBLE CAUSES

Possible Causes
CHARGING SYSTEM VOLTAGE LOW
(F100) FUSED IGNITION RUN CONTROL OUTPUT CIRCUIT HIGH RESISTANCE
(F201) FUSED IGNITION RUN/START CONTROL OUTPUT CIRCUIT HIGH RESISTANCE
TOTALLY INTEGRATED CONTROL MODULE (TIPM)
OCCUPANT RESTRAINT CONTROLLER (ORC)

Always perform the Pre-Diagnostic Troubleshooting procedure before proceeding. Refer to STANDARD PROCEDURE.

DIAGNOSTIC TEST

1. **CHECK FOR CHARGING SYSTEM DTC**

   NOTE: Make sure the battery is fully charged.

   1. Turn the ignition on.
   2. With the scan tool, read Powertrain Control Module (PCM) DTCs.

      Are there any Charging System DTCs set in the PCM?

      Yes

      - Refer to **DIAGNOSTIC CODE INDEX** for 3.7L/4.7L/5.7L or **DIAGNOSTIC CODE INDEX** for 6.7L and perform the appropriate Charging System diagnostic procedures.

      No

      - Go To 2.

2. **VERIFY ACTIVE DTC**
    1. With the scan tool, read all ORC DTCs.

       Does the scan tool display active B2199-16-BATTERY VOLTAGE - CIRCUIT VOLTAGE BELOW THRESHOLD DTC?

       Yes

       - Go To 3.

       No

       - Refer to **STANDARD PROCEDURE** and perform the RESTRAINTS SYSTEM INTERMITTENT TEST.
3. **CHECK LOW VOLTAGE ON THE M16 AND M32 SUPPLY CIRCUITS**
    1. Remove the TIPM M16 and M32 fuse.

       NOTE: Check connectors - Clean and repair as necessary.

    2. Measure the voltage on the Ignition Run Control Output circuit between the TIPM M32 fuse supply terminal TIPM C6 cavity 38 and ground.
    3. Measure the voltage on the Ignition Run/Start Control Output circuit between the TIPM M16 fuse supply terminal TIPM C6 cavity 7 and ground.

       Is the voltage below 9 ± 0.5 volts on both circuits?

       Yes

       - Replace the TIPM in accordance with Service Information.
       - Refer to **STANDARD PROCEDURE** and perform the BODY VERIFICATION TEST.

       No

       - Go To 4.
4. **CHECK FOR LOW VOLTAGE AT THE ORC**

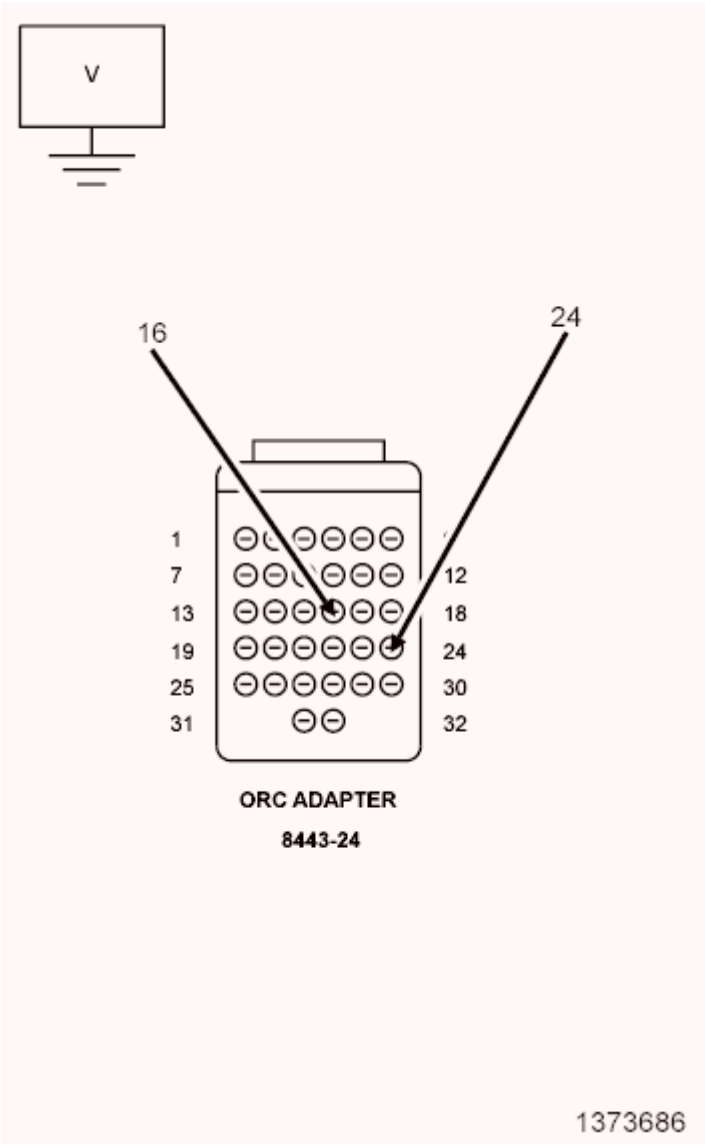

Fig. 109: Checking Voltage On Fused Ignition Run Control Output Circuit
Courtesy of CHRYSLER GROUP, LLC

WARNING: Turn the ignition off, disconnect the 12-volt battery and wait two minutes before proceeding. Failure to follow these instructions may result in possible serious or fatal injury.

1. Install the TIPM M32 and M16 fuses.
2. Disconnect the ORC harness connectors.

NOTE: Check connectors - Clean and repair as necessary.

3. Connect the SRS Load Tool Adapter (special tool #8443-24, 32-Way Adapter) to the ORC C2 harness connector.

WARNING: Turn the ignition on, then reconnect the 12-volt battery and wait two minutes before proceeding. Failure to follow these instructions may result in possible serious or fatal injury.

4. Measure the voltage on the (F100) Fused Ignition Run Control Output circuit between the appropriate terminal of the SRS Load Tool Adapter (special tool #8443-24, 32-Way Adapter) and ground.
5. Measure the voltage on the (F201) Fused Ignition Run/Start Control Output circuit between the appropriate terminal of the SRS Load Tool Adapter (special tool #8443-24, 32-Way Adapter) and ground.

Is the voltage below 9 ± 0.5 volts on both circuits?

Yes

WARNING: Turn the ignition off, disconnect the 12-volt battery and wait two minutes before proceeding. Failure to follow these instructions may result in possible serious or fatal injury.

-
- Using the wiring diagram/schematic as a guide, inspect the related wiring and connectors. Look for chafed, pierced, pinched, or partially broken wires and broken, bent, pushed out, spread, corroded, or contaminated terminals.
- Repair the F100 and F201 Fused Run and Run/Start Control Output circuits for high resistance.
- Refer to **STANDARD PROCEDURE** and perform the RESTRAINTS SYSTEM VERIFICATION TEST.

No

WARNING: Turn the ignition off, disconnect the 12-volt battery and wait two minutes before proceeding. Failure to follow these instructions may result in possible serious or fatal injury.

WARNING: If the Occupant Restraint Controller (ORC) is dropped at any time, it must be replaced. Failure to follow these instructions may result in possible serious or fatal injury.

-
-
- Replace the ORC in accordance with the Service Information.
- Refer to **STANDARD PROCEDURE** and perform the RESTRAINTS SYSTEM VERIFICATION TEST.

B2199-17-BATTERY VOLTAGE - CIRCUIT VOLTAGE ABOVE THRESHOLD

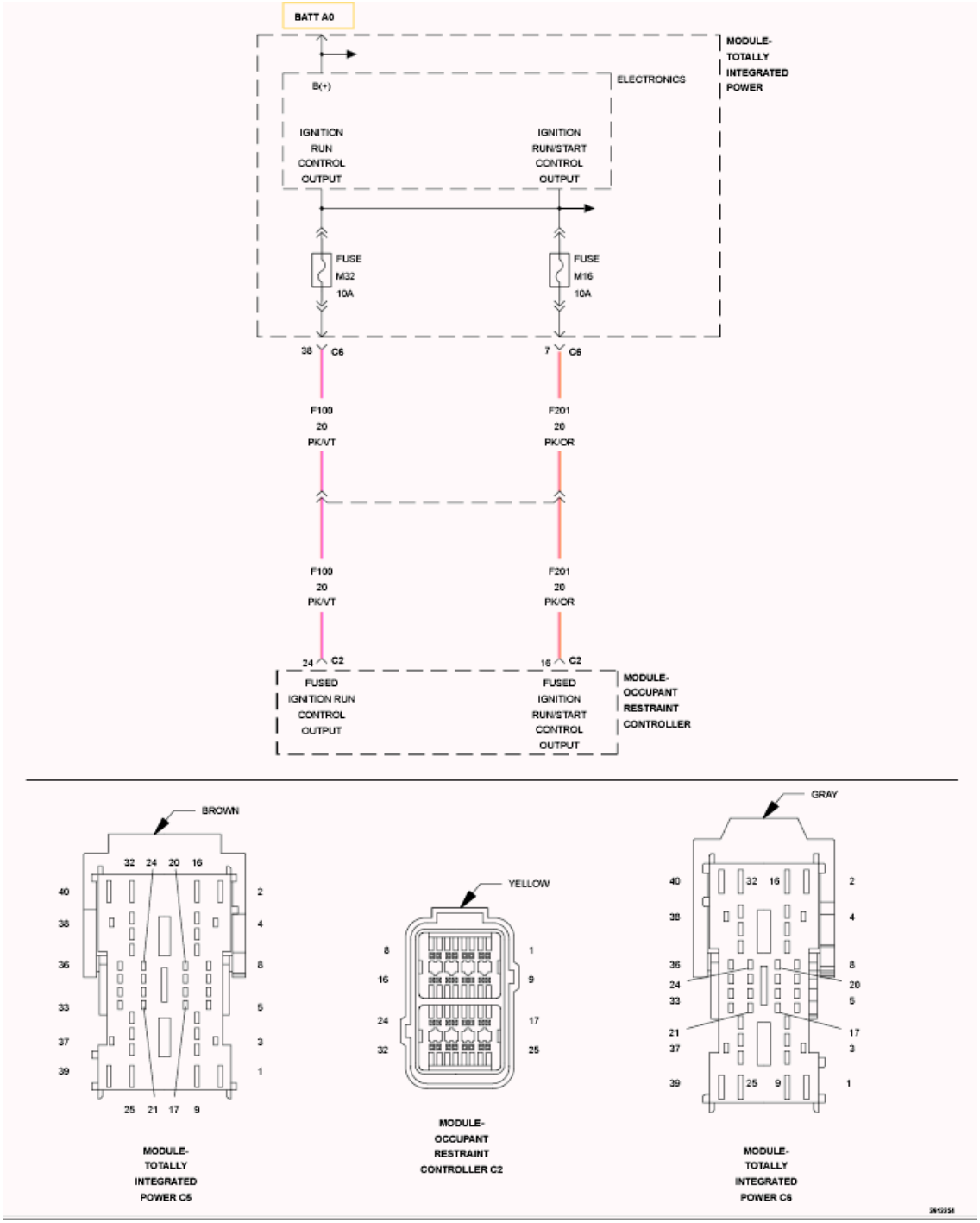

Fig. 110: Occupant Restraint Controller Circuit Wiring Diagram
Courtesy of CHRYSLER GROUP, LLC

For a complete wiring diagram, **refer to Wiring Information** .

THEORY OF OPERATION

The Occupant Restraint Controller (ORC) receives fused ignition voltage from the Totally Integrated Power Module (TIPM). The ORC is equipped with two voltage sources the F100 and F201 circuit. These circuits power the ORC and the capacitors used to initiate the squib deployment circuits in the event of collision detection.

WHEN MONITORED:

With the ignition on, the ORC continuously monitors the voltage on the F100 and F201 supply circuits. The ORC monitors the power circuits at a rate of every 10 ms.

SET CONDITION:

The ORC will set this Diagnostic Trouble Code (DTC) when the voltage on one of the supply circuits is above 18 ± 0.5 volts for more than 15 seconds. The DTC changes from Active to Stored when voltage returns to normal level and the power feed circuit voltages goes below 17 ± 0.5 volts for 5 seconds.

POSSIBLE CAUSES

Possible Causes
CHARGING SYSTEM VOLTAGE HIGH
OCCUPANT RESTRAINT CONTROLLER (ORC)

Always perform the Pre-Diagnostic Troubleshooting procedure before proceeding. Refer to STANDARD PROCEDURE.

DIAGNOSTIC TEST

NOTE: Ensure the battery is fully charged.

1. **CHECK PCM FOR CHARGING SYSTEM DTC**
   1. Turn the ignition on.
   2. With the scan tool, read Powertrain Control Module (PCM) DTCs.

      Are there any Charging System DTCs set in the PCM?

      Yes

      - Refer to **DIAGNOSTIC CODE INDEX** for 3.7L/4.7L/5.7L or **DIAGNOSTIC CODE INDEX** for 6.7L and perform the appropriate Charging System diagnostic procedures.

      No

      - Go To 2.
2. **VERIFY ACTIVE DTC**
   1. Turn the ignition on.
   2. With the scan tool, read all ORC DTCs.

Does the scan tool display active B2199-17-BATTERY VOLTAGE - CIRCUIT VOLTAGE ABOVE THRESHOLD DTC?

Yes

WARNING: Turn the ignition off, disconnect the 12-volt battery and wait two minutes before proceeding. Failure to follow these instructions may result in possible serious or fatal injury.

-
- Replace the ORC in accordance with Service Information.
- Refer to **STANDARD PROCEDURE** and perform the RESTRAINTS SYSTEM VERIFICATION TEST.

No

- Refer to **STANDARD PROCEDURE** and perform the RESTRAINTS SYSTEM INTERMITTENT TEST.

B212C-13-IGNITION RUN/START INPUT - CIRCUIT OPEN

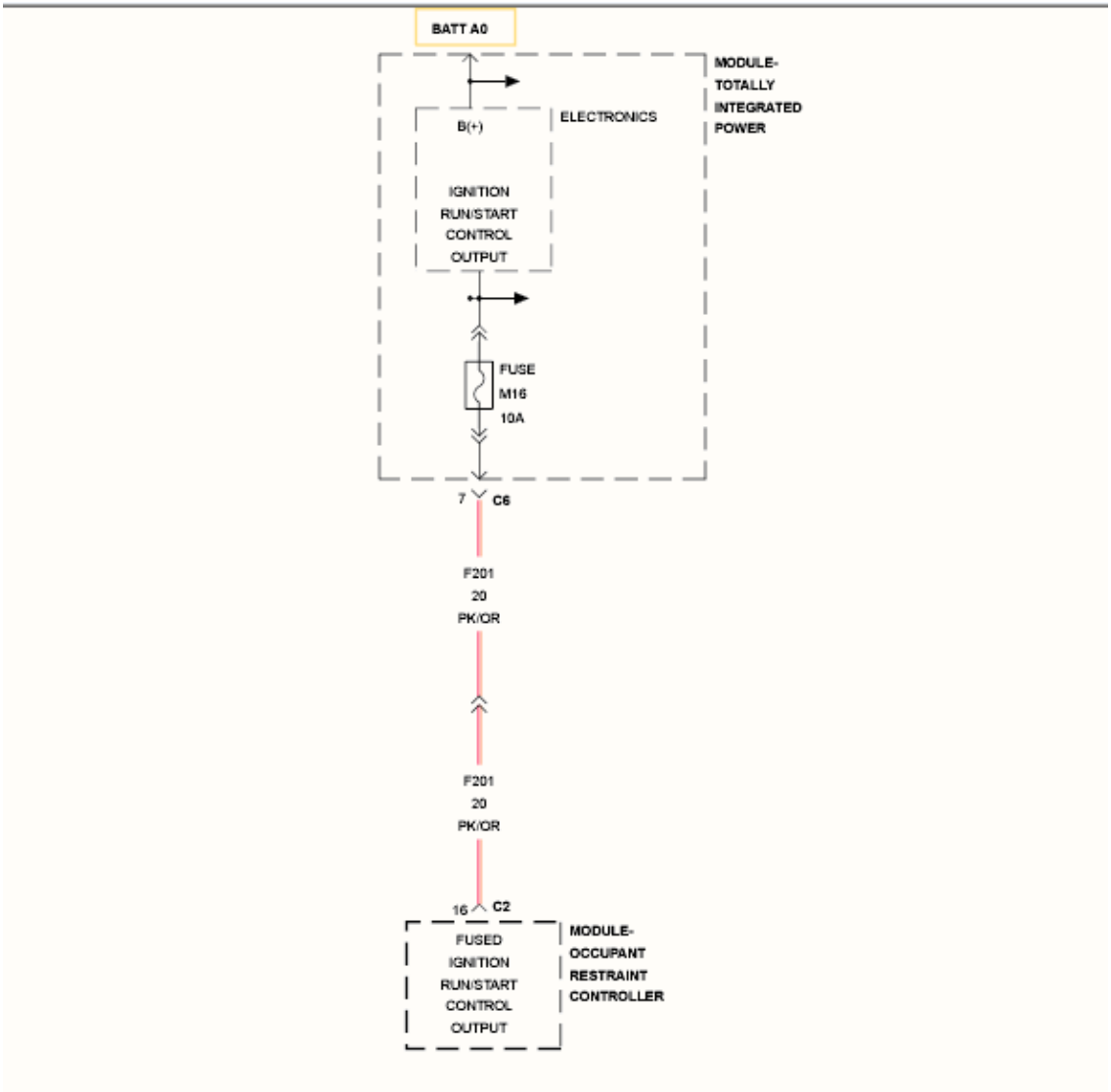
BATT A0
MODULE-
TOTALLY
INTEGRATED
POWER
B(+)
ELECTRONICS
IGNITION
RUN/START
CONTROL
OUTPUT
FUSE
M16
10A
7
C6
F201
20
PK/OR
F201
20
PK/OR
16
C2
FUSED
IGNITION
RUN/START
CONTROL
OUTPUT
MODULE-
OCCUPANT
RESTRAINT
CONTROLLER

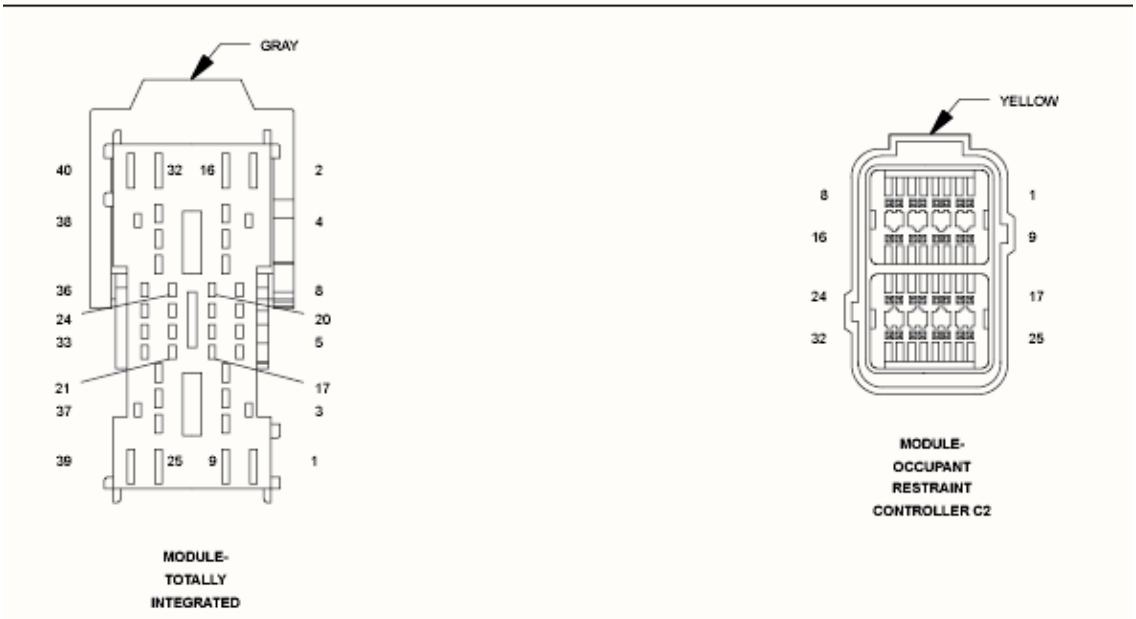
GRAY
40
32
16
2
38
4
36
8
24
20
33
5
21
17
37
3
39
25
9
1
MODULE-
TOTALLY
INTEGRATED
YELLOW
8
1
16
9
24
17
32
25
MODULE-
OCCUPANT
RESTRAINT
CONTROLLER C2

Fig. 111: Occupant Restraint Controller Circuit Wiring Diagram
Courtesy of CHRYSLER GROUP, LLC

For a complete wiring diagram, **refer to appropriate SYSTEM WIRING DIAGRAMS article** .

THEORY OF OPERATION

The Occupant Restraint Controller (ORC) receives power for the Run/Start circuit from the Totally Integrated Power Module (TIPM) via fuse M16. This circuits power the ORC and the capacitors used to initiate the squib deployment circuits in the event of collision detection. The use of the Supplemental Restraints System (SRS) Load Tool Adapter in the tests below provides a test point in place of the ORC harness connectors.

WHEN MONITORED:

The ORC monitors the voltage on the Run/Start and Run circuits and compares their voltage at power up during the initialization process, and once every 100 ms throughout the ignition cycle.

SET CONDITION:

This Diagnostic Trouble Code (DTC) sets when the ORC detects the voltage is below 6 volts on the Fused Ignition Run/Start Control Output circuit for more than 15 seconds while the Fused Ignition Run Control Output circuit remains less than 9 volts. In the event the ORC detects Run/Start voltage has returned to normal operating range and it is above 5 volts for a minimum of 5 seconds, this DTC immediately transitions to stored status.

POSSIBLE CAUSES

Possible Causes
ACTIVE TIPM RUN/START DTC
TIPM M16 FUSE OPEN
(F201) FUSED IGNITION RUN/START CONTROL OUTPUT CIRCUIT OPEN
(F201) FUSED IGNITION RUN/START CONTROL OUTPUT CIRCUIT SHORTED TO GROUND
TOTALLY INTEGRATED POWER MODULE (TIPM)
OCCUPANT RESTRAINT CONTROLLER (ORC)

Always perform the Pre-Diagnostic Troubleshooting procedure before proceeding. Refer to STANDARD PROCEDURE.

DIAGNOSTIC TEST

1. **VERIFY ACTIVE DTC**

   NOTE: Make sure the battery is fully charged.

   1. Turn the ignition on.
   2. Using a scan tool, read ORC DTCs.

Does the scan tool display active B212C-13-IGNITION RUN/START INPUT - CIRCUIT OPEN DTC?

Yes

- Go To 2.

No

- Refer to **STANDARD PROCEDURE** and perform the RESTRAINTS SYSTEM INTERMITTENT TEST.

2. **CHECK FOR AN ACTIVE TIPM RUN/START DTC**
   1. With the scan tool, read TIPM DTCs.

      Does the scan tool display any active TIPM Run/Start circuit related DTCs?

      Yes

      - Refer to **DIAGNOSIS AND TESTING** and perform the appropriate diagnostic procedure.

      No

      - Go To 3.

3. **INSPECT THE TIPM M16 FUSE**
   1. Turn the ignition to OFF.
   2. Remove and inspect TIPM M16 fuse.

      NOTE: Check connectors. Clean and repair as necessary.

      Is fuse TIPM M16 fuse open?

      Yes

      - Go To 4.

      No

      - Go To 6.

4. **CHECK (F201) FUSED IGNITION RUN/START CONTROL OUTPUT CIRCUIT RESISTANCE**

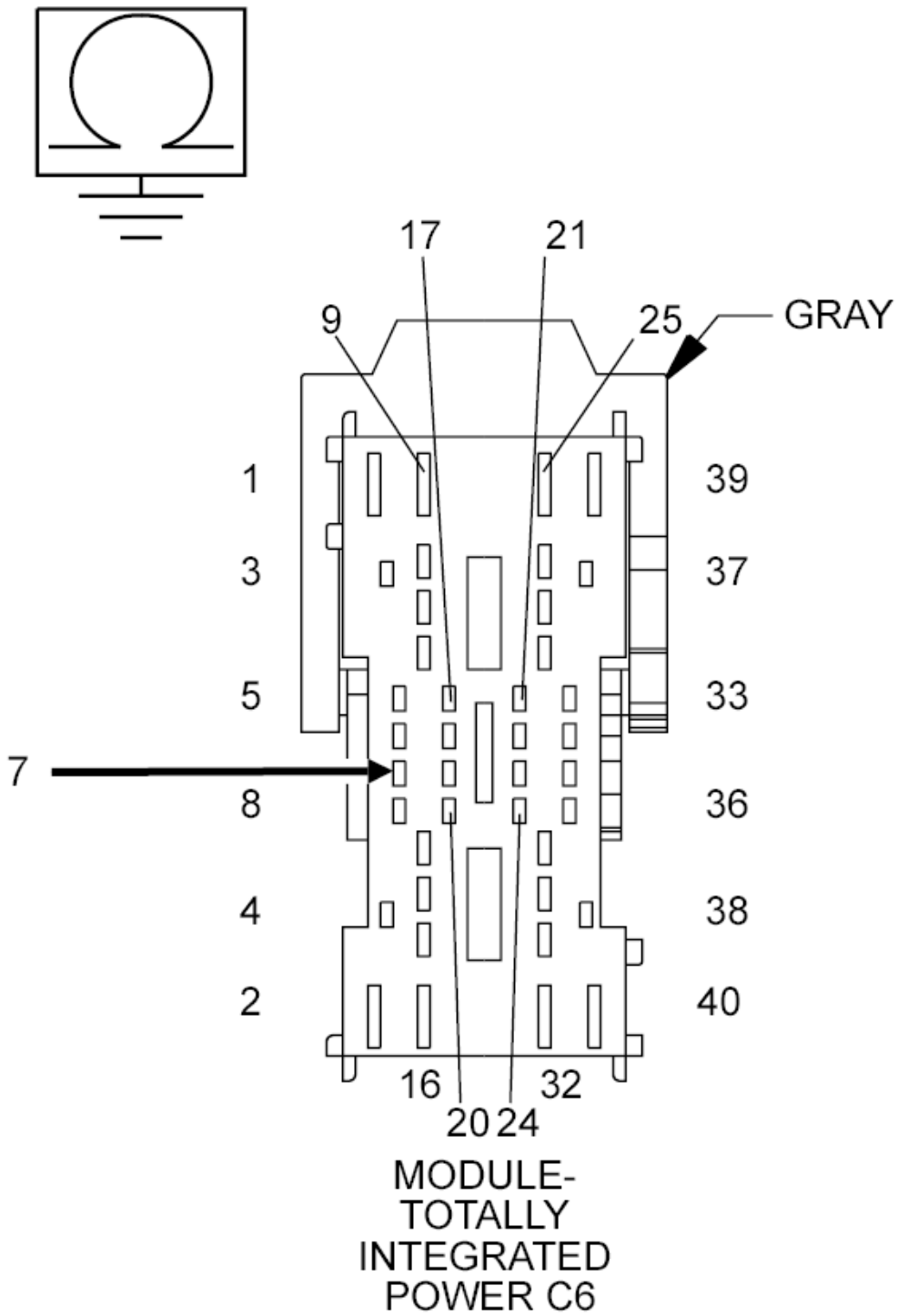

Fig. 112: Checking Fused Ignition Run/Start Control Output Circuit Resistance
Courtesy of CHRYSLER GROUP, LLC

WARNING: Turn the ignition off, disconnect the 12-volt battery and wait two minutes before proceeding. Failure to follow these instructions may

result in possible serious or fatal injury.

1. Measure the resistance of the (F201) Fused Ignition Run/Start Control Output circuit between TIPM M16 fuse terminal (output side) and ground.

   Is the resistance below 100 Ohms?

   Yes

   - Go To 5.

   No

   - Using the wiring diagram/schematic as a guide, inspect the related wiring and connectors. Look for chafed, pierced, pinched, or partially broken wires and broken, bent, pushed out, spread, corroded, or contaminated terminals.
   - Replace the TIPM M16 fuse in accordance with the Service Information.
   - Refer to **STANDARD PROCEDURE** and perform the RESTRAINTS SYSTEM VERIFICATION TEST.

5. **CHECK (F201) FUSED IGNITION RUN/START CONTROL OUTPUT CIRCUIT RESISTANCE WITH ORC DISCONNECTED**

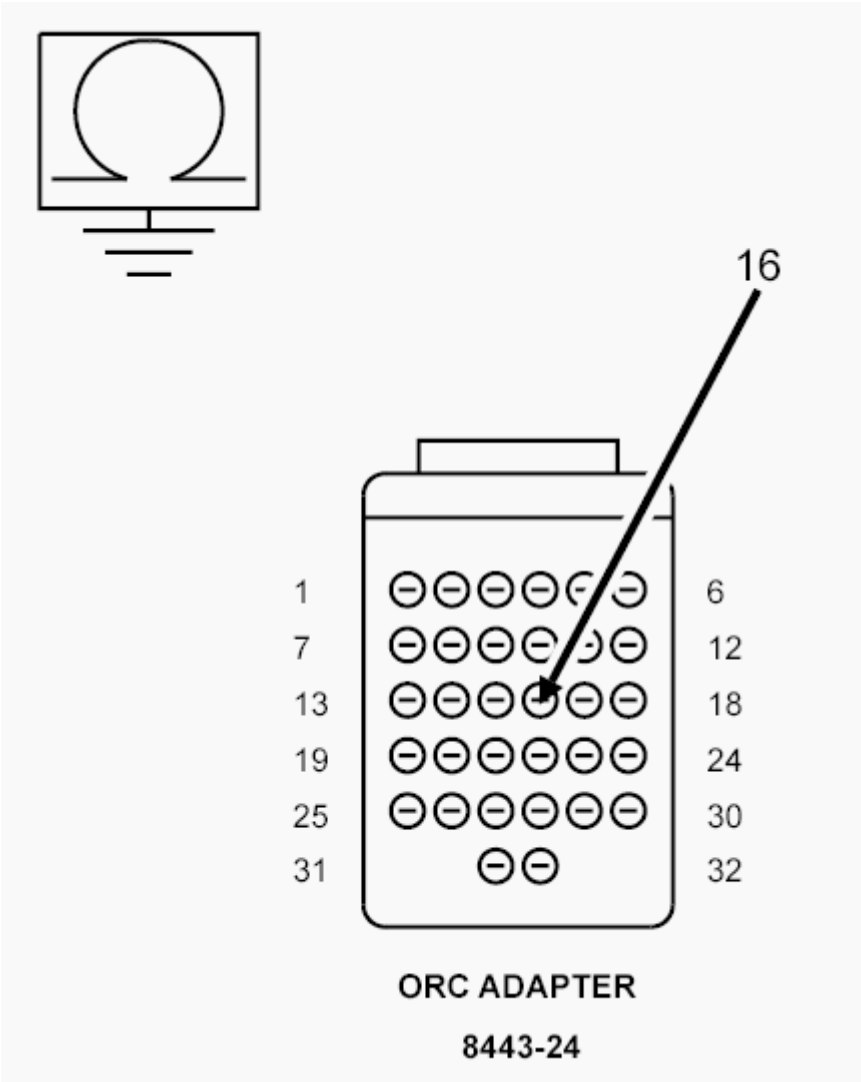

Fig. 113: Checking Fused Ignition Run/Start Control Output Circuit Resistance
Courtesy of CHRYSLER GROUP, LLC

1. Disconnect both ORC harness connectors.

   NOTE: Check connectors - Clean and repair as necessary.

2. Connect the SRS Load Tool Adapter (special tool #8443-24, 32-Way Adapter) to the ORC C2 harness connector.
3. Measure the resistance of the (F201) Fused Ignition Run/Start Control Output circuit between the appropriate terminal of the SRS Load Tool Adapter (special tool #8443-24, 32-Way Adapter) and ground.

   Is the resistance below 100 Ohms?

   Yes

- Replace the TIPM M16 fuse.
- Repair the (F201) Fused Ignition Run/Start Control Output circuit for a short to ground.
- Refer to **STANDARD PROCEDURE** and perform the RESTRAINTS SYSTEM VERIFICATION TEST.

No

WARNING: **If the Occupant Restraint Controller (ORC) is dropped at any time, it must be replaced. Failure to follow these instructions may result in possible serious or fatal injury.**

- Replace the ORC in accordance with the Service Information.
- Replace the TIPM M16 fuse.
- Refer to **STANDARD PROCEDURE** and perform the RESTRAINTS SYSTEM VERIFICATION TEST.

6. **CHECK (F201) IGNITION RUN/START CONTROL OUTPUT CIRCUIT FOR AN OPEN OR HIGH RESISTANCE**
   1. Turn the ignition on.
   2. Measure the voltage of the Ignition Run/Start Control Output circuit at the TIPM M16 fuse terminal (supply side).

   Is the voltage above 6.0 volts?

   Yes

   - Go To 7.

   No

   WARNING: **Turn the ignition off, disconnect the 12-volt battery and wait two minutes before proceeding. Failure to follow these instructions may result in possible serious or fatal injury.**

   -
   - Repair the open Ignition Run/Start Control Output circuit.
   - Refer to **STANDARD PROCEDURE** and perform the RESTRAINTS SYSTEM VERIFICATION TEST.
7. **CHECK FOR ORC CIRCUIT OPEN**

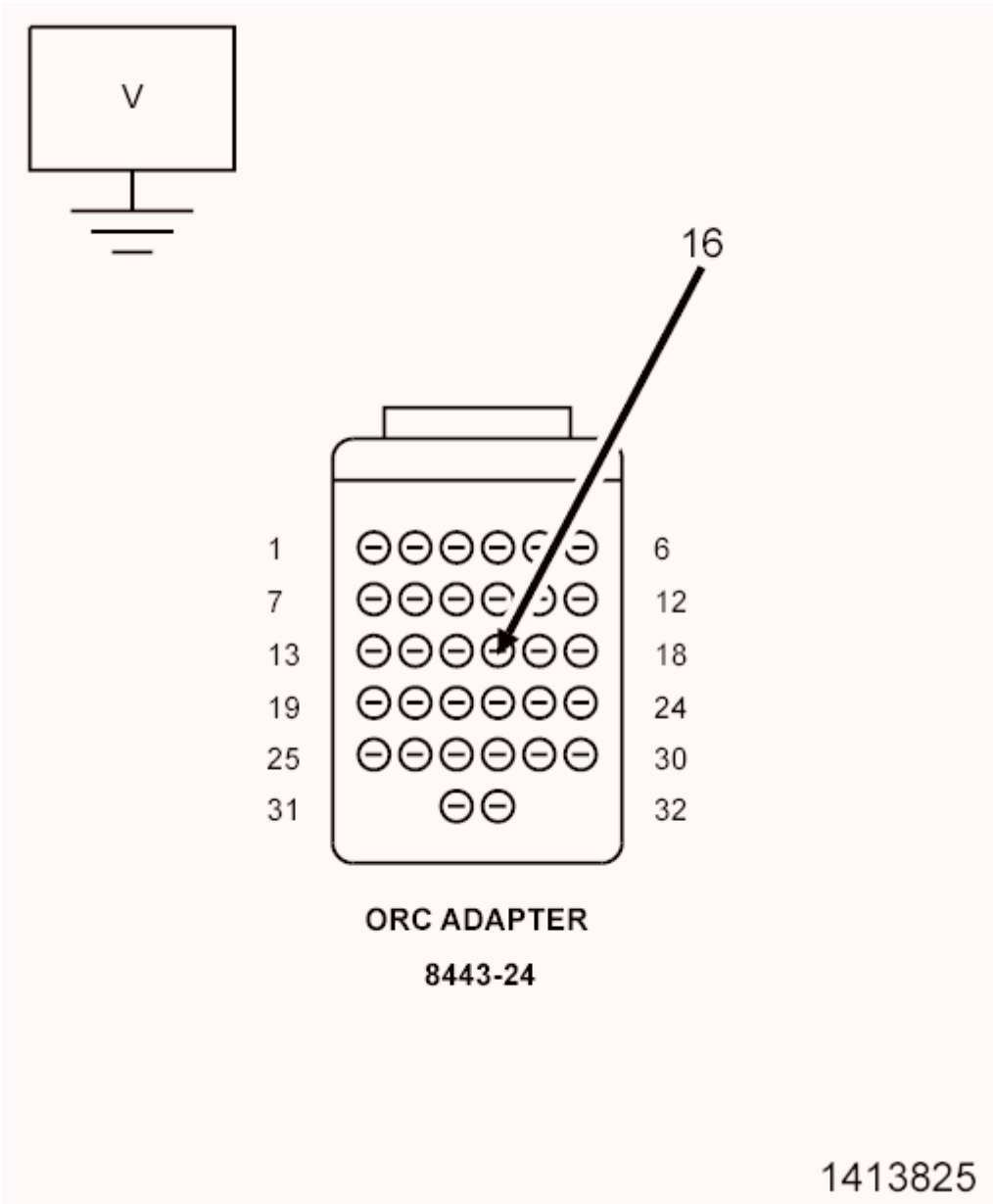

Fig. 114: Checking ORC Circuit For Open
Courtesy of CHRYSLER GROUP, LLC

WARNING: Turn the ignition off, disconnect the 12-volt battery and wait two minutes before proceeding. Failure to follow these instructions may result in possible serious or fatal injury.

1. Reinstall the TIPM M16 Fuse.
2. Disconnect both ORC harness connectors.

NOTE: Check connectors - Clean and repair as necessary.

3. Install the SRS Load Tool Adapter (special tool #8443-24, 32-Way Adapter) to the ORC C2 harness connector.

   WARNING: Turn the ignition on, then reconnect the 12-volt battery and wait two minutes before proceeding. Failure to follow these instructions may result in possible serious or fatal injury.

4. Measure the voltage of the (F201) Fused Ignition Run/Start Control Output circuit between the appropriate terminal of the SRS Load Tool Adapter (special tool #8443-24, 32-Way Adapter) and ground.

   Is the voltage above 6.0 volts?

   Yes

   WARNING: Turn the ignition off, disconnect the 12-volt battery and wait two minutes before proceeding. Failure to follow these instructions may result in possible serious or fatal injury.

   WARNING: If the Occupant Restraint Controller (ORC) is dropped at any time, it must be replaced. Failure to follow these instructions may result in possible serious or fatal injury.

   -
   -
   - Replace the ORC in accordance with the Service Information.
   - Refer to **STANDARD PROCEDURE** and perform the RESTRAINTS SYSTEM VERIFICATION TEST.

   No

   - Go To. Refer to 8.

8. **CHECK FOR OPEN (F201) FUSED IGNITION RUN START CONTROL OUTPUT CIRCUIT**

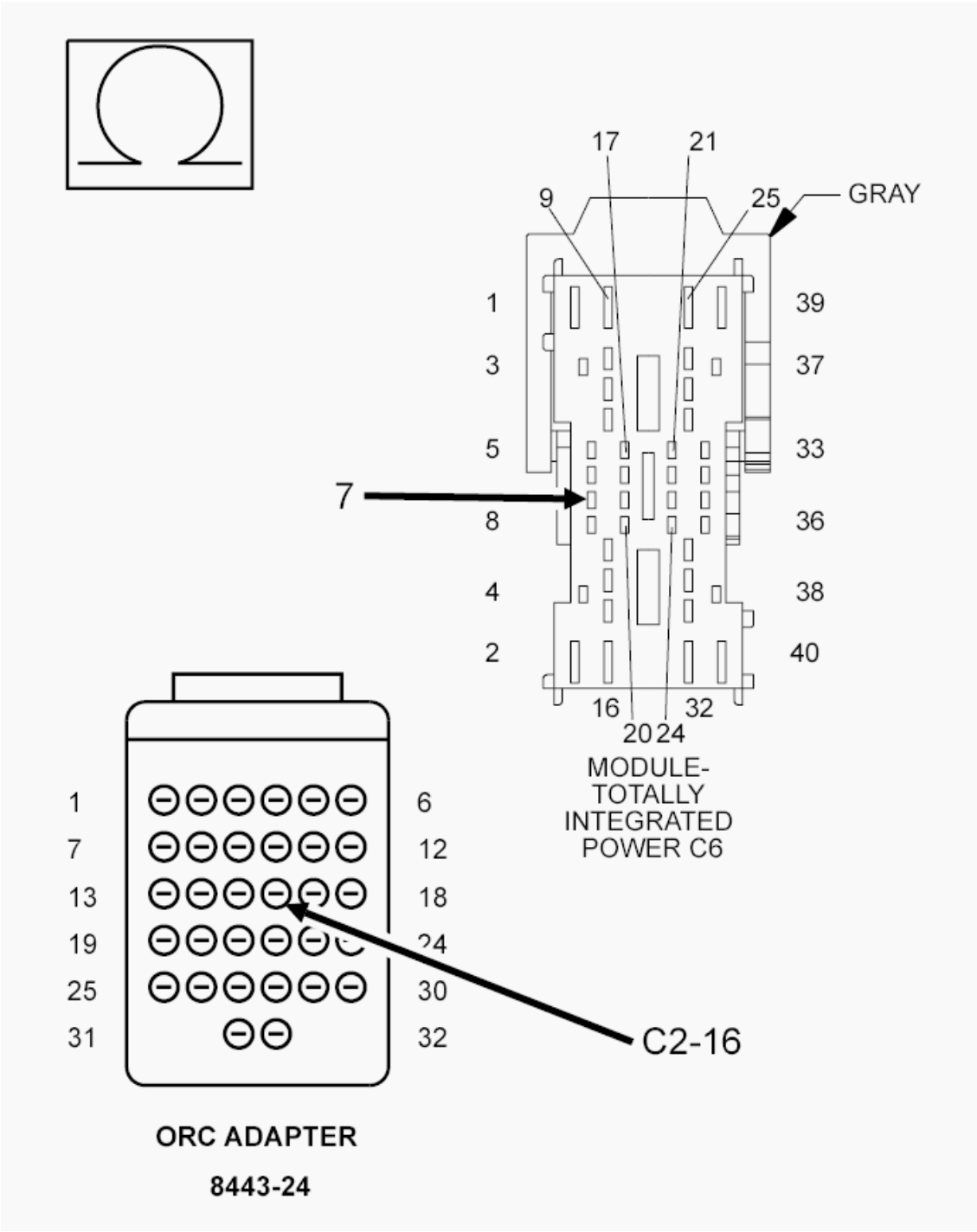

Fig. 115: Checking For Open Fused Ignition Run Start Control Output Circuit
Courtesy of CHRYSLER GROUP, LLC

WARNING: **Turn the ignition off, disconnect the 12-volt battery and wait two minutes before proceeding. Failure to follow these instructions may result in possible serious or fatal injury.**

Disconnect the TIPM C6 harness connector.

NOTE: Check connectors - Clean and repair as necessary.

1. Measure the resistance of the (F201) Fused Ignition Run/Start Control Output circuit between the SRS Load Tool Adapter (special tool #8443-24, 32-Way Adapter) cavity 16 and the TIPM C6 harness connector cavity 7.

   Is the resistance below 5.0 Ohms?

   Yes

   - Turn the ignition OFF.
   - Replace the TIPM in accordance with the Service Information.
   - Refer to **STANDARD PROCEDURE** and perform the BODY VERIFICATION TEST.

   No

   - Repair the open (F201) Fused Ignition Run/Start Control Output circuit.
   - Refer to **STANDARD PROCEDURE** and perform the RESTRAINTS SYSTEM VERIFICATION TEST.

B212D-13-IGNITION RUN ONLY INPUT-CIRCUIT OPEN

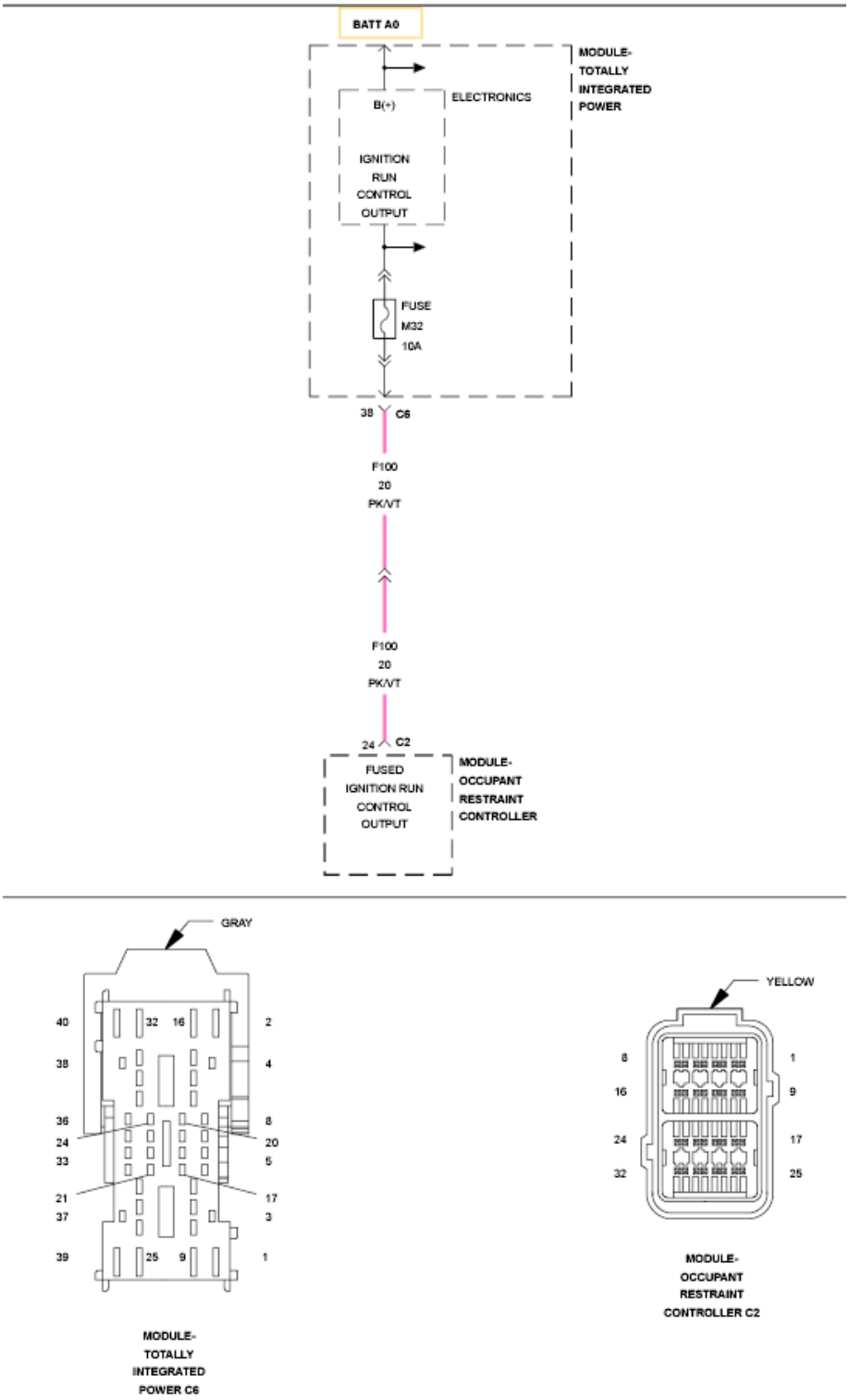

Fig. 116: Fused Ignition Run Control Circuit Wiring Diagram
Courtesy of CHRYSLER GROUP, LLC

For a complete wiring diagram, **refer to Wiring Information** .

THEORY OF OPERATION

The Occupant Restraint Controller (ORC) receives power for the Run circuit from the Totally Integrated Power Module (TIPM) via fuse M32. This circuits power the ORC and the capacitors used to initiate the squib deployment circuits in the event of collision detection. The use of the Supplemental Restraints System (SRS) Load Tool Adapter in the tests below provides a test point in place of the ORC harness connectors.

WHEN MONITORED:

The ORC monitors the voltage on the Run/Start and Run circuits and compares their voltage at power up during the initialization process, and once every 100 ms throughout the ignition cycle.

SET CONDITION:

This Diagnostic Trouble Code (DTC) sets when the ORC detects the voltage at least 4.8 volts on the Fused Ignition Run Control Output circuit for more than 15 seconds while the Fused Ignition Run/Start Control Output circuit remains below 9 volts. In the event the ORC detects voltage has returned to normal operating range and the Ignition Run only voltage feed is above 5 volts for a minimum of five seconds, this DTC immediately transitions to stored status.

POSSIBLE CAUSES

Possible Causes
ACTIVE TIPM RUN RELAY TROUBLE CODES
TIPM M32 FUSE OPEN
(F100) FUSED IGNITION RUN CONTROL OUTPUT CIRCUIT OPEN
(F100) FUSED IGNITION RUN CONTROL OUTPUT CIRCUIT SHORTED TO GROUND
TOTALLY INTEGRATED POWER MODULE (TIPM)
OCCUPANT RESTRAINT CONTROLLER (ORC)

Always perform the Pre-Diagnostic Troubleshooting procedure before proceeding. Refer to STANDARD PROCEDURE.

DIAGNOSTIC TEST

1. **VERIFY ACTIVE DTC**

   NOTE: Ensure the battery is fully charged.

   1. Turn the ignition on.
   2. With the scan tool, read ORC DTCs.

      Does the scan tool display active B212D-13-IGNITION RUN ONLY INPUT CIRCUIT OPEN DTC?

      Yes

- Go To 2.

No

- Refer to **STANDARD PROCEDURE** and perform the RESTRAINTS SYSTEM INTERMITTENT TEST.

2. **CHECK FOR ACTIVE RUN RELAY DTC**
   1. With the scan tool, read TIPM DTCs.

      Does the scan tool display any active TIPM Run Relay related DTCs?

      Yes

      - Refer to **DIAGNOSIS AND TESTING** and perform the appropriate TIPM diagnostic procedures.

      No

      - Go To 3.

3. **INSPECT TIPM FUSE M32**
   1. Turn the Ignition OFF.
   2. Remove and inspect the TIPM Fuse M32.

      NOTE: Check connectors - Clean and repair as necessary.

      Is the TIPM Fuse M32 open?

      Yes

      - Go To 4.

      No

      - Go To 6.

4. **CHECK (F100) FUSED IGNITION RUN CONTROL OUTPUT CIRCUIT RESISTANCE**

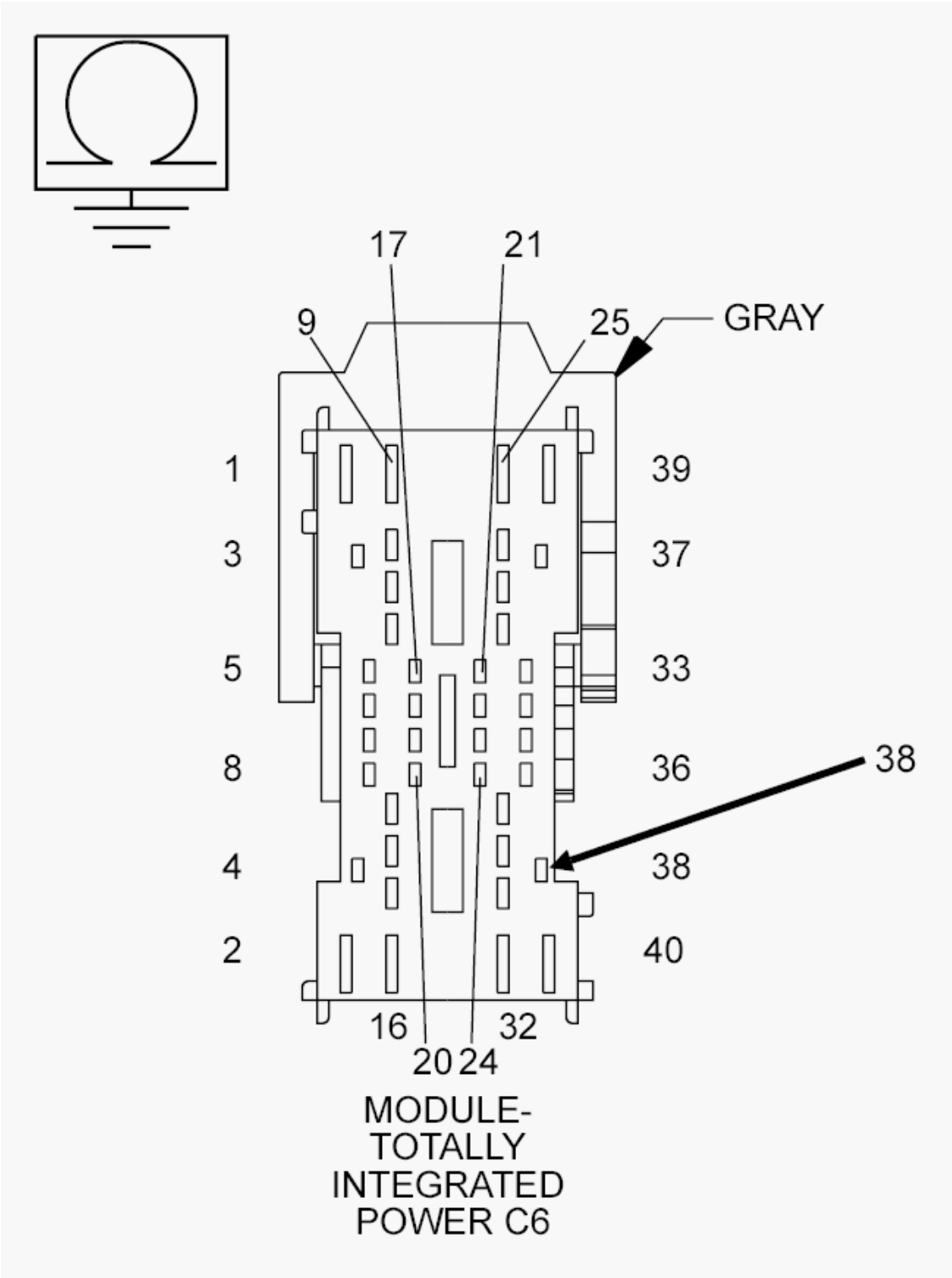

Fig. 117: Checking Fused Ignition Run Control Output Circuit Resistance
Courtesy of CHRYSLER GROUP, LLC

WARNING: Turn the ignition off, disconnect the 12-volt battery and wait two minutes before proceeding. Failure to follow these instructions may

result in possible serious or fatal injury.

1. Measure the resistance of the (F100) Fused Ignition Run Control Output circuit between the TIPM Fuse M32 output terminal and ground.

   Is the resistance below 100 Ohms?

   Yes

   - Go To 5.

   No

   - Using the wiring diagram/schematic as a guide, inspect the related wiring and connectors. Look for chafed, pierced, pinched, or partially broken wires and broken, bent, pushed out, spread, corroded, or contaminated terminals.
   - Replace TIPM Fuse M32.
   - Refer to **STANDARD PROCEDURE** and perform the RESTRAINTS SYSTEM VERIFICATION TEST.

5. **CHECK (F100) FUSED IGNITION RUN CONTROL OUTPUT CIRCUIT WITH ORC DISCONNECTED**

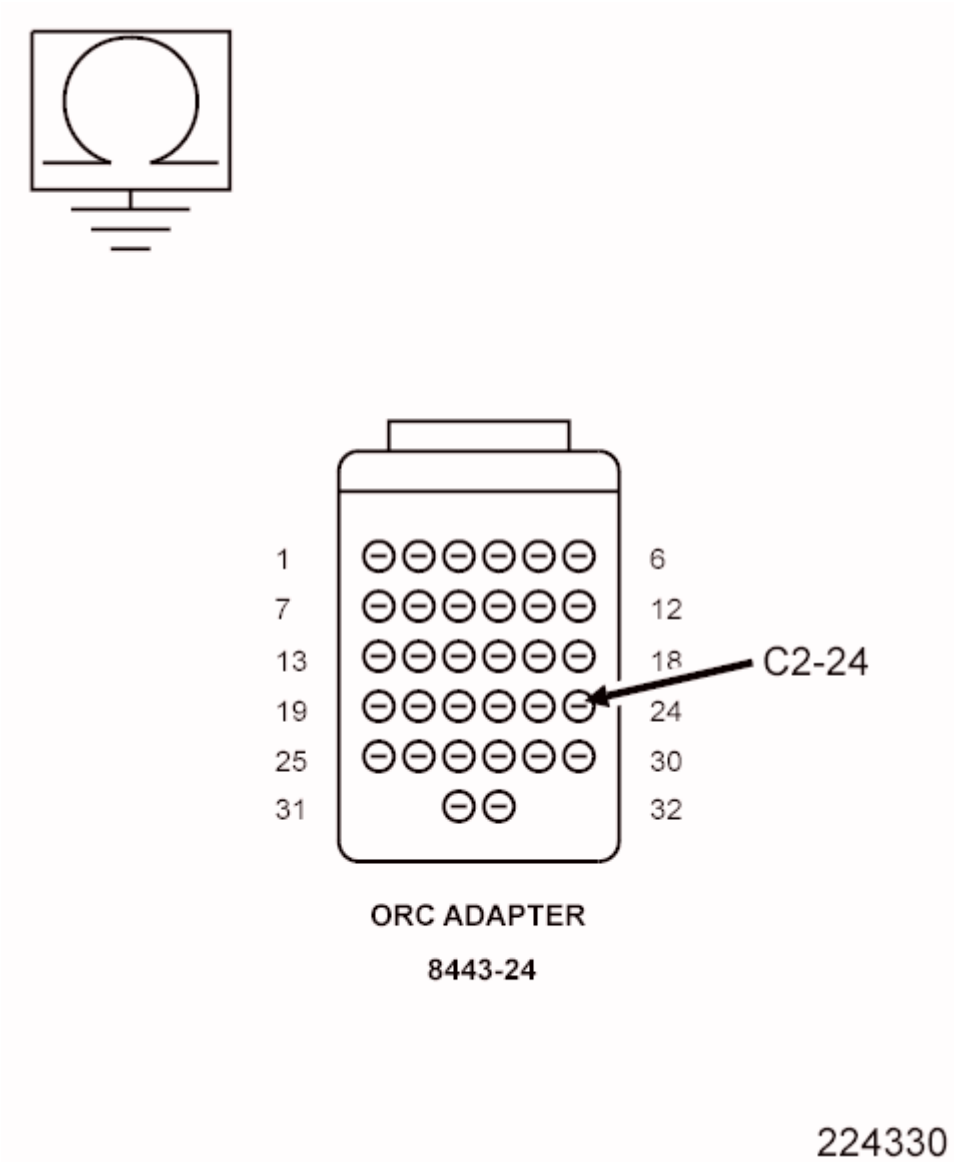

Fig. 118: Checking Fused Ignition Run Control Output Circuit
Courtesy of CHRYSLER GROUP, LLC

1. Disconnect the ORC harness connectors.

   NOTE: Check connectors - Clean and repair as necessary.

2. Connect the SRS Load Tool Adaptor (special tool #8443-24, 32-Way Adapter) to the ORC C2 harness connector.
3. Measure the resistance of the (F100) Fused Ignition Run Control Output circuit between SRS Load Tool Adaptor (special tool #8443-24, 32-Way Adapter) cavity 24 and ground.

   Is the resistance below 100 Ohms?

Yes

- Repair the (F100) Fused Ignition Run Control Output circuit for a short to ground.
- Replace the TIPM Fuse M32.
- Refer to **STANDARD PROCEDURE** and perform the RESTRAINTS SYSTEM VERIFICATION TEST.

No

WARNING: **If the Occupant Restraint Controller (ORC) is dropped at any time, it must be replaced. Failure to follow these instructions may result in possible serious or fatal injury.**

-
- Replace the ORC in accordance with the Service Information.
- Replace the TIPM Fuse M32.
- Refer to **STANDARD PROCEDURE** and perform the RESTRAINTS SYSTEM VERIFICATION TEST.

6. **CHECK TIPM FUSE M32 SUPPLY CIRCUIT VOLTAGE**
   1. Turn the ignition on.
   2. Measure the voltage of the Ignition Run Control Output circuit between the TIPM Fuse M32 supply terminal and ground.

      Is the voltage above 6.0 volts?

      Yes

      - Go To 7.

      No

      - Repair the open Ignition Run Control Output circuit.
      - Refer to **STANDARD PROCEDURE** and perform the RESTRAINTS SYSTEM VERIFICATION TEST.
7. **CHECK FOR OPEN (F100) FUSED IGNITION RUN CONTROL OUTPUT AT ORC**

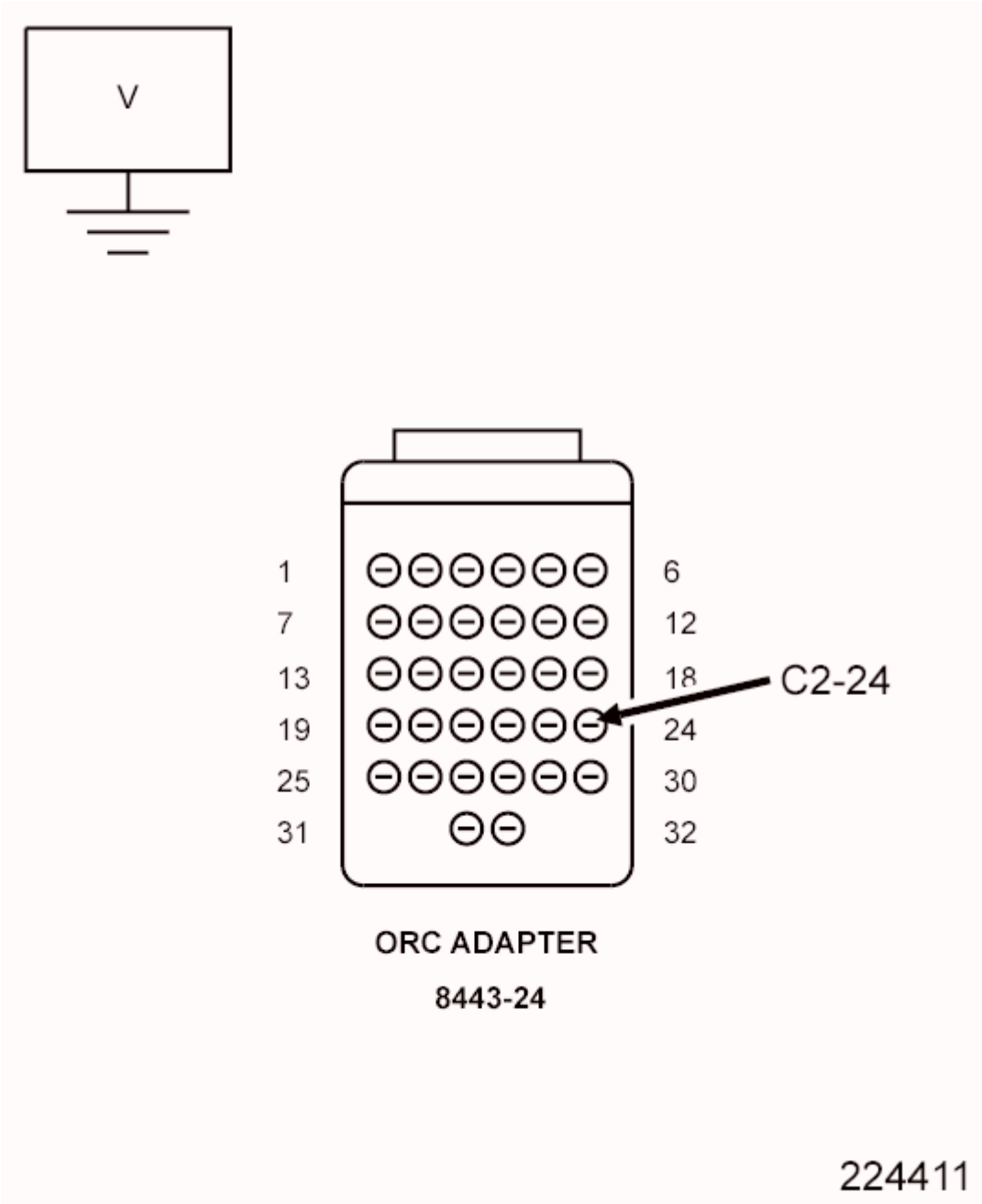

Fig. 119: Checking Fused Ignition Run Control Output Circuit
Courtesy of CHRYSLER GROUP, LLC

WARNING: **Turn the ignition off, disconnect the battery and wait two minutes before proceeding. Failure to follow these instructions may result in possible serious or fatal injury.**

1. Reinstall the TIPM Fuse M32.
2. Disconnect the ORC harness connectors.

NOTE: Check connectors - Clean and repair as necessary.

3. Connect the SRS Load Tool Adapter (special tool #8443-24, 32-Way Adapter) to the ORC C2 harness connector.

WARNING: Turn the ignition on, then reconnect the 12-volt battery and wait two minutes before proceeding. Failure to follow these instructions may result in possible serious or fatal injury.

4. Measure the voltage of the (F100) Fused Ignition Run Control Output circuit between the appropriate terminal of the SRS Load Tool Adapter (special tool #8443-24, 32-Way Adapter) and ground.

   Is the voltage above 6.0 volts?

   Yes

   - Replace the ORC in accordance with the Service Information.
   - Refer to **STANDARD PROCEDURE** and perform the RESTRAINTS SYSTEM VERIFICATION TEST.

   No

   - Go To 8.

8. **CHECK FOR OPEN (F100) FUSED IGNITION RUN CONTROL OUTPUT CIRCUIT**

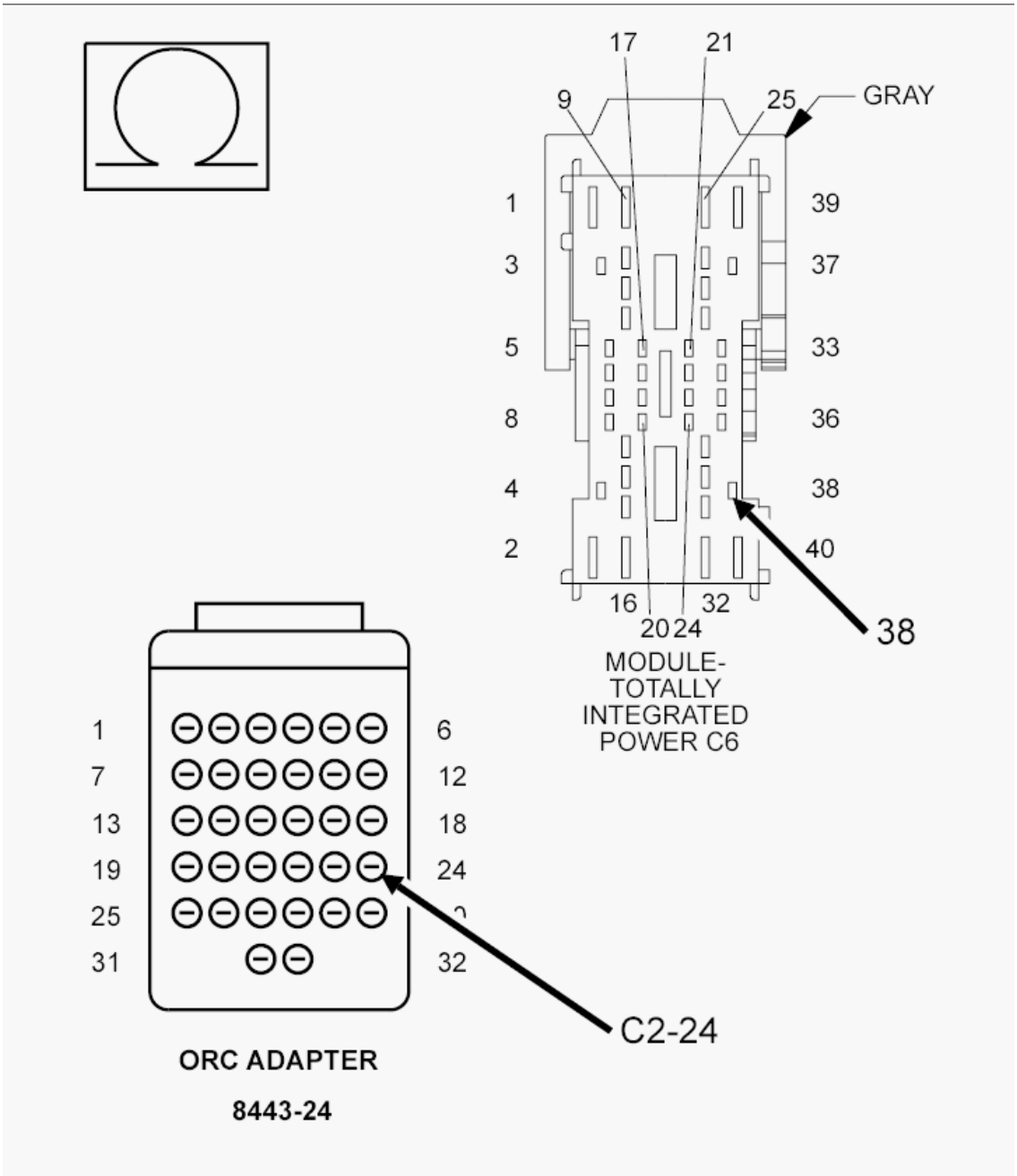

Fig. 120: Checking For Open Fused Ignition Run Control Output Circuit
Courtesy of CHRYSLER GROUP, LLC

WARNING: **Turn the ignition off, disconnect the 12-volt battery and wait two minutes before proceeding. Failure to follow these instructions may result in possible serious or fatal injury.**

1. Disconnect the TIPM C6 harness connector.

NOTE: **Check connectors - Clean and repair as necessary.**

2. Measure the resistance of the (F100) Fused Ignition Run Control Output circuit between the SRS Load Tool Adapter (special tool #8443-24, 32-Way Adapter) cavity 24 and the TIPM C6 harness connector cavity 38.

   Is the resistance below 5.0 Ohms?

   Yes

   - Replace the TIPM in accordance with the Service Information.
   - Refer to **STANDARD PROCEDURE** and perform the BODY VERIFICATION TEST.

   No

   - Repair the (F100) Fused Ignition Run Control Output circuit for an open or high resistance.
   - Refer to **STANDARD PROCEDURE** and perform the RESTRAINTS SYSTEM VERIFICATION TEST.

B210F-00-LOSS OF BATTERY VOLTAGE

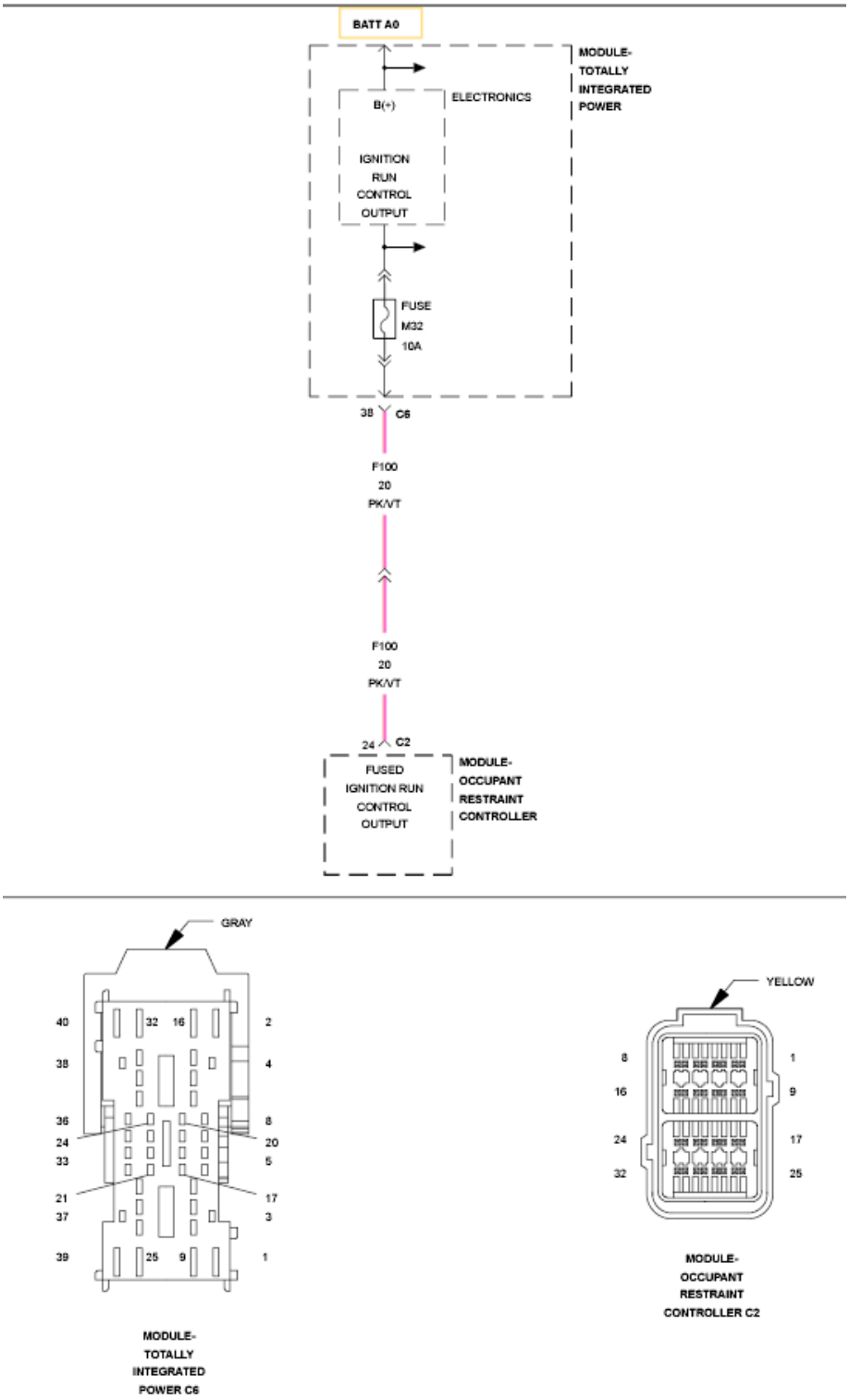

Fig. 121: Fused Ignition Run Control Circuit Wiring Diagram
Courtesy of CHRYSLER GROUP, LLC

For a complete wiring diagram, **refer to Wiring Information** .

THEORY OF OPERATION

The Occupant Restraint Controller (ORC) receives power for the Run circuit from the Totally Integrated Power Module (TIPM) via fuse M32. This circuits power the ORC and the capacitors used to initiate the squib deployment circuits in the event of collision detection.

WHEN MONITORED:

The ORC monitors the voltage on the Run/Start and Run circuits and compares their voltage at power up during the initialization process, and once every 100 ms throughout the ignition cycle. The use of the Supplemental Restraints System (SRS) Load Tool Adapter in the tests below provides a test point in place of the ORC harness connectors.

SET CONDITION:

This Diagnostic Trouble Code (DTC) sets when the ORC detects the voltage below 6 volts on the Fused Ignition Run Control Output circuit for more than 15 seconds while the Fused Ignition Run/Start Control Output circuit remains above 9 volts. In the event the ORC detects voltage has returned to normal operating range for a minimum of five seconds, this DTC immediately transitions to stored status.

POSSIBLE CAUSES

Possible Causes
ACTIVE TIPM RUN RELAY TROUBLE CODES
TIPM M32 FUSE OPEN
(F100) FUSED IGNITION RUN CONTROL OUTPUT CIRCUIT SHORTED TO GROUND
TOTALLY INTEGRATED POWER MODULE (TIPM)
OCCUPANT RESTRAINT CONTROLLER (ORC)

Always perform the Pre-Diagnostic Troubleshooting procedure before proceeding. Refer to STANDARD PROCEDURE.

DIAGNOSTIC TEST

1. **VERIFY ACTIVE DTC**

   NOTE: Make sure the battery is fully charged.

   1. Turn the ignition on.
   2. With the scan tool, read ORC DTCs.

      Does the scan tool display active B210F-00-LOSS OF BATTERY VOLTAGE - DTC?

      Yes

      - Go To 2.

No

- Refer to **STANDARD PROCEDURE** and perform the RESTRAINTS SYSTEM INTERMITTENT TEST.

2. **CHECK FOR ACTIVE RUN RELAY DTC**
   1. With the scan tool, read TIPM DTCs.

      Does the scan tool display any active TIPM Run Relay related DTCs?

      Yes

      - Refer to **DIAGNOSIS AND TESTING** and perform the appropriate diagnostic procedure.

      No

      - Go To 3.

3. **INSPECT TIPM FUSE M32**
   1. Turn the Ignition OFF.
   2. Remove and inspect the TIPM Fuse M32.

      NOTE: Check connectors - Clean and repair as necessary.

      Is the TIPM Fuse M32 open?

      Yes

      - Go To 4.

      No

      - Go To 5.

4. **CHECK (F100) FUSED IGNITION RUN CONTROL OUTPUT CIRCUIT RESISTANCE**

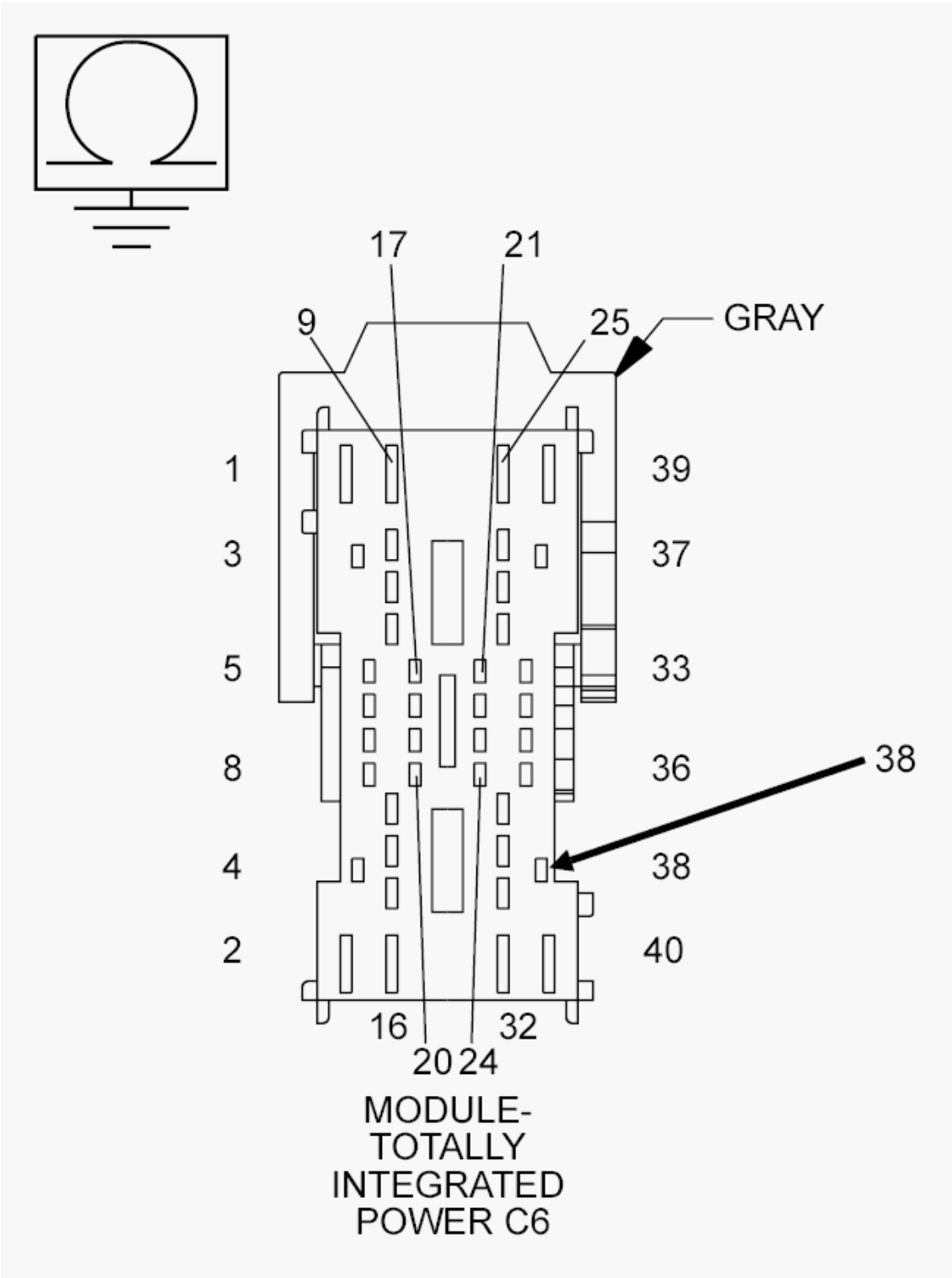

Fig. 122: Checking Fused Ignition Run Control Output Circuit Resistance
Courtesy of CHRYSLER GROUP, LLC

WARNING: Turn the ignition off, disconnect the 12-volt battery and wait two minutes before proceeding. Failure to follow these instructions may

result in possible serious or fatal injury.

1. Measure the resistance of the (F100) Fused Ignition Run Control Output circuit between the TIPM Fuse M32 output terminal TIPM C6 cavity 38 and ground.

   Is the resistance below 100 Ohms?

   Yes

   - Go To 5.

   No

   - Using the wiring diagram/schematic as a guide, inspect the related wiring and connectors. Look for chafed, pierced, pinched, or partially broken wires and broken, bent, pushed out, spread, corroded, or contaminated terminals.
   - Replace TIPM Fuse M32.
   - Refer to **STANDARD PROCEDURE** and perform the RESTRAINTS SYSTEM VERIFICATION TEST.

5. **CHECK (F100) FUSED IGNITION RUN CONTROL OUTPUT CIRCUIT WITH ORC DISCONNECTED**

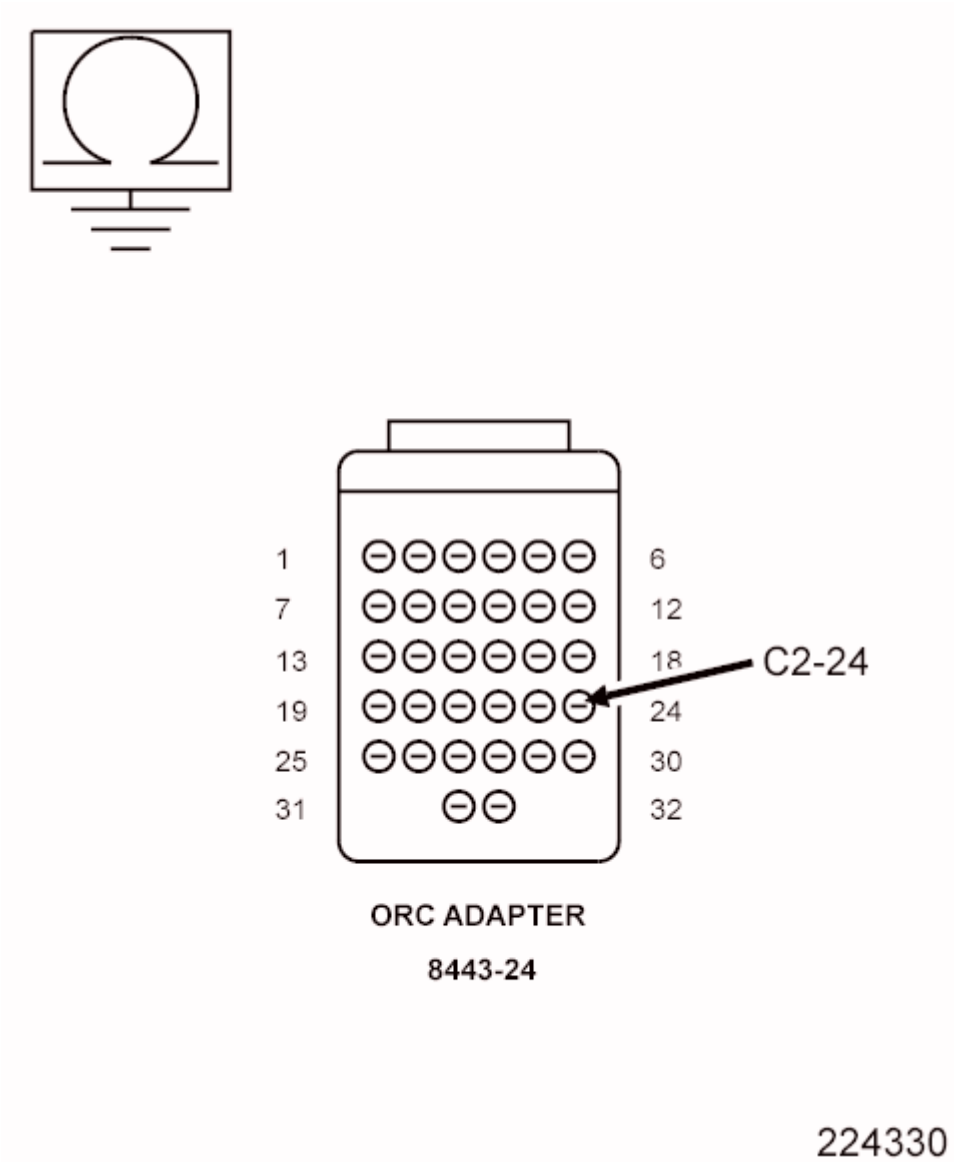

Fig. 123: Checking Fused Ignition Run Control Output Circuit
Courtesy of CHRYSLER GROUP, LLC

WARNING: **Turn the ignition off disconnect the 12-volt battery and wait two minutes before proceeding. Failure to follow these instructions may result in possible serious or fatal injury.**

1. Disconnect the ORC harness connectors.

NOTE: Check connectors - Clean and repair as necessary.

2. Connect the SRS Load Tool Adaptor (special tool #8443-24, 32-Way Adapter) to the ORC C2 harness connector.
3. Measure the resistance of the (F100) Fused Ignition Run Control Output circuit between

appropriate terminal of the SRS Load Tool Adaptor (special tool #8443-24, 32-Way Adapter) cavity 24 and ground.

Is the resistance below 100 Ohms?

Yes

- Repair the (F100) Fused Ignition Run Control Output circuit for a short to ground.
- Replace the TIPM Fuse M32.
- Refer to **STANDARD PROCEDURE** and perform the RESTRAINTS SYSTEM VERIFICATION TEST.

No

WARNING: **If the Occupant Restraint Controller (ORC) is dropped at any time, it must be replaced. Failure to follow these instructions may result in possible serious or fatal injury.**

-
- Replace the ORC in accordance with the Service Information.
- Replace the TIPM Fuse M32.
- Refer to **STANDARD PROCEDURE** and perform the RESTRAINTS SYSTEM VERIFICATION TEST.

B2207-00-OCCUPANT RESTRAINT CONTROLLER INTERNAL 1

THEORY OF OPERATION

When powered, the Occupant Restraint Controller (ORC) performs an internal self test. The repair of this fault condition does not involve any external circuitry and centers on verifying the integrity of the module's internal circuitry and software validity.

WHEN MONITORED:

The ORC checks the status and validity of the internal operating hardware and software at power up during the initialization process, and continuously through the ignition cycle.

SET CONDITION:

This Diagnostic Trouble Code (DTC) sets when a fault is detected internal to ORC hardware and/or software. Once set, this DTC is latched permanently and the module must be replaced.

POSSIBLE CAUSES

Possible Causes
OCCUPANT RESTRAINT CONTROLLER (ORC)

Always Perform the Pre-Diagnostic Troubleshooting procedure before proceeding. Refer to STANDARD PROCEDURE.

DIAGNOSTIC TEST

1. **REPLACE OCCUPANT RESTRAINT CONTROLLER (ORC)**

   NOTE: When this DTC is set, the module self test has discovered an internal fault that cannot be repaired and the module must be replaced regardless of DTC status.

   When this code is set do not clear codes, view repair.

   Repair

   WARNING: If the Occupant Restraint Controller (ORC) is dropped at any time, it must be replaced. Failure to take the proper precautions can result in accidental airbag deployment. Failure to follow these instructions may result in possible serious or fatal injury.

   WARNING: Turn the ignition off disconnect the 12-volt battery and wait two minutes before proceeding. Failure to follow these instructions may result in possible serious or fatal injury.

   -
   -
   - Replace the ORC in accordance with Service Information.
   - Refer to **STANDARD PROCEDURE** and perform the RESTRAINTS SYSTEM VERIFICATION TEST.

B2208-00-OCCUPANT RESTRAINT CONTROLLER INTERNAL 2

THEORY OF OPERATION

When powered, the Occupant Restraint Controller (ORC) performs an internal self test. The repair of this fault condition does not involve any external circuitry and centers on verifying the integrity of the module's internal circuitry and software validity.

WHEN MONITORED:

The ORC checks the status and validity of the internal operating hardware and software at power up during the initialization process, and continuously through the ignition cycle.

SET CONDITION:

This Diagnostic Trouble Code (DTC) sets when a fault is detected internal to ORC hardware and/or software. Once set, this DTC is latched permanently and the module must be replaced.

POSSIBLE CAUSES

Possible Causes
OCCUPANT RESTRAINT CONTROLLER (ORC)

Always Perform the Pre-Diagnostic Troubleshooting procedure before proceeding. Refer to STANDARD PROCEDURE.

DIAGNOSTIC TEST

1. **REPLACE OCCUPANT RESTRAINT CONTROLLER (ORC)**

   NOTE: When this DTC is set, the module self test has discovered an internal fault that cannot be repaired and the module must be replaced regardless of DTC status.

   When this code is set do not clear codes, view repair.

   Repair

   WARNING: If the Occupant Restraint Controller (ORC) is dropped at any time, it must be replaced. Failure to take the proper precautions can result in accidental airbag deployment. Failure to follow these instructions may result in possible serious or fatal injury.

   WARNING: Turn the ignition off disconnect the 12-volt battery and wait two minutes before proceeding. Failure to follow these instructions may result in possible serious or fatal injury.

   -
   -
   - Replace the ORC in accordance with Service Information.
   - Refer to **STANDARD PROCEDURE** and perform the RESTRAINTS SYSTEM VERIFICATION TEST.

B2209-00-OCCUPANT RESTRAINT CONTROLLER INTERNAL 3

THEORY OF OPERATION

When powered, the Occupant Restraint Controller (ORC) performs an internal self test. The repair of this fault condition does not involve any external circuitry and centers on verifying the integrity of the module's internal circuitry and software validity.

WHEN MONITORED:

The ORC checks the status and validity of the internal operating hardware and software at power up during the initialization process, and continuously through the ignition cycle.

SET CONDITION:

This Diagnostic Trouble Code (DTC) sets when a fault is detected internal to ORC hardware and/or software. Once set, this DTC is latched permanently and the module must be replaced.

POSSIBLE CAUSES

Possible Causes
OCCUPANT RESTRAINT CONTROLLER (ORC)

Always Perform the Pre-Diagnostic Troubleshooting procedure before proceeding. Refer to STANDARD PROCEDURE.

DIAGNOSTIC TEST

1. **REPLACE OCCUPANT RESTRAINT CONTROLLER (ORC)**

   NOTE: When this DTC is set, the module self test has discovered an internal fault that cannot be repaired and the module must be replaced regardless of DTC status.

   When this code is set do not clear codes, view repair.

   Repair

   WARNING: If the Occupant Restraint Controller (ORC) is dropped at any time, it must be replaced. Failure to take the proper precautions can result in accidental airbag deployment. Failure to follow these instructions may result in possible serious or fatal injury.

   WARNING: Turn the ignition off disconnect the 12-volt battery and wait two minutes before proceeding. Failure to follow these instructions may result in possible serious or fatal injury.

   -
   -
   - Replace the ORC in accordance with Service Information.
   - Refer to **STANDARD PROCEDURE** and perform the RESTRAINTS SYSTEM VERIFICATION TEST.

B220A-00-OCCUPANT RESTRAINT CONTROLLER INTERNAL 4

THEORY OF OPERATION

When powered, the Occupant Restraint Controller (ORC) performs an internal self test. The repair of this fault condition does not involve any external circuitry and centers on verifying the integrity of the module's internal circuitry and software validity.

WHEN MONITORED:

The ORC checks the status and validity of the internal operating hardware and software at power up during the initialization process, and continuously through the ignition cycle.

SET CONDITION:

This Diagnostic Trouble Code (DTC) sets when a fault is detected internal to ORC hardware and/or software. Once set, this DTC is latched permanently and the module must be replaced.

POSSIBLE CAUSES

Possible Causes
OCCUPANT RESTRAINT CONTROLLER (ORC)

Always Perform the Pre-Diagnostic Troubleshooting procedure before proceeding. Refer to STANDARD PROCEDURE.

DIAGNOSTIC TEST

1. **REPLACE OCCUPANT RESTRAINT CONTROLLER (ORC)**

NOTE: **When this DTC is set, the module self test has discovered an internal fault that cannot be repaired and the module must be replaced regardless of DTC status.**

When this code is set do not clear codes, view repair.

Repair

WARNING: **If the Occupant Restraint Controller (ORC) is dropped at any time, it must be replaced. Failure to take the proper precautions can result in accidental airbag deployment. Failure to follow these instructions may result in possible serious or fatal injury.**

WARNING: **Turn the ignition off disconnect the 12-volt battery and wait two minutes before proceeding. Failure to follow these instructions may result in possible serious or fatal injury.**

-
-
- Replace the ORC in accordance with Service Information.
- Refer to **STANDARD PROCEDURE** and perform the RESTRAINTS SYSTEM VERIFICATION TEST.

B220B-00-OCCUPANT RESTRAINT CONTROLLER FIRING STORED ENERGY

THEORY OF OPERATION

When powered, the Occupant Restraint Controller (ORC) performs an internal self test. The repair of this fault condition does not involve any external circuitry and centers on verifying the integrity of the module's internal circuitry and software validity.

WHEN MONITORED:

The ORC checks the status of firing stored energy circuit at power up during the initialization process, and continuously through the ignition cycle.

SET CONDITION:

This Diagnostic Trouble Code (DTC) sets when a fault is detected internal to ORC firing stored energy circuit. Once set, this DTC is latched permanently and the ORC must be replaced.

POSSIBLE CAUSES

Possible Causes
OCCUPANT RESTRAINT CONTROLLER (ORC)

Always Perform the Pre-Diagnostic Troubleshooting procedure before proceeding. Refer to STANDARD PROCEDURE.

DIAGNOSTIC TEST

1. **REPLACE OCCUPANT RESTRAINT CONTROLLER (ORC)**

   NOTE: When this DTC is set, the module self test has discovered an internal fault that cannot be repaired and the module must be replaced regardless of DTC status.

   When this code is set do not clear codes, view repair.

   Repair

   WARNING: If the Occupant Restraint Controller (ORC) is dropped at any time, it must be replaced. Failure to take the proper precautions can result in accidental airbag deployment. Failure to follow these instructions may result in possible serious or fatal injury.

   WARNING: Turn the ignition off disconnect the 12-volt battery and wait two minutes before proceeding. Failure to follow these instructions may result in possible serious or fatal injury.

   -
   -

- Replace the ORC in accordance with Service Information.
- Refer to **STANDARD PROCEDURE** and perform the RESTRAINTS SYSTEM VERIFICATION TEST.

B223B-00-VEHICLE CONFIGURATION MISMATCH -

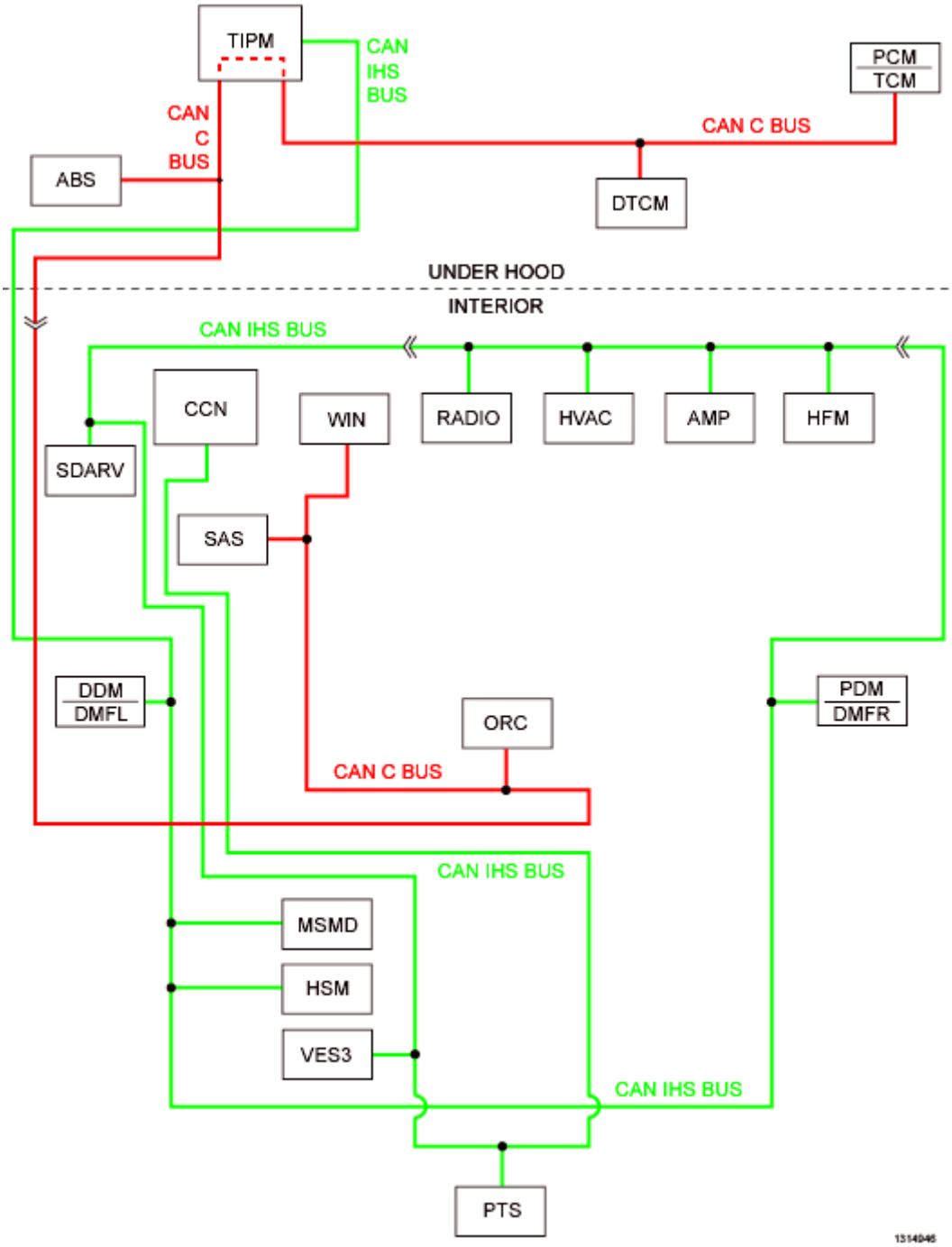

Fig. 124: CAN IHS BUS Module Wiring Diagram
Courtesy of CHRYSLER GROUP, LLC

For a complete wiring diagram, **refer to appropriate SYSTEM WIRING DIAGRAMS article** .

THEORY OF OPERATION

When powered, the Occupant Restraint Controller (ORC) performs an internal self test. The repair of this fault centers on verifying ORC and Totally Integrated Power Module (TIPM) configuration.

WHEN MONITORED:

The ORC checks its feature configuration for side airbags present and Passenger Airbag Disable (PAD) Switch present at power-up and initialization.

SET CONDITION:

This Diagnostic Trouble Code (DTC) sets when the ORC detects a 2 consecutive message mismatches between the TIPM configuration and the ORC configuration. Once set, this DTC is latched for the entire power cycle.

POSSIBLE CAUSES

Possible Causes
TIPM CONFIGURATION
OCCUPANT RESTRAINT CONTROLLER (ORC)

Always Perform the Pre-Diagnostic Troubleshooting procedure before proceeding. Refer to STANDARD PROCEDURE .

DIAGNOSTIC TEST

1. **VERIFY ACTIVE ORC DTC**

   NOTE: Ensure the battery is fully charged.

   1. Turn the ignition on.
   2. Wait 12 seconds, with the scan tool, read all ORC DTCs.

      Does the scan tool display active B223B-00-VEHICLE CONFIGURATION MISMATCH - DTC?

      Yes

      - Go To 2.

      No

      - Refer to **STANDARD PROCEDURE** and perform the RESTRAINTS SYSTEM INTERMITTENT TEST.
2. **VERIFY ORC PART NUMBER**

1. With the scan tool, read the ORC part number.

   Is the part number correct for the vehicle?

   Yes

   - Go To 3.

   No

   WARNING: Turn the ignition off, disconnect the 12-volt battery and wait two minutes before proceeding. Failure to follow these instructions may result in possible serious or fatal injury.

   WARNING: If the Occupant Restraint Controller (ORC) is dropped at any time, it must be replaced. Failure to follow these instructions may result in possible serious or fatal injury.

   -
   -
   - Replace the ORC in accordance with Service Information.
   - Refer to **STANDARD PROCEDURE** and perform the RESTRAINTS SYSTEM VERIFICATION TEST.

3. **CHECK THE TIPM CONFIGURATION**
   1. With the scan tool, check for Side Airbags and PAD Switch configuration.

      Does the Vehicle Configuration in the TIPM match the Vehicle Configuration in the ORC?

      Yes

      WARNING: Turn the ignition off, disconnect the 12-volt battery and wait two minutes before proceeding. Failure to follow these instructions may result in possible serious or fatal injury.

      WARNING: If the Occupant Restraint Controller (ORC) is dropped at any time, it must be replaced. Failure to follow these instructions may result in possible serious or fatal injury.

      -
      -
      - Replace the ORC in accordance with Service Information.
      - Refer to **STANDARD PROCEDURE** and perform the RESTRAINTS SYSTEM VERIFICATION TEST.

No

- With the scan tool enter program network configuration and program the TIPM to the vehicle configuration.
- Refer to **STANDARD PROCEDURE** and perform the BODY VERIFICATION TEST.

B222A-00-VEHICLE LINE MISMATCH -

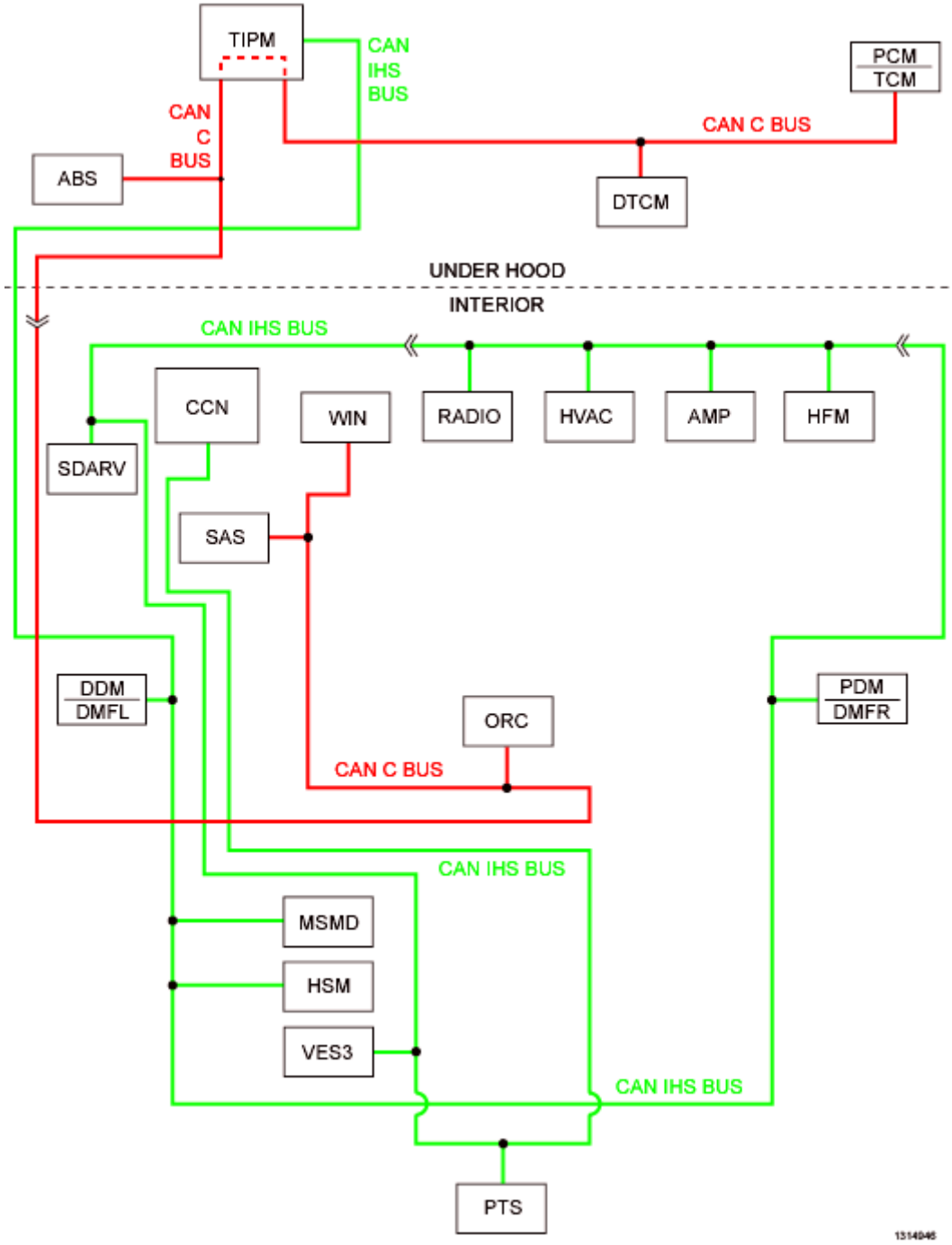

Fig. 125: CAN IHS BUS Module Wiring Diagram
Courtesy of CHRYSLER GROUP, LLC

For a complete wiring diagram, **refer to appropriate SYSTEM WIRING DIAGRAMS article** .

THEORY OF OPERATION

When powered, the Occupant Restraint Controller (ORC) performs an internal self test. The repair of this fault centers on verifying the ORC programmed and vehicle content configuration.

WHEN MONITORED:

The ORC checks its feature configuration for a stored Vehicle Line and Country Code at power-up and initialization.

SET CONDITION:

This Diagnostic Trouble Code (DTC) sets when the ORC detects a 2 consecutive message mismatches between the Vehicle configuration and the ORC configuration. Once set this DTC is latched active for the ignition cycle.

POSSIBLE CAUSES

Possible Causes
OCCUPANT RESTRAINT CONTROLLER (ORC)

Always Perform the Pre-Diagnostic Troubleshooting procedure before proceeding. Refer to STANDARD PROCEDURE.

DIAGNOSTIC TEST

1. **REPLACE OCCUPANT RESTRAINT CONTROLLER (ORC)**
    1. Turn the ignition on.
    2. With the scan tool, read ORC DTCs.

       Does the scan tool display active B222A-00-VEHICLE LINE MISMATCH - DTC?

       Yes

       WARNING: **Turn the ignition off, disconnect the 12-volt battery and wait two minutes before proceeding. Failure to follow these instructions may result in possible serious or fatal injury.**

       WARNING: **If the Occupant Restraint Controller (ORC) is dropped at any time, it must be replaced. Failure to follow these instructions may result in possible serious or fatal injury.**

       •

-
- Replace the Occupant Restraint Controller (ORC) in accordance with the Service Information.
- Refer to **STANDARD PROCEDURE** and perform the RESTRAINTS SYSTEM VERIFICATION TEST.

No

- Refer to **STANDARD PROCEDURE** and perform the RESTRAINTS SYSTEM INTERMITTENT TEST.

B2722-00-ORC UNLOCKED-ALL DEPLOYMENT DISABLED

THEORY OF OPERATION

All Occupant Restraint Controller (ORC) modules destined for service part usage are shipped in a (ORC locked state) that inhibits the deployment of all supplemental restraint squib circuits (ORC unlocked state) for safe, initial installation. Once the ORC initialization procedure is performed (ORC locked state). The ORC enters a full state of readiness and can no longer transition to the unlocked status.

WHEN MONITORED:

The ORC will detect the Deployment Disable Status (ORC LOCKED, ORC UNLOCKED or ORC IS RESPONDING WITH INCORRECT DATA) as soon as the ignition is turned on and the power is supplied to the new ORC.

SET CONDITION:

This DTC will be set as active for all service replacement ORC modules prior to the initialization procedure (ORC locked).

POSSIBLE CAUSES

Possible Causes
UNLOCKED OCCUPANT RESTRAINT CONTROLLER (ORC) Module

Always perform the Pre-Diagnostic Troubleshooting procedure before proceeding. Refer to STANDARD PROCEDURE.

DIAGNOSTIC TEST

1. **CHECK FOR ADDITIONAL ACTIVE ORC DTCS**

   NOTE: Make sure the battery is fully charged.

   1. Turn the ignition on.

2. With the scan tool, read the active ORC DTC.

   Is B2722-00-ORC UNLOCKED-ALL DEPLOYMENT DISABLED the only active DTC?

   Yes

   - Go To 2.

   No

   - Refer to **DIAGNOSIS AND TESTING** and select the appropriate diagnostic procedure.

2. **INITIALIZE ORC**
   1. With the scan tool, select Initialize ORC.
   2. The scan tool will display the current Deployment Disable Status (CURRENT STATUS)

      Select the CURRENT STATUS displayed on the scan tool.

      CURRENT STATUS

      - LOCKED
      - The ORC is in a full state of readiness.
      - Refer to **STANDARD PROCEDURE** and perform the RESTRAINTS SYSTEM VERIFICATION TEST.

      CURRENT STATUS

      - UNLOCKED
      - Go To 3.

      CURRENT STATUS

      - ORC is Responding with incorrect Data
      - With the scan tool, select MISC. FUNCTION and then Initialize ORC.
      - After the ORC Initialization is complete: Restart this test at step 1.
      - Go To 1.

3. **CHANGE ORC STATUS**
   1. Follow the instruction on the screen to change the status to LOCKED.
   2. The scan tool will display the result of the initialization.

      Does the scan tool display: ORC LOCK Successful?

      Yes

      - CURRENT STATUS is ORC LOCK Successful

- Refer to **STANDARD PROCEDURE** and perform the RESTRAINTS SYSTEM VERIFICATION TEST.

No

- Go To 4.

4. **INCOMPLETE OR FAILED ORC INITIALIZATION**

   Does the scan tool display: ORC Initialization Failed?

   Yes

   - CURRENT STATUS is ORC Initialization Failed

     WARNING: **Turn the ignition off disconnect the 12-volt battery and wait two minutes before proceeding. Failure to follow these instructions may result in possible serious or fatal injury.**

     WARNING: **If the Occupant Restraint Controller (ORC) is dropped at any time, it must be replaced. Failure to take the proper precautions can result in accidental airbag deployment. Failure to follow these instructions may result in possible serious or fatal injury.**

   -
   -
   - Replace the ORC in accordance with service information.
   - Refer to **STANDARD PROCEDURE** and perform the RESTRAINTS SYSTEM VERIFICATION TEST.

   No

   - CURRENT STATUS is Current and original VIN have not been learned by ORC
   - With the scan tool, select and rerun Initialize ORC.
   - After the Initialize ORC Procedure is complete: Restart this test at step 1.
   - Go To 1.

U0001-00-CAN C BUS

For a complete wiring diagram, **refer to appropriate SYSTEM WIRING DIAGRAMS article** .

THEORY OF OPERATION

When powered, the Occupant Restraint Controller module (ORC) "listens" to the serial data bus for the broadcast of various serial data messages.

WHEN MONITORED:

The ORC checks for serial data message traffic at power up during the initialization process, and continuously through the ignition cycle.

SET CONDITION:

This Diagnostic Trouble Code (DTC) sets when the ORC fails to detect serial data message traffic for more than five seconds. In the event the ORC detects serial data message traffic, this DTC will immediately transition to stored status.

POSSIBLE CAUSES

Possible Causes
CAN C BUS OPEN OR SHORTED CONDITION
OCCUPANT RESTRAINT CONTROLLER (ORC)

DIAGNOSTIC TEST

1. **VERIFY ACTIVE DTC**

   NOTE: Make sure the IOD fuse is installed and battery Voltage is between 10 and 16 Volts before proceeding.

   1. Turn the ignition on.
   2. With the scan tool, read ORC DTCs.

      Does the scan tool display active U0001-00-CAN C BUS - DTC?

      Yes

      - Refer to **DIAGNOSIS AND TESTING** and perform the U0001-Can C Bus diagnostic procedure.

      No

      - Refer to **DIAGNOSIS AND TESTING** and perform the Stored Lost Communication diagnostic procedure.

U0002-00-CAN C BUS OFF PERFORMANCE

For a complete wiring diagram, **refer to appropriate SYSTEM WIRING DIAGRAMS article** .

WHEN MONITORED:

Ignition run time is greater than one second. Battery voltage between 9 and 16 volts. Engine run time greater than three seconds.

SET CONDITION:

Bus messages not received from the Totally Integrated Power Module (TIPM) for approximately two to five seconds.

POSSIBLE CAUSES

Possible Causes
CAN BUS CIRCUITS OPEN OR SHORTED
DTCS RELATED TO BATTERY VOLTAGE, IGNITION, OR VIN MESSAGES
TOTALLY INTEGRATED POWER MODULE POWER AND GROUND
TIPM NOT CONFIGURED CORRECTLY
TOTALLY INTEGRATED POWER MODULE (TIPM)
MODULE THAT SET THIS DTC

DIAGNOSTIC TEST

1. **VERIFY THE DTC IS ACTIVE**

   NOTE: For vehicle communication problems, use the scan tool to refer to the Network Review Screen. The screen depicts a high level view of the vehicle network. Fault and problem areas appear in red. Selecting any of the network components allows access to the source of the problem.

   1. Turn the ignition on.
   2. With a scan tool, read DTCs.

      Is the DTC active at this time?

      Yes

      - **Diagnose the U0002-00 CAN C BUS OFF PERFORMANCE as the U0001 CAN C BUS CIRCUIT test.** Refer to **DIAGNOSIS AND TESTING** and perform the U0001-Can C Bus diagnostic procedure.

      No

      - **Refer to DIAGNOSIS AND TESTING** and perform the Stored Lost Communication DTCs diagnostic procedure.

U0141-00-LOST COMMUNICATION WITH IPM (FCM/TIPM)

For a complete wiring diagram, **refer to appropriate SYSTEM WIRING DIAGRAMS article** .

WHEN MONITORED:

Continuously when the ignition is on.

Battery voltage between 10 and 16 volts.

Ignition Off Draw (IOD) fuse installed.

Totally Integrated Power Module (TIPM) is configured correctly.

SET CONDITION:

Bus messages not received from the Integrated Power Module (TIPM) for approximately two to five seconds.

POSSIBLE CAUSES

Possible Causes
(D65) CAN C BUS(+) CIRCUIT SHORTED TO VOLTAGE
(D64) CAN C BUS(-) CIRCUIT SHORTED TO GROUND
TOTALLY INTEGRATED POWER MODULE (TIPM) POWER AND GROUND
TIPM NOT CONFIGURED CORRECTLY
TOTALLY INTEGRATED POWER MODULE (TIPM)
MODULE THAT SET THIS DTC

DIAGNOSTIC TEST

1. **VERIFY THE DTC IS ACTIVE**

   NOTE: Make sure the IOD fuse is installed and the battery is fully charged before proceeding.

   1. Turn the ignition on.
   2. With the scan tool, read active DTCs.

      Is the DTC active at this time?

      Yes

      - **Refer to <u>DIAGNOSIS AND TESTING</u>** and perform the U0141-Lost Communication with IPM (FCM/TIPM) diagnostic procedure.

      No

      - **Refer to <u>DIAGNOSIS AND TESTING</u>** and perform the Stored Lost Communication DTCs diagnostic procedure.

U0170-00-LOST COMMUNICATION W/ UP-FRONT LEFT SATELLITE SENSOR

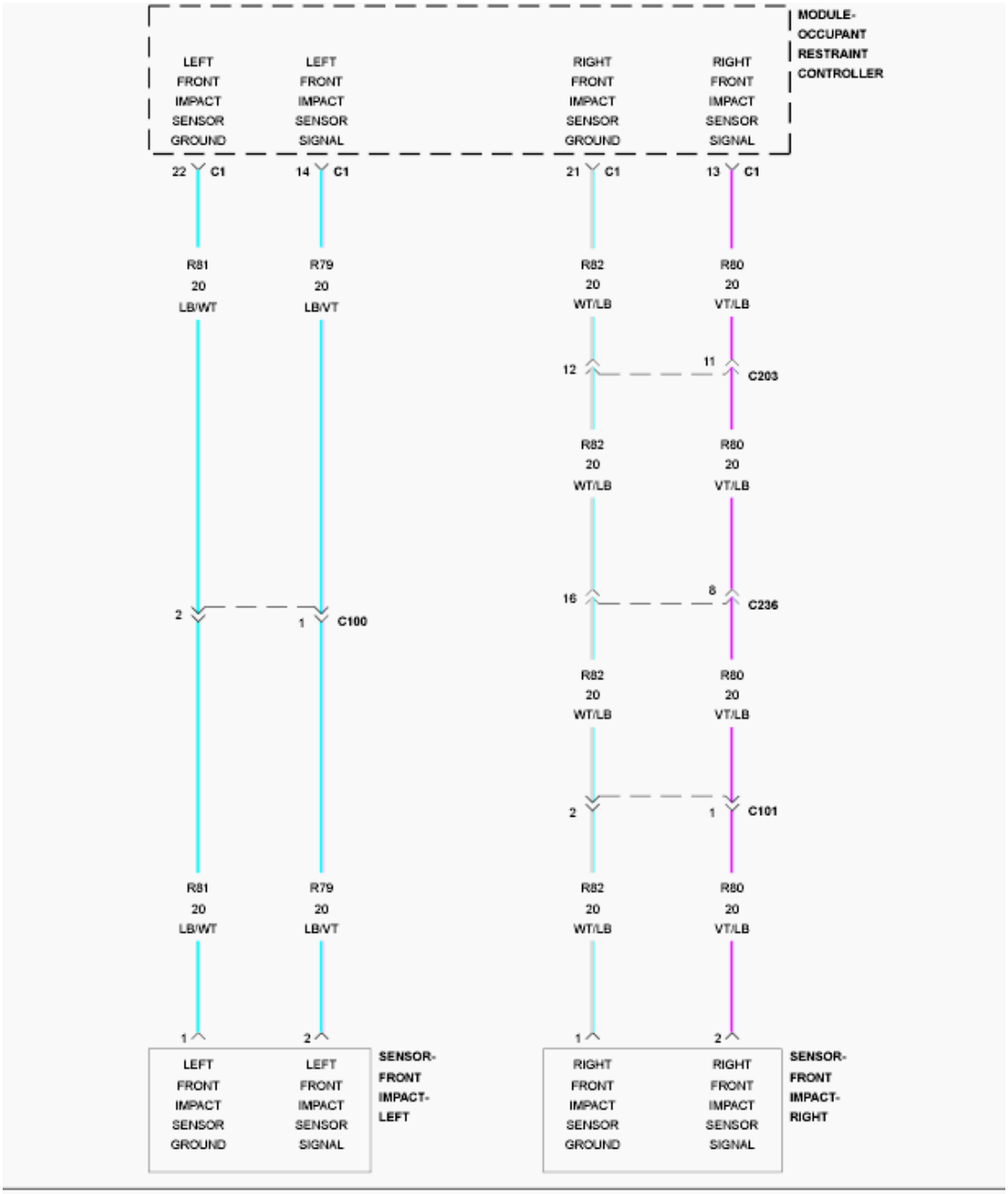
MODULE-
OCCUPANT
RESTRAINT
CONTROLLER
LEFT FRONT IMPACT SENSOR GROUND
LEFT FRONT IMPACT SENSOR SIGNAL
RIGHT FRONT IMPACT SENSOR GROUND
RIGHT FRONT IMPACT SENSOR SIGNAL
22 C1
14 C1
21 C1
13 C1
R81 20 LB/WT
R79 20 LB/VT
R82 20 WT/LB
R80 20 VT/LB
12
11
C203
R82 20 WT/LB
R80 20 VT/LB
16
8
C236
2
1
C100
R82 20 WT/LB
R80 20 VT/LB
2
1
C101
R81 20 LB/WT
R79 20 LB/VT
R82 20 WT/LB
R80 20 VT/LB
1
2
1
2
LEFT FRONT IMPACT SENSOR GROUND
LEFT FRONT IMPACT SENSOR SIGNAL
SENSOR-
FRONT
IMPACT-
LEFT
RIGHT FRONT IMPACT SENSOR GROUND
RIGHT FRONT IMPACT SENSOR SIGNAL
SENSOR-
FRONT
IMPACT-
RIGHT

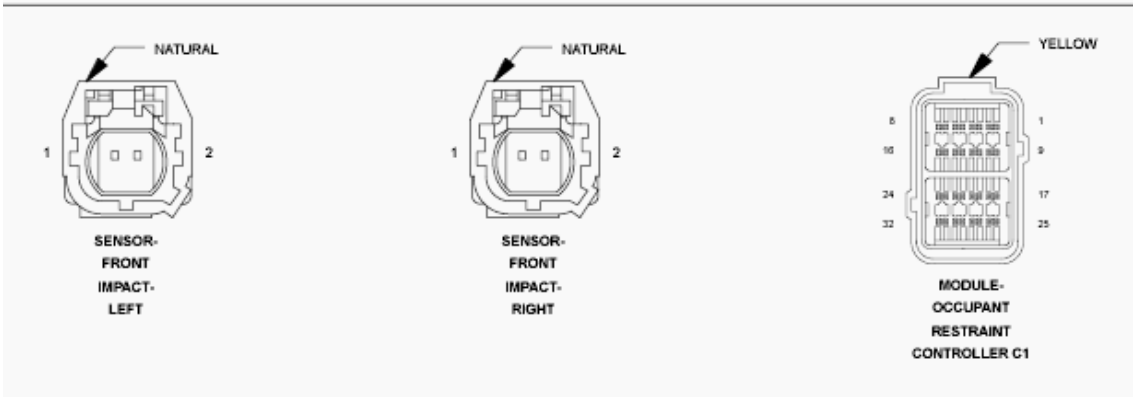
NATURAL
1
2
SENSOR-
FRONT
IMPACT-
LEFT
NATURAL
1
2
SENSOR-
FRONT
IMPACT-
RIGHT
YELLOW
8
1
16
9
24
17
32
25
MODULE-
OCCUPANT
RESTRAINT
CONTROLLER C1

Fig. 126: Front Impact Sensor Circuit Wiring Diagram
Courtesy of CHRYSLER GROUP, LLC

For a complete wiring diagram, **refer to appropriate SYSTEM WIRING DIAGRAMS article** .

THEORY OF OPERATION

The impact sensors perform their own self test using power supplied by the Occupant Restraint Controller (ORC) then communicate this status back to the ORC with periodic updates. The repair of this fault condition involves verifying the integrity of the wiring between the ORC and the sensor.

WHEN MONITORED:

The impact sensor performs a self test for internal circuitry at power up during the initialization process, and continuously through the ignition cycle every 10 ms.

SET CONDITION:

This Diagnostic Trouble Code (DTC) sets when the ORC receives notification of a self test failure within the impact sensor. Once set, this DTC is latched for the entire ignition cycle.

POSSIBLE CAUSES

Possible Causes
(R79, R81) LEFT FRONT IMPACT SENSOR CIRCUITS SHORTED TO VOLTAGE
(R79, R81) LEFT FRONT IMPACT SENSOR CIRCUITS SHORTED TO GROUND
(R79, R81) LEFT FRONT IMPACT SENSOR CIRCUITS SHORTED TOGETHER
(R79, R81) LEFT FRONT IMPACT SENSOR CIRCUITS OPEN
LEFT FRONT IMPACT SENSOR
OCCUPANT RESTRAINT CONTROLLER (ORC)

Always perform the Pre-Diagnostic Troubleshooting procedure before proceeding. Refer to STANDARD PROCEDURE.

DIAGNOSTIC TEST

1. **VERIFY ACTIVE DTC**

WARNING: **Turn the ignition off, disconnect the 12-volt battery and wait two minutes before proceeding. Failure to follow these instructions may result in possible serious or fatal injury.**

NOTE: **Using the wiring diagram/schematic as a guide check all related splices and connectors for signs of water intrusion, corrosion, pushed out or bent terminals, and correct pin tension.**

NOTE: **If after the harness inspection it appears the impact sensor connector is only seated halfway. Re-seat the harness connector into the impact sensor and lock the tab. Follow the instructions below checking for active codes.**

WARNING: **Turn the ignition on, then reconnect the 12-volt battery and wait two minutes before proceeding. Failure to follow these instructions may result in possible serious or fatal injury.**

NOTE: **Make sure the battery is fully charged.**

1. Turn the ignition on.
2. With the scan tool, read ORC DTCs.

   Does the scan tool display active U0170-00-LOST COMMUNICATION W/ UP-FRONT LEFT SATELLITE SENSOR - DTC?

   Yes

   - Go To 2.

   No

   - Refer to **STANDARD PROCEDURE** and perform the RESTRAINTS SYSTEM INTERMITTENT TEST.

2. **CHECK THE (R79, R81) LEFT FRONT IMPACT SENSOR CIRCUITS FOR A SHORT TO VOLTAGE**

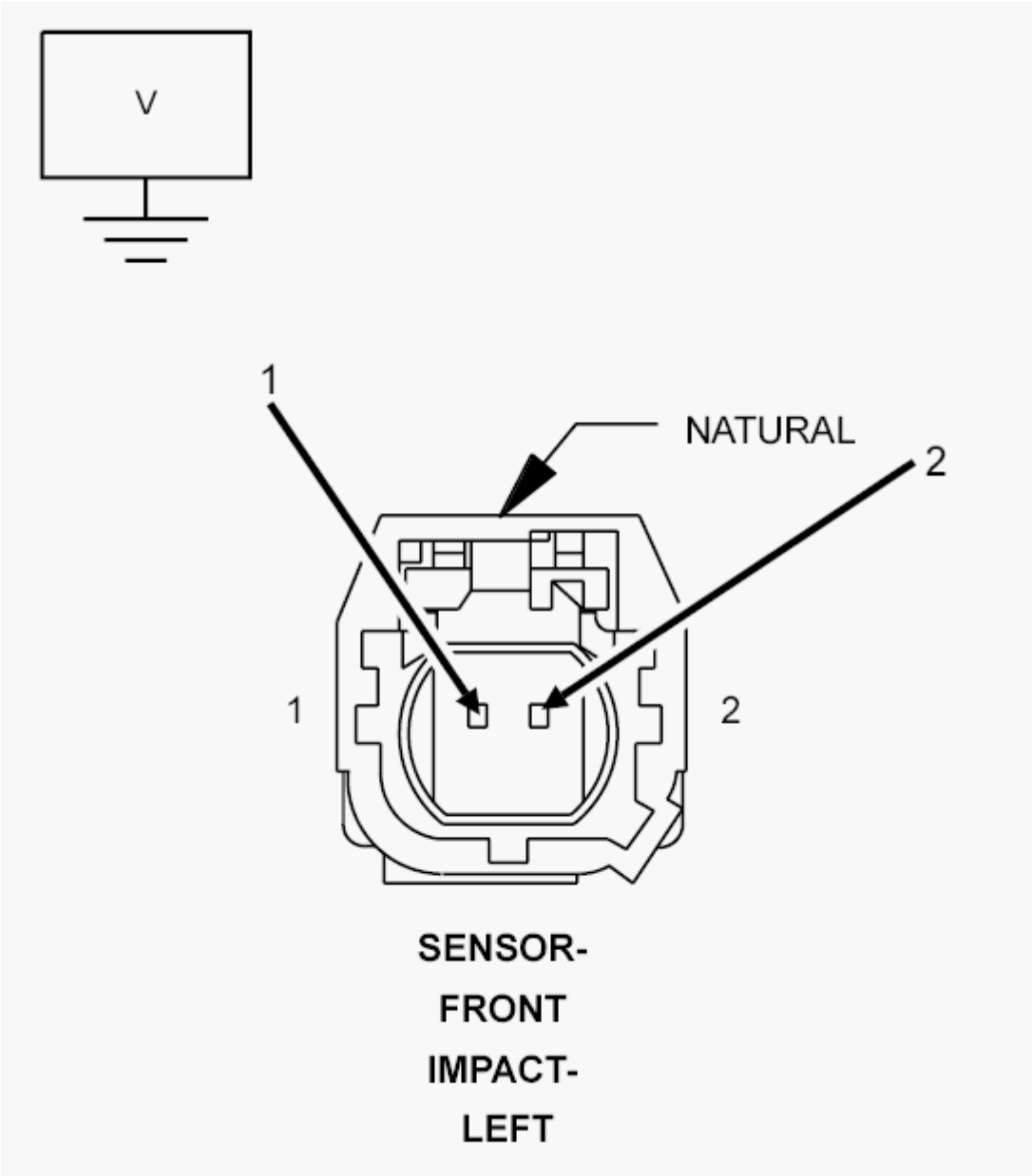

Fig. 127: Checking Left Front Impact Sensor Circuit For Short To Voltage
Courtesy of CHRYSLER GROUP, LLC

WARNING: **Turn the ignition off, disconnect the 12-volt battery and wait two minutes before proceeding. Failure to follow these instructions may result in possible serious or fatal injury.**

1. Disconnect the Left Front Impact Sensor harness connector.
2. Disconnect the ORC harness connectors.

NOTE: Check connectors - Clean and repair as necessary.

WARNING: Turn the ignition on, then reconnect the 12-volt battery and wait two minutes before proceeding. Failure to follow these instructions may result in possible serious or fatal injury.

3. Measure the voltage of the (R79) Left Front Impact Sensor Signal circuit cavity 2 and (R81) Left Front Impact Sensor Ground circuit cavity 1 at the Left Front Impact Sensor harness connector.

   Is there any voltage present?

   Yes

   - Repair the (R79, R81) Left Front Impact Sensor circuits for a short to voltage.
   - Refer to **STANDARD PROCEDURE** and perform the RESTRAINTS SYSTEM VERIFICATION TEST.

   No

   - Go To 3.

3. **CHECK THE (R79, R81) LEFT FRONT IMPACT SENSOR CIRCUITS FOR A SHORT TO GROUND**

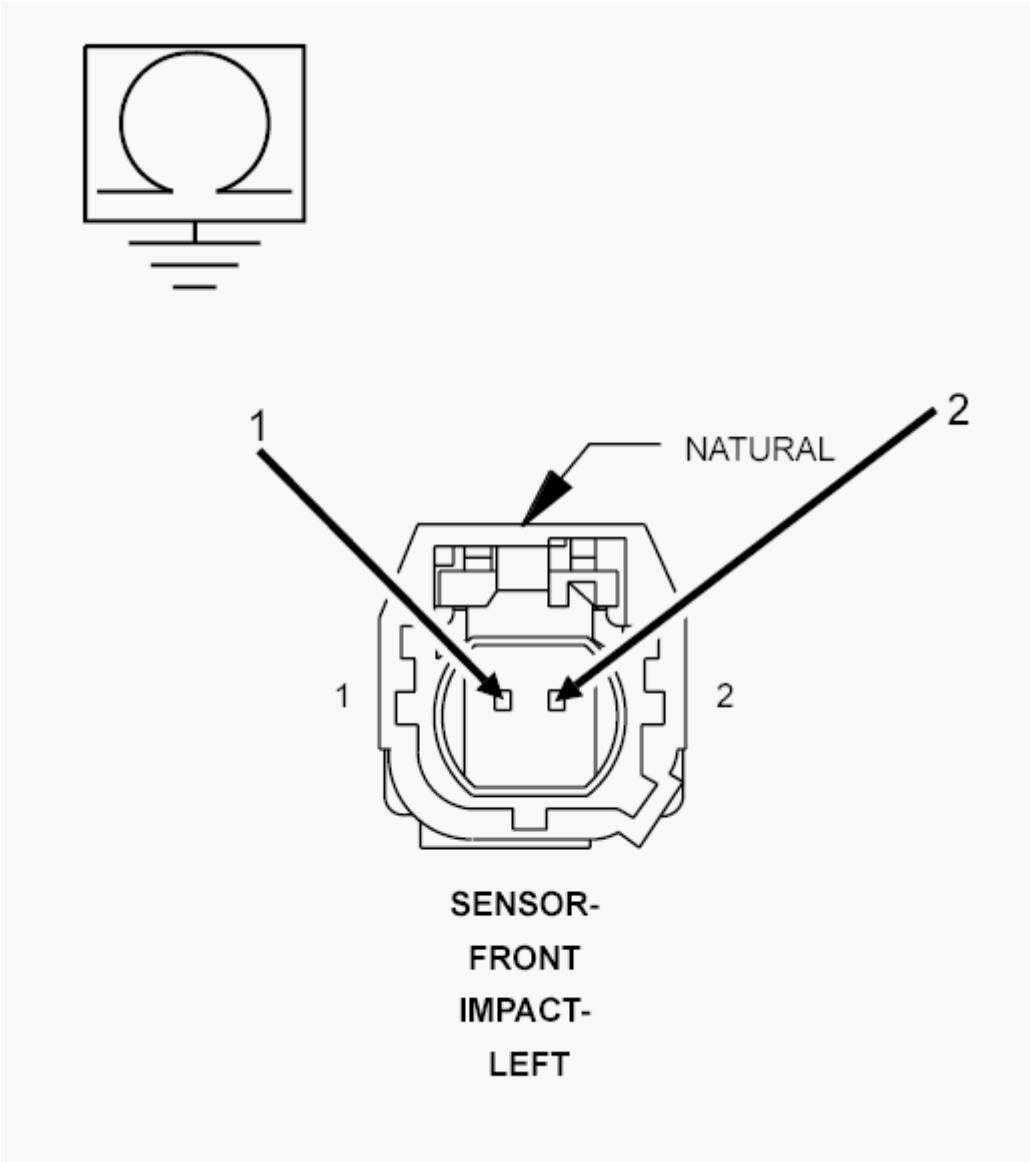

Fig. 128: Checking Left Front Impact Sensor Circuit For A Short To Ground
Courtesy of CHRYSLER GROUP, LLC

WARNING: Turn the ignition off, disconnect the 12-volt battery and wait two minutes before proceeding. Failure to follow these instructions may result in possible serious or fatal injury.

1. Measure the resistance between ground and the (R79) Left Front Impact Sensor Signal circuit at the Left Front Impact Sensor harness connector cavity 2.
2. Measure the resistance between ground and the (R81) Left Front Impact Sensor Ground circuit at the Left Front Impact Sensor harness connector cavity 1.

   Is the resistance below 100K Ohms?

Yes

- Repair the (R79, R81) Left Front Impact Sensor circuits for a short to ground.
- Refer to **STANDARD PROCEDURE** and perform the RESTRAINTS SYSTEM VERIFICATION TEST.

No

- Go To 4.

4. **CHECK THE (R79, R81) LEFT FRONT IMPACT SENSOR CIRCUITS FOR A SHORT TOGETHER**

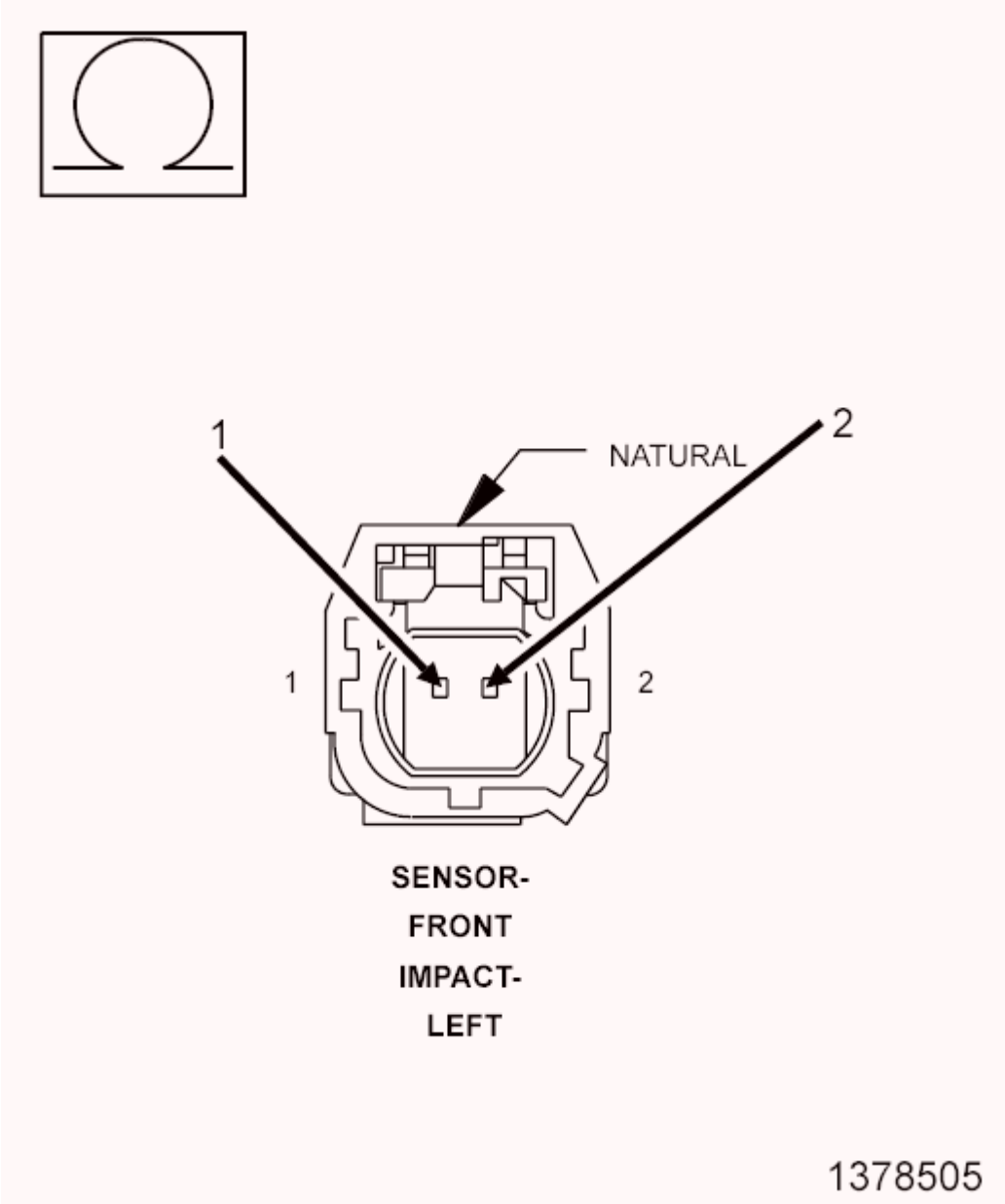

Fig. 129: Checking Left Front Impact Sensor Circuit
Courtesy of CHRYSLER GROUP, LLC

1. Measure the resistance between the (R79) Left Front Impact Sensor Signal circuit and (R81) Left Front Impact Sensor Ground circuit at the Left Front Impact Sensor harness connector.

   Is the resistance below 100K Ohms?

   Yes

   - Repair the (R79, R81) Left Front Impact Sensor circuits shorted together.
   - Refer to **STANDARD PROCEDURE** and perform the RESTRAINTS SYSTEM VERIFICATION TEST.

   No

   - Go To 5.

5. **CHECK THE (R81) LEFT FRONT IMPACT SENSOR GROUND CIRCUIT FOR AN OPEN OR HIGH RESISTANCE**

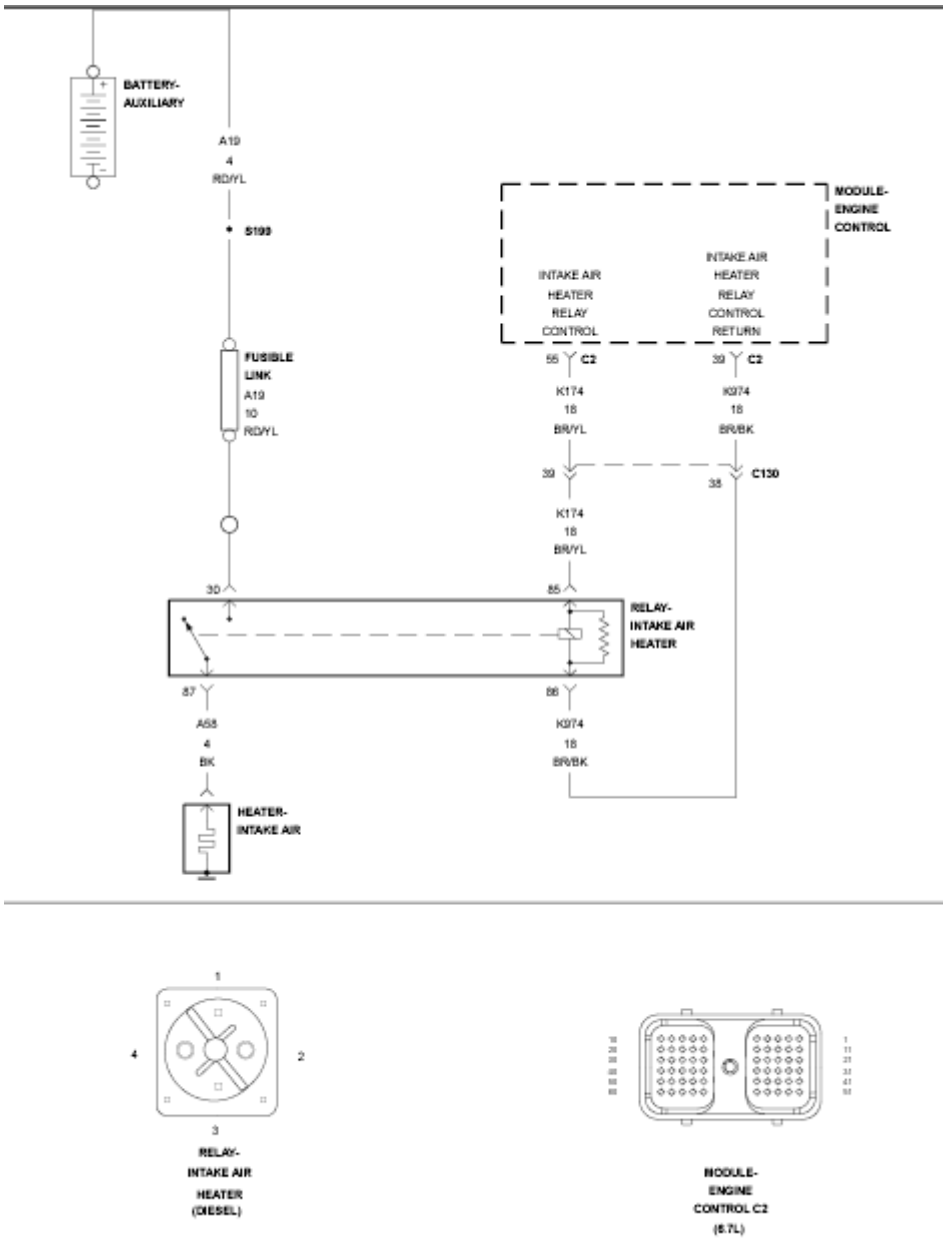

Fig. 130: Checking Left Front Impact Sensor Ground Circuit For Open
Courtesy of CHRYSLER GROUP, LLC

1. Connect the SRS Load Tool Adapter (special tool #8443-24, 32-Way Adapter) to the ORC C1 harness connector.
2. Measure the resistance of the (R81) Left Front Impact Sensor Ground circuit between the Left Front Impact Sensor harness connector cavity 1 and the SRS Load Tool Adapter (special tool #8443-24, 32-Way Adapter) cavity 22

   Is the resistance below 1 Ohm?

   Yes

- Go To 6.

No

- Repair the (R81) Left Front Impact Sensor Ground circuit for an open or high resistance.
- Refer to **STANDARD PROCEDURE** and perform the RESTRAINTS SYSTEM VERIFICATION TEST.

6. **CHECK THE (R79) LEFT FRONT IMPACT SENSOR CIRCUIT FOR AN OPEN OR HIGH RESISTANCE**

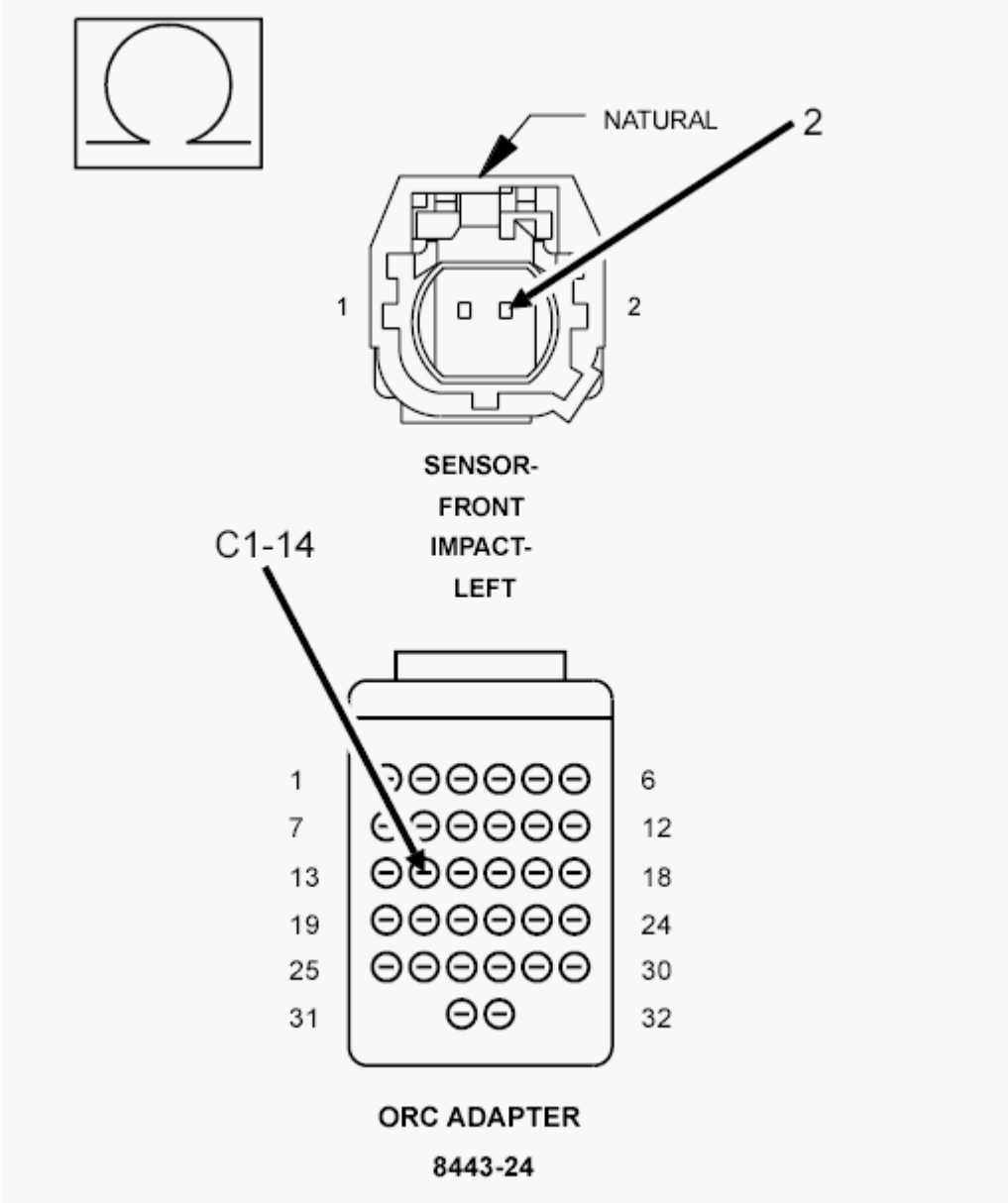

Fig. 131: Checking Left Front Impact Sensor Circuit For Open Or High Resistance
Courtesy of CHRYSLER GROUP, LLC

1. Measure the resistance of the (R79) Left Front Impact Sensor Ground circuit between the Left Front Impact Sensor harness connector and the SRS Load Tool Adapter (special tool #8443-24, 32-Way Adapter) cavity C1-14.

   Is the resistance below 1 Ohm?

   Yes

   - Go To 7.

   No

   - Repair the (R79) Left Front Impact Sensor Signal circuit for an open or high resistance.
   - Refer to **STANDARD PROCEDURE** and perform the RESTRAINTS SYSTEM VERIFICATION TEST.

7. **CHECK OPERATION OF THE LEFT FRONT IMPACT SENSOR**
   1. Replace the Left Front Impact Sensor in accordance with the Service Information.
   2. Reconnect the vehicle body harness connector to the impact sensor.
   3. Remove any special tools or jumper wires and reconnect all previously disconnected components - except the Battery.

      WARNING: **Turn the ignition on, then reconnect the 12-volt battery and wait two minutes before proceeding. Failure to follow these instructions may result in possible serious or fatal injury.**

   4. Connect the scan tool to the Data Link Connector - use the most current software available.
   5. Use the scan tool and erase the stored codes in all airbag system modules.
   6. Turn the ignition OFF, and wait 15 seconds before turning the ignition ON.
   7. Wait one minute, and read active codes and if there are none present read the stored codes.

      Does the scan tool display active U0170-00-LOST COMMUNICATION W/ UP-FRONT LEFT SATELLITE SENSOR - DTC?

      Yes

      WARNING: **Turn the ignition off, disconnect the 12-volt battery and wait two minutes before proceeding. Failure to follow these instructions may result in possible serious or fatal injury.**

      WARNING: **If the Occupant Restraint Controller (ORC) is dropped at any time, it must be replaced. Failure to follow these instructions may result in possible serious or fatal injury.**

      -

-
- Replace the ORC in accordance with Service Information.
- Refer to **STANDARD PROCEDURE** and perform the RESTRAINTS SYSTEM VERIFICATION TEST.

No

- Repair is complete.
- Refer to **STANDARD PROCEDURE** and perform the RESTRAINTS SYSTEM VERIFICATION TEST.

U0171-00-LOST COMMUNICATION W/ UP-FRONT RIGHT SATELLITE SENSOR

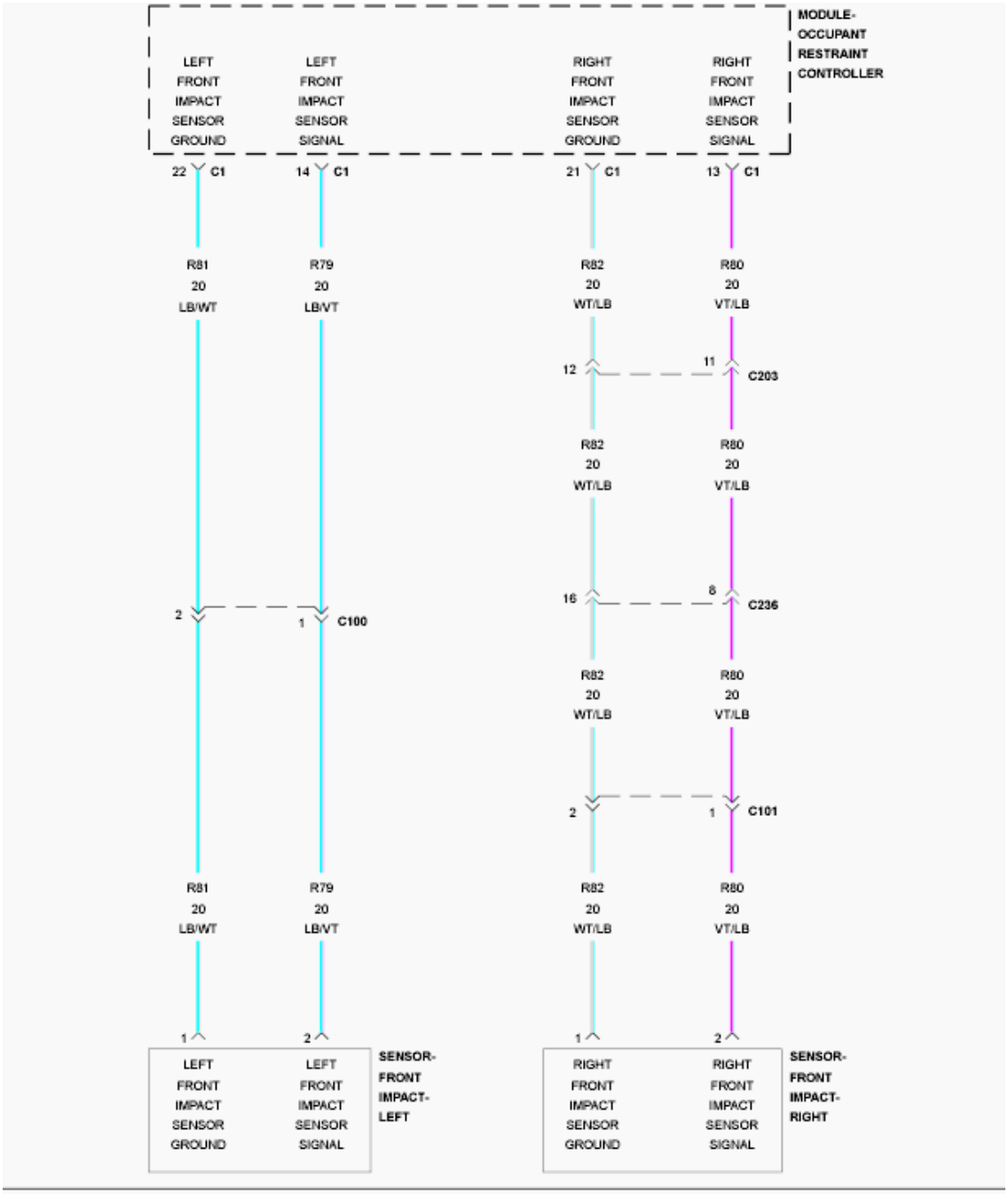
MODULE-
OCCUPANT
RESTRAINT
CONTROLLER
LEFT FRONT IMPACT SENSOR GROUND
LEFT FRONT IMPACT SENSOR SIGNAL
RIGHT FRONT IMPACT SENSOR GROUND
RIGHT FRONT IMPACT SENSOR SIGNAL
22 C1
14 C1
21 C1
13 C1
R81 20 LB/WT
R79 20 LB/VT
R82 20 WT/LB
R80 20 VT/LB
12
11
C203
R82 20 WT/LB
R80 20 VT/LB
16
8
C236
2
1
C100
R82 20 WT/LB
R80 20 VT/LB
2
1
C101
R81 20 LB/WT
R79 20 LB/VT
R82 20 WT/LB
R80 20 VT/LB
1
2
1
2
LEFT FRONT IMPACT SENSOR GROUND
LEFT FRONT IMPACT SENSOR SIGNAL
SENSOR-
FRONT
IMPACT-
LEFT
RIGHT FRONT IMPACT SENSOR GROUND
RIGHT FRONT IMPACT SENSOR SIGNAL
SENSOR-
FRONT
IMPACT-
RIGHT

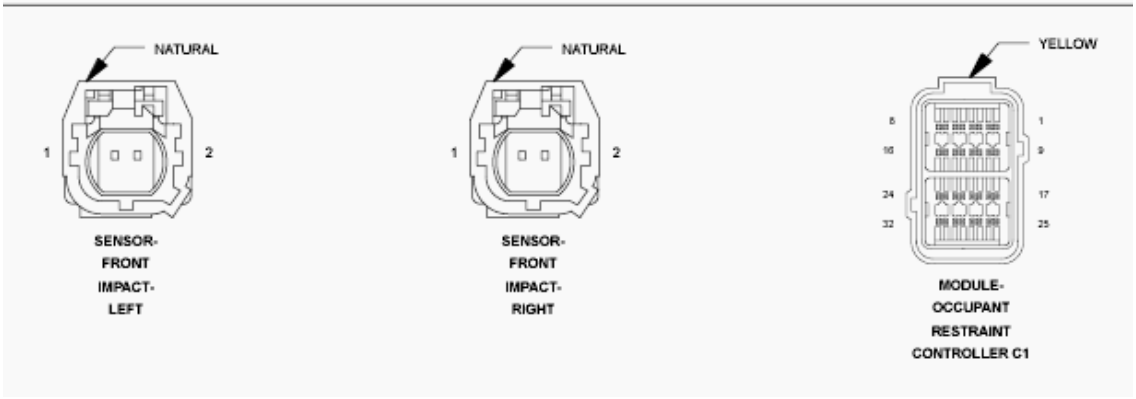
NATURAL
1
2
SENSOR-
FRONT
IMPACT-
LEFT
NATURAL
1
2
SENSOR-
FRONT
IMPACT-
RIGHT
YELLOW
8
1
16
9
24
17
32
25
MODULE-
OCCUPANT
RESTRAINT
CONTROLLER C1

Fig. 132: Front Impact Sensor Circuit Wiring Diagram
Courtesy of CHRYSLER GROUP, LLC

For a complete wiring diagram, **refer to appropriate SYSTEM WIRING DIAGRAMS article** .

THEORY OF OPERATION

The impact sensors perform their own self test using power supplied by the Occupant Restraint Controller (ORC) then communicate this status back to the ORC with periodic updates. The repair of this fault condition involves verifying the integrity of the wiring between the ORC and the sensor.

WHEN MONITORED:

The impact sensor performs a self test for internal circuitry at power up during the initialization process, and continuously through the ignition cycle every 10 ms.

SET CONDITION:

This Diagnostic Trouble Code (DTC) sets when the ORC receives notification of a self test failure within the impact sensor. Once set, this DTC is latched for the entire ignition cycle.

POSSIBLE CAUSES

Possible Causes
(R80, R82) RIGHT FRONT IMPACT SENSOR CIRCUITS SHORTED TO VOLTAGE
(R80, R82) RIGHT FRONT IMPACT SENSOR CIRCUITS SHORTED TO GROUND
(R80, R82) RIGHT FRONT IMPACT SENSOR CIRCUITS SHORTED TOGETHER
(R80, R82) RIGHT FRONT IMPACT SENSOR CIRCUITS OPEN
RIGHT FRONT IMPACT SENSOR
OCCUPANT RESTRAINT CONTROLLER (ORC)

Always perform the Pre-Diagnostic Troubleshooting procedure before proceeding. Refer to STANDARD PROCEDURE.

DIAGNOSTIC TEST

1. **VERIFY ACTIVE DTC**

WARNING: **Turn the ignition off, disconnect the 12-volt battery and wait two minutes before proceeding. Failure to follow these instructions may result in possible serious or fatal injury.**

NOTE: **Using the wiring diagram/schematic as a guide check all related splices and connectors for signs of water intrusion, corrosion, pushed out or bent terminals, and correct pin tension.**

NOTE: **If after the harness inspection it appears the impact sensor connector is only seated halfway. Re-seat the harness connector into the impact sensor and lock the tab. Follow the instructions below checking for active codes.**

WARNING: **Turn the ignition on, then reconnect the 12-volt battery and wait two minutes before proceeding. Failure to follow these instructions may result in possible serious or fatal injury.**

NOTE: **Make sure the battery is fully charged.**

1. Turn the ignition on.
2. With the scan tool, read ORC DTCs.

   Does the scan tool display active U0171-00-LOST COMMUNICATION W/ UP-FRONT RIGHT SATELLITE SENSOR - DTC?

   Yes

   - Go To 2.

   No

   - Refer to **STANDARD PROCEDURE** and perform the RESTRAINTS SYSTEM INTERMITTENT TEST.

2. **CHECK THE (R80, R82) RIGHT FRONT IMPACT SENSOR CIRCUITS FOR A SHORT TO VOLTAGE**

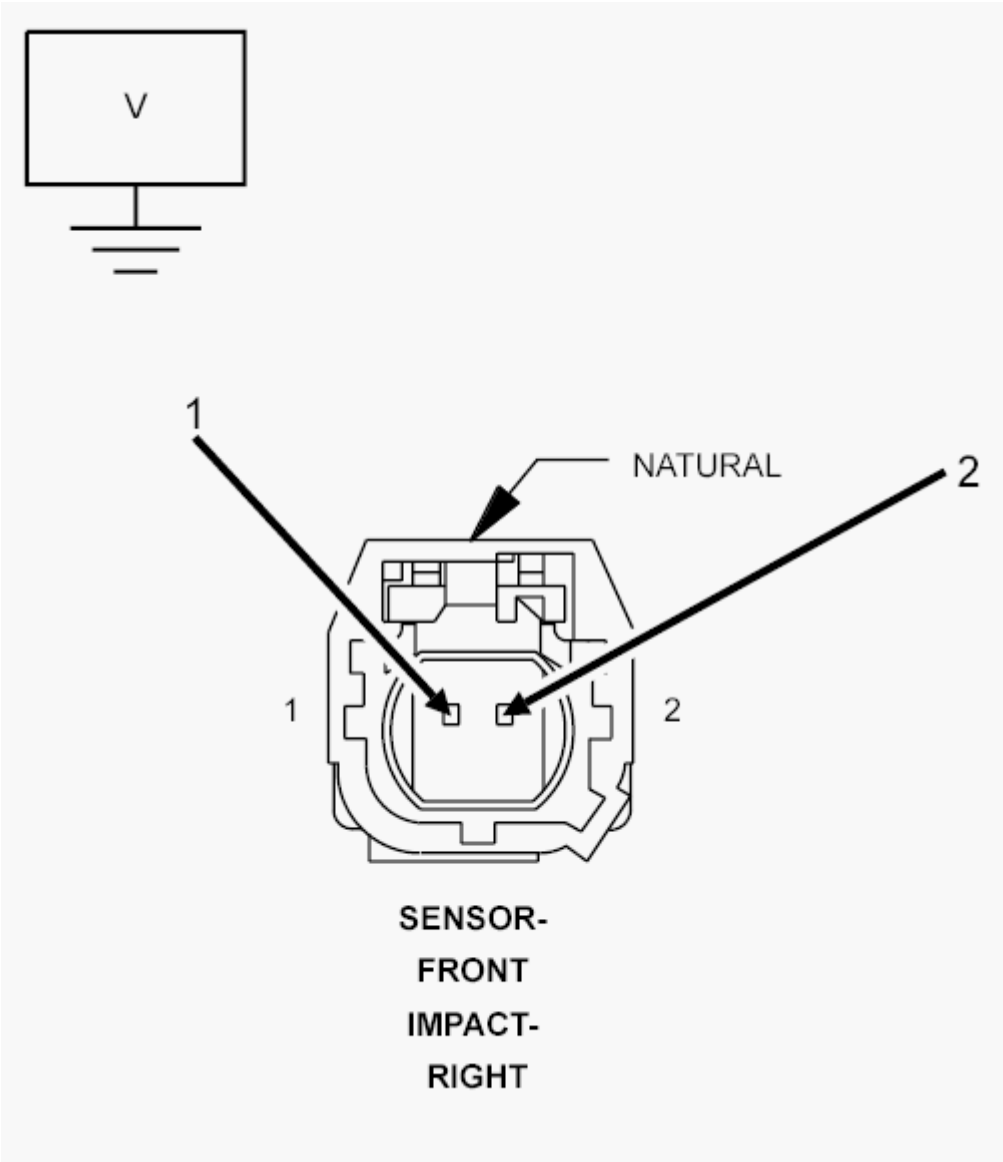

Fig. 133: Checking Right Front Impact Sensor Circuit For A Short To Voltage
Courtesy of CHRYSLER GROUP, LLC

WARNING: **Turn the ignition off, disconnect the 12-volt battery and wait two minutes before proceeding. Failure to follow these instructions may result in possible serious or fatal injury.**

1. Disconnect the Right Front Impact Sensor harness connector.
2. Disconnect the ORC harness connectors.

NOTE: **Check connectors - Clean/Repair as necessary.**

WARNING: **Turn the ignition on, then reconnect the 12-volt battery and wait two minutes before proceeding. Failure to follow these**

instructions may result in possible serious or fatal injury.

3. Measure the voltage of the (R80) Right Front Impact Sensor Signal circuit cavity 2 and (R82) Right Front Impact Sensor Ground circuit cavity 1 at the Right Front Impact Sensor harness connector.

   Is there any voltage present?

   Yes

   - Repair the (R80, R82) Right Front Impact Sensor circuits for a short to voltage.
   - Refer to **STANDARD PROCEDURE** and perform the RESTRAINTS SYSTEM VERIFICATION TEST.

   No

   - Go To 3.

3. **CHECK THE (R80, R82) RIGHT FRONT IMPACT SENSOR CIRCUITS FOR A SHORT TO GROUND**

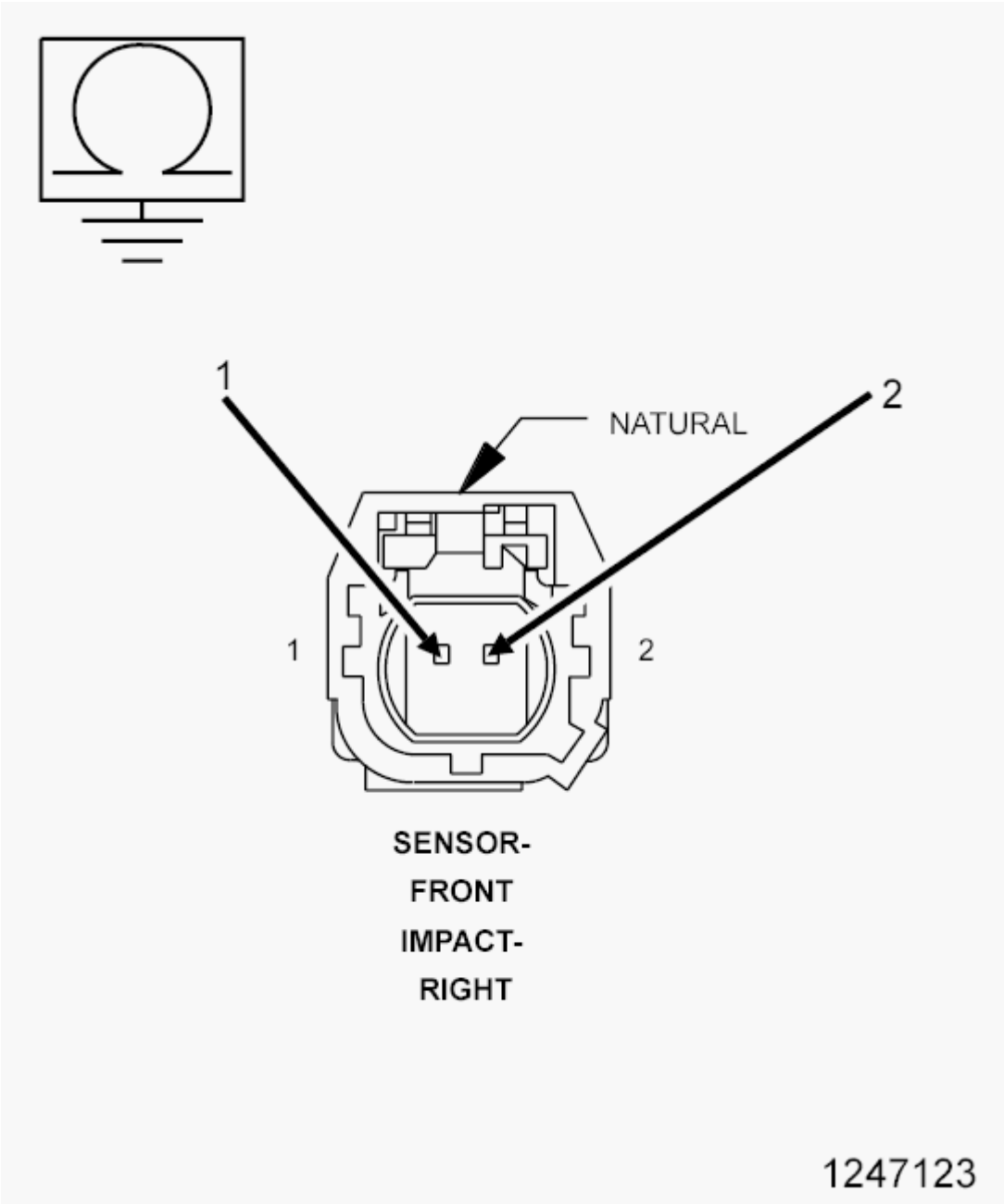

Fig. 134: Checking Right Front Impact Sensor Circuit For A Short To Ground
Courtesy of CHRYSLER GROUP, LLC

WARNING: **Turn the ignition off, disconnect the 12-volt battery and wait two minutes before proceeding. Failure to follow these instructions may result in possible serious or fatal injury.**

1. Measure the resistance between ground and the (R80) Right Front Impact Sensor Signal circuit at the Right Front Impact Sensor harness connector cavity 2.
2. Measure the resistance between ground and the (R82) Right Front Impact Sensor Ground circuit at the Right Front Impact Sensor harness connector cavity 1.

Is the resistance below 100K Ohms?

Yes

- Repair the (R80, R82) Right Front Impact Sensor circuits for a short to ground.
- Refer to **STANDARD PROCEDURE** and perform the RESTRAINTS SYSTEM VERIFICATION TEST.

No

- Go To 4.

4. **CHECK THE (R80, R82) RIGHT FRONT IMPACT SENSOR CIRCUITS FOR A SHORT TOGETHER**

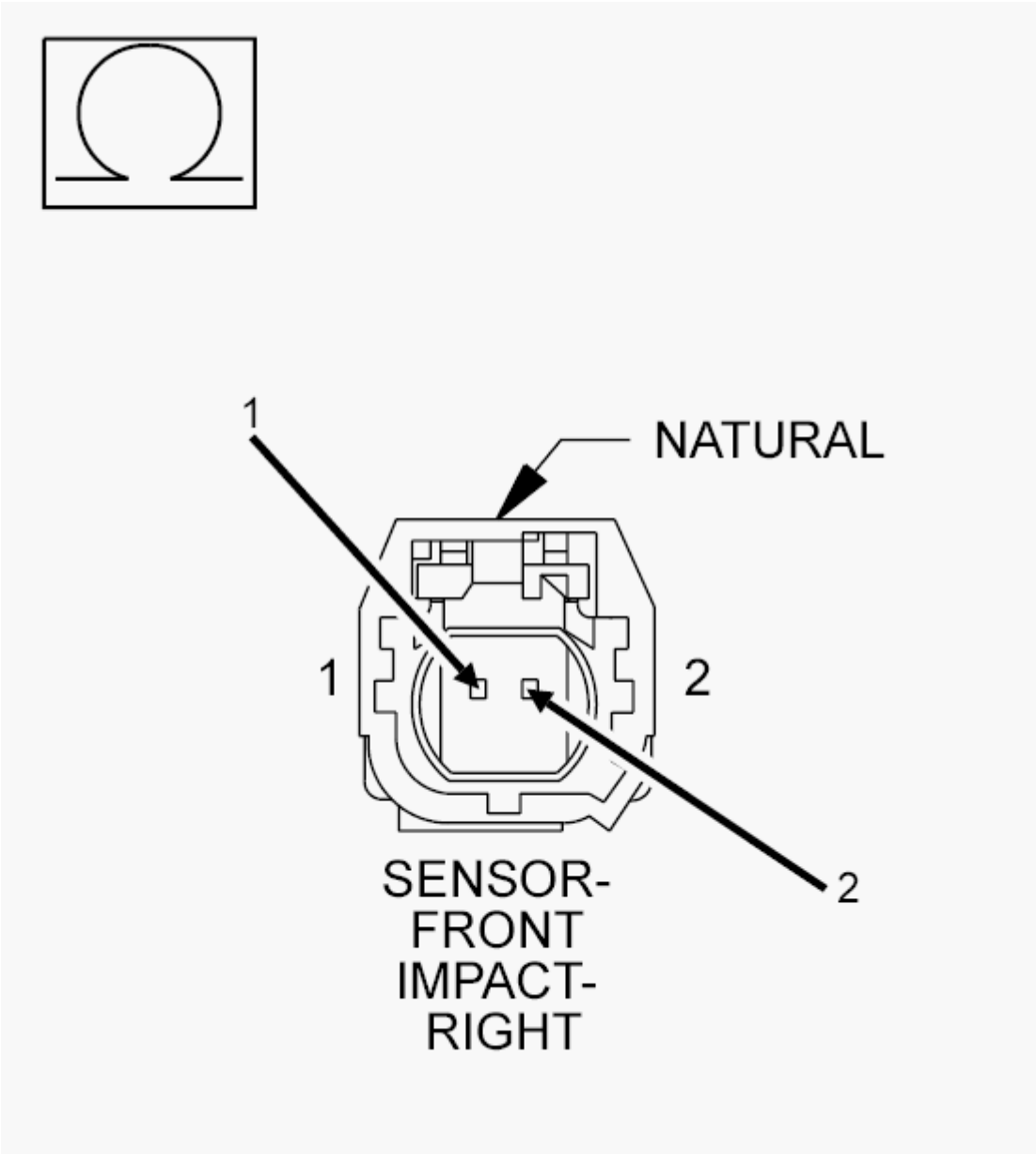

Fig. 135: Checking Right Front Impact Sensor Circuit
Courtesy of CHRYSLER GROUP, LLC

1. Measure the resistance between the (R80) Right Front Impact Sensor Signal circuit and (R82) Right Front Impact Sensor Ground circuit at the Right Front Impact Sensor harness connector.

   Is the resistance below 100K Ohms?

   Yes

   - Repair the (R80, R82) Right Front Impact Sensor circuits shorted together.
   - Refer to **STANDARD PROCEDURE** and perform the RESTRAINTS SYSTEM VERIFICATION TEST.

No

- Go To 5.

5. **CHECK THE (R82) RIGHT FRONT IMPACT SENSOR GROUND CIRCUIT FOR AN OPEN OR HIGH RESISTANCE**

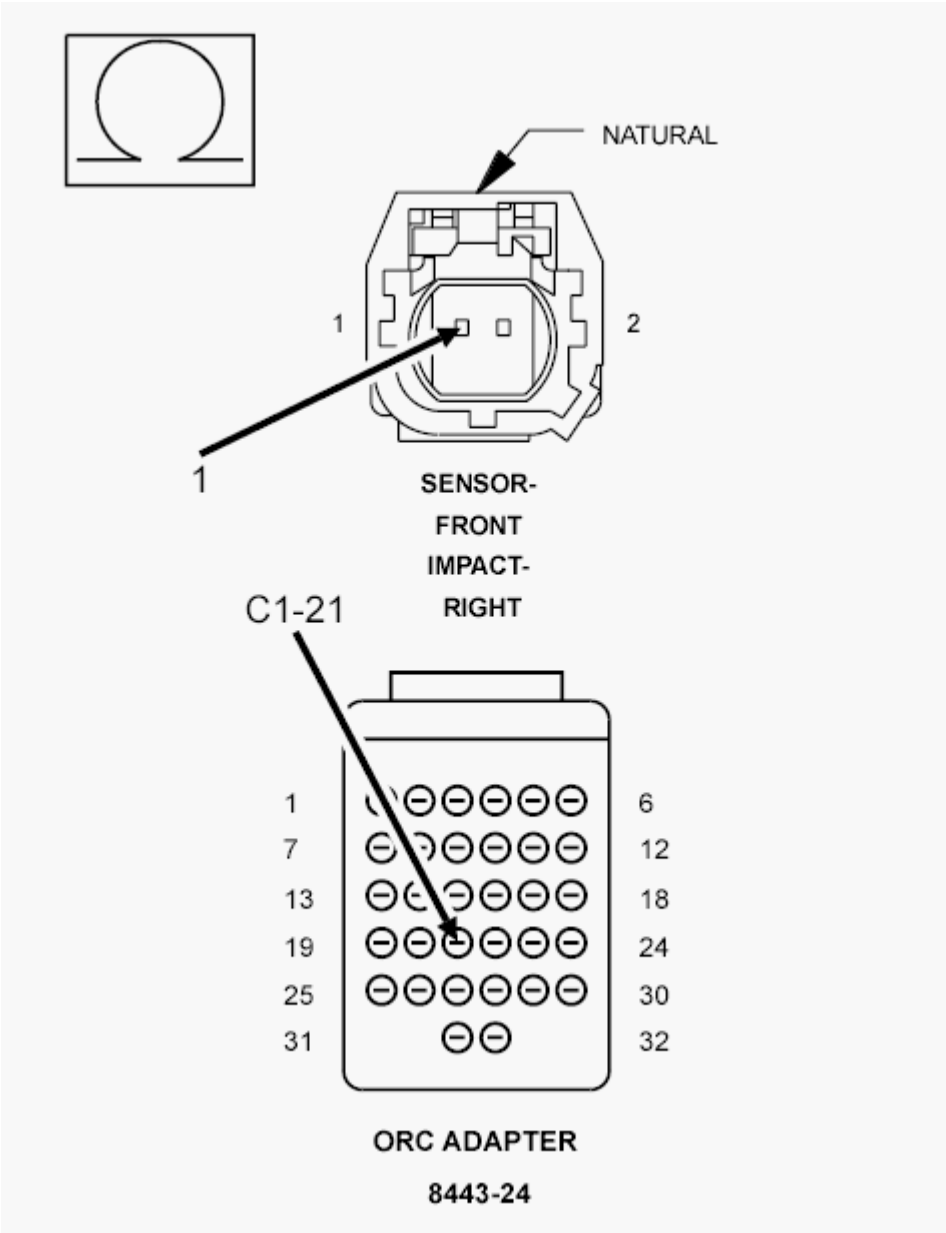

Fig. 136: Checking Right Front Impact Sensor Ground Circuit For Open Or High Resistance
Courtesy of CHRYSLER GROUP, LLC

1. Connect the SRS Load Tool Adapter (special tool #8443-24, 32-Way Adapter) to the ORC C1 harness connector.
2. Measure the resistance of the (R82) Right Front Impact Sensor Ground circuit between the Right Front Impact Sensor harness connector and the SRS Load Tool Adapter (special tool #8443-24, 32-

Way Adapter) cavity 21.

Is the resistance below 1 Ohm?

Yes

- Go To 6.

No

- Repair the (R82) Right Front Impact Sensor Ground circuit for an open or high resistance.
- Refer to **STANDARD PROCEDURE** and perform the RESTRAINTS SYSTEM VERIFICATION TEST.

6. **CHECK THE (R80) RIGHT FRONT IMPACT SENSOR SIGNAL CIRCUIT FOR AN OPEN OR HIGH RESISTANCE**

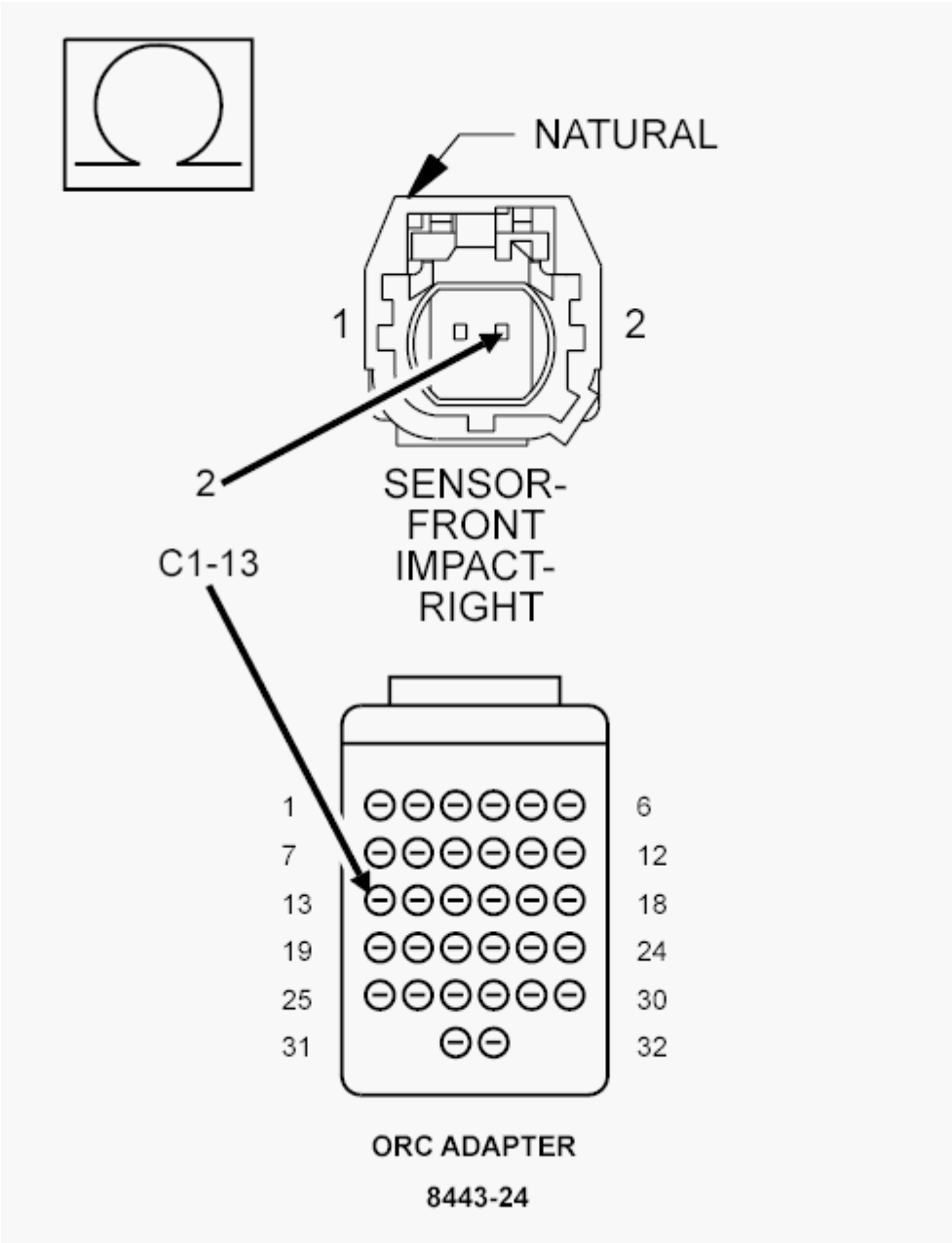

Fig. 137: Checking Right Front Impact Sensor Signal Circuit For Open Or High Resistance
Courtesy of CHRYSLER GROUP, LLC

1. Measure the resistance of the (R80) Right Front Impact Sensor Signal circuit between the Right Front Impact Sensor harness connector and the SRS Load Tool Adapter (special tool #8443-24, 32-Way Adapter) cavity 13.

   Is the resistance below 1 Ohm?

   Yes

   - Go To 7.

No

- Repair the (R80) Right Front Impact Sensor Signal circuit for an open or high resistance.
- Refer to **STANDARD PROCEDURE** and perform the RESTRAINTS SYSTEM VERIFICATION TEST.

7. **CHECK OPERATION OF THE FRONT RIGHT IMPACT SENSOR**
   1. Replace the Right Front Impact Sensor in accordance with the Service Information.
   2. Reconnect the vehicle body harness connector to the impact sensor.
   3. Remove any special tools or jumper wires and reconnect all previously disconnected components - except the Battery.

      WARNING: **Turn the ignition on, then reconnect the 12-volt battery and wait two minutes before proceeding. Failure to follow these instructions may result in possible serious or fatal injury.**

   4. Connect the scan tool to the Data Link Connector - use the most current software available.
   5. Use the scan tool and erase the stored codes in all airbag system modules.
   6. Turn the ignition OFF, and wait 15 seconds before turning the ignition ON.
   7. Wait one minute, and read active codes and if there are none present read the stored codes.

      Does the scan tool display active U0171-00-LOST COMMUNICATION W/ UP-FRONT RIGHT SATELLITE SENSOR DTC return?

      Yes

      WARNING: **Turn the ignition off, disconnect the 12-volt battery and wait two minutes before proceeding. Failure to follow these instructions may result in possible serious or fatal injury.**

      WARNING: **If the Occupant Restraint Controller (ORC) is dropped at any time, it must be replaced. Failure to follow these instructions may result in possible serious or fatal injury.**

      -
      -
      - Replace the Occupant Restraint Controller (ORC) in accordance with Service Instructions.
      - Refer to **STANDARD PROCEDURE** and perform the RESTRAINTS SYSTEM VERIFICATION TEST.

      No

      - Repair is complete.
      - Refer to **STANDARD PROCEDURE** and perform the RESTRAINTS SYSTEM

VERIFICATION TEST.

U0172-00-LOST COMMUNICATION W/ LEFT SIDE SATELLITE SENSOR 1

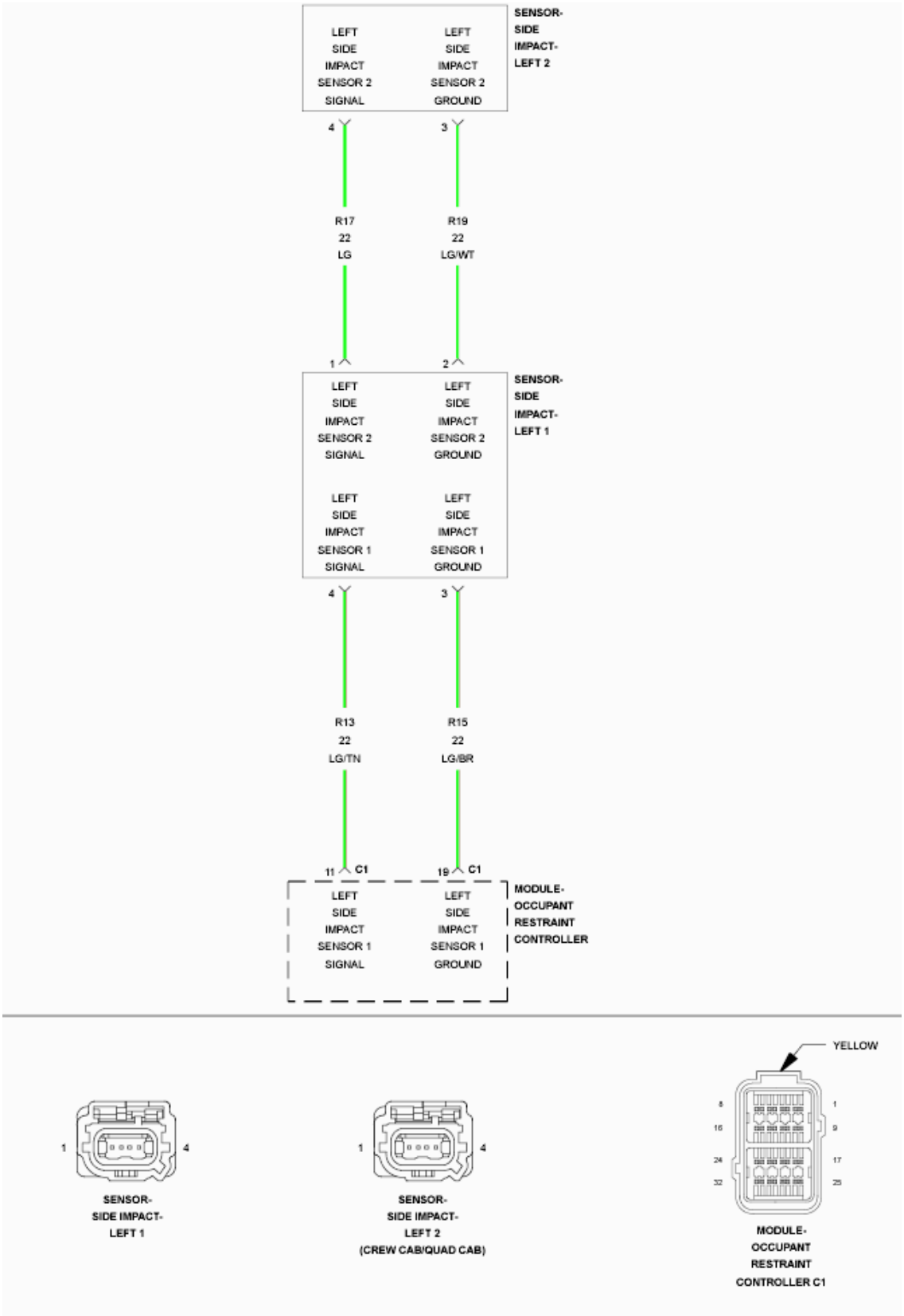

Fig. 138: Left Side Impact Sensor Circuit Wiring Diagram

Courtesy of CHRYSLER GROUP, LLC

For a complete wiring diagram, **refer to appropriate SYSTEM WIRING DIAGRAMS article** .

THEORY OF OPERATION

The location of this left side impact sensor 1 is in the B-pillar just past the first row seating. Refer to **DESCRIPTION** . The impact sensors perform their own self test using power supplied by the Occupant Restraint Controller (ORC) then communicate this status back to the ORC with periodic updates. The repair of this fault condition involves verifying the integrity of the wiring between the ORC and the sensor. If the scan tool shows this DTC has a Stored history of setting then the left side impact sensor is to be replaced. A short to voltage fault on the left side impact sensor 1 sensor wiring can cause a loss of comm impact sensor 2 code to set and the possible replacement of a good left side impact sensor 2. The left side impact 1, and 2 sensors are wired in a daisy chain pattern. The short to battery fault in a loss of comm or internal circuit failure of the side impact sensor 1 can cause the impact sensor 2 on the same side to set a loss of comm code.

WHEN MONITORED:

The Occupant Restraint Controller (ORC) continuously communicates with the Left Side Impact Sensor 1 over the sensor signal circuit. The sensor communication and on board diagnostics are powered by the ORC signal.

SET CONDITION:

This Diagnostic Trouble Code (DTC) will set, if the ORC and the Left Side Impact Sensor 1 fail to establish and maintain valid data communications.

POSSIBLE CAUSES

Possible Causes
(R13, R15) LEFT SIDE IMPACT SENSOR 1 CIRCUITS SHORTED TO VOLTAGE
(R13, R15) LEFT SIDE IMPACT SENSOR 1 CIRCUITS SHORTED TO GROUND
(R13, R15) LEFT SIDE IMPACT SENSOR 1 CIRCUITS SHORTED TOGETHER
(R13, R15) LEFT SIDE IMPACT SENSOR 1 CIRCUITS OPEN
LEFT SIDE IMPACT SENSOR 1
OCCUPANT RESTRAINT CONTROLLER (ORC)

Always Perform the Pre-Diagnostic Troubleshooting procedure before proceeding. Refer to STANDARD PROCEDURE.

DIAGNOSTIC TEST

1. **VERIFY ACTIVE DTC**

WARNING: **Turn the ignition off, disconnect the 12-volt battery and wait two minutes before proceeding. Failure to follow these instructions may result in possible serious or fatal injury.**

NOTE: **Using the wiring diagram/schematic as a guide check all related splices and connectors for signs of water intrusion, corrosion, pushed out or bent terminals, and correct pin tension.**

NOTE: **If after the harness inspection it appears the impact sensor connector is only seated halfway. Re-seat the harness connector into the impact sensor and lock the tab. Follow the instructions below checking for active codes.**

WARNING: **Turn the ignition on, then reconnect the 12-volt battery and wait two minutes before proceeding. Failure to follow these instructions may result in possible serious or fatal injury.**

NOTE: **Make sure the battery is fully charged.**

1. Turn the ignition on.
2. With the scan tool, read ORC DTCs.

   Does the scan tool display active B0091-49-LEFT SIDE ACCELERATION SENSOR 1 - INTERNAL ELECTRONIC FAILURE, U0172-00-LOST COMMUNICATION W/ LEFT SIDE SATELLITE SENSOR 1, U0173-00-LOST COMMUNICATION W/ LEFT SIDE SATELLITE SENSOR 2, U11AD-00-LOST COMMUNICATION W/ LEFT SIDE SATELLITE SENSOR 4 - DTC?

   Yes

   - Check for all other internal and lost communication codes indicated in the left side impact sensor daisy chain wiring after diagnosing DTC B0091-49-LEFT SIDE ACCELERATION SENSOR 1 - INTERNAL ELECTRONIC FAILURE, and DTC U0172-LOST COMMUNICATION W/LEFT SIDE SATELLITE ACCELERATION SENSOR 1. Go To The DTC Displayed. Refer to **DIAGNOSIS AND TESTING**. Go To 2.

   No

   - Refer to **STANDARD PROCEDURE** and perform the RESTRAINTS SYSTEM INTERMITTENT TEST.

2. **CHECK THE (R13, R15) LEFT SIDE IMPACT SENSOR 1 CIRCUITS FOR A SHORT TO VOLTAGE**

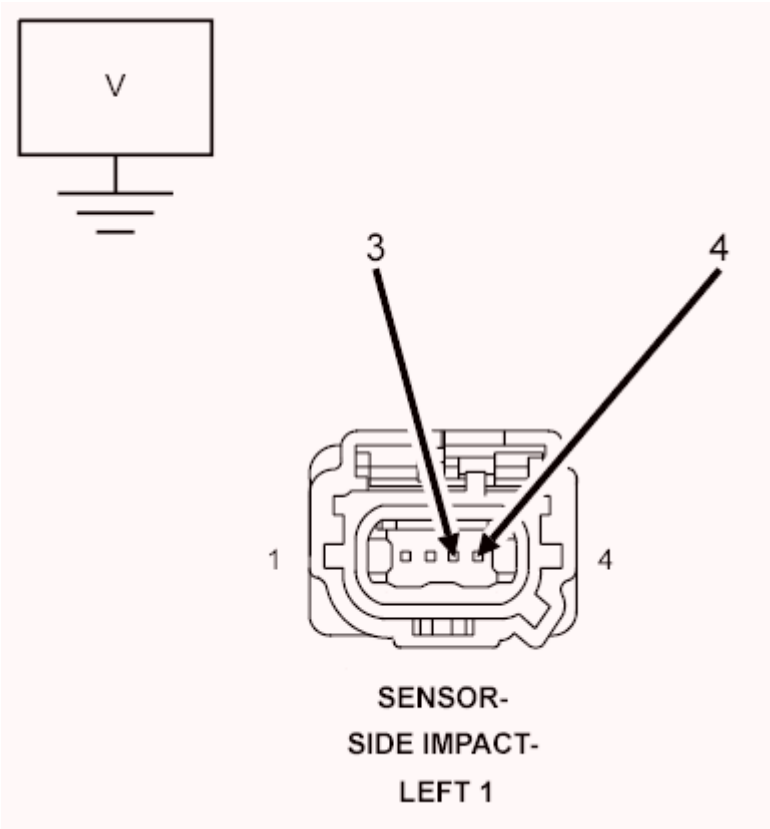

Fig. 139: Checking Left Side Impact Sensor 1 Circuit For A Short To Voltage
Courtesy of CHRYSLER GROUP, LLC

WARNING: **Turn the ignition off, disconnect the 12-volt battery and wait two minutes before proceeding. Failure to follow these instructions may result in possible serious or fatal injury.**

1. Disconnect the Left Side Impact Sensor 1 harness connector.
2. Disconnect the ORC harness connectors.

WARNING: **Turn the ignition on, then reconnect the 12-volt battery and wait two minutes before proceeding. Failure to follow these instructions may result in possible serious or fatal injury.**

3. Measure the voltage of the (R13) Left Side Impact Sensor 1 Signal circuit at the Left Side Impact Sensor 1 harness connector cavity 4.
4. Measure the voltage of the (R15) Left Side Impact Sensor 1 Ground circuit at the Left Side Impact Sensor 1 harness connector cavity 3.

   Is there any voltage present?

   Yes

- Repair the (R13, R15) Left Side Impact Sensor 1 circuits for a short to voltage.
- Refer to **STANDARD PROCEDURE** and perform the RESTRAINTS SYSTEM VERIFICATION TEST.

No

- Go To 3.

3. **CHECK THE (R13, R15) LEFT SIDE IMPACT SENSOR 1 CIRCUITS FOR A SHORT TO GROUND**

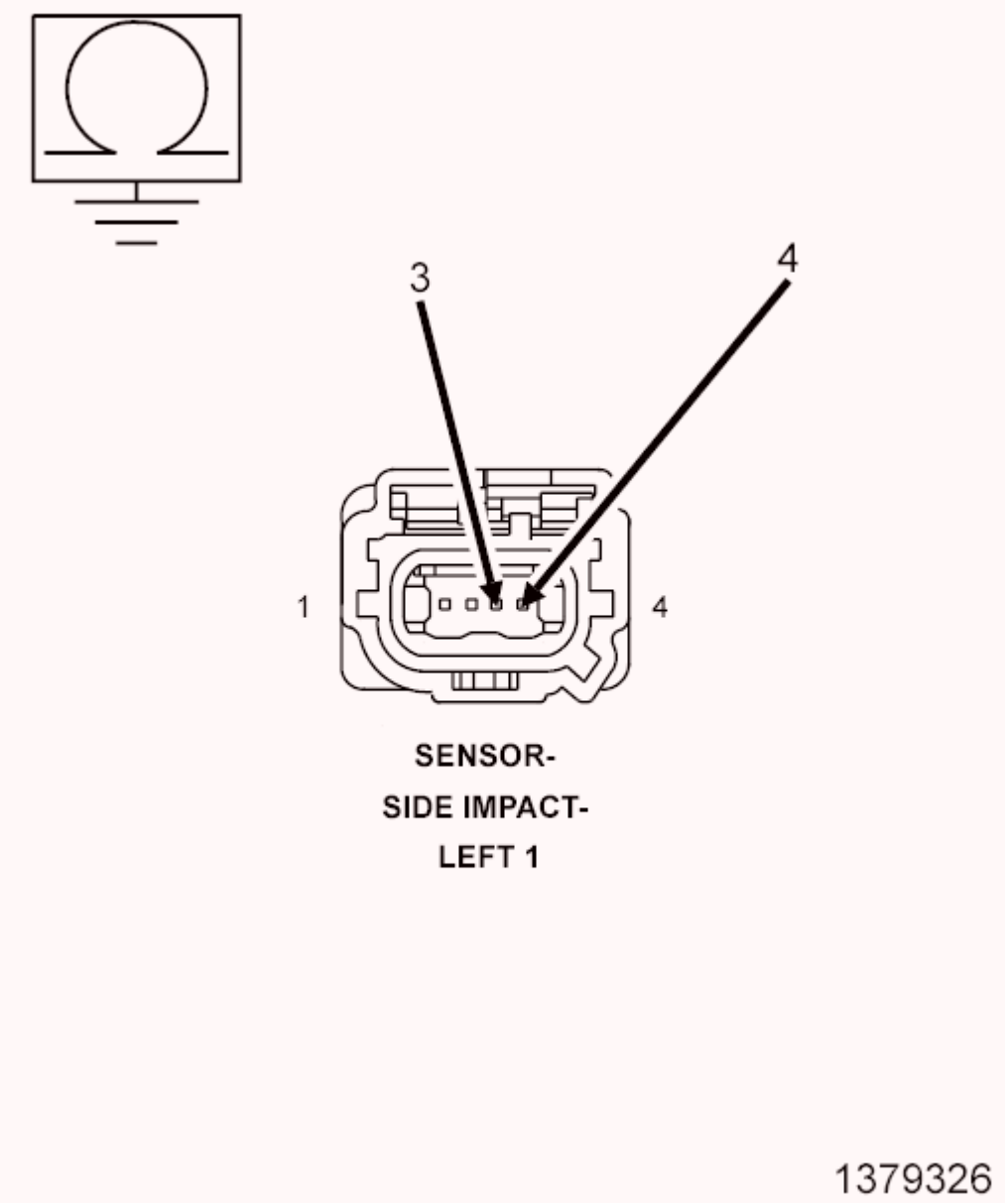

Fig. 140: Checking Left Side Impact Sensor 1 Circuit For A Short To Ground
Courtesy of CHRYSLER GROUP, LLC

WARNING: Turn the ignition off, disconnect the 12-volt battery and wait two minutes before proceeding. Failure to follow these instructions may result in possible serious or fatal injury.

1. Measure the resistance between ground and the (R13) Left Side Impact Sensor 1 Signal circuit at the Left Side Impact Sensor 1 harness connector cavity 4.
2. Measure the resistance between ground and the (R15) Left Side Impact Sensor 1 Ground circuit at the Left Side Impact Sensor 1 harness connector cavity 3.

   Is the resistance below 100K Ohms?

   Yes

   - Repair the (R13, R15) Left Side Impact Sensor 1 circuit for a short to ground.
   - Refer to **STANDARD PROCEDURE** and perform the RESTRAINTS SYSTEM VERIFICATION TEST.

   No

   - Go To 4.

4. **CHECK THE (R13, R15) LEFT SIDE IMPACT SENSOR 1 CIRCUITS FOR A SHORT TOGETHER**

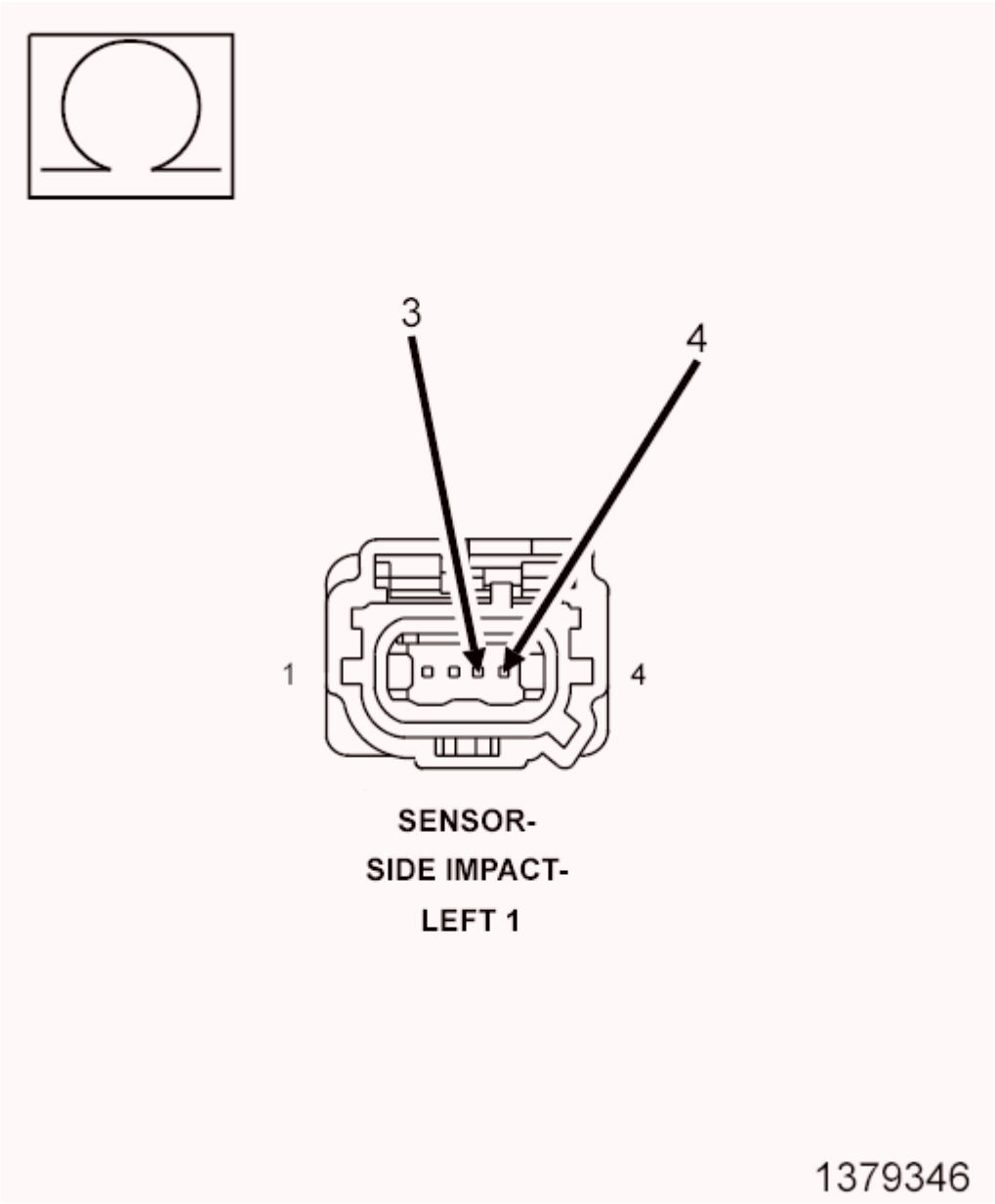

Fig. 141: Checking Left Side Impact Sensor 1 Circuit
Courtesy of CHRYSLER GROUP, LLC

1. Measure the resistance between the (R13) Left Side Impact Sensor 1 Signal circuit and (R15) Left Side Impact Sensor 1 Ground circuit at the Left Side Impact Sensor 1 harness connector cavity 3 and 4.

   Is the resistance below 100K Ohms?

   Yes

   - Repair the (R13, R15) Left Side Impact Sensor 1 circuits shorted together.
   - Refer to **STANDARD PROCEDURE** and perform the RESTRAINTS SYSTEM

VERIFICATION TEST.

No

- Go To 5.

5. **CHECK THE (R15) LEFT SIDE IMPACT SENSOR 1 GROUND CIRCUIT FOR AN OPEN OR HIGH RESISTANCE**

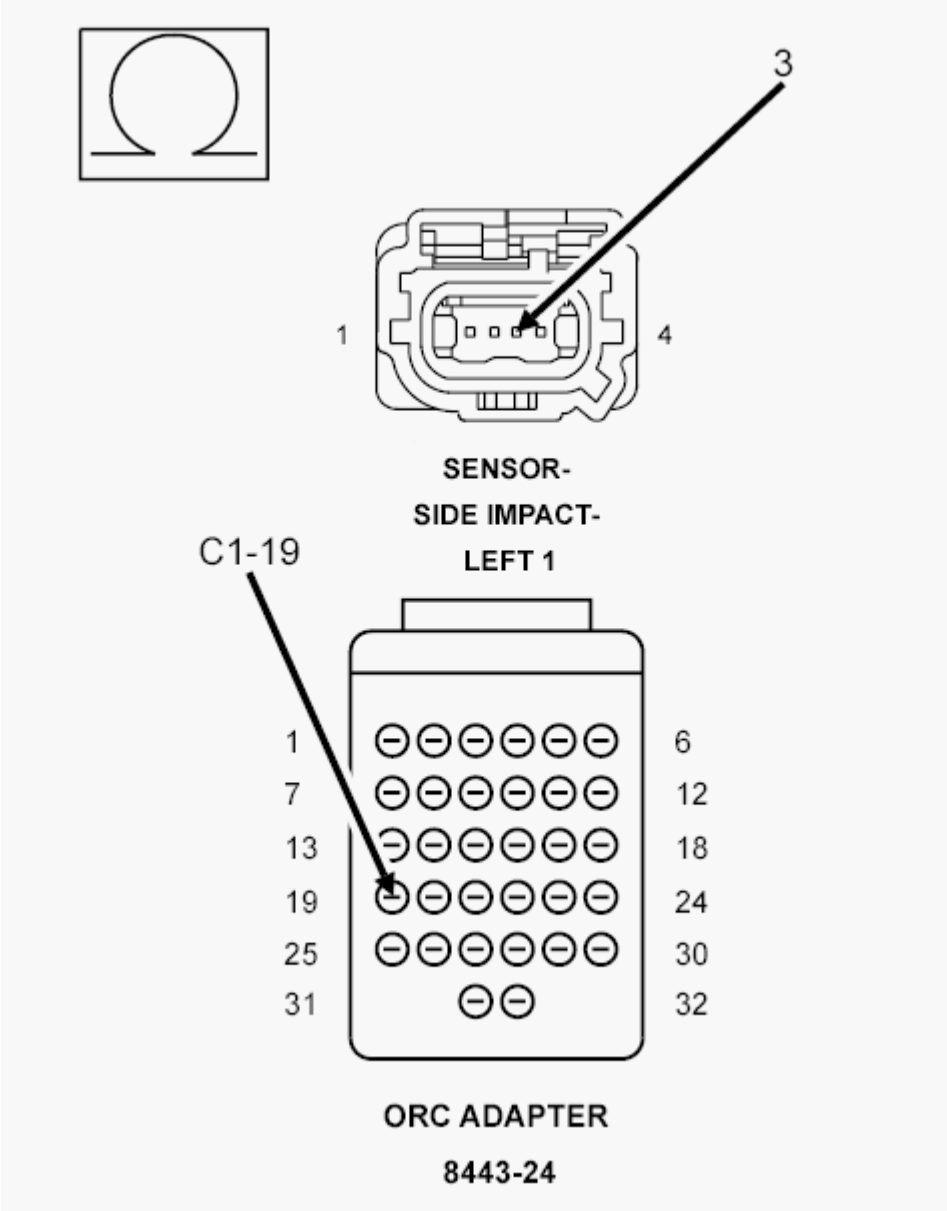

Fig. 142: Checking Left Side Impact Sensor 1 Ground Circuit For Open Or High Resistance
Courtesy of CHRYSLER GROUP, LLC

1. Connect the SRS Load Tool Adapter (special tool #8443-24, 32-Way Adapter) to the ORC C1 harness connector.

2. Measure the resistance of the (R15) Left Side Impact Sensor 1 Ground circuit between the Left Side Impact Sensor 1 harness connector and the SRS Load Tool Adapter (special tool #8443-24, 32-Way Adapter) cavity 19.

   Is the resistance below 1 Ohm?

   Yes

   - Go To 6.

   No

   - Repair the (R15) Left Side Impact Sensor 1 Ground circuit for an open or high resistance.
   - Refer to **STANDARD PROCEDURE** and perform the RESTRAINTS SYSTEM VERIFICATION TEST.

6. **CHECK THE (R13) LEFT SIDE IMPACT SENSOR 1 CIRCUIT FOR AN OPEN OR HIGH RESISTANCE**

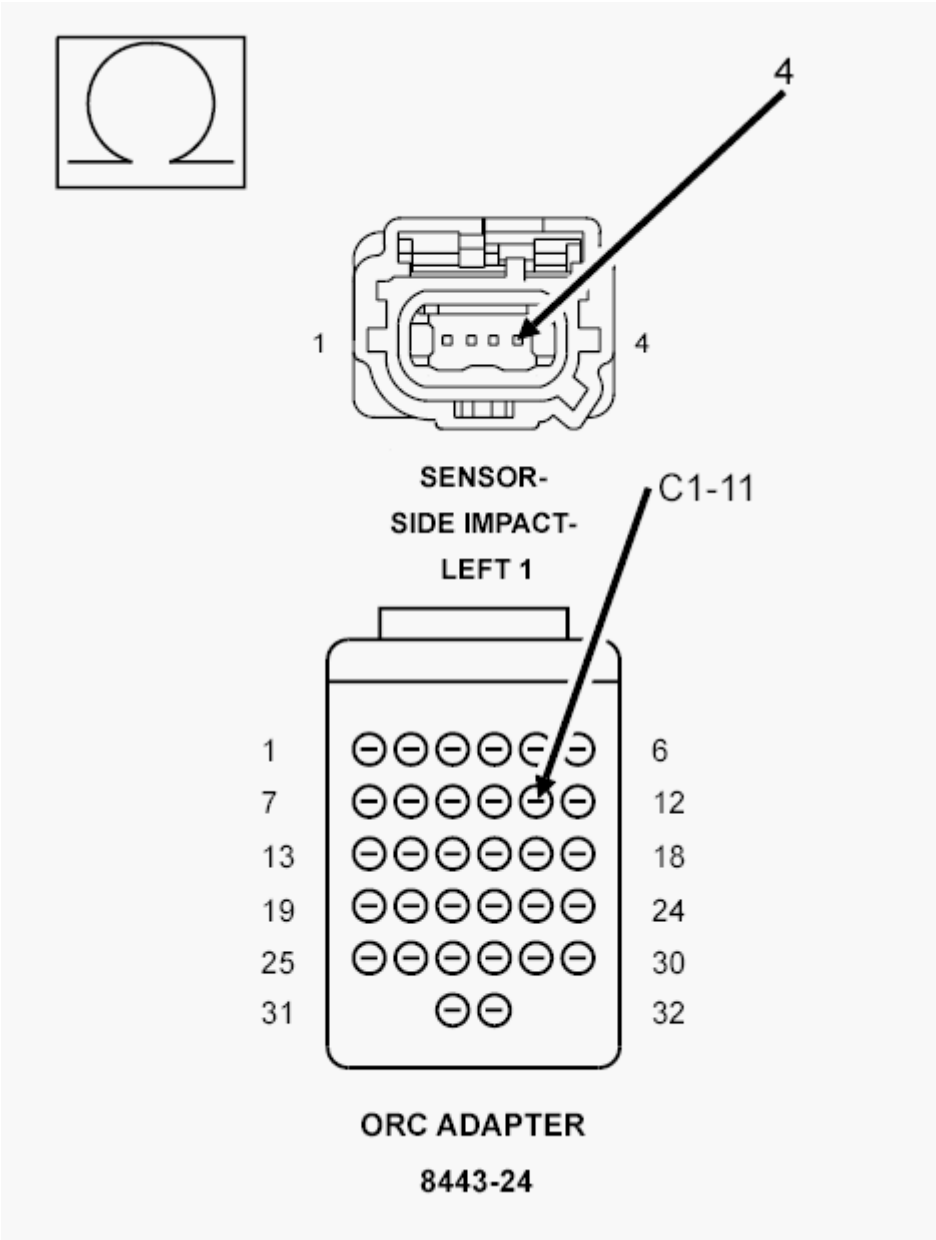

Fig. 143: Checking Left Side Impact Sensor 1 Circuit For Open Or High Resistance
Courtesy of CHRYSLER GROUP, LLC

1. Measure the resistance of the (R13) Left Side Impact Sensor 1 Signal circuit between the Left Side Impact Sensor 1 harness connector and the SRS Load Tool Adapter (special tool #8443-24, 32-Way Adapter) cavity 11.

   Is the resistance below 1 Ohm?

   Yes

   - Go To 7.

No

- Repair the (R13) Left Side Impact Sensor 1 Signal circuit for an open or high resistance.
- Refer to **STANDARD PROCEDURE** and perform the RESTRAINTS SYSTEM VERIFICATION TEST.

7. **CHECK OPERATION OF THE LEFT SIDE IMPACT SENSOR 1**
   1. Replace the Left Side Impact Sensor 1 in accordance with the Service Information.
   2. Reconnect the vehicle body harness connector to the impact sensor.
   3. Remove any special tools or jumper wires and reconnect all previously disconnected components - except the Battery.

      WARNING: **Turn the ignition on, then reconnect the 12-volt battery and wait two minutes before proceeding. Failure to follow these instructions may result in possible serious or fatal injury.**

   4. Connect the scan tool to the Data Link Connector - use the most current software available.
   5. Use the scan tool and erase the stored codes in all airbag system modules.
   6. Turn the ignition OFF, and wait 15 seconds before turning the ignition ON.
   7. Wait one minute, and read active codes and if there are none present read the stored codes.

      Does the scan tool display active U0172-00-LOST COMMUNICATION W/ LEFT SIDE SATELLITE SENSOR 1 - DTC?

      Yes

      WARNING: **Turn the ignition off, disconnect the 12-volt battery and wait two minutes before proceeding. Failure to follow these instructions may result in possible serious or fatal injury.**

      WARNING: **If the Occupant Restraint Controller (ORC) is dropped at any time, it must be replaced. Failure to follow these instructions may result in possible serious or fatal injury.**

      -
      -
      - Replace the ORC in accordance with Service Instructions.
      - Refer to **STANDARD PROCEDURE** and perform the RESTRAINTS SYSTEM VERIFICATION TEST.

      No

      - Repair is complete.
      - Refer to **STANDARD PROCEDURE** and perform the RESTRAINTS SYSTEM

VERIFICATION TEST.

U0173-00-LOST COMMUNICATION W/ LEFT SIDE SATELLITE SENSOR 2

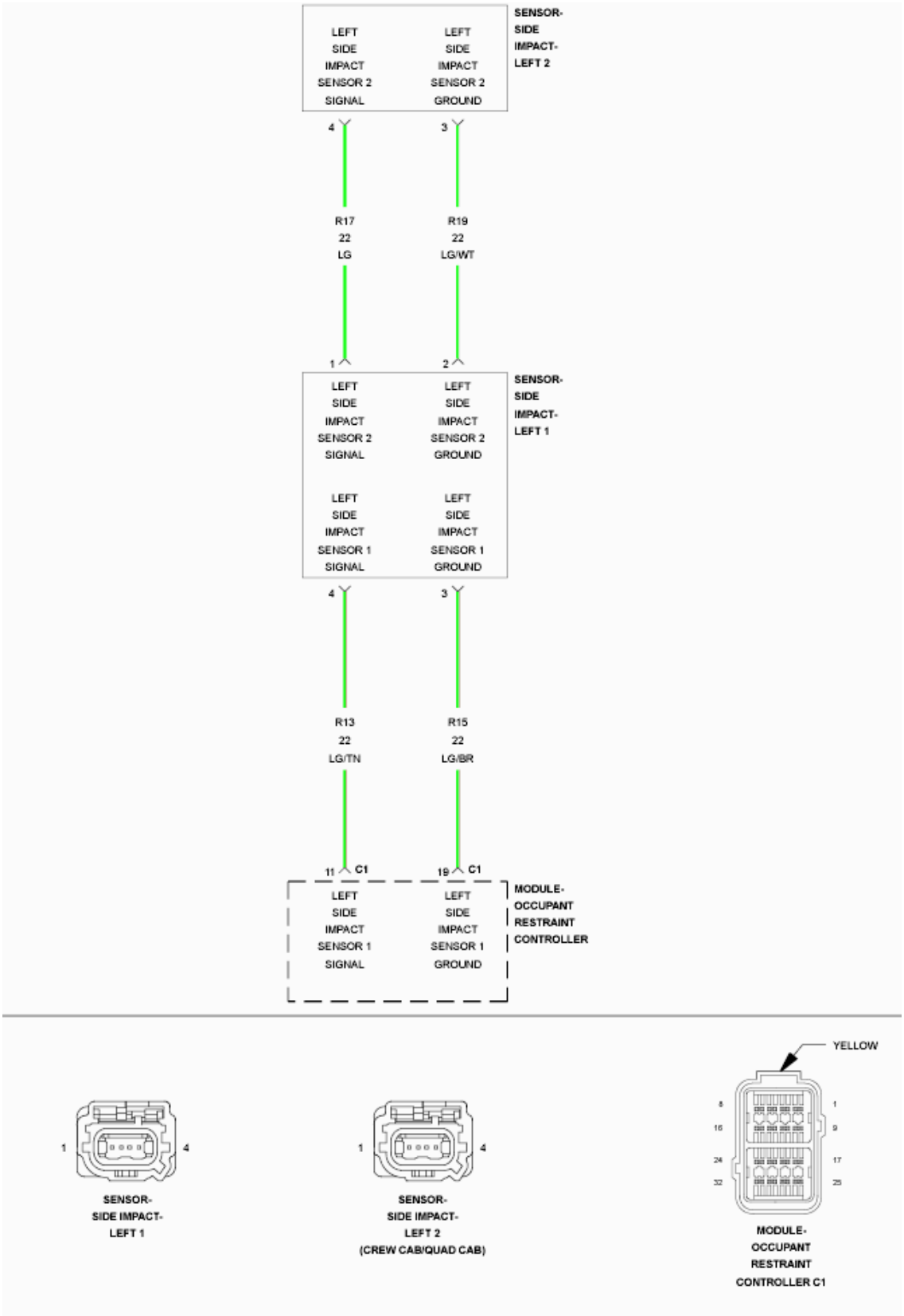

Fig. 144: Left Side Impact Sensor Circuit Wiring Diagram

Courtesy of CHRYSLER GROUP, LLC

For a complete wiring diagram, **refer to appropriate SYSTEM WIRING DIAGRAMS article** .

THEORY OF OPERATION

The location of this left side impact sensor 2 is in the C-pillar just past the second row seating. Refer to **DESCRIPTION** . The impact sensors perform their own self test using power supplied by the Occupant Restraint Controller (ORC) then communicate this status back to the ORC with periodic updates. The repair of this fault condition involves verifying the integrity of the wiring between the ORC and the sensor. If the scan tool shows this DTC has a Stored history of setting then the left side impact sensor is to be replaced. A short to voltage fault on the left side impact sensor 1 sensor wiring can cause a loss of comm impact sensor 2 code to set and the possible replacement of a good left side impact sensor 2. The left side impact 1, and 2 sensors are wired in a daisy chain pattern. The short to battery fault in a loss of comm or internal circuit failure of the side impact sensor 1 can cause the impact sensor 2 on the same side to set a loss of comm code.

WHEN MONITORED:

The ORC continuously communicates with the Left Side Impact Sensor 2 over the sensor signal circuit. The sensor communication and on board diagnostics are powered by the ORC signal.

SET CONDITION:

This Diagnostic Trouble Code (DTC) will set, if the ORC is communicating with the Left Side Impact Sensor 1 but fails to establish and maintain valid data communications with the Left Right Side Impact Sensor 2.

POSSIBLE CAUSES

Possible Causes
LOSS OF COMMUNICATION WITH THE LEFT SIDE IMPACT SENSOR 1
(R17, R19) LEFT SIDE IMPACT SENSOR 2 CIRCUITS SHORTED TO VOLTAGE
(R17, R19) LEFT SIDE IMPACT SENSOR 2 CIRCUITS SHORTED TO GROUND
(R17, R19) LEFT SIDE IMPACT SENSOR 2 CIRCUITS SHORTED TOGETHER
(R17, R19) LEFT SIDE IMPACT SENSOR 2 CIRCUITS OPEN
LEFT SIDE IMPACT SENSOR 2
OCCUPANT RESTRAINT CONTROLLER (ORC)

Always Perform the Pre-Diagnostic Troubleshooting procedure before proceeding. Refer to STANDARD PROCEDURE.

DIAGNOSTIC TEST

1. **VERIFY ACTIVE DTC**

WARNING: **Turn the ignition off, disconnect the 12-volt battery and wait two minutes before proceeding. Failure to follow these instructions may**

result in possible serious or fatal injury.

NOTE: **Using the wiring diagram/schematic as a guide check all related splices and connectors for signs of water intrusion, corrosion, pushed out or bent terminals, and correct pin tension.**

NOTE: **If after the harness inspection it appears the impact sensor connector is only seated halfway. Re-seat the harness connector into the impact sensor and lock the tab. Follow the instructions below checking for active codes.**

WARNING: **Turn the ignition on, then reconnect the 12-volt battery and wait two minutes before proceeding. Failure to follow these instructions may result in possible serious or fatal injury.**

NOTE: **Make sure the battery is fully charged.**

1. Turn the ignition on.
2. With the scan tool, read ORC DTCs.

   Does the scan tool display active B0091-49-LEFT SIDE ACCELERATION SENSOR 1 - INTERNAL ELECTRONIC FAILURE, B0092-49-LEFT SIDE ACCELERATION SENSOR 2 - INTERNAL ELECTRONIC FAILURE, U0172-00-LOST COMMUNICATION W/ LEFT SIDE SATELLITE SENSOR 1, U0173-00-LOST COMMUNICATION W/ LEFT SIDE SATELLITE SENSOR 2 - DTC?

   Yes

   - Check for all other internal and lost communication codes indicated in the left side impact sensor daisy chain wiring before diagnosing DTC U0173-LOST COMMUNICATION W/LEFT SIDE SATELLITE ACCELERATION SENSOR 2. Go To The DTC Displayed. Refer to **DIAGNOSIS AND TESTING**. If internal fault 1 and lost comm fault 1 have been checked follow DTC U0173-LOST COMMUNICATION W/LEFT SIDE SATELLITE ACCELERATION SENSOR 2. Go To 2.

   No

   - Refer to **STANDARD PROCEDURE** and perform the RESTRAINTS SYSTEM INTERMITTENT TEST.

2. **CHECK THE (R17, R19) LEFT SIDE IMPACT SENSOR 2 CIRCUITS FOR A SHORT TO VOLTAGE**

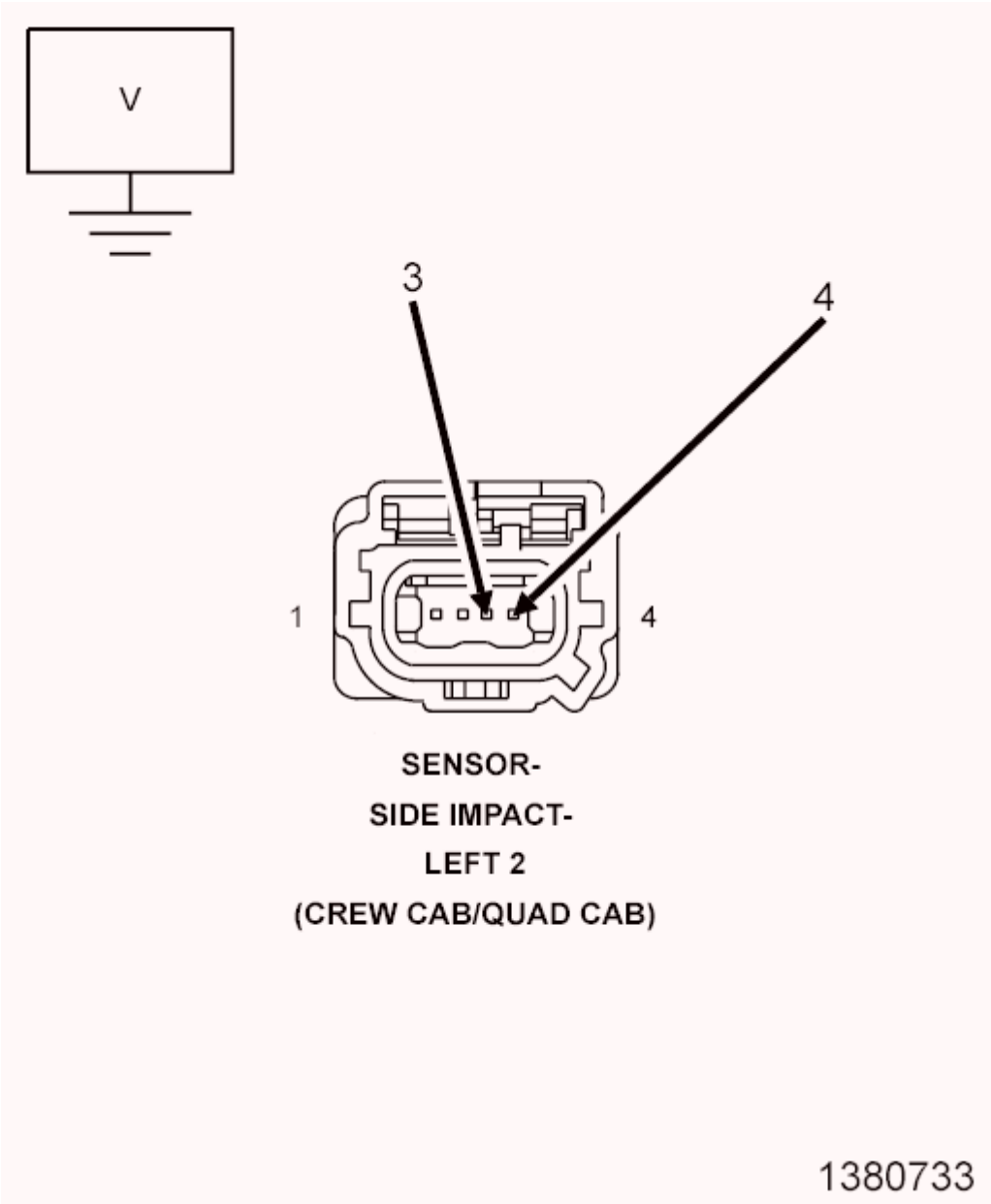

Fig. 145: Checking Left Side Impact Sensor 2 Circuit For A Short To Voltage
Courtesy of CHRYSLER GROUP, LLC

WARNING: **Turn the ignition off, disconnect the 12-volt battery and wait two minutes before proceeding. Failure to follow these instructions may result in possible serious or fatal injury.**

1. Disconnect the Left Side Impact Sensor 1 harness connector.
2. Disconnect the Left Side Impact Sensor 2 harness connector.

WARNING: **Turn the ignition on, then reconnect the 12-volt battery and wait two minutes before proceeding. Failure to follow these**

instructions may result in possible serious or fatal injury.

3. Measure the voltage of the (R19) Left Side Impact Sensor 2 Ground circuit cavity 3 at the Left Side Impact Sensor 2 harness connector.
4. Measure the voltage of the (R17) Left Side Impact Sensor 2 Signal circuit cavity 4 at the Left Side Impact Sensor 2 harness connector.

   Is there any voltage present?

   Yes

   - Repair the (R17, R19) Left Side Impact Sensor 2 circuits for a short to voltage.
   - Refer to **STANDARD PROCEDURE** and perform the RESTRAINTS SYSTEM VERIFICATION TEST.

   No

   - Go To 3.

3. **CHECK THE (R17, R19) LEFT SIDE IMPACT SENSOR 2 CIRCUITS FOR A SHORT TO GROUND**

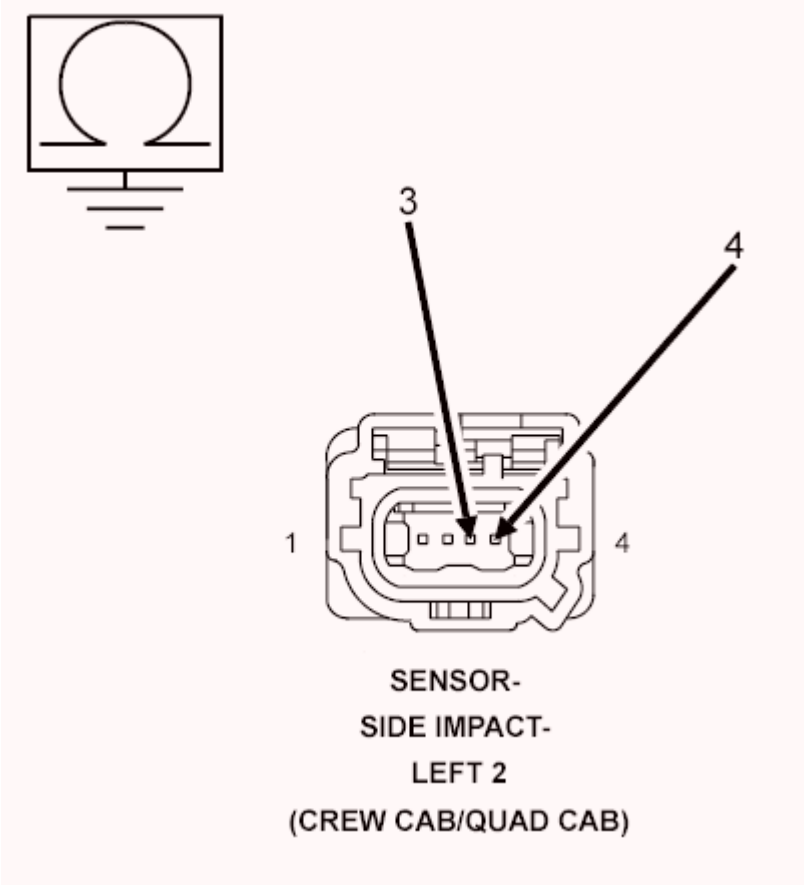

Fig. 146: Checking Left Side Impact Sensor 2 Circuit For A Short To Ground

Courtesy of CHRYSLER GROUP, LLC

WARNING: Turn the ignition off, disconnect the 12-volt battery and wait two minutes before proceeding. Failure to follow these instructions may result in possible serious or fatal injury.

1. Measure the resistance between ground and the (R17) Left Side Impact Sensor 2 Signal circuit between the Left Side Impact Sensor 2 harness connector cavity 4.
2. Measure the resistance between ground and the (R19) Left Side Impact Sensor 2 Ground circuit between the Left Side Impact Sensor 2 harness connector cavity 3.

Is the resistance below 100K Ohms?

Yes

- Repair the (R17, R19) Left Side Impact Sensor 2 circuits for a short to ground.
- Refer to **STANDARD PROCEDURE** and perform the RESTRAINTS SYSTEM VERIFICATION TEST.

No

- Go To 4.

4. **CHECK THE (R17, R19) LEFT SIDE IMPACT SENSOR 2 CIRCUITS FOR A SHORT TOGETHER**

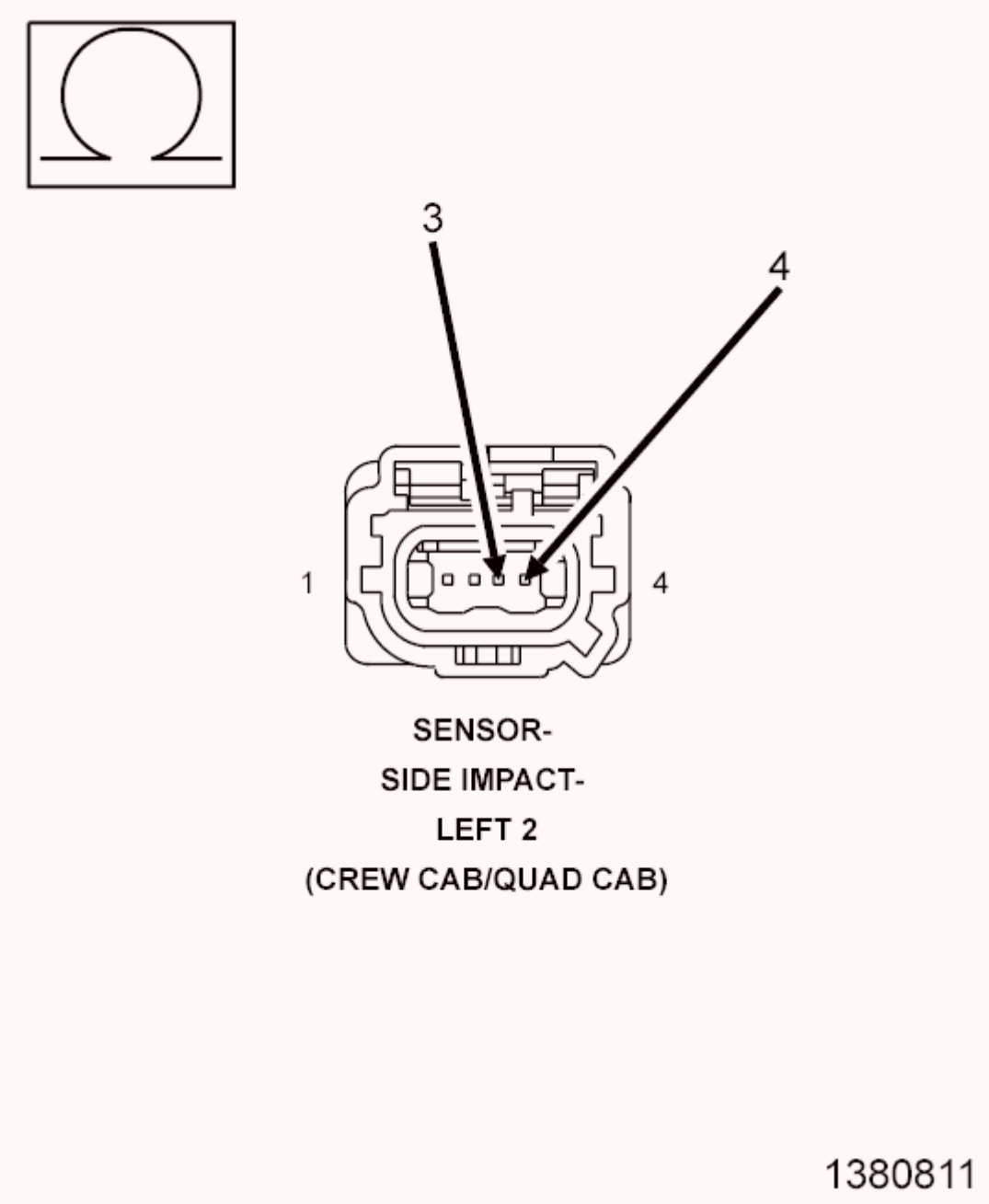

Fig. 147: Checking Left Side Impact Sensor 2 Circuit
Courtesy of CHRYSLER GROUP, LLC

1. Measure the resistance between the (R17) Left Side Impact Sensor 2 Signal circuit and (R19) Left Side Impact Sensor 2 Ground circuits at the Left Side Impact Sensor 2 harness connector cavity 4 and 3.

   Is the resistance below 100K Ohms?

   Yes

- Repair the (R17, R19) Left Side Impact Sensor 2 circuits shorted together.
- Refer to **STANDARD PROCEDURE** and perform the RESTRAINTS SYSTEM VERIFICATION TEST.

No

- Go To 5.

5. **CHECK THE (R19) LEFT SIDE IMPACT SENSOR 2 GROUND CIRCUIT FOR AN OPEN OR HIGH RESISTANCE**

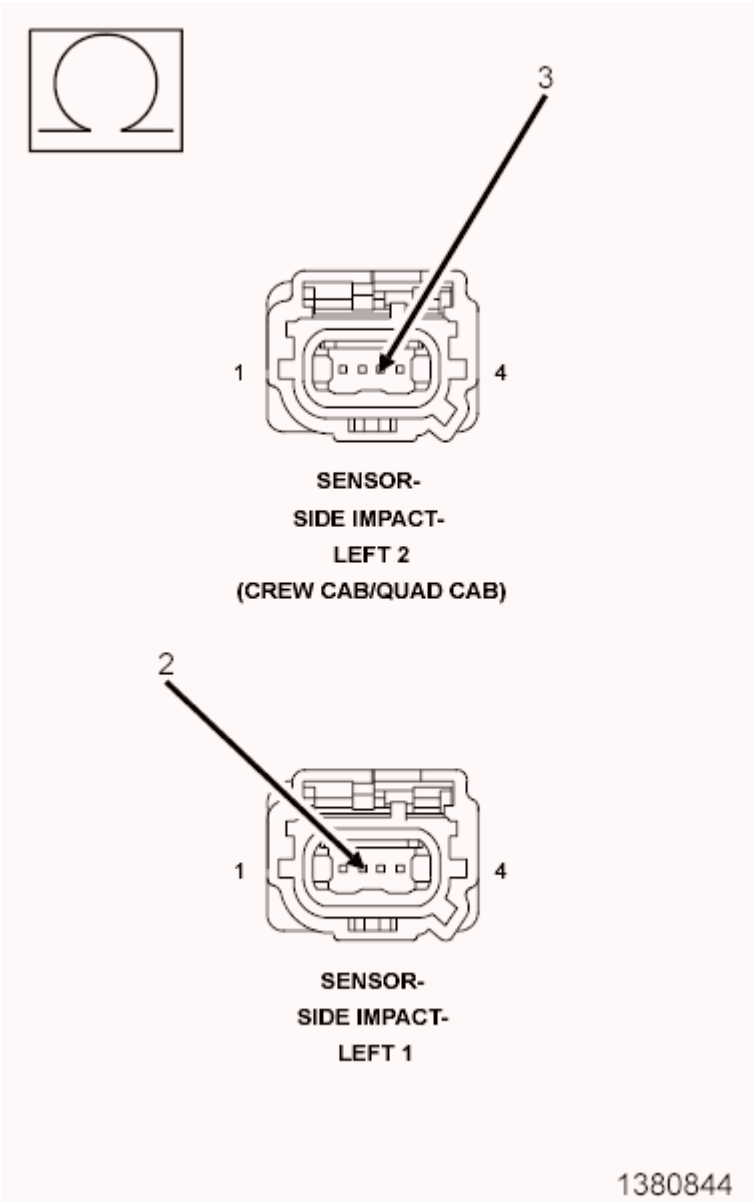

Fig. 148: Checking Left Side Impact Sensor 2 Circuit For Open
Courtesy of CHRYSLER GROUP, LLC

1. Disconnect the Left Side Impact Sensor 1 harness connector.
2. Measure the resistance of the (R19) Left Side Impact Sensor 2 Ground circuit between the Left Side Impact Sensor 2 harness connector cavity 3 and the Left Side Impact Sensor 1 harness connector cavity 2.

   Is the resistance below 1 Ohm?

   Yes

   - Go To 6.

   No

   - Repair the (R19) Left Side Impact Sensor 2 Ground circuit for an open or high resistance.
   - Refer to **STANDARD PROCEDURE** and perform the RESTRAINTS SYSTEM VERIFICATION TEST.

6. **CHECK THE (R13) LEFT SIDE IMPACT SENSOR 2 SIGNAL CIRCUIT FOR AN OPEN OR HIGH RESISTANCE**

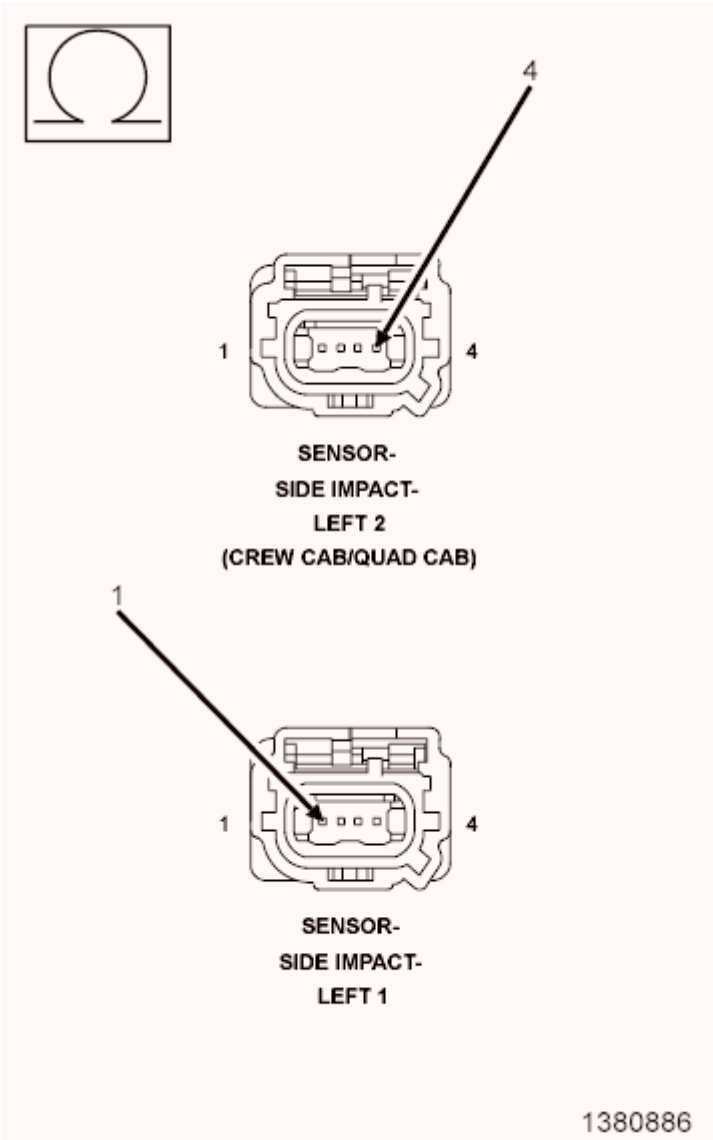

Fig. 149: Checking Left Side Impact Sensor 2 Circuit For Open
Courtesy of CHRYSLER GROUP, LLC

1. Measure the resistance of the (R17) Left Side Impact Sensor 2 Signal circuit between the Left Side Impact Sensor 2 harness connector cavity 4 and the Left Side Impact Sensor 1 harness connector cavity 1.

   Is the resistance below 1 Ohm?

   Yes

   - Go To 7.

   No

   - Repair the (R17) Left Side Impact Sensor 2 Signal circuit for an open or high resistance.

- Refer to **STANDARD PROCEDURE** and perform the RESTRAINTS SYSTEM VERIFICATION TEST.

7. **CHECK OPERATION OF THE LEFT SIDE IMPACT SENSOR 2**
    1. Replace the Left Side Impact Sensor 2 in accordance with the Service Information.
    2. Reconnect the vehicle body harness to the impact sensor.
    3. Remove any special tools or jumper wires and reconnect all previously disconnected components - except the Battery.

    WARNING: Turn the ignition on, then reconnect the 12-volt battery and wait two minutes before proceeding. Failure to follow these instructions may result in possible serious or fatal injury.

    4. Connect the scan tool to the Data Link Connector - use the most current software available.
    5. Use the scan tool and erase the stored codes in all airbag system modules.
    6. Turn the ignition OFF, and wait 15 seconds before turning the ignition ON.
    7. Wait one minute, and read active codes and if there are none present read the stored codes.

    Did the scan tool display active U0173-00-LOST COMMUNICATION W/ LEFT SIDE SATELLITE SENSOR 2 - DTC?

    Yes

    WARNING: Turn the ignition off, disconnect the 12-volt battery and wait two minutes before proceeding. Failure to follow these instructions may result in possible serious or fatal injury.

    WARNING: If the Occupant Restraint Controller (ORC) is dropped at any time, it must be replaced. Failure to follow these instructions may result in possible serious or fatal injury.

    -
    -
    - Replace the ORC in accordance with Service Instructions.
    - Refer to **STANDARD PROCEDURE** and perform the RESTRAINTS SYSTEM VERIFICATION TEST.

    No

    - Repair is complete.
    - Refer to **STANDARD PROCEDURE** and perform the RESTRAINTS SYSTEM VERIFICATION TEST.

U0175-00-LOST COMMUNICATION W/ RIGHT SIDE SATELLITE SENSOR 1

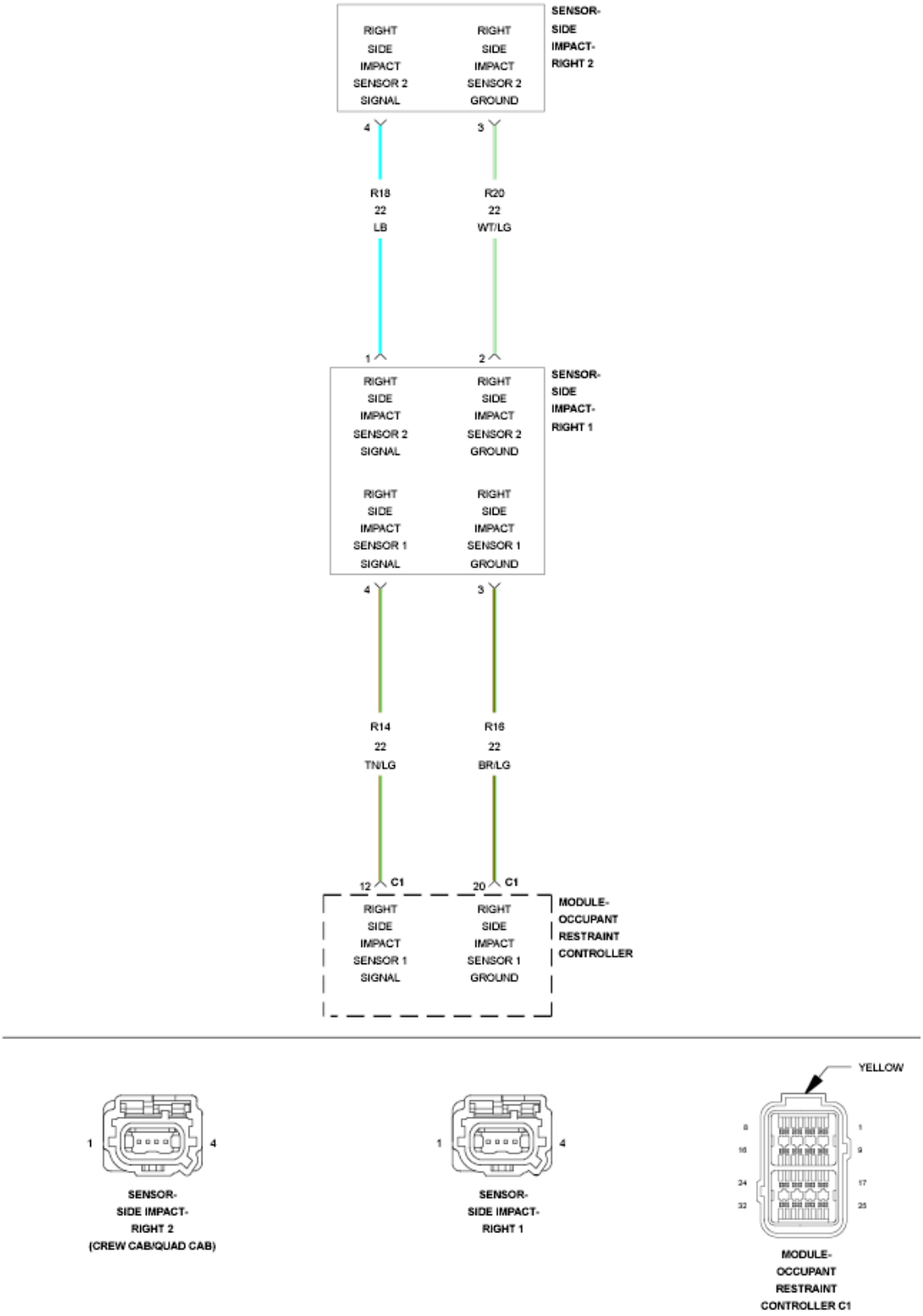

Fig. 150: Right Side Impact Sensor Circuit Wiring Diagram
Courtesy of CHRYSLER GROUP, LLC

For a complete wiring diagram, **refer to appropriate SYSTEM WIRING DIAGRAMS article** .

THEORY OF OPERATION

The location of this right side impact sensor 1 is in the B-pillar just past the first row seating. Refer to **DESCRIPTION** . The impact sensors perform their own self test using power supplied by the Occupant Restraint Controller (ORC) then communicate this status back to the ORC with periodic updates. The repair of this fault condition involves verifying the integrity of the wiring between the ORC and the sensor. If the scan tool shows this DTC has a Stored history of setting then the right side impact sensor is to be replaced. A short to voltage fault on the right side impact sensor 1 sensor wiring can cause a loss of comm impact sensor 2 or 4 code to set and the possible replacement of a good right side impact sensor 2 or 4. The right side impact 1, 2, and 4 sensors are wired in a daisy chain pattern. The short to battery fault in a loss of comm or internal circuit failure of the side impact sensor 1 can cause the impact sensor 2 and 4 on the same side to set a loss of comm code.

WHEN MONITORED:

The Occupant Restraint Controller (ORC) continuously communicates with the Right Side Impact Sensor 1 over the sensor signal circuit. The sensor communication and on board diagnostics are powered by the ORC signal.

SET CONDITION:

This Diagnostic Trouble Code (DTC) will set, if the ORC and the Right Side Impact Sensor 1 fail to establish and maintain valid data communications.

POSSIBLE CAUSES

Possible Causes
(R14, R16) RIGHT SIDE IMPACT SENSOR 1 CIRCUITS SHORTED TO VOLTAGE
(R14, R16) RIGHT SIDE IMPACT SENSOR 1 CIRCUITS SHORTED TO GROUND
(R14, R16) RIGHT SIDE IMPACT SENSOR 1 CIRCUITS SHORTED TOGETHER
(R16) RIGHT SIDE IMPACT SENSOR 1 CIRCUITS OPEN
RIGHT SIDE IMPACT SENSOR 1
OCCUPANT RESTRAINT CONTROLLER (ORC

Always Perform the Pre-Diagnostic Troubleshooting procedure before proceeding. Refer to STANDARD PROCEDURE.

DIAGNOSTIC TEST

1. **VERIFY ACTIVE DTC**

WARNING: **Turn the ignition off, disconnect the 12-volt battery and wait two minutes before proceeding. Failure to follow these instructions may result in possible serious or fatal injury.**

NOTE: **Using the wiring diagram/schematic as a guide check all related splices and connectors for signs of water intrusion, corrosion, pushed out or bent terminals, and correct pin tension.**

NOTE: **If after the harness inspection it appears the impact sensor connector is only seated halfway. Re-seat the harness connector into the impact sensor and lock the tab. Follow the instructions below checking for active codes.**

WARNING: **Turn the ignition on, then reconnect the 12-volt battery and wait two minutes before proceeding. Failure to follow these instructions may result in possible serious or fatal injury.**

NOTE: **Make sure the battery is fully charged.**

1. Turn the ignition on.
2. With the scan tool, read ORC DTCs.

   Does the scan tool display active B0096-49-RIGHT SIDE ACCELERATION SENSOR 1 - INTERNAL ELECTRONIC FAILURE, U0175-00-LOST COMMUNICATION W/ RIGHT SIDE SATELLITE SENSOR 1, U0176-00-LOST COMMUNICATION W/ RIGHT SIDE SATELLITE SENSOR 2, U11B0-00-LOST COMMUNICATION W/ RIGHT SIDE SATELLITE SENSOR 4 - DTC?

   Yes

   - Check for all other internal and lost communication codes indicated in the right side impact sensor daisy chain wiring, starting with DTC B0096-49-RIGHT SIDE ACCELERATION SENSOR 1 - INTERNAL ELECTRONIC FAILURE, then DTC U0175-00-LOST COMMUNICATION W/RIGHT SIDE SATELLITE ACCELERATION SENSOR 1. Refer to **DIAGNOSIS AND TESTING**. Then Go To 2.

   No

   - Refer to **STANDARD PROCEDURE** and perform the RESTRAINTS SYSTEM INTERMITTENT TEST.

2. **CHECK THE (R14, R16) RIGHT SIDE IMPACT SENSOR 1 CIRCUITS FOR A SHORT TO VOLTAGE**

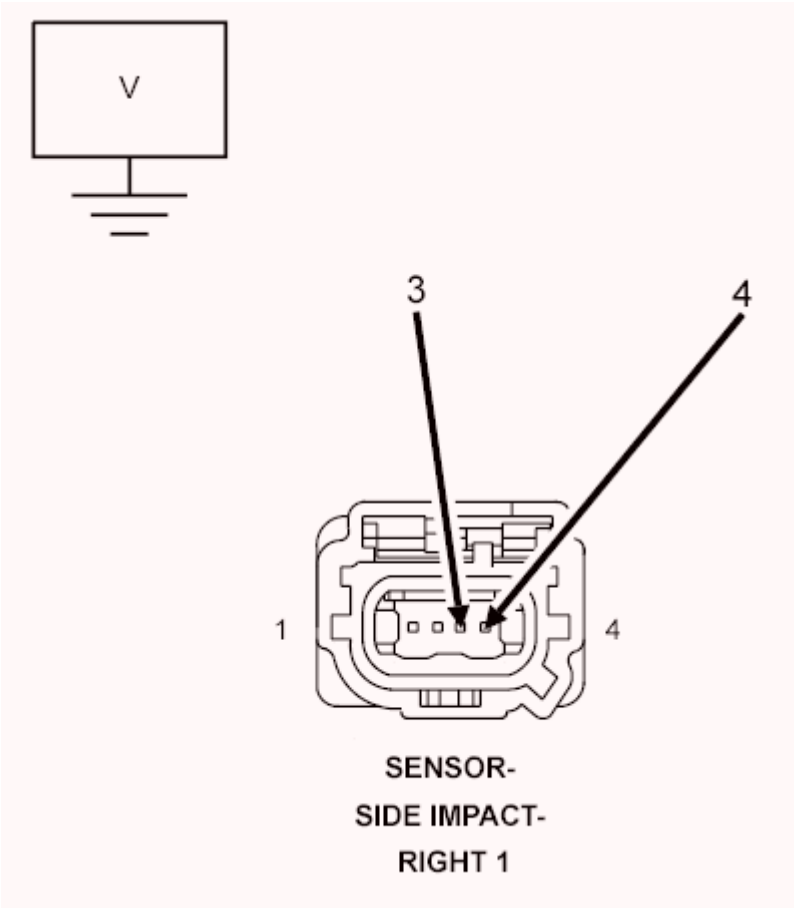

Fig. 151: Checking Right Side Impact Sensor 1 Circuit For A Short To Voltage
Courtesy of CHRYSLER GROUP, LLC

WARNING: **Turn the ignition off, disconnect the 12-volt battery and wait two minutes before proceeding. Failure to follow these instructions may result in possible serious or fatal injury.**

1. Disconnect the Right Side Impact Sensor 1 harness connector.
2. Disconnect the ORC harness connectors.

WARNING: **Turn the ignition on, then reconnect the 12-volt battery and wait two minutes before proceeding. Failure to follow these instructions may result in possible serious or fatal injury.**

3. Measure the voltage of the (R14) Right Side Impact Sensor 1 Signal circuit cavity 4 and (R16) Right Side Impact Sensor 1 Ground circuit cavity 3 at the Right Side Impact Sensor 1 harness connector.

   Is there any voltage present?

   Yes

WARNING: Turn the ignition off, disconnect the 12-volt battery and wait two minutes before proceeding. Failure to follow these instructions may result in possible serious or fatal injury.

-
- Repair the (R14, R16) Right Side Impact Sensor 1 circuits for a short to voltage.
- Refer to **STANDARD PROCEDURE** and perform the RESTRAINTS SYSTEM VERIFICATION TEST.

No

- Go To 3.

3. **CHECK THE (R14, R16) RIGHT SIDE IMPACT SENSOR 1 CIRCUITS FOR A SHORT TO GROUND**

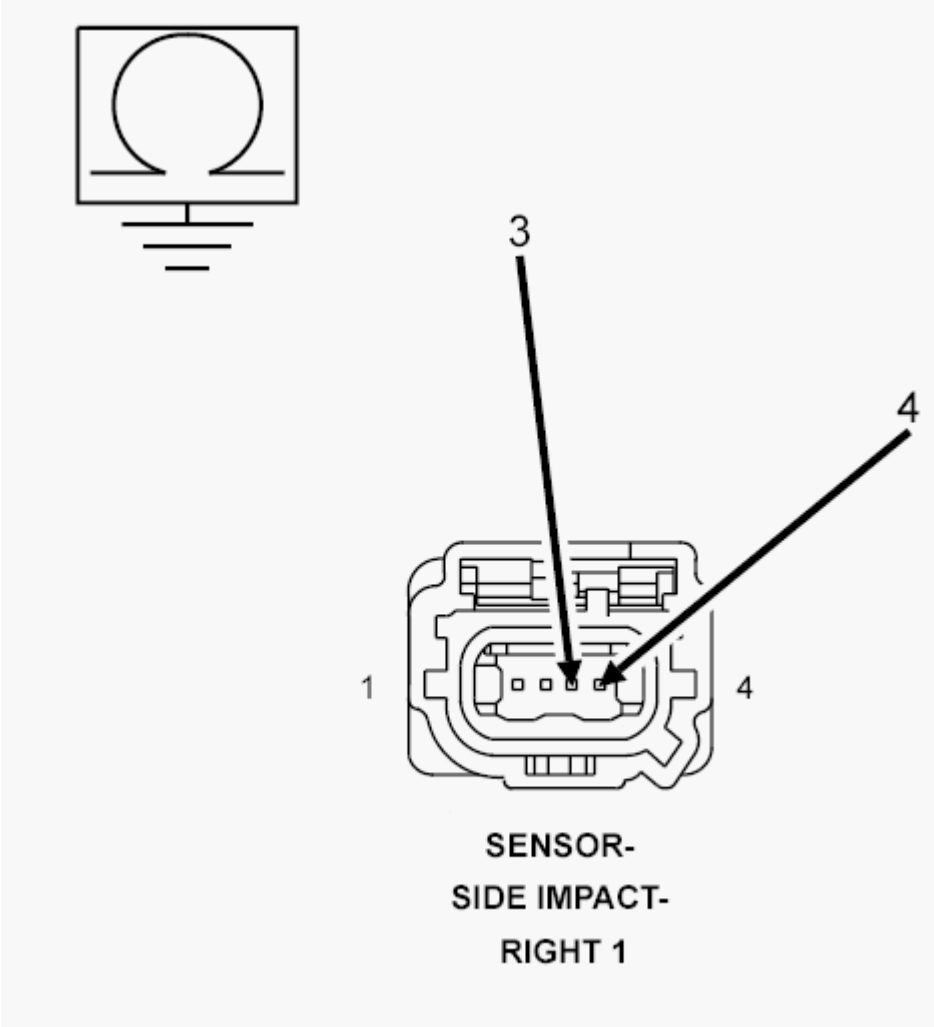

Fig. 152: Checking Right Side Impact Sensor 1 Circuit For A Short To Ground
Courtesy of CHRYSLER GROUP, LLC

WARNING: Turn the ignition off, disconnect the 12-volt battery and wait two minutes before proceeding. Failure to follow these instructions may result in possible serious or fatal injury.

1. Measure the resistance between ground and the (R16) Right Side Impact Sensor 1 Ground circuit at the Right Side Impact Sensor 1 harness connector cavity 3.
2. Measure the resistance between ground and the (R14) Right Side Impact Sensor 1 Signal circuit between the Right Side Impact Sensor 1 harness connector cavity 4.

   Is the resistance below 100K Ohms?

   Yes

   - Repair the (R14, R16) Right Side Impact Sensor 1 circuits for a short to ground.
   - Refer to **STANDARD PROCEDURE** and perform the RESTRAINTS SYSTEM VERIFICATION TEST.

   No

   - Go To 4.

4. **CHECK THE (R14, R16) RIGHT SIDE IMPACT SENSOR 1 CIRCUITS FOR A SHORT TOGETHER**

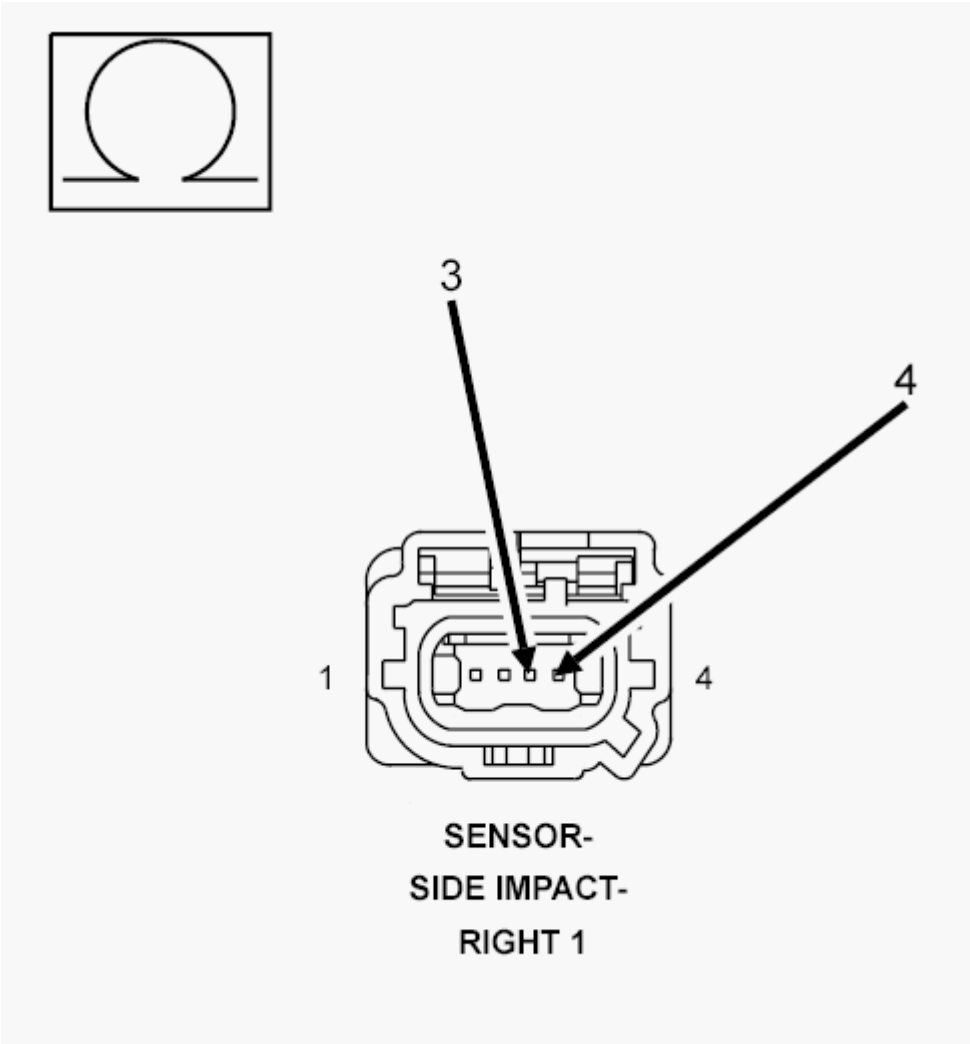

Fig. 153: Checking Right Side Impact Sensor 1 Circuit
Courtesy of CHRYSLER GROUP, LLC

1. Measure the resistance between the (R14) Right Side Impact Sensor 1 Signal and (R16) Right Side Impact Sensor 1 Ground circuits at the Right Side Impact Sensor 1 harness connector cavity 3 and 4.

   Is the resistance below 100K Ohms?

   Yes

   - Repair the (R14, R16) Right Side Impact Sensor 1 circuits shorted together.
   - Refer to **STANDARD PROCEDURE** and perform the RESTRAINTS SYSTEM VERIFICATION TEST.

   No

   - Go To 5.

5. **CHECK THE (R16) RIGHT SIDE IMPACT SENSOR 1 GROUND CIRCUIT FOR AN OPEN OR HIGH RESISTANCE**

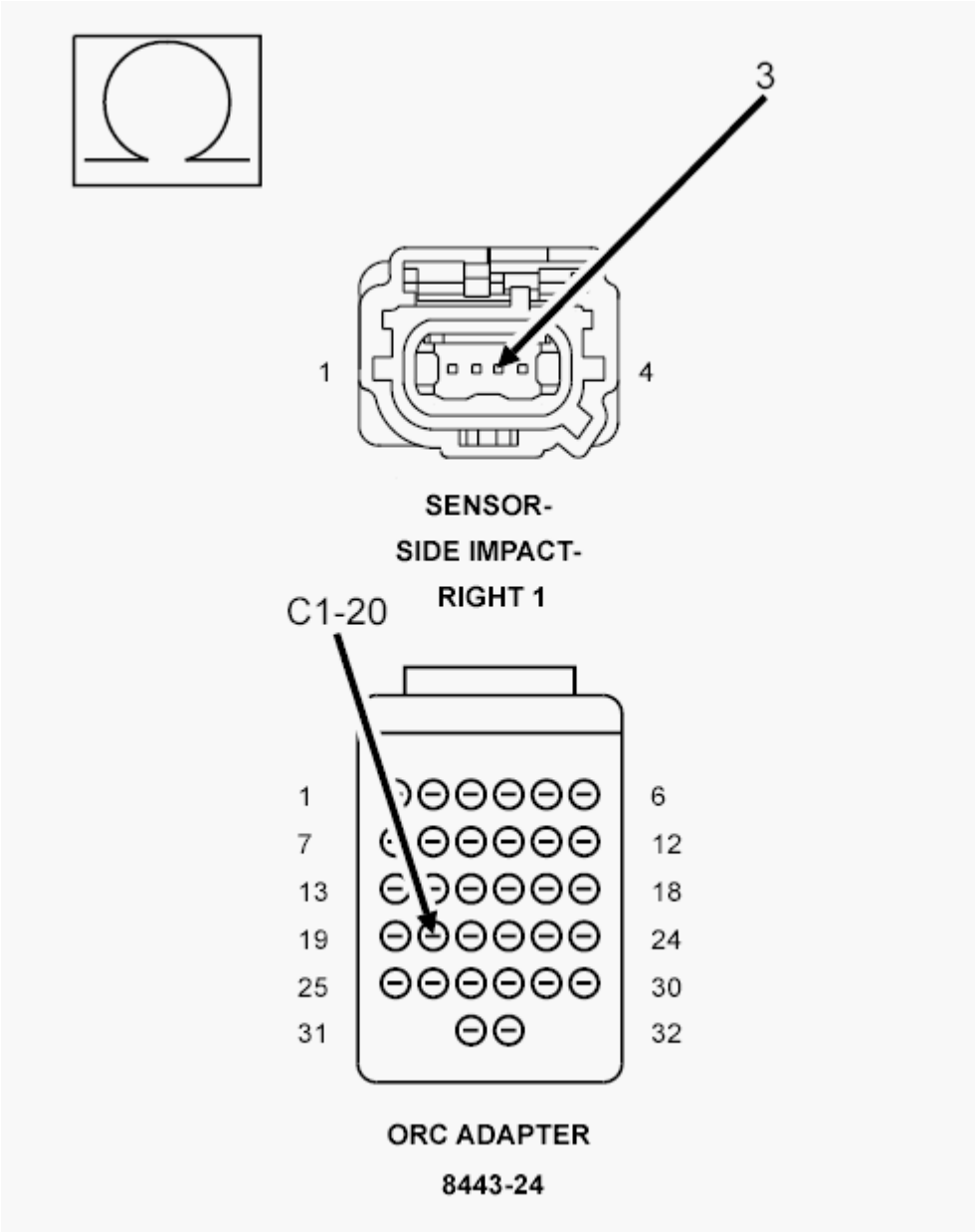

Fig. 154: Checking Right Side Impact Sensor 1 Ground Circuit For Open Or High Resistance
Courtesy of CHRYSLER GROUP, LLC

1. Connect the SRS Load Tool Adaptor (special tool #8443-24, 32-Way Adapter) to the ORC C1 harness connector.
2. Measure the resistance of the (R16) Right Side Impact Sensor 1 Ground circuit between the Right Side Impact Sensor 1 harness connector cavity 3 and the SRS Load Tool Adaptor (special tool #8443-24, 32-Way Adapter) cavity 20.

Is the resistance below 1 Ohm?

Yes

- Go To 6.

No

- Repair the (R16) Right Side Impact Sensor 1 Ground circuit for an open or high resistance.
- Refer to **STANDARD PROCEDURE** and perform the RESTRAINTS SYSTEM VERIFICATION TEST.

6. **CHECK THE (R14) RIGHT SIDE IMPACT SENSOR 1 CIRCUIT FOR AN OPEN OR HIGH RESISTANCE**

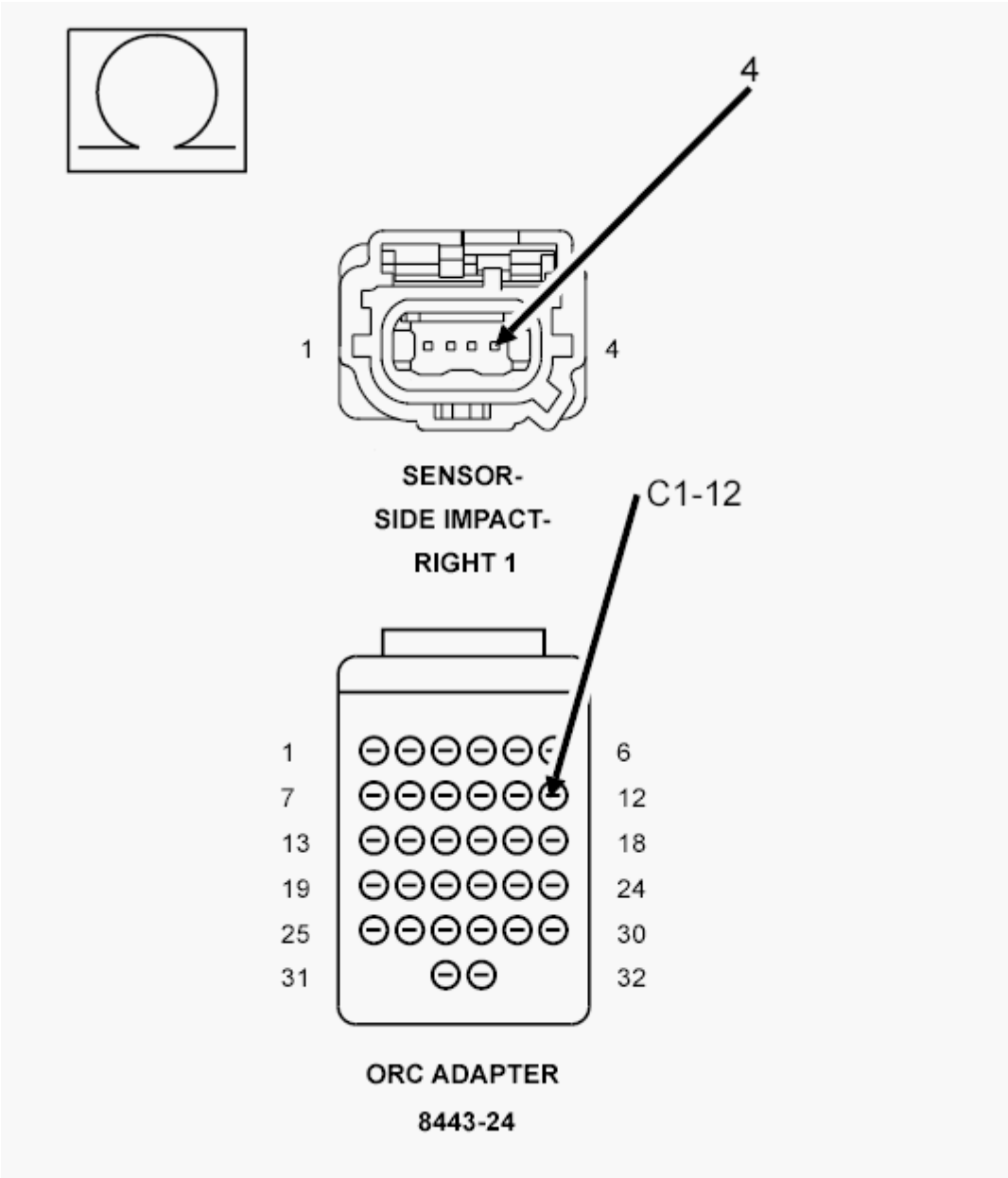

Fig. 155: Checking Right Side Impact Sensor 1 Circuit For Open Or High Resistance
Courtesy of CHRYSLER GROUP, LLC

1. Measure the resistance of the (R14) Right Side Impact Sensor 1 Signal circuit between the Right Side Impact Sensor 1 harness connector cavity 4 and the SRS Load Tool Adaptor (special tool #8443-24, 32-Way Adapter) cavity 12.

   Is the resistance below 1 Ohm?

   Yes

   - Go To 7.

No

- Repair the (R14) Right Side Impact Sensor 1 Signal circuit for an open or high resistance.
- Refer to **STANDARD PROCEDURE** and perform the RESTRAINTS SYSTEM VERIFICATION TEST.

7. **CHECK OPERATION OF THE RIGHT SIDE IMPACT SENSOR 1**
   1. Replace the Right Side Impact Sensor 1.
   2. Reconnect the vehicle body harness to the impact sensor.
   3. Remove any special tools or jumper wires and reconnect all previously disconnected components - except the Battery.

      WARNING: **Turn the ignition on, then reconnect the 12-volt battery and wait two minutes before proceeding. Failure to follow these instructions may result in possible serious or fatal injury.**

   4. Connect the scan tool to the Data Link Connector - use the most current software available.
   5. Use the scan tool and erase the stored codes in all airbag system modules.
   6. Turn the ignition OFF, and wait 15 seconds before turning the ignition ON.
   7. Wait one minute, and read active codes and if there are none present read the stored codes.

      Does the scan tool display active U0175-00-LOST COMMUNICATION W/ RIGHT SIDE SATELLITE SENSOR 1 - DTC?

      Yes

      WARNING: **Turn the ignition off, disconnect the 12-volt battery and wait two minutes before proceeding. Failure to follow these instructions may result in possible serious or fatal injury.**

      WARNING: **If the Occupant Restraint Controller (ORC) is dropped at any time, it must be replaced. Failure to follow these instructions may result in possible serious or fatal injury.**

      -
      -
      - Replace the ORC in accordance with Service Instructions.
      - Refer to **STANDARD PROCEDURE** and perform the RESTRAINTS SYSTEM VERIFICATION TEST.

      No

      - Repair is complete.
      - Refer to **STANDARD PROCEDURE** and perform the RESTRAINTS SYSTEM

VERIFICATION TEST.

U0176-00-LOST COMMUNICATION W/ RIGHT SIDE SATELLITE SENSOR 2

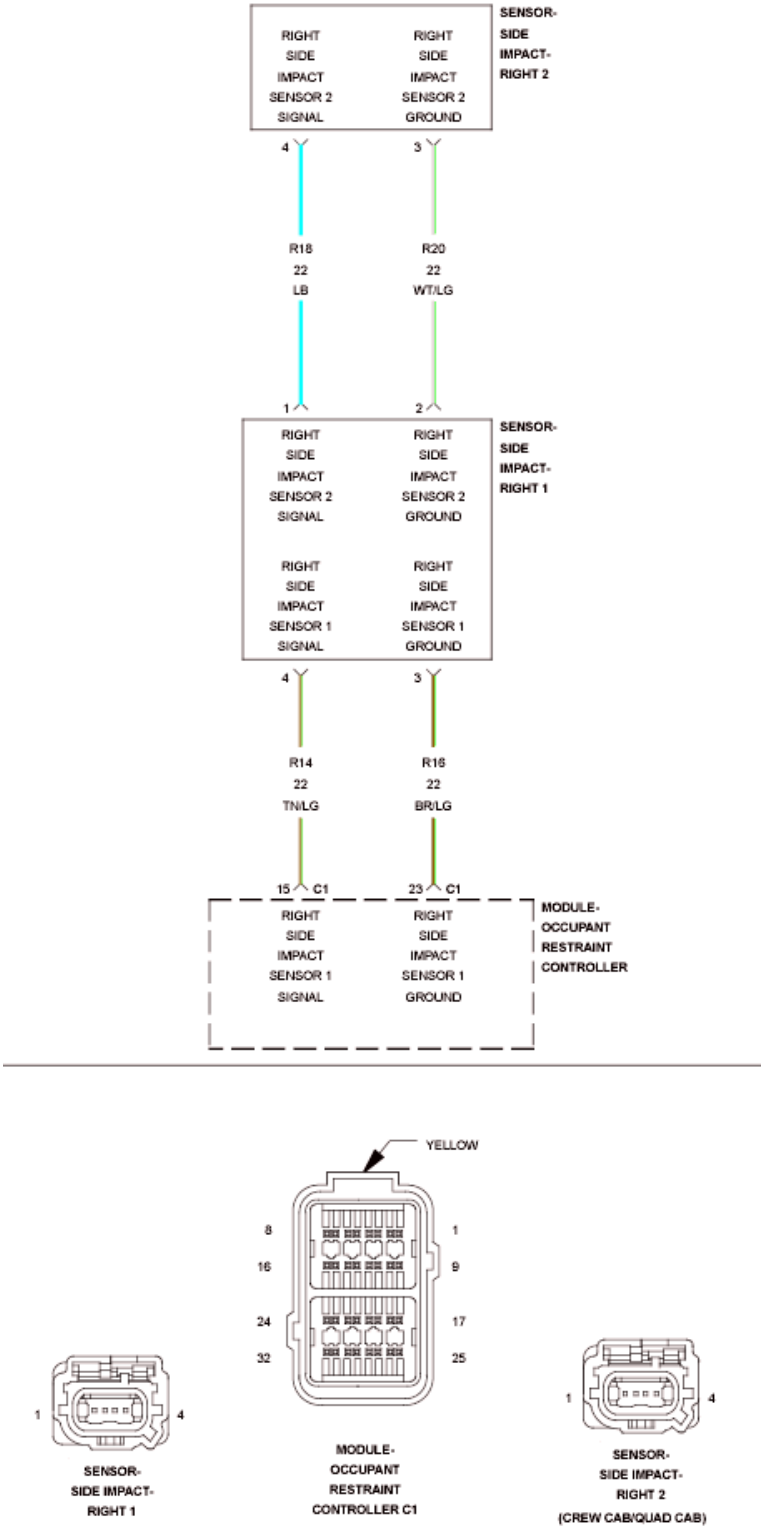

Fig. 156: Right Side Impact Sensor Circuit Wiring Diagram

Courtesy of CHRYSLER GROUP, LLC

For a complete wiring diagram, **refer to appropriate SYSTEM WIRING DIAGRAMS article** .

THEORY OF OPERATION

The location of this right side impact sensor 2 is in the C-pillar just past the second row seating. Refer to **DESCRIPTION** . The impact sensors perform their own self test using power supplied by the Occupant Restraint Controller (ORC) then communicate this status back to the ORC with periodic updates. The repair of this fault condition involves verifying the integrity of the wiring between the ORC and the sensor. If the scan tool shows this DTC has a Stored history of setting then the right side impact sensor is to be replaced. A short to voltage fault on the right side impact sensor 1 sensor wiring can cause a loss of comm impact sensor 2 code to set and the possible replacement of a good right side impact sensor 2. The right side impact 1, and 2 sensors are wired in a daisy chain pattern. The short to battery fault in a loss of comm or internal circuit failure of the side impact sensor 1 can cause the impact sensor 2 on the same side to set a loss of comm code.

WHEN MONITORED:

The Occupant Restraint Controller (ORC) continuously communicates with the Right Side Impact Sensor 2 over the sensor signal circuit. The sensor communication and on board diagnostics are powered by the ORC signal.

SET CONDITION:

This Diagnostic Trouble Code (DTC) will set, if the ORC is communicating with the Right Side Impact Sensor 1 but fails to establish and maintain valid data communications with the Right Side Impact Sensor 2.

POSSIBLE CAUSES

Possible Causes
LOSS OF COMMUNICATION WITH THE RIGHT SIDE IMPACT SENSOR 1
(R18, R20) RIGHT SIDE IMPACT SENSOR 2 CIRCUITS SHORTED TO VOLTAGE
(R18, R20) RIGHT SIDE IMPACT SENSOR 2 CIRCUITS SHORTED TO GROUND
(R18, R20) RIGHT SIDE IMPACT SENSOR 2 CIRCUITS SHORTED TOGETHER
(R18, R20) RIGHT SIDE IMPACT SENSOR 2 CIRCUITS OPEN
RIGHT SIDE IMPACT SENSOR 2
OCCUPANT RESTRAINT CONTROLLER (ORC

Always Perform the Pre-Diagnostic Troubleshooting procedure before proceeding. Refer to STANDARD PROCEDURE.

DIAGNOSTIC TEST

1. **VERIFY ACTIVE DTC**

WARNING: **Turn the ignition off, disconnect the 12-volt battery and wait two**

minutes before proceeding. Failure to follow these instructions may result in possible serious or fatal injury.

NOTE: **Using the wiring diagram/schematic as a guide check all related splices and connectors for signs of water intrusion, corrosion, pushed out or bent terminals, and correct pin tension.**

NOTE: **If after the harness inspection it appears the impact sensor connector is only seated halfway. Re-seat the harness connector into the impact sensor and lock the tab. Follow the instructions below checking for active codes.**

WARNING: **Turn the ignition on, then reconnect the 12-volt battery and wait two minutes before proceeding. Failure to follow these instructions may result in possible serious or fatal injury.**

NOTE: **Make sure the battery is fully charged.**

1. Turn the ignition on.
2. With the scan tool, read ORC DTCs.

   Does the scan tool display active B1B75-RIGHT SIDE SATELLITE ACCELERATION SENSOR 1 INTERNAL, U0175-LOST COMMUNICATION W/RIGHT SIDE SATELLITE ACCELERATION SENSOR 1, U0176-LOST COMMUNICATION W/RIGHT SIDE SATELLITE ACCELERATION SENSOR 2- DTC?

   Yes

   - Check for all other internal and lost communication codes indicated in the right side impact sensor daisy chain wiring before diagnosing DTC U0176-LOST COMMUNICATION W/RIGHT SIDE SATELLITE ACCELERATION SENSOR 2. Go To The DTC Displayed. Refer to **DIAGNOSIS AND TESTING**. If internal fault 1 and lost comm fault 1 have been checked follow DTC U0176-LOST COMMUNICATION W/RIGHT SIDE SATELLITE ACCELERATION SENSOR 2. Go To 2.

   No

   - Refer to **STANDARD PROCEDURE** and perform the RESTRAINTS SYSTEM INTERMITTENT TEST.

2. **CHECK THE (R18, R20) RIGHT SIDE IMPACT SENSOR 2 CIRCUITS FOR A SHORT TO VOLTAGE**

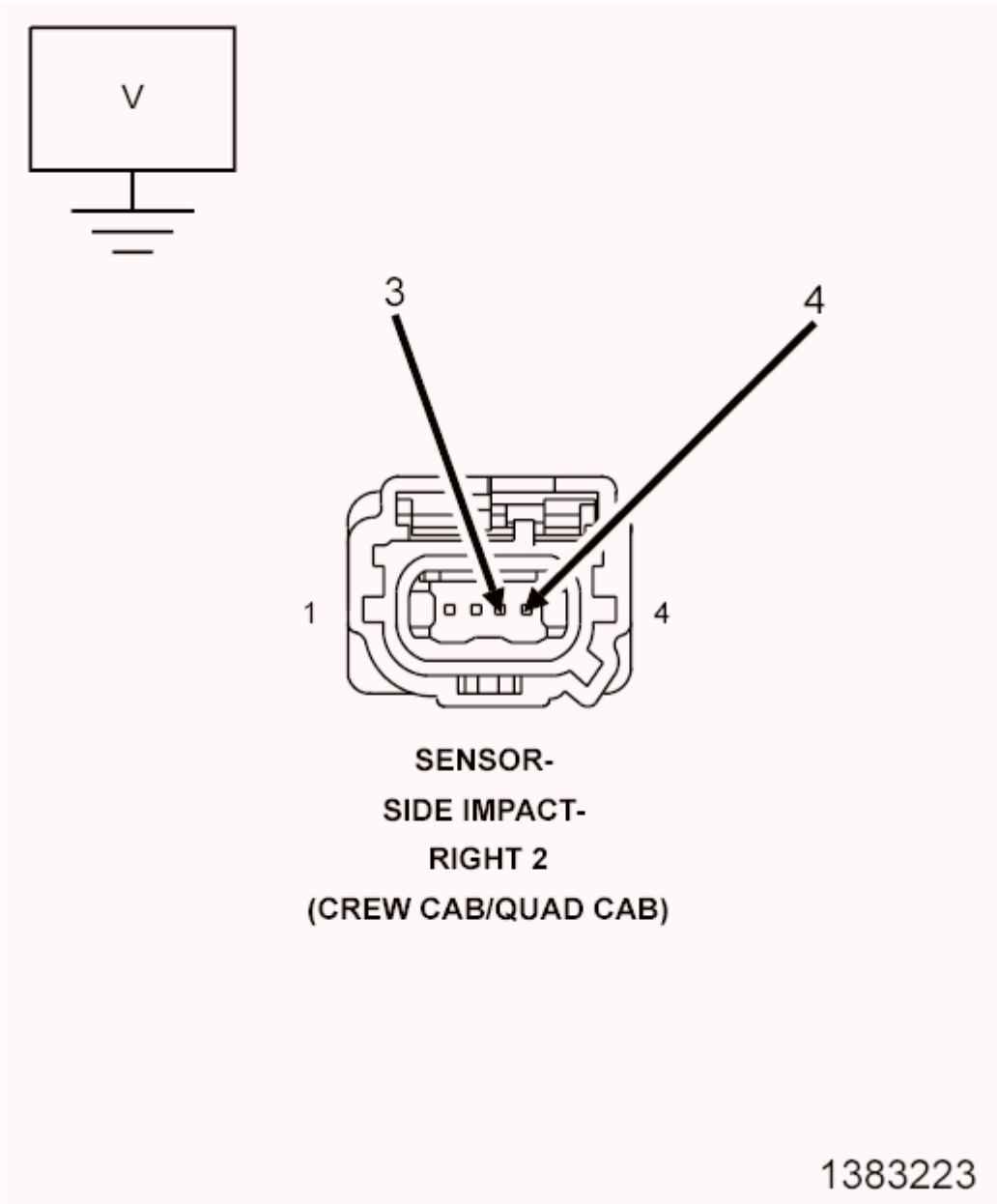

Fig. 157: Checking Right Side Impact Sensor 2 Circuit For A Short To Voltage
Courtesy of CHRYSLER GROUP, LLC

WARNING: **Turn the ignition off, disconnect the 12-volt battery and wait two minutes before proceeding. Failure to follow these instructions may result in possible serious or fatal injury.**

1. Disconnect the Right Side Impact Sensor 1 harness connector.
2. Disconnect the Right Side Impact Sensor 2 harness connector.

WARNING: **Turn the ignition on, then reconnect the 12-volt battery and wait two minutes before proceeding. Failure to follow these**

instructions may result in possible serious or fatal injury.

3. Measure the voltage of the (R18) Right Side Impact Sensor 1 Signal circuit cavity 4 and (R20) Right Side Impact Sensor 1 Ground circuit cavity 3 at the Right Side Impact Sensor 1 harness connector.

   Is there any voltage present?

   Yes

   - Repair the (R18, R20) Right Side Impact Sensor 1 circuits for a short to voltage.
   - Refer to **STANDARD PROCEDURE** and perform the RESTRAINTS SYSTEM VERIFICATION TEST.

   No

   - Go To 3.

3. **CHECK THE (R18, R20) RIGHT SIDE IMPACT SENSOR 1 CIRCUITS FOR A SHORT TO GROUND**

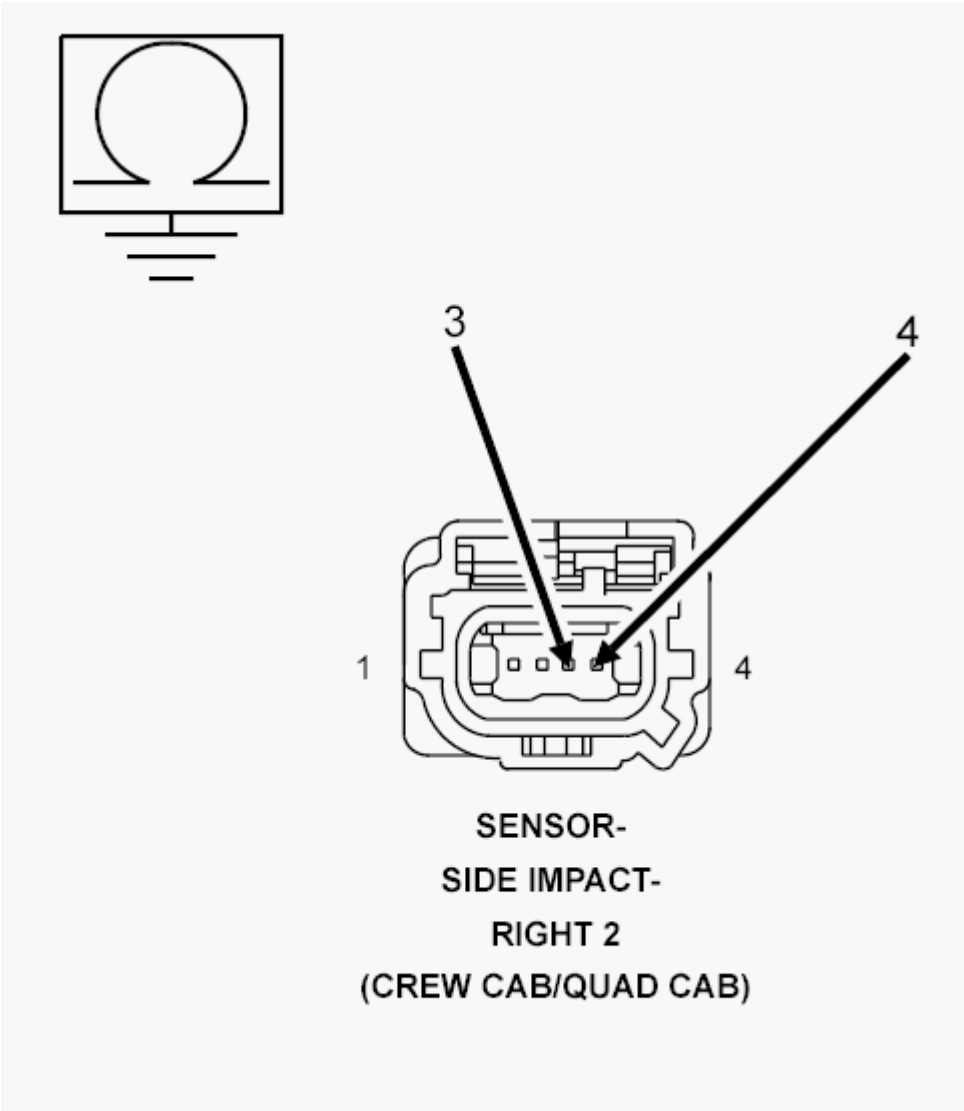

Fig. 158: Checking Right Side Impact Sensor 1 Circuit For A Short To Ground
Courtesy of CHRYSLER GROUP, LLC

WARNING: **Turn the ignition on, then reconnect the battery and wait two minutes before proceeding. Failure to follow these instructions may result in possible serious or fatal injury.**

1. Measure the resistance between ground and the (R18) Right Side Impact Sensor 2 Signal circuit at the Right Side Impact Sensor 2 harness connector cavity 4.
2. Measure the resistance between ground and the (R20) Right Side Impact Sensor 2 Ground circuit at the Right Side Impact Sensor 2 harness connector cavity 3.

   Is the resistance below 100K Ohms?

   Yes

- Repair the (R18, R20) Right Side Impact Sensor 2 circuits for a short to ground.
- Refer to **STANDARD PROCEDURE** and perform the RESTRAINTS SYSTEM VERIFICATION TEST.

No

- Go To 4.

4. **CHECK THE (R18, R20) RIGHT SIDE IMPACT SENSOR 2 CIRCUITS FOR A SHORT TOGETHER**

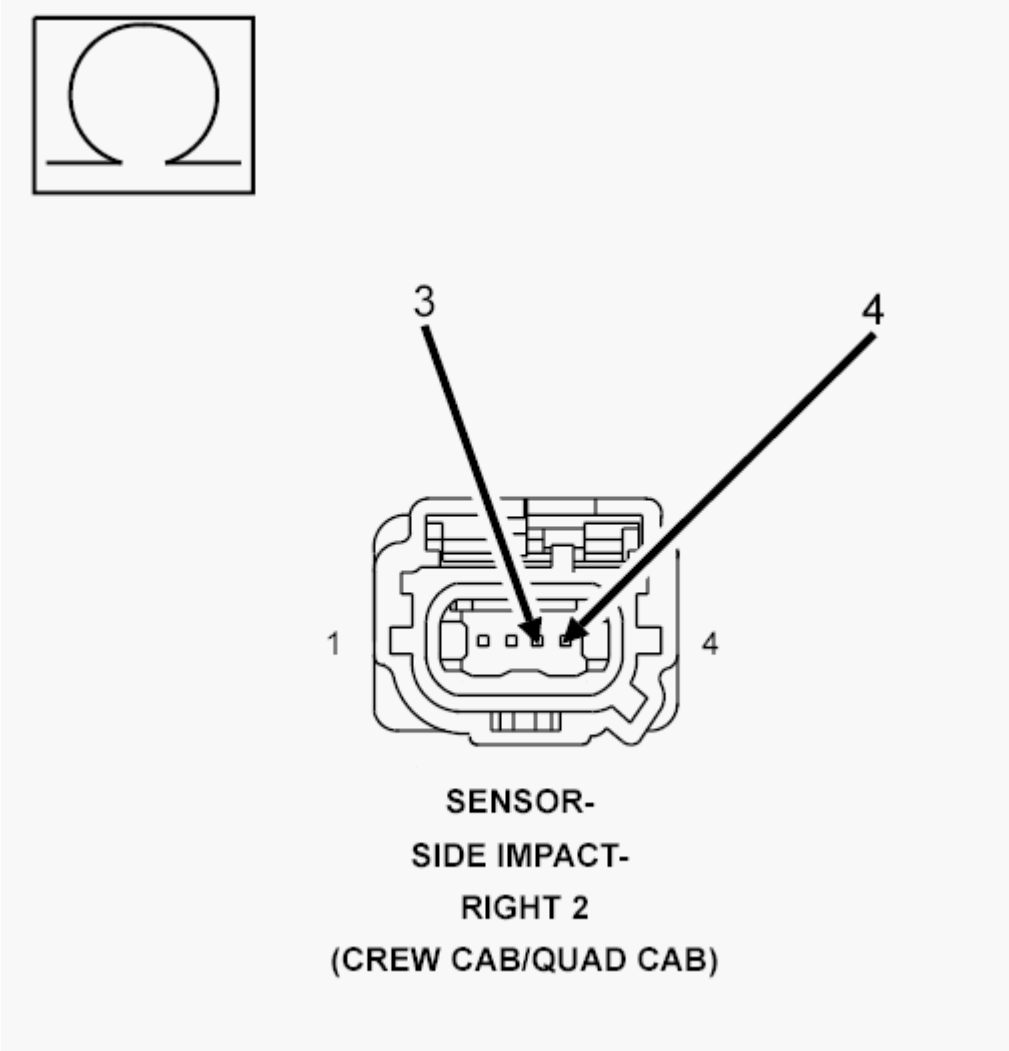

Fig. 159: Checking Right Side Impact Sensor 2 Circuit
Courtesy of CHRYSLER GROUP, LLC

1. Measure the resistance between the (R18) Right Side Impact Sensor 2 Signal circuit and (R20) Right Side Impact Sensor 2 Ground circuit at the Right Side Impact Sensor 2 harness connector.

   Is the resistance below 100K Ohms?

Yes

- Repair the (R18, R20) Right Side Impact Sensor 2 circuits shorted together.
- Refer to **STANDARD PROCEDURE** and perform the RESTRAINTS SYSTEM VERIFICATION TEST.

No

- Go To 5.

5. **CHECK THE (R20) RIGHT SIDE IMPACT SENSOR 2 GROUND CIRCUIT FOR AN OPEN OR HIGH RESISTANCE**

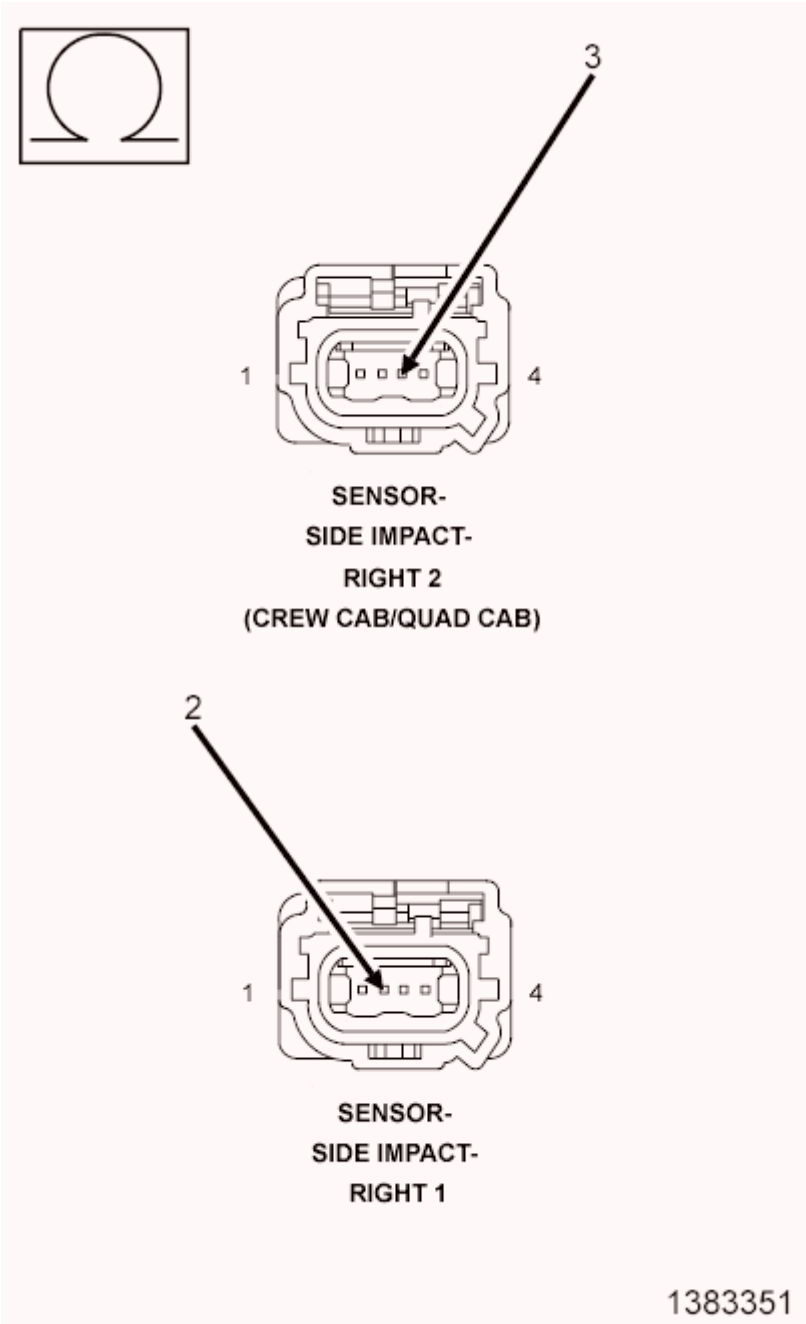

Fig. 160: Checking Right Side Impact Sensor 2 Ground Circuit For Open
Courtesy of CHRYSLER GROUP, LLC

1. Disconnect the Right Side Impact Sensor 1 harness connector.
2. Measure the resistance of the (R20) Right Side Impact Sensor 2 Ground circuit between the Right Side Impact Sensor 2 harness connector cavity 3 and the Right Side Impact Sensor 1 harness connector cavity 2.

   Is the resistance below 1 Ohm?

Yes

- Go To 6.

No

- Repair the (R20) Right Side Impact Sensor 2 Ground circuit for an open or high resistance.
- Refer to **STANDARD PROCEDURE** and perform the RESTRAINTS SYSTEM VERIFICATION TEST.

6. **CHECK THE (R18) RIGHT SIDE IMPACT SENSOR 2 SIGNAL CIRCUIT FOR AN OPEN OR HIGH RESISTANCE**

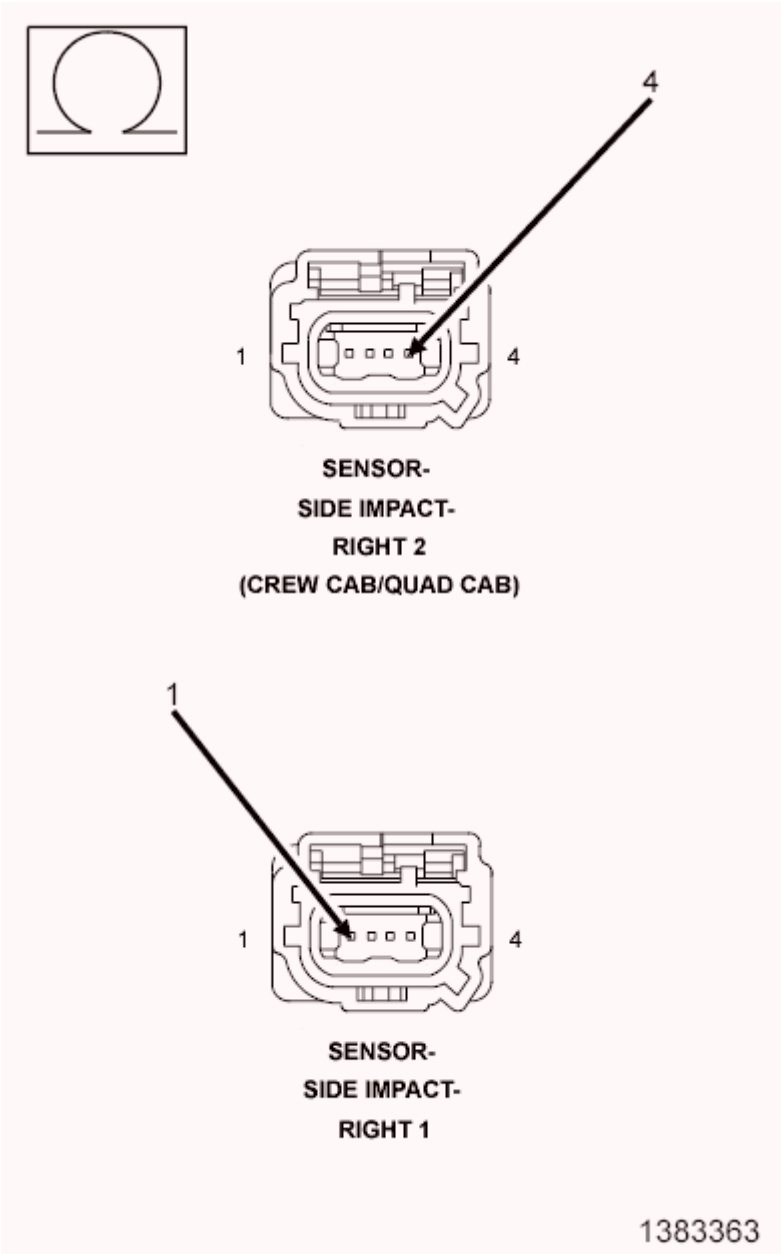

Fig. 161: Checking Right Side Impact Sensor 2 Signal Circuit For Open
Courtesy of CHRYSLER GROUP, LLC

1. Measure the resistance of the (R18) Right Side Impact Sensor 2 Signal circuit between the Right Side Impact Sensor 1 harness connector cavity 4 and the Right Side Impact Sensor 1 harness connector cavity 1.

   Is the resistance below 1 Ohm?

   Yes

   - Go To 7.

   No

   - Repair the (R18) Right Side Impact Sensor 2 Signal circuit for an open or high resistance.
   - Refer to **STANDARD PROCEDURE** and perform the RESTRAINTS SYSTEM VERIFICATION TEST.

7. **CHECK OPERATION OF THE RIGHT SIDE IMPACT SENSOR 2**
   1. Replace the Right Side Impact Sensor 2.
   2. Reconnect the vehicle body harness connector to the Right Side Impact Sensor 2.
   3. Remove any special tools or jumper wires and reconnect all previously disconnected components - except the Battery.

      WARNING: **Turn the ignition on, then reconnect the 12-volt battery and wait two minutes before proceeding. Failure to follow these instructions may result in possible serious or fatal injury.**

   4. Connect the scan tool to the Data Link Connector - use the most current software available.
   5. Use the scan tool and erase the stored codes in all airbag system modules.
   6. Turn the ignition OFF, and wait 15 seconds before turning the ignition ON.
   7. Wait one minute, and read active codes and if there are none present read the stored codes.

      Did the scan tool display active U0176-00-LOST COMMUNICATION W/ RIGHT SIDE SATELLITE SENSOR 2 - DTC?

      Yes

      WARNING: **Turn the ignition off, disconnect the 12-volt battery and wait two minutes before proceeding. Failure to follow these instructions may result in possible serious or fatal injury.**

      WARNING: **If the Occupant Restraint Controller (ORC) is dropped at**

      -

- **any time, it must be replaced. Failure to follow these instructions may result in possible serious or fatal injury.**
-
- Replace the ORC in accordance with Service Instructions.
- Refer to **STANDARD PROCEDURE** and perform the RESTRAINTS SYSTEM VERIFICATION TEST.

No

- Repair is complete.
- Refer to **STANDARD PROCEDURE** and perform the RESTRAINTS SYSTEM VERIFICATION TEST.

U11AD-00-LOST COMMUNICATION W/ LEFT SIDE SATELLITE SENSOR 4

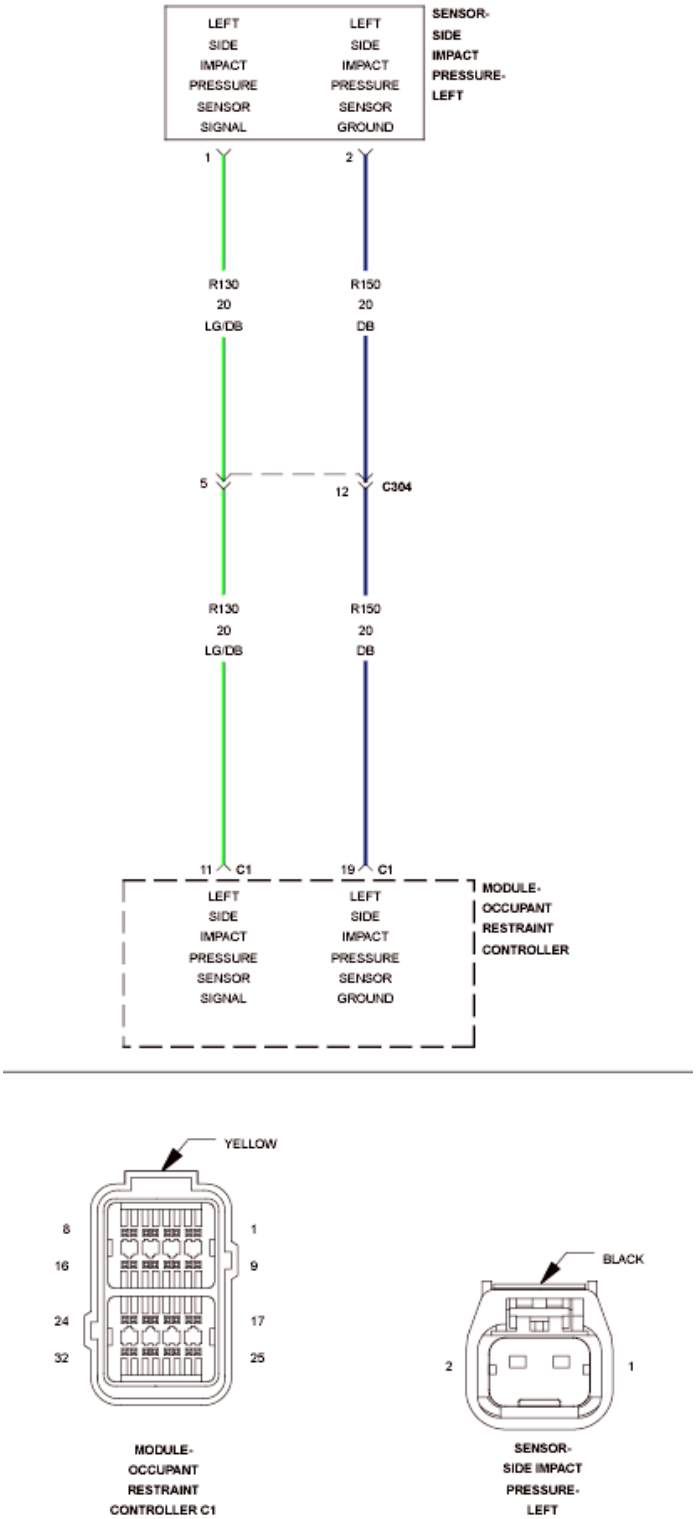

Fig. 162: Left Side Satellite Sensor Circuit Wiring Diagram
Courtesy of CHRYSLER GROUP, LLC

For a complete wiring diagram, **refer to appropriate SYSTEM WIRING DIAGRAMS article** .

THEORY OF OPERATION

The sensor 4 impact sensors are located in the first row driver and passenger doors. Impact pressure sensors perform their own self test using power supplied by the Occupant Restraint Controller (ORC) then communicate this status back to the ORC. The repair of this fault centers on verifying the integrity of the sensor's internal circuitry and software validity. A short to voltage fault on the left side impact sensor 2 sensor wiring can cause a loss of comm impact sensor 4 code to set and the possible replacement of a good left side impact sensor 4. The left side impact 1, 2, and 4 sensors are wired in a daisy chain pattern. The short to battery fault in a loss of comm or internal circuit failure of the side impact sensor 1 can cause the impact sensors 2 and 4 on the same side to set a loss of comm code.

WHEN MONITORED:

The ORC continuously communicates with the Left Side Impact Pressure Sensor over the sensor signal circuit. The sensor communication and on board diagnostics are powered by the ORC signal.

SET CONDITION:

This Diagnostic Trouble Code (DTC) will set, if the ORC and the Left Side Impact Pressure Sensor do not establish and maintain valid data communications.

POSSIBLE CAUSES

Possible Causes
(R130, R150) LEFT SIDE IMPACT PRESSURE SENSOR CIRCUITS SHORTED TO VOLTAGE
(R130, R150) LEFT SIDE IMPACT PRESSURE SENSOR CIRCUITS SHORTED TO GROUND
(R130, R150) LEFT SIDE IMPACT PRESSURE SENSOR CIRCUITS SHORTED TOGETHER
(R130, R150) LEFT SIDE IMPACT PRESSURE SENSOR CIRCUITS OPEN
LOST COMMUNICATION WITH THE LEFT SIDE IMPACT SENSOR 1 OR 2
LEFT SIDE IMPACT PRESSURE SENSOR
OCCUPANT RESTRAINT CONTROLLER (ORC)

Always Perform the Pre-Diagnostic Troubleshooting procedure before proceeding. Refer to STANDARD PROCEDURE.

DIAGNOSTIC TEST

1. **VERIFY ACTIVE DTC**

WARNING: **Turn the ignition off, disconnect the 12-volt battery and wait two minutes before proceeding. Failure to follow these instructions may result in possible serious or fatal injury.**

NOTE: **Using the wiring diagram/schematic as a guide check all related splices and connectors for signs of water intrusion, corrosion, pushed out or bent terminals, and correct pin tension.**

NOTE: **If after the harness inspection it appears the impact sensor connector is only seated halfway. Re-seat the harness connector into the impact sensor and lock the tab. Follow the instructions below checking for active codes.**

WARNING: **Turn the ignition on, then reconnect the 12-volt battery and wait two minutes before proceeding. Failure to follow these instructions may result in possible serious or fatal injury.**

NOTE: **Make sure the battery is fully charged.**

1. Turn the ignition on.
2. With the scan tool, read ORC DTCs.

   Does the scan tool display active B0091-49-LEFT SIDE ACCELERATION SENSOR 1 - INTERNAL ELECTRONIC FAILURE, B0092-49-LEFT SIDE ACCELERATION SENSOR 2 - INTERNAL ELECTRONIC FAILURE, U0172-00-LOST COMMUNICATION W/ LEFT SIDE SATELLITE SENSOR 1, U0173-00-LOST COMMUNICATION W/ LEFT SIDE SATELLITE SENSOR 2, U11AD-00-LOST COMMUNICATION W/ LEFT SIDE SATELLITE SENSOR 4 - DTC?

   Yes

   NOTE: **Check for the active codes and repair for the fault starting with the Internal failure code or codes, check for active or stored status. Upon fixing the left side impact sensor 1 internal fault then check the left side impact sensor 2 internal fault if status changes to stored for all codes fault is fixed if status is still active proceed to the left side impact sensor 1 loss of comm check for status of the left side impact sensor 1 code status being active. If all codes go to stored status, fault in daisy chain is fixed if code status is still active continue. Check the left side impact sensor 2 check for status of the left side impact sensor 2 code going to stored. If status of all codes goes to stored status, fault in daisy chain is fixed if code status is still active continue. Check the left side impact sensor 4, fix fault and check for status of code going to stored status.**

   -
   - Check for all other internal and lost communication codes indicated in the left side impact sensor daisy chain wiring before diagnosing DTC U11AD-00-LOST COMMUNICATION W/ LEFT SIDE SATELLITE SENSOR 4. Go To The DTC Displayed. Refer to **DIAGNOSIS AND TESTING**. If internal fault 1 and 2 and lost comm fault 1 and 2 have been checked follow DTC U11AD-00-LOST COMMUNICATION W/ LEFT SIDE SATELLITE SENSOR 4. Go To 2.

   No

- Refer to **STANDARD PROCEDURE** and perform the RESTRAINTS SYSTEM INTERMITTENT TEST.

2. **CHECK THE (R130, R150) LEFT SIDE IMPACT PRESSURE SENSOR CIRCUITS FOR A SHORT TO VOLTAGE**

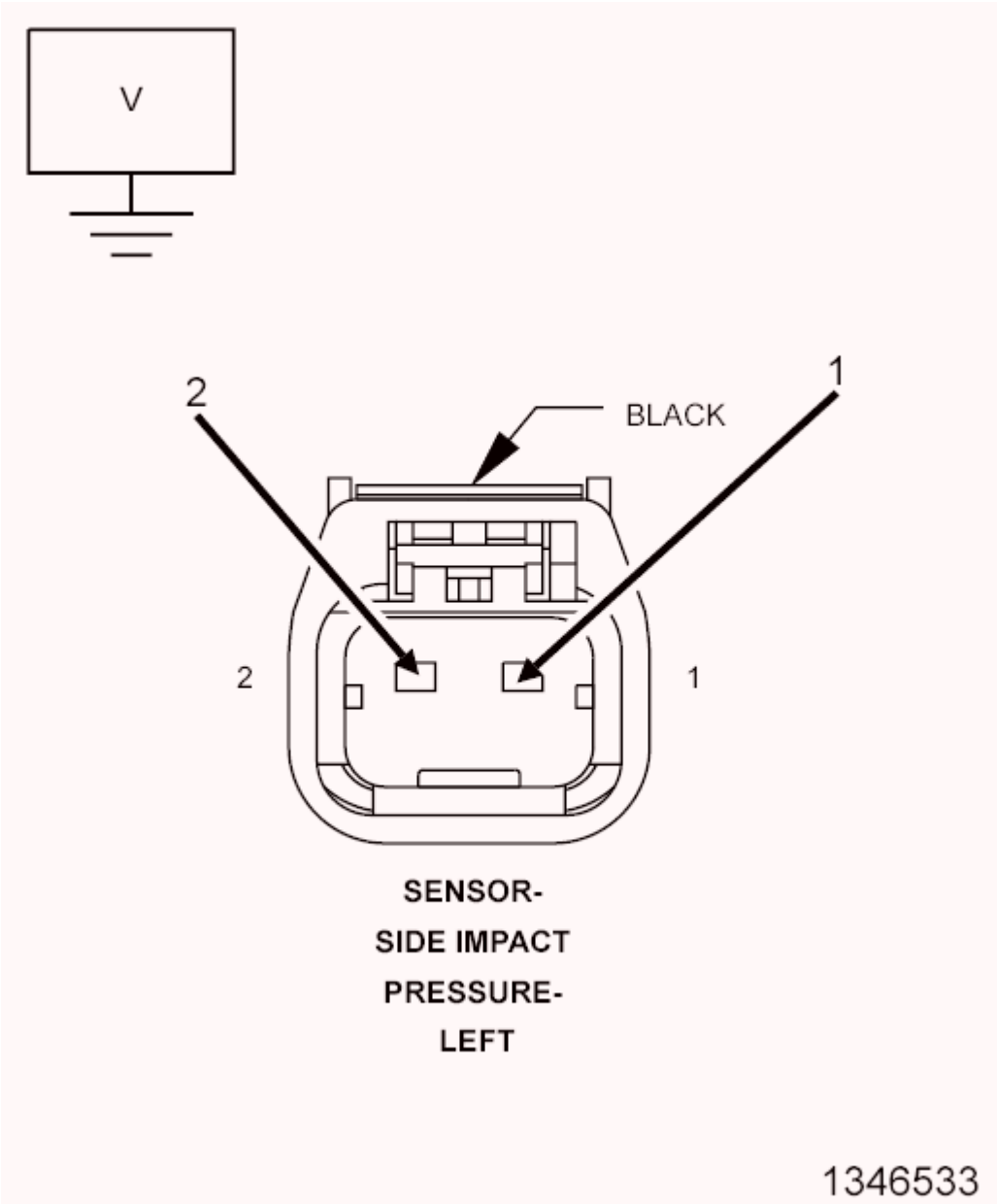

Fig. 163: Checking Left Side Impact Pressure Sensor Circuit For A Short To Voltage
Courtesy of CHRYSLER GROUP, LLC

WARNING: **Turn the ignition off, disconnect the 12-volt battery and wait two minutes before proceeding. Failure to follow these instructions may result in possible serious or fatal injury.**

1. Disconnect the Left Side Impact Pressure Sensor harness connector.
2. Disconnect the ORC harness connectors.

WARNING: Turn the ignition on, then reconnect the 12-volt battery and wait two minutes before proceeding. Failure to follow these instructions may result in possible serious or fatal injury.

3. Measure the voltage of the (R130) Left Side Impact Pressure Sensor Signal circuit and (R150) Left Side Impact Pressure Sensor Ground circuit at the Left Side Impact Pressure Sensor harness connector.

   Is there any voltage present?

   Yes

   - Repair the (R130, R150) Left Side Impact Pressure Sensor circuits for a short to voltage.
   - Refer to **STANDARD PROCEDURE** and perform the RESTRAINTS SYSTEM VERIFICATION TEST.

   No

   - Go To 3.

3. **CHECK THE (R130, R150) LEFT SIDE IMPACT PRESSURE SENSOR CIRCUITS FOR A SHORT TO GROUND**

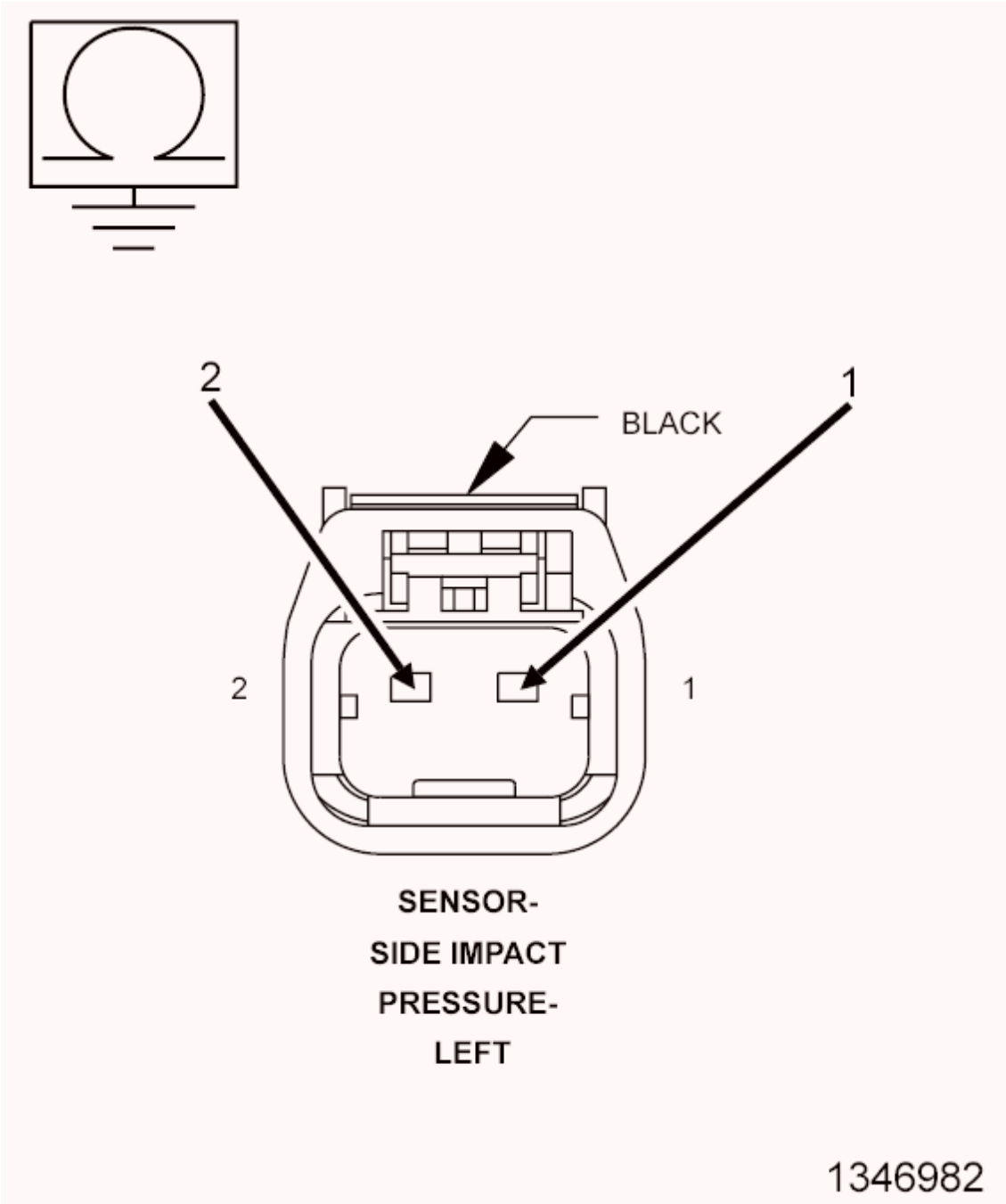

Fig. 164: Checking Left Side Impact Pressure Sensor Circuit For A Short To Ground
Courtesy of CHRYSLER GROUP, LLC

WARNING: **Turn the ignition off, disconnect the 12-volt battery and wait two minutes before proceeding. Failure to follow these instructions may result in possible serious or fatal injury.**

1. Measure the resistance between ground and the (R130) Left Side Impact Pressure Sensor Signal circuit at the Left Side Impact Pressure Sensor harness connector.

2. Measure the resistance between ground and the (R150) Left Side Impact Pressure Sensor Ground circuit at the Left Side Impact Pressure Sensor harness connector.

   Is the resistance below 100K Ohms?

   Yes

   - Repair the (R130, R150) Left Side Impact Pressure Sensor circuits for a short to ground.
   - Refer to **STANDARD PROCEDURE** and perform the RESTRAINTS SYSTEM VERIFICATION TEST.

   No

   - Go To 4.

4. **CHECK THE (R130, R150) LEFT SIDE IMPACT PRESSURE SENSOR CIRCUITS FOR A SHORT TOGETHER**

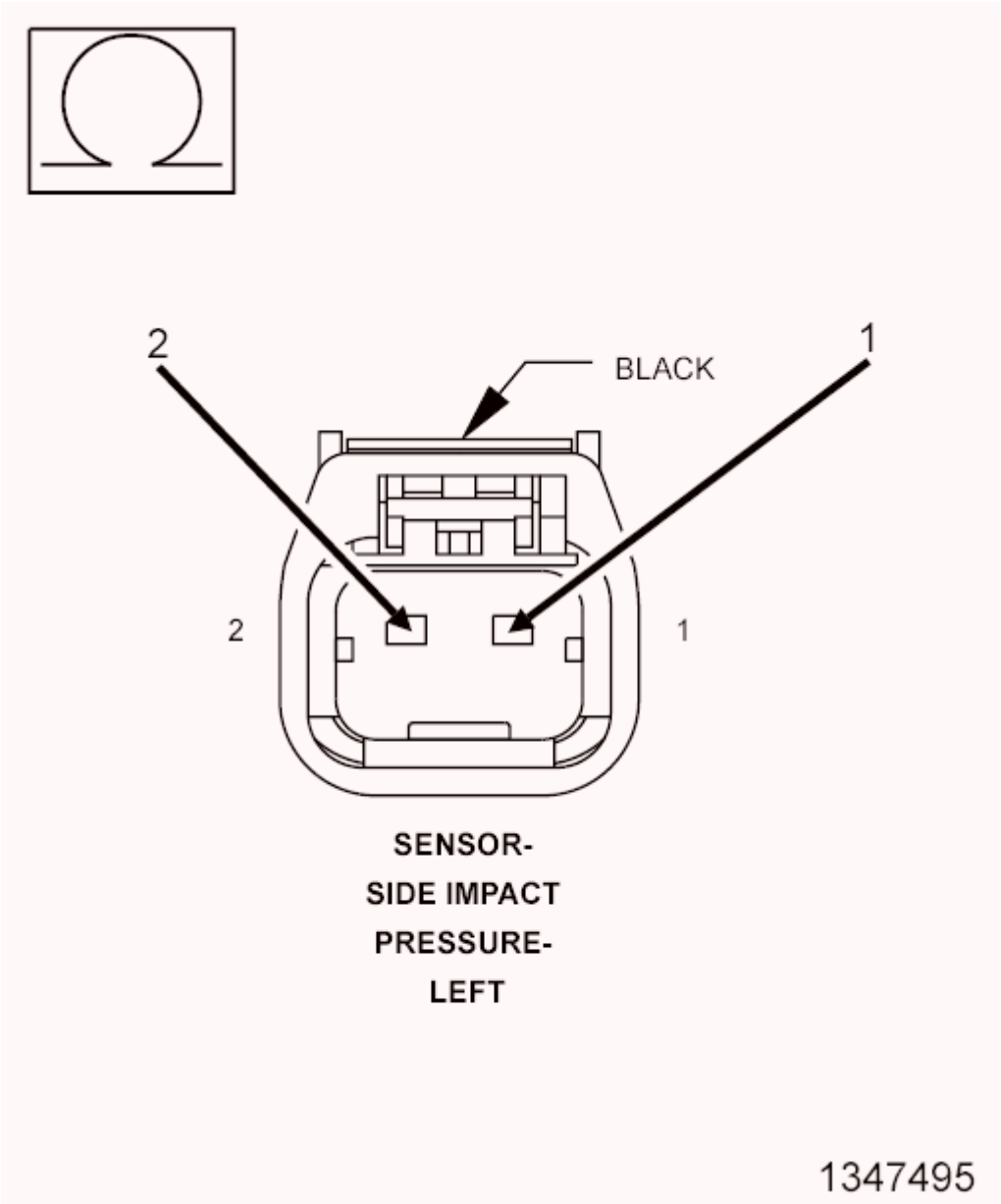

Fig. 165: Checking Left Side Impact Pressure Sensor Circuit
Courtesy of CHRYSLER GROUP, LLC

1. Measure the resistance between the (R130) Left Side Impact Pressure Sensor Signal and (R150) Left Side Impact Pressure Sensor Ground circuits at the Left Side Impact Pressure Sensor harness connector.

   Is the resistance below 100K Ohms?

   Yes

   - Repair the (R13, R15) Left Side Impact Pressure Sensor circuits shorted together.
   - Refer to **STANDARD PROCEDURE** and perform the RESTRAINTS SYSTEM

VERIFICATION TEST.

No

- Go To 5.

5. **CHECK THE (R150) LEFT SIDE IMPACT PRESSURE SENSOR GROUND CIRCUIT FOR AN OPEN OR HIGH RESISTANCE**

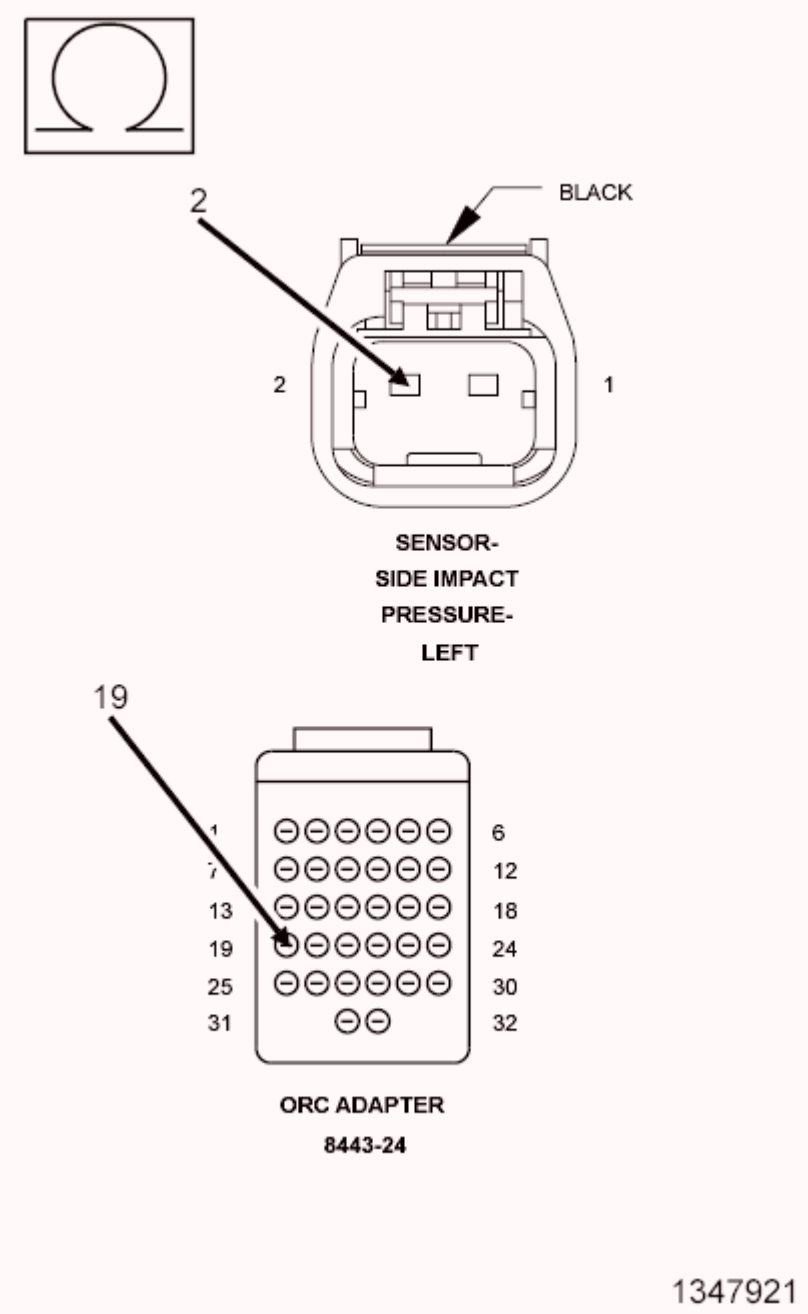

Fig. 166: Checking Left Side Impact Pressure Sensor Ground Circuit For Open
Courtesy of CHRYSLER GROUP, LLC

1. Connect the SRS Load Tool Adapter (special tool #8443-24, 32-Way Adapter) to the ORC harness connector.
2. Measure the resistance of the (R150) Left Side Impact Pressure Sensor Ground circuit between the Left Side Impact Pressure Sensor harness connector cavity 2 and the SRS Load Tool Adapter (special tool #8443-24, 32-Way Adapter) cavity 19.

   Is the resistance below 1 Ohm?

   Yes

   - Go To 6.

   No

   - Repair the (R150) Left Side Impact Pressure Sensor Ground circuit for an open or high resistance.
   - Refer to **STANDARD PROCEDURE** and perform the RESTRAINTS SYSTEM VERIFICATION TEST.

6. **CHECK THE (R130) LEFT SIDE IMPACT PRESSURE SENSOR CIRCUIT FOR AN OPEN OR HIGH RESISTANCE**

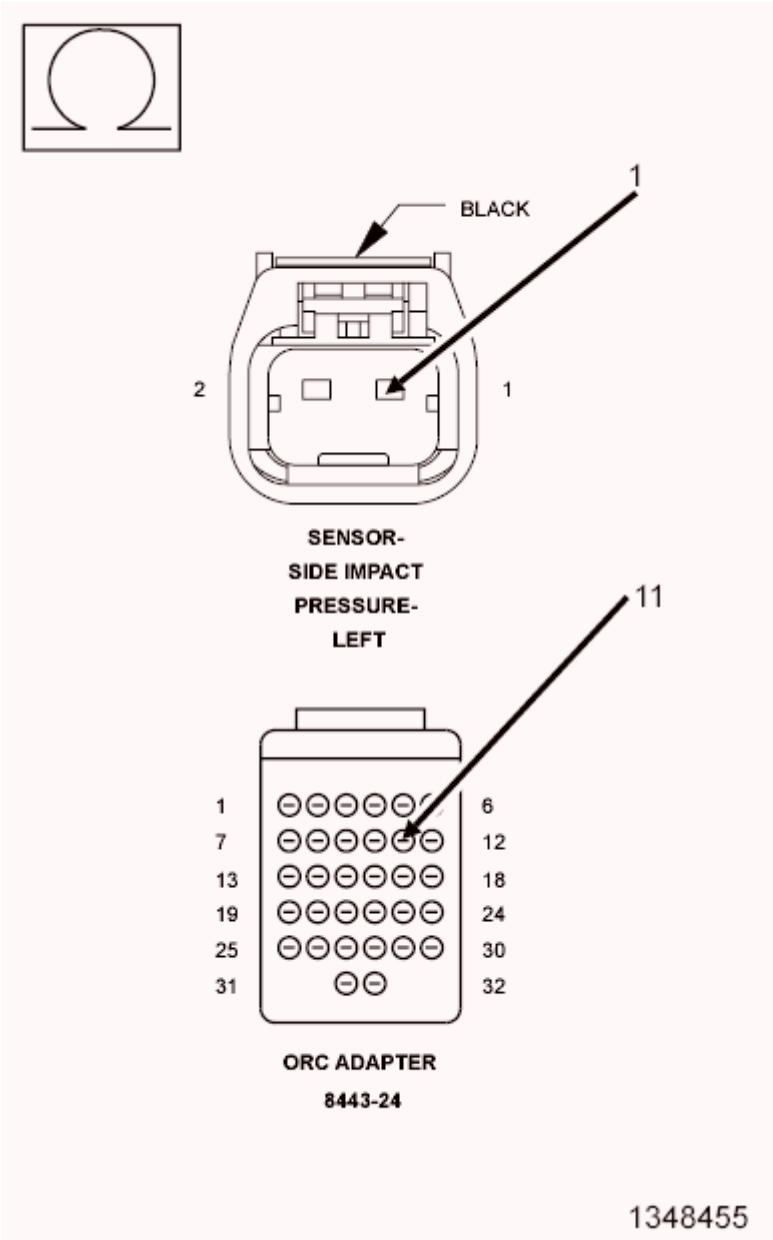

Fig. 167: Checking Left Side Impact Pressure Sensor Circuit For Open
Courtesy of CHRYSLER GROUP, LLC

1. Measure the resistance of the (R130) Left Side Impact Pressure Sensor Signal circuit between the Left Side Impact Pressure Sensor harness connector cavity 1 and the SRS Load Tool Adapter (special tool #8443-24, 32-Way Adapter) cavity 11.

   Is the resistance below 1 Ohm?

   Yes

   - Go To 7.

No

- Repair the (R13) Left Side Impact Pressure Sensor Signal circuit for an open or high resistance.
- Refer to **STANDARD PROCEDURE** and perform the RESTRAINTS SYSTEM VERIFICATION TEST.

7. **CHECK OPERATION OF THE LEFT SIDE IMPACT PRESSURE SENSOR**
   1. Replace the Left Side Impact Pressure Sensor in accordance with the Service Information.
   2. Reconnect the vehicle body harness to the impact pressure sensor.
   3. Remove any special tools or jumper wires and reconnect all previously disconnected components - except the Battery.

      WARNING: **Turn the ignition on, then reconnect the 12-volt battery and wait two minutes before proceeding. Failure to follow these instructions may result in possible serious or fatal injury.**

   4. Connect the scan tool to the Data Link Connector - use the most current software available.
   5. Use the scan tool and erase the stored codes in all airbag system modules.
   6. Turn the ignition OFF, and wait 15 seconds before turning the ignition ON.
   7. Wait one minute, and read active codes and if there are none present read the stored codes.

   Did the active U11AD-00-LOST COMMUNICATION W/ LEFT SIDE SATELLITE SENSOR 4 - DTC return?

   Yes

   WARNING: **Turn the ignition off, disconnect the 12-volt battery and wait two minutes before proceeding. Failure to follow these instructions may result in possible serious or fatal injury.**

   WARNING: **If the Occupant Restraint Controller (ORC) is dropped at any time, it must be replaced. Failure to follow these instructions may result in possible serious or fatal injury.**

   -
   -
   - Replace the Occupant Restraint Controller (ORC) in accordance with Service Instructions.
   - Refer to **STANDARD PROCEDURE** and perform the RESTRAINTS SYSTEM VERIFICATION TEST.

   No

   - Repair is complete.

- Refer to **STANDARD PROCEDURE** and perform the RESTRAINTS SYSTEM VERIFICATION TEST.

U11B0-00-LOST COMMUNICATION W/ RIGHT SIDE SATELLITE SENSOR 4

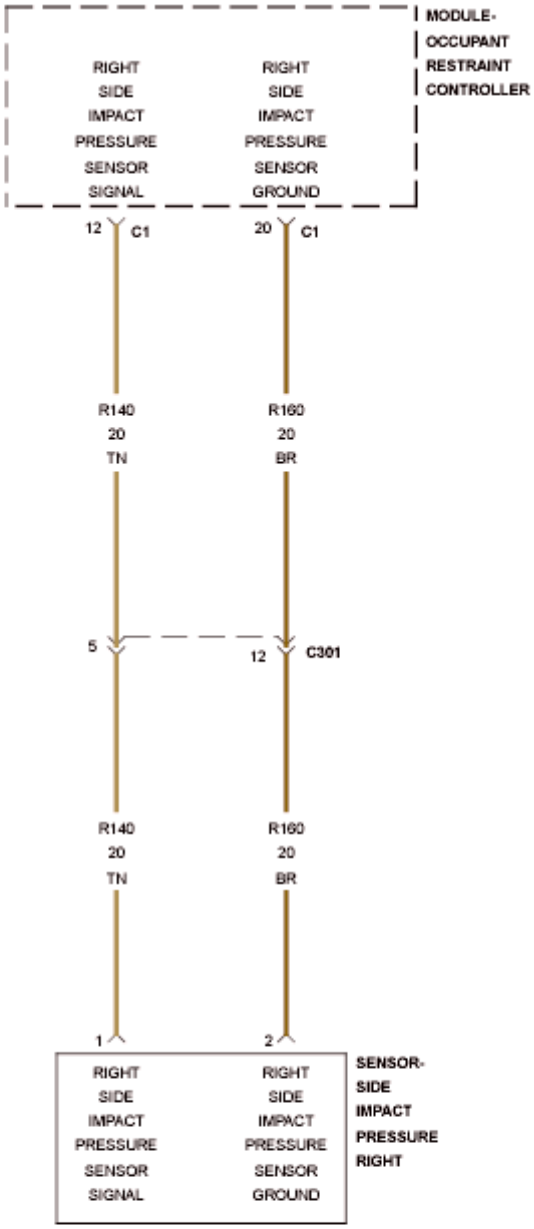

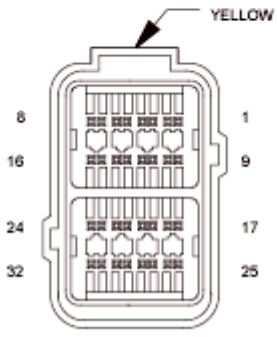

MODULE-

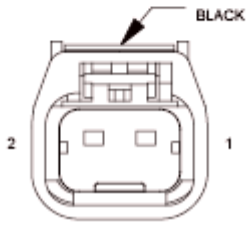

SENSOR-

Fig. 168: Right Side Satellite Circuit Wiring Diagram
Courtesy of CHRYSLER GROUP, LLC

For a complete wiring diagram, **refer to appropriate SYSTEM WIRING DIAGRAMS article** .

THEORY OF OPERATION

The sensor 4 impact sensors are located in the first row driver and passenger doors. Impact pressure sensors perform their own self test using power supplied by the Occupant Restraint Controller (ORC) then communicate this status back to the ORC. The repair of this fault centers on verifying the integrity of the sensor's internal circuitry and software validity. A short to voltage fault on the right side impact sensor 2 sensor wiring can cause a loss of comm impact sensor 4 code to set and the possible replacement of a good right side impact sensor 4. The right side impact 1, 2, and 4 sensors are wired in a daisy chain pattern. The short to battery fault in a loss of comm or internal circuit failure of the side impact sensor 1 can cause the impact sensors 2 and 4 on the same side to set a loss of comm code.

WHEN MONITORED:

The ORC continuously communicates with the Right Side Impact Pressure Sensor over the sensor signal circuit. The sensor communication and on board diagnostics are powered by the ORC signal.

SET CONDITION:

This Diagnostic Trouble Code (DTC) will set, if the ORC and the Right Side Impact Pressure Sensor do not establish and maintain valid data communications.

POSSIBLE CAUSES

Possible Causes
(R140, R160) RIGHT SIDE IMPACT PRESSURE SENSOR CIRCUITS SHORTED TO VOLTAGE
(R140, R160) RIGHT SIDE IMPACT PRESSURE SENSOR CIRCUITS SHORTED TO GROUND
(R140, R160) RIGHT SIDE IMPACT PRESSURE SENSOR CIRCUITS SHORTED TOGETHER
(R140, R160) RIGHT SIDE IMPACT PRESSURE SENSOR CIRCUITS OPEN
LOST COMMUNICATION WITH THE RIGHT SIDE IMPACT SENSOR 1 OR 2
RIGHT SIDE IMPACT PRESSURE SENSOR
OCCUPANT RESTRAINT CONTROLLER (ORC

Always Perform the Pre-Diagnostic Troubleshooting procedure before proceeding. Refer to STANDARD PROCEDURE.

DIAGNOSTIC TEST

1. **VERIFY ACTIVE DTC**

WARNING: **Turn the ignition off, disconnect the 12-volt battery and wait two minutes before proceeding. Failure to follow these instructions may**

result in possible serious or fatal injury.

NOTE: **Using the wiring diagram/schematic as a guide check all related splices and connectors for signs of water intrusion, corrosion, pushed out or bent terminals, and correct pin tension.**

NOTE: **If after the harness inspection it appears the impact sensor connector is only seated halfway. Re-seat the harness connector into the impact sensor and lock the tab. Follow the instructions below checking for active codes.**

WARNING: **Turn the ignition on, then reconnect the 12-volt battery and wait two minutes before proceeding. Failure to follow these instructions may result in possible serious or fatal injury.**

NOTE: **Make sure the battery is fully charged.**

1. Turn the ignition on.
2. With the scan tool, read ORC DTCs.

   Does the scan tool display active Service InfoB0096-49-RIGHT SIDE ACCELERATION SENSOR 1 - INTERNAL ELECTRONIC FAILURE, B0097-49-RIGHT SIDE ACCELERATION SENSOR 2 - INTERNAL ELECTRONIC FAILURE, U0175-00-LOST COMMUNICATION W/ RIGHT SIDE SATELLITE SENSOR 1, U0176-00-LOST COMMUNICATION W/ RIGHT SIDE SATELLITE SENSOR 2, U11B0-00-LOST COMMUNICATION W/ RIGHT SIDE SATELLITE SENSOR 4 - DTC?

   Yes

   NOTE: **Check for the active codes and repair for the fault starting with the Internal failure code or codes, check for active or stored status. Upon fixing the right side impact sensor 1 then check the right side impact sensor 2 internal fault if status changes to stored for all codes fault is fixed if status is still active proceed to the right side impact sensor 1 loss of comm check for status of the right side impact sensor 1 code status being active. If all codes go to stored status, fault in daisy chain is fixed if code status is still active continue. Check the right side impact sensor 2 check for status of the right side impact sensor 2 code going to stored. If status of all codes goes to stored status, fault in daisy chain is fixed if code status is still active continue. Check the right side impact sensor 4, fix fault and check for status of code going to stored status.**

   -
   - Check for all other internal and lost communication codes indicated in the right side impact

sensor daisy chain wiring before diagnosing DTC U11B0-00-LOST COMMUNICATION W/ RIGHT SIDE SATELLITE SENSOR 4. Go To The DTC Displayed. Refer to **DIAGNOSIS AND TESTING**. If internal fault 1, internal fault 2, and lost comm fault 1, and lost comm fault 2 have been checked follow DTC U11B0-00-LOST COMMUNICATION W/ RIGHT SIDE SATELLITE SENSOR 4. Go To 2.

No

- Refer to **STANDARD PROCEDURE** and perform the RESTRAINTS SYSTEM INTERMITTENT TEST.

2. **CHECK THE (R140, R160) RIGHT SIDE IMPACT PRESSURE SENSOR CIRCUITS FOR A SHORT TO VOLTAGE**

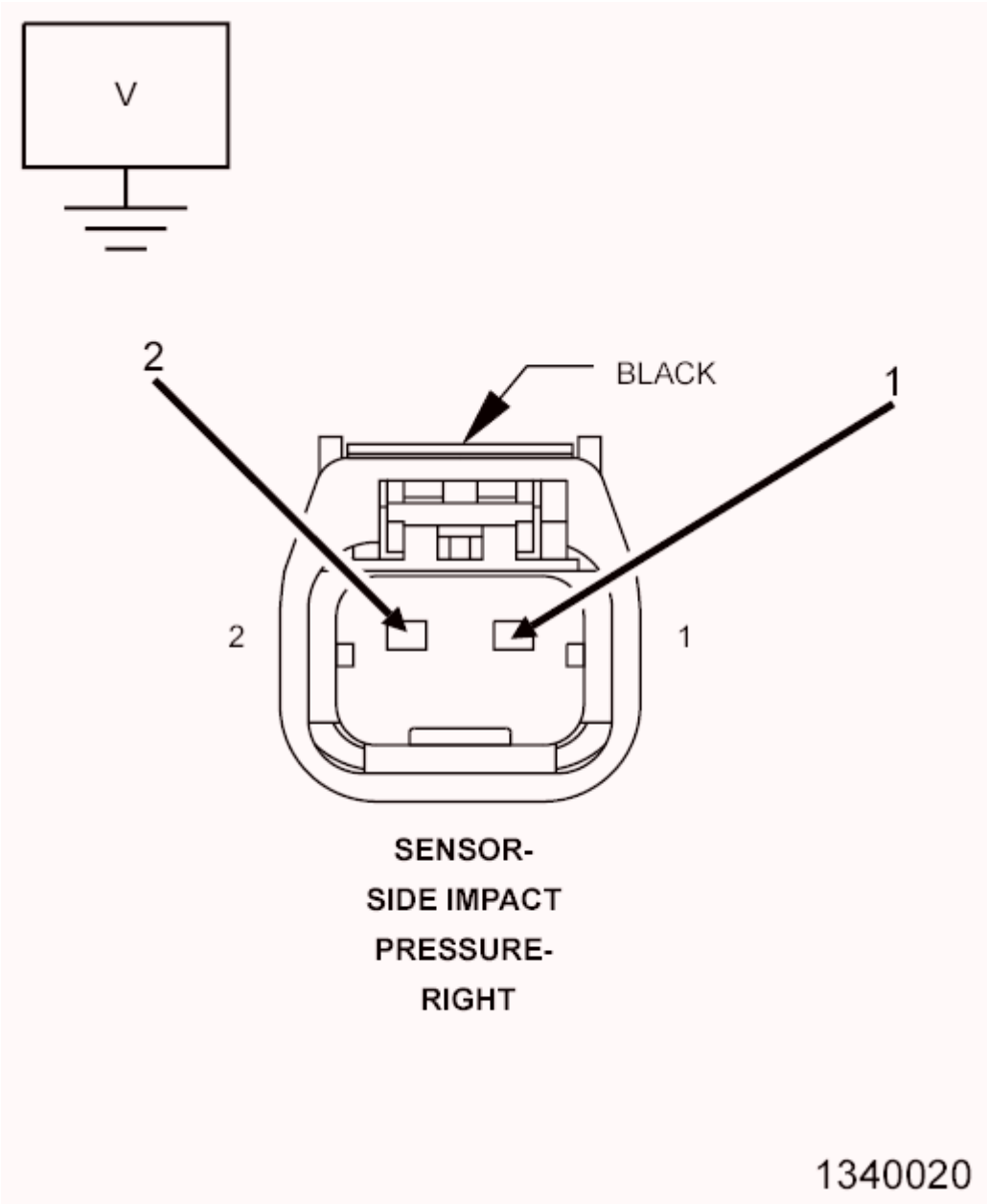

Fig. 169: Checking Right Side Impact Pressure Sensor Circuit For A Short To Voltage
Courtesy of CHRYSLER GROUP, LLC

WARNING: **Turn the ignition off, disconnect the 12-volt battery and wait two minutes before proceeding. Failure to follow these instructions may result in possible serious or fatal injury.**

1. Disconnect the Right Side Impact Pressure Sensor harness connector.
2. Disconnect the ORC harness connectors.

WARNING: **Turn the ignition on, then reconnect the 12-volt battery and wait two minutes before proceeding. Failure to follow these**

instructions may result in possible serious or fatal injury.

3. Measure the voltage of the (R140) Right Side Impact Pressure Sensor Signal circuit at the Right Side Impact Pressure Sensor harness connector.
4. Measure the voltage of the (R160) Right Side Impact Pressure Sensor Ground circuit at the Right Side Impact Pressure Sensor harness connector.

   Is there any voltage present?

   Yes

   - Repair the (R140, R160) Right Side Impact Pressure Sensor circuits for a short to voltage.
   - Refer to **STANDARD PROCEDURE** and perform the RESTRAINTS SYSTEM VERIFICATION TEST.

   No

   - Go To 3.

3. **CHECK THE (R140, R1160) RIGHT SIDE IMPACT PRESSURE SENSOR CIRCUITS FOR A SHORT TO GROUND**

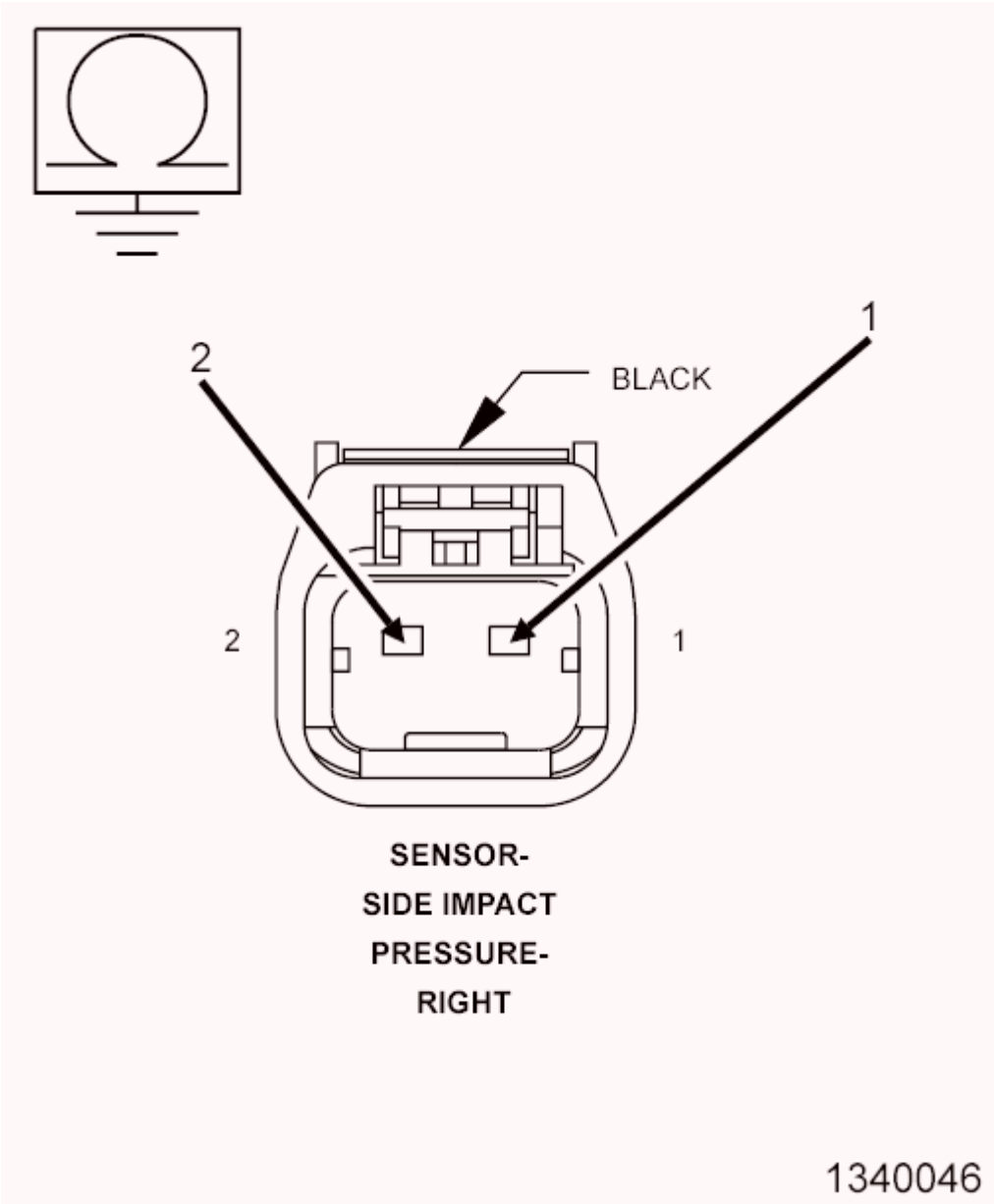

Fig. 170: Checking Right Side Impact Pressure Sensor Circuit For A Short To Ground
Courtesy of CHRYSLER GROUP, LLC

WARNING: **Turn the ignition off, disconnect the 12-volt battery and wait two minutes before proceeding. Failure to follow these instructions may result in possible serious or fatal injury.**

1. Measure the resistance between ground and the (R140) Right Side Impact Pressure Sensor Signal circuit at the Right Side Impact Pressure Sensor harness connector.
2. Measure the resistance between ground and the (R160) Right Side Impact Pressure Sensor Ground circuit at the Right Side Impact Pressure Sensor harness connector.

   Is the resistance below 100K Ohms?

Yes

- Repair the (R140, R160) Right Side Impact Pressure Sensor circuits for a short to ground.
- Refer to **STANDARD PROCEDURE** and perform the RESTRAINTS SYSTEM VERIFICATION TEST.

No

- Go To 4.

4. **CHECK THE (R140, R160) RIGHT SIDE IMPACT PRESSURE SENSOR CIRCUITS FOR A SHORT TOGETHER**

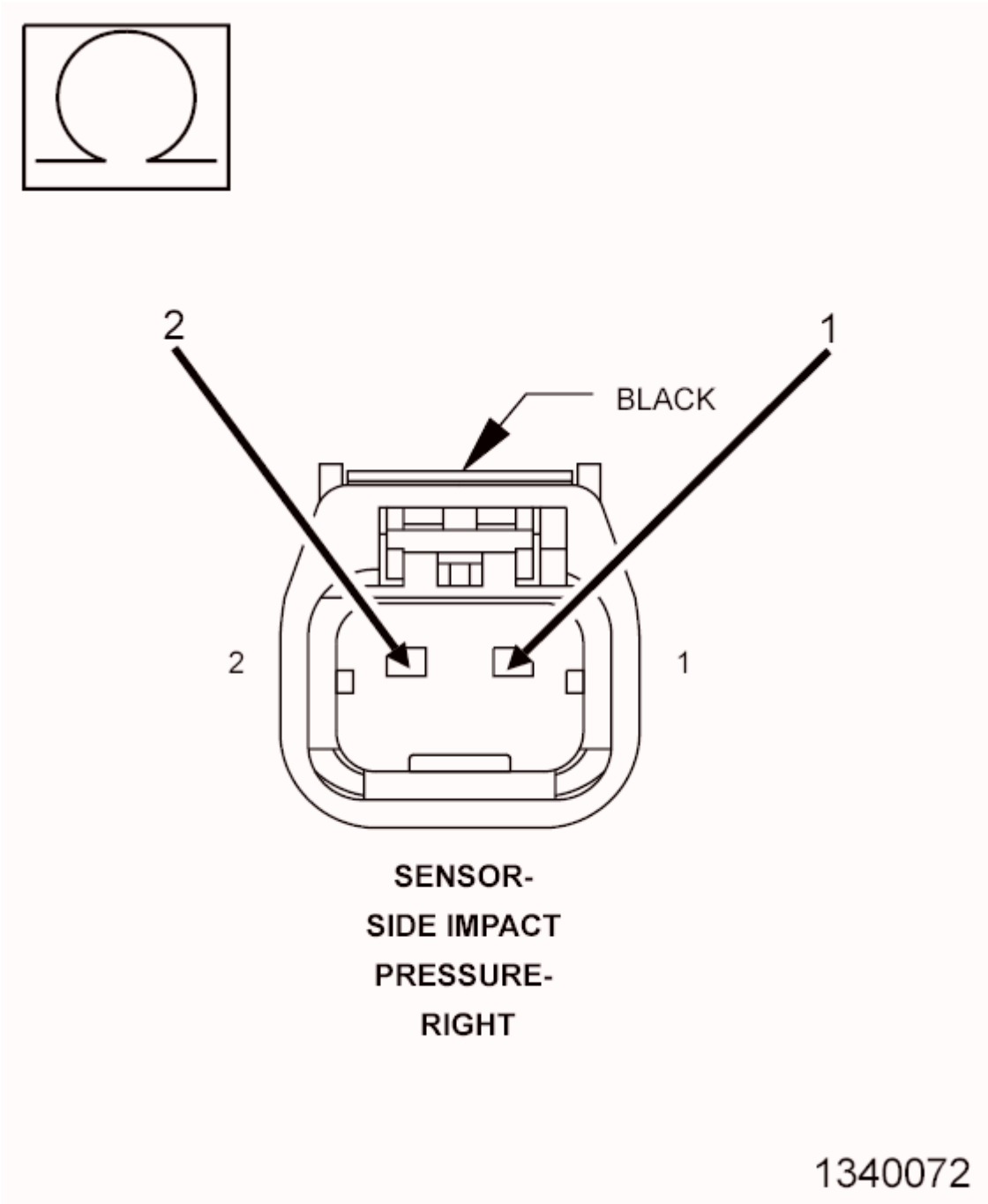

Fig. 171: Checking Right Side Impact Pressure Sensor Circuit
Courtesy of CHRYSLER GROUP, LLC

1. Measure the resistance between the (R140) Right Side Impact Pressure Sensor Signal circuit and (R160) Right Side Impact Pressure Sensor Ground circuit at the Right Side Impact Pressure Sensor harness connector.

   Is the resistance below 100K Ohms?

Yes

- Repair the (R140, R160) Right Side Impact Pressure Sensor circuits shorted together.
- Refer to **STANDARD PROCEDURE** and perform the RESTRAINTS SYSTEM VERIFICATION TEST.

No

- Go To 5.

5. **CHECK THE (R140) RIGHT SIDE IMPACT PRESSURE SENSOR SIGNAL CIRCUIT FOR AN OPEN OR HIGH RESISTANCE**

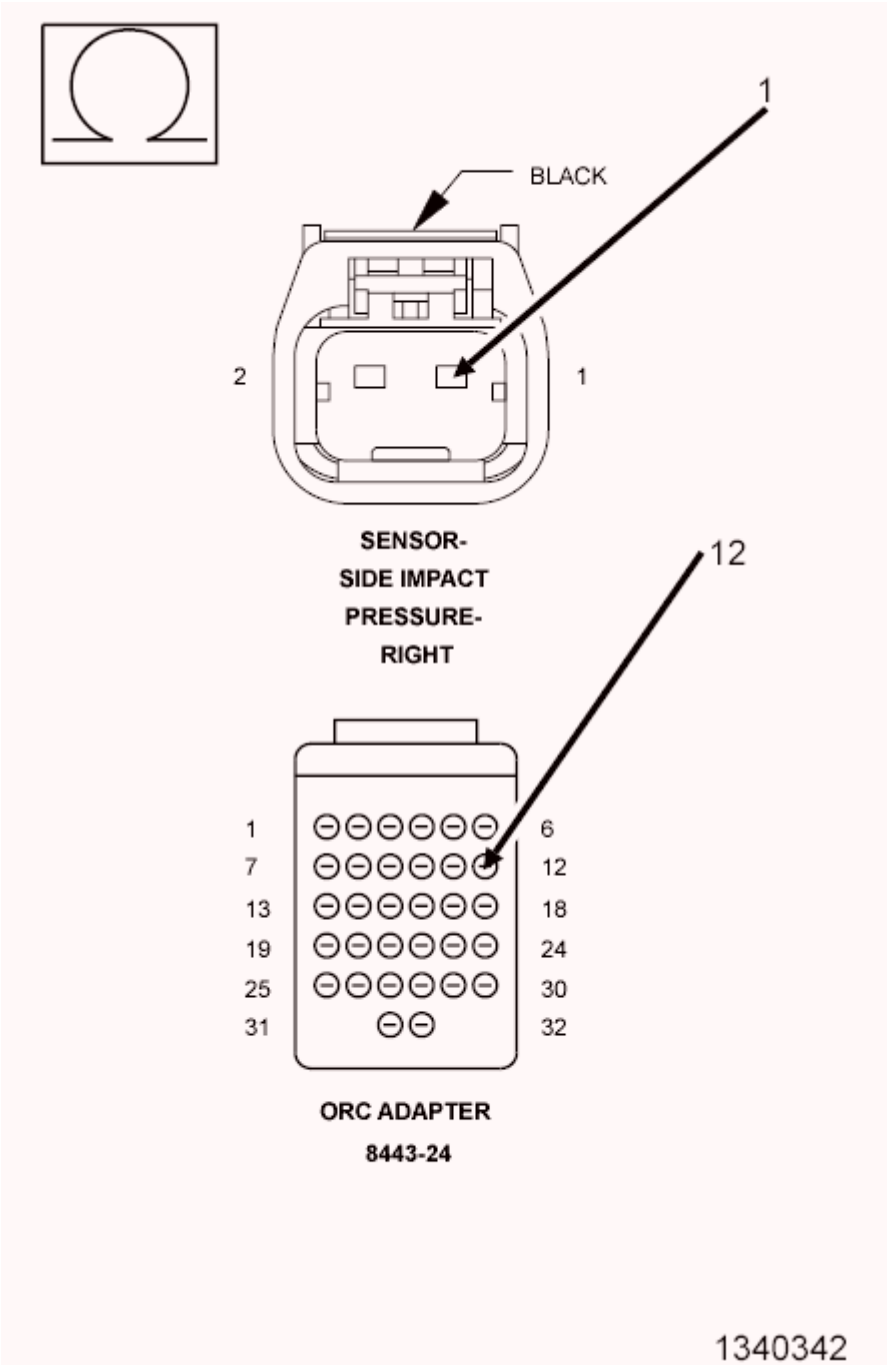

Fig. 172: Checking Right Side Impact Pressure Sensor Signal Circuit For Open
Courtesy of CHRYSLER GROUP, LLC

1. Connect the SRS Load Tool Adaptor (special tool #8443-24, 32-Way Adapter) to the ORC C1 harness connector.
2. Measure the resistance of the (R140) Right Side Impact Pressure Sensor Signal circuit between the Right Side Impact Pressure Sensor harness connector cavity 1 and the SRS Load Tool Adaptor (special tool #8443-24, 32-Way Adapter) cavity 12.

Is the resistance below 1 Ohm?

Yes

- Go To 6.

No

- Repair the (R140) Right Side Impact Pressure Sensor Signal circuit for an open or high resistance.
- Refer to **STANDARD PROCEDURE** and perform the RESTRAINTS SYSTEM VERIFICATION TEST.

6. **CHECK THE (R160) RIGHT SIDE IMPACT PRESSURE SENSOR GROUND CIRCUIT FOR AN OPEN OR HIGH RESISTANCE**

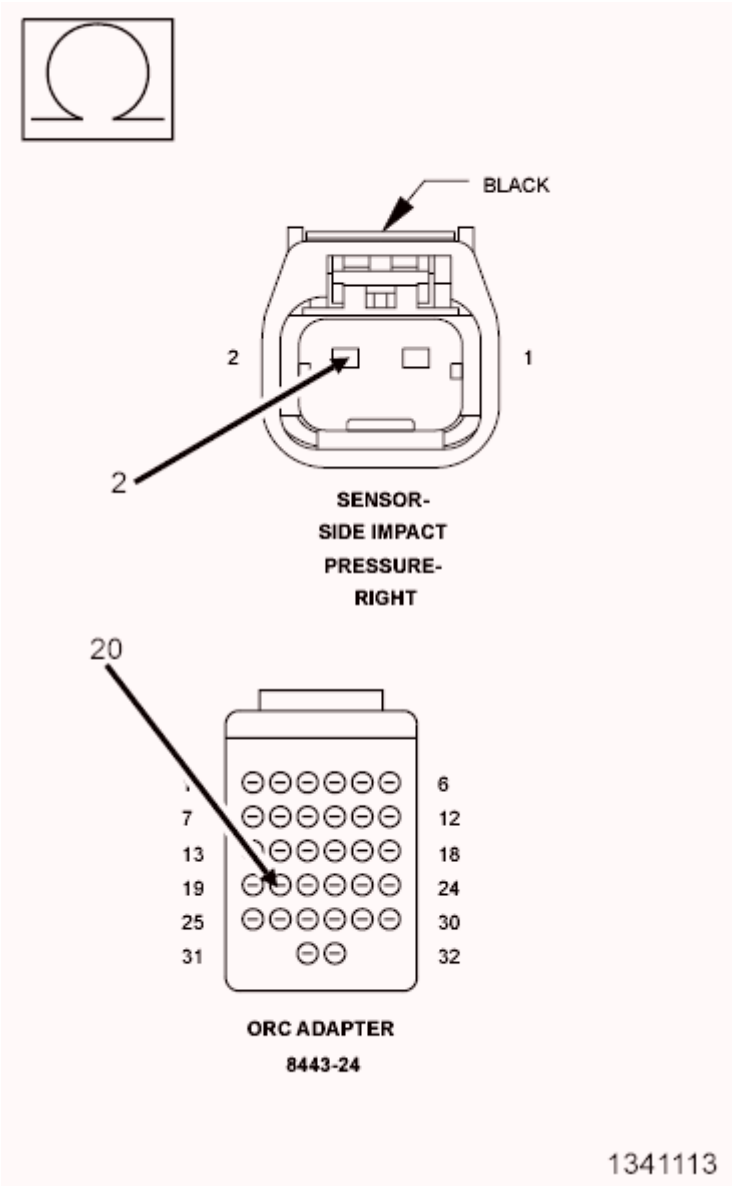

Fig. 173: Checking Right Side Impact Pressure Sensor Ground Circuit For Open
Courtesy of CHRYSLER GROUP, LLC

1. Measure the resistance of the (R160) Right Side Impact Pressure Sensor Ground circuit between the Right Side Impact Pressure Sensor harness connector cavity 2 and the SRS Load Tool Adaptor (special tool #8443-24, 32-Way Adapter) cavity 20.

   Is the resistance below 1 Ohm?

   Yes

   - Go To 7.

   No

- Repair the (R160) Right Side Impact Pressure Sensor ground circuit for an open or high resistance.
- Refer to **STANDARD PROCEDURE** and perform the RESTRAINTS SYSTEM VERIFICATION TEST.

7. **CHECK OPERATION OF THE RIGHT SIDE IMPACT PRESSURE SENSOR**
   1. Replace the Right Side Impact Pressure Sensor.
   2. Reconnect the vehicle body harness to the Right Side Impact Pressure Sensor.
   3. Remove any special tools or jumper wires and reconnect all previously disconnected components - except the Battery.

      WARNING: **Turn the ignition on, then reconnect the 12-volt battery and wait two minutes before proceeding. Failure to follow these instructions may result in possible serious or fatal injury.**

   4. Connect the scan tool to the Data Link Connector - use the most current software available.
   5. Use the scan tool and erase the stored codes in all airbag system modules.
   6. Turn the ignition OFF, and wait 15 seconds before turning the ignition ON.
   7. Wait one minute, and read active codes and if there are none present read the stored codes.

      Did the active U11B0-00-LOST COMMUNICATION W/ RIGHT SIDE SATELLITE SENSOR 4 - DTC return?

      Yes

      WARNING: **Turn the ignition off, disconnect the 12-volt battery and wait two minutes before proceeding. Failure to follow these instructions may result in possible serious or fatal injury.**

      WARNING: **If the Occupant Restraint Controller (ORC) is dropped at any time, it must be replaced. Failure to follow these instructions may result in possible serious or fatal injury.**

      -
      -
      - Replace the Occupant Restraint Controller (ORC) in accordance with Service Instructions.
      - Refer to **STANDARD PROCEDURE** and perform the RESTRAINTS SYSTEM VERIFICATION TEST.

      No

      - Repair is complete.
      - Refer to **STANDARD PROCEDURE** and perform the RESTRAINTS SYSTEM VERIFICATION TEST.

U1414-00-IMPLAUSIBLE/MISSING ECU NETWORK CONFIGURATION DATA -

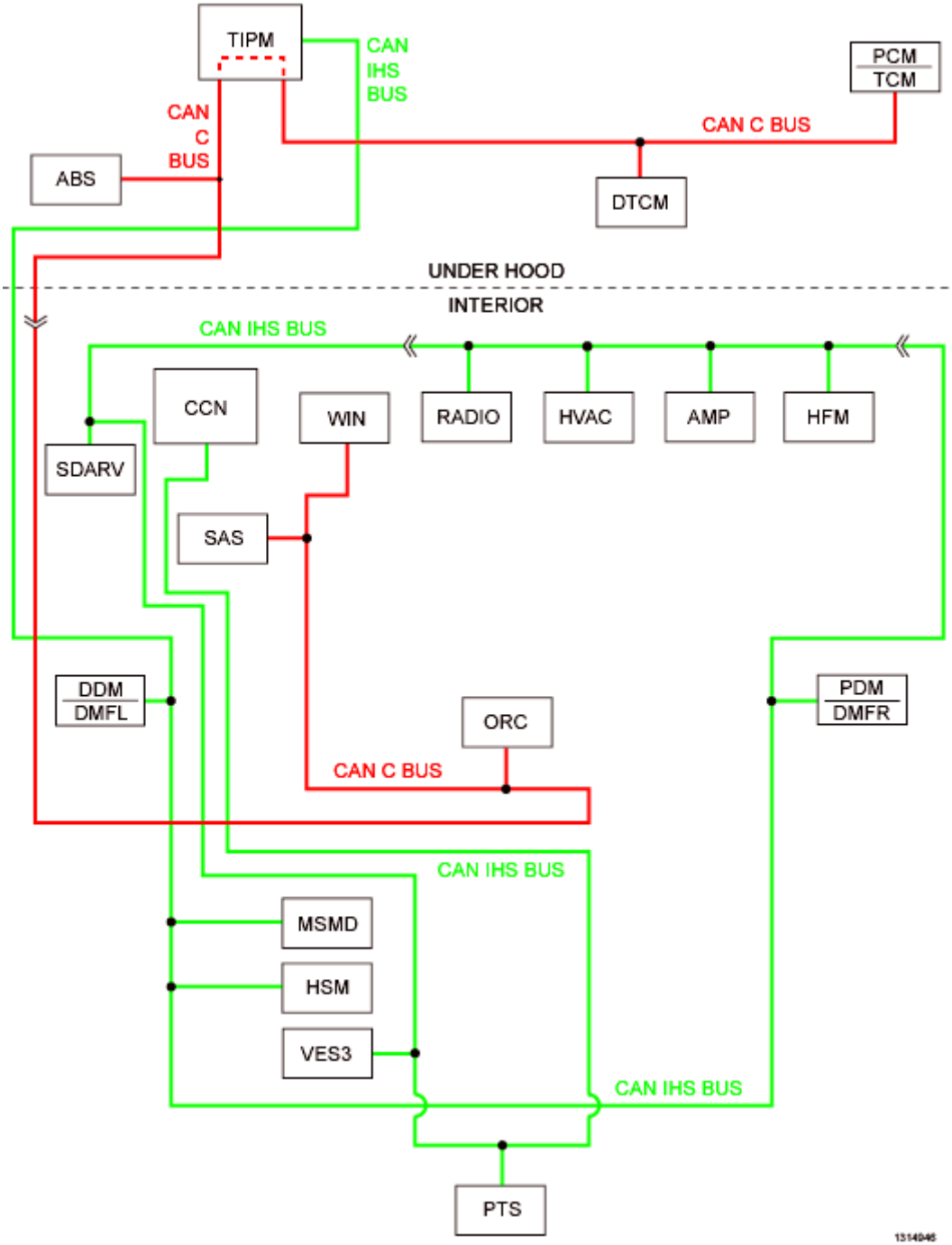

Fig. 174: CAN IHS BUS Module Wiring Diagram
Courtesy of CHRYSLER GROUP, LLC

For a complete wiring diagram, **refer to appropriate SYSTEM WIRING DIAGRAMS article** .

THEORY OF OPERATION

When powered, the Occupant Restraint Controller (ORC) performs an internal self test. The repair of this fault centers on verifying that the ORC is configured correctly for the vehicle's restraint system components.

WHEN MONITORED:

The ORC checks for a configuration message from the Totally Integrated Power Module (TIPM) at power-up and initialization.

SET CONDITION:

This Diagnostic Trouble Code (DTC) sets when the configuration message is not equal to the programmed configuration or when the configuration message is missing for 7 seconds. Once set, this DTC is latched for a power cycle.

POSSIBLE CAUSES

Possible Causes
TOTALLY INTEGRATED POWER MODULE (TIPM)

Always Perform the Pre-Diagnostic Troubleshooting procedure before proceeding. Refer to STANDARD PROCEDURE.

DIAGNOSTIC TEST

1. **VERIFY ACTIVE ORC DTC**

   NOTE: Ensure the battery is fully charged.

   1. Turn the ignition on.
   2. With the scan tool, read ORC DTCs.

      Does the scan tool display an active U1414-00-IMPLAUSIBLE/MISSING ECU NETWORK CONFIGURATION DATA - DTC?

      Yes

      - Go To 2.

      No

      - Repair complete.
      - Refer to **STANDARD PROCEDURE** and perform the RESTRAINTS SYSTEM VERIFICATION TEST.
2. **VERIFY ACTIVE TIPM DTC**
   1. With the scan tool, read TIPM DTCs.

Does the scan tool display any active TIPM DTCs?

Yes

- Refer to **DIAGNOSIS AND TESTING** and perform the appropriate TIPM diagnostic procedures.

No

- Replace the Totally Integrated Power Module (TIPM) in accordance with Service Information.
- Refer to **STANDARD PROCEDURE** and perform the BODY VERIFICATION TEST.

U1415-00-IMPLAUSIBLE/MISSING VEHICLE CONFIGURATION DATA -

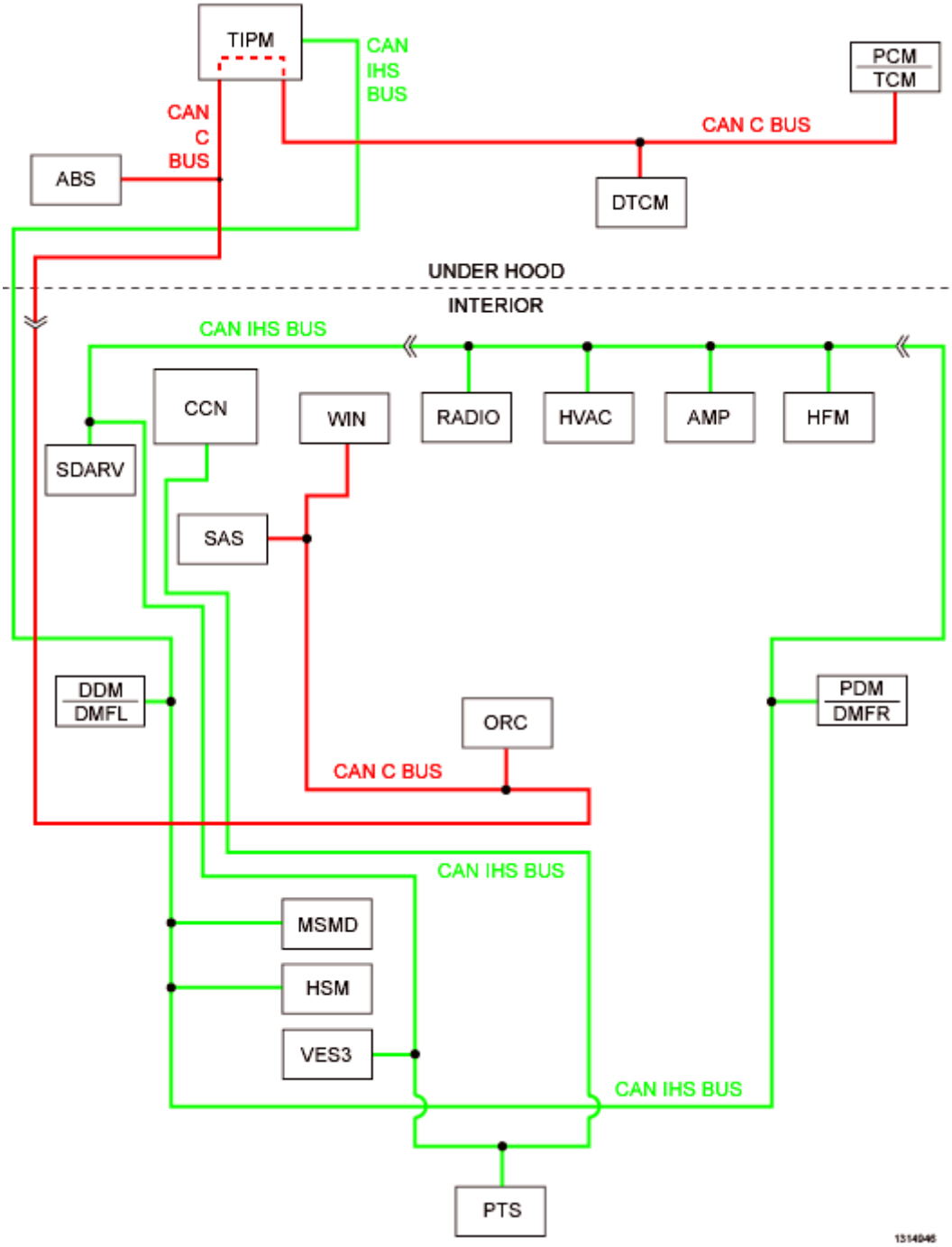

Fig. 175: CAN IHS BUS Module Wiring Diagram
Courtesy of CHRYSLER GROUP, LLC

For a complete wiring diagram, **refer to appropriate SYSTEM WIRING DIAGRAMS article** .

THEORY OF OPERATION

When powered, the Occupant Restraint Controller (ORC) performs an internal self test. The repair of this fault centers on verifying that the ORC is configured correctly for the vehicle's restraint system components.

WHEN MONITORED:

The ORC checks for a configuration message from the Totally Integrated Power Module (TIPM) at power-up and initialization.

SET CONDITION:

This Diagnostic Trouble Code (DTC) sets when the configuration message is not equal to the programmed configuration or when the configuration message is missing for 7 seconds. Once set, this DTC is latched for a power cycle.

POSSIBLE CAUSES

Possible Causes
TOTALLY INTEGRATED POWER MODULE (TIPM)

Always Perform the Pre-Diagnostic Troubleshooting procedure before proceeding. Refer to STANDARD PROCEDURE.

DIAGNOSTIC TEST

1. **VERIFY ACTIVE ORC DTC**

   NOTE: Ensure the battery is fully charged.

   1. Turn the ignition on.
   2. With the scan tool, read ORC DTCs.

      Does the scan tool display an active U1415-00-IMPLAUSIBLE/MISSING VEHICLE CONFIGURATION DATA - DTC?

      Yes

      - Go To 2.

      No

      - Repair complete.
      - Refer to **STANDARD PROCEDURE** and perform the RESTRAINTS SYSTEM VERIFICATION TEST.
2. **VERIFY ACTIVE TIPM DTC**
   1. With the scan tool, read TIPM DTCs.

      Does the scan tool display any active TIPM DTCs?

      Yes

- Refer to **DIAGNOSIS AND TESTING** and perform the appropriate TIPM diagnostic procedures.

No

- Replace the Totally Integrated Power Module (TIPM) in accordance with Service Information.
- Refer to **STANDARD PROCEDURE** and perform the BODY VERIFICATION TEST.

STANDARD PROCEDURE

RESTRAINTS SYSTEM INTERMITTENT TEST

For a complete wiring diagram, **refer to appropriate SYSTEM WIRING DIAGRAMS article** .

DIAGNOSTIC TEST

1. **RECORD AND ERASE ALL RESTRAINT SYSTEM DTCS**

   With the scan tool, record and erase all DTCs from all restraints system modules. Monitor for any active codes as you work through the following steps.

   - Review the code monitored and set conditions for any DTCs that are stored and attempt to reproduce the conditions listed.
   - Wiggle the wiring harness and connectors of the related airbag circuit, sensor, or component.
   - If codes are related to the Driver Airbag circuits, rotate the steering wheel from stop to stop.
   - Turn the ignition off.
   - Refer to any Technical Service Bulletins (TSBs) that may apply.

   Was the source of the customer complaint found or did any DTCs appear and stay active?

   Yes

   - Make the appropriate repairs and either Refer to **STANDARD PROCEDURE** and perform the RESTRAINTS SYSTEM VERIFICATION TEST.
   - Refer to **DIAGNOSIS AND TESTING** and select the DTC procedure.

   No

   - Go To 2.
2. **ATTEMPT TO REPRODUCE THE CONDITION**

   In the event the customer complaint cannot be duplicated due to an intermittent condition in the restraints system, the following may aid in attempting to reproduce the condition.

WARNING: Turn the ignition off, disconnect the 12-volt battery and wait two minutes before proceeding. Failure to follow these instructions may result in possible serious or fatal injury.

- Using the wiring diagram/schematic as a guide, inspect the wiring and connectors related to the stored code or component in question.
- Look for chafed, pierced, pinched, or partially broken wires and broken, bent, pushed out, spread, corroded, or contaminated terminals.
- Reconnect any disconnected components and harness connectors and ensure they are properly seated.

WARNING: Turn the ignition on, then reconnect the 12-volt battery and wait two minutes before proceeding. Failure to follow these instructions may result in possible serious or fatal injury.

- If numerous trouble codes were set, use a schematic and inspect any common ground or supply circuits.

Was the source of the intermittent condition located?

Yes

- Make the appropriate repairs and Refer to **STANDARD PROCEDURE** and perform the RESTRAINTS SYSTEM VERIFICATION TEST.

No

- The problem cannot be found at this time.

RESTRAINTS SYSTEM PRE-DIAGNOSTIC PROCEDURE

DIAGNOSTIC TEST

1. Before attempting to repair any restraint system, technicians should be familiar with and fully understand the system operation. Refer to **OPERATION** and **DESCRIPTION** for complete details. The following should be used as a checklist to be completed in its entirety prior to referencing specific Restraints Diagnostic Procedures.

   FOLLOW THE BASIC OUTLINE SET FORTH IN THE SIX-STEP TROUBLESHOOTING PROCEDURE

   1. Verification of complaint.
   2. Verification of any related symptoms.
   3. Symptom analysis.
   4. Problem isolation.

5. Repair of isolated problem.
6. Verification of proper operation.

TAKE INTO ACCOUNT CURRENT VEHICLE CONDITION, REPAIR HISTORY, AND TECHNICAL SERVICE BULLETINS (TSBs)

- Verify that there are no outward signs of vehicle damage or effects from a collision that could impact the proper operation of the Restraints system.
- Check for aftermarket vehicle accessories that may have been installed improperly or could interfere with the system.
- Check the vehicle repair history for repairs that may relate to the current condition.
- Check for current Technical Service Bulletins (TSBs) for the Restraints system related to the customer concern. If a TSB applies, follow the procedure outlined in the TSB.

DIAGNOSE ONLY THOSE FAILURES THAT ARE ACTIVE AND CAN BE REPRODUCED

- Check the control module central to the subsystem that is exhibiting the condition for active DTCs.
- For an intermittent failure that is not active at the time of vehicle inspection, perform the RESTRAINTS SYSTEM INTERMITTENT TEST and document the event on the repair order. Refer to **STANDARD PROCEDURE**.

ADDRESS ACTIVE DIAGNOSTIC TROUBLE CODES (DTCs) IN THE CORRECT ORDER

1. Low/High Voltage and Serial Data Loss of Communication Codes.
2. Module Internal Failure and Configuration Mismatch Codes.
3. Circuit specific DTC failures.

Should the malfunction still be present after conducting this Pre-diagnostic Procedure, technicians should continue to the appropriate DTC procedure. Refer to **DIAGNOSIS AND TESTING**.

Was the Pre-Test reviewed and is the DTC still present?

Yes

- Refer to **DIAGNOSIS AND TESTING** and perform the appropriate DTC procedure.

No

- Test Complete.

RESTRAINTS SYSTEM VERIFICATION TEST

DIAGNOSTIC TEST

1. **PERFORM THE RESTRAINTS SYSTEM VERIFICATION TEST**

NOTE: **If the ORC has been replaced, the ORC Initialization Procedure must be performed to clear the ORC Unlocked DTC and bring the module to a full state of readiness. Refer to DIAGNOSIS AND TESTING. Please perform all steps in the sequence presented following exactly the steps to successfully complete the procedures.**

WARNING: **Turn the ignition off disconnect the 12-volt battery and wait two minutes before proceeding. Failure to follow these instructions may result in possible serious or fatal injury.**

1. Remove any special tools or jumper wires and reconnect all previously disconnected components - except the Battery.

   If equipped with the keyless ignition, use this ignition on warning.

   WARNING: **Disconnect the 12-volt battery wait two minutes before proceeding, remove the ORC fuses, connect the 12-volt battery, wait two minutes before proceeding. Cycle the ignition to the On position, then reconnect the ORC fuses. Wait two minutes before proceeding. Failure to follow these instructions may result in possible serious or fatal injury.**

   If equipped with the standard key ignition, use this ignition on warning.

   WARNING: **Turn the ignition on, then reconnect the 12-volt battery and wait two minutes before proceeding. Failure to follow these instructions may result in possible serious or fatal injury.**

2. Connect the scan tool to the Data Link Connector - use the most current software available.
3. With the scan tool, erase stored DTCs in all airbag system modules.
4. Perform module reset.

   NOTE: **If equipped with an Airbag On - Off switch, read the DTCs in all switch positions.**

5. Exercise the Restraints System to duplicate the appropriate monitor conditions for any DTCs that were set.
6. Wait one minute, and read active codes, if there are none present, read the stored codes.
7. If the scan tool shows any active or stored codes, refer to **DIAGNOSTIC CODE INDEX** and follow the path specified for that trouble code. If no active or stored codes are present, the repair is complete.

Are any DTCs present or, is the original condition still present?

Yes

- Refer to **DIAGNOSIS AND TESTING** and perform the appropriate diagnostic procedure.

No

WARNING: Turn the ignition off disconnect the 12-volt battery and wait two minutes before proceeding. Failure to follow these instructions may result in possible serious or fatal injury.

-
- If the battery was disconnected for any reason, you must perform the Battery Reconnection procedure in the 8F-Engine Systems section of the Service Information.

NOTE: Please follow the ignition on warnings for either the standard key ignition or keyless ignition for reintroducing battery voltage to the restraint airbag system.

WARNING: Disconnect the 12-volt battery wait two minutes before proceeding, remove the ORC fuses, connect the 12-volt battery, wait two minutes before proceeding. Cycle the ignition to the On position, then reconnect the ORC fuses. Wait two minutes before proceeding. Failure to follow these instructions may result in possible serious or fatal injury.

WARNING: Turn the ignition on, then reconnect the 12-volt battery and wait two minutes before proceeding. Failure to follow these instructions may result in possible serious or fatal injury.

- If equipped with the keyless ignition, use this ignition on warning.

  If equipped with the standard key ignition, use this ignition on warning.

- Repair is complete.

WARNING

WARNING

WARNING: **To avoid serious or fatal injury on vehicles equipped with the Supplemental Restraint System (SRS), never attempt to repair the electrically conductive circuits or wiring components related to the SRS for which there is no MOPAR wiring repair kit. It is important to use ONLY the recommended splicing kit and procedure. For applicable and available MOPAR wiring repair kits, please visit the MOPAR Connector Web Site at the following address on the internet: (http://dto.vftis.com/mopar/disclaimer.asp). Inappropriate repairs can compromise the conductivity and current carrying capacity of those critical electrical circuits, which may cause SRS components not to deploy when required, or to deploy when not required. Only minor cuts or abrasions of wire and terminal insulation where the conductive material has not been damaged, or connector insulators where the integrity of the latching and locking mechanisms have not been compromised may be repaired using appropriate methods.**

WARNING: **To avoid serious or fatal injury during and following any seat belt or child restraint anchor service, carefully inspect all seat belts, buckles, mounting hardware, retractors, tether straps, and anchors for proper installation, operation, or damage. Replace any belt that is cut, frayed, or torn. Straighten any belt that is twisted. Tighten any loose fasteners. Replace any belt that has a damaged or ineffective buckle or retractor. Replace any belt that has a bent or damaged latch plate or anchor plate. Replace any child restraint anchor or the unit to which the anchor is integral that has been bent or damaged. Never attempt to repair a seat belt or child restraint component. Always replace damaged or ineffective seat belt and child restraint components with the correct, new and unused replacement parts listed in the Chrysler Mopar® Parts Catalog. Failure to follow these instructions may result in possible serious or fatal injury.**

WARNING: **To avoid serious or fatal injury on vehicles equipped with airbags, disable the Supplemental Restraint System (SRS) before attempting any steering wheel, steering column, airbag, seat belt tensioner, impact sensor or instrument panel component diagnosis or service. Disconnect and isolate the battery negative (ground) cable, then wait two minutes for the system capacitor to discharge before performing further diagnosis or service. This is the only sure way to disable the SRS. Failure to take the proper**

precautions could result in accidental airbag deployment.

WARNING: To avoid potential physical injury or damage to sensitive electronic circuits and systems, always disconnect and isolate the battery negative (ground) cable and the positive cable, then ground the positive cable to discharge the Occupant Restraint Controller (ORC) capacitor before performing any welding operations on the vehicle. Failure to take the proper precautions could result in accidental airbag deployment, possible damage to the Supplemental Restraint System (SRS) circuits and components, and possible damage to other electronic circuits and components. Whenever a welding process is being performed within 12 inches (30 centimeters) of an electronic module or wiring harness, then that module or harness should be relocated out of the way, or disconnected. Always protect against component or vehicle damage from weld spatter by using weld blankets and screens.

WARNING: To avoid serious or fatal injury, do not attempt to dismantle an airbag unit or tamper with its inflator. Do not puncture, incinerate or bring into contact with electricity. Do not store at temperatures exceeding 93° C (200° F). An airbag inflator unit may contain sodium azide and potassium nitrate. These materials are poisonous and extremely flammable. Contact with acid, water, or heavy metals may produce harmful and irritating gases (sodium hydroxide is formed in the presence of moisture) or combustible compounds. An airbag inflator unit may also contain a gas canister pressurized to over 17.24 kPa (2500 psi). Failure to follow these instructions may result in possible serious or fatal injury.

WARNING: To avoid serious or fatal injury when handling a seat belt tensioner retractor. Exercise proper care to keep fingers out from under the retractor cover and away from the seat belt webbing where it exits from the retractor cover. Failure to follow these instructions may result in possible serious or fatal injury.

WARNING: To avoid serious or fatal injury, replace all Supplemental Restraint System (SRS) components only with parts specified in the Chrysler Mopar® Parts Catalog. Substitute parts may appear interchangeable, but internal differences may result in inferior occupant protection.

WARNING: To avoid serious or fatal injury, the fasteners, screws, and bolts originally used for the Supplemental Restraint System (SRS) components must never be replaced with any substitutes. These fasteners have special coatings and are specifically designed for the SRS. Anytime a new fastener is needed, replace it with the correct fasteners provided in the service package or specified in the Chrysler Mopar® Parts Catalog.

WARNING: To avoid serious or fatal injury when a steering column has an airbag unit attached, never place the column on the floor or any other surface with the steering wheel or airbag unit face down. Failure to follow these instructions may result in possible serious or fatal injury.

DESCRIPTION

DESCRIPTION

An occupant restraint system is standard factory-installed safety equipment on this vehicle. Available occupant restraints for this vehicle include both active and passive types. Active restraints are those which require the vehicle occupants to take some action to employ, such as fastening and adjusting a seat belt; while passive restraints require no action by the vehicle occupants to be employed.

ACTIVE RESTRAINTS

The active restraints for this vehicle include:

- **Child Restraint Anchors** - All standard cab vehicles are equipped with two, fixed-position, child seat upper tether anchors that are integral to the upper cab back panel reinforcement and concealed behind individual trim cover and bezel units that are integral to the cab back trim panel. All vehicles with rear seats are equipped with three child seat upper tether anchor straps that are secured to the upper cab back panel reinforcement, behind the upright rear seat back. Two lower anchors are also provided for each rear outboard seating position on quad or crew cabs. Mega cabs have lower anchors provided for all three rear seating positions. These lower anchors are accessed from the front of the seat where the seat back meets the seat cushion. Child seat upper tether and lower anchors for the front seat are unavailable on quad or crew cab and mega cab vehicles. Likewise, lower anchors for the front seat are not available on standard cab vehicles.
- **Front Seat Belts** - Both outboard front seating positions are equipped with three-point seat belt systems employing a lower B-pillar mounted inertia latch-type Emergency Locking Retractor (ELR), a height-adjustable upper B-pillar mounted turning loop, a fixed lower seat belt anchor secured to the lower B-pillar (standard cab) or floor panel adjacent to the B-pillar (quad or crew cab), and a traveling end-release seat belt buckle secured to the inboard seat track. Except for the driver side front seat, the retractors for all vehicles are also switchable from an ELR to an Automatic Locking Retractor (ALR) for compatibility with child seats. The front seat belt buckle for the driver side of all vehicles includes an integral seat belt switch that detects whether its seat belt has been fastened. The center front seating position for standard cabs is also equipped with a three-point seat belt employing a floor panel mounted inertia latch-type ELR, a routing bracket and bezel near the top of the cab back panel, and two fixed end-release buckles secured to the center seat cushion frame. One of the center buckles is specially keyed to serve as the center seat belt lower anchor. The center front seating position for quad or crew cab vehicles with a split bench front seat is equipped with a fixed lap belt and an end-release buckle secured to the center seat cushion frame.
- **Rear Seat Belts** - On all vehicles equipped with rear seats, each rear seating position is equipped with a three-point seat belt system. Each outboard rear seating position seat belt employs a lower C-pillar mounted inertia latch-type Emergency Locking Retractor (ELR), a fixed position upper C-pillar mounted turning loop, and a fixed lower seat belt anchor secured to the lower C-pillar. The quad or crew cab rear seat center seating position has a rear floor panel mounted inertia latch-type ELR and a routing bracket and bezel on the top of the cab back panel, while the mega cab rear seat center position retractor and a

routing bracket and bezel are mounted to the rear seat back panel. A fixed end-release buckle unit for the quad or crew cab right outboard seating position is integral to the right side of the center retractor mounting bracket on the rear floor panel. The end-release buckle units for the quad or crew cab center and left outboard seating positions are individually secured to the rear floor panel on vehicles with the standard equipment rear bench seat, or secured with the rear seat mounting hardware on vehicles with the optional split rear bench seat. The fixed end-release buckle units for all mega cab rear seating positions are secured to the seat cushion frame mounting hardware. The rear seat retractors for all vehicles are also switchable from an ELR to an Automatic Locking Retractor (ALR) for compatibility with child seats.

PASSIVE RESTRAINTS

8098029e

Fig. 1: SRS Logo
Courtesy of CHRYSLER GROUP, LLC

The passive restraints available for this vehicle include the following:

- **Dual Front Airbags** - Multistage driver and front passenger airbags are used in this vehicle. This airbag system consists of passive, inflatable, Supplemental Restraint System (SRS) components and vehicles with this equipment can be readily identified by the **SRS - AIRBAG** logo molded into the driver airbag trim cover in the center of the steering wheel and also into the passenger airbag door on the top of the instrument panel trim cover above the upper glove box or storage bin opening. Vehicles with the airbag system can also be identified by the airbag indicator, which will illuminate in the ElectroMechanical Instrument Cluster (EMIC) (also known as the Cab Compartment Node/CCN) from four to six seconds as a bulb test each time the ignition switch is turned to the ON position. A pyrotechnic-type seat belt tensioner is also integral to the front outboard seat belt retractors to work in conjunction with the dual front airbags.
- **Seat Airbags** - Front seat-mounted seat (pelvic and thorax) airbags are optional equipment in this vehicle. This airbag system consists of passive, inflatable, SRS components and vehicles with this equipment can be readily identified by a sewn tag with the **SRS - AIRBAG** logo located on the outboard side of the front seat back trim cover.
- **Side Curtain Airbags** - Side curtain airbags are standard equipment for this vehicle when it is also equipped with dual front airbags. This airbag system consists of passive, inflatable, SRS components and vehicles with this equipment can be readily identified by a molded identification trim button with the **SRS**

- AIRBAG logo located at the top of each B-pillar trim (all models) and C-pillar trim (quad or crew cab and mega cab only) near the headliner.

The SRS includes the following major components, which are described in further detail elsewhere in this service information:

- **Airbag Indicator -** The airbag indicator is integral to the ElectroMechanical Instrument Cluster (EMIC) (also known as the Cab Compartment Node/CCN), which is located on the instrument panel in front of the driver.
- **Clockspring -** The clockspring is located near the top of the steering column, directly beneath the steering wheel.
- **Driver Airbag -** The driver airbag is located in the center of the steering wheel horn pad, beneath the driver airbag trim cover.
- **Driver Knee Blocker -** The driver knee blocker is a structural unit secured to the back side of and integral to the instrument panel steering column opening cover.
- **Front Impact Sensor -** Two front impact sensors are used, one left side and one right side. One sensor is located on the back side of each end of the lower radiator support cross member on each side of the cooling module and below the inboard side of each front lamp unit.
- **Occupant Restraint Controller -** The Occupant Restraint Controller (ORC) is located on a mounting bracket on the floor panel transmission tunnel below the center section of the front seat, or under the center floor console, as the vehicle is equipped.
- **Passenger Airbag -** The passenger airbag is located in the instrument panel, beneath the passenger airbag door integral to the top of the instrument panel trim cover just forward of the upper glove box or storage bin on the passenger side of the vehicle.
- **Passenger Knee Blocker -** The passenger knee blocker is a structural reinforcement that is integral to and concealed within the lower glove box door.
- **Seat Airbag -** On vehicles so equipped, a seat (pelvic and thorax) airbag unit is secured to each outboard front seat back frame, where it is concealed beneath the seat back trim cover and foam.
- **Seat Belt Tensioner -** A seat belt tensioner is integral to both front outboard seat belt retractor units. The seat belt retractor tensioner units are secured to the right and left inner B-pillars and concealed beneath the lower B-pillar trim.
- **Side Curtain Airbag -** A side curtain airbag is secured to each inside roof side rail above the headliner, and extends from the A-pillar to near the cab back.
- **Side Impact Sensor -** Up to six side impact sensors are used on vehicles with side curtain airbags, up to three on each side of the vehicle. One pressure-type sensor is located on each right and left front door module carrier behind the front door trim panel on some vehicles. In addition, an acceleration-type sensor is located on each inner B-pillar behind the lower B-pillar trim on all models, while quad or crew cab and mega cab models also have one acceleration-type sensor on each inner C-pillar behind the lower C-pillar trim.

The ORC and the EMIC each contain a microprocessor and programming that allow them to communicate with each other using the Controller Area Network (CAN) data bus. This method of communication is used by the ORC for control of the airbag indicator in the EMIC. Refer to **COMMUNICATION, DESCRIPTION** .

Hard wired circuitry connects the SRS components to each other through the electrical system of the vehicle.

These hard wired circuits are integral to several wire harnesses, which are routed throughout the vehicle and retained by many different methods. These circuits may be connected to each other, to the vehicle electrical system, and to the SRS components through the use of a combination of soldered splices, splice block connectors, and many different types of wire harness terminal connectors and insulators. Refer to the appropriate wiring information. The wiring information includes wiring diagrams, proper wire and connector repair procedures, further details on wire harness routing and retention, as well as pin-out and location views for the various wire harness connectors, splices and grounds.

OPERATION

OPERATION

ACTIVE RESTRAINTS

The primary passenger restraints in this or any other vehicle are the standard equipment factory-installed seat belts and child restraint anchors. Seat belts and child restraint anchors are referred to as an active restraint because the vehicle occupants are required to physically fasten and properly adjust these restraints in order to benefit from them.

PASSIVE RESTRAINTS

The passive restraints are referred to as a Supplemental Restraint System (SRS) components because they were designed and are intended to enhance the protection for the occupants of the vehicle **only** when used in conjunction with the seat belts. They are referred to as passive restraints because the vehicle occupants are not required to do anything to make them operate; however, the vehicle occupants must be wearing their seat belts in order to obtain the maximum safety benefit from the factory-installed SRS components.

The SRS electrical circuits are continuously monitored and controlled by a microprocessor and software contained within the Occupant Restraint Controller (ORC). An airbag indicator in the ElectroMechanical Instrument Cluster (EMIC) (also known as the Cab Compartment Node/CCN) illuminates for about four to six seconds as a bulb test each time the ignition switch is turned to the ON or START positions. Following the bulb test, the airbag indicator is turned ON or OFF by the ORC to indicate the status of the SRS. If the airbag indicator comes ON at any time other than during the bulb test, it indicates that there is a problem in the SRS electrical circuits. Such a problem may cause airbags not to deploy when required, or to deploy when not required.

Deployment of the SRS components depends upon the angle and severity of an impact. Deployment is not based upon vehicle speed; rather, deployment is based upon the rate of deceleration as measured by the forces of gravity (G force) upon the acceleration-type impact sensors, or by a pressure wave within a front door as measured by the pressure-type impact sensor. When an impact is severe enough, the microprocessor in the ORC signals the inflator of the appropriate airbag units to deploy their airbag cushions.

The outboard front seat belt retractor tensioners are provided with a deployment signal by the ORC in conjunction with the front airbags. The side curtain airbags and, if equipped, the seat airbags (also known as pelvic and thorax airbags) are provided with a deployment signal individually by the ORC based upon a side impact sensor input for the same side of the vehicle. The ORC also contains a rollover sensor. Should the vehicle roll over and not cause any acceleration-type or pressure-type impact sensor to signal the need for a deployment, the rollover sensor in the ORC will deploy the side curtain airbags, the seat airbags and under

certain conditions, will also actuate the seat belt retractor tensioners.

During a frontal vehicle impact, the knee blockers work in concert with properly fastened and adjusted seat belts to restrain both the driver and the right front seat passenger in the proper position for an airbag deployment. The knee blockers also absorb and distribute the crash energy from the driver and the right front seat passenger to the structure of the instrument panel. The seat belt tensioners remove the slack from the outboard front seat belts to provide further assurance that the driver and right front seat passenger are properly positioned and restrained for an airbag deployment.

Typically, the vehicle occupants recall more about the events preceding and following a collision than they do of an airbag deployment itself. This is because the airbag deployment and deflation occur very rapidly. In a typical 48 kilometer-per-hour (30 mile-per-hour) barrier impact, from the moment of impact until the airbags are fully inflated takes about 40 milliseconds. Within one to two seconds from the moment of impact, the airbags are almost entirely deflated. The times cited for these events are approximations, which apply only to a barrier impact at the given speed. Actual times will vary somewhat, depending upon the vehicle speed, impact angle, severity of the impact, and the type of collision.

When the ORC monitors a problem in any of the SRS circuits or components, including the seat belt tensioners, it stores a fault code or Diagnostic Trouble Code (DTC) in its memory circuit and sends an electronic message to the EMIC to turn ON the airbag indicator. The hard wired circuits between components related to the SRS may be diagnosed using conventional diagnostic tools and procedures. Refer to the appropriate wiring information. The wiring information includes wiring diagrams, proper wire and connector repair procedures, details of wire harness routing and retention, connector pin-out information and location views for the various wire harness connectors, splices and grounds.

However, conventional diagnostic methods will not prove conclusive in the diagnosis of the SRS or the electronic controls or communication between other modules and devices that provide features of the SRS. The most reliable, efficient, and accurate means to diagnose the SRS or the electronic controls and communication related to SRS operation, as well as the retrieval or erasure of a DTC requires the use of a diagnostic scan tool. Refer to the appropriate diagnostic information.

DIAGNOSIS AND TESTING

DIAGNOSIS AND TESTING - SUPPLEMENTAL RESTRAINT SYSTEM

The hard wired circuits between modules and components related to the Supplemental Restraint System (SRS) may be diagnosed using conventional diagnostic tools and procedures. Refer to the appropriate wiring information. The wiring information includes wiring diagrams, proper wire and connector repair procedures, details of wire harness routing and retention, connector pin-out information and location views for the various wire harness connectors, splices and grounds.

However, conventional diagnostic methods will not prove conclusive in the diagnosis of the SRS or the electronic controls or communication between other modules and devices that provide features of the SRS. The most reliable, efficient, and accurate means to diagnose the SRS or the electronic controls and communication related to SRS operation, as well as the retrieval or erasure of a DTC requires the use of a diagnostic scan tool. Refer to the appropriate diagnostic information.

In addition to a diagnostic scan tool that contains the latest version of the proper diagnostic software, certain

diagnostic procedures for the SRS may require the use of the SRS Load Tool special tool along with the appropriate Load Tool Jumpers and Adapters. Refer to the appropriate diagnostic information.

WARNING: To avoid serious or fatal injury on vehicles equipped with airbags, disable the Supplemental Restraint System (SRS) before attempting any steering wheel, steering column, airbag, seat belt tensioner, impact sensor or instrument panel component diagnosis or service. Disconnect and isolate the battery negative (ground) cable, then wait two minutes for the system capacitor to discharge before performing further diagnosis or service. This is the only sure way to disable the SRS. Failure to take the proper precautions could result in accidental airbag deployment.

STANDARD PROCEDURE

HANDLING NON-DEPLOYED SUPPLEMENTAL RESTRAINTS

At no time should any source of electricity be permitted near the inflator on the back of a non-deployed airbag or seat belt tensioner. When carrying a non-deployed airbag, the trim cover or airbag cushion side of the unit should be pointed away from the body to minimize injury in the event of an accidental deployment. If the airbag unit is placed on a bench or any other surface, the trim cover or airbag cushion side of the unit should be face up to minimize movement in the event of an accidental deployment.

When handling a non-deployed seat belt tensioner, take proper care to keep fingers out from under the retractor or buckle cover and away from the seat belt webbing or cable where it exits from the retractor or buckle cover. In addition, the Supplemental Restraint System (SRS) should be disarmed whenever any steering wheel, steering column, seat belt tensioner, airbag, impact sensor, or instrument panel components require diagnosis or service. Failure to observe this warning could result in accidental airbag deployment and possible personal injury.

All damaged, ineffective or non-deployed airbags and seat belt tensioners which are replaced on vehicles are to be handled and disposed of properly. If an airbag or seat belt tensioner unit is ineffective or damaged and non-deployed, refer to the Hazardous Substance Control System for information regarding the potentially hazardous properties of the subject component and the proper safe handling procedures. Then dispose of all non-deployed and deployed airbags and seat belt tensioners in a manner consistent with state, provincial, local and federal regulations.

SUPPLEMENTAL RESTRAINT STORAGE

Airbags and seat belt tensioners must be stored in their original, special container until they are used for service. Also, they must be stored in a clean, dry environment; away from sources of extreme heat, sparks and high electrical energy. Always place or store any airbag on a surface with its trim cover or airbag cushion side facing up, to minimize movement in case of an accidental deployment.

SERVICE AFTER A SUPPLEMENTAL RESTRAINT DEPLOYMENT

Any vehicle which is to be returned to use following a Supplemental Restraint System (SRS) component deployment must have the deployed restraints replaced. In addition, the following guidelines MUST be

observed.

- **Following ANY major vehicle impact damage in the vicinity of an impact sensor or the ORC** - It is critical that the mounting surfaces and mounting brackets for the Occupant Restraint Controller (ORC), front impact sensors and side impact sensors located within the proximity of the impact damage be closely inspected and restored to their original conditions. Because the ORC and each impact sensor are used by the SRS to monitor or confirm the direction and severity of a vehicle impact, improper orientation or insecure fastening of these components may cause airbags not to deploy when required, or to deploy when not required.
- **If the driver airbag is deployed** - If the driver airbag has been deployed, the clockspring and the steering column must be replaced.
- **If the passenger airbag is deployed** - If the passenger airbag has been deployed, the instrument panel trim cover must also be replaced.
- **If a seat airbag is deployed** - If a seat (pelvic and thorax) airbag has been deployed, the seat back frame, the seat back foam and the seat back trim cover on the same side of the vehicle as the deployed airbag must also be replaced.
- **If a seat belt tensioner is deployed** - The seat belt tensioners are deployed in conjunction with the front airbags, but can also be deployed with side curtain airbags. The seat belt tensioners must be replaced if either front airbag has been deployed, and must be inspected if either side curtain airbag has been deployed.
- **If a side curtain airbag is deployed** - If a side curtain airbag has been deployed, the headliner as well as the upper A, B and C-pillar trim on the same side of the vehicle as the deployed airbag must also be replaced. On vehicles with an optional sunroof, the sunroof drain tubes and hoses must be closely inspected following a side curtain airbag deployment.

The components identified with the deployed SRS components in the preceding list are not intended for reuse and will be damaged or weakened as a result of an airbag deployment, which may or may not be obvious during a visual inspection. All other vehicle components should be closely inspected following any SRS component deployment, but are to be replaced only as required by the extent of the visible damage incurred.

SQUIB CIRCUIT WIRING REPAIRS

In addition to the preceding guidelines, be aware that the heat created by the initiator during an airbag or tensioner deployment will cause collateral damage to the connected wiring (squib circuits) and connector insulators. There are two methods by which an airbag or seat belt tensioner may be connected to the vehicle electrical system. The first method involves a short pigtail harness and connector insulator that are integral to the airbag or tensioner unit and are replaced as a unit with the service replacement airbag or seat belt tensioner. This connection method typically requires no additional wiring repair following a deployment.

However, the second connection method involves a wire harness takeout and connector insulator that are connected directly to the airbag or tensioner initiator or squib. These direct-connect type take outs and connector insulators **MUST** be repaired following an airbag or seat belt tensioner deployment using the approved Supplemental Restraint System Wiring Repairs procedure. Refer to **STANDARD PROCEDURE**.

AIRBAG SQUIB STATUS

Multistage airbags with multiple initiators (squibs) must be checked to determine that all squibs were used

during the deployment event. The driver and passenger airbags in this vehicle are deployed by electrical signals generated by the Occupant Restraint Controller (ORC) through the driver or passenger squib 1 and squib 2 circuits to the two initiators in the airbag inflators. Typically, both initiators are used and all potentially hazardous chemicals are burned during an airbag deployment event. However, it is possible for only one initiator to be used; therefore, it is always necessary to confirm that both initiators have been used in order to avoid the improper handling or disposal of potentially live pyrotechnic or hazardous materials. The following procedure should be performed using a diagnostic scan tool to verify the status of both airbag squibs before either deployed airbag is removed from the vehicle for disposal.

CAUTION: Deployed front airbags having two initiators (squibs) in the airbag inflator may or may not have live pyrotechnic material within the inflator. Do not dispose of these airbags unless you are certain of complete deployment. Refer to the Hazardous Substance Control System for information regarding the potentially hazardous properties of the subject component and the proper safe handling procedures. Then dispose of all non-deployed and deployed airbags and seat belt tensioners in a manner consistent with state, provincial, local and federal regulations.

1. Be certain that the diagnostic scan tool contains the latest version of the proper diagnostic software. Connect the scan tool to the 16-way Data Link Connector (DLC). The DLC is located on the driver side lower edge of the instrument panel, outboard of the steering column.
2. Turn the ignition switch to the ON position.
3. Using the scan tool, read and record the active (current) Diagnostic Trouble Code (DTC) data.

Using the active DTC information, refer to the **Airbag Squib Status** table to determine the status of both driver and passenger airbag squibs.

AIRBAG SQUIB STATUS		
IF THE ACTIVE DTC IS:	**CONDITIONS**	**SQUIB STATUS**
Driver or Passenger Squib 1 open	**AND** the stored DTC minutes for both Driver or Passenger squibs are within 15 minutes of each other	Both Squib 1 and 2 were used.
Driver or Passenger Squib 2 open		
Driver or Passenger Squib 1 open	**AND** the stored DTC minutes for Driver or Passenger Squib 2 open is GREATER than the stored DTC minutes for Driver or Passenger Squib 1 by 15 minutes or more	Squib 1 was used; Squib 2 is live.
Driver or Passenger Squib 2 open		
Driver or Passenger Squib 1 open	**AND** the stored DTC minutes for Driver or Passenger Squib 1 open is GREATER than the stored DTC minutes for Driver or Passenger Squib 2 by 15 minutes or more	Squib 1 is live; Squib 2 was used.
Driver or Passenger Squib 2 open		
Driver or Passenger Squib 1 open	**AND** Driver or Passenger Squib 2 open is NOT an active code	Squib 1 was used; Squib 2 is live.
Driver or Passenger Squib 2 open	**AND** Driver or Passenger Squib 1 open is NOT an active code	Squib 1 is live; Squib 2 was used.

NOTE: **If none of the Driver or Passenger Squib 1 or 2 open are active codes, the status of the airbag squibs is unknown. In this case the airbag should be handled and disposed of as if the squibs were both live.**

CLEANUP PROCEDURE

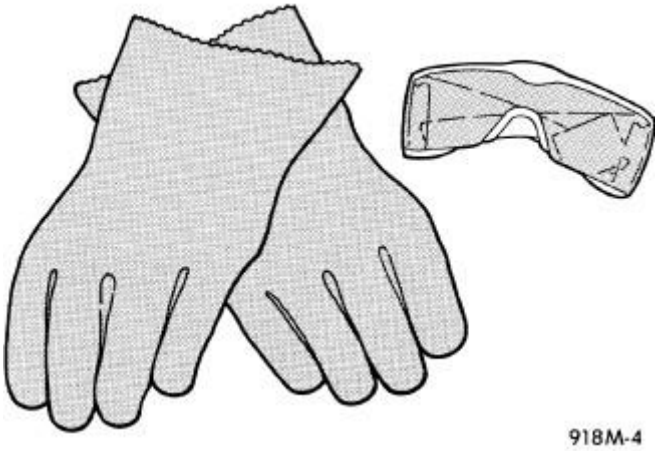

Fig. 2: Clean Up Safety Equipment
Courtesy of CHRYSLER GROUP, LLC

Following a Supplemental Restraint System (SRS) component deployment, the vehicle interior will contain a powdery residue. This residue consists primarily of harmless particulate by-products of the small pyrotechnic charge that initiates the propellant used to deploy a SRS component. However, this residue may also contain traces of sodium hydroxide powder, a chemical by-product of the propellant material that is used to generate the inert gas that inflates the airbag. Since sodium hydroxide powder can irritate the skin, eyes, nose, or throat, be certain to wear safety glasses, rubber gloves, and a long-sleeved shirt during cleanup.

WARNING: **To avoid serious or fatal injury, if you experience skin irritation during cleanup, run cool water over the affected area. Also, if you experience irritation of the nose or throat, exit the vehicle for fresh air until the irritation ceases. If irritation continues, see a physician.**

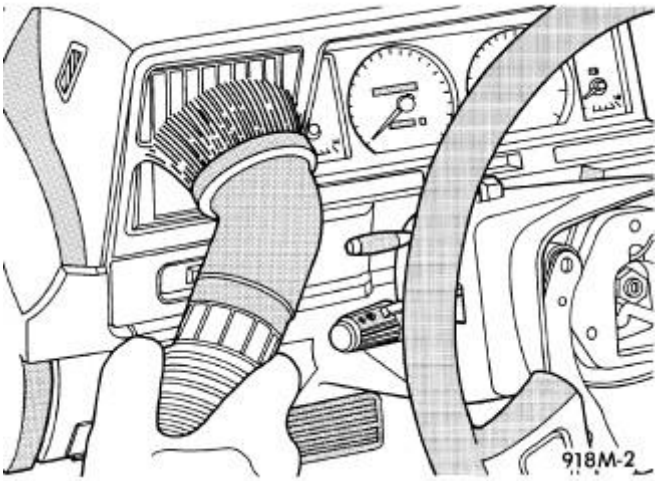

Fig. 3: Vacuuming Residual Powder
Courtesy of CHRYSLER GROUP, LLC

1. Begin the cleanup by using a vacuum cleaner to remove any residual powder from the vehicle interior. Clean from outside the vehicle and work your way inside, so that you avoid kneeling or sitting on a non-cleaned area.
2. Be certain to vacuum the heater and air conditioning outlets as well. Run the heater and air conditioner blower on the lowest speed setting and vacuum any powder expelled from the outlets.

CAUTION: Deployed front airbags having two initiators (squibs) in the airbag inflator may or may not have live pyrotechnic material within the inflator. Do not dispose of these airbags unless you are certain of complete deployment. Refer to AIRBAG SQUIB STATUS. All damaged, ineffective, or non-deployed Supplemental Restraint System (SRS) components which are replaced on vehicles are to be handled and disposed of properly. If an airbag or seat belt tensioner unit is ineffective or damaged and non-deployed, refer to the Hazardous Substance Control System for information regarding the potentially hazardous properties of the subject component and the proper safe handling procedures. Then dispose of all non-deployed and deployed airbags and seat belt tensioners in a manner consistent with state, provincial, local and federal regulations.

3. Next, remove the deployed SRS components from the vehicle. Refer to the appropriate service removal procedures.
4. You may need to vacuum the interior of the vehicle a second time to recover all of the powder.

SUPPLEMENTAL RESTRAINT SYSTEM WIRING REPAIRS

It is important when repairing any Supplemental Restraint System (SRS) electrical circuits to use the recommended splicing kit and procedure. For applicable and available MOPAR wiring repair kits, please visit the MOPAR Connector Web Site at the following address on the internet:

(http://dto.vftis.com/mopar/disclaimer.asp).

This recommended procedure involves crimping the wires together with a splice band, soldering the crimped connection and, finally, sealing and protecting the repair. The crimp and solder ensure a strong mechanical bond that will always pass a pull test while also maintaining the conductivity and current carrying capacity of the circuit. The adhesive sealant and heat shrink tubing ensures the splice repair will perform as well or better than the original wire and be safe from potential corrosion or short circuits.

There is no limit to the number of splice repairs that can be made in one harness using this procedure. However, as has been past practice, multiple adjacent splices should be offset from each other. This wiring splice repair procedure is approved for harness side repairs only. Repairs and splices to pigtail wires on SRS components such as airbag units, seat belt tensioner units or clocksprings are not approved or recommended.

REPAIR PROCEDURE

CAUTION: If additional wire is needed when making a splice repair to any wire, it is important that the same or next larger size wire gauge be used. Refer to the appropriate wiring information for the original wire gauge size.

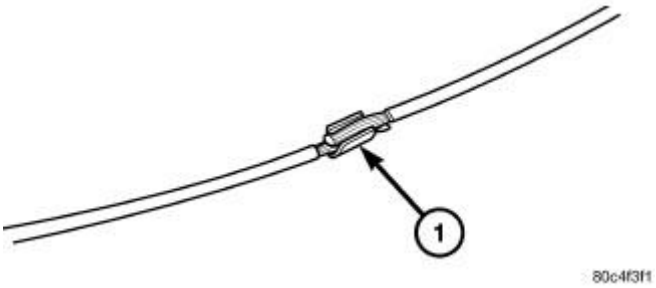

Fig. 4: Splice Band
Courtesy of CHRYSLER GROUP, LLC

1. Remove 13 millimeters (0.50 inch) of insulation from each wire that needs to be spliced.
2. Place a piece of adhesive sealant-lined heat shrink tubing (Part Number 04778570 or equivalent) over the wire on one side of the splice. Be certain the length of tubing will be sufficient to cover and seal the entire repair area.
3. Place the strands of the wires being spliced so that they are overlapping each other within the splice band (1).

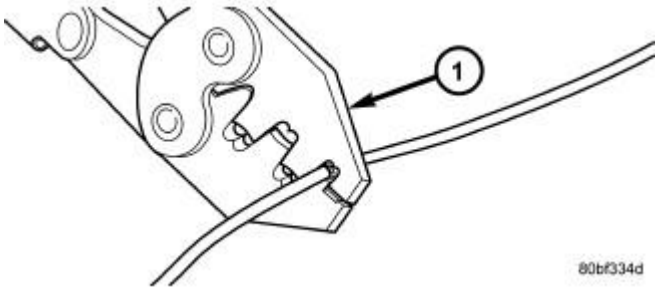

Fig. 5: Crimping Tool

Courtesy of CHRYSLER GROUP, LLC

4. Using a crimping tool (1) (MOPAR Part Number 05019912AA, Miller Special Tool Number (special tool #10042, Crimper, Wire/Terminal) or equivalent) crimp the splice band and wires together securely.

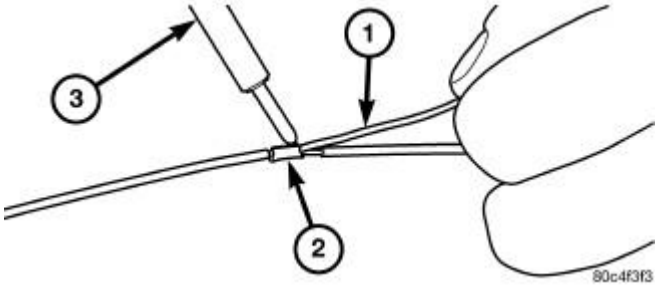

Fig. 6: Solder Splice
Courtesy of CHRYSLER GROUP, LLC

CAUTION: Never use acid core solder for electrical wiring repairs.

5. Using rosin core type solder (1) only and a suitable soldering iron (3), solder the wire and splice band connection (2) together.

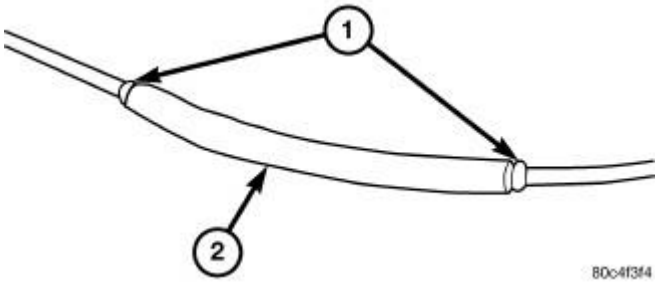

Fig. 7: Heat Shrink Tube
Courtesy of CHRYSLER GROUP, LLC

6. Center the heat shrink tubing (2) over the splice joint repair and heat using a suitable heat gun. Heat the joint until the tubing is tightly sealed and sealant (1) begins to ooze out of both ends of the tubing.

SUPPLEMENTAL RESTRAINTS VERIFICATION TEST

NOTE: The following procedure should be performed using a diagnostic scan tool to verify proper Supplemental Restraint System (SRS) operation following the service or replacement of any SRS component. Refer to the appropriate diagnostic procedures.

WARNING: To avoid serious or fatal injury on vehicles equipped with airbags, disable the Supplemental Restraint System (SRS) before attempting any steering

wheel, steering column, airbag, seat belt tensioner, impact sensor or instrument panel component diagnosis or service. Disconnect and isolate the battery negative (ground) cable, then wait two minutes for the system capacitor to discharge before performing further diagnosis or service. This is the only sure way to disable the SRS. Failure to take the proper precautions could result in accidental airbag deployment.

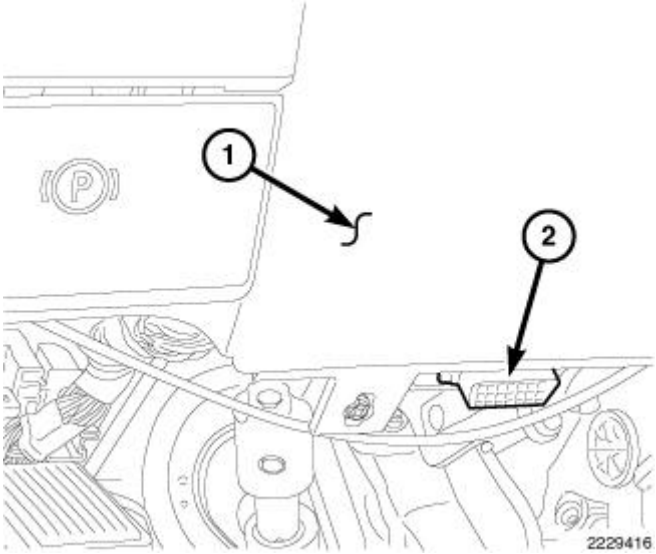

Fig. 8: Locating DLC
Courtesy of CHRYSLER GROUP, LLC

1. During the following test, the battery negative cable remains disconnected and isolated, as it was during the Supplemental Restraint System (SRS) component removal and installation procedures.
2. Be certain that the diagnostic scan tool contains the latest version of the proper diagnostic software. Connect the scan tool to the 16-way Data Link Connector (DLC) (2). The DLC is located on the driver side lower edge of the instrument panel, near the steering column opening cover (1) and outboard of the steering column.
3. Turn the ignition switch to the ON position and exit the vehicle with the scan tool.
4. Check to be certain that nobody is in the vehicle, then reconnect the battery negative cable.
5. Using the scan tool, read and record the active (current) Diagnostic Trouble Code (DTC) data.
6. Next, use the scan tool to read and record any stored (historical) DTC data.
7. If any DTC is found, refer to the appropriate diagnostic information.
8. Use the scan tool to erase the stored DTC data. If any problems remain, the stored DTC data will not erase. Refer to the appropriate diagnostic information to diagnose any stored DTC that will not erase. If the stored DTC information is successfully erased, refer to 9.
9. Turn the ignition switch to the OFF position for about 15 seconds, and then back to the ON position. Observe the airbag indicator in the instrument cluster. It should light from four to six seconds, and then go out. This indicates that the SRS is functioning normally and that the repairs are complete. If the airbag indicator fails to light, or lights and stays ON, there is still an active SRS fault or malfunction. Refer to the appropriate diagnostic information to diagnose the problem.

SPECIFICATIONS

SPECIFICATIONS

TORQUE SPECIFICATIONS

DESCRIPTION	N.m	Ft. Lbs.	In. Lbs.
Turning Loop Height Adjuster Mounting Screw	39	29	-
Passenger Airbag Lower Bracket Mounting Screws	8	-	71
Seat Airbag Mounting Nuts	10	-	88
Side Curtain Airbag Mounting Screws	7	-	62
Child Restraint Tether Strap Mounting Screw	14	10	-
Front Center Seat Belt Center Buckle or Center Anchor Buckle Lower Anchor Mounting Screw	39	29	-
Front Outboard Seat Belt Buckle Lower Anchor Mounting Screw	25	18	-
Rear Seat Belt Center Buckle and Left Outboard Buckle Lower Anchor Bracket Mounting Screws	39	29	-
Clockspring Mounting Screws	3	-	25
Occupant Restraint Controller Mounting Nuts	12	9	-
Front Center Seat Belt Retractor Lower Bracket Mounting Screws	39	29	-
Front Center Seat Belt Bracket To Body Bracket Mounting Screws	20	15	-
Front Outboard Seat Belt Retractor Upper Bracket Mounting Screw	12	-	106
Front Outboard Seat Belt Retractor Lower Bracket Mounting Screw	39	29	-
Front Outboard Seat Belt			

Turning Loop Mounting Screw	39	29	-
Front Outboard Seat Belt Lower Anchor Mounting Screw	39	29	-
Rear Center Seat Belt Bracket To Body Bracket Mounting Screws	20	15	-
Rear Center Seat Belt Retractor Lower Bracket Mounting Screws	39	29	-
Rear Outboard Seat Belt Retractor Lower Bracket Mounting Screw	39	29	-
Rear Outboard Seat Belt Turning Loop Mounting Screw	39	29	-
Rear Outboard Seat Belt Lower Anchor Mounting Screw	39	29	-
Front Impact Sensor Mounting Screw	10	-	90
Side Acceleration-Type Impact Sensor Mounting Screws	9	-	80

SPECIAL TOOLS

SPECIAL TOOLS

	10042 - Crimper, Wire/Terminal (Originally Shipped In Kit Number(s) 10042.) 10187 - Remover Tool, Driver's Airbag (Originally Shipped In Kit Number(s) 10187, 10203.)

ADJUSTER, SEAT BELT TURNING LOOP

REMOVAL

REMOVAL

WARNING: **To avoid serious or fatal injury during and following any seat belt or child restraint anchor service, carefully inspect all seat belts, buckles, mounting hardware, retractors, tether straps, and anchors for proper installation, operation, or damage. Replace any belt that is cut, frayed, or**

torn. Straighten any belt that is twisted. Tighten any loose fasteners. Replace any belt that has a damaged or ineffective buckle or retractor. Replace any belt that has a bent or damaged latch plate or anchor plate. Replace any child restraint anchor or the unit to which the anchor is integral that has been bent or damaged. Never attempt to repair a seat belt or child restraint component. Always replace damaged or ineffective seat belt and child restraint components with the correct, new and unused replacement parts listed in the Chrysler Mopar® Parts Catalog. Failure to follow these instructions may result in possible serious or fatal injury.

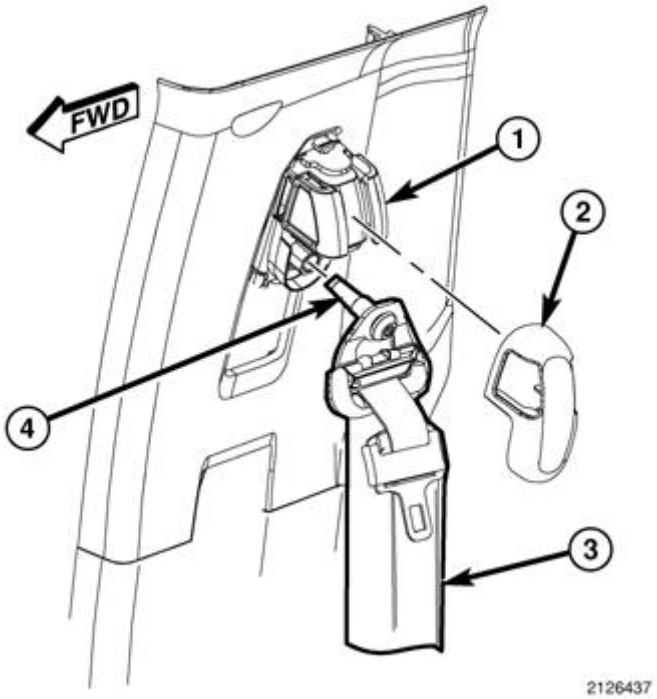

Fig. 9: Front Seat Belt Turning Loop & Height Adjuster
Courtesy of CHRYSLER GROUP, LLC

1. Firmly grasp the top of the trim cover (2) for the front seat belt turning loop height adjuster (1) on the inside of the upper B-pillar and pull it away from the height adjuster far enough unsnap it, then disengage the lower snap features of the trim cover from the adjuster and discard. The trim cover is a one time component and is not intended for reuse.
2. Remove the screw (4) that secures the front seat belt (3) turning loop to the height adjuster on the inside of the upper B-pillar.
3. Remove the seat belt turning loop from the height adjuster.

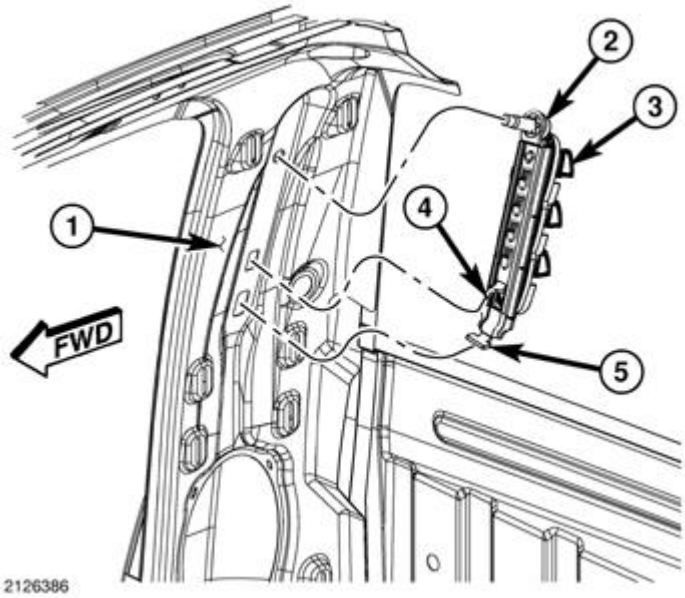

Fig. 10: B-Pillar
Courtesy of CHRYSLER GROUP, LLC

4. Remove the upper trim from the inside of the B-pillar (1). Refer to **PANEL, B-PILLAR TRIM, UPPER, REMOVAL** .
5. Remove the screw (2) that secures the height adjuster (3) to the inside of the upper B-pillar.
6. Lift the height adjuster upward on the B-pillar far enough to disengage the hook (4) on the back of the adjuster from the B-pillar.
7. Rotate the top of the adjuster down and rearward to a horizontal position in order to disengage the T-tab (5) near the lower end of the height adjuster from the hole in the B-pillar.
8. Remove the height adjuster from the B-pillar.

INSTALLATION

INSTALLATION

WARNING: **To avoid serious or fatal injury during and following any seat belt or child restraint anchor service, carefully inspect all seat belts, buckles, mounting hardware, retractors, tether straps, and anchors for proper installation, operation, or damage. Replace any belt that is cut, frayed, or torn. Straighten any belt that is twisted. Tighten any loose fasteners. Replace any belt that has a damaged or ineffective buckle or retractor. Replace any belt that has a bent or damaged latch plate or anchor plate. Replace any child restraint anchor or the unit to which the anchor is integral that has been bent or damaged. Never attempt to repair a seat belt or child restraint component. Always replace damaged or ineffective seat belt and child restraint components with the correct, new and unused replacement parts listed in the Chrysler Mopar® Parts Catalog. Failure to follow these instructions may result in possible serious or fatal**

injury.

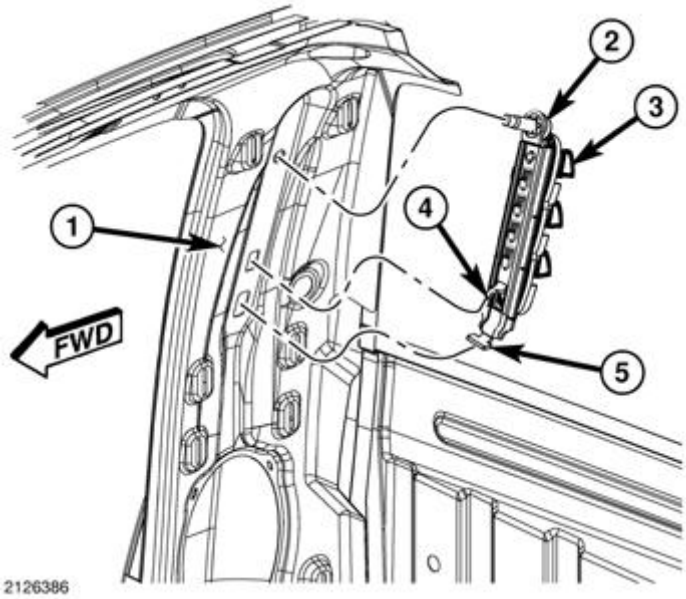

Fig. 11: B-Pillar
Courtesy of CHRYSLER GROUP, LLC

1. Position the front seat belt turning loop height adjuster (3) horizontally to the inside of the upper B-pillar (1) with the top of the adjuster oriented rearward.
2. Engage the T-tab (5) near the lower end of the height adjuster into the hole in the B-pillar.
3. Rotate the top of the height adjuster up and forward to a vertical position on the inside of the B-pillar.
4. Lift the height adjuster upward on the B-pillar far enough to engage the hook (4) on the back of the adjuster into the B-pillar clearance hole.
5. Install and tighten the screw (2) that secures the height adjuster to the inside of the upper B-pillar. Tighten the screw to 39 N.m (29 ft. lbs.).
6. Reinstall the upper trim onto the inside of the B-pillar. Refer to **PANEL, B-PILLAR TRIM, UPPER, INSTALLATION** .

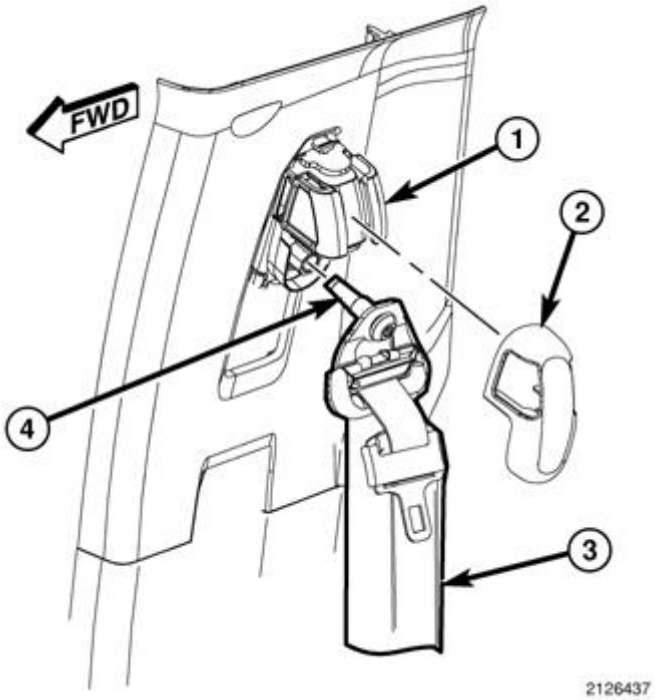

Fig. 12: Front Seat Belt Turning Loop & Height Adjuster
Courtesy of CHRYSLER GROUP, LLC

7. Position the front seat belt (3) turning loop onto the height adjuster (1) on the inside of the upper B-pillar.
8. Install and tighten the screw (4) that secures the turning loop to the height adjuster. Tighten the screw to 39 N.m (29 ft. lbs.).
9. Engage the lower snap features of a new trim cover (2) under the height adjuster, then use hand pressure to press the top of the trim cover firmly and evenly over the height adjuster until it snaps into place.

AIR BAG, DRIVER

DESCRIPTION

DESCRIPTION

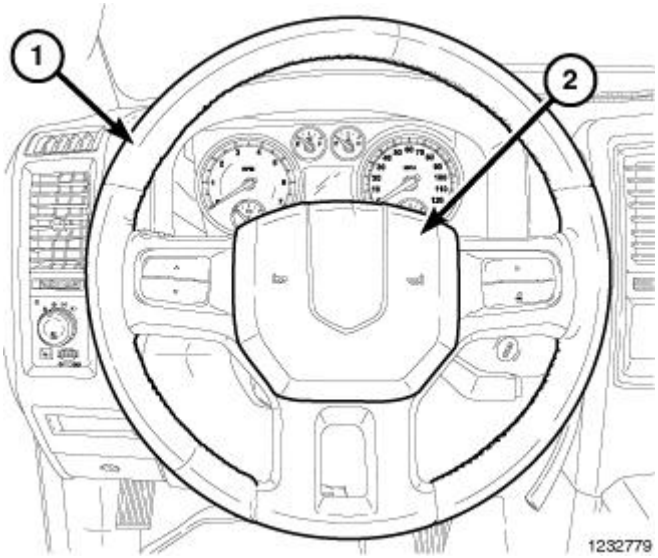

Fig. 13: Driver Airbag Protective Trim Cover
Courtesy of CHRYSLER GROUP, LLC

The injection molded, thermoplastic driver airbag protective trim cover (2) is the most visible part of the driver airbag. The driver airbag is located in the center of the steering wheel (1), where it is secured to the armature of the four-spoke steering wheel. An injection molded bright emblem with the Dodge Ram logo is applied to the center of the trim cover.

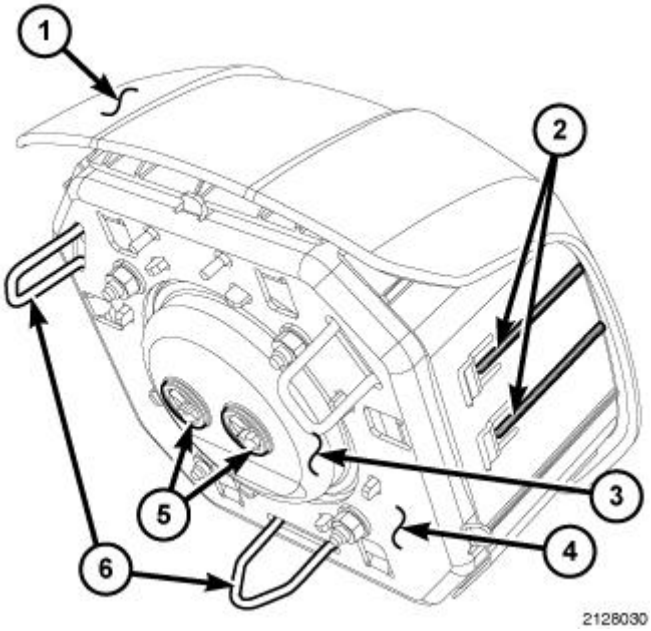

Fig. 14: Airbag Housing & Inflator
Courtesy of CHRYSLER GROUP, LLC

Concealed beneath the driver airbag trim cover (1) are the folded airbag cushion, the airbag housing (4), the airbag inflator (3) and the retainers that secure the inflator to the airbag housing. The airbag cushion, housing, and inflator are secured within an integral receptacle molded into the back of the trim cover. The four vertical

walls of this receptacle have numerous small windows with blocking tabs (2) that are engaged by numerous hook formations around the perimeter of the airbag housing. Each hook is inserted through one of the windows and the blocking tab in each window keeps the hook properly engaged with the trim cover, locking the trim cover securely into place on the airbag housing.

Three wire loop snap retainers (6) extend from the housing to secure the airbag to the steering wheel armature. The wire loop at the 6 o'clock position has a distinctive V-shape to ensure proper orientation of the airbag when it is installed onto the steering wheel. Unlike many prior driver airbags, the horn switch used for this application is not a resistive membrane unit located between the airbag cushion and trim cover. The horn switch used in this vehicle is a floating type switch design that is secured to four pods within the steering wheel hub cavity and is separate from the driver airbag. Refer to **DESCRIPTION** .

The airbag used in this vehicle is a multistage-type that complies with revised federal airbag standards to deploy with less force than those used in some prior vehicles. A radial deploying 67 centimeter (26.5 inch) diameter fabric cushion with internal tethers is used. The airbag inflator is a dual-initiator, non-azide, pyrotechnic-type unit and is secured to the stamped metal airbag housing by four studs using four flanged hex nuts. Two keyed and color-coded connector receptacles (5) on the driver airbag inflator connect the two inflator initiators to the vehicle electrical system through two black-jacketed, two-wire pigtail harnesses of the clockspring. A locator hole has been added to the back of the driver airbag housing at the 12 o'clock position and a routing clip with a plastic push-in retainer has been added to the clockspring pigtail wires to route the wiring away from potential pinch points.

The driver airbag unit cannot be repaired, and must be replaced if deployed, ineffective or in any way damaged. The driver airbag trim cover may be disassembled from the driver airbag unit, and is available for separate service replacement.

OPERATION

OPERATION

The multistage driver airbag is deployed by electrical signals generated by the Occupant Restraint Controller (ORC) through the driver airbag squib 1 and squib 2 circuits to the two initiators in the airbag inflator. By using two initiators, the airbag can be deployed at multiple levels of force. The force level is controlled by the ORC to suit the monitored impact conditions by providing one of several delay intervals between the electrical signals provided to the two initiators. The longer the delay between these signals, the less forcefully the airbag will deploy.

When the ORC sends the proper electrical signals to each initiator, the electrical energy generates enough heat to initiate a small pyrotechnic charge, which in turn ignites chemical pellets within the inflator. Once ignited, these chemical pellets burn rapidly and produce a large quantity of inert gas. The inflator is sealed to the back of the airbag housing and a diffuser in the inflator directs all of the inert gas into the airbag cushion, causing the cushion to inflate. As the cushion inflates, the driver airbag trim cover will split at predetermined breakout lines, then fold back out of the way. Following an airbag deployment, the airbag cushion quickly deflates by venting the inert gas towards the instrument panel through vent holes within the fabric used to construct the back (steering wheel side) panel of the airbag cushion.

Some of the chemicals used to create the inert gas may be considered hazardous while in their solid state before they are burned, but they are securely sealed within the airbag inflator. Typically, both initiators are used and all

potentially hazardous chemicals are burned during an airbag deployment event. However, it is possible for only one initiator to be used during a deployment due to an airbag system fault; therefore, it is necessary to always confirm that both initiators have been used in order to avoid the improper disposal of potentially live pyrotechnic or hazardous materials. Refer to **STANDARD PROCEDURE**.

The inert gas that is produced when the chemicals are burned is harmless. However, a small amount of residue from the burned chemicals may cause some temporary discomfort if it contacts the skin, eyes, or breathing passages. If skin or eye irritation is noted, rinse the affected area with plenty of cool, clean water. If breathing passages are irritated, move to another area where there is plenty of clean, fresh air to breath. If the irritation is not alleviated by these actions, contact a physician.

Proper diagnosis of the driver airbag inflator and squib circuits requires the use of a diagnostic scan tool. Refer to the appropriate diagnostic information.

REMOVAL

REMOVAL

WARNING: To avoid serious or fatal injury on vehicles equipped with airbags, disable the Supplemental Restraint System (SRS) before attempting any steering wheel, steering column, airbag, seat belt tensioner, impact sensor or instrument panel component diagnosis or service. Disconnect and isolate the battery negative (ground) cable, then wait two minutes for the system capacitor to discharge before performing further diagnosis or service. This is the only sure way to disable the SRS. Failure to take the proper precautions could result in accidental airbag deployment.

WARNING: To avoid serious or fatal injury when removing a deployed airbag, rubber gloves, eye protection, and a long-sleeved shirt should be worn. There may be deposits on the airbag cushion and other interior surfaces. In large doses, these deposits may cause irritation to the skin and eyes.

NOTE: The following procedure is for replacement of an ineffective or damaged driver airbag. If the airbag is ineffective or damaged, but not deployed, review the recommended procedures for Handling Non-Deployed Supplemental Restraints. Refer to STANDARD PROCEDURE. If the driver airbag has been deployed, review the recommended procedures for Service After A Supplemental Restraint Deployment before removing the airbag from the vehicle. .

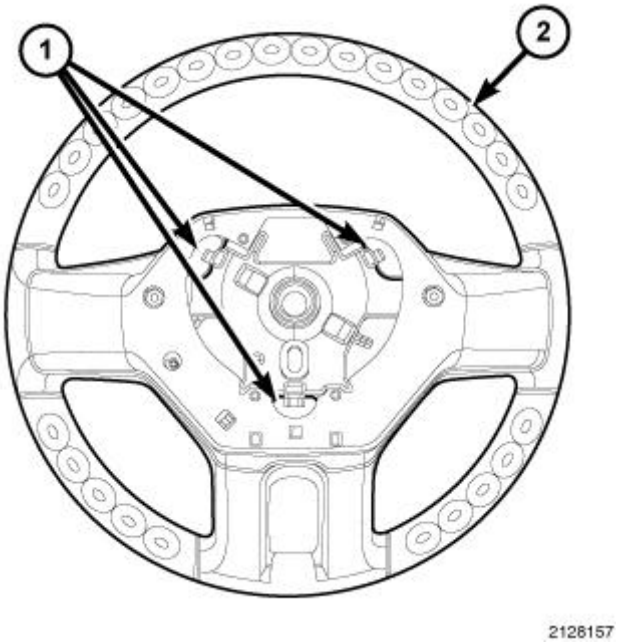

Fig. 15: Airbag Retainer Access Holes
Courtesy of CHRYSLER GROUP, LLC

1. Disconnect and isolate the battery negative cable. Wait two minutes for the system capacitor to discharge before further service.
2. Remove the upper shroud from the steering column. Refer to **SHROUD, STEE RING COLUMN, REMOVAL** .

   .

3. Release the steering column tilt lever and lower the column to its most downward position for easiest driver airbag removal access.

   NOTE: It may be helpful to use a small mirror to aid visibility during the initial attempt to remove the driver airbag from the steering wheel.

4. There are three airbag retainer access holes (1) on the instrument panel side of the hub of the steering wheel (2), located at the two o'clock, six o'clock and ten o'clock positions. The steering wheel must be rotated to bring each of these access holes up to the twelve o'clock position of the steering column one at a time for removal access.

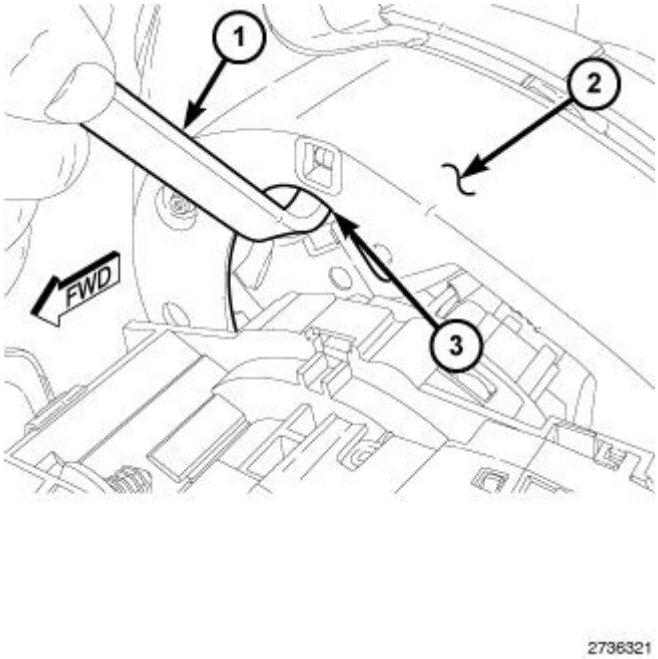

Fig. 16: Inserting Driver Airbag Removal Tool No. 10187
Courtesy of CHRYSLER GROUP, LLC

5. Insert the short blade (Tip A) of the Driver Airbag Removal Tool (Special Tool #(special tool #10187, Remover Tool, Driver's Airbag)) (1) or the blade of an equivalent prying tool into either of the upper (two o'clock or ten o'clock) access holes (3) of the steering wheel hub rear trim cover (2), being certain to place the blade of the tool on the inboard (steering wheel hub) side of the airbag snap retainer wire loop.

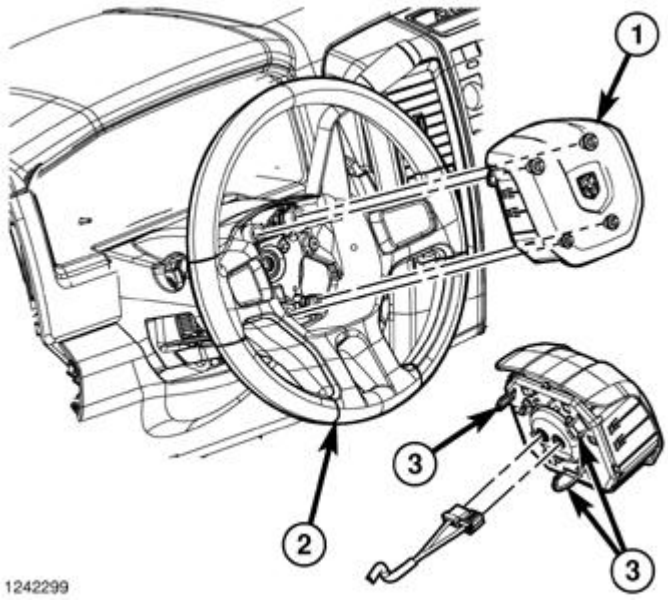

Fig. 17: Snap Retainer Wire Loop
Courtesy of CHRYSLER GROUP, LLC

6. Push the handle of the tool downward for the blade to pry the snap retainer wire loop (3) upward far

enough to disengage the loop from the hook of the steering wheel armature. At the same time, gently pull the driver airbag (1) away from the steering wheel (2) to prevent the retainer from snapping back into place over the hook once it is disengaged.

7. Repeat Steps 5 and 6 at the other upper (two o'clock or ten o'clock) access hole to disengage the other upper snap retainer wire loop.
8. Repeat Steps 5 and 6 at the lower (six o'clock) access hole to disengage the lower snap retainer wire loop. The lower snap retainer wire loop has a distinctive V-shape and must always be installed onto the six o'clock hook of the steering wheel armature.

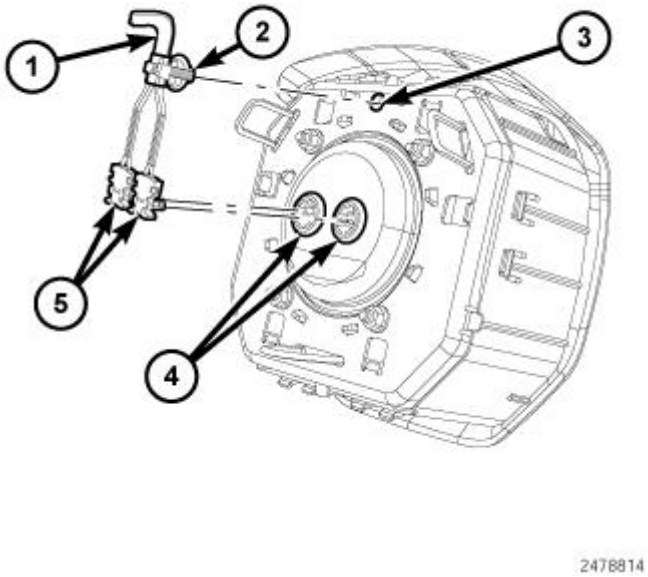

Fig. 18: Clockspring Pigtail Wiring Harness
Courtesy of CHRYSLER GROUP, LLC

9. Pull the driver airbag away from the steering wheel far enough to access and disengage the plastic push-in retainer (2) of the clockspring pigtail wire harness (1) from the locator hole (3) at the 12 o'clock position on the back of the airbag housing.

CAUTION: Do not pull on the clockspring pigtail wires or pry on the connector insulator to disengage the connector from the driver airbag inflator connector receptacle. Improper removal of these pigtail wires and their connector insulators can result in damage to the airbag circuits or connector insulators.

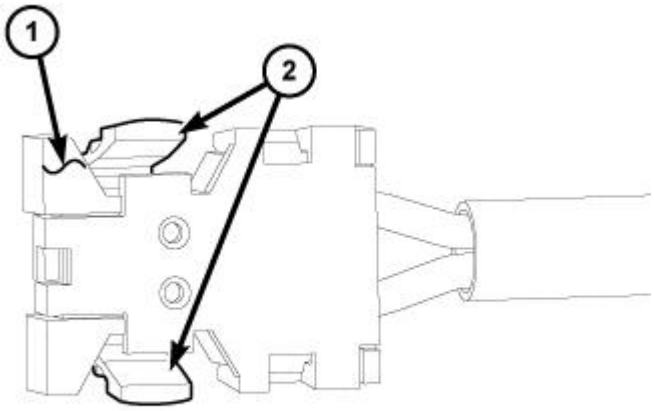

2128307

Fig. 19: Airbag Pigtail Wire Connector Insulators & Integral Latches
Courtesy of CHRYSLER GROUP, LLC

10. The clockspring driver airbag pigtail wire connector insulators (1) are secured by integral latches (2) to the airbag inflator connector receptacles, which are located on the back of the driver airbag housing. Pinch both latches firmly, then pull the insulators straight out from the airbag inflator to disconnect them from the connector receptacles.
11. Remove the driver airbag from the steering wheel.
12. If the driver airbag has been deployed, the clockspring and the steering column must be replaced.

DISASSEMBLY

DISASSEMBLY

WARNING: **To avoid serious or fatal injury on vehicles equipped with airbags, disable the Supplemental Restraint System (SRS) before attempting any steering wheel, steering column, airbag, seat belt tensioner, impact sensor or instrument panel component diagnosis or service. Disconnect and isolate the battery negative (ground) cable, then wait two minutes for the system capacitor to discharge before performing further diagnosis or service. This is the only sure way to disable the SRS. Failure to take the proper precautions could result in accidental airbag deployment.**

WARNING: **To avoid serious or fatal injury, service of this unit should be performed only by Chrysler-trained and authorized dealer service technicians. Failure to take the proper precautions or to follow the proper procedures could result in accidental, incomplete, or improper airbag deployment and possible occupant injuries.**

WARNING: **To avoid serious or fatal injury, use extreme care to prevent any foreign material from entering the Driver AirBag (DAB), or becoming entrapped**

between the DAB cushion and the DAB trim cover. Failure to observe this warning could result in occupant injuries upon airbag deployment.

WARNING: **To avoid serious or fatal injury, the Driver AirBag (DAB) trim cover must never be painted. Replacement trim covers are serviced in the original colors. Paint may change the way in which the material of the trim cover responds to an airbag deployment. Failure to observe this warning could result in occupant injuries upon airbag deployment.**

NOTE: **The following procedures can be used to replace the driver airbag trim cover for service of cosmetic damage issues. If the driver airbag is ineffective or deployed, the entire driver airbag and trim cover must be replaced as a unit.**

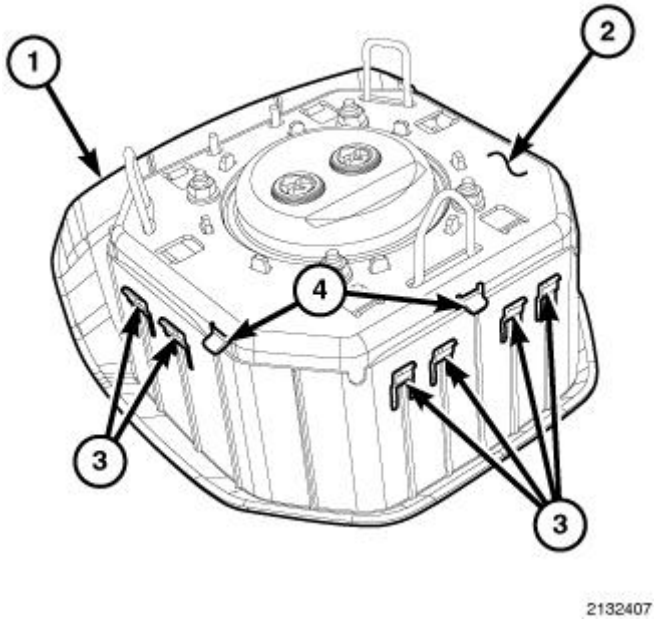

Fig. 20: Airbag Housing Hooks
Courtesy of CHRYSLER GROUP, LLC

1. Disconnect and isolate the battery negative cable. Wait two minutes for the system capacitor to discharge before further service.
2. Remove the driver airbag from the steering wheel. Refer to **AIR BAG, DRIVER, REMOVAL**.
3. Place the driver airbag on a suitable clean and dry work surface with the trim cover (1) facing down. If the trim cover will be reused, be certain to take the proper precautions to prevent the trim cover from receiving cosmetic damage during the following procedures.
4. Disengage each of the twelve hooks (3) of the airbag housing (2) from the twelve windows in the vertical walls of the trim cover, one wall at a time. Start by disengaging the upper wall, then do each of the two side walls, and finish with the lower wall. To disengage the hooks, use hand pressure to push outward on the upper edge of the receptacle wall far enough to clear the locating tab (4) on the airbag housing, at the same time push the adjacent edge of the airbag housing firmly and evenly downward into the trim cover

receptacle.

5. With all of the hooks disengaged, lift the housing, inflator, and cushion as a unit from the receptacle on the back of the driver airbag trim cover.

ASSEMBLY

ASSEMBLY

WARNING: To avoid serious or fatal injury on vehicles equipped with airbags, disable the Supplemental Restraint System (SRS) before attempting any steering wheel, steering column, airbag, seat belt tensioner, impact sensor or instrument panel component diagnosis or service. Disconnect and isolate the battery negative (ground) cable, then wait two minutes for the system capacitor to discharge before performing further diagnosis or service. This is the only sure way to disable the SRS. Failure to take the proper precautions could result in accidental airbag deployment.

WARNING: To avoid serious or fatal injury, service of this unit should be performed only by Chrysler-trained and authorized dealer service technicians. Failure to take the proper precautions or to follow the proper procedures could result in accidental, incomplete, or improper airbag deployment and possible occupant injuries.

WARNING: To avoid serious or fatal injury, use extreme care to prevent any foreign material from entering the Driver AirBag (DAB), or becoming entrapped between the DAB cushion and the DAB trim cover. Failure to observe this warning could result in occupant injuries upon airbag deployment.

WARNING: To avoid serious or fatal injury, the Driver AirBag (DAB) trim cover must never be painted. Replacement trim covers are serviced in the original colors. Paint may change the way in which the material of the trim cover responds to an airbag deployment. Failure to observe this warning could result in occupant injuries upon airbag deployment.

NOTE: The following procedures can be used to replace the driver airbag trim cover and horn switch unit for service. If the driver airbag is ineffective or deployed, the entire driver airbag, trim cover and horn switch must be replaced as a unit.

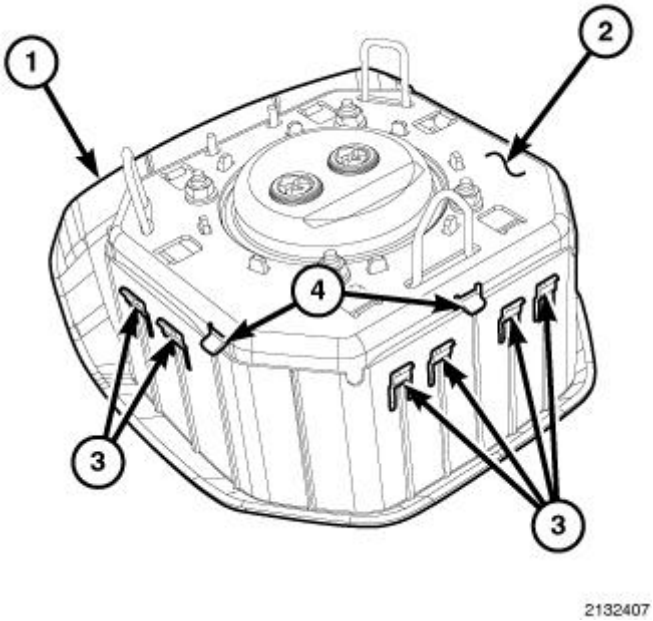

Fig. 21: Airbag Housing Hooks
Courtesy of CHRYSLER GROUP, LLC

1. Place the driver airbag trim cover (1) on a suitable clean and dry work surface with the receptacle facing up. Be certain to take the proper precautions to prevent the trim cover from receiving cosmetic damage during the following procedures.
2. Position the driver airbag housing (2), inflator, and cushion as a unit over the trim cover receptacle.
3. Using hand pressure, push the airbag housing firmly and evenly down into the trim cover receptacle far enough that the hooks (3) of the housing are aligned with the windows in the vertical walls of the receptacle.
4. Work around the perimeter of the unit engaging each of the twelve hooks on the driver airbag housing through the twelve windows in the walls of the trim cover receptacle.
5. After the driver airbag has been assembled, try pulling the trim cover and the airbag housing away from each other. This action will fully seat the edges of the windows into the cradles of the hooks and the vertical walls of the receptacle beneath the locating tabs (4) of the housing.

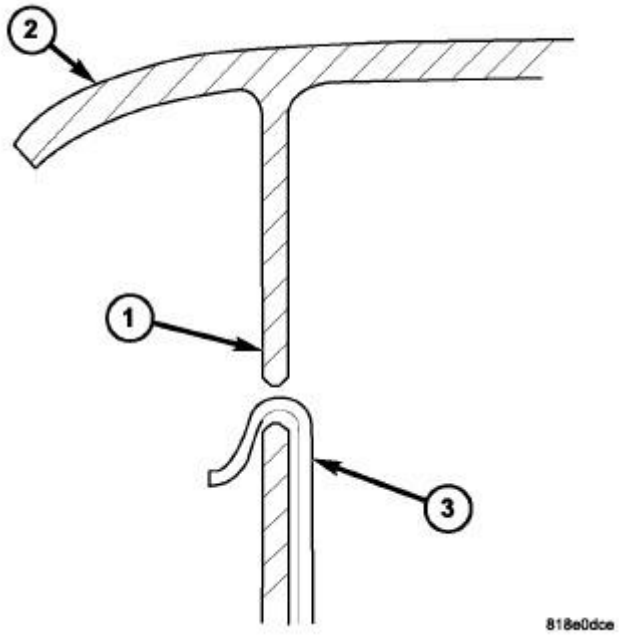

Fig. 22: Airbag Blocking Tab & Housing Hook
Courtesy of CHRYSLER GROUP, LLC

6. Before reinstalling the airbag onto the steering wheel, check that the blocking tab (1) in each of the trim cover (2) windows is oriented over the airbag housing hook (3) as shown in illustration.
7. Reinstall the driver airbag onto the steering wheel. Refer to **AIR BAG, DRIVER, INSTALLATION**.

INSTALLATION

INSTALLATION

WARNING: **To avoid serious or fatal injury on vehicles equipped with airbags, disable the Supplemental Restraint System (SRS) before attempting any steering wheel, steering column, airbag, seat belt tensioner, impact sensor or instrument panel component diagnosis or service. Disconnect and isolate the battery negative (ground) cable, then wait two minutes for the system capacitor to discharge before performing further diagnosis or service. This is the only sure way to disable the SRS. Failure to take the proper precautions could result in accidental airbag deployment.**

WARNING: **To avoid serious or fatal injury, use extreme care to prevent any foreign material from entering the Driver AirBag (DAB), or becoming entrapped between the DAB cushion and the DAB trim cover. Failure to observe this warning could result in occupant injuries upon airbag deployment.**

WARNING: **To avoid serious or fatal injury, the driver airbag trim cover must never be painted. Replacement airbags are serviced with trim covers in the original**

colors. Paint may change the way in which the material of the trim cover responds to an airbag deployment. Failure to observe this warning could result in occupant injuries upon airbag deployment.

NOTE: **The following procedure is for replacement of an ineffective or damaged driver airbag. If the airbag is ineffective or damaged, but not deployed, review the recommended procedures for Handling Non-Deployed Supplemental Restraints. Refer to STANDARD PROCEDURE. If the driver airbag has been deployed, review the recommended procedures for Service After A Supplemental Restraint Deployment before removing the airbag from the vehicle. .**

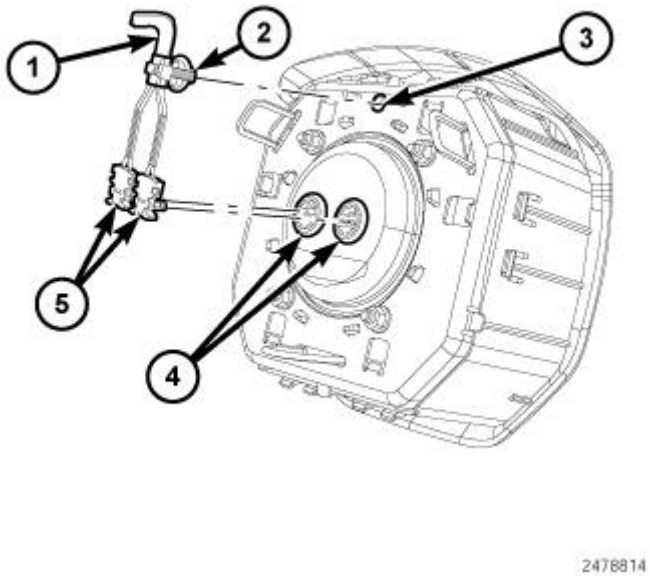

Fig. 23: Clockspring Pigtail Wiring Harness
Courtesy of CHRYSLER GROUP, LLC

1. Position the driver airbag close enough to the steering wheel to reconnect the two clockspring driver airbag pigtail wire (1) electrical connections (5) to the inflator connector receptacles (4) on the back of the airbag housing.
2. Reconnect the wire connectors to the airbag inflator connector receptacles by pressing straight in on the connector insulator. Be certain to engage each keyed and color-coded connector to the matching connector receptacle. You can be certain that each connector is fully engaged in its receptacle by listening carefully for a distinct, audible click as the connector latches snap into place.
3. Be certain to fully engage the plastic push-in retainer (2) of the clockspring pigtail wires into the locator hole (3) at the 12 o'clock position on the back of the airbag housing.

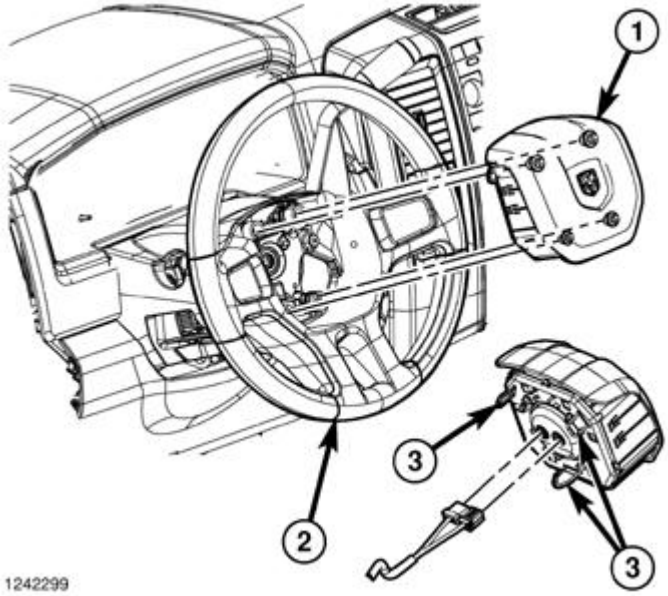

Fig. 24: Snap Retainer Wire Loop
Courtesy of CHRYSLER GROUP, LLC

4. Carefully position the driver airbag (1) into the hub cavity of the steering wheel (2). Be certain that the clockspring pigtail wires and the steering wheel wire harness are not pinched between the driver airbag and the horn switch, the steering wheel armature or, on vehicles equipped with a diesel engine, the steering wheel damper weight.
5. Engage the lower airbag snap retainer wire loop (3) onto the lower hook of the steering wheel armature. The lower snap retainer wire loop has a distinctive V-shape and must always be installed onto the six o'clock hook of the steering wheel armature.
6. Roll the driver airbag upwards and press firmly and evenly over the two upper snap retainer wire loop locations simultaneously until they snap into place over the two upper hooks of the steering wheel armature.
7. Reinstall the upper shroud onto the steering column. Refer to **SHROUD, STEERING COLUMN, INSTALLATION** .
8. Do not reconnect the battery negative cable at this time. The Supplemental Restraint System (SRS) Verification Test procedure should be performed following service of any SRS component. Refer to **STANDARD PROCEDURE**.

AIR BAG, PASSENGER

DESCRIPTION

DESCRIPTION

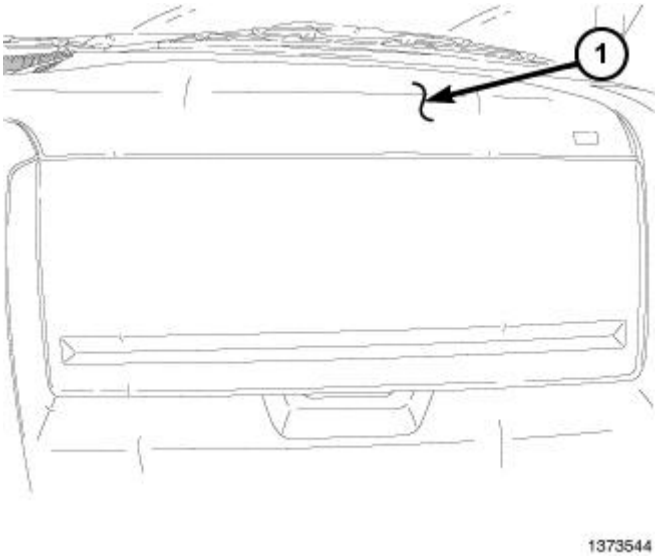

Fig. 25: Instrument Panel Trim Cover
Courtesy of CHRYSLER GROUP, LLC

The horizontal surface of the instrument panel trim cover (1) above the upper glove box/storage bin is the most visible part of the passenger airbag. The passenger airbag door is integral to the top of the instrument panel trim cover forward of the upper glove box/storage bin opening on the instrument panel in front of the front seat passenger seating position.

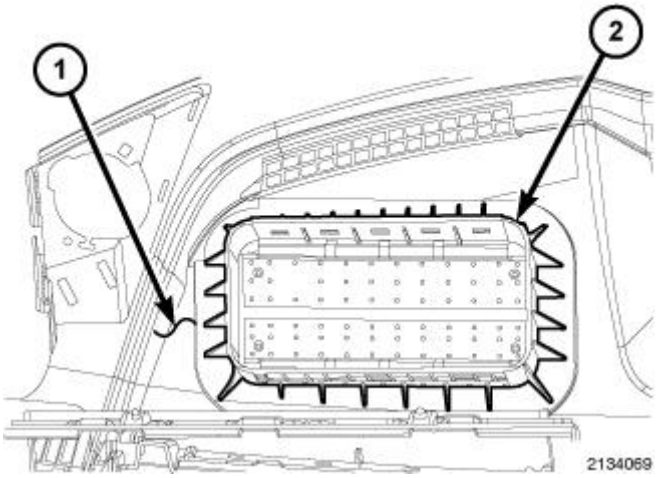

Fig. 26: Passenger Air Bag
Courtesy of CHRYSLER GROUP, LLC

Located below the passenger airbag door area of the instrument panel trim cover (1), the molded thermoplastic passenger airbag retainer (2) or chute is secured to the underside of the trim cover. The retainer defines the airbag door breakout area of the trim cover and serves as the receptacle for the passenger airbag cushion and housing. Numerous small window openings on the forward and rearward flanges of the receptacle receive mating hook formations stamped into the airbag housing, which locate and secure the housing to the trim cover.

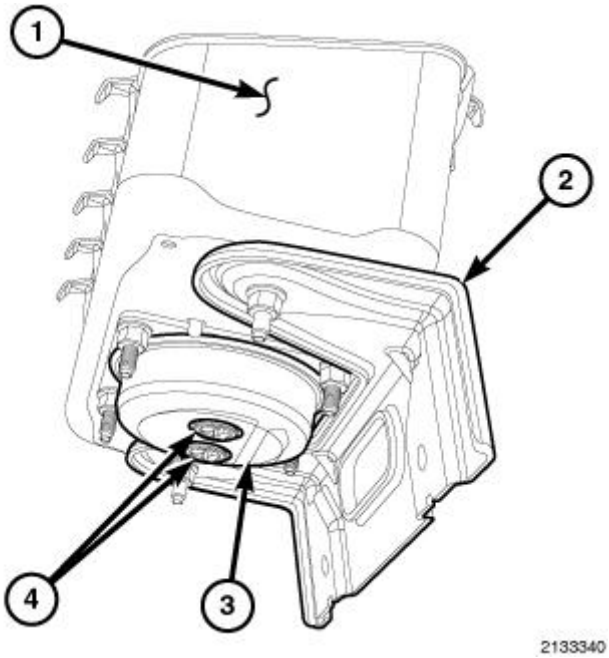

Fig. 27: Passenger Airbag Unit Mounting Bracket
Courtesy of CHRYSLER GROUP, LLC

The passenger airbag unit is also secured by two screws through a stamped mounting bracket (2) to the instrument panel structural support. The passenger airbag unit used in this vehicle is a multistage type that complies with revised federal airbag standards to deploy with less force than those used in some prior vehicles.

The passenger airbag unit consists of a stamped metal housing (1), the airbag cushion, and the airbag inflator (3). The airbag inflator is secured to the housing by four screws and nuts. The airbag housing contains the folded rectangular airbag cushion. The folded airbag cushion within the metal housing should never be unfolded.

The airbag inflator is a non-azide, pyrotechnic-type unit that is secured to and sealed within the airbag housing. Two dedicated takeouts and yellow connectors of the instrument panel wire harness with keyed, and color-coded (black and orange) insulators connect the two inflator initiators (4) to the vehicle electrical system.

The passenger airbag cannot be repaired, and must be replaced if deployed, ineffective, or in any way damaged. The passenger airbag door and retainer are serviced only as a unit with the instrument panel trim cover. If the passenger airbag is deployed, the instrument panel trim cover must also be replaced.

OPERATION

OPERATION

The multistage passenger airbag is deployed by electrical signals generated by the Occupant Restraint Controller (ORC) through the passenger airbag squib 1 and squib 2 circuits to the two initiators in the airbag inflator. By using two initiators, the airbag can be deployed at multiple levels of force. The force level is controlled by the ORC to suit the monitored impact conditions by providing one of multiple delay intervals between the electrical signals provided to the two initiators. The longer the delay between these signals, the less

forcefully the airbag will deploy.

When the ORC sends the proper electrical signals to each initiator, the electrical energy generates enough heat to initiate a small pyrotechnic charge which, in turn ignites chemical pellets within the inflator. Once ignited, these chemical pellets burn rapidly and produce a large quantity of inert gas. The inflator is sealed to the airbag cushion and a diffuser in the inflator directs all of the inert gas into the airbag cushion, causing the cushion to inflate. As the cushion inflates, the passenger airbag door area of the instrument panel top pad will split at predetermined tear seam lines concealed on the underside of the instrument panel trim cover, then the door will pivot up over the top of the instrument panel and out of the way. Following an airbag deployment, the airbag cushion quickly deflates by venting the inert gas through a discrete vent hole in each fabric side panel of the airbag cushion.

The airbag cushion in this vehicle also has an active vent located on each side of the cushion. The active vents close during an unobstructed deployment to provide a fully inflated bag. However, if the deployment is obstructed by an out-of-position passenger, the active vents open to reduce the likelihood of an airbag-induced injury.

Typically, both initiators are used during an airbag deployment event. However, it is possible for only one initiator to be used during a deployment due to an airbag system fault; therefore, it is necessary to always confirm that both initiators have been used in order to avoid the improper disposal of potentially live pyrotechnic materials. Refer to **STANDARD PROCEDURE**.

Proper diagnosis of the passenger airbag inflator and the passenger airbag squib circuits requires the use of a diagnostic scan tool. Refer to the appropriate diagnostic information.

REMOVAL

REMOVAL

WARNING: **To avoid serious or fatal injury on vehicles equipped with airbags, disable the Supplemental Restraint System (SRS) before attempting any steering wheel, steering column, airbag, seat belt tensioner, impact sensor or instrument panel component diagnosis or service. Disconnect and isolate the battery negative (ground) cable, then wait two minutes for the system capacitor to discharge before performing further diagnosis or service. This is the only sure way to disable the SRS. Failure to take the proper precautions could result in accidental airbag deployment.**

WARNING: **To avoid serious or fatal injury when removing a deployed airbag, rubber gloves, eye protection, and a long-sleeved shirt should be worn. There may be deposits on the airbag unit and other interior surfaces. In large doses, these deposits may cause irritation to the skin and eyes.**

NOTE: **The following procedure is for replacement of an ineffective or damaged passenger airbag. If the airbag is ineffective or damaged, but not deployed, review the recommended procedures for Handling Non-Deployed Supplemental Restraints. Refer to STANDARD PROCEDURE. If the passenger airbag has been**

deployed, review the recommended procedures for Service After A Supplemental Restraint Deployment before removing the airbag from the vehicle. .

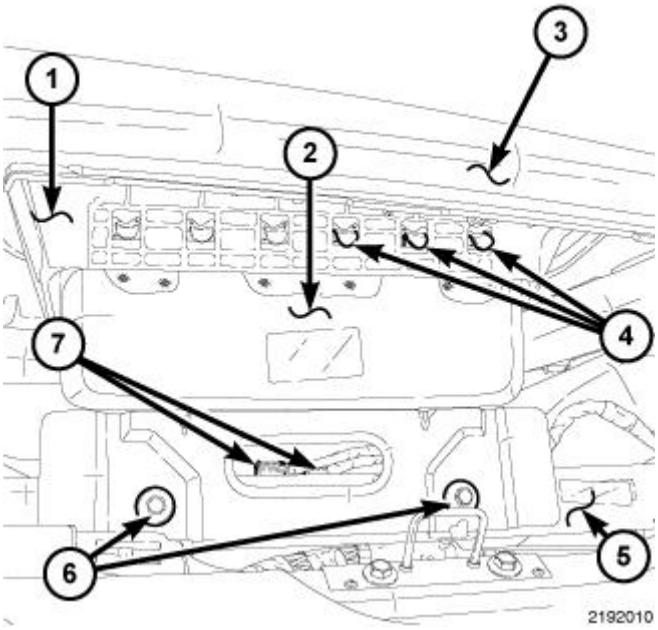

Fig. 28: Passenger Airbag Mounting
Courtesy of CHRYSLER GROUP, LLC

1. Disconnect and isolate the battery negative cable. Wait two minutes for the system capacitor to discharge before further service.
2. Remove the glove box from the instrument panel. Refer to **GLOVE BOX, INSTRUMENT PANEL, REMOVAL** .
3. Remove the upper storage bin/glove box from the instrument panel. Refer to **BIN, INSTRUMENT PANEL, REMOVAL** .
4. Reach through the upper storage bin/glove box opening of the instrument panel to access and remove the two screws (6) that secure the passenger airbag (2) lower bracket to the instrument panel structural support (5).
5. Remove all of the components and fasteners that secure the trim cover (3) to the instrument panel structural support. Refer to **COVER, INSTRUMENT PANEL, REMOVAL** .
6. Slowly and carefully lift the trim cover up from the instrument panel structural support far enough to access and disconnect the instrument panel wire harness connectors (7) from the passenger airbag inflator. To disconnect the connectors:
    1. Pull the connector lock out of the connector insulator.
    2. Pinch both latches firmly, then pull the insulators straight out from the airbag inflator to disconnect them from the connector receptacles.
7. Remove the instrument panel trim cover and passenger airbag from the vehicle as a unit and place it upside down on a suitable work surface. If the trim cover will be reused, be certain to take the proper precautions to protect the trim cover from cosmetic damage.

8. Disengage all of the hooks (4) on one side of the airbag housing from the windows in the forward or rearward vertical wall of the airbag chute/retainer (1) on the underside of the trim cover. To disengage the hooks, use hand pressure to push one edge of the airbag housing firmly and evenly downward into the retainer receptacle. Then, while pulling outward on the adjacent upper edge of the receptacle wall, roll the disengaged side out of the retainer and disengage the hooks on the opposite side from the retainer.
9. With all of the hooks disengaged, lift the housing, inflator, and cushion as a unit from the retainer receptacle on the underside of the instrument panel trim cover.

INSTALLATION

INSTALLATION

WARNING: To avoid serious or fatal injury on vehicles equipped with airbags, disable the Supplemental Restraint System (SRS) before attempting any steering wheel, steering column, airbag, seat belt tensioner, impact sensor or instrument panel component diagnosis or service. Disconnect and isolate the battery negative (ground) cable, then wait two minutes for the system capacitor to discharge before performing further diagnosis or service. This is the only sure way to disable the SRS. Failure to take the proper precautions could result in accidental airbag deployment.

WARNING: To avoid serious or fatal injury when removing a deployed airbag, rubber gloves, eye protection, and a long-sleeved shirt should be worn. There may be deposits on the airbag unit and other interior surfaces. In large doses, these deposits may cause irritation to the skin and eyes.

WARNING: To avoid serious or fatal injury, use extreme care to prevent any foreign material from entering the passenger airbag, or becoming entrapped between the passenger airbag cushion and the instrument panel trim cover. Failure to observe this warning could result in occupant injuries upon airbag deployment.

WARNING: To avoid serious or fatal injury, the instrument panel trim cover must never be painted. Replacement trim covers are serviced in the original colors. Paint may change the way in which the material of the trim cover responds to an airbag deployment. Failure to observe this warning could result in occupant injuries upon airbag deployment.

NOTE: The following procedure is for replacement of an ineffective or damaged passenger airbag. If the airbag is ineffective or damaged, but not deployed, review the recommended procedures for handling non-deployed supplemental restraints. Refer to STANDARD PROCEDURE. If the passenger airbag has been deployed, review the recommended procedures for service after a supplemental restraint deployment before removing the airbag from the vehicle. .

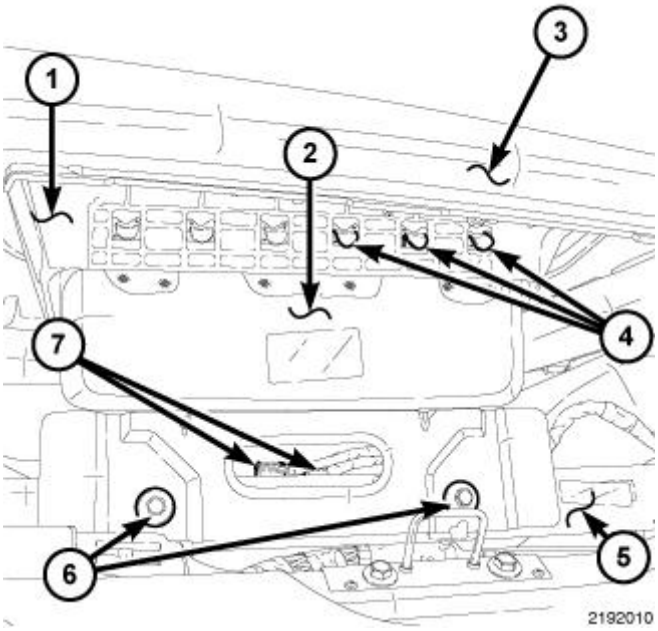

Fig. 29: Passenger Airbag Mounting
Courtesy of CHRYSLER GROUP, LLC

1. Place the instrument panel trim cover (3) on a suitable work surface with the airbag chute/retainer (1) receptacle facing up. Be certain to take the proper precautions to prevent the trim cover from receiving cosmetic damage during the following procedures.
2. Carefully position the passenger airbag housing (2) into the airbag retainer receptacle.
3. Work around the perimeter of the unit engaging each of the hooks (4) on the passenger airbag housing through the windows in the forward and rearward vertical walls of the retainer receptacle.
4. Position the instrument panel trim cover and passenger airbag over the instrument panel structural support (5) as a unit.
5. Lift the trim cover up from the instrument panel structural support far enough to access and reconnect the instrument panel wire harness connectors (7) to the passenger airbag inflator. Be certain that the latches and lock on each connector are fully engaged.
6. Reinstall all of the fasteners and components that secure the trim cover to the instrument panel structural support. Refer to **COVER, INSTRUMENT PANEL, INSTALLATION** .
7. Reach through the upper storage bin/glove box opening of the instrument panel to install and tighten the two screws (6) that secure the passenger airbag lower bracket to the instrument panel structural support. Tighten the screws to 8 N.m (71 in. lbs.).
8. Reinstall the upper storage bin/glove box into the instrument panel. Refer to **BIN, INSTRUMENT PANEL, INSTALLATION** .
9. Reinstall the glove box into the instrument panel. Refer to **GLOVE BOX, INSTRUMENT PANEL, INSTALLATION** .
10. Do not reconnect the battery negative cable at this time. The Supplemental Restraint System (SRS) Verification Test procedure should be performed following service of any SRS component. Refer to **STANDARD PROCEDURE**.

AIR BAG, SEAT

DESCRIPTION

DESCRIPTION

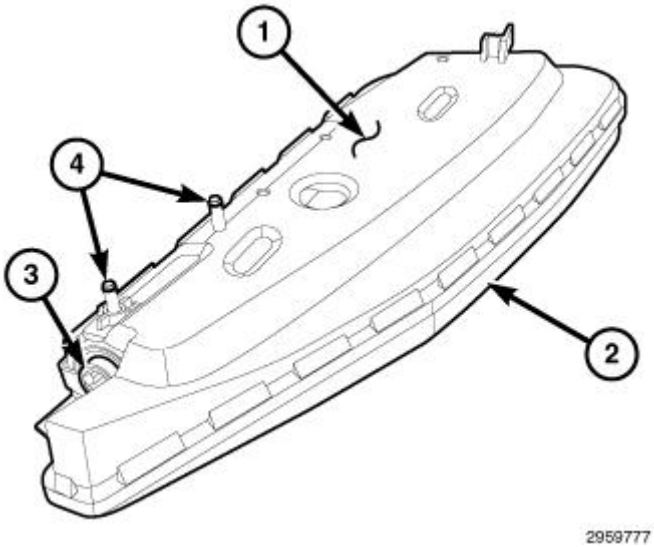

Fig. 30: Two Studs, Plastic Airbag Housing, Molded Plastic Outer Cover & Inflator Initiator
Courtesy of CHRYSLER GROUP, LLC

Seat AirBags (SAB) (also known as thorax or pelvic airbags) are available equipment on this vehicle. These airbags are completely concealed beneath the seat back trim cover on the upper outboard sides of both front seat backs. The airbags are inserted into a sewn pouch called an intensifier on the inside of the trim cover, then secured to the seat back frame by nuts on two studs (4). Both studs are installed on a stamped metal bracket located within the molded plastic inner SAB housing (1) and exit through the inboard side of the housing.

The folded SAB cushion is contained within and protected by the molded plastic inner and outer (2) clamshell-type SAB housing. The cushion is constructed of a coated nylon fabric. The SAB housing also contains the airbag inflator, a high pressure cylinder filled with inert gas and a heat shield. The airbag inflator is a single-initiator, hybrid-type unit that is secured to and sealed within the airbag housing. The SAB is connected to the vehicle electrical system through a dedicated jumper wire harness with a connector insulator that connects directly to the inflator initiator (3). The connector insulators are uniquely keyed and color-coded to ensure they can only be connected to the initiator.

The SAB cannot be repaired, and must be replaced if deployed, ineffective or in any way damaged. If the SAB is deployed, the seat back frame, the seat back foam cushion, the seat back trim cover and the seat airbag jumper wire harness must also be replaced.

OPERATION

OPERATION

Each Seat AirBag (SAB) is deployed individually by an electrical signal generated by the Occupant Restraint

Controller (ORC) to which it is connected through left or right SAB line 1 and line 2 (or squib) circuits. The hybrid-type inflator assembly for each airbag contains a small canister of highly compressed inert gas. When the ORC sends the proper electrical signal to the inflator, the electrical energy creates enough heat to ignite chemical pellets within the inflator.

Once ignited, these chemicals burn rapidly and produce the pressure necessary to rupture a containment disk in the inert gas canister. The inflator and inert gas canister are sealed and connected so that all of the released gas is directed into the folded SAB cushion, causing the cushion to inflate. As the cushion inflates it will split open the molded plastic outer clamshell housing, the sewn pouch (intensifier) and the outboard side of the seat back trim cover, then expand into the area between the outboard side of the front seat and the front door to form a cushion to protect the front seat occupant during a side impact collision or a vehicle rollover incident.

Following the deployment, the SAB cushion slowly deflates by venting the inert gas through the loose weave of the cushion fabric and the deflated cushion hangs down loosely from the outboard side of the front seat back.

Proper diagnosis of the SAB inflator and squib circuits requires the use of a diagnostic scan tool. Refer to the appropriate diagnostic information.

REMOVAL

REMOVAL

WARNING: **To avoid serious or fatal injury on vehicles equipped with airbags, disable the Supplemental Restraint System (SRS) before attempting any steering wheel, steering column, airbag, seat belt tensioner, impact sensor or instrument panel component diagnosis or service. Disconnect and isolate the battery negative (ground) cable, then wait two minutes for the system capacitor to discharge before performing further diagnosis or service. This is the only sure way to disable the SRS. Failure to take the proper precautions could result in accidental airbag deployment.**

WARNING: **To avoid serious or fatal injury when removing a deployed airbag, rubber gloves, eye protection, and a long-sleeved shirt should be worn. There may be deposits on the airbag unit and other interior surfaces. In large doses, these deposits may cause irritation to the skin and eyes.**

NOTE: **The following procedure is for replacement of an ineffective or damaged Seat AirBag (SAB). If the SAB is ineffective or damaged, but not deployed, review the recommended procedures for Handling Non-Deployed Supplemental Restraints. Refer to STANDARD PROCEDURE. If the SAB has been deployed, review the recommended procedures for Service After A Supplemental Restraint Deployment before removing the airbag from the vehicle. .**

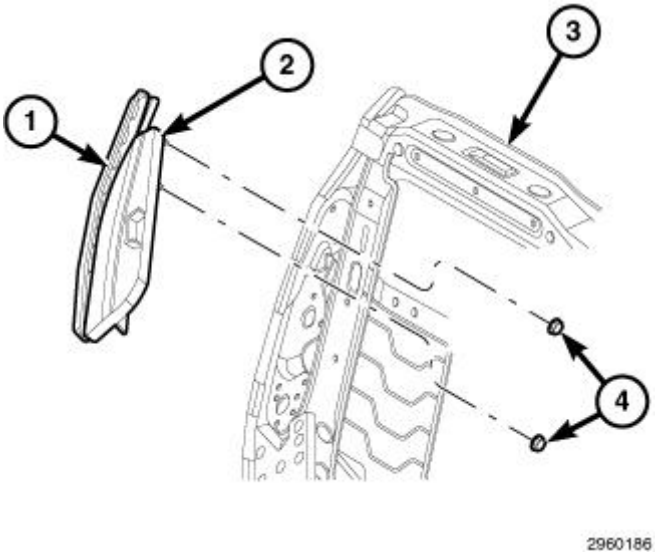

Fig. 31: Front Seat Back Frame, Seat Airbag Jumper Wire Harness, Seat Airbag Inflator Initiator, Two Nuts & Seat Airbag
Courtesy of CHRYSLER GROUP, LLC

1. Position the front seat to its most forward position for easiest access to the front seat mounting hardware.
2. Disconnect and isolate the battery negative cable. Wait two minutes for the system capacitor to discharge before further service.
3. Remove the front seat from the vehicle. Refer to **SEAT, FRONT, REMOVAL** and **SEAT, FRONT CENTER, REMOVAL** .

CAUTION: During removal of the seat back trim cover, be certain not to tear or damage the integral nylon pouch that contains the Seat AirBag (SAB). If the nylon pouch or the trim cover are torn or damaged, the entire front seat back trim cover must be replaced with a new unit.

4. Remove the trim from the front and back of the front seat back frame (3), but do not remove the outboard side of the seat back trim cover until after the Seat AirBag (SAB) has been detached from the seat back frame. Refer to **REMOVAL** .

CAUTION: Do not pull on the Seat AirBag (SAB) jumper wire harness take out or pry on the connector insulator to disengage the connector from the SAB inflator connector receptacle. Improper removal of this take out and its connector insulator can result in damage to the airbag circuits or the connector insulator.

5. Disconnect the SAB jumper wire harness (1) connector from the SAB inflator initiator (2). Slide the yellow locking tab down, then squeeze the two latch tabs on the connector insulator. Pull the insulator straight out from the inflator to disconnect it from the connector receptacle.
6. From behind the seat locate and remove the two nuts (4) that secure the SAB to the outboard side of the seat back frame.

7. Working between the seat back trim cover and the seat back frame carefully disengage the two seat airbag studs from the seat back frame and from the nylon pouch (intensifier), then slide the airbag out of the pouch. Be certain not to tear or damage the nylon pouch or the trim cover.

INSTALLATION

INSTALLATION

WARNING: To avoid serious or fatal injury on vehicles equipped with airbags, disable the Supplemental Restraint System (SRS) before attempting any steering wheel, steering column, airbag, seat belt tensioner, impact sensor or instrument panel component diagnosis or service. Disconnect and isolate the battery negative (ground) cable, then wait two minutes for the system capacitor to discharge before performing further diagnosis or service. This is the only sure way to disable the SRS. Failure to take the proper precautions could result in accidental airbag deployment.

NOTE: The following procedure is for replacement of an ineffective or damaged Seat AirBag (SAB). If the SAB is ineffective or damaged, but not deployed, review the recommended procedures for Handling Non-Deployed Supplemental Restraints. Refer to STANDARD PROCEDURE. If the SAB has been deployed, review the recommended procedures for Service After A Supplemental Restraint Deployment before removing the airbag from the vehicle. .

CAUTION: The Seat AirBag (SAB) must be installed into the nylon pouch integral to the front seat back trim cover before the SAB or the trim cover are installed on the front seat back frame. Failure to do so will adversely affect the function of the SAB system.

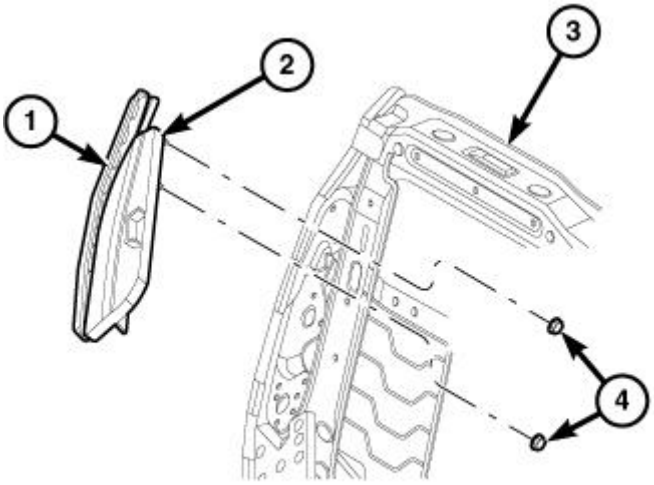

Fig. 32: Front Seat Back Frame, Seat Airbag Jumper Wire Harness, Seat Airbag Inflator Initiator, Two Nuts & Seat Airbag

Courtesy of CHRYSLER GROUP, LLC

1. Carefully slide the Seat AirBag (SAB) unit (1) into the nylon pouch (intensifier) integral to the outboard side of the front seat back trim cover and engage the two airbag studs through the holes provided in the pouch. Be certain not to tear or damage the nylon pouch or the trim cover.
2. Position the SAB and seat back trim cover as a unit to the outboard side of the seat back frame (3) and insert the SAB mounting studs through the mounting holes in the frame.
3. Install and tighten the two nuts (4) that secure the SAB to the outboard side of the seat back frame. Tighten the nuts to 10 N.m (88 in. lbs.).
4. Reconnect the seat jumper wire harness connector to the SAB inflator initiator (2). Be certain that the connector latches and lock are fully engaged.

CAUTION: Be certain that all of the trim is properly reinstalled on the front seat back frame. Failure to do so will adversely affect the function of the Seat AirBag (SAB) system.

5. Reinstall the trim onto the front and back of the front seat back frame. Refer to **INSTALLATION** .
6. Reinstall the front seat into the vehicle. Refer to **SEAT, FRONT, INSTALLATION** and **SEAT, FRONT CENTER, INSTALLATION** .
7. Do not reconnect the battery negative cable at this time. The Supplemental Restraint System (SRS) Verification Test procedure should be performed following service of any SRS component. Refer to **STANDARD PROCEDURE**.

AIR BAG, SIDE CURTAIN

DESCRIPTION

DESCRIPTION

Fig. 33: SRS Logo
Courtesy of CHRYSLER GROUP, LLC

Side curtain airbags are standard equipment on this vehicle. These airbags are passive, inflatable, Supplemental Restraint System (SRS) components, and vehicles with this equipment can be readily identified by a molded identification trim button with the **SRS - AIRBAG** logo located on the upper B-pillar trim. This system is designed to reduce injuries to the vehicle occupants in the event of a side impact collision.

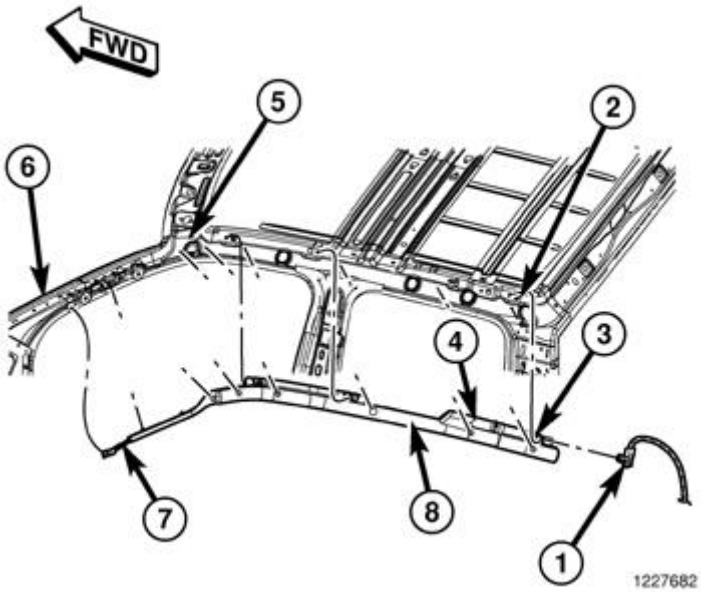

Fig. 34: Curtain Airbags, Side Rails, Tether, Inflator & Manifold
Courtesy of CHRYSLER GROUP, LLC

Vehicles equipped with side curtain airbags have two individually controlled curtain airbag units (8). These airbag units are concealed and mounted above the headliner where they are each secured to one of the roof side rails (5). Each folded airbag cushion is contained within a fabric wrap and extruded plastic channels that extend along the roof rail from the A-pillar (6) at the front of the vehicle to the rearmost pillar of the vehicle. A long tether (7) extends down the A-pillar toward the belt line from the front of the airbag cushion, where it is retained to the inside of the pillar with plastic push-in fasteners.

The hybrid-type inflator (3) for each airbag is initially secured by a bracket with a T-tab at the front into a keyed slot in the roof rail above the B-pillar (standard cab) or above the rear door opening (quad or crew cab and mega cab), and is connected to the airbag cushion by a long tubular manifold (4). The airbag is then secured during installation with a single plastic push-in fastener to the roof rail. The entire assembly is then secured along the inside of the roof rail with screws.

The initiator of the airbag inflator is connected to the vehicle electrical system by a dedicated two-wire take out and connector of the body wire harness routed up the B-pillar (standard cab) or C-pillar (quad or crew cab and mega cab). A keyed and latched connector insulator (1) is connected directly to the connector receptacle of the initiator near the rear of the inflator. The body wire harness connects each curtain airbag unit to the Occupant Restraint Controller (ORC).

The side curtain airbag unit cannot be adjusted or repaired and must be replaced if deployed, ineffective, or in any way damaged. Once a side curtain airbag has been deployed, the complete airbag unit, the headliner, the upper A, B, and C-pillar trim, and all other visibly damaged components must be replaced.

OPERATION

OPERATION

Each side curtain airbag is deployed individually by an electrical signal generated by the Occupant Restraint Controller (ORC) to which it is connected through left or right curtain airbag line 1 and line 2 (or squib) circuits. The hybrid-type inflator assembly for each airbag contains a small canister of highly compressed inert gas. When the ORC sends the proper electrical signal to the airbag inflator, the electrical energy creates enough heat to ignite chemical pellets within the inflator.

Once ignited, these chemicals burn rapidly and produce the pressure necessary to rupture a containment disk in the inert gas canister. The inflator and inert gas canister are sealed and connected to a tubular manifold so that all of the released gas is directed into the folded curtain airbag cushion, causing the cushion to inflate. As the airbag cushion inflates it will drop down from the roof rail between the edge of the headliner and the side glass/body pillars to form a curtain-like cushion to protect the vehicle occupants during a side impact collision.

The front tether keeps the front portion of the side airbag cushion taut to the side of the vehicle, thus ensuring that the bag will deploy in the proper position. Following the airbag deployment, the airbag cushion slowly deflates by venting the inert gas through the loose weave of the cushion fabric, and the deflated cushion hangs down loosely from the roof rail.

Proper diagnosis of the side curtain airbag inflator and the curtain airbag squib circuits requires the use of a diagnostic scan tool. Refer to the appropriate diagnostic information.

REMOVAL

REMOVAL

WARNING: **To avoid serious or fatal injury on vehicles equipped with airbags, disable the Supplemental Restraint System (SRS) before attempting any steering wheel, steering column, airbag, seat belt tensioner, impact sensor or instrument panel component diagnosis or service. Disconnect and isolate the battery negative (ground) cable, then wait two minutes for the system capacitor to discharge before performing further diagnosis or service. This is the only sure way to disable the SRS. Failure to take the proper precautions could result in accidental airbag deployment.**

WARNING: **To avoid serious or fatal injury when removing a deployed airbag, rubber gloves, eye protection, and a long-sleeved shirt should be worn. There may be deposits on the airbag unit and other interior surfaces. In large doses, these deposits may cause irritation to the skin and eyes.**

WARNING: **To avoid serious or fatal injury, use extreme care to prevent any foreign material from entering the side curtain airbag, or becoming entrapped between the side curtain airbag cushion and the headliner. Failure to observe this warning could result in occupant injuries upon airbag deployment.**

NOTE: **The following procedure is for replacement of an ineffective or damaged side curtain airbag. If the airbag is ineffective or damaged, but not deployed, review the recommended procedures for Handling Non-Deployed Supplemental Restraints. Refer to STANDARD PROCEDURE. If the side curtain airbag has been deployed, review the recommended procedures for Service After A Supplemental Restraint Deployment before removing the airbag from the vehicle. .**

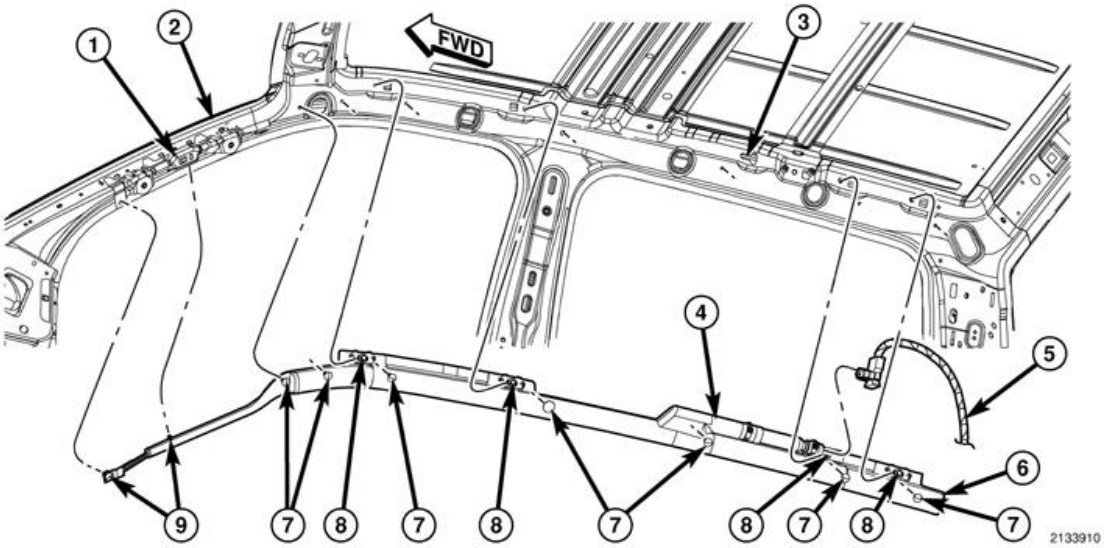

Fig. 35: Side Curtain Airbags, Screws, Retainers, Inflator & Connector
Courtesy of CHRYSLER GROUP, LLC

1. Disconnect and isolate the battery negative cable. Wait two minutes for the system capacitor to discharge before further service.

NOTE: **If a side curtain airbag is being removed, but has not been deployed, the headliner does not have to be removed from the passenger compartment. Lowering the headliner and resting it on the seat backs will allow enough clearance to remove the side curtain airbag from the vehicle. However, if either side curtain airbag has been deployed, the headliner must be removed from the passenger compartment and replaced with a new unit.**

2. Lower or remove the headliner from the vehicle, as required. Refer to **HEADLINER, REMOVAL** .
3. Remove the 2 (standard cab), 4 (quad or crew cab) or 5 (mega cab) screws (8) that secure the side curtain airbag (6) to the inner roof rail.
4. Disengage the 2 plastic push-in retainers (9) that secure the side curtain airbag front tether to the assist handle bracket (1) on the inner A-pillar (2).
5. Disengage the 1 plastic push-in retainer (7) that secures the side curtain airbag to the inner roof rail.
6. The body wire harness connector (5) insulator is secured by integral latches to the connector receptacle at the rear of the inflator (4). Pinch both latches firmly, then pull the insulator straight out from the airbag inflator to disconnect it from the connector receptacle.

7. Slide the inflator rearward far enough to disengage the T-tab at the front of the inflator bracket from the keyed slot (3) in the inner roof rail over the front door opening (standard cab) or rear door opening (quad or crew cab and mega cab).
8. Remove the side curtain airbag from the vehicle as a unit.

INSTALLATION

INSTALLATION

WARNING: To avoid serious or fatal injury on vehicles equipped with airbags, disable the Supplemental Restraint System (SRS) before attempting any steering wheel, steering column, airbag, seat belt tensioner, impact sensor or instrument panel component diagnosis or service. Disconnect and isolate the battery negative (ground) cable, then wait two minutes for the system capacitor to discharge before performing further diagnosis or service. This is the only sure way to disable the SRS. Failure to take the proper precautions could result in accidental airbag deployment.

WARNING: To avoid serious or fatal injury when removing a deployed airbag, rubber gloves, eye protection, and a long-sleeved shirt should be worn. There may be deposits on the airbag unit and other interior surfaces. In large doses, these deposits may cause irritation to the skin and eyes.

WARNING: To avoid serious or fatal injury, use extreme care to prevent any foreign material from entering the side curtain airbag, or becoming entrapped between the side curtain airbag cushion and the headliner. Failure to observe this warning could result in occupant injuries upon airbag deployment.

NOTE: The following procedure is for replacement of an ineffective or damaged side curtain airbag. If the airbag is ineffective or damaged, but not deployed, review the recommended procedures for Handling Non-Deployed Supplemental Restraints. Refer to STANDARD PROCEDURE. If the side curtain airbag has been deployed, review the recommended procedures for Service After A Supplemental Restraint Deployment before removing the airbag from the vehicle. .

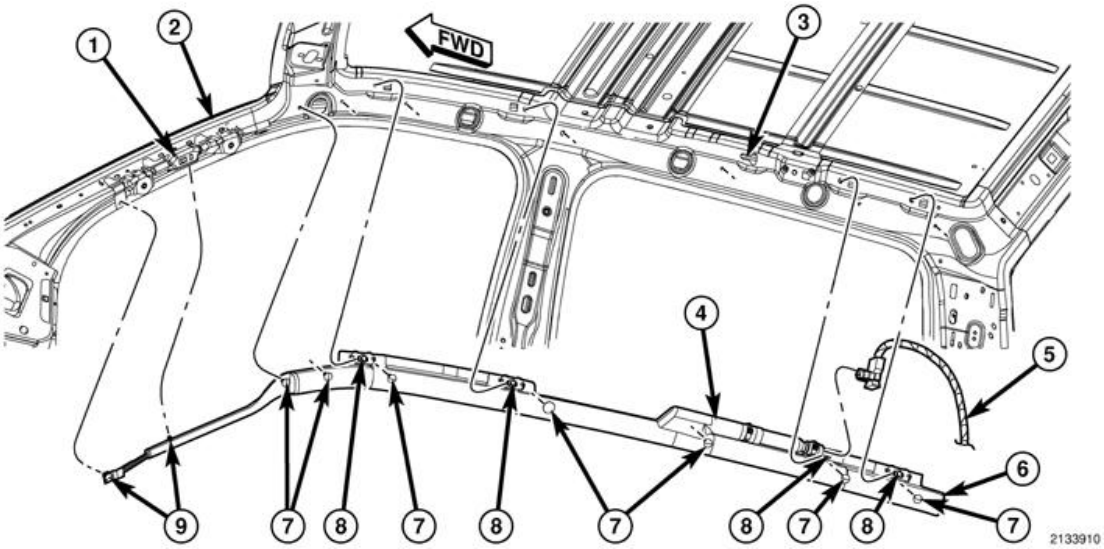

Fig. 36: Side Curtain Airbags, Screws, Retainers, Inflator & Connector
Courtesy of CHRYSLER GROUP, LLC

1. Check to be certain that the 2 (standard cab), 4 (quad or crew cab) or 5 (mega cab) spring nuts are properly installed in the inner roof rail and that they are in good condition.
2. Position the side curtain airbag (6) into the vehicle as a unit.
3. Insert the T-tab at the front of the inflator (4) bracket into the keyed slot (3) in the inner roof rail over the front door opening (standard cab) or rear door opening (quad or crew cab and mega cab) and slide the inflator forward to engage it.
4. Reconnect the body wire harness (5) connector for the side curtain airbag to the connector receptacle at the back of the inflator. You can be certain that each connector is fully engaged in its receptacle by listening carefully for a distinct, audible click as the connector latches snap into place.
5. Align the 1 plastic push-in retainer (7) that secures the side curtain airbag with the hole in the inner roof side rail and push it straight in until it is fully seated.
6. Working from rear to front, install and tighten the 2 (standard cab), 4 (quad or crew cab) or 5 (mega cab) screws (8) that secure the side curtain airbag to the spring nuts in the inner roof rail. Tighten the screws to 7 N.m (62 in. lbs.).
7. Engage the 2 plastic push-in retainers (9) that secure the side curtain airbag front tether to the assist handle bracket (1) on the inner A-pillar (2).
8. Reinstall the headliner into the vehicle. Refer to **HEADLINER, INSTALLATION** .
9. Do not reconnect the battery negative cable at this time. The Supplemental Restraint System (SRS) Verification Test procedure should be performed following service of any SRS component. Refer to **STANDARD PROCEDURE**.

ANCHOR, CHILD SEAT

DESCRIPTION

DESCRIPTION

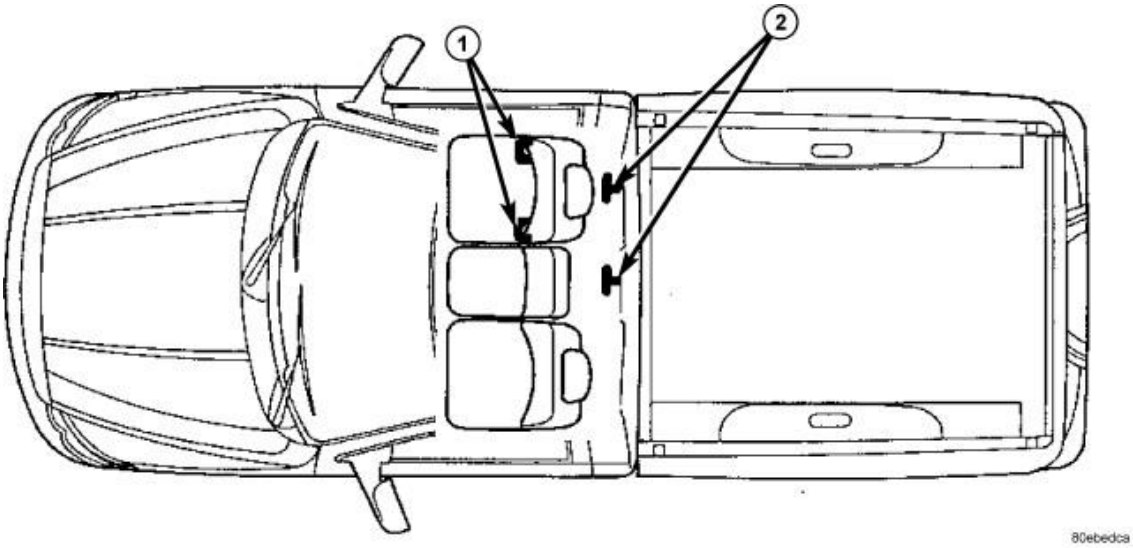

Fig. 37: Child Restraint Anchor Location - Standard CAB
Courtesy of CHRYSLER GROUP, LLC

This vehicle is equipped with a Lower Anchors and Tether for CHildren, or LATCH child restraint anchorage system. The LATCH system provides for the installation of suitable child restraints in certain seating positions without using the standard equipment seat belt provided for that seating position.

Standard cab vehicles are equipped with a fixed-position child restraint upper tether anchor for the front center and outboard seating positions (2); and, child restraint lower anchors for the front outboard seating position (1).

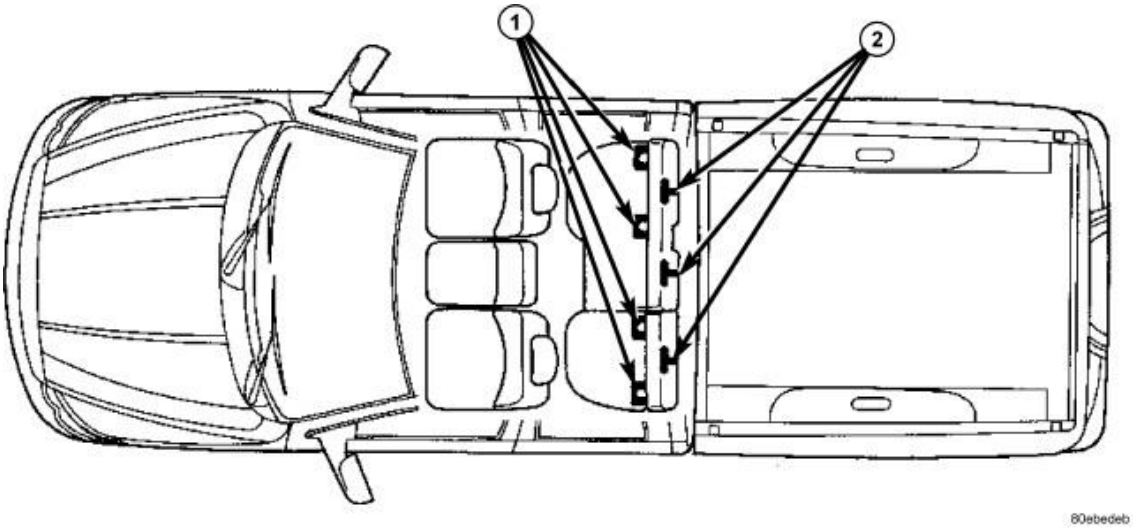

Fig. 38: Child Restraint Anchor Location - Quad CAB
Courtesy of CHRYSLER GROUP, LLC

Quad or crew cab vehicles are equipped with a fixed-position child restraint upper tether anchor strap for the rear center and both rear outboard seating positions (2), and child restraint lower anchors for both rear outboard seating positions (1). All front seat child restraint anchors are deleted on quad or crew cabs.

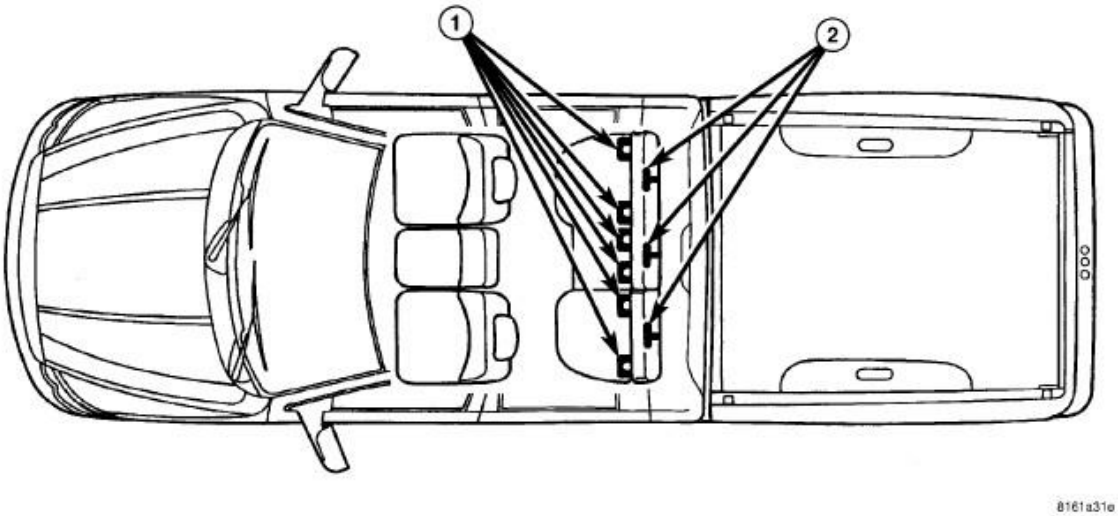

Fig. 39: Child Restraint Anchor Location - Mega CAB
Courtesy of CHRYSLER GROUP, LLC

Mega cab vehicles are also equipped with a fixed-position child restraint upper tether anchor for the rear center and both rear outboard seating positions (2), and have child restraint lower anchors for all three rear seating positions (1). As on quad or crew cabs, all front seat child restraint anchors are deleted on mega cab vehicles.

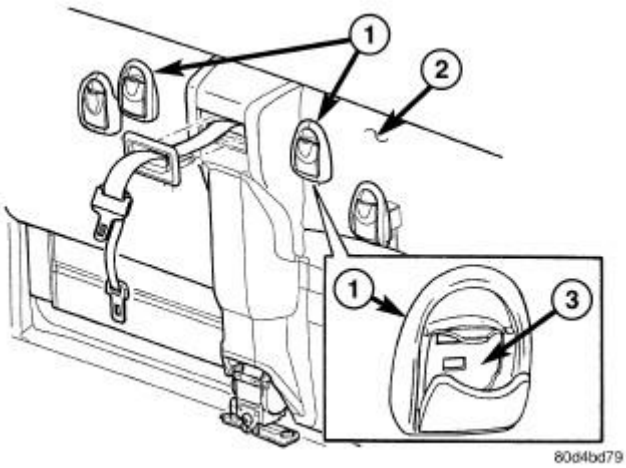

Fig. 40: Locating Upper Tether Anchors - Standard CAB
Courtesy of CHRYSLER GROUP, LLC

The two upper tether anchors (3) for standard cabs and three upper tether anchors for mega cabs are integral to the upper cab back panel reinforcement and are concealed behind individual trim cover and bezel units (1) that are integral to the cab back trim panel (2). These upper tether anchors cannot be adjusted or repaired and, if ineffective or damaged, they must be replaced as a unit with the upper cab back panel reinforcement. The upper tether anchor trim covers and bezels are serviced as a unit with the cab back trim panels.

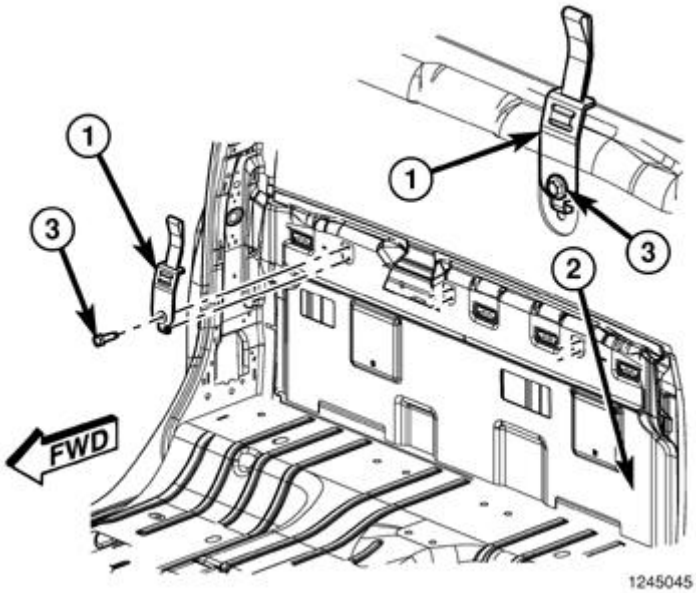

Fig. 41: Locating Upper Tether Anchor Straps - Quad CAB
Courtesy of CHRYSLER GROUP, LLC

The three upper tether anchor straps (1) for quad or crew cabs are secured to the upper cab back panel (2) reinforcement with screws (3). These anchor straps are concealed behind the upright rear seat back. The upper tether anchor straps are available for individual service replacement.

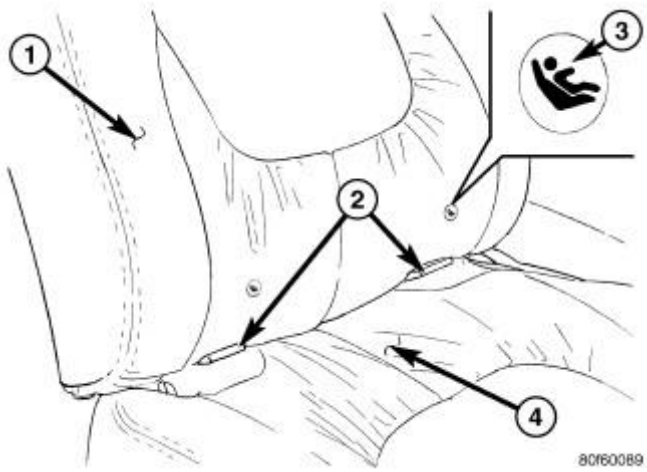

Fig. 42: Locating Lower Anchors
Courtesy of CHRYSLER GROUP, LLC

The lower anchors (2) for all vehicles are integral to their respective front or rear seat cushion frame. Round markers (3) with an imprinted child seat icon on the standard cab front seat back trim cover helps identify the anchor locations for that application because they may be otherwise difficult to see with the seat back in the upright position. These lower anchors are each constructed from round steel bar stock that is formed into a U-shape, then securely welded at each end to the seat cushion frame. They are each accessed from the front of their respective seats, at each side where the seat back meets the seat cushion. These lower anchors cannot be

adjusted or repaired and, if ineffective or damaged, they must be replaced as a unit with the seat cushion frame.

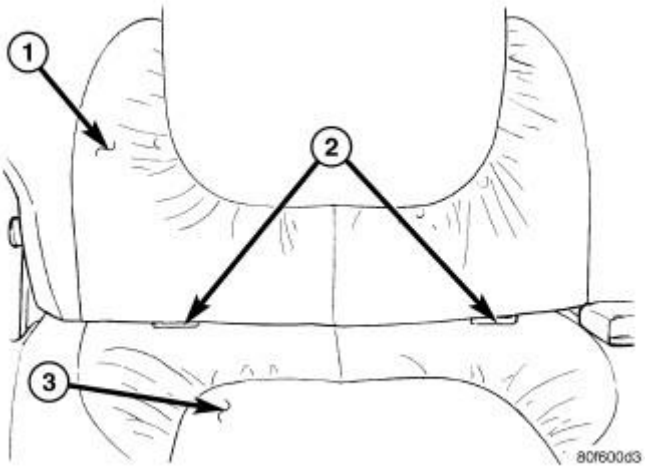

Fig. 43: Locating Lower Seat Anchors - Quad CAB
Courtesy of CHRYSLER GROUP, LLC

On quad or crew cab and mega cab, if the rear seat lower anchors (2) have been bent or broken as a result of a vehicle collision, the latch for the affected rear seat cushion frame unit must also be replaced.

WARNING: **To avoid serious or fatal injury during and following any seat belt or child restraint anchor service, carefully inspect all seat belts, buckles, mounting hardware, retractors, tether straps, and anchors for proper installation, operation, or damage. Replace any belt that is cut, frayed, or torn. Straighten any belt that is twisted. Tighten any loose fasteners. Replace any belt that has a damaged or ineffective buckle or retractor. Replace any belt that has a bent or damaged latch plate or anchor plate. Replace any child restraint anchor or the unit to which the anchor is integral that has been bent or damaged. Never attempt to repair a seat belt or child restraint component. Always replace damaged or ineffective seat belt and child restraint components with the correct, new and unused replacement parts listed in the Chrysler Mopar® Parts Catalog. Failure to follow these instructions may result in possible serious or fatal injury.**

OPERATION

OPERATION

All vehicles manufactured for sale in the United States and Canada are required to be equipped with a Lower Anchors and Tether for CHildren, or LATCH child restraint anchorage system. In standard cab models, the outboard front passenger seat has a single set of anchor provisions for installing a LATCH-compatible child seat. In quad or crew cab models, the second row seats have two sets of anchor provisions for installing a LATCH-compatible child seat. A single seat may be mounted in the center seating position, or one in each outboard seating position. In mega cab models, the second row seats have three sets of anchor provisions to

accommodate the installation of a LATCH-compatible child seat in any one, or all three of the second row seating positions.

With LATCH, child seats are secured by direct attachment to the vehicle seat structure, rather than by the seat belts. With LATCH-compatible child seats, lower anchors attach to the seat structure through heavy-gauge wire loops located at the intersection between the seat cushion and the seat back surfaces.

In standard cab models, two upper tether anchors are integral to the upper cab back panel reinforcement, one each for the front passenger and front center seating positions to secure the top tether strap of child seats equipped with this feature. In quad or crew cab models, three upper tether anchor loops are secured to the upper cab back panel reinforcement to secure the top tether strap of child seats equipped with this feature. These upper tether anchors work with both LATCH-compatible and other child seats equipped with a top tether strap. In mega cab models, three upper tether anchors are integral to the upper cab back panel reinforcement, one for each of the three second row seating positions to secure the top tether strap of child seats equipped with this feature.

The owner's information packet in the vehicle glove box contains details and suggestions on the proper use of all of the factory-installed child restraint anchors.

REMOVAL

REMOVAL

WARNING: **To avoid serious or fatal injury during and following any seat belt or child restraint anchor service, carefully inspect all seat belts, buckles, mounting hardware, retractors, tether straps, and anchors for proper installation, operation, or damage. Replace any belt that is cut, frayed, or torn. Straighten any belt that is twisted. Tighten any loose fasteners. Replace any belt that has a damaged or ineffective buckle or retractor. Replace any belt that has a bent or damaged latch plate or anchor plate. Replace any child restraint anchor or the unit to which the anchor is integral that has been bent or damaged. Never attempt to repair a seat belt or child restraint component. Always replace damaged or ineffective seat belt and child restraint components with the correct, new and unused replacement parts listed in the Chrysler Mopar® Parts Catalog. Failure to follow these instructions may result in possible serious or fatal injury.**

NOTE: **The following procedure applies only to the rear seat upper child tether straps used on quad or crew cab vehicles. The child restraint anchors used in other vehicles and locations are integral to other components and cannot be serviced separately.**

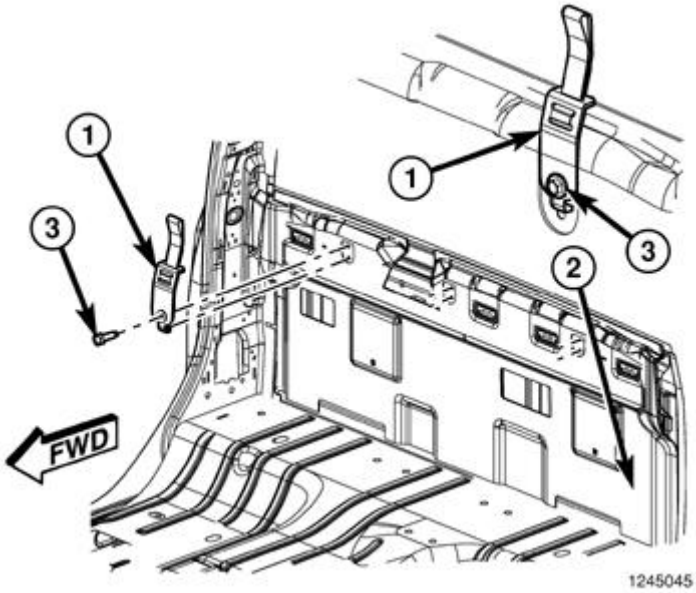

Fig. 44: Locating Upper Tether Anchor Straps - Quad CAB
Courtesy of CHRYSLER GROUP, LLC

1. Remove the rear seat from the vehicle. Refer to **SEAT, REAR, REMOVAL** or **SEAT, MEGA CAB REAR, REMOVAL** .
2. Remove the screw (3) that secures the child tether strap (1) to the upper cab back panel (2) reinforcement.
3. Remove the child tether strap from the upper cab back panel reinforcement.

INSTALLATION

INSTALLATION

WARNING: **To avoid serious or fatal injury during and following any seat belt or child restraint anchor service, carefully inspect all seat belts, buckles, mounting hardware, retractors, tether straps, and anchors for proper installation, operation, or damage. Replace any belt that is cut, frayed, or torn. Straighten any belt that is twisted. Tighten any loose fasteners. Replace any belt that has a damaged or ineffective buckle or retractor. Replace any belt that has a bent or damaged latch plate or anchor plate. Replace any child restraint anchor or the unit to which the anchor is integral that has been bent or damaged. Never attempt to repair a seat belt or child restraint component. Always replace damaged or ineffective seat belt and child restraint components with the correct, new and unused replacement parts listed in the Chrysler Mopar® Parts Catalog. Failure to follow these instructions may result in possible serious or fatal injury.**

NOTE: **The following procedure applies only to the rear seat upper child tether straps used on quad or crew cab vehicles. The child restraint anchors used in other vehicles and locations are integral to other components and cannot be serviced**

separately.

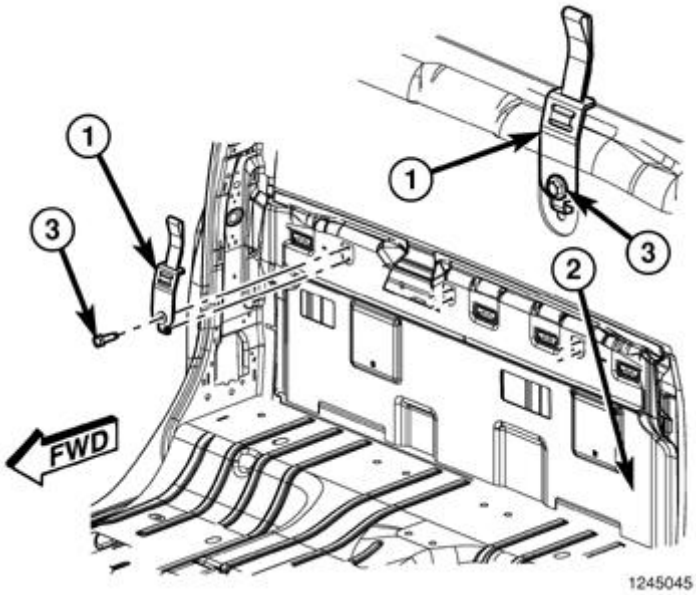

Fig. 45: Locating Upper Tether Anchor Straps - Quad CAB
Courtesy of CHRYSLER GROUP, LLC

1. Position the child tether strap (1) onto the cab back panel (2) upper reinforcement.
2. Install and tighten the screw (3) that secures the child tether strap to the upper cab back panel reinforcement. Tighten the screw to 14 N.m (10 ft. lbs.).
3. Reinstall the rear seat into the vehicle. Refer to **SEAT, REAR, INSTALLATION** or **SEAT, MEGA CAB REAR, INSTALLATION** .

BUCKLE, SEAT BELT

REMOVAL

FRONT CENTER AND CENTER ANCHOR

WARNING: **To avoid serious or fatal injury during and following any seat belt or child restraint anchor service, carefully inspect all seat belts, buckles, mounting hardware, retractors, tether straps, and anchors for proper installation, operation, or damage. Replace any belt that is cut, frayed, or torn. Straighten any belt that is twisted. Tighten any loose fasteners. Replace any belt that has a damaged or ineffective buckle or retractor. Replace any belt that has a bent or damaged latch plate or anchor plate. Replace any child restraint anchor or the unit to which the anchor is integral that has been bent or damaged. Never attempt to repair a seat belt or child restraint component. Always replace damaged or ineffective seat belt and child restraint components with the correct, new and unused replacement parts listed in the Chrysler Mopar® Parts Catalog.**

Failure to follow these instructions may result in possible serious or fatal injury.

NOTE: **A fixed position front center seat belt buckle is located on the left side of the front center seat section (20 percent) used on all vehicles with a split bench front seat. Standard cab vehicles have a unique, fixed position, black, keyed, lower anchor buckle for the three-point center seat belt lower anchor located on the right side of the front center seat section. Quad or crew cab and mega cab vehicles have a fixed position front center seat lap belt located on the right side of the front center seat section. The following procedure applies to the front center seating position belt buckle, the lap belt or the anchor buckle. The three-point front center seat belt and retractor unit is only used on standard cab vehicles. Refer to RETRACTOR, SEAT BELT, REMOVAL.**

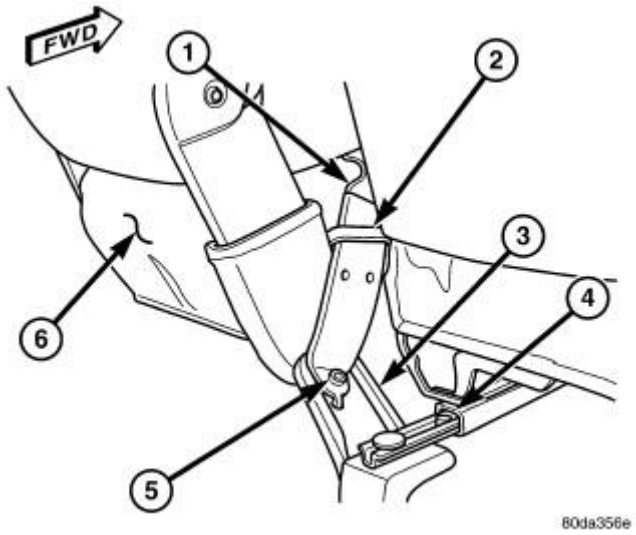

Fig. 46: Identifying Front Center Seat Belt Components
Courtesy of CHRYSLER GROUP, LLC

1. Move the adjacent right or left front outboard seat section (40 percent) to its most forward position and tilt the seat back forward for easiest access to the lower anchor of the front center seat belt buckle, lap belt or anchor buckle (1).
2. On standard cab vehicles only, if equipped, remove the stowage tray from the rear floor panel behind the seat. Refer to **BIN, STORAGE, REMOVAL** .
3. From behind the front seat, remove the screw (5) that secures the lower anchor of the front center seat belt buckle, lap belt or anchor buckle to the center seat support bracket (3).
4. From the front of the front seat, reach between the side of the center seat cushion (6) and the adjacent right or left front outboard seat cushion to access and remove the seat belt buckle, lap belt or anchor buckle through the elastic strap (2) on the side of the center seat cushion.
5. Remove the front center seat belt buckle, lap belt or anchor buckle unit from the front seat.

FRONT OUTBOARD

WARNING: To avoid serious or fatal injury during and following any seat belt or child restraint anchor service, carefully inspect all seat belts, buckles, mounting hardware, retractors, tether straps, and anchors for proper installation, operation, or damage. Replace any belt that is cut, frayed, or torn. Straighten any belt that is twisted. Tighten any loose fasteners. Replace any belt that has a damaged or ineffective buckle or retractor. Replace any belt that has a bent or damaged latch plate or anchor plate. Replace any child restraint anchor or the unit to which the anchor is integral that has been bent or damaged. Never attempt to repair a seat belt or child restraint component. Always replace damaged or ineffective seat belt and child restraint components with the correct, new and unused replacement parts listed in the Chrysler Mopar® Parts Catalog. Failure to follow these instructions may result in possible serious or fatal injury.

NOTE: A traveling front outboard seat belt buckle is located on the inboard side of each front outboard split bench seat section (40 percent) or bucket seat used on all vehicles. The seat belt buckle on the driver side front seat for all vehicles also includes a seat belt switch.

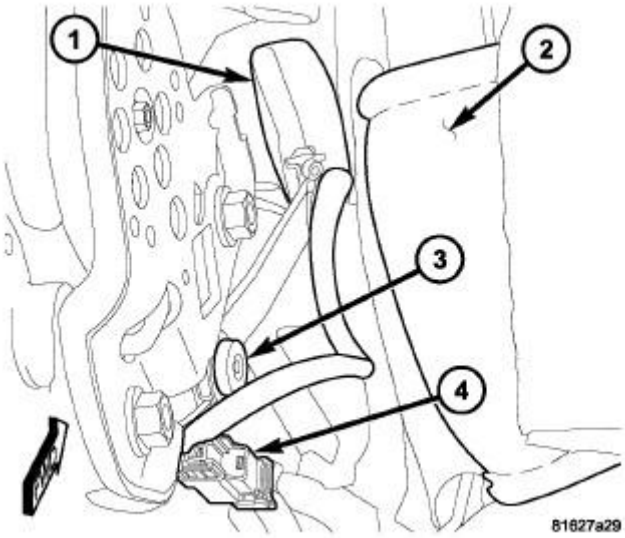

Fig. 47: Identifying Front Outboard Seat Belt Buckle
Courtesy of CHRYSLER GROUP, LLC

1. Move the right or left front outboard split bench seat section or bucket seat to its most rearward position and tilt the seat back forward for easiest access to the front outboard seat belt buckle lower anchor.
2. On standard cab vehicles only equipped with a split bench seat, also move the outboard seat section opposite the side from which the buckle is to be removed to its most forward position and tilt the seat back forward.

3. On standard cab vehicles only, if equipped, remove the stowage tray from the rear floor panel behind the seat. Refer to **BIN, STORAGE, REMOVAL** .
4. On the driver side only, from behind the front seat disconnect the seat belt switch pigtail wire connector (4) from the seat wire harness take out and connector located on the lower inboard side of the seat cushion frame just forward of the buckle lower anchor.
5. From behind the front seat, remove the screw (3) that secures the buckle (1) lower anchor to the lower inboard side of the seat cushion frame.
6. From the front of the front seat, reach between the center seat cushion (2) or center floor console and the right or left front outboard seat cushion to access and remove the front outboard seat belt buckle from the seat.

REAR CENTER ANCHOR AND RIGHT OUTBOARD - MEGA CAB

WARNING: **To avoid serious or fatal injury during and following any seat belt or child restraint anchor service, carefully inspect all seat belts, buckles, mounting hardware, retractors, tether straps, and anchors for proper installation, operation, or damage. Replace any belt that is cut, frayed, or torn. Straighten any belt that is twisted. Tighten any loose fasteners. Replace any belt that has a damaged or ineffective buckle or retractor. Replace any belt that has a bent or damaged latch plate or anchor plate. Replace any child restraint anchor or the unit to which the anchor is integral that has been bent or damaged. Never attempt to repair a seat belt or child restraint component. Always replace damaged or ineffective seat belt and child restraint components with the correct, new and unused replacement parts listed in the Chrysler Mopar® Parts Catalog. Failure to follow these instructions may result in possible serious or fatal injury.**

NOTE: **The rear seat right outboard occupant buckle is serviced as a unit with an anchor bracket. The lower anchor of the rear center seat belt and retractor is also secured to the anchor bracket with a screw so that it can be removed from the anchor bracket and serviced separately from the buckle. Refer to RETRACTOR, SEAT BELT, REMOVAL.**

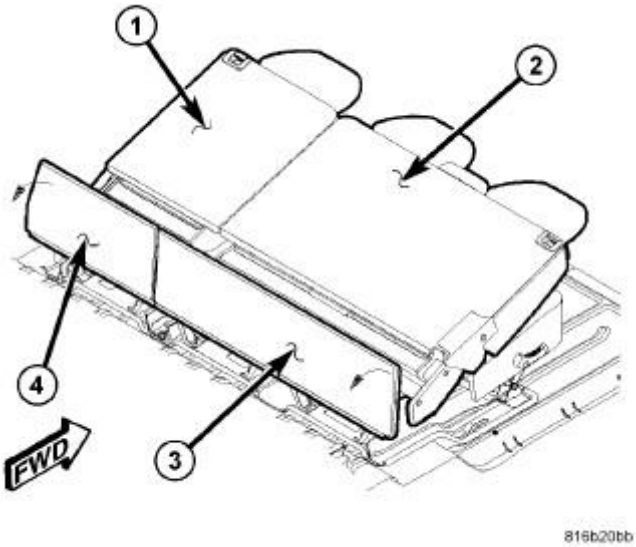

Fig. 48: Accessing Rear Center & Outboard Buckle Bracket - Mega Cab
Courtesy of CHRYSLER GROUP, LLC

1. Fold the 60 percent section of the rear seat back (2) down onto the seat cushion in the cargo storage position, then lift and prop open the seat back filler panel (3) as necessary for easiest access to the rear center seat belt lower anchor and right outboard buckle anchor bracket.

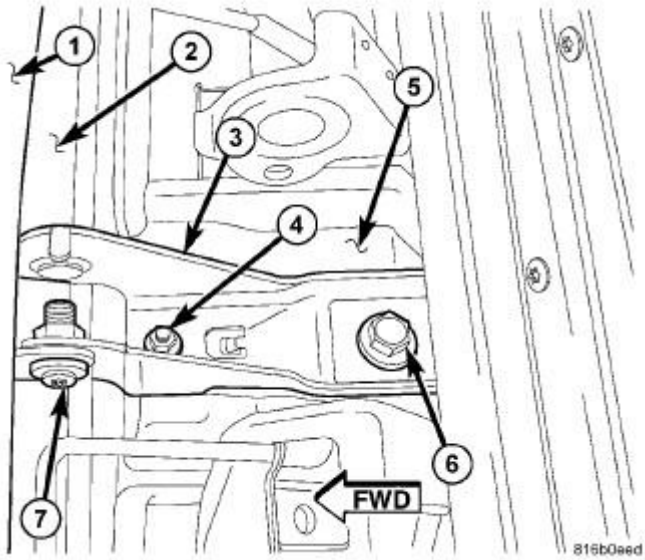

Fig. 49: Identifying Seat Back, Seat Cushion, Anchor Bracket, Nut, Rear Mounting Bracket, & Screw
Courtesy of CHRYSLER GROUP, LLC

2. Remove the screw (7) that secures the center seat belt lower anchor to the anchor bracket (3) and temporarily secure the belt lower anchor to keep it from being pulled from between the seat back (1) and the seat cushion (2) by the retractor.

3. Remove and discard the screw (6) that secures the buckle anchor bracket and the rear seat rear mounting bracket (5) to the rear floor panel.
4. Remove the nut (4) that secures the buckle anchor bracket to the stud on the rear seat rear mounting bracket.
5. Disengage the buckle from between the seat cushion and the seat back, then remove the anchor bracket and buckle from behind the rear seat as a unit.

REAR CENTER AND LEFT OUTBOARD - MEGA CAB

WARNING: **To avoid serious or fatal injury during and following any seat belt or child restraint anchor service, carefully inspect all seat belts, buckles, mounting hardware, retractors, tether straps, and anchors for proper installation, operation, or damage. Replace any belt that is cut, frayed, or torn. Straighten any belt that is twisted. Tighten any loose fasteners. Replace any belt that has a damaged or ineffective buckle or retractor. Replace any belt that has a bent or damaged latch plate or anchor plate. Replace any child restraint anchor or the unit to which the anchor is integral that has been bent or damaged. Never attempt to repair a seat belt or child restraint component. Always replace damaged or ineffective seat belt and child restraint components with the correct, new and unused replacement parts listed in the Chrysler Mopar® Parts Catalog. Failure to follow these instructions may result in possible serious or fatal injury.**

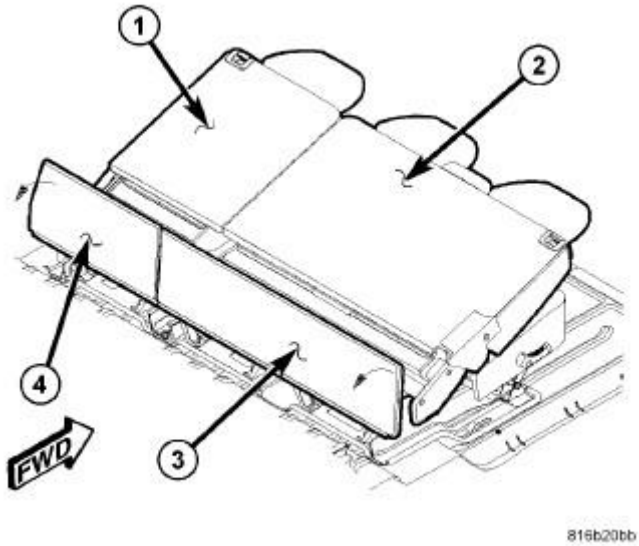

Fig. 50: Accessing Rear Center & Outboard Buckle Bracket - Mega Cab
Courtesy of CHRYSLER GROUP, LLC

1. Fold both the 40 percent section and the 60 percent section of the rear seat back (1 and 2) down onto the seat cushion in the cargo storage position, then lift and prop open the seat back filler panels (3 and 4) as necessary for easiest access to the rear center and left outboard seat belt buckle anchor bracket.

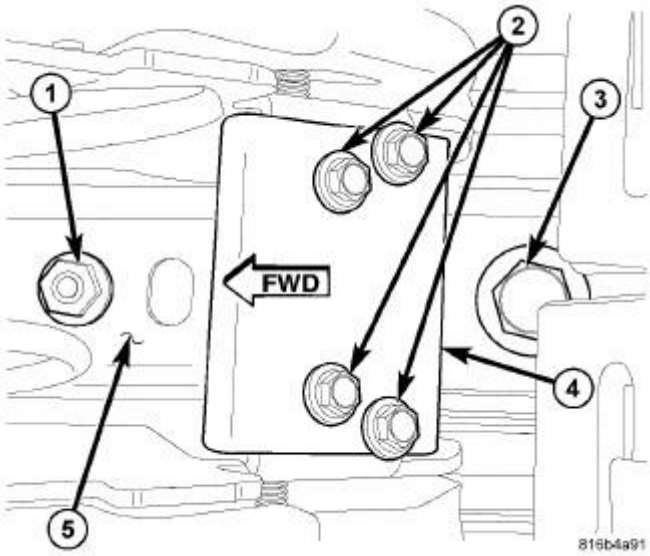

Fig. 51: Identifying Nut, Screws, Stabilizer Bracket & Buckle Anchor Bracket
Courtesy of CHRYSLER GROUP, LLC

2. Remove the four screws (2) that secure the stabilizer bracket (4) to the two inboard seat hinge brackets.
3. Remove the stabilizer bracket from between the seat hinge brackets.
4. Remove and discard the screw (3) that secures the buckle anchor bracket (5) and the rear seat rear mounting bracket to the rear floor panel.
5. Remove the nut (1) that secures the buckle anchor bracket to the stud on the rear seat rear mounting bracket.
6. Disengage the buckles from between the seat cushion and the seat back, then remove the anchor bracket and buckles from between the rear seat sections as a unit.

REAR - QUAD OR CREW CAB

WARNING: **To avoid serious or fatal injury during and following any seat belt or child restraint anchor service, carefully inspect all seat belts, buckles, mounting hardware, retractors, tether straps, and anchors for proper installation, operation, or damage. Replace any belt that is cut, frayed, or torn. Straighten any belt that is twisted. Tighten any loose fasteners. Replace any belt that has a damaged or ineffective buckle or retractor. Replace any belt that has a bent or damaged latch plate or anchor plate. Replace any child restraint anchor or the unit to which the anchor is integral that has been bent or damaged. Never attempt to repair a seat belt or child restraint component. Always replace damaged or ineffective seat belt and child restraint components with the correct, new and unused replacement parts listed in the Chrysler Mopar® Parts Catalog. Failure to follow these instructions may result in possible serious or fatal injury.**

NOTE: **The following removal procedure covers service of the rear seat center and left outboard seat belt buckle units. The rear seat right outboard seat belt buckle is serviced as a unit with the rear seat center seat belt and retractor assembly. Refer to RETRACTOR, SEAT BELT, REMOVAL.**

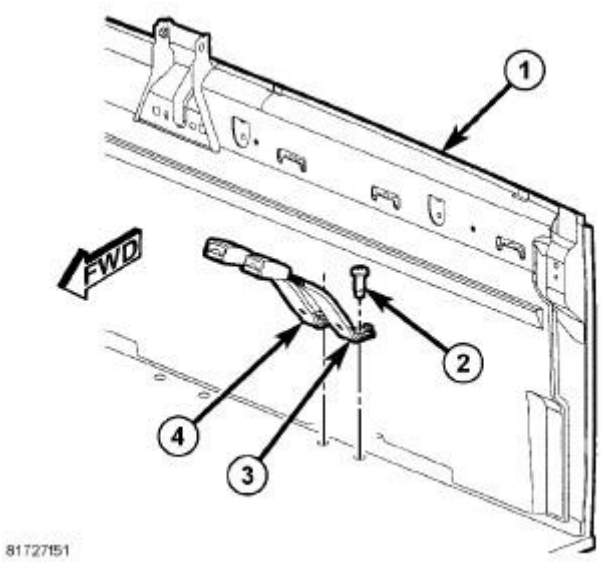

Fig. 52: Cab Back Panel -- Seat Belt Buckle Units
Courtesy of CHRYSLER GROUP, LLC

1. Lift up the rear seat cushion into its stowed position against the rear seat back.
2. Remove the screw (2) that secures either the center (4) or the left outboard (3) occupant buckle unit to the rear floor panel near the base of the cab back panel (1). On vehicles with the optional 60/40 split rear bench, the screw that secures the buckle unit also secures one of the rear seat mounting brackets to the rear floor panel.
3. Remove the center or left outboard occupant buckle unit from the rear floor panel or from the rear seat mounting bracket.

INSTALLATION

FRONT CENTER AND CENTER ANCHOR

WARNING: **To avoid serious or fatal injury during and following any seat belt or child restraint anchor service, carefully inspect all seat belts, buckles, mounting hardware, retractors, tether straps, and anchors for proper installation, operation, or damage. Replace any belt that is cut, frayed, or torn. Straighten any belt that is twisted. Tighten any loose fasteners. Replace any belt that has a damaged or ineffective buckle or retractor. Replace any belt that has a bent or damaged latch plate or anchor plate. Replace any child restraint anchor or the unit to which the anchor is integral that has been bent or damaged. Never attempt to repair a seat belt or child restraint component. Always replace damaged or ineffective**

seat belt and child restraint components with the correct, new and unused replacement parts listed in the Chrysler Mopar® Parts Catalog. Failure to follow these instructions may result in possible serious or fatal injury.

NOTE: **A fixed position front center seat belt buckle is located on the left side of the front center seat section (20 percent) used on all vehicles with a split bench front seat. Standard cab vehicles have a unique, fixed position, black, keyed, lower anchor buckle for the three-point center seat belt lower anchor located on the right side of the front center seat section. Quad or crew cab and mega cab vehicles have a fixed position front center seat lap belt located on the right side of the front center seat section. The following procedure applies to the front center seating position belt buckle, the lap belt or the anchor buckle. The three-point front center seat belt and retractor unit is only used on standard cab vehicles. Refer to RETRACTOR, SEAT BELT, INSTALLATION.**

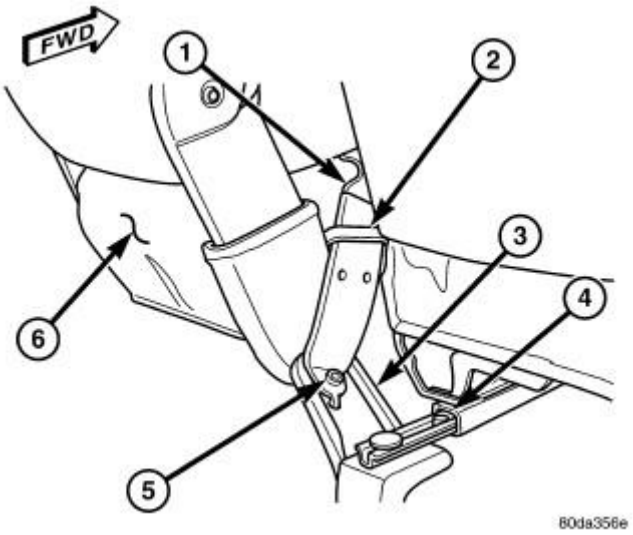

Fig. 53: Identifying Front Center Seat Belt Components
Courtesy of CHRYSLER GROUP, LLC

1. From the front of the front seat, position the front center seat belt buckle, lap belt or anchor buckle unit (1) through the elastic strap (2) on the side of the center seat cushion (6).
2. From the front of the front seat, reach between the side of the center seat cushion and the adjacent right or left front outboard seat cushion to route the lower anchor of the seat belt buckle, lap belt or anchor buckle unit down between the side of the center seat cushion and the adjacent right or left front outboard seat cushion. Be certain that the belt webbing is not twisted.
3. From behind the front seat, position the lower anchor of the seat belt buckle, lap belt or anchor buckle to the center seat support bracket (3). Be certain to engage the anti-rotation tab on the lower anchor into the corresponding hole in the center seat support bracket.
4. Install and tighten the screw (5) that secures the lower anchor of the seat belt buckle, lap belt or anchor

buckle to the center seat support bracket. Tighten the screw to 39 N.m (29 ft. lbs.).

5. On standard cab vehicles only, if equipped, reinstall the stowage tray onto the rear floor panel behind the seat. Refer to **BIN, STORAGE, INSTALLATION** .

FRONT OUTBOARD

WARNING: To avoid serious or fatal injury during and following any seat belt or child restraint anchor service, carefully inspect all seat belts, buckles, mounting hardware, retractors, tether straps, and anchors for proper installation, operation, or damage. Replace any belt that is cut, frayed, or torn. Straighten any belt that is twisted. Tighten any loose fasteners. Replace any belt that has a damaged or ineffective buckle or retractor. Replace any belt that has a bent or damaged latch plate or anchor plate. Replace any child restraint anchor or the unit to which the anchor is integral that has been bent or damaged. Never attempt to repair a seat belt or child restraint component. Always replace damaged or ineffective seat belt and child restraint components with the correct, new and unused replacement parts listed in the Chrysler Mopar® Parts Catalog. Failure to follow these instructions may result in possible serious or fatal injury.

NOTE: A traveling front outboard seat belt buckle is located on the inboard side of each front outboard split bench seat section (40 percent) or bucket seat used on all vehicles. The seat belt buckle on the driver side front seat for all vehicles also includes a seat belt switch.

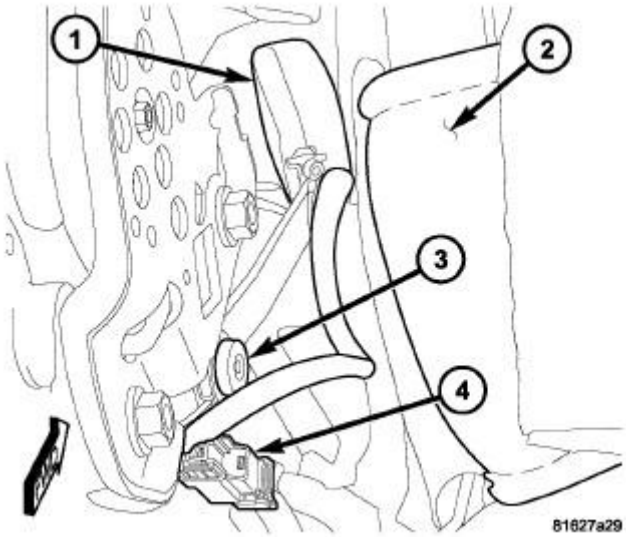

Fig. 54: Identifying Front Outboard Seat Belt Buckle
Courtesy of CHRYSLER GROUP, LLC

1. From the front of the front seat, reach between the center seat cushion (2) or center floor console and the

right or left front outboard seat cushion to position the front outboard seat belt buckle to the seat.

2. From behind the front seat, position the front outboard seat belt buckle lower anchor to the lower inboard side of the seat cushion frame. Be certain to engage the anti-rotation tab on the lower anchor into the corresponding hole in the seat cushion frame.
3. Install and tighten the screw (3) that secures the front outboard seat belt buckle lower anchor to the seat cushion frame. Tighten the screw to 25 N.m (18 ft. lbs.).
4. On the driver side only, reconnect the seat belt switch pigtail wire connector (4) to the seat wire harness take out and connector located on the lower inboard side of the seat cushion frame just forward of the buckle lower anchor.
5. On standard cab vehicles only, if equipped, reinstall the stowage tray onto the rear floor panel behind the seat. Refer to **BIN, STORAGE, INSTALLATION** .

REAR CENTER ANCHOR AND RIGHT OUTBOARD - MEGA CAB

WARNING: **To avoid serious or fatal injury during and following any seat belt or child restraint anchor service, carefully inspect all seat belts, buckles, mounting hardware, retractors, tether straps, and anchors for proper installation, operation, or damage. Replace any belt that is cut, frayed, or torn. Straighten any belt that is twisted. Tighten any loose fasteners. Replace any belt that has a damaged or ineffective buckle or retractor. Replace any belt that has a bent or damaged latch plate or anchor plate. Replace any child restraint anchor or the unit to which the anchor is integral that has been bent or damaged. Never attempt to repair a seat belt or child restraint component. Always replace damaged or ineffective seat belt and child restraint components with the correct, new and unused replacement parts listed in the Chrysler Mopar® Parts Catalog. Failure to follow these instructions may result in possible serious or fatal injury.**

NOTE: **The rear seat right outboard occupant buckle is serviced as a unit with a mounting bracket. The lower anchor of the rear center seat belt and retractor is also secured to the mounting bracket with a screw so that it can be removed from the mounting bracket and serviced separately from the buckle. Refer to RETRACTOR, SEAT BELT, REMOVAL.**

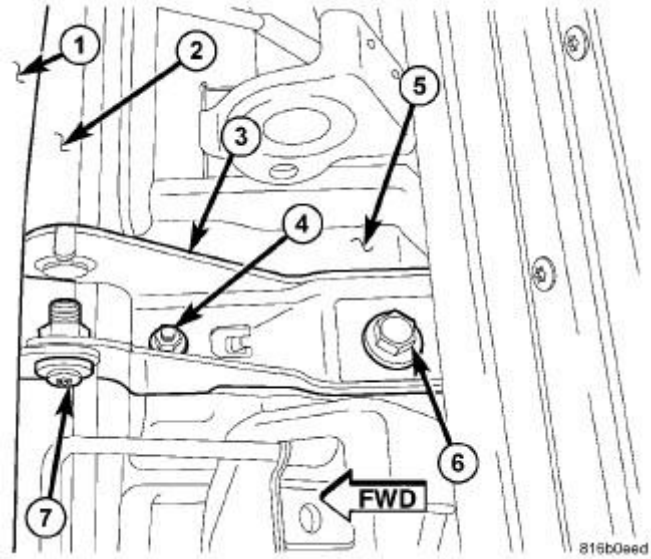

Fig. 55: Identifying Seat Back, Seat Cushion, Anchor Bracket, Nut, Rear Mounting Bracket, & Screw
Courtesy of CHRYSLER GROUP, LLC

1. Engage the buckle unit between the seat cushion (2) and the seat back (1), then position the anchor bracket (3) to the rear seat rear mounting bracket (5) behind the rear seat as a unit. Be certain to engage the anti-rotation tab on the anchor bracket into the clearance hole in the mounting bracket.
2. Install and tighten the nut (4) that secures the buckle anchor bracket to the stud on the rear seat rear mounting bracket. Tighten the nut to 23 N.m (17 ft. lbs.).
3. Install and tighten a new screw (6) to secure the buckle anchor bracket and the rear seat rear mounting bracket to the rear floor panel. Tighten the screw to 47 N.m (35 ft. lbs.).
4. Route the center seat belt lower anchor between the seat back and the seat cushion and position it to the anchor bracket. Be certain the belt webbing is not twisted between the retractor and the anchor bracket.
5. Install and tighten the screw (7) that secures the seat belt lower anchor to the anchor bracket. Tighten the screw to 40 N.m (30 ft. lbs.).
6. Restore the 60 percent seat back filler panel and the seat back to their previous positions.

REAR CENTER AND LEFT OUTBOARD - MEGA CAB

WARNING: **To avoid serious or fatal injury during and following any seat belt or child restraint anchor service, carefully inspect all seat belts, buckles, mounting hardware, retractors, tether straps, and anchors for proper installation, operation, or damage. Replace any belt that is cut, frayed, or torn. Straighten any belt that is twisted. Tighten any loose fasteners. Replace any belt that has a damaged or ineffective buckle or retractor. Replace any belt that has a bent or damaged latch plate or anchor plate. Replace any child restraint anchor or the unit to which the anchor is integral that has been bent or damaged. Never attempt to repair a seat belt or child restraint component. Always replace damaged or ineffective seat belt and child restraint components with the correct, new and**

unused replacement parts listed in the Chrysler Mopar® Parts Catalog. Failure to follow these instructions may result in possible serious or fatal injury.

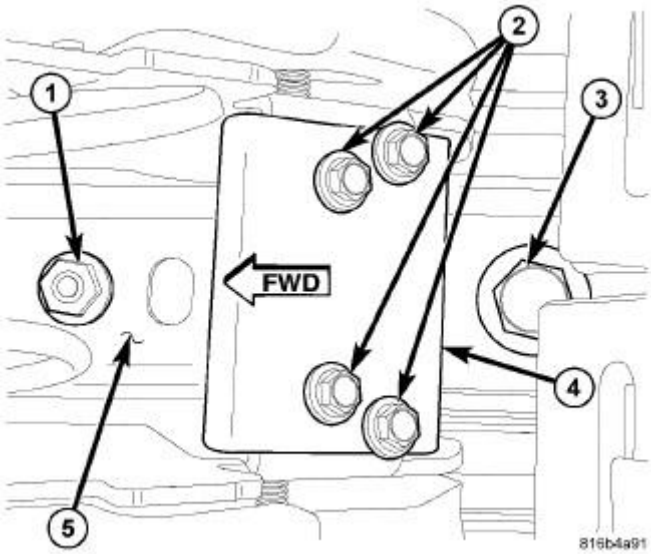

Fig. 56: Identifying Nut, Screws, Stabilizer Bracket & Buckle Anchor Bracket
Courtesy of CHRYSLER GROUP, LLC

1. Position the buckles and anchor bracket (5) between the inboard rear seat hinge brackets and engage the buckle units between the seat cushion and the seat back as a unit. Be certain to engage the anti-rotation tab on the anchor bracket into the clearance hole in the rear seat rear mounting bracket.
2. Install and tighten the nut (1) that secures the buckle anchor bracket to the stud on the rear seat rear mounting bracket. Tighten the nut to 23 N.m (17 ft. lbs.).
3. Install and tighten a new screw (3) to secure the buckle anchor bracket and the rear seat rear mounting bracket to the rear floor panel. Tighten the screw to 47 N.m (35 ft. lbs.).
4. Position the stabilizer bracket (4) between the two inboard rear seat hinge brackets.
5. Install and tighten the four screws (2) that secure the stabilizer bracket to the hinge brackets. Tighten the screws to 5 N.m (44 in. lbs.).
6. Restore both seat back filler panels and both seat backs to their previous positions.

REAR - QUAD OR CREW CAB

WARNING: **To avoid serious or fatal injury during and following any seat belt or child restraint anchor service, carefully inspect all seat belts, buckles, mounting hardware, retractors, tether straps, and anchors for proper installation, operation, or damage. Replace any belt that is cut, frayed, or torn. Straighten any belt that is twisted. Tighten any loose fasteners. Replace any belt that has a damaged or ineffective buckle or retractor. Replace any belt that has a bent or damaged latch plate or anchor plate. Replace any child restraint anchor or the unit to which the anchor is**

integral that has been bent or damaged. Never attempt to repair a seat belt or child restraint component. Always replace damaged or ineffective seat belt and child restraint components with the correct, new and unused replacement parts listed in the Chrysler Mopar® Parts Catalog. Failure to follow these instructions may result in possible serious or fatal injury.

NOTE: **The following installation procedure covers service of the rear seat center and left outboard seat belt buckle units. The rear seat right outboard seat belt buckle is serviced as a unit with the rear seat center seat belt and retractor assembly. Refer to RETRACTOR, SEAT BELT, INSTALLATION.**

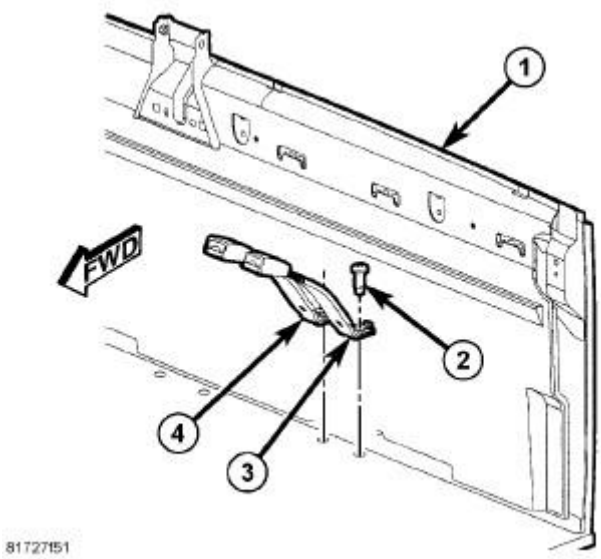

Fig. 57: Cab Back Panel -- Seat Belt Buckle Units
Courtesy of CHRYSLER GROUP, LLC

1. Position the center (4) or the left outboard (3) occupant buckle unit onto the rear floor panel or onto the rear seat mounting bracket near the base of the cab back panel (1). On vehicles with the optional 60/40 split rear bench, the screw that secures the buckle unit also secures one of the rear seat mounting brackets to the rear floor panel.
2. Install and tighten the screw (2) that secures the center or the left outboard occupant buckle unit to the rear floor panel. Tighten the screw to 39 N.m (29 ft. lbs.).
3. Restore the rear seat cushion to its seating position.

CLOCKSPRING

DESCRIPTION

DESCRIPTION

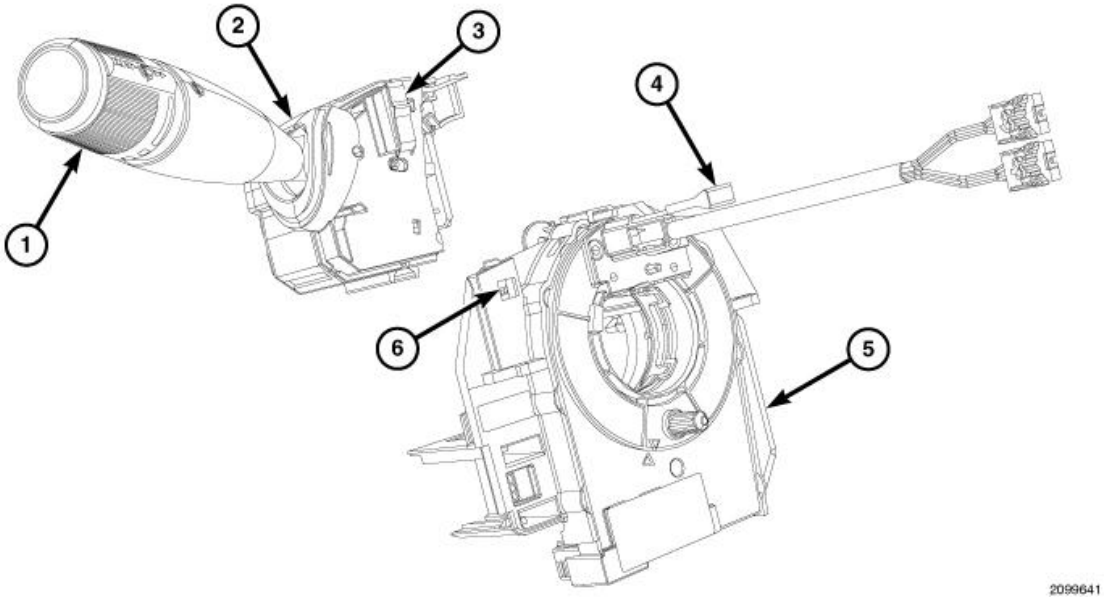

Fig. 58: Multi-Function Switch Assembly
Courtesy of CHRYSLER GROUP, LLC

The clockspring (5) for this vehicle is secured near the top of the steering column below the steering wheel. The clockspring also includes an integral, internal turn signal cancel cam, a Steering Angle Sensor (SAS) and, on vehicles equipped with the optional heated steering wheel, a set of internal slip rings. All of these components are serviced as a unit with the clockspring. The clockspring also supports the multi-function switch (1), the Steering Control Module (SCM) internal to the multi-function switch housing (2) and a blank filler (7) for, or the optional adjustable pedal switch, which are secured to the clockspring mounting bracket with integral keyways and latch feature provisions. The multi-function switch, adjustable pedal switch blank filler or the adjustable pedal switch are available for individual service replacement. When combined, these components are sometimes referred to as the Steering Column Control Module (SCCM).

The clockspring case includes integral tabs at the top and bottom for mounting the unit to the steering column housing with two screws, as well as integral provisions for mounting and supporting the multi-function switch, adjustable pedal switch, SAS and heated steering wheel slip rings. The SAS integral to the clockspring includes an electronic circuit board and a microprocessor, which allows it to communicate with other electronic modules in the vehicle over the Controller Area Network (CAN) data bus. The SAS circuitry is contained within a flat, molded plastic case that is secured to the lower surface of the clockspring case that hangs below the steering column.

Within the plastic clockspring case is a spool-like molded plastic rotor with a large exposed hub and an integral turn signal cancel cam. The upper surface of the rotor hub has a large center hole, an engagement dowel or drive pin, a single sleeve containing two short driver airbag squib pigtail wires with connectors, and a connector receptacle that faces toward the steering wheel. On vehicles equipped with the optional heated steering wheel, a third heated steering wheel pigtail wire and connector exits the upper surface of the rotor.

Service replacement clocksprings are shipped pre-centered and with a molded plastic locking pin (4) that snaps into a receptacle on the rotor. The locking pin secures the centered clockspring rotor to the clockspring case and the SAS during shipment and handling, but must be removed from the clockspring after it is installed on the steering column. The locking pin is a one time component and cannot be reinstalled once it has been removed.

The clockspring must be replaced if proper centering has been compromised or the tape may be damaged and Diagnostic Trouble Codes (DTCs) or faults may be set within the SAS.

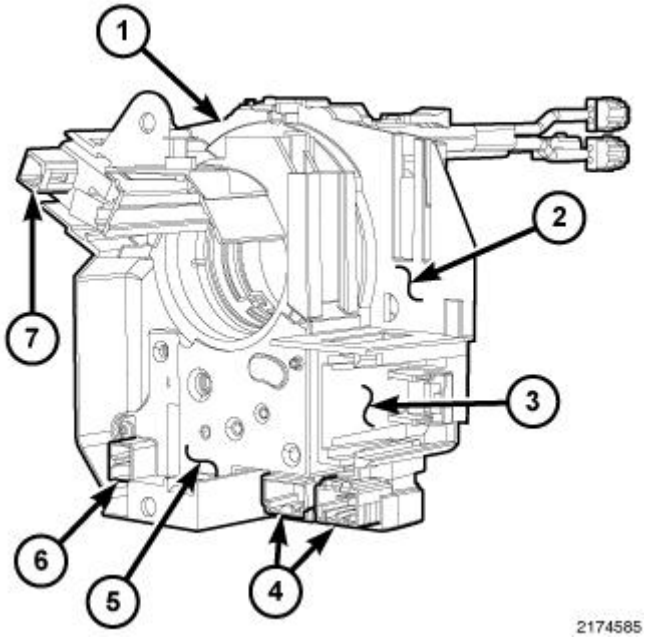

Fig. 59: Clockspring Case
Courtesy of CHRYSLER GROUP, LLC

The lower surface of the clockspring case (1) facing toward the instrument panel includes two receptacles on the left for mounting the multi-function switch (2) and the optional adjustable pedal switch (3). There are two integral connector receptacles (4) on the left lower corner of the clockspring case. Clocksprings with a SAS (5) also have a dedicated connector (6) near the right lower corner of that unit. Vehicles equipped with the optional heated steering wheel also have a dedicated connector (7) to the internal slip rings on the upper right corner of the clockspring case.

Within the plastic case and wound around the rotor spool is a long ribbon-like tape that consists of several thin copper wire leads sandwiched between two thin plastic membranes. The outer end of the tape terminates at the connector receptacles that face the instrument panel, while the inner end of the tape terminates at the driver airbag squib pigtail wires and connector receptacle on the hub of the clockspring rotor that face the steering wheel.

The clockspring cannot be repaired. If damaged, ineffective or if the driver airbag has been deployed, the clockspring must be replaced.

OPERATION

OPERATION

The clockspring is a mechanical electrical circuit component that is used to provide continuous electrical continuity between the fixed instrument panel wire harness and the electrical components mounted on or in the rotating steering wheel. On this vehicle the rotating electrical components include the driver airbag, the horn

switch, the Electronic Vehicle Information Center (EVIC) switches, the speed control switches, the remote radio switches and the steering wheel heating element, if the vehicle is so equipped. The clockspring case is positioned and secured to the top of the steering column. The fixed connector receptacles on the back of the fixed clockspring case connect the clockspring to the vehicle electrical system through several take outs with connectors from the instrument panel wire harness.

The turn signal cancel cam is integral to the rim of the clockspring rotor hub within the clockspring case so it also moves with the rotation of the steering wheel. Two short, black-sleeved pigtail wires on the upper surface of the clockspring rotor connect the clockspring to the driver airbag, while a steering wheel wire harness connected to the connector receptacle on the upper surface of the clockspring rotor completes circuits to the horn switch, the speed control switch and, if the vehicle is so equipped, to the optional remote radio switches and EVIC switches on the steering wheel. A third pigtail wire is dedicated to providing the high current requirements of the heating element for the optional heated steering wheel received through a dedicated connection on the back of the clockspring through a set of slip rings internal to the clockspring case. Another connector receptacle found on the Steering Angle Sensor (SAS) on the back of the clockspring is dedicated to the inputs and outputs of the SAS.

Like the clockspring in a timepiece, the clockspring tape has travel limits and can be damaged by being wound too tightly during full stop-to-stop steering wheel rotation. To prevent this from occurring, the clockspring is centered when it is installed on the steering column. Centering the clockspring indexes the clockspring tape and the SAS integral to the clockspring to the movable steering components so that the tape can operate within its designed travel limits and the SAS can accurately monitor and communicate steering wheel inputs. However, if the clockspring is removed from the steering column or if the steering shaft is disconnected from the steering gear, the clockspring spool and the SAS can change position relative to the movable steering components and relative to each other. The clockspring must be replaced if proper centering has been compromised or the tape may be damaged and Diagnostic Trouble Codes (DTC) or faults may be set within the SAS.

Service replacement clocksprings are shipped pre-centered and with a plastic locking pin installed. This locking pin should not be removed until the clockspring has been installed on the steering column. If the locking pin is removed before the clockspring is installed on a steering column, the clockspring must be replaced with a new unit. Proper clockspring installation must also be confirmed by viewing the SAS Menu Item, Data Display function using a diagnostic scan tool.

The hard wired clockspring circuits as well as the hard wired inputs and outputs of the SAS may be diagnosed using conventional diagnostic tools and procedures. Refer to the appropriate wiring information. However, conventional diagnostic methods will not prove conclusive in the diagnosis of the SAS or the electronic controls or communication between other modules and devices that provide features of the Electronic Stability Program (ESP) or the Supplemental Restraint System (SRS). The most reliable, efficient, and accurate means to diagnose the SAS or the electronic controls and communication related to ESP or SRS operation requires the use of a diagnostic scan tool. Refer to the appropriate diagnostic information.

STANDARD PROCEDURE

STANDARD PROCEDURE - CLOCKSPRING CENTERING

WARNING: To avoid serious or fatal injury on vehicles equipped with airbags, disable the Supplemental Restraint System (SRS) before attempting any steering wheel, steering column, airbag, seat belt tensioner, impact sensor or

instrument panel component diagnosis or service. Disconnect and isolate the battery negative (ground) cable, then wait two minutes for the system capacitor to discharge before performing further diagnosis or service. This is the only sure way to disable the SRS. Failure to take the proper precautions could result in accidental airbag deployment.

CAUTION: Always turn the steering wheel until the front wheels are in the straight-ahead position. Then, prior to removing the clockspring from the steering column or disconnecting the steering column from the steering gear, lock the steering wheel to the steering column or securely fasten the clockspring rotor to the clockspring case. If clockspring centering has been compromised for ANY reason, the entire clockspring and Steering Angle Sensor (SAS) unit MUST be replaced with a new unit.

Like the clockspring in a timepiece, the clockspring tape has travel limits and can be damaged by being wound too tightly during full stop-to-stop steering wheel rotation. To prevent this from occurring, the clockspring is centered when it is installed on the steering column. Centering the clockspring indexes the clockspring tape and the SAS integral to the clockspring to the movable steering components so that the tape can operate within its designed travel limits and the SAS can accurately monitor and communicate steering wheel inputs. However, if the clockspring is removed from the steering column or if the steering shaft is disconnected from the steering gear, the clockspring spool and the SAS can change position relative to the movable steering components and relative to each other. The clockspring must be replaced if proper centering has been compromised or the tape may be damaged and Diagnostic Trouble Codes (DTC) or faults may be set within the SAS.

Service replacement clocksprings are shipped pre-centered and with a plastic locking pin installed. This locking pin should not be removed until the clockspring has been installed on the steering column. If the locking pin is removed before the clockspring is installed on a steering column, the clockspring must be replaced with a new unit. Proper clockspring installation must also be confirmed by viewing the SAS Menu Item, Data Display function using a diagnostic scan tool.

REMOVAL

REMOVAL

WARNING: To avoid serious or fatal injury on vehicles equipped with airbags, disable the Supplemental Restraint System (SRS) before attempting any steering wheel, steering column, airbag, seat belt tensioner, impact sensor or instrument panel component diagnosis or service. Disconnect and isolate the battery negative (ground) cable, then wait two minutes for the system capacitor to discharge before performing further diagnosis or service. This is the only sure way to disable the SRS. Failure to take the proper precautions could result in accidental airbag deployment.

CAUTION: Always turn the steering wheel until the front wheels are in the straight-ahead position. Then, prior to removing the clockspring from the steering column or disconnecting the steering column from the steering gear, lock

the steering wheel to the steering column or securely fasten the clockspring rotor to the clockspring case. If clockspring centering has been compromised for ANY reason, the entire clockspring and Steering Angle Sensor (SAS) unit MUST be replaced with a new unit.

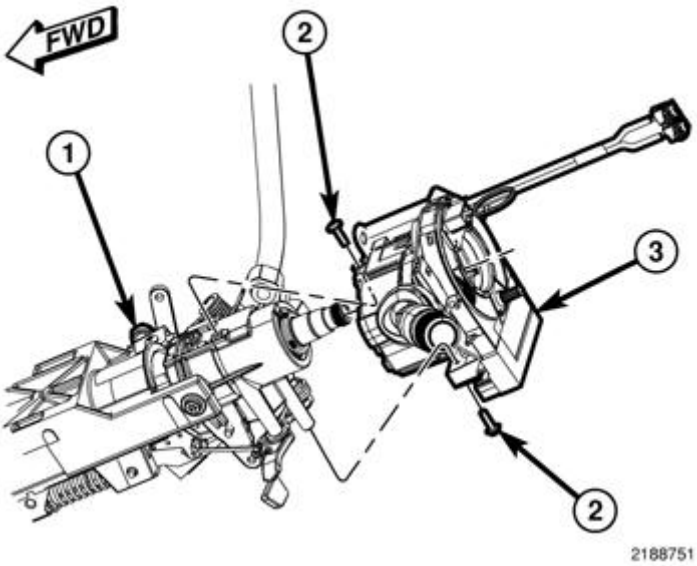

Fig. 60: Clockspring & Steering Column
Courtesy of CHRYSLER GROUP, LLC

1. Place the front wheels in the straight ahead position.
2. Disconnect and isolate the battery negative cable.
3. Remove the driver airbag from the steering wheel. Refer to **AIR BAG, DRIVER, REMOVAL**.
4. Disconnect the steering wheel wire harness connector from the upper clockspring (3) connector receptacle.
5. If equipped, disconnect the clockspring pigtail wire connector for the steering wheel heater element from the steering wheel connector receptacle.
6. Remove the steering wheel from the steering column (1). Refer to **WHEEL, STEERING, REMOVAL** .
7. If the removed clockspring is to be reused, be certain to secure the clockspring rotor to the clockspring case to maintain clockspring centering until it is reinstalled on the steering column. If clockspring centering is not maintained, the clockspring and Steering Angle Sensor (SAS) unit must be replaced with a new unit. Refer to **CLOCKSPRING, STANDARD PROCEDURE**.
8. Remove the upper and lower shrouds from the steering column. Refer to **SHROUD, STEERING COLUMN, REMOVAL** .
9. Remove the two screws (2) that secure the clockspring to the steering column housing.

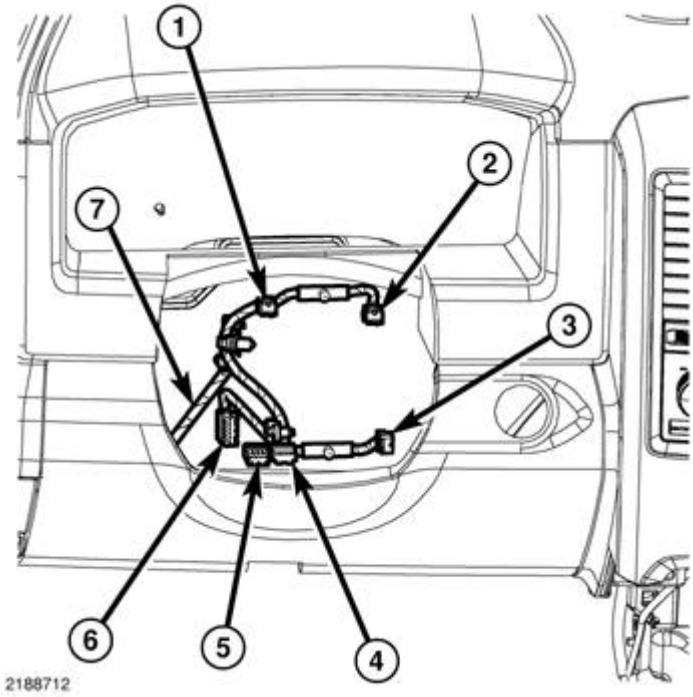

Fig. 61: Instrument Panel Wire Harness Connectors
Courtesy of CHRYSLER GROUP, LLC

10. Pull the clockspring rearward away from the top of the steering column far enough to access and disconnect the following instrument panel wire harness (7) connectors and their wiring retainers from the clockspring, as the vehicle is equipped:
    1. Multi-function switch connector (1)
    2. Heated steering wheel slip ring connector (2)
    3. Steering Angle Sensor (SAS) connector (3)
    4. Two clockspring connectors (4 and 5)
    5. Adjustable pedal switch connector (6).
11. Remove the clockspring from the steering column. The clockspring cannot be repaired. It must be replaced if ineffective, damaged, centering has been compromised or the driver airbag has been deployed.
12. Remove the multi-function switch from the clockspring. Refer to **SWITCH, MULTIFUNCTION, REMOVAL** .
13. Remove the adjustable pedal switch blank filler or switch from the clockspring. Refer to **SWITCH, ADJUSTABLE PEDALS, REMOVAL** .

INSTALLATION

INSTALLATION

WARNING: **To avoid serious or fatal injury on vehicles equipped with airbags, disable the Supplemental Restraint System (SRS) before attempting any steering wheel, steering column, airbag, seat belt tensioner, impact sensor or instrument panel component diagnosis or service. Disconnect and isolate**

the battery negative (ground) cable, then wait two minutes for the system capacitor to discharge before performing further diagnosis or service. This is the only sure way to disable the SRS. Failure to take the proper precautions could result in accidental airbag deployment.

CAUTION: If the clockspring is not properly centered in relation to the Steering Angle Sensor (SAS), steering wheel, steering shaft and steering gear, it may be damaged or Diagnostic Trouble Codes (DTC) may be set in the SAS. Refer to CLOCKSPRING, STANDARD PROCEDURE. Service replacement clocksprings are shipped pre-centered and with a locking pin installed. This locking pin should not be removed until the clockspring has been installed on the steering column.

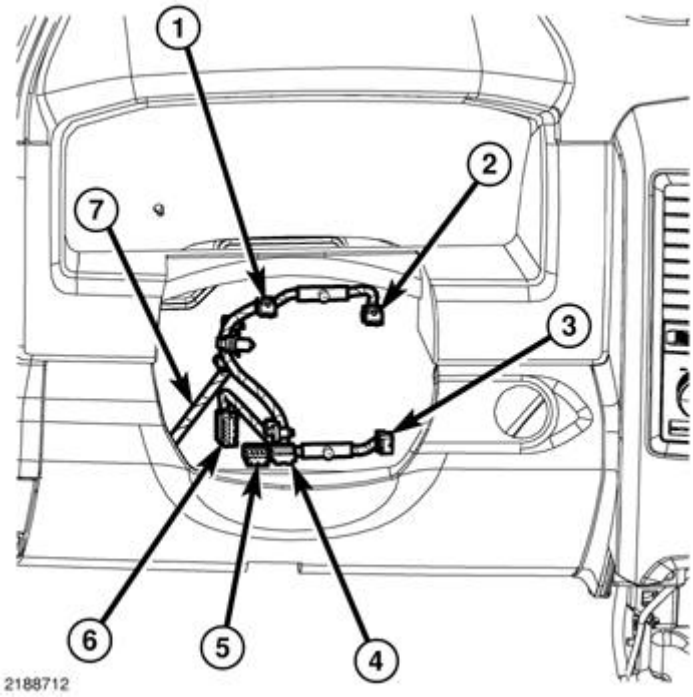

Fig. 62: Instrument Panel Wire Harness Connectors
Courtesy of CHRYSLER GROUP, LLC

1. Reinstall the adjustable pedal switch blank filler or switch onto the clockspring. Refer to **SWITCH, ADJUSTABLE PEDALS, INSTALLATION** .
2. Reinstall the multi-function switch onto the clockspring. Refer to **SWITCH, MULTIFUNCTION, INSTALLATION** .
3. With the centered clockspring rotor and case secured to each other, or with the plastic locking pin installed, carefully slide the clockspring down over the steering column upper shaft far enough to access and reconnect the following instrument panel wire harness (7) connectors and their wiring retainers to the clockspring, as the vehicle is equipped:
    1. Multi-function switch connector (1)
    2. Heated steering wheel slip ring connector (2)

3. Steering Angle Sensor (SAS) connector (3)
4. Two clockspring connectors (4 and 5)
5. Adjustable pedal switch connector (6).

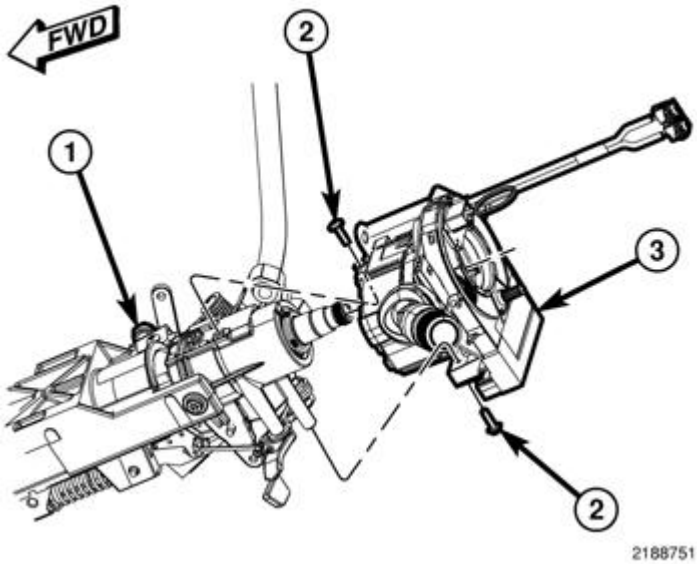

Fig. 63: Clockspring & Steering Column
Courtesy of CHRYSLER GROUP, LLC

4. Position the clockspring (3) onto the steering column housing (1).
5. Install and tighten the two screws (2) that secure the clockspring to the steering column housing. Tighten the screws to 3 N.m (25 in. lbs.).
6. Reinstall the upper and lower shrouds onto the steering column. Refer to **SHROUD, STEERING COLUMN, INSTALLATION** .
7. Remove the plastic locking pin or any other device that is being used to secure the clockspring rotor to the clockspring case to maintain clockspring centering.
8. Reinstall the steering wheel onto the steering column. Refer to **WHEEL, STEERING, INSTALLATION** .

NOTE: **When reinstalling the steering wheel, be certain to index the engagement dowel/drive pin on the upper surface of the clockspring rotor between the two fins cast into the lower surface of the steering wheel armature hub.**

9. If equipped, reconnect the clockspring pigtail wire connector for the steering wheel heater element to the steering wheel connector receptacle.
10. Reconnect the steering wheel wire harness connector to the upper clockspring connector receptacle. Be certain that the steering wheel wire harness is routed between the steering wheel back trim cover and the steering wheel armature.
11. Reinstall the driver airbag onto the steering wheel. Refer to **AIR BAG, DRIVER, INSTALLATION**.
12. Reconnect the battery negative cable.

NOTE: **Proper clockspring installation must also be confirmed by viewing the SAS Menu Item, Data Display function using a diagnostic scan tool.**

CONTROLLER, OCCUPANT RESTRAINT

DESCRIPTION

DESCRIPTION

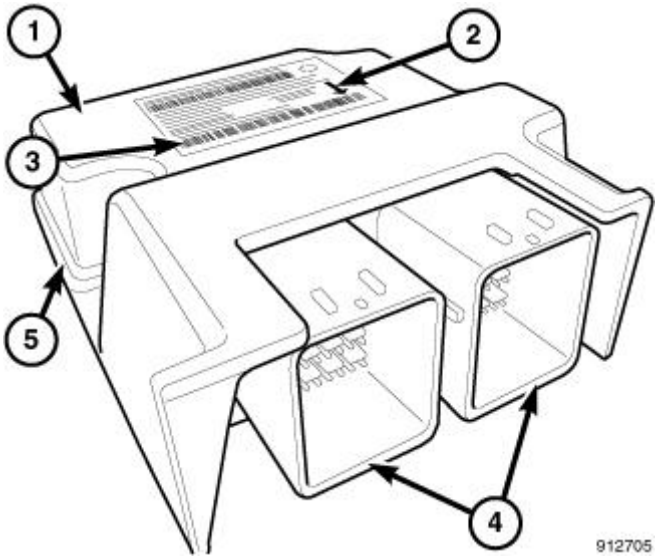

Fig. 64: Occupant Restraint Controller
Courtesy of CHRYSLER GROUP, LLC

The Occupant Restraint Controller (ORC) (1) is located in the passenger compartment of the vehicle, where it is secured by three nuts to three studs on a stamped steel mounting bracket welded onto the top of the floor panel transmission tunnel under the center front seat section or the center floor console, as the vehicle is equipped. Concealed within a hollow in the center of the die cast aluminum ORC housing is the electronic circuitry of the ORC which includes a microprocessor, an electronic impact sensor, an electronic safing sensor, and an energy storage capacitor. A stamped metal cover plate is secured to the bottom of the ORC housing with screws to enclose and protect the internal electronic circuitry and components.

An arrow (2) printed on the label (3) on the top of the ORC housing provides a visual verification of the proper orientation of the unit, and should always be pointed toward the front of the vehicle. The ORC housing has three integral flanges with mounting holes. Two are on the corners oriented towards the left side of the vehicle, and one is near the center of the side facing the right side of the vehicle. A molded plastic electrical connector (4) with two receptacles, each containing up to 32 terminal pins, exits the forward facing side of the ORC housing. These terminal pins connect the ORC to the vehicle electrical system through two dedicated take outs and connectors, one each from the instrument panel and the body wire harnesses.

A molded plastic protective cover is installed over the ORC to provide additional moisture contamination protection to the unit. Integral latch features on each side of the cover engage a slot (5) on each side of the base of the ORC housing to secure the cover to the ORC. This protective cover **must** be reinstalled following any service requiring its removal.

The impact sensor and safing sensor internal to the ORC are calibrated for the specific vehicle, and are only serviced as a unit with the ORC. The ORC cannot be repaired or adjusted and, if damaged or ineffective, it must be replaced.

OPERATION

OPERATION

The microprocessor in the Occupant Restraint Controller (ORC) contains the Supplemental Restraint System (SRS) logic circuits and controls all of the SRS components. The ORC uses On-Board Diagnostics (OBD) and can communicate with other electronic modules in the vehicle as well as with the diagnostic scan tool using the Controller Area Network (CAN) data bus. This method of communication is used for control of the airbag indicator in the ElectroMechanical Instrument Cluster (EMIC) (also known as the Cab Compartment Node/CCN) and for SRS diagnosis and testing through the 16-way Data Link Connector (DLC) located on the driver side lower edge of the instrument panel.

The ORC microprocessor continuously monitors all of the SRS electrical circuits to determine the system readiness. If the ORC detects a monitored system fault, it sets an active and stored Diagnostic Trouble Code (DTC) and sends electronic messages to the EMIC over the CAN data bus to turn ON the airbag indicator. An active fault only remains for the duration of the fault, or in some cases for the duration of the current ignition switch cycle, while a stored fault causes a DTC to be stored in memory by the ORC. For some DTCs, if a fault does not recur for a number of ignition cycles, the ORC will automatically erase the stored DTC. For other internal faults, the stored DTC is latched forever.

The ORC receives battery current through two circuits; a fused ignition switch output (run) circuit through a fuse in the Totally Integrated Power Module (TIPM), and a fused ignition switch output (run-start) circuit through a second fuse in the TIPM. The ORC receives ground through a ground circuit and take out of the instrument panel wire harness that is secured by a ground screw to the body sheet metal. These connections allow the ORC to be operational whenever the ignition switch is in the START or ON positions.

The ORC also contains an energy-storage capacitor. When the ignition switch is in the START or ON positions, this capacitor is continually being charged with enough electrical energy to deploy the SRS components for up to one second following a battery disconnect or failure. The purpose of the capacitor is to provide backup SRS protection in case there is a loss of battery current supply to the ORC during an impact.

Various sensors within the ORC are continuously monitored by the ORC logic. These internal sensors, along with several external impact sensor inputs allow the ORC to determine both the severity of an impact and to verify the necessity for deployment of any SRS components. Two remote front impact sensors are located on the back of the right and left ends of the lower radiator cross member near the front of the vehicle. The electronic impact sensors are accelerometers that sense the rate of vehicle deceleration, which provides verification of the direction and severity of an impact.

The ORC also monitors inputs from an internal rollover sensor and up to six additional remote side impact sensors located within both the left and right front doors, B-pillars and C-pillars to control deployment of the side curtain airbag units and, if equipped, the seat (pelvic and thorax) airbag units.

The impact sensors within the ORC are electronic accelerometer sensors that provide additional logic inputs to the ORC microprocessor. These sensors are used to verify the need for a SRS component deployment by

detecting impact energy of a lesser magnitude than that of the primary electronic impact sensors, and must exceed a safing threshold in order for the SRS components to deploy. A separate impact sensor within the ORC provides confirmation to the ORC microprocessor of side impact forces. This separate sensor is a bi-directional unit that detects impact forces from either side of the vehicle.

Pre-programmed decision algorithms in the ORC microprocessor determine when the deceleration rate as signaled by the impact sensors indicate an impact that is severe enough to require SRS protection and, based upon the severity of the monitored impact, determines the level of front airbag deployment force required for each front seating position. When the programmed conditions are met, the ORC sends the proper electrical signals to deploy the dual multistage front airbags at the programmed force levels, the front seat belt tensioners and either side curtain or seat airbag unit.

The hard wired inputs and outputs for the ORC may be diagnosed using conventional diagnostic tools and procedures. Refer to the appropriate wiring information. However, conventional diagnostic methods will not prove conclusive in the diagnosis of the ORC or the electronic controls or communication between other modules and devices that provide features of the SRS. The most reliable, efficient, and accurate means to diagnose the ORC or the electronic controls and communication related to SRS operation requires the use of a diagnostic scan tool. Refer to the appropriate diagnostic information.

REMOVAL

MODULE

WARNING: **To avoid serious or fatal injury on vehicles equipped with airbags, disable the Supplemental Restraint System (SRS) before attempting any steering wheel, steering column, airbag, seat belt tensioner, impact sensor or instrument panel component diagnosis or service. Disconnect and isolate the battery negative (ground) cable, then wait two minutes for the system capacitor to discharge before performing further diagnosis or service. This is the only sure way to disable the SRS. Failure to take the proper precautions could result in accidental airbag deployment.**

WARNING: **To avoid serious or fatal injury, never strike or drop the Occupant Restraint Controller (ORC) as it can damage the impact sensor or affect its calibration. The ORC contains the impact sensor, which enables the system to deploy the Supplemental Restraint System (SRS) components. If an ORC is accidentally dropped during service, the module must be scrapped and replaced with a new unit. Failure to observe this warning could result in accidental, incomplete or improper SRS component deployment.**

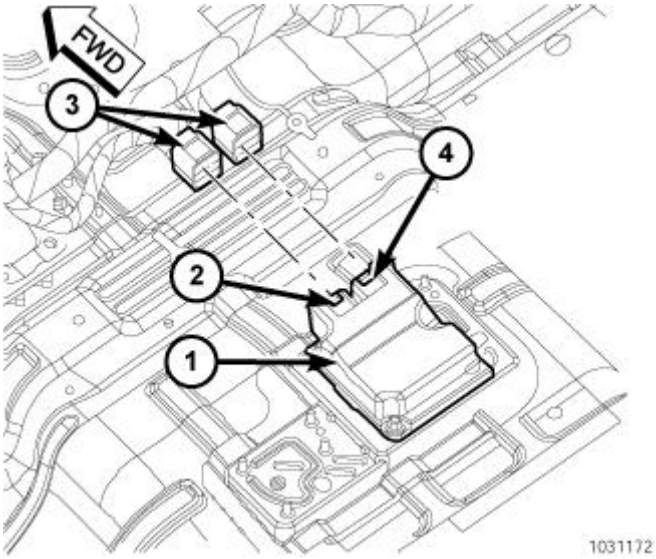

Fig. 65: Occupant Restraint Controller & Connectors
Courtesy of CHRYSLER GROUP, LLC

1. Disconnect and isolate the battery negative cable. Wait two minutes for the system capacitor to discharge before further service.
2. Remove the protective cover from the Occupant Restraint Controller (ORC) (1). Refer to **CONTROLLER, OCCUPANT RESTRAINT, REMOVAL**.
3. Disconnect the instrument panel and body wire harness connectors (3) for the ORC from the ORC connector receptacles (2 and 4) located on the forward facing side of the module. To disconnect the connectors from the ORC:
    1. Slide the red Connector Position Assurance (CPA) lock on the top of the connector to the side.
    2. Depress the edge of the CPA lock closest to the ORC to release the connector latch tab and pull the connector straight away from the ORC connector receptacle.

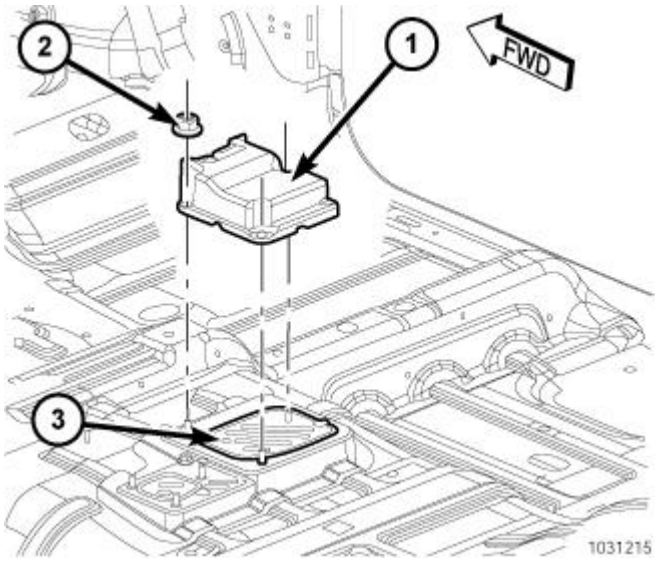

Fig. 66: Occupant Restraint Controller, Mount & Nuts

Courtesy of CHRYSLER GROUP, LLC

4. Remove the three nuts (2) that secure the ORC (1) to the studs of the ORC mount (3) welded onto the top of the floor panel transmission tunnel.
5. Remove the ORC from the ORC mount.

COVER

WARNING: To avoid serious or fatal injury on vehicles equipped with airbags, disable the Supplemental Restraint System (SRS) before attempting any steering wheel, steering column, airbag, seat belt tensioner, impact sensor or instrument panel component diagnosis or service. Disconnect and isolate the battery negative (ground) cable, then wait two minutes for the system capacitor to discharge before performing further diagnosis or service. This is the only sure way to disable the SRS. Failure to take the proper precautions could result in accidental airbag deployment.

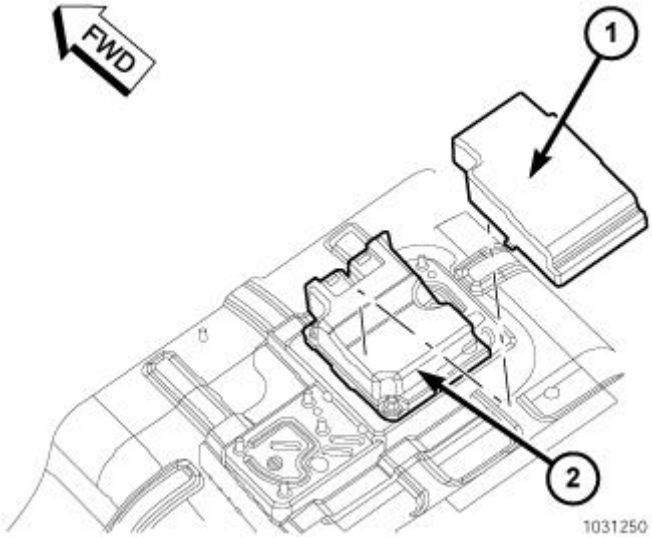

Fig. 67: Occupant Restraint Controller & Cover
Courtesy of CHRYSLER GROUP, LLC

1. Disconnect and isolate the battery negative cable. Wait two minutes for the system capacitor to discharge before further service.
2. On vehicles equipped with front bucket seats, remove the front floor console from the vehicle. Refer to **CONSOLE, FLOOR, REMOVAL** .

NOTE: The front bench seat assembly must be unfastened from the floor panel, but need not be removed from the vehicle for access to the Occupant Restraint Controller (ORC) cover for service.

3. On vehicles equipped with a front bench seat, detach the front seat from the floor panel. Refer to **SEAT, FRONT, REMOVAL** and **SEAT, FRONT CENTER, REMOVAL** .

4. Using a trim stick or another suitable wide flat-bladed tool, gently pry the latch feature on either side of the ORC cover (1) away from the base of the ORC (2) far enough to disengage the cover from the module.
5. Remove the ORC cover from over the ORC.

INSTALLATION

MODULE

WARNING: To avoid serious or fatal injury on vehicles equipped with airbags, disable the Supplemental Restraint System (SRS) before attempting any steering wheel, steering column, airbag, seat belt tensioner, impact sensor or instrument panel component diagnosis or service. Disconnect and isolate the battery negative (ground) cable, then wait two minutes for the system capacitor to discharge before performing further diagnosis or service. This is the only sure way to disable the SRS. Failure to take the proper precautions could result in accidental airbag deployment.

WARNING: To avoid serious or fatal injury, never strike or drop the Occupant Restraint Controller (ORC) as it can damage the impact sensor or affect its calibration. The ORC contains the impact sensor, which enables the system to deploy the Supplemental Restraint System (SRS) components. If an ORC is accidentally dropped during service, the module must be scrapped and replaced with a new unit. Failure to observe this warning could result in accidental, incomplete or improper SRS component deployment.

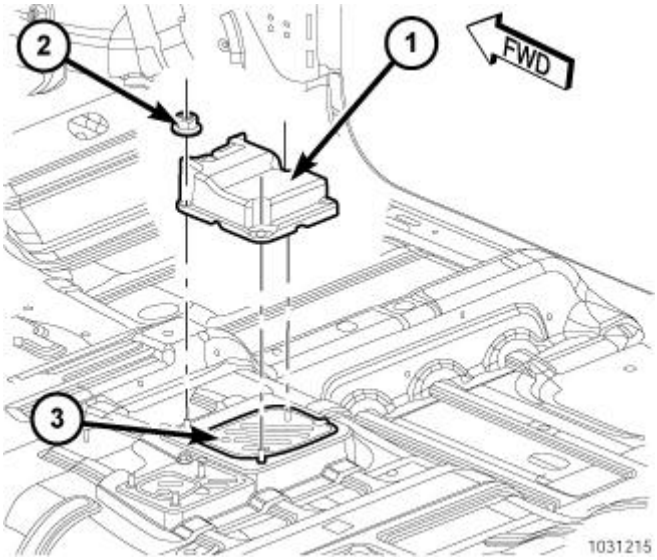

Fig. 68: Occupant Restraint Controller, Mount & Nuts
Courtesy of CHRYSLER GROUP, LLC

1. Position the Occupant Restraint Controller (ORC) (1) over the three studs of the ORC mount (3) welded

onto the top of the floor panel transmission tunnel. When the ORC is correctly positioned, the arrow on the ORC label will be pointed forward in the vehicle.

2. Install and tighten the three nuts (2) that secure the ORC to the studs of the ORC mount that is welded onto the floor panel transmission tunnel. Tighten the nuts to 12 N.m (9 ft. lbs.).

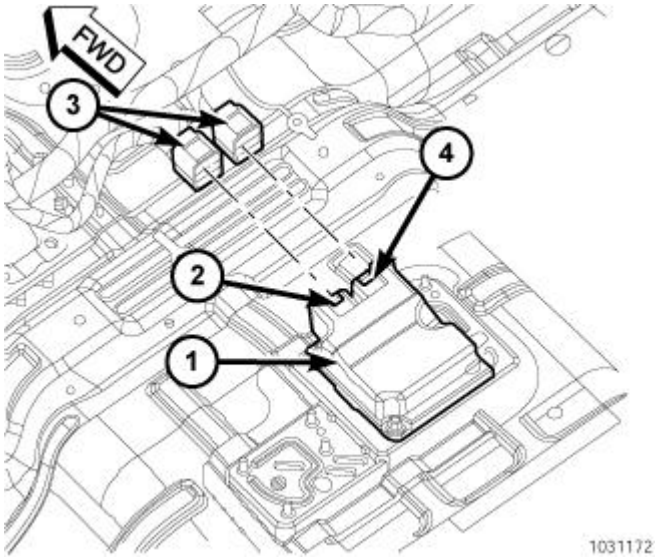

Fig. 69: Occupant Restraint Controller & Connectors
Courtesy of CHRYSLER GROUP, LLC

3. Reconnect the instrument panel and body wire harness connectors (3) for the ORC (1) to the ORC connector receptacles (2 and 4) located on the forward facing side of the module. Be certain that the latches and the red Connector Position Assurance (CPA) locks on both connectors are each fully engaged.
4. Reinstall the ORC cover onto the ORC. Refer to **CONTROLLER, OCCUPANT RESTRAINT, INSTALLATION**.
5. Do not reconnect the battery negative cable at this time. The Supplemental Restraint System (SRS) Verification Test procedure should be performed following service of any SRS component. Refer to **STANDARD PROCEDURE**.

COVER

WARNING: **To avoid serious or fatal injury on vehicles equipped with airbags, disable the Supplemental Restraint System (SRS) before attempting any steering wheel, steering column, airbag, seat belt tensioner, impact sensor or instrument panel component diagnosis or service. Disconnect and isolate the battery negative (ground) cable, then wait two minutes for the system capacitor to discharge before performing further diagnosis or service. This is the only sure way to disable the SRS. Failure to take the proper precautions could result in accidental airbag deployment.**

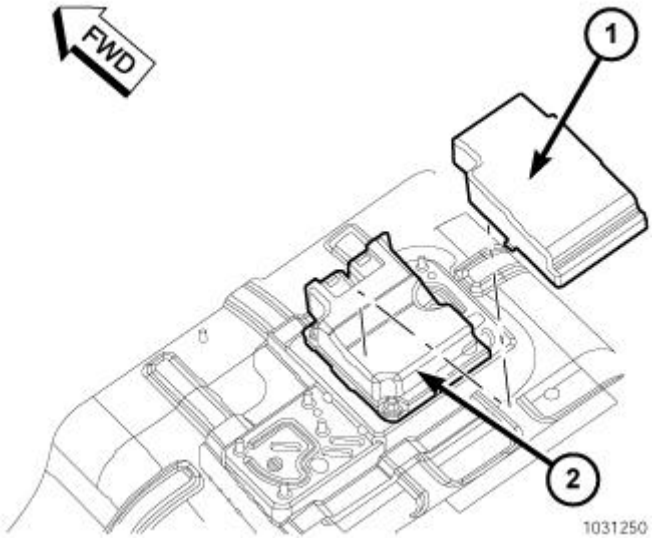

Fig. 70: Occupant Restraint Controller & Cover
Courtesy of CHRYSLER GROUP, LLC

1. Position the ORC cover (1) over the Occupant Restraint Controller (ORC) (2).
2. Align the latch feature on each side of the ORC cover with the notch in each side at the base of the ORC housing.
3. Using hand pressure, press firmly and evenly downward on the ORC cover until each latch feature is fully engaged with the ORC housing.
4. On vehicles equipped with a front bench seat, reinstall the front seat onto the floor panel. Refer to **SEAT, FRONT, INSTALLATION** and **SEAT, FRONT CENTER, INSTALLATION** .
5. On vehicles equipped with front bucket seats, reinstall the front floor console into the vehicle. Refer to **CONSOLE, FLOOR, INSTALLATION** .
6. Reconnect the battery negative cable.

RETRACTOR, SEAT BELT

DESCRIPTION

DESCRIPTION

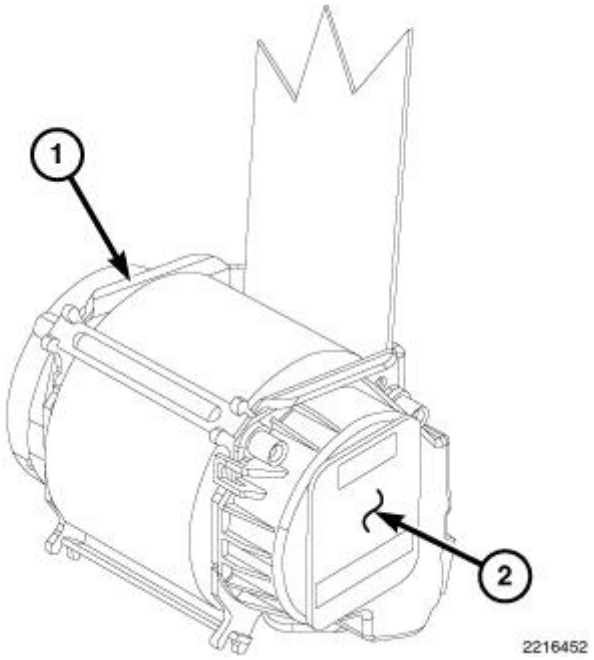

Fig. 71: Seat Belt Retractor
Courtesy of CHRYSLER GROUP, LLC

The seat belt retractors (1) used in all seating positions include an inertia-type, emergency locking mechanism as standard equipment. However, the retractor locking mechanisms for all seating positions except the driver side front position are mechanically switchable from an Emergency Locking Retractor (ELR) to an Automatic Locking Retractor (ALR). The primary function of this feature is to securely accommodate a child seat in any seating position of the vehicle without the need for a self-cinching seat belt tip half latch plate unit or another supplemental device that would be required to prevent the seat belt webbing from unwinding freely from the retractor spool of an inertia-type emergency locking retractor mechanism.

The emergency and automatic locking mechanisms are integral to the seat belt and retractor unit and are concealed beneath a molded plastic cover (2) located on one side of the retractor spool. These locking mechanisms cannot be adjusted or repaired and, if ineffective or damaged, the entire seat belt and retractor unit must be replaced.

OPERATION

OPERATION

The locked mode of the Automatic Locking Retractor (ALR) is engaged and the retractor is switched from operating as a standard inertia-type Emergency Locking Retractor (ELR) by first buckling the combination lap and shoulder belt buckle. Then grasp the shoulder belt and pull all of the webbing out of the retractor. Once all of the belt webbing is extracted from the spool, the retractor will automatically become engaged in the pre-locked automatic locking mode and will make a light, audible clicking or ratcheting sound as the shoulder belt is allowed to retract to confirm that the automatic locking mode is now engaged. Once the automatic locking mode is engaged, the retractor will remain locked and the belt will remain tight around whatever it is restraining.

The retractor is returned to standard emergency locking (inertia) mode by unbuckling the combination lap and shoulder belt buckle and allowing the belt webbing to be almost fully retracted onto the retractor spool. The emergency locking mode is confirmed by the absence of the light, audible clicking or ratcheting sound as the belt webbing retracts. This mode will allow the belt to unwind from and wind onto the retractor spool freely unless and until a predetermined inertia load is sensed, or until the retractor is again switched to the automatic locking mode.

REMOVAL

CENTER - STANDARD CAB

WARNING: To avoid serious or fatal injury during and following any seat belt or child restraint anchor service, carefully inspect all seat belts, buckles, mounting hardware, retractors, tether straps, and anchors for proper installation, operation, or damage. Replace any belt that is cut, frayed, or torn. Straighten any belt that is twisted. Tighten any loose fasteners. Replace any belt that has a damaged or ineffective buckle or retractor. Replace any belt that has a bent or damaged latch plate or anchor plate. Replace any child restraint anchor or the unit to which the anchor is integral that has been bent or damaged. Never attempt to repair a seat belt or child restraint component. Always replace damaged or ineffective seat belt and child restraint components with the correct, new and unused replacement parts listed in the Chrysler Mopar® Parts Catalog. Failure to follow these instructions may result in possible serious or fatal injury.

NOTE: A front center three-point seat belt and retractor is used only on standard cab vehicles. Quad or crew cab and mega cab vehicles with a front bench seat have a two-point lap belt in the front center seating position. Refer to BUCKLE, SEAT BELT, REMOVAL.

NOTE: All seat belt retractors except the driver side front retractor include a switchable automatic locking mechanism. Refer to RETRACTOR, SEAT BELT, DESCRIPTION.

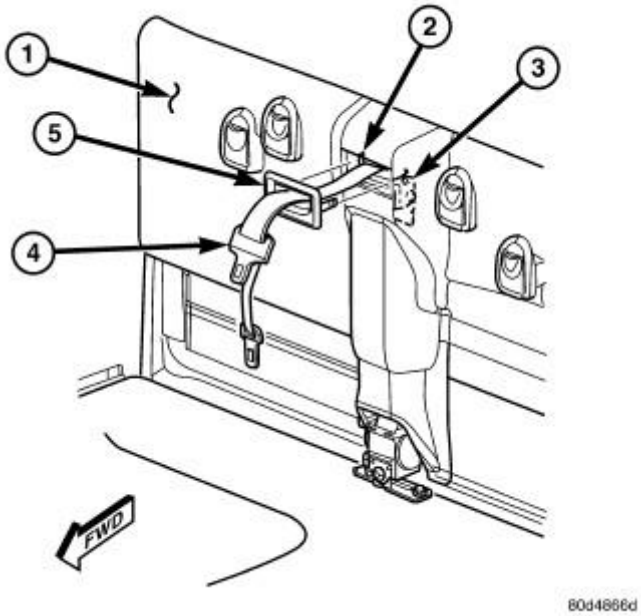

Fig. 72: Front Center Seat Belt, Bezel & Trim Panel
Courtesy of CHRYSLER GROUP, LLC

1. Reach between the center of the front seat cushion and front seat back to access and unbuckle the front center seat belt lower anchor latch plate from the unique black, keyed lower anchor buckle. Use an ignition key or a small screwdriver to depress the small white release button on the anchor buckle.
2. Move the front seat to its most forward position for easiest access to the front center seat belt and retractor unit.
3. Remove the stowage tray from the rear floor panel behind the seat. Refer to **BIN, STORAGE, REMOVAL** .
4. Using a trim stick or another suitable wide flat-bladed tool, gently pry at each side of the front center seat belt bezel (5) on the cab back trim panel (1) to release the snap features that secure the bezel to the panel.
5. Remove the bezel from the webbing of the front center seat belt (4).
6. Remove the trim from the cab back panel. Refer to **PANEL, CAB BACK TRIM, REMOVAL** .

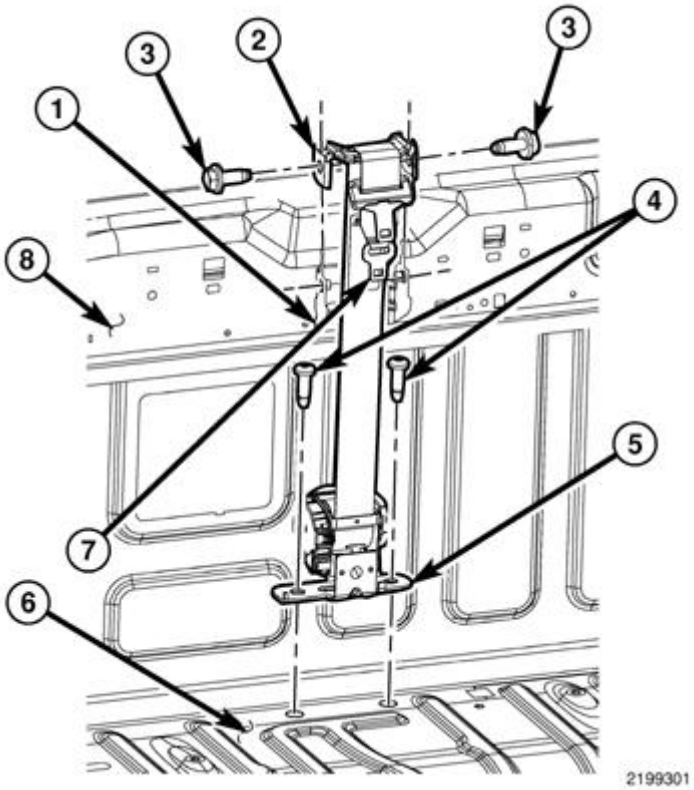

Fig. 73: Front Center Seat Belt, Brackets, Panel & Screws
Courtesy of CHRYSLER GROUP, LLC

7. Remove the two screws (3) that secure the belt bracket (2) of the front center seat belt (7) to the body bracket (1) on the upper cab back panel (8) reinforcement.
8. Remove the belt bracket of the front center seat belt from the body bracket on the upper cab back panel reinforcement.
9. Remove the two screws (4) that secure the front center seat belt retractor bracket (5) to the floor panel (6) near the base of the cab back panel.
10. Remove the front center seat belt and retractor unit from the floor panel.

FRONT OUTBOARD - EXCEPT STANDARD CAB

WARNING: **To avoid serious or fatal injury on vehicles equipped with airbags, disable the Supplemental Restraint System (SRS) before attempting any steering wheel, steering column, airbag, seat belt tensioner, impact sensor or instrument panel component diagnosis or service. Disconnect and isolate the battery negative (ground) cable, then wait two minutes for the system capacitor to discharge before performing further diagnosis or service. This is the only sure way to disable the SRS. Failure to take the proper precautions could result in accidental airbag deployment.**

WARNING: **To avoid serious or fatal injury during and following any seat belt or child restraint anchor service, carefully inspect all seat belts, buckles,**

mounting hardware, retractors, tether straps, and anchors for proper installation, operation, or damage. Replace any belt that is cut, frayed, or torn. Straighten any belt that is twisted. Tighten any loose fasteners. Replace any belt that has a damaged or ineffective buckle or retractor. Replace any belt that has a bent or damaged latch plate or anchor plate. Replace any child restraint anchor or the unit to which the anchor is integral that has been bent or damaged. Never attempt to repair a seat belt or child restraint component. Always replace damaged or ineffective seat belt and child restraint components with the correct, new and unused replacement parts listed in the Chrysler Mopar® Parts Catalog. Failure to follow these instructions may result in possible serious or fatal injury.

NOTE: **The following procedure is for replacement of an ineffective or damaged seat belt and retractor unit. The front outboard retractors also include a seat belt tensioner. If the front seat belt or retractor is ineffective or damaged, but the seat belt tensioner is not deployed, review the recommended procedures for Handling Non-Deployed Supplemental Restraints. Refer to STANDARD PROCEDURE. If the seat belt tensioner has been deployed, review the recommended procedures for Service After A Supplemental Restraint Deployment before removing the unit from the vehicle. .**

NOTE: **All seat belt retractors except the driver side front retractor include a switchable automatic locking mechanism. Refer to RETRACTOR, SEAT BELT, DESCRIPTION.**

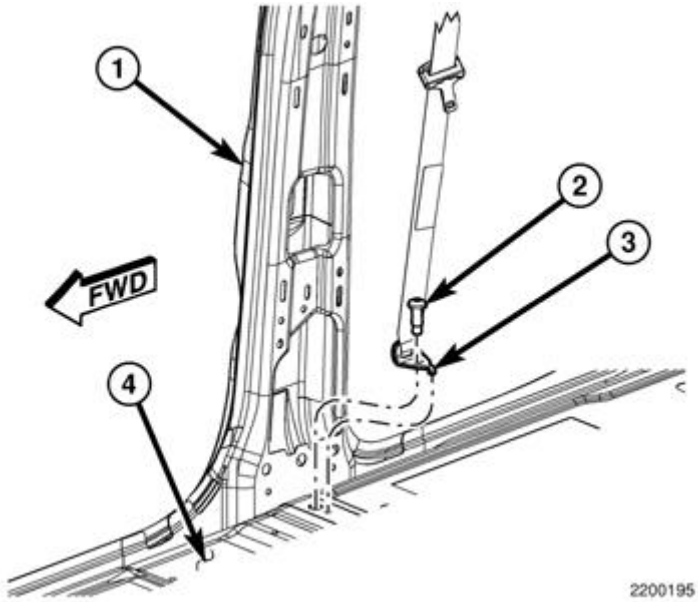

Fig. 74: Front Seat Belt Lower Anchor
Courtesy of CHRYSLER GROUP, LLC

1. Adjust the front seat to its most forward position for easiest access to the front seat belt lower anchor (3)

and the lower B-pillar trim.

2. Disconnect and isolate the battery negative cable. Wait two minutes for the system capacitor to discharge before further service.
3. On the passenger side only, remove the trim cover from the front seat riser as necessary to access the front seat belt lower anchor. Refer to **SEAT, FRONT, REMOVAL** .
4. Remove the screw (2) that secures the lower anchor (3) to the floor panel (4) near the base of the B-pillar (1).

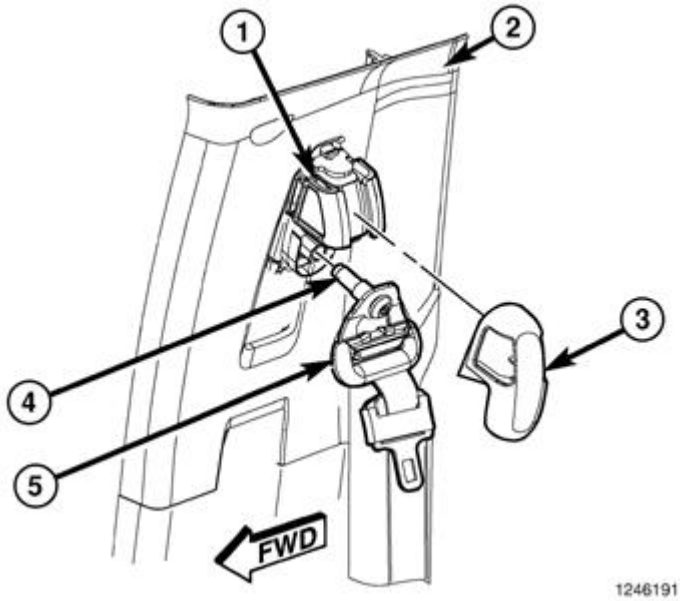

Fig. 75: Seat Belt Turning Loop Height Adjuster
Courtesy of CHRYSLER GROUP, LLC

5. Firmly grasp the top of the trim cover (3) for the front seat belt turning loop height adjuster (1) on the inside of the upper B-pillar and pull it away from the height adjuster far enough unsnap it, then disengage the lower snap features of the trim cover from the adjuster and discard. The trim cover is a one time component and is not intended for reuse.
6. Remove the screw (4) that secures the seat belt turning loop (5) to the height adjuster on the upper B-pillar.
7. Remove the seat belt turning loop from the height adjuster.
8. Remove the lower trim from the inside of the B-pillar. Refer to **PANEL, B-PILLAR TRIM, LOWER, REMOVAL** .

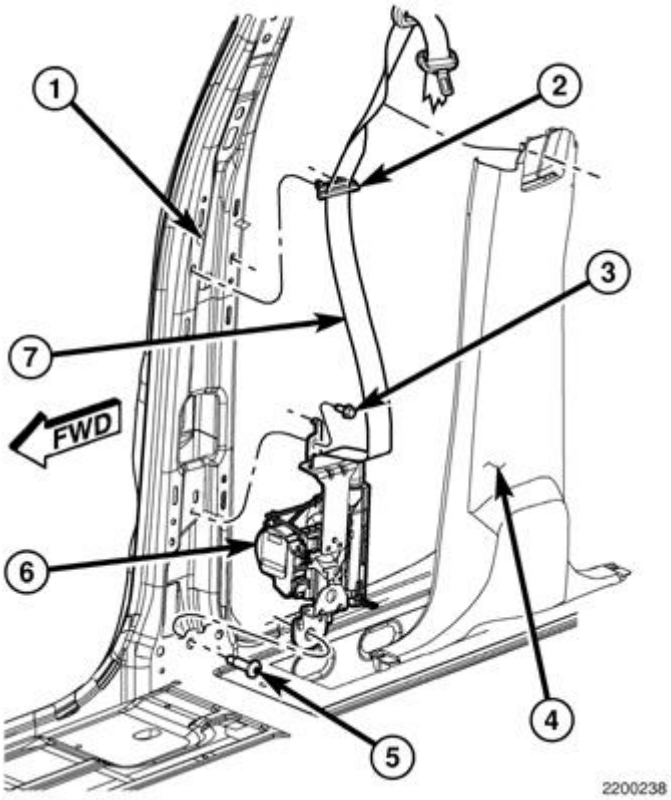

Fig. 76: Upper & Lower Retractor Bracket Screws
Courtesy of CHRYSLER GROUP, LLC

9. Disengage the two clips that secure the belt web guide (2) to the B-pillar (1).
10. Remove the screw (3) that secures the upper retractor (6) bracket to the B-pillar.
11. Remove the screw (5) that secures the lower retractor bracket to the B-pillar.
12. Disengage the locating tab on the upper retractor bracket from the clearance hole in the inner B-pillar.

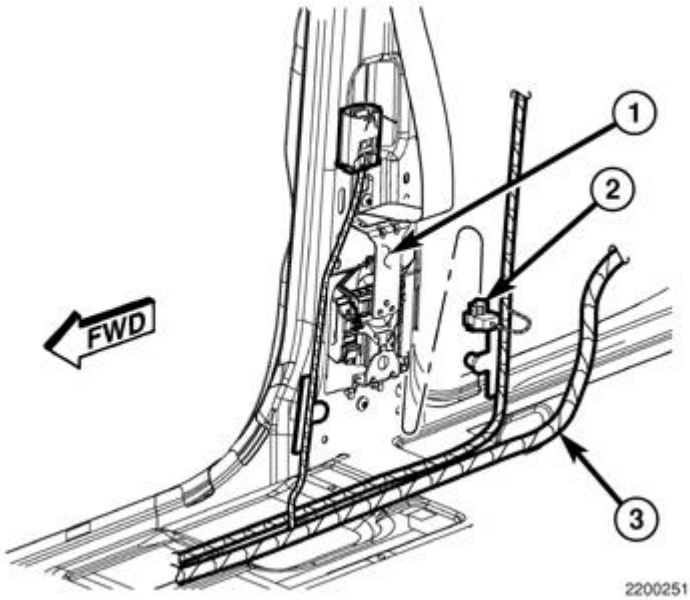

Fig. 77: Seat Belt Tensioner Initiator, Connector & Harness
Courtesy of CHRYSLER GROUP, LLC

13. Disconnect the yellow connector (2) of the body wire harness (3) from the seat belt tensioner initiator on the retractor (1).
14. Remove the front outboard seat belt and retractor from the vehicle as a unit.

OUTBOARD - STANDARD CAB

WARNING: **To avoid serious or fatal injury on vehicles equipped with airbags, disable the Supplemental Restraint System (SRS) before attempting any steering wheel, steering column, airbag, seat belt tensioner, impact sensor or instrument panel component diagnosis or service. Disconnect and isolate the battery negative (ground) cable, then wait two minutes for the system capacitor to discharge before performing further diagnosis or service. This is the only sure way to disable the SRS. Failure to take the proper precautions could result in accidental airbag deployment.**

WARNING: **To avoid serious or fatal injury during and following any seat belt or child restraint anchor service, carefully inspect all seat belts, buckles, mounting hardware, retractors, tether straps, and anchors for proper installation, operation, or damage. Replace any belt that is cut, frayed, or torn. Straighten any belt that is twisted. Tighten any loose fasteners. Replace any belt that has a damaged or ineffective buckle or retractor. Replace any belt that has a bent or damaged latch plate or anchor plate. Replace any child restraint anchor or the unit to which the anchor is integral that has been bent or damaged. Never attempt to repair a seat belt or child restraint component. Always replace damaged or ineffective seat belt and child restraint components with the correct, new and unused replacement parts listed in the Chrysler Mopar® Parts Catalog. Failure to follow these instructions may result in possible serious or fatal injury.**

NOTE: **The following procedure is for replacement of an ineffective or damaged seat belt and retractor unit. The front outboard retractors also include a seat belt tensioner. If the front seat belt or retractor is ineffective or damaged, but the seat belt tensioner is not deployed, review the recommended procedures for Handling Non-Deployed Supplemental Restraints. Refer to STANDARD PROCEDURE. If the seat belt tensioner has been deployed, review the recommended procedures for Service After A Supplemental Restraint Deployment before removing the unit from the vehicle. .**

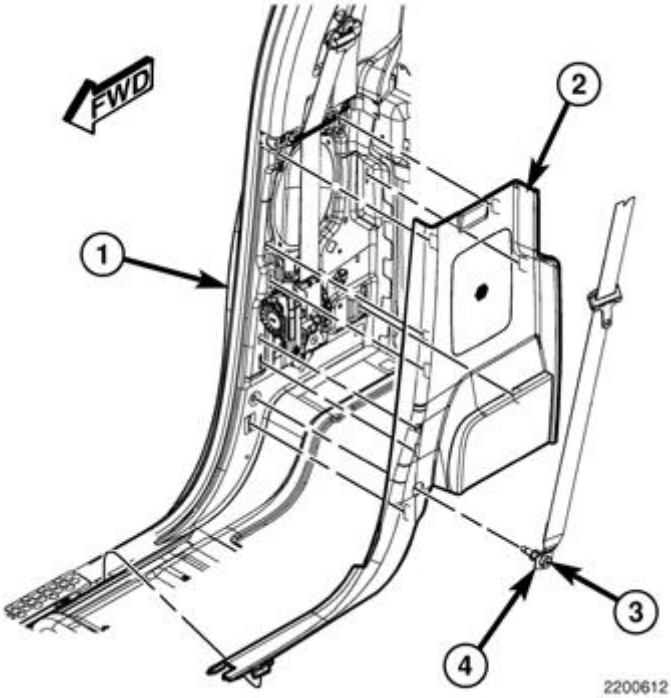

Fig. 78: Lower B-Pillar Trim
Courtesy of CHRYSLER GROUP, LLC

1. Adjust the front seat to its most forward position for easiest access to the front seat belt lower anchor (4) and the lower B-pillar trim (2).
2. Disconnect and isolate the battery negative cable. Wait two minutes for the system capacitor to discharge before further service.
3. Remove the screw (3) that secures the lower anchor to the inner B-pillar (1).
4. Remove the lower trim from the inside of the B-pillar. Refer to **PANEL, B-PILLAR TRIM, LOWER, REMOVAL** .
5. Grasp the upper edge of the lower anchor cover and pull upward to unsnap it from the front seat cushion outboard side shield.

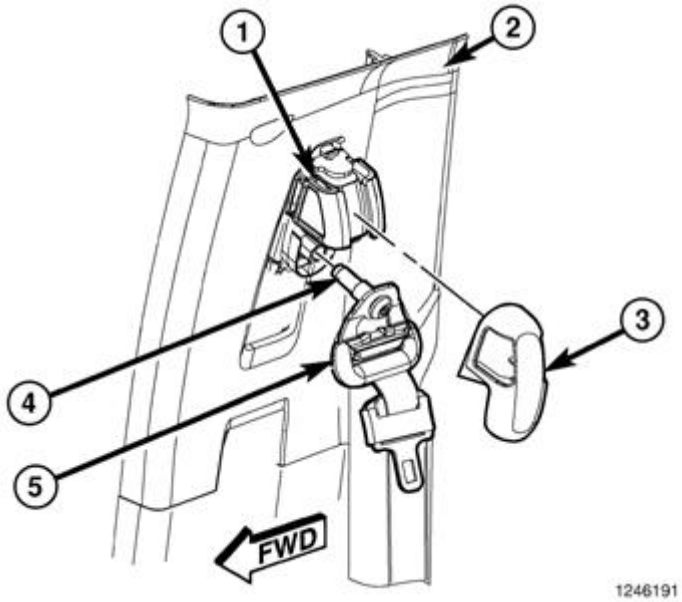

Fig. 79: Seat Belt Turning Loop Height Adjuster
Courtesy of CHRYSLER GROUP, LLC

6. Firmly grasp the top of the trim cover (3) for the front seat belt turning loop height adjuster (1) on the inside of the upper B-pillar and pull it away from the height adjuster far enough unsnap it, then disengage the lower snap features of the trim cover from the adjuster and discard. The trim cover is a one time component and is not intended for reuse.
7. Remove the screw (4) that secures the seat belt turning loop (5) to the height adjuster on the upper B-pillar.
8. Remove the seat belt turning loop from the height adjuster.

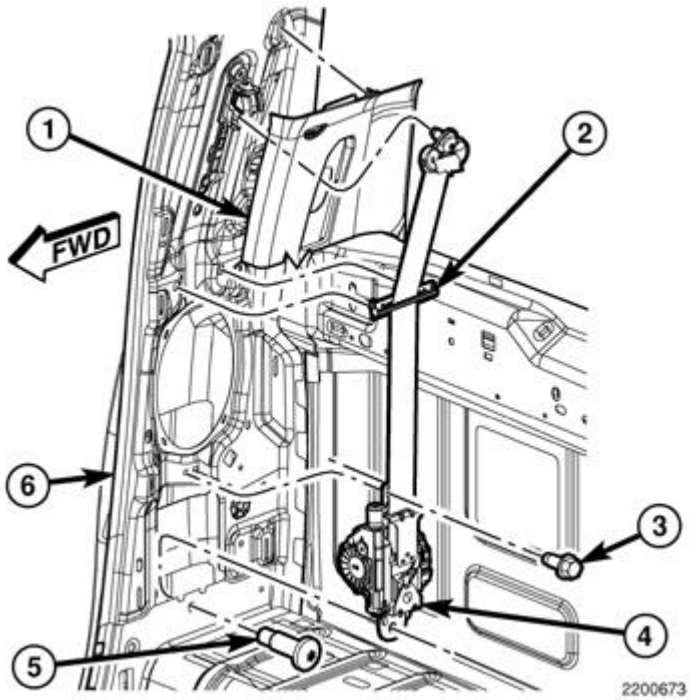

Fig. 80: Upper & Lower Retractor Bracket Screws (Standard Cab)
Courtesy of CHRYSLER GROUP, LLC

9. Disengage the two clips that secure the belt web guide (2) to the B-pillar (6).
10. Remove the screw (3) that secures the upper retractor (4) bracket to the B-pillar.
11. Remove the screw (5) that secures the lower retractor bracket to the B-pillar.
12. Disengage the locating tab on the upper retractor bracket from the clearance hole in the inner B-pillar.
13. Remove the front outboard seat belt and retractor from the B-pillar as a unit.

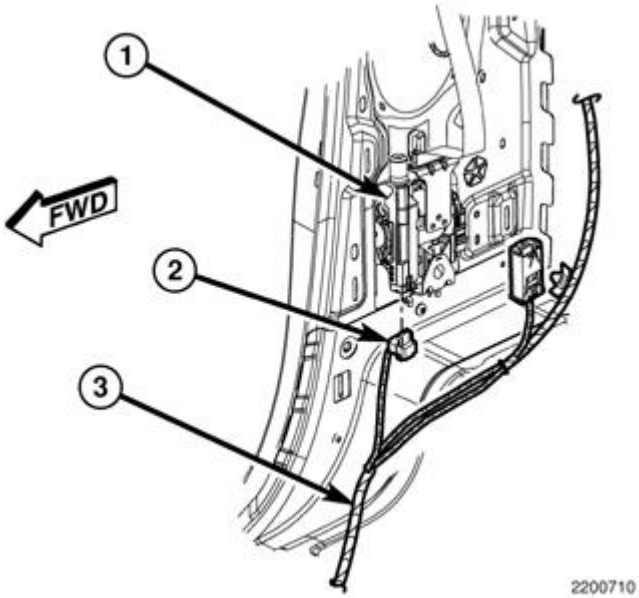

Fig. 81: Seat Belt Tensioner Initiator
Courtesy of CHRYSLER GROUP, LLC

14. Disconnect the yellow connector (2) of the body wire harness (3) from the seat belt tensioner initiator on the retractor (1).
15. Remove the front outboard seat belt and retractor from the vehicle as a unit.

REAR CENTER - MEGA CAB

WARNING: **To avoid serious or fatal injury during and following any seat belt or child restraint anchor service, carefully inspect all seat belts, buckles, mounting hardware, retractors, tether straps, and anchors for proper installation, operation, or damage. Replace any belt that is cut, frayed, or torn. Straighten any belt that is twisted. Tighten any loose fasteners. Replace any belt that has a damaged or ineffective buckle or retractor. Replace any belt that has a bent or damaged latch plate or anchor plate. Replace any child restraint anchor or the unit to which the anchor is integral that has been bent or damaged. Never attempt to repair a seat belt or child restraint component. Always replace damaged or ineffective seat belt and child restraint components with the correct, new and**

unused replacement parts listed in the Chrysler Mopar® Parts Catalog. Failure to follow these instructions may result in possible serious or fatal injury.

NOTE: **All seat belt retractors except the driver side front retractor include a switchable automatic locking mechanism. Refer to RETRACTOR, SEAT BELT, DESCRIPTION.**

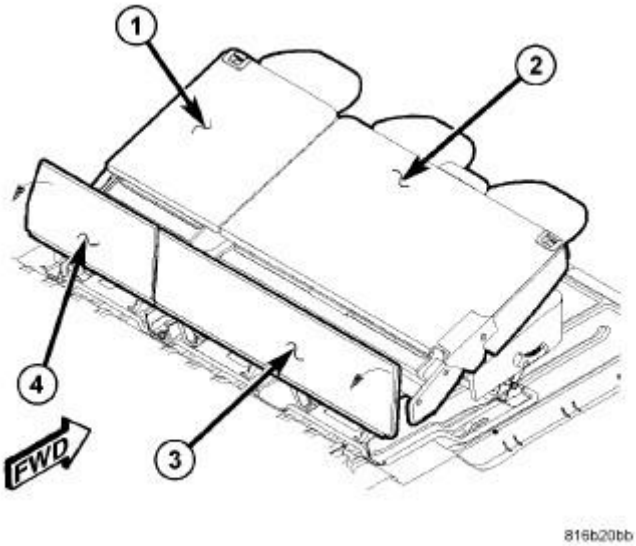

Fig. 82: Accessing Rear Center & Outboard Buckle Bracket - Mega Cab
Courtesy of CHRYSLER GROUP, LLC

1. Fold the 60 percent section of the rear seat back (2) down onto the seat cushion in the cargo storage position, then lift and prop open the seat back filler panel (3) as necessary for easiest access to the rear center seat belt lower anchor and right outboard buckle anchor bracket.

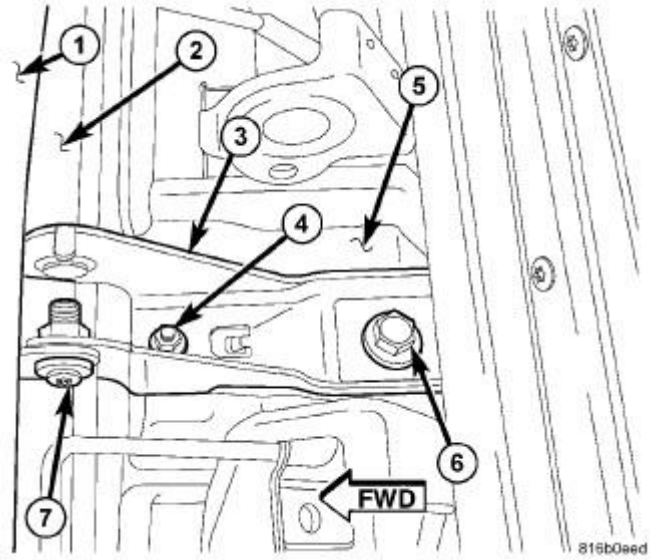

Fig. 83: Identifying Seat Back, Seat Cushion, Anchor Bracket, Nut, Rear Mounting Bracket, & Screw
Courtesy of CHRYSLER GROUP, LLC

2. Remove the screw (7) that secures the center seat belt lower anchor to the anchor bracket (3) and, from the front of the seat back, pull the belt lower anchor out from between the seat back (1) and the seat cushion (2).

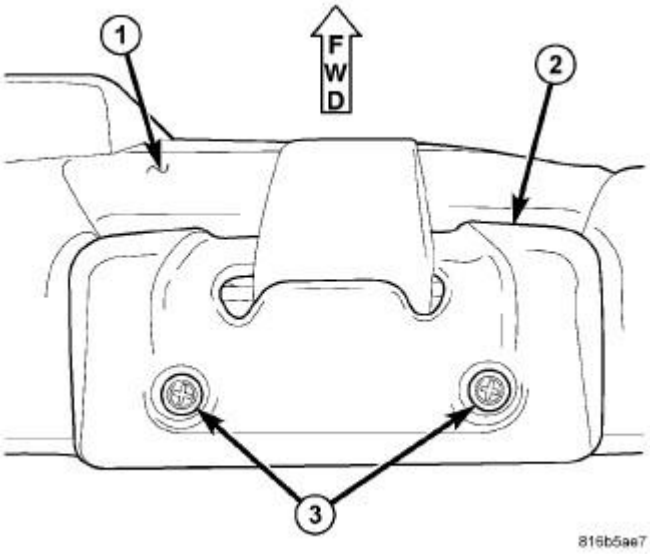

Fig. 84: Rear Seat Back & Bezel
Courtesy of CHRYSLER GROUP, LLC

3. Remove the two screws (3) that secure the bezel (2) to the top of the 60 percent section of the rear seat back (1).
4. Remove the bezel from the webbing of the rear center seat belt.

5. Remove the trim cover from the 60 percent section of the rear seat back. Refer to **COVER, SEAT BACK, MEGA CAB REAR, REMOVAL** .

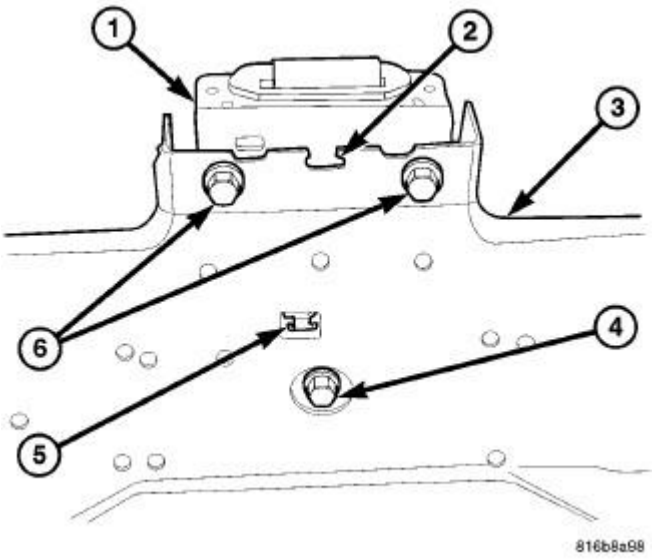

Fig. 85: Seat Back Frame, Belt Bracket & Screws
Courtesy of CHRYSLER GROUP, LLC

6. Remove the two screws (6) that secure the belt bracket (1) of the rear center seat belt to the top of the seat back frame (3).
7. Disengage the belt bracket of the rear center seat belt from the seat back frame.
8. Remove the screw (4) that secures the rear center seat belt retractor to the seat back frame.
9. Remove the seat belt and retractor from the rear seat back as a unit.

REAR CENTER - QUAD OR CREW CAB

WARNING: **To avoid serious or fatal injury during and following any seat belt or child restraint anchor service, carefully inspect all seat belts, buckles, mounting hardware, retractors, tether straps, and anchors for proper installation, operation, or damage. Replace any belt that is cut, frayed, or torn. Straighten any belt that is twisted. Tighten any loose fasteners. Replace any belt that has a damaged or ineffective buckle or retractor. Replace any belt that has a bent or damaged latch plate or anchor plate. Replace any child restraint anchor or the unit to which the anchor is integral that has been bent or damaged. Never attempt to repair a seat belt or child restraint component. Always replace damaged or ineffective seat belt and child restraint components with the correct, new and unused replacement parts listed in the Chrysler Mopar® Parts Catalog. Failure to follow these instructions may result in possible serious or fatal injury.**

NOTE: **The rear center seat belt and retractor is secured to a mounting bracket that includes the right outboard occupant seat belt buckle. The rear right outboard occupant buckle is available for service only as a unit with the center seat belt and retractor.**

NOTE: **All seat belt retractors except the driver side front retractor include a switchable automatic locking mechanism. Refer to RETRACTOR, SEAT BELT, DESCRIPTION.**

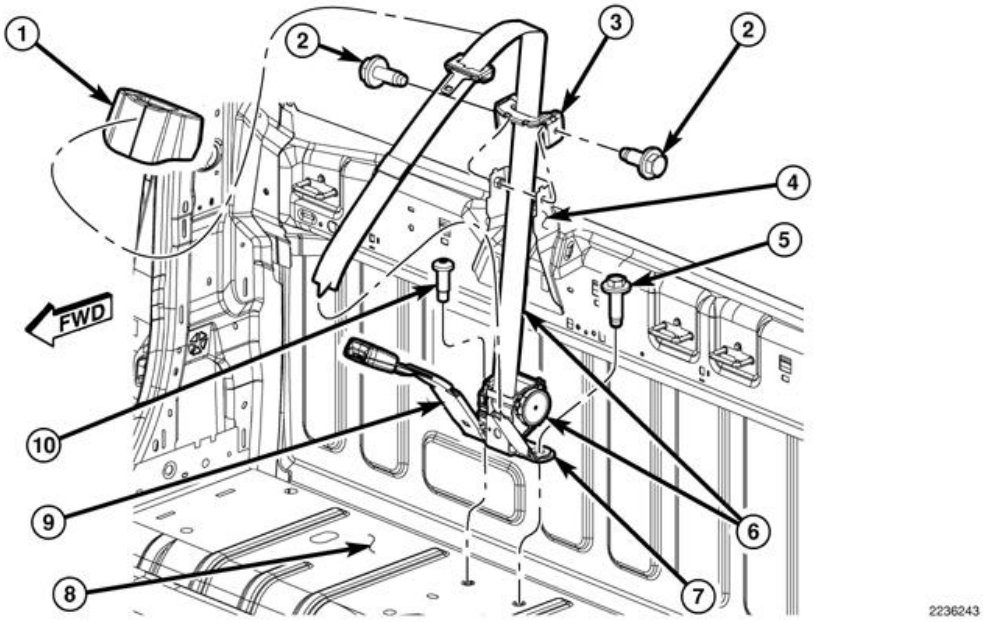

Fig. 86: Rear Center Seat Belt Retractor
Courtesy of CHRYSLER GROUP, LLC

1. Lift up the rear seat cushion into its stowed position against the rear seat back.
2. Remove the screw (5) that secures the center seat belt lower anchor (7) and the left side of the seat belt retractor (6) mounting bracket to the rear floor panel (8).
3. Remove the rear seat from the vehicle. On vehicles with the optional 60/40 split rear bench, only the 60 percent section (right side) of the rear seat must be removed. Refer to **SEAT, REAR, REMOVAL** or **SEAT, MEGA CAB REAR, REMOVAL** .
4. Lift upward on the forward edge of the rear center seat belt bezel (1) at the top of the cab back panel to release the snap features that secure the bezel to the belt bracket (3).
5. Remove the bezel from the webbing of the rear center seat belt.
6. Remove the two screws (2) that secure the belt bracket of the rear center seat belt to the body bracket (4) on the upper cab back panel reinforcement.
7. Remove the belt bracket of the rear center seat belt from the body bracket.
8. Remove the screw (10) that secures the right side of the seat belt retractor mounting bracket and the right outboard occupant buckle (9) unit to the rear floor panel near the base of the cab back panel.
9. Remove the rear center seat belt and retractor unit from the vehicle.

REAR OUTBOARD

WARNING: To avoid serious or fatal injury during and following any seat belt or child restraint anchor service, carefully inspect all seat belts, buckles, mounting hardware, retractors, tether straps, and anchors for proper installation, operation, or damage. Replace any belt that is cut, frayed, or torn. Straighten any belt that is twisted. Tighten any loose fasteners. Replace any belt that has a damaged or ineffective buckle or retractor. Replace any belt that has a bent or damaged latch plate or anchor plate. Replace any child restraint anchor or the unit to which the anchor is integral that has been bent or damaged. Never attempt to repair a seat belt or child restraint component. Always replace damaged or ineffective seat belt and child restraint components with the correct, new and unused replacement parts listed in the Chrysler Mopar® Parts Catalog. Failure to follow these instructions may result in possible serious or fatal injury.

NOTE: All seat belt retractors except the driver side front retractor include a switchable automatic locking mechanism. Refer to RETRACTOR, SEAT BELT, DESCRIPTION.

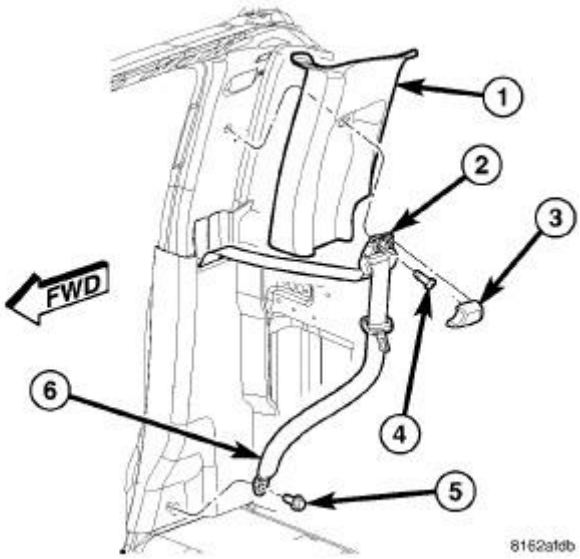

Fig. 87: Seat Belt Turning Loop, Lower Anchor & Screws
Courtesy of CHRYSLER GROUP, LLC

1. Remove the rear seat from the vehicle. Refer to **SEAT, REAR, REMOVAL** or **SEAT, MEGA CAB REAR, REMOVAL** .
2. Remove the screw (5) that secures the seat belt lower anchor (6) to the base of the inner C-pillar.
3. Unsnap the trim cover (3) from the front seat belt turning loop (2) and discard. The trim cover is a one time component and is not intended for reuse.

4. Remove the screw (4) that secures the seat belt turning loop to the upper C-pillar.
5. Remove the seat belt turning loop from the upper C-pillar.
6. Remove the upper trim (1) from the inside of the C-pillar. Refer to **PANEL, C-PILLAR TRIM, UPPER, REMOVAL** .

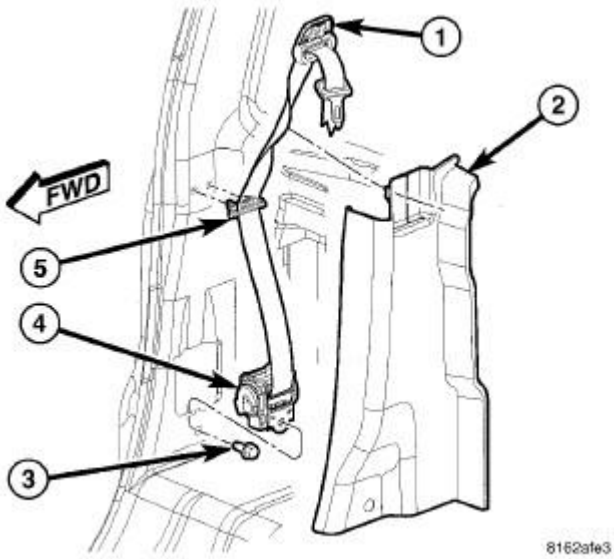

Fig. 88: Identifying Rear Outboard Belt - Quad CAB
Courtesy of CHRYSLER GROUP, LLC

7. Remove the lower trim (2) from the inside of the C-pillar. Refer to **PANEL, C-PILLAR TRIM, LOWER, REMOVAL** .
8. Disengage the two clips that secure the belt web guide (5) to the inner C-pillar.
9. Remove the screw (3) that secures the lower bracket of the retractor (4) to the C-pillar.
10. Disengage the hooks on the upper retractor bracket from the slots in the C-pillar above the retractor mounting hole.
11. Remove the rear outboard seat belt and retractor from the C-pillar as a unit.

INSTALLATION

CENTER - STANDARD CAB

WARNING: **To avoid serious or fatal injury during and following any seat belt or child restraint anchor service, carefully inspect all seat belts, buckles, mounting hardware, retractors, tether straps, and anchors for proper installation, operation, or damage. Replace any belt that is cut, frayed, or torn. Straighten any belt that is twisted. Tighten any loose fasteners. Replace any belt that has a damaged or ineffective buckle or retractor. Replace any belt that has a bent or damaged latch plate or anchor plate. Replace any child restraint anchor or the unit to which the anchor is integral that has been bent or damaged. Never attempt to repair a seat**

belt or child restraint component. Always replace damaged or ineffective seat belt and child restraint components with the correct, new and unused replacement parts listed in the Chrysler Mopar® Parts Catalog. Failure to follow these instructions may result in possible serious or fatal injury.

NOTE: **A front center three-point seat belt and retractor is used only on standard cab vehicles. Quad or crew cab and mega cab vehicles with a front bench seat have a two-point lap belt in the front center seating position. Refer to BUCKLE, SEAT BELT, INSTALLATION.**

NOTE: **All seat belt retractors except the driver side front retractor include a switchable automatic locking mechanism. Refer to RETRACTOR, SEAT BELT, DESCRIPTION.**

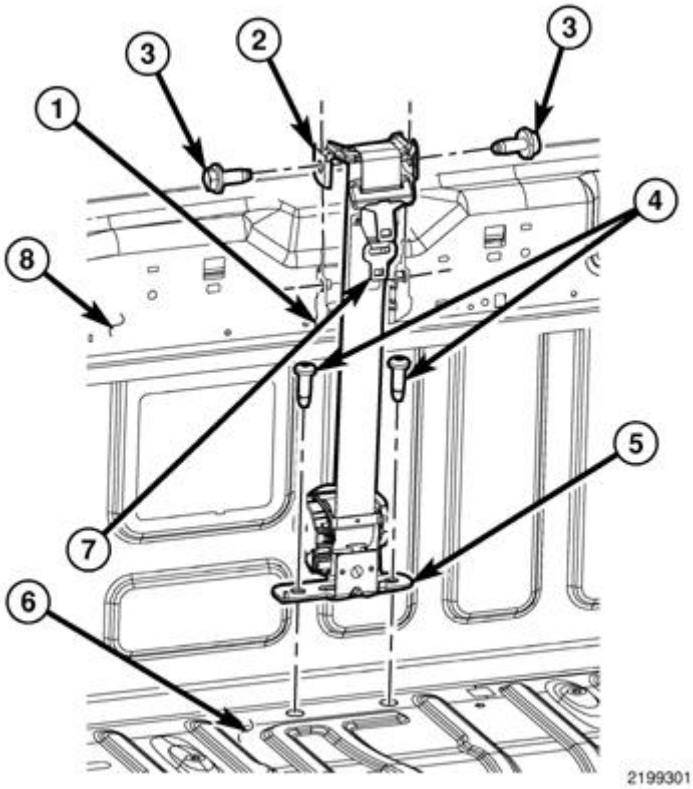

Fig. 89: Front Center Seat Belt, Brackets, Panel & Screws
Courtesy of CHRYSLER GROUP, LLC

1. Position the front center seat belt and retractor unit (5) to the floor panel (6) at the base of the cab back panel (8) to the right of center.
2. Install and tighten the two screws (4) that secure the front center seat belt retractor bracket to the floor panel near the base of the cab back panel. Tighten the screws to 39 N.m (29 ft. lbs.).
3. Position the belt bracket (2) of the front center seat belt (7) to the body bracket (1) on the upper cab back panel reinforcement.

4. Install and tighten the two screws (3) that secure the belt bracket of the front center seat belt to the body bracket on the upper cab back panel reinforcement. Tighten the screws to 20 N.m (15 ft. lbs.).

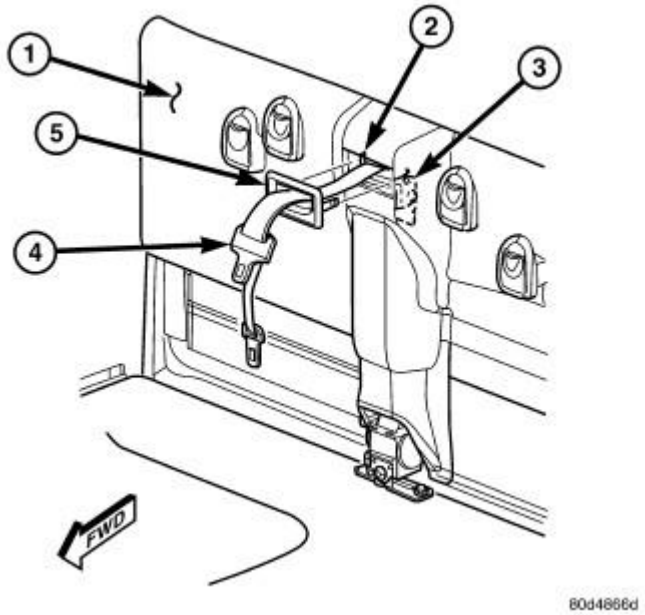

Fig. 90: Front Center Seat Belt, Bezel & Trim Panel
Courtesy of CHRYSLER GROUP, LLC

5. Reinstall the trim (1) onto the cab back panel. Refer to **PANEL, CAB BACK TRIM, INSTALLATION** .
6. Route the webbing of the front center seat belt (4) through the bezel (5) and position the bezel to the belt opening near the top of the cab back trim panel.
7. Using hand pressure, press firmly and evenly on each side of the front center seat belt bezel until it snaps into place on the cab back trim panel.
8. Reinstall the stowage tray onto the rear floor panel behind the seat. Refer to **BIN, STORAGE, INSTALLATION** .
9. Reach between the center of the front seat cushion and front seat back to access and buckle the front center seat belt lower anchor latch plate to the unique black, keyed lower anchor buckle.

FRONT OUTBOARD - EXCEPT STANDARD CAB

WARNING: **To avoid serious or fatal injury on vehicles equipped with airbags, disable the Supplemental Restraint System (SRS) before attempting any steering wheel, steering column, airbag, seat belt tensioner, impact sensor or instrument panel component diagnosis or service. Disconnect and isolate the battery negative (ground) cable, then wait two minutes for the system capacitor to discharge before performing further diagnosis or service. This is the only sure way to disable the SRS. Failure to take the proper**

precautions could result in accidental airbag deployment.

WARNING: To avoid serious or fatal injury during and following any seat belt or child restraint anchor service, carefully inspect all seat belts, buckles, mounting hardware, retractors, tether straps, and anchors for proper installation, operation, or damage. Replace any belt that is cut, frayed, or torn. Straighten any belt that is twisted. Tighten any loose fasteners. Replace any belt that has a damaged or ineffective buckle or retractor. Replace any belt that has a bent or damaged latch plate or anchor plate. Replace any child restraint anchor or the unit to which the anchor is integral that has been bent or damaged. Never attempt to repair a seat belt or child restraint component. Always replace damaged or ineffective seat belt and child restraint components with the correct, new and unused replacement parts listed in the Chrysler Mopar® Parts Catalog. Failure to follow these instructions may result in possible serious or fatal injury.

NOTE: The following procedure is for replacement of an ineffective or damaged seat belt and retractor unit. The front outboard retractors also include a seat belt tensioner. If the front seat belt or retractor is ineffective or damaged, but the seat belt tensioner is not deployed, review the recommended procedures for Handling Non-Deployed Supplemental Restraints. Refer to STANDARD PROCEDURE. If the seat belt tensioner has been deployed, review the recommended procedures for Service After A Supplemental Restraint Deployment before removing the unit from the vehicle. .

NOTE: All seat belt retractors except the driver side front retractor include a switchable automatic locking mechanism. Refer to RETRACTOR, SEAT BELT, DESCRIPTION.

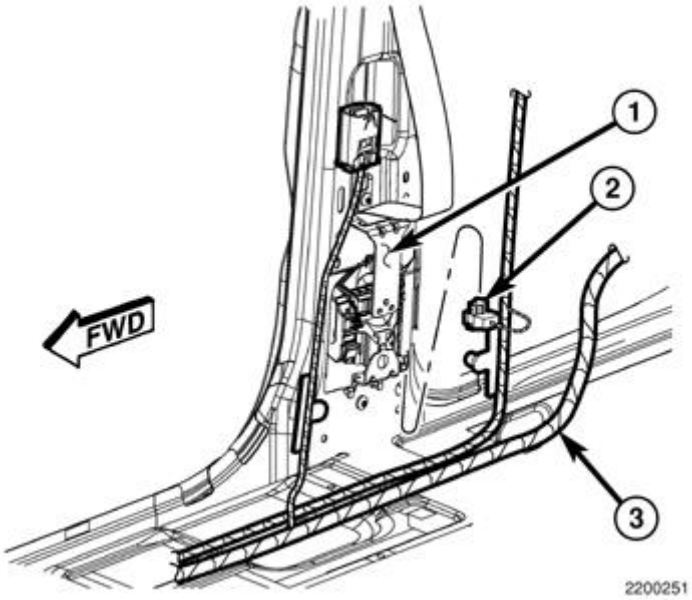

Fig. 91: Seat Belt Tensioner Initiator, Connector & Harness
Courtesy of CHRYSLER GROUP, LLC

1. Position the front outboard seat belt and retractor (1) into the vehicle.
2. Reconnect the yellow connector (2) of the body wire harness (3) to the seat belt tensioner initiator on the retractor.

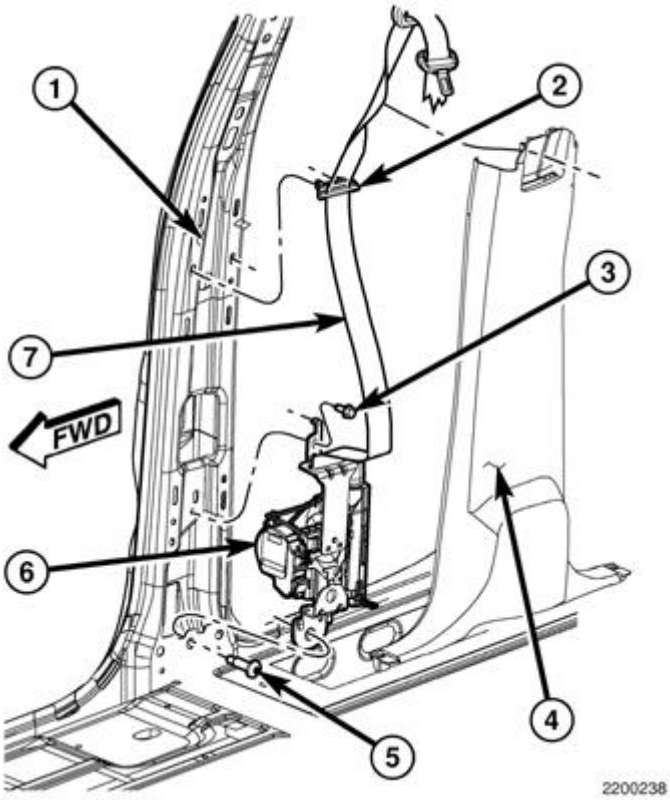

Fig. 92: Upper & Lower Retractor Bracket Screws
Courtesy of CHRYSLER GROUP, LLC

3. Position the seat belt (7) and retractor (6) to the inner B-pillar (1) as a unit. Be certain to engage the locating tab on the upper retractor bracket into the clearance hole in the B-pillar.
4. Loosely install the screw (5) that secures the lower retractor bracket to the B-pillar.
5. Install and tighten the screw (3) that secures the upper retractor bracket to the B-pillar. Tighten the screw to 12 N.m (106 in. lbs.).
6. Tighten the screw that secures the lower retractor bracket to the B-pillar. Tighten the screw to 39 N.m (29 ft. lbs.).
7. Position the belt web guide (2) to the B-pillar and use hand pressure to press it firmly and evenly until the two clips that secure it snap into place. Be certain that the seat belt webbing between the retractor and the web guide is not twisted.
8. Reinstall the lower trim (4) onto the inside of the B-pillar. Refer to **PANEL, B-PILLAR TRIM, LOWER, INSTALLATION** .

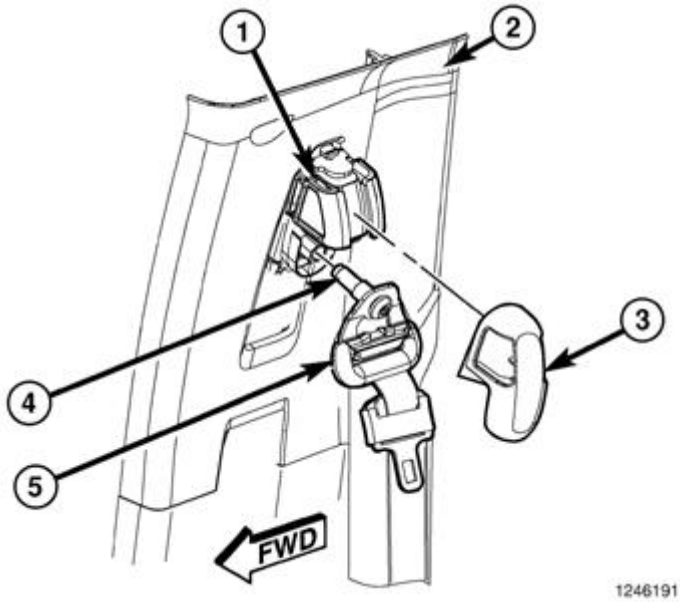

Fig. 93: Seat Belt Turning Loop Height Adjuster
Courtesy of CHRYSLER GROUP, LLC

9. Position the seat belt turning loop (5) onto the height adjuster (1) on the upper B-pillar. Be certain that the seat belt webbing between the web guide and the turning loop is not twisted.
10. Install and tighten the screw (4) that secures the turning loop to the height adjuster. Tighten the screw to 39 N.m (29 ft. lbs.).
11. Position a new trim cover (3) over the top of the turning loop, then snap it into place. Engage the lower snap features first, then the upper snap features. The trim cover is a one time component and is not intended for reuse.

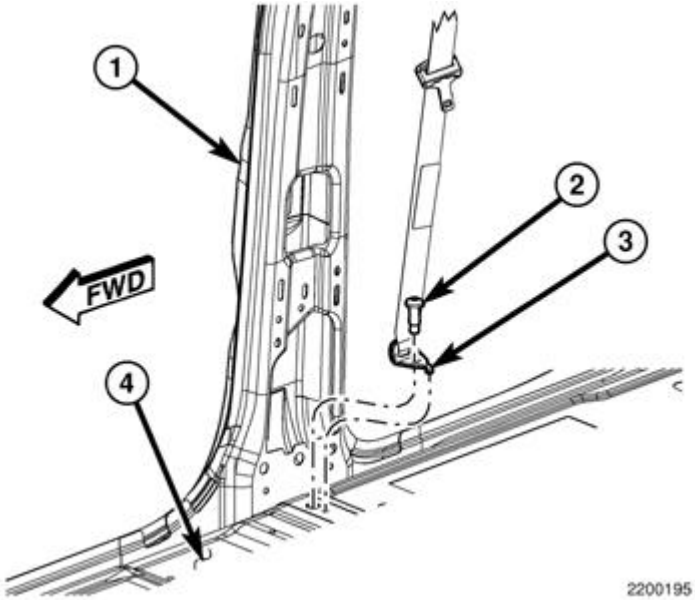

Fig. 94: Front Seat Belt Lower Anchor
Courtesy of CHRYSLER GROUP, LLC

12. Position the seat belt lower anchor (3) to the mounting hole in the floor panel (4) near the base of the B-pillar (1) cushion frame. Be certain that the seat belt webbing between the turning loop and the lower anchor is not twisted.
13. Install and tighten the screw (2) that secures the lower anchor to the floor panel. Tighten the screw to 39 N.m (29 ft. lbs.).
14. Do not reconnect the battery negative cable at this time. The Supplemental Restraint System (SRS) Verification Test procedure should be performed following service of any SRS component. Refer to **STANDARD PROCEDURE**.

OUTBOARD - STANDARD CAB

WARNING: **To avoid serious or fatal injury on vehicles equipped with airbags, disable the Supplemental Restraint System (SRS) before attempting any steering wheel, steering column, airbag, seat belt tensioner, impact sensor or instrument panel component diagnosis or service. Disconnect and isolate the battery negative (ground) cable, then wait two minutes for the system capacitor to discharge before performing further diagnosis or service. This is the only sure way to disable the SRS. Failure to take the proper precautions could result in accidental airbag deployment.**

WARNING: **To avoid serious or fatal injury during and following any seat belt or child restraint anchor service, carefully inspect all seat belts, buckles, mounting hardware, retractors, tether straps, and anchors for proper installation, operation, or damage. Replace any belt that is cut, frayed, or torn. Straighten any belt that is twisted. Tighten any loose fasteners. Replace any belt that has a damaged or ineffective buckle or retractor. Replace any belt that has a bent or damaged latch plate or anchor plate. Replace any child restraint anchor or the unit to which the anchor is integral that has been bent or damaged. Never attempt to repair a seat belt or child restraint component. Always replace damaged or ineffective seat belt and child restraint components with the correct, new and unused replacement parts listed in the Chrysler Mopar® Parts Catalog. Failure to follow these instructions may result in possible serious or fatal injury.**

NOTE: **The following procedure is for replacement of an ineffective or damaged seat belt and retractor unit. The front outboard retractors also include a seat belt tensioner. If the front seat belt or retractor is ineffective or damaged, but the seat belt tensioner is not deployed, review the recommended procedures for Handling Non-Deployed Supplemental Restraints. Refer to STANDARD PROCEDURE. If the seat belt tensioner has been deployed, review the recommended procedures for Service After A Supplemental Restraint Deployment before removing the unit from the vehicle. .**

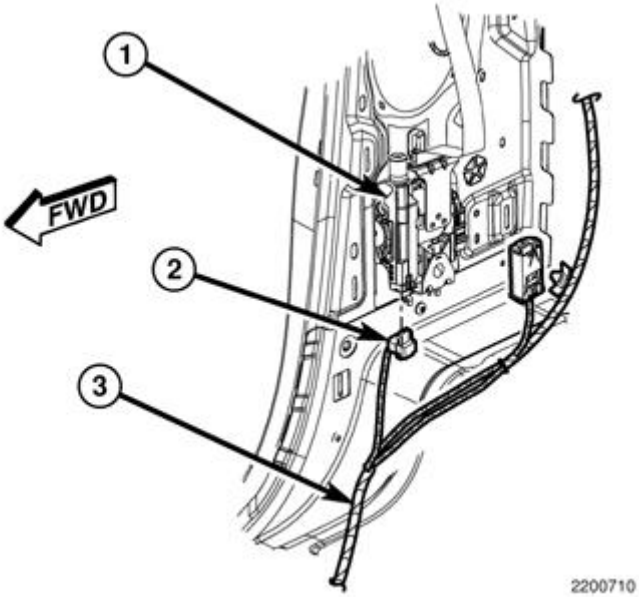

Fig. 95: Seat Belt Tensioner Initiator
Courtesy of CHRYSLER GROUP, LLC

1. Position the front outboard seat belt and retractor (1) into the vehicle.
2. Reconnect the yellow connector (2) of the body wire harness (3) to the seat belt tensioner initiator on the retractor.

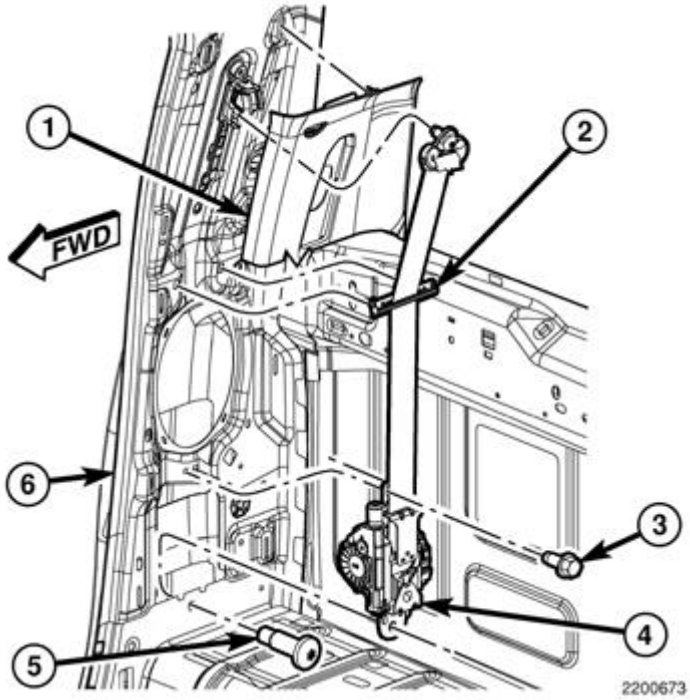

Fig. 96: Upper & Lower Retractor Bracket Screws (Standard Cab)
Courtesy of CHRYSLER GROUP, LLC

3. Position the seat belt and retractor (4) to the inner B-pillar (6) as a unit. Be certain to engage the locating

tab on the upper retractor bracket into the clearance hole in the B-pillar.

4. Loosely install the screw (5) that secures the lower retractor bracket to the B-pillar.
5. Install and tighten the screw (3) that secures the upper retractor bracket to the B-pillar. Tighten the screw to 12 N.m (106 in. lbs.).
6. Tighten the screw that secures the lower retractor bracket to the B-pillar. Tighten the screw to 39 N.m (29 ft. lbs.).
7. Position the belt web guide (2) to the B-pillar and use hand pressure to press it firmly and evenly until the two clips that secure it snap into place. Be certain that the seat belt webbing between the retractor and the web guide is not twisted.
8. Reinstall the lower trim (3) onto the inside of the B-pillar. Refer to **PANEL, B-PILLAR TRIM, LOWER, INSTALLATION** .

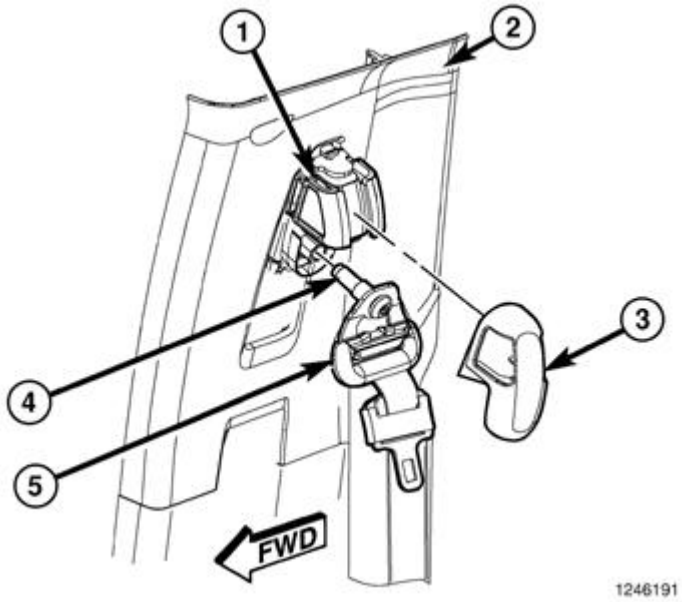

Fig. 97: Seat Belt Turning Loop Height Adjuster
Courtesy of CHRYSLER GROUP, LLC

9. Position the seat belt turning loop (5) onto the height adjuster (1) on the upper B-pillar. Be certain that the seat belt webbing between the web guide and the turning loop is not twisted.
10. Install and tighten the screw (4) that secures the turning loop to the height adjuster. Tighten the screw to 39 N.m (29 ft. lbs.).
11. Position a new trim cover (3) over the top of the turning loop, then snap it into place. Engage the lower snap features first, then the upper snap features. The trim cover is a one time component and is not intended for reuse.

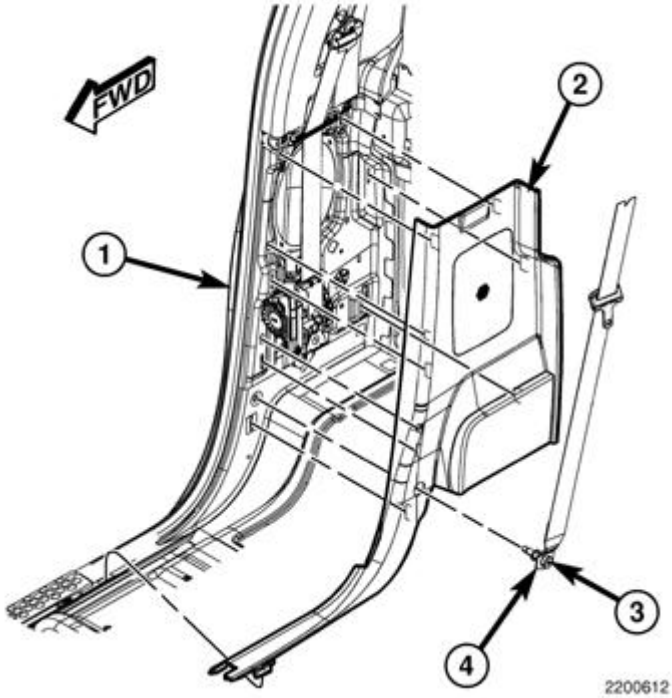

Fig. 98: Lower B-Pillar Trim
Courtesy of CHRYSLER GROUP, LLC

12. Position the seat belt lower anchor (4) to the mounting hole near the base of the inner B-pillar (1). Be certain that the seat belt webbing between the turning loop and the lower anchor is not twisted.
13. Install and tighten the screw (3) that secures the lower anchor to the B-pillar. Tighten the screw to 39 N.m (29 ft. lbs.).
14. Do not reconnect the battery negative cable at this time. The Supplemental Restraint System (SRS) Verification Test procedure should be performed following service of any SRS component. Refer to **STANDARD PROCEDURE**.

REAR CENTER - MEGA CAB

WARNING: **To avoid serious or fatal injury during and following any seat belt or child restraint anchor service, carefully inspect all seat belts, buckles, mounting hardware, retractors, tether straps, and anchors for proper installation, operation, or damage. Replace any belt that is cut, frayed, or torn. Straighten any belt that is twisted. Tighten any loose fasteners. Replace any belt that has a damaged or ineffective buckle or retractor. Replace any belt that has a bent or damaged latch plate or anchor plate. Replace any child restraint anchor or the unit to which the anchor is integral that has been bent or damaged. Never attempt to repair a seat belt or child restraint component. Always replace damaged or ineffective seat belt and child restraint components with the correct, new and unused replacement parts listed in the Chrysler Mopar® Parts Catalog. Failure to follow these instructions may result in possible serious or fatal injury.**

NOTE: **All seat belt retractors except the driver side front retractor include a switchable automatic locking mechanism. Refer to RETRACTOR, SEAT BELT, DESCRIPTION.**

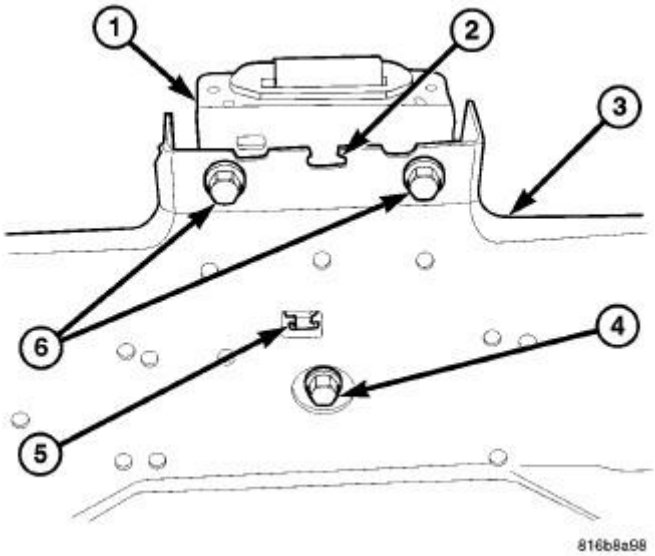

Fig. 99: Seat Back Frame, Belt Bracket & Screws
Courtesy of CHRYSLER GROUP, LLC

1. Position the rear center seat belt and retractor unit into the 60 percent section of the rear seat back frame (3). Be certain the tab (5) on the retractor bracket is engaged in the slot in the frame.
2. Install and tighten the screw (4) that secures the rear center seat belt retractor to the seat back frame. Tighten the screw to 60 N.m (44 ft. lbs.).
3. Position the belt bracket (1) of the rear center seat belt onto the top of the seat back frame. Be certain the tab (2) on the bracket is engaged in the slot in the frame.
4. Install and tighten the two screws (6) that secure the belt bracket of the rear center seat belt to the seat back frame. Tighten the screws to 60 N.m (44 ft. lbs.).
5. Reinstall the trim cover onto the 60 percent section of the rear seat back frame. Refer to **COVER, SEAT BACK, MEGA CAB REAR, INSTALLATION** .

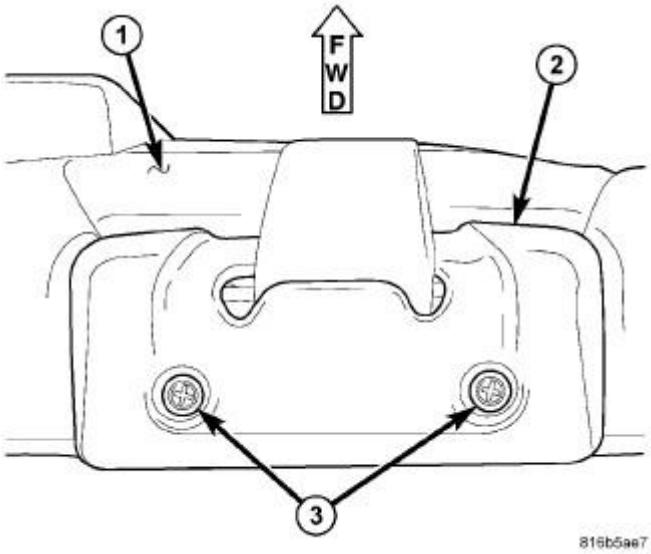

Fig. 100: Rear Seat Back & Bezel
Courtesy of CHRYSLER GROUP, LLC

6. Engage the rear center seat belt bezel (2) over the webbing of the rear center seat belt.
7. Position the bezel over the belt bracket on the top of the rear seat back (1).
8. Install and tighten the two screws (3) that secure the bezel to the belt bracket on the top of the rear seat back frame. Tighten the screws to 5 N.m (44 in. lbs.).

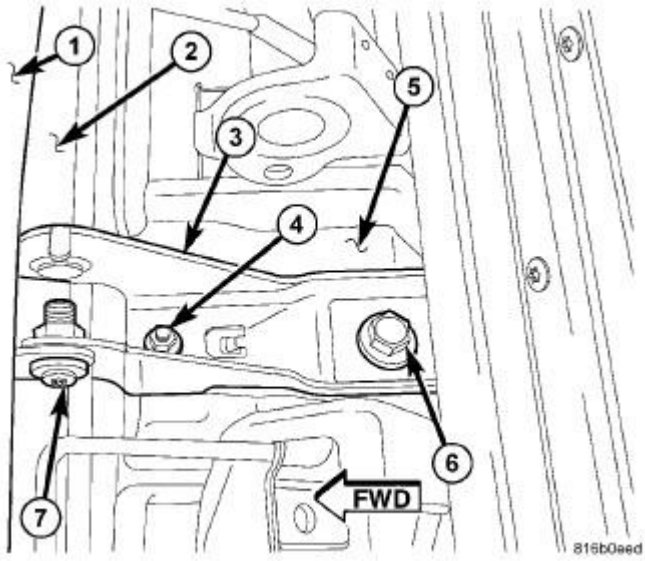

Fig. 101: Identifying Seat Back, Seat Cushion, Anchor Bracket, Nut, Rear Mounting Bracket, & Screw
Courtesy of CHRYSLER GROUP, LLC

9. Route the center seat belt lower anchor between the seat back (1) and the seat cushion (2) and position it

to the anchor bracket (3). Be certain the belt webbing is not twisted between the retractor and the anchor bracket.

10. Install and tighten the screw (7) that secures the seat belt lower anchor to the anchor bracket. Tighten the screw to 40 N.m (30 ft. lbs.).
11. Restore the 60 percent seat back filler panel and the seat back to their previous positions.

REAR CENTER - QUAD OR CREW CAB

WARNING: To avoid serious or fatal injury during and following any seat belt or child restraint anchor service, carefully inspect all seat belts, buckles, mounting hardware, retractors, tether straps, and anchors for proper installation, operation, or damage. Replace any belt that is cut, frayed, or torn. Straighten any belt that is twisted. Tighten any loose fasteners. Replace any belt that has a damaged or ineffective buckle or retractor. Replace any belt that has a bent or damaged latch plate or anchor plate. Replace any child restraint anchor or the unit to which the anchor is integral that has been bent or damaged. Never attempt to repair a seat belt or child restraint component. Always replace damaged or ineffective seat belt and child restraint components with the correct, new and unused replacement parts listed in the Chrysler Mopar® Parts Catalog. Failure to follow these instructions may result in possible serious or fatal injury.

NOTE: The rear center seat belt and retractor is secured to a mounting bracket that includes the right outboard occupant seat belt buckle. The rear right outboard occupant buckle is available for service only as a unit with the center seat belt and retractor.

NOTE: All seat belt retractors except the driver side front retractor include a switchable automatic locking mechanism. Refer to <u>RETRACTOR, SEAT BELT, DESCRIPTION</u>.

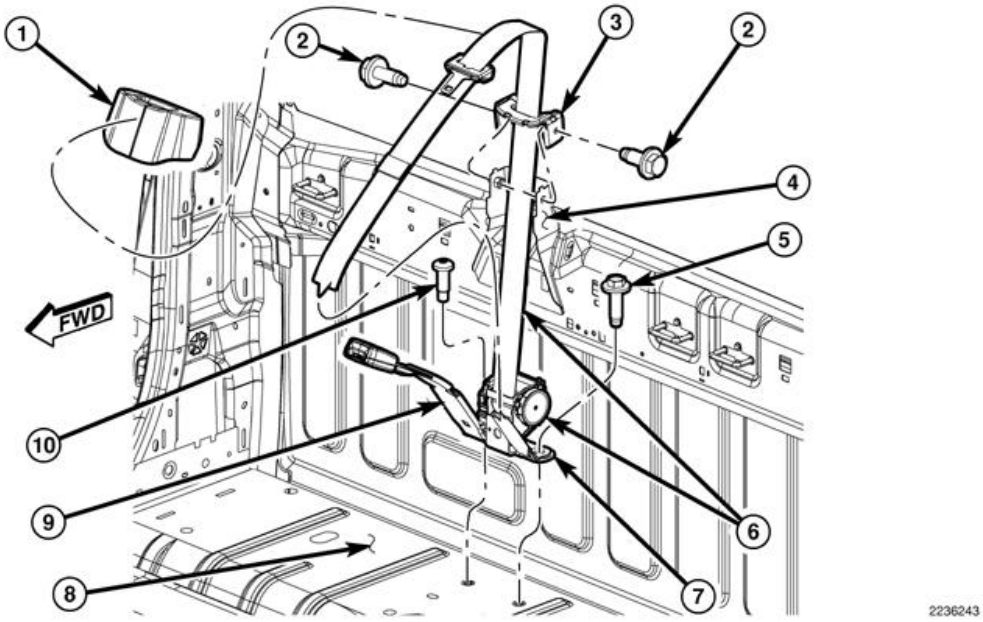

Fig. 102: Rear Center Seat Belt Retractor
Courtesy of CHRYSLER GROUP, LLC

1. Position the rear center seat belt retractor (6) and right outboard occupant buckle unit (9) onto the rear floor panel (8) near the base of the cab back panel.
2. Loosely install the screw (10) that secures the right side of the seat belt retractor mounting bracket and the right outboard occupant buckle unit to the rear floor panel near the base of the cab back panel.
3. Position the belt bracket (3) of the rear center seat belt onto the body bracket (4) on the upper cab back panel reinforcement.
4. Install and tighten the two screws (2) that secure the belt bracket to the body bracket. Tighten the screws to 20 N.m (15 ft. lbs.).
5. Lift the webbing of the rear center seat belt and slide the bezel (1) over the webbing to position it over the belt bracket at the top of the cab back panel. Engage the rearward snap features of the bezel with the belt bracket. Using hand pressure, press firmly and evenly downward on the front of the bezel until it snaps into place over the belt bracket.
6. Reinstall the rear seat into the vehicle. On vehicles with the optional 60/40 split rear bench, only the 60 percent section (right side) of the rear seat must be reinstalled. Refer to **SEAT, REAR, INSTALLATION** or **SEAT, MEGA CAB REAR, INSTALLATION** .
7. Insert the rear center seat belt lower anchor (7) between the rear seat back and the seat cushion, and position the anchor to the left side of the seat belt retractor mounting bracket on the rear floor panel.
8. Install and tighten the screw (5) that secures the center seat belt lower anchor and the left side of the seat belt retractor mounting bracket to the rear floor panel. Tighten the screw to 39 N.m (29 ft. lbs.).
9. Tighten the screw that secures the right side of the seat belt retractor mounting bracket to the rear floor panel. Tighten the screw to 39 N.m (29 ft. lbs.).
10. Restore the rear seat cushion to its seating position.

REAR OUTBOARD

WARNING: To avoid serious or fatal injury during and following any seat belt or child restraint anchor service, carefully inspect all seat belts, buckles, mounting hardware, retractors, tether straps, and anchors for proper installation, operation, or damage. Replace any belt that is cut, frayed, or torn. Straighten any belt that is twisted. Tighten any loose fasteners. Replace any belt that has a damaged or ineffective buckle or retractor. Replace any belt that has a bent or damaged latch plate or anchor plate. Replace any child restraint anchor or the unit to which the anchor is integral that has been bent or damaged. Never attempt to repair a seat belt or child restraint component. Always replace damaged or ineffective seat belt and child restraint components with the correct, new and unused replacement parts listed in the Chrysler Mopar® Parts Catalog. Failure to follow these instructions may result in possible serious or fatal injury.

NOTE: All seat belt retractors except the driver side front retractor include a switchable automatic locking mechanism. Refer to RETRACTOR, SEAT BELT, DESCRIPTION.

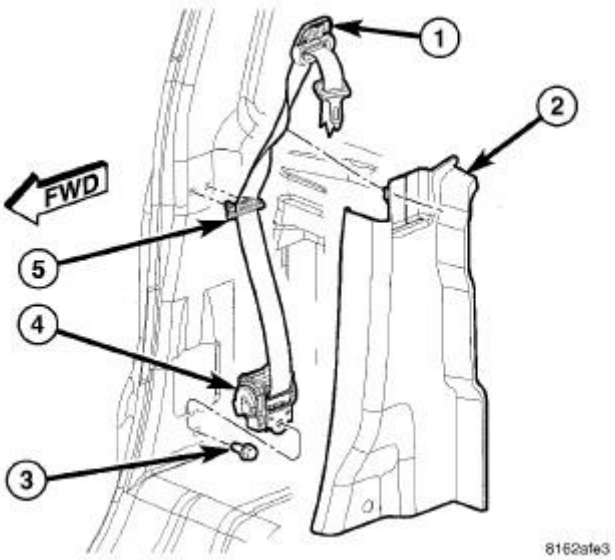

Fig. 103: Identifying Rear Outboard Belt - Quad CAB
Courtesy of CHRYSLER GROUP, LLC

1. Position the rear outboard seat belt and retractor (4) to the inner C-pillar as a unit. Be certain to engage the hooks on the upper retractor bracket into the mounting hole in the C-pillar.
2. Install and tighten the screw (3) that secures the lower retractor bracket to the C-pillar. Tighten the screw to 39 N.m (29 ft. lbs.).
3. Position the belt web guide (5) to the B-pillar and use hand pressure to press it firmly and evenly until the two clips that secure it snap into place. Be certain that the seat belt webbing between the retractor and the web guide is not twisted.

4. Reinstall the lower trim (2) onto the inside of the C-pillar. Refer to **PANEL, C-PILLAR TRIM, LOWER, INSTALLATION** .

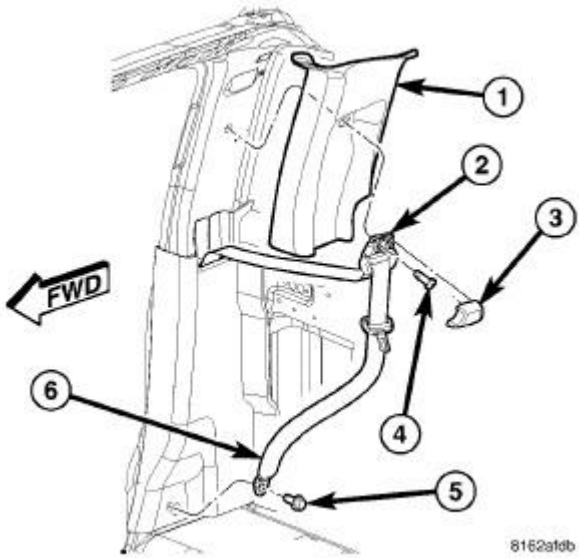

Fig. 104: Seat Belt Turning Loop, Lower Anchor & Screws
Courtesy of CHRYSLER GROUP, LLC

5. Reinstall the upper trim (1) onto the inside of the C-pillar. Refer to **PANEL, C-PILLAR TRIM, UPPER, INSTALLATION** .
6. Position the seat belt turning loop (2) onto the upper C-pillar.
7. Install and tighten the screw (4) that secures the turning loop to the C-pillar. Tighten the screw to 39 N.m (29 ft. lbs.).
8. Engage the upper edge of a new trim cover (3) over the top of the turning loop. Then squeeze the lower end of the trim cover and the turning loop together firmly and evenly until the engagement tabs of the trim cover snap into the slots of the turning loop.
9. Position the seat belt lower anchor (6) to the mounting hole at the base of the C-pillar.
10. Install and tighten the screw (5) that secures the lower anchor to the C-pillar. Tighten the screw to 39 N.m (29 ft. lbs.).
11. Reinstall the rear seat into the vehicle. Refer to **SEAT, REAR, INSTALLATION** or **SEAT, MEGA CAB REAR, INSTALLATION** .

SEAT BELT

REMOVAL

REMOVAL

WARNING: **To avoid serious or fatal injury during and following any seat belt or child restraint anchor service, carefully inspect all seat belts, buckles,**

mounting hardware, retractors, tether straps, and anchors for proper installation, operation, or damage. Replace any belt that is cut, frayed, or torn. Straighten any belt that is twisted. Tighten any loose fasteners. Replace any belt that has a damaged or ineffective buckle or retractor. Replace any belt that has a bent or damaged latch plate or anchor plate. Replace any child restraint anchor or the unit to which the anchor is integral that has been bent or damaged. Never attempt to repair a seat belt or child restraint component. Always replace damaged or ineffective seat belt and child restraint components with the correct, new and unused replacement parts listed in the Chrysler Mopar® Parts Catalog. Failure to follow these instructions may result in possible serious or fatal injury.

NOTE: **A fixed position front center seat belt buckle is located on the left side of the front center seat section (20 percent) used on all vehicles with a split bench front seat. Standard cab vehicles have a unique, fixed position, black, keyed, lower anchor buckle for the three-point center seat belt lower anchor located on the right side of the front center seat section. Quad or crew cab and mega cab vehicles have a fixed position front center seat lap belt located on the right side of the front center seat section. The following procedure applies to the front center seating position belt buckle, the lap belt or the anchor buckle. The three-point front center seat belt and retractor unit is only used on standard cab vehicles. Refer to RETRACTOR, SEAT BELT, REMOVAL.**

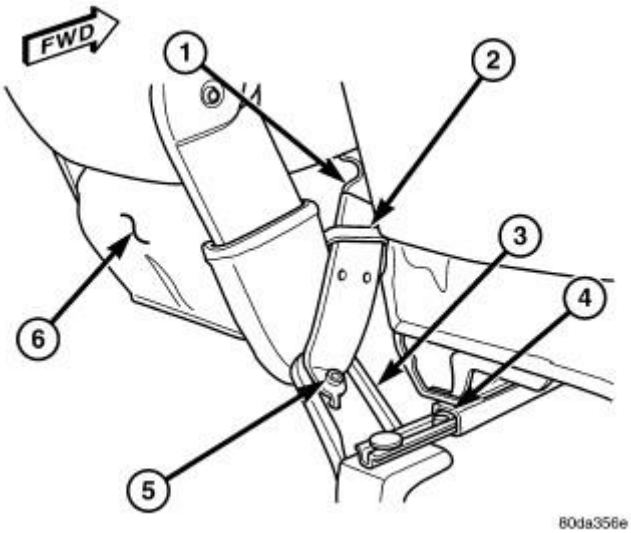

Fig. 105: Identifying Front Center Seat Belt Components
Courtesy of CHRYSLER GROUP, LLC

1. Move the adjacent right or left front outboard seat section (40 percent) to its most forward position and tilt the seat back forward for easiest access to the lower anchor of the front center seat belt buckle, lap belt or anchor buckle (1).

2. On standard cab vehicles only, if equipped, remove the stowage tray from the rear floor panel behind the seat. Refer to **BIN, STORAGE, REMOVAL** .
3. From behind the front seat, remove the screw (5) that secures the lower anchor of the front center seat belt buckle, lap belt or anchor buckle to the center seat support bracket (3).
4. From the front of the front seat, reach between the side of the center seat cushion (6) and the adjacent right or left front outboard seat cushion to access and remove the seat belt buckle, lap belt or anchor buckle through the elastic strap (2) on the side of the center seat cushion.
5. Remove the front center seat belt buckle, lap belt or anchor buckle unit from the front seat.

INSTALLATION

INSTALLATION

WARNING: **To avoid serious or fatal injury during and following any seat belt or child restraint anchor service, carefully inspect all seat belts, buckles, mounting hardware, retractors, tether straps, and anchors for proper installation, operation, or damage. Replace any belt that is cut, frayed, or torn. Straighten any belt that is twisted. Tighten any loose fasteners. Replace any belt that has a damaged or ineffective buckle or retractor. Replace any belt that has a bent or damaged latch plate or anchor plate. Replace any child restraint anchor or the unit to which the anchor is integral that has been bent or damaged. Never attempt to repair a seat belt or child restraint component. Always replace damaged or ineffective seat belt and child restraint components with the correct, new and unused replacement parts listed in the Chrysler Mopar® Parts Catalog. Failure to follow these instructions may result in possible serious or fatal injury.**

NOTE: **A fixed position front center seat belt buckle is located on the left side of the front center seat section (20 percent) used on all vehicles with a split bench front seat. Standard cab vehicles have a unique, fixed position, black, keyed, lower anchor buckle for the three-point center seat belt lower anchor located on the right side of the front center seat section. Quad or crew cab and mega cab vehicles have a fixed position front center seat lap belt located on the right side of the front center seat section. The following procedure applies to the front center seating position belt buckle, the lap belt or the anchor buckle. The three-point front center seat belt and retractor unit is only used on standard cab vehicles. Refer to RETRACTOR, SEAT BELT, INSTALLATION.**

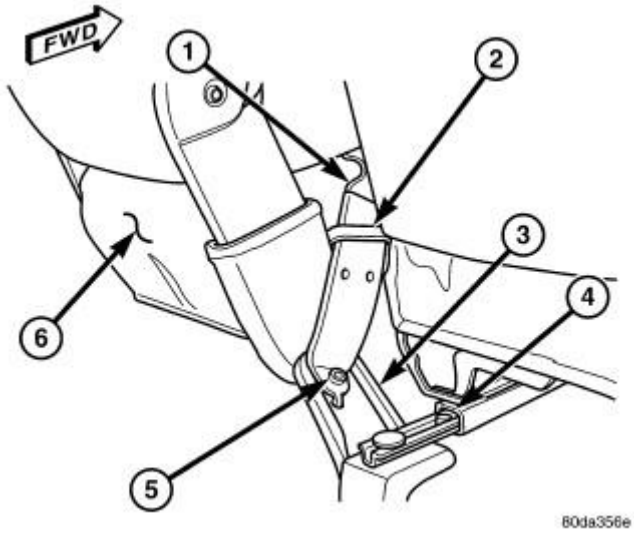

Fig. 106: Identifying Front Center Seat Belt Components
Courtesy of CHRYSLER GROUP, LLC

1. From the front of the front seat, position the front center seat belt buckle, lap belt or anchor buckle unit (1) through the elastic strap (2) on the side of the center seat cushion (6).
2. From the front of the front seat, reach between the side of the center seat cushion and the adjacent right or left front outboard seat cushion to route the lower anchor of the seat belt buckle, lap belt or anchor buckle unit down between the side of the center seat cushion and the adjacent right or left front outboard seat cushion. Be certain that the belt webbing is not twisted.
3. From behind the front seat, position the lower anchor of the seat belt buckle, lap belt or anchor buckle to the center seat support bracket (3). Be certain to engage the anti-rotation tab on the lower anchor into the corresponding hole in the center seat support bracket.
4. Install and tighten the screw (5) that secures the lower anchor of the seat belt buckle, lap belt or anchor buckle to the center seat support bracket. Tighten the screw to 39 N.m (29 ft. lbs.).
5. On standard cab vehicles only, if equipped, reinstall the stowage tray onto the rear floor panel behind the seat. Refer to **BIN, STORAGE, INSTALLATION** .

SENSOR, IMPACT

DESCRIPTION

DESCRIPTION

Remote or satellite impact sensors are located in various locations in the vehicle. These sensors are mounted remotely from the impact sensor that is internal to the Occupant Restraint Controller (ORC). Sensors at the front of the vehicle provide an additional logic input for use by the Occupant Restraint Controller (ORC) to control the front airbags and the seat belt pretensioners. Sensors on each side of the vehicle provide an additional logic input for use by the ORC to control the side curtain airbags, the seat belt pretensioners and, if equipped, the seat airbags. Two types of sensors are used in this vehicle. They are the acceleration-type and the pressure-type, which are described in further detail in the following paragraphs.

ACCELERATION TYPE

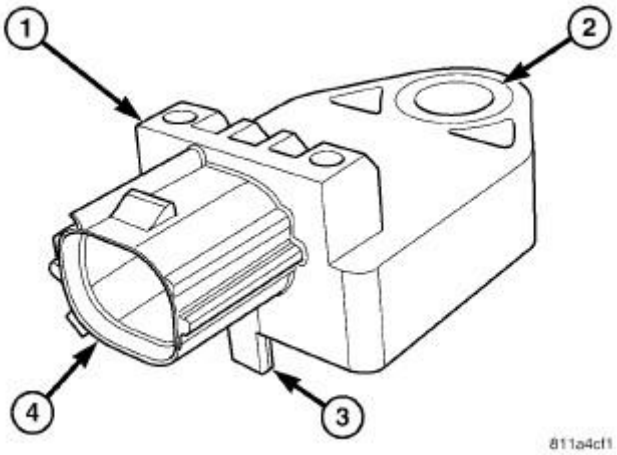

Fig. 107: Impact Sensor Components
Courtesy of CHRYSLER GROUP, LLC

Each vehicle has at least four, but as many as six remote acceleration-type impact sensors (1). Two front sensors, one each for the left and right sides of the vehicle are secured with a screw to the back of the right or left end of the lower radiator cross member within the engine compartment. Two side sensors, one each for the left and right sides of the vehicle are secured with a screw near the base of the right or left inner B-pillar within the passenger compartment. Quad cab or crew cab and mega cab models have two additional side sensors, one each for the left and right sides of the vehicle, secured with a screw near the base of the right or left inner C-pillar within the passenger compartment.

The right and left front impact sensors are identical in construction and calibration. The right and left side impact sensors are also identical in construction and calibration. Although the front and side impact sensors are similar in appearance and construction, they are not interchangeable. The front sensors are designed to withstand the harsher operating environment found within the engine compartment.

Each sensor housing has an integral connector receptacle (4), an integral anti-rotation pin (3), and an integral mounting hole (2) with a metal sleeve to provide crush protection. A cavity in the center of the molded plastic impact sensor housing contains the electronic circuitry of the sensor which includes an electronic communication chip and an electronic acceleration sensor. Potting material fills the cavity to seal and protect the internal electronic circuitry and components. The front impact sensors are each connected to the vehicle electrical system through a dedicated take out and connector of the Front End Module (FEM) wire harness, while the side impact sensors are connected through dedicated take outs and connectors of the body wire harness.

The acceleration-type impact sensors cannot be repaired or adjusted and, if damaged or ineffective, they must be replaced.

PRESSURE TYPE

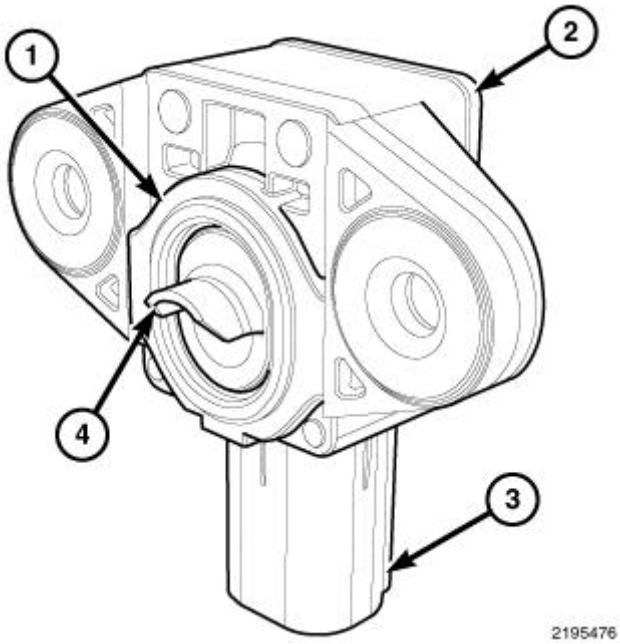

Fig. 108: Pressure-Type Front Door Side Impact Sensors
Courtesy of CHRYSLER GROUP, LLC

Two pressure-type front door side impact sensors (2) are used on all standard cab versions of this vehicle, one each for the left and right sides of the vehicle. These sensors are also used on club, crew or mega cab styles, but only if they are also equipped with the optional seat airbags. These sensors are mounted remotely from the impact sensor that is internal to the Occupant Restraint Controller (ORC). Each pressure-type sensor is secured with two screws and is sealed by a resilient gasket (1) to the front door module carrier on the inside of each front door. The sensors are concealed behind the front door trim panel within the passenger compartment.

The right and left front door side impact sensors are identical in construction and calibration, and are interchangeable. The sensor housing has an integral connector receptacle (3), two integral mounting tabs, and an integral hood-like water shield (4) that extends through a hole in the front door module carrier into the interior of the door cavity and protects the sensor orifice from contamination.

A cavity in the center of the molded plastic sensor housing contains the electronic circuitry of the sensor, which includes an electronic communication chip and the electronic pressure sensor. The housing cavity is filled with a potting material to seal and protect the internal electronic circuitry and components. A label on the sensor has a directional arrow and the word **down** imprinted upon it to provide verification of the correct sensor orientation in the vehicle. The pressure-type side impact sensors are each connected to the vehicle electrical system through a dedicated take out and connector of the front door wire harnesses.

The pressure-type side impact sensors cannot be repaired or adjusted and, if damaged or ineffective, they must be replaced.

OPERATION

OPERATION

ACCELERATION-TYPE

The acceleration-type impact sensors are electronic accelerometers that sense the rate of vehicle deceleration, which provides verification of the direction and severity of an impact. Each sensor also contains an electronic communication chip that allows the unit to communicate the sensor status as well as sensor fault information to the microprocessor in the Occupant Restraint Controller (ORC).

The ORC microprocessor continuously monitors all of the passive restraint system electrical circuits to determine the system readiness. If the ORC detects a monitored system fault, it sets a Diagnostic Trouble Code (DTC) and controls the airbag indicator operation accordingly. The impact sensors each receive battery current and ground through shared left and right sensor plus and minus circuits from the ORC. The impact sensors and the ORC communicate by modulating the voltage in the sensor plus circuit.

The hard wired circuits between the impact sensors and the ORC may be diagnosed using conventional diagnostic tools and procedures. Refer to the appropriate wiring information. However, conventional diagnostic methods will not prove conclusive in the diagnosis of the impact sensors or the electronic controls or communication between other modules and devices that provide some features of the Supplemental Restraint System (SRS). The most reliable, efficient, and accurate means to diagnose the acceleration-type impact sensors or the electronic controls and communication related to impact sensor operation requires the use of a diagnostic scan tool. Refer to the appropriate diagnostic information.

PRESSURE-TYPE

The pressure-type front door side impact sensors recognize a side impact in the front door area by monitoring changes in pressure within the front door cavity. A sudden pressure wave is created as the door collapses during an impact event. Each sensor also contains an electronic communication chip that allows the unit to communicate the sensor status as well as sensor fault information to the microprocessor in the Occupant Restraint Controller (ORC).

The ORC microprocessor continuously monitors all of the passive restraint system electrical circuits to determine the system readiness. If the ORC detects a monitored system fault, it sets a Diagnostic Trouble Code (DTC) and controls the airbag indicator operation accordingly. The impact sensors each receive battery current and ground through shared left and right sensor plus and minus circuits from the ORC. The impact sensors and the ORC communicate by modulating the current in the sensor plus circuit.

The hard wired circuits between the pressure-type front door side impact sensors and the ORC may be diagnosed using conventional diagnostic tools and procedures. Refer to the appropriate wiring information. However, conventional diagnostic methods will not prove conclusive in the diagnosis of the impact sensors or the electronic controls or communication between other modules and devices that provide features of the Supplemental Restraint System (SRS). The most reliable, efficient, and accurate means to diagnose the pressure-type impact sensors or the electronic controls and communication related to impact sensor operation requires the use of a diagnostic scan tool. Refer to the appropriate diagnostic information.

REMOVAL

FRONT

WARNING: To avoid serious or fatal injury on vehicles equipped with airbags, disable the Supplemental Restraint System (SRS) before attempting any steering wheel, steering column, airbag, seat belt tensioner, impact sensor or

instrument panel component diagnosis or service. Disconnect and isolate the battery negative (ground) cable, then wait two minutes for the system capacitor to discharge before performing further diagnosis or service. This is the only sure way to disable the SRS. Failure to take the proper precautions could result in accidental airbag deployment.

WARNING: **To avoid serious or fatal injury, never strike or drop the Electronic Pedestrian Protection (EPP) system impact sensor, as it can damage the impact sensor or affect its calibration. The EPP impact sensor enables the system to deploy the EPP system active hood hinge actuators. If an impact sensor is accidentally dropped during service, the sensor must be scrapped and replaced with a new unit. Failure to observe this warning could result in accidental, incomplete, or improper EPP active hood hinge actuator deployment.**

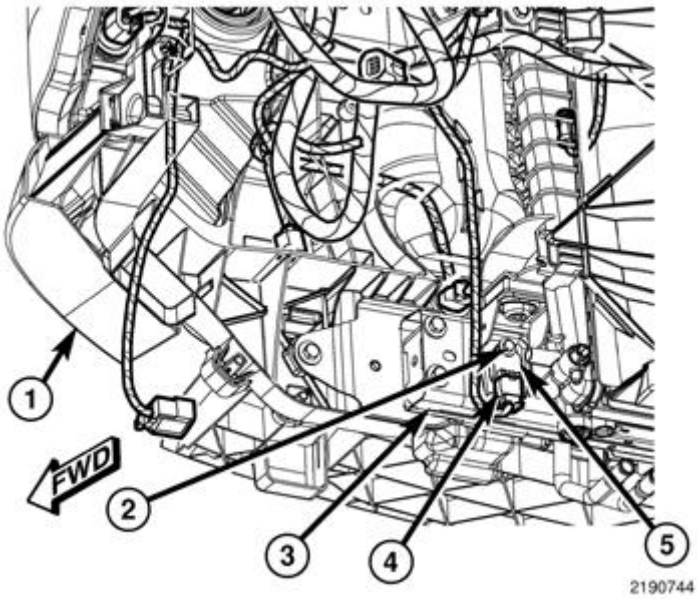

Fig. 109: Left Front Impact Sensor, Connector & Screw
Courtesy of CHRYSLER GROUP, LLC

1. Disconnect and isolate the battery negative cable. Wait two minutes for the system capacitor to discharge before further service.
2. Disconnect the Front End Module (FEM) (1) wire harness connector (4) from the right or left front impact sensor (5) connector receptacle.
3. Remove the screw (2) that secures the front impact sensor to the back of the right or left end of the lower radiator crossmember (3).
4. Remove the right or left front impact sensor from the engine compartment.

SIDE

WARNING: **To avoid serious or fatal injury on vehicles equipped with airbags, disable**

the Supplemental Restraint System (SRS) before attempting any steering wheel, steering column, airbag, seat belt tensioner, impact sensor or instrument panel component diagnosis or service. Disconnect and isolate the battery negative (ground) cable, then wait two minutes for the system capacitor to discharge before performing further diagnosis or service. This is the only sure way to disable the SRS. Failure to take the proper precautions could result in accidental airbag deployment.

WARNING: **To avoid serious or fatal injury, never strike or drop the side impact sensor, as it can damage the impact sensor or affect its calibration. The side impact sensor enables the system to deploy the side Supplemental Restraint System (SRS) components. If an impact sensor is accidentally dropped during service, the sensor must be scrapped and replaced with a new unit. Failure to observe this warning could result in accidental, incomplete, or improper side SRS component deployment.**

FRONT DOOR

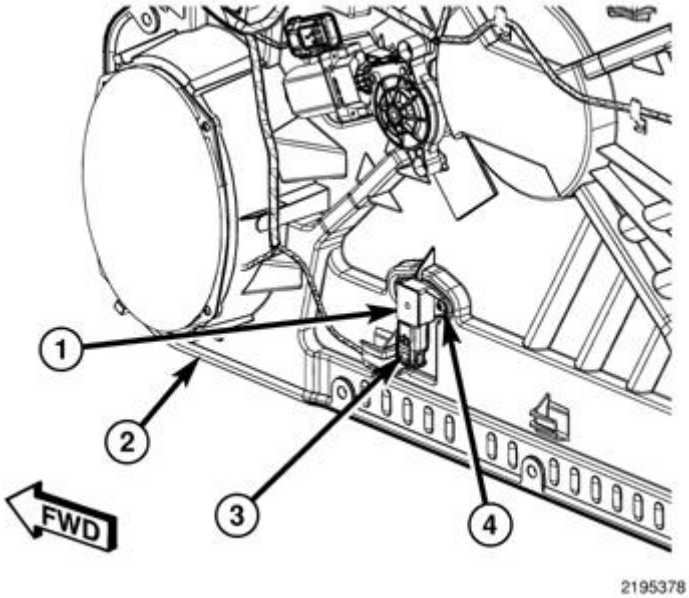

Fig. 110: Side Impact Sensor (Front Door)
Courtesy of CHRYSLER GROUP, LLC

NOTE: **Two pressure-type front door side impact sensors are used on all standard cab versions of this vehicle, one each for the left and right sides of the vehicle. These pressure-type impact sensors are also used on club, crew and mega cab versions, but only if they are equipped with the optional seat airbags.**

1. Disconnect and isolate the battery negative cable. Wait two minutes for the system capacitor to discharge before further service.
2. Remove the trim panel from the inside of the right or left front door. Refer to **PANEL, DOOR TRIM, REMOVAL** .

3. Disconnect the front door module wire harness connector (3) from the side impact sensor (1) connector receptacle.
4. Remove the two screws (4) that secure the sensor to the front door module carrier panel (2).
5. Remove the side impact sensor from the front door.

B-PILLAR - STANDARD CAB

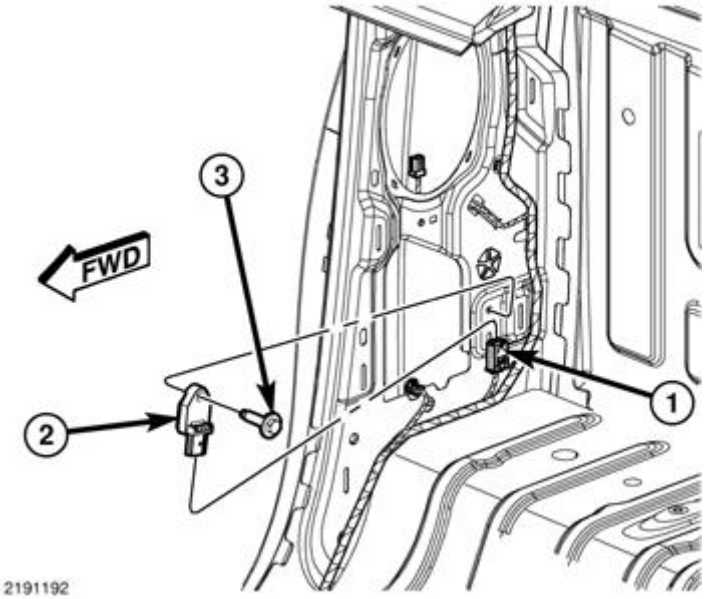

Fig. 111: Side Impact Sensor (B-Pillar - Standard Cab)
Courtesy of CHRYSLER GROUP, LLC

1. Adjust the driver or passenger side front seat to its most forward position for easiest access to the B-pillar trim.
2. Disconnect and isolate the battery negative cable. Wait two minutes for the system capacitor to discharge before further service.
3. Remove the trim from the inside of the lower B-pillar. Refer to **PANEL, B-PILLAR TRIM, LOWER, REMOVAL** .
4. Disconnect the body wire harness connector (1) from the side impact sensor (2) connector receptacle.
5. Remove the screw (3) that secures the sensor to the inner B-pillar.
6. Remove the sensor from the inner B-pillar.

B-PILLAR - EXCEPT STANDARD CAB

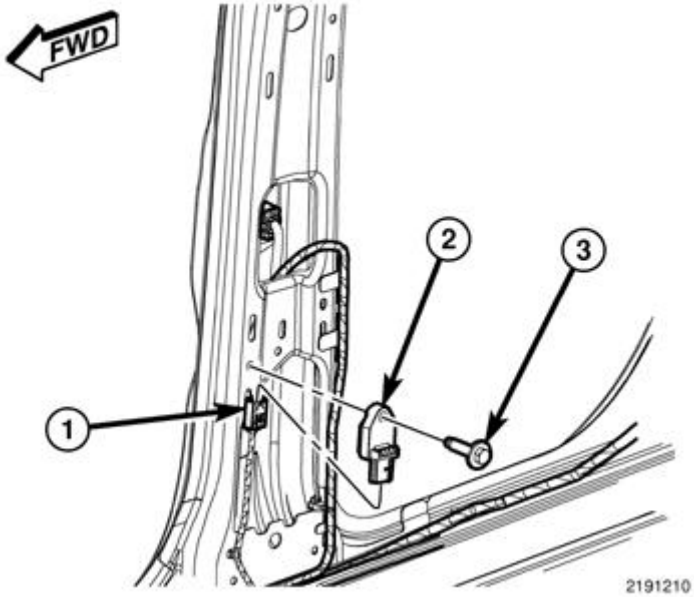

Fig. 112: Side Impact Sensor (B-Pillar)
Courtesy of CHRYSLER GROUP, LLC

1. Adjust the driver or passenger side front seat to its most forward position for easiest access to the B-pillar trim.
2. Disconnect and isolate the battery negative cable. Wait two minutes for the system capacitor to discharge before further service.
3. Remove the trim from the inside of the lower B-pillar. Refer to **PANEL, B-PILLAR TRIM, LOWER, REMOVAL** .
4. Disconnect the body wire harness connector (1) from the side impact sensor (2) connector receptacle.
5. Remove the screw (3) that secures the sensor to the inner B-pillar.
6. Remove the sensor from the inner B-pillar.

C-PILLAR

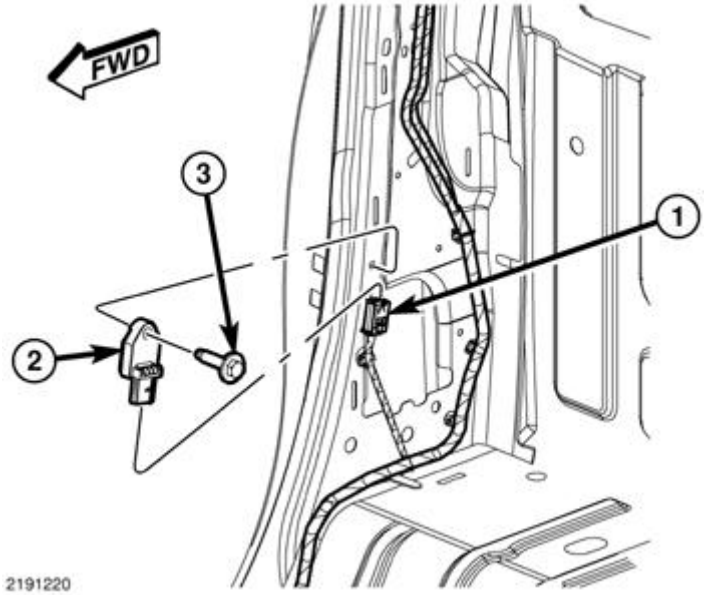

Fig. 113: Side Impact Sensor (C-Pillar)
Courtesy of CHRYSLER GROUP, LLC

1. Disconnect and isolate the battery negative cable. Wait two minutes for the system capacitor to discharge before further service.
2. Remove the trim from the inside of the lower C-pillar. Refer to **PANEL, C-PILLAR TRIM, LOWER, REMOVAL** .
3. Disconnect the body wire harness connector (1) from the side impact sensor (2) connector receptacle.
4. Remove the screw (3) that secures the sensor to the inner C-pillar.
5. Remove the sensor from the inner C-pillar.

INSTALLATION

FRONT

WARNING: **To avoid serious or fatal injury on vehicles equipped with airbags, disable the Supplemental Restraint System (SRS) before attempting any steering wheel, steering column, airbag, seat belt tensioner, impact sensor or instrument panel component diagnosis or service. Disconnect and isolate the battery negative (ground) cable, then wait two minutes for the system capacitor to discharge before performing further diagnosis or service. This is the only sure way to disable the SRS. Failure to take the proper precautions could result in accidental airbag deployment.**

WARNING: **To avoid serious or fatal injury, never strike or drop the Electronic Pedestrian Protection (EPP) system impact sensor, as it can damage the impact sensor or affect its calibration. The EPP impact sensor enables the system to deploy the EPP system active hood hinge actuators. If an impact sensor is accidentally dropped during service, the sensor must be**

scrapped and replaced with a new unit. Failure to observe this warning could result in accidental, incomplete, or improper EPP active hood hinge actuator deployment.

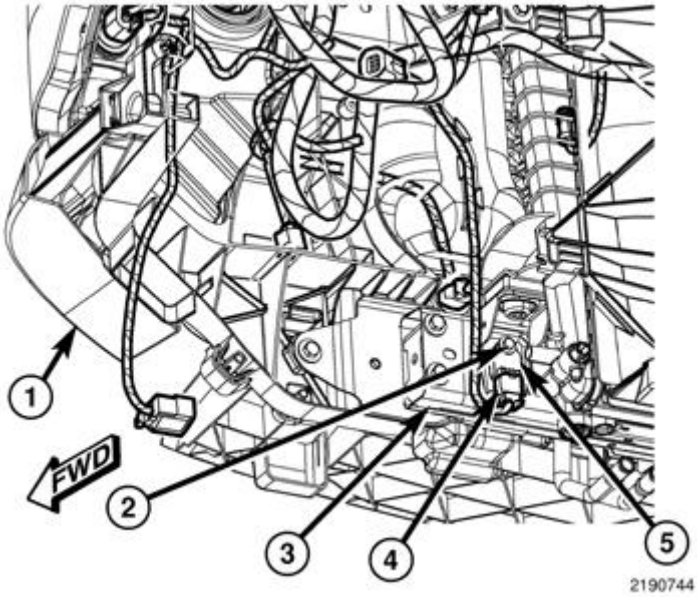

Fig. 114: Left Front Impact Sensor, Connector & Screw
Courtesy of CHRYSLER GROUP, LLC

1. Position the right or left front impact sensor (5) onto the back of the right or left end of the lower radiator cross member (3). Be certain that the anti-rotation pin on the back of the sensor is engaged in the clearance hole of the cross member.
2. Install and tighten the screw (2) that secures the sensor to the back of the cross member. Tighten the screw to 10 N.m (90 in. lbs.).
3. Reconnect the Front End Module (FEM) (1) wire harness connector (4) to the sensor connector receptacle.
4. Do not reconnect the battery negative cable at this time. The Supplemental Restraint System (SRS) Verification Test procedure should be performed following service of any SRS component. Refer to **STANDARD PROCEDURE**.

SIDE

WARNING: **To avoid serious or fatal injury on vehicles equipped with airbags, disable the Supplemental Restraint System (SRS) before attempting any steering wheel, steering column, airbag, seat belt tensioner, impact sensor or instrument panel component diagnosis or service. Disconnect and isolate the battery negative (ground) cable, then wait two minutes for the system capacitor to discharge before performing further diagnosis or service. This is the only sure way to disable the SRS. Failure to take the proper precautions could result in accidental airbag deployment.**

WARNING: To avoid serious or fatal injury, never strike or drop the side impact sensor, as it can damage the impact sensor or affect its calibration. The side impact sensor enables the system to deploy the side Supplemental Restraint System (SRS) components. If an impact sensor is accidentally dropped during service, the sensor must be scrapped and replaced with a new unit. Failure to observe this warning could result in accidental, incomplete, or improper side SRS component deployment.

FRONT DOOR

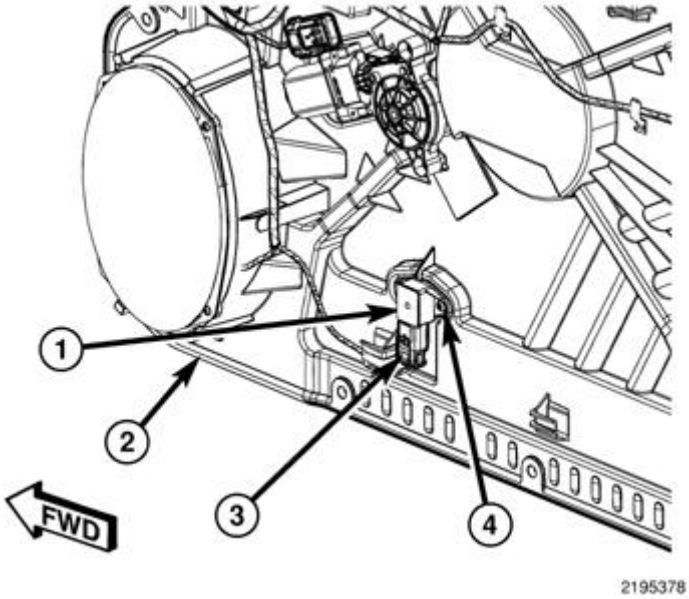

Fig. 115: Side Impact Sensor (Front Door)
Courtesy of CHRYSLER GROUP, LLC

NOTE: Two pressure-type front door side impact sensors are used on all standard cab versions of this vehicle, one each for the left and right sides of the vehicle. These pressure-type impact sensors are also used on club, crew and mega cab versions, but only if they are equipped with the optional seat airbags.

NOTE: Be certain that the gasket between the pressure-type side impact sensor and the front door module carrier panel is in good condition and positioned on the back of the sensor. There MUST be a good seal between the sensor and the module carrier panel for the sensor to operate properly. If the gasket is in poor condition, replace the sensor.

1. Position the side impact sensor (1) to the right or left front door module carrier panel (2). When the sensor is correctly positioned, the arrow on the sensor label will be pointed toward the bottom of the door.
2. Install and tighten the two screws (4) that secure the sensor to the carrier panel. Tighten the screws securely.
3. Reconnect the front door module wire harness connector (3) to the sensor connector receptacle.

4. Reinstall the trim panel onto the inside of the right or left front door. Refer to **PANEL, DOOR TRIM, INSTALLATION** .
5. Do not reconnect the battery negative cable at this time. The Supplemental Restraint System (SRS) Verification Test procedure should be performed following service of any SRS component. Refer to **STANDARD PROCEDURE**.

B-PILLAR - STANDARD CAB

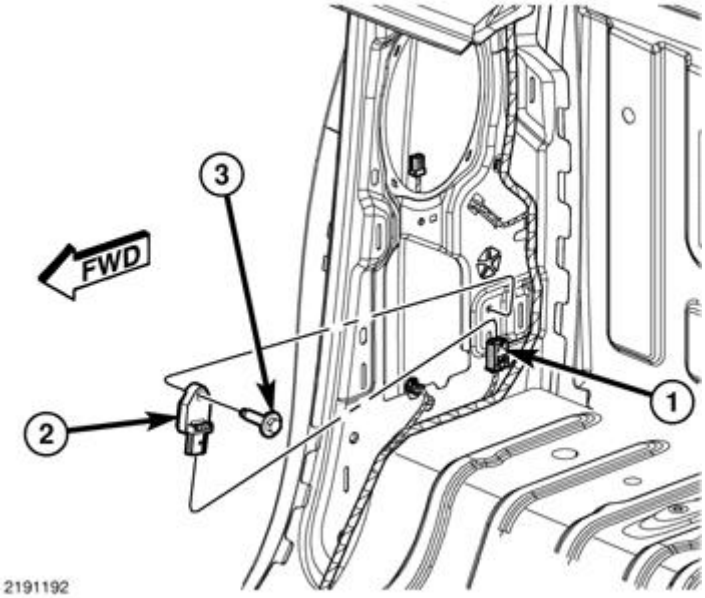

Fig. 116: Side Impact Sensor (B-Pillar - Standard Cab)
Courtesy of CHRYSLER GROUP, LLC

1. Position the side impact sensor (2) to the inside of B-pillar. Be certain that the anti-rotation pin on the back of the sensor is engaged in the clearance hole of the B-pillar.
2. Install and tighten the screw (3) that secures the sensor to the inner B-pillar. Tighten the screw to 9 N.m (80 in. lbs.).
3. Reconnect the body wire harness connector (1) to the sensor connector receptacle.
4. Reinstall the trim onto the inside of the lower B-pillar. Refer to **PANEL, B-PILLAR TRIM, LOWER, INSTALLATION** .
5. Do not reconnect the battery negative cable at this time. The Supplemental Restraint System (SRS) Verification Test procedure should be performed following service of any SRS component. Refer to **STANDARD PROCEDURE**.

B-PILLAR - EXCEPT STANDARD CAB

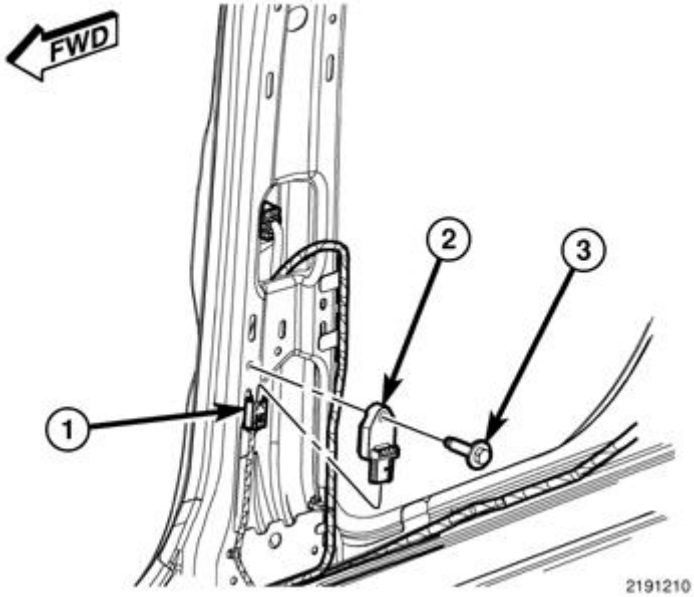

Fig. 117: Side Impact Sensor (B-Pillar)
Courtesy of CHRYSLER GROUP, LLC

1. Position the side impact sensor (2) to the inside of B-pillar. Be certain that the anti-rotation pin on the back of the sensor is engaged in the clearance hole of the B-pillar.
2. Install and tighten the screw (3) that secures the sensor to the inner B-pillar. Tighten the screw to 9 N.m (80 in. lbs.).
3. Reconnect the body wire harness connector (1) to the sensor connector receptacle.
4. Reinstall the trim onto the inside of the lower B-pillar. Refer to **PANEL, B-PILLAR TRIM, LOWER, INSTALLATION** .
5. Do not reconnect the battery negative cable at this time. The Supplemental Restraint System (SRS) Verification Test procedure should be performed following service of any SRS component. Refer to **STANDARD PROCEDURE**.

C-PILLAR

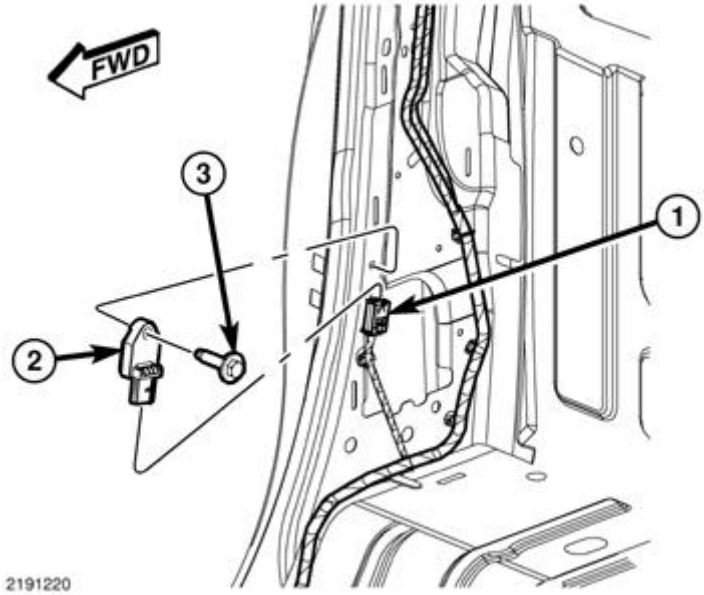

Fig. 118: Side Impact Sensor (C-Pillar)
Courtesy of CHRYSLER GROUP, LLC

1. Position the side impact sensor (2) to the inside of C-pillar. Be certain that the anti-rotation pin on the back of the sensor is engaged in the clearance hole of the C-pillar.
2. Install and tighten the screw (3) that secures the sensor to the inner B-pillar. Tighten the screw to 9 N.m (80 in. lbs.).
3. Reconnect the body wire harness connector (1) to the sensor connector receptacle.
4. Reinstall the trim onto the inside of the lower C-pillar. Refer to **PANEL, C-PILLAR TRIM, LOWER, INSTALLATION** .
5. Do not reconnect the battery negative cable at this time. The Supplemental Restraint System (SRS) Verification Test procedure should be performed following service of any SRS component. Refer to **STANDARD PROCEDURE**.

SWITCH, SEAT BELT, DRIVER

DESCRIPTION

DESCRIPTION

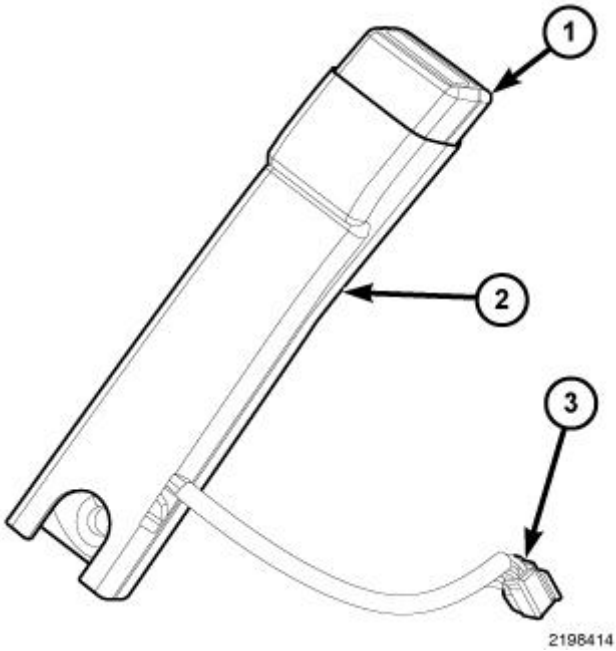

Fig. 119: Driver Side Seat Belt Switch
Courtesy of CHRYSLER GROUP, LLC

All vehicles are equipped with a driver side seat belt switch that is a small, normally open, single pole, single throw, leaf contact, momentary switch. The driver side seat belt switch is integral to the buckle (1) of the driver side front seat belt buckle, which is located within a molded plastic scabbard (2) and secured by a screw to the inboard side of the driver side front seat cushion frame.

The seat belt switch is connected to the vehicle electrical system through a two-lead pigtail wire and connector (3) on the seat belt buckle-half, which is connected to a wire harness connector and take out of the seat wire harness routed beneath the driver side front seat cushion in the passenger compartment.

The seat belt switch cannot be adjusted or repaired. If ineffective or damaged, the entire driver side front seat belt buckle-half unit must be replaced.

OPERATION

OPERATION

The driver side seat belt switch is designed to control a path to ground for the seat belt switch sense input of the Occupant Restraint Controller (ORC). When the driver side front seat belt tip-half is inserted into the seat belt buckle, the switch closes the path to ground; and, when the driver side front seat belt tip-half is removed from the seat belt buckle, the switch opens the ground path. The switch is actuated by the latch mechanism within the seat belt buckle.

The seat belt switch is connected in series between ground and the seat belt switch sense input of the ORC. The ORC relays an electronic **seat belt switch status** message to other electronic modules in the vehicle over the Controller Area Network (CAN) data bus. The seat belt switch receives ground at all times through its pigtail wire connection to the seat wire harness from a take out of the body wire harness. An eyelet terminal connector

on the body wire harness ground take out is secured beneath a ground screw to the body sheet metal.

The seat belt switch as well as the hard wired circuits between the switch and the ORC may be diagnosed using conventional diagnostic tools and procedures. Refer to the appropriate wiring information. However, conventional diagnostic methods will not prove conclusive in the diagnosis of the electronic controls or communication between modules related to seat belt switch operation. The most reliable, efficient and accurate means to diagnose the seat belt switch requires the use of a diagnostic scan tool. Refer to the appropriate diagnostic information.

TENSIONER, SEAT BELT

DESCRIPTION

DESCRIPTION

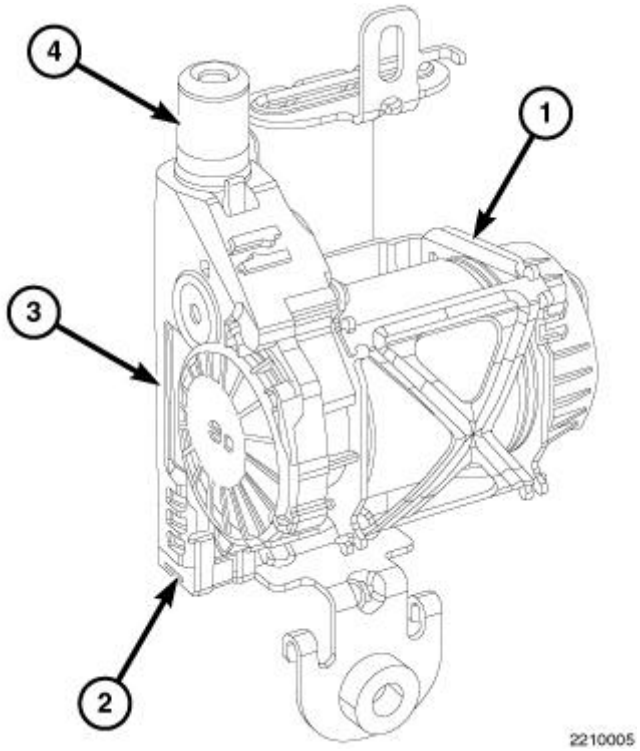

Fig. 120: Seat Belt Retractor Tensioner
Courtesy of CHRYSLER GROUP, LLC

Seat belt retractor tensioners supplement the dual front airbag system for all versions of this vehicle. These tensioners are integral to the front seat belt and retractor units (1), which are secured to the B-pillars on the right and left sides of the vehicle. The retractors are concealed beneath the molded plastic B-pillar trim. The seat belt tensioner consists primarily of a molded plastic tensioner housing (3), a tubular metal piston housing (4), a piston, a short rack gear, a set of pinion gears and a pyrotechnically activated gas generator (2).

All of these components are located on one side of the retractor spool on the outside of the retractor housing. The seat belt tensioners are controlled by the Occupant Restraint Controller (ORC) and are connected to the vehicle electrical system through dedicated take outs of the body wire harness by keyed and latching molded

plastic connector insulators to ensure a secure connection.

The retractor tensioners cannot be repaired and, if ineffective or damaged, the entire front seat belt and retractor unit must be replaced. The retractor tensioners are not intended for reuse and must be replaced following any front airbag deployment. A locked retractor that will not allow the seat belt webbing to be retracted or extracted is a sure indication that the seat belt tensioner has been deployed and requires replacement. Refer to **RETRACTOR, SEAT BELT, REMOVAL**.

OPERATION

OPERATION

The seat belt tensioners are deployed in conjunction with the dual front airbags by a signal generated by the Occupant Restraint Controller (ORC) through the driver or passenger seat belt tensioner line 1 and line 2 (or squib) circuits. When the ORC sends the proper electrical signal to the tensioners, the electrical energy generates enough heat to initiate a small pyrotechnic gas generator.

The gas generator is installed in one end of the tubular metal piston housing, which contains a piston and a small rack gear. As the gas expands, it pushes the piston and the rack gear through the tube. The rack gear engages a pinion gear that drives a gear set within the tensioner housing, which rotates the seat belt retractor spool causing slack to be removed from the front seat belt webbing.

Removing excess slack from the front seat belts not only keeps the occupants properly positioned for an airbag deployment following a frontal impact of the vehicle, but also helps to reduce injuries that the occupant might experience in these situations as a result of harmful contact with the steering wheel, steering column, instrument panel or windshield. Also, the seat belt retractor has a two-stage mechanism that is designed to control the loading being applied to the occupants by the seat belts during a frontal impact, further reducing the potential for occupant injuries.

The ORC monitors the condition of the seat belt tensioners through circuit resistance, and will illuminate the airbag indicator in the ElectroMechanical Instrument Cluster (EMIC) (also known as the Cab Compartment Node/CCN) and store a Diagnostic Trouble Code (DTC) for any fault that is detected. Proper diagnosis of the seat belt tensioner gas generator and squib circuits requires the use of a diagnostic scan tool. Refer to the appropriate diagnostic information.

2012 STEERING

Steering System - Ram Pickup

DESCRIPTION

DESCRIPTION

CAUTION: MOPAR® ATF+4 is to be used in the power steering system. No other power steering or automatic transmission fluid is to be used in the system. Damage may result to the power steering pump and system if any other fluid is used, and do not overfill.

The rack and pinion power steering systems consist of:

- Steering column
- Steering gear (rack and pinion or recirculating ball)
- Belt driven hydraulic steering pump
- Pump pressure and return hoses
- Oil Cooler

DIAGNOSIS AND TESTING

STEERING SYSTEM DIAGNOSIS CHARTS

NOTE: There are four diagnosis charts following that cover POWER STEERING NOISE, BINDING AND STICKING, INSUFFICIENT ASST. OR POOR RETURN TO CENTER and LOOSE STEERING AND VEHICLE LEAD.

NOTE: * There is some noise in all power steering systems. One of the most common is a hissing sound evident when turning the steering wheel when at a standstill or when parking and the steering wheel is at the end of its travel. Hiss is a very high frequency noise similar to that experienced while slowly closing a water tap. The noise is present in every valve and results when high velocity fluid passes valve orifice edges. There is no relationship between this noise and the performance of the steering system.

NOTE: ** A light clunk may be felt or heard during steering wheel reversal while vehicle is stationary. This results from internal steering gear rack movement at the bushings and in no way affects the performance of the steering system. This movement may be felt in the steering components during steering wheel reversal.

NOTE: * Power steering pump growl/moan/groan results from the development of**

high pressure fluid flow. Normally this noise level should not be high enough to be objectionable.

POWER STEERING NOISE

CONDITION	POSSIBLE CAUSES	EVALUATION/CORRECTION
OBJECTIONABLE HISS OR WHISTLE WHILE TURNING STEERING WHEEL WHEN STATIONARY OR MOVING SLOWLY*	1. Damaged or mispositioned steering column shaft/coupling dash boot seal.	1. Check to ensure boot is properly installed and seals against sheet metal. Reposition or replace steering column shaft/coupling dash boot seal as necessary.
	2. Mis-routed power steering hose.	2. Check routing of power steering hoses. Ensure hoses do not come in unwanted contact with other components and objects.
	3. Restriction in pressure or return hose.	3. Using an electronic listening tool, determine if noise is coming from either pressure or return hose. Replace hose that noise is present within.
	4. Noisy valve in power steering gear.	4. For evaluation and correction, refer to **DIAGNOSIS AND TESTING**.
RATTLE OR EXCESSIVE CLUNK**	1. Power steering gear loose on frame.	1. Check fastener torque and tighten to specifications. Replace as necessary. Check steering wheel center following repair.
	2. Loose shock assembly mounting fasteners at tower or knuckle.	2. Check fastener torque and tighten to specifications.
	3. Excessive play in outer tie rod.	3. Inspect and replace if necessary.
	4. Engine cradle/crossmember mounting fasteners loose at frame or bushings worn.	4. Check fastener torque and tighten to specifications. Inspect bushings and repair as necessary.
	5. Wheel Mounting (Lug) nuts loose.	5. Inspect wheel mounting (Lug) nuts and studs and repair as necessary. Tighten nuts to specifications.
	6. Power steering hose touching the body or frame of vehicle.	6. For evaluation and correction, refer to **PUMP, DIAGNOSIS AND TESTING**.
	7. Stabilizer bar link joints worn (occurs with steering input only when moving, not stationary).	7. At park, jounce only one side of vehicle front to exercise stabilizer bar. Replace stabilizer bar link.
	8. Loose lower control arm mounting bolts at engine cradle, frame or crossmember (occurs with steering input only when moving, not stationary).	8. Check control arm mounting bolts and tighten to specified torque.

	9. Loose intermediate shaft or column.	9. Rotate intermediate (steering) shaft in relationship to gear, checking for free-play. Check column fasteners and tighten to specifications as necessary.
	10. Lower control arm pivot bushing worn (occurs with steering input only when moving, not stationary).	10. Inspect bushings for wear and replace lower control arm as necessary.
	11. Internal power steering gear noise.	11. Drive vehicle on rough road, then steer rapidly back and forth when stopped. Replace power steering gear as necessary.
	12. Loose inner tie rod.	12. Inspect and replace if necessary.
	13. Damaged engine cradle/crossmember.	13. Inspect the cradle/crossmember for cracks or other damage. Replace as necessary.
POPPING NOISE	1. Loose steering gear mounting fasteners.	1. Check fasteners for proper torque and retighten as necessary.
	2. Loose outer tie rod mounting nut or jam nut.	2. Check fastener torque. Replace nuts as necessary and tighten to specifications.
	3. Loose intermediate (steering) shaft coupling at gear input shaft.	3. Make sure coupling is fully seated on gear input shaft. Retighten or re-seat as necessary.
	4. Worn tie rod (outer or inner).	4. Inspect and replace if necessary.
	5. Worn axle half-shaft.	5. For evaluation and correction, refer to **DIAGNOSIS AND TESTING - HALF SHAFT** .
CHIRP OR SQUEAL (POWER STEERING PUMP)	1. Loose power steering pump drive belt.	1. Inspect belt. Replace belt if worn or glazed. Tighten/adjust power steering pump drive belt if equipped with a manual tensioner.
	2. Pulley alignment incorrect.	2. Realign accessory drives.
	4. Power steering pump noisy (worn bearing/bushing noise).	4. Using an electronic listening tool, determine if noise is coming from pump. Replace power steering pump as required.
	5. Generator or water pump noisy.	5. Using an electronic listening tool, determine if noise is coming from Generator or water pump. Replace faulty component.
WHINE, GROWL, MOAN OR GROAN (POWER STEERING PUMP)***	1. Low power steering fluid level.	1. Fill power steering fluid reservoir to proper level and check for leaks (make sure all air is bled from the system fluid).
	2. Air in power steering fluid.	2. Inspect for excessive air bubbles in fluid (fluid will appear foamy and lighter in color). Inspect hoses for leaks and replace as necessary. Bleed air from fluid. Refer to **PUMP, STANDARD PROCEDURE**.

	3. Power steering hose touching body or frame of vehicle.	3. For evaluation and correction, refer to **PUMP, DIAGNOSIS AND TESTING**.
	4. Wear of power steering pump internal components.	4. For evaluation and correction, refer to **PUMP, DIAGNOSIS AND TESTING**.
COLD START WHINE OR MOAN (POWER STEERING PUMP)***	1. Low power steering fluid level.	1. Fill power steering fluid reservoir to proper level and check for leaks (make sure all air is bled from the system fluid).
	2. Extremely low ambient temperature (near 0 F° (-18 C°) or below)	2. Some noise is expected as pump attempts to pull cold, thick fluid. Noise should go away as vehicle warms up. Acceptable levels of excessive noise are one second at 0 F° (-18 C°) and 15 seconds at -20 F° (-29 C°). If noise is excessive, look for poor sealing on the return hose or a possible fluid leak.
SQUEAKING OR RUBBING SOUND	1. Steering column shroud or shaft rubbing.	1. While turning the steering wheel, listen down column to locate. Check interference between moving components. Move or realign shrouds or shaft as necessary. Replace components if this does not correct problem.
	2. Clockspring inside steering column noisy.	2. Remove clockspring and reinstall steering wheel for testing. If noise is gone, replace clockspring.
	3. Boot/dash seal lubrication inadequate.	3. Remove boot seal and recheck for noise. Lubricate seal as necessary.
	4. Steering gear outer tie rod noisy.	4. While a helper turns the steering wheel, use an electronic listening tool to determine if noise is coming from either outer tie rod. Replace outer tie rods as necessary.
	5. Steering gear internally noisy.	5. Remove dash seal boot, then exercise the steering wheel. If noise is still present at gear, replace steering gear.
SCRUBBING OR KNOCKING SOUND.	1. Incorrect tire or wheel size.	1. Replace incorrect size tire or wheel with original equipment size.
	2. Worn motor or transmission mount.	2. Drive vehicle, moving accelerator pedal rapidly up and down attempting to locate noise. Try in both forward and reverse. Replace mounts as necessary.
	3. Tires contacting wheel well.	3. Make sure wheel house is properly positioned. If not, reposition as necessary. If steering wheel is properly centered, check steering gear travel left to right by rotating the steering wheel to each stop. Steering wheel should rotate the same amount in both directions from center. If not, replace steering gear.

	4. Interference between moving steering components and other components.	4. Check for bent or misaligned components. Correct or replace as necessary.
	5. Accessory drive pulley rubbing against another component.	5. Check pulleys for wear. Check for worn engine or transmission mount. Reposition components or replace mounts as necessary.

BINDING AND STICKING

CONDITION	POSSIBLE CAUSE	CORRECTION
DIFFICULT TO TURN WHEEL STICKS OR BINDS	1. Low fluid level.	1. Fill to proper level.
	2. Tire pressure.	2. Adjust tire pressure.
	3. Steering components (ball joints/tie rod ends).	3 Inspect and repair as necessary.
	4. Loose belt.	4. Adjust or replace.
	5. Low pump pressure.	5. Pressure test and replace if necessary.
	6. Intermediate shaft binding.	6. Replace intermediate shaft.
	7. Column shaft coupler binding.	7. Replace coupler.
	8. Steering gear worn.	8. Replace gear.
	9. Pump seized / Stuck valve	9. Replace pump.

INSUFFICIENT ASST. OR POOR RETURN TO CENTER

CONDITION	POSSIBLE CAUSE	CORRECTION
HARD TURNING OR MOMENTARY INCREASE IN TURNING EFFORT	1. Tire pressure.	1. Adjust tire pressure.
	2. Low fluid level.	2. Fill to proper level.
	3. Loose belt.	3. Adjust or replace.
	4. Low pump pressure.	4. Pressure test and repair as necessary.
	5. Internal gear leak.	5. Replace gear.
STEERING WHEEL DOES NOT WANT TO RETURN TO CENTER POSITION	1. Tire pressure.	1. Adjust tire pressure.
	2. Wheel alignment.	2. Align front end.
	3. Lack of lubrication.	3. Inspect and lubricate suspension components.
	4. High friction in steering gear.	4. Replace gear.

LOOSE STEERING AND VEHICLE LEAD

CONDITION	POSSIBLE CAUSE	CORRECTION
EXCESSIVE PLAY IN STEERING WHEEL	1. Worn or loose suspension or steering components.	1. Inspect and repair as necessary.
	2. Worn or loose wheel bearings.	2. Inspect and repair or adjust bearings.
	3. Steering gear mounting.	3. Tighten gear mounting bolts to

		specification.
	4. Gear out of adjustment.	4. Replace gear.
	5. Worn or loose steering coupler.	5. Inspect and replace as necessary.
VEHICLE PULLS OR LEADS TO ONE SIDE.	1. Tire Pressure.	1. Adjust tire pressure.
	2. Radial tire lead.	2. Rotate tires.
	3. Brakes dragging.	3. Repair as necessary.
	4. Wheel alignment.	4. Align front end.
	5. Steering gear valve bias.	5. Replace steering gear.

NOTE: *** Steering shudder can be expected in new vehicles and vehicles with recent steering system repairs. Shudder should dissipate after the vehicle has been driven several weeks.**

NOTE: **** To evaluate this condition, it may be necessary to disconnect the coupling at the base of the steering column. Turn the steering wheel and feel or listen for internal rubbing in steering column. To avoid damaging the column clockspring, note the following. Before disconnecting coupling, place tires in the straight-ahead position and center steering wheel. Once disconnected, DO NOT rotate steering wheel more than one revolution in either direction and place steering wheel in original location before reconnecting coupling. If this position is lost, the steering column clockspring must be recentered. Refer to STANDARD PROCEDURE - CLOCKSPRING CENTERING .**

NOTE: ***** Increased low speed or stationary steering effort can be expected if the steering fluid is at a high temperature. High fluid temperature usually results from high engine rpm due to trailer towing, ascending grades, or racing the engine for prolonged periods of time.**

POWER STEERING FLOW AND PRESSURE

The following procedure is used to test the operation of the power steering system on the vehicle. This test will provide the gallons per minute (GPM) or flow rate of the power steering pump along with the maximum relief pressure. Perform test any time a power steering system problem is present. This test will determine if the power steering pump or power steering gear is not functioning properly. The following pressure and flow test is performed using Power Steering Kit (special tool #6815, Kit, Power Steering) and Power Steering Kit (special tool #6893A, Kit, Power Steering).

GAS ENGINE TOOL CONNECTIONS

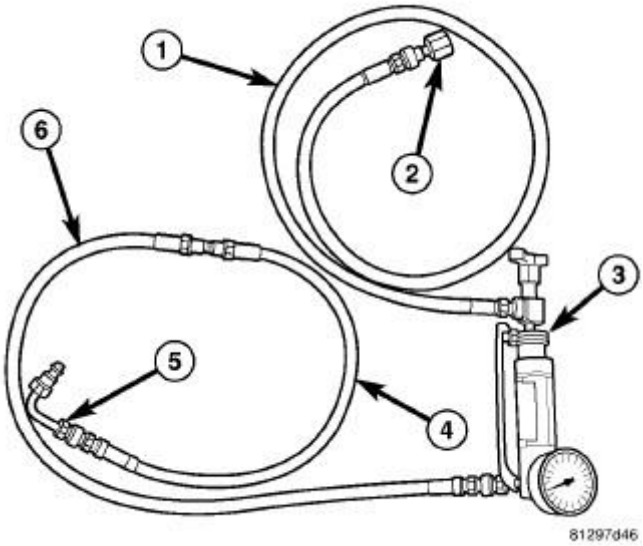

Fig. 1: Power Steering Analyzer Components
Courtesy of CHRYSLER GROUP, LLC

1. Connect Hose Assembly (special tool #6959, Assembly, Hose) (1) to the valve side of Power Steering Analyzer (special tool #6800, Analyzer, Power Steering) (3), and connect Adapter (special tool #6826, Adapter, LH P/S Tester) (2) to the hose assembly.
2. Connect Power Steering Hose (special tool #6713, Hose, Power Steering) (6) to the gauge side of Power Steering Analyzer (special tool #6800, Analyzer, Power Steering) (3), and connect P/S Adapter (special tool #6825A, Adapter, Power Steering) or (special tool #6865, Adapter, Power Steering (Jeep)) (as necessary for clearance) to the hose assembly.
3. disconnect the P/S pump pressure line at the P/S pump.
4. Connect the hose from the valve side of the Power Steering Analyzer (special tool #6800, Analyzer, Power Steering) (3) to the pressure line at the P/S pump.
5. Connect the hose from the gauge side of the Power Steering Analyzer (special tool #6800, Analyzer, Power Steering) (3) to the P/S pump.
6. Proceed with the Flow and Pressure Test. Refer to **TEST PROCEDURE**.

DIESEL ENGINE TOOL CONNECTIONS

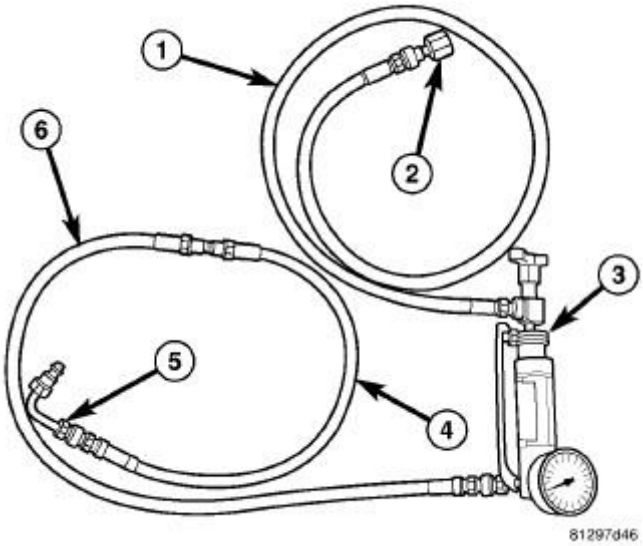

Fig. 2: Power Steering Analyzer Components
Courtesy of CHRYSLER GROUP, LLC

1. Connect Hose Assembly (special tool #6959, Assembly, Hose) (1) to the valve side of Power Steering Analyzer (special tool #6800, Analyzer, Power Steering) (3), and connect Adapter (special tool #8185-2, Adapter, Power Steering Tester) (2) to the hose assembly.
2. Connect Power Steering Hose (special tool #6713, Hose, Power Steering) (6) to the gauge side of Power Steering Analyzer (special tool #6800, Analyzer, Power Steering) (3), and connect P/S Adapter (special tool #8630-1, Adapter Power Steering) (5) to the hose assembly.
3. Disconnect the P/S pump pressure line at the hydro-boost connection.
4. Connect the hose from the valve side of the Power Steering Analyzer (special tool #6800, Analyzer, Power Steering) (3) to the hydro-boost line.
5. Connect the hose from the gauge side of the Power Steering Analyzer (special tool #6800, Analyzer, Power Steering) (3) to the P/S pump pressure line at the hydro-boost connection.
6. Proceed with the Flow and Pressure Test. Refer to **TEST PROCEDURE**.

TEST PROCEDURE

NOTE: Check the power steering belt to make sure that it is in good condition and properly adjusted.

NOTE: If fluid leaked from the steering system, it should be filled to correct level prior to starting the engine.

1. Open the test valve completely.
2. Start engine and let idle long enough to circulate power steering fluid through flow/pressure test gauge and to get air out of the fluid. Then shut off engine.
3. Check fluid level, add fluid as necessary. Start engine again and let idle.

4. Gauge should read below 2068 kPa (300 psi), If above specification, inspect the hoses for restrictions and repair as necessary.
5. Increase the engine speed to 1500 RPM and read the flow meter. If the flow rate (GPM) is below specification, (refer to **PUMP SPECIFICATION** for GPM) the pump should be replaced.

CAUTION: The following test procedure involves testing maximum pump pressure output and flow control valve operation. Do not leave the valve closed for more than three seconds as the pump could be damaged.

6. Close valve fully three times and record highest pressure indicated each time. **All three readings must be above specifications and within 345 kPa (50 psi) of each other.**
   - If the pressures are above specifications but not within 345 kPa (50 psi) of each other, replace the pump.
   - If the pressures are within 345 kPa (50 psi) of each other but below specifications, replace the pump.

CAUTION: Do not force the pump to operate against the stops for more than 2 to 3 seconds at a time because, pump damage will result.

7. Open the test valve and turn the steering wheel to the extreme left **AND** right positions three times against the stops. Record the highest pressure reading at each position. If pressures readings are not within 50 psi of each other, the gear is leaking internally and must be replaced.

PUMP SPECIFICATION

GEAR TYPE	RELIEF PRESSURE	FLOW RATE (GPM) AT 1500 RPM
Rack and Pinion	11135 kPa (1615 psi)	3.0 - 3.5
Recirculating Ball	12065 kPa (1750 psi)	3.5 - 4.0

STANDARD PROCEDURE

STANDARD PROCEDURE - OUTER TIE ROD END LUBRICATION

NOTE: View is typical.

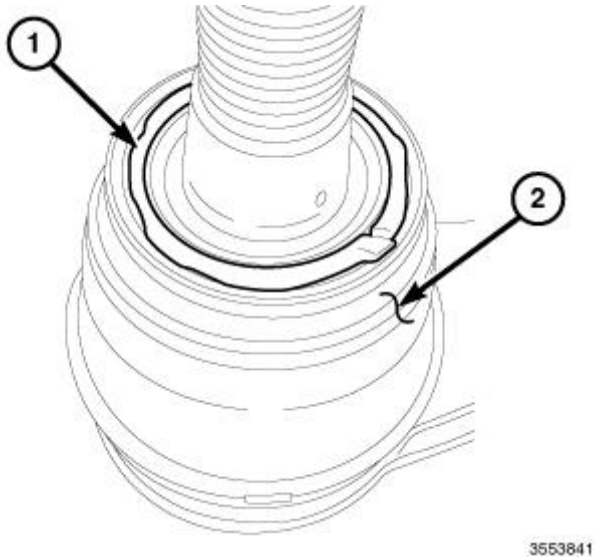

Fig. 3: Locating Grease & Tie Rod End Boot
Courtesy of CHRYSLER GROUP, LLC

NOTE: **If a new tie rod end is to be installed, make sure the boot (2) is properly lubricated.**

Any time the outer tie rod end is disconnected from the knuckle, before assembly, clean all old grease and debris from the boot with a clean cloth and apply outer tie rod grease P/N 68088623AA (1) to the boot (2) as shown in illustration.

SPECIAL TOOLS

SPECIAL TOOLS

	10087-2A - Adapter Wrench, Inner Tie Rod 10087-3 - Wrench, Inner Tie Rod (Originally Shipped In Kit Number(s) 10100, 10130.) 10390 - Separator, Tie Rod 10403 - Separator, Drag Link 6713 - Hose, Power Steering 6800 - Analyzer, Power Steering 6815 - Kit, Power Steering (Originally Shipped In Kit Number(s) 6784, 6809, 6898.) 6825A - Adapter, Power Steering (Originally Shipped In Kit Number(s) 6893A, 6894, 6895, 6897, 6898, 8887, 8887CC.) 6826 - Adapter, LH P/S Tester (Originally Shipped In Kit Number(s) 6893A, 6894, 6895, 6897, 6898.) 6865 - Adapter, Power Steering (Jeep) (Originally Shipped In Kit Number(s) 6896.) 6893A - Kit, Power Steering

	(Originally Shipped In Kit Number(s) 6896.)
	6959 - Assembly, Hose (Originally Shipped In Kit Number(s) 6945, 6946, 6947, 6948, 6949.)
	8185-2 - Adapter, Power Steering Tester (Originally Shipped In Kit Number(s) 8701, 8701CC.)
	8630-1 - Adapter Power Steering (Originally Shipped In Kit Number(s) 8721, 8721CC, 8844, 8844CC.)
	8677 - Remover, Ball Joint (Originally Shipped In Kit Number(s) 8685, 8685CC, 8712, 9973, 9974, 9975.)
	9360 - Remover, Ball Joint (Originally Shipped In Kit Number(s) 9329, 9515, 9516, 9516-CAN, 9517, 9517-CAN, 9518, 9519, 9540, 9541.)
	9615A - Remover, Pitman Arm
	9688A - Cap Adapter, Power Steering Pump (Originally Shipped In Kit Number(s) 10075A-DOD, 10075-CHRYSLER, 10075-DODGE.)
	C-3894-A - Puller, Tie Rod (Originally Shipped In Kit Number(s) 9202, 9202A-CAN, 9202CC, 9299, 9299CC, 9299CC, 9300A-CAN.)
	C-4207-A - Vacuum Pump, Hand
	L-4407A - Puller, Gear

COLUMN

DESCRIPTION

DESCRIPTION

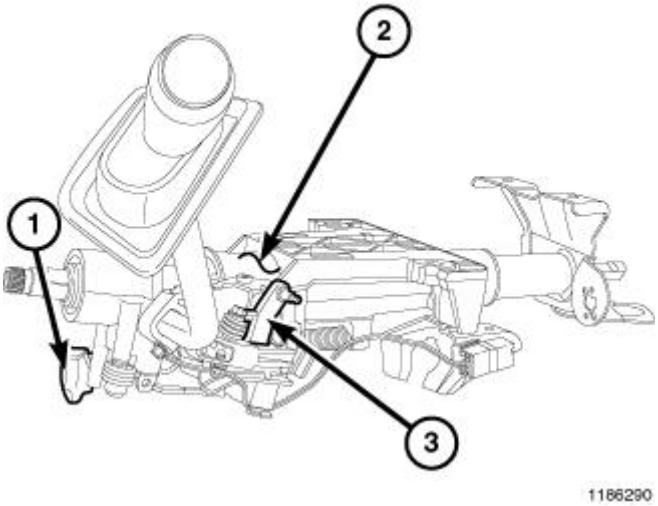

Fig. 4: Steering Column Assembly
Courtesy of CHRYSLER GROUP, LLC

The tilt and standard column (2) has been designed to be serviced as an assembly; less wiring, switches,

shrouds, steering wheel, etc. Most steering column components can be serviced without removing the steering column from the vehicle. The adjustable pedal switch is now mounted on the left side of the steering column below the multi-function switch and the ignition switch has been moved to the instrument panel.

To service the steering wheel, switches or airbag, follow all WARNINGS and CAUTIONS. Refer to **WARNING** .

WARNING: The airbag system is a sensitive, complex electro-mechanical unit. Before attempting to diagnose, remove or install the airbag system components you must first disconnect and isolate the battery negative (ground) cable. Then wait two minutes for the system capacitor to discharge. Failure to do so could result in accidental deployment of the airbag and possible personal injury. The fasteners, screws, and bolts, originally used for the airbag components, have special coatings and are specifically designed for the airbag system. They must never be replaced with any substitutes. Anytime a new fastener is needed, replace with the correct fasteners provided in the service package or fasteners listed in the parts books.

CAUTION: Do not hammer on steering column shaft. This may cause damage to the shaft or bearing.

CAUTION: Do not attempt to remove the pivot bolts to disassemble the tilting mechanism. Do not remove shaft lock plate or plate retainer. This will damage the column.

CAUTION: Do not attempt to remove or modify the park lock slider or link.

NOTE: When servicing the steering wheel after removing the old bolt, a new bolt must be used when installing.

NOTE: When servicing the coupler a new bolt must be used when installing.

DIAGNOSIS AND TESTING

DIAGNOSIS AND TESTING - STEERING COLUMN

The steering column bracket rear mounts that the studs or bolts go through on both sides of the steering column have a plastic/metal capsule designed to fracture or move when enough force to damage the steering column has occurred. There are 2 steering column mounting capsules, one on each side of the column. A collapse may occur where the tube housing may move into the rear bracket assembly OR the tube may move inside the tube housing. Typically if this type of collapse happens, the capsules should have indicated damage. However, if the any of the following steps indicate a collapse, the steering column will still need replacement.

NOTE: **All illustrations within this procedure are typical; however the steering column capsules are the same in all vehicles.**

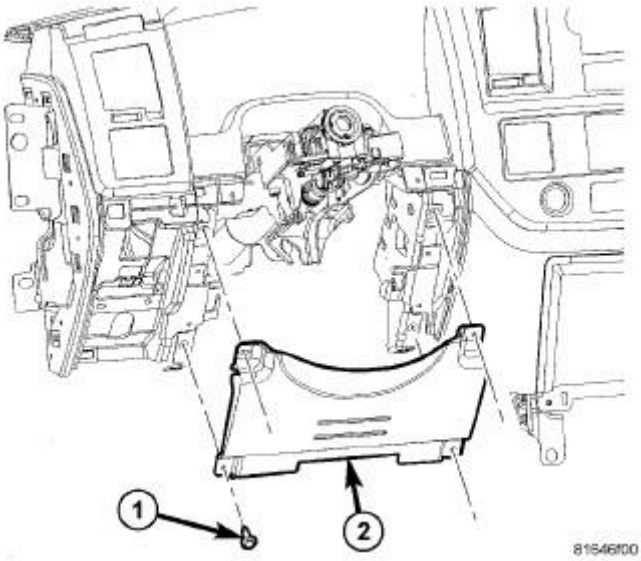

Fig. 5: Retaining Screws & Steering Column Opening Cover Reinforcement
Courtesy of CHRYSLER GROUP, LLC

1. Grasp the steering wheel at the 9 and 3 o'clock positions, and again at the 12 and 6 o'clock positions and attempt to rock the steering wheel back and forth and up and down. If there is excessive movement or an audible clunking or grinding sound, replace the steering column. Refer to **COLUMN, REMOVAL**.
2. Remove the steering column opening cover. Refer to **COVER, STEERING COLUMN OPENING, REMOVAL** .
3. If equipped, remove the retaining screws (1) and the steering column opening cover reinforcement (2).

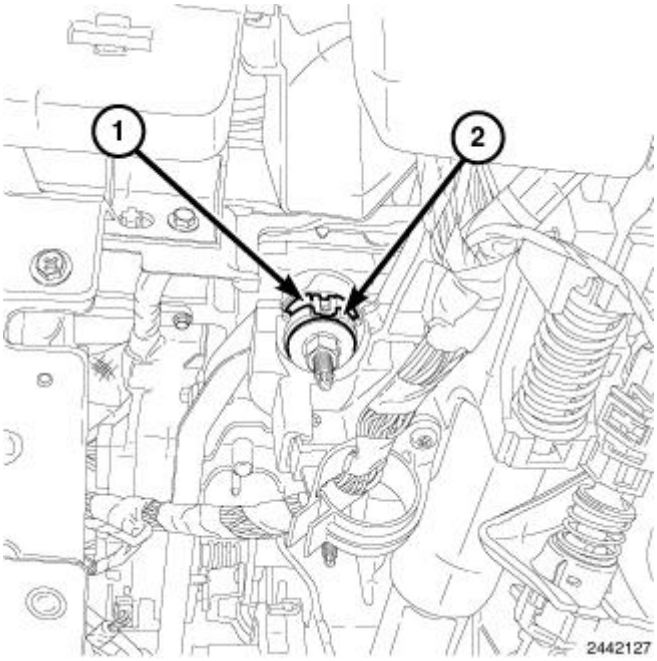

Fig. 6: Inspecting For Fractures In Plastic Area & Movement In Metal Area
Courtesy of CHRYSLER GROUP, LLC

4. Visually inspect for fractures in the plastic area (1) and movement in the metal area (2) of the two capsules while pushing and pulling the steering wheel up and down, and left and right.
5. If capsules are fractured or have moved, replace the steering column. Refer to **COLUMN, REMOVAL**.

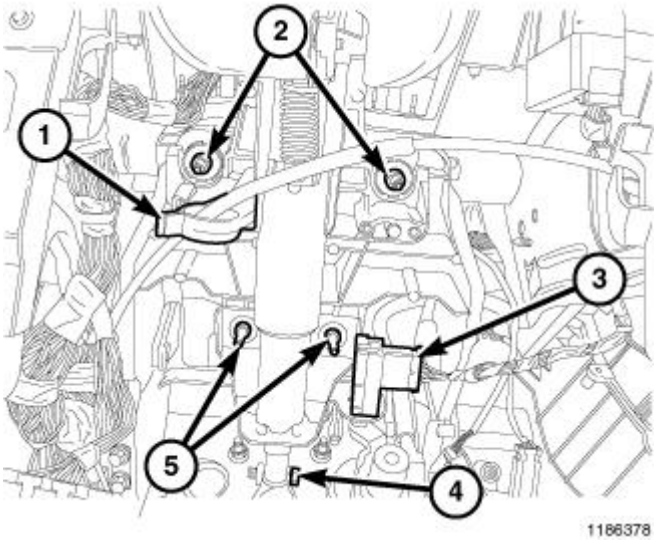

Fig. 7: Steering Column Retaining Bolts Or Nuts
Courtesy of CHRYSLER GROUP, LLC

6. Loosen the steering column retaining bolts (or nuts) (2, 5) several turns but do not remove. Remove **only one** of the rear retaining bolts (or nuts) (2). Verify that the capsule has movement, but it should not slide out of the bracket assembly. If the capsule **does** come out of the bracket assembly, replace the steering

column. Refer to **COLUMN, REMOVAL**.

7. Install the previously removed bolt (or nut) (2) several turns, and remove the opposite one (2) and check that capsule in the same way. If the capsule **does** come out of the bracket assembly, replace the steering column. Refer to **COLUMN, REMOVAL**.
8. Install the steering column retaining bolts (or nuts) (2, 5) and tighten to 27 N.m (20 ft. lbs.).

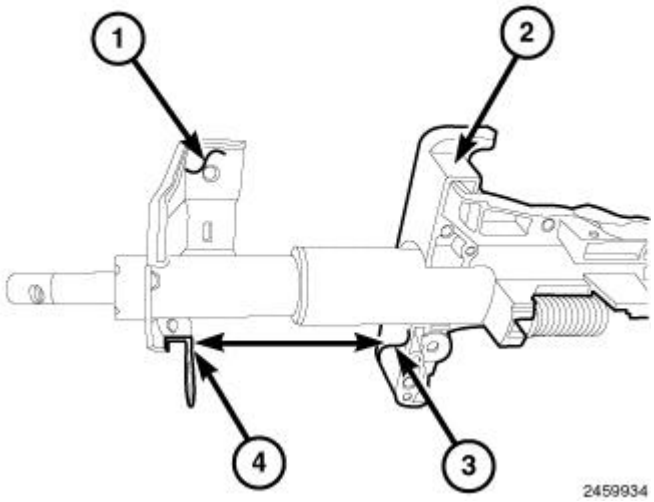

Fig. 8: Measuring Distance From Brake Switch Mounting Bracket To The Flat Of Rear Mounting Bracket
Courtesy of CHRYSLER GROUP, LLC

9. Measure the distance from the brake switch mounting bracket (4) to the flat of the rear mounting bracket (3). If less than 144 mm (5.6875 in. or 5 -11/16 in.), replace the steering column. Refer to **COLUMN, REMOVAL**.
10. If the steering column passes all tests and measurements above, the steering column is not collapsed and should not need to be replaced.

SPECIFICATIONS

SPECIFICATIONS

DESCRIPTION	N.m	Ft. Lbs.	In. Lbs.
Upper Steering Coupling Pinch Bolt	38	28	-
Lower Steering Coupling Upper Pinch Bolt	38	28	-
Lower Steering Coupling Lower Pinch Bolt (to gear)	57	42	-
Steering Wheel Bolt	61	45	-
Steering Column	27	20	239

Mounting Nuts			
Tilt Lever Release Mounting Screws	4.5	-	40
Gearshift Lever Assembly	12	-	105
Gearshift Lever, Lever Only	12	-	105

REMOVAL

REMOVAL

WARNING: Before servicing the steering column the airbag system must be disarmed. Refer to RESTRAINTS - SERVICE INFORMATION . Failure to do so may result in accidental deployment of the airbag and possible personal injury.

CAUTION: All fasteners must be torqued to specification to ensure proper operation of the steering column.

NOTE: 1500 series shown in illustration, others similar.

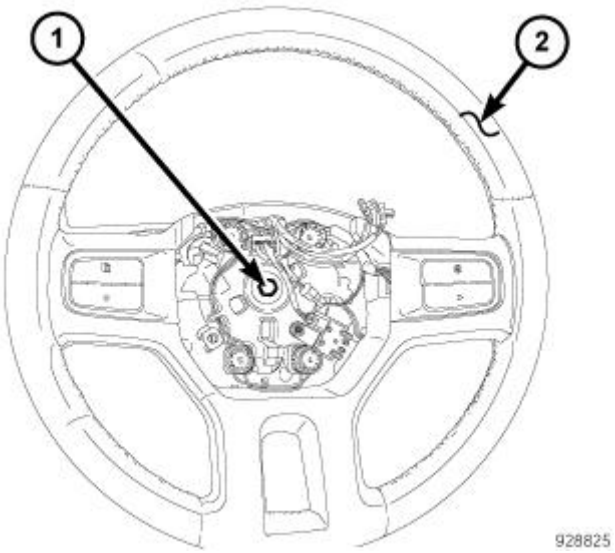

Fig. 9: Steering Wheel Bolt
Courtesy of CHRYSLER GROUP, LLC

1. Position the front wheels **straight ahead** .
2. Disconnect the negative battery cable from the battery.
3. Remove the airbag. Refer to **AIR BAG, DRIVER, REMOVAL** .
4. Partially remove the steering wheel bolt (1) and leave the bolt in the column.

5. Install Steering Wheel Puller (special tool #C-3894-A, Puller, Tie Rod) or equivalent using the top of the bolt to push on, and loosen the steering wheel (2).
6. Remove the tool and steering wheel bolt (1), and discard the steering wheel bolt (1).

NOTE: Route the harness through the steering wheel during removal.

7. Remove the steering wheel (2).
8. Remove the clockspring. Refer to **CLOCKSPRING, REMOVAL** .
9. Remove the upper and lower column shrouds. Refer to **SHROUD, STEERING COLUMN, REMOVAL**.
10. Disconnect the wiring harness routing retainers and connectors to the various components of the steering column.

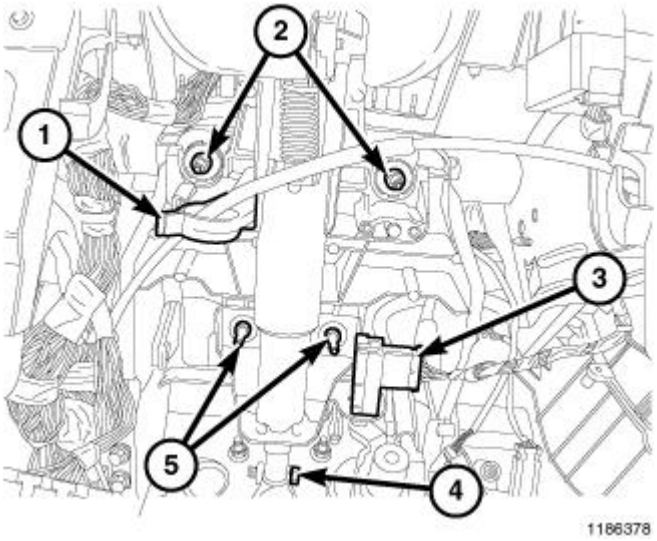

Fig. 10: Steering Column Retaining Bolts Or Nuts
Courtesy of CHRYSLER GROUP, LLC

11. If equipped with a floor shift, remove the shift cable from the routing clip (1).
12. If equipped with a column shift, disconnect the shift cable from the shift assembly lever and remove the cable from the bracket.
13. Remove the brake light switch (3).
14. Remove the upper steering shaft coupler bolt (4) and discard. Separate the shaft from the coupler.
15. Remove the forward steering column mounting nuts (5).
16. Support the steering wheel and remove the forward steering column mounting nuts (2).
17. Remove the steering column assembly from the vehicle.
18. Remove and transfer any necessary components.

INSTALLATION

INSTALLATION

WARNING: Before servicing the steering column the airbag system must be disarmed. Refer to RESTRAINTS - SERVICE INFORMATION . Failure to do so may result in accidental deployment of the airbag and possible personal injury.

CAUTION: All fasteners must be torqued to specification to ensure proper operation of the steering column.

NOTE: 1500 series shown in illustration, others similar.

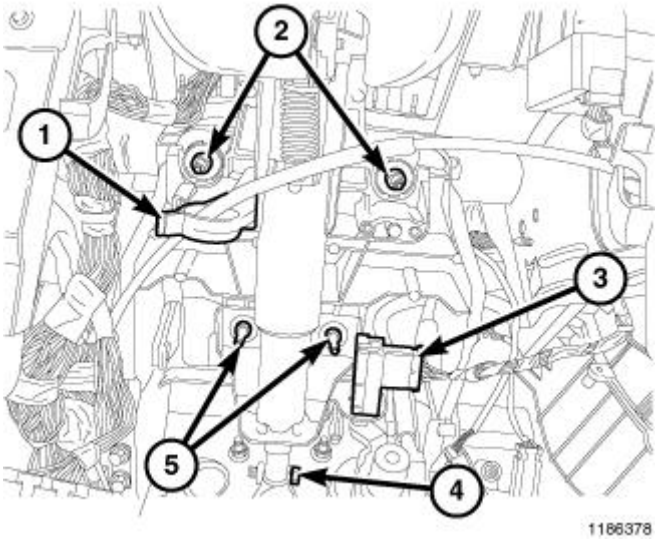

Fig. 11: Steering Column Retaining Bolts Or Nuts
Courtesy of CHRYSLER GROUP, LLC

1. Position the steering column on the dash panel support and loosely install the mounting nuts (2, 5).

NOTE: A new bolt must be used for reinstallation.

2. Install the steering shaft coupler on the steering shaft and loosely install a **new** bolt (4).
3. Center steering column in dash opening and tighten mounting nuts (2, 5) to 27 N.m (20 ft. lbs.).
4. Tighten the coupler bolt (4) to 38 N.m (28 ft. lbs.).
5. Install the brake light switch (3). Refer to **SWITCH, STOP LAMP, INSTALLATION** .
6. If equipped with a floor shift, install the shift cable in the routing clip (1).
7. If equipped with a column shift, install the shift cable to the shift assembly lever and the bracket. Adjust the shift cable.
8. Install the clockspring. Refer to **CLOCKSPRING, INSTALLATION** .
9. Connect the wiring harness routing clips and connectors to the column components.
10. Install the upper and lower shrouds. Refer to **SHROUD, STEERING COLUMN, INSTALLATION**.

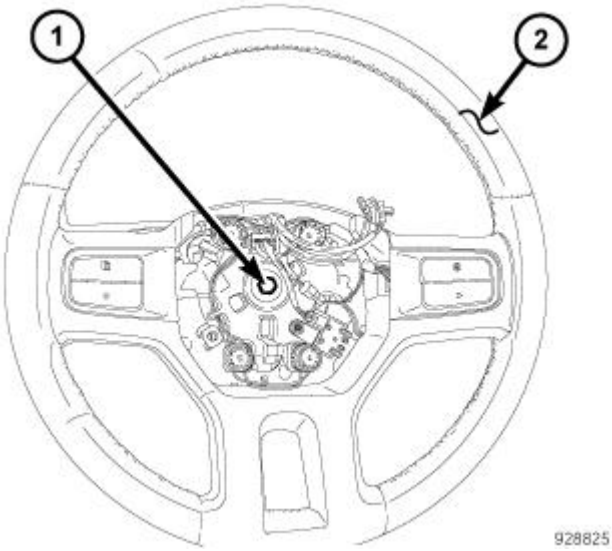

Fig. 12: Steering Wheel Bolt
Courtesy of CHRYSLER GROUP, LLC

11. Align the spline on the steering wheel hub to shaft and install the steering wheel (2).

NOTE: A new bolt must be used for reinstallation.

12. Install a **new** steering wheel bolt (1) and tighten the to 61 N.m (45 ft. lbs.).
13. Install the airbag. Refer to **AIR BAG, DRIVER, INSTALLATION** .
14. Connect the negative battery cable to the battery.
15. Test the operation of the horn, Electronic PRNDL Indicator, lights and any other functions that are steering column operated.

COUPLING, STEERING COLUMN, LOWER

REMOVAL

REMOVAL

1. Disconnect the negative battery cable.
2. Raise and support the vehicle. Refer to **HOISTING, STANDARD PROCEDURE** .
3. Lock the steering wheel with the wheels in the straight position.
4. Remove the left front tire and wheel assembly.

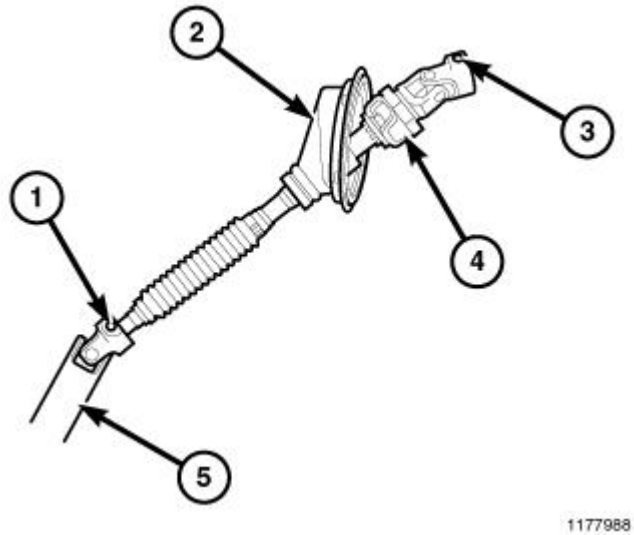

Fig. 13: Lower Coupling & Pinch Bolt
Courtesy of CHRYSLER GROUP, LLC

NOTE: Mark both lower coupling (5) connections for proper installation.

5. Remove and discard the lower coupling upper pinch bolt (1).

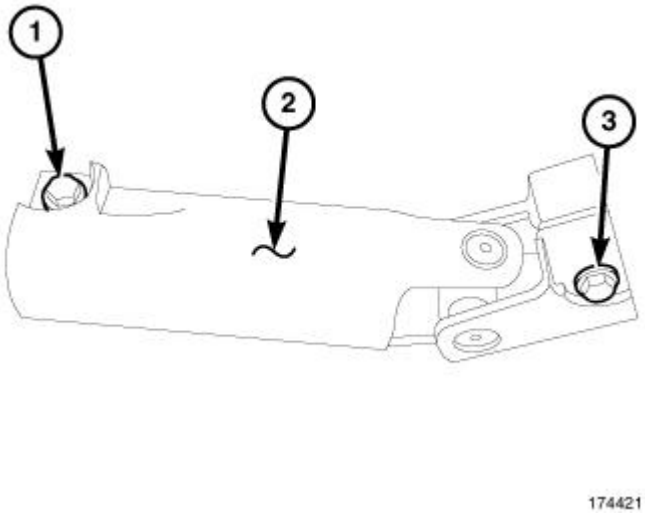

Fig. 14: Lower Steering Coupler
Courtesy of CHRYSLER GROUP, LLC

6. Remove and discard the lower coupling lower pinch bolt (1).
7. Remove the lower steering shaft coupling (2).

INSTALLATION

INSTALLATION

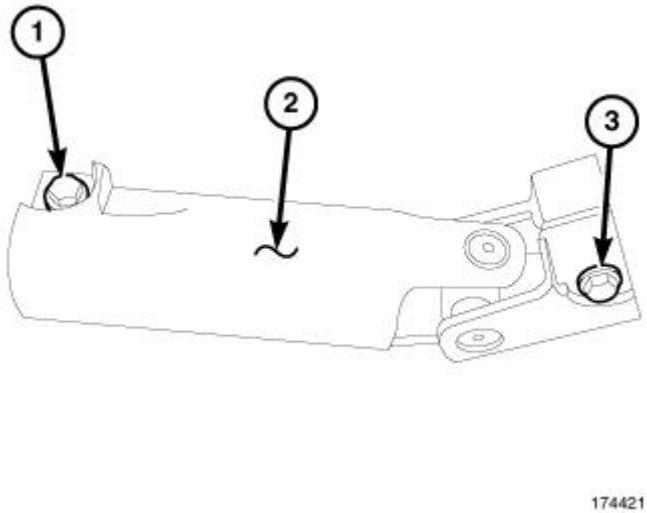

Fig. 15: Lower Steering Coupler
Courtesy of CHRYSLER GROUP, LLC

1. Install the coupling (2) to the steering rack and pinion, and intermediate shaft using the marks made in the removal process.

NOTE: New pinch bolts must be used for reinstallation.

2. Install the lower coupling lower pinch bolt (1) and tighten to 57 N.m (42 ft. lbs.).

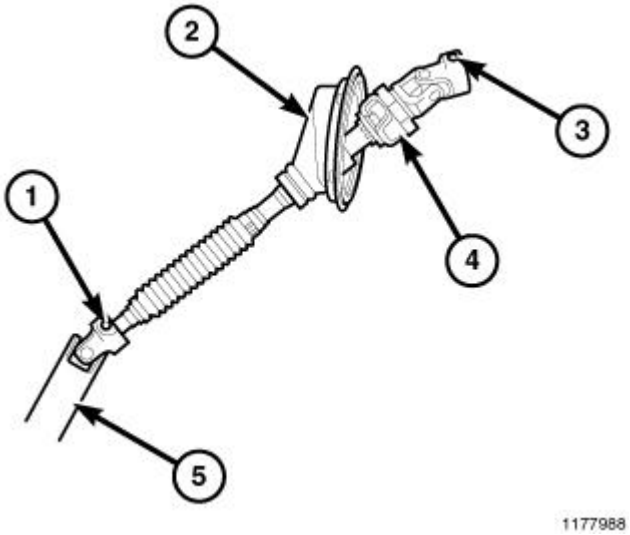

Fig. 16: Lower Coupling & Pinch Bolt
Courtesy of CHRYSLER GROUP, LLC

3. Install the lower coupling upper pinch bolt (1) and tighten to 38 N.m (28 ft. lbs.).
4. Install the left front tire and wheel assembly. Refer to **STANDARD PROCEDURE** .

5. Remove the support and lower the vehicle.
6. Reconnect the negative battery cable.
7. Unlock the steering wheel.

COUPLING, STEERING COLUMN, UPPER

REMOVAL

REMOVAL

1. Disconnect the negative battery cable.
2. Lock the steering wheel with the wheels in the straight position.

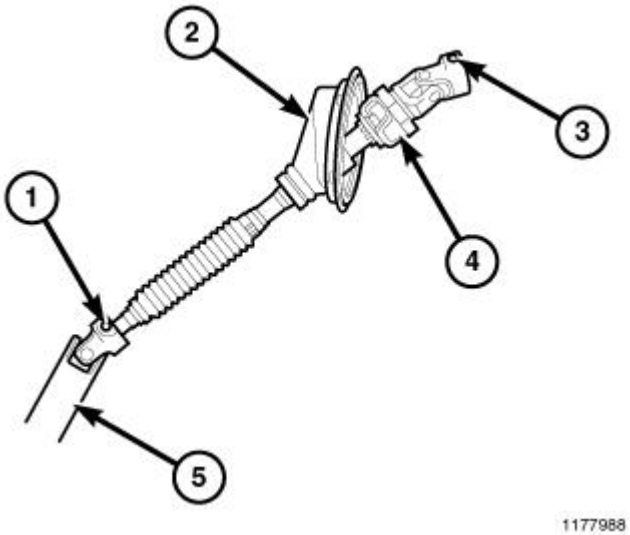

Fig. 17: Upper Steering Coupler Shaft
Courtesy of CHRYSLER GROUP, LLC

3. Remove and discard the upper coupling pinch bolt (3).
4. Lower the upper steering coupling shaft (4) from the column.
5. Remove the upper steering coupling shaft seal (2) from the cowl panel.
6. Remove and discard the lower coupling upper pinch bolt (1).
7. Remove the upper steering coupling shaft (3) from the vehicle.

INSTALLATION

INSTALLATION

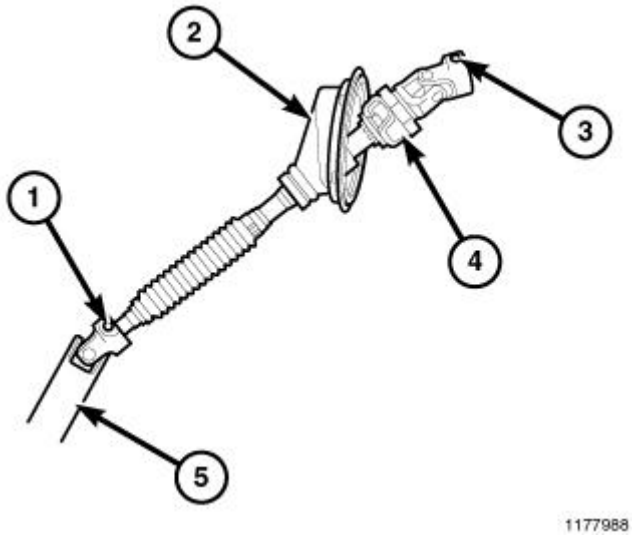

Fig. 18: Upper Steering Coupler Shaft
Courtesy of CHRYSLER GROUP, LLC

1. Install the upper steering coupling shaft (3) to the vehicle inserting the shaft into the lower coupling.

NOTE: **New steering coupling shaft pinch bolts for the upper and lower shafts must be used.**

2. Install a new lower coupling upper pinch bolt (1) and tighten to 38 N.m (28 ft.lbs.).
3. Install the upper steering coupling shaft seal (2) to the cowl panel.
4. Install the steering column shaft into the upper coupling.
5. Install a new upper coupling pinch bolt (3) and tighten to 38 N.m (28 ft.lbs).
6. Unlock the steering wheel.
7. Reconnect the negative battery cable.

KNOB, TILT LEVER RELEASE

REMOVAL

REMOVAL

1. Disconnect the negative battery cable.
2. Remove the steering column upper and lower shrouds. Refer to **SHROUD, STEERING COLUMN, REMOVAL**.

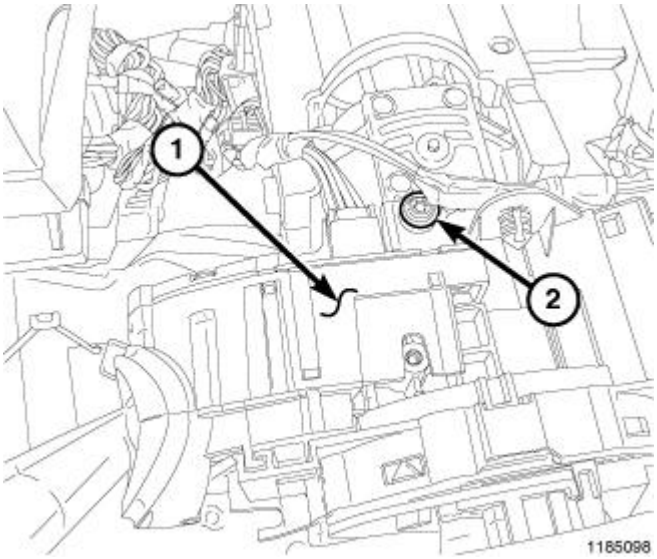

Fig. 19: Multi-Function Switch Mounting Bracket Upper Retaining Screw
Courtesy of CHRYSLER GROUP, LLC

3. Remove the multi-function switch mounting bracket upper retaining screw (2).

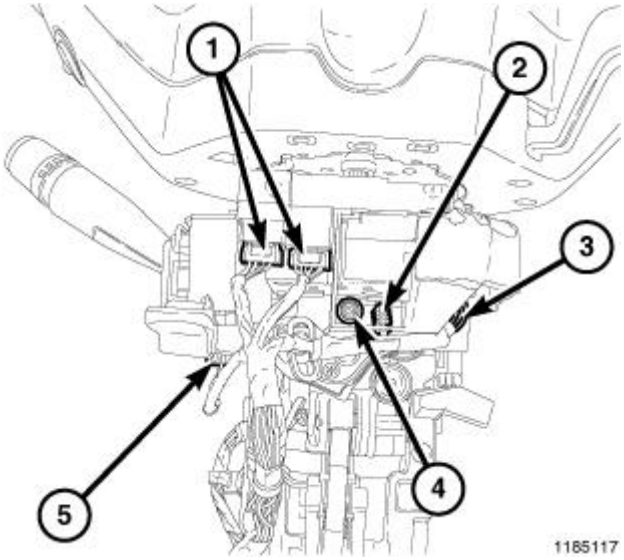

Fig. 20: Locating Clockspring Connectors
Courtesy of CHRYSLER GROUP, LLC

4. Disconnect the clockspring connectors (1).
5. If equipped, disconnect the Steering Angle Sensor (SAS) harness routing retainer (2) and connector (3).
6. If equipped, disconnect the adjustable pedals switch connector (5).
7. Remove the multi-function switch mounting bracket lower retaining screw (4).

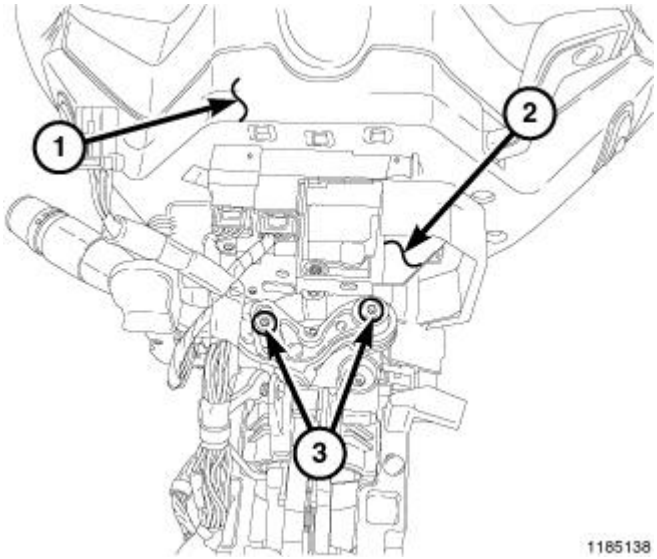

Fig. 21: Tilt Release Lever Screws
Courtesy of CHRYSLER GROUP, LLC

8. Carefully pull the multi-function switch mounting bracket (2) toward the steering wheel (1) to gain access to the tilt release lever screws (3).
9. Remove the tilt release lever screws (3).

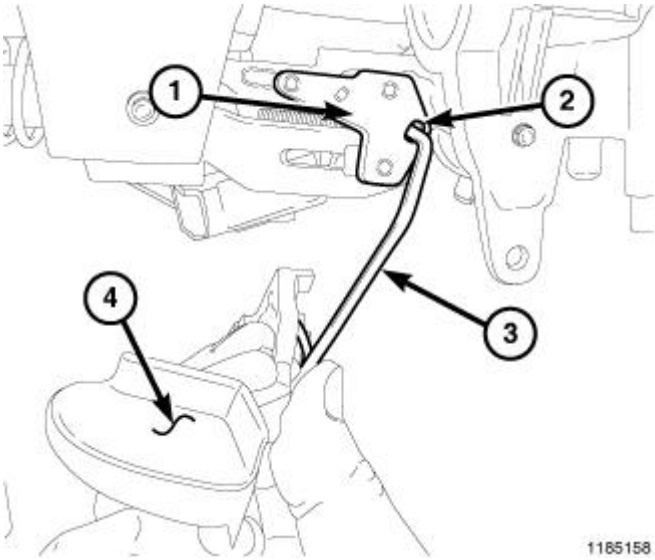

Fig. 22: Release Cam Linkage & Release Cam
Courtesy of CHRYSLER GROUP, LLC

NOTE: The release cam linkage (3) is tabbed to lock into the release cam (1) after installation.

10. Remove the tilt release lever/cam linkage from the steering column by rotating the tilt release lever (4) down (clockwise) to align the linkage tabs with the rectangular hole (2) of the cam (1) and pull out.

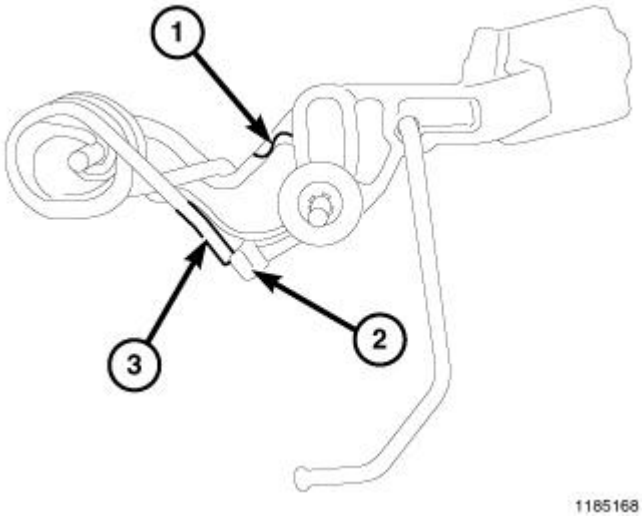

Fig. 23: Tilt Release Lever
Courtesy of CHRYSLER GROUP, LLC

NOTE: A new tilt release lever (1) includes a pre-loaded spring (3) and the linkage.

11. If the tilt release lever (1) is to be reinstalled on the column, reload the spring (3) against the tab (2) as shown in illustration.

INSTALLATION

INSTALLATION

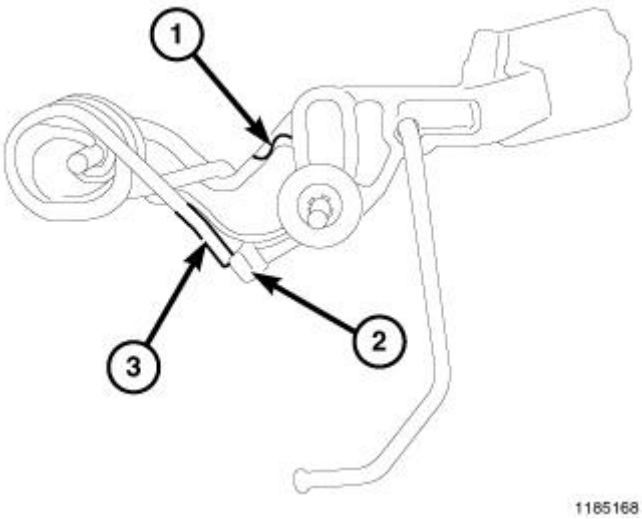

Fig. 24: Tilt Release Lever
Courtesy of CHRYSLER GROUP, LLC

NOTE: A new tilt release lever (1) includes a pre-loaded spring (3) and the linkage. The

spring will have tension and should not be released prior to installation.

1. If the original tilt release lever (1) is to be reinstalled on the column, carefully reload the spring (3) against the tab (2) as shown in illustration.

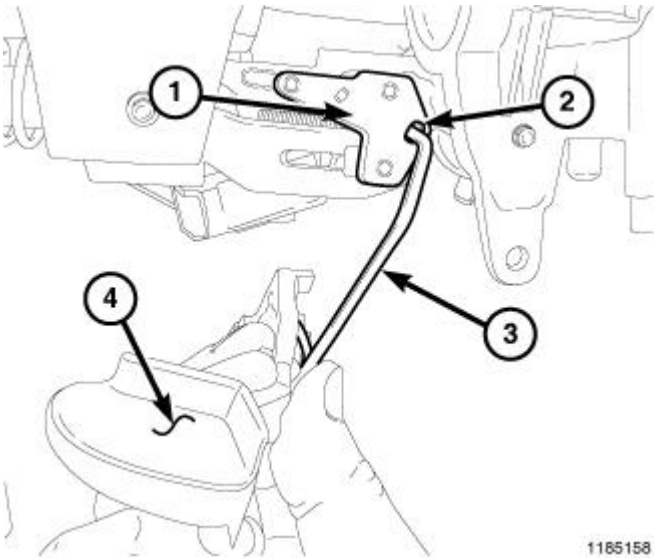

Fig. 25: Release Cam Linkage & Release Cam
Courtesy of CHRYSLER GROUP, LLC

NOTE: The release lever/cam linkage (3) is tabbed to lock into the release cam (1) after installation.

2. Insert the tilt release lever/cam linkage (3) into the slotted cam hole (2) and rotate the tilt release lever (4) into position.

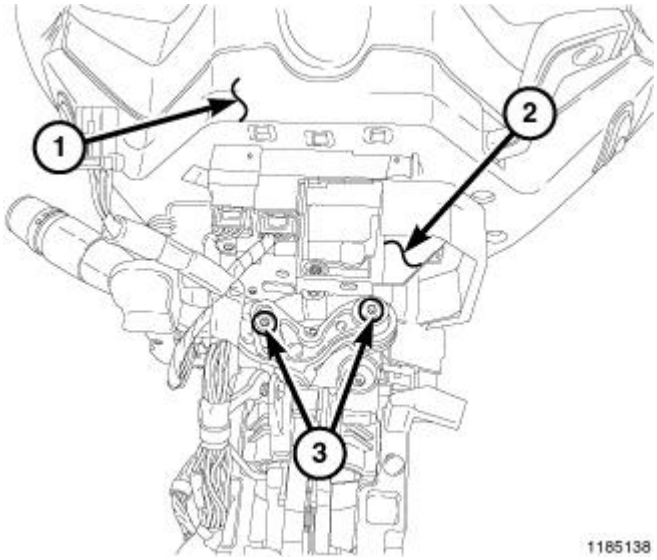

Fig. 26: Tilt Release Lever Screws
Courtesy of CHRYSLER GROUP, LLC

3. Install the tilt release lever screws (3).

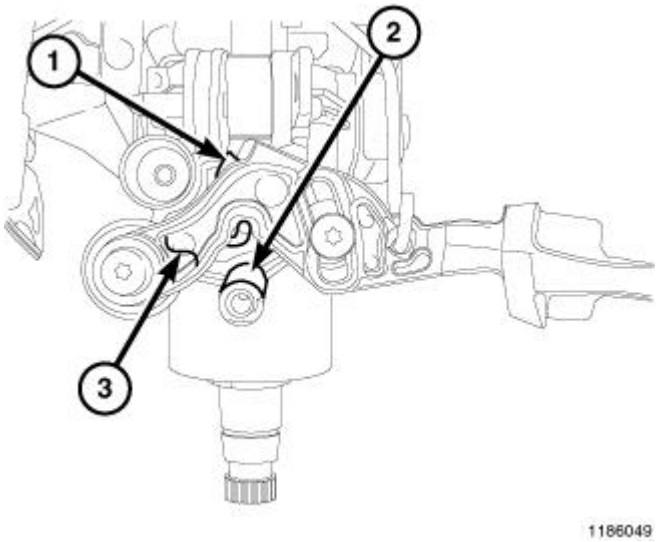

Fig. 27: Pre-Loaded Spring Tip
Courtesy of CHRYSLER GROUP, LLC

4. From the underside the column, push the pre-loaded spring tip (1) up with a small flat blade screwdriver or suitable tool to release the spring from the tab. The spring should snap against the column in the area shown in illustration (3). Verify the tilt release lever for proper operation before proceeding.

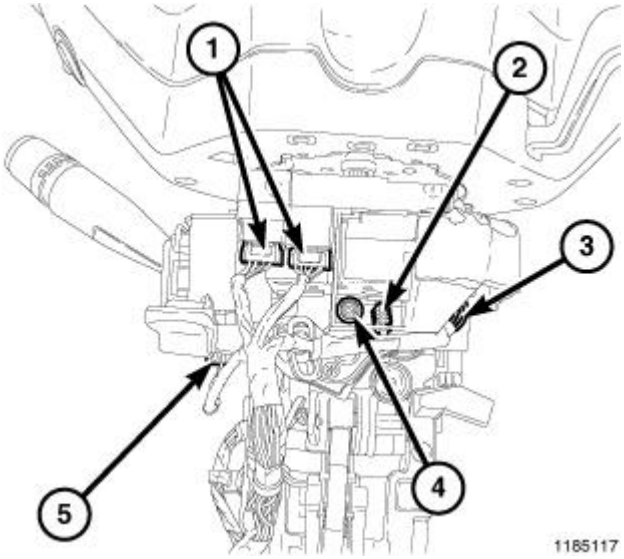

Fig. 28: Locating Clockspring Connectors
Courtesy of CHRYSLER GROUP, LLC

5. Position the multi-function switch mounting bracket and install the lower retaining screw (4).
6. If equipped, connect the adjustable pedals switch connector (5), harness routing retainer (2), and SAS connector (3).
7. Connect the clockspring connectors (1).

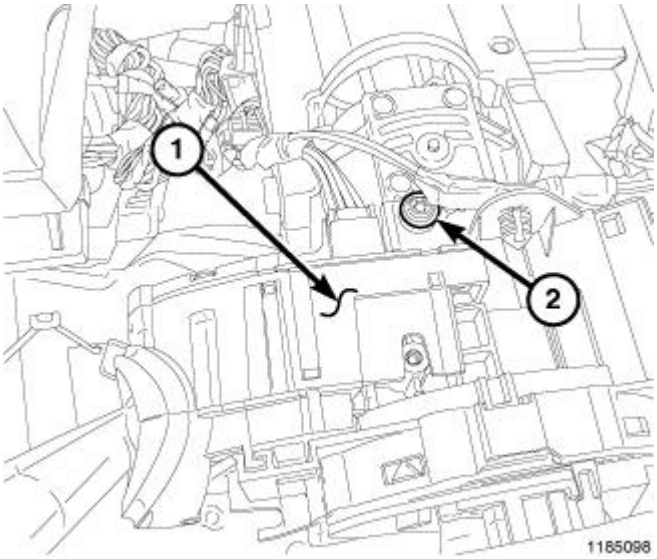

Fig. 29: Multi-Function Switch Mounting Bracket Upper Retaining Screw
Courtesy of CHRYSLER GROUP, LLC

8. Install the multi-function switch mounting bracket upper retaining screw (2).
9. Install the steering column shrouds. Refer to **SHROUD, STEERING COLUMN, INSTALLATION**.
10. Connect the negative battery cable.

LEVER, GEARSHIFT

REMOVAL

ASSEMBLY

1. Disconnect the negative battery cable.
2. Remove the upper and lower column shrouds. Refer to **SHROUD, STEERING COLUMN, REMOVAL**.

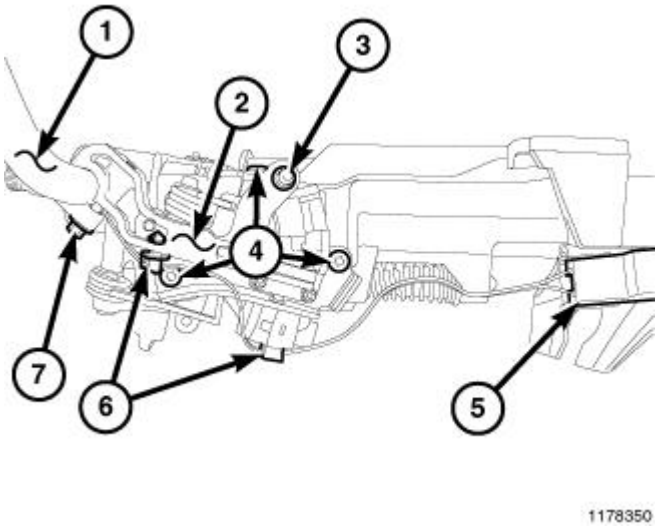

Fig. 30: Gearshift Lever Assembly Components
Courtesy of CHRYSLER GROUP, LLC

3. Disconnect the gearshift harness connector (5).
4. Disconnect the shift cable (3) from the gearshift lever assembly (2).
5. Remove the gearshift lever assembly mounting screws (4).
6. Remove the gearshift lever assembly.

LEVER ONLY

1. Disconnect the negative battery cable.
2. Remove the upper and lower column shrouds. Refer to **SHROUD, STEERING COLUMN, REMOVAL**.

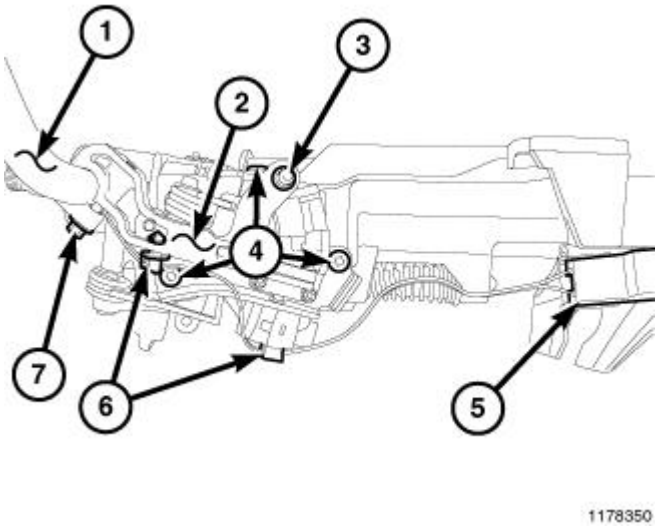

Fig. 31: Gearshift Lever Assembly Components
Courtesy of CHRYSLER GROUP, LLC

3. Disconnect the gearshift harness connector (5).
4. Disconnect the gearshift harness retainers (6).
5. Remove the gearshift lever pinch bolt (7) from the gearshift lever assembly (2).
6. Remove the gearshift lever (1) from the gearshift lever assembly (2).

INSTALLATION

ASSEMBLY

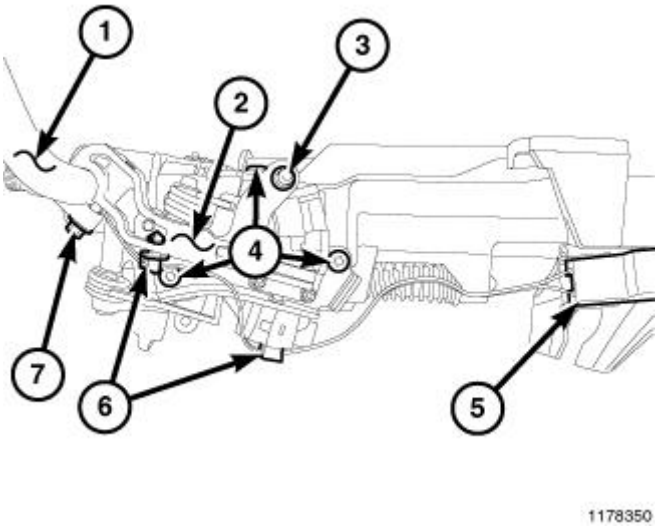

Fig. 32: Gearshift Lever Assembly Components
Courtesy of CHRYSLER GROUP, LLC

1. Position the gearshift lever assembly (2), install the retaining screws and tighten to 12 N.m (105 in. lbs.).
2. Connect the shift cable to the lever (2).
3. Connect the gearshift harness connector (5).
4. Ensure the gear shift lever and transmission are in the PARK position and snap the cable adjust clip in place.
5. Install the upper and lower column shrouds, steering column opening cover, and reinforcement. Refer to **SHROUD, STEERING COLUMN, INSTALLATION**.
6. Connect the negative battery cable.

LEVER ONLY

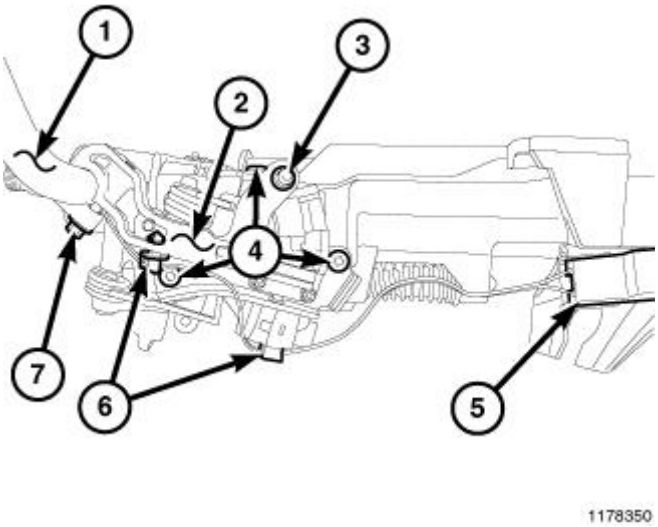

Fig. 33: Gearshift Lever Assembly Components
Courtesy of CHRYSLER GROUP, LLC

1. Install the gearshift lever (1) in the gearshift lever assembly (2).
2. Install the gearshift lever pinch bolt (7) and tighten to 12 N.m (105 in. lbs.).
3. Connect the gearshift harness retainers (6).
4. Connect the gearshift harness connector (5).
5. Install the upper and lower column shrouds, steering column opening cover, and reinforcement. Refer to **SHROUD, STEERING COLUMN, INSTALLATION**.
6. Connect the negative battery cable.

SHROUD, STEERING COLUMN

REMOVAL

UPPER

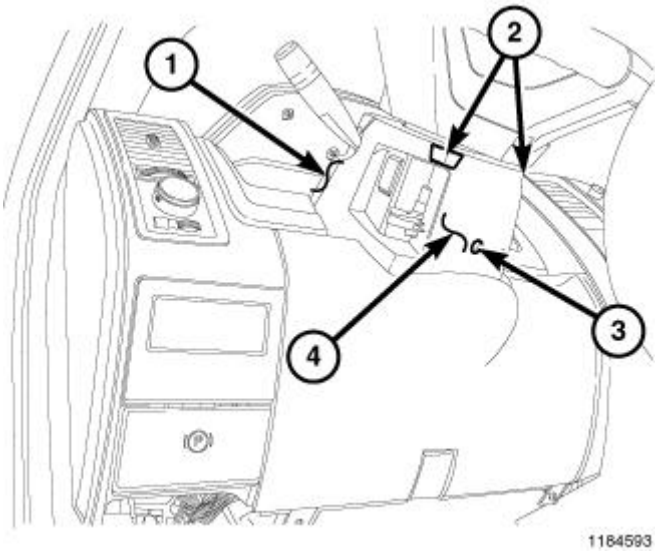

Fig. 34: Steering Column Shroud
Courtesy of CHRYSLER GROUP, LLC

1. From below the steering column, remove the two outboard screws within the recess areas (2) that secure the upper shroud (1) to the lower shroud (4).

NOTE: **There are snap connections near the instrument cluster and between the shroud and the steering wheel that secure the upper and lower shroud.**

2. Remove the upper shroud (1) by pushing gently inward and upward on both sides of the upper shroud above the parting line of the lower shroud to release the snap features that secure the two shroud halves to each other.

LOWER

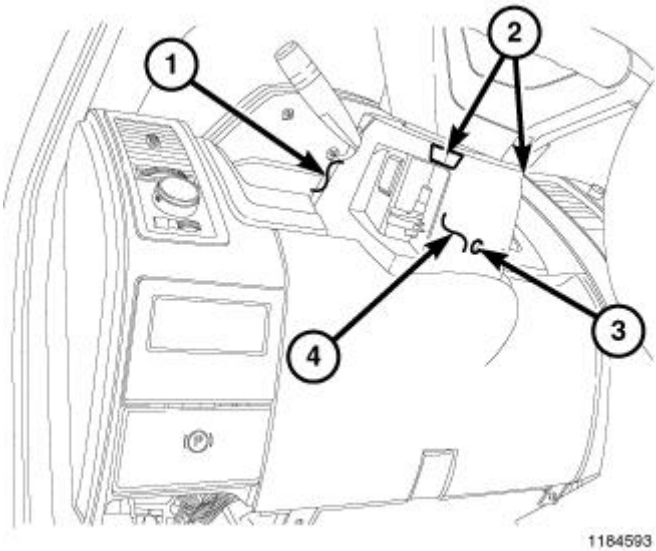

Fig. 35: Steering Column Shroud

Courtesy of CHRYSLER GROUP, LLC

1. From below the steering column, remove the two outboard screws within the recess areas (2) that secure the upper shroud (1) to the lower shroud (4).

   NOTE: There are snap connections near the instrument cluster and between the shroud and the steering wheel that secure the upper and lower shroud.

2. Remove the upper shroud (1) by pushing gently inward and upward on both sides of the upper shroud above the parting line of the lower shroud to release the snap features that secure the two shroud halves to each other.
3. Remove the steering column opening cover from the instrument panel. Refer to **COVER, STEERING COLUMN OPENING, REMOVAL** .

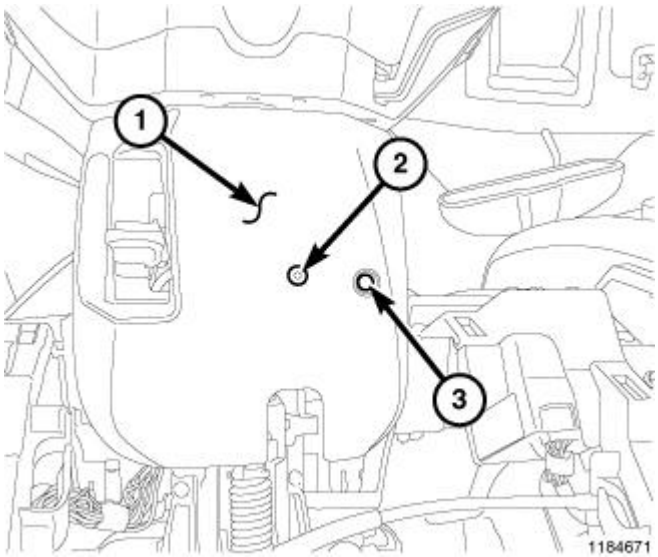

Fig. 36: Steering Column Lower Shroud
Courtesy of CHRYSLER GROUP, LLC

4. Remove the lower shroud to column retaining screw (2) and carefully move the lower shroud over the steering column tilt lever and off the steering column.

INSTALLATION

UPPER

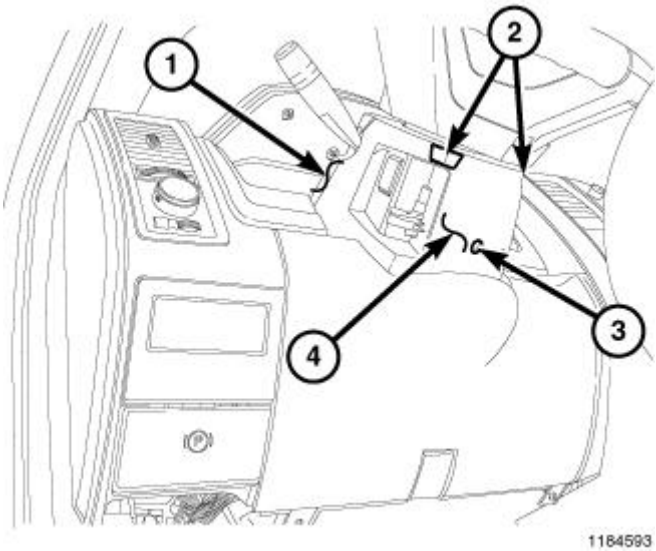

Fig. 37: Steering Column Shroud
Courtesy of CHRYSLER GROUP, LLC

NOTE: **If the vehicle is equipped with an automatic transmission, be certain to engage the gearshift lever boot into the opening in both shroud halves.**

1. Position the upper shroud (1) onto the steering column over the lower shroud (4).
2. Align the snaps features on the upper and lower shroud halves and apply hand pressure to snap together.
3. From below the steering column, install the two outboard screws within the recess areas (2) that secure the upper shroud (1) to the lower shroud (4).

LOWER

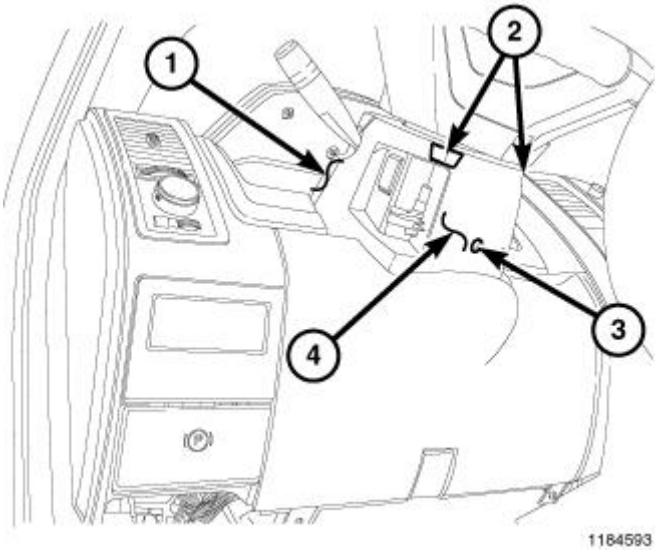

Fig. 38: Steering Column Shroud
Courtesy of CHRYSLER GROUP, LLC

1. Position the lower shroud (4) over the steering column tilt lever and align on the steering column.

NOTE: **If the vehicle is equipped with an automatic transmission, be certain to engage the gearshift lever boot into the opening in both shroud halves.**

2. Position the upper shroud (1) onto the steering column over the lower shroud (4).
3. Align the snap features on the upper and lower shroud halves (1, 4) and apply hand pressure to snap together.
4. From below the steering column, install the two outboard screws within the recess areas (2) that secure the upper shroud (1) to the lower shroud (4).

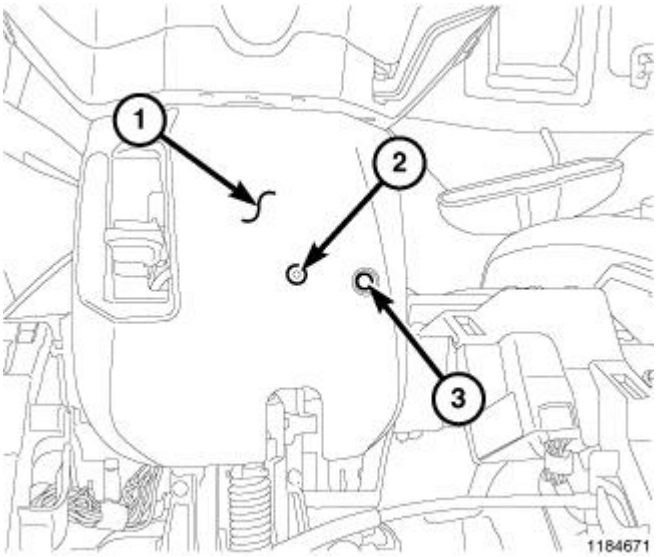

Fig. 39: Steering Column Lower Shroud
Courtesy of CHRYSLER GROUP, LLC

5. Install the lower shroud to column retaining screw (3).
6. Install the steering column opening cover. Refer to **COVER, STEERING COLUMN OPENING, INSTALLATION** .

WHEEL, STEERING

REMOVAL

REMOVAL

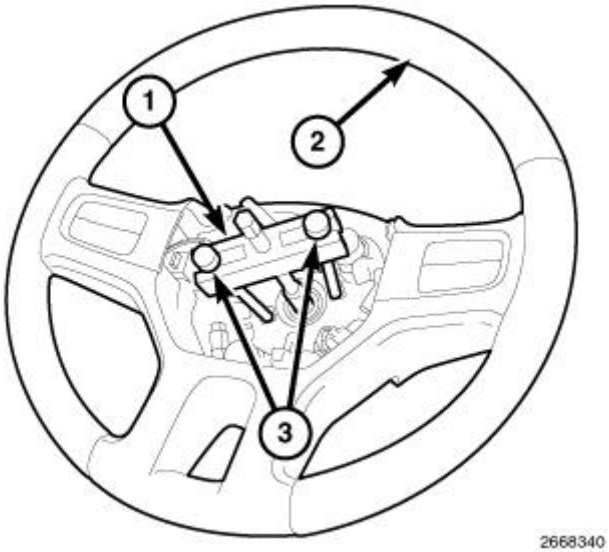

Fig. 40: Removing Steering Wheel
Courtesy of CHRYSLER GROUP, LLC

1. Disable and remove the driver's side airbag. Refer to **AIR BAG, DRIVER, REMOVAL** .
2. Remove the steering wheel bolt and discard.

NOTE: The jaws should point outward from the center of the steering wheel for removal.

3. Install Gear Puller (special tool #L-4407A, Puller, Gear) (1) and OTC® 7929A jaws (3) or equivalent and loosen the steering wheel (2).
4. Remove the tools (1, 3) and then remove the steering wheel (2).

INSTALLATION

INSTALLATION

NOTE: Do not reuse the old steering wheel bolt (a new bolt must be used)

1. Install steering wheel to the column

NOTE: Be certain that the steering wheel mounting bolt is tightened to the proper torque specification to ensure proper clockspring operation.

2. Install the new steering wheel bolt. Tighten the bolt to 61 N.m (45 ft. lbs.).
3. Install the driver's side air bag. Refer to **AIR BAG, DRIVER, INSTALLATION** .

GEAR, INDEPENDENT FRONT SUSPENSION

SPECIFICATIONS

SPECIFICATIONS

DESCRIPTION	N.m	Ft. Lbs.	In. Lbs.
Steering Gear to Frame Bolts	319	235	-
Steering Gear Coupler Bolt	49	36	-
Tie Rod End Knuckle Nut	61, Then tighten an additional 90°	45, Then tighten an additional 90°	-
Tie Rod End Jam Nut	127	94	-
Tie Rod End, Inner	169	125	-
Power Steering Pressure Line to Gear	32	23	-
Power Steering Pressure Line To Pump	37	27	-
Power Steering Return Line	50	37	-

REMOVAL

REMOVAL

NOTE: **The steering column on vehicles with an automatic transmission may not be equipped with an internal locking shaft that allows the ignition key cylinder to be locked with the key. Alternative methods of locking the steering wheel for service will have to be used.**

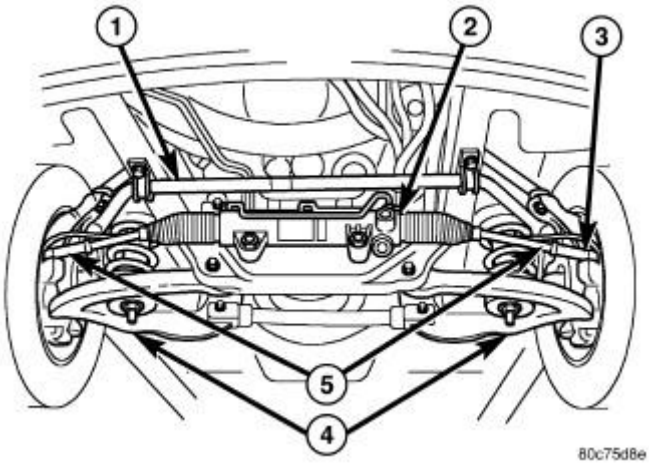

Fig. 41: Rack & Pinion, Outer Tie Rods & Knuckles
Courtesy of CHRYSLER GROUP, LLC

1. Lock the steering wheel.

2. Drain and siphon the power steering fluid from the reservoir.
3. Raise and support the vehicle.
4. Remove and discard the steering coupler pinch bolt.
5. Disconnect the power steering hoses from the rack and pinion (2).
6. Remove the front tires and wheels.
7. Remove the outer tie rod nuts and separate outer tie rods (3) from the knuckles (5) using Ball Joint Remover (special tool #8677, Remover, Ball Joint). Refer to **END, TIE ROD, REMOVAL** or **END, TIE ROD, LINK AND COIL, REMOVAL**.

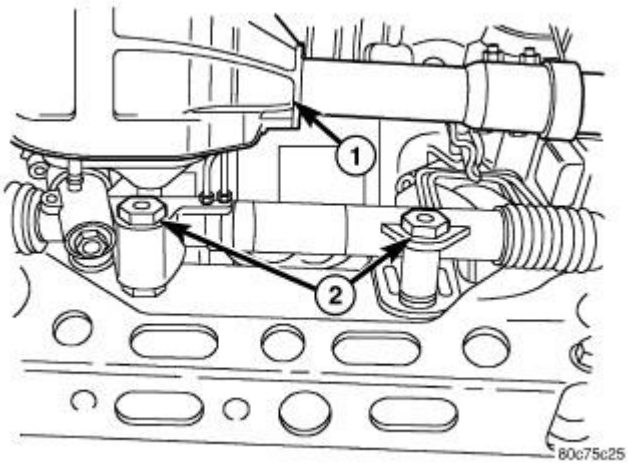

Fig. 42: Front Axle, Steering Gear Mounting Nuts & Bushings
Courtesy of CHRYSLER GROUP, LLC

1 - FRONT AXLE
2 - STEERING GEAR MOUNTING NUTS AND BUSHINGS

NOTE: 4wd model shown in illustration. 2wd model similar.

8. If equipped, remove the skid plate. Refer to **PLATE, SKID, FRONT, REMOVAL** .
9. Remove the rack and pinion mounting bolts (2) and remove the rack from the vehicle.

INSTALLATION

INSTALLATION

NOTE: Before installing gear inspect bushings and replace if worn or damaged.

NOTE: In the frame there are two holes for the mounting of the steering gear, one is slotted and one is round. When tightening the gear to specifications make sure to tighten the mounting bolt with the hole first to avoid movement of the

steering gear.

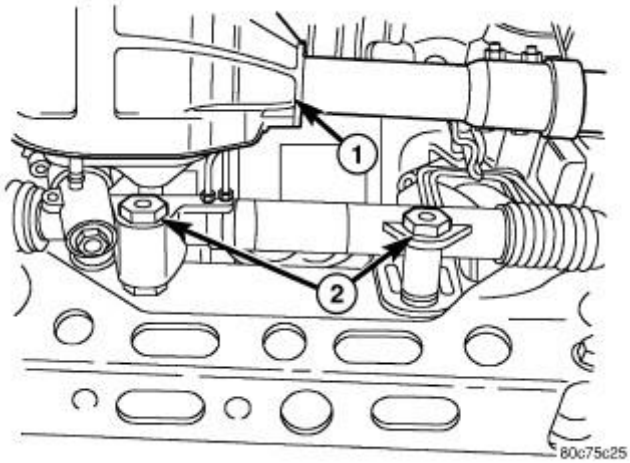

Fig. 43: Front Axle, Steering Gear Mounting Nuts & Bushings
Courtesy of CHRYSLER GROUP, LLC

1 - FRONT AXLE
2 - STEERING GEAR MOUNTING NUTS AND BUSHINGS

NOTE: 4wd model shown in illustration. 2wd model similar.

1. Position the rack and pinion to the front crossmember.
2. Install the retaining bolts (2). Tighten the bolts (2) to 319 N.m (235 ft. lbs.).

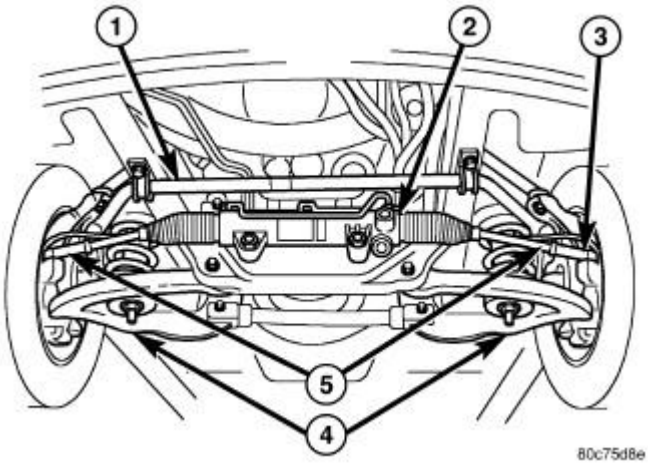

Fig. 44: Rack & Pinion, Outer Tie Rods & Knuckles
Courtesy of CHRYSLER GROUP, LLC

3. Slide the shaft coupler onto the gear and install a **new** pinch bolt. Tighten the pinch bolt to 49 N.m (36 ft. lbs.).

4. Clean and dry the tie rod end studs (3) and the tapers in the knuckles (5).
5. Install the tie rod ends into the steering knuckles. Install and tighten the retaining nuts to 61 N.m (45 ft. lbs.), then turn an additional 90°. Refer to **END, TIE ROD, INSTALLATION** or **END, TIE ROD, LINK AND COIL, INSTALLATION**.
6. Connect the pressure power steering hose to the steering gear and tighten to 32 N.m (23 ft. lbs.). Refer to **HOSE, POWER STEERING, INDEPENDENT FRONT SUSPENSION, INSTALLATION** or **HOSE, POWER STEERING, LINK AND COIL, INSTALLATION**.
7. Connect the return power steering hose to the steering gear and tighten to 50 N.m (37 ft. lbs.). Refer to **HOSE, POWER STEERING, INDEPENDENT FRONT SUSPENSION, INSTALLATION** or **HOSE, POWER STEERING, LINK AND COIL, INSTALLATION**.
8. If equipped, install the front skid plate. Refer to **PLATE, SKID, FRONT, INSTALLATION** .
9. Install the front tires and wheels. Refer to **WHEELS, STANDARD PROCEDURE** .
10. Lower the vehicle.
11. Fill the power steering system with fluid. Refer to **PUMP, STANDARD PROCEDURE**.
12. Adjust the toe alignment. Refer to **WHEEL ALIGNMENT, STANDARD PROCEDURE** .

BUSHING, STEERING GEAR

REMOVAL

REMOVAL

1. Remove the steering gear. Refer to **GEAR, INDEPENDENT FRONT SUSPENSION, REMOVAL** or **GEAR, LINK AND COIL, REMOVAL**.

CAUTION: Do not overtighten the vise on the gear case.

2. Mount the steering gear in a soft jawed vise.

NOTE: If the bushings are seized a brass punch can be used to remove the bushings from the gear using care not to strike the gear.

3. Remove the front mounting bushings.
4. Remove the rear mounting bushings.
5. Remove the steering gear from the vise and place it on the bench.

INSTALLATION

INSTALLATION

NOTE: Coat all bushings with a thin rubber lubricate oil prior to installation.

NOTE: **A rubber mallet can be used to assist in the installation of the bushings once lubricated.**

1. Coat the rear bushings with a thin rubber lubricate oil then install the rear bushings using a rubber mallet to seat the bushings in the gear.
2. Coat the front bushings with a thin rubber lubricate oil then install the front bushings using a rubber mallet to seat the bushings in the gear.
3. Install the steering gear. Refer to **GEAR, INDEPENDENT FRONT SUSPENSION, INSTALLATION** or **GEAR, LINK AND COIL, INSTALLATION**.
4. Adjust the toe position (if necessary). Refer to **WHEEL ALIGNMENT, STANDARD PROCEDURE** .

GEAR, LINK AND COIL

SPECIFICATIONS

SPECIFICATIONS

DESCRIPTION	N.m	Ft. Lbs.	In. Lbs.
Steering Gear, Frame Mounting Bolts (2500, 3500)	196	145	-
Steering Coupler to Gear Shaft	49	36	-
Power Steering Pressure Line To Gear	32	23	-
Power Steering Return Line	54	40	-
Power Steering Pressure Line To Pump (2500, 3500)	37	27	-
Steering Gear Adjustment Screw Locknut	34	25	-
Steering Gear Pitman Shaft Nut (2500, 3500)	300	225	-
Steering Gear Pitman Shaft Cover Bolts	68	50	-
Steering Gear Valve Housing to Gear Bolts	54	40	-
Steering Gear Retainer Ring Screw	2.26	-	20
Steering Gear Retainer Ring	97	72	-

REMOVAL

REMOVAL

1. Place the front wheels in a straight-ahead position.

NOTE: **The steering column on vehicles with an automatic transmission may not be equipped with an internal locking shaft that allows the ignition key cylinder to be locked with the key. Alternative methods of locking the steering wheel for service will have to be used.**

2. Lock the steering wheel.
3. Siphon out as much power steering fluid as possible.
4. Disconnect and cap the fluid hoses from steering gear. Refer to **HOSE, POWER STEERING, INDEPENDENT FRONT SUSPENSION, REMOVAL** or **HOSE, POWER STEERING, LINK AND COIL, REMOVAL**.

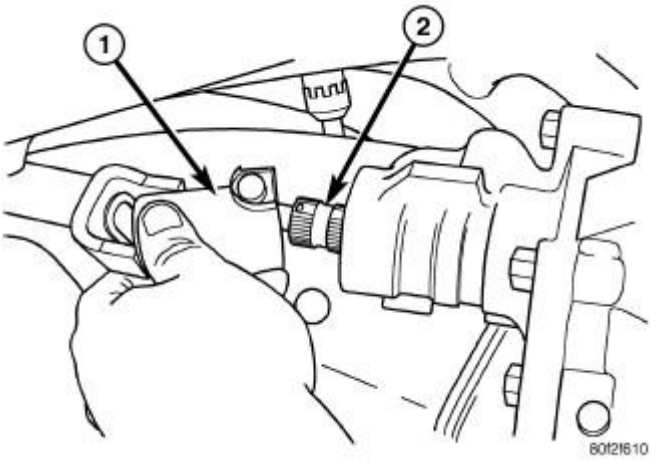

Fig. 45: Steering Shaft Coupler Pinch Bolt
Courtesy of CHRYSLER GROUP, LLC

5. Remove the steering shaft coupler pinch bolt (1) at the steering gear and slide coupler off steering gear (2).

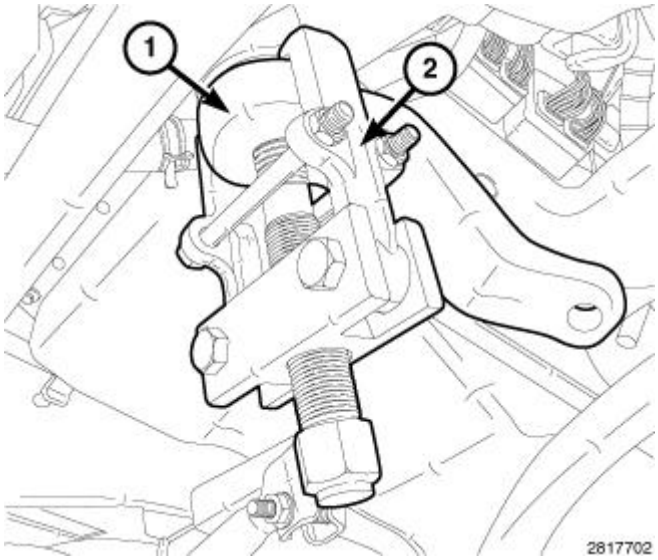

Fig. 46: Pitman Arm & Remover
Courtesy of CHRYSLER GROUP, LLC

6. Remove the steering gear shaft to pitman arm (1) retaining nut and washer.
7. Mark the steering gear shaft and pitman arm (1) for installation reference.
8. Using the Pitman Arm Remover (special tool #9615A, Remover, Pitman Arm) (2) or equivalent, remove the pitman arm (1) from the steering gear shaft. Refer to **ARM, PITMAN, LINK AND COIL, REMOVAL**.

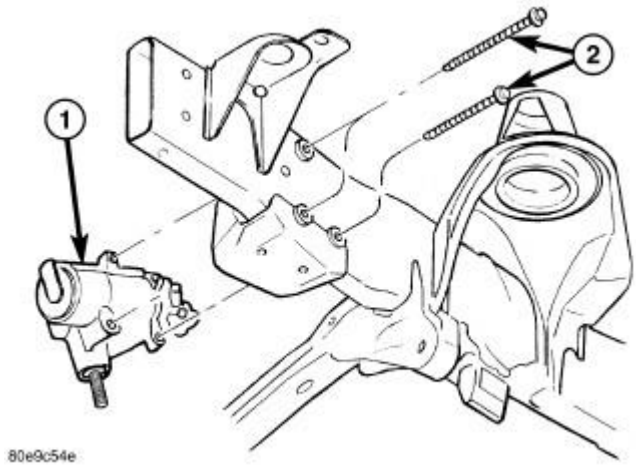

Fig. 47: Steering Gear & Mounting Bolts
Courtesy of CHRYSLER GROUP, LLC

1 - STEERING GEAR
2 - MOUNTING BOLTS (3)

9. Remove the steering gear (1) three retaining bolts (2) and remove the steering gear (1) from the vehicle.

INSTALLATION

INSTALLATION

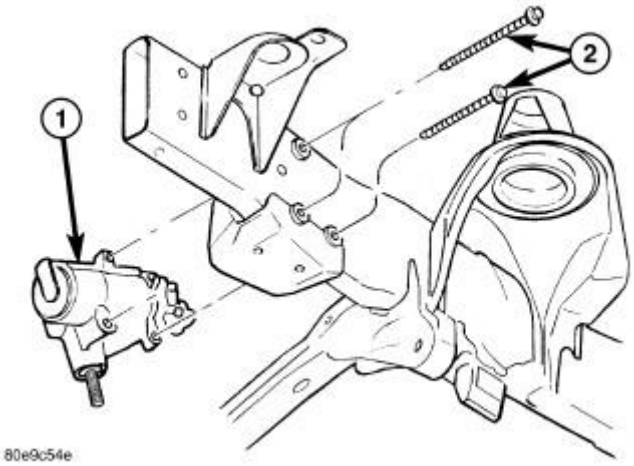

Fig. 48: Steering Gear & Mounting Bolts
Courtesy of CHRYSLER GROUP, LLC

1. Position the steering gear (1) the frame rail. install the three mounting bolts (2), and tighten to 196 N.m (145 ft. lbs.).

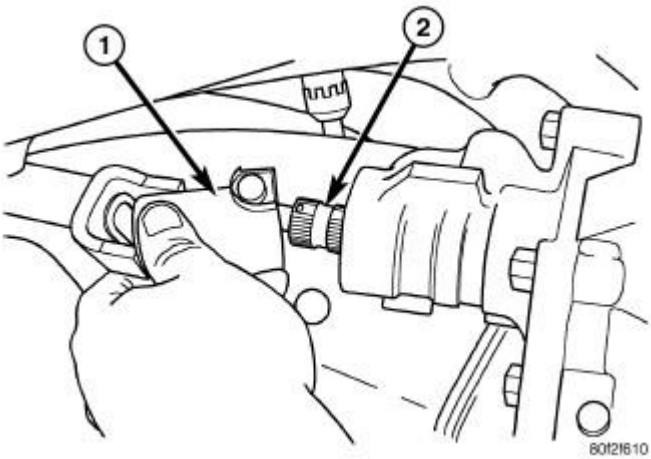

Fig. 49: Steering Shaft Coupler Pinch Bolt
Courtesy of CHRYSLER GROUP, LLC

1 - STEERING COUPLER
2 - STEERING GEAR INPUT SHAFT

2. Align steering coupler (1) on gear shaft (2). Install pinch bolt and tighten to 49 N.m (36 ft. lbs.) torque.

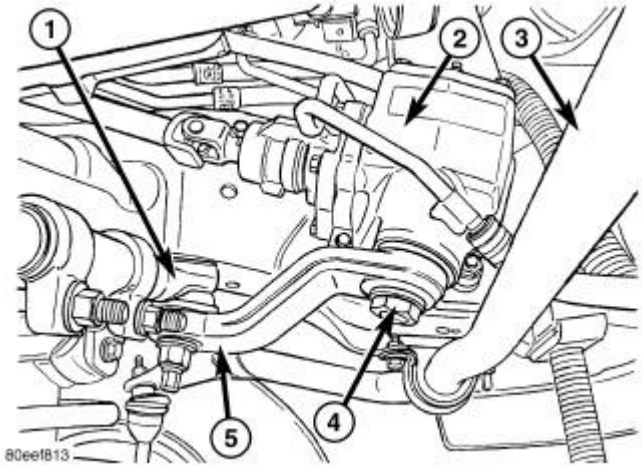

Fig. 50: Pitman Arm, Steering Gear & Nut/Washer
Courtesy of CHRYSLER GROUP, LLC

1 - DRAGLINK
2 - STEERING GEAR
3 - SWAYBAR
4 - NUT/WASHER
5 - PITMAN ARM

3. Align and install the pitman arm (5). Refer to **ARM, PITMAN, LINK AND COIL, INSTALLATION**.
4. Install the washer and retaining nut (4) on the pitman shaft. Tighten the nut to 305 N.m (225 ft. lbs.).
5. Connect fluid hoses to steering gear, tighten to 32 N.m (23 ft. lbs.). Refer to **HOSE, POWER STEERING, INDEPENDENT FRONT SUSPENSION, INSTALLATION** or **HOSE, POWER STEERING, LINK AND COIL, INSTALLATION**.
6. Add fluid. Refer to **PUMP, STANDARD PROCEDURE**.
7. Reset the toe and center the steering wheel. Refer to **WHEEL ALIGNMENT, STANDARD PROCEDURE** .

LINKAGE, INDEPENDENT FRONT SUSPENSION

END, TIE ROD

DIAGNOSIS AND TESTING

DIAGNOSIS AND TESTING - TIE ROD

Tie rod free-play can be measured using the following hand methods:

OUTER TIE ROD

1. Raise and support the vehicle. Refer to **HOISTING, STANDARD PROCEDURE** .

2. Remove the front wheels.
3. Install two standard wheel mounting nuts, flat side to rotor, diagonally opposite to each on the rotor.

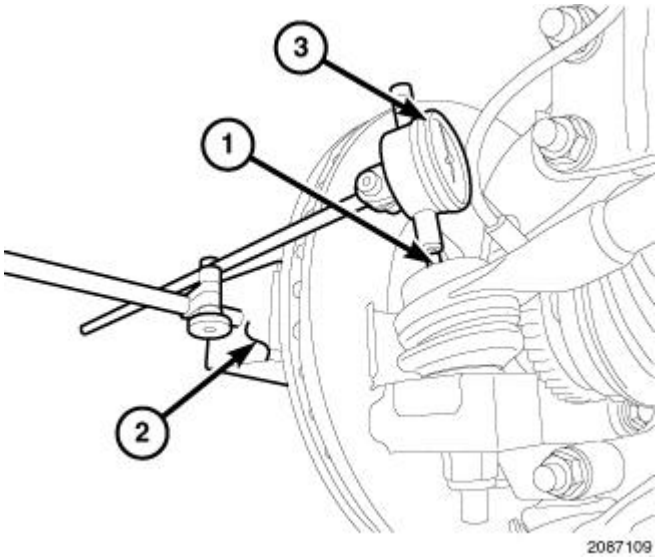

Fig. 51: Aligning Dial Indicator Pointer With Direction Of Stud Axis
Courtesy of CHRYSLER GROUP, LLC

4. Attach a magnetic dial indicator (2) to the inside or outside of the brake rotor, then align the dial indicator's contact pointer (1) with the direction of the stud axis and touch the outer tie rod.
5. Zero the dial indicator. (3)

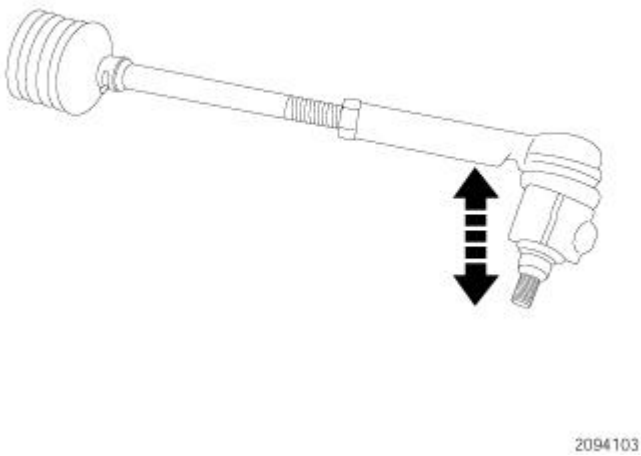

Fig. 52: Checking Outer Tie Rod Free-Play
Courtesy of CHRYSLER GROUP, LLC

NOTE: **When checking free-play, DO NOT rotate the tie rod. Just because a tie rod rotates easily does not mean that it is necessarily faulty. Using more than**

light hand pressure will result in a false reading.

6. Grasp the outer tie rod near the ball stud and attempt to move the tie rod straight up and down using light hand pressure. (Less than 10 lbs. of force.)
7. Measure and record any tie rod free-play movement.
8. Remove the magnetic dial indicator.
9. Remove the standard wheel mounting nuts from the two studs.

If the free-play in the tie rod exceeds 0.05 mm (.002 in.), replace the outer tie rod. Refer to **END, TIE ROD, REMOVAL** or **END, TIE ROD, LINK AND COIL, REMOVAL**. If the free-play is less than 0.05 mm (.002 in.) at the outer tie rod check the inner tie rod for free-play. Refer to the following procedure.

INNER TIE ROD

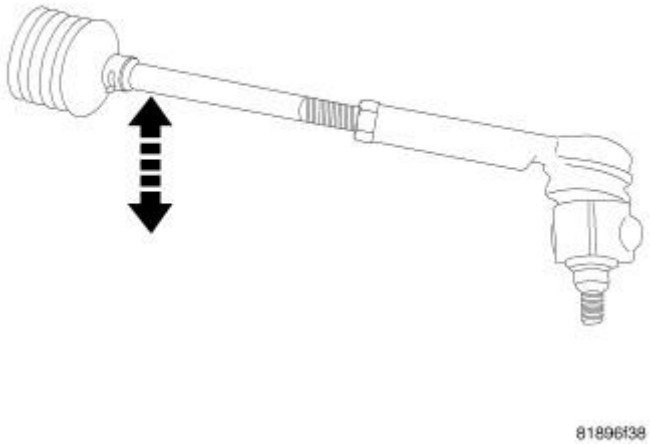

Fig. 53: Checking Inner Tie Rod Free-Play
Courtesy of CHRYSLER GROUP, LLC

1. Grasp the inner tie rod near the steering gear bellows and attempt to move the tie rod straight up and down. If any free-play is felt, replace the inner tie rod end. Refer to **END, TIE ROD, REMOVAL**.
2. If no free-play is felt, install the front wheels. Refer to **WHEELS, STANDARD PROCEDURE** .
3. Remove support and lower the vehicle.

REMOVAL

OUTER TIE ROD END

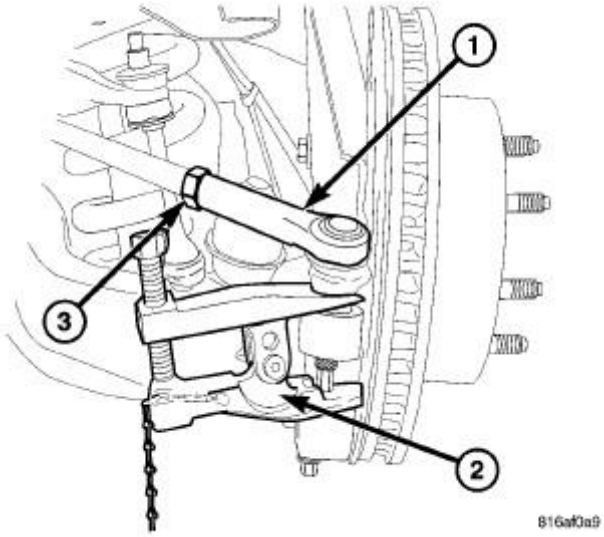

Fig. 54: Outer Tie Rod End, Jam Nut & Separator
Courtesy of CHRYSLER GROUP, LLC

NOTE: Do not twist the boot anytime during removal or installation.

1. Loosen the jam nut (3).
2. Remove the outer tie rod end nut from the ball stud.
3. Separate the tie rod ball stud (1) from the knuckle with Ball Joint Remover (special tool #9360, Remover, Ball Joint) (2) .
4. Unthread the outer tie rod end (1) from the inner tie rod.

INNER TIE ROD END

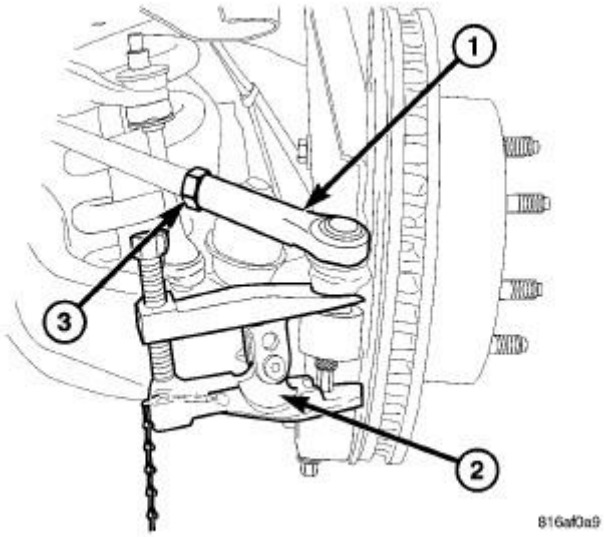

Fig. 55: Outer Tie Rod End, Jam Nut & Separator
Courtesy of CHRYSLER GROUP, LLC

1. Remove the outer tie rod end (1) **Count the number of turns when removing, this will aid in setting the toe after installation.** . Refer to **END, TIE ROD, REMOVAL**.
2. Remove the jam nut (3).

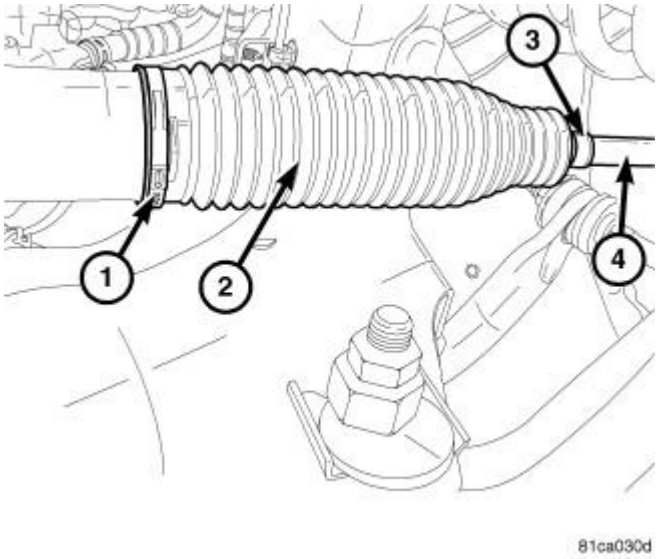

Fig. 56: Boot & Clamps
Courtesy of CHRYSLER GROUP, LLC

3. Remove the clamps (1, 3) for the inner tie rod boot (2).
4. Remove the boot (2).

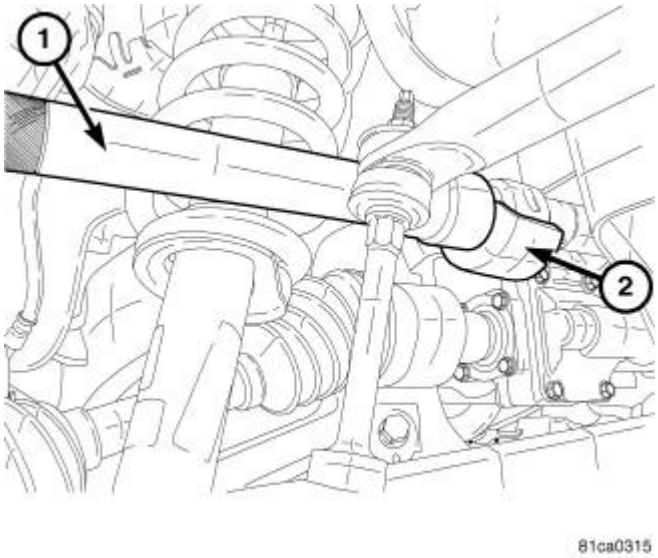

Fig. 57: Identifying Socket & Tube
Courtesy of CHRYSLER GROUP, LLC

5. Install Inner Tie Rod Wrench (special tool #10087-3, Wrench, Inner Tie Rod) (2) and Inner Tie Rod Adapter Wrench (special tool #10087-2A, Adapter Wrench, Inner Tie Rod) (1) and remove the inner tie rod end.

INSTALLATION

OUTER TIE ROD END

NOTE: All views are typical.

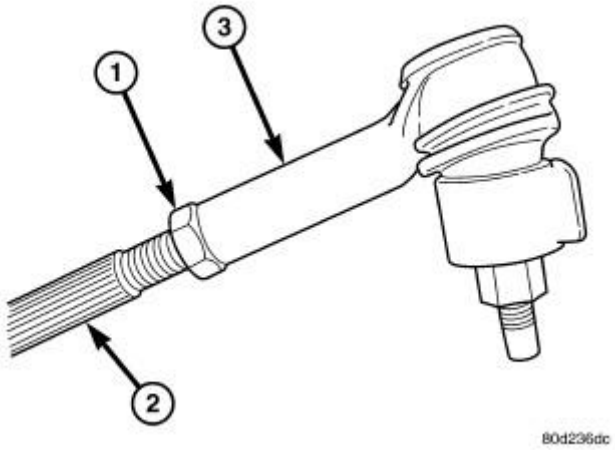

Fig. 58: Tie Rod End
Courtesy of CHRYSLER GROUP, LLC

NOTE: Do not twist the boot at anytime during removal or installation.

1. Thread the outer tie rod end (3) onto the inner tie rod (2), to it's original position.

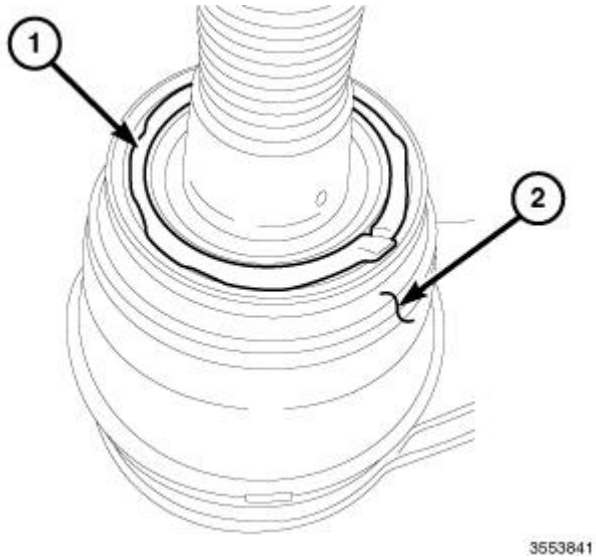

Fig. 59: Locating Grease & Tie Rod End Boot
Courtesy of CHRYSLER GROUP, LLC

NOTE: **If a new tie rod end is to be installed, make sure the boot (2) is properly lubricated.**

2. Clean all old grease and debris from the boot (2) with a clean cloth.
3. Apply outer tie rod grease P/N 68088623AA (1) to the tie rod end boot (2).

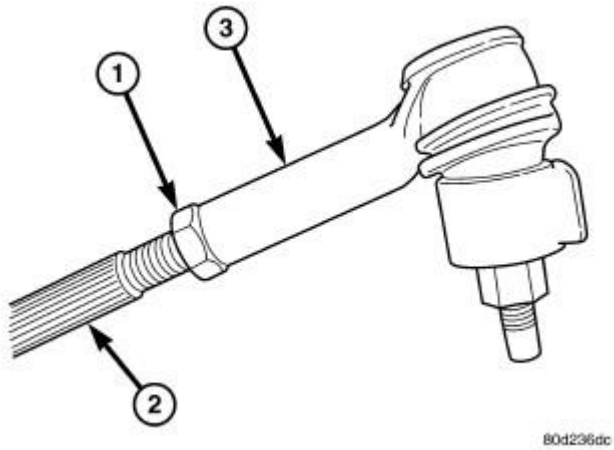

Fig. 60: Tie Rod End
Courtesy of CHRYSLER GROUP, LLC

4. Install the outer tie rod end (3) into the steering knuckle.
5. Tighten the ball stud nut on the ball stud to 61 N.m (45 ft. lbs.) then an additional 90°.
6. Set wheel toe pattern. Refer to **WHEEL ALIGNMENT, STANDARD PROCEDURE** .
7. Tighten jam nut (1) to 127 N.m (94 ft. lbs.).

INNER TIE ROD END

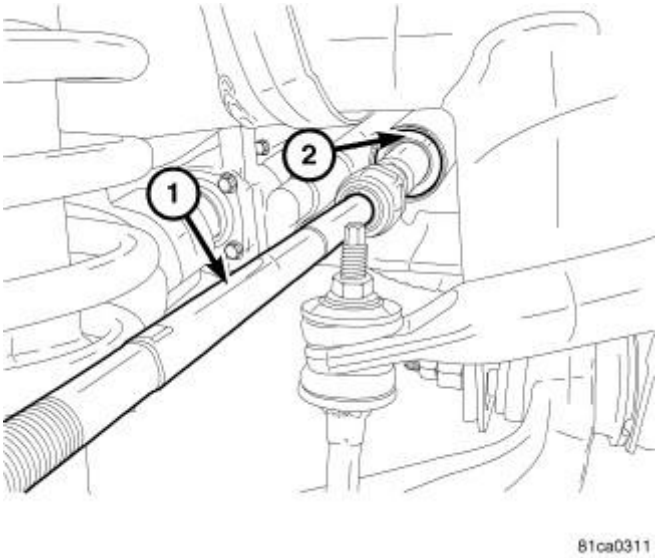

Fig. 61: Identifying Inner Tie Rod, Rack & Pinion
Courtesy of CHRYSLER GROUP, LLC

1. Thread the inner tie rod (1) to the rack and pinion (2).

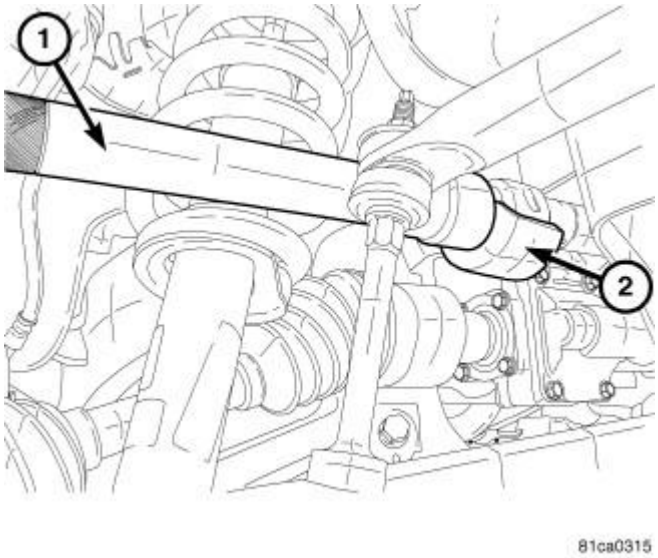

Fig. 62: Identifying Socket & Tube
Courtesy of CHRYSLER GROUP, LLC

2. Tighten the inner tie rod end using Inner Tie Rod Wrench (special tool #10087-3, Wrench, Inner Tie Rod) (2) and Inner Tie Rod Adapter Wrench (special tool #10087-2A, Adapter Wrench, Inner Tie Rod) (1) to 169 N.m (125 ft.lbs.).

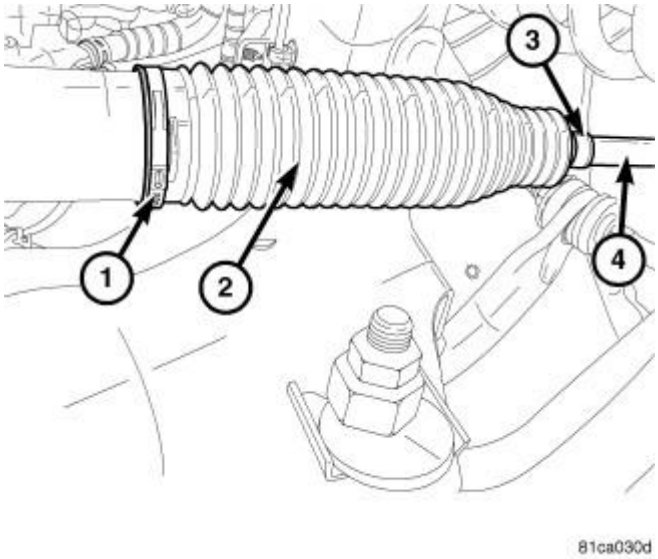

Fig. 63: Boot & Clamps
Courtesy of CHRYSLER GROUP, LLC

3. Install the inner tie rod end boot (2) and reclamp (1, 3) to the tie rod (4) and rack.

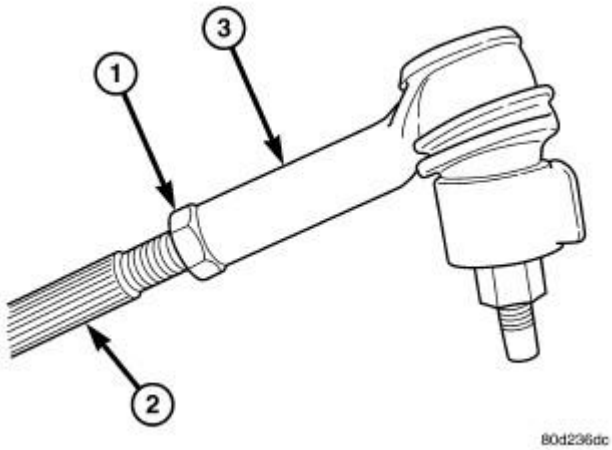

Fig. 64: Tie Rod End
Courtesy of CHRYSLER GROUP, LLC

4. Install the jam nut (1) to the inner tie rod end (2).
5. Install the outer tie rod (3) the same number of turns when removed. Refer to **END, TIE ROD, INSTALLATION**.
6. Install the front wheels.
7. Lower the vehicle.
8. Perform toe adjustment. Refer to **TOE ADJUSTMENT - RACK AND PINION STEERING SYSTEM** .
9. Tighten the jam nut (1) after toe adjustment. Tighten to 50 N.m (37 ft. lbs.).

LINKAGE, LINK AND COIL

DESCRIPTION

DESCRIPTION

CAUTION: If any steering components are replaced or serviced an alignment must be performed.

NOTE: To avoid damaging ball stud seals, use an appropriate puller to remove tie rod ends.

Some late build **4500/5500** vehicles have a new design steering system. The primary difference is that the drag link is connected directly to the knuckle. The **2500/3500, cab chassis, and early build 4500/5500** steering linkage is unchanged from the previous model year with the drag link attached to the RH tie rod. Both designs are shown in illustrations below.

DRAG LINK TO TIE ROD SYSTEM

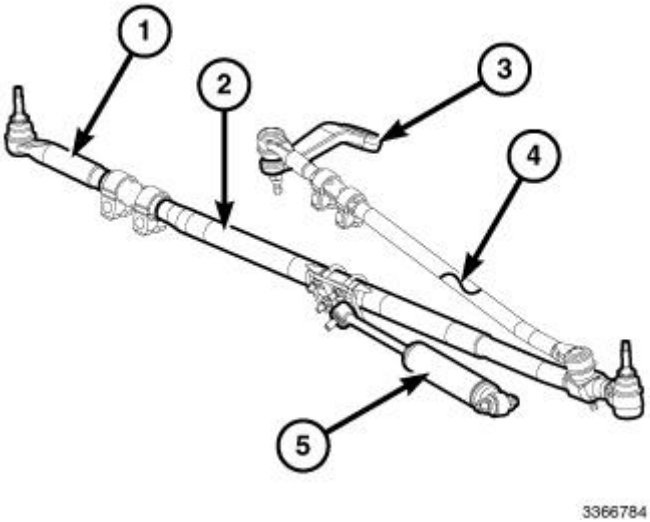

Fig. 65: Tie Rod End, Tie Rod, Pitman Arm, Drag Link & Steering Damper
Courtesy of CHRYSLER GROUP, LLC

The **2500/3500, cab chassis, and early build 4500/5500** steering linkage is unchanged from the previous model year and is comprised of a tie rod end (1), tie rod (2), pitman arm (3), drag link (4), and steering damper (5). The drag link is connected between the pitman arm (3) and the tie rod (2).

DRAG LINK TO KNUCKLE SYSTEM

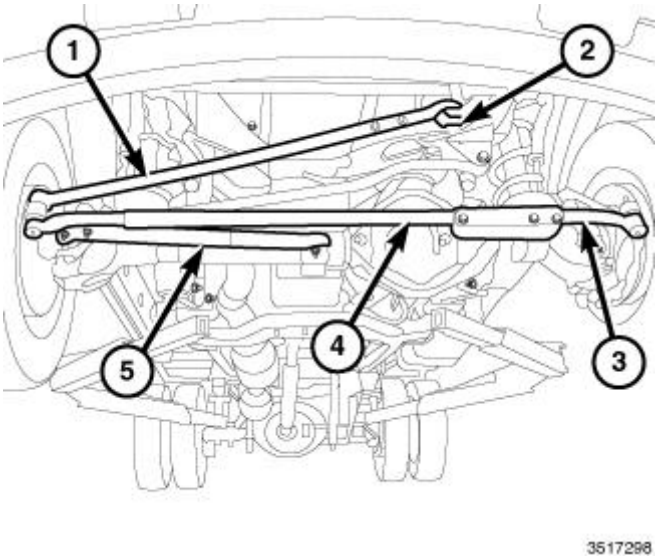

Fig. 66: Tie Rod End, Tie Rod, Pitman Arm, Drag Link & Steering Damper (Late Build)
Courtesy of CHRYSLER GROUP, LLC

The **late build 4500/5500** steering linkage is a new design but still comprised of a tie rod end (3), tie rod (4), pitman arm (2), drag link (1), and steering damper (5). The new design has the drag link (1) connected between the pitman arm (2) and the knuckle.

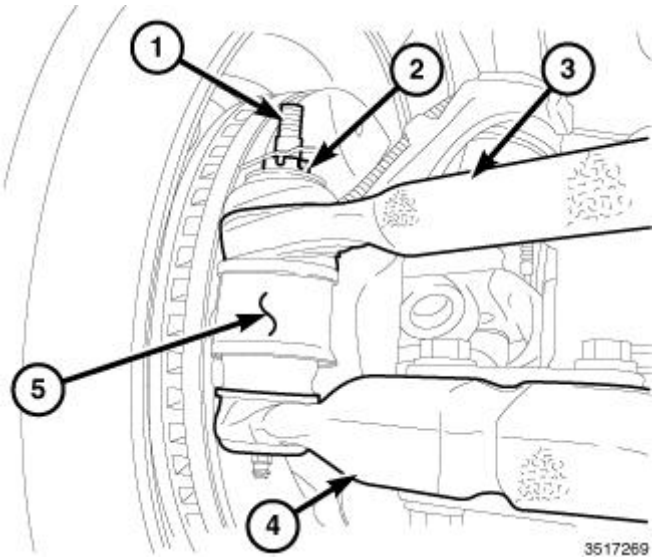

Fig. 67: RH Tie Rod, Ball Stud, Knuckle, Drag Link & Castle Nut
Courtesy of CHRYSLER GROUP, LLC

The RH tie rod (4) contains a ball stud (1) that extends through the knuckle (5) and the outer end of the drag link (3) with a castle nut (2) on top of the drag link (3). The tie rod ball stud is tapered to match with the knuckle, and the drag link end has a sleeve that is also tapered and extends into the knuckle.

STANDARD PROCEDURE

STANDARD PROCEDURE - LUBRICATION

Periodic lubrication of the steering system components is required. Refer to **MAINTENANCE SCHEDULES, DESCRIPTION** .

The following components must be lubricated:

- Tie rod
- Tie rod end
- Drag link

SPECIFICATIONS

TORQUE SPECIFICATIONS

2500/3500

DESCRIPTION	N.m	Ft. Lbs.	In. Lbs.
Pitman Arm Gear Shaft Nut (2500, 3500)	240	177	-
Drag Link to Pitman Arm (2500, 3500)	136	100	-
Drag Link to Tie Rod (2500, 3500)	136	100	-
Drag Link Adjuster Clamp (2500, 3500)	54	40	-
Tie Rod End to Knuckle (2500, 3500)	105	78	-
Tie Rod End Adjuster Clamp (2500, 3500)	54	40	-
Stabilizer Bar Link to Axle (2500, 3500)	68	50	-
Steering Damper to Axle or Linkage (2500, 3500)	101	75	-
Steering Damper Bracket U-Bolt Nuts (2500, 3500)	61	45	-
Track bar to Axle - M16 fastener (2500, 3500)	271	200	-
Track Bar to Frame - M16 fastener (2500, 3500)	271	200	-

4500/5500

DESCRIPTION	N.m	Ft. Lbs.	In. Lbs.
Pitman Arm Gear Shaft Nut (4500, 5500)	300	221	-
Drag Link Pitman Arm (4500, 5500)	156	115	-

Drag Link/Tie Rod to Knuckle, RH (4500, 5500)	140	100	-
Drag Link Adjuster Clamp (4500, 5500)	55	40	-
Tie Rod End to Knuckle LH (4500, 5500)	115	85	-
Tie Rod End Adjuster Clamp (4500, 5500)	90	66	-
Stabilizer Bar Link to Axle (4500, 5500)	149	110	-
Stabilizer Bar Link to Stabilizer bar (4500, 5500)	60	44	-
Stabilizer Bar to Frame (4500, 5500)	58	43	-
Steering Damper to Axle (4500, 5500)	117	86	-
Steering Damper to Linkage (4500, 5500)	117	86	-
Steering Damper Bracket to Linkage U-Bolt Nuts (4500, 5500)	55	41	-
Steering Damper Bracket to Linkage Bolt (4500, 5500)	135	100	-
Track bar to Axle (4500, 5500)	370	273	-
Track Bar to Frame (4500, 5500)	370	273	-

ARM, PITMAN, LINK AND COIL

REMOVAL

REMOVAL

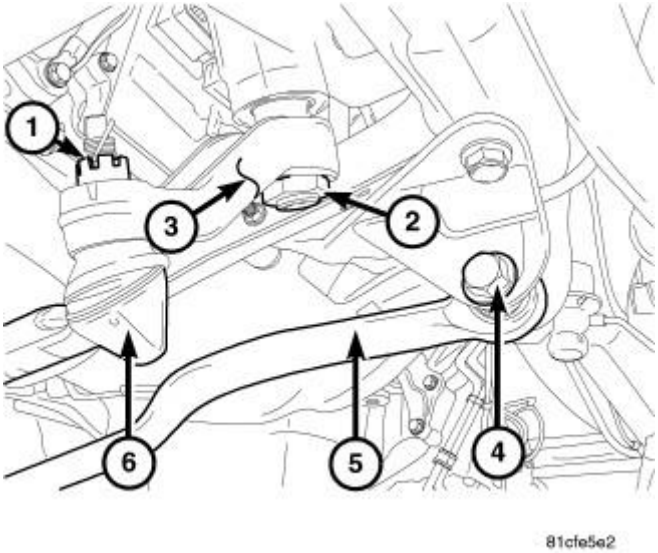

Fig. 68: Pitman Arm, Nuts, Drag Link & Track Bar
Courtesy of CHRYSLER GROUP, LLC

1. Remove the track bar bolt (4) and lower the track bar (5) to allow enough clearance.

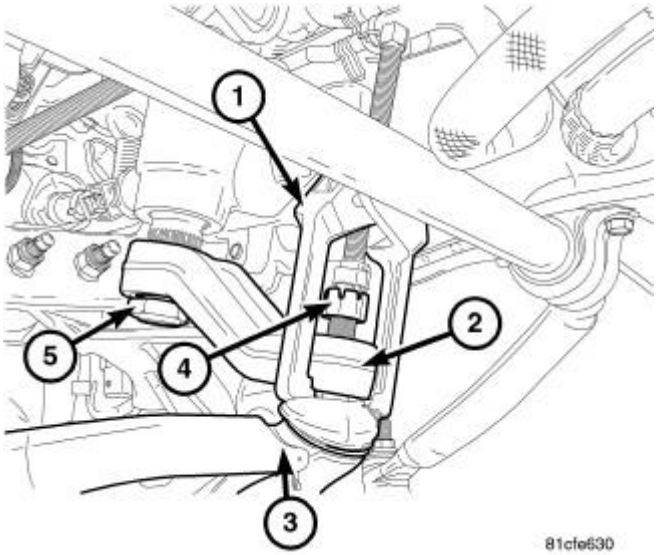

Fig. 69: Drag Link Puller
Courtesy of CHRYSLER GROUP, LLC

2. Remove the drag link nut (4) from the pitman arm (2).
3. Install puller C3894-A (1) or equivalent and separate the drag link (3) from the pitman arm (2).
4. Mark the pitman arm (2) and shaft positions for installation reference. Unstake the nut (5) and the remove from the pitman arm (2).

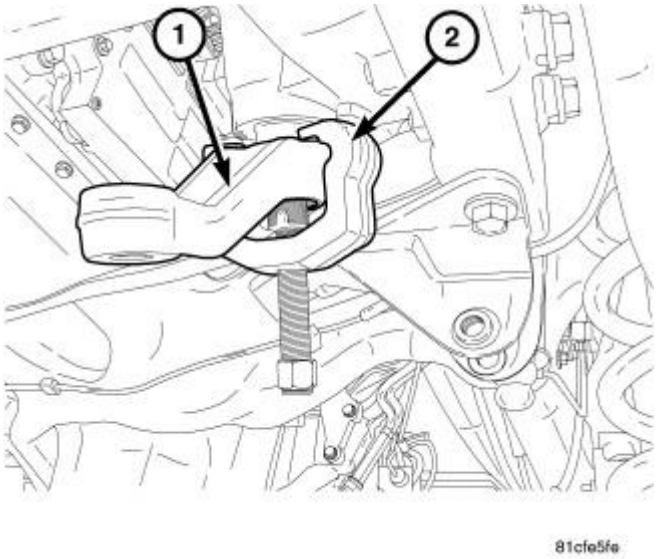

Fig. 70: Identifying Pitman Arm Puller
Courtesy of CHRYSLER GROUP, LLC

5. Remove the pitman arm (1) with Puller OTC® 5055 (2) or an equivalent pitman arm puller tool.

INSTALLATION

INSTALLATION

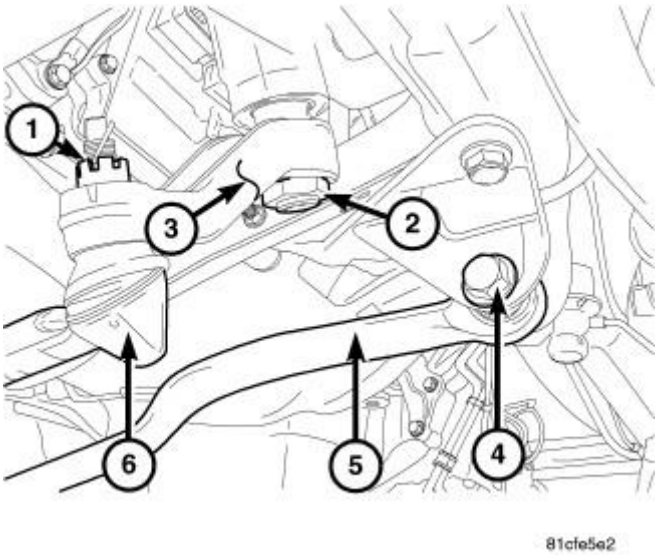

Fig. 71: Pitman Arm, Nuts, Drag Link & Track Bar
Courtesy of CHRYSLER GROUP, LLC

NOTE: **Care is to be taken to assure the steering gear does not travel more than 25 degrees off center, at the output shaft in either direction, prior to setting of the poppet valves. This is critical during the installation of the pitman arm. Failure to do this will result in the improper setting of the poppet valves. If set**

improperly the gear will not go into relief bypass and there is potential for heat build up and damage to the steering system. Once set, the poppet valves can not be reset.

1. Align reference marks and install pitman arm (3).
2. Install the retaining nut (2) on the pitman shaft and tighten nut to 300 N.m (225 ft. lbs.).
3. Install the drag link (6) to the pitman arm (3). Install the nut (1) and tighten to 54 N.m (40 ft. lbs.). Then an additional 90°.
4. Install the track bar (5) and tighten the bolt (4) to 54 N.m (40 ft. lbs.)
5. Remove the supports and lower the vehicle to the surface. Center steering wheel and adjust toe. Refer to **WHEEL ALIGNMENT, STANDARD PROCEDURE** .
6. After adjustment tighten tie rod adjustment sleeve clamp bolts to 61 N.m (45 ft. lbs.).

"SETTING THE POPPET VALVES IN THE STEERING GEAR BOX AFTER ALIGNMENT HAS BEEN PERFORMED"

1. With the engine at idle and the vehicle still on the turn angle plates or with weight off tires, steer the wheels to full travel in one direction until axle stop contact is made (approximately 2 1/8 turns). Maximum input torque to the steering wheel to be applied during this procedure.

NOTE: **Prior to reaching full turn, approximately 1 3/4 turns, a slight increase in turning effort will be experienced and will remain until the steering stop is reached.**

2. Follow the same procedure while turning the steering wheel in the opposite direction. The poppets are now positioned to trip and reduce pressure as the steered wheels approach the axle stops in either direction.

DAMPER, STEERING, LINK AND COIL

REMOVAL

DAMPER - 2500/3500

NOTE: **All views are typical.**

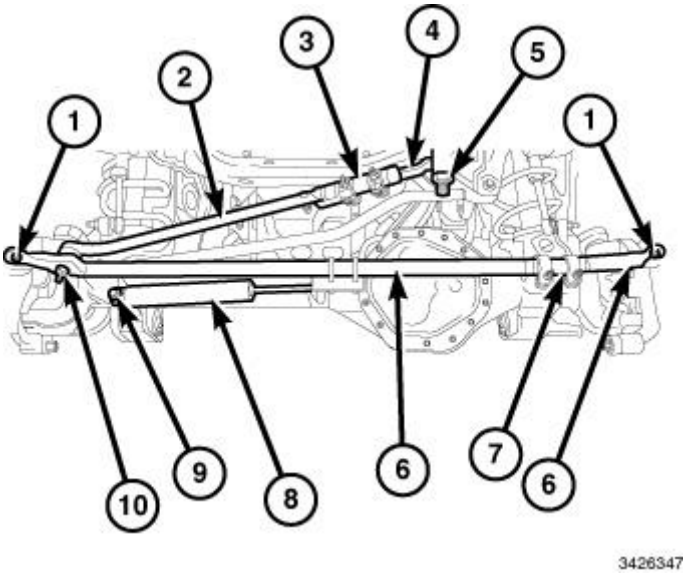

Fig. 72: Link And Coil Steering System Components
Courtesy of CHRYSLER GROUP, LLC

1. Raise and support the vehicle. Refer to **HOISTING, STANDARD PROCEDURE** .
2. Remove the steering damper mounting nut and bolt (9) at the axle.

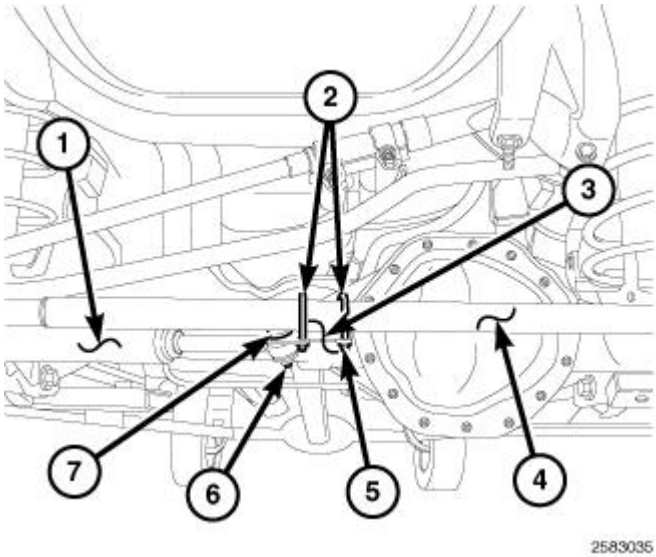

Fig. 73: Identifying Steering Damper & Linkage Bracket Bolt
Courtesy of CHRYSLER GROUP, LLC

3. Remove the steering damper mounting nut (6) at the linkage bracket (3).
4. Remove the steering damper (1).

DAMPER - 4500/5500

NOTE: All views are typical.

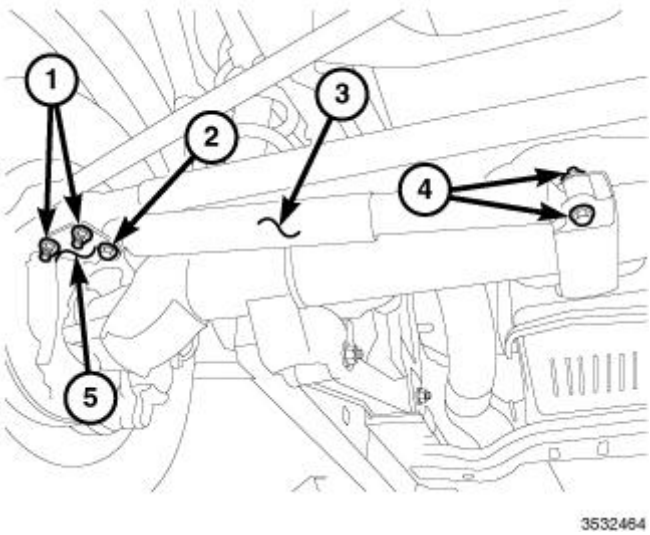

Fig. 74: Steering Damper, Linkage Bracket, Nuts & Bolts
Courtesy of CHRYSLER GROUP, LLC

1. Raise and support the vehicle. Refer to **HOISTING, STANDARD PROCEDURE** .
2. Remove the steering damper mounting nut and bolt (4) at the axle.
3. Remove the steering damper mounting nut and bolt (2) at the linkage bracket (5).
4. Remove the steering damper (3).

BRACKET - 2500/3500

NOTE: All views are typical.

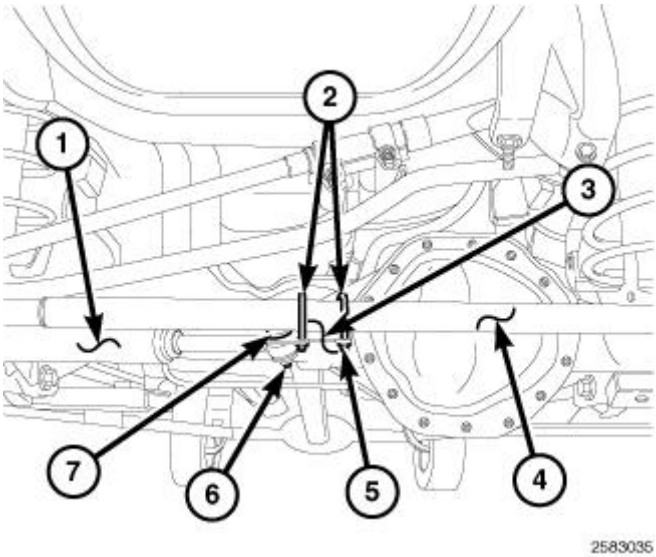

Fig. 75: Identifying Steering Damper & Linkage Bracket Bolt
Courtesy of CHRYSLER GROUP, LLC

1. Raise and support the vehicle. Refer to **HOISTING, STANDARD PROCEDURE** .
2. Remove the steering damper mounting nut (6) at the linkage bracket (3) and position the steering damper (1) off the retaining bolt (7).

NOTE: Some vehicles may have only one u-bolt retaining the bracket to the tie rod.

3. Remove the four (or two) mounting bracket u-bolt nuts (5) and remove the bracket (3).

BRACKET - 4500/5500

NOTE: All views are typical.

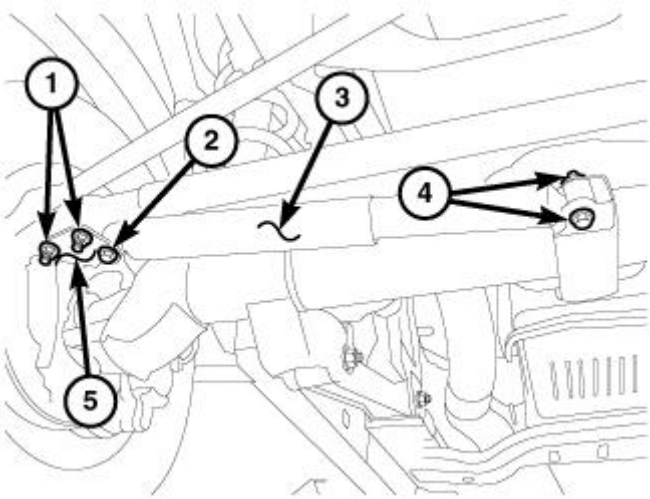

3532464

Fig. 76: Steering Damper, Linkage Bracket, Nuts & Bolts
Courtesy of CHRYSLER GROUP, LLC

1. Raise and support the vehicle. Refer to **HOISTING, STANDARD PROCEDURE** .
2. Remove the steering damper mounting bolt and nut (2) at the linkage bracket (5) and position the steering damper (3) away from the bracket (5).
3. Remove the mounting bracket bolts and nuts (1) and remove the bracket (5).

INSTALLATION

DAMPER - 2500/3500

NOTE: All views are typical.

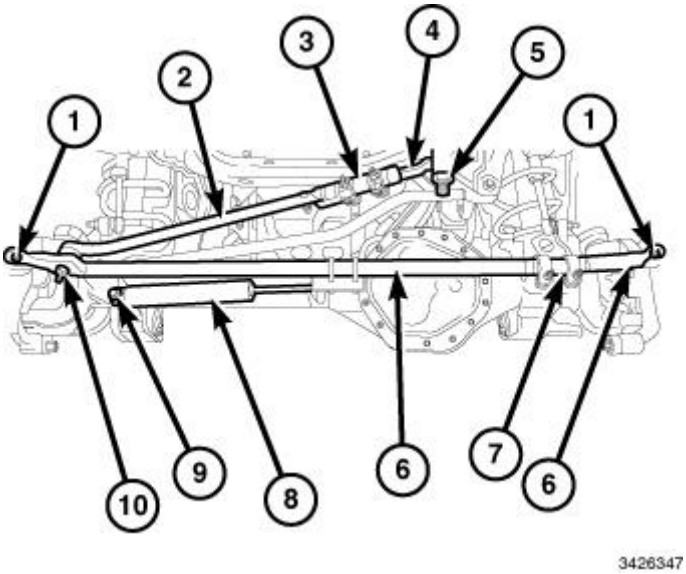

Fig. 77: Link And Coil Steering System Components
Courtesy of CHRYSLER GROUP, LLC

1. Position the steering damper (8) on the axle bracket. Install the bolt and nut (9) and tighten to specifications. Refer to **LINKAGE, LINK AND COIL, SPECIFICATIONS**.

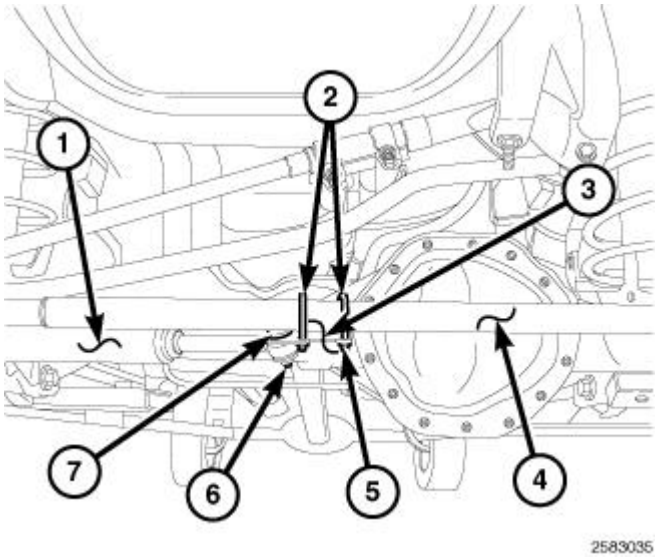

Fig. 78: Identifying Steering Damper & Linkage Bracket Bolt
Courtesy of CHRYSLER GROUP, LLC

2. Position the steering damper (1) on the linkage bracket bolt (7), install the nut (6) and tighten to specifications. Refer to **LINKAGE, LINK AND COIL, SPECIFICATIONS**.
3. Remove the support and lower the vehicle.

DAMPER - 4500/5500

NOTE: **All views are typical.**

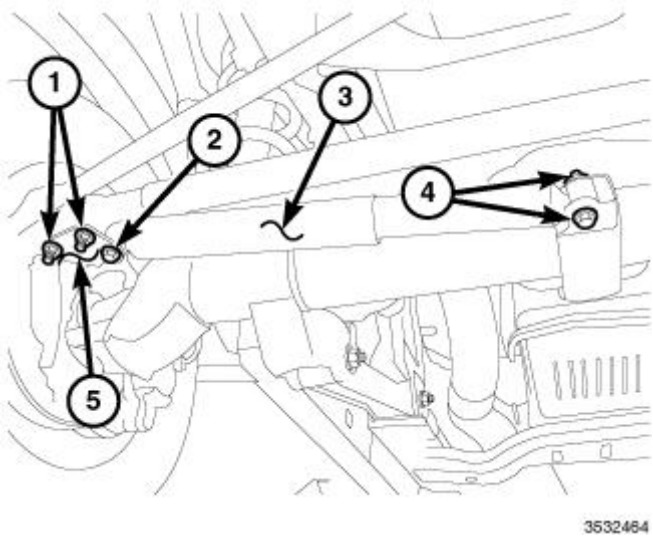

Fig. 79: Steering Damper, Linkage Bracket, Nuts & Bolts
Courtesy of CHRYSLER GROUP, LLC

1. Position the steering damper (3) on the axle bracket, install the bolt and nut (4) and tighten to specifications. Refer to **LINKAGE, LINK AND COIL, SPECIFICATIONS**.
2. Position the steering damper (3) on the linkage bracket (5), install the bolt and nut (2) and tighten to specifications. Refer to **LINKAGE, LINK AND COIL, SPECIFICATIONS**.
3. Remove the supports and lower the vehicle.

BRACKET - 2500/3500

NOTE: **All views are typical.**

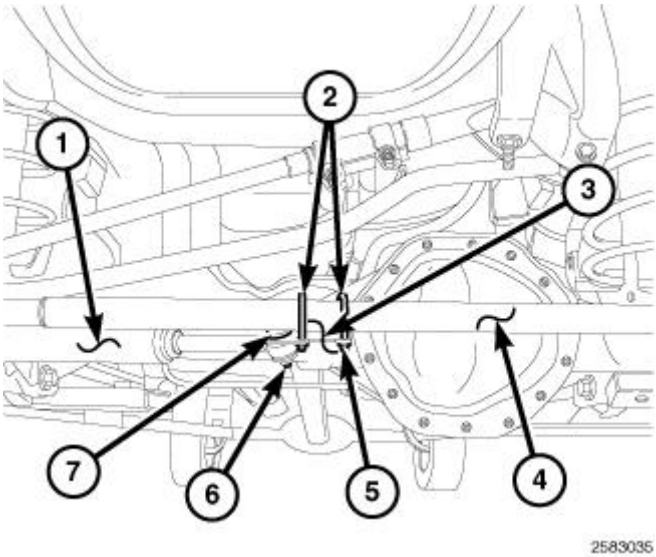

Fig. 80: Identifying Steering Damper & Linkage Bracket Bolt
Courtesy of CHRYSLER GROUP, LLC

NOTE: **Some brackets may have the steering damper retaining bolt permanently attached to the bracket.**

1. Place the steering damper retaining bolt (7) in the bracket (3) and position the bracket on the flat of the linkage.
2. With the bracket (3) centered on the flat of the linkage, position the u-bolts (2) over the linkage, through the bracket and install the four (or two) u-bolt nuts (5). Do not tighten at this time.
3. Verify the bracket (3) is centered in the flat area of the linkage and tighten the four (or two) u-bolt nuts (5) to specifications. Refer to **LINKAGE, LINK AND COIL, SPECIFICATIONS**.
4. Position the steering damper (1) on the retaining bolt (7).
5. Install the steering damper retaining nut (6) and tighten to specifications. Refer to **LINKAGE, LINK AND COIL, SPECIFICATIONS**.
6. Remove the support and lower the vehicle.

BRACKET - 4500/5500

NOTE: **All views are typical.**

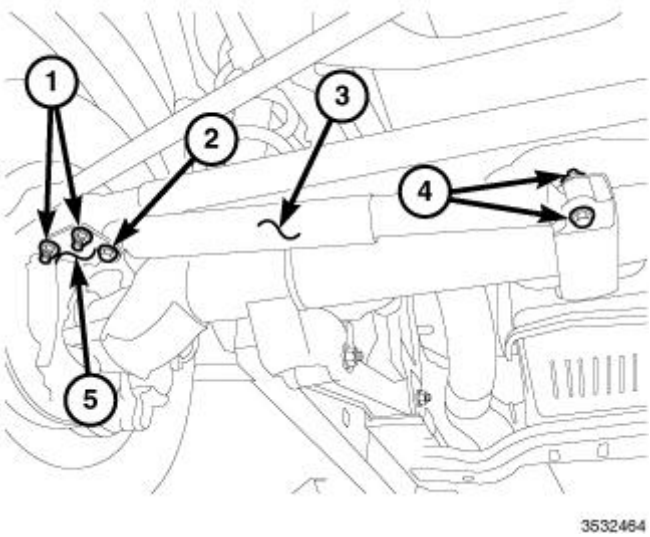

Fig. 81: Steering Damper, Linkage Bracket, Nuts & Bolts
Courtesy of CHRYSLER GROUP, LLC

1. Position the steering damper bracket (5), install the bolts and nuts (1) and tighten to specifications. Refer to **LINKAGE, LINK AND COIL, SPECIFICATIONS**.
2. Position the steering damper (3), install the bolt and nut (2) and tighten to specifications. Refer to **LINKAGE, LINK AND COIL, SPECIFICATIONS**.
3. Remove the support and lower the vehicle.

DRAG LINK, STEERING, LINK AND COIL

REMOVAL

RH - TO TIE ROD

NOTE: All views are typical.

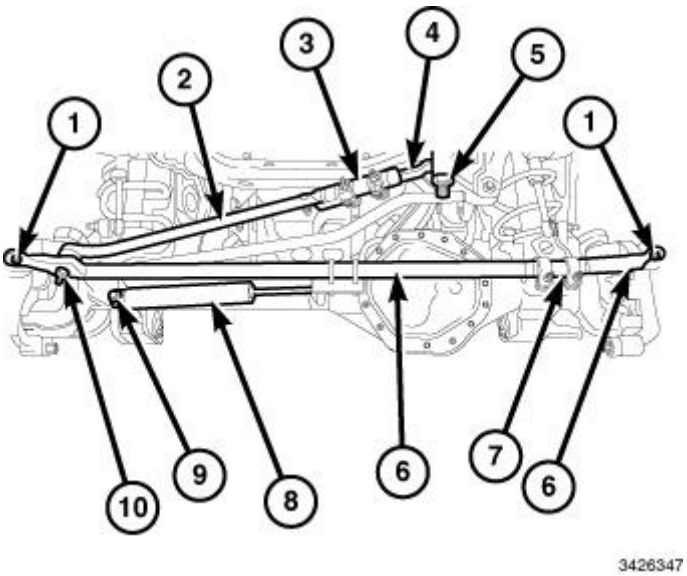

Fig. 82: Link And Coil Steering System Components
Courtesy of CHRYSLER GROUP, LLC

1. Raise and support the vehicle. Refer to **HOISTING, STANDARD PROCEDURE** .
2. Remove the drag link to tie rod nut (10).
3. Loosen the nut/bolt on the drag link adjuster sleeve (3) as necessary.
4. Remove the drag link (2) from the tie rod (6). (3).
5. Remove the drag link (2) from the adjuster sleeve (3).

TO PITMAN ARM

NOTE: All views are typical. 2500 shown in illustration, others similar.

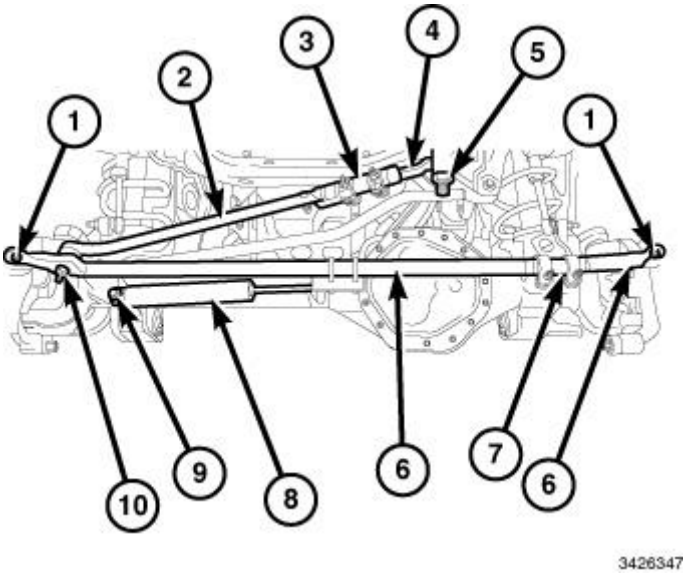

Fig. 83: Link And Coil Steering System Components
Courtesy of CHRYSLER GROUP, LLC

1. Raise and support the vehicle. Refer to **HOISTING, STANDARD PROCEDURE** .
2. Remove the drag link to pitman arm nut (5).
3. Loosen the nut/bolt on the tie rod adjuster sleeve (3).

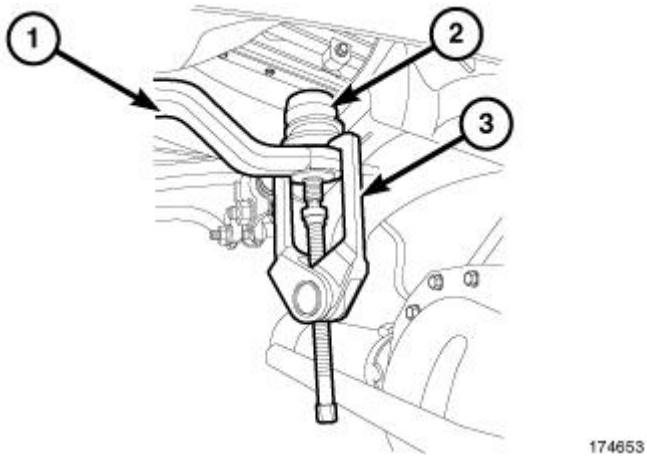

Fig. 84: Draglink Removal
Courtesy of CHRYSLER GROUP, LLC

1 - PITMAN ARM
2 - DRAG LINK
3 - C -3894-A PULLER

4. Remove the drag link (2) from the pitman arm (1), with (special tool #C-3894-A, Puller, Tie Rod) (3).
5. Remove the drag link from the adjuster sleeve.

TO KNUCKLE

NOTE: All views are typical.

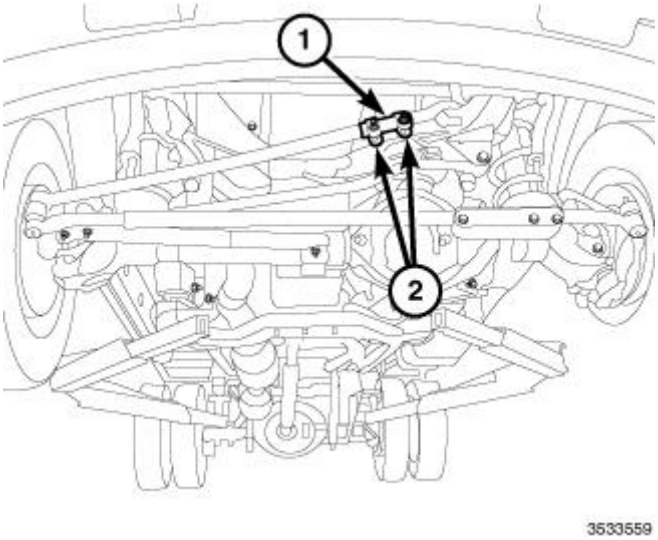

Fig. 85: Drag Link Adjuster Sleeve, Nut & Bolt
Courtesy of CHRYSLER GROUP, LLC

1. Raise and support the vehicle. Refer to **HOISTING, STANDARD PROCEDURE** .
2. Loosen the nut/bolt (2) on the drag link adjuster sleeve (1) as necessary.

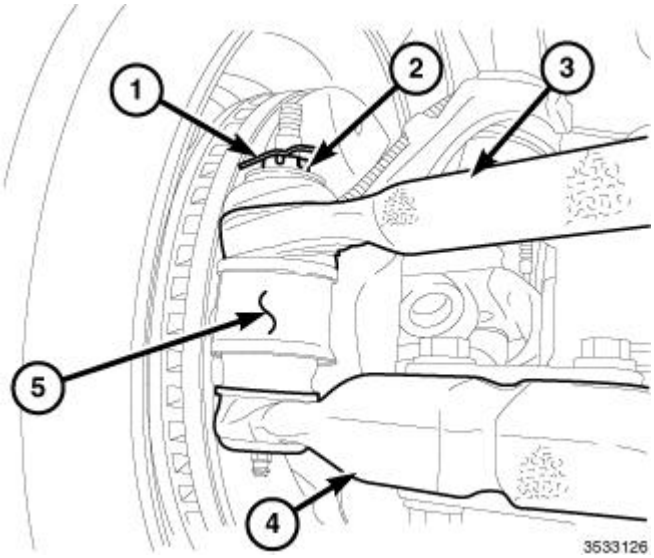

Fig. 86: Drag Link/Tie Rod To Knuckle Nut & Cotter Key
Courtesy of CHRYSLER GROUP, LLC

3. Remove the cotter key (1) and the drag link/tie rod to knuckle nut (2).

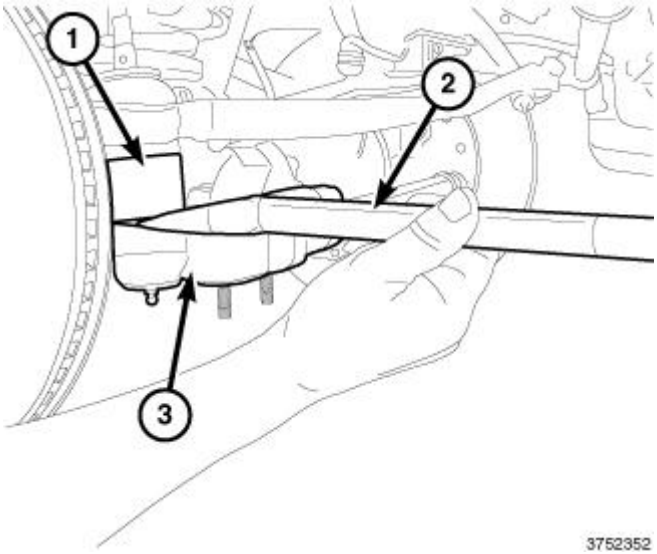

Fig. 87: Removing Tie Rod End From Knuckle
Courtesy of CHRYSLER GROUP, LLC

WARNING: Any time the tie rod end has been disconnected from the knuckle, a new boot/seal must be used or damage to the ball stud may result.

4. Remove the tie rod end (3) from the knuckle (1) with (special tool #10390, Separator, Tie Rod) (2).

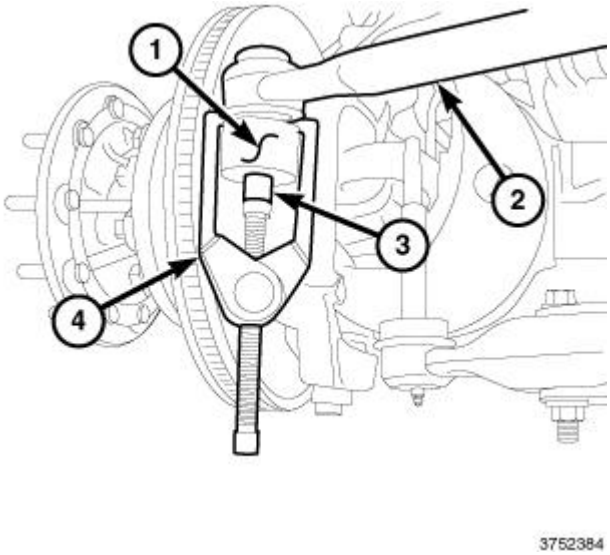

Fig. 88: Removing Drag Link End From Knuckle
Courtesy of CHRYSLER GROUP, LLC

5. Remove the drag link end (2) from the knuckle (1) with (special tool #C-3894-A, Puller, Tie Rod) (4) and (special tool #10403, Separator, Drag Link) (3).
6. Remove the drag link end (3) from the adjuster sleeve.

INSTALLATION

RH - TO TIE ROD

NOTE: All views are typical.

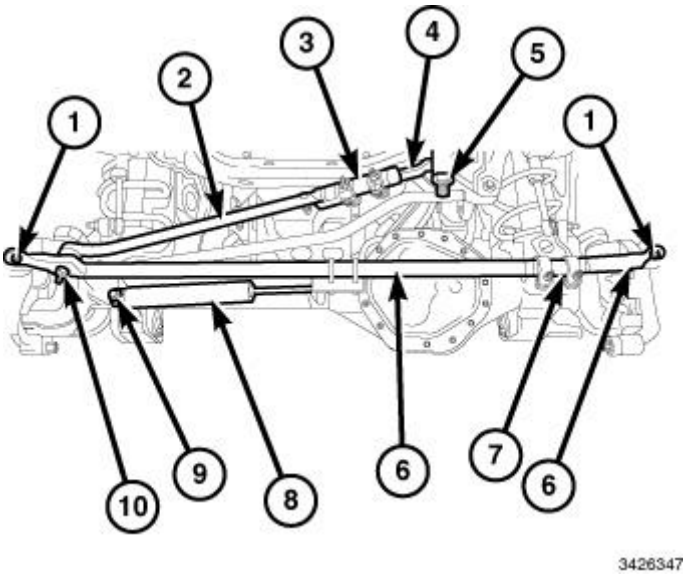

Fig. 89: Link And Coil Steering System Components
Courtesy of CHRYSLER GROUP, LLC

1. Install the drag link end (2) to the adjustment sleeve (3) and to the tie rod (6).
2. Install the drag link to tie rod nut (10) and tighten to specifications. Refer to **LINKAGE, LINK AND COIL, SPECIFICATIONS**.
3. Remove the supports and lower the vehicle. Center the steering wheel and adjust the toe. Refer to **WHEEL ALIGNMENT, STANDARD PROCEDURE** .

   NOTE: Position the clamp on the adjustment sleeve so retaining bolt is located on the bottom side of the sleeve.

4. After adjustment, tighten drag link adjustment sleeve clamp bolts to specifications. Refer to **LINKAGE, LINK AND COIL, SPECIFICATIONS**.

TO PITMAN ARM

NOTE: All views are typical. 2500 shown in illustration, others similar.

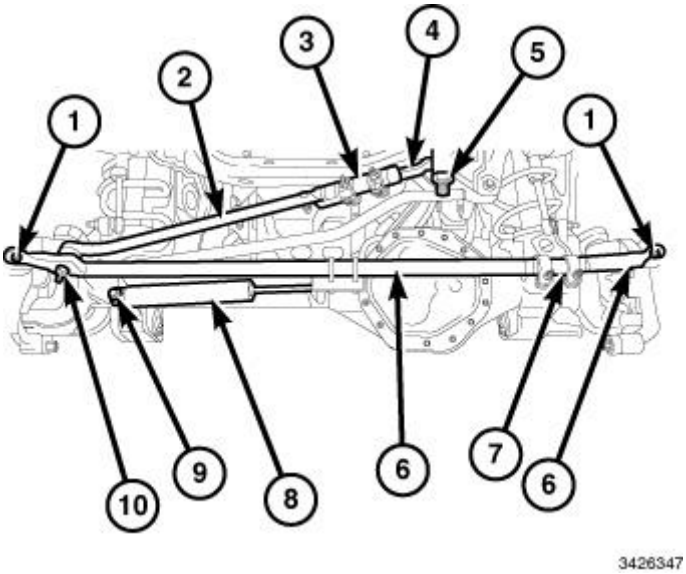

Fig. 90: Link And Coil Steering System Components
Courtesy of CHRYSLER GROUP, LLC

1. Install the drag link end (4) to the adjustment sleeve (3) and to the pitman arm.
2. Install the drag link to pitman arm nut (5) and tighten to specifications. Refer to **LINKAGE, LINK AND COIL, SPECIFICATIONS**.
3. Remove the supports and lower the vehicle. Center the steering wheel and adjust the toe. Refer to **WHEEL ALIGNMENT, STANDARD PROCEDURE** .

NOTE: **Position the clamp on the adjustment sleeve so retaining bolt is located on the bottom side of the sleeve.**

4. After adjustment, tighten the tie rod adjustment sleeve clamp bolts to specifications. Refer to **LINKAGE, LINK AND COIL, SPECIFICATIONS**.

TO KNUCKLE

NOTE: **All views are typical.**

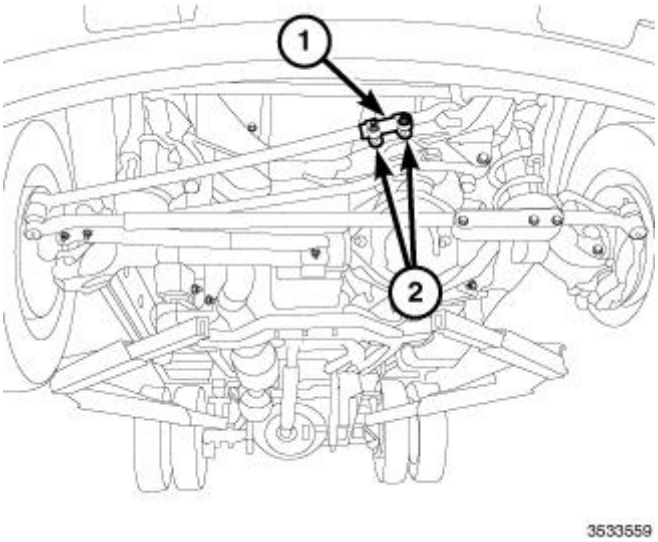

Fig. 91: Drag Link Adjuster Sleeve, Nut & Bolt
Courtesy of CHRYSLER GROUP, LLC

1. Install the drag link end to the adjustment sleeve (1).

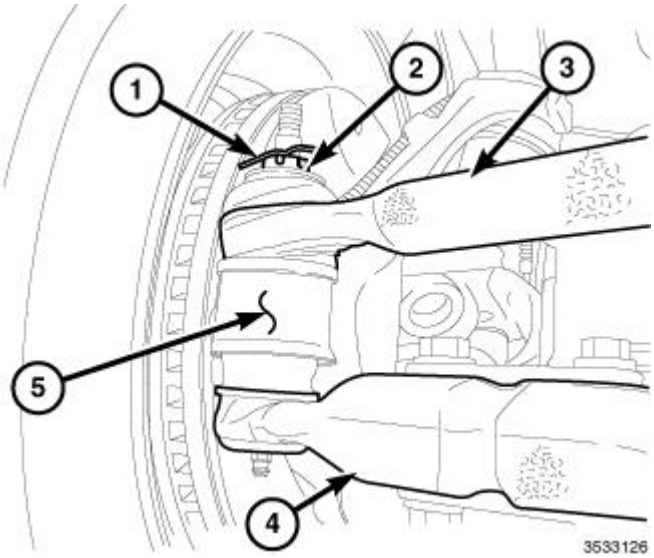

Fig. 92: Drag Link/Tie Rod To Knuckle Nut & Cotter Key
Courtesy of CHRYSLER GROUP, LLC

WARNING: **Any time the tie rod end has been disconnected from the knuckle, a new boot/seal must be used or damage to the ball stud may result.**

2. Install the tie rod end (4) with a new boot/seal, and drag link (3) into the knuckle (5).
3. Install the drag link/tie rod to knuckle nut (2) and tighten to specifications. Refer to **LINKAGE, LINK AND COIL, SPECIFICATIONS**.
4. Install the cotter key (1).

5. Install the wheel. Refer to **WHEELS, STANDARD PROCEDURE** .

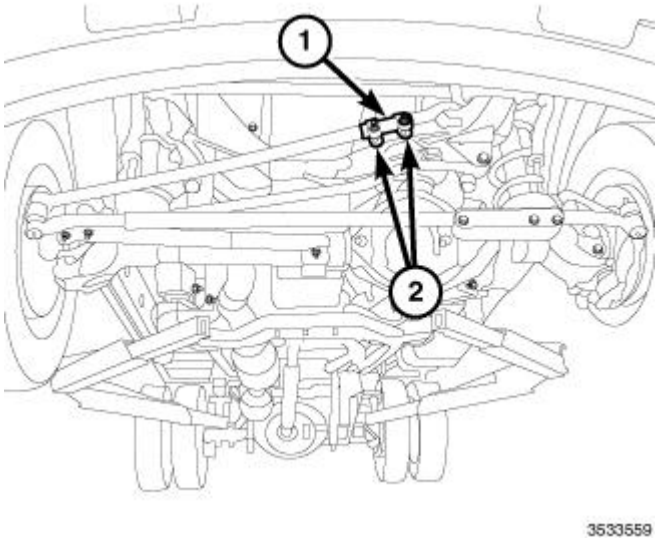

Fig. 93: Drag Link Adjuster Sleeve, Nut & Bolt
Courtesy of CHRYSLER GROUP, LLC

6. Remove the supports and lower the vehicle. Center the steering wheel and adjust the toe. Refer to **WHEEL ALIGNMENT, STANDARD PROCEDURE** .

NOTE: Position the clamp on the adjustment sleeve (1) so retaining bolt is located on the bottom side of the sleeve.

7. After adjustment tighten tie rod adjustment sleeve clamp bolts (2) to specifications. Refer to **LINKAGE, LINK AND COIL, SPECIFICATIONS**.

END, TIE ROD, LINK AND COIL

REMOVAL

RH - DRAG LINK TO TIE ROD

NOTE: All views are typical.

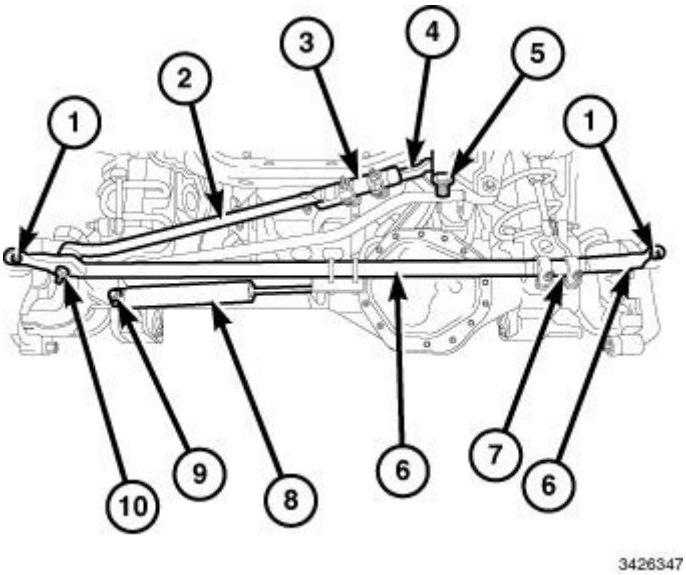

Fig. 94: Link And Coil Steering System Components
Courtesy of CHRYSLER GROUP, LLC

1. Raise and support the vehicle. Refer to **HOISTING, STANDARD PROCEDURE** .
2. Remove the wheel.
3. Remove tie rod to knuckle nut (1).
4. Remove the drag link to tie rod retaining nut (10).
5. Loosen the nut/bolt on the tie rod adjuster sleeve (7).

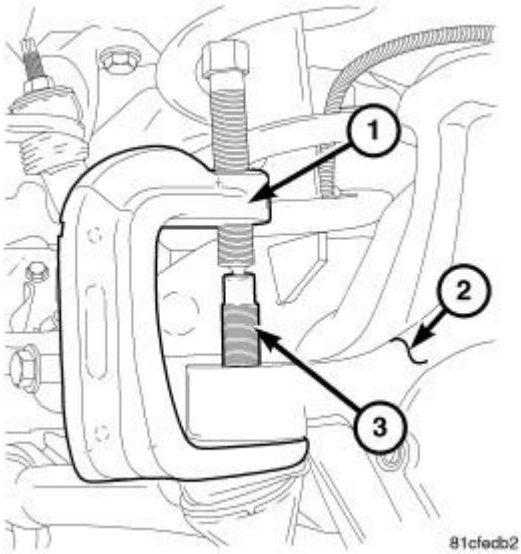

Fig. 95: Tie Rod Puller
Courtesy of CHRYSLER GROUP, LLC

6. Remove tie rod (3) from the knuckle (2) and the drag link from the tie rod with (special tool #8677, Remover, Ball Joint) (1).
7. Remove the tie rod end from the adjuster sleeve.

NOTE: **All views are typical.**

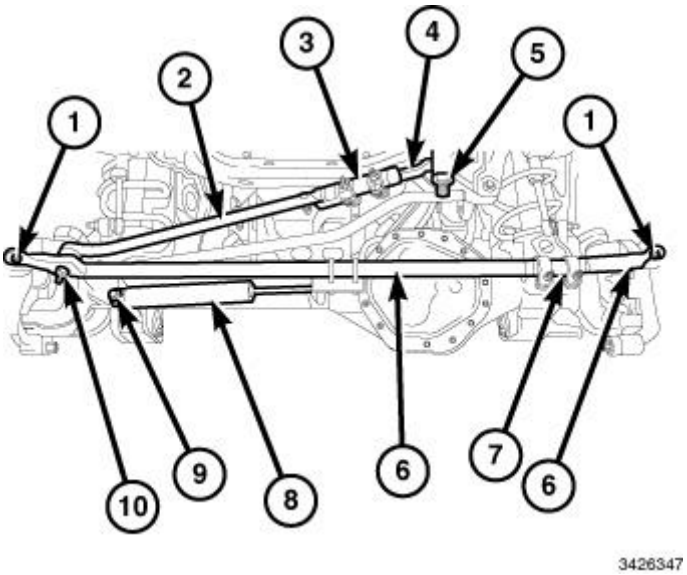

Fig. 96: Link And Coil Steering System Components
Courtesy of CHRYSLER GROUP, LLC

1. Raise and support the vehicle. Refer to **HOISTING, STANDARD PROCEDURE** .
2. Remove the wheel.
3. Remove tie rod to knuckle nut (1).
4. Loosen the nut/bolt on the tie rod adjuster sleeve (7) as necessary.

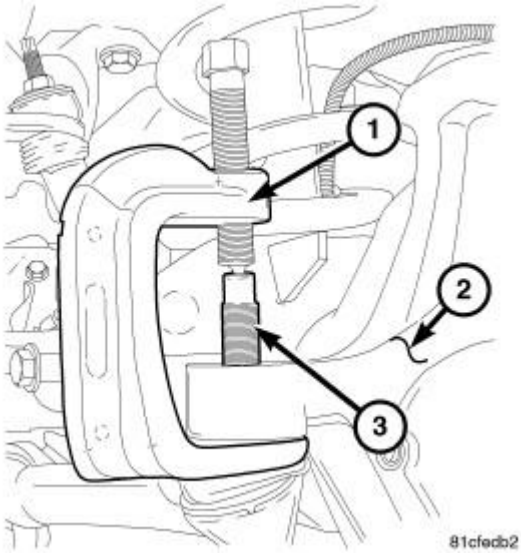

Fig. 97: Tie Rod Puller
Courtesy of CHRYSLER GROUP, LLC

5. Remove tie rod (3) from the knuckle (2) with (special tool #8677, Remover, Ball Joint) (1).
6. Remove the tie rod end from the adjuster sleeve.

RH - WITH DRAG LINK TO KNUCKLE

NOTE: All views are typical.

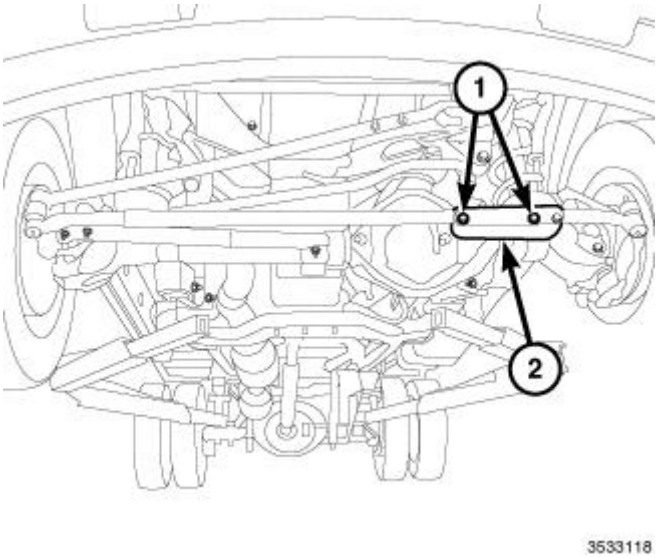

Fig. 98: Tie Rod Adjuster Sleeve, Nut & Bolt
Courtesy of CHRYSLER GROUP, LLC

1. Raise and support the vehicle. Refer to **HOISTING, STANDARD PROCEDURE** .
2. Remove the wheel.
3. Loosen the nut/bolt (1) on the tie rod adjuster sleeve (2) as necessary.

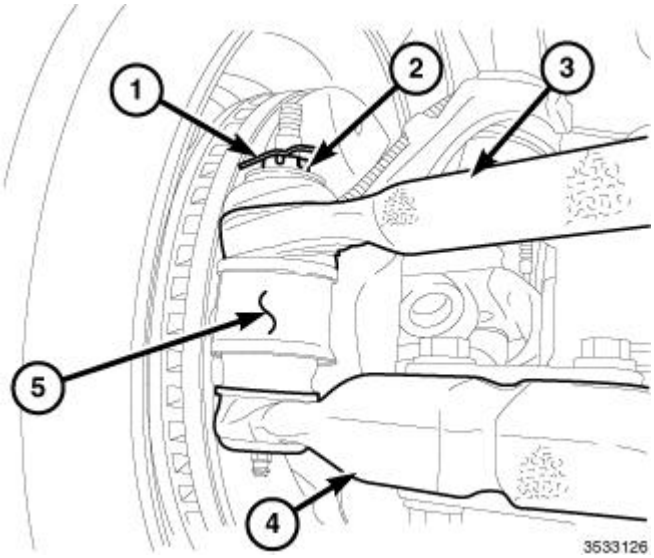

Fig. 99: Drag Link/Tie Rod To Knuckle Nut & Cotter Key

Courtesy of CHRYSLER GROUP, LLC

4. Remove the cotter key (1) and the drag link/tie rod to knuckle nut (2).

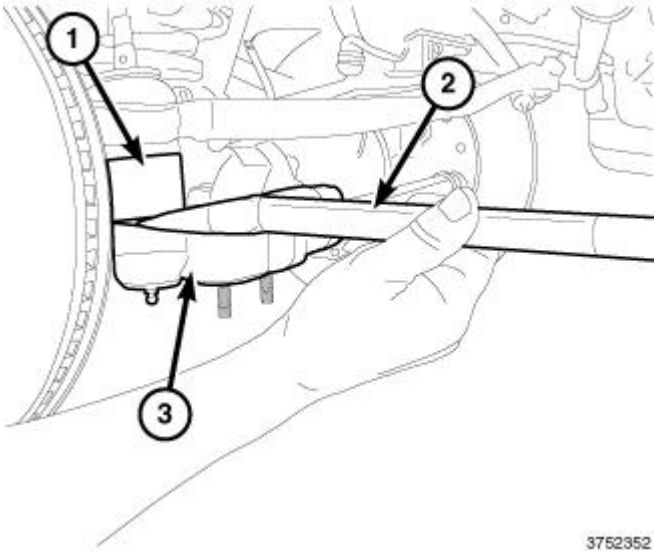

Fig. 100: Removing Tie Rod End From Knuckle
Courtesy of CHRYSLER GROUP, LLC

WARNING: Any time the tie rod end has been disconnected from the knuckle, a new boot/seal must be used or damage to the ball stud may result.

5. Remove the tie rod end (3) from the knuckle (1) with (special tool #10390, Separator, Tie Rod) (2).

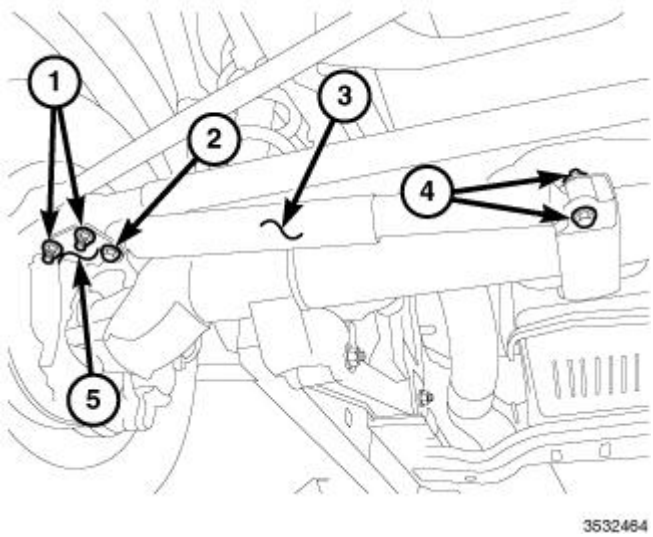

Fig. 101: Steering Damper, Linkage Bracket, Nuts & Bolts
Courtesy of CHRYSLER GROUP, LLC

CAUTION: Do not allow the LH tie rod to hang freely from the knuckle. Damage to the tie rod ball stud may result.

6. Remove the steering damper/mounting bracket bolts and nuts (1) and remove the bracket and shock from the tie rod end.
7. Remove the tie rod end from the adjuster sleeve.

INSTALLATION

RH - DRAG LINK TO TIE ROD

NOTE: All views typical.

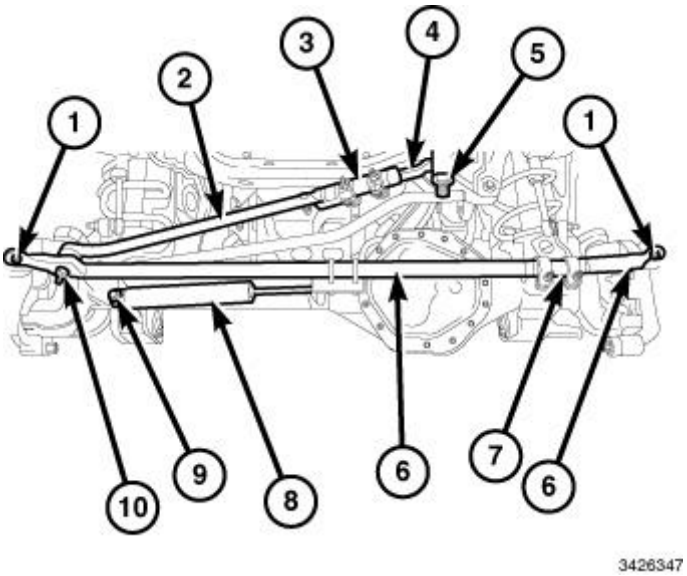

Fig. 102: Link And Coil Steering System Components
Courtesy of CHRYSLER GROUP, LLC

1. Install the tie rod (6) into the adjuster sleeve (7) and into the steering knuckle.
2. Install the drag link (2) to the tie rod (6). Install the nut (10) and tighten to specifications. Refer to **LINKAGE, LINK AND COIL, SPECIFICATIONS**.
3. Install the wheels as necessary. Refer to **WHEELS, STANDARD PROCEDURE** .
4. Remove the supports and lower the vehicle. Center the steering wheel and adjust the toe. Refer to **WHEEL ALIGNMENT, STANDARD PROCEDURE** .

NOTE: Position the clamp on the sleeve so retaining bolt is located on the bottom side of the sleeve.

5. After adjustment tighten tie rod adjustment sleeve clamp bolts to specifications. Refer to **LINKAGE, LINK AND COIL, SPECIFICATIONS**.

LH - ALL

NOTE: **All views typical.**

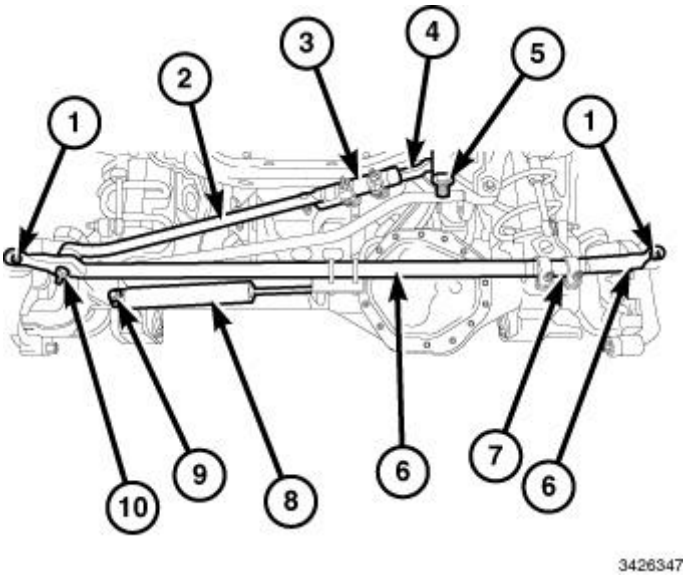

Fig. 103: Link And Coil Steering System Components
Courtesy of CHRYSLER GROUP, LLC

1. Install the tie rod (6) into the adjuster sleeve (7) and into the steering knuckle.
2. Install the wheel. Refer to **WHEELS, STANDARD PROCEDURE** .
3. Remove the supports and lower the vehicle to the surface. Center the steering wheel and adjust the toe. Refer to **WHEEL ALIGNMENT, STANDARD PROCEDURE** .

   NOTE: **Position the clamp on the sleeve so retaining bolt is located on the bottom side of the sleeve.**

4. After adjustment tighten tie rod adjustment sleeve clamp bolts to specifications. Refer to **LINKAGE, LINK AND COIL, SPECIFICATIONS**.

RH - WITH DRAG LINK TO KNUCKLE

NOTE: **All views typical.**

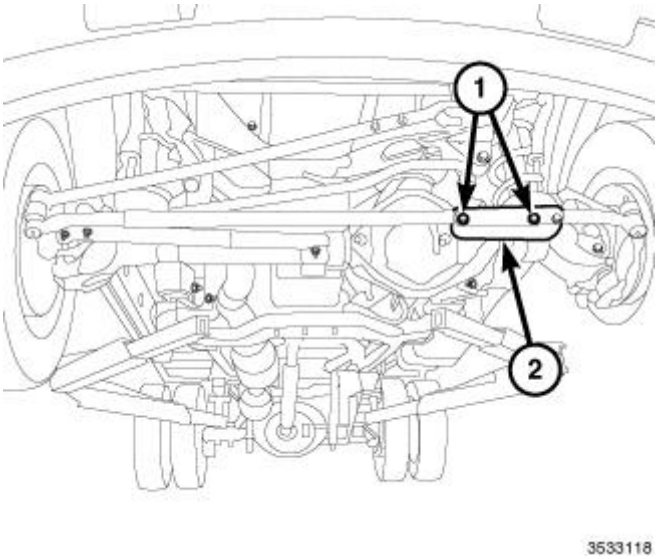

Fig. 104: Tie Rod Adjuster Sleeve, Nut & Bolt
Courtesy of CHRYSLER GROUP, LLC

1. Install the tie rod into the adjuster sleeve (2).

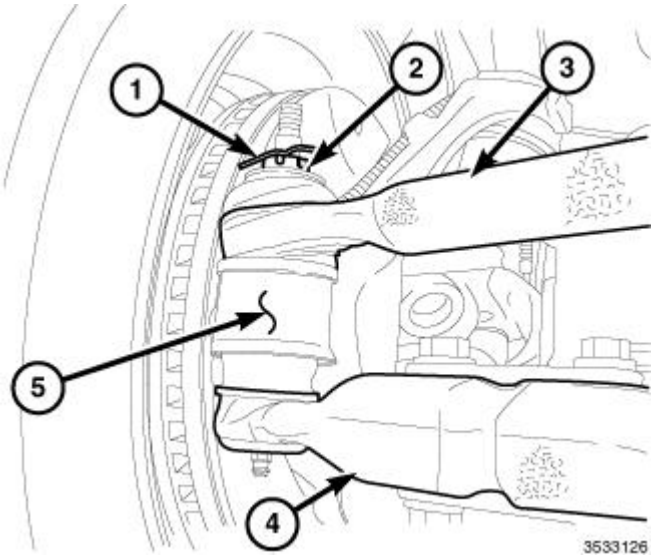

Fig. 105: Drag Link/Tie Rod To Knuckle Nut & Cotter Key
Courtesy of CHRYSLER GROUP, LLC

WARNING: **Any time the tie rod end has been disconnected from the knuckle, a new boot/seal must be used or damage to the ball stud may result.**

2. Install the tie rod (4) with a new boot/seal to the knuckle (5).
3. Install the nut (2) and tighten to specifications. Refer to **LINKAGE, LINK AND COIL, SPECIFICATIONS**.
4. Install the cotter pin (1).

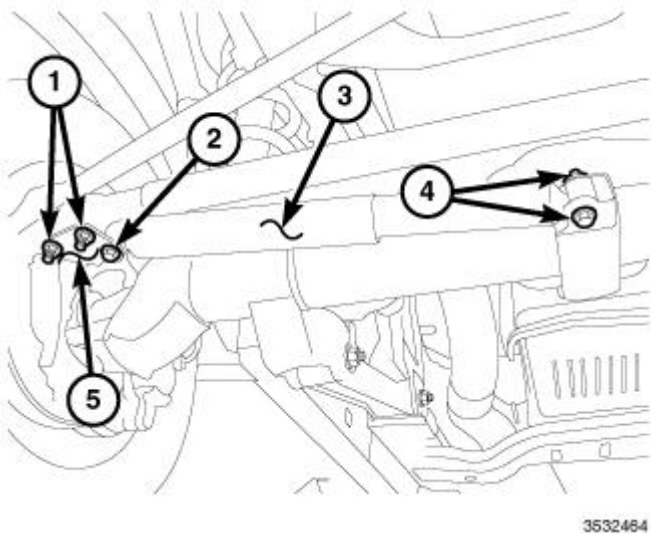

Fig. 106: Steering Damper, Linkage Bracket, Nuts & Bolts
Courtesy of CHRYSLER GROUP, LLC

5. Install the steering damper/mounting bracket, bolts and nuts (1) and tighten to specifications. Refer to **LINKAGE, LINK AND COIL, SPECIFICATIONS**.
6. Install the wheel. Refer to **WHEELS, STANDARD PROCEDURE** .
7. Remove the supports and lower the vehicle to the surface. Center the steering wheel and adjust the toe. Refer to **WHEEL ALIGNMENT, STANDARD PROCEDURE** .

NOTE: Position the clamp on the sleeve so retaining bolt is located on the bottom side of the sleeve.

8. After adjustment tighten tie rod adjustment sleeve clamp bolts to specifications. Refer to **LINKAGE, LINK AND COIL, SPECIFICATIONS**.

PUMP

DESCRIPTION

DESCRIPTION

CAUTION: MOPAR® ATF+4 is to be used in the power steering system. No other power steering or automatic transmission fluid is to be used in the system. Damage may result to the power steering pump and system if any other fluid is used, and do not overfill.

The pump is connected to the steering gear via the pressure hose and the return hose. The pump shaft has a pressed-on pulley that is belt driven by the crankshaft pulley.

All vehicles are equipped with a power steering fluid cooler.

NOTE: **Power steering pumps are not interchangeable with pumps installed on other vehicles.**

OPERATION

OPERATION

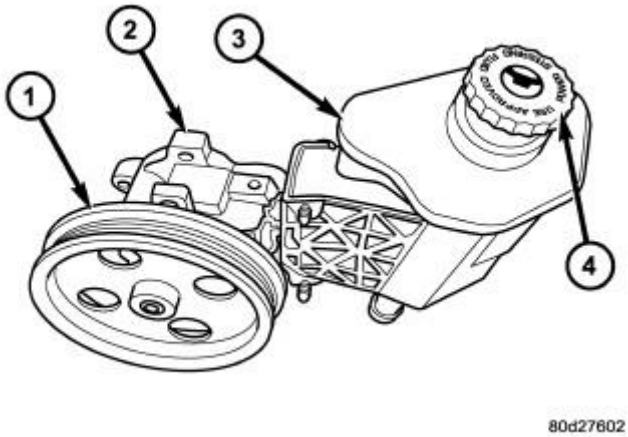

Fig. 107: Power Steering Pump
Courtesy of CHRYSLER GROUP, LLC

1 - 3.7L AND 4.7L (6 GROOVE) PHENOLIC (PLASTIC TYPE) PULLEY
1 - 5.7L AND 8.0L (7 GROOVE) PHENOLIC (PLASTIC TYPE) PULLEY
2 - PUMP ASSEMBLY
3 - RESERVOIR
4 - CAP

Hydraulic pressure is provided for the power steering gear by the belt driven power steering pump (2). Refer to **Fig. 107**. The power steering pumps are constant flow rate and displacement, vane-type pumps.

DIAGNOSIS AND TESTING

PUMP LEAKAGE

The pump is serviced as an assembly and should not be disassembled. The plastic pump reservoir and the reservoir o-rings can be replaced.

Check for leaks in the following areas:

- Pump shaft seal behind the pulley
- Pump to reservoir O-ring

- Reservoir cap
- Pressure and return lines
- Flow control valve fitting

POWER STEERING PUMP AND HOSES

NOTE: This information is designed to be used in conjunction with the diagnostic charts at the beginning of the Steering service information. Refer to DIAGNOSIS AND TESTING.

CHECKING FOR WEAR OF POWER STEERING PUMP INTERNAL COMPONENTS

1. Place gear selector in PARK (or NEUTRAL) with wheels chalked.
2. With the engine idling, have a helper turn the steering wheel.
3. Using an electronic listening tool, determine if noise is coming from the pump.
4. Increase the engine speed and have a helper turn the steering wheel. Does the noise change with load?
5. Replace the power steering pump if excessive noise is present. Refer to **PUMP, REMOVAL**.

CHECKING FOR POWER STEERING HOSES TOUCHING BODY OR FRAME OF VEHICLE

Check hoses and hose tubes as following:

- Inspect hoses and hose tubes for witness marks. If witness marks are present, adjust hose(s) to the proper position by loosening, repositioning and tightening attachments to the specified torque. Refer to **PUMP, SPECIFICATIONS**. **Do not bend tubing to adjust.** Replace the hose assembly if damaged.
- Check fastener torque of hose mounting brackets and tube nuts. Refer to **PUMP, SPECIFICATIONS**.
- Have a helper bump the steering gear off of the stops to induce pressure fluctuations which may move the hose. If hose contact is made, adjust hose(s) to the proper position by loosening, repositioning and tightening attachments to the specified torque. Refer to **PUMP, SPECIFICATIONS**. **Do not bend tubing to adjust.** Replace the hose assembly if damaged.

STANDARD PROCEDURE

POWER STEERING SYSTEM BLEEDING

WARNING: The fluid level should be checked with engine off to prevent injury from moving components.

CAUTION: Mopar® Power Steering Fluid + 4 or Mopar® ATF+4 Automatic Transmission Fluid is to be used in the power steering system. Both Fluids have the same material standard specifications (MS-9602). No other power steering or automatic transmission fluid is to be used in the system. Damage may result to the power steering pump and system if another fluid is used. Do not overfill the system.

CAUTION: If the air is not purged from the power steering system correctly, pump failure could result.

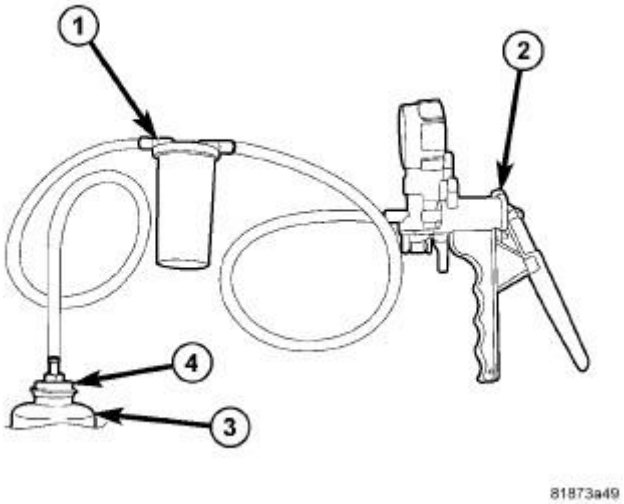

Fig. 108: Connecting Hand Vacuum Pump For Power Steering System Bleeding
Courtesy of CHRYSLER GROUP, LLC

NOTE: Be sure the vacuum tool used in the following procedure is clean and free of any fluids.

1. Check the fluid level. As measured on the side of the reservoir, the level should indicate between MAX and MIN when the fluid is at normal ambient temperature. Adjust the fluid level as necessary. Refer to **FLUID, STANDARD PROCEDURE**.
2. Tightly insert P/S Cap Adapter (special tool #9688A, Cap Adapter, Power Steering Pump) (4) into the mouth of the reservoir (3).

CAUTION: Failure to use a vacuum pump reservoir (1) may allow power steering fluid to be sucked into the hand vacuum pump.

3. Attach Hand Vacuum Pump (special tool #C-4207-A, Vacuum Pump, Hand) (2), or equivalent, with reservoir (1) attached, to the P/S Cap Adapter (special tool #9688A, Cap Adapter, Power Steering Pump) (4).

CAUTION: Do not run the vehicle while vacuum is applied to the power steering system. Damage to the power steering pump can occur.

NOTE: When performing the following step make sure the vacuum level is maintained during the entire time period.

4. Using Hand Vacuum Pump (2), apply 68-85 kPa (20-25 in. Hg) of vacuum to the system for a minimum of three minutes.
5. Slowly release the vacuum and remove the special tools.
6. Adjust the fluid level as necessary. Refer to 1.
7. Repeat through until the fluid no longer drops when vacuum is applied. Refer to 1.
8. Start the engine and cycle the steering wheel lock-to-lock three times.

NOTE: Do not hold the steering wheel at the stops.

9. Stop the engine and check for leaks at all connections.
10. Check for any signs of air in the reservoir and check the fluid level. If air is present, repeat the procedure as necessary.

FLUSHING POWER STEERING SYSTEM

Flushing is required when the power steering/hydraulic booster system fluid has become contaminated. Contaminated fluid in the steering/booster system can cause seal deterioration and affect steering gear/booster spool valve operation.

NOTE: The engine should not be run so that all of the fluid is drained from the system. The pump should never be run without fluid.

1. Raise the front end of the vehicle off the ground until the wheels are free to turn.
2. Remove the return line from the pump.
3. Plug the return line port/ports at the pump.
4. Position the return line/lines into a large container to catch the fluid.
5. While an assistant is filling the pump reservoir start the engine.
6. With the engine running at idle turn the wheel back and forth.

NOTE: Do not contact or hold the wheel against the steering stops.

7. Run a quart of fluid through the system then stop the engine and install the return line/lines.
8. Fill the system with fluid and perform Steering Pump Initial Operation. Refer to **PUMP, STANDARD PROCEDURE**.
9. Start the engine and run it for fifteen minutes then stop the engine.
10. Remove the return line/lines from the pump and plug the pump port/ports.
11. Pour fresh fluid into the reservoir and check the draining fluid for contamination. If the fluid is still contaminated, then flush the system again.
12. Install the return line/lines and perform Steering Pump Initial Operation. Refer to **PUMP, STANDARD PROCEDURE**.

SPECIFICATIONS

SPECIFICATIONS

DESCRIPTION	N.m	Ft. Lbs.	In. Lbs.
Power Steering Pressure Switch	10	-	80
Power Steering Pressure Line to Gear	32	23	-
Power Steering Return Line	50	37	-
Power Steering Pressure Line to Pump	31	23	-
Power Steering Pump Mounting Bolts	28	21	-
Power Steering Pump Reservoir Bolts	13	10	120
Power Steering Pump Bracket Bolts	5	5	62

REMOVAL

REMOVAL

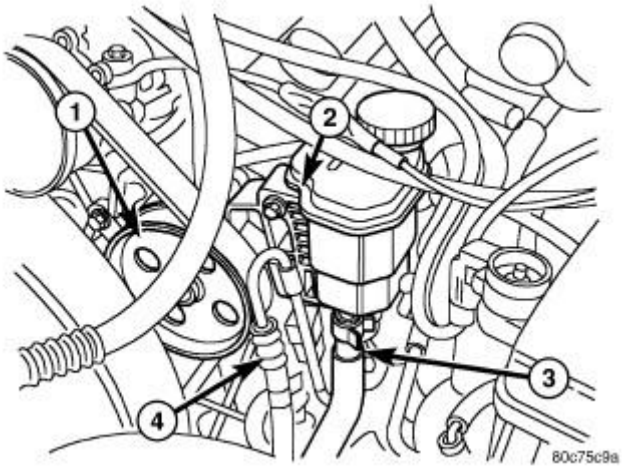

Fig. 109: Power Steering Pump & Hoses
Courtesy of CHRYSLER GROUP, LLC

1 - POWER STEERING PULLEY
2 - POWER STEERING RESERVOIR
3 - RETURN HOSE
4 - HIGH PRESSURE HOSE

1. Drain and siphon the power steering fluid from the reservoir.

2. Remove the serpentine belt. Refer to **BELT, SERPENTINE, REMOVAL** .

CAUTION: Do not remove the fitting on the pump that the high pressure hose screws into. The fitting may come loose unless it is backed up using another wrench. If the fitting does come loose, it must be retightened before continuing. (57 - 67 Nm, 40 - 50 lb.ft.). If this fitting comes out of the pump body, the internal spring and valve parts will fall out of the pump and they cannot be reinstalled properly. If this occurs the pump needs to be replaced with a new pump.

3. Disconnect the return hose (3).
4. Disconnect the pressure hose (4).
5. Remove the three bolts securing the pump to the cylinder head thru the pulley holes (1).

INSTALLATION

INSTALLATION

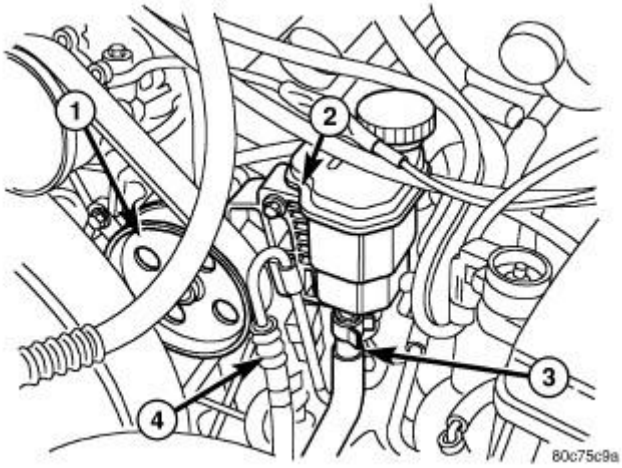

Fig. 110: Power Steering Pump & Hoses
Courtesy of CHRYSLER GROUP, LLC

1 - POWER STEERING PULLEY
2 - POWER STEERING RESERVOIR
3 - RETURN HOSE
4 - HIGH PRESSURE HOSE

1. Align the pump with the mounting holes in the left cylinder head.
2. Install 3 pump mounting bolts through the pulley access holes (1). Tighten the bolts to 28 N.m (21 ft. lbs.).
3. Reconnect the pressure line (4) and return hose (3) to the pump and reservoir (2). Tighten the pressure line to 31 N.m (23 ft. lbs.).

4. Install the serpentine drive belt. Refer to **BELT, SERPENTINE, INSTALLATION** .
5. Fill the power steering pump. Refer to **PUMP, STANDARD PROCEDURE**.

COOLER, POWER STEERING

REMOVAL

REMOVAL

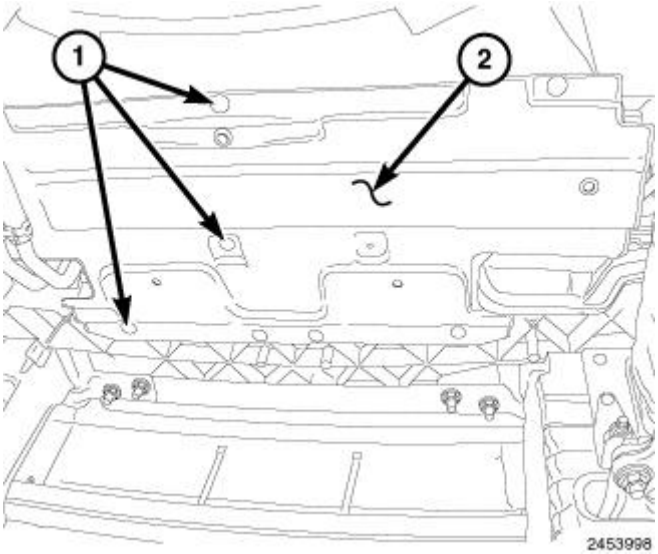

Fig. 111: Splash Shield & Push Pins
Courtesy of CHRYSLER GROUP, LLC

1. Drain and siphon the power steering fluid.
2. Raise and support the vehicle. Refer to **HOISTING, STANDARD PROCEDURE** .
3. If equipped, remove the eight lower engine splash shield push pins (1) and remove the splash shield (2).

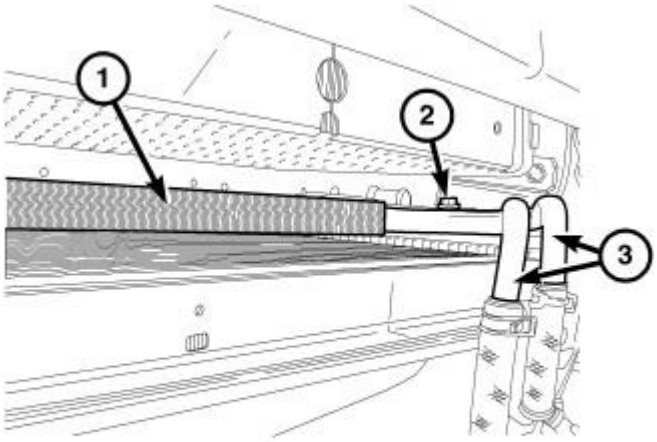

Fig. 112: Power Steering Fluid Cooler & Lines
Courtesy of CHRYSLER GROUP, LLC

4. Disconnect the return and supply hoses connected to the power steering fluid cooler lines (3).
5. Remove the mounting bracket bolts (2) securing the fluid cooler (1) to the brace.
6. Remove the fluid cooler (1) from the vehicle.

INSTALLATION

INSTALLATION

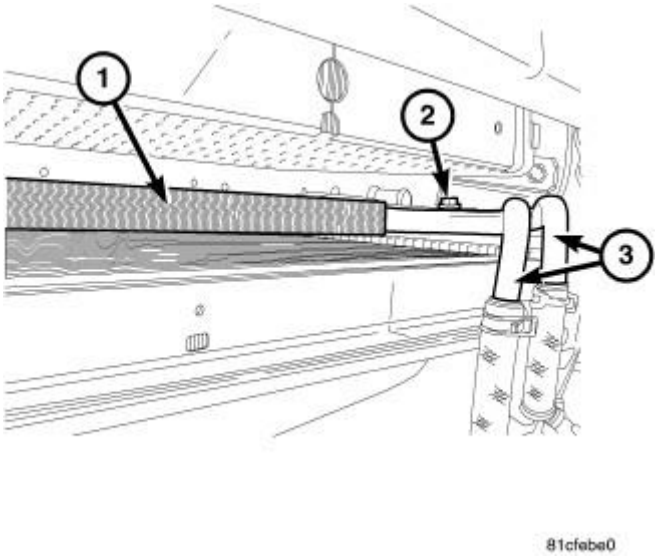

Fig. 113: Power Steering Fluid Cooler & Lines
Courtesy of CHRYSLER GROUP, LLC

1. Position the fluid cooler (1) to the vehicle.
2. Install the mounting bracket bolts (2) securing the fluid cooler (1) to the brace.
3. Install and clamp the return and supply hoses to the power steering fluid cooler lines (3).

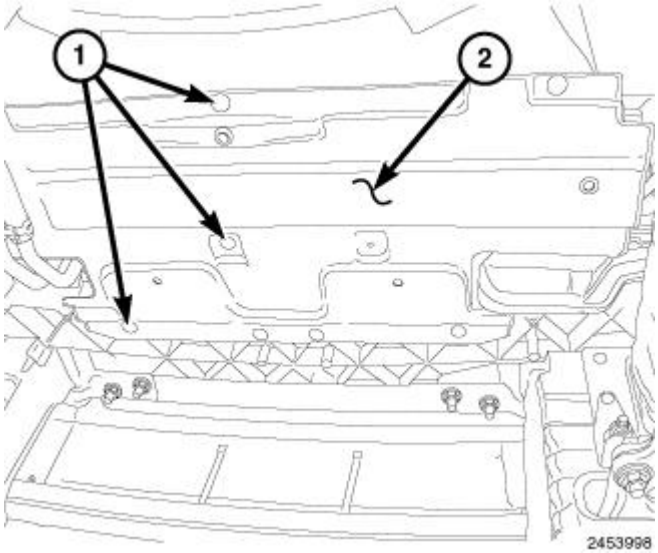

Fig. 114: Splash Shield & Push Pins
Courtesy of CHRYSLER GROUP, LLC

4. If equipped, position the lower engine splash shield (2) and install the eight retainers (1).
5. Remove the support and lower the vehicle.
6. Refill the power steering fluid. Refer to **PUMP, STANDARD PROCEDURE**.

FLUID

DESCRIPTION

DESCRIPTION

NOTE: **It is normal that some pressure will build up inside the reservoir, especially, with a warm vehicle. A slight popping noise upon removal of the cap is normal. The fluid level should read between the ADD and the FULL COLD marks. When the fluid is hot it should read between ADD and FULL HOT marks. Only add fluid when the vehicle is cold.**

The recommended fluid for the power steering system is Mopar® ATF +4.

Mopar® ATF+4, when new is red in color. The ATF+4 is dyed red so it can be identified from other fluids used in the vehicle such as engine oil or antifreeze. The red color is not permanent and is not an indicator of fluid condition, As the vehicle is driven, the ATF+4 will begin to look darker in color and may eventually become brown. **THIS IS NORMAL.** ATF+4 also has a unique odor that may change with age. Consequently, odor and color cannot be used to indicate the fluid condition or the need for a fluid change.

STANDARD PROCEDURE

STANDARD PROCEDURE - POWER STEERING FLUID LEVEL CHECKING

WARNING: FLUID LEVEL SHOULD BE CHECKED WITH THE ENGINE OFF TO PREVENT PERSONAL INJURY FROM MOVING PARTS.

CAUTION: MOPAR® ATF+4 is to be used in the power steering system. No other power steering or automatic transmission fluid is to be used in the system. Damage may result to the power steering pump and system if any other fluid is used, and do not overfill.

The power steering fluid level can be viewed on the dipstick attached to the filler cap. There are two ranges listed on the dipstick, COLD and HOT. Before opening power steering system, wipe the reservoir filler cap free of dirt and debris. Remove the cap and check the fluid level on its dipstick. When the fluid is at normal ambient temperature, approximately 21°C to 27°C (70°F to 80°F), the fluid level should read between the minimum and maximum area of the cold range. When the fluid is hot, fluid level is allowed to read up to the highest end of the HOT range. Only add fluid when the vehicle is cold.

Use only Mopar® ATF+4. Do not overfill the power steering system.

HOSE, POWER STEERING, INDEPENDENT FRONT SUSPENSION

REMOVAL

RETURN HOSE - GEAR TO COOLER

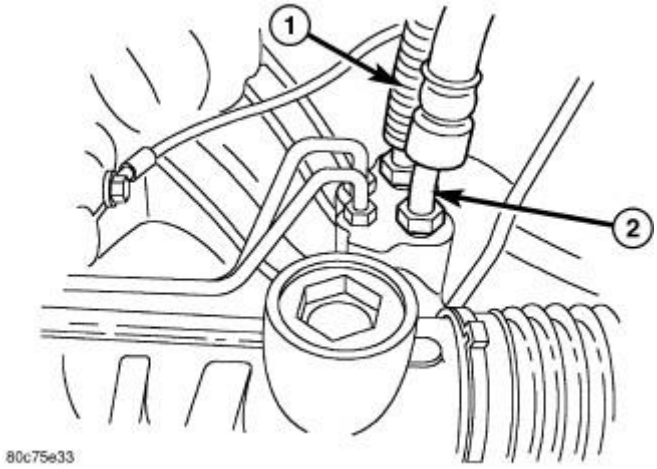

Fig. 115: Hose Connections
Courtesy of CHRYSLER GROUP, LLC

1 - RETURN HOSE
2 - PRESSURE HOSE

1. Drain and siphon the power steering system.
2. Raise and support the vehicle.
3. Disconnect the return hose at the cooler.

4. Disconnect the return hose (1) at the gear. Refer to **Fig. 115**.
5. Remove the return hose from the routing clamp at the fan shroud and then remove from the vehicle.

PRESSURE HOSE

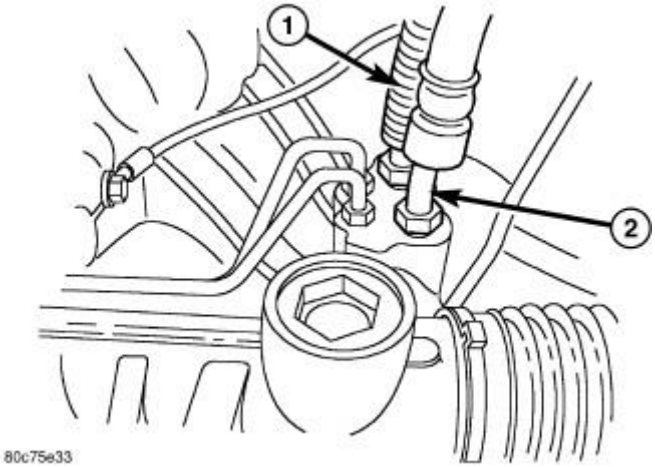

Fig. 116: Hose Connections
Courtesy of CHRYSLER GROUP, LLC

1 - RETURN HOSE
2 - PRESSURE HOSE

1. Drain and siphon the power steering system.
2. Raise and support the vehicle.
3. Disconnect the pressure hose at the pump.
4. Disconnect the pressure hose (2) at the gear .
5. Remove the pressure hose from the vehicle.

RETURN HOSE - RESERVOIR TO COOLER

1. Drain and siphon the power steering system.
2. Disconnect the return hose at the reservoir.
3. Raise and support the vehicle.
4. Remove the return hose from the routing clamp at the fan shroud.
5. Disconnect the return hose at the cooler.
6. Remove the hose from the vehicle.

INSTALLATION

RETURN HOSE - GEAR TO COOLER

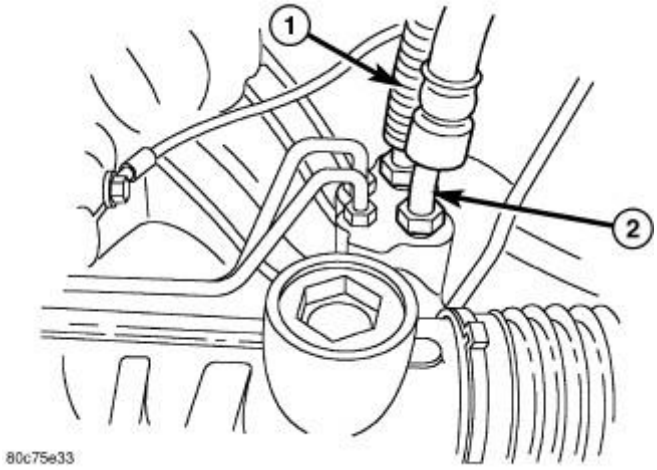

Fig. 117: Hose Connections
Courtesy of CHRYSLER GROUP, LLC

1 - RETURN HOSE
2 - PRESSURE HOSE

1. Install the return hose to the vehicle.
2. Reconnect the return hose at the cooler.
3. Reconnect the return hose (1) at the gear. Tighten the hose to 50 N.m (37 ft. lbs.) .
4. Reattach the hose to the routing clip at the fan shroud.
5. Remove the support and lower the vehicle.
6. Refill the power steering system. Refer to **PUMP, STANDARD PROCEDURE**.

PRESSURE HOSE

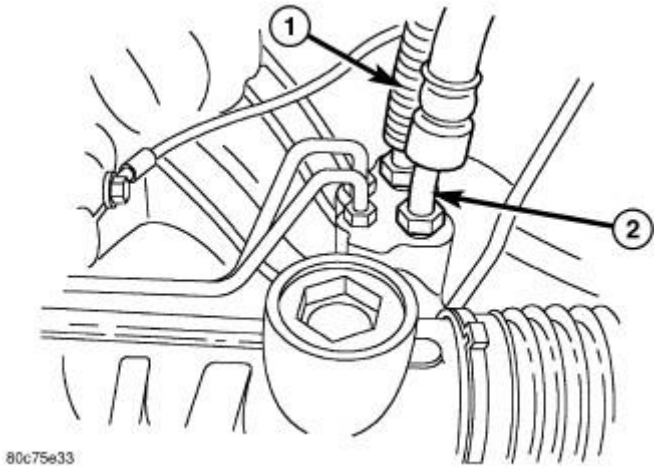

Fig. 118: Hose Connections
Courtesy of CHRYSLER GROUP, LLC

1 - RETURN HOSE
2 - PRESSURE HOSE

NOTE: **Be sure to align the pressure hose so it does not contact the fan shroud or the frame rail.**

1. Install the pressure hose to the vehicle.
2. Reconnect the pressure hose (2) at the gear. Tighten the hose to 32 N.m (23 ft. lbs.) .
3. Reconnect the pressure hose at the pump. Tighten the hose to 31 N.m (23 ft. lbs.).
4. Remove the support and lower the vehicle.
5. Refill the power steering system. Refer to **PUMP, STANDARD PROCEDURE**.

RETURN HOSE - RESERVOIR TO COOLER

1. Install the return hose to the vehicle.
2. Reconnect the return hose at the cooler.
3. Reattach the hose to the routing clip at the fan shroud.
4. Remove the support and lower the vehicle.
5. Reconnect the return hose at the reservoir.
6. Refill the power steering system. Refer to **PUMP, STANDARD PROCEDURE**.

HOSE, POWER STEERING, LINK AND COIL

REMOVAL

RETURN HOSE - GEAR TO COOLER

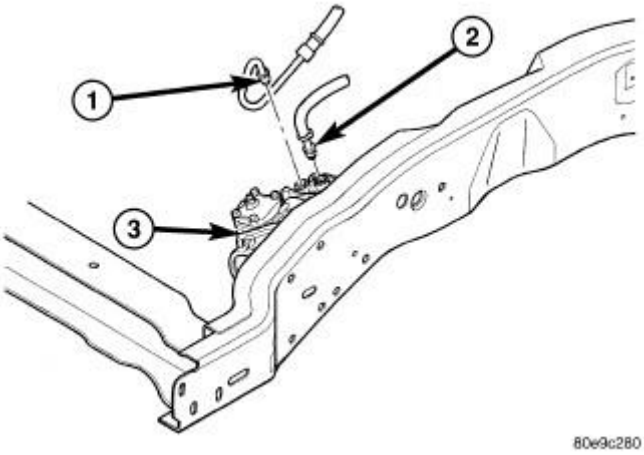

Fig. 119: Power Steering Hoses & Steering Gear
Courtesy of CHRYSLER GROUP, LLC

1 - HIGH PRESSURE HOSE
2 - RETURN HOSE
3 - STEERING GEAR

1. Drain and siphon the power steering system.
2. Raise and support the vehicle.
3. Disconnect the return hose at the cooler.
4. Disconnect the return hose (2) at the gear. Refer to **Fig. 119**.
5. Remove the return hose from the routing clamp at the fan shroud and then remove from the vehicle.

PRESSURE HOSE

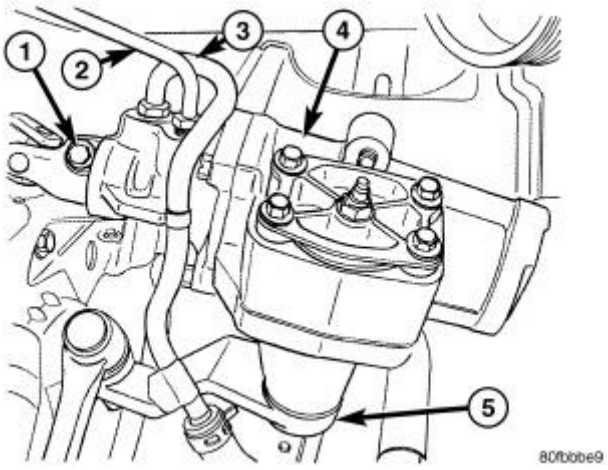

Fig. 120: Steering Gear & Hoses
Courtesy of CHRYSLER GROUP, LLC

1 - LOWER COUPLING BOLT
2 - HIGH PRESSURE HOSE
3 - RETURN HOSE
4 - STEERING GEAR
5 - PITMAN ARM

1. Drain and siphon the power steering system.
2. Raise and support the vehicle.
3. Disconnect the pressure hose at the pump.
4. Disconnect the pressure hose (2) at the gear (4). Refer to **Fig. 120**.
5. Remove the pressure hose from the vehicle.

RETURN HOSE - RESERVOIR TO COOLER

1. Drain and siphon the power steering system.

2. Disconnect the return hose at the reservoir.
3. Raise and support the vehicle.
4. Remove the return hose from the routing clamp at the fan shroud.
5. Disconnect the return hose at the cooler.
6. Remove the hose from the vehicle.

INSTALLATION

RETURN HOSE - GEAR TO COOLER

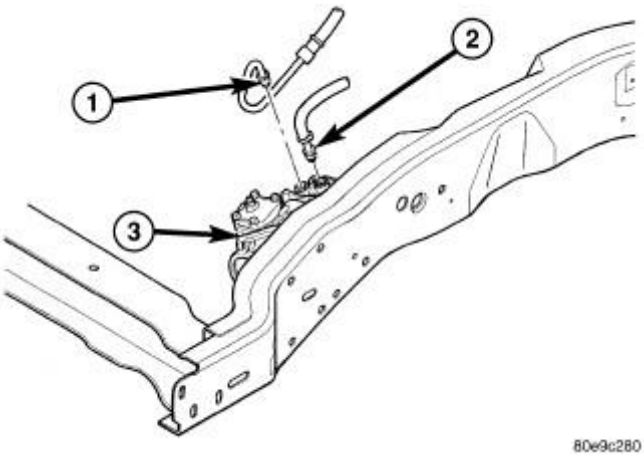

Fig. 121: Power Steering Hoses & Steering Gear
Courtesy of CHRYSLER GROUP, LLC

1 - HIGH PRESSURE HOSE
2 - RETURN HOSE
3 - STEERING GEAR

1. Install the return hose to the vehicle.
2. Reconnect the return hose at the cooler.
3. Reconnect the return hose (2) at the gear. Tighten the hose to 51 N.m (38 ft. lbs.) .
4. Reattach the hose to the routing clip at the fan shroud.
5. Remove the support and lower the vehicle.
6. Refill the power steering system. Refer to **PUMP, STANDARD PROCEDURE**.

PRESSURE HOSE

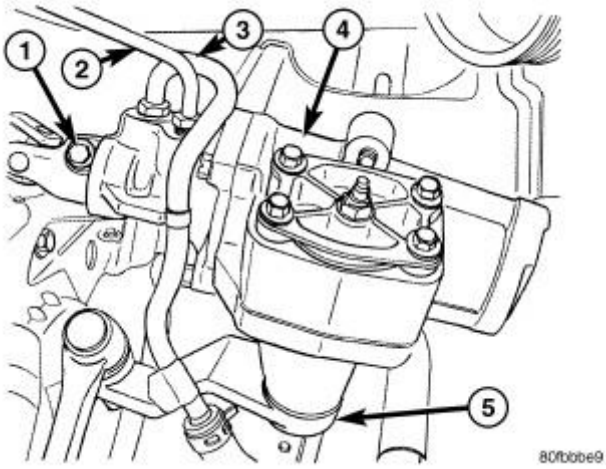

Fig. 122: Steering Gear & Hoses
Courtesy of CHRYSLER GROUP, LLC

1 - LOWER COUPLING BOLT
2 - HIGH PRESSURE HOSE
3 - RETURN HOSE
4 - STEERING GEAR
5 - PITMAN ARM

NOTE: **Be sure to align the pressure hose so it does not contact the fan shroud or the frame rail.**

1. Install the pressure hose to the vehicle.
2. Reconnect the pressure hose (2) at the gear (4). Tighten the hose to 32 N.m (23 ft. lbs.) .
3. Reconnect the pressure hose at the pump. Tighten the hose to 36 N.m (27 ft. lbs.).
4. Remove the support and lower the vehicle.
5. Refill the power steering system. Refer to **PUMP, STANDARD PROCEDURE**.

RETURN HOSE - RESERVOIR TO COOLER

1. Install the return hose to the vehicle.
2. Reconnect the return hose at the cooler.
3. Reattach the hose to the routing clip at the fan shroud.
4. Remove the support and lower the vehicle.
5. Reconnect the return hose at the reservoir.
6. Refill the power steering system. Refer to **PUMP, STANDARD PROCEDURE**.

PULLEY, POWER STEERING PUMP

REMOVAL

REMOVAL

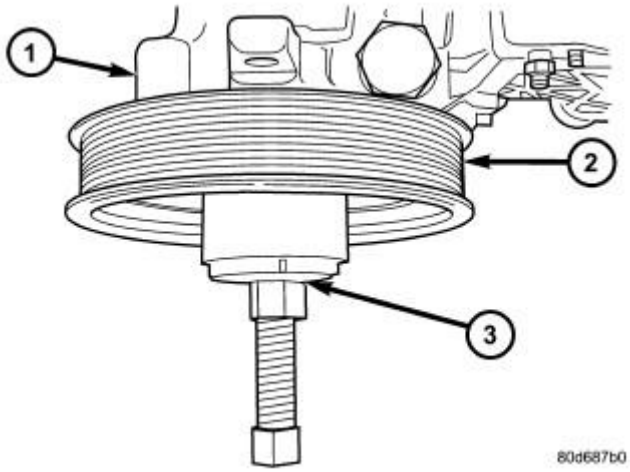

Fig. 123: Removing Pulley
Courtesy of CHRYSLER GROUP, LLC

1 - POWER STEERING PUMP
2 - PULLEY
3 - POWER STEERING PULLEY REMOVAL TOOL

CAUTION: Do not reuse the old power steering pump pulley it is not intended for reuse. A new pulley must be installed if removed.

1. Remove the power steering pump assembly (1). Refer to **PUMP, REMOVAL**.
2. Remove the pulley (2) from the pump using (OTC® 7185) power steering pulley removal tool or equivalent (3). Refer to **Fig. 123**.

INSTALLATION

INSTALLATION

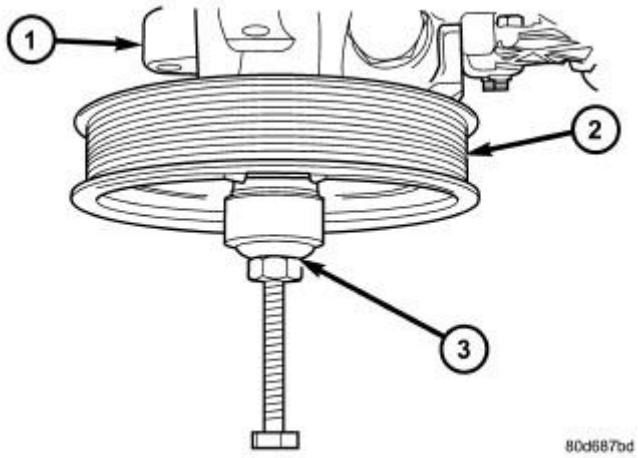

Fig. 124: Installing Pulley
Courtesy of CHRYSLER GROUP, LLC

1 - POWER STEERING PUMP
2 - PULLEY
3 - POWER STEERING PUMP PULLEY INSTALLATION TOOL

CAUTION: Do not reuse the old power steering pump pulley it is not intended for reuse. A new pulley must be installed if removed.

1. Replace the pulley (2) if it's bent, cracked, or loose.
2. Install the pulley (2) on the pump (1) using (OTC® 7771) power steering pulley installation tool or equivalent (3) making sure it is flush with the end of the shaft. Refer to **Fig. 124**. Ensure the tool and pulley remain aligned with the pump shaft.
3. Install the power steering pump assembly. Refer to **PUMP, INSTALLATION**.
4. Run engine until warm (5 min.) and note any belt chirp. If chirp exists, move pulley outward approximately 0.5 mm (0.020 in.). If noise increases, press on 1.0 mm (0.040 in.). **Be careful that pulley does not contact mounting bolts.**

RESERVOIR, POWER STEERING PUMP

REMOVAL

REMOVAL

1. Drain and siphon the power steering fluid from the reservoir.
2. Remove the serpentine belt.
3. Remove the power steering pump. Refer to **PUMP, REMOVAL**.

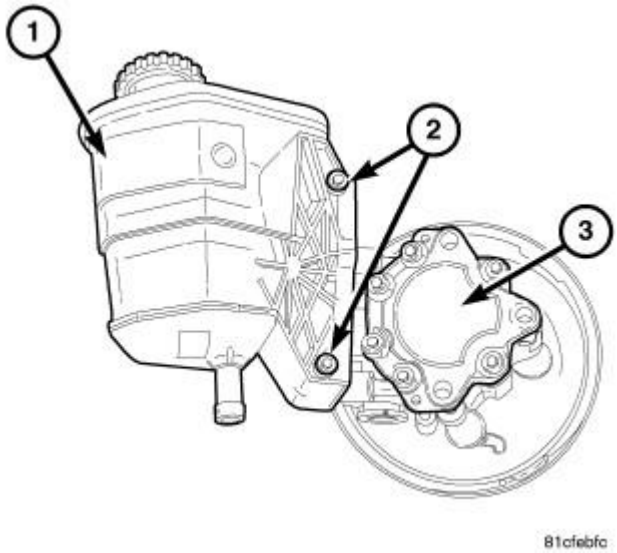

Fig. 125: Reservoir & Mounting Bolts
Courtesy of CHRYSLER GROUP, LLC

4. Remove the reservoir mounting bolts (2).
5. Remove the reservoir (1).
6. Remove the rear bracket to the pump mounting bolts (if equipped).

INSTALLATION

INSTALLATION

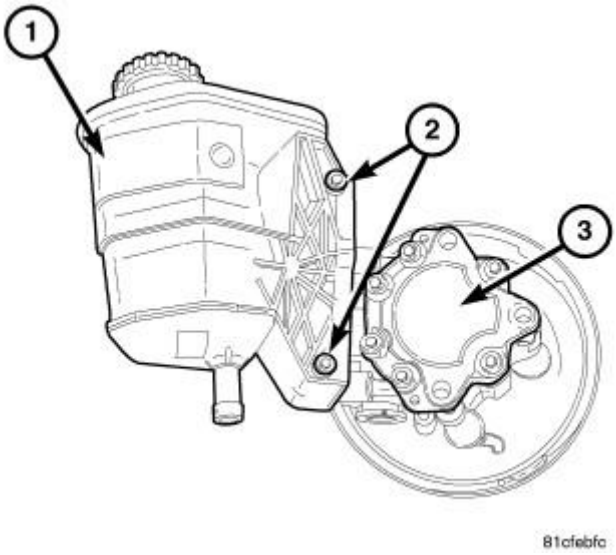

Fig. 126: Reservoir & Mounting Bolts
Courtesy of CHRYSLER GROUP, LLC

1. Install the reservoir bracket to the pump housing (if equipped). **Do not reuse the o-rings (install new o-rings).** Tighten bolts to 7 N.m (62 in. lbs.).

NOTE: Ensure the reservoir (1) is fully seated onto the pump (3).

2. Install the reservoir (1) to the bracket/pump body (3).
3. Install the reservoir mounting bolts (2). Tighten bolts to 13 N.m (120 in. lbs.).
4. Install the power steering pump (3). Refer to **PUMP, INSTALLATION**.
5. Install the serpentine drive belt. Refer to **BELT, SERPENTINE, INSTALLATION** .
6. Fill the power steering pump. Refer to **PUMP, STANDARD PROCEDURE**.

SPECIAL TOOLS

SPECIAL TOOLS

10326-1 - Adapter, Tie Rod Alignment
10326-2 - Inclinometer
6761 - Installer, Ball Joint
(Originally Shipped In Kit Number(s) 6745, 8165CC.)
8445-1 - Installer, Cup
(Originally Shipped In Kit Number(s) 8627CC, 8704, 8704CC.)
8445-2 - Installer, Cup
(Originally Shipped In Kit Number(s) 8627CC, 8704, 8704CC.)
8445-3 - Remover, Ball Joint
(Originally Shipped In Kit Number(s) 8627CC, 8704, 8704CC.)
8677 - Remover, Ball Joint
(Originally Shipped In Kit Number(s) 8685, 8685CC, 8712, 9973, 9974, 9975.)
8698-1 - Installer, Ball Joint
(Originally Shipped In Kit Number(s) 8685, 8685CC, 8712.)
8698-2 - Remover, Receiver Cup
(Originally Shipped In Kit Number(s) 8685, 8685CC, 8712.)
8698-3 - Remover/Installer
(Originally Shipped In Kit Number(s) 8685, 8685CC, 8712.)
8836-6 - Remover, Bushing
(Originally Shipped In Kit Number(s) 8715, 8719, 8719CC.)
8975-1 - Installer, Ball Joint
(Originally Shipped In Kit Number(s) 8887, 8887CC.)
8975-2 - Cup, Remover
(Originally Shipped In Kit Number(s) 8887, 8887CC.)
8975-3 - Cup, Remover
(Originally Shipped In Kit Number(s) 8887, 8887CC.)
8975-4 - Remover, Ball Joint
(Originally Shipped In Kit Number(s) 8887, 8887CC.)
8975-5 - Receiver, Ball Joint
(Originally Shipped In Kit Number(s) 8887, 8887CC.)
9360 - Remover, Ball Joint
(Originally Shipped In Kit Number(s) 9329, 9515, 9516, 9516-CAN, 9517, 9517-CAN, 9518, 9519, 9540, 9541.)
9362 - Wrench, Strut Nut
(Originally Shipped In Kit Number(s) 9329, 9515, 9516, 9516-CAN, 9517, 9517-CAN, 9518, 9519, 9540, 9541.)

9652 - Remover/Installer, Ball Joint

	(Originally Shipped In Kit Number(s) 9330, 9576, 9576-CAN, 9577, 9787.)
	9770-1 - Receiver, Ball Joint (Originally Shipped In Kit Number(s) 9765.)
	9770-2 - Remover, Ball Joint (Originally Shipped In Kit Number(s) 9765.)
	9859-1 - Cup, Installation (Originally Shipped In Kit Number(s) 10045.)
	9859-2 - Base, Pressing (Originally Shipped In Kit Number(s) 10045.)
	9859-3 - Disc, Balljoint Remover (Originally Shipped In Kit Number(s) 10045.)
	9859-4 - Cup, Receiver (Originally Shipped In Kit Number(s) 10045.)
	C-3894-A - Puller, Tie Rod (Originally Shipped In Kit Number(s) 9202, 9202A-CAN, 9202CC, 9299, 9299CC, 9299CC, 9300A-CAN.)
	C-4150A - Press, Ball Joint (Originally Shipped In Kit Number(s) 6672, 6745.)
	C-4212F - Press, Ball Joint (Originally Shipped In Kit Number(s) 6745, 6880, 6881, MLR-C03.)
	DD-1278 - Compressor, Front Spring

WHEEL ALIGNMENT

DIAGNOSIS AND TESTING

DIAGNOSIS AND TESTING - PRE-ALIGNMENT INSPECTION

Before starting wheel alignment, the following inspection and necessary corrections must be completed. Refer to Suspension and Steering System Diagnosis Chart below for additional information.

1. Inspect tires for size, air pressure and tread wear.
2. Inspect front wheel bearings for wear.
3. Inspect front wheels for excessive radial or lateral runout and balance.
4. Inspect ball studs, linkage pivot points and steering gear for looseness, roughness or binding.
5. Inspect suspension components for wear and noise.
6. Road test the vehicle.

SUSPENSION AND STEERING SYSTEM DIAGNOSIS

CONDITION	POSSIBLE CAUSES	CORRECTION
FRONT END NOISE	1. Loose or worn wheel bearing.	1. Replace wheel bearing.
	2. Loose or worn steering or suspension components.	2. Tighten or replace components as necessary.

	3. Loose or worn steering or suspension components.	3. Tighten or replace components as necessary.
EXCESSIVE PLAY IN STEERING	1. Loose or worn wheel bearing.	1. Replace wheel bearing.
	2. Loose or worn steering or suspension components.	2. Tighten or replace components as necessary.
	3. Loose or worn steering gear.	3. Replace steering gear.
FRONT WHEELS SHIMMY	1. Loose or worn wheel bearing.	1. Replace wheel bearing.
	2. Loose or worn steering or suspension components.	2. Tighten or replace components as necessary.
	3. Tires worn or out of balance.	3. Replace or balance tires.
	4. Alignment.	4. Align vehicle to specifications.
VEHICLE INSTABILITY	1. Loose or worn wheel bearing.	1. Replace wheel bearing.
	2. Loose or worn steering or suspension components.	2. Tighten or replace components as necessary.
	3. Tire pressure.	3. Adjust tire pressure.
	4. Alignment.	4. Align vehicle to specifications.
EXCESSIVE STEERING EFFORT	1. Loose or worn steering gear.	1. Replace steering gear.
	2. Column coupler binding.	2. Replace coupler.
	3. Tire pressure.	3. Adjust tire pressure.
	4. Alignment.	4. Align vehicle to specifications.
VEHICLE PULLS TO ONE SIDE	1. Tire pressure.	1. Adjust tire pressure.
	2. Tire.	2. Criss-Cross Front Tires.
	3. Alignment.	3. Align vehicle to specifications.
	4. Loose or worn steering or suspension components.	4. Tighten or replace components as necessary.
	5. Radial tire lead.	5. Rotate or replace tire as necessary.
	6. Brake pull.	6. Repair brake as necessary.
	7. Weak or broken spring.	7. Replace spring.

STANDARD PROCEDURE

ALIGNMENT - RACK AND PINION STEERING SYSTEM

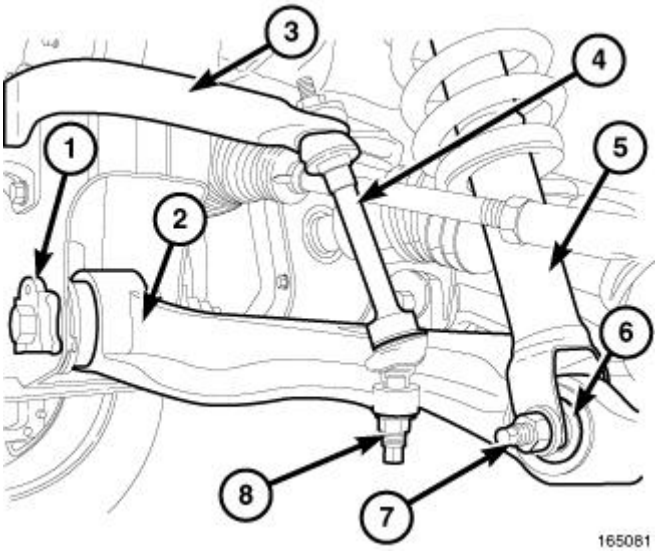

Fig. 1: Lower Control Arm Components
Courtesy of CHRYSLER GROUP, LLC

Camber and caster angle adjustments involve changing the position of the lower control arm (2) with the slots in the frame brackets (1). Vehicle should be at normal ride height.

CASTER

Moving the front or rear position of the lower control arm in or out, will change the caster angle and camber angle significantly. To maintain the camber angle while adjusting caster, move one pivot bolt of the lower control arm in or out. Then move the other pivot bolt of the lower control arm in the opposite direction.

To increase positive caster angle, move the rear position of the lower control arm inward (toward the engine). Move the front of the lower control arm outward (away from the engine) slightly until the desired camber angle is obtained.

CAMBER

Move both pivot bolts of the lower control arm together in or out. This will change the camber angle significantly and little effect on the caster angle.

After adjustment is made tighten the lower control arm nuts to proper torque specification. Refer to **SPECIFICATIONS**. .

TOE ADJUSTMENT

The wheel toe position adjustment is the final adjustment.

1. Start the engine and turn wheels both ways before straightening the wheels. Secure the steering wheel with the front wheels in the straight-ahead position.

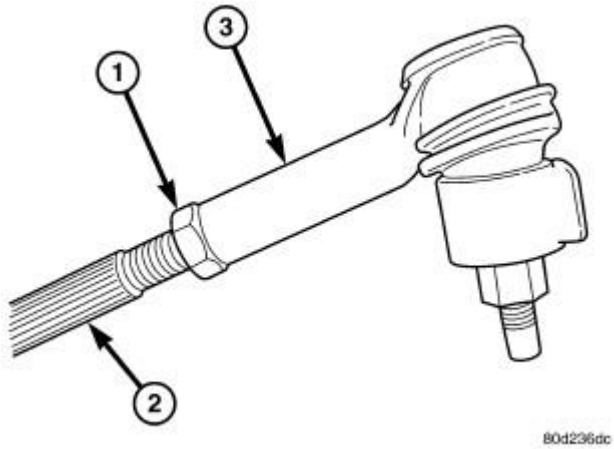

Fig. 2: Tie Rod End
Courtesy of CHRYSLER GROUP, LLC

2. Loosen the tie rod jam nuts (1).

NOTE: **Each front wheel should be adjusted for one-half of the total toe position specification. This will ensure the steering wheel will be centered when the wheels are positioned straight-ahead.**

3. Adjust the wheel toe position by turning the inner tie rod (2) as necessary.
4. Tighten the tie rod jam nut (1) to 127 N.m (94 ft. lbs.). **Make sure the toe setting does not change during tightening.**
5. Verify the specifications.
6. Road test the vehicle.

ALIGNMENT - RECIRCULATING BALL STEERING SYSTEM

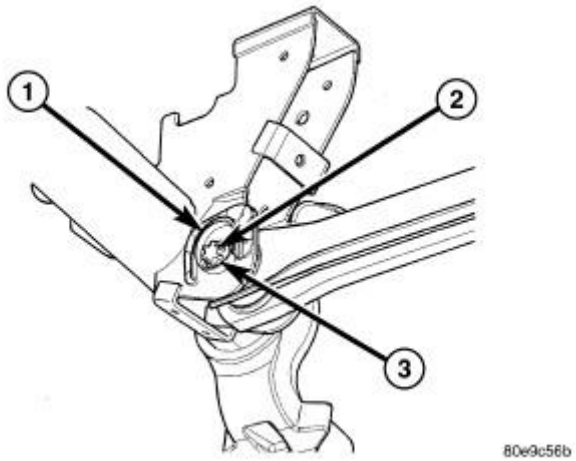

Fig. 3: Alignment Adjustment Cam

1 - BRACKET REINFORCEMENT
2 - ADJUSTING BOLT
3 - ADJUSTMENT CAM

NOTE: **For all EXCEPT late build 4500/5500, if an alignment is being performed WITHOUT having replaced the LH tie rod end, the Tie Rod Ball Stud Housing Misalignment Check procedure must be performed as the first step. The Tie Rod Ball Stud Housing Misalignment Check procedure will determine if the LH tie rod end needs to be serviced due to excessive internal stress during turns. For a description of the late build 4500/5500 difference, refer to LINKAGE, LINK AND COIL, DESCRIPTION .**

Before each alignment reading the vehicle should be jounced (rear first, then front). Grasp each bumper at the center and jounce the vehicle up and down several times. Always release the bumper in the down position. **Set the front end alignment to specifications while the vehicle is in its NORMALLY LOADED CONDITION.**

CAMBER: The wheel camber angle is preset and is not adjustable.

CASTER adjustment: Check the caster of the front axle for correct angle. Be sure the axle is not bent or twisted. Road test the vehicle and make left and right turns. Observe the steering wheel return-to-center position. Low caster will cause poor steering wheel returnability.

For 2500/3500, caster can be adjusted by rotating the cams (3) on the lower suspension arm.

For 4500/5500, caster can be adjusted by loosening the bolts on the lower suspension arm, moving the arm within the slot and tightening the bolt.

TOE POSITION: The wheel toe position adjustment should be the final adjustment.

1. For all **EXCEPT late build 4500/5500** , if an alignment is being performed **without** having replaced the LH tie rod end, the Tie Rod Ball Stud Housing Misalignment Check procedure **must be performed prior to loosening any adjustment sleeve** . Refer to **WHEEL ALIGNMENT, STANDARD PROCEDURE**. If the LH tie rod end has just been replaced, proceed with step 2.
2. Start the engine and turn wheels both ways before straightening the wheels. Center and secure the steering wheel and turn off engine.
3. Loosen the adjustment sleeve clamp bolts.

   NOTE: **With the vehicle in a level position, verify the drag link/tie rod ball joints are not twisted and are centered. Rotate drag link/tie rod until ball joints are level.**

4. Adjust the right wheel toe position with the drag link adjuster sleeve. Turn the sleeve until the right wheel is at the correct specification. **Verify a level drag link ball joint.** Position clamp bolts to their original position and tighten to specifications. Refer to **LINKAGE, LINK AND COIL, SPECIFICATIONS** .

Make sure the toe setting does not change during clamp tightening.

5. Adjust the left wheel toe position with the tie rod adjuster sleeve. Turn the sleeve until the left wheel is at the correct specification. **Verify a level tie rod ball joint.** Position clamp bolts to their original position and tighten to specifications. Refer to **LINKAGE, LINK AND COIL, SPECIFICATIONS** . **Make sure the toe setting does not change during clamp tightening.**

CAUTION: For all EXCEPT late build 4500/5500, setting the toe can put the tie rod ball stud alignment out of specifications causing damage to the LH tie rod. The procedure must be run again to verify or reset.

6. For all **EXCEPT late build 4500/5500** , check to verify it is still within specifications. Refer to **TIE ROD BALL STUD HOUSING MISALIGNMENT CHECK**.

NOTE: Toe setting may change during tightening, make sure to verify reading after tightening.

7. Verify the steering wheel is straight and the toe settings are correct (repeat steps 2-6 if necessary).
8. Road test the vehicle.

TOE ADJUSTMENT - RACK AND PINION STEERING SYSTEM

1. Start the engine and turn wheels both ways before straightening the wheels. Secure the steering wheel with the front wheels in the straight-ahead position.

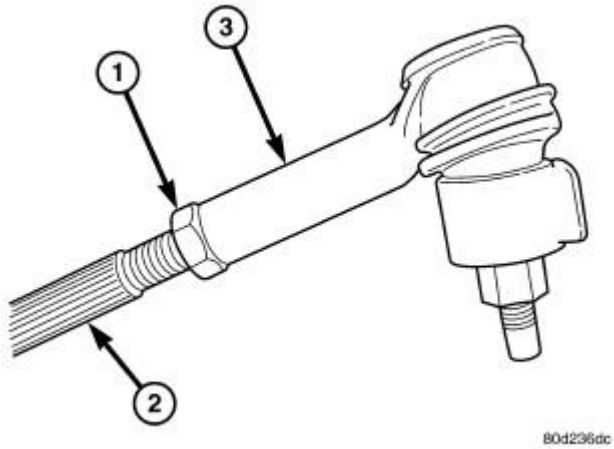

Fig. 4: Tie Rod End
Courtesy of CHRYSLER GROUP, LLC

2. Loosen the tie rod jam nuts (1).

NOTE: Each front wheel should be adjusted for one-half of the total toe position specification. This will ensure the steering wheel will be centered when the wheels are positioned straight-ahead.

3. Adjust the wheel toe position by turning the inner tie rod (2) as necessary.

NOTE: Make sure the toe setting does not change during tightening.

4. Tighten the tie rod jam nut (1) to 127 N.m (94 ft. lbs.).
5. Verify the specifications.
6. Road test the vehicle.

TOE ADJUSTMENT - RECIRCULATING BALL STEERING SYSTEM

NOTE: For all EXCEPT late build 4500/5500, if an alignment is being performed WITHOUT having replaced the LH tie rod end, the Tie Rod Ball Stud Housing Misalignment Check procedure must be performed as the first step. The Tie Rod Ball Stud Housing Misalignment Check procedure will determine if the LH tie rod end needs to be serviced due to excessive internal stress during turns. For a description of the late build 4500/5500 difference, refer to LINKAGE, LINK AND COIL, DESCRIPTION .

The wheel toe position adjustment is the final adjustment.

1. For all **EXCEPT late build 4500/5500** , if an alignment is being performed **without** having replaced the LH tie rod end, the Tie Rod Ball Stud Housing Misalignment Check procedure **must be performed prior to loosening any adjustment sleeve** . Refer to **WHEEL ALIGNMENT, STANDARD PROCEDURE**. If the LH tie rod end has just been replaced, proceed with step 2.
2. Start the engine and turn wheels both ways before straightening the wheels. Center and secure the steering wheel and turn off engine.
3. Loosen the adjustment sleeve clamp bolts.

NOTE: With the vehicle in a level position, verify the drag link/tie rod ball joints are not twisted and are centered. Rotate drag link/tie rod until ball joints are level.

4. Adjust the right wheel toe position with the drag link adjuster sleeve. Turn the sleeve until the right wheel is at the correct specification. **Verify a level drag link ball joint.** Position clamp bolts to their original position and tighten to specifications. Refer to **LINKAGE, LINK AND COIL, SPECIFICATIONS** . **Make sure the toe setting does not change during clamp tightening.**
5. Adjust the left wheel toe position with the tie rod adjuster sleeve. Turn the sleeve until the left wheel is at the correct specification. **Verify a level tie rod ball joint.** Position clamp bolts to their original position and tighten to specifications. Refer to **LINKAGE, LINK AND COIL, SPECIFICATIONS** . **Make sure the toe setting does not change during clamp tightening.**

CAUTION: For all EXCEPT late build 4500/5500, setting the toe can put the tie rod ball stud alignment out of specifications causing damage to the LH tie rod. The procedure must be run again to verify or reset.

6. For all **EXCEPT late build 4500/5500** , check to verify it is still within specifications. Refer to **TIE ROD BALL STUD HOUSING MISALIGNMENT CHECK**.

NOTE: Toe setting may change during tightening, make sure to verify reading after tightening.

7. Verify the steering wheel is straight and the toe settings are correct (repeat steps 2-5 if necessary).
8. Road test the vehicle.

TIE ROD BALL STUD HOUSING MISALIGNMENT CHECK

NOTE: This procedure describes how to check for parallel alignment of the RH and LH steering tie rod ball stud housings. It is essential to have these within +/-3 degrees of parallel to prevent ball stud durability issues.

NOTE: All views, left side shown in illustration, right side similar.

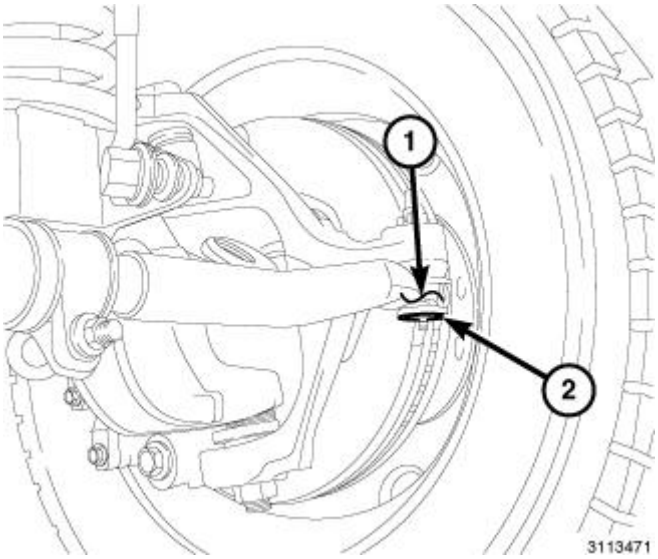

Fig. 5: Tie Rod Ball Stud Housing
Courtesy of CHRYSLER GROUP, LLC

1. Position the vehicle on a level surface with vehicle weight on the front tires, and place the front wheels in the straight ahead position
2. Make sure the circular bottom plane (2) of the LH and RH tie rod ball stud housings (1) are free of debris and burrs.

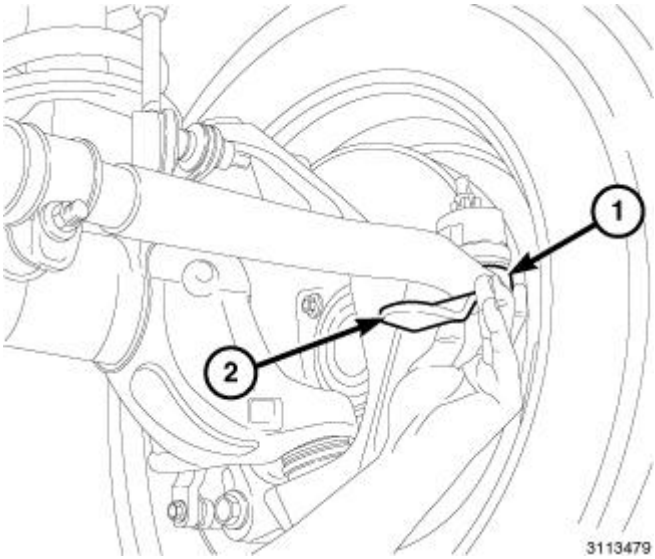

Fig. 6: Measuring Tie Rod Angle
Courtesy of CHRYSLER GROUP, LLC

NOTE: **Measure and record the RH tie rod angle first to establish a baseline for the truck, then measure and record the LH tie rod angle using the same procedure used on the right tie rod. Measure both the RH and LH tie rod ball stud housing angles from underneath the truck using the following steps.**

3. Hold the (special tool #10326-1, Adapter, Tie Rod Alignment) (2) securely under the circular bottom plane of the ball stud housing (1). Make sure the tool makes contact with the entire perimeter of the ball stud housing (1) and is not resting on the domed cap or grease fitting.

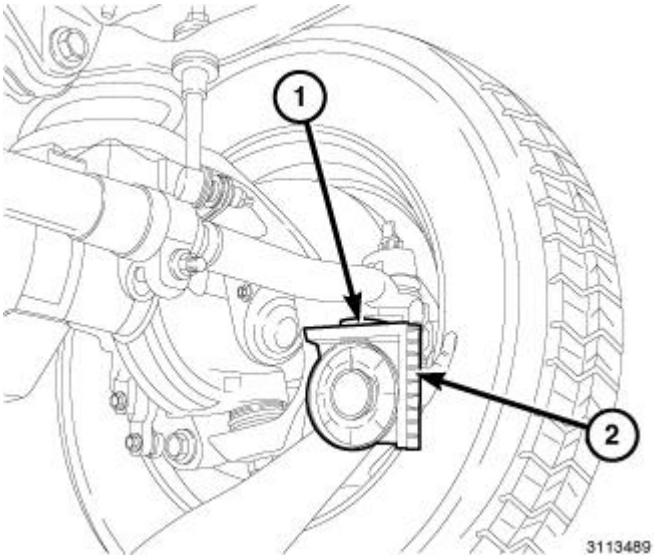

Fig. 7: Mounting The Inclinometer
Courtesy of CHRYSLER GROUP, LLC

NOTE: **The angle on the inclinometer is POSITIVE WHEN THE NEEDLE IS FORWARD of the zero degree mark (pointing toward the front of the truck on both the LH or RH sides) and NEGATIVE WHEN AFTER the zero (pointing toward the rear of the truck). The tie rod angle readings should always be positive unless castor is significantly out of specifications.**

4. Mount the (special tool #10326-2, Inclinometer) (2) on the flat bottom surface of (special tool #10326-1, Adapter, Tie Rod Alignment) (1) in the fore-aft orientation. Record the tie rod angle, then repeat steps 3, 4 on the LH tie rod end.
5. Determine the offset of the RH and LH tie rod ball stud housings by calculating the **difference** between the LH and RH ball stud angles. **For example, if one side is +3 degrees and the other side is -4 degrees then the difference is 7 degrees.**
   - Equal to or less than 3 degree difference - no further action needs to be taken, return to the **previous procedure** step and continue that procedure.
   - Over 3 degree difference **with** a new LH tie rod end - Loosen the LH tie rod adjustment sleeve bolts and rotate the tie rod end to adjust the ball stud housing to within 3 degrees of the RH side, then proceed with alignment or toe adjustment. Refer to **WHEEL ALIGNMENT, STANDARD PROCEDURE**.
   - Over 3 degree difference **without** a new LH tie rod end - Replace the LH tie rod end. Refer to **END, TIE ROD, REMOVAL** or **END, TIE ROD, LINK AND COIL, REMOVAL** .

NOTE: **Any future alignment process on a recirculating ball steering systems should use this procedure.**

CURB HEIGHT MEASUREMENT

The wheel alignment is to be checked and all alignment adjustments made with the vehicle at its required curb height specification.

Vehicle height is to be checked with the vehicle on a flat, level surface, preferably a vehicle alignment rack. The tires are to be inflated to the recommended pressure. All tires are to be the same size as standard equipment. Vehicle height is checked with the fuel tank full of fuel, and no passenger or luggage compartment load.

Inspect the vehicle for bent or weak suspension components. Compare the parts tag on the suspect coil spring(s) to the parts book and the vehicle sales code, checking for a match. Once removed from the vehicle, compare the coil spring height to a correct new or known good coil spring. The heights should vary if the suspect spring is weak.

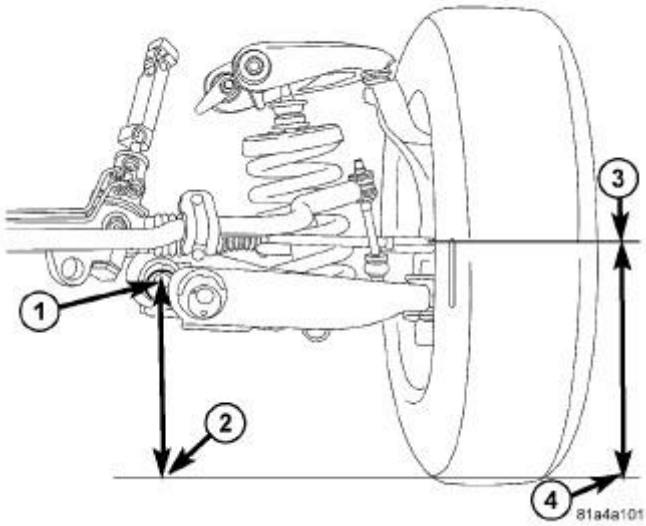

Fig. 8: Front Curb Height Measurement (LD)
Courtesy of CHRYSLER GROUP, LLC

1. Front - On each side of the vehicle, measure the distance from the center of the rear lower control arm bolt (1) to the ground (2) **Record the measurement** . Next measure the distance from the spindle center (3) to the ground (4) **Record the measurement.**
2. Take the two measurements and subtract them to get the curb height specification.

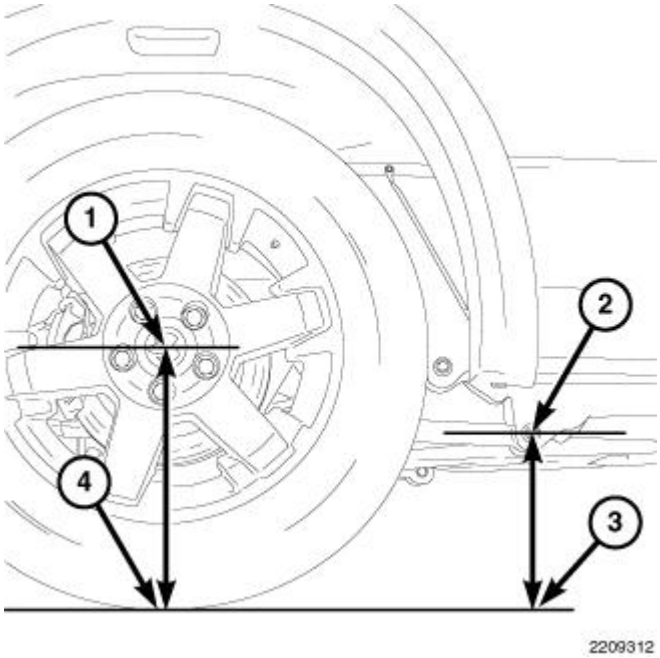

Fig. 9: Rear Curb Height Measurement (LD)
Courtesy of CHRYSLER GROUP, LLC

3. Rear - On each side of the vehicle, measure the distance from the center of the lower control arm forward

bolt (2) to the ground (3) **Record the measurement** . Next measure the distance from the center of the rear wheel (1) to the ground (4) **Record the measurement.**

4. Subtract the control arm bolt to floor measurement from the wheel to floor measurement to calculate the ride height. (wheel - control arm = ride height).

CURB HEIGHT SPECIFICATIONS - FRONT

MODEL	FRONT
4X4 Without TRX	64 mm - 84 mm 2.5 in. - 3.3 in.
4X4 With TRX	45 mm - 65 mm 1.77 in. - 2.5 in.
4X2 With TRX	35 mm - 55 mm 1.37 in. - 2.16 in.
4X2 With 17" Wheels Without TRX	47 mm - 67 mm 1.85 in. - 2.63 in.
4X2 With 20" wheels	35 mm - 55 mm 1.37 in. - 2.16 in.

CURB HEIGHT SPECIFICATIONS - REAR, 120 WHEELBASE

MODEL	REAR
4X4 Without TRX	60 mm - 80 mm 2.36 in. - 3.14 in
4X4 With TRX	48 mm - 68 mm 1.88 in. - 2.67 in
4X2 With TRX	72 mm - 92 mm 2.83 in. - 3.62 in
4X2 With 17" Wheels Without TRX	72 mm - 92 mm 2.83 in. - 3.62 in
4X2 With 20" wheels	69 mm - 89 mm 2.71 in. - 3.5 in

CURB HEIGHT SPECIFICATIONS - REAR, 140 WHEELBASE

MODEL	REAR
4X4 Without TRX	58 mm - 78 mm 2.28 in. - 3.07 in
4X4 With TRX	46 mm - 66 mm 1.81 in. - 2.59 in
4X2 With TRX	71 mm - 91 mm 2.79 in. - 2.8 in
4X2 With 17" Wheels Without TRX	71 mm - 91 mm 2 in. - 3.58 in
4X2 With 20" wheels	69 mm - 89 mm 2.71 in. - 3.5 in

CURB HEIGHT MEASUREMENT (HD)

The wheel alignment is to be checked and all alignment adjustments made with the vehicle at its required curb height specification.

Vehicle height is to be checked with the vehicle on a flat, level surface, preferably a vehicle alignment rack. The tires are to be inflated to the recommended pressure. All tires are to be the same size as standard equipment. Vehicle height is checked with the fuel tank full of fuel, and no passenger or luggage compartment load.

Inspect the vehicle for bent or weak suspension components. Compare the parts tag on the suspect coil spring(s) to the parts book and the vehicle sales code, checking for a match. Once removed from the vehicle, compare the coil spring height to a correct new or known good coil spring. The heights should vary if the suspect spring is weak.

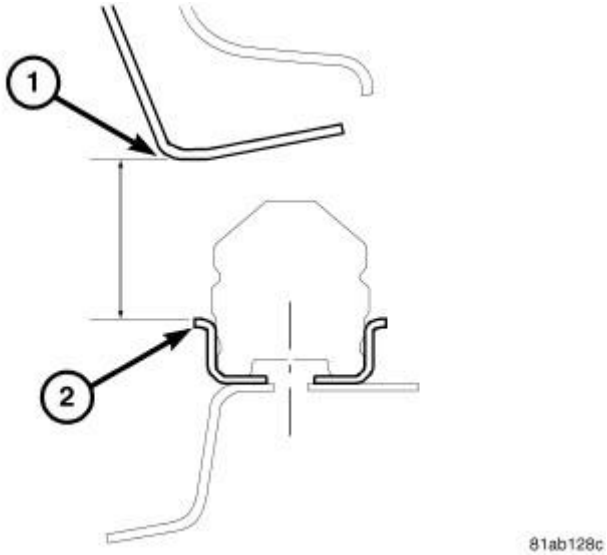

Fig. 10: 4X2 Front Curb Height Measurement
Courtesy of CHRYSLER GROUP, LLC

1. Front **4X2** On each side of the vehicle, measure the distance from the top of the jounce bumper flange (2) to the bottom of the frame rail (1).

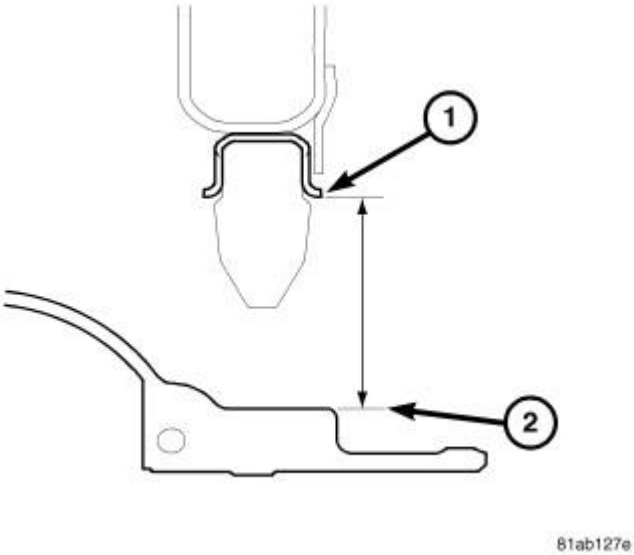

Fig. 11: 4X4 Front Curb Height Measurement
Courtesy of CHRYSLER GROUP, LLC

2. Front **4X4** On each side of the vehicle, measure the distance from the top of the axle (2) to the bottom of the jounce bumper flange (1).

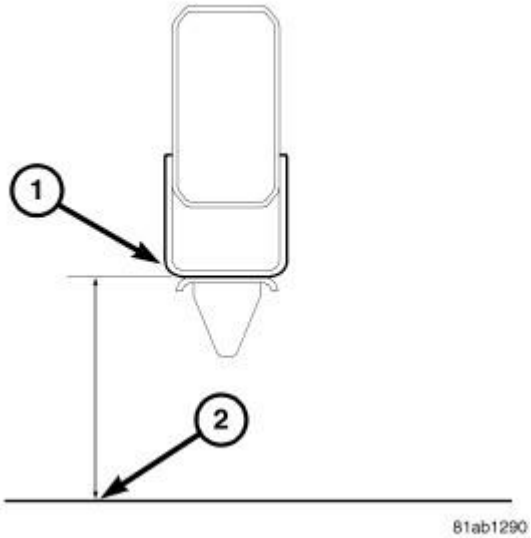

Fig. 12: Rear Curb Height Measurement
Courtesy of CHRYSLER GROUP, LLC

3. Rear **ALL -** On each side of the vehicle, measure the distance at the top of the axle tube (2) to the bottom of the frame rail (1).
4. Compare the measurements to the specifications listed in the following Curb Height Specifications chart.

FRONT CURB HEIGHT SPECIFICATIONS

MODEL	FRONT
4X2 HD	

NOTE: **When the vehicle has been up-fitted and ride height has been altered, vehicle toe must be reset. Refer to <u>WHEEL ALIGNMENT, STANDARD PROCEDURE</u>.**	75 mm ± 10 mm 3.0 in. ± 0.40 in
4X4 HD **NOTE:** **When the vehicle has been up-fitted and ride height has been altered, vehicle toe must be reset. Refer to <u>WHEEL ALIGNMENT, STANDARD PROCEDURE</u>.**	102 mm ± 10 mm 4.0 in. ± 0.40 in
POWERWAGON	137 mm ± 10 mm 5.40 in. ± 0.40 in
4500/5500 Bare Frame Rails **NOTE:** **There are optional front coil springs available, which can raise front ride height 8-16mm (0.30-0.60 in) depending on wheelbase and rear bed configurations.** **NOTE:** **When the vehicle has been up-fitted and ride height has been altered, vehicle toe must be reset. Refer to <u>WHEEL ALIGNMENT, STANDARD PROCEDURE</u>.**	111 mm ± 10 mm 4.40 in. ± 0.40 in

REAR CURB HEIGHT SPECIFICATIONS

MODEL	REAR
4x4 2500 10.5 AXLE	200.4 7.88 in
4x2 2500 10.5 AXLE	167.2 mm 6.58 in
4x4 2500/3500 SRW 11.5 AXLE	200.9 mm 7.90 in
4x2 2500/3500 SRW 11.5 AXLE	167.8 mm 6.60 in
4x4 3500 DRW 11.5 AXLE	203 mm 7.99 in
4x2 3500 DRW 11.5 AXLE	173.3 mm 6.82 in
4500/5500 Bare Frame Rails	174 mm ± 10 mm 6.9 in ± 10 in

SPECIFICATIONS

SPECIFICATIONS

NOTE: **All alignment specifications are in degrees.**

NOTE: **All wheel alignments are to be set with the vehicle at curb height. Refer to <u>WHEEL ALIGNMENT, STANDARD PROCEDURE</u>.**

1500 SERIES - ALL

FRONT ALIGNMENT	PREFERRED SETTING	ACCEPTABLE RANGE
CAMBER - LEFT	0.10°	-0.40° to 0.60°
CAMBER - RIGHT	-0.10°	-0.60° to 0.40°
CROSS - CAMBER (Maximum Side-To-Side Difference)	0.20°	-0.30° to 0.70°
CASTER -- LEFT	3.50°	3.00° to 4.00°
CASTER - RIGHT **(20 in. Tire)**	3.90°	3.40° to 4.40°
CROSS - CASTER **(20 in. Tire)**	-0.40°	-0.90° to 0.10°
CASTER - RIGHT **(17 in. Tire)**	3.75°	3.25° to 4.25°
CROSS - CASTER **(17 in. Tire)**	-0.25°	-0.75° to 0.25°
TOE - TOTAL*	0.10°	0.00° to 0.20°
Positive toe (+) is toe-in and negative toe (?) is Toe-out. * TOTAL TOE is the sum of both the left and right wheel toe settings. TOTAL TOE should be equally split between each wheel on the same axle to ensure the steering wheel is centered after setting toe.		

REAR ALIGNMENT	PREFERRED SETTING	ACCEPTABLE RANGE
CAMBER	-0.10°	-0.60° to 0.40°
CROSS - CAMBER (Maximum Side-To-Side Difference)	0.00°	-0.50° to 0.50°
TOE - TOTAL*	0.30°	-0.00° to 0.60°
THRUST ANGLE	0.00°	-0.30° to 0.30°
Positive toe (+) is toe-in and negative toe (?) is Toe-out. * TOTAL TOE is the sum of both the left and right wheel toe settings. TOTAL TOE should be equally split between each wheel on the same axle to ensure the steering wheel is centered after setting toe.		

2500 SERIES - 4X2

FRONT ALIGNMENT	PREFERRED SETTING	ACCEPTABLE RANGE
CAMBER - LEFT	0.00°	-0.50° to +0.50°
CAMBER - RIGHT	0.00°	-0.50° to +0.50°
CROSS-CAMBER	0.00°	-0.50° to +0.50°
CASTER - LEFT	+4.15°	+3.65° to +4.65°
CASTER - RIGHT	+4.00°	+3.05° to +4.05°
CROSS-CASTER	+0.15°	-0.35° to +0.65°
TOE - TOTAL*	+0.20°	+0.10° to +0.30°
Positive toe (+) is toe-in and negative toe (?) is Toe-out.		

* TOTAL TOE is the sum of both the left and right wheel toe settings. TOTAL TOE should be equally split between each wheel on the same axle to ensure the steering wheel is centered after setting toe.

REAR ALIGNMENT	PREFERRED SETTING	ACCEPTABLE RANGE
CAMBER	-0.10°	-0.45° to +0.25°
CROSS-CAMBER	0.00°	-0.30° to +0.30°
TOE - TOTAL*	+0.10°	-0.20° to +0.40°
THRUST ANGLE	0.00°	-0.30° to +0.30°
Positive toe (+) is toe-in and negative toe (?) is Toe-out. * TOTAL TOE is the sum of both the left and right wheel toe settings. TOTAL TOE should be equally split between each wheel on the same axle to ensure the steering wheel is centered after setting toe.		

2500 SERIES - 4X4

FRONT ALIGNMENT	PREFERRED SETTING	ACCEPTABLE RANGE
CAMBER - LEFT	0.25°	-0.25° to +0.75°
CAMBER - RIGHT	0.25°	-0.25° to +0.75°
CROSS-CAMBER	0.00°	-0.50° to +0.50°
CASTER - LEFT	+4.50°	+4.00° to +5.00°
CASTER - RIGHT	+4.50°	+4.00° to +5.00°
CROSS-CASTER	0.00°	-0.50° to +0.50°
TOE - TOTAL*	+0.20°	+0.10° to +0.30°
Positive toe (+) is toe-in and negative toe (?) is Toe-out. * TOTAL TOE is the sum of both the left and right wheel toe settings. TOTAL TOE should be equally split between each wheel on the same axle to ensure the steering wheel is centered after setting toe.		

REAR ALIGNMENT	PREFERRED SETTING	ACCEPTABLE RANGE
CAMBER	-0.10°	-0.45° to +0.25°
CROSS-CAMBER	0.00°	-0.30° to +0.30°
TOE - TOTAL*	+0.10°	-0.20° to +0.40°
THRUST ANGLE	0.00°	-0.30° to +0.30°
Positive toe (+) is toe-in and negative toe (?) is Toe-out. * TOTAL TOE is the sum of both the left and right wheel toe settings. TOTAL TOE should be equally split between each wheel on the same axle to ensure the steering wheel is centered after setting toe.		

3500 SERIES - 4X2

FRONT ALIGNMENT	PREFERRED SETTING	ACCEPTABLE RANGE
CAMBER - LEFT	0.00°	-0.50° to +0.50°
CAMBER - RIGHT	0.00°	-0.50° to +0.50°
CROSS-CAMBER	0.00°	-0.50° to +0.50°
CASTER - LEFT	+4.15°	+3.65° to +4.65°
CASTER - RIGHT	+4.00°	+3.50° to +4.05°
CROSS-CASTER	+0.15°	-0.35° to +0.65°

TOE - TOTAL*	+0.20°	+0.10° to +0.30°
Positive toe (+) is toe-in and negative toe (?) is Toe-out. * TOTAL TOE is the sum of both the left and right wheel toe settings. TOTAL TOE should be equally split between each wheel on the same axle to ensure the steering wheel is centered after setting toe.		

REAR ALIGNMENT	PREFERRED SETTING	ACCEPTABLE RANGE
CAMBER	-0.10°	-0.45° to +0.25°
CROSS-CAMBER	0.00°	-0.30° to +0.30°
TOE - TOTAL*	+0.10°	-0.20° to +0.40°
THRUST ANGLE	0.00°	-0.30° to +0.30°
Positive toe (+) is toe-in and negative toe (?) is Toe-out. * TOTAL TOE is the sum of both the left and right wheel toe settings. TOTAL TOE should be equally split between each wheel on the same axle to ensure the steering wheel is centered after setting toe.		

3500 SERIES - 4X4

FRONT ALIGNMENT	PREFERRED SETTING	ACCEPTABLE RANGE
CAMBER - LEFT	0.25°	-0.25° to +0.75°
CAMBER - RIGHT	0.25°	-0.25° to +0.75°
CROSS-CAMBER	0.00°	-0.50° to +0.50°
CASTER - LEFT	+4.50°	+4.00° to +5.00°
CASTER - RIGHT	+4.50°	+4.00° to +5.00°
CROSS-CASTER	0.00°	-0.50° to +0.50°
TOE - TOTAL*	+0.20°	+0.10° to +0.30°
Positive toe (+) is toe-in and negative toe (?) is Toe-out. * TOTAL TOE is the sum of both the left and right wheel toe settings. TOTAL TOE should be equally split between each wheel on the same axle to ensure the steering wheel is centered after setting toe.		

REAR ALIGNMENT	PREFERRED SETTING	ACCEPTABLE RANGE
CAMBER	-0.10°	-0.45° to +0.25°
CROSS-CAMBER	0.00°	-0.30° to +0.30°
TOE - TOTAL*	+0.10°	-0.20° to +0.40°
THRUST ANGLE	0.00°	-0.30° to +0.30°
Positive toe (+) is toe-in and negative toe (?) is Toe-out. * TOTAL TOE is the sum of both the left and right wheel toe settings. TOTAL TOE should be equally split between each wheel on the same axle to ensure the steering wheel is centered after setting toe.		

2500/3500 SERIES - BOX OFF - 4X2

FRONT ALIGNMENT	PREFERRED SETTING	ACCEPTABLE RANGE
CAMBER - LEFT	0.00°	-0.50° to +0.50°
CAMBER - RIGHT	0.00°	-0.50° to +0.50°
CROSS-CAMBER	0.00°	-0.50° to +0.50°
CASTER - LEFT	+3.75°	+3.25° to +4.25°

CASTER - RIGHT	+3.75°	+3.25° to +4.25°
CROSS-CASTER	0.00°	-0.50° to +0.50°
TOE - TOTAL*	+0.20°	+0.10° to +0.30°
Positive toe (+) is toe-in and negative toe (?) is Toe-out. * TOTAL TOE is the sum of both the left and right wheel toe settings. TOTAL TOE should be equally split between each wheel on the same axle to ensure the steering wheel is centered after setting toe.		

REAR ALIGNMENT	PREFERRED SETTING	ACCEPTABLE RANGE
CAMBER	-0.10°	-0.45° to +0.25°
CROSS-CAMBER	0.00°	-0.30° to +0.30°
TOE - TOTAL*	+0.10°	-0.20° to +0.40°
THRUST ANGLE	0.00°	-0.30° to +0.30°
Positive toe (+) is toe-in and negative toe (?) is Toe-out. * TOTAL TOE is the sum of both the left and right wheel toe settings. TOTAL TOE should be equally split between each wheel on the same axle to ensure the steering wheel is centered after setting toe.		

2500/3500 SERIES - BOX OFF - 4X4

FRONT ALIGNMENT	PREFERRED SETTING	ACCEPTABLE RANGE
CAMBER - LEFT	0.25°	-0.25° to +0.75°
CAMBER - RIGHT	0.25°	-0.25° to +0.75°
CROSS-CAMBER	0.00°	-0.50° to +0.50°
CASTER - LEFT	+3.75°	+3.25° to +4.25°
CASTER - RIGHT	+3.75°	+3.25° to +4.25°
CROSS-CASTER	-0.00°	-0.50° to +0.50°
TOE - TOTAL*	+0.20°	+0.10° to +0.30°
Positive toe (+) is toe-in and negative toe (?) is Toe-out. * TOTAL TOE is the sum of both the left and right wheel toe settings. TOTAL TOE should be equally split between each wheel on the same axle to ensure the steering wheel is centered after setting toe.		

REAR ALIGNMENT	PREFERRED SETTING	ACCEPTABLE RANGE
CAMBER	-0.10°	-0.45° to +0.25°
CROSS-CAMBER	0.00°	-0.30° to +0.30°
TOE - TOTAL*	+0.10°	-0.20° to +0.40°
THRUST ANGLE	0.00°	-0.30° to +0.30°
Positive toe (+) is toe-in and negative toe (?) is Toe-out. * TOTAL TOE is the sum of both the left and right wheel toe settings. TOTAL TOE should be equally split between each wheel on the same axle to ensure the steering wheel is centered after setting toe.		

3500 SERIES - CAB CHASSIS

FRONT ALIGNMENT	PREFERRED SETTING	ACCEPTABLE RANGE
CAMBER - LEFT	0.25°	-0.25° to +0.75°
CAMBER - RIGHT	0.25°	-0.25° to +0.75°

CROSS-CAMBER	0.00°	-0.50° to +0.50°
CASTER - LEFT CASTER - RIGHT CROSS-CASTER	+3.75° +3.75° -0.00°	+3.25° to +4.25° +3.25° to +4.25° -0.50° to +0.50°
TOE - TOTAL*	+0.20°	+0.10° to +0.30°
Positive toe (+) is toe-in and negative toe (?) is Toe-out. * TOTAL TOE is the sum of both the left and right wheel toe settings. TOTAL TOE should be equally split between each wheel on the same axle to ensure the steering wheel is centered after setting toe.		

REAR ALIGNMENT	PREFERRED SETTING	ACCEPTABLE RANGE
CAMBER CROSS-CAMBER	-0.10° 0.00°	-0.45° to +0.25° -0.30° to +0.30°
TOE - TOTAL*	+0.10°	-0.20° to +0.40°
THRUST ANGLE	0.00°	-0.30° to +0.30°
Positive toe (+) is toe-in and negative toe (?) is Toe-out. * TOTAL TOE is the sum of both the left and right wheel toe settings. TOTAL TOE should be equally split between each wheel on the same axle to ensure the steering wheel is centered after setting toe.		

4500/5500 SERIES - WHEEL BASE 144, 164, 168

FRONT ALIGNMENT	PREFERRED SETTING	ACCEPTABLE RANGE
CAMBER - LEFT CAMBER - RIGHT CROSS-CAMBER	0.10° 0.10° 0.00°	-0.40° to +0.60° -0.40° to +0.60° -0.50° to +0.50°
CASTER - LEFT CASTER - RIGHT CROSS-CASTER	+3.00° +3.50° -2.83°	+2.0° to +4.0° +2.50° to +4.50° -2.83°
TOE - TOTAL*	+0.20°	+0.10° to +0.30°
Positive toe (+) is toe-in and negative toe (?) is Toe-out. * TOTAL TOE is the sum of both the left and right wheel toe settings. TOTAL TOE should be equally split between each wheel on the same axle to ensure the steering wheel is centered after setting toe.		

REAR ALIGNMENT	PREFERRED SETTING	ACCEPTABLE RANGE
CAMBER CROSS-CAMBER	-0.10° 0.00°	-0.45° to +0.25° -0.30° to +0.30°
TOE - TOTAL*	+0.10°	-0.20° to +0.40°
THRUST ANGLE	0.00°	-0.30° to +0.30°
Positive toe (+) is toe-in and negative toe (?) is Toe-out. * TOTAL TOE is the sum of both the left and right wheel toe settings. TOTAL TOE should be equally split between each wheel on the same axle to ensure the steering wheel is centered after setting toe.		

4500/5500 SERIES - WHEEL BASE 188, 192

FRONT ALIGNMENT	PREFERRED SETTING	ACCEPTABLE RANGE

CAMBER - LEFT	0.10°	-0.40° to +0.60°
CAMBER - RIGHT	0.10°	-0.40° to +0.60°
CROSS-CAMBER	0.00°	-0.50° to +0.50°
CASTER - LEFT	+3.50°	+2.50° to +4.50°
CASTER - RIGHT	+4.00°	+3.00° to +5.00°
CROSS-CASTER	-2.83°	-2.83°
TOE - TOTAL*	+0.20°	+0.10° to +0.30°
Positive toe (+) is toe-in and negative toe (?) is Toe-out. * TOTAL TOE is the sum of both the left and right wheel toe settings. TOTAL TOE should be equally split between each wheel on the same axle to ensure the steering wheel is centered after setting toe.		

REAR ALIGNMENT	PREFERRED SETTING	ACCEPTABLE RANGE
CAMBER	-0.10°	-0.45° to +0.25°
CROSS-CAMBER	0.00°	-0.30° to +0.30°
TOE - TOTAL*	+0.10°	-0.20° to +0.40°
THRUST ANGLE	0.00°	-0.30° to +0.30°
Positive toe (+) is toe-in and negative toe (?) is Toe-out. * TOTAL TOE is the sum of both the left and right wheel toe settings. TOTAL TOE should be equally split between each wheel on the same axle to ensure the steering wheel is centered after setting toe.		

4500/5500 SERIES - WHEEL BASE 204

FRONT ALIGNMENT	PREFERRED SETTING	ACCEPTABLE RANGE
CAMBER - LEFT	0.10°	-0.40° to +0.60°
CAMBER - RIGHT	0.10°	-0.40° to +0.60°
CROSS-CAMBER	0.00°	-0.50° to +0.50°
CASTER - LEFT	+3.80°	+2.80° to +4.80°
CASTER - RIGHT	+4.00°	+3.00° to +5.00°
CROSS-CASTER	-2.83°	-2.83°
TOE - TOTAL*	+0.20°	+0.10° to +0.30°
Positive toe (+) is toe-in and negative toe (?) is Toe-out. * TOTAL TOE is the sum of both the left and right wheel toe settings. TOTAL TOE should be equally split between each wheel on the same axle to ensure the steering wheel is centered after setting toe.		

REAR ALIGNMENT	PREFERRED SETTING	ACCEPTABLE RANGE
CAMBER	-0.10°	-0.45° to +0.25°
CROSS-CAMBER	0.00°	-0.30° to +0.30°
TOE - TOTAL*	+0.10°	-0.20° to +0.40°
THRUST ANGLE	0.00°	-0.30° to +0.30°
Positive toe (+) is toe-in and negative toe (?) is Toe-out. * TOTAL TOE is the sum of both the left and right wheel toe settings. TOTAL TOE should be equally split between each wheel on the same axle to ensure the steering wheel is centered after setting toe.		

FRONT, INDEPENDENT FRONT SUSPENSION

DESCRIPTION

4X2

The front suspension is designed to allow each wheel to adapt to different road surfaces independently. The wheels are mounted to hub/bearings units bolted to the steering knuckle. The double-row hub bearings are sealed and lubricated for life. The steering knuckles turn (pivot) on ball joints.

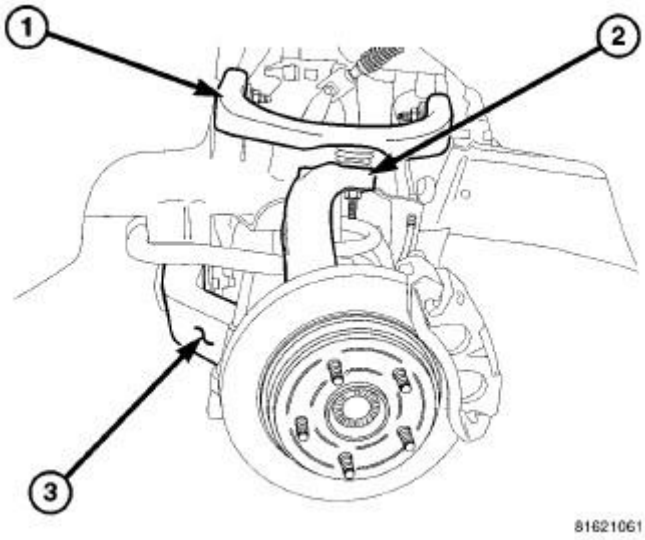

Fig. 13: 4X2 Independent Front Suspension
Courtesy of CHRYSLER GROUP, LLC

The front suspension is comprised of:

- Shock Absorbers
- Coil Spring
- Control Arms (1 and 3)
- Steering Knuckles (2)
- Stabilizer Bar
- Stabilizer Link
- Tie Rod Ends
- Hub/Bearing
- Rack and Pinion
- Ball Joints

NOTE: Components attached with a nut must be torqued to specification.

NOTE: **Suspension components with rubber/urethane bushings should be tightened with the vehicle at normal ride height. It is important to have the springs supporting the weight of the vehicle when the fasteners are torqued. If springs are not at their normal ride position, vehicle ride comfort could be affected and premature bushing wear may occur.**

4X4

The front suspension is designed to allow each wheel to adapt to different road surfaces independently. The wheels are mounted to hub/bearings units bolted to the steering knuckle. The double-row hub bearings are sealed and lubricated for life. The steering knuckles turn (pivot) on ball joints.

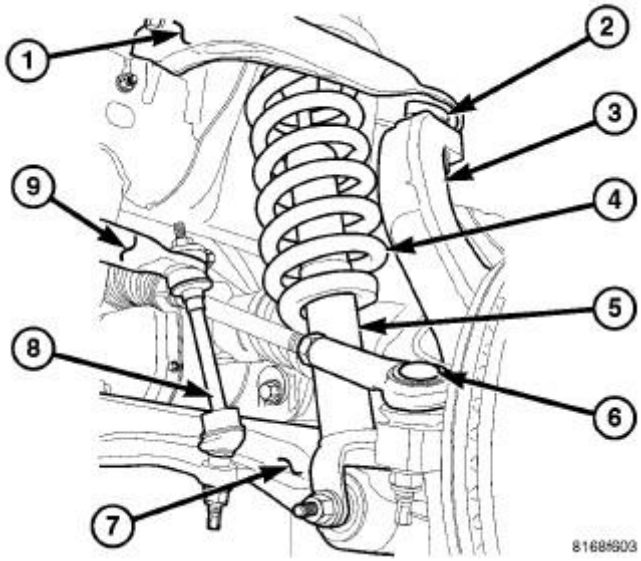

Fig. 14: 4X4 Coil Over Front Suspension
Courtesy of CHRYSLER GROUP, LLC

The front suspension is comprised of:

- Coil over Shock absorbers (5)
- Coil over Springs (4)
- Control arms (1, 7)
- Steering knuckles (3)
- Stabilizer bar (9)
- Stabilizer link (8)
- Tie Rod Ends (6)
- Hub/Bearing
- Rack and Pinion
- Ball Joints (2)

NOTE: **Components attached with a nut must be torqued to specification.**

NOTE: **Suspension components with rubber/urethane bushings should be tightened with the vehicle at normal ride height. It is important to have the springs supporting the weight of the vehicle when the fasteners are torqued. If springs are not at their normal ride position, vehicle ride comfort could be affected and premature bushing wear may occur.**

CONTROL ARMS

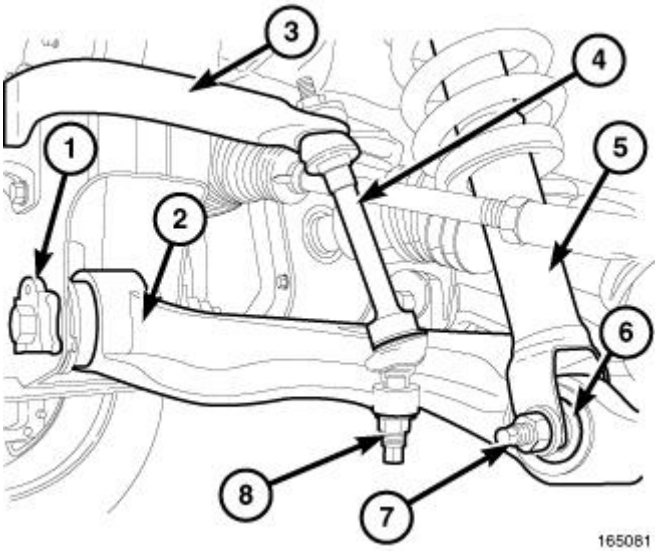

Fig. 15: Lower Control Arm Components
Courtesy of CHRYSLER GROUP, LLC

The lower control arm (2) bolts in frame brackets. The frame brackets have slotted holes which allow the arms (2) to be adjusted with cambolts (1) for caster and camber adjustment.

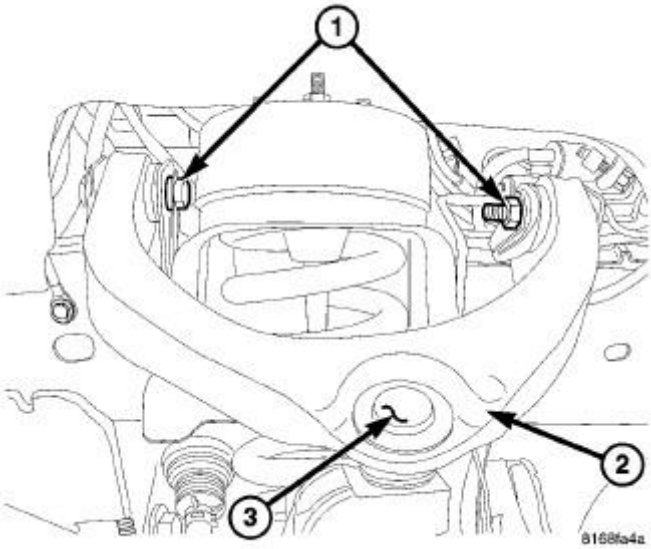

Fig. 16: Identifying Upper Control Arms & Ball Studs
Courtesy of CHRYSLER GROUP, LLC

The upper control arms (2) bolt to the upper frame brackets and pivots through bushings.

The control arms have lube for life ball studs (3). The control arm travel (jounce) is limited through the use of rubber/urethane bumpers. Rebound travel is limited by the shock absorber.

Having the suspension at curb ride height when torquing bolts ensures good ride characteristics and longer bushing life by preventing excessive "wind-up" of the bushing.

STANDARD PROCEDURE

STANDARD PROCEDURE - OUTER TIE ROD END LUBRICATION

NOTE: View is typical.

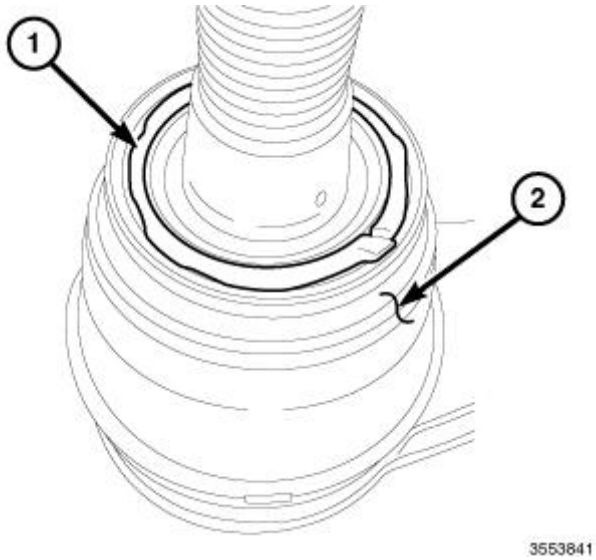

Fig. 17: Locating Grease & Tie Rod End Boot
Courtesy of CHRYSLER GROUP, LLC

NOTE: **If a new tie rod end is to be installed, make sure the boot (2) is properly lubricated.**

Any time the outer tie rod end is disconnected from the knuckle, before assembly, clean all old grease and debris from the boot with a clean cloth and apply outer tie rod grease P/N 68088623AA (1) to the boot (2) as shown in illustration.

SPECIFICATIONS

SPECIFICATIONS

1500 - 4X2 AND 4X4

DESCRIPTION	N.m	Ft. Lbs.	In. Lbs.
Shock Absorber Upper Nut - 4X4	61	45	-
Shock Absorber Lower Bolt - 4X4	210	155	-
Shock Absorber Upper Nut - 4X2	54	40	-
Shock Absorber Lower Bolt - 4X2	26	19	250
Lower Control Arm Frame Nuts	210	155	-
Lower Control Arm Ball Joint Nut	51, Then an additional 90°	37.5, Then an additional 90°	-
Upper Control Arm Frame Nuts	176	130	-

Upper Control Arm Ball Joint Nut	54, Then an additional 200°	40, Then an additional 200°	-
Stabilizer Bar Frame Bolt	59	43.5	-
Stabilizer Link Lower Control Arm Nut	102	75	-
Stabilizer Link Stabilizer Bar Nut	27	20	-
Hub/Bearing Bolts	163	120	-
Half Shaft Nut	251	185	-
Tie Rod End Jamb Nut	75	55	
Tie Rod End Nut	61, Then an additional 90°	45, Then an additional 90°	-

2500/3500 - 4X2

DESCRIPTION	N.m	Ft. Lbs.	In. Lbs.
Shock Absorber Upper Nut	61	45	-
Shock Absorber Lower Bolt	28	21	250
Lower Control Arm Frame Nuts	258	190	-
Lower Control Arm Ball Joint Nut	157	116	-
Upper Control Arm Frame Nuts	149	110	-
Upper Control Arm Ball Joint Nut	125	92	-
Stabilizer Bar Frame Bolt	64	47	-
Stabilizer Link Lower Control Arm Nut	111	82	-
Stabilizer Link Stabilizer Bar Nut	27	20	-
Hub/Bearing Bolts	174	128	-
Tie Rod End Jamb Nut	75	55	
Tie Rod End Nut	108	80	-

ARM, LOWER CONTROL

REMOVAL

4X2

1. Raise and support the vehicle.
2. Remove the tire and wheel assembly.

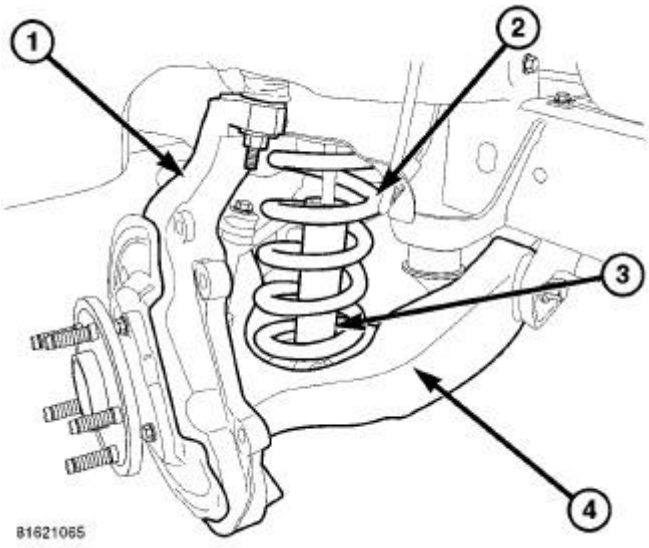

Fig. 18: Steering Knuckle, Lower Control Arm, Shock & Spring
Courtesy of CHRYSLER GROUP, LLC

3. Support the lower control arm at the outboard side of the lower control arm to support vehicle weight.
4. Remove the shock (3). Refer to **SHOCK ABSORBER, SUSPENSION, REMOVAL**.

NOTE: Do not allow the caliper to hang freely, support the caliper assembly.

5. Remove the disc brake caliper adapter. Refer to **ADAPTER, DISC BRAKE CALIPER, REMOVAL** .
6. Remove the rotor.
7. Remove the upper ball joint nut.

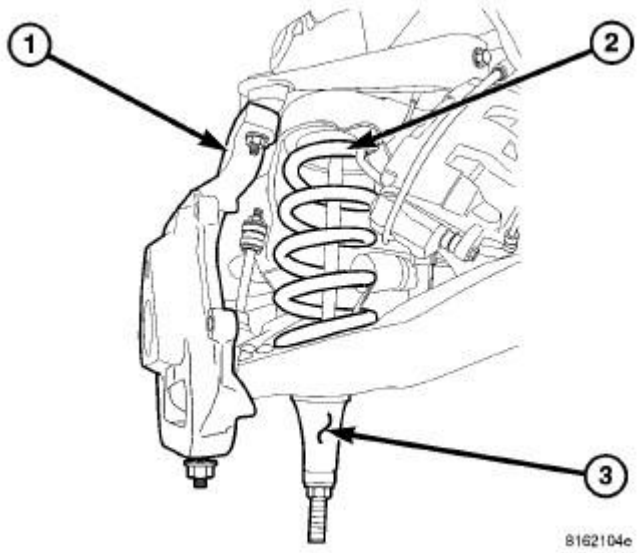

Fig. 19: Coil Spring Compressor Tool

Courtesy of CHRYSLER GROUP, LLC

8. Install Front Spring Compressor (special tool #DD-1278, Compressor, Front Spring) (3) up through the lower control arm, coil spring (2) and shock hole in the frame. The bell-shaped adapter goes against the lower control arm. Install the nut on top of the tool at the shock hole.
9. Tighten the spring compressor nut against bell-shaped adapter finger tight then loosen 1/2 turn to hold the spring in place.

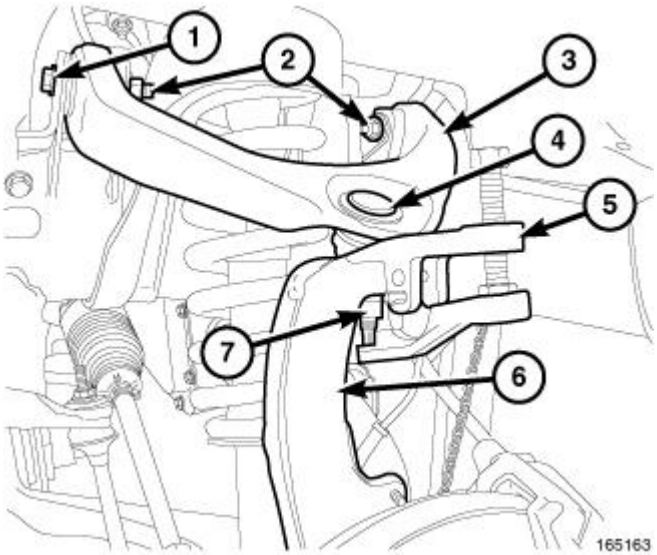

Fig. 20: Separating Upper Ball Joint From Knuckle
Courtesy of CHRYSLER GROUP, LLC

10. Separate the upper ball joint (4) from the knuckle (6) using Ball Joint Remover (special tool #9360, Remover, Ball Joint) (5).
11. Remove the knuckle from the vehicle.
12. Remove the lower stabilizer link nut.

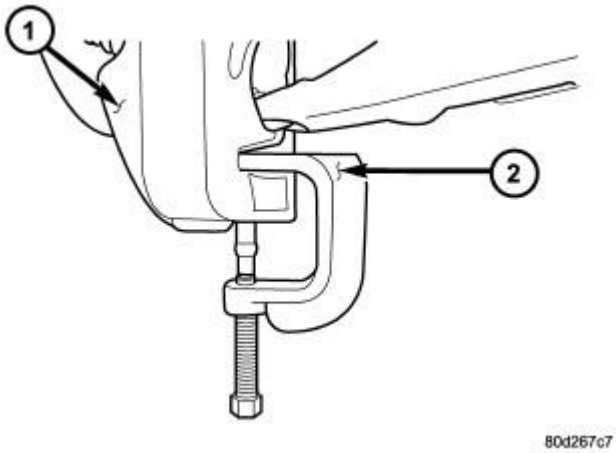

Fig. 21: Lower Ball Joint Separation

Courtesy of CHRYSLER GROUP, LLC

1 - STEERING KNUCKLE
2 - SPECIAL TOOL 8677

13. Remove the lower ball joint nut at the steering knuckle (1).
14. Separate the ball joint from the knuckle using Ball Joint Remover (special tool #8677, Remover, Ball Joint) (2).

NOTE: Do not allow the upper control arm to rebound downward, it must be supported.

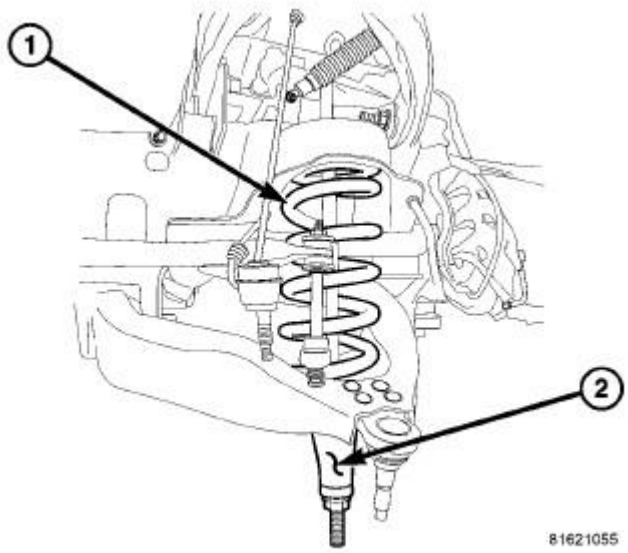

Fig. 22: Coil Spring Tool Support
Courtesy of CHRYSLER GROUP, LLC

15. Remove the lower control arm support.
16. Tighten the spring compressor tool to allow clearance for the lower ball joint to be removed out of the knuckle.
17. Loosen the tension on the spring compressor tool (2) slowly allowing the lower control arm to pivot downward.
18. Remove the spring compressor tool (2).
19. Remove coil spring (1) and isolator pad from the vehicle.
20. Remove the front and rear pivot bolts.
21. Remove the lower control arm.

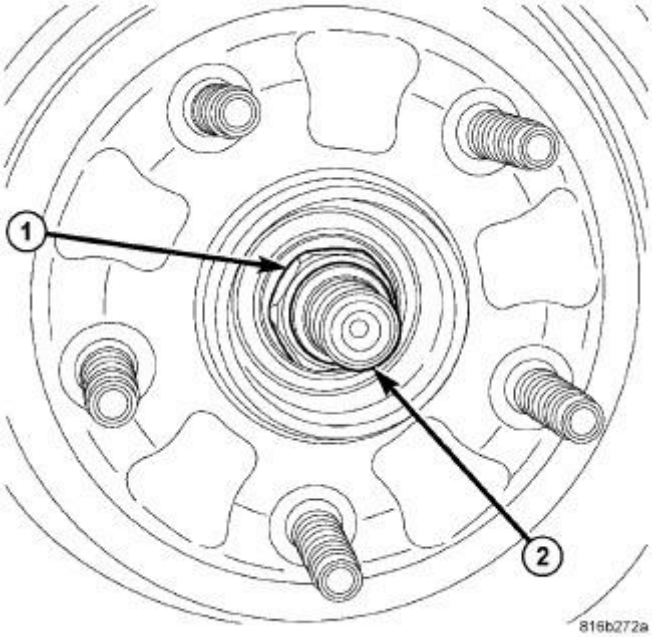

Fig. 23: Half Shaft Nut
Courtesy of CHRYSLER GROUP, LLC

1. Raise and support the vehicle.
2. Remove the wheel and tire assembly.
3. Remove half shaft nut (1) from the shaft (2).

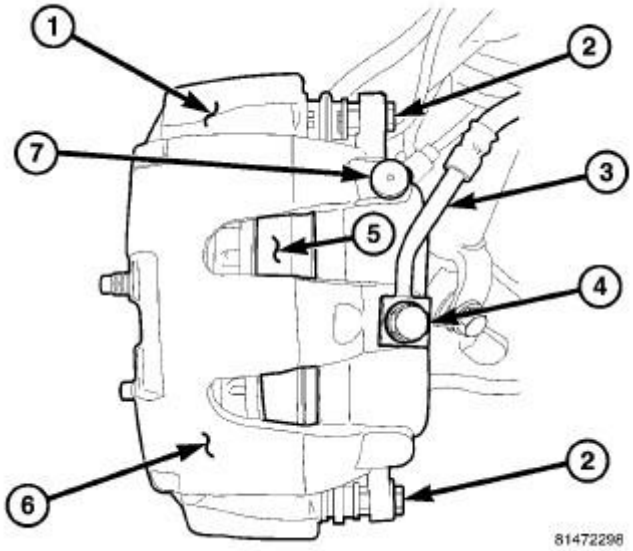

Fig. 24: Identifying Disc Brake Caliper Components
Courtesy of CHRYSLER GROUP, LLC

4. Compress the disc brake caliper (6).

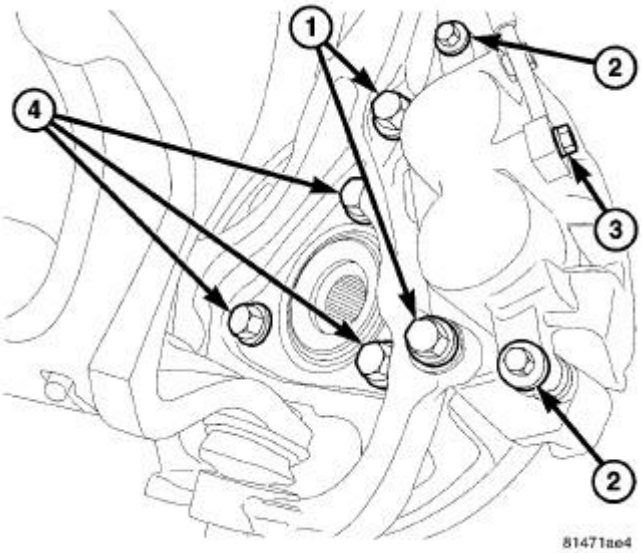

Fig. 25: Identifying Caliper Slide Pin Bolts
Courtesy of CHRYSLER GROUP, LLC

5. Remove the caliper adapter bolts (1)

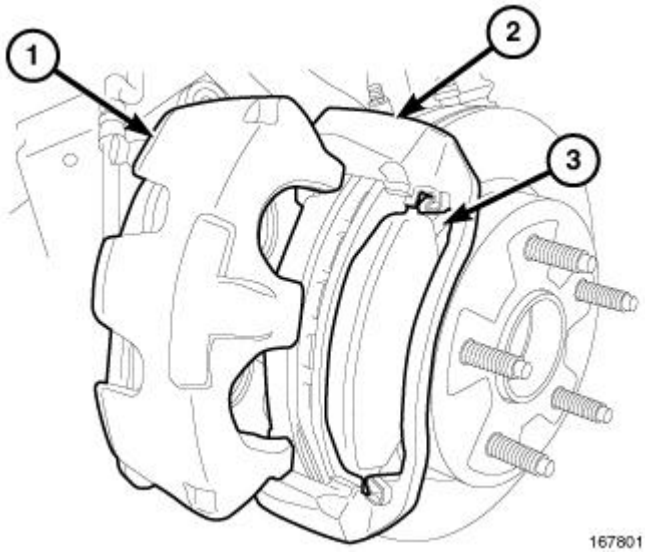

Fig. 26: Caliper Removal/Install
Courtesy of CHRYSLER GROUP, LLC

CAUTION: Never allow the disc brake caliper to hang from the brake hose. Damage to the brake hose will result. Provide a suitable support to hang the caliper securely.

6. Remove the disc brake caliper (1) and the caliper adapter (2) as an assembly.
7. Remove the rotor from the hub/bearing.

8. If equipped with ABS, remove the wheel speed sensor wiring clips and disconnect the electrical connector.

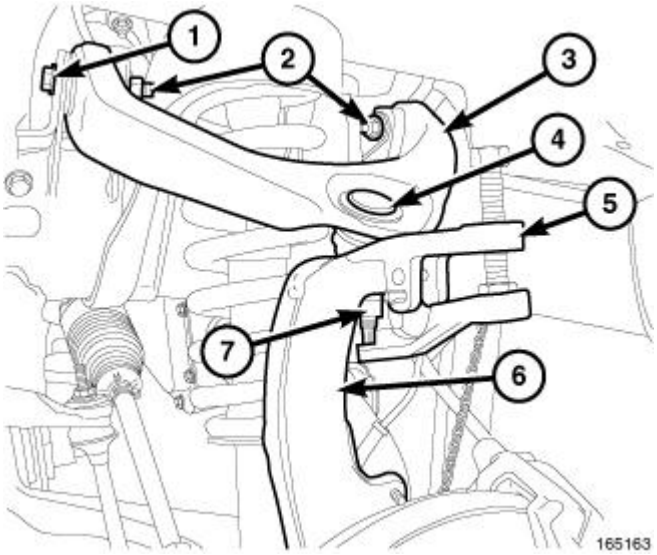

Fig. 27: Separating Upper Ball Joint From Knuckle
Courtesy of CHRYSLER GROUP, LLC

9. Remove the upper ball joint nut (7).
10. Separate the ball joint from the steering knuckle using Ball Joint Remover (special tool #9360, Remover, Ball Joint) (5).

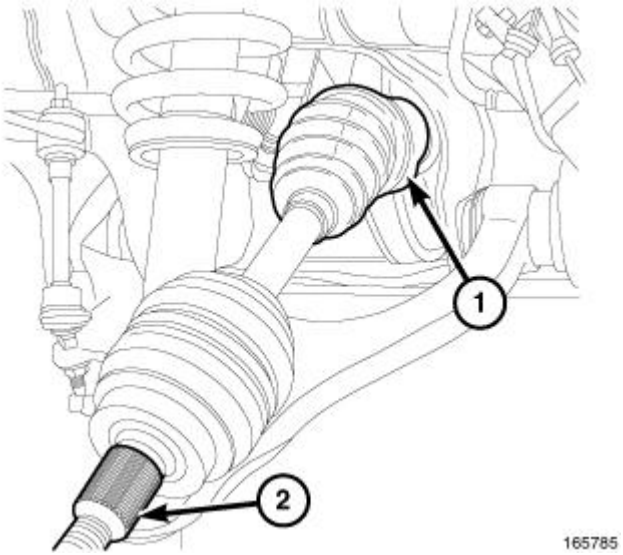

Fig. 28: Half Shaft
Courtesy of CHRYSLER GROUP, LLC

11. Disengage inner C/V joint (1) from axle shaft with two pry bars between the C/V housing and axle housing.
12. Remove the front halfshaft.

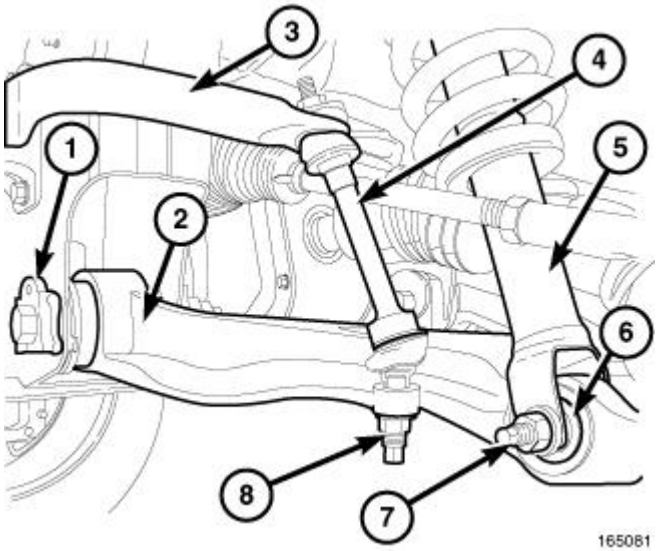

Fig. 29: Lower Control Arm Components
Courtesy of CHRYSLER GROUP, LLC

13. Remove the shock absorber lower nut/bolt (7).
14. Remove the stabilizer bar link lower nut (8).

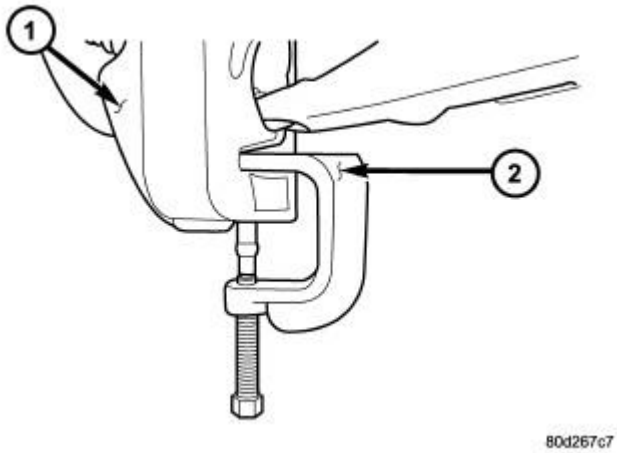

Fig. 30: Lower Ball Joint Separation
Courtesy of CHRYSLER GROUP, LLC

1 - STEERING KNUCKLE
2 - SPECIAL TOOL 8677

15. Using a suitable tie strap, support the knuckle. Remove the lower ball joint nut. Separate ball joint from the steering knuckle using Ball Joint Remover (special tool #8677, Remover, Ball Joint) (2).

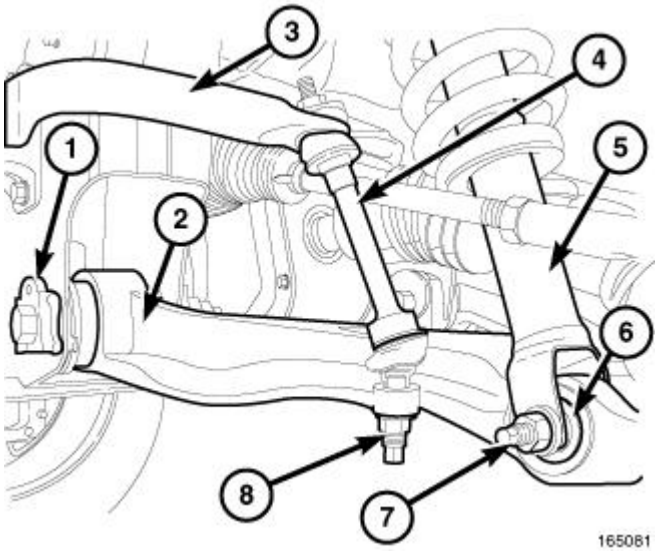

Fig. 31: Lower Control Arm Components
Courtesy of CHRYSLER GROUP, LLC

16. Remove the two control arm pivot bolts (1) and control arm (2) from frame rail brackets.

INSTALLATION

4X2

1. Install the lower control arm into place on the vehicle.
2. Install the front and rear control arm pivot bolts finger tight.

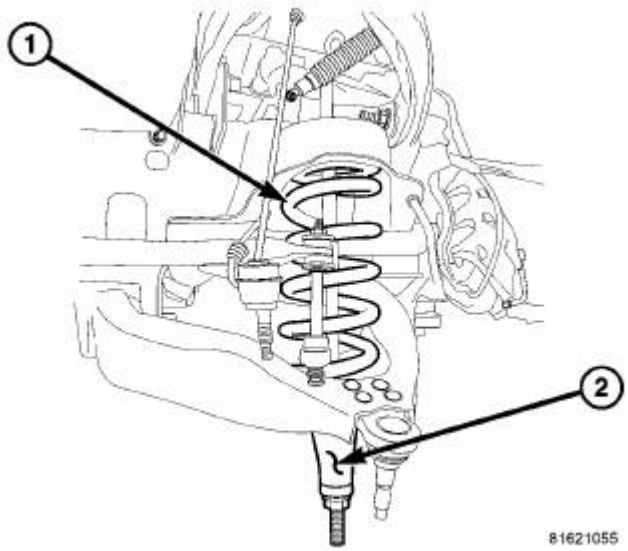

Fig. 32: Coil Spring Tool Support
Courtesy of CHRYSLER GROUP, LLC

3. Install the coil spring (1) into the frame pocket. Refer to **SPRING, FRONT COIL, INSTALLATION**.
4. Install the Spring Compressor (special tool #DD-1278, Compressor, Front Spring) (2) up through the lower suspension arm, coil spring and shock hole in the frame.
5. Tighten the tool nut to compress the coil spring (1).

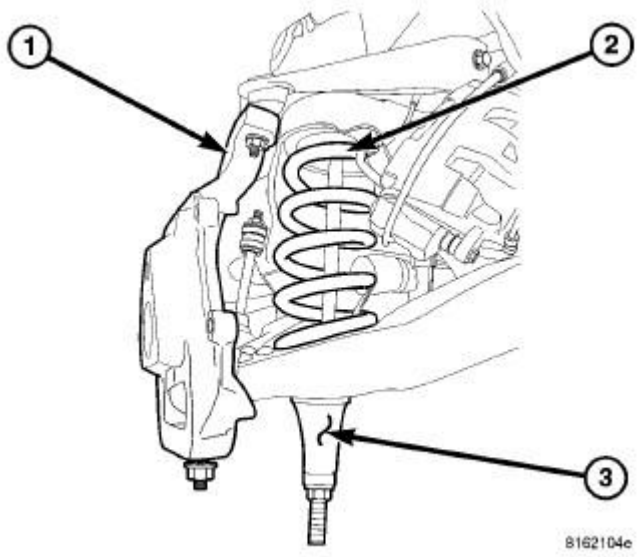

Fig. 33: Coil Spring Compressor Tool
Courtesy of CHRYSLER GROUP, LLC

6. Install the knuckle (1) to the control arms.
7. Position the lower ball joint into the steering knuckle.
8. Install the retaining nut on the lower ball joint and tighten to specifications. Refer to **SPECIFICATIONS**. .
9. Position the upper ball joint to the knuckle (1).
10. Install the retaining nut on the upper ball joint and tighten to specifications. Refer to **SPECIFICATIONS**. .
11. Support the lower control arm at the outboard side of the lower control arm to support vehicle weight.
12. Remove the spring compressor tool (3).
13. Install the shock absorber. Refer to **SHOCK ABSORBER, SUSPENSION, INSTALLATION**.
14. Install the stabilizer link. Refer to **LINK, STABILIZER BAR, INSTALLATION**.
15. Remove the lower control arm support.
16. Install the wheel and tire assembly and lower the vehicle. Refer to **WHEELS, STANDARD PROCEDURE** .
17. Lower the vehicle to the floor with vehicle weight and tighten the front and rear pivot bolts to the frame to specifications. Refer to **SPECIFICATIONS**. .
18. Perform a wheel alignment. Refer to **WHEEL ALIGNMENT, STANDARD PROCEDURE**.

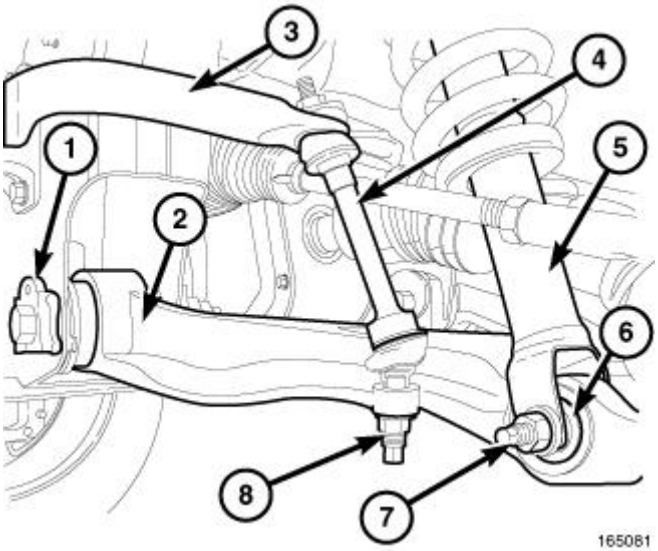

Fig. 34: Lower Control Arm Components
Courtesy of CHRYSLER GROUP, LLC

1. Position the lower control arm (2) at the frame rail brackets. Install the pivot bolts (1) and nuts, and tighten the nuts finger-tight.

CAUTION: The ball joint stud taper must be CLEAN and DRY before installing the knuckle. Clean the stud taper with mineral spirits to remove dirt and grease.

2. Insert the lower ball joint stud into the steering knuckle. Install and tighten the retaining nut to specifications. Refer to **SPECIFICATIONS**. .
3. Install shock absorber lower bolt/nut (7) and tighten to specifications. Refer to **SPECIFICATIONS**. .
4. Install the stabilizer bar link lower nut (8) and tighten to specifications. Refer to **SPECIFICATIONS**. .

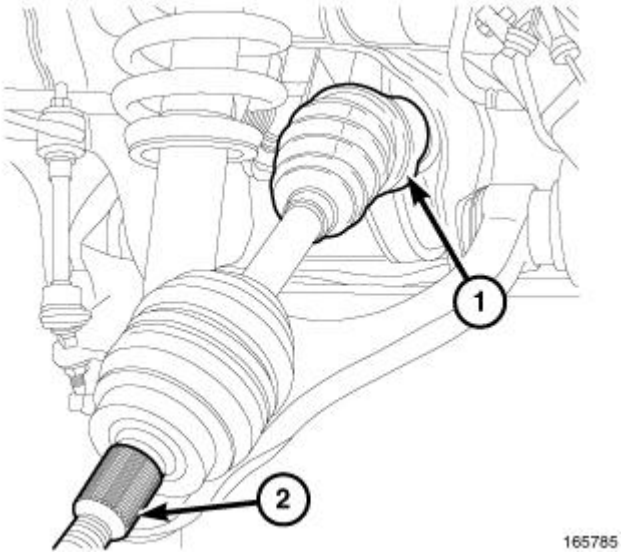

Fig. 35: Half Shaft

Courtesy of CHRYSLER GROUP, LLC

5. Install the front halfshaft to the axle by pushing the inner C/V (1) firmly to engage axle shaft snap ring into the inner C/V housing.
6. Clean hub bearing bore, hub bearing mating surface and half shaft splines (2) and apply a light coating of grease to the front axle shaft output splines.

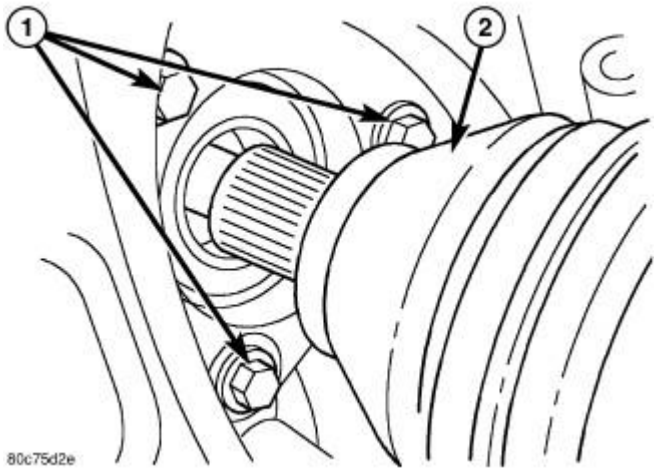

Fig. 36: Half Shaft & Hub/Bearing
Courtesy of CHRYSLER GROUP, LLC

7. Install half shaft (2) into the knuckle.

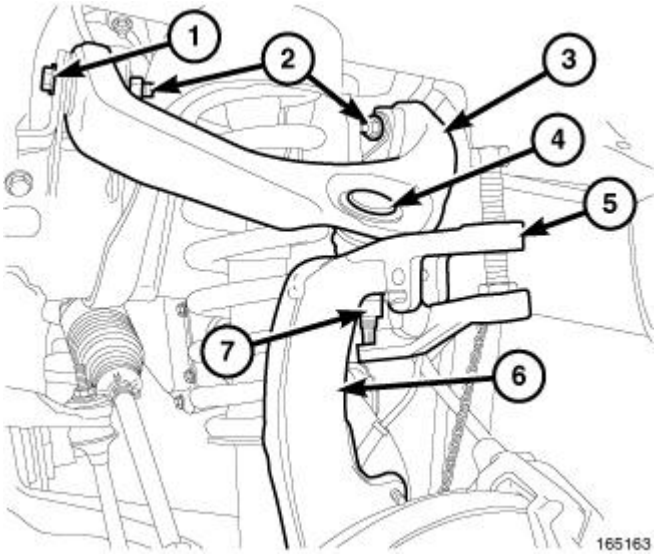

Fig. 37: Separating Upper Ball Joint From Knuckle
Courtesy of CHRYSLER GROUP, LLC

8. Insert the upper ball joint (4) into the steering knuckle (6).
9. Install and tighten the upper ball joint retaining nut to specifications. Refer to **SPECIFICATIONS**. .

10. Tighten the lower control arm front pivot nut and rear pivot bolt to specifications. Refer to **SPECIFICATIONS**. .

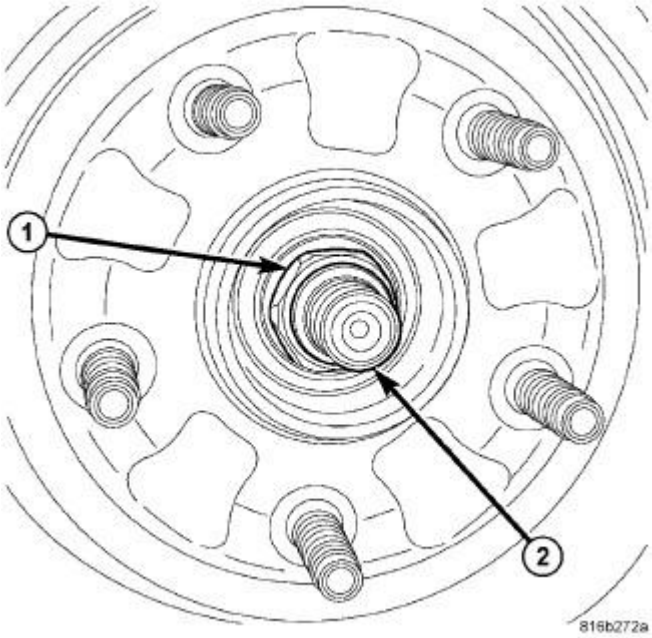

Fig. 38: Half Shaft Nut
Courtesy of CHRYSLER GROUP, LLC

11. Install half shaft hub nut (1) and tighten to specifications. Refer to **SPECIFICATIONS**. .
12. Install the wheel and tire assembly. Refer to **WHEELS, STANDARD PROCEDURE** .
13. Remove the support and lower the vehicle.
14. Perform a wheel alignment. Refer to **WHEEL ALIGNMENT, STANDARD PROCEDURE**.

ARM, UPPER CONTROL

REMOVAL

REMOVAL

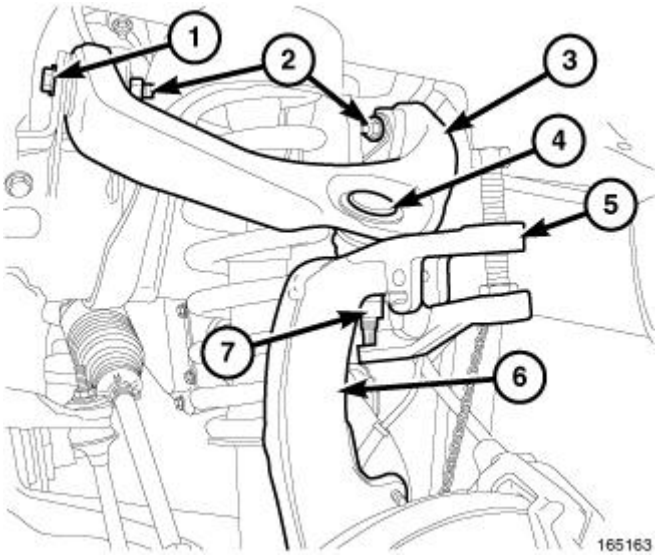

Fig. 39: Separating Upper Ball Joint From Knuckle
Courtesy of CHRYSLER GROUP, LLC

1. Raise and support the vehicle.
2. Remove wheel and tire assembly.
3. Remove the disc brake caliper adapter with the caliper. Refer to **ADAPTER, DISC BRAKE CALIPER, REMOVAL** .
4. Remove the rotor.
5. Remove the wheel speed sensor wire from the upper control arm.
6. Remove the nut from upper ball joint (4).

CAUTION: When installing Remover (special tool #9360, Remover, Ball Joint) (5) to separate the ball joint, be careful not to damage the ball joint seal.

7. Separate upper ball joint (4) from the steering knuckle (6) with Ball Joint Remover (special tool #9360, Remover, Ball Joint) (5).

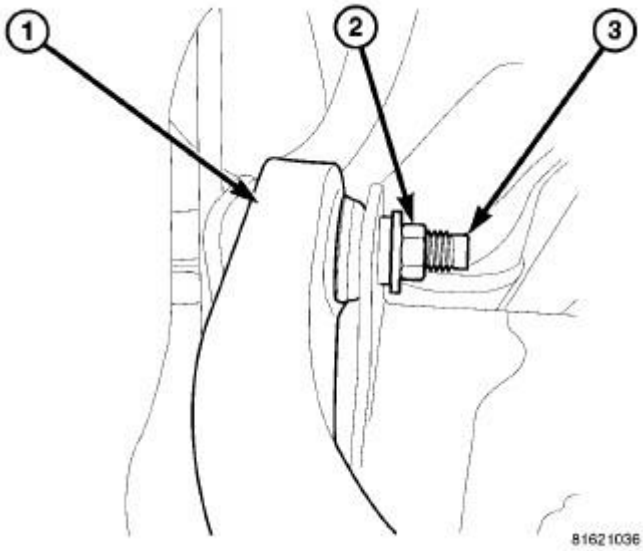

Fig. 40: Identifying Control Arm, Pivot Bolts, & Flag Nuts
Courtesy of CHRYSLER GROUP, LLC

8. Remove the control arm pivot bolts (3) and flag nuts (2) remove control arm (1).

INSTALLATION

INSTALLATION

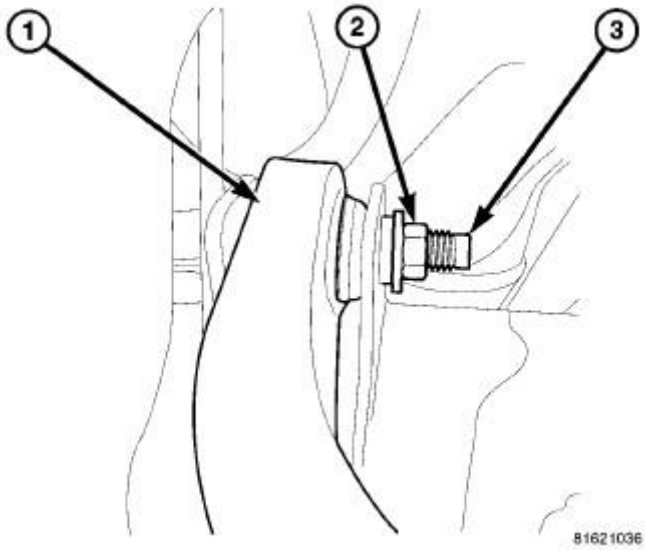

Fig. 41: Identifying Control Arm, Pivot Bolts, & Flag Nuts
Courtesy of CHRYSLER GROUP, LLC

1. Position the control arm (1) into the frame brackets. Install bolt (3) and nut (2), and tighten to specifications. Refer to **SPECIFICATIONS**. .

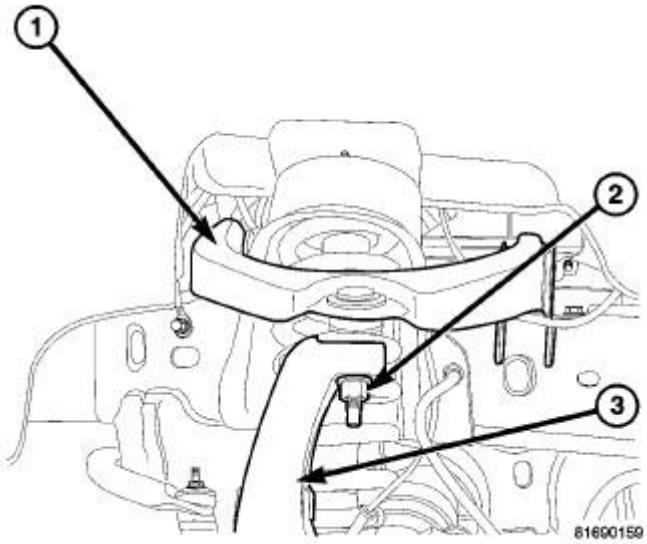

Fig. 42: Steering Knuckle & Upper Ball Joint Nut
Courtesy of CHRYSLER GROUP, LLC

2. Insert the ball joint in the steering knuckle (3) and tighten the upper ball joint nut (2) to specifications. Refer to **SPECIFICATIONS**. .
3. Install the rotor to the hub.
4. Install the disc brake caliper and adapter to the knuckle. Refer to **ADAPTER, DISC BRAKE CALIPER, INSTALLATION** .
5. Install the wheel speed sensor wire to the upper control arm.
6. Install the wheel and tire assembly. Refer to **WHEELS, STANDARD PROCEDURE** .
7. Remove the support and lower vehicle.
8. Perform a wheel alignment. Refer to **WHEEL ALIGNMENT, STANDARD PROCEDURE**.

BALL JOINT, SUSPENSION, LOWER

DIAGNOSIS AND TESTING

DIAGNOSIS AND TESTING - LOWER BALL JOINT - INDEPENDENT FRONT SUSPENSION

1. Raise and support the vehicle. Refer to **HOISTING, STANDARD PROCEDURE** .

NOTE: **When using floor stands on aluminum control arms a wood block or similar should be placed between the stand and the control arm.**

2. Place safety floor stands under both lower control arms as far outboard as possible. Lower the vehicle to allow the stands to support some or all of the vehicle weight.
3. Mount a dial indicator solidly to the topside of the lower control arm.

NOTE: **The dial indicator plunger must be perpendicular to the machined surface of the steering knuckle.**

4. Position the indicator plunger against the bottom surface of the steering knuckle and then zero the dial indicator.
5. Position a pry bar under the tire assembly. Pry upwards on the tire assembly.

NOTE: **On the 4x4 replacement of the lower ball joint is not recommended. If the ball joint movement exceeds specifications, replacement of the lower control arm is necessary.**

6. If the travel exceeds 0.5 mm (0.020 in.), replace the lower ball joint. **For 4x2** . Refer to **BALL JOINT, SUSPENSION, LOWER, REMOVAL**. **For 4x4** . Refer to **ARM, LOWER CONTROL, REMOVAL**.

REMOVAL

REMOVAL

1. Raise and support the vehicle. Refer to **HOISTING, STANDARD PROCEDURE** .
2. Remove the knuckle. Refer to **KNUCKLE, STEERING, REMOVAL**.

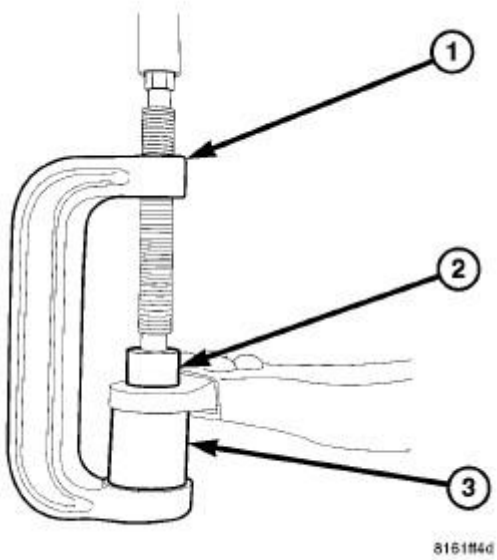

Fig. 43: Lower Ball Joint Removal
Courtesy of CHRYSLER GROUP, LLC

NOTE: **Extreme pressure lubrication must be used on the threaded portions of the tool. This will increase the longevity of the tool and insure proper operation during the removal and installation process.**

3. Press the ball joint from the lower control arm using Ball Joint Press (special tool #C-4212F, Press, Ball

Joint) (PRESS) (1), Remover/Installer (special tool #8836-6, Remover, Bushing) (DRIVER) (2) and Ball Joint Remover/Installer (special tool #8698-2, Remover, Receiver Cup) (RECEIVER) (3).

INSTALLATION

INSTALLATION

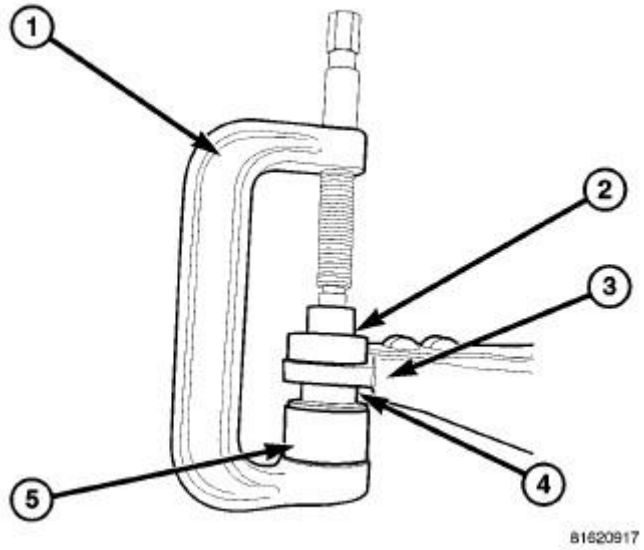

Fig. 44: Installing Lower Ball Joint
Courtesy of CHRYSLER GROUP, LLC

NOTE: Extreme pressure lubrication must be used on the threaded portions of the tool. This will increase the longevity of the tool and insure proper operation during the removal and installation process.

1. Install the ball joint (4) into the control arm (3) and press in using Ball Joint Press C-4212F (press) (1), Ball Joint Remover/Installer (special tool #8698-3, Remover/Installer) (driver) (2) and Ball Joint Remover/Installer (special tool #8698-1, Installer, Ball Joint) (receiver) (5).
2. Stake the ball joint flange in four evenly spaced places around the ball joint flange, using a punch and hammer.
3. Install the steering knuckle. Refer to **KNUCKLE, STEERING, INSTALLATION**.
4. Install the tie rod end into the steering knuckle. Refer to **END, TIE ROD, INSTALLATION** .
5. Install the brake caliper and rotor. Refer to **ROTOR, BRAKE, INSTALLATION** .
6. Install the tire and wheel assembly. Refer to **WHEELS, STANDARD PROCEDURE** .
7. Check the vehicle ride height. Refer to **WHEEL ALIGNMENT, STANDARD PROCEDURE**.
8. Perform a wheel alignment. Refer to **WHEEL ALIGNMENT, STANDARD PROCEDURE**.

BALL JOINT, SUSPENSION, UPPER

DIAGNOSIS AND TESTING

DIAGNOSIS AND TESTING - UPPER BALL JOINT - INDEPENDENT FRONT SUSPENSION

1. Raise the front of the vehicle. Place safety floor stands under both lower control arms as far outboard as possible. Lower the vehicle to allow the stands to support some or all of the vehicle weight.
2. Remove the front tires.

NOTE: The dial indicator plunger must be perpendicular to the machined surface of the ball joint.

3. Mount a dial indicator solidly to the frame.

NOTE: Use care not to pry or tear the ball joint boot (5), when checking the free play.

4. Position dial indicator plunger on the topside of the upper ball joint and then zero the dial indicator.
5. Position a pry bar between the steering knuckle and the upper control arm. Pry upwards on the upper control arm.
6. If the travel exceeds 0.5 mm (0.020 in.), replace the upper ball joint. Refer to **BALL JOINT, SUSPENSION, UPPER, REMOVAL**.
7. If the upper ball joint is within specs reinstall the front tires. Refer to **WHEELS, STANDARD PROCEDURE** .

REMOVAL

REMOVAL

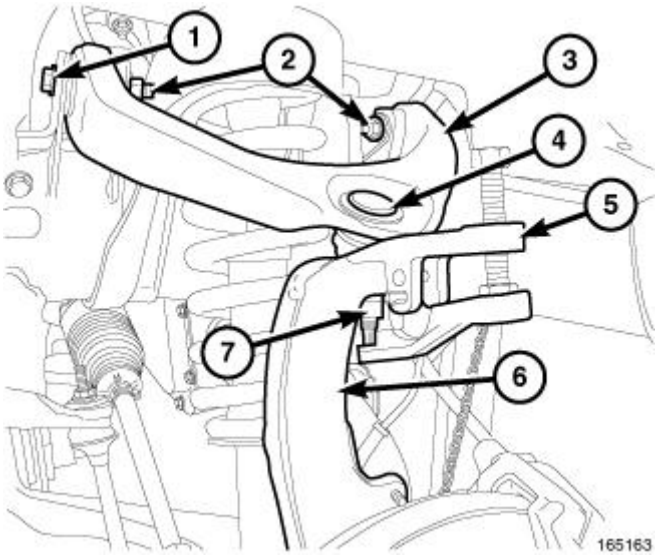

Fig. 45: Separating Upper Ball Joint From Knuckle
Courtesy of CHRYSLER GROUP, LLC

1. Raise vehicle and support the vehicle.

2. Remove the tire and wheel.
3. Remove the upper ball joint retaining nut.
4. Separate the upper ball joint (4) from the knuckle (6) using Ball Joint Remover (special tool #9360, Remover, Ball Joint) (5).
5. Remove the wheel speed sensor wire from the upper control arm.
6. Move the knuckle out of the way for access to remove the ball joint.
7. Remove the ball joint boot.

NOTE: It may be necessary to install a block of wood between the control arm and frame bracket to allow clearance for the ball joint press tool.

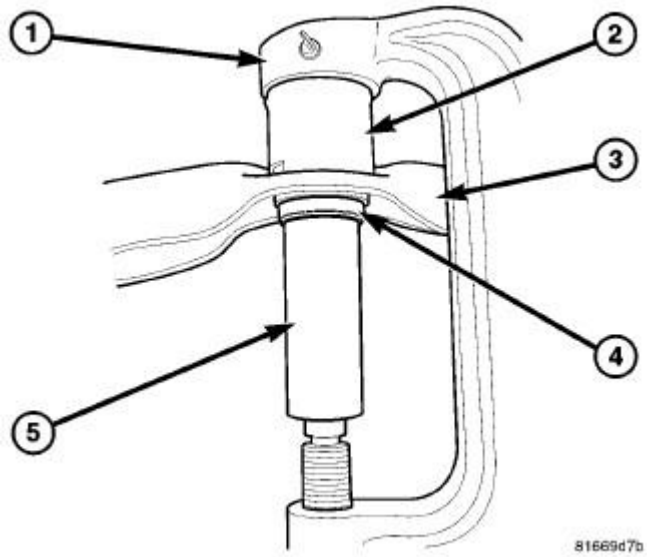

Fig. 46: Removing Upper Ball Joint
Courtesy of CHRYSLER GROUP, LLC

NOTE: Extreme pressure lubrication must be used on the threaded portions of the tool. This will increase the longevity of the tool and insure proper operation during the removal and installation process.

8. Remove the ball joint (4) from the upper control arm (3) using Ball Joint Press (special tool #C-4212F, Press, Ball Joint) (1), Ball Joint Remover (special tool #9770-1, Receiver, Ball Joint) (2) and Ball Joint Remover (special tool #9770-2, Remover, Ball Joint) (5).

INSTALLATION

INSTALLATION

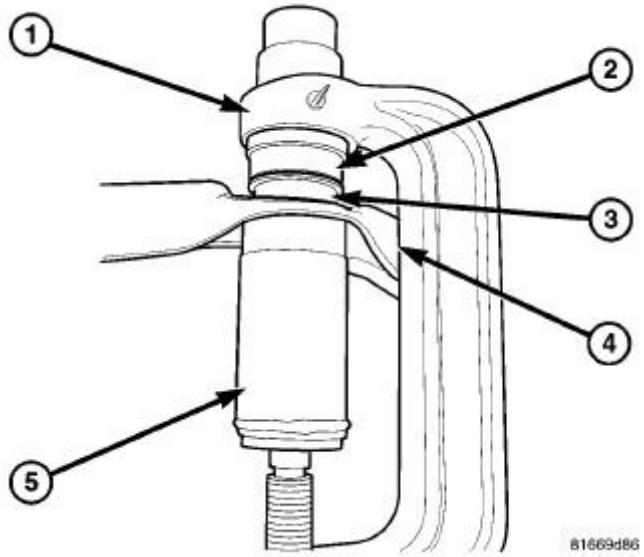

Fig. 47: Installing Upper Ball Joint
Courtesy of CHRYSLER GROUP, LLC

NOTE: **Extreme pressure lubrication must be used on the threaded portions of the tool. This will increase the longevity of the tool and insure proper operation during the removal and installation process.**

1. Install the ball joint (3) into the upper control arm (4) and press in using Ball Joint Press (special tool #C-4212F, Press, Ball Joint) (1), Ball Joint Installer (special tool #9652, Remover/Installer, Ball Joint) (2) and Installer (special tool #8445-1, Installer, Cup) (5).
2. Install the upper ball joint into the knuckle.
3. Install the upper ball joint retaining nut and tighten to specifications. Refer to **SPECIFICATIONS**. .
4. Install the wheel speed sensor wire to the upper control arm.
5. Install the tire and wheel.
6. Remove the supports and lower the vehicle.
7. Perform a wheel alignment. Refer to **WHEEL ALIGNMENT, STANDARD PROCEDURE**.

HUB AND BEARING

REMOVAL

4X2

1. Raise and support the vehicle.
2. Remove the wheel and tire assembly.
3. Remove the brake caliper and rotor. Refer to **ROTOR, BRAKE, REMOVAL** .

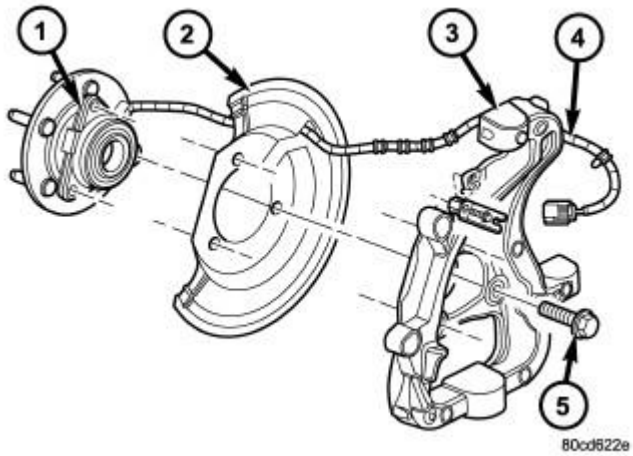

Fig. 48: Hub/Bearing 4X2
Courtesy of CHRYSLER GROUP, LLC

1 - HUB/BEARING
2 - DUST SHIELD
3 - STEERING KNUCKLE
4 - WHEEL SPEED SENSOR WIRE
5 - HUB/BEARING MOUNTING BOLT

4. Remove the ABS wheel speed sensor if equipped (4). Refer to **SENSOR, WHEEL SPEED, FRONT, REMOVAL** .
5. Remove the three hub/bearing mounting bolts (5) from the steering knuckle (3).
6. Slide the hub/bearing (1) out of the steering knuckle (3).
7. Remove the brake dust shield (2).

4X4

1. Raise and support the vehicle.
2. Remove the wheel and tire assembly.
3. Remove the brake caliper and rotor. Refer to **ROTOR, BRAKE, REMOVAL** .
4. Remove the ABS wheel speed sensor if equipped. Refer to **SENSOR, WHEEL SPEED, FRONT, REMOVAL** .
5. Remove the halfshaft nut.

NOTE: **Do not strike the knuckle with a hammer to remove the tie rod end or the ball joint. Damage to the steering knuckle will occur.**

6. Remove the tie rod end nut and separate the tie rod from the knuckle using Ball Joint Remover (special tool #9360, Remover, Ball Joint).
7. Remove the upper ball joint nut and separate the upper ball joint from the knuckle using Ball Joint

Remover (special tool #9360, Remover, Ball Joint).

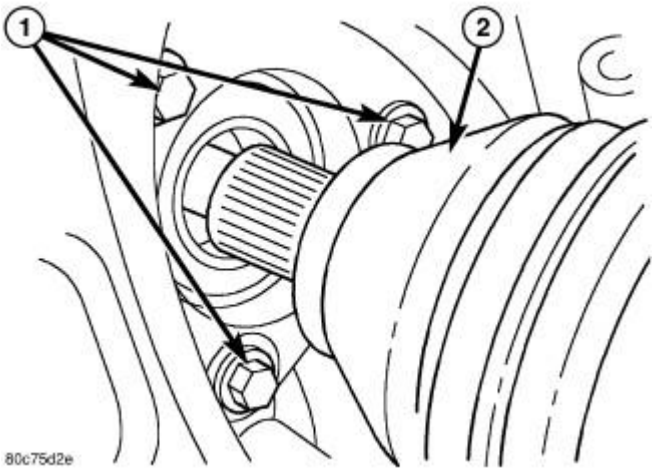

Fig. 49: Half Shaft & Hub/Bearing
Courtesy of CHRYSLER GROUP, LLC

8. Pull down on the steering knuckle to separate the halfshaft (2) from the hub/bearing.
9. Remove the three hub/bearing mounting bolts (1) from the steering knuckle.
10. Slide the hub/bearing out of the steering knuckle.
11. Remove the brake dust shield.

INSTALLATION

4X2

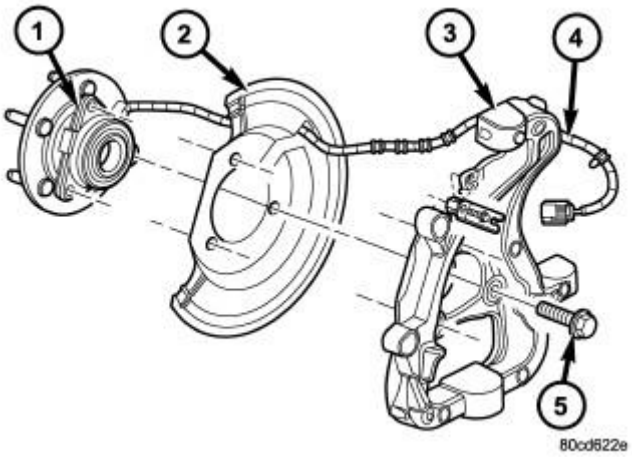

Fig. 50: Hub/Bearing 4X2
Courtesy of CHRYSLER GROUP, LLC

1 - HUB/BEARING

2 - DUST SHIELD
3 - STEERING KNUCKLE
4 - WHEEL SPEED SENSOR WIRE
5 - HUB/BEARING MOUNTING BOLT

1. Install the brake dust shield (2).
2. Install the hub/bearing (1) into the steering knuckle (3) and tighten the bolts (5) to specifications. Refer to **SPECIFICATIONS**. .
3. Install the brake rotor and caliper. Refer to **ROTOR, BRAKE, INSTALLATION** .
4. Install the ABS wheel speed sensor (4) if equipped. Refer to **SENSOR, WHEEL SPEED, FRONT, INSTALLATION** .
5. Install the wheel and tire assembly. Refer to **WHEELS, STANDARD PROCEDURE** .
6. Remove the support and lower vehicle.

4X4

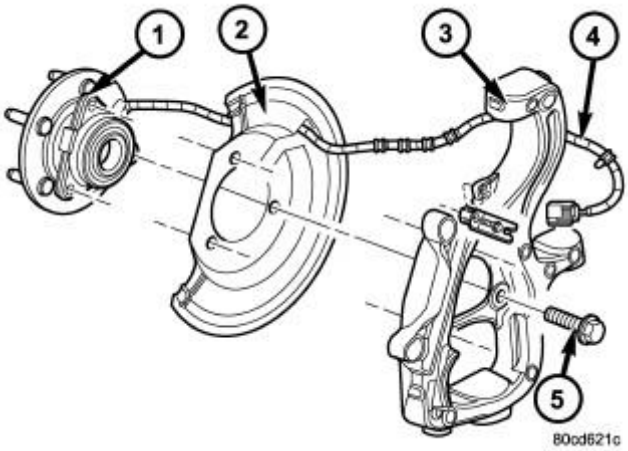

Fig. 51: Brake Dust Shield, Hub/Bearing Assembly (4x4) & Spindle
Courtesy of CHRYSLER GROUP, LLC

1 - HUB/BEARING
2 - DUST SHIELD
3 - STEERING KNUCKLE
4- WHEEL SPEED SENSOR WIRE
5 - HUB/BEARING MOUNTING BOLT

1. Install the brake dust shield (2).
2. Install the hub/bearing (1) into the steering knuckle (3) and tighten the bolts to specifications. Refer to **SPECIFICATIONS**. .
3. Install the brake rotor and caliper. Refer to **ROTOR, BRAKE, INSTALLATION** .
4. Install the ABS wheel speed sensor if equipped. Refer to **SENSOR, WHEEL SPEED, FRONT,**

INSTALLATION .

5. Install the upper ball joint nut to the steering knuckle and tighten to specifications. Refer to **SPECIFICATIONS**. .
6. Install the tie rod end nut to the steering knuckle and tighten to specifications. Refer to **SPECIFICATIONS**. .
7. Install the halfshaft nut and tighten to specifications. Refer to **SPECIFICATIONS**. .
8. Install the wheel and tire assembly. Refer to **WHEELS, STANDARD PROCEDURE** .
9. Remove the support and lower vehicle.

KNUCKLE, STEERING

DESCRIPTION

DESCRIPTION

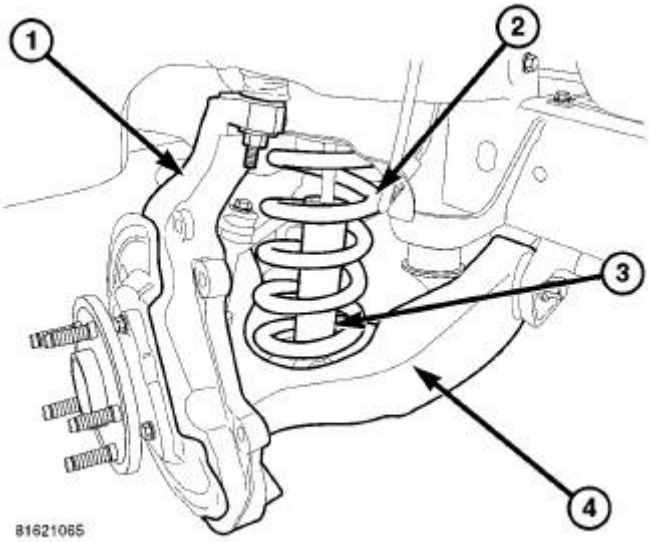

Fig. 52: Steering Knuckle, Lower Control Arm, Shock & Spring
Courtesy of CHRYSLER GROUP, LLC

The knuckle (1) is a single casting with legs machined for the upper and lower ball joints. The knuckle also has machined mounting locations for the front brake calipers and hub bearing.

OPERATION

OPERATION

The steering knuckle pivot between the upper and lower ball joint. Steering linkage attached to the knuckle allows the vehicle to be steered.

REMOVAL

REMOVAL

1. Raise and support the vehicle. Refer to **HOISTING, STANDARD PROCEDURE** .
2. Remove the wheel and tire assembly.
3. Remove the ABS wheel speed sensor, disconnecting the electrical harness as necessary to remove knuckle. Refer to **SENSOR, WHEEL SPEED, FRONT, REMOVAL** .

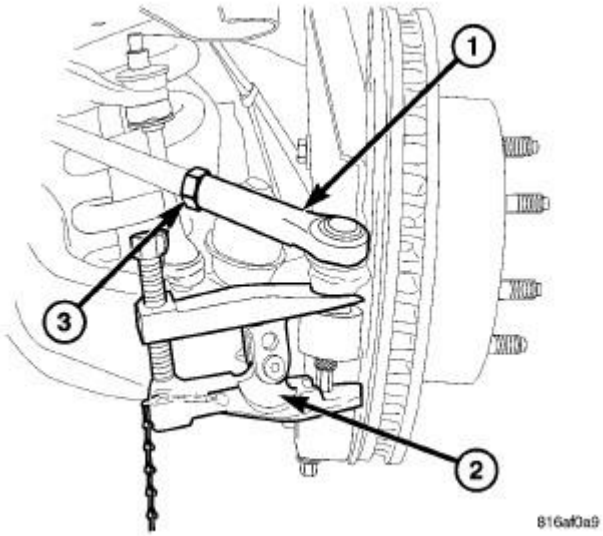

Fig. 53: Removing Outer Tie Rod End
Courtesy of CHRYSLER GROUP, LLC

4. Remove the tie rod end nut from the ball stud.
5. Separate the tie rod ball stud (1) from the knuckle with Ball Joint Remover (special tool #9360, Remover, Ball Joint) (2).
6. Remove the halfshaft nut (4X4 only).

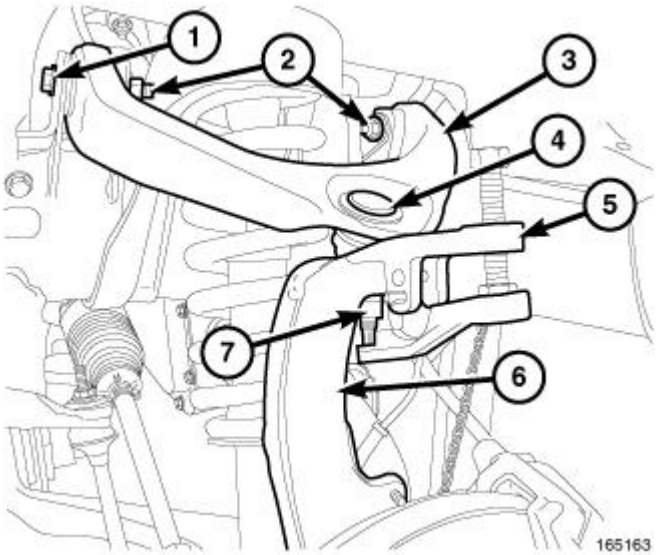

Fig. 54: Separating Upper Ball Joint From Knuckle
Courtesy of CHRYSLER GROUP, LLC

7. Remove the upper ball joint nut. Separate the ball joint (4) from the knuckle (6) with Ball Joint Remover (special tool #9360, Remover, Ball Joint) (5)

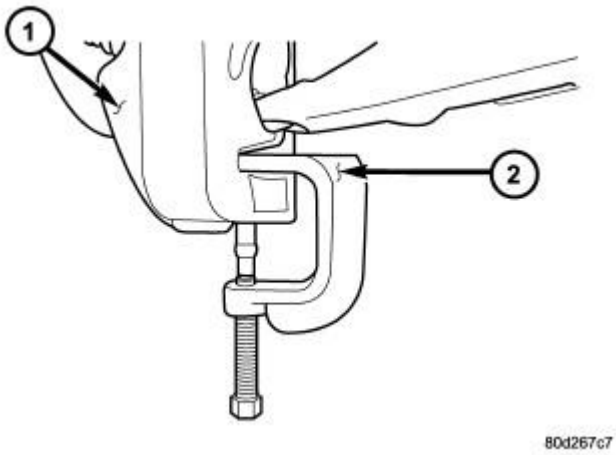

Fig. 55: Separating Ball Joint From Steering Knuckle
Courtesy of CHRYSLER GROUP, LLC

1 - STEERING KNUCKLE
2 - SPECIAL TOOL 8677

CAUTION: When installing puller (special tool #8677, Remover, Ball Joint) to separate the ball joint, be careful not to damage the ball joint seal.

8. Support the outboard side of the lower control arm to support vehicle weight.

9. Remove the lower ball joint nut. Separate the ball joint from the knuckle with Ball Joint Remover (special tool #8677, Remover, Ball Joint) (2).

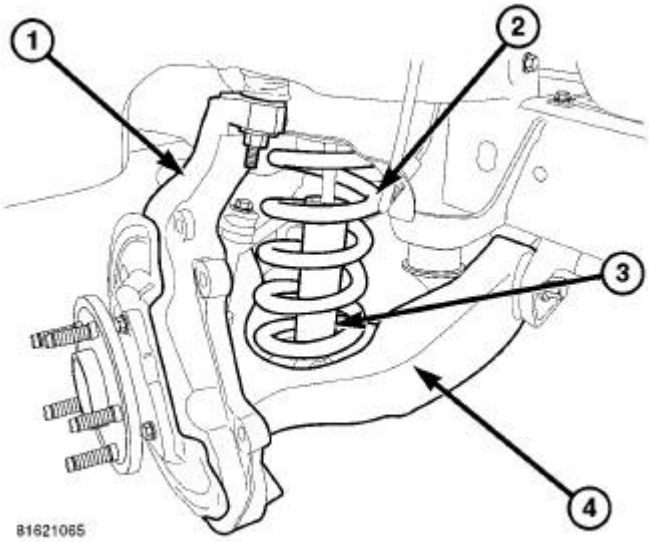

Fig. 56: Steering Knuckle, Lower Control Arm, Shock & Spring
Courtesy of CHRYSLER GROUP, LLC

10. Remove the steering knuckle (1) from the vehicle.
11. If required, remove the hub/bearing and dust shield from the knuckle (1).
    a. Remove the three hub/bearing mounting bolts from the steering knuckle (1).
    b. Slide the hub/bearing out of the steering knuckle (1).
    c. Remove the brake dust shield.

INSTALLATION

INSTALLATION

NOTE: All views are typical.

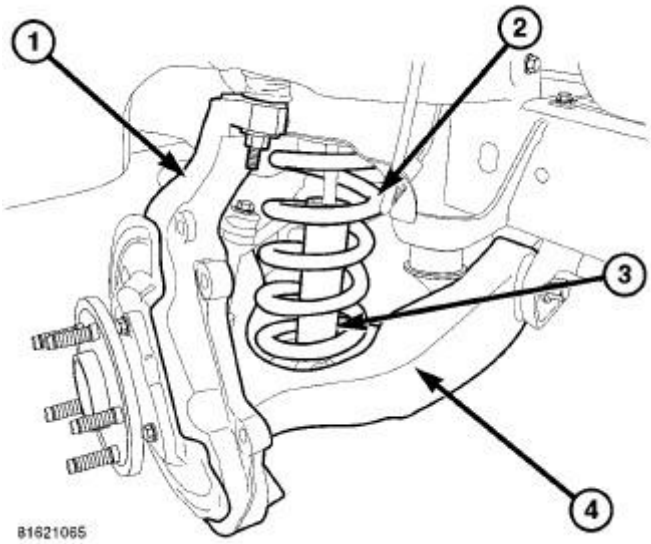

Fig. 57: Steering Knuckle, Lower Control Arm, Shock & Spring
Courtesy of CHRYSLER GROUP, LLC

CAUTION: The ball joint stud tapers must be CLEAN and DRY before installing the knuckle. Clean the stud tapers with a clean cloth to remove dirt and grease.

NOTE: When installing hub/bearing with ABS brakes, position the speed sensor opening towards the front of the vehicle.

1. Install the brake dust shield and hub/bearing to the steering knuckle (1) and tighten the 3 bolts to specifications. Refer to **SPECIFICATIONS**. .
2. Install the knuckle (1) onto the upper and lower ball joints.
3. Install the upper and lower ball joint nuts and tighten to specifications. Refer to **SPECIFICATIONS**. .
4. Remove the hydraulic jack from the lower control arm (4).

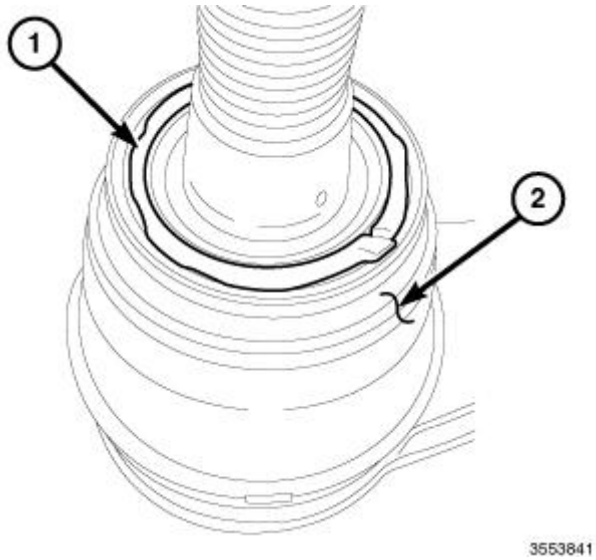

Fig. 58: Locating Grease & Tie Rod End Boot
Courtesy of CHRYSLER GROUP, LLC

NOTE: **If a new tie rod end is to be installed, make sure the boot (2) is properly lubricated.**

5. Clean all old grease and debris from the boot (2) with a clean cloth.
6. Apply outer tie rod grease P/N 68088623AA (1) to the tie rod end boot (2).
7. Install the tie rod end and tighten the nut to specifications. Refer to **SPECIFICATIONS**. .
8. Install the front halfshaft into the hub/bearing (if equipped).
9. Install the halfshaft nut (if equipped) and tighten to specifications. Refer to **SPECIFICATIONS**. .
10. Install the ABS wheel speed sensor (if equipped) and brake shield, rotor and caliper. Refer to **SENSOR, WHEEL SPEED, FRONT, INSTALLATION** and **ROTOR, BRAKE, INSTALLATION** .
11. Install the wheel and tire assembly. Refer to **WHEELS, STANDARD PROCEDURE** .
12. Remove the support and lower the vehicle.
13. Perform a wheel alignment. Refer to **WHEEL ALIGNMENT, STANDARD PROCEDURE**.

LINK, STABILIZER BAR

REMOVAL

REMOVAL

NOTE: **4X4 shown in illustration, 4x2 similar.**

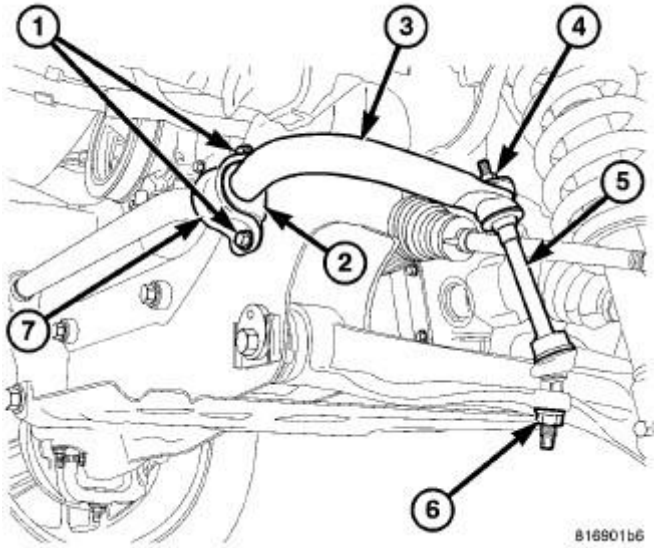

Fig. 59: Stabilizer Bar, Grommets, Mounting Bolts, Retainers & Bushings
Courtesy of CHRYSLER GROUP, LLC

NOTE: **It may be necessary to remove the other stabilizer link upper nut (4) in order to remove the link (5) being worked on from the vehicle.**

1. Raise and support the vehicle.
2. Remove the lower nut (6).
3. Remove the upper nut, retainers and grommets (4).
4. Remove the stabilizer link (5) from the vehicle.

INSTALLATION

INSTALLATION

NOTE: **4X4 shown in illustration, 4x2 similar.**

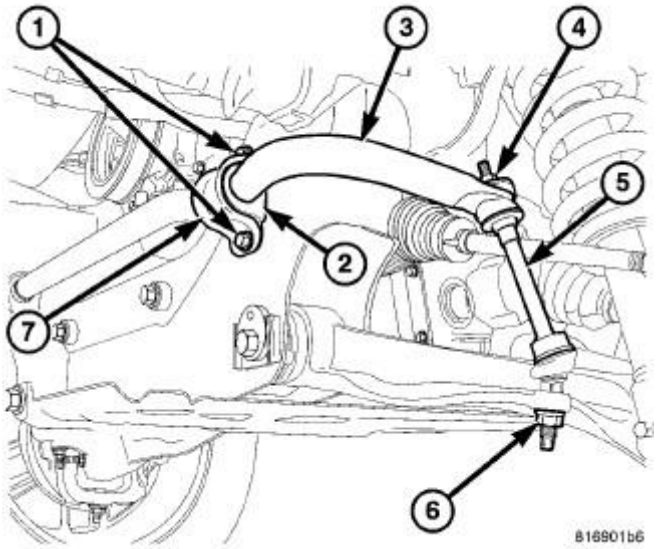

Fig. 60: Stabilizer Bar, Grommets, Mounting Bolts, Retainers & Bushings
Courtesy of CHRYSLER GROUP, LLC

1. Install the stabilizer link (5) to the vehicle.
2. Install the lower nut (6) and tighten to specifications. Refer to **SPECIFICATIONS**. .
3. Install the retainers, grommets and upper nut (4) and tighten to specifications. Refer to **SPECIFICATIONS**. .
4. Remove the support and lower the vehicle.

SHOCK ABSORBER, SUSPENSION

DIAGNOSIS AND TESTING

DIAGNOSIS AND TESTING - SHOCK ABSORBER

A knocking or rattling noise from a shock absorber may be caused by movement between mounting bushings and metal brackets or attaching components. These noises can usually be stopped by tightening the attaching nuts. If the noise persists, inspect for damaged and worn bushings, and attaching components. Repair as necessary if any of these conditions exist.

WARNING: **The shock absorbers are under high pressure. Do Not heat or attempt to open the shock absorbers.**

A squeal noise from the shock absorber may be caused by the hydraulic valving and may be intermittent. This condition is not repairable and the shock absorber must be replaced.

A squeak or creak noise coming from the shock area may be related to any of the suspension components or mounts, but not necessarily the shock.

NOTE: **When inspecting the shock absorber, do not clamp the body or the piston rod.**

NOTE: **Monotube shock absorber compression forces will be much higher than standard shock absorbers.**

The shock absorbers are not refillable or adjustable. If a malfunction occurs, the shock absorber must be replaced. To check a shock absorber, grasp the tube and invert the shock so the piston rod touches the ground, then compress the shock four or five times. The action throughout each stroke should be smooth and even, and the piston rod should extend from the shock on its own.

The shock absorber bushings do not require any type of lubrication. Do not attempt to stop bushing noise by lubricating them. Grease and mineral oil-base lubricants will deteriorate the bushing.

REMOVAL

4X2

1. Raise and support vehicle.
2. Support the lower control arm outboard end.

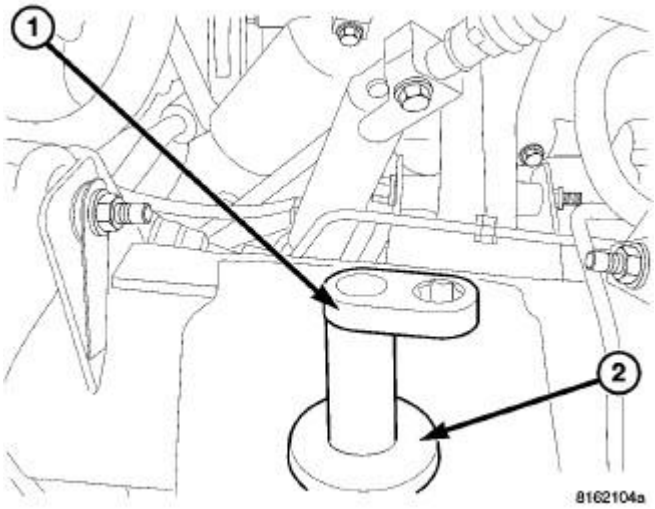

Fig. 61: Shock Wrench & Grommet
Courtesy of CHRYSLER GROUP, LLC

3. Remove the upper shock absorber nut by using Strut Nut Wrench (special tool #9362, Wrench, Strut Nut) (1), retainer and grommet (2). If necessary, insert 11/32 socket though Wrench onto hex located on end of shock shaft to prevent shaft from turning.
4. Remove the lower bolts and remove the shock absorber.

4X4-COIL OVER

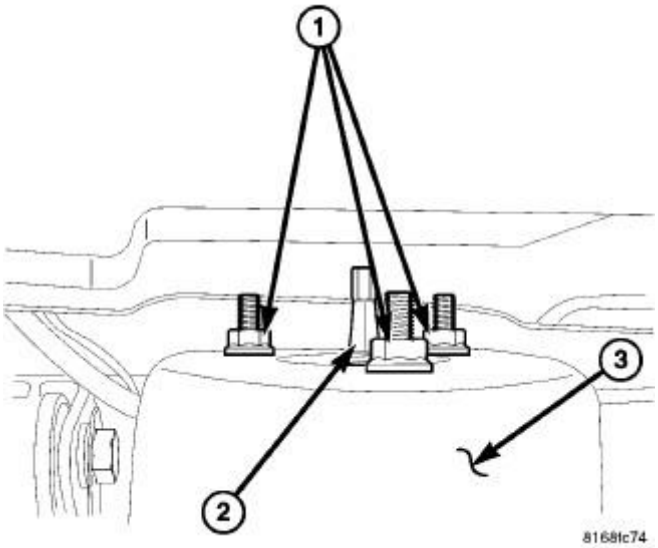

Fig. 62: Upper Shock Nuts
Courtesy of CHRYSLER GROUP, LLC

1. Raise and support the vehicle. Refer to **HOISTING, STANDARD PROCEDURE** .
2. Remove the tire and wheel assembly.
3. Support the lower control arm outboard end.
4. Remove the three upper shock nuts (1).

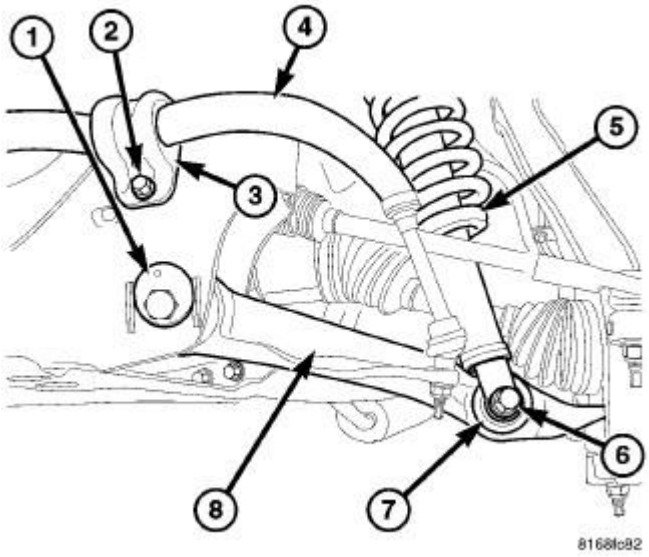

Fig. 63: Lower Shock Mount
Courtesy of CHRYSLER GROUP, LLC

5. Remove the lower shock bolt (6) and nut.
6. Remove the caliper adapter with the caliper. Refer to **ADAPTER, DISC BRAKE CALIPER,**

REMOVAL .

7. Remove the rotor. Refer to **ROTOR, BRAKE, REMOVAL** .
8. Disconnect the wheel speed sensor wiring from the knuckle and upper control arm.

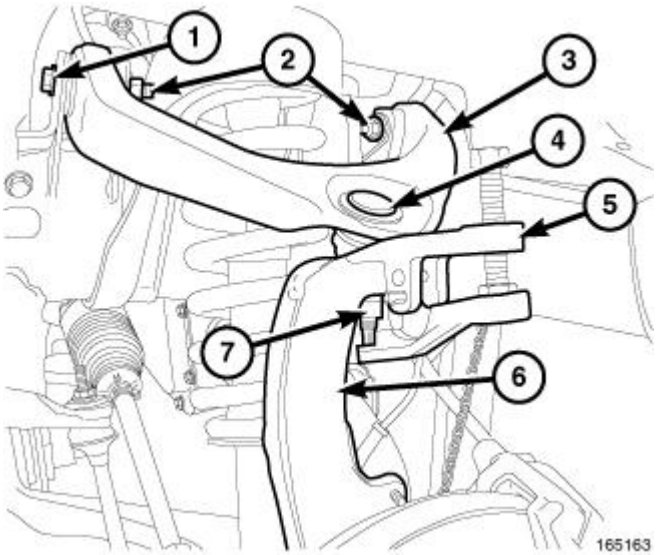

Fig. 64: Separating Upper Ball Joint From Knuckle
Courtesy of CHRYSLER GROUP, LLC

9. Remove the upper ball joint retaining nut and separate the upper ball joint (4) from the knuckle (6) using Ball Joint Remover (special tool #9360, Remover, Ball Joint) (5).

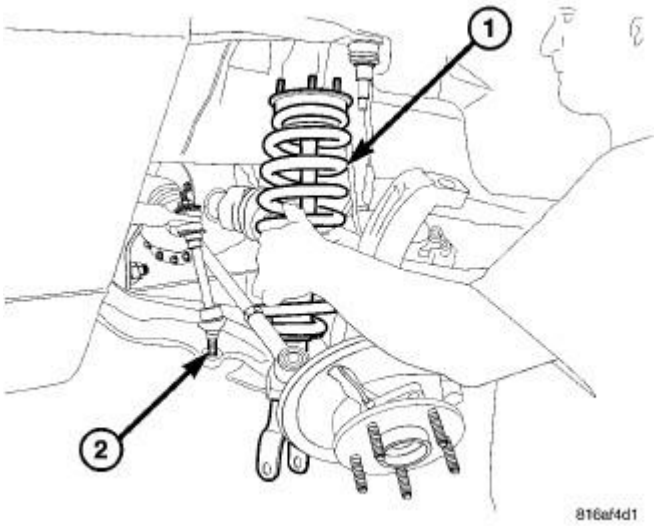

Fig. 65: Shock Assembly & Stabilizer Link Lower Nut
Courtesy of CHRYSLER GROUP, LLC

10. Remove the stabilizer link lower nut (2).

11. Remove the axle hub nut.
12. Remove the shock assembly (1).

INSTALLATION

4X2

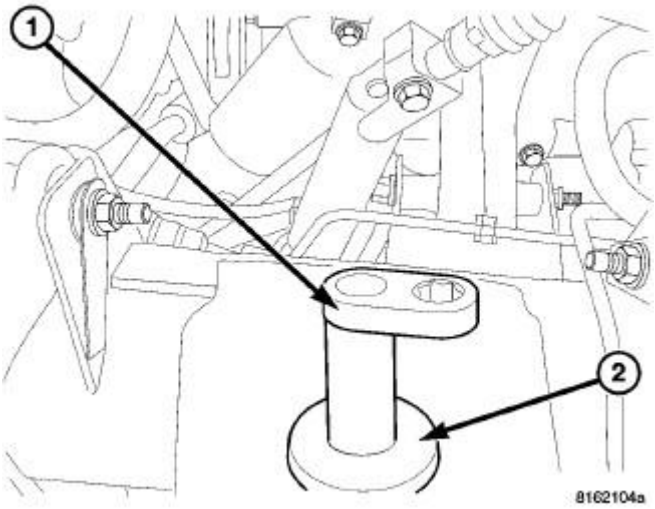

Fig. 66: Shock Wrench & Grommet
Courtesy of CHRYSLER GROUP, LLC

NOTE: Upper shock nut must be replaced or use Mopar Lock 'N Seal or Loctite® 242 on existing nut.

1. Install the lower retainer and grommet on the shock absorber stud. Insert the shock absorber through the frame bracket hole.
2. Install the lower bolts and tighten the bolts to specifications. Refer to **SPECIFICATIONS**. .
3. Install the upper grommet, retainer (2) and new nut or use Mopar Lock 'N Seal or Loctite® 242 on existing nut, on the shock absorber stud. Using Strut Nut Wrench (special tool #9362, Wrench, Strut Nut) (1), tighten nut to specifications. Refer to **SPECIFICATIONS**. .
4. Remove the support from the lower control arm outboard end.
5. Remove the support and lower the vehicle.

4X4-COIL OVER

NOTE: All suspension components should be tighten with the weight of the vehicle on them (curb height).

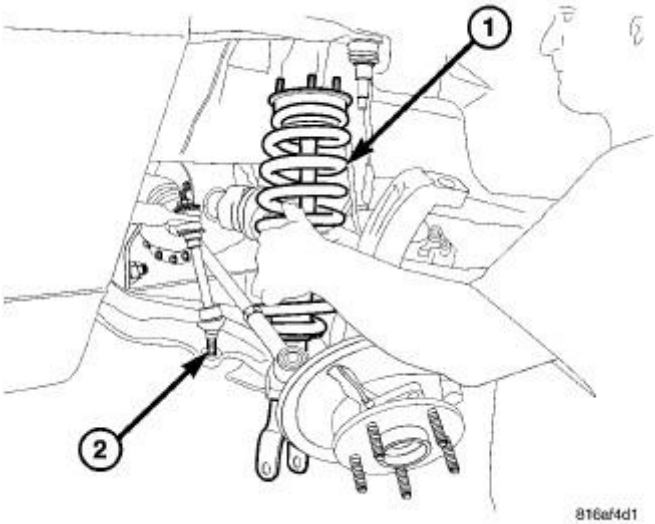

Fig. 67: Shock Assembly & Stabilizer Link Lower Nut
Courtesy of CHRYSLER GROUP, LLC

1. Install the shock (1) back in place in the vehicle.

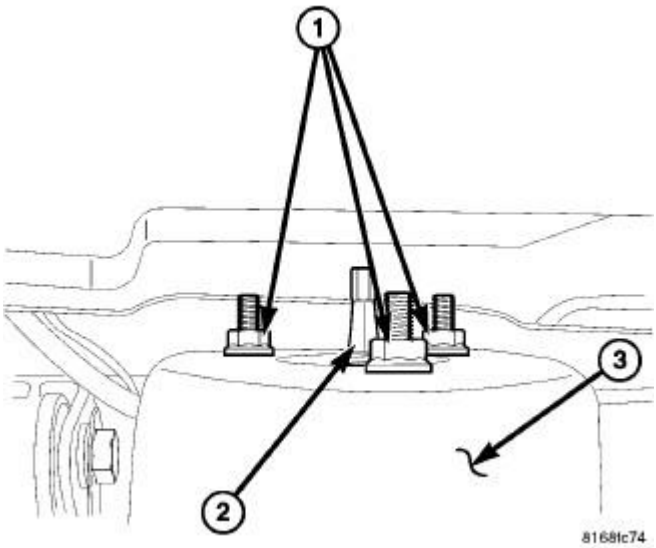

Fig. 68: Upper Shock Nuts
Courtesy of CHRYSLER GROUP, LLC

2. Install the upper part of the shock (2) into the frame bracket (3).
3. Install the upper nuts (1) and tighten to specifications. Refer to **SPECIFICATIONS**. .

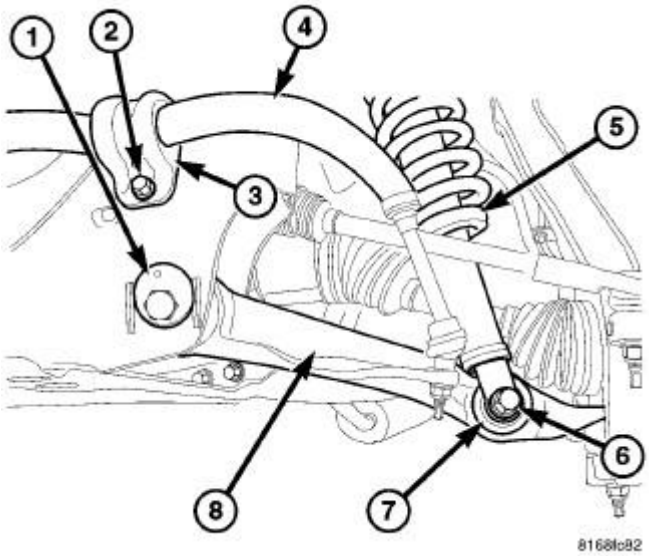

Fig. 69: Lower Shock Mount
Courtesy of CHRYSLER GROUP, LLC

4. Install the lower part of the shock (5) into the lower control arm shock bushing (7).
5. Install and position bolt (6) so head of bolt is facing rearward of vehicle and hand start nut. Tighten the bolt (6) and nut to specifications. Refer to **SPECIFICATIONS**. .
6. Install the upper ball joint to the knuckle and install the retaining nut and tighten to specifications. Refer to **SPECIFICATIONS**. .
7. Install the axle hub nut and tighten to specifications. Refer to **SPECIFICATIONS**. .
8. Install the stabilizer link lower nut and tighten to specifications. Refer to **SPECIFICATIONS**. .
9. Reconnect the wheel speed sensor wiring to the knuckle and upper control arm.
10. Install the rotor. Refer to **ROTOR, BRAKE, INSTALLATION** .
11. Install the caliper adapter with the caliper. Refer to **ADAPTER, DISC BRAKE CALIPER, INSTALLATION** .
12. Remove the support from the lower control arm outboard end.
13. Install the tire and wheel assembly. Refer to **WHEELS, STANDARD PROCEDURE** .
14. Remove the support and lower the vehicle.

SPRING, FRONT COIL

REMOVAL

4X2

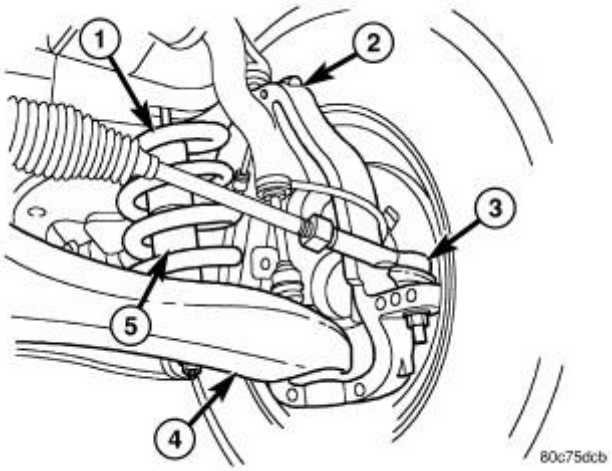

Fig. 70: Coil Spring
Courtesy of CHRYSLER GROUP, LLC

1. Raise and support vehicle. Refer to **HOISTING, STANDARD PROCEDURE** .
2. Remove the front wheel and tire assembly.
3. Support the lower control arm (4) at the outboard side of the lower control arm to support vehicle weight.
4. Remove the shock absorber (5). Refer to **SHOCK ABSORBER, SUSPENSION, REMOVAL**.

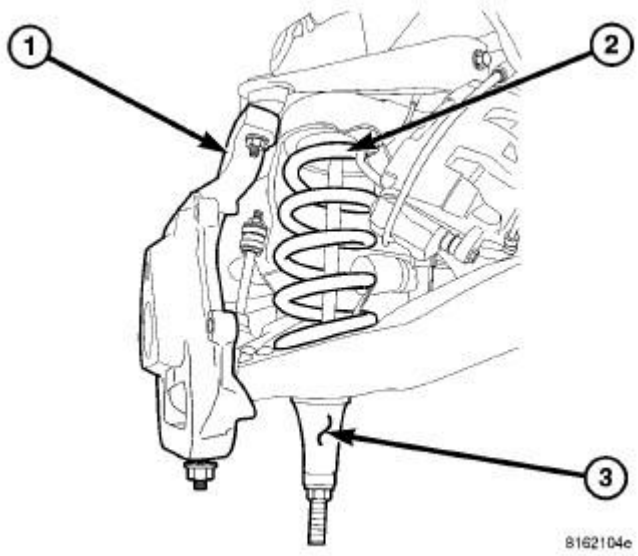

Fig. 71: Coil Spring Compressor Tool
Courtesy of CHRYSLER GROUP, LLC

5. Install Front Spring Compressor (special tool #DD-1278, Compressor, Front Spring) (3) up through the lower suspension arm, coil spring and shock hole in the frame. The bell-shaped adapter (3) goes against the lower suspension arm. Install the nut on top of the tool at the shock hole.
6. Tighten the spring compressor nut against bell-shaped adapter finger tight then loosen 1/2 turn.

NOTE: **This will hold the spring in place until the lower suspension arm is separated from the steering knuckle.**

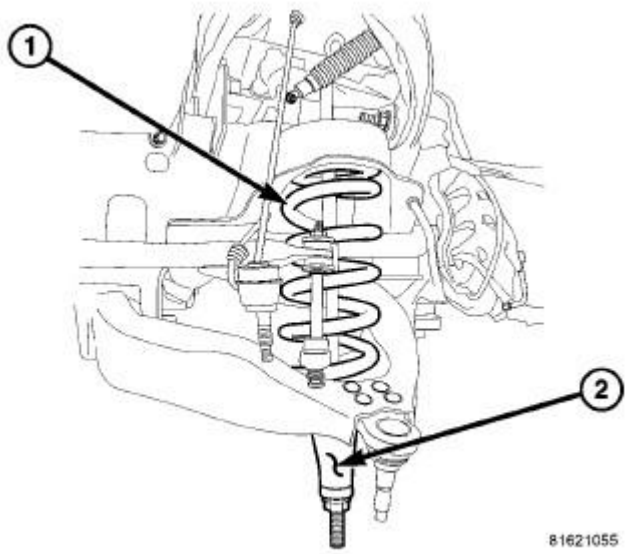

Fig. 72: Coil Spring Tool Support
Courtesy of CHRYSLER GROUP, LLC

7. Remove the steering knuckle. Refer to **KNUCKLE, STEERING, REMOVAL**.
8. Remove the stabilizer link. Refer to **LINK, STABILIZER BAR, REMOVAL**.
9. Remove the lower control arm support.
10. Tighten the spring compressor tool (2) to collapse the coil spring.

NOTE: **It may necessary to loosen the control arm pivot bolt to allow downward swing.**

11. Loosen the tension on the spring compressor tool (2) slowly allowing the lower suspension arm to pivot downward.
12. Remove the spring compressor tool (2).
13. Remove coil spring (1) and isolator pad from the vehicle.

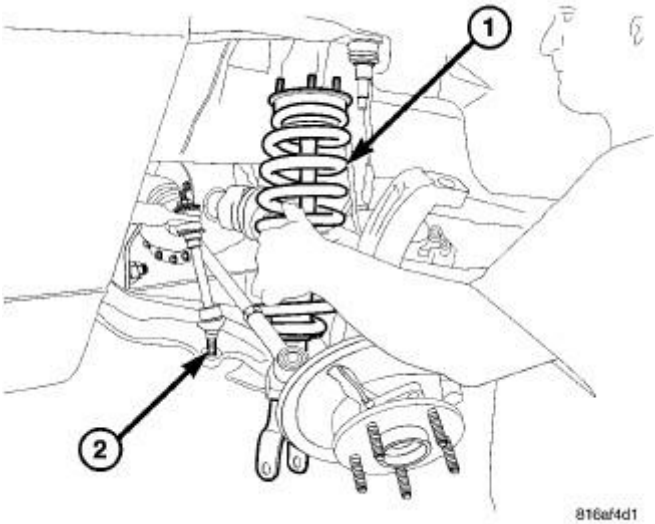

Fig. 73: Shock Assembly & Stabilizer Link Lower Nut
Courtesy of CHRYSLER GROUP, LLC

1. Remove the shock (1). Refer to **SHOCK ABSORBER, SUSPENSION, REMOVAL**.

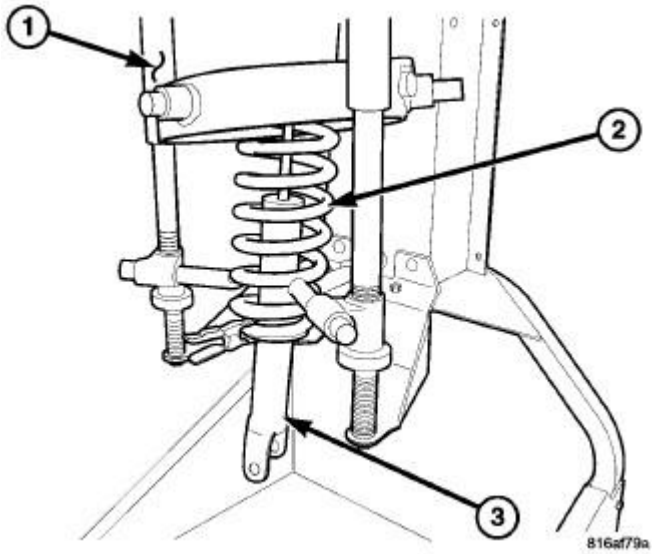

Fig. 74: Shock Assembly & Spring Compressor Tool
Courtesy of CHRYSLER GROUP, LLC

2. Install the shock assembly (3) in the Branick 7200® spring removal/installation tool or equivalent (1).
3. Compress the spring (2).

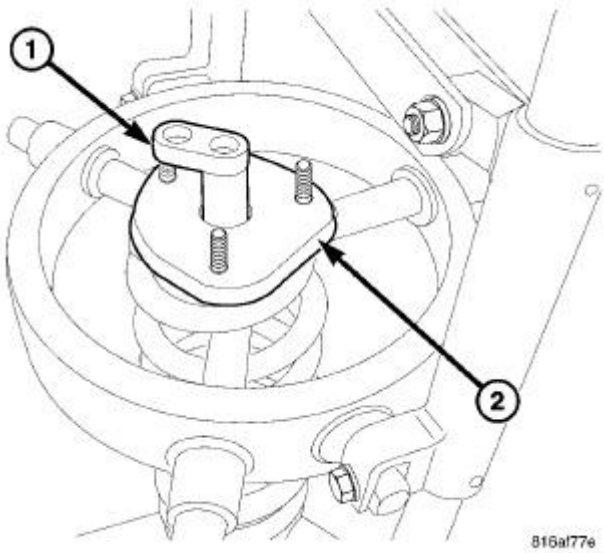

Fig. 75: Strut Nut Wrench 9362
Courtesy of CHRYSLER GROUP, LLC

4. Position Strut Nut Wrench (special tool #9362, Wrench, Strut Nut) (1), on shock shaft retaining nut. Next, insert 8 mm socket though Wrench onto hex located on end of shock shaft. While holding shock shaft from turning, remove nut from shock shaft using Wrench (1).
5. Remove the upper shock nut.

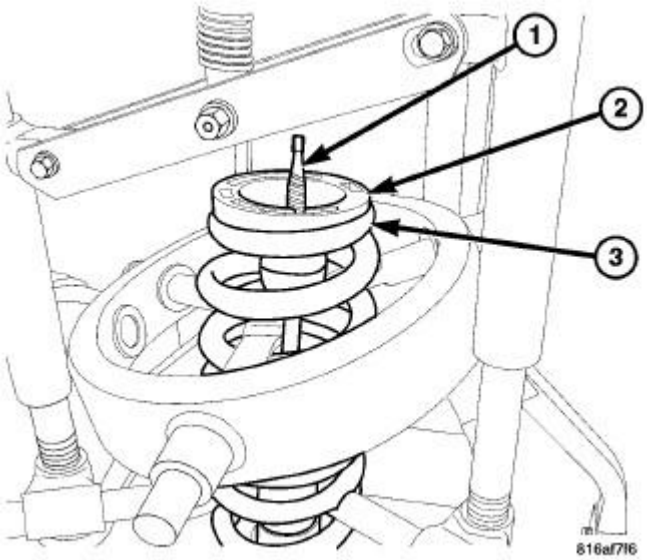

Fig. 76: Upper Spring Isolator
Courtesy of CHRYSLER GROUP, LLC

6. Remove the shock upper mounting plate.
7. Remove the dust cover.

8. Remove and inspect the upper spring isolator (2).
9. Remove the shock.

INSTALLATION

4X2

1. Tape the isolator pad to the top of the coil spring. Position the spring in the lower suspension arm well. Be sure that the coil spring is seated in the well.

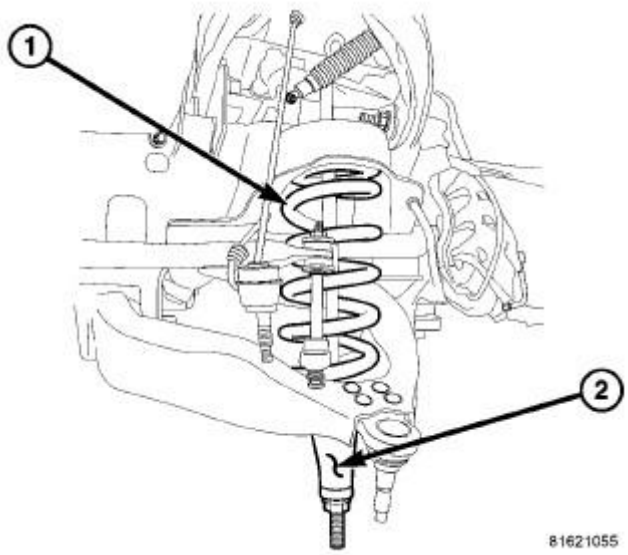

Fig. 77: Coil Spring Tool Support
Courtesy of CHRYSLER GROUP, LLC

2. Install Front Spring Compressor (special tool #DD-1278, Compressor, Front Spring) (2) up through the lower suspension arm, coil spring and shock hole in the frame.
3. Tighten the tool nut to compress the coil spring.

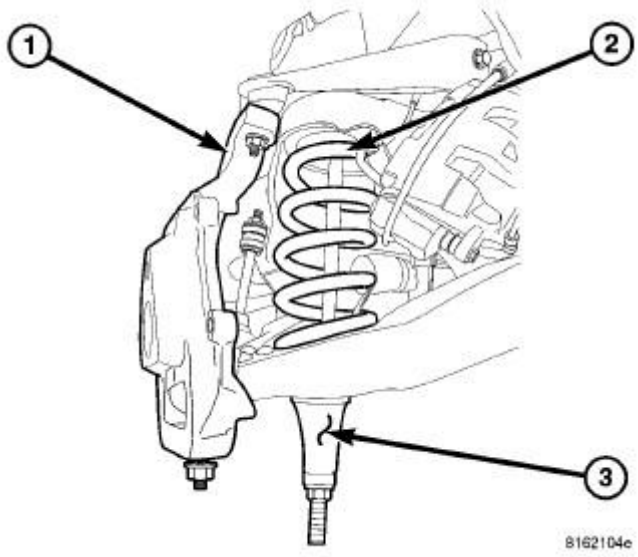

Fig. 78: Coil Spring Compressor Tool
Courtesy of CHRYSLER GROUP, LLC

4. Install the steering knuckle. Refer to **KNUCKLE, STEERING, INSTALLATION**.
5. Install the retaining nut on the upper ball joint and tighten to specifications. Refer to **SPECIFICATIONS**. .
6. Remove the spring compressor tool.
7. Support the lower control arm at the outboard side of the lower control arm to support vehicle weight.
8. Install the shock absorber. Refer to **SHOCK ABSORBER, SUSPENSION, INSTALLATION**.
9. Install the stabilizer link. Refer to **LINK, STABILIZER BAR, INSTALLATION**.
10. Remove the lower control arm support.
11. Install the wheel and tire assembly. Refer to **WHEELS, STANDARD PROCEDURE** .
12. remove the support and lower the vehicle to the floor with vehicle weight. Tighten the front and rear control arm frame pivot bolts if loosened to specifications. Refer to **SPECIFICATIONS**. .
13. Perform a wheel alignment. Refer to **WHEEL ALIGNMENT, STANDARD PROCEDURE**.

4X4-COIL OVER

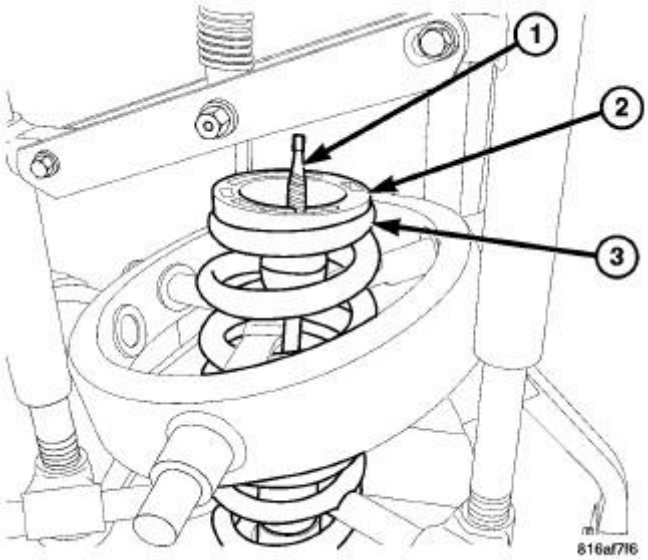

Fig. 79: Upper Spring Isolator
Courtesy of CHRYSLER GROUP, LLC

1. Position the shock (1) into the coil spring (3).
2. Install the upper isolator (2).

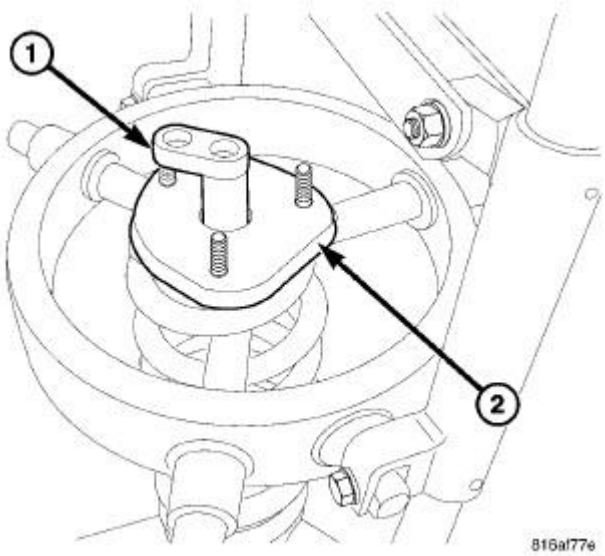

Fig. 80: Strut Nut Wrench 9362
Courtesy of CHRYSLER GROUP, LLC

3. Install the dust cover.
4. Install the upper shock mounting plate (2).
5. Install the shock upper mounting nut.
6. Install Strut Nut Wrench (special tool #9362, Wrench, Strut Nut) (1) (on end of a torque wrench), on

shock shaft retaining nut. Next, insert 8 mm socket though Wrench onto hex located on end of shock shaft. While holding shock shaft from turning, tighten nut to specifications. Refer to **SPECIFICATIONS**. .

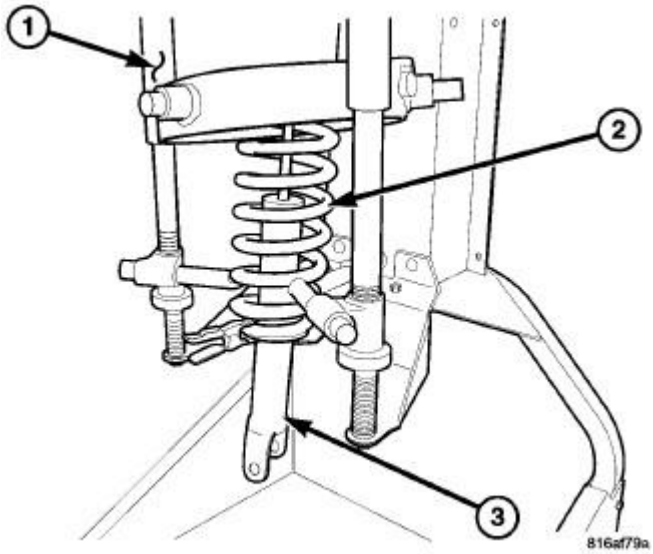

Fig. 81: Shock Assembly & Spring Compressor Tool
Courtesy of CHRYSLER GROUP, LLC

7. Decompress the spring (2).
8. Remove the shock assembly from the spring compressor tool (1).

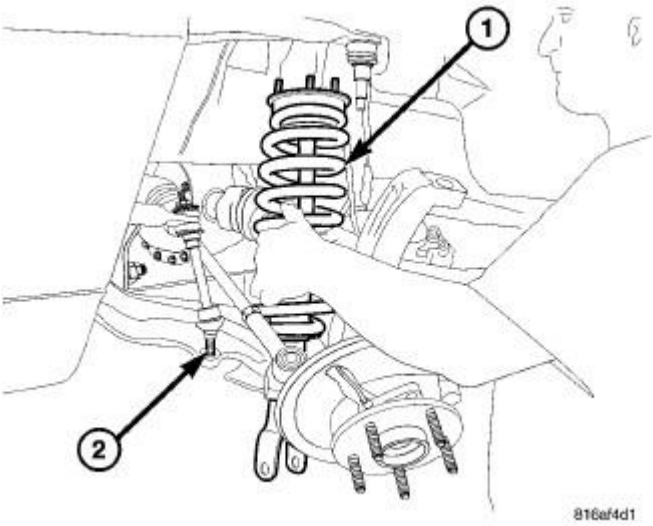

Fig. 82: Shock Assembly & Stabilizer Link Lower Nut
Courtesy of CHRYSLER GROUP, LLC

9. Install the shock assembly (1). Refer to **SHOCK ABSORBER, SUSPENSION, INSTALLATION**.

STABILIZER BAR, FRONT

DESCRIPTION

DESCRIPTION

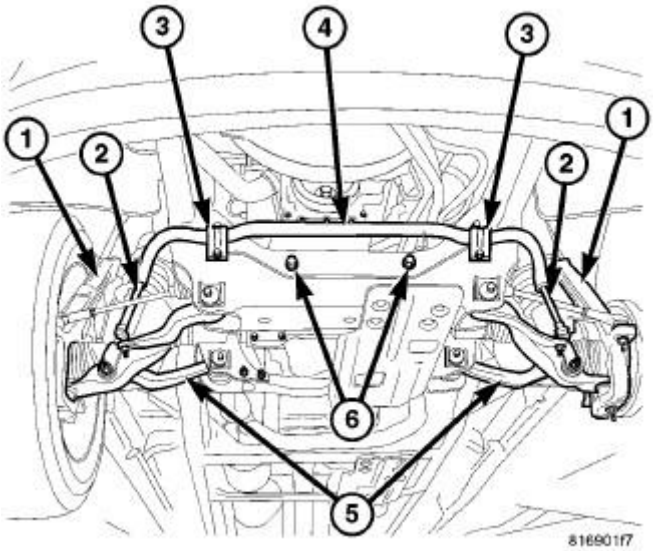

Fig. 83: Stabilizer Bar/Links & Lower Control Arms
Courtesy of CHRYSLER GROUP, LLC

The stabilizer bar (4) extends across the front underside of the chassis and connects to the frame crossmember. The ends of the bar mount to the stabilizer links (2), The stabilizer links (2) are then connected to the lower control arms (5). All mounting points of the stabilizer bar (4) are isolated by bushings.

OPERATION

OPERATION

The stabilizer bar is used to minimize vehicle front sway during turns. The bar helps to maintain a flat attitude to the road surface.

REMOVAL

REMOVAL

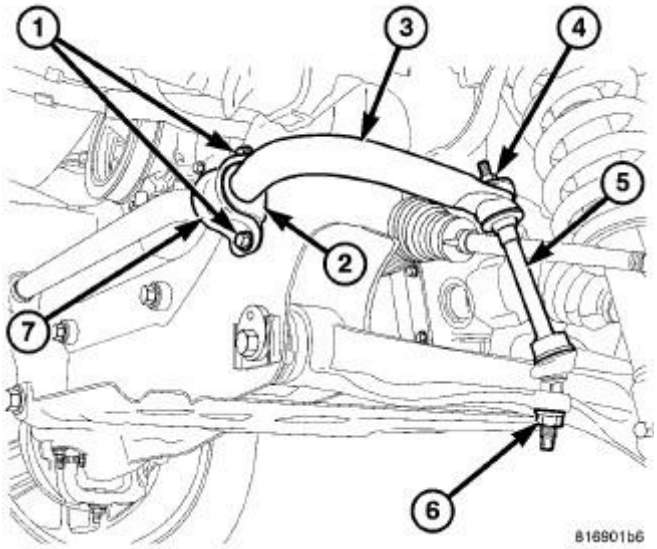

Fig. 84: Stabilizer Bar, Grommets, Mounting Bolts, Retainers & Bushings
Courtesy of CHRYSLER GROUP, LLC

NOTE: To service the stabilizer bar the vehicle should be on a drive on hoist. The vehicle suspension must be at curb height for stabilizer bar installation.

1. Remove the stabilizer bar link upper nuts and remove the retainers and grommets (4).
2. Remove the stabilizer bar mounting bolts (1) **and discard the mounting bolts** .
3. Remove the retainers (7) from the frame crossmember and remove the bar (3).
4. If necessary, remove the bushings (2) from the stabilizer bar (3), **Do not cut the old bushings off the stabilizer bar use a mixture of soapy water in order to aid in sliding the bushing off** .

INSTALLATION

INSTALLATION

NOTE: To service the stabilizer bar the vehicle must be on a drive on hoist. The vehicle suspension must be at curb height for stabilizer bar installation.

1. If the bushings were removed, Clean the bar and install the bushings on the stabilizer bar using a mixture of soapy water or equivalent in order to slide the bushing over the bar with ease. **Do not cut the new bushing for installation.**

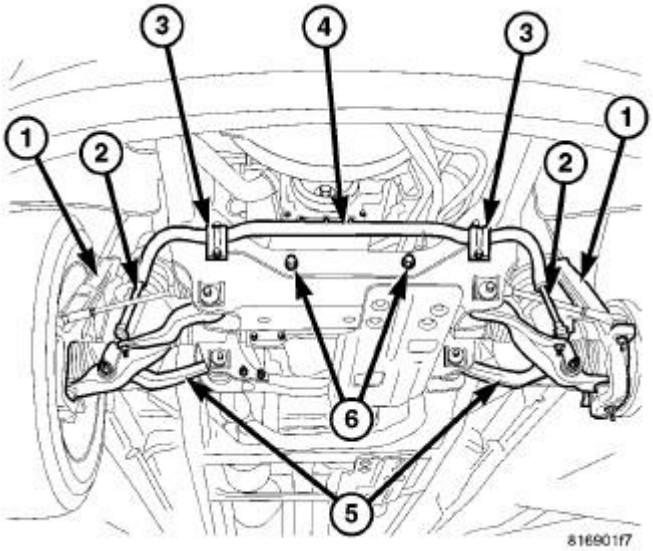

Fig. 85: Stabilizer Bar/Links & Lower Control Arms
Courtesy of CHRYSLER GROUP, LLC

NOTE: **Install new mounting bolts Do not reuse old bolts.**

NOTE: **Check the alignment of the bar to ensure there is no interference with the either frame rail or chassis component. Spacing should be equal on both sides.**

2. Position the stabilizer bar (4) on the frame crossmember brackets and install the bracket (3) bolts finger-tight.

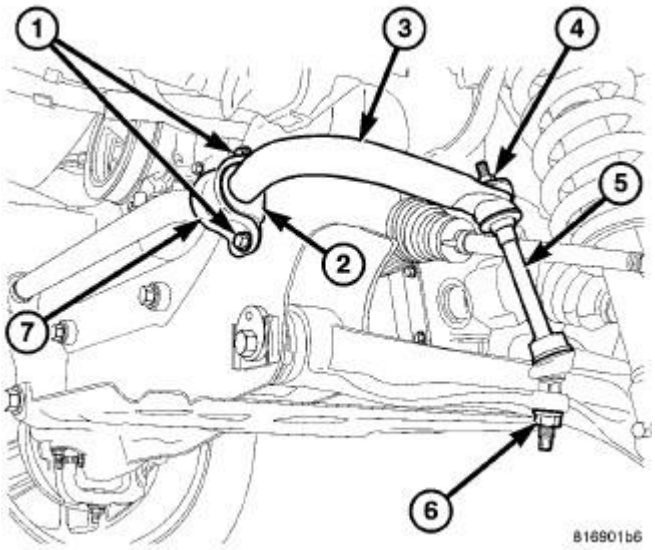

Fig. 86: Stabilizer Bar, Grommets, Mounting Bolts, Retainers & Bushings

3. Install the stabilizer bar (3) to the stabilizer link (5) and install the grommets and retainers.
4. Install the nuts (4) to the stabilizer link (3) and tighten to specifications. Refer to **SPECIFICATIONS**. .
5. Tighten the brackets to the frame to specifications. Refer to **SPECIFICATIONS**. .

FRONT, LINK AND COIL

SPECIFICATIONS

SPECIFICATIONS

NOTE: **Suspension components with rubber/urethane bushings should be tightened with the vehicle at normal ride height. It is important to have the springs supporting the weight of the vehicle when the fasteners are torqued. If springs are not at their normal ride position, vehicle ride comfort could be affected and premature bushing wear may occur.**

2500/3500 - 4X4

DESCRIPTION	N.m	Ft. Lbs.	In. Lbs.
Shock Absorber Upper Nut	54	40	-
Shock Absorber Lower Bolt	136	100	-
Shock Tower to Frame	75	55	-
Lower Ball Joint Nut Initial Torque	47	35	-
Lower Ball Joint Nut Final Torque	200	148	-
Upper Ball Joint Nut	94	70	-
Lower Control Arm Frame Nuts	271	200	-
Lower Control Arm Axle Nut	271	200	-
Upper Control Arm Frame Nuts	163	120	-
Upper Control Arm Axle Nut	163	120	-
Stabilizer Bar Frame Bolt	61	45	-
Stabilizer Link Axle Bracket	149	110	-
Stabilizer Link Stabilizer Bar Nut	38	27	-
Stabilizer Link Axle	149	110	-

Bracket (Power Wagon)			
Stabilizer Link Stabilizer Bar Nut (Power Wagon)	149	110	-
Hub/Bearing Bolts	202	149	-
Axle Nut	179 Beginning Torque, Then Rotate 5 to 10 Times With a Final Torque of 356	132 Beginning Torque, Then Rotate 5 to 10 Times With a Final Torque of 263	-
Track Bar to Frame	300	221	
Track Bar to Axle	300	221	
Tie Rod End Nut	75	55	-

3500 CAB CHASSIS

DESCRIPTION	N.m	Ft. Lbs.	In. Lbs.
Shock Absorber Upper	54	40	-
Shock Absorber Lower Bolt	136	100	-
Shock Tower to Frame	75	55	-
Lower Ball Joint Nut Initial Torque	47	35	-
Lower Ball Joint Nut Final Torque	200	148	-
Upper Ball Joint Nut	94	70	-
Lower Control Arm Frame Nuts	230	170	-
Lower Control Arm Axle Nut	190	140	-
Upper Control Arm Frame Nuts	163	120	-
Upper Control Arm Axle Nut	163	120	-
Stabilizer Bar Frame Bolt	61	45	-
Stabilizer Link Axle Bracket	150	110	-
Stabilizer Link Stabilizer Bar Nut	38	27	-
Hub/Bearing Bolts	202	149	-
Hub Extension Bolts	130	96	-
Axle Nut, (9 1/4 Axle)	179 Beginning Torque, Then Rotate 5 to 10 Times With a Final Torque of 356	132 Beginning Torque, Then Rotate 5 to 10 Times With a Final Torque of 263	-
Axle Nut (275 FBI Axle)	330	243	-

Tie Rod End Nut	54, Then an additional 90°	40, Then an additional 90°	-
Track Bar to Frame	300	221	-
Track Bar to Axle	300	221	-

4500/5500

DESCRIPTION	N.m	Ft. Lbs.	In. Lbs.
Shock Absorber Upper Nut	54	40	-
Shock Absorber Lower Bolt	136	100	-
Shock Tower to Frame	75	55	-
Upper Ball Joint to Knuckle	400	295	-
Lower Ball Joint Nut	200	148	-
Upper Ball Joint Nut	200	148	-
Lower Control Arm Frame Nuts	415	306	-
Lower Control Arm Axle Nut	415	415	-
Upper Control Arm Frame Nuts	250	184	-
Upper Control Arm Axle Nut	250	184	-
Stabilizer Bar Frame Bolt	58	43	-
Stabilizer Link Axle Bracket	150	110	-
Stabilizer Link Stabilizer Bar Nut	60	44	-
Hub/Bearing Bolts	202	149	-
Hub Extension Bolts	130	96	-
Axle Nut, (9 1/4 Axle)	179 Beginning Torque, Then Rotate 5 to 10 Times With a Final Torque of 356	132 Beginning Torque, Then Rotate 5 to 10 Times With a Final Torque of 263	-
Axle Nut (275 FBI Axle)	330	243	-
Tie Rod End Nut	164	121	-
Track Bar to Frame	370	273	-
Track Bar to Axle	370	273	-

ACTUATOR, STABILIZER BAR

DESCRIPTION

DESCRIPTION

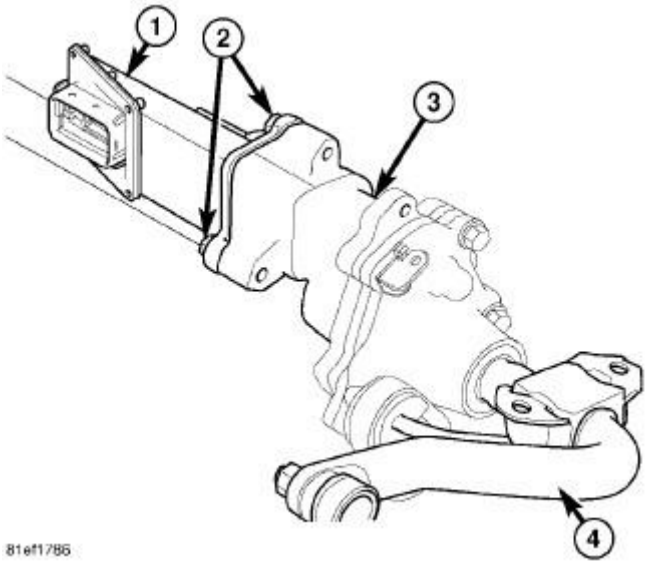

Fig. 87: Identifying Stabilizer Bar Actuator
Courtesy of CHRYSLER GROUP, LLC

The actuator (1) is a motor driven unit that engages and disengages the disconnecting stabilizer bar (4).

This system allows greater front suspension travel in off-road situations. It consists of a disconnecting unit (3), electronic actuator (1), stabilizer bar (4).

REMOVAL

REMOVAL

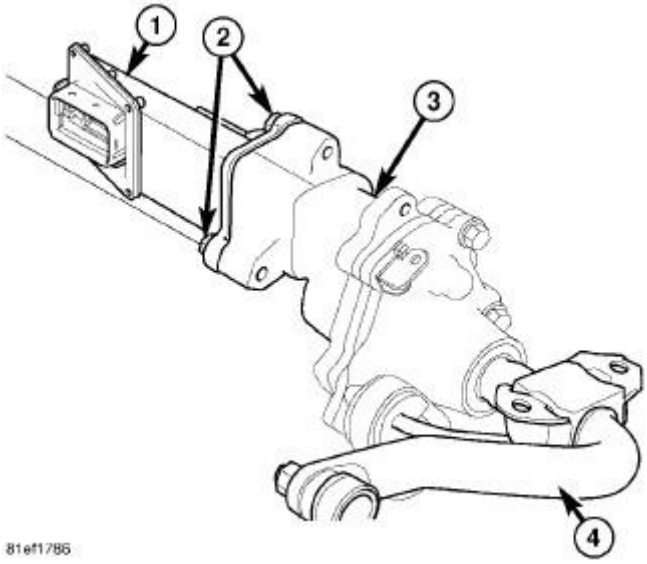

Fig. 88: Identifying Stabilizer Bar Actuator
Courtesy of CHRYSLER GROUP, LLC

WARNING: The disconnecting stabilizer bar unit (3) is not serviced separately from the bar (4). Do not disassemble this unit from the stabilizer bar.

1. Raise and support the vehicle.

NOTE: Before removing the connector from the actuator (1) clean the outside of the connector with a cleaner and compressed air, to remove any dirt or debris.

2. Disconnect the electronic actuator electrical connector for the disconnecting stabilizer bar.
3. Remove the 3 actuator bolts (2) then remove the actuator (1).

INSTALLATION

INSTALLATION

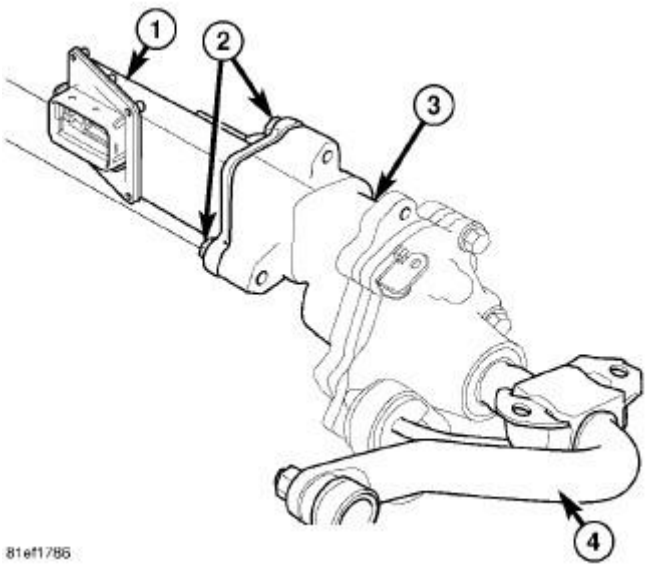

Fig. 89: Identifying Stabilizer Bar Actuator
Courtesy of CHRYSLER GROUP, LLC

WARNING: The disconnecting stabilizer bar unit (3) is not serviced separately from the bar (4). Do not disassemble this unit from the stabilizer bar.

1. Install the actuator (1) to the disconnecting unit (3) and tighten the bolts (2) to specifications. Refer to **SPECIFICATIONS**. .

NOTE: **The seal must be clean and intact in the electrical connector when reconnecting to the actuator (1).**

2. Reconnect the electronic actuator electrical connector for the disconnecting stabilizer bar.
3. Remove the supports and lower the vehicle.
4. Using a scan tool program the new stabilizer bar to the vehicle.

ARM, LOWER CONTROL

REMOVAL

REMOVAL

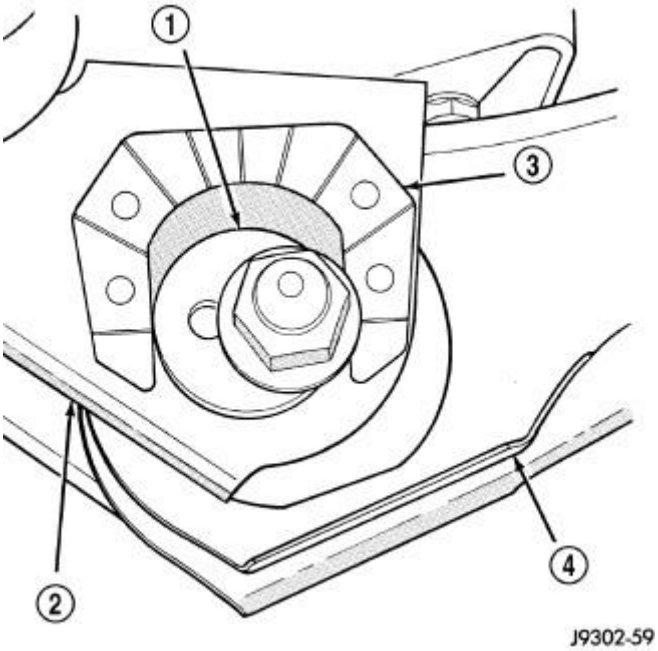

Fig. 90: Adjustment Cam
Courtesy of CHRYSLER GROUP, LLC

1. Raise and support the vehicle.
2. Paint or scribe alignment marks on the cam adjusters (1) and control arm (4) for installation reference.

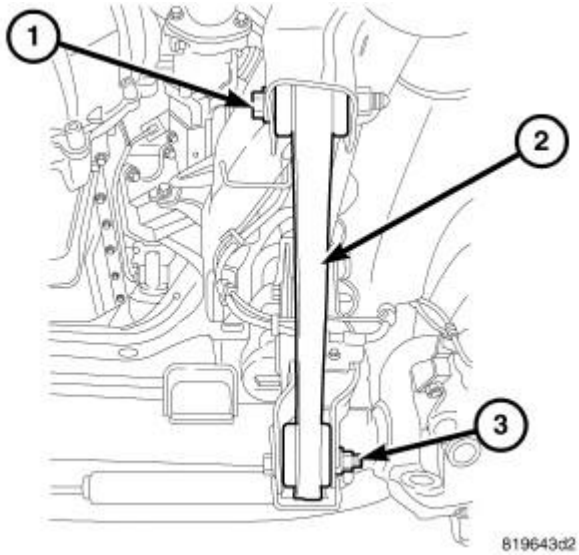

Fig. 91: Identifying Axle, Frame Rail Bracket, & Lower Control Arm
Courtesy of CHRYSLER GROUP, LLC

NOTE: **Discard the nuts and bolts and do not reuse, New nuts and bolts should be used when replacing or servicing the control arms.**

3. Remove the lower control arm nut, cam and cam bolt from the axle (3).
4. Remove the nut and bolt from the frame rail bracket (1) and remove the lower control arm (2).

INSTALLATION

INSTALLATION

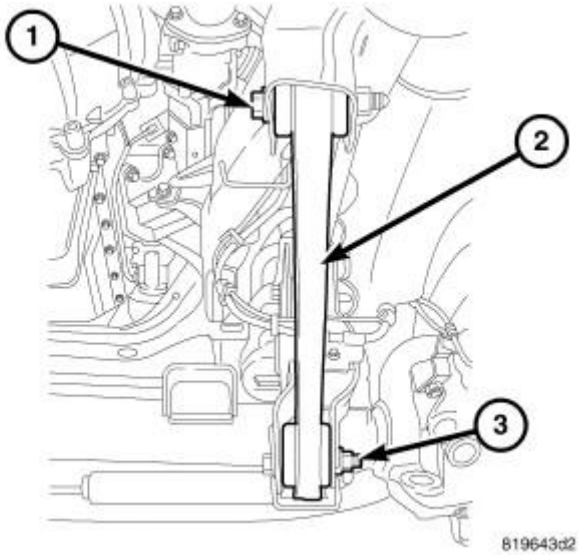

Fig. 92: Identifying Axle, Frame Rail Bracket, & Lower Control Arm
Courtesy of CHRYSLER GROUP, LLC

NOTE: **Discard the nuts and bolts and do not reuse. New nuts and bolts should be used when replacing or servicing the control arms.**

1. Position the lower control arm (2) at the axle bracket (3) and frame rail bracket (1).
2. Install the rear bolt and finger tighten the nut.

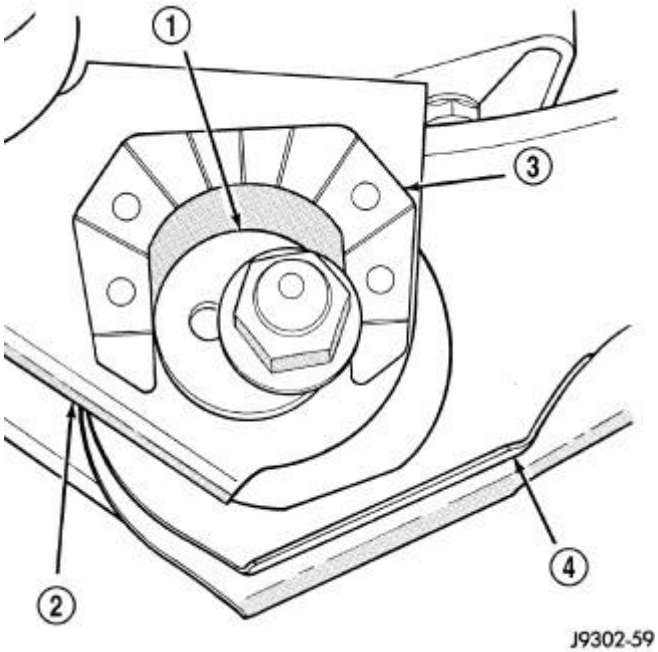

Fig. 93: Adjustment Cam
Courtesy of CHRYSLER GROUP, LLC

3. Install the cam bolt (1), cam and nut in the axle and align the reference marks.
4. Remove support and lower the vehicle.
5. Tighten cam nut at the axle bracket and the rear nut at the frame bracket to specifications. Refer to **SPECIFICATIONS**. .

ARM, UPPER CONTROL

REMOVAL

LEFT

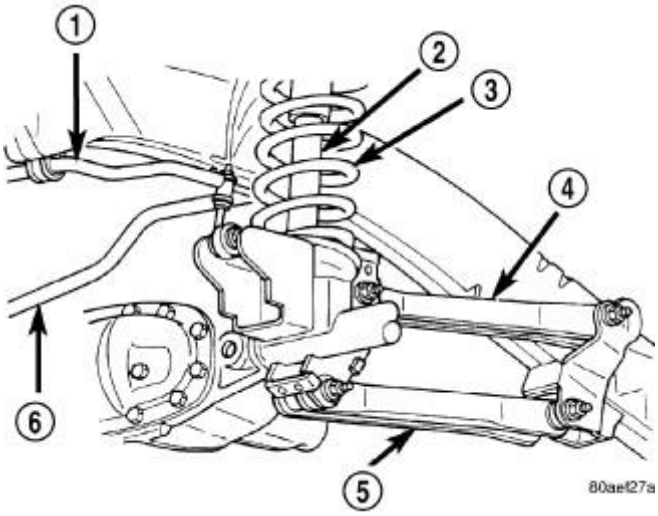

Fig. 94: Upper Control Arm, Lower Control Arm & Coil Spring Components
Courtesy of CHRYSLER GROUP, LLC

1 - STABILIZER BAR
2 - SHOCK ABSORBER
3 - COIL SPRING
4 - UPPER CONTROL ARM
5 - LOWER CONTROL ARM
6 - TRACK BAR

1. Raise and support the vehicle.

NOTE: **Discard the nuts and bolts and do not reuse. New nuts and bolts should be used when replacing or servicing the control arms.**

2. Remove the upper control arm (4) nut and bolt at the axle bracket. Refer to **Fig. 94**.
3. Remove the nut and bolt at the frame rail and remove the upper control arm (4).

RIGHT

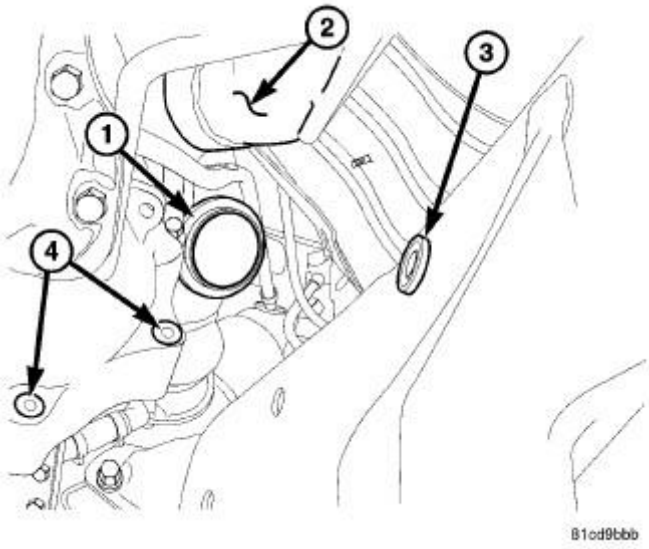

Fig. 95: Exhaust Removal
Courtesy of CHRYSLER GROUP, LLC

1. Raise and support the vehicle.
2. Support the axle.
3. Disconnect the exhaust system at the manifold(s) (1).
4. Disconnect the exhaust bracket (4) at the transmission.
5. Disconnect the rubber exhaust mounts for the exhaust.
6. Raise the exhaust system up and back in order to gain access to the removal of the upper bolt (3).

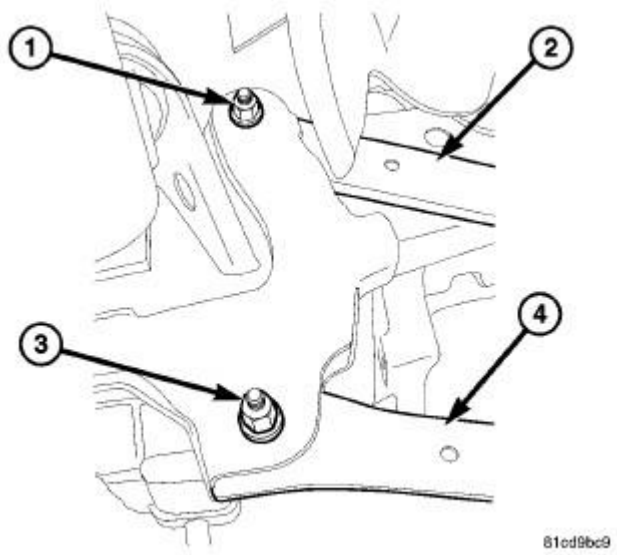

Fig. 96: Upper & Lower Control Arm Bolts
Courtesy of CHRYSLER GROUP, LLC

NOTE: **Discard the nuts and bolts and do not reuse. New nuts and bolts should be used when replacing or servicing the control arms.**

7. Remove the nut (1) and bolt at the frame rail and remove the upper control arm (2).
8. Remove the upper control arm nut and bolt at the axle bracket.
9. Remove the control arm (2) from the vehicle.

INSTALLATION

LEFT

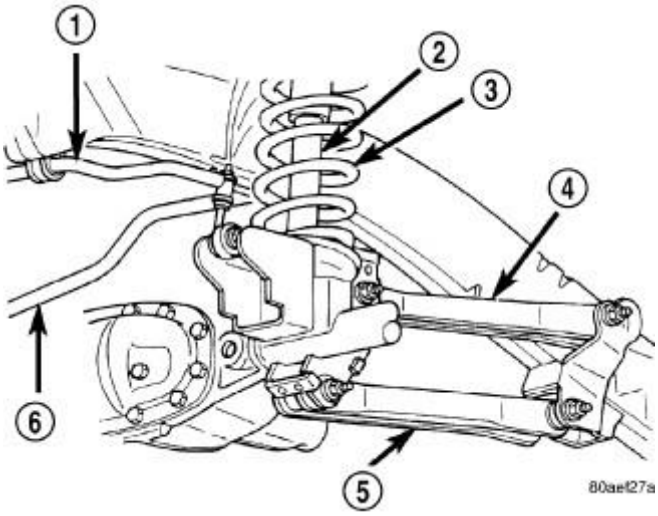

Fig. 97: Upper Control Arm, Lower Control Arm & Coil Spring Components
Courtesy of CHRYSLER GROUP, LLC

1 - STABILIZER BAR
2 - SHOCK ABSORBER
3 - COIL SPRING
4 - UPPER CONTROL ARM
5 - LOWER CONTROL ARM
6 - TRACK BAR

NOTE: **Discard the nuts and bolts and do not reuse. New nuts and bolts should be used when replacing or servicing the control arms.**

1. Position the upper control arm (4) at the axle and frame rail.
2. Install the bolts and finger tighten the nuts.
3. Remove the supports and lower the vehicle.
4. Tighten nut at the axle bracket and frame bracket to specifications. Refer to **SPECIFICATIONS**. .

RIGHT

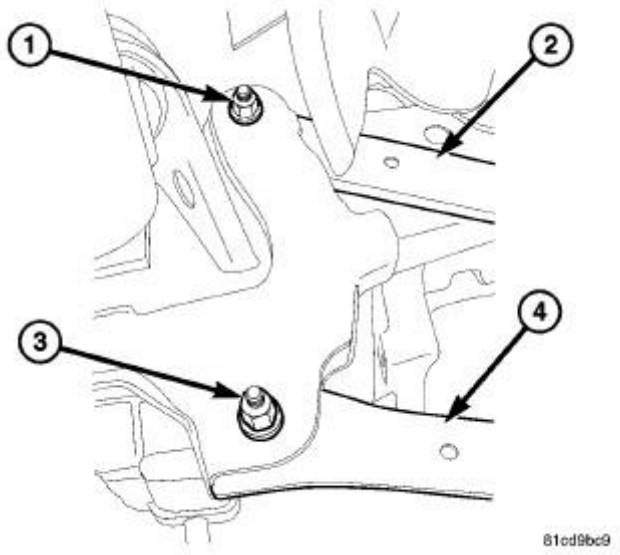

Fig. 98: Upper & Lower Control Arm Bolts
Courtesy of CHRYSLER GROUP, LLC

NOTE: **Discard the nuts and bolts and do not reuse. New nuts and bolts should be used when replacing or servicing the control arms.**

1. Position the upper control arm (2) at the axle and frame rail.
2. Install the bolts, then finger tighten the nuts (1).
3. Tighten nut at the axle bracket and frame bracket to specifications. Refer to **SPECIFICATIONS**. .
4. Remove the support for the axle.

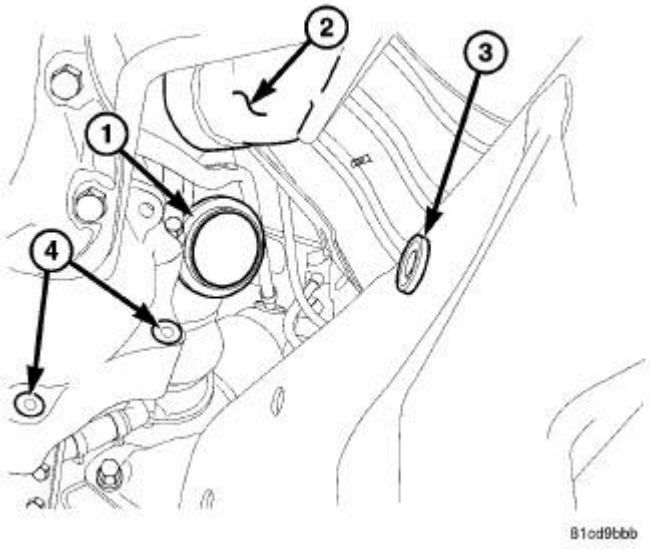

Fig. 99: Exhaust Removal
Courtesy of CHRYSLER GROUP, LLC

5. Install the exhaust system back into place.
6. Reconnect the rubber exhaust mounts.
7. Reconnect the exhaust (2) at the manifold(s) (1).
8. Reconnect the exhaust bracket (4) at the transmission.
9. Remove the supports and lower the vehicle.

BALL JOINT, SUSPENSION, LOWER

DIAGNOSIS AND TESTING

DIAGNOSIS AND TESTING - LOWER BALL JOINT - LINK AND COIL

To properly diagnose the lower ball joint two readings from the dial indicator are necessary, The two readings must be added together to find a total ball joint movement as identified in the steps below.

NOTE: All views typical.

1. Raise and support the vehicle.

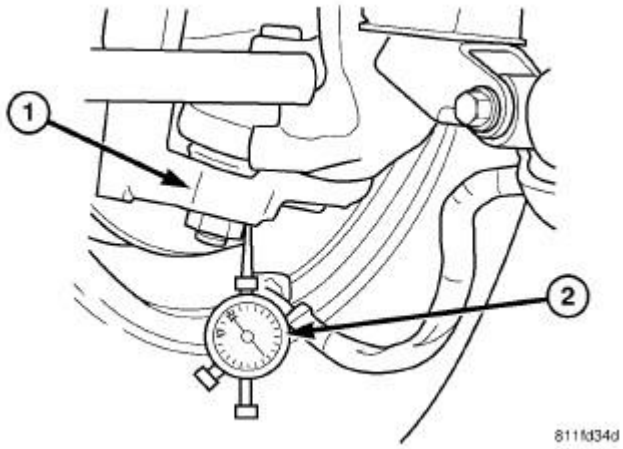

Fig. 100: Dial Indicator Position
Courtesy of CHRYSLER GROUP, LLC

1 - STEERING KNUCKLE
2 - DIAL INDICATOR

2. Attach a dial indicator (2) with the indicator resting on the flat part of the steering knuckle (1) by the lower ball stud.
3. Set the dial indicator (2) to zero.

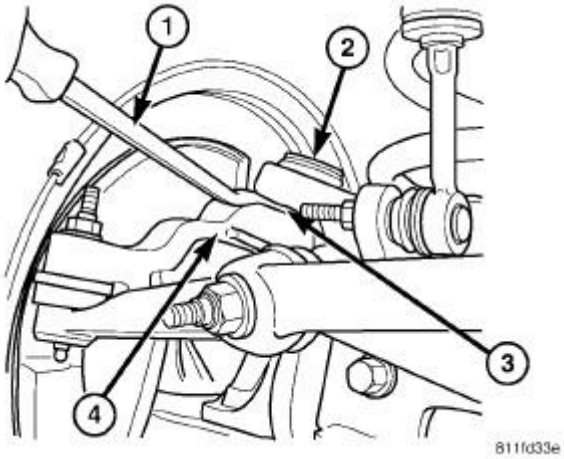

Fig. 101: Prying Between Knuckle & Axle Tube Yoke Next To Upper Ball Joint
Courtesy of CHRYSLER GROUP, LLC

1 - PRY BAR
2 - UPPER BALL JOINT
3 - GREASE SEAL
4 - STEERING KNUCKLE

NOTE: Use care not to damage the upper ball joint grease seal (3).

4. Pry between the knuckle (4) and the axle tube yoke next to the upper ball joint (2), Record the reading on the dial indicator. **This will be the first reading** .

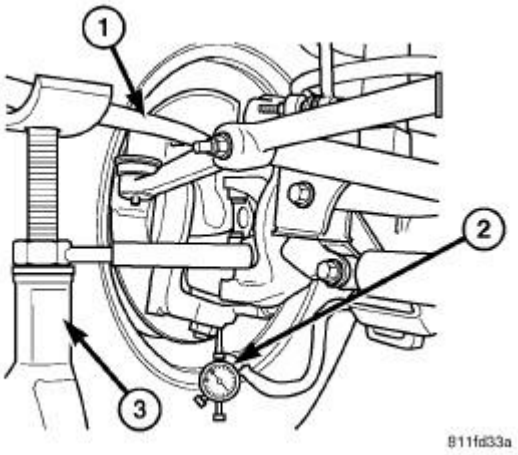

Fig. 102: Using A Long Prybar To Lift Knuckle Assembly
Courtesy of CHRYSLER GROUP, LLC

1 - PRY BAR
2 - DIAL INDICATOR

3 - JACK STAND

5. Set the dial indicator (2) back to zero.
6. Set up a jack stand (3) and use a long pry bar (1) to lift the knuckle assembly.

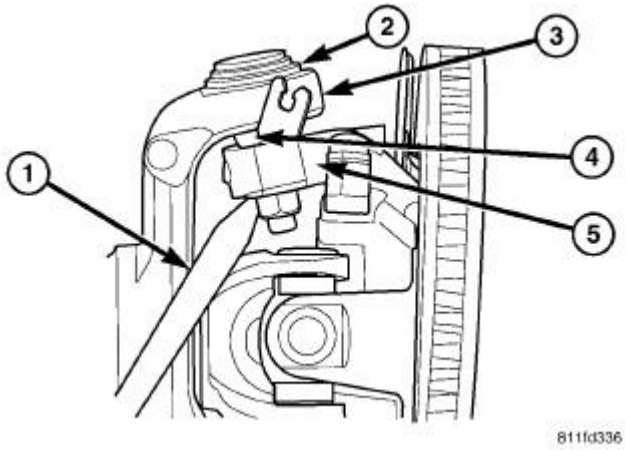

Fig. 103: Prying Upward On Flat Part Of Steering Knuckle Next To Ball Joint Stud & Nut
Courtesy of CHRYSLER GROUP, LLC

1 - PRY BAR
2 - UPPER BALL JOINT
3 - AXLE YOKE
4 - GREASE SEAL
5 - STEERING KNUCKLE

7. Pry upwards on the flat part of the steering knuckle (5) next to the ball joint stud and nut (2) using the jack stand as leverage. Record the reading on the dial indicator. **This will be the second reading** .
8. Add the two reading together for a total lower ball joint movement, If this reading is above 2.29 mm (0.090 in) then replacement of the lower ball joint is necessary. Refer to **BALL JOINT, SUSPENSION, LOWER, REMOVAL**.

REMOVAL

2500, 3500

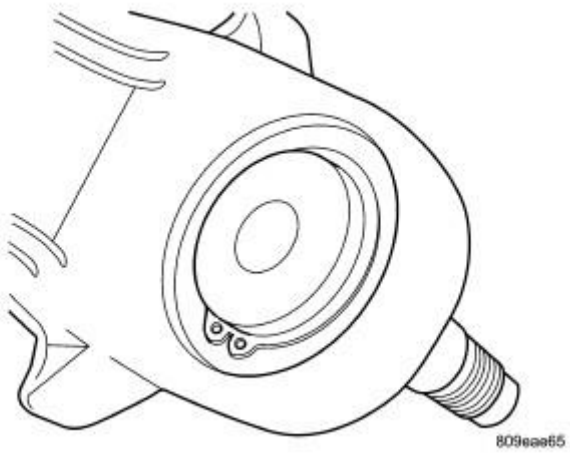

Fig. 104: Lower Snap Ring
Courtesy of CHRYSLER GROUP, LLC

1. Remove the steering knuckle. Refer to **KNUCKLE, STEERING, REMOVAL**.
2. Remove the axle shaft from the axle. Refer to **REMOVAL** or **REMOVAL** .
3. Remove lower snap ring from the lower ball joint.

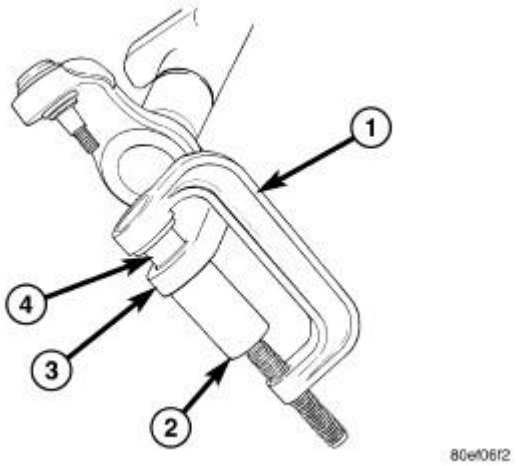

Fig. 105: Removing Lower Ball Joint
Courtesy of CHRYSLER GROUP, LLC

1 - SPECIAL TOOL C4212F
2 - SPECIAL TOOL 8975-2
3 - KNUCKLE
4 - SPECIAL TOOL 8975-4

4. Position Ball Joint Remover/Installer (special tool #8975-2, Cup, Remover) (RECEIVER) (2) and Ball Joint Remover/Installer (special tool #8975-4, Remover, Ball Joint) (DRIVER) (4) with Ball Joint Press (special tool #C-4212F, Press, Ball Joint) (1) as shown in illustration to remove lower ball stud.

4500 AND 5500

1. Remove the axle shaft from the axle.
2. Remove the steering knuckle. Refer to **KNUCKLE, STEERING, REMOVAL**.

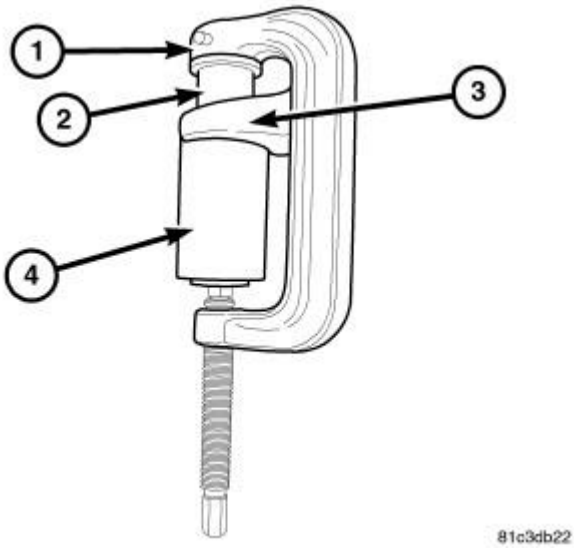

Fig. 106: Removing Lower Ball Stud
Courtesy of CHRYSLER GROUP, LLC

3. Position special tool (special tool #9859-4, Cup, Receiver) (RECEIVER) (4) and (special tool #9859-3, Disc, Balljoint Remover) (DRIVER) (2) with tool (special tool #C-4212F, Press, Ball Joint) (PRESS) (1) shown in illustration to remove lower ball stud.

INSTALLATION

2500, 3500

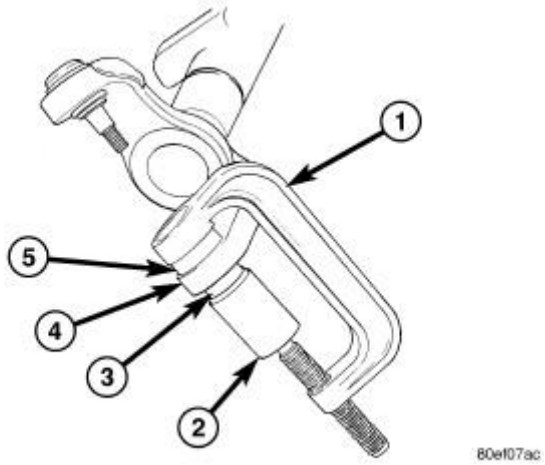

Fig. 107: Installing Lower Ball Joint
Courtesy of CHRYSLER GROUP, LLC

1 - SPECIAL TOOL C4212F
2 - SPECIAL TOOL 8975-1
3 - BALL JOINT
4 - KNUCKLE
5 - SPECIAL TOOL 8975-3

1. Position Ball Joint Remover/Installer (special tool #8975-1, Installer, Ball Joint) (DRIVER) (2) and Ball Joint Remover/Installer (special tool #8975-3, Cup, Remover) (RECEIVER) (5) with Ball Joint Press (special tool #C-4212F, Press, Ball Joint) (1) as shown in illustration to install lower ball stud (3).
2. Install the axle shaft into the axle. Refer to **INSTALLATION** or **INSTALLATION** .
3. Install the steering knuckle. Refer to **KNUCKLE, STEERING, INSTALLATION**.

4500 AND 5500

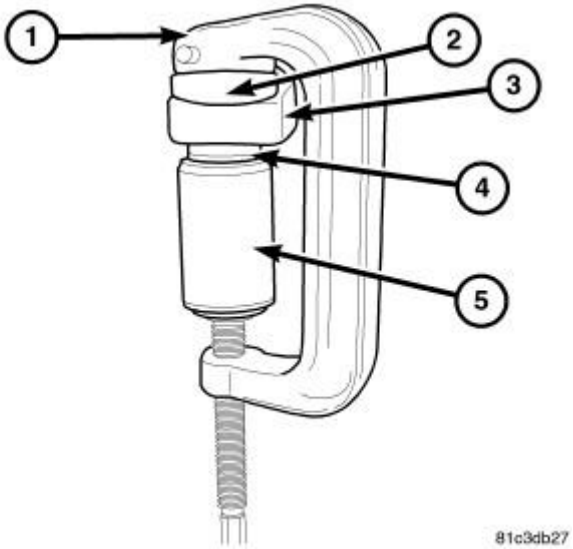

Fig. 108: Installing Lower Ball Stud
Courtesy of CHRYSLER GROUP, LLC

1. Position special tool (special tool #9859-1, Cup, Installation) (DRIVER) (5) and (special tool #9859-2, Base, Pressing) (RECEIVER) (2) with (special tool #C-4212F, Press, Ball Joint) (PRESS) (1) as shown in illustration to install lower ball stud (4).
2. Install the steering knuckle. Refer to **KNUCKLE, STEERING, INSTALLATION**.
3. Install the axle shaft into the axle.

BALL JOINT, SUSPENSION, UPPER

DIAGNOSIS AND TESTING

DIAGNOSIS AND TESTING - UPPER BALL JOINT - LINK AND COIL

To properly diagnose the upper ball joint two readings from the dial indicator are necessary, The two readings must be added together to find a total ball joint movement as identified in the steps below.

1. Raise and support the vehicle.

NOTE: All views typical.

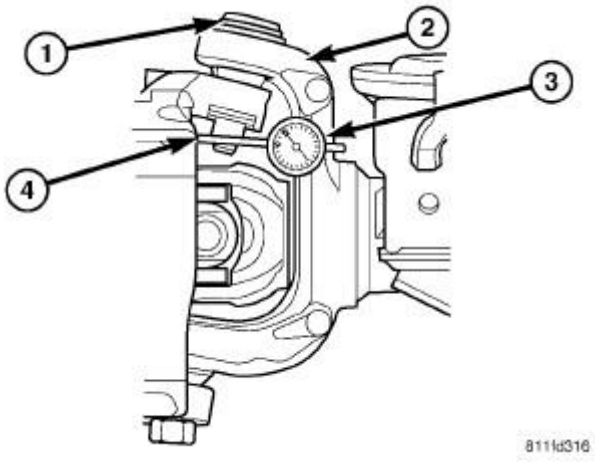

Fig. 109: Upper Ball Joint Movement
Courtesy of CHRYSLER GROUP, LLC

1 - UPPER BALL JOINT
2 - AXLE YOKE
3 - DIAL INDICATOR
4 - STEERING KNUCKLE FLAT

2. Attach a dial indicator (3) with the indicator resting on either the front or back sides of the steering knuckle (4) as close to the upper ball joint (1) as possible.
3. Set the dial indicator (3) to zero.
4. Grab the tire by pushing in on the top of the tire and pulling out on the bottom of the tire. Record the reading on the dial indicator (3). **This will be the first reading** .
5. Set the dial indicator (3) back to zero.
6. Grab the tire by pulling in on the top of the tire and pushing out on the bottom of the tire. Record the reading on the dial indicator (3). **This will be the second reading** .
7. Add the two readings together for a total upper ball joint movement. If this reading is above 1.52 mm (0.060 in) then replacement of the upper ball joint is necessary. Refer to **BALL JOINT, SUSPENSION, UPPER, REMOVAL**.

REMOVAL

2500, 3500

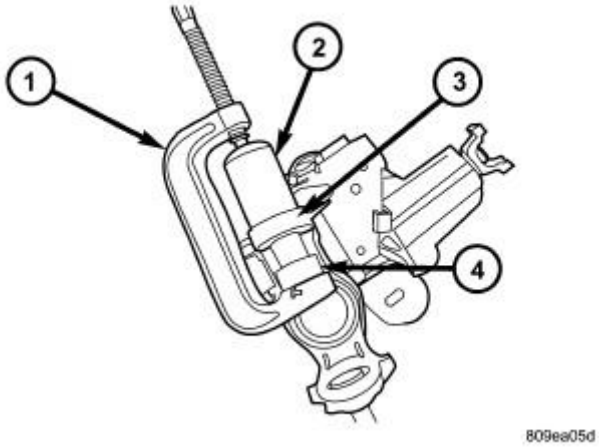

Fig. 110: Upper Ball Joint Removal
Courtesy of CHRYSLER GROUP, LLC

1 - SPECIAL TOOL C4212F
2 - SPECIAL TOOL 6761
3 - KNUCKLE
4 - SPECIAL TOOL 8445-3

1. Remove the steering knuckle. Refer to **KNUCKLE, STEERING, REMOVAL**.
2. Remove the axle shaft from the axle. Refer to **REMOVAL** or **REMOVAL** .
3. Position Ball Joint Installer (special tool #6761, Installer, Ball Joint) (RECEIVER) (2) and Remover/ Installer (special tool #8445-3, Remover, Ball Joint) (DRIVER) (4) with Ball Joint Press (special tool #C-4212F, Press, Ball Joint) (1) as shown in illustration to remove upper ball stud.

4500 AND 5500

NOTE: The upper ball joints screw in and out (they are not pressed in).

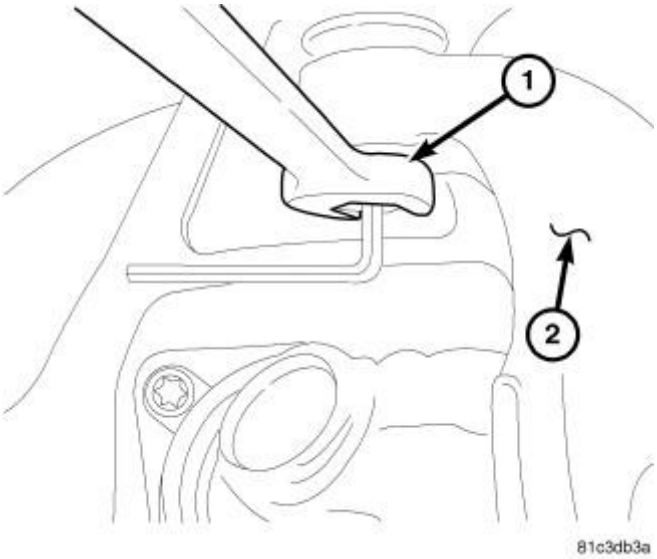

Fig. 111: Upper Ball Joint Nut
Courtesy of CHRYSLER GROUP, LLC

1. Remove the wheel and tire assembly.
2. Support the lower part of the steering knuckle.
3. Remove the upper ball joint nut (1).

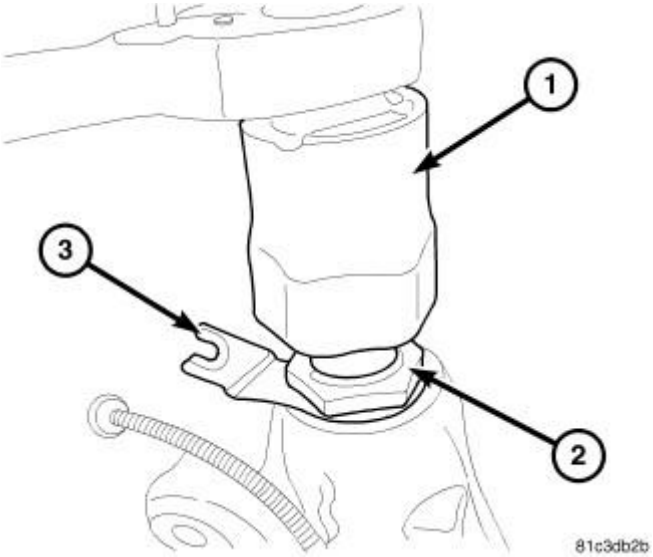

Fig. 112: Upper Ball Joint & Wheel Speed Sensor Wire Bracket
Courtesy of CHRYSLER GROUP, LLC

4. Disconnect the wheel speed sensor wire from the bracket (3).
5. Install a 60 mm socket (1) and unscrew the upper ball joint (2) from the steering knuckle.
6. Remove the wheels speed sensor wire bracket (3).

INSTALLATION

2500, 3500

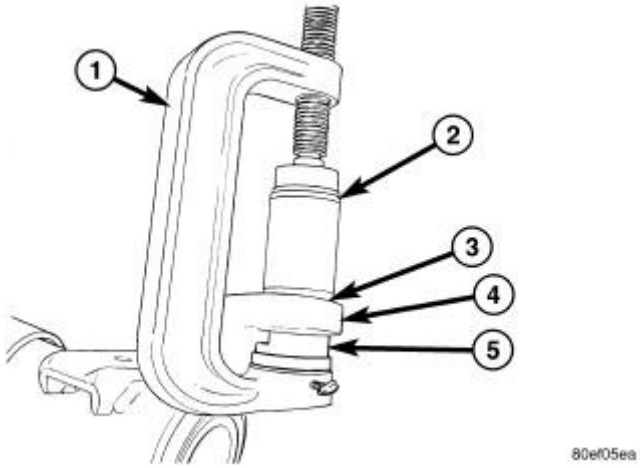

Fig. 113: Installing Upper Ball Joint
Courtesy of CHRYSLER GROUP, LLC

1 - SPECIAL TOOL C4212-F
2 - SPECIAL TOOL 8445-2
3 - BALL JOINT
4 - KNUCKLE
5 - SPECIAL TOOL 8975-5

1. Position Remover/ Installer (special tool #8445-2, Installer, Cup) (DRIVER) (2) and Ball Joint Remover/Installer (special tool #8975-5, Receiver, Ball Joint) (RECEIVER) (5) with Ball Joint Press (special tool #C-4212F, Press, Ball Joint) (1) as shown in illustration to install upper ball stud (3).
2. Install the axle shaft into the axle. Refer to **INSTALLATION** or **INSTALLATION** .
3. Install the steering knuckle. Refer to **KNUCKLE, STEERING, INSTALLATION**.

4500 AND 5500

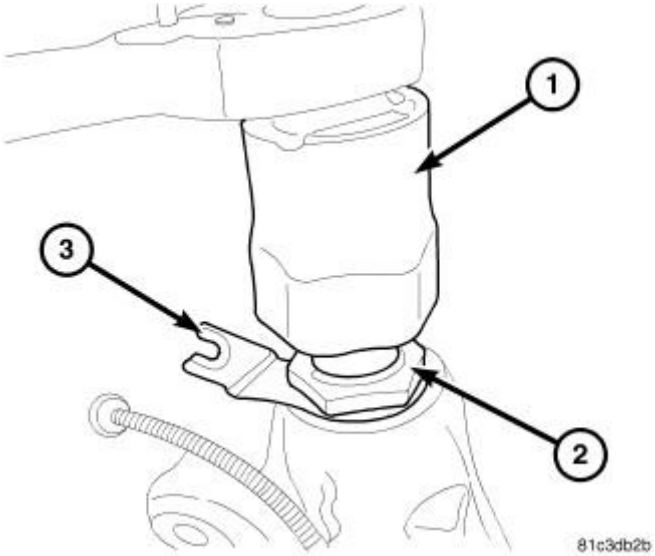

Fig. 114: Upper Ball Joint & Wheel Speed Sensor Wire Bracket
Courtesy of CHRYSLER GROUP, LLC

1. Install the wheel speed sensor bracket (3) to the upper ball joint (2).
2. Screw the upper ball joint (2) into the steering knuckle and tighten to specifications. Refer to **SPECIFICATIONS**. .
3. Reconnect the wheel speed sensor wire into the bracket (3).

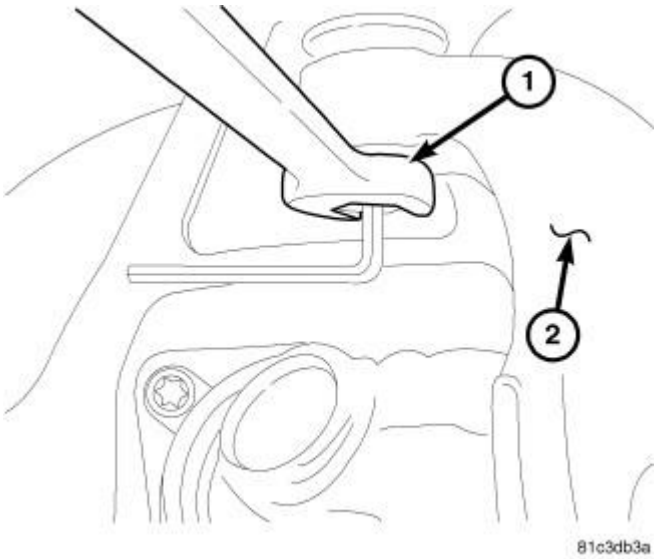

Fig. 115: Upper Ball Joint Nut
Courtesy of CHRYSLER GROUP, LLC

4. Install the upper ball joint mounting nut and tighten to specifications. Refer to **SPECIFICATIONS**. .
5. Remove the support from the steering knuckle.
6. Install the tire and wheel assembly.

HUB AND BEARING

REMOVAL

2500, 3500

1. Raise and support the vehicle.
2. Remove the wheel and tire assembly.

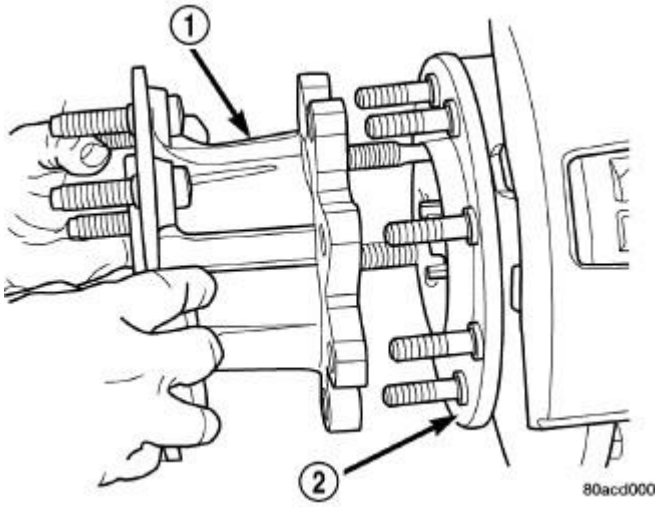

Fig. 116: Hub Extension
Courtesy of CHRYSLER GROUP, LLC

3. Remove the hub extension (1) mounting nuts and remove the extension from the rotor if equipped.

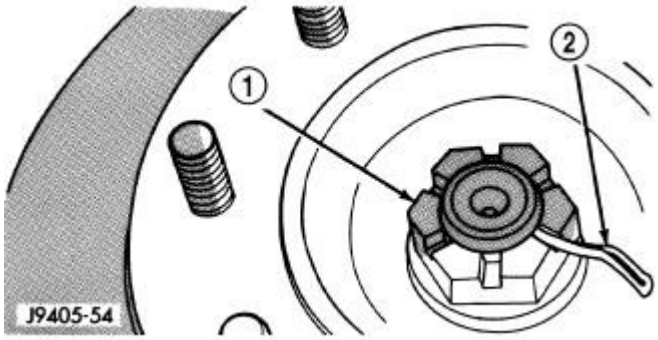

Fig. 117: Hub Nut Cotter Pin
Courtesy of CHRYSLER GROUP, LLC

4. Remove the brake caliper. Refer to **CALIPER, DISC BRAKE, REMOVAL** .
5. Remove the cotter pin (2) and the hub nut (1) from the axle shaft.
6. Remove the caliper adapter. Refer to **ADAPTER, DISC BRAKE CALIPER, REMOVAL** .
7. Remove the disc brake rotor. Refer to **ROTOR, BRAKE, REMOVAL** .
8. Disconnect the wheel speed sensor wire.

9. Remove the hub/bearing 4 mounting bolts and remove the hub/bearing.

4500 AND 5500

1. Raise and support the vehicle.
2. Remove the wheel and tire assembly.
3. Remove the brake caliper. Refer to **CALIPER, DISC BRAKE, REMOVAL** .
4. Remove the caliper adapter. Refer to **ADAPTER, DISC BRAKE CALIPER, REMOVAL** .

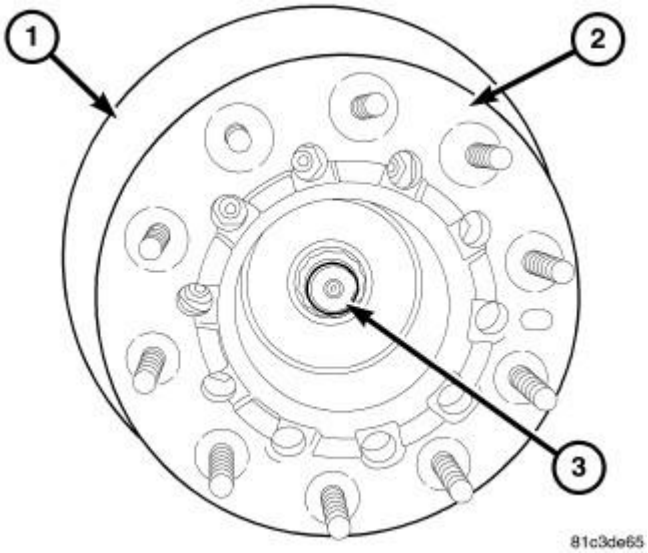

Fig. 118: Disc Brake Rotor, Hub Extension & Axle Shaft Nut
Courtesy of CHRYSLER GROUP, LLC

5. Remove the hub extension (2) and disc brake rotor (1). Refer to **ROTOR, BRAKE, REMOVAL** .
6. Remove the axle shaft nut (3) from the axle shaft.

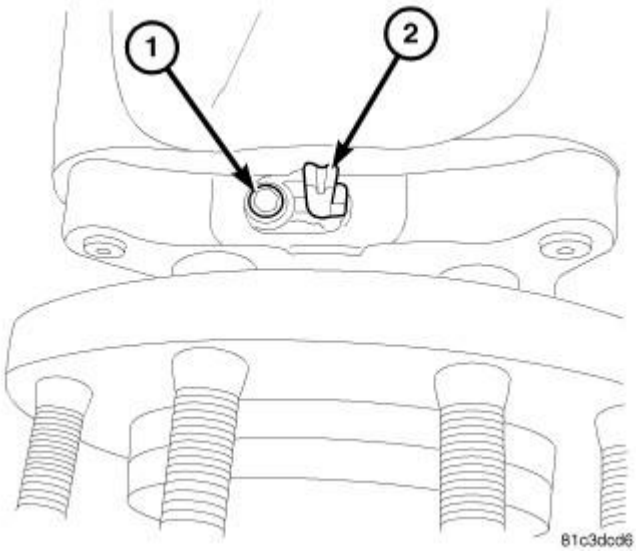

Fig. 119: Wheel Speed Sensor & Bolt
Courtesy of CHRYSLER GROUP, LLC

7. Disconnect the wheel speed sensor wire and remove the wheel speed sensor bolt (1) from the hub/bearing then remove the sensor (2).

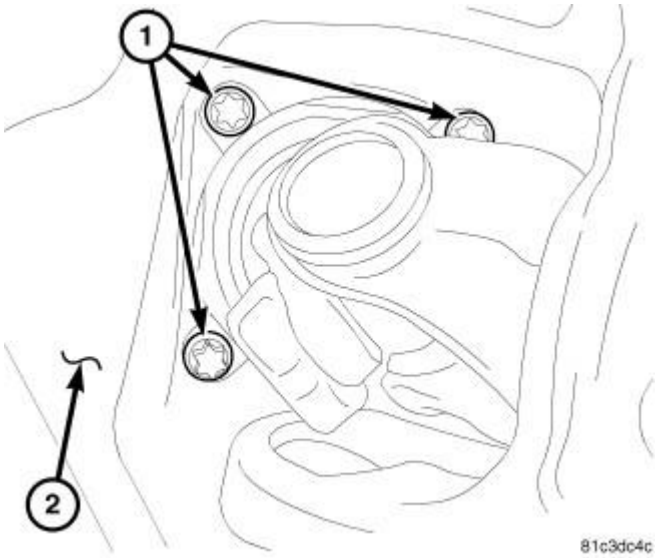

Fig. 120: Hub/Bearing Bolts
Courtesy of CHRYSLER GROUP, LLC

8. Remove the hub/bearing 4 mounting bolts (1) and remove the hub/bearing.

INSTALLATION

2500, 3500

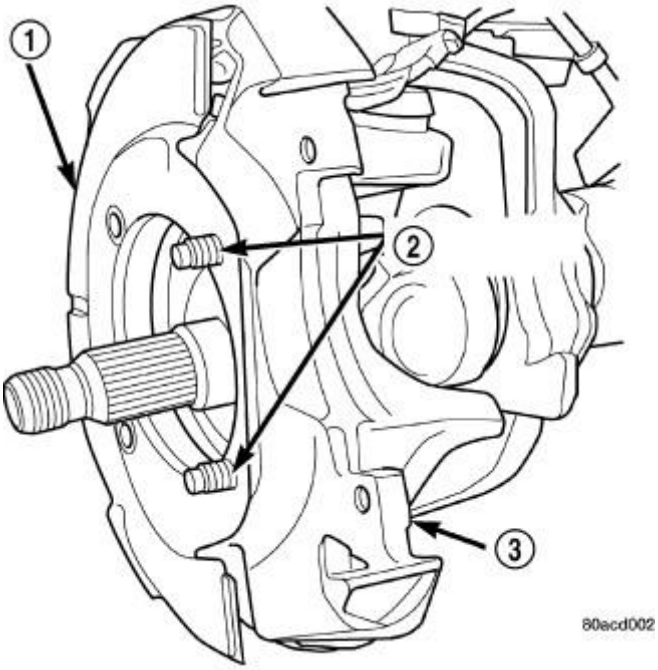

Fig. 121: Brake Shield
Courtesy of CHRYSLER GROUP, LLC

1. Position the brake shield (1) on bolts.
2. Install the hub/bearing to the knuckle and tighten the hub/bearing bolts (2) to specifications. Refer to **SPECIFICATIONS**. .
3. Install the hub nut and tighten to specifications. Refer to **SPECIFICATIONS**. .
4. Install the wheel speed sensor to the hub. Refer to **SENSOR, WHEEL SPEED, FRONT, INSTALLATION** .
5. Install the disc brake rotor. Refer to **ROTOR, BRAKE, INSTALLATION** .
6. Install the brake caliper adapter with the caliper. Refer to **ADAPTER, DISC BRAKE CALIPER, INSTALLATION** .
7. If equipped, install the hub extension and nuts to the front rotor and tighten nuts to specifications. Refer to **SPECIFICATIONS**. .
8. Install the wheel and tire assemblies. Refer to **WHEELS, STANDARD PROCEDURE** .
9. Remove the support and lower the vehicle.
10. Apply the brakes several times to seat the brake shoes and caliper piston. Do not move the vehicle until a firm brake pedal is obtained.

4500 AND 5500

NOTE: **If installing a NEW hub/bearing on a 4X4 only Steps 1-3 should be followed for the correct shim size.**

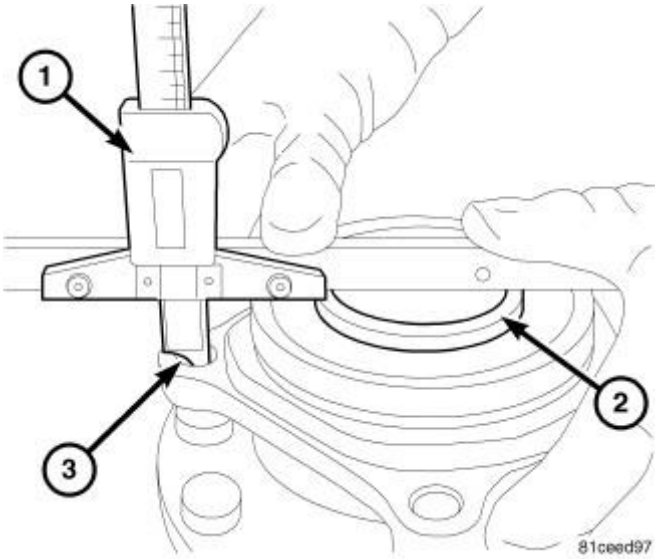

Fig. 122: Measuring From Hub/Bearing Unit Crimp To Flange
Courtesy of CHRYSLER GROUP, LLC

1. Measure from the new hub/bearing unit crimp (2) to the flange (3).
2. Choose the correct shim according to the table:

HUB MEASURED	29.50 to 29.83 mm (1.16 to 1.17 in)	29, 84 to 30, 18 (1.17 to 1.18 in)	30, 19 to 30, 53 (1.18 to 1.20 in)	30, 54 to 30, 88 (1.20 to 1.21 in)	30, 89 to 31, 23 (1.21 to 1.22 in)	31, 24 to 31, 50 (1.22 to 1.23 in)
SHIM THICKNESS	7.00 mm (0.27 in)	6.65 (0.26 in)	6.30 (0.24 in)	5.95 (0.23 in)	5.60 (0.22 in)	5.25 (0.20 in)

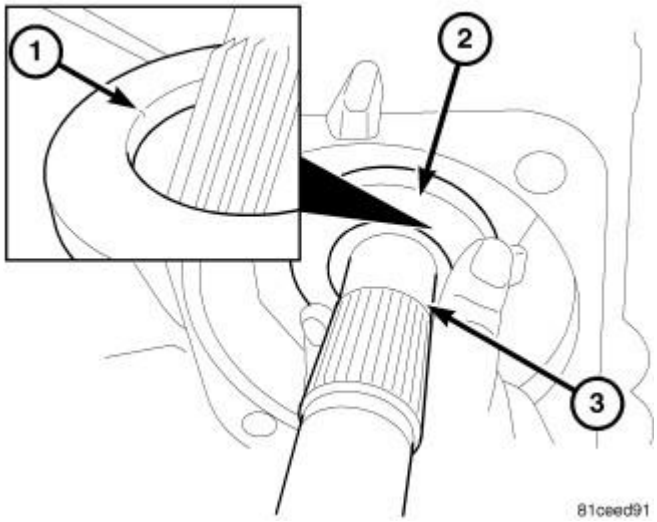

Fig. 123: Installing Shim
Courtesy of CHRYSLER GROUP, LLC

3. Check the shim (2) on the axle shaft (3). Be sure that the shim (2) is placed with the radius side (1) to the

joint.

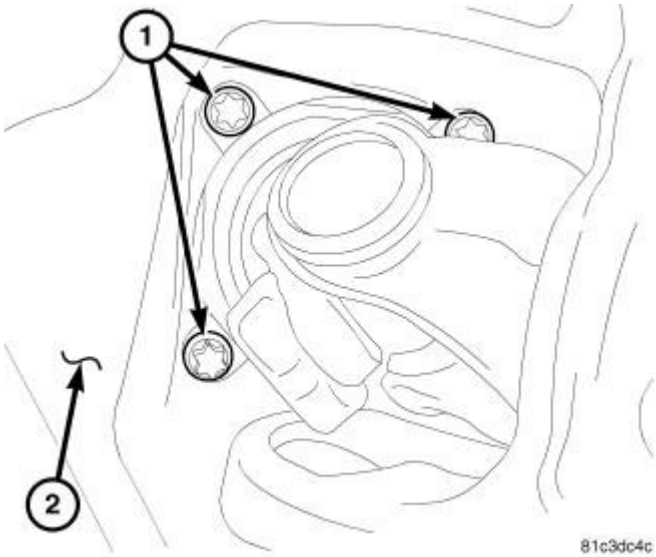

Fig. 124: Hub/Bearing Bolts
Courtesy of CHRYSLER GROUP, LLC

4. Install the hub/bearing to the knuckle and tighten the hub/bearing bolts (1) to specifications. Refer to **SPECIFICATIONS**. .

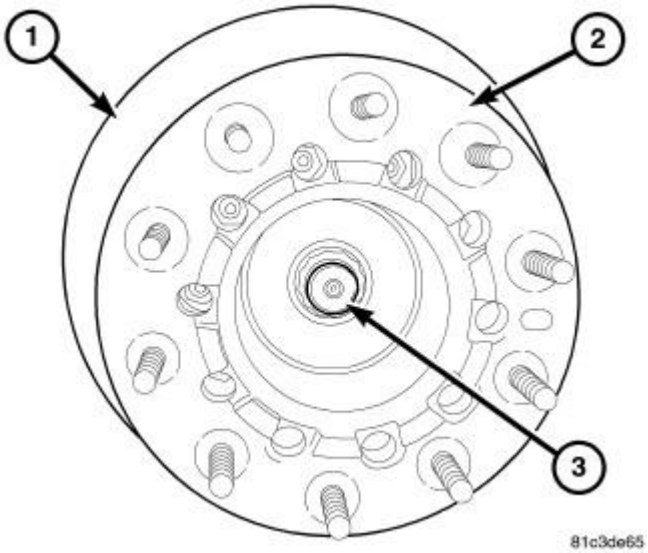

Fig. 125: Disc Brake Rotor, Hub Extension & Axle Shaft Nut
Courtesy of CHRYSLER GROUP, LLC

5. Install the axle nut (3) and tighten to specifications. Refer to **SPECIFICATIONS**. .

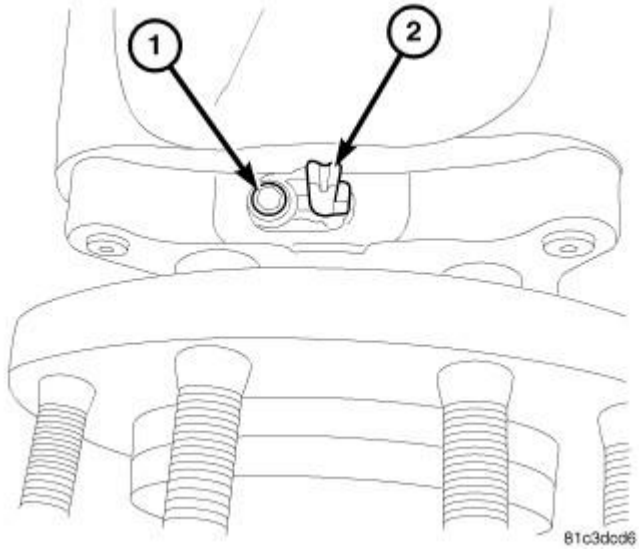

Fig. 126: Wheel Speed Sensor & Bolt
Courtesy of CHRYSLER GROUP, LLC

6. Install the wheel speed sensor 2) to the hub and tighten the bolt (1). Refer to **SENSOR, WHEEL SPEED, FRONT, INSTALLATION** .

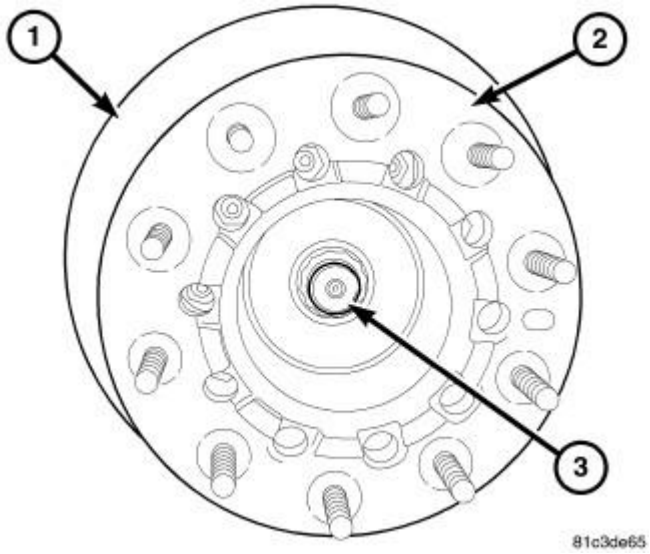

Fig. 127: Disc Brake Rotor, Hub Extension & Axle Shaft Nut
Courtesy of CHRYSLER GROUP, LLC

7. Install the disc brake rotor (1). Refer to **ROTOR, BRAKE, INSTALLATION** .
8. Install the hub extension (2) and nuts to the front rotor and tighten nuts to specifications. Refer to **SPECIFICATIONS**. .
9. Install the brake caliper adapter with the caliper. Refer to **ADAPTER, DISC BRAKE CALIPER, INSTALLATION** .
10. Install the wheel and tire assemblies. Refer to **WHEELS, STANDARD PROCEDURE** .

11. Remove the support and lower the vehicle.
12. Apply the brakes several times to seat the brake shoes and caliper piston. Do not move the vehicle until a firm brake pedal is obtained.

KNUCKLE, STEERING

REMOVAL

2500, 3500

1. Remove the hub bearing. Refer to **HUB AND BEARING, REMOVAL**.
2. Remove tie-rod or drag link end from the steering knuckle arm.
3. Remove the wheel speed sensor. Refer to **SENSOR, WHEEL SPEED, FRONT, REMOVAL** .
4. Loosen the upper ball stud nut.**Do not remove the nut at this time.**
5. Remove the lower ball joint nut.

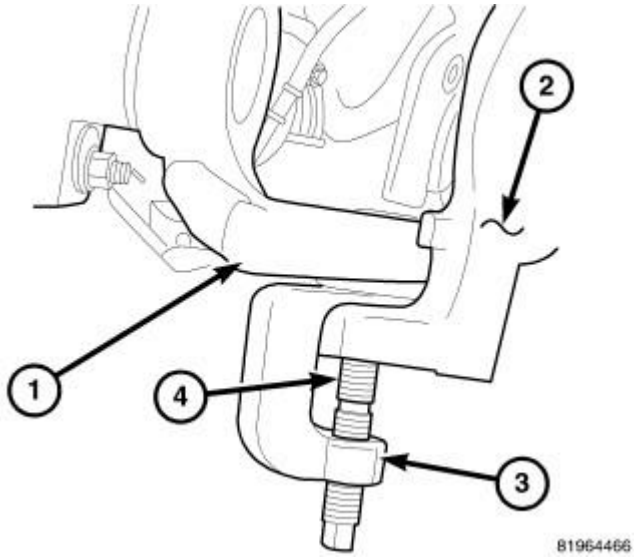

Fig. 128: Separating Lower Ball Joint
Courtesy of CHRYSLER GROUP, LLC

6. Separate the lower ball joint (4) using Ball Joint Press (special tool #C-4150A, Press, Ball Joint) (3).
7. Remove the upper ball joint nut.
8. Remove the steering knuckle (2).

4500 AND 5500

1. Remove tie-rod or drag link end from the steering knuckle arm.

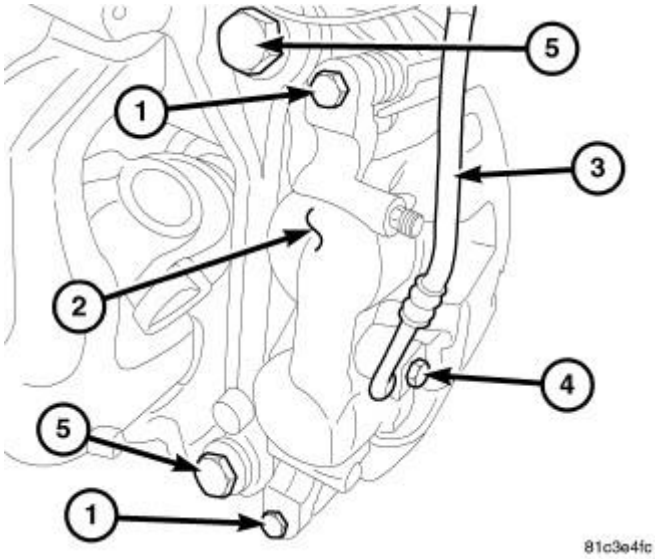

Fig. 129: Disc Brake Caliper & Bolts
Courtesy of CHRYSLER GROUP, LLC

2. Remove the disc brake caliper bolts (1) and the disc brake caliper (2).

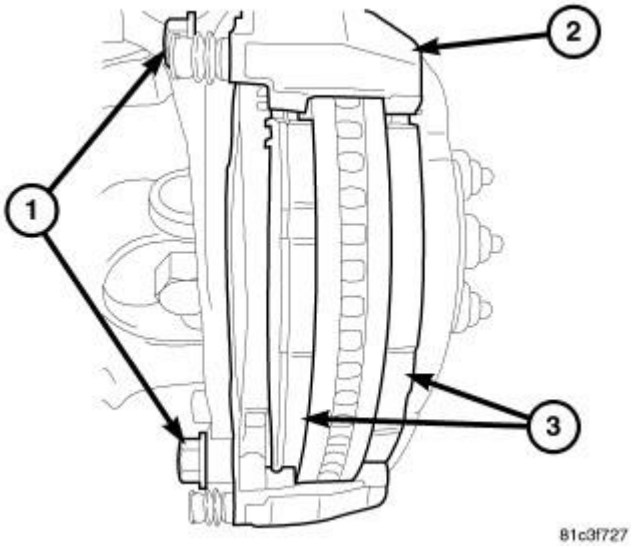

Fig. 130: Disc Brake Caliper Adapter & Bolts
Courtesy of CHRYSLER GROUP, LLC

3. Remove the disc brake caliper adapter bolts (1) and remove the adapter (2).

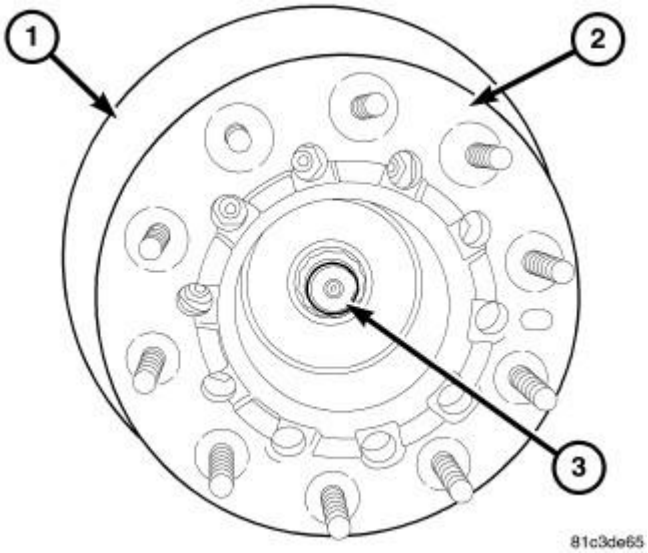

Fig. 131: Disc Brake Rotor, Hub Extension & Axle Shaft Nut
Courtesy of CHRYSLER GROUP, LLC

4. Remove the disc brake rotor (1) and the hub extension (2).

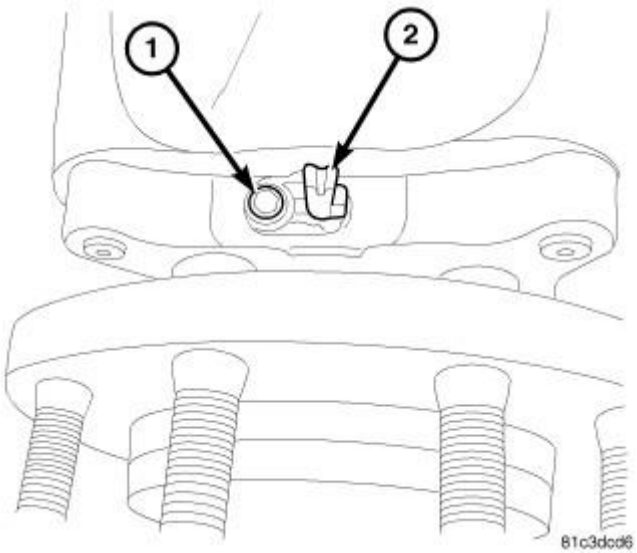

Fig. 132: Wheel Speed Sensor & Bolt
Courtesy of CHRYSLER GROUP, LLC

5. Remove the wheel speed sensor (2). Refer to **SENSOR, WHEEL SPEED, FRONT, REMOVAL** .

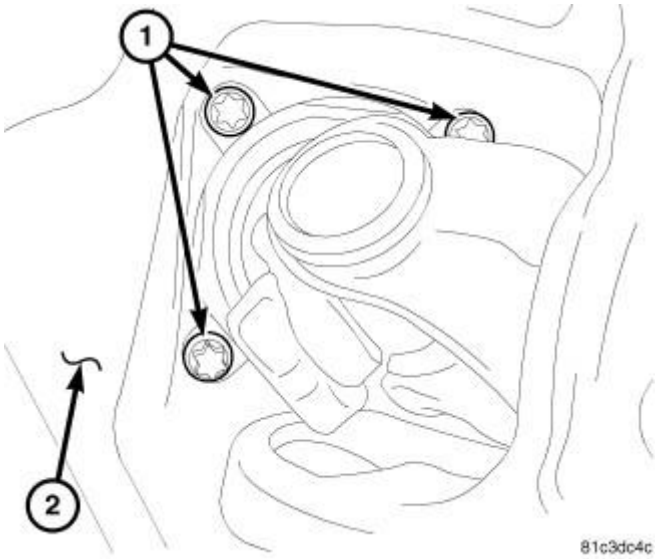

Fig. 133: Hub/Bearing Bolts
Courtesy of CHRYSLER GROUP, LLC

6. Remove the hub bearing bolts (1) and the hub/bearing. Refer to **HUB AND BEARING, REMOVAL**.

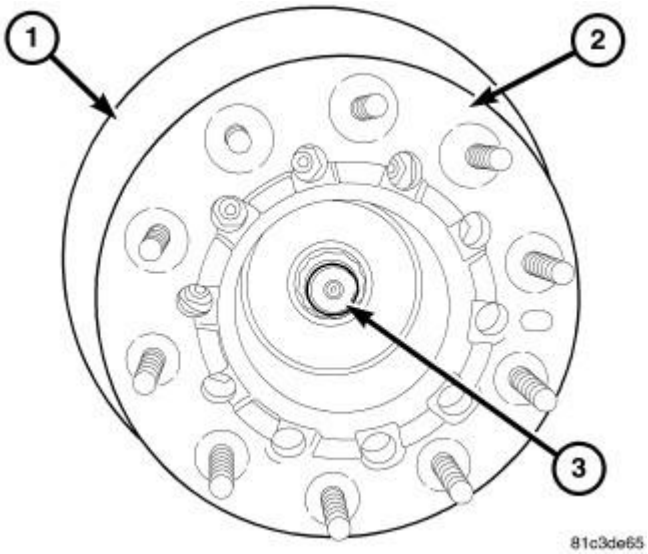

Fig. 134: Disc Brake Rotor, Hub Extension & Axle Shaft Nut
Courtesy of CHRYSLER GROUP, LLC

7. Remove the axle shaft nut (3) if equipped.

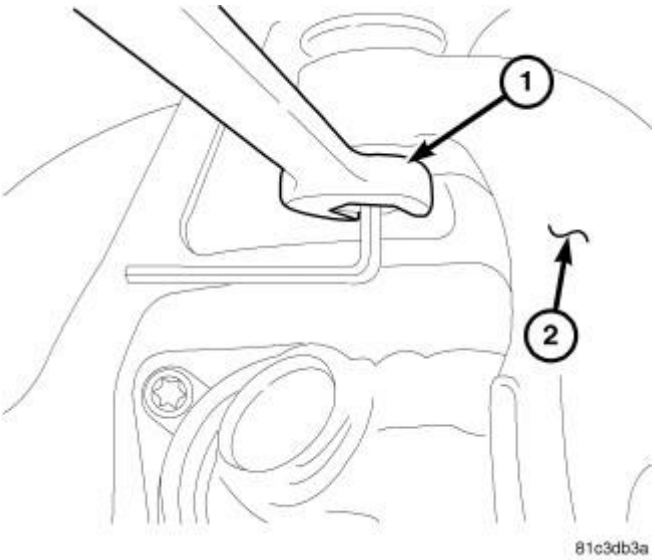

Fig. 135: Upper Ball Joint Nut
Courtesy of CHRYSLER GROUP, LLC

8. Remove the upper ball stud nut (1).

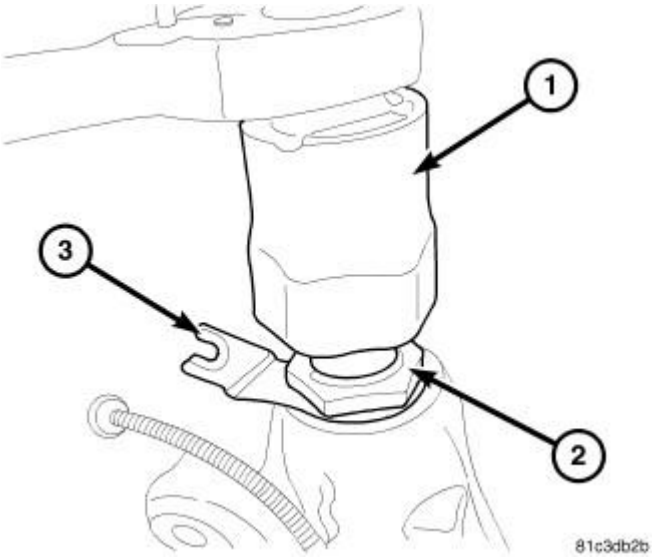

Fig. 136: Upper Ball Joint & Wheel Speed Sensor Wire Bracket
Courtesy of CHRYSLER GROUP, LLC

9. Remove the upper ball joint (2). Refer to **BALL JOINT, SUSPENSION, UPPER, REMOVAL**.

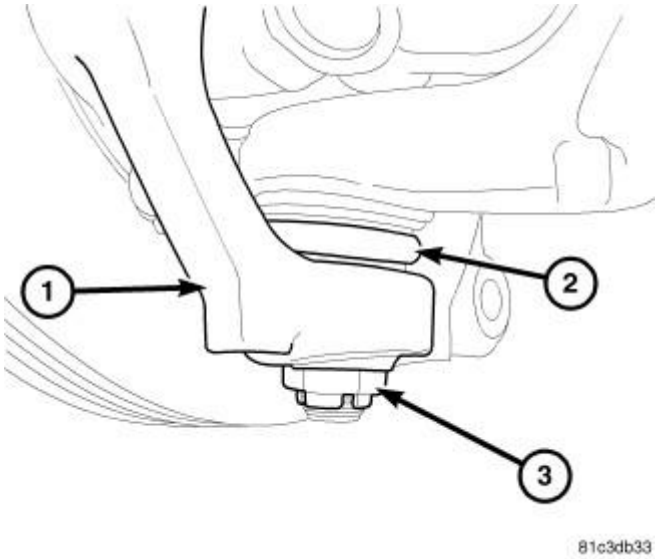

Fig. 137: Identifying Lower Ball Joint Nut
Courtesy of CHRYSLER GROUP, LLC

10. Remove the lower ball joint nut (3).

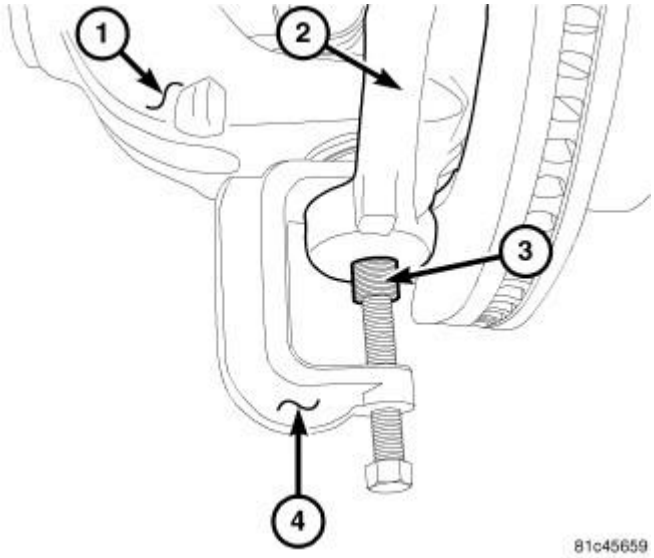

Fig. 138: Separating Lower Ball Joint From Knuckle
Courtesy of CHRYSLER GROUP, LLC

11. Separate the lower ball joint (3) from the knuckle (2) using special tool (special tool #8677, Remover, Ball Joint) separator (4).
12. Remove the steering knuckle (2).

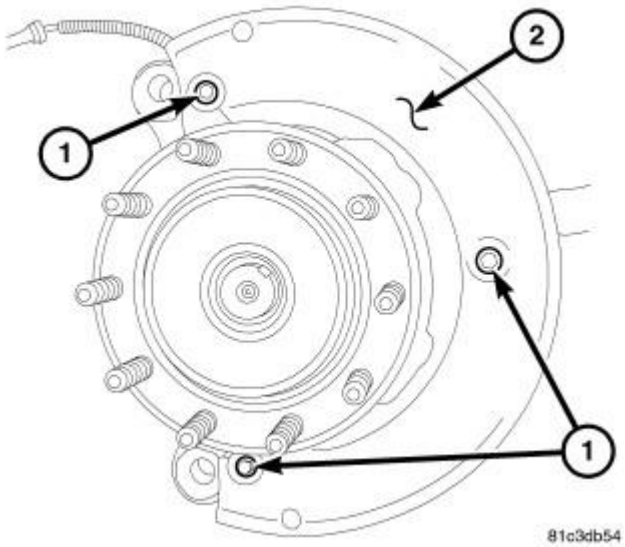

Fig. 139: Dust Shield
Courtesy of CHRYSLER GROUP, LLC

13. Remove the dust shield (2) from the knuckle if needed.

INSTALLATION

2500, 3500

1. Position the steering knuckle on the ball studs.
2. Install and tighten lower ball stud nut to **initial torque** specifications. Refer to **SPECIFICATIONS**. .
3. Install and tighten upper ball stud nut to specifications. Refer to **SPECIFICATIONS**. .
4. Re-torque lower ball stud nut to **final torque** specifications. Refer to **SPECIFICATIONS**. .
5. Install the hub bearing. Refer to **HUB AND BEARING, INSTALLATION**.
6. Install tie-rod or drag link end onto the steering knuckle arm and tighten to specifications. Refer to **SPECIFICATIONS**. .
7. Install the wheel speed sensor. Refer to **SENSOR, WHEEL SPEED, FRONT, INSTALLATION** .

4500 AND 5500

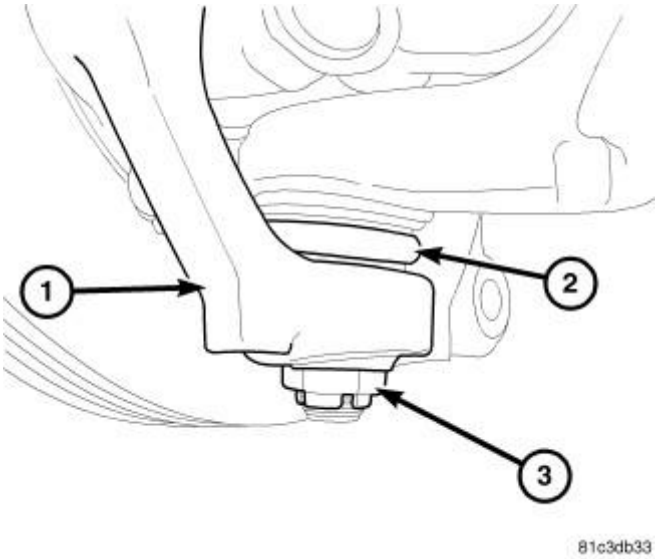

Fig. 140: Identifying Lower Ball Joint Nut
Courtesy of CHRYSLER GROUP, LLC

1. Position the steering knuckle (1) on the ball stud.
2. Install and tighten the lower ball stud nut (3) to specifications. Refer to **SPECIFICATIONS**. .

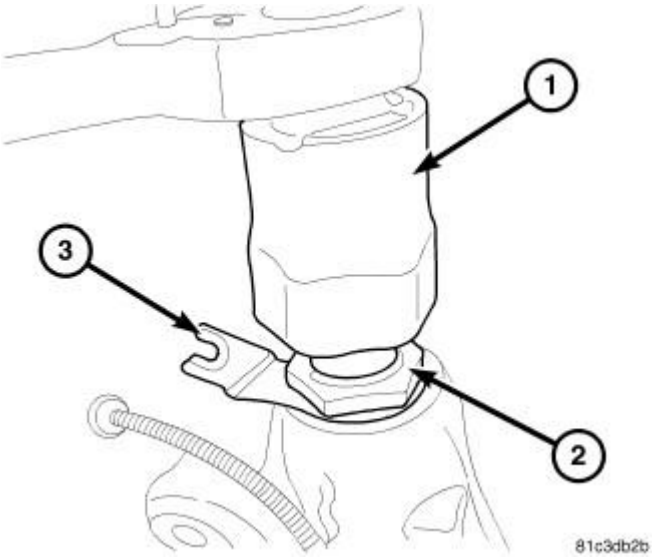

Fig. 141: Upper Ball Joint & Wheel Speed Sensor Wire Bracket
Courtesy of CHRYSLER GROUP, LLC

NOTE: **Make sure the wheel speed sensor bracket (3) for the wire is installed between the knuckle and ball joint (2).**

3. Install the upper ball joint (2) into the steering knuckle and tighten to specifications. Refer to **SPECIFICATIONS**. .

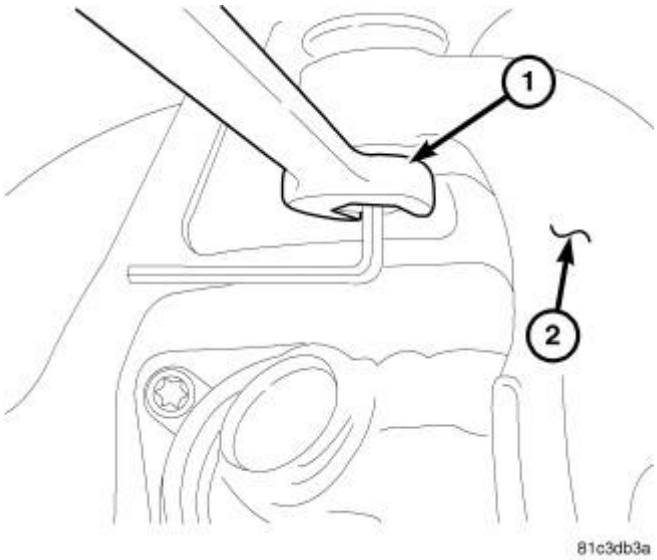

Fig. 142: Upper Ball Joint Nut
Courtesy of CHRYSLER GROUP, LLC

4. Install and tighten the upper ball stud nut (1) to specifications. Refer to **SPECIFICATIONS**. .
5. Retorque the lower ball stud nut to specifications. Refer to **SPECIFICATIONS**. .

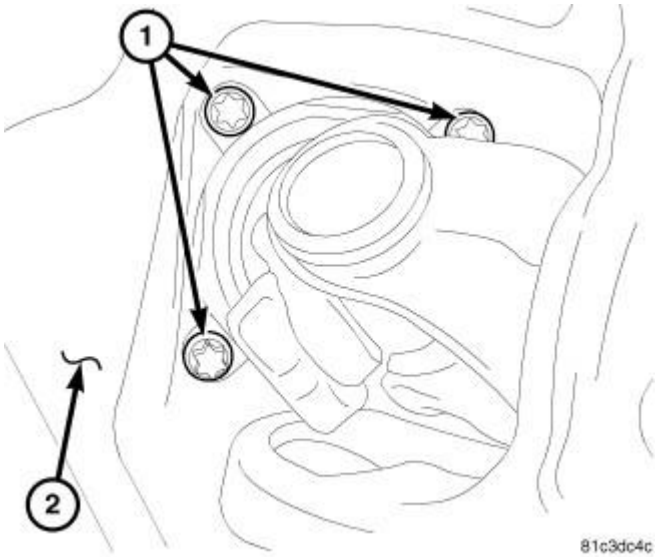

Fig. 143: Hub/Bearing Bolts
Courtesy of CHRYSLER GROUP, LLC

6. Install the hub bearing and tighten the bolts (1) to specifications. Refer to **SPECIFICATIONS**. .

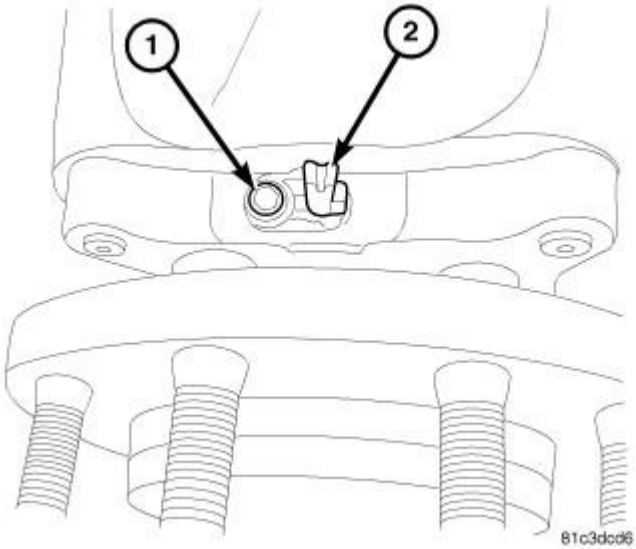

Fig. 144: Wheel Speed Sensor & Bolt
Courtesy of CHRYSLER GROUP, LLC

7. Install the wheel speed sensor (2). Refer to **SENSOR, WHEEL SPEED, FRONT, INSTALLATION** .

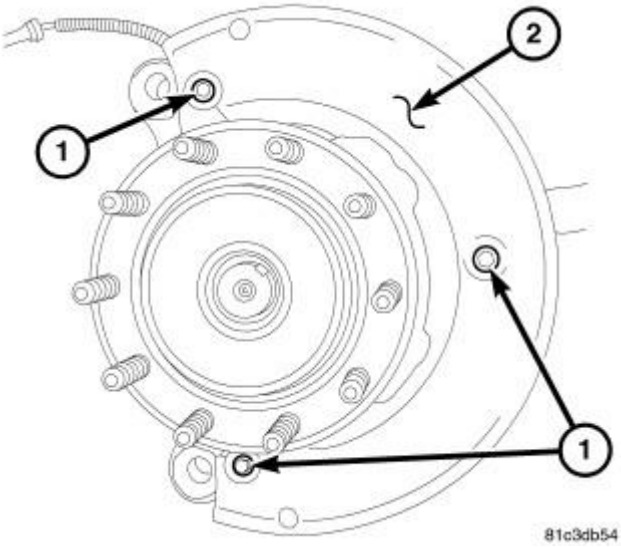

Fig. 145: Dust Shield
Courtesy of CHRYSLER GROUP, LLC

8. Install the dust shield (2) if removed.

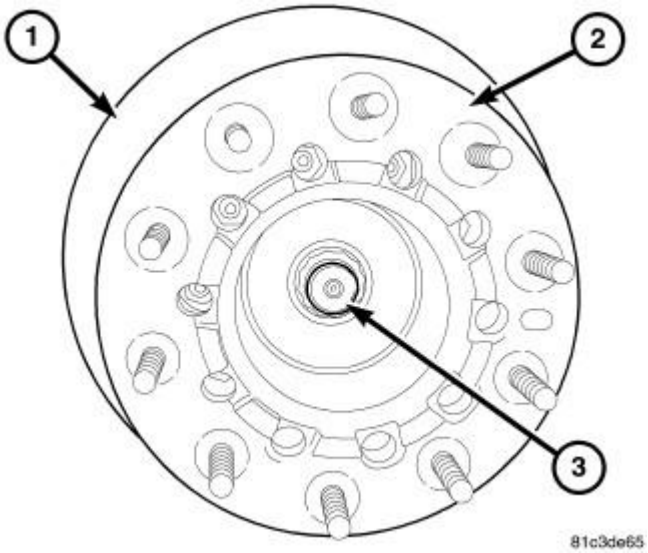

Fig. 146: Disc Brake Rotor, Hub Extension & Axle Shaft Nut
Courtesy of CHRYSLER GROUP, LLC

9. Install the disc brake rotor (1) and extension (2) to the hub/bearing.

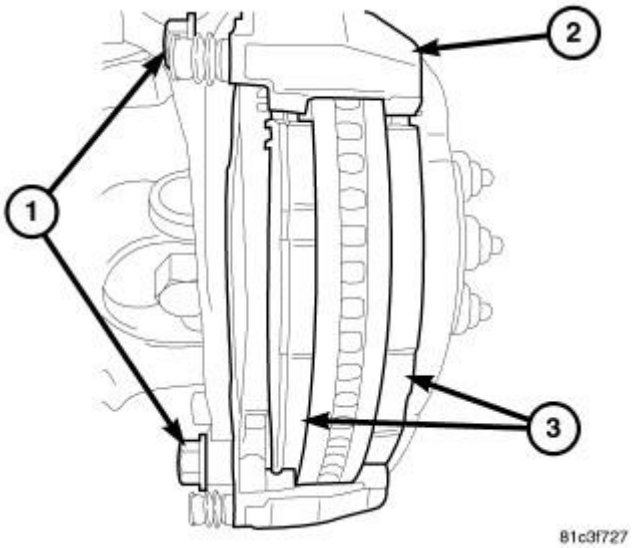

Fig. 147: Disc Brake Caliper Adapter & Bolts
Courtesy of CHRYSLER GROUP, LLC

10. Install the disc brake caliper adapter (2) and bolts (1).

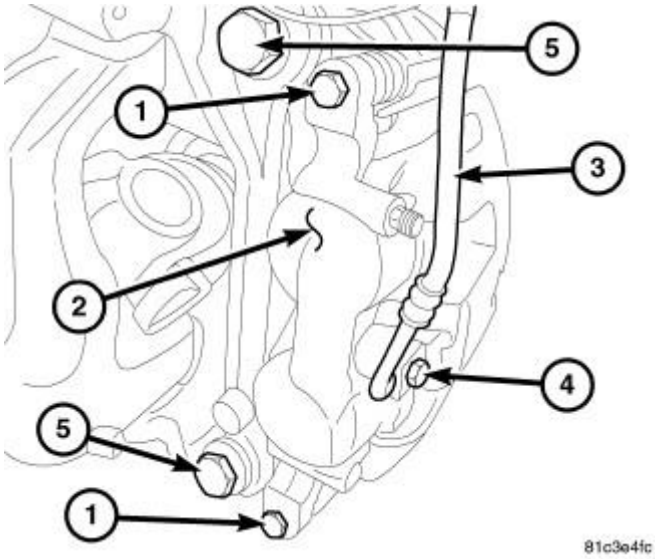

Fig. 148: Disc Brake Caliper & Bolts
Courtesy of CHRYSLER GROUP, LLC

11. Install the disc brake caliper (2) and tighten the bolts (1).
12. Install tie-rod or drag link end onto the steering knuckle arm.

LINK, STABILIZER BAR

REMOVAL

STABILIZER LINK

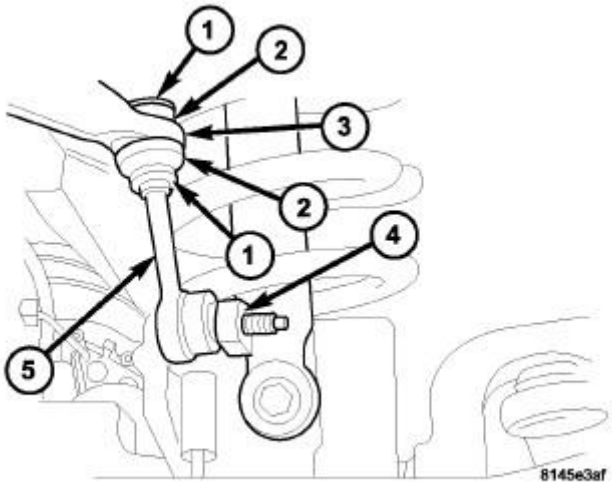

Fig. 149: Identifying Retainer, Grommet, Stabilizer Bar, Axle Bracket & Stabilizer Link
Courtesy of CHRYSLER GROUP, LLC

1 - RETAINER
2 - GROMMET
3 - STABILIZER BAR
4 - AXLE BRACKET
5 - STABILIZER LINK

1. Raise and support the vehicle.
2. Hold the stabilizer link (5) shafts with a wrench and remove the link nuts at the stabilizer bar (3).
3. Remove the retainers (1) and grommets (2) from the stabilizer bar links (5).

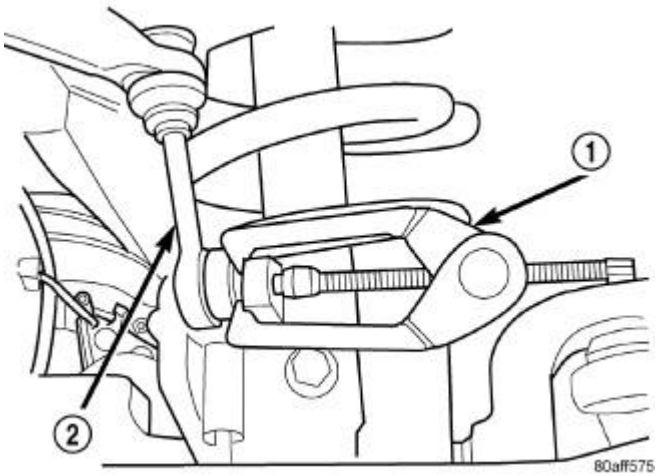

Fig. 150: Stabilizer Link
Courtesy of CHRYSLER GROUP, LLC

1 - PULLER
2 - LINK

4. Remove the stabilizer bar link nuts from the axle brackets.
5. Remove the links (2) from the axle brackets with Puller (special tool #C-3894-A, Puller, Tie Rod) (1). Refer to **Fig. 150**.

STABILIZER LINK WITH DISCONNECTING STABILIZER BAR

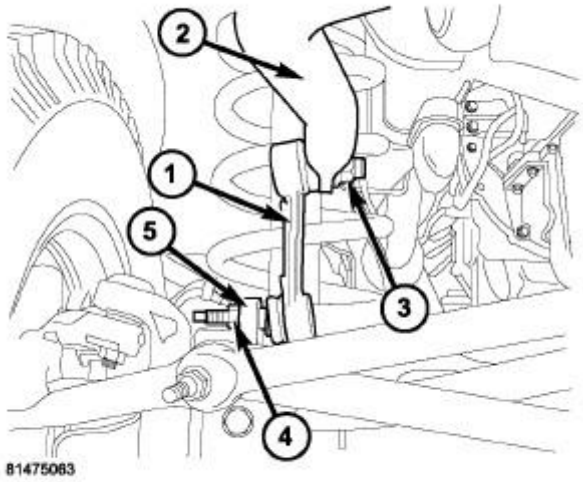

Fig. 151: Identifying Stabilizer Link, Nuts & Stabilizer Bar
Courtesy of CHRYSLER GROUP, LLC

1. Raise and support the vehicle.
2. Hold the stabilizer link (1) shafts with a wrench and remove the link nuts (3) at the stabilizer bar (2).

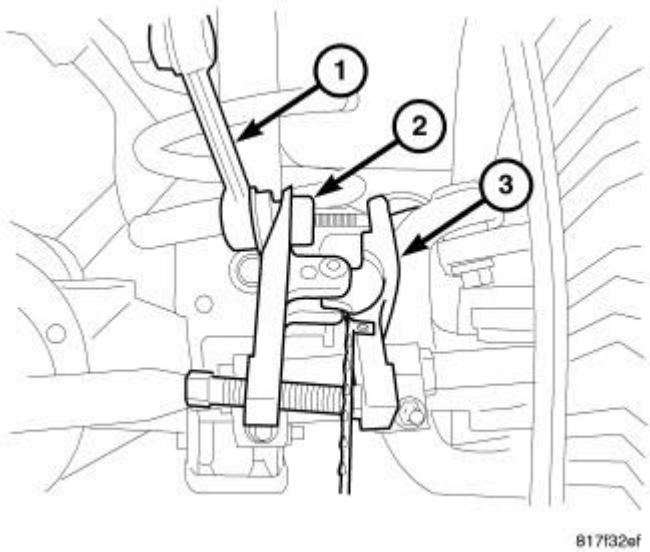

Fig. 152: Removing Links From Axle Brackets
Courtesy of CHRYSLER GROUP, LLC

3. Remove the stabilizer bar link nuts from the axle brackets (2).
4. Remove the links (1) from the axle brackets (2) with Puller (special tool #9360, Remover, Ball Joint) (3) .

INSTALLATION

STANDARD LINK

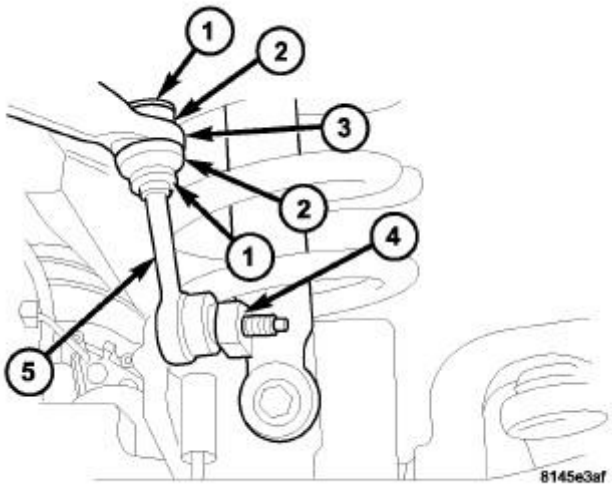

Fig. 153: Identifying Retainer, Grommet, Stabilizer Bar, Axle Bracket & Stabilizer Link
Courtesy of CHRYSLER GROUP, LLC

1 - RETAINER
2 - GROMMET
3 - STABILIZER BAR
4 - AXLE BRACKET
5 - STABILIZER LINK

1. Install links (5) to the axle bracket (4) and tighten nut to specifications. Refer to **SPECIFICATIONS**. .
2. Install links (5), retainers (1), grommets (2) and nuts to the stabilizer bar. Hold the link shaft with a wrench and tighten the nuts to specifications. Refer to **SPECIFICATIONS**. .
3. Remove the supports and lower the vehicle.

WITH DISCONNECTING STABILIZER BAR

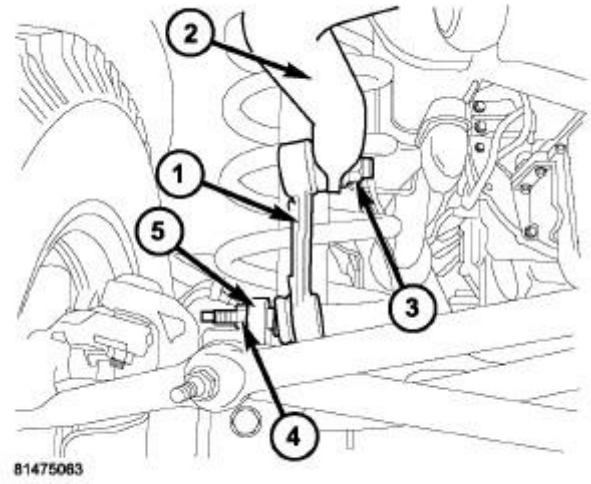

Fig. 154: Identifying Stabilizer Link, Nuts & Stabilizer Bar
Courtesy of CHRYSLER GROUP, LLC

1. Install links (1) to the axle bracket (5) and tighten nut (4) to specifications. Refer to **SPECIFICATIONS**. .
2. Install links (1) and nuts (3) to the stabilizer bar (2). Hold the link shaft with a wrench and tighten the nuts to specifications. Refer to **SPECIFICATIONS**. .
3. Remove the supports and lower the vehicle.

SHOCK ABSORBER, SUSPENSION

DIAGNOSIS AND TESTING

DIAGNOSIS AND TESTING - SHOCK ABSORBER

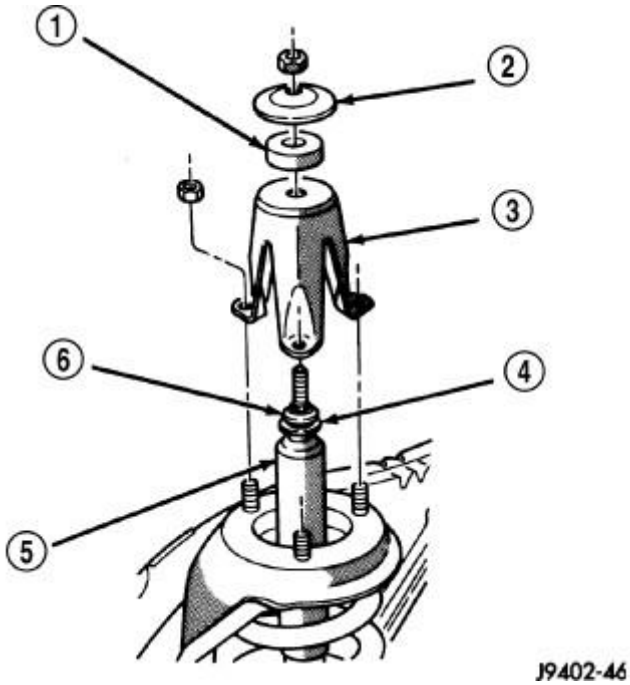

Fig. 155: Shock Absorber Components
Courtesy of CHRYSLER GROUP, LLC

1 - GROMMET
2 - RETAINER
3 - BRACKET
4 - RETAINER
5 - SHOCK
6 - GROMMET

A knocking or rattling noise from a shock absorber (5) may be caused by movement between mounting grommets (1 and 6) and metal brackets (3) or attaching components. These noises can usually be stopped by tightening the attaching nuts. If the noise persists, inspect for damaged and worn bushings, and attaching components. Repair as necessary if any of these conditions exist.

A squeaking noise from the shock absorber may be caused by the hydraulic valving and may be intermittent. This condition is not repairable and the shock absorber must be replaced.

The shock absorbers are not refillable or adjustable. If a malfunction occurs, the shock absorber must be replaced. To test a shock absorber, hold it in an upright position and force the piston in and out of the cylinder four or five times. The action throughout each stroke should be smooth and even.

The shock absorber bushings do not require any type of lubrication. Do not attempt to stop bushing noise by lubricating them. Grease and mineral oil-base lubricants will deteriorate the bushing.

REMOVAL

REMOVAL

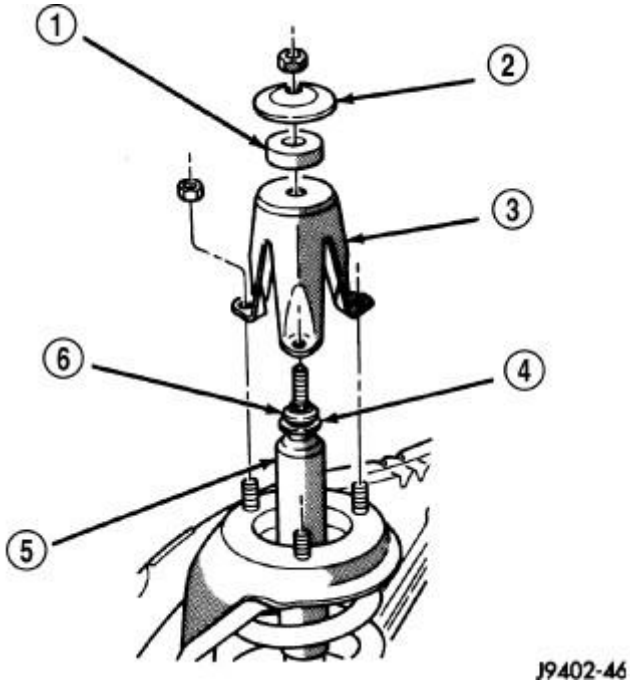

Fig. 156: Shock Absorber Components
Courtesy of CHRYSLER GROUP, LLC

1 - GROMMET
2 - RETAINER
3 - BRACKET
4 - RETAINER
5 - SHOCK
6 - GROMMET

1. Remove the nut, retainer (4) and grommet (1) from the upper stud in the engine compartment.
2. Remove three nuts from the upper shock bracket (3). Refer to **Fig. 156**.

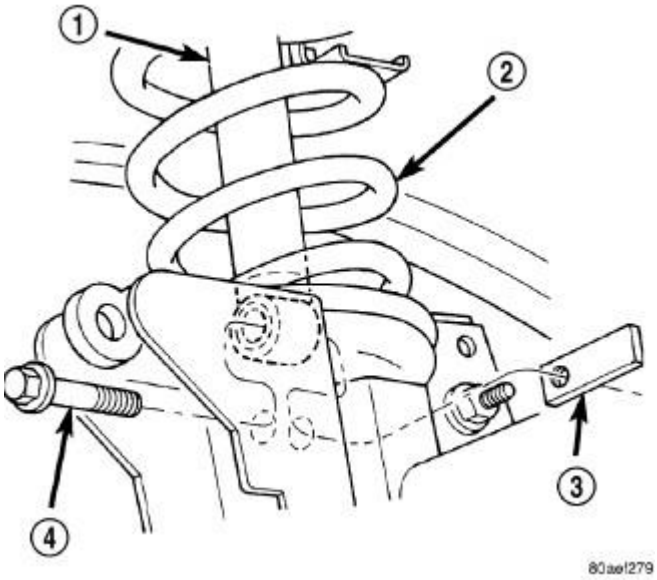

Fig. 157: Shock Absorber & Bolts
Courtesy of CHRYSLER GROUP, LLC

3. Remove the lower bolt (4) from the axle bracket. Refer to **Fig. 157**. Remove the shock absorber (1) from engine compartment.

INSTALLATION

INSTALLATION

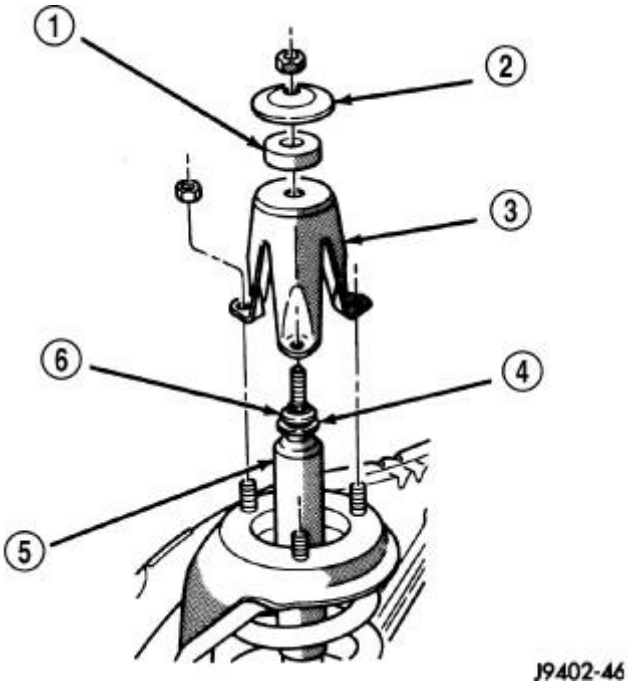

Fig. 158: Shock Absorber Components
Courtesy of CHRYSLER GROUP, LLC

1 - GROMMET
2 - RETAINER
3 - BRACKET
4 - RETAINER
5 - SHOCK
6 - GROMMET

1. Position the lower retainer (4) and grommet (6) on the upper stud. Insert the shock absorber (5) through the spring from engine compartment.

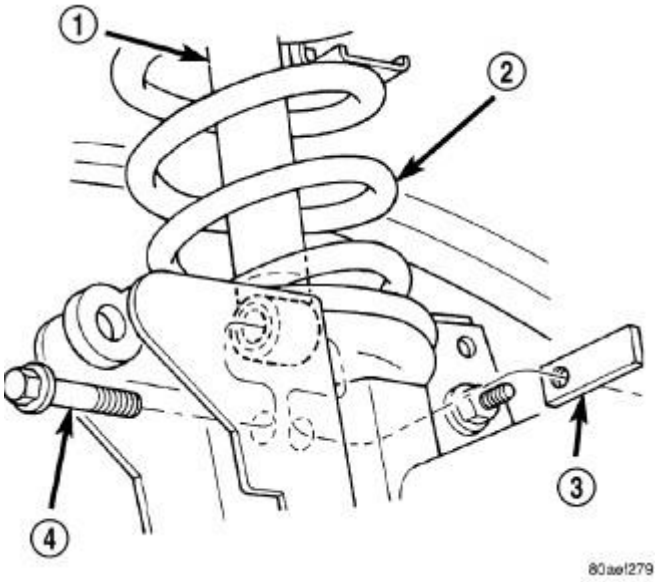

Fig. 159: Shock Absorber & Bolts
Courtesy of CHRYSLER GROUP, LLC

1 - SHOCK
2 - SPRING
3 - FLAG NUT
4 - SHOCK BOLT

2. Install the lower bolt (4) and tighten to specifications. Refer to **SPECIFICATIONS**. .

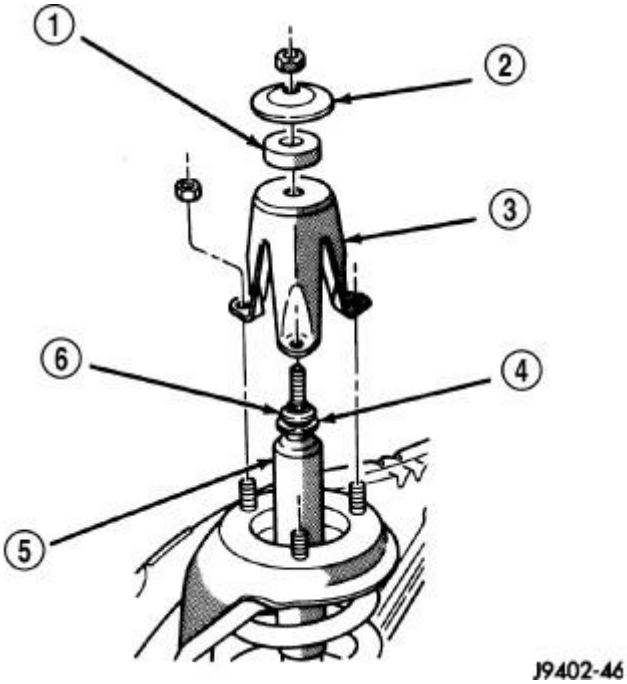

Fig. 160: Shock Absorber Components
Courtesy of CHRYSLER GROUP, LLC

1 - GROMMET
2 - RETAINER
3 - BRACKET
4 - RETAINER
5 - SHOCK
6 - GROMMET

3. Install the upper shock bracket (3) and three nuts and tighten nuts to specifications. Refer to **SPECIFICATIONS**. .
4. Install upper grommet (1) and retainer (2). Install upper shock nut and tighten to specifications. Refer to **SPECIFICATIONS**. .

SPRING, FRONT COIL

REMOVAL

REMOVAL

1. Raise and support the vehicle. Position a hydraulic jack under the axle to support it.

2. Paint or scribe alignment marks on lower suspension arm cam adjusters and axle bracket for installation reference.
3. Remove the upper suspension arm and loosen lower suspension arm bolts.
4. Mark and disconnect the front propeller shaft from the axle 4x4 models.
5. Disconnect the track bar from the frame rail bracket.
6. Disconnect the drag link from pitman arm.
7. Disconnect the stabilizer bar link and shock absorber from the axle.
8. Lower the axle until the spring is free from the upper mount. Remove the coil spring.

INSTALLATION

INSTALLATION

1. Position the coil spring on the axle pad.
2. Raise the axle into position until the spring seats in the upper mount.
3. Connect the stabilizer bar links and shock absorbers to the axle bracket. Connect the track bar to the frame rail bracket.
4. Install the upper suspension arm.
5. Install the front propeller shaft to the axle, if equipped.
6. Install drag link to pitman arm and tighten nut to specifications. Refer to **SPECIFICATIONS**. . Install a new cotter pin.
7. Remove the supports and lower the vehicle.
8. Tighten the following suspension components to specifications. Refer to **SPECIFICATIONS**. .

- Link to stabilizer bar nut.
- Lower shock bolt.
- Track bar bolt at axle shaft tube bracket.
- Upper suspension arm nut at axle bracket.
- Upper suspension nut at frame bracket.
- Align lower suspension arm reference marks and tighten cam nut.
- Lower suspension nut at frame bracket.

STABILIZER BAR, FRONT

DESCRIPTION

STABILIZER BAR

The bar extends across the front underside of the chassis and connects to the frame crossmember. The ends of the bar mount to the lower suspension arm. All mounting points of the stabilizer bar are isolated by bushings.

DISCONNECTING STABILIZER BAR

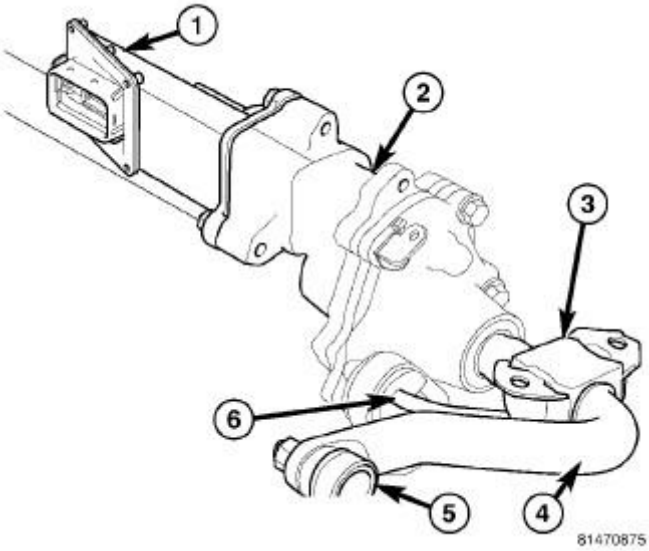

Fig. 161: Disconnecting Stabilizer Bar Unit
Courtesy of CHRYSLER GROUP, LLC

WARNING: **The disconnecting stabilizer bar unit (2) is not serviced separately from the bar (4). Do not disassemble this unit (2) from the stabilizer bar (4).**

NOTE: **The stabilizer links (5), stabilizer bar retainers/ bushings (3), stabilizer bar with the disconnecting unit as an assembly (4) and the stabilizer bar actuator (1) are the only are serviceable components.**

NOTE: **When replacing the disconnecting stabilizer bar with a new bar you must use a scan tool to program the new stabilizer bar to the vehicle.**

This system allows greater front suspension travel in off-road situations. It consists of a disconnecting unit (2), electronic actuator (1), stabilizer bar (4), stabilizer bar mounting retainers (3), stabilizer links (5) and a anti-rotational bracket (6) connected to the stabilizer bar retainer (3).

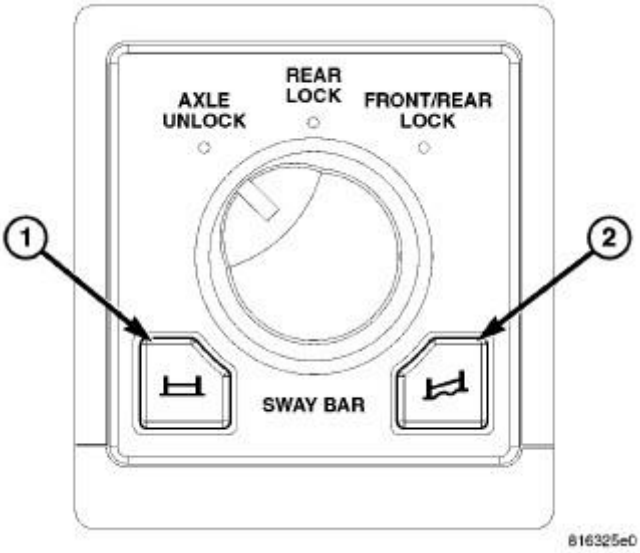

Fig. 162: Disconnecting Stabilizer Switch
Courtesy of CHRYSLER GROUP, LLC

The electronic disconnecting stabilizer bar is operated by a combined transfer case and disconnecting stabilizer switch on the dash: The 2 mode positions are: On-Road mode (1), and Off-Road mode (2). The electronic disconnecting stabilizer bar is designed to be driven in On-Road mode (1) (indicated by a solid on-road mode light) for normal street and highway conditions (dry hard surfaced roads).

To service the switch, remove the Instrument panel center bezel. Refer to **BEZEL, INSTRUMENT PANEL, CENTER, REMOVAL** .

OPERATION

STABILIZER BAR

The stabilizer bar is used to minimize vehicle front sway during turns. The bar helps to maintain a flat attitude to the road surface.

DISCONNECTING STABILIZER BAR

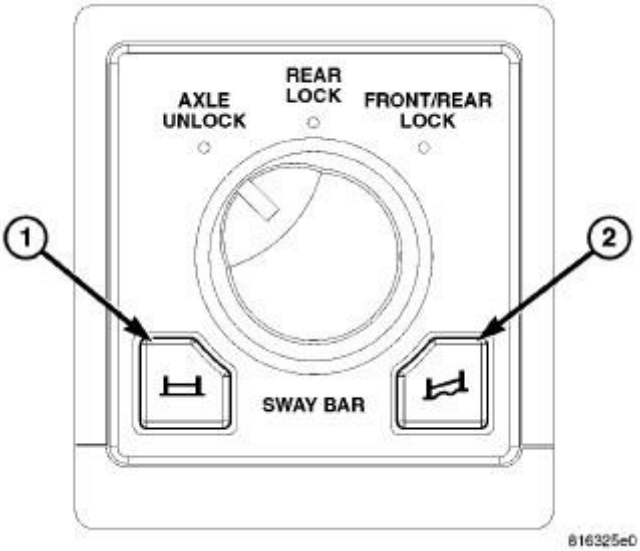

Fig. 163: Disconnecting Stabilizer Switch
Courtesy of CHRYSLER GROUP, LLC

NOTE: The off-road mode (2) is intended for use at low speed only and is equipped with a vehicle speed sensor. When in off-road mode, if the vehicle speed exceeds 18 MPH, the system will return to on-road mode (indicated by a flashing off-road mode light). If vehicle speed is reduced to 14 MPH, the system will once again return to off-road mode (indicated by a solid off-road mode light).

When in a severe off-road situation, the stabilizer bar may be placed into off-road mode to increase maneuverability. To engage the off-road mode, place the vehicle in 4WD HI or LO, and depress the Stabilizer Bar Control Switch for off-road mode (2). The off-road mode indicator light will flash until mode has been fully engaged, indicated by a solid light.

To disengage off-road mode, depress the Stabilizer Bar Control Switch for on-road mode (1). The on-road mode indicator light will flash until mode has been fully engaged, indicated by a solid light.

REMOVAL

STABILIZER BAR

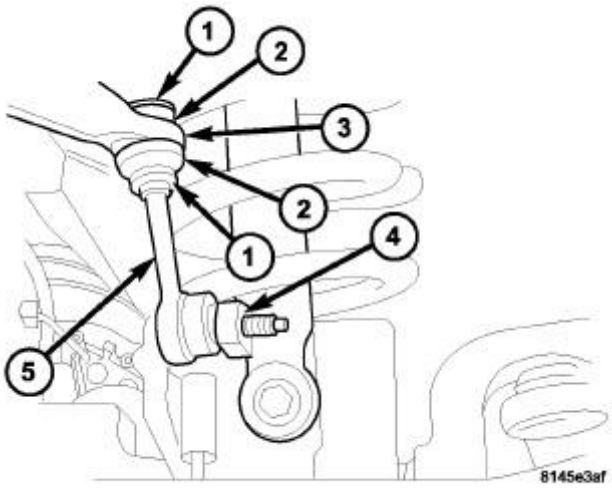

Fig. 164: Identifying Retainer, Grommet, Stabilizer Bar, Axle Bracket & Stabilizer Link
Courtesy of CHRYSLER GROUP, LLC

1 - RETAINER
2 - GROMMET
3 - STABILIZER BAR
4 - AXLE BRACKET
5 - STABILIZER LINK

1. Raise and support the vehicle.
2. Hold the stabilizer link (5) shafts with a wrench and remove the link nuts at the stabilizer bar (3).
3. Remove the retainers (1) and grommets (2) from the stabilizer bar links (5).
4. Remove the stabilizer bar clamps from the frame rails and remove the stabilizer bar.

DISCONNECTING STABILIZER BAR

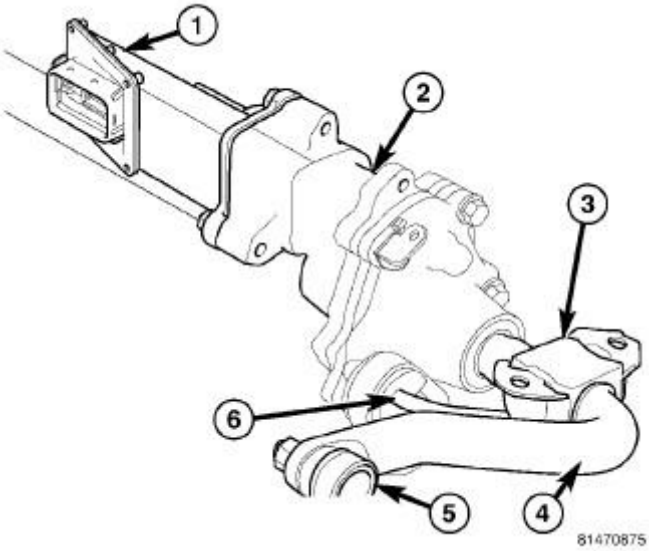

Fig. 165: Disconnecting Stabilizer Bar Unit
Courtesy of CHRYSLER GROUP, LLC

WARNING: The disconnecting stabilizer bar unit (2) is not serviced separately from the bar (4). Do not disassemble this unit (2) from the stabilizer bar (4).

NOTE: The stabilizer links (5), stabilizer bar retainers/ bushings (3), stabilizer bar with the disconnecting unit as an assembly (4) and the stabilizer bar actuator (1) are the only are serviceable components.

NOTE: When replacing the disconnecting stabilizer bar with a new bar you must use a scan tool to program the new stabilizer bar to the vehicle.

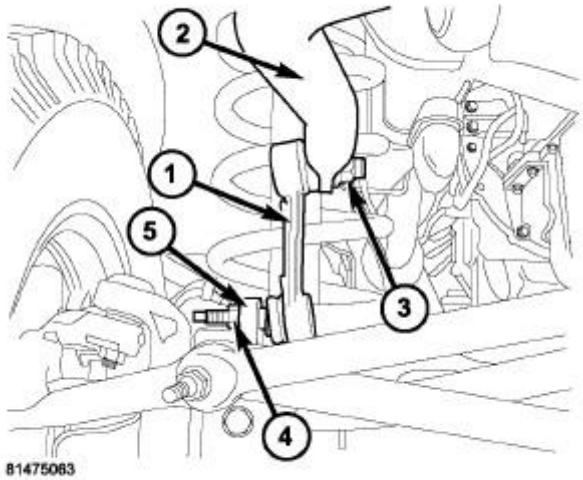

Fig. 166: Identifying Stabilizer Link, Nuts, & Stabilizer Bar
Courtesy of CHRYSLER GROUP, LLC

1. Raise and support the vehicle.
2. Hold the stabilizer link (1) shafts with a wrench and remove the link nuts (3) at the stabilizer bar (2).

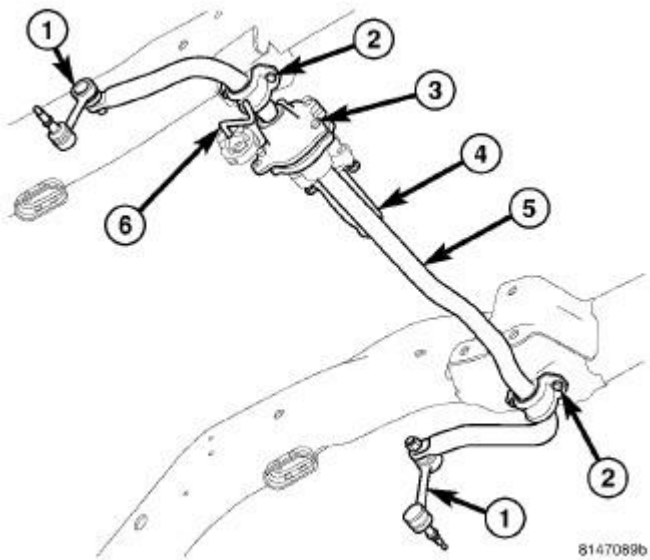

Fig. 167: Disconnecting Stabilizer Bar
Courtesy of CHRYSLER GROUP, LLC

NOTE: **Before removing the connector (4) from the actuator clean the outside of the connector with a cleaner and compressed air, to remove any dirt or debris.**

3. Disconnect the electronic actuator electrical connector (4) for the disconnecting stabilizer bar (5).
4. Remove the 3 bolts securing the disconnecting stabilizer actuator **If replacing the stabilizer bar** . Refer to **ACTUATOR, STABILIZER BAR, REMOVAL**.

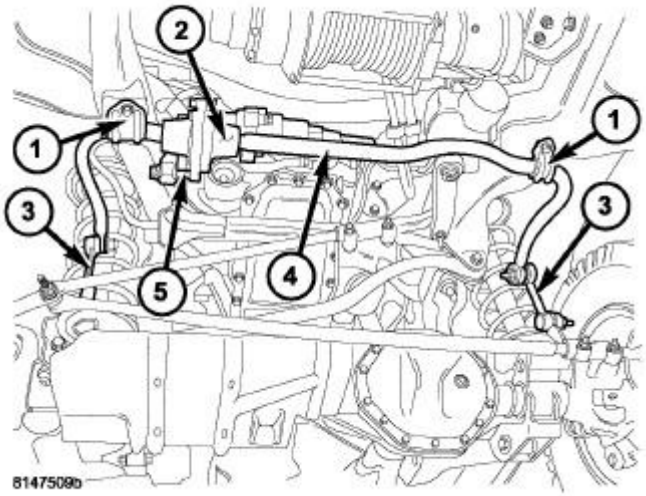

Fig. 168: Identifying Stabilizer Bar & Retainers
Courtesy of CHRYSLER GROUP, LLC

5. Remove the stabilizer bar retainers (1) from the frame rails and remove the stabilizer bar (4).

INSTALLATION

STANDARD STABILIZER BAR

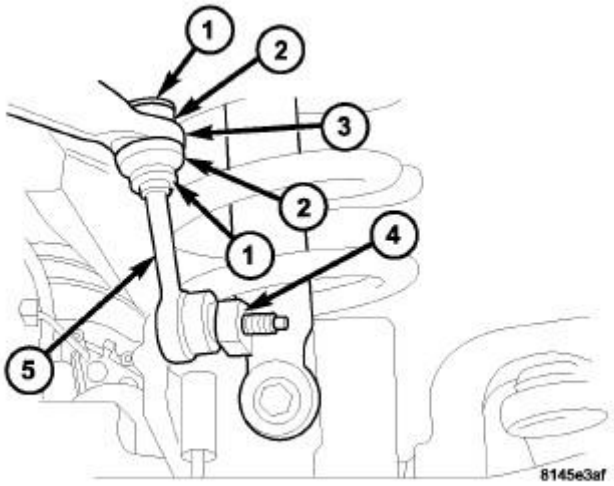

Fig. 169: Identifying Retainer, Grommet, Stabilizer Bar, Axle Bracket & Stabilizer Link
Courtesy of CHRYSLER GROUP, LLC

1 - RETAINER
2 - GROMMET

3 - STABILIZER BAR
4 - AXLE BRACKET
5 - STABILIZER LINK

1. Position the stabilizer bar on the frame rail and install the clamps and bolts. Ensure the bar is centered with equal spacing on both sides.
2. Tighten the clamp bolts to specifications. Refer to **SPECIFICATIONS**. .
3. Install links (5), retainers (1), grommets (2) and nuts to the stabilizer bar (3). Hold the link shaft with a wrench and tighten the nuts to specifications. Refer to **SPECIFICATIONS**. .
4. Remove the supports and lower the vehicle.

DISCONNECTING STABILIZER BAR

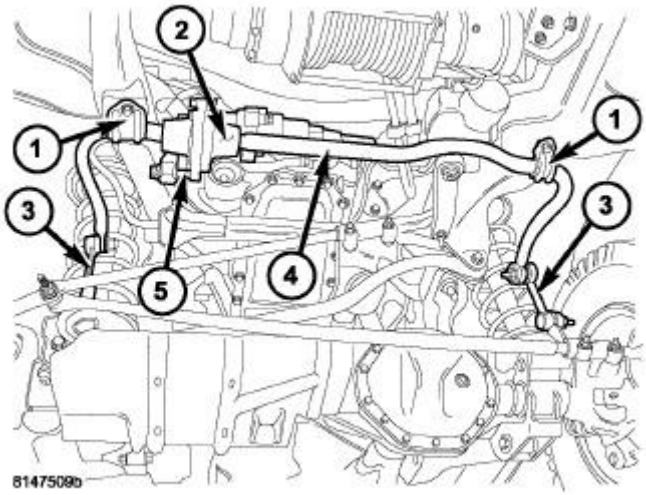

Fig. 170: Identifying Stabilizer Bar & Retainers
Courtesy of CHRYSLER GROUP, LLC

WARNING: **The disconnecting stabilizer bar unit (2) is not serviced separately from the bar (4). Do not disassemble this unit (2) from the stabilizer bar (4).**

NOTE: **The stabilizer links (3), stabilizer bar retainers/ bushings (1), stabilizer bar with the disconnecting unit as an assembly (4) and the stabilizer bar actuator are the only are serviceable components.**

NOTE: **When replacing the disconnecting stabilizer bar with a new bar you must use a scan tool to program the new stabilizer bar to the vehicle.**

1. Position the stabilizer bar (4) on the frame rail and install the retainers with bushings and bolts (1). Ensure the bar is centered with equal spacing on both sides.

2. Tighten the retainer bolts (1) to specifications. Refer to **SPECIFICATIONS**. .

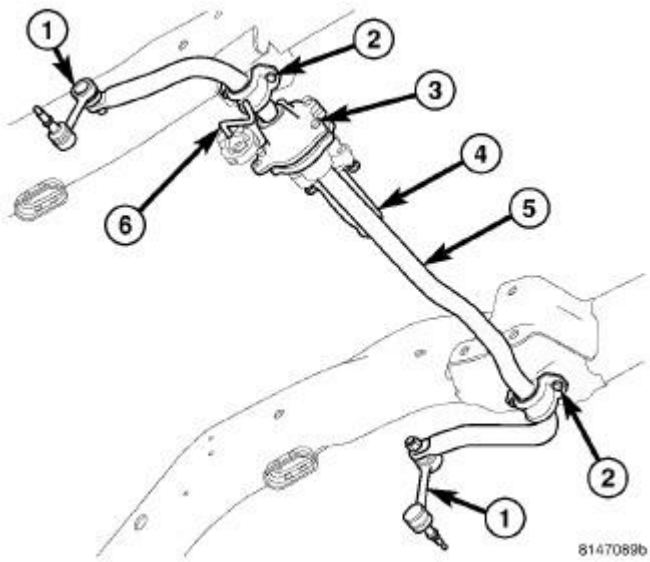

Fig. 171: Disconnecting Stabilizer Bar
Courtesy of CHRYSLER GROUP, LLC

NOTE: **The seal must be clean and intact in the electrical connector when reconnecting to the actuator.**

3. **If the actuator was removed** , install the actuator (4) to the disconnecting unit (3). Refer to **ACTUATOR, STABILIZER BAR, INSTALLATION**.
4. Reconnect the electronic actuator electrical connector for the disconnecting stabilizer bar (5).

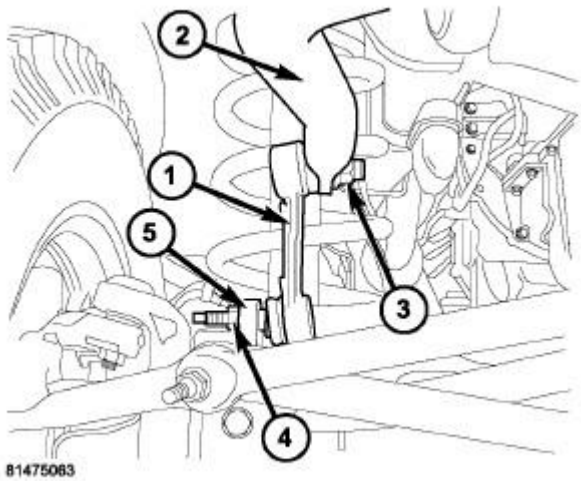

Fig. 172: Identifying Stabilizer Link, Nuts, & Stabilizer Bar

Courtesy of CHRYSLER GROUP, LLC

5. Install links (1) and nuts (3) to the stabilizer bar (2). Hold the link shaft with a wrench and tighten the nuts to specifications. Refer to **SPECIFICATIONS**. .
6. Remove the supports and lower the vehicle.
7. Using a scan tool program the new stabilizer bar to the vehicle.

TRACK BAR, FRONT

REMOVAL

REMOVAL

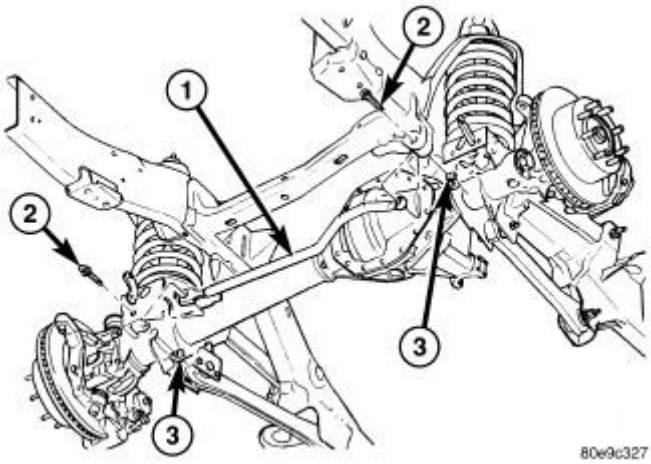

Fig. 173: Track Bar, Bolts & Nuts
Courtesy of CHRYSLER GROUP, LLC

1 - TRACK BAR
2 - BOLT
3 - NUT

1. Raise and support the axle.
2. Remove the track bar bolts (2) and nuts (3). Refer to **Fig. 173**.
3. Remove the track bar (1). Refer to **Fig. 173**.

INSTALLATION

INSTALLATION

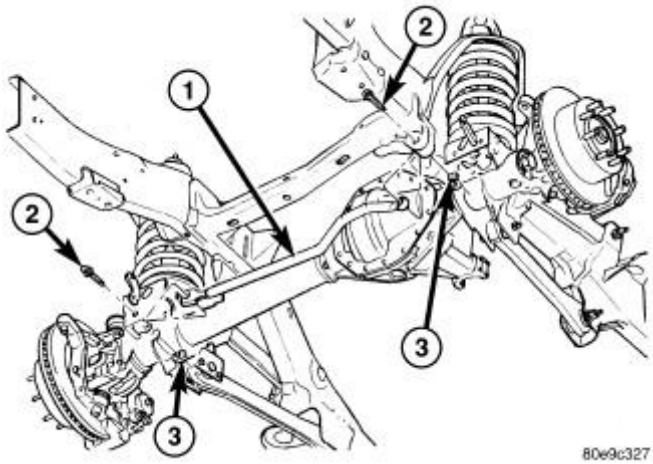

Fig. 174: Track Bar, Bolts & Nuts
Courtesy of CHRYSLER GROUP, LLC

1 - TRACK BAR
2 - BOLT
3 - NUT

1. Install the track bar (1).
2. Install the new bolts (2) and nuts (3) and torque to specifications. Refer to **SPECIFICATIONS**. .
3. Remove the supports under the axle and lower the vehicle to the ground.

DESCRIPTION

DESCRIPTION

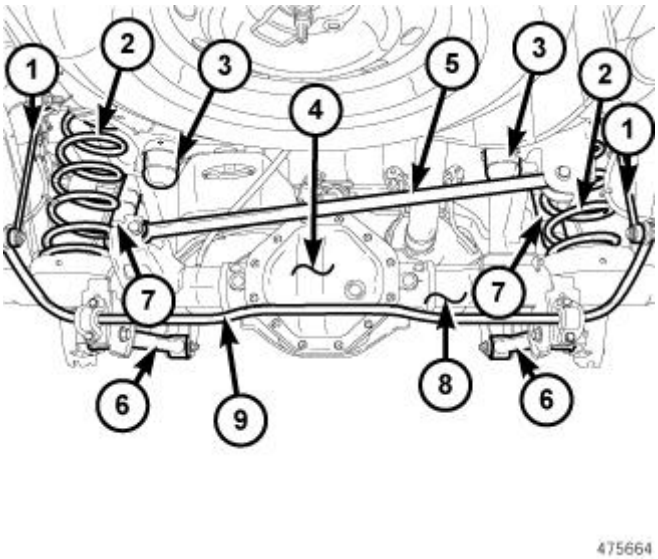

Fig. 1: Rear Suspension Components
Courtesy of CHRYSLER GROUP, LLC

The rear suspension system on the 1500 series is a coil spring system, while the 2500 and 3500 series is a leaf spring system. The suspension systems are comprised of:

- Shock Absorbers (7)
- Jounce Bumpers (3)
- Stabilizer Bar (9) (1500 series)
- Stabilizer links (1) (1500 series)
- Coil Springs (2) (1500 series)
- Upper Control Arms (above lower control arms, not shown in illustration) (1500 series).
- Lower Control Arms (6) (1500 series)
- Track Bar (5) (1500 series)
- Leaf Springs (2500 and 3500 series, not shown in illustration)
- Auxiliary Leaf Spring (3500 series, not shown in illustration)
- Auxiliary Spring Bumpers (3500 series, not shown in illustration)
- Leaf Spring Eye Bushings (2500 and 3500 series, not shown in illustration)
- Leaf Spring Tip Inserts (2500 and 3500 series, not shown in illustration)

CAUTION: A vehicle should always be loaded so the vehicle weight center-line is located immediately forward of the rear axle. Correct vehicle loading provides proper front tire-to-road contact. This results in maximum vehicle handling stability and safety. Incorrect vehicle weight distribution can cause excessive tire tread wear, spring fatigue or failure, and erratic steering.

CAUTION: Suspension components with rubber/urethane bushings (except stabilizer bar) should be tightened with the vehicle at normal ride height. It is important to have the springs supporting the weight of the vehicle when the fasteners are torqued. If springs are not at their normal ride position, vehicle ride comfort could be affected and premature bushing wear may occur.

DIAGNOSIS AND TESTING

DIAGNOSIS AND TESTING - COIL SPRING AND SHOCK

A knocking or rattling noise from a shock absorber may be caused by movement between mounting bushings and metal brackets or attaching components. These noises can usually be stopped by tightening the attaching nuts. If the noise persists, inspect for damaged and worn bushings, and attaching components. Repair as necessary if any of these conditions exist.

A squeaking noise from the shock absorber may be caused by the hydraulic valving and may be intermittent. This condition is not repairable and the shock absorber must be replaced.

The shock absorbers are not refillable or adjustable. If a malfunction occurs, the shock absorber must be replaced. To test a shock absorber, hold it in an upright position and force the piston in and out of the cylinder four or five times. The action throughout each stroke should be smooth and even.

If the vehicle is used for severe, off-road operation, the springs should be examined periodically. Check for broken springs.

SPRING AND SHOCK ABSORBER

CONDITION	POSSIBLE CAUSES	CORRECTION
REAR OF VEHICLE SAGS	1. Broken spring.	1. Replace spring.
	2. Spring fatigue.	2. Replace spring.
SPRING NOISE	1. Worn springs.	1. Replace spring.
	2. Worn isolators.	2. Replace isolators.
	3. Severely overloaded.	3. Check GVW of vehicle (Unload cargo).
SHOCK NOISE	1. Loose mounting fastener.	1. Tighten to specification.
	2. Worn bushings.	2. Replace shock.
	3. Leaking shock.	3. Replace shock.

LEAF SPRING AND SHOCK

A knocking or rattling noise from a shock absorber may be caused by movement between mounting bushings and metal brackets or attaching components. These noises can usually be stopped by tightening the attaching nuts. If the noise persists, inspect for damaged and worn bushings, and attaching components. Repair as necessary if any of these conditions exist.

WARNING: The shock absorbers are under high pressure. Do Not heat or attempt to open the shock absorbers.

A squeal noise from the shock absorber may be caused by the hydraulic valving and may be intermittent. This condition is not repairable and the shock absorber must be replaced.

NOTE: When inspecting the shock absorber, do not clamp the body or the piston rod.

NOTE: Monotube shock absorber compression forces will be much higher than standard shock absorbers.

The shock absorbers are not refillable or adjustable. If a malfunction occurs, the shock absorber must be replaced. To check a shock absorber, grasp the tube and invert the shock so the piston rod touches the ground, then compress the shock four or five times. The action throughout each stroke should be smooth and even, and the piston rod should extend from the shock on its own.

The shock absorber bushings do not require any type of lubrication. Do not attempt to stop bushing noise by lubricating them. Grease and mineral oil-base lubricants will deteriorate the bushing.

A squeak or creak noise coming from the shock area may be related to any of the suspension components or mounts, but not necessarily the shock.

The spring eye and shock absorber bushings do not require any type of lubrication. Do not attempt to stop spring bushing noise by lubricating them. Grease and mineral oil-base lubricants will deteriorate the bushing rubber.

If the vehicle is used for severe, off-road operation, the springs should be examined periodically. Check for broken and shifted leafs, loose and missing clips, and broken center bolts. Refer to Spring and Shock Absorber Diagnosis chart for additional information.

SPRING AND SHOCK ABSORBER

CONDITION	POSSIBLE CAUSES	CORRECTION
SPRING SAGS	1. Broken leaf.	1. Replace spring.
	2. Spring fatigue.	2. Replace spring.
SPRING NOISE	1. Loose spring clamp bolts.	1. Tighten to specification.
	2. Worn bushings.	2. Replace bushings.
	3. Worn or missing spring tip inserts.	3. Replace spring tip inserts.

SHOCK NOISE	1. Loose mounting fastener.	1. Tighten to specification.
	2. Worn bushings.	2. Replace shock.
	3. Leaking shock.	3. Replace shock.

SPECIFICATIONS

SPECIFICATIONS

1500

DESCRIPTION	N.m	Ft. Lbs.	In. Lbs.
Control Arm Bolt/Nut	305	225	-
Park Brake Cable Guide Bolt	20	15	177
Shock Absorber Bolt/Nut	136	100	-
Stabilizer Bar To Axle Bracket Bolts	50	37	-
Stabilizer Link To Frame Bolt/Nut	75	55.5	-
Stabilizer Link To Stabilizer Bar Nut	107	79	-
Track Bar Bolts	175	129	-

2500 AND 3500

DESCRIPTION	N.m	Ft. Lbs.	In. Lbs.
Jounce Bumper Bolts	29	21.5	-
Shock Absorber, Lower Nut/Bolt	136	100	-
Shock Absorber, Upper Nut/Bolt	136	100	-
Spring Clamp U-Bolt Nuts	149	110	-
Spring Front Nut/Bolt to Frame	345	254.5	-
Spring Shackle Nut/Bolt, Upper/Lower	217	160	-

3500 CAB CHASSIS

DESCRIPTION	N.m	Ft. Lbs.	In. Lbs.
Shock Absorber, Lower Bolt/Nut	136	100	-
Shock Absorber, Upper Bolt/Nut	250	185	-
Spring Clamp U-Bolt	488	360	-

Nuts			
Spring Front Bolt/Nut To Frame	385	289	-
Rear Spring Eye To Shackle Bracket Bolt/Nut	217	160	-
Rear Spring Shackle To Bracket Bolt/Nut	217	160	-
Jounce Bumper Bolts	55	41	-
Auxiliary Spring Bumpers	N/A	N/A	N/A
Stabilizer Bar Link To Frame	75	55	-
Stabilizer Bar To Stabilizer Link	88	65	-
Stabilizer Bar To Axle	65	48	-

4500 AND 5500

DESCRIPTION	N.m	Ft. Lbs.	In. Lbs.
Shock Absorber, Lower Bolt/Nut	136	100	-
Shock Absorber, Upper Bolt/Nut	250	185	-
Spring Clamp U-Bolt Nuts	488	360	-
Spring Front Bolt/Nut To Frame	488	360	-
Rear Spring Eye To Shackle Bolt/Nut	217	160	-
Rear Spring Shackle To Frame Bolt/Nut	430	317	-
Jounce Bumper Bolts	55	41	-
Auxiliary Spring Bumpers	N/A	N/A	N/A
Stabilizer Bar Link To Frame	75	55	-
Stabilizer Bar To Stabilizer Link	88	65	-
Stabilizer Bar To Axle	65	48	-

ARM, LOWER CONTROL

REMOVAL

REMOVAL

1. Raise and support the vehicle. Refer to **HOISTING, STANDARD PROCEDURE** .
2. Support the rear axle with a suitable holding fixture.

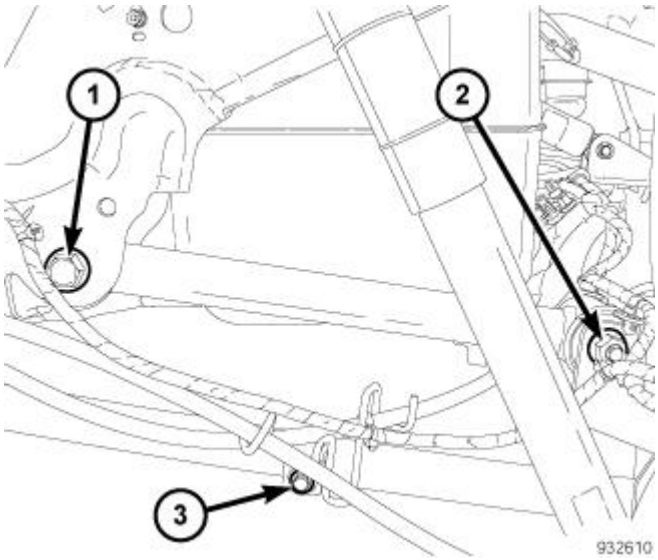

Fig. 2: Guide Bolt, Upper Control Arm Bolts & Nut
Courtesy of CHRYSLER GROUP, LLC

3. Remove the parking brake cable guide bolt (Left side only).

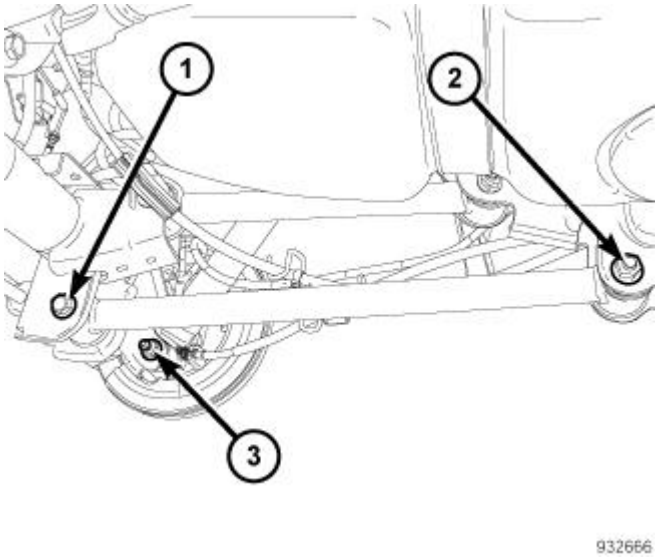

Fig. 3: Lower Control Arm Bolts & Nuts
Courtesy of CHRYSLER GROUP, LLC

4. Remove the lower control arm bolt (1) and nut at the axle **and discard the nut** .
5. Remove the lower control arm bolt and nut (2) at the frame.
6. Remove the lower control arm from the vehicle.

INSTALLATION

INSTALLATION

NOTE: The small bushing attaches to the frame and the large bushing to the axle.

1. Install the lower control arm to the vehicle.

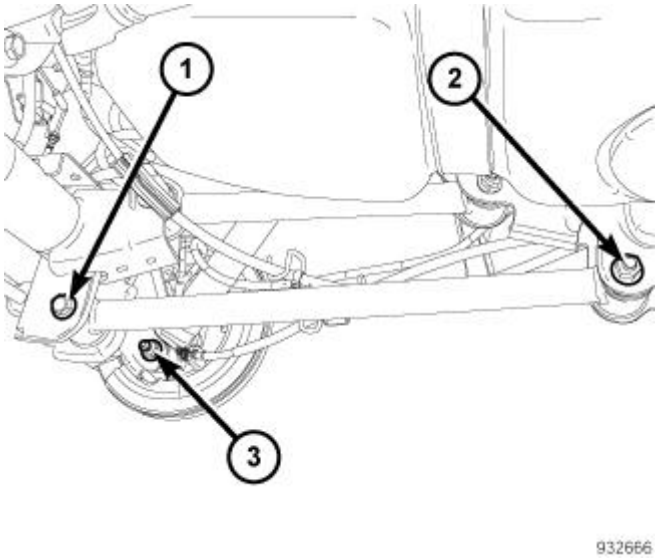

Fig. 4: Lower Control Arm Bolts & Nuts
Courtesy of CHRYSLER GROUP, LLC

2. Install the lower control arm bolt (1) with a **new** nut at the axle. Do not tighten.
3. Install the lower control arm bolt and nut (2) at the frame. Do not tighten.

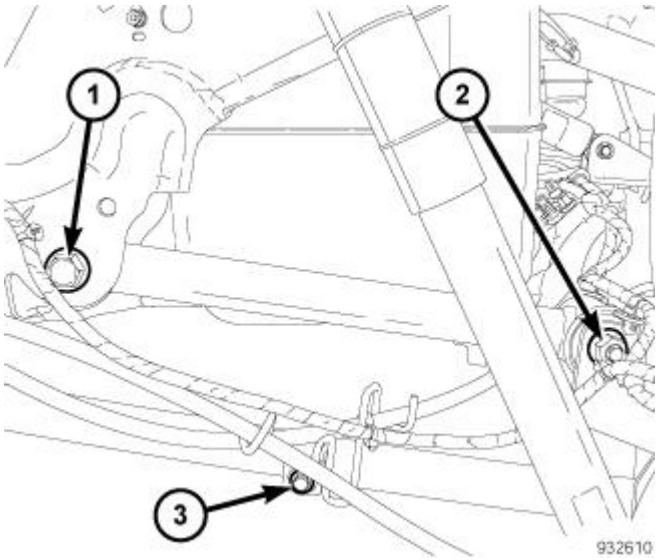

Fig. 5: Guide Bolt, Upper Control Arm Bolts & Nut
Courtesy of CHRYSLER GROUP, LLC

4. Position the parking brake cable guide (Left side only), install the guide bolt (3) and tighten to specifications. Refer to **SPECIFICATIONS**.
5. Remove the holding fixture supporting the axle.
6. Remove the support and lower the vehicle.
7. Tighten the lower control arm bolts to specifications. Refer to **SPECIFICATIONS**.

ARM, UPPER CONTROL

REMOVAL

REMOVAL

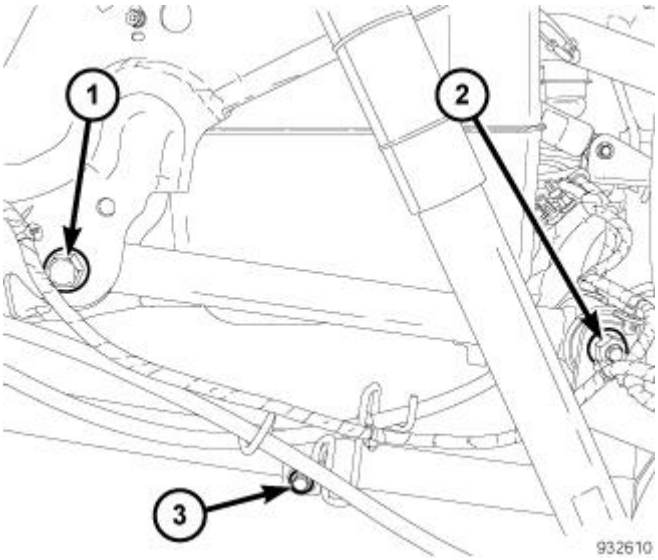

Fig. 6: Guide Bolt, Upper Control Arm Bolts & Nut
Courtesy of CHRYSLER GROUP, LLC

1. Raise and support the vehicle. Refer to **HOISTING, STANDARD PROCEDURE** .
2. Support the rear axle with a suitable holding fixture.
3. Remove the upper control arm bolt and nut (2) at the axle **and discard the nut** .
4. Remove the upper control arm front bolt (1) and nut at the frame.
5. Remove the upper control arm from the vehicle.

INSTALLATION

INSTALLATION

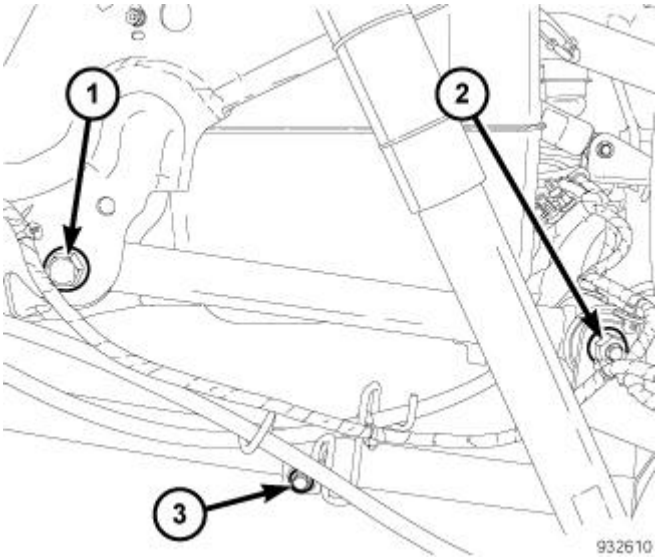

Fig. 7: Guide Bolt, Upper Control Arm Bolts & Nut
Courtesy of CHRYSLER GROUP, LLC

NOTE: The small bushing attaches to the axle and the large bushing to the frame.

1. Position the upper control arm to the vehicle.
2. Install the upper control arm bolt (1) and nut at the frame. Do not tighten.
3. Install the upper control arm bolt with a **new** nut (2) at the axle. Do not tighten.
4. Remove the holding fixture supporting the axle.
5. Remove the support and lower the vehicle.
6. Tighten the upper control arm bolts/nuts to specifications. Refer to **SPECIFICATIONS**.

BUMPER, JOUNCE

REMOVAL

COIL SPRING SYSTEM

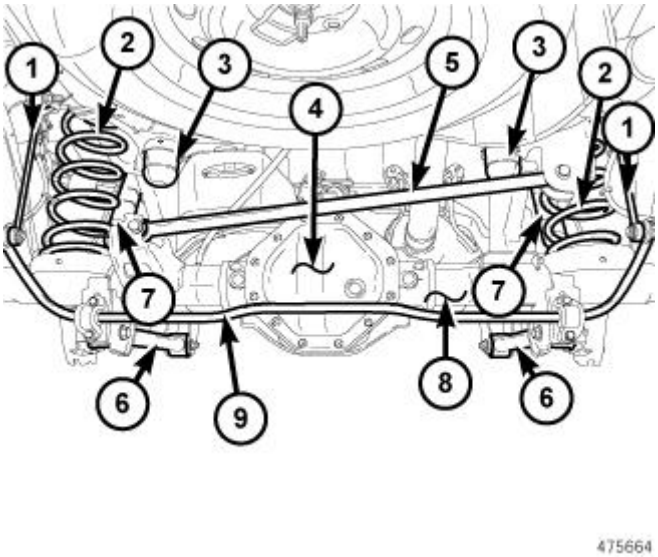

Fig. 8: Rear Suspension Components
Courtesy of CHRYSLER GROUP, LLC

1. Raise and support the vehicle. Refer to **HOISTING, STANDARD PROCEDURE** .

NOTE: **Rocking motion may be required while pulling the jounce bumper from the seating bracket**

2. Twist and pull out the jounce bumper (3) to remove from the seating bracket.

LEAF SPRING SYSTEM

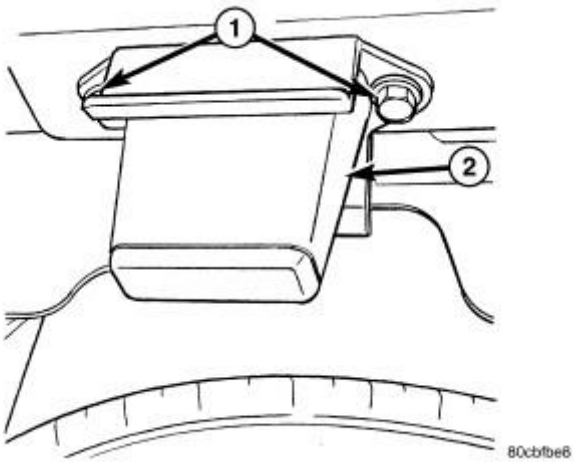

Fig. 9: Jounce Bumper & Mounting Bolts
Courtesy of CHRYSLER GROUP, LLC

1 - MOUNTING BOLTS
2 - JOUNCE BUMPER

1. Remove the two bolts (1) securing the jounce bumper (2) to the bracket.
2. Remove the jounce bumper (2).

INSTALLATION

COIL SPRING SYSTEM

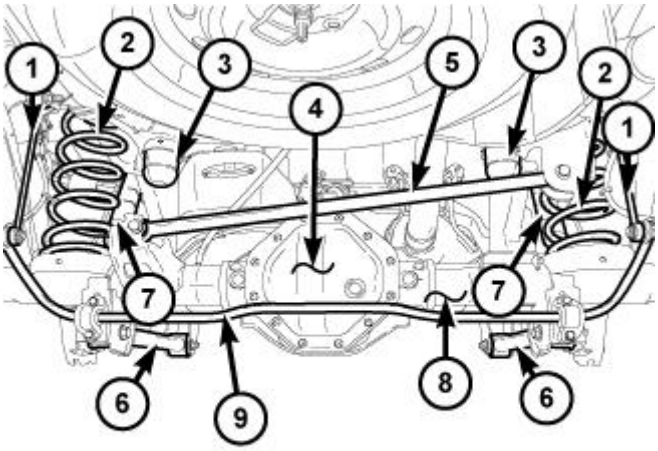

Fig. 10: Rear Suspension Components
Courtesy of CHRYSLER GROUP, LLC

1. Install the jounce bumper (3) and twist to seat in the bracket.
2. Remove the support and lower the vehicle.

LEAF SPRING SYSTEM

NOTE: **Some vehicles may snap into position instead using bolts. The jounce bumper will be located in the same position.**

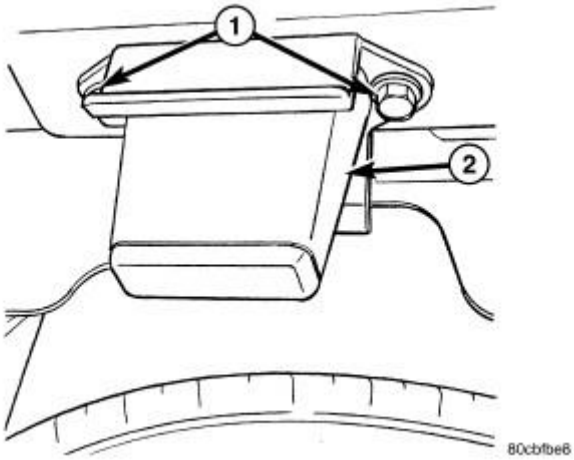

Fig. 11: Jounce Bumper & Mounting Bolts
Courtesy of CHRYSLER GROUP, LLC

1 - MOUNTING BOLTS
2 - JOUNCE BUMPER

1. Install the jounce bumper (2).
2. Install the two bolts (1) securing the jounce bumper (2) to the bracket and tighten to specifications. Refer to **SPECIFICATIONS**.

BUSHING(S)

REMOVAL

REMOVAL

CAUTION: Handling of springs must be done with care. Impact marks or nicks as small as 0.5 mm (0.0196 in.) deep in the spring eye or in the leaf incorporating the eye may result in premature spring failure.

1. Remove the spring from the vehicle. Refer to **SPRING(S), REMOVAL**.
2. Make small relief cuts in the flared up end of the bushing metal being careful not to cut the spring. Use a punch to bend the flared bushing metal down for push out.
3. Position the spring eye in a press.
4. Press the bushing out with an appropriate size driver.

INSTALLATION

INSTALLATION

CAUTION: Handling of springs must be done with care. Impact marks or nicks as

small as 0.5 mm (0.0196 in.) deep in the spring eye or in the leaf incorporating the eye may result in premature spring failure.

1. Press new bushing into the spring eye with an appropriate size driver. The bushing should be centered in the spring eye.
2. Stake the outer metal of the bushing in a minimum of six points to retain the bushing.
3. Install the spring on the vehicle. Refer to **SPRING(S), INSTALLATION**.

INSERT, SPRING TIP

REMOVAL

REMOVAL

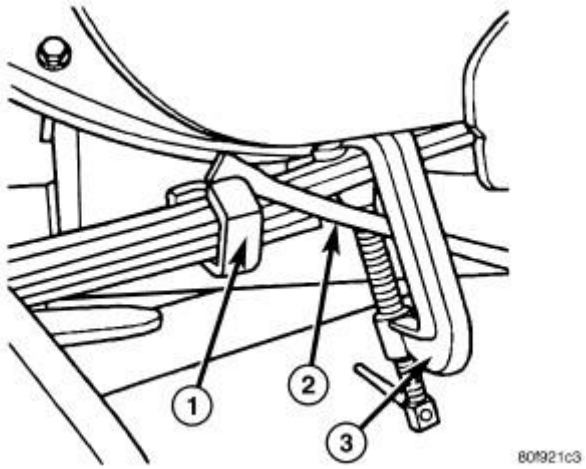

Fig. 12: C-Clamp, Pry Bar & Leaf Spring Clinch Clamp
Courtesy of CHRYSLER GROUP, LLC

1 - REAR LEAF SPRING CLINCH CLAMP
2 - PRY BAR
3 - C-CLAMP

1. Raise and support the vehicle.
2. Remove both rear tire and wheel assemblies
3. Position a large C-Clamp (3) adjacent to the spring clinch clip (1) and clamp the leaves of the spring together

CAUTION: When working on the front leaf spring clinch clamps finish the front before starting on the rear to prevent personal injury.

4. Use an appropriate pry bar (2) to bend open the spring clinch clip (1). Refer to **Fig. 12**. If necessary,

remove the existing spring clinch clip isolators.

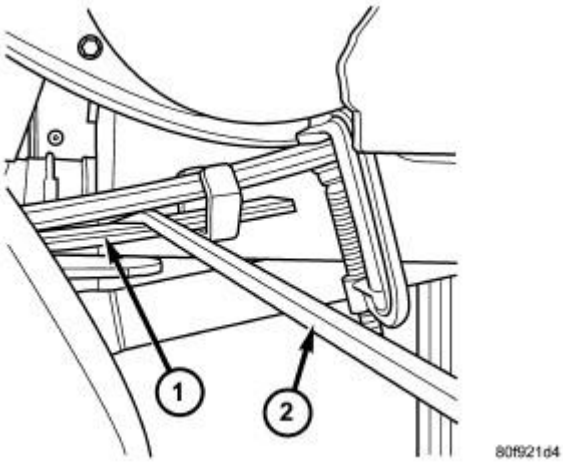

Fig. 13: Separating Spring Using Pry Bar
Courtesy of CHRYSLER GROUP, LLC

1 - REAR LEAF SPRING
2 - PRY BAR

5. Use the pry bar (2) to spread apart the leaf (1). Refer to **Fig. 13**. The clearance between the leaves should be enough to remove the old liner (if necessary) and install the replacement liner.

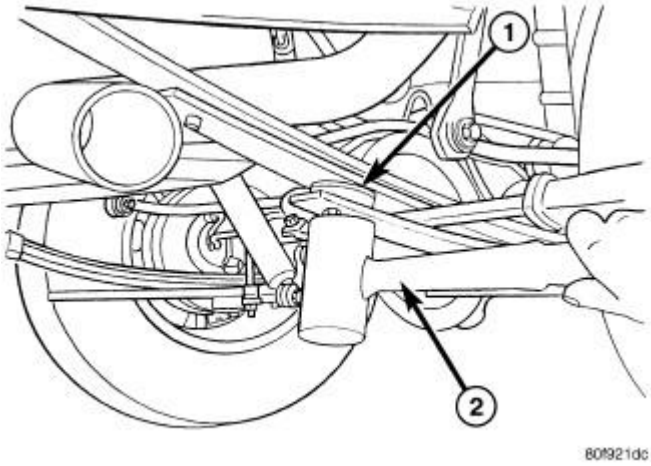

Fig. 14: Removing Spring Tip Liner
Courtesy of CHRYSLER GROUP, LLC

1 - SPRING TIP LINER
2 - RUBBER MALLET

6. If necessary, remove the old spring tip liner (1). Refer to **Fig. 14**.

INSTALLATION

INSTALLATION

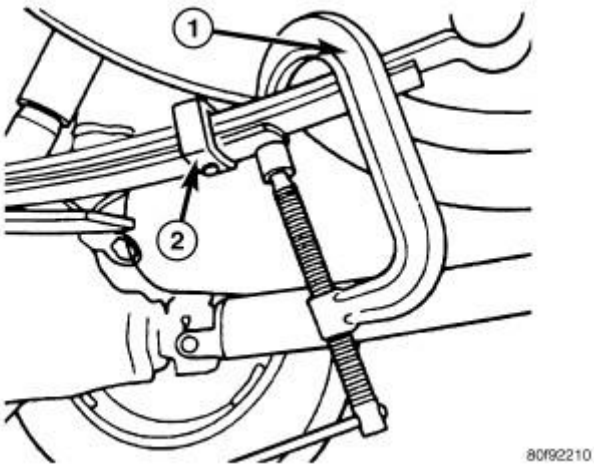

Fig. 15: C-Clamp & Spring Clinch Clip
Courtesy of CHRYSLER GROUP, LLC

1 - C-CLAMP
2 - SPRING CLINCH CLAMP

1. With the prybar still inserted between the leaves, install a new spring tip liner onto the leaf.
2. Firmly seat the spring tip liner onto the leaf. A C-Clamp (1) can be used to compress the adjacent leaves together which will seat the liner retaining pin into the hole. Refer to **Fig. 15**.

NOTE: **The spring tip liner is properly installed when the retaining pin is pointing toward the pavement and the wear pad is contacting the leaf spring.**

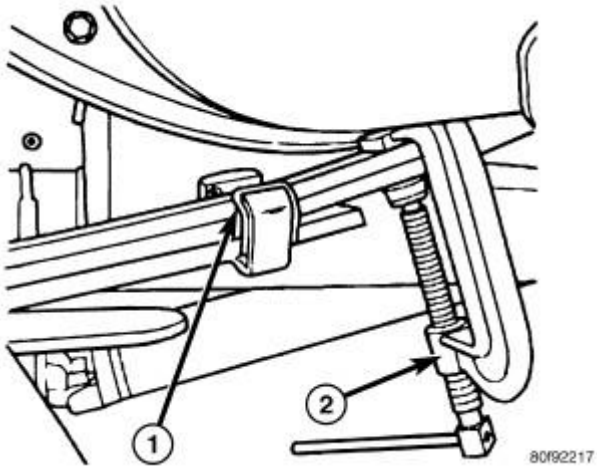

Fig. 16: Spring Clinch Clip Isolator

Courtesy of CHRYSLER GROUP, LLC

1 - SPRING CLINCH CLIP ISOLATOR
2 - C-CLAMP

3. Apply a small amount of lubricant oil onto the tip liner wear pad.
4. Install all the spring tip liners.
5. Place one spring clinch clip isolator (1) onto the outboard side of the spring clinch clip and one isolator on the inboard side of the spring clinch clip. Refer to **Fig. 16**.

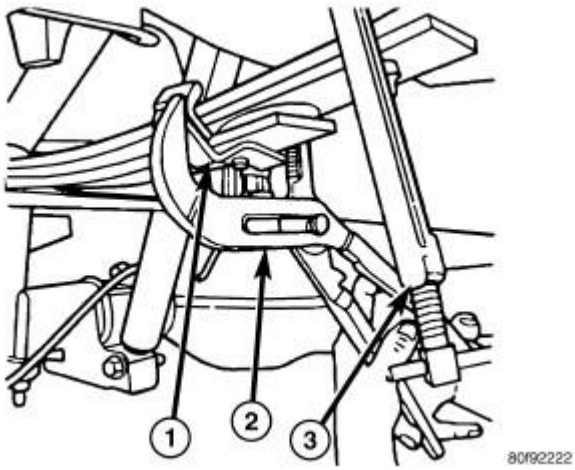

Fig. 17: Closing Spring Clinch Clip
Courtesy of CHRYSLER GROUP, LLC

1 - SPRING CLINCH CLIP
2 - ADJUSTABLE PLIERS
3 - C-CLAMP

6. Using large adjustable pliers (2), close the spring clinch clip (1) until the isolator contacts the leaf spring. Refer to **Fig. 17**.

CAUTION: Do not use a hammer to close the spring clinch clip. Damage to the isolator may result.

7. Use an appropriate pry bar to bend open the spring clinch clip. If necessary, remove the existing spring clinch clip isolators.
8. Repeat procedure for the other side of the vehicle.
9. Install the tire wheel assemblies.
10. Lower the vehicle.

LINK, STABILIZER BAR

REMOVAL

REMOVAL

1. Raise and support the vehicle. Refer to **HOISTING, STANDARD PROCEDURE** .
2. Support the rear axle with a suitable holding fixture.

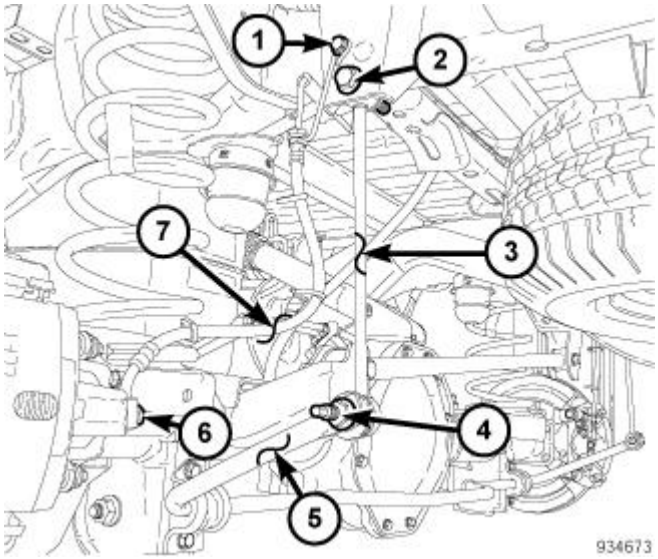

Fig. 18: Stabilizer Link Components
Courtesy of CHRYSLER GROUP, LLC

3. Remove the stabilizer link upper bolt (2) and nut.
4. Remove the stabilizer link lower nut (4).
5. Remove stabilizer link (3).

INSTALLATION

INSTALLATION

NOTE: All views are typical.

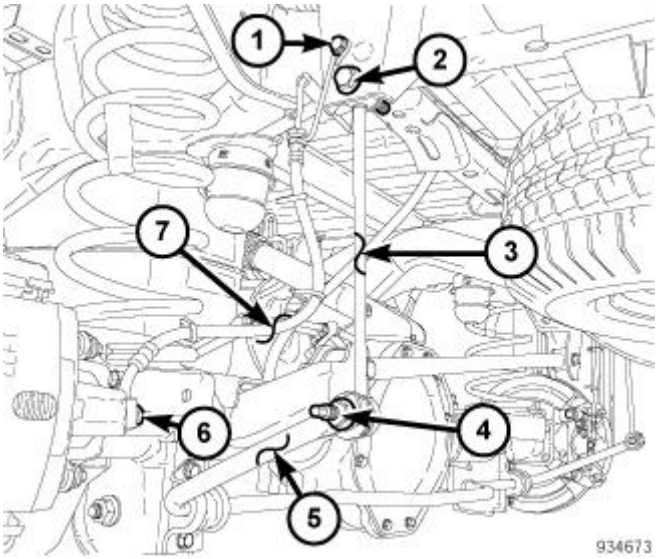

Fig. 19: Stabilizer Link Components
Courtesy of CHRYSLER GROUP, LLC

1. Position the stabilizer link and install the link upper bolt (2) and nut. Do not tighten.
2. Install the stabilizer link lower nut (4). Do not tighten.
3. Remove the holding fixture supporting the axle.
4. Remove the support and lower the vehicle.
5. Tighten stabilizer link lower nuts (2, 4) to specifications. Refer to **SPECIFICATIONS**.

SHOCK ABSORBER, SUSPENSION

REMOVAL

REMOVAL

NOTE: **View is typical of a coil spring system. A leaf spring system is similar.**

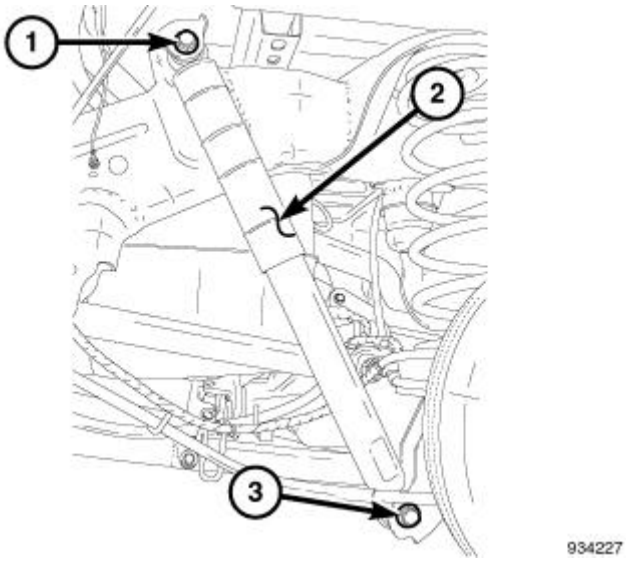

Fig. 20: Shock Absorber & Shock Upper/Lower Bolt
Courtesy of CHRYSLER GROUP, LLC

1. Raise and support the vehicle. Refer to **HOISTING, STANDARD PROCEDURE** .
2. Support the rear axle with a suitable holding fixture.
3. Remove the shock upper bolt (1) and nut.
4. Remove the shock lower bolt (3) and nut.
5. Remove the shock absorber (2) from the vehicle.

INSTALLATION

INSTALLATION

NOTE: View is typical of a coil spring system. A leaf spring system is similar.

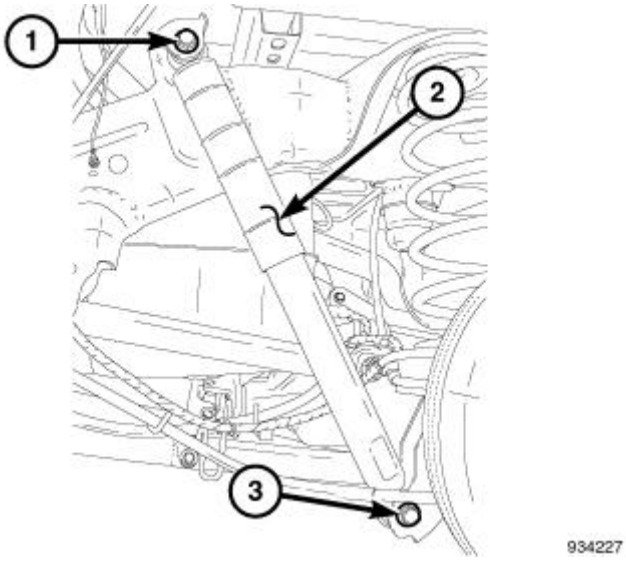

Fig. 21: Shock Absorber & Shock Upper/Lower Bolt
Courtesy of CHRYSLER GROUP, LLC

NOTE: **All torques should be made with the full vehicle weight on the ground being supported by the tires.**

1. Position the shock absorber (2) in the brackets.
2. Install the bolts (1, 3) through the brackets and the shock (2).
3. Install the nuts on the bolts (1, 3) and do not tighten.
4. Remove the holding fixture supporting the axle.
5. Remove the support and lower the vehicle.
6. Tighten shock bolts (1, 3) and nuts to specifications. Refer to **SPECIFICATIONS**.

SPRING(S)

REMOVAL

COIL SPRING

1. Raise and support the vehicle. Refer to **HOISTING, STANDARD PROCEDURE** .
2. Support the axle with a suitable holding fixture.

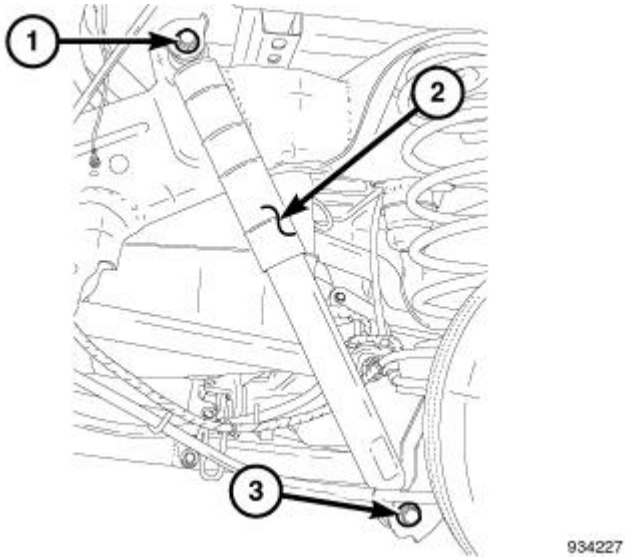

Fig. 22: Shock Absorber & Shock Upper/Lower Bolt
Courtesy of CHRYSLER GROUP, LLC

3. Remove the shock lower bolt (3) and nut.

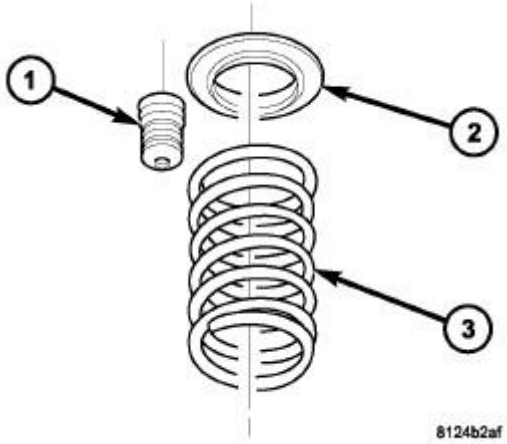

Fig. 23: Rear Coil Spring
Courtesy of CHRYSLER GROUP, LLC

NOTE: Lower the axle carefully and avoid putting stress on the flexible brake line.

4. Lower the axle support and tilt the axle to remove the spring (3) and isolator (2) from the vehicle.

LEAF SPRING

NOTE: Two types of shackles are used for different vehicle applications. There are tension shackles and compression shackles. A tension shackle sits on its frame mounting bracket (spring above), and a compression shackle hangs from its mounting bracket (spring below. The tension type shackle must be removed with the spring.

NOTE: All views are typical.

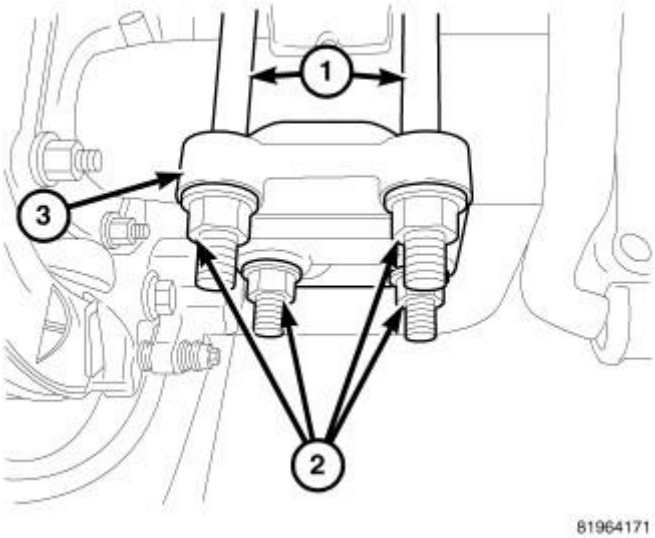

Fig. 24: Identifying Nuts, Spring Clamp U-Bolts & Spring
Courtesy of CHRYSLER GROUP, LLC

1. Raise and support the vehicle. Refer to **HOISTING, STANDARD PROCEDURE** .
2. Support the axle with a suitable holding fixture.
3. Remove the nuts (2), spring clamp bolts (1) and the plate that attach the spring (3) to the axle.
4. Remove the nuts and bolts from the spring front eye to frame.

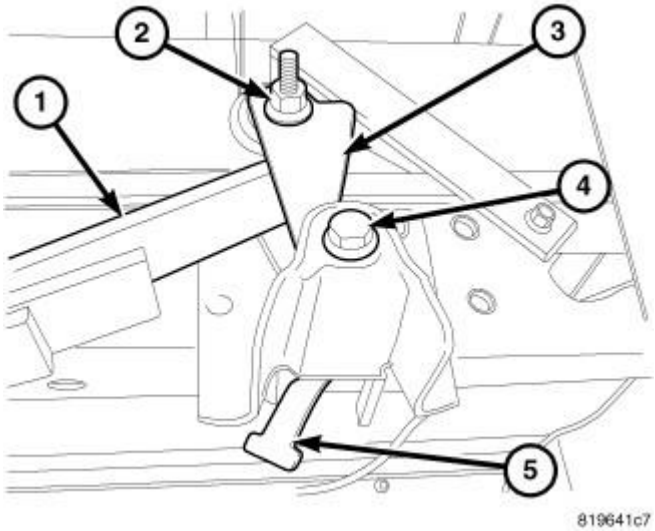

Fig. 25: Identifying Nuts, Rear Shackle & Spring
Courtesy of CHRYSLER GROUP, LLC

5. For a tension type shackle (3) only, remove the shackle to mounting bracket bolt (4) and flag nut (5).

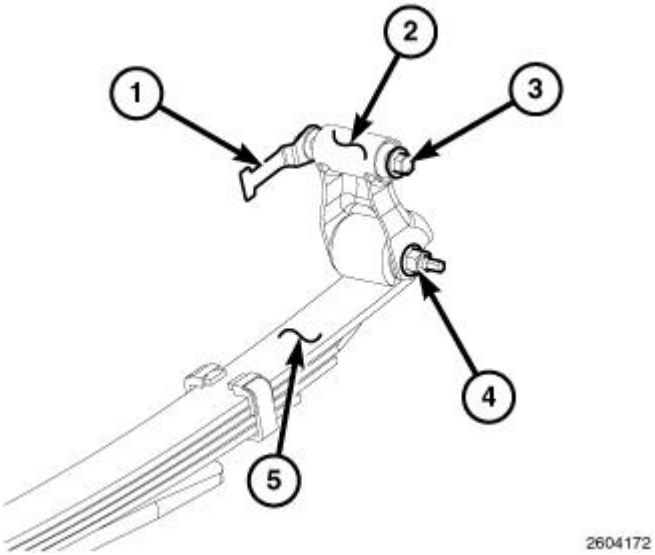

Fig. 26: Compression Type Shackle Components
Courtesy of CHRYSLER GROUP, LLC

6. For a compression type shackle (2) only, remove the spring eye to shackle bolt and nut (3).
7. Remove the spring from the vehicle.
8. Remove and transfer any necessary components.

INSTALLATION

COIL SPRING

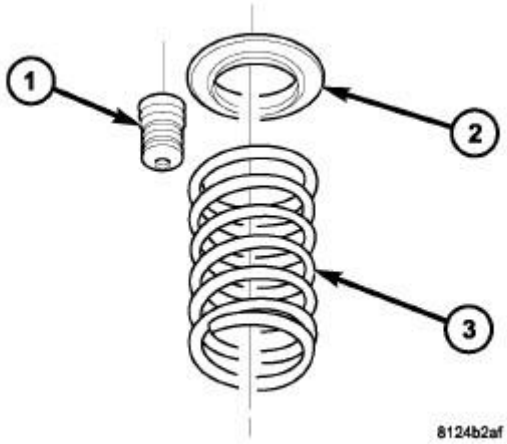

Fig. 27: Rear Coil Spring
Courtesy of CHRYSLER GROUP, LLC

NOTE: **All torques should be made with the full vehicle weight on the ground being supported by the tires.**

1. Position spring (3) and isolator (2) on the axle and align into the spring upper pocket.
2. Carefully raise the rear axle into place.

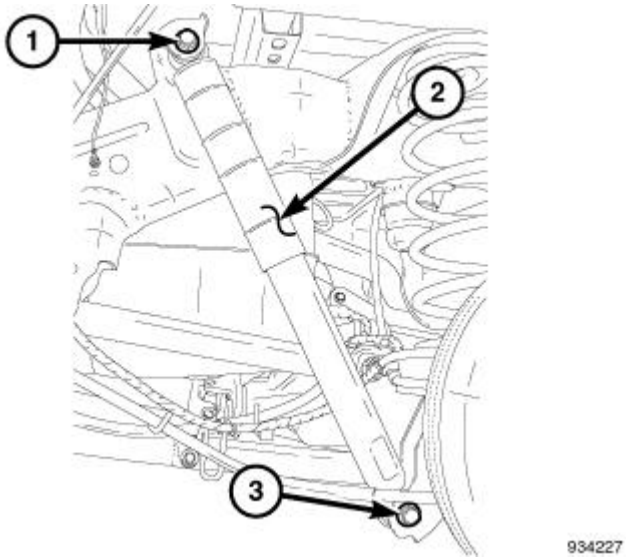

Fig. 28: Shock Absorber & Shock Upper/Lower Bolt
Courtesy of CHRYSLER GROUP, LLC

3. Install the shock lower bolt (3) and nut, and do not tighten.
4. Remove the holding fixture for the rear axle.
5. Remove the support and lower the vehicle.
6. Tighten shock lower bolt (3) and nut to specifications. Refer to **SPECIFICATIONS**.

LEAF SPRING

NOTE: **Two types of shackles are used for different vehicle applications. There are tension shackles and compression shackles. A tension shackle sits on its frame mounting bracket (spring above), and a compression shackle hangs from its mounting bracket (spring below. The tension type shackle must be removed with the spring.**

NOTE: **All views are typical.**

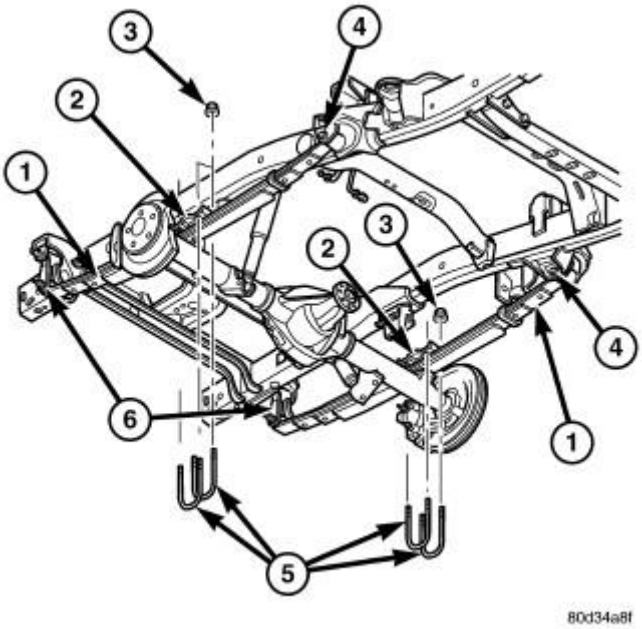

Fig. 29: Rear Suspension Components (Leaf Spring)
Courtesy of CHRYSLER GROUP, LLC

1. Position spring (1) on axle shaft tube so spring center bolt is inserted into the locating hole in the axle tube.
2. Align the front of the spring with the bolt hole in the front bracket. Install the eye pivot bolt and nut (4). Do not tighten.

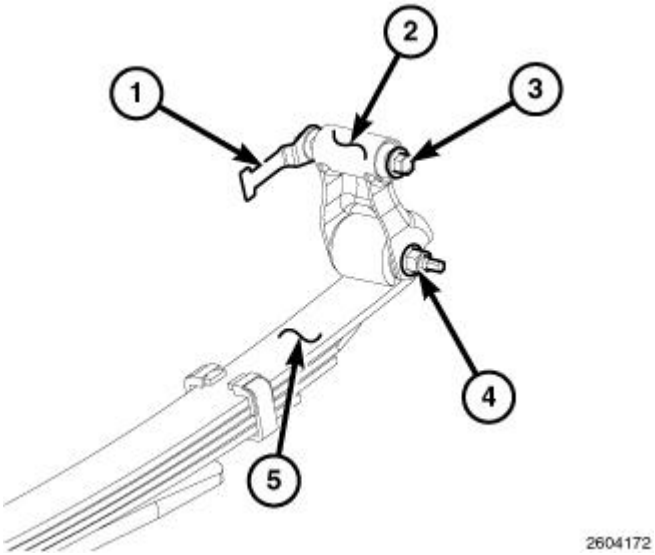

Fig. 30: Compression Type Shackle Components
Courtesy of CHRYSLER GROUP, LLC

3. For a compression type shackle (2) only, align the spring (5) to the shackle (2) and install the spring eye to shackle bolt and nut (3). Do not tighten.

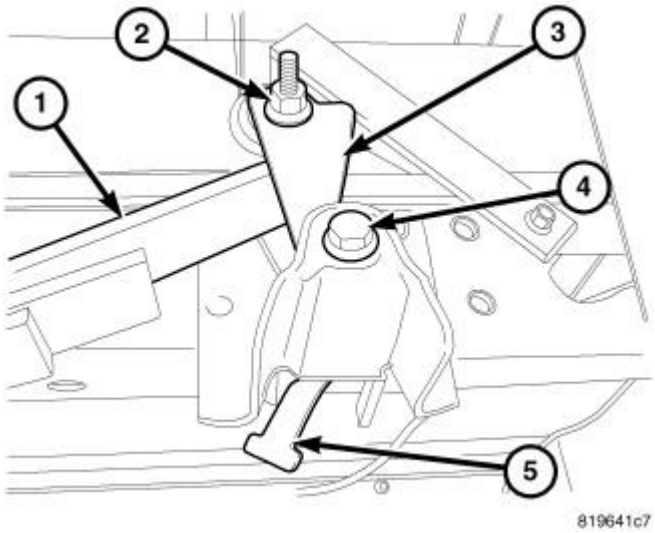

Fig. 31: Identifying Nuts, Rear Shackle & Spring
Courtesy of CHRYSLER GROUP, LLC

4. For a tension type shackle (3) only, align the shackle (3) to the mounting bracket and install the shackle to mounting bracket bolt (4) and flag nut (5). Do not tighten.

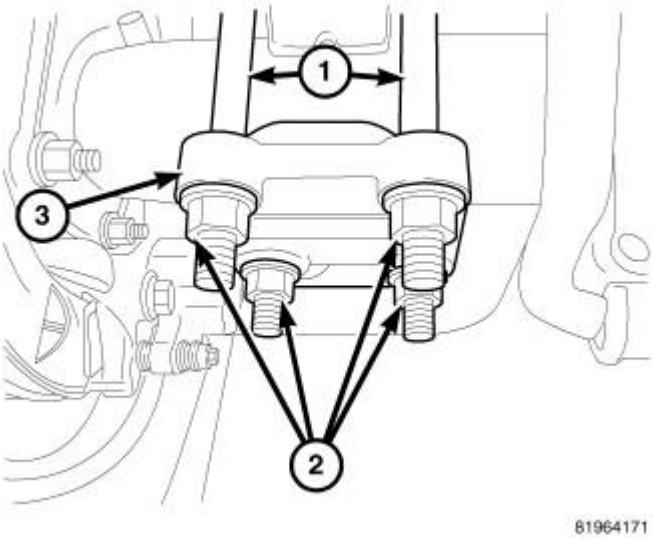

Fig. 32: Identifying Nuts, Spring Clamp U-Bolts & Spring
Courtesy of CHRYSLER GROUP, LLC

5. Install the spring clamp bolts (1), plate (3) and the retaining nuts (2).
6. Remove the holding fixture for the rear axle.
7. Remove the supports and lower the vehicle so that the weight is being supported by the tires.
8. Tighten the spring clamp retaining nuts, spring front and rear pivot nuts, and the shackle nut/bolts to specifications. Refer to **SPECIFICATIONS**.

STABILIZER BAR, REAR SUSPENSION

REMOVAL

REMOVAL

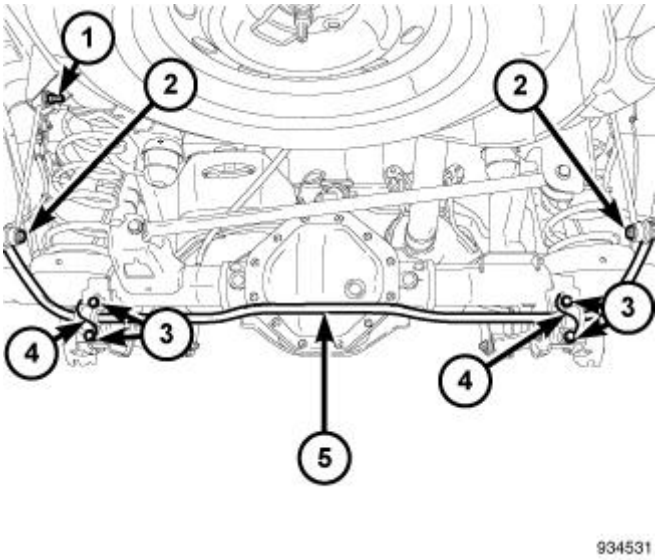

Fig. 33: Rear Stabilizer Bar Components
Courtesy of CHRYSLER GROUP, LLC

1. Raise and support vehicle. Refer to **HOISTING, STANDARD PROCEDURE** .
2. Remove both stabilizer bar link lower mounting nuts (2).
3. Remove stabilizer bar retainer bolts (3) and retainers (4).
4. Remove stabilizer bar (5).
5. Remove and transfer the bushings if necessary.

INSTALLATION

INSTALLATION

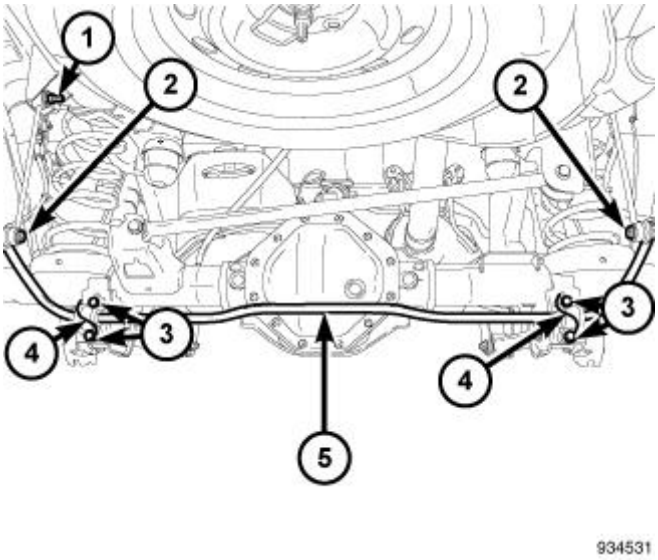

Fig. 34: Rear Stabilizer Bar Components
Courtesy of CHRYSLER GROUP, LLC

1. Install stabilizer bar bushings.
2. Install the stabilizer bar (5) and center it with equal spacing on both sides.
3. Install stabilizer bar retainers (4) and bolts (3). Do not tighten.
4. Install the stabilizer bar links on the stabilizer bar (5) and install link lower mounting nuts. Do not tighten.
5. Remove the support and lower the vehicle.
6. Tighten the stabilizer bar retainer bolts (3) and stabilizer lower link nuts to specifications. Refer to **SPECIFICATIONS**.

TRACK BAR, REAR

REMOVAL

REMOVAL

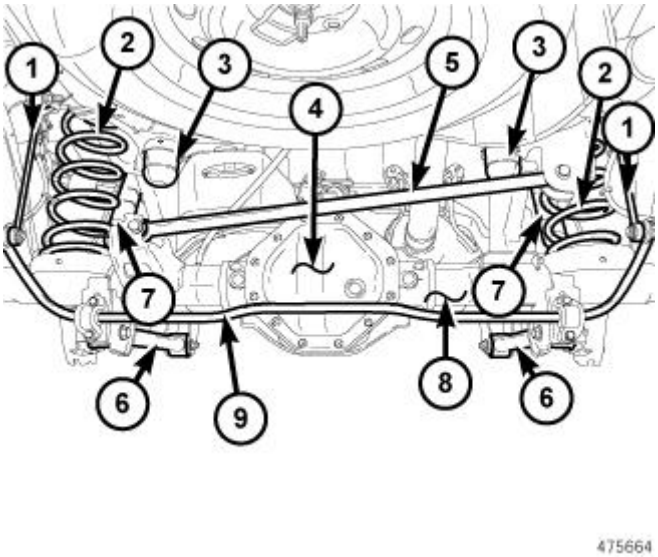

Fig. 35: Rear Suspension Components
Courtesy of CHRYSLER GROUP, LLC

1. Raise and support the vehicle. Refer to **HOISTING, STANDARD PROCEDURE** .
2. Support the rear axle with a suitable holding fixture.
3. Remove the track bar bolt/nut from the frame bracket.
4. Remove the track bar bolt/nut from the axle bracket.
5. Remove the track bar (5).

INSTALLATION

INSTALLATION

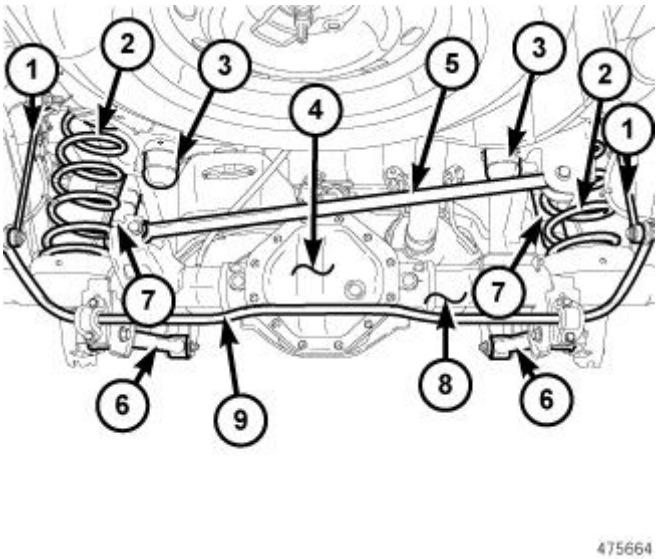

Fig. 36: Rear Suspension Components
Courtesy of CHRYSLER GROUP, LLC

1. Position the track bar (5) onto the vehicle.
2. Install the track bar bolt and nut in the frame bracket. Do not tighten.
3. Install the track bar bolt and nut in the axle bracket. Do not tighten.
4. Remove the holding fixture supporting the axle.
5. Remove the supports and lower the vehicle.
6. Tighten the track bar mounting bolts/nuts to specifications. Refer to **SPECIFICATIONS**.

DIAGNOSTIC CODE INDEX

DIAGNOSTIC CODE INDEX

DTC	Description
B2199-16	BATTERY VOLTAGE - CIRCUIT VOLTAGE BELOW THRESHOLD
B2199-17	BATTERY VOLTAGE - CIRCUIT VOLTAGE ABOVE THRESHOLD
B21DD-84	SYSTEM VOLTAGE - SIGNAL VOLTAGE BELOW ALLOWABLE RANGE
B21DD-85	SYSTEM VOLTAGE - SIGNAL ABOVE ALLOWABLE RANGE
C0077-00	LOW TIRE PRESSURE
C1501-96	TIRE PRESSURE SENSOR 1 - INTERNAL COMPONENT FAILURE
C1502-96	TIRE PRESSURE SENSOR 2 - INTERNAL COMPONENT FAILURE
C1503-96	TIRE PRESSURE SENSOR 3 - INTERNAL COMPONENT FAILURE
C1504-96	TIRE PRESSURE SENSOR 4 - INTERNAL COMPONENT FAILURE
C151C-00	TIRE PRESSURE SENSORS MISSING
C151D-00	TIRE PRESSURE SENSOR LOCATION UNDETERMINED
C1580-00	LEFT/RIGHT SIDE TIRE PRESSURE SENSOR LOCATION UNDETERMINED
C1581-00	FRONT/REAR TIRE PRESSURE SENSOR LOCATION UNDETERMINED
C1597-00	TPM SYSTEM DEACTIVATED-WINTER MODE
C2209-00	TIRE PRESSURE MONITOR INTERNAL
U0001-00	CAN C BUS
U0100-00	LOST COMMUNICATION WITH ECM/PCM
U0121-00	LOST COMMUNICATION WITH ANTI-LOCK BRAKE SYSTEM (ABS) CONTROL MODULE
U0141-00	LOST COMMUNICATION WITH IPM (FCM/TIPM)

DIAGNOSIS AND TESTING

B2199-16-BATTERY VOLTAGE - CIRCUIT VOLTAGE BELOW THRESHOLD

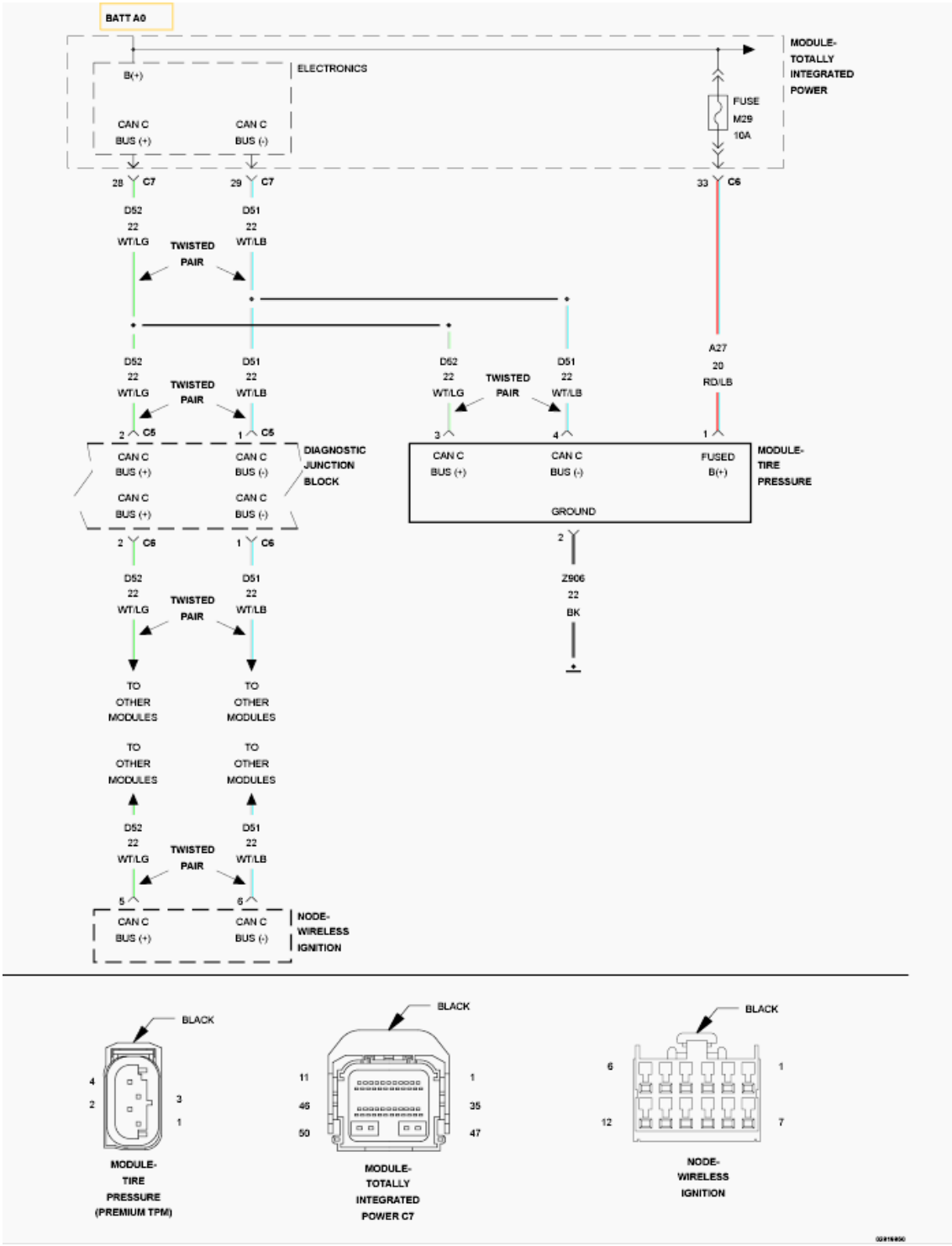

Fig. 1: TPM Power Supply Wiring Diagram
Courtesy of CHRYSLER GROUP, LLC

For a complete wiring diagram, **refer to appropriate SYSTEM WIRING DIAGRAMS article** .

WHEN MONITORED:

Continuously.

SET CONDITION:

Any time the Tire Pressure Monitoring (TPM) Module senses voltage input below 8.0 volts for over 20 ms, this code will set.

POSSIBLE CAUSES

POSSIBLE CAUSES
NON-FCC COMPLIANT COMPONENTS
LOW VOLTAGE ENGINE DTC
(A27) FUSED B(+) CIRCUIT HIGH RESISTANCE
(Z906) GROUND CIRCUIT HIGH RESISTANCE
TIRE PRESSURE MONITORING (TPM) MODULE

NOTE: Check for and remove any non-FCC compliant components before beginning this diagnostic procedure.

DIAGNOSTIC TEST

1. **CHECK POWERTRAIN CONTROL MODULE (PCM) DTC's**

   NOTE: Make sure the battery is fully charged before proceeding.

   1. Ignition on, engine not running.
   2. With the scan tool, read PCM DTC's.

      Are there any battery or charging systems DTC's?

      Yes

      - Refer to **3.7L/4.7L/5.7L - DIAGNOSTIC CODE INDEX - NGC - 1500 & 2500** or **6.7L - DIAGNOSTIC CODE INDEX - 2500 & 3500** or **5.7L - DIAGNOSTIC CODE INDEX - 3500 CAB & CHASSIS** or **6.7L - DIAGNOSTIC CODE INDEX - 3500 CAB & CHASSIS, 4500 & 5500** and perform the appropriate diagnostic procedure.

      No

      - Go To 2.

2. **VERIFY THE DTC IS ACTIVE**
   1. With the scan tool, record and erase stored DTC's.
   2. Start the engine and run for two minutes.
   3. With the scan tool, read DTC's.

Is the DTC active at this time?

Yes

- Go To 3.

No

- Go To 5.

3. **(A27) FUSED B(+) CIRCUIT OPEN OR HIGH RESISTANCE**

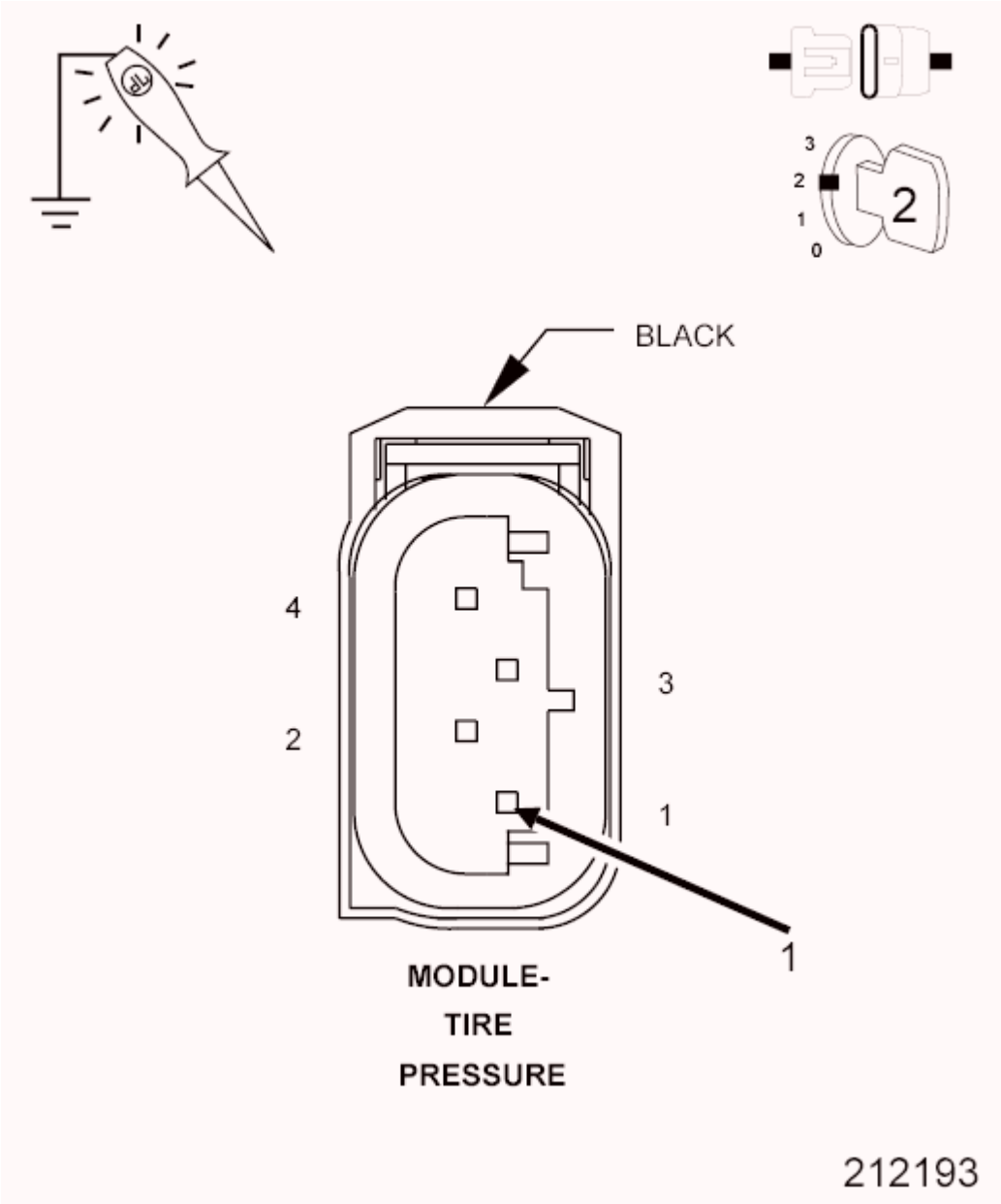

Fig. 2: Checking Fused B(+) Circuit For An Open Or High Resistance

Courtesy of CHRYSLER GROUP, LLC

1. Turn the ignition off to the lock position
2. Disconnect the TPM Module harness connector.
3. Ignition on, engine not running.
4. Using a 12-volt test light connected to ground, check (A27) Fused B(+) circuit in the TPM Module harness connector.

NOTE: **The test light must illuminate brightly. Compare the brightness to that of a direct connection to the battery.**

Does the test light illuminate brightly?

Yes

- Go To 4.

No

- Repair the (A27) Fused B(+) circuit for an open or high resistance.
- Perform the TPM VERIFICATION TEST. Refer to **STANDARD PROCEDURE**.

4. **(Z906) GROUND CIRCUIT OPEN OR HIGH RESISTANCE**

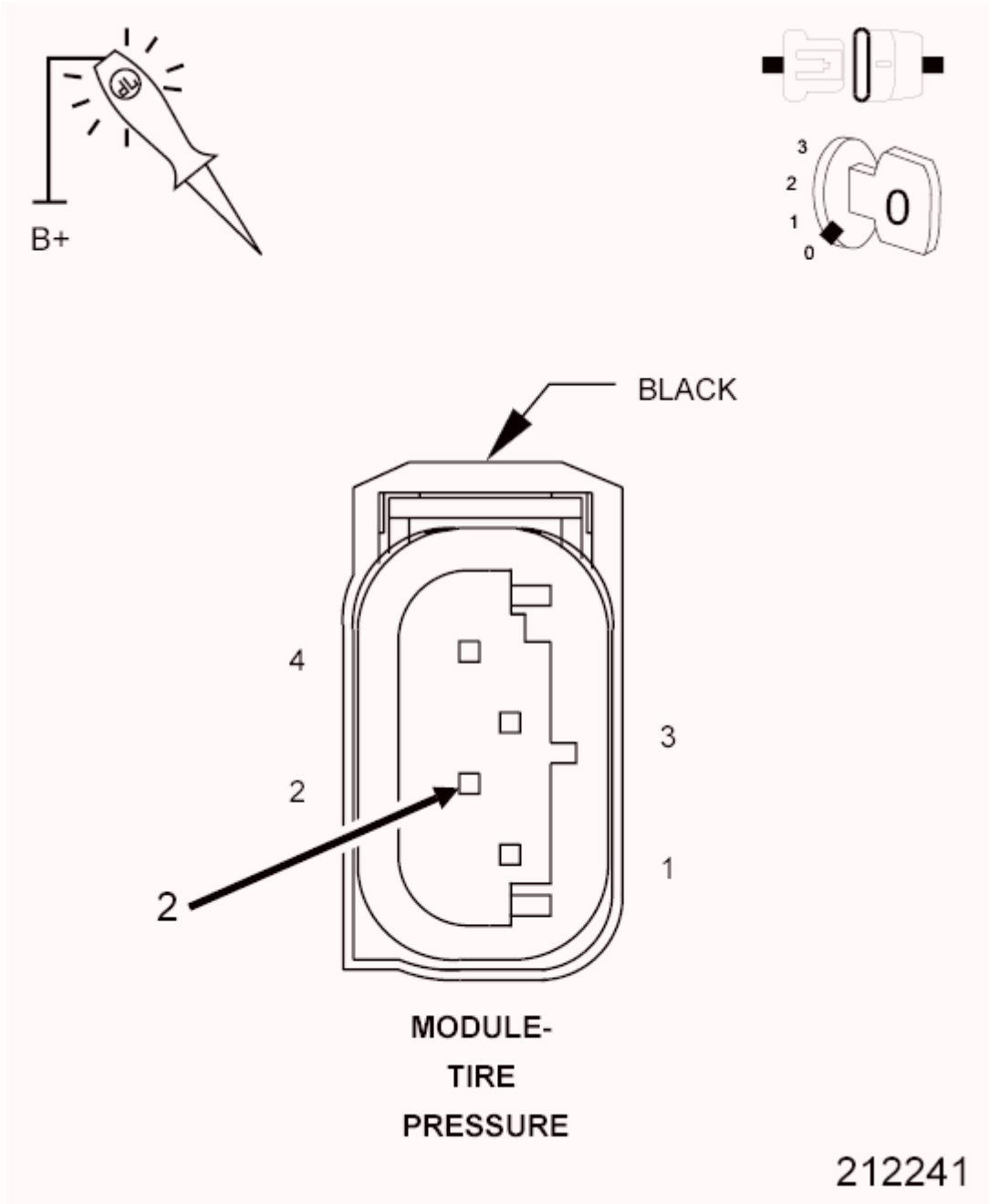

Fig. 3: Checking Ground Circuit In TPM Module Harness Connector For An Open Or High Resistance
Courtesy of CHRYSLER GROUP, LLC

1. Turn the ignition off to the lock position
2. Using a 12-volt test light connected to 12-volts, check the (Z906) Ground circuit in the TPM Module harness connector.

NOTE: **The test light must illuminate brightly. Compare the brightness to that of a direct connection to the battery.**

Does the test light illuminate brightly?

Yes

- Replace the Tire Pressure Monitoring (TPM) Module in accordance with Service Information. Refer to **MODULE, TIRE PRESSURE MONITORING (TPM), REMOVAL** .
- Perform the TPM VERIFICATION TEST. Refer to **STANDARD PROCEDURE**.

No

- Repair the (Z906) Ground circuit for an open or high resistance.
- Perform the TPM VERIFICATION TEST. Refer to **STANDARD PROCEDURE**.

5. **INTERMITTENT WIRING AND CONNECTORS**
   1. Using the wiring diagrams as a guide, check all related splices and connectors for signs of water intrusion, corrosion, pushed out or bent terminals, and correct pin tension.
   2. Wiggle test the wiring harness and connectors while monitoring the scan tool data relative to this circuit.
   3. Look for the data to change or for the DTC to reset during the wiggle test.
   4. While monitoring the scan tool data relative to this circuit.
   5. Look for the data to change other than as expected or for the DTC to reset.

   Were any problems found?

   Yes

   - Repair as necessary.
   - Perform the TPM VERIFICATION TEST. Refer to **STANDARD PROCEDURE**.

   No

   - The conditions that caused this code to set are not present at this time. Using the wiring diagram/schematic as a guide, inspect the wiring and connectors.

B2199-17-BATTERY VOLTAGE - CIRCUIT VOLTAGE ABOVE THRESHOLD

For a complete wiring diagram, **refer to appropriate SYSTEM WIRING DIAGRAMS article** .

WHEN MONITORED:

Continuously.

SET CONDITION:

Any time the Tire Pressure Monitoring (TPM) Module senses voltage input above 16.0 volts for over 20ms, this

code will set.

POSSIBLE CAUSES

POSSIBLE CAUSES
NON-FCC COMPLIANT COMPONENTS
HIGH VOLTAGE ENGINE DTC
TIRE PRESSURE MODULE (TPM)

NOTE: **Check for and remove any non-FCC compliant components before beginning this diagnostic procedure.**

DIAGNOSTIC TEST

1. **CHECK POWERTRAIN CONTROL MODULE (PCM) DTC's**
    1. With the scan tool, read PCM DTC's.

       Are there any ENGINE DTC's present?

       Yes

       - Refer to **3.7L/4.7L/5.7L - DIAGNOSTIC CODE INDEX - NGC - 1500 & 2500** or **6.7L - DIAGNOSTIC CODE INDEX - 2500 & 3500** or **5.7L - DIAGNOSTIC CODE INDEX - 3500 CAB & CHASSIS** or **6.7L - DIAGNOSTIC CODE INDEX - 3500 CAB & CHASSIS, 4500 & 5500** and perform the appropriate diagnostic procedure.

       No

       - Go To 2.
2. **VERIFY THE DTC IS ACTIVE**
    1. With the scan tool, record and erase stored DTC's.
    2. Start the engine and run for two minutes.
    3. With the scan tool, read DTC's.

       Is the DTC active at this time?

       Yes

       - Replace the Tire Pressure Monitoring (TPM) Module in accordance with Service Information. Refer to **MODULE, TIRE PRESSURE MONITORING (TPM), REMOVAL** .
       - Perform the TPM VERIFICATION TEST. Refer to **STANDARD PROCEDURE**.

       No

- Go To 3.

3. **INTERMITTENT WIRING AND CONNECTORS**
    1. Using the wiring diagrams as a guide, check all related splices and connectors for signs of water intrusion, corrosion, pushed out or bent terminals, and correct pin tension.
    2. Wiggle test the wiring harness and connectors while monitoring the scan tool data relative to this circuit.
    3. Look for the data to change or for the DTC to reset during the wiggle test.
    4. While monitoring the scan tool data relative to this circuit.
    5. Look for the data to change other than as expected or for the DTC to reset.

    Were any problems found?

    Yes

    - Repair as necessary.
    - Perform the TPM VERIFICATION TEST. Refer to **STANDARD PROCEDURE**.

    No

    - The conditions that caused this code to set are not present at this time. Using the wiring diagram/schematic as a guide, inspect the wiring and connectors.
    - Perform the TPM VERIFICATION TEST. Refer to **STANDARD PROCEDURE**.

B21DD-84-SYSTEM VOLTAGE - SIGNAL VOLTAGE BELOW ALLOWABLE RANGE

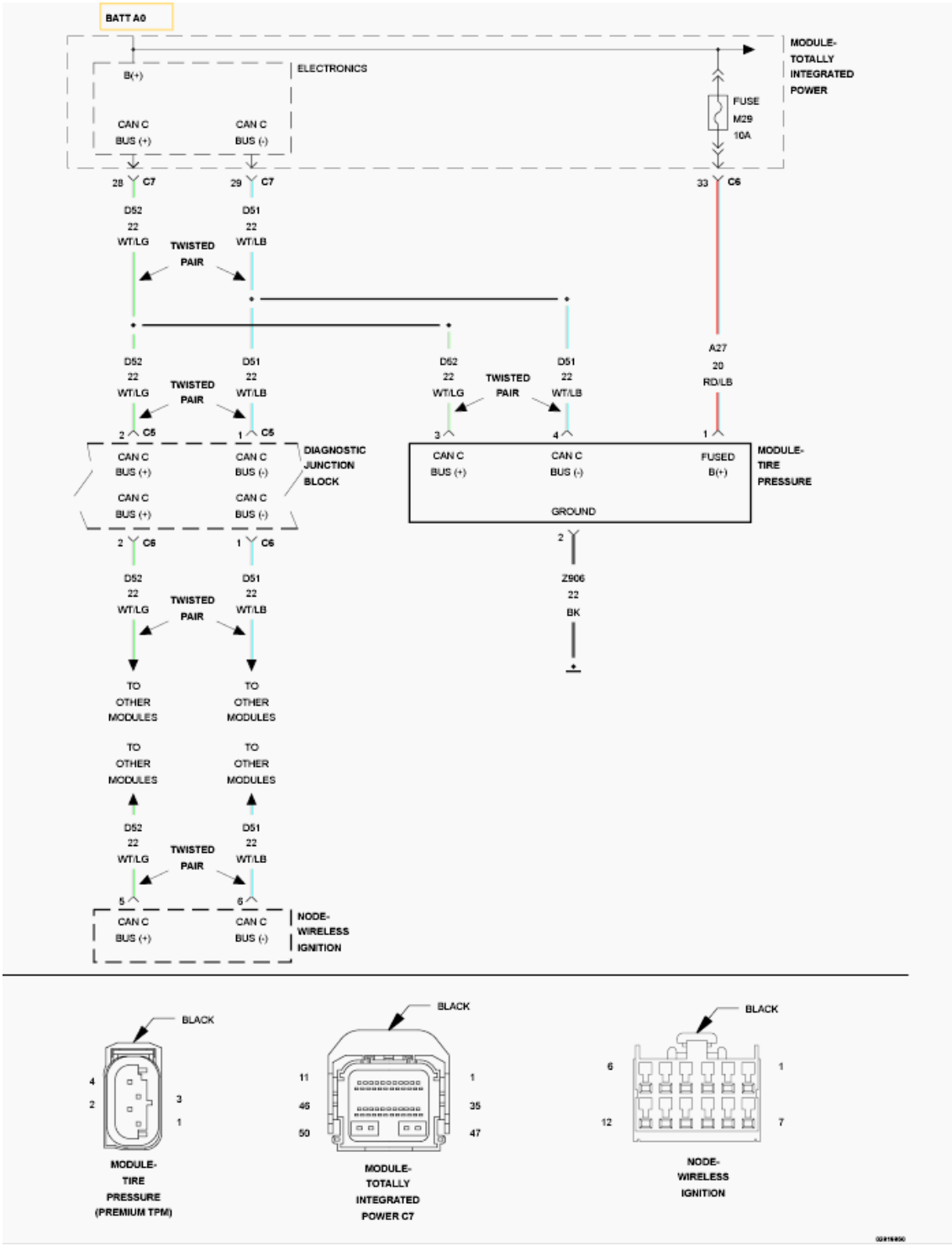

Fig. 4: TPM Power Supply Wiring Diagram
Courtesy of CHRYSLER GROUP, LLC

For a complete wiring diagram, **refer to appropriate SYSTEM WIRING DIAGRAMS article** .

WHEN MONITORED:

Continuously.

SET CONDITION:

Anytime the Tire Pressure Monitoring (TPM) Module senses voltage input below 8.0 volts for over 20 ms, this code will set.

POSSIBLE CAUSES

POSSIBLE CAUSES
NON-FCC COMPLIANT COMPONENTS
LOW VOLTAGE ENGINE DTC
(A27) FUSED B(+) CIRCUIT HIGH RESISTANCE
(Z906) GROUND CIRCUIT HIGH RESISTANCE
TIRE PRESSURE MONITORING (TPM) MODULE

NOTE: Check for and remove any non-FCC compliant components before beginning this diagnostic procedure.

DIAGNOSTIC TEST

1. **CHECK POWERTRAIN CONTROL MODULE (PCM) DTC's**

   NOTE: Make sure the battery is fully charged before proceeding.

   1. Ignition on, engine not running.
   2. With the scan tool, read PCM DTC's.

      Are there any battery or charging system DTC's?

      No

      - Go To 2.

      Yes

      - Refer to **3.7L/4.7L/5.7L - DIAGNOSTIC CODE INDEX - NGC - 1500 & 2500** or **6.7L - DIAGNOSTIC CODE INDEX - 2500 & 3500** or **5.7L - DIAGNOSTIC CODE INDEX - 3500 CAB & CHASSIS** or **6.7L - DIAGNOSTIC CODE INDEX - 3500 CAB & CHASSIS, 4500 & 5500** and perform the appropriate diagnostic procedure.
2. **VERIFY THE DTC IS ACTIVE**
   1. With the scan tool, record and erase stored DTC's.
   2. Start the engine and run for two minutes.
   3. With the scan tool, read DTC's.

Is the DTC active at this time?

Yes

- Go To 3.

No

- Go To 5.

3. **(A27) FUSED B(+) CIRCUIT OPEN OR HIGH RESISTANCE**

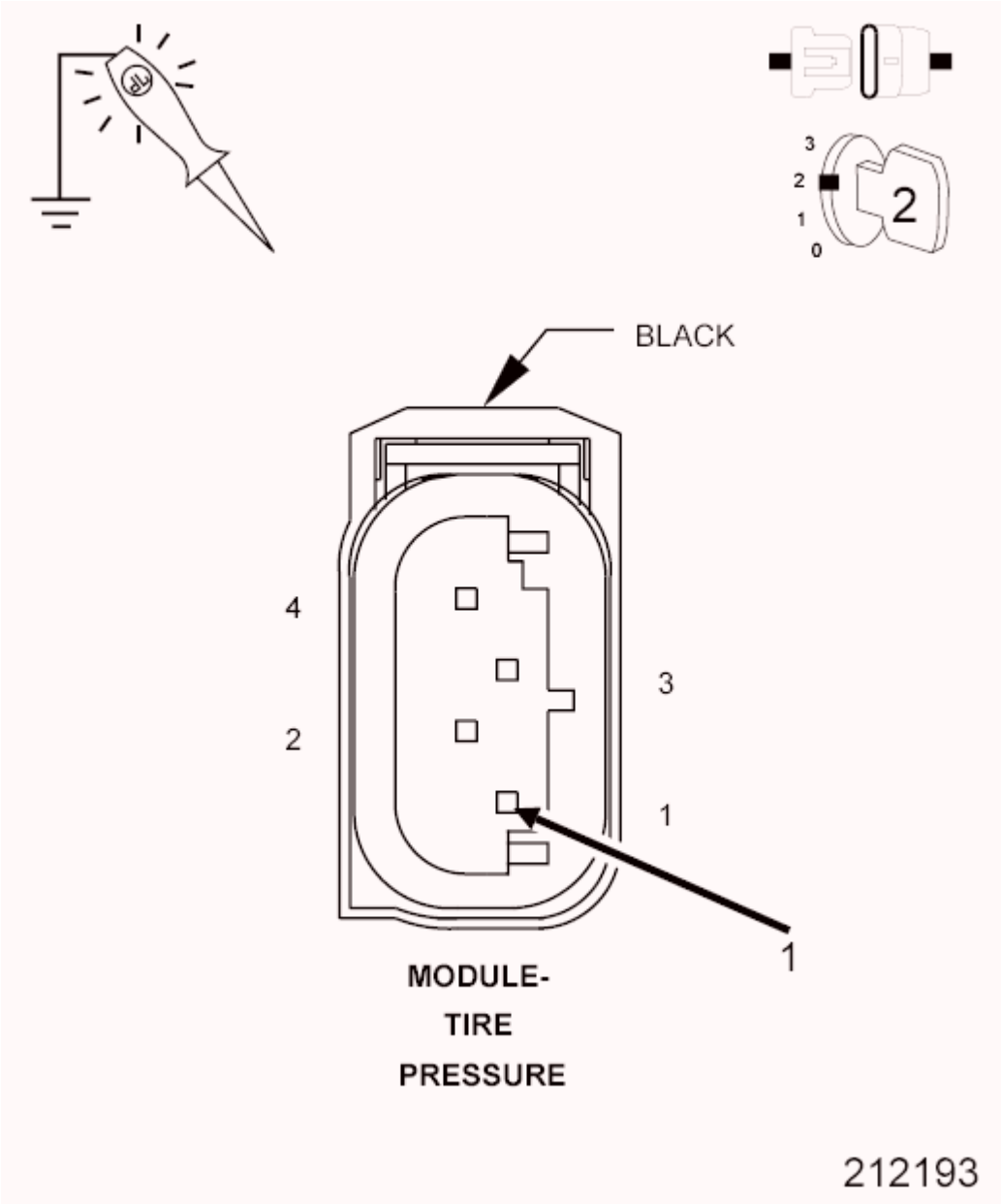

Fig. 5: Checking Fused B(+) Circuit For An Open Or High Resistance

Courtesy of CHRYSLER GROUP, LLC

1. Turn the ignition off to the lock position.
2. Disconnect the TPM harness connector.
3. Ignition on, engine not running.
4. Using a 12-volt test light connected to ground, check (A27) Fused B(+) circuit in the Tire Pressure Module harness connector.

NOTE: **The test light must illuminate brightly. Compare the brightness to that of a direct connection to the battery.**

Does the test light illuminate brightly?

Yes

- Go To 4.

No

- Repair the (A27) Fused B(+) circuit for an open or high resistance.
- Perform the TPM VERIFICATION TEST. Refer to **STANDARD PROCEDURE**.

4. **(Z906) GROUND CIRCUIT OPEN OR HIGH RESISTANCE**

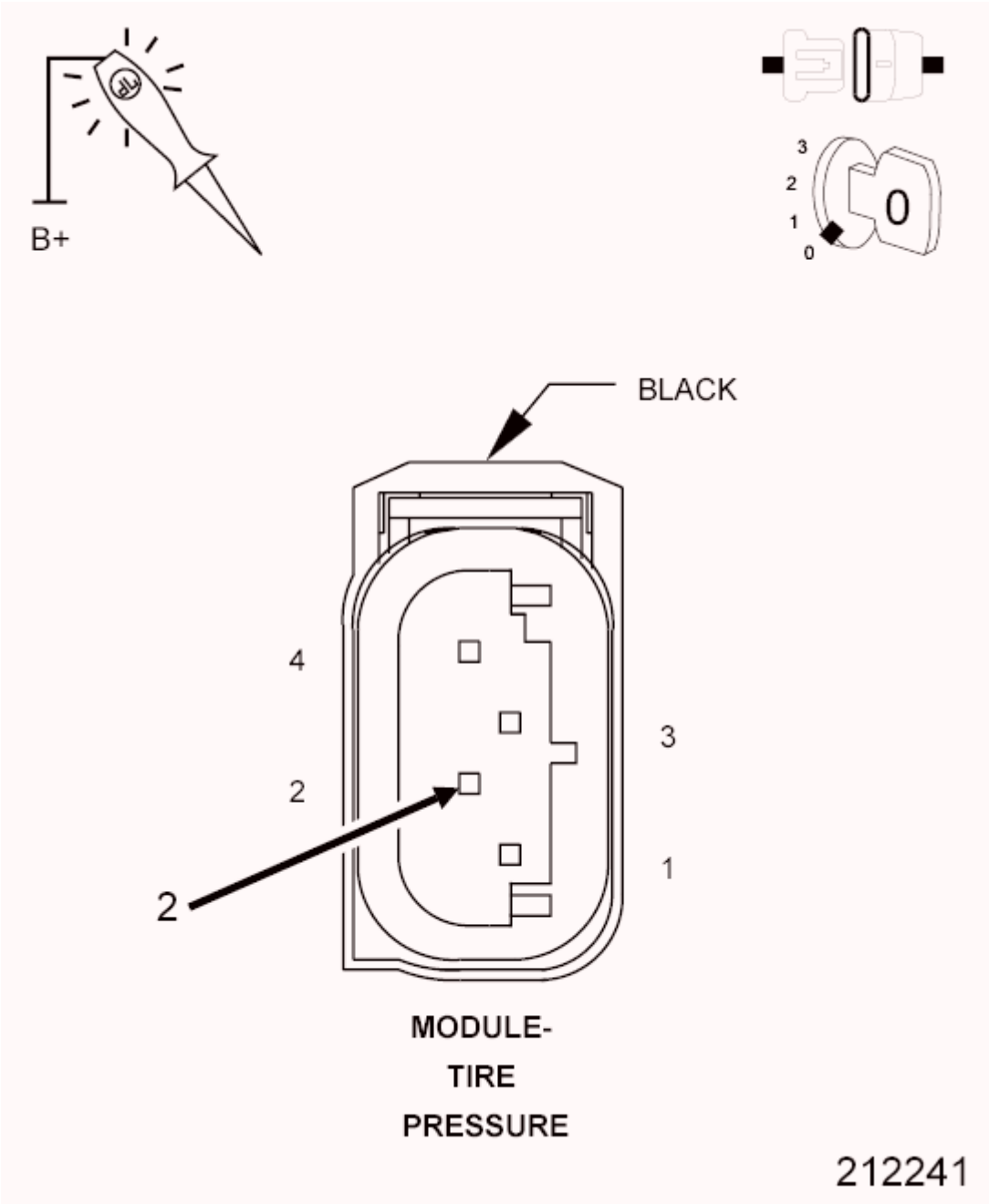

Fig. 6: Checking Ground Circuit In TPM Module Harness Connector For An Open Or High Resistance
Courtesy of CHRYSLER GROUP, LLC

1. Turn the ignition off to the lock position
2. Using a 12-volt test light connected to 12-volts, check the (Z906) Ground circuit in the Tire Pressure Module harness connector.

NOTE: **The test light must illuminate brightly. Compare the brightness to that of a direct connection to the battery.**

Does the test light illuminate brightly?

Yes

- Replace the Tire Pressure Monitoring (TPM) Module in accordance with Service Information. Refer to **MODULE, TIRE PRESSURE MONITORING (TPM), REMOVAL** .
- Perform the TPM VERIFICATION TEST. Refer to **STANDARD PROCEDURE**.

No

- Repair the (Z906) Ground circuit for an open or high resistance.
- Perform the TPM VERIFICATION TEST. Refer to **STANDARD PROCEDURE**.

5. **INTERMITTENT WIRING AND CONNECTORS**
   1. Using the wiring diagrams as a guide, check all related splices and connectors for signs of water intrusion, corrosion, pushed out or bent terminals, and correct pin tension.
   2. Wiggle test the wiring harness and connectors while monitoring the scan tool data relative to this circuit.
   3. Look for the data to change or for the DTC to reset during the wiggle test.
   4. While monitoring the scan tool data relative to this circuit.
   5. Look for the data to change other than as expected or for the DTC to reset.

   Were any problems found?

   Yes

   - Repair as necessary.
   - Perform the TPM VERIFICATION TEST. Refer to **STANDARD PROCEDURE**.

   No

   - The conditions that caused this code to set are not present at this time. Using the wiring diagram/schematic as a guide, inspect the wiring and connectors.
   - Perform the TPM VERIFICATION TEST. Refer to **STANDARD PROCEDURE**.

B21DD-85-SYSTEM VOLTAGE - SIGNAL ABOVE ALLOWABLE RANGE

For a complete wiring diagram, **refer to appropriate SYSTEM WIRING DIAGRAMS article** .

WHEN MONITORED:

Continuously.

SET CONDITION:

Any time the Tire Pressure Monitoring (TPM) Module senses voltage input above 16.0 volts for over 20ms, this code will set.

POSSIBLE CAUSES

POSSIBLE CAUSES
NON-FCC COMPLIANT COMPONENTS
HIGH VOLTAGE ENGINE DTC
TIRE PRESSURE MONITORING (TPM) MODULE

NOTE: **Check for and remove any non-FCC compliant components before beginning this diagnostic procedure.**

DIAGNOSTIC TEST

1. **CHECK POWERTRAIN CONTROL MODULE (PCM) DTC's**
   1. With the scan tool, read PCM DTC's.

      Are there any battery or charging system DTC's present?

      Yes

      - Refer to **3.7L/4.7L/5.7L - DIAGNOSTIC CODE INDEX - NGC - 1500 & 2500** or **6.7L - DIAGNOSTIC CODE INDEX - 2500 & 3500** or **5.7L - DIAGNOSTIC CODE INDEX - 3500 CAB & CHASSIS** or **6.7L - DIAGNOSTIC CODE INDEX - 3500 CAB & CHASSIS, 4500 & 5500** and perform the appropriate diagnostic procedure.

      No

      - Go To 2.
2. **VERIFY THE DTC IS ACTIVE**
   1. With the scan tool, record and erase stored DTC's.
   2. Start the engine and run for two minutes.
   3. With the scan tool, read DTC's.

      Is the DTC active at this time?

      Yes

      - Replace the Tire Pressure Monitoring (TPM) Module in accordance with Service Information. Refer to **MODULE, TIRE PRESSURE MONITORING (TPM), REMOVAL** .
      - Perform the TPM VERIFICATION TEST. Refer to **STANDARD PROCEDURE**.

      No

- The conditions that caused this code to set are not present at this time. Using the wiring diagram/schematic as a guide, inspect the wiring and connectors.
- Perform the TPM VERIFICATION TEST. Refer to **STANDARD PROCEDURE**.

3. **INTERMITTENT WIRING AND CONNECTORS**
    1. Using the wiring diagrams as a guide, check all related splices and connectors for signs of water intrusion, corrosion, pushed out or bent terminals, and correct pin tension.
    2. Wiggle test the wiring harness and connectors while monitoring the scan tool data relative to this circuit.
    3. Look for the data to change or for the DTC to reset during the wiggle test.
    4. While monitoring the scan tool data relative to this circuit.
    5. Look for the data to change other than as expected or for the DTC to reset.

    Were any problems found?

    Yes

    - Repair as necessary.
    - Perform the TPM VERIFICATION TEST. Refer to **STANDARD PROCEDURE**.

    No

    - The conditions that caused this code to set are not present at this time. Using the wiring diagram/schematic as a guide, inspect the wiring and connectors.
    - Perform the TPM VERIFICATION TEST. Refer to **STANDARD PROCEDURE**.

C0077-00-LOW TIRE PRESSURE

For a complete wiring diagram, **refer to appropriate SYSTEM WIRING DIAGRAMS article** .

WHEN MONITORED:

Continuously while driving.

SET CONDITION:

A low pressure condition will exist when the tire pressure falls below or is equal to the low pressure threshold value as specified for the vehicle.

POSSIBLE CAUSES

Possible Causes
NON-FCC COMPLIANT COMPONENTS
INCORRECT TIRE PRESSURE
INCORRECT PLACARD VALUES

TIRE PRESSURE MONITORING (TPM) SENSOR
TIRE PRESSURE MONITORING (TPM) MODULE

NOTE: **Check for and remove any non-FCC compliant components before beginning this diagnostic procedure.**

NOTE: **Adjust all tired to cold placard values and test drive before continuing with diagnostic procedure.**

DIAGNOSTIC TEST

1. **VERIFY DTC IS ACTIVE**

   Note if any the following conditions are present:

   - Low Tire Pressure DTC's.
   - TPM Sensor Internal fault.
   - Spare tire is not equipped with a TPM Sensor and is currently on the vehicle. Repair the tire and install it back on the vehicle.

   NOTE: **Before beginning diagnostic procedure, verify that tire pressures are correct.**

   1. Turn the ignition on.
   2. With the scan tool, read and record TPM Module DTC's.
   3. With the scan tool, erase stored TPM Module DTC's.
   4. Test drive the vehicle at a speed greater than 24 km/h (15 mph) up to 20 minutes in order to receive TPM Sensor data and allow for the system to update.
   5. With the scan tool, select View DTC's in the TPM Module.

      Is the DTC status Active at this time?

      Yes

      - Go To 2.

      No

      - Go To 7.

2. **LOW TIRE PRESSURE**

   NOTE: **Some vehicles will not receive TPM Sensor data when the vehicle is stationary. The vehicle will need to be driven at speeds greater than 24 km/h (15 mph) for about a minute in order to receive TPM Sensor data.**

1. Verify that all tire pressures are to the recommended cold inflation tire pressure specifications.
2. With the scan tool, clear DTC's in the TPM Module.
3. With the scan tool, select View DTC's in the TPM Module.

   Does the DTC reset or is the status Active for this DTC?

   Yes

   - Go To 3.

   No

   - Test Complete.
   - Perform the TPM VERIFICATION TEST. Refer to **STANDARD PROCEDURE**.

3. **TIRE PRESSURE SENSOR**

NOTE: **Before continuing with any TPM diagnostic test, use the scan tool and read the "Tire Placard Pressure - Front" and "Tire Placard Pressure - Rear" under "Data Display" in the TPM. Confirm that the values match the Tire Inflation Pressure (Placard) label located on the driver's side B-Pillar. If the incorrect Placard Values have been programmed in the TPM, use the scan tool and read the "Tire Placard Pressure - Front" and "Tire Placard Pressure - Rear" under "Data Display" in the Totally Integrated Power Module (TIPM). If the Placard values are incorrect in the TIPM, select the TIPM, then under "Miscellaneous Functions", select "Update Pressure Threshold" and follow the procedure in the scan tool. Enter the front and rear placard pressure values as seen on the Tire Inflation Pressure (Placard) label. Repeat step #2.**

NOTE: **The following tests are used to locate the TPM Sensor that is setting the low pressure fault. If the tires have been rotated, the TPM Sensor is no longer in sequence from the factory. Faults are linked to the TPM Sensor ID's. You MUST locate the TPM Sensor that set the fault before continuing.**

1. With the scan tool, select View Data Display in the TPM Module and find the compensated tire pressure values located under each of the TPM Sensor Identification locations.

   Are any of the compensated tire pressure values below the Placard Value?

   Yes

   - Go To 4.

   No

- Test complete.
- Perform the TPM VERIFICATION TEST. Refer to **STANDARD PROCEDURE**.

4. **TPM-RKE ANALYZER**

   Is there a TPM-RKE Analyzer (9936) available?

   Yes

   - Go To 5.

   No

   - Go To 6.

5. **TIRE PRESSURE SENSOR INTERNAL FAULT SET USING TPM-RKE ANALYZER CH9936**

   NOTE: The following procedure is used to locate the TPM Sensor that is setting the sensor internal fault. If the tires have been rotated, the TPM Sensor is no longer in sequence from the factory. Faults are linked to the TPM Sensor ID's. You MUST locate the correct TPM Sensor that set the fault before continuing. Use the following method below at every tire location.

   NOTE: If the TPM sensor ID's do not match, it may be necessary to move the vehicle to a location away from other TPM sensors and repeat this step.

   NOTE: Always be certain to select proper vehicle line and model year when using this tool, as the tool will automatically use the correct protocol to attempt to read the TPM sensor. If the incorrect vehicle line and/or model year is selected, the TPM sensor will not respond to the tool.

   1. Use a TPM-RKE Analyzer (special tool #CH9936, Analyzer, TPM/RKE) to scan each TPM sensor for a response, and store in the proper location in the TPM-RKE Analyzer. If you receive no response from any of the TPM sensors, check to make sure that the TPM-RKE Analyzer is set correctly, and repeat the process on each non-responsive wheel.
   2. Replace the TPM sensor if the results show a "Damaged Accel", "Damaged Temp", "Damaged Press", "H/W fail", "S/W fail" or the Tire Pressure Sensor does not respond after repeated attempts. Install the correct Tire Pressure Monitoring (TPM) Sensor in accordance with the Service Information. Perform the TPM VERIFICATION TEST. Refer to **STANDARD PROCEDURE**.
   3. With the scan tool, select Data Display for the TPM.
   4. Check to see if the Sensor ID's match what is programmed into the TPM.

      Has the Tire Pressure Sensor been located?

      Yes

      - Install the Tire Pressure Monitoring (TPM) Sensor in accordance with the Service

Information. Refer to **SENSOR, TIRE PRESSURE MONITORING (TPM), REMOVAL** .

- Perform the TPM VERIFICATION TEST. Refer to **STANDARD PROCEDURE**.

No

- Replace the Tire Pressure Monitoring (TPM) Module in accordance with the Service Information. Refer to **MODULE, TIRE PRESSURE MONITORING (TPM), REMOVAL** .
- Perform the TPM VERIFICATION TEST. Refer to **STANDARD PROCEDURE**.

6. **TPM SENSOR INTERNAL FAULT SET**

NOTE: **Some vehicles will not receive TPM Sensor data when the vehicle is stationary. The vehicle may need to be driven at speeds greater than 24 km/h (15 mph) for about a minute in order to receive TPM Sensor data.**

1. Turn the ignition on.
2. Starting with the left front wheel, deflate the tire to 20 PSI, wait Two minutes, and check the scan tool for changes to any compensated tire pressure values.
3. Look for a tire location with a non-responsive TPM Sensor ID.
4. Repeat this test on each wheel on the vehicle until the sensor in question has been identified

Has the TPM Sensor been located?

Yes

- Install the Tire Pressure Monitoring (TPM) Sensor in accordance with the Service Information. Refer to **SENSOR, TIRE PRESSURE MONITORING (TPM), REMOVAL** .
- Perform the TPM VERIFICATION TEST. Refer to **STANDARD PROCEDURE**.

No

- Replace the Tire Pressure Monitoring (TPM) Module in accordance with the Service Information. Refer to **MODULE, TIRE PRESSURE MONITORING (TPM), REMOVAL** .
- Perform the TPM VERIFICATION TEST. Refer to **STANDARD PROCEDURE**.

7. **INTERMITTENT TIRE PRESSURE SENSOR DTC**

1. Using the wiring diagram/schematic as a guide, inspect the wiring harness and connectors.
2. Perform any Technical Service Bulletins that may apply to this condition.
3. With the scan tool, clear DTC's in the TPM.
4. Test drive the vehicle for a minimum of 20 minutes with vehicle speed greater than 24 km/h (15 mph).

5. With the scan tool, select View DTC's in the TPM.

   Were any problems found?

   Yes

   - Repair as necessary.
   - Perform the TPM VERIFICATION TEST. Refer to **STANDARD PROCEDURE**.

   No

   - Test complete, the condition or conditions that originally set this DTC are not present at this time.

C1501-96-TIRE PRESSURE SENSOR 1 - INTERNAL COMPONENT FAILURE

For a complete wiring diagram, **refer to appropriate SYSTEM WIRING DIAGRAMS article** .

THEORY OF OPERATION

The Tire Pressure Monitoring (TPM) Sensor actively monitors the air pressure, air temperature inside the tire, the direction of the tire rotation and the internal battery status. Each sensor has a unique ID code. The TPM Sensor transmits the data at regular intervals via an encoded signal to a receiver circuit located in the Tire Pressure Monitoring (TPM) Module.

WHEN MONITORED:

With vehicle speed greater than 24 km/h (15 mph).

SET CONDITION:

The TPM Module will monitor the signals from the four active road tire TPM Sensors. A loss of RF signal error is detected if data is not received or cannot be accurately decoded for a maximum of 20 minutes when the vehicle speed is above 24 km/h (15 mph). An internal sensor hardware error condition will be set when an error in the shock sensor, pressure sensor, or temperature sensor is detected. The Tire Pressure Monitoring Telltale Lamp will flash on and off for 75 seconds then remain on solid when a system fault is detected.

POSSIBLE CAUSES

Possible Causes
NON-FCC COMPLIANT COMPONENTS
AFTERMARKET TIRES/WHEELS
INTERMITTENT TIRE PRESSURE MONITORING (TPM) SENSOR INTERNAL DTC
TIRE PRESSURE MONITORING (TPM) SENSOR
TIRE PRESSURE MONITORING (TPM) MODULE

NOTE: **Check for and remove any non-FCC compliant components, and verify that the tire pressures are correct, before beginning this diagnostic procedure.**

DIAGNOSTIC TEST

1. **DTC STATUS IS ACTIVE**
    1. Turn the ignition on.
    2. With the scan tool, read and record TPM Module DTC's.
    3. Test drive the vehicle at a speed greater than 24 km/h (15 mph) up to 20 minutes in order to receive TPM Sensor data and allow for the system to update.
    4. With the scan tool, erase stored TPM Module DTC's.
    5. With the scan tool, select View DTC's in the TPM Module.

    Is the DTC status Active at this time?

    Yes

    - Go To 2.

    No

    - Go To 8.
2. **TIRE PRESSURE MONITORING (TPM) SENSOR INTERNAL FAULT ACTIVE**
    1. Turn the ignition on.
    2. With the scan tool, select Data Display for the TPM Module and locate the following:
        - Tire 1 Pressure Sensor HW Fault
        - Tire 1 Pressure Sensor Missing ID
        - Tire 1 Temperature Sensor HW Fault
        - Tire 1 Temperature Sensor SW O/U
        - Tire 1 Acceleration Sensor HW Fault
        - Tire 1 Loss of Signal from Pressure Sensor

    Do any of the above faults read "Set"?

    Yes

    - Go To 3.

    No

    - Go To 7.
3. **TPM-RKE ANALYZER CH9936**

Is there a TPM-RKE Analyzer CH9936 available?

Yes

- Go To 4.

No

- Go To 7.

4. **TIRE PRESSURE MONITORING (TPM) SENSOR INTERNAL DTC**

NOTE: **This fault can be set if the incorrect or no TPM Sensor is installed on the vehicle. If the spare tire is currently installed on the vehicle, and it is not equipped with a TPM Sensor, this DTC can be set. Replace the spare with a TPM Sensor equipped wheel and tire assembly. Test drive the vehicle. If the DTC resets, continue with the diagnostic procedure.**

1. Perform a visual inspection to verify that all road wheels are equipped with a TPM Sensor.
2. With the TPM-RKE Analyzer (special tool #CH9936, Analyzer, TPM/RKE) verify the correct TPM Sensor is on the vehicle.

   Is the correct TPM Sensor installed on the vehicle?

   Yes

   - Go To 5.

   No

   - Install the correct Tire Pressure Monitoring (TPM) Sensor in accordance with the Service Information. Refer to **SENSOR, TIRE PRESSURE MONITORING (TPM), REMOVAL** .
   - Perform the TPM VERIFICATION TEST. Refer to **STANDARD PROCEDURE**.

5. **TIRE PRESSURE MONITORING (TPM) SENSOR INTERNAL FAULT SET USING TPM-RKE ANALYZER**

NOTE: **The following procedure is used to locate the TPM Sensor that is setting the internal fault. If the tires have been rotated, the TPM Sensor is no longer in sequence from the factory. Faults are linked to the TPM Sensor ID's. You MUST locate the TPM Sensor that set the fault before continuing. Use the following method below at every tire location.**

NOTE: **If the TPM Sensor ID's do not match, it may be necessary to move the vehicle to a location away from other TPM Sensors and repeat this step.**

NOTE: **Always be certain to select the proper vehicle line and model year when using this tool, as the tool will automatically use the correct protocol to attempt to read the TPM Sensor. If the incorrect vehicle line and/or model year is selected, the TPM Sensor will not respond to the tool.**

1. Use a TPM-RKE Analyzer (special tool #CH9936, Analyzer, TPM/RKE) to scan each TPM Sensor for a response, and store in the proper location in the TPM-RKE Analyzer. If you receive no response from any of the TPM Sensors, check to make sure that the TPM-RKE Analyzer is set correctly and repeat the process on each non-responsive wheel.
2. Replace the TPM Sensor if the results show a "Damaged Accel", "Damaged Temp", "Damaged Press", "H/W fail", "S/W fail" or the TPM Sensor does not respond after repeated attempts. Install the correct Tire Pressure Monitoring (TPM) Sensor in accordance with the Service Information. Refer to **SENSOR, TIRE PRESSURE MONITORING (TPM), REMOVAL** . Perform the TPM VERIFICATION TEST. Refer to **STANDARD PROCEDURE**.
3. With the scan tool, select Data Display for the TPM Module.
4. Check to see if the Sensor ID's match what is programmed into the TPM Module.

   Has the TPM Sensor been located?

   Yes

   - Install the Tire Pressure Monitoring (TPM) Sensor in accordance with the Service Information. Refer to **SENSOR, TIRE PRESSURE MONITORING (TPM), REMOVAL** .
   - Perform the TPM VERIFICATION TEST. Refer to **STANDARD PROCEDURE**.

   No

   - Go To 6.

6. **TIRE PRESSURE MONITORING (TPM) SENSOR INTERNAL FAULT - MISMATCHED ID**

NOTE: **If the TPM Sensor ID's do not match, it may be necessary to move the vehicle to a location away from other TPM Sensors and repeat this step.**

1. Use a TPM-RKE Analyzer (special tool #CH9936, Analyzer, TPM/RKE) to verify the TPM Sensor ID's match what is programmed into the TPM Module. The TPM Sensor Identifications are located under "Data Display" for the TPM Module.

   Do the TPM Sensor ID's match what is stored in the TPM Module?

   Yes

   - Replace the Tire Pressure Monitoring (TPM) Module in accordance with the Service Information. Refer to **MODULE, TIRE PRESSURE MONITORING (TPM), REMOVAL** .

- Perform the TPM VERIFICATION TEST. Refer to **STANDARD PROCEDURE**.

No

- Test complete.
- Perform the TPM VERIFICATION TEST. Refer to **STANDARD PROCEDURE**.

7. **TIRE PRESSURE MONITORING (TPM) SENSOR INTERNAL FAULT SET**

NOTE: **Some vehicles will not receive the TPM Sensor data when the vehicle is stationary. The vehicle may need to be driven at speeds greater than 24 km/h (15 mph) for about a minute in order to receive TPM Sensor data.**

1. Turn the ignition on.
2. Starting with the left front wheel, deflate the tire to 20 PSI, wait two minutes, and check the scan tool for changes to any compensated tire pressure values.
3. Look for a tire location with a non-responsive TPM Sensor ID.
4. Repeat this test on each wheel on the vehicle until the TPM Sensor in question has been identified.

Has the TPM Sensor been located?

Yes

- Install the Tire Pressure Monitoring (TPM) Sensor in accordance with the Service Information. Refer to **SENSOR, TIRE PRESSURE MONITORING (TPM), REMOVAL** .
- Perform the TPM VERIFICATION TEST. Refer to **STANDARD PROCEDURE**.

No

- Test complete.
- Perform the TPM VERIFICATION TEST. Refer to **STANDARD PROCEDURE**.

8. **INTERMITTENT TIRE PRESSURE MONITORING (TPM) SENSOR DTC**

1. The conditions necessary to set this DTC are not present at this time.
2. Perform any Technical Service Bulletins that may apply to this condition.
3. With the scan tool, clear DTC's in the Tire Pressure Monitoring (TPM) Module.
4. Test drive the vehicle for a minimum of 20 minutes with vehicle speed greater than 24 km/h (15 mph).
5. With the scan tool, select View DTC's in the Tire Pressure Monitoring (TPM) Module.

Does the DTC reset or is the status Active for this DTC?

Yes

- Return to the beginning of this test and perform the diagnostic procedure as necessary.

No

- Test complete.
- Perform the TPM VERIFICATION TEST. Refer to **STANDARD PROCEDURE**.

C1502-96-TIRE PRESSURE SENSOR 2 - INTERNAL COMPONENT FAILURE

For a complete wiring diagram, **refer to appropriate SYSTEM WIRING DIAGRAMS article** .

THEORY OF OPERATION

The Tire Pressure Monitoring (TPM) Sensor actively monitors the air pressure, air temperature inside the tire, the direction of the tire rotation and the internal battery status. Each sensor has a unique ID code. The TPM Sensor transmits the data at regular intervals via an encoded signal to a receiver circuit located in the Tire Pressure Monitoring (TPM) Module.

WHEN MONITORED:

With vehicle speed greater than 24 km/h (15 mph).

SET CONDITION:

The TPM Module will monitor the signals from the four active road tire TPM Sensors. A loss of RF signal error is detected if data is not received or cannot be accurately decoded for a maximum of 20 minutes when the vehicle speed is above 24 km/h (15 mph). An internal sensor hardware error condition will be set when an error in the shock sensor, pressure sensor, or temperature sensor is detected. The Tire Pressure Monitoring Telltale Lamp will flash on and off for 75 seconds then remain on solid when a system fault is detected.

POSSIBLE CAUSES

Possible Causes
NON-FCC COMPLIANT COMPONENTS
AFTERMARKET TIRES/WHEELS
INTERMITTENT TIRE PRESSURE MONITORING (TPM) SENSOR INTERNAL DTC
TIRE PRESSURE MONITORING (TPM) SENSOR
TIRE PRESSURE MONITORING (TPM) MODULE

NOTE: **Check for and remove any non-FCC compliant components, and verify that the tire pressures are correct, before beginning this diagnostic procedure.**

DIAGNOSTIC TEST

1. **DTC STATUS IS ACTIVE**
    1. Turn the ignition on.

2. With the scan tool, read and record TPM Module DTC's.
3. Test drive the vehicle at a speed greater than 24 km/h (15 mph) up to 20 minutes in order to receive TPM Sensor data and allow for the system to update.
4. With the scan tool, erase stored TPM Module DTC's.
5. With the scan tool, select View DTC's in the TPM Module.

   Is the DTC status Active at this time?

   Yes

   - Go To 2.

   No

   - Go To 8.

2. **TIRE PRESSURE MONITORING (TPM) SENSOR INTERNAL FAULT ACTIVE**
   1. Turn the ignition on.
   2. With the scan tool, select Data Display for the TPM Module and locate the following:
      - Tire 2 Pressure Sensor HW Fault
      - Tire 2 Pressure Sensor Missing ID
      - Tire 2 Temperature Sensor HW Fault
      - Tire 2 Temperature Sensor SW O/U
      - Tire 2 Acceleration Sensor HW Fault
      - Tire 2 Loss of Signal from Pressure Sensor

      Do any of the above faults read "Set"?

      Yes

      - Go To 3.

      No

      - Go To 7.

3. **TPM-RKE ANALYZER CH9936**

   Is there a TPM-RKE Analyzer CH9936 available?

   Yes

   - Go To 4.

   No

- Go To 7.

4. **TIRE PRESSURE MONITORING (TPM) SENSOR INTERNAL DTC**

NOTE: **This fault can be set if the incorrect or no TPM Sensor is installed on the vehicle. If the spare tire is currently installed on the vehicle, and it is not equipped with a TPM Sensor, this DTC can be set. Replace the spare with a TPM Sensor equipped wheel and tire assembly. Test drive the vehicle. If the DTC resets, continue with the diagnostic procedure.**

1. Perform a visual inspection to verify that all road wheels are equipped with a TPM Sensor.
2. With the TPM-RKE Analyzer (special tool #CH9936, Analyzer, TPM/RKE) verify the correct TPM Sensor is on the vehicle.

   Is the correct TPM Sensor installed on the vehicle?

   Yes

   - Go To 5.

   No

   - Install the correct Tire Pressure Monitoring (TPM) Sensor in accordance with the Service Information. Refer to **SENSOR, TIRE PRESSURE MONITORING (TPM), REMOVAL** .
   - Perform the TPM VERIFICATION TEST. Refer to **STANDARD PROCEDURE**.

5. **TIRE PRESSURE MONITORING (TPM) SENSOR INTERNAL FAULT SET USING TPM-RKE ANALYZER CH9936**

NOTE: **The following procedure is used to locate the TPM Sensor that is setting the internal fault. If the tires have been rotated, the TPM Sensor is no longer in sequence from the factory. Faults are linked to the TPM Sensor ID's. You MUST locate the TPM Sensor that set the fault before continuing. Use the following method below at every tire location.**

NOTE: **If the TPM Sensor ID's do not match, it may be necessary to move the vehicle to a location away from other TPM Sensors and repeat this step.**

NOTE: **Always be certain to select the proper vehicle line and model year when using this tool, as the tool will automatically use the correct protocol to attempt to read the TPM Sensor. If the incorrect vehicle line and/or model year is selected, the TPM Sensor will not respond to the tool.**

1. Use a TPM-RKE Analyzer (special tool #CH9936, Analyzer, TPM/RKE) to scan each TPM Sensor for a response, and store in the proper location in the TPM-RKE Analyzer. If you receive no response from any of the TPM Sensors, check to make sure that the TPM-RKE Analyzer is set

correctly and repeat the process on each non-responsive wheel.

2. Replace the TPM Sensor if the results show a "Damaged Accel", "Damaged Temp", "Damaged Press", "H/W fail", "S/W fail" or the TPM Sensor does not respond after repeated attempts. Install the correct Tire Pressure Monitoring (TPM) Sensor in accordance with the Service Information. Refer to **SENSOR, TIRE PRESSURE MONITORING (TPM), REMOVAL** . Perform the TPM VERIFICATION TEST. Refer to **STANDARD PROCEDURE**.
3. With the scan tool, select Data Display for the TPM Module.
4. Check to see if the TPM Sensor ID's match what is programmed into the TPM Module.

   Has the TPM Sensor been located?

   Yes

   - Install the Tire Pressure Monitoring (TPM) Sensor in accordance with the Service Information. Refer to **SENSOR, TIRE PRESSURE MONITORING (TPM), REMOVAL** .
   - Perform the TPM VERIFICATION TEST. Refer to **STANDARD PROCEDURE**.

   No

   - Go To 6.

6. **TIRE PRESSURE MONITORING (TPM) SENSOR INTERNAL FAULT - MISMATCHED ID**

NOTE: **If the sensor ID's do not match, it may be necessary to move the vehicle to a location away from other TPM Sensors and repeat this step.**

1. Use a TPM-RKE Analyzer (special tool #CH9936, Analyzer, TPM/RKE) to verify the TPM Sensor ID's match what is programmed into the TPM Module. The TPM Sensor Identifications are located under "Data Display" for the TPM Module.

   Do the TPM Sensor ID's match what is stored in the TPM Module?

   Yes

   - Replace the Tire Pressure Monitoring (TPM) Module in accordance with the Service Information. Refer to **MODULE, TIRE PRESSURE MONITORING (TPM), REMOVAL** .
   - Perform the TPM VERIFICATION TEST. Refer to **STANDARD PROCEDURE**.

   No

   - Test complete.
   - Perform the TPM VERIFICATION TEST. Refer to **STANDARD PROCEDURE**.

7. **TIRE PRESSURE MONITORING (TPM) SENSOR INTERNAL FAULT SET**

NOTE: **Some vehicles will not receive TPM Sensor data when the vehicle is stationary. The vehicle may need to be driven at speeds greater than 24 km/h (15 mph) for about a minute in order to receive TPM Sensor data.**

1. Turn the ignition on.
2. Starting with the left front wheel, deflate the tire to 20 PSI, wait two minutes, and check the scan tool for changes to any compensated tire pressure values.
3. Look for a tire location with a non-responsive TPM Sensor ID.
4. Repeat this test on each wheel on the vehicle until the TPM Sensor in question has been identified.

   Has the TPM Sensor been located?

   Yes

   - Install the Tire Pressure Monitoring (TPM) Sensor in accordance with the Service Information. Refer to **SENSOR, TIRE PRESSURE MONITORING (TPM), REMOVAL** .
   - Perform the TPM VERIFICATION TEST. Refer to **STANDARD PROCEDURE**.

   No

   - Test complete.
   - Perform the TPM VERIFICATION TEST. Refer to **STANDARD PROCEDURE**.

8. **INTERMITTENT TIRE PRESSURE MONITORING (TPM) SENSOR DTC**
   1. The conditions necessary to set this DTC are not present at this time.
   2. Perform any Technical Service Bulletins that may apply to this condition.
   3. With the scan tool, clear DTC's in the Tire Pressure Monitoring (TPM) Module.
   4. Test drive the vehicle for a minimum of 20 minutes with vehicle speed greater than 24 km/h (15 mph).
   5. With the scan tool, select View DTC's in the Tire Pressure Monitoring (TPM) Module.

      Does the DTC reset or is the status Active for this DTC?

      Yes

      - Return to the beginning of this test and perform the diagnostic procedure as necessary.

      No

      - Test complete.
      - Perform the TPM VERIFICATION TEST. Refer to **STANDARD PROCEDURE**.

C1503-96-TIRE PRESSURE SENSOR 3 - INTERNAL COMPONENT FAILURE

For a complete wiring diagram, **refer to appropriate SYSTEM WIRING DIAGRAMS article** .

THEORY OF OPERATION

The Tire Pressure Monitoring (TPM) Sensor actively monitors the air pressure, air temperature inside the tire, the direction of the tire rotation and the internal battery status. Each sensor has a unique ID code. The TPM Sensor transmits the data at regular intervals via an encoded signal to a receiver circuit located in the Tire Pressure Monitoring (TPM) Module.

WHEN MONITORED:

With vehicle speed greater than 24 km/h (15 mph).

SET CONDITION:

The TPM Module will monitor the signals from the four active road tire TPM Sensors. A loss of RF signal error is detected if data is not received or cannot be accurately decoded for a maximum of 20 minutes when the vehicle speed is above 24 km/h (15 mph). An internal sensor hardware error condition will be set when an error in the shock sensor, pressure sensor, or temperature sensor is detected. The Tire Pressure Monitoring Telltale Lamp will flash on and off for 75 seconds then remain on solid when a system fault is detected.

POSSIBLE CAUSES

Possible Causes
NON-FCC COMPLIANT COMPONENTS
AFTERMARKET TIRES/WHEELS
INTERMITTENT TIRE PRESSURE MONITORING (TPM) SENSOR INTERNAL DTC
TIRE PRESSURE MONITORING (TPM) SENSOR
TIRE PRESSURE MONITORING (TPM) MODULE

NOTE: Check for and remove any non-FCC compliant components, and verify that the tire pressures are correct, before beginning this diagnostic procedure.

DIAGNOSTIC TEST

1. **DTC STATUS IS ACTIVE**

   NOTE: Before beginning diagnostic procedure, verify that tire pressures are correct.

   1. Turn the ignition on.
   2. With the scan tool, read and record TPM Module DTC's.
   3. Test drive the vehicle at a speed greater than 24 km/h (15 mph) up to 20 minutes in order to receive TPM Sensor data and allow for the system to update.
   4. With the scan tool, erase stored TPM Module DTC's.

5. With the scan tool, select View DTC's in the TPM Module.

   Is the DTC status Active at this time?

   Yes

   - Go To 2.

   No

   - Go To 8.

2. **TIRE PRESSURE MONITORING (TPM) SENSOR INTERNAL FAULT ACTIVE**
   1. Turn the ignition on.
   2. With the scan tool, select Data Display for the TPM and locate the following:
      - Tire 3 Pressure Sensor HW Fault
      - Tire 3 Pressure Sensor Missing ID
      - Tire 3 Temperature Sensor HW Fault
      - Tire 3 Temperature Sensor SW O/U
      - Tire 3 Acceleration Sensor HW Fault
      - Tire 3 Loss of Signal from Pressure Sensor

      Do any of the above faults read "Set"?

      Yes

      - Go To 3.

      No

      - Go To 7.

3. **TPM/RKE ANALYZER CH9936**

   Is there a TPM-RKE Analyzer CH9936 available?

   Yes

   - Go To 4.

   No

   - Go To 7.

4. **TIRE PRESSURE MONITORING (TPM) SENSOR INTERNAL DTC**

   NOTE: This fault can be set if the incorrect or no TPM Sensor is installed on the

vehicle. If the spare tire is currently installed on the vehicle, and it is not equipped with a TPM Sensor, this DTC can be set. Replace the spare with a TPM Sensor equipped wheel and tire assembly. Test drive the vehicle. If the DTC resets, continue with the diagnostic procedure.

1. Perform a visual inspection to verify that all road wheels are equipped with a TPM Sensor.
2. With the TPM-RKE Analyzer (special tool #CH9936, Analyzer, TPM/RKE) verify the correct TPM Sensor is on the vehicle.

   Are the correct TPM sensors installed on the vehicle?

   Yes

   - Go To 5.

   No

   - Install the correct Tire Pressure Monitoring (TPM) Sensor in accordance with the Service Information. Refer to **SENSOR, TIRE PRESSURE MONITORING (TPM), REMOVAL** .
   - Perform the TPM VERIFICATION TEST. Refer to **STANDARD PROCEDURE**.

5. **TIRE PRESSURE MONITORING (TPM) SENSOR INTERNAL FAULT SET USING TPM/RKE ANALYZER**

NOTE: **The following procedure is used to locate the TPM Sensor that is setting the internal fault. If the tires have been rotated, the TPM Sensor is no longer in sequence from the factory. Faults are linked to the TPM Sensor ID's. You MUST locate the TPM Sensor that set the fault before continuing. Use the following method below at every tire location.**

NOTE: **If the TPM Sensor ID's do not match, it may be necessary to move the vehicle to a location away from other TPM Sensors and repeat this step.**

NOTE: **Always be certain to select the proper vehicle line and model year when using this tool, as the tool will automatically use the correct protocol to attempt to read the TPM Sensor. If the incorrect vehicle line and/or model year is selected, the TPM Sensor will not respond to the tool.**

1. Use a TPM-RKE Analyzer (special tool #CH9936, Analyzer, TPM/RKE) to scan each TPM Sensor for a response, and store in the proper location in the TPM-RKE Analyzer. If you receive no response from any of the TPM Sensors, check to make sure that the TPM-RKE Analyzer is set correctly and repeat the process on each non-responsive wheel.
2. Replace the TPM Sensor if the results show a "Damaged Accel", "Damaged Temp", "Damaged Press", "H/W fail", "S/W fail" or the TPM Sensor does not respond after repeated attempts. Install the correct Tire Pressure Monitoring (TPM) Sensor in accordance with the Service Information.

Refer to **SENSOR, TIRE PRESSURE MONITORING (TPM), REMOVAL** . Perform the TPM VERIFICATION TEST. Refer to **STANDARD PROCEDURE**.

3. With the scan tool, select Data Display for the TPM Module.
4. Check to see if the Sensor ID's match what is programmed into the TPM Module.

   Has the TPM Sensor been located?

   Yes

   - Install the Tire Pressure Monitoring (TPM) Sensor in accordance with the Service Information. Refer to **SENSOR, TIRE PRESSURE MONITORING (TPM), REMOVAL** .
   - Perform the TPM VERIFICATION TEST. Refer to **STANDARD PROCEDURE**.

   No

   - Go To 6.

6. **TIRE PRESSURE MONITORING (TPM) SENSOR INTERNAL FAULT - MISMATCHED ID**

   NOTE: If the TPM Sensor ID's do not match, it may be necessary to move the vehicle to a location away from other TPM Sensors and repeat this step.

   1. Use a TPM-RKE Analyzer to verify the TPM Sensor ID's match what is programmed into the TPM Module. The TPM Sensor Identifications are located under "Data Display" for the TPM Module.

      Do the TPM Sensor ID's match what is stored in the TPM Module?

      Yes

      - Replace the Tire Pressure Monitoring (TPM) Module in accordance with the Service Information. Refer to **MODULE, TIRE PRESSURE MONITORING (TPM), REMOVAL** .
      - Perform the TPM VERIFICATION TEST. Refer to **STANDARD PROCEDURE**.

      No

      - Test complete.
      - Perform the TPM VERIFICATION TEST. Refer to **STANDARD PROCEDURE**.

7. **TIRE PRESSURE MONITORING (TPM) SENSOR INTERNAL FAULT SET**

   NOTE: Some vehicles will not receive the TPM Sensor data when the vehicle is stationary. The vehicle may need to be driven at speeds greater than 24 km/h (15 mph) for about a minute in order to receive TPM Sensor data.

   1. Turn the ignition on.

2. Starting with the left front wheel, deflate the tire to 20 PSI, wait two minutes, and check the scan tool for changes to any compensated tire pressure values.
3. Look for a tire location with a non-responsive TPM Sensor ID.
4. Repeat this test on each wheel on the vehicle until the TPM Sensor in question has been identified.

   Has the TPM Sensor been located?

   Yes

   - Install the Tire Pressure Monitoring (TPM) Sensor in accordance with the Service Information. Refer to **SENSOR, TIRE PRESSURE MONITORING (TPM), REMOVAL** .
   - Perform the TPM VERIFICATION TEST. Refer to **STANDARD PROCEDURE**.

   No

   - Test complete.
   - Perform the TPM VERIFICATION TEST. Refer to **STANDARD PROCEDURE**.

8. **INTERMITTENT TIRE PRESSURE MONITORING (TPM) SENSOR DTC**
   1. The conditions necessary to set this DTC are not present at this time.
   2. Perform any Technical Service Bulletins that may apply to this condition.
   3. With the scan tool, clear DTC's in the Tire Pressure Monitoring (TPM) Module.
   4. Test drive the vehicle for a minimum of 20 minutes with vehicle speed greater than 24 km/h (15 mph).
   5. With the scan tool, select View DTC's in the Tire Pressure Monitoring (TPM) Module.

      Does the DTC reset or is the status Active for this DTC?

      Yes

      - Return to the beginning of this test and perform the diagnostic procedure as necessary.

      No

      - Test complete.
      - Perform the TPM VERIFICATION TEST. Refer to **STANDARD PROCEDURE**.

C1504-96-TIRE PRESSURE SENSOR 4 - INTERNAL COMPONENT FAILURE

For a complete wiring diagram, **refer to appropriate SYSTEM WIRING DIAGRAMS article** .

THEORY OF OPERATION

The Tire Pressure Monitoring (TPM) Sensor actively monitors the air pressure, air temperature inside the tire,

the direction of the tire rotation and the internal battery status. Each sensor has a unique ID code. The TPM Sensor transmits the data at regular intervals via an encoded signal to a receiver circuit located in the Tire Pressure Monitoring (TPM) Module.

WHEN MONITORED:

With vehicle speed greater than 24 km/h (15 mph).

SET CONDITION:

The TPM Module will monitor the signals from the four active road tire TPM Sensors. A loss of RF signal error is detected if data is not received or cannot be accurately decoded for a maximum of 20 minutes when the vehicle speed is above 24 km/h (15 mph). An internal sensor hardware error condition will be set when an error in the shock sensor, pressure sensor, or temperature sensor is detected. The Tire Pressure Monitoring Telltale Lamp will flash on and off for 75 seconds then remain on solid when a system fault is detected.

POSSIBLE CAUSES

Possible Causes
NON-FCC COMPLIANT COMPONENTS
AFTERMARKET TIRES/WHEELS
INTERMITTENT TIRE PRESSURE MONITORING (TPM) SENSOR INTERNAL DTC
TIRE PRESSURE MONITORING (TPM) SENSOR
TIRE PRESSURE MONITORING (TPM) MODULE

NOTE: Check for and remove any non-FCC compliant components, and verify that the tire pressures are correct, before beginning this diagnostic procedure.

DIAGNOSTIC TEST

1. **DTC STATUS IS ACTIVE**

   NOTE: Before beginning diagnostic procedure, verify that tire pressures are correct.

   1. Turn the ignition on.
   2. With the scan tool, read and record TPM Module DTC's.
   3. Test drive the vehicle at a speed greater than 24 km/h (15 mph) up to 20 minutes in order to receive TPM Sensor data and allow for the system to update.
   4. With the scan tool, erase stored TPM Module DTC's.
   5. With the scan tool, select View DTC's in the TPM Module.

   Is the DTC status Active at this time?

   Yes

- Go To 2.

No

- Go To 8.

2. **TIRE PRESSURE MONITORING (TPM) SENSOR INTERNAL FAULT ACTIVE**
   1. Turn the ignition on.
   2. With the scan tool, select Data Display for the TPM Module and locate the following:
      - Tire 4 Pressure Sensor HW Fault
      - Tire 4 Pressure Sensor Missing ID
      - Tire 4 Temperature Sensor HW Fault
      - Tire 4 Temperature Sensor SW O/U
      - Tire 4 Acceleration Sensor HW Fault
      - Tire 4 Loss of Signal from Pressure Sensor

      Do any of the above faults read "Set"?

      Yes

      - Go To 3.

      No

      - Go To 7.
3. **TPM/RKE ANALYZER CH9936**

   Is there a TPM-RKE Analyzer CH9936 available?

   Yes

   - Go To 4.

   No

   - Go To 7.
4. **TIRE PRESSURE MONITORING (TPM) SENSOR INTERNAL DTC**

   NOTE: This fault can be set if the incorrect or no TPM Sensor is installed on the vehicle. If the spare tire is currently installed on the vehicle, and it is not equipped with a TPM Sensor, this DTC can be set. Replace the spare with a TPM Sensor equipped wheel and tire assembly. Test drive the vehicle. If the DTC resets, continue with the diagnostic procedure.

   1. Perform a visual inspection to verify that all road wheels are equipped with a TPM Sensor.

2. With the TPM-RKE Analyzer (special tool #CH9936, Analyzer, TPM/RKE) verify the correct TPM Sensor is on the vehicle.

   Is the correct TPM Sensor installed on the vehicle?

   Yes

   - Go To 5.

   No

   - Install the correct Tire Pressure Monitoring (TPM) Sensor in accordance with the Service Information. Refer to **SENSOR, TIRE PRESSURE MONITORING (TPM), REMOVAL** .
   - Perform the TPM VERIFICATION TEST. Refer to **STANDARD PROCEDURE**.

5. **TIRE PRESSURE MONITORING (TPM) SENSOR INTERNAL FAULT SET USING TPM-RKE ANALYZER**

   NOTE: The following procedure is used to locate the TPM Sensor that is setting the internal fault. If the tires have been rotated, the TPM Sensor is no longer in sequence from the factory. Faults are linked to the TPM Sensor ID's. You MUST locate the TPM Sensor that set the fault before continuing. Use the following method below at every tire location.

   NOTE: If the TPM Sensor ID's do not match, it may be necessary to move the vehicle to a location away from other TPM Sensors and repeat this step.

   NOTE: Always be certain to select the proper vehicle line and model year when using this tool, as the tool will automatically use the correct protocol to attempt to read the TPM Sensor. If the incorrect vehicle line and/or model year is selected, the TPM Sensor will not respond to the tool.

   1. Use a TPM-RKE Analyzer (special tool #CH9936, Analyzer, TPM/RKE) to scan each TPM Sensor for a response, and store in the proper location in the TPM-RKE Analyzer. If you receive no response from any of the TPM Sensors, check to make sure that the TPM-RKE Analyzer is set correctly and repeat the process on each non-responsive wheel.
   2. Replace the TPM Sensor if the results show a "Damaged Accel", "Damaged Temp", "Damaged Press", "H/W fail", "S/W fail" or the TPM Sensor does not respond after repeated attempts. Install the correct Tire Pressure Monitoring (TPM) Sensor in accordance with the Service Information. Refer to **SENSOR, TIRE PRESSURE MONITORING (TPM), REMOVAL** . Perform the TPM VERIFICATION TEST. Refer to **STANDARD PROCEDURE**.
   3. With the scan tool, select Data Display for the TPM Module.
   4. Check to see if the Sensor ID's match what is programmed into the TPM Module.

      Has the TPM Sensor been located?

Yes

- Install the Tire Pressure Monitoring (TPM) Sensor in accordance with the Service Information. Refer to **SENSOR, TIRE PRESSURE MONITORING (TPM), REMOVAL** .
- Perform the TPM VERIFICATION TEST. Refer to **STANDARD PROCEDURE**.

No

- Go To 6.

6. **TIRE PRESSURE MONITORING (TPM) SENSOR INTERNAL FAULT - MISMATCHED ID**

NOTE: **If the TPM Sensor ID's do not match, it may be necessary to move the vehicle to a location away from other TPM Sensors and repeat this step.**

1. Use a TPM-RKE Analyzer (special tool #CH9936, Analyzer, TPM/RKE) to verify the TPM Sensor ID's match what is programmed into the TPM Module. The TPM Sensor Identifications are located under "Data Display" for the TPM Module.

   Do the TPM Sensor ID's match what is stored in the TPM Module?

   Yes

   - Replace the Tire Pressure Monitoring (TPM) Module in accordance with the Service Information. Refer to **MODULE, TIRE PRESSURE MONITORING (TPM), REMOVAL** .
   - Perform the TPM VERIFICATION TEST. Refer to **STANDARD PROCEDURE**.

   No

   - Test complete.
   - Perform the TPM VERIFICATION TEST. Refer to **STANDARD PROCEDURE**.

7. **TIRE PRESSURE MONITORING (TPM) SENSOR INTERNAL FAULT SET**

NOTE: **Some vehicles will not receive the TPM Sensor data when the vehicle is stationary. The vehicle may need to be driven at speeds greater than 24 km/h (15 mph) for about a minute in order to receive TPM Sensor data.**

1. Turn the ignition on.
2. Starting with the left front wheel, deflate the tire to 20 PSI, wait two minutes, and check the scan tool for changes to any compensated tire pressure values.
3. Look for a tire location with a non-responsive TPM Sensor ID.
4. Repeat this test on each wheel on the vehicle until the TPM Sensor in question has been identified.

   Has the TPM Sensor been located?

Yes

- Install the Tire Pressure Monitoring (TPM) Sensor in accordance with the Service Information. Refer to **SENSOR, TIRE PRESSURE MONITORING (TPM), REMOVAL** .
- Perform the TPM VERIFICATION TEST. Refer to **STANDARD PROCEDURE**.

No

- Test complete.
- Perform the TPM VERIFICATION TEST. Refer to **STANDARD PROCEDURE**.

8. **INTERMITTENT TIRE PRESSURE MONITORING (TPM) SENSOR DTC**
   1. The conditions necessary to set this DTC are not present at this time.
   2. Perform any Technical Service Bulletins that may apply to this condition.
   3. With the scan tool, clear DTC's in the Tire Pressure Monitoring (TPM) Module.
   4. Test drive the vehicle for a minimum of 20 minutes with vehicle speed greater than 24 km/h (15 mph).
   5. With the scan tool, select View DTC's in the Tire Pressure Monitoring (TPM) Module.

      Does the DTC reset or is the status Active for this DTC?

      Yes

      - Return to the beginning of this test and perform the diagnostic procedure as necessary.

      No

      - Test complete.
      - Perform the TPM VERIFICATION TEST. Refer to **STANDARD PROCEDURE**.

C151C-00-TIRE PRESSURE SENSORS MISSING

For a complete wiring diagram, **refer to appropriate SYSTEM WIRING DIAGRAMS article** .

THEORY OF OPERATION

When installing a new Tire Pressure Monitoring (TPM) Module, the module is programed with universal ID's for the Tire Pressure Monitoring (TPM) Sensors. The TPM Module must be programmed with the correct TPM Sensor ID's.

NOTE: **FF is the default value. If this value is found, the TPM controller has not been programmed.**

WHEN MONITORED:

During vehicle TPM Sensor ID locate process.

SET CONDITION:

When installing a new Tire Pressure Monitoring (TPM) Module.

POSSIBLE CAUSES

Possible Causes
NON-FCC COMPLIANT COMPONENTS
INCORRECT TIRE PRESSURE MONITORING (TPM) SENSOR ID(S)
TIRE PRESSURE MONITORING (TPM) SENSOR
TIRE PRESSURE MONITORING (TPM) MODULE

NOTE: Check for and remove any non-FCC compliant components before beginning this diagnostic procedure.

DIAGNOSTIC TEST

1. **VERIFY DTC IS ACTIVE**

   NOTE: Before beginning diagnostic procedure, verify that tire pressures are correct.

   1. Turn the ignition on.
   2. With the scan tool, read and record TPM Module DTC's.
   3. Test drive the vehicle at a speed greater than 24 km/h (15 mph) for 20 minutes in order to receive TPM data and allow for the system to update.
   4. With the scan tool, erase active TPM Module DTC's.
   5. With the scan tool, select View DTC's in the Tire Pressure Module (TPM).

   Is the DTC status Active at this time?

   Yes

   - Go To 2.

   No

   - Test complete.
   - Perform the TPM VERIFICATION TEST. Refer to **STANDARD PROCEDURE**.

2. **TPM-RKE ANALYZER CH9936**

   Is there a TPM-RKE Analyzer CH9936 available?

Yes

- Go To 3.

No

- Go To 4.

3. **WITH TPM-RKE TOOL CHECK TIRE PRESSURE MONITORING (TPM) SENSOR ID(S)**

NOTE: **Always be certain to select the proper vehicle line and model year when using this tool, as the tool will automatically use the correct protocol to attempt to read the Sensor. If the incorrect vehicle line and/or model year is selected, the Sensor will not respond to the tool.**

NOTE: **If you receive no response from any of the tire pressure sensors, check to make sure that the TPM-RKE Analyzer is set correctly, and repeat the process on each of the non-responsive wheel(s)**

1. Use a TPM-RKE Analyzer (special tool #CH9936, Analyzer, TPM/RKE) to scan each TPM Sensor for an ID, store in the proper location in the TPM-RKE Analyzer.
2. Use a TPM-RKE Analyzer to upload the correct ID's and proper locations in the scan tool.
3. With the scan tool, select the TPM Module under "Miscellaneous Functions", follow the procedure for uploading TPM Sensor ID's.
4. With the scan tool, erase TPM Module DTC's.
5. Test drive the vehicle at a speed greater than 24 km/h (15 mph) for 20 minutes in order to receive TPM data and allow for the system to update.
6. With the scan tool, check to see if the TPM sensor ID's match what is programmed into the TPM Module.

   Do the TPM ID's match?

   Yes

   - Test complete.
   - Perform the TPM VERIFICATION TEST. Refer to **STANDARD PROCEDURE**.

   No

   - Install a new Tire Pressure Monitoring (TPM) Module in accordance with the Service Information. Refer to **MODULE, TIRE PRESSURE MONITORING (TPM), REMOVAL** .
   - Perform the TPM VERIFICATION TEST. Refer to **STANDARD PROCEDURE**.

4. **WITHOUT TPM-RKE TOOL CHECK TIRE PRESSURE MONITORING (TPM) SENSOR ID(S)**
   1. Turn the ignition on.

2. Starting with the left front wheel, deflate the tire to 20 PSI, wait two minutes, and check the scan tool for changes to any compensated tire pressure values.
3. Repeat the above step on each wheel of the vehicle.
4. With the scan tool, erase TPM Module DTC's.
5. Test drive the vehicle at a speed greater than 24 km/h (15 mph) for 20 minutes in order to receive TPM data and allow for the system to update.
6. With the scan tool, check to see if the TPM sensor ID's are programmed into the TPM Module.

   Are the TPM Sensor ID's in the TPM Module?

   Yes

   - Test complete.
   - Perform the TPM VERIFICATION TEST. Refer to **STANDARD PROCEDURE**.

   No

   - Install a new Tire Pressure Monitoring (TPM) Module in accordance with the Service Information. Refer to **MODULE, TIRE PRESSURE MONITORING (TPM), REMOVAL** .
   - Perform the TPM VERIFICATION TEST. Refer to **STANDARD PROCEDURE**.

C151D-00-TIRE PRESSURE SENSOR LOCATION UNDETERMINED

For a complete wiring diagram, **refer to appropriate SYSTEM WIRING DIAGRAMS article** .

THEORY OF OPERATION

The vehicle Tire Pressure Monitoring (TPM) Sensor locate process occurs after the vehicle is stationary for more than 20 min. The TPM system will determine the sensor positions while driving at speeds above 24 km/h (15 mph). This process can take up to 20 min to determine TPM Sensor positions.

WHEN MONITORED:

During vehicle TPM Sensor locate process.

SET CONDITION:

Must fail multiple vehicle TPM Sensor locate processes if localization fails due to Left/Right fail or Front/Rear fail or if the TPM Module is new and has never attempted localization. If missing TPM Sensors are present on first drive, C151D will set to show that the TPM Sensor location cannot be determined/guaranteed (cannot revert to last known good locations).

POSSIBLE CAUSES

Possible Causes

DIAGNOSTIC TEST

1. **VERIFY DTC IS ACTIVE**

NOTE: **The DTC C151D should not exist on its own. If any other DTC's are present, refer to the appropriate diagnostic procedure in this information first before continuing.**

NOTE: **If a new TPM Module was installed, the vehicle must remain stationary for 20 minutes before proceeding with this diagnostic procedure.**

1. Turn the ignition on.
2. With the scan tool, read and record TPM Module DTC's.
3. Test drive the vehicle at a speed greater than 24 km/h (15 mph) for 20 minutes in order to receive TPM Sensor data and allow for the system to update.
4. With the scan tool, erase TPM Module DTC's.
5. With the scan tool, select View DTC's in the TPM Module.

Is DTC C151D Active on its own at this time?

Yes

- Install a new TPM Module in accordance with the Service Information. Refer to **MODULE, TIRE PRESSURE MONITORING (TPM), REMOVAL** .
- Perform the TPM VERIFICATION TEST. Refer to **STANDARD PROCEDURE**.

No

- Test complete, the condition or conditions that originally set this DTC are not present at this time. Using the wiring diagrams as a guide, check all related splices and connectors for signs of water intrusion, corrosion, pushed out or bent terminals, and correct pin tension.
- Perform the TPM VERIFICATION TEST. Refer to **STANDARD PROCEDURE**.

C1580-00-LEFT/RIGHT SIDE TIRE PRESSURE SENSOR LOCATION UNDETERMINED

For a complete wiring diagram, **refer to appropriate SYSTEM WIRING DIAGRAMS article** .

THEORY OF OPERATION

The vehicle Tire Pressure Monitoring (TPM) Sensor locate process occurs after the vehicle remains stationary for 20 minutes. The Tire Pressure Monitoring (TPM) Module will determine the TPM Sensor positions. The TPM Sensors themselves determine which side of the vehicle they are located on.

WHEN MONITORED:

During vehicle TPM Sensor locate process.

SET CONDITION:

Must fail multiple vehicle TPM sensor locate processes if localization fails due to Left/Right fail or if the TPM module is new and has never attempted localization.

POSSIBLE CAUSES

Possible Causes
NON-FCC COMPLIANT COMPONENTS
TIRE PRESSURE MONITORING (TPM) SENSOR
TIRE PRESSURE MONITORING (TPM) MODULE

NOTE: **Check for and remove any non-FCC compliant components before beginning this diagnostic procedure.**

NOTE: **The vehicle must remain stationary for 20 minutes before proceeding with this diagnostic procedure.**

DIAGNOSTIC TEST

1. **DTC STATUS IS ACTIVE**
    1. Turn the ignition on.
    2. With the scan tool, read and record TPM Module DTC's.
    3. With the scan tool, erase stored TPM Module DTC's.
    4. Test drive the vehicle at a speed greater than 24 km/h (15 mph) for 20 minutes in order to receive TPM Sensor data and allow for the system to update.
    5. With the scan tool, select View DTC's in the TPM Module.

    Is the DTC status Active at this time?

    Yes

    - Go To 2.

    No

    - Go To 3.
2. **TIRE PRESSURE MONITORING (TPM) SENSOR INTERNAL FAULT ACTIVE**
    1. Turn the ignition on.
    2. With the scan tool, select Data Display for the TPM Module and locate the following for each TPM

Sensor:

- Tire Pressure Sensor HW Fault
- Tire Temperature Sensor HW Fault
- Tire Acceleration Sensor HW Fault

Do any of the above HW faults read "Set"?

Yes

- For each TPM Sensor with a HW Fault. Install a new Tire Pressure Monitoring (TPM) Sensor in accordance with the Service Information. Refer to **SENSOR, TIRE PRESSURE MONITORING (TPM), REMOVAL** .
- Perform the TPM VERIFICATION TEST. Refer to **STANDARD PROCEDURE**.

No

- Install a new Tire Pressure Monitoring (TPM) Module in accordance with the Service Information. Refer to **MODULE, TIRE PRESSURE MONITORING (TPM), REMOVAL** .
- Perform the TPM VERIFICATION TEST. Refer to **STANDARD PROCEDURE**.

3. **INTERMITTENT TIRE PRESSURE MONITORING (TPM) SENSOR DTC**
   1. The conditions necessary to set this DTC are not present at this time.
   2. Perform any Technical Service Bulletins that may apply to this condition.
   3. With the scan tool, clear DTC's in the Tire Pressure Monitoring (TPM) Module.
   4. Have the vehicle remain stationary for 20 minutes.
   5. With the scan tool, select View DTC's in the Tire Pressure Monitoring (TPM) Module.

   Does the DTC reset or is the status Active for this DTC?

   Yes

   - Install a new Tire Pressure Monitoring (TPM) Module in accordance with the Service Information. Refer to **MODULE, TIRE PRESSURE MONITORING (TPM), REMOVAL** .
   - Perform the TPM VERIFICATION TEST. Refer to **STANDARD PROCEDURE**.

   No

   - Test complete.
   - Perform the TPM VERIFICATION TEST. Refer to **STANDARD PROCEDURE**.

C1581-00-FRONT/REAR TIRE PRESSURE SENSOR LOCATION UNDETERMINED

For a complete wiring diagram, **refer to appropriate SYSTEM WIRING DIAGRAMS article** .

THEORY OF OPERATION

The vehicle Tire Pressure Monitoring (TPM) Sensor locate process occurs after the vehicle remains stationary for 20 minutes. The Tire Pressure Monitoring (TPM) Module will determine the Tire Pressure Monitoring (TPM) Sensor positions. The TPM Module measures the signal strength of each TPM sensor and determines if the are in the front or rear.

WHEN MONITORED:

During vehicle TPM Sensor locate process.

SET CONDITION:

Must fail multiple vehicle TPM sensor locate processes if localization fails due to Front/Rear fail or if the TPM module is new and has never attempted localization.

POSSIBLE CAUSES

Possible Causes
NON-FCC COMPLIANT COMPONENTS
TIRE PRESSURE MONITORING (TPM) MODULE HARNESS
INCORRECT TIRE PRESSURE MONITORING (TPM) MODULE INSTALLATION
TIRE PRESSURE MONITORING (TPM) MODULE

NOTE: Check for and remove any non-FCC compliant components before beginning this diagnostic procedure.

DIAGNOSTIC TEST

1. **DTC STATUS IS ACTIVE**

   NOTE: The vehicle must remain stationary for 20 minutes before proceeding with this diagnostic procedure.

   1. Turn the ignition on.
   2. With the scan tool, read and record TPM Module DTC's.
   3. Test drive the vehicle at a speed greater than 24 km/h (15 mph) for 10 minutes in order to receive TPM Sensor data and allow for the system to update.
   4. With the scan tool, erase stored TPM Module DTC's.
   5. With the scan tool, select View DTC's in the TPM Module.

   Is the DTC status Active at this time?

   Yes

- Go To 2.

No

- Go To 3.

2. **TIRE PRESSURE MONITORING (TPM) MODULE INTERFERENCE**

NOTE: Interference may occur if the TPM Module is installed incorrectly or the TPM harness is not fastened properly to the body.

1. Turn the ignition off.

   Verify the following:

   - Aftermarket devices are installed or in the vehicle.
   - The TPM Module harness is damaged or is routed incorrectly.
   - The TPM Module is installed incorrectly.

   Are there any of the above conditions present?

   Yes

   - Repair as necessary.
   - Perform the TPM VERIFICATION TEST. Refer to **STANDARD PROCEDURE**.

   No

   - Install a new Tire Pressure Monitoring (TPM) Module in accordance with the Service Information. Refer to **MODULE, TIRE PRESSURE MONITORING (TPM), REMOVAL** .
   - Perform the TPM VERIFICATION TEST. Refer to **STANDARD PROCEDURE**.

3. **INTERMITTENT TIRE PRESSURE MONITORING (TPM) SENSOR DTC**

1. The conditions necessary to set this DTC are not present at this time.
2. Perform any Technical Service Bulletins that may apply to this condition.
3. With the scan tool, clear DTC's in the Tire Pressure Monitoring (TPM) Module.
4. Test drive the vehicle for a minimum of 20 minutes with vehicle speed greater than 24 km/h (15 mph).
5. With the scan tool, select View DTC's in the Tire Pressure Monitoring (TPM) Module.

   Does the DTC reset or is the status Active for this DTC?

   Yes

   - Install a new Tire Pressure Monitoring (TPM) Module in accordance with the Service

Information. Refer to **MODULE, TIRE PRESSURE MONITORING (TPM), REMOVAL** .

- Perform the TPM VERIFICATION TEST. Refer to **STANDARD PROCEDURE**.

No

- Test complete.
- Perform the TPM VERIFICATION TEST. Refer to **STANDARD PROCEDURE**.

C1597-00-TPM SYSTEM DEACTIVATED-WINTER MODE

For a complete wiring diagram, **refer to appropriate SYSTEM WIRING DIAGRAMS article** .

THEORY OF OPERATION

NOTE: When this DTC is active the TPM Module will enter a deactivation mode (Winter Mode) and the TPM system becomes deactivated. If winter tires and wheel assemblies are installed no repair is required.

The Tire Pressure Monitor (TPM) Module determines the TPM Sensor positions by performing the vehicle Tire Pressure Monitoring (TPM) Sensor locate procedure. This procedure is run after the vehicle has been stationary for 20 minutes. After driving the vehicle at speeds greater than 24 km/h (15 mph) for a minimum of 10 minutes without the TPM Sensor installed, the TPM Module sends a bus message commanding the TPM telltale lamp to flash for 75 seconds. After the 75 seconds of flashing, the lamp will remain on solid and a chime will be heard. The message center will display SERVICE TPM SYSTEM for five seconds and shut off, all while the tire pressure values will be displayed as dashes. After the ignition has been cycled off and on the TPM telltale lamp will remain off, the message center will no longer display SERVICE TPM SYSTEM, and the tire pressures continue to be displayed as dashes.

WHEN MONITORED:

During vehicle TPM Sensor locate process.

SET CONDITION:

For BUX/Canada vehicles only where all four TPM Sensors fail the locate processes at the same time because the TPM sensors are not installed on winter tire and wheel assemblies.

POSSIBLE CAUSES

Possible Causes
NON-FCC COMPLIANT COMPONENTS
TIRE PRESSURE MONITORING (TPM) SENSORS NOT PRESENT
TIRE PRESSURE MONITORING (TPM) SENSORS
TIRE PRESSURE MONITORING (TPM) MODULE

NOTE: **Check for and remove any non-FCC compliant components before beginning this diagnostic procedure.**

DIAGNOSTIC TEST

1. **DTC STATUS IS ACTIVE**
    1. Turn the ignition on.
    2. With the scan tool, read and record the TPM Module DTC's.
    3. With the scan tool, erase stored TPM Module DTC's.
    4. Drive the vehicle at speeds greater than 24 km/h (15 mph) for 10 minutes.
    5. With the scan tool, read DTC's in the TPM Module.

    Is DTC C1597-00 Active at this time?

    Yes

    - Go To 2.

    No

    - Go To 4.
2. **TIRE PRESSURE MONITORING (TPM) WINTER MODE**

    NOTE: **Repair all other TPM Module DTC's before continuing with this test procedure.**

    1. Turn the ignition off.
    2. Cycle the ignition from off to on.
    3. Check for the following conditions:
        - The telltale lamp is off.
        - The tire pressure values in the Instrument Cluster are displayed as dashes.
        - The message center **is not** displaying "SERVICE TPM SYSTEM".

    Are all of the above conditions correct?

    Yes

    - The Tire Pressure Monitoring (TPM) Module is now in deactivation mode (Winter Mode). This DTC will remain active until the correct tire and wheel assemblies are installed back on the vehicle. Once one of the correct tire and wheel assemblies are reinstalled, the other three must also be reinstalled prior to turning the ignition on.

    No

- Go To 3.

3. **TIRE PRESSURE MONITORING (TPM) SENSORS**
    1. Turn the ignition off.
    2. Verify the correct TPM Sensors are installed in all of the tire and wheel assemblies.

    Are the correct TPM Sensors installed?

    Yes

    - Install a new Tire Pressure Monitoring (TPM) Module in accordance with the Service Information. Refer to **MODULE, TIRE PRESSURE MONITORING (TPM), REMOVAL** .
    - Perform the TPM VERIFICATION TEST. Refer to **STANDARD PROCEDURE**.

    No

    - Install all new Tire Pressure Monitoring (TPM) Sensors in accordance with the Service Information. Refer to **SENSOR, TIRE PRESSURE MONITORING (TPM), REMOVAL** .
    - Perform the TPM VERIFICATION TEST. Refer to **STANDARD PROCEDURE**.

4. **INTERMITTENT TIRE PRESSURE MONITORING (TPM) SENSOR DTC**
    1. The conditions necessary to set this DTC are not present at this time.
    2. Perform any Technical Service Bulletins that may apply to this condition.
    3. With the scan tool, clear DTC's in the Tire Pressure Monitoring (TPM) Module.
    4. Test drive the vehicle for a minimum of 10 minutes with vehicle speed greater than 24 km/h (15 mph).
    5. With the scan tool, select View DTC's in the Tire Pressure Monitoring (TPM) Module.

    Does the DTC reset or is the status Active for this DTC?

    Yes

    - Install a new Tire Pressure Monitoring (TPM) Module in accordance with the Service Information. Refer to **MODULE, TIRE PRESSURE MONITORING (TPM), REMOVAL** .
    - Perform the TPM VERIFICATION TEST. Refer to **STANDARD PROCEDURE**.

    No

    - Test complete.
    - Perform the TPM VERIFICATION TEST. Refer to **STANDARD PROCEDURE**.

C2209-00-TIRE PRESSURE MONITOR INTERNAL

WHEN MONITORED:

Ignition on. The Tire Pressure Monitoring (TPM) Module monitors its internal microprocessors for correct operation.

SET CONDITION:

If the Tire Pressure Module detects an internal fault, the DTC is set.

POSSIBLE CAUSES

Possible Causes
NON-FCC COMPLIANT COMPONENTS
TIRE PRESSURE MONITORING (TPM) MODULE - INTERNAL FAULT

NOTE: Check for and remove any non-FCC compliant components before beginning this diagnostic procedure.

DIAGNOSTIC TEST

1. **TPM INTERNAL FAILURE DTC PRESENT**
    1. Turn the ignition on.
    2. With the scan tool, read DTC's.
    3. With the scan tool, erase stored DTC's.
    4. Turn the ignition off.
    5. Turn the ignition on.
    6. With the scan tool, read DTC's.

    Does the scan tool display TIRE PRESSURE MODULE INTERNAL FAILURE?

    Yes

    - Replace the Tire Pressure Monitoring (TPM) Module in accordance with the Service Information. Refer to **MODULE, TIRE PRESSURE MONITORING (TPM), REMOVAL** .
    - Perform the TPM VERIFICATION TEST. Refer to **STANDARD PROCEDURE**.

    No

    - The conditions that caused this code to set are not present at this time. Using the wiring diagram/schematic as a guide, inspect the wiring and connectors.
    - Perform the TPM VERIFICATION TEST. Refer to **STANDARD PROCEDURE**.

U0001-00-CAN C BUS

For a complete wiring diagram, **refer to appropriate SYSTEM WIRING DIAGRAMS article** .

WHEN MONITORED:

With the ignition on, battery voltage between 9 and 16 volts, and engine run time greater than Three seconds.

SET CONDITION:

The Tire Pressure Monitoring (TPM) Module does not receive any Can C bus messages for a specific amount of time. One trip fault.

POSSIBLE CAUSES

Possible Causes
CAN C BUS OPEN OR SHORTED CONDITION TIRE PRESSURE MONITORING (TPM) MODULE

DIAGNOSTIC TEST

1. **ACTIVE DTC**

NOTE: **For vehicle communication problems, use the scan tool to refer to the Network Review Screen. The screen depicts a high level view of the vehicle network. Fault and problem areas appear in red. Selecting any of the network components allows access to the source of the problem.**

1. Turn the ignition on.
2. With a scan tool, select View DTC's.

   Is the status Active for this DTC?

   Yes

   - **Refer to U0001-CAN C BUS** and perform the diagnostic procedure.

   No

   - **Refer to STORED LOST COMMUNICATION DTC's** and perform the diagnostic procedure.

U0100-00-LOST COMMUNICATION WITH ECM/PCM

For a complete wiring diagram, **refer to appropriate SYSTEM WIRING DIAGRAMS article** .

WHEN MONITORED:

Ignition run time is greater than one second. Battery voltage between 9 and 16 volts. Engine run time greater

than three seconds.

SET CONDITION:

Bus messages not received from the Powertrain Control Module (ECM/PCM) for approximately two to five seconds.

POSSIBLE CAUSES

Possible Causes
CAN BUS CIRCUITS OPEN OR SHORTED
DTC's RELATED TO BATTERY VOLTAGE, IGNITION, OR VIN MESSAGES
POWERTRAIN CONTROL MODULE POWER AND GROUND
TIPM NOT CONFIGURED CORRECTLY
POWERTRAIN CONTROL MODULE (ECM/PCM)
MODULE THAT SET THIS DTC

NOTE: If present, diagnose and repair DTC U0002-88-CAN C BUS OFF PERFORMANCE- BUS OFF before diagnosing this DTC.

DIAGNOSTIC TEST

1. **VERIFY DTC IS ACTIVE**

   NOTE: Make sure the IOD fuse is installed and the battery is fully charged before proceeding.

   1. Turn the ignition on.
   2. With the scan tool, read the active DTC's.

      Is this DTC active?

      Yes

      - **Refer to U0100-LOST COMMUNICATION WITH ECM/PCM** and perform the diagnostic procedure.

      No

      - **Refer to STORED LOST COMMUNICATION DTC's** and perform the diagnostic procedure.

U0121-00-LOST COMMUNICATION WITH ANTI-LOCK BRAKE SYSTEM (ABS) CONTROL MODULE

For a complete wiring diagram, **refer to appropriate SYSTEM WIRING DIAGRAMS article** .

WHEN MONITORED:

Continuously when the ignition is on.

The battery voltage between 10 and 16 volts.

Ignition Off Draw (IOD) fuse installed.

Totally Integrated Power Module (TIPM) is configured correctly.

SET CONDITION:

Bus messages not received from the Anti-lock Brake System (ABS) Module for approximately two to five seconds.

POSSIBLE CAUSES

Possible Causes
CAN BUS CIRCUITS OPEN OR SHORTED
DTC's RELATED TO BATTERY VOLTAGE, IGNITION, OR VIN MESSAGES
TOTALLY INTEGRATED POWER MODULE POWER AND GROUND
TIPM NOT CONFIGURED CORRECTLY
TOTALLY INTEGRATED POWER MODULE (TIPM)
MODULE THAT SET THIS DTC

DIAGNOSTIC TEST

1. **VERIFY THE DTC IS ACTIVE**

   NOTE: Make sure the IOD fuse is installed and the battery is fully charged before proceeding.

   1. Turn the ignition on.
   2. With the scan tool, read active DTC's.

      Is the DTC active at this time?

      Yes

      - **Refer to U0121-LOST COMMUNICATION WITH ABS** and perform the diagnostic procedure.

      No

      - **Refer to STORED LOST COMMUNICATION DTC's** and perform the diagnostic procedure.

U0141-00-LOST COMMUNICATION WITH IPM (FCM/TIPM)

For a complete wiring diagram, **refer to appropriate SYSTEM WIRING DIAGRAMS article** .

WHEN MONITORED:

Continuously when the ignition is on.

The battery voltage between 10 and 16 volts.

Ignition Off Draw (IOD) fuse installed.

Totally Integrated Power Module (TIPM) is configured correctly.

SET CONDITION:

Bus messages not received from the Totally Integrated Power Module (TIPM) for approximately two to five seconds.

POSSIBLE CAUSES

Possible Causes
CAN BUS CIRCUITS OPEN OR SHORTED
DTC's RELATED TO BATTERY VOLTAGE, IGNITION, OR VIN MESSAGES
TOTALLY INTEGRATED POWER MODULE POWER AND GROUND
TIPM NOT CONFIGURED CORRECTLY
TOTALLY INTEGRATED POWER MODULE (TIPM)
MODULE THAT SET THIS DTC

DIAGNOSTIC TEST

1. **VERIFY DTC IS ACTIVE**

   NOTE: Make sure the IOD fuse is installed and the battery is fully charged before proceeding.

   1. Turn the ignition on.
   2. With the scan tool, read active DTC's.

      Is this DTC active?

      Yes

      - **Refer to U0141-LOST COMMUNICATION WITH IPM (FCM/TIPM)** and perform the diagnostic procedure.

No

- **Refer to STORED LOST COMMUNICATION DTC's** and perform the diagnostic procedure.

STANDARD PROCEDURE

STANDARD PROCEDURE - TPM VERIFICATION

For a complete wiring diagram, **refer to appropriate SYSTEM WIRING DIAGRAMS article** .

DIAGNOSTIC TEST

1. **TIRE PRESSURE MONITORING (TPM) MODULE**

   Was the TPM Module replaced during the test procedure?

   Yes

   - Go To 2.

   No

   - Go To 3.
2. **PLACARD PRESSURE VALUES**
   1. Reconnect the previously removed and/or disconnected components and connectors.
   2. With the scan tool, select "Miscellaneous Functions" in the Totally Integrated Power Module (TIPM). Then select the desired procedure and follow the display on the scan tool.
   3. Program the Placard Pressure Values into the Totally Integrated Power Module (TIPM).
   4. Go To "Tire Pressure Module (TPM)", select "Data Display", read "'Tire Placard Pressure - Front" and "'Tire Placard Pressure -Rear" and confirm the values match the Tire Inflation Pressure (Placard) label. Also, go into the Totally Integrated Power Module (TIPM), select Data Display and read "'Tire Placard Pressure - Front" and "'Tire Placard Pressure -Rear" to confirm the values were programmed correctly. If the Placard values are incorrect in the TIPM or TPM Module, select the Totally Integrated Power Module (TIPM) then under "Miscellaneous Functions", select "Update Pressure Threshold" and enter the placard pressure value as seen on the Tire Inflation Pressure (Placard) label.
   5. With the scan tool, erase all stored DTC's.
   6. With the scan tool, read TPM Module DTC's.

   Are there any DTC's present?

   Yes

   - Repair not complete, perform the appropriate diagnostic procedure. Refer to **DIAGNOSIS AND**

TESTING.

No

- Go To 3.

3. **TPM SENSOR REPLACEMENT**

NOTE: **If a TPM-RKE Tool is not available, let the vehicle sit stationary for more then 20 minutes, and then proceed to step 4.**

1. Using an updated TPM-RKE Analyzer Tool, select TPM Functions, then enter the Model Year and the Body Style of the vehicle, and for the Trigger Selection select PARK SENSOR
2. Scan each TPM Sensor at each road wheel, and store each TPM Sensor ID in the correct location. (LEFT FRONT, LEFT REAR, RIGHT FRONT, RIGHT REAR, and SPARE TIRE (if equipped).)
3. Connect the TPM-RKE Analyzer Tool to the scan tool, and then follow the programming steps outlined in the diagnostic scan tool for "Program Tire Pressure Sensor ID w/ TPM Tool" under "MISC" for the TPM.
4. Drive the vehicle for a minimum of 20 minutes while maintaining a continuous speed above 24 km/h (15 mph).
5. With the scan tool, read TPM DTC's.

Are there any TPM DTC's present?

Yes

- Perform the appropriate diagnostic procedure. Refer to **DIAGNOSIS AND TESTING**.

No

- Repair complete.

DIAGNOSIS AND TESTING

DIAGNOSIS AND TESTING - TIRE AND WHEEL VIBRATION

Tire and wheel imbalance, runout and tire road force variation can cause vehicles to exhibit steering wheel vibration and/or seat vibration.

VISUAL INSPECTION

Visual inspection of the vehicle is recommended prior to road testing or performing any other procedure. Raise and support the vehicle. Refer to **HOISTING, STANDARD PROCEDURE** .

Inspect for the following:

- Verify correct (OEM) wheel and tire, as well as presence of wheel weights.
- Inspect tires and wheels for damage, mud packing and unusual wear; correct as necessary.
- Check and adjust tire air pressure to the pressure listed on the label attached to the driver's door opening.

ROAD TEST

NOTE: If a Noise & Vibration Analyzer is available, use it to diagnosis the issue during the road test.

NOTE: If the vehicle has been sitting for an extended period of time it is recommended to drive to warm the tires. This process could eliminate flat spots that can cause vibration.

Road test vehicle on a smooth road **at and near the designated speed** where legal speed limits allow. Lightly place hands on steering wheel at the 10:00 and 2:00 positions and observe for:

- Steering wheel oscillation: clockwise/counterclockwise
- Steering wheel high frequency movement: rapid vibration up and down
- Seat high frequency movement: rapid vibration up and down

To rule out vibrations due to brakes or powertrain:

- Lightly apply brakes at the designated speed; if vibration occurs or is enhanced, vibration is likely due to a brake concern.
- Shift transmission into neutral while vibration is occurring, if vibration is eliminated, vibration is likely due to a powertrain concern. Refer to **PROPELLER SHAFT VIBRATION** .

TIRE/WHEEL BALANCE AND ROAD FORCE VARIATION

NOTE: **If wheel balance equipment is capable of testing tire road force variation and the tire/wheel assemblies are within specification, place the tires with the greater road force variation on the rear of the vehicle.**

Balance the tire and wheel assemblies as necessary, and if wheel balance equipment is capable, also test for tire and wheel runout and road force variation following the wheel balancer manufacturer's instructions and using the information listed in Tire And Wheel Balance. Refer to **STANDARD PROCEDURE**. Repeat the road test above to verify the vibration is repaired.

STANDARD PROCEDURE

TIRE AND WHEEL BALANCE

NOTE: **Always verify the wheel and tire balance before removing any wheel weights. If assembly is within specification and weights are not corroded or loose, do not remove weights. The process of removing and adding weight could damage wheel protective coating.**

NOTE: **Balance and road force variation equipment must be calibrated and maintained per equipment manufacturer's specifications.**

NOTE: **If a tire sealant & inflator kit was used to temporarily repair small punctures then the tire must be removed from wheel and all the sealant must be removed with a water damped cloth before repairing & balancing the assembly.**

NOTE: **Some wheels may not have an outer flange. Apply adhesive weights on midplane surface to balance.**

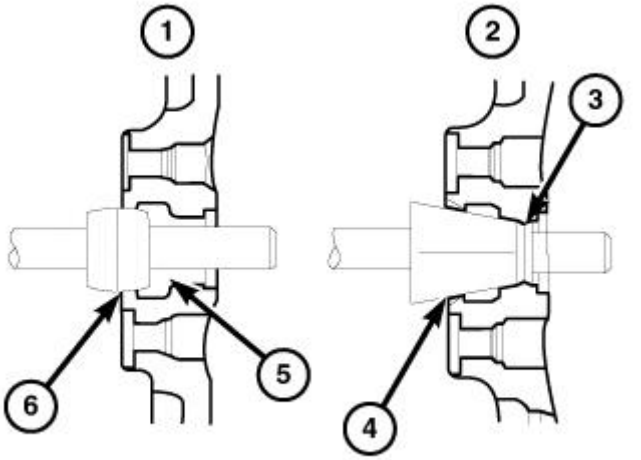

2460193

Fig. 1: Balancing Wheels Using Cone/Collet
Courtesy of CHRYSLER GROUP, LLC

NOTE: **Balance equipment could read an incorrect balance result when measuring Chrome Clad wheels. This is caused by the equipments mounting cone/collet contacting the cladding or the cone/collet is not balanced. A dual-taper collet (1) type wheel centering tool is recommended as opposed to a high-taper cone (2) type wheel centering tool. Always use the manufacturer's recommended balance equipment.**

- **Dual-taper collet type (1)**
- **High-taper cone type (2)**
- **Possible obstruction (3)**
- **May not seat properly (4)**
- **No obstruction (5)**
- **Properly seated (6)**

NOTE: **If wheel balance equipment is capable of testing tire road force variation and the tire/wheel assemblies are within specification, place the tires with the greater road force variation on the rear of the vehicle.**

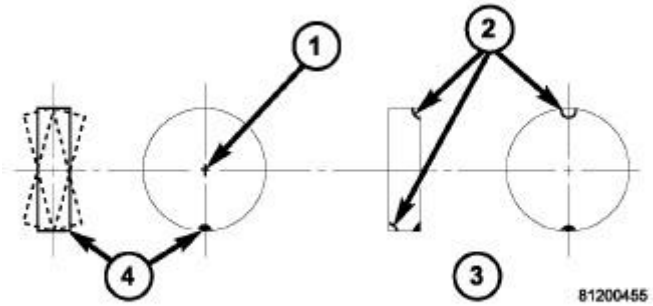

Fig. 2: Dynamic Balancing
Courtesy of CHRYSLER GROUP, LLC

For dynamic balancing (**recommended**), the balance equipment is designed to indicate the location and amount of weight to be applied to both the inner and outer rim flanges (2).

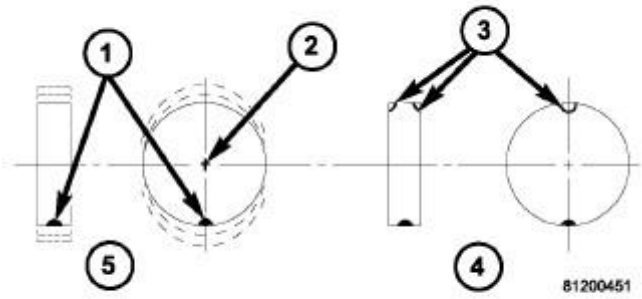

Fig. 3: Static Balancing
Courtesy of CHRYSLER GROUP, LLC

For static balancing (**not recommended**), find the location of the heavy spot causing the imbalance (1). Counter balance the wheel directly opposite the heavy spot. Determine weight required to counterbalance the area of imbalance. Place half of this weight on the **inner** rim flange and the other half on the **outer** rim flange (3) at the predetermined spots.

Aluminum wheels use a different type wheel weight than steel wheels. Be sure to use the correct wheel weight for the wheel type.

Always verify the balance. When using off-vehicle equipment, remount the tire and wheel assembly 180 degrees on the balancer spindle and recheck balance. Balance variation from one spot to the other should not be more than 0.125 (?) ounce. If variation is more than 0.125 ounce, balancing equipment could be malfunctioning, or the wrong collet/cone may have been used.

If difficult to balance, break down the tire and wheel assembly and check for loose debris inside the tire. Prior to disassembly, mark (index) the tire at the valve stem. Use this mark in order to remount the tire in its original orientation with respect to the wheel.

TIRE ROTATION

Tires on the front and rear axles operate at different loads and perform different steering, driving, and braking functions. For these reasons, the tires wear at unequal rates. They may also develop irregular wear patterns. These effects can be reduced by rotating the tires according to the maintenance schedule in the Owners Manual. This will improve tread life, traction and maintain a smooth quiet ride.

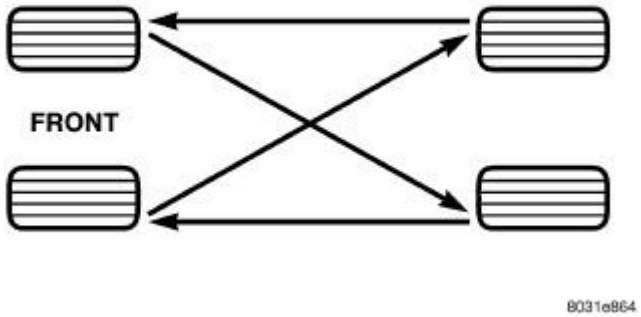

Fig. 4: Tire Rotation Pattern - Single Rear Wheel
Courtesy of CHRYSLER GROUP, LLC

The recommended method of tire rotation for a single rear wheel vehicle is to cross the front wheels to the rear, and to move the rear wheels straight forward to the front. Other methods can be used, but may not provide the same tire longevity benefits.

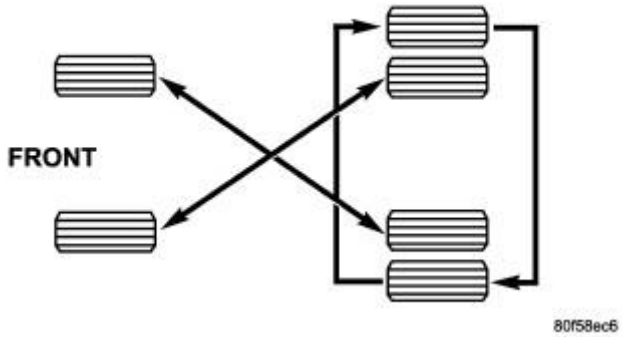

Fig. 5: Tire Rotation Pattern - Dual Rear Wheels
Courtesy of CHRYSLER GROUP, LLC

CAUTION: 3500 Dual rear tires have a new tire rotation pattern. This is to accommodate the outlined white letter (OWL) tires. When replacing a flat, the spare tire may have to be remounted on the rim or installed at a different location to maintain the correct placement of the outlined white letter (OWL) tires.

The recommended method of tire rotation for the 3500 dual wheel vehicle is to crisscross the front wheels with the inside rear wheels, and to switch the outside right and left rear wheels. Other methods can be used, but may not provide the same tire longevity benefits.

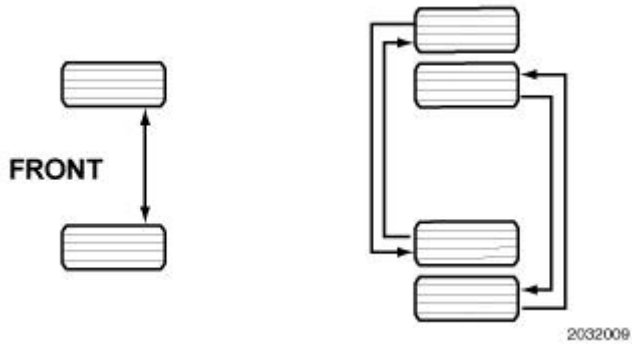

Fig. 6: Tire Rotation Pattern - 4500 & 5500
Courtesy of CHRYSLER GROUP, LLC

The recommended method of tire rotation for the 4500 and 5500 dual wheel vehicles to switch the 2 front wheels, switch the inside left rear with the outside right rear, and to switch the inside right rear with the outside left rear.

SPECIFICATIONS

SPECIFICATIONS

DESCRIPTION	N.m	Ft. Lbs.	In. Lbs.
Lug Nut M14 (1500)	183	135	-
Lug Nut M14 (2500, 3500 - SRW)	203	150	-
Lug Nut M14 with Flat Washer (3500, 4500, 5500 - DRW)	196	145	-
Spare Tire Winch	20	15	177

SPECIAL TOOLS

SPECIAL TOOLS

	C-4150A - Press, Ball Joint (Originally Shipped In Kit Number(s) 6672, 6745.)

TIRES

DESCRIPTION

TIRES

Tires are designed and engineered for each specific vehicle. They provide the best overall performance for normal operation. The ride and handling characteristics match the vehicle's requirements. With proper care they will give excellent reliability, traction, skid resistance, and tread life.

Driving habits have more effect on tire life than any other factor. Careful drivers will obtain in most cases, much greater mileage than severe use or careless drivers. A few of the driving habits which will shorten the life of any tire are:

- Rapid acceleration
- Severe brake applications
- High speed driving
- Excessive speeds on turns
- Striking curbs and other obstacles

Radial-ply tires are more prone to irregular tread wear. It is important to follow the tire rotation interval. Refer to **STANDARD PROCEDURE**. This will help to achieve a greater tread life.

TIRE IDENTIFICATION

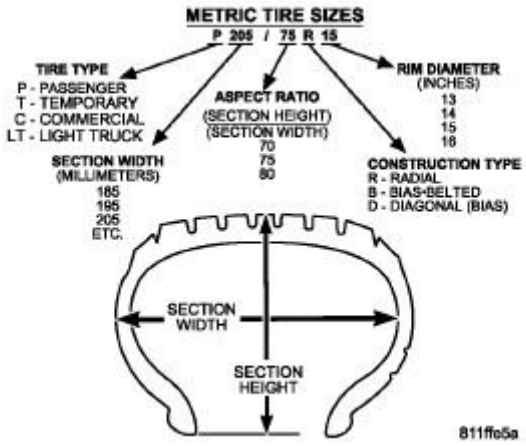

Fig. 7: Tire Identification Information
Courtesy of CHRYSLER GROUP, LLC

Tire type, size, aspect ratio and speed rating are encoded in the letters and numbers imprinted on the side wall of the tire. Refer to the chart to decipher the tire identification code.

Performance tires have a speed rating letter after the aspect ratio number. The speed rating is not always printed on the tire sidewall. These ratings are:

- **Q** up to 99 mph
- **S** up to 112 mph
- **T** up to 118 mph
- **U** up to 124 mph
- **H** up to 130 mph
- **V** up to 149 mph
- **W** (consult the tire manufacturer for the specific speed rating)

- **Z** more than 149 mph (consult the tire manufacturer for the specific speed rating)

An All Season type tire will have either **M + S, M AND S or M-S** (indicating mud and snow traction) imprinted on the side wall.

TIRE CHAINS

Tire snow chains may be used on **certain** models. Refer to the Owner's Manual for more information.

SPARE / TEMPORARY TIRE

The temporary spare tire is designed for emergency use only. The original tire should be repaired or replaced at the first opportunity, then reinstalled. Do not exceed speeds of 80 KMH (50 MPH). when using the temporary spare tire. Refer to Owner's Manual for complete details.

SPARE / FULL SIZE WITH MATCHING TIRE

The spare is a full usage wheel with a matching tire, It can be used within the (posted legal) speed limits or distance limitations as of the rest of the vehicles four tires. Refer to Owner's Manual for complete details.

RADIAL - PLY TIRES

Radial-ply tires improve handling, tread life and ride quality, and decrease rolling resistance.

Radial-ply tires must always be used in sets of four. Under no circumstances should they be used on the front only. They may be mixed with temporary spare tires when necessary. A maximum speed of 80 KMH (50 MPH) is recommended while a temporary spare is in use.

Radial-ply tires have the same load-carrying capacity as other types of tires of the same size. They also use the same recommended inflation pressures.

The use of oversized tires, either in the front or rear of the vehicle, can cause vehicle drive train failure. This could also cause inaccurate wheel speed signals when the vehicle is equipped with Anti-Lock Brakes.

The use of tires from different manufactures on the same vehicle is NOT recommended. The proper tire pressure should be maintained on all four tires.

REPLACEMENT TIRES

The original equipment tires provide a proper balance of many characteristics such as:

- Ride
- Noise
- Handling
- Durability
- Tread life

- Traction
- Rolling resistance
- Speed capability

It is recommended that tires equivalent to the original equipment tires be used when replacement is needed.

Failure to use equivalent replacement tires may adversely affect the safety and handling of the vehicle.

The use of oversize tires may cause interference with vehicle components. Under extremes of suspension and steering travel, interference with vehicle components may cause tire damage.

WARNING: Failure to equip the vehicle with tires having adequate speed capability can result in sudden tire failure.

TIRE INFLATION PRESSURES

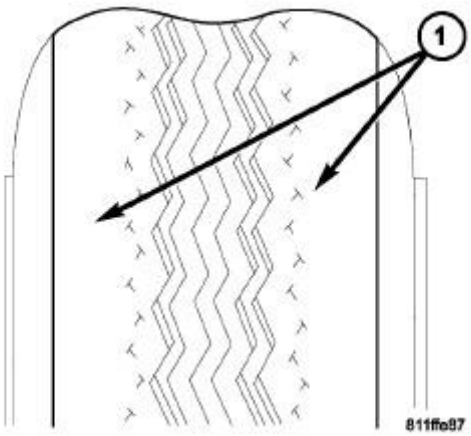

Fig. 8: Under Inflation
Courtesy of CHRYSLER GROUP, LLC

WARNING: Over or under inflated tires can affect vehicle handling and tread wear. This may cause the tire to fail suddenly, resulting in loss of vehicle control.

Under inflation will cause rapid shoulder wear (1), tire flexing, and possible tire failure.

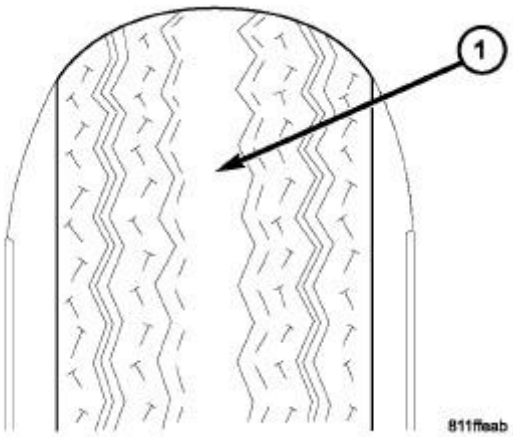

Fig. 9: Over Inflation
Courtesy of CHRYSLER GROUP, LLC

Over inflation will cause rapid center wear (1) reduction in the tire's ability to cushion shocks.

Improper inflation can cause:

- Uneven wear patterns
- Reduced tread life
- Reduced fuel economy
- Unsatisfactory ride
- Vehicle drift

For proper tire pressure specification, refer to the tire label placard usually located on the drivers door latch pillar.

DIAGNOSIS AND TESTING

PRESSURE GAUGES

A quality air pressure gauge is recommended to check tire pressure. After checking the air pressure, replace valve cap finger tight.

TIRE NOISE OR VIBRATION

Radial-ply tires are sensitive to force impulses caused by improper mounting, vibration, wheel defects, or possibly tire imbalance.

To find out if tires are causing the noise or vibration, drive the vehicle over a smooth road at varying speeds. Note the noise level during acceleration and deceleration. The engine, differential and exhaust noises will change as speed varies, while the tire noise will usually remain constant.

TREAD WEAR INDICATORS

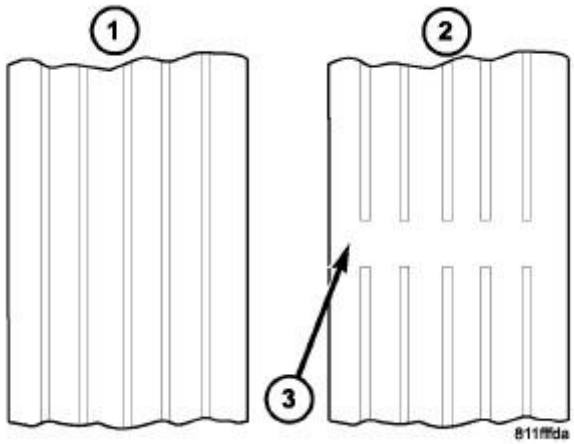

Fig. 10: Identifying Tread Wear Indicators
Courtesy of CHRYSLER GROUP, LLC

Tread wear indicators (3) are molded into the bottom of the tread grooves. When tread depth is 1.6 mm (1/16 in.), the tread wear indicators (3) will appear as a 13 mm (1/2 in.) band.

Tire replacement is necessary when indicators appear in two or more grooves or if localized balding occurs.

TIRE WEAR PATTERNS

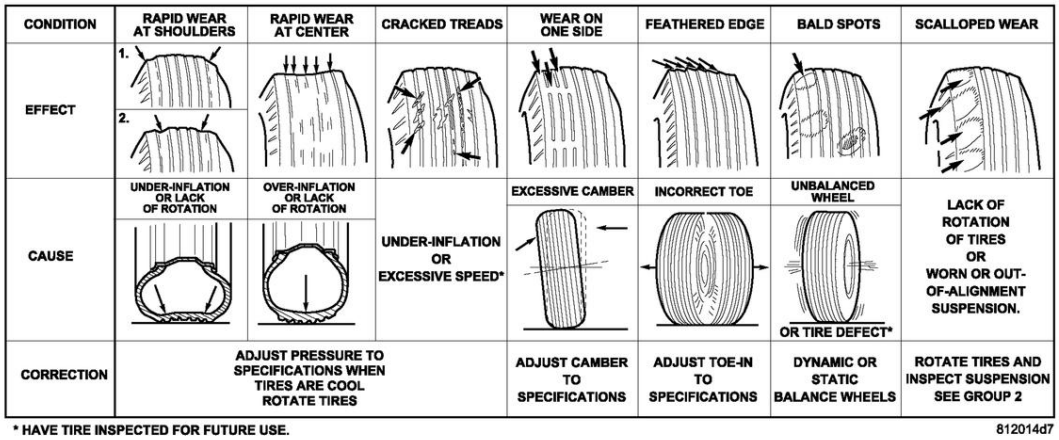

Fig. 11: Identifying Tire Wear Patterns
Courtesy of CHRYSLER GROUP, LLC

Under inflation will cause wear on the shoulders of tire. Over inflation will cause wear at the center of tire.

Excessive camber causes the tire to run at an angle to the road. One side of tread is then worn more than the other.

Excessive toe-in or toe-out causes wear on the tread edges and a feathered effect across the tread.

TIRE/VEHICLE LEAD

Use the following Vehicle Lead Diagnosis And Correction Chart to diagnose and correct a vehicle lead or drift problem.

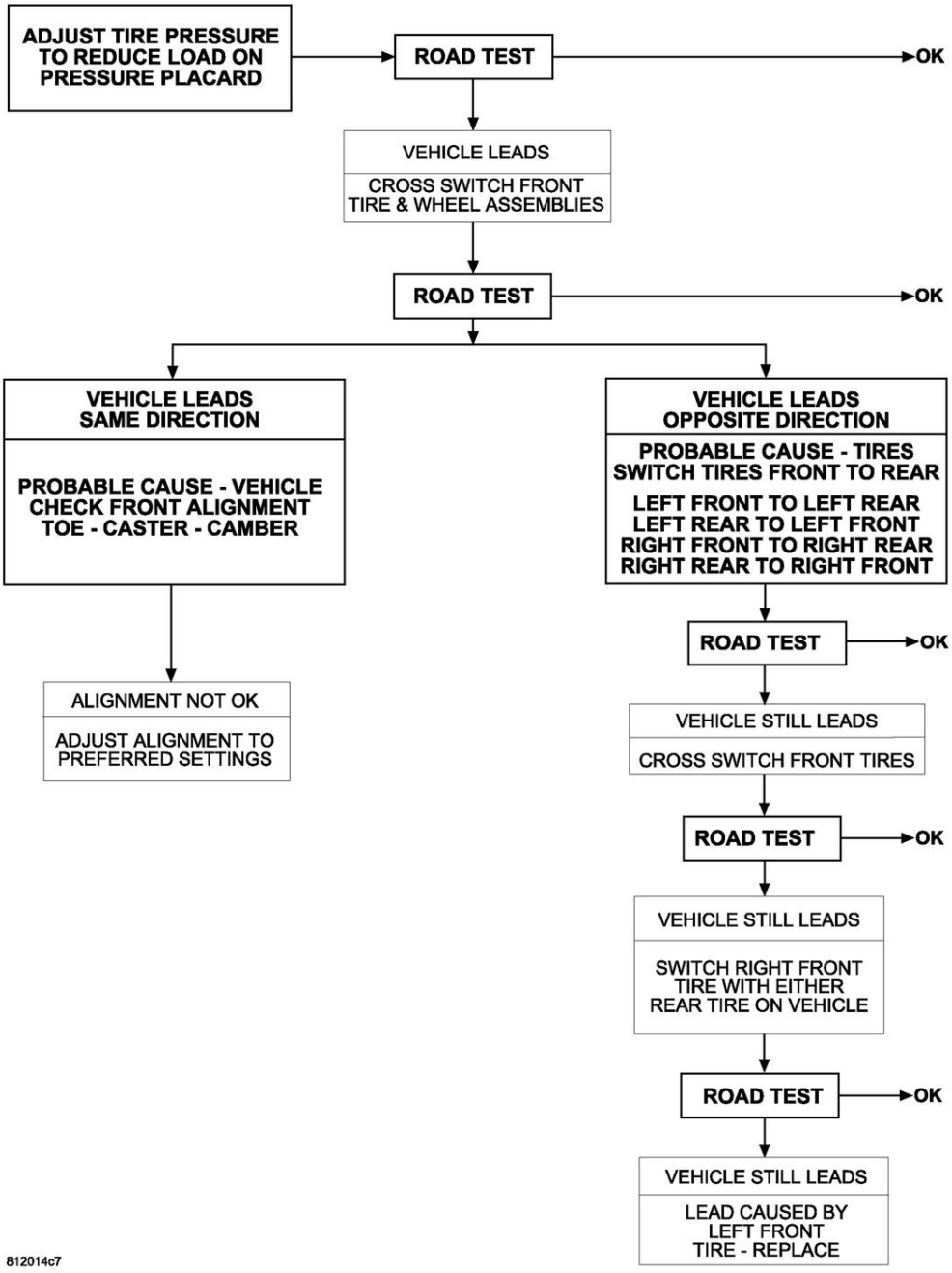

Fig. 12: Vehicle Lead Diagnosis & Correction Chart

Courtesy of CHRYSLER GROUP, LLC

STANDARD PROCEDURE

STANDARD PROCEDURE - TIRE REPAIR AREA

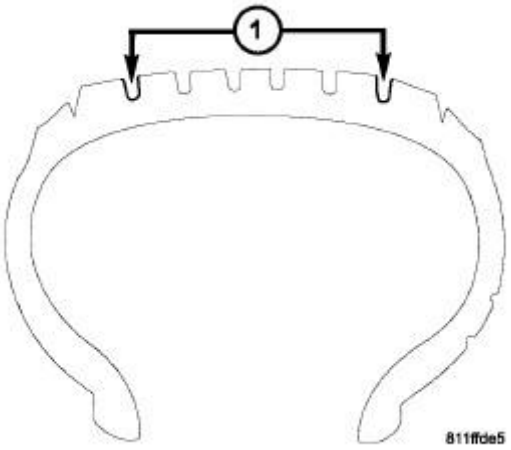

Fig. 13: Identifying Tire Repair Area
Courtesy of CHRYSLER GROUP, LLC

For proper repairing, a radial tire must be removed from the wheel. Repairs should only be made if the defect, or puncture, is in the tread area (1). The tire should be replaced if the puncture is located in the sidewall.

Deflate tire completely before removing the tire from the wheel. Use lubrication such as a mild soap solution when dismounting or mounting tire. Use tools free of burrs or sharp edges which could damage the tire or wheel rim.

Before mounting tire on wheel, make sure all rust is removed from the rim bead and repaint if necessary.

Install wheel on vehicle, and tighten to proper torque specification.

SPECIFICATIONS

TIRE REVOLUTIONS PER MILE

TIRE SIZE	REVOLUTIONS PER MILE
P245/70R17	685
LT245/70R17	675
LT265/70R17	657
LT245/70R17	684
LT265/70R17	658
LT285/70R17	632
P265/70R17	657

P265/70R17	661
LT275/70R17	649
LT275/70R17	649
P275/55R20	655
P275/60R20	636
P235/85R17	636
LT235/80R17	649
LT235/80R17	649
LT235/80R17	649
LT235/80R17	648

WINCH, SPARE TIRE CARRIER

REMOVAL

REMOVAL

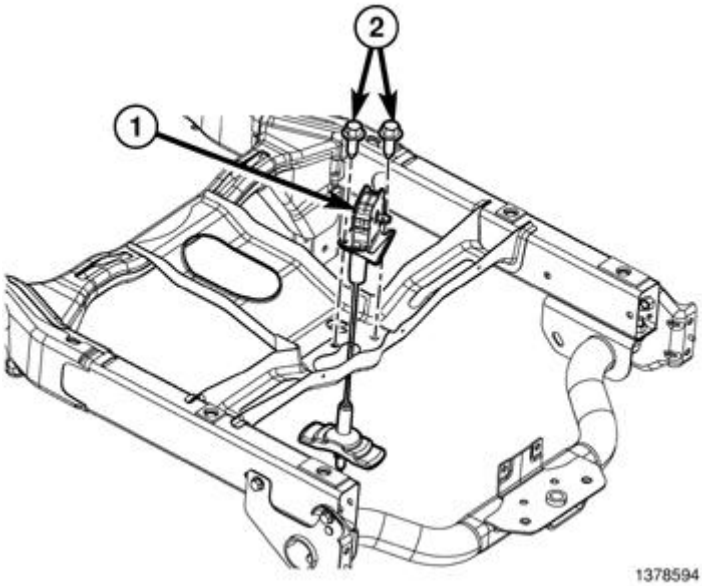

Fig. 14: Spare Tire Carrier Winch
Courtesy of CHRYSLER GROUP, LLC

NOTE: **"Do NOT use impact tools on the Spare Tire Winch assembly to raise or lower the Spare Tire".**

1. Remove the spare tire.
2. Raise and support the vehicle. Refer to **HOISTING, STANDARD PROCEDURE** .
3. Remove the spare tire winch bolts (2) and then remove the winch (1).

INSTALLATION

INSTALLATION

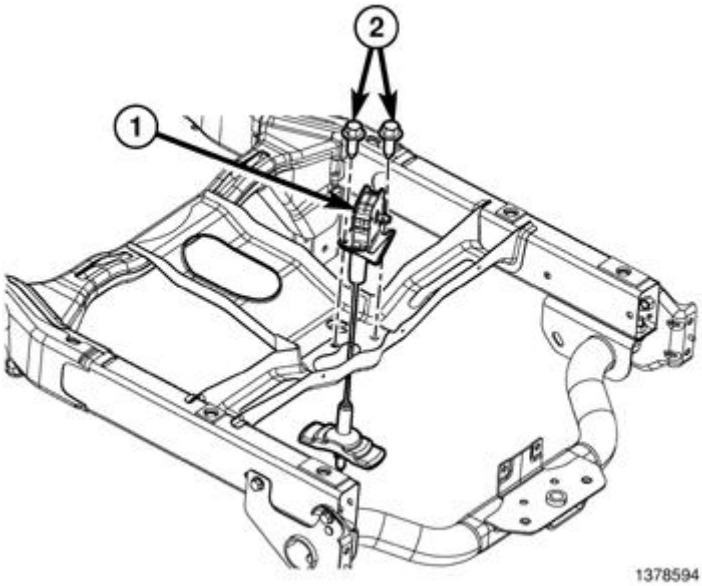

Fig. 15: Spare Tire Carrier Winch
Courtesy of CHRYSLER GROUP, LLC

1. Position the winch (1) on the crossmember. Install the bolts (2) and tighten to 20 N.m (15 ft.lbs.).
2. Remove the supports and lower the vehicle.

NOTE: "Do NOT use impact tools on the Spare Tire Winch assembly to raise or lower the Spare Tire".

3. Install the spare tire back into position.

WHEELS

DESCRIPTION

GENERAL INFORMATION

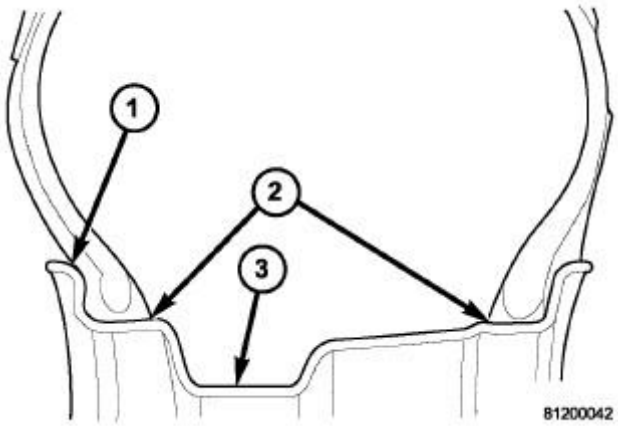

Fig. 16: Identifying Wheel/Rim Design
Courtesy of CHRYSLER GROUP, LLC

The rim size is on the vehicle safety certification label located on the drivers door shut face. Original equipment wheels/rims are designed for operation up to the specified maximum vehicle capacity.

All models use stamped steel, cast aluminum or forged aluminum wheels. Every wheel has raised sections between the rim flanges (1) and rim drop well (3) called safety humps.

Initial inflation of the tire forces the bead over these raised sections. In case of rapid loss of air pressure, the raised sections help hold the tire on the wheel.

The wheel studs and nuts are designed for specific applications. All aluminum and some steel wheels have wheel stud nuts with an enlarged nose. This enlarged nose is necessary to ensure proper retention of the wheels. Do not use replacement studs or nuts with a different design or lesser quality.

HD - WHEELS

Original equipment wheels are designed for the specified Maximum Vehicle Capacity.

All models use steel or aluminum drop center wheels.

Aluminum wheels require special balance weights and alignment equipment.

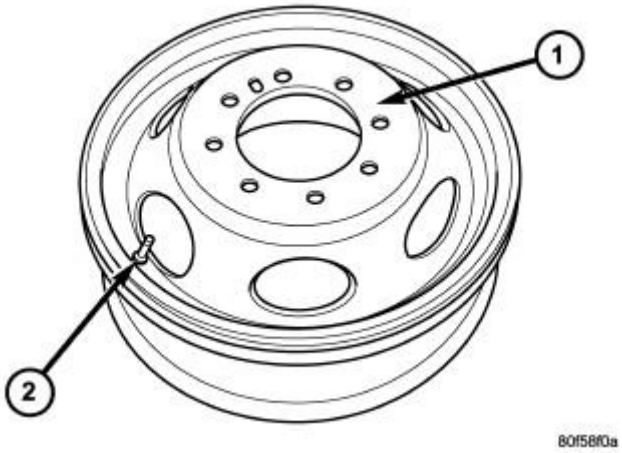

Fig. 17: Flat Face Wheel
Courtesy of CHRYSLER GROUP, LLC

1 - FLAT FACE
2 - VALVE STEM

1. On vehicles equipped with dual rear wheels, the rim is an eight stud hole pattern wheel. The wheels have a flat mounting surface (1).

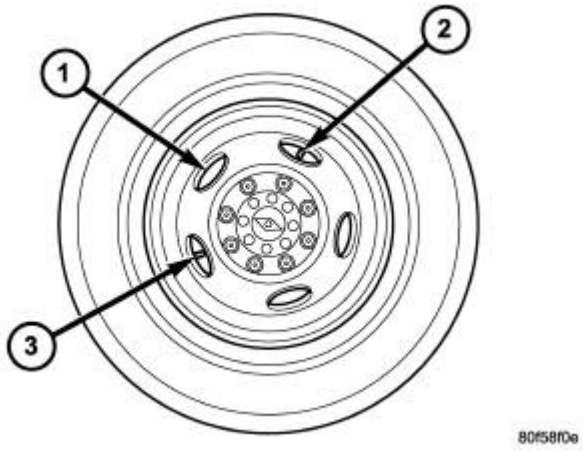

Fig. 18: Dual Rear Wheels
Courtesy of CHRYSLER GROUP, LLC

1 - WINDOW OPENINGS (5)
2 - INBOARD VALVE STEM
3 - OUTBOARD VALVE STEM

2. The slots (1) in the wheel must be aligned to provide access to the valve stem.

DIAGNOSIS AND TESTING

DIAGNOSIS AND TESTING - WHEEL INSPECTION

Inspect wheels for:

- Excessive run out
- Dents or cracks
- Damaged wheel lug nut holes
- Air Leaks from any area or surface of the rim

NOTE: Do not attempt to repair a wheel by hammering, heating or welding.

If a wheel is damaged an original equipment replacement wheel should be used. When obtaining replacement wheels, they should be equivalent in load carrying capacity. The diameter, width, offset, pilot hole and bolt circle of the wheel should be the same as the original wheel.

WARNING: Failure to use equivalent replacement wheels may adversely affect the safety and handling of the vehicle. Used wheels are not recommended. The service history of the wheel may have included severe treatment or very high mileage. The rim could fail without warning.

WARNING: Chrysler LLC does not recommend that customers use "reconditioned" wheels (wheels that have been damaged and repaired) because they can result in a sudden catastrophic wheel failure which could cause loss of control and result in injury or death.

For Clarification:

- **Cosmetic refinishing for the purpose of repairing a superficial flaw is an acceptable procedure providing it is limited to paint or clear coat only, the wheel is not modified in any way, and there is no exposure to paint curing heat over 200 degrees Fahrenheit.**
- **Damaged wheels are those which have been bent, broken, cracked or sustained some other physical damage which may have compromised the wheel structure**
- **Repaired indicates that the wheel has been modified through bending, welding, heating, straightening, or material removal to rectify damage.**
- **Re-plating of chrome plated wheels is not an acceptable procedure nor is chrome plating of original equipment painted or polished wheels, as this may alter mechanical properties and affect fatigue life.**

STANDARD PROCEDURE

DUAL REAR WHEEL INSTALLATION

Dual rear wheels use a special heavy duty lug nut wrench. It is recommended to remove and install dual rear wheels only when the proper wrench is available. The wrench is also used to remove wheel center caps for more information, refer to Owner's Manual.

The tires on both wheels must be completely raised off the ground when tightening the lug nuts. This will ensure correct wheel centering and maximum wheel clamping.

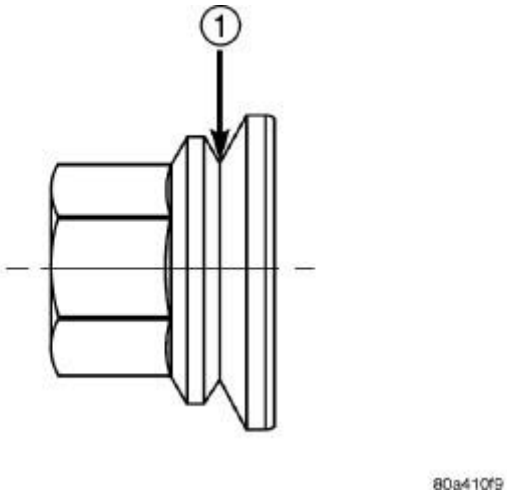

Fig. 19: Lug Nut Oil Application Area
Courtesy of CHRYSLER GROUP, LLC

1 - PLACE TWO DROPS OF OIL HERE

A two piece flat face lug nut with right-hand threads is used for retaining the wheels on the hubs. Refer to **Fig. 19**.

The dual rear wheel lug nuts should be tightened according to the following procedure:

NOTE: Do not use more then two drops of oil on the nut/washer (1), since the center caps attach in this area.

- Place two drops of oil to the interface of the nut/washer (1) before installing on the wheel stud. Refer to **Fig. 19**.
- Tighten the wheel lug nuts in the numbered sequential pattern until they are snug tight. Then tighten lug nut to specified torque following same number sequence. Refer to **SPECIFICATIONS**.
- Tighten lug nuts in same numbered sequence a second time to the specified torque. This will ensure that the wheels are thoroughly mated.
- Check lug nut specified torque after 100 miles (160 kilometers). Also after 500 miles (800 kilometers) of vehicle operation.

NOTE: Wheel lug nuts should be tightened to specified torque at every maintenance

interval thereafter.

WHEEL REPLACEMENT

The wheel studs and nuts are designed for specific applications. They must be replaced with equivalent parts. Do not use replacement parts of lesser quality or a substitute design. All aluminum and some steel wheels have wheel stud nuts which feature an enlarged nose. This enlarged nose is necessary to ensure proper retention of the aluminum wheels.

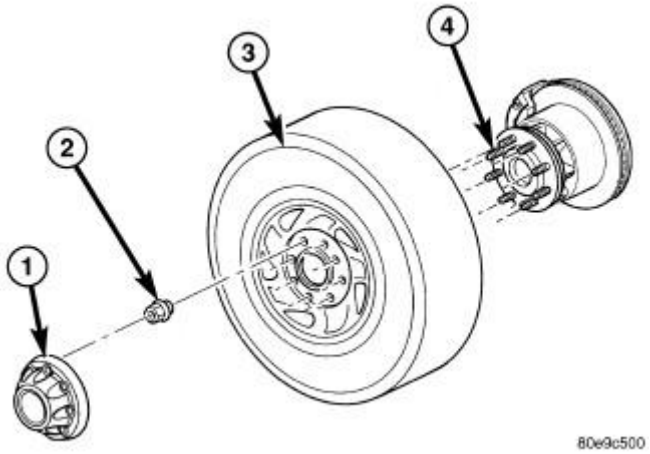

Fig. 20: Wheel Installation (8-Lug Shown)
Courtesy of CHRYSLER GROUP, LLC

1 - CENTER CAP
2 - LUG NUT
3 - TIRE/WHEEL ASSEMBLY
4 - WHEEL STUDS

NOTE: Do not use chrome plated lug nuts with chrome plated wheels.

NOTE: All wheel nuts should then be tightened just snug. Gradually tighten them in sequence to the proper torque specification.

NOTE: Never use oil or grease on studs or nuts.

Before installing the wheel, be sure to remove any build up of corrosion on the wheel mounting surfaces. Ensure wheels are installed with good metal-to-metal contact. Improper installation could cause loosening of wheel nuts. Refer to **Fig. 20**. This could affect the safety and handling of your vehicle.

To install the wheel (3), first position it properly on the mounting surface. Refer to **Fig. 20**.

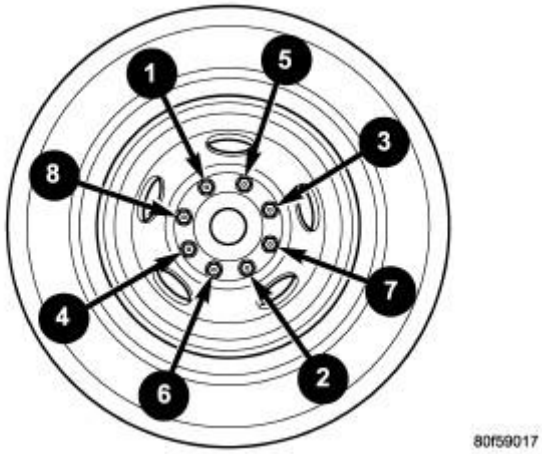

Fig. 21: 8-Lug Tightening Sequence
Courtesy of CHRYSLER GROUP, LLC

8-lug pattern.

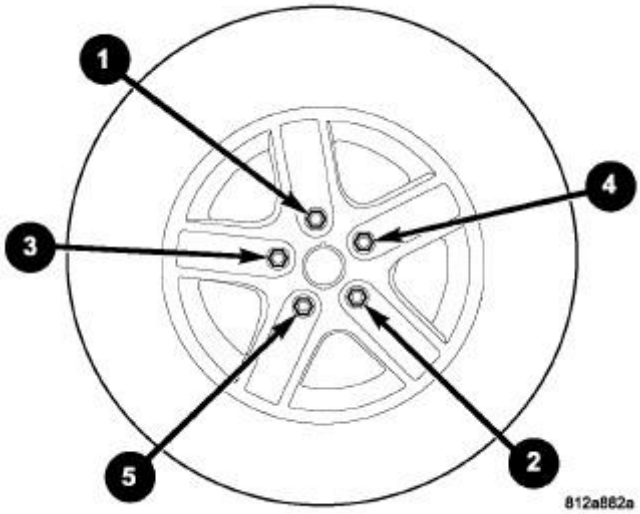

Fig. 22: 5-Lug Tightening Sequence
Courtesy of CHRYSLER GROUP, LLC

5-lug pattern.

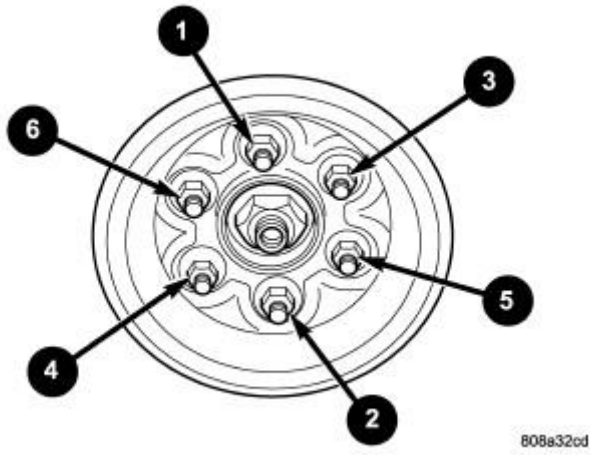

Fig. 23: 6-Lug Tightening Sequence
Courtesy of CHRYSLER GROUP, LLC

6- bolt pattern.

Wheels must be replaced if they have:

- Excessive runout
- Bent or dented
- Leak air through welds
- Have damaged bolt holes

Wheel repairs employing hammering, heating, or welding are not allowed.

Original equipment wheels are available through your dealer. Replacement wheels from any other source should be equivalent in:

- Load carrying capacity
- Diameter
- Width
- Offset
- Mounting configuration

Failure to use equivalent replacement wheels may affect the safety and handling of your vehicle. Replacement with **used** wheels is not recommended. Their service history may have included severe treatment.

COVER, WHEEL

REMOVAL

REMOVAL

NOTE: **The hub caps must be removed before raising the vehicle off the ground.**

NOTE: **You must use the flat end of the hub/cap remover/installer combination tool to pry off the wheel skins. Insert the flat tip completely and using a back and forth motion, loosen the wheel skin. repeat this procedure around the tire until the wheel skin pops off.**

1. On 2500/3500 single rear wheel (SRW) models, insert a hub/cap remover/installer combination tool using the blade on the end of the tool to pry the cap off in a back and forth motion.
2. On 3500 models with dual rear wheels (DRW), you must first remove the hub caps. The hub/cap remover/installer combination tool must be inserted in the pry off notch of the rear hub caps.
3. Position the hub/cap remover/installer combination tool and pull out on the tool firmly. The cap should come off.

   NOTE: **Failure to use a back and forth motion could damage the wheel skin chrome finish.**

4. The wheel skins can now be removed from the wheel. Use the flat end of the lug nut wrench to pry off the wheel skins. Make sure that the flat end is inserted and use a back and forth motion to remove the wheel skin.
5. On 3500 models front hub caps use the hub/cap remover/installer combination tool to pry off the cap in a back and forth motion. The wheel skins can now be removed.

INSTALLATION

INSTALLATION

FRONT

1. Align the valve stem with the notch in the wheel skin.
2. Seat on side of the wheel skin's wire retainer on to the wheel.
3. Using a rubber mallet, strike the opposite side of the wheel skin until the skin is properly seated.

   NOTE: **The wheel skin and the hub cap are fully seated when there is a consistent gap between the skin/ cap and the wheel.**

4. Tug on the hub cap/wheel skin to ensure that they are properly installed.

REAR

1. Install one 1 1/2 inch valve stem extension on each rear inner wheel.

   NOTE: **A 3/8 in. drive 10mm deep wheel socket with a 10 in. or greater extension can be used to remove the existing valve stem cap and install the extension.**

2. Install one 1 in. valve stem extension on each outer wheel.
3. Align the cooling windows of the wheel skin with the cooling windows of the wheel. Seat one side of the wheel skin's retainer onto the wheel. Using a rubber mallet, strike thew wheel skin on the outer circumference. Strike at several locations around the circumference until the skin is fully seated.

NOTE: **The wheel skin and the hub cap are fully seated when there is a consistent gap between the skin/cap and the wheel.**

4. Tug on the hub/cap wheel skin to ensure that they are properly installed.

STUD, WHEEL

REMOVAL

FRONT

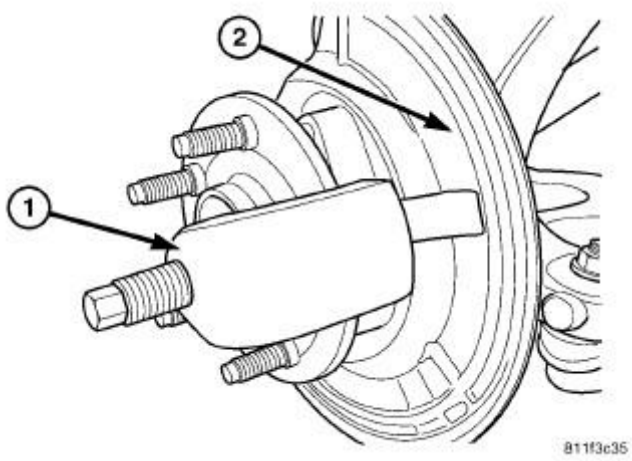

Fig. 24: Removing Stud Using Special Tool
Courtesy of CHRYSLER GROUP, LLC

1. Raise and support the vehicle.
2. Remove the wheel and tire assembly.
3. Remove the brake caliper, caliper adapter and rotor. Refer to **ROTOR, BRAKE, REMOVAL** .
4. Remove the wheel speed sensor from the hub.

NOTE: **After the wheel stud is pressed from the flange, the axle shaft will not turn past the hub/bearing retaining bolt end. Before pressing the wheel stud from the flange, rotate the axle shaft so the stud that needs replacement is aligned with the wheel speed sensor opening.**

5. Press the stud from the hub using remover (special tool #C-4150A, Press, Ball Joint) (1).

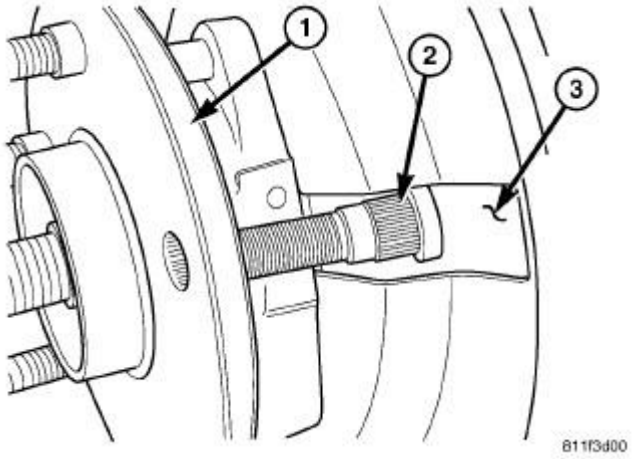

Fig. 25: Stud, Hub & Access Hole
Courtesy of CHRYSLER GROUP, LLC

6. Remove the stud (2) from the hub (1) through the backing plate access hole (3).

REAR - 1500 ONLY

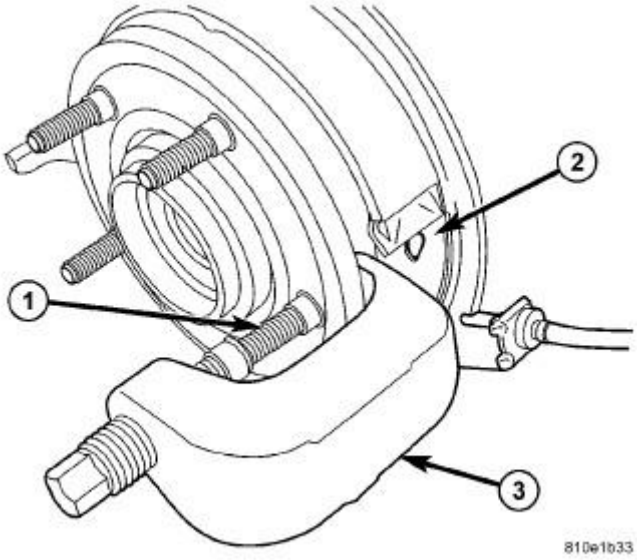

Fig. 26: Removing Stud From Hub
Courtesy of CHRYSLER GROUP, LLC

CAUTION: Move axle shaft carefully to prevent damage to the shaft bearing and seal in the axle tube.

1. Pull the axle shaft out of the axle approximately 25mm (1 in.) for clearance to remove the wheel stud. Refer to **SHAFT, AXLE** .
2. Press the stud (1) from the hub using Ball Joint Press (special tool #C-4150A, Press, Ball Joint) (3).

3. Remove the stud (1) from the rear of the hub flange.

REAR

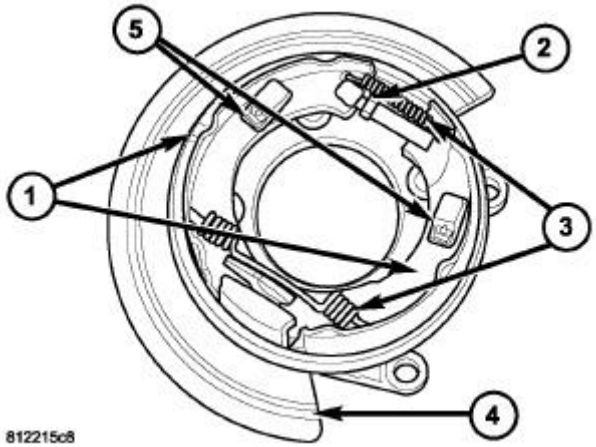

Fig. 27: Parking Brake Shoes, Adjuster & Spring
Courtesy of CHRYSLER GROUP, LLC

1. Raise and support the vehicle. Refer to **HOISTING, STANDARD PROCEDURE** .
2. Remove the wheel and tire assembly.
3. Remove the brake caliper, caliper adapter and rotor. Refer to **ROTOR, BRAKE, REMOVAL** .
4. Using appropriate tools, remove the spring (3) at parking brake adjuster (2).
5. Spread the parking brake shoes (1) apart enough to remove the adjuster (may need to back off adjustment), then remove the adjuster (2).

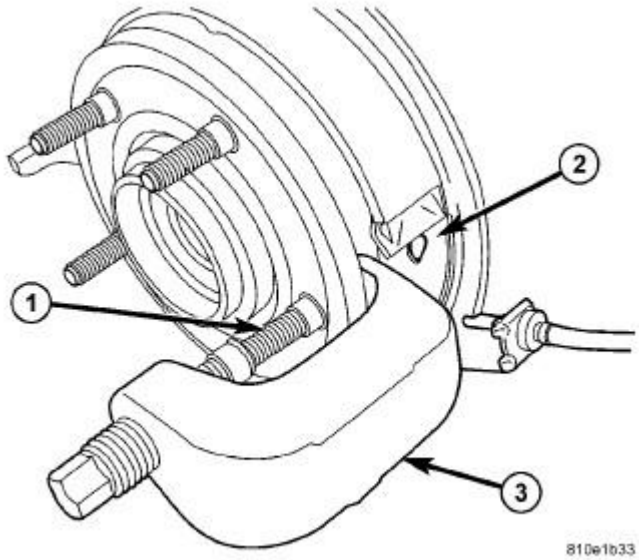

Fig. 28: Removing Stud From Hub

Courtesy of CHRYSLER GROUP, LLC

6. Rotate the axle around until the wheel stud (1) lines up with the opening where the adjuster was removed.
7. Press the stud (1) from the hub using Ball Joint Press (special tool #C-4150A, Press, Ball Joint) (3).
8. Remove the stud (1) from the rear of the hub flange. It may be necessary to work the hub flange back and forth to ease stud removal.

INSTALLATION

FRONT

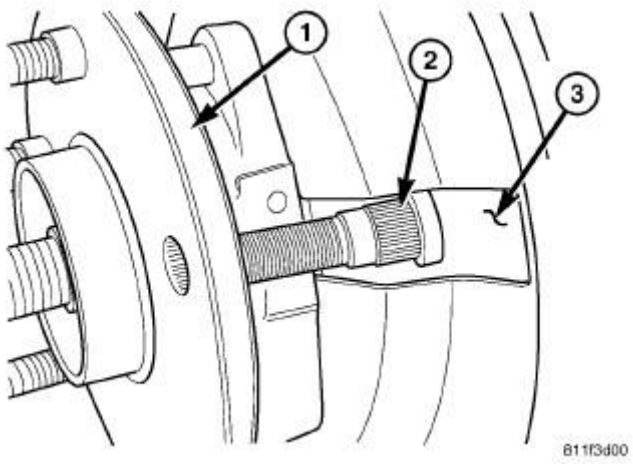

Fig. 29: Stud, Hub & Access Hole
Courtesy of CHRYSLER GROUP, LLC

1. Install the new stud (2) into the hub flange (1).
2. Install three proper sized washers onto the stud, then install lug nut with the flat side of the nut against the washers.
3. Tighten the lug nut until the stud is pulled into the hub flange. Verify that the stud is properly seated into the flange.
4. Remove the lug nut and washers.
5. Install the brake rotor, caliper adapter, and caliper. Refer to **ROTOR, BRAKE, INSTALLATION** .
6. Install the wheel speed sensor.
7. Install the wheel and tire assembly, use new lug nut on the stud or studs that were replaced.
8. Remove the support and lower the vehicle.

REAR - 1500 ONLY

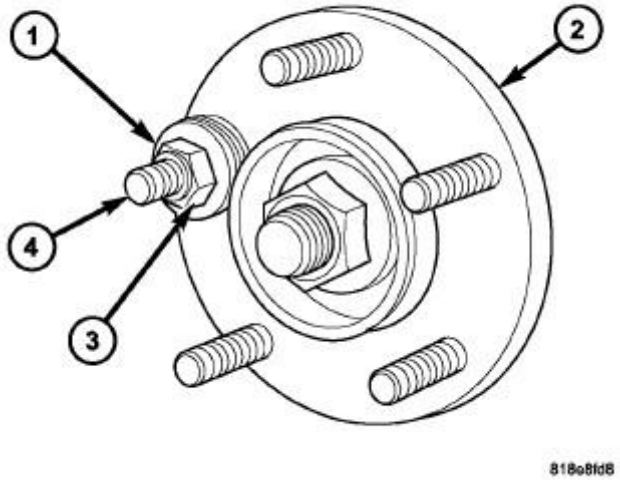

Fig. 30: Stud Installation
Courtesy of CHRYSLER GROUP, LLC

CAUTION: Move axle shaft carefully to prevent damage to the shaft bearing and seal in the axle tube.

1. Install the new stud (4) into the back of the hub flange (2) and seat as follows:
    1. Install three proper sized washers (1) onto the new stud (4), then install a lug nut (3) with the flat side of the nut against the washers.
    2. Tighten the lug nut (3) until the stud (4) is pulled into the hub flange (2). Verify that the stud is properly seated into the flange.
    3. Remove the lug nut (3) and washers (1).
2. Install the axle shaft. Refer to **INSTALLATION** .
3. Using a new lug nut on the new stud, install the wheel and tire assembly. Refer to **WHEELS, STANDARD PROCEDURE**.
4. Remove the supports and lower the vehicle.

REAR

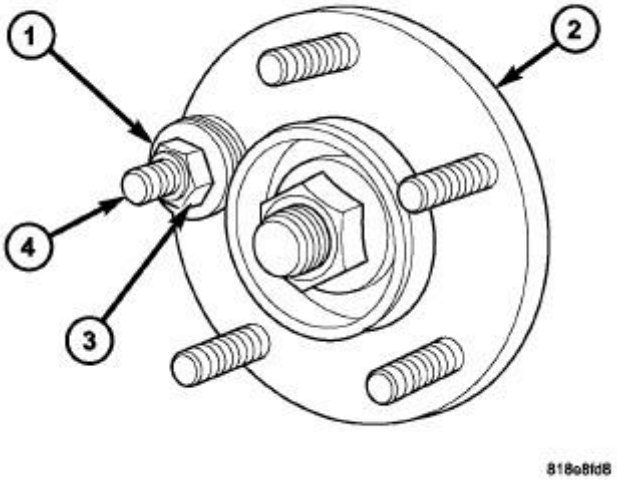

Fig. 31: Stud Installation
Courtesy of CHRYSLER GROUP, LLC

1. Install the new stud (4) into the hub flange (2) at the opening where the adjuster was removed.
2. Install three proper sized washers (1) onto the new stud (4), then install a lug nut (3) with the flat side of the nut against the washers.
3. Tighten the lug nut (3) until the stud (4) is pulled into the hub flange (2). Verify that the stud is properly seated into the flange.
4. Remove the lug nut (3) and washers (1).

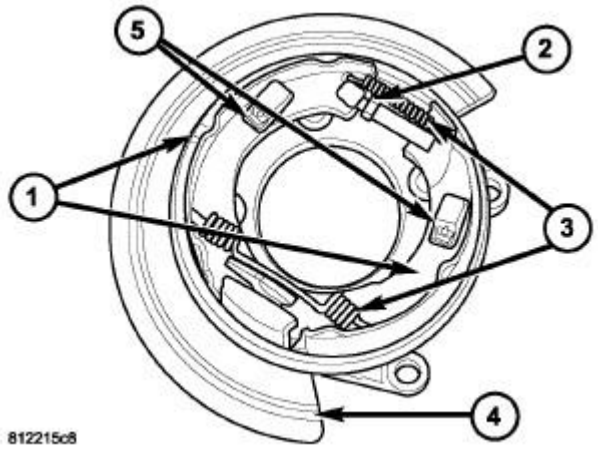

Fig. 32: Parking Brake Shoes, Adjuster & Spring
Courtesy of CHRYSLER GROUP, LLC

5. Install the parking brake adjuster (2) between the parking brake shoes (1) with the adjuster star wheel near the adjustment window in the brake shield.
6. Using appropriate tools, install the spring (3) at the adjuster (2).

7. Adjust parking brake shoes as necessary. Refer to **SHOES, PARKING BRAKE, ADJUSTMENTS** .
8. Install the brake rotor, caliper adapter and caliper. Refer to **ROTOR, BRAKE, INSTALLATION** .
9. Using a new lug nut on the new stud, install the wheel and tire assembly. Refer to **WHEELS, STANDARD PROCEDURE**.
10. Remove the supports and lower the vehicle.

TIRE PRESSURE MONITORING

DESCRIPTION

DESCRIPTION

There are two tire pressure monitoring systems available, a base system and a premium system. On the 2500 series base and premium systems there is a light load switch located on the instrument panel in the center stack.

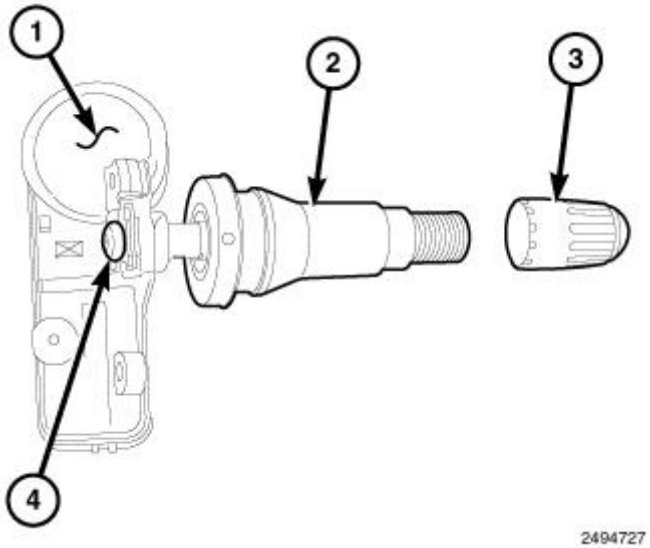

Fig. 33: Tire Pressure Monitoring Sensor Components
Courtesy of CHRYSLER GROUP, LLC

The **Base TPM system** consists of tire pressure monitoring sensors (1) attached to each road wheel (and spare if equipped with a sensor) valve stem (2), a central receiver module, an indicator lamp, and on some applications a Light Load switch located on the instrument panel center stack. The valve stem (2) used on this system is redesigned to look similar to a standard valve stem. The 2500 series truck uses a Tire Pressure Monitoring (TPM) module as the central receiver module, located in the left front wheel well forward of the splash shield. The 1500 series uses the Wireless Ignition Node (WIN) as the central receiver module.

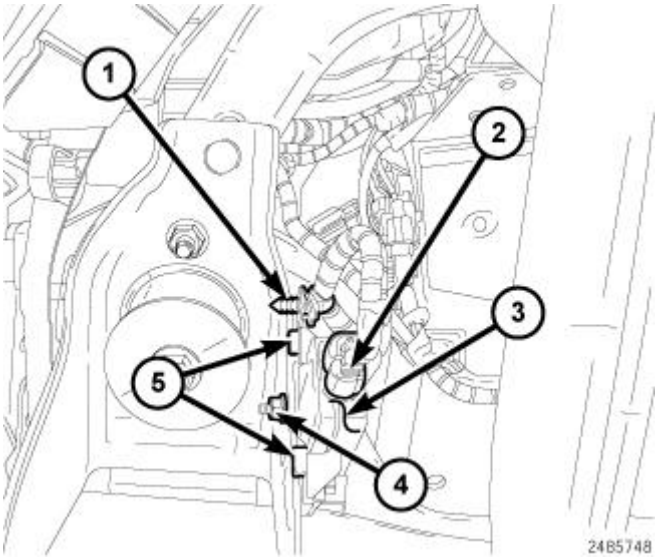

Fig. 34: Tire Pressure Monitor Module & Wiring Harness Connector
Courtesy of CHRYSLER GROUP, LLC

The **Premium TPM system** used on the 1500 and 2500 series consists of tire pressure monitoring sensors attached to each road wheel (and spare if equipped with a sensor) valve stem (similar to the base system valve stem in the previous illustration above), a Tire Pressure Monitoring (TPM) module (3) located in the left front wheel well forward of the splash shield, an electronic display, an indicator lamp, and on some applications a Light Load switch located on the instrument panel center stack.

OPERATION

OPERATION

The Tire Pressure Monitoring (TPM) system monitors air pressure in the four road tires, or if the vehicle original equipment includes a full size matching spare, then all five tires. Pressure in the spare tire is not monitored with a compact spare or a "non-matching spare.

There are two tire pressure monitoring systems available, a base system and a premium system. The base system does not specify how many tires are low or where they are located. The premium system does indicate which tire is low.

LIGHT LOAD SWITCH

On the 2500 series base and premium systems there is a "Light Load" switch located on the instrument panel in the center stack. If equipped, these vehicles will have two different recommended tire pressure values depending on the vehicle load/switch setting. The Light Load switch which will allow the driver to change between two different recommended "Placard Pressure", "Low-pressure Threshold" and Hysteresis Pressure Values". These values are stored in the modules non-volatile memory during the initial Manufacturing Plant Process, or during a service procedure, as required. To determine the pressure thresholds for a vehicle, refer to the Tire Inflation Pressure (Placard) Label or Supplemental Tire Pressure Information Label, and then apply the placard pressure to the following table. The Low Pressure OFF Threshold is defined as the Low Pressure ON Threshold plus the Hysteresis Pressure Value.

BASE TIRE PRESSURE MONITORING

The tire pressure monitoring (TPM) system is designed to operate without loss of function for all OEM tire construction for this vehicle. Sensors, mounted to each road wheel (and spare if equipped with a sensor) as part of the valve stem, transmit an RF signal indicating their individual pressure to the Tire Pressure Monitoring (TPM) module for the 2500 series, or the Wireless Ignition Node (WIN) for the 1500 series. These transmissions occur approximately once every minute at speeds over 15 mph (24 km/h). For more information on sensors, refer to **SENSOR, TIRE PRESSURE MONITORING (TPM), OPERATION**.

If the TPM system detects that the tire pressure in any road tire is going low, beyond the Low Pressure (lamp) ON threshold (refer to placard table below), the TPM system will continuously illuminate an indicator lamp. If a system fault is detected, the indicator lamp will flash on/off for 75 seconds, then remain on solid.

If the WIN or TPM module detects a warning or fault condition at ignition key "ON" it will wait ten seconds +/- 10 % before sending the first request to illuminate the indicator lamp. This will assure that the display module has concluded its bulb check period. The display module will request a chime once per ignition cycle for each "warning" or "fault" condition detected. A "warning" or "fault" condition will remain enabled until the problem causing the condition is corrected and removed/reset.

The WIN or TPM module will store all warning and fault conditions, placard pressure values and low-pressure threshold values (lamp ON and OFF) in memory that can be accessed through diagnostic communication. If new sensors are introduced to the vehicle, the data stored for the sensor being replaced will be deleted.

The WIN or TPM module will store all wheel sensor ID's and locations and faults in memory that can be accessed through diagnostic communication, and all other data values transmitted from each active wheel sensor.

The WIN or TPM module shall continuously monitor for the receipt of tire pressure RF message transmissions from the wheel sensors during both the ignition key "ON" and key "OFF" cycles. The wheel sensor ID's and the location of each sensor (e.g. Tire 1, Tire 2 etc.) are learned by the WIN or TPM during the initial Manufacturing Plant Process, or during a service procedure, as required.

The TPM System will continue to warn the driver of low tire pressure as long as the condition exists, and will not turn off the indicator lamp until the tire pressure is at or above the Low Pressure (lamp) OFF threshold (refer to placard table below). The system will automatically update and the TPM indicator lamp will extinguish once the updated tire pressures have been received.

NOTE: **A new sensor ID can also be programmed directly into the WIN or TPM module by using a RKE-TPM Analyzer in conjunction with a Scan Tool. Once the new sensor ID has been programmed, the vehicle will need to be driven above 15 mph until the fault is no longer active (lamp extinguishes) and display is updated (for up to 20 minutes).**

The WIN or TPM automatically learns and stores the sensor IDs while driving "within 20 minutes continuously above 15 mph (24 km/h)" after a sensor has been replaced. The learning sequence will initiate when the vehicle has been stopped for more than 20 minutes.

Tire pressure will vary with temperature by about 1 psi (6.9 kPa) for every 12°F (6.5°C). This means that when

the outside temperature decreases, the tire pressure will decrease. Tire pressure should always be set based on cold inflation tire pressure (placard pressure). This is defined as the tire pressure after a vehicle has not been driven for more than 3 hours (and in outside ambient temperature). The tire pressure will also increase as the vehicle is driven; this is normal and there should be no adjustment for this increased pressure. For a system fault, the system will return to normal once the WIN receives a valid transmission from that sensor location.

The recommended "Placard Pressure", "Low-pressure Threshold" (Low Pressure ON) and "Hysteresis Pressure" values for the tires installed on the vehicle, are learned by the WIN module configuration during the initial Manufacturing Plant Process, or during a service procedure, as required.

To determine the pressure thresholds for a vehicle, refer to the Tire Inflation Pressure (Placard) Label, and then apply the placard pressure to the following table. The Low Pressure OFF Threshold is defined as the Low Pressure ON Threshold plus the Hysteresis Pressure value.

For further information, refer to the Owners Manual or the Appropriate Diagnostic Information.

PREMIUM TIRE PRESSURE MONITORING

The Tire Pressure Monitoring (TPM) system is designed to operate without loss of function for all OEM tire construction for this vehicle. Sensors, mounted to each road wheel (and spare if equipped with a sensor) as part of the valve stem, transmit an RF signal indicating their individual pressure to a receiver located in the Tire Pressure Monitoring (TPM) module. These transmissions occur approximately once every minute at speeds over 15 mph (24 km/h). For more information on sensors, refer to **SENSOR, TIRE PRESSURE MONITORING (TPM), OPERATION**.

If the TPM module detects that the tire pressure in any road tire is going low, beyond the Low Pressure (lamp) ON threshold (refer to placard table below), a chime will sound and the indicator lamp will turn on. In addition to the chime and lamp, a graphic display of the pressure value(s) and position of the low tire(s) will flash in the Electronic Vehicle Information Center (EVIC). Once pressure in the suspect tire(s) raises above the Low Pressure (lamp) OFF Threshold (refer to placard table below), and the TPM module receives a valid transmission from the sensor the lamp will go out. If a system fault is detected due to a missing sensor signal, in addition to a chime and a indicator lamp flashing, a "Check TPM System" text message will be displayed in the instrument cluster, and the tire pressure graphic display will display "- -" in place of the pressure value. After the flash sequence the TPM indicator lamp will remain illuminated. The system will return to normal once the TPM module receives a valid transmission from that sensor location. If a system fault is detected, the indicator lamp will flash on/off for 75 seconds and then remain on solid.

If the TPM module detects a warning or fault condition at ignition key "ON" it will wait approximately ten seconds before sending the first request to illuminate the indicator lamp. This will assure that the display module has concluded its bulb check period. The display module will request a chime once per ignition cycle when a "warning" or "fault" condition is detected. A "warning" or "fault" condition will remain enabled until the problem causing the condition is corrected and reset.

NOTE: **A new sensor ID can also be programmed directly into the WIN or TPM module by using a RKE-TPM Analyzer in conjunction with a Scan Tool. Once the new sensor ID has been programmed, the vehicle will need to be driven above 15 mph until the fault is no longer active (lamp extinguishes) and display is updated (for up to 20 minutes).**

The TPM module shall continuously monitor for the receipt of tire pressure RF message transmissions from the wheel sensors during the ignition key "ON" cycle. The wheel sensor ID's and the location of each sensor (e.g. Tire 1, Tire 2 etc.) are learned by the TPM control module using signal strength and direction of wheel rotation as received by the TPM module from each of the sensors, and updates the graphic display when necessary or during a service procedure, as required.

The TPM System will continue to warn the driver of low tire pressure as long as the condition exists, and will not turn off the indicator lamp until the tire pressure is at or above the Low Pressure (lamp) OFF threshold (refer to placard table below). The system will automatically update and the TPM indicator lamp will turn off once the updated tire pressures have been received.

Tire pressure will vary with temperature by about 1 psi (6.9 kPa) for every 12°F (6.5°C). This means that when the outside temperature decreases, the tire pressure will decrease. Tire pressure should always be set based on cold inflation tire pressure (placard pressure). This is defined as the tire pressure after a vehicle has not been driven for more than 3 hours (and in outside ambient temperature). The tire pressure will also increase as the vehicle is driven? this is normal and there should be no adjustment for this increased pressure. For a system fault, the system will return to normal once the TPM module receives a valid transmission from that sensor location.

The recommended "Placard Pressure", "Low-pressure Threshold" (Low Pressure ON) and "Hysteresis Pressure" values for the tires installed on the vehicle, are learned by the TPM module configuration during the initial Manufacturing Plant Process, or during a service procedure, as required.

To determine the pressure thresholds for a vehicle, refer to the Tire Inflation Pressure (Placard) Label, and then apply the placard pressure to the following table. The Low Pressure OFF Threshold is defined as the Low Pressure ON Threshold plus the Hysteresis Pressure value.

For further information, refer to the Owners Manual or the Appropriate Diagnostic Information.

TPM THRESHOLD PRESSURES

NOTE: **To determine the pressure thresholds for a vehicle, refer to the Tire Inflation Pressure (Placard) Label found on the Driver's B-Pillar, then apply the placard pressure to the following table.**

Placard Pressure (Cold) (PSI)	Low Pressure ON Threshold (PSI)	Low Pressure OFF Threshold (PSI)
28	22	28
29	23	29
30	24	30
31	25	31
32	25	32
33	26	33
34	27	34
35	28	35
36	29	36

37	29	37
38	30	38
39	31	39
40	32	40
41	33	41
42	34	42
43	35	43
44	35	44
45	36	45
46	37	46
47	38	47
48	38	48
49	39	49
50	40	50
51	41	51
55	44	55
60	48	60
65	52	65
70	56	70
75	60	75
80	64	80

DIAGNOSIS AND TESTING

DIAGNOSIS AND TESTING - TIRE PRESSURE MONITORING SYSTEM

When diagnosing a tire pressure issue, first check the Tire Pressure Monitoring (TPM) indicator lamp in the instrument cluster during ignition key ON. From the OFF position, turn the key to ON and check the TPM indicator lamp to observe one of the following:

- If after 10 seconds the indicator lamp is illuminating continuously (not flashing), refer to LOW PRESSURE below.
- If after 10 seconds the indicator lamp flashes on/off for 75 seconds, then remains on solid, there is a system fault detected. Refer to SYSTEM FAULT below.

LOW PRESSURE

NOTE: **Tire pressure may increase from 2 to 6 psi (14 to 41 kPa) during normal driving conditions. Do NOT reduce this normal pressure build up.**

NOTE: **Tire pressure will vary with temperature by about 1 psi (6.9 kPa) for every 12°F (6.5°C). This means that when the outside temperature decreases, the tire pressure will also decrease. Tire pressure should always be set based on cold**

inflation tire pressure. For details, refer to TIRES, DESCRIPTION.

Check air pressure as necessary in all tires using a known accurate air gauge and adjust to the specification listed on the Tire Inflation Pressure Label (Placard) provided with the vehicle (usually applied to the driver side B-pillar). After adjusting air pressure in a tire on the vehicle, allow approximately two minutes for the message or indicator lamp to go out.

If air pressure in any tire is low, inspect **all** the tires for leaks. A water "dunk tank" or other water test may be used to check for a leak around the sensor as long as any water at the valve core is removed once the procedure is completed. The water can be easily expelled from the core area by pushing in on the core for several seconds, allowing escaping air to drive out any moisture. Reinflate the tire as necessary. Always make sure the original (special) valve stem cap is securely installed to keep moisture out of the sensor.

If the indicator lamp is still ON continuously, refer to the appropriate diagnostic information.

SYSTEM FAULT

After an ignition key ON, if a system fault is detected, a chime will sound, and the TPM indicator (telltale) lamp will flash for 75 seconds, then remain on solid. A system fault can occur by many scenarios, including the following:

- Signal interference due to electronic devices or driving next to facilities emitting the same Radio Frequencies as the TPM sensors.
- Installing some form of aftermarket window tinting that affects radio wave signals.
- Accumulation of snow or ice around the wheels or wheel housings.
- Using tire chains on the vehicle.
- Using wheels not equipped with TPM sensors.

If a system fault is detected, refer to **DIAGNOSIS AND TESTING** .

SPECIFICATIONS

SPECIFICATIONS

DESCRIPTION	N.m	Ft. Lbs.	In. Lbs.
TPM Module Bracket Mounting Nut	8	-	71
Tire Pressure Sensor to Valve Stem Mounting Screw	1.4	-	12

MODULE, TIRE PRESSURE MONITORING (TPM)

DESCRIPTION

DESCRIPTION

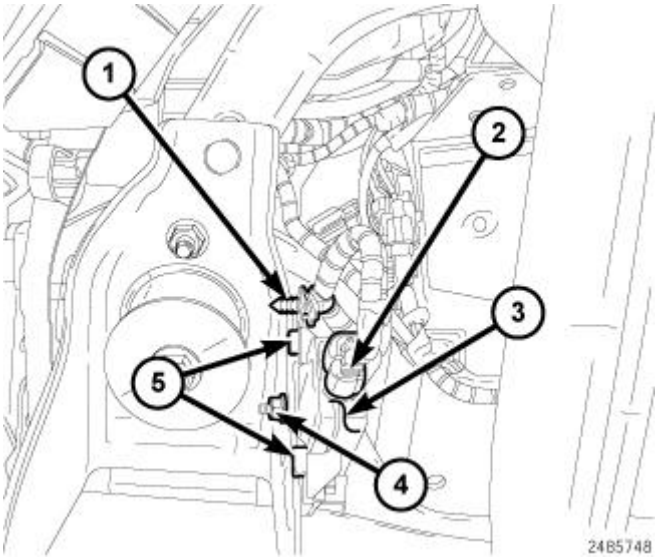

Fig. 35: Tire Pressure Monitor Module & Wiring Harness Connector
Courtesy of CHRYSLER GROUP, LLC

The TPM Module (3) is a stand-alone receiver that is used to perform all TPM functionality in a Premium TPM System (1500 and 2500), and on the Base TPM System (2500 only). The TPM is located in the left front wheel well forward of the splash shield, near the body to frame mount and is mounted to the frame with a bracket. The TPM uses information transmitted from each of the sensors as well as the difference in the strength of the signal received to determine the location of each of the sensors.

OPERATION

OPERATION

The TPM receives information from each of the sensors in the form of RF signals. The information contained in each of the transmissions provides all the information necessary for the TPM to determine the pressure in each tire as well as the position of the sensor. This auto-locating process only happens in the first 10 minutes of any drive cycle while traveling at speeds above 15mph (24 km/h) (The auto-locating process will start again only if the vehicle has been shut off for approximately 20 minutes or longer). The TPM then transmits the required information directly to the CCN in order to update the lamp, chime and display as required.

REMOVAL

REMOVAL

NOTE: The TPM is located in the left front wheel well forward of the splash shield, near the body to frame mount and is mounted to the frame with a bracket.

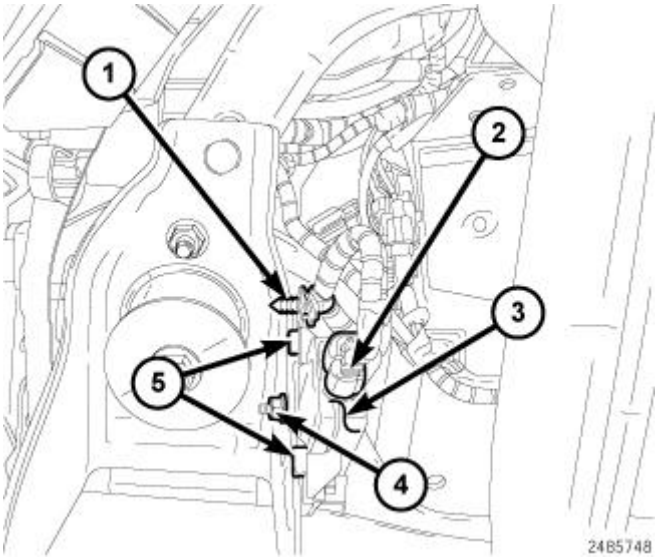

Fig. 36: Tire Pressure Monitor Module & Wiring Harness Connector
Courtesy of CHRYSLER GROUP, LLC

1. Disconnect and isolate the battery negative cable.
2. Raise and support the vehicle. Refer to **HOISTING, STANDARD PROCEDURE** .
3. Disconnect the wiring harness connector (2) and wiring harness retainer (1) at the Tire Pressure Module (3).
4. Remove mounting nut (4), then remove the Tire Pressure Module (3) from the frame.

INSTALLATION

INSTALLATION

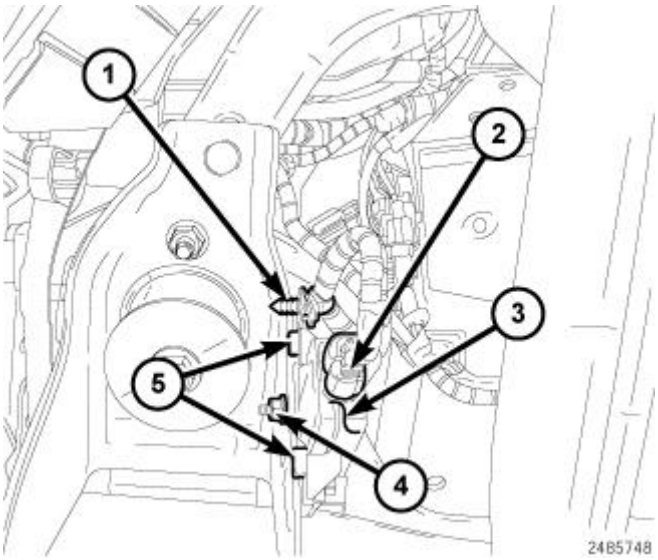

Fig. 37: Tire Pressure Monitor Module & Wiring Harness Connector
Courtesy of CHRYSLER GROUP, LLC

NOTE: Verify that the two tabs (5) are properly positioned on the edge of the frame.

1. Position the tire pressure monitor module (3) on the frame, install mounting nut (4) and torque to 8 N.m (71 in. lbs.).
2. Connect wiring harness connector (2) and wiring harness retainer at the Tire Pressure Module (3).
3. Remove the support and lower the vehicle.
4. Perform one of the following to make the system learn the new sensor ID.
    1. Use the TPM-RKE Analyzer 9936, with the Scan Tool to program the TPM Module with the tire pressure sensor ID. This is part of the TPM Diagnostic Verification Test. Refer to **STANDARD PROCEDURE** .
    2. Once the vehicle has remained stationary for more than 20 minutes, drive vehicle for a minimum of 20 minutes while maintaining a continuous speed above 15 mph (24 km/h). During this time, the system will learn the new sensor ID. This is part of the TPM Verification Test. Refer to **STANDARD PROCEDURE** .

SENSOR, TIRE PRESSURE MONITORING (TPM)

CAUTION

CAUTION

CAUTION: The use of tire sealants is not recommended for vehicles equipped with the Tire Pressure Monitoring system. Tire sealants may clog tire pressure sensors.

CAUTION: Tire pressure sensor valve stem caps and cores are specially designed for the sensors. Due to risk of corrosion, do not use a standard valve stem cap or core in a tire pressure sensor in place of the original equipment style sensor cap and core.

CAUTION: It is not recommended to install a tire pressure sensor in an aftermarket wheel. Use tire pressure sensors in original style factory wheels only.

CAUTION: Any time a sensor is to be reinstalled in a wheel, a new valve stem assembly must be installed to ensure air tight sealing.

NOTE: TPM thresholds have been established for the original tire size equipped on the vehicle. Use original size tires only to maintain system accuracy.

DESCRIPTION

DESCRIPTION

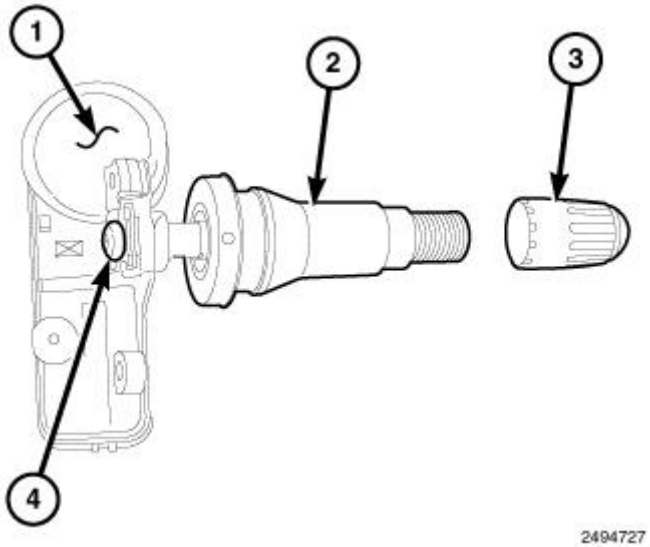

Fig. 38: Tire Pressure Monitoring Sensor Components
Courtesy of CHRYSLER GROUP, LLC

NOTE: Replace the valve stem assembly and tire pressure sensor mounting screw with each tire change.

One tire pressure sensor (1) is mounted to a valve stem (2) specifically designed for mounting the pressure sensor (1) in each wheel in place of the traditional tire valve stem. Each sensor has an internal battery that lasts up to 10 years. The battery is not serviceable. At the time of battery failure, the sensor (1) must be replaced. The TPM system operates on a 433 MHz radio frequency. The tire pressure sensor valve stem (2) looks similar to a standard valve stem with the tire mounted on the wheel. To visually identify a tire pressure sensor/valve stem, the valve stem cap (3) is longer than a standard valve stem.

NOTE: This vehicle uses the 433 MHz TPM sensor. Although 315 MHz and 433 MHz sensors are identical in size and shape, they are not interchangeable. Always make sure the correct sensor is being used. A RKE-TPM Analyzer can be used to determine the sensor's frequency without having to dismount the tire.

The TPM sensors are designed for original style factory wheels. It is not recommended to install a tire pressure sensor in an aftermarket wheel. (This could cause sealing and system performance issues.)

The serviceable components of the tire pressure sensor are:

- Tire pressure sensor (1), including all components below
- Valve stem (2), including screw (4), core, and cap (3)
- Valve stem core (not shown in illustration)
- Valve stem cap (3)

The valve stem caps and cores used are specifically designed for the tire pressure monitoring sensors. Although similar to standard valve stem caps and cores, they are different. The valve stem cap has a special seal inside to keep moisture and corrosion out. The valve stem core has a special nickel coating to protect from corrosion.

OPERATION

OPERATION

CAUTION: The TPMS has been optimized for the original equipment tires and wheels. TPMS pressures have been established for the tire size equipped on your vehicle. Undesirable system operation or sensor damage may result when using replacement equipment that is not of the same size, type, and/or style. After-market wheels can cause sensor damage. Do not use aftermarket tire sealants or balance beads if your vehicle is equipped with a TPMS, as damage to the sensors may result.

CAUTION: After inspecting or adjusting the tire pressure always reinstall the valve stem cap. This will prevent moisture and dirt from entering the valve stem, which could damage the Tire Pressure Monitoring Sensor.

CAUTION: Tire pressure sensor valve stem caps and cores are specially designed for the sensors. Due to risk of corrosion, do not use a standard valve stem cap or core in a tire pressure sensor in place of the original equipment style sensor cap and core.

CAUTION: Any time a sensor is to be reinstalled in a wheel, a new valve stem assembly must be installed to ensure air tight sealing.

NOTE: TPM thresholds have been established for the original tire size equipped on the vehicle. Use original size tires only to maintain system accuracy.

The battery operated tire pressure sensor is both a transmitter and a receiver. The TPM sensor can be forced to transmit if using a special tool such as a TPM-RKE Analyzer. The TPM-RKE Analyzer has the ability to change the sensor mode and to diagnose a faulty TPM sensor. Using a TPM-RKE Analyzer can take up to a minute to force a transmission from a sensor.

Each sensor's (transmitter) broadcast is uniquely coded so that the module can monitor the state of each of the sensors on the four rotating road wheels. The module can automatically learn and store the sensor's ID while driving "within 10 minutes continuously above 15 m.p.h. (24 Km/h)" after a sensor has been replaced. The vehicle must be stationary for more then 20 minutes in order to initiate the learning sequence.

The sensor IDs can also be programmed using the TPM-RKE Analyzer Tool. Scan each TPM sensor at each road wheel, and store each Sensor ID in the correct location. (LEFT FRONT, LEFT REAR, RIGHT FRONT, and RIGHT REAR) Connect the TPM-RKE Analyzer Tool to the Scan Tool. Then follow the programming steps outlined in the diagnostic Scan Tool for "Program Tire Pressure Sensor ID w/ TPM Tool".

DIAGNOSIS AND TESTING

DIAGNOSIS AND TESTING - TIRE PRESSURE SENSOR

NOTE: **Tire pressure may increase from 2 to 6 psi (14 to 41 kPa) during normal driving conditions. Do NOT reduce this normal pressure build up.**

NOTE: **Tire pressure will vary with temperature by about 1 psi (6.9 kPa) for every 12 F° (6.5 C). This means that when the outside temperature decreases, the tire pressure will also decrease. Tire pressure should always be set based on cold inflation tire pressure.**

When diagnosing a tire pressure issue, always check air pressure in the tires first with a known accurate air gauge. Adjust air pressure as necessary to that listed on the Tire Inflation Pressure Label (Placard) provided with the vehicle (usually applied to the driver's side B-pillar). After adjusting air pressure in a tire on the vehicle, allow approximately two minutes for the message or indicator lamp to go out.

Check the tire pressure indicator lamp in the instrument cluster. If the lamp is illuminating continuously, inspect all the tires for leaks. A water "dunk tank" or other water test may be used to check for leaks around the sensor as long as any water at the valve core is removed once the procedure is completed. The water can be easily expelled from the core area by pushing in on the core for several seconds, allowing escaping air to drive out any moisture. Reinflate the tire as necessary. Always make sure the original valve stem cap is securely installed to keep moisture out of the sensor. If the gauge-read pressure in the tires does not indicate a tire pressure issue, refer to the appropriate diagnostic information.

If the indicator lamp is flashing on/off for 75 seconds and then remains on solid, a system fault was detected. Refer to the appropriate diagnostic information.

REMOVAL

REMOVAL

1. Raise and support vehicle. Refer to **HOISTING, STANDARD PROCEDURE** .
2. Remove tire and wheel assembly.

CAUTION: **The cap used on this valve stem contains an O-ring seal to prevent contamination and moisture from entering the valve stem. Do not substitute a regular valve stem cap in its place.**

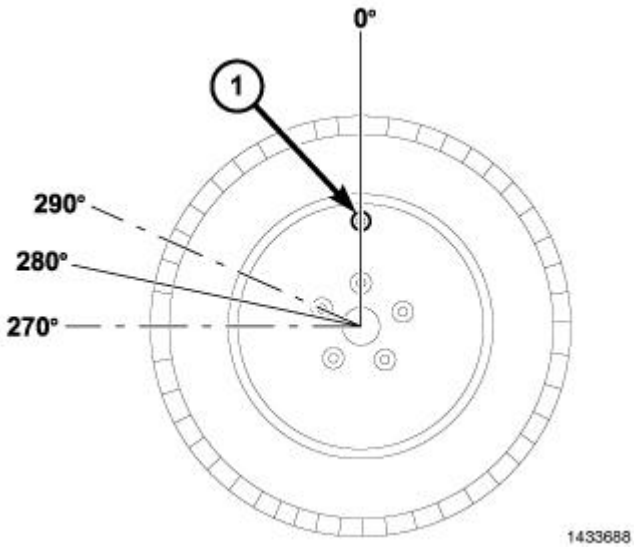

Fig. 39: Positioning Tire Mounting/Dismounting Tool
Courtesy of CHRYSLER GROUP, LLC

3. Dismount tire from wheel following tire changer manufacturers instructions while paying special attention to the following to avoid damaging the pressure sensor:
    1. When breaking the tire bead loose from the wheel rim, avoid using the Bead Breaker in the area of the sensor (1). That includes both outer and inner beads of the tire.
    2. When preparing to dismount the tire from the wheel, carefully insert the mounting/dismounting tool 280° from the valve stem ± 10°, then proceed to dismount the tire from the wheel. Use this process on both outer and inner tire beads.

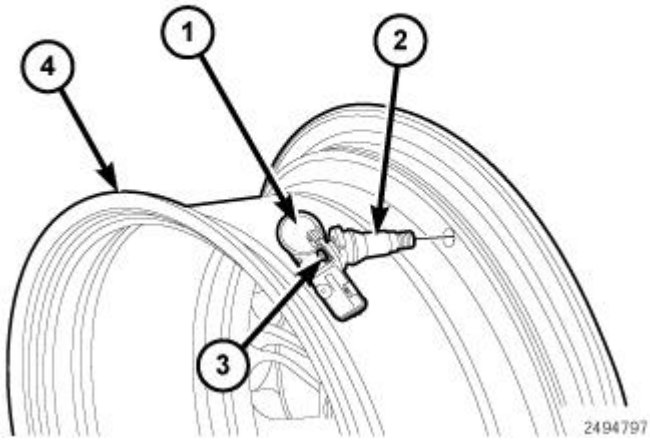

Fig. 40: Valve Stem Retainer Screw, Sensor & Valve Stem
Courtesy of CHRYSLER GROUP, LLC

4. Remove the sensor to valve stem retainer screw (3) and remove the sensor (1) from the valve stem (2).
5. Remove the valve stem (2) from the wheel (4).

INSTALLATION

INSTALLATION

NOTE: **If replacing tire pressure sensor, a new valve stem will be pre-mounted to the sensor as an assembly. Verify that the sensor is positioned properly before seating the valve stem. If replacing a valve stem only (using the existing tire pressure sensor), the new valve stem will include a new tire pressure sensor mounting screw. Always use a new mounting screw when attaching a sensor to a valve stem.**

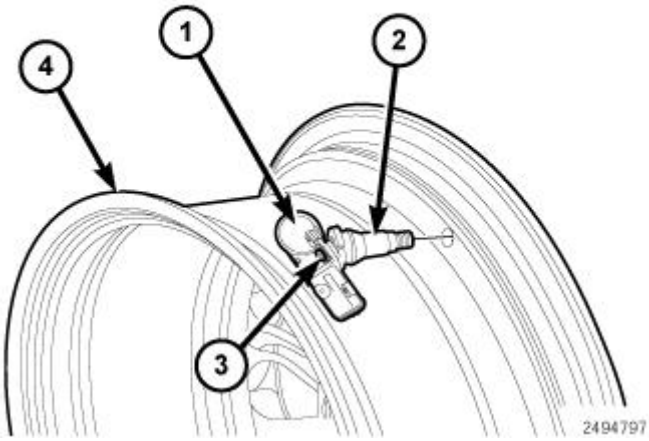

Fig. 41: Valve Stem Retainer Screw, Sensor & Valve Stem
Courtesy of CHRYSLER GROUP, LLC

CAUTION: **Any time a sensor is to be reinstalled in a wheel, a new valve stem assembly must be installed to ensure air tight sealing.**

1. Wipe area clean around sensor/valve stem mounting hole in wheel (4). Make sure surface of wheel is not damaged.

   NOTE: **A new valve stem is pre-lubricated for proper installation with a standard tool.**

   NOTE: **If replacing tire pressure sensor, a new valve stem will be pre-mounted to the sensor as an assembly. Verify that the sensor is positioned properly before seating the valve stem.**

2. Insert valve stem (2) through wheel (4) and pull through to seat with standard valve stem installation tool.

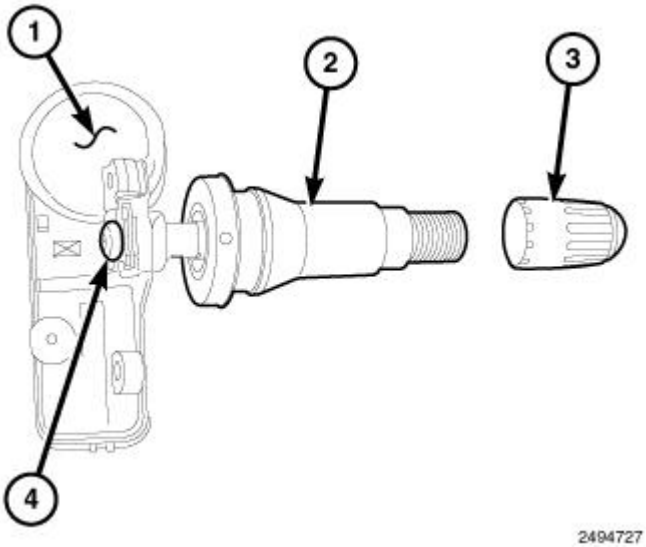

Fig. 42: Tire Pressure Monitoring Sensor Components
Courtesy of CHRYSLER GROUP, LLC

3. If replacing the valve stem (2) only (using the existing tire pressure sensor), verify that the flat sides of the brass extension on the bottom of the valve stem (2) are at a 90 degree angle with the wheel. Position the pressure sensor (1) over the brass extension, install the retainer screw (4) and tighten to 1.4 N.m (12 in. lbs.).
4. Mount tire on wheel following tire changer manufacturers instructions, paying special attention to the following to avoid damaging tire pressure sensor:

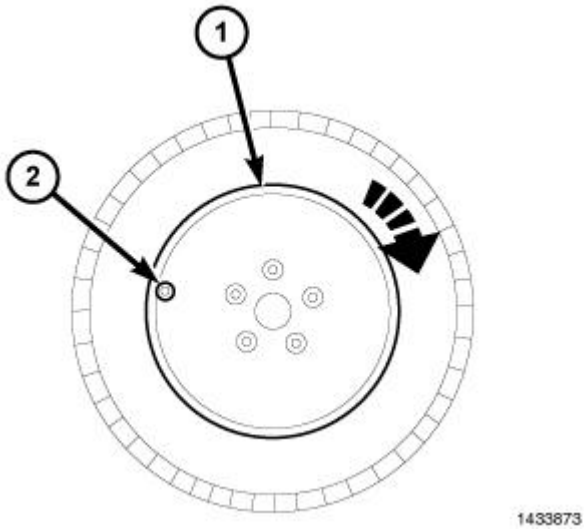

Fig. 43: Mounting Tire Using Rotating Wheel Machine
Courtesy of CHRYSLER GROUP, LLC

1.

1 - HEAD OF CHANGER LOCATED HERE
2 - VALVE STEM

Rotating Wheel Tire Changers - Once the wheel is mounted to the changer, position the sensor valve stem (2) approximately 280° from the head of the changer (located at 1) in a clockwise direction before rotating the wheel (also in a clockwise direction) to mount the tire. Use this procedure on both the outer and inner tire beads.

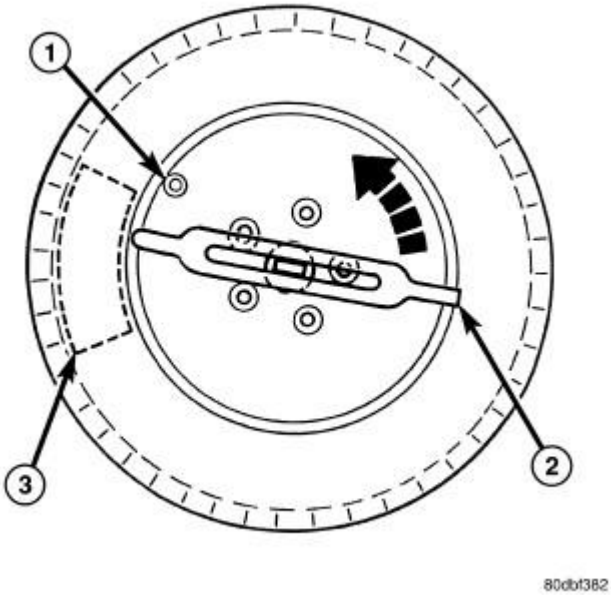

Fig. 44: Mounting Tire Using Rotating Tool Machine
Courtesy of CHRYSLER GROUP, LLC

1 - VALVE STEM
2 - INSTALLATION END OF MOUNTING/DISMOUNTING TOOL
3 - BEAD BREAKER (KEEP CLEAR OF SENSOR)

2. Rotating Tool Tire Changers - Position the wheel on the changer so that the sensor valve stem (1) is located approximately 210° clockwise from the installation end of the mounting/dismounting tool (2) once the tool is mounted for tire installation. Make sure the sensor is clear of the lower bead breaker area (3) to avoid damaging the sensor when the breaker rises. Rotate the tool (2) in a counterclockwise direction to mount the tire. Use this procedure on both the outer and inner tire beads.

5. Adjust air pressure to that listed on Tire Inflation Pressure Label (Placard) provided with vehicle (usually applied to driver's side B-pillar). Make sure **original style** valve stem cap is securely installed to keep moisture out of sensor.
6. Install tire and wheel assembly on the vehicle.
7. Remove the support and lower the vehicle.
8. Perform one of the following to make the system learn the new sensor ID.

1. Use the TPM-RKE Analyzer, 9936, with the Scan Tool to program the WIN with the tire pressure sensor ID. This is part of the TPM Diagnostic Verification Test. Refer to **STANDARD PROCEDURE** .
2. Once the vehicle has remained stationary for more than 20 minutes, drive vehicle for a minimum of 10 minutes while maintaining a continuous speed above 15 mph (24 km/h). During this time, the system will learn the new sensor ID. This is part of the TPM Diagnostic Verification Test. Refer to **STANDARD PROCEDURE** .

NOTE: If a sensor cannot be trained, refer to appropriate diagnostic information.

SWITCH

DESCRIPTION

DESCRIPTION

Fig. 45: Tire Light Load Inflation Reset Switch
Courtesy of CHRYSLER GROUP, LLC

The Tire Pressure Monitor (TPM) system "Tire Light Load Inflation" reset switch will allow the driver to switch between the max load inflation pressure (cold) low pressure warning threshold and the light load inflation pressure (cold) low pressure warning threshold depending on the vehicle's load condition. The Tire and Loading Information label defines the recommended front and rear cold tire inflation pressures for the vehicle when operating in the Max Load condition. A Supplemental Tire Pressure Information label is also available defining Tire Light Load Inflation pressures when operating in the light load condition. When the "Tire Light Load Inflation" reset switch LED is ON (only the words (LIGHT LOAD" will illuminate), the Tire Pressure Monitoring (TPM) system is using the light load inflation pressure (cold) low inflation warning thresholds.

OPERATION

OPERATION

Fig. 46: Tire Light Load Inflation Reset Switch
Courtesy of CHRYSLER GROUP, LLC

This vehicle may have different recommended tire pressure values between the front and rear tires as shown in both the Tire Loading Information Label and the Supplemental Tire Pressure Information Label. It is also equipped to be driven with tire pressures appropriate to either a Light Load condition or the vehicle Max Load condition.

The "Tire Light Load Inflation" reset switch will allow the driver to change between the max load inflation pressure (cold) low pressure warning threshold and the light load inflation pressure (cold) low pressure warning threshold depending on the vehicle's load condition. Refer to the "Supplemental Tire Pressure Information" label for the vehicle's Light Load inflation pressures and "Tire and Loading Information" label for the vehicle's Max Load inflation pressures.

To switch from the max load inflation pressure (cold) low pressure warning threshold to the light load inflation pressure (cold) low pressure warning threshold, begin by placing the Ignition switch in the RUN position. Next, lower all four road tire pressures to the Light Load Inflation Pressure values as listed on the Supplemental Tire Pressure Information label. The Supplemental Tire Pressure Information label is located on the rear face of the driver door. Use an accurate tire gauge to check the tire pressures when lowering all four tire pressures. After all four tire pressures have been lowered to the Light Load inflation pressures, press the "Tire Light Load Inflation" reset switch. If the "Tire Light Load Inflation" switch's amber colored LED turns ON (only the words LIGHT LOAD will illuminate), the Tire Pressure Monitoring (TPM) system is using the light load inflation pressure (cold) low pressure warning thresholds. When the vehicle light or max load condition has been changed, the Electronic Vehicle Information Center (EVIC) will display "TIRE PRESSURE LT LOAD SET" or "TIRE PRESSURE MAX LOAD SET" depending on the system conditions.

If the "Tire Light Load Inflation" reset switch amber colored LED flashes on and off for 10 seconds (only the words LIGHT LOAD will illuminate), after all four tire pressures have been lowered to the Light Load inflation pressures, the pressure in any one of the four tires may not be at the light load inflation pressure (cold) values as indicated for the Light Load condition as defined in the Supplemental Tire Pressure Information label located on the rear face of the driver door. Using an accurate tire pressure gauge, re-check the tire pressures for the light load inflation pressure (cold) value.

WARNING: It is the driver's responsibility to change to the max load inflation pressure (cold) low pressure warning threshold condition when not driving in the light load condition as defined as two occupants (150 lbs each) plus 200 pounds of cargo. The vehicle "Light Load Definition" is found in the Supplemental Tire Pressure Information Label located on the rear face of the driver door. Failure to do so may cause you to lose control resulting in an accident, causing serious or fatal injury.

To switch back to the max load inflation pressure (cold) low pressure warning threshold, press the "Tire Light Load Inflation" reset switch. It is not necessary to first fill the tires to the max load inflation pressure (cold) values to switch the TPMS system to the max load inflation pressure (cold) low pressure warning threshold. If after pressing the "Tire Light Load Inflation" reset switch and tire pressures are below the max load inflation pressure (cold) low pressure warning thresholds, the TPMS low pressure warning telltale lamp located in the Instrument Cluster will turn ON and a chime will sound. The tire pressures are now required to be inflated to the max load inflation pressure (cold) values described on the Tire and Loading Information label. The Tire and Loading Information label is located on the drivers side B-pillar. If the "Tire Light Load Inflation" reset switch LED turns OFF the TPMS has been reset and the Tire Pressure Monitoring (TPM) system is using the max load inflation pressure (cold) low pressure warning thresholds.

DIAGNOSIS AND TESTING

DIAGNOSIS AND TESTING - LIGHT LOAD SWITCH

In order to obtain conclusive testing, the Tire Pressure Monitor (TPM) system and the Controller Area Network (CAN) data bus circuit must be checked. **Any diagnosis of the TPM system should begin with, the use of a scan tool and the appropriate diagnostic service information** .

Refer to the appropriate wiring information for complete wiring diagrams.

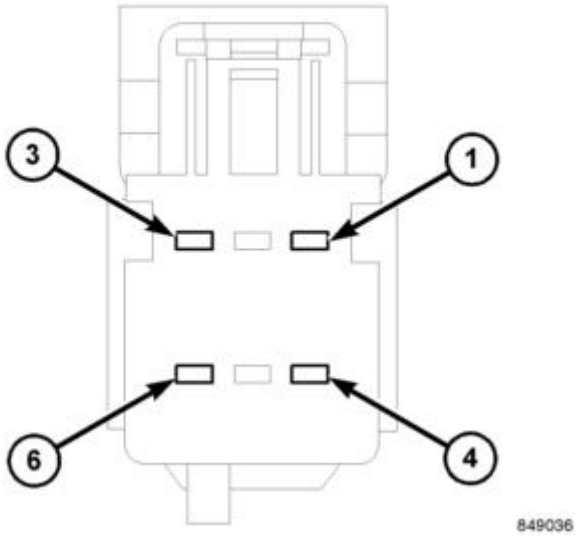

Fig. 47: Light Load Switch Connector Terminals
Courtesy of CHRYSLER GROUP, LLC

1. Remove the light load switch. Refer to **SWITCH, REMOVAL**.
2. Disconnect the wire harness connector from the back of the light load switch. Check for continuity between the light load switch harness connector cavity terminal 4 and a good ground. Resistance should be less than 5 ohms. If OK, go to the next step, if not OK repair the ground circuit of the light load switch.

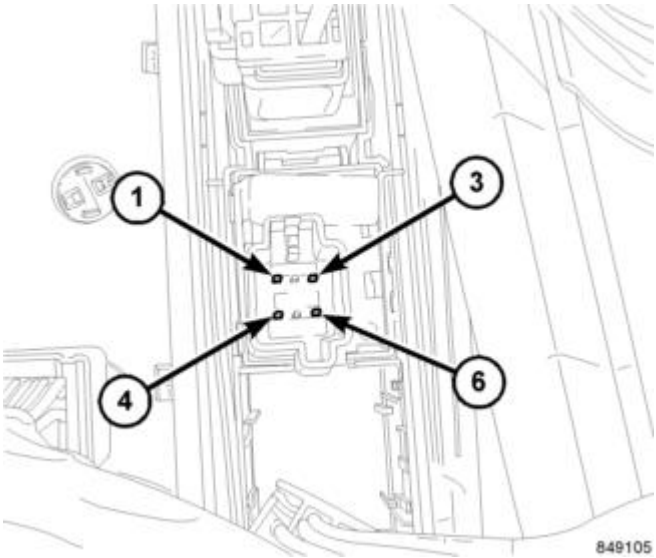

Fig. 48: Light Load Switch Pins
Courtesy of CHRYSLER GROUP, LLC

3. Test the continuity of the light load switch (component side) between pins three and four with the switch depressed (closed) and with the switch released (open). There should be continuity (less than 100 Ohms) with the switch depressed and no continuity (infinity) with the switch released. If OK, go to the next step. If not OK, replace the light load switch. Refer to **SWITCH, REMOVAL**.
4. Test the TPM switch signal circuit between the light load switch harness connector cavity 3 and the instrument cluster harness connector C3 cavity 5 for an open or short to ground. Repair the circuit as required, and install the light load switch. Refer to **SWITCH, INSTALLATION**.

REMOVAL

REMOVAL

1. Disconnect and isolate the battery negative cable.
2. Remove the instrument panel center bezel. Refer to **BEZEL, INSTRUMENT PANEL, CENTER, REMOVAL** .
3. Disconnect the switch/module electrical connectors.
4. Using an appropriate flat bladed tool, remove the light load switch/module from the bezel.

INSTALLATION

INSTALLATION

1. Align the tabs of the switch/module to the instrument panel center bezel and gently push together until the tabs are securely in place.
2. Connect the switch/module electrical connectors.
3. Install the instrument panel center bezel. Refer to **BEZEL, INSTRUMENT PANEL, CENTER, INSTALLATION** .
4. Connect the battery negative cable.
5. Verify system operation.

DESCRIPTION

DESCRIPTION

The 66RFE automatic transmissions is a sophisticated, multi-range, electronically controlled transmission which combines optimized gear ratios for responsive performance, state of the art efficiency features and low NVH. Other features include driver adaptive shifting and three planetary gear sets to provide wide ratio capability with precise ratio steps for optimum driveability.

The hydraulic portion of the transmission consists of the transmission fluid, fluid passages, hydraulic valves, and various line pressure control components.

The primary mechanical components of the transmission consist of the following:

- Larger bell housing with a different bolt pattern and a cutout to accommodate diesel applications.
- Three multiple disc input clutches
- Three multiple disc holding clutches
- Five hydraulic accumulators
- Three planetary gear sets
- Dual Stage Hydraulic oil pump
- Valve body
- Solenoid pack

The Transmission Control Module (TCM) is the "heart" or "brain" of the electronic control system and relies on information from various direct and indirect inputs (sensors, switches, etc.) to determine driver demand and vehicle operating conditions. Depending on the vehicle configuration, the TCM may be a standalone module or it may be housed along with the Powertrain Control Module (PCM) in a single module. With this information, the TCM can calculate and perform timely and quality shifts through various output or control devices (solenoid pack, transmission control relay, etc.).

TRANSMISSION IDENTIFICATION

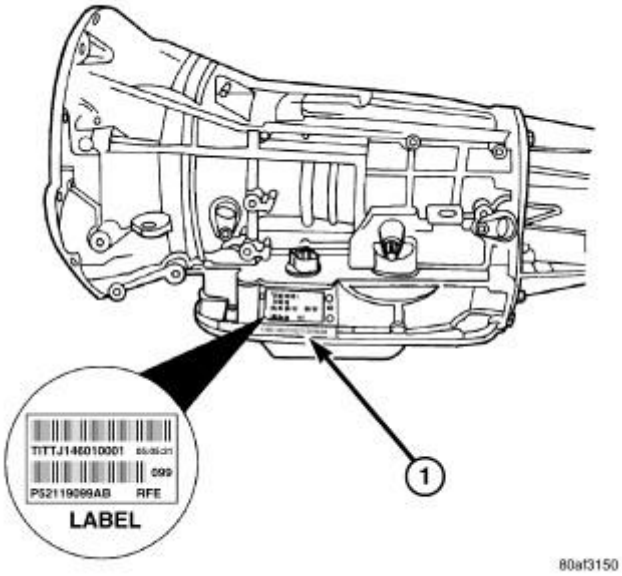

Fig. 1: Transmission Identification Numbers
Courtesy of CHRYSLER GROUP, LLC

Transmission identification numbers are stamped (1) on the left side of the case just above the oil pan sealing surface. Refer to this information when ordering replacement parts. A label is attached to the transmission case above the stamped numbers. The label gives additional information which may also be necessary for identification purposes.

GEAR RATIOS

The 66RFE gear ratios are:

1st

3.23:1

2nd

1.83:1

3rd

1.41:1

4th

1.00:1

5th

0.81:1

6th

0.62:1

Reverse

4.44:1

OPERATION

OPERATION

The 66RFE offers full electronic control of all automatic up and downshifts, and features real-time adaptive closed-loop shift and pressure control. Electronic shift and torque converter clutch controls help protect the transmission from damage due to high temperatures, which can occur under severe operating conditions. By altering shift schedules, line pressure, and converter clutch control, these controls reduce heat generation and increase transmission cooling.

To help reduce efficiency-robbing parasitic losses, the transmission includes a dual-stage transmission fluid pump with electronic output pressure control. Under most driving conditions, pump output capacity greatly exceeds that which is needed to keep the clutches applied. The 66RFE pump-pressure control system monitors input torque and adjusts the pump pressure accordingly. The primary stage of the pump works continuously; the second stage is bypassed when demand is low. The control system also monitors input and output speed and, if incipient clutch slip is observed, the pressure control solenoid duty cycle is varied, increasing pressure in proportion to demand.

A high-travel torque converter damper assembly allows earlier torque converter clutch engagement to reduce slippage. Needle-type thrust bearings reduce internal friction. The 66RFE is packaged in a one-piece die-cast aluminum case. To reduce NVH, the case has high lateral, vertical and torsional stiffness. Dual filters protect the pump and other components. A cooler return filter is added to the customary main sump filter. Independent lubrication and cooler circuits assure ample pressure for normal transmission operation even if the cooler is obstructed or the fluid cannot flow due to extremely low temperatures.

NOTE: Vehicles equipped with ERS (Electronic Range Select) do not provide 2nd gear in limp-in, because the shift lever has no "2" or "1" position.

The hydraulic control system design (without electronic assist) provides the transmission with PARK, REVERSE, NEUTRAL, and FOURTH gears, based solely on driver shift lever selection. This design allows the vehicle to be driven (in "limp-in" mode) in the event of a electronic control system failure, or a situation that the Transmission Control Module (TCM) recognizes as potentially damaging to the transmission.

The TCM also performs certain self-diagnostic functions and provides comprehensive information (sensor data, DTC's, etc.) which is helpful in proper diagnosis and repair. This information can be viewed with the scan tool.

DIAGNOSIS AND TESTING

AUTOMATIC TRANSMISSION

NOTE: **Before attempting any repair on a automatic transmission, check for Diagnostic Trouble Codes with the scan tool.**

Transmission malfunctions may be caused by these general conditions:

- Poor engine performance
- Improper adjustments
- Hydraulic malfunctions
- Mechanical malfunctions
- Electronic malfunctions

Diagnosis of these problems should always begin by checking the easily accessible variables: fluid level and condition, gearshift cable adjustment. Then perform a road test to determine if the problem has been corrected or if more diagnosis is necessary. If the problem persists after the preliminary tests and corrections are completed, hydraulic pressure checks should be performed.

FLUID LEAKAGE

TRANSMISSION OIL LEAK

Begin with a thorough inspection of the transmission, particularly at the area of the suspected leak. If an oil leak source is not readily identifiable, the following steps should be followed:

1. Clean or degrease the transmission with a water soluble solvent only.
2. Add an oil soluble dye (use as recommended by manufacturer) while the powertrain is at ambient temperature. Start the engine and let idle for approximately 15 minutes. Check the oil dip stick (if equipped) to make sure the dye is thoroughly mixed as indicated with a fluorescent color under a black light.
3. Using a black light, inspect the entire transmission for fluorescent dye, practically at the suspected area of oil leak. If the oil leak is found and identified, repair per service information instructions.
4. If dye is not observed, drive the vehicle at various speeds for approximately 24 km (15 miles) and repeat inspection.

TORQUE CONVERTER HOUSING AREA

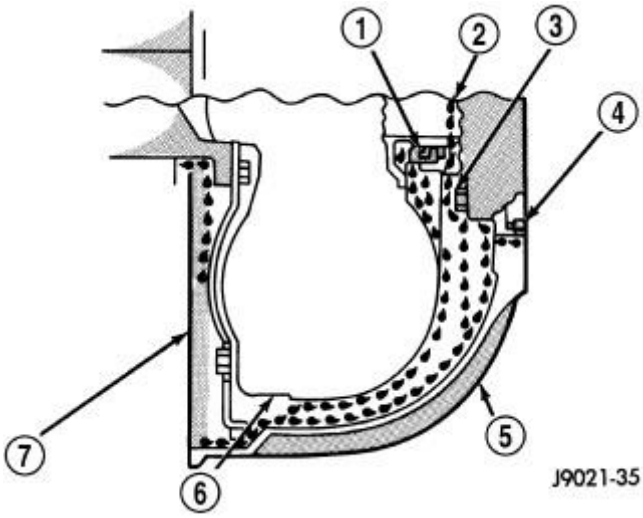

Fig. 2: Torque Converter Housing Leak Paths
Courtesy of CHRYSLER GROUP, LLC

1 - PUMP SEAL
2 - PUMP VENT
3 - PUMP BOLT
4 - PUMP GASKET
5 - CONVERTER HOUSING
6 - CONVERTER
7 - REAR MAIN SEAL LEAK

When diagnosing converter housing (5) fluid leaks, three actions must be taken before repair:

1. Verify proper transmission fluid level.
2. Verify that the leak originates from the converter housing area and is transmission fluid.
3. Determine the true source of the leak.

Fluid leakage at or around the torque converter area may originate from an engine oil leak (7). Refer to **Fig. 2**. The area should be examined closely. Factory fill fluid is red and, therefore, can be distinguished from engine oil.

Some suspected converter housing fluid leaks may not be leaks at all. They may only be the result of residual fluid in the converter housing, or excess fluid spilled during factory fill, or fill after repair. Converter housing leaks have several potential sources. Through careful observation, a leak source can be identified before removing the transmission for repair.

The 66RFE uses a one piece pump cover which includes the impeller hub seal. Leaks at the pump cover o-ring or the impeller hub seal usually travel down the inside of the converter housing.

TORQUE CONVERTER LEAKAGE

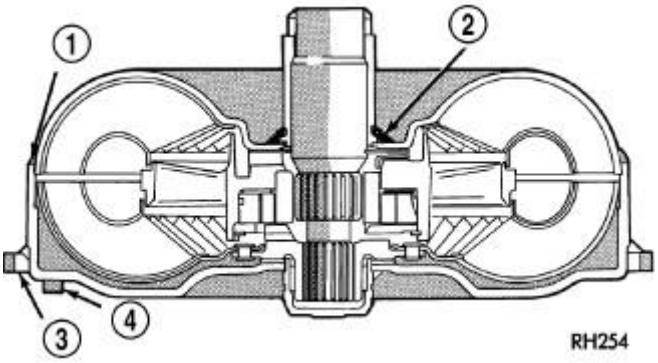

Fig. 3: Torque Converter Leak Points
Courtesy of CHRYSLER GROUP, LLC

1 - OUTSIDE DIAMETER WELD
2 - TORQUE CONVERTER HUB WELD
3 - STARTER RING GEAR
4 - LUG

Possible sources of torque converter leakage are:

- Torque converter weld leaks at the outside diameter weld (1).
- Torque converter hub weld (2).

PRELIMINARY

Two basic procedures are required. One procedure for vehicles that are drivable and an alternate procedure for disabled vehicles (will not back up or move forward).

VEHICLE IS DRIVABLE

1. Record all DTCs and the accompanying DTC Event Data.
2. Check for an appropriate Technical Service Bulletin that applies to the customer complaint.
3. Check fluid level and condition.
4. Road test and note how transmission upshifts, downshifts, and engages.
5. If the complaint was related to shift quality, perform the Quick Learn procedure. Refer to **MODULE, TRANSMISSION CONTROL, STANDARD PROCEDURE** .
6. If the shift complaint still exists, compare actual line pressure (sensor reading, using the scan tool) to the Desired Line Pressure reading, in Park, Drive, and Reverse at 1500 RPM. Check that the LP sensor reads 30 psi (the minimum it should ever display) with key on / engine off.
7. Follow the diagnosis procedure for any DTC's that exist.

VEHICLE IS DISABLED

1. Record all DTCs and the accompanying DTC Event Data.

2. Compare actual line pressure (sensor reading, using the scan tool) to the Desired Line Pressure reading, in Park, Drive, and Reverse at 1500 RPM. Check that the LP sensor reads 30 psi (the minimum it should ever display) with key on / engine off. If line pressure is incorrect, check fluid level and condition.
3. With engine running, place transmission in gear and verify correct PRNDL reading. Observe the Input and Output speeds using the scan tool. If output RPM is greater than zero but vehicle does not move, check for transfer case in Neutral (or failed internally), failed propshaft, or failed / disconnected drive axle. If output RPM is zero and input RPM is greater than zero, internal transmission slippage is indicated. Run clutch slip tests using the scan tool, check oil pan for debris, and air check the various clutch circuits.
4. Shift the transmission into neutral, if both input and output speeds are zero, check flexplate bolts, torque converter, and transmission input shaft.
5. Remove, inspect, and repair the transmission as necessary

ROAD TESTING

Before road testing, be sure the fluid level and control cable adjustments have been checked and adjusted if necessary. Verify that all diagnostic trouble codes have been resolved.

Observe engine performance during the road test. A poorly tuned engine will not allow accurate analysis of transmission operation.

Operate the transmission in all gear ranges. Check for shift variations and engine flare which indicates slippage. Note if shifts are harsh, spongy, delayed, early, or if part throttle downshifts are sensitive.

Slippage indicated by engine flare, usually means clutch or line pressure problems.

A slipping clutch can often be determined by comparing which internal units are applied in the various gear ranges. The Clutch Application charts provide a basis for analyzing road test results.

66RFE CLUTCH APPLICATION CHART

GEAR RANGE	UD	OD	R	2C	4C	L/R	OVERRUNNING
P-PARK						ON	
R-REVERSE			ON			ON	
N-NEUTRAL						ON	
D-FIRST	ON					ON*	ON
D-SECOND	ON			ON			
D-THIRD (SECOND PRIME)	ON				ON		
D-FOURTH	ON	ON					
D-FIFTH		ON			ON		
D-SIXTH		ON		ON			
D-LIMP-IN (FULL)	ON	ON					
*L/R clutch is on only with the output shaft speed below 150 rpm.							

HYDRAULIC PRESSURE TEST

An accurate tachometer and pressure test gauges are required. Test Gauge (special tool #C-3293-SP, Gauge, Pressure 0-300 P.S.I.) has a 300 psi range and is used at all locations where pressures exceed 100 psi.

PRESSURE TEST PORT LOCATIONS

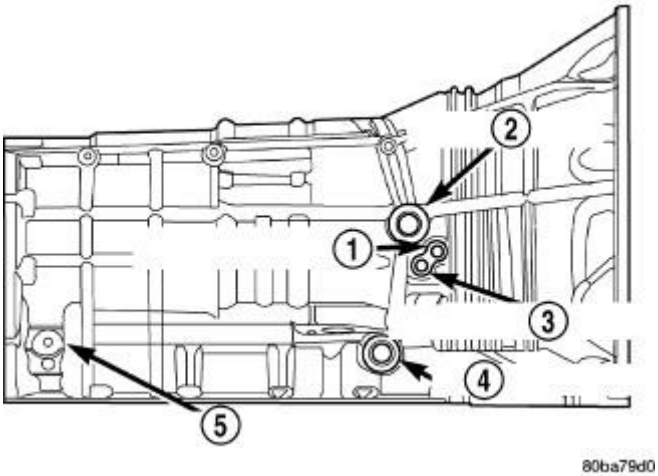

Fig. 4: Pressure Test Port Locations
Courtesy of CHRYSLER GROUP, LLC

Only two pressure ports are supplied on the transmission case. The torque converter clutch apply (3) and release (1) ports are located on the right side of the transmission case.

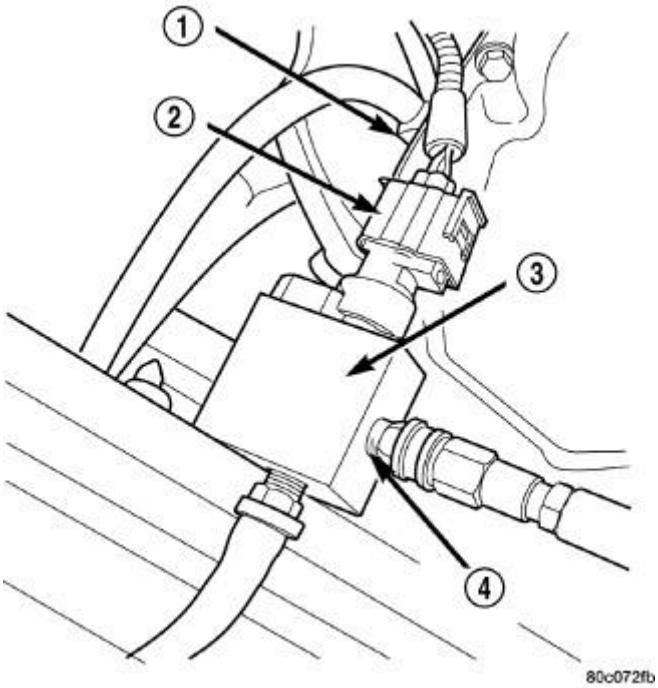

Fig. 5: Installing Line Pressure Adapter 8259
Courtesy of CHRYSLER GROUP, LLC

To determine the line pressure, there are two available methods. The scan tool can be used to read line pressure from the line pressure sensor. The second method is to install Line Pressure Adapter (special tool #8259, Adapter, Pressure Test) (3) into the transmission case and then install the pressure gauge and the original sensor (2) into the adapter. This will allow a comparison of the scan tool readings and the gauge reading to determine the accuracy of the line pressure sensor. The scan tool line pressure reading should match the gauge reading within ±10 psi.

TEST PROCEDURE

All pressure readings should be taken with the transmission fluid level full, transmission oil at the normal operating temperature, and the engine at 1500 rpm. Check the transmission for proper operation in each gear position that is in question or if a specific element is in question, check the pressure readings in at least two gear positions that employ that element. Refer to **SCHEMATICS AND DIAGRAMS** to determine the correct pressures for each element in a given gear position.

NOTE: **The 66RFE utilizes closed loop control of pump line pressure. The pressure readings may vary greatly, therefore you should always follow the desired line pressure.**

Some common pressures that can be measured to evaluate pump and clutch performance are the upshift/downshift pressures, garage shift pressures, and TCC pressure. For the upshift/downshift pressure for all shifts, refer to **UPSHIFT PRESSURES** and **DOWNSHIFT PRESSURES**. For in-gear maximum pressure for each gear position, refer to **IN-GEAR PRESSURES**.

UPSHIFT PRESSURES

66RFE								
ENGINE	**1-2**	**2-3**	**2prime-3**	**3-4**	**2prime-4**	**2-5**	**3-5**	**4-5**
5.7L	150	125	125	135	135	135	135	135
66RFE								
ENGINE	**1-2**	**2-3**	**3-4**	**4-5**	**5-6**	**2-4**	**3-5**	**4-6**
6.7L	160	150	150	160	160	150	150	160

DOWNSHIFT PRESSURES

66RFE										
ENGINE	**5-4**	**5-3**		**5-2**	**4-3**	**4-2prime**	**3-2**	**3-2prime**	**2prime-1**	**2-1**
5.7L	135	135		135	135	135	135	135	135	135
66RFE										
ENGINE	**6-5**	**6-4**	**5-4**	**5-3**	**4-3**	**4-2**	**3-2**	**3-1**	**2-1**	**-**
6.7L	150	150	150	160	150	160	150	160	160	-

IN-GEAR PRESSURES

66RFE								
ENGINE	**1**	**2**	**2prime**	**3**	**4**	**5**	**NEUTRAL**	**REVERSE**
5.7L	160	135	135	135	135	135	120	250

66RFE								
ENGINE	**1**	**2**	**3**	**4**	**5**	**6**	**NEUTRAL**	**REVERSE**
6.7L	160	150	150	160	160	160	125	250

Actual line-pressure while in-gear will vary based upon minimum learned line-pressure. Minimum line-pressure starts at 40 psi and learns up to the minimum pressure to hold the clutches in an applied state.

AIR CHECKING TRANSMISSION CLUTCH OPERATION

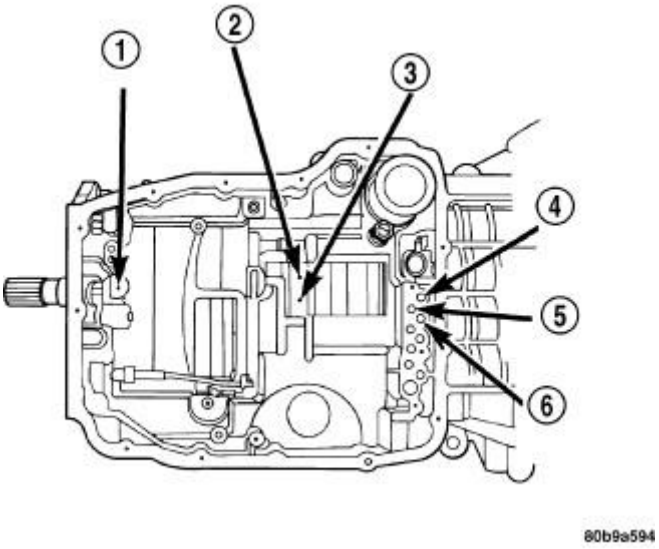

Fig. 6: Air Pressure Test Passages
Courtesy of CHRYSLER GROUP, LLC

1 - LOW REVERSE CLUTCH
2 - 4C CLUTCH
3 - 2C CLUTCH
4 - OVERDRIVE CLUTCH
5 - UNDERDRIVE CLUTCH
6 - REVERSE CLUTCH

NOTE: Each clutch includes a small bleed orifice, so minimal air leakage is normal and expected.

Air-pressure testing can be used to check transmission clutch operation. The test can be conducted with the transmission either in the vehicle or on the work bench, as a final check.

Air-pressure testing requires that the oil pan and valve body be removed from the transmission. The clutch apply passages are shown in the Air Pressure Test Passages graphic. Refer to **Fig. 6**.

NOTE: The air supply which is used must be free of moisture and dirt. Use a pressure

of 30 psi to test clutch operation.

Apply air pressure at each port. If the clutch is functioning, a soft thump will be heard as the clutch is applied. The clutch application can also be felt by touching the appropriate element while applying air pressure. As the air pressure is released, the clutch should also release.

CONVERTER HOUSING FLUID LEAK

When diagnosing converter housing fluid leaks, two items must be established before repair.

1. Verify that a leak condition actually exists.
2. Determined the true source of the leak.

Some suspected converter housing fluid leaks may not be leaks at all. They may only be the result of residual fluid in the converter housing, or excess fluid spilled during factory fill or fill after repair. Converter housing leaks have several potential sources. Through careful observation, a leak source can be identified before removing the transmission for repair. Torque converter seal leaks tend to move along the drive hub and onto the rear of the converter. Pump cover seal leaks tend to run down the cover and the inside surface of the bellhousing.

Some leaks, or suspected leaks, may be particularly difficult to locate. If necessary, a Mopar® approved dye should be used to locate and confirm a leak.

TORQUE CONVERTER LEAK POINTS

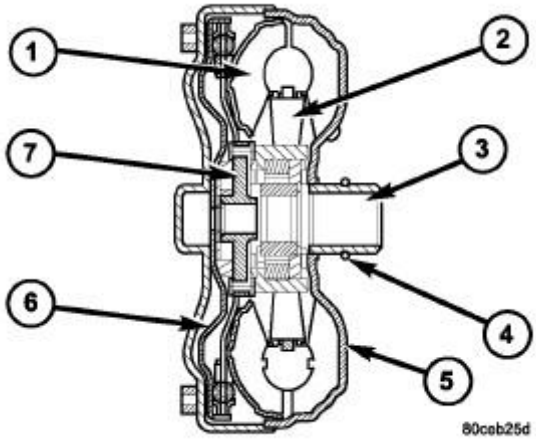

Fig. 7: Cutaway View Of Torque Converter
Courtesy of CHRYSLER GROUP, LLC

1 - TURBINE ASSEMBLY	5 - IMPELLER ASSEMBLY
2 - STATOR	6 - CONVERTER CLUTCH PISTON
3 - CONVERTER HUB	7 - TURBINE HUB
4 - O-RING	

Possible sources of converter leaks are:

1. Leaks at the weld joint around the outside diameter weld. Refer to **Fig. 7**.
2. Leaks at the converter hub weld. Refer to **Fig. 7**.

In most cases, a torque converter which is wet from transmission fluid indicates a leak at one of these areas.

STANDARD PROCEDURE

STANDARD PROCEDURE - ALUMINUM THREAD REPAIR

Damaged or worn threads in the aluminum transmission case and valve body can be repaired by the use of Heli-Coils™, or equivalent. This repair consists of drilling out the worn-out damaged threads. Then tap the hole with a special Heli-Coil™ tap, or equivalent, and installing a Heli-Coil™ insert, or equivalent, into the hole. This brings the hole back to its original thread size.

Heli-Coil™, or equivalent, tools and inserts are readily available from most automotive parts suppliers.

DRIVE LEARN - RFE TRANSMISSIONS

When a transmission is repaired and a Quick Learn procedure has been performed on the Transmission Control Module (TCM), the following Drive Learn procedure can be performed to fine tune any shifts which are particularly objectionable.

NOTE: It is not necessary to perform the complete Drive Learn procedure every time the TCM is Quick Learned. Perform only the portions which target the objectionable shift.

LEARN A SMOOTH 1ST NEUTRAL TO DRIVE SHIFT

Perform this procedure only if the complaint is for a delayed or harsh shift the first time the transmission is put into gear after the vehicle is allowed to set with the engine not running for at least 10 minutes. Use the following steps to have the TCM learn the 1st N-D UD CVI.

NOTE: The transmission oil temperature must be between 80 - 110°F (27 - 43°C).

1. Start the engine only when the engine and ignition have been off for at least ten (10) minutes.
2. With the vehicle at a stop and the service brake applied, record the 1st N-D UD CVI while performing a Neutral to Drive shift. The 1st N-D UD CVI accounts for air entrapment in the UD clutch that may occur after the engine has been off for a period of time.
3. Repeat until the recorded 1st N-D UD CVI value stabilizes. Refer to 1 and 2.

NOTE: It is important that this procedure be performed when the transmission temperature is between 80 - 110°F (27 - 43°C). If this procedure takes too long to complete fully for the allowed transmission oil temperature, the vehicle may be

returned to the customer with an explanation that the shift will improve daily during normal vehicle usage. The TCM also learns at higher oil temperatures, but these values (line pressure correction values) are not available for viewing on the scan tool.

LEARN A SMOOTH NEUTRAL TO DRIVE GARAGE SHIFT

Perform this procedure if the complaint is for a delayed or harsh shift when the transmission is put into gear after the vehicle has had its first shift. Use the following steps to have the TCM learn the Norm N-D UD CVI.

NOTE: The transmission oil temperature must be between 80 - 110°F (27 - 43°C) to learn the UD CVI. Additional learning occurs at temperatures as low as 0°F and as high as 200°F. This procedure may be performed at any temperature that experiences poor shift quality. Although the UD CVI may not change, shift quality should improve.

1. Start the vehicle engine and shift to drive.
2. Move the vehicle forward to a speed of at least 16 km/h (10 MPH) and come to a stop. This ensures no air is present in the UD hydraulic circuit.
3. Perform repeated N-D shifts at a stop while pausing in Neutral for at least 2-3 seconds and monitor Norm N-D UD CVI volume until the value stabilizes. The value will change during the N-D shift. This is normal since the UD value is different for the N-D shift then the normal value shown which is used for 4-3 coastdown and kickdowns. Perform repeated shifts in this temperature range until the Norm N-D UD CVI value stabilizes and the N-D shifts become smooth.

LEARN THE 1ST 2-3 SHIFT AFTER A RESTART OR SHIFT TO REVERSE

Use the following steps to have the TCM learn the 1st 2-3 shift OD CVI.

NOTE: The transmission oil temperature must be above 80°F (27°C).

1. With the vehicle engine running, select reverse gear for over 2 seconds.
2. Shift the transmission to Drive and accelerate the vehicle from a stop at a steady 15 degree throttle opening and perform a 2-3 shift while noting the 1st 2-3 OD CVI.
3. Repeat until the 1st 2-3 upshift becomes smooth and the 1st 2-3 OD CVI stabilizes. Refer to 1 and 2.

LEARN A SMOOTH 2-3 AND 3-4 UPSHIFT

NOTE: The transmission oil temperature must be above 110°F (43°C).

Use the following steps to have the TCM learn the OD and 4C CVI's.

1. Accelerate the vehicle from a stop at a steady 15 degree throttle opening and perform multiple 1-2, 2-3, and 3-4 upshifts. The 2nd 2-3 shift following a restart or shift to reverse will be shown during the shift as a value between the 1st 2-3 OD CVI and the normal OD CVI. Updates to the normal OD CVI will occur

after the 2nd shift into 3rd gear, following a restart or shift to reverse.

2. Repeat until the 2-3 and 3-4 shifts become smooth and the OD and 4C CVI become stable. Refer to 1.

LEARN A SMOOTH 4-3 COASTDOWN AND PART THROTTLE 4-3 KICKDOWN

NOTE: The transmission oil temperature must be above 110°F (43°C).

Use the following steps to have the TCM learn the UD shift volume.

1. At a vehicle speed between 64-97 km/h (40-60 MPH), perform repeated 4-3 kickdown shifts.
2. Repeat until the UD volume becomes somewhat stable and the shift becomes smooth. Refer to 1.

LEARN A SMOOTH 1-2 UPSHIFT AND 3-2 KICKDOWN

Use the following steps to have the TCM learn the 2C shift volume.

NOTE: The transmission oil temperature must be above 110°F (43°C).

1. With a vehicle speed below 48 km/h (30 MPH) and the transmission in 3rd gear, perform multiple 3-2 kickdowns.
2. Repeat until the 3-2 kickdowns become smooth and the 2C CVI becomes stable. Refer to 1.

LEARN A SMOOTH MANUAL 2-1 PULLDOWN SHIFT AS WELL AS A NEUTRAL TO REVERSE SHIFT

NOTE: The transmission oil temperature must be above 110°F (43°C).

Use the following steps to have the TCM learn the LR volume.

1. With the vehicle speed around 40-48 km/h (25-30 MPH) in Manual 2nd, perform manual pulldowns to Low or 1st gear at closed throttle.
2. Repeat until the LR CVI becomes stable and the manual 2-1 becomes smooth. Refer to 1.

LEARN A SMOOTH NEUTRAL TO REVERSE SHIFT

NOTE: The transmission oil temperature must be above 110°F (43°C).

1. With the vehicle at a stop, perform Neutral to Reverse shifts until the shift is smooth. An unlearned Neutral to Reverse shift may be harsh or exhibit a double bump.
2. If any of the shifts are still not smooth after the clutch volume stabilizes, an internal transmission problem may be present.

LEARN A SMOOTH 4-5 UPSHIFT

NOTE: The transmission oil temperature must be above 110°F (43°C).

Use the following steps to have the TCM learn the Alt 2C CVI.

1. Accelerate the vehicle through 88 km/h (55mph) at a steady 10-15 degree throttle opening and perform multiple 4-5 upshifts.
2. Repeat until the 4-5 shift become smooth and the Alt 2C CVI become stable. Refer to 1. There is a separate 2C volume used and learned for 4-5 shifts, 2CA. It is independent of the 2C CVI learned on 3-2 kickdowns.

TCM QUICK LEARN - RLE AND RFE TRANSMISSIONS

The quick learn procedure requires the use of the scan tool.

This program allows the electronic transmission system to recalibrate itself. This will provide the proper transmission operation. The quick learn procedure should be performed if any of the following procedures are performed:

- Transmission Assembly Replacement.
- Transmission Control Module Replacement.
- Solenoid Pack Replacement.
- Clutch Plate and/or Seal Replacement.
- Valve Body Replacement or Recondition.

To perform the Quick Learn Procedure, the following conditions must be met:

- The brakes must be applied.
- The engine speed must be above 500 rpm.
- The throttle angle (TPS) must be less than 3 degrees.
- The shift lever position must stay in PARK until prompted to shift to overdrive.
- The shift lever position must stay in overdrive after the Shift to Overdrive prompt until the scan tool indicates the procedure is complete.
- The calculated oil temperature must be above 60° and below 200°.

SPECIFICATIONS

SPECIFICATIONS

GENERAL

Component	Metric	Inch
Output Shaft End Play	0.25-0.52 mm	0.010-0.020 in.
Input Shaft End Play	0.52-0.74 mm	0.020-0.029 in.
2C Clutch Pack Clearance	0.99-1.65 mm	0.039-0.065 in.
4C Clutch Pack Clearance	0.770-1.390 mm	0.030-0.055 in.
L/R Clutch Pack Clearance	1.18-2.09 mm	0.046-0.082 in.

OD Clutch Pack Clearance	0.75-1.61 mm	0.030-0.063 in.
UD Clutch Pack Clearance	1.02-1.72 mm	0.040-0.068 in.
Reverse Clutch Pack Clearance	0.58-1.47 mm	0.023-0.058 in.

66RFE FLUID

Recommended fluid	Mopar® ATF +4
Service Fill - 66RFE	4X2 - 5.2 L (5.5 Quarts)
	4X4 - 6.2 L (6.5 Quarts)
Overhaul -68RFE	15.6-16.6 L (16.4-17.5 Quarts)?

GEAR RATIOS

1ST	3.23:1
2ND	1.83:1
3RD	1.41:1
4TH	1.0:1
5TH	0.81:1
6TH	0.62:1
REVERSE	4.44:1

TORQUE SPECIFICATIONS

DESCRIPTION	N.m	Ft. Lbs.	In. Lbs.
Accumulator cover screw	7	-	60
For rear mount specifications, refer to **TORQUE SPECIFICATIONS** . .	-	-	-
Converter housing bolt	68	50	-
Cooler line at trans fitting	17.5	-	155
Cooler return filter	9.5	-	84
Detent spring screw	4.5	-	40
Driveplate to crankshaft bolt	75	55	-
Extension housing bolt	54	40	-
Fill tube at transmission bolt	10	-	88
Fill tube at valve cover nut	10	-	88
Input speed sensor bolt	12	-	105
Inspection cover bolt	10	-	88
Line pressure sensor bolt	12	-	105
Manual selector shaft cross-bolt	16	-	140
Manual selector shaft retaining screw	28	-	250
Manual valve cam retaining	4.5	-	40

screw			
Oil pan bolts	12	-	105
Oil pump body to cover bolts	4.5	-	40
Oil pump bolt	28	-	250
Output speed sensor bolt	12	-	105
Plate to oil pump body screw	4.5	-	40
Pressure test port plug	5	-	45
Primary fluid filter screw	4.5	-	40
Reaction shaft support bolt	12	-	105
Solenoid module to transfer plate screw	6	-	50
Torque converter housing to engine lower four bolt	54	40	-
Torque converter housing to engine upper four bolts	41	30	-
Torque converter to driveplate bolt	88	65	780
Transmission collar bolt	68	50	-
Transfer case nuts	35	26	-
Valve body to case bolts	12	-	105
Valve body to transfer plate screw	5.5	-	50

SCHEMATICS AND DIAGRAMS

SCHEMATICS AND DIAGRAMS

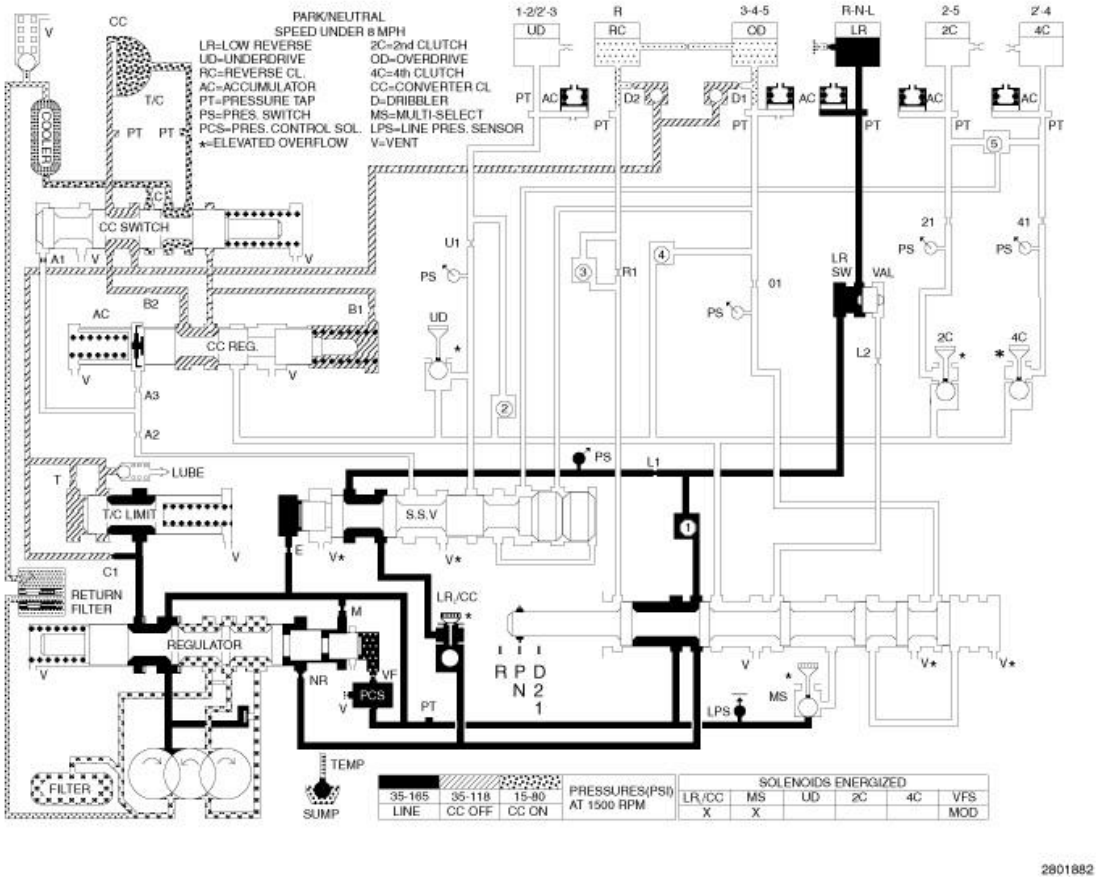

Fig. 8: Hydraulic Flow In Park/Neutral
Courtesy of CHRYSLER GROUP, LLC

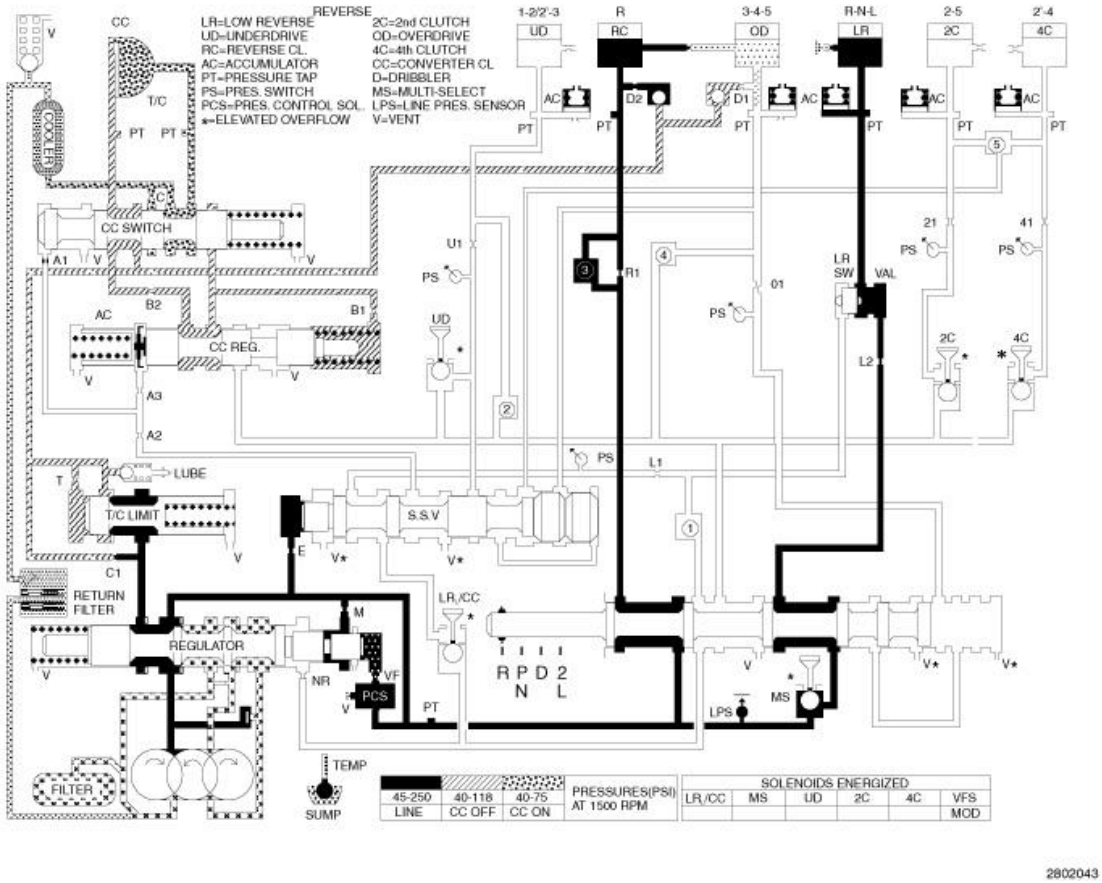

Fig. 9: Hydraulic Flow In Neutral Over 8MPH
Courtesy of CHRYSLER GROUP, LLC

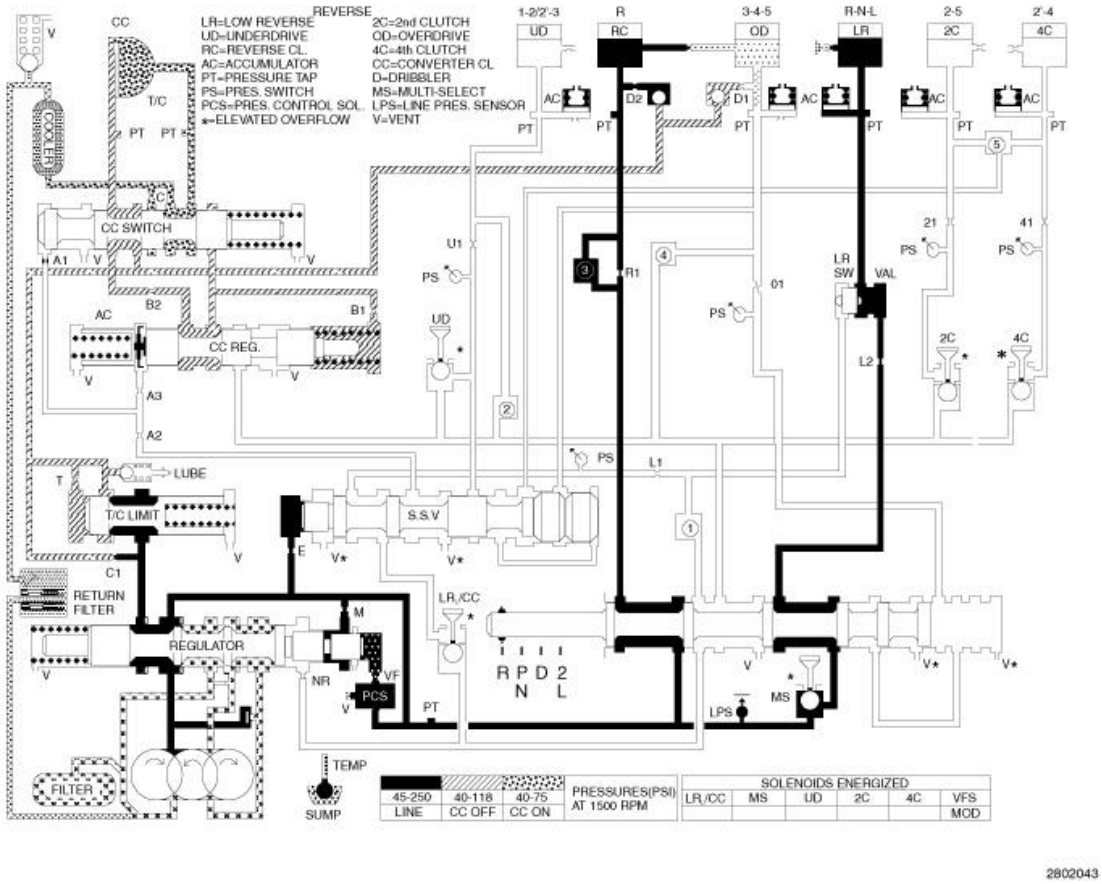

Fig. 10: Hydraulic Flow In Reverse
Courtesy of CHRYSLER GROUP, LLC

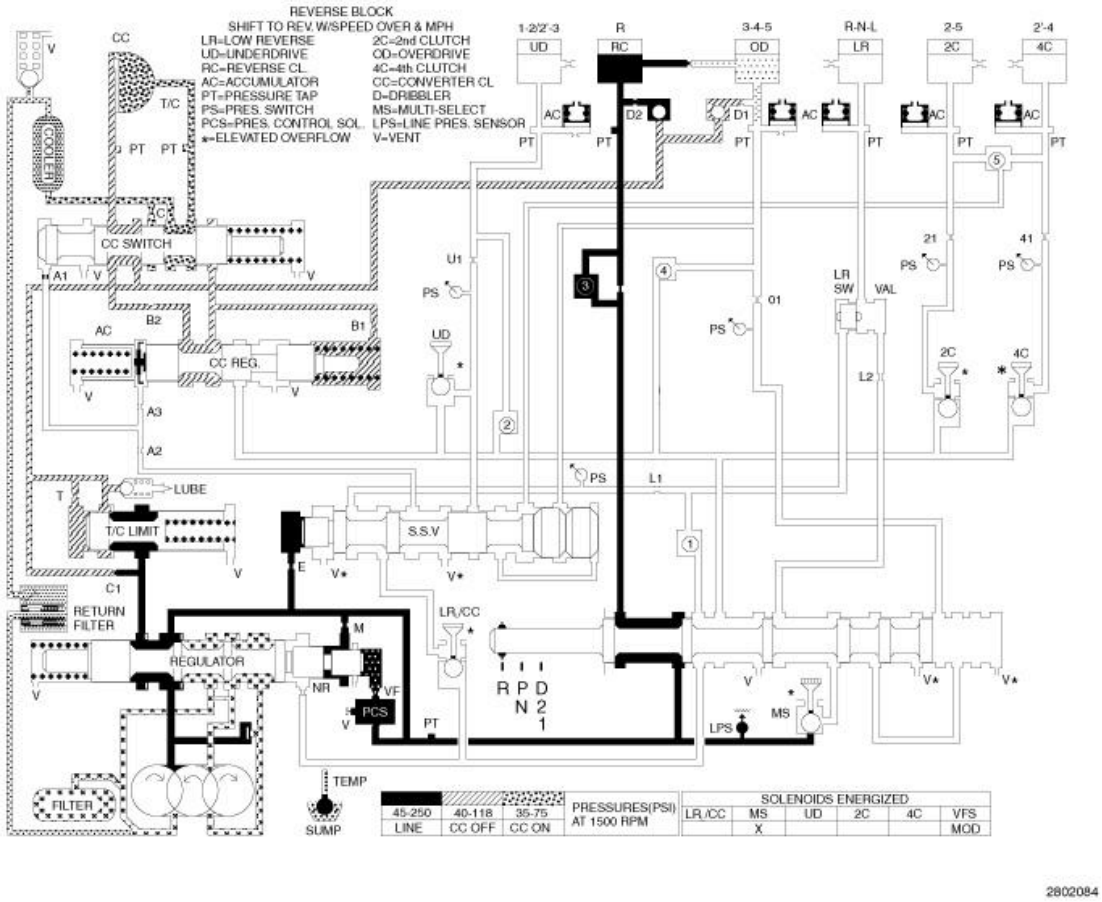

Fig. 11: Hydraulic Flow In Reverse Block
Courtesy of CHRYSLER GROUP, LLC

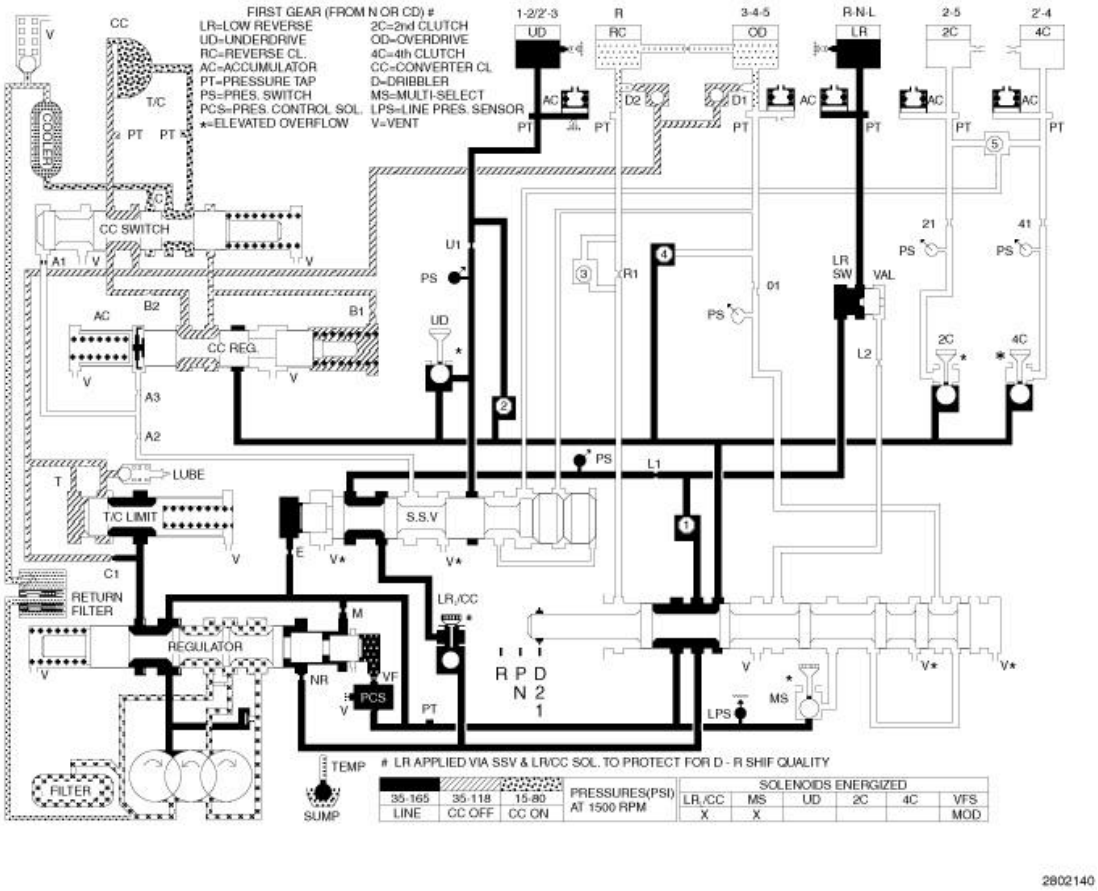

Fig. 12: Hydraulic Flow In First Gear (From N Or OD)
Courtesy of CHRYSLER GROUP, LLC

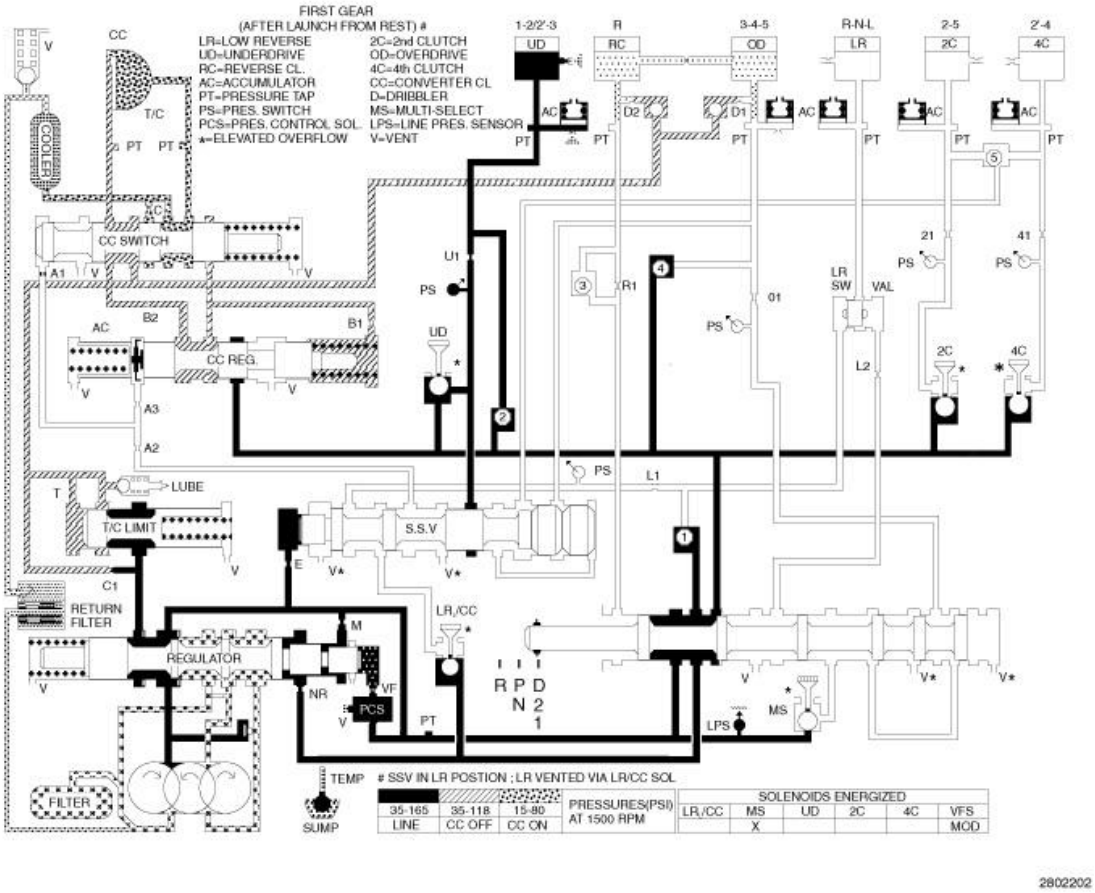

<u>Fig. 13: Hydraulic Flow In First Gear (After Launch From Rest)</u>
Courtesy of CHRYSLER GROUP, LLC

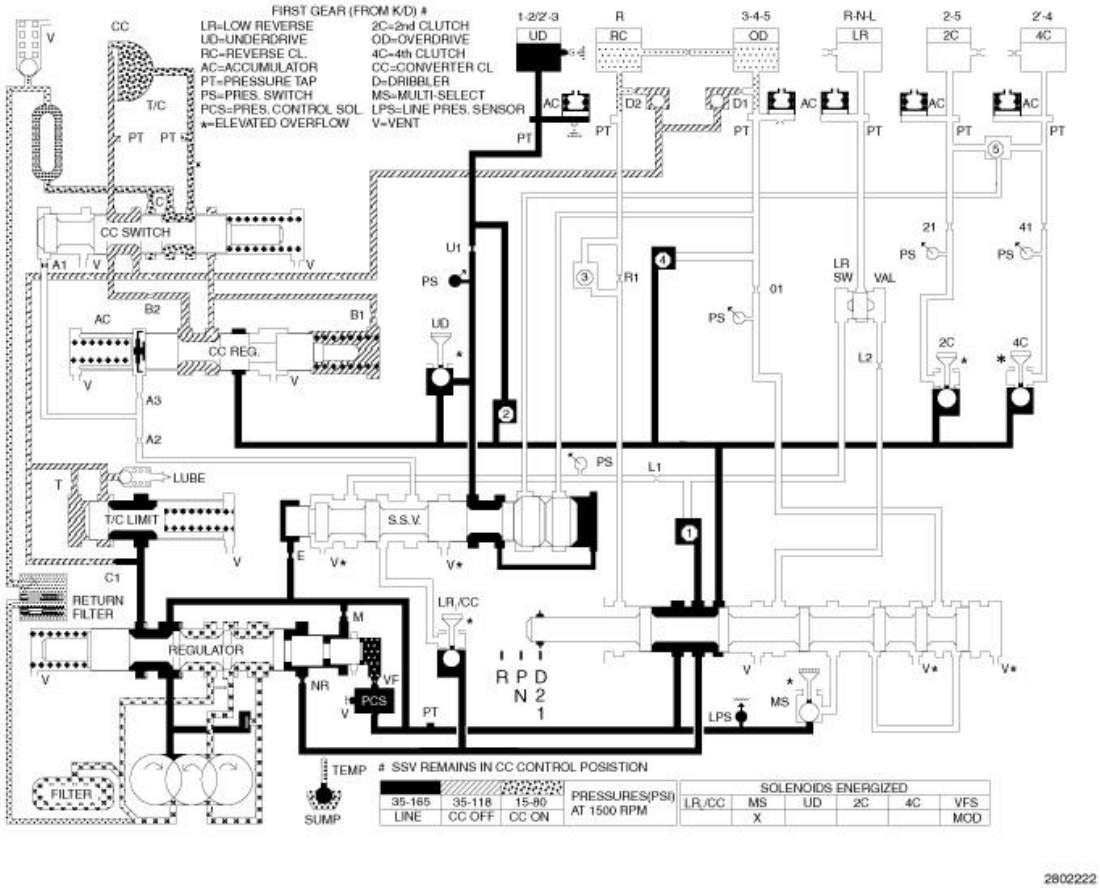

Fig. 14: Hydraulic Flow In First Gear (From K/D)
Courtesy of CHRYSLER GROUP, LLC

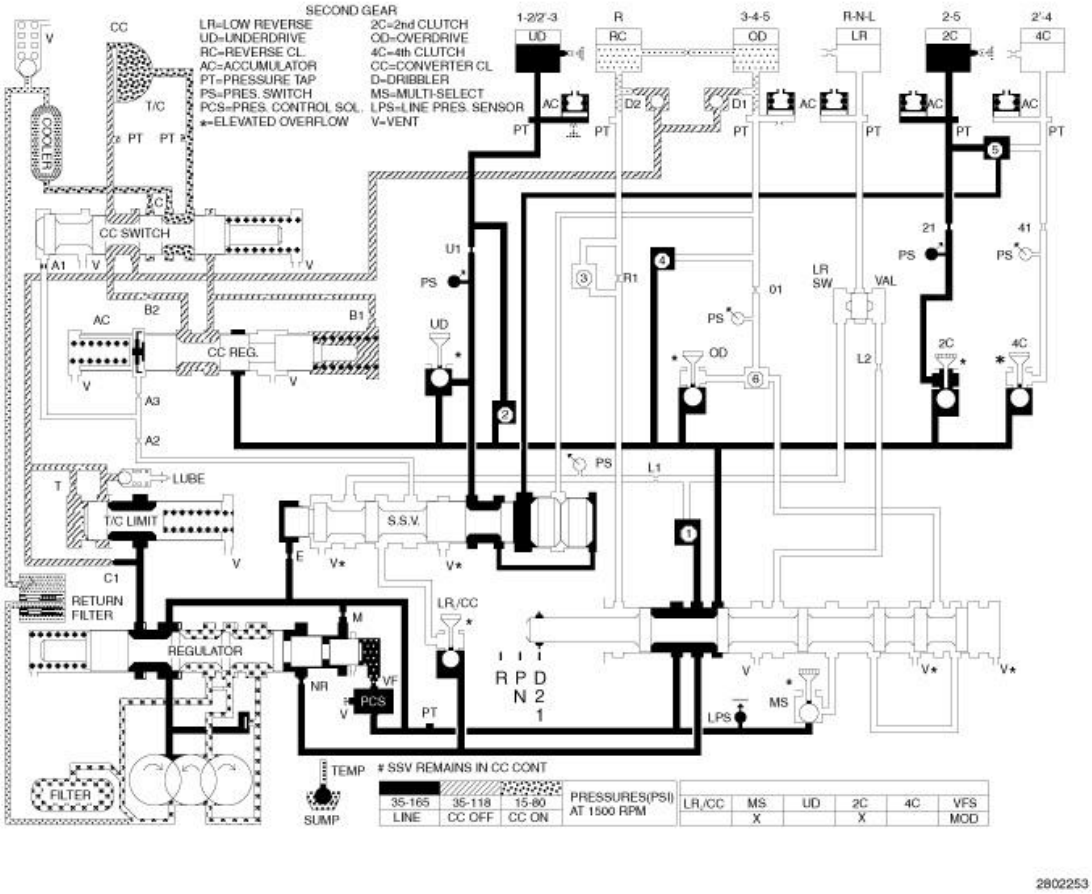

Fig. 15: Hydraulic Flow In Second Gear
Courtesy of CHRYSLER GROUP, LLC

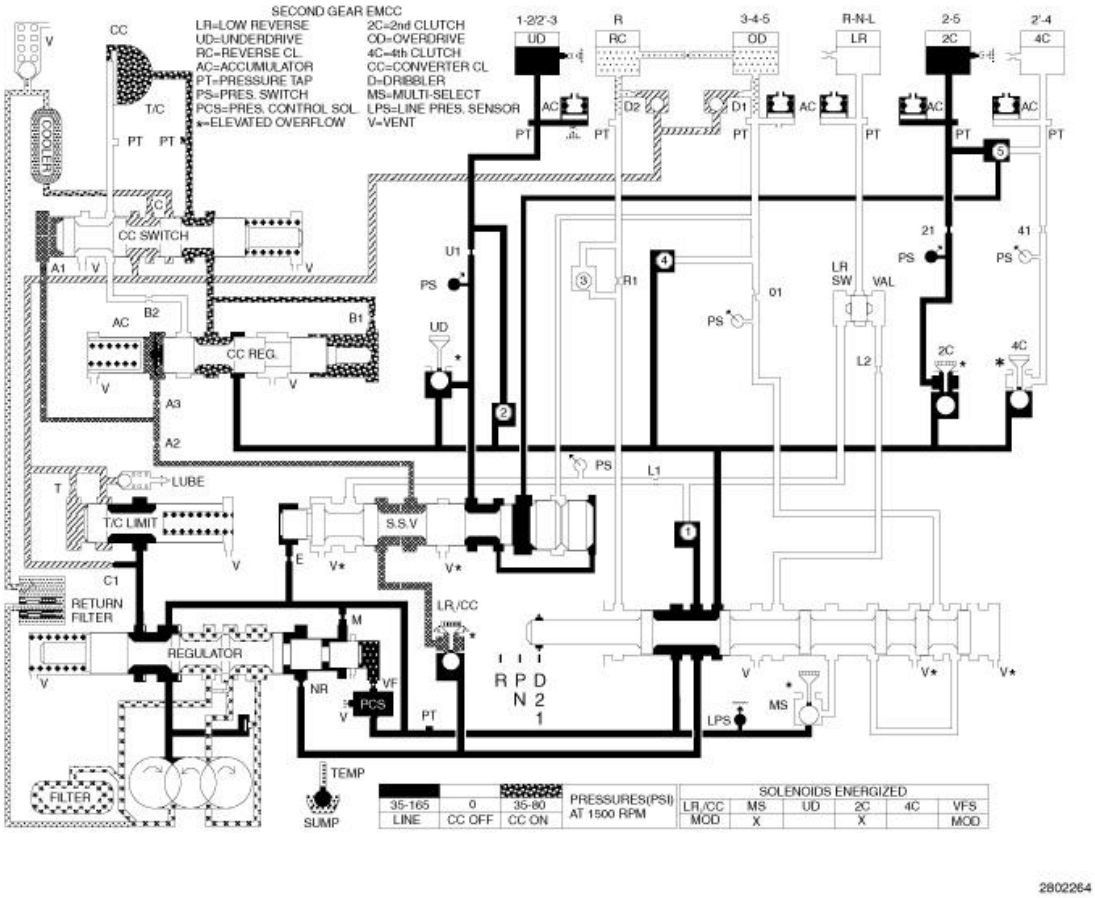

Fig. 16: Hydraulic Flow In Second Gear EMCC
Courtesy of CHRYSLER GROUP, LLC

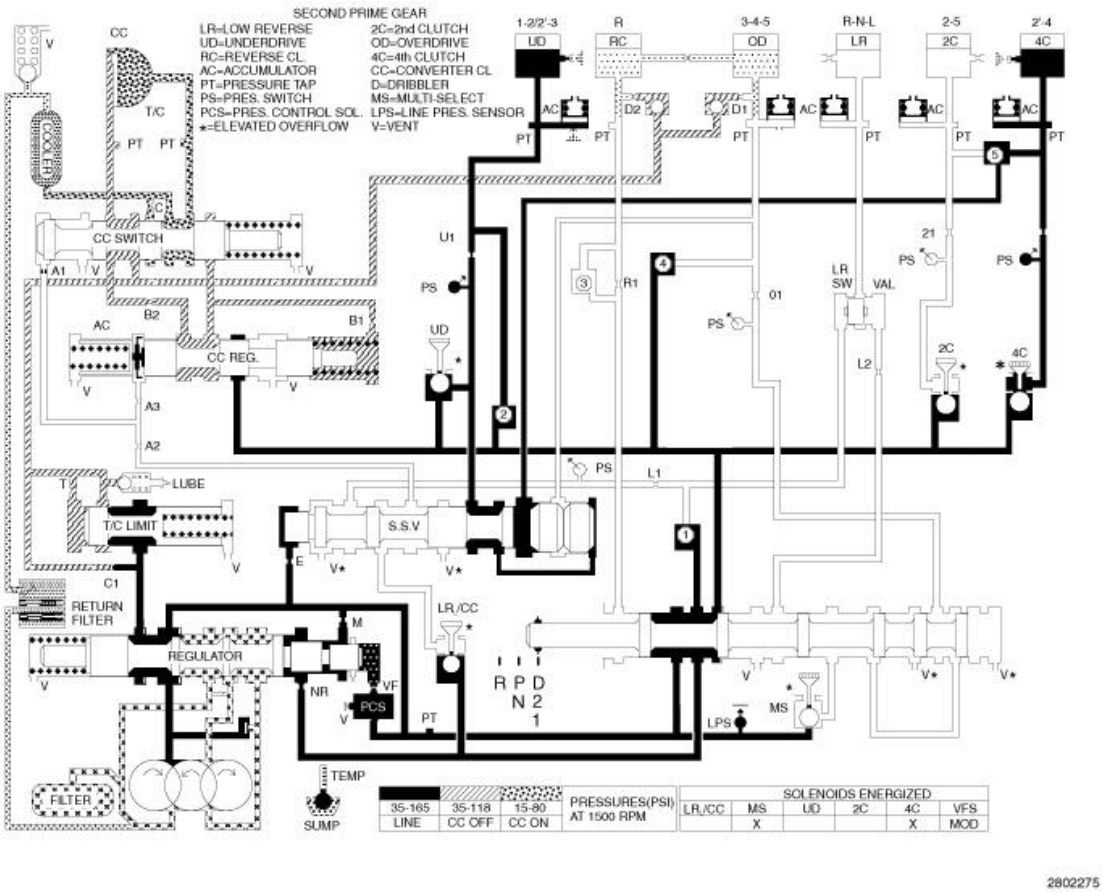

Fig. 17: Hydraulic Flow In Third Gear
Courtesy of CHRYSLER GROUP, LLC

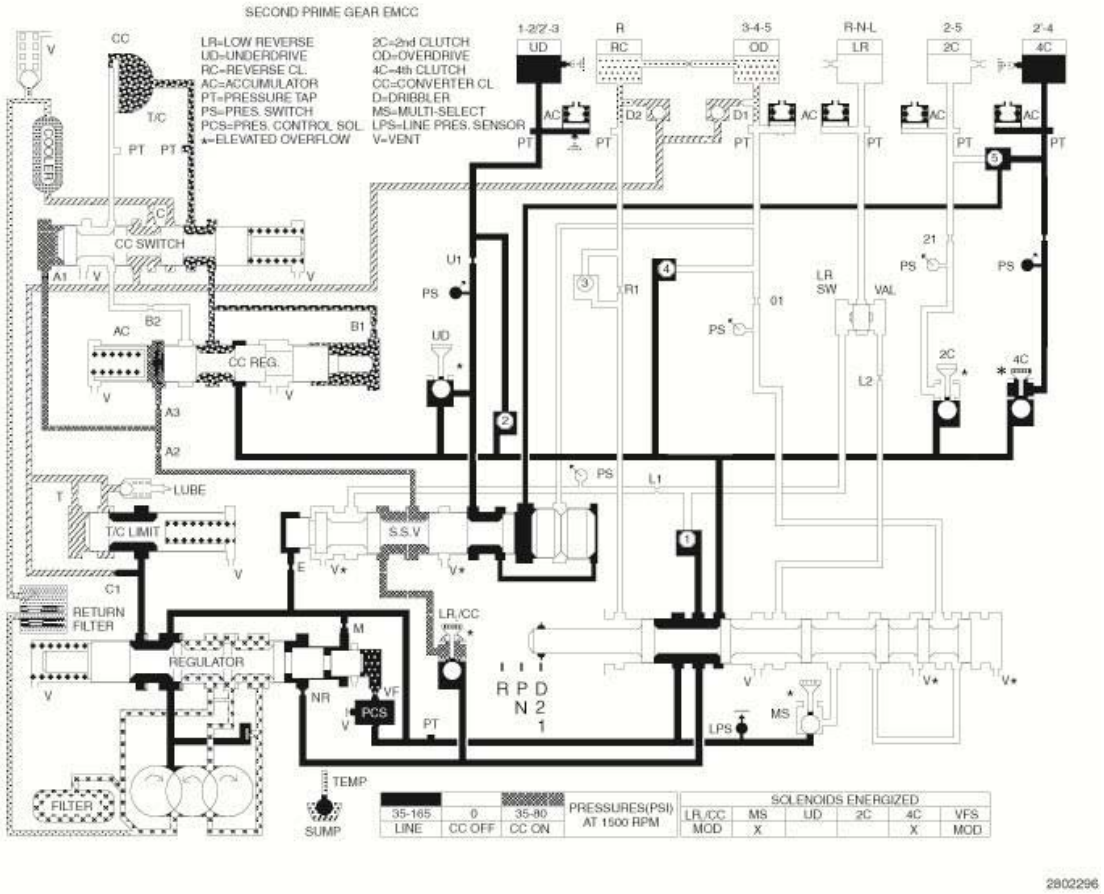

Fig. 18: Hydraulic Flow In Third Gear EMCC
Courtesy of CHRYSLER GROUP, LLC

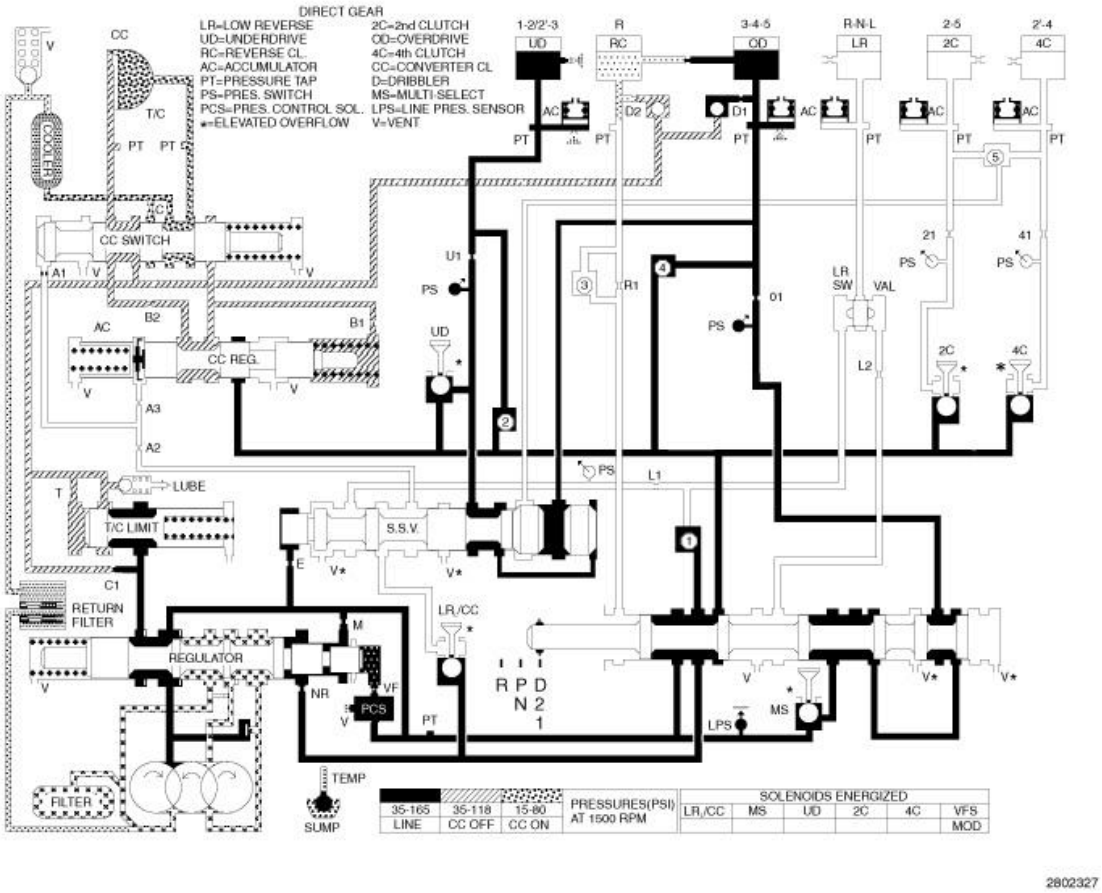

Fig. 19: Hydraulic Flow In Direct Gear
Courtesy of CHRYSLER GROUP, LLC

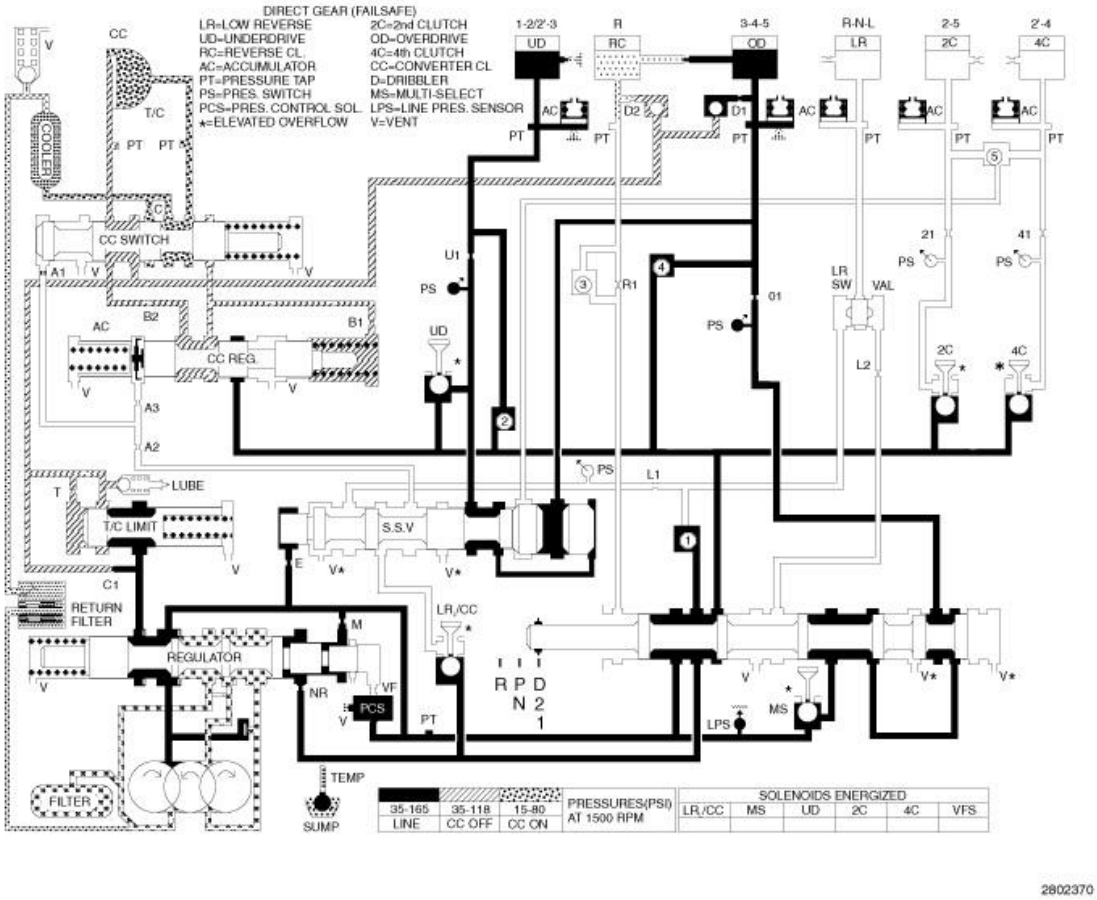

Fig. 20: Hydraulic Flow In Direct Gear (Failsafe)
Courtesy of CHRYSLER GROUP, LLC

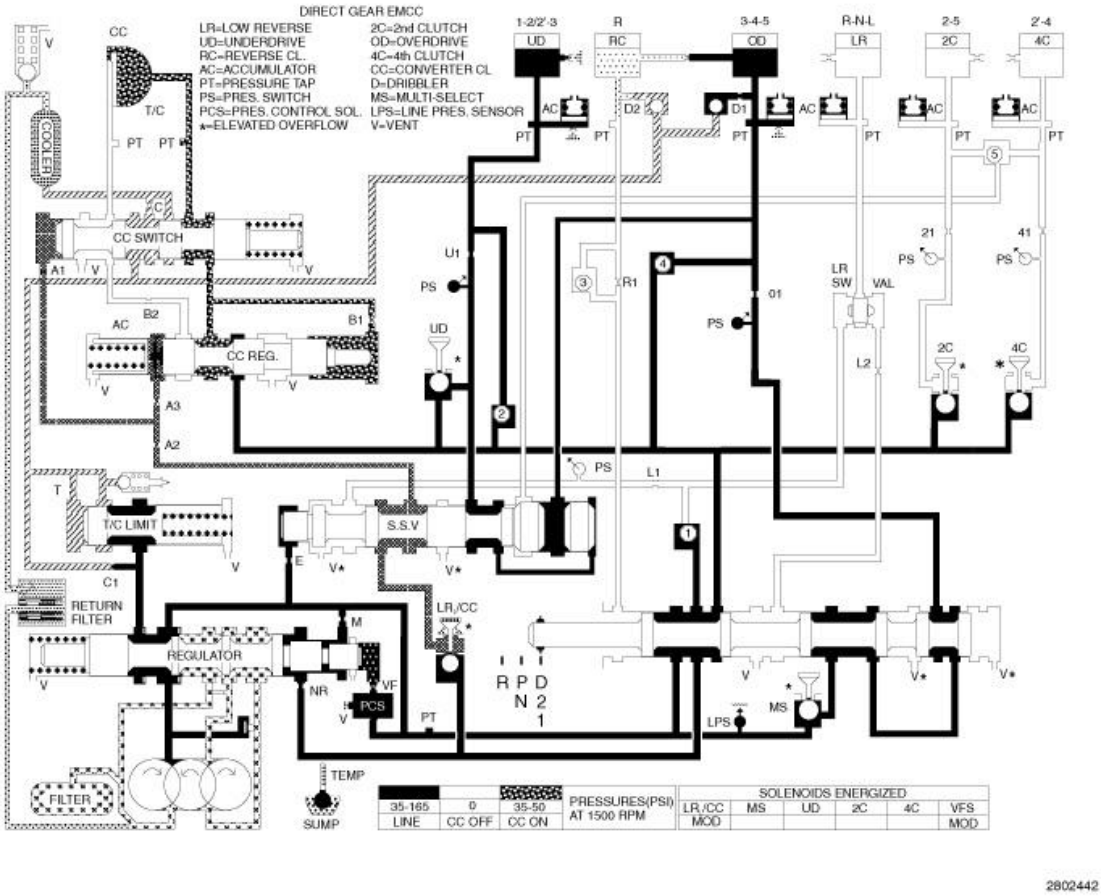

Fig. 21: Hydraulic Flow In Direct Gear EMCC
Courtesy of CHRYSLER GROUP, LLC

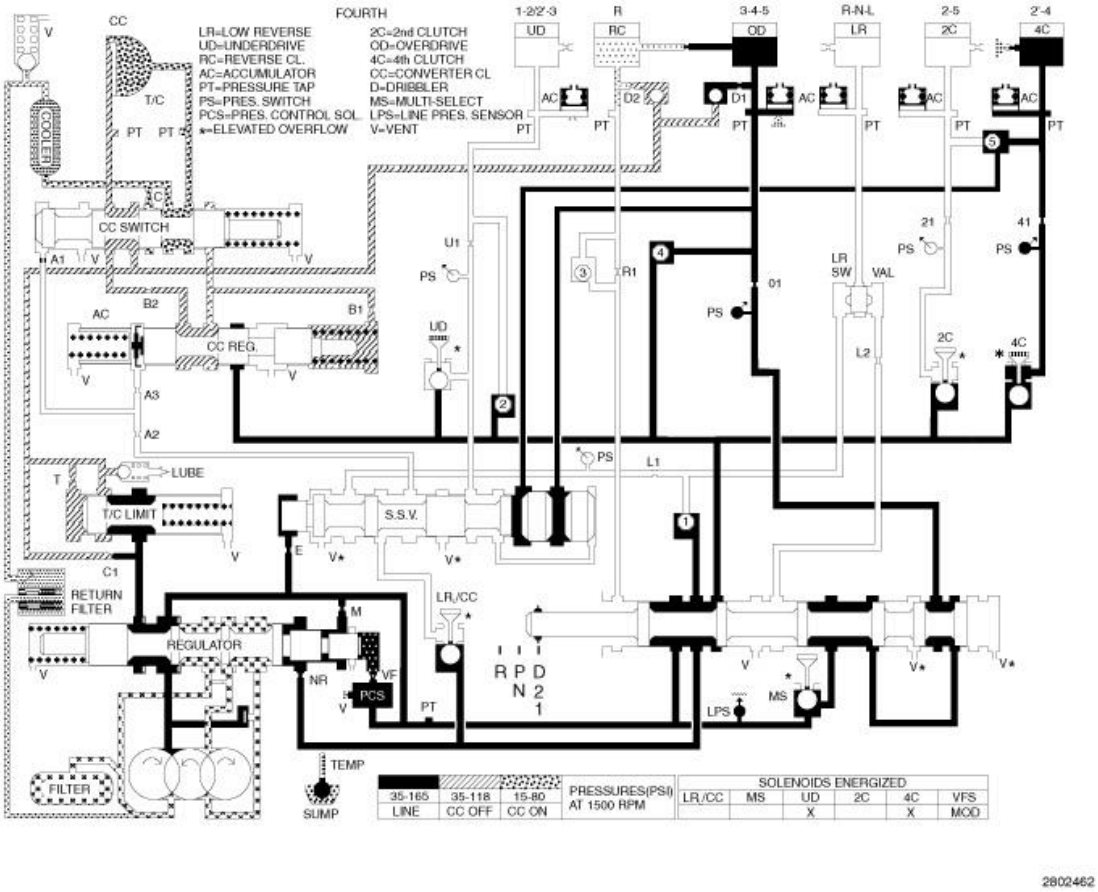

Fig. 22: Hydraulic Flow In Fifth
Courtesy of CHRYSLER GROUP, LLC

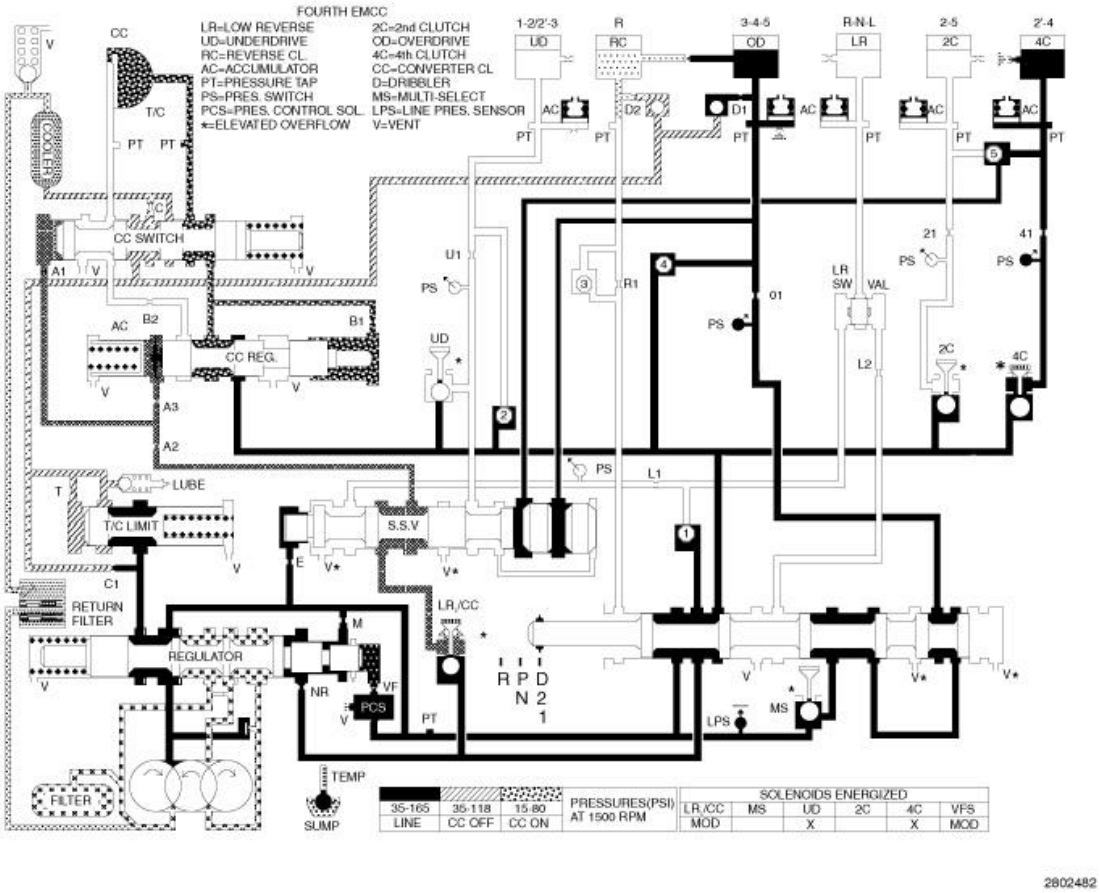

Fig. 23: Hydraulic Flow In Fifth EMCC
Courtesy of CHRYSLER GROUP, LLC

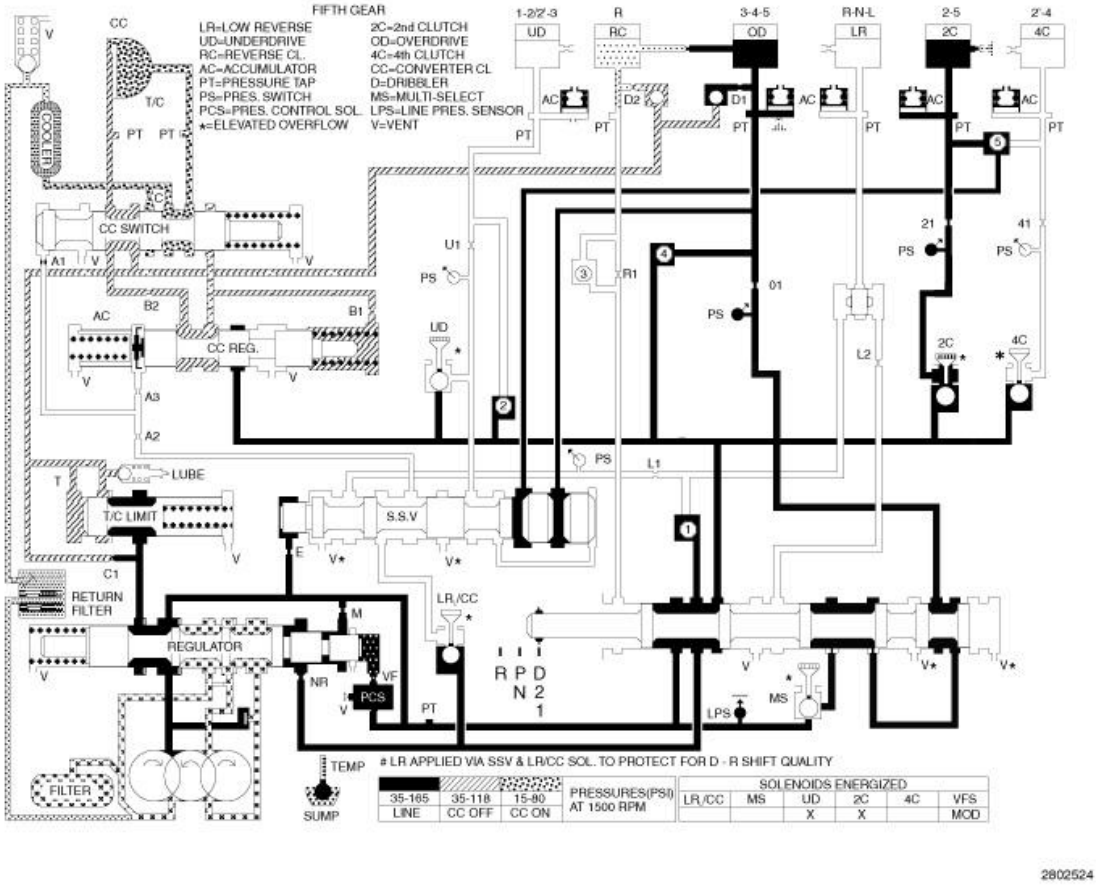

Fig. 24: Hydraulic Flow In Sixth
Courtesy of CHRYSLER GROUP, LLC

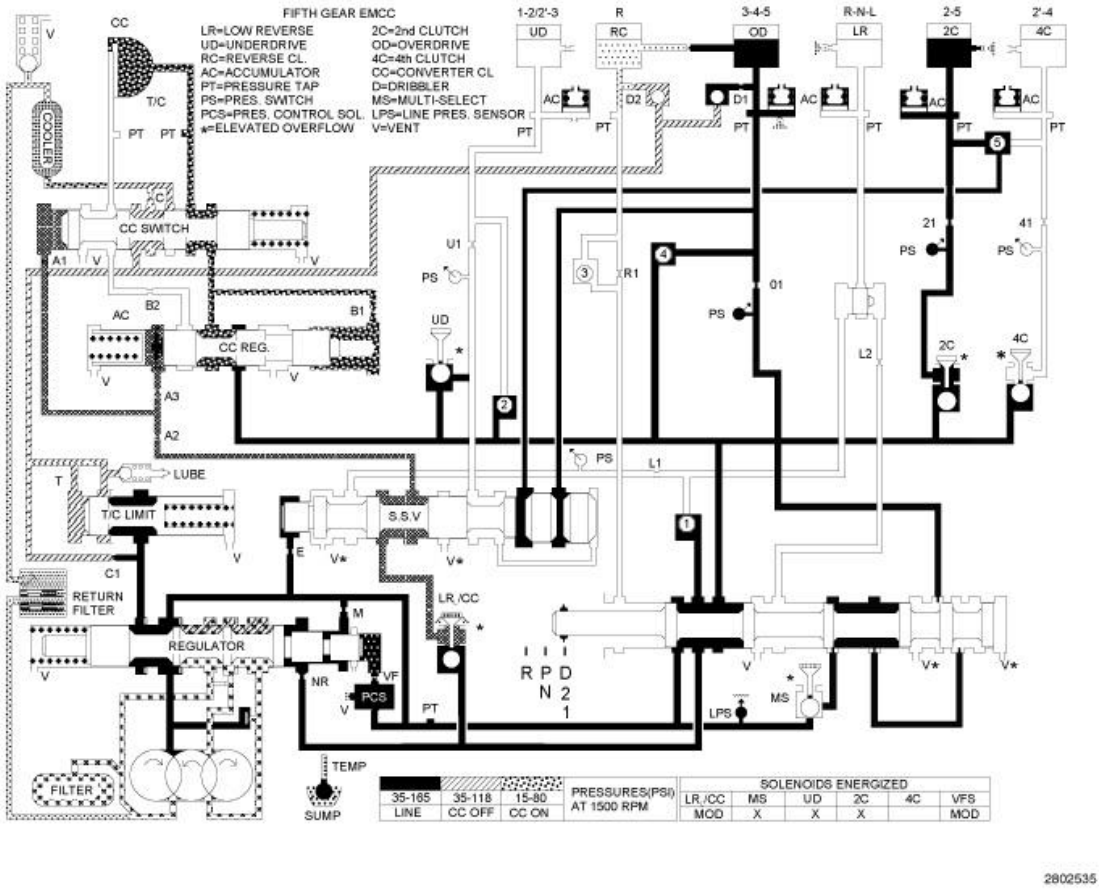

Fig. 25: Hydraulic Flow In Sixth EMCC
Courtesy of CHRYSLER GROUP, LLC

REMOVAL

REMOVAL

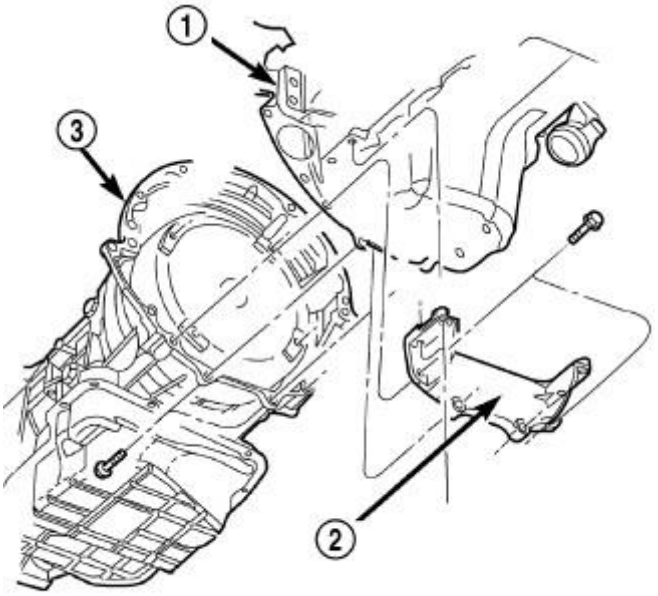

Fig. 26: Engine, Structural Dust Cover & Transmission
Courtesy of CHRYSLER GROUP, LLC

1. Disconnect the negative battery cable.
2. Raise and support the vehicle
3. Remove any necessary skid plates. Refer to **PLATE, SKID, FRONT, REMOVAL** or **PLATE, SKID, TRANSFER CASE, REMOVAL** .
4. Mark propeller shaft and axle companion flanges for assembly alignment.
5. Remove the rear propeller shaft
6. Remove the front propeller shaft, if necessary.
7. Remove the engine (1) to transmission (3) structural dust cover (2).

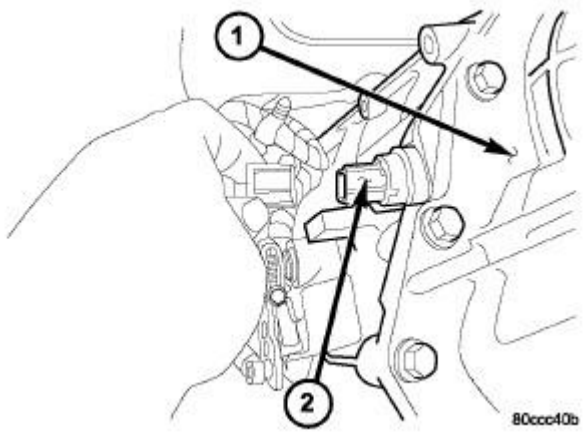

Fig. 27: Output Speed Sensor

Courtesy of CHRYSLER GROUP, LLC

8. Remove the exhaust support bracket from the rear of the transmission.
9. Disconnect and lower or remove any necessary exhaust components.
10. Remove the starter motor.
11. Rotate crankshaft in clockwise direction until converter bolts are accessible. Then remove bolts one at a time. Rotate crankshaft with socket wrench on dampener bolt.
12. Disengage the output speed sensor connector from the output speed sensor (2).

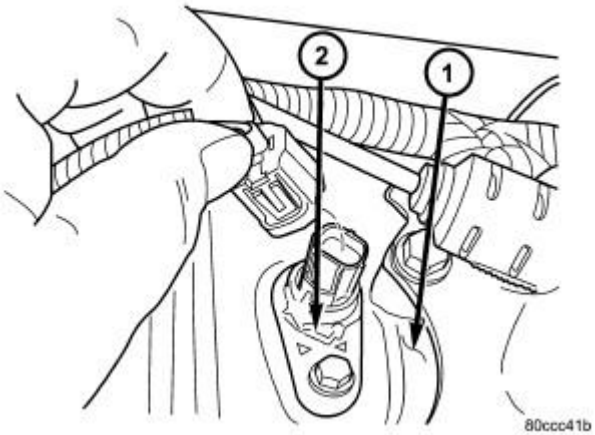

Fig. 28: Input Speed Sensor
Courtesy of CHRYSLER GROUP, LLC

13. Disengage the input speed sensor connector from the input speed sensor (2).

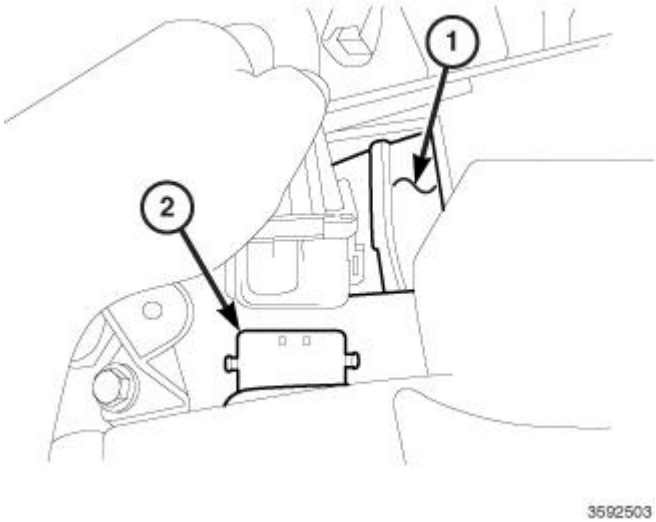

Fig. 29: Transmission Solenoid/TRS Assembly
Courtesy of CHRYSLER GROUP, LLC

14. Disengage the transmission solenoid/TRS assembly connector from the transmission solenoid/TRS assembly (2).

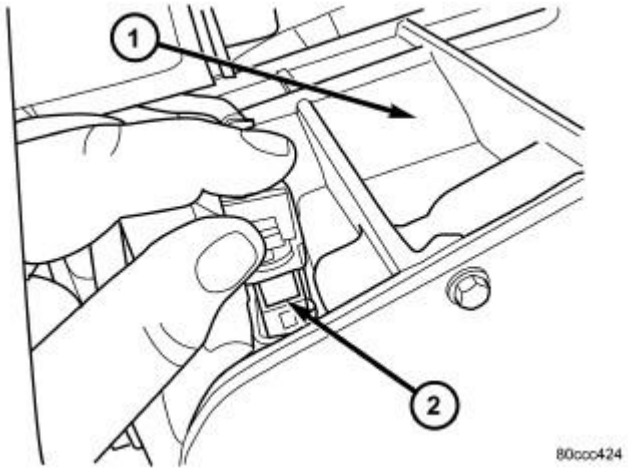

Fig. 30: Line Pressure Sensor
Courtesy of CHRYSLER GROUP, LLC

15. Disengage the line pressure sensor connector from the line pressure sensor (2).

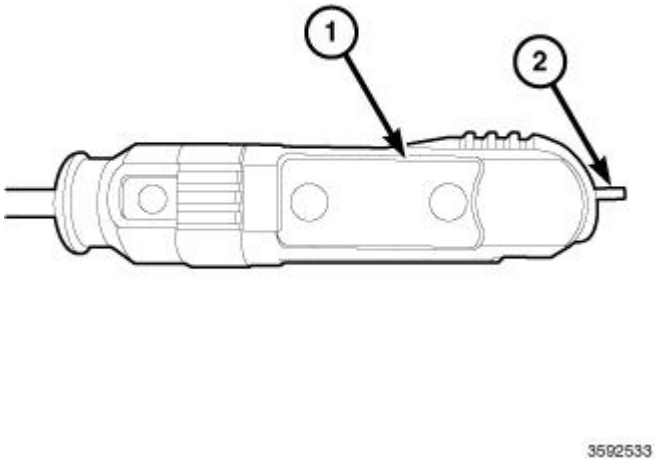

Fig. 31: Gearshift Cable & Pin
Courtesy of CHRYSLER GROUP, LLC

16. Disconnect gearshift cable (1) from transmission manual valve lever by fully depressing pin (2) until it locks into the release position. Remove cable end by moving upward.

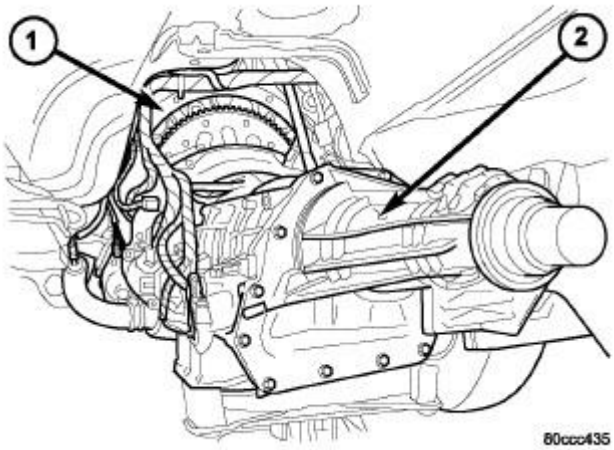

Fig. 32: Identifying Transmission
Courtesy of CHRYSLER GROUP, LLC

17. Disconnect the transmission vent hose from the transmission.
18. Support rear of engine with safety stand or jack.
19. Raise transmission slightly with service jack to relieve load on crossmember and supports.
20. Remove bolts securing rear support and cushion to transmission and crossmember.
21. If equipped, remove transfer case.
22. Disconnect transmission fluid cooler lines at transmission fittings and clips and position aside.

NOTE: When disconnecting the transmission oil cooler lines, it is necessary to replace the line clip that is located on the oil pan stud. The retention force of the clip is severely degraded upon removal.

23. Remove all remaining converter housing bolts.
24. Remove the transmission dipstick tube.
25. Carefully work transmission and torque converter assembly rearward off engine block dowels.
26. Hold torque converter in place during transmission removal.
27. Lower transmission (2) and remove assembly from under the vehicle.
28. To remove torque converter, carefully slide torque converter out of the transmission.

DISASSEMBLY

DISASSEMBLY

CAUTION: Tag all snap rings, thrust washers, washers, spacers and thrust bearings, etc. during disassembly for quick identification and assembly. Failure to follow these instructions will damage and cause transmission failure.

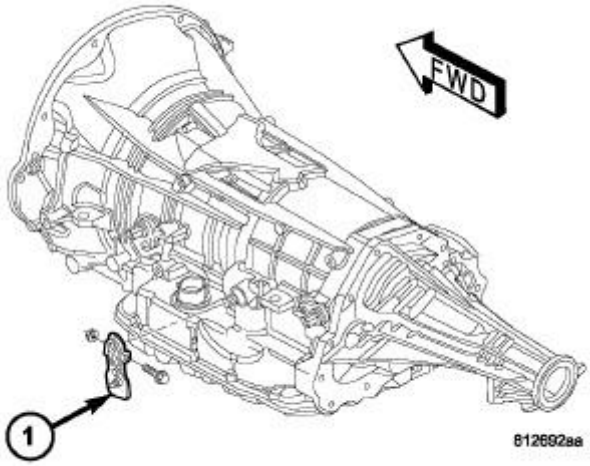

Fig. 33: Manual Shift Lever
Courtesy of CHRYSLER GROUP, LLC

1. Drain fluid from transmission.
2. Clean exterior of transmission with suitable solvent or pressure washer.
3. Remove the torque converter from the transmission.
4. Remove the manual shift lever (1) from the transmission.

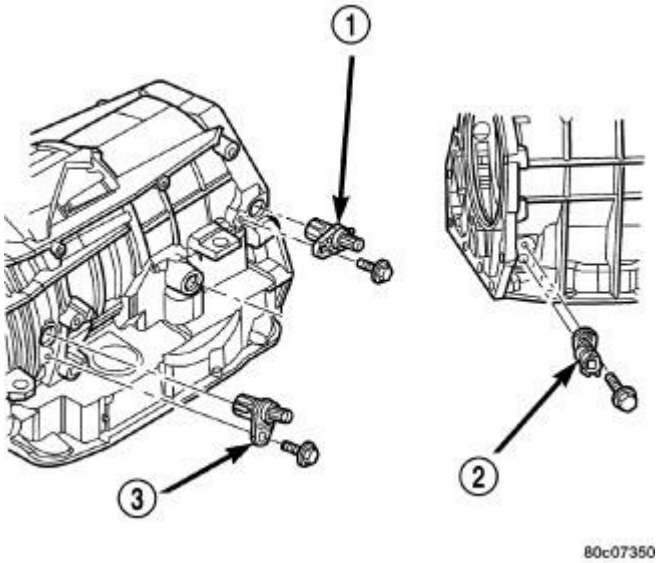

Fig. 34: Input, Output & Line Pressure Sensors
Courtesy of CHRYSLER GROUP, LLC

5. Remove the input (3), output (1), and line pressure sensors (2) from the transmission case.
6. Inspect the ends of the sensors for debris, which may indicate the nature of the transmission failure.

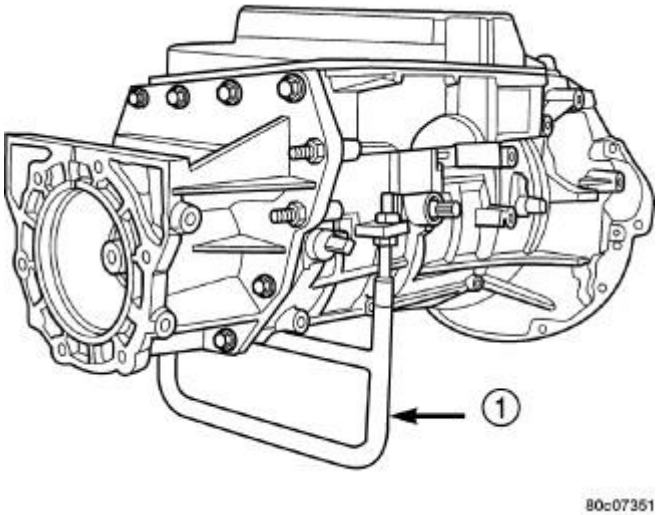

Fig. 35: Install Support Stand - Tool 8257
Courtesy of CHRYSLER GROUP, LLC

7. Install (special tool #8257, Support, Transmission) (1) onto the transmission case.

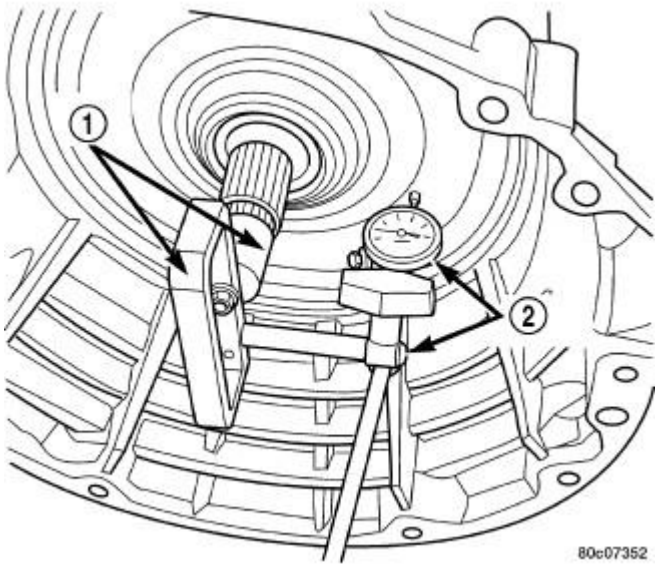

Fig. 36: Measuring Input Shaft End Play
Courtesy of CHRYSLER GROUP, LLC

8. Using (special tool #8266-17, Spline Tool, RFE Output) from (special tool #8266B, End Play Socket Set) (1) and (special tool #C-3339A, Set, Dial Indicator) (2), measure and record the input shaft end-play.

NOTE: **When measuring the input shaft end-play, two "stops" will be felt. When the input shaft is pushed inward and the dial indicator zeroed, the first "stop" felt when the input shaft is pulled outward is the movement of the input shaft in the input clutch housing hub. This value should not be**

included in the end-play measured value and therefore must be recorded and subtracted from the dial indicator reading.

NOTE: (special tool #8266-17, Spline Tool, RFE Output) will fit loosely onto the input shaft, this should not effect the performance of the adapter.

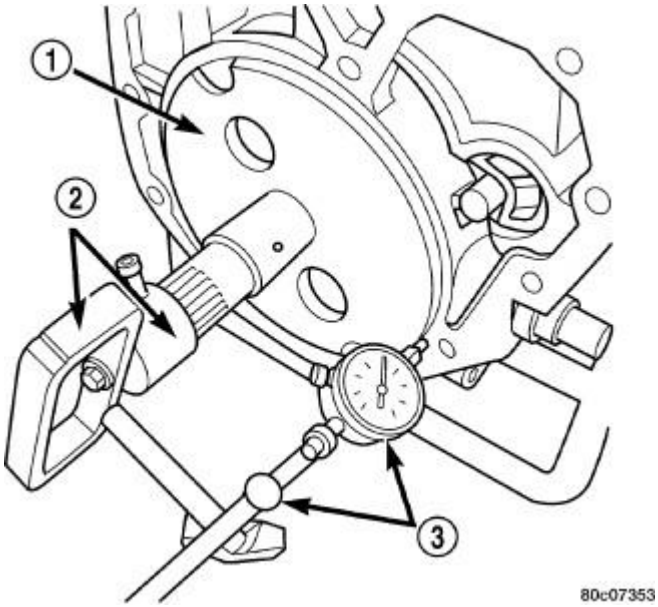

Fig. 37: Measuring Output Shaft End Play
Courtesy of CHRYSLER GROUP, LLC

9. Remove the bolts holding the transmission extension/adapter housing to the transmission case.
10. Remove the extension/adapter housing from the transmission case.
11. Using (special tool #10065, Plate, Alignment), Output Shaft (special tool #8266-20, Spline Tool, AS68RC Output), handle from (special tool #8266B, End Play Socket Set) (2) and (special tool #C-3339A, Set, Dial Indicator) (3), measure and record the output shaft end-play.

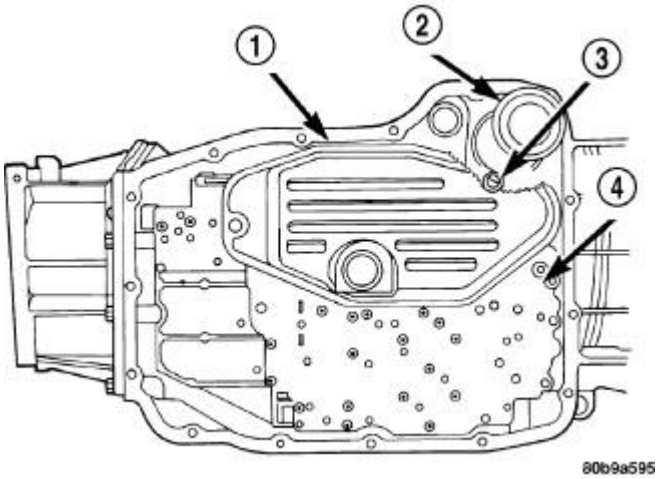

Fig. 38: Primary Oil & Cooler Return Filters

Courtesy of CHRYSLER GROUP, LLC

12. Remove the bolts holding the transmission oil pan to the transmission case.
13. Remove the transmission oil pan from the transmission case.
14. Remove the primary oil filter (1) and the oil cooler return filter (2).

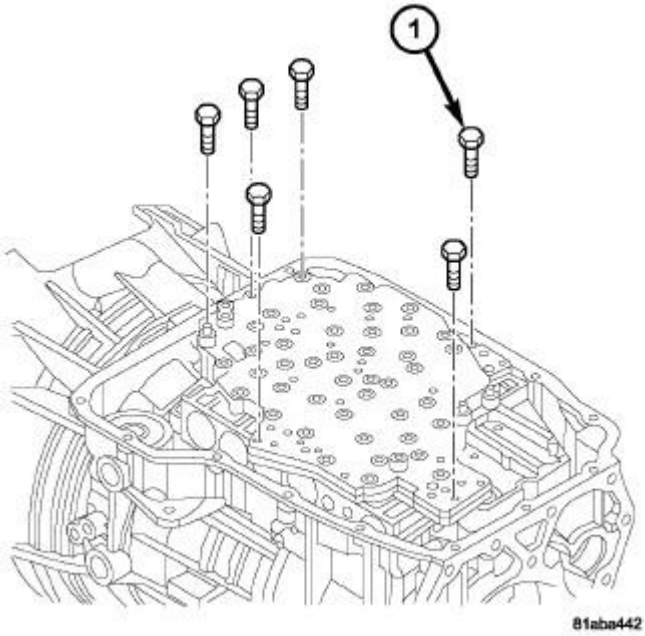

Fig. 39: Valve Body Bolts
Courtesy of CHRYSLER GROUP, LLC

1 - VALVE BODY TO CASE BOLT (6)

15. Remove the bolts (1) holding the valve body to the transmission case.
16. Remove the valve body from the transmission case.

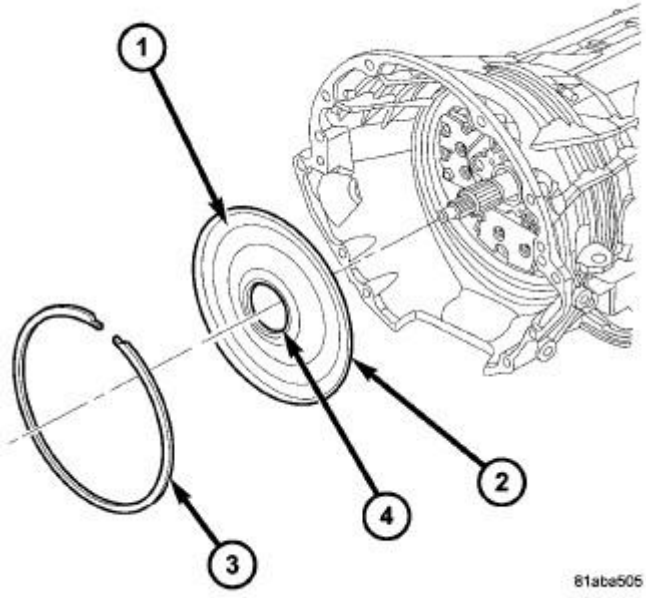

Fig. 40: Front Cover
Courtesy of CHRYSLER GROUP, LLC

17. Remove the outer snap-ring (3) securing the transmission front cover (1) into the transmission case.
18. Reaching through a case opening in the valve body area with a long blunted tool, remove the transmission front cover (1) from the transmission case.

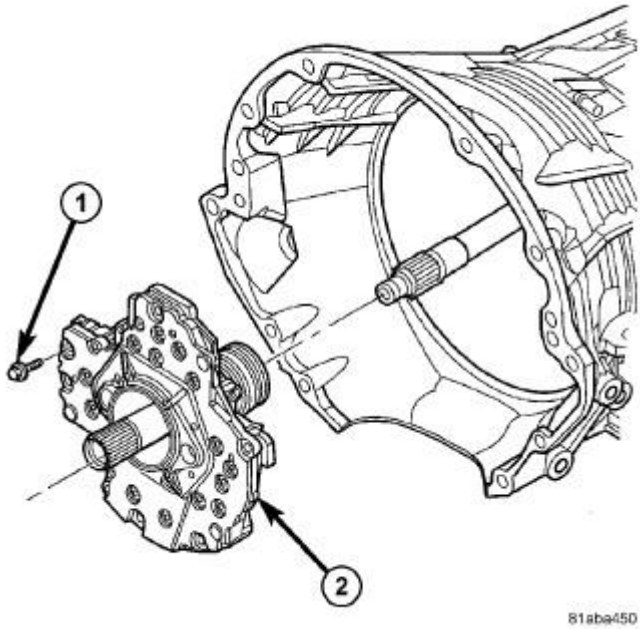

Fig. 41: Oil Pump & Bolt

Courtesy of CHRYSLER GROUP, LLC

19. Remove the bolts (1) holding the oil pump into the transmission case.
20. Remove the oil pump (2). Hold inward on the input shaft to prevent pulling the input clutch assembly with the oil pump.

CAUTION: If the input shaft is not held during oil pump removal, the input clutch assembly will attempt to move forward with the oil pump and the numbers 2, 3, or 4 bearings inside the input clutch assembly may become dislodged.

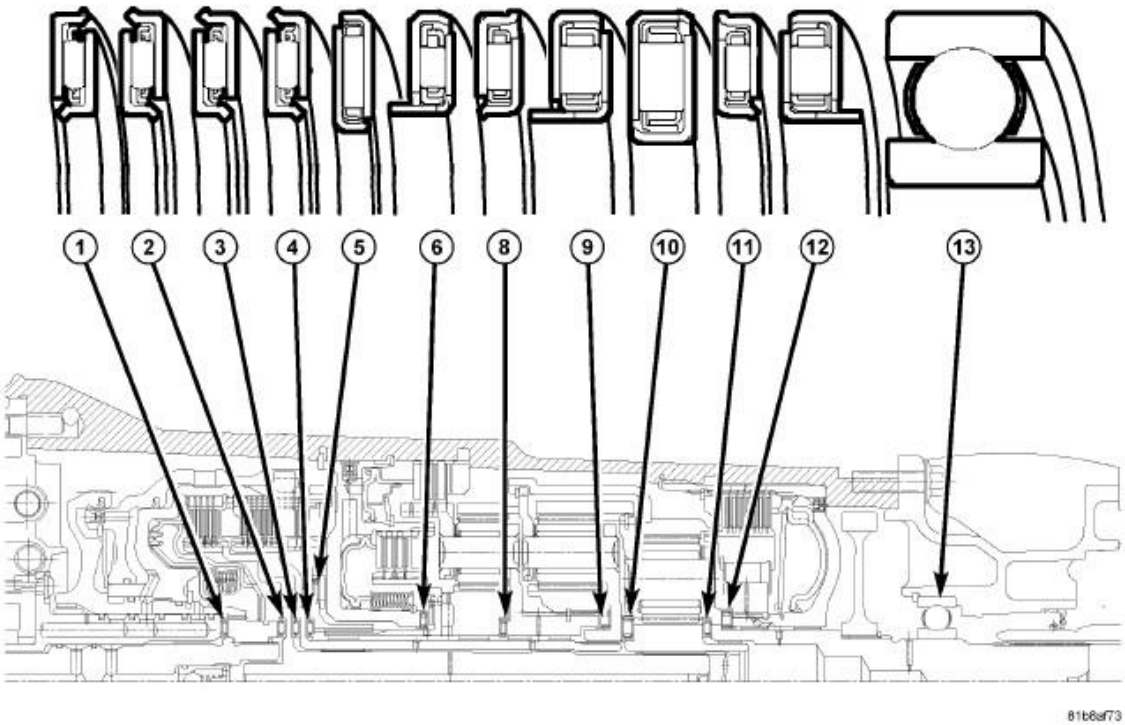

Fig. 42: Thrust Bearings & Output Shaft Bearing
Courtesy of CHRYSLER GROUP, LLC

1 - THRUST BEARING NO. 1	8 - THRUST BEARING NO. 8
2 - THRUST BEARING NO. 2	9 - THRUST BEARING NO. 9
3 - THRUST BEARING NO. 3	10 - THRUST BEARING

	NO. 10
4 - THRUST BEARING NO. 4	11 - THRUST BEARING NO. 11
5 - THRUST BEARING NO. 5	12 - THRUST BEARING NO. 12
6 - THRUST BEARING NO. 6	13 - OUTPUT SHAFT BEARING

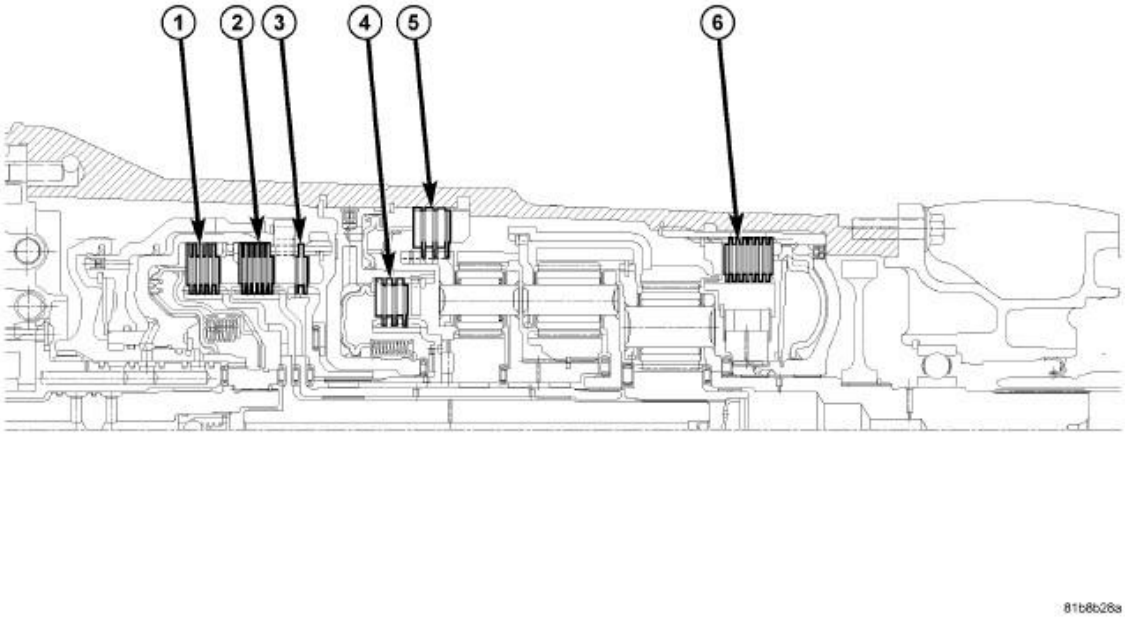

Fig. 43: 66RFE Clutch Orientation
Courtesy of CHRYSLER GROUP, LLC

1 - U/D CLUTCH	4 - 4C CLUTCH
2 - O/D CLUTCH	5 - 2C CLUTCH
3 - REVERSE CLUTCH	6 - L/R CLUTCH

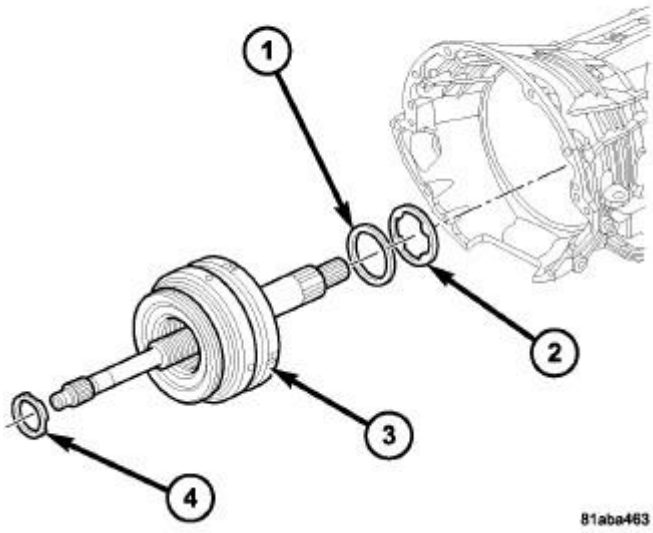

Fig. 44: Input Clutch Assembly
Courtesy of CHRYSLER GROUP, LLC

21. Remove the number 1 thrust bearing (4) from the input clutch assembly.
22. Remove the input clutch assembly (3) from the transmission case.
23. Remove the number 5 thrust bearing (1) and selective thrust plate (2) from the input clutch assembly (3), or the 4C clutch retainer/bulkhead.

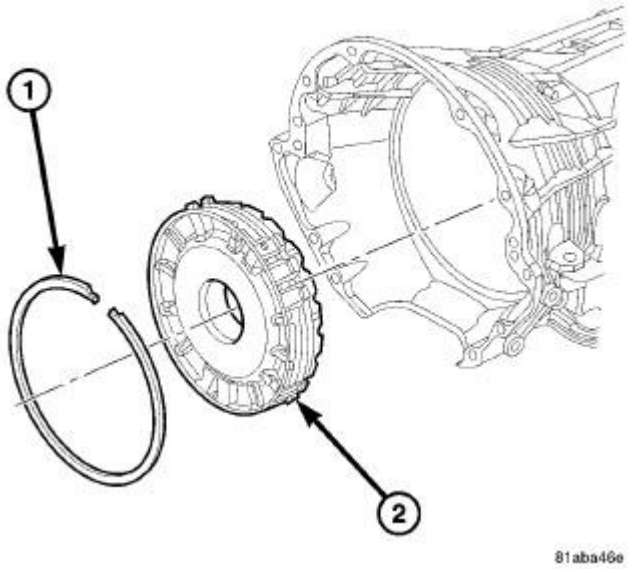

Fig. 45: 4C Clutch Retainer/Bulkhead & Snap-Ring
Courtesy of CHRYSLER GROUP, LLC

24. Remove the 4C clutch retainer/bulkhead tapered snap-ring (1) from the transmission case.
25. Remove the 4C clutch retainer/bulkhead (2) from the transmission case.

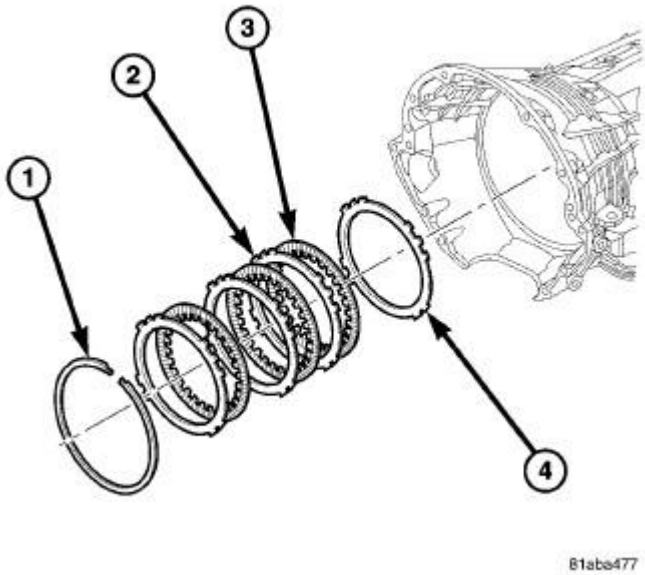

Fig. 46: 2C Clutch Pack
Courtesy of CHRYSLER GROUP, LLC

26. Remove the front 2C clutch pack snap-ring (1) from the transmission case.
27. Remove the 2C clutch pack (2, 3, 4) from the transmission case.

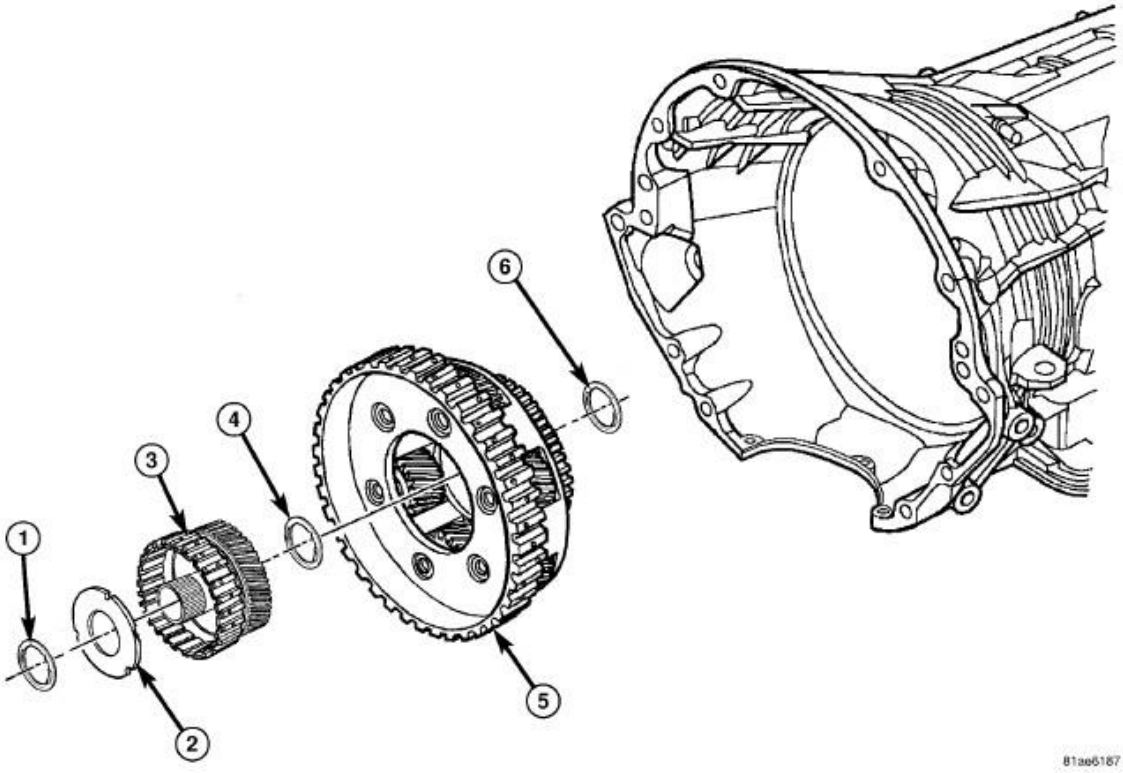

Fig. 47: Reaction Annulus & Carrier
Courtesy of CHRYSLER GROUP, LLC

28. Remove the rear selective thrust plate (2) and number 6 thrust bearing (1) from the 4C clutch hub (3).
29. Remove the 4C clutch hub/reaction sun gear (3) from the reaction planetary carrier (5).
30. Remove the reaction planetary carrier (5).
31. Remove the number 8 thrust bearing (4) from the reaction planetary carrier (5).
32. Remove the number 9 thrust bearing (6) from the reverse planetary gear set.

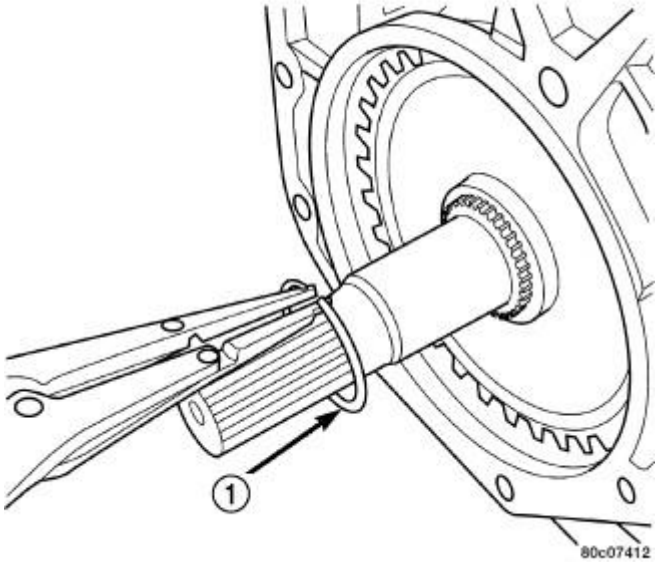

Fig. 48: Park Sprag Snap-Ring
Courtesy of CHRYSLER GROUP, LLC

33.
34. Remove the snap-ring (1) holding the park sprag gear onto the output shaft.

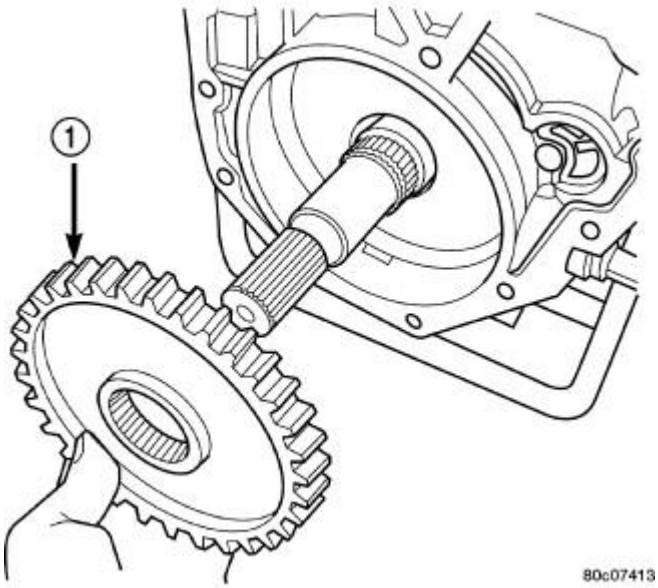

Fig. 49: Park Sprag Gear
Courtesy of CHRYSLER GROUP, LLC

35. Remove the park sprag gear (1) from the output shaft.

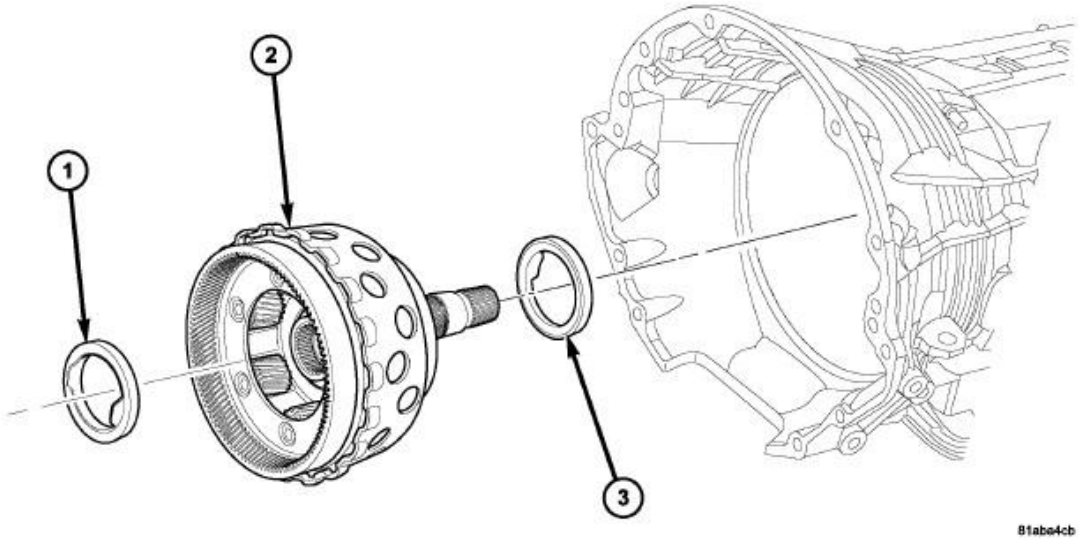

Fig. 50: Input/Reverse Planetary Assembly
Courtesy of CHRYSLER GROUP, LLC

36. Remove the input/reverse planetary assembly (1).
37. Remove thrust bearing number (9) from the input/reverse planetary assembly (2).
38. Remove the number 12 thrust bearing (3) from the input/reverse planetary assembly (2).

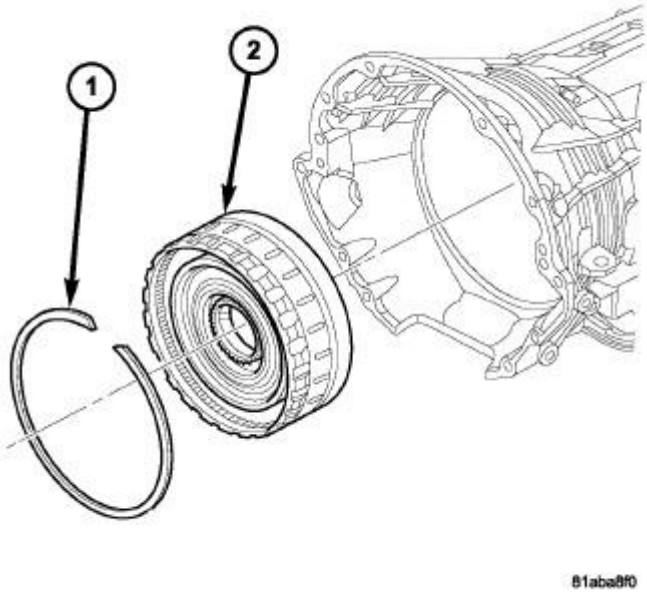

Fig. 51: Low/Reverse Clutch Retainer
Courtesy of CHRYSLER GROUP, LLC

39. Remove the snap-ring (1) holding the low/reverse clutch retainer (2) into the transmission case.
40. Remove the low/reverse clutch retainer (2) from the transmission case.

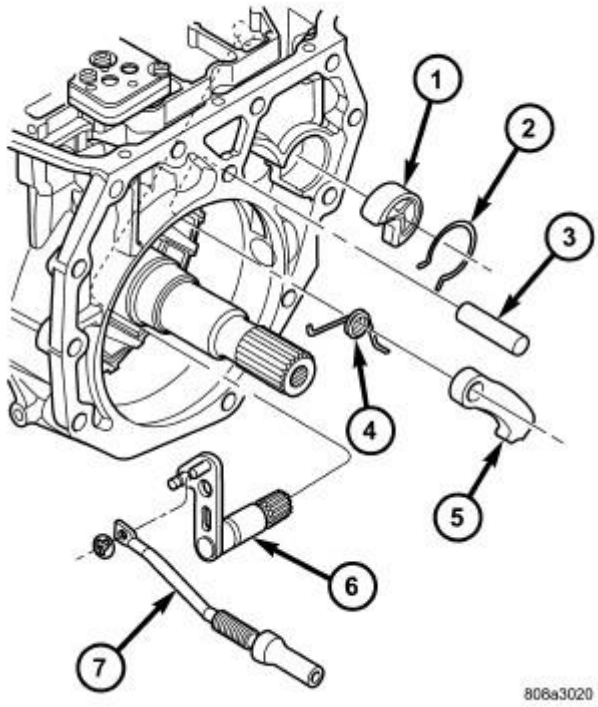

Fig. 52: Manual Shaft/Park Lock Components
Courtesy of CHRYSLER GROUP, LLC

41. Remove the park rod (7) and e-clip.
42. Remove the park rod guide snap-ring (2).
43. Remove the park rod guide (1).
44. Remove the park pawl pivot shaft (3), park pawl (5), and spring (4).
45. Remove the manual selector shaft (6).
46. Remove the manual selector shaft seal.
47. Remove the dipstick tube seal.

CLEANING

CLEANING

The use of crocus cloth is permissible where necessary, providing it is used carefully. When used on shafts, or valves, use extreme care to avoid rounding off sharp edges. Sharp edges are vital as they prevent foreign matter from getting between the valve and valve bore.

Do not reuse oil seals, gaskets, seal rings, or O-rings during overhaul. Replace these parts as a matter of course. Also do not reuse snap rings or E-clips that are bent or distorted. Replace these parts as well.

Lubricate transmission parts with Mopar® ATF +4, Automatic Transmission Fluid, during overhaul and

assembly. Use petroleum jelly, Mopar® Door Ease, or Ru-Glyde to prelubricate seals, O-rings, and thrust washers. Petroleum jelly can also be used to hold parts in place during reassembly.

Clean the case in a solvent tank. Flush the case bores and fluid passages thoroughly with solvent. Dry the case and all fluid passages with compressed air. Be sure all solvent is removed from the case and that all fluid passages are clear.

NOTE: **Do not use shop towels or rags to dry the case (or any other transmission component) unless they are made from lint-free materials. Lint will stick to case surfaces and transmission components and circulate throughout the transmission after assembly. A sufficient quantity of lint can block fluid passages and interfere with valve body operation.**

INSPECTION

INSPECTION

Inspect the case for cracks, porous spots, worn bores, or damaged threads. Damaged threads can be repaired with Helicoil® thread inserts. However, the case will have to be replaced if it exhibits any type of damage or wear.

ASSEMBLY

ASSEMBLY

NOTE: **Apply trans jell or petroleum jelly to all slide portions, rolling contacts surfaces, thrust surfaces etc. to prevent burnout during initial operation. Lubricate O-rings and O-ring seals with MOPAR® ATF+4. Soak all friction disks in MOPAR® ATF+4 for at least two hours before assembly of clutch packs.**

NOTE: **Clean and inspect all components. Replace any components which show evidence of excessive wear or scoring.**

NOTE: **If the transmission assembly is being reconditioned (clutch/seal replacement) or replaced, it is necessary to perform the Quick Learn Procedure using the scan tool. Refer to MODULE, TRANSMISSION CONTROL, STANDARD PROCEDURE .**

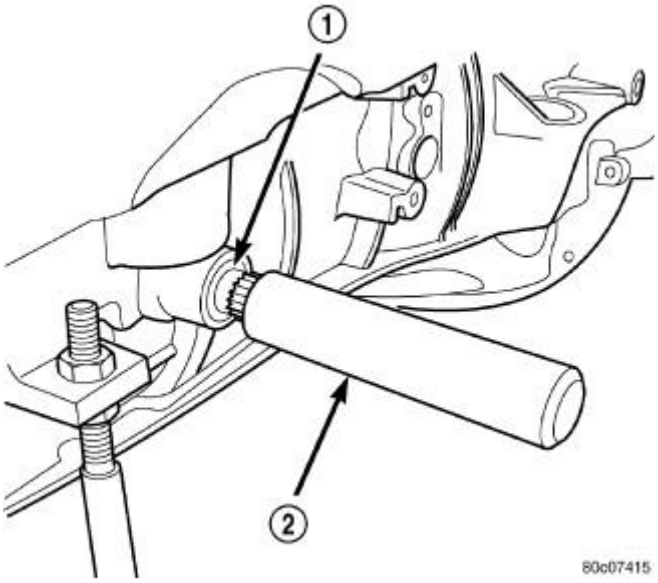

Fig. 53: Installing Selector Shaft Seal
Courtesy of CHRYSLER GROUP, LLC

1. Install a new selector shaft seal (1) using (special tool #8253, Installer, Seal) (2).

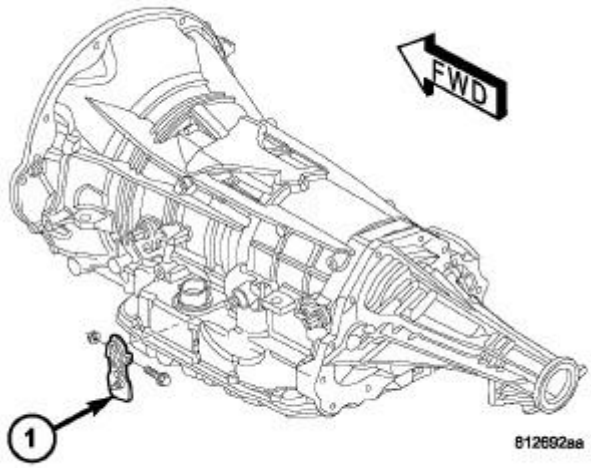

Fig. 54: Manual Shift Lever
Courtesy of CHRYSLER GROUP, LLC

2. Install the manual selector shaft and retaining screw. Tighten the manual selector shaft retaining screw to 28 N.m (250 in.lbs.).
3. Install the manual shift lever (1) onto the manual selector shaft. Torque the retaining cross-bolt to 16 N.m (140 in.lbs.).

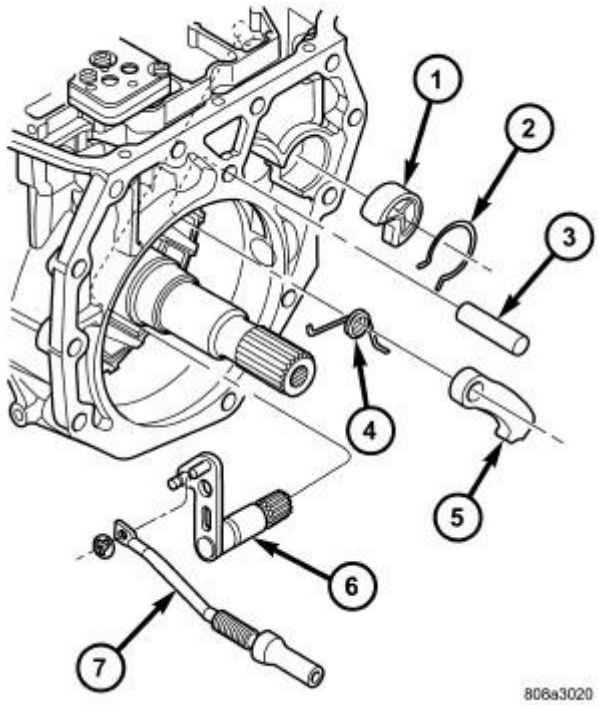

Fig. 55: Manual Shaft/Park Lock Components
Courtesy of CHRYSLER GROUP, LLC

4. Install the park pawl (5), spring (4), and shaft (3).
5. Install the park rod (7) and e-clip.
6. Install the park rod guide (1) and snap-ring (2).

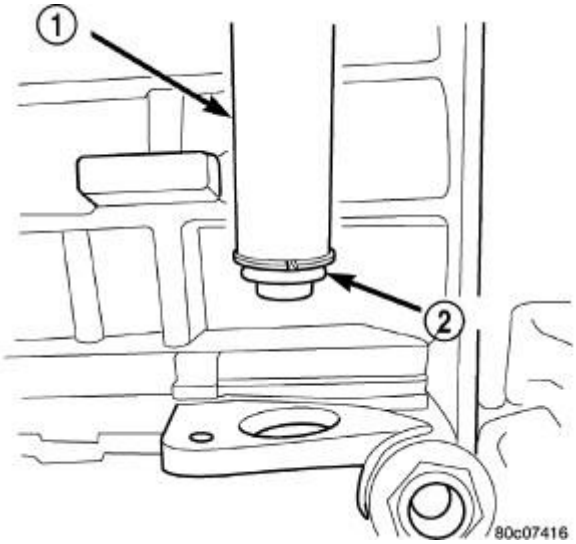

Fig. 56: Installing Fill Tube Seal
Courtesy of CHRYSLER GROUP, LLC

7. Install a new fill tube seal (2) using (special tool #8254, Installer, Grommet) (1).

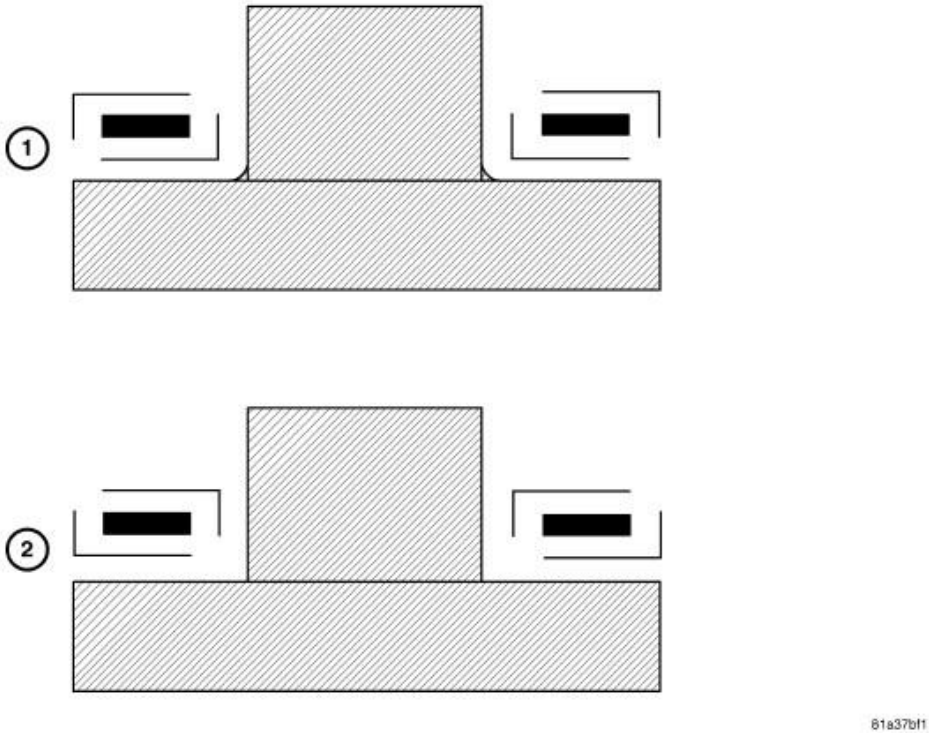

Fig. 57: Thrust Bearing Orientation
Courtesy of CHRYSLER GROUP, LLC

1 - CORRECT INSTALLATION
2 - INCORRECT INSTALLATION

CAUTION: A thrust bearing must be installed correctly or transmission failure may occur.

When installing a thrust bearing be certain the rolled surface (outer race) of the thrust bearing contacts the rolled surface of the component.

NOTE: The 66RFE transmission does not use a number 7 thrust bearing.

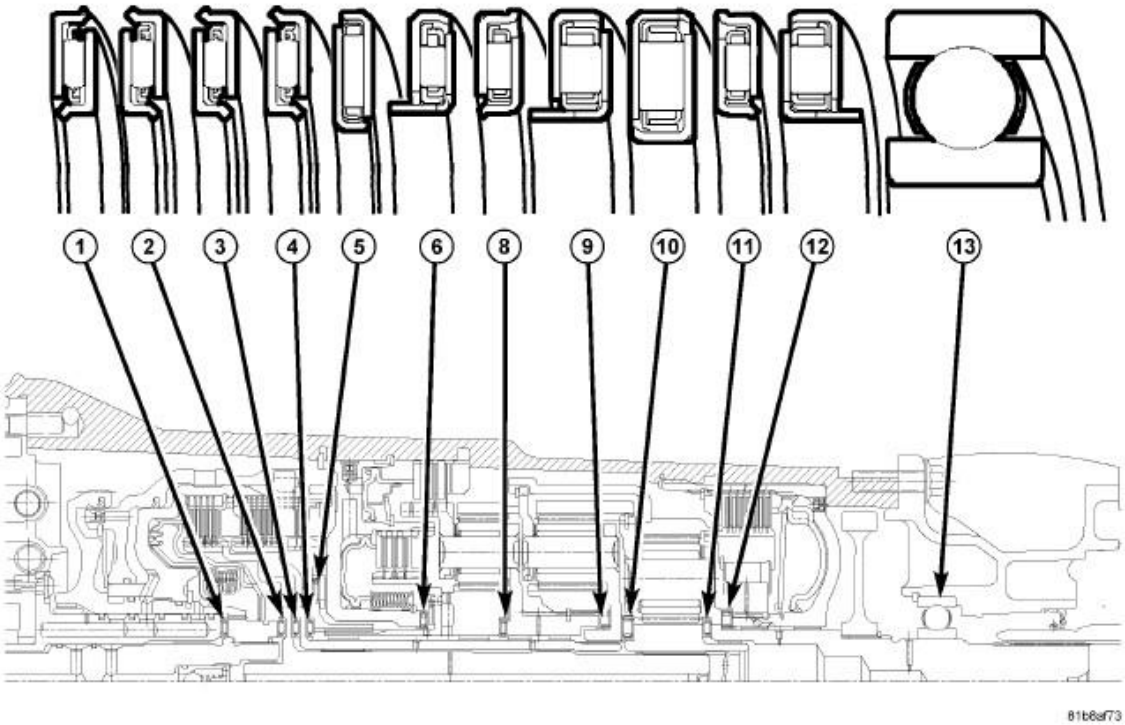

Fig. 58: Thrust Bearings & Output Shaft Bearing
Courtesy of CHRYSLER GROUP, LLC

1 - THRUST BEARING NO. 1	8 - THRUST BEARING NO. 8
2 - THRUST BEARING NO. 2	9 - THRUST BEARING NO. 9
3 - THRUST BEARING NO. 3	10 - THRUST BEARING NO. 10
4 - THRUST BEARING NO. 4	11 - THRUST BEARING NO. 11
5 - THRUST BEARING NO. 5	12 - THRUST BEARING NO. 12
6 - THRUST BEARING NO. 6	13 - OUTPUT

	SHAFT BEARING

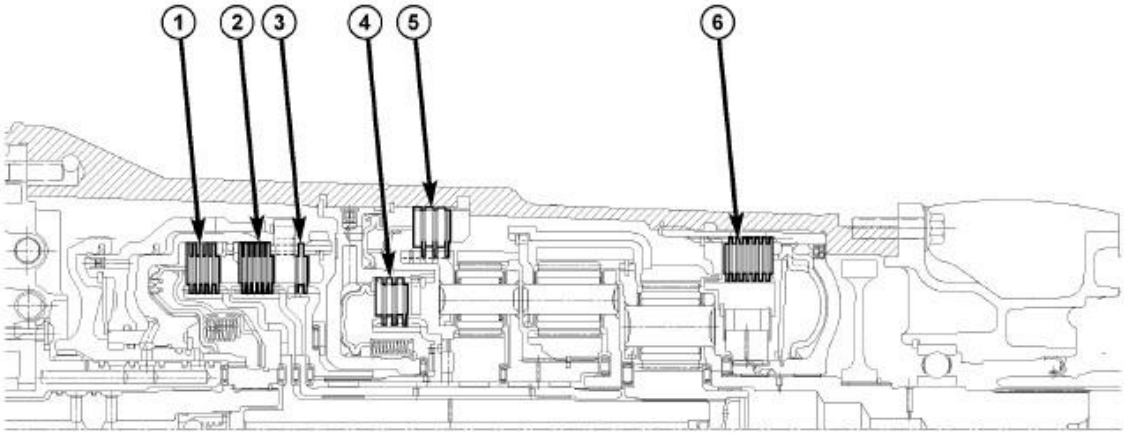

81b8b28a

Fig. 59: 66RFE Clutch Orientation
Courtesy of CHRYSLER GROUP, LLC

1 - U/D CLUTCH	4 - 4C CLUTCH
2 - O/D CLUTCH	5 - 2C CLUTCH
3 - REVERSE CLUTCH	6 - L/R CLUTCH

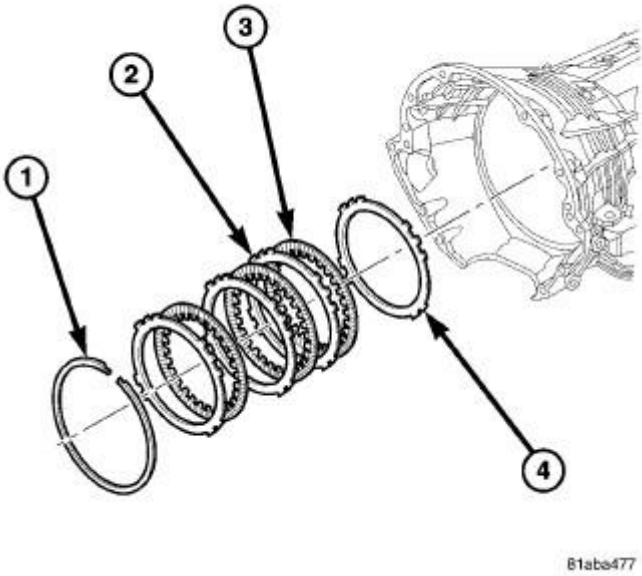

Fig. 60: 2C Clutch Pack
Courtesy of CHRYSLER GROUP, LLC

NOTE: Before final assembly of transmission centerline, the 2C/4C clutch components should be installed into position and measured as follows:

8. Install the 2C reaction plate (4) with the beveled edge down (rearward) into the transmission case.
9. Install the 2C clutch pack (2, 3) into the transmission case.
10. Install the flat 2C clutch snap-ring (1) into the transmission case.

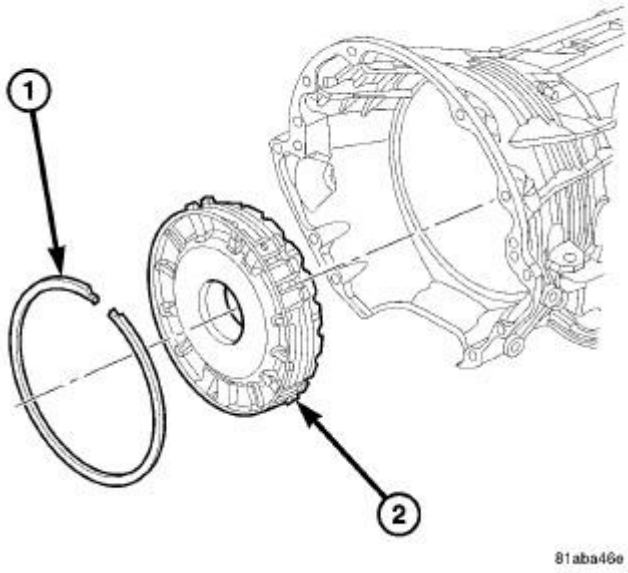

Fig. 61: 4C Clutch Retainer/Bulkhead & Snap-Ring
Courtesy of CHRYSLER GROUP, LLC

11. Install the 4C retainer/bulkhead (2) into the transmission case. Make sure that the oil feed holes are pointing toward the valve body area.
12. Install the 4C retainer/bulkhead tapered snap-ring (1) into the transmission case. Make sure that the open ends of the snap-ring are located in the case opening toward the valve body area.
13. Using a feeler gauge through the opening in the rear of the transmission case, measure the 2C clutch pack clearance between the 2C reaction plate and the transmission case at four different points. The average of these measurements is the 2C clutch pack clearance. The correct clutch clearance is 0.99-1.65 mm (0.039-0.065 in.). The reaction plate is not selective. If the clutch pack clearance is not within specification, the reaction plate, all the friction discs, and steels must be replaced.
14. Remove the 4C retainer/bulkhead and all of the 2C clutch components from the transmission case.

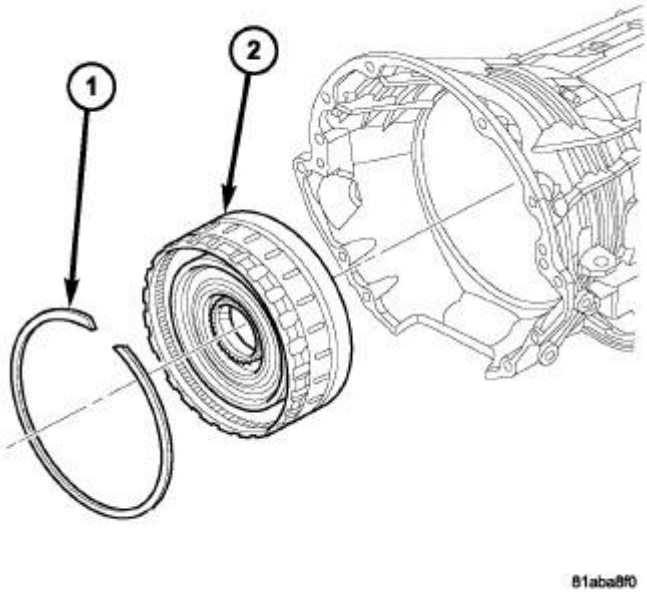

Fig. 62: Low/Reverse Clutch Retainer
Courtesy of CHRYSLER GROUP, LLC

1 - SNAP-RING
2 - LOW/REVERSE OVERRUNNING CLUTCH ASSEMBLY

15. Install the low/reverse clutch assembly (2). Make sure that the oil feed hole points toward the valve body area and that the bleed orifice is aligned with the notch in the rear of the transmission case.
16. Install the snap-ring (1) to hold the low/reverse clutch retainer into the transmission case. The snap-ring is tapered and must be installed with the tapered side forward. Once installed, verify that the snap-ring is fully seated in the snap-ring groove.
17. Air check the low/reverse clutch and verify correct overrunning clutch operation. Refer to **AIR CHECKING TRANSMISSION CLUTCH OPERATION**.

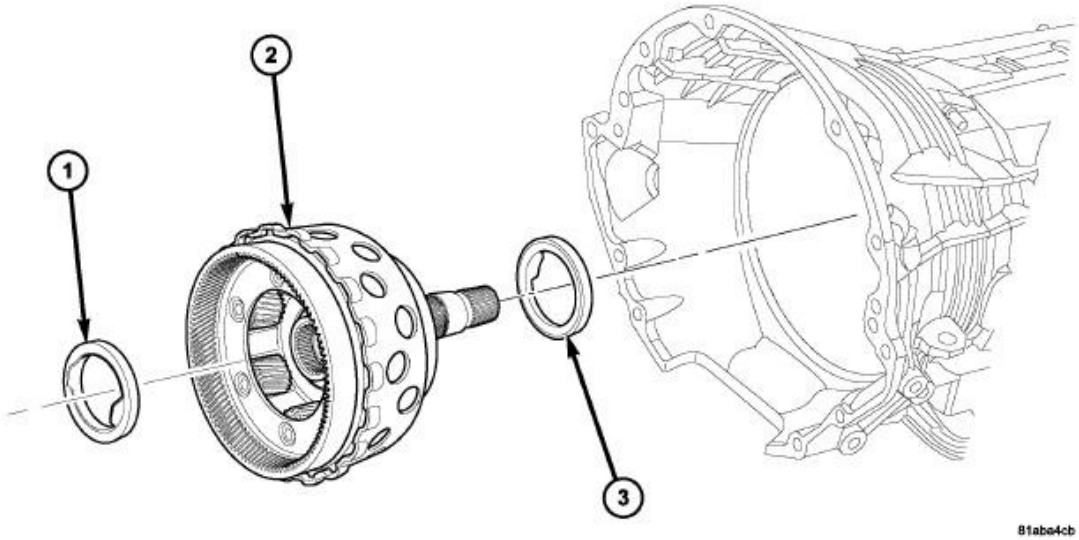

Fig. 63: Input/Reverse Planetary Assembly
Courtesy of CHRYSLER GROUP, LLC

18. Install the number 12 thrust bearing (3) over the output shaft and against the rear planetary gear set, the black side with the tabs goes towards the ORC. Install the number nine thrust bearing with the silver side against the reverse carrier and the black side facing towards the front of the transmission.
19. Install the number 9 thrust bearing (1), with the silver side against the reverse carrier and the black side facing out.
20. Install the reverse/input planetary assembly (2) through the low/reverse clutch assembly.

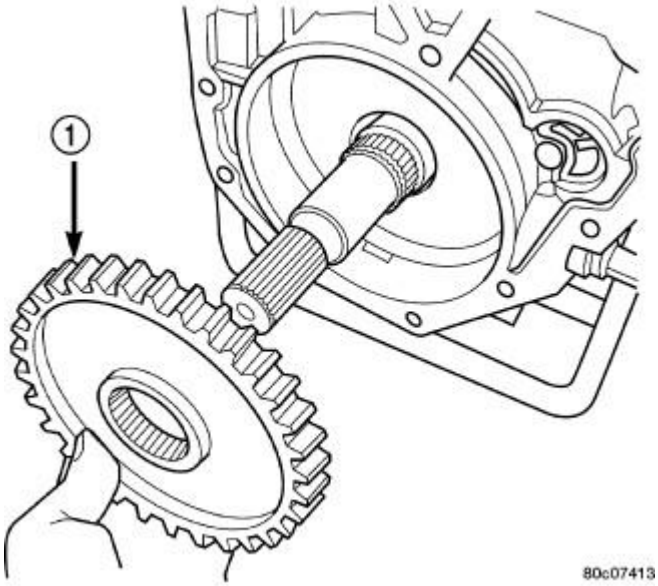

Fig. 64: Park Sprag Gear
Courtesy of CHRYSLER GROUP, LLC

21. Install the park sprag gear (1) onto the output shaft.

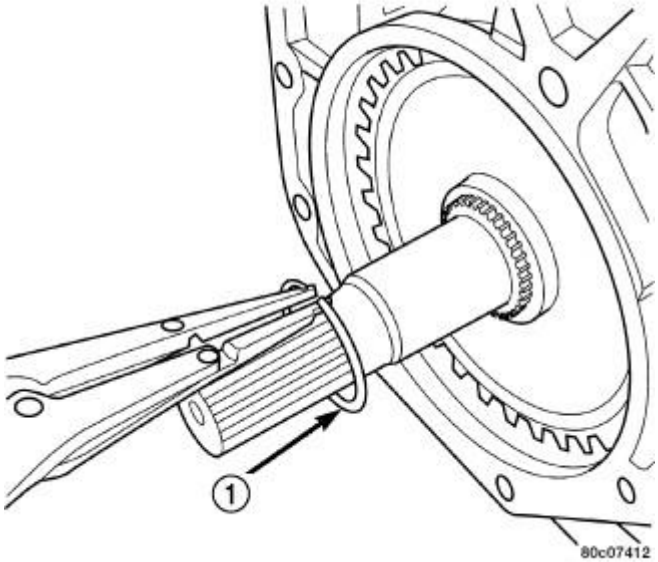

Fig. 65: Park Sprag Snap-Ring
Courtesy of CHRYSLER GROUP, LLC

22. Install the snap-ring (1) to hold the park sprag onto the output shaft.

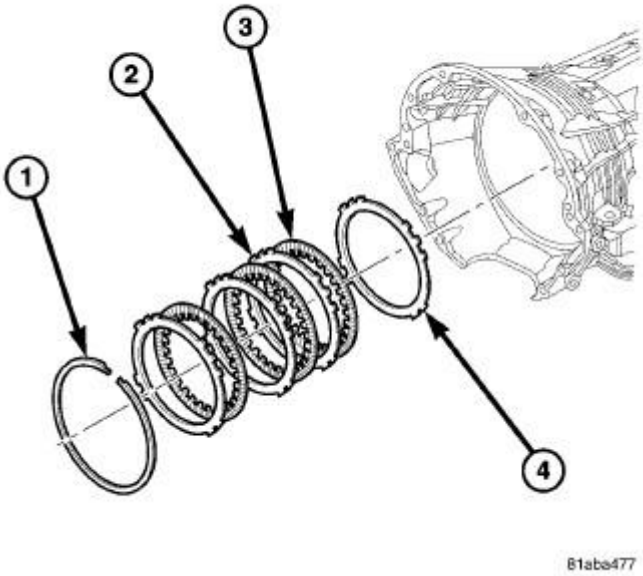

Fig. 66: 2C Clutch Pack
Courtesy of CHRYSLER GROUP, LLC

23. Install the 2C reaction plate (4).
24. Install the 2C clutch pack (2, 3, 4) into the transmission case.
25. Install the flat 2C / 4C clutch retainer snap-ring into the transmission case.

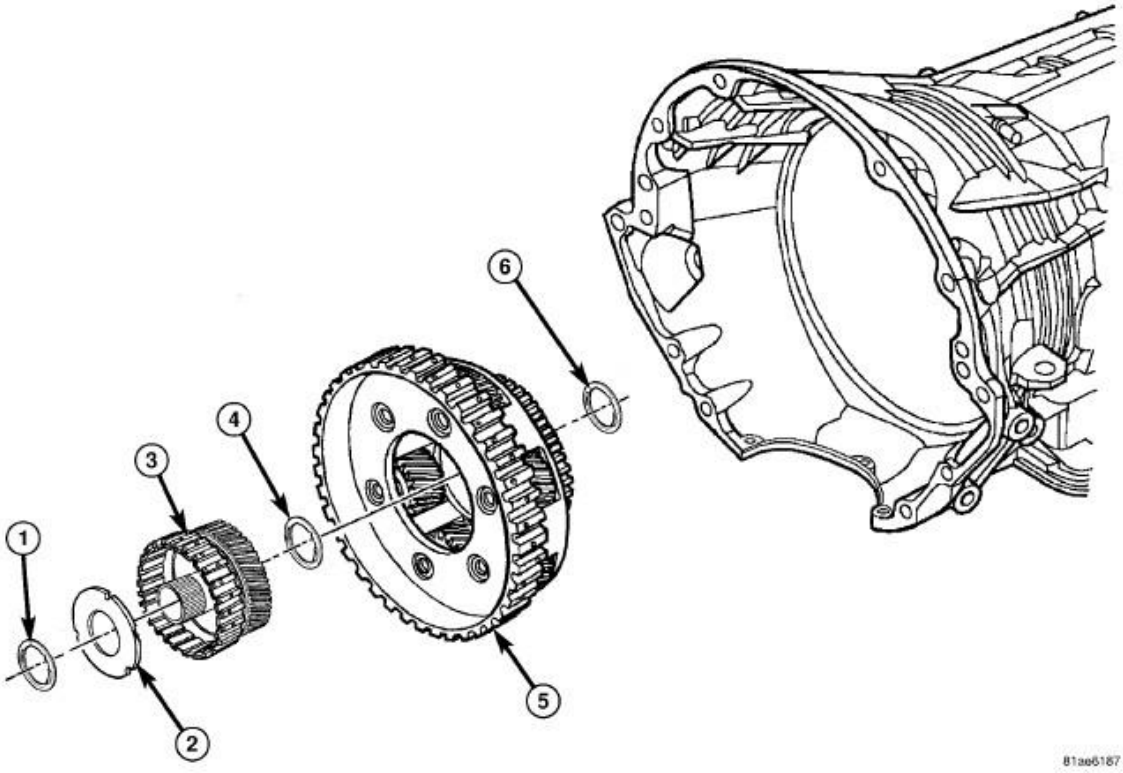

Fig. 67: Reaction Annulus & Carrier
Courtesy of CHRYSLER GROUP, LLC

26. Install the reaction planetary gear set.
27. Install the number 8 thrust bearing (4) into the reaction sun gear with the blue ink stripe against the sun gear with the inner race facing up.

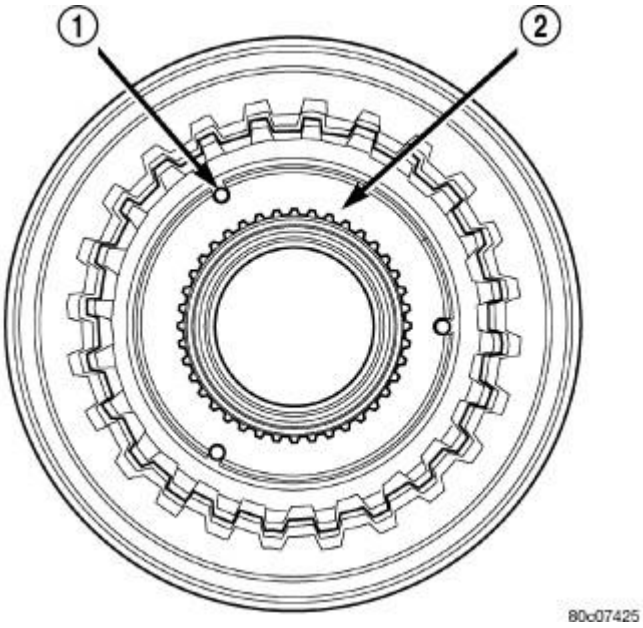

Fig. 68: Aligning Thrust Plate

Courtesy of CHRYSLER GROUP, LLC

28. Install the output shaft selective thrust plate (2) onto the 4C clutch hub with the oil grooves facing the hub and the lugs (1) and notches aligned as shown in illustration.

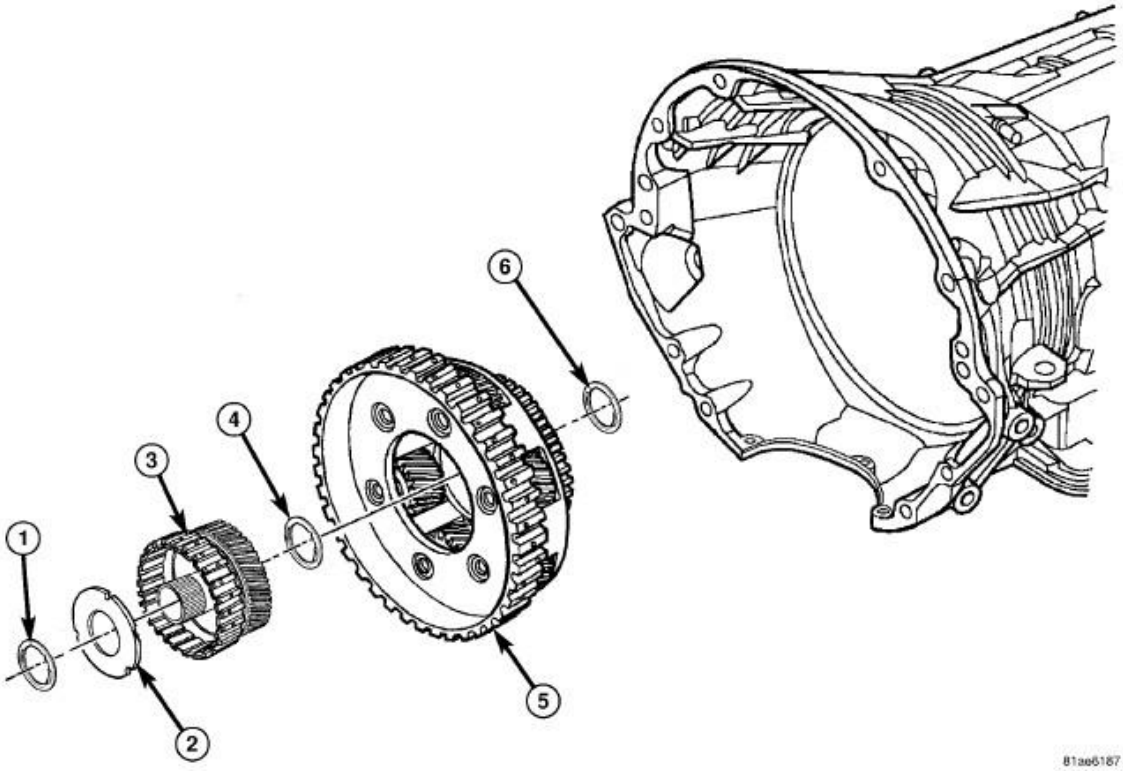

Fig. 69: Reaction Annulus & Carrier
Courtesy of CHRYSLER GROUP, LLC

29. Install the number 6 thrust bearing (1) against the output shaft selective thrust plate (2) with the flat side against the thrust plate and the raised tabs on the inner race facing the front of the transmission.
30. Install the install the 4C clutch / reaction sun gear (3) into the reaction planetary gear set.

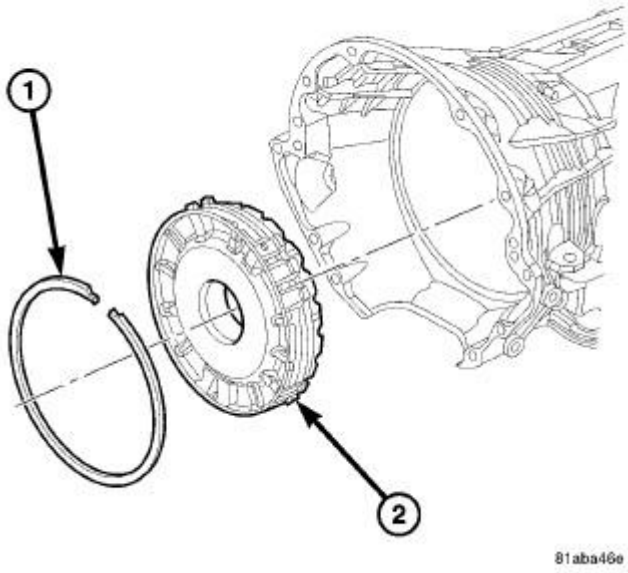

Fig. 70: 4C Clutch Retainer/Bulkhead & Snap-Ring
Courtesy of CHRYSLER GROUP, LLC

31. Install the 2C / 4C retainer/bulkhead (2) into the transmission case. Make sure that the oil feed holes are pointing toward the valve body area. Rotate the 4C clutch hub during the installation of the 4C retainer/bulkhead to ease installation.
32. Install the 2C / 4C retainer/bulkhead tapered snap-ring (1) into the transmission case with the taper toward the front of the case. Make sure that the open ends of the snap-ring are located in the case opening toward the valve body area.
33. Air check the 2C and 4C clutch operation. Refer to **AIR CHECKING TRANSMISSION CLUTCH OPERATION**.

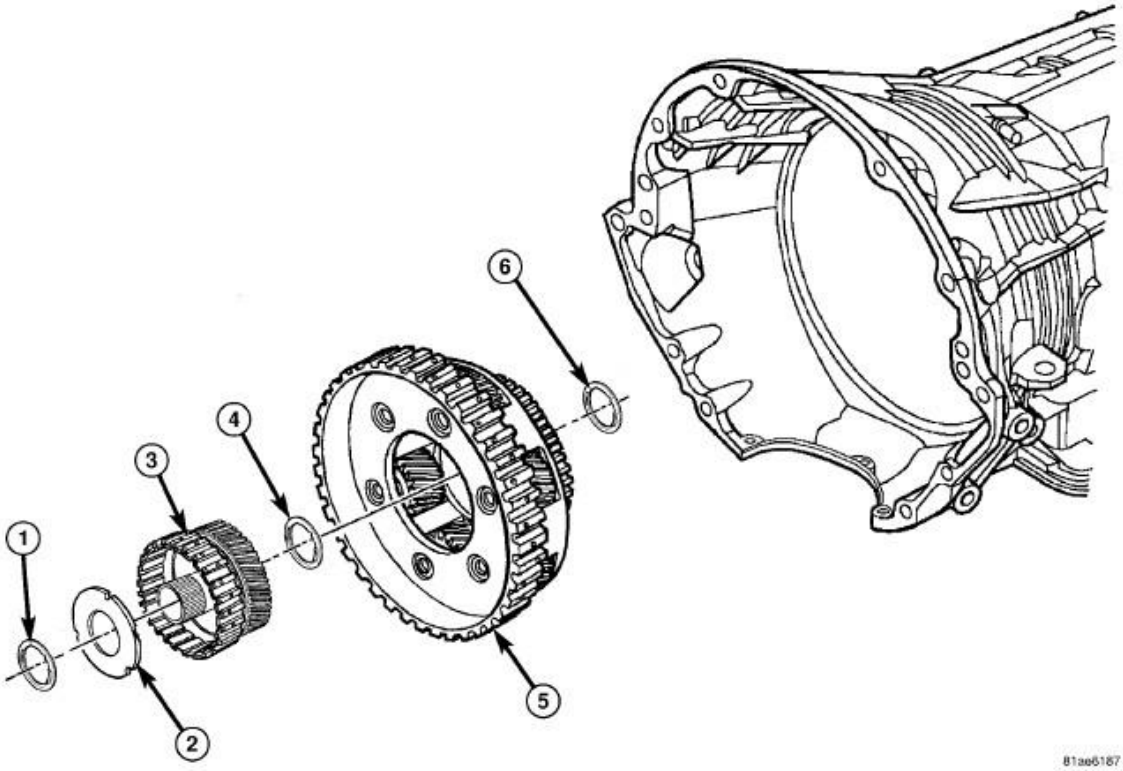

Fig. 71: Reaction Annulus & Carrier
Courtesy of CHRYSLER GROUP, LLC

1 - THRUST BEARING NUMBER 6	5 - REACTION PLANETARY CARRIER
2 - OUTPUT END PLAY THRUST PLATE (SELECTIVE)	6 - THRUST BEARING NUMBER 9
3 - 4C CLUTCH HUB / REACTION SUN GEAR	
4 - THRUST BEARING NUMBER 8	

NOTE: **The output shaft end play is adjusted by means of a selectable bearing spacer (2) in front of the 4C clutch hub/reaction sun gear. The selectable bearing spacer thickness is identified by a numeric numeral molded or stamped into the spacer.**

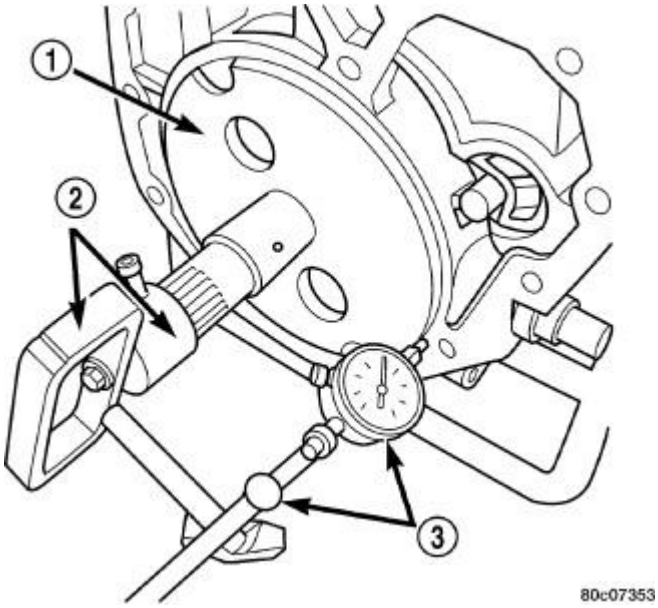

Fig. 72: Measuring Output Shaft End Play
Courtesy of CHRYSLER GROUP, LLC

34. Using (special tool #10065, Plate, Alignment), (special tool #8266-20, Spline Tool, AS68RC Output), handle from (special tool #8266B, End Play Socket Set) (2) and (special tool #C-3339A, Set, Dial Indicator) (3), measure and record the output shaft end-play. The correct output shaft end-play is 0.25-0.52 mm (0.010-0.020 in.). Adjust as necessary. Install the chosen output shaft selective bearing spacer and re-measure end-play to verify selection.

    Output Shaft End Play Selectable Bearing Spacer Thickness

    - 09 = 2.18 mm (0.086 in.)
    - 10 = 2.33 mm (0.092 in.)
    - 11 = 2.48 mm (0.098 in.)
    - 12 = 2.63 mm (0.103 in.)
    - 13 = 2.78 mm (0.109 in.)
    - 14 = 2.69 mm (0.115 in.)
    - 43 = 3.08 mm (0.121 in.)
    - 16 = 3.23 mm (0.127 in.)
    - 17 = 3.38 mm (0.133 in.)
    - 18 = 3.53 mm (0.139 in.)
    - 19 = 3.68 mm (0.145 in.)
35. Apply a bead of RTV silicone and install the extension/adapter housing onto the transmission case.
36. Install and torque the bolts to hold the extension/adapter housing onto the transmission case. The correct torque is 54 N.m (40 ft.lbs.).

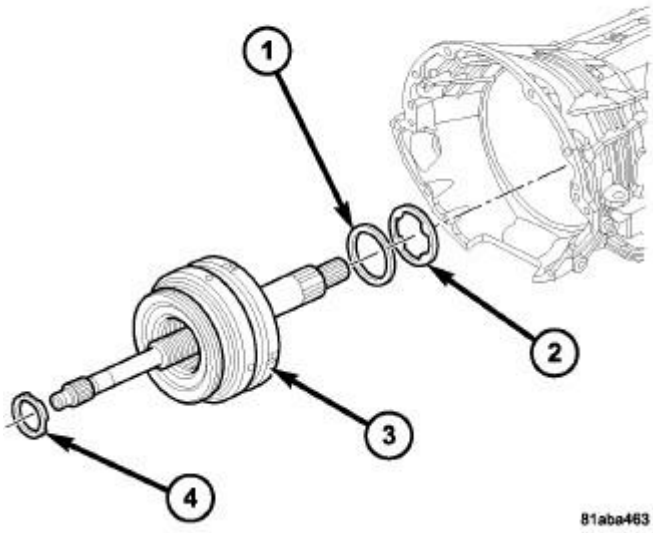

Fig. 73: Input Clutch Assembly
Courtesy of CHRYSLER GROUP, LLC

37. Install the number 5 thrust bearing (1) and selective thrust plate (2) onto the input clutch assembly (3). Be sure that the outer race of the bearing is against the thrust plate.
38. Install the input clutch assembly (3) into the transmission case. Make sure that the input clutch assembly is fully installed by performing a visual inspection through the input speed sensor hole. If the tone wheel teeth on the input clutch assembly are centered in the hole, the assembly is fully installed.
39. Install the number 1 thrust bearing (4) with the outer race up in the pocket of the input clutch assembly.

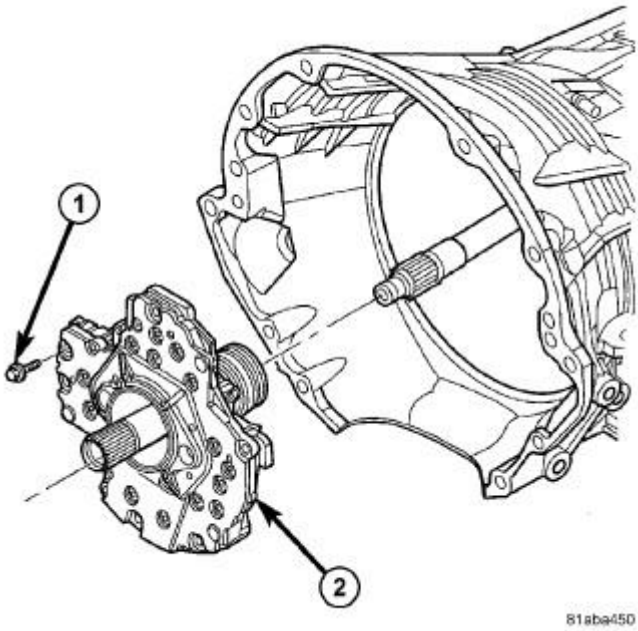

Fig. 74: Oil Pump & Bolt
Courtesy of CHRYSLER GROUP, LLC

40. Install the oil pump (2) into the transmission case making certain the oil pump is flush with the transmission case.
41. Install the bolts (1) to hold the oil pump into the transmission case. Tighten the oil pump bolts to 28 N.m (250 in.lbs.).

NOTE: **When measuring the input shaft end-play, two "stops" will be felt. When the input shaft is pushed inward and the dial indicator zeroed, the first "stop" felt when the input shaft is pulled outward is the movement of the input shaft in the input clutch housing hub. This value should not be included in the end-play measured value and therefore must be recorded and subtracted from the dial indicator reading.**

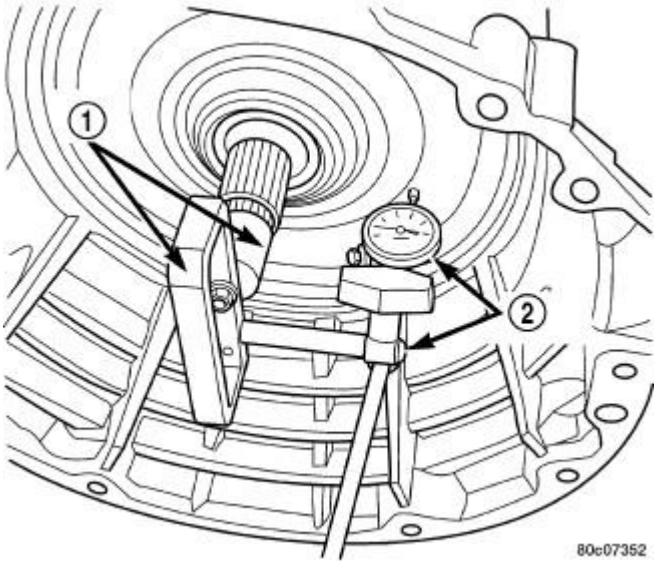

Fig. 75: Measuring Input Shaft End Play
Courtesy of CHRYSLER GROUP, LLC

1 - TOOL 8266 -17
2 - TOOL C-3339A

NOTE: **If NO input shaft end play is noted, disassemble the input clutch assembly and check for the #2, #3, or #4 thrust bearing fallen out of position or cracked. Replace any cracked thrust bearing and reassemble using trans jell or petroleum jelly to retain the thrust bearings. The selectable bearing spacer thickness is identified by a numeric numeral molded or stamped into the spacer.**

NOTE: **(special tool #8266-17, Spline Tool, RFE Output) will fit loosely onto the input shaft, this should not effect the performance of the adapter.**

42. Using (special tool #8266-17, Spline Tool, RFE Output) from (special tool #8266B, End Play Socket Set) (1) and (special tool #C-3339A, Set, Dial Indicator) (2), measure and record the input shaft end-play. The correct end-play is 0.52-0.74 mm (0.020-0.029 in.). Adjust as necessary. Install the chosen selectable bearing spacer on the number 5 thrust bearing and re-measure end-play to verify selection.

Input Shaft End Play Selectable Bearing Spacer Thickness

- 27 = 1.57 mm (0.062 in.)
- 28 = 1.71 mm (0.067 in.)
- 29 = 1.85 mm (0.073 in.)
- 30 = 1.99 mm (0.078 in.)
- 31 = 2.13 mm (0.084 in.)

- 32 = 2.27 mm (0.089 in.)
- 33 = 2.41 mm (0.095 in.)
- 34 = 2.55 mm (0.100 in.)
- 35 = 2.69 mm (0.106 in.)
- 36 = 2.83 mm (0.111 in.)
- 37 = 2.97 mm (0.117 in.)
- 38 = 3.11 mm (0.122 in.)
- 39 = 3.25 mm (0.128 in.)
- 40 = 3.39 mm (0.133 in.)
- 41 = 3.67 mm (0.144 in.)

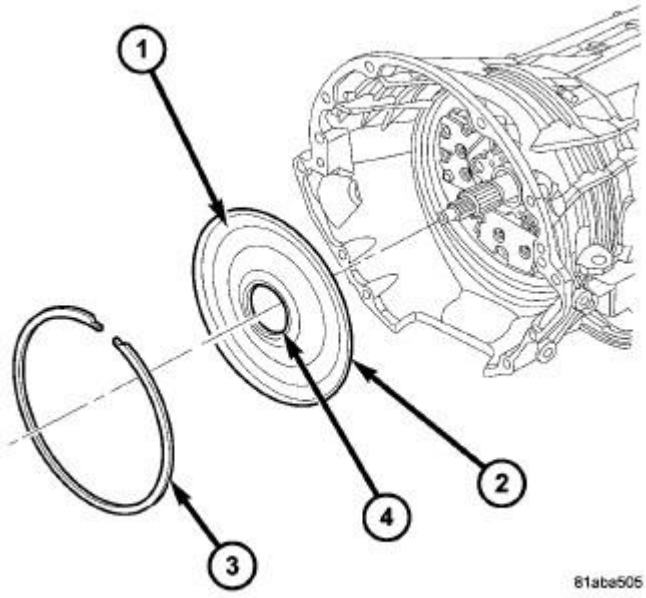

Fig. 76: Front Cover
Courtesy of CHRYSLER GROUP, LLC

NOTE: To avoid contamination and garter spring dislodgement, do not handle the front cover seal when installing the front cover into the transmission case.

43. Position the new front cover (1) onto transmission case.
44. Using a dead-blow mallet and the (special tool #9955, Installer, Front Cover), install the front cover into the transmission case.
45. Install the snap ring into the transmission case.

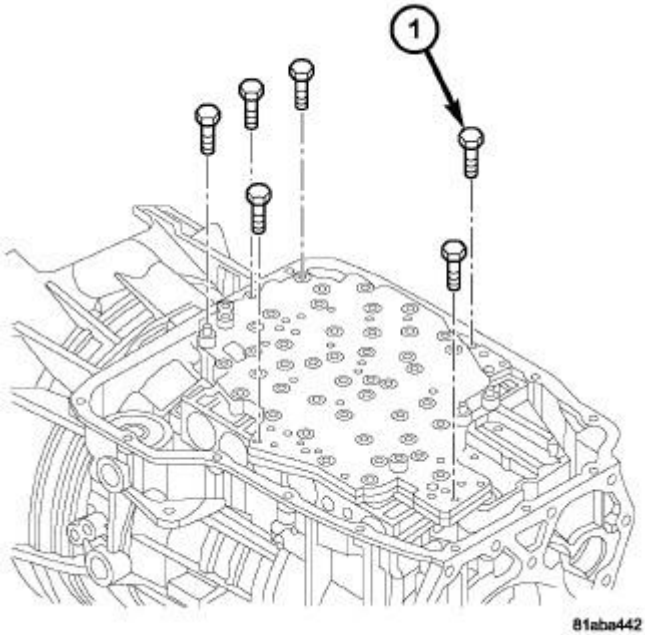

Fig. 77: Valve Body Bolts
Courtesy of CHRYSLER GROUP, LLC

1 - VALVE BODY TO CASE BOLT (6)

46. Install the valve body. Verify that the pin on the manual lever has properly engaged the TRS selector plate. Tighten the valve body to transmission case bolts (1) to 12 N.m (105 in.lbs.).

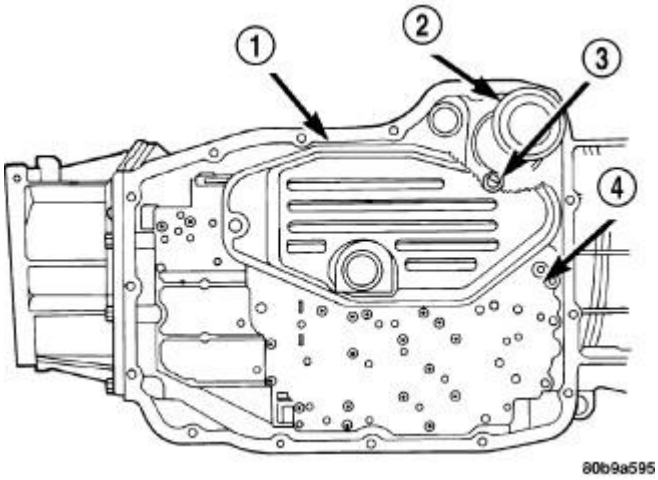

Fig. 78: Primary Oil & Cooler Return Filters
Courtesy of CHRYSLER GROUP, LLC

CAUTION: The primary oil filter seal MUST be fully installed flush against the oil pump body. DO NOT install the seal onto the filter neck and attempt to install the filter and seal as an assembly. Damage to the

transmission will result.

47. Install a new primary oil filter seal in the oil pump inlet bore. Seat the seal in the bore with the butt end of a hammer, or other suitable tool.
48. Install the primary oil filter (1) and the oil cooler return filter (2). Tighten the screw to hold the primary oil filter to the valve body to 4.5 N.m (40 in.lbs.). Using (special tool #8321, Wrench, Oil Filter), tighten the cooler return oil filter to the transmission case to 9.5 N.m (84 in. lbs.).
49. Apply RTV silicone to the oil pan and install the transmission oil pan. Tighten the bolts to 12 N.m (105 in.lbs.).

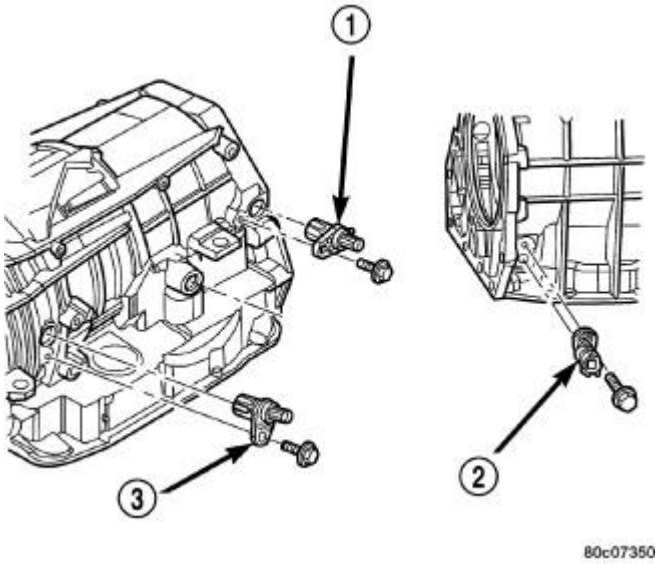

Fig. 79: Input, Output & Line Pressure Sensors
Courtesy of CHRYSLER GROUP, LLC

1 - OUTPUT SPEED SENSOR
2 - LINE PRESSURE SENSOR
3 - INPUT SPEED SENSOR

50. Install the input (3), output (1), and line pressure sensors (2). Tighten the bolts to 12 N.m (105 in.lbs.).

INSTALLATION

INSTALLATION

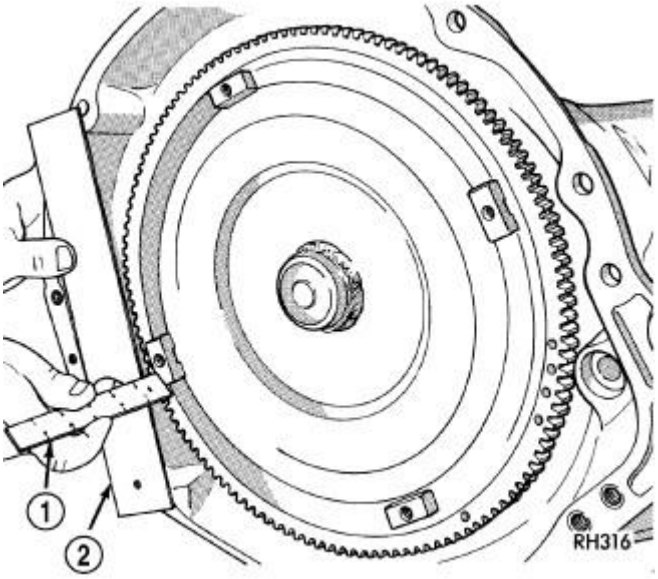

Fig. 80: Checking Torque Converter Seating
Courtesy of CHRYSLER GROUP, LLC

1. Check torque converter hub and hub drive flats for sharp edges burrs, scratches, or nicks. Polish the hub and flats with 320/400 grit paper and crocus cloth if necessary. Verify that the converter hub o-ring is properly installed and is free of any debris. The hub must be smooth to avoid damaging pump seal at installation.
2. If a replacement transmission is being installed, transfer any components necessary, such as the manual shift lever and shift cable bracket, from the original transmission onto the replacement transmission.
3. Lubricate oil pump seal lip with transmission fluid.
4. Align converter and oil pump.
5. Carefully insert converter in oil pump. Then rotate converter back and forth until fully seated in pump gears.
6. Check converter seating with steel scale (1) and straightedge (2). Surface of converter lugs should be at least 13mm (1/2 in.) to rear of straightedge when converter is fully seated.
7. Temporarily secure converter with C-clamp.

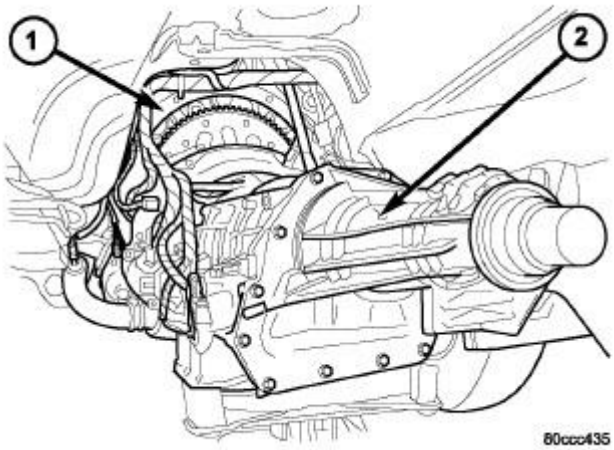

Fig. 81: Identifying Transmission
Courtesy of CHRYSLER GROUP, LLC

8. Position transmission on jack and secure it with chains.
9. Check condition of converter driveplate. Replace the plate if cracked, distorted or damaged. **Also be sure transmission dowel pins are seated in engine block and protrude far enough to hold transmission in alignment.**
10. Apply a light coating of Mopar® High Temp Grease to the torque converter hub pocket in the rear pocket of the engine's crankshaft.
11. Raise transmission (2) and align the torque converter with the drive plate and transmission converter housing with the engine block.

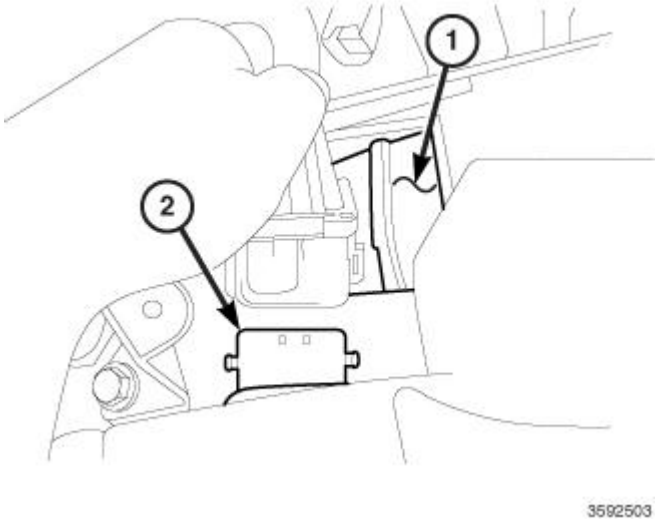

Fig. 82: Transmission Solenoid/TRS Assembly
Courtesy of CHRYSLER GROUP, LLC

12. Move transmission forward. Then raise, lower or tilt transmission to align the converter housing with engine block dowels.

13. Carefully work transmission forward and over engine block dowels until converter hub is seated in crankshaft. Verify that no wires, or the transmission vent hose, have become trapped between the engine block and the transmission.
14. Install two bolts to attach the transmission to the engine.
15. Install remaining torque converter housing to engine bolts. Tighten to 68 N.m (50 ft.lbs.).
16. If equipped, install transfer case. Tighten transfer case nuts to 35 N.m (26 ft.lbs.).
17. Install rear support to transmission. Tighten bolts specification. Refer to **TORQUE SPECIFICATIONS** . .
18. Lower transmission onto crossmember and install bolts attaching transmission mount to crossmember. Tighten bolts specification. Refer to **TORQUE SPECIFICATIONS** . .
19. Remove engine support fixture.
20. Connect wires to solenoid and pressure switch assembly (2) connector.

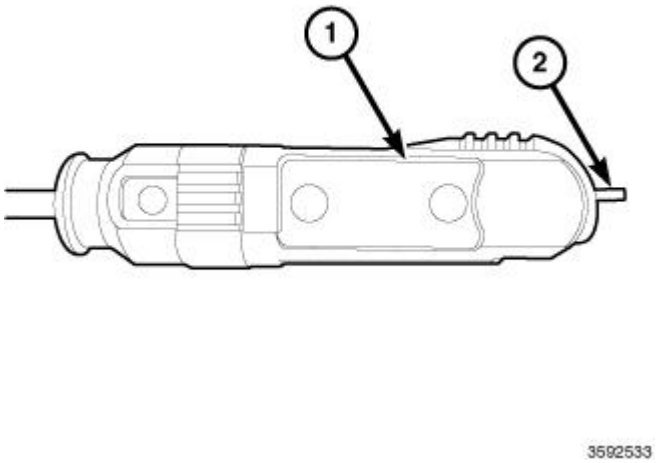

Fig. 83: Gearshift Cable & Pin
Courtesy of CHRYSLER GROUP, LLC

21. Connect gearshift cable to transmission from the top in a downward direction. Cable locking pin (2) will snap outward when cable is fully seated.

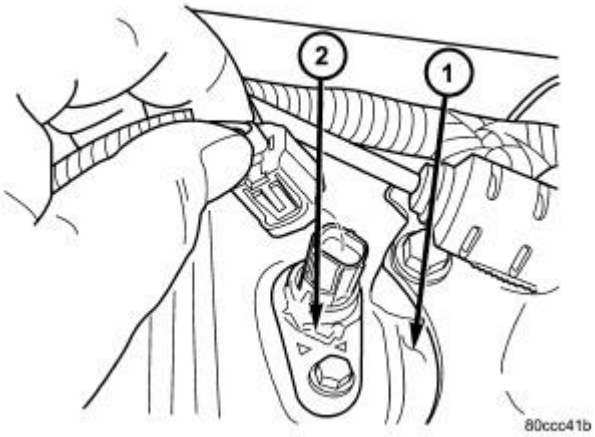

Fig. 84: Input Speed Sensor
Courtesy of CHRYSLER GROUP, LLC

22. Connect wires to input speed sensor (2).

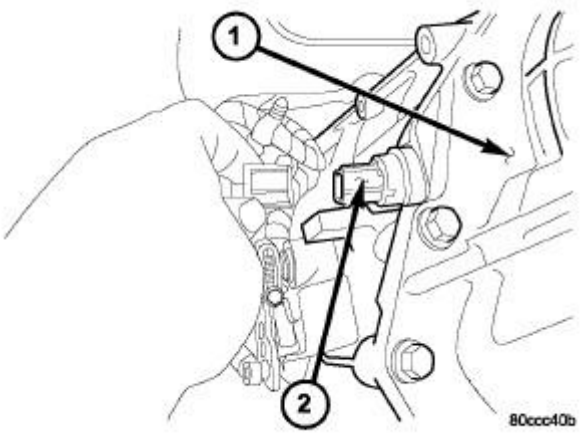

Fig. 85: Output Speed Sensor
Courtesy of CHRYSLER GROUP, LLC

23. Connect wires to output speed sensor (2).

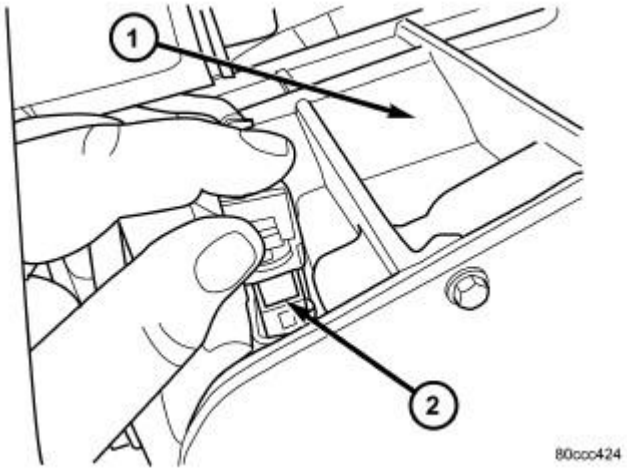

Fig. 86: Line Pressure Sensor
Courtesy of CHRYSLER GROUP, LLC

24. Connect wires to line pressure sensor (2). Be sure transmission harnesses are properly routed.

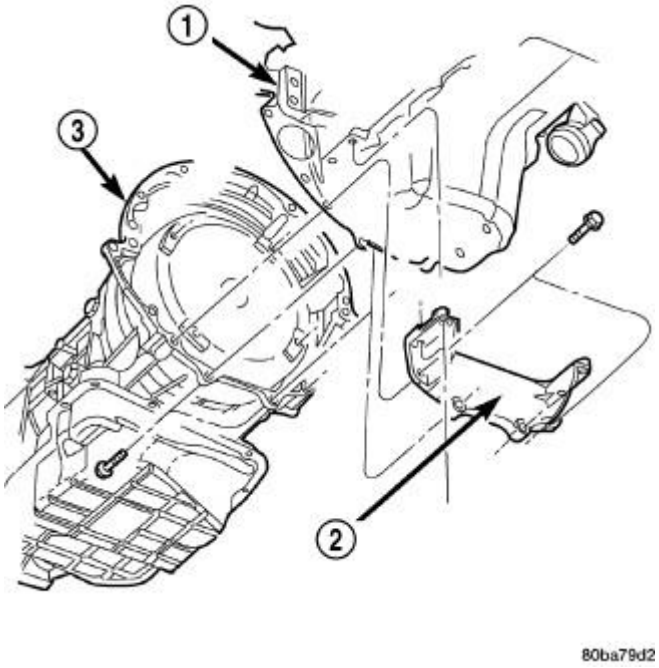

Fig. 87: Engine, Structural Dust Cover & Transmission
Courtesy of CHRYSLER GROUP, LLC

CAUTION: It is essential that the correct length bolts are used to attach the converter to the flexplate. Bolts that are too long will damage the clutch surface inside the torque converter.

25. Install torque converter-to-driveplate bolts. Tighten bolts to 31 N.m (270 in. lbs.).
26. Install starter motor and cooler line bracket.

NOTE: **When connecting the transmission oil cooler lines, it is necessary to replace the line clip that is located on the oil pan stud. The retention force of the clip is severely degraded upon removal.**

27. Connect cooler lines to transmission.
28. Install transmission fill tube.
29. Install exhaust components, if necessary.
30. Align and connect propeller shaft(s).
31. Install the structural dust cover (2) onto the transmission and the engine. Refer to **COVER, STRUCTURAL DUST, INSTALLATION, 5.7L** .
32. Adjust gearshift cable if necessary.
33. Install any skid plates removed previously. Refer to **PLATE, SKID, FRONT, INSTALLATION** or **PLATE, SKID, TRANSFER CASE, INSTALLATION** .
34. Lower vehicle.
35. Fill transmission with Mopar® ATF +4, Automatic Transmission Fluid.

SPECIAL TOOLS

SPECIAL TOOLS

	10020 - Installer, Seal (Originally Shipped In Kit Number(s) 10019.) 10065 - Plate, Alignment (Originally Shipped In Kit Number(s) 10065.) 6756 - Receiver, Ball Joint (Originally Shipped In Kit Number(s) 6745, 6809.) 6960 - Tools, Trac-Lok Axle (Originally Shipped In Kit Number(s) 6947, 6949, 6966.) 8154 - Installer, Seal (Originally Shipped In Kit Number(s) 8163, 8163CC, 8164, 8164CC.) 8249 - Compressor, Spring (Originally Shipped In Kit Number(s) 8283, 8283CC, 8527, 8527CC, 8575, 8575CC, 9975.) 8250 - Compressor, Spring (Originally Shipped In Kit Number(s) 8283, 8283CC, 8527, 8527CC, 8575, 8575CC, 9975.) 8251 - Compressor, Spring (Originally Shipped In Kit Number(s) 8283, 8283CC, 8527, 8527CC, 8575, 8575CC, 9975.) 8252 - Installer (Originally Shipped In Kit Number(s) 8283, 8283CC, 8527, 8527CC, 8575, 8575CC, 9975.) 8253 - Installer, Seal (Originally Shipped In Kit Number(s) 8283, 8283CC, 8527, 8527CC, 8575, 8575CC, 9975.) 8254 - Installer, Grommet (Originally Shipped In Kit Number(s) 8283, 8283CC, 8527, 8527CC, 8575, 8575CC, 9975.) 8257 - Support, Transmission (Originally Shipped In Kit Number(s) 8283, 8283CC, 8527, 8527CC, 8575, 8575CC, 9975.)

	8259 - Adapter, Pressure Test (Originally Shipped In Kit Number(s) 8283, 8283CC, 8527, 8527CC, 8575, 8575CC, 9975.)
	8260A - Fixture, Input Clutch (Originally Shipped In Kit Number(s) 8260A.)
	8266-17 - Spline Tool, RFE Output (Originally Shipped In Kit Number(s) 8283, 8527, 8575.)
	8266-20 - Spline Tool, AS68RC Output (Originally Shipped In Kit Number(s) 9978.)
	8266B - End Play Socket Set (Originally Shipped In Kit Number(s) 8283, 8527, 8575, 8575CC.)
	8285 - Compressor, Spring (Originally Shipped In Kit Number(s) 8283, 8283CC, 8527, 8527CC, 8575, 8575CC, 9975.)
	8321 - Wrench, Oil Filter (Originally Shipped In Kit Number(s) 8283, 8283CC, 8527, 8527CC, 8575, 8575CC, 9975.)
	8349-1 - Installer Crank Seal (Originally Shipped In Kit Number(s) 8283, 8283CC, 8527, 8527CC, 8575, 8575CC.)
	8504-1 - Piston Installer (Outer) (Originally Shipped In Kit Number(s) 8283, 8283CC, 8527, 8527CC, 8575, 8575CC, 9975.)
	8896 - Installer, Seal (Originally Shipped In Kit Number(s) 8887, 8887CC.)
	9045 - Installer, Plug (Originally Shipped In Kit Number(s) 8847, 8850, 8850CC, 8853, 8854, 8854CC.)
	9955 - Installer, Front Cover (Originally Shipped In Kit Number(s) 9955.)
	C-3293-SP - Gauge, Pressure 0-300 P.S.I.
	C-3339A - Set, Dial Indicator (Originally Shipped In Kit Number(s) 9202.)
	C-4171 - Driver Handle, Universal (Originally Shipped In Kit Number(s) 9202, 9202A-CAN, 9202CC, 9299, 9299CC, 9299CC, 9300A-CAN.)

ASSEMBLY, INPUT CLUTCH

DESCRIPTION

DESCRIPTION

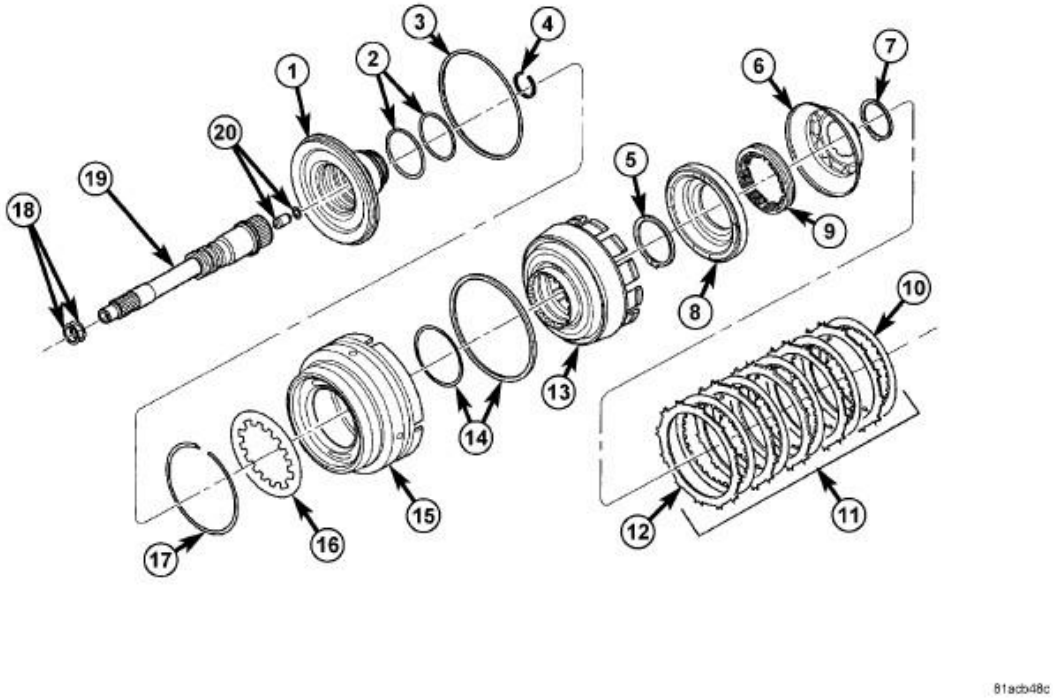

Fig. 88: Input Clutch Assembly - Part 1
Courtesy of CHRYSLER GROUP, LLC

1 - INPUT CLUTCH HUB	11 - UD CLUTCH
2 - O-RING SEALS	12 - UD OUTER DISC
3 - SEAL	13 - INPUT CLUTCH RETAINER
4 - SNAP-RING	14 - SEAL
5 - SNAP-RING	15 - OD/REV PISTON
6 - UD BALANCE PISTON	16 - BELLEVILLE SPRING
7 - SNAP-RING	17 - SNAP-RING
8 - UD PISTON	18 - SEAL RINGS
9 - UD SPRING PACK	19 - INPUT SHAFT
10 - UD INNER DISC	20 - LUBRICATION CHECK VALVE AND SNAP-RING

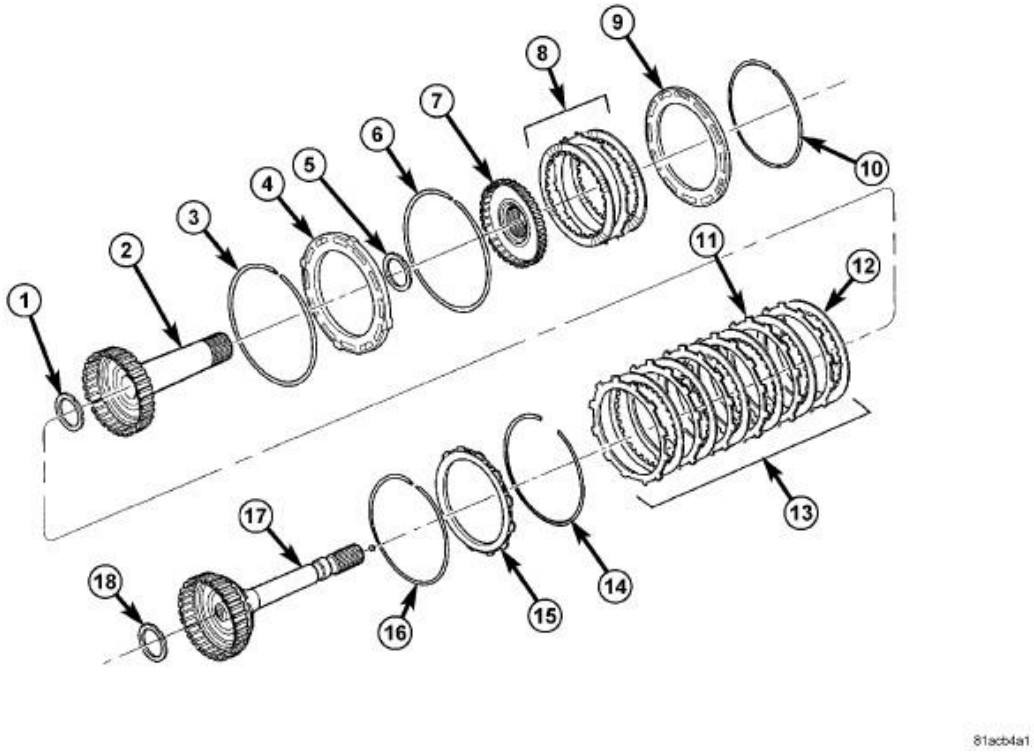

Fig. 89: Input Clutch Assembly - Part 2
Courtesy of CHRYSLER GROUP, LLC

1 - THRUST BEARING NUMBER 3	10 - SNAP-RING (SELECT)
2 - OD HUB/SHAFT	11 - OD OUTER DISC
3 - SNAP-RING (WAVE)	12 - OD INNER DISC
4 - REV/OD PRESSURE PLATE	13 - OD CLUTCH
5 - THRUST BEARING NUMBER 4	14 - SNAP-RING (TAPERED)
6 - SNAP-RING (FLAT)	15 - UD/OD REACTION PLATE
7 - REVERSE HUB/SHAFT	16 - SNAP-RING (FLAT)
8 - REVERSE CLUTCH	17 - UD HUB/SHAFT
9 - REVERSE REACTION PLATE	18 - THRUST BEARING NUMBER 2

Three hydraulically applied input clutches are used to drive planetary components. The underdrive, overdrive, and reverse clutches are considered input clutches and are contained within the input clutch assembly.

The input clutch assembly also contains:

- Input shaft
- Input hub
- Clutch retainer
- Underdrive piston
- Overdrive/reverse piston

- Overdrive hub
- Underdrive hub

OPERATION

OPERATION

The three input clutches are responsible for driving different components of the planetary geartrain.

UNDERDRIVE CLUTCH

The underdrive clutch is hydraulically applied in first, second, third, and fourth (direct) gears by pressurized fluid against the underdrive piston. When the underdrive clutch is applied, the underdrive hub drives the input sun gear.

OVERDRIVE CLUTCH

The overdrive clutch is hydraulically applied in fourth (direct), fifth, and sixth gears by pressurized fluid against the overdrive/reverse piston. When the overdrive clutch is applied, the overdrive hub drives the reverse carrier/input annulus assembly.

REVERSE CLUTCH

The reverse clutch is hydraulically applied in reverse gear by pressurized fluid against the overdrive/reverse piston. When the reverse clutch is applied, the reaction sun gear is driven.

DISASSEMBLY

DISASSEMBLY

NOTE: **If the input clutch assembly is being reconditioned (clutch/seal replacement) or replaced, it is necessary to perform the Quick Learn Procedure using the scan tool. Refer to MODULE, TRANSMISSION CONTROL, STANDARD PROCEDURE .**

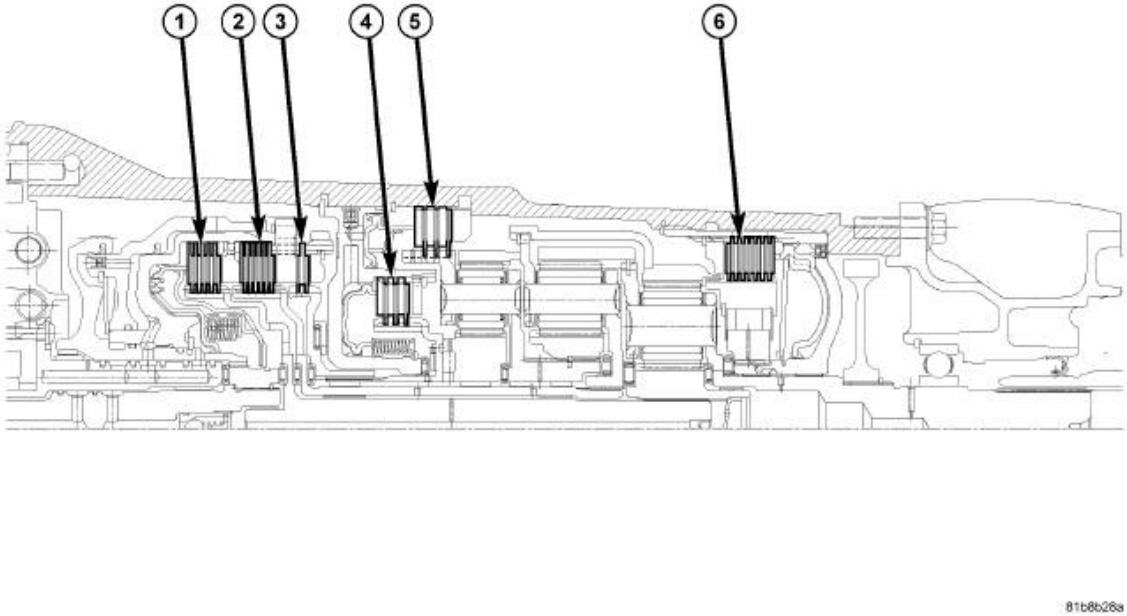

Fig. 90: 66RFE Clutch Orientation
Courtesy of CHRYSLER GROUP, LLC

1 - U/D CLUTCH	4 - 4C CLUTCH
2 - O/D CLUTCH	5 - 2C CLUTCH
3 - REVERSE CLUTCH	6 - L/R CLUTCH

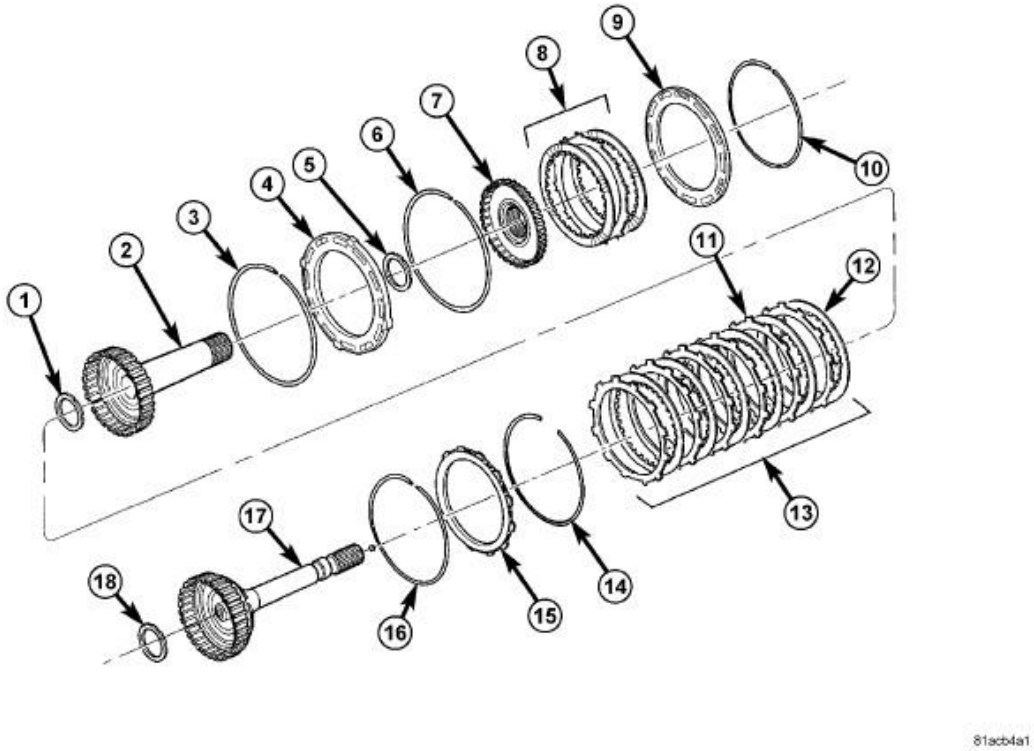

Fig. 91: Input Clutch Assembly - Part 2
Courtesy of CHRYSLER GROUP, LLC

1. Remove the reverse reaction plate selective snap-ring (10) from the input clutch retainer.
2. Remove the reverse reaction plate (9) from the input clutch retainer.
3. Remove the reverse hub (7) and reverse clutch pack (8) from the input clutch retainer.
4. Remove the number 4 thrust bearing (5) from the overdrive hub (2).
5. Remove the overdrive hub (2) from the input clutch retainer.
6. Remove the number 3 thrust bearing (1) from the underdrive hub (17).
7. Remove the OD/reverse pressure plate snap-ring (6) from the from the OD/reverse piston.
8. Remove the OD/reverse pressure plate (4), overdrive clutch (13), and UD hub (17) from the input clutch retainer.
9. Remove the number 2 thrust bearing (18) from the input clutch hub.
10. Remove the overdrive clutch wave snap-ring (3) from the from the OD/reverse piston.
11. Remove the UD/OD reaction plate tapered snap-ring (14) from the input clutch retainer.
12. Remove the UD/OD reaction plate (15) from the input clutch retainer.
13. Remove the UD/OD reaction plate flat snap-ring (16) from the input clutch retainer.
14. Remove the underdrive clutch pack (11) from the input clutch retainer (13).

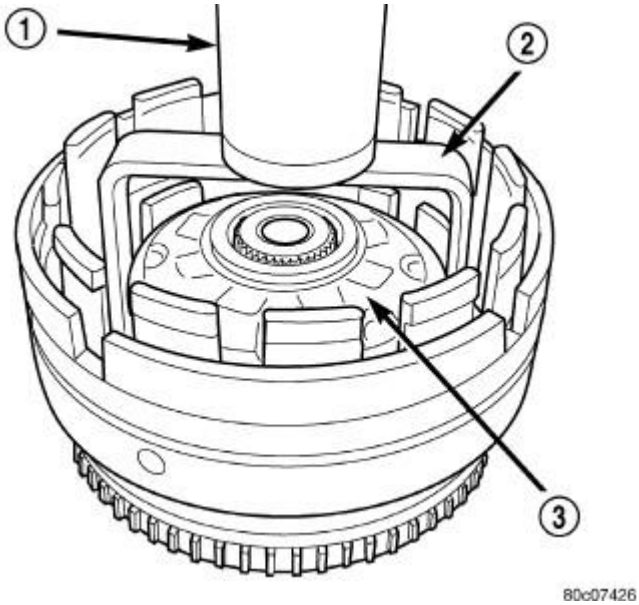

Fig. 92: Compressing UD/OD Balance Piston
Courtesy of CHRYSLER GROUP, LLC

15. Using Spring Compressor (special tool #8251, Compressor, Spring) (2), compress the UD balance piston (3) and remove the snap-ring from the input clutch hub.

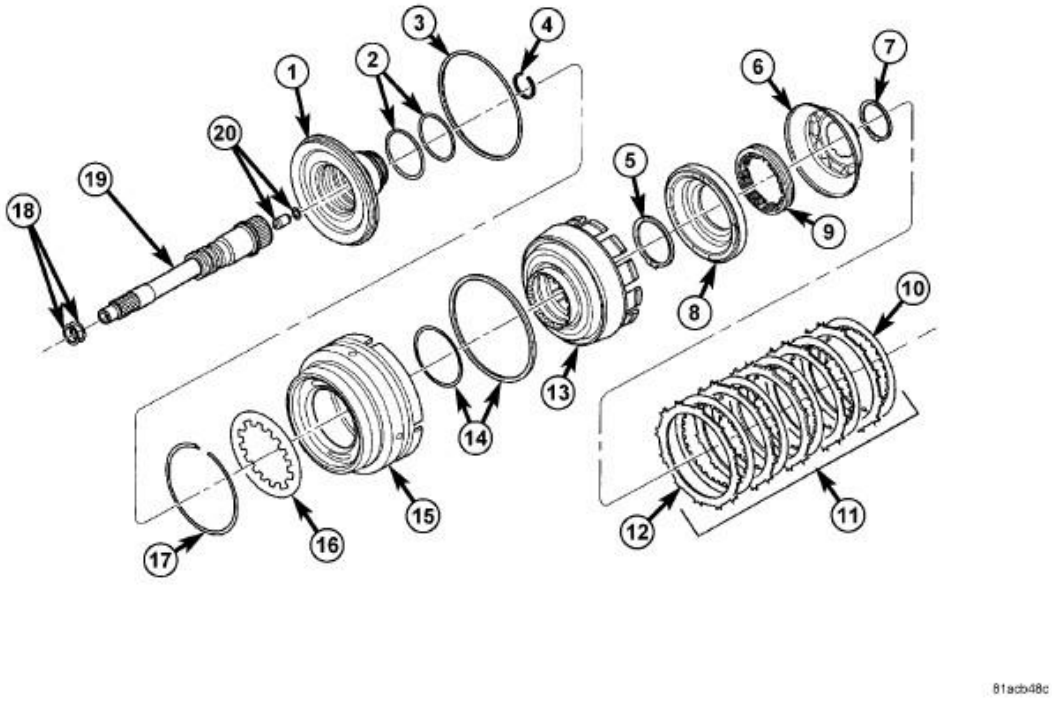

Fig. 93: Input Clutch Assembly - Part 1
Courtesy of CHRYSLER GROUP, LLC

NOTE: **Both the UD balance piston and the underdrive piston have seals molded onto them. If the seal is damaged, do not attempt to install a new seal onto the piston. The piston/seal must be replaced as an assembly.**

16. Remove the UD balance piston (6) and piston return spring (9) from the input clutch retainer (13).
17. Remove the underdrive piston (8) from the input clutch retainer (13).
18. Remove the input clutch retainer tapered snap-ring (5).
19. Separate input clutch retainer (13) from input clutch hub (1).
20. Separate OD/reverse piston (15) from input clutch hub retainer (13).

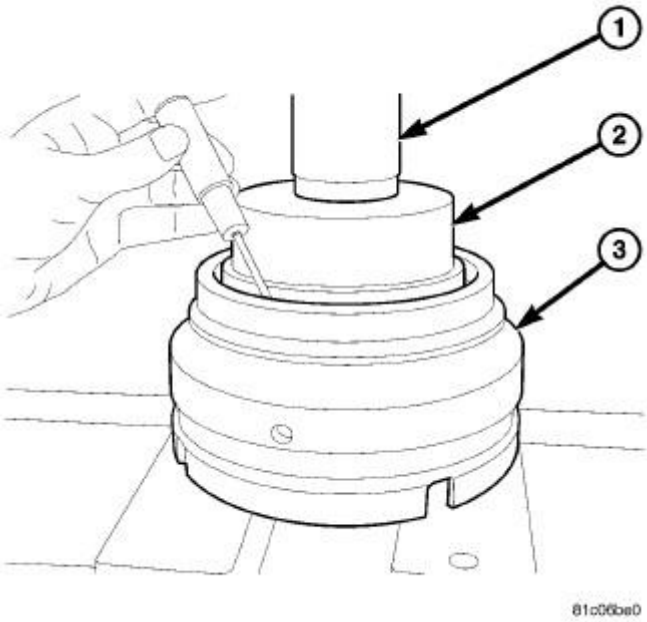

Fig. 94: Compressing OD/Reverse Belleville Spring
Courtesy of CHRYSLER GROUP, LLC

21. Using Arbor Press (1) and tool (special tool #8349-1, Installer Crank Seal) (2) compress the OD / Reverse belleville spring just enough to remove the snap ring.
22. Remove the belleville spring and snap ring from the OD / Reverse piston (3).
23. Remove all seals and o-rings from the input shaft and input hub. The o-rings on the input hub are color coded. Be sure to make note of which o-ring belongs in which location.

ASSEMBLY

ASSEMBLY

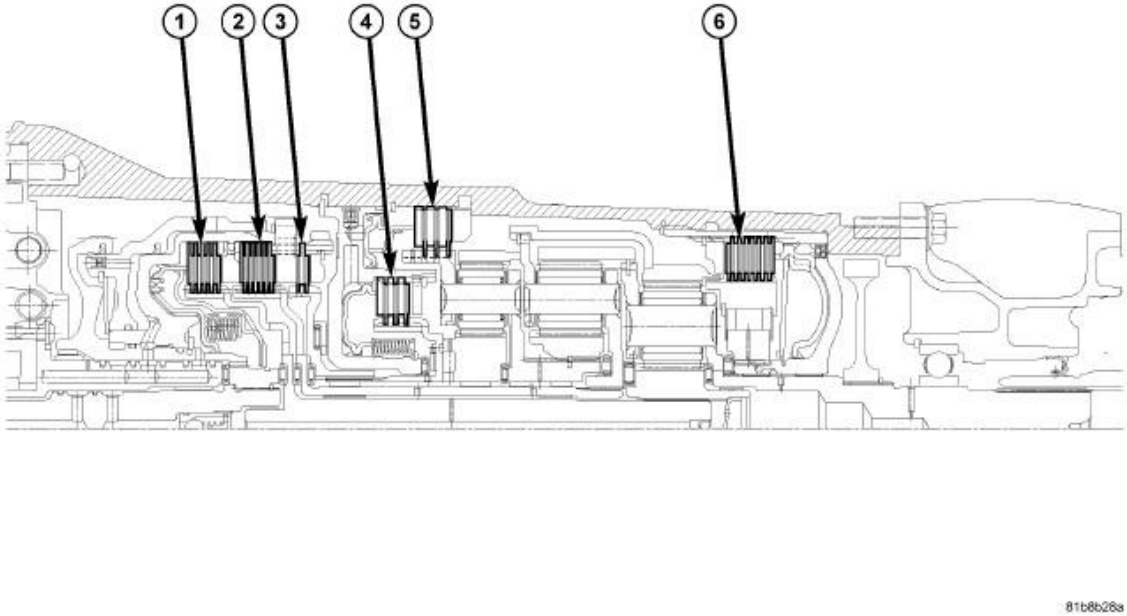

Fig. 95: 66RFE Clutch Orientation
Courtesy of CHRYSLER GROUP, LLC

1 - U/D CLUTCH	4 - 4C CLUTCH
2 - O/D CLUTCH	5 - 2C CLUTCH
3 - REVERSE CLUTCH	6 - L/R CLUTCH

NOTE: **The 66RFE transmission does not use a number 7 thrust bearing.**

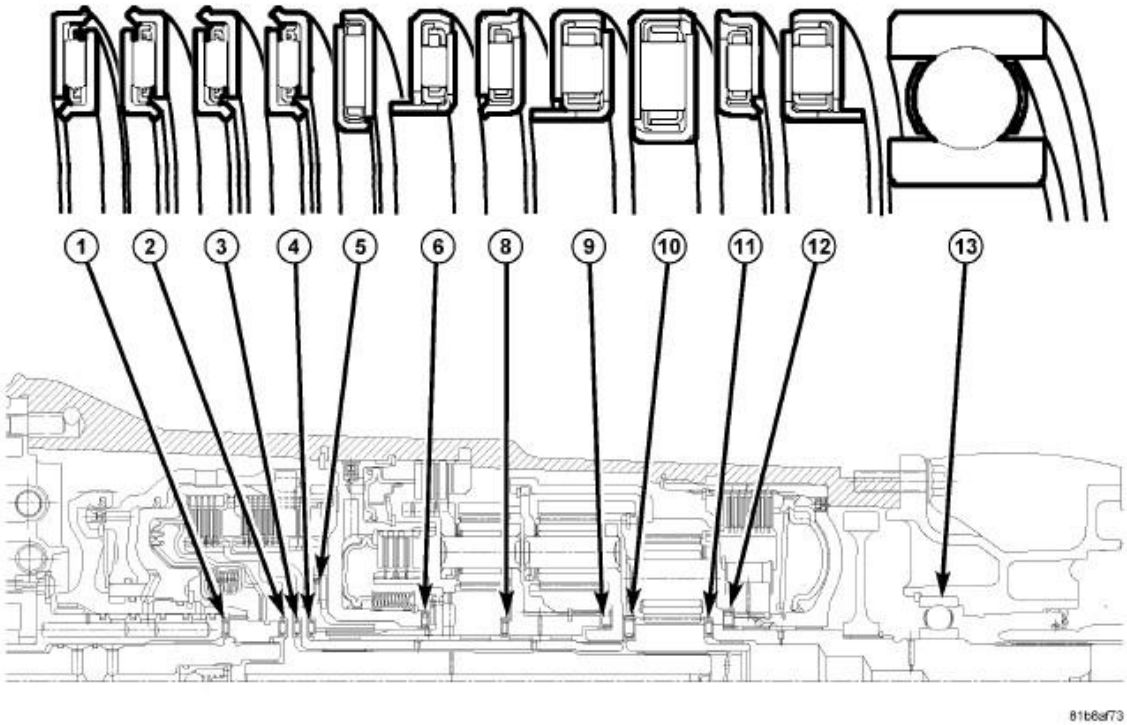

Fig. 96: Thrust Bearings & Output Shaft Bearing
Courtesy of CHRYSLER GROUP, LLC

1 - THRUST BEARING NO. 1	8 - THRUST BEARING NO. 8
2 - THRUST BEARING NO. 2	9 - THRUST BEARING NO. 9
3 - THRUST BEARING NO. 3	10 - THRUST BEARING NO. 10
4 - THRUST BEARING NO. 4	11 - THRUST BEARING NO. 11
5 - THRUST BEARING NO. 5	12 - THRUST BEARING NO. 12
6 - THRUST BEARING NO. 6	13 - OUTPUT

NOTE: **When installing the OD / Reverse piston belleville spring, orientate it such that it contacts a new surface on the piston.**

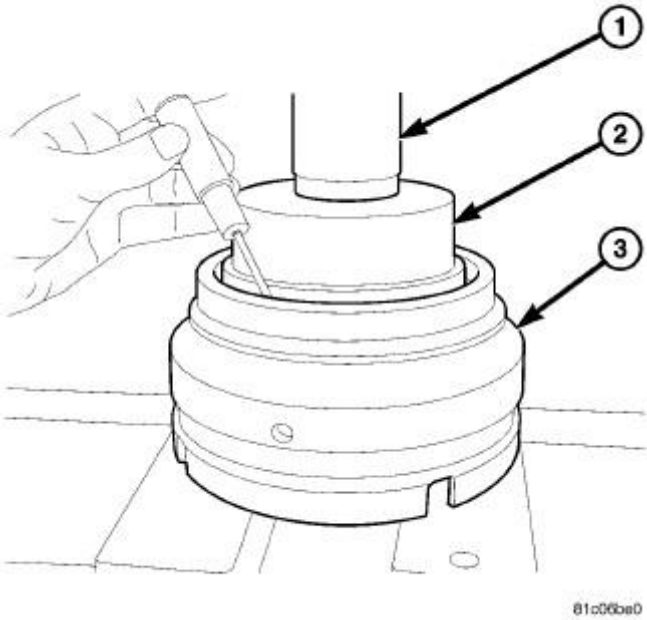

Fig. 97: Compressing OD/Reverse Belleville Spring
Courtesy of CHRYSLER GROUP, LLC

1. Install the belleville spring and snap ring loosely onto the OD / Reverse piston (3).
2. Using an Arbor Press (1) and tool (special tool #8349-1, Installer Crank Seal) (2) compress the belleville spring just enough to install the snap ring.

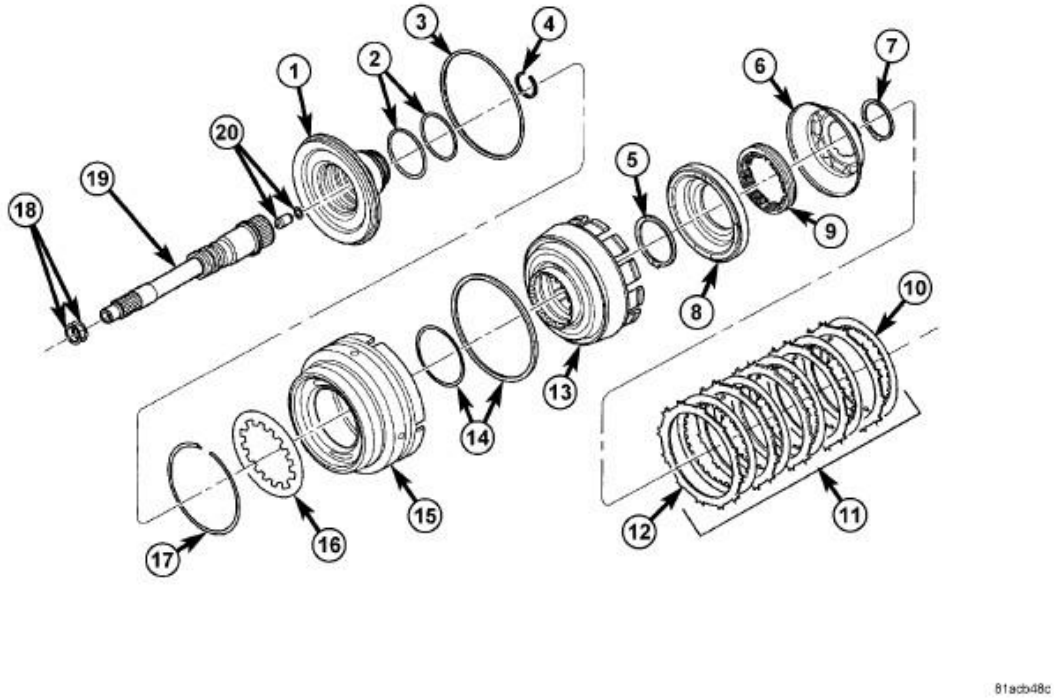

Fig. 98: Input Clutch Assembly - Part 1
Courtesy of CHRYSLER GROUP, LLC

NOTE: **Install all new seals and o-rings onto the input shaft and input hub. The o-rings on the input hub are color coded. Be sure to install the correct o-ring in the correct location.**

3. Check the transmission lubrication check valve (20) located in the input shaft using shop air. The valve should only allow air flow in one direction. If the valve allows no air flow, or air flow in both directions, the valve will need to be replaced.
4. Lubricate all seals with Mopar® ATF +4, Automatic Transmission Fluid, prior to installation.
5. Assemble the OD/reverse piston (15) onto the input clutch retainer (13).
6. Assemble the input clutch retainer (13) onto the input clutch hub (1).
7. Install the input clutch retainer tapered snap-ring (5) with tapered side up onto the input clutch hub (1).

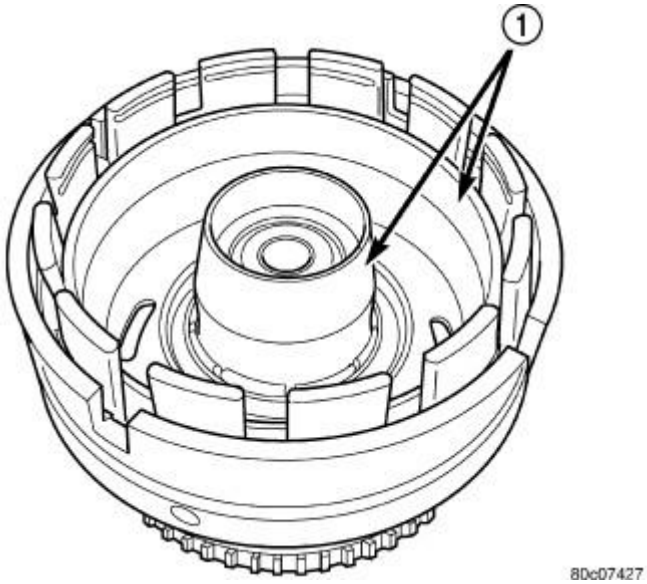

Fig. 99: Installing Underdrive Piston
Courtesy of CHRYSLER GROUP, LLC

8. Install Piston Installer (special tool #8504-1, Piston Installer (Outer)) (1) into the input clutch retainer and onto the input clutch hub to guide the inner and outer underdrive piston seals into position.
9. Install the underdrive piston into the input clutch retainer and over the input clutch hub.

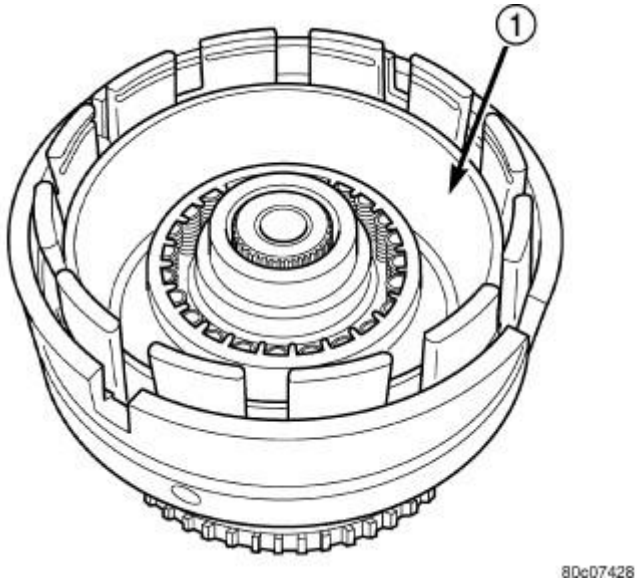

Fig. 100: Installing Balance Piston Seal
Courtesy of CHRYSLER GROUP, LLC

10. Install the UD balance piston return spring pack into the input clutch retainer.
11. Install Piston Installer (special tool #8252, Installer) (1) into the input clutch retainer to guide the UD balance piston seal into position inside the underdrive piston.

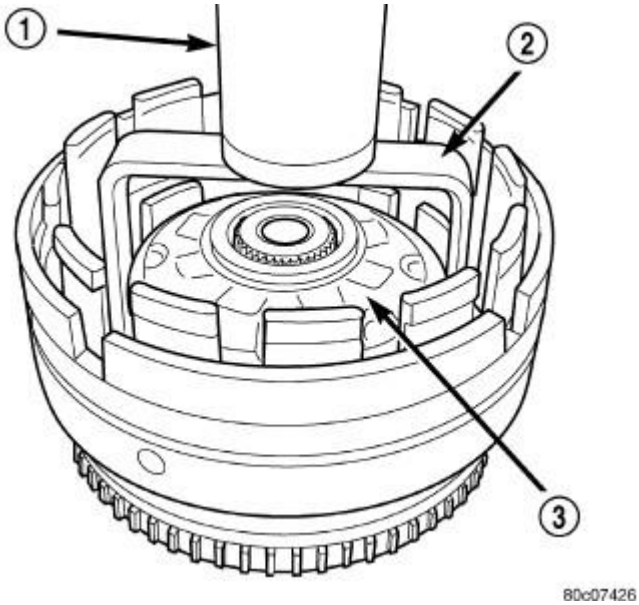

Fig. 101: Compressing Return Spring Pack
Courtesy of CHRYSLER GROUP, LLC

12. Install the UD balance piston (3) into the input clutch retainer and the underdrive piston.
13. Using Spring Compressor (special tool #8251, Compressor, Spring) (2), compress the UD return spring pack and secure the piston in place with the snap-ring.

NOTE: **The 66RFE UD clutch discs (both the internal-and external-toothed discs) can now be identified by the numbers "605/604" which are laser-burned into the friction material facing. Install an outer-toothed disc first then alternate inner and outer discs, ending with an inner-toothed disc on top, install all discs with the friction material facing up.**

14. Install the underdrive clutch pack into the input clutch retainer.

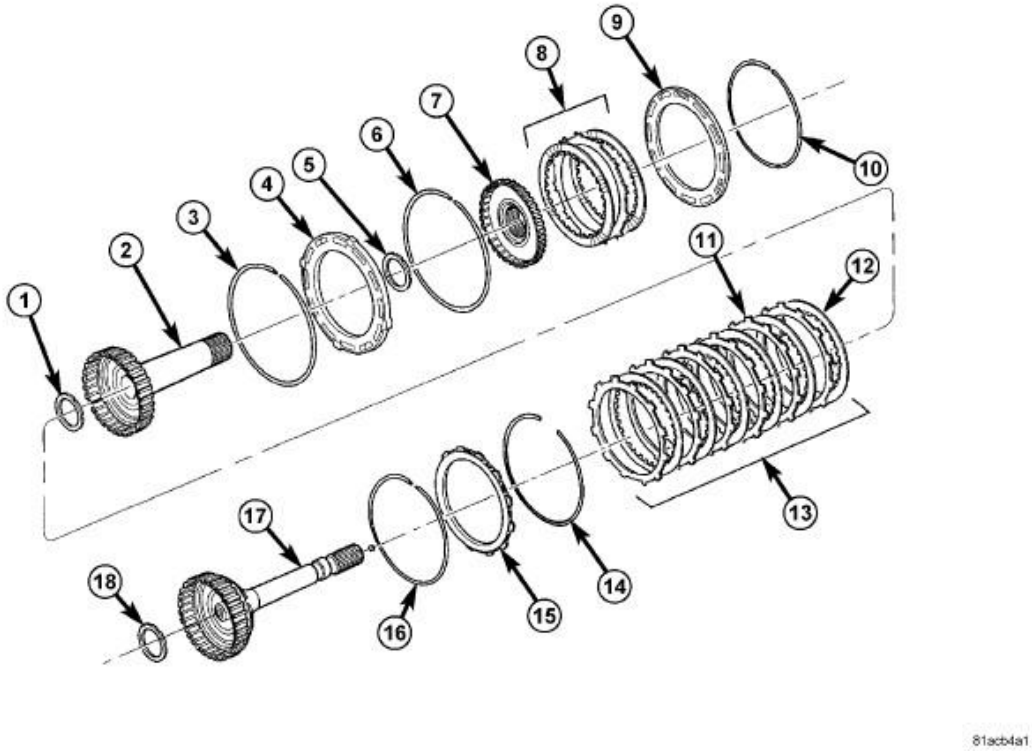

Fig. 102: Input Clutch Assembly - Part 2
Courtesy of CHRYSLER GROUP, LLC

15. Install the UD / OD reaction plate lower flat snap-ring (16). The correct snap-ring can be identified by the two tabbed ears.
16. Install the UD / OD reaction plate (15) into the input clutch retainer. The reaction plate is to be installed with the wide face down, and the narrow face up.
17. Install the UD reaction plate upper tapered snap-ring (14) with tapered side up, and with both tips underneath the retainer lugs.`

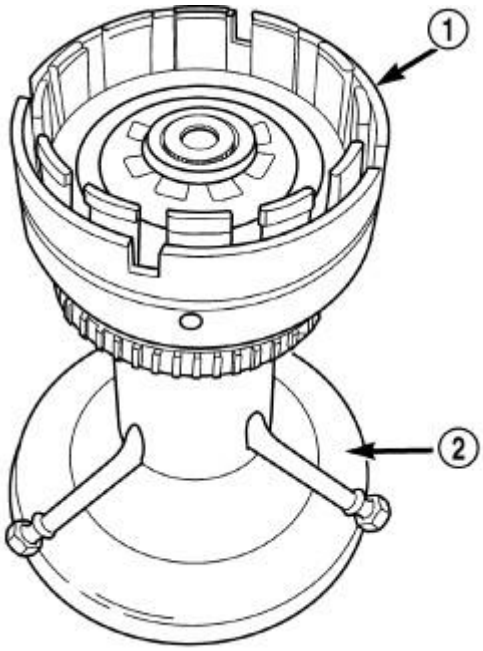

Fig. 103: Input Clutch Assembly Mounted On Tool 8260A
Courtesy of CHRYSLER GROUP, LLC

18. Install the input clutch assembly into Input Clutch Pressure Fixture (special tool #8260A, Fixture, Input Clutch) (2).

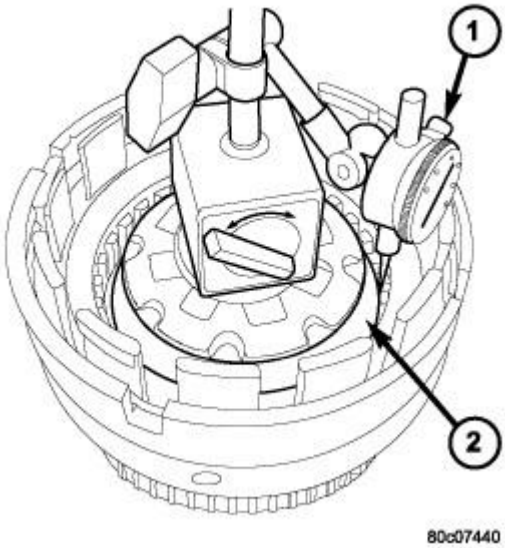

Fig. 104: Measuring UD Clutch Clearance
Courtesy of CHRYSLER GROUP, LLC

19. Mount a dial indicator (special tool #C-3339A, Set, Dial Indicator) (1) on the input clutch hub. Push down on the UD clutch discs and zero the indicator against the UD clutch discs. Apply 20 psi of air pressure to the UD clutch and record the dial indicator reading. Measure and record UD clutch pack

measurement in four (4) places, 90° apart. Take average of four measurements and compare with UD clutch pack clearance specification. The correct clutch clearance is 1.02-1.72 mm (0.040-0.068 in.). The reaction plate is not selective. If the clutch clearance is not within specification, replace the reaction plate along with all the friction and steel discs.

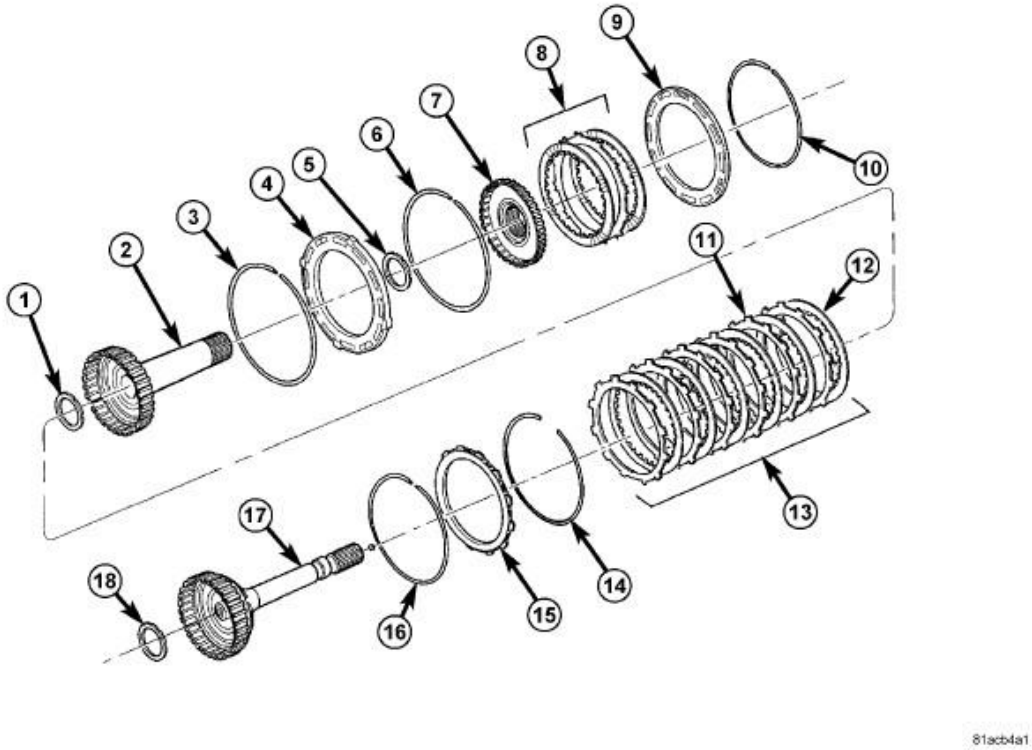

Fig. 105: Input Clutch Assembly - Part 2
Courtesy of CHRYSLER GROUP, LLC

20. Install the overdrive clutch pack (13) into the input clutch retainer. Install an outer toothed disc (11) first and then alternate inner disc (12) and outer discs, ending with a inner toothed disc (12) on top. Install all discs with the friction material facing up.
21. Install the overdrive clutch wavy snap-ring (3) with the two tabbed ears into the OD/reverse piston.
22. Install the OD/reverse pressure plate (4) into the input clutch retainer, with the stepped face down toward the OD clutch.
23. Install the OD/reverse pressure plate flat snap-ring (6) into the OD/reverse piston.

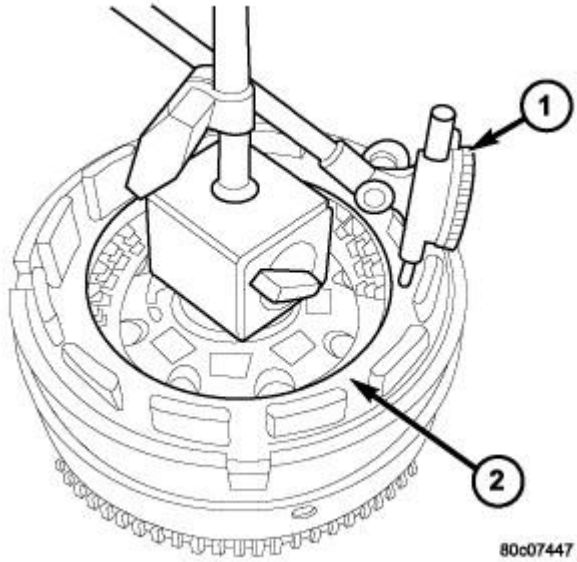

Fig. 106: Measuring OD Clutch Clearance
Courtesy of CHRYSLER GROUP, LLC

24. Mount a dial indicator (special tool #C-3339A, Set, Dial Indicator) (1) on the input clutch hub and zero the indicator against the OD/reverse pressure plate (2). Apply 20 psi of air pressure to the overdrive clutch and record the dial indicator reading. Measure and record OD clutch pack measurement in four (4) places, 90° apart. Take average of four measurements and compare with OD clutch pack clearance specification. Verify that the clutch clearance is 0.75-1.61 mm (0.030-0.063 in.). The OD / Reverse pressure plate is selective. If the clutch clearance is not within specification, select and install the proper pressure plate.

NOTE: The 66RFE uses three (3) selective OD/Rev pressure plates. Two of the three plates have a numeric identification number and a stepped face.

SELECTABLE END PLAY PRESSURE PLATES

- One stepped face, identification number 1 = 8.90 mm (0.350 in.)
- One stepped face, identification number 2 = 9.34 mm (0.367 in.)
- Both faces flat, no identification number = 9.74 mm (0.383 in.)

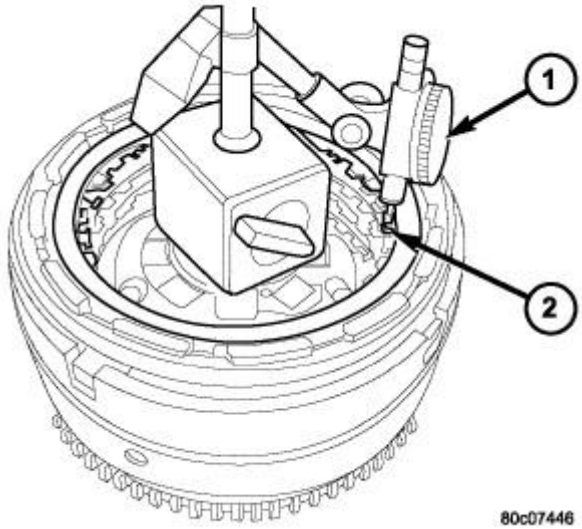

Fig. 107: Measuring Reverse Clutch Clearance
Courtesy of CHRYSLER GROUP, LLC

25. Install the reverse clutch pack into the input clutch retainer.
26. Install the reverse reaction plate into the input clutch retainer.
27. Install the reverse reaction plate selective snap-ring into the input clutch retainer.
28. Mount a dial indicator to the assembly, push down on the clutch discs, pull up on the reaction plate to ensure the plate is properly seated and zero the indicator against the reverse clutch discs (2). Apply 20 psi of air pressure to the reverse clutch and record the dial indicator reading. Measure and record Reverse clutch pack measurement in four (4) places, 90° apart. Take average of four measurements and compare with Reverse clutch pack clearance specification. The correct clutch clearance is 0.58-1.47 mm (0.023-0.058 in.). Adjust as necessary. Install the chosen snap-ring and re-measure to verify selection.

NOTE: **The 66RFE uses one of three (3) different selective snap rings. They are identified by the end cuts (either straight [square] cut or "butterfly" [S-curved] cut):**

SELECTABLE END PLAY SNAP RINGS

- One Square End, One Butterfly End = 1.55 mm (0.061 in.)
- Both Ends Square Cut = 1.85 mm (0.073 in)
- Both Ends Butterfly Cut = 2.2 mm (0.087 in.)

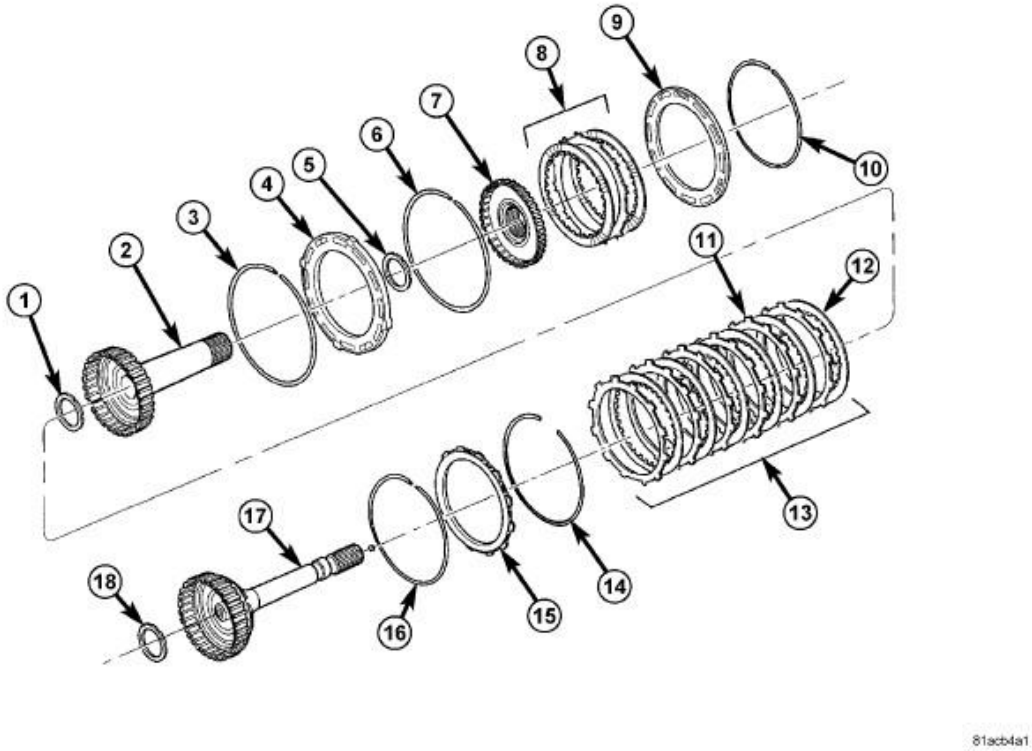

Fig. 108: Input Clutch Assembly - Part 2
Courtesy of CHRYSLER GROUP, LLC

29. Remove the reverse clutch pack (8) from the input clutch retainer.
30. Install the number 2 thrust bearing (18) onto the underdrive hub (17) with outer race against the hub with petroleum jelly.
31. Install the underdrive hub (17) into the input clutch retainer.
32. Install the number 3 thrust bearing (1) into the overdrive hub (2) with the outer race against the hub with petroleum jelly.
33. Install the overdrive hub (2) into the input clutch retainer.
34. Install the number 4 thrust bearing (5) into the reverse hub with outer race against the hub with petroleum jelly.
35. Install the reverse hub (7) into the input clutch retainer.
36. Install the complete reverse clutch pack (8).
37. Install the reverse reaction plate (9) and snap-ring (10).
38. Push up on reaction plate to allow reverse clutch to move freely.

ASSEMBLY, TRANSMISSION SOLENOID AND TRS

DESCRIPTION

DESCRIPTION

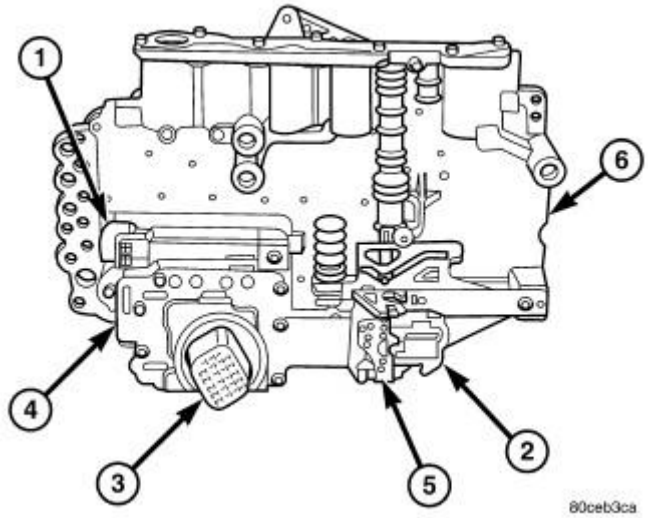

Fig. 109: Solenoid & Pressure Switch Assembly
Courtesy of CHRYSLER GROUP, LLC

1 - PRESSURE CONTROL SOLENOID
2 - TRANSMISSION RANGE SELECTOR PLATE
3 - 23-WAY CONNECTOR
4 - SOLENOID PACK
5 - TRANSMISSION RANGE SENSOR
6 - VALVE BODY

The transmission solenoid/TRS assembly is internal to the transmission and mounted on the valve body assembly. The assembly consists of five solenoids that control hydraulic pressure to five of the friction elements (transmission clutches), and the torque converter clutch. The pressure control solenoid is located on the side of the solenoid/TRS assembly. The solenoid/TRS assembly also contains the Transmission Range Sensor (TRS) and five pressure switches that feed information to the TCM.

OPERATION

OPERATION

SOLENOIDS

Solenoids are used to control the L/R, 2C, 4C, OD, and UD friction elements. The reverse clutch is controlled by line pressure and the position of the manual valve in the valve body. All the solenoids are contained within the Solenoid and Pressure Switch Assembly. The 2C, 4C, and UD solenoids are dedicated to those specific clutches (respectively). The L/R solenoid controls either the L/R clutch (in 1st gear and Park/Neutral) or the torque converter clutch (TCC), in 2nd and higher gears. The position of the solenoid switch valve (SSV) determines which element the L/R solenoid is controlling. The Multi-Select (MS) solenoid controls either the OD clutch (in Drive gears) or the L/R clutch (in Reverse). The position of the manual valve determines which element the MS solenoid is controlling.

The TCM energizes or operates the solenoids individually by grounding the return wire of the solenoid as necessary. When a solenoid is energized, the solenoid valve shifts, and a fluid passage is opened or closed (vented or applied), depending on its default operating state. The result is an apply or release of a frictional element.

The MS and UD solenoids are normally applied (they supply hydraulic pressure to the clutch when they are de-energized), which provides appropriate transmission limp-in operation in the event of an electrical failure.

The continuity of the solenoids and circuits are periodically tested. Each solenoid is turned on or off depending on its current state. An inductive spike should be detected by the TCM during this test. If no spike is detected, the circuit is tested again to verify the failure. In addition to the periodic testing, the solenoid circuits are tested if a speed ratio or pressure switch error occurs.

PRESSURE SWITCHES

The TCM relies on five pressure switches to monitor fluid pressure in the L/R, 2C, 4C, UD, and OD hydraulic circuits. The primary purpose of these switches is to help the TCM detect when clutch circuit hydraulic failures occur. The switches close at 23 psi and open at 11 psi, and simply indicate whether or not pressure exists. The switches are continuously monitored by the TCM for the correct states (open or closed) in each gear as shown in the following charts.

66RFE PRESSURE SWITCH STATES

GEAR	ERS DISPLAY	L/R	2C	4C	UD	OD
R		OP	OP	OP	OP	OP
P/N		CL	OP	OP	OP	OP
1ST	1	CL*	OP	OP	CL	OP
2ND	2	OP	CL	OP	CL	OP
3RD	3	OP	OP	CL	CL	OP
4TH	4	OP	OP	OP	CL	CL
5TH	5	OP	OP	CL	OP	CL
6TH	6	OP	CL	OP	CL	CL
*L/R is closed if output speed is below 100 rpm in Drive. L/R is always closed in ERS1.						

A Diagnostic Trouble Code (DTC) will set if the TCM senses any switch open or closed at the wrong time in a given gear.

REMOVAL

REMOVAL

NOTE: **If the Transmission Solenoid/TRS Assembly is being replaced, the Quick Learn Procedure must be performed. Refer to MODULE, TRANSMISSION CONTROL, STANDARD PROCEDURE .**

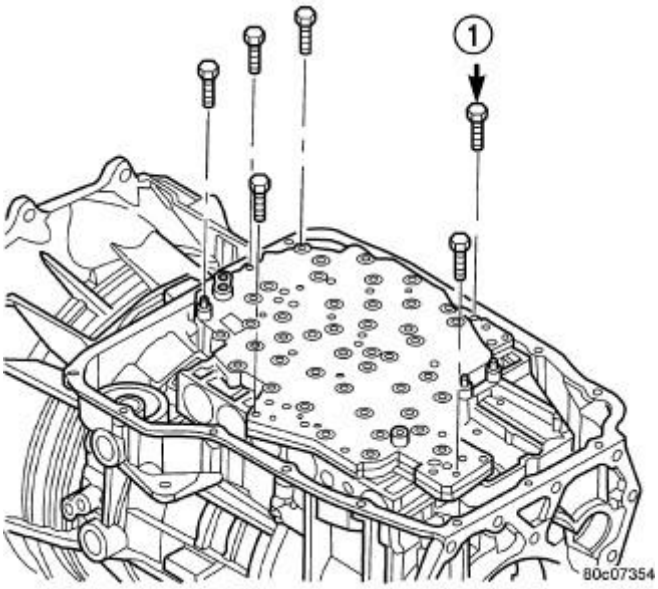

Fig. 110: Valve Body Bolts
Courtesy of CHRYSLER GROUP, LLC

1 - VALVE BODY TO CASE BOLT (6)

1. Remove the valve body from the transmission. Refer to **VALVE BODY, REMOVAL**.

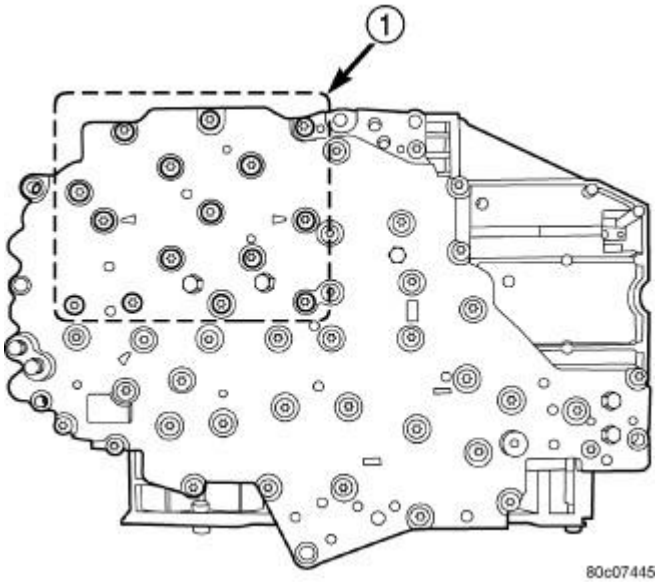

Fig. 111: Solenoid Pack Bolts
Courtesy of CHRYSLER GROUP, LLC

2. Remove the bolts (1) holding the transmission solenoid/TRS assembly onto the valve body.
3. Separate the transmission solenoid/TRS assembly from the valve body.

INSTALLATION

INSTALLATION

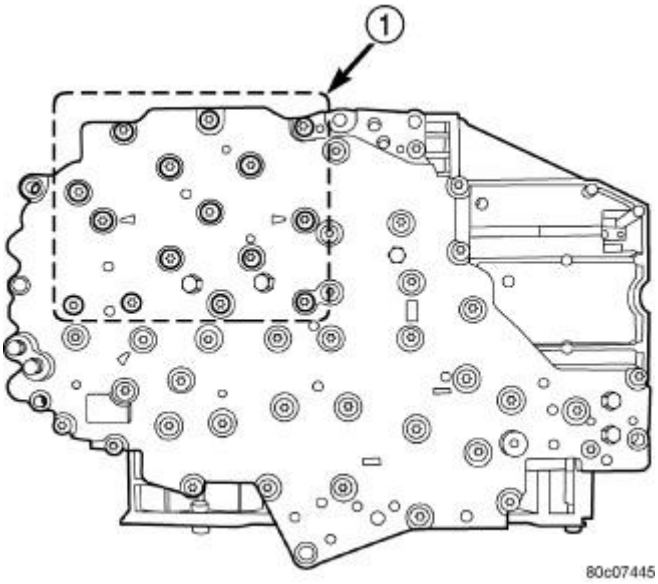

Fig. 112: Solenoid Pack Bolts
Courtesy of CHRYSLER GROUP, LLC

1 - SOLENOID PACK BOLTS (15)

1. Place TRS selector plate in the PARK position.
2. Position the transmission solenoid/TRS assembly onto the valve body. Be sure that both alignment dowels are fully seated in the valve body and that the TRS switch contacts are properly positioned in the selector plate
3. Install the bolts (1) to hold the transmission solenoid/TRS assembly onto the valve body. Refer to **Fig. 112**.
4. Tighten the solenoid assembly screws adjacent to the arrows cast into the bottom of the valve body first. Tighten the screws to 6 N.m (50 in.lbs.).
5. Tighten the remainder of the solenoid assembly screws to 6 N.m (50 in.lbs.).
6. Install the valve body into the transmission.

CABLE, SHIFT

DIAGNOSIS AND TESTING

DIAGNOSIS AND TESTING - GEARSHIFT CABLE

1. Engine starts must be possible with shift lever in PARK or NEUTRAL positions only. Engine starts must not be possible in any other gear position.
2. With the shift lever in the:

1. PARK position - Apply upward force on the shift arm and remove pressure. Engine starts must be possible.
2. PARK position - Apply downward force on the shift arm and remove pressure. Engine starts must be possible.
3. NEUTRAL position - Normal position. Engine starts must be possible.
4. NEUTRAL position - Engine running and brakes applied, apply upward force on the shift arm. Transmission shall not be able to shift from neutral to reverse.

ADJUSTMENTS

ADJUSTMENTS

NOTE: Always run the shift lever test using the scan tool to help diagnose a potential TRS problem

Check adjustment by starting the engine in PARK and NEUTRAL. Adjustment is CORRECT if the engine starts only in these positions. Adjustment is INCORRECT if the engine starts in one but not both positions. If the engine starts in any position other than PARK or NEUTRAL, or if the engine will not start at all, the transmission range sensor may be faulty.

GEARSHIFT ADJUSTMENT PROCEDURE

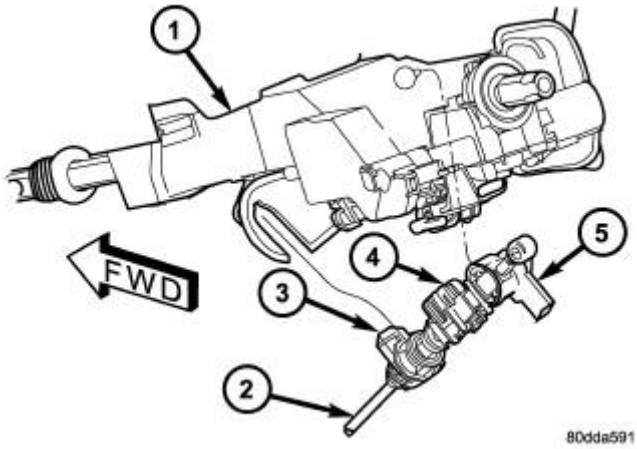

Fig. 113: Gearshift Cable At Steering Column
Courtesy of CHRYSLER GROUP, LLC

1 - STEERING COLUMN
2 - GEARSHIFT CABLE
3 - GEARSHIFT CABLE LOCK TAB
4 - BTSI SOLENOID LOCK TAB
5 - BTSI CONNECTOR

1. Shift transmission into PARK.
2. Release cable adjuster lock tab (3) (underneath the steering column) to unlock cable. Refer to **Fig. 113**.
3. Raise vehicle.
4. Disengage the cable eyelet from the transmission manual shift lever.
5. Verify transmission shift lever is in PARK detent by moving lever fully rearward. Last rearward detent is PARK position.
6. Verify positive engagement of transmission park lock by attempting to rotate propeller shaft. Shaft will not rotate when park lock is engaged.
7. Snap the cable eyelet onto the transmission manual shift lever.
8. Lower vehicle.
9. Lock shift cable by pressing cable adjuster lock tab (3) downward until it snaps into place.
10. Check engine starting. Engine should start only in PARK and NEUTRAL.

REMOVAL

REMOVAL

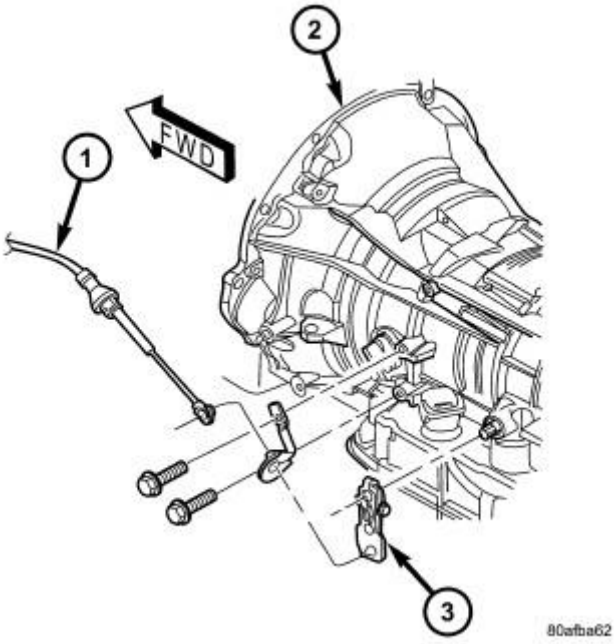

Fig. 114: Gearshift Cable At Transmission
Courtesy of CHRYSLER GROUP, LLC

1 - GEARSHIFT CABLE
2 - RFE TRANSMISSION
3 - MANUAL LEVER

1. Shift transmission into PARK.

2. Raise vehicle.
3. Disengage cable (1) eyelet at transmission manual shift lever (3) and pull cable adjuster out of mounting bracket. Refer to **Fig. 114**.

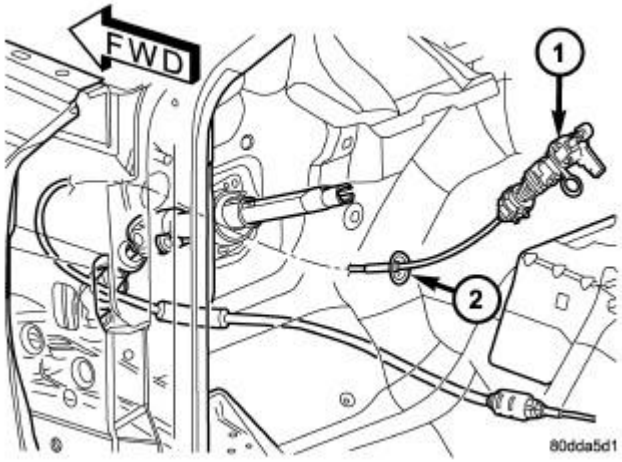

Fig. 115: Gearshift Cable At Dash Panel
Courtesy of CHRYSLER GROUP, LLC

1 - GEARSHIFT CABLE
2 - GROMMET

4. Lower the vehicle.
5. Remove the dash panel insulation pad as necessary to access the gearshift cable grommet (2). Refer to **Fig. 115**.
6. Remove grommet (2) from the dash panel.

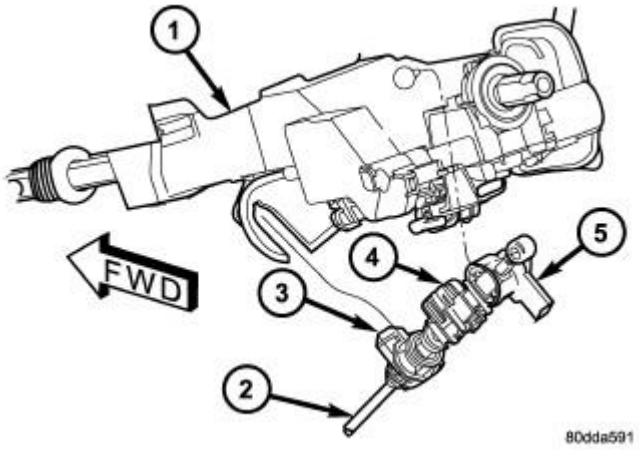

Fig. 116: Gearshift Cable At Steering Column
Courtesy of CHRYSLER GROUP, LLC

1 - STEERING COLUMN
2 - GEARSHIFT CABLE
3 - GEARSHIFT CABLE LOCK TAB
4 - BTSI SOLENOID LOCK TAB
5 - BTSI CONNECTOR

7. Remove any steering column (1) trim necessary to access the gearshift cable (2) and BTSI mechanism.
8. Disconnect the BTSI wiring connector (5).
9. Disconnect cable at lower column bracket and shift lever pin and pull the cable through the dash panel opening into the vehicle. Refer to **Fig. 116**.
10. Remove gearshift cable (2) from vehicle.

INSTALLATION

INSTALLATION

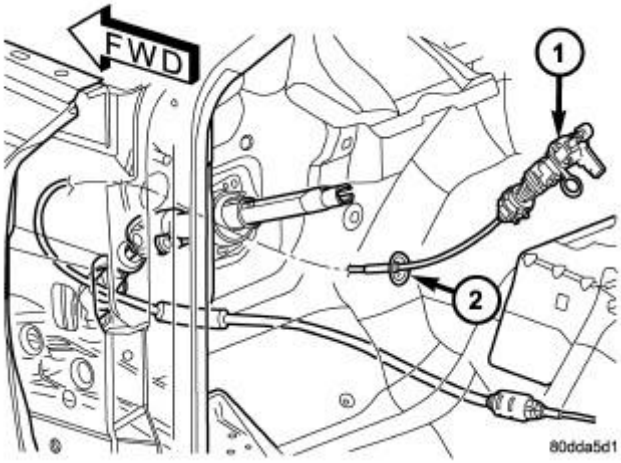

Fig. 117: Gearshift Cable At Dash Panel
Courtesy of CHRYSLER GROUP, LLC

1. Route the transmission end of the gearshift cable (1) through the opening in the dash panel.
2. Seat the cable grommet (2) into the dash panel opening.

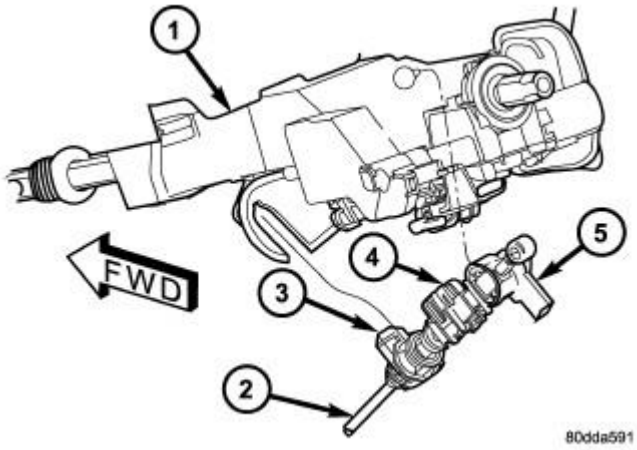

Fig. 118: Gearshift Cable At Steering Column
Courtesy of CHRYSLER GROUP, LLC

3. Snap the cable into the steering column (1) bracket so the retaining ears are engaged and snap the cable eyelet onto the shift lever ball stud.
4. Raise the vehicle.
5. Place the transmission manual shift lever in the "PARK" detent (rearmost) position and rotate prop shaft to ensure transmission is in PARK.
6. Route the gearshift cable through the transmission mounting bracket and secure the cable by snapping the cable retaining ears into the transmission bracket and snapping the cable eyelet on the manual shift lever ball stud.
7. Lower vehicle.
8. Lock the shift cable adjustment by pressing the cable adjuster lock tab (3) downward until it snaps into place.
9. Check for proper operation of the transmission range sensor.
10. Adjust the gearshift cable and BTSI mechanism. Refer to **CABLE, SHIFT, ADJUSTMENTS**.

CLUTCH, LOW AND REVERSE

DISASSEMBLY

DISASSEMBLY

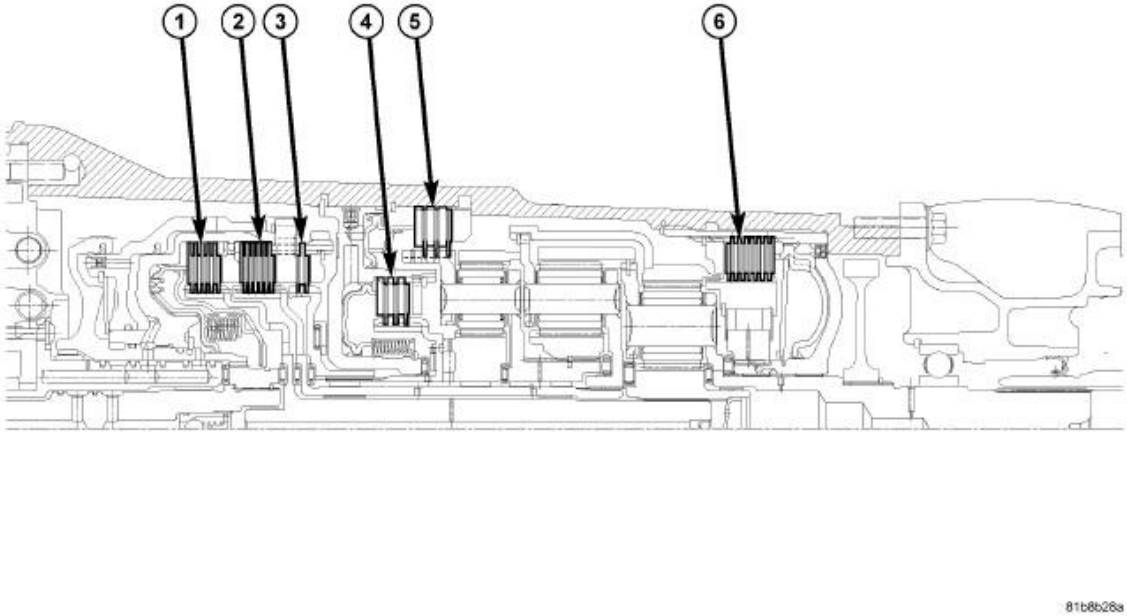

Fig. 119: 66RFE Clutch Orientation
Courtesy of CHRYSLER GROUP, LLC

1 - U/D CLUTCH	4 - 4C CLUTCH
2 - O/D CLUTCH	5 - 2C CLUTCH
3 - REVERSE CLUTCH	6 - L/R CLUTCH

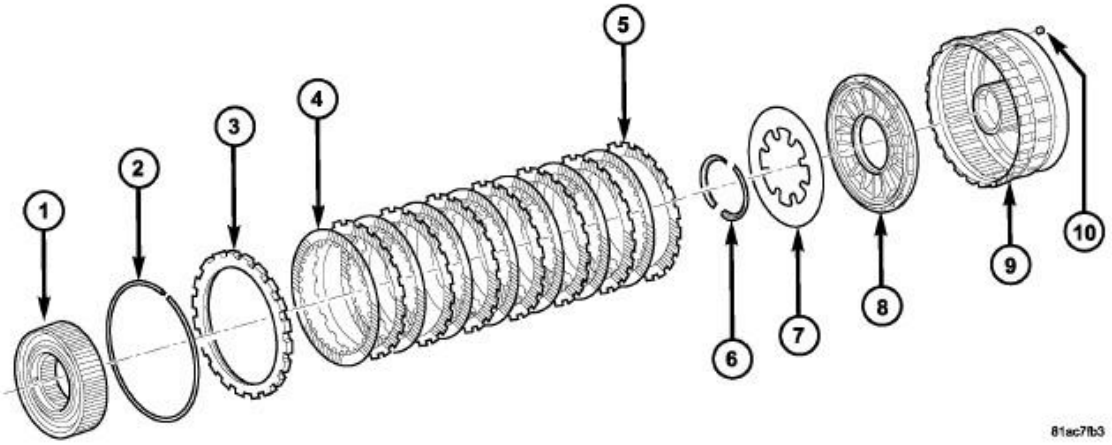

Fig. 120: Exploded View Of Low/Reverse Clutch
Courtesy of CHRYSLER GROUP, LLC

1. Remove the low/reverse reaction plate flat snap-ring (2).
2. Remove the reaction plate (3).
3. Remove the low/reverse clutch (4, 5) and the overrunning clutch (1) from the low/reverse clutch retainer (9).
4. Separate the low/reverse clutch (4, 5) from the overrunning clutch (1).

NOTE: **The ORC is no longer serviced, it is sold as an assembly only. Be certain that the outer race will rotate in one direction but not both relative to the inner race**

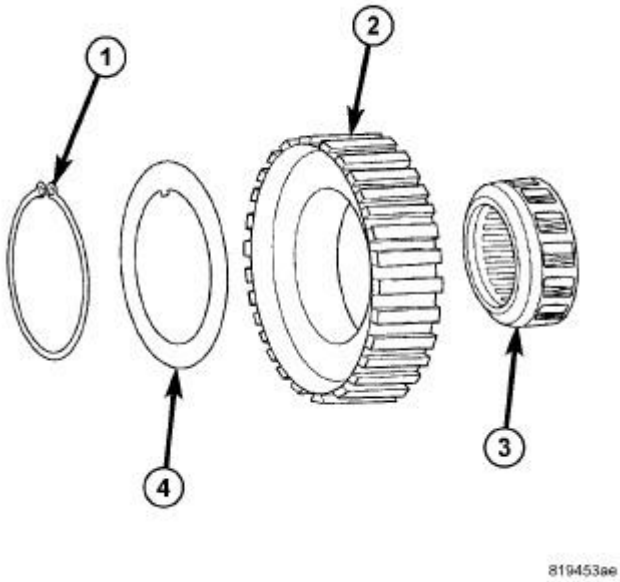

Fig. 121: Overrunning Clutch Components
Courtesy of CHRYSLER GROUP, LLC

1 - SNAP-RING
2 - OUTER RACE
3 - OVERRUNNING CLUTCH
4 - SPACER

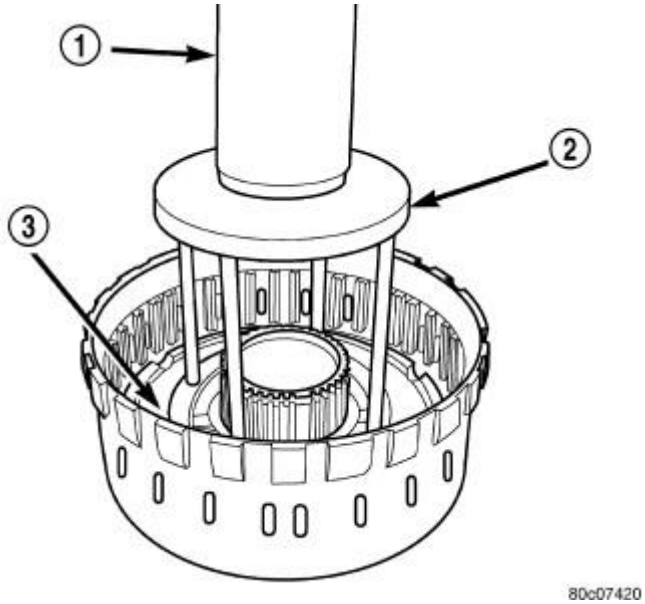

Fig. 122: Compressing Low/Reverse Belleville Spring
Courtesy of CHRYSLER GROUP, LLC

1 - PRESS
2 - TOOL 8285
3 - BELLEVILLE SPRING

5. Using Spring Compressor (special tool #8285, Compressor, Spring) (2) and a suitable shop press (1), compress the low/reverse Belleville spring (3) and remove the split retaining ring holding the Belleville spring into the low/reverse clutch retainer.
6. Remove the low/reverse Belleville spring (3) and piston from the low/reverse clutch retainer. Use 20 psi of air pressure to remove the piston if necessary.

CLEANING

CLEANING

Clean the overrunning clutch assembly, and low-reverse clutch retainer. Dry them with compressed air after cleaning.

INSPECTION

INSPECTION

Verify that the overrunning clutch assembly turns smoothly in one direction, and locks in the opposite direction. Verify that the oil feed holes in the inner race are not blocked by debris.

Replace the LR clutch retainer if the piston bores or bushing surfaces are badly scored, worn or damaged.

ASSEMBLY

ASSEMBLY

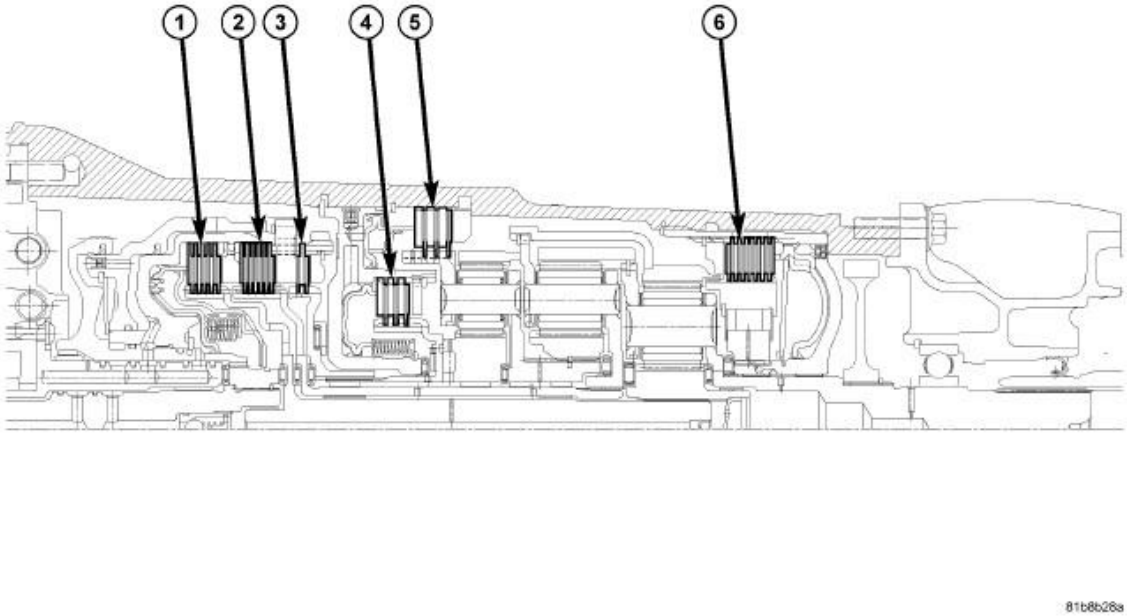

Fig. 123: 66RFE Clutch Orientation
Courtesy of CHRYSLER GROUP, LLC

1 - U/D CLUTCH	4 - 4C CLUTCH
2 - O/D CLUTCH	5 - 2C CLUTCH
3 - REVERSE CLUTCH	6 - L/R CLUTCH

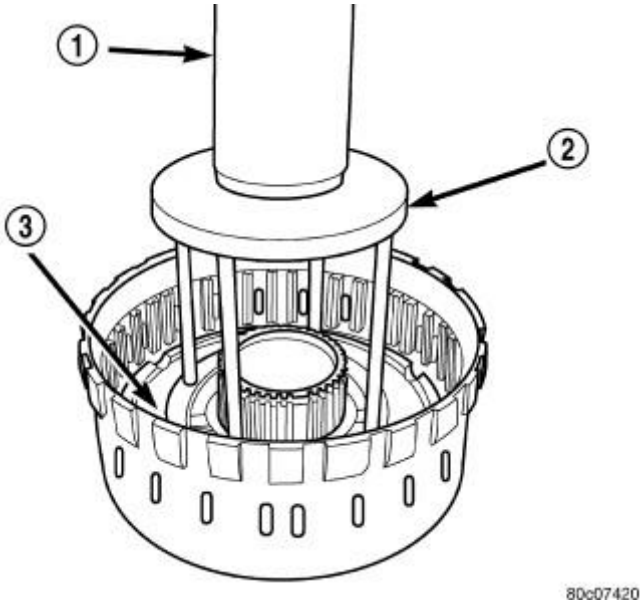

Fig. 124: Compressing Low/Reverse Belleville Spring
Courtesy of CHRYSLER GROUP, LLC

1 - PRESS
2 - TOOL 8285
3 - BELLEVILLE SPRING

1. Check the bleed orifice to ensure that it is not plugged or restricted.
2. Lubricate the seals with Mopar® ATF +4, Automatic Transmission Fluid, prior to installation.
3. Install the low/reverse piston into the low/reverse clutch retainer.
4. Position the low/reverse Belleville spring (3) on the low/reverse piston.
5. Using Spring Compressor (special tool #8285, Compressor, Spring) (2) and a suitable shop press (1), compress the low/reverse Belleville spring (3) and install the split retaining ring to hold the Belleville spring into the low/reverse clutch retainer.

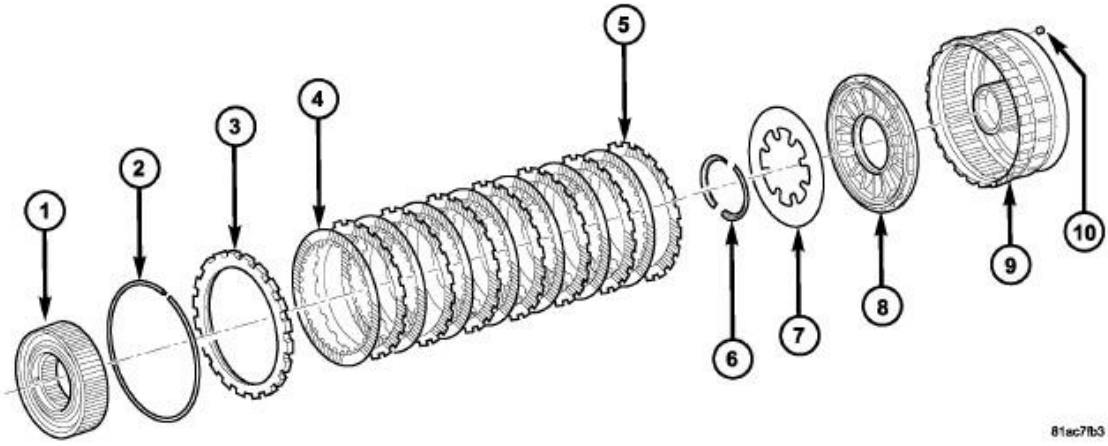

Fig. 125: Exploded View Of Low/Reverse Clutch

Courtesy of CHRYSLER GROUP, LLC

1 - OVERRUNNING CLUTCH	8 - PISTON
2 - SNAP RING (SELECTIVE)	9 - L/R CLUTCH RETAINER
3 - REACTION PLATE	10 - BLEED ORIFICE
4 - DISC	
5 - PLATE	
6 - RETAINER	
7 - BELLEVILLE SPRING	

NOTE: **Install an outer-toothed disc first, then alternate inner and outer-toothed discs, ending with an inner-toothed disc. Install all the discs with the friction material facing up.**

6. Assemble and install the low/reverse clutch pack (4, 5) into the low/reverse clutch retainer (9).
7. Install the low/reverse reaction plate (3) into the low/reverse clutch retainer (9). The reaction plate is directional and must be installed with the flat side down.
8. Install the low/reverse clutch pack snap-ring (2). The snap-ring is selectable and should be chosen to give the correct clutch pack clearance.
9. Measure the low/reverse clutch pack clearance and adjust as necessary. The correct clutch clearance is 1.18-2.09 mm (0.046-0.082 in.).

NOTE: **When installing the overrunning clutch be certain the notched end of the external spline teeth faces upward. The ORC is properly seated when the inner spline stepped face is below the face of the LR clutch retainer hub.**

10. Install the overrunning clutch (1) into the low/reverse clutch retainer (9) making sure that the index splines are aligned with the retainer.

COVER, OIL PUMP

REMOVAL

REMOVAL

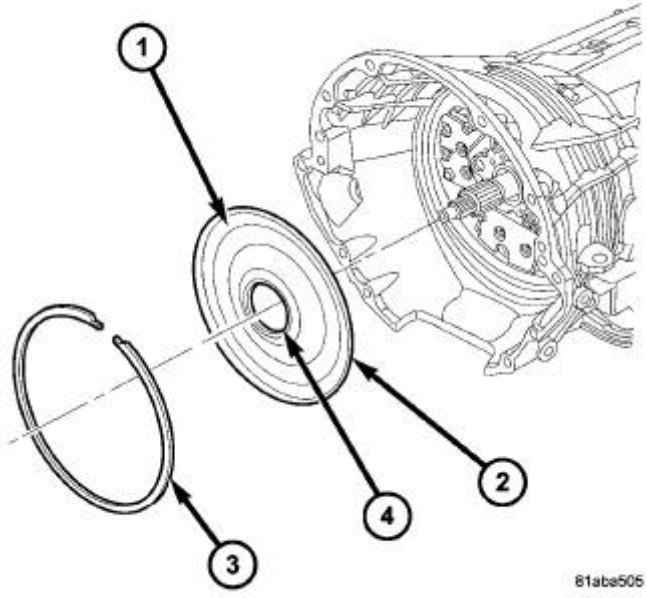

Fig. 126: Front Cover
Courtesy of CHRYSLER GROUP, LLC

1 - FRONT COVER
2 - O - RING
3 - SNAP RING
4 - FRONT COVER SEAL

1. Remove the bolts holding the transmission oil pan to the transmission case.
2. Remove the transmission oil pan from the transmission case.
3. Remove the snap ring (3) from the transmission case.
4. Reaching through a case opening in the valve body area with a long blunted tool, remove the transmission front cover (1) from the transmission case.

INSTALLATION

INSTALLATION

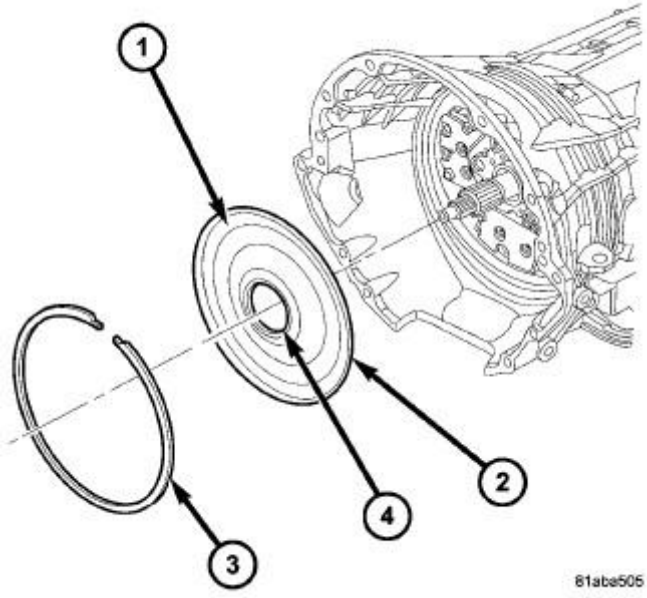

Fig. 127: Front Cover
Courtesy of CHRYSLER GROUP, LLC

1 - FRONT COVER
2 - O - RING
3 - SNAP RING
4 - FRONT COVER SEAL

NOTE: **To avoid contamination and garter spring dislodgement, do not handle the front cover seal (4) when positioning the front cover into the transmission case.**

1. Position a new front cover (1) into the transmission case.

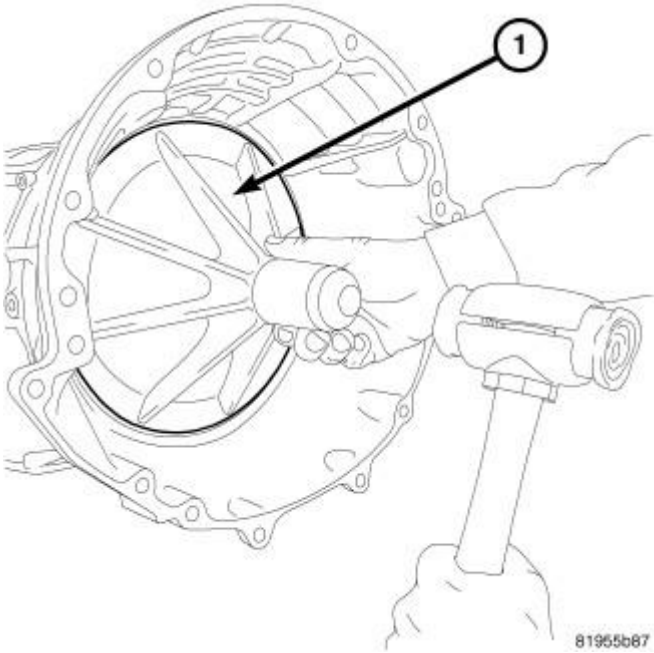

Fig. 128: Front Cover Installation Tool
Courtesy of CHRYSLER GROUP, LLC

1 - Front Cover installation Tool 9955

2. Using the front cover installation tool (special tool #9955, Installer, Front Cover) (1) and a dead-blow mallet, install the front cover into transmission case.

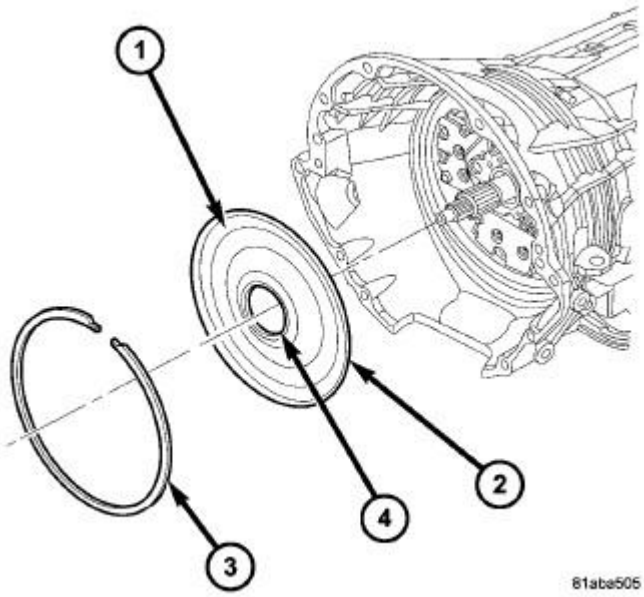

Fig. 129: Front Cover

Courtesy of CHRYSLER GROUP, LLC

1 - FRONT COVER
2 - O - RING
3 - SNAP RING
4 - FRONT COVER SEAL

3. Install the snap ring (3) into the transmission case.
4. Apply RTV silicone to the oil pan and install the transmission oil pan.
5. Tighten the bolts to 12 N.m (105 in. lbs.).

FLUID AND FILTER

DIAGNOSIS AND TESTING

EFFECTS OF INCORRECT FLUID LEVEL

A low fluid level allows the pump to take in air along with the fluid. Air in the fluid will cause fluid pressures to be low and develop slower than normal. If the transmission is overfilled, the gears churn the fluid into foam. This aerates the fluid and causing the same conditions occurring with a low level. In either case, air bubbles cause fluid overheating, oxidation, and varnish buildup which interferes with valve and clutch operation. Foaming also causes fluid expansion which can result in fluid overflow from the transmission vent or fill tube. Fluid overflow can easily be mistaken for a leak if inspection is not careful.

CAUSES OF BURNT FLUID

Burnt, discolored fluid is a result of overheating which has three primary causes.

1. Internal clutch slippage, usually caused by low line pressure, inadequate clutch apply pressure, or clutch seal failure.
2. A result of restricted fluid flow through the main and auxiliary cooler. This condition is usually the result of a faulty or improperly installed drainback valve, a damaged oil cooler, or severe restrictions in the coolers and lines caused by debris or kinked lines.
3. Heavy duty operation with a vehicle not properly equipped for this type of operation. Trailer towing or similar high load operation will overheat the transmission fluid if the vehicle is improperly equipped. Such vehicles should have an auxiliary transmission fluid cooler, a heavy duty cooling system, and the engine/axle ratio combination needed to handle heavy loads.

FLUID CONTAMINATION

Transmission fluid contamination is generally a result of:

- adding incorrect fluid
- failure to clean dipstick and fill tube when checking level
- engine coolant entering the fluid

- internal failure that generates debris
- overheat that generates sludge (fluid breakdown)
- failure to replace contaminated converter after repair

The use of non-recommended fluids can result in transmission failure. The usual results are erratic shifts, slippage, abnormal wear and eventual failure due to fluid breakdown and sludge formation. Avoid this condition by using recommended fluids only.

The dipstick cap and fill tube should be wiped clean before checking fluid level. Dirt, grease and other foreign material on the cap and tube could fall into the tube if not removed beforehand. Take the time to wipe the cap and tube clean before withdrawing the dipstick.

Engine coolant in the transmission fluid is generally caused by a cooler malfunction. The only remedy is to replace the radiator as the cooler in the radiator is not a serviceable part. If coolant has circulated through the transmission, an overhaul is necessary.

The torque converter should also be replaced whenever a failure generates sludge and debris. This is necessary because normal converter flushing procedures will not remove all contaminants.

STANDARD PROCEDURE

FLUID LEVEL CHECK

Low fluid level can cause a variety of conditions because it allows the pump to take in air along with the fluid. As in any hydraulic system, air bubbles make the fluid spongy, therefore, pressures will be low and build up slowly.

Improper filling can also raise the fluid level too high. When the transmission has too much fluid, the geartrain churns up foam and cause the same conditions which occur with a low fluid level.

In either case, air bubbles can cause overheating and fluid oxidation, and varnishing. This can interfere with normal valve, clutch, and accumulator operation. Foaming can also result in fluid escaping from the transmission vent where it may be mistaken for a leak.

The transmission has a dipstick to check oil level. It is located on the right side of the engine. Be sure to wipe all dirt from dipstick handle before removing.

The torque converter fills in both the P (PARK) and N (NEUTRAL) positions. Place the selector lever in P (PARK) to be sure that the fluid level check is accurate. **The engine should be running at idle speed for at least one minute, with the vehicle on level ground.** At normal operating temperature (approximately 82° C. or 180° F), the fluid level is correct if it is in the HOT region (cross-hatched area) on the oil level indicator. The fluid level will be approximately at the upper COLD hole of the dipstick at 21° C (70° F) fluid temperature.

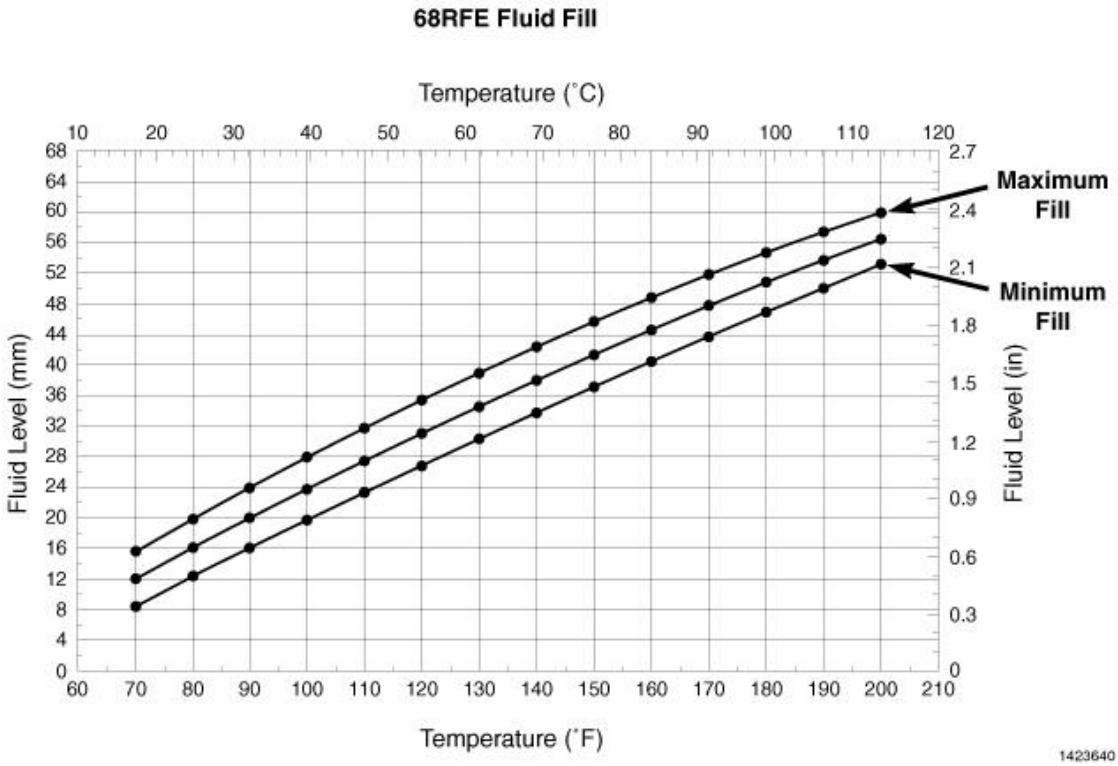

Fig. 130: Transmission Fluid Fill Level Vs. Transmission Fluid Temperature Chart
Courtesy of CHRYSLER GROUP, LLC

NOTE: **Engine and Transmission should be at normal operating temperature before performing this procedure. After the fluid has been checked, seat the dipstick fully to seal out water and dirt.**

1. Start engine and apply parking brake.
2. Shift the transmission into DRIVE for approximately 2 seconds.
3. Shift the transmission into REVERSE for approximately 2 seconds.
4. Shift the transmission into PARK.
5. Hook up scan tool and select transmission.
6. Select sensors.
7. Read the transmission temperature value.
8. Compare the fluid temperature value with the chart.
9. Adjust transmission fluid level shown on the dipstick according to the Transmission Fluid Temperature Chart.

NOTE: **After adding any fluid to the transmission, wait a minimum of 2 minutes for the oil to fully drain from the fill tube into the transmission before rechecking the fluid level.**

10. Check transmission for leaks.

FLUID AND FILTER REPLACEMENT

For proper service intervals, refer to **MAINTENANCE SCHEDULES, DESCRIPTION** .

REMOVAL

1. Hoist and support vehicle on safety stands.
2. Place a large diameter shallow drain pan beneath the transmission pan.
3. Remove bolts holding front and sides of pan to transmission.
4. Loosen bolts holding rear of pan to transmission.
5. Slowly separate front of pan away from transmission allowing the fluid to drain into drain pan.
6. Hold up pan and remove remaining bolts holding pan to transmission.
7. While holding pan level, lower pan away from transmission.
8. Pour remaining fluid in pan into drain pan.

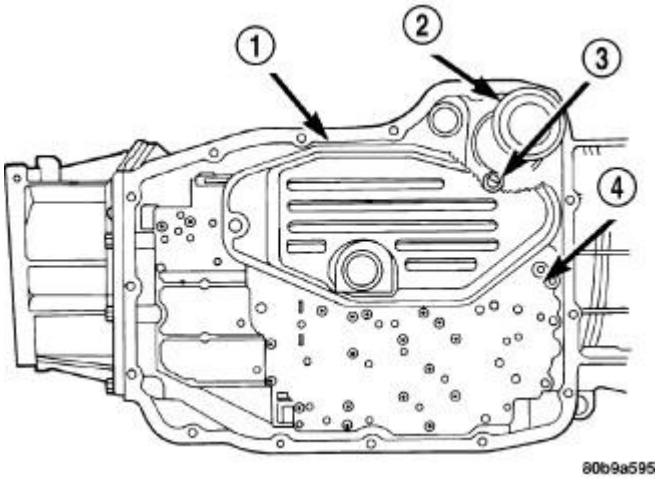

Fig. 131: Primary Oil Filter & Oil Cooler Return Filter
Courtesy of CHRYSLER GROUP, LLC

1 - PRIMARY OIL FILTER
2 - COOLER RETURN FILTER
3 - COOLER RETURN FILTER BYPASS VALVE
4 - VALVE BODY

9. Remove the screw holding the primary oil filter (1) to valve body. Refer to **Fig. 131**.
10. Separate filter from valve body and oil pump and pour fluid in filter into drain pan.
11. Inspect the oil filter seal in the bottom of the oil pump. If the seal is not installed completely in the oil pump, or is otherwise damaged, then remove and discard the oil filter seal from the bottom of the oil pump. If the seal is installed correctly and is in good condition, it can be reused.
12. If replacing the cooler return filter (2), use Oil Filter Wrench (special tool #8321, Wrench, Oil Filter) to remove the filter from the transmission.

13. Dispose of used trans fluid and filter(s) properly.

INSPECTION

Inspect bottom of pan and magnet for excessive amounts of metal. A light coating of clutch material on the bottom of the pan does not indicate a problem unless accompanied by a slipping condition or shift lag. If fluid and pan are contaminated with excessive amounts of debris, refer to **DIAGNOSIS AND TESTING**.

CLEANING

1. Using a suitable solvent, clean pan and magnet.
2. Using a suitable gasket scraper, clean original sealing material from surface of transmission case and the transmission pan.

INSTALLATION

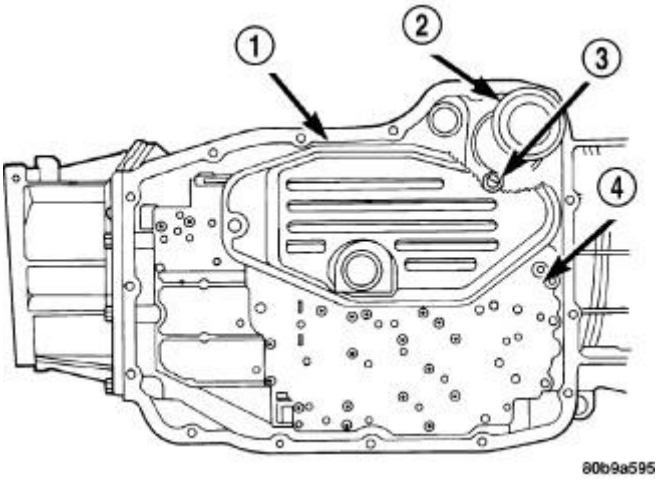

Fig. 132: Primary Oil Filter & Oil Cooler Return Filter
Courtesy of CHRYSLER GROUP, LLC

1 - PRIMARY OIL FILTER
2 - COOLER RETURN FILTER
3 - COOLER RETURN FILTER BYPASS VALVE
4 - VALVE BODY

CAUTION: The primary oil filter seal MUST be fully installed flush against the oil pump body. DO NOT install the seal onto the filter neck and attempt to install the filter and seal as an assembly. Damage to the transmission will result.

1. If necessary, install a new primary oil filter seal in the oil pump inlet bore. Seat the seal in the bore with Installer (special tool #6960, Tools, Trac-Lok Axle) or another suitable tool (appropriately sized drift or socket, the butt end of a hammer etc.).

2. Place replacement filter in position on valve body and into the oil pump.
3. Install screw to hold the primary oil filter (1) to valve body. Refer to **Fig. 132**. Tighten screw to 4.5 N.m (40 in. lbs.) torque.
4. Install new cooler return filter (2) onto the transmission, if necessary. Torque the filter to 9.5 N.m (84 in.lbs.).
5. Place bead of Mopar® RTV sealant onto the transmission case sealing surface.
6. Place pan in position on transmission.
7. Install bolts to hold pan to transmission. Tighten bolts to 12 N.m (105 in. lbs.) torque.
8. Lower vehicle and fill transmission with MOPAR® ATF +4.

TRANSMISSION FILL

To avoid overfilling transmission after a fluid change or overhaul, perform the following procedure:

1. Remove dipstick and insert clean funnel in transmission fill tube.
2. Add following initial quantity of Mopar® ATF +4 to transmission:
    1. If only fluid and filter were changed, add **10 pints (5 quarts)** of ATF +4 to transmission.
    2. If transmission was completely overhauled and the torque converter was replaced or drained, add **24 pints (12 quarts)** of ATF +4 to transmission.
3. Check the transmission fluid and adjust as required. Refer to **STANDARD PROCEDURE**.

GEARTRAIN, PLANETARY

DESCRIPTION

DESCRIPTION

NOTE: The 66RFE transmission does not use a number 7 thrust bearing.

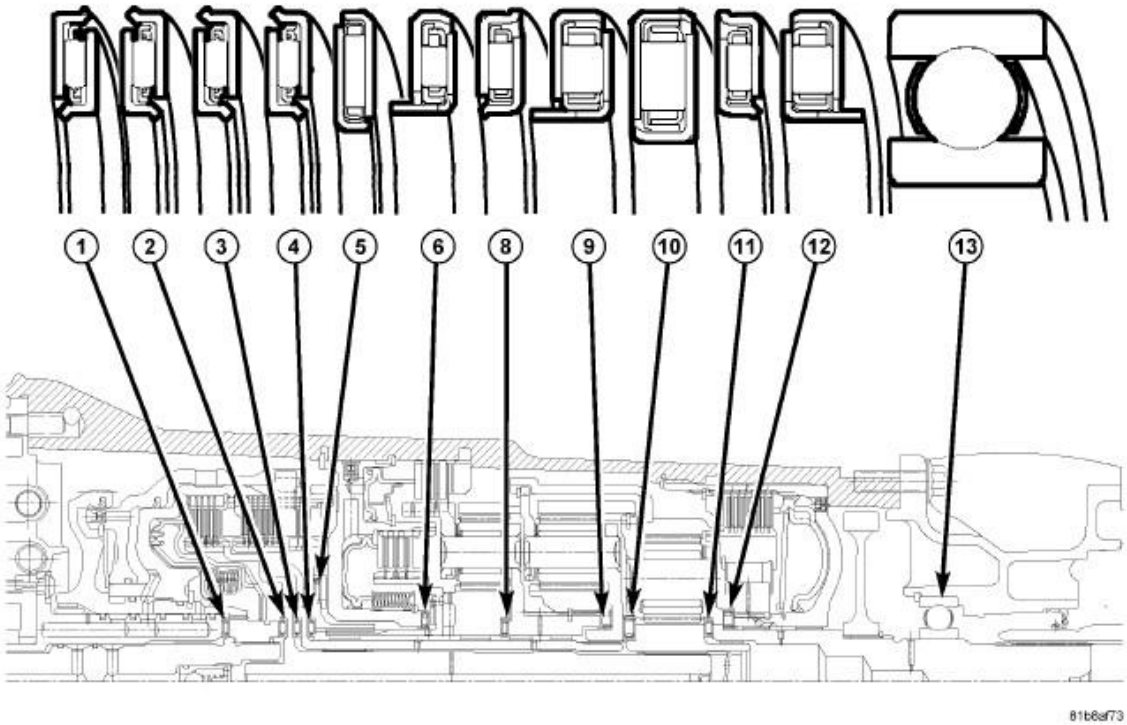

Fig. 133: Thrust Bearings & Output Shaft Bearing
Courtesy of CHRYSLER GROUP, LLC

1 - THRUST BEARING NO. 1	8 - THRUST BEARING NO. 8
2 - THRUST BEARING NO. 2	9 - THRUST BEARING NO. 9
3 - THRUST BEARING NO. 3	10 - THRUST BEARING NO. 10
4 - THRUST BEARING NO. 4	11 - THRUST BEARING NO. 11
5 - THRUST BEARING NO. 5	12 - THRUST BEARING NO. 12
6 - THRUST BEARING NO. 6	13 - OUTPUT

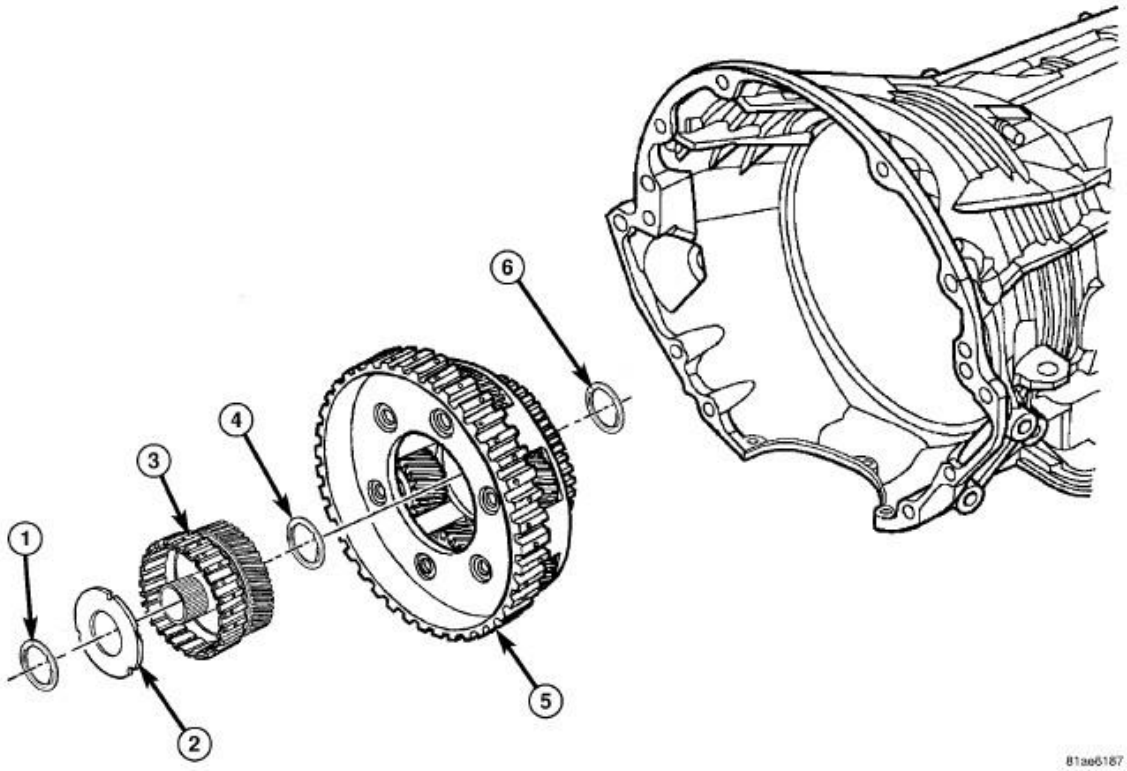

Fig. 134: Reaction Annulus & Carrier
Courtesy of CHRYSLER GROUP, LLC

1 - THRUST BEARING NUMBER 6	5 - REACTION PLANETARY CARRIER
2 - OUTPUT END PLAY THRUST PLATE (SELECTIVE)	6 - THRUST BEARING NUMBER 9
3 - 4C CLUTCH HUB / REACTION SUN GEAR	
4 - THRUST BEARING NUMBER 8	

The planetary geartrain is located behind the 2C/4C retainer/bulkhead, toward the rear of the transmission. The planetary geartrain consists of two primary assemblies:

- Reaction (3, 5).

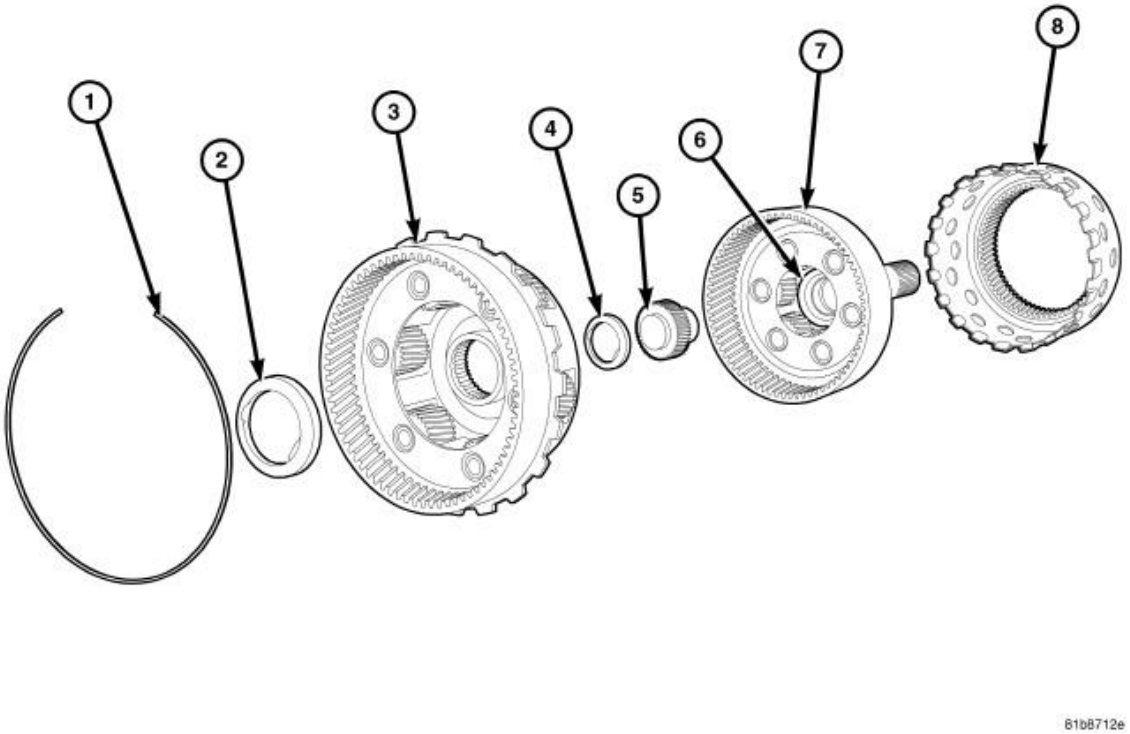

Fig. 135: Reverse Carrier
Courtesy of CHRYSLER GROUP, LLC

1. SNAP RING	5. INPUT SUN GEAR
2. NUMBER NINE BEARING	6. NUMBER 11 BEARING (CAPTURED)
3. REVERSE PLANETARY CARRIER	7. INPUT PLANETARY CARRIER
4. THRUST BEARING NUMBER 10	8. INPUT ANNULUS GEAR

- Reverse (3).
- Input (5, 7, 8).

OPERATION

OPERATION

REACTION PLANETARY GEAR SET

The reaction planetary carrier and reverse sun gear are a single component which is held by the 2C clutch when

required. The sun gear is retained on the reaction carrier hub by a hidden snap ring and can not be removed. The reaction sun gear is a stand alone component that can be driven by the reverse clutch or held by the 4C clutch. The reaction annulus is welded to the reverse planetary carrier.

REVERSE PLANETARY GEAR SET

The reverse planetary gear set is the middle of the three planetary sets. The reverse planetary carrier can be driven by the overdrive clutch as required. The reverse planetary carrier is welded to the reaction annulus gear and splined to the input annulus gear, which can be held by the low/reverse clutch. The reverse annulus gear, input planetary carrier, and output shaft are all one piece. The reverse annulus gear is retained on the input carrier flange by a hidden snap ring and can not be disassembled.

INPUT PLANETARY GEAR SET

The input sun gear of the input planetary gear set is driven by the underdrive clutch. The number 11 thrust bearing is captive underneath the pinion gears and therefore cannot be removed.

DISASSEMBLY

DISASSEMBLY

NOTE: The 66RFE transmission does not use a number 7 thrust bearing.

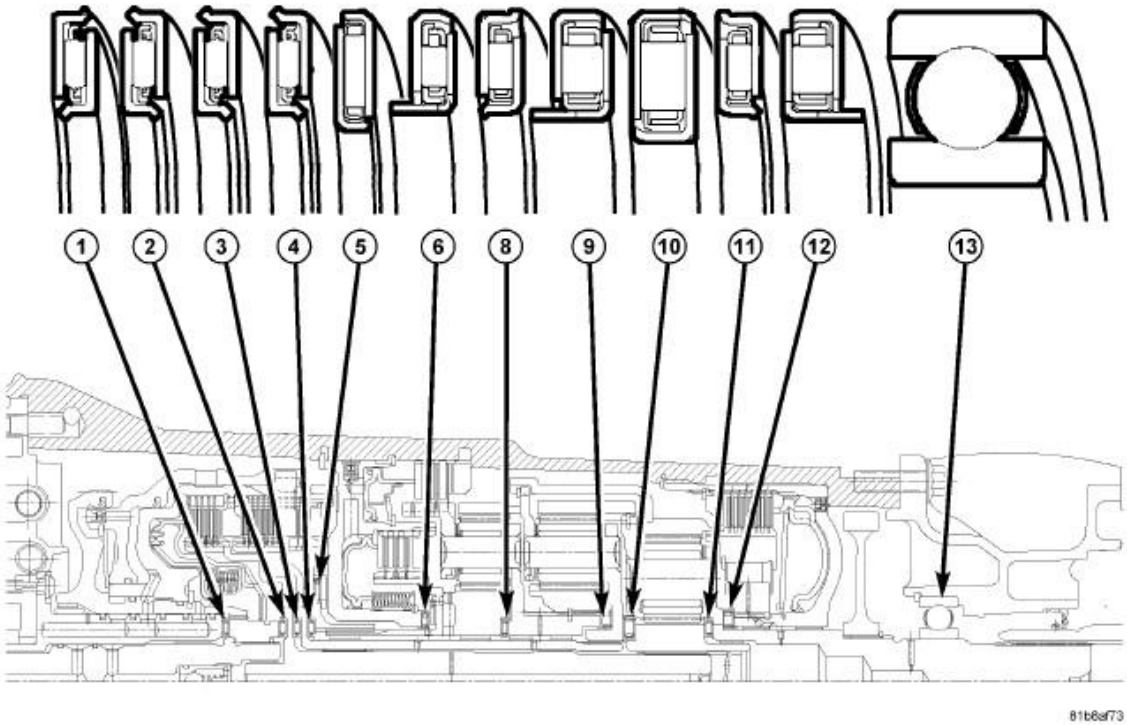

Fig. 136: Thrust Bearings & Output Shaft Bearing
Courtesy of CHRYSLER GROUP, LLC

1 - THRUST BEARING NO. 1	8 - THRUST BEARING NO. 8
2 - THRUST BEARING NO. 2	9 - THRUST BEARING NO. 9
3 - THRUST BEARING NO. 3	10 - THRUST BEARING NO. 10
4 - THRUST BEARING NO. 4	11 - THRUST BEARING NO. 11
5 - THRUST BEARING NO. 5	12 - THRUST BEARING NO. 12
6 - THRUST BEARING NO. 6	13 - OUTPUT SHAFT BEARING

NOTE: **The number 11 thrust bearing is captured under the input planetary carrier pinion gears and is not serviceable.**

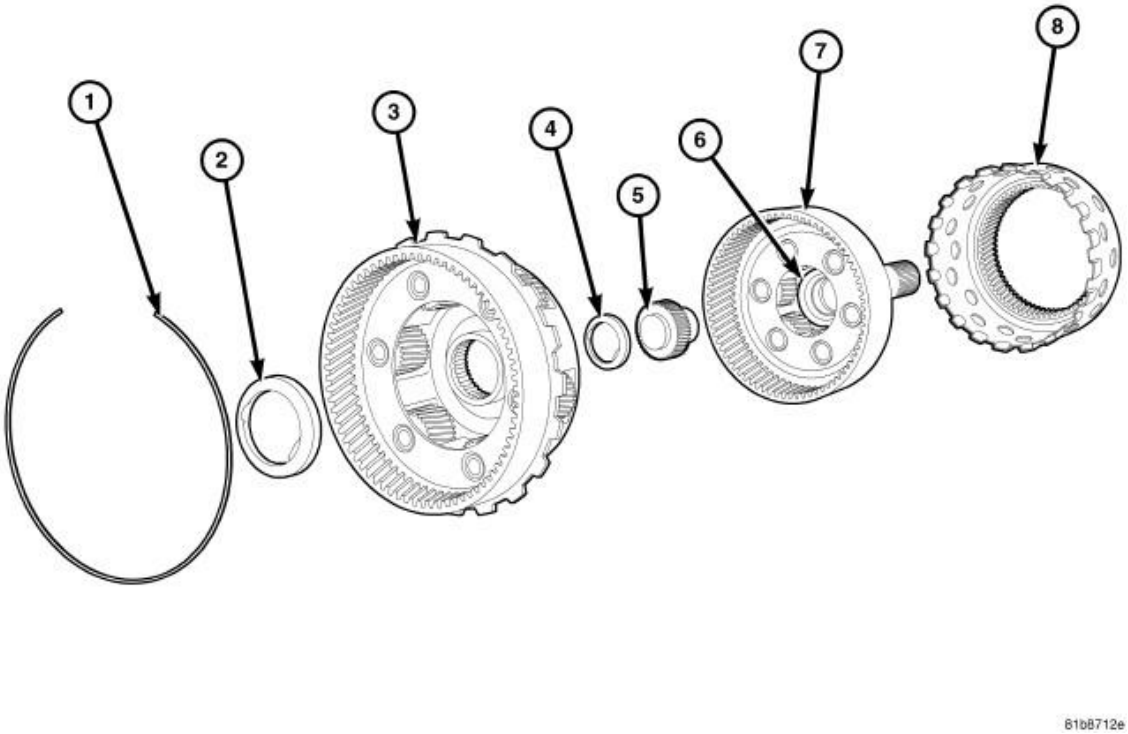

Fig. 137: Reverse Carrier
Courtesy of CHRYSLER GROUP, LLC

1. Remove the snap-ring (1) holding the input annulus (8) onto the input carrier (7).
2. Remove the input annulus (8) from the input carrier (7).
3. Remove the number 9 thrust bearing from the reverse planetary carrier (3).
4. Remove the reverse planetary gear carrier (3).
5. Remove the number 10 thrust bearing (4) from the input sun gear (5).
6. Remove the input sun gear (5) from the input carrier (7).

CLEANING

CLEANING

Clean the planetary components in solvent and dry them with compressed air.

INSPECTION

INSPECTION

Inspect each planetary carrier assembly for damage. Check that each pinion gear rotates freely and smoothly on its shaft. Check that the fixed thrust washer on each side of each pinion gear is in place. Check that the outer ends of the pinion shafts are not discolored from overheating. Replace the carrier assembly if jammed or sticky pinion gears, spun or missing fixed washers, or blackened pinion shafts are found.

Check sun gear and annulus gear condition. Replace components as necessary if damaged or if any bushings are scored or worn. The bushings are not serviceable. Replace the driving shell if worn, cracked or damaged.

Replace the output shaft if the machined surfaces are scored, pitted, or damaged in any way. Also replace the shaft if the splines are damaged, or exhibits cracks at any location.

ASSEMBLY

ASSEMBLY

NOTE: The 66RFE transmission does not use a number 7 thrust bearing.

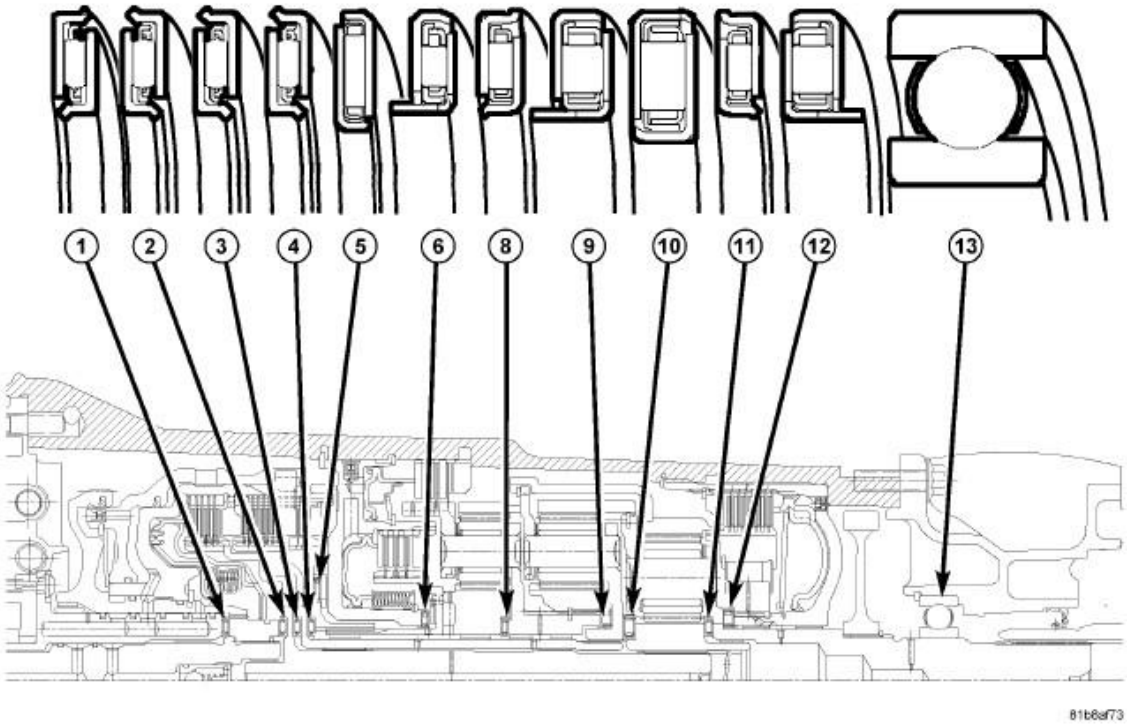

Fig. 138: Thrust Bearings & Output Shaft Bearing
Courtesy of CHRYSLER GROUP, LLC

1 - THRUST BEARING NO. 1	8 - THRUST BEARING NO. 8
2 - THRUST BEARING NO. 2	9 - THRUST BEARING NO. 9
3 - THRUST BEARING NO. 3	10 - THRUST

4 - THRUST BEARING NO. 4	BEARING NO. 10
5 - THRUST BEARING NO. 5	11 - THRUST BEARING NO. 11
6 - THRUST BEARING NO. 6	12 - THRUST BEARING NO. 12
	13 - OUTPUT SHAFT BEARING

NOTE: **The number 11 thrust bearing is captured under the input planetary carrier pinion gears and is not serviceable.**

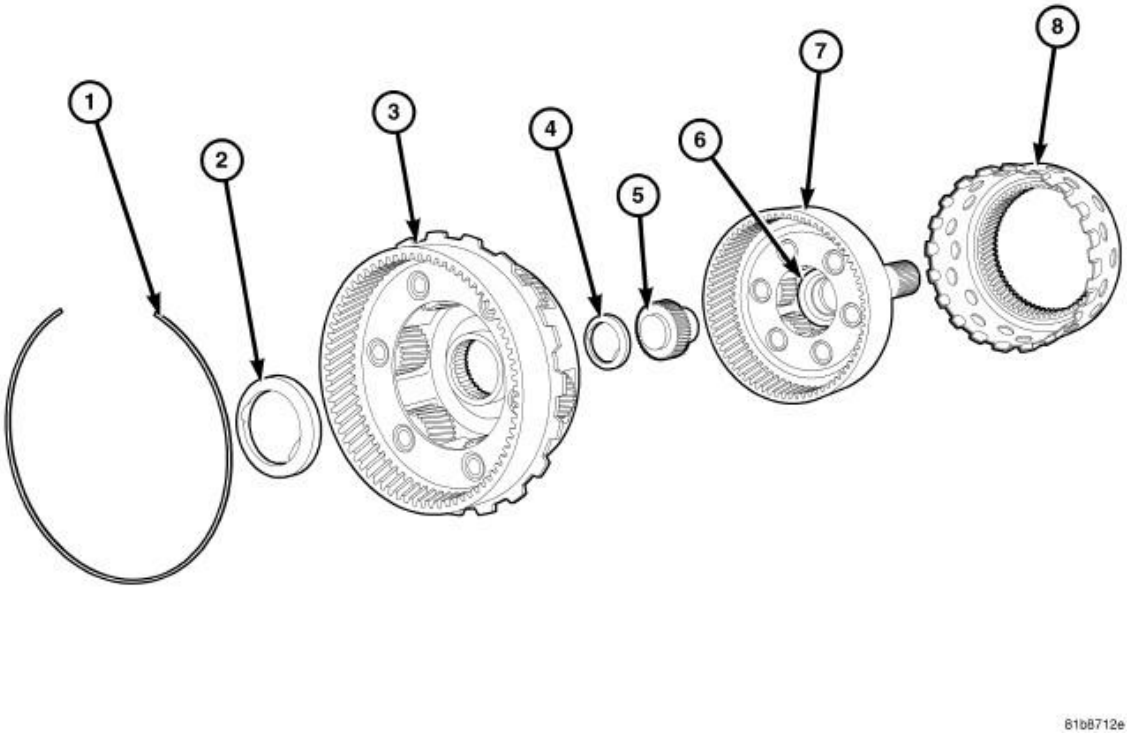

Fig. 139: Reverse Carrier
Courtesy of CHRYSLER GROUP, LLC

NOTE: **Clean and inspect all components. Replace any components which show evidence of excessive wear or scoring.**

1. Install the input sun gear (5) into the input planetary carrier (7).

2. Install the number 10 thrust bearing (4) onto the input sun gear (5) with the inner race toward the gear.
3. Install the number nine thrust bearing (2) onto the face of the reverse planetary carrier (3) with the inner race toward the carrier and the tabs facing upward.
4. Install the reverse planetary gear carrier (3) into the input planetary carrier (7).
5. Install the input annulus gear (8) onto the input planetary carrier (7).
6. Install the snap-ring (1) to hold the input annulus gear (8) into the input carrier (7).

HOLDING CLUTCHES

DESCRIPTION

DESCRIPTION

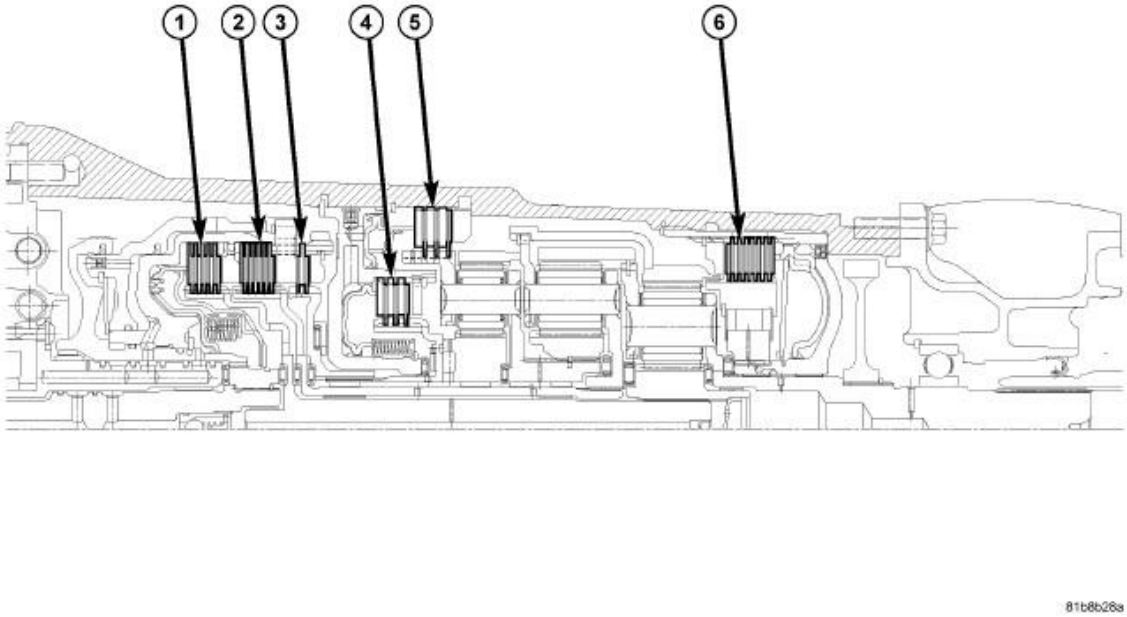

Fig. 140: 66RFE Clutch Orientation
Courtesy of CHRYSLER GROUP, LLC

1 - U/D CLUTCH	4 - 4C CLUTCH
2 - O/D CLUTCH	5 - 2C CLUTCH
3 - REVERSE CLUTCH	6 - L/R CLUTCH

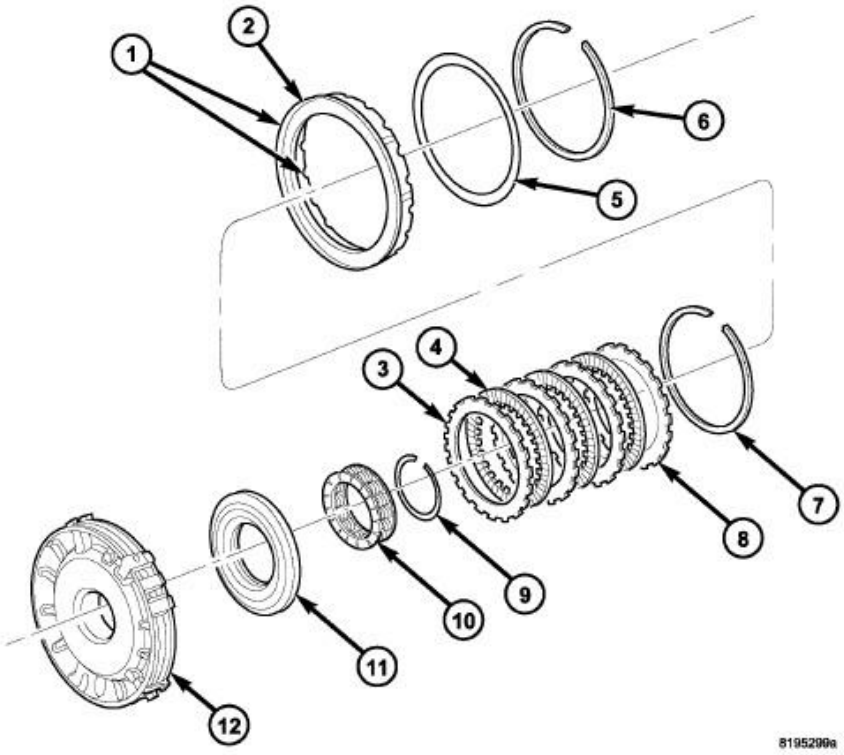

Fig. 141: 2/4 Clutches
Courtesy of CHRYSLER GROUP, LLC

1 - SEALS	8 - REACTION PLATE
2 - 2C PISTON	9 - SNAP-RING
3 - PLATE	10 - RETURN SPRING
4 - DISC	11 - 4C PISTON
5 - 2C BELLEVILLE SPRING	12 - 4C RETAINER/BULKHEAD
6 - SNAP-RING	
7 - SNAP-RING (SELECT)	

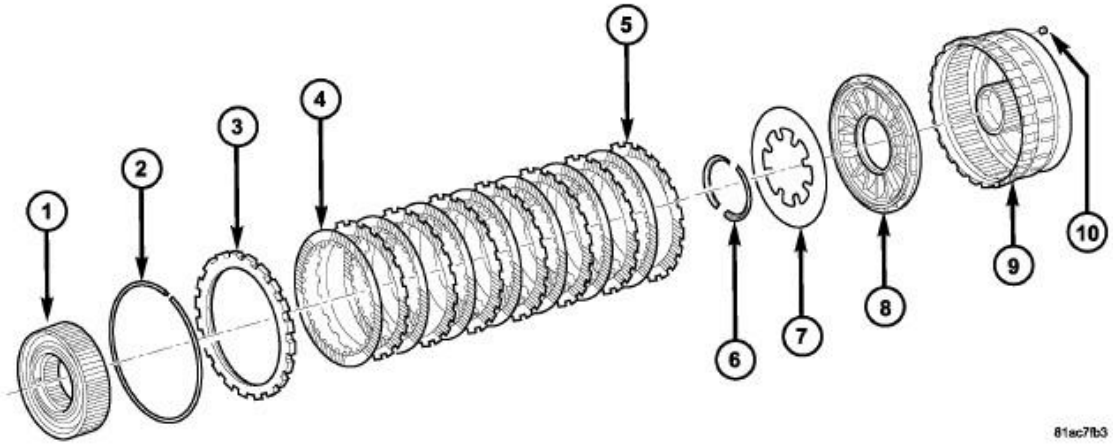

Fig. 142: Exploded View Of Low/Reverse Clutch

Courtesy of CHRYSLER GROUP, LLC

1 - OVERRUNNING CLUTCH	8 - PISTON
2 - SNAP RING (SELECTIVE)	9 - L/R CLUTCH RETAINER
3 - REACTION PLATE	10 - BLEED ORIFICE
4 - DISC	
5 - PLATE	
6 - RETAINER	
7 - BELLEVILLE SPRING	

Three hydraulically applied multi-disc clutches are used to hold some planetary geartrain components stationary while the input clutches drive others. The 2C, 4C, and Low/Reverse clutches are considered holding clutches. The 2C and 4C clutches are located in the 4C retainer/bulkhead (12).

The Low/Reverse clutch is located at the rear of the transmission case.

OPERATION

OPERATION

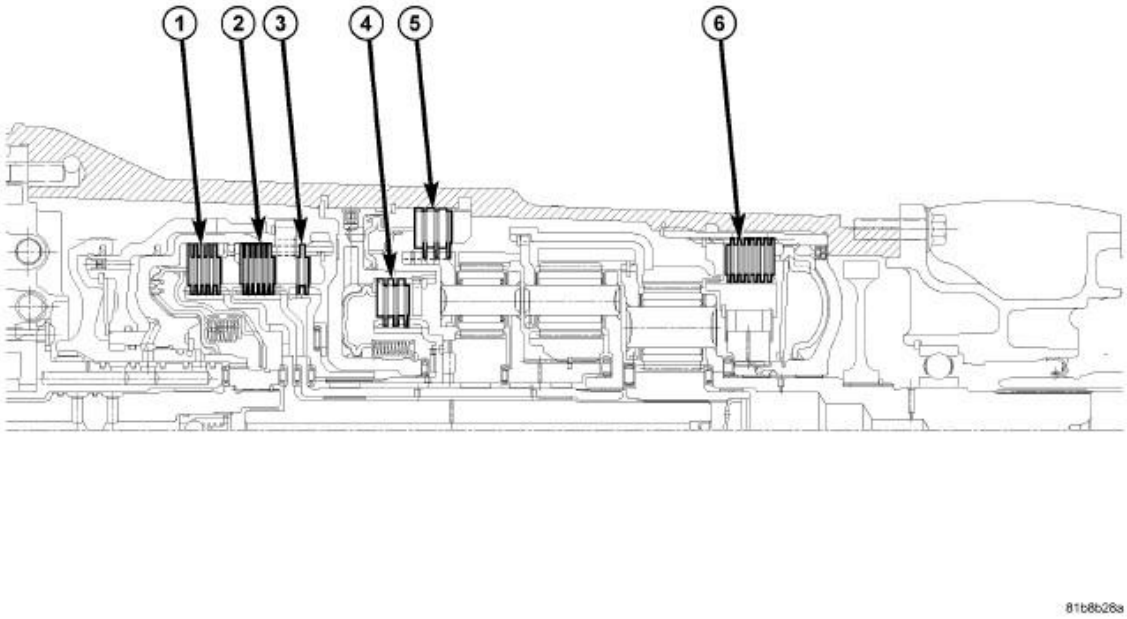

Fig. 143: 66RFE Clutch Orientation
Courtesy of CHRYSLER GROUP, LLC

1 - U/D CLUTCH	4 - 4C CLUTCH

2 - O/D CLUTCH	5 - 2C CLUTCH
3 - REVERSE CLUTCH	6 - L/R CLUTCH

2C CLUTCH

The 2C clutch is hydraulically applied in second and sixth gears by pressurized fluid against the 2C piston. When the 2C clutch is applied, the reaction planetary carrier and reverse sun gear are held or grounded to the transmission case.

4C CLUTCH

The 4C clutch is hydraulically applied in third and fifth gears by pressurized fluid against the 4C clutch piston. When the 4C clutch is applied, the reaction sun gear is held or grounded to the transmission case.

LOW/REVERSE CLUTCH

The Low/Reverse clutch is hydraulically applied in park, reverse, neutral, and first gear, only at low speeds, by pressurized fluid against the Low/Reverse clutch piston. When the Low/Reverse clutch is applied, the input annulus assembly is held or grounded to the transmission case.

HOUSING, TRANSMISSION, REAR EXTENSION

REMOVAL

REMOVAL

1. Remove the rear drive shaft. Refer to **SHAFT, DRIVE, REAR LIGHT DUTY, REMOVAL** or **SHAFT, DRIVE, REAR HEAVY DUTY, REMOVAL** .

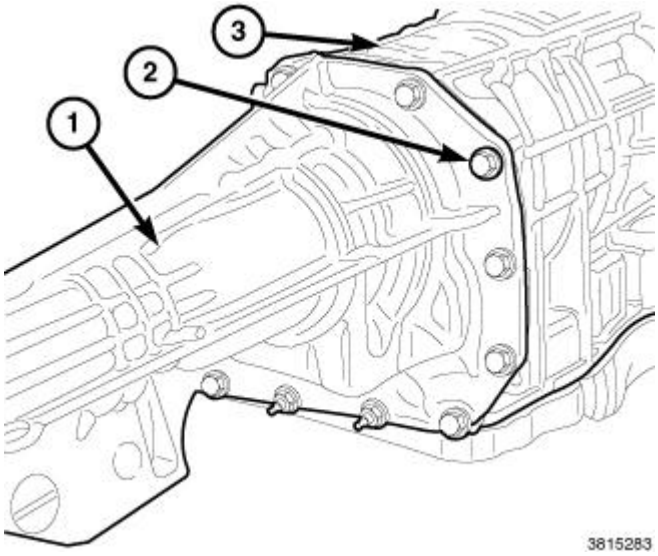

Fig. 144: Extension Housing & Bolts

Courtesy of CHRYSLER GROUP, LLC

2. Remove extension housing bolts (2).
3. Remove extension housing (1) from the transmission (3).

DISASSEMBLY

DISASSEMBLY

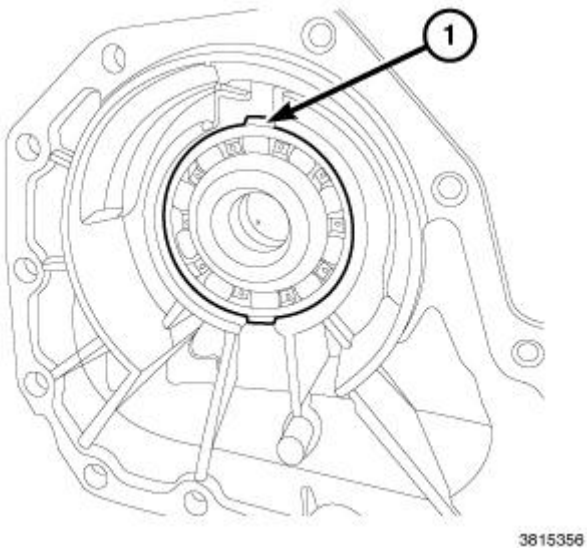

Fig. 145: Bearing Snap-Ring
Courtesy of CHRYSLER GROUP, LLC

1. Remove the bearing snap-ring (1) from the extension housing.

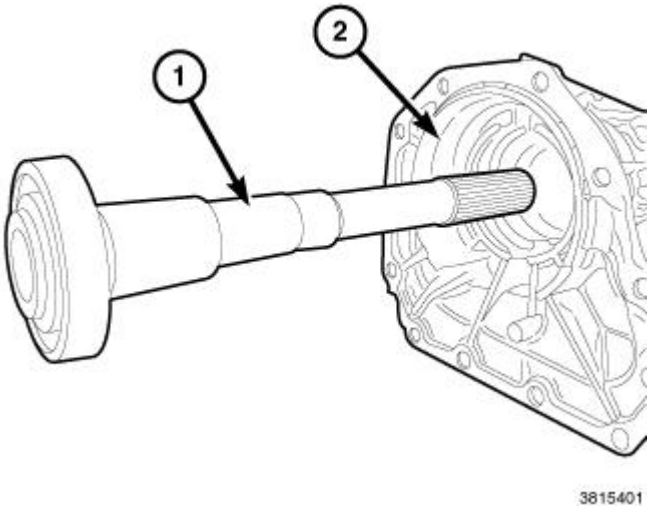

Fig. 146: Shaft & Extension Housing
Courtesy of CHRYSLER GROUP, LLC

2. Remove the shaft (1) from the extension housing (2).

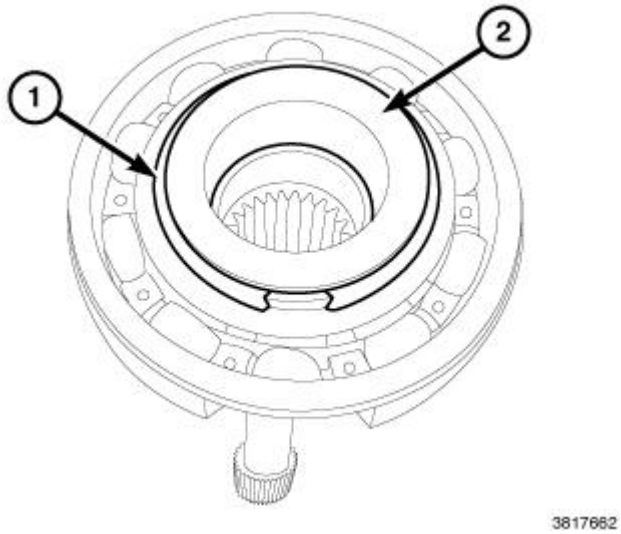

Fig. 147: Snap-Ring & Shaft
Courtesy of CHRYSLER GROUP, LLC

3. Remove snap ring (1) from shaft (2).

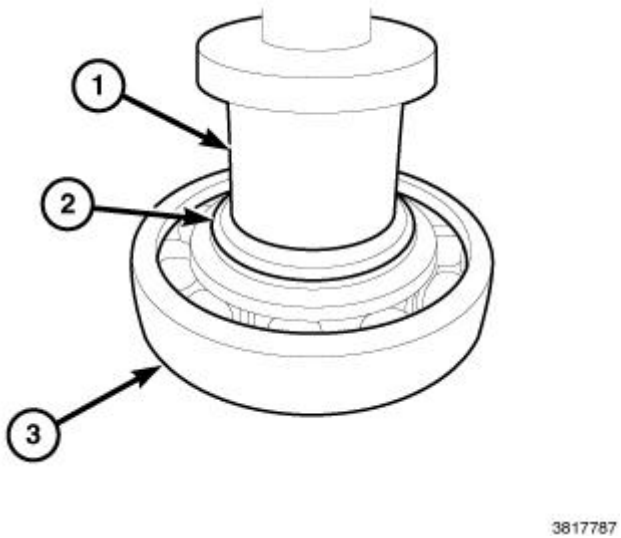

Fig. 148: Removing Bearing From Shaft
Courtesy of CHRYSLER GROUP, LLC

4. Using (special tool #9045, Installer, Plug) (1) and press, remove bearing (3) from shaft (2).

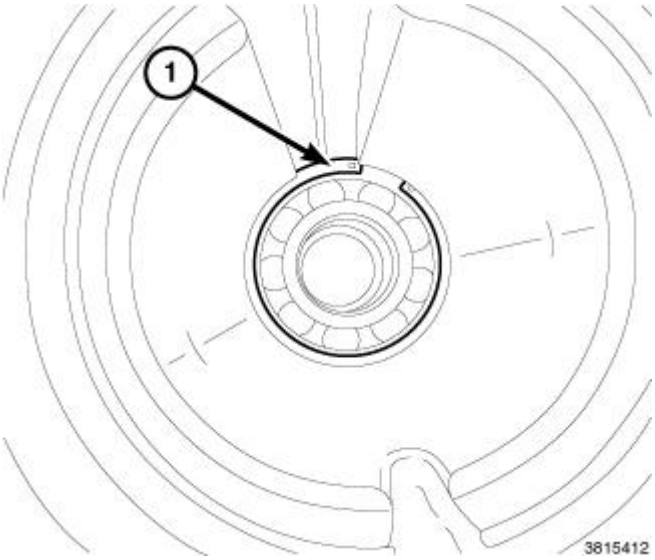

Fig. 149: Center Bearing Snap-Ring
Courtesy of CHRYSLER GROUP, LLC

5. Remove the center bearing snap ring (1) and spacer (if equipped).

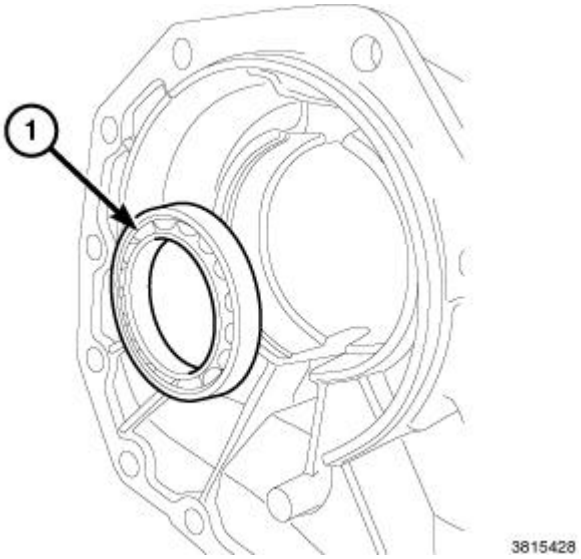

Fig. 150: Center Bearing
Courtesy of CHRYSLER GROUP, LLC

6. Remove the center bearing (1).
7. Using a seal removal tool, remove rear extension housing output shaft seal.

ASSEMBLY

ASSEMBLY

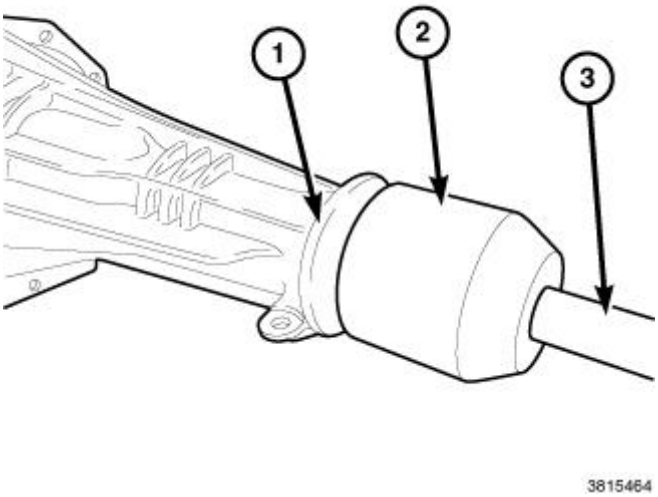

Fig. 151: Installing Extension Housing Oil Seal
Courtesy of CHRYSLER GROUP, LLC

1. Clean the extension housing seal bore in the extension housing of any residue or particles remaining from the original seal.

NOTE: **The small weep hole in the dust boot of the seal should face downward when installed in the extension housing.**

2. Install new oil seal in the extension housing (1) using (special tool #8896, Installer, Seal) (2) and (special tool #C-4171, Driver Handle, Universal) (3).

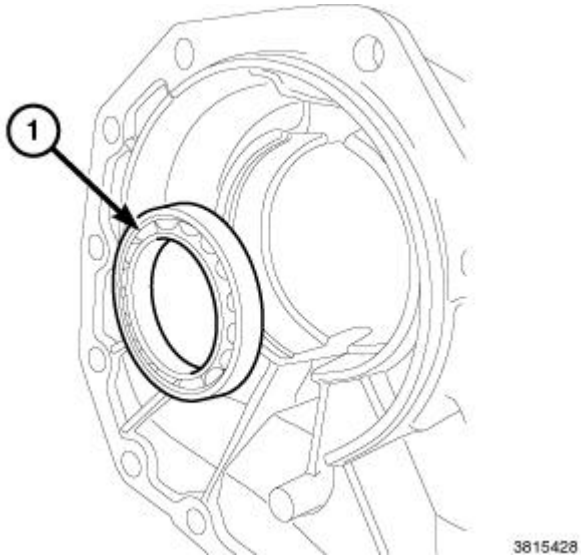

Fig. 152: Center Bearing
Courtesy of CHRYSLER GROUP, LLC

3. Install the center bearing (1).

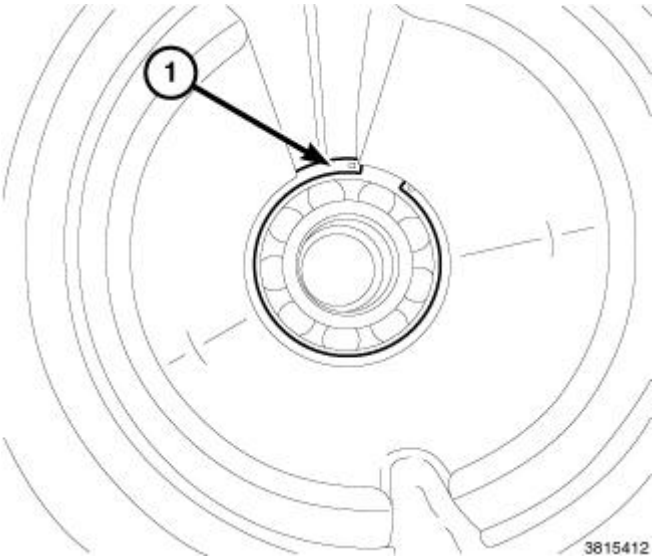

Fig. 153: Center Bearing Snap-Ring
Courtesy of CHRYSLER GROUP, LLC

4. Install the spacer (if equipped) and center bearing snap ring (1).

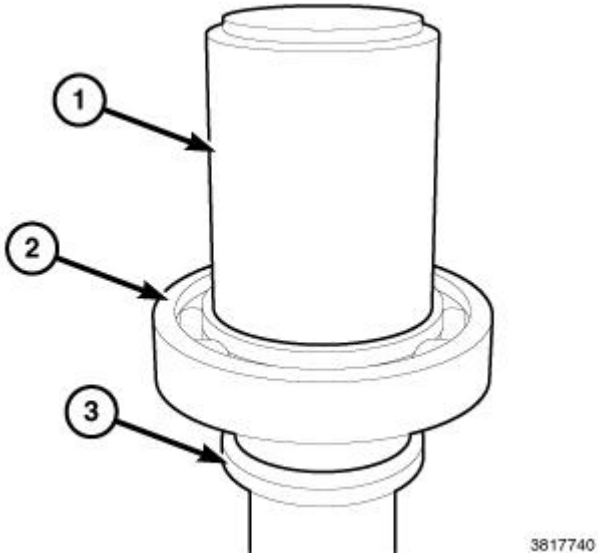

Fig. 154: Installing Bearing On Shaft
Courtesy of CHRYSLER GROUP, LLC

5. Using (special tool #6756, Receiver, Ball Joint) (1) and press, install the bearing (2) onto the shaft (3).

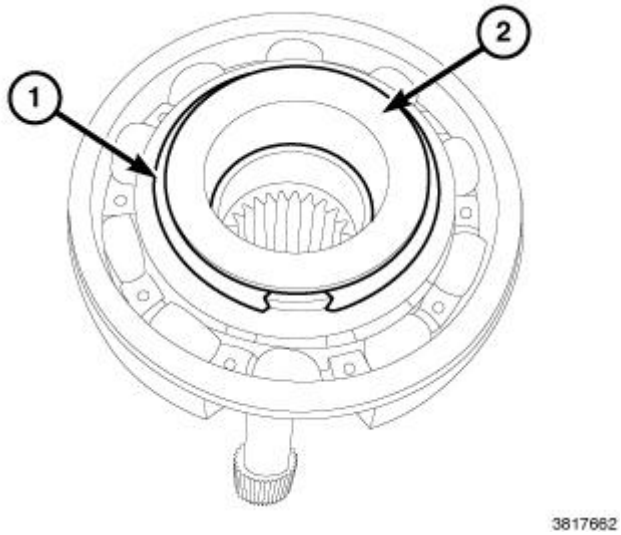

Fig. 155: Snap-Ring & Shaft
Courtesy of CHRYSLER GROUP, LLC

6. Install snap ring (1) on shaft (2).

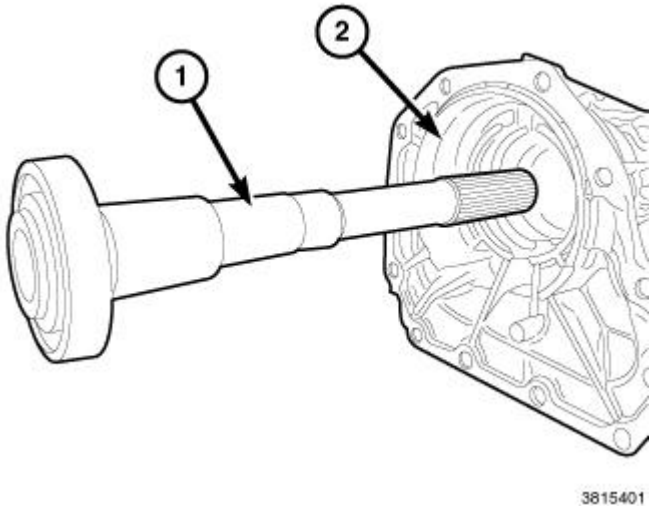

Fig. 156: Shaft & Extension Housing
Courtesy of CHRYSLER GROUP, LLC

7. Install the shaft (1) into the extension housing (2).

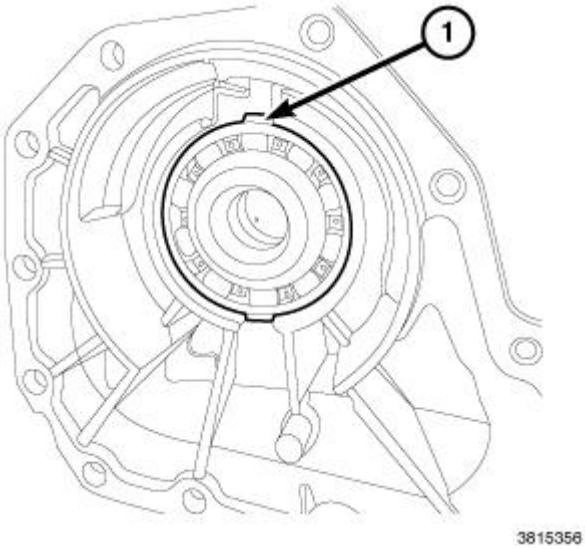

Fig. 157: Bearing Snap-Ring
Courtesy of CHRYSLER GROUP, LLC

8. Install the bearing snap-ring (1) into the extension housing.

INSTALLATION

INSTALLATION

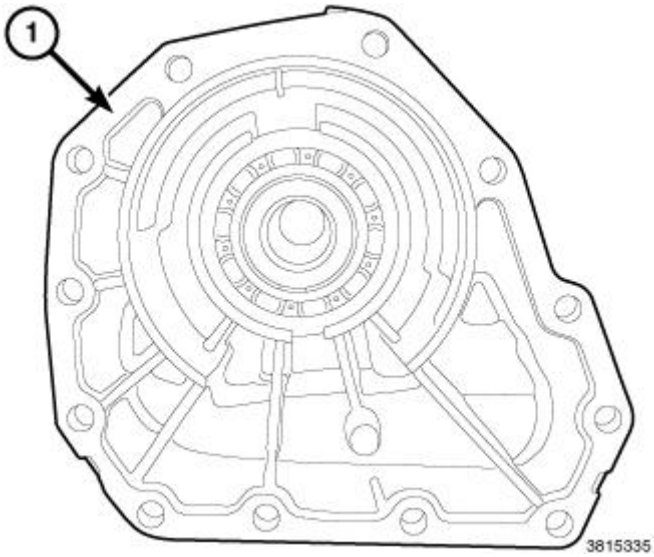

Fig. 158: RTV Application Area
Courtesy of CHRYSLER GROUP, LLC

1. Apply a bead of RTV silicone to the extension housing.

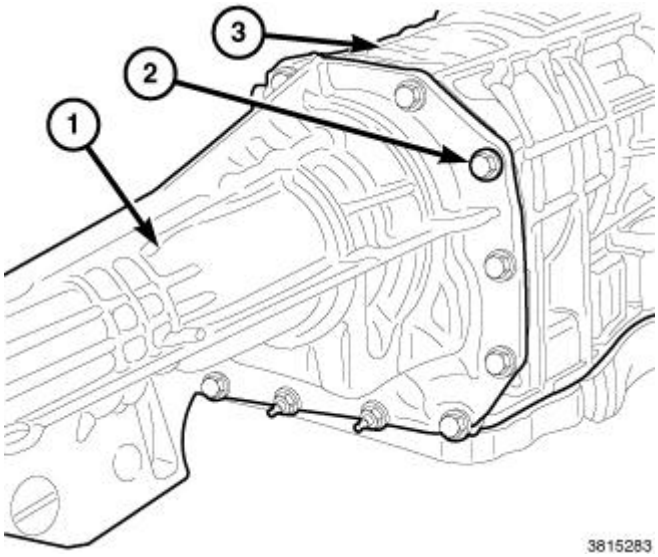

Fig. 159: Extension Housing & Bolts
Courtesy of CHRYSLER GROUP, LLC

2. Install the extension housing (1) on the transmission (3).
3. Install the extension housing bolts (2) and tighten to 54 N.m (40 ft. lbs.).
4. Install rear drive shaft. Refer to **SHAFT, DRIVE, REAR LIGHT DUTY, INSTALLATION** or **SHAFT, DRIVE, REAR HEAVY DUTY, INSTALLATION** .

MECHANISM, BRAKE TRANSMISSION SHIFT INTERLOCK

DESCRIPTION

DESCRIPTION

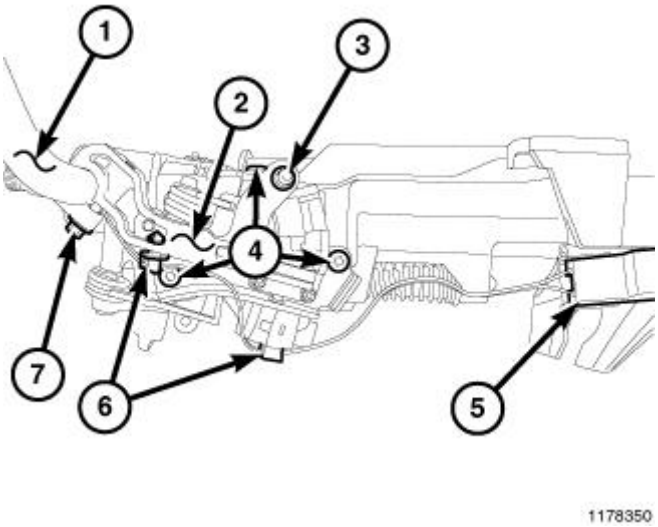

Fig. 160: Gearshift Lever Assembly
Courtesy of CHRYSLER GROUP, LLC

The Brake Transmission Shifter Interlock (BTSI), is a solenoid operated system. It consists of a solenoid permanently mounted on the gearshift lever assembly.

OPERATION

OPERATION

The system locks the shifter into the PARK position. The interlock system is engaged whenever the ignition switch is in the LOCK or ACCESSORY position. An additional electrically activated feature will prevent shifting out of the PARK position unless the brake pedal is depressed approximately one-half an inch. A magnetic holding device in line with the park lock cable is energized when the ignition is in the RUN position. When the key is in the RUN position and the brake pedal is depressed, the shifter is unlocked and will move into any position. The interlock system also prevents the ignition switch from being turned to the LOCK or ACCESSORY position, unless the shifter is fully locked into the PARK position.

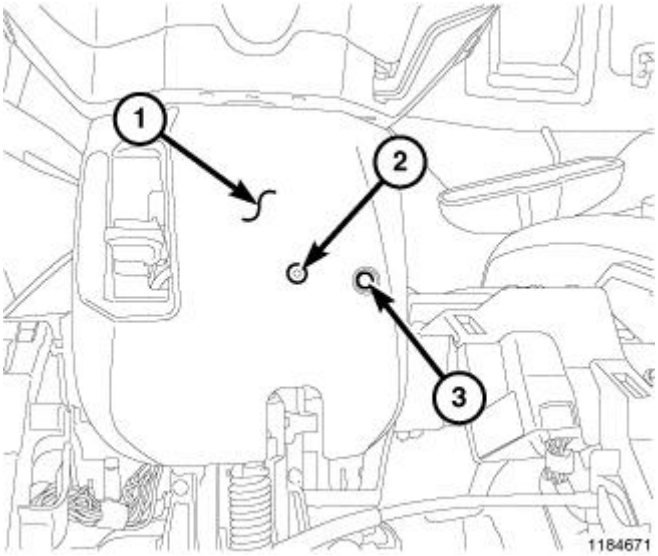

Fig. 161: Steering Column Lower Shroud
Courtesy of CHRYSLER GROUP, LLC

The system override (3) is located on the bottom of the column shroud (1) and requires a long thin screwdriver to depress the release.

DIAGNOSIS AND TESTING

DIAGNOSIS AND TESTING - BRAKE TRANSMISSION SHIFT INTERLOCK

1. Verify that the key can only be removed in the PARK position.
2. When the shift lever is in PARK And the shift handle pushbutton is in the "OUT" position, the ignition key cylinder should rotate freely from OFF to LOCK. When the shifter is in any other gear or neutral position, the ignition key cylinder should not rotate to the LOCK position.
3. Shifting out of PARK should not be possible when the ignition key cylinder is in the OFF position.
4. Shifting out of PARK should not be possible while applying normal pushbutton force and ignition key

cylinder is in the RUN or START positions unless the foot brake pedal is depressed approximately 1/2 inch (12mm).

5. Shifting out of PARK should not be possible when the ignition key cylinder is in the ACCESSORY or LOCK positions.
6. Shifting between any gears, NEUTRAL or into PARK may be done without depressing foot brake pedal with ignition switch in RUN or START positions.

ADJUSTMENTS

ADJUSTMENTS

ADJUSTMENT PROCEDURE

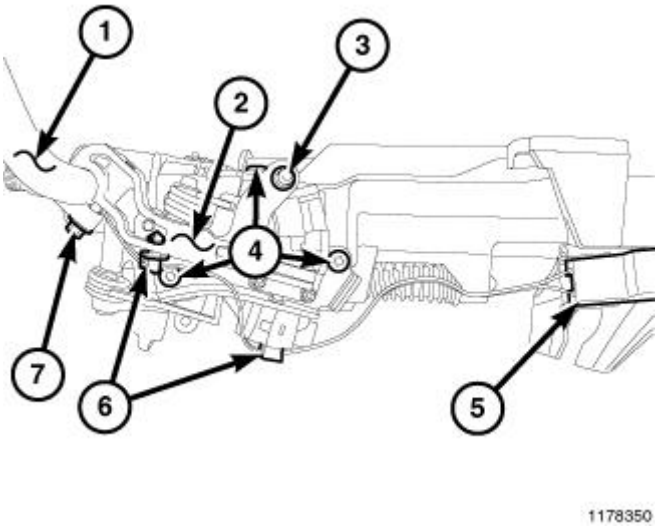

Fig. 162: Gearshift Lever Assembly
Courtesy of CHRYSLER GROUP, LLC

The BTSI is part of the shift lever assembly (2) and is non-adjustable.

BTSI FUNCTION CHECK

1. Verify removal of ignition key allowed in PARK position only.
2. When the shift lever is in PARK, the ignition key cylinder should rotate freely from off to lock. When the shifter is in any other position, the ignition key should not rotate from off to lock.
3. Shifting out of PARK should not be possible when the ignition key cylinder is in the off position.
4. Shifting out of PARK should not be possible while applying normal force, and ignition key cylinder is in the run or start positions, unless the foot brake pedal is depressed approximately 1/2 inch (12mm).
5. Shifting out of PARK should not be possible when the ignition key cylinder is in the accessory or lock position.
6. Shifting between any gear and NEUTRAL, or PARK, may be done without depressing foot brake with ignition switch in run or start positions.

7. Engine starts must be possible with shifter lever in PARK or NEUTRAL positions only. Engine starts must not be possible in any position other than PARK or NEUTRAL.
8. With shifter lever in the:

- PARK position - Apply upward force on the shift arm and remove pressure. Engine starts must be possible.
- PARK position - Apply downward force on the shift arm and remove pressure. Engine starts must be possible.
- NEUTRAL position - Normal position. Engine starts must be possible.
- NEUTRAL position - Engine running and brakes applied, apply upward force on the shift arm. Transmission shall not be able to shift from neutral to reverse.

PUMP, TRANSMISSION OIL

DESCRIPTION

DESCRIPTION

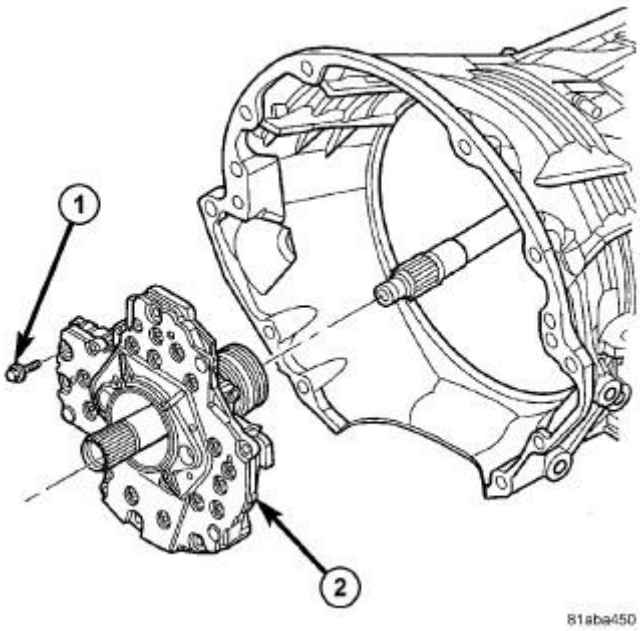

Fig. 163: Oil Pump & Bolt
Courtesy of CHRYSLER GROUP, LLC

1 - OIL PUMP TO CASE BOLT (6)
2 - OIL PUMP

The oil pump (2) is located at the front of the transmission inside the bell housing and behind the transmission front cover.

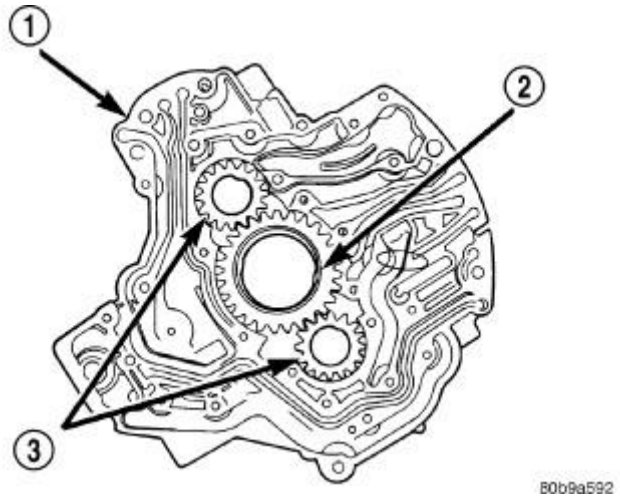

Fig. 164: Oil Pump Gears
Courtesy of CHRYSLER GROUP, LLC

1 - PUMP HOUSING
2 - DRIVE GEAR
3 - DRIVEN GEARS

The oil pump consists of two independent pumps. Refer to **Fig. 164**.

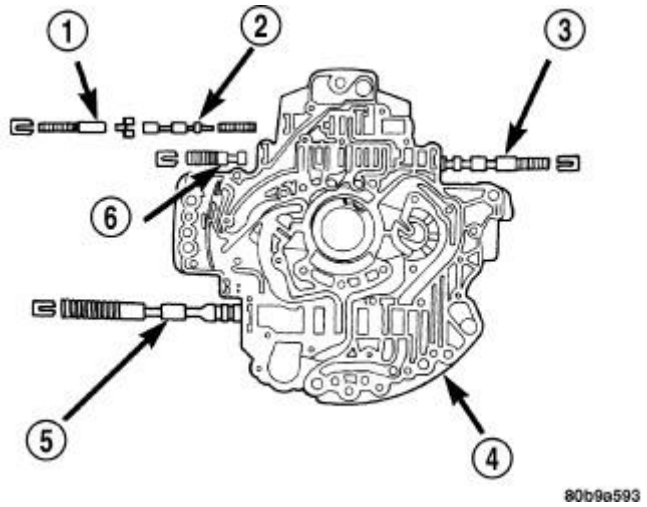

Fig. 165: Identifying Pump Valves
Courtesy of CHRYSLER GROUP, LLC

1 - TORQUE CONVERTER CLUTCH ACCUMULATOR VALVE
2 - TORQUE CONVERTER CLUTCH CONTROL VALVE
3 - TORQUE CONVERTER CLUTCH SWITCH VALVE
4 - PUMP VALVE BODY
5 - MAIN REGULATOR VALVE
6 - TORQUE CONVERTER CLUTCH LIMIT VALVE

The oil pump also contains a number of valves. The converter clutch switch (3) and control valves (2), main regulator valve (5), and converter pressure limit valve (6) are all located in the oil pump valve body.

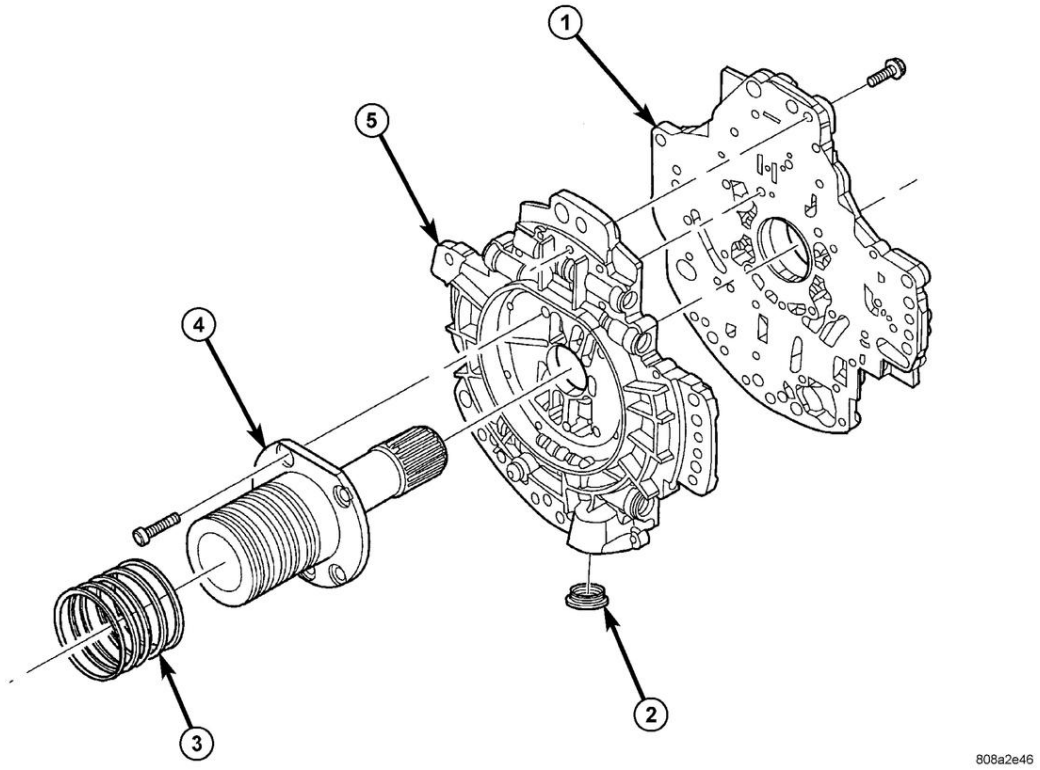

Fig. 166: Oil Pump Reaction Shaft
Courtesy of CHRYSLER GROUP, LLC

1 - PUMP HOUSING	4 - REACTION SHAFT SUPPORT
2 - OIL FILTER SEAL	5 - PUMP VALVE BODY
3 - SEAL RING (5)	

A filter seal (2), and a bolt on reaction shaft (4) complete the oil pump assembly.

OPERATION

OPERATION

As the torque converter rotates, the converter hub rotates the oil pump drive gear. As the drive gear rotates both driven gears, a vacuum is created when the gear teeth come out of mesh. This suction draws fluid through the pump inlet from the oil pan. As the gear teeth come back into mesh, pressurized fluid is forced into the pump outlet and to the oil pump valves.

At low speeds, both sides of the pump supply fluid to the transmission. As the speed of the torque converter increases, the flow from both sides increases until the flow from the primary side alone is sufficient to meet system demands. At this point, the check valve located between the two pumps closes. The secondary side is shut down and the primary side supplies all the fluid to the transmission.

CONVERTER CLUTCH SWITCH VALVE

The converter clutch switch valve is used to control the direction of oil flow to the torque converter. When the converter clutch is released (CC switch valve downshifted), hydraulic pressure is supplied to the front (OFF) side of the torque converter clutch. When the converter clutch is applied (CC switch valve upshifted), regulated oil pressure is supplied to the back (ON) side of the converter clutch.

CONVERTER CLUTCH REGULATOR VALVE

The converter clutch regulator valve is used to control the hydraulic pressure supplied to the back (ON) side of the torque converter clutch.

TORQUE CONVERTER LIMIT VALVE

The torque converter limit valve serves to limit the maximum pressure supplied to the front side of the torque converter clutch.

DISASSEMBLY

DISASSEMBLY

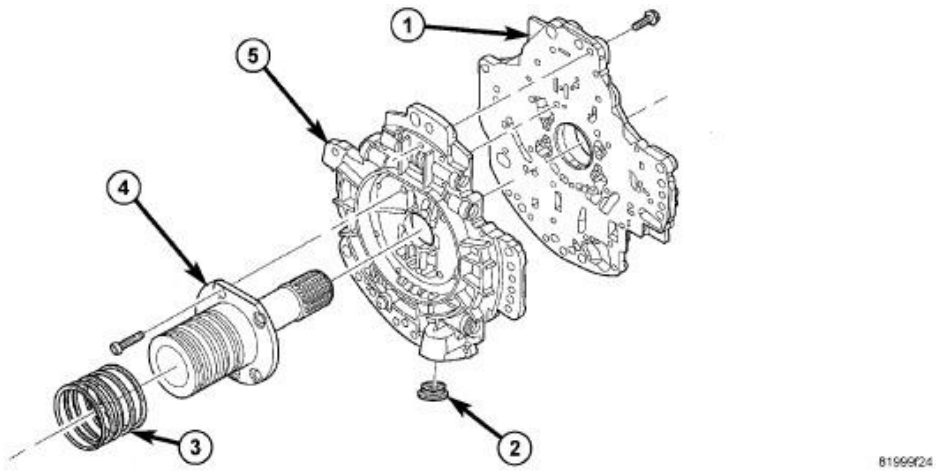

Fig. 167: Oil Pump Reaction Shaft
Courtesy of CHRYSLER GROUP, LLC

1 - PUMP HOUSING	4 - REACTION SHAFT SUPPORT
2 - OIL FILTER SEAL	5 - PUMP VALVE BODY
3 - SEAL RING (5)	

1. Remove the bolts holding the reaction shaft support (4) to the oil pump.
2. Remove the reaction shaft support (4) from the oil pump.
3. Remove all bolts holding the oil pump halves together.
4. Using suitable prying tools, separate the oil pump sections by inserting the tools in the supplied areas and prying the halves apart.

NOTE: **The oil pump halves are aligned to each other through the use of two dowels. Be sure to pry upward evenly to prevent damage to the oil pump components.**

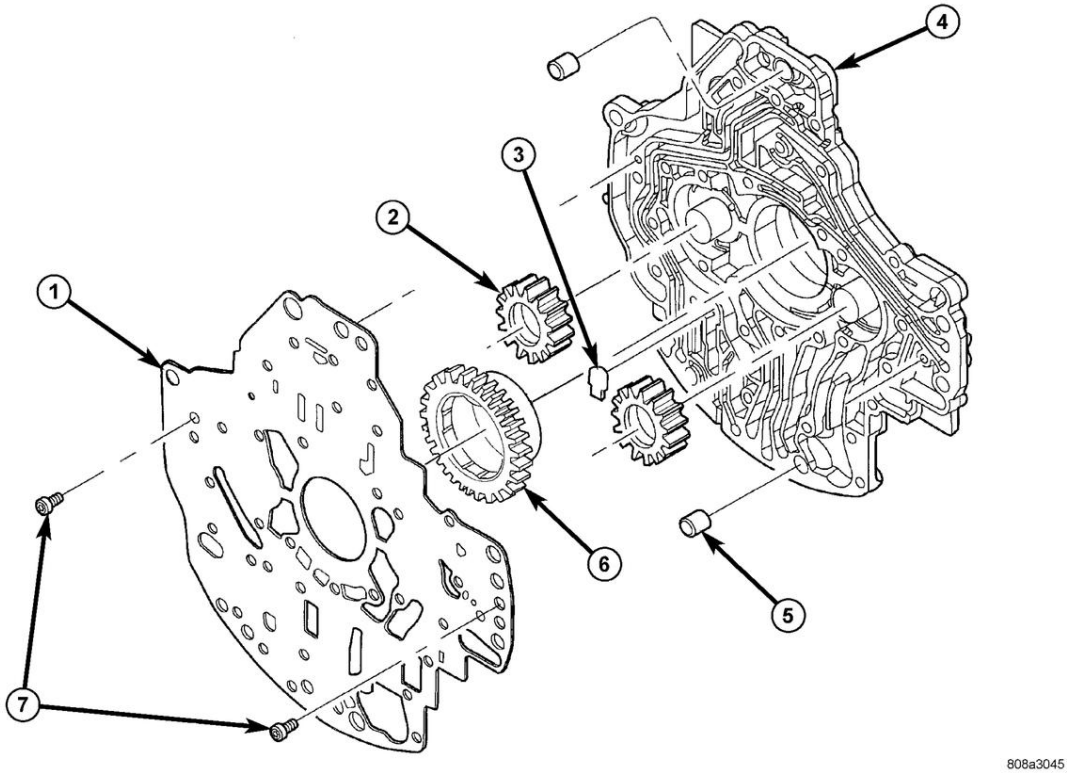

Fig. 168: Oil Pump Housing & Gears
Courtesy of CHRYSLER GROUP, LLC

1 - SEPARATOR PLATE	5 - DOWEL (2)
2 - DRIVEN GEAR (2)	6 - DRIVE GEAR
3 - FLAPPER VALVE	7 - SCREW
4 - PUMP HOUSING	

5. Remove the screws (7) holding the separator plate (1) onto the oil pump housing (4).
6. Remove the separator plate (1) from the oil pump housing (4).
7. Mark all gears for location. The gears are select fit and if the oil pump is to be reused, the gears must be returned to their original locations.
8. Remove the oil pump flapper valve (3) from its pocket in the pump housing.
9. Remove the oil pump gears (2, 6) from the oil pump housing (4).

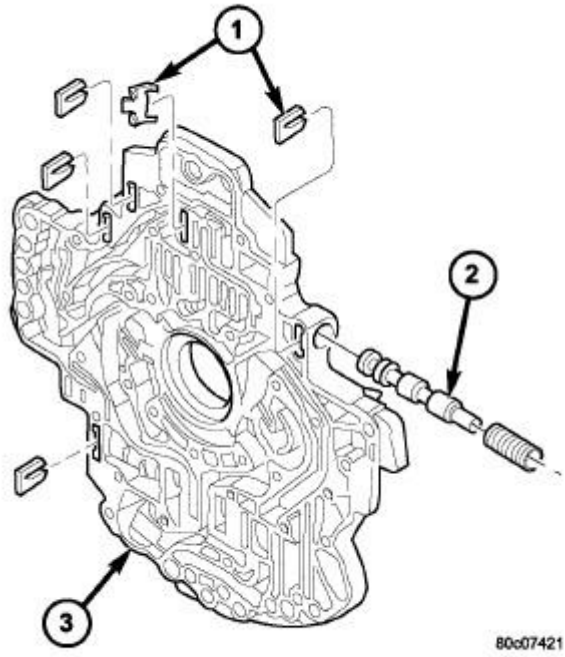

Fig. 169: Oil Pump Valve Retainers & T/C Switch Valve
Courtesy of CHRYSLER GROUP, LLC

1 - RETAINER
2 - T/C SWITCH VALVE
3 - OIL PUMP VALVE BODY

10. Remove the oil pump valve retainers (1) and TCC Switch Valve (2) and spring one at a time. Mark the combination of components as a group and tag them as to the location from which they were removed.

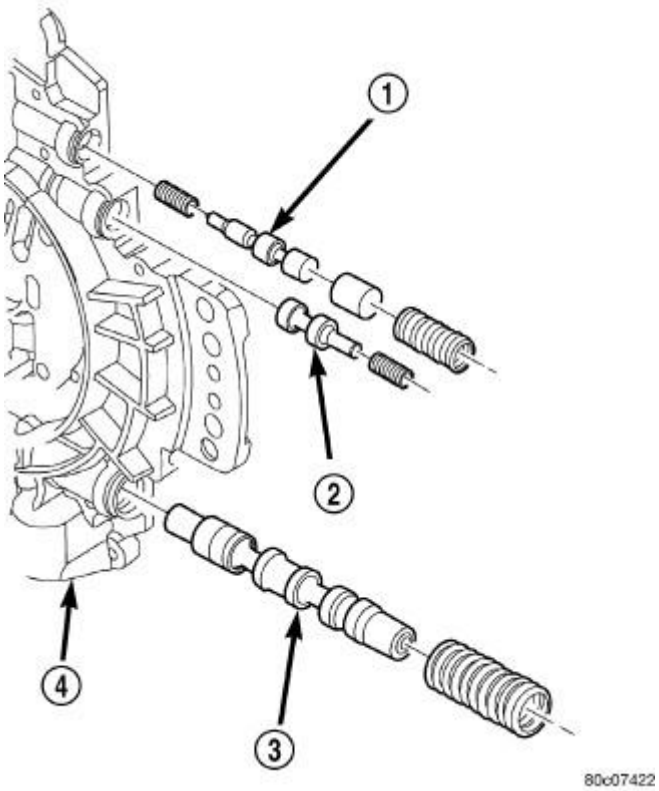

Fig. 170: T/C Regulator Valve, T/C Limit Valve & Regulator Valve
Courtesy of CHRYSLER GROUP, LLC

1 - T/C REGULATOR VALVE
2 - T/C LIMIT VALVE
3 - MAIN REGULATOR VALVE
4 - OIL PUMP VALVE BODY

11. Remove the T/C regulator valve (1), T/C limit valve (2), and main regulator valve (3).

CLEANING

CLEANING

Clean pump and support components with solvent and dry them with compressed air.

INSPECTION

INSPECTION

Check condition of the seal rings and bushing sleeve on the reaction shaft support. The seal rings do not need to be replaced unless cracked, broken, or severely worn.

Inspect the pump and support components. Replace the pump or support if the seal ring grooves or machined surfaces are worn, scored, pitted, or damaged. Replace the pump gears if pitted, worn, chipped, or damaged.

Inspect the pump reaction shaft support bushings. Replace either bushing only if heavily worn, scored or damaged. It is not necessary to replace the bushings unless they are actually damaged.

Inspect the valves and plugs for scratches, burrs, nicks, or scores. Minor surface scratches on steel valves and plugs can be removed with crocus cloth but **do not round off the edges of the valve or plug lands.** Maintaining sharpness of these edges is vitally important. The edges prevent foreign matter from lodging between the valves and plugs and the bore.

Inspect all the valve and plug bores in the oil pump valve body. Use a penlight to view the bore interiors. Replace the oil pump if any bores are distorted or scored. Inspect all of the valve springs. The springs must be free of distortion, warpage or broken coils.

Trial fit each valve and plug in its bore to check freedom of operation. When clean and dry, the valves and plugs should drop freely into the bores. Tip the pump valve body back and forth and check to see that each valve slides freely in its bore under its own weight (without pushing or prying).

ASSEMBLY

ASSEMBLY

NOTE: **Clean and inspect all components. Make sure that all passages are thoroughly cleaned and are free from dirt or debris. Make sure that all valves move freely in their proper bore. Make sure that all gear pockets and bushings are free from excessive wear and scoring. Replace the oil pump if any excessive wear or scoring is found.**

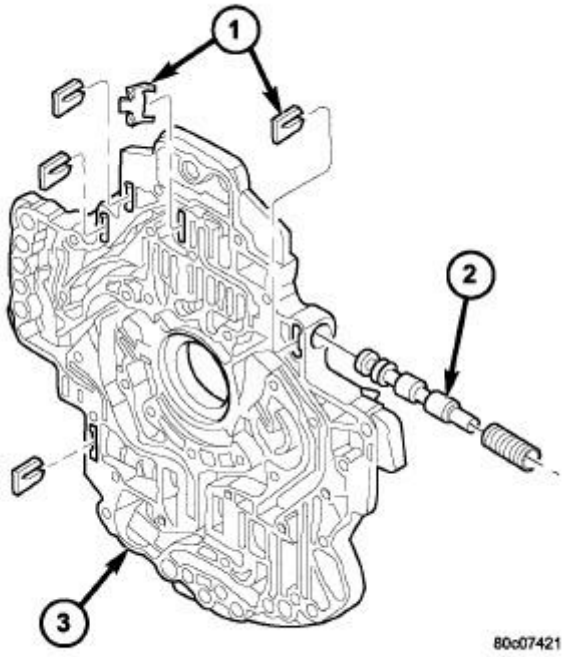

Fig. 171: Oil Pump Valve Retainers & T/C Switch Valve
Courtesy of CHRYSLER GROUP, LLC

1 - RETAINER
2 - T/C SWITCH VALVE
3 - OIL PUMP VALVE BODY

1. Lubricate the oil pump valves with Mopar® ATF +4 and install the TCC Switch Valve (2), spring, and retainer (1) into the appropriate oil pump valve body (3) bore.

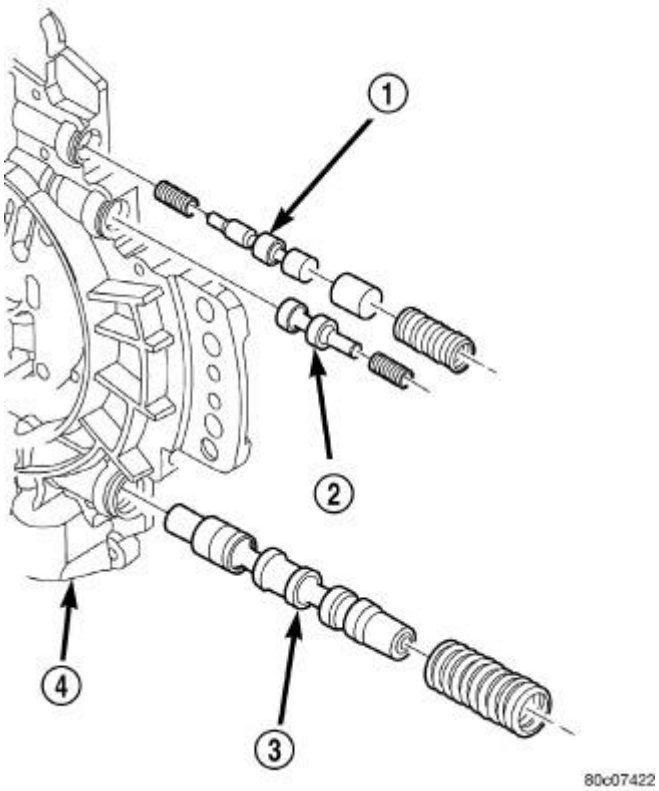

Fig. 172: T/C Regulator Valve, T/C Limit Valve & Regulator Valve
Courtesy of CHRYSLER GROUP, LLC

1 - T/C REGULATOR VALVE
2 - T/C LIMIT VALVE
3 - MAIN REGULATOR VALVE
4 - OIL PUMP VALVE BODY

2. Install the T/C regulator valve (1), T/C limit valve (2), and main regulator valve (3).

NOTE: **The pump separator plate is heat treated and therefore may exhibit a blue color or other discoloration in some areas. This is normal.**

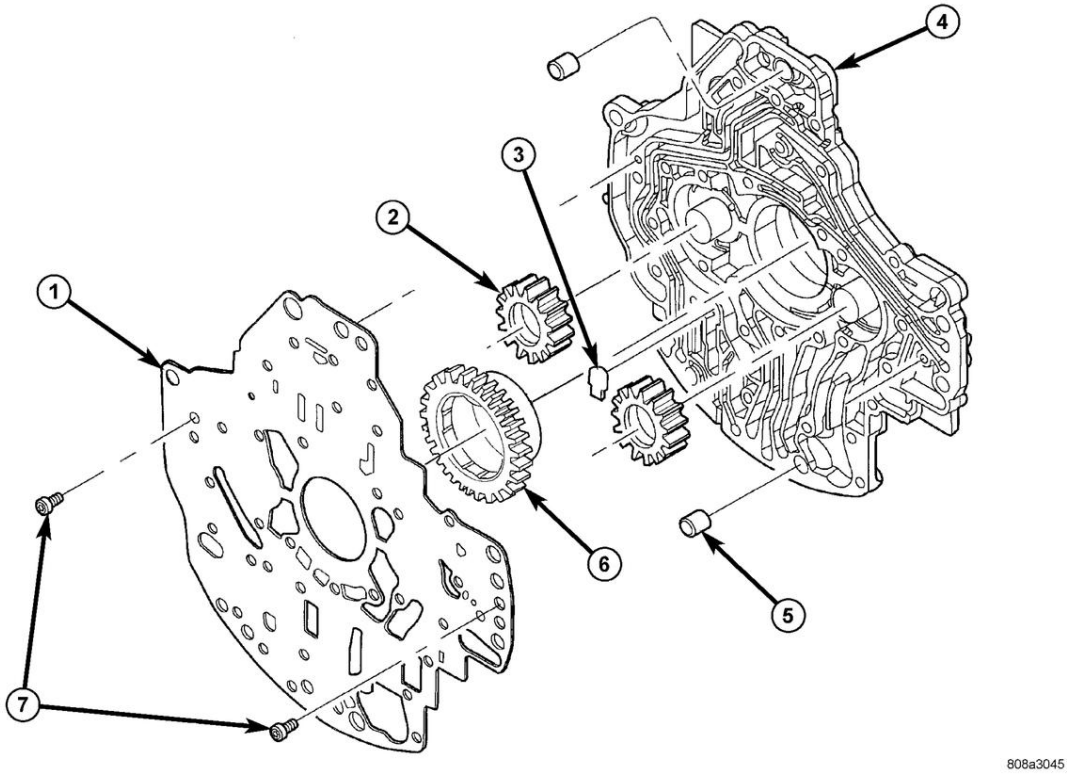

Fig. 173: Oil Pump Housing & Gears
Courtesy of CHRYSLER GROUP, LLC

1 - SEPARATOR PLATE	5 - DOWEL (2)
2 - DRIVEN GEAR (2)	6 - DRIVE GEAR
3 - FLAPPER VALVE	7 - SCREW
4 - PUMP HOUSING	

3. Coat the gears (2, 6) with Mopar® ATF +4 and install into their original locations.
4. Place the oil pump flapper valve (3) into its pocket in the pump housing, with the rounded edges facing down.
5. Place the separator plate (1) onto the oil pump housing (4).
6. Install the screws (7) to hold the separator plate (1) onto the oil pump housing (4). Tighten the screws to 4.5 N.m (40 in.lbs.).

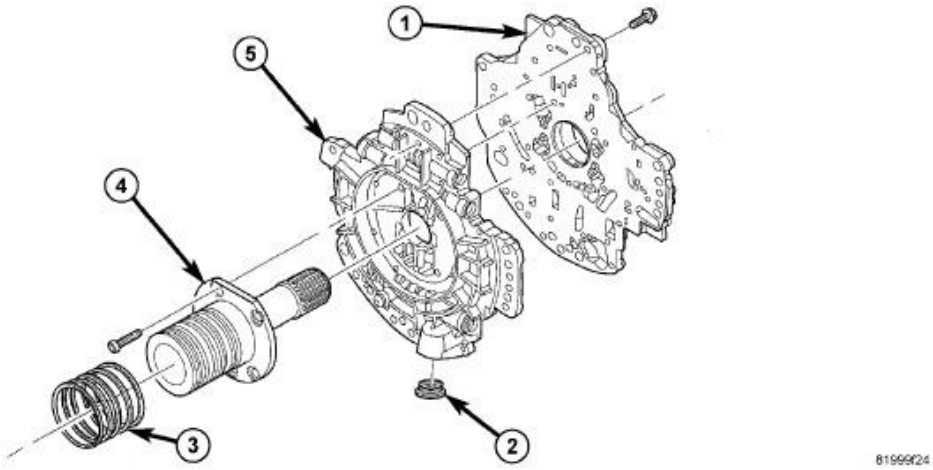

Fig. 174: Oil Pump Reaction Shaft
Courtesy of CHRYSLER GROUP, LLC

1 - PUMP HOUSING	4 - REACTION SHAFT SUPPORT
2 - OIL FILTER SEAL	5 - PUMP VALVE BODY
3 - SEAL RING (5)	

7. Position the oil pump valve body (5) onto the locating dowels.
8. Seat the two oil pump halves together and install all bolts finger tight.
9. Torque all bolts down slowly starting in the center and working outward. The correct torque is 4.5 N.m (40 in.lbs.).
10. Verify that the oil pump gears rotate freely and smoothly.
11. Position the reaction shaft support (4) onto the oil pump valve body (5).
12. Install and torque the bolts to hold the reaction shaft support (4) to the oil pump valve body (5). The correct torque is 12 N.m (105 in.lbs.).

RETAINER, TRANSMISSION 2ND AND 4TH CLUTCH PISTON

DISASSEMBLY

DISASSEMBLY

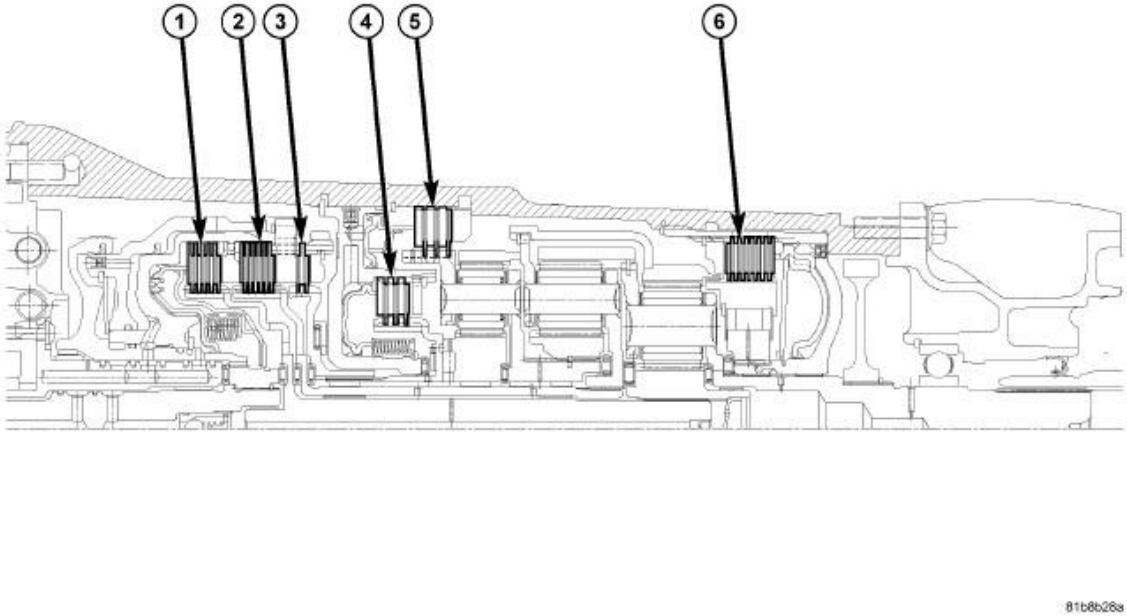

Fig. 175: 66RFE Clutch Orientation
Courtesy of CHRYSLER GROUP, LLC

1 - U/D CLUTCH	4 - 4C CLUTCH
2 - O/D CLUTCH	5 - 2C CLUTCH
3 - REVERSE CLUTCH	6 - L/R CLUTCH

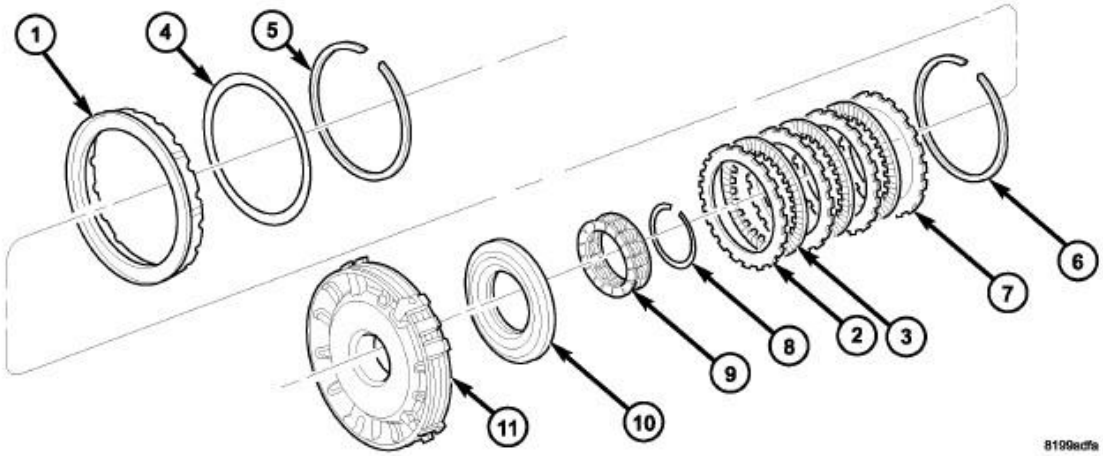

Fig. 176: 2nd & 4th Clutches
Courtesy of CHRYSLER GROUP, LLC

1. Remove the 2C piston Belleville spring snap-ring (5) from the 2C / 4C retainer/bulkhead (12).
2. Remove the 2C piston Belleville spring (4) from the retainer/bulkhead (11).
3. Remove the 2C piston (1) from the retainer/bulkhead (11). Use 20 psi of air pressure to remove the piston if necessary.
4. Remove the 4C clutch snap-ring (6) from the retainer/bulkhead (11)
5. Remove the 4C clutch pack (2, 3, 7) from the retainer/bulkhead (11).

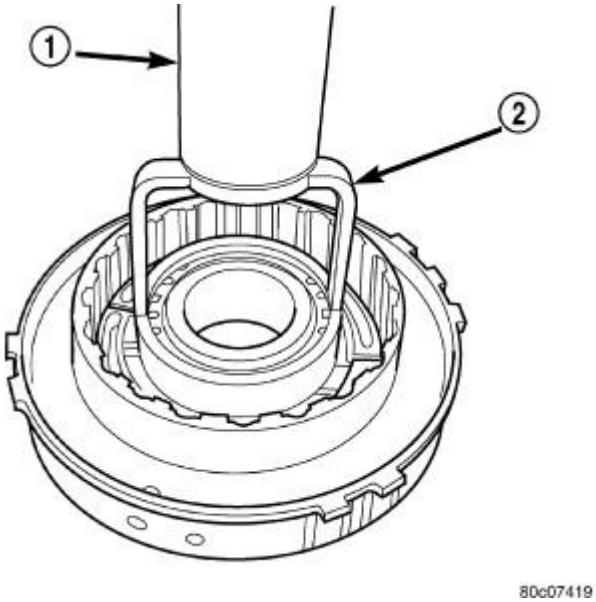

Fig. 177: Compressing 4C Piston Return Spring
Courtesy of CHRYSLER GROUP, LLC

6. Using Spring Compressor (special tool #8250, Compressor, Spring) (2) and a suitable shop press (1), compress the 4C piston return spring and remove the snap-ring.

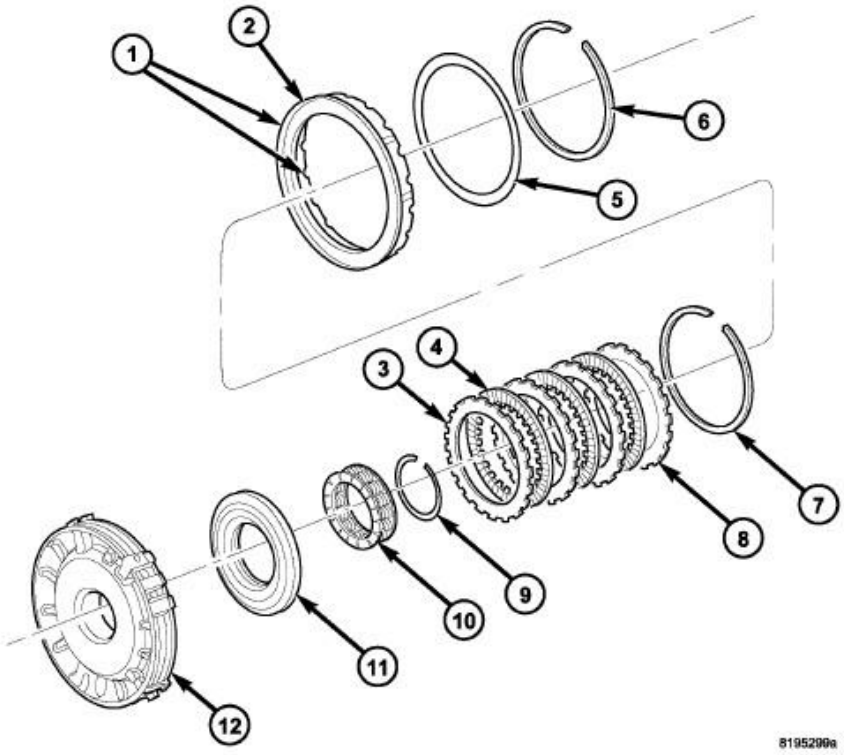

Fig. 178: 2/4 Clutches
Courtesy of CHRYSLER GROUP, LLC

1 - SEALS	8 - REACTION PLATE
2 - 2C PISTON	9 - SNAP-RING
3 - PLATE	10 - RETURN SPRING
4 - DISC	11 - 4C PISTON
5 - 2C BELLEVILLE SPRING	12 - 4C RETAINER/BULKHEAD
6 - SNAP-RING	
7 - SNAP-RING (SELECT)	

7. Remove the 4C piston return spring (10) and piston (11) from the retainer/bulkhead (12). Use 20 psi of air pressure to remove the piston if necessary.

ASSEMBLY

ASSEMBLY

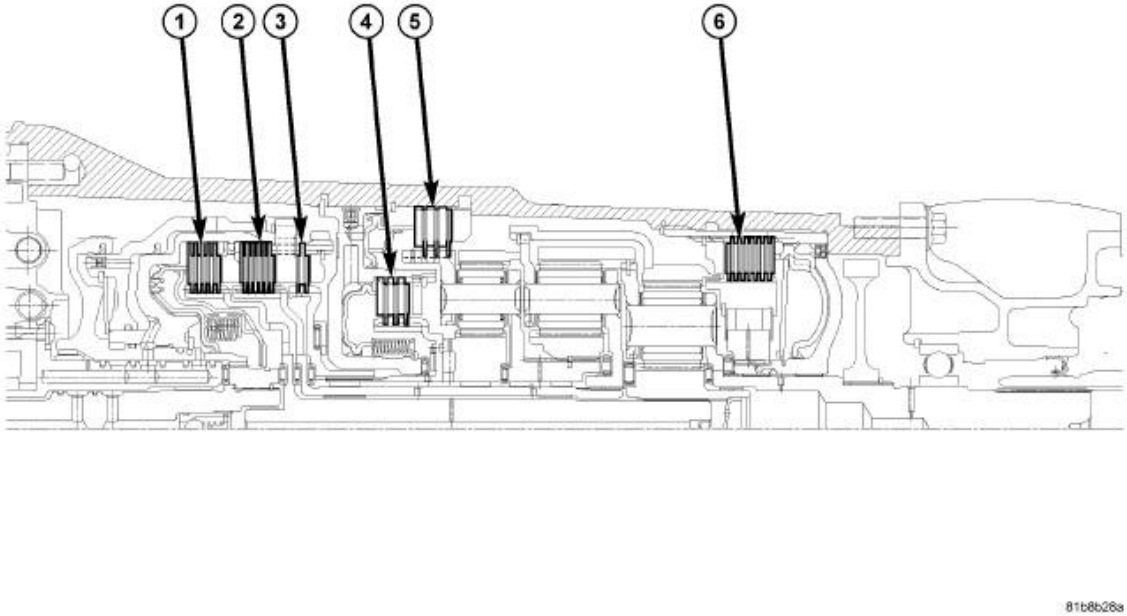

Fig. 179: 66RFE Clutch Orientation
Courtesy of CHRYSLER GROUP, LLC

1 - U/D CLUTCH	4 - 4C CLUTCH
2 - O/D CLUTCH	5 - 2C CLUTCH
3 - REVERSE CLUTCH	6 - L/R CLUTCH

NOTE: **Clean and inspect all components. Replace any components which show evidence of excessive wear or scoring.**

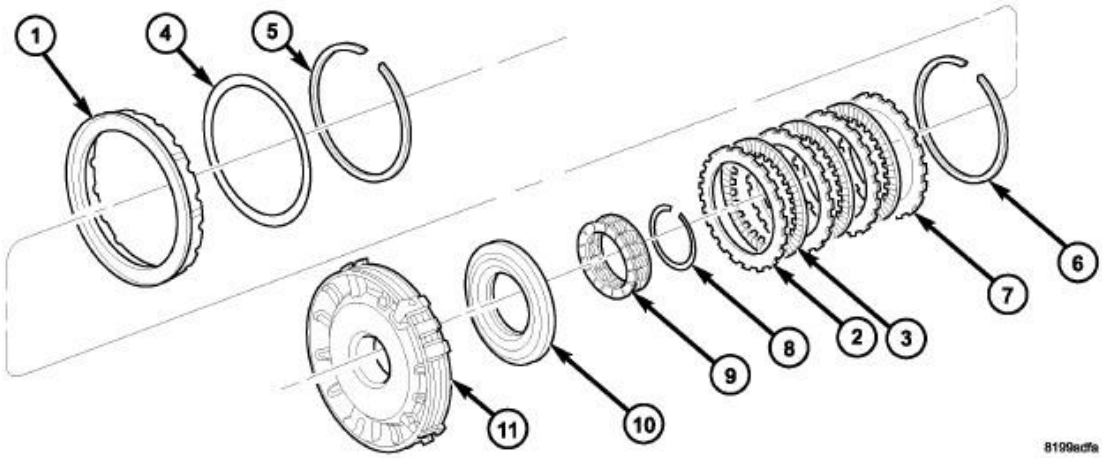

Fig. 180: 2nd & 4th Clutches
Courtesy of CHRYSLER GROUP, LLC

1 - 2C PISTON	8 - SNAP-RING
2 - PLATE	9 - RETURN SPRING
3 - DISC	10 - 4C PISTON
4 - 2C BELLEVILLE SPRING	11 - 4C RETAINER/BULKHEAD
5 - SNAP-RING	
6 - SNAP-RING (SELECT)	
7 - REACTION PLATE	

1. Lubricate all seals with Mopar® ATF +4 prior to installation.

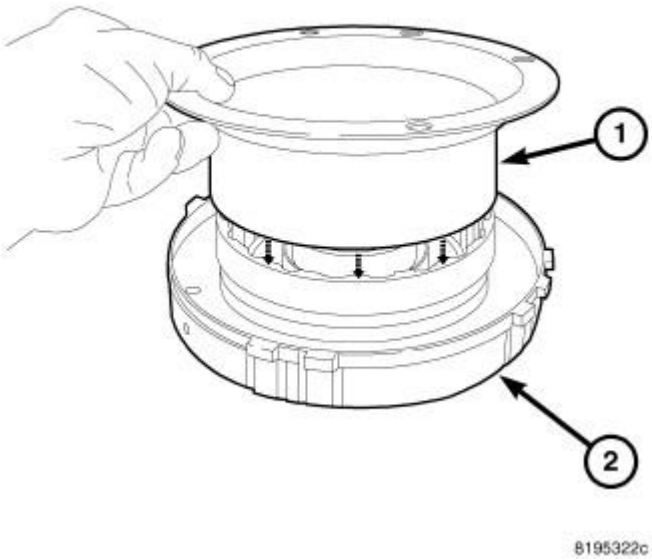

Fig. 181: Inserting Installation Aid Into 4C Retainer/bulkhead
Courtesy of CHRYSLER GROUP, LLC

2. Insert the installation aid (1) into the 4C retainer/bulkhead (2).

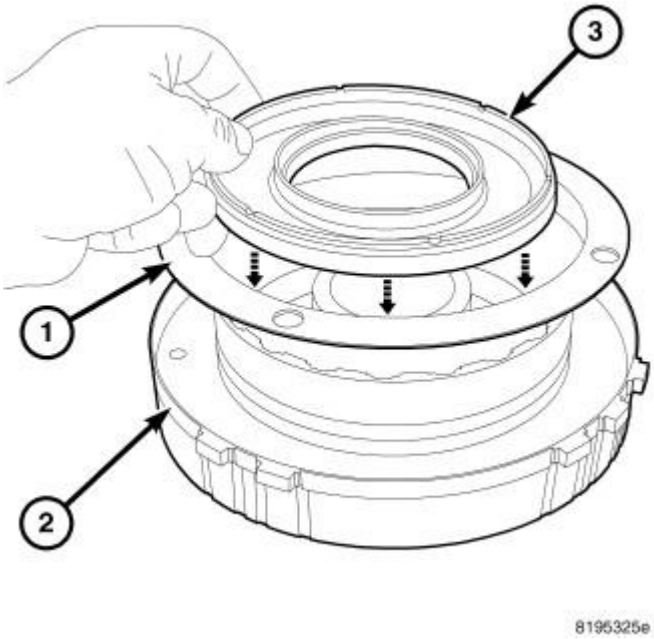

Fig. 182: Installing 4C Piston
Courtesy of CHRYSLER GROUP, LLC

3. Lubricate the inner and outer 4C piston seals (3) with MOPAR® ATF+ 4.
4. Install the 4C piston (3) into the installation aid (1).

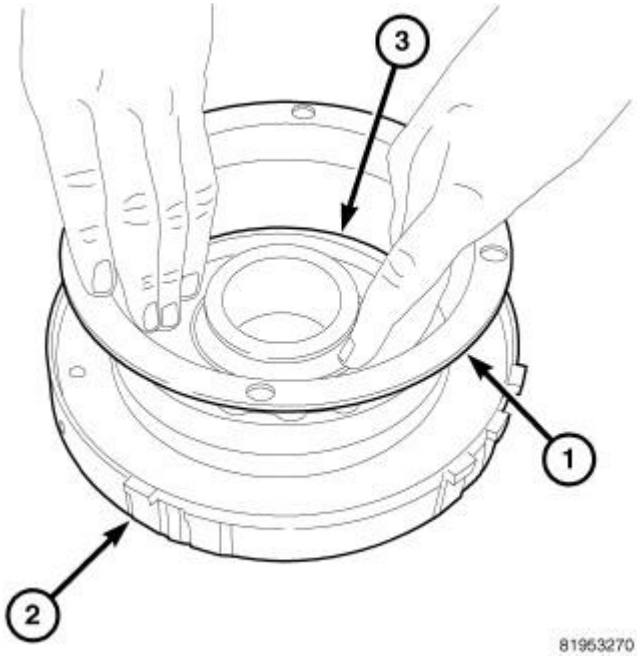

Fig. 183: Seating 4C Piston
Courtesy of CHRYSLER GROUP, LLC

5. Push the 4C piston (3) down evenly until it is seated in the 4C retainer/bulkhead (2).

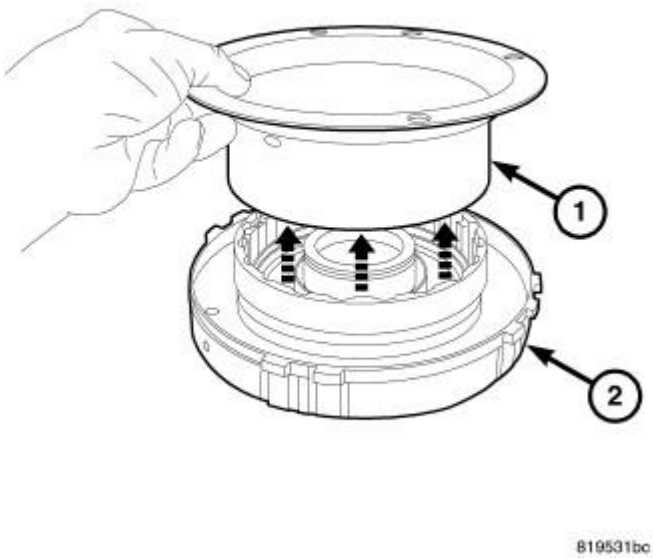

Fig. 184: Removing Installation Aid
Courtesy of CHRYSLER GROUP, LLC

6. Remove the installation aid (1) from the 4C retainer/bulkhead (2).

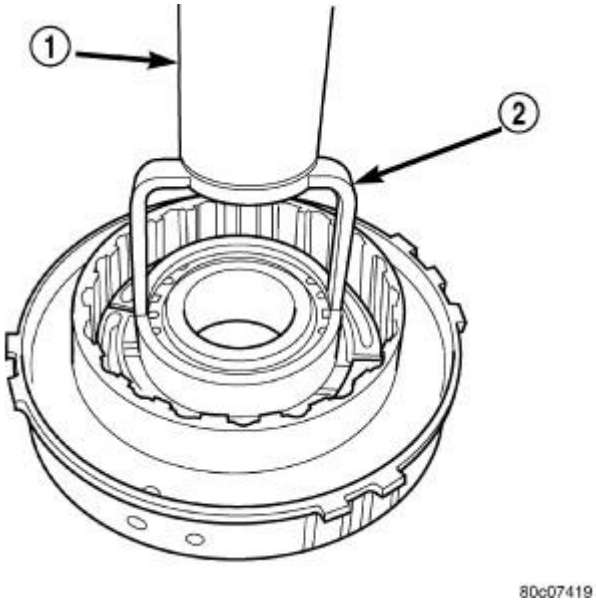

Fig. 185: Compressing 4C Piston Return Spring
Courtesy of CHRYSLER GROUP, LLC

1 - PRESS
2 - TOOL 8250

7. Position the 4C piston return spring onto the 4C piston.
8. Using Spring Compressor (special tool #8250, Compressor, Spring) (2) and a suitable shop press (1), compress the 4C piston return spring and install the snap-ring.

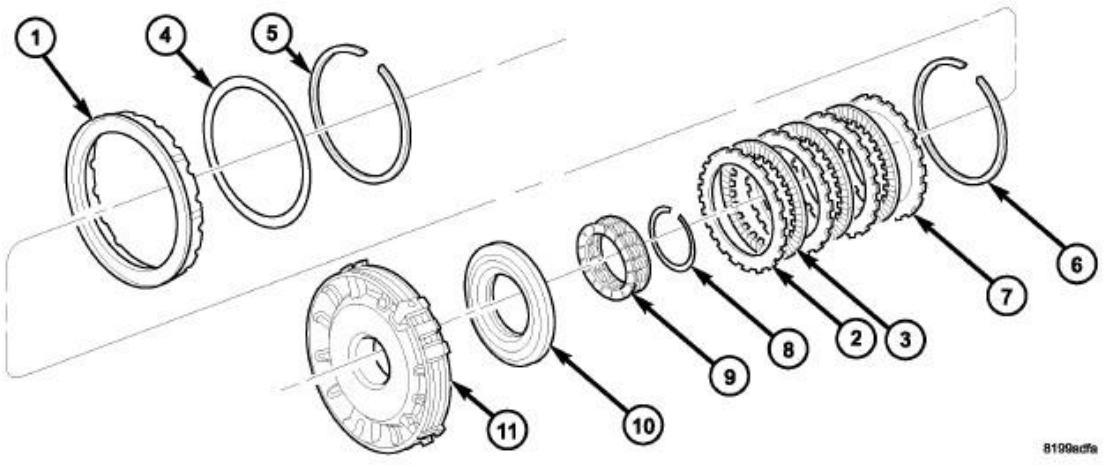

Fig. 186: 2nd & 4th Clutches
Courtesy of CHRYSLER GROUP, LLC

1 - 2C PISTON	8 - SNAP-RING
2 - PLATE	9 - RETURN SPRING
3 - DISC	10 - 4C PISTON
4 - 2C BELLEVILLE SPRING	11 - 4C RETAINER/BULKHEAD
5 - SNAP-RING	
6 - SNAP-RING (SELECT)	
7 - REACTION PLATE	

9. Assemble and install the 4C clutch pack (2, 3) into the retainer/bulkhead (11) with a steel separator plate against the piston.
10. Install the 4C reaction plate (7) and snap-ring (6) into the retainer/bulkhead (11). The 4C reaction plate is non-directional.
11. Measure the 4C clutch clearance. The correct clutch clearance is 0.770-1.390 mm (0.030-0.055 in.). The snap-ring (6) is selectable. Install the chosen snap-ring and re-measure to verify the selection.

    The 4C selectable snap ring thickness are as follows:

    4C SELECTABLE SNAP RING THICKNESS

    - One Butterfly End, One Square End = 1.79 mm (0.070 in.).
    - Both Ends Buttery Fly Cut = 2.20 mm (0.087 in.).
    - One Butterfly End, One Inverted Butterfly End = 2.61 mm (0.103 in.).
12. Install the 2C piston (1) into the retainer/bulkhead (11).

13. Position the 2C Belleville spring (5) onto the 2C piston (2).
14. Position the 2C Belleville spring snap-ring (6) onto the 2C Belleville spring (5).

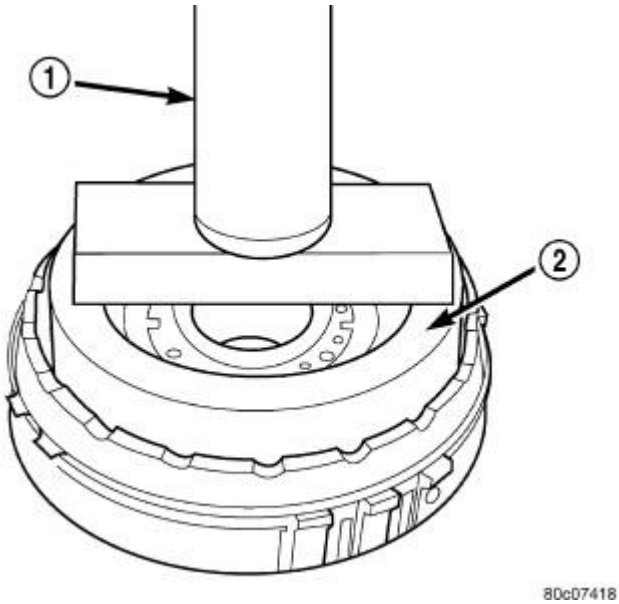

Fig. 187: Compressing 2C Belleville Spring
Courtesy of CHRYSLER GROUP, LLC

1 - PRESS
2 - TOOL 8249

15. Using Spring Compressor (special tool #8249, Compressor, Spring) (2) and a suitable shop press (1), compress the Belleville spring until the snap-ring is engaged with the snap-ring groove in the retainer/bulkhead.

SEAL, ADAPTER HOUSING

REMOVAL

REMOVAL

1. On 4WD vehicles remove the transfer case from the transmission, on 2WD vehicles remove the propeller shaft.
2. Using a pry tool, remove the output shaft seal.

INSTALLATION

INSTALLATION

NOTE: On the 2WD models use Seal Installer (special tool #8154, Installer, Seal) with Handle (special tool #C-4171, Driver Handle, Universal).

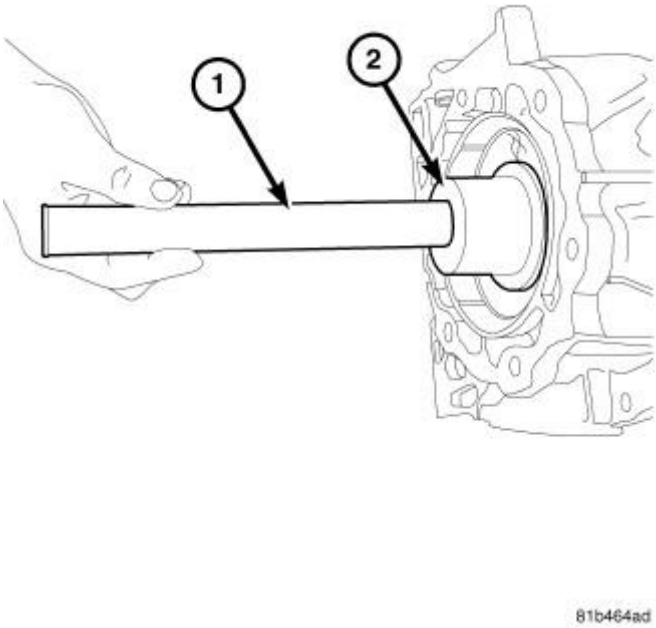

Fig. 188: Installing Oil Seal
Courtesy of CHRYSLER GROUP, LLC

1 - HANDLE C-4171
2 - SEAL INSTALLER 10020

1. Clean the seal bore in the extension housing of any residue or particles remaining from the original seal.
2. Install new oil seal in the extension housing using Handle (special tool #C-4171, Driver Handle, Universal) (1) and Seal Installer (special tool #10020, Installer, Seal) (2).

SEAL, OUTPUT SHAFT

REMOVAL

REMOVAL

1. Remove the rear drive shaft. Refer to **SHAFT, DRIVE, REAR LIGHT DUTY, REMOVAL** or **SHAFT, DRIVE, REAR HEAVY DUTY, REMOVAL** .
2. Using a seal removal tool, remove rear extension housing output shaft seal.

INSTALLATION

INSTALLATION

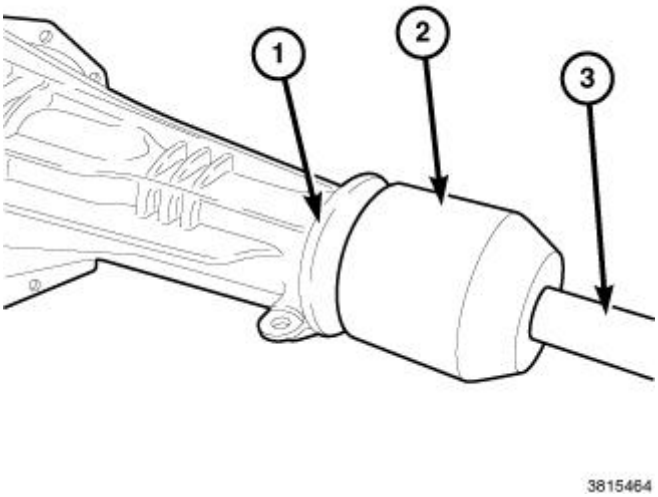

Fig. 189: Installing Extension Housing Oil Seal
Courtesy of CHRYSLER GROUP, LLC

1. Clean the extension housing seal bore in the extension housing of any residue or particles remaining from the original seal.

NOTE: The small weep hole in the dust boot of the seal should face downward when installed in the extension housing.

2. Install new oil seal in the extension housing (1) using (special tool #8896, Installer, Seal) (2) and (special tool #C-4171, Driver Handle, Universal) (3).
3. Install rear drive shaft. Refer to **SHAFT, DRIVE, REAR LIGHT DUTY, INSTALLATION** or **SHAFT, DRIVE, REAR HEAVY DUTY, INSTALLATION** .

SENSOR, SPEED, INPUT

DESCRIPTION

DESCRIPTION

The Input and Output Speed Sensors are two-wire magnetic pickup devices that generate AC signals as rotation occurs. They are mounted in the left side of the transmission case and are considered primary inputs to the Transmission Control Module (TCM).

OPERATION

OPERATION

The Input Speed Sensor provides information on how fast the input shaft is rotating. As the teeth of the input clutch hub pass by the sensor coil, an AC voltage is generated and sent to the TCM. The TCM interprets this information as input shaft rpm.

The Output Speed Sensor generates an AC signal in a similar fashion, though its coil is excited by rotation of the park gear teeth. The TCM interprets this information as output shaft rpm.

The TCM compares the input and output speed signals to determine the following:

- Transmission gear ratio
- Speed ratio error detection
- CVI calculation

The TCM also compares the input speed signal and the engine speed signal to determine the following:

- Torque converter clutch slippage
- Torque converter element speed ratio

REMOVAL

REMOVAL

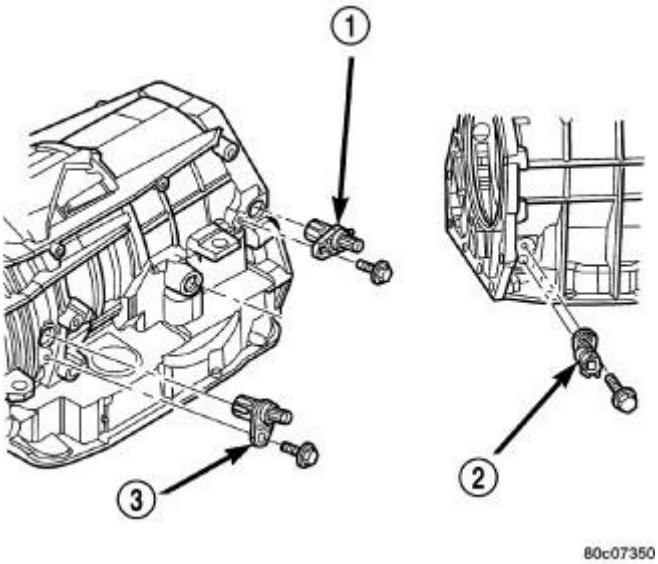

Fig. 190: Input, Output, & Line Pressure Sensors
Courtesy of CHRYSLER GROUP, LLC

1 - OUTPUT SPEED SENSOR
2 - LINE PRESSURE SENSOR
3 - INPUT SPEED SENSOR

1. Raise vehicle.
2. Place a suitable fluid catch pan under the transmission.
3. Remove the wiring connector from the input speed sensor (3). Refer to **Fig. 190**.
4. Remove the bolt holding the input speed sensor to the transmission case.

5. Remove the input speed sensor (3) from the transmission case.

INSTALLATION

INSTALLATION

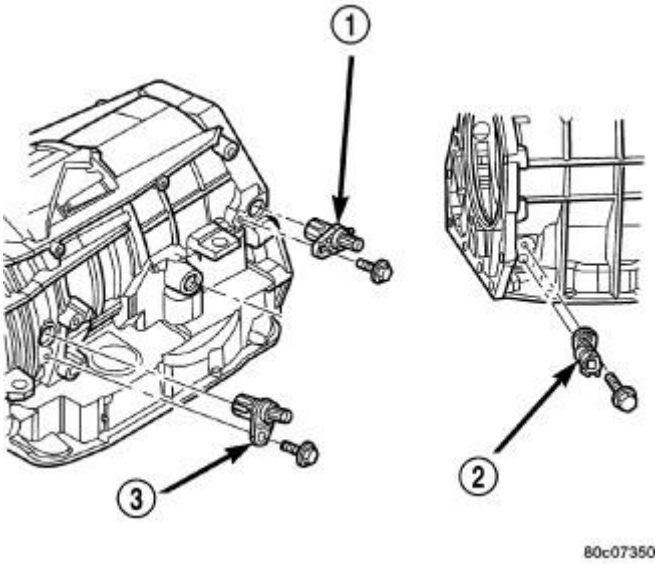

Fig. 191: Input, Output, & Line Pressure Sensors
Courtesy of CHRYSLER GROUP, LLC

1 - OUTPUT SPEED SENSOR
2 - LINE PRESSURE SENSOR
3 - INPUT SPEED SENSOR

1. Install the input speed sensor (3) into the transmission case. Refer to **Fig. 191**.
2. Install the bolt to hold the input speed sensor (3) into the transmission case. Tighten the bolt to 12 N.m (105 in.lbs.).
3. Install the wiring connector onto the input speed sensor.
4. Verify the transmission fluid level. Add fluid as necessary.
5. Lower vehicle.

SENSOR, SPEED, OUTPUT

DESCRIPTION

DESCRIPTION

The Input and Output Speed Sensors are two-wire magnetic pickup devices that generate AC signals as rotation occurs. They are mounted in the left side of the transmission case and are considered primary inputs to the Transmission Control Module (TCM).

OPERATION

OPERATION

The Input Speed Sensor provides information on how fast the input shaft is rotating. As the teeth of the input clutch hub pass by the sensor coil, an AC voltage is generated and sent to the TCM. The TCM interprets this information as input shaft rpm.

The Output Speed Sensor generates an AC signal in a similar fashion, though its coil is excited by rotation of the park gear teeth. The TCM interprets this information as output shaft rpm.

The TCM compares the input and output speed signals to determine the following:

- Transmission gear ratio
- Speed ratio error detection
- CVI calculation

The TCM also compares the input speed signal and the engine speed signal to determine the following:

- Torque converter clutch slippage
- Torque converter element speed ratio

REMOVAL

REMOVAL

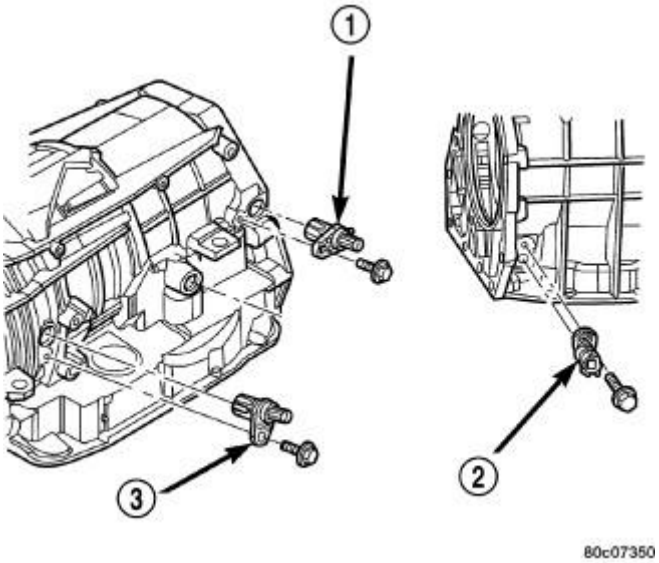

Fig. 192: Input, Output, & Line Pressure Sensors
Courtesy of CHRYSLER GROUP, LLC

1 - OUTPUT SPEED SENSOR

2 - LINE PRESSURE SENSOR
3 - INPUT SPEED SENSOR

1. Raise vehicle.
2. Place a suitable fluid catch pan under the transmission.
3. Remove the wiring connector from the output speed sensor (1). Refer to **Fig. 192**.
4. Remove the bolt holding the output speed sensor (1) to the transmission case.
5. Remove the output speed sensor (1) from the transmission case.

INSTALLATION

INSTALLATION

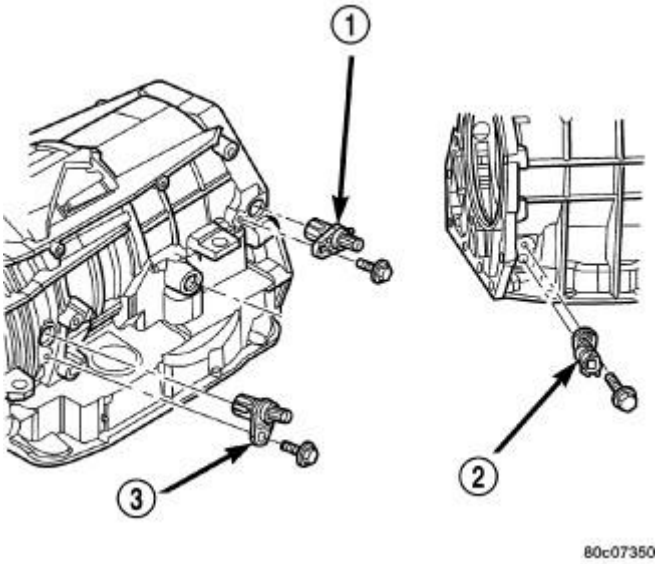

Fig. 193: Input, Output, & Line Pressure Sensors
Courtesy of CHRYSLER GROUP, LLC

1 - OUTPUT SPEED SENSOR
2 - LINE PRESSURE SENSOR
3 - INPUT SPEED SENSOR

1. Install the output speed sensor (1) into the transmission case. Refer to **Fig. 193**.
2. Install the bolt to hold the output speed sensor (1) into the transmission case. Tighten the bolt to 12 N.m (105 in.lbs.).
3. Install the wiring connector onto the output speed sensor (1).
4. Verify the transmission fluid level. Add fluid as necessary.
5. Lower vehicle.

SENSOR, TRANSMISSION OIL TEMPERATURE

DESCRIPTION

DESCRIPTION

The transmission temperature sensor is a thermistor that is integral to the Transmission Range Sensor (TRS).

OPERATION

OPERATION

The transmission temperature sensor is used by the TCM to sense the temperature of the fluid in the sump. Since fluid temperature can affect transmission shift quality and convertor lock up, the TCM requires this information to determine which shift schedule to operate in.

CALCULATED TEMPERATURE

A failure in the temperature sensor or circuit will result in calculated temperature being substituted for actual temperature. Calculated temperature is a predicted fluid temperature which is calculated from a combination of inputs:

- Battery (ambient) temperature
- Engine coolant temperature
- In-gear run time since start-up

SENSOR, TRANSMISSION RANGE

DESCRIPTION

DESCRIPTION

The Transmission Range Sensor (TRS) is part of the solenoid module, which is mounted to the top of the valve body inside the transmission.

The Transmission Range Sensor (TRS) has five switch contact pins that:

- Determine shift lever position
- Supply ground to the Starter Relay in Park and Neutral only.

The TRS also has an integrated temperature sensor (thermistor) that communicates transmission temperature to the TCM and PCM.

OPERATION

OPERATION

The Transmission Range Sensor (TRS) communicates shift lever position to the TCM as a combination of open and closed switches. Each shift lever position has an assigned combination of switch states (open/closed) that

the TCM receives from four sense circuits. The TCM interprets this information and determines the appropriate transmission gear position and shift schedule.

There are many possible combinations of open and closed switches (codes). Five of these possible codes correspond to valid gear position, there are two codes for the neutral position and three are recognized as "between gear" codes. This results in many codes which should **never occur** . These are called "invalid" codes. An invalid code will result in a DTC, and the TCM will then determine the shift lever position based on pressure switch data. This allows reasonably normal transmission operation with a TRS failure.

GEAR	C5	C4	C3	C2	C1
Park	CL	OP	OP	CL	CL
Temp 1	CL	OP	OP	CL	OP
Reverse	OP	OP	OP	CL	OP
Temp 2	OP	OP	CL	CL	OP
Neutral 1	OP	OP	CL	CL	CL
Neutral 2	OP	CL	CL	CL	CL
Temp 3	OP	CL	CL	CL	OP
Drive	OP	CL	CL	OP	OP

SENSOR, VARIABLE LINE PRESSURE

DESCRIPTION

DESCRIPTION

The TCM utilizes a closed-loop system to control transmission line pressure. The system contains a variable force style solenoid, the Pressure Control Solenoid, which is part of the pressure switch assembly. The solenoid is duty cycle controlled by the TCM to vent the unnecessary line pressure supplied by the oil pump back to the pump inlet. The system contains a Line Pressure Sensor, which is a direct input to the TCM. The line pressure sensor monitors the transmission line pressure and completes the feedback loop to the TCM. The TCM uses this information to adjust its control of the pressure control solenoid to achieve the desired line pressure.

OPERATION

OPERATION

The TCM calculates the desired line pressure based upon inputs from the transmission and engine. The TCM calculates the torque input to the transmission and uses that information as the primary input to the calculation. The line pressure is set to a predetermined value during shifts, to ensure consistent shift quality. During all other operation, the desired line pressure value is adjusted based on torque level and other transmission requirements.

REMOVAL

REMOVAL

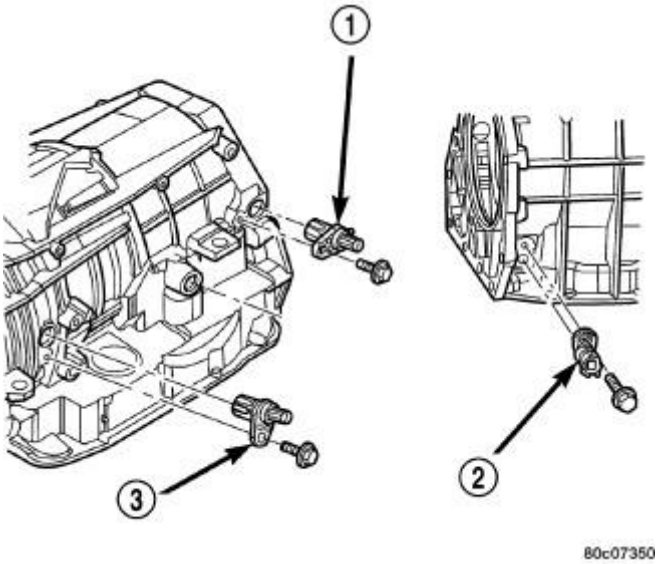

Fig. 194: Input, Output, & Line Pressure Sensors
Courtesy of CHRYSLER GROUP, LLC

1 - OUTPUT SPEED SENSOR
2 - LINE PRESSURE SENSOR
3 - INPUT SPEED SENSOR

1. Raise vehicle.
2. Place a suitable fluid catch pan under the transmission.
3. Remove the wiring connector from the line pressure sensor (2). Refer to **Fig. 194**.
4. Remove the bolt holding the line pressure sensor (2) to the transmission case.
5. Remove the line pressure sensor (2) from the transmission case.

INSTALLATION

INSTALLATION

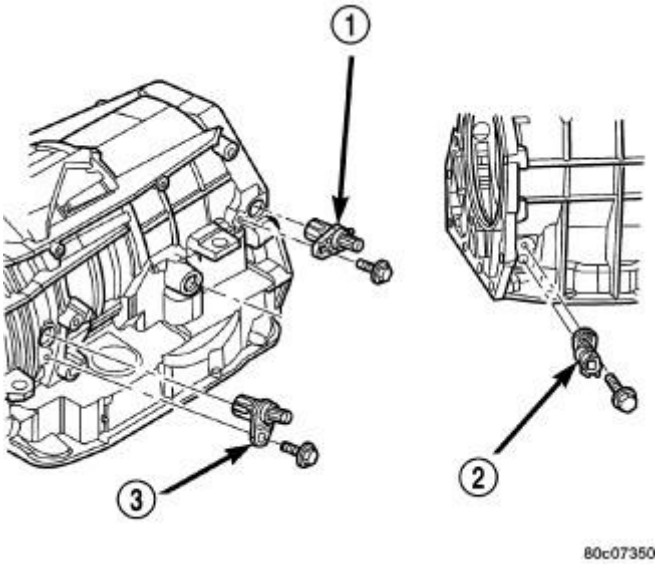

Fig. 195: Input, Output, & Line Pressure Sensors
Courtesy of CHRYSLER GROUP, LLC

1 - OUTPUT SPEED SENSOR
2 - LINE PRESSURE SENSOR
3 - INPUT SPEED SENSOR

1. Install the line pressure sensor (2) into the transmission case. Refer to **Fig. 195**.
2. Install the bolt to hold the line pressure sensor (2) into the transmission case. Tighten the bolt to 12 N.m (105 in.lbs.).
3. Install the wiring connector onto the line pressure sensor (2).
4. Verify the transmission fluid level. Add fluid as necessary.
5. Lower vehicle.

SHIFTER, TRANSMISSION

DESCRIPTION

DESCRIPTION

The gear shift mechanism provides four shift positions which are:

- Park (P)
- Reverse (R)
- Neutral (N)
- Drive (D)

OPERATION

OPERATION

Drive range provides underdrive FIRST, SECOND and THIRD gears, direct FOURTH gear and overdrive FIFTH and SIXTH gears. The shift into overdrive FIFTH and SIXTH gear occurs only after the transmission has completed the shift into FOURTH gear. No other movement of the shift mechanism is required to complete the 4-5 or 5-6 gear shifts.

The FOURTH and FIFTH gear upshift occurs automatically unless the Tow/Haul mode is enabled.

Upshifts into both overdrive gears, FIFTH and SIXTH, will be delayed when the transmission fluid temperature is below 4.5° C (40° F) or above 115.5° C (240° F).

SWITCH, OVERDRIVE LOCKOUT

DESCRIPTION

DESCRIPTION

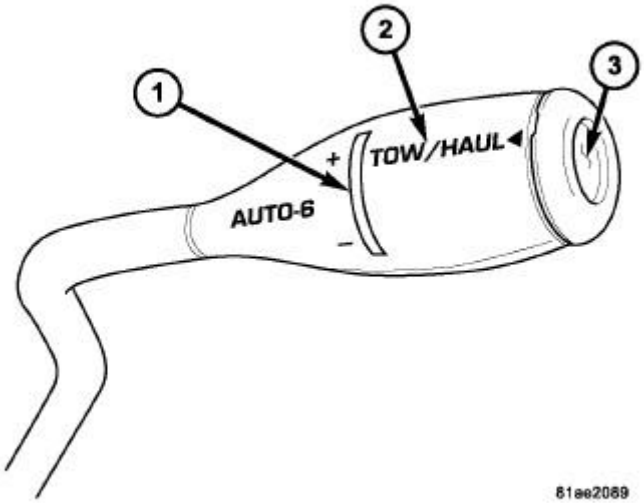

Fig. 196: Tow/Haul Overdrive Off Switch
Courtesy of CHRYSLER GROUP, LLC

1 - AUTO-6 (ERS)	3 - OVERDRIVE ON/OFF SWITCH
2 - TOW / HAUL	

The Tow/Haul and Auto-6 Electronic Range Select (ERS) switches are located in the shift lever arm. The switches are momentary contact devices that signal the PCM to toggle current status of the Tow/Haul function and adjust the ERS maximum allowed gear range.

OPERATION

OPERATION

At key-on, normal operation is provided. Pressing the switch enables Tow/Haul mode and the Tow/Haul lamp will be illuminated. In Tow/Haul mode, 4-5 upshifts are delayed. Shifts into 5th and 6th gear are still allowed under steady cruise conditions. Closed throttle downshifts (for improved engine braking) may occur during steady braking maneuvers. Pressing the switch a second time restores normal operation. Normal operation is always the default at start-up; the switch must be pressed after each key start if Tow/Haul mode is desired.

The Electronic Range Select (ERS) allows the selection of the desired top gear, when the shifter is in the D (Drive) position. For example, if ERS 3rd is selected, the transmission will never shift above 3rd gear, but can down shift into 2nd or 1st when needed.

TORQUE CONVERTER

DESCRIPTION

DESCRIPTION

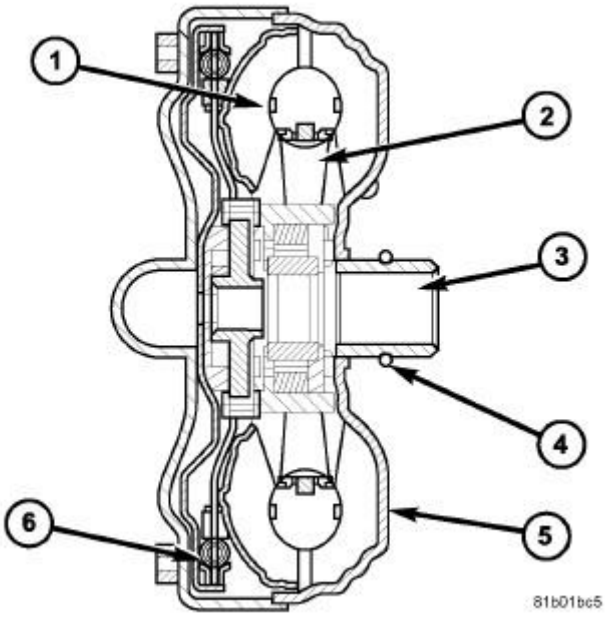

Fig. 197: Torque Converter Components
Courtesy of CHRYSLER GROUP, LLC

1 - TURBINE ASSEMBLY	5 - IMPELLER ASSEMBLY

2 - STATOR	6 - CONVERTER CLUTCH
3 - CONVERTER HUB	7 - TURBINE HUB
4 - O-RING (IF EQUIPPED)	

The torque converter is a hydraulic device that couples the engine crankshaft to the transmission. Refer to **Fig. 197**. The torque converter consists of an outer shell with an internal turbine (1), a stator (2), an overrunning clutch, an impeller (5), and an electronically applied converter clutch (6). The converter clutch provides reduced engine speed and greater fuel economy when engaged. Clutch engagement also provides reduced transmission fluid temperatures. The torque converter hub (3) drives the transmission oil (fluid) pump and contains an o-ring seal (4) to better control oil flow.

The torque converter is a sealed, welded unit that is not repairable and is serviced as an assembly.

CAUTION: The torque converter must be replaced if a transmission failure resulted in large amounts of metal or fiber contamination in the fluid.

IMPELLER

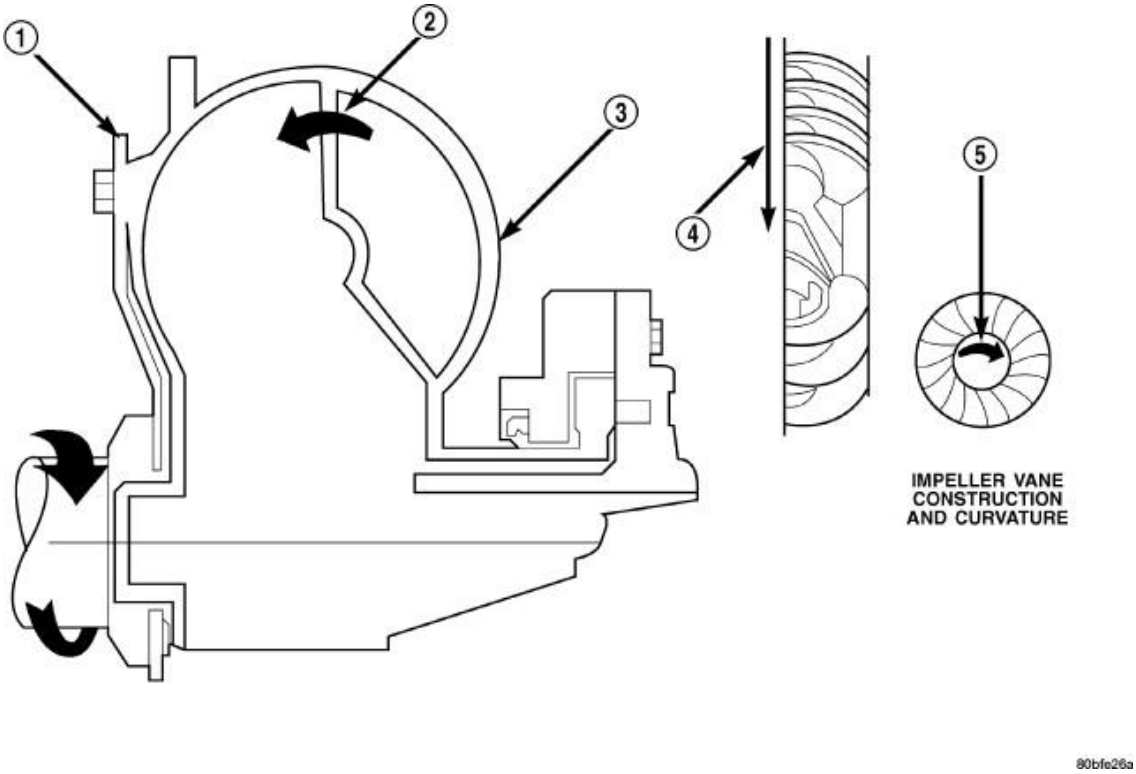

Fig. 198: Impeller
Courtesy of CHRYSLER GROUP, LLC

1 - ENGINE FLEXPLATE	4 - ENGINE ROTATION
2 - OIL FLOW FROM IMPELLER SECTION INTO TURBINE SECTION	5 - ENGINE ROTATION

3 - IMPELLER VANES AND COVER ARE INTEGRAL	

The impeller is an integral part of the converter housing. Refer to **Fig. 198**. The impeller consists of curved blades placed radially along the inside of the housing on the transmission side of the converter. As the converter housing is rotated by the engine, so is the impeller, because they are one and the same and are the driving members of the system.

TURBINE

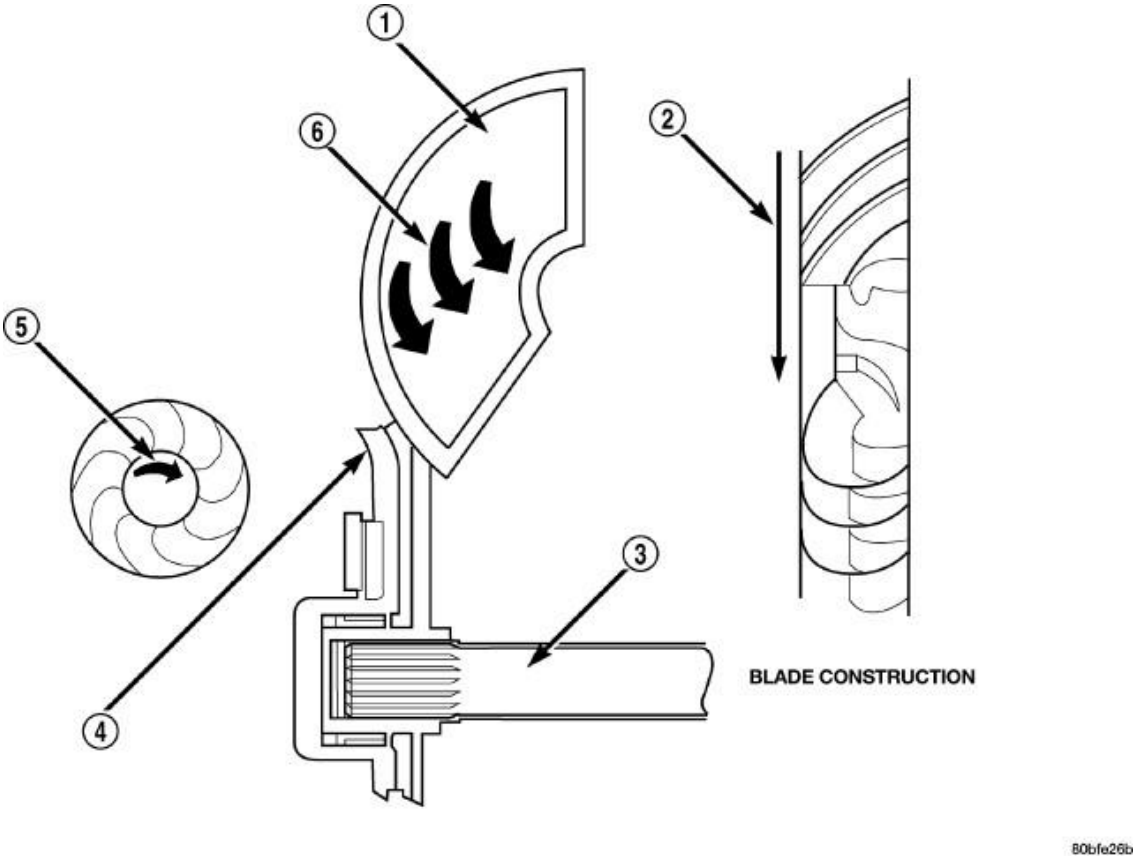

Fig. 199: Turbine
Courtesy of CHRYSLER GROUP, LLC

1 - TURBINE VANE	4 - PORTION OF TORQUE CONVERTER COVER
2 - ENGINE ROTATION	5 - ENGINE ROTATION
3 - INPUT SHAFT	6 - OIL FLOW WITHIN TURBINE SECTION

The turbine is the output, or driven, member of the converter. Refer to **Fig. 199**. The turbine is mounted within the housing opposite the impeller, but is not attached to the housing. The input shaft is inserted through the center of the impeller and splined into the turbine. The design of the turbine is similar to the impeller, except the blades of the turbine are curved in the opposite direction.

STATOR

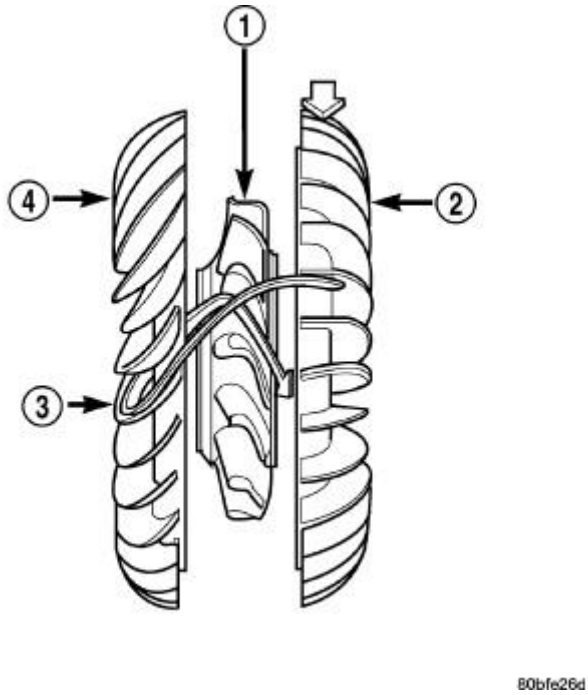

Fig. 200: Stator
Courtesy of CHRYSLER GROUP, LLC

1 - STATOR
2 - IMPELLER
3 - FLUID FLOW
4 - TURBINE

The stator assembly is mounted on a stationary shaft which is an integral part of the oil pump. Refer to **Fig. 200**. The stator (1) is located between the impeller (2) and the turbine (4) within the torque converter case.

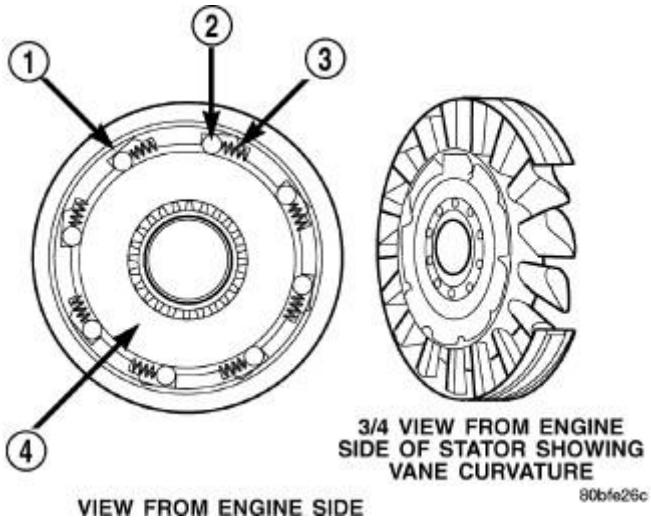

Fig. 201: Identifying Stator Components
Courtesy of CHRYSLER GROUP, LLC

1 - CAM (OUTER RACE)
2 - ROLLER
3 - SPRING
4 - INNER RACE

The stator contains an over-running clutch (1-4), which allows the stator to rotate only in a clockwise direction. Refer to **Fig. 201**. When the stator is locked against the over-running clutch, the torque multiplication feature of the torque converter is operational.

TORQUE CONVERTER CLUTCH (TCC)

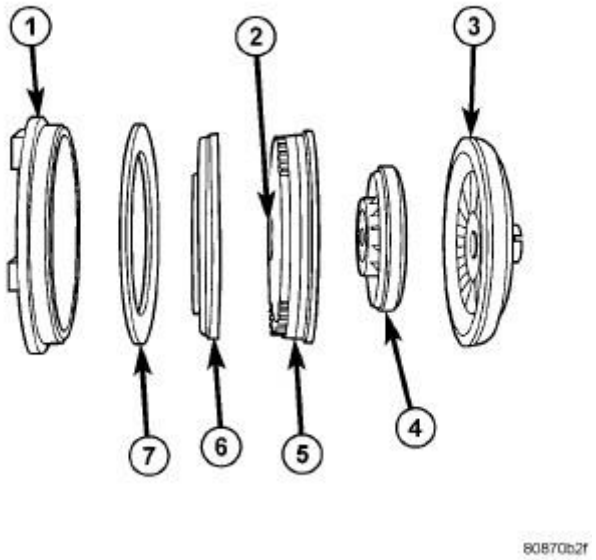

Fig. 202: Identifying Torque Converter Clutch (TCC) Components
Courtesy of CHRYSLER GROUP, LLC

1 - IMPELLER FRONT COVER
2 - THRUST WASHER ASSEMBLY
3 - IMPELLER
4 - STATOR
5 - TURBINE
6 - PISTON
7 - FRICTION DISC

The TCC was installed to improve the efficiency of the torque converter that is lost to the slippage of the fluid

coupling. Refer to **Fig. 202**. Although the fluid coupling provides smooth, shock-free power transfer, it is natural for all fluid couplings to slip. If the impeller (3) and turbine (5) were mechanically locked together, a zero slippage condition could be obtained. A hydraulic piston (6) with friction material (7) was added to the turbine assembly (5) to provide this mechanical lock-up.

In order to reduce heat build-up in the transmission and buffer the powertrain against torsional vibrations, the TCM can duty cycle the L/R-CC Solenoid to achieve a smooth application of the torque converter clutch. This function, referred to as Electronically Modulated Converter Clutch (EMCC) can occur at various times depending on the following variables:

- Shift lever position
- Current gear range
- Transmission fluid temperature
- Engine coolant temperature
- Input speed
- Throttle angle
- Engine speed

OPERATION

OPERATION

The converter impeller (driving member), which is integral to the converter housing and bolted to the engine drive plate, rotates at engine speed. Refer to **Fig. 203**. The converter turbine (driven member), which reacts from fluid pressure generated by the impeller, rotates and turns the transmission input shaft.

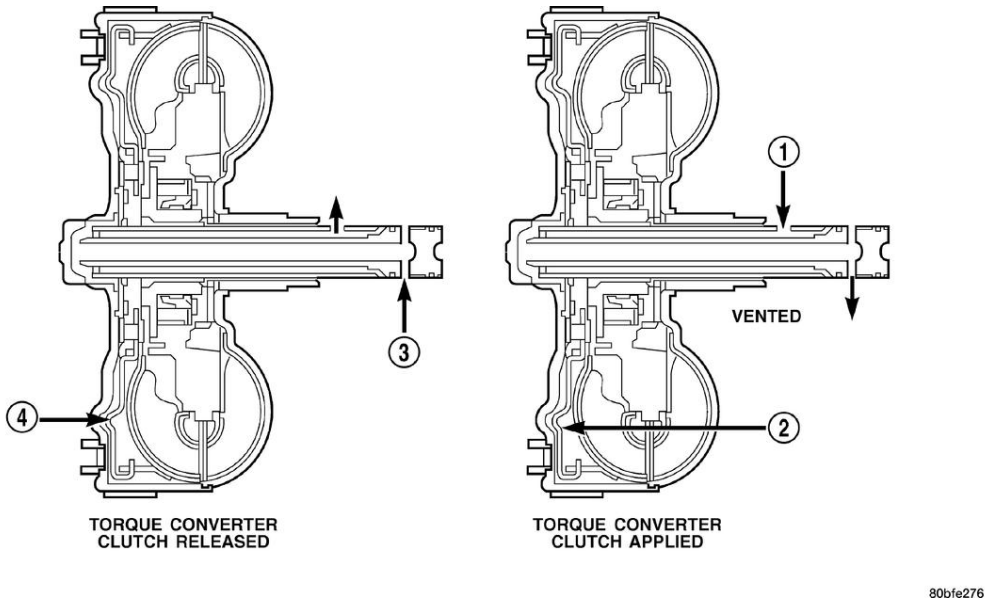

Fig. 203: Identifying Piston Travel
Courtesy of CHRYSLER GROUP, LLC

1 - APPLY PRESSURE	3 - RELEASE PRESSURE
2 - THE PISTON MOVES SLIGHTLY FORWARD	4 - THE PISTON MOVES SLIGHTLY REARWARD

TURBINE

As the fluid that was put into motion by the impeller blades strikes the blades of the turbine, some of the energy and rotational force is transferred into the turbine and the input shaft. This causes both of them (turbine and input shaft) to rotate in a clockwise direction following the impeller. As the fluid is leaving the trailing edges of the turbine's blades it continues in a "hindering" direction back toward the impeller. If the fluid is not redirected before it strikes the impeller, it will strike the impeller in such a direction that it would tend to slow it down.

STATOR

Torque multiplication is achieved by locking the stator's over-running clutch to its shaft. Refer to **Fig. 204**. Under stall conditions (the turbine is stationary), the oil leaving the turbine blades strikes the face of the stator blades and tries to rotate them in a counterclockwise direction. When this happens the over-running clutch of the stator locks and holds the stator from rotating. With the stator locked, the oil strikes the stator blades and is redirected into a "helping" direction before it enters the impeller. This circulation of oil from impeller to turbine, turbine to stator, and stator to impeller, can produce a maximum torque multiplication of about 1.75:1. As the turbine begins to match the speed of the impeller, the fluid that was hitting the stator in such as way as to cause it to lock-up is no longer doing so. In this condition of operation, the stator begins to free wheel and the converter acts as a fluid coupling.

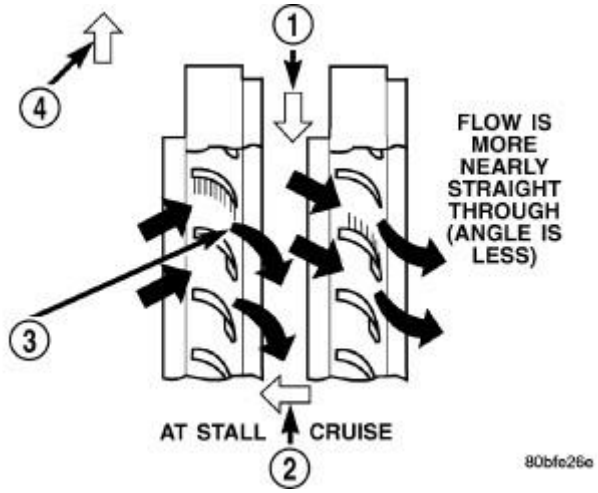

Fig. 204: Stator Operation
Courtesy of CHRYSLER GROUP, LLC

1 - DIRECTION STATOR WILL FREE WHEEL DUE TO OIL PUSHING ON BACKSIDE OF VANES
2 - FRONT OF ENGINE
3 - INCREASED ANGLE AS OIL STRIKES VANES
4 - DIRECTION STATOR IS LOCKED UP DUE TO OIL PUSHING AGAINST STATOR VANES

TORQUE CONVERTER CLUTCH (TCC)

In a standard torque converter, the impeller and turbine are rotating at about the same speed and the stator is freewheeling, providing no torque multiplication. By applying the turbine's piston and friction material to the front cover, a total converter engagement can be obtained. The result of this engagement is a direct 1:1 mechanical link between the engine and the transmission.

The clutch can be engaged in all gear ranges except first depending on the Tow/Haul and ERS status. In normal operation, the clutch will engage after the shift to fourth gear. If the Tow/Haul mode is enabled, the clutch will engage after the shift to third (direct) gear.

The TCM controls the torque converter clutch via the L/R-CC Solenoid. There are four TCC operational modes:

- No EMCC
- Partial EMCC
- Full EMCC
- Gradual EMCC Release

NO EMCC

Under No EMCC conditions, the L/R Solenoid is OFF. There are several conditions that can result in NO EMCC operations. No EMCC can be initiated due to a fault in the transmission or because the TCM does not see the need for EMCC under current driving conditions.

PARTIAL EMCC

Partial EMCC operation modulates the L/R Solenoid (duty cycle) to obtain partial torque converter clutch application. Partial EMCC operation is maintained until Full EMCC is called for and actuated. During Partial EMCC some slip does occur. Partial EMCC will usually occur at low speeds, low load and light throttle situations.

FULL EMCC

During Full EMCC operation, the TCM increases the L/R Solenoid duty cycle to full ON after Partial EMCC control brings the engine speed within the desired slip range of transmission input speed relative to engine rpm.

GRADUAL EMCC RELEASE

This operation is to soften the change from Full or Partial EMCC to No EMCC. This is done at mid-throttle by slowly decreasing the L/R Solenoid duty cycle.

REMOVAL

REMOVAL

CAUTION: Verify that transmission is secure on the lifting device or work surface, the center of gravity of the transmission will shift when the torque converter is

removed creating an unstable condition. The torque converter is a heavy unit. Use caution when separating the torque converter from the transmission.

1. Remove transmission and torque converter from vehicle. Refer to **REMOVAL**.
2. Place a suitable drain pan under the converter housing end of the transmission.
3. Pull the torque converter forward until the center hub clears the oil pump seal.
4. Separate the torque converter from the transmission.

INSTALLATION

INSTALLATION

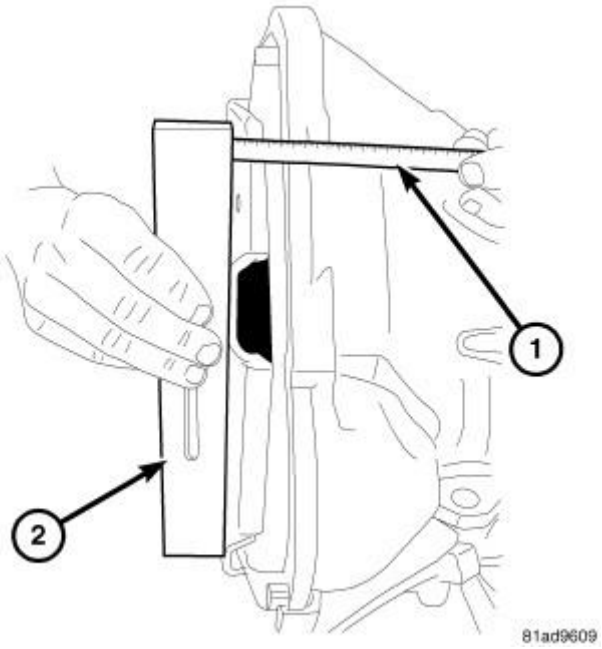

Fig. 205: Checking Converter Seating With Steel Scale & Straightedge
Courtesy of CHRYSLER GROUP, LLC

NOTE: **Check converter hub and drive flats for sharp edges, burrs, scratches, or nicks. Polish the hub and flats with 800/1000 grit paper or crocus cloth if necessary. Verify that the converter hub o-ring is properly installed and is free from debris. The hub must be smooth to avoid damaging the pump seal at installation.**

1. Lubricate oil pump seal lip with transmission fluid.
2. Place torque converter in position on transmission.

CAUTION: Do not damage oil pump seal or converter hub o-ring while inserting torque converter into the front of the transmission.

3. Align torque converter to oil pump seal opening.
4. Insert torque converter hub into oil pump.
5. While pushing torque converter inward, rotate converter until converter is fully seated in the oil pump gears.
6. Check converter seating with a scale (1) and straightedge (2). Surface of converter lugs should be at least 25 mm (1in.) to rear of straightedge when converter is fully seated.
7. If necessary, temporarily secure converter with C-clamp attached to the converter housing.
8. Install the transmission in the vehicle. Refer to **TORQUE CONVERTER, INSTALLATION**.
9. Fill the transmission with the recommended fluid.

VALVE BODY

DESCRIPTION

DESCRIPTION

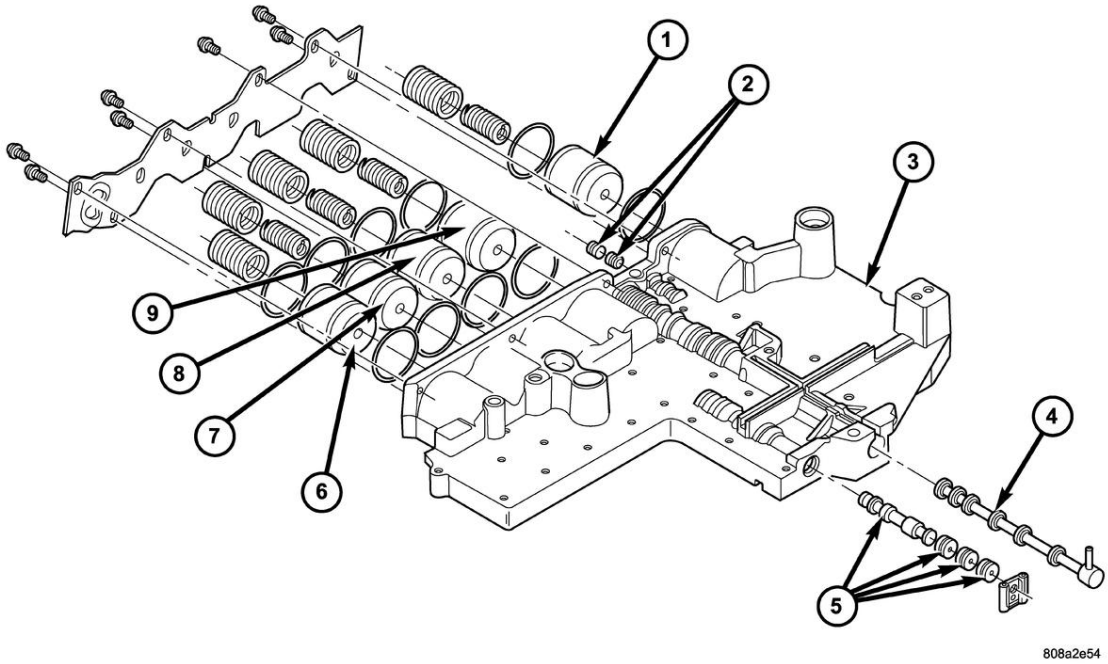

Fig. 206: Exploded View Of Upper Valve Body Components
Courtesy of CHRYSLER GROUP, LLC

1 - LOW/REVERSE ACCUMULATOR	6 - OVERDRIVE ACCUMULATOR
2 - LOW/REVERSE SHUTTLE VALVE AND PLUG	7 - UNDERDRIVE ACCUMULATOR
3 - UPPER VALVE BODY	8 - 4C ACCUMULATOR
4 - MANUAL VALVE	9 - 2C ACCUMULATOR
5 - SOLENOID SWITCH VALVE AND PLUGS	

The valve body consists of a cast aluminum valve body, a separator plate, and a transfer plate. The valve body contains valves and check balls that control fluid delivery to the torque converter clutch and frictional clutches. The valve body contains the following components:

- Solenoid switch valve
- Manual valve
- Low/reverse shuttle valve
- 5 Accumulators

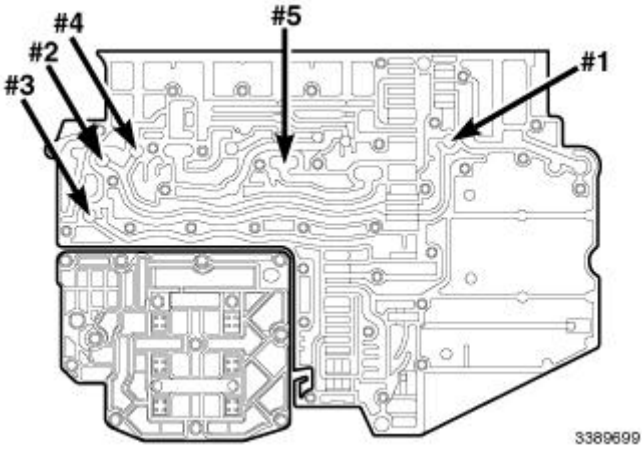

Fig. 207: Check Ball Locations
Courtesy of CHRYSLER GROUP, LLC

- 5 check balls

OPERATION

OPERATION

NOTE: **Refer to SCHEMATICS AND DIAGRAMS for a visual aid in determining valve location, operation and design.**

SOLENOID SWITCH VALVE

The Solenoid Switch Valve (SSV) controls the direction of the transmission fluid when the L/R-TCC solenoid is energized.

The Solenoid Switch Valve controls line pressure from the LR-TCC solenoid. In 1st gear, the SSV will be in the downshifted position, thus directing fluid to the L/R clutch circuit. In all other gears, the solenoid switch valve will be in the upshifted position and directs the fluid into the torque converter clutch (TCC) circuit.

When shifting into 1st gear, a special hydraulic sequence is performed to ensure SSV movement into the downshifted position. The L/R pressure switch is monitored to confirm SSV movement. If the movement is not confirmed (the L/R pressure switch does not close), 2nd gear is substituted for 1st. A DTC will be set after three unsuccessful attempts are made to get into 1st gear in one given key start.

MANUAL VALVE

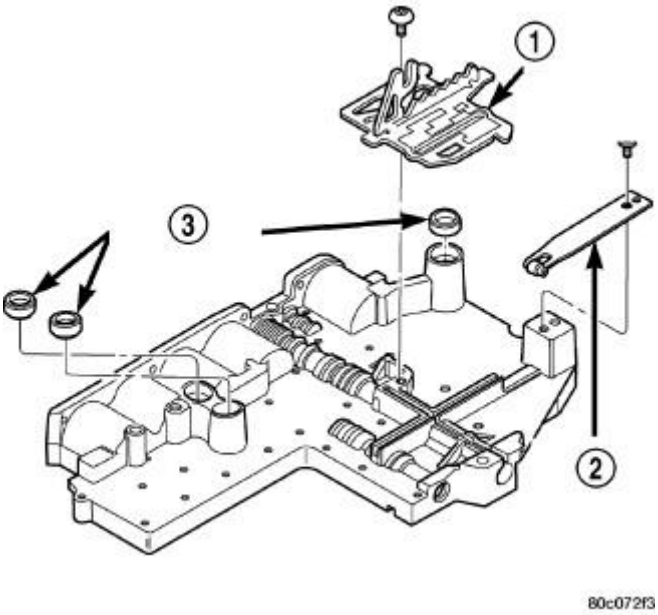

Fig. 208: Identifying TRS Selector Plate, Detent Spring & Passage Seals
Courtesy of CHRYSLER GROUP, LLC

1 - TRS SELECTOR PLATE
2 - DETENT SPRING
3 - CLUTCH PASSAGE SEALS

The manual valve is a relay valve. The purpose of the manual valve is to direct fluid to the correct circuit needed for a specific gear or driving range. The manual valve, as the name implies, is manually operated by the driver with a lever located on the top of the valve body. The valve is connected mechanically to the gearshift mechanism. The valve is held in each of its positions by a roller detent spring (2) that engages the roostercomb of the TRS selector plate (1).

LOW/REVERSE SWITCH VALVE

The low/reverse switch valve allows the low/reverse clutch to be operated by either the LR/CC solenoid or the MS solenoid.

REMOVAL

REMOVAL

NOTE: **The valve body can be removed for service without having to remove the transmission assembly. The valve body can be disassembled for cleaning and inspection of the individual components.**

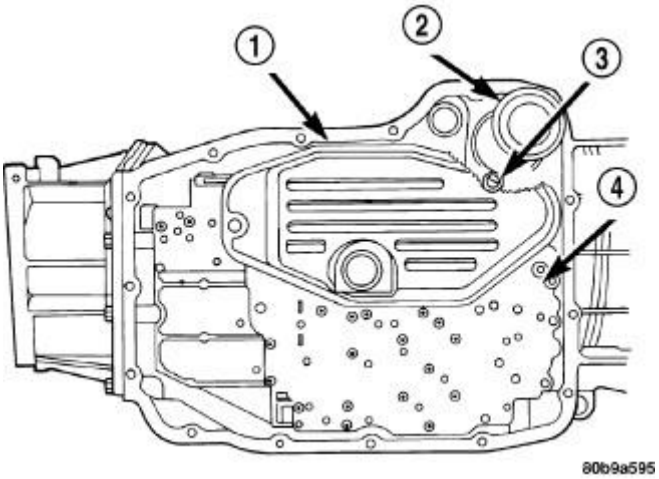

Fig. 209: Primary Oil Filter & Oil Cooler Return Filter
Courtesy of CHRYSLER GROUP, LLC

1. Shift transmission into PARK.
2. Raise vehicle.
3. Disconnect wires at the solenoid and pressure switch assembly 23 pin electrical connector.
4. Position drain pan under transmission oil pan.
5. Remove transmission oil pan.
6. Remove the primary oil filter (1) from valve body.

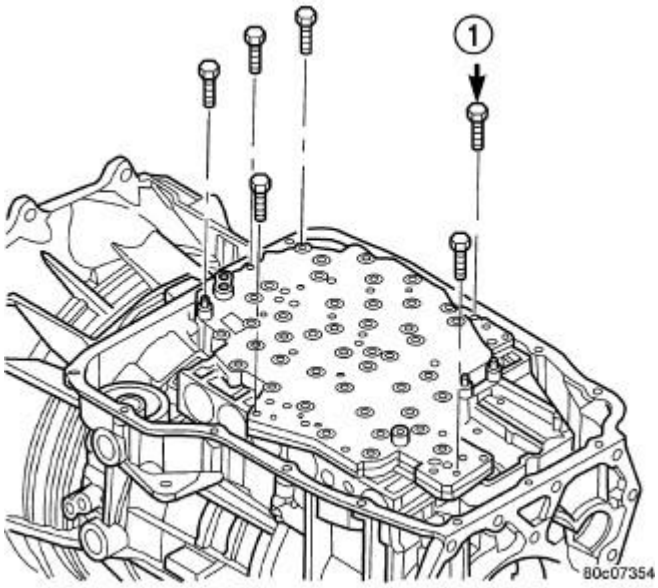

Fig. 210: Valve Body Bolts
Courtesy of CHRYSLER GROUP, LLC

7. Remove bolts (1) attaching valve body to transmission case.
8. Lower the valve body and work the electrical connector out of transmission case.

9. Separate the valve body from the transmission.

DISASSEMBLY

DISASSEMBLY

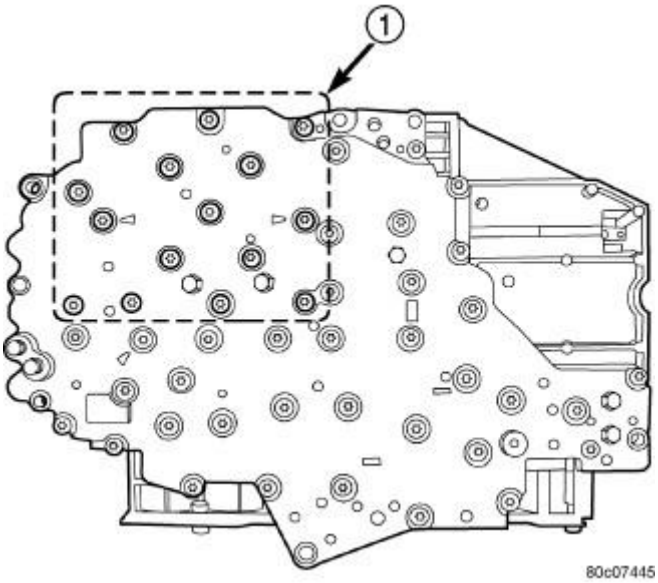

Fig. 211: Solenoid Pack Bolts
Courtesy of CHRYSLER GROUP, LLC

1 - SOLENOID PACK BOLTS (15)

1. Remove the bolts (1) holding the solenoid and pressure switch assembly to the valve body. Do not remove the screws on the top of the solenoid and pressure switch assembly.
2. Separate the solenoid and pressure switch assembly from the valve body.

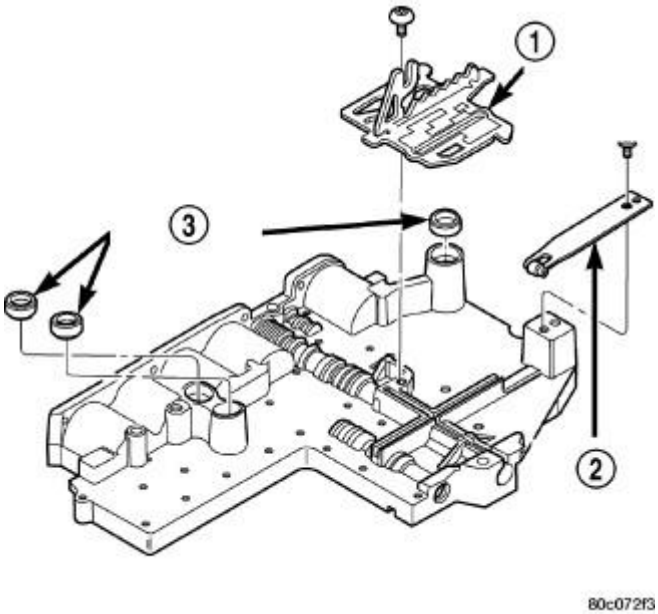

Fig. 212: Identifying TRS Selector Plate, Detent Spring & Passage Seals
Courtesy of CHRYSLER GROUP, LLC

1 - TRS SELECTOR PLATE
2 - DETENT SPRING
3 - CLUTCH PASSAGE SEALS

3. Remove the screw holding the detent spring (2) onto the valve body.
4. Remove the detent spring (2) from the valve body.
5. Remove the TRS selector plate (1) from the valve body and the manual valve.
6. Remove the clutch passage seals (3) from the valve body, if necessary.

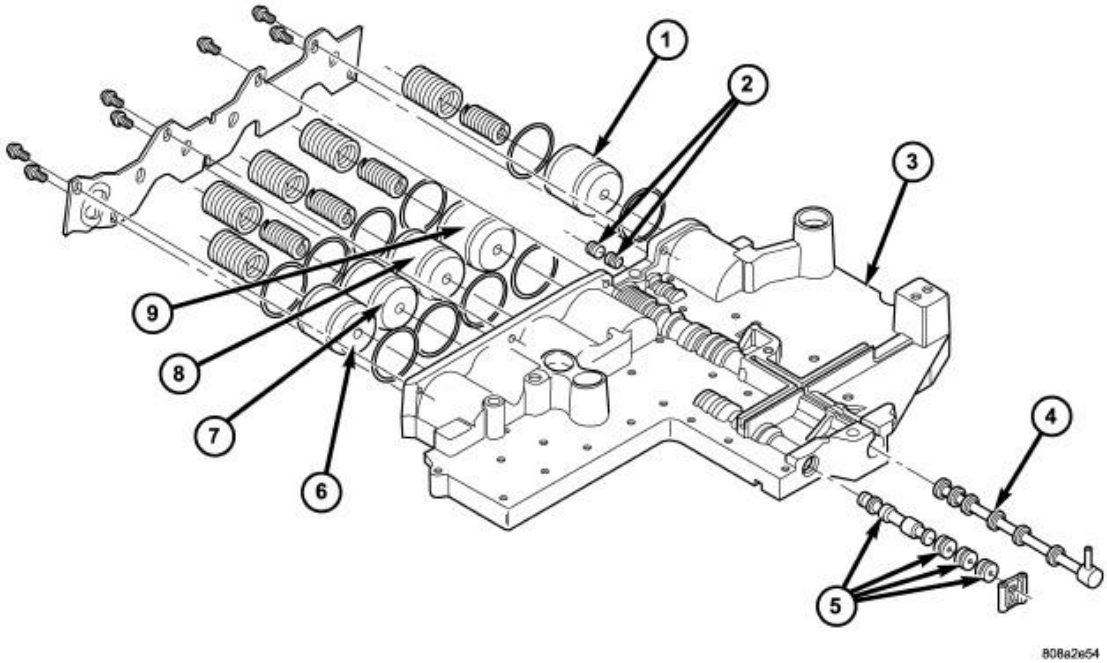

Fig. 213: Exploded View Of Upper Valve Body Components
Courtesy of CHRYSLER GROUP, LLC

1 - LOW/REVERSE ACCUMULATOR	6 - OVERDRIVE ACCUMULATOR
2 - LOW/REVERSE SHUTTLE VALVE AND PLUG	7 - UNDERDRIVE ACCUMULATOR
3 - UPPER VALVE BODY	8 - 4C ACCUMULATOR
4 - MANUAL VALVE	9 - 2C ACCUMULATOR
5 - SOLENOID SWITCH VALVE AND PLUGS	

7. Remove the screws holding the accumulator cover onto the valve body.
8. Remove the accumulator springs and pistons (1, 6-9) from the valve body. Note which accumulator piston and spring belong in each location.

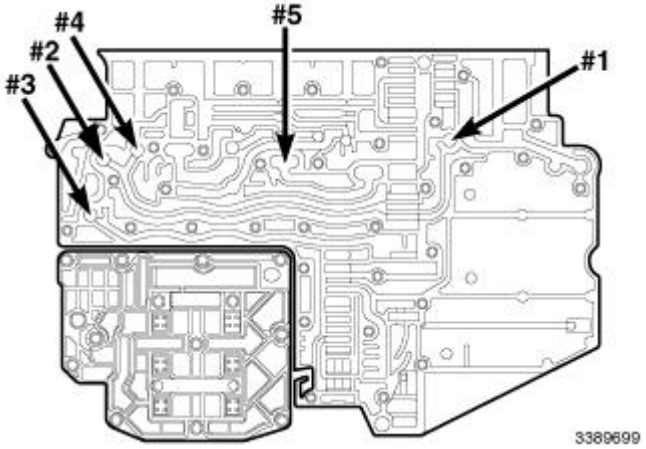

Fig. 214: Check Ball Locations
Courtesy of CHRYSLER GROUP, LLC

9. Place the valve body on the bench with the transfer plate upward.

NOTE: **The valve body contains five check balls. The transfer plate must be placed upward to prevent losing the check balls when the transfer plate is removed from the valve body.**

10. Remove the screws holding the valve body to the valve body transfer plate.
11. Remove the transfer plate from the valve body. Note the location of all check balls.
12. Remove the check balls from the valve body.

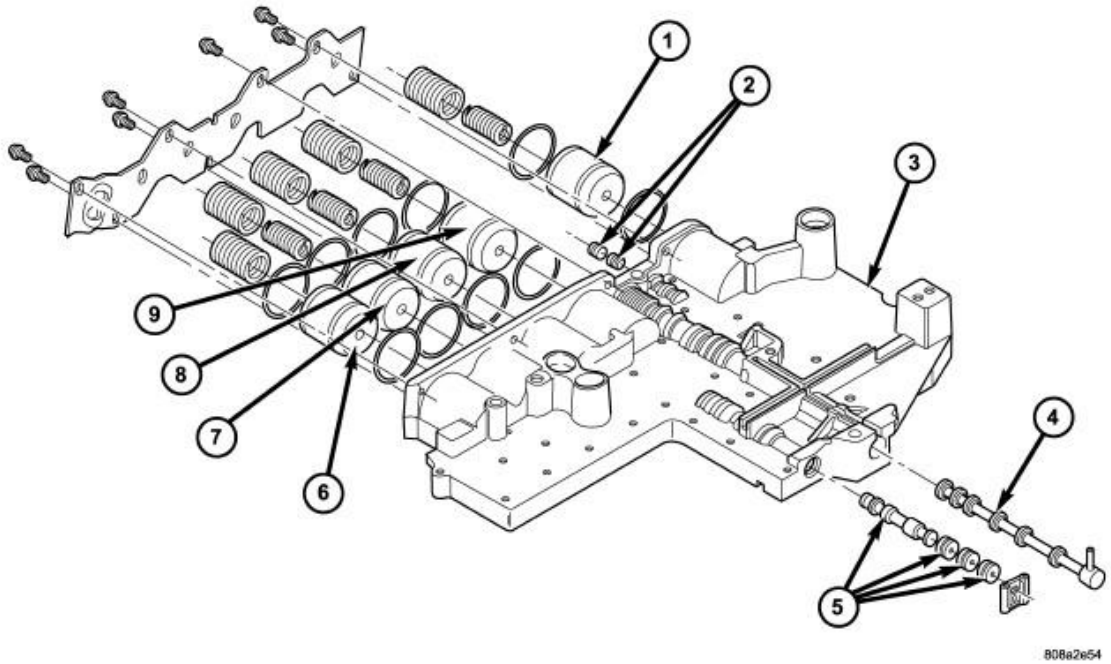

Fig. 215: Exploded View Of Upper Valve Body Components

Courtesy of CHRYSLER GROUP, LLC

1 - LOW/REVERSE ACCUMULATOR	6 - OVERDRIVE ACCUMULATOR
2 - LOW/REVERSE SHUTTLE VALVE AND PLUG	7 - UNDERDRIVE ACCUMULATOR
3 - UPPER VALVE BODY	8 - 4C ACCUMULATOR
4 - MANUAL VALVE	9 - 2C ACCUMULATOR
5 - SOLENOID SWITCH VALVE AND PLUGS	

13. Remove the retainer securing the solenoid switch valve (5) from the valve body. Remove the solenoid switch valve and plugs (5), the manual valve (4) and low reverse shuttle valve and plug (2). Tag each valve and plug combination with location information to aid in assembly.

CLEANING

CLEANING

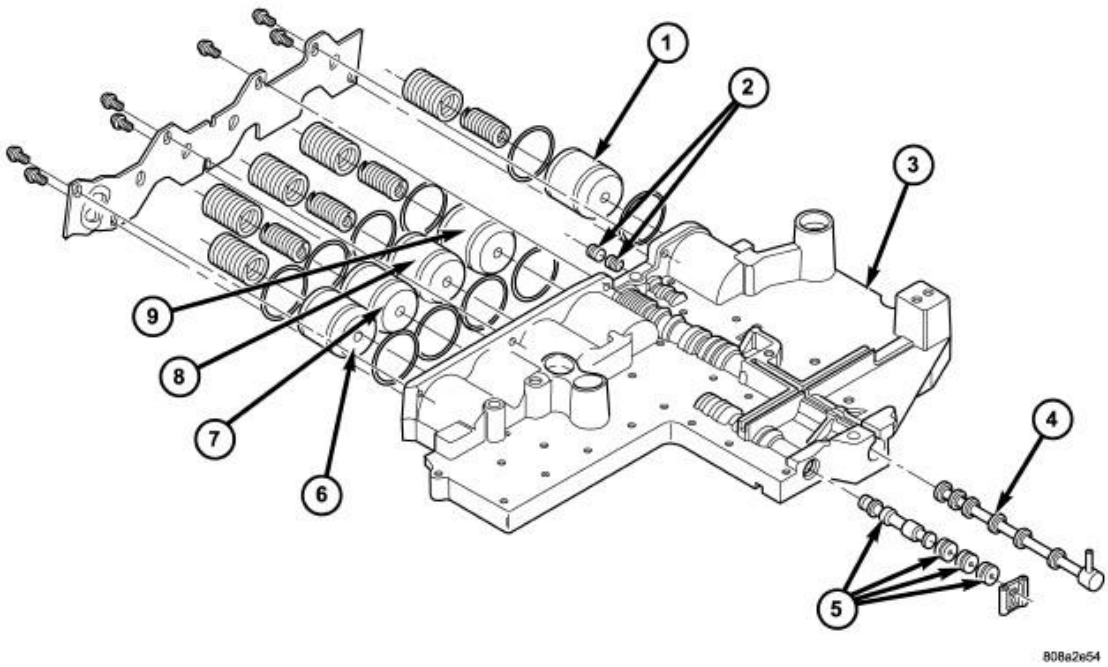

Fig. 216: Exploded View Of Upper Valve Body Components
Courtesy of CHRYSLER GROUP, LLC

1 - LOW/REVERSE ACCUMULATOR	6 - OVERDRIVE ACCUMULATOR
2 - LOW/REVERSE SHUTTLE VALVE AND PLUG	7 - UNDERDRIVE ACCUMULATOR

3 - UPPER VALVE BODY	8 - 4C ACCUMULATOR
4 - MANUAL VALVE	9 - 2C ACCUMULATOR
5 - SOLENOID SWITCH VALVE AND PLUGS	

Clean the valve housings, valves, plugs, springs, transfer plate and separator plate with a standard parts cleaning solution only. Do not use gasoline, kerosene, or any type of caustic solution.

Do not immerse any of the electrical components in cleaning solution. Clean the electrical components by wiping them off with dry shop towels only.

Dry all except the electrical parts with compressed air. Make sure all passages are clean and free from obstructions. **Do not use rags or shop towels to dry or wipe off valve body components. Lint from these materials can stick to valve body parts, interfere with valve operation, and clog filters and fluid passages.**

INSPECTION

INSPECTION

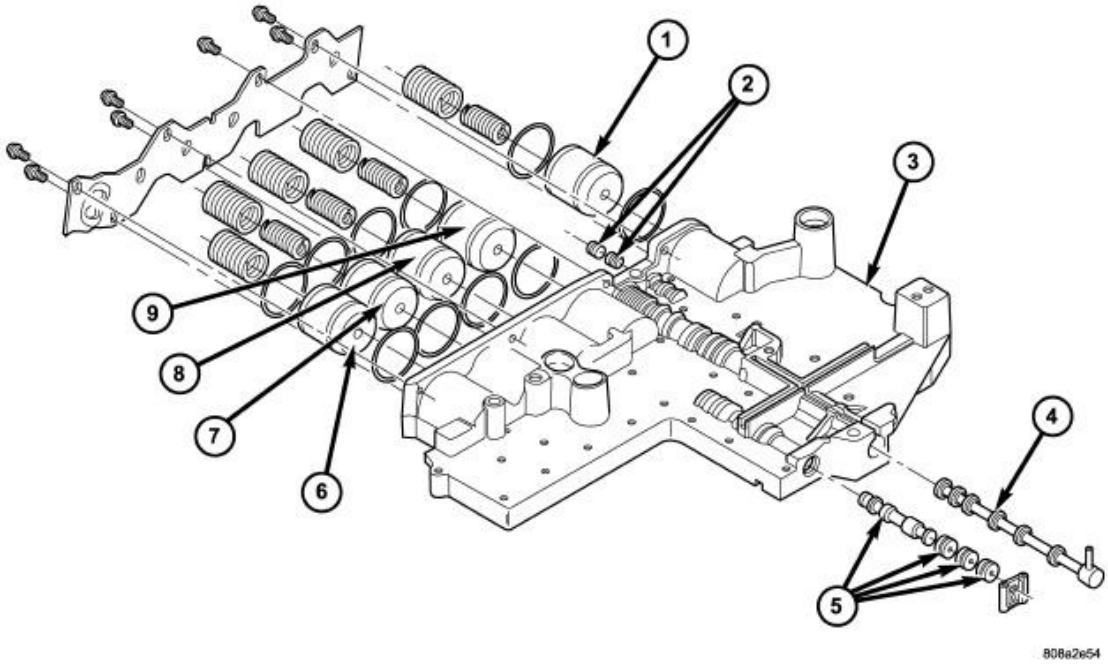

Fig. 217: Exploded View Of Upper Valve Body Components
Courtesy of CHRYSLER GROUP, LLC

1 - LOW/REVERSE ACCUMULATOR	6 - OVERDRIVE ACCUMULATOR
2 - LOW/REVERSE SHUTTLE VALVE AND PLUG	7 - UNDERDRIVE ACCUMULATOR
3 - UPPER VALVE BODY	8 - 4C ACCUMULATOR
4 - MANUAL VALVE	9 - 2C ACCUMULATOR

NOTE: **Only the INNER accumulator seal ring actually seals the pressure in the bore. The outer seal ring only serves to guide the piston in the bore. Gouges which do not extend past the inner seal ring (and have no raised edges, which could damage the guide ring) are acceptable. The machined accumulator bores often have a tiger-striped appearance. This is NORMAL and does NOT require replacement, as long as the bores are smooth in the inner seal ring area.**

Inspect all of the valve body mating surfaces for scratches, nicks, burrs, or distortion. Use a straightedge to check surface flatness. Minor scratches may be removed with crocus cloth using only very light pressure.

Minor distortion of a valve body mating surface may be corrected by smoothing the surface with a sheet of crocus cloth. Position the crocus cloth on a surface plate, sheet of plate glass or equally flat surface. If distortion is severe or any surfaces are heavily scored, the valve body will have to be replaced.

Inspect the valves and plugs for scratches, burrs, nicks, or scores. Minor surface scratches on steel valves and plugs can be removed with crocus cloth but **do not round off the edges of the valve or plug lands.** Maintaining sharpness of these edges is vitally important. The edges prevent foreign matter from lodging between the valves and plugs and the bore.

Inspect all the valve and plug bores in the valve body. Use a penlight to view the bore interiors. Replace the valve body if any bores are distorted or scored. Inspect all of the valve body springs. The springs must be free of distortion, warpage or broken coils.

Trial fit each valve and plug in its bore to check freedom of operation. When clean and dry, the valves and plugs should drop freely into the bores.

Valve body bores do not normally change dimensionally with use. If the valve body functioned correctly when new, it should continue to operate properly after cleaning and inspection. It should not be necessary to replace a valve body assembly unless it is damaged in handling.

Inspect all the accumulator bores in the valve body as well as the accumulator piston seal rings, and replace if cut or damaged. Use a penlight to view the bore interiors. Replace the valve body if any bores are distorted or scored. Inspect all of the accumulator springs. The springs must be free of distortion, warpage or broken coils.

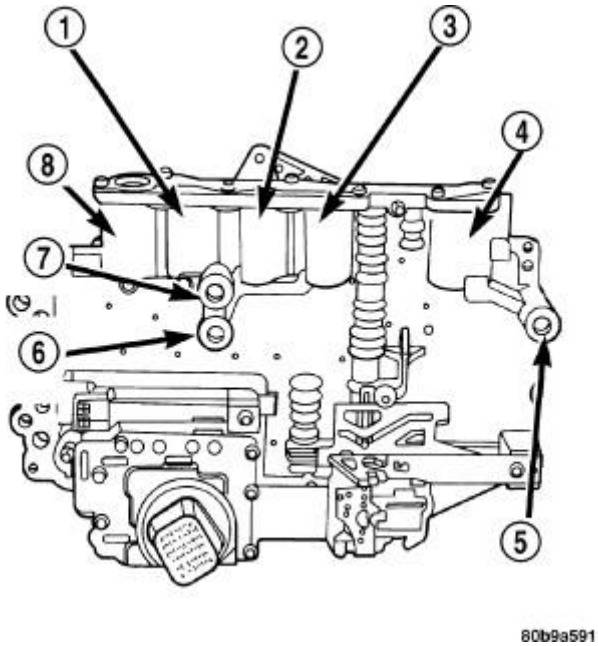

Fig. 218: Valve Body Seals
Courtesy of CHRYSLER GROUP, LLC

1 - UNDERDRIVE ACCUMULATOR (2 SPRINGS)
2 - 4TH CLUTCH ACCUMULATOR (2 SPRINGS)
3 - 2ND CLUTCH ACCUMULATOR (2 SPRINGS)
4 - LOW REVERSE ACCUMULATOR (2 SPRINGS)
5 - LOW/REVERSE PASSAGE SEAL
6 - 2ND CLUTCH PASSAGE SEAL
7 - 4TH CLUTCH PASSAGE SEAL
8 - OVERDRIVE ACCUMULATOR (1 SPRING)

Inspect all the fluid seals on the valve body. Refer to **Fig. 218**. Replace any seals that are cracked, distorted, or damaged in any way. These seals pass fluid pressure directly to the clutches. Any pressure leak at these points, may cause transmission performance problems.

ASSEMBLY

ASSEMBLY

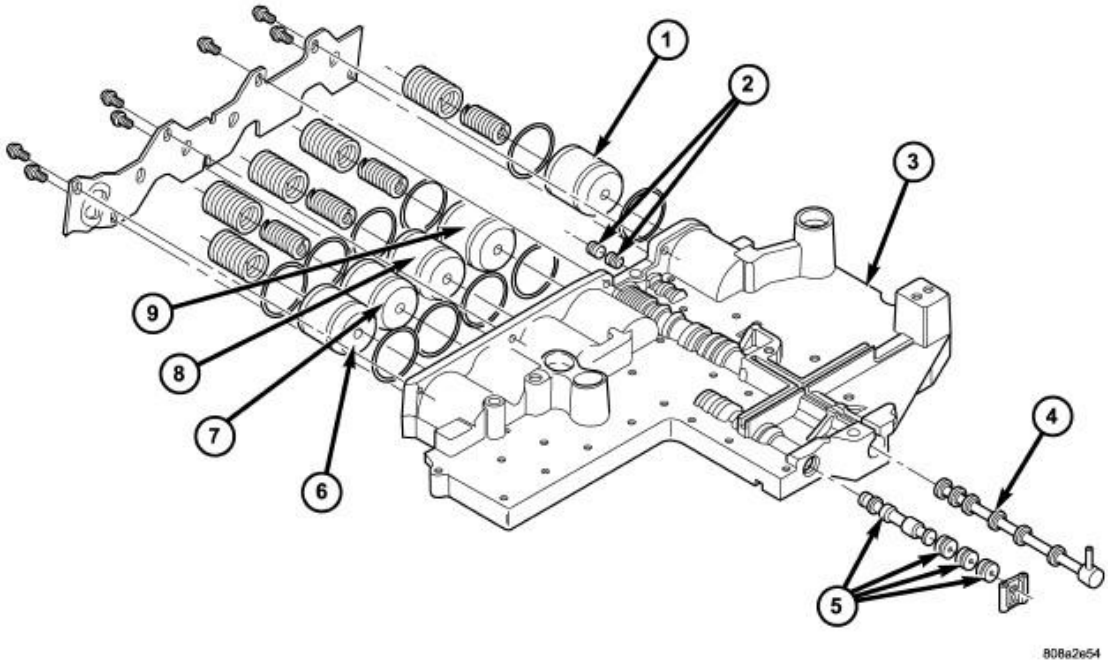

Fig. 219: Exploded View Of Upper Valve Body Components
Courtesy of CHRYSLER GROUP, LLC

1 - LOW/REVERSE ACCUMULATOR	6 - OVERDRIVE ACCUMULATOR
2 - LOW/REVERSE SHUTTLE VALVE AND PLUG	7 - UNDERDRIVE ACCUMULATOR
3 - UPPER VALVE BODY	8 - 4C ACCUMULATOR
4 - MANUAL VALVE	9 - 2C ACCUMULATOR
5 - SOLENOID SWITCH VALVE AND PLUGS	

1. Lubricate valves, plugs and the housing valve bores with clean transmission fluid.
2. Install solenoid switch valve and plugs and plugs (5) and the retainer into the valve body.

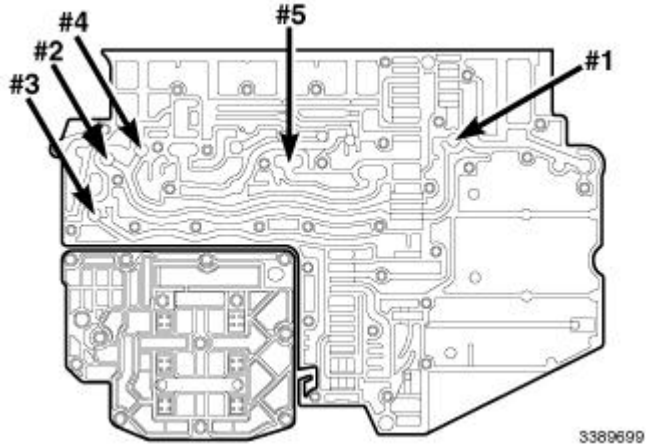

Fig. 220: Check Ball Locations

Courtesy of CHRYSLER GROUP, LLC

3. Install the valve body check balls into their proper locations.
4. Position the separator and transfer plate onto the valve body.
5. Install the screws to hold the transfer plate to the valve body. Tighten the screws to 6 N.m (50 in. lbs.).

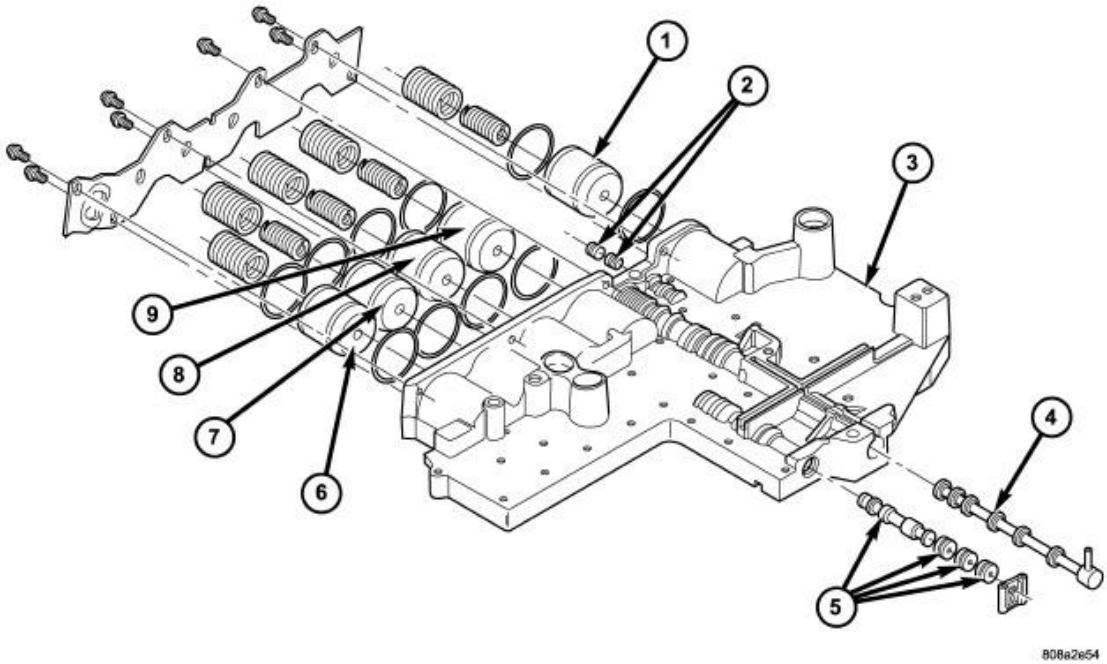

Fig. 221: Exploded View Of Upper Valve Body Components
Courtesy of CHRYSLER GROUP, LLC

1 - LOW/REVERSE ACCUMULATOR	6 - OVERDRIVE ACCUMULATOR
2 - LOW/REVERSE SHUTTLE VALVE AND PLUG	7 - UNDERDRIVE ACCUMULATOR
3 - UPPER VALVE BODY	8 - 4C ACCUMULATOR
4 - MANUAL VALVE	9 - 2C ACCUMULATOR
5 - SOLENOID SWITCH VALVE AND PLUGS	

6. Install the accumulator piston seal rings onto each accumulator piston.
7. Install the accumulator pistons (1, 6-9) and springs into the valve body in the location from which they were removed. Note that all accumulators except the overdrive have two springs. The overdrive accumulator piston (6) has only one spring.
8. Install the Low / Reverse shuttle valve, plug, and retainer (2) into the valve body housing.
9. Position the accumulator cover onto the valve body.

10. Install the screws to hold the accumulator cover onto the valve body. Tighten the screws to 7 N.m (60 in. lbs.).
11. Install the manual valve (4).

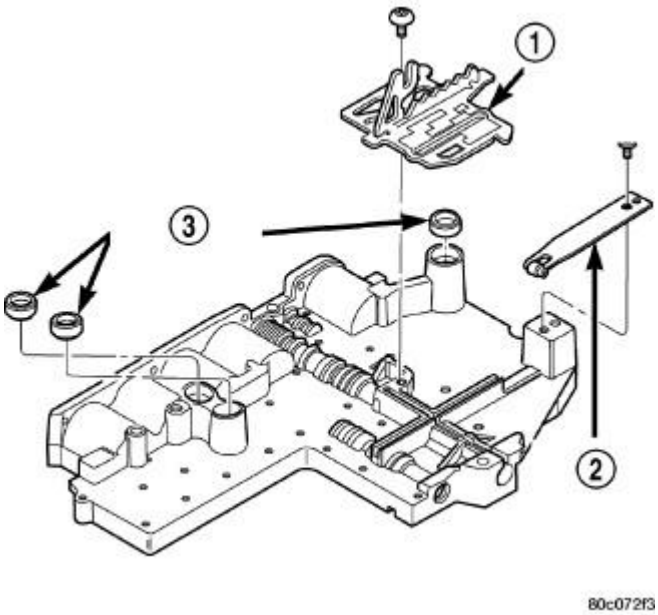

Fig. 222: Identifying TRS Selector Plate, Detent Spring & Passage Seals
Courtesy of CHRYSLER GROUP, LLC

1 - TRS SELECTOR PLATE
2 - DETENT SPRING
3 - CLUTCH PASSAGE SEALS

12. Install the TRS selector plate (1) onto the valve body and the manual valve.
13. Position the detent spring (2) onto the valve body.
14. Install the screw to hold the detent spring (2) onto the valve body. Tighten the screw to 4.5 N.m (40 in. lbs.).
15. Install new clutch passage seals (3) onto the valve body, if necessary.

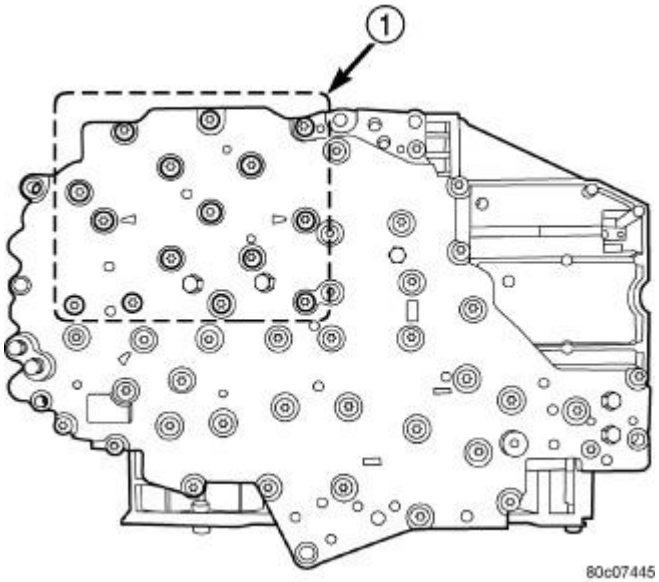

Fig. 223: Solenoid Pack Bolts
Courtesy of CHRYSLER GROUP, LLC

1 - SOLENOID PACK BOLTS (15)

16. Install the solenoid and pressure switch assembly onto the valve body.
17. Install the bolts (1) to hold the solenoid and pressure switch assembly onto the valve body. Tighten the bolts to 6 N.m (50 in. lbs.). Tighten the bolts adjacent to the arrows cast into the bottom of the transfer plate first.

INSTALLATION

INSTALLATION

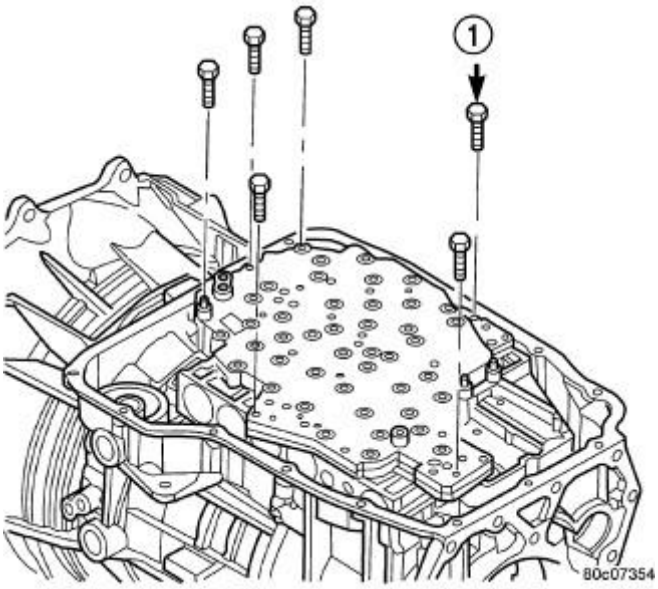

Fig. 224: Valve Body Bolts
Courtesy of CHRYSLER GROUP, LLC

1 - VALVE BODY TO CASE BOLT (6)

1. Place TRS selector plate in the PARK position.
2. Place the transmission in the PARK position.
3. Lubricate seal on the solenoid and pressure switch assembly connector with petroleum jelly.
4. Position valve body in transmission and align the manual lever on the valve body to the pin on the transmission manual shift lever.
5. Seat valve body in case and install one or two bolts to hold valve body in place.
6. Tighten valve body bolts alternately and evenly to 12 N.m (105 in. lbs.) torque.
7. Operate the external manual shift lever and ensure that the TRS selector plate moves correctly into all gear range positions.

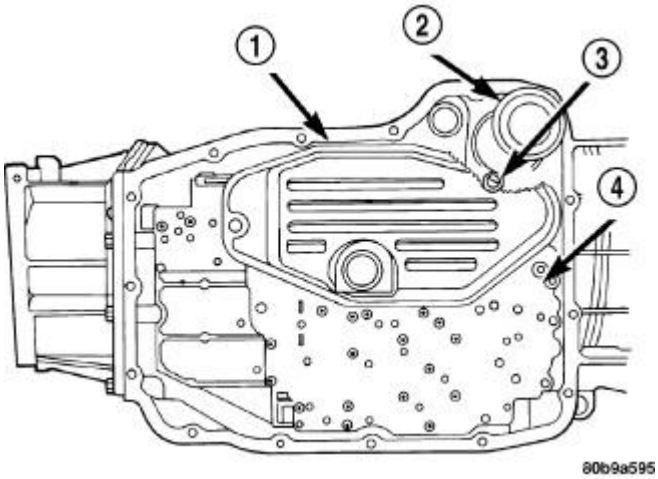

Fig. 225: Primary Oil Filter & Oil Cooler Return Filter
Courtesy of CHRYSLER GROUP, LLC

1 - PRIMARY OIL FILTER
2 - COOLER RETURN FILTER
3 - COOLER RETURN FILTER BYPASS VALVE
4 - VALVE BODY

CAUTION: The primary oil filter seal MUST be fully installed flush against the oil pump body. DO NOT install the seal onto the filter neck and attempt to install the filter and seal as an assembly. Damage to the transmission will result.

8. Install a new primary oil filter seal in the oil pump inlet bore. Seat the seal in the bore with the butt end of a hammer, or other suitable tool.
9. Place replacement filter (1) in position on valve body and into the oil pump.
10. Install screw to hold filter to valve body. Tighten screw to 4.5 N.m (40 in. lbs.) torque.
11. Connect the solenoid and pressure switch 23 pin electrical assembly connector.
12. Install oil pan using silicone gasket sealer. Tighten pan bolts to 12 N.m (105 in. lbs.) torque.
13. Lower vehicle and fill transmission with Mopar® ATF +4.
14. Check and adjust gearshift cable, if necessary.

VALVE, SOLENOID SWITCH

DESCRIPTION

DESCRIPTION

The Solenoid Switch Valve (SSV) is located in the main valve body and directs the output from the L/R-TCC solenoid to either the L/R clutch or the TCC control valves

OPERATION

OPERATION

The Solenoid Switch Valve directs the output pressure from the LR-TCC solenoid. In 1st gear, the SSV will be in the downshifted position, thus directing fluid to the L/R clutch circuit. In all other gears, the solenoid switch valve will be in the upshifted position and directs the fluid to the torque converter clutch (TCC) switch valve and TCC regulator valve.

When shifting into 1st gear, a special hydraulic sequence is performed to ensure SSV movement into the downshifted position. The L/R pressure switch is monitored to confirm SSV movement. If the movement is not confirmed (the L/R pressure switch does not close), 2nd gear is substituted for 1st. A DTC will be set after three unsuccessful attempts are made to get into 1st gear in one given key start.

DESCRIPTION

DESCRIPTION

The Orion 68RFE automatic transmissions is a sophisticated, multi-range, electronically controlled transmission which combines optimized gear ratios for responsive performance, state of the art efficiency features and low NVH. Other features include driver adaptive shifting and three planetary gear sets to provide wide ratio capability with precise ratio steps for optimum driveability.

The hydraulic portion of the transmission consists of the transmission fluid, fluid passages, hydraulic valves, and various line pressure control components.

The primary mechanical components of the transmission consist of the following:

- Larger bell housing with a different bolt pattern and a cutout to accommodate diesel applications.
- Three multiple disc input clutches
- Three multiple disc holding clutches
- Five hydraulic accumulators
- Three planetary gear sets
- Dual Stage Hydraulic oil pump
- Valve body
- Solenoid pack

The Transmission Control Module (TCM) is the "heart" or "brain" of the electronic control system and relies on information from various direct and indirect inputs (sensors, switches, etc.) to determine driver demand and vehicle operating conditions. Depending on the vehicle configuration, the TCM may be a standalone module or it may be housed along with the Powertrain Control Module (PCM) in a single module. With this information, the TCM can calculate and perform timely and quality shifts through various output or control devices (solenoid pack, transmission control relay, etc.).

TRANSMISSION IDENTIFICATION

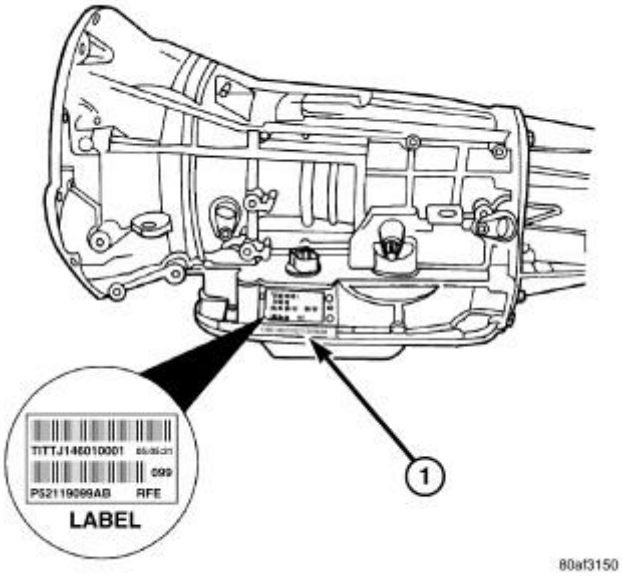

Fig. 1: Transmission Identification Numbers
Courtesy of CHRYSLER GROUP, LLC

1 - IDENTIFICATION NUMBERS (STAMPED)

Transmission identification numbers are stamped (1) on the left side of the case just above the oil pan sealing surface. Refer to this information when ordering replacement parts. A label is attached to the transmission case above the stamped numbers. The label gives additional information which may also be necessary for identification purposes.

GEAR RATIOS

The 68RFE gear ratios are:

1st

3.23:1

2nd

1.83:1

3rd

1.41:1

4th

1.00:1

5th

0.81:1

6th

0.62:1

Reverse

4.44:1

OPERATION

OPERATION

The 68RFE offers full electronic control of all automatic up and downshifts, and features real-time adaptive closed-loop shift and pressure control. Electronic shift and torque converter clutch controls help protect the transmission from damage due to high temperatures, which can occur under severe operating conditions. By altering shift schedules, line pressure, and converter clutch control, these controls reduce heat generation and increase transmission cooling.

To help reduce efficiency-robbing parasitic losses, the transmissions includes a dual-stage transmission fluid pump with electronic output pressure control. Under most driving conditions, pump output capacity greatly exceeds that which is needed to keep the clutches applied. The 68RFE pump-pressure control system monitors input torque and adjusts the pump pressure accordingly. The primary stage of the pump works continuously; the second stage is bypassed when demand is low. The control system also monitors input and output speed and, if incipient clutch slip is observed, the pressure control solenoid duty cycle is varied, increasing pressure in proportion to demand.

A high-travel torque converter damper assembly allows earlier torque converter clutch engagement to reduce slippage. Needle-type thrust bearings reduce internal friction. The 68RFE is packaged in a one-piece die-cast aluminum case. To reduce NVH, the case has high lateral, vertical and torsional stiffness. Dual filters protect the pump and other components. A cooler return filter is added to the customary main sump filter. Independent lubrication and cooler circuits assure ample pressure for normal transmission operation even if the cooler is obstructed or the fluid cannot flow due to extremely low temperatures.

NOTE: Vehicles such as the DH, D1 equipped with ERS (Electronic Range Select) do not provide 2nd gear in limp-in, because the shift lever has no "2" or "1" position.

The hydraulic control system design (without electronic assist) provides the transmission with PARK, REVERSE, NEUTRAL, and FOURTH gears, based solely on driver shift lever selection. This design allows the vehicle to be driven (in "limp-in" mode) in the event of a electronic control system failure, or a situation that the Transmission Control Module (TCM) recognizes as potentially damaging to the transmission.

The TCM also performs certain self-diagnostic functions and provides comprehensive information (sensor data, DTC's, etc.) which is helpful in proper diagnosis and repair. This information can be viewed with the scan tool.

DIAGNOSIS AND TESTING

AUTOMATIC TRANSMISSION

NOTE: Before attempting any repair on a automatic transmission, check for Diagnostic Trouble Codes with the scan tool.

Transmission malfunctions may be caused by these general conditions:

- Poor engine performance
- Improper adjustments
- Hydraulic malfunctions
- Mechanical malfunctions
- Electronic malfunctions

Diagnosis of these problems should always begin by checking the easily accessible variables: fluid level and condition, gearshift cable adjustment. Then perform a road test to determine if the problem has been corrected or if more diagnosis is necessary. If the problem persists after the preliminary tests and corrections are completed, hydraulic pressure checks should be performed.

FLUID LEAKAGE

TRANSMISSION OIL LEAK

Begin with a thorough inspection of the transmission, particularly at the area of the suspected leak. If an oil leak source is not readily identifiable, the following steps should be followed:

1. Clean or degrease the transmission with a water soluble solvent only.
2. Add an oil soluble dye (use as recommended by manufacturer) while the powertrain is at ambient temperature. Start the engine and let idle for approximately 15 minutes. Check the oil dip stick (if equipped) to make sure the dye is thoroughly mixed as indicated with a fluorescent color under a black light.
3. Using a black light, inspect the entire transmission for fluorescent dye, practically at the suspected area of oil leak. If the oil leak is found and identified, repair per service information instructions.
4. If dye is not observed, drive the vehicle at various speeds for approximately 24 km (15 miles) and repeat inspection.

TORQUE CONVERTER HOUSING AREA

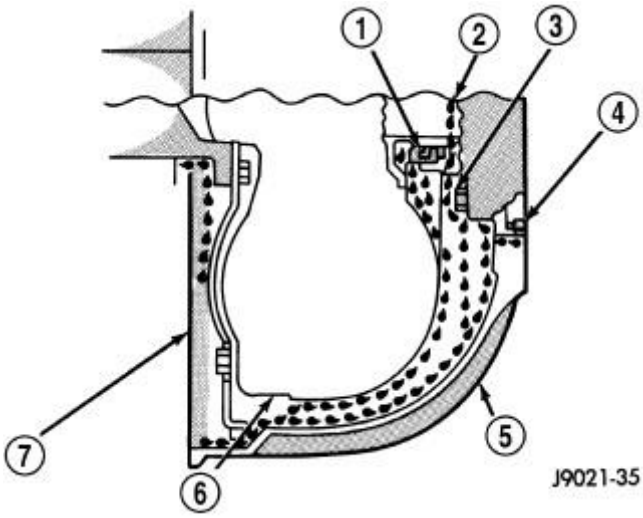

Fig. 2: Torque Converter Housing Leak Paths
Courtesy of CHRYSLER GROUP, LLC

1 - PUMP SEAL
2 - PUMP VENT
3 - PUMP BOLT
4 - PUMP GASKET
5 - CONVERTER HOUSING
6 - CONVERTER
7 - REAR MAIN SEAL LEAK

When diagnosing converter housing (5) fluid leaks, three actions must be taken before repair:

1. Verify proper transmission fluid level.
2. Verify that the leak originates from the converter housing area and is transmission fluid.
3. Determine the true source of the leak.

Fluid leakage at or around the torque converter area may originate from an engine oil leak (7). Refer to **Fig. 2**. The area should be examined closely. Factory fill fluid is red and, therefore, can be distinguished from engine oil.

Some suspected converter housing fluid leaks may not be leaks at all. They may only be the result of residual fluid in the converter housing, or excess fluid spilled during factory fill, or fill after repair. Converter housing leaks have several potential sources. Through careful observation, a leak source can be identified before removing the transmission for repair.

The 68RFE uses a one piece pump cover which includes the impeller hub seal. Leaks at the pump cover o-ring or the impeller hub seal usually travel down the inside of the converter housing.

TORQUE CONVERTER LEAKAGE

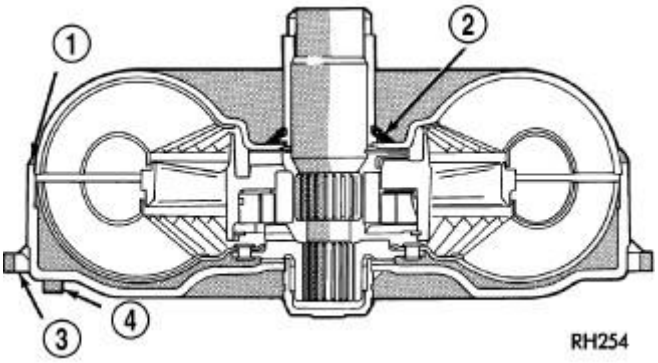

Fig. 3: Torque Converter Leak Points
Courtesy of CHRYSLER GROUP, LLC

1 - OUTSIDE DIAMETER WELD
2 - TORQUE CONVERTER HUB WELD
3 - STARTER RING GEAR
4 - LUG

Possible sources of torque converter leakage are:

- Torque converter weld leaks at the outside diameter weld (1).
- Torque converter hub weld (2).

PRELIMINARY

Two basic procedures are required. One procedure for vehicles that are drivable and an alternate procedure for disabled vehicles (will not back up or move forward).

VEHICLE IS DRIVABLE

1. Record all DTCs and the accompanying DTC Event Data.
2. Check for an appropriate Technical Service Bulletin that applies to the customer complaint.
3. Check fluid level and condition.
4. Road test and note how transmission upshifts, downshifts, and engages.
5. If the complaint was related to shift quality, perform the Quick Learn procedure. Refer to **MODULE, TRANSMISSION CONTROL, STANDARD PROCEDURE** .
6. If the shift complaint still exists, compare actual line pressure (sensor reading, using the scan tool) to the Desired Line Pressure reading, in Park, Drive, and Reverse at 1500 RPM. Check that the LP sensor reads 30 psi (the minimum it should ever display) with key on / engine off.
7. Follow the diagnosis procedure for any DTC's that exist.

VEHICLE IS DISABLED

1. Record all DTCs and the accompanying DTC Event Data.

2. Compare actual line pressure (sensor reading, using the scan tool) to the Desired Line Pressure reading, in Park, Drive, and Reverse at 1500 RPM. Check that the LP sensor reads 30 psi (the minimum it should ever display) with key on / engine off. If line pressure is incorrect, check fluid level and condition.
3. With engine running, place transmission in gear and verify correct PRNDL reading. Observe the Input and Output speeds using the scan tool. If output RPM is greater than zero but vehicle does not move, check for transfer case in Neutral (or failed internally), failed propshaft, or failed / disconnected drive axle. If output RPM is zero and input RPM is greater than zero, internal transmission slippage is indicated. Run clutch slip tests using the scan tool, check oil pan for debris, and air check the various clutch circuits.
4. Shift the transmission into neutral, if both input and output speeds are zero, check flexplate bolts, torque converter, and transmission input shaft.
5. Remove, inspect, and repair the transmission as necessary

ROAD TESTING

Before road testing, be sure the fluid level and control cable adjustments have been checked and adjusted if necessary. Verify that all diagnostic trouble codes have been resolved.

Observe engine performance during the road test. A poorly tuned engine will not allow accurate analysis of transmission operation.

Operate the transmission in all gear ranges. Check for shift variations and engine flare which indicates slippage. Note if shifts are harsh, spongy, delayed, early, or if part throttle downshifts are sensitive.

Slippage indicated by engine flare, usually means clutch or line pressure problems.

A slipping clutch can often be determined by comparing which internal units are applied in the various gear ranges. The Clutch Application charts provide a basis for analyzing road test results.

68RFE CLUTCH APPLICATION CHART

GEAR RANGE	UD	OD	R	2C	4C	L/R	OVERRUNNING
P-PARK						ON	
R-REVERSE			ON			ON	
N-NEUTRAL						ON	
D-FIRST	ON					ON*	ON
D-SECOND	ON			ON			
D-THIRD (SECOND PRIME)	ON				ON		
D-FOURTH	ON	ON					
D-FIFTH		ON			ON		
D-SIXTH		ON		ON			
D-LIMP-IN (FULL)	ON	ON					
*L/R clutch is on only with the output shaft speed below 150 rpm.							

HYDRAULIC PRESSURE TEST

An accurate tachometer and pressure test gauges are required. Test Gauge (special tool #C-3293-SP, Gauge, Pressure 0-300 P.S.I.) has a 300 psi range and is used at all locations where pressures exceed 100 psi.

PRESSURE TEST PORT LOCATIONS

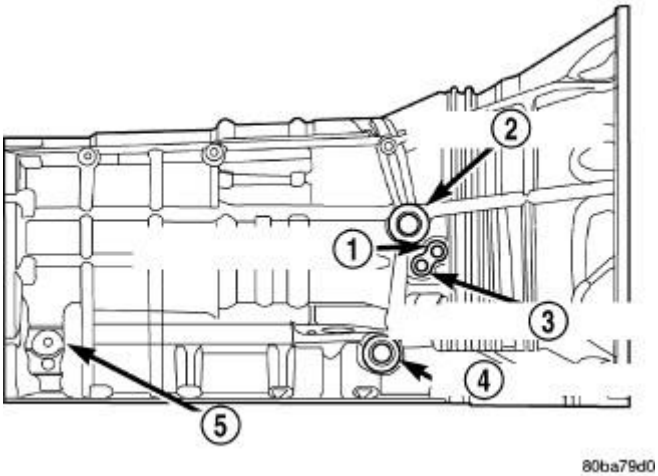

Fig. 4: Pressure Test Port Locations
Courtesy of CHRYSLER GROUP, LLC

1 - TCC RELEASE
2 - TO COOLER
3 - TCC APPLY
4 - FROM COOLER
5 - LINE PRESSURE SENSOR

Only two pressure ports are supplied on the transmission case. The torque converter clutch apply (3) and release (1) ports are located on the right side of the transmission case. Refer to **Fig. 4**.

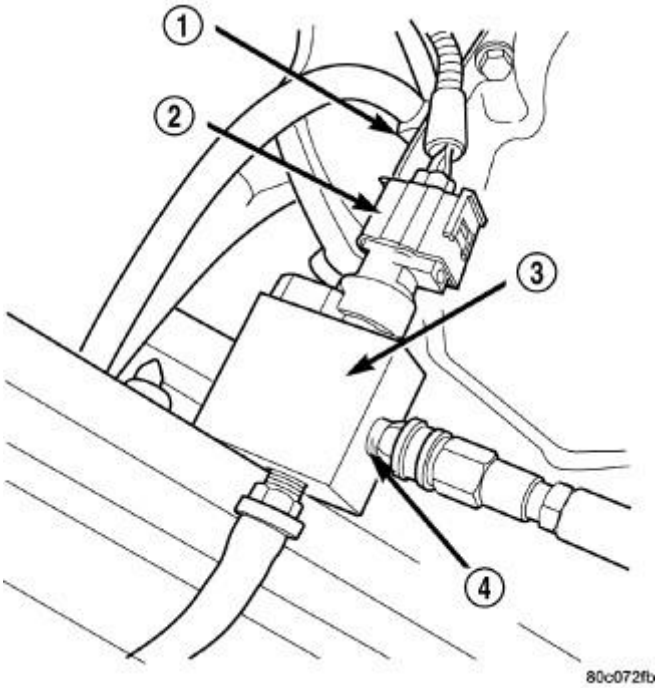

Fig. 5: Line Pressure Adapter 8259
Courtesy of CHRYSLER GROUP, LLC

1 - LINE PRESSURE SENSOR PORT
2 - LINE PRESSURE SENSOR
3 - TOOL 8259
4 - PRESSURE TAP

To determine the line pressure, there are two available methods. The scan tool can be used to read line pressure from the line pressure sensor. The second method is to install Line Pressure Adapter (special tool #8259, Adapter, Pressure Test) (3) into the transmission case and then install the pressure gauge and the original sensor (2) into the adapter. Refer to **Fig. 5**. This will allow a comparison of the scan tool readings and the gauge reading to determine the accuracy of the line pressure sensor. The scan tool line pressure reading should match the gauge reading within ±10 psi.

TEST PROCEDURE

All pressure readings should be taken with the transmission fluid level full, transmission oil at the normal operating temperature, and the engine at 1500 rpm. Check the transmission for proper operation in each gear position that is in question or if a specific element is in question, check the pressure readings in at least two gear positions that employ that element. Refer to **SCHEMATICS AND DIAGRAMS** to determine the correct pressures for each element in a given gear position.

NOTE: **The 68RFE utilizes closed loop control of pump line pressure. The pressure readings may therefore vary greatly but should always follow line the desired pressure.**

Some common pressures that can be measured to evaluate pump and clutch performance are the upshift/downshift pressures, garage shift pressures, and TCC pressure. For the upshift/downshift pressure for all shifts, refer to **UPSHIFT PRESSURES** and **DOWNSHIFT PRESSURES**. For in-gear maximum pressure for each gear position, refer to **IN-GEAR PRESSURES**.

UPSHIFT PRESSURES

545RFE								
ENGINE	**1-2**	**2-3**	**2prime-3**	**3-4**	**2prime-4**	**2-5**	**3-5**	**4-5**
5.7L	150	125	125	135	135	135	135	135
68RFE								
ENGINE	**1-2**	**2-3**	**3-4**	**4-5**	**5-6**	**2-4**	**3-5**	**4-6**
6.7L	160	150	150	160	160	150	150	160

DOWNSHIFT PRESSURES

545RFE										
ENGINE	**5-4**	**5-3**		**5-2**	**4-3**	**4-2prime**	**3-2**	**3-2prime**	**2prime-1**	**2-1**
5.7L	135	135		135	135	135	135	135	135	135
68RFE										
ENGINE	**6-5**	**6-4**	**5-4**	**5-3**	**4-3**	**4-2**	**3-2**	**3-1**	**2-1**	-
6.7L	150	150	150	160	150	160	150	160	160	-

IN-GEAR PRESSURES

545RFE								
ENGINE	**1**	**2**	**2prime**	**3**	**4**	**5**	**NEUTRAL**	**REVERSE**
5.7L	160	135	135	135	135	135	120	250
68RFE								
ENGINE	**1**	**2**	**3**	**4**	**5**	**6**	**NEUTRAL**	**REVERSE**
6.7L	160	150	150	160	160	160	125	250

Actual line-pressure while in-gear will vary based upon minimum learned line-pressure. Minimum line-pressure starts at 40 psi and learns up to the minimum pressure to hold the clutches in an applied state.

AIR CHECKING TRANSMISSION CLUTCH OPERATION

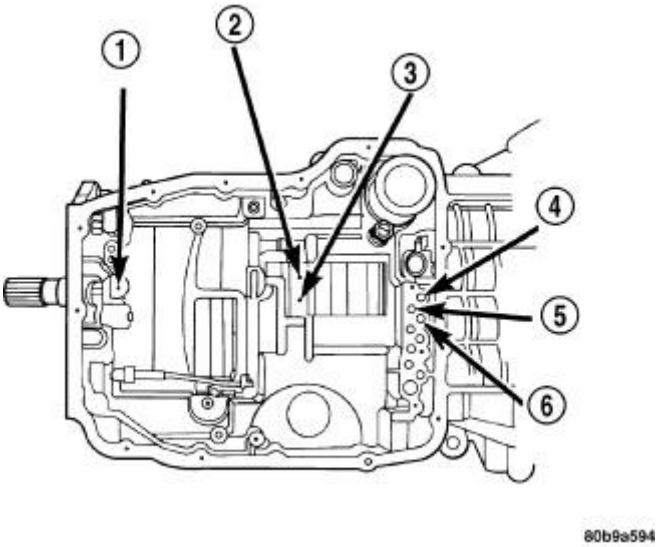

Fig. 6: Air Pressure Test Passages
Courtesy of CHRYSLER GROUP, LLC

1 - LOW REVERSE CLUTCH
2 - 4C CLUTCH
3 - 2C CLUTCH
4 - OVERDRIVE CLUTCH
5 - UNDERDRIVE CLUTCH
6 - REVERSE CLUTCH

NOTE: **Each clutch includes a small bleed orifice, so minimal air leakage is normal and expected.**

Air-pressure testing can be used to check transmission clutch operation. The test can be conducted with the transmission either in the vehicle or on the work bench, as a final check.

Air-pressure testing requires that the oil pan and valve body be removed from the transmission. The clutch apply passages are shown in the Air Pressure Test Passages graphic. Refer to **Fig. 6**.

NOTE: **The air supply which is used must be free of moisture and dirt. Use a pressure of 30 psi to test clutch operation.**

Apply air pressure at each port. If the clutch is functioning, a soft thump will be heard as the clutch is applied. The clutch application can also be felt by touching the appropriate element while applying air pressure. As the air pressure is released, the clutch should also release.

CONVERTER HOUSING FLUID LEAK

When diagnosing converter housing fluid leaks, two items must be established before repair.

1. Verify that a leak condition actually exists.
2. Determined the true source of the leak.

Some suspected converter housing fluid leaks may not be leaks at all. They may only be the result of residual fluid in the converter housing, or excess fluid spilled during factory fill or fill after repair. Converter housing leaks have several potential sources. Through careful observation, a leak source can be identified before removing the transmission for repair. Torque converter seal leaks tend to move along the drive hub and onto the rear of the converter. Pump cover seal leaks tend to run down the cover and the inside surface of the bellhousing.

Some leaks, or suspected leaks, may be particularly difficult to locate. If necessary, a Mopar® approved dye should be used to locate and confirm a leak.

TORQUE CONVERTER LEAK POINTS

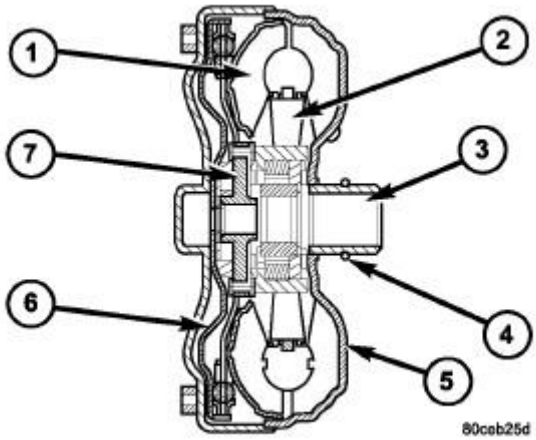

Fig. 7: Cutaway View Of Torque Converter
Courtesy of CHRYSLER GROUP, LLC

1 - TURBINE ASSEMBLY	5 - IMPELLER ASSEMBLY
2 - STATOR	6 - CONVERTER CLUTCH PISTON
3 - CONVERTER HUB	7 - TURBINE HUB
4 - O-RING	

Possible sources of converter leaks are:

1. Leaks at the weld joint around the outside diameter weld. Refer to **Fig. 7**.
2. Leaks at the converter hub weld. Refer to **Fig. 7**.

In most cases, a torque converter which is wet from transmission fluid indicates a leak at one of these areas.

STANDARD PROCEDURE

STANDARD PROCEDURE - ALUMINUM THREAD REPAIR

Damaged or worn threads in the aluminum transmission case and valve body can be repaired by the use of Heli-Coils™, or equivalent. This repair consists of drilling out the worn-out damaged threads. Then tap the hole with a special Heli-Coil™ tap, or equivalent, and installing a Heli-Coil™ insert, or equivalent, into the hole. This brings the hole back to its original thread size.

Heli-Coil™, or equivalent, tools and inserts are readily available from most automotive parts suppliers.

DRIVE LEARN - RFE TRANSMISSIONS

When a transmission is repaired and a Quick Learn procedure has been performed on the Transmission Control Module (TCM), the following Drive Learn procedure can be performed to fine tune any shifts which are particularly objectionable.

NOTE: It is not necessary to perform the complete Drive Learn procedure every time the TCM is Quick Learned. Perform only the portions which target the objectionable shift.

LEARN A SMOOTH 1ST NEUTRAL TO DRIVE SHIFT

Perform this procedure only if the complaint is for a delayed or harsh shift the first time the transmission is put into gear after the vehicle is allowed to set with the engine not running for at least 10 minutes. Use the following steps to have the TCM learn the 1st N-D UD CVI.

NOTE: The transmission oil temperature must be between 80 - 110°F (27 - 43°C).

1. Start the engine only when the engine and ignition have been off for at least ten (10) minutes.
2. With the vehicle at a stop and the service brake applied, record the 1st N-D UD CVI while performing a Neutral to Drive shift. The 1st N-D UD CVI accounts for air entrapment in the UD clutch that may occur after the engine has been off for a period of time.
3. Repeat until the recorded 1st N-D UD CVI value stabilizes. Refer to 1 and 2.

NOTE: It is important that this procedure be performed when the transmission temperature is between 80 - 110°F (27 - 43°C). If this procedure takes too long to complete fully for the allowed transmission oil temperature, the vehicle may be returned to the customer with an explanation that the shift will improve daily during normal vehicle usage. The TCM also learns at higher oil temperatures, but these values (line pressure correction values) are not available for viewing on the scan tool.

LEARN A SMOOTH NEUTRAL TO DRIVE GARAGE SHIFT

Perform this procedure if the complaint is for a delayed or harsh shift when the transmission is put into gear after the vehicle has had its first shift. Use the following steps to have the TCM learn the Norm N-D UD CVI.

NOTE: **The transmission oil temperature must be between 80 - 110°F (27 - 43°C) to learn the UD CVI. Additional learning occurs at temperatures as low as 0°F and as high as 200°F. This procedure may be performed at any temperature that experiences poor shift quality. Although the UD CVI may not change, shift quality should improve.**

1. Start the vehicle engine and shift to drive.
2. Move the vehicle forward to a speed of at least 16 km/h (10 MPH) and come to a stop. This ensures no air is present in the UD hydraulic circuit.
3. Perform repeated N-D shifts at a stop while pausing in Neutral for at least 2-3 seconds and monitor Norm N-D UD CVI volume until the value stabilizes. The value will change during the N-D shift. This is normal since the UD value is different for the N-D shift then the normal value shown which is used for 4-3 coastdown and kickdowns. Perform repeated shifts in this temperature range until the Norm N-D UD CVI value stabilizes and the N-D shifts become smooth.

LEARN THE 1ST 2-3 SHIFT AFTER A RESTART OR SHIFT TO REVERSE

Use the following steps to have the TCM learn the 1st 2-3 shift OD CVI.

NOTE: **The transmission oil temperature must be above 80°F (27°C).**

1. With the vehicle engine running, select reverse gear for over 2 seconds.
2. Shift the transmission to Drive and accelerate the vehicle from a stop at a steady 15 degree throttle opening and perform a 2-3 shift while noting the 1st 2-3 OD CVI.
3. Repeat until the 1st 2-3 upshift becomes smooth and the 1st 2-3 OD CVI stabilizes. Refer to 1 and 2.

LEARN A SMOOTH 2-3 AND 3-4 UPSHIFT

NOTE: **The transmission oil temperature must be above 110°F (43°C).**

Use the following steps to have the TCM learn the OD and 4C CVI's.

1. Accelerate the vehicle from a stop at a steady 15 degree throttle opening and perform multiple 1-2, 2-3, and 3-4 upshifts. The 2nd 2-3 shift following a restart or shift to reverse will be shown during the shift as a value between the 1st 2-3 OD CVI and the normal OD CVI. Updates to the normal OD CVI will occur after the 2nd shift into 3rd gear, following a restart or shift to reverse.
2. Repeat until the 2-3 and 3-4 shifts become smooth and the OD and 4C CVI become stable. Refer to 1.

LEARN A SMOOTH 4-3 COASTDOWN AND PART THROTTLE 4-3 KICKDOWN

NOTE: **The transmission oil temperature must be above 110°F (43°C).**

Use the following steps to have the TCM learn the UD shift volume.

1. At a vehicle speed between 64-97 km/h (40-60 MPH), perform repeated 4-3 kickdown shifts.

2. Repeat until the UD volume becomes somewhat stable and the shift becomes smooth. Refer to 1.

LEARN A SMOOTH 1-2 UPSHIFT AND 3-2 KICKDOWN

Use the following steps to have the TCM learn the 2C shift volume.

NOTE: The transmission oil temperature must be above 110°F (43°C).

1. With a vehicle speed below 48 km/h (30 MPH) and the transmission in 3rd gear, perform multiple 3-2 kickdowns.
2. Repeat until the 3-2 kickdowns become smooth and the 2C CVI becomes stable. Refer to 1.

LEARN A SMOOTH MANUAL 2-1 PULLDOWN SHIFT AS WELL AS A NEUTRAL TO REVERSE SHIFT

NOTE: The transmission oil temperature must be above 110°F (43°C).

Use the following steps to have the TCM learn the LR volume.

1. With the vehicle speed around 40-48 km/h (25-30 MPH) in Manual 2nd, perform manual pulldowns to Low or 1st gear at closed throttle.
2. Repeat until the LR CVI becomes stable and the manual 2-1 becomes smooth. Refer to 1.

LEARN A SMOOTH NEUTRAL TO REVERSE SHIFT

NOTE: The transmission oil temperature must be above 110°F (43°C).

1. With the vehicle at a stop, perform Neutral to Reverse shifts until the shift is smooth. An unlearned Neutral to Reverse shift may be harsh or exhibit a double bump.
2. If any of the shifts are still not smooth after the clutch volume stabilizes, an internal transmission problem may be present.

LEARN A SMOOTH 4-5 UPSHIFT

NOTE: The transmission oil temperature must be above 110°F (43°C).

Use the following steps to have the TCM learn the Alt 2C CVI.

1. Accelerate the vehicle through 88 km/h (55mph) at a steady 10-15 degree throttle opening and perform multiple 4-5 upshifts.
2. Repeat until the 4-5 shift become smooth and the Alt 2C CVI become stable. Refer to 1. There is a separate 2C volume used and learned for 4-5 shifts, 2CA. It is independent of the 2C CVI learned on 3-2 kickdowns.

TCM QUICK LEARN - RLE AND RFE TRANSMISSIONS

The quick learn procedure requires the use of the scan tool.

This program allows the electronic transmission system to recalibrate itself. This will provide the proper transmission operation. The quick learn procedure should be performed if any of the following procedures are performed:

- Transmission Assembly Replacement.
- Transmission Control Module Replacement.
- Solenoid Pack Replacement.
- Clutch Plate and/or Seal Replacement.
- Valve Body Replacement or Recondition.

To perform the Quick Learn Procedure, the following conditions must be met:

- The brakes must be applied.
- The engine speed must be above 500 rpm.
- The throttle angle (TPS) must be less than 3 degrees.
- The shift lever position must stay in PARK until prompted to shift to overdrive.
- The shift lever position must stay in overdrive after the Shift to Overdrive prompt until the scan tool indicates the procedure is complete.
- The calculated oil temperature must be above 60° and below 200°.

SPECIFICATIONS

SPECIFICATIONS

GENERAL

Component	Metric	Inch
Output Shaft End Play	0.25-0.52 mm	0.010-0.020 in.
Input Shaft End Play	0.52-0.74 mm	0.020-0.029 in.
2C Clutch Pack Clearance	0.99-1.65 mm	0.039-0.065 in.
4C Clutch Pack Clearance	0.770-1.390 mm	0.030-0.055 in.
L/R Clutch Pack Clearance	1.18-2.09 mm	0.046-0.082 in.
OD Clutch Pack Clearance	0.75-1.61 mm	0.030-0.063 in.
UD Clutch Pack Clearance	1.02-1.72 mm	0.040-0.068 in.
Reverse Clutch Pack Clearance	0.58-1.47 mm	0.023-0.058 in.

68RFE FLUID

Recommended fluid	Mopar® ATF +4
Service Fill - 68RFE	4X2 - 5.2 L (5.5 Quarts)
	4X4 - 6.2 L (6.5 Quarts)
Overhaul -68RFE	15.6-16.6 L (16.4-17.5 Quarts)?

GEAR RATIOS

1ST	3.23:1
2ND	1.83:1
3RD	1.41:1
4TH	1.0:1
5TH	0.81:1
6TH	0.62:1
REVERSE	4.44:1

TORQUE SPECIFICATIONS

DESCRIPTION	N.m	Ft. Lbs.	In. Lbs.
Accumulator cover screw	7	-	60
For rear mount specifications, refer to **TORQUE SPECIFICATIONS** . .	-	-	-
Converter housing bolt	68	50	-
Cooler line at trans fitting	17.5	-	155
Cooler return filter	9.5	-	84
Detent spring screw	4.5	-	40
Driveplate to crankshaft bolt	75	55	-
Extension housing bolt	54	40	-
Fill tube at transmission bolt	10	-	88
Fill tube at valve cover nut	10	-	88
Input speed sensor bolt	12	-	105
Inspection cover bolt	10	-	88
Line pressure sensor bolt	12	-	105
Manual selector shaft cross-bolt	16	-	140
Manual selector shaft retaining screw	28	-	250
Manual valve cam retaining screw	4.5	-	40
Oil pan bolts	12	-	105
Oil pump body to cover bolts	4.5	-	40
Oil pump bolt	28	-	250
Output speed sensor bolt	12	-	105
Plate to oil pump body screw	4.5	-	40
Pressure test port plug	5	-	45
Primary fluid filter screw	4.5	-	40

Reaction shaft support bolt	12	-	105
Solenoid module to transfer plate screw	6	-	50
Torque converter housing to engine lower four bolt	54	40	-
Torque converter housing to engine upper four bolts	41	30	-
Torque converter to driveplate bolt	88	65	780
Transmission collar bolt	68	50	-
Transfer case nuts	35	26	-
Valve body to case bolts	12	-	105
Valve body to transfer plate screw	5.5	-	50

SCHEMATICS AND DIAGRAMS

SCHEMATICS AND DIAGRAMS

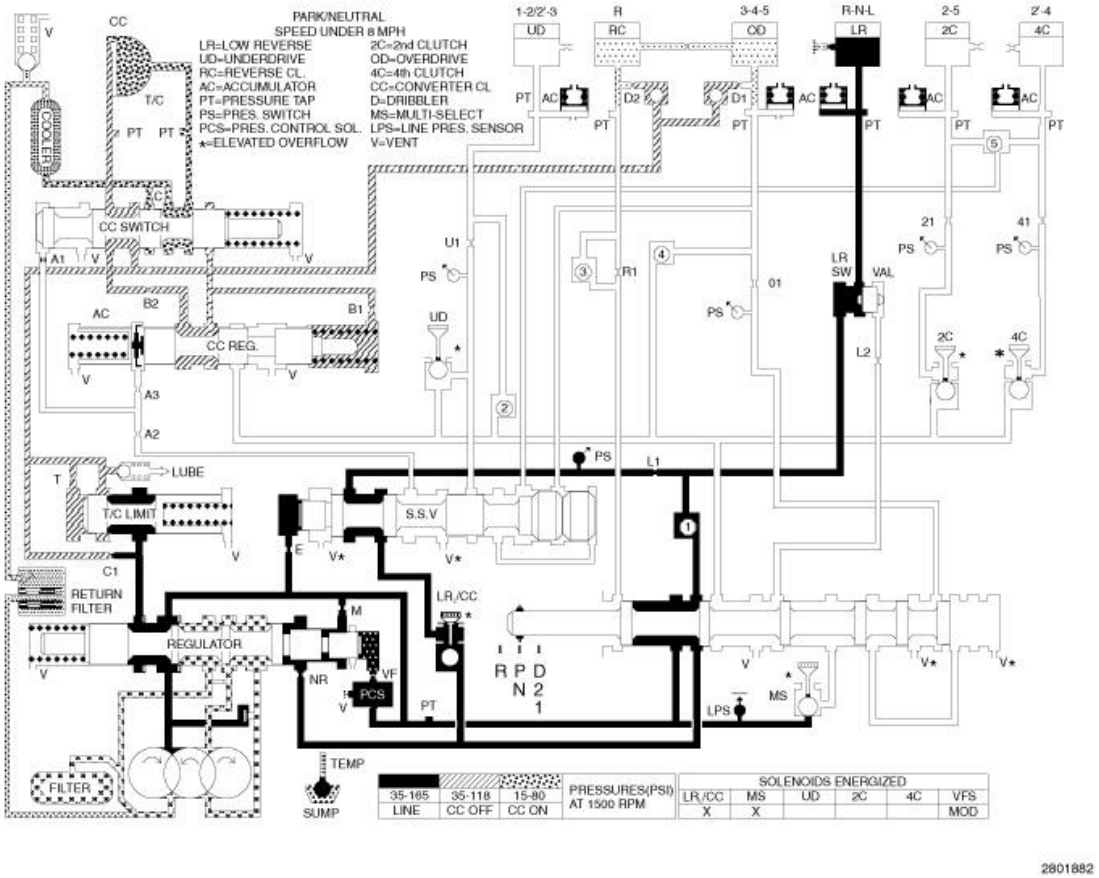

Fig. 8: Hydraulic Flow In Park/Neutral

Courtesy of CHRYSLER GROUP, LLC

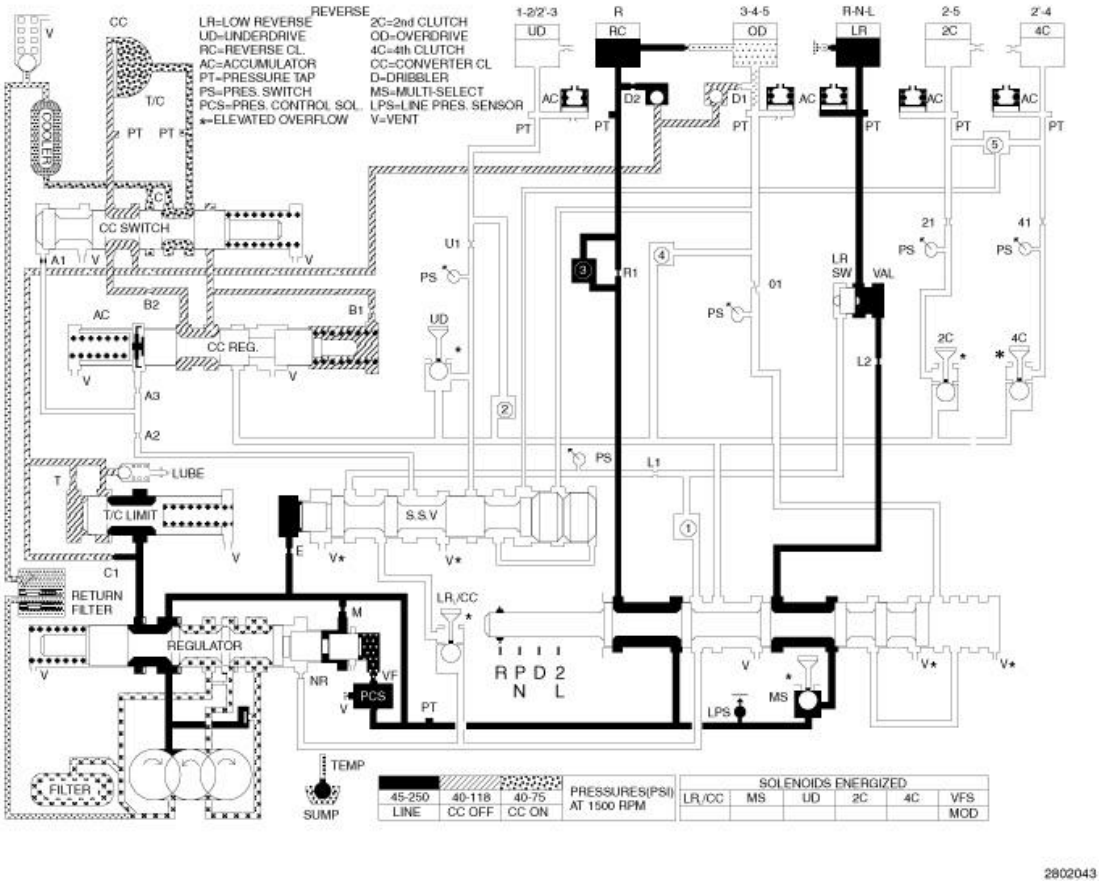

<u>Fig. 9: Hydraulic Flow In Neutral Over 8MPH</u>
Courtesy of CHRYSLER GROUP, LLC

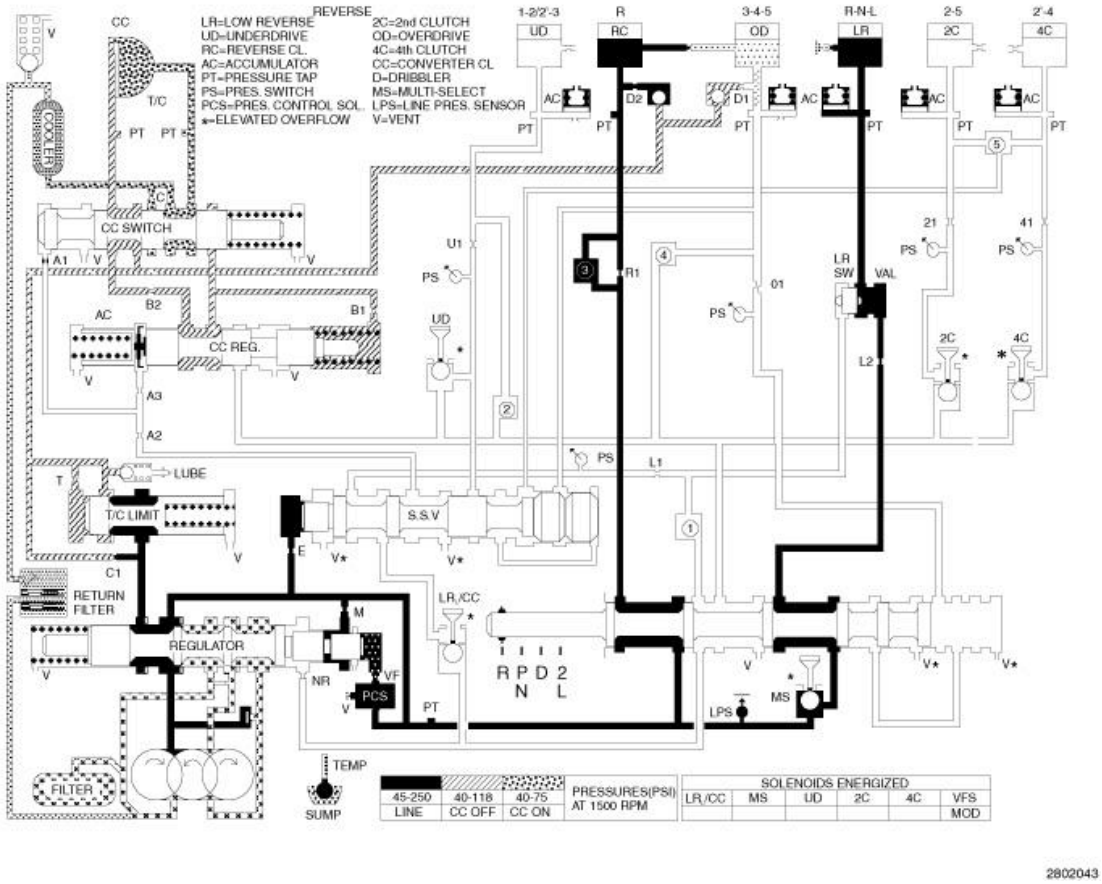

Fig. 10: Hydraulic Flow In Reverse
Courtesy of CHRYSLER GROUP, LLC

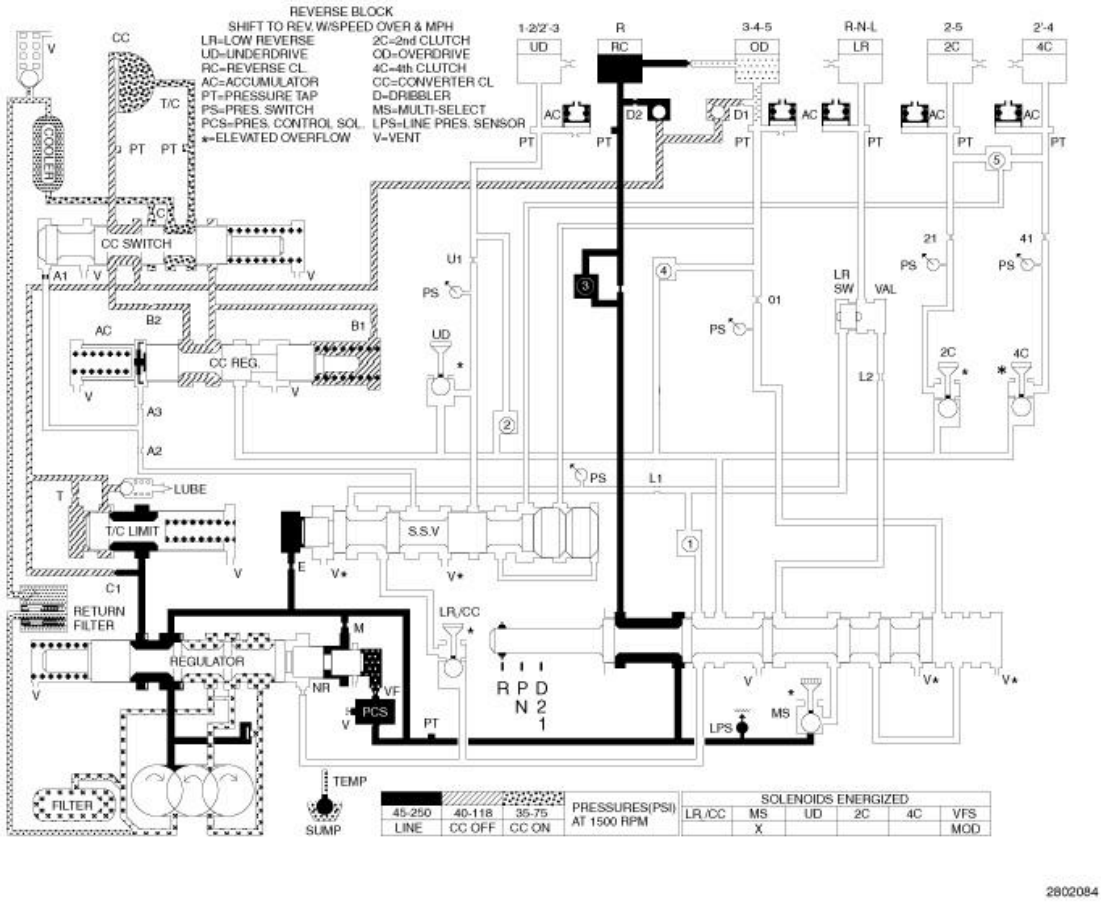

Fig. 11: Hydraulic Flow In Reverse Block
Courtesy of CHRYSLER GROUP, LLC

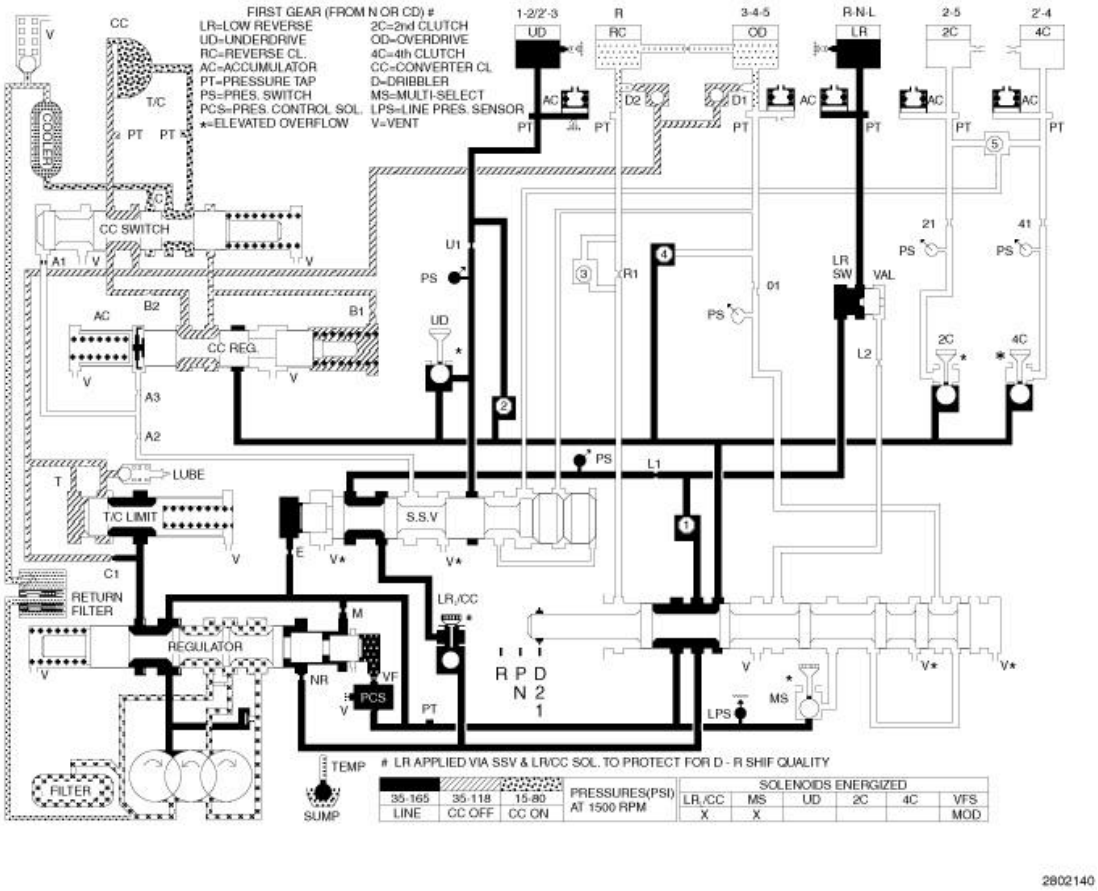

Fig. 12: Hydraulic Flow In First Gear (From N Or OD)
Courtesy of CHRYSLER GROUP, LLC

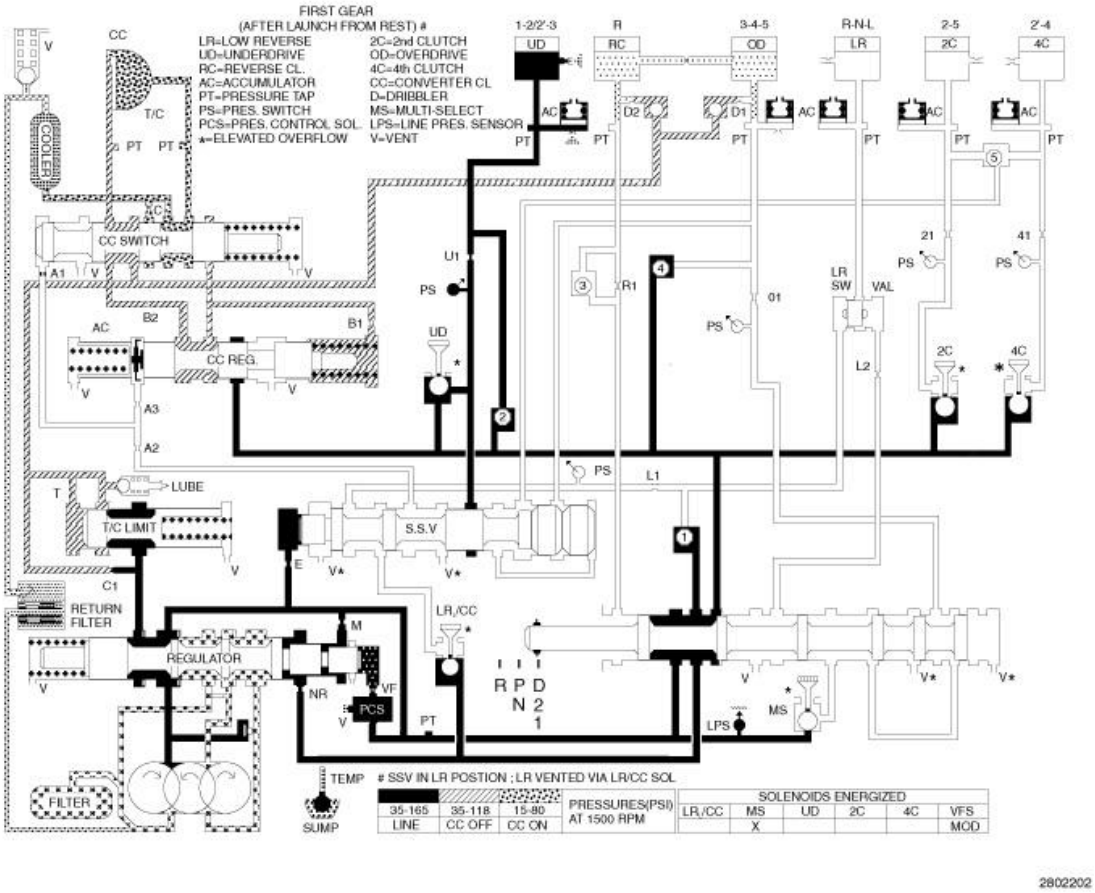

<u>Fig. 13: Hydraulic Flow In First Gear (After Launch From Rest)</u>
Courtesy of CHRYSLER GROUP, LLC

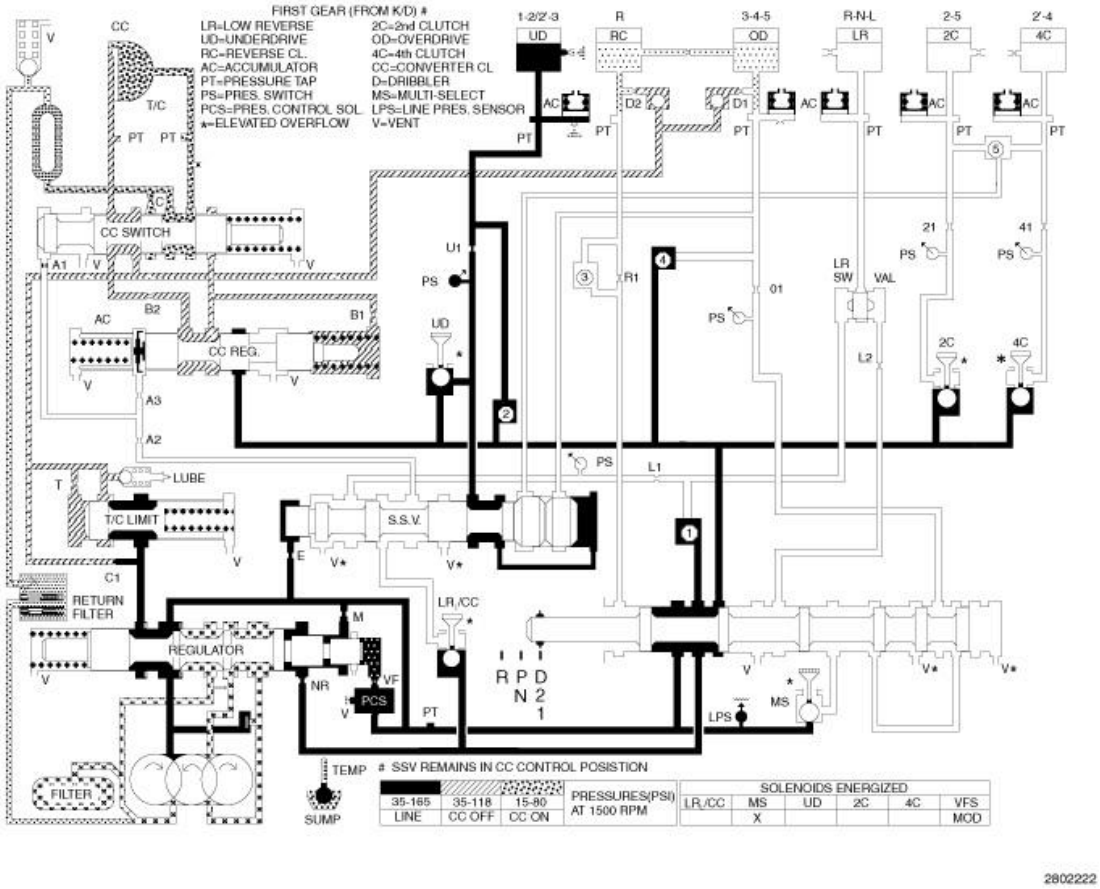

Fig. 14: Hydraulic Flow In First Gear (From K/D)
Courtesy of CHRYSLER GROUP, LLC

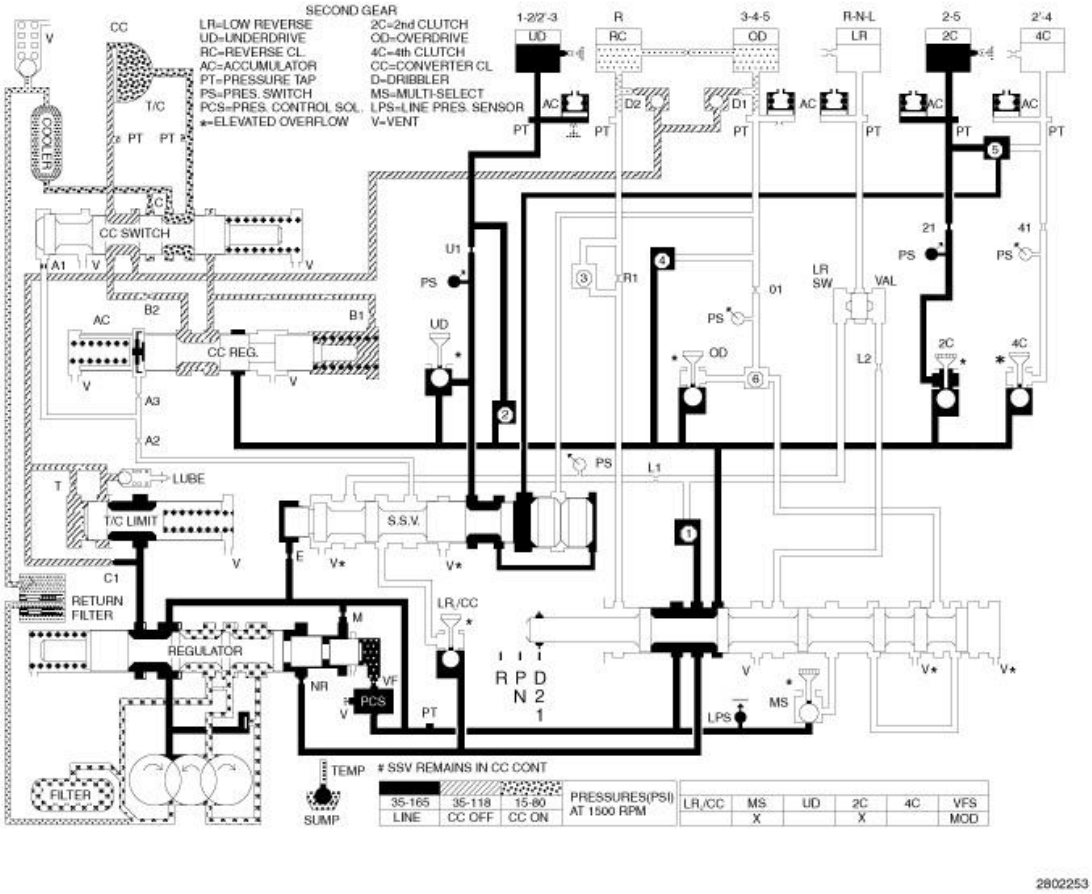

Fig. 15: Hydraulic Flow In Second Gear
Courtesy of CHRYSLER GROUP, LLC

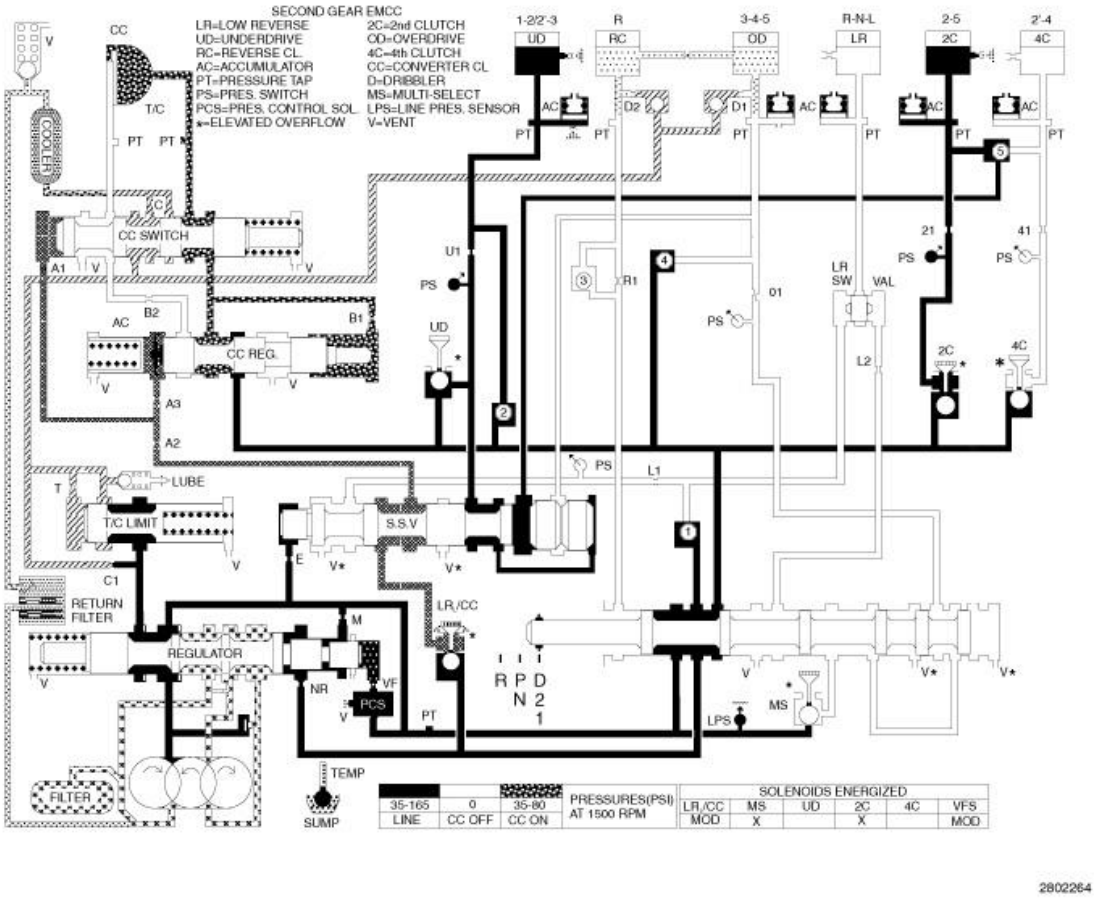

Fig. 16: Hydraulic Flow In Second Gear EMCC
Courtesy of CHRYSLER GROUP, LLC

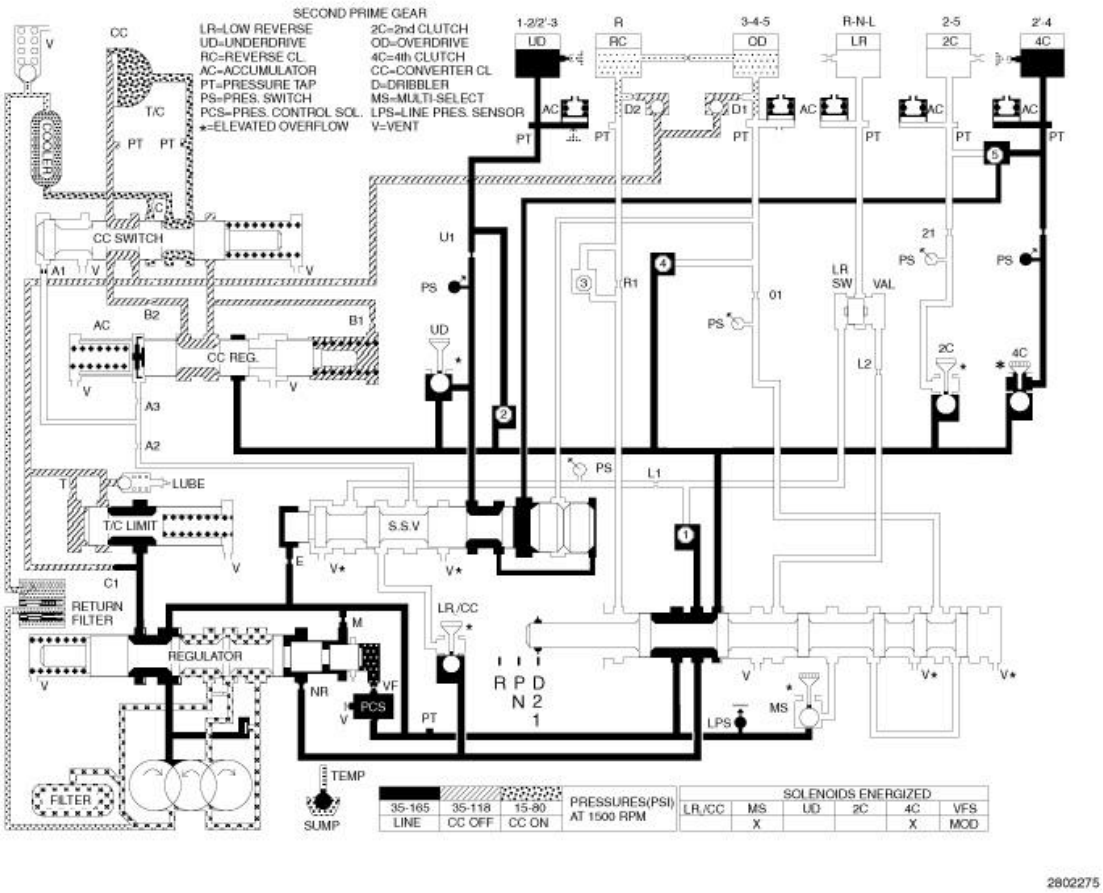

Fig. 17: Hydraulic Flow In Third Gear
Courtesy of CHRYSLER GROUP, LLC

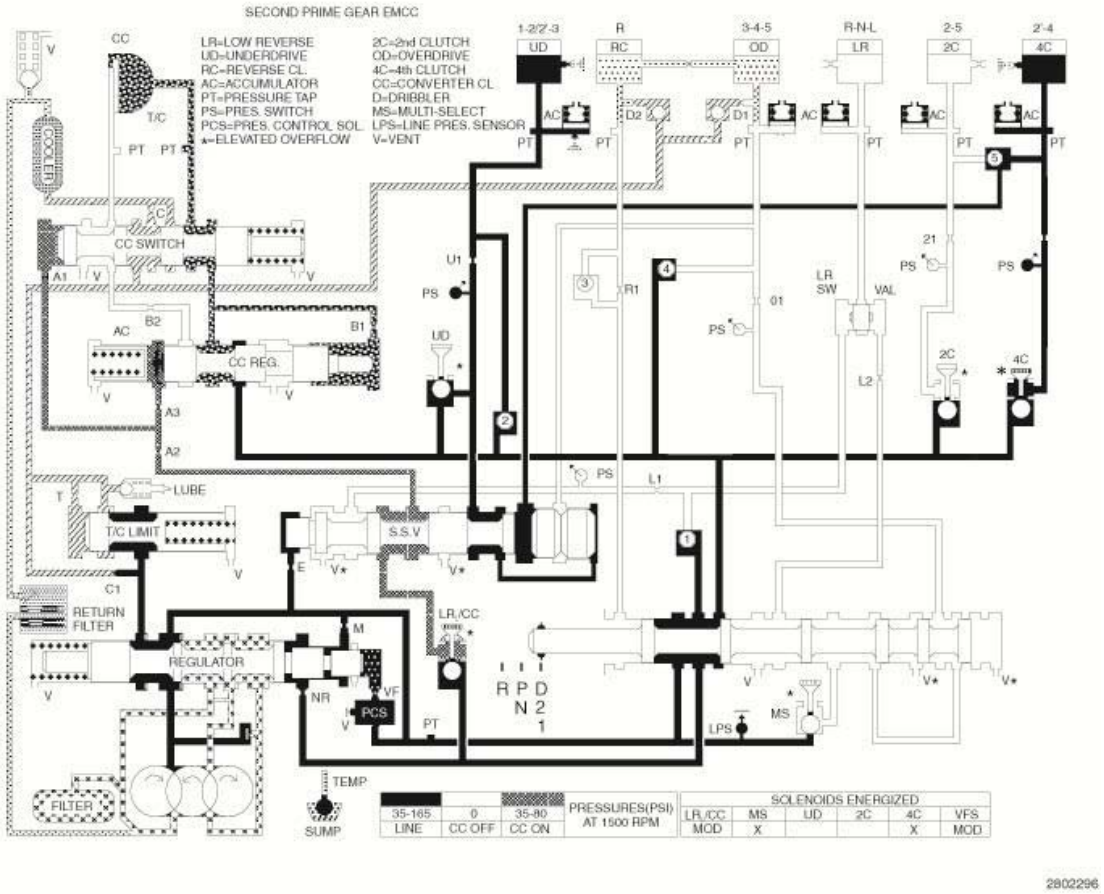

Fig. 18: Hydraulic Flow In Third Gear EMCC
Courtesy of CHRYSLER GROUP, LLC

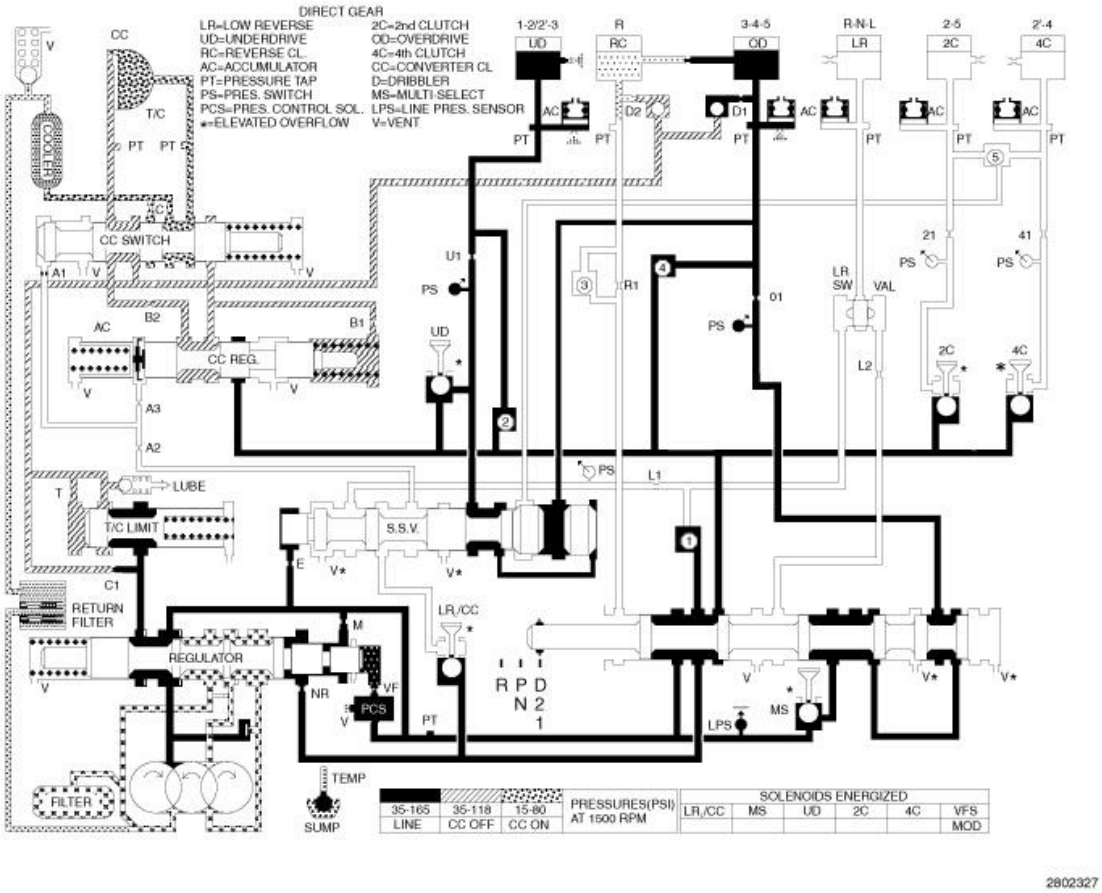

Fig. 19: Hydraulic Flow In Direct Gear
Courtesy of CHRYSLER GROUP, LLC

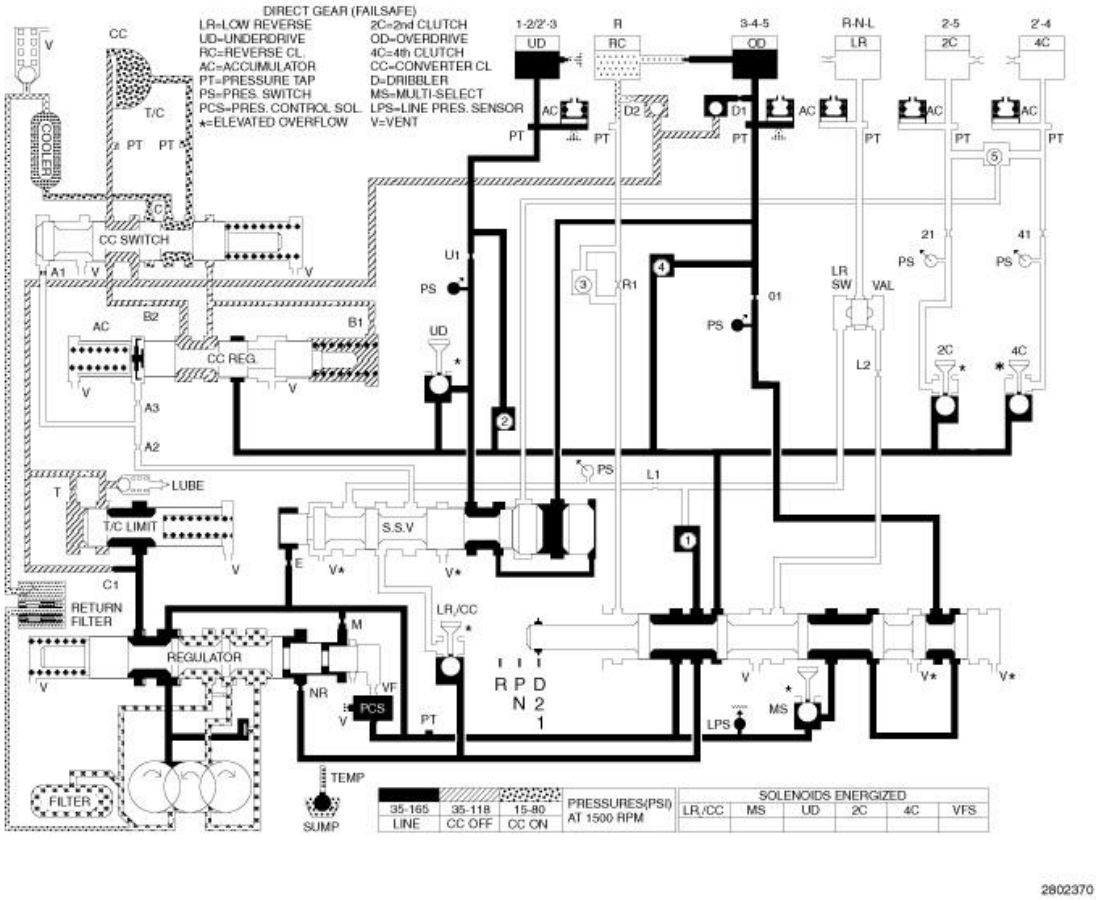

Fig. 20: Hydraulic Flow In Direct Gear (Failsafe)
Courtesy of CHRYSLER GROUP, LLC

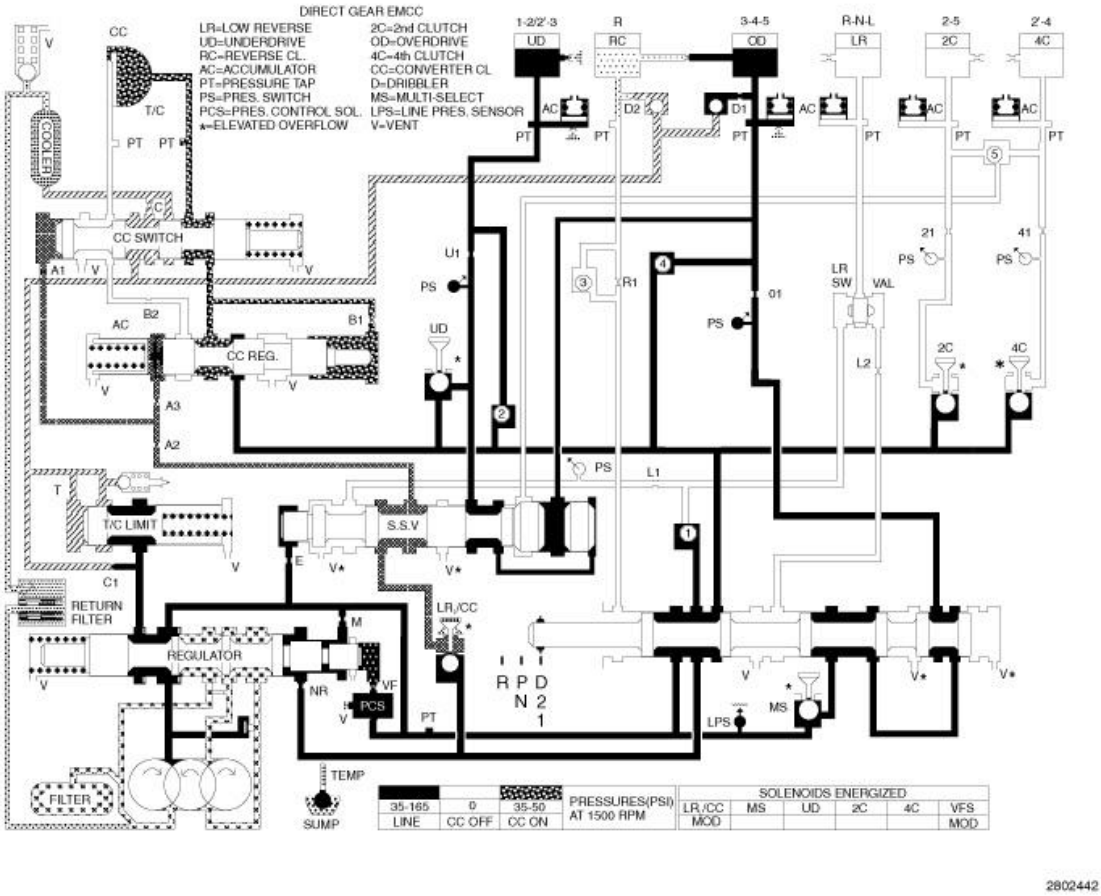

Fig. 21: Hydraulic Flow In Direct Gear EMCC
Courtesy of CHRYSLER GROUP, LLC

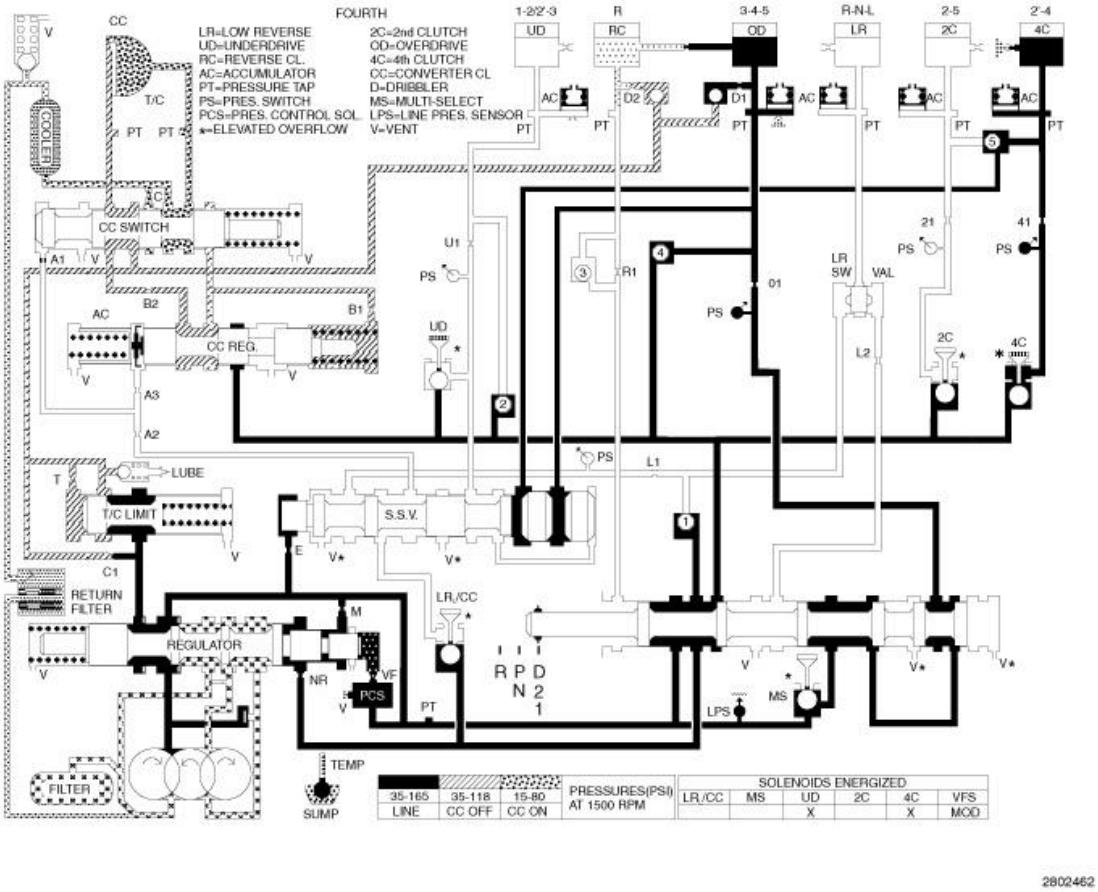

Fig. 22: Hydraulic Flow In Fifth
Courtesy of CHRYSLER GROUP, LLC

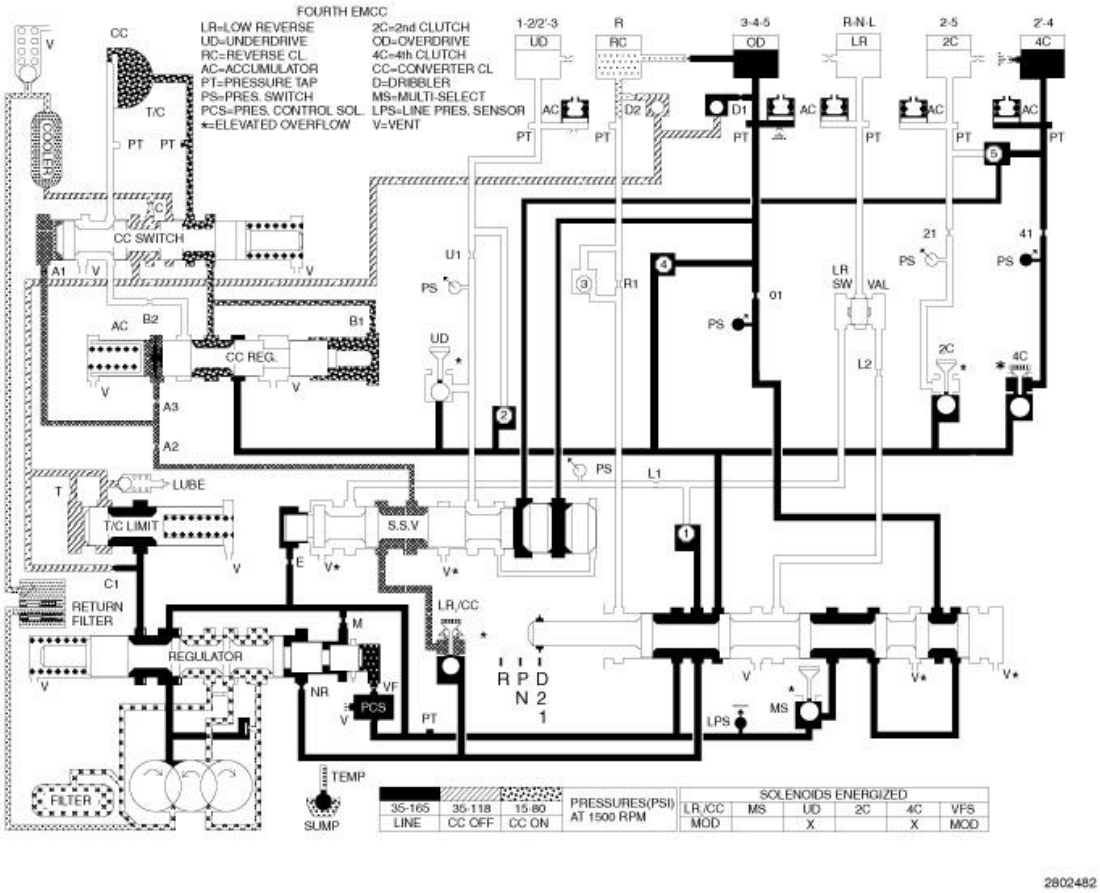

Fig. 23: Hydraulic Flow In Fifth EMCC
Courtesy of CHRYSLER GROUP, LLC

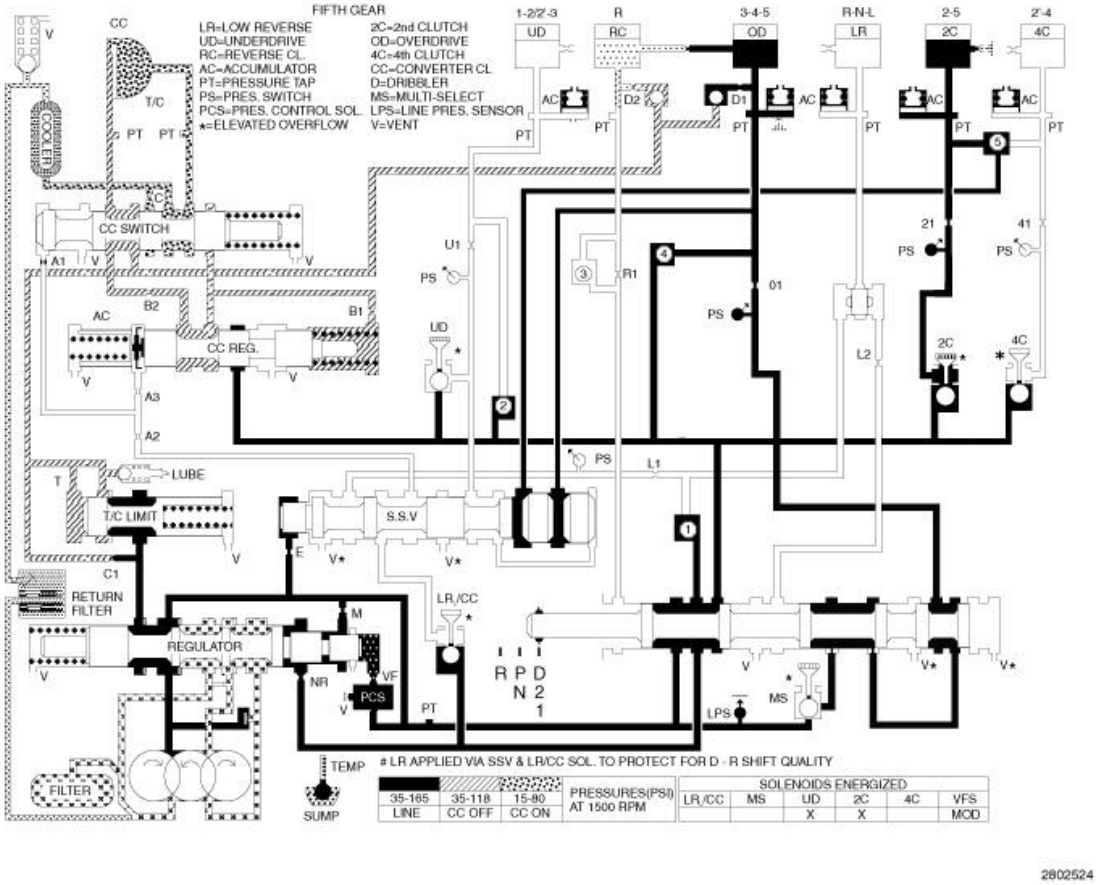

Fig. 24: Hydraulic Flow In Sixth
Courtesy of CHRYSLER GROUP, LLC

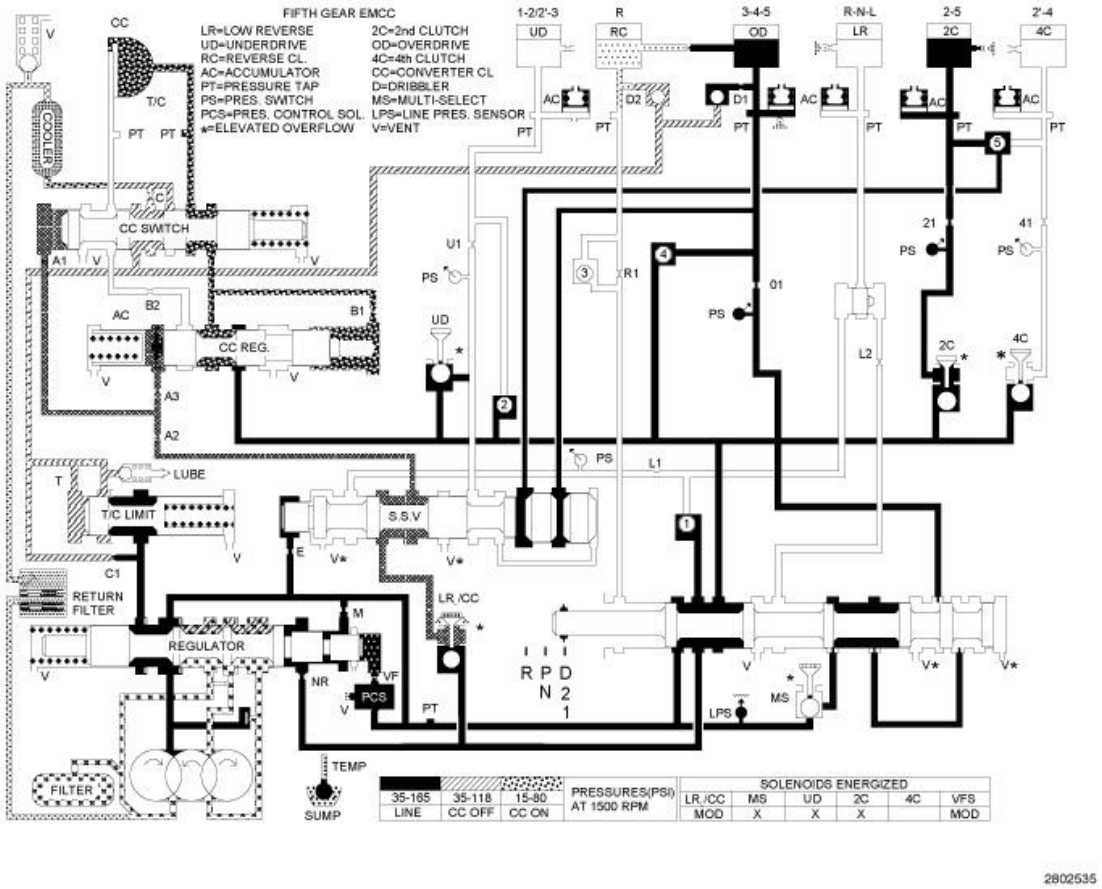

Fig. 25: Hydraulic Flow In Sixth EMCC
Courtesy of CHRYSLER GROUP, LLC

REMOVAL

REMOVAL

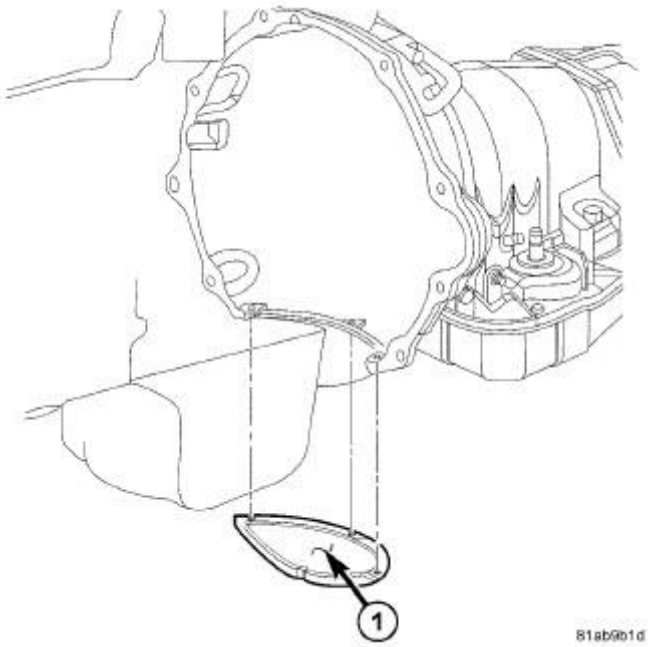

Fig. 26: Dust Shield
Courtesy of CHRYSLER GROUP, LLC

1. Disconnect the negative battery cable.
2. Raise and support the vehicle
3. Remove any necessary skid plates. Refer to **PLATE, SKID, FRONT, REMOVAL** or **PLATE, SKID, TRANSFER CASE, REMOVAL** .

NOTE: Mark propeller shaft and axle companion flanges for assembly alignment.

4. Remove the rear propeller shaft
5. Remove the front propeller shaft, if necessary.
6. Remove the exhaust support bracket from the front and rear of the transmission (if equipped).
7. Disconnect and lower or remove any necessary exhaust components.
8. Remove the bolts securing the power bending bracket to the engine block and the transmission case.
9. Remove the power bending bracket.
10. Loosen the inspection cover bolts and remove the inspection cover.
11. Remove the transmission dust shield (1).

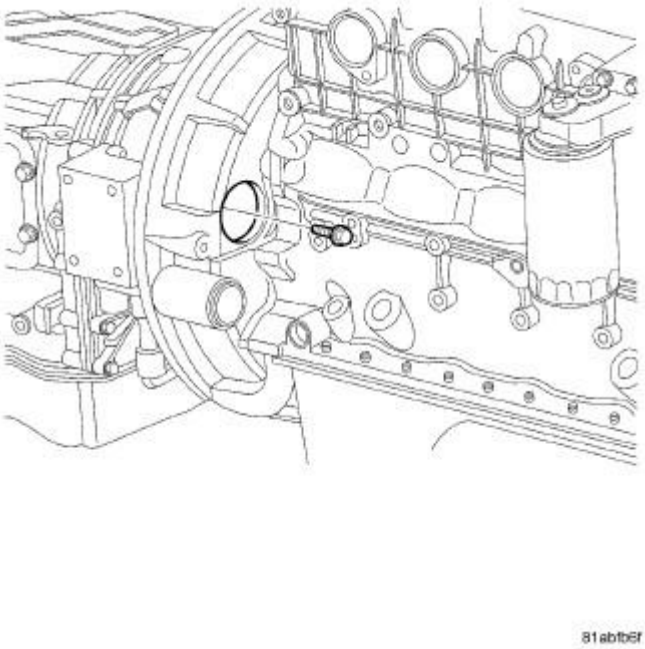

Fig. 27: Torque Converter Bolts
Courtesy of CHRYSLER GROUP, LLC

12. Rotate the fly wheel and remove the torque converter bolts one at a time.

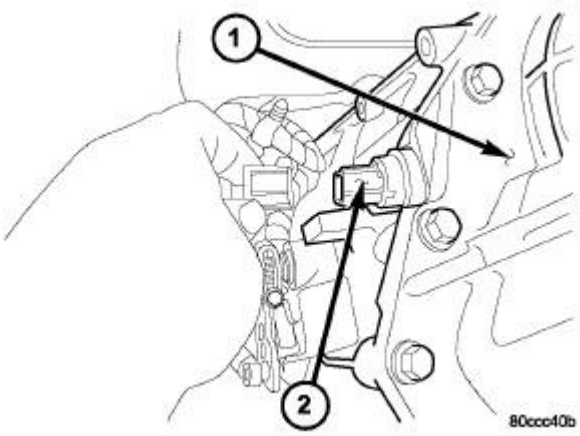

Fig. 28: Output Speed Sensor
Courtesy of CHRYSLER GROUP, LLC

1 - TRANSMISSION
2 - OUTPUT SPEED SENSOR

13. Disengage the output speed sensor connector from the output speed sensor (2).

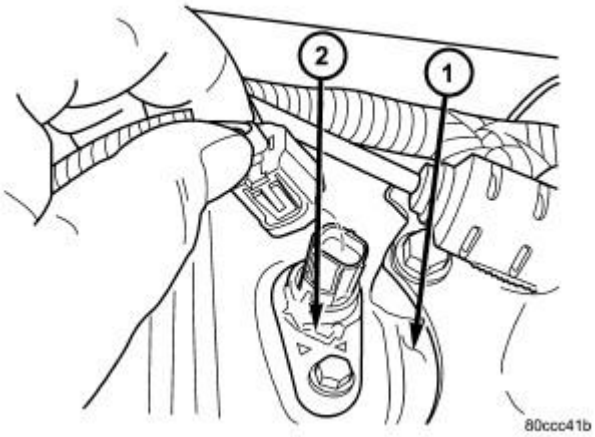

Fig. 29: Input Speed Sensor
Courtesy of CHRYSLER GROUP, LLC

1 - TRANSMISSION
2 - INPUT SPEED SENSOR

14. Disengage the input speed sensor connector from the input speed sensor (2).

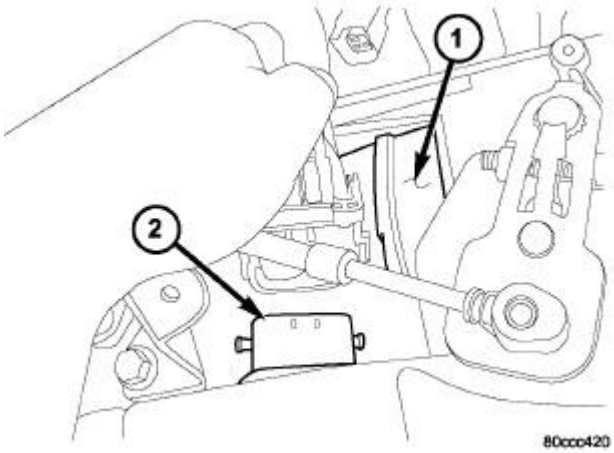

Fig. 30: Transmission Solenoid/TRS Assembly
Courtesy of CHRYSLER GROUP, LLC

1 - TRANSMISSION
2 - TRANSMISSION SOLENOID/TRS ASSEMBLY

15. Disengage the transmission solenoid/TRS assembly connector from the transmission solenoid/TRS assembly (2).

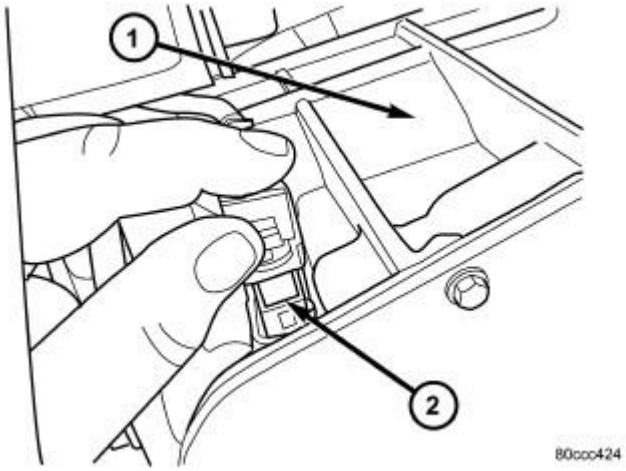

Fig. 31: Line Pressure Sensor
Courtesy of CHRYSLER GROUP, LLC

1 - TRANSMISSION
2 - LINE PRESSURE SENSOR

16. Disengage the line pressure sensor connector from the line pressure sensor (2).

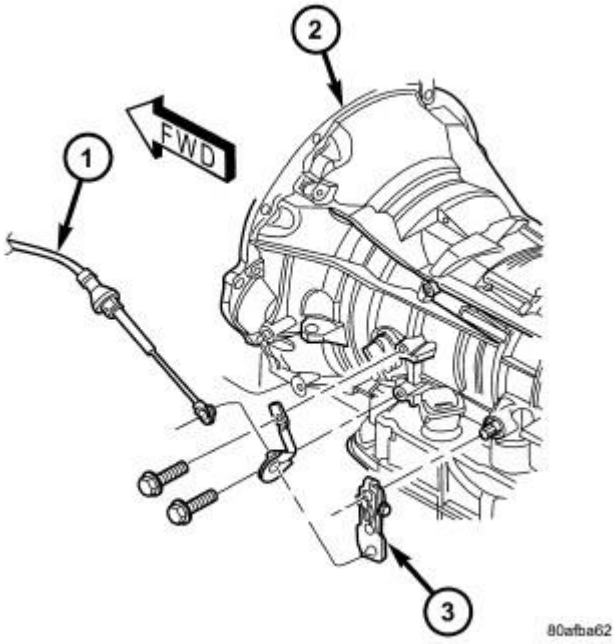

Fig. 32: Gearshift Cable & Transmission Manual Valve Lever
Courtesy of CHRYSLER GROUP, LLC

1 - GEARSHIFT CABLE
2 - RFE TRANSMISSION

3 - MANUAL LEVER

17. Disconnect gearshift cable (1) from transmission manual valve lever (3).

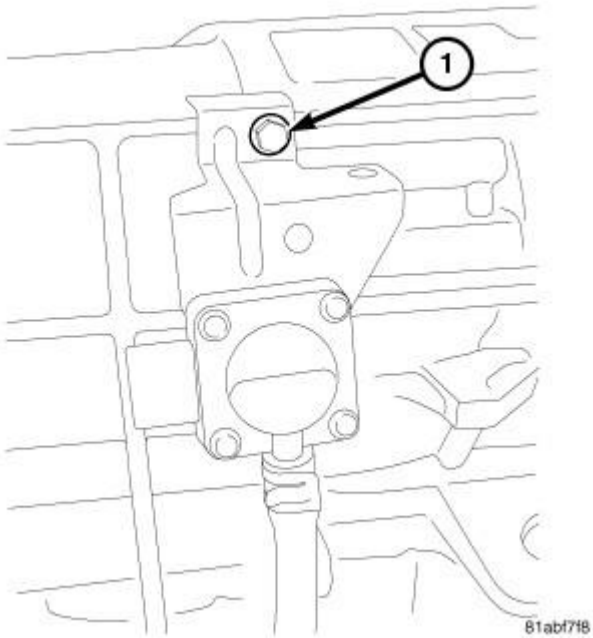

Fig. 33: Differential Pressure Sensor Bolt
Courtesy of CHRYSLER GROUP, LLC

1 - BOLT

18. Disconnect electrical connector from the differential pressure sensor.
19. Remove bolt (1) securing differential pressure sensor to the transmission case and position differential pressure sensor aside.

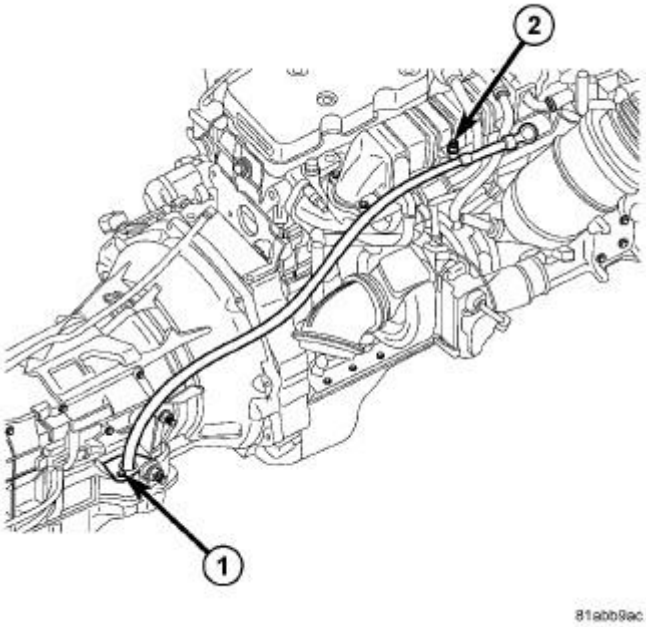

Fig. 34: 68RFE Fill Tube, Bolt & Nut
Courtesy of CHRYSLER GROUP, LLC

1 - FILL TUBE BOLT
2 - FILL TUBE NUT

Remove the bolt (1) securing the fill tube at the transmission (if equipped).

20. Disconnect the cooler lines from the transmission using cooler line disconnect tool (special tool #9546, Disconnect Tool).

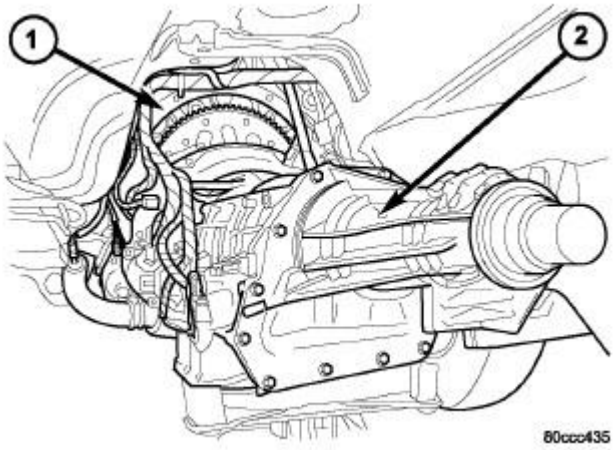

Fig. 35: Engine & Transmission
Courtesy of CHRYSLER GROUP, LLC

1 - ENGINE
2 - TRANSMISSION

21. Disconnect the transmission vent hose from the transmission.
22. Support rear of engine with safety stand or jack.
23. Raise transmission slightly with service jack to relieve load on crossmember and supports.
24. Remove bolts securing rear support and cushion to transmission and crossmember.
25. Remove transfer case, if necessary.
26. Remove all remaining converter housing bolts.
27. Carefully work transmission and torque converter assembly rearward off engine block dowels while removing the fill tube from the fill tube bore.
28. Hold torque converter in place during transmission removal.
29. Lower transmission (2) and remove assembly from under the vehicle.
30. To remove torque converter, carefully slide torque converter out of the transmission.

DISASSEMBLY

DISASSEMBLY

CAUTION: Tag all snap rings, thrust washers, washers, spacers and thrust bearings, etc. during disassembly for quick identification and assembly. Failure to follow these instructions will damage and cause transmission failure.

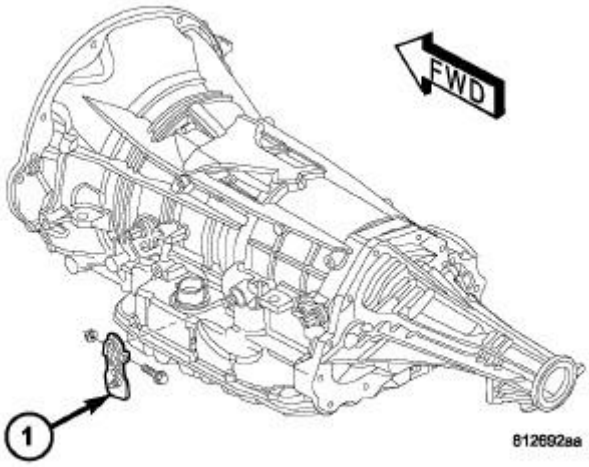

Fig. 36: Manual Shift Lever
Courtesy of CHRYSLER GROUP, LLC

1 - MANUAL SHAFT LEVER

1. Drain fluid from transmission.
2. Clean exterior of transmission with suitable solvent or pressure washer.
3. Remove the torque converter from the transmission.
4. Remove the manual shift lever (1) from the transmission.

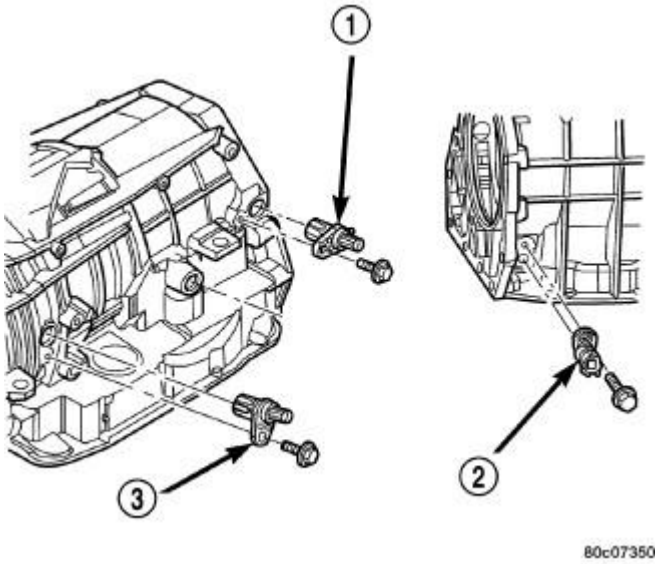

Fig. 37: Input, Output & Line Pressure Sensors
Courtesy of CHRYSLER GROUP, LLC

1 - OUTPUT SPEED SENSOR
2 - LINE PRESSURE SENSOR
3 - INPUT SPEED SENSOR

5. Remove the input (3), output (1), and line pressure sensors (2) from the transmission case.
6. Inspect the ends of the sensors for debris, which may indicate the nature of the transmission failure.

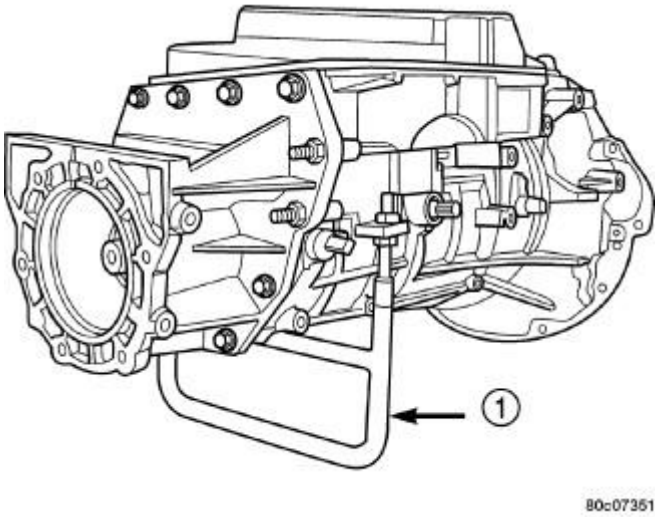

Fig. 38: Installing Support Stand 8257
Courtesy of CHRYSLER GROUP, LLC

1 - TOOL 8257

7. Install Support Stand (special tool #8257, Support, Transmission) (1) onto the transmission case.

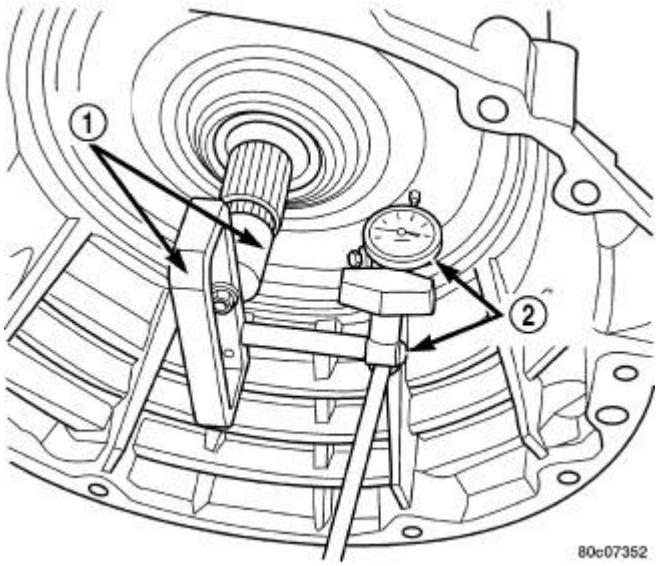

Fig. 39: Measuring Input Shaft End Play
Courtesy of CHRYSLER GROUP, LLC

1 - TOOL 8266 -17
2 - TOOL C-3339A

8. Using Adapter (special tool #8266-17, Spline Tool, RFE Output) from End-Play Tool Set (special tool #8266B, End Play Socket Set) (1) and Dial Indicator (special tool #C-3339A, Set, Dial Indicator) (2),

measure and record the input shaft end-play.

NOTE: **When measuring the input shaft end-play, two "stops" will be felt. When the input shaft is pushed inward and the dial indicator zeroed, the first "stop" felt when the input shaft is pulled outward is the movement of the input shaft in the input clutch housing hub. This value should not be included in the end-play measured value and therefore must be recorded and subtracted from the dial indicator reading.**

NOTE: **Adapter (special tool #8266-17, Spline Tool, RFE Output) will fit loosely onto the input shaft, this should not effect the performance of the adapter.**

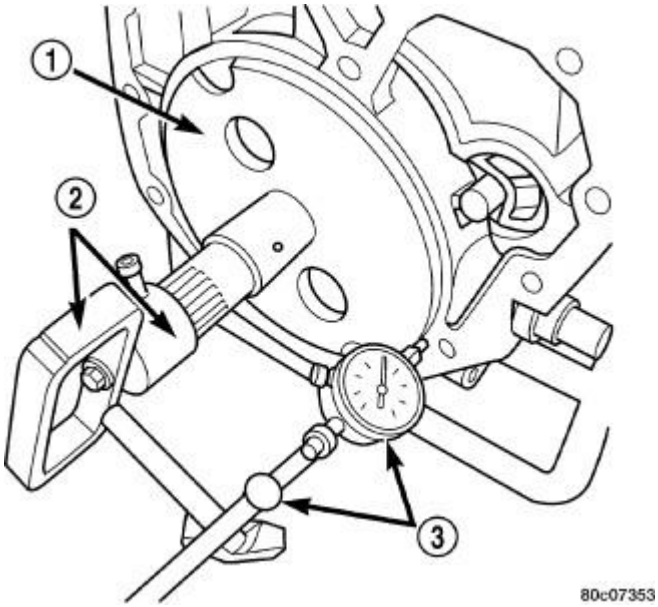

Fig. 40: Measuring Output Shaft End Play
Courtesy of CHRYSLER GROUP, LLC

1 - TOOL 10065
2 - TOOL 8266-20
3 - TOOL C-3339A

9. Remove the bolts holding the transmission extension/adapter housing to the transmission case.
10. Remove the extension/adapter housing from the transmission case.
11. Using Alignment Plate (special tool #10065, Plate, Alignment), Output Shaft Endplay Socket (special tool #8266-20, Spline Tool, AS68RC Output), handle from End-Play Tool Set (special tool #8266B, End Play Socket Set) (2) and Dial Indicator (special tool #C-3339A, Set, Dial Indicator) (3), measure and record the output shaft end-play.

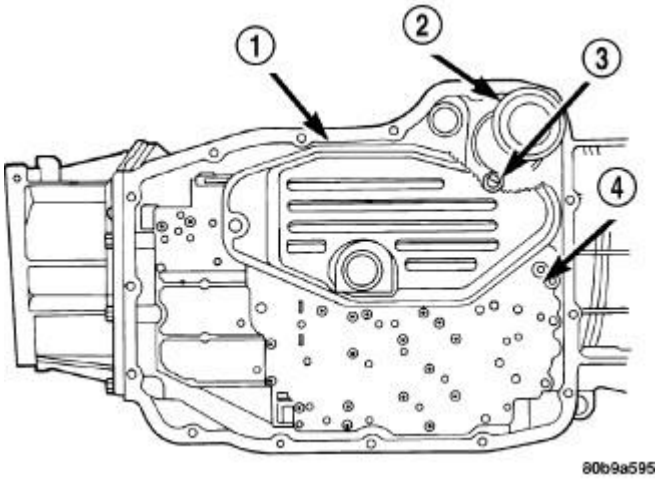

Fig. 41: Primary Oil & Cooler Return Filters
Courtesy of CHRYSLER GROUP, LLC

1 - PRIMARY OIL FILTER
2 - COOLER RETURN FILTER
3 - COOLER RETURN FILTER BYPASS VALVE
4 - VALVE BODY

12. Remove the bolts holding the transmission oil pan to the transmission case.
13. Remove the transmission oil pan from the transmission case.
14. Remove the primary oil filter (1) and the oil cooler return filter (2).

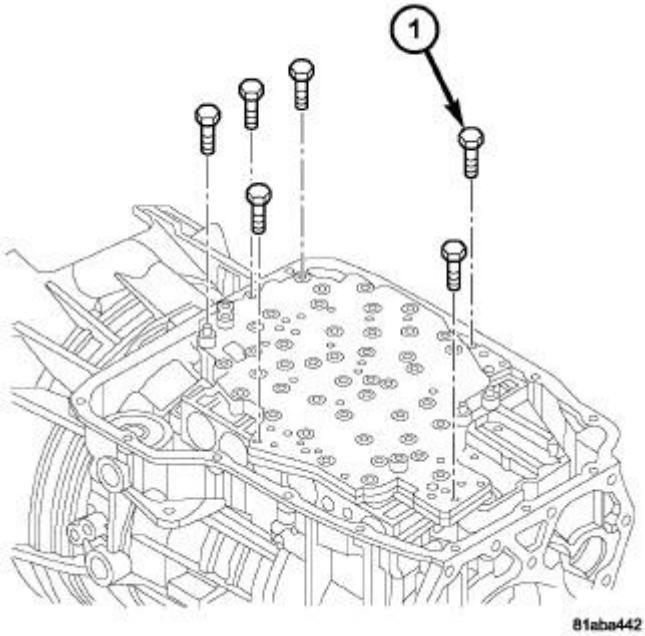

Fig. 42: Valve Body Bolts

Courtesy of CHRYSLER GROUP, LLC

1 - VALVE BODY TO CASE BOLT (6)

15. Remove the bolts (1) holding the valve body to the transmission case.
16. Remove the valve body from the transmission case.

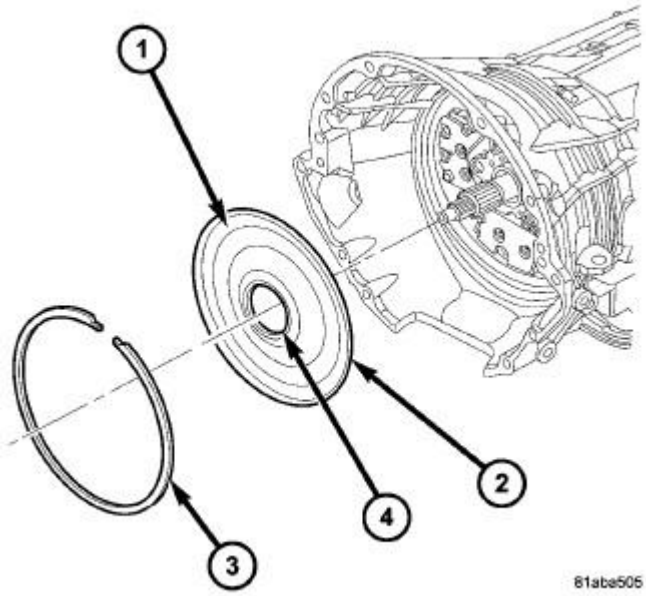

Fig. 43: Front Cover
Courtesy of CHRYSLER GROUP, LLC

1 - FRONT COVER
2 - O - RING
3 - SNAP RING
4 - FRONT COVER SEAL

17. Remove the outer snap-ring (3) securing the transmission front cover (1) into the transmission case.
18. Reaching through a case opening in the valve body area with a long blunted tool, remove the transmission front cover (1) from the transmission case.

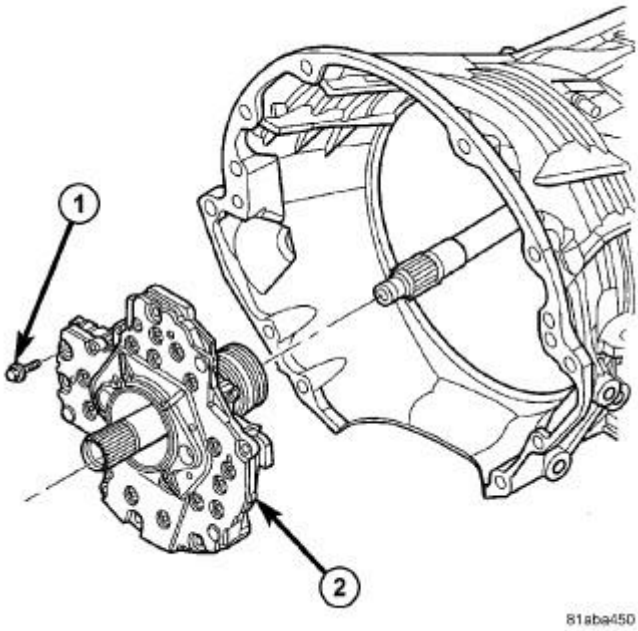

Fig. 44: Oil Pump & Bolt
Courtesy of CHRYSLER GROUP, LLC

1 - OIL PUMP TO CASE BOLT (6)
2 - OIL PUMP

19. Remove the bolts (1) holding the oil pump into the transmission case.
20. Remove the oil pump (2). Hold inward on the input shaft to prevent pulling the input clutch assembly with the oil pump.

CAUTION: If the input shaft is not held during oil pump removal, the input clutch assembly will attempt to move forward with the oil pump and the numbers 2, 3, or 4 bearings inside the input clutch assembly may become dislodged.

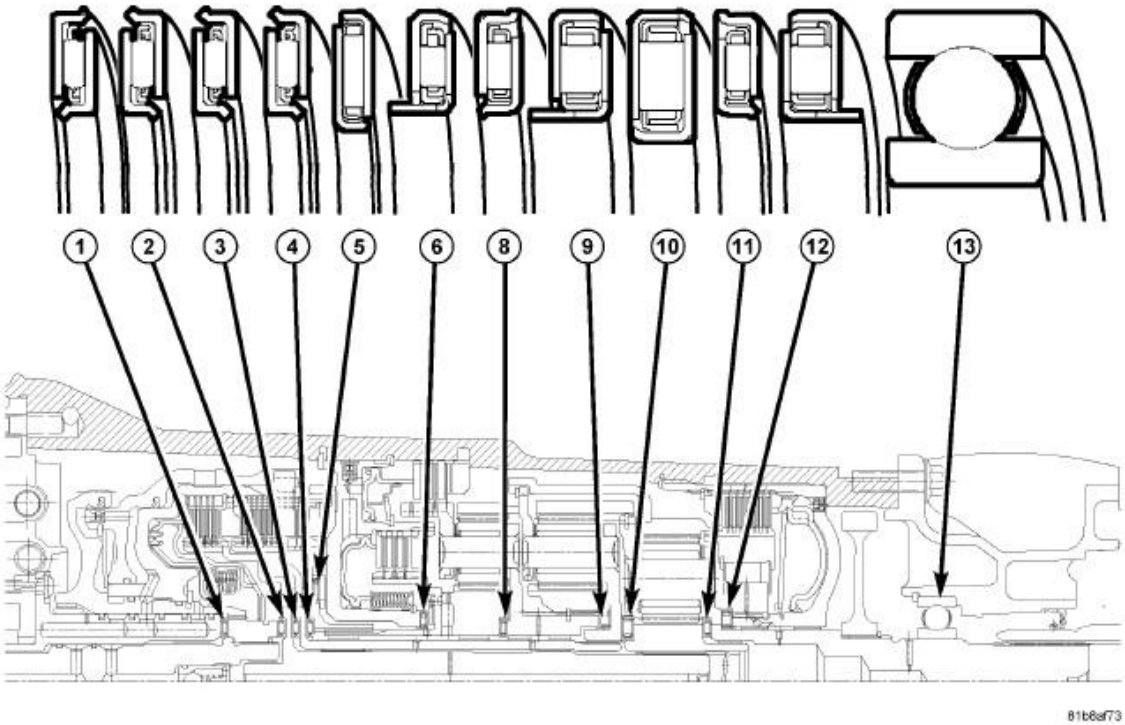

Fig. 45: 68RFE Bearing Orientation
Courtesy of CHRYSLER GROUP, LLC

1 - THRUST BEARING NO. 1	8 - THRUST BEARING NO. 8
2 - THRUST BEARING NO. 2	9 - THRUST BEARING NO. 9
3 - THRUST BEARING NO. 3	10 - THRUST BEARING NO. 10
4 - THRUST BEARING NO. 4	11 - THRUST BEARING NO. 11
5 - THRUST BEARING NO. 5	12 - THRUST BEARING NO. 12
6 - THRUST BEARING NO. 6	13 - OUTPUT

	SHAFT BEARING

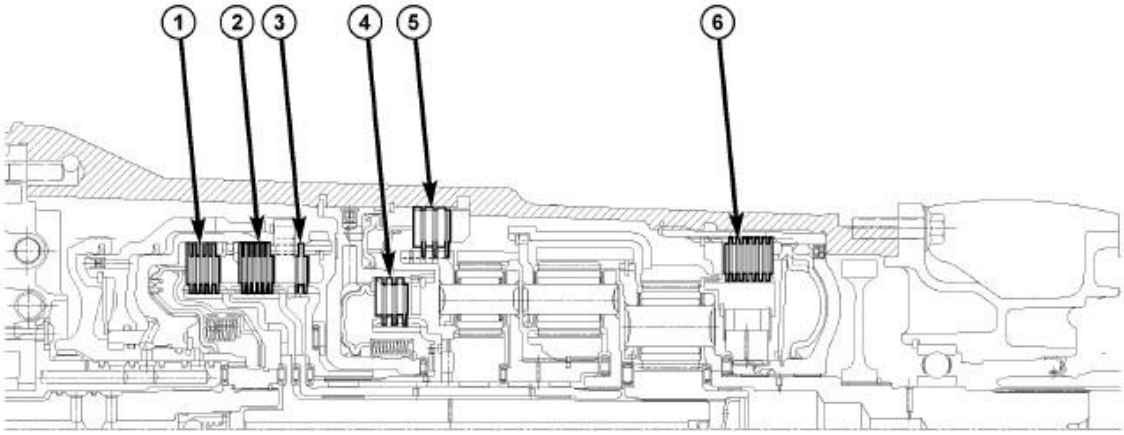

81b8b28a

Fig. 46: 68RFE Clutch Orientation
Courtesy of CHRYSLER GROUP, LLC

1 - U/D CLUTCH	4 - 4C CLUTCH
2 - O/D CLUTCH	5 - 2C CLUTCH
3 - REVERSE CLUTCH	6 - L/R CLUTCH

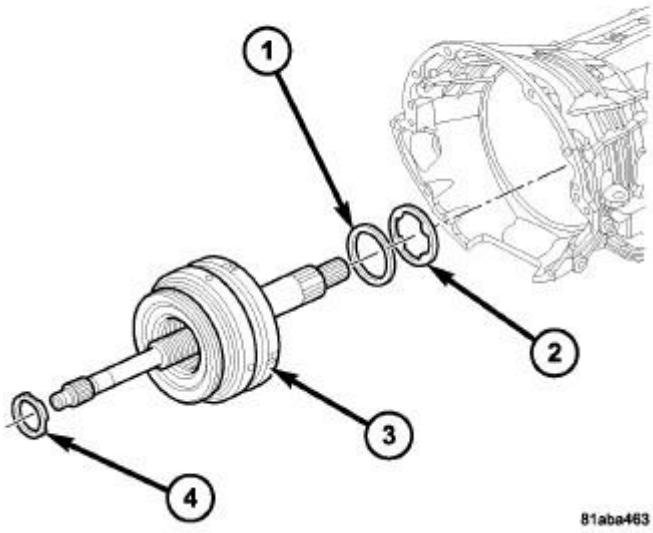

Fig. 47: Input Clutch Assembly
Courtesy of CHRYSLER GROUP, LLC

1 - THRUST BEARING NUMBER 5
2 - THRUST PLATE (SELECT)
3 - INPUT CLUTCH ASSEMBLY
4 - THRUST BEARING NUMBER 1

21. Remove the number 1 thrust bearing (4) from the input clutch assembly.
22. Remove the input clutch assembly (3) from the transmission case.
23. Remove the number 5 thrust bearing (1) and selective thrust plate (2) from the input clutch assembly (3), or the 4C clutch retainer/bulkhead.

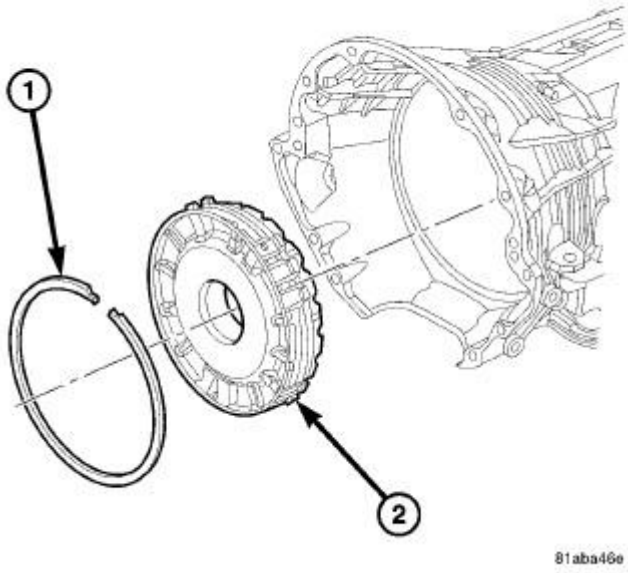

Fig. 48: 4C Clutch Retainer/Bulkhead & Snap-Ring
Courtesy of CHRYSLER GROUP, LLC

1 - SNAP-RING
2 - 2C/4C CLUTCH RETAINER/BULKHEAD

24. Remove the 4C clutch retainer/bulkhead tapered snap-ring (1) from the transmission case.
25. Remove the 4C clutch retainer/bulkhead (2) from the transmission case.

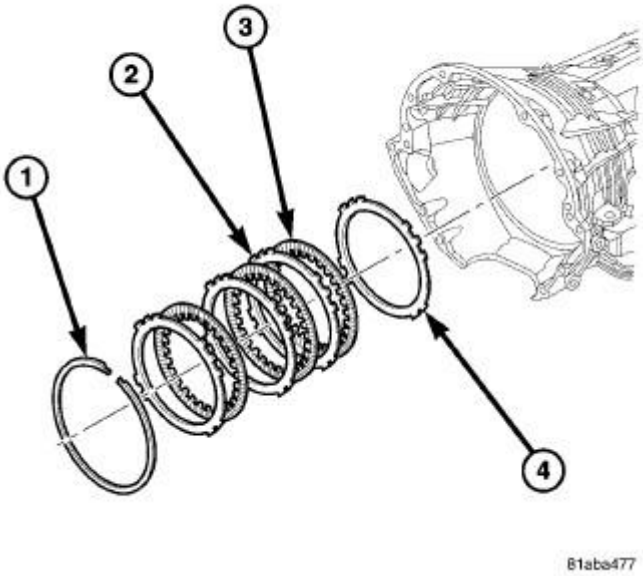

Fig. 49: 2C Clutch Pack
Courtesy of CHRYSLER GROUP, LLC

1 - SNAP-RING
2 - PLATE
3 - DISC
4 - REACTION PLATE

26. Remove the front 2C clutch pack snap-ring (1) from the transmission case.
27. Remove the 2C clutch pack (2, 3, 4) from the transmission case.

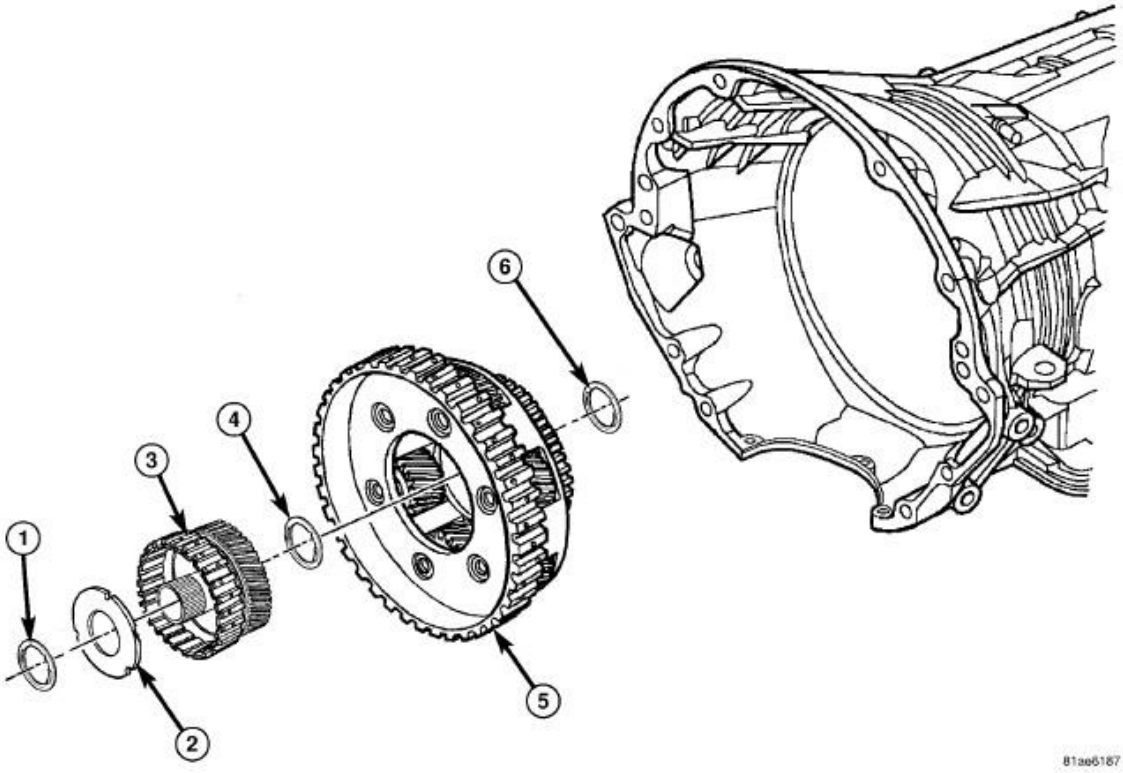

Fig. 50: Reaction Annulus & Carrier
Courtesy of CHRYSLER GROUP, LLC

1 - THRUST BEARING NUMBER 6	5 - REACTION PLANETARY CARRIER
2 - OUTPUT END PLAY THRUST PLATE (SELECTIVE)	6 - THRUST BEARING NUMBER 9
3 - 4C CLUTCH HUB / REACTION SUN GEAR	
4 - THRUST BEARING NUMBER 8	

28. Remove the rear selective thrust plate (2) and number 6 thrust bearing (1) from the 4C clutch hub (3).
29. Remove the 4C clutch hub/reaction sun gear (3) from the reaction planetary carrier (5).
30. Remove the reaction planetary carrier (5).
31. Remove the number 8 thrust bearing (4) from the reaction planetary carrier (5).
32. Remove the number 9 thrust bearing (6) from the reverse planetary gear set.

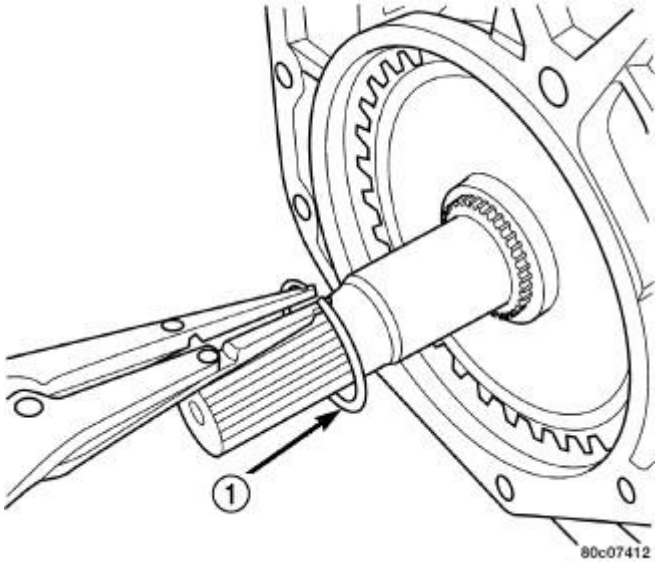

Fig. 51: Park Sprag Snap-Ring
Courtesy of CHRYSLER GROUP, LLC

33.

1 - SNAP-RING

34. Remove the snap-ring (1) holding the park sprag gear onto the output shaft.

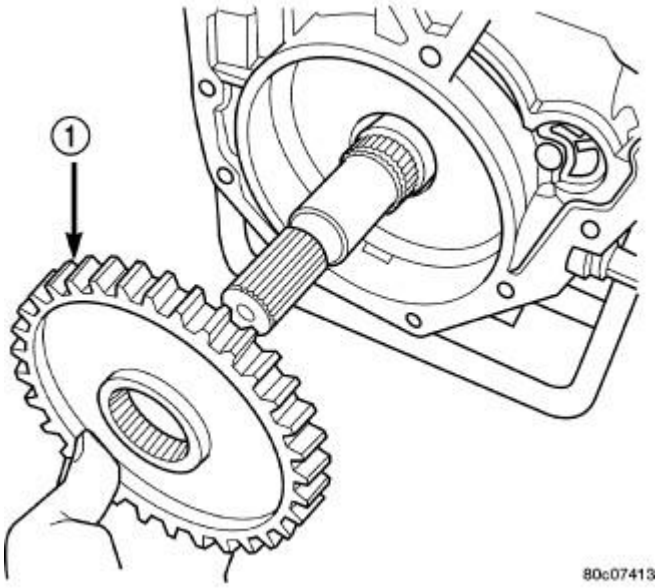

Fig. 52: Park Sprag Gear
Courtesy of CHRYSLER GROUP, LLC

1 - PARK SPRAG

GEAR

35. Remove the park sprag gear (1) from the output shaft.

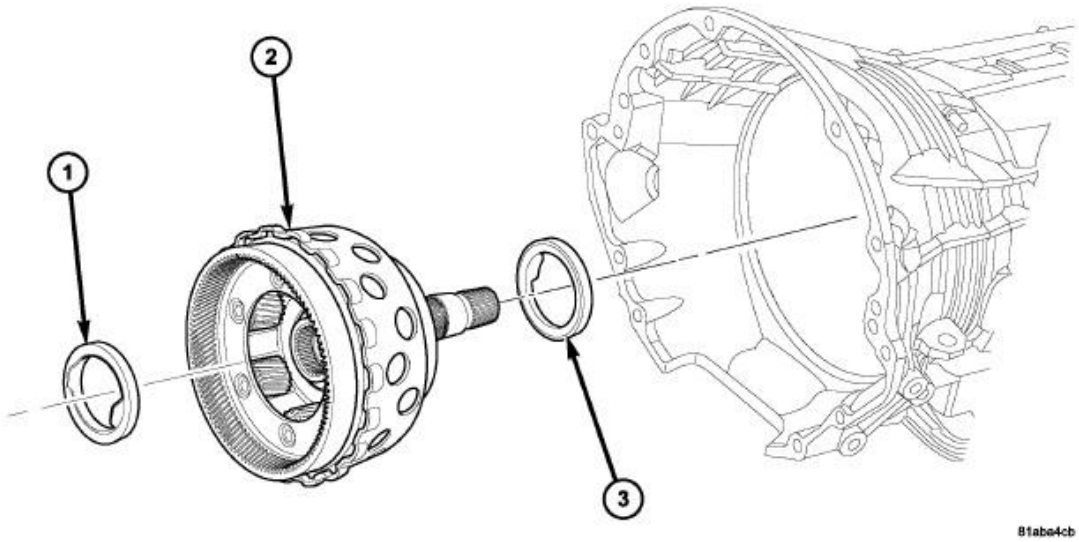

Fig. 53: Input/Reverse Planetary Assembly
Courtesy of CHRYSLER GROUP, LLC

1 - THRUST BEARING NUMBER 9
2 - INPUT/REVERSE PLANETARY ASSEMBLY
3 - THRUST BEARING NUMBER 12

36. Remove the input/reverse planetary assembly (1).
37. Remove thrust bearing number (9) from the input/reverse planetary assembly (2).
38. Remove the number 12 thrust bearing (3) from the input/reverse planetary assembly (2).

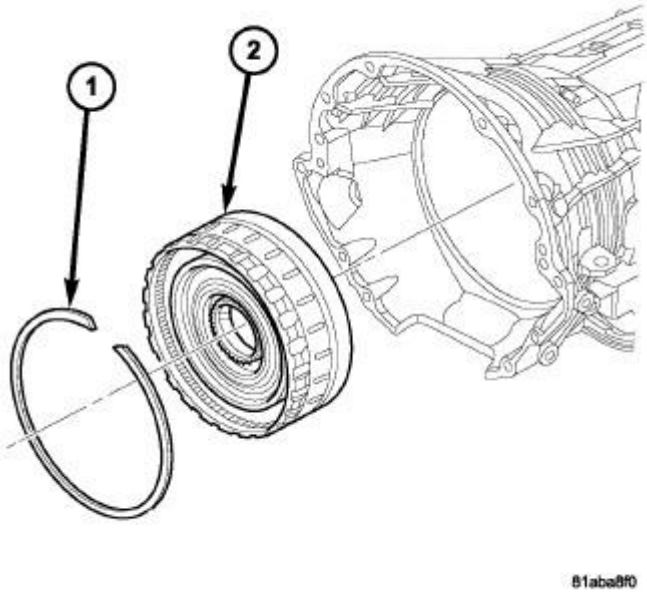

Fig. 54: Low/Reverse Clutch Retainer
Courtesy of CHRYSLER GROUP, LLC

1 - SNAP-RING
2 - LOW/REVERSE OVERRUNNING CLUTCH ASSEMBLY

39. Remove the snap-ring (1) holding the low/reverse clutch retainer (2) into the transmission case.
40. Remove the low/reverse clutch retainer (2) from the transmission case.

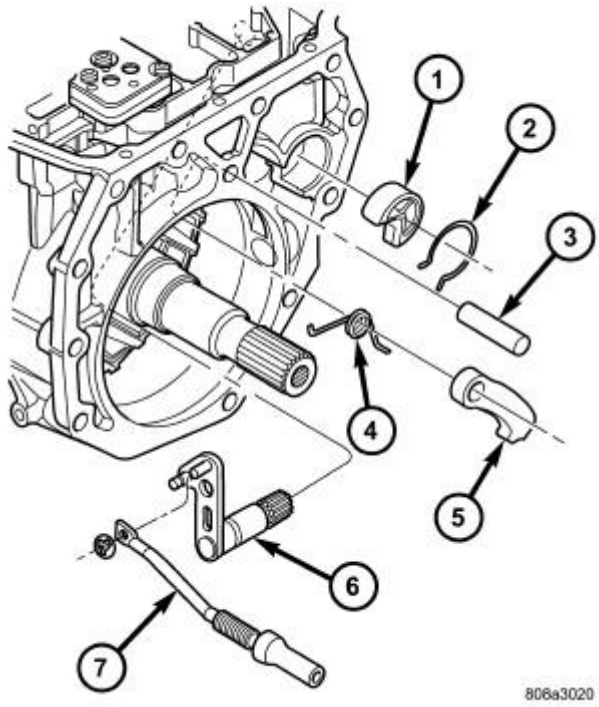

Fig. 55: Manual Shaft/Park Lock Components
Courtesy of CHRYSLER GROUP, LLC

1 - GUIDE
2 - SNAP-RING
3 - SHAFT
4 - SPRING
5 - PARK PAWL
6 - MANUAL SHAFT/LEVER
7 - PARK ROD

41. Remove the park rod (7) and e-clip.
42. Remove the park rod guide snap-ring (2).
43. Remove the park rod guide (1).
44. Remove the park pawl pivot shaft (3), park pawl (5), and spring (4).
45. Remove the manual selector shaft (6).
46. Remove the manual selector shaft seal.
47. Remove the dipstick tube seal.

CLEANING

CLEANING

The use of crocus cloth is permissible where necessary, providing it is used carefully. When used on shafts, or valves, use extreme care to avoid rounding off sharp edges. Sharp edges are vital as they prevent foreign matter from getting between the valve and valve bore.

Do not reuse oil seals, gaskets, seal rings, or O-rings during overhaul. Replace these parts as a matter of course. Also do not reuse snap rings or E-clips that are bent or distorted. Replace these parts as well.

Lubricate transmission parts with Mopar® ATF +4, Automatic Transmission Fluid, during overhaul and assembly. Use petroleum jelly, Mopar® Door Ease, or Ru-Glyde to prelubricate seals, O-rings, and thrust washers. Petroleum jelly can also be used to hold parts in place during reassembly.

Clean the case in a solvent tank. Flush the case bores and fluid passages thoroughly with solvent. Dry the case and all fluid passages with compressed air. Be sure all solvent is removed from the case and that all fluid passages are clear.

NOTE: **Do not use shop towels or rags to dry the case (or any other transmission component) unless they are made from lint-free materials. Lint will stick to case surfaces and transmission components and circulate throughout the transmission after assembly. A sufficient quantity of lint can block fluid passages and interfere with valve body operation.**

INSPECTION

INSPECTION

Inspect the case for cracks, porous spots, worn bores, or damaged threads. Damaged threads can be repaired with Helicoil® thread inserts. However, the case will have to be replaced if it exhibits any type of damage or wear.

ASSEMBLY

ASSEMBLY

NOTE: **Apply trans jell or petroleum jelly to all slide portions, rolling contacts surfaces, thrust surfaces etc. to prevent burnout during initial operation. Lubricate O-rings and O-ring seals with MOPAR® ATF+4. Soak all friction disks in MOPAR® ATF+4 for at least two hours before assembly of clutch packs.**

NOTE: **Clean and inspect all components. Replace any components which show evidence of excessive wear or scoring.**

NOTE: **If the transmission assembly is being reconditioned (clutch/seal replacement) or replaced, it is necessary to perform the Quick Learn Procedure using the scan tool. Refer to MODULE, TRANSMISSION CONTROL, STANDARD PROCEDURE .**

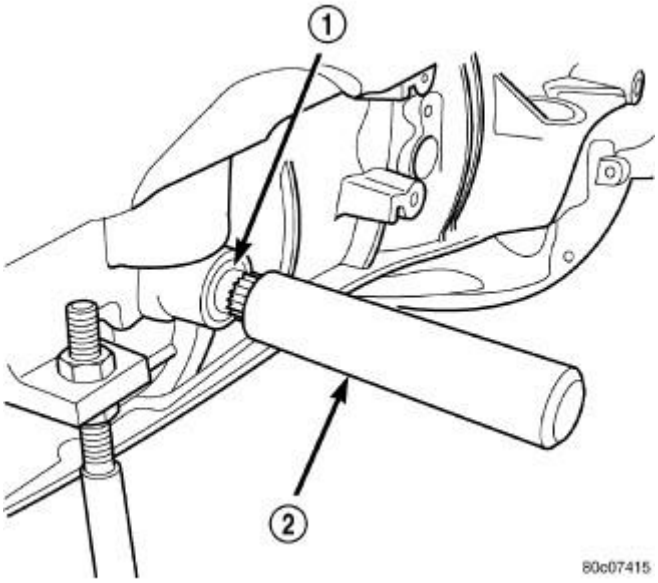

Fig. 56: Installing Selector Shaft Seal
Courtesy of CHRYSLER GROUP, LLC

1 - SEAL
2 - TOOL 8253

1. Install a new selector shaft seal (1) using Seal Installer (special tool #8253, Installer, Seal) (2).

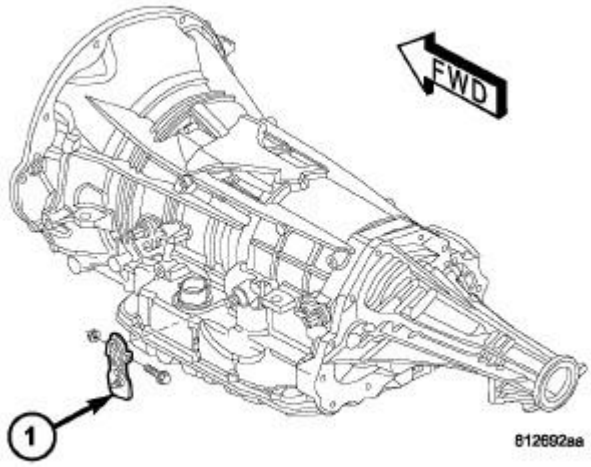

Fig. 57: Manual Shift Lever
Courtesy of CHRYSLER GROUP, LLC

1 - MANUAL SHAFT LEVER

2. Install the manual selector shaft and retaining screw. Tighten the manual selector shaft retaining screw to 28 N.m (250 in.lbs.).
3. Install the manual shift lever (1) onto the manual selector shaft. Torque the retaining cross-bolt to 16 N.m (140 in.lbs.).

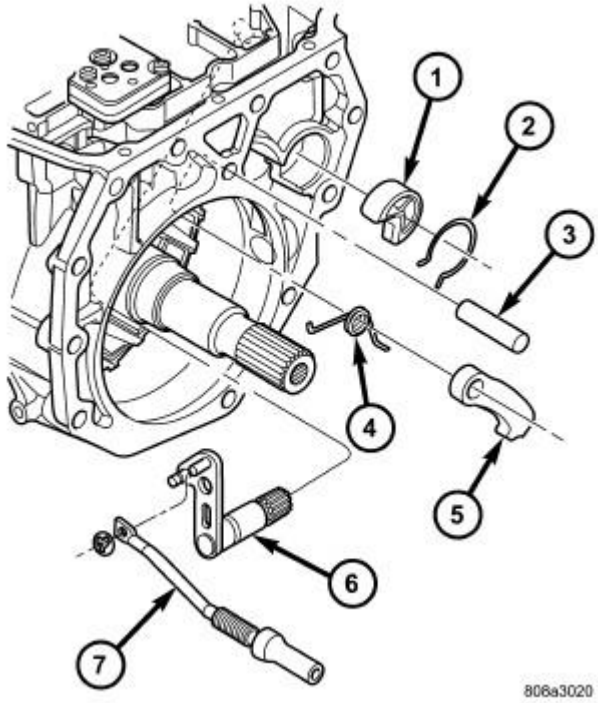

Fig. 58: Manual Shaft/Park Lock Components
Courtesy of CHRYSLER GROUP, LLC

1 - GUIDE
2 - SNAP-RING
3 - SHAFT
4 - SPRING
5 - PARK PAWL
6 - MANUAL SHAFT/LEVER
7 - PARK ROD

4. Install the park pawl (5), spring (4), and shaft (3).
5. Install the park rod (7) and e-clip.
6. Install the park rod guide (1) and snap-ring (2).

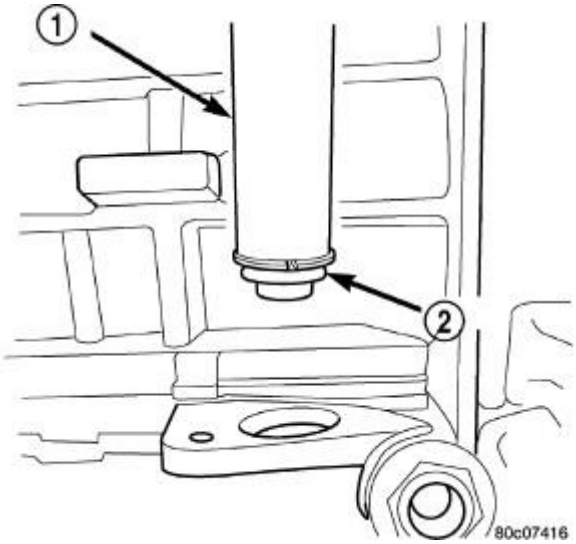

Fig. 59: Installing Fill Tube Seal
Courtesy of CHRYSLER GROUP, LLC

1 - TOOL 8254
2 - SEAL

7. Install a new fill tube seal (2) using Seal Installer (special tool #8254, Installer, Grommet) (1).

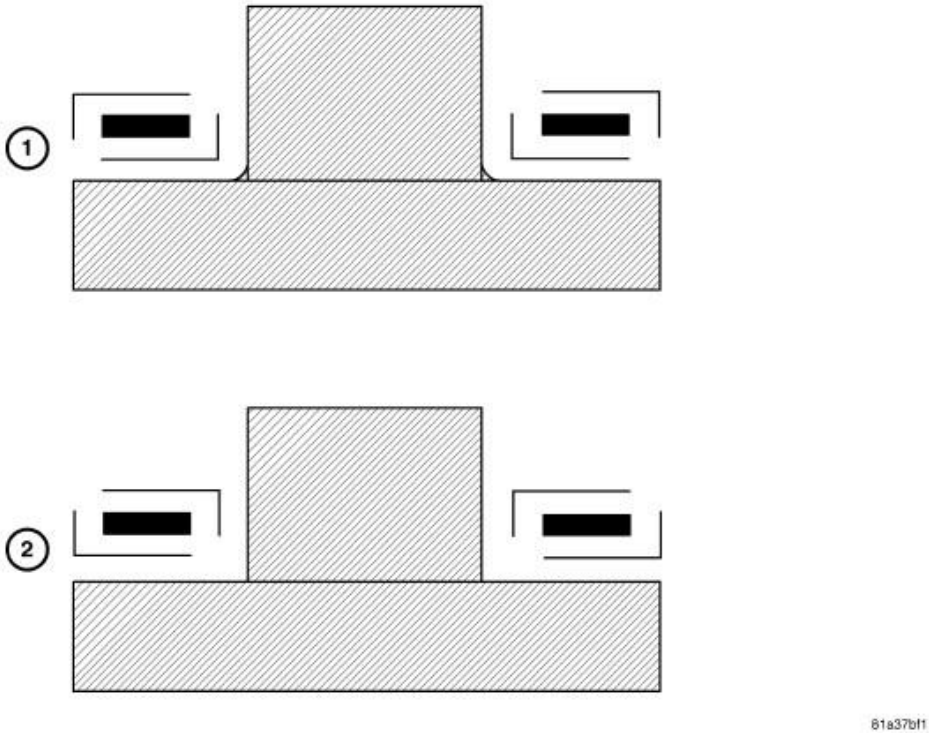

Fig. 60: Thrust Bearing Orientation
Courtesy of CHRYSLER GROUP, LLC

1 - CORRECT INSTALLATION
2 - INCORRECT INSTALLATION

CAUTION: A thrust bearing must be installed correctly or transmission failure may occur.

When installing a thrust bearing be certain the rolled surface (outer race) of the thrust bearing contacts the rolled surface of the component.

NOTE: The 68RFE transmission does not use a number 7 thrust bearing.

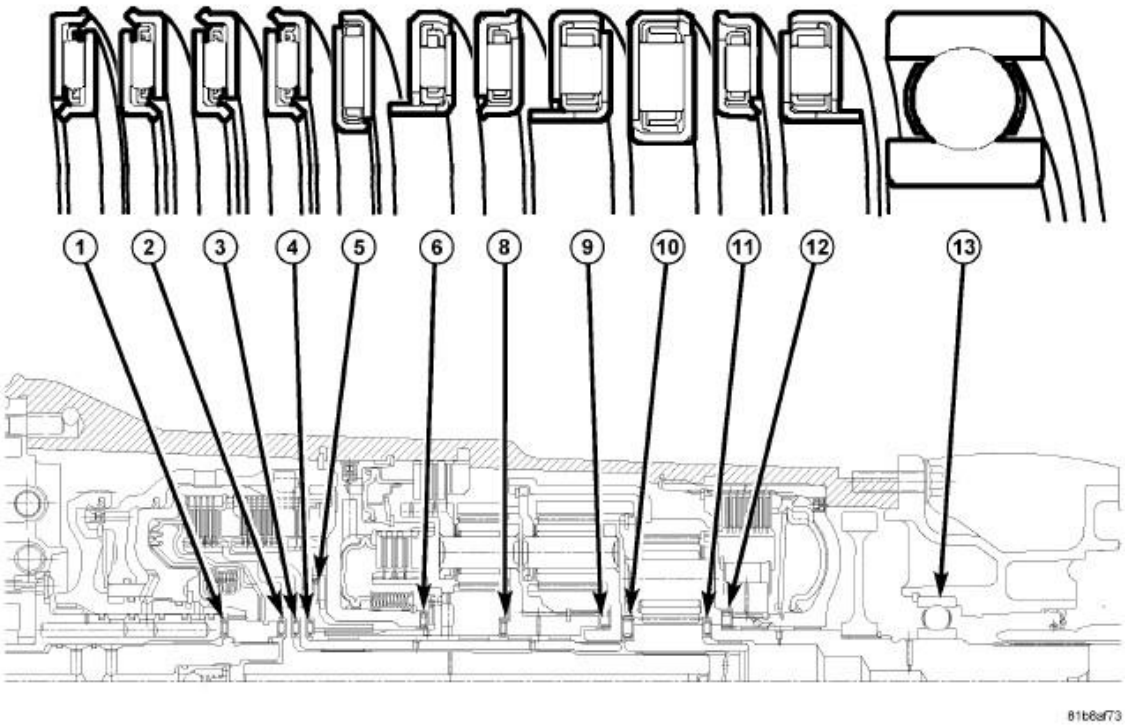

Fig. 61: 68RFE Bearing Orientation
Courtesy of CHRYSLER GROUP, LLC

1 - THRUST BEARING NO. 1	8 - THRUST BEARING NO. 8
2 - THRUST BEARING NO. 2	9 - THRUST BEARING NO. 9
	10 - THRUST

3 - THRUST BEARING NO. 3	BEARING NO. 10
4 - THRUST BEARING NO. 4	11 - THRUST BEARING NO. 11
5 - THRUST BEARING NO. 5	12 - THRUST BEARING NO. 12
6 - THRUST BEARING NO. 6	13 - OUTPUT SHAFT BEARING

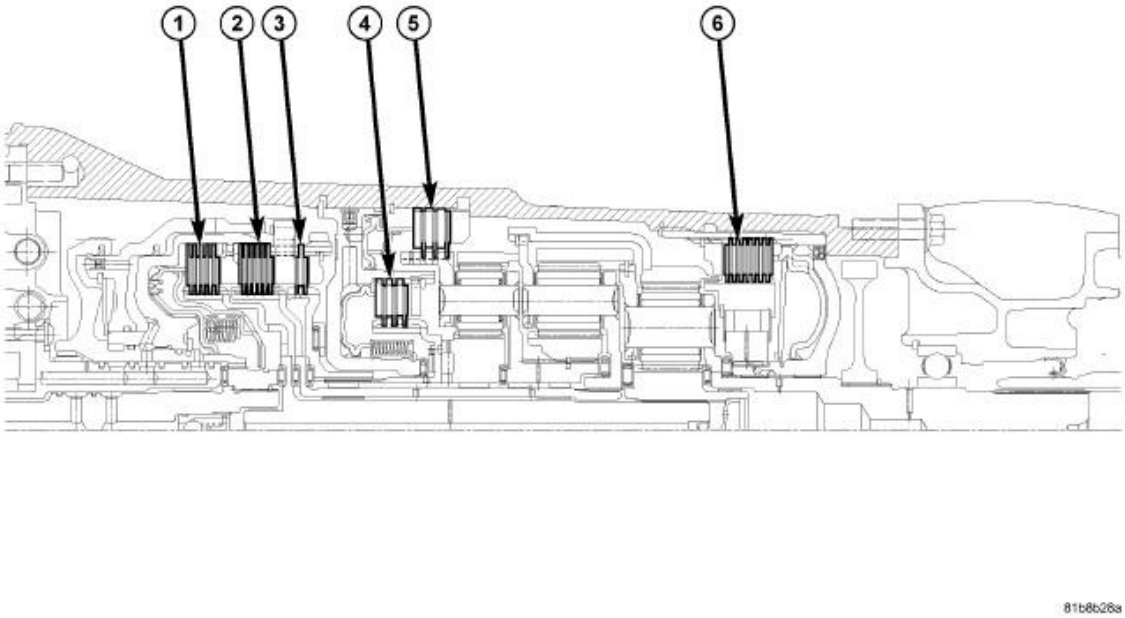

Fig. 62: 68RFE Clutch Orientation
Courtesy of CHRYSLER GROUP, LLC

1 - U/D CLUTCH	4 - 4C CLUTCH
2 - O/D CLUTCH	5 - 2C CLUTCH
3 - REVERSE CLUTCH	6 - L/R CLUTCH

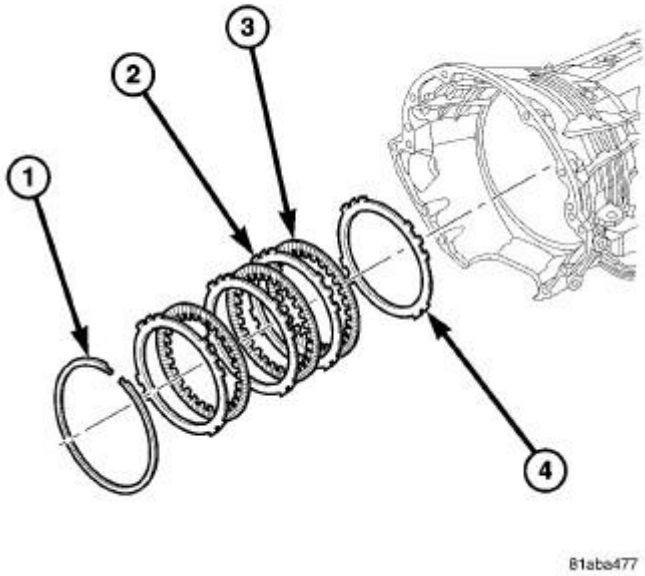

Fig. 63: 2C Clutch Pack
Courtesy of CHRYSLER GROUP, LLC

1 - SNAP-RING
2 - PLATE
3 - DISC
4 - REACTION PLATE

NOTE: **Before final assembly of transmission centerline, the 2C/4C clutch components should be installed into position and measured as follows:**

8. Install the 2C reaction plate (4) with the beveled edge down (rearward) into the transmission case.
9. Install the 2C clutch pack (2, 3) into the transmission case.
10. Install the flat 2C clutch snap-ring (1) into the transmission case.

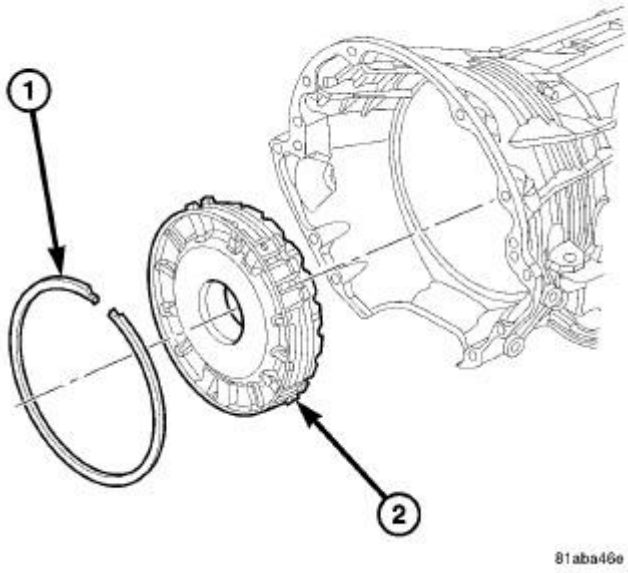

Fig. 64: 4C Clutch Retainer/Bulkhead & Snap-Ring
Courtesy of CHRYSLER GROUP, LLC

1 - SNAP-RING
2 - 2C/4C CLUTCH RETAINER/BULKHEAD

11. Install the 4C retainer/bulkhead (2) into the transmission case. Make sure that the oil feed holes are pointing toward the valve body area.
12. Install the 4C retainer/bulkhead tapered snap-ring (1) into the transmission case. Make sure that the open ends of the snap-ring are located in the case opening toward the valve body area.
13. Using a feeler gauge through the opening in the rear of the transmission case, measure the 2C clutch pack clearance between the 2C reaction plate and the transmission case at four different points. The average of these measurements is the 2C clutch pack clearance. The correct clutch clearance is 0.99-1.65 mm (0.039-0.065 in.). The reaction plate is not selective. If the clutch pack clearance is not within specification, the reaction plate, all the friction discs, and steels must be replaced.
14. Remove the 4C retainer/bulkhead and all of the 2C clutch components from the transmission case.

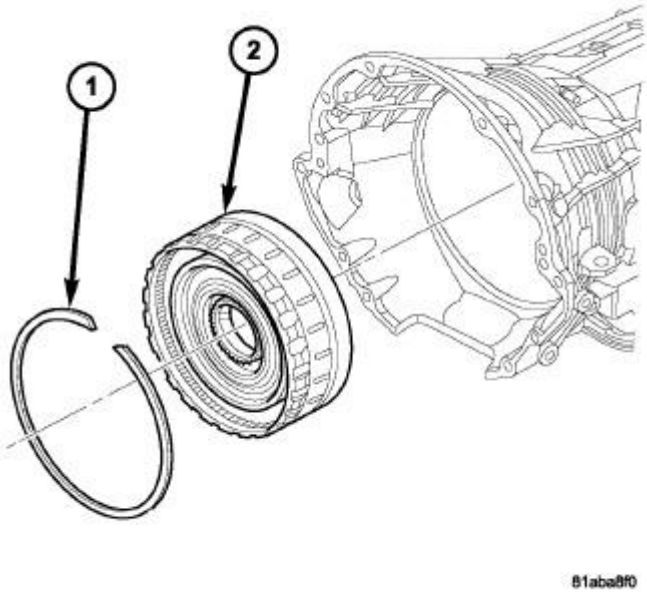

Fig. 65: Low/Reverse Clutch Retainer
Courtesy of CHRYSLER GROUP, LLC

1 - SNAP-RING
2 - LOW/REVERSE OVERRUNNING CLUTCH ASSEMBLY

15. Install the low/reverse clutch assembly (2). Make sure that the oil feed hole points toward the valve body area and that the bleed orifice is aligned with the notch in the rear of the transmission case.
16. Install the snap-ring (1) to hold the low/reverse clutch retainer into the transmission case. The snap-ring is tapered and must be installed with the tapered side forward. Once installed, verify that the snap-ring is fully seated in the snap-ring groove.
17. Air check the low/reverse clutch and verify correct overrunning clutch operation. Refer to **DIAGNOSIS AND TESTING**.

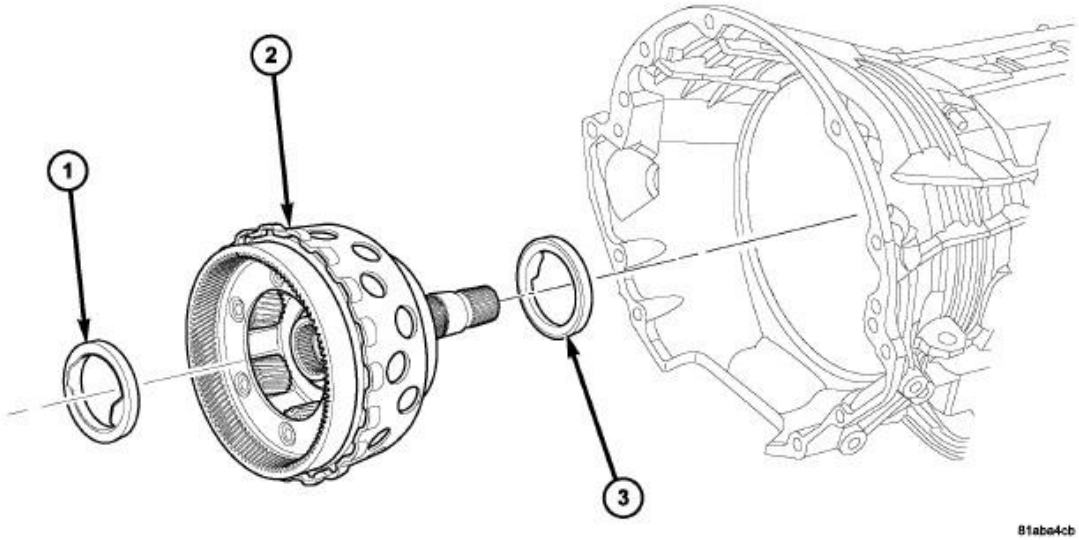

Fig. 66: Input/Reverse Planetary Assembly
Courtesy of CHRYSLER GROUP, LLC

1 - THRUST BEARING NUMBER 9
2 - INPUT/REVERSE PLANETARY ASSEMBLY
3 - THRUST BEARING NUMBER 12

18. Install the number 12 thrust bearing (3) over the output shaft and against the rear planetary gear set, the black side with the tabs goes towards the ORC. Install the number nine thrust bearing with the silver side against the reverse carrier and the black side facing towards the front of the transmission.
19. Install the number 9 thrust bearing (1), with the silver side against the reverse carrier and the black side facing out.
20. Install the reverse/input planetary assembly (2) through the low/reverse clutch assembly.

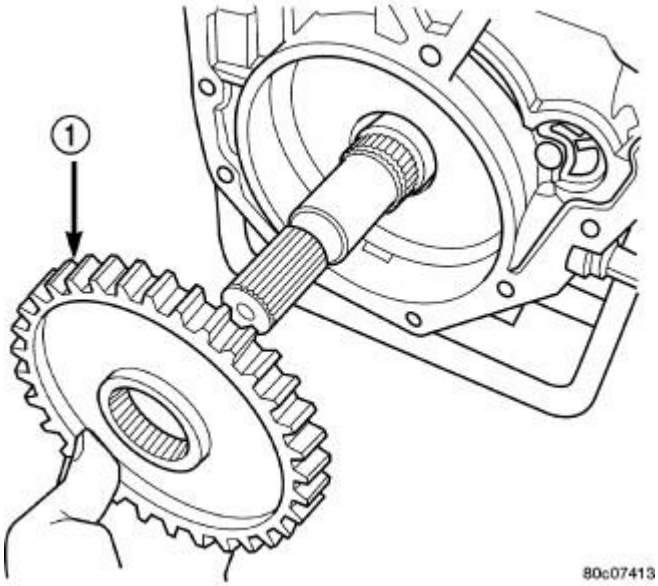

Fig. 67: Park Sprag Gear
Courtesy of CHRYSLER GROUP, LLC

1 - PARK SPRAG GEAR

21. Install the park sprag gear (1) onto the output shaft.

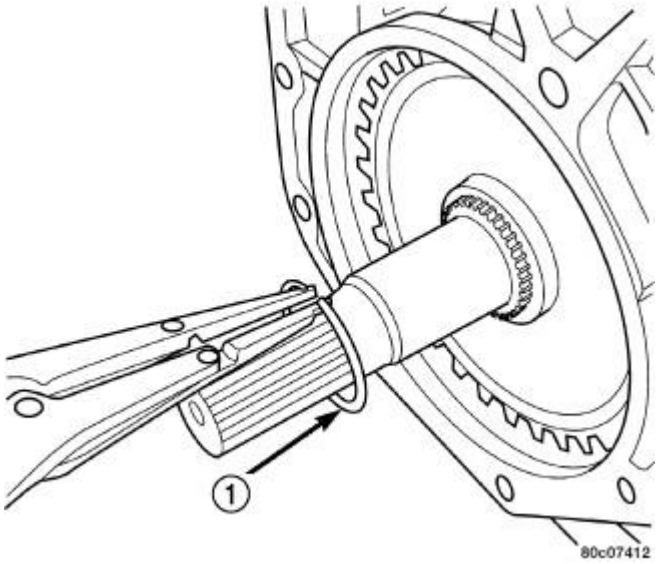

Fig. 68: Park Sprag Snap-Ring
Courtesy of CHRYSLER GROUP, LLC

1 - SNAP-RING

22. Install the snap-ring (1) to hold the park sprag onto the output shaft.

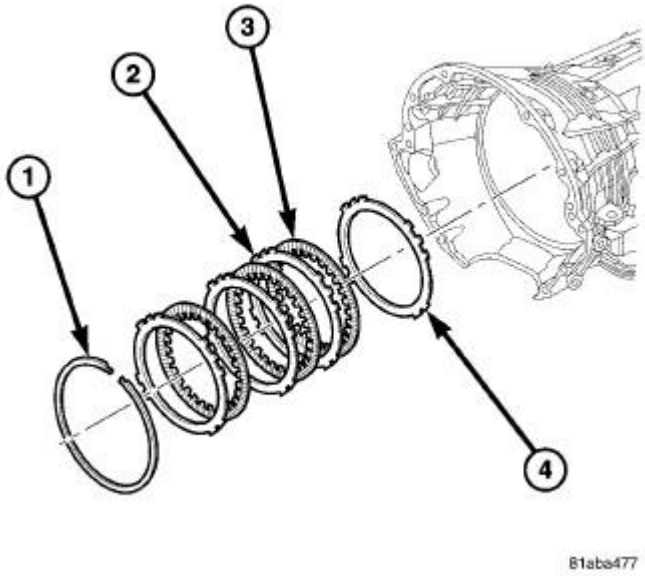

Fig. 69: 2C Clutch Pack
Courtesy of CHRYSLER GROUP, LLC

1 - SNAP-RING
2 - PLATE
3 - DISC
4 - REACTION PLATE

23. Install the 2C reaction plate (4).
24. Install the 2C clutch pack (2, 3, 4) into the transmission case.
25. Install the flat 2C / 4C clutch retainer snap-ring into the transmission case.

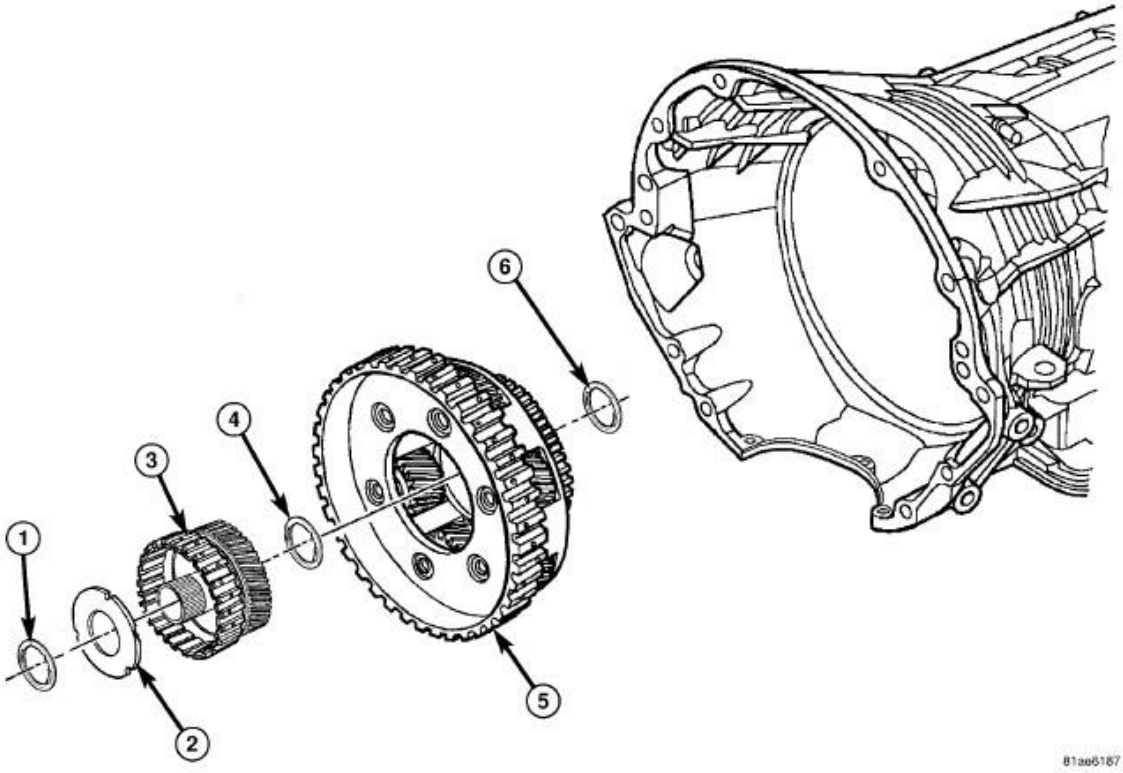

Fig. 70: Reaction Annulus & Carrier
Courtesy of CHRYSLER GROUP, LLC

1 - THRUST BEARING NUMBER 6	5 - REACTION PLANETARY CARRIER
2 - OUTPUT END PLAY THRUST PLATE (SELECTIVE)	6 - THRUST BEARING NUMBER 9
3 - 4C CLUTCH HUB / REACTION SUN GEAR	
4 - THRUST BEARING NUMBER 8	

26. Install the reaction planetary gear set.
27. Install the number 8 thrust bearing (4) into the reaction sun gear with the blue ink stripe against the sun gear with the inner race facing up.

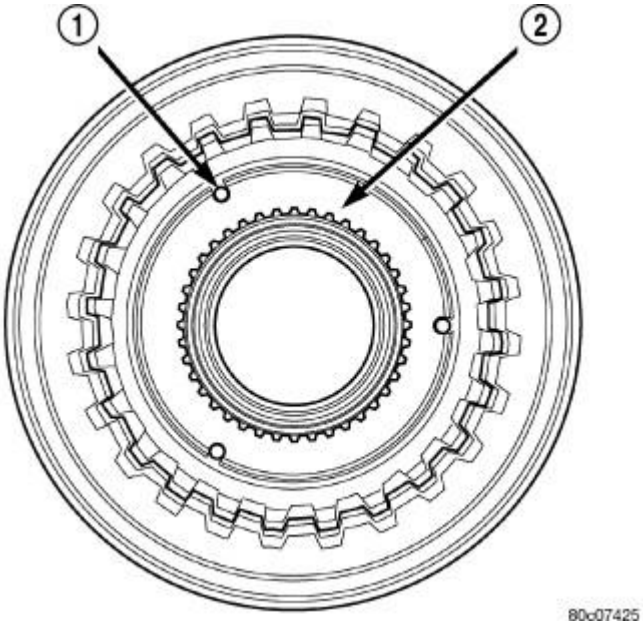

Fig. 71: Thrust Plate Alignment
Courtesy of CHRYSLER GROUP, LLC

1 - LOCATING LUG (3)
2 - THRUST PLATE

28. Install the output shaft selective thrust plate (2) onto the 4C clutch hub with the oil grooves facing the hub and the lugs (1) and notches aligned as shown in illustration.

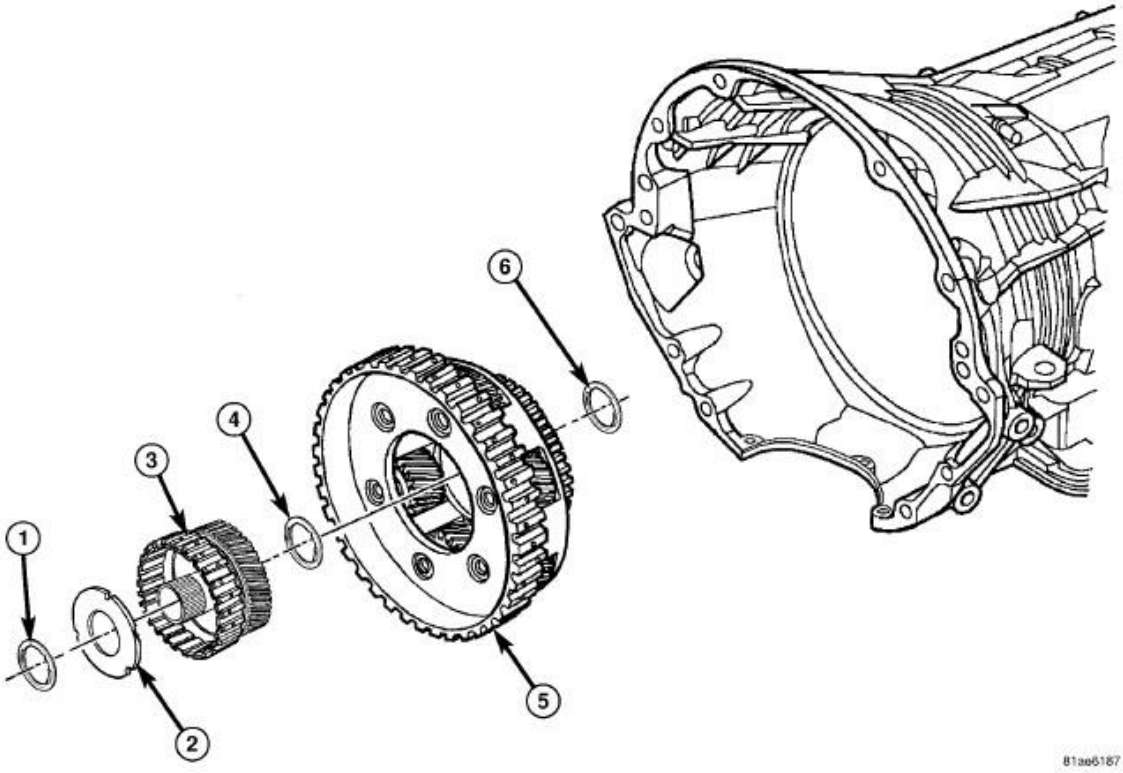

Fig. 72: Reaction Annulus & Carrier
Courtesy of CHRYSLER GROUP, LLC

1 - THRUST BEARING NUMBER 6	5 - REACTION PLANETARY CARRIER
2 - OUTPUT END PLAY THRUST PLATE (SELECTIVE)	6 - THRUST BEARING NUMBER 9
3 - 4C CLUTCH HUB / REACTION SUN GEAR	
4 - THRUST BEARING NUMBER 8	

29. Install the number 6 thrust bearing (1) against the output shaft selective thrust plate (2) with the flat side against the thrust plate and the raised tabs on the inner race facing the front of the transmission.
30. Install the install the 4C clutch / reaction sun gear (3) into the reaction planetary gear set.

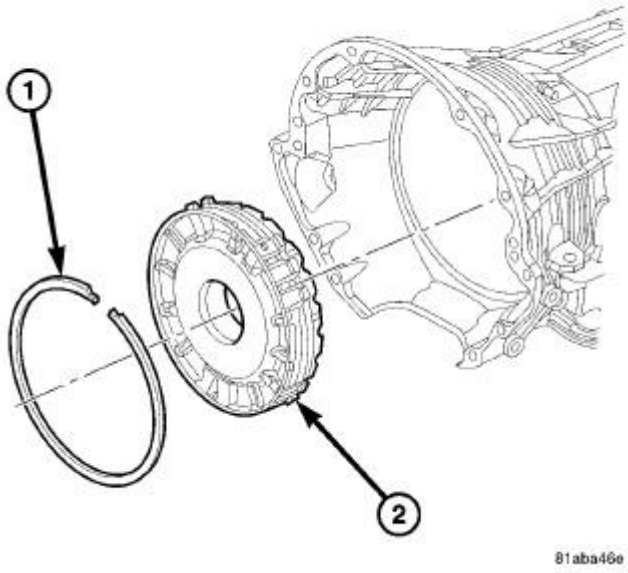

Fig. 73: 4C Clutch Retainer/Bulkhead & Snap-Ring
Courtesy of CHRYSLER GROUP, LLC

1 - SNAP-RING
2 - 2C/4C CLUTCH RETAINER/BULKHEAD

31. Install the 2C / 4C retainer/bulkhead (2) into the transmission case. Make sure that the oil feed holes are pointing toward the valve body area. Rotate the 4C clutch hub during the installation of the 4C retainer/bulkhead to ease installation.
32. Install the 2C / 4C retainer/bulkhead tapered snap-ring (1) into the transmission case with the taper toward the front of the case. Make sure that the open ends of the snap-ring are located in the case opening toward the valve body area.
33. Air check the 2C and 4C clutch operation. Refer to **DIAGNOSIS AND TESTING**.

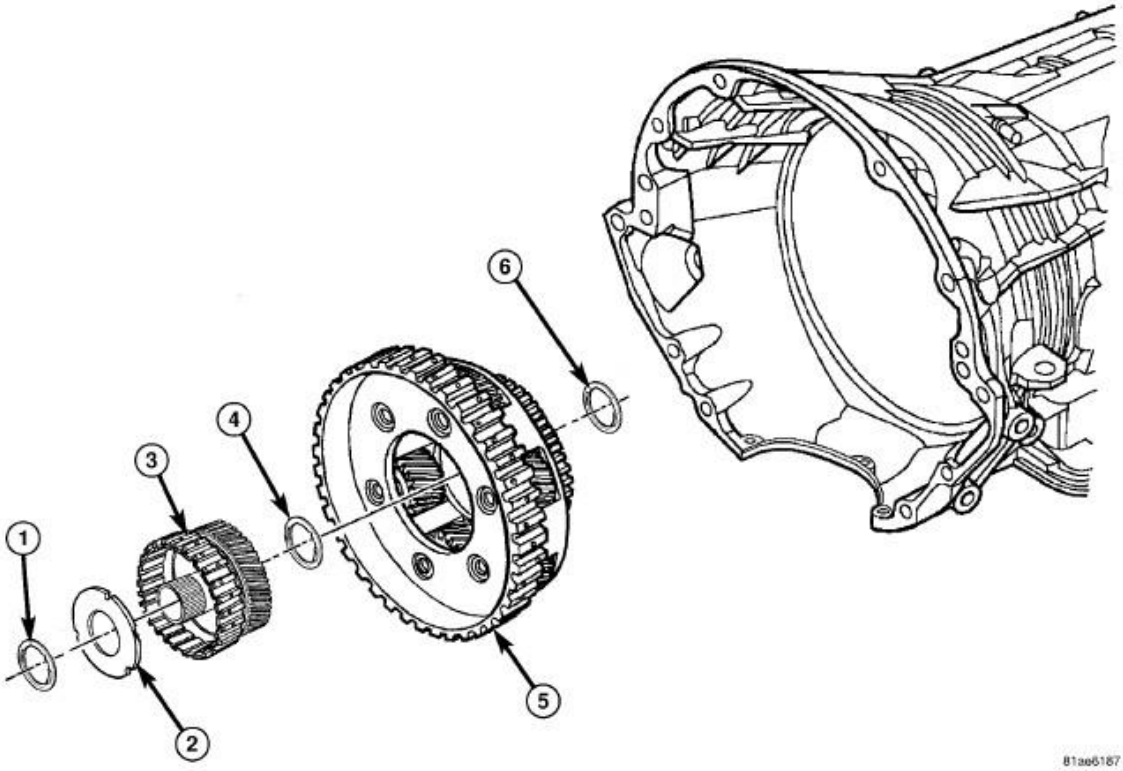

Fig. 74: Reaction Annulus & Carrier
Courtesy of CHRYSLER GROUP, LLC

1 - THRUST BEARING NUMBER 6	5 - REACTION PLANETARY CARRIER
2 - OUTPUT END PLAY THRUST PLATE (SELECTIVE)	6 - THRUST BEARING NUMBER 9
3 - 4C CLUTCH HUB / REACTION SUN GEAR	
4 - THRUST BEARING NUMBER 8	

NOTE: **The output shaft end play is adjusted by means of a selectable bearing spacer (2) in front of the 4C clutch hub/reaction sun gear. The selectable bearing spacer thickness is identified by a numeric numeral molded or stamped into the spacer.**

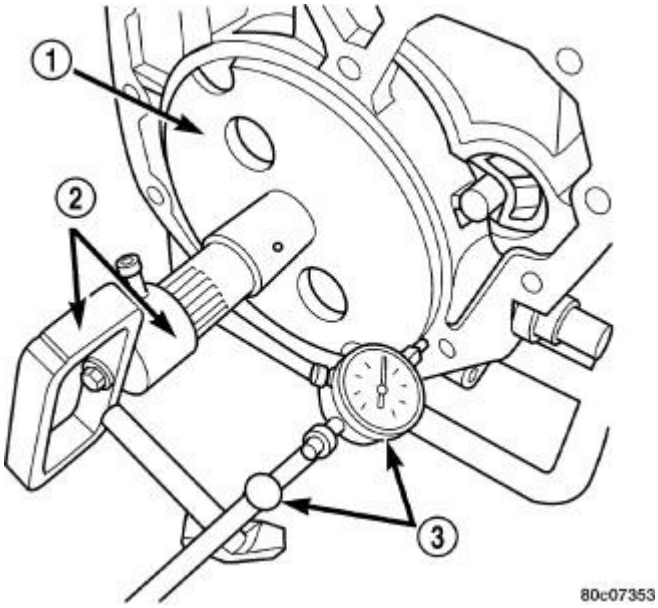

Fig. 75: Measuring Output Shaft End Play
Courtesy of CHRYSLER GROUP, LLC

1 - TOOL 10065
2 - TOOL 8266-20
3 - TOOL C-3339A

34. Using Alignment Plate (special tool #10065, Plate, Alignment), Output Shaft Endplay Socket (special tool #8266-20, Spline Tool, AS68RC Output), handle from End-Play Tool Set (special tool #8266B, End Play Socket Set) (2) and Dial Indicator (special tool #C-3339A, Set, Dial Indicator) (3), measure and record the output shaft end-play. The correct output shaft end-play is 0.25-0.52 mm (0.010-0.020 in.). Adjust as necessary. Install the chosen output shaft selective bearing spacer and re-measure end-play to verify selection.

Output Shaft End Play Selectable Bearing Spacer Thickness

- 09 = 2.18 mm (0.086 in.)
- 10 = 2.33 mm (0.092 in.)
- 11 = 2.48 mm (0.098 in.)
- 12 = 2.63 mm (0.103 in.)
- 13 = 2.78 mm (0.109 in.)
- 14 = 2.69 mm (0.115 in.)
- 43 = 3.08 mm (0.121 in.)
- 16 = 3.23 mm (0.127 in.)
- 17 = 3.38 mm (0.133 in.)
- 18 = 3.53 mm (0.139 in.)
- 19 = 3.68 mm (0.145 in.)

35. Apply a bead of RTV silicone and install the extension/adapter housing onto the transmission case.
36. Install and torque the bolts to hold the extension/adapter housing onto the transmission case. The correct torque is 54 N.m (40 ft.lbs.).

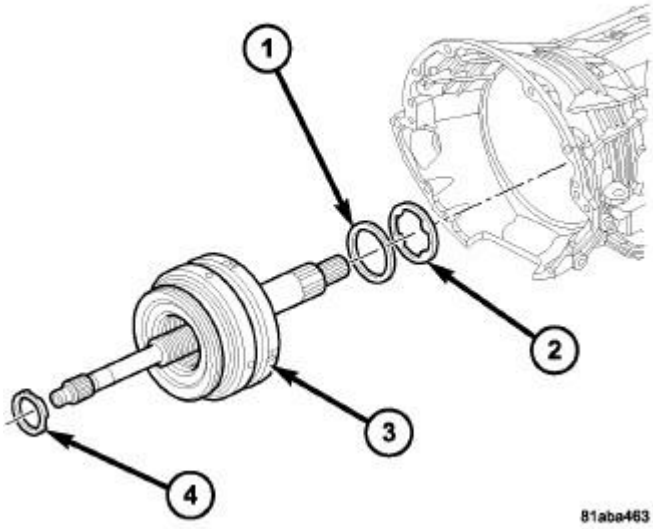

Fig. 76: Input Clutch Assembly
Courtesy of CHRYSLER GROUP, LLC

1 - THRUST BEARING NUMBER 5
2 - THRUST PLATE (SELECT)
3 - INPUT CLUTCH ASSEMBLY
4 - THRUST BEARING NUMBER 1

37. Install the number 5 thrust bearing (1) and selective thrust plate (2) onto the input clutch assembly (3). Be sure that the outer race of the bearing is against the thrust plate.
38. Install the input clutch assembly (3) into the transmission case. Make sure that the input clutch assembly is fully installed by performing a visual inspection through the input speed sensor hole. If the tone wheel teeth on the input clutch assembly are centered in the hole, the assembly is fully installed.
39. Install the number 1 thrust bearing (4) with the outer race up in the pocket of the input clutch assembly.

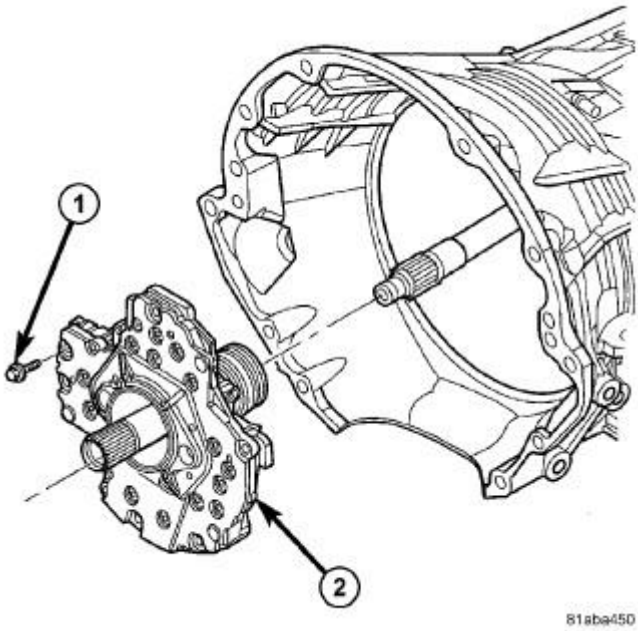

Fig. 77: Oil Pump & Bolt
Courtesy of CHRYSLER GROUP, LLC

1 - OIL PUMP TO CASE BOLT (6)
2 - OIL PUMP

40. Install the oil pump (2) into the transmission case making certain the oil pump is flush with the transmission case.
41. Install the bolts (1) to hold the oil pump into the transmission case. Tighten the oil pump bolts to 28 N.m (250 in.lbs.).

NOTE: **When measuring the input shaft end-play, two "stops" will be felt. When the input shaft is pushed inward and the dial indicator zeroed, the first "stop" felt when the input shaft is pulled outward is the movement of the input shaft in the input clutch housing hub. This value should not be included in the end-play measured value and therefore must be recorded and subtracted from the dial indicator reading.**

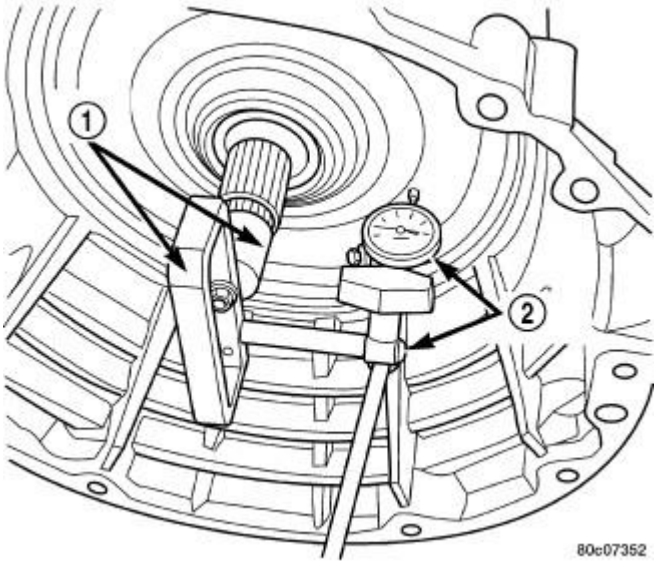

Fig. 78: Measuring Input Shaft End Play
Courtesy of CHRYSLER GROUP, LLC

1 - TOOL 8266 -17
2 - TOOL C-3339A

NOTE: **If NO input shaft end play is noted, disassemble the input clutch assembly and check for the #2, #3, or #4 thrust bearing fallen out of position or cracked. Replace any cracked thrust bearing and reassemble using trans jell or petroleum jelly to retain the thrust bearings. The selectable bearing spacer thickness is identified by a numeric numeral molded or stamped into the spacer.**

NOTE: **Adapter (special tool #8266-17, Spline Tool, RFE Output) will fit loosely onto the input shaft, this should not effect the performance of the adapter.**

42. Using Adapter (special tool #8266-17, Spline Tool, RFE Output) from End-Play Tool Set (special tool #8266B, End Play Socket Set) (1) and Dial Indicator (special tool #C-3339A, Set, Dial Indicator) (2), measure and record the input shaft end-play. The correct end-play is 0.52-0.74 mm (0.020-0.029 in.). Adjust as necessary. Install the chosen selectable bearing spacer on the number 5 thrust bearing and re-measure end-play to verify selection.

Input Shaft End Play Selectable Bearing Spacer Thickness

- 27 = 1.57 mm (0.062 in.)
- 28 = 1.71 mm (0.067 in.)
- 29 = 1.85 mm (0.073 in.)
- 30 = 1.99 mm (0.078 in.)

- 31 = 2.13 mm (0.084 in.)
- 32 = 2.27 mm (0.089 in.)
- 33 = 2.41 mm (0.095 in.)
- 34 = 2.55 mm (0.100 in.)
- 35 = 2.69 mm (0.106 in.)
- 36 = 2.83 mm (0.111 in.)
- 37 = 2.97 mm (0.117 in.)
- 38 = 3.11 mm (0.122 in.)
- 39 = 3.25 mm (0.128 in.)
- 40 = 3.39 mm (0.133 in.)
- 41 = 3.67 mm (0.144 in.)
-

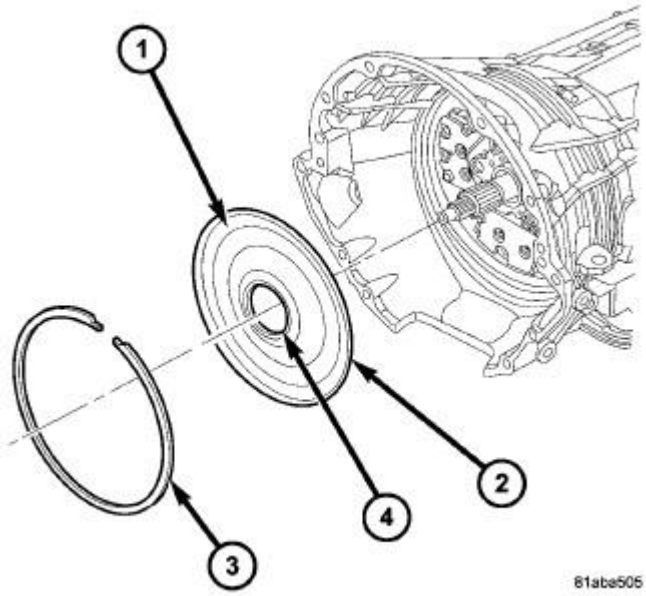

Fig. 79: Front Cover
Courtesy of CHRYSLER GROUP, LLC

1 - FRONT COVER
2 - O - RING
3 - SNAP RING
4 - FRONT COVER SEAL

NOTE: **To avoid contamination and garter spring dislodgement, do not handle the front cover seal when installing the front cover into the transmission case.**

43. Position the new front cover (1) onto transmission case.
44. Using a dead-blow mallet and the front cover installation tool (special tool #9955, Installer, Front Cover), install the front cover into the transmission case.
45. Install the snap ring into the transmission case.

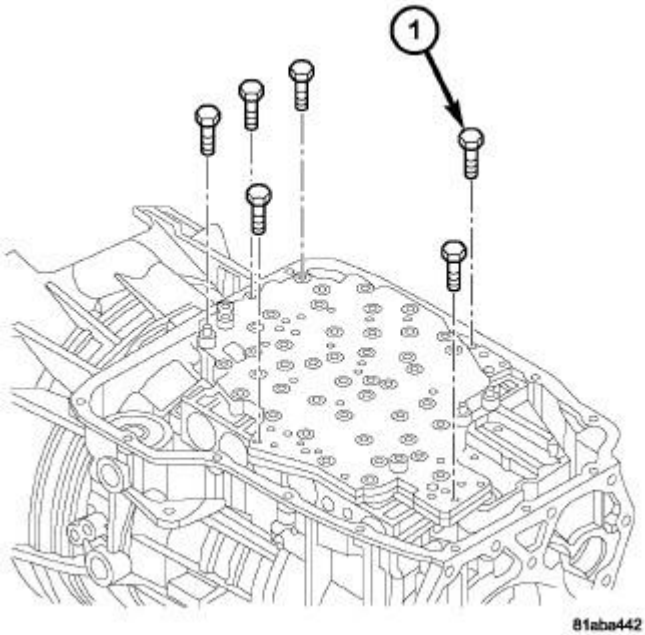

Fig. 80: Valve Body Bolts
Courtesy of CHRYSLER GROUP, LLC

1 - VALVE BODY TO CASE BOLT (6)

46. Install the valve body. Verify that the pin on the manual lever has properly engaged the TRS selector plate. Tighten the valve body to transmission case bolts (1) to 12 N.m (105 in.lbs.).

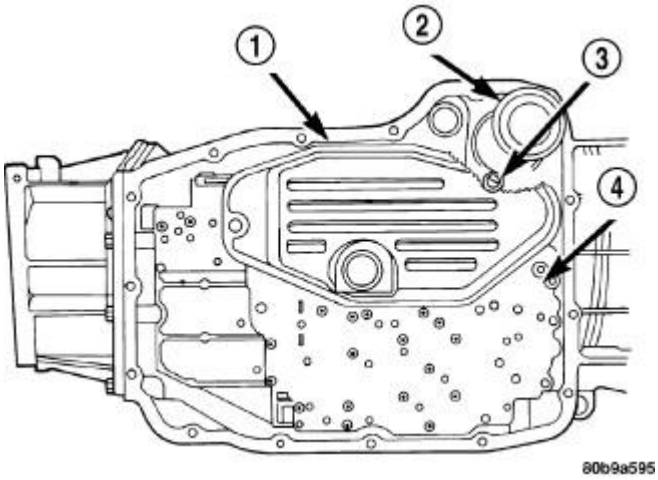

Fig. 81: Primary Oil & Cooler Return Filters
Courtesy of CHRYSLER GROUP, LLC

1 - PRIMARY OIL FILTER
2 - COOLER RETURN FILTER
3 - COOLER RETURN FILTER BYPASS VALVE
4 - VALVE BODY

CAUTION: The primary oil filter seal MUST be fully installed flush against the oil pump body. DO NOT install the seal onto the filter neck and attempt to install the filter and seal as an assembly. Damage to the transmission will result.

47. Install a new primary oil filter seal in the oil pump inlet bore. Seat the seal in the bore with the butt end of a hammer, or other suitable tool.
48. Install the primary oil filter (1) and the oil cooler return filter (2). Tighten the screw to hold the primary oil filter to the valve body to 4.5 N.m (40 in.lbs.). Using Filter Wrench (special tool #8321, Wrench, Oil Filter), tighten the cooler return oil filter to the transmission case to 9.5 N.m (84 in. lbs.).
49. Apply RTV silicone to the oil pan and install the transmission oil pan. Tighten the bolts to 12 N.m (105 in.lbs.).

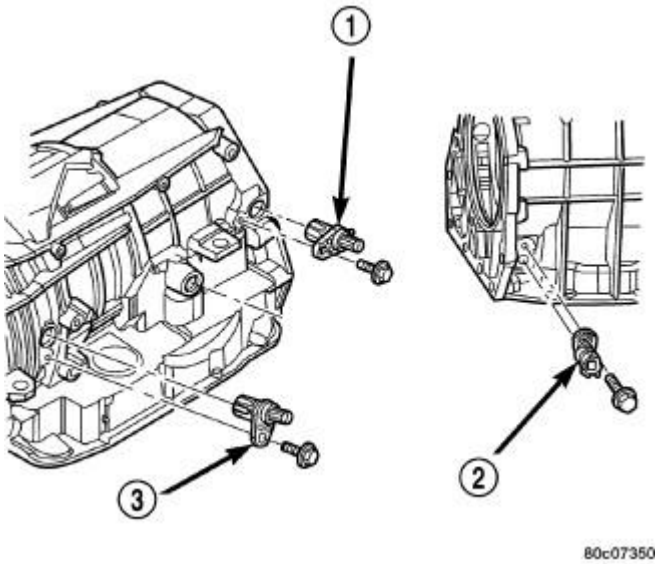

Fig. 82: Input, Output & Line Pressure Sensors
Courtesy of CHRYSLER GROUP, LLC

1 - OUTPUT SPEED SENSOR
2 - LINE PRESSURE SENSOR
3 - INPUT SPEED SENSOR

50. Install the input (3), output (1), and line pressure sensors (2). Tighten the bolts to 12 N.m (105 in.lbs.).

INSTALLATION

INSTALLATION

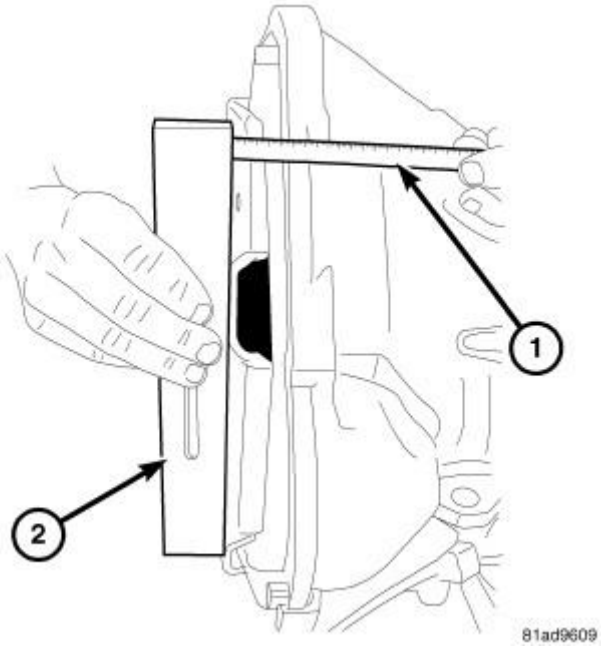

Fig. 83: Checking Torque Converter Clearance
Courtesy of CHRYSLER GROUP, LLC

1 - SCALE
2 - STRAIGHTEDGE

1. Check torque converter hub and hub drive flats for sharp edges burrs, scratches, or nicks. Polish the hub and flats with 800/1000 grit paper and crocus cloth if necessary. Verify that the converter hub o-ring is properly installed and is free of any debris. The hub must be smooth to avoid damaging pump seal at installation.
2. If a replacement transmission is being installed, transfer any components necessary, such as the manual shift lever and shift cable bracket, from the original transmission onto the replacement transmission.
3. Lubricate oil pump seal lip with transmission fluid.
4. Align converter and oil pump.
5. Carefully insert converter in oil pump. Then rotate converter back and forth until fully seated in pump gears.
6. Check converter seating with steel scale and straightedge. Surface of converter lugs should be in front of the bell housing face about 25 mm, (1 in.).
7. Temporarily secure converter with C-clamp.

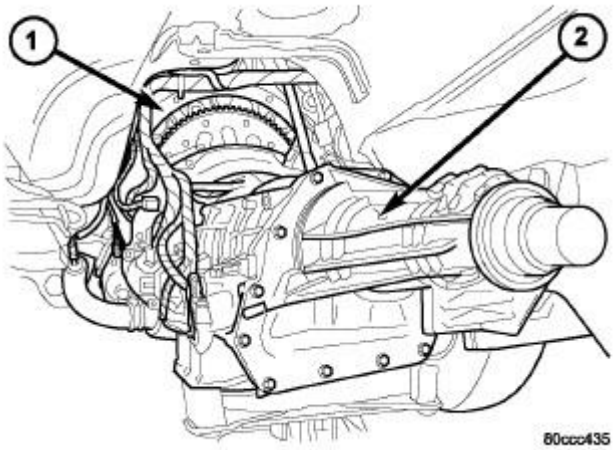

Fig. 84: Engine & Transmission
Courtesy of CHRYSLER GROUP, LLC

1 - ENGINE
2 - TRANSMISSION

8. Position transmission on jack and secure it with chains.
9. Check condition of converter driveplate. Replace the plate if cracked, distorted or damaged. **Also be sure transmission dowel pins are seated in engine block and protrude far enough to hold transmission in alignment.**
10. Apply a light coating of Mopar® High Temp Grease to the torque converter hub pocket in the rear pocket of the engine's crankshaft.
11. Raise transmission (2) and align the torque converter with the drive plate and transmission converter housing with the engine block.
12. Move transmission forward. Then raise, lower or tilt transmission to align the converter housing with engine block dowels while positioning filler tube into the filler tube bore.
13. Carefully work transmission forward and over engine block dowels until converter hub is seated in crankshaft. Verify that no wires, or the transmission vent hose, have become trapped between the engine block and the transmission.
14. Install two bolts to attach the transmission to the engine.
15. Install remaining torque converter housing to engine bolts. Tighten to 68 N.m (50 ft.lbs.).
16. Install transfer case, if equipped. Tighten transfer case nuts to 35 N.m (26 ft.lbs.).
17. Install rear support to transmission. Tighten bolts specification. Refer to **TORQUE SPECIFICATIONS** . .
18. Lower transmission onto crossmember and install nuts attaching transmission mount to crossmember. Tighten bolts specification. Refer to **TORQUE SPECIFICATIONS** . .
19. Remove engine support fixture.
20. Install the transmission inspection cover. Tighten the bolts to 10 N.m (88 in. lbs.)
21. Install the power bending bracket.

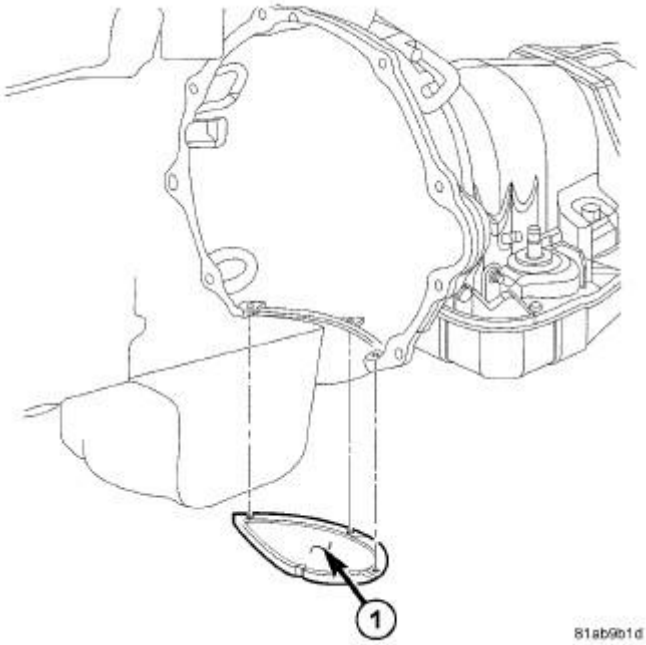

Fig. 85: Dust Shield
Courtesy of CHRYSLER GROUP, LLC

22. Install the transmission dust shield.

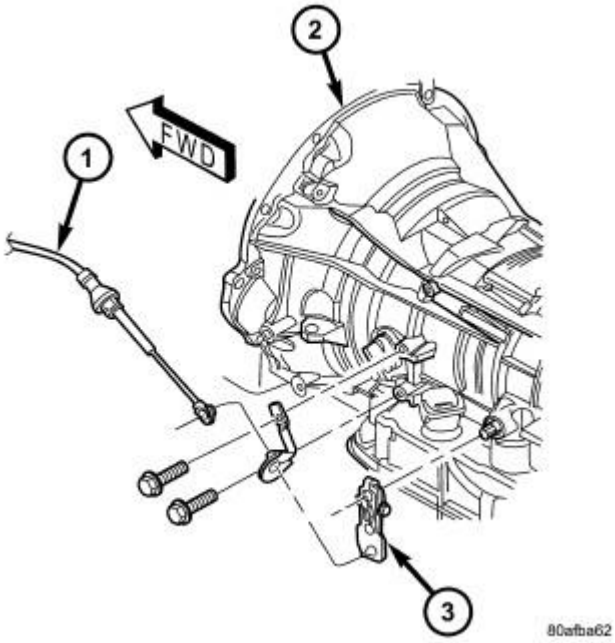

Fig. 86: Gearshift Cable & Transmission Manual Valve Lever
Courtesy of CHRYSLER GROUP, LLC

1 - GEARSHIFT CABLE
2 - RFE TRANSMISSION
3 - MANUAL LEVER

23. Connect gearshift cable to transmission.

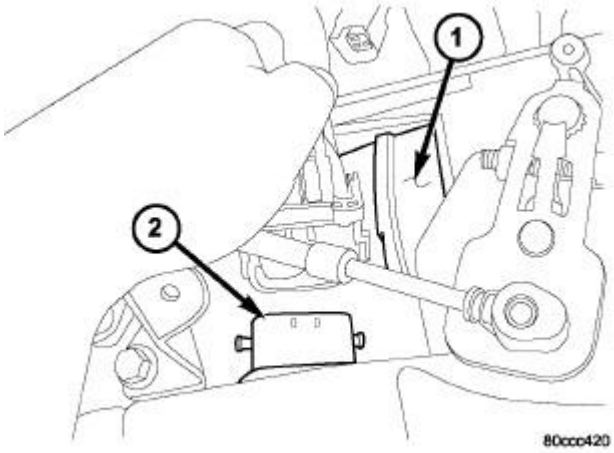

Fig. 87: Transmission Solenoid/TRS Assembly
Courtesy of CHRYSLER GROUP, LLC

1 - TRANSMISSION
2 - TRANSMISSION SOLENOID/TRS ASSEMBLY

24. Connect wires to solenoid and pressure switch assembly (2) connector.

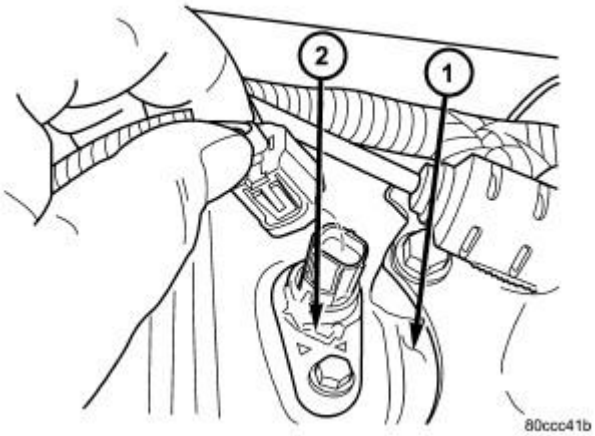

Fig. 88: Input Speed Sensor
Courtesy of CHRYSLER GROUP, LLC

1 - TRANSMISSION

2 - INPUT SPEED SENSOR

25. Connect wires to input speed sensor (2).

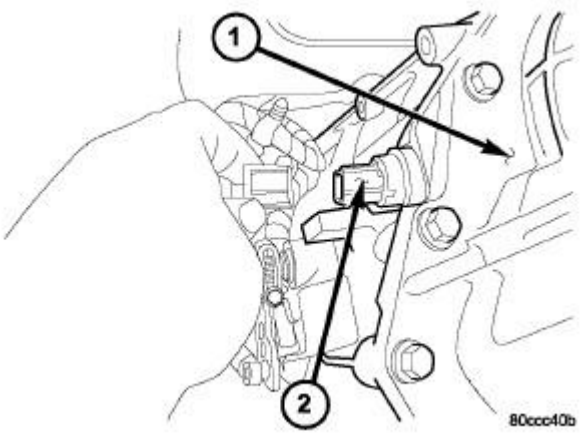

Fig. 89: Output Speed Sensor
Courtesy of CHRYSLER GROUP, LLC

1 - TRANSMISSION
2 - OUTPUT SPEED SENSOR

26. Connect wires to output speed sensor (2).

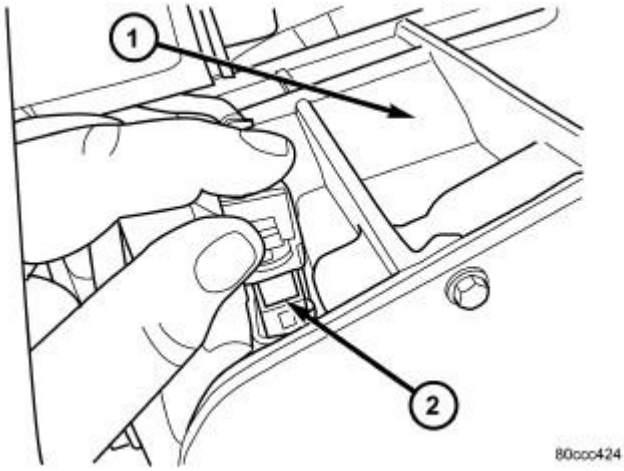

Fig. 90: Line Pressure Sensor
Courtesy of CHRYSLER GROUP, LLC

1 - TRANSMISSION
2 - LINE PRESSURE SENSOR

27. Connect wires to line pressure sensor (2). Be sure transmission harnesses are properly routed.

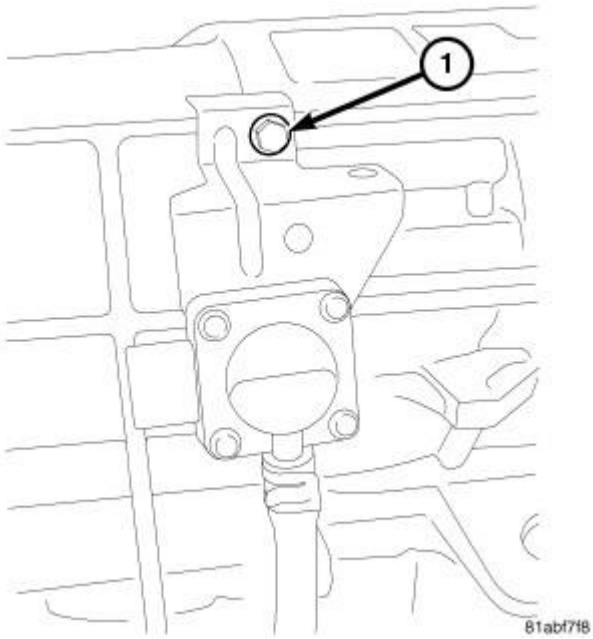

Fig. 91: Differential Pressure Sensor Bolt
Courtesy of CHRYSLER GROUP, LLC

1 - BOLT

28. Install the differential pressure sensor bolt (if equipped). Tighten bolt to 10 N.m (88 in. lbs.).

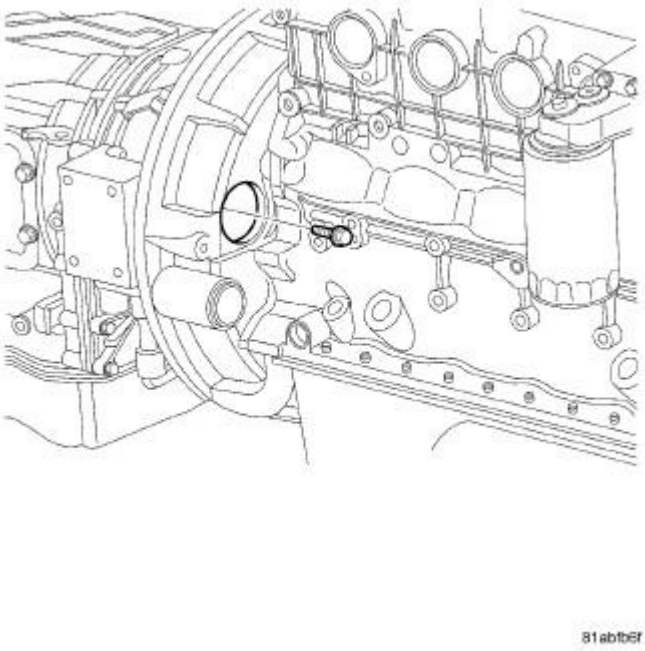

Fig. 92: Torque Converter Bolts
Courtesy of CHRYSLER GROUP, LLC

CAUTION: It is essential that the correct length bolts are used to attach the converter to the flexplate. Bolts that are too long will damage the clutch surface inside the torque converter.

29. Install torque converter-to-driveplate bolts. Tighten bolts to 88 N.m (65 ft. lbs.).
30. Connect cooler lines to transmission.

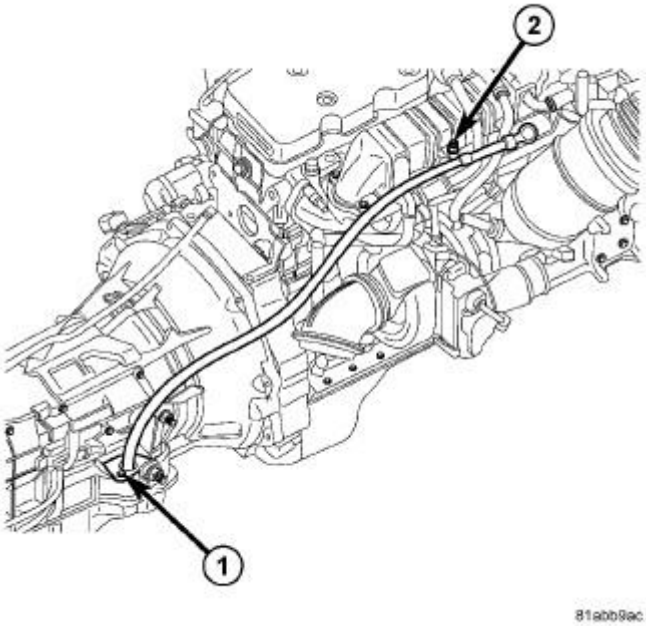

Fig. 93: 68RFE Fill Tube, Bolt & Nut
Courtesy of CHRYSLER GROUP, LLC

1 - FILL TUBE BOLT
2 - FILL TUBE NUT

31. Install transmission fill tube bolt (1). Tighten bolt to 10 N.m (88 in. lbs.)
32. Install exhaust components, if necessary.
33. Align and connect propeller shaft(s).
34. Adjust gearshift cable if necessary.
35. Install any skid plates removed previously. Refer to **PLATE, SKID, FRONT, INSTALLATION** or **PLATE, SKID, TRANSFER CASE, INSTALLATION** .
36. Lower vehicle.
37. Fill transmission with Mopar® ATF +4, Automatic Transmission Fluid.

SPECIAL TOOLS

SPECIAL TOOLS

	10020 - Installer, Seal (Originally Shipped In Kit Number(s) 10019.) 10065 - Plate, Alignment (Originally Shipped In Kit Number(s) 10065.) 6756 - Receiver, Ball Joint (Originally Shipped In Kit Number(s) 6745, 6809.) 6960 - Tools, Trac-Lok Axle (Originally Shipped In Kit Number(s) 6947, 6949, 6966.) 8154 - Installer, Seal (Originally Shipped In Kit Number(s) 8163, 8163CC, 8164, 8164CC.) 8249 - Compressor, Spring (Originally Shipped In Kit Number(s) 8283, 8283CC, 8527, 8527CC, 8575, 8575CC, 9975.) 8250 - Compressor, Spring (Originally Shipped In Kit Number(s) 8283, 8283CC, 8527, 8527CC, 8575, 8575CC, 9975.) 8251 - Compressor, Spring (Originally Shipped In Kit Number(s) 8283, 8283CC, 8527, 8527CC, 8575, 8575CC, 9975.) 8252 - Installer (Originally Shipped In Kit Number(s) 8283, 8283CC, 8527, 8527CC, 8575, 8575CC, 9975.) 8253 - Installer, Seal (Originally Shipped In Kit Number(s) 8283, 8283CC, 8527, 8527CC, 8575, 8575CC, 9975.) 8254 - Installer, Grommet (Originally Shipped In Kit Number(s) 8283, 8283CC, 8527, 8527CC, 8575, 8575CC, 9975.) 8257 - Support, Transmission (Originally Shipped In Kit Number(s) 8283, 8283CC, 8527, 8527CC, 8575, 8575CC, 9975.) 8259 - Adapter, Pressure Test (Originally Shipped In Kit Number(s) 8283, 8283CC, 8527, 8527CC, 8575, 8575CC, 9975.) 8260A - Fixture, Input Clutch (Originally Shipped In Kit Number(s) 8260A.) 8266-17 - Spline Tool, RFE Output (Originally Shipped In Kit Number(s) 8283, 8527, 8575.) 8266-20 - Spline Tool, AS68RC Output (Originally Shipped In Kit Number(s) 9978.) 8266B - End Play Socket Set (Originally Shipped In Kit Number(s) 8283, 8527, 8575, 8575CC.) 8285 - Compressor, Spring (Originally Shipped In Kit Number(s) 8283, 8283CC, 8527, 8527CC, 8575, 8575CC, 9975.) 8321 - Wrench, Oil Filter (Originally Shipped In Kit Number(s) 8283, 8283CC, 8527, 8527CC, 8575, 8575CC, 9975.) 8349-1 - Installer Crank Seal (Originally Shipped In Kit Number(s) 8283, 8283CC, 8527, 8527CC, 8575, 8575CC.) 8504-1 - Piston Installer (Outer)

	(Originally Shipped In Kit Number(s) 8283, 8283CC, 8527, 8527CC, 8575, 8575CC, 9975.) 8896 - Installer, Seal (Originally Shipped In Kit Number(s) 8887, 8887CC.) 9045 - Installer, Plug (Originally Shipped In Kit Number(s) 8847, 8850, 8850CC, 8853, 8854, 8854CC.) 9546 - Disconnect Tool (Originally Shipped In Kit Number(s) 9590.) 9955 - Installer, Front Cover (Originally Shipped In Kit Number(s) 9955.) C-3293-SP - Gauge, Pressure 0-300 P.S.I. C-3339A - Set, Dial Indicator (Originally Shipped In Kit Number(s) 9202.) C-4171 - Driver Handle, Universal (Originally Shipped In Kit Number(s) 9202, 9202A-CAN, 9202CC, 9299, 9299CC, 9299CC, 9300A-CAN.)

ASSEMBLY, INPUT CLUTCH

DESCRIPTION

DESCRIPTION

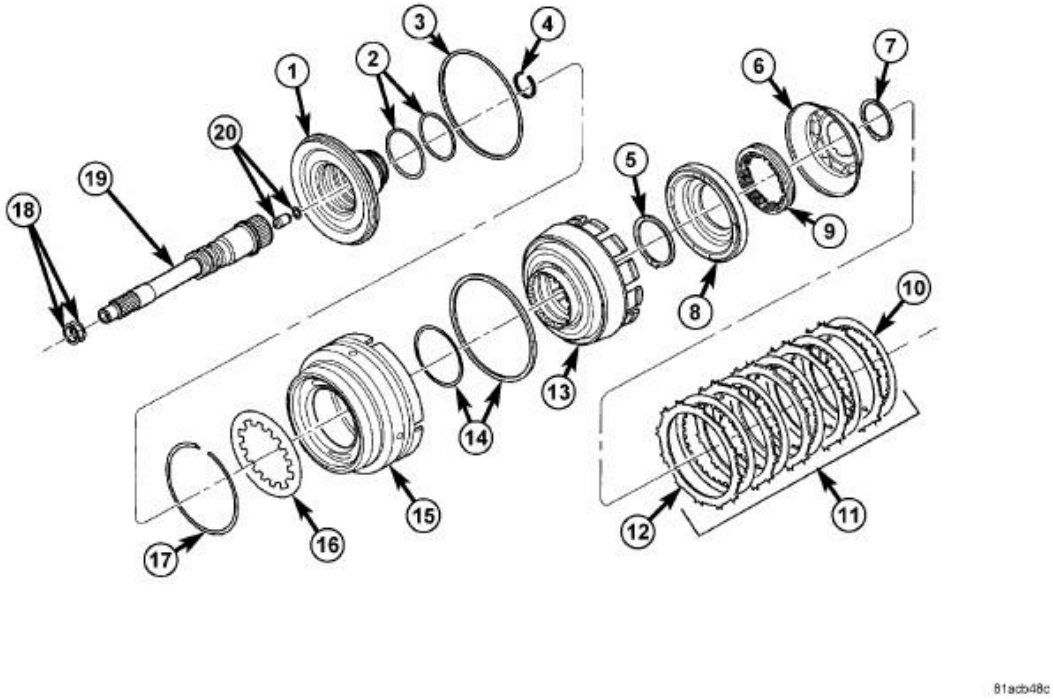

Fig. 94: Input Clutch Assembly - Part 1
Courtesy of CHRYSLER GROUP, LLC

1 - INPUT CLUTCH HUB	11 - UD CLUTCH
2 - O-RING SEALS	12 - UD OUTER DISC
3 - SEAL	13 - INPUT CLUTCH RETAINER
4 - SNAP-RING	14 - SEAL
5 - SNAP-RING	15 - OD/REV PISTON
6 - UD BALANCE PISTON	16 - BELLEVILLE SPRING
7 - SNAP-RING	17 - SNAP-RING
8 - UD PISTON	18 - SEAL RINGS
9 - UD SPRING PACK	19 - INPUT SHAFT
10 - UD INNER DISC	20 - LUBRICATION CHECK VALVE AND SNAP-RING

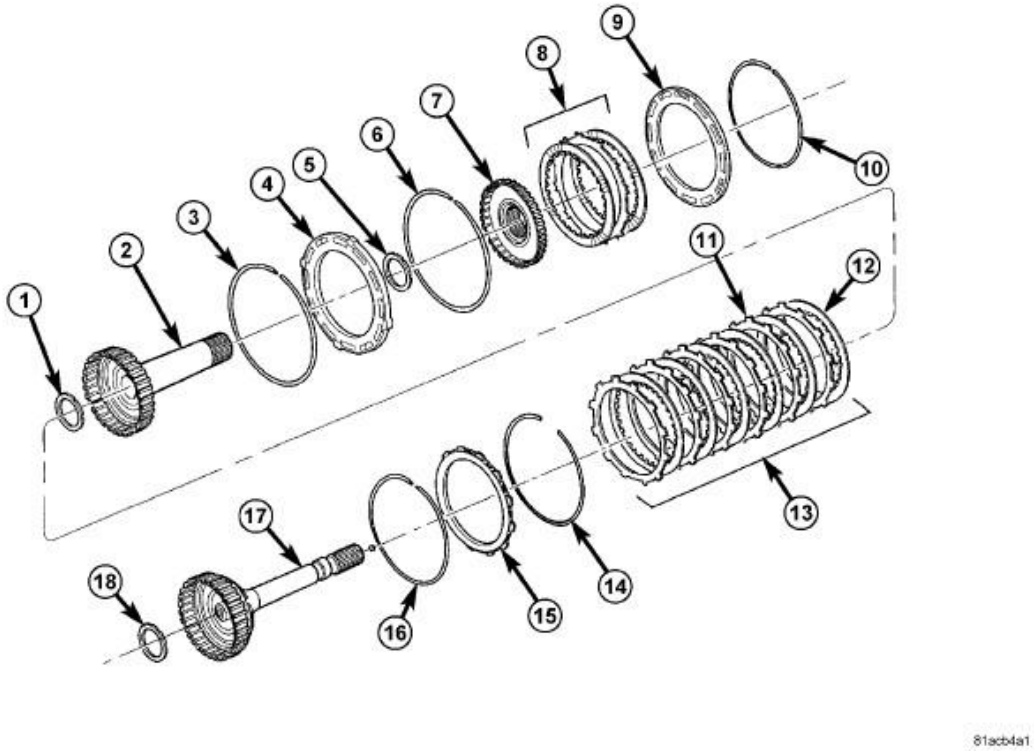

Fig. 95: Input Clutch Assembly - Part 2
Courtesy of CHRYSLER GROUP, LLC

1 - THRUST BEARING NUMBER 3	10 - SNAP-RING (SELECT)
2 - OD HUB/SHAFT	11 - OD OUTER DISC
3 - SNAP-RING (WAVE)	12 - OD INNER DISC
4 - REV/OD PRESSURE PLATE	13 - OD CLUTCH
5 - THRUST BEARING NUMBER 4	14 - SNAP-RING (TAPERED)
6 - SNAP-RING (FLAT)	15 - UD/OD REACTION PLATE
7 - REVERSE HUB/SHAFT	16 - SNAP-RING (FLAT)
8 - REVERSE CLUTCH	17 - UD HUB/SHAFT

9 - REVERSE REACTION PLATE	18 - THRUST BEARING NUMBER 2

Three hydraulically applied input clutches are used to drive planetary components. The underdrive, overdrive, and reverse clutches are considered input clutches and are contained within the input clutch assembly.

The input clutch assembly also contains:

- Input shaft
- Input hub
- Clutch retainer
- Underdrive piston
- Overdrive/reverse piston
- Overdrive hub
- Underdrive hub

OPERATION

OPERATION

The three input clutches are responsible for driving different components of the planetary geartrain.

UNDERDRIVE CLUTCH

The underdrive clutch is hydraulically applied in first, second, third, and fourth (direct) gears by pressurized fluid against the underdrive piston. When the underdrive clutch is applied, the underdrive hub drives the input sun gear.

OVERDRIVE CLUTCH

The overdrive clutch is hydraulically applied in fourth (direct), fifth, and sixth gears by pressurized fluid against the overdrive/reverse piston. When the overdrive clutch is applied, the overdrive hub drives the reverse carrier/input annulus assembly.

REVERSE CLUTCH

The reverse clutch is hydraulically applied in reverse gear by pressurized fluid against the overdrive/reverse piston. When the reverse clutch is applied, the reaction sun gear is driven.

DISASSEMBLY

DISASSEMBLY

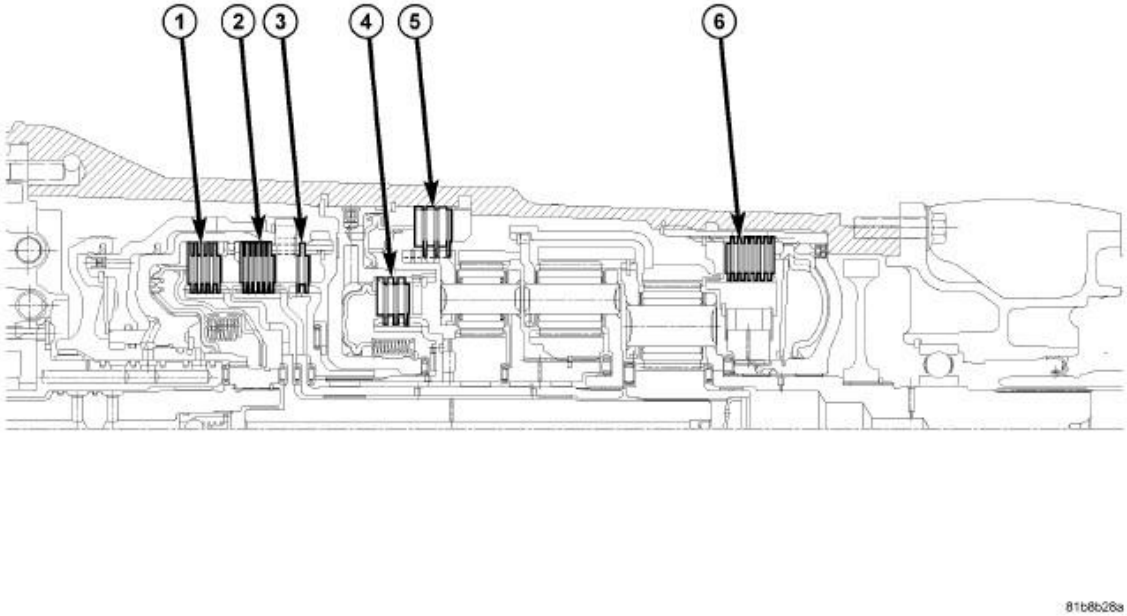

Fig. 96: 68RFE Clutch Orientation
Courtesy of CHRYSLER GROUP, LLC

1 - U/D CLUTCH	4 - 4C CLUTCH
2 - O/D CLUTCH	5 - 2C CLUTCH
3 - REVERSE CLUTCH	6 - L/R CLUTCH

NOTE: **If the input clutch assembly is being reconditioned (clutch/seal replacement) or replaced, it is necessary to perform the Quick Learn Procedure using the scan tool. Refer to MODULE, TRANSMISSION CONTROL, STANDARD PROCEDURE .**

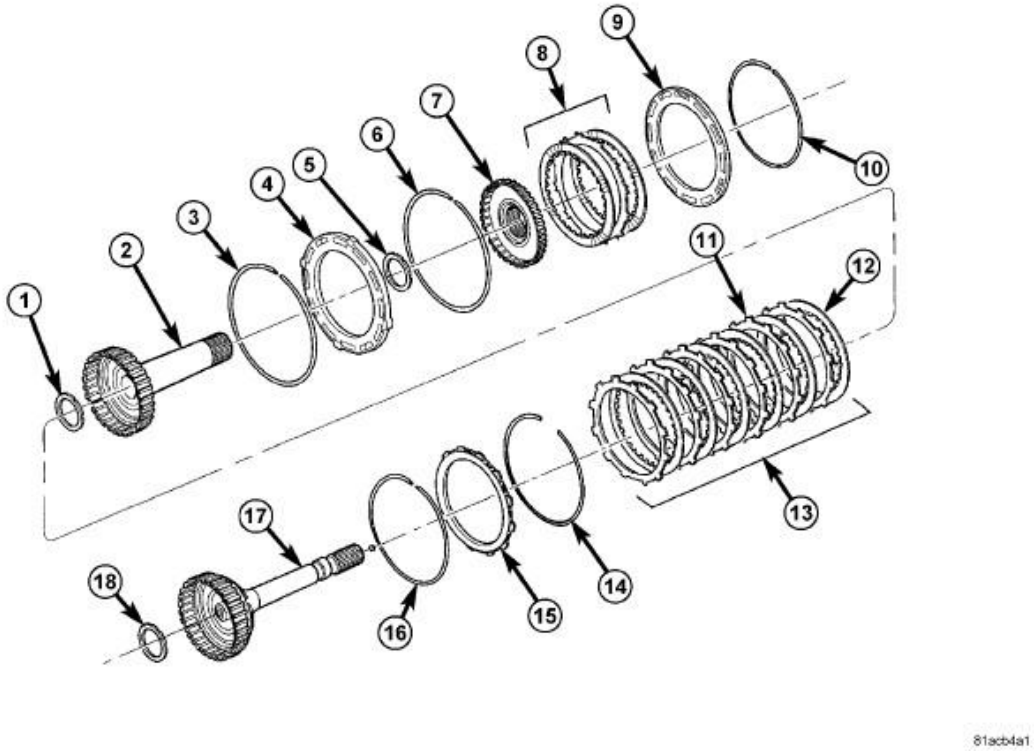

Fig. 97: Input Clutch Assembly - Part 2
Courtesy of CHRYSLER GROUP, LLC

1 - THRUST BEARING NUMBER 3	10 - SNAP-RING (SELECT)
2 - OD HUB/SHAFT	11 - OD OUTER DISC
3 - SNAP-RING (WAVE)	12 - OD INNER DISC
4 - REV/OD PRESSURE PLATE	13 - OD CLUTCH
5 - THRUST BEARING NUMBER 4	14 - SNAP-RING (TAPERED)
6 - SNAP-RING (FLAT)	15 - UD/OD REACTION PLATE
7 - REVERSE HUB/SHAFT	16 - SNAP-RING (FLAT)
8 - REVERSE CLUTCH	17 - UD HUB/SHAFT
9 - REVERSE REACTION PLATE	18 - THRUST BEARING NUMBER 2

1. Remove the reverse reaction plate selective snap-ring (10) from the input clutch retainer.
2. Remove the reverse reaction plate (9) from the input clutch retainer.
3. Remove the reverse hub (7) and reverse clutch pack (8) from the input clutch retainer.
4. Remove the number 4 thrust bearing (5) from the overdrive hub (2).
5. Remove the overdrive hub (2) from the input clutch retainer.
6. Remove the number 3 thrust bearing (1) from the underdrive hub (17).
7. Remove the OD/reverse pressure plate snap-ring (6) from the from the OD/reverse piston.
8. Remove the OD/reverse pressure plate (4), overdrive clutch (13), and UD hub (17) from the input clutch retainer.

9. Remove the number 2 thrust bearing (18) from the input clutch hub.
10. Remove the overdrive clutch wave snap-ring (3) from the from the OD/reverse piston.
11. Remove the UD/OD reaction plate tapered snap-ring (14) from the input clutch retainer.
12. Remove the UD/OD reaction plate (15) from the input clutch retainer.
13. Remove the UD/OD reaction plate flat snap-ring (16) from the input clutch retainer.

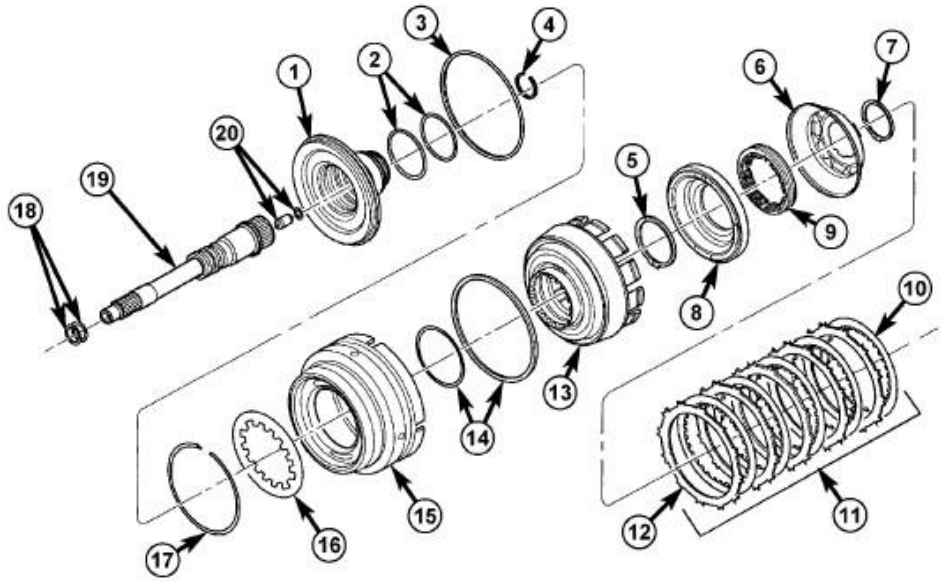

81acb48c

Fig. 98: Input Clutch Assembly - Part 1
Courtesy of CHRYSLER GROUP, LLC

1 - INPUT CLUTCH HUB	11 - UD CLUTCH
2 - O-RING SEALS	12 - UD OUTER DISC
3 - SEAL	13 - INPUT CLUTCH RETAINER
4 - SNAP-RING	14 - SEAL
5 - SNAP-RING	15 - OD/REV PISTON
6 - UD BALANCE PISTON	16 - BELLEVILLE SPRING
7 - SNAP-RING	17 - SNAP-RING
8 - UD PISTON	18 - SEAL RINGS
9 - UD SPRING PACK	19 - INPUT SHAFT
10 - UD INNER DISC	20 - LUBRICATION CHECK VALVE AND SNAP-RING

14. Remove the underdrive clutch pack (11) from the input clutch retainer (13).

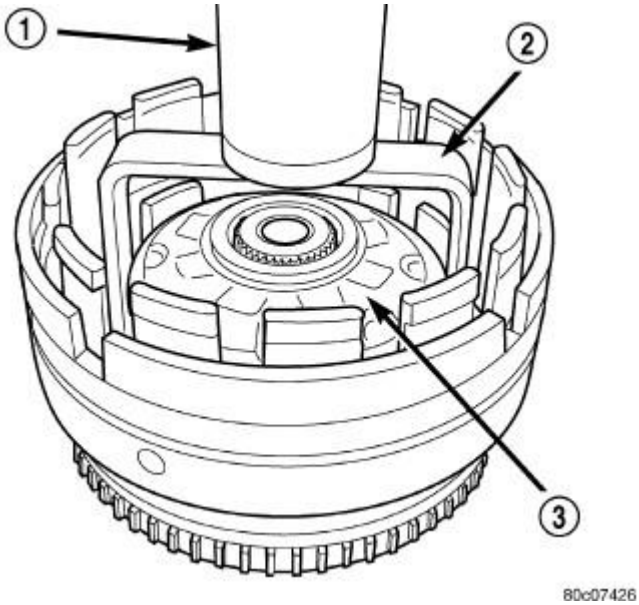

Fig. 99: Compressing UD Balance Piston
Courtesy of CHRYSLER GROUP, LLC

1 - PRESS
2 - TOOL 8251
3 - BALANCE PISTON

15. Using Spring Compressor (special tool #8251, Compressor, Spring) (2), compress the UD balance piston (3) and remove the snap-ring from the input clutch hub.

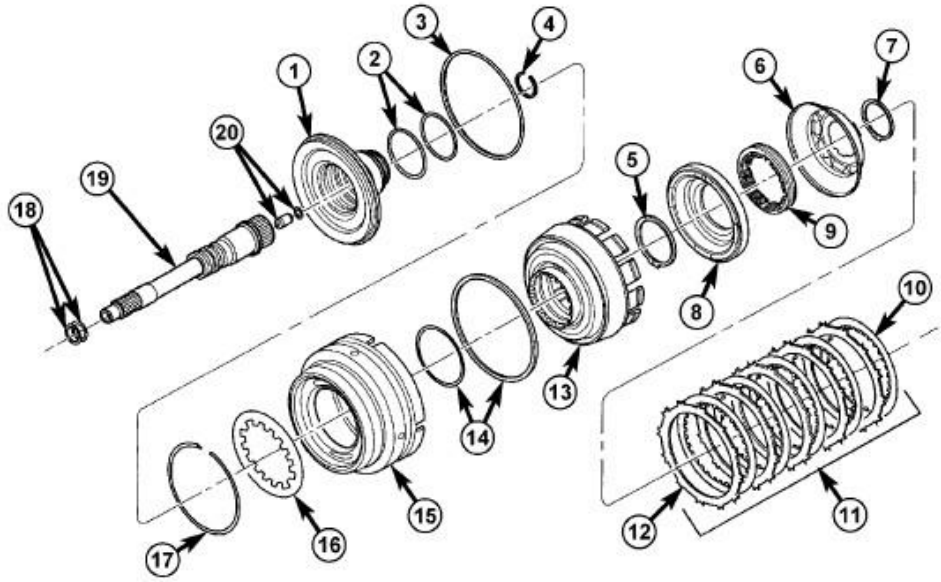

81acb48c

Fig. 100: Input Clutch Assembly - Part 1
Courtesy of CHRYSLER GROUP, LLC

1 - INPUT CLUTCH HUB	11 - UD CLUTCH
2 - O-RING SEALS	12 - UD OUTER DISC
3 - SEAL	13 - INPUT CLUTCH RETAINER
4 - SNAP-RING	14 - SEAL
5 - SNAP-RING	15 - OD/REV PISTON
6 - UD BALANCE PISTON	16 - BELLEVILLE SPRING
7 - SNAP-RING	17 - SNAP-RING
8 - UD PISTON	18 - SEAL RINGS
9 - UD SPRING PACK	19 - INPUT SHAFT
10 - UD INNER DISC	20 - LUBRICATION CHECK VALVE AND SNAP-RING

16. Remove the UD balance piston (6) and piston return spring (9) from the input clutch retainer (13).
17. Remove the underdrive piston (8) from the input clutch retainer (13).

NOTE: **Both the UD balance piston and the underdrive piston have seals molded onto them. If the seal is damaged, do not attempt to install a new seal onto the piston. The piston/seal must be replaced as an assembly.**

18. Remove the input clutch retainer tapered snap-ring (5).
19. Separate input clutch retainer (13) from input clutch hub (1).
20. Separate OD/reverse piston (15) from input clutch hub retainer (13).

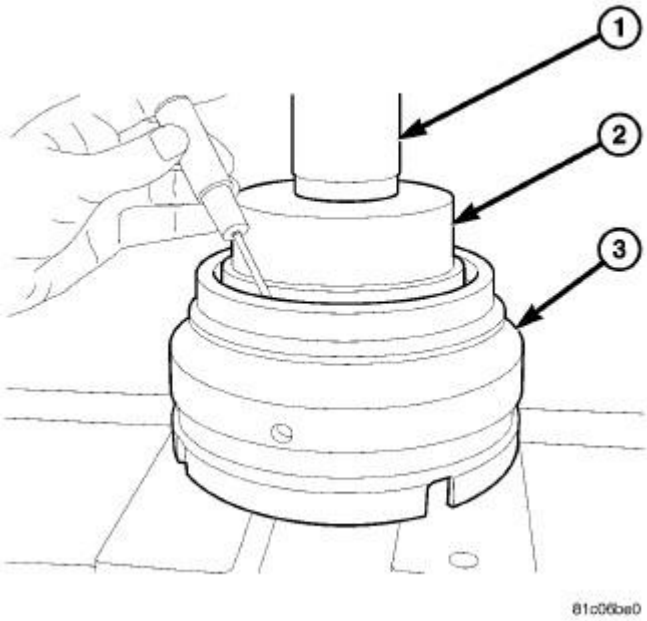

Fig. 101: Compressing OD/Reverse Belleville Spring
Courtesy of CHRYSLER GROUP, LLC

1 - ARBOR PRESS
2 - TOOL 8349-1
3 - OD / REVERSE PISTON

21. Using Arbor Press (1) and tool (special tool #8349-1, Installer Crank Seal) (2) compress the OD / Reverse belleville spring just enough to remove the snap ring.
22. Remove the belleville spring and snap ring from the OD / Reverse piston (3).
23. Remove all seals and o-rings from the input shaft and input hub. The o-rings on the input hub are color coded. Be sure to make note of which o-ring belongs in which location.

ASSEMBLY

ASSEMBLY

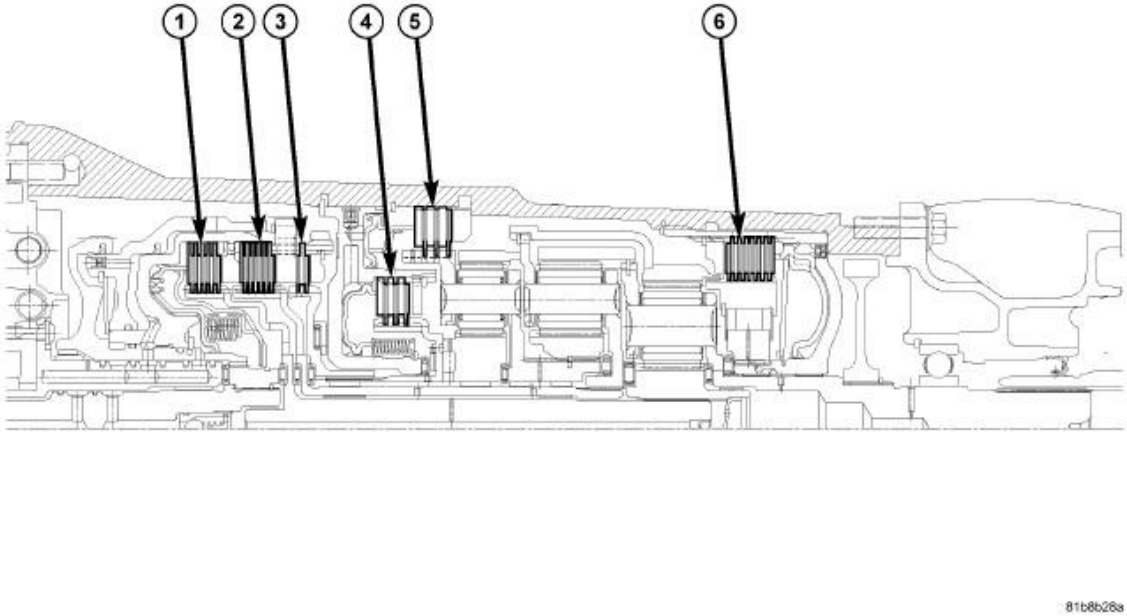

Fig. 102: 68RFE Clutch Orientation
Courtesy of CHRYSLER GROUP, LLC

1 - U/D CLUTCH	4 - 4C CLUTCH
2 - O/D CLUTCH	5 - 2C CLUTCH
3 - REVERSE CLUTCH	6 - L/R CLUTCH

NOTE: The 68RFE transmission does not use a number 7 thrust bearing.

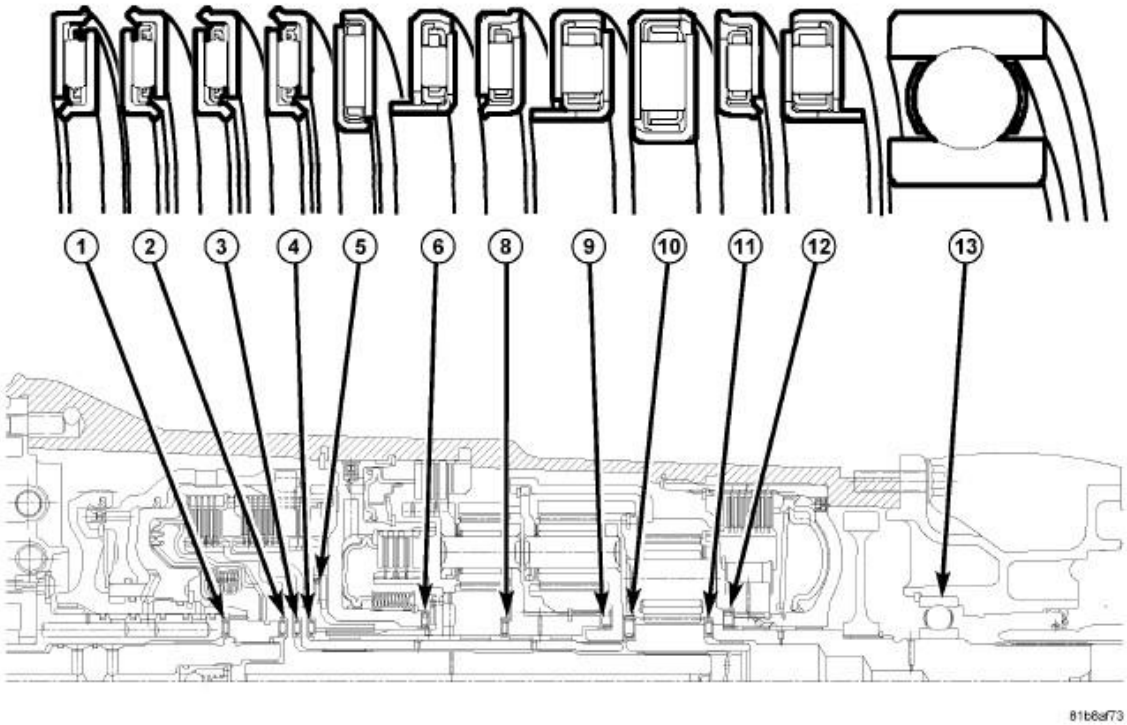

Fig. 103: 68RFE Bearing Orientation
Courtesy of CHRYSLER GROUP, LLC

1 - THRUST BEARING NO. 1	8 - THRUST BEARING NO. 8
2 - THRUST BEARING NO. 2	9 - THRUST BEARING NO. 9
3 - THRUST BEARING NO. 3	10 - THRUST BEARING NO. 10
4 - THRUST BEARING NO. 4	11 - THRUST BEARING NO. 11
5 - THRUST BEARING NO. 5	12 - THRUST BEARING NO. 12
6 - THRUST BEARING NO. 6	13 - OUTPUT

NOTE: **When installing the OD / Reverse piston belleville spring, orientate it such that it contacts a new surface on the piston.**

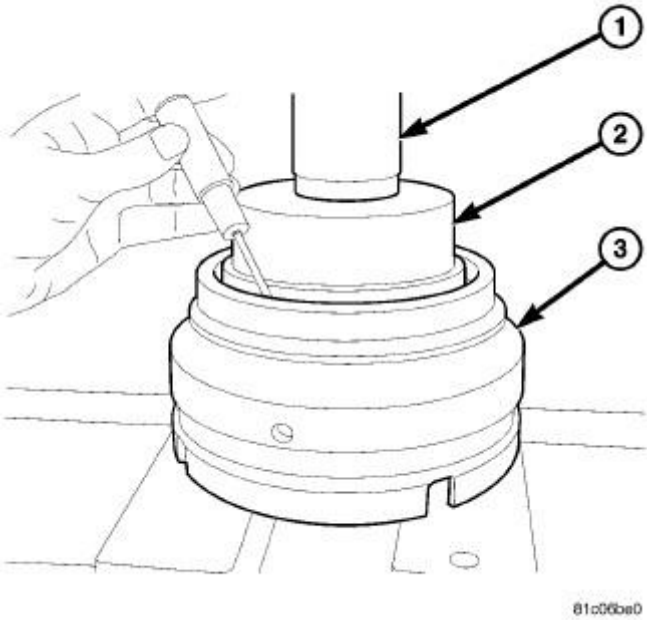

Fig. 104: Compressing OD/Reverse Belleville Spring
Courtesy of CHRYSLER GROUP, LLC

1 - ARBOR PRESS
2 - TOOL 8349-1
3 - OD / REVERSE PISTON

1. Install the belleville spring and snap ring loosely onto the OD / Reverse piston (3).
2. Using an Arbor Press (1) and tool (special tool #8349-1, Installer Crank Seal) (2) compress the belleville spring just enough to install the snap ring.

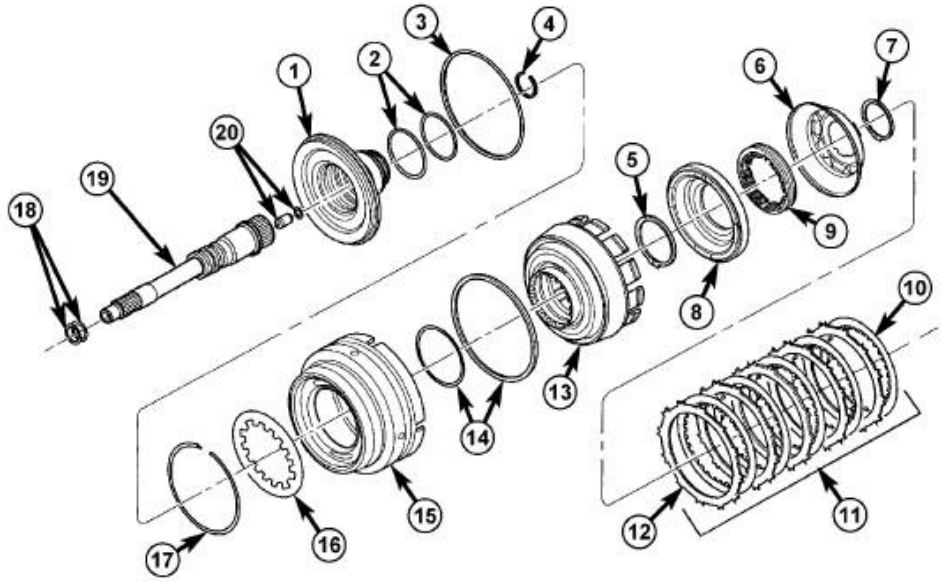

81acb48c

Fig. 105: Input Clutch Assembly - Part 1
Courtesy of CHRYSLER GROUP, LLC

1 - INPUT CLUTCH HUB	11 - UD CLUTCH
2 - O-RING SEALS	12 - UD OUTER DISC
3 - SEAL	13 - INPUT CLUTCH RETAINER
4 - SNAP-RING	14 - SEAL
5 - SNAP-RING	15 - OD/REV PISTON
6 - UD BALANCE PISTON	16 - BELLEVILLE SPRING
7 - SNAP-RING	17 - SNAP-RING
8 - UD PISTON	18 - SEAL RINGS
9 - UD SPRING PACK	19 - INPUT SHAFT
10 - UD INNER DISC	20 - LUBRICATION CHECK VALVE AND SNAP-RING

NOTE: **Install all new seals and o-rings onto the input shaft and input hub. The o-rings on the input hub are color coded. Be sure to install the correct o-ring in the correct location.**

3. Check the transmission lubrication check valve (20) located in the input shaft using shop air. The valve should only allow air flow in one direction. If the valve allows no air flow, or air flow in both directions, the valve will need to be replaced.

4. Lubricate all seals with Mopar® ATF +4, Automatic Transmission Fluid, prior to installation.
5. Assemble the OD/reverse piston (15) onto the input clutch retainer (13).
6. Assemble the input clutch retainer (13) onto the input clutch hub (1).
7. Install the input clutch retainer tapered snap-ring (5) with tapered side up onto the input clutch hub (1).

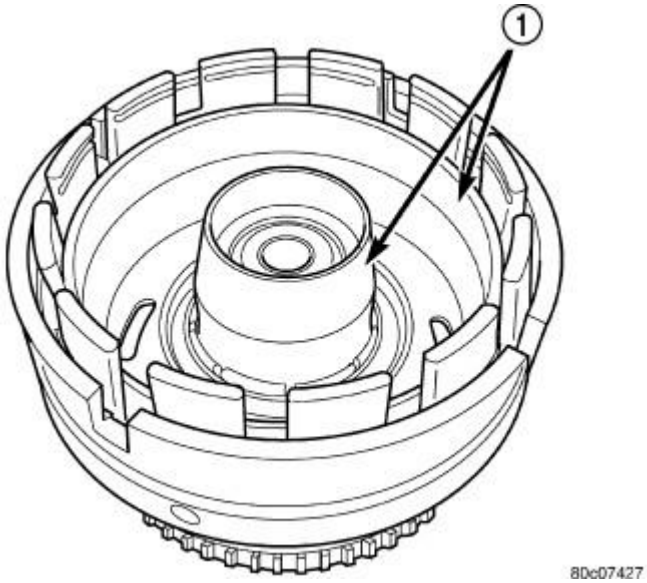

Fig. 106: Installing Underdrive Piston
Courtesy of CHRYSLER GROUP, LLC

1 - PISTON GUIDES 8504

8. Install Piston Installer (special tool #8504-1, Piston Installer (Outer)) (1) into the input clutch retainer and onto the input clutch hub to guide the inner and outer underdrive piston seals into position.
9. Install the underdrive piston into the input clutch retainer and over the input clutch hub.

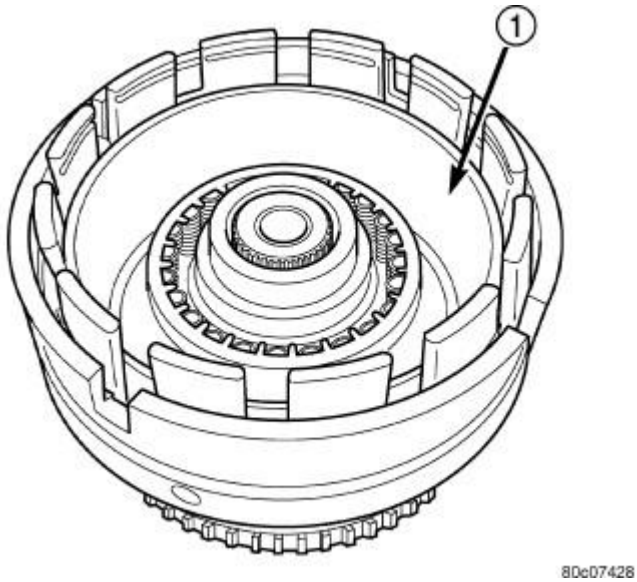

Fig. 107: Installing Balance Piston Using Tool 8252
Courtesy of CHRYSLER GROUP, LLC

1 - TOOL 8252

10. Install the UD balance piston return spring pack into the input clutch retainer.
11. Install Piston Installer (special tool #8252, Installer) (1) into the input clutch retainer to guide the UD balance piston seal into position inside the underdrive piston.

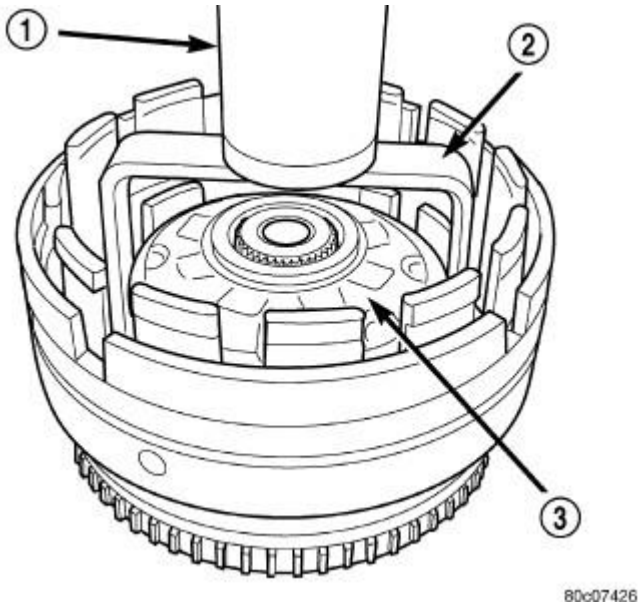

Fig. 108: Compressing UD Balance Piston
Courtesy of CHRYSLER GROUP, LLC

1 - PRESS
2 - TOOL 8251
3 - BALANCE PISTON

12. Install the UD balance piston (3) into the input clutch retainer and the underdrive piston.
13. Using Spring Compressor (special tool #8251, Compressor, Spring) (2), compress the UD return spring pack and secure the piston in place with the snap-ring.

NOTE: **The 68RFE UD clutch discs (both the internal-and external-toothed discs) can now be identified by the numbers "605/604" which are laser-burned into the friction material facing. Install an outer-toothed disc first then alternate inner and outer discs, ending with an inner-toothed disc on top, install all discs with the friction material facing up.**

14. Install the underdrive clutch pack into the input clutch retainer.

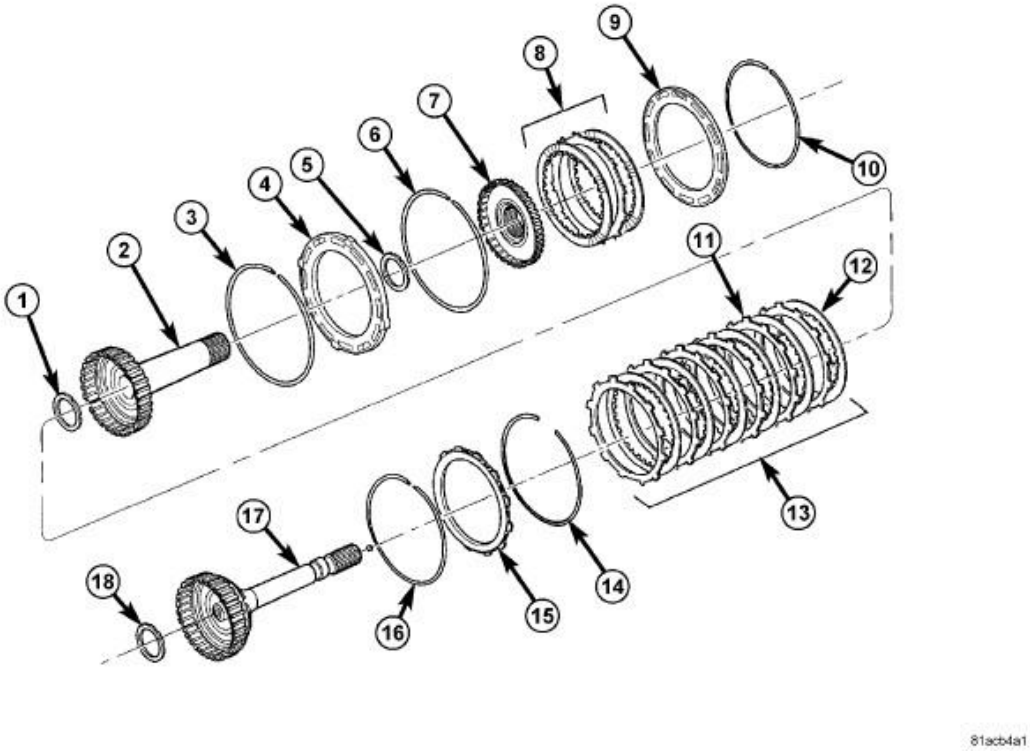

Fig. 109: Input Clutch Assembly - Part 2
Courtesy of CHRYSLER GROUP, LLC

1 - THRUST BEARING NUMBER 3	10 - SNAP-RING (SELECT)
2 - OD HUB/SHAFT	11 - OD OUTER DISC
3 - SNAP-RING (WAVE)	12 - OD INNER DISC
4 - REV/OD PRESSURE PLATE	13 - OD CLUTCH
5 - THRUST BEARING NUMBER 4	14 - SNAP-RING (TAPERED)
6 - SNAP-RING (FLAT)	15 - UD/OD REACTION PLATE
7 - REVERSE HUB/SHAFT	16 - SNAP-RING (FLAT)
8 - REVERSE CLUTCH	17 - UD HUB/SHAFT
9 - REVERSE REACTION PLATE	18 - THRUST BEARING NUMBER 2

15. Install the UD / OD reaction plate lower flat snap-ring (16). The correct snap-ring can be identified by the two tabbed ears.
16. Install the UD / OD reaction plate (15) into the input clutch retainer. The reaction plate is to be installed with the wide face down, and the narrow face up.
17. Install the UD reaction plate upper tapered snap-ring (14) with tapered side up, and with both tips underneath the retainer lugs.`

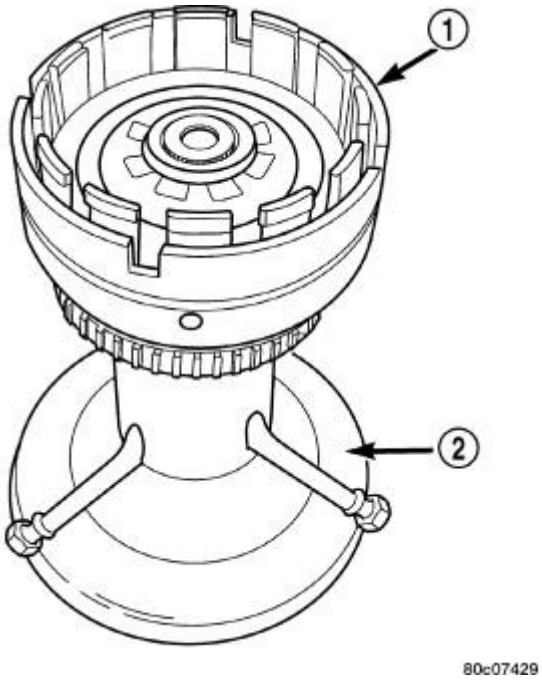

Fig. 110: Input Clutch Assembly Mounted On Tool 8260A
Courtesy of CHRYSLER GROUP, LLC

1 - INPUT CLUTCH ASSEMBLY
2 - TOOL 8260

18. Install the input clutch assembly into Input Clutch Pressure Fixture (special tool #8260A, Fixture, Input Clutch) (2).

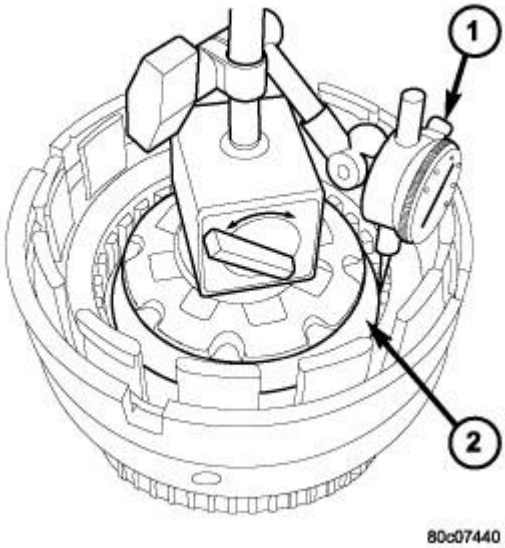

Fig. 111: Measuring UD Clutch Clearance
Courtesy of CHRYSLER GROUP, LLC

1 - TOOL C-3339	
2 - UNDERDRIVE CLUTCH PACK	

19. Mount a dial indicator (special tool #C-3339A, Set, Dial Indicator) (1) on the input clutch hub. Push down on the UD clutch discs and zero the indicator against the UD clutch discs. Apply 20 psi of air pressure to the UD clutch and record the dial indicator reading. Measure and record UD clutch pack measurement in four (4) places, 90° apart. Take average of four measurements and compare with UD clutch pack clearance specification. The correct clutch clearance is 1.02-1.72 mm (0.040-0.068 in.). The reaction plate is not selective. If the clutch clearance is not within specification, replace the reaction plate along with all the friction and steel discs.

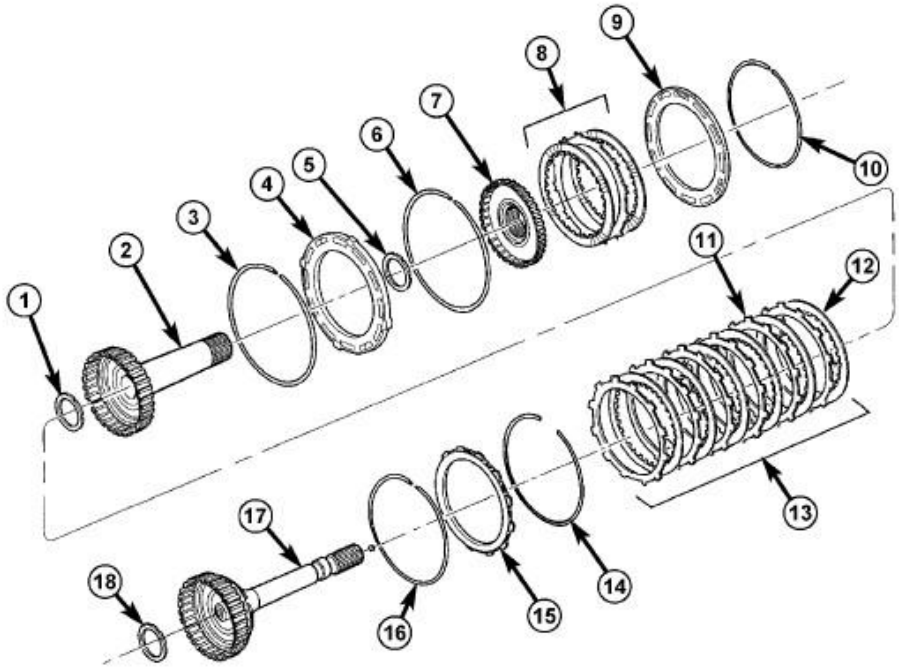

81acb4a1

Fig. 112: Input Clutch Assembly - Part 2
Courtesy of CHRYSLER GROUP, LLC

1 - THRUST BEARING NUMBER 3	10 - SNAP-RING (SELECT)
2 - OD HUB/SHAFT	11 - OD OUTER DISC
3 - SNAP-RING (WAVE)	12 - OD INNER DISC
4 - REV/OD PRESSURE PLATE	13 - OD CLUTCH
5 - THRUST BEARING NUMBER 4	14 - SNAP-RING (TAPERED)
6 - SNAP-RING (FLAT)	15 - UD/OD REACTION PLATE

7 - REVERSE HUB/SHAFT	16 - SNAP-RING (FLAT)
8 - REVERSE CLUTCH	17 - UD HUB/SHAFT
9 - REVERSE REACTION PLATE	18 - THRUST BEARING NUMBER 2

20. Install the overdrive clutch pack (13) into the input clutch retainer. Install an outer toothed disc (11) first and then alternate inner disc (12) and outer discs, ending with a inner toothed disc (12) on top. Install all discs with the friction material facing up.
21. Install the overdrive clutch wavy snap-ring (3) with the two tabbed ears into the OD/reverse piston.
22. Install the OD/reverse pressure plate (4) into the input clutch retainer, with the stepped face down toward the OD clutch.
23. Install the OD/reverse pressure plate flat snap-ring (6) into the OD/reverse piston.

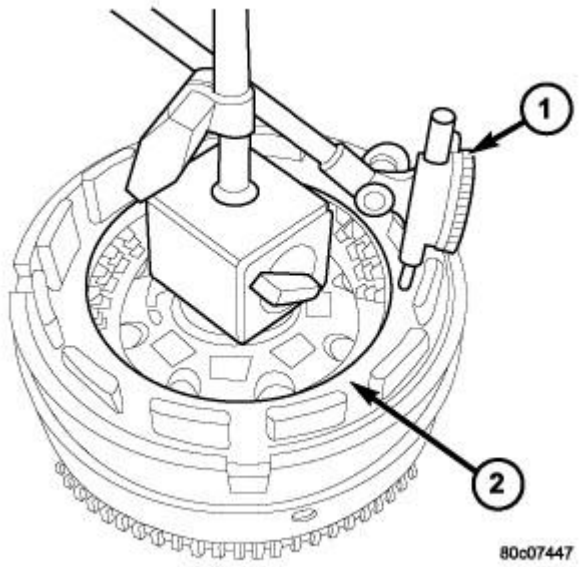

Fig. 113: Measuring OD Clutch Clearance
Courtesy of CHRYSLER GROUP, LLC

1 - TOOL C-3339
2 - OD/REV REACTION PLATE

24. Mount a dial indicator (special tool #C-3339A, Set, Dial Indicator) (1) on the input clutch hub and zero the indicator against the OD/reverse pressure plate (2). Apply 20 psi of air pressure to the overdrive clutch and record the dial indicator reading. Measure and record OD clutch pack measurement in four (4) places, 90° apart. Take average of four measurements and compare with OD clutch pack clearance specification. Verify that the clutch clearance is 0.75-1.61 mm (0.030-0.063 in.). The OD / Reverse pressure plate is selective. If the clutch clearance is not within specification, select and install the proper pressure plate.

NOTE: The 68RFE uses three (3) selective OD/Rev pressure plates. Two of the

three plates have a numeric identification number and a stepped face.

SELECTABLE END PLAY PRESSURE PLATES

- One stepped face, identification number 1 = 8.90 mm (0.350 in.)
- One stepped face, identification number 2 = 9.34 mm (0.367 in.)
- Both faces flat, no identification number = 9.74 mm (0.383 in.)

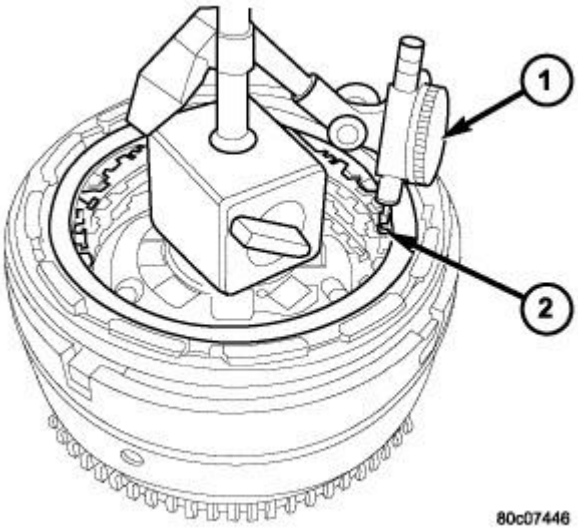

Fig. 114: Measuring Reverse Clutch Clearance
Courtesy of CHRYSLER GROUP, LLC

1 - TOOL C-3339
2 - REVERSE CLUTCH PACK

25. Install the reverse clutch pack into the input clutch retainer.
26. Install the reverse reaction plate into the input clutch retainer.
27. Install the reverse reaction plate selective snap-ring into the input clutch retainer.
28. Mount a dial indicator to the assembly, push down on the clutch discs, pull up on the reaction plate to ensure the plate is properly seated and zero the indicator against the reverse clutch discs (2). Apply 20 psi of air pressure to the reverse clutch and record the dial indicator reading. Measure and record Reverse clutch pack measurement in four (4) places, 90° apart. Take average of four measurements and compare with Reverse clutch pack clearance specification. The correct clutch clearance is 0.58-1.47 mm (0.023-0.058 in.). Adjust as necessary. Install the chosen snap-ring and re-measure to verify selection.

NOTE: The 68RFE uses one of three (3) different selective snap rings. They are identified by the end cuts (either straight [square] cut or "butterfly" [S-curved] cut):

SELECTABLE END PLAY SNAP RINGS

- One Square End, One Buttery Fly End = 1.55 mm (0.061 in.)
- Both Ends Square Cut = 1.85 mm (0.073 in)
- Both Ends Buttery Fly Cut = 2.2 mm (0.087 in.)

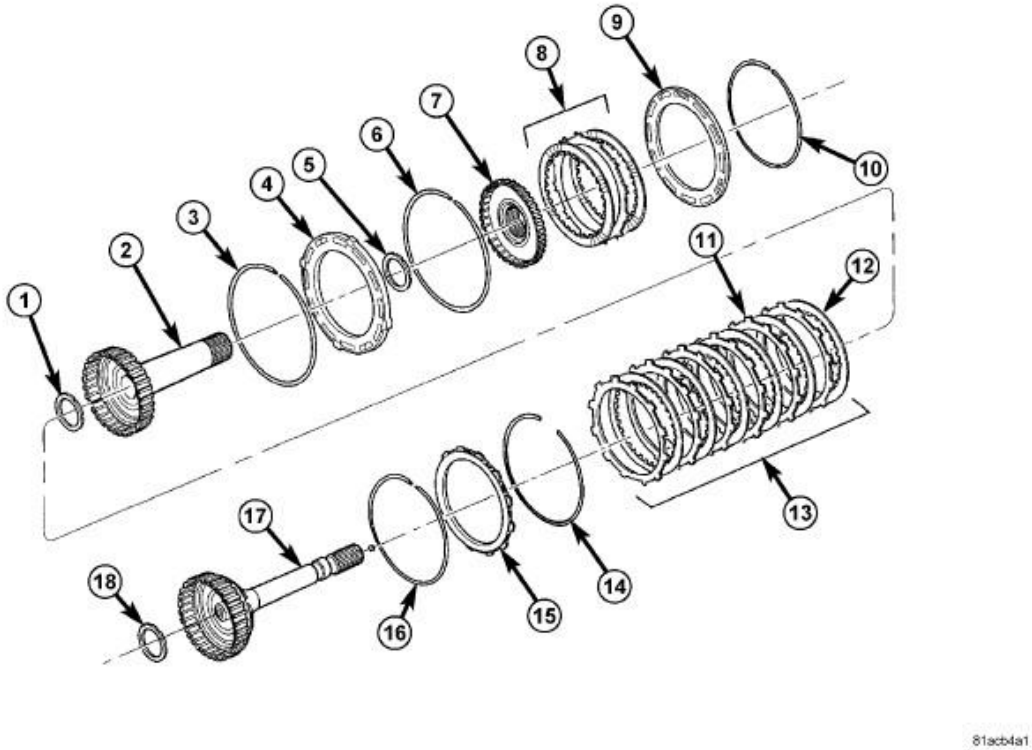

Fig. 115: Input Clutch Assembly - Part 2
Courtesy of CHRYSLER GROUP, LLC

1 - THRUST BEARING NUMBER 3	10 - SNAP-RING (SELECT)
2 - OD HUB/SHAFT	11 - OD OUTER DISC
3 - SNAP-RING (WAVE)	12 - OD INNER DISC
4 - REV/OD PRESSURE PLATE	13 - OD CLUTCH
5 - THRUST BEARING NUMBER 4	14 - SNAP-RING (TAPERED)
6 - SNAP-RING (FLAT)	15 - UD/OD REACTION PLATE
7 - REVERSE HUB/SHAFT	16 - SNAP-RING (FLAT)
8 - REVERSE CLUTCH	17 - UD HUB/SHAFT
9 - REVERSE REACTION PLATE	18 - THRUST BEARING NUMBER 2

29. Remove the reverse clutch pack (8) from the input clutch retainer.
30. Install the number 2 thrust bearing (18) onto the underdrive hub (17) with outer race against the hub with petroleum jelly.
31. Install the underdrive hub (17) into the input clutch retainer.
32. Install the number 3 thrust bearing (1) into the overdrive hub (2) with the outer race against the hub with petroleum jelly.
33. Install the overdrive hub (2) into the input clutch retainer.
34. Install the number 4 thrust bearing (5) into the reverse hub with outer race against the hub with petroleum jelly.
35. Install the reverse hub (7) into the input clutch retainer.
36. Install the complete reverse clutch pack (8).
37. Install the reverse reaction plate (9) and snap-ring (10).
38. Push up on reaction plate to allow reverse clutch to move freely.

ASSEMBLY, TRANSMISSION SOLENOID AND TRS

DESCRIPTION

DESCRIPTION

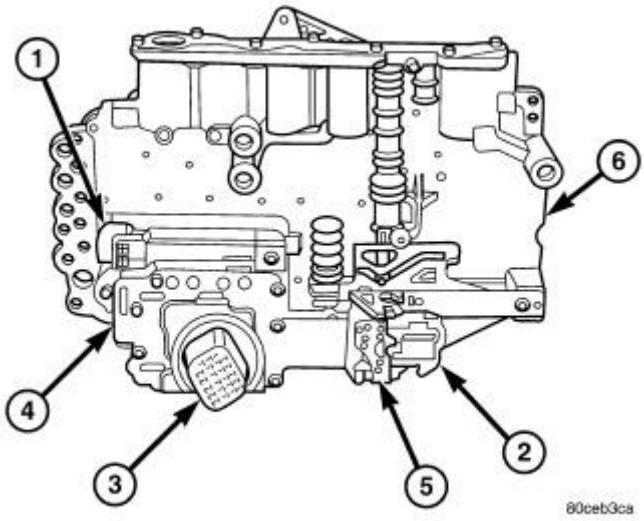

Fig. 116: Locating Transmission Solenoid/TRS Assembly, Transmission Range Sensor & Pressure Control Solenoid
Courtesy of CHRYSLER GROUP, LLC

1 - PRESSURE CONTROL SOLENOID
2 - TRANSMISSION RANGE SELECTOR PLATE
3 - 23-WAY CONNECTOR

4 - SOLENOID PACK
5 - TRANSMISSION RANGE SENSOR
6 - VALVE BODY

The transmission solenoid/TRS assembly is internal to the transmission and mounted on the valve body assembly. The assembly consists of five solenoids that control hydraulic pressure to five of the friction elements (transmission clutches), and the torque converter clutch. The pressure control solenoid is located on the side of the solenoid/TRS assembly. The solenoid/TRS assembly also contains the Transmission Range Sensor (TRS) and five pressure switches that feed information to the TCM.

OPERATION

OPERATION

SOLENOIDS

Solenoids are used to control the L/R, 2C, 4C, OD, and UD friction elements. The reverse clutch is controlled by line pressure and the position of the manual valve in the valve body. All the solenoids are contained within the Solenoid and Pressure Switch Assembly. The 2C, 4C, and UD solenoids are dedicated to those specific clutches (respectively). The L/R solenoid controls either the L/R clutch (in 1st gear and Park/Neutral) or the torque converter clutch (TCC), in 2nd and higher gears. The position of the solenoid switch valve (SSV) determines which element the L/R solenoid is controlling. The Multi-Select (MS) solenoid controls either the OD clutch (in Drive gears) or the L/R clutch (in Reverse). The position of the manual valve determines which element the MS solenoid is controlling.

The TCM energizes or operates the solenoids individually by grounding the return wire of the solenoid as necessary. When a solenoid is energized, the solenoid valve shifts, and a fluid passage is opened or closed (vented or applied), depending on its default operating state. The result is an apply or release of a frictional element.

The MS and UD solenoids are normally applied (they supply hydraulic pressure to the clutch when they are electrically "off"), which provides appropriate transmission limp-in operation in the event of an electrical failure.

The continuity of the solenoids and circuits are periodically tested. Each solenoid is turned on or off depending on its current state. An inductive spike should be detected by the TCM during this test. If no spike is detected, the circuit is tested again to verify the failure. In addition to the periodic testing, the solenoid circuits are tested if a speed ratio or pressure switch error occurs.

PRESSURE SWITCHES

The TCM relies on five pressure switches to monitor fluid pressure in the L/R, 2C, 4C, UD, and OD hydraulic circuits. The primary purpose of these switches is to help the TCM detect when clutch circuit hydraulic failures occur. The switches close at 23 psi and open at 11 psi, and simply indicate whether or not pressure exists. The switches are continuously monitored by the TCM for the correct states (open or closed) in each gear as shown in the following chart.

68RFE PRESSURE SWITCH STATES

GEAR	ERS DISPLAY	L/R	2C	4C	UD	OD
R		OP	OP	OP	OP	OP
P/N		CL	OP	OP	OP	OP
1ST	1	CL*	OP	OP	CL	OP
2ND	2	OP	CL	OP	CL	OP
3RD	3	OP	OP	CL	CL	OP
4TH	4	OP	OP	OP	CL	CL
5TH	5	OP	OP	CL	OP	CL
6TH	6	OP	CL	OP	CL	CL
*L/R is closed if output speed is below 100 rpm in Drive. L/R is always closed in ERS1.						

A Diagnostic Trouble Code (DTC) will set if the TCM senses any switch open or closed at the wrong time in a given gear.

REMOVAL

REMOVAL

NOTE: **If the Transmission Solenoid/TRS Assembly is being replaced, the Quick Learn Procedure must be performed. Refer to MODULE, TRANSMISSION CONTROL, STANDARD PROCEDURE .**

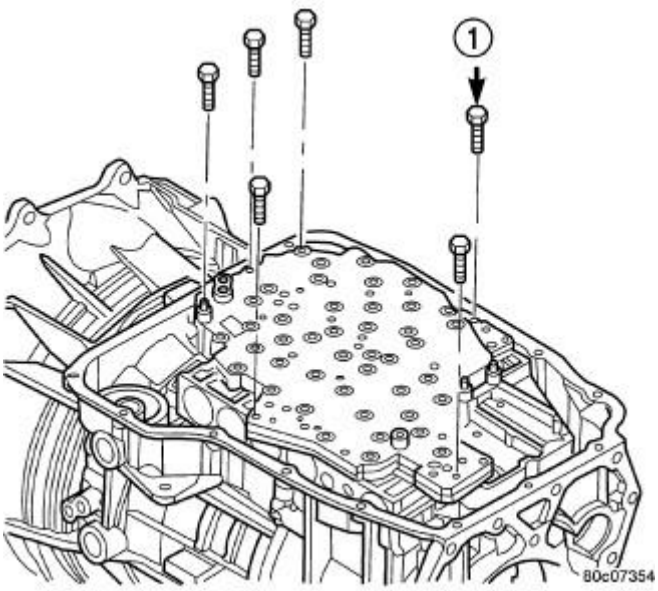

Fig. 117: Valve Body Bolts
Courtesy of CHRYSLER GROUP, LLC

1 - VALVE BODY TO CASE BOLT (6)

1. Remove the valve body from the transmission.

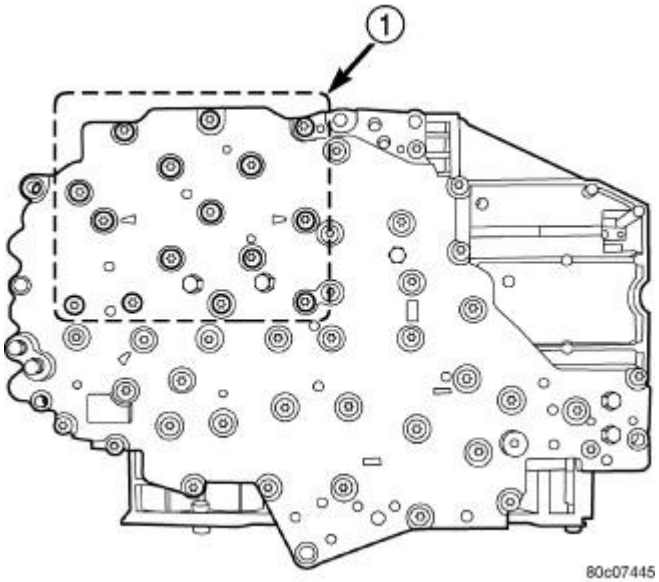

Fig. 118: Solenoid Pack Bolts
Courtesy of CHRYSLER GROUP, LLC

1 - SOLENOID PACK BOLTS (15)

2. Remove the bolts (1) holding the transmission solenoid/TRS assembly onto the valve body.
3. Separate the transmission solenoid/TRS assembly from the valve body.

INSTALLATION

INSTALLATION

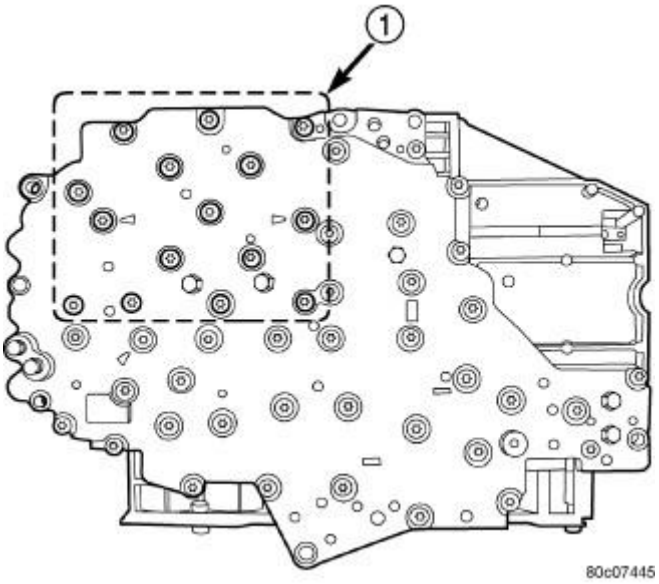

Fig. 119: Solenoid Pack Bolts
Courtesy of CHRYSLER GROUP, LLC

1 - SOLENOID PACK BOLTS (15)

1. Place TRS selector plate in the PARK position.
2. Position the transmission solenoid/TRS assembly onto the valve body. Be sure that both alignment dowels are fully seated in the valve body and that the TRS switch contacts are properly positioned in the selector plate
3. Install the bolts (1) to hold the transmission solenoid/TRS assembly onto the valve body.
4. Tighten the solenoid assembly screws adjacent to the arrows cast into the bottom of the valve body first. Tighten the screws to 6 N.m (50 in.lbs.).
5. Tighten the remainder of the solenoid assembly screws to 6 N.m (50 in.lbs.).
6. Install the valve body into the transmission.

CABLE, SHIFT

DIAGNOSIS AND TESTING

DIAGNOSIS AND TESTING - GEARSHIFT CABLE

1. Engine starts must be possible with shift lever in PARK or NEUTRAL positions only. Engine starts must not be possible in any other gear position.
2. With the shift lever in the:
    1. PARK position - Apply upward force on the shift arm and remove pressure. Engine starts must be possible.
    2. PARK position - Apply downward force on the shift arm and remove pressure. Engine starts must be possible.

3. NEUTRAL position - Normal position. Engine starts must be possible.
4. NEUTRAL position - Engine running and brakes applied, apply upward force on the shift arm. Transmission shall not be able to shift from neutral to reverse.

ADJUSTMENTS

ADJUSTMENTS

NOTE: Always run the shift lever test using the scan tool to help diagnose a potential TRS problem

Check adjustment by starting the engine in PARK and NEUTRAL. Adjustment is CORRECT if the engine starts only in these positions. Adjustment is INCORRECT if the engine starts in one but not both positions. If the engine starts in any position other than PARK or NEUTRAL, or if the engine will not start at all, the transmission range sensor may be faulty.

GEARSHIFT ADJUSTMENT PROCEDURE

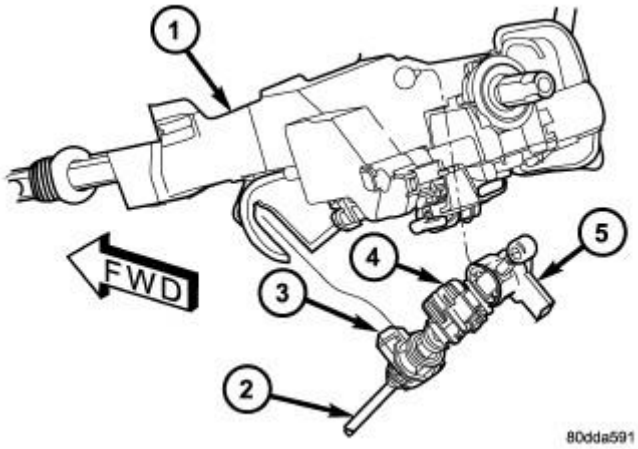

Fig. 120: Gearshift Cable At Steering Column
Courtesy of CHRYSLER GROUP, LLC

1 - STEERING COLUMN
2 - GEARSHIFT CABLE
3 - GEARSHIFT CABLE LOCK TAB
4 - BTSI SOLENOID LOCK TAB
5 - BTSI CONNECTOR

1. Shift transmission into PARK.
2. Release cable adjuster lock tab (3) (underneath the steering column) to unlock cable. Refer to **Fig. 120**.
3. Raise vehicle.
4. Disengage the cable eyelet from the transmission manual shift lever.

5. Verify transmission shift lever is in PARK detent by moving lever fully rearward. Last rearward detent is PARK position.
6. Verify positive engagement of transmission park lock by attempting to rotate propeller shaft. Shaft will not rotate when park lock is engaged.
7. Snap the cable eyelet onto the transmission manual shift lever.
8. Lower vehicle.
9. Lock shift cable by pressing cable adjuster lock tab (3) downward until it snaps into place.
10. Check engine starting. Engine should start only in PARK and NEUTRAL.

REMOVAL

REMOVAL

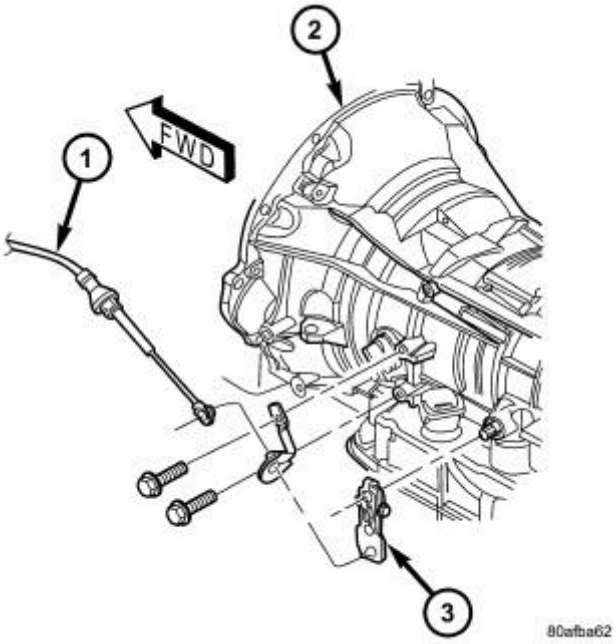

Fig. 121: Gearshift Cable At Transmission
Courtesy of CHRYSLER GROUP, LLC

1 - GEARSHIFT CABLE
2 - RFE TRANSMISSION
3 - MANUAL LEVER

1. Shift transmission into PARK.
2. Raise vehicle.
3. Disengage cable (1) eyelet at transmission manual shift lever (3) and pull cable adjuster out of mounting bracket. Refer to **Fig. 121**.

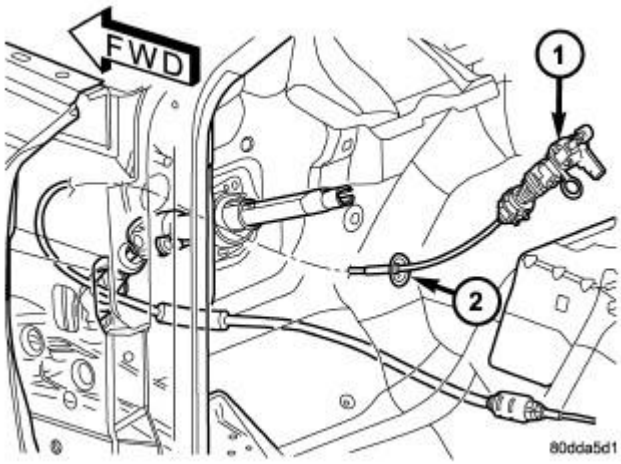

Fig. 122: Gearshift Cable At Dash Panel
Courtesy of CHRYSLER GROUP, LLC

1 - GEARSHIFT CABLE
2 - GROMMET

4. Lower the vehicle.
5. Remove the dash panel insulation pad as necessary to access the gearshift cable grommet (2). Refer to **Fig. 122**.
6. Remove grommet (2) from the dash panel.

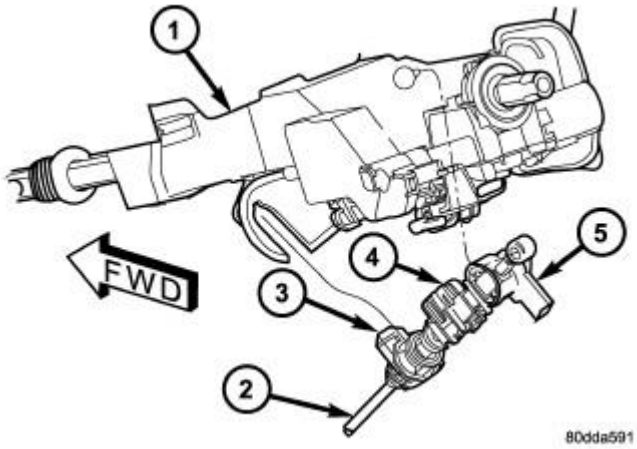

Fig. 123: Gearshift Cable At Steering Column
Courtesy of CHRYSLER GROUP, LLC

1 - STEERING COLUMN
2 - GEARSHIFT CABLE
3 - GEARSHIFT CABLE LOCK TAB

4 - BTSI SOLENOID LOCK TAB
5 - BTSI CONNECTOR

7. Remove any steering column (1) trim necessary to access the gearshift cable (2) and BTSI mechanism.
8. Disconnect the BTSI wiring connector (5).
9. Disconnect cable at lower column bracket and shift lever pin and pull the cable through the dash panel opening into the vehicle. Refer to **Fig. 123**.
10. Remove gearshift cable (2) from vehicle.

INSTALLATION

INSTALLATION

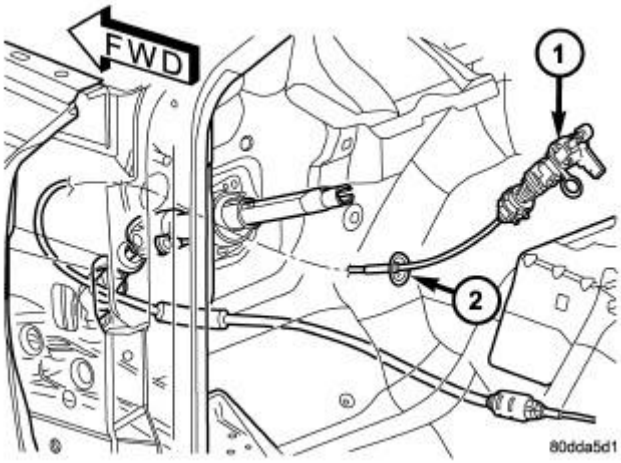

Fig. 124: Gearshift Cable At Dash Panel
Courtesy of CHRYSLER GROUP, LLC

1 - GEARSHIFT CABLE
2 - GROMMET

1. Route the transmission end of the gearshift cable (1) through the opening in the dash panel. Refer to **Fig. 124**.
2. Seat the cable grommet (2) into the dash panel opening.

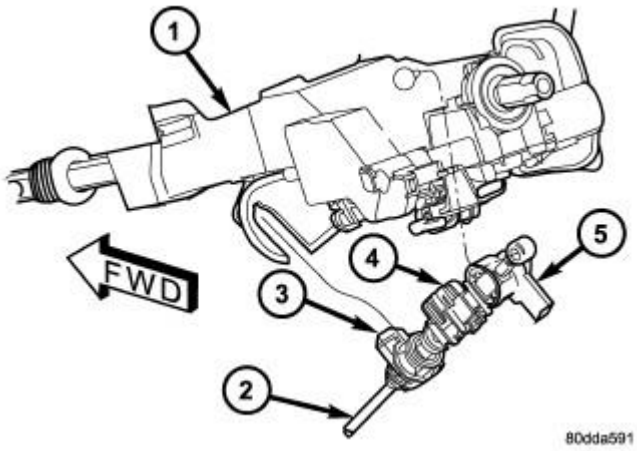

Fig. 125: Gearshift Cable At Steering Column
Courtesy of CHRYSLER GROUP, LLC

1 - STEERING COLUMN
2 - GEARSHIFT CABLE
3 - GEARSHIFT CABLE LOCK TAB
4 - BTSI SOLENOID LOCK TAB
5 - BTSI CONNECTOR

3. Snap the cable into the steering column (1) bracket so the retaining ears are engaged and snap the cable eyelet onto the shift lever ball stud. Refer to **Fig. 125**.
4. Raise the vehicle.
5. Place the transmission manual shift lever in the "PARK" detent (rearmost) position and rotate prop shaft to ensure transmission is in PARK.
6. Route the gearshift cable through the transmission mounting bracket and secure the cable by snapping the cable retaining ears into the transmission bracket and snapping the cable eyelet on the manual shift lever ball stud.
7. Lower vehicle.
8. Lock the shift cable adjustment by pressing the cable adjuster lock tab (3) downward until it snaps into place.
9. Check for proper operation of the transmission range sensor.
10. Adjust the gearshift cable and BTSI mechanism. Refer to **CABLE, SHIFT, ADJUSTMENTS** and **SYSTEM, SHIFT INTERLOCK, ADJUSTMENTS**.

CLUTCH

DISASSEMBLY

DISASSEMBLY

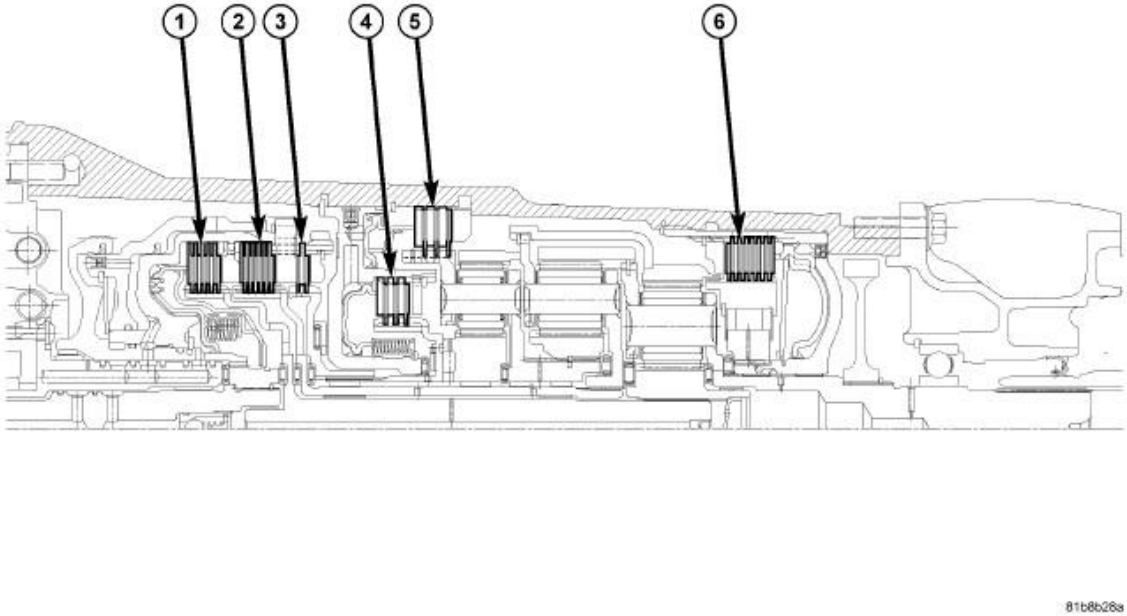

Fig. 126: 68RFE Clutch Orientation
Courtesy of CHRYSLER GROUP, LLC

1 - U/D CLUTCH	4 - 4C CLUTCH
2 - O/D CLUTCH	5 - 2C CLUTCH
3 - REVERSE CLUTCH	6 - L/R CLUTCH

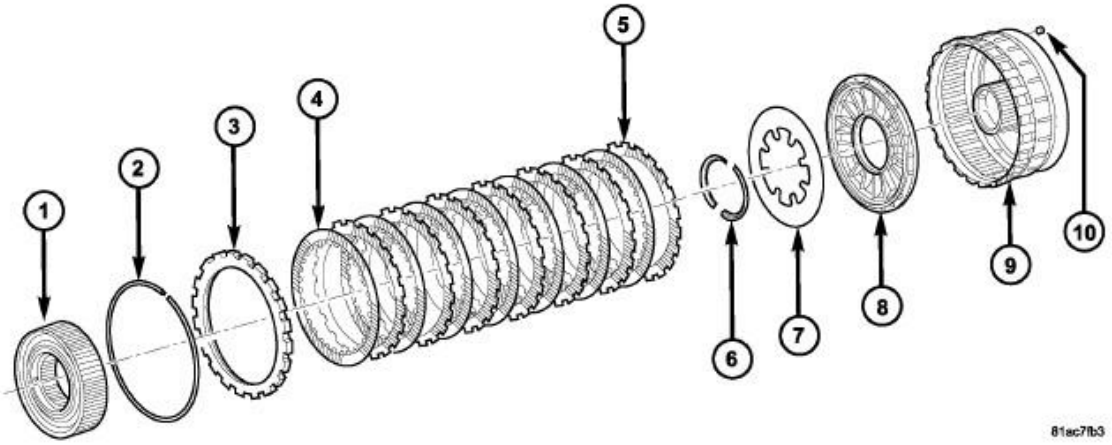

Fig. 127: Low/Reverse Clutch
Courtesy of CHRYSLER GROUP, LLC

1 - OVERRUNNING CLUTCH	8 - PISTON
2 - SNAP RING (SELECTIVE)	9 - L/R CLUTCH RETAINER
3 - REACTION PLATE	10 - BLEED ORIFICE
4 - DISC	
5 - PLATE	
6 - RETAINER	
7 - BELLEVILLE SPRING	

1. Remove the low/reverse reaction plate flat snap-ring (2).
2. Remove the reaction plate (3).
3. Remove the low/reverse clutch (4, 5) and the overrunning clutch (1) from the low/reverse clutch retainer (9).
4. Separate the low/reverse clutch (4, 5) from the overrunning clutch (1).

NOTE: **The ORC is no longer serviced, it is sold as an assembly only. Be certain that the outer race will rotate in one direction but not both relative to the inner race**

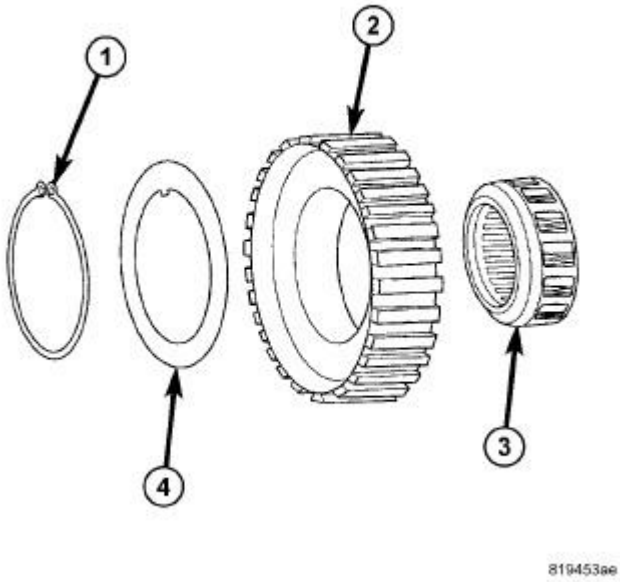

Fig. 128: 68RFE Overrunning Clutch
Courtesy of CHRYSLER GROUP, LLC

1 - SNAP-RING
2 - OUTER RACE
3 - OVERRUNNING CLUTCH
4 - SPACER

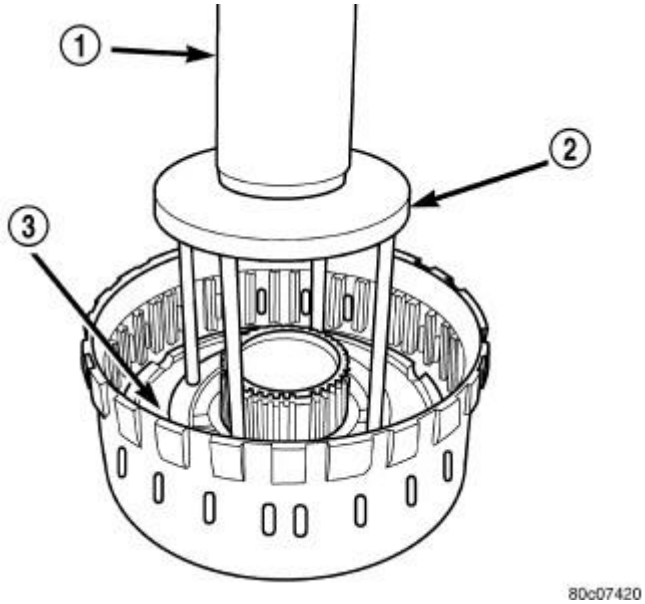

Fig. 129: Compressing Low/Reverse Belleville Spring
Courtesy of CHRYSLER GROUP, LLC

1 - PRESS
2 - TOOL 8285
3 - BELLEVILLE SPRING

5. Using Spring Compressor (special tool #8285, Compressor, Spring) (2) and a suitable shop press (1), compress the low/reverse Belleville spring (3) and remove the split retaining ring holding the Belleville spring into the low/reverse clutch retainer. Refer to **Fig. 129**.
6. Remove the low/reverse Belleville spring (3) and piston from the low/reverse clutch retainer. Use 20 psi of air pressure to remove the piston if necessary.

CLEANING

CLEANING

Clean the overrunning clutch assembly, and low-reverse clutch retainer. Dry them with compressed air after cleaning.

INSPECTION

INSPECTION

Verify that the overrunning clutch assembly turns smoothly in one direction, and locks in the opposite direction. Verify that the oil feed holes in the inner race are not blocked by debris.

Replace the LR clutch retainer if the piston bores or bushing surfaces are badly scored, worn or damaged.

ASSEMBLY

ASSEMBLY

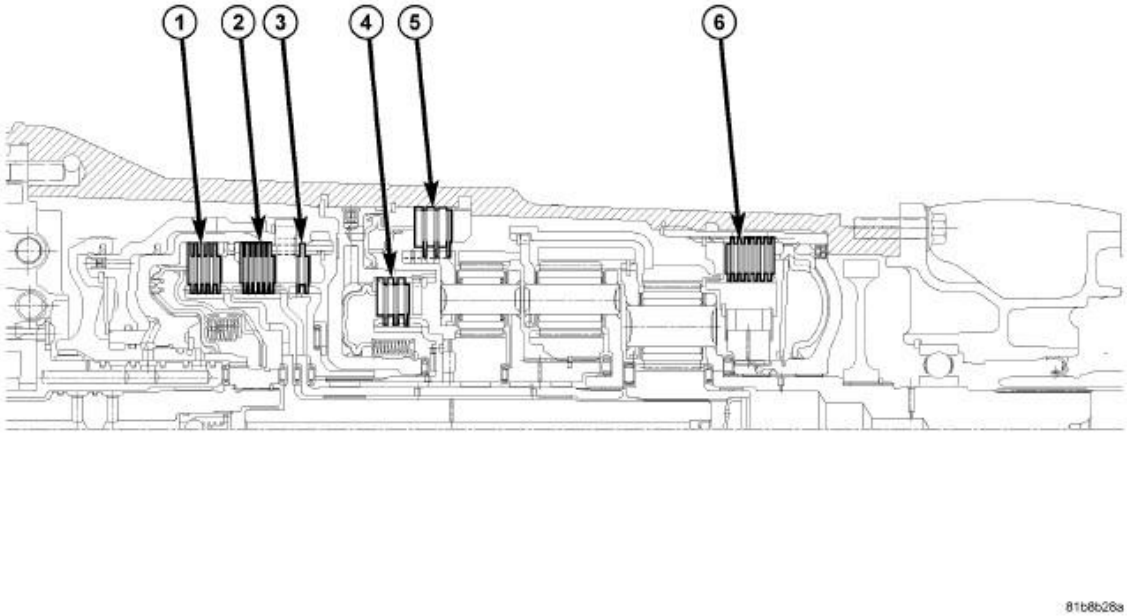

Fig. 130: 68RFE Clutch Orientation
Courtesy of CHRYSLER GROUP, LLC

1 - U/D CLUTCH	4 - 4C CLUTCH
2 - O/D CLUTCH	5 - 2C CLUTCH
3 - REVERSE CLUTCH	6 - L/R CLUTCH

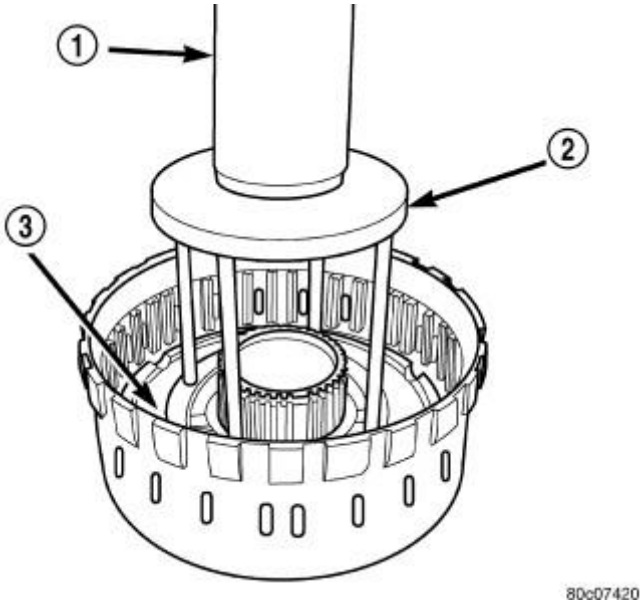

Fig. 131: Compressing Low/Reverse Belleville Spring
Courtesy of CHRYSLER GROUP, LLC

1 - PRESS
2 - TOOL 8285
3 - BELLEVILLE SPRING

1. Check the bleed orifice to ensure that it is not plugged or restricted.
2. Lubricate the seals with Mopar® ATF +4, Automatic Transmission Fluid, prior to installation.
3. Install the low/reverse piston into the low/reverse clutch retainer.
4. Position the low/reverse Belleville spring (3) on the low/reverse piston.
5. Using Spring Compressor (special tool #8285, Compressor, Spring) (2) and a suitable shop press (1), compress the low/reverse Belleville spring (3) and install the split retaining ring to hold the Belleville spring into the low/reverse clutch retainer.

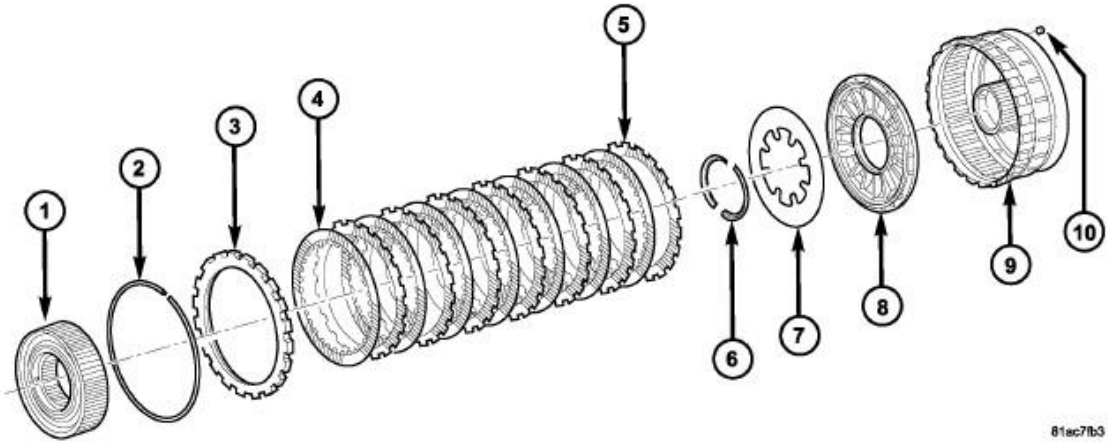

Fig. 132: Low/Reverse Clutch

Courtesy of CHRYSLER GROUP, LLC

1 - OVERRUNNING CLUTCH	8 - PISTON
2 - SNAP RING (SELECTIVE)	9 - L/R CLUTCH RETAINER
3 - REACTION PLATE	10 - BLEED ORIFICE
4 - DISC	
5 - PLATE	
6 - RETAINER	
7 - BELLEVILLE SPRING	

NOTE: **Install an outer-toothed disc first, then alternate inner and outer-toothed discs, ending with an inner-toothed disc. Install all the discs with the friction material facing up.**

6. Assemble and install the low/reverse clutch pack (4, 5) into the low/reverse clutch retainer (9).
7. Install the low/reverse reaction plate (3) into the low/reverse clutch retainer (9). The reaction plate is directional and must be installed with the flat side down.
8. Install the low/reverse clutch pack snap-ring (2). The snap-ring is selectable and should be chosen to give the correct clutch pack clearance.
9. Measure the low/reverse clutch pack clearance and adjust as necessary. The correct clutch clearance is 1.18-2.09 mm (0.046-0.082 in.).

NOTE: **When installing the overrunning clutch be certain the notched end of the external spline teeth faces upward. The ORC is properly seated when the inner spline stepped face is below the face of the LR clutch retainer hub.**

10. Install the overrunning clutch (1) into the low/reverse clutch retainer (9) making sure that the index splines are aligned with the retainer.

COVER, OIL PUMP

REMOVAL

REMOVAL

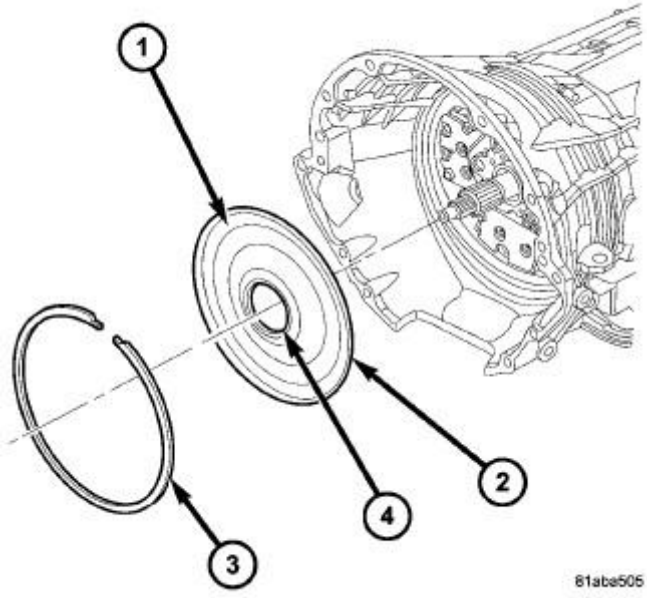

Fig. 133: Front Cover
Courtesy of CHRYSLER GROUP, LLC

1 - FRONT COVER
2 - O - RING
3 - SNAP RING
4 - FRONT COVER SEAL

1. Remove the bolts holding the transmission oil pan to the transmission case.
2. Remove the transmission oil pan from the transmission case.
3. Remove the snap ring (3) from the transmission case.
4. Reaching through a case opening in the valve body area with a long blunted tool, remove the transmission front cover (1) from the transmission case.

INSTALLATION

INSTALLATION

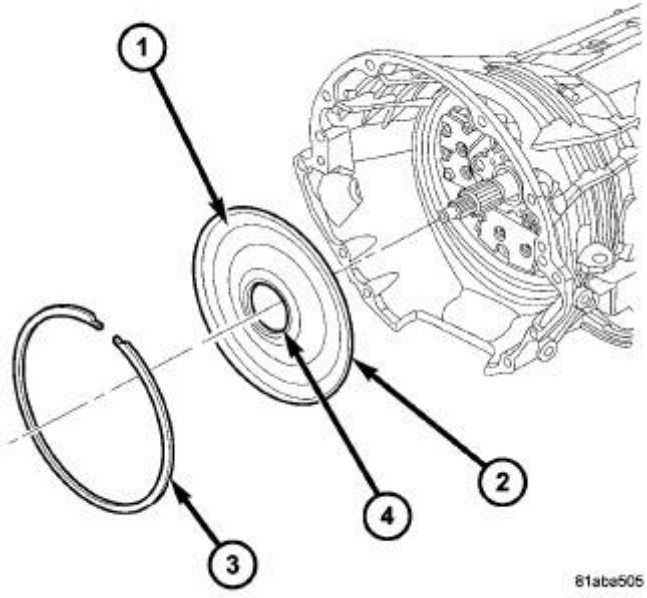

Fig. 134: Front Cover
Courtesy of CHRYSLER GROUP, LLC

1 - FRONT COVER
2 - O - RING
3 - SNAP RING
4 - FRONT COVER SEAL

NOTE: **To avoid contamination and garter spring dislodgement, do not handle the front cover seal (4) when positioning the front cover into the transmission case.**

1. Position a new front cover (1) into the transmission case.

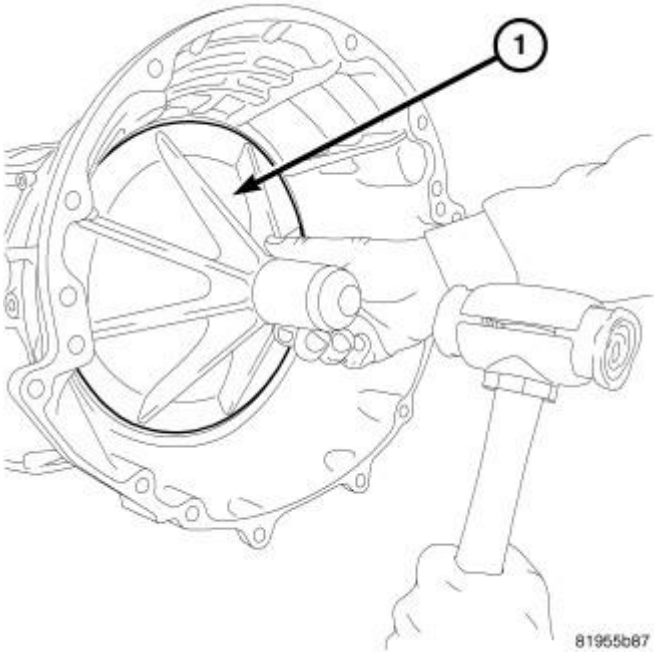

Fig. 135: Front Cover Installation Tool
Courtesy of CHRYSLER GROUP, LLC

1 - Front Cover installation Tool 9955

2. Using the front cover installation tool (special tool #9955, Installer, Front Cover) (1) and a dead-blow mallet, install the front cover into transmission case.

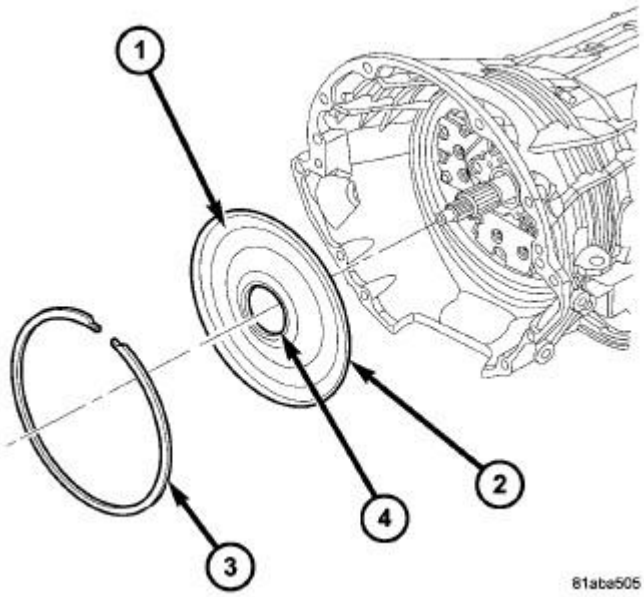

Fig. 136: Front Cover

Courtesy of CHRYSLER GROUP, LLC

1 - FRONT COVER
2 - O - RING
3 - SNAP RING
4 - FRONT COVER SEAL

3. Install the snap ring (3) into the transmission case.
4. Apply RTV silicone to the oil pan and install the transmission oil pan.
5. Tighten the bolts to 12 N.m (105 in. lbs.).

FLUID

DIAGNOSIS AND TESTING

EFFECTS OF INCORRECT FLUID LEVEL

A low fluid level allows the pump to take in air along with the fluid. Air in the fluid will cause fluid pressures to be low and develop slower than normal. If the transmission is overfilled, the gears churn the fluid into foam. This aerates the fluid and causing the same conditions occurring with a low level. In either case, air bubbles cause fluid overheating, oxidation, and varnish buildup which interferes with valve and clutch operation. Foaming also causes fluid expansion which can result in fluid overflow from the transmission vent or fill tube. Fluid overflow can easily be mistaken for a leak if inspection is not careful.

CAUSES OF BURNT FLUID

Burnt, discolored fluid is a result of overheating which has three primary causes.

1. Internal clutch slippage, usually caused by low line pressure, inadequate clutch apply pressure, or clutch seal failure.
2. A result of restricted fluid flow through the main and auxiliary cooler. This condition is usually the result of a faulty or improperly installed drainback valve, a damaged oil cooler, or severe restrictions in the coolers and lines caused by debris or kinked lines.
3. Heavy duty operation with a vehicle not properly equipped for this type of operation. Trailer towing or similar high load operation will overheat the transmission fluid if the vehicle is improperly equipped. Such vehicles should have an auxiliary transmission fluid cooler, a heavy duty cooling system, and the engine/axle ratio combination needed to handle heavy loads.

FLUID CONTAMINATION

Transmission fluid contamination is generally a result of:

- adding incorrect fluid
- failure to clean dipstick and fill tube when checking level
- engine coolant entering the fluid

- internal failure that generates debris
- overheat that generates sludge (fluid breakdown)
- failure to replace contaminated converter after repair

The use of non-recommended fluids can result in transmission failure. The usual results are erratic shifts, slippage, abnormal wear and eventual failure due to fluid breakdown and sludge formation. Avoid this condition by using recommended fluids only.

The dipstick cap and fill tube should be wiped clean before checking fluid level. Dirt, grease and other foreign material on the cap and tube could fall into the tube if not removed beforehand. Take the time to wipe the cap and tube clean before withdrawing the dipstick.

Engine coolant in the transmission fluid is generally caused by a cooler malfunction. The only remedy is to replace the radiator as the cooler in the radiator is not a serviceable part. If coolant has circulated through the transmission, an overhaul is necessary.

The torque converter should also be replaced whenever a failure generates sludge and debris. This is necessary because normal converter flushing procedures will not remove all contaminants.

STANDARD PROCEDURE

FLUID LEVEL CHECK

Low fluid level can cause a variety of conditions because it allows the pump to take in air along with the fluid. As in any hydraulic system, air bubbles make the fluid spongy, therefore, pressures will be low and build up slowly.

Improper filling can also raise the fluid level too high. When the transmission has too much fluid, the geartrain churns up foam and cause the same conditions which occur with a low fluid level.

In either case, air bubbles can cause overheating and fluid oxidation, and varnishing. This can interfere with normal valve, clutch, and accumulator operation. Foaming can also result in fluid escaping from the transmission vent where it may be mistaken for a leak.

The transmission has a dipstick to check oil level. It is located on the right side of the engine. Be sure to wipe all dirt from dipstick handle before removing.

The torque converter fills in both the P (PARK) and N (NEUTRAL) positions. Place the selector lever in P (PARK) to be sure that the fluid level check is accurate. **The engine should be running at idle speed for at least one minute, with the vehicle on level ground.** At normal operating temperature (approximately 82° C. or 180° F), the fluid level is correct if it is in the HOT region (cross-hatched area) on the oil level indicator. The fluid level will be approximately at the upper COLD hole of the dipstick at 21° C (70° F) fluid temperature.

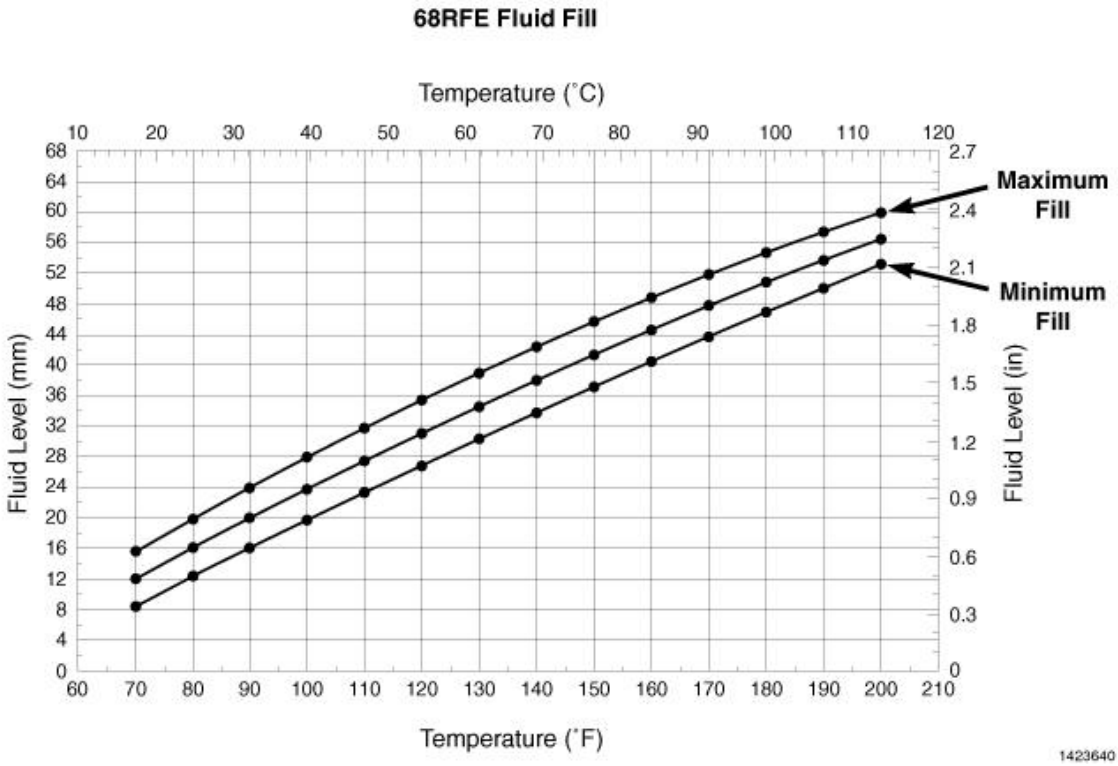

Fig. 137: Transmission Fluid Fill Level Temperature Chart
Courtesy of CHRYSLER GROUP, LLC

NOTE: **Engine and Transmission should be at normal operating temperature before performing this procedure. After the fluid has been checked, seat the dipstick fully to seal out water and dirt.**

1. Start engine and apply parking brake.
2. Shift the transmission into DRIVE for approximately 2 seconds.
3. Shift the transmission into REVERSE for approximately 2 seconds.
4. Shift the transmission into PARK.
5. Hook up scan tool and select transmission.
6. Select sensors.
7. Read the transmission temperature value.
8. Compare the fluid temperature value with the chart.
9. Adjust transmission fluid level shown on the dipstick according to the Transmission Fluid Temperature Chart.

NOTE: **After adding any fluid to the transmission, wait a minimum of 2 minutes for the oil to fully drain from the fill tube into the transmission before rechecking the fluid level.**

10. Check transmission for leaks.

FLUID AND FILTER REPLACEMENT

For proper service intervals. Refer to **MAINTENANCE SCHEDULES, DESCRIPTION** .

REMOVAL

1. Hoist and support vehicle on safety stands.
2. Place a large diameter shallow drain pan beneath the transmission pan.
3. Remove bolts holding front and sides of pan to transmission.
4. Loosen bolts holding rear of pan to transmission.
5. Slowly separate front of pan away from transmission allowing the fluid to drain into drain pan.
6. Hold up pan and remove remaining bolts holding pan to transmission.
7. While holding pan level, lower pan away from transmission.
8. Pour remaining fluid in pan into drain pan.

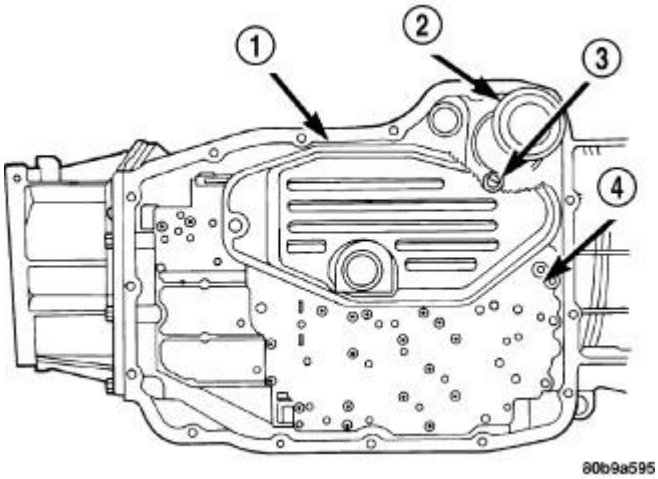

Fig. 138: Primary Oil Filter & Oil Cooler Return Filter
Courtesy of CHRYSLER GROUP, LLC

1 - PRIMARY OIL FILTER
2 - COOLER RETURN FILTER
3 - COOLER RETURN FILTER BYPASS VALVE
4 - VALVE BODY

9. Remove the screw holding the primary oil filter (1) to valve body. Refer to **Fig. 138**.
10. Separate filter from valve body and oil pump and pour fluid in filter into drain pan.
11. Inspect the oil filter seal in the bottom of the oil pump. If the seal is not installed completely in the oil pump, or is otherwise damaged, then remove and discard the oil filter seal from the bottom of the oil pump. If the seal is installed correctly and is in good condition, it can be reused.
12. If replacing the cooler return filter (2), use Oil Filter Wrench (special tool #8321, Wrench, Oil Filter) to remove the filter from the transmission.

13. Dispose of used trans fluid and filter(s) properly.

INSPECTION

Inspect bottom of pan and magnet for excessive amounts of metal. A light coating of clutch material on the bottom of the pan does not indicate a problem unless accompanied by a slipping condition or shift lag. If fluid and pan are contaminated with excessive amounts of debris, refer to **DIAGNOSIS AND TESTING**.

CLEANING

1. Using a suitable solvent, clean pan and magnet.
2. Using a suitable gasket scraper, clean original sealing material from surface of transmission case and the transmission pan.

INSTALLATION

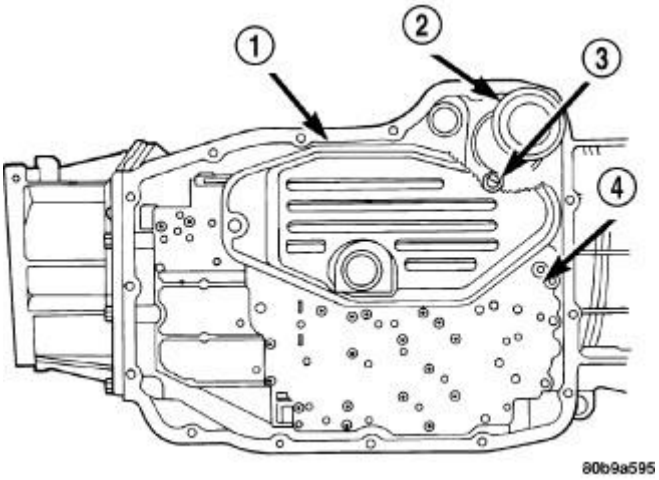

Fig. 139: Primary Oil Filter & Oil Cooler Return Filter
Courtesy of CHRYSLER GROUP, LLC

1 - PRIMARY OIL FILTER
2 - COOLER RETURN FILTER
3 - COOLER RETURN FILTER BYPASS VALVE
4 - VALVE BODY

CAUTION: The primary oil filter seal MUST be fully installed flush against the oil pump body. DO NOT install the seal onto the filter neck and attempt to install the filter and seal as an assembly. Damage to the transmission will result.

1. If necessary, install a new primary oil filter seal in the oil pump inlet bore. Seat the seal in the bore with Installer (special tool #6960, Tools, Trac-Lok Axle) or another suitable tool (appropriately sized drift or socket, the butt end of a hammer etc.).

2. Place replacement filter in position on valve body and into the oil pump.
3. Install screw to hold the primary oil filter (1) to valve body. Refer to **Fig. 139**. Tighten screw to 4.5 N.m (40 in. lbs.) torque.
4. Install new cooler return filter (2) onto the transmission, if necessary. Torque the filter to 9.5 N.m (84 in.lbs.).
5. Place bead of Mopar® RTV sealant onto the transmission case sealing surface.
6. Place pan in position on transmission.
7. Install bolts to hold pan to transmission. Tighten bolts to 12 N.m (105 in. lbs.) torque.
8. Lower vehicle and fill transmission with MOPAR® ATF +4.

TRANSMISSION FILL

To avoid overfilling transmission after a fluid change or overhaul, perform the following procedure:

1. Remove dipstick and insert clean funnel in transmission fill tube.
2. Add following initial quantity of Mopar® ATF +4 to transmission:
    1. If only fluid and filter were changed, add **10 pints (5 quarts)** of ATF +4 to transmission.
    2. If transmission was completely overhauled and the torque converter was replaced or drained, add **24 pints (12 quarts)** of ATF +4 to transmission.
3. Check the transmission fluid and adjust as required. Refer to **FLUID LEVEL CHECK**.

GEARTRAIN, PLANETARY

DESCRIPTION

DESCRIPTION

NOTE: The 68RFE transmission does not use a number 7 thrust bearing.

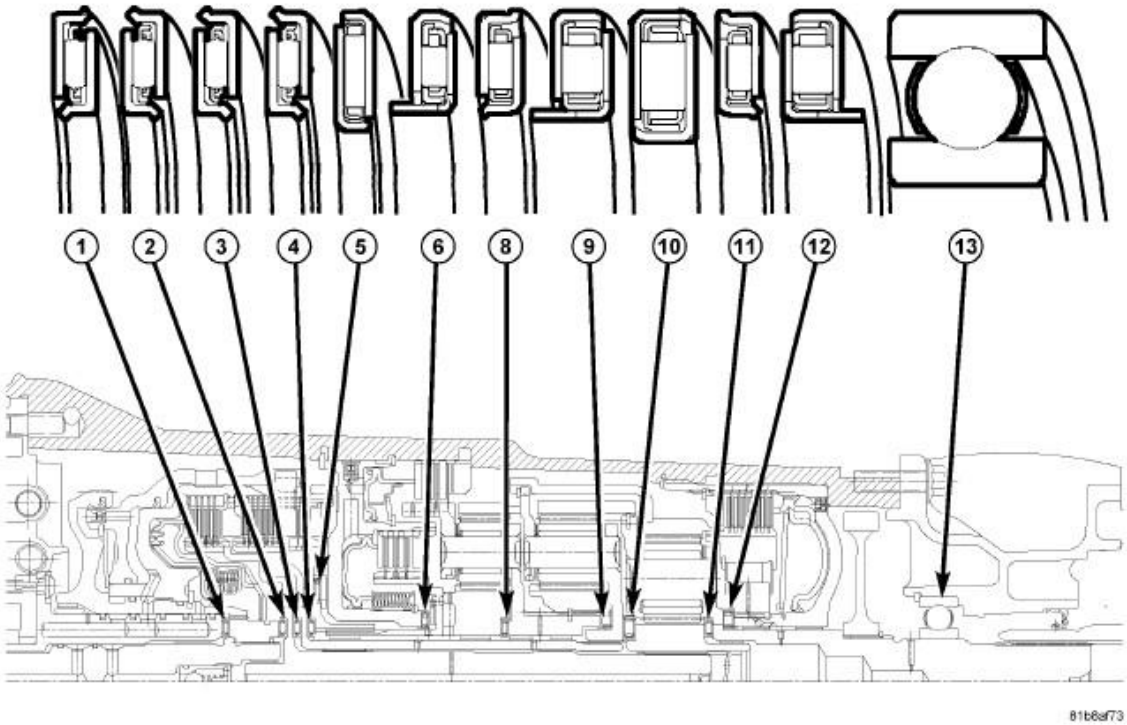

Fig. 140: 68RFE Bearing Orientation
Courtesy of CHRYSLER GROUP, LLC

1 - THRUST BEARING NO. 1	8 - THRUST BEARING NO. 8
2 - THRUST BEARING NO. 2	9 - THRUST BEARING NO. 9
3 - THRUST BEARING NO. 3	10 - THRUST BEARING NO. 10
4 - THRUST BEARING NO. 4	11 - THRUST BEARING NO. 11
5 - THRUST BEARING NO. 5	12 - THRUST BEARING NO. 12
6 - THRUST BEARING NO. 6	13 - OUTPUT

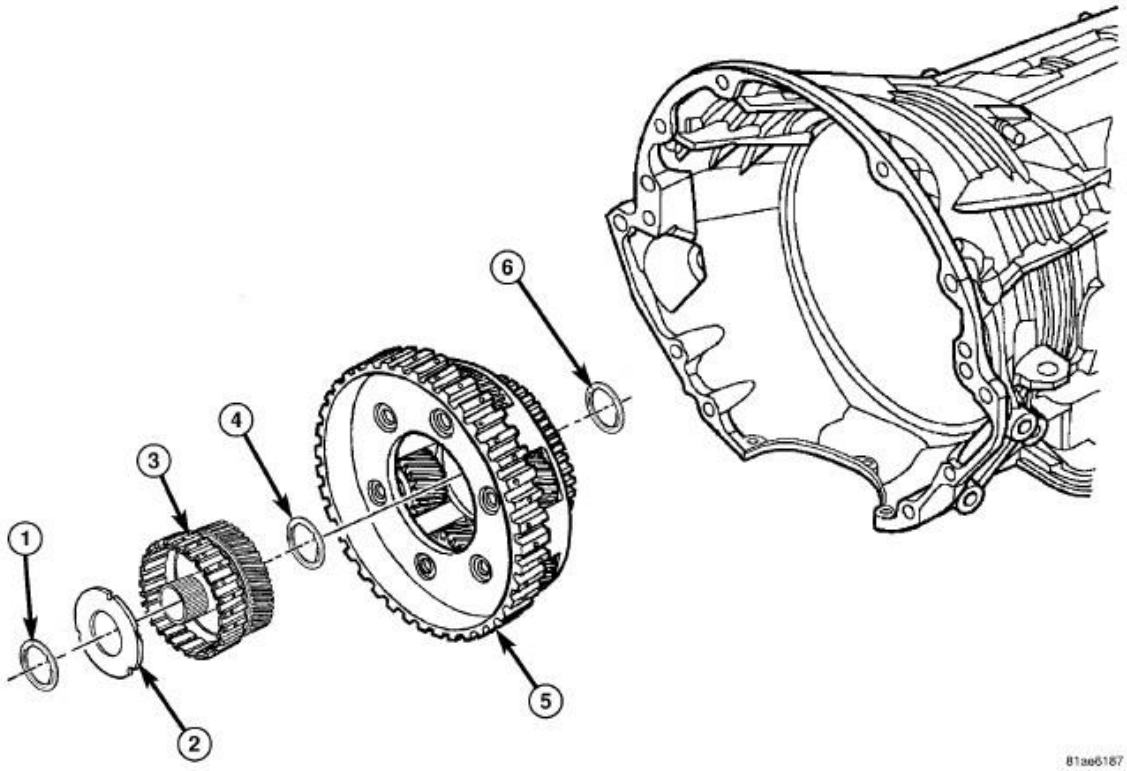

Fig. 141: Reaction Annulus & Carrier
Courtesy of CHRYSLER GROUP, LLC

1 - THRUST BEARING NUMBER 6	5 - REACTION PLANETARY CARRIER
2 - OUTPUT END PLAY THRUST PLATE (SELECTIVE)	6 - THRUST BEARING NUMBER 9
3 - 4C CLUTCH HUB / REACTION SUN GEAR	
4 - THRUST BEARING NUMBER 8	

The planetary geartrain is located behind the 2C/4C retainer/bulkhead, toward the rear of the transmission. The planetary geartrain consists of two primary assemblies:

- Reaction (3, 5).

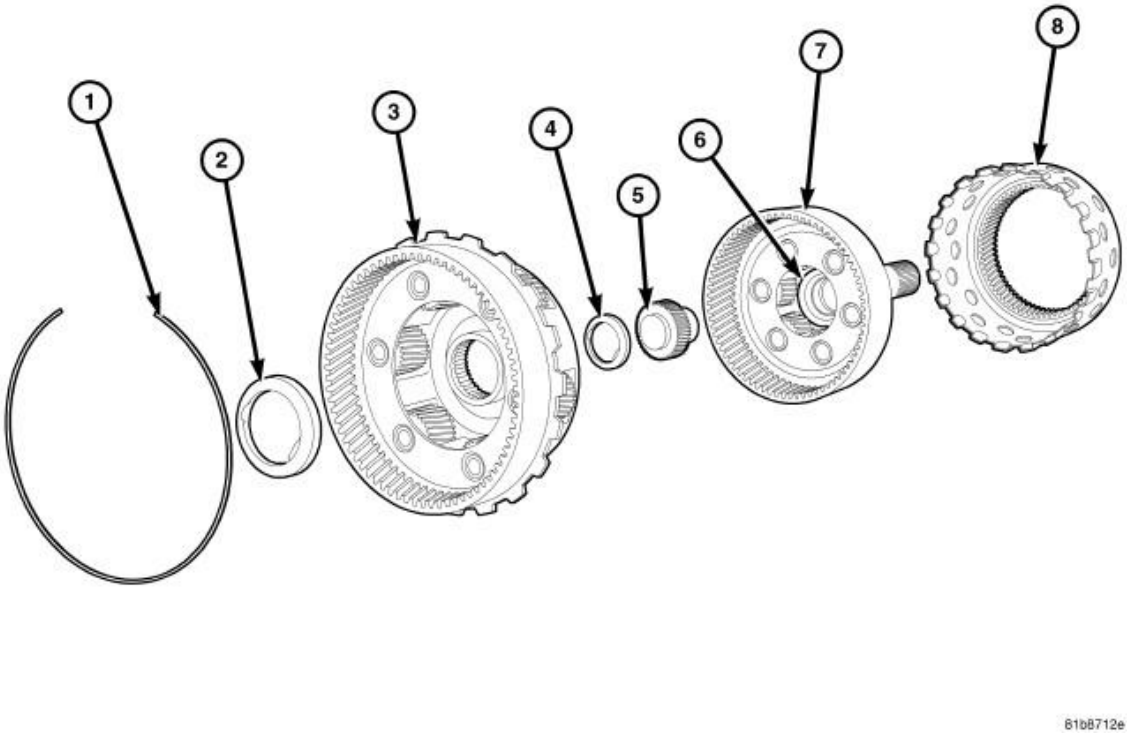

Fig. 142: Reverse Carrier
Courtesy of CHRYSLER GROUP, LLC

1. SNAP RING	5. INPUT SUN GEAR
2. NUMBER NINE BEARING	6. NUMBER 11 BEARING (CAPTURED)
3. REVERSE PLANETARY CARRIER	7. INPUT PLANETARY CARRIER
4. THRUST BEARING NUMBER 10	8. INPUT ANNULUS GEAR

- Reverse (3).
- Input (5, 7, 8).

OPERATION

OPERATION

REACTION PLANETARY GEAR SET

The reaction planetary carrier and reverse sun gear are a single component which is held by the 2C clutch when

required. The sun gear is retained on the reaction carrier hub by a hidden snap ring and can not be removed. The reaction sun gear is a stand alone component that can be driven by the reverse clutch or held by the 4C clutch. The reaction annulus is welded to the reverse planetary carrier.

REVERSE PLANETARY GEAR SET

The reverse planetary gear set is the middle of the three planetary sets. The reverse planetary carrier can be driven by the overdrive clutch as required. The reverse planetary carrier is welded to the reaction annulus gear and splined to the input annulus gear, which can be held by the low/reverse clutch. The reverse annulus gear, input planetary carrier, and output shaft are all one piece. The reverse annulus gear is retained on the input carrier flange by a hidden snap ring and can not be disassembled.

INPUT PLANETARY GEAR SET

The input sun gear of the input planetary gear set is driven by the underdrive clutch. The number 11 thrust bearing is captive underneath the pinion gears and therefore cannot be removed.

DISASSEMBLY

DISASSEMBLY

NOTE: The 68RFE transmission does not use a number 7 thrust bearing.

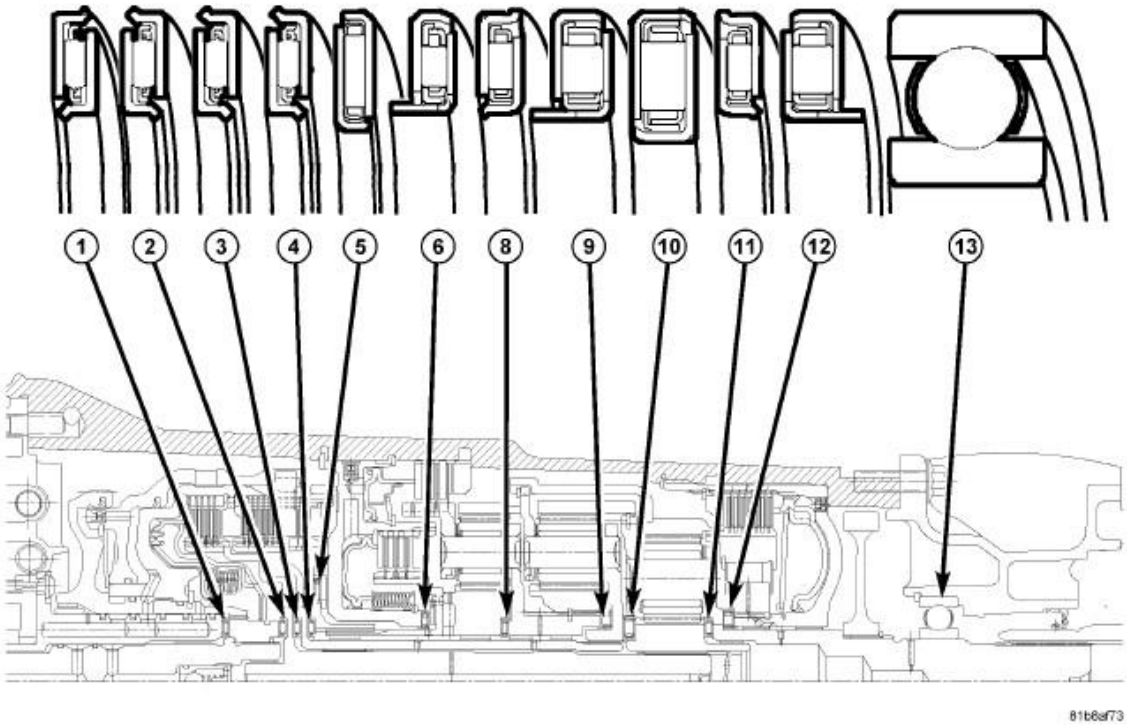

Fig. 143: 68RFE Bearing Orientation
Courtesy of CHRYSLER GROUP, LLC

1 - THRUST BEARING NO. 1	8 - THRUST BEARING NO. 8
2 - THRUST BEARING NO. 2	9 - THRUST BEARING NO. 9
3 - THRUST BEARING NO. 3	10 - THRUST BEARING NO. 10
4 - THRUST BEARING NO. 4	11 - THRUST BEARING NO. 11
5 - THRUST BEARING NO. 5	12 - THRUST BEARING NO. 12
6 - THRUST BEARING NO. 6	13 - OUTPUT SHAFT BEARING

NOTE: **The number 11 thrust bearing is captured under the input planetary carrier pinion gears and is not serviceable.**

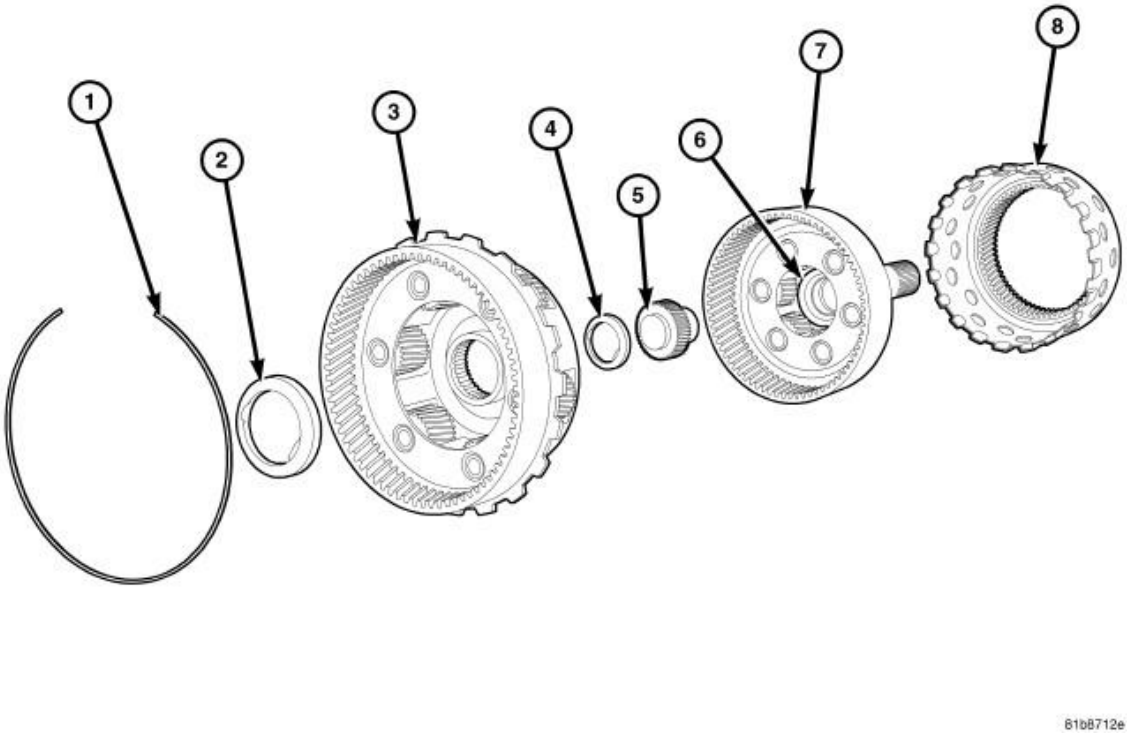

Fig. 144: Reverse Carrier
Courtesy of CHRYSLER GROUP, LLC

1. SNAP RING	5. INPUT SUN GEAR
2. NUMBER NINE BEARING	6. NUMBER 11 BEARING (CAPTURED)
3. REVERSE PLANETARY CARRIER	7. INPUT PLANETARY CARRIER
4. THRUST BEARING NUMBER 10	8. INPUT ANNULUS GEAR

1. Remove the snap-ring (1) holding the input annulus (6) onto the input carrier (5).
2. Remove the input annulus (8) from the input carrier (7).
3. Remove the number 9 thrust bearing from the reverse planetary carrier (6).
4. Remove the reverse planetary gear carrier (2).
5. Remove the number 10 thrust bearing (3) from the input sun gear (4).
6. Remove the input sun gear (4) from the input carrier (5).

CLEANING

CLEANING

Clean the planetary components in solvent and dry them with compressed air.

INSPECTION

INSPECTION

Inspect each planetary carrier assembly for damage. Check that each pinion gear rotates freely and smoothly on its shaft. Check that the fixed thrust washer on each side of each pinion gear is in place. Check that the outer ends of the pinion shafts are not discolored from overheating. Replace the carrier assembly if jammed or sticky pinion gears, spun or missing fixed washers, or blackened pinion shafts are found.

Check sun gear and annulus gear condition. Replace components as necessary if damaged or if any bushings are scored or worn. The bushings are not serviceable. Replace the driving shell if worn, cracked or damaged.

Replace the output shaft if the machined surfaces are scored, pitted, or damaged in any way. Also replace the shaft if the splines are damaged, or exhibits cracks at any location.

ASSEMBLY

ASSEMBLY

NOTE: The 68RFE transmission does not use a number 7 thrust bearing.

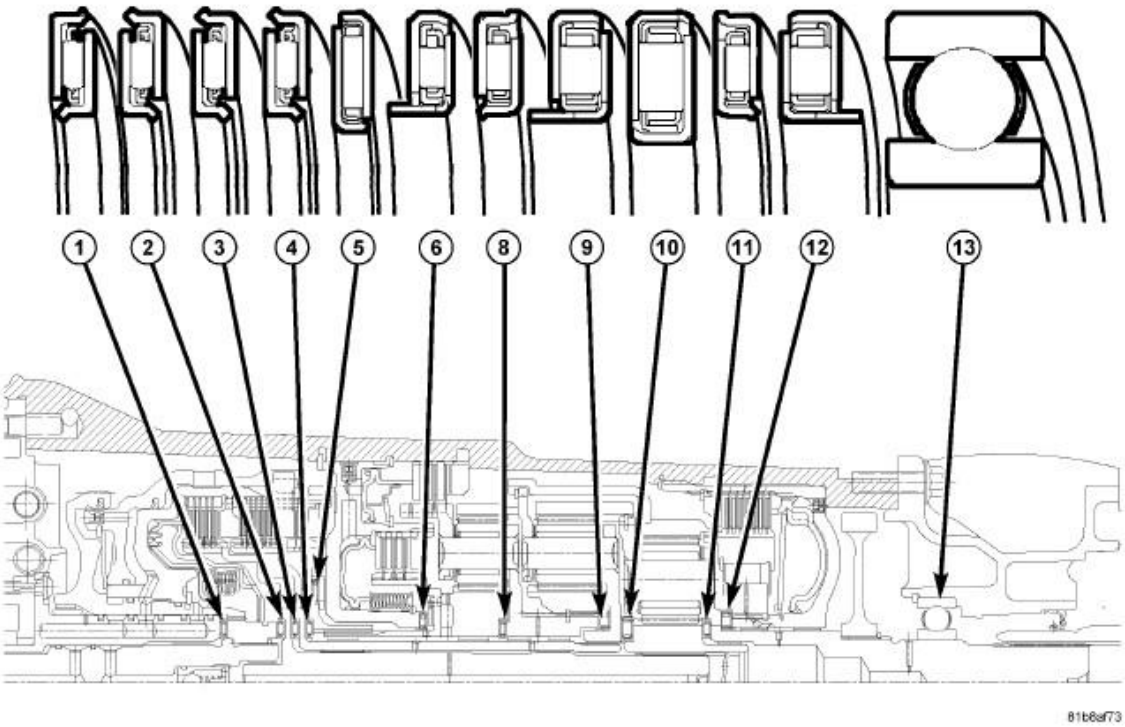

Fig. 145: 68RFE Bearing Orientation

Courtesy of CHRYSLER GROUP, LLC

1 - THRUST BEARING NO. 1	8 - THRUST BEARING NO. 8
2 - THRUST BEARING NO. 2	9 - THRUST BEARING NO. 9
3 - THRUST BEARING NO. 3	10 - THRUST BEARING NO. 10
4 - THRUST BEARING NO. 4	11 - THRUST BEARING NO. 11
5 - THRUST BEARING NO. 5	12 - THRUST BEARING NO. 12
6 - THRUST BEARING NO. 6	13 - OUTPUT SHAFT BEARING

NOTE: **The number 11 thrust bearing is captured under the input planetary carrier pinion gears and is not serviceable.**

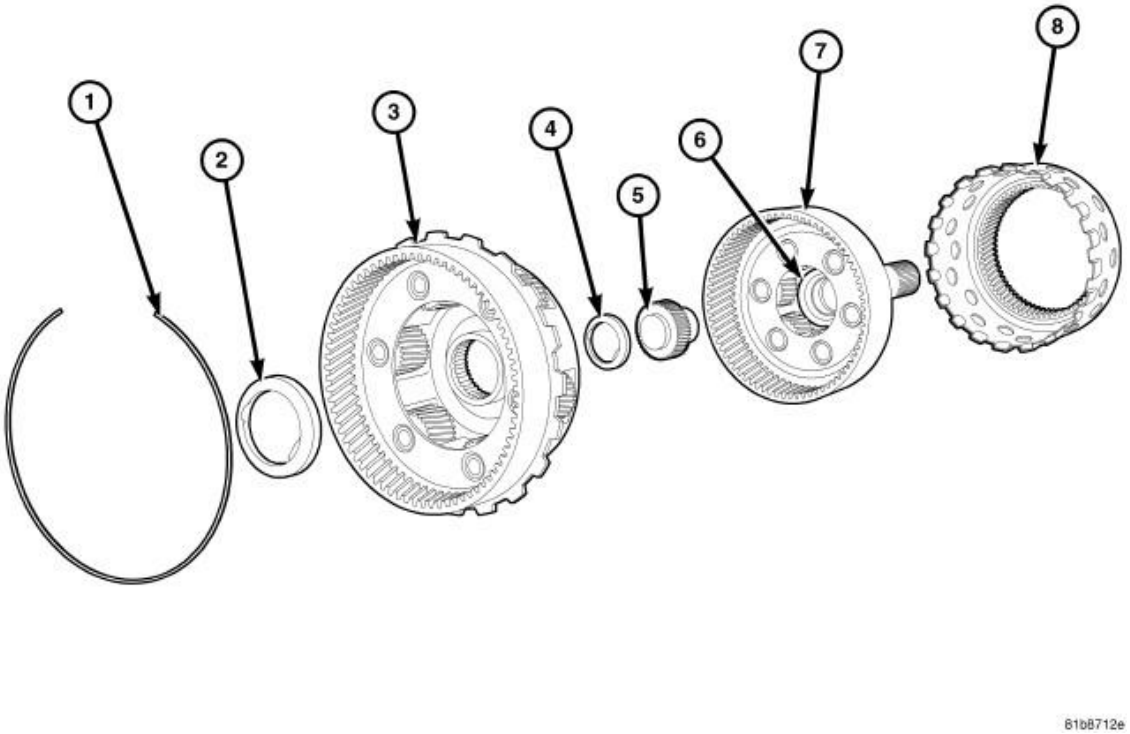

Fig. 146: Reverse Carrier
Courtesy of CHRYSLER GROUP, LLC

1. SNAP RING	5. INPUT SUN GEAR
2. NUMBER NINE BEARING	6. NUMBER 11 BEARING (CAPTURED)
3. REVERSE PLANETARY CARRIER	7. INPUT PLANETARY CARRIER
4. THRUST BEARING NUMBER 10	8. INPUT ANNULUS GEAR

NOTE: **Clean and inspect all components. Replace any components which show evidence of excessive wear or scoring.**

1. Install the input sun gear (5) into the input planetary carrier (7).
2. Install the number 10 thrust bearing (4) onto the input sun gear (5) with the inner race toward the gear.
3. Install the number nine thrust bearing (2) onto the face of the reverse planetary carrier (3) with the inner race toward the carrier and the tabs facing upward.
4. Install the reverse planetary gear carrier (3) into the input planetary carrier (7).
5. Install the input annulus gear (8) onto the input planetary carrier (7).

6. Install the snap-ring (1) to hold the input annulus gear (8) into the input carrier (7).

HOLDING CLUTCHES

DESCRIPTION

DESCRIPTION

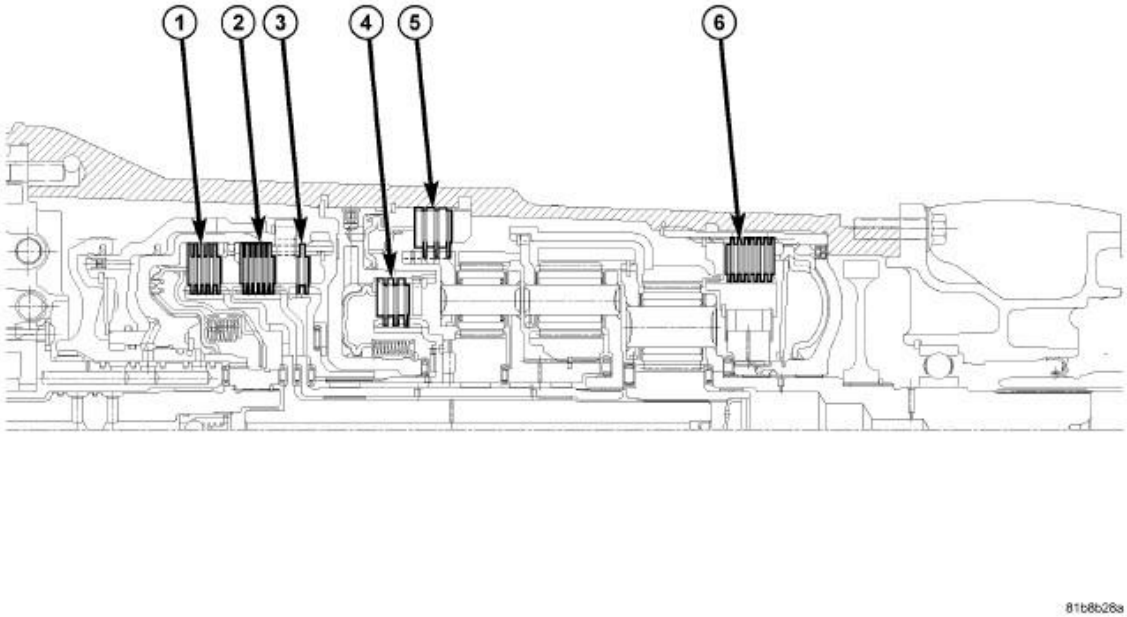

Fig. 147: 68RFE Clutch Orientation
Courtesy of CHRYSLER GROUP, LLC

1 - U/D CLUTCH	4 - 4C CLUTCH
2 - O/D CLUTCH	5 - 2C CLUTCH
3 - REVERSE CLUTCH	6 - L/R CLUTCH

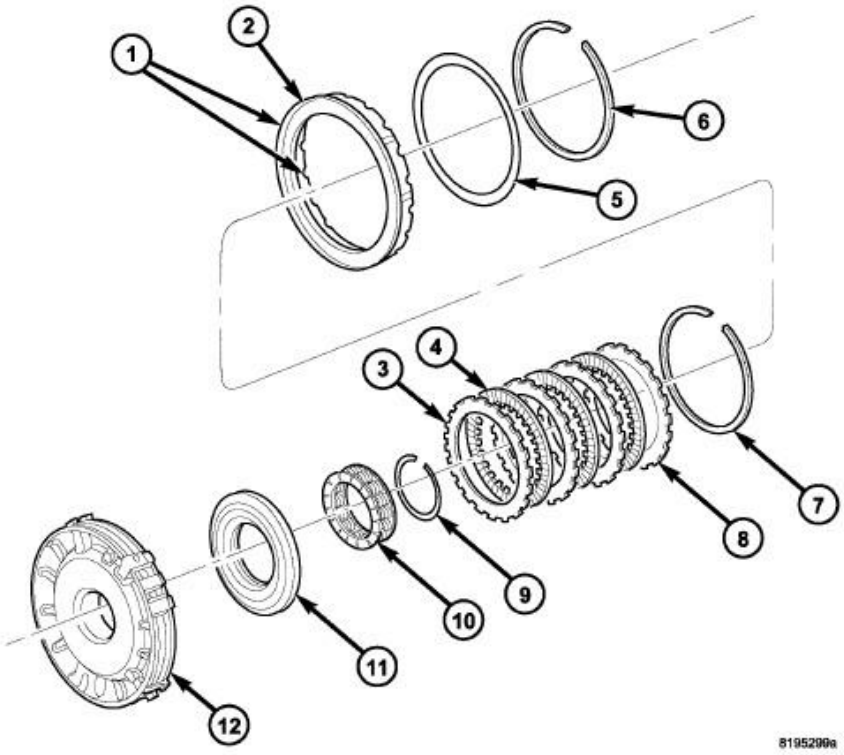

Fig. 148: 2/4 Clutches
Courtesy of CHRYSLER GROUP, LLC

1 - SEALS	8 - REACTION PLATE
2 - 2C PISTON	9 - SNAP-RING
3 - PLATE	10 - RETURN SPRING
4 - DISC	11 - 4C PISTON
5 - 2C BELLEVILLE SPRING	12 - 4C RETAINER/BULKHEAD
6 - SNAP-RING	
7 - SNAP-RING (SELECT)	

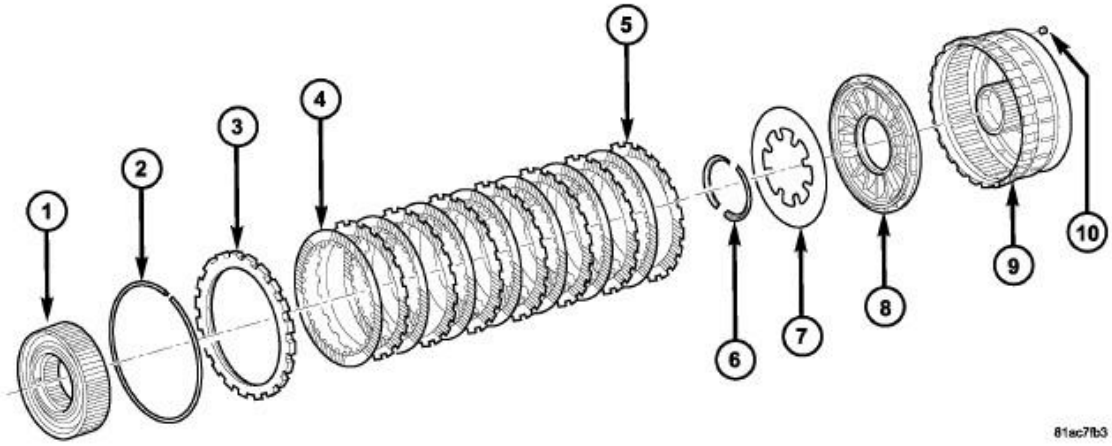

Fig. 149: Low/Reverse Clutch

Courtesy of CHRYSLER GROUP, LLC

1 - OVERRUNNING CLUTCH	8 - PISTON
2 - SNAP RING (SELECTIVE)	9 - L/R CLUTCH RETAINER
3 - REACTION PLATE	10 - BLEED ORIFICE
4 - DISC	
5 - PLATE	
6 - RETAINER	
7 - BELLEVILLE SPRING	

Three hydraulically applied multi-disc clutches are used to hold some planetary geartrain components stationary while the input clutches drive others. The 2C, 4C, and Low/Reverse clutches are considered holding clutches. The 2C and 4C clutches are located in the 4C retainer/bulkhead (12).

The Low/Reverse clutch is located at the rear of the transmission case.

OPERATION

OPERATION

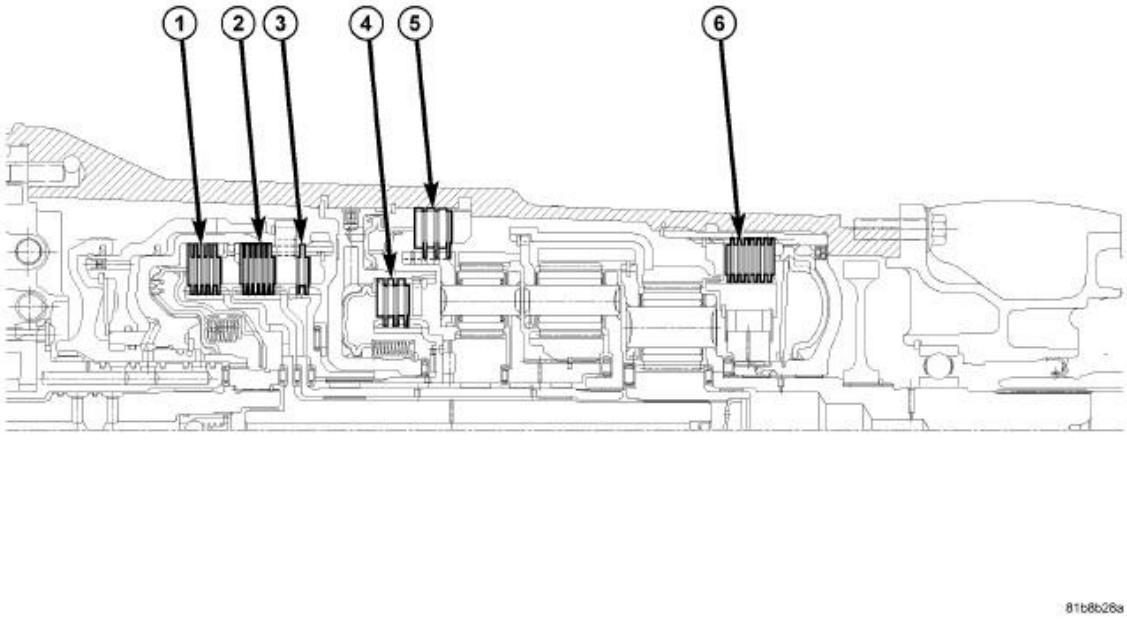

Fig. 150: 68RFE Clutch Orientation
Courtesy of CHRYSLER GROUP, LLC

1 - U/D CLUTCH	4 - 4C CLUTCH

2 - O/D CLUTCH	5 - 2C CLUTCH
3 - REVERSE CLUTCH	6 - L/R CLUTCH

2C CLUTCH

The 2C clutch is hydraulically applied in second and sixth gears by pressurized fluid against the 2C piston. When the 2C clutch is applied, the reaction planetary carrier and reverse sun gear are held or grounded to the transmission case.

4C CLUTCH

The 4C clutch is hydraulically applied in third and fifth gears by pressurized fluid against the 4C clutch piston. When the 4C clutch is applied, the reaction sun gear is held or grounded to the transmission case.

LOW/REVERSE CLUTCH

The Low/Reverse clutch is hydraulically applied in park, reverse, neutral, and first gear, only at low speeds, by pressurized fluid against the Low/Reverse clutch piston. When the Low/Reverse clutch is applied, the input annulus assembly is held or grounded to the transmission case.

HOUSING, TRANSMISSION, REAR EXTENSION

REMOVAL

REMOVAL

1. Remove the rear drive shaft. Refer to **SHAFT, DRIVE, REAR LIGHT DUTY, REMOVAL** or **SHAFT, DRIVE, REAR HEAVY DUTY, REMOVAL** .

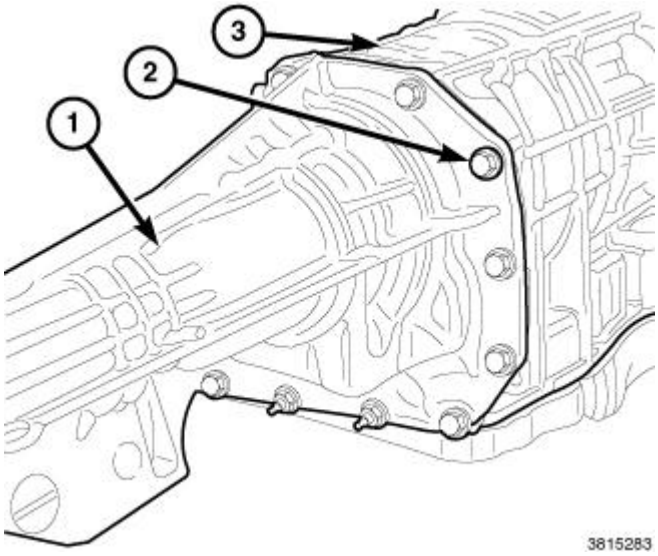

Fig. 151: Extension Housing & Bolts

Courtesy of CHRYSLER GROUP, LLC

2. Remove extension housing bolts (2).
3. Remove extension housing (1) from the transmission (3).

DISASSEMBLY

DISASSEMBLY

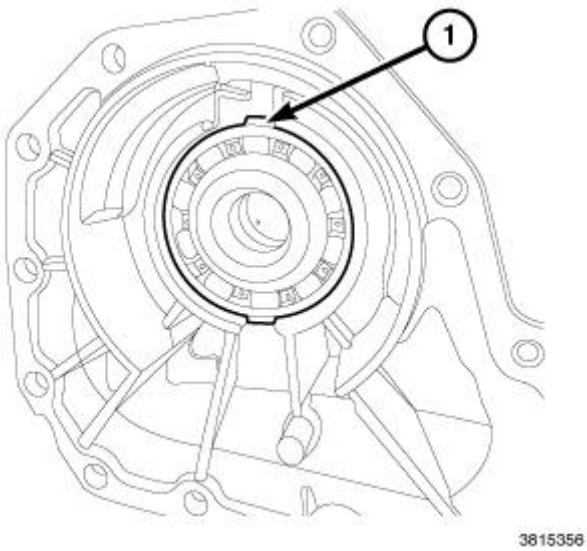

Fig. 152: Bearing Snap-Ring
Courtesy of CHRYSLER GROUP, LLC

1. Remove the bearing snap-ring (1) from the extension housing.

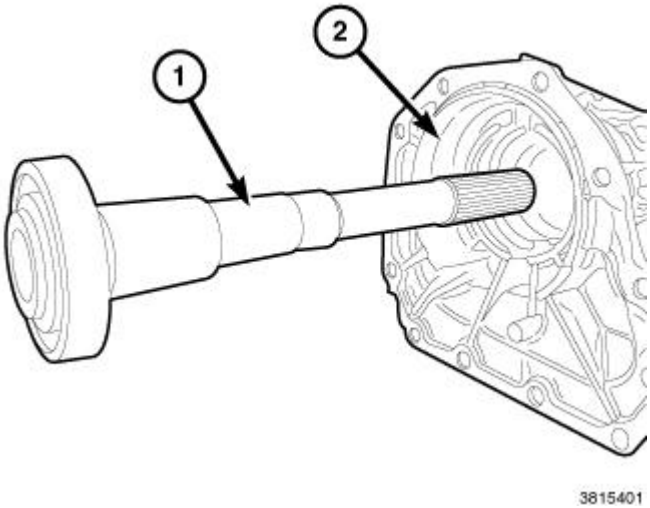

Fig. 153: Shaft & Extension Housing
Courtesy of CHRYSLER GROUP, LLC

2. Remove the shaft (1) from the extension housing (2).

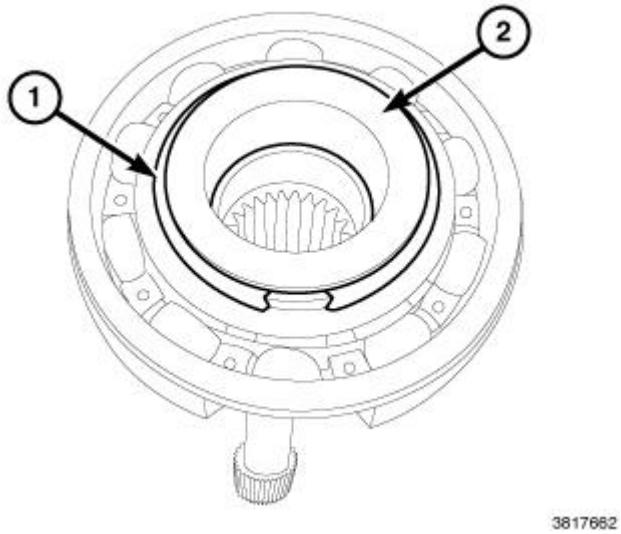

Fig. 154: Snap-Ring & Shaft
Courtesy of CHRYSLER GROUP, LLC

3. Remove snap ring (1) from shaft (2).

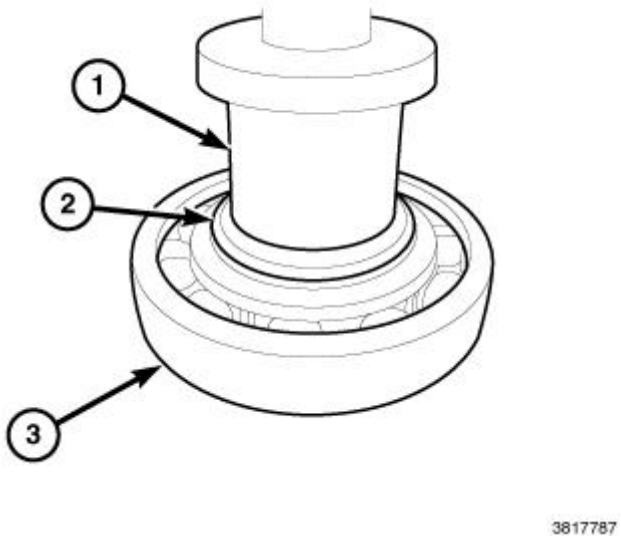

Fig. 155: Removing Bearing From Shaft
Courtesy of CHRYSLER GROUP, LLC

4. Using (special tool #9045, Installer, Plug) (1) and press, remove bearing (3) from shaft (2).

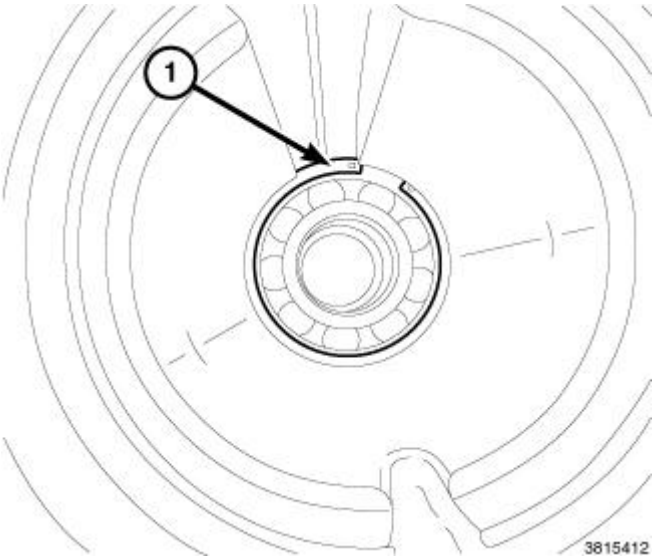

Fig. 156: Center Bearing Snap-Ring
Courtesy of CHRYSLER GROUP, LLC

5. Remove the center bearing snap ring (1) and spacer (if equipped).

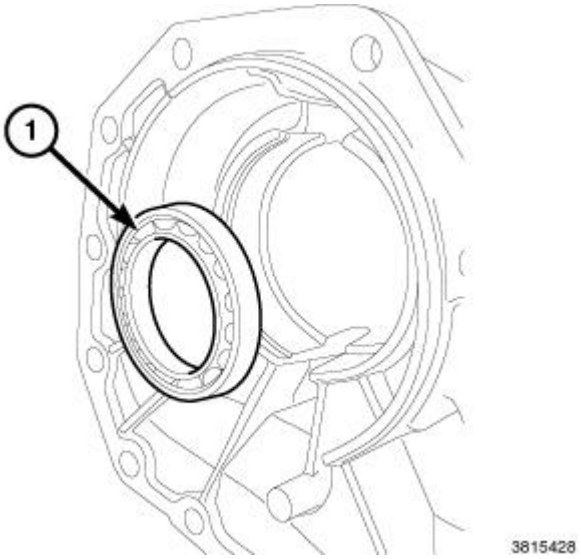

Fig. 157: Center Bearing
Courtesy of CHRYSLER GROUP, LLC

6. Remove the center bearing (1).
7. Using a seal removal tool, remove rear extension housing output shaft seal.

ASSEMBLY

ASSEMBLY

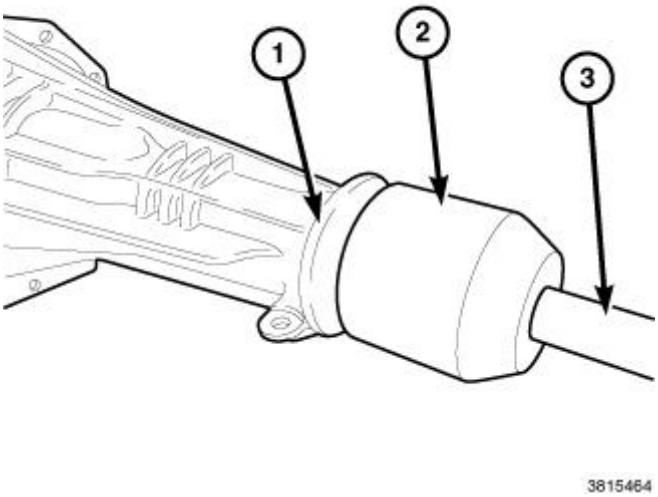

Fig. 158: Installing Extension Housing Oil Seal
Courtesy of CHRYSLER GROUP, LLC

1. Clean the extension housing seal bore in the extension housing of any residue or particles remaining from the original seal.

   NOTE: The small weep hole in the dust boot of the seal should face downward when installed in the extension housing.

2. Install new oil seal in the extension housing (1) using (special tool #8896, Installer, Seal) (2) and (special tool #C-4171, Driver Handle, Universal) (3).

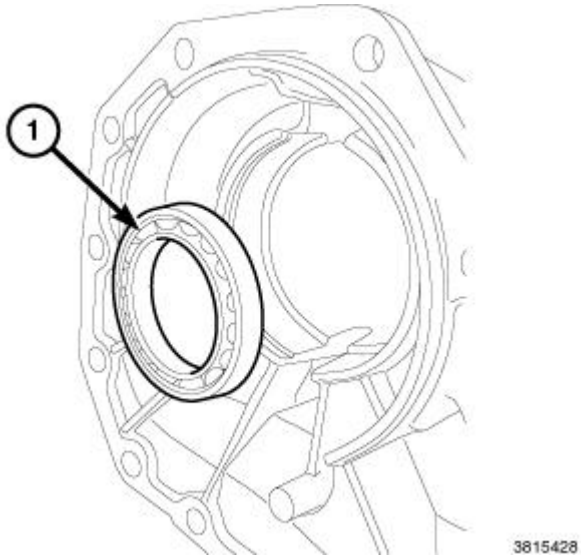

Fig. 159: Center Bearing
Courtesy of CHRYSLER GROUP, LLC

3. Install the center bearing (1).

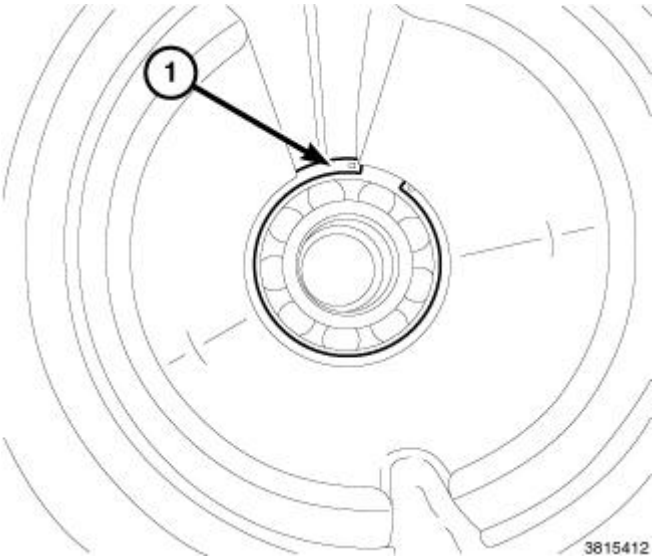

Fig. 160: Center Bearing Snap-Ring
Courtesy of CHRYSLER GROUP, LLC

4. Install the spacer (if equipped) and center bearing snap ring (1).

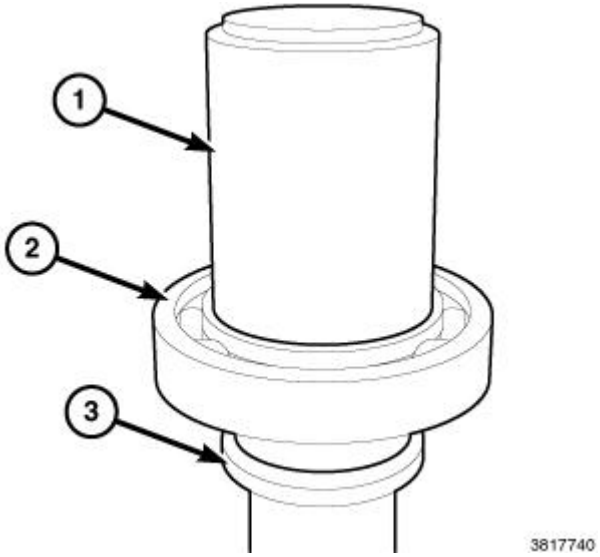

Fig. 161: Installing Bearing On Shaft
Courtesy of CHRYSLER GROUP, LLC

5. Using (special tool #6756, Receiver, Ball Joint) (1) and press, install the bearing (2) onto the shaft (3).

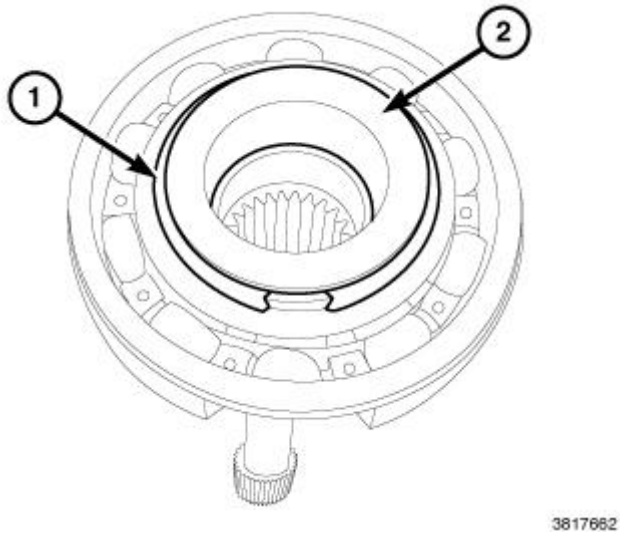

Fig. 162: Snap-Ring & Shaft
Courtesy of CHRYSLER GROUP, LLC

6. Install snap ring (1) on shaft (2).

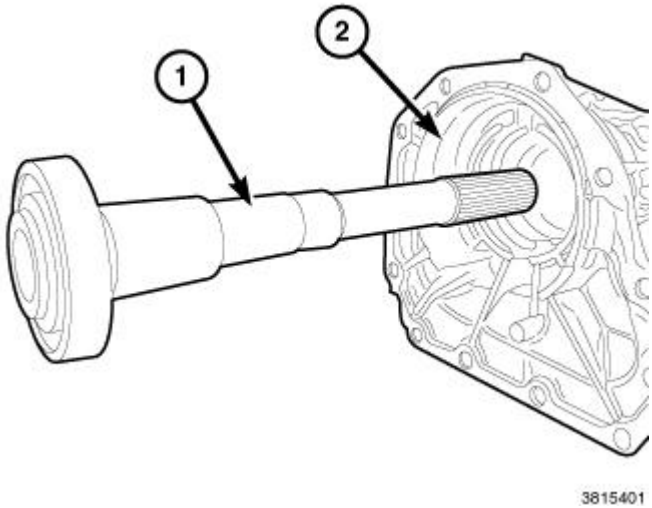

Fig. 163: Shaft & Extension Housing
Courtesy of CHRYSLER GROUP, LLC

7. Install the shaft (1) into the extension housing (2).

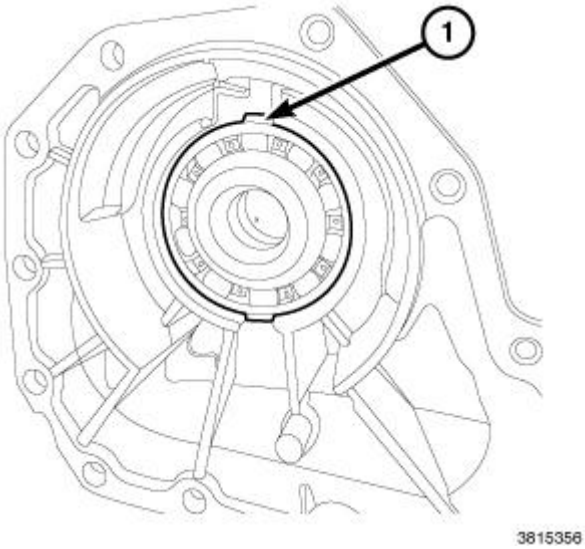

Fig. 164: Bearing Snap-Ring
Courtesy of CHRYSLER GROUP, LLC

8. Install the bearing snap-ring (1) into the extension housing.

INSTALLATION

INSTALLATION

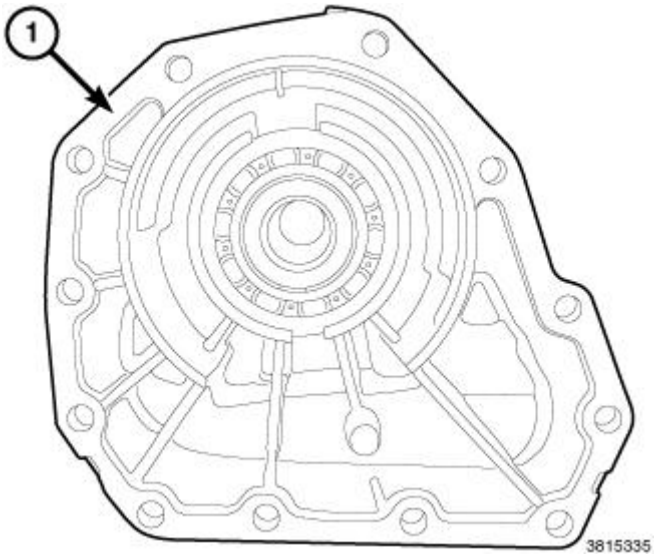

Fig. 165: RTV Application Area
Courtesy of CHRYSLER GROUP, LLC

1. Apply a bead of RTV silicone to the extension housing.

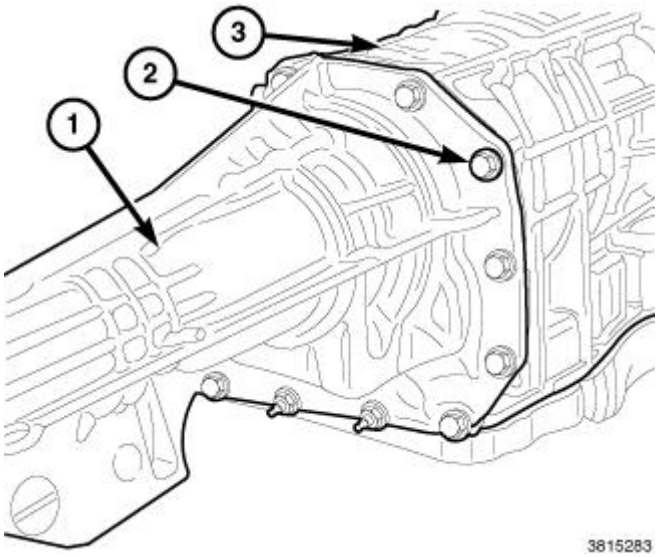

Fig. 166: Extension Housing & Bolts
Courtesy of CHRYSLER GROUP, LLC

2. Install the extension housing (1) on the transmission (3).
3. Install the extension housing bolts (2) and tighten to 54 N.m (40 ft. lbs.).
4. Install rear drive shaft. Refer to **SHAFT, DRIVE, REAR LIGHT DUTY, INSTALLATION** or **SHAFT, DRIVE, REAR HEAVY DUTY, INSTALLATION** .

PUMP, TRANSMISSION OIL

DESCRIPTION

DESCRIPTION

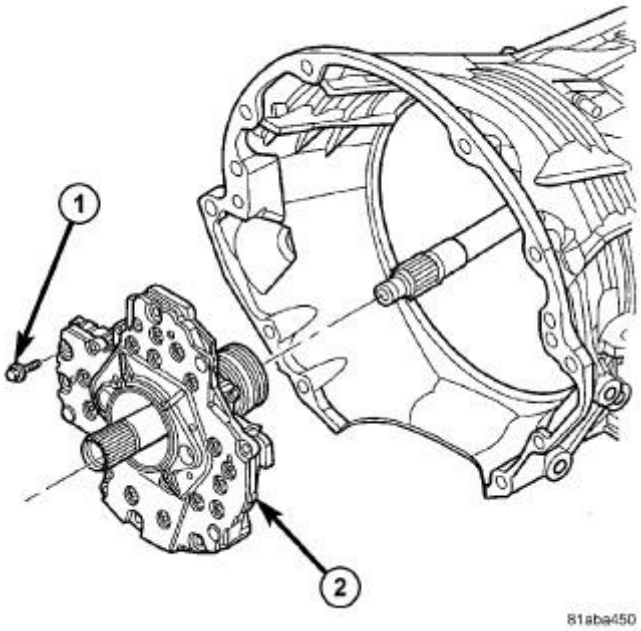

Fig. 167: Oil Pump & Bolt
Courtesy of CHRYSLER GROUP, LLC

1 - OIL PUMP TO CASE BOLT (6)
2 - OIL PUMP

The oil pump (2) is located at the front of the transmission inside the bell housing and behind the transmission front cover.

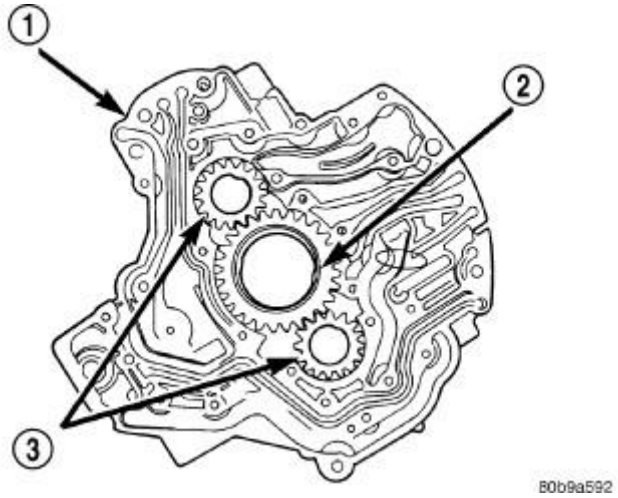

Fig. 168: Oil Pump Gears
Courtesy of CHRYSLER GROUP, LLC

1 - PUMP HOUSING

2 - DRIVE GEAR
3 - DRIVEN GEARS

The oil pump consists of two independent pumps. Refer to **Fig. 168**.

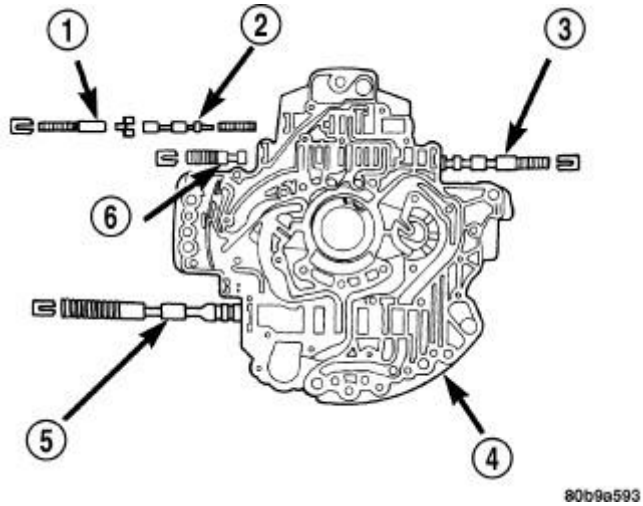

Fig. 169: Oil Pump Valves
Courtesy of CHRYSLER GROUP, LLC

1 - TORQUE CONVERTER CLUTCH ACCUMULATOR VALVE
2 - TORQUE CONVERTER CLUTCH CONTROL VALVE
3 - TORQUE CONVERTER CLUTCH SWITCH VALVE
4 - PUMP VALVE BODY
5 - MAIN REGULATOR VALVE
6 - TORQUE CONVERTER CLUTCH LIMIT VALVE

The oil pump also contains a number of valves. The converter clutch switch (3) and control valves (2), main regulator valve (5), and converter pressure limit valve (6) are all located in the oil pump valve body.

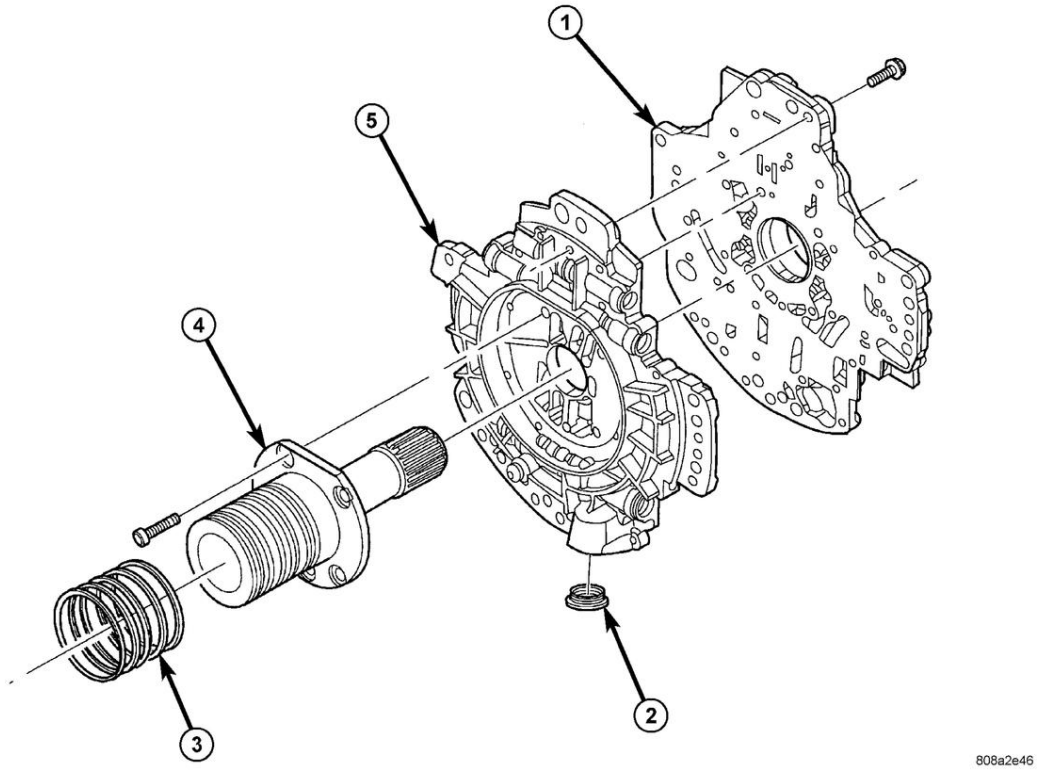

Fig. 170: Oil Pump Reaction Shaft
Courtesy of CHRYSLER GROUP, LLC

1 - PUMP HOUSING	4 - REACTION SHAFT SUPPORT
2 - OIL FILTER SEAL	5 - PUMP VALVE BODY
3 - SEAL RING (5)	

A filter seal (2), and a bolt on reaction shaft (4) complete the oil pump assembly.

OPERATION

OPERATION

As the torque converter rotates, the converter hub rotates the oil pump drive gear. As the drive gear rotates both driven gears, a vacuum is created when the gear teeth come out of mesh. This suction draws fluid through the pump inlet from the oil pan. As the gear teeth come back into mesh, pressurized fluid is forced into the pump outlet and to the oil pump valves.

At low speeds, both sides of the pump supply fluid to the transmission. As the speed of the torque converter increases, the flow from both sides increases until the flow from the primary side alone is sufficient to meet system demands. At this point, the check valve located between the two pumps closes. The secondary side is shut down and the primary side supplies all the fluid to the transmission.

CONVERTER CLUTCH SWITCH VALVE

The converter clutch switch valve is used to control the direction of oil flow to the torque converter. When the converter clutch is released (CC switch valve downshifted), hydraulic pressure is supplied to the front (OFF) side of the torque converter clutch. When the converter clutch is applied (CC switch valve upshifted), regulated oil pressure is supplied to the back (ON) side of the converter clutch.

CONVERTER CLUTCH REGULATOR VALVE

The converter clutch regulator valve is used to control the hydraulic pressure supplied to the back (ON) side of the torque converter clutch.

TORQUE CONVERTER LIMIT VALVE

The torque converter limit valve serves to limit the maximum pressure supplied to the front side of the torque converter clutch.

DISASSEMBLY

DISASSEMBLY

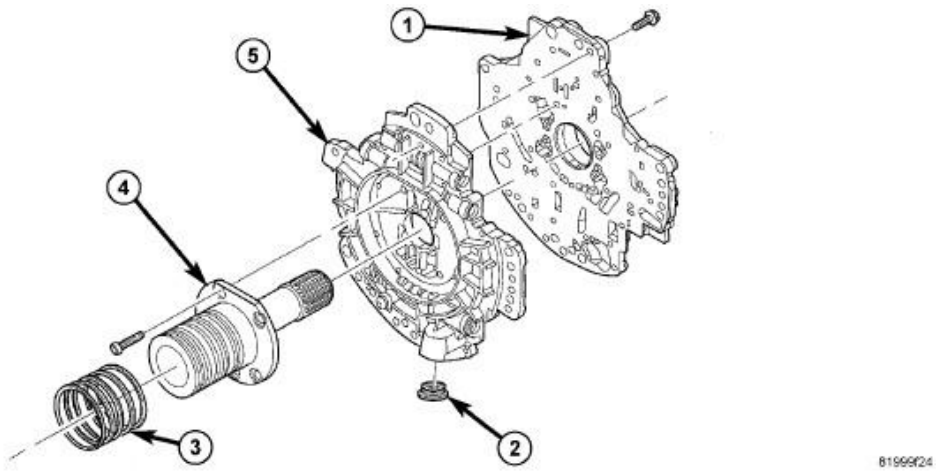

Fig. 171: Oil Pump Reaction Shaft
Courtesy of CHRYSLER GROUP, LLC

1 - PUMP HOUSING	4 - REACTION SHAFT SUPPORT
2 - OIL FILTER SEAL	5 - PUMP VALVE BODY
3 - SEAL RING (5)	

1. Remove the bolts holding the reaction shaft support (4) to the oil pump.
2. Remove the reaction shaft support (4) from the oil pump.
3. Remove all bolts holding the oil pump halves together.
4. Using suitable prying tools, separate the oil pump sections by inserting the tools in the supplied areas and prying the halves apart.

NOTE: The oil pump halves are aligned to each other through the use of two

dowels. Be sure to pry upward evenly to prevent damage to the oil pump components.

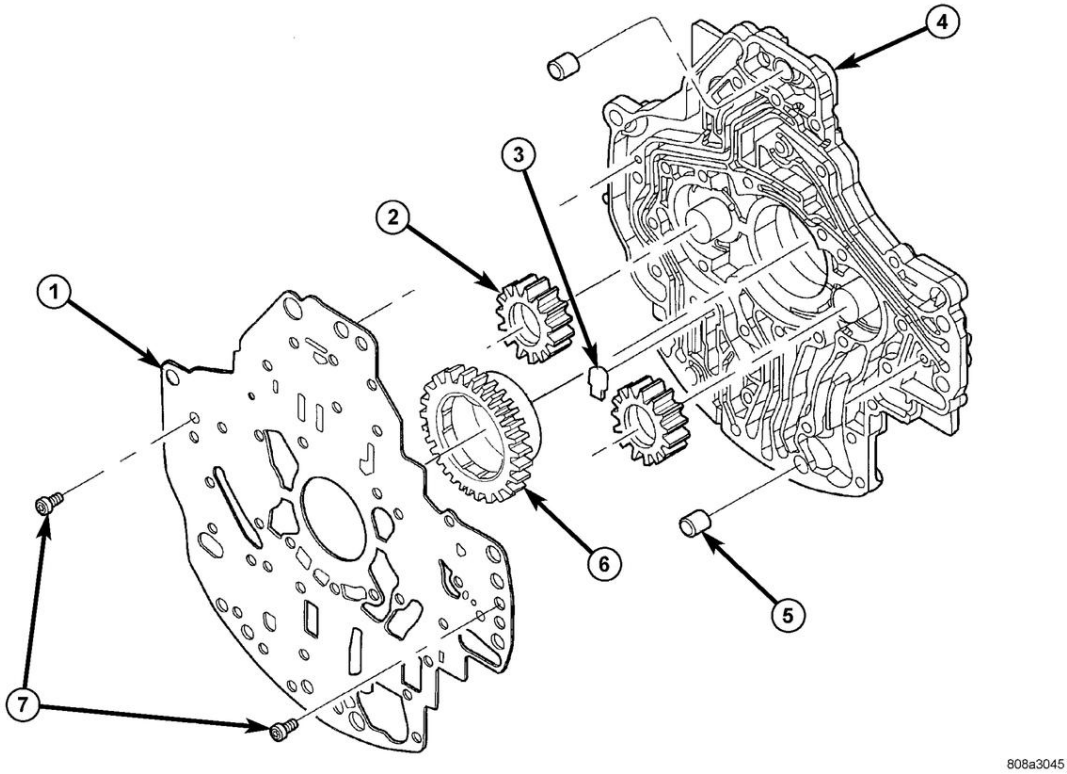

Fig. 172: Oil Pump Housing & Gears
Courtesy of CHRYSLER GROUP, LLC

1 - SEPARATOR PLATE	5 - DOWEL (2)
2 - DRIVEN GEAR (2)	6 - DRIVE GEAR
3 - FLAPPER VALVE	7 - SCREW
4 - PUMP HOUSING	

5. Remove the screws (7) holding the separator plate (1) onto the oil pump housing (4).
6. Remove the separator plate (1) from the oil pump housing (4).
7. Mark all gears for location. The gears are select fit and if the oil pump is to be reused, the gears must be returned to their original locations.
8. Remove the oil pump flapper valve (3) from its pocket in the pump housing.
9. Remove the oil pump gears (2, 6) from the oil pump housing (4).

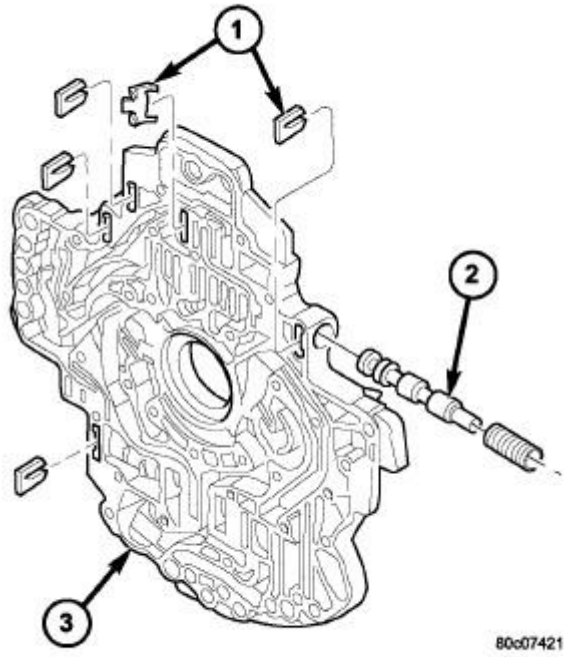

Fig. 173: Oil Pump Valve Body, T/C Switch Valve & Retainers
Courtesy of CHRYSLER GROUP, LLC

1 - RETAINER
2 - T/C SWITCH VALVE
3 - OIL PUMP VALVE BODY

10. Remove the oil pump valve retainers (1) and TCC Switch Valve (2) and spring one at a time. Mark the combination of components as a group and tag them as to the location from which they were removed.

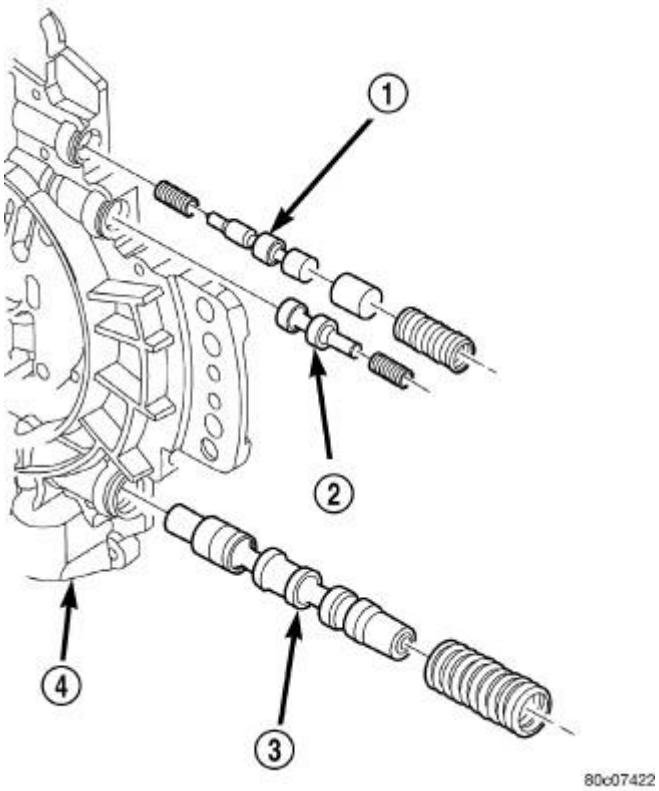

Fig. 174: T/C Regulator Valve, T/C Limit Valve & Regulator Valve
Courtesy of CHRYSLER GROUP, LLC

1 - T/C REGULATOR VALVE
2 - T/C LIMIT VALVE
3 - MAIN REGULATOR VALVE
4 - OIL PUMP VALVE BODY

11. Remove the T/C regulator valve (1), T/C limit valve (2), and main regulator valve (3).

CLEANING

CLEANING

Clean pump and support components with solvent and dry them with compressed air.

INSPECTION

INSPECTION

Check condition of the seal rings and bushing sleeve on the reaction shaft support. The seal rings do not need to be replaced unless cracked, broken, or severely worn.

Inspect the pump and support components. Replace the pump or support if the seal ring grooves or machined surfaces are worn, scored, pitted, or damaged. Replace the pump gears if pitted, worn, chipped, or damaged.

Inspect the pump reaction shaft support bushings. Replace either bushing only if heavily worn, scored or damaged. It is not necessary to replace the bushings unless they are actually damaged.

Inspect the valves and plugs for scratches, burrs, nicks, or scores. Minor surface scratches on steel valves and plugs can be removed with crocus cloth but **do not round off the edges of the valve or plug lands.** Maintaining sharpness of these edges is vitally important. The edges prevent foreign matter from lodging between the valves and plugs and the bore.

Inspect all the valve and plug bores in the oil pump valve body. Use a penlight to view the bore interiors. Replace the oil pump if any bores are distorted or scored. Inspect all of the valve springs. The springs must be free of distortion, warpage or broken coils.

Trial fit each valve and plug in its bore to check freedom of operation. When clean and dry, the valves and plugs should drop freely into the bores. Tip the pump valve body back and forth and check to see that each valve slides freely in its bore under its own weight (without pushing or prying).

ASSEMBLY

ASSEMBLY

NOTE: **Clean and inspect all components. Make sure that all passages are thoroughly cleaned and are free from dirt or debris. Make sure that all valves move freely in their proper bore. Make sure that all gear pockets and bushings are free from excessive wear and scoring. Replace the oil pump if any excessive wear or scoring is found.**

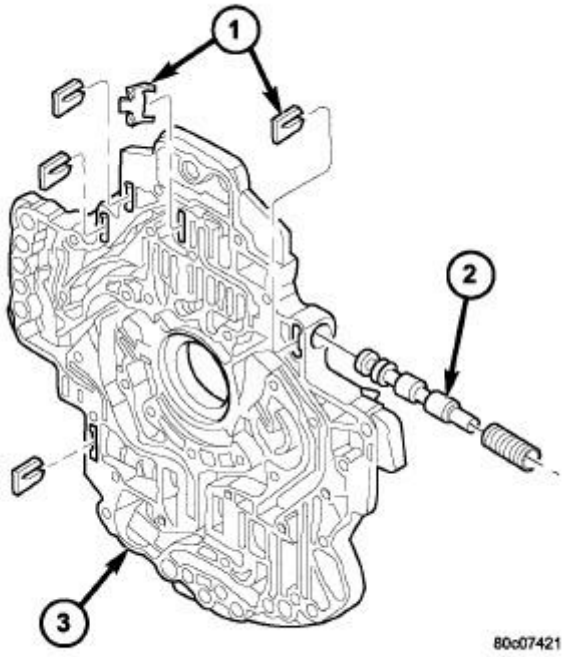

Fig. 175: Oil Pump Valve Body, T/C Switch Valve & Retainers
Courtesy of CHRYSLER GROUP, LLC

1 - RETAINER
2 - T/C SWITCH VALVE
3 - OIL PUMP VALVE BODY

1. Lubricate the oil pump valves with Mopar® ATF +4 and install the TCC Switch Valve (2), spring, and retainer (1) into the appropriate oil pump valve body (3) bore.

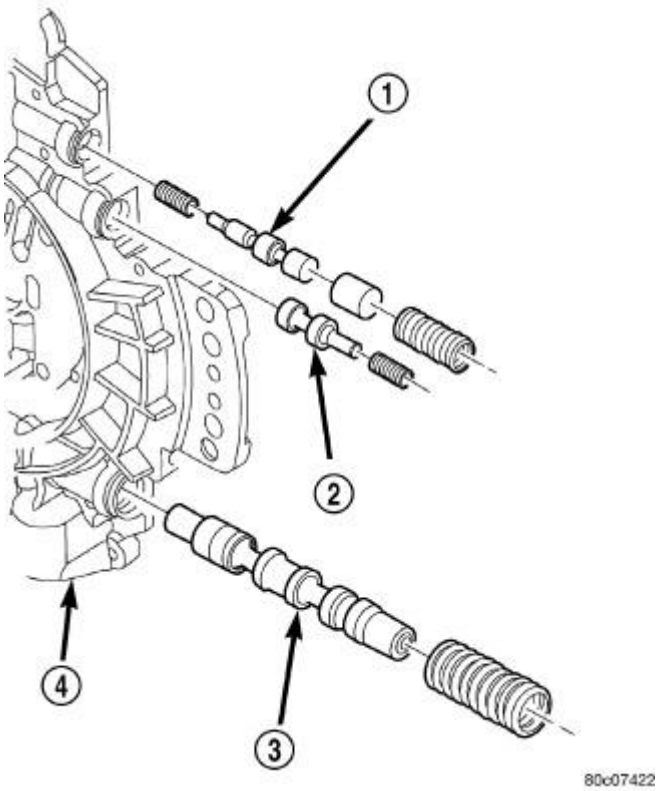

Fig. 176: T/C Regulator Valve, T/C Limit Valve & Regulator Valve
Courtesy of CHRYSLER GROUP, LLC

1 - T/C REGULATOR VALVE
2 - T/C LIMIT VALVE
3 - MAIN REGULATOR VALVE
4 - OIL PUMP VALVE BODY

2. Install the T/C regulator valve (1), T/C limit valve (2), and main regulator valve (3).

NOTE: **The pump separator plate is heat treated and therefore may exhibit a blue color or other discoloration in some areas. This is normal.**

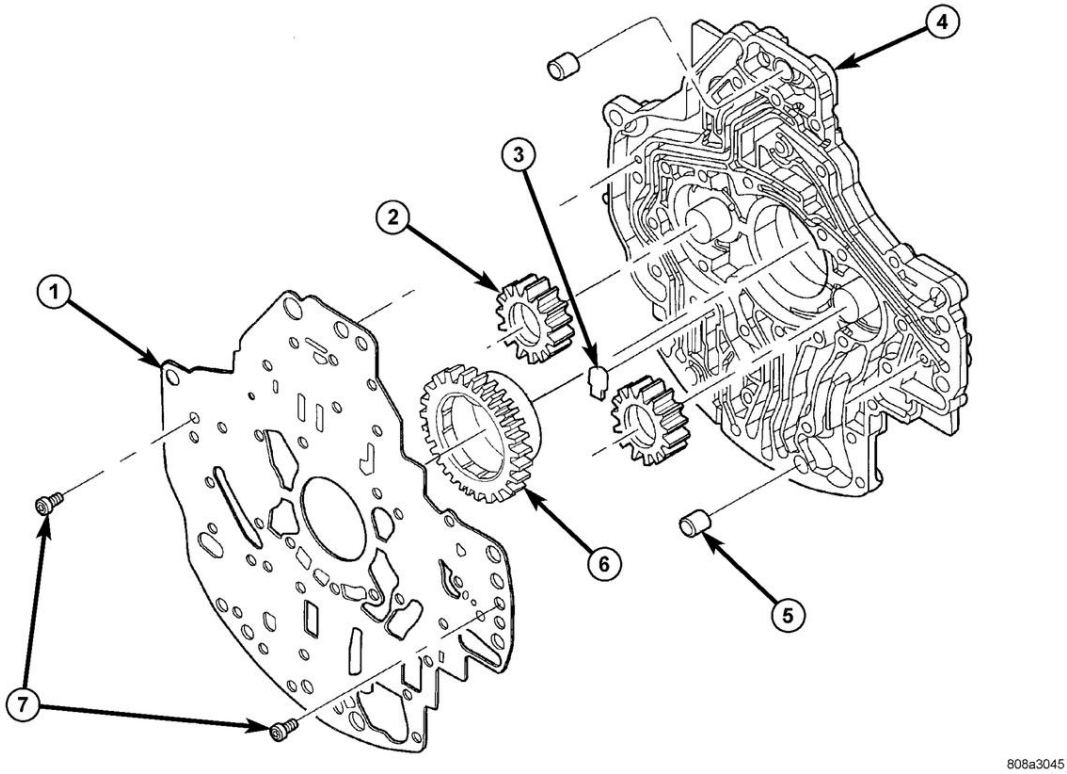

Fig. 177: Oil Pump Housing & Gears
Courtesy of CHRYSLER GROUP, LLC

1 - SEPARATOR PLATE	5 - DOWEL (2)
2 - DRIVEN GEAR (2)	6 - DRIVE GEAR
3 - FLAPPER VALVE	7 - SCREW
4 - PUMP HOUSING	

3. Coat the gears (2, 6) with Mopar® ATF +4 and install into their original locations.
4. Place the oil pump flapper valve (3) into its pocket in the pump housing, with the rounded edges facing down.
5. Place the separator plate (1) onto the oil pump housing (4).
6. Install the screws (7) to hold the separator plate (1) onto the oil pump housing (4). Tighten the screws to 4.5 N.m (40 in.lbs.).

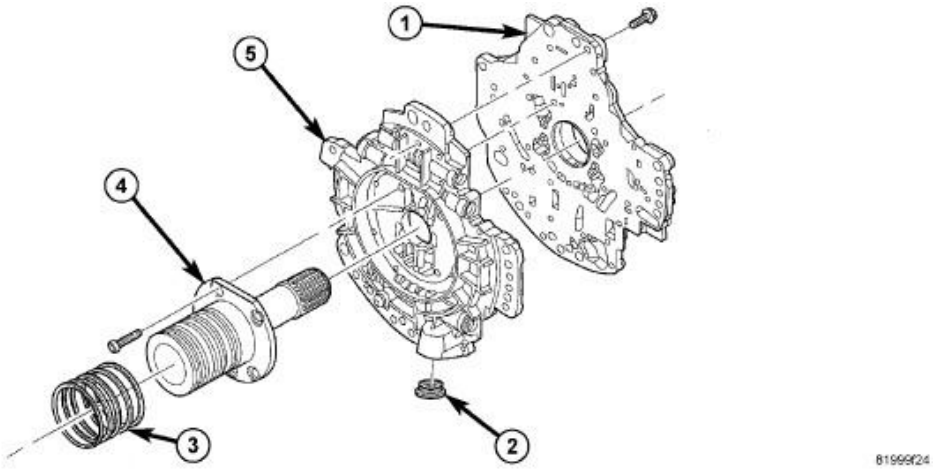

Fig. 178: Oil Pump Reaction Shaft
Courtesy of CHRYSLER GROUP, LLC

1 - PUMP HOUSING	4 - REACTION SHAFT SUPPORT
2 - OIL FILTER SEAL	5 - PUMP VALVE BODY
3 - SEAL RING (5)	

7. Position the oil pump valve body (5) onto the locating dowels.
8. Seat the two oil pump halves together and install all bolts finger tight.
9. Torque all bolts down slowly starting in the center and working outward. The correct torque is 4.5 N.m (40 in.lbs.).
10. Verify that the oil pump gears rotate freely and smoothly.
11. Position the reaction shaft support (4) onto the oil pump valve body (5).
12. Install and torque the bolts to hold the reaction shaft support (4) to the oil pump valve body (5). The correct torque is 12 N.m (105 in.lbs.).

RETAINER, TRANSMISSION 2ND AND 4TH CLUTCH PISTON

DISASSEMBLY

DISASSEMBLY

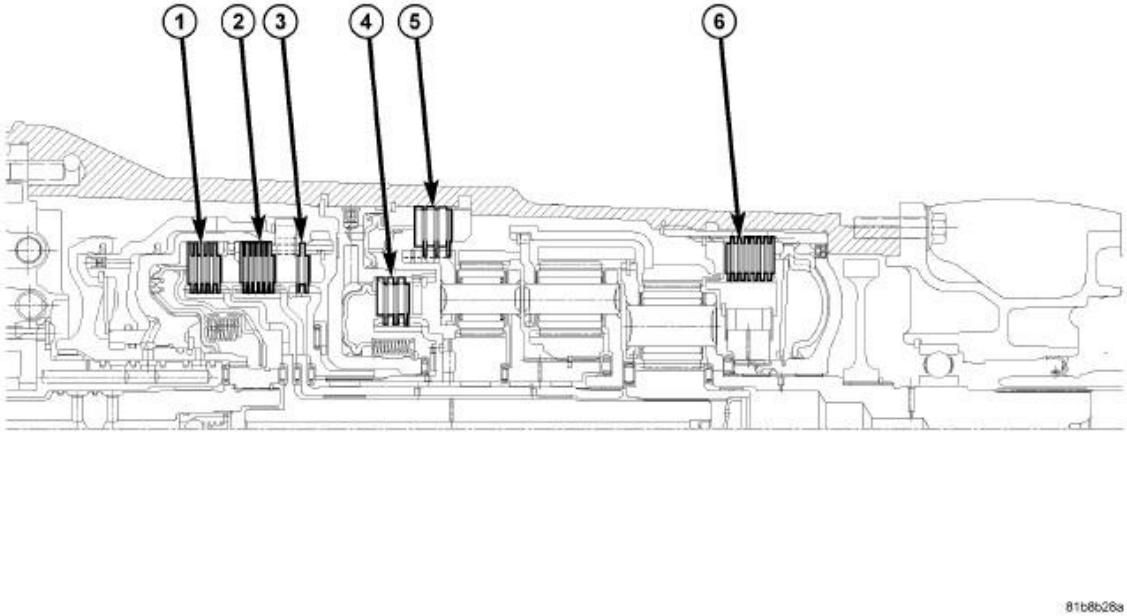

Fig. 179: 68RFE Clutch Orientation
Courtesy of CHRYSLER GROUP, LLC

1 - U/D CLUTCH	4 - 4C CLUTCH
2 - O/D CLUTCH	5 - 2C CLUTCH
3 - REVERSE CLUTCH	6 - L/R CLUTCH

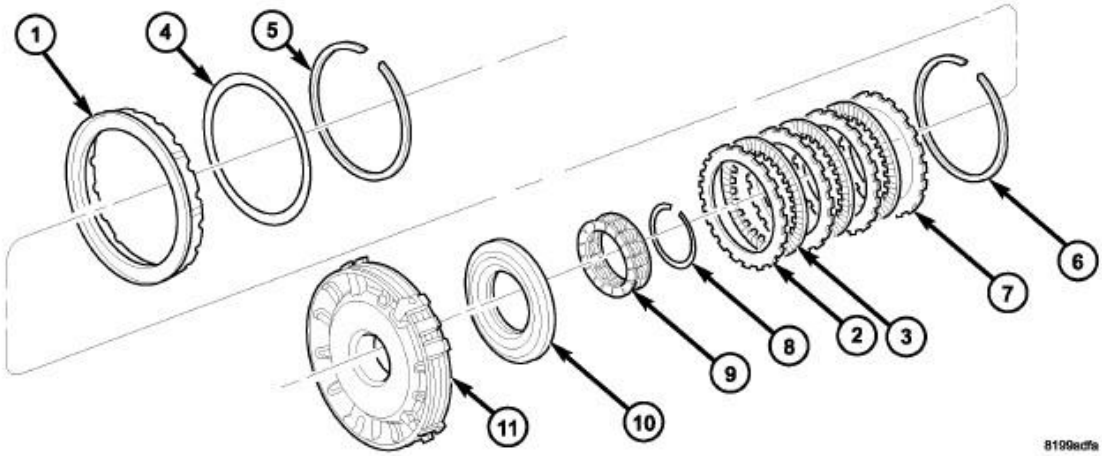

Fig. 180: 2nd & 4th Clutches
Courtesy of CHRYSLER GROUP, LLC

1 - 2C PISTON	8 - SNAP-RING
2 - PLATE	9 - RETURN SPRING
3 - DISC	10 - 4C PISTON
4 - 2C BELLEVILLE SPRING	11 - 4C RETAINER/BULKHEAD
5 - SNAP-RING	
6 - SNAP-RING (SELECT)	
7 - REACTION PLATE	

1. Remove the 2C piston Belleville spring snap-ring (5) from the 2C / 4C retainer/bulkhead (12).
2. Remove the 2C piston Belleville spring (4) from the retainer/bulkhead (11).
3. Remove the 2C piston (1) from the retainer/bulkhead (11). Use 20 psi of air pressure to remove the piston if necessary.
4. Remove the 4C clutch snap-ring (6) from the retainer/bulkhead (11)
5. Remove the 4C clutch pack (2, 3, 7) from the retainer/bulkhead (11).

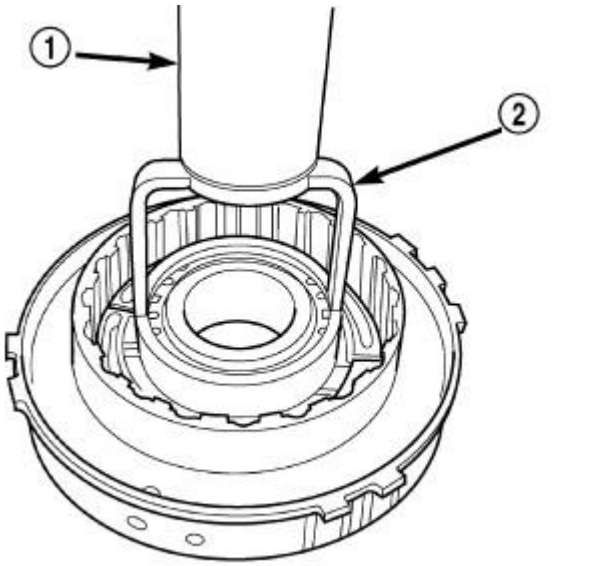

80c07419

Fig. 181: Compressing 4C Piston Return Spring
Courtesy of CHRYSLER GROUP, LLC

1 - PRESS
2 - TOOL 8250

6. Using Spring Compressor (special tool #8250, Compressor, Spring) (2) and a suitable shop press (1), compress the 4C piston return spring and remove the snap-ring.

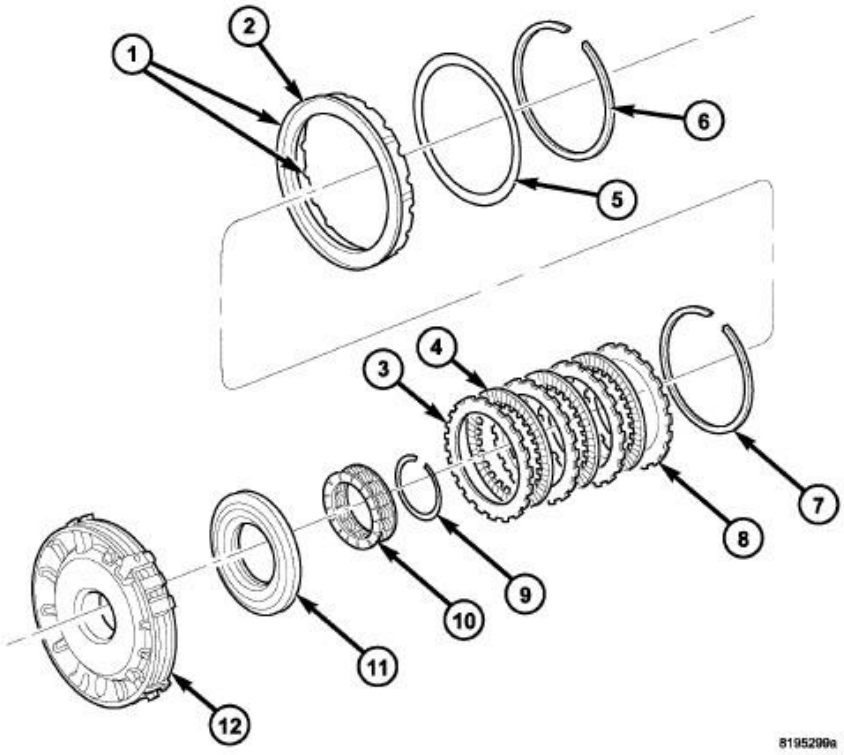

Fig. 182: 2/4 Clutches
Courtesy of CHRYSLER GROUP, LLC

1 - SEALS	8 - REACTION PLATE
2 - 2C PISTON	9 - SNAP-RING
3 - PLATE	10 - RETURN SPRING
4 - DISC	11 - 4C PISTON
5 - 2C BELLEVILLE SPRING	12 - 4C RETAINER/BULKHEAD
6 - SNAP-RING	
7 - SNAP-RING (SELECT)	

7. Remove the 4C piston return spring (10) and piston (11) from the retainer/bulkhead (12). Use 20 psi of air pressure to remove the piston if necessary.

ASSEMBLY

ASSEMBLY

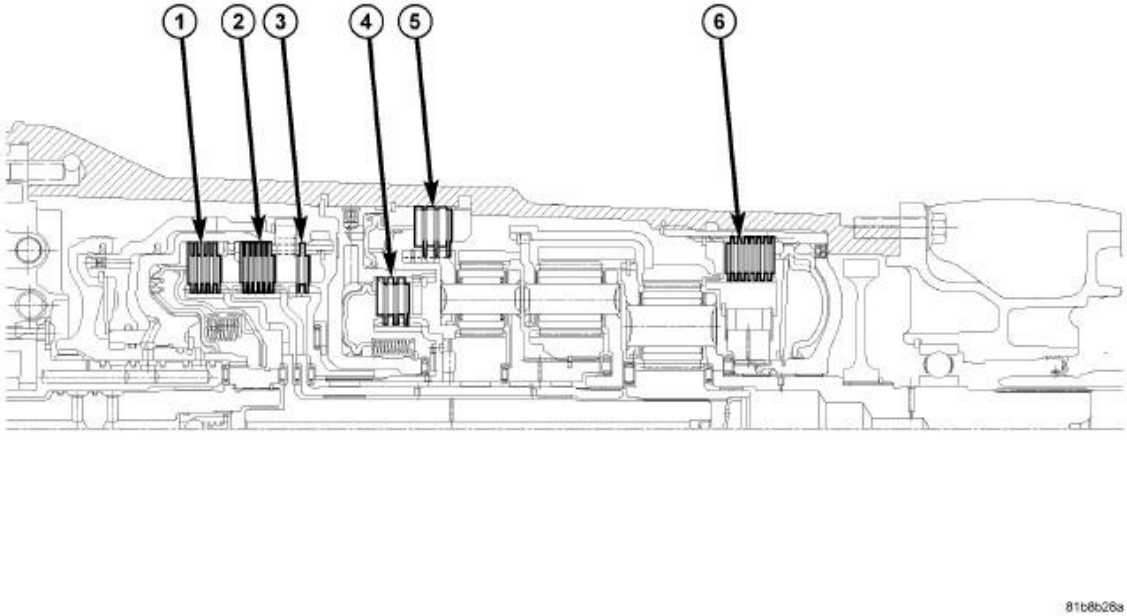

Fig. 183: 68RFE Clutch Orientation
Courtesy of CHRYSLER GROUP, LLC

1 - U/D CLUTCH	4 - 4C CLUTCH
2 - O/D CLUTCH	5 - 2C CLUTCH
3 - REVERSE CLUTCH	6 - L/R CLUTCH

NOTE: **Clean and inspect all components. Replace any components which show evidence of excessive wear or scoring.**

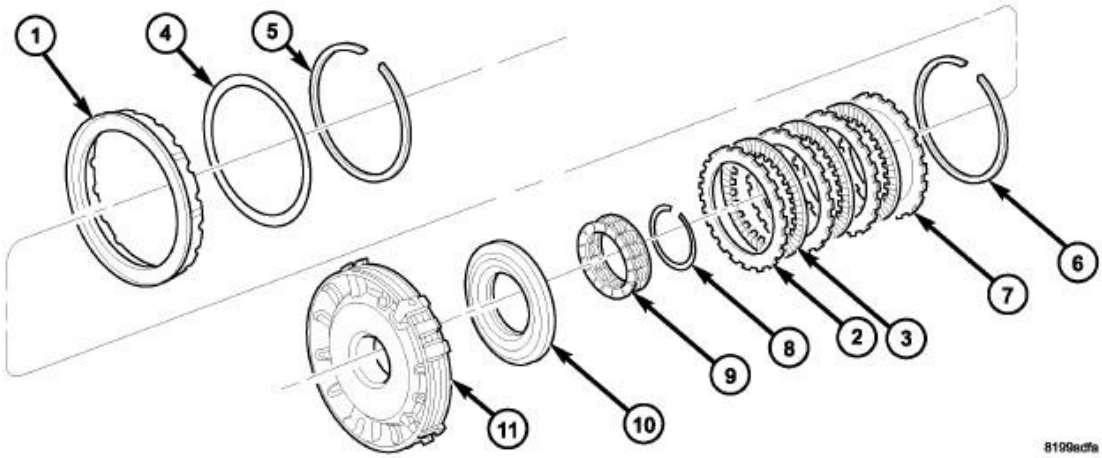

Fig. 184: 2nd & 4th Clutches
Courtesy of CHRYSLER GROUP, LLC

1 - 2C PISTON	8 - SNAP-RING
2 - PLATE	9 - RETURN SPRING
3 - DISC	10 - 4C PISTON
4 - 2C BELLEVILLE SPRING	11 - 4C RETAINER/BULKHEAD
5 - SNAP-RING	
6 - SNAP-RING (SELECT)	
7 - REACTION PLATE	

1. Lubricate all seals with Mopar® ATF +4 prior to installation.

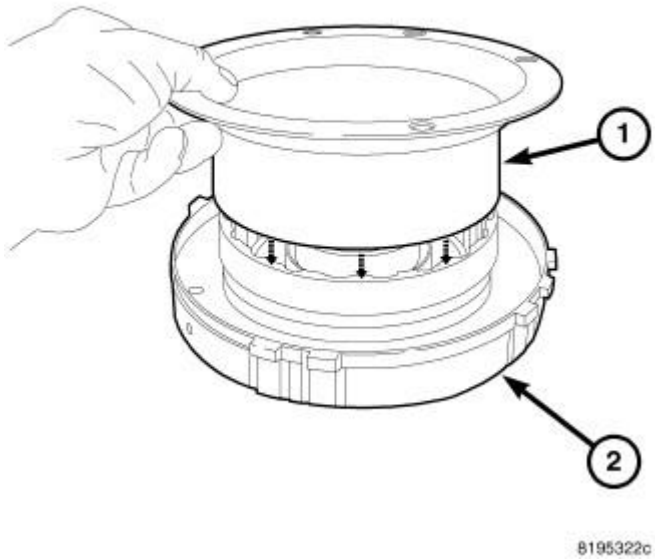

Fig. 185: Inserting Installation Aid Into 4C Retainer/bulkhead
Courtesy of CHRYSLER GROUP, LLC

1 -INSTALLATION AID
2 -4C RETAINER

2. Insert the installation aid (1) into the 4C retainer/bulkhead (2).

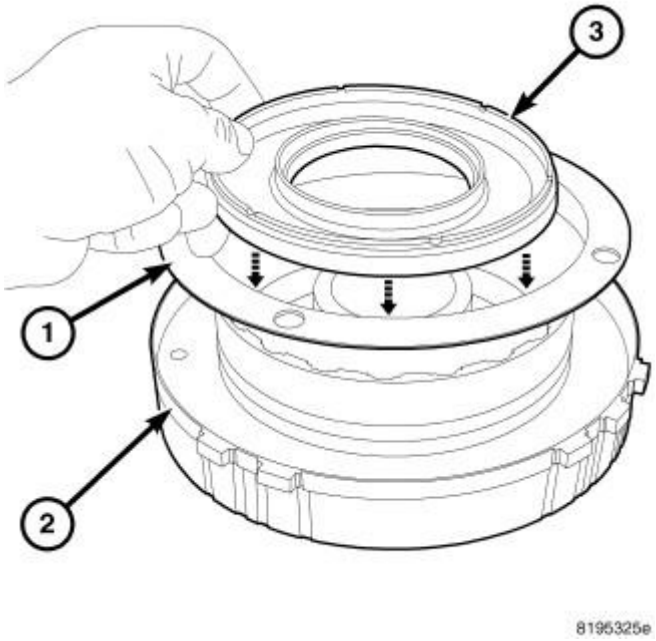

Fig. 186: Installing 4C Piston
Courtesy of CHRYSLER GROUP, LLC

1 - INSTALLATION AID
2 - 4C RETAINER
3 - 4C PISTON

3. Lubricate the inner and outer 4C piston seals (3) with MOPAR® ATF+ 4.
4. Install the 4C piston (3) into the installation aid (1).

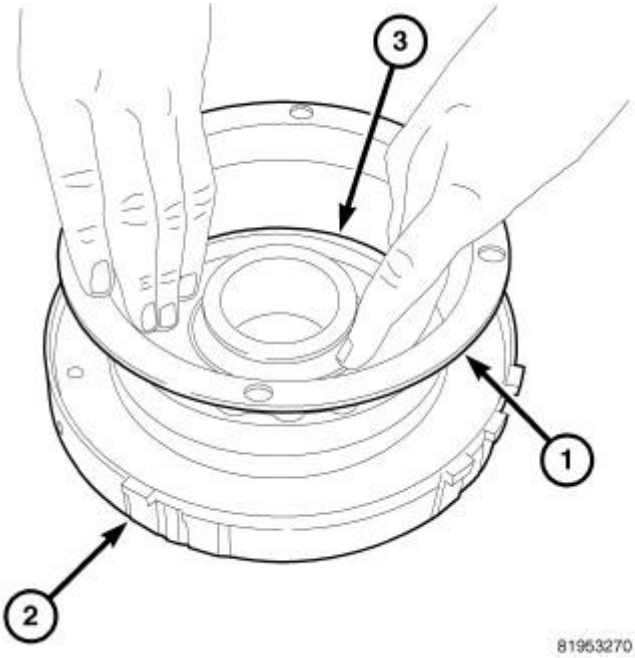

Fig. 187: Seating 4C Piston
Courtesy of CHRYSLER GROUP, LLC

1 -INSTALLATION AID
2 -4C RETAINER
3 - 4C PISTON

5. Push the 4C piston (3) down evenly until it is seated in the 4C retainer/bulkhead (2).

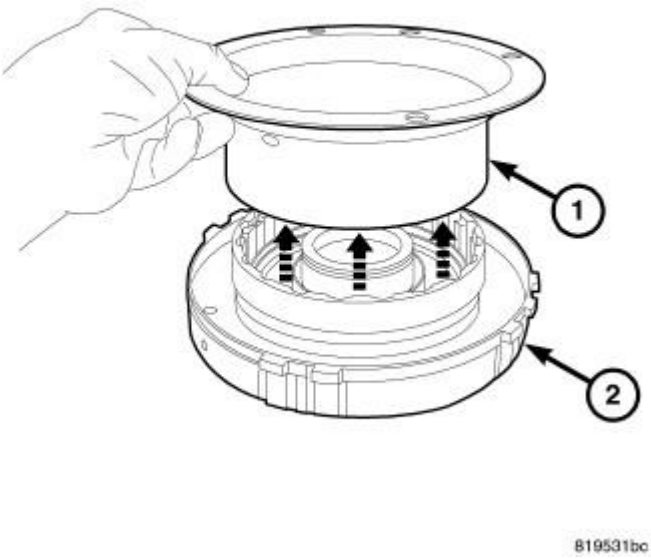

Fig. 188: Removing Installation Aid

Courtesy of CHRYSLER GROUP, LLC

1 -INSTALLATION AID
2 -4C RETAINER
3 - 4C PISTON

6. Remove the installation aid (1) from the 4C retainer/bulkhead (2).

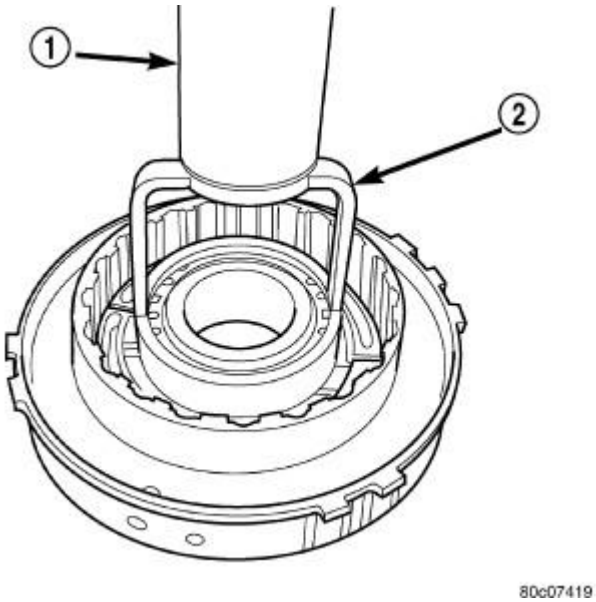

Fig. 189: Compressing 4C Piston Return Spring
Courtesy of CHRYSLER GROUP, LLC

1 - PRESS
2 - TOOL 8250

7. Position the 4C piston return spring onto the 4C piston.
8. Using Spring Compressor (special tool #8250, Compressor, Spring) (2) and a suitable shop press (1), compress the 4C piston return spring and install the snap-ring.

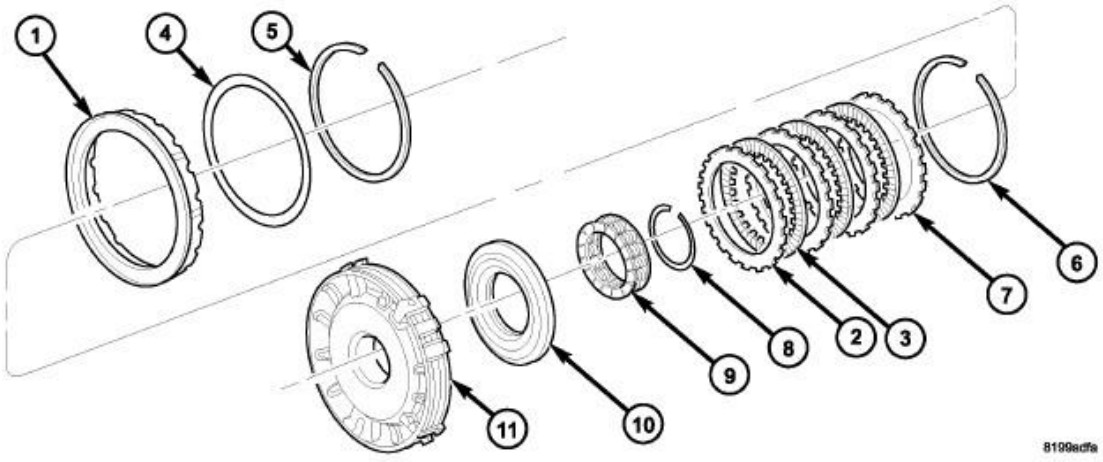

Fig. 190: 2nd & 4th Clutches
Courtesy of CHRYSLER GROUP, LLC

1 - 2C PISTON	8 - SNAP-RING
2 - PLATE	9 - RETURN SPRING
3 - DISC	10 - 4C PISTON
4 - 2C BELLEVILLE SPRING	11 - 4C RETAINER/BULKHEAD
5 - SNAP-RING	
6 - SNAP-RING (SELECT)	
7 - REACTION PLATE	

9. Assemble and install the 4C clutch pack (2, 3) into the retainer/bulkhead (11) with a steel separator plate against the piston.
10. Install the 4C reaction plate (7) and snap-ring (6) into the retainer/bulkhead (11). The 4C reaction plate is non-directional.
11. Measure the 4C clutch clearance. The correct clutch clearance is 0.770-1.390 mm (0.030-0.055 in.). The snap-ring (6) is selectable. Install the chosen snap-ring and re-measure to verify the selection.

    The 4C selectable snap ring thickness are as follows:

    4C SELECTABLE SNAP RING THICKNESS

    - One Butterfly End, One Square End = 1.79 mm (0.070 in.).
    - Both Ends Buttery Fly Cut = 2.20 mm (0.087 in.).
    - One Butterfly End, One Inverted Butterfly End = 2.61 mm (0.103 in.).
12. Install the 2C piston (1) into the retainer/bulkhead (11).
13. Position the 2C Belleville spring (5) onto the 2C piston (2).
14. Position the 2C Belleville spring snap-ring (6) onto the 2C Belleville spring (5).

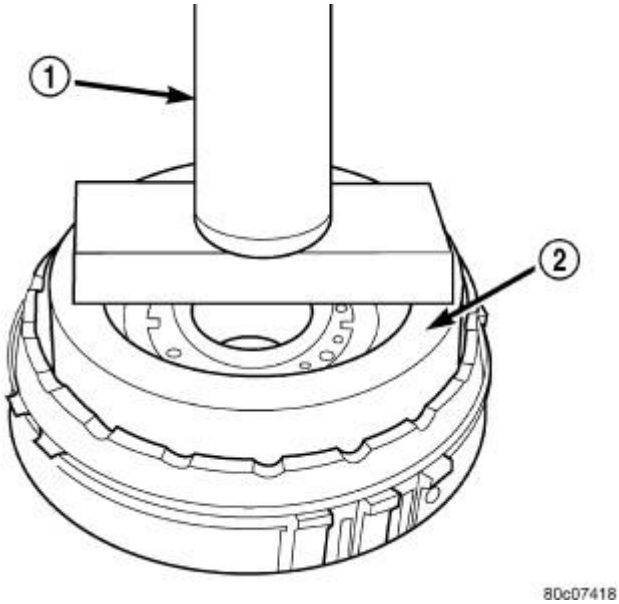

Fig. 191: Compressing 2C Belleville Spring
Courtesy of CHRYSLER GROUP, LLC

1 - PRESS
2 - TOOL 8249

15. Using Spring Compressor (special tool #8249, Compressor, Spring) (2) and a suitable shop press (1), compress the Belleville spring until the snap-ring is engaged with the snap-ring groove in the retainer/bulkhead.

SEAL, ADAPTER HOUSING

REMOVAL

REMOVAL

1. On 4WD vehicles remove the transfer case from the transmission, on 2WD vehicles remove the propeller shaft.
2. Using a pry tool, remove the output shaft seal.

INSTALLATION

INSTALLATION

NOTE: **On the 2WD models use Seal Installer (special tool #8154, Installer, Seal) with Handle (special tool #C-4171, Driver Handle, Universal).**

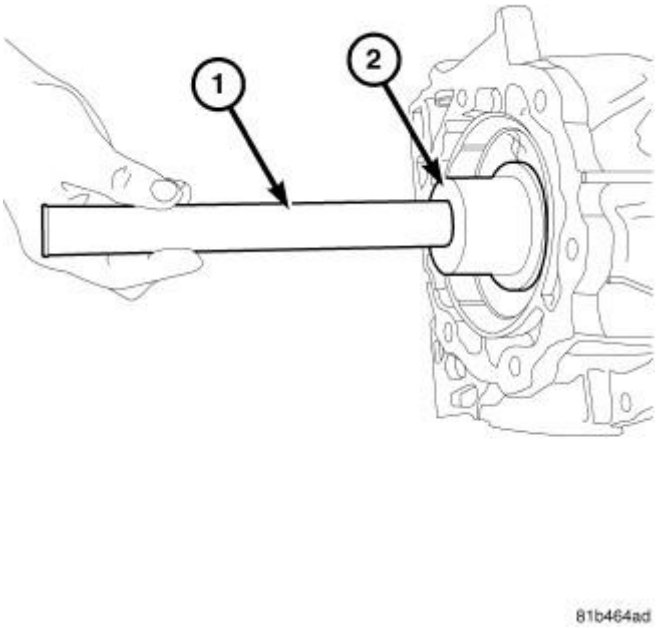

Fig. 192: Installing Oil Seal
Courtesy of CHRYSLER GROUP, LLC

1 - HANDLE C-4171
2 - SEAL INSTALLER 10020

1. Clean the seal bore in the extension housing of any residue or particles remaining from the original seal.
2. Install new oil seal in the extension housing using Handle (special tool #C-4171, Driver Handle, Universal) (1) and Seal Installer (special tool #10020, Installer, Seal) (2).

SEAL, OUTPUT SHAFT

REMOVAL

REMOVAL

1. Remove the rear drive shaft. Refer to **SHAFT, DRIVE, REAR LIGHT DUTY, REMOVAL** or **SHAFT, DRIVE, REAR HEAVY DUTY, REMOVAL** .
2. Using a seal removal tool, remove rear extension housing output shaft seal.

INSTALLATION

INSTALLATION

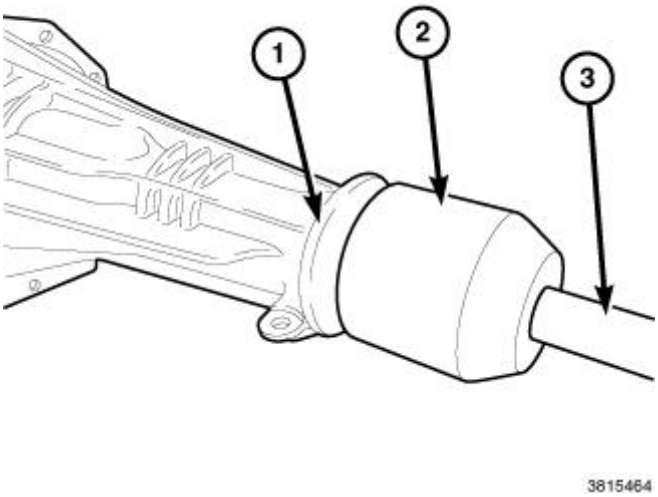

Fig. 193: Installing Extension Housing Oil Seal
Courtesy of CHRYSLER GROUP, LLC

1. Clean the extension housing seal bore in the extension housing of any residue or particles remaining from the original seal.

NOTE: The small weep hole in the dust boot of the seal should face downward when installed in the extension housing.

2. Install new oil seal in the extension housing (1) using (special tool #8896, Installer, Seal) (2) and (special tool #C-4171, Driver Handle, Universal) (3).
3. Install rear drive shaft. Refer to **SHAFT, DRIVE, REAR LIGHT DUTY, INSTALLATION** or **SHAFT, DRIVE, REAR HEAVY DUTY, INSTALLATION** .

SENSOR, SPEED, INPUT

DESCRIPTION

DESCRIPTION

The Input and Output Speed Sensors are two-wire magnetic pickup devices that generate AC signals as rotation occurs. They are mounted in the left side of the transmission case and are considered primary inputs to the Transmission Control Module (TCM).

OPERATION

OPERATION

The Input Speed Sensor provides information on how fast the input shaft is rotating. As the teeth of the input clutch hub pass by the sensor coil, an AC voltage is generated and sent to the TCM. The TCM interprets this information as input shaft rpm.

The Output Speed Sensor generates an AC signal in a similar fashion, though its coil is excited by rotation of the park gear teeth. The TCM interprets this information as output shaft rpm.

The TCM compares the input and output speed signals to determine the following:

- Transmission gear ratio
- Speed ratio error detection
- CVI calculation

The TCM also compares the input speed signal and the engine speed signal to determine the following:

- Torque converter clutch slippage
- Torque converter element speed ratio

REMOVAL

REMOVAL

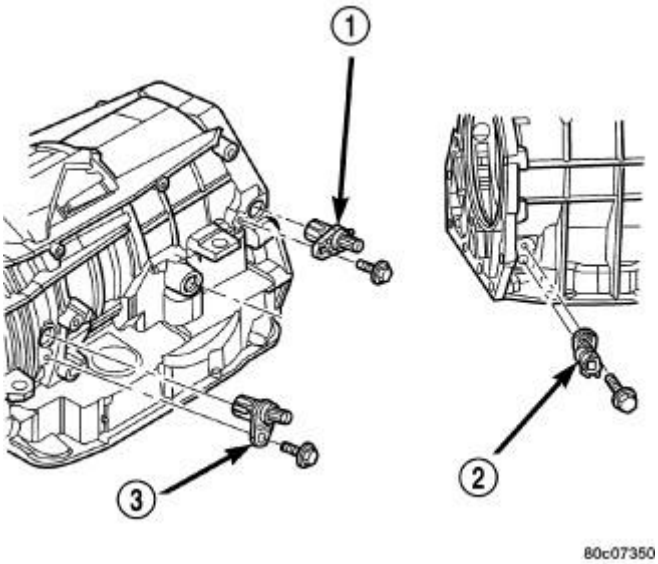

Fig. 194: Input, Output, & Line Pressure Sensors
Courtesy of CHRYSLER GROUP, LLC

1 - OUTPUT SPEED SENSOR
2 - LINE PRESSURE SENSOR
3 - INPUT SPEED SENSOR

1. Raise vehicle.
2. Place a suitable fluid catch pan under the transmission.
3. Remove the wiring connector from the input speed sensor (3). Refer to **Fig. 194**.
4. Remove the bolt holding the input speed sensor to the transmission case.

5. Remove the input speed sensor (3) from the transmission case.

INSTALLATION

INSTALLATION

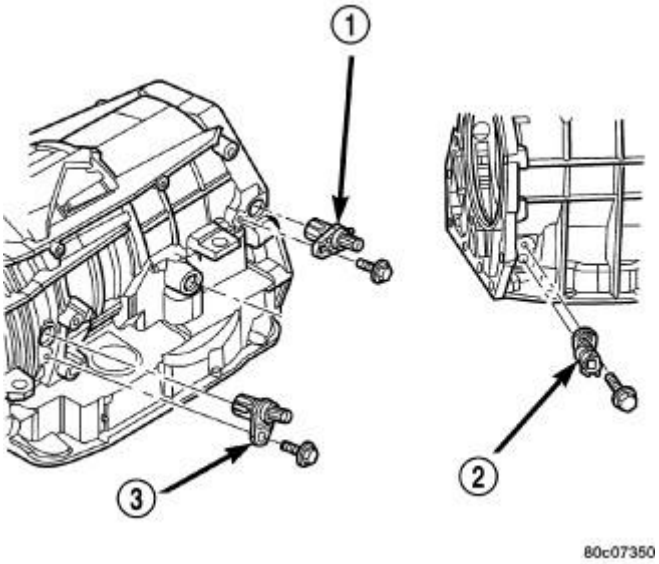

Fig. 195: Input, Output, & Line Pressure Sensors
Courtesy of CHRYSLER GROUP, LLC

1 - OUTPUT SPEED SENSOR
2 - LINE PRESSURE SENSOR
3 - INPUT SPEED SENSOR

1. Install the input speed sensor (3) into the transmission case. Refer to **Fig. 195**.
2. Install the bolt to hold the input speed sensor (3) into the transmission case. Tighten the bolt to 12 N.m (105 in.lbs.).
3. Install the wiring connector onto the input speed sensor.
4. Verify the transmission fluid level. Add fluid as necessary.
5. Lower vehicle.

SENSOR, SPEED, OUTPUT

DESCRIPTION

DESCRIPTION

The Input and Output Speed Sensors are two-wire magnetic pickup devices that generate AC signals as rotation occurs. They are mounted in the left side of the transmission case and are considered primary inputs to the Transmission Control Module (TCM).

OPERATION

OPERATION

The Input Speed Sensor provides information on how fast the input shaft is rotating. As the teeth of the input clutch hub pass by the sensor coil, an AC voltage is generated and sent to the TCM. The TCM interprets this information as input shaft rpm.

The Output Speed Sensor generates an AC signal in a similar fashion, though its coil is excited by rotation of the park gear teeth. The TCM interprets this information as output shaft rpm.

The TCM compares the input and output speed signals to determine the following:

- Transmission gear ratio
- Speed ratio error detection
- CVI calculation

The TCM also compares the input speed signal and the engine speed signal to determine the following:

- Torque converter clutch slippage
- Torque converter element speed ratio

REMOVAL

REMOVAL

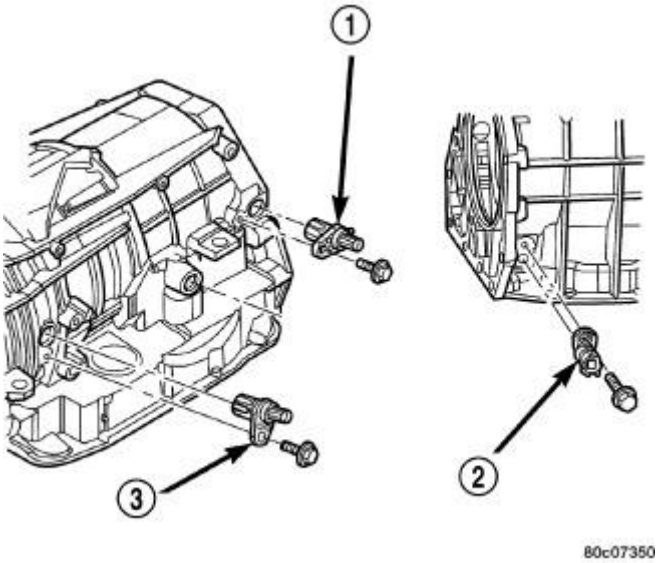

Fig. 196: Input, Output, & Line Pressure Sensors
Courtesy of CHRYSLER GROUP, LLC

1 - OUTPUT SPEED SENSOR

2 - LINE PRESSURE SENSOR
3 - INPUT SPEED SENSOR

1. Raise vehicle.
2. Place a suitable fluid catch pan under the transmission.
3. Remove the wiring connector from the output speed sensor (1). Refer to **Fig. 196**.
4. Remove the bolt holding the output speed sensor (1) to the transmission case.
5. Remove the output speed sensor (1) from the transmission case.

INSTALLATION

INSTALLATION

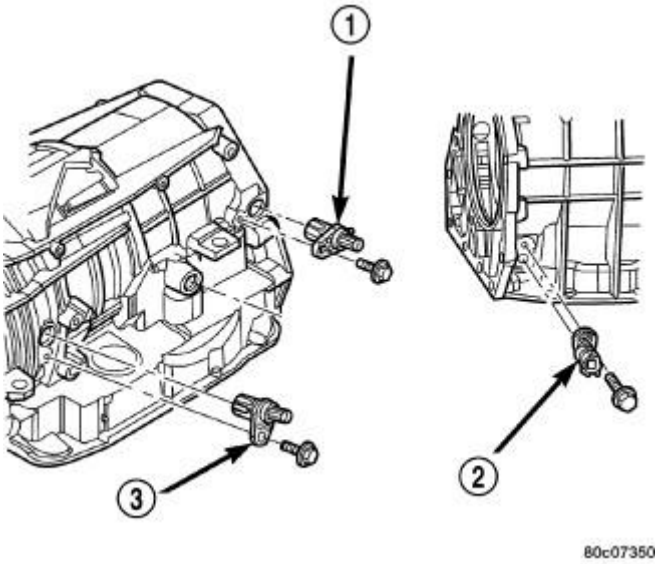

Fig. 197: Input, Output, & Line Pressure Sensors
Courtesy of CHRYSLER GROUP, LLC

1 - OUTPUT SPEED SENSOR
2 - LINE PRESSURE SENSOR
3 - INPUT SPEED SENSOR

1. Install the output speed sensor (1) into the transmission case. Refer to **Fig. 197**.
2. Install the bolt to hold the output speed sensor (1) into the transmission case. Tighten the bolt to 12 N.m (105 in.lbs.).
3. Install the wiring connector onto the output speed sensor (1).
4. Verify the transmission fluid level. Add fluid as necessary.
5. Lower vehicle.

SENSOR, TRANSMISSION OIL TEMPERATURE

DESCRIPTION

DESCRIPTION

The transmission temperature sensor is a thermistor that is integral to the Transmission Range Sensor (TRS).

OPERATION

OPERATION

The transmission temperature sensor is used by the TCM to sense the temperature of the fluid in the sump. Since fluid temperature can affect transmission shift quality and convertor lock up, the TCM requires this information to determine which shift schedule to operate in.

CALCULATED TEMPERATURE

A failure in the temperature sensor or circuit will result in calculated temperature being substituted for actual temperature. Calculated temperature is a predicted fluid temperature which is calculated from a combination of inputs:

- Battery (ambient) temperature
- Engine coolant temperature
- In-gear run time since start-up

SENSOR, TRANSMISSION RANGE

DESCRIPTION

DESCRIPTION

The Transmission Range Sensor (TRS) is part of the solenoid module, which is mounted to the top of the valve body inside the transmission.

The Transmission Range Sensor (TRS) has five switch contact pins that:

- Determine shift lever position
- Supply ground to the Starter Relay in Park and Neutral only.

The TRS also has an integrated temperature sensor (thermistor) that communicates transmission temperature to the TCM and PCM.

OPERATION

OPERATION

The Transmission Range Sensor (TRS) communicates shift lever position to the TCM as a combination of open and closed switches. Each shift lever position has an assigned combination of switch states (open/closed) that

the TCM receives from four sense circuits. The TCM interprets this information and determines the appropriate transmission gear position and shift schedule.

There are many possible combinations of open and closed switches (codes). Five of these possible codes correspond to valid gear position, there are two codes for the neutral position and three are recognized as "between gear" codes. This results in many codes which should **never occur** . These are called "invalid" codes. An invalid code will result in a DTC, and the TCM will then determine the shift lever position based on pressure switch data. This allows reasonably normal transmission operation with a TRS failure.

GEAR	C5	C4	C3	C2	C1
Park	CL	OP	OP	CL	CL
Temp 1	CL	OP	OP	CL	OP
Reverse	OP	OP	OP	CL	OP
Temp 2	OP	OP	CL	CL	OP
Neutral 1	OP	OP	CL	CL	CL
Neutral 2	OP	CL	CL	CL	CL
Temp 3	OP	CL	CL	CL	OP
Drive	OP	CL	CL	OP	OP

SENSOR, VARIABLE LINE PRESSURE

DESCRIPTION

DESCRIPTION

The TCM utilizes a closed-loop system to control transmission line pressure. The system contains a variable force style solenoid, the Pressure Control Solenoid, which is part of the pressure switch assembly. The solenoid is duty cycle controlled by the TCM to vent the unnecessary line pressure supplied by the oil pump back to the pump inlet. The system contains a Line Pressure Sensor, which is a direct input to the TCM. The line pressure sensor monitors the transmission line pressure and completes the feedback loop to the TCM. The TCM uses this information to adjust its control of the pressure control solenoid to achieve the desired line pressure.

OPERATION

OPERATION

The TCM calculates the desired line pressure based upon inputs from the transmission and engine. The TCM calculates the torque input to the transmission and uses that information as the primary input to the calculation. The line pressure is set to a predetermined value during shifts, to ensure consistent shift quality. During all other operation, the desired line pressure value is adjusted based on torque level and other transmission requirements.

REMOVAL

REMOVAL

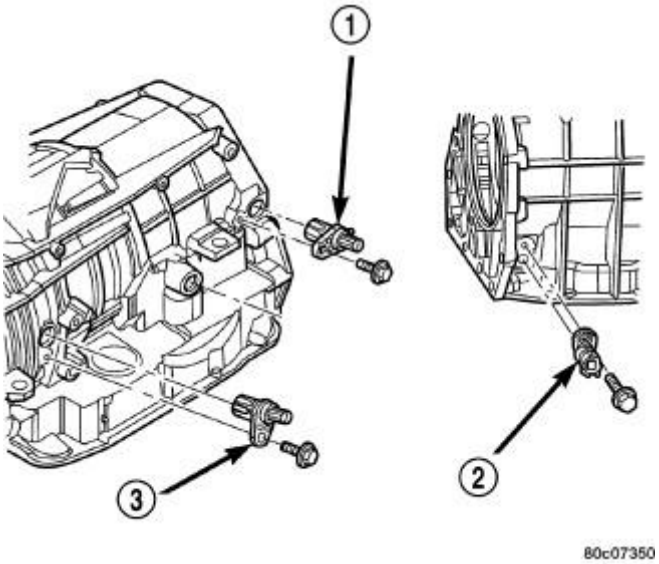

Fig. 198: Input, Output, & Line Pressure Sensors
Courtesy of CHRYSLER GROUP, LLC

1 - OUTPUT SPEED SENSOR
2 - LINE PRESSURE SENSOR
3 - INPUT SPEED SENSOR

1. Raise vehicle.
2. Place a suitable fluid catch pan under the transmission.
3. Remove the wiring connector from the line pressure sensor (2). Refer to **Fig. 198**.
4. Remove the bolt holding the line pressure sensor (2) to the transmission case.
5. Remove the line pressure sensor (2) from the transmission case.

INSTALLATION

INSTALLATION

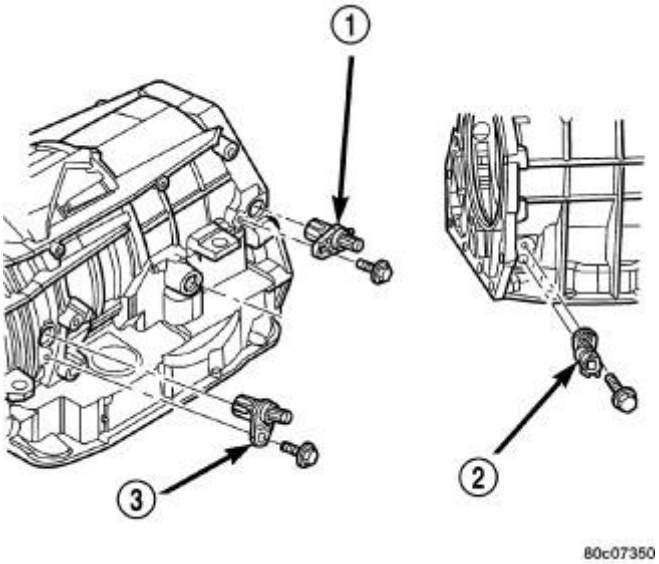

Fig. 199: Input, Output, & Line Pressure Sensors
Courtesy of CHRYSLER GROUP, LLC

1 - OUTPUT SPEED SENSOR
2 - LINE PRESSURE SENSOR
3 - INPUT SPEED SENSOR

1. Install the line pressure sensor (2) into the transmission case. Refer to **Fig. 199**.
2. Install the bolt to hold the line pressure sensor (2) into the transmission case. Tighten the bolt to 12 N.m (105 in.lbs.).
3. Install the wiring connector onto the line pressure sensor (2).
4. Verify the transmission fluid level. Add fluid as necessary.
5. Lower vehicle.

SHIFTER, TRANSMISSION

DESCRIPTION

DESCRIPTION

The gear shift mechanism provides four shift positions which are:

- Park (P)
- Reverse (R)
- Neutral (N)
- Drive (D)

OPERATION

OPERATION

Drive range provides underdrive FIRST, SECOND and THIRD gears, direct FOURTH gear and overdrive FIFTH and SIXTH gears. The shift into overdrive FIFTH and SIXTH gear occurs only after the transmission has completed the shift into FOURTH gear. No other movement of the shift mechanism is required to complete the 4-5 or 5-6 gear shifts.

The FOURTH and FIFTH gear upshift occurs automatically unless the Tow/Haul mode is enabled.

Upshifts into both overdrive gears, FIFTH and SIXTH, will be delayed when the transmission fluid temperature is below 4.5° C (40° F) or above 115.5° C (240° F).

SWITCH, OVERDRIVE LOCKOUT

DESCRIPTION

DESCRIPTION

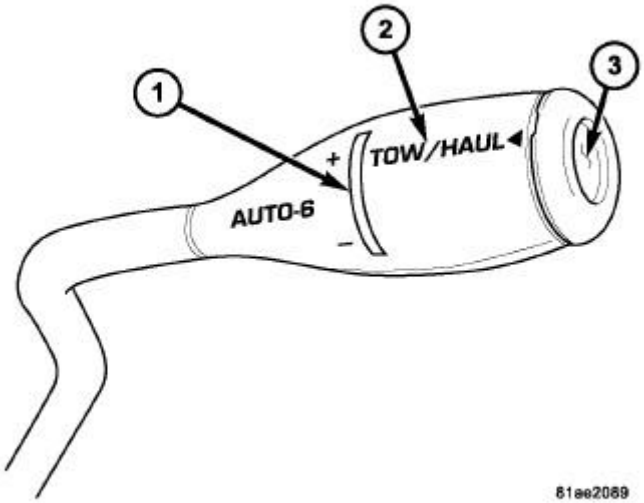

Fig. 200: Tow/Haul Overdrive Off Switch
Courtesy of CHRYSLER GROUP, LLC

1 - AUTO-6 (ERS)	3 - OVERDRIVE ON/OFF SWITCH
2 - TOW / HAUL	

The Tow/Haul and Auto-6 Electronic Range Select (ERS) switches are located in the shift lever arm. The switches are momentary contact devices that signal the PCM to toggle current status of the Tow/Haul function and adjust the ERS maximum allowed gear range.

OPERATION

OPERATION

At key-on, normal operation is provided. Pressing the switch enables Tow/Haul mode and the Tow/Haul lamp will be illuminated. In Tow/Haul mode, 4-5 upshifts are delayed. Shifts into 5th and 6th gear are still allowed under steady cruise conditions. Closed throttle downshifts (for improved engine braking) may occur during steady braking maneuvers. Pressing the switch a second time restores normal operation. Normal operation is always the default at start-up; the switch must be pressed after each key start if Tow/Haul mode is desired.

The Electronic Range Select (ERS) allows the selection of the desired top gear, when the shifter is in the D (Drive) position. For example, if ERS 3rd is selected, the transmission will never shift above 3rd gear, but can down shift into 2nd or 1st when needed.

SYSTEM, SHIFT INTERLOCK

DESCRIPTION

DESCRIPTION

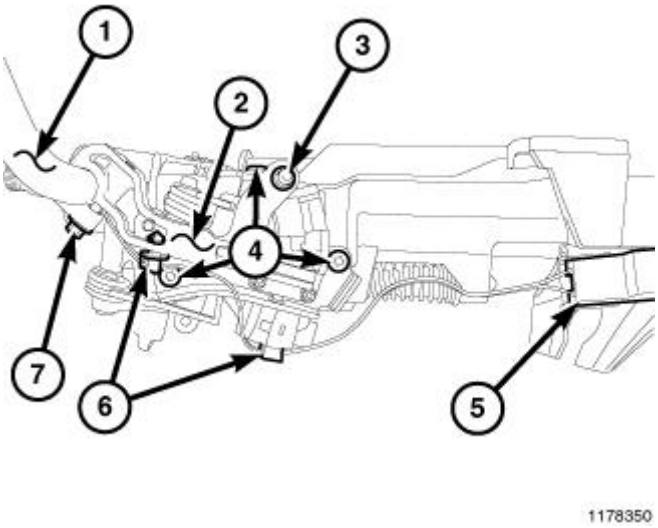

Fig. 201: Gearshift Lever Assembly
Courtesy of CHRYSLER GROUP, LLC

The Brake Transmission Shifter Interlock (BTSI), is a solenoid operated system. It consists of a solenoid permanently mounted on the gearshift lever assembly.

OPERATION

OPERATION

The system locks the shifter into the PARK position. The interlock system is engaged whenever the ignition switch is in the LOCK or ACCESSORY position. An additional electrically activated feature will prevent shifting out of the PARK position unless the brake pedal is depressed approximately one-half an inch. A magnetic holding device in line with the park lock cable is energized when the ignition is in the RUN position. When the key is in the RUN position and the brake pedal is depressed, the shifter is unlocked and will move into any position. The interlock system also prevents the ignition switch from being turned to the LOCK or ACCESSORY position, unless the shifter is fully locked into the PARK position.

DIAGNOSIS AND TESTING

DIAGNOSIS AND TESTING - BRAKE TRANSMISSION SHIFT INTERLOCK

1. Verify that the key can only be removed in the PARK position.
2. When the shift lever is in PARK And the shift handle pushbutton is in the "OUT" position, the ignition key cylinder should rotate freely from OFF to LOCK. When the shifter is in any other gear or neutral position, the ignition key cylinder should not rotate to the LOCK position.
3. Shifting out of PARK should not be possible when the ignition key cylinder is in the OFF position.
4. Shifting out of PARK should not be possible while applying normal pushbutton force and ignition key cylinder is in the RUN or START positions unless the foot brake pedal is depressed approximately 1/2 inch (12mm).
5. Shifting out of PARK should not be possible when the ignition key cylinder is in the ACCESSORY or LOCK positions.
6. Shifting between any gears, NEUTRAL or into PARK may be done without depressing foot brake pedal with ignition switch in RUN or START positions.

ADJUSTMENTS

ADJUSTMENTS

ADJUSTMENT PROCEDURE

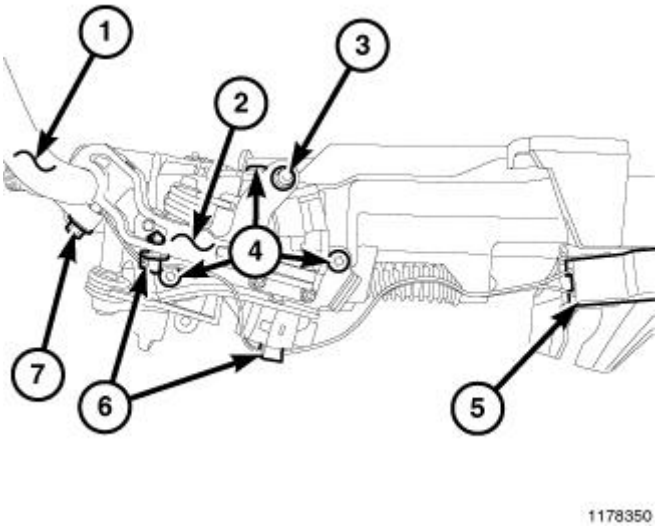

Fig. 202: Gearshift Lever Assembly
Courtesy of CHRYSLER GROUP, LLC

The BTSI is part of the shift lever assembly (2) and is non-adjustable.

BTSI FUNCTION CHECK

1. Verify removal of ignition key allowed in PARK position only.
2. When the shift lever is in PARK, the ignition key cylinder should rotate freely from off to lock. When the shifter is in any other position, the ignition key should not rotate from off to lock.
3. Shifting out of PARK should not be possible when the ignition key cylinder is in the off position.
4. Shifting out of PARK should not be possible while applying normal force, and ignition key cylinder is in the run or start positions, unless the foot brake pedal is depressed approximately 1/2 inch (12mm).
5. Shifting out of PARK should not be possible when the ignition key cylinder is in the accessory or lock position.
6. Shifting between any gear and NEUTRAL, or PARK, may be done without depressing foot brake with ignition switch in run or start positions.
7. Engine starts must be possible with shifter lever in PARK or NEUTRAL positions only. Engine starts must not be possible in any position other than PARK or NEUTRAL.
8. With shifter lever in the:

- PARK position - Apply upward force on the shift arm and remove pressure. Engine starts must be possible.
- PARK position - Apply downward force on the shift arm and remove pressure. Engine starts must be possible.
- NEUTRAL position - Normal position. Engine starts must be possible.
- NEUTRAL position - Engine running and brakes applied, apply upward force on the shift arm. Transmission shall not be able to shift from neutral to reverse.

TORQUE CONVERTER

DESCRIPTION

DESCRIPTION

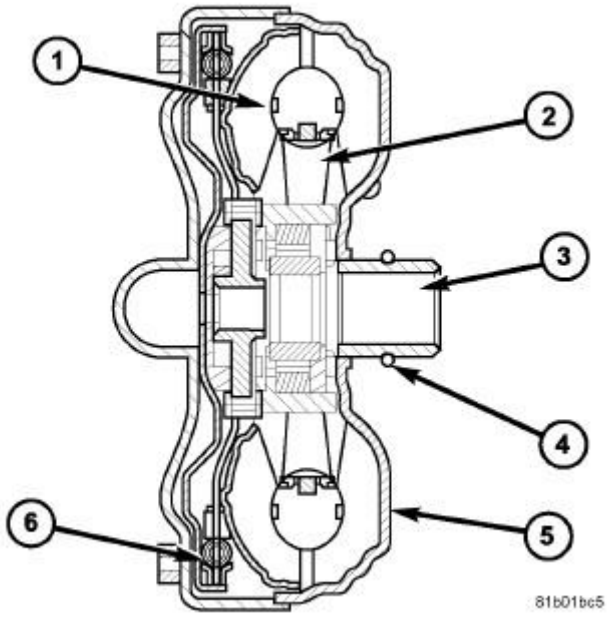

Fig. 203: Torque Converter Components
Courtesy of CHRYSLER GROUP, LLC

1 - TURBINE ASSEMBLY	5 - IMPELLER ASSEMBLY
2 - STATOR	6 - CONVERTER CLUTCH
3 - CONVERTER HUB	7 - TURBINE HUB
4 - O-RING (IF EQUIPPED)	

The torque converter is a hydraulic device that couples the engine crankshaft to the transmission. Refer to **Fig. 203**. The torque converter consists of an outer shell with an internal turbine (1), a stator (2), an overrunning clutch, an impeller (5), and an electronically applied converter clutch (6). The converter clutch provides reduced engine speed and greater fuel economy when engaged. Clutch engagement also provides reduced transmission fluid temperatures. The torque converter hub (3) drives the transmission oil (fluid) pump and contains an o-ring seal (4) to better control oil flow.

The torque converter is a sealed, welded unit that is not repairable and is serviced as an assembly.

CAUTION: The torque converter must be replaced if a transmission failure resulted in large amounts of metal or fiber contamination in the fluid.

IMPELLER

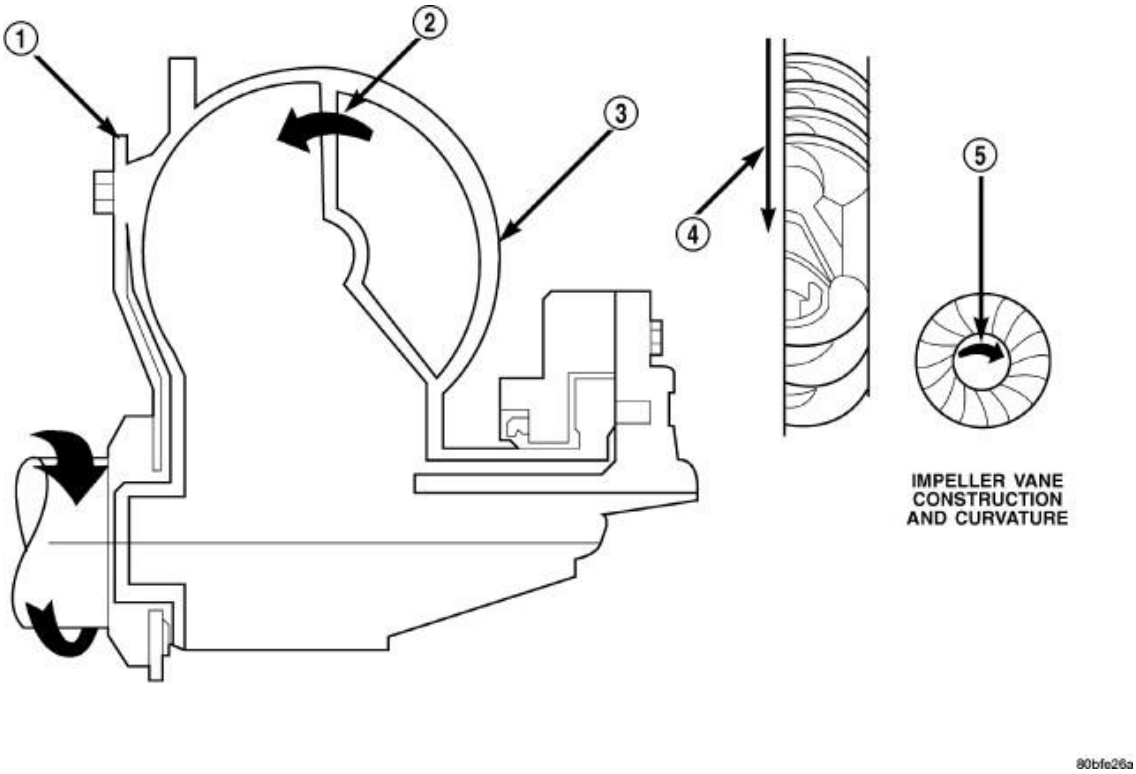

Fig. 204: Impeller
Courtesy of CHRYSLER GROUP, LLC

1 - ENGINE FLEXPLATE	4 - ENGINE ROTATION
2 - OIL FLOW FROM IMPELLER SECTION INTO TURBINE SECTION	5 - ENGINE ROTATION
3 - IMPELLER VANES AND COVER ARE INTEGRAL	

The impeller is an integral part of the converter housing. Refer to **Fig. 204**. The impeller consists of curved blades placed radially along the inside of the housing on the transmission side of the converter. As the converter housing is rotated by the engine, so is the impeller, because they are one and the same and are the driving members of the system.

TURBINE

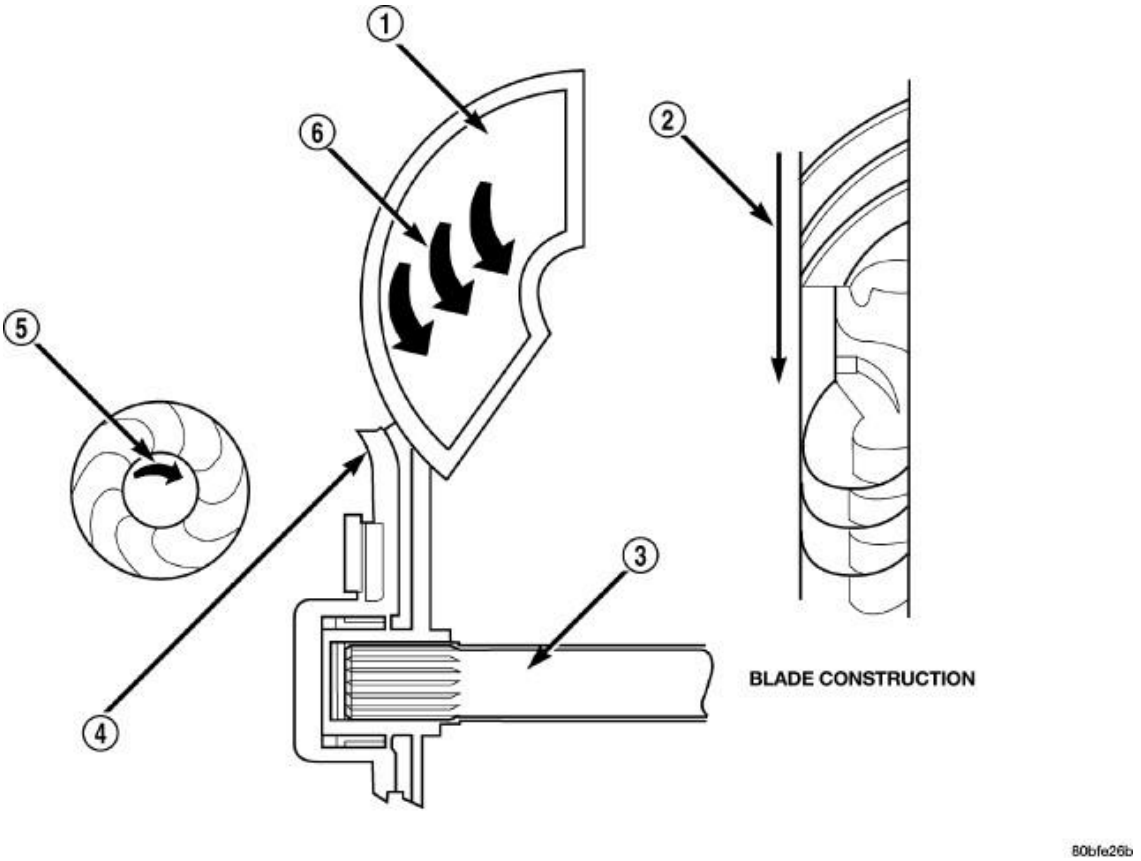

Fig. 205: Turbine
Courtesy of CHRYSLER GROUP, LLC

1 - TURBINE VANE	4 - PORTION OF TORQUE CONVERTER COVER
2 - ENGINE ROTATION	5 - ENGINE ROTATION
3 - INPUT SHAFT	6 - OIL FLOW WITHIN TURBINE SECTION

The turbine is the output, or driven, member of the converter. Refer to **Fig. 205**. The turbine is mounted within the housing opposite the impeller, but is not attached to the housing. The input shaft is inserted through the center of the impeller and splined into the turbine. The design of the turbine is similar to the impeller, except the blades of the turbine are curved in the opposite direction.

STATOR

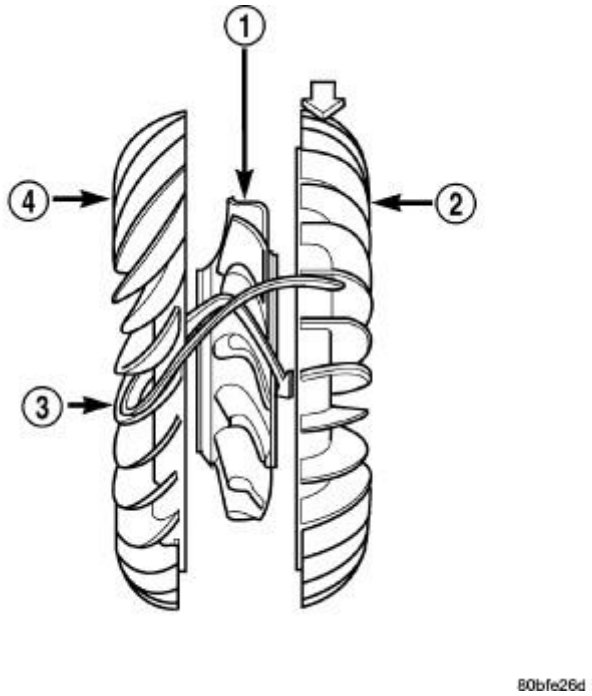

Fig. 206: Stator
Courtesy of CHRYSLER GROUP, LLC

1 - STATOR
2 - IMPELLER
3 - FLUID FLOW
4 - TURBINE

The stator assembly is mounted on a stationary shaft which is an integral part of the oil pump. Refer to **Fig. 206**. The stator (1) is located between the impeller (2) and the turbine (4) within the torque converter case.

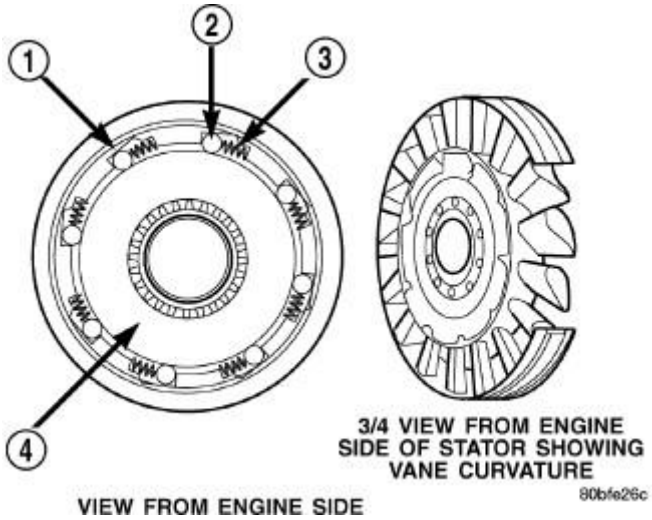

Fig. 207: Stator Components
Courtesy of CHRYSLER GROUP, LLC

1 - CAM (OUTER RACE)
2 - ROLLER
3 - SPRING
4 - INNER RACE

The stator contains an over-running clutch (1-4), which allows the stator to rotate only in a clockwise direction. Refer to **Fig. 207**. When the stator is locked against the over-running clutch, the torque multiplication feature of the torque converter is operational.

TORQUE CONVERTER CLUTCH (TCC)

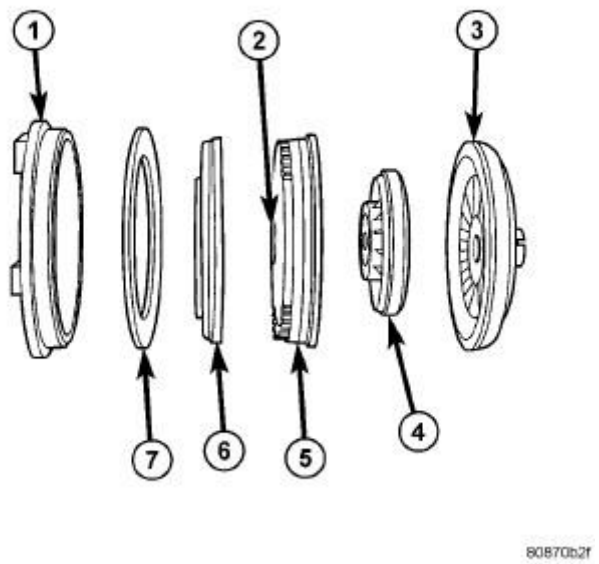

Fig. 208: Torque Converter Clutch (TCC)
Courtesy of CHRYSLER GROUP, LLC

1 - IMPELLER FRONT COVER
2 - THRUST WASHER ASSEMBLY
3 - IMPELLER
4 - STATOR
5 - TURBINE
6 - PISTON
7 - FRICTION DISC

The TCC was installed to improve the efficiency of the torque converter that is lost to the slippage of the fluid coupling. Refer to **Fig. 208**. Although the fluid coupling provides smooth, shock-free power transfer, it is natural for all fluid couplings to slip. If the impeller (3) and turbine (5) were mechanically locked together, a zero slippage condition could be obtained. A hydraulic piston (6) with friction material (7) was added to the

turbine assembly (5) to provide this mechanical lock-up.

In order to reduce heat build-up in the transmission and buffer the powertrain against torsional vibrations, the TCM can duty cycle the L/R-CC Solenoid to achieve a smooth application of the torque converter clutch. This function, referred to as Electronically Modulated Converter Clutch (EMCC) can occur at various times depending on the following variables:

- Shift lever position
- Current gear range
- Transmission fluid temperature
- Engine coolant temperature
- Input speed
- Throttle angle
- Engine speed

OPERATION

OPERATION

The converter impeller (driving member), which is integral to the converter housing and bolted to the engine drive plate, rotates at engine speed. Refer to **Fig. 209**. The converter turbine (driven member), which reacts from fluid pressure generated by the impeller, rotates and turns the transmission input shaft.

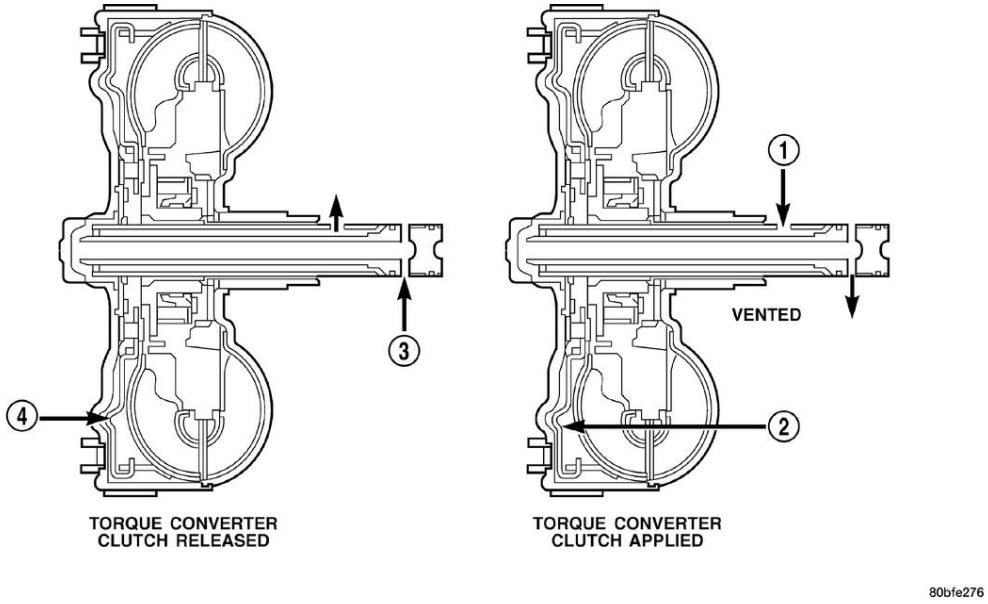

Fig. 209: Identifying Torque Converter Fluid Operation
Courtesy of CHRYSLER GROUP, LLC

1 - APPLY PRESSURE	3 - RELEASE PRESSURE
2 - THE PISTON MOVES SLIGHTLY FORWARD	4 - THE PISTON MOVES SLIGHTLY REARWARD

TURBINE

As the fluid that was put into motion by the impeller blades strikes the blades of the turbine, some of the energy and rotational force is transferred into the turbine and the input shaft. This causes both of them (turbine and input shaft) to rotate in a clockwise direction following the impeller. As the fluid is leaving the trailing edges of the turbine's blades it continues in a "hindering" direction back toward the impeller. If the fluid is not redirected before it strikes the impeller, it will strike the impeller in such a direction that it would tend to slow it down.

STATOR

Torque multiplication is achieved by locking the stator's over-running clutch to its shaft. Refer to **Fig. 210**. Under stall conditions (the turbine is stationary), the oil leaving the turbine blades strikes the face of the stator blades and tries to rotate them in a counterclockwise direction. When this happens the over-running clutch of the stator locks and holds the stator from rotating. With the stator locked, the oil strikes the stator blades and is redirected into a "helping" direction before it enters the impeller. This circulation of oil from impeller to turbine, turbine to stator, and stator to impeller, can produce a maximum torque multiplication of about 1.75:1. As the turbine begins to match the speed of the impeller, the fluid that was hitting the stator in such as way as to cause it to lock-up is no longer doing so. In this condition of operation, the stator begins to free wheel and the converter acts as a fluid coupling.

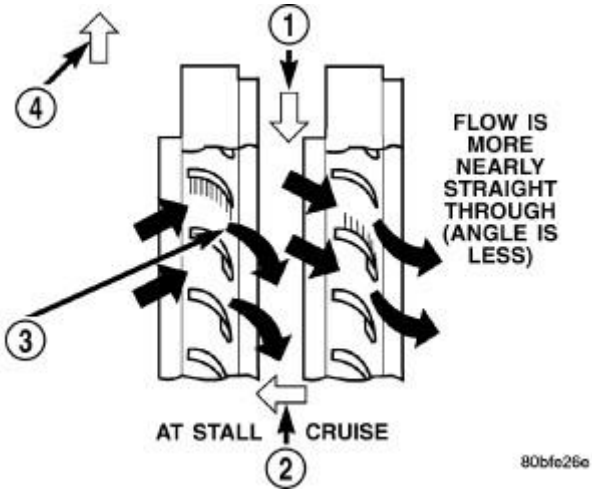

Fig. 210: Stator Operation
Courtesy of CHRYSLER GROUP, LLC

1 - DIRECTION STATOR WILL FREE WHEEL DUE TO OIL PUSHING ON BACKSIDE OF VANES
2 - FRONT OF ENGINE
3 - INCREASED ANGLE AS OIL STRIKES VANES
4 - DIRECTION STATOR IS LOCKED UP DUE TO OIL PUSHING AGAINST STATOR VANES

TORQUE CONVERTER CLUTCH (TCC)

In a standard torque converter, the impeller and turbine are rotating at about the same speed and the stator is freewheeling, providing no torque multiplication. By applying the turbine's piston and friction material to the front cover, a total converter engagement can be obtained. The result of this engagement is a direct 1:1

mechanical link between the engine and the transmission.

The clutch can be engaged in all gear ranges except first depending on the Tow/Haul and ERS status. In normal operation, the clutch will engage after the shift to fourth gear. If the Tow/Haul mode is enabled, the clutch will engage after the shift to third (direct) gear.

The TCM controls the torque converter clutch via the L/R-CC Solenoid. There are four TCC operational modes:

- No EMCC
- Partial EMCC
- Full EMCC
- Gradual EMCC Release

NO EMCC

Under No EMCC conditions, the L/R Solenoid is OFF. There are several conditions that can result in NO EMCC operations. No EMCC can be initiated due to a fault in the transmission or because the TCM does not see the need for EMCC under current driving conditions.

PARTIAL EMCC

Partial EMCC operation modulates the L/R Solenoid (duty cycle) to obtain partial torque converter clutch application. Partial EMCC operation is maintained until Full EMCC is called for and actuated. During Partial EMCC some slip does occur. Partial EMCC will usually occur at low speeds, low load and light throttle situations.

FULL EMCC

During Full EMCC operation, the TCM increases the L/R Solenoid duty cycle to full ON after Partial EMCC control brings the engine speed within the desired slip range of transmission input speed relative to engine rpm.

GRADUAL EMCC RELEASE

This operation is to soften the change from Full or Partial EMCC to No EMCC. This is done at mid-throttle by slowly decreasing the L/R Solenoid duty cycle.

REMOVAL

REMOVAL

1. Remove transmission and torque converter from vehicle. Refer to **REMOVAL**.
2. Place a suitable drain pan under the converter housing end of the transmission.

CAUTION: Verify that transmission is secure on the lifting device or work surface, the center of gravity of the transmission will shift when the torque converter is removed creating an unstable condition. The torque converter is a heavy unit. Use caution when separating the

torque converter from the transmission.

3. Pull the torque converter forward until the center hub clears the oil pump seal.
4. Separate the torque converter from the transmission.

INSTALLATION

INSTALLATION

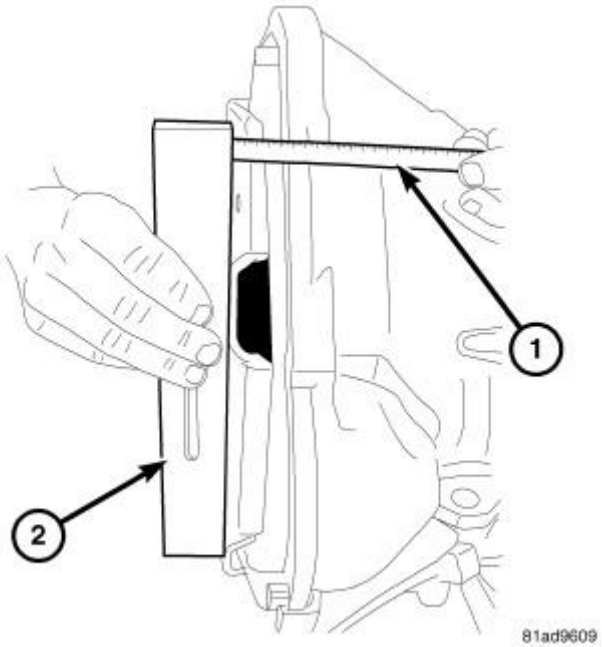

Fig. 211: Checking Torque Converter Clearance
Courtesy of CHRYSLER GROUP, LLC

1 - SCALE
2 - STRAIGHTEDGE

NOTE: **Check converter hub and drive flats for sharp edges, burrs, scratches, or nicks. Polish the hub and flats with 800/1000 grit paper or crocus cloth if necessary. Verify that the converter hub o-ring is properly installed and is free from debris. The hub must be smooth to avoid damaging the pump seal at installation.**

1. Lubricate oil pump seal lip with transmission fluid.
2. Place torque converter in position on transmission.

CAUTION: Do not damage oil pump seal or converter hub o-ring while inserting torque converter into the front of the transmission.

3. Align torque converter to oil pump seal opening.

4. Insert torque converter hub into oil pump.
5. While pushing torque converter inward, rotate converter until converter is fully seated in the oil pump gears.
6. Check converter seating with a scale (1) and straightedge (2). Surface of converter lugs should be at least 25 mm (1in.) to rear of straightedge when converter is fully seated.
7. If necessary, temporarily secure converter with C-clamp attached to the converter housing.
8. Install the transmission in the vehicle. Refer to **INSTALLATION**.
9. Fill the transmission with the recommended fluid.

VALVE BODY

DESCRIPTION

DESCRIPTION

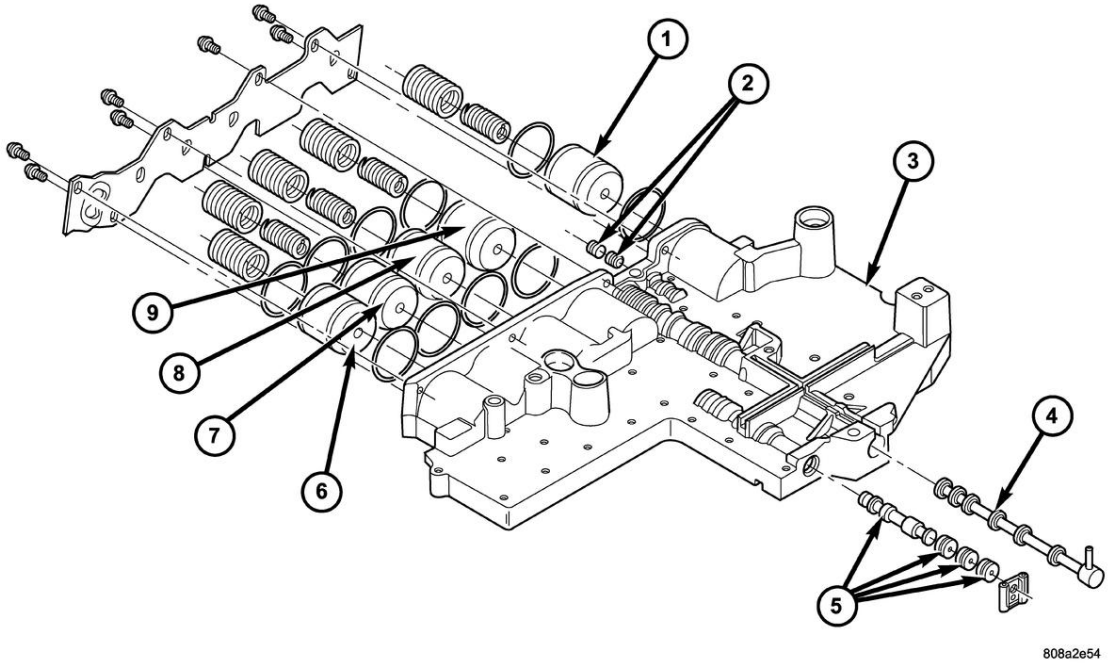

Fig. 212: Valve Body Components
Courtesy of CHRYSLER GROUP, LLC

1 - LOW/REVERSE ACCUMULATOR	6 - OVERDRIVE ACCUMULATOR
2 - LOW/REVERSE SHUTTLE VALVE AND PLUG	7 - UNDERDRIVE ACCUMULATOR
3 - UPPER VALVE BODY	8 - 4C ACCUMULATOR
4 - MANUAL VALVE	9 - 2C ACCUMULATOR
5 - SOLENOID SWITCH VALVE AND PLUGS	

The valve body consists of a cast aluminum valve body, a separator plate, and a transfer plate. The valve body contains valves and check balls that control fluid delivery to the torque converter clutch and frictional clutches. The valve body contains the following components:

- Solenoid switch valve
- Manual valve
- Low/reverse shuttle valve
- 5 Accumulators

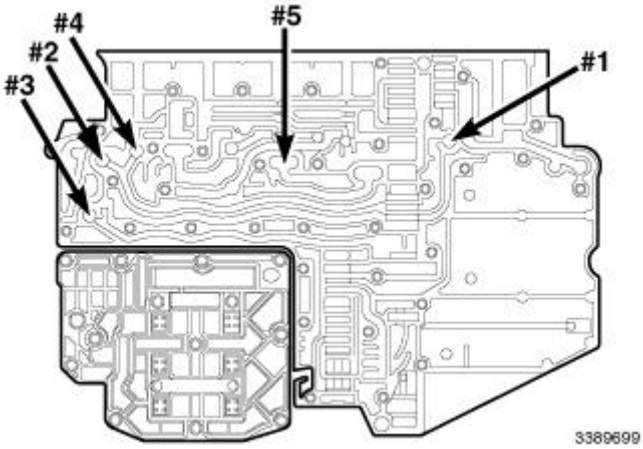

Fig. 213: Check Ball Locations
Courtesy of CHRYSLER GROUP, LLC

- 5 check balls

OPERATION

OPERATION

NOTE: **Refer to SCHEMATICS AND DIAGRAMS for a visual aid in determining valve location, operation and design.**

SOLENOID SWITCH VALVE

The Solenoid Switch Valve (SSV) controls the direction of the transmission fluid when the L/R-TCC solenoid is energized.

The Solenoid Switch Valve controls line pressure from the LR-TCC solenoid. In 1st gear, the SSV will be in the downshifted position, thus directing fluid to the L/R clutch circuit. In all other gears, the solenoid switch valve will be in the upshifted position and directs the fluid into the torque converter clutch (TCC) circuit.

When shifting into 1st gear, a special hydraulic sequence is performed to ensure SSV movement into the downshifted position. The L/R pressure switch is monitored to confirm SSV movement. If the movement is not confirmed (the L/R pressure switch does not close), 2nd gear is substituted for 1st. A DTC will be set after three unsuccessful attempts are made to get into 1st gear in one given key start.

MANUAL VALVE

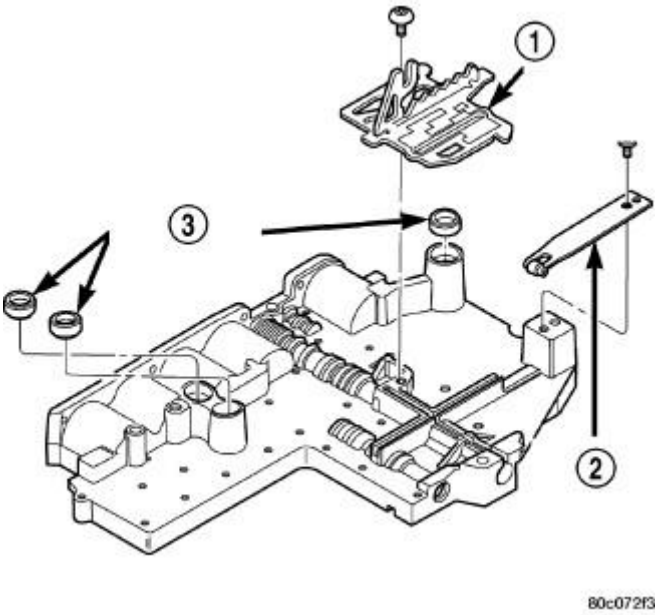

Fig. 214: TRS Selector Plate, Detent Spring & Clutch Passage Seals
Courtesy of CHRYSLER GROUP, LLC

1 - TRS SELECTOR PLATE
2 - DETENT SPRING
3 - CLUTCH PASSAGE SEALS

The manual valve is a relay valve. The purpose of the manual valve is to direct fluid to the correct circuit needed for a specific gear or driving range. The manual valve, as the name implies, is manually operated by the driver with a lever located on the top of the valve body. The valve is connected mechanically to the gearshift mechanism. The valve is held in each of its positions by a roller detent spring (2) that engages the roostercomb of the TRS selector plate (1).

LOW/REVERSE SWITCH VALVE

The low/reverse switch valve allows the low/reverse clutch to be operated by either the LR/CC solenoid or the MS solenoid.

REMOVAL

REMOVAL

NOTE: **The valve body can be removed for service without having to remove the transmission assembly. The valve body can be disassembled for cleaning and inspection of the individual components.**

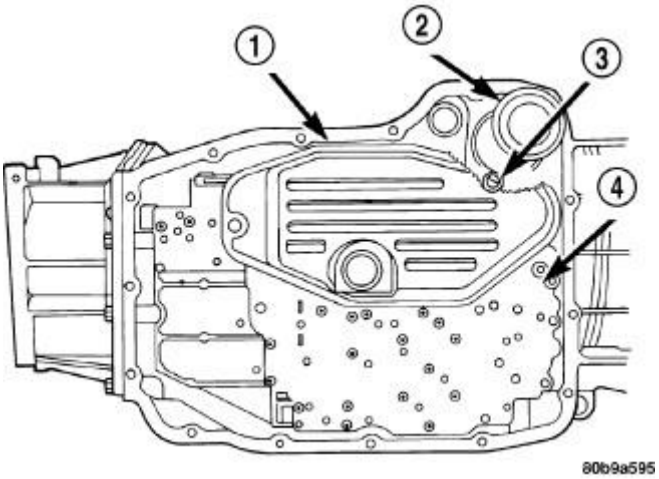

Fig. 215: Primary Oil Filter & Oil Cooler Return Filter
Courtesy of CHRYSLER GROUP, LLC

1 - PRIMARY OIL FILTER
2 - COOLER RETURN FILTER
3 - COOLER RETURN FILTER BYPASS VALVE
4 - VALVE BODY

1. Shift transmission into PARK.
2. Raise vehicle.
3. Disconnect wires at the solenoid and pressure switch assembly 23 pin electrical connector.
4. Position drain pan under transmission oil pan.
5. Remove transmission oil pan.
6. Remove the primary oil filter (1) from valve body.

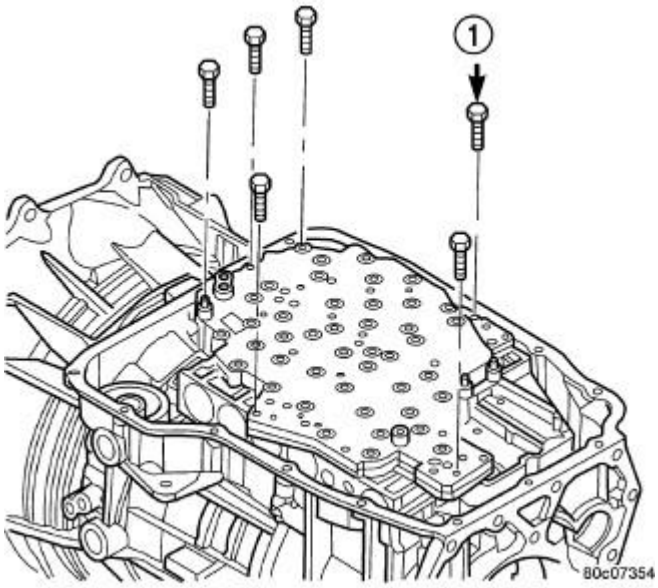

Fig. 216: Valve Body Bolts
Courtesy of CHRYSLER GROUP, LLC

7. Remove bolts (1) attaching valve body to transmission case.
8. Lower the valve body and work the electrical connector out of transmission case.
9. Separate the valve body from the transmission.

DISASSEMBLY

DISASSEMBLY

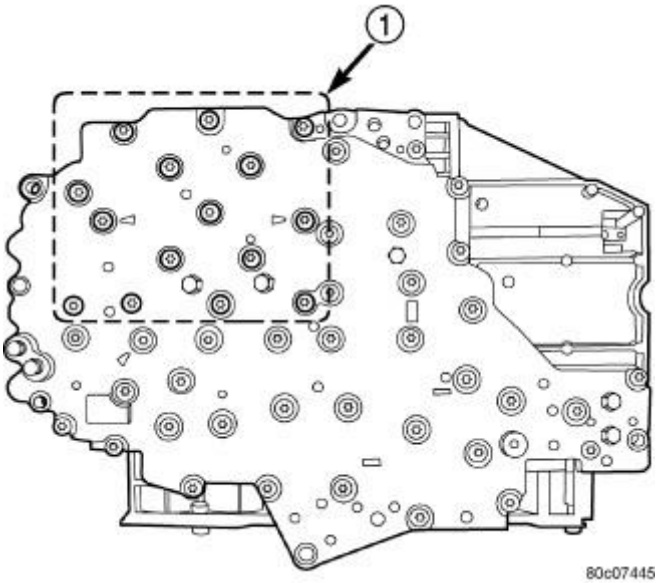

Fig. 217: Solenoid Pack Bolts
Courtesy of CHRYSLER GROUP, LLC

1 - SOLENOID PACK BOLTS (15)

1. Remove the bolts (1) holding the solenoid and pressure switch assembly to the valve body. Do not remove the screws on the top of the solenoid and pressure switch assembly.
2. Separate the solenoid and pressure switch assembly from the valve body.

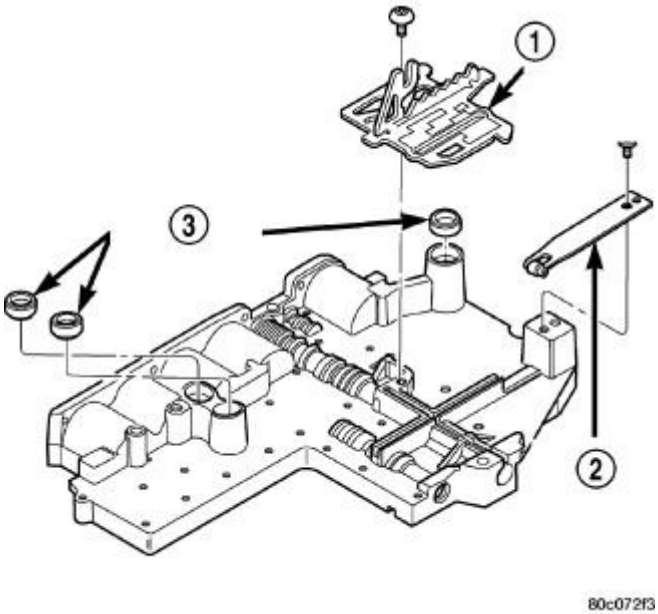

Fig. 218: TRS Selector Plate, Detent Spring & Clutch Passage Seals
Courtesy of CHRYSLER GROUP, LLC

1 - TRS SELECTOR PLATE
2 - DETENT SPRING
3 - CLUTCH PASSAGE SEALS

3. Remove the screw holding the detent spring (2) onto the valve body.
4. Remove the detent spring (2) from the valve body.
5. Remove the TRS selector plate (1) from the valve body and the manual valve.
6. Remove the clutch passage seals (3) from the valve body, if necessary.

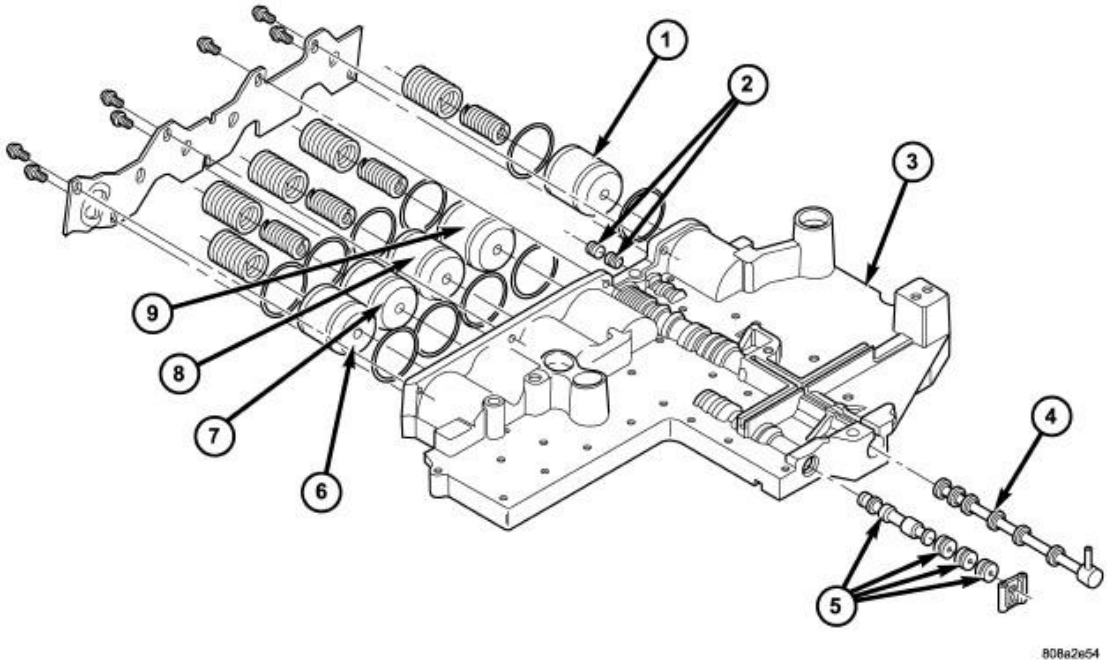

Fig. 219: Valve Body Components
Courtesy of CHRYSLER GROUP, LLC

1 - LOW/REVERSE ACCUMULATOR	6 - OVERDRIVE ACCUMULATOR
2 - LOW/REVERSE SHUTTLE VALVE AND PLUG	7 - UNDERDRIVE ACCUMULATOR
3 - UPPER VALVE BODY	8 - 4C ACCUMULATOR
4 - MANUAL VALVE	9 - 2C ACCUMULATOR
5 - SOLENOID SWITCH VALVE AND PLUGS	

7. Remove the screws holding the accumulator cover onto the valve body.
8. Remove the accumulator springs and pistons (1, 6-9) from the valve body. Note which accumulator piston and spring belong in each location.

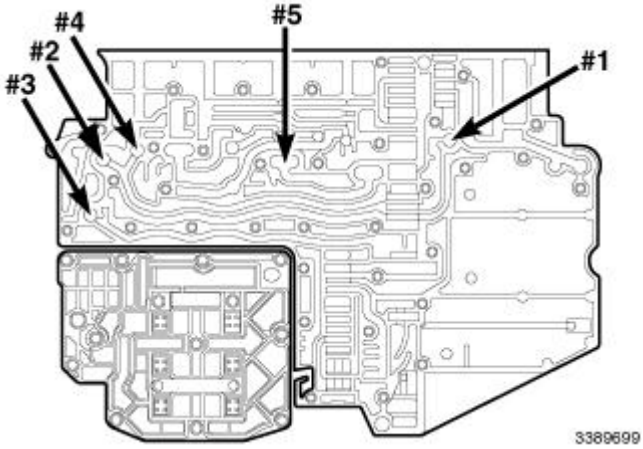

Fig. 220: Check Ball Locations
Courtesy of CHRYSLER GROUP, LLC

9. Place the valve body on the bench with the transfer plate upward.

NOTE: **The valve body contains five check balls. The transfer plate must be placed upward to prevent losing the check balls when the transfer plate is removed from the valve body.**

10. Remove the screws holding the valve body to the valve body transfer plate.
11. Remove the transfer plate from the valve body. Note the location of all check balls.
12. Remove the check balls from the valve body.

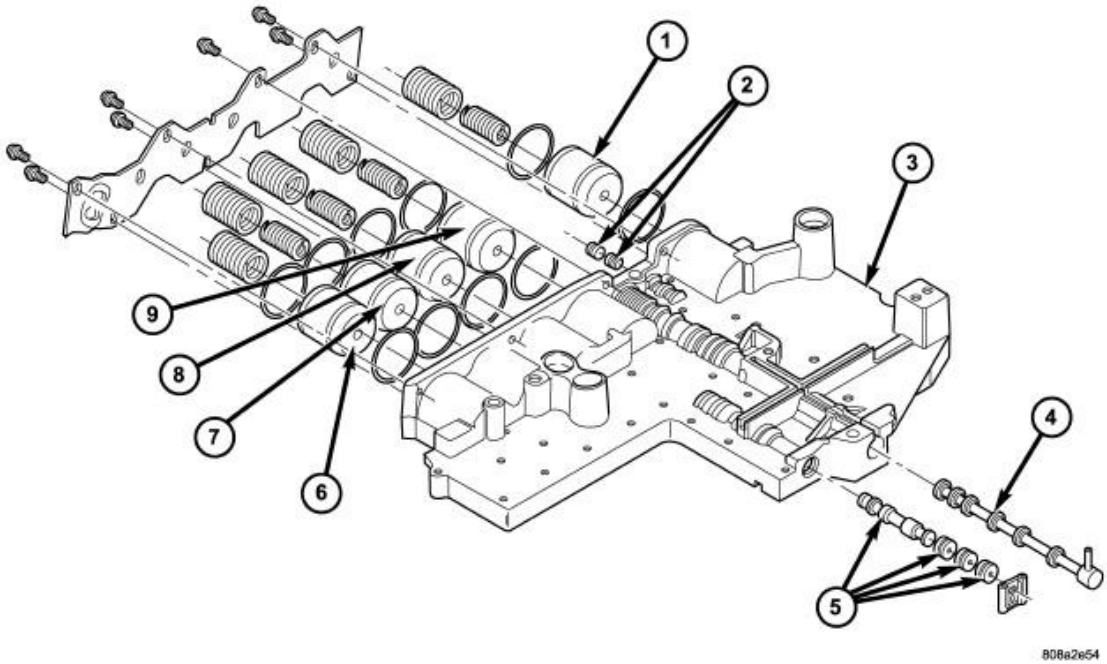

Fig. 221: Valve Body Components

Courtesy of CHRYSLER GROUP, LLC

1 - LOW/REVERSE ACCUMULATOR	6 - OVERDRIVE ACCUMULATOR
2 - LOW/REVERSE SHUTTLE VALVE AND PLUG	7 - UNDERDRIVE ACCUMULATOR
3 - UPPER VALVE BODY	8 - 4C ACCUMULATOR
4 - MANUAL VALVE	9 - 2C ACCUMULATOR
5 - SOLENOID SWITCH VALVE AND PLUGS	

13. Remove the retainer securing the solenoid switch valve (5) from the valve body. Remove the solenoid switch valve and plugs (5), the manual valve (4) and low reverse shuttle valve and plug (2). Tag each valve and plug combination with location information to aid in assembly.

CLEANING

CLEANING

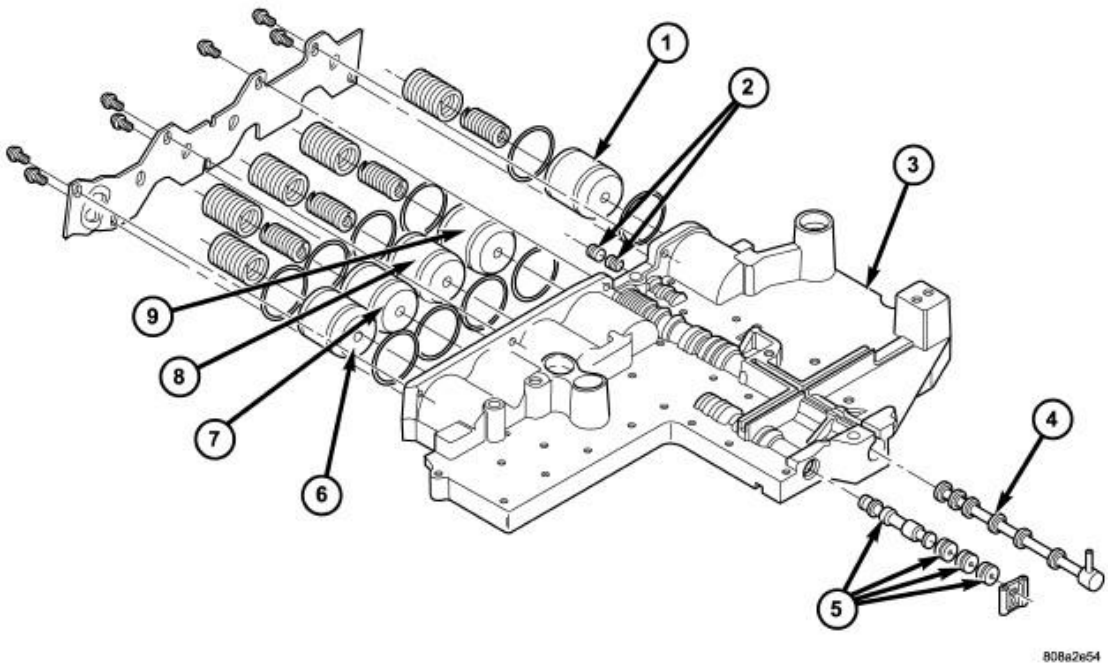

Fig. 222: Valve Body Components
Courtesy of CHRYSLER GROUP, LLC

1 - LOW/REVERSE ACCUMULATOR	6 - OVERDRIVE ACCUMULATOR
2 - LOW/REVERSE SHUTTLE VALVE AND PLUG	7 - UNDERDRIVE ACCUMULATOR

3 - UPPER VALVE BODY	8 - 4C ACCUMULATOR
4 - MANUAL VALVE	9 - 2C ACCUMULATOR
5 - SOLENOID SWITCH VALVE AND PLUGS	

Clean the valve housings, valves, plugs, springs, transfer plate and separator plate with a standard parts cleaning solution only. Do not use gasoline, kerosene, or any type of caustic solution.

Do not immerse any of the electrical components in cleaning solution. Clean the electrical components by wiping them off with dry shop towels only.

Dry all except the electrical parts with compressed air. Make sure all passages are clean and free from obstructions. **Do not use rags or shop towels to dry or wipe off valve body components. Lint from these materials can stick to valve body parts, interfere with valve operation, and clog filters and fluid passages.**

INSPECTION

INSPECTION

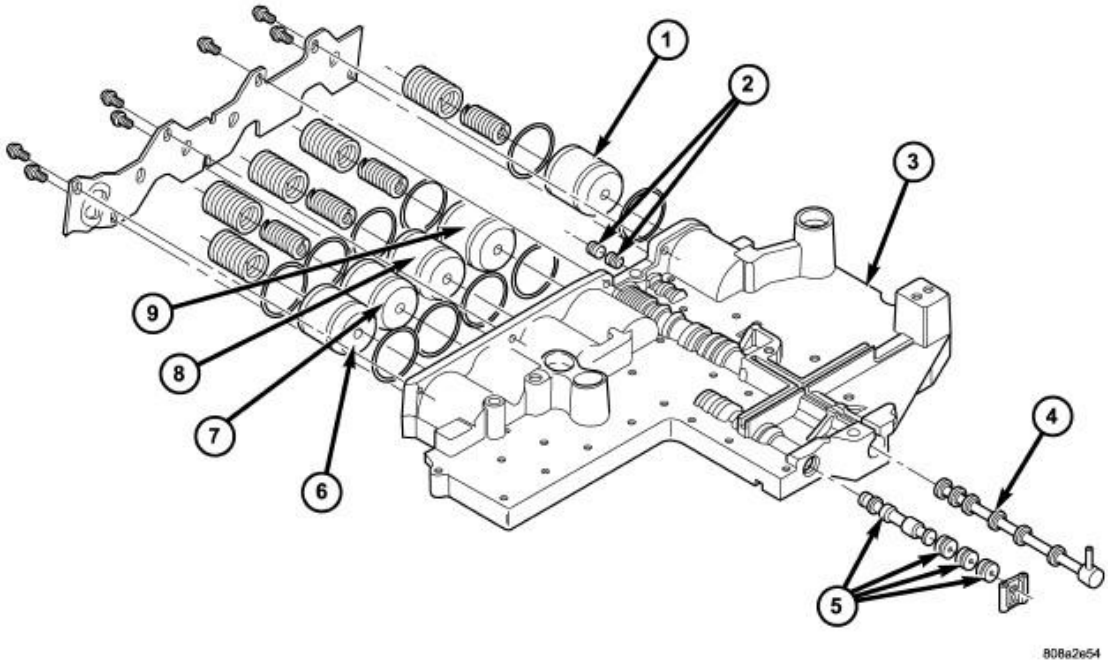

Fig. 223: Valve Body Components
Courtesy of CHRYSLER GROUP, LLC

1 - LOW/REVERSE ACCUMULATOR	6 - OVERDRIVE ACCUMULATOR
2 - LOW/REVERSE SHUTTLE VALVE AND PLUG	7 - UNDERDRIVE ACCUMULATOR
3 - UPPER VALVE BODY	8 - 4C ACCUMULATOR
4 - MANUAL VALVE	9 - 2C ACCUMULATOR

NOTE: **Only the INNER accumulator seal ring actually seals the pressure in the bore. The outer seal ring only serves to guide the piston in the bore. Gouges which do not extend past the inner seal ring (and have no raised edges, which could damage the guide ring) are acceptable. The machined accumulator bores often have a tiger-striped appearance. This is NORMAL and does NOT require replacement, as long as the bores are smooth in the inner seal ring area.**

Inspect all of the valve body mating surfaces for scratches, nicks, burrs, or distortion. Use a straightedge to check surface flatness. Minor scratches may be removed with crocus cloth using only very light pressure.

Minor distortion of a valve body mating surface may be corrected by smoothing the surface with a sheet of crocus cloth. Position the crocus cloth on a surface plate, sheet of plate glass or equally flat surface. If distortion is severe or any surfaces are heavily scored, the valve body will have to be replaced.

Inspect the valves and plugs for scratches, burrs, nicks, or scores. Minor surface scratches on steel valves and plugs can be removed with crocus cloth but **do not round off the edges of the valve or plug lands.** Maintaining sharpness of these edges is vitally important. The edges prevent foreign matter from lodging between the valves and plugs and the bore.

Inspect all the valve and plug bores in the valve body. Use a penlight to view the bore interiors. Replace the valve body if any bores are distorted or scored. Inspect all of the valve body springs. The springs must be free of distortion, warpage or broken coils.

Trial fit each valve and plug in its bore to check freedom of operation. When clean and dry, the valves and plugs should drop freely into the bores.

Valve body bores do not normally change dimensionally with use. If the valve body functioned correctly when new, it should continue to operate properly after cleaning and inspection. It should not be necessary to replace a valve body assembly unless it is damaged in handling.

Inspect all the accumulator bores in the valve body as well as the accumulator piston seal rings, and replace if cut or damaged. Use a penlight to view the bore interiors. Replace the valve body if any bores are distorted or scored. Inspect all of the accumulator springs. The springs must be free of distortion, warpage or broken coils.

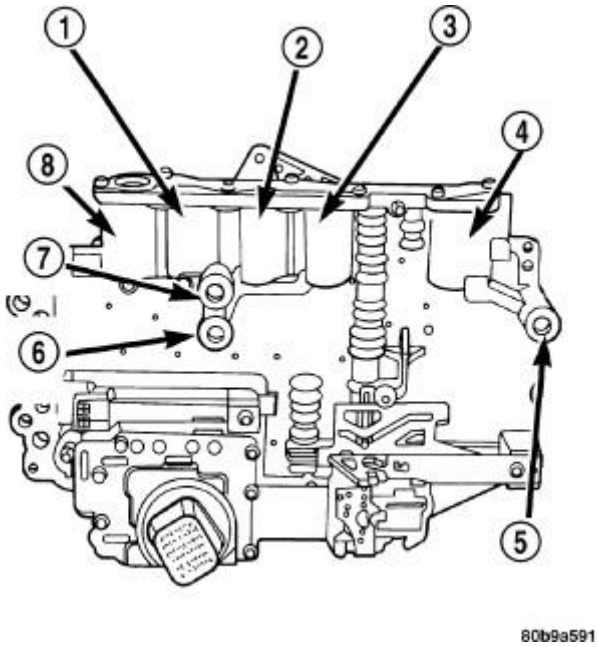

Fig. 224: Valve Body Seals
Courtesy of CHRYSLER GROUP, LLC

1 - UNDERDRIVE ACCUMULATOR (2 SPRINGS)
2 - 4TH CLUTCH ACCUMULATOR (2 SPRINGS)
3 - 2ND CLUTCH ACCUMULATOR (2 SPRINGS)
4 - LOW REVERSE ACCUMULATOR (2 SPRINGS)
5 - LOW/REVERSE PASSAGE SEAL
6 - 2ND CLUTCH PASSAGE SEAL
7 - 4TH CLUTCH PASSAGE SEAL
8 - OVERDRIVE ACCUMULATOR (1 SPRING)

Inspect all the fluid seals on the valve body. Refer to **Fig. 224**. Replace any seals that are cracked, distorted, or damaged in any way. These seals pass fluid pressure directly to the clutches. Any pressure leak at these points, may cause transmission performance problems.

ASSEMBLY

ASSEMBLY

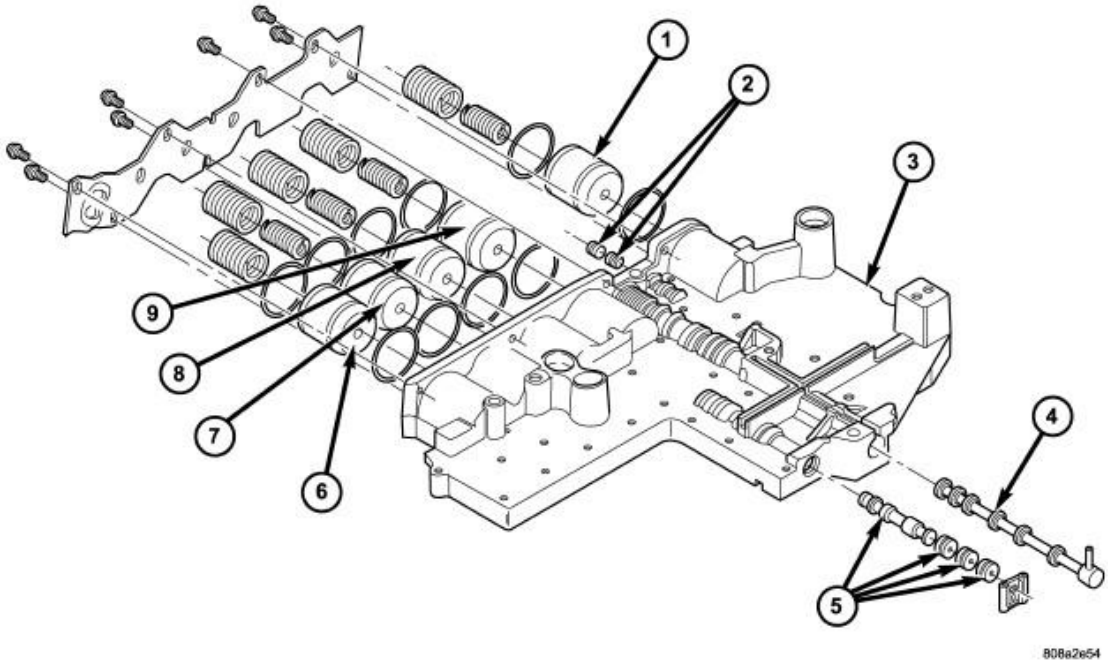

Fig. 225: Valve Body Components
Courtesy of CHRYSLER GROUP, LLC

1 - LOW/REVERSE ACCUMULATOR	6 - OVERDRIVE ACCUMULATOR
2 - LOW/REVERSE SHUTTLE VALVE AND PLUG	7 - UNDERDRIVE ACCUMULATOR
3 - UPPER VALVE BODY	8 - 4C ACCUMULATOR
4 - MANUAL VALVE	9 - 2C ACCUMULATOR
5 - SOLENOID SWITCH VALVE AND PLUGS	

1. Lubricate valves, plugs and the housing valve bores with clean transmission fluid.
2. Install solenoid switch valve and plugs and plugs (5) and the retainer into the valve body.

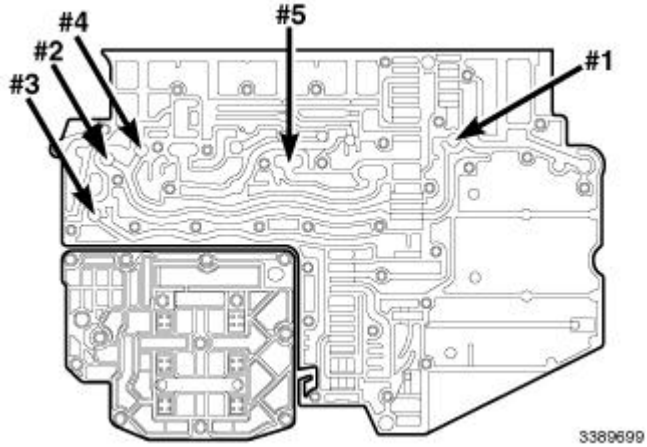

Fig. 226: Check Ball Locations

Courtesy of CHRYSLER GROUP, LLC

3. Install the valve body check balls into their proper locations.
4. Position the separator and transfer plate onto the valve body.
5. Install the screws to hold the transfer plate to the valve body. Tighten the screws to 6 N.m (50 in. lbs.).

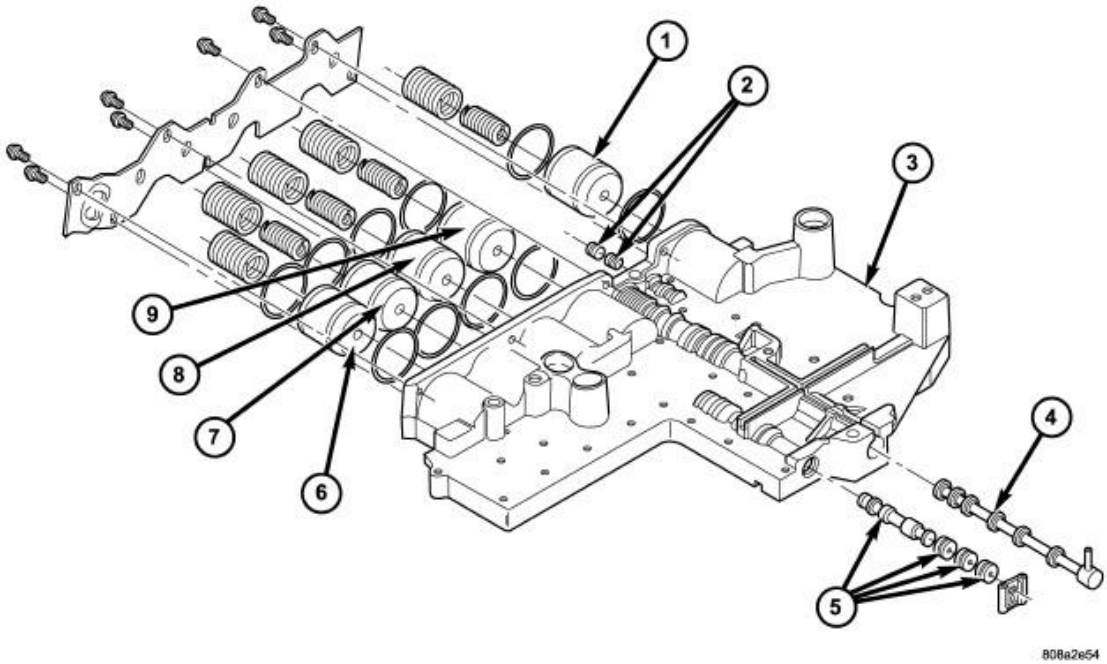

Fig. 227: Valve Body Components
Courtesy of CHRYSLER GROUP, LLC

1 - LOW/REVERSE ACCUMULATOR	6 - OVERDRIVE ACCUMULATOR
2 - LOW/REVERSE SHUTTLE VALVE AND PLUG	7 - UNDERDRIVE ACCUMULATOR
3 - UPPER VALVE BODY	8 - 4C ACCUMULATOR
4 - MANUAL VALVE	9 - 2C ACCUMULATOR
5 - SOLENOID SWITCH VALVE AND PLUGS	

6. Install the accumulator piston seal rings onto each accumulator piston.
7. Install the accumulator pistons (1, 6-9) and springs into the valve body in the location from which they were removed. Note that all accumulators except the overdrive have two springs. The overdrive accumulator piston (6) has only one spring.
8. Install the Low / Reverse shuttle valve, plug, and retainer (2) into the valve body housing.
9. Position the accumulator cover onto the valve body.

10. Install the screws to hold the accumulator cover onto the valve body. Tighten the screws to 7 N.m (60 in. lbs.).
11. Install the manual valve (4).

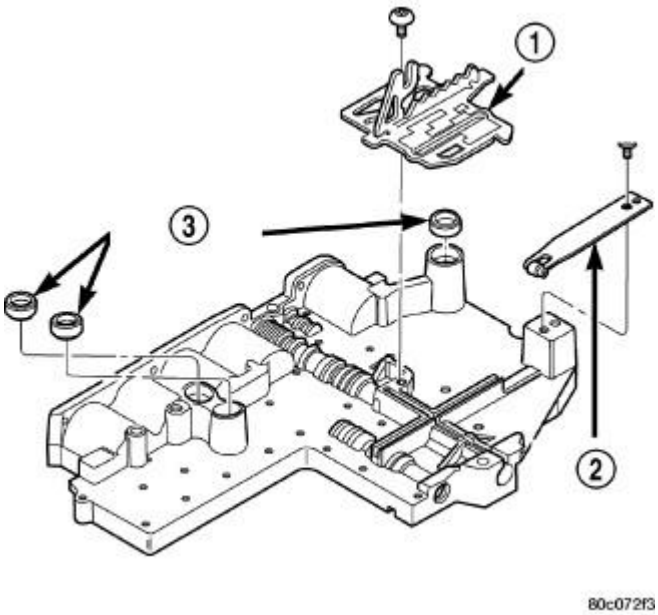

Fig. 228: TRS Selector Plate, Detent Spring & Clutch Passage Seals
Courtesy of CHRYSLER GROUP, LLC

1 - TRS SELECTOR PLATE
2 - DETENT SPRING
3 - CLUTCH PASSAGE SEALS

12. Install the TRS selector plate (1) onto the valve body and the manual valve.
13. Position the detent spring (2) onto the valve body.
14. Install the screw to hold the detent spring (2) onto the valve body. Tighten the screw to 4.5 N.m (40 in. lbs.).
15. Install new clutch passage seals (3) onto the valve body, if necessary.

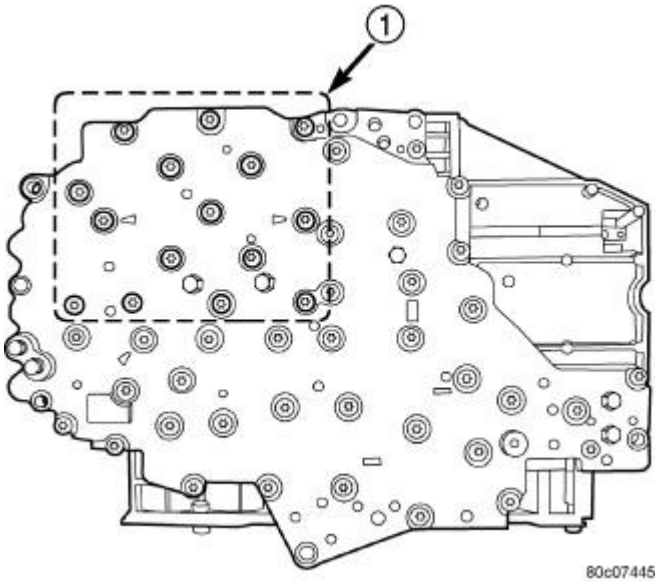

Fig. 229: Solenoid Pack Bolts
Courtesy of CHRYSLER GROUP, LLC

1 - SOLENOID PACK BOLTS (15)

16. Install the solenoid and pressure switch assembly onto the valve body.
17. Install the bolts (1) to hold the solenoid and pressure switch assembly onto the valve body. Tighten the bolts to 6 N.m (50 in. lbs.). Tighten the bolts adjacent to the arrows cast into the bottom of the transfer plate first.

INSTALLATION

INSTALLATION

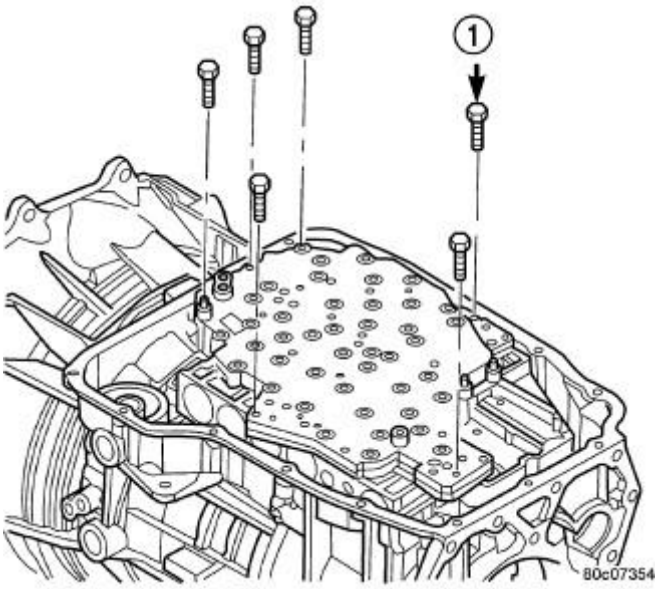

Fig. 230: Valve Body Bolts
Courtesy of CHRYSLER GROUP, LLC

1 - VALVE BODY TO CASE BOLT (6)

1. Place TRS selector plate in the PARK position.
2. Place the transmission in the PARK position.
3. Lubricate seal on the solenoid and pressure switch assembly connector with petroleum jelly.
4. Position valve body in transmission and align the manual lever on the valve body to the pin on the transmission manual shift lever.
5. Seat valve body in case and install one or two bolts to hold valve body in place.
6. Tighten valve body bolts alternately and evenly to 12 N.m (105 in. lbs.) torque.
7. Operate the external manual shift lever and ensure that the TRS selector plate moves correctly into all gear range positions.

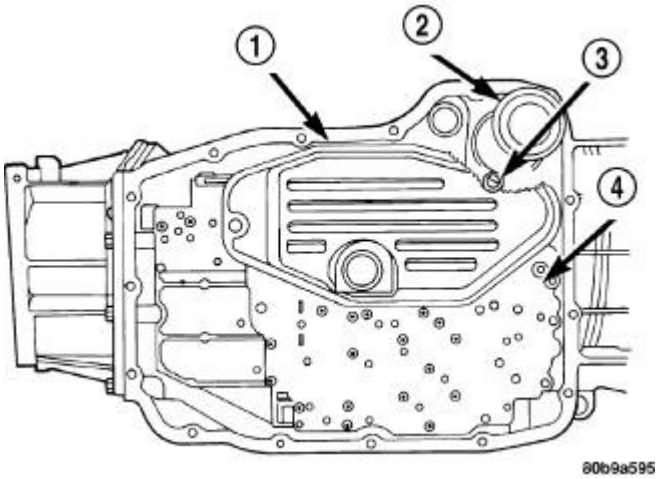

Fig. 231: Primary Oil Filter & Oil Cooler Return Filter
Courtesy of CHRYSLER GROUP, LLC

1 - PRIMARY OIL FILTER
2 - COOLER RETURN FILTER
3 - COOLER RETURN FILTER BYPASS VALVE
4 - VALVE BODY

CAUTION: The primary oil filter seal MUST be fully installed flush against the oil pump body. DO NOT install the seal onto the filter neck and attempt to install the filter and seal as an assembly. Damage to the transmission will result.

8. Install a new primary oil filter seal in the oil pump inlet bore. Seat the seal in the bore with the butt end of a hammer, or other suitable tool.
9. Place replacement filter (1) in position on valve body and into the oil pump.
10. Install screw to hold filter to valve body. Tighten screw to 4.5 N.m (40 in. lbs.) torque.
11. Connect the solenoid and pressure switch 23 pin electrical assembly connector.
12. Install oil pan using silicone gasket sealer. Tighten pan bolts to 12 N.m (105 in. lbs.) torque.
13. Lower vehicle and fill transmission with Mopar® ATF +4.
14. Check and adjust gearshift cable, if necessary.

VALVE, SOLENOID SWITCH

DESCRIPTION

DESCRIPTION

The Solenoid Switch Valve (SSV) is located in the main valve body and directs the output from the L/R-TCC solenoid to either the L/R clutch or the TCC control valves

OPERATION

OPERATION

The Solenoid Switch Valve directs the output pressure from the LR-TCC solenoid. In 1st gear, the SSV will be in the downshifted position, thus directing fluid to the L/R clutch circuit. In all other gears, the solenoid switch valve will be in the upshifted position and directs the fluid to the torque converter clutch (TCC) switch valve and TCC regulator valve.

When shifting into 1st gear, a special hydraulic sequence is performed to ensure SSV movement into the downshifted position. The L/R pressure switch is monitored to confirm SSV movement. If the movement is not confirmed (the L/R pressure switch does not close), 2nd gear is substituted for 1st. A DTC will be set after three unsuccessful attempts are made to get into 1st gear in one given key start.

DESCRIPTION

DESCRIPTION

CAUTION: The AS68RC Transmission uses a unique automatic transmission fluid. MOPAR® AS68RC ATF is the only recommended fluid. Failure to follow this caution will result in damage to the transmission.

TRANSMISSION COMPONENTS

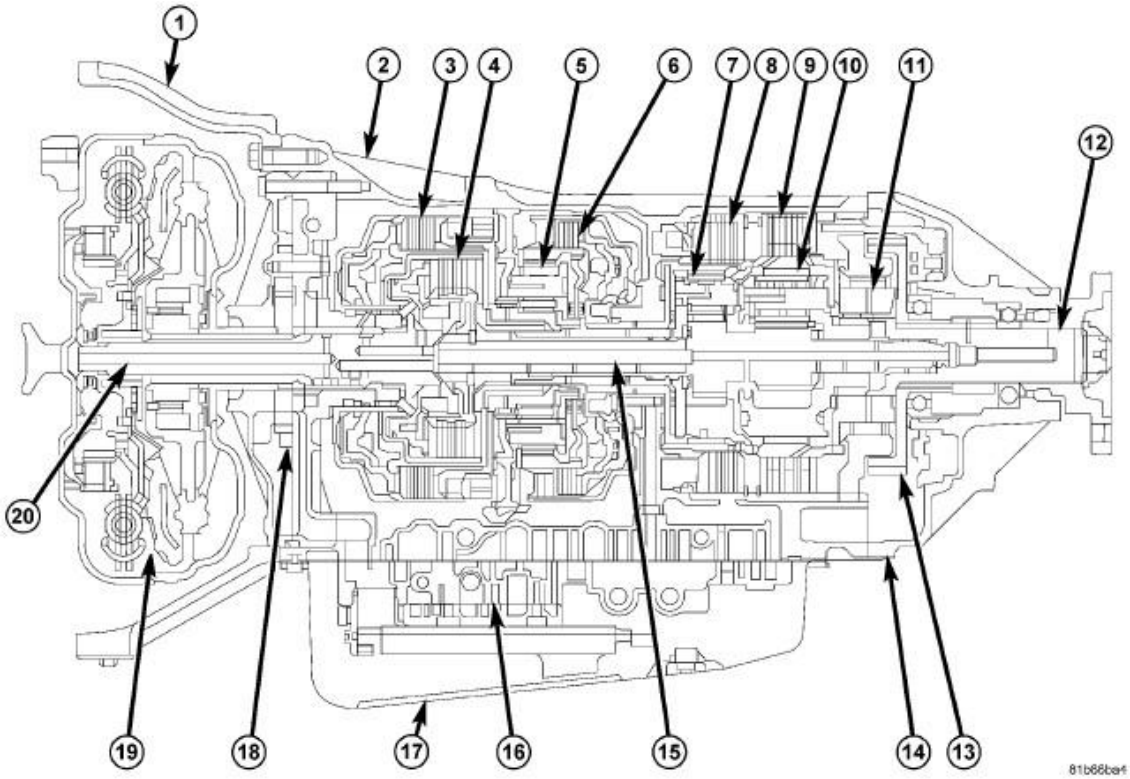

Fig. 1: AS68RC Transmission Components
Courtesy of CHRYSLER GROUP, LLC

1 - CONVERTER HOUSING	11 - F1 ONE WAY CLUTCH
2 - TRANSMISSION CASE	12 - OUTPUT SHAFT
3 - K2 CLUTCH	13 - PARKING LOCK GEAR

4 - K1 CLUTCH	14 - EXTENSION HOUSING
5 - P1 PLANETARY GEAR	15 - SUN GEAR SHAFT
6 - K3 CLUTCH	16 - VALVE BODY
7 - P2 PLANETARY GEAR	17 - OIL PAN
8 - B1 BRAKE	18 - OIL PUMP
9 - B2 BRAKE	19 - TORQUE CONVERTER
10 - P3 PLANETARY GEAR	20 - INPUT SHAFT

The AS68RC six speed automatic transmission displays durability characteristics required in the truck and bus industries, while serving fundamental roles in improving vehicle performance through a new gear train and a multi disc lock up clutch. Other features include better braking performance, higher torque capacity with less weight, smoother shift quality while attaining high reliability.

The hydraulic control mechanism utilizes direct control of main pressure by use of a linear solenoid.

The primary mechanical components of the transmission consist of the following:

- Three sets of clutch packs
- Two sets of brake packs
- A one way clutch
- Three planetary gear sets
- Single stage, three element, two phase type torque converter.
- Valve body
- Linear solenoids
- Shift solenoids
- Oil Pump

The Transmission Control Module (TCM) is the "heart" or "brain" of the electronic control system and relies on information from various direct and indirect inputs (sensors, switches, etc.) to determine driver demand and vehicle operating conditions. Depending on the vehicle configuration, the TCM may be a standalone module or it may be housed along with the Powertrain Control Module (PCM) in a single module. With this information, the TCM can calculate and perform timely and quality shifts through various output or control devices.

TRANSMISSION IDENTIFICATION

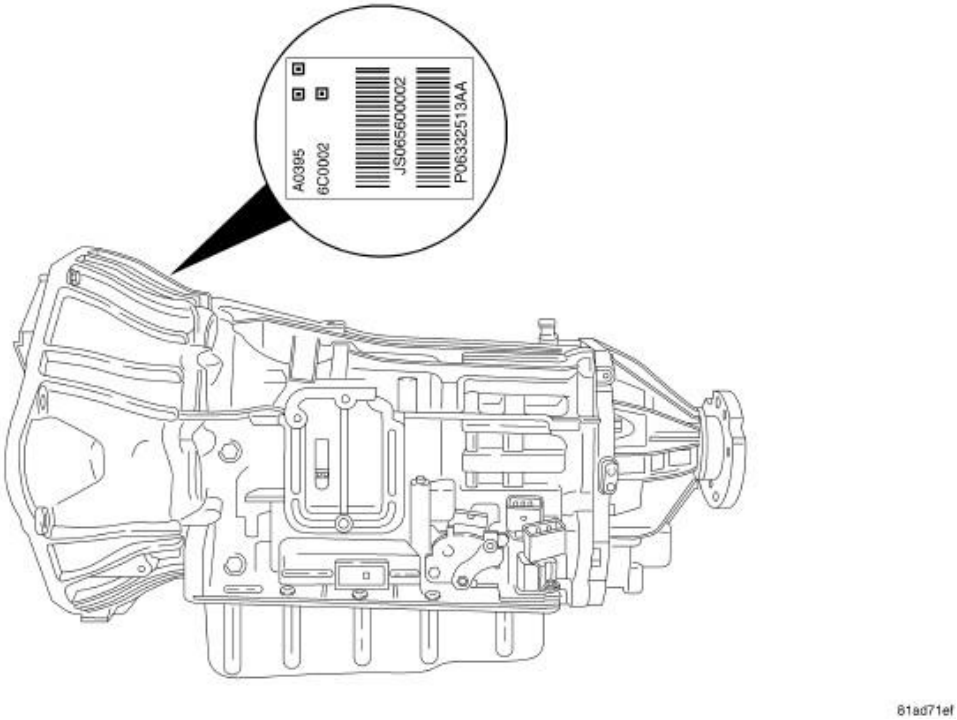

Fig. 2: AS68RC Identification Tag
Courtesy of CHRYSLER GROUP, LLC

NOTE: Some transmissions may have the ID. Tag located on the either side of the transmission case.

Transmission identification numbers are located on top of the torque converter housing. Refer to this information when ordering replacement parts. The label gives additional information which may also be necessary for identification purposes.

GEAR RATIOS

The AS68RC gear ratios are:

1st

3.74:1

2nd

2.00:1

3rd

1.34:1

4th

1.00:1

5th

0.77:1

6th

0.63:1

Reverse

- 3.54:1

THRUST BEARING ORIENTATION

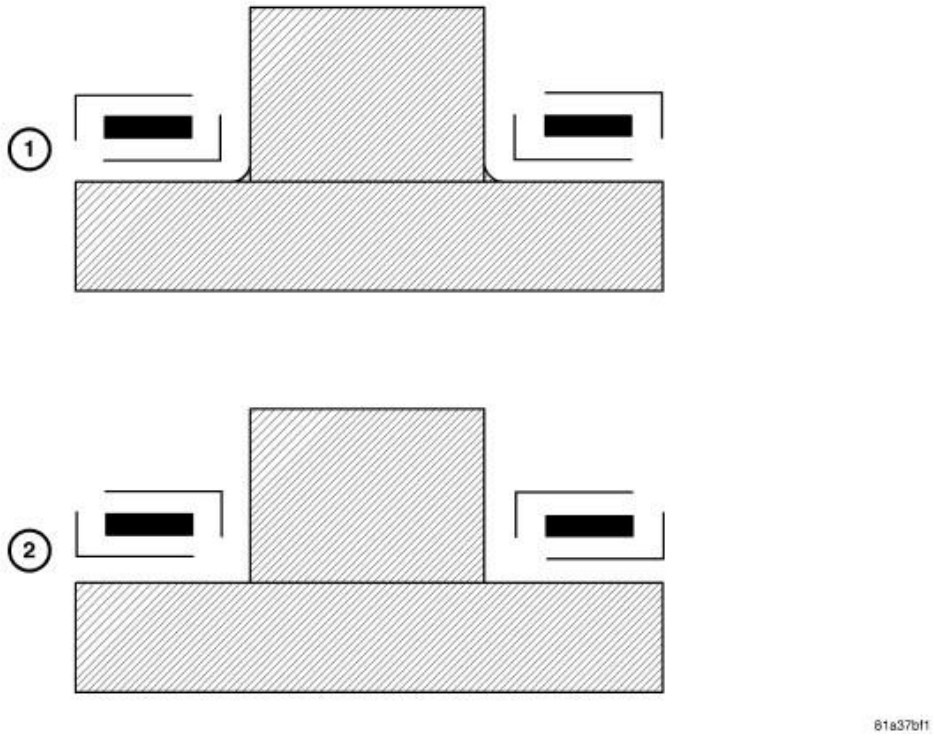

Fig. 3: Thrust Bearing Orientation
Courtesy of CHRYSLER GROUP, LLC

1 - CORRECT INSTALLATION
2 - INCORRECT INSTALLATION

CAUTION: A thrust bearing must be installed correctly. Failure to heed this caution

will result in transmission failure.

When installing a thrust bearing, be certain the rolled surface (outer race) of the thrust bearing contacts the rolled surface of the component.

OPERATION

OPERATION

The AS68RC offers full electronic control of all automatic up and downshifts, and features real-time adaptive closed-loop shift and pressure control. Electronic shift and torque converter clutch controls help protect the transmission from damage due to high temperatures, which can occur under severe operating conditions. By altering shift schedules, line pressure, and converter clutch control, these controls reduce heat generation and increase transmission cooling.

Wide gear range and close ratio was implemented in order to improve both operational and fuel performance. The first gear ratio was lowered by 18% with respect to conventional four speed automatics to improve launch capabilities.

The hydraulic control system design (without electronic assist) provides the transmission with REVERSE, FIFTH and THIRD. This design allows the vehicle to be driven (in "limp-in" mode) in the event of a electronic control system failure, or a situation that the Transmission Control Module (TCM) recognizes as potentially damaging to the transmission.

The TCM also performs certain self-diagnostic functions and provides comprehensive information (sensor data, DTC's, etc.) which is helpful in proper diagnosis and repair. Additionally, the ability to calibrate the TCM with the StarScan® allows for the transmission to deliver optimum shift quality to customers with diverse vehicle applications.

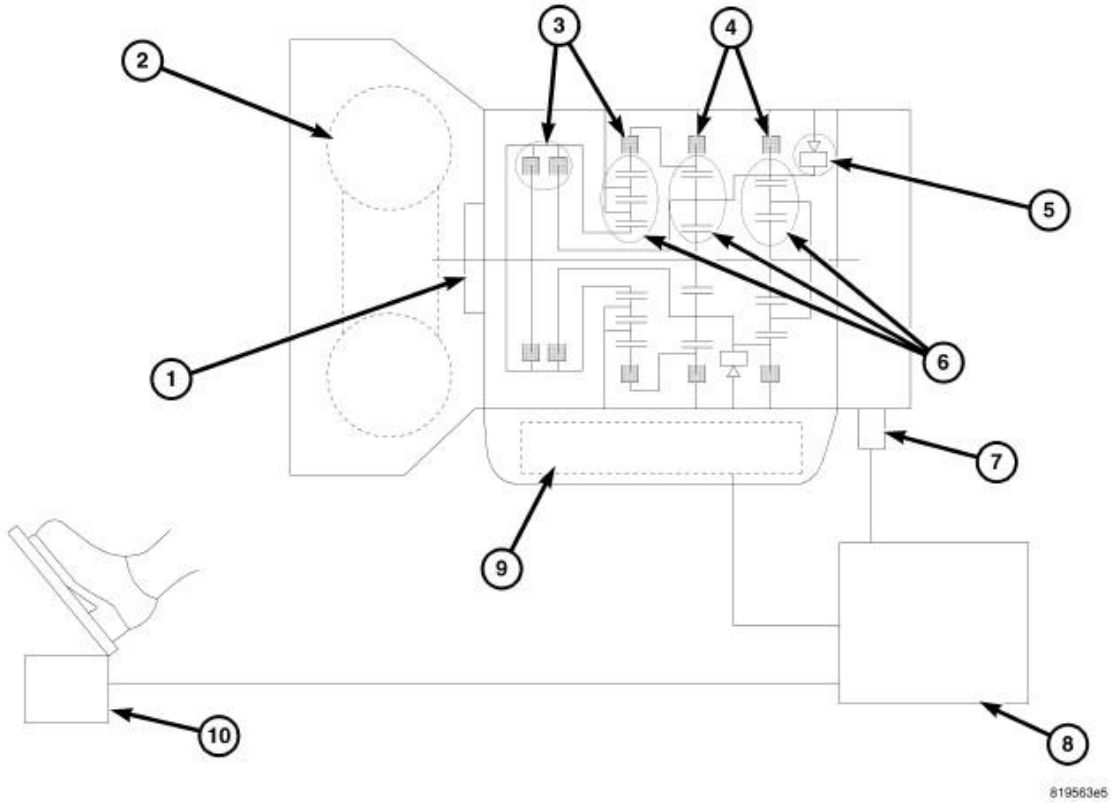

Fig. 4: Clutches
Courtesy of CHRYSLER GROUP, LLC

1- OIL PUMP	6 - P1, P2, P3 PLANETARY GEAR
2 - TORQUE CONVERTER	7 - VEHICLE SPEED SENSOR
3 - K2, K1, K3 CLUTCHES	8 - TRANSMISSION CONTROL MODULE
4 - B1, B2 BRAKES	9 - CONTROL VALVE (SOLENOID)
5 - F1 ONE WAY CLUTCH	10 - ACCELERATOR PEDAL POSITION

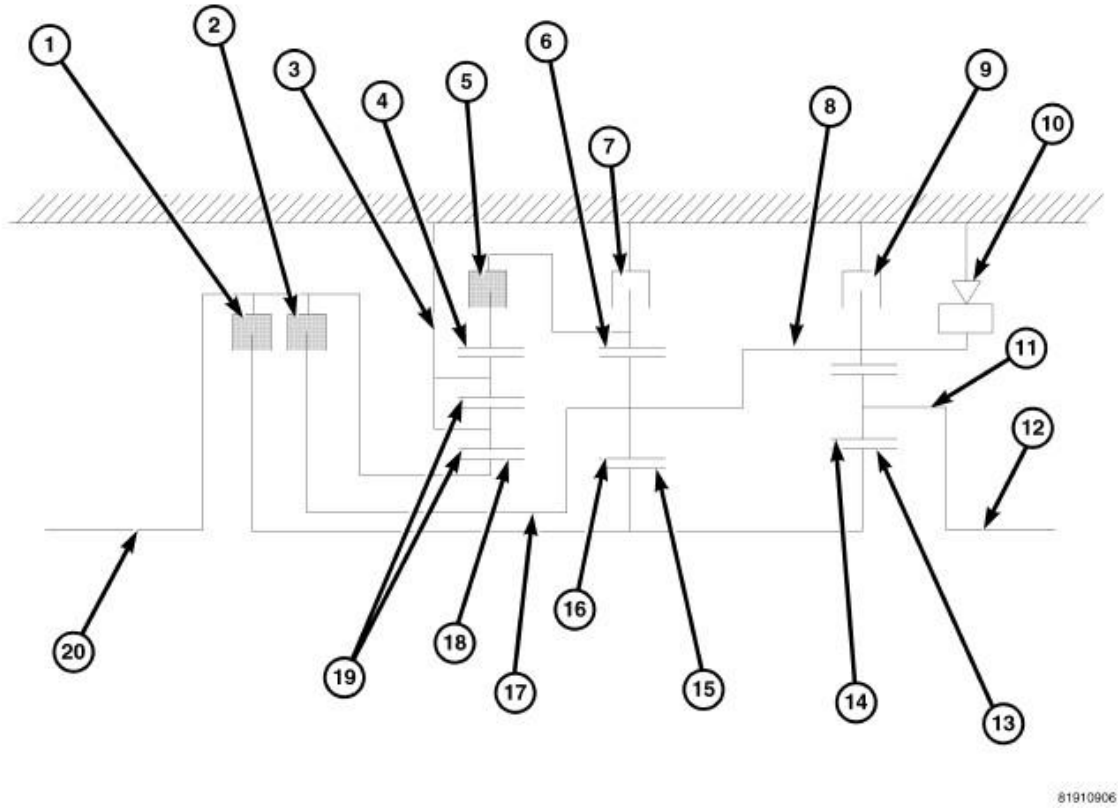

Fig. 5: Transmission Structure
Courtesy of CHRYSLER GROUP, LLC

1 - K1 CLUTCH	11- P3 PLANETARY ANNULUS
2 - K2 CLUTCH	12 - OUTPUT SHAFT
3 - P1 PLANETARY ANNULUS	13 - P3 PLANETARY SUN GEAR
4 - P1 PLANETARY ANNULUS GEAR	14 - P3 PLANETARY PINION GEARS
5 - K3 CLUTCH	15 - P3 PLANETARY SUN GEAR
6 - P3 PLANETARY ANNULUS GEAR	16 - P3 PLANETARY PINION GEAR
7 - B1 BRAKE	17 - P3 PLANETARY ANNULUS
8 - P3 PLANETARY ANNULUS GEAR	18 - P1 PLANETARY SUN GEAR
9 - B2 BRAKE	19 - P1 PLANETARY PINION GEAR
10 - F1 ONE WAY CLUTCH	20 - INPUT SHAFT

CLUTCHES AND BRAKES

FUNCTIONS OF CLUTCHES AND BRAKES

COMPONENT	FUNCTION
CLUTCH NO. 1	Engage input shaft with P3 and P3 planetary sun gears.
CLUTCH NO. 2	Engage input shaft with P3 planetary carrier and P3 planetary annulus gear.
CLUTCH NO. 3	Engage P1 planetary annulus gear with P3 planetary annulus gear.

BRAKE NO. 1	Lock P2 planetary annulus gear.
BRAKE NO. 2	Lock P2 planetary carrier and P3 planetary annulus gear.
F1 ONE WAY CLUTCH	Lock P3 planetary carrier and P3 planetary annulus gear against counterclockwise rotation (only allowing them to rotate clockwise).

OPERATION AND TIMING OF CLUTCHES, BRAKES AND SOLENOIDS

SHIFTER POSITION		CLUTCH NUMBER			BRAKE NUMBER		ONE-WAY CLUTCH
		1	2	3	1	2	F1
P	PARKING					X	
R	REVERSE (HIGH TORQUE)			X		X	
	REVERSE (LOW TORQUE)			X		X	
N	NEUTRAL				-	X	
D	FIRST	X				X	X*
	SECOND	X			X		
	THIRD	X		X			
	FOURTH	X	X				
	FIFTH		X	X			
	SIXTH		X		X		
* Only in operation when driven.							

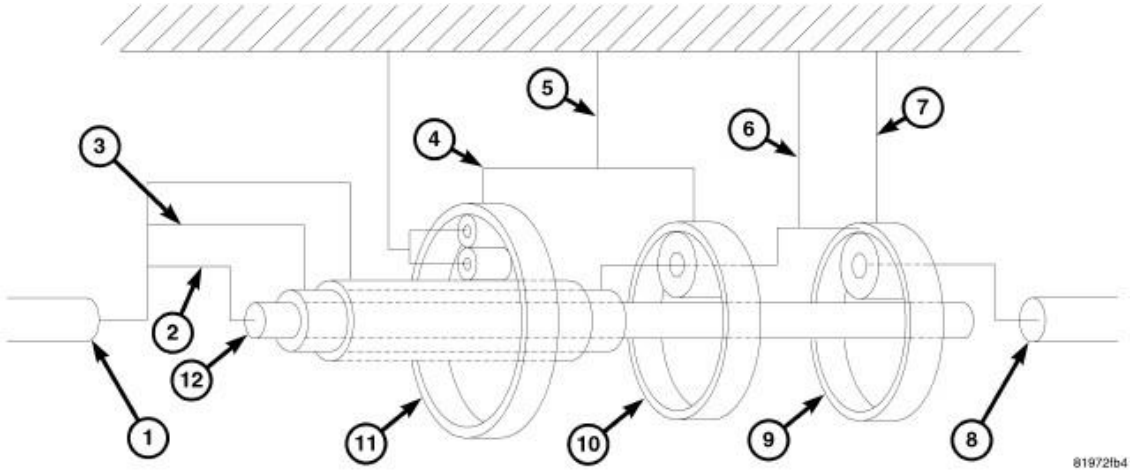

Fig. 6: Gear Components
Courtesy of CHRYSLER GROUP, LLC

1 - INPUT SHAFT	7 - F1 ONE-WAY CLUTCH
2 - K1 CLUTCH	8 - OUTPUT SHAFT
3 - K2 CLUTCH	9 - P3 PLANETARY ANNULUS
4 - K3 CLUTCH	10 - P2 PLANETARY ANNULUS
5 - B1 BRAKE	11 - P1 PLANETARY ANNULUS
6 - B2 BRAKE	12 - SUN GEAR SHAFT

FIRST GEAR POWER FLOW

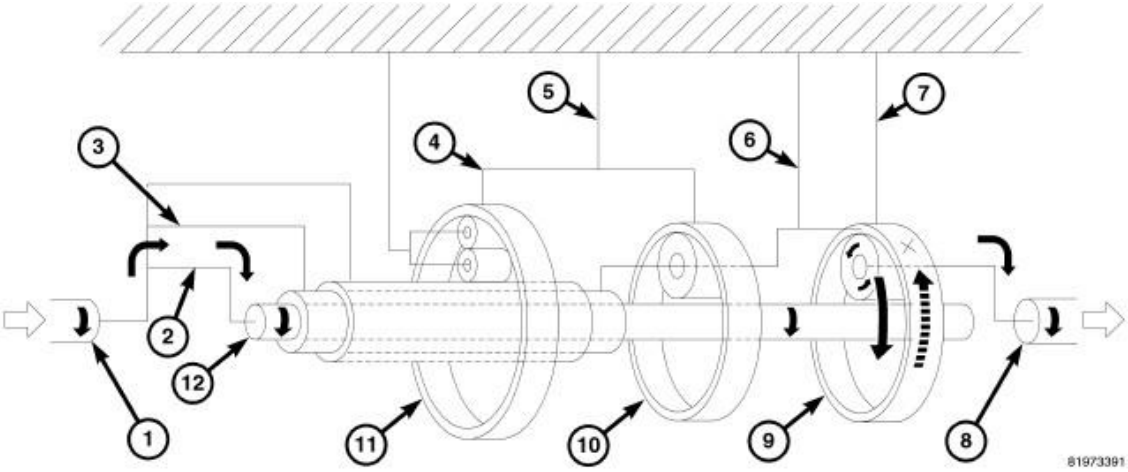

Fig. 7: First Gear Sequence
Courtesy of CHRYSLER GROUP, LLC

1 - INPUT SHAFT	7 - F1 ONE WAY CLUTCH
2 - K1 CLUTCH	8 - OUTPUT SHAFT
3 - K2 CLUTCH	9 - P3 PLANETARY ANNULUS
4 - K3 CLUTCH	10 - P2 PLANETARY ANNULUS
5 - B1 BRAKE	11 - P1 PLANETARY ANNULUS
6 - B2 BRAKE	12 - SUN GEAR SHAFT

FIRST GEAR

	K1	K2	K3	B1	B2	F1	GEAR RATIO
FIRST GEAR	X				X	X	3.74:1
X = in operation							

When oil pressure is applied to K1 clutch (2) and the input shaft (1) and sun gear shaft (12) which are directly connected; as a result of the clockwise turning effect of the input shaft (1), the sun gear shaft (12) rotates clockwise.

The rotation of the sun gear shaft (12) is transmitted as counterclockwise turning effect to the P3 planetary pinion gear as it attempts to rotate the P3 planetary annulus gear counterclockwise.

The counterclockwise rotation is checked by the action of the F1 one-way clutch (6), the P3 planetary pinion gear rotates clockwise (revolves centering on the sun gear shaft (12), while rotating clockwise on its own axis.

This conveys a clockwise turning effect to the P3 planetary annulus (9) and the output shaft (8) connected to it.

SECOND GEAR POWER FLOW

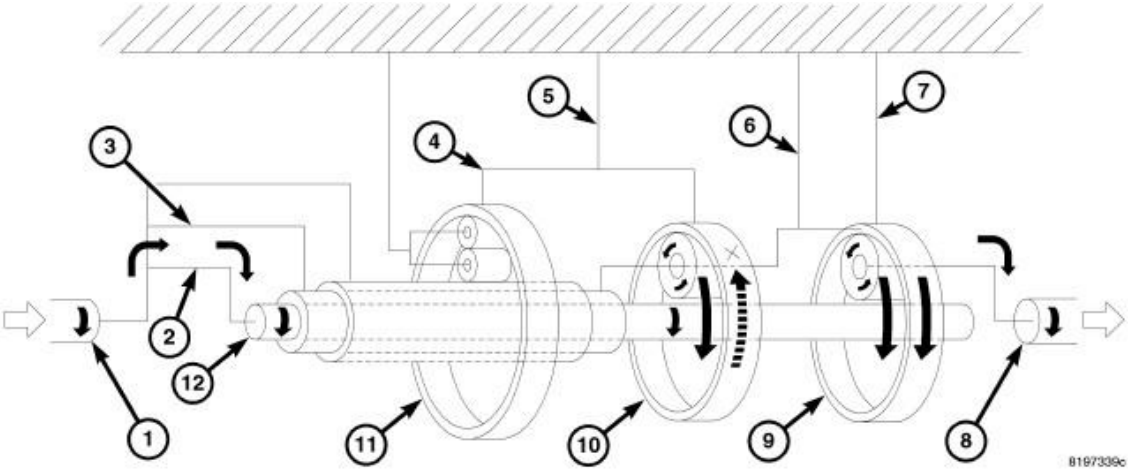

Fig. 8: Second Gear Sequence
Courtesy of CHRYSLER GROUP, LLC

1 - INPUT SHAFT	7 -F1 ONE WAY CLUTCH
2 - K1 CLUTCH	8 - OUTPUT SHAFT
3 - K2 CLUTCH	9 - P3 PLANETARY ANNULUS
4 - K3 CLUTCH	10 - P2 PLANETARY ANNULUS
5 - B1 BRAKE	11 - P1 PLANETARY ANNULUS
6 - B2 BRAKE	12 - SUN GEAR SHAFT

SECOND GEAR

	K1	K2	K3	B1	B2	F1	GEAR RATIO
SECOND GEAR	X			X			2.00:1
X = in operation							

When oil pressure is applied to K1 clutch (2) and the input shaft (1) and the sun gear shaft (12) which are directly connected ; the sun gear shaft (12) rotates clockwise.

The clockwise rotation of the sun gear shaft (12) is transmitted as counterclockwise turning effect to the P2 planetary pinion gear and attempts to rotate the P2 planetary annulus gear counterclockwise.

Since the P2 planetary annulus gear is fixed by the B1 brake (5), the P2 planetary pinion gear rotates counterclockwise, and the clockwise turning effect is conveyed to the P2 planetary annulus (10).

As a result, a clockwise turning effect is given to the P3 planetary annulus gear that is connected to the P2 planetary annulus (10).

The clockwise turning effect of the sun gear shaft (12) is also conveyed to the P3 planetary pinion gear, the P3 planetary annulus gear is also decelerated and is rotating clockwise.

The P3 planetary pinion gear revolves clockwise while rotating counterclockwise on its own axis, and the clockwise turning effect is conveyed to the output shaft (8) that is connected to the P3 planetary annulus (9).

THIRD GEAR POWER FLOW

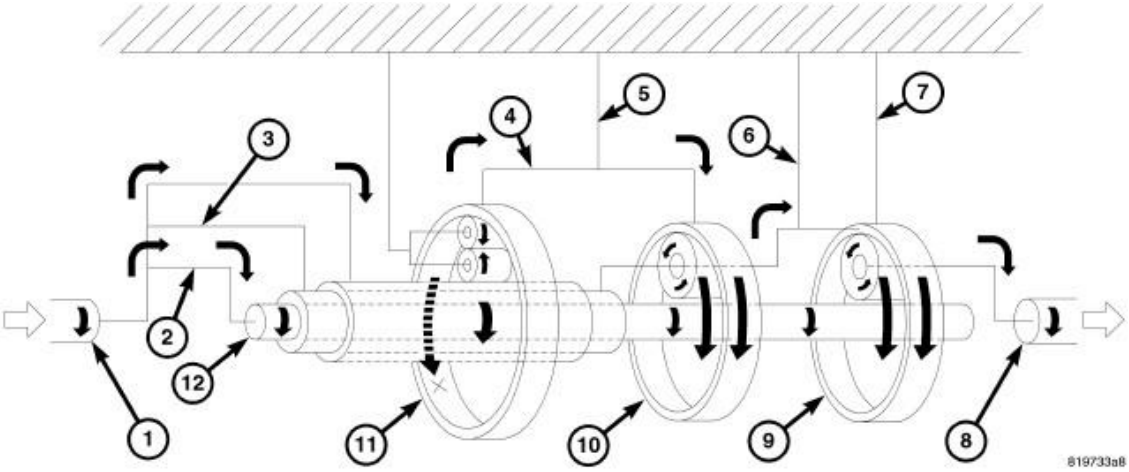

Fig. 9: Third Gear Sequence
Courtesy of CHRYSLER GROUP, LLC

1 - INPUT SHAFT	7 - F1 ONE WAY CLUTCH
2 - K1 CLUTCH	8 - OUTPUT SHAFT
3 - K2 CLUTCH	9 - P3 PLANETARY ANNULUS
4 - K3 CLUTCH	10 - P2 PLANETARY ANNULUS
5 - B1 BRAKE	11 - P1 PLANETARY ANNULUS
6 - B2 BRAKE	12 - SUN GEAR SHAFT

THIRD GEAR

	K1	K2	K3	B1	B2	F1	GEAR RATIO
THIRD GEAR	X		X				1.34:1
X = in operation							

When oil pressure is applied to the K3 clutch (4), the clockwise turning effect of the P1 planetary annulus gear is conveyed and the P2 planetary annulus gear rotates clockwise.

When oil pressure is applied to the K1 clutch (2), the input shaft (1) and the sun gear shaft (12) are directly connected, the sun gear shaft (12) rotates clockwise.

As a result, the P2 planetary pinion gear revolves clockwise while rotating clockwise on its own axis, thus a clockwise turning effect is given to the P3 planetary annulus gear that is connected to the P2 planetary annulus (10).

This rotation and clockwise turning effect of the sun gear shaft (12) gives turning effect to the P3 planetary pinion gear to revolve clockwise while rotating clockwise on its own axis, and a clockwise turning effect then given to the P3 planetary annulus (9) and also to the output shaft (8).

FOURTH GEAR POWER FLOW

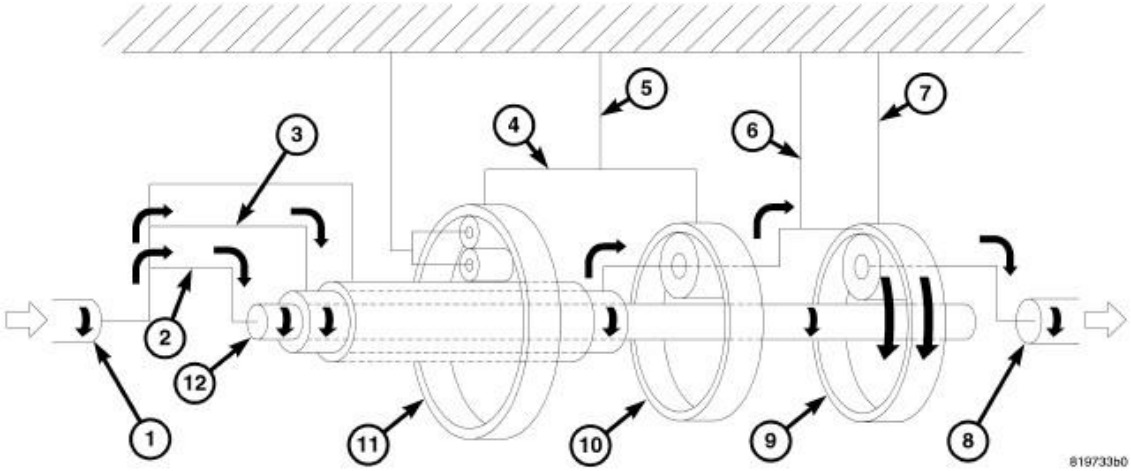

Fig. 10: Forth Gear Sequence
Courtesy of CHRYSLER GROUP, LLC

1 - INPUT SHAFT	7 - F1 ONE WAY CLUTCH
2 - K1 CLUTCH	8 - OUTPUT SHAFT
3 - K2 CLUTCH	9 - P3 PLANETARY ANNULUS
4 - K3 CLUTCH	10 - P2 PLANETARY ANNULUS
5 - B1 BRAKE	11 - P1 PLANETARY ANNULUS
6 - B2 BRAKE	12 - SUN GEAR SHAFT

FOURTH GEAR

	K1	K2	K3	B1	B2	F1	GEAR RATIO
FOURTH GEAR	X	X					1.00:1
X = in operation							

When oil pressure is applied to K1 clutch (2), and the input shaft (1) and the sun gear shaft (12) are directly connected, the sun gear shaft (12) rotates clockwise.

When oil pressure is applied to K2 clutch, then the P3 planetary gear rotates clockwise via the P2 planetary gear (10).

This action gives a clockwise turning effect to the P3 planetary annulus (9) and the clockwise turning effect is given to the output shaft (8).

FIFTH GEAR POWER FLOW

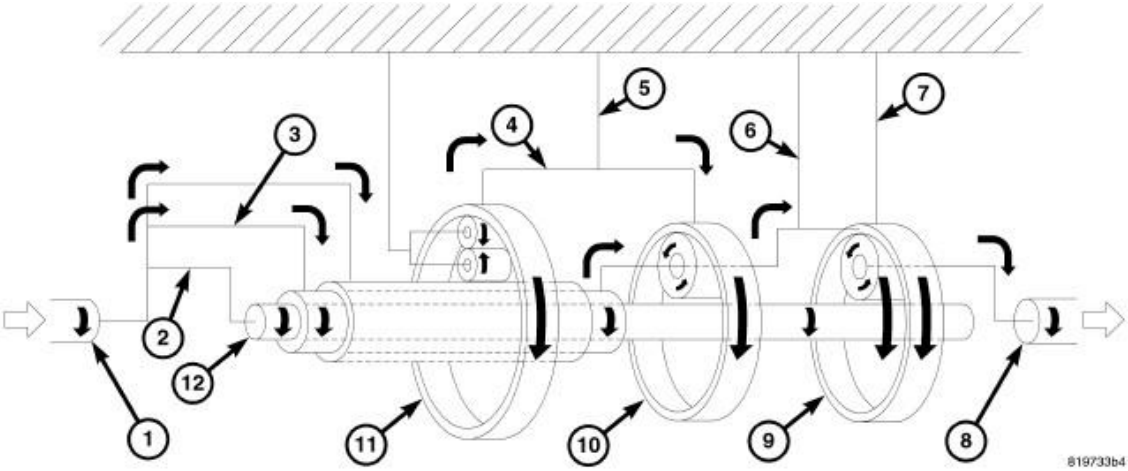

Fig. 11: Fifth Gear Sequence
Courtesy of CHRYSLER GROUP, LLC

1 - INPUT SHAFT	7 - F1 ONE WAY CLUTCH
2 - K1 CLUTCH	8 - OUTPUT SHAFT
3 - K2 CLUTCH	9 - P3 PLANETARY ANNULUS
4 - K3 CLUTCH	10 - P2 PLANETARY ANNULUS
5 - B1 BRAKE	11 - P1 PLANETARY ANNULUS
6 - B2 BRAKE	12 - SUN GEAR SHAFT

FIFTH GEAR

	K1	K2	K3	B1	B2	F1	GEAR RATIO
FIFTH GEAR		X	X				0.77:1
X = in operation							

When oil pressure is applied to the K3 clutch (4), a clockwise turning effect of the P1 planetary annulus gear is transmitted and the P2 planetary annulus gear rotates clockwise.

When oil pressure is applied to the K2 clutch (3), a clockwise turning effect is given to the P2 planetary annulus (10).

As the P2 planetary annulus gear rotates, the clockwise turning effect of the sun gear shaft (12) is obtained.

Then, a clockwise turning effect of the P3 planetary annulus gear that is connected to the P2 planetary annulus (10) and a clockwise turning effect of the sun gear shaft gives a clockwise turning effect to the P3 planetary annulus (9), and a clockwise turning effect is also given to the output shaft (8).

SIXTH GEAR POWER FLOW

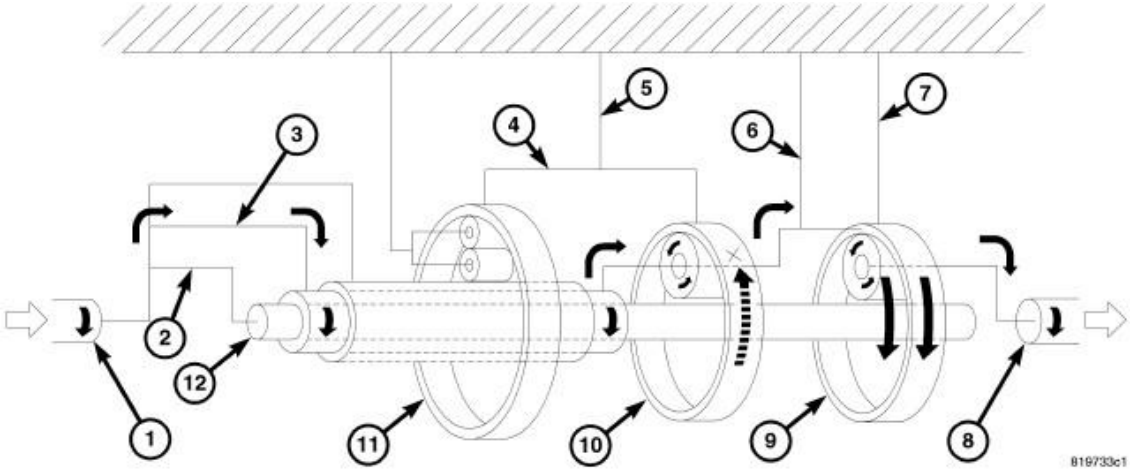

Fig. 12: Sixth Gear Sequence
Courtesy of CHRYSLER GROUP, LLC

1 - INPUT SHAFT	7 - F1 ONE WAY CLUTCH
2 - K1 CLUTCH	8 - OUTPUT SHAFT
3 - K2 CLUTCH	9 - P3 PLANETARY ANNULUS
4 - K3 CLUTCH	10 - P2 PLANETARY ANNULUS
5 - B1 BRAKE	11 - P1 PLANETARY ANNULUS
6 - B2 BRAKE	12 - SUN GEAR SHAFT

SIXTH GEAR

	K1	K2	K3	B1	B2	F1	GEAR RATIO
SIXTH GEAR		X		X			0.63:1
X = in operation							

Oil pressure is applied to the K2 clutch (3), and a clockwise turning effect is given to the P2 planetary annulus (10).

Oil pressure is applied to the B1 brake, and since the P2 planetary annulus gear is fixed, the P2 planetary pinion gear rotates counterclockwise on it's own axis while revolving clockwise.

As a result, the sun gear shaft (12) obtains a clockwise turning effect.

The clockwise turning effect of the sun gear shaft (12) and the P3 planetary annulus gear connected to the P2 planetary annulus (10) gives a clockwise turning effect to the P3 planetary annulus, and the clockwise turning effect is then also given to the output shaft.

REVERSE GEAR POWER FLOW

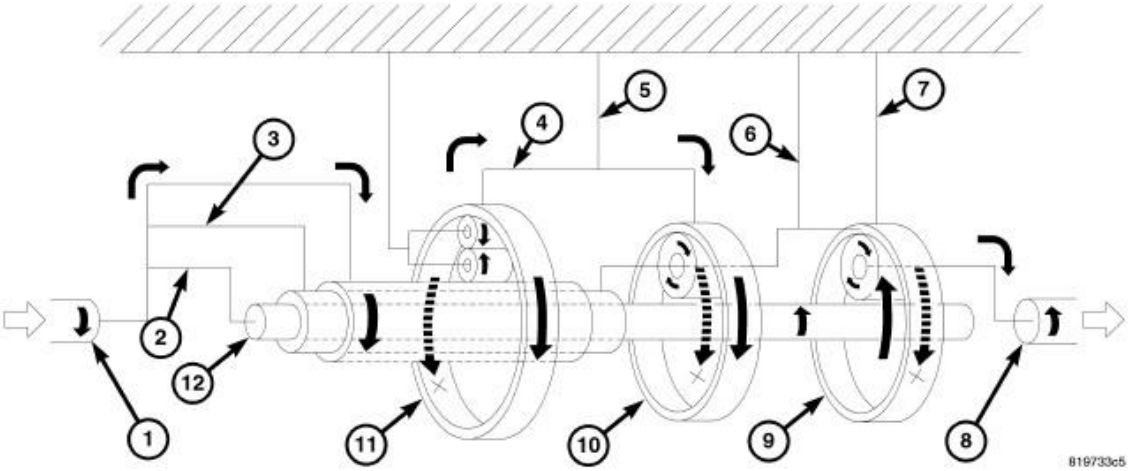

Fig. 13: Reverse Gear Power Flow
Courtesy of CHRYSLER GROUP, LLC

1 - INPUT SHAFT	7 - F1 ONE WAY CLUTCH
2 - K1 CLUTCH	8 - OUTPUT SHAFT
3 - K2 CLUTCH	9 - P3 PLANETARY ANNULUS
4 - K3 CLUTCH	10 - P2 PLANETARY ANNULUS
5 - B1 BRAKE	11 - P1 PLANETARY ANNULUS
6 - B2 BRAKE	12 - SUN GEAR SHAFT

REVERSE GEAR

	K1	K2	K3	B1	B2	F1	GEAR RATIO
REVERSE GEAR			X		X		- 3.54:1
X = in operation							

When oil pressure is applied to the K3 clutch (4) and a clockwise turning effect of the P1 planetary annulus gear is transmitted; the P2 planetary annulus gear rotates clockwise.

Oil pressure is then applied to the B2 brake to fix the P3 planetary annulus gear and P2 planetary annulus (10) that is connected to it.

As a result the P2 planetary pinion gear rotates clockwise with it's position fixed giving a counterclockwise turning effect to the sun gear shaft (12).

As a result of the clockwise turning effect given to the sun gear shaft (12), and the fixed P3 planetary annulus gear, the P3 planetary pinion gear revolves counterclockwise while rotating clockwise on it's own axis, and the counterclockwise turning effect is then given to the P3 planetary annulus (9) and also to the output shaft (8).

Schedule	Sump Temperature	Transmission Operation
TEMPERATURE - BASED SHIFT SCHEDULING		
Extreme Cold	Below -20 C (-4 F)	P / R / N, 3rd Only (limp in), No Lock Up

Super Cold	Below -10 C (-14 F)	P / R / N / 4 / 3/ 2 / 1, No OD, No Lock Up (less down shifts)
Cold	Below 5 C (41 F)	P / R / N / 4 / 3/ 2 / 1, No OD, No Lock Up
Warm	Below 25 C (77 F)	All Gear Ratios, No Lock Up
Hot	Between 25-140 C (77-284 F)	Normal Operation
Overheat	Above 140 C (284 F)	Allow second gear lockup to reduce heat generation

DIAGNOSIS AND TESTING

AUTOMATIC TRANSMISSION

NOTE: Before attempting any repair on a automatic transmission, check for Diagnostic Trouble Codes with the scan tool.

Transmission malfunctions may be caused by these general conditions:

- Poor engine performance
- Improper adjustments
- Hydraulic malfunctions
- Mechanical malfunctions
- Electronic malfunctions

Diagnosis of these problems should always begin by checking the easily accessible variables: fluid level and condition, gearshift cable adjustment. Then perform a road test to determine if the problem has been corrected or if more diagnosis is necessary. If the problem persists after the preliminary tests and corrections are completed, hydraulic pressure checks should be performed.

FLUID LEAKAGE

FLUID LEAKAGE - TRANSMISSION OIL LEAK

Begin with a thorough inspection of the transmission, particularly at the area of the suspected leak. If an oil leak source is not readily identifiable, the following steps should be followed:

1. Clean or degrease the transmission with a water soluble solvent only.
2. Add an oil soluble dye (use as recommended by manufacturer) while the powertrain is at ambient temperature. Start the engine and let idle for approximately 15 minutes. Check the oil dip stick (if equipped) to make sure the dye is thoroughly mixed as indicated with a fluorescent color under a black light.
3. Using a black light, inspect the entire transmission for fluorescent dye, mostly at the suspected area of oil leak. If the oil leak is found and identified, repair per service information instructions.
4. If dye is not observed, drive the vehicle at various speeds for approximately 24 km (15 miles) and repeat inspection.

TORQUE CONVERTER HOUSING AREA

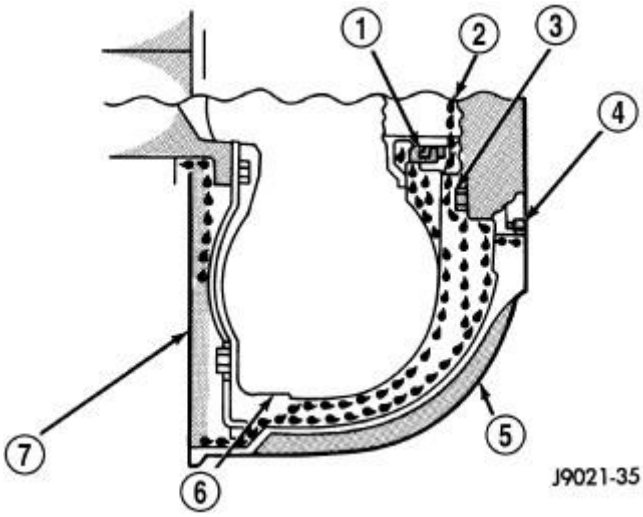

Fig. 14: Converter Housing Leak Paths
Courtesy of CHRYSLER GROUP, LLC

1 - PUMP SEAL
2 - PUMP VENT
3 - PUMP BOLT
4 - PUMP GASKET
5 - CONVERTER HOUSING
6 - CONVERTER
7 - REAR MAIN SEAL LEAK

When diagnosing converter housing (5) fluid leaks, three actions must be taken before repair:

1. Verify proper transmission fluid level.
2. Verify that the leak originates from the converter housing area and is transmission fluid.
3. Determine the true source of the leak.

Fluid leakage at or around the torque converter area may originate from an engine oil leak (7). The area should be examined closely. Factory fill fluid is red and, therefore, can be distinguished from engine oil.

Some suspected converter housing fluid leaks may not be leaks at all. They may only be the result of residual fluid in the converter housing, or excess fluid spilled during factory fill, or fill after repair. Converter housing leaks have several potential sources. Through careful observation, a leak source can be identified before removing the transmission for repair.

Pump seal (1) leaks tend to move along the drive hub and onto the rear of the converter. Pump o-ring or pump body leaks follow the same path as a seal leak. Pump attaching bolt (3) leaks are generally deposited on the inside of the converter housing (5) and not on the converter itself. Pump seal (1) or gasket (4) leaks usually travel down the inside of the converter housing.

TORQUE CONVERTER LEAKAGE

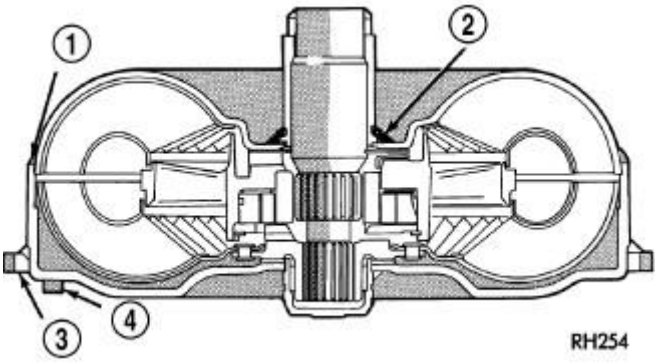

Fig. 15: Converter Leak Points-Typical
Courtesy of CHRYSLER GROUP, LLC

1 - OUTSIDE DIAMETER WELD
2 - TORQUE CONVERTER HUB WELD
3 - STARTER RING GEAR
4 - LUG

Possible sources of torque converter leakage are:

- Torque converter weld leaks at the outside diameter weld (1).
- Torque converter hub weld (2).

PRELIMINARY

Two basic procedures are required. One procedure for vehicles that are drivable and an alternate procedure for disabled vehicles (will not back up or move forward).

VEHICLE IS DRIVABLE

1. Record all DTCs and the accompanying DTC Event Data.
2. Check for an appropriate Technical Service Bulletin that applies to the customer complaint.
3. Check fluid level and condition.
4. Road test and note how transmission upshifts, downshifts, and engages.
5. If the complaint was related to shift quality, perform the Quick Learn procedure and the Drive Learn Procedure. Refer to **MODULE, TRANSMISSION CONTROL, STANDARD PROCEDURE** . .
6. If the complaint still exists, remove, inspect, and repair the transmission as necessary

VEHICLE IS DISABLED

1. Record all DTCs and the accompanying DTC Event Data.
2. With engine running, place transmission in gear and verify correct PRNDL reading. Observe the Input

and Output speeds using the scan tool. If output RPM is greater than zero but vehicle does not move, check for transfer case in Neutral (or failed internally), failed propshaft, or failed / disconnected drive axle. If output RPM is zero and input RPM is greater than zero, internal transmission slippage is indicated. Run clutch slip tests using the scan tool, check oil pan for debris, and air check the various clutch circuits.

3. Shift the transmission into neutral, if both input and output speeds are zero, check drive plate bolts, torque converter, and transmission input shaft.
4. Remove, inspect, and repair the transmission as necessary

ROAD TESTING

Before road testing, be sure the fluid level and control cable adjustments have been checked and adjusted if necessary. Verify that all diagnostic trouble codes have been resolved.

Observe engine performance during the road test. A poorly tuned engine will not allow accurate analysis of transmission operation.

Operate the transmission in all gear ranges. Check for shift variations and engine flare which indicates slippage. Note if shifts are harsh, spongy, delayed, early, or if part throttle downshifts are sensitive.

Slippage indicated by engine flare, usually means clutch or line pressure problems.

A slipping clutch can often be determined by comparing which internal units are applied in the various gear ranges. The Clutch Application charts provide a basis for analyzing road test results.

HYDRAULIC PRESSURE TEST

An accurate tachometer and pressure test gauge are required. Test Gauge (special tool #C-3293-SP, Gauge, Pressure 0-300 P.S.I.) has a 300 psi range and is used at all locations where pressures exceed 100 psi.

PRESSURE TEST PORT LOCATION

NOTE: The AS68RC pressure port plugs are 1/2 x 20 UNF thread, with O-ring.

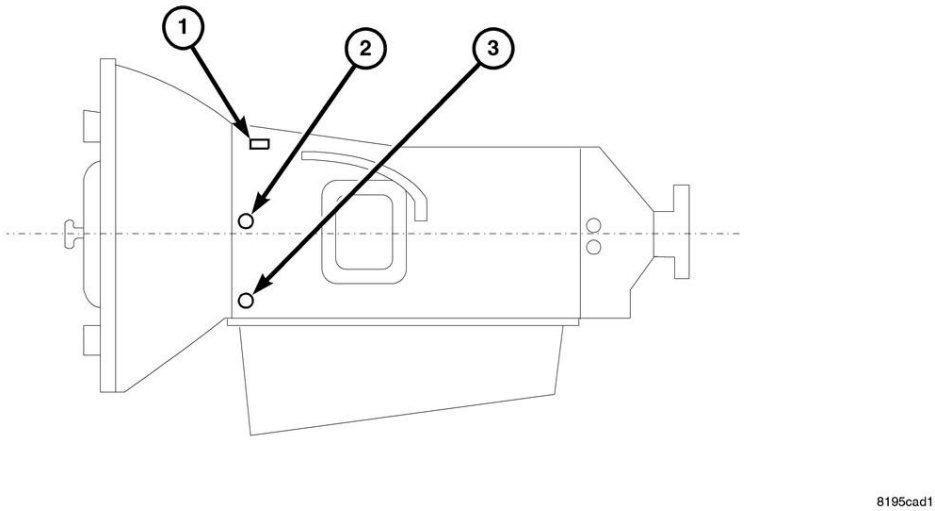

Fig. 16: Line Pressure Port
Courtesy of CHRYSLER GROUP, LLC

1 - PLANT USE 2 - LINE PRESSURE PORT 3 - PLANT USE

Only one line pressure port (2) is supplied on the transmission case.

A line pressure test is performed to check the performance of the oil pump, to check the functionality of the control valves, and to check parts for oil leakage.

LINE PRESSURES

At Idling Speed	P Range	560 - 870 kpa (81 - 125 psi)
	N Range	
At Stalling Speed	D Range	1660 - 2010 kpa (240 - 290 psi)
	R Range	

TEST PROCEDURE

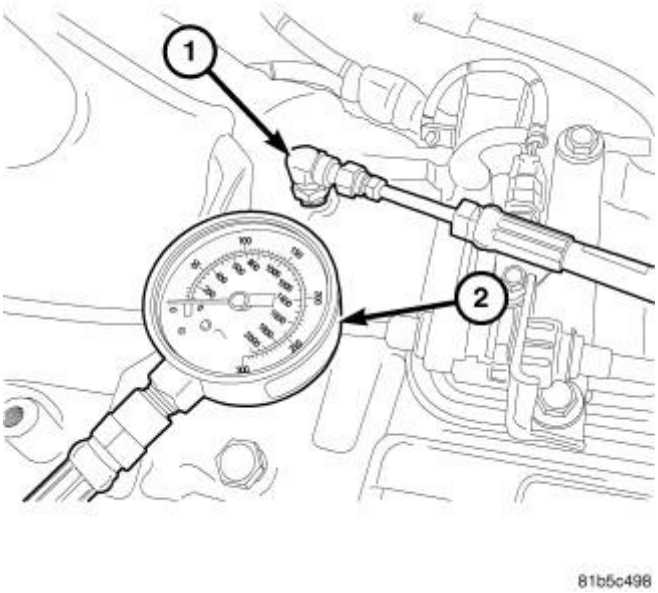

Fig. 17: Line Pressure Reading
Courtesy of CHRYSLER GROUP, LLC

1 - LINE PRESSURE ADAPTER 100009-1
2 - OIL PRESSURE GAUGE C-3293SP

NOTE: **The AS68RC utilizes closed loop control of pump line pressure. The pressure readings may therefore vary greatly but should always follow line pressure.**

All pressure readings should be taken with the transmission fluid level full, transmission oil at the normal operating temperature. Check the transmission for proper operation in each gear position that is in question or if a specific element is in question.

WARNING: **The line pressure test should be performed by two people. One person moves away from the vehicle and checks the condition of the tires and wheel chocks. The other person performs the test. Failure to follow these instruction may result in personal injury or may be fatal.**

1. Fully apply the parking brake.
2. Apply wheel chocks.
3. Remove the line pressure sensing plug and install adapter fitting (special tool #10009, Adapters, Line Pressure) (1) and the oil pressure gauge (special tool #C-3293-SP, Gauge, Pressure 0-300 P.S.I.) (2).
4. Start the engine and allow it to warm up until the ATF reaches a temperature of 50 - 80° C (120 - 175° F).
5. Depress the brake pedal firmly. While holding down the brake pedal firmly shift into the D range, measure and record the oil pressure at idle.

WARNING: **If the engine speed does not reach the stall level and the rear wheel**

start to turn, ease off the accelerator and stop the test. Failure to follow these instruction may result in personal injury or may be fatal.

6. Fully depress the accelerator pedal. Quickly measure and record the oil pressure at stall speed.

   Take measurements in a similar manner for the R range.

7. Remove adapter fitting (special tool #10009, Adapters, Line Pressure) (1) and the oil pressure gauge (special tool #C-3293-SP, Gauge, Pressure 0-300 P.S.I.) (2).
8. Install the line pressure sensing plug and tighten to 27 N.m (20 ft.lbs.)

POSSIBLE CAUSES

NOTE: **If the measured values do not conform to the standard values, locate the possible cause by referring to the following table and inspect the component.**

TEST RESULT	CONCEIVABLE CAUSE	
Measured value is higher than standard value in all ranges.	Regulator valve is sticking.	
Measured value is lower than standard value in all ranges.	Regulator valve is sticking.	
	Oil pump is worn or clogged filter.	
Measured value is lower than standard value in D range only.	Oil leak exists in D range system.	
	K1 clutch is abnormal.	
Measured value is lower than	K3 clutch is abnormal.	

standard value in R range only.	B2 clutch is abnormal.	

AIR CHECKING TRANSMISSION CLUTCH OPERATION

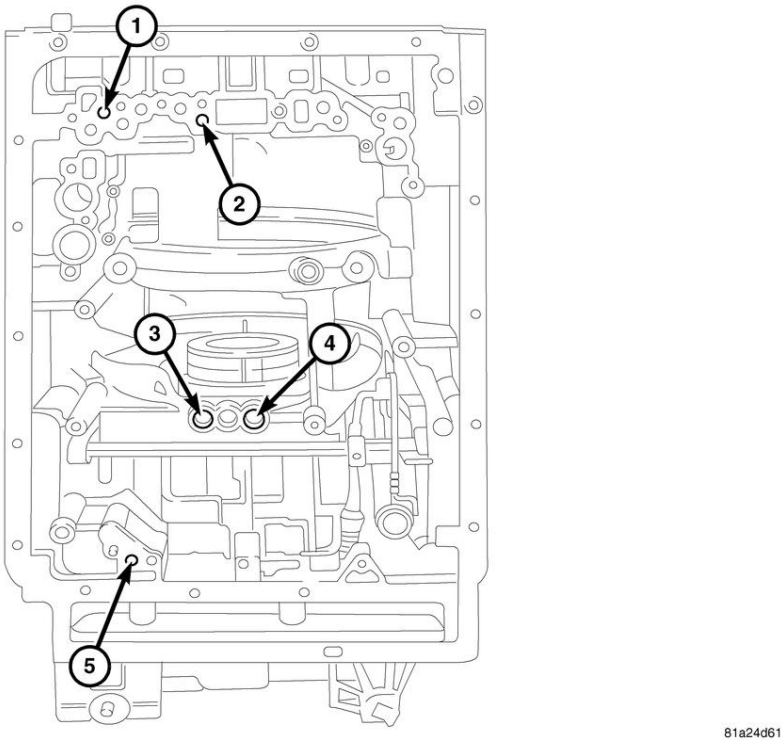

Fig. 18: Air Check Port Locations
Courtesy of CHRYSLER GROUP, LLC

1 - K1 CLUTCH	4 - B1 BRAKE
2 - K2 CLUTCH	5 - B2 BRAKE
3 - K3 CLUTCH	

Air-pressure testing can be used to check transmission clutch and brake operation. The test can be conducted with the transmission either in the vehicle or on the work bench, as a final check.

Air-pressure testing requires that the oil pan and valve body be removed from the transmission.

NOTE: **The air supply which is used must be free of moisture and dirt. Use a pressure of 400 - 500 kPa (58 - 72 psi) to test clutch operation.**

Apply air pressure at each port. If the clutch or brake is functioning, a soft thump will be heard as the clutch or

brake is applied. The clutch or brake application can also be felt by touching the appropriate element while applying air pressure. As the air pressure is released, the clutch or brake should also release.

CONVERTER HOUSING FLUID LEAK

When diagnosing converter housing fluid leaks, two items must be established before repair.

1. Verify that a leak condition actually exists.
2. Determined the true source of the leak.

Some suspected converter housing fluid leaks may not be leaks at all. They may only be the result of residual fluid in the converter housing, or excess fluid spilled during factory fill or fill after repair. Converter housing leaks have several potential sources. Through careful observation, a leak source can be identified before removing the transmission for repair. Torque converter seal leaks tend to move along the drive hub and onto the rear of the converter. Pump cover seal leaks tend to run down the cover and the inside surface of the bellhousing.

Some leaks, or suspected leaks, may be particularly difficult to locate. If necessary, a Mopar® approved dye should be used to locate and confirm a leak.

TORQUE CONVERTER LEAK POINTS

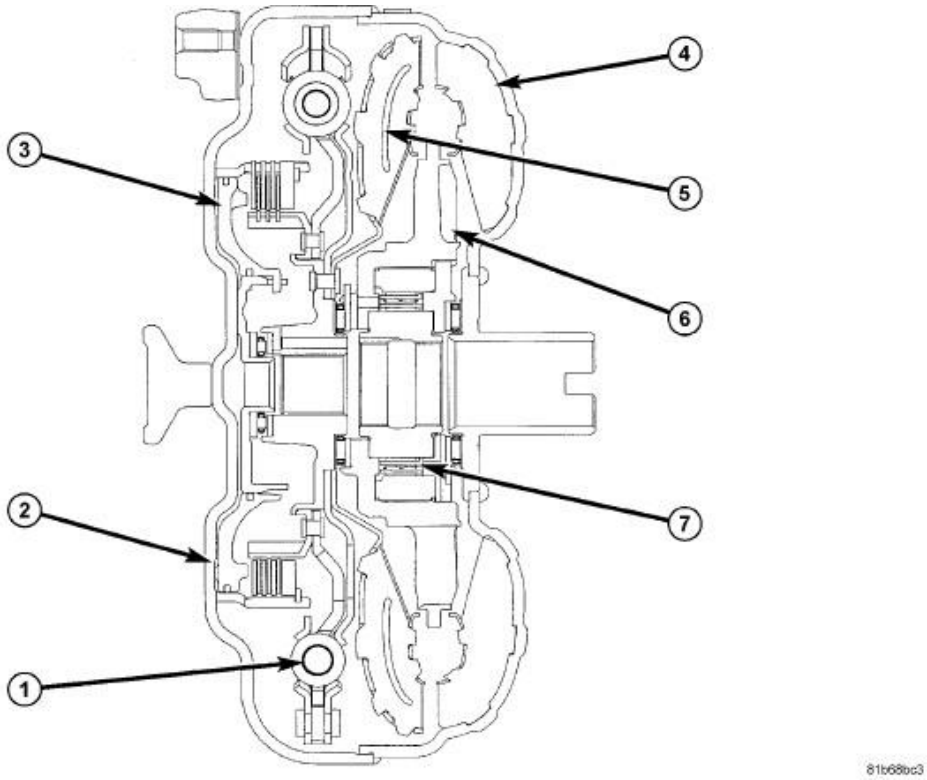

Fig. 19: Cut Away View Of Torque Converter
Courtesy of CHRYSLER GROUP, LLC

1 - LOCK - UP DAMPER	5 - TURBINE RUNNER
2 - CONVERTER FRONT COVER	6 - STATOR
3 - LOCK - UP PISTON	7 - ONE - WAY CLUTCH
4 - PUMP IMPELLER	

Possible sources of converter leaks are:

1. Leaks at the weld joint around the outside diameter weld.
2. Leaks at the converter hub weld.

In most cases, a torque converter which is wet from transmission fluid indicates a leak at one of these areas.

STANDARD PROCEDURE

STANDARD PROCEDURE - ALUMINUM THREAD REPAIR

Damaged or worn threads in the aluminum transmission case and valve body can be repaired by the use of Heli-Coils™, or equivalent. This repair consists of drilling out the worn-out damaged threads. Then tap the hole with a special Heli-Coil™ tap, or equivalent, and installing a Heli-Coil™ insert, or equivalent, into the hole. This brings the hole back to its original thread size.

Heli-Coil™, or equivalent, tools and inserts are readily available from most automotive parts suppliers.

SPECIFICATIONS

SPECIFICATIONS

GENERAL SPECIFICATIONS

Transmission Type	Six-Speed Automatic, Electronically Controlled, Fully Adaptive, Electronically Modulated Torque Converter
Lubrication Method	Pump (internal - external gear-type)
Cooling Method	Water Heat Exchanger and/or Air-to-Oil Heat Exchanger
Recommended Fluid	Mopar® AS68RC
Overhaul Capacity	13 L (13.74 Quarts)
Service Fill	6.8 L (7.2 Quarts)

CLEARANCES

Component	Metric	Inch

Output Shaft End- Play	0.50 - 0.90 mm	0.019 - 0.035 in.
Input Shaft End- Play	0.50 - 0.90 mm	0.019 - 0.035 in.
4WD Extension Housing Output Shaft End-Play (with external selectable washer in place)	0.00 - 0.24 mm	0.000 - 0.009 in.
B1 Brake Clutch Pack Clearance	1.25 - 1.50 mm	0.049 - 0.059 in.
B1 Brake Piston Stroke	1.55 - 1.80 mm	0.061 - 0.071 in.
B2 Brake Clutch Pack Clearance	1.60 -.2.04 mm	0.063 - 0.080 in.
B2 Brake Piston Stroke	1.84 - 2.28 mm	0.072 - 0.090 in.
K1 Clutch Pack Clearance	1.25 - 1.50 mm	0.049 - 0.059 in.
K1 Clutch Piston stroke	1.49 - 1.74 mm	0.059 - 0.069 in.
K2 Clutch Pack Clearance	1.25 - 1.50 mm	0.049 - 0.059 in.
K2 Clutch Piston Stroke	1.60 - 1.85 mm	0.063 - 0.071 in.
K3 Clutch Pack Clearance	1.25 - 1.50 mm	0.049 - 0.059 in.
K3 Clutch Piston Stroke	1.60 - 1.85 mm	0.063 - 0.071 in.
Oil Pump Side Clearance	0.02-0.055 mm	0.0008-0.002 in.

GEAR RATIOS

1ST	**3.74:1**
2ND	2.00:1
3RD	1.34:1
4TH	1.00:1
5TH	0.77:1
6TH	0.63:1
REVERSE	-3.54:1

TORQUE SPECIFICATIONS

DESCRIPTION	**N.m**	**Ft. Lbs.**	**In. Lbs.**
Fitting, cooler line at trans	44	32	-
Fitting, Jiffy Tite	25	18	-
Bolt, torque convertor	50	37	-
Bolt / nut, crossmember	68	50	-
Bolt, differential pressure sensor	10		88
Bolt, flexplate to crankshaft	75	55	-
Bolt, oil pan drain	22	16	-
Bolt, fluid filter	10	-	88
Bolt, extension housing	37	27	-
Bolt, oil pump	21	15.5	-
Bolt, oil pump body to cover	21	15.49	-

Plug, pressure sensing	27	20	-
Bolt, PTO cover	15	11	-
Bolt, P1 planetary carrier to transmission case	28	21	-
Bolt, torque converter housing	64	47	-
Bolt, oil pan	7	-	62
Bolt, filler tube	12.5	9	-
Bolt, transmission range	12.5	-	106
Electrical harness connectors to case (valve body)	8	-	71
Bolt, 4WD Extension housing seal plate at output shaft	17	12.5	-
Nut, transmission range	7	-	62
Bolt, input speed sensor	8	-	70
Bolt, output speed sensor	8	-	70
External temperature sensor (at cooler line fitting)	34	25	-
Nut, output shaft	210	155	-
Nuts, manual shift lever	12.5	9	-

VALVE BODY TORQUE SPECIFICATIONS

VALVE BODY TORQUE

DESCRIPTION	N.m	In. Lbs.
Bolt, upper valve body to lower valve body (M5)	5.5	49
Bolts, separator plate to lower valve body (M6)	10	88
(2) 58 mm (2.28 in.)	10	88
(3) 31.2 mm (1.23 in.)	10	88
(4) 42.5 mm (1.67 in.)	10	88
(5) 43 mm (1.69 in.)	10	88
(6) 51 mm (2.00 in.)	10	88
(7) 57.2 mm (2.25 in.)	10	88
(8) 41.5 mm (1.63 in.)	5.5	49
(15) 32.2 mm (1.27 in.)	10	88

Refer to valve body installation. Refer to **VALVE BODY, INSTALLATION**.

REMOVAL

REMOVAL

1. Disconnect the negative battery cable.
2. Raise and support the vehicle.
3. Remove any necessary skid plates. Refer to **PLATE, SKID, FRONT, REMOVAL** or **PLATE, SKID, TRANSFER CASE, REMOVAL** .
4. Mark propeller shaft and axle companion flanges for assembly alignment.
5. Remove the rear propeller shaft.
6. Remove the front propeller shaft, if necessary.
7. Remove the engine to transmission inspection cover.
8. Remove the exhaust support bracket from the rear of the transmission.
9. Remove the exhaust particulate filter.

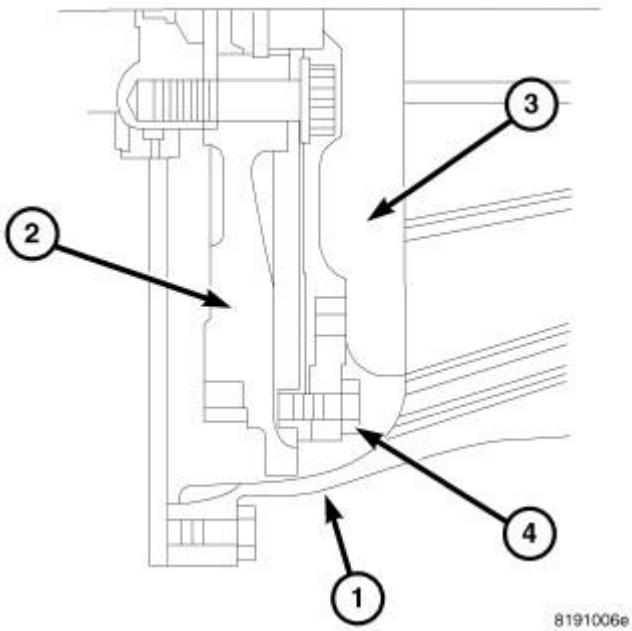

Fig. 20: Drive Plate & Torque Converter
Courtesy of CHRYSLER GROUP, LLC

1 - OPENING	3 - TORQUE CONVERTER
2 - DRIVE PLATE	4 - TORQUE CONVERTER BOLT

10. Rotate crankshaft in clockwise direction until torque converter bolts (4) are accessible. Then remove the 6 bolts one at a time. Rotate crankshaft with socket wrench on dampener bolt.

CAUTION: Tag the orientation of all electrical connectors. Some electrical

connectors may be interchangeable, damage to the electrical system may occur if the connectors are reversed.

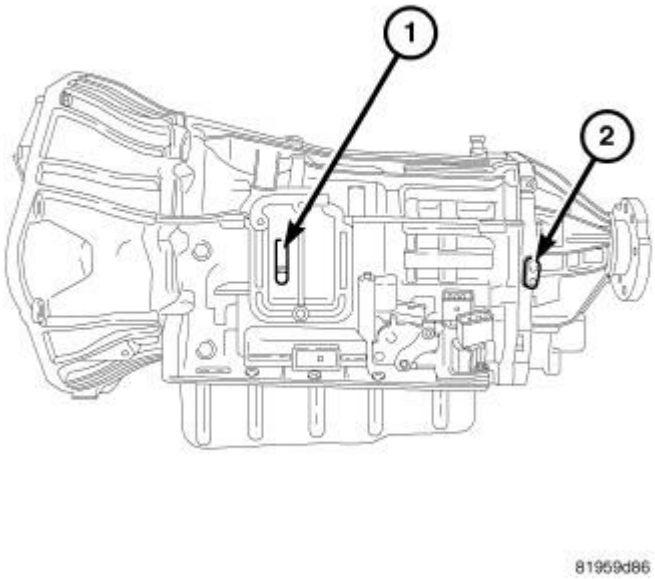

Fig. 21: Input & Output Speed Sensors
Courtesy of CHRYSLER GROUP, LLC

1 - INPUT SPEED SENSOR
2 - OUTPUT SPEED SENSOR

11. Disconnect the input speed sensor (1), output speed sensor (2), electrical connectors and position the harness aside.
12. Disconnect the transmission valve body solenoid and pressure switch electrical connectors and position harness aside.
13. Disconnect the cooler line temperature sensor electrical connector and position harness aside.

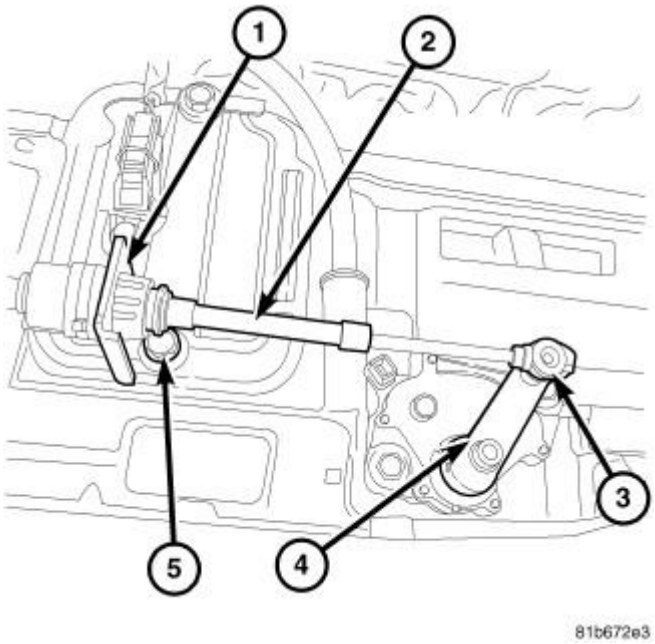

Fig. 22: Shift Cable At Transmission
Courtesy of CHRYSLER GROUP, LLC

1 - SHIFT CABLE BRACKET	4 - MANUAL SHIFT LEVER
2 - SHIFT CABLE	5 - SHIFT CABLE BRACKET BOLT
3 - SHIFT CABLE BALL SOCKET	

14. Disconnect gearshift cable ball socket (3) from transmission manual valve lever (4).
15. Remove the shift cable (2) from the shift cable bracket (1).
16. Remove the shift cable bracket bolt (5) and shift cable bracket (1).

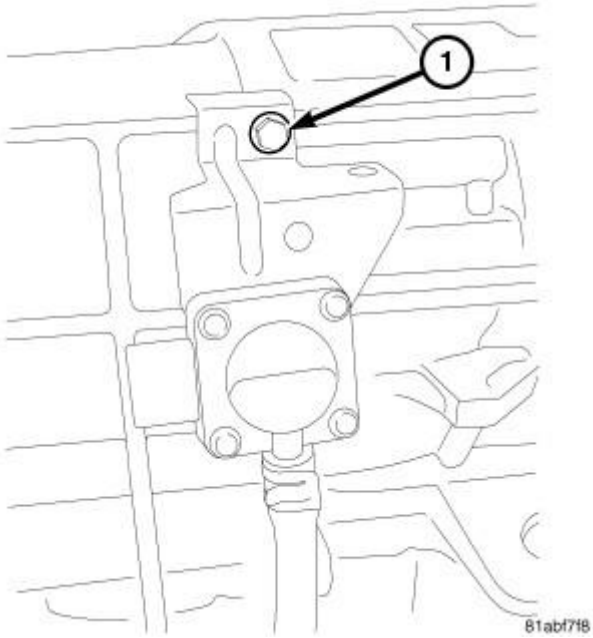

Fig. 23: Differential Pressure Sensor & Bolt
Courtesy of CHRYSLER GROUP, LLC

1 - BOLT

17. Remove the bolt (1) securing the differential pressure sensor to the transmission case, if equipped.

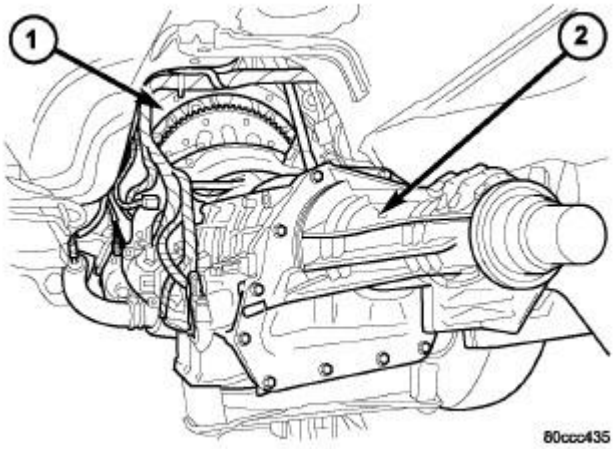

Fig. 24: Identifying Transmission & Engine
Courtesy of CHRYSLER GROUP, LLC

1 - ENGINE
2 - TRANSMISSION

18. Disconnect the transmission vent hose from the transmission.

19. Support rear of engine with safety stand or jack.

NOTE: Support the transmission where the transmission oil pan meets the transmission case.

20. Raise transmission slightly with service jack to relieve load on crossmember and supports.
21. Remove bolts securing rear support and cushion to transmission and crossmember.
22. Remove transfer case, if necessary. Refer to appropriate Transmission and Transfer Case article.

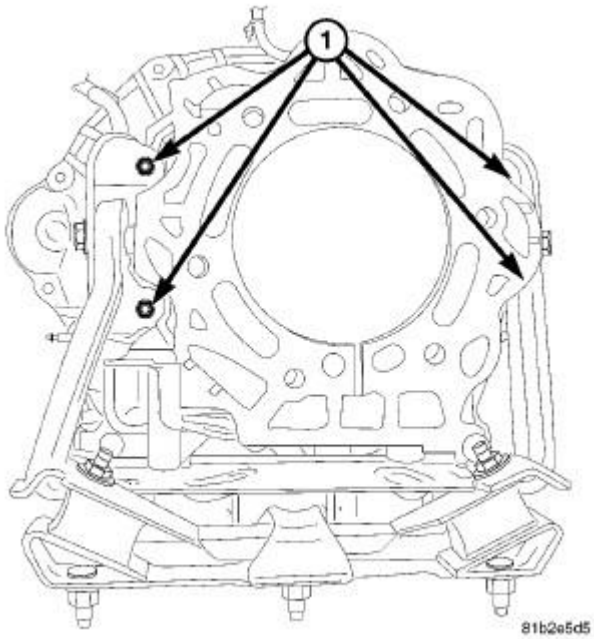

Fig. 25: Power Bending Bracket Nuts
Courtesy of CHRYSLER GROUP, LLC

23. Remove the nuts (1) securing the power bending bracket to extension housing, if equipped.

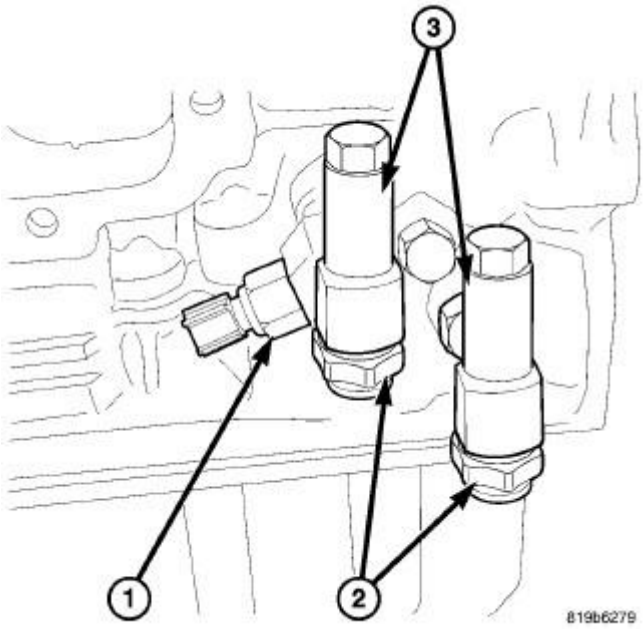

Fig. 26: Temperature Sensor & Line Fittings
Courtesy of CHRYSLER GROUP, LLC

1 - TEMPERATURE SENSOR
2 - JIFFY TITE FITTINGS
3 - COOLER LINE FITTINGS

24. Disconnect transmission fluid cooler lines at transmission Jiffy Tite fittings (2) with quick connect tool (special tool #9546, Disconnect Tool).
25. Remove all remaining converter housing bolts.
26. Carefully work transmission and torque converter assembly rearward off engine block dowels.
27. Hold torque converter in place during transmission removal.
28. Lower transmission (2) and remove assembly from under the vehicle.

CAUTION: Verify that transmission is secure on the lifting device or work surface, the center of gravity of the transmission will shift when the torque converter is removed creating an unstable condition. The torque converter is a heavy unit. Use caution when separating the torque converter from the transmission.

29. To remove torque converter, carefully slide torque converter out of the transmission.

DISASSEMBLY

DISASSEMBLY

CAUTION: Tag all snap rings, thrust washers, washers, spacers and thrust bearings, etc. during disassembly for quick identification and assembly. Failure to follow these instructions will damage and cause transmission failure.

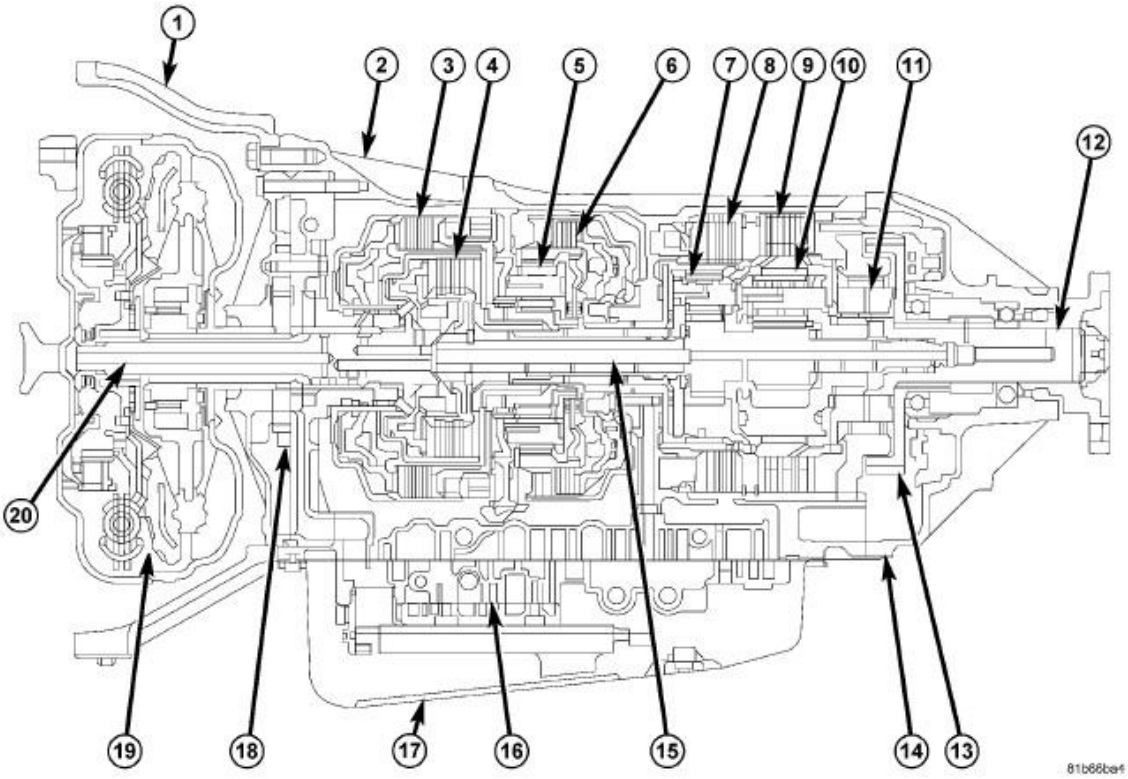

Fig. 27: AS68RC Transmission Components
Courtesy of CHRYSLER GROUP, LLC

1 - CONVERTER HOUSING	11 - F1 ONE WAY CLUTCH
2 - TRANSMISSION CASE	12 - OUTPUT SHAFT
3 - K2 CLUTCH	13 - PARKING LOCK GEAR
4 - K1 CLUTCH	14 - EXTENSION HOUSING
5 - P1 PLANETARY GEAR	15 - SUN GEAR SHAFT
6 - K3 CLUTCH	16 - VALVE BODY
7 - P2 PLANETARY GEAR	17 - OIL PAN
	18 - OIL

8 - B1 BRAKE	PUMP
9 - B2 BRAKE	19 - TORQUE CONVERTER
10 - P3 PLANETARY GEAR	20 - INPUT SHAFT

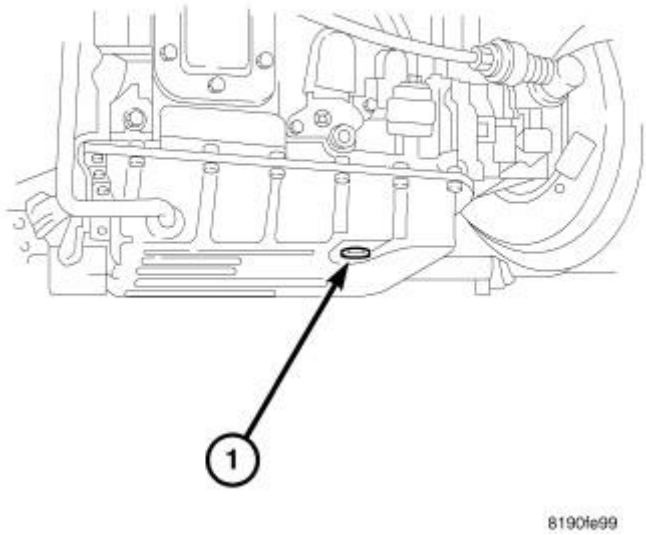

Fig. 28: Drain Plug
Courtesy of CHRYSLER GROUP, LLC

1 - DRAIN PLUG

1. Place the transmission manual shift lever into the park lock position.
2. Plug all openings and clean exterior of transmission with water soluble solvent or a pressure washer.
3. Remove oil pan drain plug (1) and drain fluid from transmission.

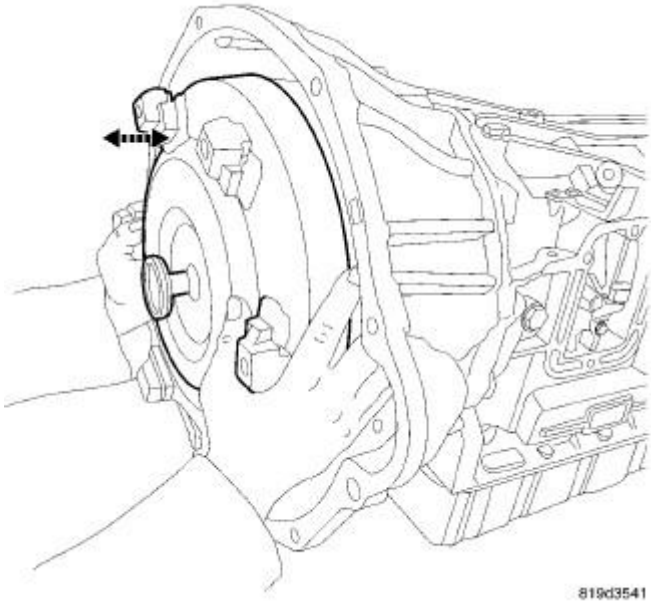

Fig. 29: Removing/Installing Torque Converter From Transmission
Courtesy of CHRYSLER GROUP, LLC

WARNING: **Be certain the transmission is secure when removing the torque converter, the torque converter is very heavy. Failure to follow these instructions may result in personal injury or may be fatal.**

4. Remove the torque converter from the transmission.

NOTE: **Gear train end play is a critical pre-disassembly check to help determine the condition of the transmission. End play reading greater than specification (larger gap) indicate that a bearing or thrust plate is either missing, worn or has disintegrated, in which case there will be debris in the oil pan.**

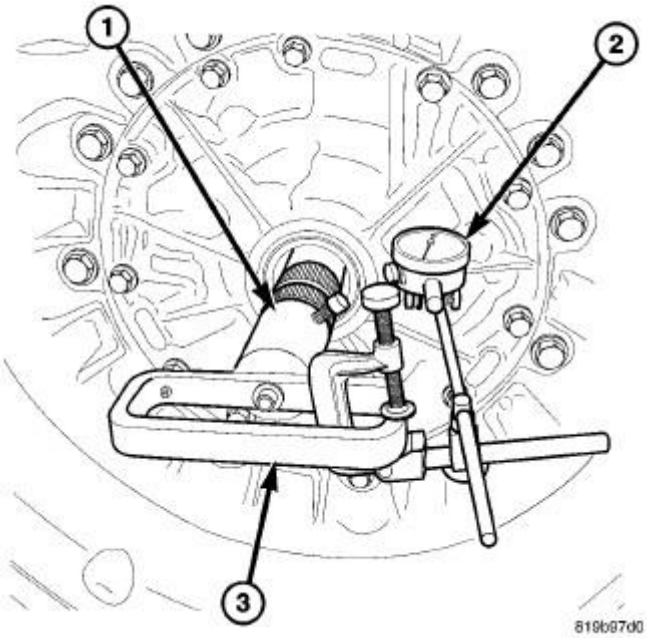

Fig. 30: Measuring Input Shaft End Play
Courtesy of CHRYSLER GROUP, LLC

1 - Socket 8266-19
2 - Dial Indicator C-3339A
3 - Handle 8266-A

5. Using Adapter (special tool #8266-19, Spline Tool, AS68RC Input) (1) and the handle from End-Play Tool Set (special tool #8266B, End Play Socket Set) (2) and Dial Indicator (special tool #C-3339A, Set, Dial Indicator) (3), measure and record the input shaft end-play.

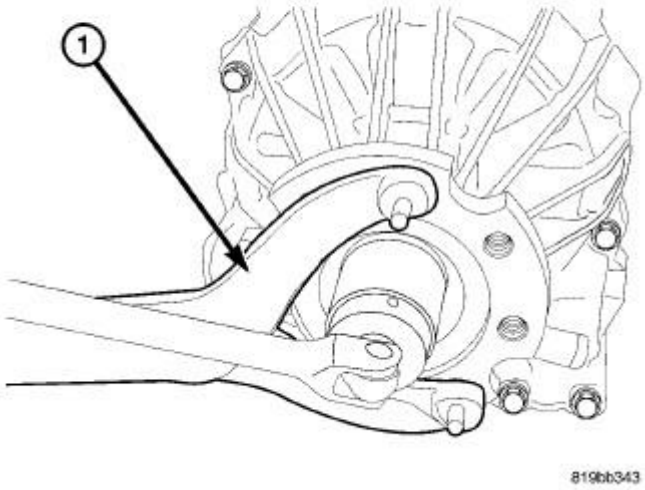

Fig. 31: Removing/Installing Output Shaft Nut
Courtesy of CHRYSLER GROUP, LLC

1 - FLANGE HOLDER TOOL C-3281

6. Using a small chisel pry open the stakes on the output shaft flange nut and install Flange Holder tool (special tool #C-3281, Holder, Flange) (1) to assist in removing the output flange nut. Remove the output shaft flange nut.

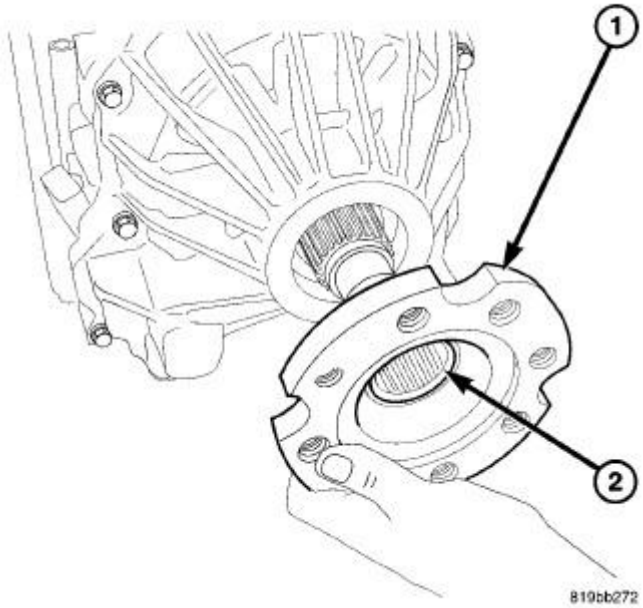

Fig. 32: Output Shaft Flange & O-Ring Seal
Courtesy of CHRYSLER GROUP, LLC

1 - OUTPUT SHAFT FLANGE
2 - O-RING SEAL

7. Remove the output flange (1) and o-ring seal (2).
8. Using a pry tool, remove the output shaft seal.

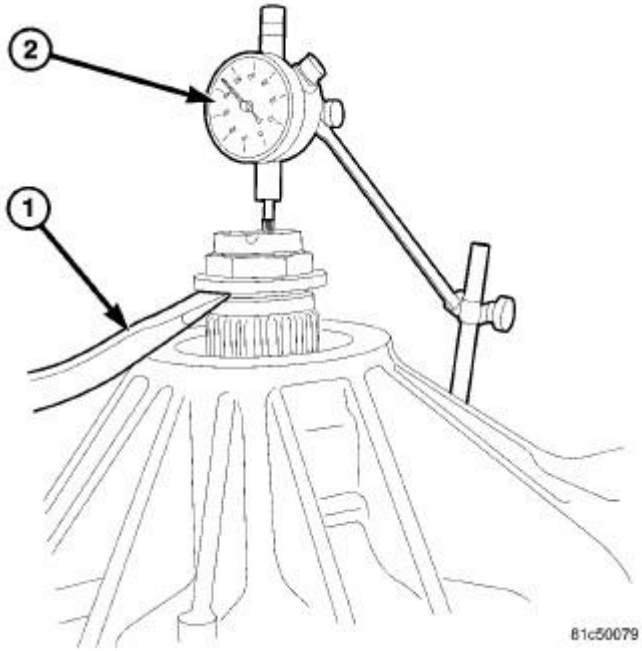

Fig. 33: Measuring 2WD Output Shaft End-Play
Courtesy of CHRYSLER GROUP, LLC

1 - PRY TOOL
2 - C-3339A DIAL INDICATOR

9. Install a **NEW** nut on the output shaft and install the Dial Indicator (special tool #C-3339A, Set, Dial Indicator) (2).
10. With the transmission in a vertical position, and using a pry tool (1) on the output shaft nut measure and record the output shaft end-play. The output shaft end-play clearance is 0.50-0.90 mm (0.019-0.035 in.)

NOTE: **The 4WD extension housing has two output shaft end-play shims fore and aft of the output shaft bearing, therefor the output shaft end-play checking procedure must be performed twice. The external shim and snap ring is in place to prevent excess forward pressure on the NO. 9 thrust bearing while the 4WD transfer case is bolted to the extension housing.**

4WD OUTPUT SHAFT END PLAY CHECK

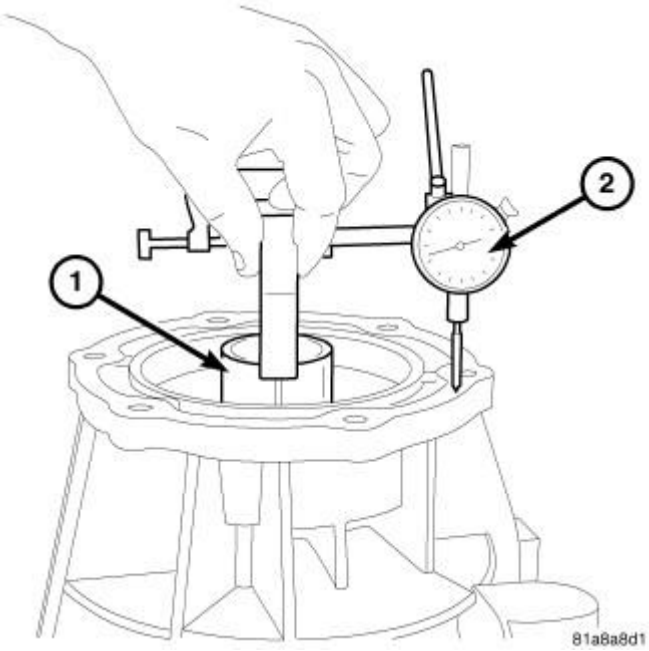

Fig. 34: Measuring 4WD Output Shaft End Play
Courtesy of CHRYSLER GROUP, LLC

1 - OUTPUT SHAFT END PLAY TOOL 8266-20
2 - DIAL INDICATOR SET C-3339A

1. **With the 4WD extension housing installed onto the transmission case,** install Adapter (special tool #8266-20, Spline Tool, AS68RC Output) (1) and the handle from End-Play Tool Set (special tool #8266B, End Play Socket Set) and Dial Indicator (special tool #C-3339A, Set, Dial Indicator) (2).
2. With the transmission in a vertical position, measure and record the output shaft end-play. The output shaft end-play clearance is 0.00 - 0.24 mm (0.000-0.009 in.)

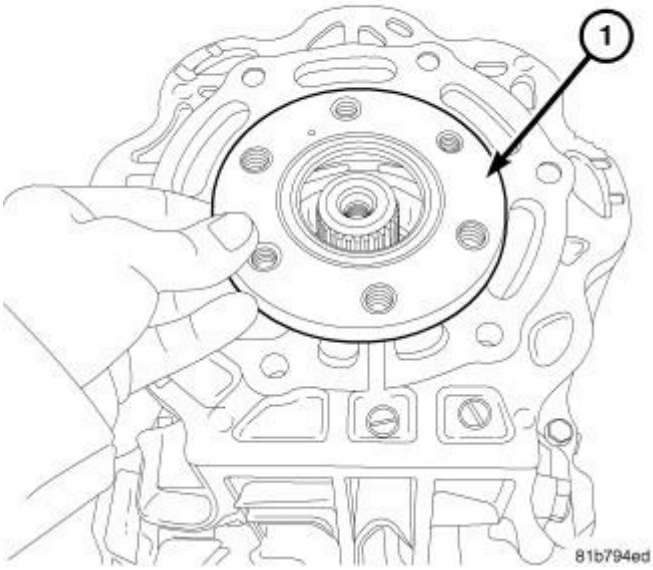

Fig. 35: 4WD Output Shaft Seal Retainer
Courtesy of CHRYSLER GROUP, LLC

1 - 4WD OUTPUT SHAFT SEAL RETAINER

3. Using a pry tool, remove the output shaft seal.
4. Remove seal retainer (1).

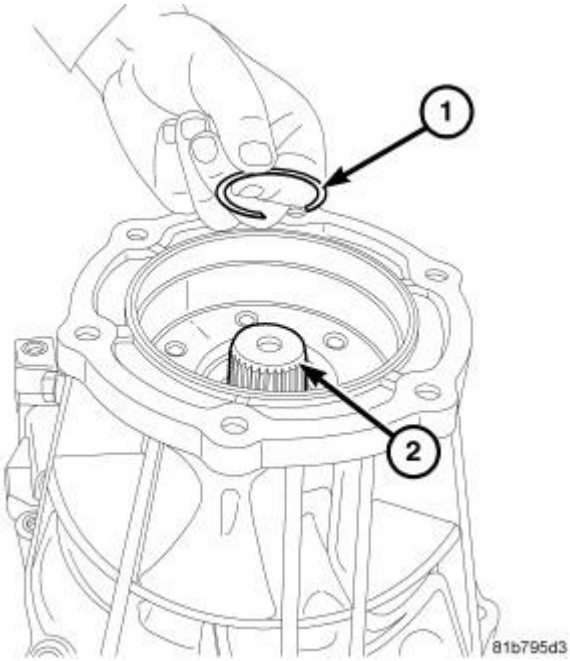

Fig. 36: 4WD Output Shaft & Snap Ring
Courtesy of CHRYSLER GROUP, LLC

1 - 4WD OUTPUT SHAFT SNAP RING
2 - 4WD OUTPUT SHAFT

5. Remove the external snap ring (1) and selectable output shaft end-play washer.
6. Using Adapter (special tool #8266-20, Spline Tool, AS68RC Output) (1) and the handle from End-Play Tool Set (special tool #8266B, End Play Socket Set) and Dial Indicator (special tool #C-3339A, Set, Dial Indicator) (2), measure and record the output shaft end-play. The output shaft end-play clearance is 0.50-0.90 mm (0.019-0.035 in.)

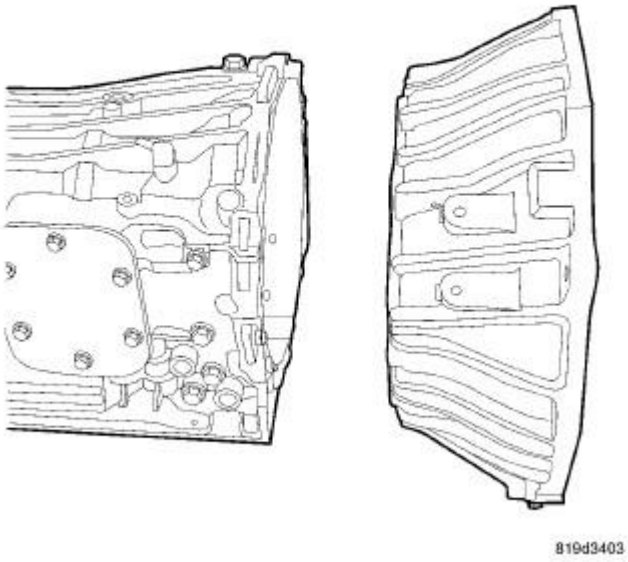

Fig. 37: Torque Converter Housing
Courtesy of CHRYSLER GROUP, LLC

NOTE: Support the bottom of the transmission case before removing the torque converter housing.

11. Remove the bolts securing the torque converter housing to the transmission case and remove the housing.

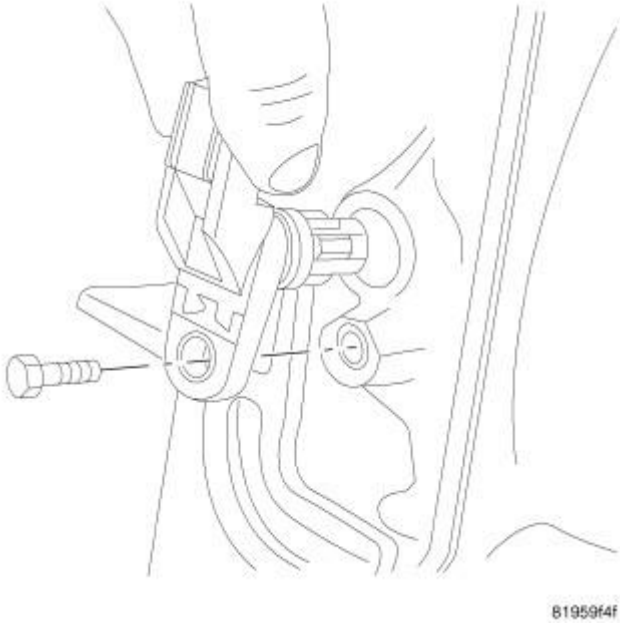

Fig. 38: Input Speed Sensor
Courtesy of CHRYSLER GROUP, LLC

12. Remove the input speed sensor.

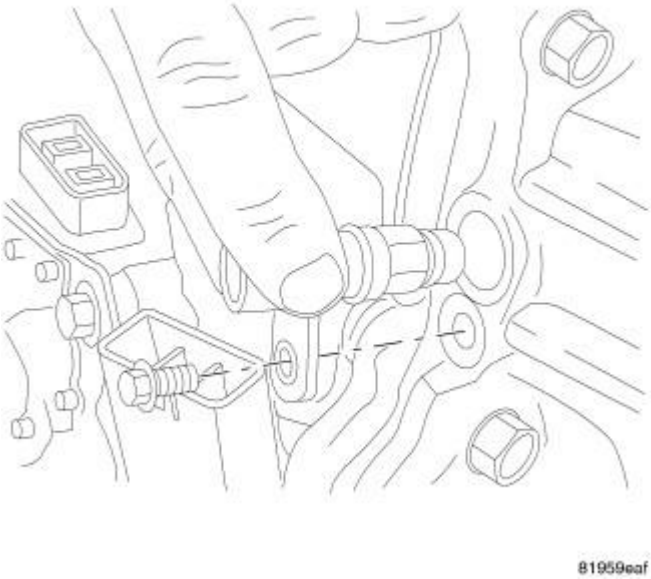

Fig. 39: Output Speed Sensor
Courtesy of CHRYSLER GROUP, LLC

13. Remove the output speed sensor

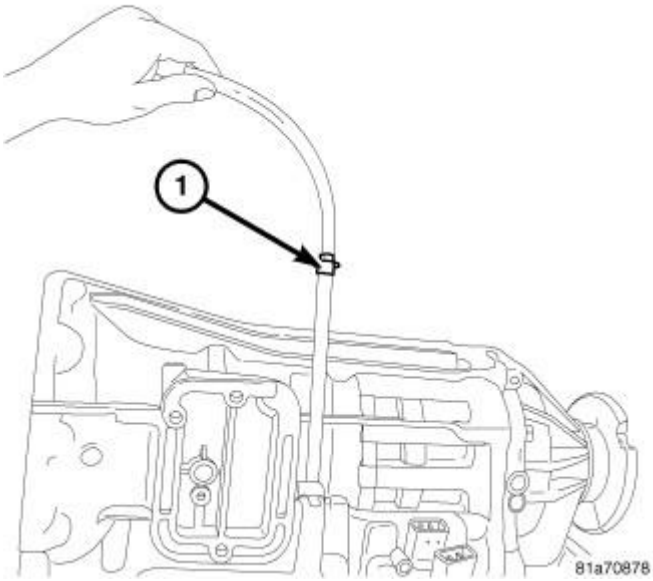

Fig. 40: Fill Tube & O-Ring
Courtesy of CHRYSLER GROUP, LLC

1 - FILL TUBE O-RING

14. Remove the bolt (if equipped) securing the transmission fill tube to the transmission case and remove the fill tube.
15. Remove the manual shift lever from the transmission.
16. Remove the transmission range sensor. Refer to **SENSOR, TRANSMISSION RANGE, REMOVAL**.
17. Using a pry tool remove the manual shift lever seals (one each side of the transmission).

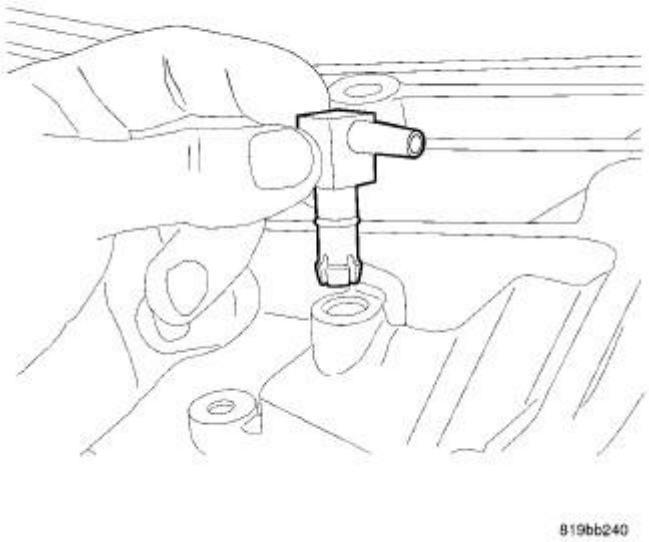

Fig. 41: Breather Fitting
Courtesy of CHRYSLER GROUP, LLC

18. Remove the breather hose and fitting, if necessary.

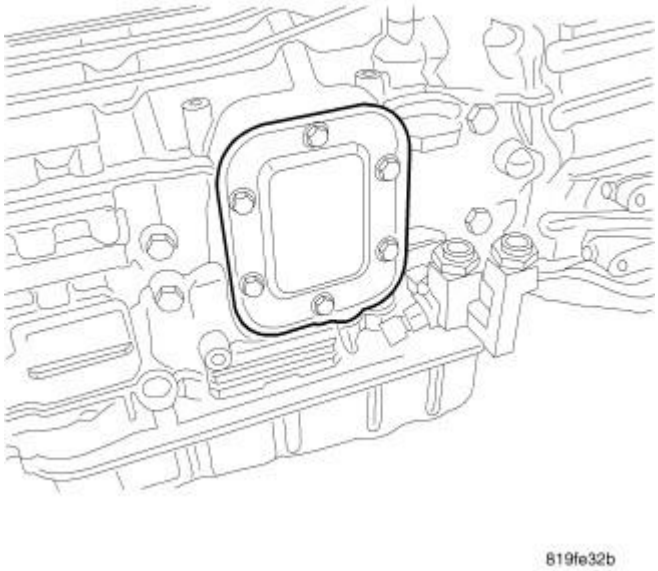

Fig. 42: PTO Dust Cover
Courtesy of CHRYSLER GROUP, LLC

19. Remove the PTO dust cover bolts and dust cover.

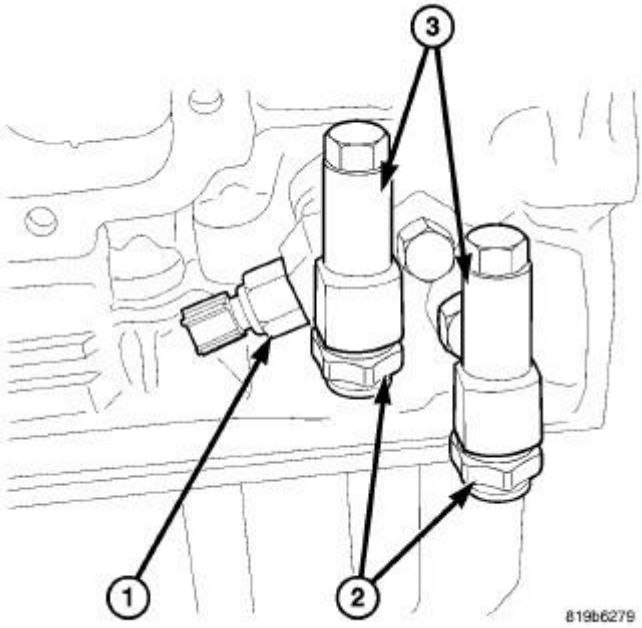

Fig. 43: Temperature Sensor & Line Fittings
Courtesy of CHRYSLER GROUP, LLC

1 - TEMPERATURE SENSOR
2 - JIFFY TITE FITTINGS
3 - COOLER LINE FITTINGS

20. Remove the temperature sensor (1) from the ATF output cooler line fitting.
21. Remove the Jiffy Tite fittings (2) from both cooler line fittings.
22. Loosen both cooler line fittings (3).
23. Remove both cooler line fittings (3).

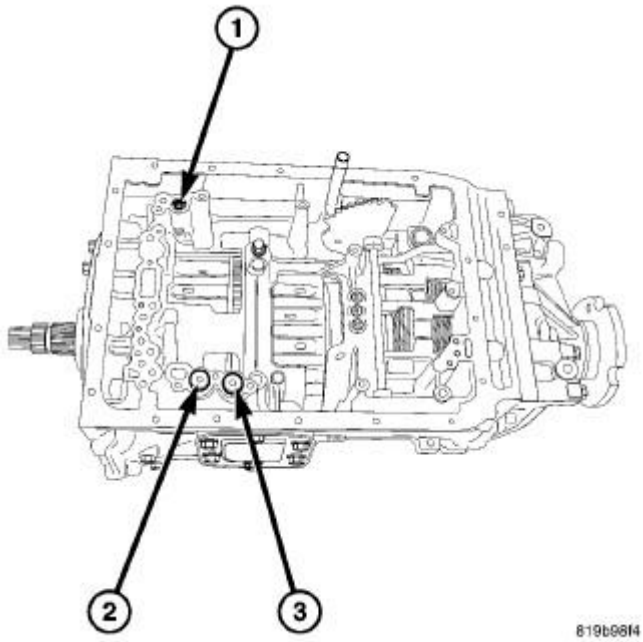

Fig. 44: Accumulator Valves
Courtesy of CHRYSLER GROUP, LLC

24. Remove the valve body. Refer to **VALVE BODY, REMOVAL**.
25. Remove the three accumulator valves (1), (2), (3) and then the accumulator springs.

	ACCUMULATORS		SPRING COLOR
	DIAMETER	**HEIGHT**	
ACCUMULATOR NO. ONE (1)	16 mm (0.63 in.)	40.18 mm (1.58 in.)	PURPLE
ACCUMULATOR NO. TWO (2)	20 mm (0.79 in.)	38.18 mm (1.50 in.)	PINK
ACCUMULATOR NO. THREE (3)	20 mm (0.79 in.)	39.18 mm (1.54 in.)	BLUE

26. Air check the transmission. Refer to **AIR CHECKING TRANSMISSION CLUTCH OPERATION**.

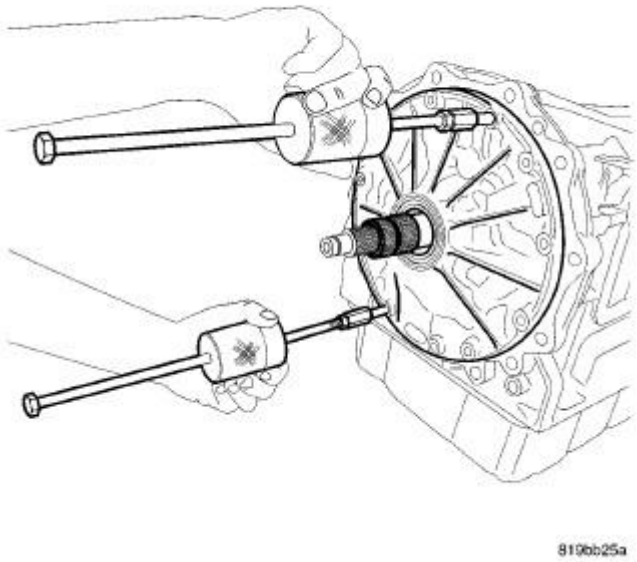

Fig. 45: Removing Oil Pump
Courtesy of CHRYSLER GROUP, LLC

NOTE: Using a marker or paint pen, tag the orientation of the oil pump to the transmission case.

27. Remove the bolts securing the oil pump to the transmission case and use tool (special tool #C-3752, Slide Hammers) and adapters (special tool #9981, Adapters, Puller) to remove the oil pump.

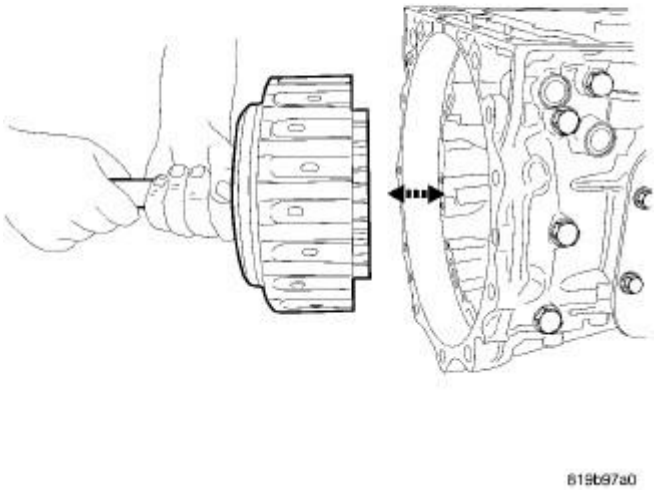

Fig. 46: Input Shaft With K1 & K2 Clutch Assemblies
Courtesy of CHRYSLER GROUP, LLC

28. Remove the input shaft assembly with the K1 and K2 clutch assemblies attached.

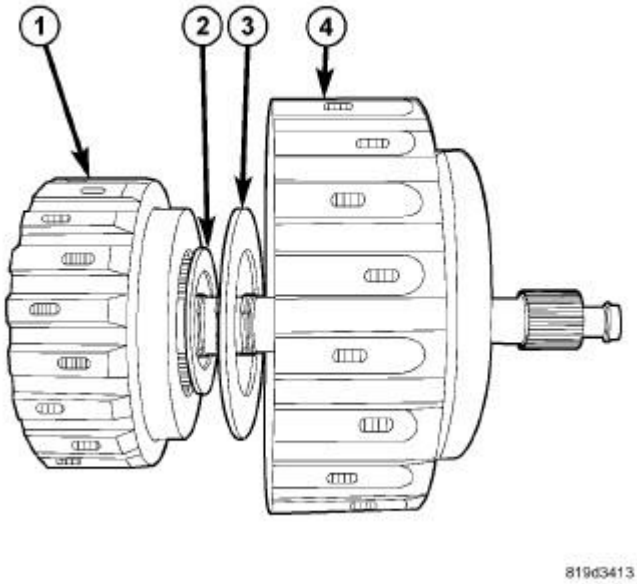

Fig. 47: K1 & K2 Clutches
Courtesy of CHRYSLER GROUP, LLC

1 - K1 CLUTCH ASSEMBLIES 2 - NO. 1 BEARING RACE (SELECT)
3 - THRUST WASHER
4 - K2 CLUTCH ASSEMBLIES

NOTE: **The input shaft end-play clearance is adjusted by means of a selectable thrust bearing race located between the K1 and the K2 clutch pack retainers.**

29. Remove the K2 clutch assembly (4) and the selectable input shaft end-play thrust bearing number one (2) and thrust washer (3) from the K1 clutch / input shaft assembly (1).

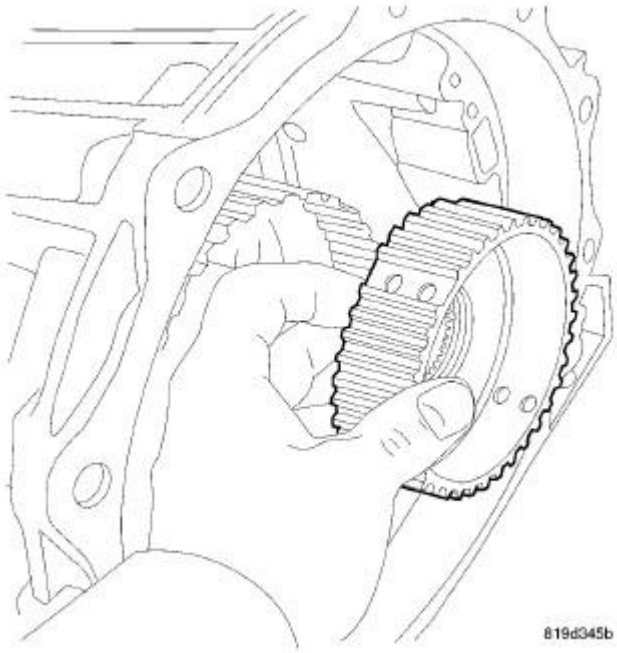

Fig. 48: K1 Clutch Hub
Courtesy of CHRYSLER GROUP, LLC

30. Remove the K1 clutch hub.

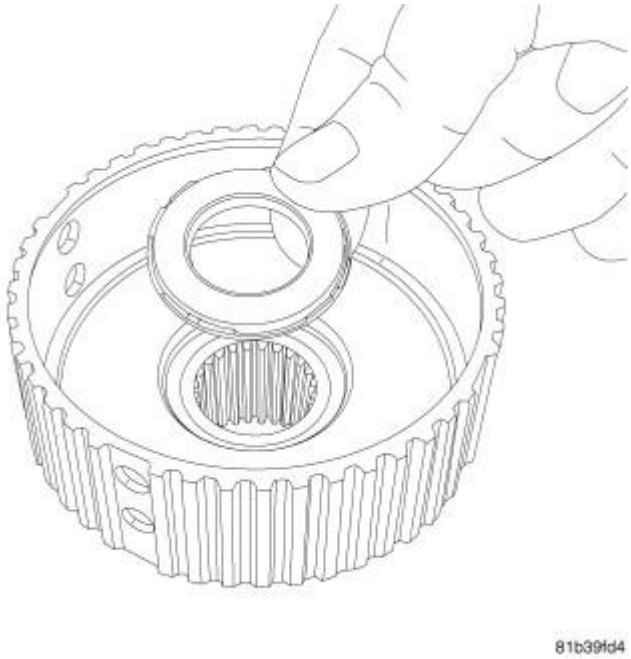

Fig. 49: K1 Thrust Bearing No 2
Courtesy of CHRYSLER GROUP, LLC

1 - K1 THRUST BEARING No. 2

31. Remove the K1 thrust bearing number 2.

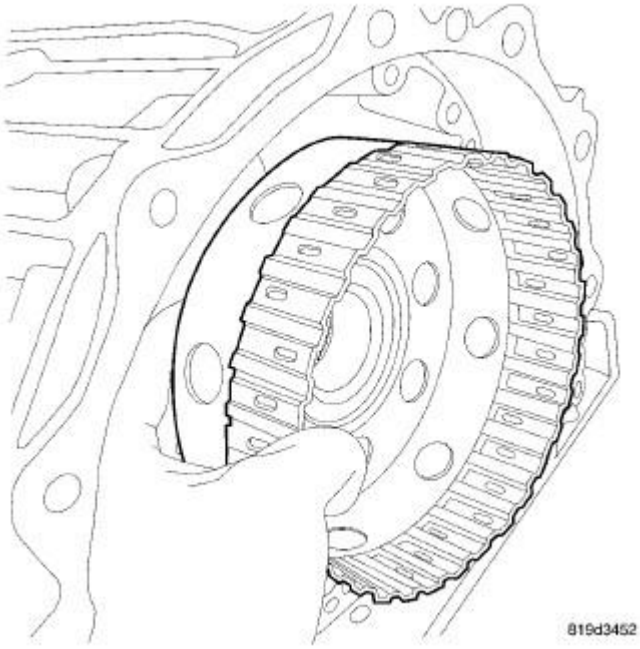

Fig. 50: K2 Clutch Hub
Courtesy of CHRYSLER GROUP, LLC

32. Remove the K2 clutch hub.

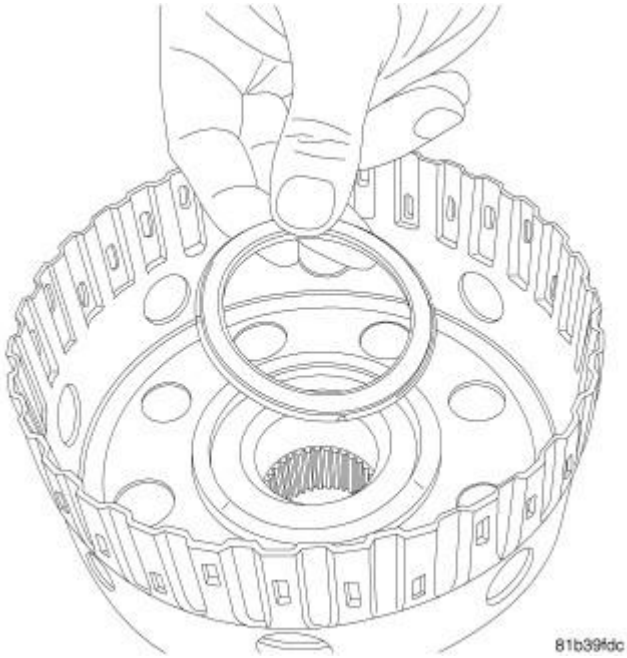

Fig. 51: K2 Hub Thrust Bearing No. 3
Courtesy of CHRYSLER GROUP, LLC

1 - K2 THRUST BEARING No. 3

33. Remove the K2 thrust bearing number three.

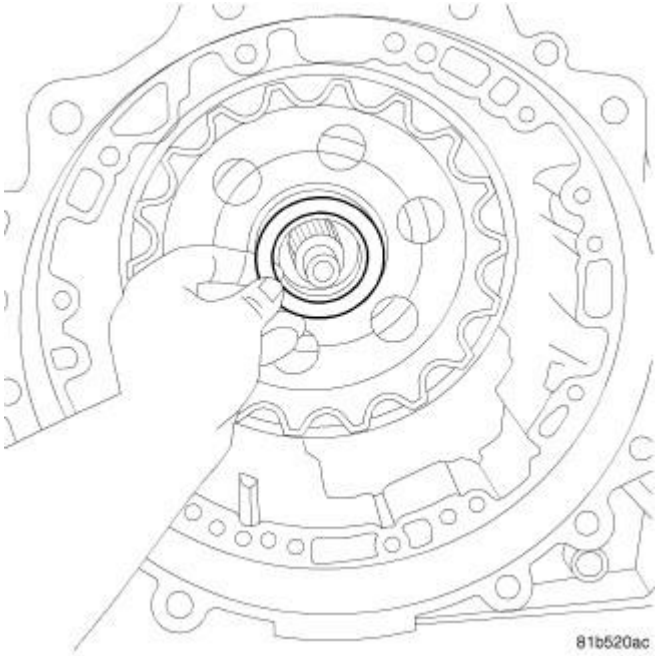

Fig. 52: Removing Front Sun/PTO Front Thrust Bearing No. 4

Courtesy of CHRYSLER GROUP, LLC

34. Remove the front sun / PTO front thrust bearing number four.

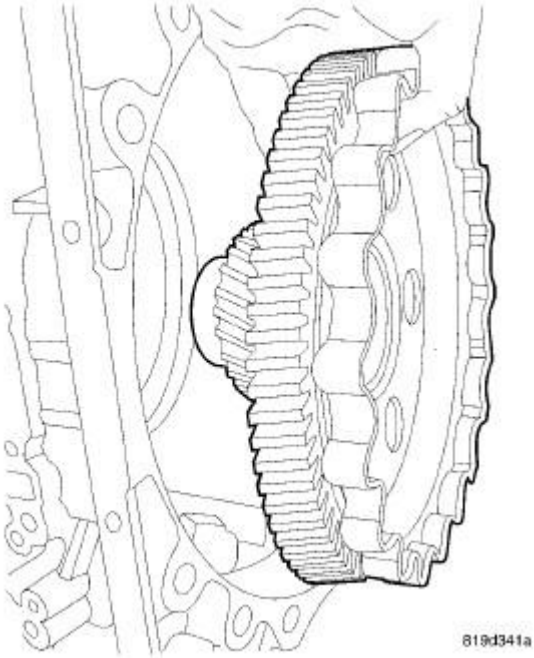

Fig. 53: Front Sun / PTO Drive Gear
Courtesy of CHRYSLER GROUP, LLC

35. Remove the front sun / PTO drive gear.

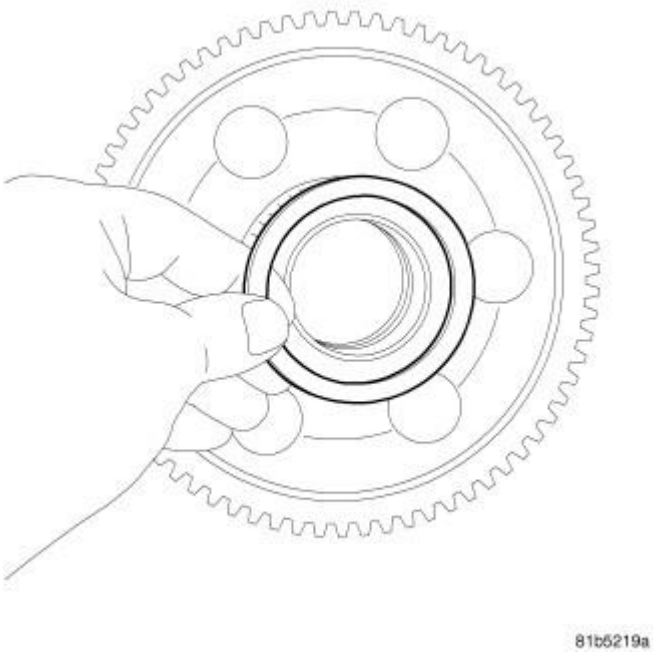

Fig. 54: Front Sun / PTO Rear Thrust Bearing No. 5

Courtesy of CHRYSLER GROUP, LLC

36. Remove the front sun/PTO rear thrust bearing number five.

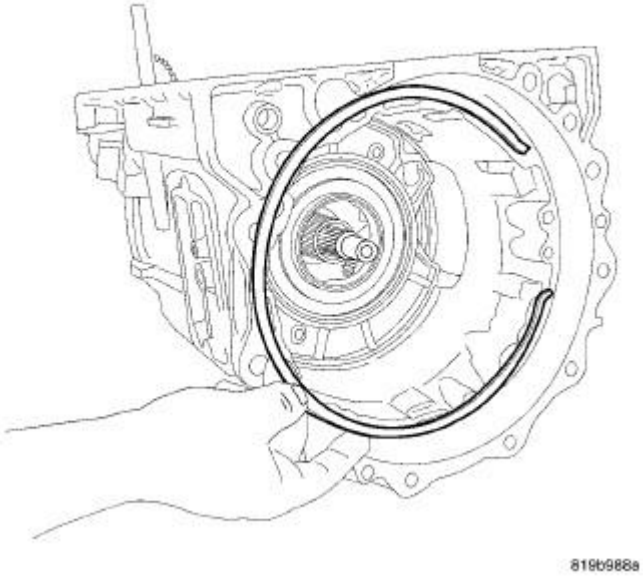

Fig. 55: Carrier Snap Ring
Courtesy of CHRYSLER GROUP, LLC

NOTE: The beveled edge of the snap ring is facing outward.

37. Remove the snap ring from the transmission case.

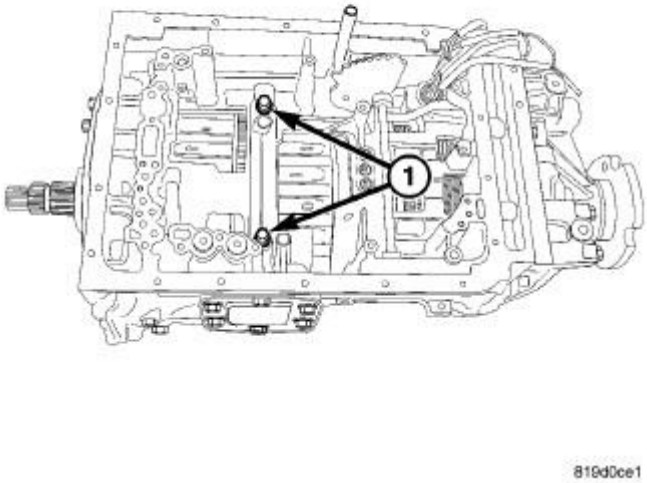

Fig. 56: P1 Carrier Bolts
Courtesy of CHRYSLER GROUP, LLC

1 - BOLTS

38. Remove the two bolts (1) securing the P1 carrier to the transmission case.

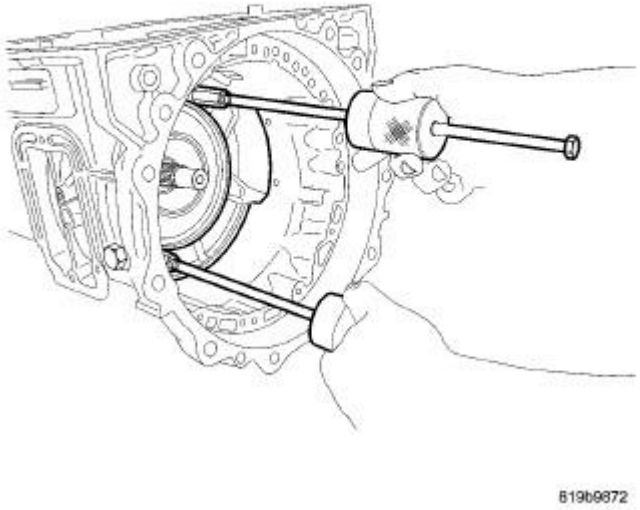

Fig. 57: Removing P1 Carrier

Courtesy of CHRYSLER GROUP, LLC

39. Remove the P1 carrier using tool (special tool #C-3752, Slide Hammers) and adapters (special tool #9980, Adapters, Puller).

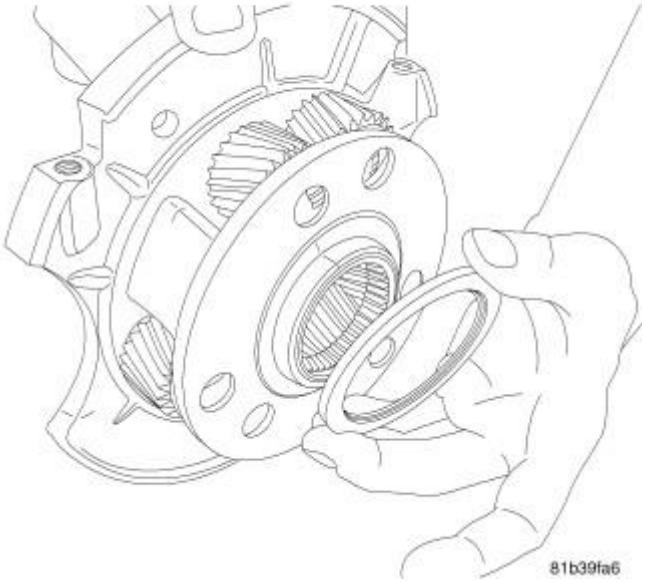

Fig. 58: P1 Thrust Bearing No. 6
Courtesy of CHRYSLER GROUP, LLC

1 - THRUST BEARING NO. 6

40. Remove the P1 thrust bearing number six.

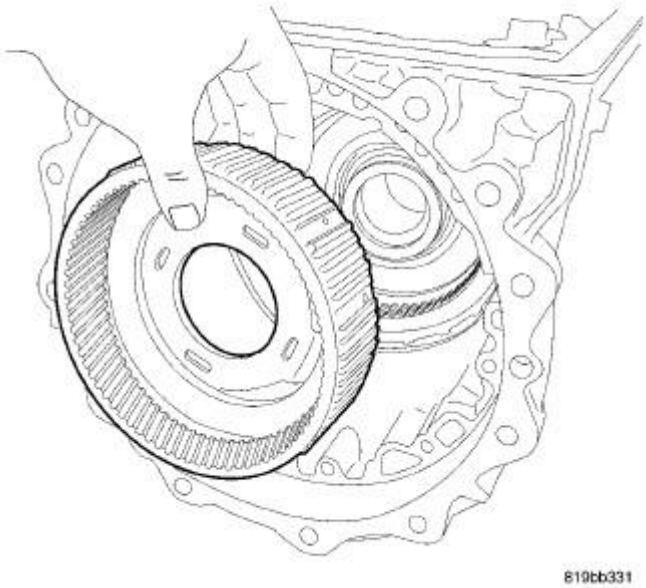

Fig. 59: P1 Annulus Gear
Courtesy of CHRYSLER GROUP, LLC

41. Remove the P1 annulus gear and thrust bearing.

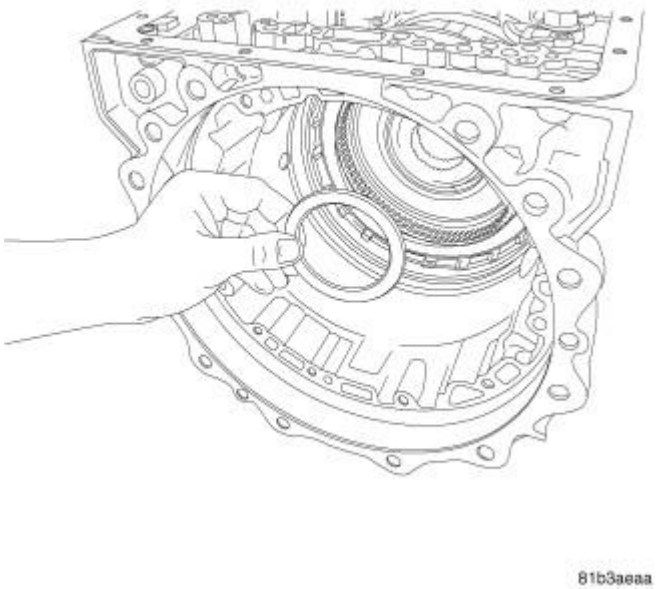

Fig. 60: P1 Annulus Thrust Washer No. 7
Courtesy of CHRYSLER GROUP, LLC

1 - P1 ANNULUS THRUST BEARING NO. 7

42. Remove the P1 annulus thrust bearing number seven.

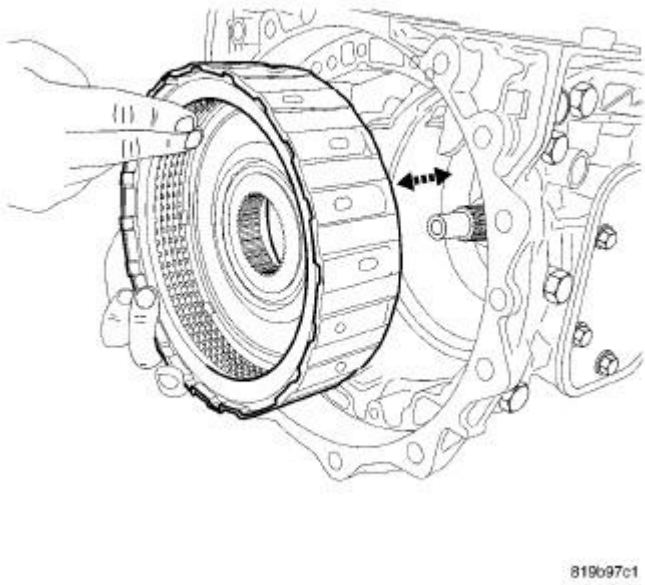

Fig. 61: K3 Clutch
Courtesy of CHRYSLER GROUP, LLC

43. Remove the K3 clutch assembly.

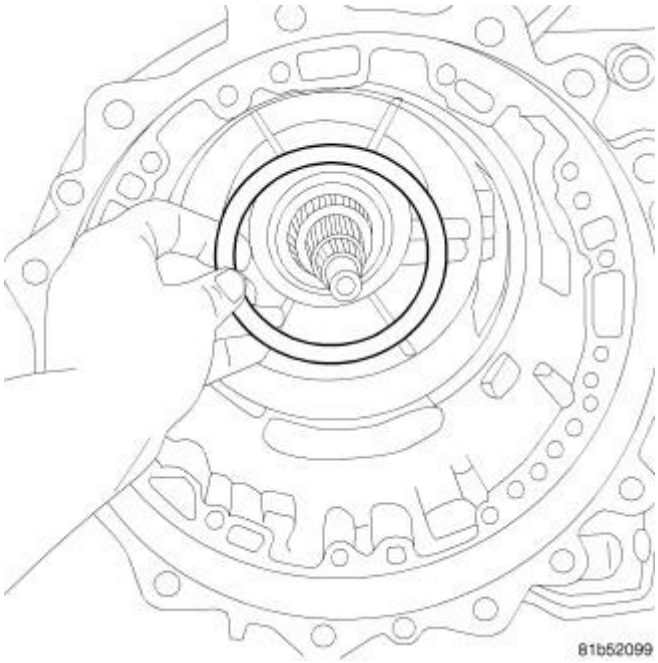

Fig. 62: K3 Hub Rear Thrust Bearing No. 8
Courtesy of CHRYSLER GROUP, LLC

44. Remove the K3 hub rear thrust bearing number eight.

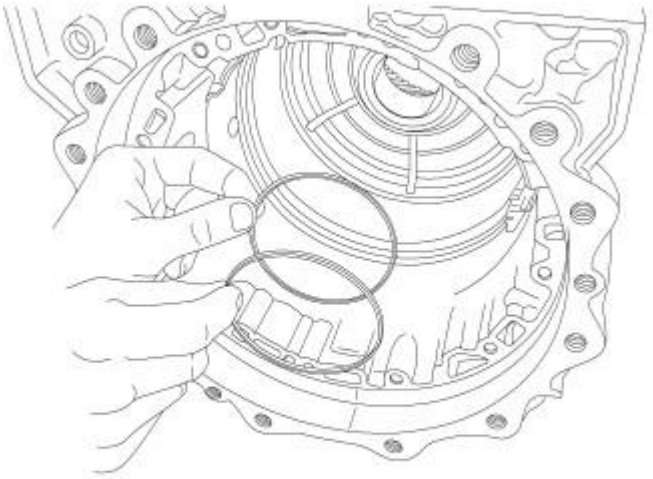

81b39fbe

Fig. 63: K3 Support Seal Rings
Courtesy of CHRYSLER GROUP, LLC

1 - K3 SUPPORT SEAL RINGS

45. Remove the K3 support seal rings if necessary.

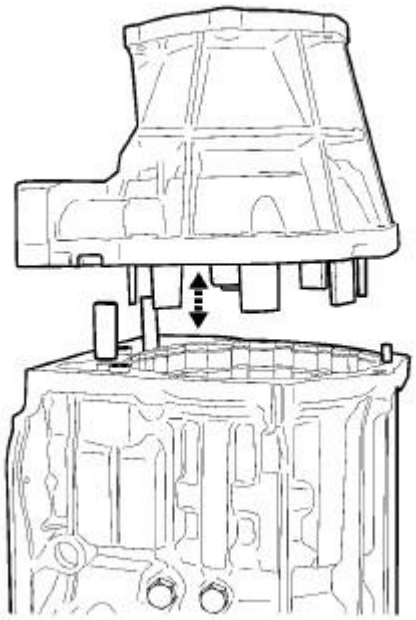

819b97cb

Fig. 64: Extension Housing
Courtesy of CHRYSLER GROUP, LLC

46. Remove the bolts securing the 2WD or the 4WD extension housing to the transmission case and remove the housing.

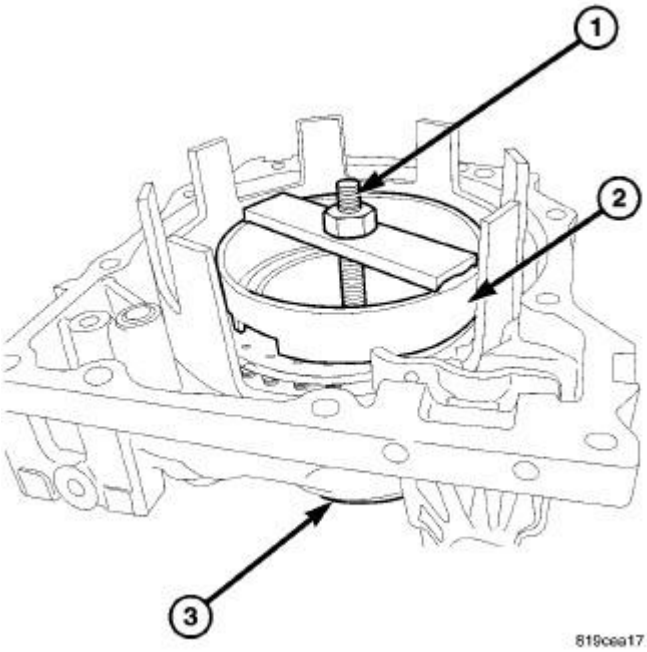

Fig. 65: Compressing B2 Piston With Special Tools
Courtesy of CHRYSLER GROUP, LLC

1 - BOLT 8622
2 - COMPRESSOR PLATE MB991790
3 - WASHER 9982-2

47. Install tools (special tool #8622, Screw, Clutch Spring Compressor) (1), (special tool #9982-2, Plate, Back Up) (3), (special tool #MB991790, Compressor, Spring) (2) onto the B2 clutch piston assembly in the extension housing and compress the piston.

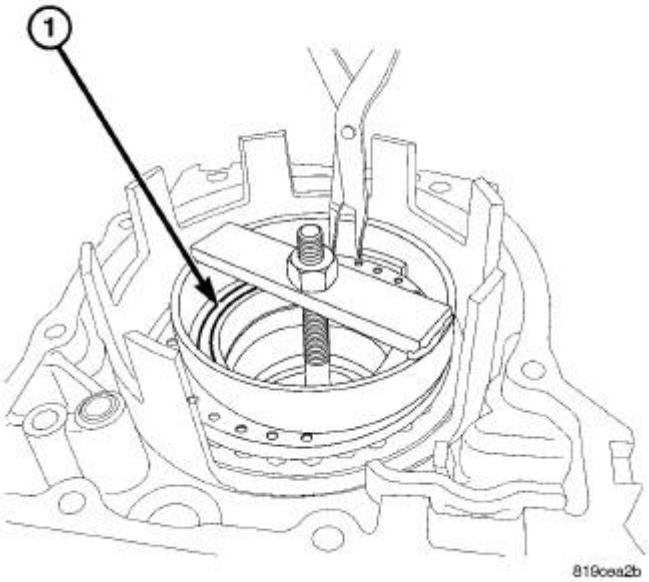

Fig. 66: B2 Piston Snap Ring
Courtesy of CHRYSLER GROUP, LLC

1 - SNAP RING

48. Remove the B2 piston snap ring (1).

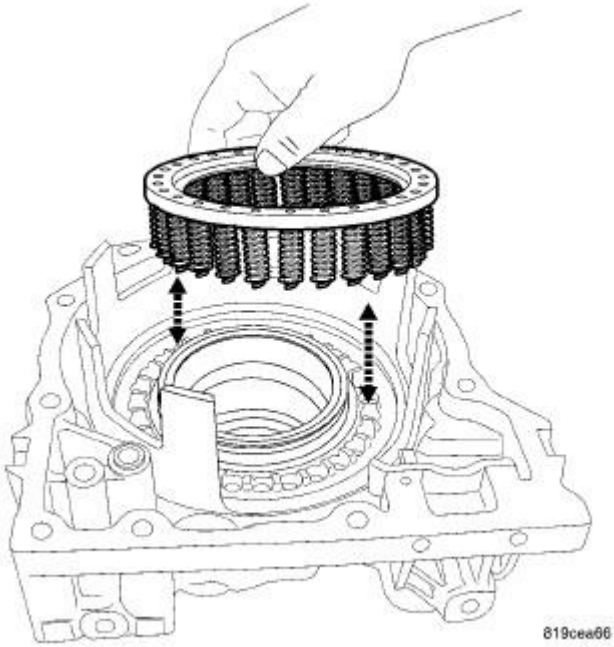

Fig. 67: B2 Piston Return Spring

Courtesy of CHRYSLER GROUP, LLC

49. Remove the B2 piston return spring assembly.

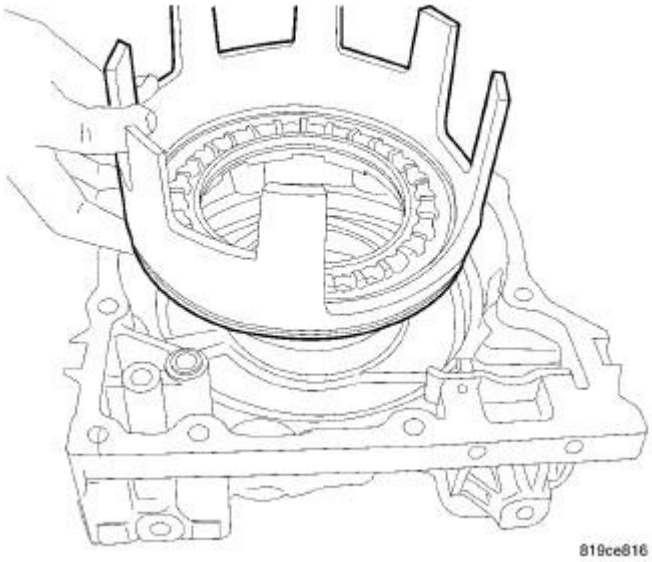

Fig. 68: B2 Brake Piston
Courtesy of CHRYSLER GROUP, LLC

50. Remove the B2 piston.

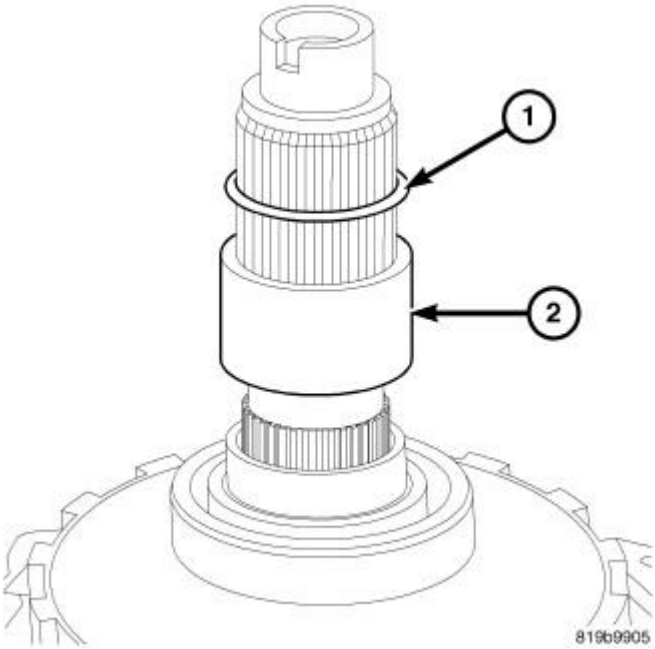

Fig. 69: Output Shaft End Play Selectable Washer & Spacer

Courtesy of CHRYSLER GROUP, LLC

1 - OUTPUT SHAFT END PLAY SELECTABLE WASHER
2 - SPACER

51. Remove the output shaft end play selectable washer (1) and the spacer (2)

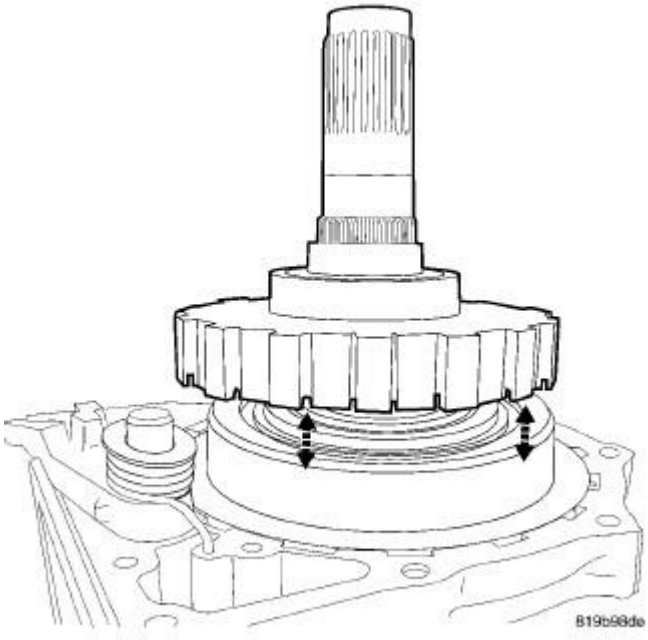

Fig. 70: Output Shaft Lock Gear
Courtesy of CHRYSLER GROUP, LLC

NOTE: **On 4WD models remove the snap ring from the output shaft in order to remove the output shaft park lock gear from the 4WD extension housing.**

52. Remove the output shaft and the park lock gear.

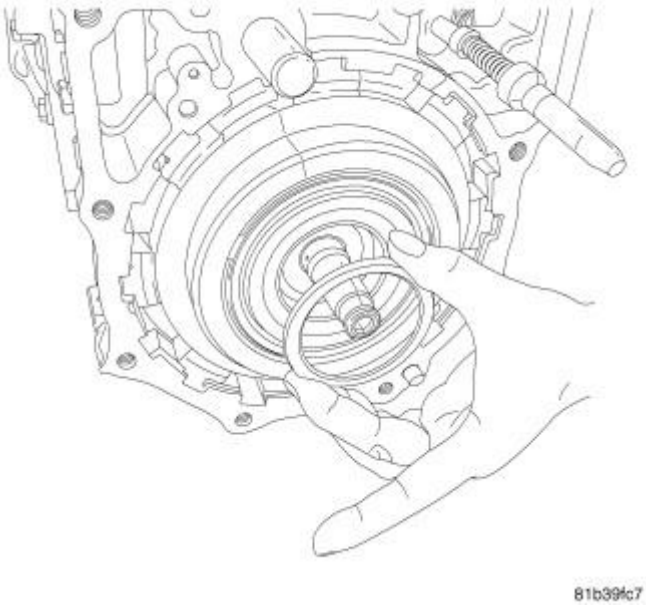

Fig. 71: F1 Clutch Thrust Bearing No. 14
Courtesy of CHRYSLER GROUP, LLC

1 - F1 CLUTCH THRUST BEARING NO. 14

53. Remove the F1 clutch thrust bearing number fourteen.

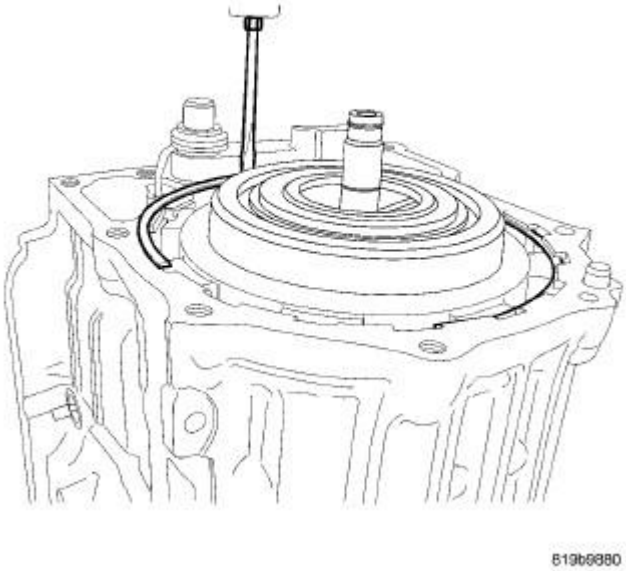

Fig. 72: One Way Clutch Snap Ring
Courtesy of CHRYSLER GROUP, LLC

54. Remove the F1 one way clutch rear snap ring.

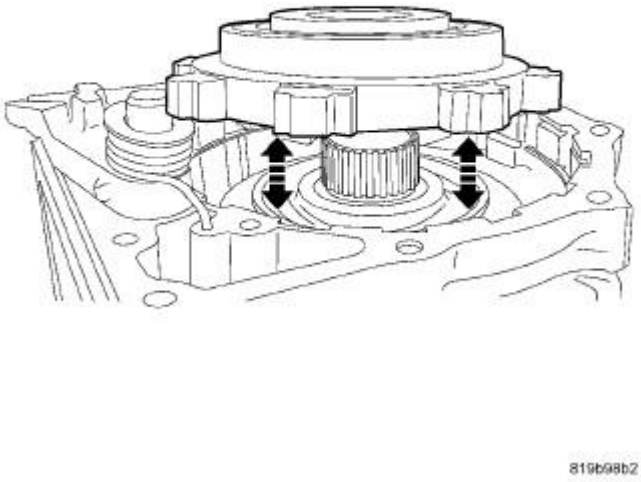

Fig. 73: F1 One Way Clutch
Courtesy of CHRYSLER GROUP, LLC

55. Scribe the orientation of the F1 one way clutch to the transmission case.
56. Remove the F1 one way clutch and front snap ring.

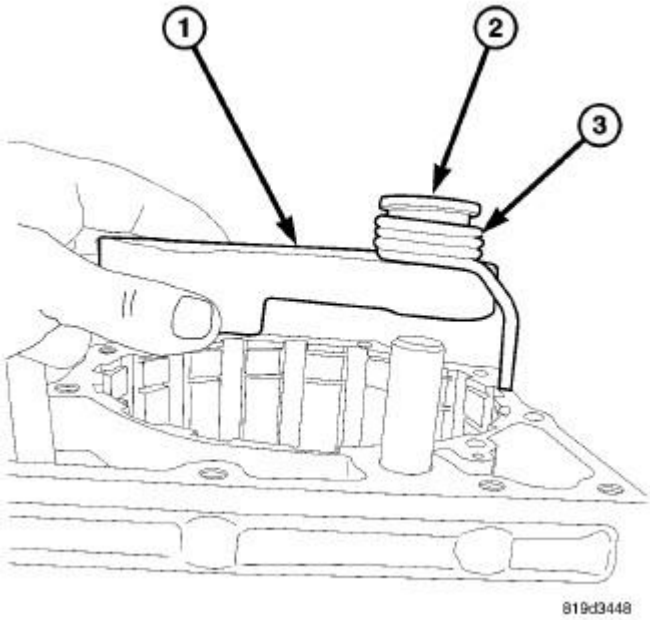

Fig. 74: Park Pawl Assembly
Courtesy of CHRYSLER GROUP, LLC

1 - PARK PAWL
2 - PARK PAWL WASHER
3 - PARK PAWL SPRING

57. Remove the park pawl assembly from the transmission case.

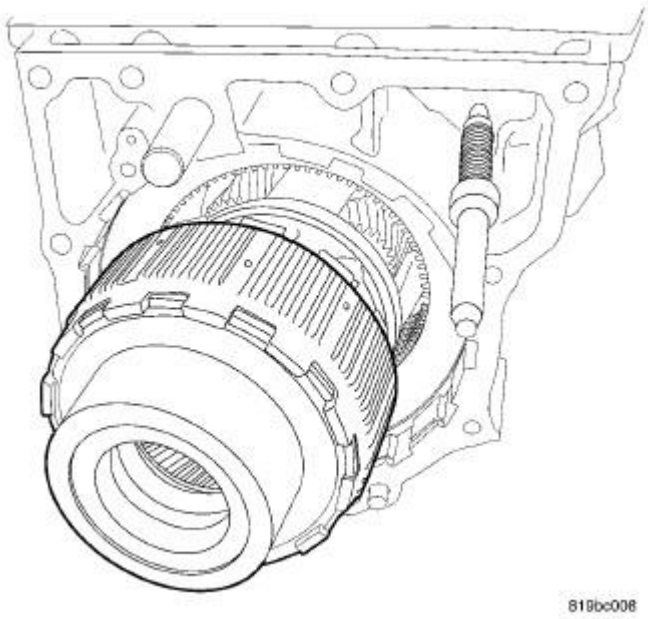

Fig. 75: P3 Annulus Gear
Courtesy of CHRYSLER GROUP, LLC

58. Remove the P3 annulus gear.

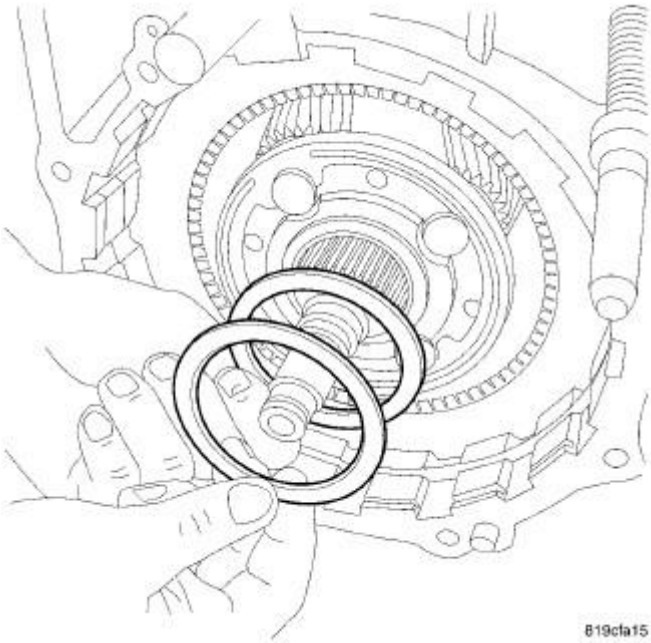

Fig. 76: Thrust Bearing & Washer No. 13
Courtesy of CHRYSLER GROUP, LLC

59. Remove the thrust bearing and washer number thirteen.

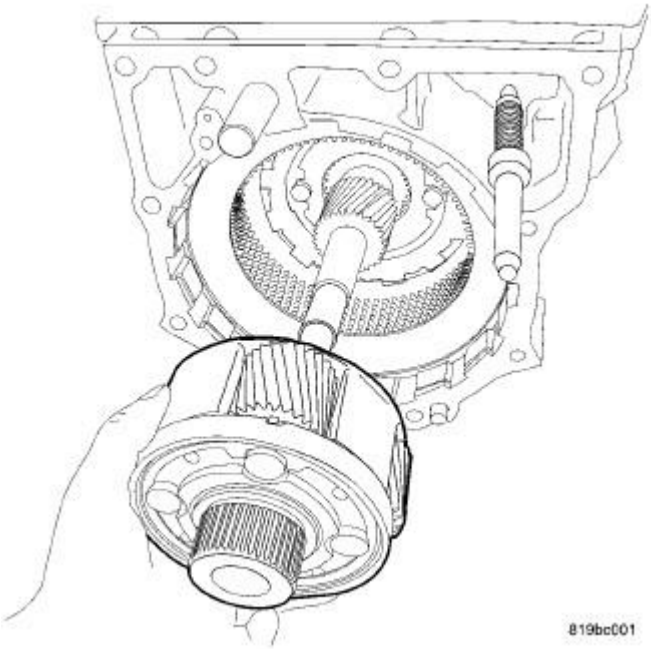

Fig. 77: P3 Planetary Gear Carrier
Courtesy of CHRYSLER GROUP, LLC

NOTE: **Be certain that the P3 carrier thrust bearing race is in position while removing the P3 carrier.**

60. Remove the P3 planetary gear carrier.

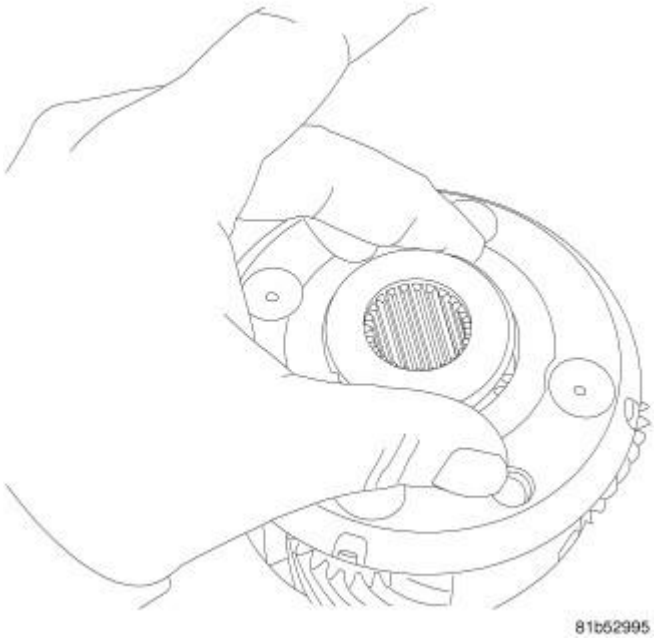

Fig. 78: P3 Planetary Front Thrust Bearing No. 12
Courtesy of CHRYSLER GROUP, LLC

61. Remove the P3 planetary gear carrier front thrust bearing number twelve.

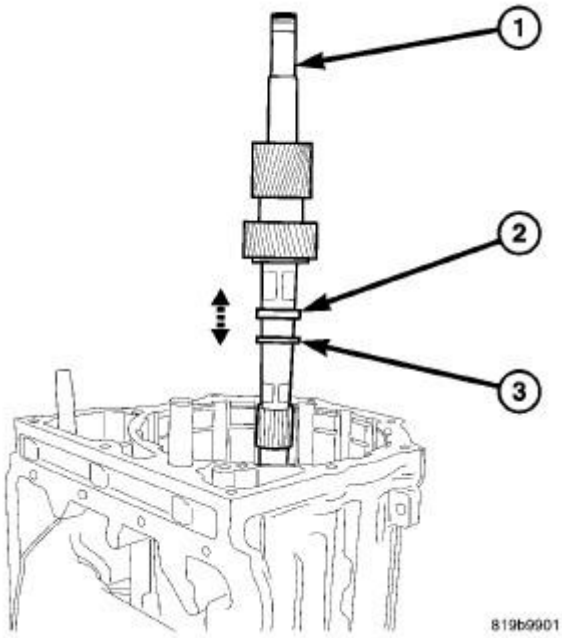

Fig. 79: Sun Gear Shaft, Thrust Bearing No. 11 & Thrust Bearing Race/Washer
Courtesy of CHRYSLER GROUP, LLC

1 - SUN GEAR SHAFT
2 - THRUST BEARING NO. 11
3 - THRUST BEARING RACE / WASHER

62. Remove the sun gear shaft (1) thrust bearing number eleven (2) and thrust bearing race / washer (3).

NOTE: **The selectable clutch pack reaction plates are identified by an alpha numeric numeral stamped into the face of the plate.**

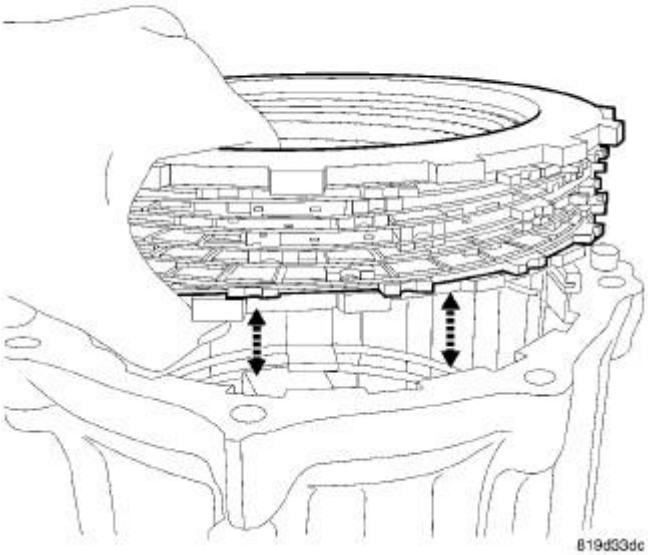

Fig. 80: B2 Brake Clutches
Courtesy of CHRYSLER GROUP, LLC

63. Remove the snap ring and B2 brake clutch assembly.

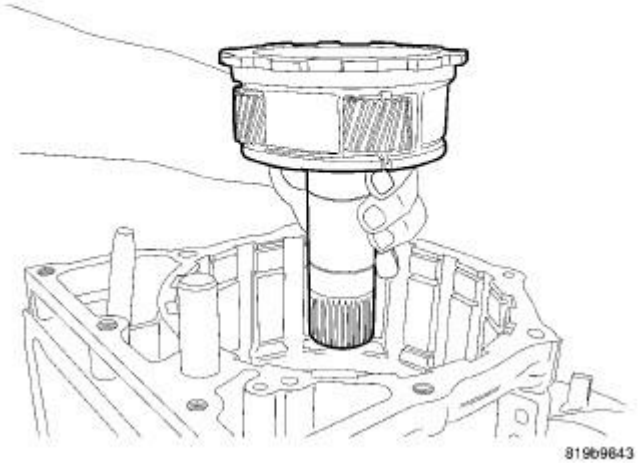

Fig. 81: P2 Planetary Gear Carrier
Courtesy of CHRYSLER GROUP, LLC

64. Remove the P2 planetary gear carrier.

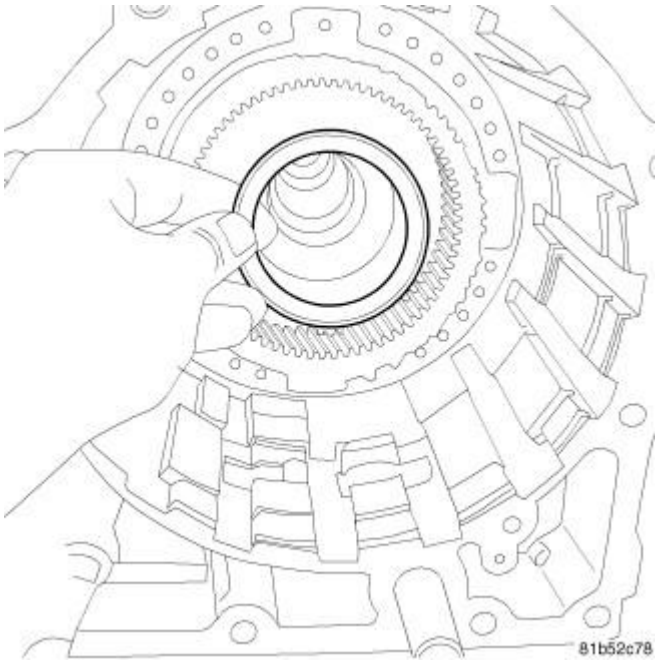

Fig. 82: P2 Planetary Gear Thrust Bearing No. 10
Courtesy of CHRYSLER GROUP, LLC

65. Remove the P2 planetary gear thrust bearing number ten.

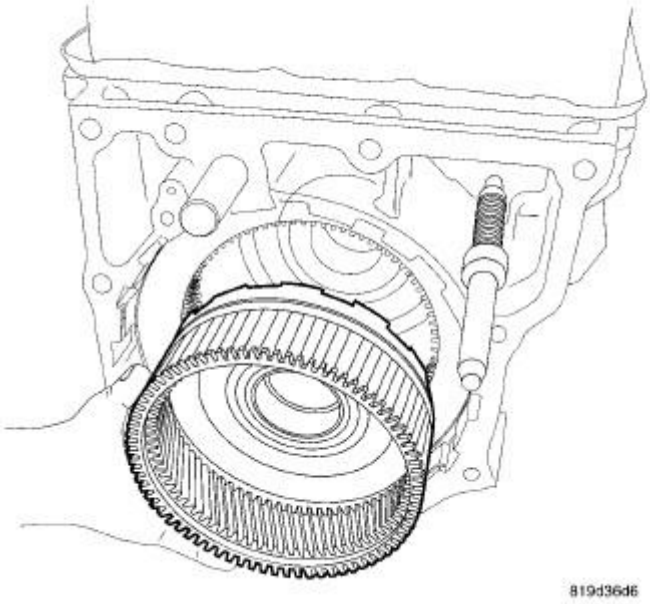

Fig. 83: P2 Planetary Annulus Gear
Courtesy of CHRYSLER GROUP, LLC

66. Remove the P2 planetary annulus gear.

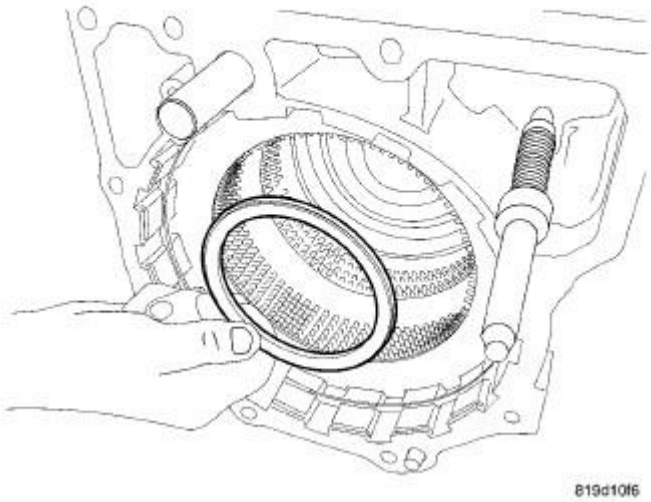

Fig. 84: P2 Planetary Annulus Gear Thrust Bearing No. 9
Courtesy of CHRYSLER GROUP, LLC

67. Remove the P2 planetary annulus gear thrust bearing number nine.

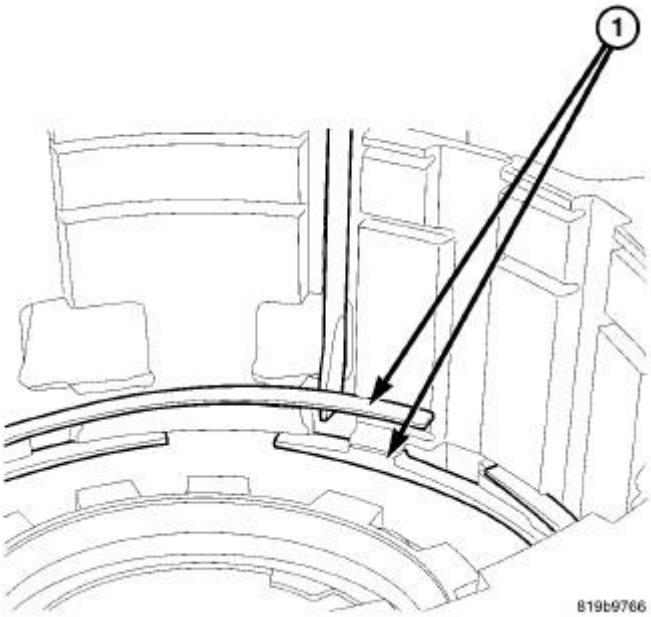

Fig. 85: Two Snap Rings

Courtesy of CHRYSLER GROUP, LLC

1 - SNAP RINGS

68. Remove the two snap rings (1).

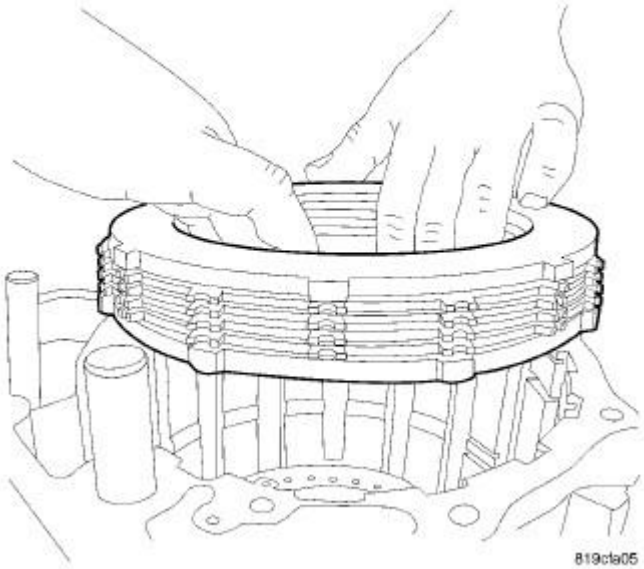

Fig. 86: B1 Brake Clutch Assembly
Courtesy of CHRYSLER GROUP, LLC

NOTE: **The selectable clutch pack reaction plates are identified by an alpha numeric numeral stamped onto the face of the plate.**

69. Remove the B1 brake clutch assembly.

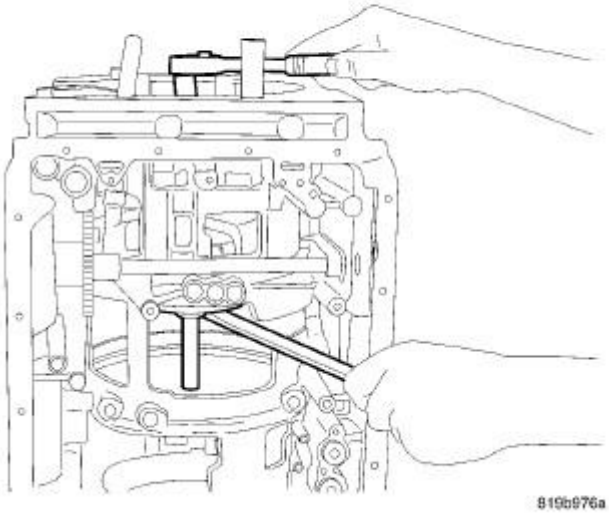

Fig. 87: Compressing B1 Brake Piston
Courtesy of CHRYSLER GROUP, LLC

70. Install tools (special tool #8622, Screw, Clutch Spring Compressor), (special tool #9982, Compressor, Spring) and MB 991790, onto the B1 brake piston assembly and compress the piston.

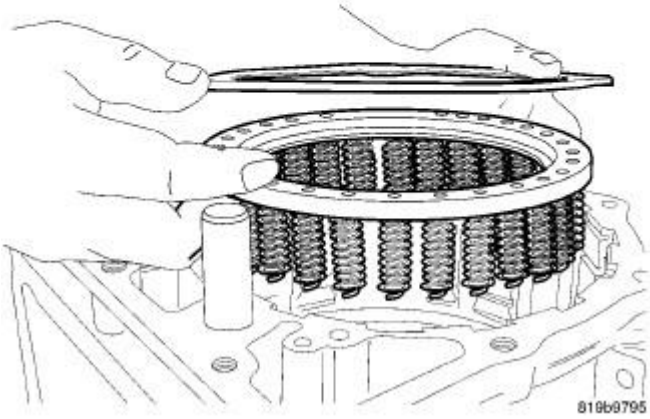

Fig. 88: B1 Brake Piston Snap Ring & Return Spring Assembly
Courtesy of CHRYSLER GROUP, LLC

71. Remove the B1 brake piston snap ring and the B1 piston return spring assembly.

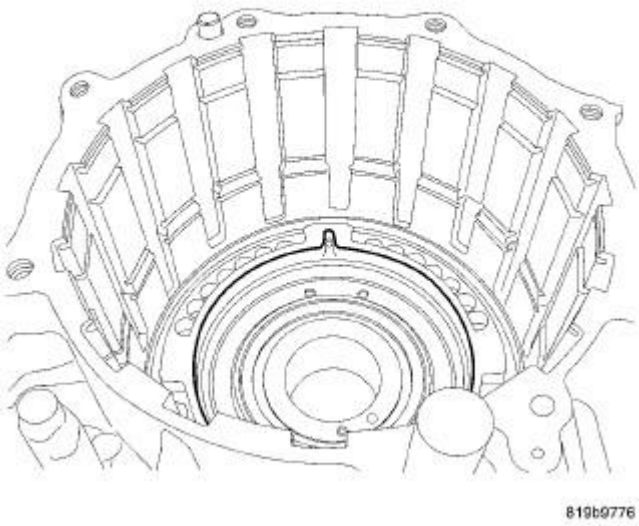

Fig. 89: B1 Piston Groove
Courtesy of CHRYSLER GROUP, LLC

NOTE: The orientation of the groove on the B1 piston is at the 12:00 o'clock position to the transmission case.

72. Remove the B1 brake piston.

CLEANING

CLEANING

The use of crocus cloth is permissible where necessary, providing it is used carefully. When used on shafts, or valves, use extreme care to avoid rounding off sharp edges. Sharp edges are vital as they prevent foreign matter from getting between the valve and valve bore.

Do not reuse oil seals, gaskets, seal rings, or O-rings during overhaul. Replace these parts as a matter of course. Also do not reuse snap rings or E-clips that are bent or distorted. Replace these parts as well.

Lubricate transmission parts with Mopar® AS68RC, Automatic Transmission Fluid, during overhaul and assembly. Use petroleum jelly to prelubricate seals, O-rings, and thrust washers. Petroleum jelly can also be used to hold parts in place during reassembly.

Clean the case in a solvent tank. Flush the case bores and fluid passages thoroughly with solvent. Dry the case and all fluid passages with compressed air. Be sure all solvent is removed from the case and that all fluid

passages are clear.

NOTE: **Do not use shop towels or rags to dry the case (or any other transmission component) unless they are made from lint-free materials. Lint will stick to case surfaces and transmission components and circulate throughout the transmission after assembly. A sufficient quantity of lint can block fluid passages and interfere with valve body operation.**

INSPECTION

INSPECTION

Inspect the case for cracks, porous spots, worn bores, or damaged threads. Damaged threads can be repaired with Helicoil® thread inserts. However, the case will have to be replaced if it exhibits any type of damage or wear.

ASSEMBLY

ASSEMBLY

NOTE: **If the transmission is being reconditioned (clutch/seal replacement) or replaced, it is necessary to perform the Quick Learn Procedure using the scan tool. Refer to MODULE, TRANSMISSION CONTROL, STANDARD PROCEDURE .**

NOTE: **Apply trans jell or petroleum jelly to all slide portions, rolling contacts surfaces, thrust surfaces etc. to prevent burnout during initial operation. Lubricate O-rings and O-ring seals with MOPAR® AS68RC ATF. Soak all friction discs in MOPAR® AS68RC ATF for at least two hours before assembly of clutch packs.**

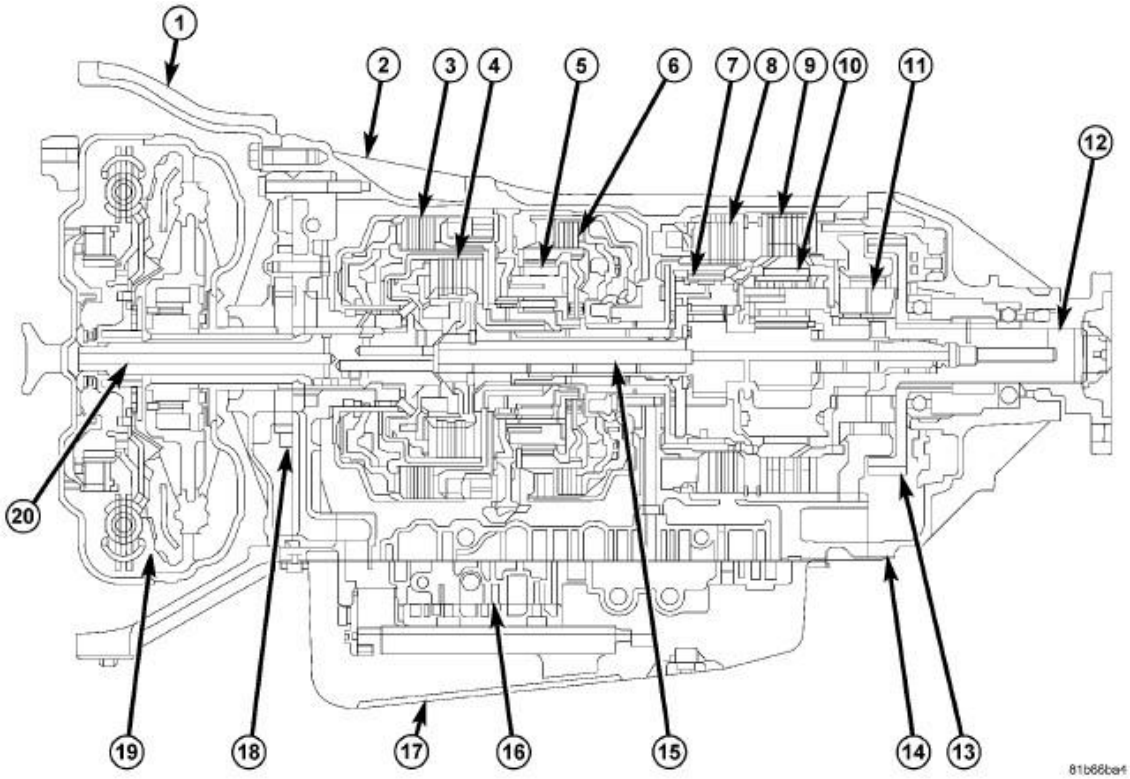

Fig. 90: AS68RC Transmission Components
Courtesy of CHRYSLER GROUP, LLC

1 - CONVERTER HOUSING	11 - F1 ONE WAY CLUTCH
2 - TRANSMISSION CASE	12 - OUTPUT SHAFT
3 - K2 CLUTCH	13 - PARKING LOCK GEAR
4 - K1 CLUTCH	14 - EXTENSION HOUSING
5 - P1 PLANETARY GEAR	15 - SUN GEAR SHAFT
6 - K3 CLUTCH	16 - VALVE BODY
7 - P2 PLANETARY GEAR	17 - OIL PAN
8 - B1 BRAKE	18 - OIL PUMP
9 - B2 BRAKE	19 - TORQUE CONVERTER
	20 - INPUT

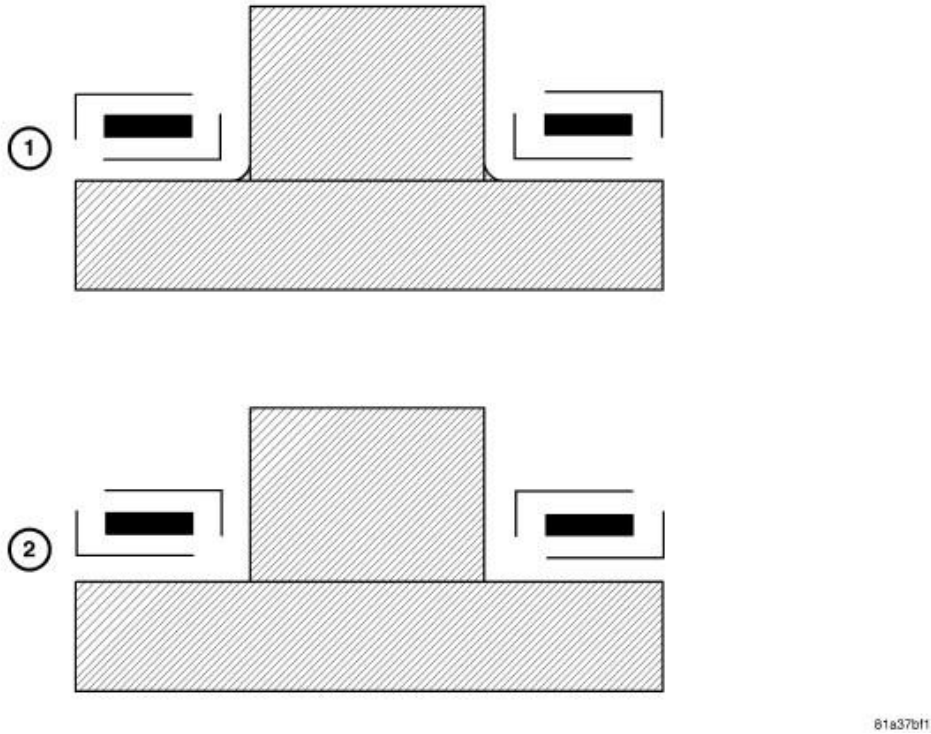

Fig. 91: Thrust Bearing Orientation
Courtesy of CHRYSLER GROUP, LLC

1 - CORRECT INSTALLATION
2 - INCORRECT INSTALLATION

CAUTION: A thrust bearing must be installed correctly or transmission failure may occur.

When installing a thrust bearing be certain the rolled surface (outer race) of the thrust bearing contacts the rolled surface of the component.

NOTE: There five snap ring in the back half of the transmission case, three wide and two narrow snap rings.

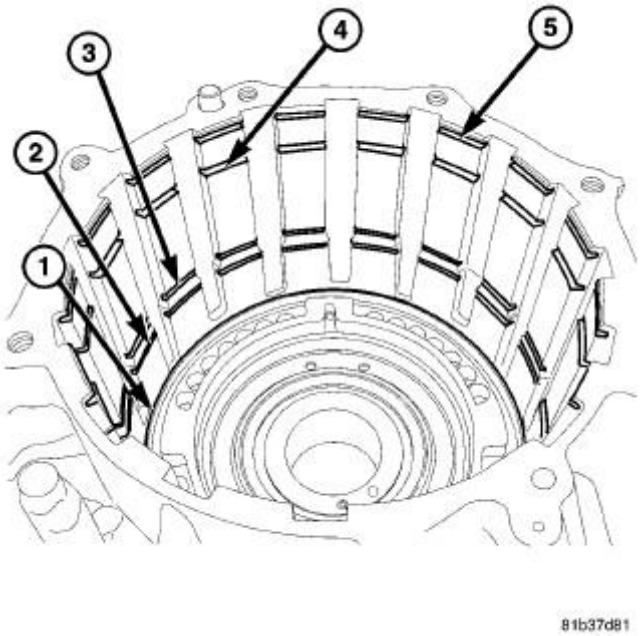

Fig. 92: Snap Ring Orientation
Courtesy of CHRYSLER GROUP, LLC

1 - WIDE B1 SNAP RING
2 - WIDE B1 CLUTCH SNAP RING
3 - WIDE B2 CLUTCH SNAP RING
4 - NARROW F1 CLUTCH INNER SNAP RING
5 - NARROW F1 CLUTCH OUTER SNAP RING

NOTE: **Before final assembly of the transmission a B1 and B2 piston and clutch pack clearance check must be performed.**

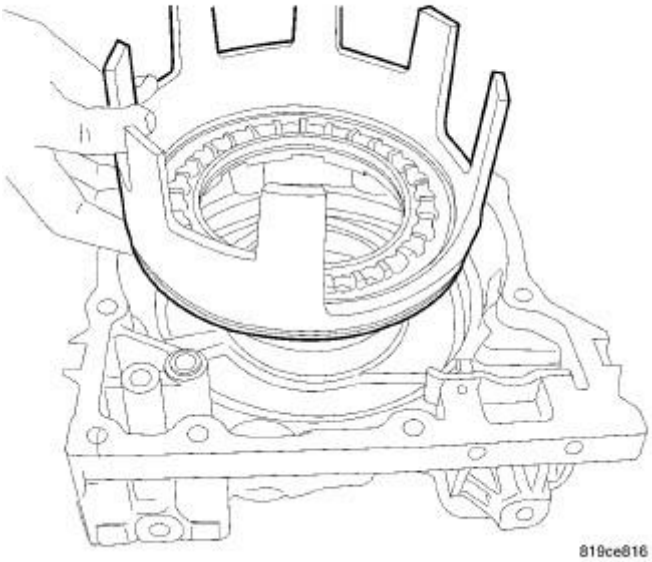

Fig. 93: B2 Brake Piston
Courtesy of CHRYSLER GROUP, LLC

1. Lubricate the B2 brake piston seals with MOPAR® AS68RC ATF and install the B2 brake piston into the extension housing.

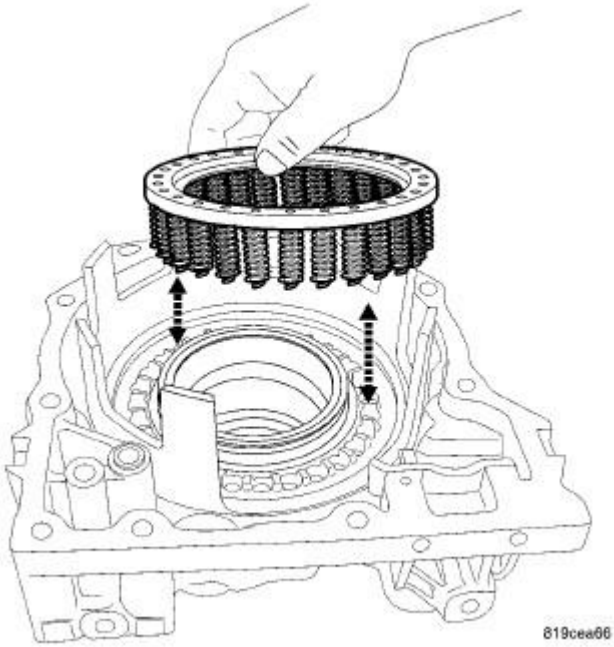

Fig. 94: B2 Piston Return Spring
Courtesy of CHRYSLER GROUP, LLC

2. Install the B2 brake piston return spring assembly.

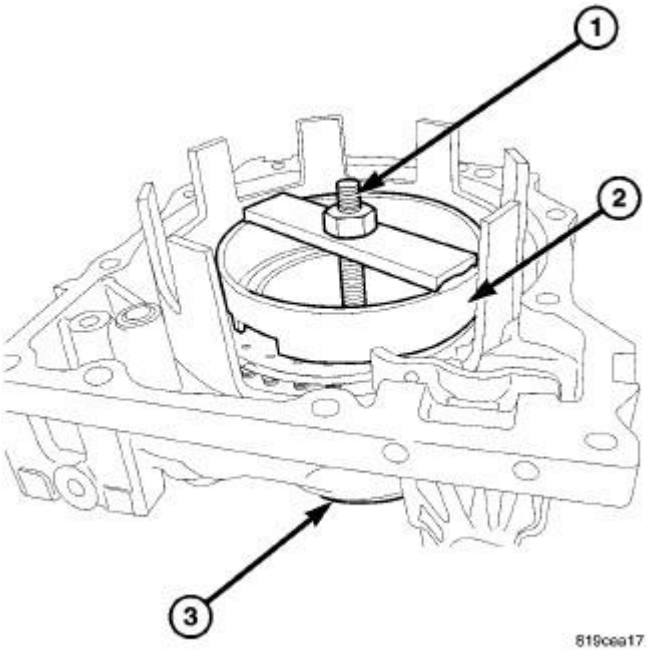

Fig. 95: Compressing B2 Piston With Special Tools
Courtesy of CHRYSLER GROUP, LLC

1 - BOLT 8622
2 - COMPRESSOR PLATE MB991790
3 - WASHER 9982-2

3. Install Bolt (special tool #8622, Screw, Clutch Spring Compressor) (1), Washer (special tool #9982-2, Plate, Back Up) (3) and Compressor (special tool #MB991790, Compressor, Spring) (2) onto the B2 brake piston assembly and compress the B2 brake piston assembly.

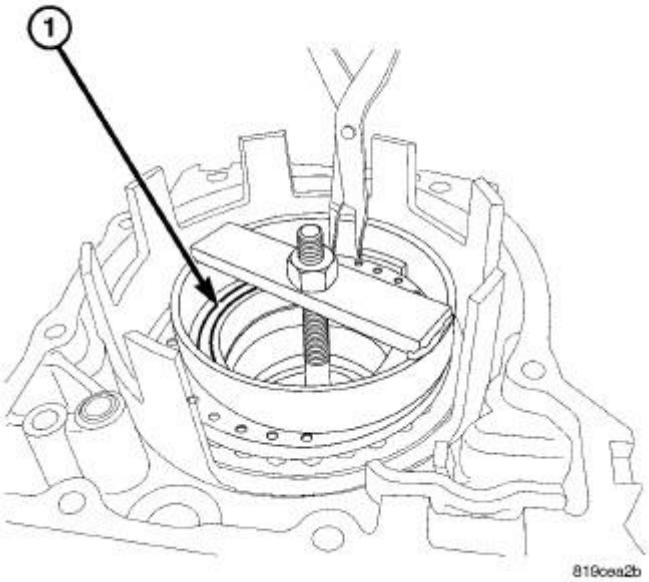

Fig. 96: B2 Piston Snap Ring
Courtesy of CHRYSLER GROUP, LLC

1 - SNAP RING

4. Install the B2 brake piston snap ring (1).

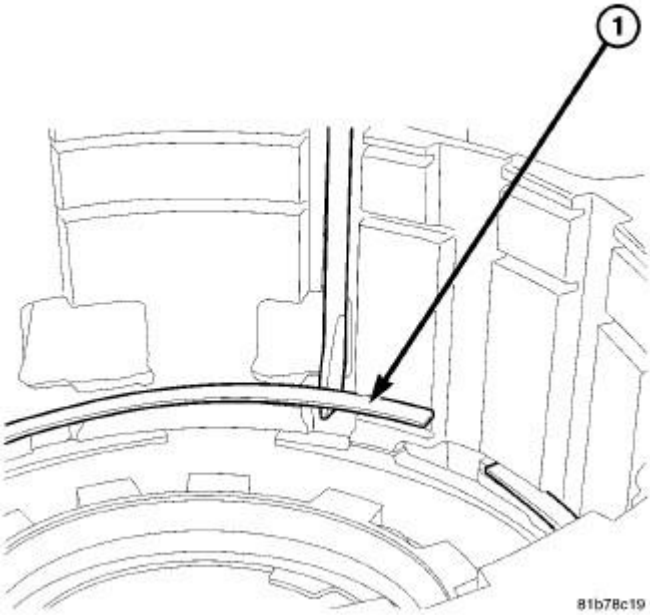

Fig. 97: B2 Clutch Snap Ring

Courtesy of CHRYSLER GROUP, LLC

1 - SNAP RING

5. Install the B2 wide snap ring (1).

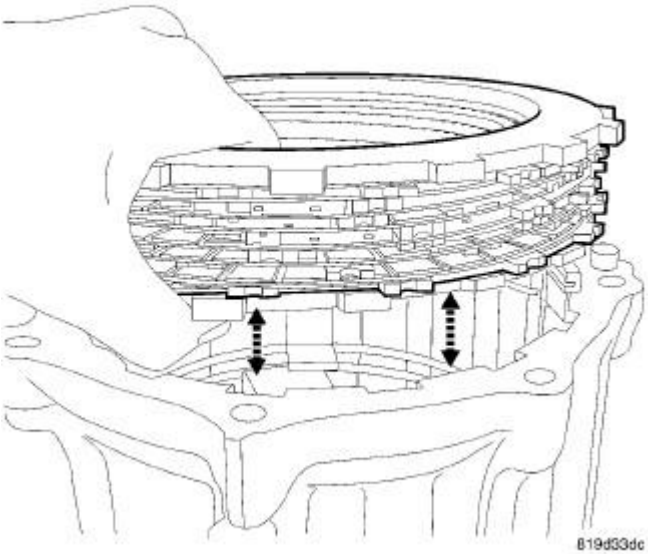

Fig. 98: B2 Brake Clutches
Courtesy of CHRYSLER GROUP, LLC

NOTE: **For the B2 brake, only the rear most plate (towards the piston) is selectable. However, the front most pressure plate (towards snap ring), always uses the plate marked "D".**

6. Install the (special tool #9982-1, Compressor) compressor plate into the transmission case in order to check the clutch pack clearance.
7. Install the B2 brake clutch pack into the transmission case.

CLUTCH CLEARANCE AND PISTON TRAVEL COMBINATIONS

	MEASUREMENT ITEM	CONDITION	SUSPECTED CAUSE	ACTION
	Clutch Clearance	Normal	Discs/Plates are worn thin and warped,	Replace the discs and plates and recheck clearances. If not OK-

	Piston Travel	High	snap ring and groove height, piston wear.	Check the piston, snap ring and snap ring groove
LOW PROBABILITY	Clutch Clearance	Normal	Piston travel issue (interference, obstruction from broken part) or Discs/Plates are too thick (above specs.) and snap ring grove at wrong height (high).	Replace the discs and plates and recheck clearances. If not OK- Check the piston, snap ring and snap ring groove
	Piston Travel	Low		
LOW PROBABILITY	Clutch Clearance	High	Low possibility, piston height, snap-ring groove, snap-ring thickness, disk and plates thickness and flatness.	Replace the discs and plates and recheck clearances. If not OK- Check the piston, snap ring and snap ring groove.
	Piston Travel	Normal		
	Clutch Clearance	High	Discs/Plates are worn (thin) or snap ring thickness groove height, piston height.	Replace the discs and plates and recheck clearances. If not OK- Check the piston, snap ring and snap ring groove.
	Piston Travel	High		
			Piston travel issue	Replace

LOW PROBABILITY	Clutch Clearance	High	(interference, obstruction from broken part combined with improper piston height, snap ring groove wear or height, or snap ring thickness) or piston does not fully return.	the discs and plates and recheck clearances. If not OK- Check the piston, snap ring and snap ring groove.
	Piston Travel	Low		
	Clutch Clearance	Low	Discs/Plates are not flat or combination of high piston height and low snap ring groove height.	Replace the discs and plates and recheck clearances. If not OK- Check the piston, snap ring and snap ring groove.
	Piston Travel	Normal		
	Clutch Clearance	Low	Discs/Plates are worn (thin) and warped.	Replace the discs and plates and recheck clearances. If not OK- Check the piston, snap ring and snap ring groove
	Piston Travel	High		
	Clutch Clearance	Low	Discs/Plates are too thick/extra discs or snap	Replace the discs and plates and recheck clearances. If not OK-

	Piston Travel	Low	ring height too low or piston too tall.	Check the piston, snap ring and snap ring groove

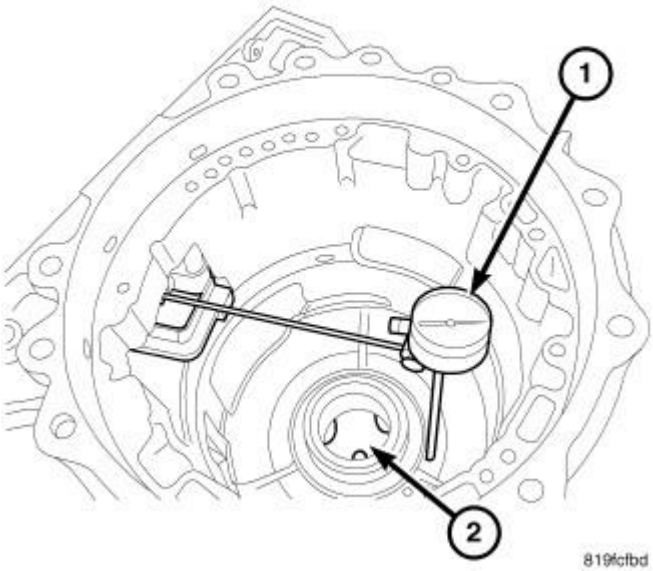

Fig. 99: Dial Indicator On B2 Brake Piston
Courtesy of CHRYSLER GROUP, LLC

1 - 9524 90° DIAL INDICATOR
2 - 9982-1 CLUTCH COMPRESSOR PLATE

NOTE: **If the B2 brake piston assembly stroke is not within tolerance, check the B2 brake piston seals and the hydraulic fluid circuit path.**

8. Using two bolts, temporarily install the extension housing onto the transmission case.
9. Install the (special tool #9524, Indicator, Dial) 90° Dial Indicator and mounts from the Dial Indicator Set (special tool #C-3339A, Set, Dial Indicator) and Extension Tip MLR- (special tool #6268, Tip, Dial Indicator) so that the extension tip passes through one of the two smaller holes in the transmission case bulk head and through a void in the (special tool #9982-1, Compressor) compressor plate in order to contact the B2 brake piston.

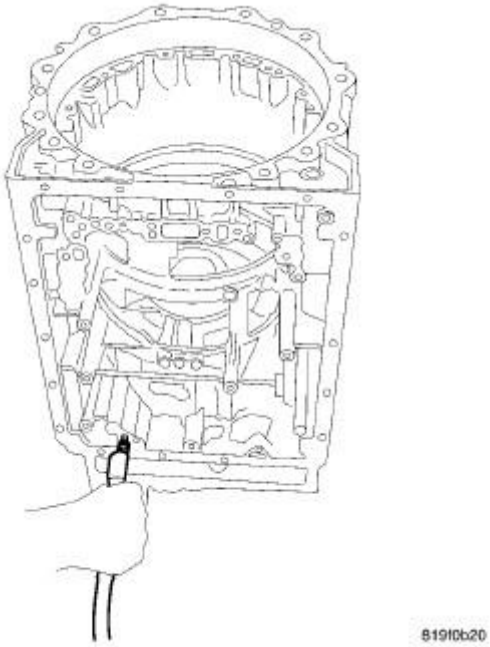

Fig. 100: Applying Air To Check B2 Brake Piston Stroke
Courtesy of CHRYSLER GROUP, LLC

10. Apply 400-500 kPa (58 - 72 psi) of air to check the B2 brake piston stroke. Refer to **AIR CHECKING TRANSMISSION CLUTCH OPERATION**.

    The B2 brake piston stroke clearance is 1.84 - 2.28 mm (0.072 - 0.090 in.).

    NOTE: The selectable clutch pack reaction plates are identified by an alpha numeric numeral stamped into the face of the plate.

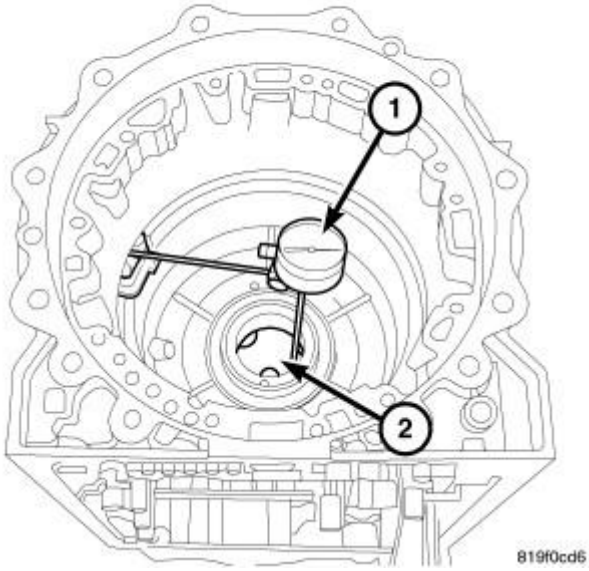

Fig. 101: Dial Indicator On Compressor Plate
Courtesy of CHRYSLER GROUP, LLC

1 - 9524 90° DIAL INDICATOR
2 -9982 CLUTCH COMPRESSOR PLATE

11. Move the 90° Dial Indicator (special tool #9524, Indicator, Dial) and mounts from Dial Indicator Set (special tool #C-3339A, Set, Dial Indicator) (1) and extension tip MLR- (special tool #6268, Tip, Dial Indicator) so that it makes contact with the (special tool #9982-1, Compressor) compressor plate (2).

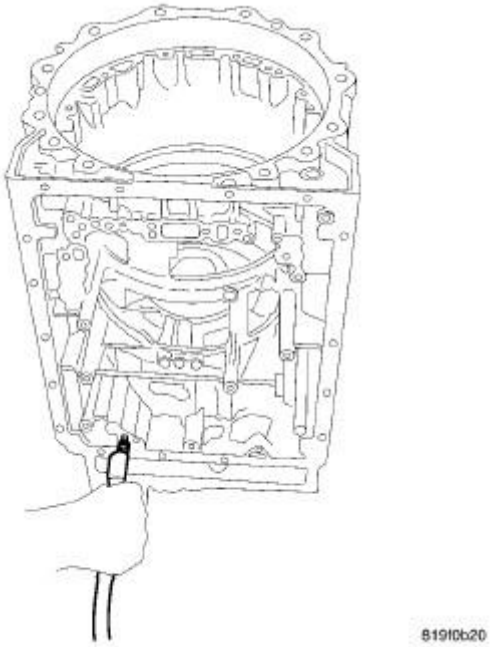

Fig. 102: Applying Air To Check B2 Brake Clutch Clearance
Courtesy of CHRYSLER GROUP, LLC

12. Apply 400 - 500 kPa(58 - 72 psi) of air to check the B2 brake clutch clearance. Refer to **AIR CHECKING TRANSMISSION CLUTCH OPERATION**.

    The B2 brake clutch pack clearance is 1.60 - 2.04 mm (0.063 - 0.080 in.). If the clearance is not within tolerance choose the correct selectable reaction plate.

    - A = 5.40 mm (0.212 in.)
    - B = 5.60 mm (0.220 in.)
    - C = 5.80 mm (0.228 in.)
    - D = 6.00 mm (0.236 in.)
13. Assemble and disassemble as necessary to achieve the correct B2 brake clearance.
14. Remove the dial indicator set.
15. Remove the extension housing and set aside.
16. Remove the B2 clutch pack and snap ring.
17. Remove the (special tool #9982-1, Compressor) compressor plate.

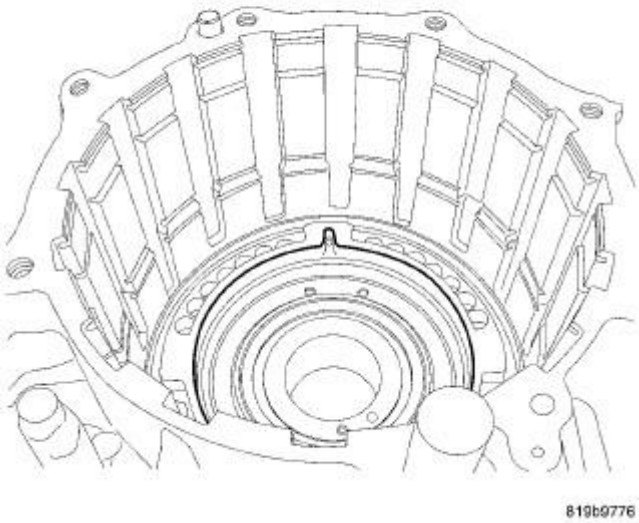

Fig. 103: B1 Piston Groove
Courtesy of CHRYSLER GROUP, LLC

NOTE: The orientation of the groove on the B1 piston is at the 12:00 o'clock position to the transmission case.

18. Apply MOPAR® AS68RC ATF to the seals of the B1 piston and install the piston into the transmission case.

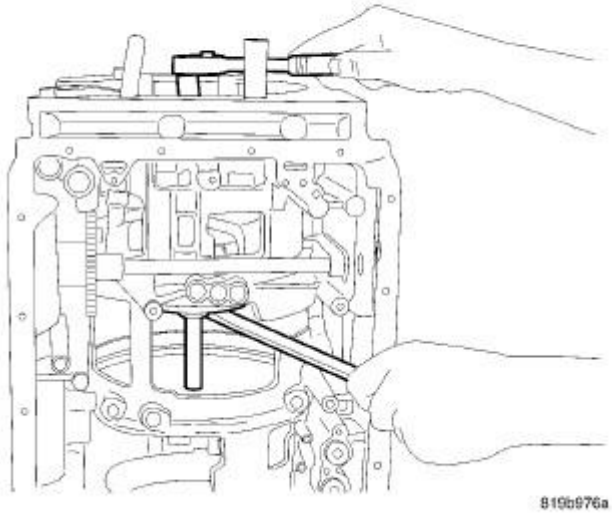

Fig. 104: Compressing B1 Brake Piston
Courtesy of CHRYSLER GROUP, LLC

19. Install the B1 piston return spring and a wide snap ring into the transmission case using tools (special tool #8622, Screw, Clutch Spring Compressor) and (special tool #9982-2, Plate, Back Up).

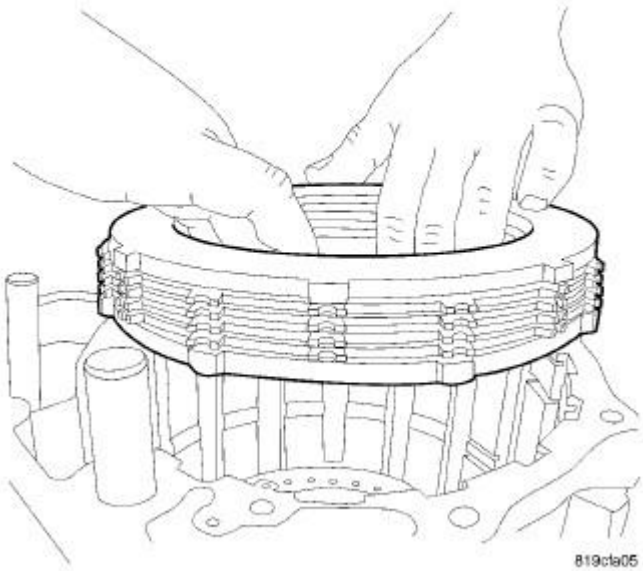

Fig. 105: B1 Brake Clutch Assembly
Courtesy of CHRYSLER GROUP, LLC

20. Install the B1 clutch assembly, into the deeper grooves of the transmission case with the thickest pressure plate to the inside and install a wide snap ring.

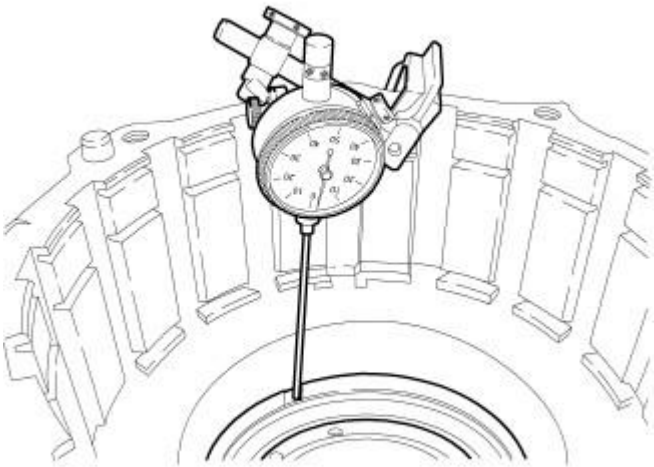

819fc756

Fig. 106: Checking B1 Brake Piston Assembly Stroke
Courtesy of CHRYSLER GROUP, LLC

NOTE: If the B1 brake piston assembly stroke is not within tolerance, check the B1 brake piston seals and the hydraulic fluid circuit path.

21. Install the Dial Indicator set (special tool #C-3339A, Set, Dial Indicator) and extension tip MLR- (special tool #6268, Tip, Dial Indicator) so the dial indicator tip contacts the B1 brake piston and check the B1 brake piston assembly stroke.

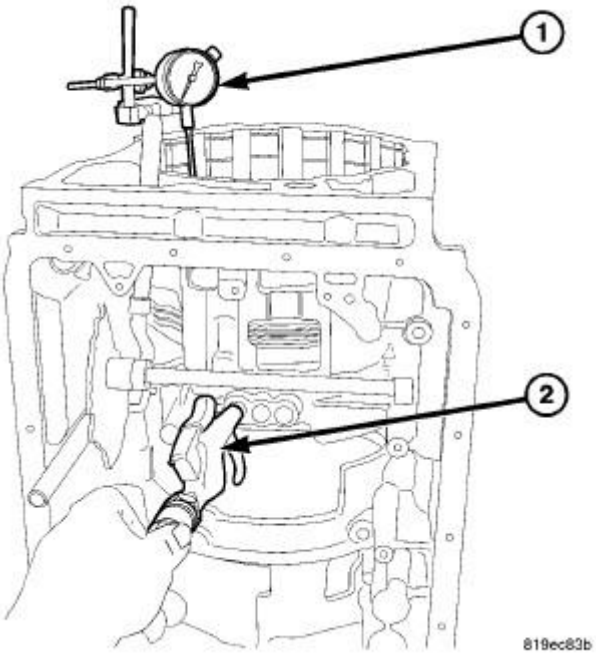

Fig. 107: Applying Air To Check B1 Brake Piston Stroke
Courtesy of CHRYSLER GROUP, LLC

1 - DIAL INDICATOR
2 - AIR APPLY

22. Apply 400-500 kPa (58 - 72 psi) of air to check the B1 brake piston stroke. Refer to **AIR CHECKING TRANSMISSION CLUTCH OPERATION**.

    The B1 brake piston stroke clearance is 1.55 - 1.80 mm (0.061 - 0.071 in.)

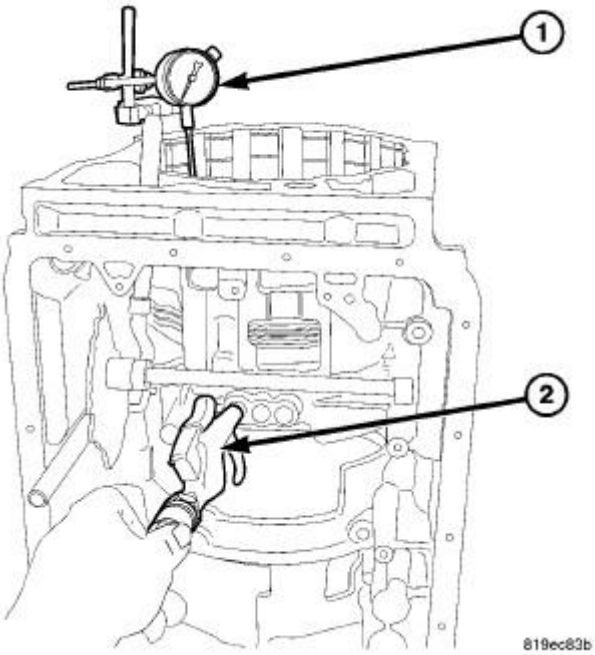

Fig. 108: Applying Air To Check B1 Brake Clutch Pack Clearance
Courtesy of CHRYSLER GROUP, LLC

1 - DIAL INDICATOR
2 - AIR APPLY

NOTE: **The selectable clutch pack reaction plates are identified by an alpha numeric numeral stamped into the face of the plate.**

23. Move the Dial Indicator Set (special tool #C-3339A, Set, Dial Indicator) (1) and extension tip MLR- (special tool #6268, Tip, Dial Indicator) so the tip makes contact with the B1 brake clutch pack apply 400 - 500 kPa(58 - 72 psi) of air (2) to check the B1 brake clutch pack clearance. Refer to **AIR CHECKING TRANSMISSION CLUTCH OPERATION**.

    The B1 brake clutch pack clearance is 1.25 - 1.50 mm (0.049 - 0.059 in.). If the clearance is not within tolerance, choose the correct selectable reaction plate.

    - A = 5.40 mm (0.212 in.)
    - B = 5.55 mm (0.218 in.)
    - C = 5.70 mm (0.224 in.)
    - D = 5.85 mm (0.230 in.)
    - E = 6.0 mm (0.236 in.)
24. Remove the dial indicator set (special tool #C-3339A, Set, Dial Indicator) and extension tip MLR- (special tool #6268, Tip, Dial Indicator).

CAUTION: While installing the trust washers and bearings be certain they are orientated correctly to the transmission component. A thrust bearing must be installed correctly or transmission failure may occur.

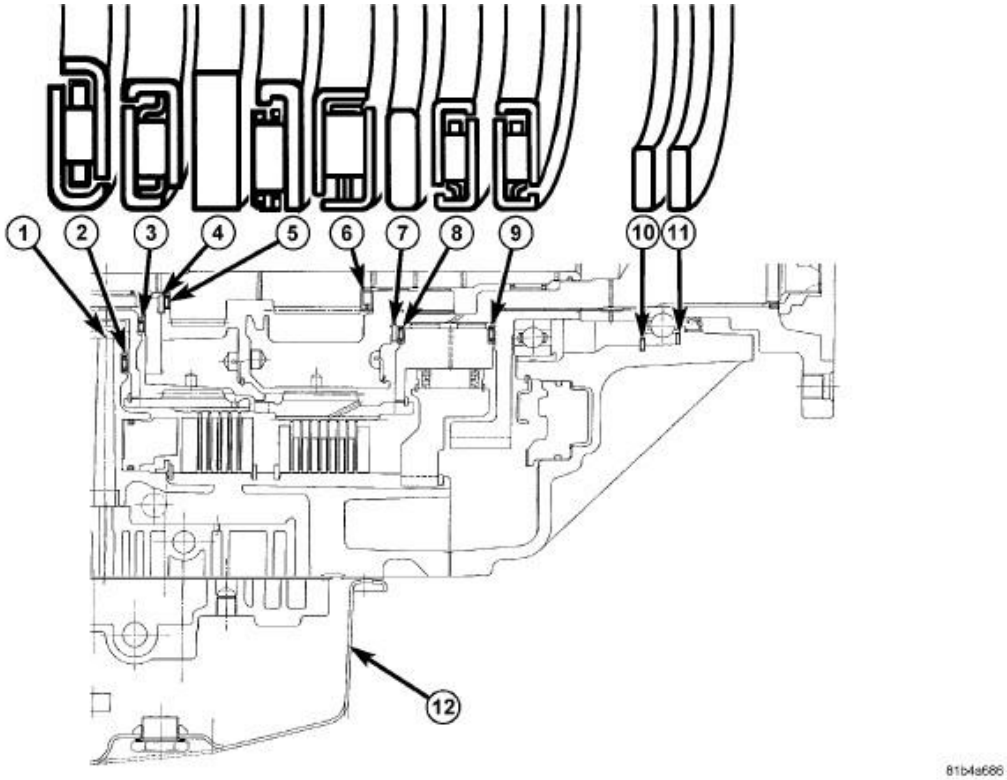

Fig. 109: Thrust Bearing & Washer Orientation Behind Bulkhead
Courtesy of CHRYSLER GROUP, LLC

1- TRANSMISSION BULK HEAD	7 - THRUST WASHER
2 - THRUST BEARING NO. 9	8 - THRUST BEARING NO. 13
3 - THRUST BEARING NO. 10	9 - THRUST BEARING NO. 14
4 - THRUST BEARING RACE / WASHER	10 - SELECTABLE END PLAY WASHER
5 - THRUST BEARING NO. 11	11 - SELECTABLE END PLAY WASHER (4WD)
6 - THRUST BEARING NO. 12	12 - OIL PAN

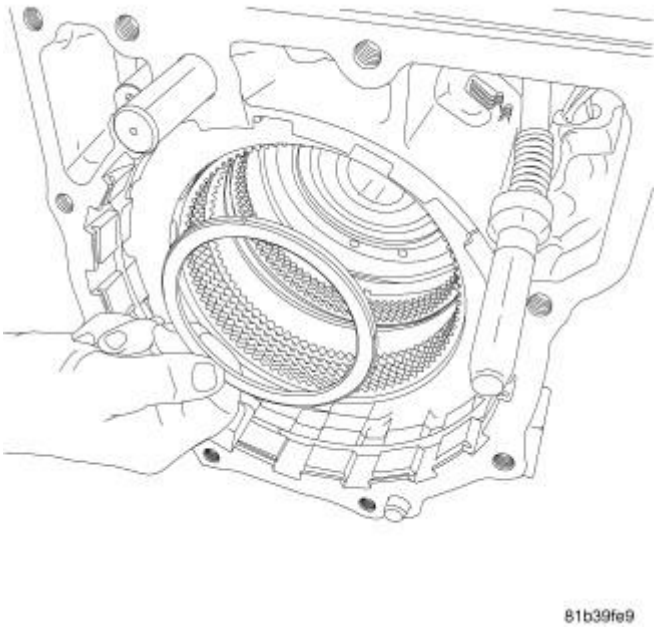

Fig. 110: P2 Carrier Thrust Bearing No. 9
Courtesy of CHRYSLER GROUP, LLC

1 - P2 CARRIER THRUST BEARING NO. 9

25. Lubricate with trans jell or petroleum jelly and install the number nine thrust bearing into the transmission case.

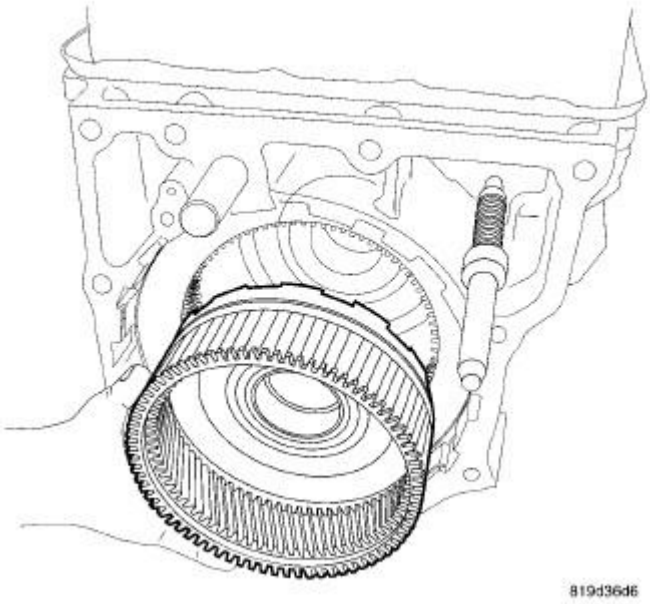

Fig. 111: P2 Planetary Annulus Gear

Courtesy of CHRYSLER GROUP, LLC

26. Install the B2 clutch pack and a wide snap ring.
27. Install the P2 planetary annulus gear.

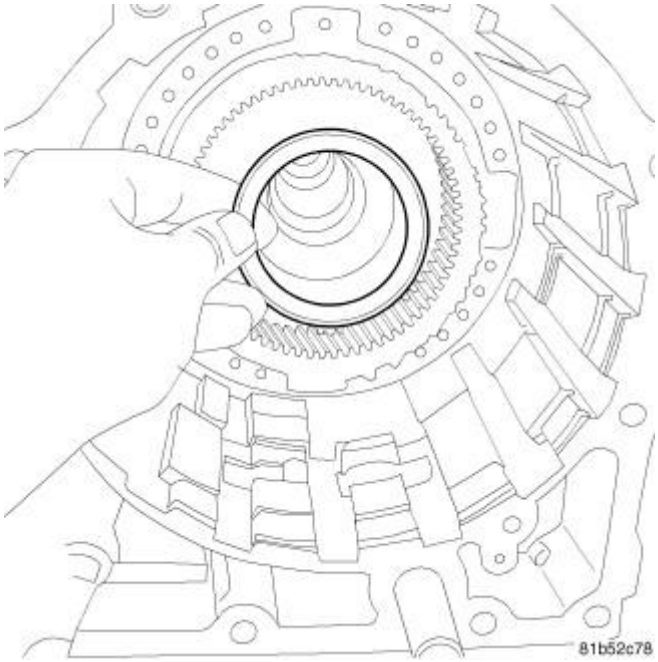

Fig. 112: P2 Planetary Gear Thrust Bearing No. 10
Courtesy of CHRYSLER GROUP, LLC

28. Lubricate with trans jell or petroleum jelly and install the number ten thrust bearing into the transmission case.

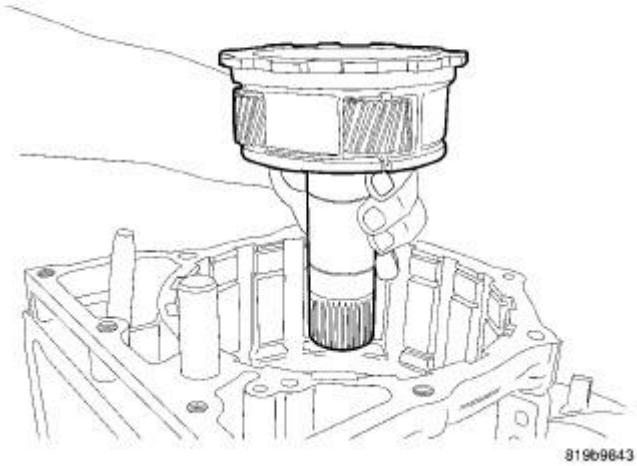

Fig. 113: P2 Planetary Gear Carrier
Courtesy of CHRYSLER GROUP, LLC

29. Install P2 planetary gear carrier into the transmission case.

NOTE: **Be certain the sun gear shaft seal rings are in position. Lubricate the front sun gear shaft seal ring with MOPAR® AS68RC ATF.**

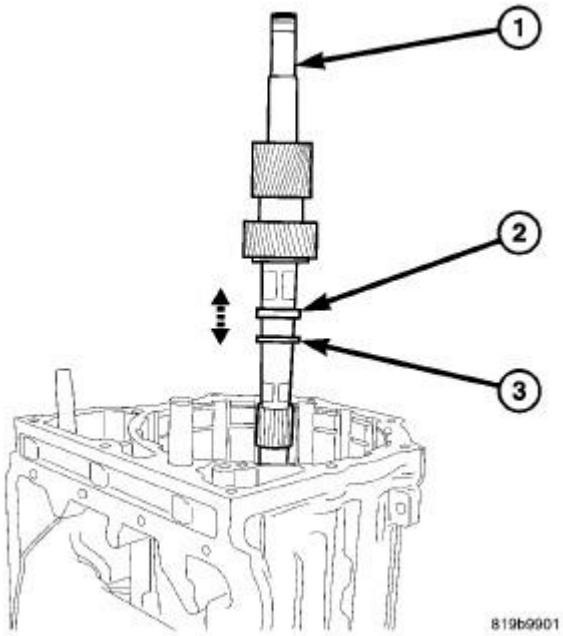

Fig. 114: Sun Gear Shaft, Thrust Bearing No. 11 & Thrust Bearing Race/Washer
Courtesy of CHRYSLER GROUP, LLC

1 - SUN GEAR SHAFT
2 - THRUST BEARING NO. 11
3 - THRUST BEARING RACE / WASHER

30. Lubricate with trans jell or petroleum jelly and install the number eleven thrust bearing (2) and thrust bearing race / washer (3) and the sun gear shaft (1) into the transmission case.

Fig. 115: P3 Planetary Front Thrust Bearing No. 12
Courtesy of CHRYSLER GROUP, LLC

31. Lubricate with trans jell or petroleum jelly and install the number twelve thrust bearing.

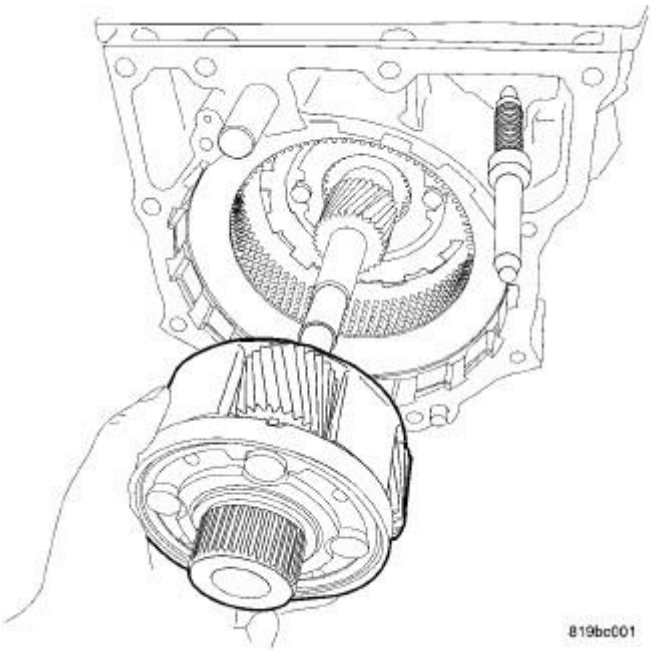

Fig. 116: P3 Planetary Gear Carrier
Courtesy of CHRYSLER GROUP, LLC

32. Install the P3 planetary gear carrier the transmission case.

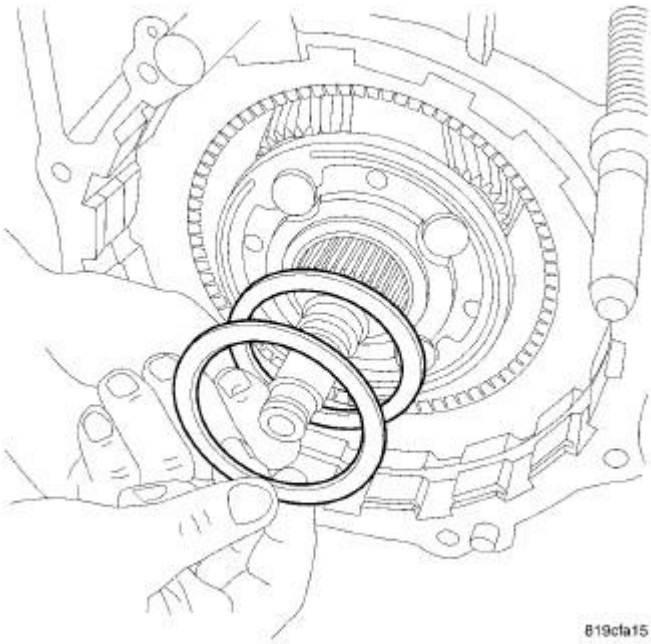

Fig. 117: Thrust Bearing & Washer No. 13
Courtesy of CHRYSLER GROUP, LLC

33. Lubricate with trans jell or petroleum jelly and install the number thirteen thrust bearing and washer.

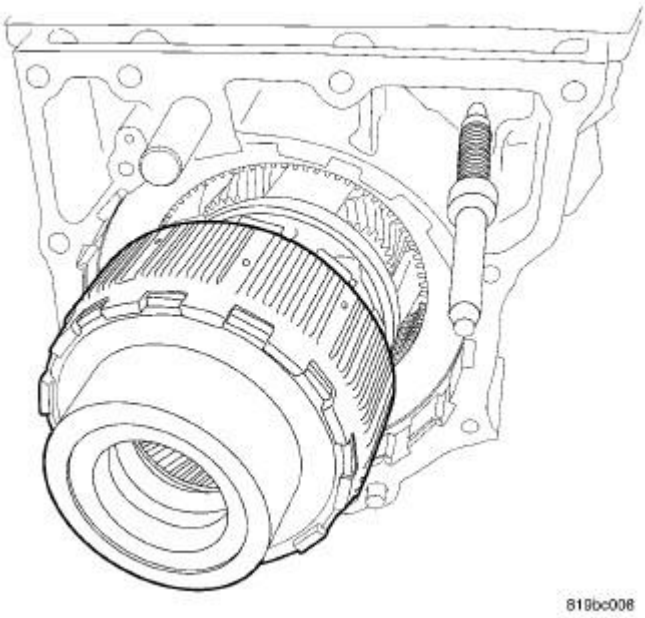

Fig. 118: P3 Annulus Gear
Courtesy of CHRYSLER GROUP, LLC

34. Install the P3 planetary annulus gear into the transmission case.

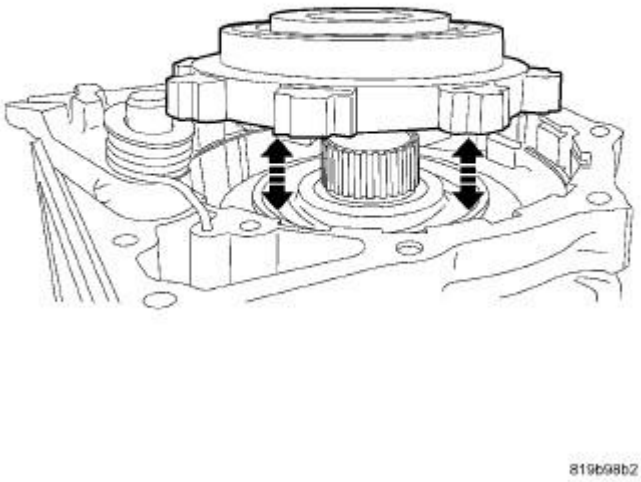

Fig. 119: F1 One Way Clutch

Courtesy of CHRYSLER GROUP, LLC

35. Install a narrow inner F1 one way clutch snap ring into the transmission case.
36. Align the F1 one way clutch to the scribe marks and install the F1 one way clutch into the transmission case.
37. Install a narrow F1 one way clutch outer snap ring into the transmission case.

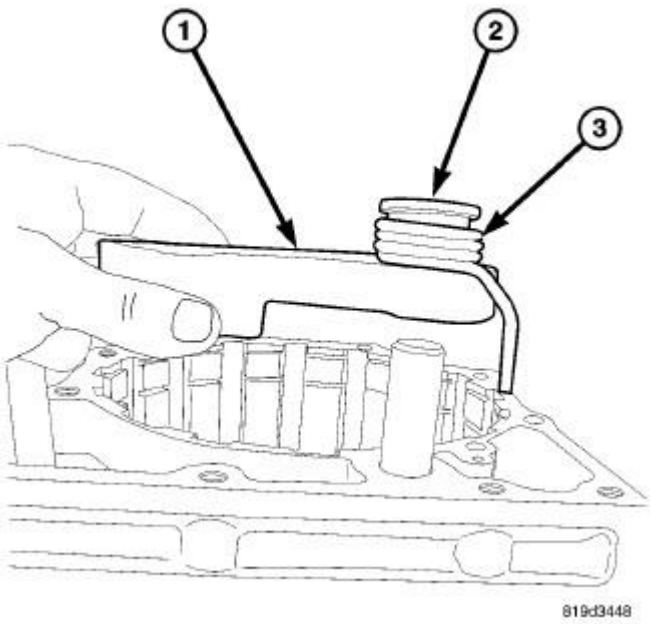

Fig. 120: Park Pawl Assembly
Courtesy of CHRYSLER GROUP, LLC

1 - PARK PAWL
2 - PARK PAWL WASHER
3 - PARK PAWL SPRING

NOTE: **Install the park brake pawl with spring to pull pawl away from the park brake gear.**

38. Install the park brake pawl assembly.

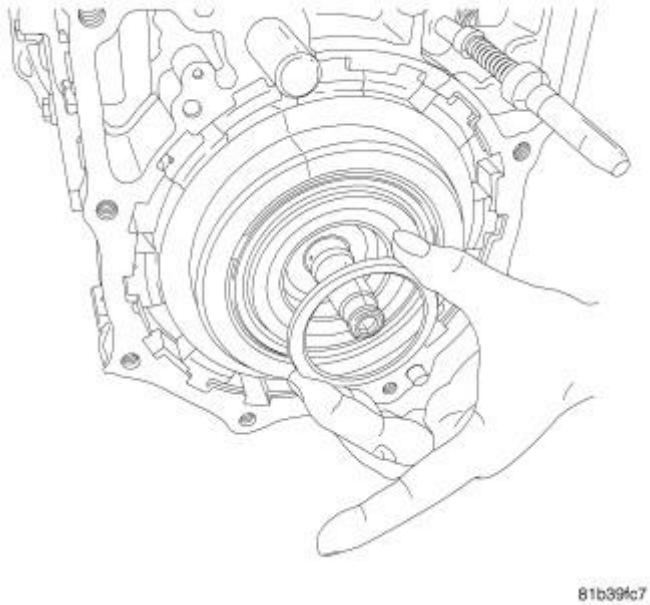

Fig. 121: F1 Clutch Thrust Bearing No. 14
Courtesy of CHRYSLER GROUP, LLC

1 - F1 CLUTCH THRUST BEARING NO. 14

39. Lubricate with trans jell or petroleum jelly and install the number fourteen thrust bearing.

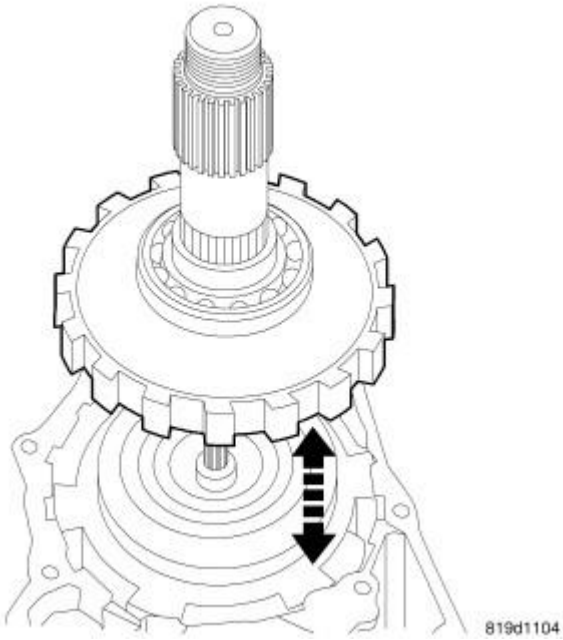

Fig. 122: Output Shaft/Park Lock Gear Assembly
Courtesy of CHRYSLER GROUP, LLC

40. Install the output shaft / park lock gear assembly into the transmission case.

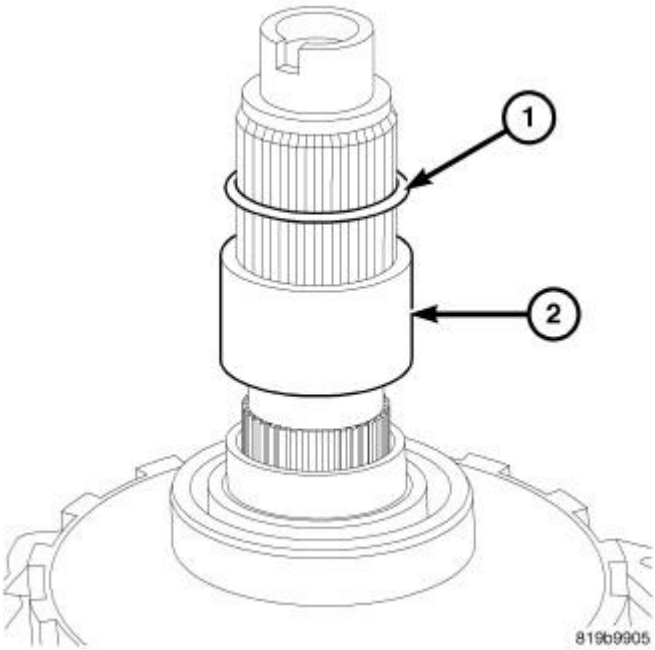

Fig. 123: Output Shaft End Play Selectable Washer & Spacer
Courtesy of CHRYSLER GROUP, LLC

1 - OUTPUT SHAFT END PLAY SELECTABLE WASHER
2 - SPACER

41. Install the spacer (2), so that the spacer covers the lower splines of the output shaft, and install the selectable end play washer (1) onto the output shaft and park lock gear assembly.
42. Install the extension housing with a new gasket, while aligning park brake shaft and the transmission range selector shaft, onto the transmission case.
43. Install and tighten the extension housing bolts. Tighten bolts to 37 N.m (27 ft.lbs.)

NOTE: **End- play readings that are below specification (smaller gap) may indicate that a bearing is out of position or that the transmission might have been set-up incorrectly.**

NOTE: **The selectable output shaft end-play washers are identified by an alpha numeric numeral stamped onto the face of the washer.**

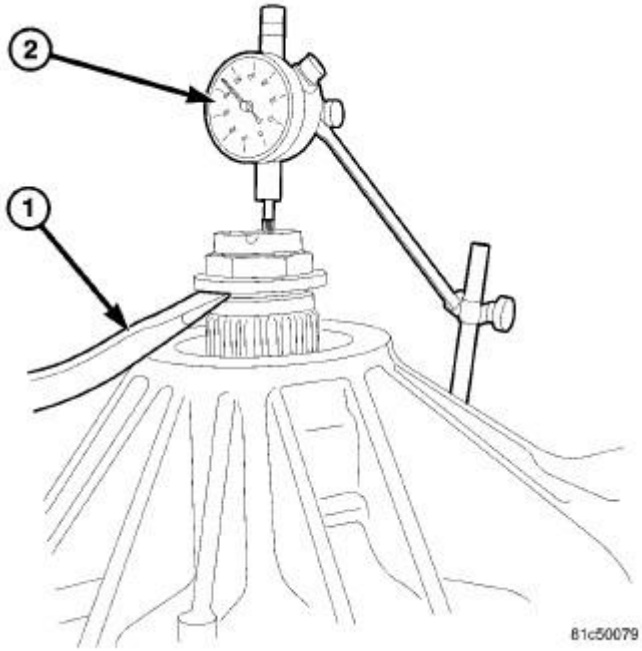

Fig. 124: Measuring 2WD Output Shaft End-Play
Courtesy of CHRYSLER GROUP, LLC

1 - PRY TOOL
2 - C-3339A DIAL INDICATOR

44. Install a **NEW** nut on the output shaft and install the Dial Indicator (special tool #C-3339A, Set, Dial Indicator) (2).
45. With the transmission in a vertical position, and using a pry tool (1) on the output shaft nut measure and record the output shaft end-play. The output shaft end-play clearance is 0.50-0.90 mm (0.019-0.035 in.). Assemble and disassemble as necessary to achieve the correct output shaft end-play clearance.

2WD and 4WD EXTENSION HOUSING INTERNAL SELECTABLE END-PLAY WASHERS

- I = 1.00mm (0.039 in.)
- J = 1.20 mm (0.047 in.)
- K = 1.40 mm (0.055 in.)
- L = 1.60 mm (0.063 in.)
- M = 1.80 mm (0.071 in.)
- N = 2.00 mm (0.079 in.)

46. Remove the Dial Indicator (2) set up.

4WD OUTPUT SHAFT END PLAY CHECK

NOTE: The 4WD extension housing has two selectable output shaft end-play

washers, fore and aft of the output shaft bearing, therefore the output shaft end-play checking procedure must be performed twice. The external selectable end-play washer and snap ring is in place to prevent excess forward pressure on the NO. 9 thrust bearing while the 4WD transfer case is bolted to the extension housing.

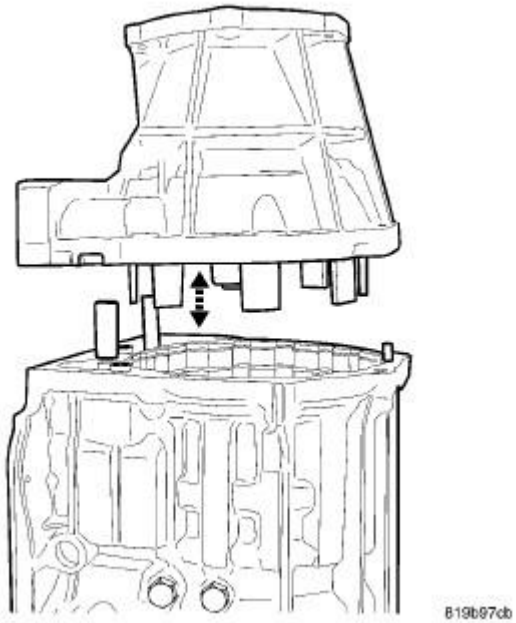

Fig. 125: Extension Housing
Courtesy of CHRYSLER GROUP, LLC

1. Install the 4WD extension housing with a new gasket, while aligning park brake shaft and the transmission range selector shaft, onto the transmission case. Tighten bolts to 37 N.m (27 ft.lbs.)

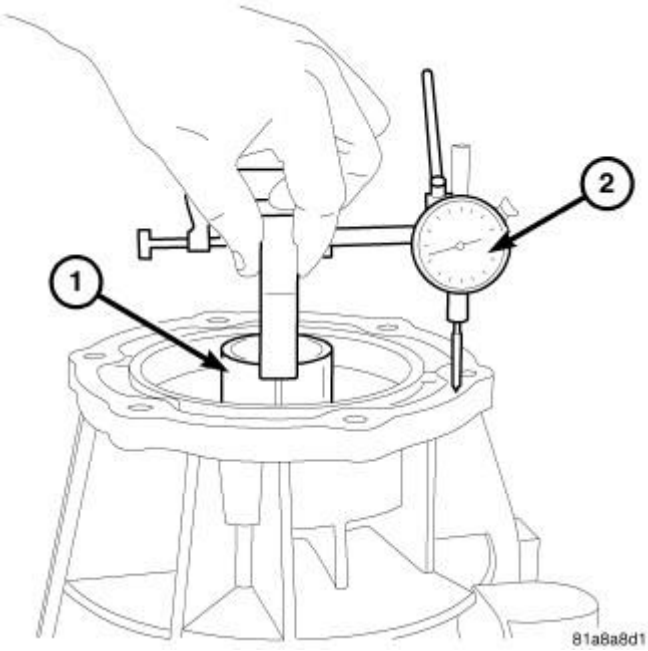

Fig. 126: Measuring 4WD Output Shaft End Play
Courtesy of CHRYSLER GROUP, LLC

1 - OUTPUT SHAFT END PLAY TOOL 8266-20
2 - DIAL INDICATOR SET C-3339A

2. Install Adapter (special tool #8266-20, Spline Tool, AS68RC Output) (1) and the handle from End-Play Tool Set (special tool #8266B, End Play Socket Set) and Dial Indicator (special tool #C-3339A, Set, Dial Indicator) (2).
3. With the transmission in a vertical position, measure and record the output shaft end-play. The output shaft end-play clearance is 0.50-0.90 mm (0.019-0.035 in.), Assemble and disassemble as necessary to achieve the correct output shaft end-play clearance.

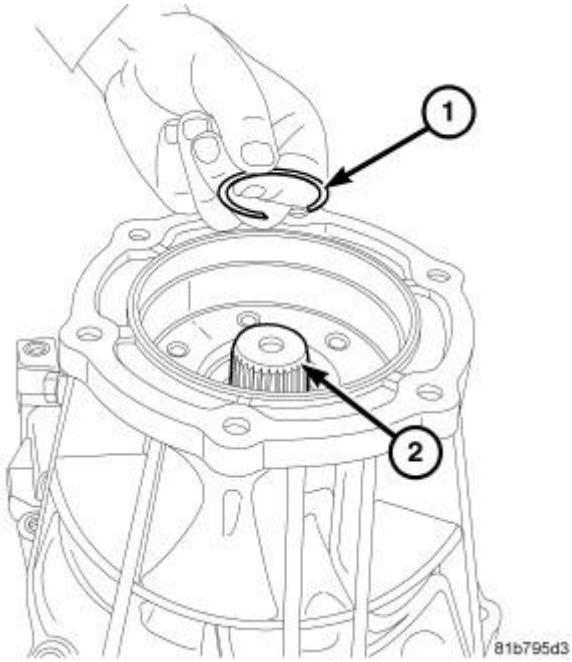

Fig. 127: 4WD Output Shaft & Snap Ring
Courtesy of CHRYSLER GROUP, LLC

1 - 4WD OUTPUT SHAFT SNAP RING
2 - 4WD OUTPUT SHAFT

4. Install the selectable output shaft end-play washer and the external snap ring (1).

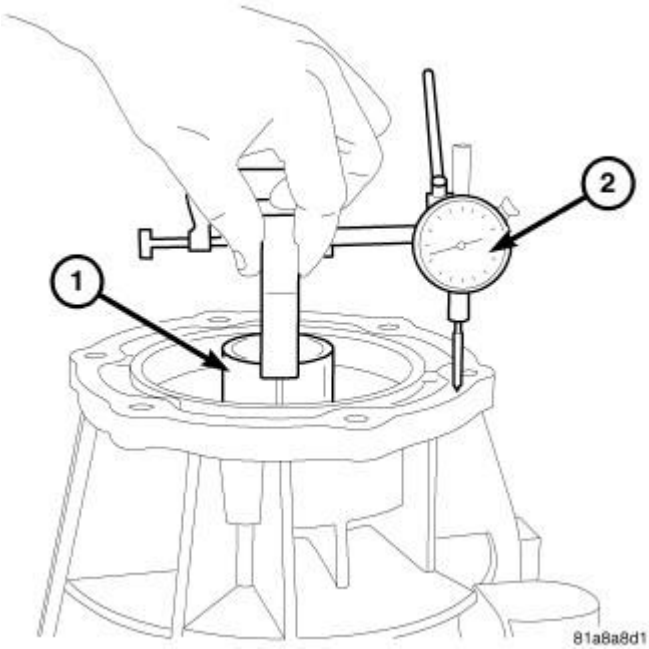

Fig. 128: Measuring 4WD Output Shaft End Play
Courtesy of CHRYSLER GROUP, LLC

1 - OUTPUT SHAFT END PLAY TOOL 8266-20
2 - DIAL INDICATOR SET C-3339A

5. Using Adapter (special tool #8266-20, Spline Tool, AS68RC Output) (1) and the handle from End-Play Tool Set (special tool #8266B, End Play Socket Set) and Dial Indicator (special tool #C-3339A, Set, Dial Indicator) (2), while the transmission is still in a vertical position measure and record the output shaft end-play. The output shaft end-play clearance is 0.00 - 0.24 mm (0.000-0.009 in.). Assemble and disassemble as necessary to achieve the correct output shaft end-play clearance.

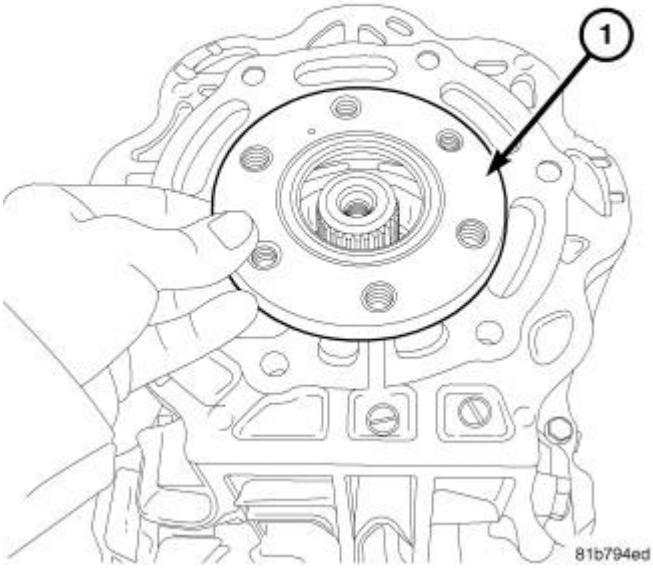

Fig. 129: 4WD Output Shaft Seal Retainer
Courtesy of CHRYSLER GROUP, LLC

1 - 4WD OUTPUT SHAFT SEAL RETAINER

4WD EXTERNAL EXTENSION HOUSING SELECTABLE END PLAY WASHERS

- I = 1.0 mm (0.039 in.)
- J = 1.20 mm (0.047 in.)
- K = 1.40 mm (0.055 in.)
- L = 1.60 mm (0.063 in.)
- M = 1.80 mm (0.071 in.)
- N = 2.0. mm (0.079 in.)
- O = 2.20 mm (0.087 in.)
- P = 2.40 mm (0.094 in.)

6. Remove the Dial Indicator set up.

7. Install the output shaft seal retainer (1) and the bolts. Tighten the bolts to 17 N.m (12.5 ft.lbs.).
8. Install a new output shaft seal using Installer tool (special tool #9984, Installer, Seal).

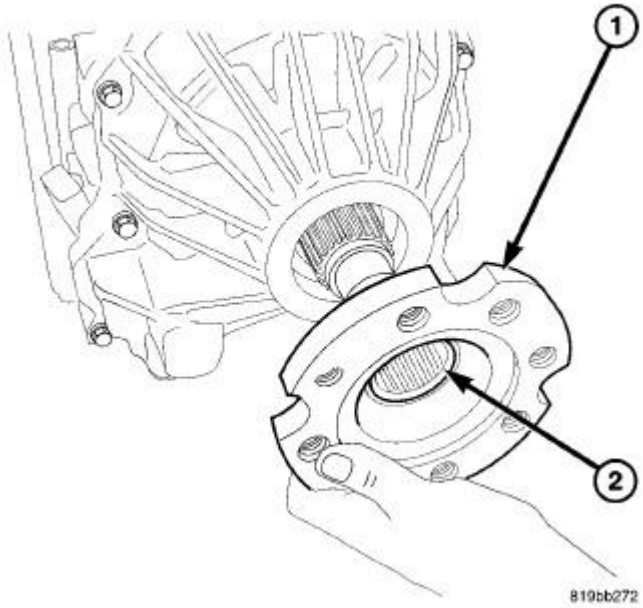

Fig. 130: Output Shaft Flange & O-Ring Seal
Courtesy of CHRYSLER GROUP, LLC

1 - OUTPUT SHAFT FLANGE
2 - O-RING SEAL

47. Install a new output shaft seal into the 2WD extension housing using Installer tool (special tool #9985, Installer, Seal).
48. Install the output shaft flange (1) and O-ring seal (2).

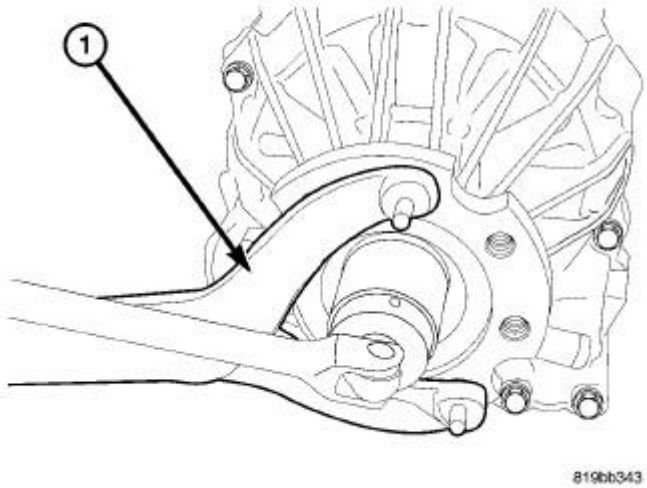

Fig. 131: Removing/Installing Output Shaft Nut
Courtesy of CHRYSLER GROUP, LLC

1 - FLANGE HOLDER TOOL C-3281

NOTE: Do not exceed the specified torque value on the output shaft nut.

49. Install the **NEW** output shaft flange nut and tighten to 210 N.m (155 ft.lbs.).
50. Using a small chisel, stake the output shaft flange nut into the void on the output shaft.

CAUTION: While installing the trust washers and bearings be certain they are orientated correctly to the transmission component. A thrust bearing must be installed correctly or transmission failure may occur.

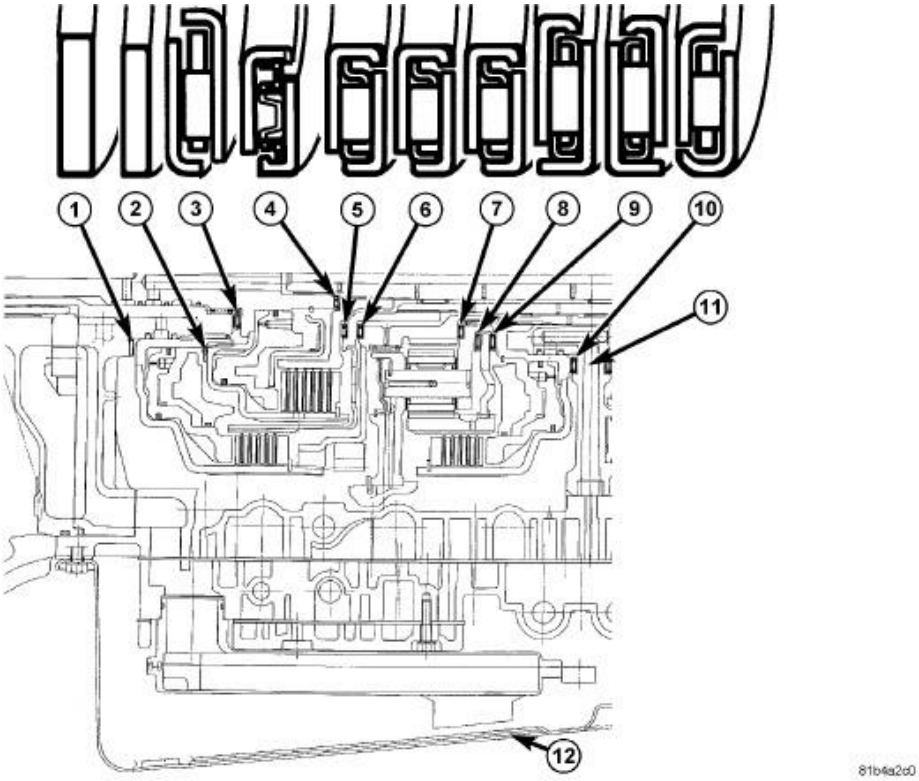

Fig. 132: Thrust Washer & Bearing Orientation Before Bulkhead
Courtesy of CHRYSLER GROUP, LLC

1 - NYLON WASHER	7 - THRUST BEARING NO. 5
2 - THRUST WASHER	8 - THRUST BEARING NO. 6
3 - THRUST BEARING NO. 1 (WITH SELECTABLE RACE)	9 - THRUST BEARING NO. 7
4 - THRUST BEARING NO. 2	10 - THRUST BEARING NO. 8
5 - THRUST BEARING NO. 3	11 - TRANSMISSION BULK HEAD
6 - THRUST BEARING NO. 4	12 - OIL PAN

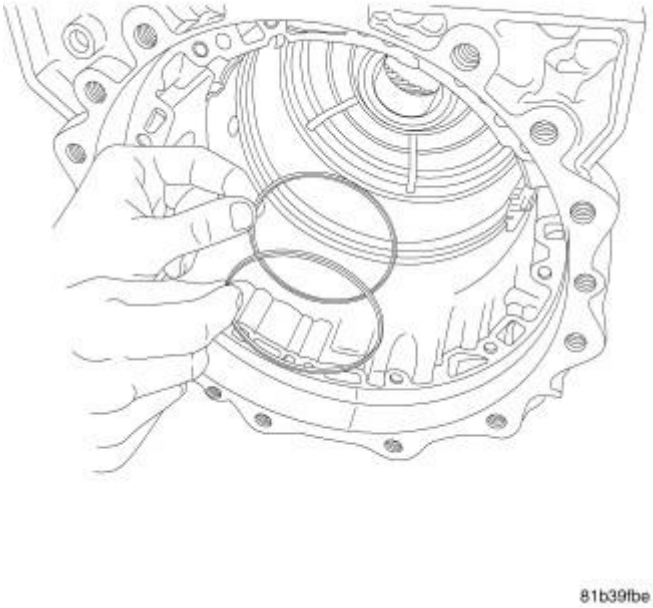

Fig. 133: K3 Support Seal Rings
Courtesy of CHRYSLER GROUP, LLC

1 - K3 SUPPORT SEAL RINGS

51. Apply trans jell or petroleum jelly onto the seal rings. Install the K3 support seal rings.

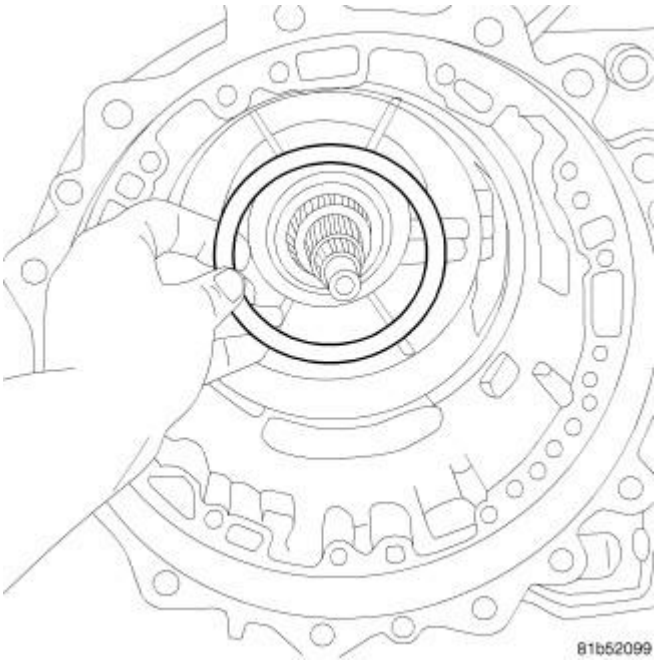

Fig. 134: K3 Hub Rear Thrust Bearing No. 8
Courtesy of CHRYSLER GROUP, LLC

52. Lubricate with trans jell or petroleum jelly and install the number eight thrust bearing.

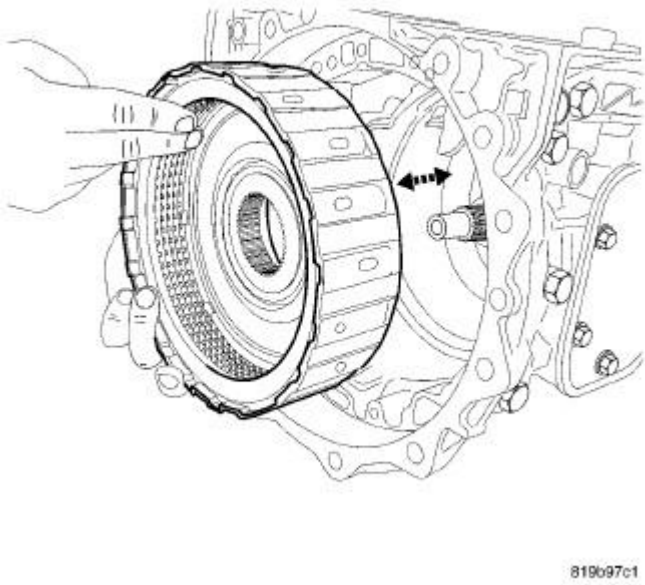

Fig. 135: K3 Clutch
Courtesy of CHRYSLER GROUP, LLC

53. Install the K3 clutch into the transmission case.

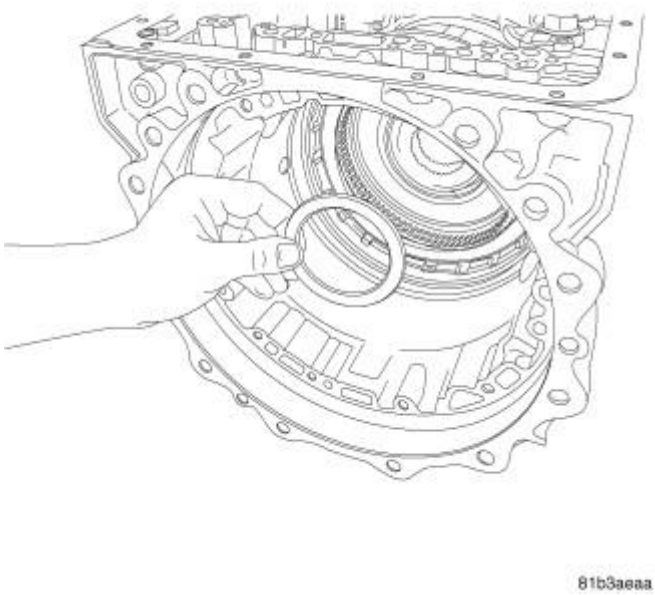

Fig. 136: P1 Annulus Thrust Washer No. 7
Courtesy of CHRYSLER GROUP, LLC

1 - P1 ANNULUS THRUST BEARING NO. 7

54. Lubricate with trans jell or petroleum jelly and install the number seven thrust bearing.

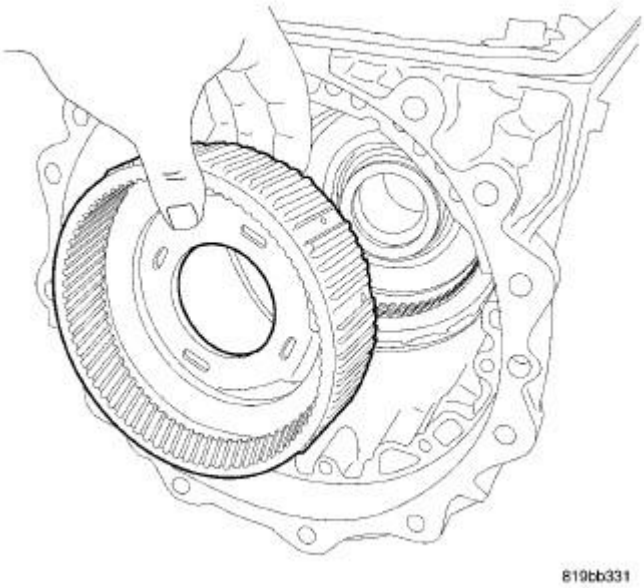

Fig. 137: P1 Annulus Gear
Courtesy of CHRYSLER GROUP, LLC

55. Install the P1 annulus gear into the transmission case.

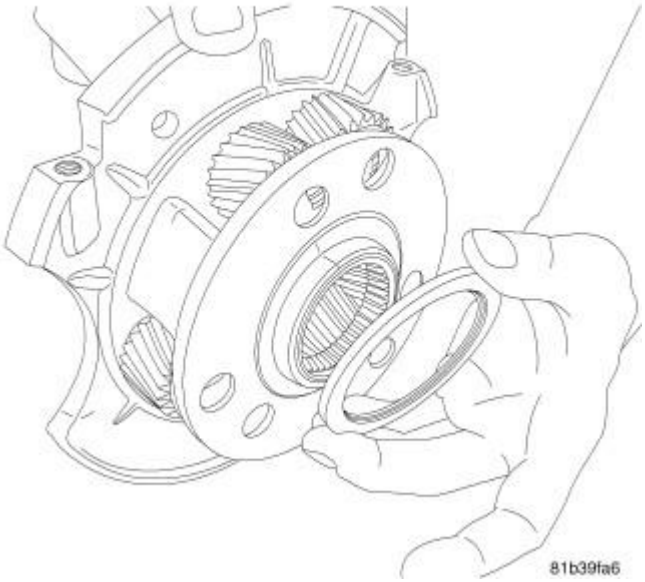

Fig. 138: P1 Thrust Bearing No. 6
Courtesy of CHRYSLER GROUP, LLC

1 - THRUST BEARING NO. 6

56. Lubricate with trans jell or petroleum jelly and install the number six thrust bearing.

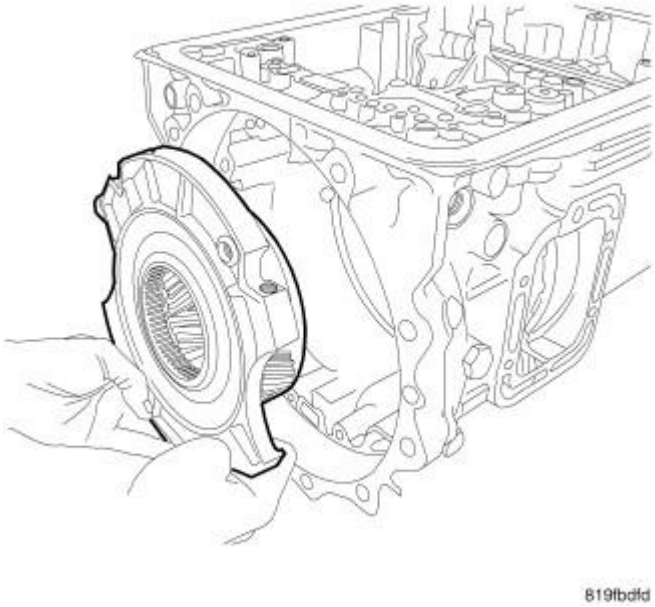

Fig. 139: P1 Planetary Carrier
Courtesy of CHRYSLER GROUP, LLC

57. Install the P1 planetary carrier into the transmission case.

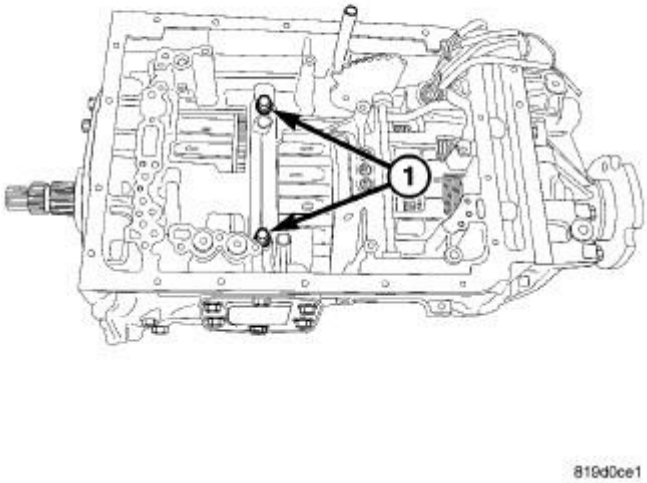

Fig. 140: P1 Carrier Bolts
Courtesy of CHRYSLER GROUP, LLC

1 - BOLTS

58. Install the P1 planetary carrier and the bolts (1) into the transmission case and hand tighten.

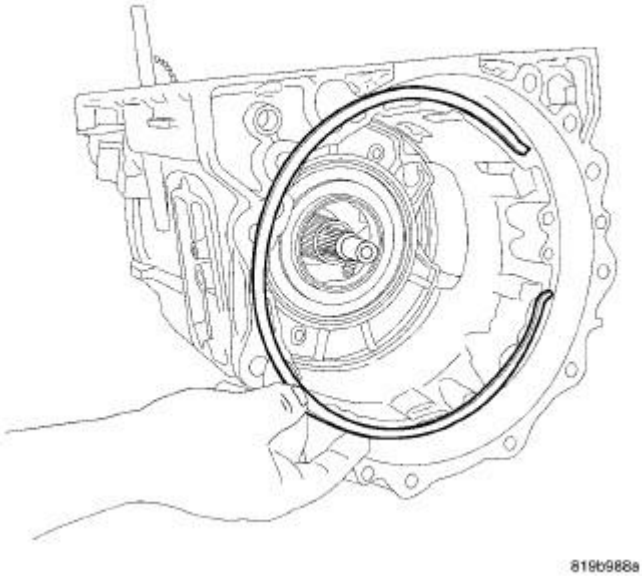

Fig. 141: Carrier Snap Ring

Courtesy of CHRYSLER GROUP, LLC

NOTE: **The tapered edge of the snap ring faces outward. The "hooked" ends of the snap ring should be to the window side of the PTO.**

59. Install the P1 planetary carrier snap ring into the transmission case. Tighten the bolts to 28 N.m (21 ft.lbs.).

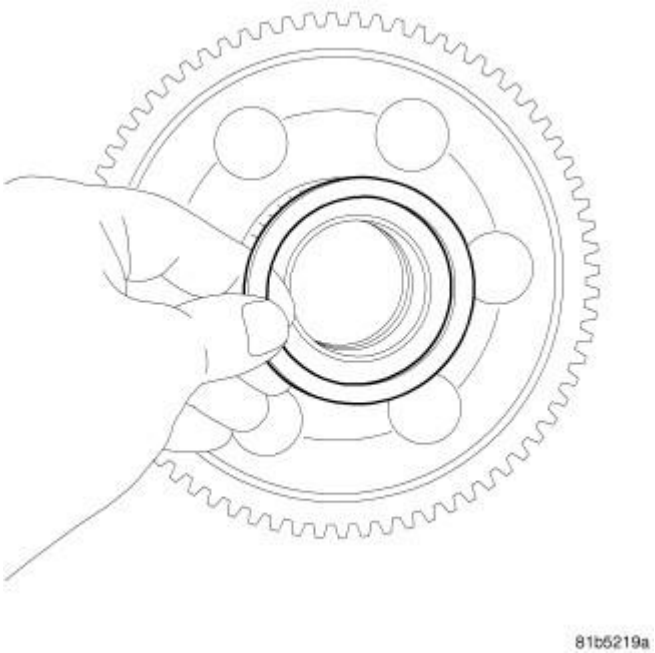

Fig. 142: Front Sun / PTO Rear Thrust Bearing No. 5
Courtesy of CHRYSLER GROUP, LLC

60. Lubricate with trans jell or petroleum jelly and install thrust bearing number five.

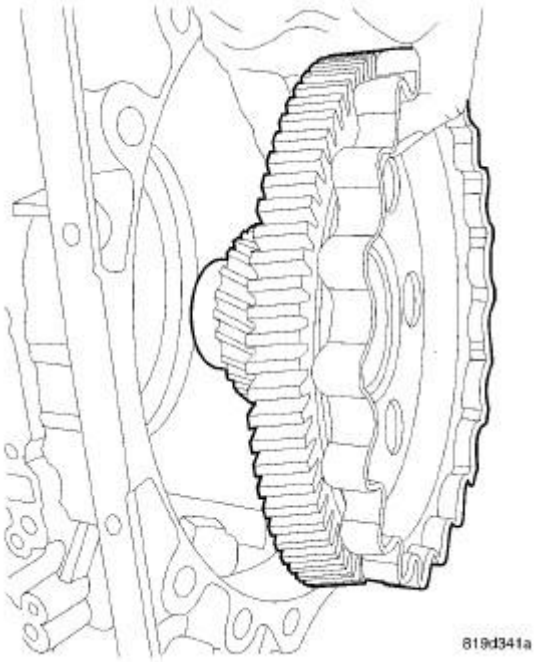

Fig. 143: Front Sun / PTO Drive Gear
Courtesy of CHRYSLER GROUP, LLC

61. Install the front sun / PTO drive gear into the transmission case.

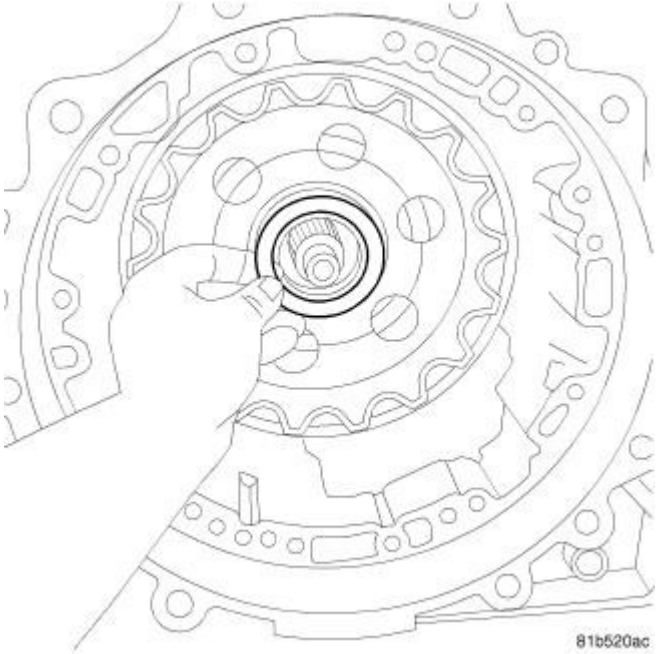

Fig. 144: Removing Front Sun/PTO Front Thrust Bearing No. 4
Courtesy of CHRYSLER GROUP, LLC

62. Lubricate with trans jell or petroleum jelly and install thrust bearing number four.

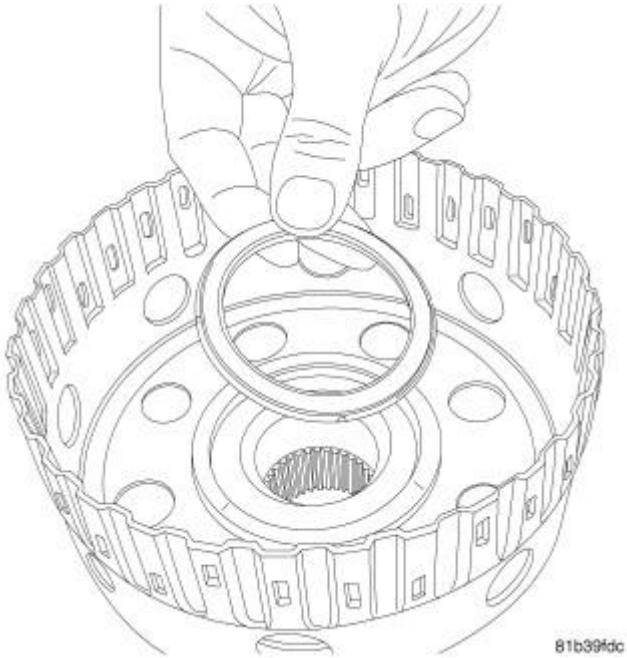

Fig. 145: K2 Hub Thrust Bearing No. 3
Courtesy of CHRYSLER GROUP, LLC

1 - K2 THRUST BEARING No. 3

63. Lubricate with trans jell or petroleum jelly and install thrust bearing number three.

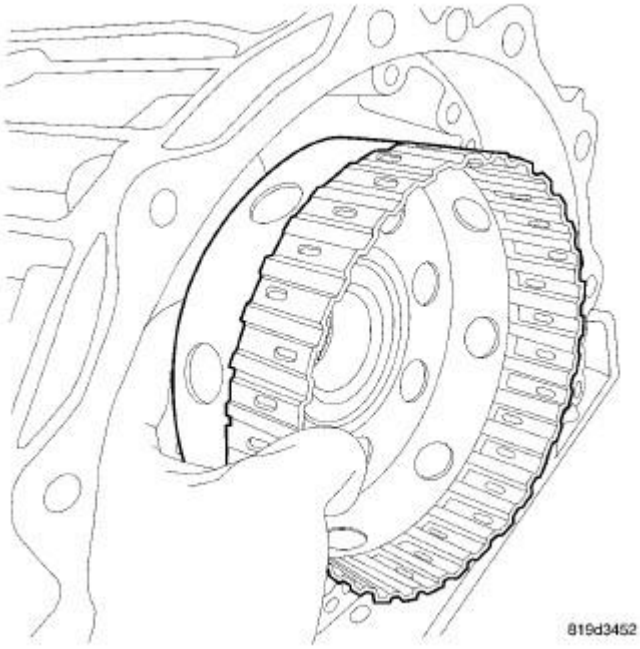

Fig. 146: K2 Clutch Hub
Courtesy of CHRYSLER GROUP, LLC

64. Install the K2 clutch hub into the transmission case.

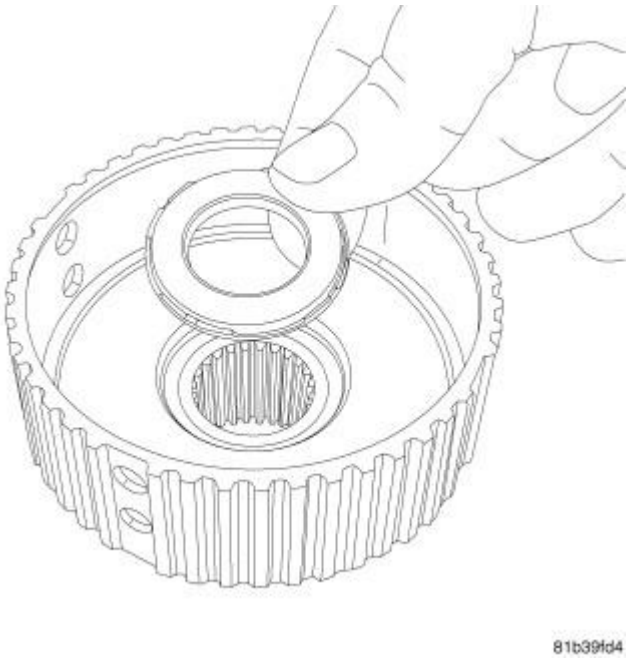

Fig. 147: K1 Thrust Bearing No 2
Courtesy of CHRYSLER GROUP, LLC

1 - K1 THRUST BEARING No. 2

65. Lubricate with trans jell or petroleum jelly and install thrust bearing number two.

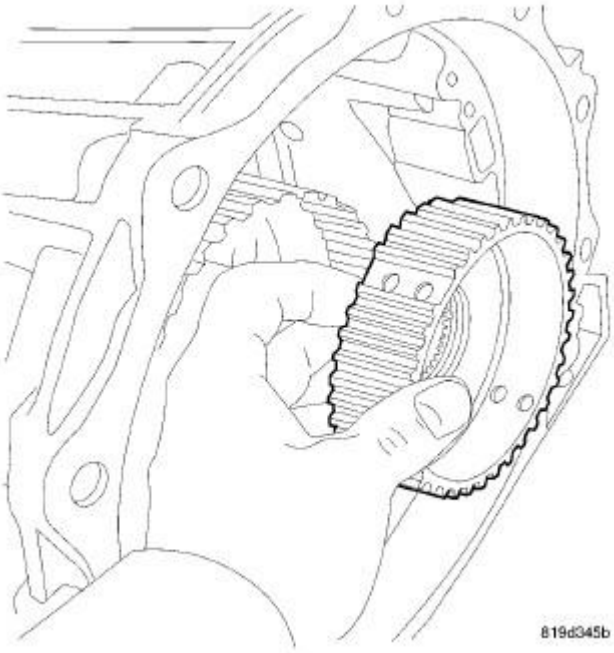

Fig. 148: K1 Clutch Hub
Courtesy of CHRYSLER GROUP, LLC

66. Install the K1 clutch hub and thrust bearing into the transmission case.

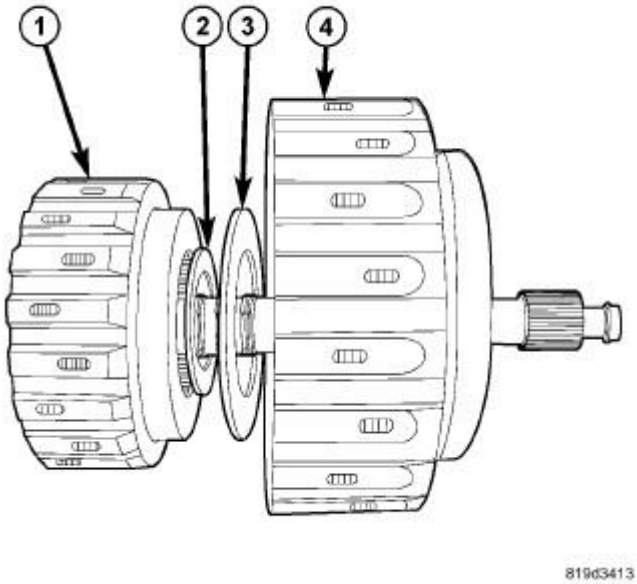

Fig. 149: K1 & K2 Clutches
Courtesy of CHRYSLER GROUP, LLC

1 - K1 CLUTCH ASSEMBLIES 2 - NO. 1 BEARING RACE (SELECT)
3 - THRUST WASHER
4 - K2 CLUTCH ASSEMBLIES

67. Apply trans jell or petroleum jelly onto the input shaft seal rings and install the K2 clutch assembly (3) onto the K1 clutch / input shaft assembly (1) with selectable input shaft end-play thrust bearing number one (2) and thrust washer (3) in place.

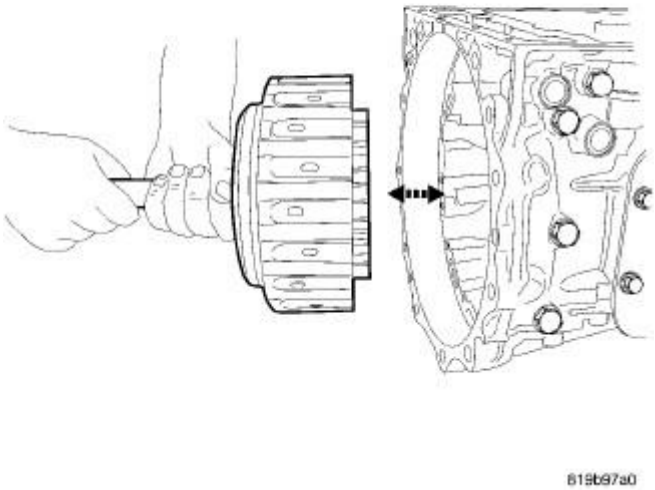

Fig. 150: Input Shaft With K1 & K2 Clutch Assemblies
Courtesy of CHRYSLER GROUP, LLC

68. Install the K2 clutch assembly and the K1 clutch / input shaft assembly into the transmission case.

CAUTION: If the oil pump is being replaced, the valve body must also be replaced. Failure to follow these instructions will damage the transmission.

NOTE: Be certain the input shaft seal rings are in place as well as the seal ring on the oil pump hub.

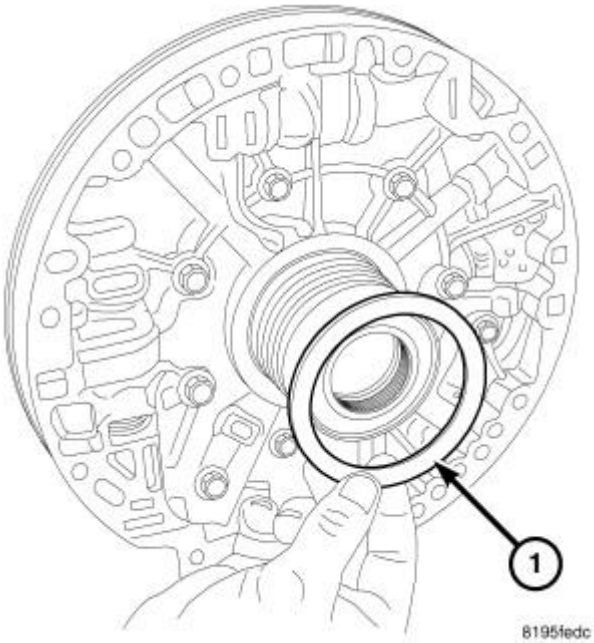

Fig. 151: Oil Pump Nylon Thrust Washer
Courtesy of CHRYSLER GROUP, LLC

1 - NYLON THRUST WASHER

69. Lubricate with trans jell or petroleum jelly and install the nylon thrust washer (1) onto the oil pump.

NOTE: **Two pin punches inserted through the oil pump mounting holes will aid in the installation of the oil pump.**

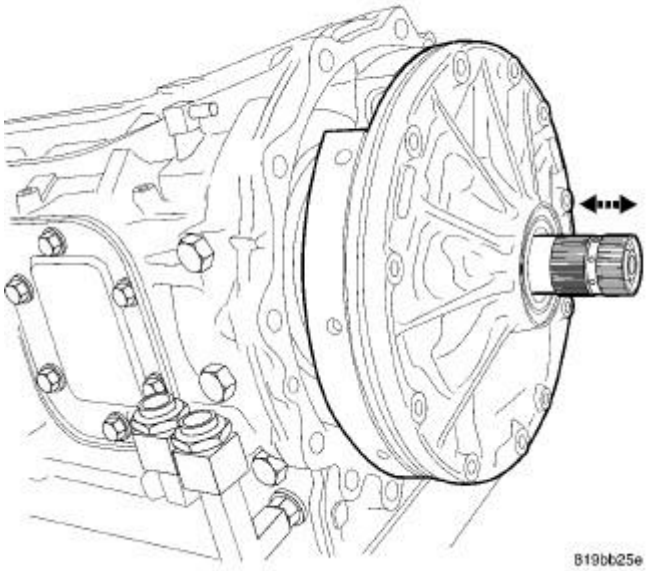

Fig. 152: Installing Oil Pump
Courtesy of CHRYSLER GROUP, LLC

70. Install a new torque converter hub seal into the oil pump using Installation tool (special tool #9987, Installer, Seal).
71. Lubricate the oil pump o-ring with MOPAR® AS68RC ATF.
72. Install the oil pump with a new gasket onto the transmission case.
73. Apply a light coating of MOPAR® thread sealant onto the oil pump bolts and install the bolts. Tighten bolts in a crisscross fashion to 21 N.m (15.5 ft.lbs.).

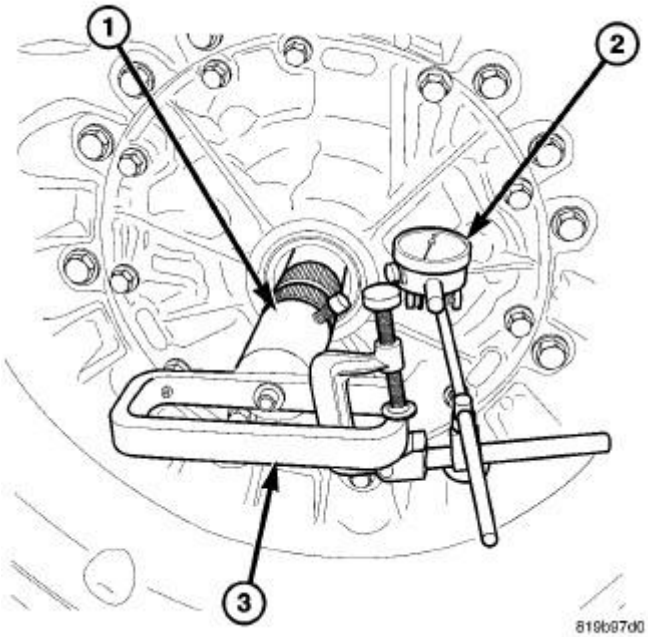

Fig. 153: Measuring Input Shaft End Play
Courtesy of CHRYSLER GROUP, LLC

1 - Socket 8266-19
2 - Dial Indicator C-3339A
3 - Handle 8266-A

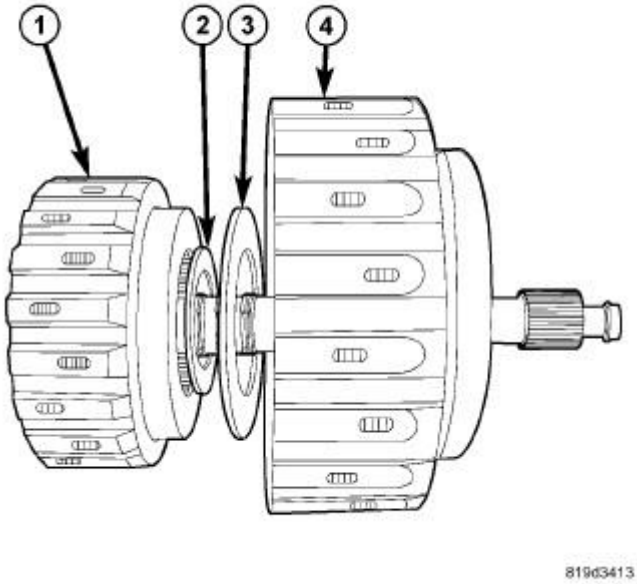

Fig. 154: K1 & K2 Clutches

Courtesy of CHRYSLER GROUP, LLC

1 - K1 CLUTCH ASSEMBLIES 2 - NO. 1 BEARING RACE (SELECT)
3 - THRUST WASHER
4 - K2 CLUTCH ASSEMBLIES

NOTE: **The input shaft end-play clearance may be checked with or without the torque converter housing in place.**

NOTE: **The input shaft end-play clearance is adjusted by means of the selectable NO. 1 thrust bearing race (2). The Thrust Washer (3) is non selectable.**

74. Install the Dial Indicator Set (special tool #C-3339A, Set, Dial Indicator) and Input Shaft Spline Socket (special tool #8266-19, Spline Tool, AS68RC Input) to check the input shaft end-play clearance.

    The input shaft end-play clearance for both 2WD and 4WD is 0.50-0.90 mm (0.019-0.035 in.). If the clearance is not within tolerance choose the correct selectable thrust bearing race.

    - Bearing race number one = 0.81 mm (0.031 in.)
    - Bearing race number two = 1.10 mm (0.043 in.)
    - Bearing race number three = 1.60 mm (0.063 in.)
75. Assemble and disassemble as necessary to achieve the input shaft end-play clearance.
76. Remove the Dial Indicator (2) set up.

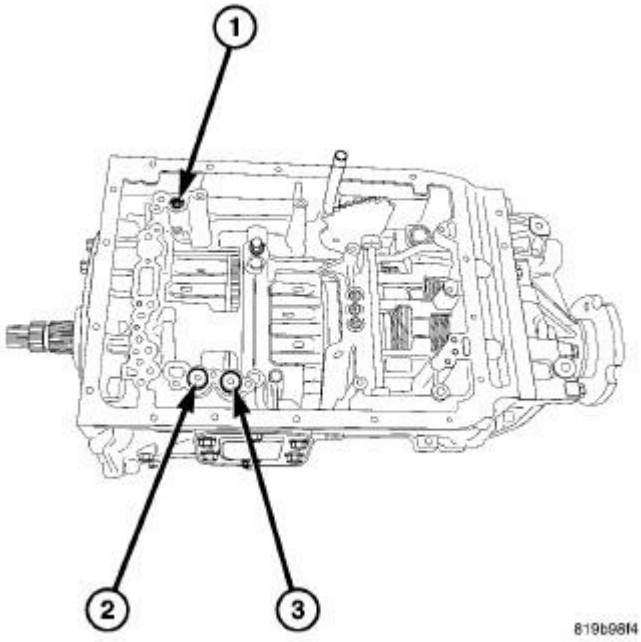

Fig. 155: Accumulator Valves
Courtesy of CHRYSLER GROUP, LLC

NOTE: These dimensions are at time of production.

	ACCUMULATORS		SPRING COLOR
	DIAMETER	**HEIGHT**	
ACCUMULATOR NO. ONE (1)	16 mm (0.63 in.)	40.18 mm (1.58 in.)	PURPLE
ACCUMULATOR NO. TWO (2)	20 mm (0.79 in.)	38.18 mm (1.50 in.)	PINK
ACCUMULATOR NO. THREE (3)	20 mm (0.79 in.)	39.18 mm (1.54 in.)	BLUE

77. Install the three accumulator springs first and then the three accumulator valves (1), (2),(3).
78. Install the valve body. Refer to **VALVE BODY, INSTALLATION**.

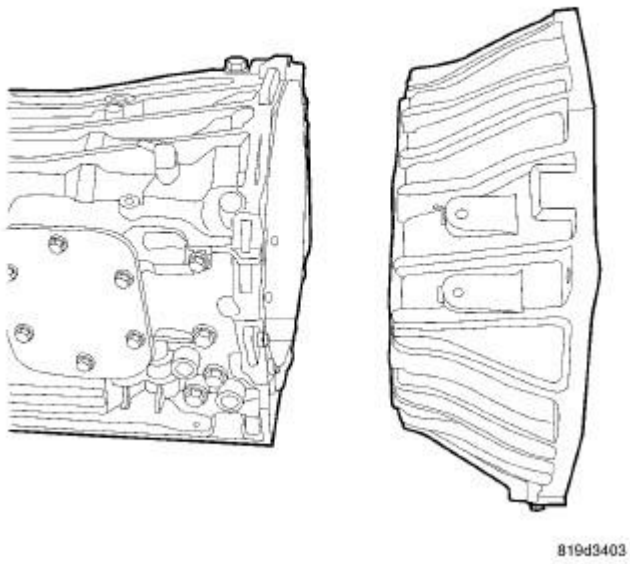

Fig. 156: Torque Converter Housing
Courtesy of CHRYSLER GROUP, LLC

79. Install the torque converter housing to the transmission case.
80. Install the torque converter housing bolts and tighten to 64 N.m (47 ft.lbs.)

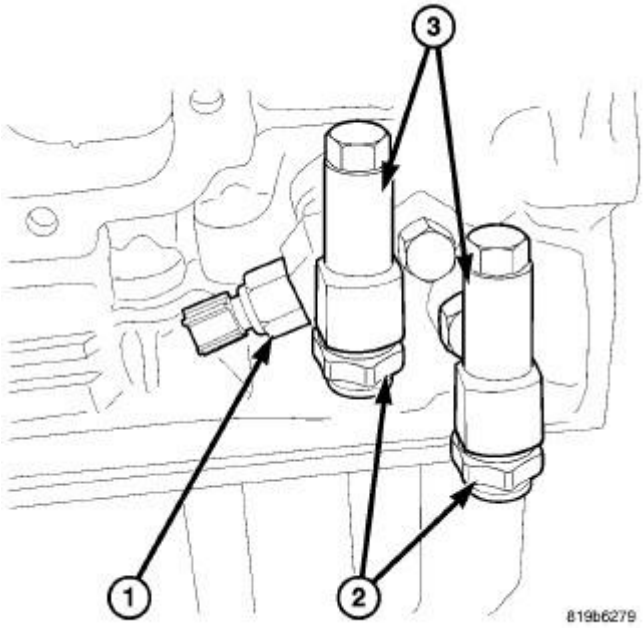

Fig. 157: Temperature Sensor & Line Fittings
Courtesy of CHRYSLER GROUP, LLC

1 - TEMPERATURE SENSOR
2 - JIFFY TITE FITTINGS
3 - COOLER LINE FITTINGS

81. Apply trans jell or petroleum jelly onto the cooler line seals and install the cooler line fittings (3) into the transmission case.
82. Tighten the cooler line fittings (3) to 44 N.m (32 in.lbs.)
83. Apply trans jell or petroleum jelly onto the Jiffy Tite fitting seals and install the Jiffy Tite fittings (2) onto the cooler line fittings.
84. Tighten Jiffy Tite fittings (2) to 25 N.m (18 ft.lbs.)
85. Install the ATF output temperature sensor (1) onto the output cooler line fitting.
86. Tighten the ATF output temperature sensor (1) to 34 N.m (25 ft.lbs.)

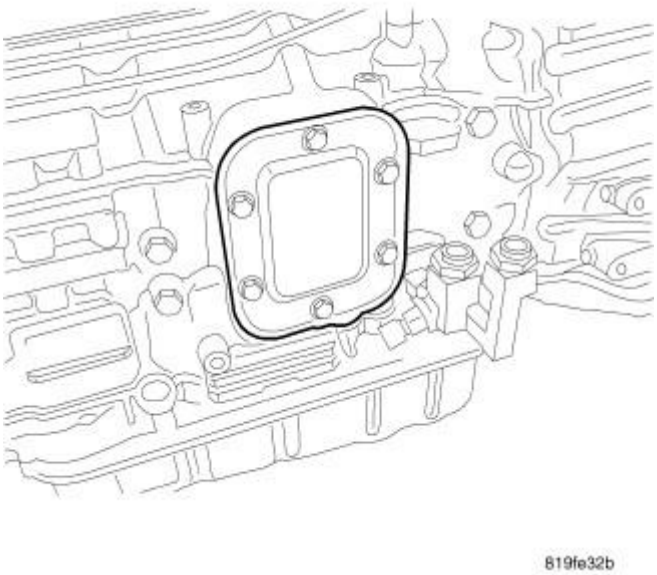

Fig. 158: PTO Dust Cover
Courtesy of CHRYSLER GROUP, LLC

87. Install a new gasket onto the PTO cover and apply a light coating of MOPAR® thread sealant onto the PTO cover bolts, install the bolts. Tighten the PTO cover bolts to 15 N.m (11 ft.lbs.).

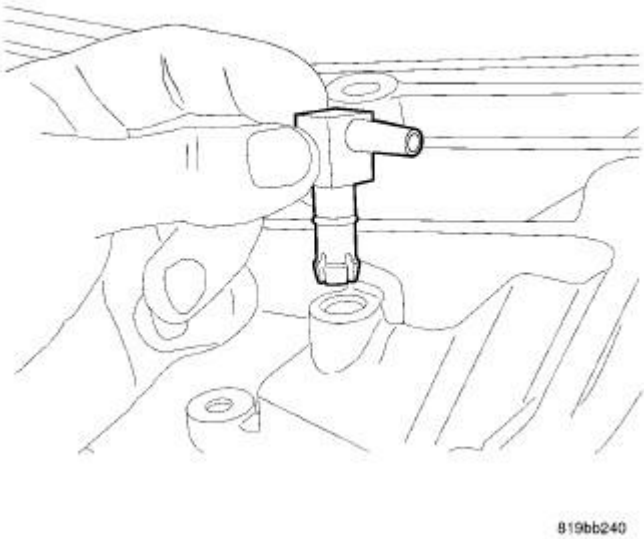

Fig. 159: Breather Fitting
Courtesy of CHRYSLER GROUP, LLC

88. Lubricate the o-ring with AS68RC ATF and install a new breather hose fitting into the transmission case.

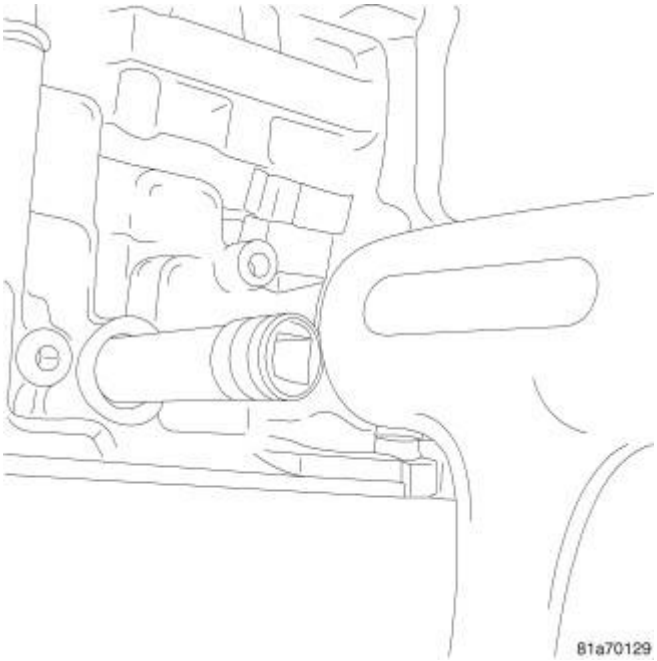

Fig. 160: Manual Shift Lever Seal Installation
Courtesy of CHRYSLER GROUP, LLC

89. Lubricate the manual shift lever seals (one on each side of the transmission) with trans jell or petroleum jelly and install the seal into the transmission case.

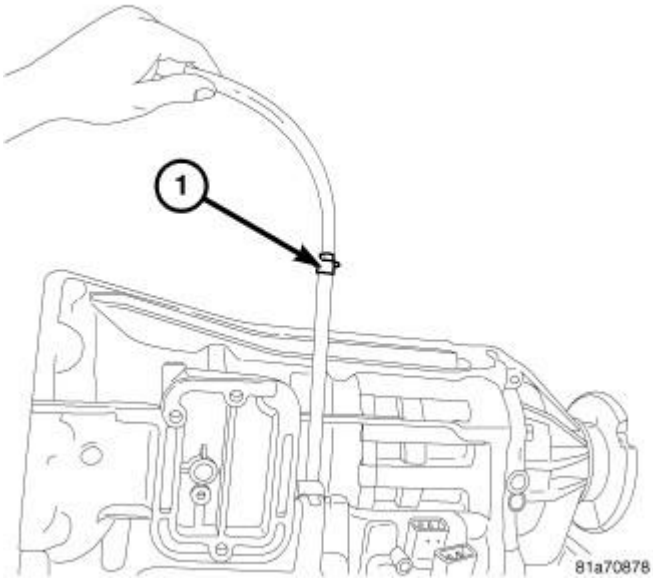

Fig. 161: Fill Tube & O-Ring
Courtesy of CHRYSLER GROUP, LLC

1 - FILL TUBE O-RING

90. Lubricate the transmission fill tube O-ring (1) with trans jell or petroleum jelly and install the fill tube into the transmission case.
91. Install the transmission fill tube to case bolt (if equipped) and tighten bolt to 12.5 N.m (9 ft.lbs.).
92. Install the transmission range sensor. Refer to **SENSOR, TRANSMISSION RANGE, INSTALLATION**.
93. Install the manual shift lever onto the transmission manual shift lever shaft. Tighten the inside nut to 12.5 N.m (9 ft.lbs.). While holding the inside nut tighten the outside nut to 12.5 N.m (9 ft.lbs.).

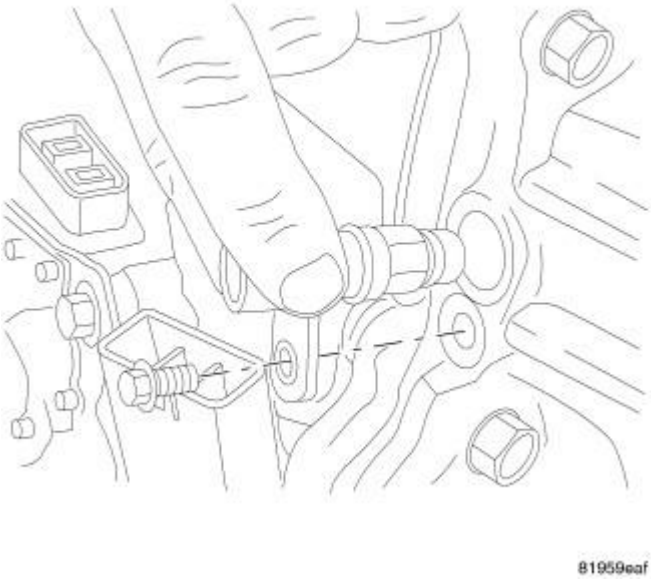

Fig. 162: Output Speed Sensor
Courtesy of CHRYSLER GROUP, LLC

94. Apply trans jell or petroleum jelly onto the output speed sensor seal and install the output speed sensor into the transmission case.
95. Install the output speed sensor bolt. Tighten the output speed sensor bolt to 8 N.m (70 in.lbs.).

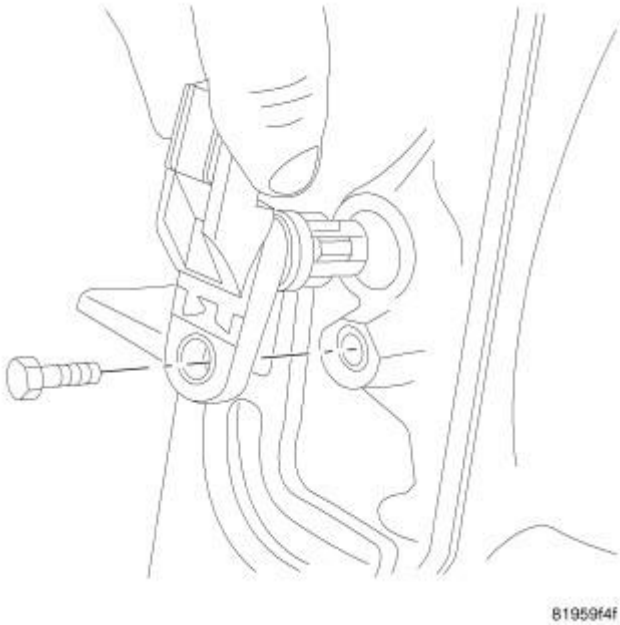

Fig. 163: Input Speed Sensor
Courtesy of CHRYSLER GROUP, LLC

96. Apply trans jell or petroleum jelly onto the input speed sensor seal and install the input speed sensor into the transmission case.
97. Install the input speed sensor bolt. Tighten the input speed sensor bolt to 8 N.m (70 in.lbs.).

WARNING: Be certain the transmission is secure when installing the torque converter, the torque converter is very heavy. Failure to follow these instructions may result in personal injury or may be fatal.

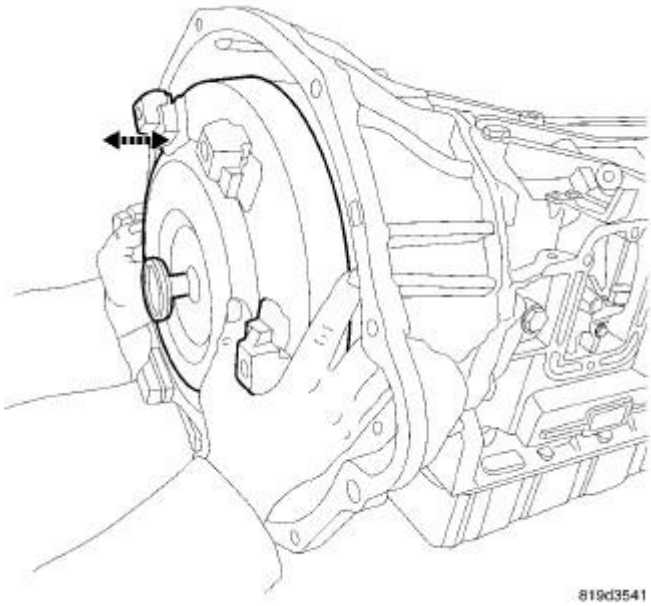

Fig. 164: Removing/Installing Torque Converter From Transmission
Courtesy of CHRYSLER GROUP, LLC

98. Apply trans jell or petroleum jelly onto the input shaft ring seals and torque converter hub seal.
99. Install the torque converter onto the input shaft while applying inward pressure and rotating back and forth at the same time in order to align the input shaft splines and the two teeth on the oil pump drive gear.
100. Install a C-clamp or similar devise to secure the torque converter into the torque converter housing.

INSTALLATION

INSTALLATION

NOTE: **After the installation of the transmission, a quick learn must be performed using the scan tool. Refer to MODULE, TRANSMISSION CONTROL, STANDARD PROCEDURE .**

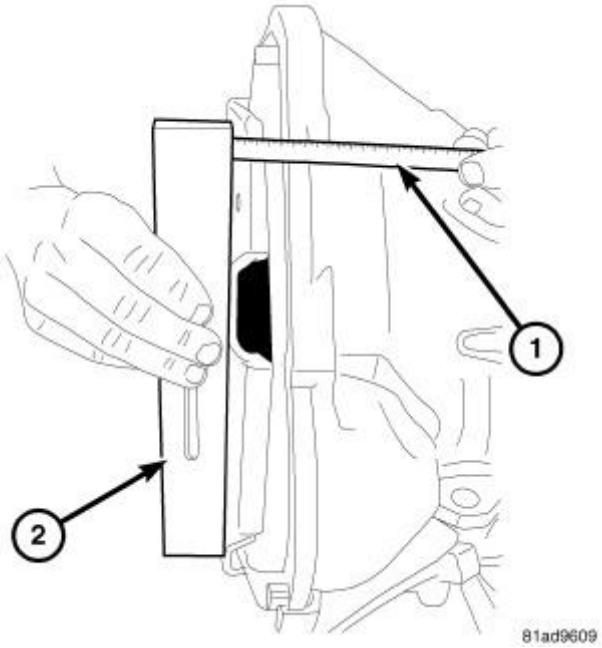

Fig. 165: Checking Torque Converter Seating
Courtesy of CHRYSLER GROUP, LLC

1 - SCALE
2 - STRAIGHTEDGE

NOTE: If the torque converter hub is severely scored or gouged it must be replaced.

1. Check torque converter hub and hub drive flats for sharp edges burrs, scratches, or nicks. Polish the hub and flats with 320/400 grit paper and crocus cloth if necessary. The hub must be smooth to avoid damaging pump seal at installation.
2. If a replacement transmission is being installed, transfer any components necessary, such as the manual shift lever and shift cable bracket, from the original transmission onto the replacement transmission.
3. Lubricate oil pump seal lip with trans jell or petroleum jelly.
4. Align converter and oil pump.
5. Carefully insert converter in oil pump. Then rotate converter back and forth until fully seated in pump gears.
6. Check converter seating with steel scale (1) and straightedge (2). Surface of converter lugs should be at least 28.2 mm (1.12 in.) to rear of straightedge when converter is fully seated.
7. Temporarily secure converter with C-clamp.

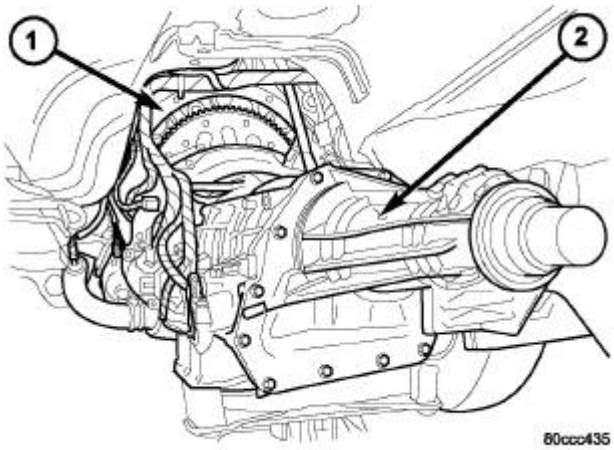

Fig. 166: Identifying Transmission & Engine
Courtesy of CHRYSLER GROUP, LLC

1 - ENGINE
2 - TRANSMISSION

8. Position transmission on jack and secure it with chains.
9. Check condition of converter driveplate. Replace the plate if cracked, distorted or damaged. **Also be sure transmission dowel pins are seated in engine block and protrude far enough to hold transmission in alignment.**
10. Apply a light coating of MOPAR® High Temp Grease to the torque converter hub pocket in the rear pocket of the engine's crankshaft.
11. Raise transmission (2) and align the torque converter with the drive plate and transmission converter housing with the engine block.
12. Move transmission forward. Then raise, lower or tilt transmission to align the converter housing with engine block dowels.
13. Carefully work transmission forward and over engine block dowels until converter hub is seated in crankshaft. Verify that no wires, or the transmission vent hose, have become trapped between the engine block and the transmission.
14. Install the bolts to attach the transmission to the engine. Tighten the bolts to 64 N.m (47 in. lbs.)

CAUTION: It is essential that correct length bolts be used to attach the converter to the driveplate. Failure to follow this caution may result in transmission damage.

15. Rotate crankshaft with socket wrench on dampener bolt in clockwise direction and install **NEW** torque converter to driveplate bolts. Tighten bolts to 31 N.m (270 in. lbs.).

CAUTION: If replacing a engine mount / bracket, be certain to inspect all other engine mounts in the system. Failure to follow this caution may result in damage to the vehicle.

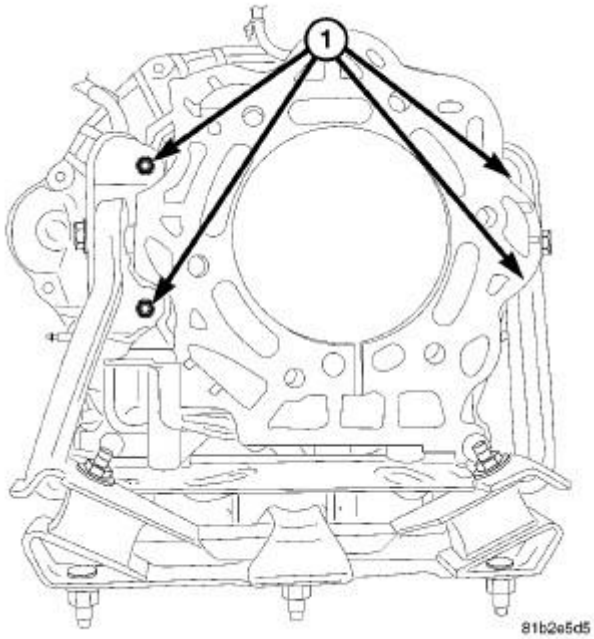

Fig. 167: Power Bending Bracket Nuts
Courtesy of CHRYSLER GROUP, LLC

16. Install the power bending bracket onto the extension housing, if equipped. Tighten the power bending bracket nuts (1) to 30 N.m (22 ft.lbs.). Refer to **INSULATOR, ENGINE MOUNT, REAR, INSTALLATION, 6.7L** .
17. Install transfer case, if equipped. Tighten transfer case nuts to 35 N.m (26 ft.lbs.). Refer to appropriate Transmission and Transfer Case article.
18. Install rear support to transmission. Tighten bolts to 47 N.m (35 ft.lbs.).
19. Lower transmission onto crossmember and install bolts attaching transmission mount to crossmember. Tighten clevis bracket to crossmember bolts to 47 N.m (35 ft.lbs.). Tighten the clevis bracket to rear support bolt to 68 N.m (50 ft.lbs.).
20. Remove engine support fixture.

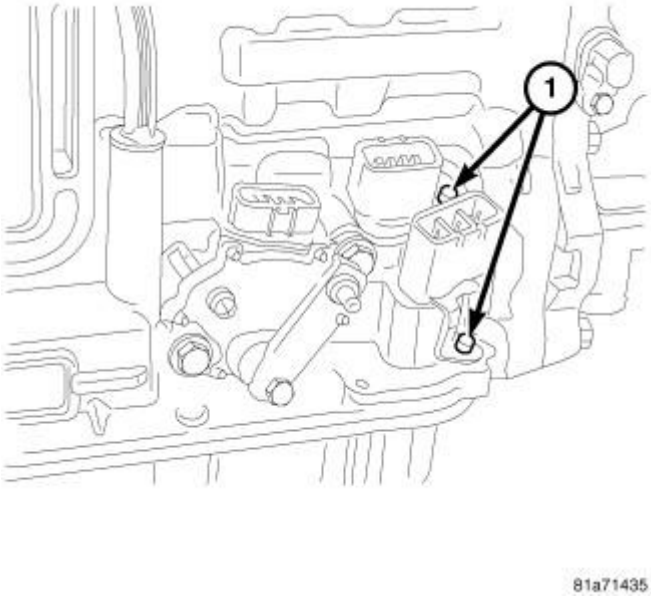

Fig. 168: Connector Bolts
Courtesy of CHRYSLER GROUP, LLC

1 - CONNECTOR BOLTS

CAUTION: Install the electrical connectors correctly. Some electrical connectors may be interchangeable, damage to the electrical system may occur if the connectors are reversed.

21. Connect wire harnesses to solenoids and transmission range sensor assembly.

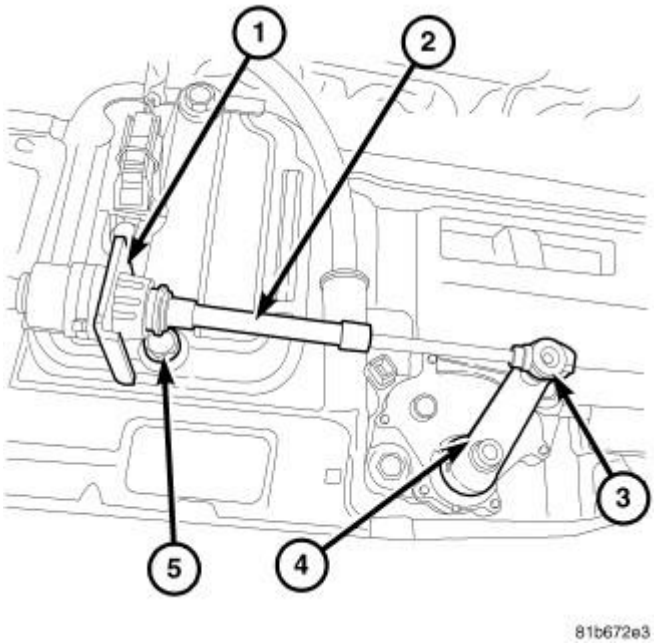

Fig. 169: Shift Cable At Transmission
Courtesy of CHRYSLER GROUP, LLC

1 - SHIFT CABLE BRACKET	4 - MANUAL SHIFT LEVER
2 - SHIFT CABLE	5 - SHIFT CABLE BRACKET BOLT
3 - SHIFT CABLE BALL SOCKET	

22. Install shift cable bracket (1) and the shift cable bracket bolt (5). Tighten bolt to 27 N.m (20 ft.lbs.).
23. Install the shift cable (2) into the shift cable bracket (1).
24. Connect gearshift cable ball socket (3) from transmission manual valve lever (4).

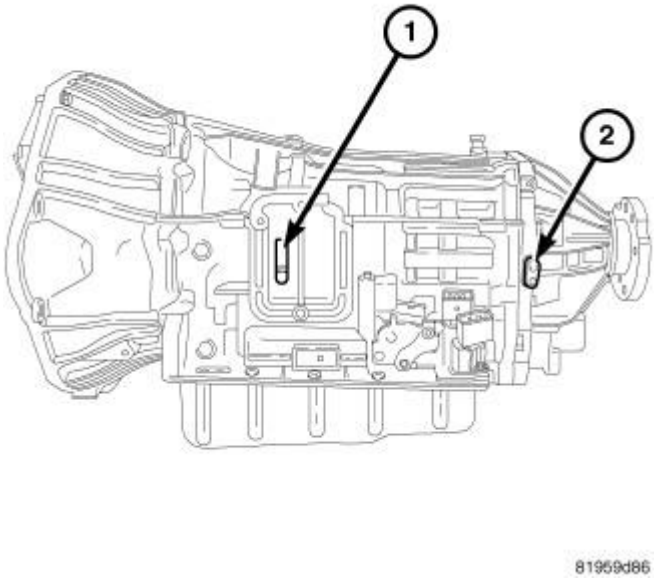

Fig. 170: Input & Output Speed Sensors
Courtesy of CHRYSLER GROUP, LLC

1 - INPUT SPEED SENSOR
2 - OUTPUT SPEED SENSOR

25. Connect the wire harness to the input speed sensor (1) and the output speed sensor (2).

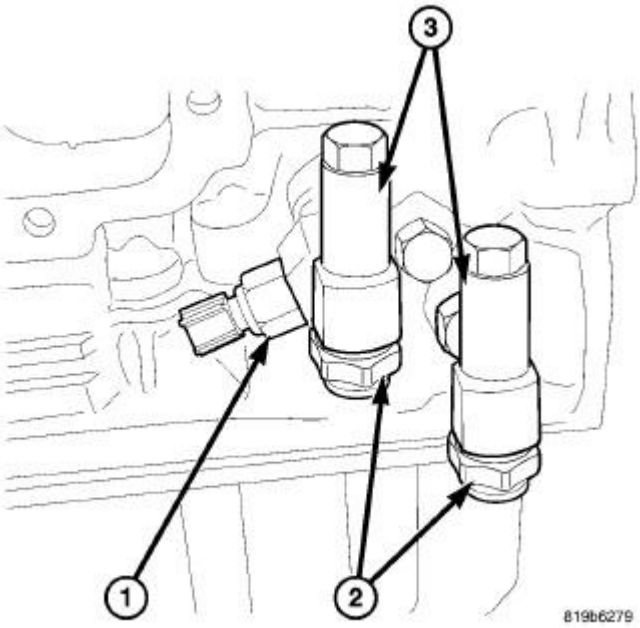

Fig. 171: Temperature Sensor & Line Fittings

Courtesy of CHRYSLER GROUP, LLC

1 - TEMPERATURE SENSOR 2 - JIFFY TITE FITTINGS 3 - COOLER LINE FITTINGS

26. Connect the electrical harness to torque converter temperature sensor (1) and be certain transmission harnesses are properly routed.
27. Connect cooler lines to transmission (2).
28. Install transmission fill tube.

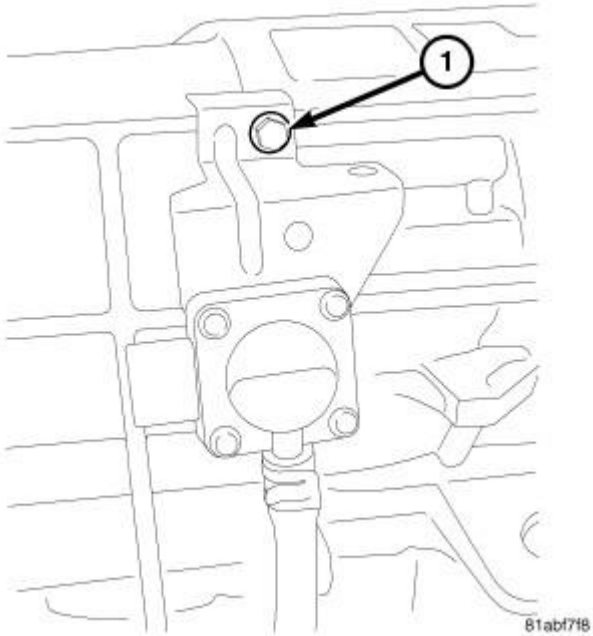

Fig. 172: Differential Pressure Sensor & Bolt
Courtesy of CHRYSLER GROUP, LLC

1 - BOLT

29. Install bolt (1) securing the differential pressure sensor onto the transmission case. Tighten the bolt to 10N.m (88 in. lbs.).
30. Install exhaust particulate filter.
31. Align and connect propeller shaft(s).
32. Adjust gearshift cable if necessary.
33. Install any skid plates removed previously. Refer to **PLATE, SKID, FRONT, INSTALLATION** or **PLATE, SKID, TRANSFER CASE, INSTALLATION** .
34. Lower vehicle.
35. Fill transmission with MOPAR® AS68RC Automatic Transmission Fluid. Refer to **FLUID, STANDARD PROCEDURE**.

SPECIAL TOOLS

SPECIAL TOOLS

	10009 - Adapters, Line Pressure (Originally Shipped In Kit Number(s) 10009, 10009, 10045.) 5059-A - Compressor, Spring (Originally Shipped In Kit Number(s) 6303, 6672, 8853.) 6268 - Tip, Dial Indicator (Originally Shipped In Kit Number(s) 6303, 8853.) 8266-19 - Spline Tool, AS68RC Input (Originally Shipped In Kit Number(s) 9978.) 8266-20 - Spline Tool, AS68RC Output (Originally Shipped In Kit Number(s) 9978.) 8266B - End Play Socket Set (Originally Shipped In Kit Number(s) 8283, 8527, 8575, 8575CC.) 8622 - Screw, Clutch Spring Compressor (Originally Shipped In Kit Number(s) 8666, 8667, 8705, 8705CC.) 9524 - Indicator, Dial (Originally Shipped In Kit Number(s) 9329, 9329-SUP, 9515-SUP2, 9516, 9516-SUP, 9517-SUP2, 9518, 9518-SUP, 9519, 9540-SUP, 9541-SUP, 9694.) 9546 - Disconnect Tool (Originally Shipped In Kit Number(s) 9590.) 9980 - Adapters, Puller (Originally Shipped In Kit Number(s) 9978.) 9981 - Adapters, Puller (Originally Shipped In Kit Number(s) 9978.) 9982 - Compressor, Spring (Originally Shipped In Kit Number(s) 9978.) 9982-1 - Compressor (Originally Shipped In Kit Number(s) 9978.) 9982-2 - Plate, Back Up (Originally Shipped In Kit Number(s) 9978.) 9983 - Alignment Tool, TRS (Originally Shipped In Kit Number(s) 9978.) 9984 - Installer, Seal (Originally Shipped In Kit Number(s) 9978.) 9985 - Installer, Seal (Originally Shipped In Kit Number(s) 9978.) 9987 - Installer, Seal (Originally Shipped In Kit Number(s) 10006, 9978.) C-3281 - Holder, Flange (Originally Shipped In Kit Number(s) 9202, 9202A-CAN, 9202CC, 9299, 9299CC, 9299CC, 9300A-CAN.) C-3293-SP - Gauge, Pressure 0-300 P.S.I.

	C-3339A - Set, Dial Indicator (Originally Shipped In Kit Number(s) 9202.) C-3752 - Slide Hammers (Originally Shipped In Kit Number(s) 9202, 9202A-CAN, 9202-CAN, 9202CC.) MB991790 - Compressor, Spring (Originally Shipped In Kit Number(s) 8666, 8667, 8705.)

CABLE, SHIFT

DIAGNOSIS AND TESTING

DIAGNOSIS AND TESTING - GEARSHIFT CABLE

1. Engine starts must be possible with shift lever in PARK or NEUTRAL positions only. Engine starts must not be possible in any other gear position.
2. With the shift lever in the:
    1. PARK position - Apply upward force on the shift arm and remove pressure. Engine starts must be possible.
    2. PARK position - Apply downward force on the shift arm and remove pressure. Engine starts must be possible.
    3. NEUTRAL position - Normal position. Engine starts must be possible.
    4. NEUTRAL position - Engine running and brakes applied, apply upward force on the shift arm. Transmission shall not be able to shift from neutral to reverse.

ADJUSTMENTS

ADJUSTMENTS

NOTE: **Always run the shift lever test using the scan tool to help diagnose a potential TRS problem**

Check adjustment by starting the engine in PARK and NEUTRAL. Adjustment is CORRECT if the engine starts only in these positions. Adjustment is INCORRECT if the engine starts in one but not both positions. If the engine starts in any position other than PARK or NEUTRAL, or if the engine will not start at all, the transmission range sensor may be faulty.

GEARSHIFT ADJUSTMENT PROCEDURE

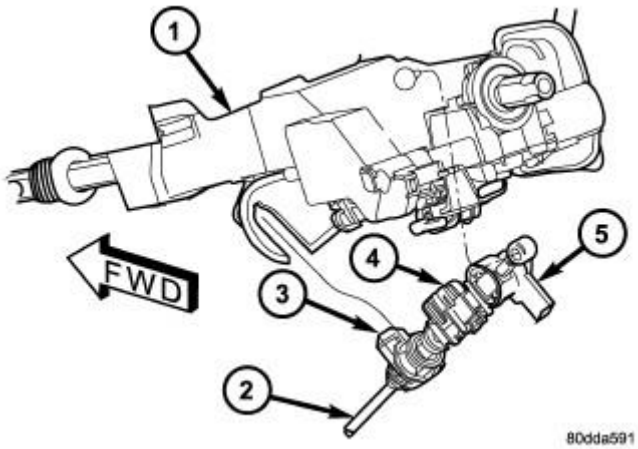

Fig. 173: Gearshift Cable & Steering Column
Courtesy of CHRYSLER GROUP, LLC

1 - STEERING COLUMN
2 - GEARSHIFT CABLE
3 - GEARSHIFT CABLE LOCK TAB
4 - BTSI SOLENOID LOCK TAB
5 - BTSI CONNECTOR

1. Shift transmission into PARK.
2. Release cable adjuster lock tab (3) (underneath the steering column) to unlock cable. Refer to **Fig. 173**.
3. Raise vehicle.
4. Disengage the cable eyelet from the transmission manual shift lever.
5. Verify transmission shift lever is in PARK detent by moving lever fully rearward. Last rearward detent is PARK position.
6. Verify positive engagement of transmission park lock by attempting to rotate propeller shaft. Shaft will not rotate when park lock is engaged.
7. Snap the cable eyelet onto the transmission manual shift lever.
8. Lower vehicle.
9. Lock shift cable by pressing cable adjuster lock tab (3) downward until it snaps into place.
10. Check engine starting. Engine should start only in PARK and NEUTRAL.

REMOVAL

REMOVAL

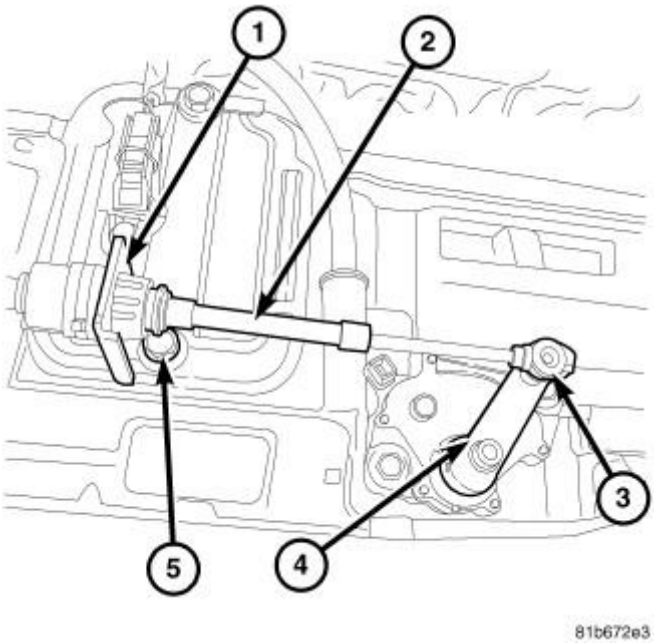

Fig. 174: Shift Cable At Transmission
Courtesy of CHRYSLER GROUP, LLC

1 - SHIFT CABLE BRACKET	4 - MANUAL SHIFT LEVER
2 - SHIFT CABLE	5 - SHIFT CABLE BRACKET BOLT
3 - SHIFT CABLE BALL SOCKET	

1. Shift transmission into PARK.
2. Raise vehicle.
3. Disconnect the shift cable ball socket (3) at transmission manual shift lever (4) and pull shift cable out of mounting bracket (1).

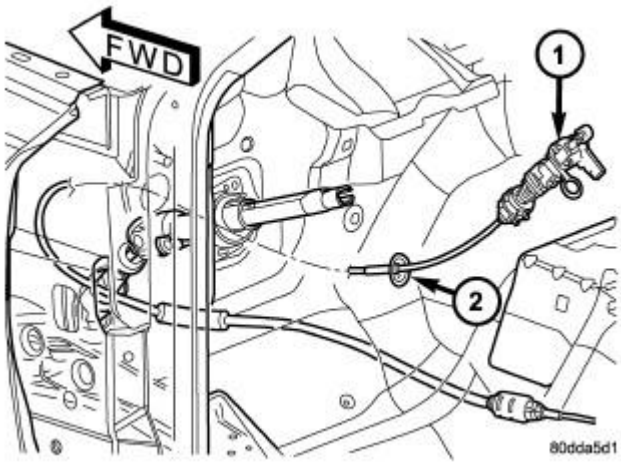

Fig. 175: Gearshift Cable At Dash Panel
Courtesy of CHRYSLER GROUP, LLC

1 - GEARSHIFT CABLE
2 - GROMMET

4. Lower the vehicle.
5. Remove the dash panel insulation pad as necessary to access the gearshift cable grommet (2). Refer to **Fig. 175**.
6. Remove grommet (2) from the dash panel.

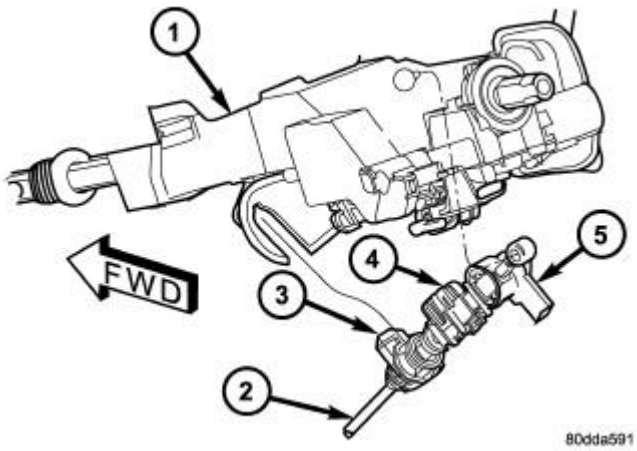

Fig. 176: Gearshift Cable & Steering Column
Courtesy of CHRYSLER GROUP, LLC

1 - STEERING COLUMN
2 - GEARSHIFT CABLE
3 - GEARSHIFT CABLE LOCK TAB

4 - BTSI SOLENOID LOCK TAB
5 - BTSI CONNECTOR

7. Remove any steering column (1) trim necessary to access the gearshift cable (2) and BTSI mechanism.
8. Disconnect the BTSI wiring connector (5).
9. Disconnect cable at lower column bracket and shift lever pin and pull the cable through the dash panel opening into the vehicle. Refer to **Fig. 176**.
10. Remove gearshift cable (2) from vehicle.

INSTALLATION

INSTALLATION

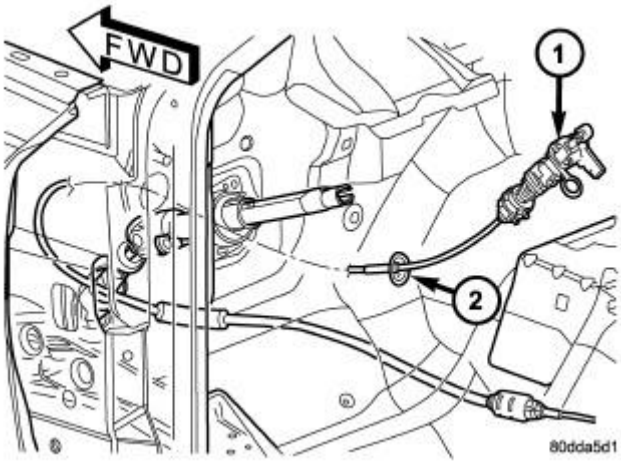

Fig. 177: Gearshift Cable At Dash Panel
Courtesy of CHRYSLER GROUP, LLC

1 - GEARSHIFT CABLE
2 - GROMMET

1. Route the transmission end of the gearshift cable (1) through the opening in the dash panel. Refer to **Fig. 177**.
2. Seat the cable grommet (2) into the dash panel opening.

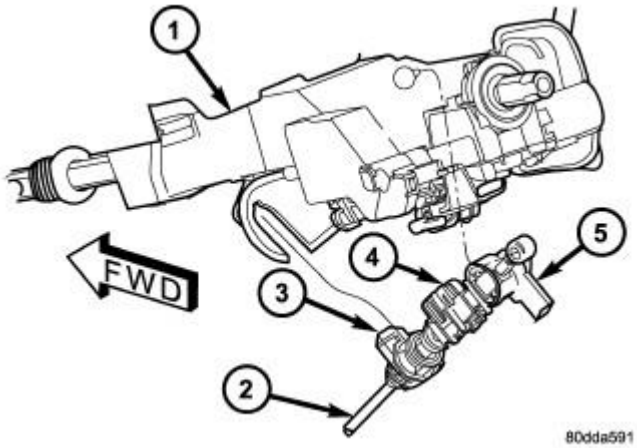

Fig. 178: Gearshift Cable & Steering Column
Courtesy of CHRYSLER GROUP, LLC

1 - STEERING COLUMN
2 - GEARSHIFT CABLE
3 - GEARSHIFT CABLE LOCK TAB
4 - BTSI SOLENOID LOCK TAB
5 - BTSI CONNECTOR

3. Snap the cable into the steering column (1) bracket so the retaining ears are engaged and snap the cable eyelet onto the shift lever ball stud.

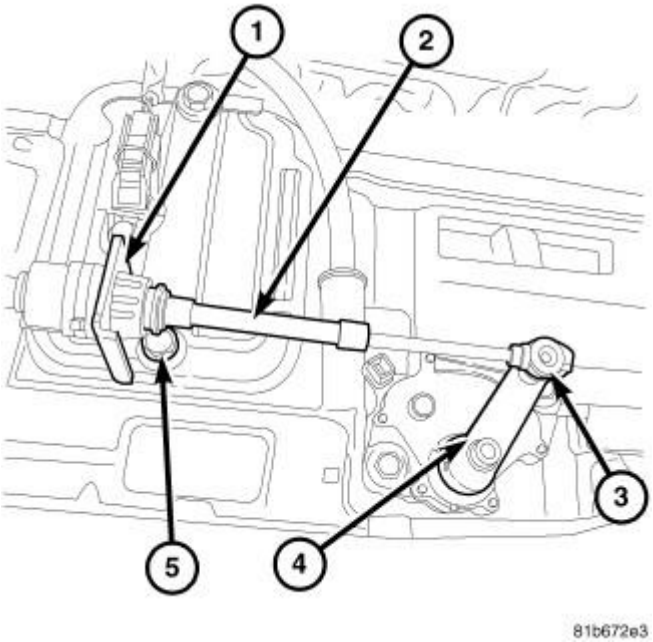

Fig. 179: Shift Cable At Transmission
Courtesy of CHRYSLER GROUP, LLC

1 - SHIFT CABLE BRACKET	4 - MANUAL SHIFT LEVER
2 - SHIFT CABLE	5 - SHIFT CABLE BRACKET BOLT
3 - SHIFT CABLE BALL SOCKET	

4. Raise the vehicle.
5. Place the transmission manual shift lever in the "PARK" detent (rearmost) position and rotate prop shaft to ensure transmission is in PARK.
6. Route the gearshift cable through the shift cable mounting bracket (1) and secure the cable by snapping the cable retaining ears into the bracket and by snapping the shift cable ball socket (3) onto the manual shift lever (4) ball stud.
7. Lower vehicle.
8. Lock the shift cable adjustment by pressing the cable adjuster lock tab (3) downward until it snaps into place.
9. Check for proper operation of the transmission range sensor.
10. Adjust the gearshift cable and BTSI mechanism. Refer to **CABLE, SHIFT, ADJUSTMENTS** and **SYSTEM, SHIFT INTERLOCK, ADJUSTMENTS**.

CLUTCH, NUMBER 1

DISASSEMBLY

DISASSEMBLY

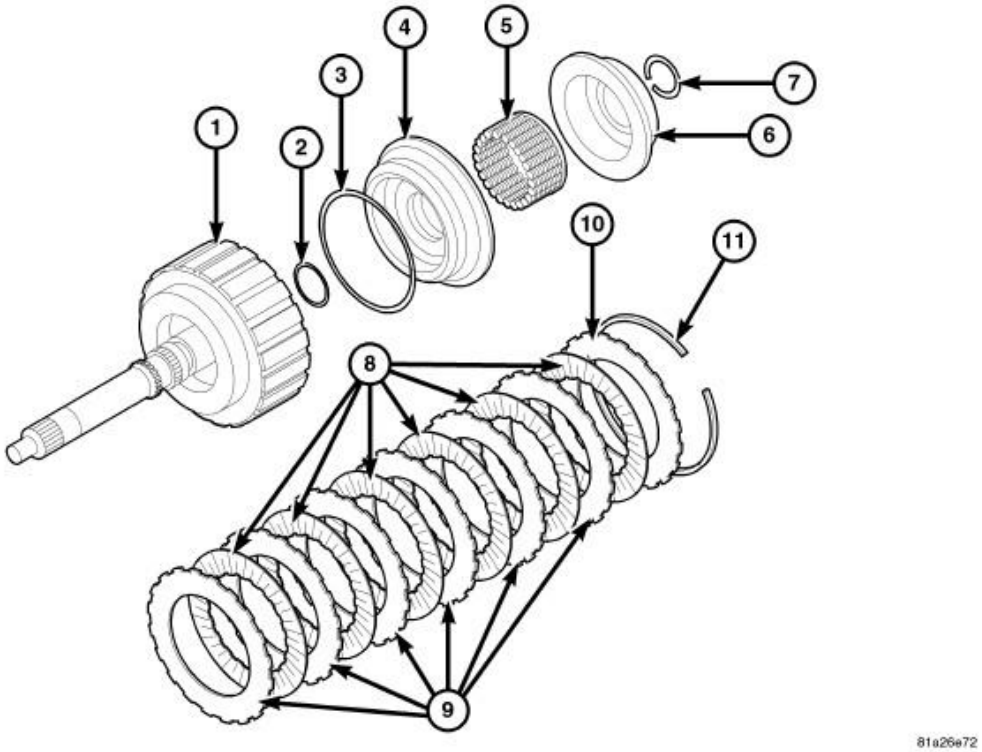

Fig. 180: Exploded View Of K1 Clutch Assembly
Courtesy of CHRYSLER GROUP, LLC

1 - INPUT SHAFT	7 - SNAP RING
2 - D-RING	8 - DISC
3 - D-RING	9 - PLATE
4 - PISTON	10 - REACTION PLATE
5 - PISTON RETURN SPRING	11- SNAP RING
6 - BALANCE PISTON	

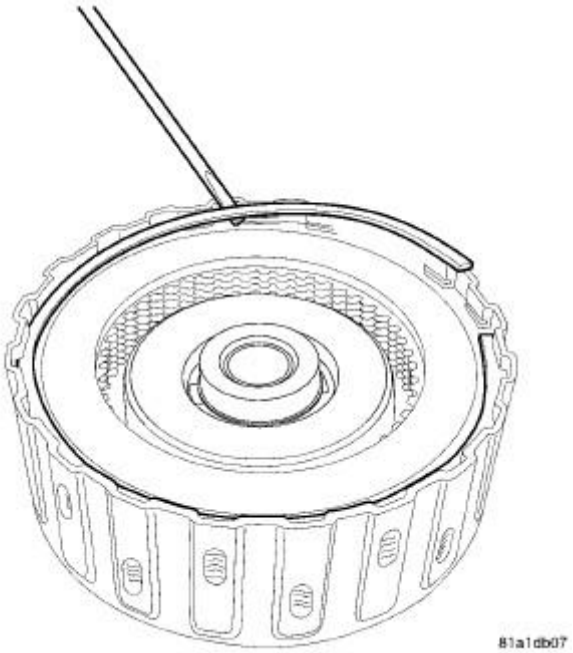

Fig. 181: K1 Clutch Snap Ring
Courtesy of CHRYSLER GROUP, LLC

1. Remove the snap ring from the K1 clutch assembly.
2. Remove the K1 clutch pack from the K1 clutch retainer.

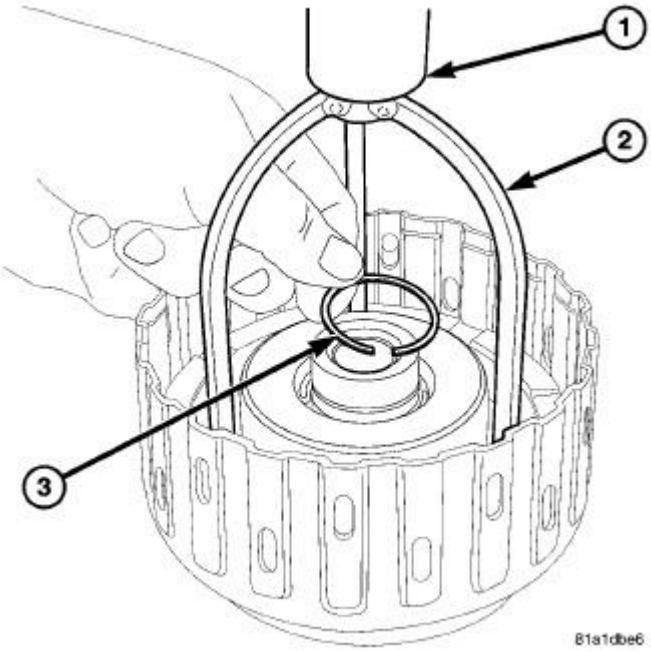

Fig. 182: Compressing K1 Clutch Piston Assembly
Courtesy of CHRYSLER GROUP, LLC

3. Using an arbor press (1) and Compressor tool (special tool #5059-A, Compressor, Spring) (2), compress the K1 clutch piston assembly and remove the snap ring (3) using snap ring pliers.

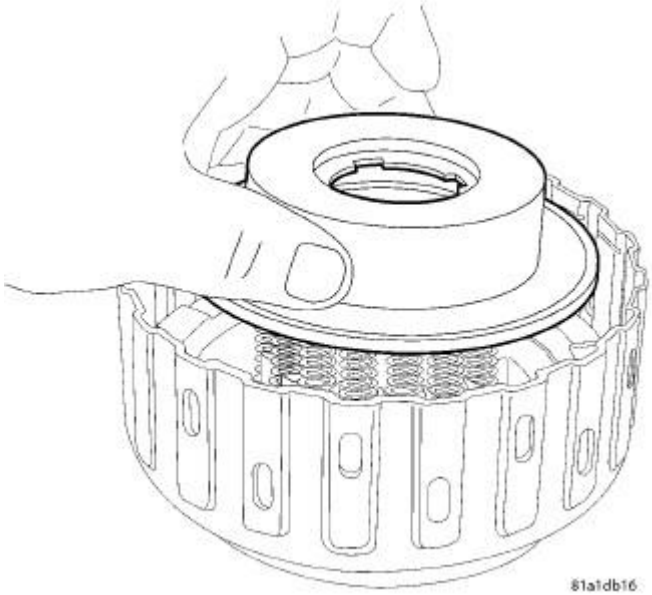

Fig. 183: K1 Clutch Balance Piston
Courtesy of CHRYSLER GROUP, LLC

4. Remove the K1 clutch balance piston.

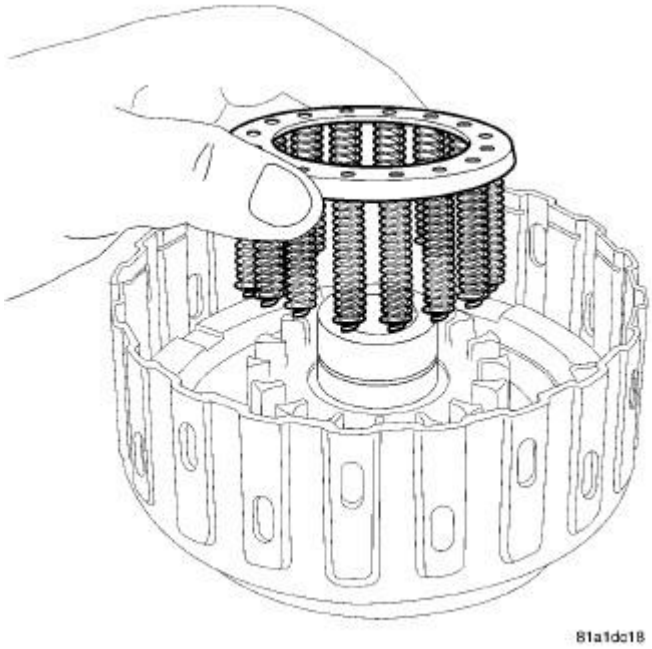

Fig. 184: K1 Clutch Piston Return Spring
Courtesy of CHRYSLER GROUP, LLC

5. Remove the K1 clutch piston return spring.

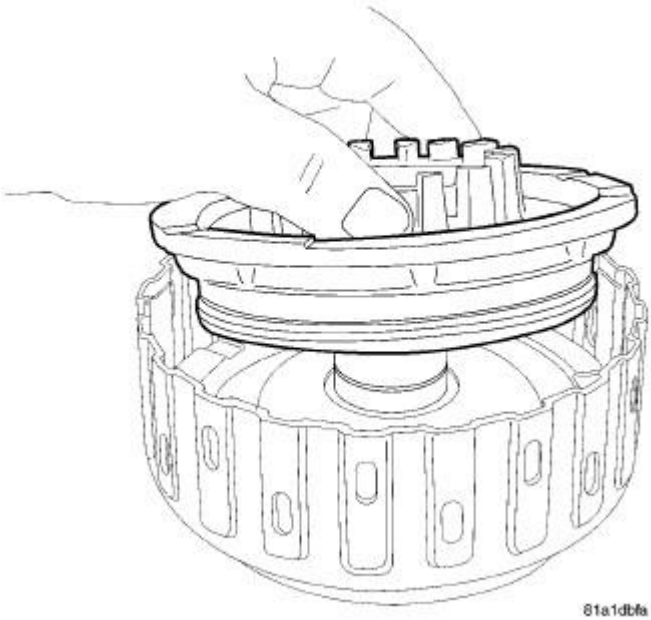

Fig. 185: K1 Clutch Piston
Courtesy of CHRYSLER GROUP, LLC

6. Remove the K1 clutch piston.

ASSEMBLY

ASSEMBLY

NOTE: **Apply trans jell or petroleum jelly to all slide portions, rolling contacts surfaces, thrust surfaces etc. to prevent burnout during initial operation. Lubricate O-rings and O-ring seals with MOPAR® AS68RC ATF. Soak all friction discs in MOPAR® AS68RC ATF for at least two hours before assembly of clutch packs.**

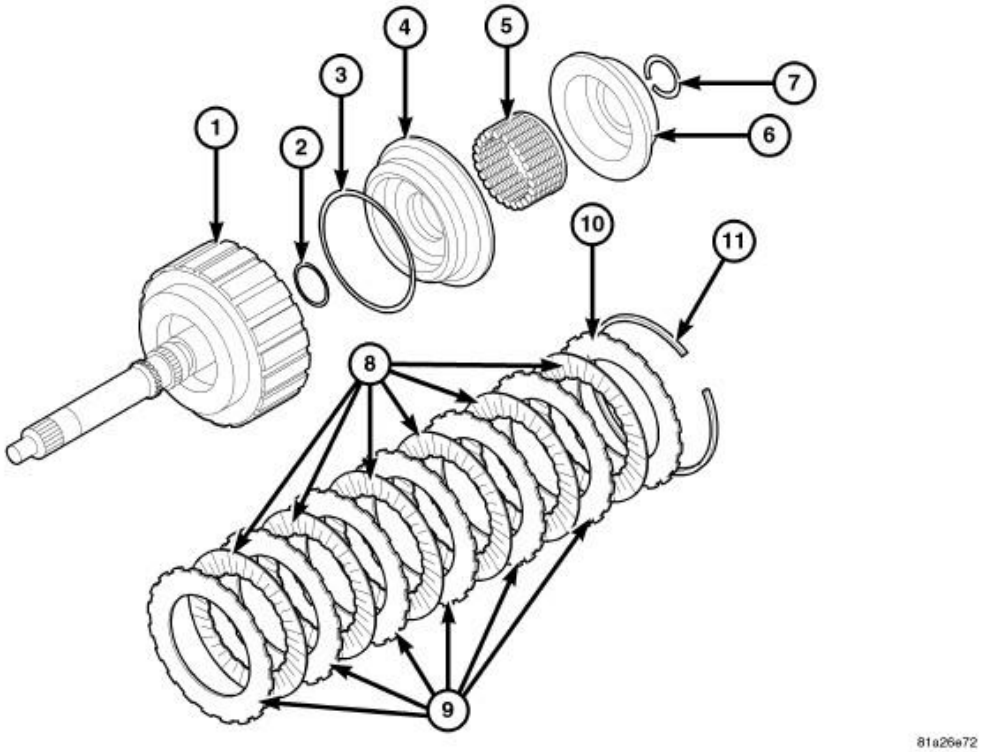

Fig. 186: Exploded View Of K1 Clutch Assembly
Courtesy of CHRYSLER GROUP, LLC

1 - INPUT SHAFT	7 - SNAP RING
2 - D-RING	8 - DISC
3 - D-RING	9 - PLATE
4 - PISTON	10 - REACTION PLATE
5 - PISTON RETURN SPRING	11- SNAP RING
6 - BALANCE PISTON	

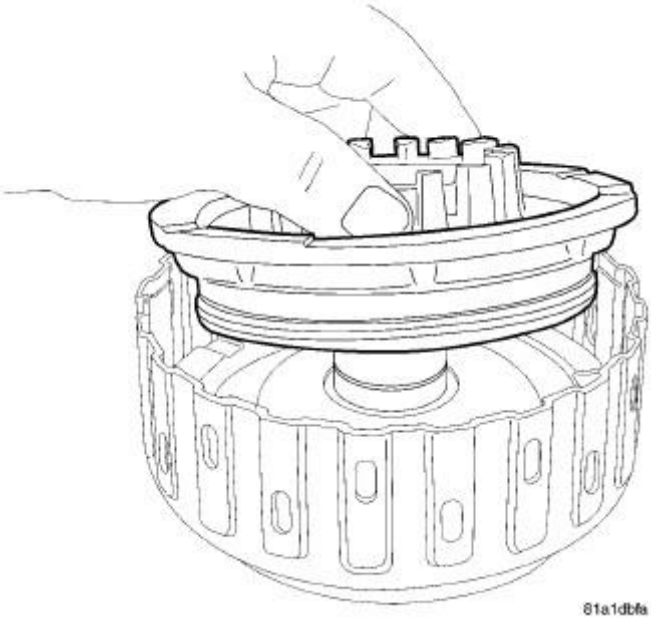

Fig. 187: K1 Clutch Piston
Courtesy of CHRYSLER GROUP, LLC

1. Lubricate K1 clutch piston seals with MOPAR® AS68RC ATF and install the piston into the K1 clutch retainer / input shaft assembly.

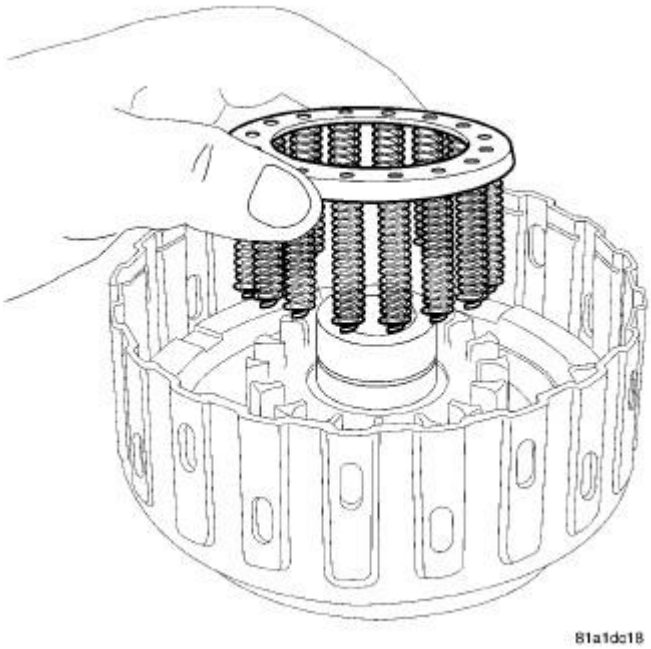

Fig. 188: K1 Clutch Piston Return Spring
Courtesy of CHRYSLER GROUP, LLC

2. Install the K1 clutch piston return spring into the K1 clutch retainer / input shaft assembly.

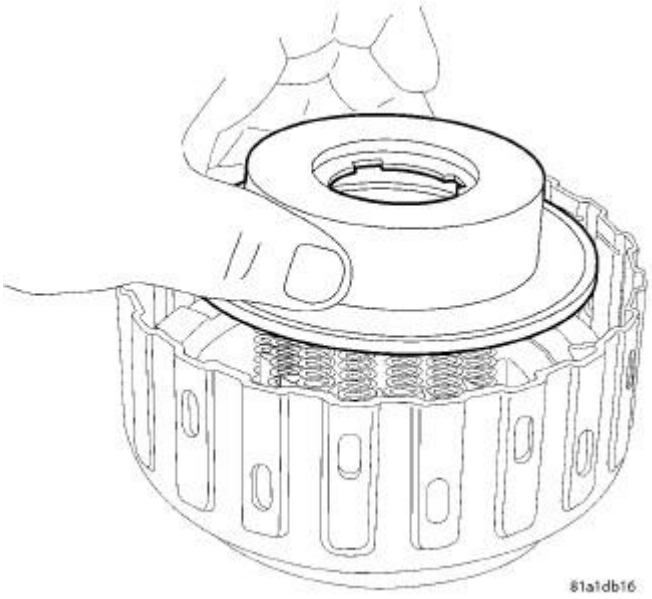

Fig. 189: K1 Clutch Balance Piston
Courtesy of CHRYSLER GROUP, LLC

3. Lubricate the seals on the K1 clutch balance piston with MOPAR® AS68RC ATF and install it into the K1 clutch retainer / input shaft assembly.

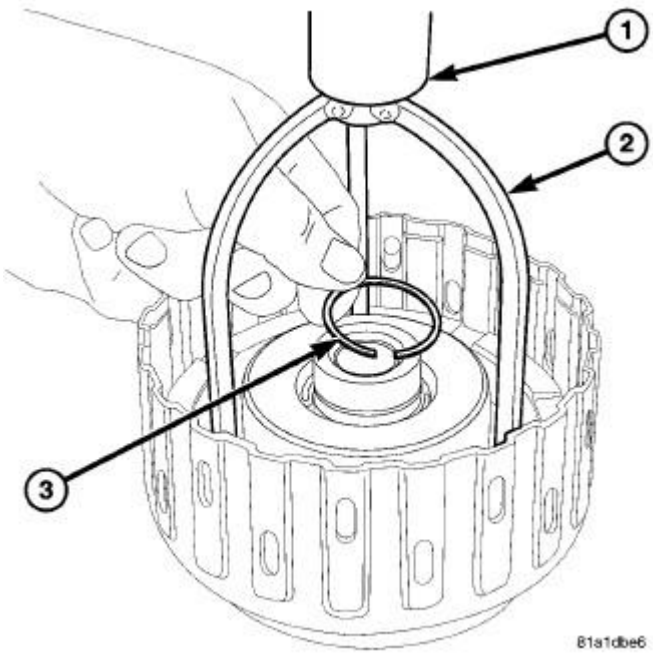

Fig. 190: Compressing K1 Clutch Piston Assembly
Courtesy of CHRYSLER GROUP, LLC

4. Using an arbor press (1) and Compressor tool (special tool #5059-A, Compressor, Spring) (2), compress the K1 clutch piston assembly and install the snap ring (3) using snap ring pliers.

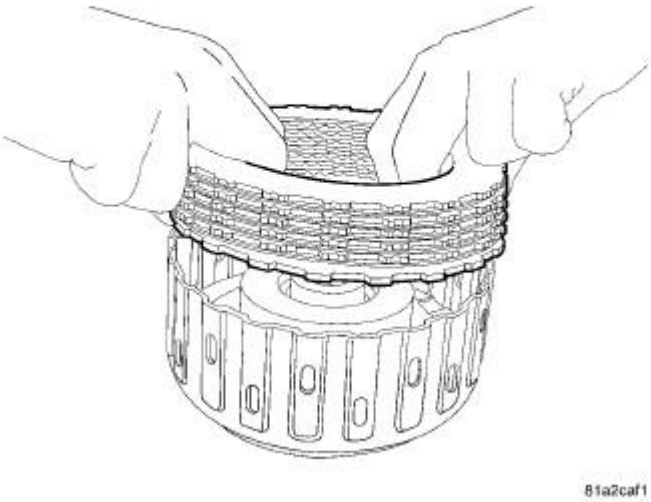

Fig. 191: K1 Clutch Pack
Courtesy of CHRYSLER GROUP, LLC

5. Install the K1 clutch pack.

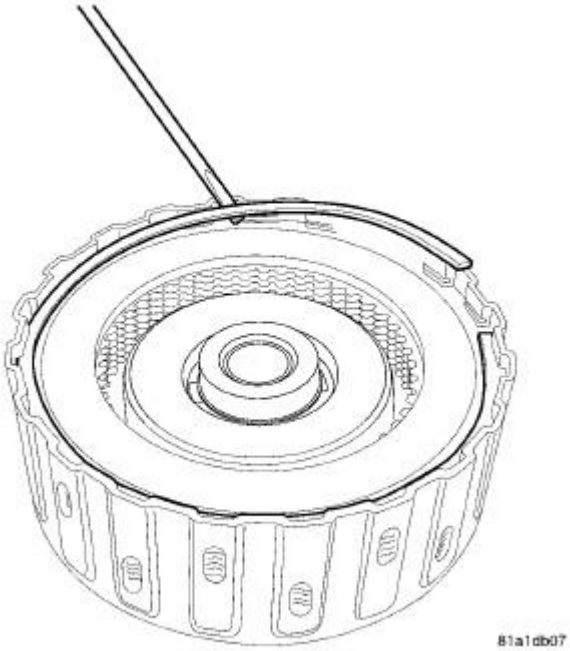

Fig. 192: K1 Clutch Snap Ring
Courtesy of CHRYSLER GROUP, LLC

6. Install the K1 clutch snap ring.

CLUTCH CLEARANCE AND PISTON TRAVEL COMBINATIONS

	Measurement Item	Condition	Suspected Cause	Action
	Clutch Clearance	Normal	Discs/Plates are worn thin and warped, snap ring and groove height, piston wear.	Replace the discs and plates and recheck clearances. If not OK- Check the piston, snap ring and snap ring groove
	Piston Travel	High		
LOW PROBABILITY	Clutch Clearance	Normal	Piston travel issue (interference, obstruction from broken part) or Discs/Plates are too thick (above specs.) and snap ring grove at wrong height (high).	Replace the discs and plates and recheck clearances. If not OK- Check the piston, snap ring and snap ring groove
	Piston Travel	Low		
LOW PROBABILITY	Clutch Clearance	High	Low possibility, piston height, snap-ring groove, snap-ring thickness, disk and plates thickness and flatness.	Replace the discs and plates and recheck clearances. If not OK- Check the piston, snap ring and snap ring
	Piston Travel	Normal		

				groove.
	Clutch Clearance	High	Discs/Plates are worn (thin) or snap ring thickness groove height, piston height.	Replace the discs and plates and recheck clearances. If not OK- Check the piston, snap ring and snap ring groove.
	Piston Travel	High		
LOW PROBABILITY	Clutch Clearance	High	Piston travel issue (interference, obstruction from broken part combined with improper piston height, snap ring groove wear or height, or snap ring thickness) or piston does not fully return.	Replace the discs and plates and recheck clearances. If not OK- Check the piston, snap ring and snap ring groove.
	Piston Travel	Low		
	Clutch Clearance	Low	Discs/Plates are not flat or combination of high piston height and low snap ring groove height.	Replace the discs and plates and recheck clearances. If not OK- Check the piston, snap ring and snap ring groove.
	Piston Travel	Normal		
				Replace

	Clutch Clearance	Low	Discs/Plates are worn (thin) and warped.	the discs and plates and recheck clearances. If not OK- Check the piston, snap ring and snap ring groove
	Piston Travel	High		
	Clutch Clearance	Low	Discs/Plates are too thick/extra discs or snap ring height too low or piston too tall.	Replace the discs and plates and recheck clearances. If not OK- Check the piston, snap ring and snap ring groove
	Piston Travel	Low		

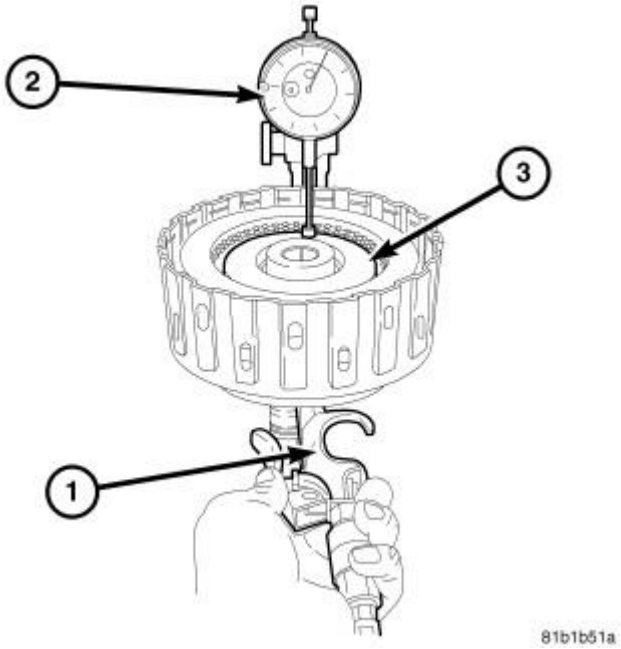

Fig. 193: K1 Piston Stroke
Courtesy of CHRYSLER GROUP, LLC

1 - AIR APPLY 2 - C-3339-A DIAL INDICATOR 3 - K1 BALANCE PISTON

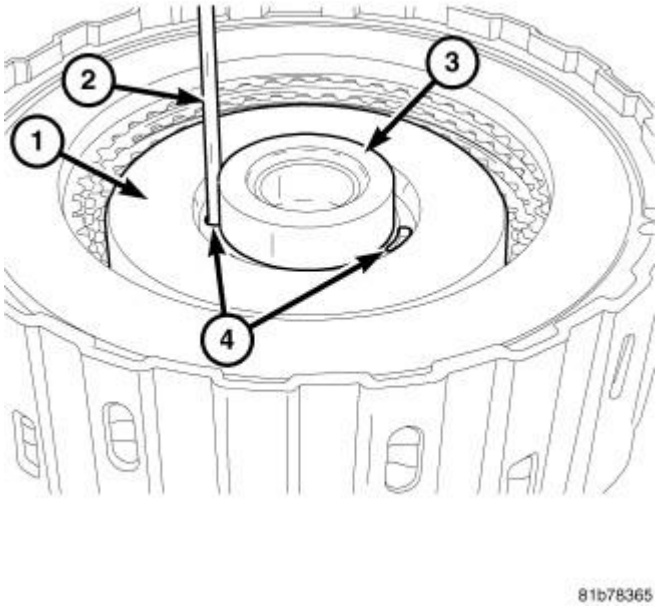

Fig. 194: K1 Clutch Piston Stroke Clearance
Courtesy of CHRYSLER GROUP, LLC

1 - BALANCE PISTON	3 - INPUT SHAFT HUB
2 - DIAL INDICATOR TIP	4 - BALANCE PISTON VOIDS

NOTE: **It may be necessary to reposition the balance piston snap ring to fully access the balance piston void.**

NOTE: **If the K1 piston assembly stroke is not within tolerance check the K1 piston seals and the hydraulic fluid circuit path.**

7. Install the dial indicator set (special tool #C-3339A, Set, Dial Indicator) (2).
8. Position the dial indicator tip (2) into the balance piston void (4), between the balance piston (1) and the input shaft hub (3), being certain the tip contacts the piston, and apply 400 - 500 kPa.(58 - 72 psi.) of air to the upper most circuit path of the input shaft, to check the K1 clutch piston stroke clearance.

   The K1 clutch piston stroke clearance is 1.49 - 1.74 mm (0.058 - 0.069 in.).

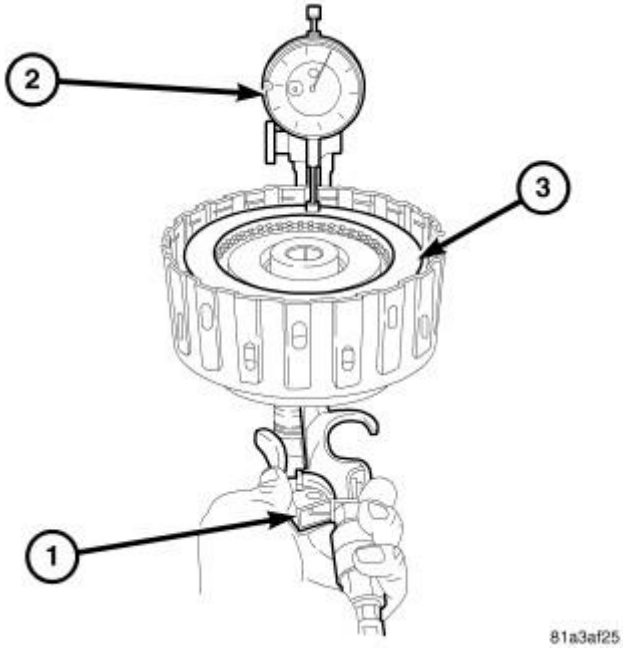

Fig. 195: Checking K1 Clutch Pack Clearance
Courtesy of CHRYSLER GROUP, LLC

1 - AIR APPLY
2 - DIAL INDICATOR
3 - K1 CLUTCH PACK

NOTE: **The selectable clutch pack reaction plates are identified by an alpha numeric numeral stamped into the face of the plate.**

9. Install the Dial Indicator Set C-3339A and apply 400 - 500 kPa (58 - 72 psi) of air to the upper most circuit path of the input shaft, to check the K1 clutch pack clearance.

   The K1 clutch pack clearance is 1.25 - 1.50 mm (0.049 - 0.059 in.). If the clearance is not within tolerance, choose the correct selectable reaction plate.

- A = 2.95 mm (0.116 in.)
- B = 3.10 mm (0.122 in.)
- C = 3.25 mm (0.128 in.)
- D = 3.40 mm (0.134 in.)
- E = 3.55 mm (0.139 in.)

CLUTCH, NUMBER 2

DISASSEMBLY

DISASSEMBLY

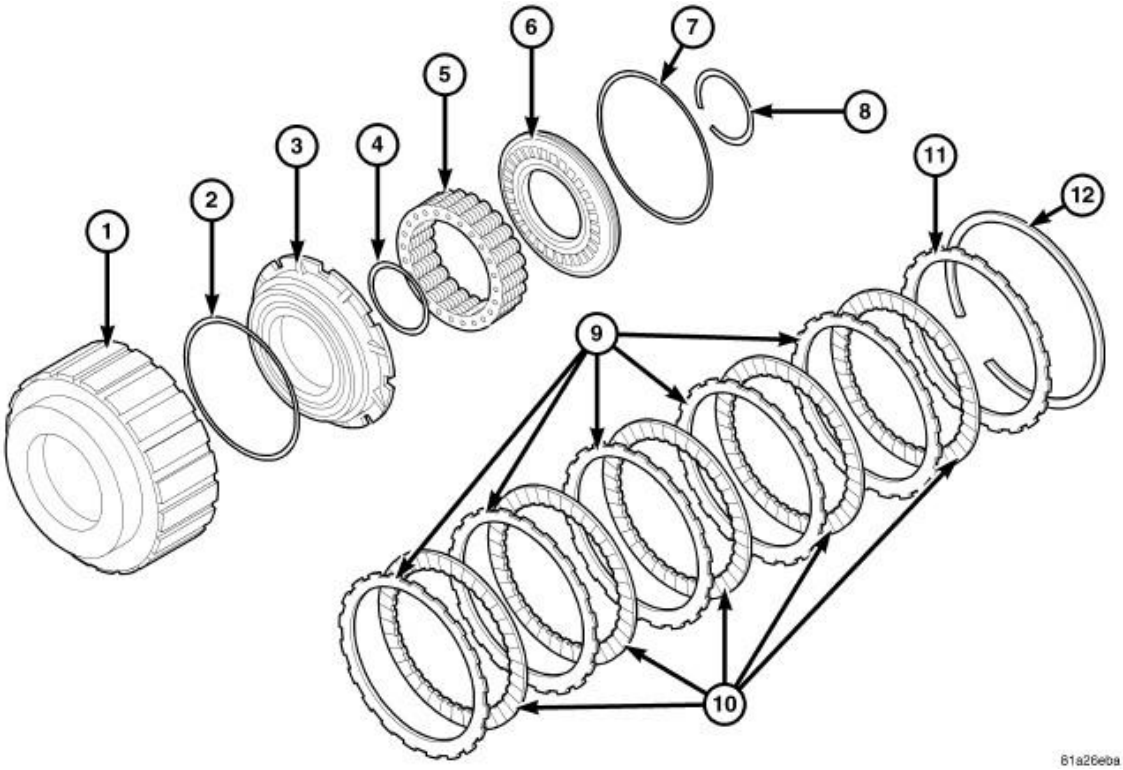

Fig. 196: Exploded View Of K2 Clutch Assembly
Courtesy of CHRYSLER GROUP, LLC

1 - CLUTCH RETAINER	7 - O-RING
2 - D-RING	8 - SNAP RING
3 - PISTON	9 - PLATE
4 - D-RING	10 - DISC
5 - PISTON RETURN SPRING	11 - REACTION PLATE
6 - BALANCE PISTON	12 - SNAP RING

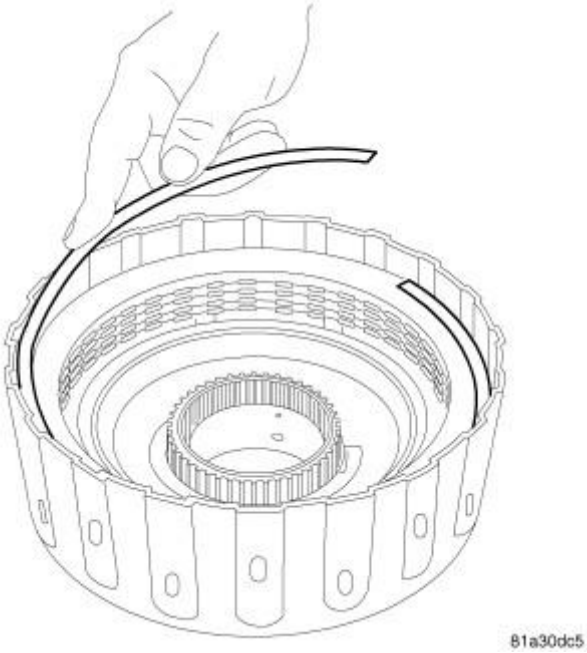

Fig. 197: K2 Clutch Pack Snap Ring
Courtesy of CHRYSLER GROUP, LLC

1. Remove the K2 clutch pack snap ring.

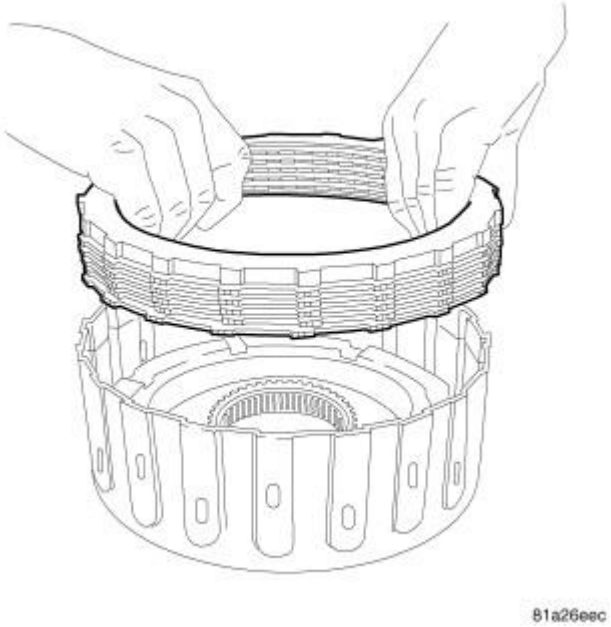

Fig. 198: K2 Clutch Pack
Courtesy of CHRYSLER GROUP, LLC

2. Remove the K2 clutch pack from the K2 clutch retainer.

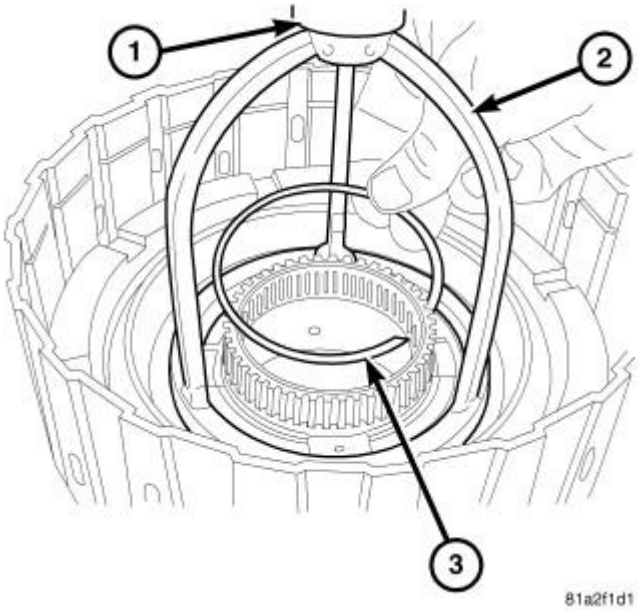

Fig. 199: K2 Piston Snap Ring
Courtesy of CHRYSLER GROUP, LLC

3. Using an arbor press (1) and Compressor tool (special tool #5059-A, Compressor, Spring) (2), compress the K2 clutch piston assembly and remove the snap ring (3) using snap ring pliers.

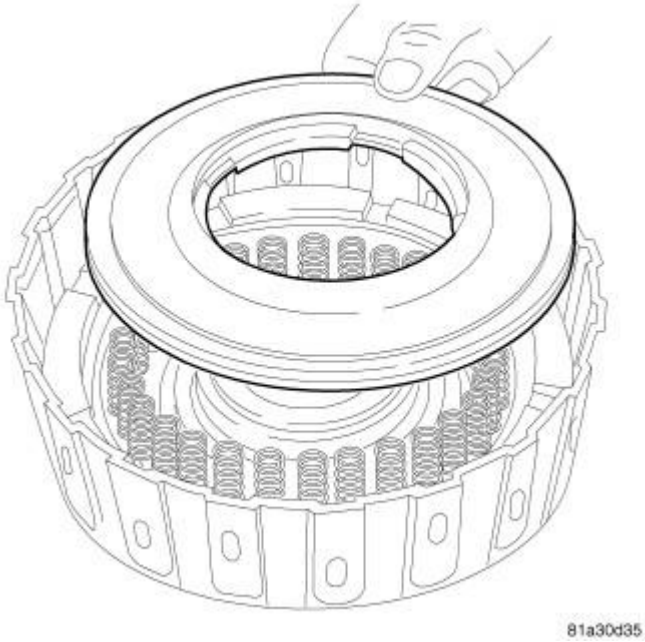

Fig. 200: K2 Clutch Balance Piston
Courtesy of CHRYSLER GROUP, LLC

4. Remove the K2 clutch balance piston.

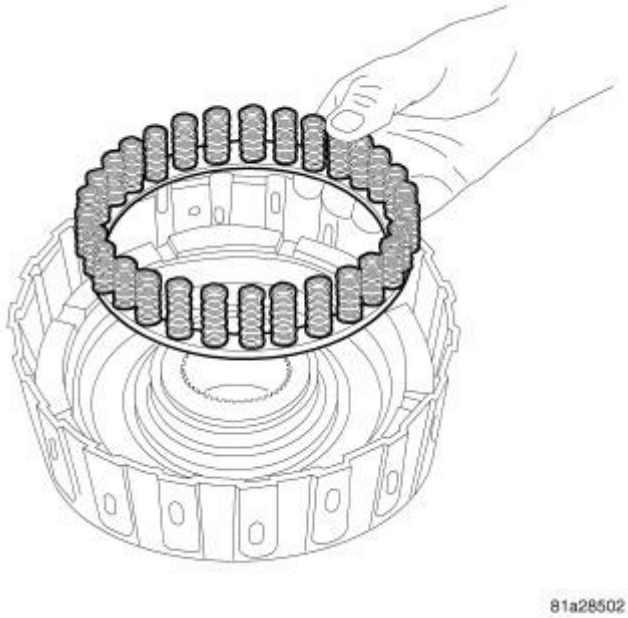

Fig. 201: K2 Clutch Piston Return Spring
Courtesy of CHRYSLER GROUP, LLC

5. Remove the K2 clutch piston return spring.

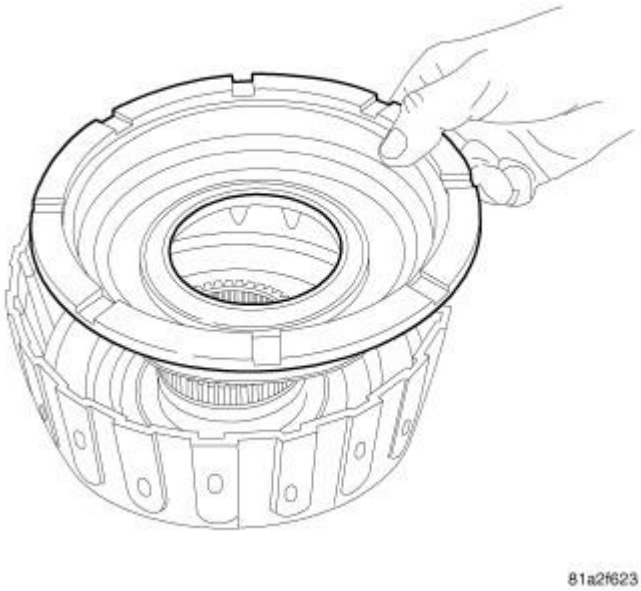

Fig. 202: K2 Clutch Piston
Courtesy of CHRYSLER GROUP, LLC

6. Remove the K2 clutch piston.

ASSEMBLY

ASSEMBLY

NOTE: **Apply trans jell or petroleum jelly to all slide portions, rolling contacts surfaces, thrust surfaces etc. to prevent burnout during initial operation. Lubricate O-rings and O-ring seals with MOPAR® AS68RC ATF. Soak all friction discs in MOPAR® AS68RC ATF for at least two hours before assembly of clutch packs.**

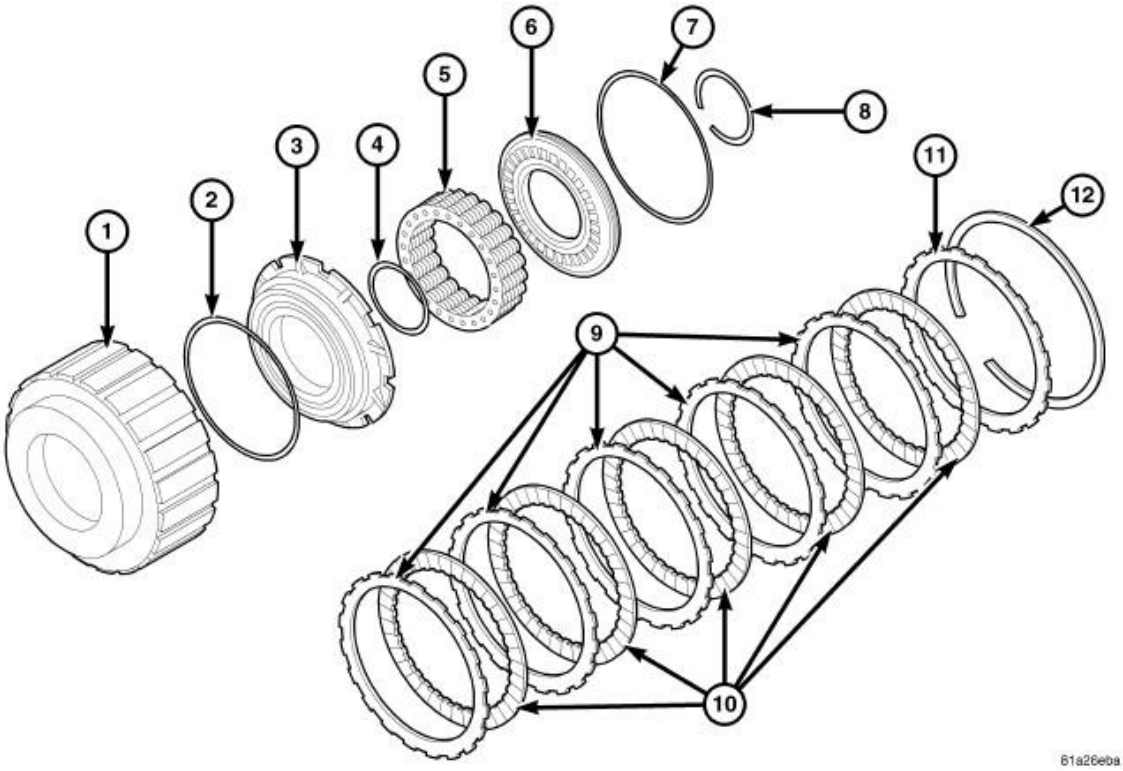

Fig. 203: Exploded View Of K2 Clutch Assembly
Courtesy of CHRYSLER GROUP, LLC

1 - CLUTCH RETAINER	7 - O-RING
2 - D-RING	8 - SNAP RING
3 - PISTON	9 - PLATE
4 - D-RING	10 - DISC
5 - PISTON RETURN SPRING	11 - REACTION PLATE
6 - BALANCE PISTON	12 - SNAP RING

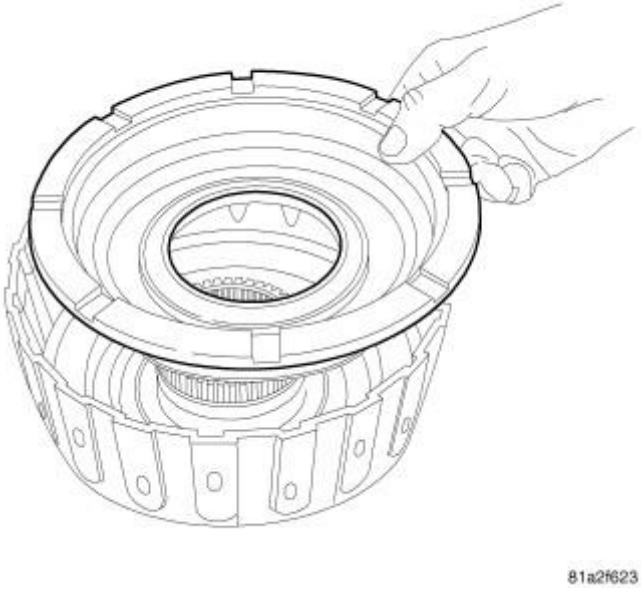

Fig. 204: K2 Clutch Piston
Courtesy of CHRYSLER GROUP, LLC

1. Lubricate K2 clutch piston seals with MOPAR® AS68RC ATF and install the piston into the K2 clutch retainer.

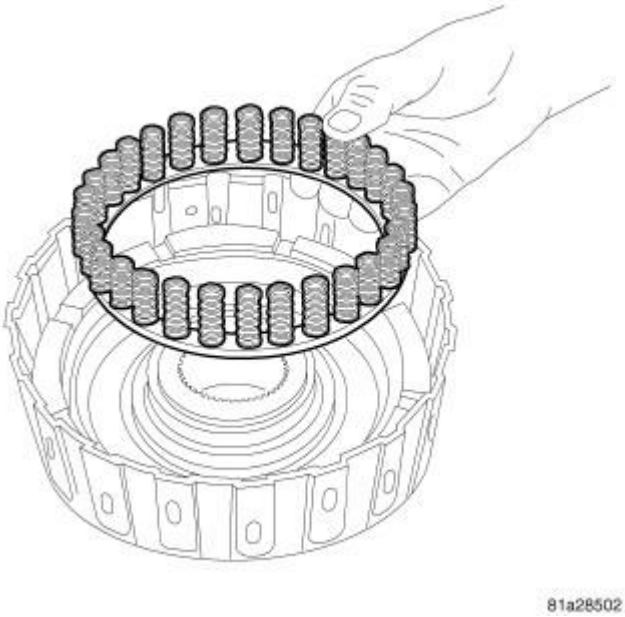

Fig. 205: K2 Clutch Piston Return Spring
Courtesy of CHRYSLER GROUP, LLC

2. Install the K2 clutch piston return spring into the K2 clutch retainer.

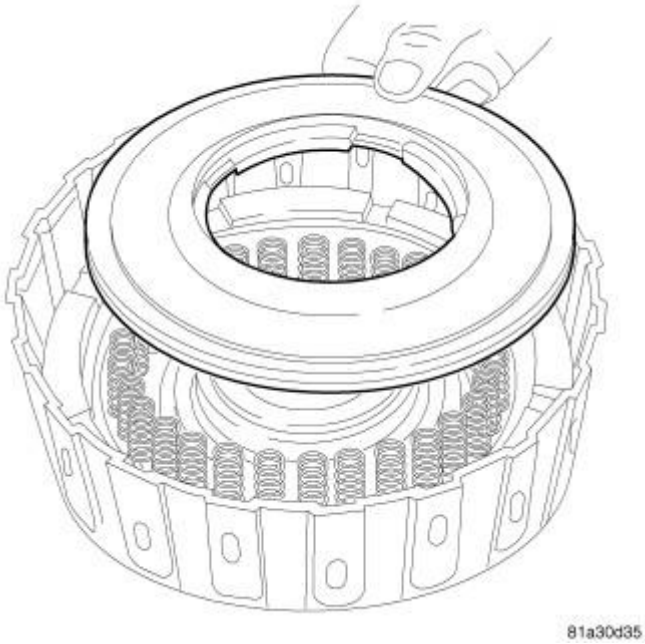

Fig. 206: K2 Clutch Balance Piston
Courtesy of CHRYSLER GROUP, LLC

3. Lubricate the seals on the K2 clutch balance piston with MOPAR ® AS68RC ATF and install it into the K2 clutch retainer.

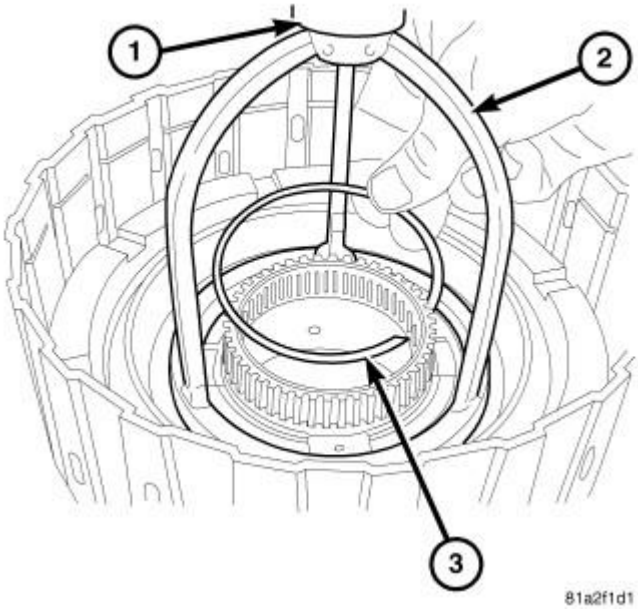

Fig. 207: K2 Piston Snap Ring
Courtesy of CHRYSLER GROUP, LLC

4. Using an arbor press (1) and Compressor tool (special tool #5059-A, Compressor, Spring) (2), compress the K2 clutch piston assembly and install the snap ring (3) using snap ring pliers.

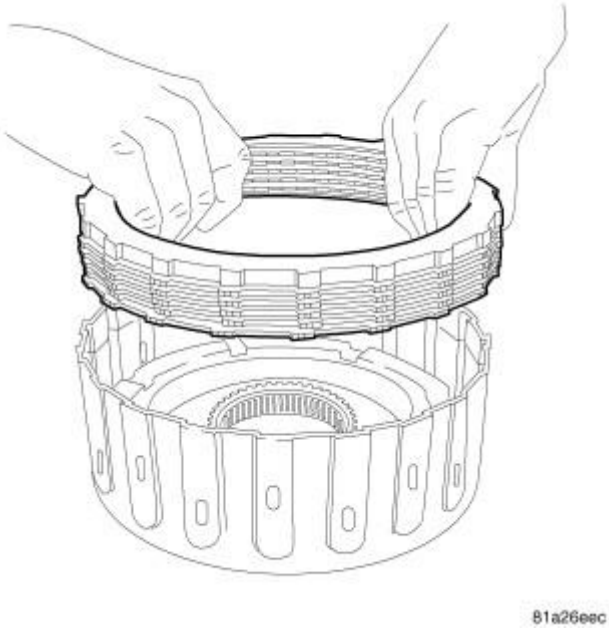

Fig. 208: K2 Clutch Pack
Courtesy of CHRYSLER GROUP, LLC

5. Install the K2 clutch pack.

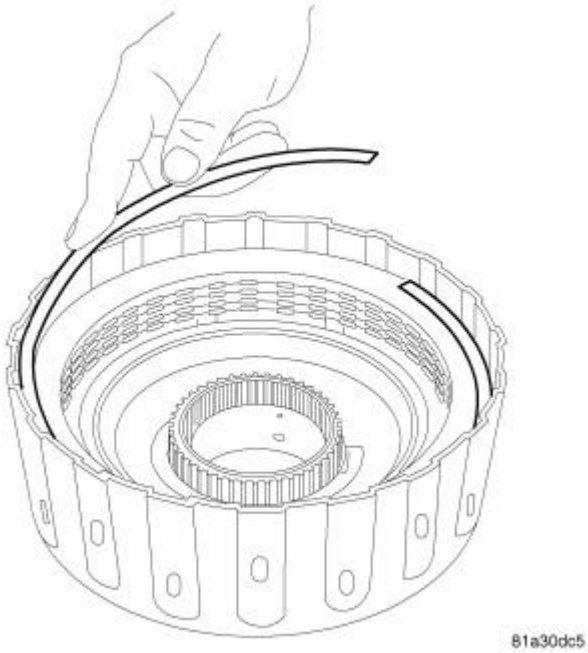

Fig. 209: K2 Clutch Pack Snap Ring
Courtesy of CHRYSLER GROUP, LLC

6. Install the K2 clutch snap ring.

CLUTCH CLEARANCE AND PISTON TRAVEL COMBINATIONS

	Measurement Item	Condition	Suspected Cause	Action
	Clutch Clearance	Normal	Discs/Plates are worn thin and warped, snap ring and groove height, piston wear.	Replace the discs and plates and recheck clearances. If not OK- Check the piston, snap ring and snap ring groove
	Piston Travel	High		
LOW PROBABILITY	Clutch Clearance	Normal	Piston travel issue (interference, obstruction from broken part) or Discs/Plates are too thick (above specs.) and snap ring grove at wrong height (high).	Replace the discs and plates and recheck clearances. If not OK- Check the piston, snap ring and snap ring groove
	Piston Travel	Low		
LOW PROBABILITY	Clutch Clearance	High	Low possibility, piston height, snap-ring groove, snap-ring thickness, disk and plates thickness and flatness.	Replace the discs and plates and recheck clearances. If not OK- Check the piston, snap ring and snap ring groove.
	Piston Travel	Normal		
	Clutch Clearance	High	Discs/Plates are worn (thin) or	Replace the discs and plates and recheck

	Piston Travel	High	snap ring thickness groove height, piston height.	clearances. If not OK- Check the piston, snap ring and snap ring groove.
LOW PROBABILITY	Clutch Clearance	High	Piston travel issue (interference, obstruction from broken part combined with improper piston height, snap ring groove wear or height, or snap ring thickness) or piston does not fully return.	Replace the discs and plates and recheck clearances. If not OK- Check the piston, snap ring and snap ring groove.
	Piston Travel	Low		
	Clutch Clearance	Low	Discs/Plates are not flat or combination of high piston height and low snap ring groove height.	Replace the discs and plates and recheck clearances. If not OK- Check the piston, snap ring and snap ring groove.
	Piston Travel	Normal		
	Clutch Clearance	Low	Discs/Plates are worn (thin) and	Replace the discs and plates and recheck clearances. If not OK-

	Piston Travel	High	warped.	Check the piston, snap ring and snap ring groove
	Clutch Clearance	Low	Discs/Plates are too thick/extra discs or snap ring height too low or piston too tall.	Replace the discs and plates and recheck clearances. If not OK- Check the piston, snap ring and snap ring groove
	Piston Travel	Low		

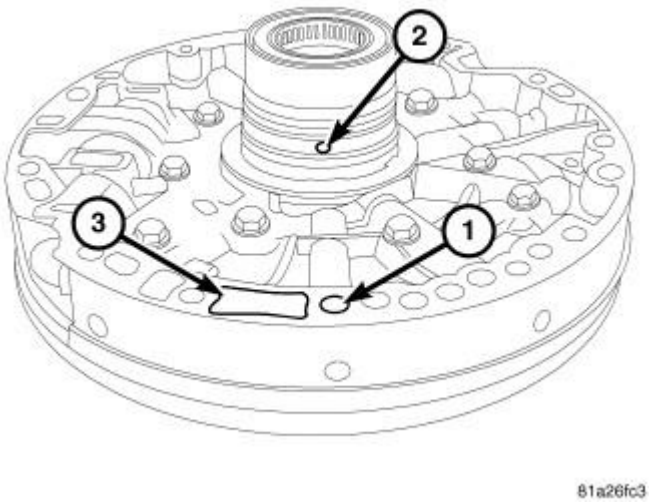

Fig. 210: Oil Pump Air Path
Courtesy of CHRYSLER GROUP, LLC

1 - INTAKE AIR PRESSURE
2 - EXHAUST AIR PRESSURE
3 - OIL PUMP SUCTION HOLE

NOTE: **The hydraulic circuit path for the K2 clutch assembly is located next to the oil pump suction hole.**

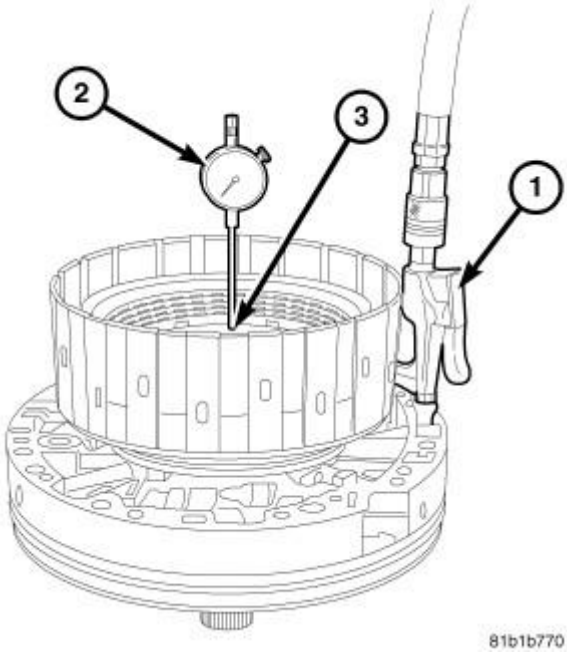

Fig. 211: Checking K2 Clutch Piston Stroke Clearance
Courtesy of CHRYSLER GROUP, LLC

1 - AIR SUPPLY
2 - DIAL INDICATOR
3 - K2 BALANCE PISTON

NOTE: **If the K2 piston assembly stroke is not within tolerance check the K2 piston seals and the hydraulic fluid circuit path.**

7. Invert the oil pump and place the K2 clutch assembly onto the oil pump hub.
8. Install the Dial Indicator Set (special tool #C-3339A, Set, Dial Indicator) (2), being certain the tip contacts the piston (3), and apply 400 - 500 kPa.(58 - 72 psi.) of air (1) to check the K2 clutch piston stroke clearance.

   The K2 clutch piston stroke clearance is 1.60 - 1.85 mm (0.063 - 0.071in.).

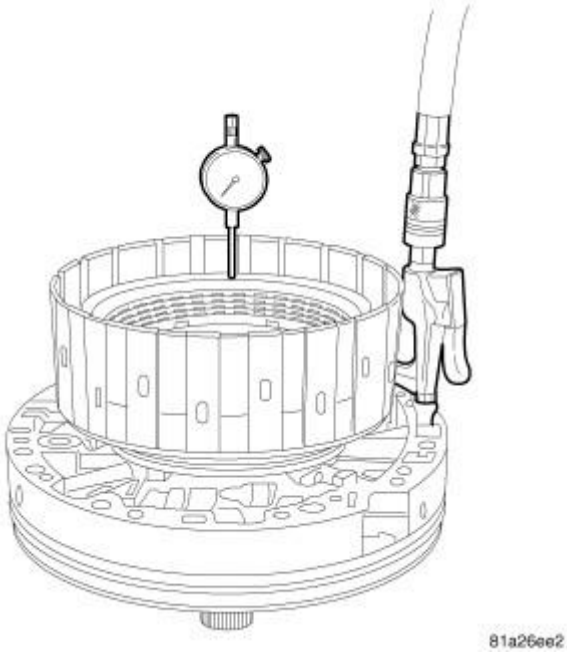

Fig. 212: Checking K2 Clutch Clearance
Courtesy of CHRYSLER GROUP, LLC

NOTE: The selectable clutch pack reaction plates are identified by an alpha numeric numeral stamped into the face of the plate.

9. Install the Dial Indicator Set C-3339A and apply 400 - 500 kPa (58 - 72 psi) of air to check the K2 clutch pack clearance.

   The K2 clutch pack clearance is 1.25 - 1.50 mm (0.049 - 0.059 in.). If the clearance is not within tolerance choose the correct selectable reaction plate.

- A = 6.30 mm (0.248 in.)
- B = 6.45 mm (0.254 in.)
- C = 6.60 mm (0.260 in.)
- D = 6.75 mm (0.266 in.)
- E = 6.90 mm (0.272 in.)

CLUTCH, NUMBER 3

DISASSEMBLY

DISASSEMBLY

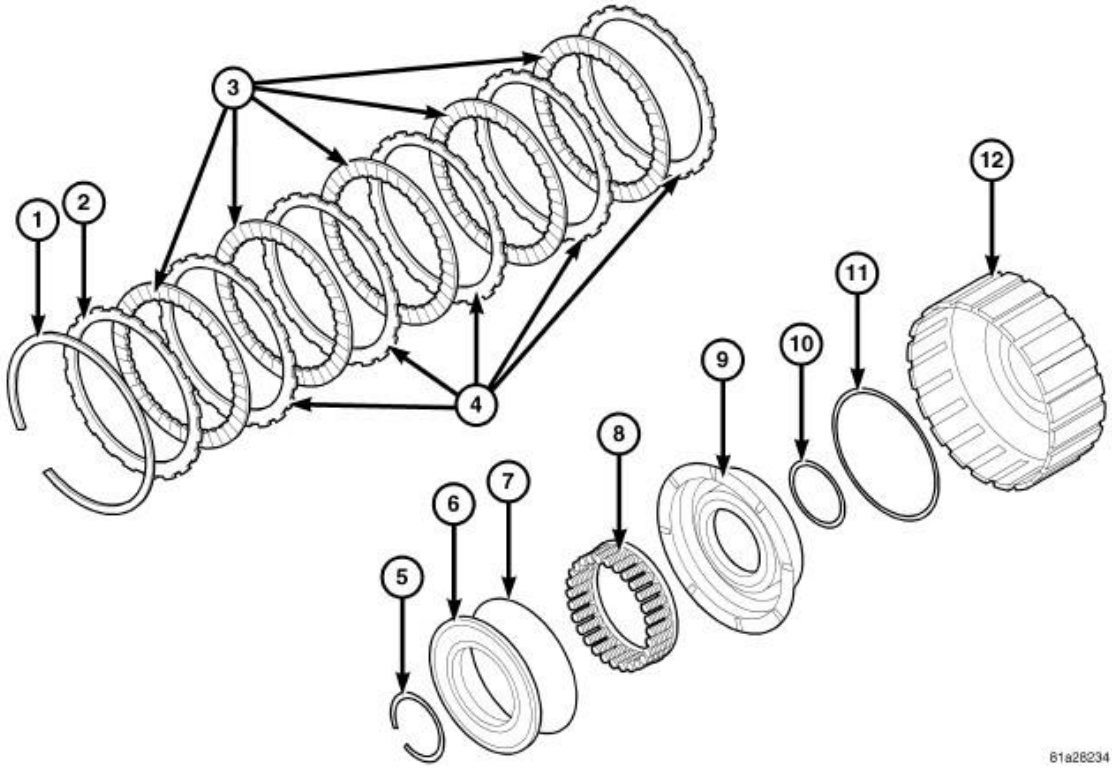

Fig. 213: K3 Clutch Exploded View
Courtesy of CHRYSLER GROUP, LLC

1 - SNAP RING	7 - O-RING
2 - REACTION PLATE	8 - PISTON RETURN SPRING
3 - DISC	9 - PISTON
4 - PLATE	10 - D-RING
5 - SNAP RING	11 - D-RING
6 - BALANCE PISTON	12 - CLUTCH RETAINER

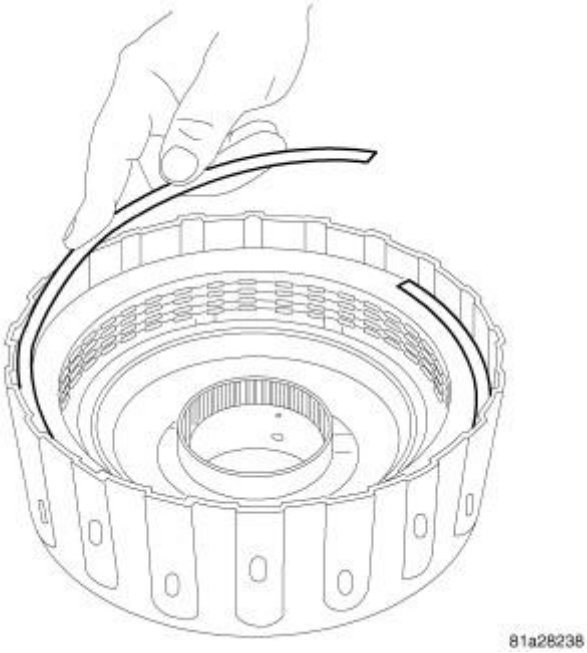

Fig. 214: K3 Clutch Pack Snap Ring
Courtesy of CHRYSLER GROUP, LLC

1. Remove the K3 clutch pack snap ring.

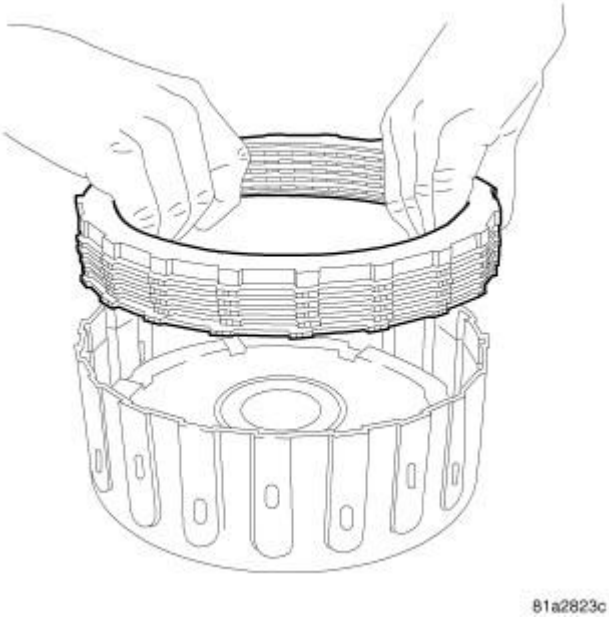

Fig. 215: K3 Clutch Pack
Courtesy of CHRYSLER GROUP, LLC

2. Remove the K3 clutch pack from the K3 clutch retainer.

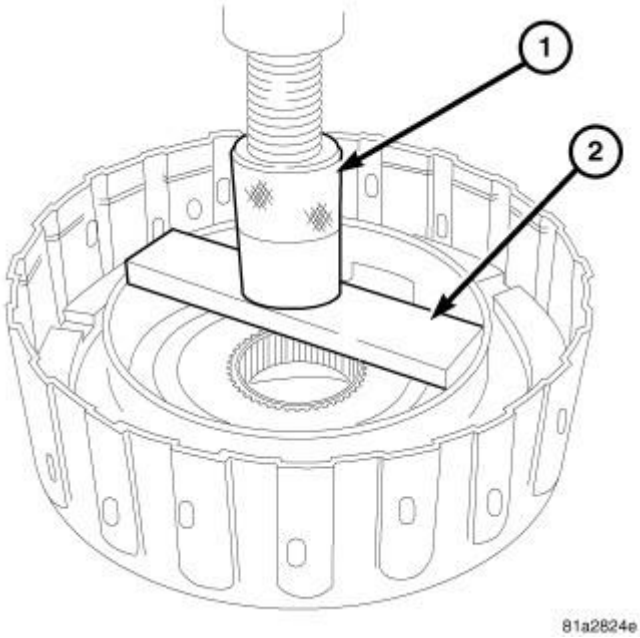

Fig. 216: Compressing K3 Clutch Piston Assembly
Courtesy of CHRYSLER GROUP, LLC

1 - ARBOR PRESS
2 - COMPRESSOR 5059

3. Using an arbor press (1) and Compressor tool (special tool #MB991790, Compressor, Spring) (2), compress the K3 clutch piston assembly.

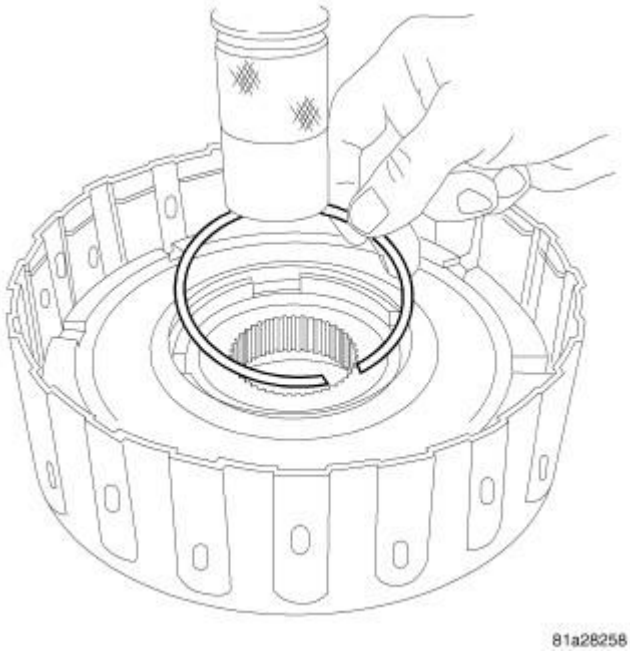

Fig. 217: K3 Piston Snap Ring

Courtesy of CHRYSLER GROUP, LLC

4. Remove the K3 piston snap ring using snap ring pliers.

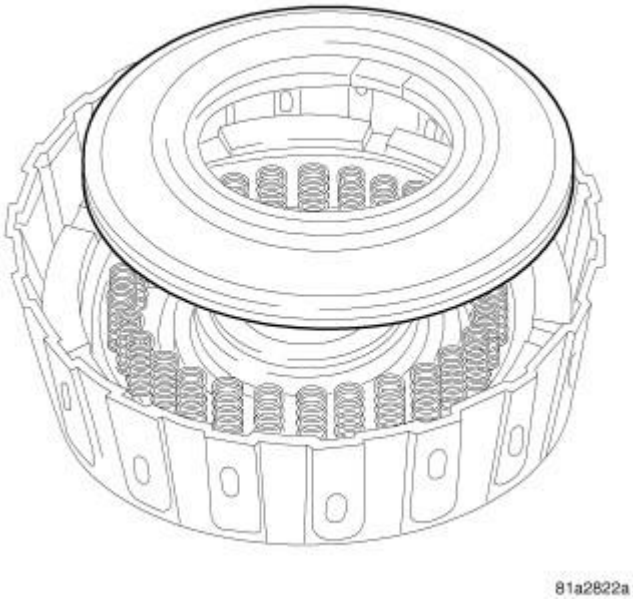

Fig. 218: K3 Clutch Balance Piston
Courtesy of CHRYSLER GROUP, LLC

5. Remove the K3 clutch balance piston.

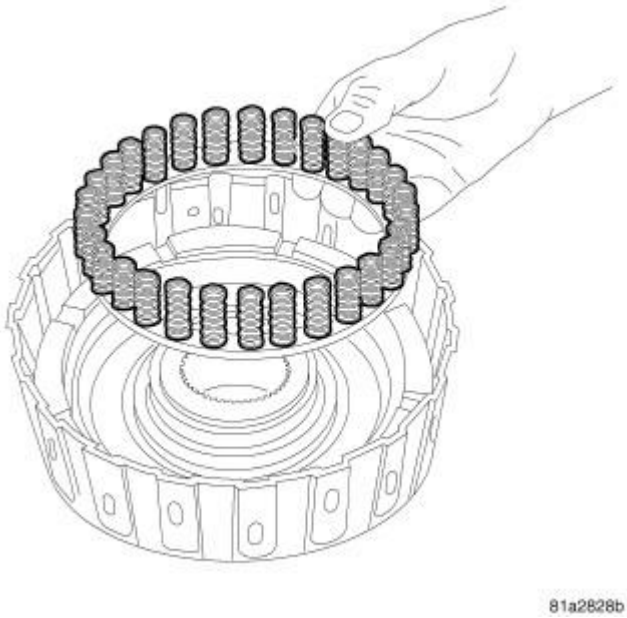

Fig. 219: K3 Clutch Piston Return Spring
Courtesy of CHRYSLER GROUP, LLC

6. Remove the K3 clutch piston return spring.

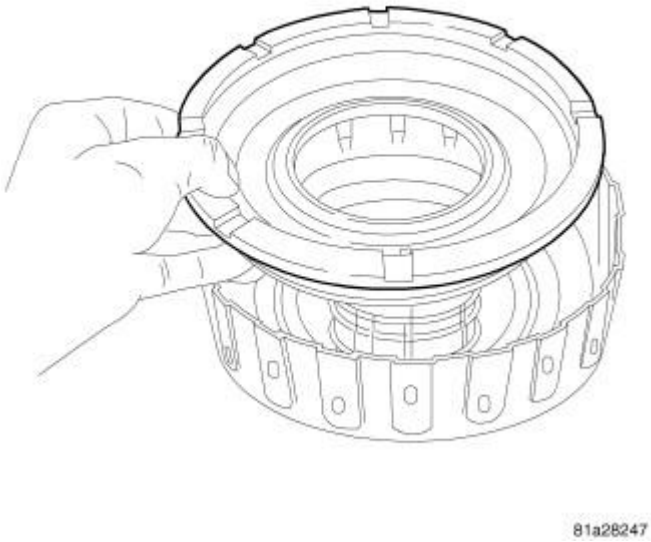

Fig. 220: K3 Clutch Piston
Courtesy of CHRYSLER GROUP, LLC

7. Remove the K3 clutch piston.

ASSEMBLY

ASSEMBLY

NOTE: **Apply trans jell or petroleum jelly to all slide portions, rolling contacts surfaces, thrust surfaces etc. to prevent burnout during initial operation. Lubricate O-rings and O-ring seals with MOPAR® AS68RC ATF. Soak all friction discs in MOPAR® AS68RC ATF for at least two hours before assembly of clutch packs.**

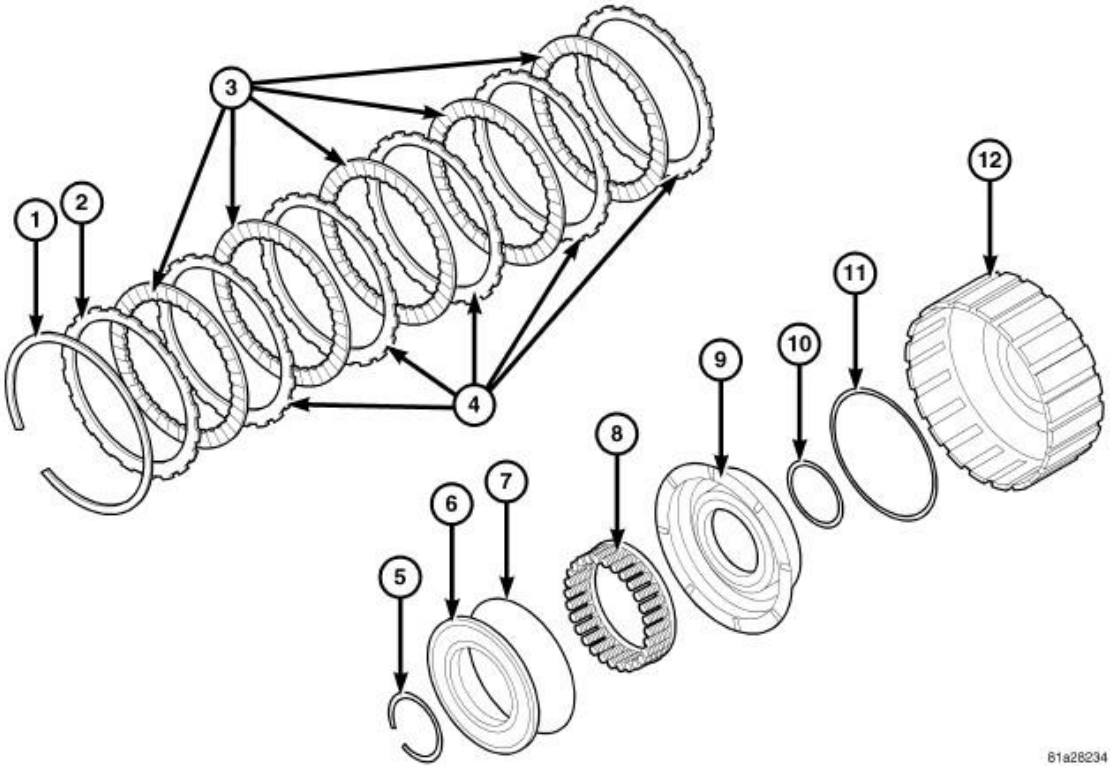

Fig. 221: K3 Clutch Exploded View
Courtesy of CHRYSLER GROUP, LLC

1 - SNAP RING	7 - O-RING
2 - REACTION PLATE	8 - PISTON RETURN SPRING
3 - DISC	9 - PISTON
4 - PLATE	10 - D-RING
5 - SNAP RING	11 - D-RING
6 - BALANCE PISTON	12 - CLUTCH RETAINER

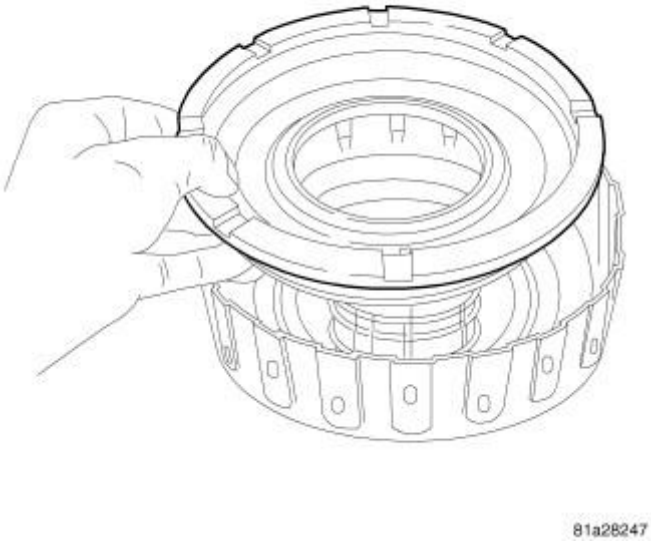

Fig. 222: K3 Clutch Piston
Courtesy of CHRYSLER GROUP, LLC

1. Lubricate K3 clutch piston seals with MOPAR® AS68RC ATF and install the piston into the K3 clutch retainer.

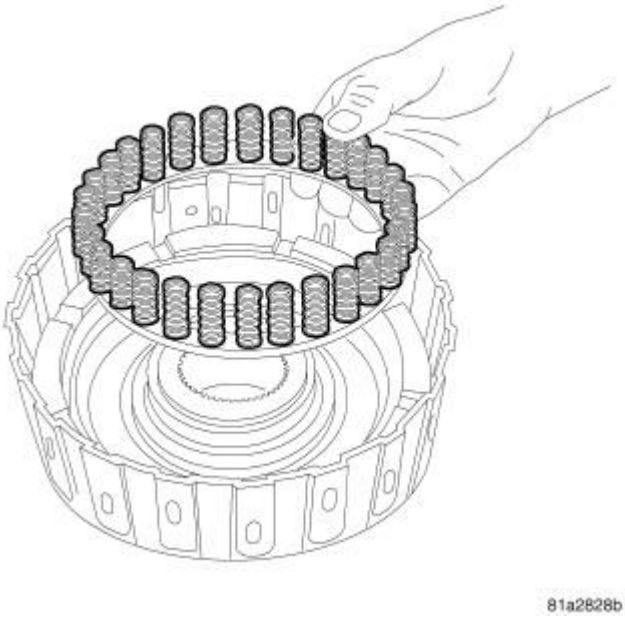

Fig. 223: K3 Clutch Piston Return Spring
Courtesy of CHRYSLER GROUP, LLC

2. Install the K3 clutch piston return spring into the K3 clutch retainer.

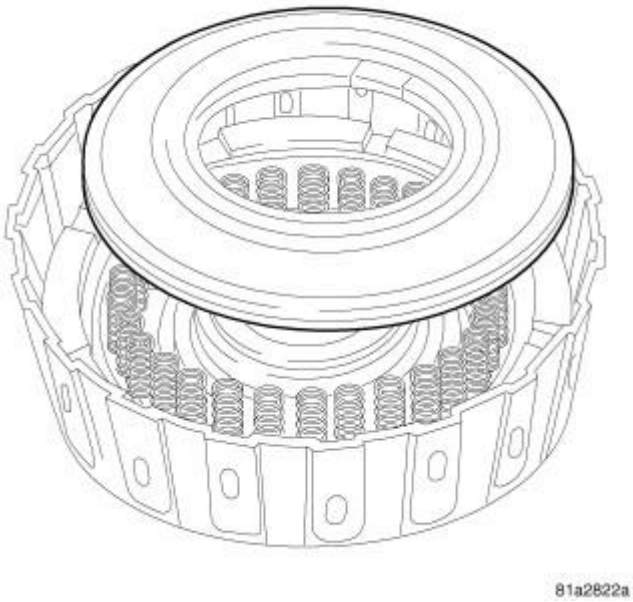

Fig. 224: K3 Clutch Balance Piston
Courtesy of CHRYSLER GROUP, LLC

3. Lubricate the seals on the K3 clutch balance piston with MOPAR ® AS68RC ATF and install it into the K3 clutch retainer.

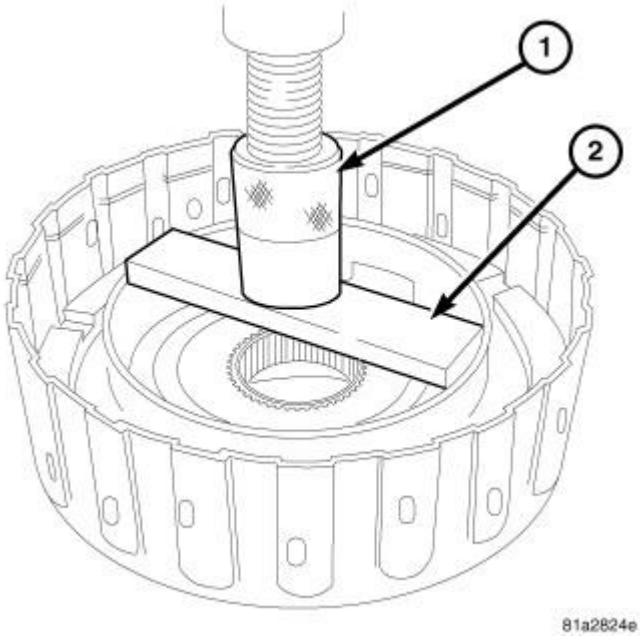

Fig. 225: Compressing K3 Clutch Piston Assembly
Courtesy of CHRYSLER GROUP, LLC

1 - ARBOR PRESS

2 - COMPRESSOR 5059

4. Using an arbor press (1) and Compressor tool (special tool #5059-A, Compressor, Spring) (2), compress the K3 clutch piston assembly.

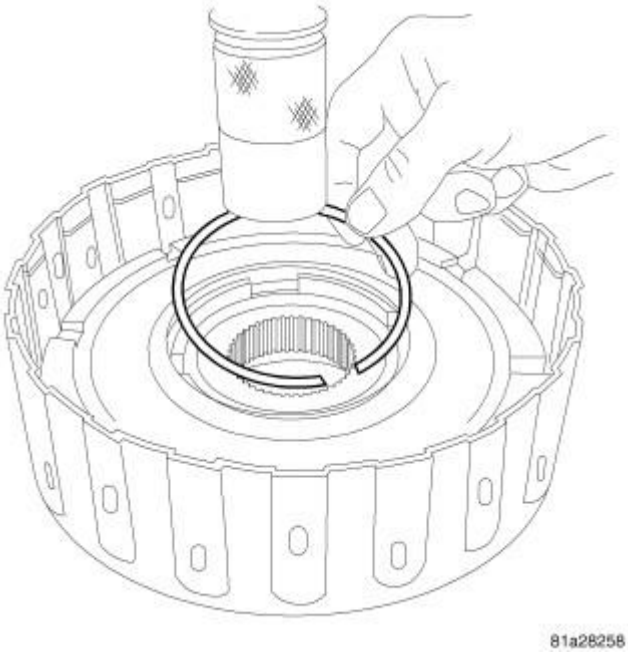

Fig. 226: K3 Piston Snap Ring
Courtesy of CHRYSLER GROUP, LLC

5. Install the K3 piston snap ring using snap ring pliers.

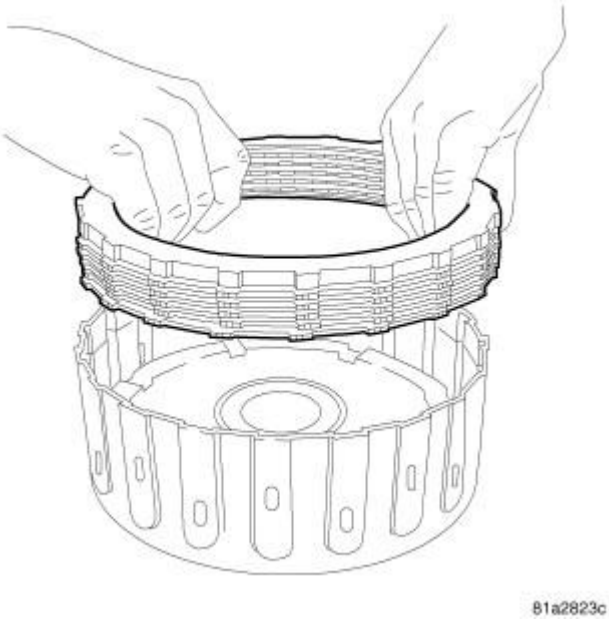

Fig. 227: K3 Clutch Pack
Courtesy of CHRYSLER GROUP, LLC

6. Remove the K3 piston assembly from the transmission case and install the K3 clutch pack.

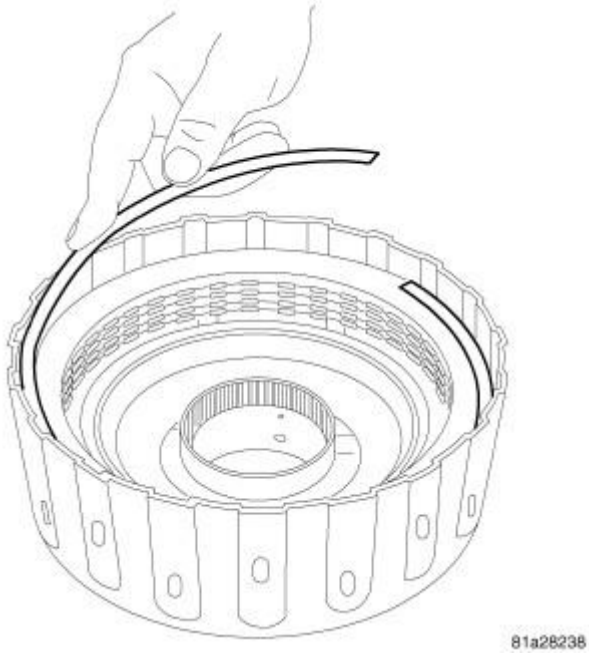

Fig. 228: K3 Clutch Pack Snap Ring
Courtesy of CHRYSLER GROUP, LLC

7. Install the K3 clutch snap ring.

CLUTCH CLEARANCE AND PISTON TRAVEL COMBINATIONS

	Measurement Item	Condition	Suspected Cause	Action
	Clutch Clearance	Normal	Discs/Plates are worn thin and warped, snap ring and groove height, piston wear.	Replace the discs and plates and recheck clearances. If not OK- Check the piston, snap ring and snap ring groove
	Piston Travel	High		
			Piston travel issue (interference,	Replace the discs

LOW PROBABILITY	Clutch Clearance	Normal	obstruction from broken part) or Discs/Plates are too thick (above specs.) and snap ring grove at wrong height (high).	and plates and recheck clearances. If not OK- Check the piston, snap ring and snap ring groove
	Piston Travel	Low		
LOW PROBABILITY	Clutch Clearance	High	Low possibility, piston height, snap-ring groove, snap-ring thickness, disk and plates thickness and flatness.	Replace the discs and plates and recheck clearances. If not OK- Check the piston, snap ring and snap ring groove.
	Piston Travel	Normal		
	Clutch Clearance	High	Discs/Plates are worn (thin) or snap ring thickness groove height, piston height.	Replace the discs and plates and recheck clearances. If not OK- Check the piston, snap ring and snap ring groove.
	Piston Travel	High		
LOW PROBABILITY	Clutch Clearance	High	Piston travel issue (interference, obstruction from broken part combined with improper piston	Replace the discs and plates and recheck clearances. If not OK-

	Piston Travel	Low	height, snap ring groove wear or height, or snap ring thickness) or piston does not fully return.	Check the piston, snap ring and snap ring groove.
	Clutch Clearance	Low	Discs/Plates are not flat or combination of high piston height and low snap ring groove height.	Replace the discs and plates and recheck clearances. If not OK- Check the piston, snap ring and snap ring groove.
	Piston Travel	Normal		
	Clutch Clearance	Low	Discs/Plates are worn (thin) and warped.	Replace the discs and plates and recheck clearances. If not OK- Check the piston, snap ring and snap ring groove
	Piston Travel	High		
	Clutch Clearance	Low	Discs/Plates are too thick/extra discs or snap ring height too low or piston too tall.	Replace the discs and plates and recheck clearances. If not OK- Check the piston, snap ring and snap ring
	Piston Travel	Low		

				groove

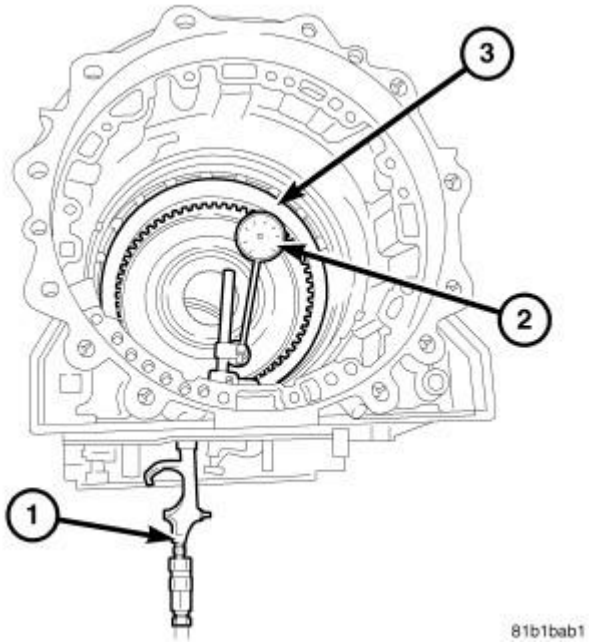

Fig. 229: K3 Piston Stroke
Courtesy of CHRYSLER GROUP, LLC

1 - AIR APPLY
2 -9524 90° DIAL INDICATOR
3 - K3 CLUTCH

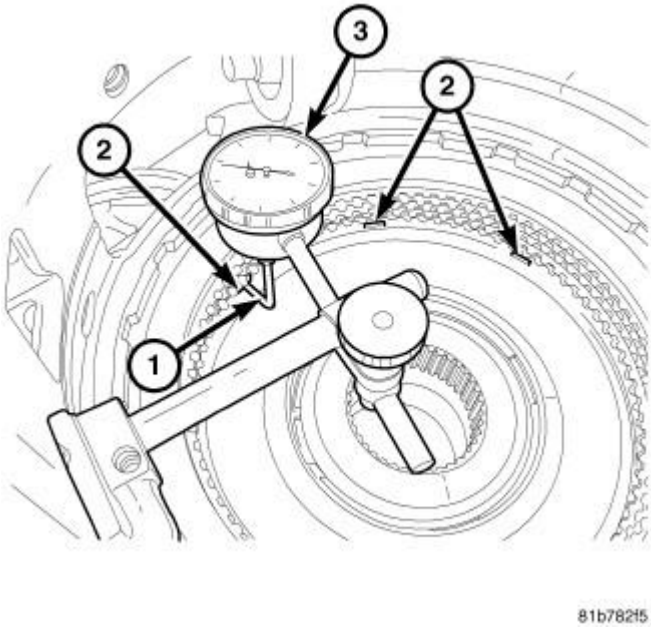

Fig. 230: Checking K3 Clutch Piston Stroke Clearance

Courtesy of CHRYSLER GROUP, LLC

1 - SP-1917 90° DIAL INDICATOR TIP
2 - PISTON VOIDS
3 - 9524 90° DIAL INDICATOR

NOTE: **If the K3 piston assembly stroke is not within tolerance check the K3 piston seals and the hydraulic fluid circuit path.**

8. Install the K3 clutch assembly into the transmission case.
9. Install the 90° Dial Indicator (special tool #9524, Indicator, Dial) (3) with the SP1917 90° dial indicator tip (1) and mounts from the Dial Indicator Set (special tool #C-3339A, Set, Dial Indicator), being certain the dial indicator tip is positioned into a piston void (2) so that the tip contacts the piston, apply 400 - 500 kPa (58 - 72 psi) of air to check the K3 clutch piston stroke clearance. Refer to **AIR CHECKING TRANSMISSION CLUTCH OPERATION**.

   The K3 clutch piston stroke clearance is 1.60 - 1.85 mm (0.063 - 0.071 in.).

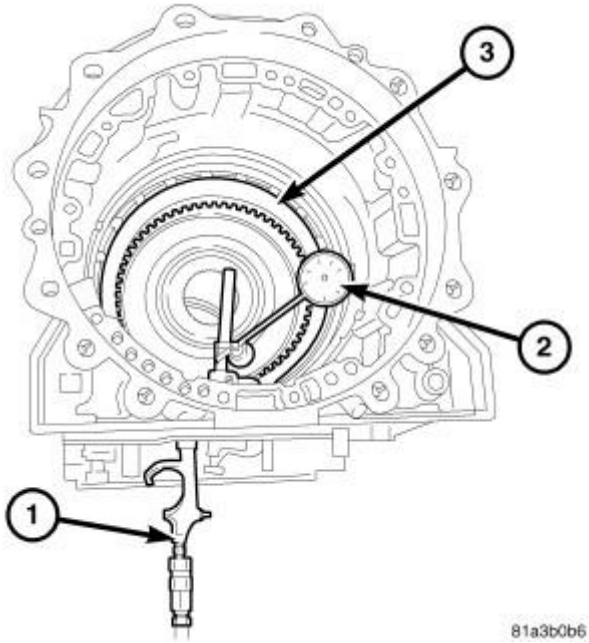

Fig. 231: Checking K3 Clutch Pack Clearance
Courtesy of CHRYSLER GROUP, LLC

1 - AIR APPLY
2 - 90° DIAL INDICATOR 9524
3 - K3 CLUTCH PACK

10. Install the K3 clutch pack assembly into the transmission case.

NOTE: **The selectable clutch pack reaction plates are identified by an alpha numeric numeral stamped into the face of the plate.**

11. Install the 90° Dial Indicator (special tool #9524, Indicator, Dial) and mounts from Dial Indicator Set (special tool #C-3339A, Set, Dial Indicator) and apply 400 - 500 kPa (58 - 72 psi) of air to check the K3 clutch pack clearance. Refer to **AIR CHECKING TRANSMISSION CLUTCH OPERATION**.

    The K3 clutch pack clearance is 1.25 - 1.50 mm (0.049 - 0.059 in.). If the clearance is not within tolerance, choose the correct selectable reaction plate.

- A = 6.30 mm (0.248 in.)
- B = 6.45 mm (0.254 in.)
- C = 6.60 mm (0.260 in.)
- D = 6.75 mm (0.266 in.)
- E = 6.90 mm (0.272 in.)

CLUTCH, OVERRUNNING

DESCRIPTION

DESCRIPTION

The function of a one-way mechanical clutch is that it allows the clutch to freewheel in one direction during certain operating conditions of the transmission.

OPERATION

OPERATION

The F1 one way clutch locks the front planetary carrier and rear planetary ring gear against counterclockwise rotation, only allowing them to rotate clockwise.

DISASSEMBLY

DISASSEMBLY

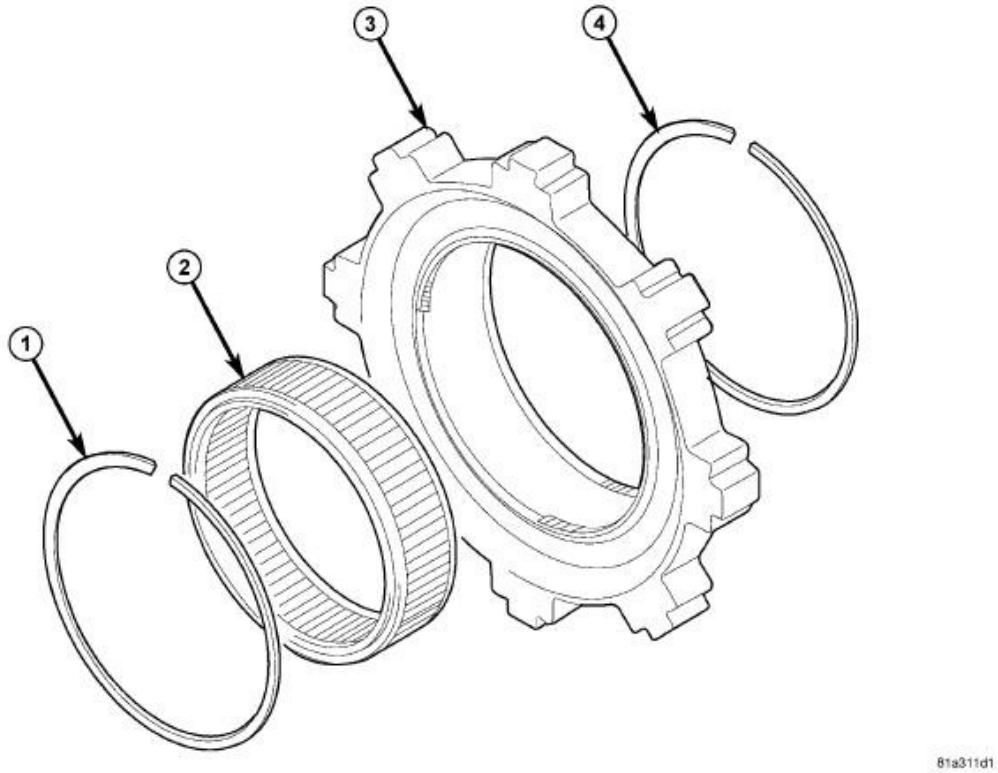

Fig. 232: F1 One Way Clutch
Courtesy of CHRYSLER GROUP, LLC

1 - SNAP RING	4 - SNAP RING
2 - F1 ONE WAY CLUTCH	
3 - F1 ONE WAY CLUTCH OUTER RACE	

1. Remove the snap ring (1 from the F1 one way clutch assembly.
2. Remove the F1 one way clutch (2) from the F1 one way clutch outer race (3)

ASSEMBLY

ASSEMBLY

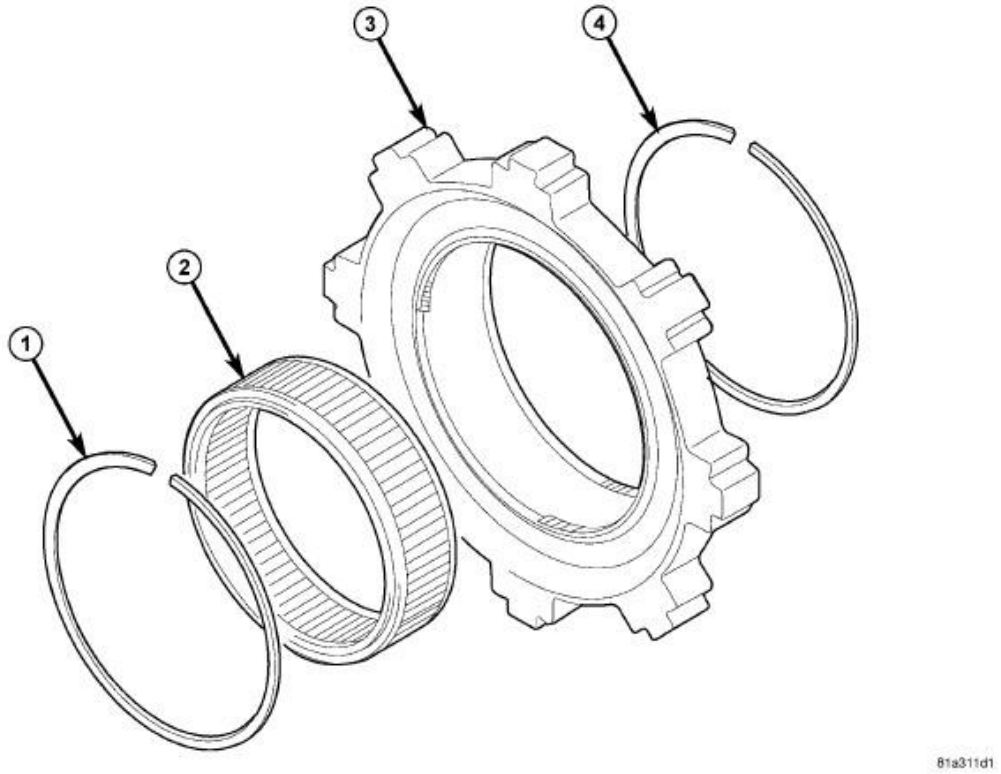

Fig. 233: F1 One Way Clutch
Courtesy of CHRYSLER GROUP, LLC

1 - SNAP RING	4 - SNAP RING
2 - F1 ONE WAY CLUTCH	
3 - F1 ONE WAY CLUTCH OUTER RACE	

NOTE: **Apply trans jell or petroleum jelly to all slide portions, rolling contacts surfaces, thrust surfaces etc. to prevent burnout during initial operation. Lubricate O-rings and O-ring seals with MOPAR® AS68RC ATF. Soak all friction discs in MOPAR® AS68RC ATF for at least two hours before assembly of clutch packs.**

NOTE: **The F1 one way clutch should be assembled so that it will idle clockwise as seen from the transmission case side.**

1. Install the F1 one way clutch (2), with the tab openings facing the rear, into the F1 one way clutch outer race (3).
2. Install the snap rings (2), (5) into the F1 one way clutch assembly.

FLUID

DIAGNOSIS AND TESTING

EFFECTS OF INCORRECT FLUID LEVEL

A low fluid level allows the pump to take in air along with the fluid. Air in the fluid will cause fluid pressures to be low and develop slower than normal. If the transmission is overfilled, the gears churn the fluid into foam. This aerates the fluid and causing the same conditions occurring with a low level. In either case, air bubbles cause fluid overheating, oxidation, and varnish buildup which interferes with valve and clutch operation. Foaming also causes fluid expansion which can result in fluid overflow from the transmission vent or fill tube. Fluid overflow can easily be mistaken for a leak if inspection is not careful.

CAUSES OF BURNT FLUID

Burnt, discolored fluid is a result of overheating which has three primary causes.

1. Internal clutch slippage, usually caused by low line pressure, inadequate clutch apply pressure, or clutch seal failure.
2. A result of restricted fluid flow through the main and/or auxiliary cooler.
3. Heavy duty operation with a vehicle not properly equipped for this type of operation. Trailer towing or similar high load operation will overheat the transmission fluid if the vehicle is improperly equipped. Such vehicles should have an auxiliary transmission fluid cooler, a heavy duty cooling system, and the engine/axle ratio combination needed to handle heavy loads.

FLUID CONTAMINATION

Transmission fluid contamination is generally a result of:

- adding incorrect fluid.
- failure to clean dipstick and fill tube when checking level.
- engine coolant entering the fluid.
- internal failure that generates debris.
- overheat that generates sludge (fluid breakdown).
- failure to replace contaminated converter after repair.

The use of non-recommended fluids can result in transmission failure. The usual results are erratic shifts, slippage, abnormal wear and eventual failure due to fluid breakdown and sludge formation. Avoid this condition by using recommended fluids only.

The dipstick cap and fill tube should be wiped clean before checking fluid level. Dirt, grease and other foreign material on the cap and tube could fall into the tube if not removed beforehand. Take the time to wipe the cap and tube clean before withdrawing the dipstick.

Engine coolant in the transmission fluid is generally caused by a cooler malfunction. The only remedy is to replace the radiator as the cooler in the radiator is not a serviceable part. If coolant has circulated through the transmission, an overhaul is necessary.

The torque converter should be replaced whenever a failure generates sludge and debris. This is necessary because normal converter flushing procedures will not remove all contaminants.

STANDARD PROCEDURE

FLUID LEVEL CHECK

Low fluid level can cause a variety of conditions because it allows the pump to take in air along with the fluid. As in any hydraulic system, air bubbles make the fluid spongy, therefore, pressures will be low and build up slowly.

Improper filling can also raise the fluid level too high. When the transmission has too much fluid, the gear train churns up foam and cause the same conditions which occur with a low fluid level.

In either case, air bubbles can cause overheating and/or fluid oxidation, and varnishing. This can interfere with normal valve, clutch, and accumulator operation. Foaming can also result in fluid escaping from the transmission vent where it may be mistaken for a leak.

After the fluid has been checked, seat the dipstick fully to seal out water and dirt.

The transmission has a dipstick to check oil level. Be sure to wipe all dirt from dipstick handle before removing.

The torque converter fills in both the P (PARK) and N (NEUTRAL) positions. Place the selector lever in P (PARK) to be sure that the fluid level check is accurate. **The engine should be running at idle speed for at least one minute, with the vehicle on level ground.** At normal operating temperature (approximately 82° C. or 180° F), the fluid level is correct if it is in the HOT region (cross-hatched area) on the oil level indicator. The fluid level will be approximately at the upper COLD hole of the dipstick at 21° C (70° F) fluid temperature.

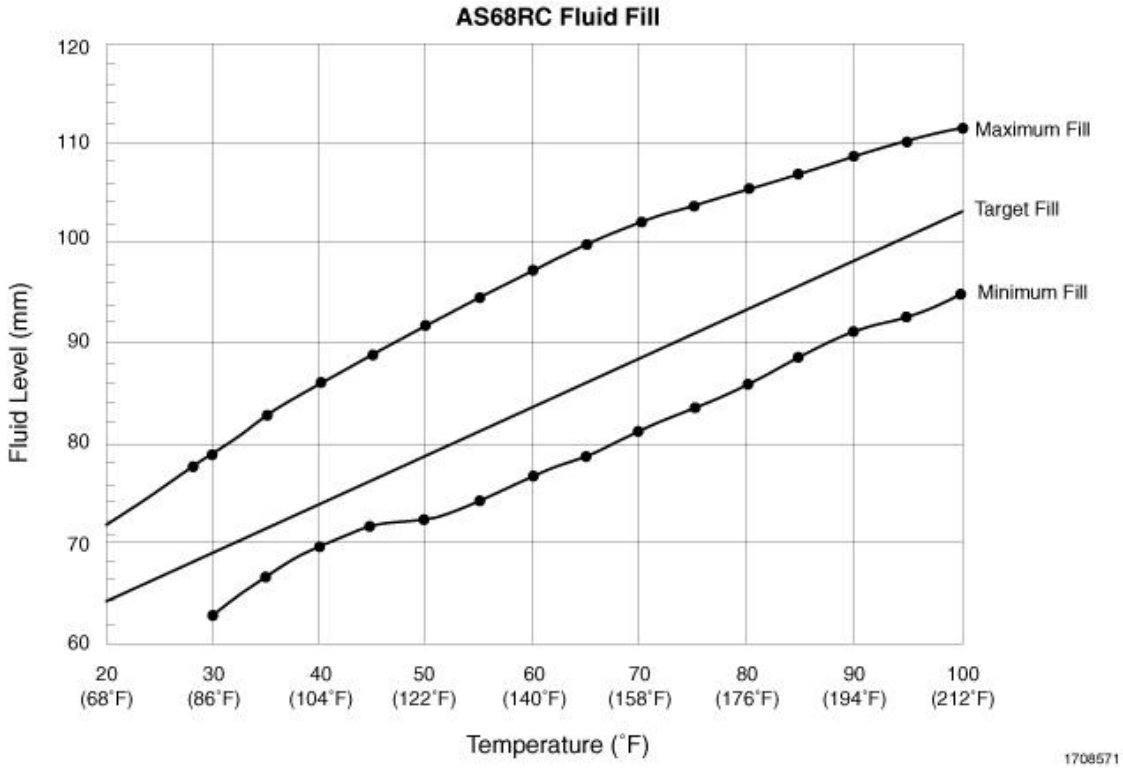

Fig. 234: Transmission Fluid Fill Level Vs. Transmission Fluid Temperature Chart

Courtesy of CHRYSLER GROUP, LLC

NOTE: The engine and transmission should be at normal operating temperature before performing this procedure. Optimum fluid temperature for checking the level should be between 70°C (158°F) and 80°C (176°F).

1. Start engine and apply parking brake.
2. Shift the transmission into DRIVE for approximately 2 seconds.
3. Shift the transmission into REVERSE for approximately 2 seconds.
4. Shift the transmission into PARK.
5. Connect the scan tool and select transmission.
6. Select sensors.
7. Read the transmission temperature value.
8. Compare the fluid temperature value with the chart.
9. Adjust transmission fluid level shown on the dipstick according to the Transmission Fluid Temperature Chart.

NOTE: After adding any fluid to the transmission, wait a minimum of 2 minutes for the oil to fully drain from the fill tube into the transmission before rechecking the fluid level.

10. Check transmission for leaks.

FLUID AND FILTER REPLACEMENT

REMOVAL

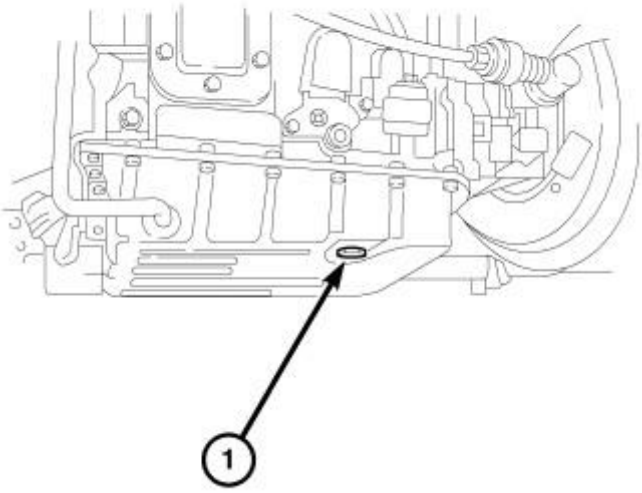

Fig. 235: Drain Plug
Courtesy of CHRYSLER GROUP, LLC

1 - DRAIN PLUG

1. Raise vehicle.
2. Place a large diameter drain pan beneath the transmission pan.
3. Remove the drain plug bolt (1) and allow the oil to drain from the transmission pan.
4. Remove the drain pan bolts from the transmission case.
5. Remove the drain pan.

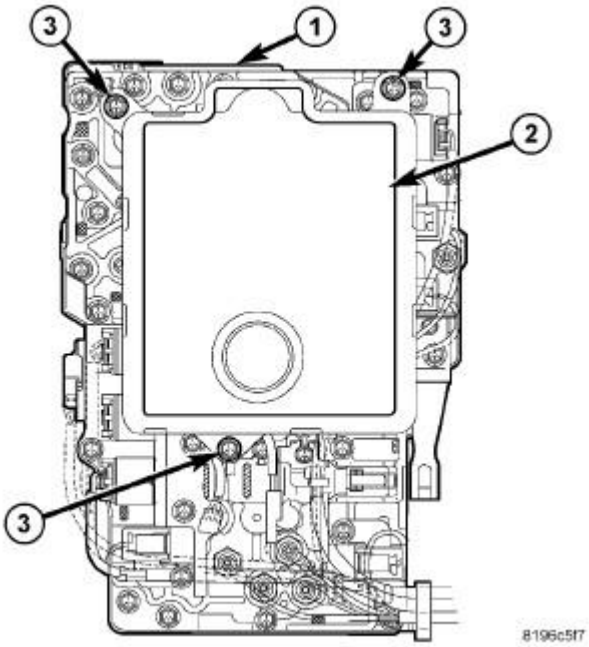

Fig. 236: Transmission Oil Filter
Courtesy of CHRYSLER GROUP, LLC

1 - VALVE BODY
2 - TRANSMISSION OIL FILTER
3 - 19.8 MILLIMETER FLANGE BOLTS

6. Remove the transmission oil filter bolts (3).
7. Remove the transmission oil filter and o-ring seal from the valve body (1).

INSPECTION

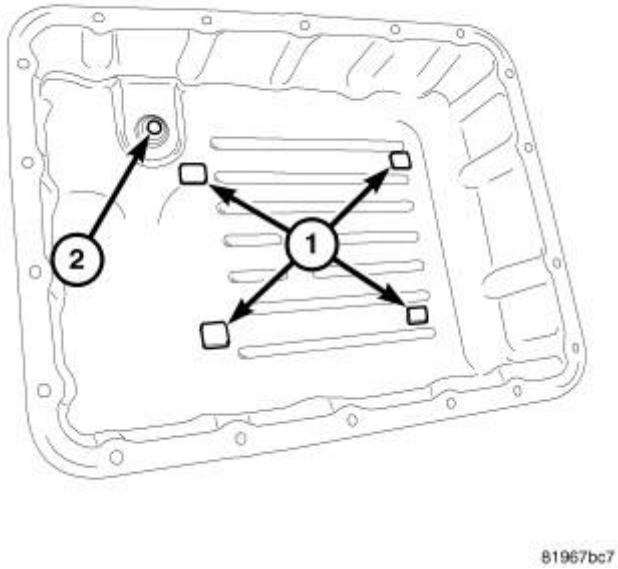

Fig. 237: Oil Pan Magnets
Courtesy of CHRYSLER GROUP, LLC

1 - PICK-UP MAGNETS
2 - MAGNETIC DRAIN PLUG

Inspect bottom of pan, pick-up magnets (1) and magnetic drain plug (2) and fluid filter for excessive amounts of metal. A light coating of clutch material on the bottom of the pan does not indicate a problem unless accompanied by a slipping condition or shift lag. If fluid and pan are contaminated with excessive amounts of debris, refer to **DIAGNOSIS AND TESTING**.

CLEANING

1. Using a suitable solvent, clean pan and magnet.
2. Using a suitable gasket scraper, clean original sealing material from surface of transmission case and the transmission pan.

INSTALLATION

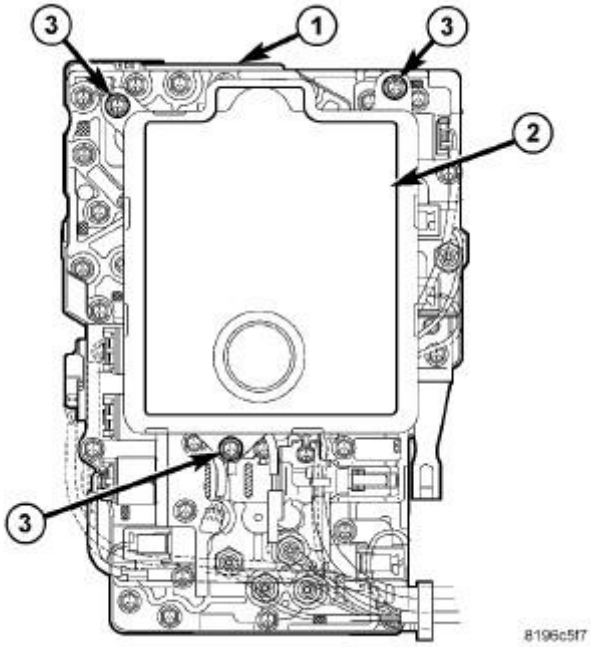

Fig. 238: Transmission Oil Filter
Courtesy of CHRYSLER GROUP, LLC

1 - VALVE BODY
2 - TRANSMISSION OIL FILTER
3 - 19.8 MILLIMETER FLANGE BOLTS

1. Lubricate the transmission oil filter seal with MOPAR® AS68RC ATF.
2. Install the new transmission oil filter (2) in position on valve body (1) and into the oil pump.
3. Install the transmission oil filter bolts (3).
4. Tighten bolts to 10 N.m (88 in.lbs.) torque.
5. Install a new transmission oil pan gasket.
6. Place pan in position on transmission.
7. Install bolts to hold pan to transmission. Tighten bolts to 7 N.m (62 in. lbs.) torque.

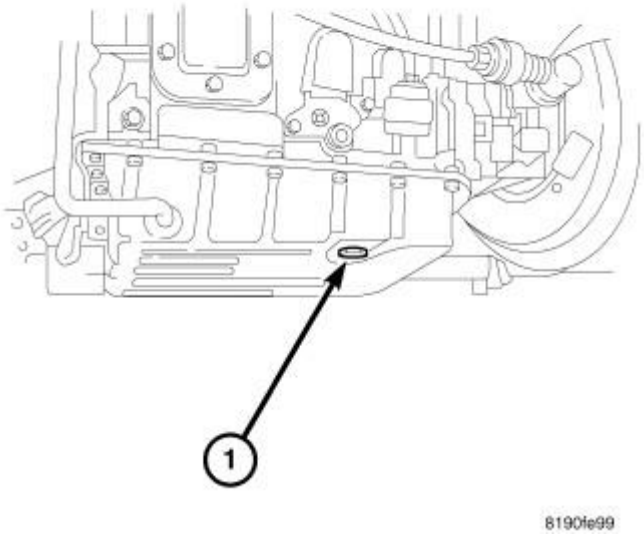

Fig. 239: Drain Plug
Courtesy of CHRYSLER GROUP, LLC

1 - DRAIN PLUG

8. Install transmission drain plug bolt (1).
9. Tighten oil pan drain plug to 22 N?m (16 ft. lbs.) torque.
10. Lower vehicle and fill transmission with MOPAR® AS68RC ATF. Refer to **FLUID, STANDARD PROCEDURE**.

TRANSMISSION FILL

To avoid overfilling transmission after a fluid change or overhaul, perform the following procedure:

1. Remove dipstick and insert clean funnel in transmission fill tube.
2. Add following initial quantity of Mopar® AS68RC ATF to transmission:
    1. If only fluid and filter were changed, add **6.8L (7.2 quarts)** of AS68RC to transmission.
    2. If transmission was completely overhauled and the torque converter was replaced or drained, add **13L (13.75 quarts)** of Mopar® AS68RC ATF to transmission.
3. Check the transmission fluid and adjust as required.

GEARTRAIN, PLANETARY

DESCRIPTION

DESCRIPTION

NOTE: **The 68RFE transmission does not use a number 7 thrust bearing.**

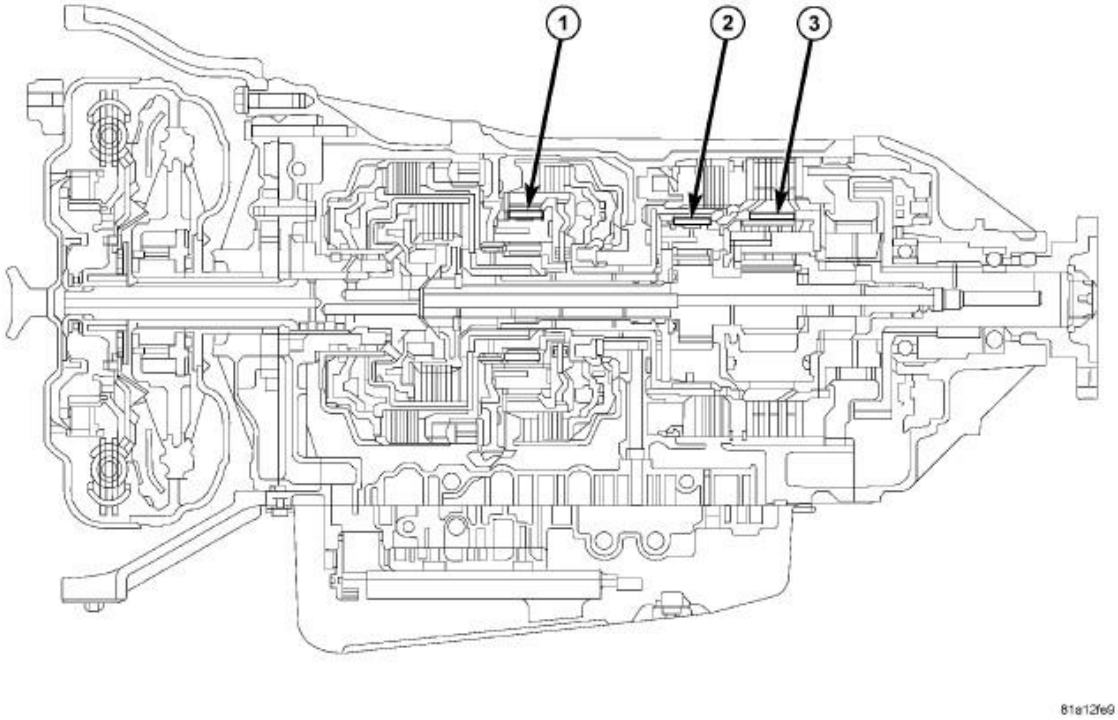

Fig. 240: Orientation Of Planetary Gear Set
Courtesy of CHRYSLER GROUP, LLC

1 - P1 PLANETARY GEAR SET 2 - P2 PLANETARY GEAR SET 3 - P3 PLANETARY GEAR SET

GEAR SETS

		Gear Teeth	Gear Thickness
P1 Planetary Gear	Sun	49	27 mm (1.06 in.)
	Pinion 1	23	26 mm (0.90 in.)
	Pinion 2	22	26 mm (1.02 in.)
	Annulus	100	28.2 mm (1.10 in.)
P2 Planetary	Sun	38	27.2 mm (1.07 in.)
	Pinion 1	22	28 mm (1.10 in.)

Gear	Annulus	82	28.8 mm (1.13 in.)
P3 Planetary Gear	Sun	31	43 mm (1.69 IN.)
	Pinion 1	27	40 mm (1.57 in.)
	Annulus	85	35.6 mm (1.43 in.)

P1 PLANETARY GEAR SET

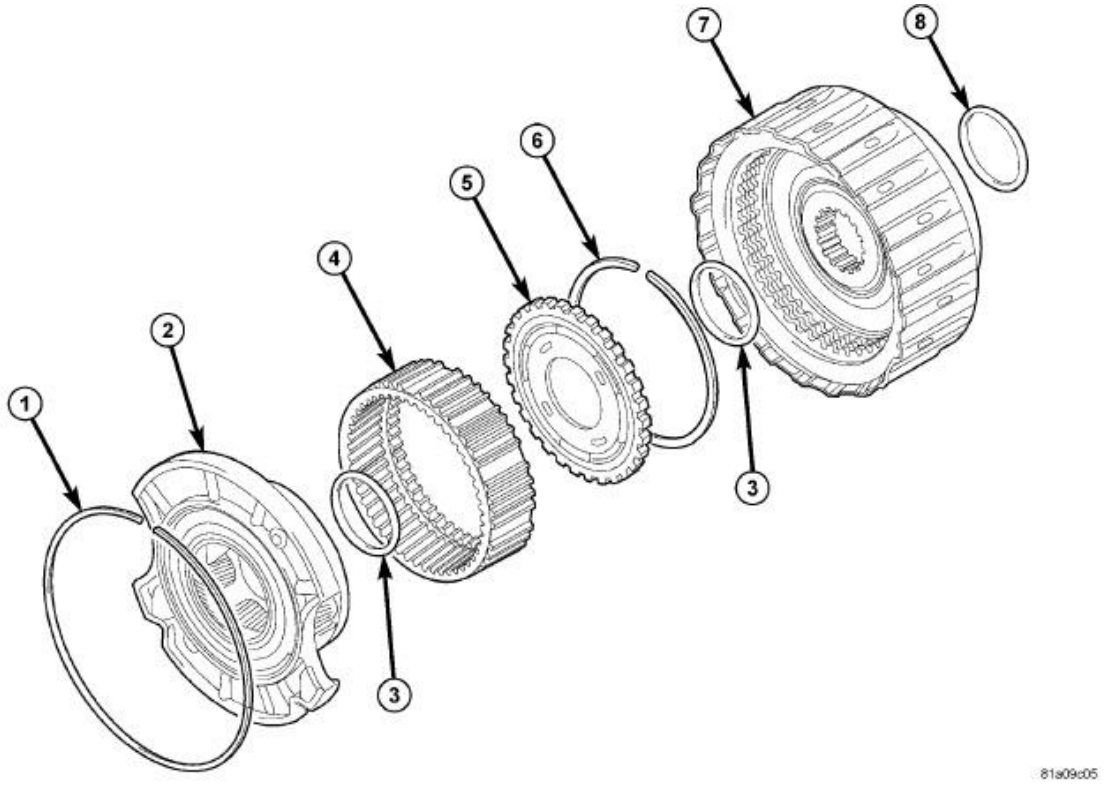

Fig. 241: P1 Planetary Gear Components
Courtesy of CHRYSLER GROUP, LLC

1 - SNAP RING	5 - ANNULUS GEAR FLANGE
2 - P1 PLANETARY GEAR	6 - SNAP RING
3 - THRUST BEARING	7 - C3 CLUTCH ASSEMBLY
4 - ANNULUS GEAR	8 - THRUST BEARING

The P1 planetary gear set is in front of the transmission case bulkhead located behind the oil pump, C1 and C2 clutch assemblies and is bolted to the transmission case. The P1 planetary gear set works in conjunction with the C3 clutch assembly.

P2 PLANETARY GEAR SET

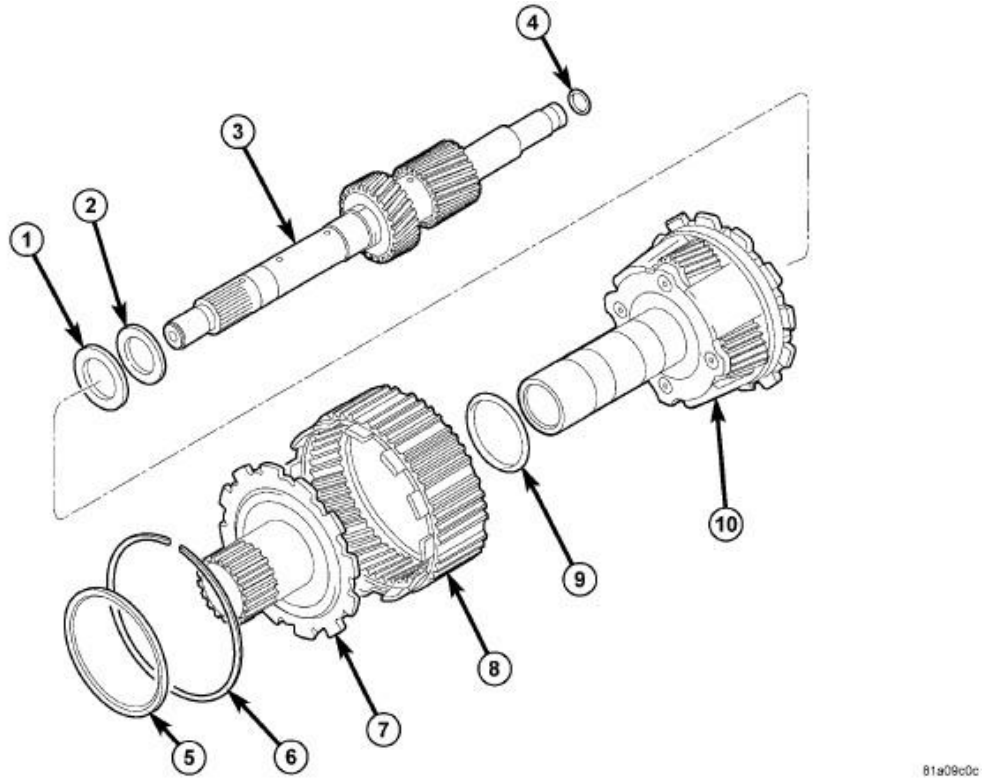

Fig. 242: P2 Planetary Gear Set Components
Courtesy of CHRYSLER GROUP, LLC

1 - THRUST BEARING RACE	6 - SNAP RING
2 - THRUST BEARING	7 - P2 HUB
3 - SUN GEAR SHAFT	8 - ANNULUS GEAR
4 - OIL SEAL RING	9 - THRUST BEARING
5 - THRUST BEARING	10 - P2 PLANETARY GEAR

The P2 planetary gear set is first gear set located behind the transmission case bulkhead. The P2 planetary gear set works in conjunction with the B1 brake clutch.

P3 PLANETARY GEAR SET

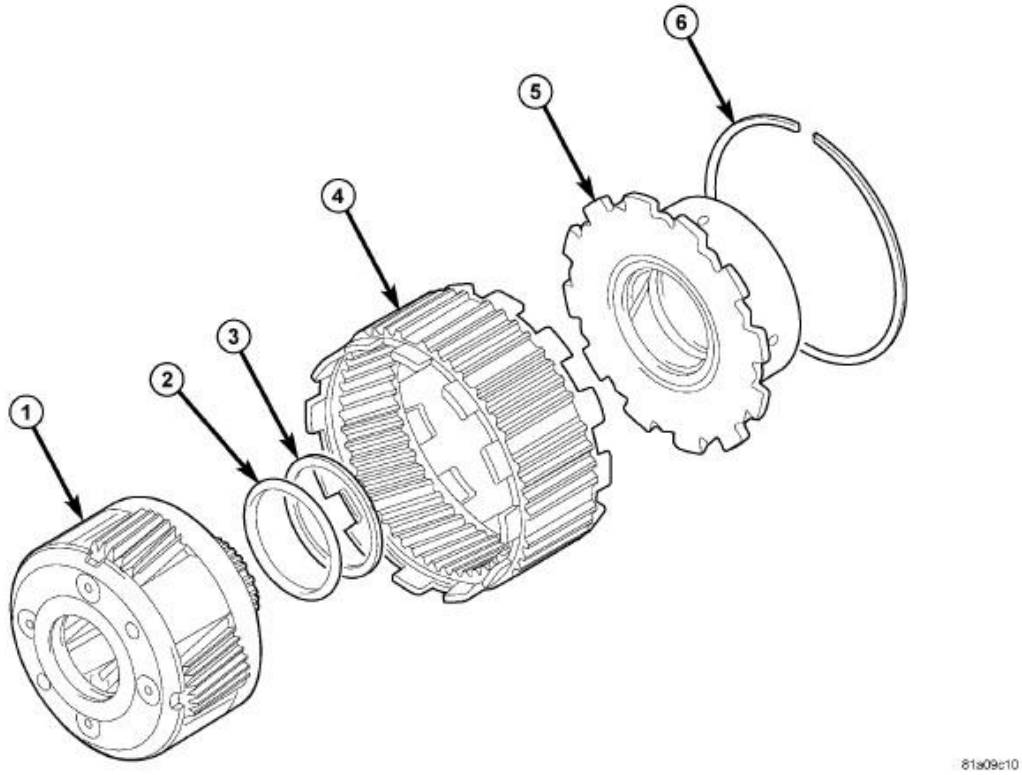

Fig. 243: P3 Planetary Gear Set Components
Courtesy of CHRYSLER GROUP, LLC

1 - P3 PLANETARY GEAR	4 - ANNULUS GEAR
2 - THRUST BEARING RACE	5 - P3 hub
3 - THRUST BEARING	6 - SNAP RING

The P3 planetary gear set is located behind the P2 planetary gear set in front of the F1 one-way clutch. The P3 planetary gear set works in conjunction with the B2 brake clutch.

OPERATION

OPERATION

Planetary gear sets are so named because of their physical arrangement. All planetary gear sets contain at least

three main components.

- A sun gear at the center of the gear set.
- A carrier assembly with planetary pinion gears that rotate around the sun gear.
- An internal annulus that encompasses the entire gear set.

This arrangement provides both strength and efficiency and also evenly distributes the energy forces flowing through the gear set. Another benefit of planetary gears is that gear clash, a common occurrence in manual transmissions, is eliminated because the gear teeth are always in mesh.

DISASSEMBLY

DISASSEMBLY

P1 PLANETARY GEAR SET

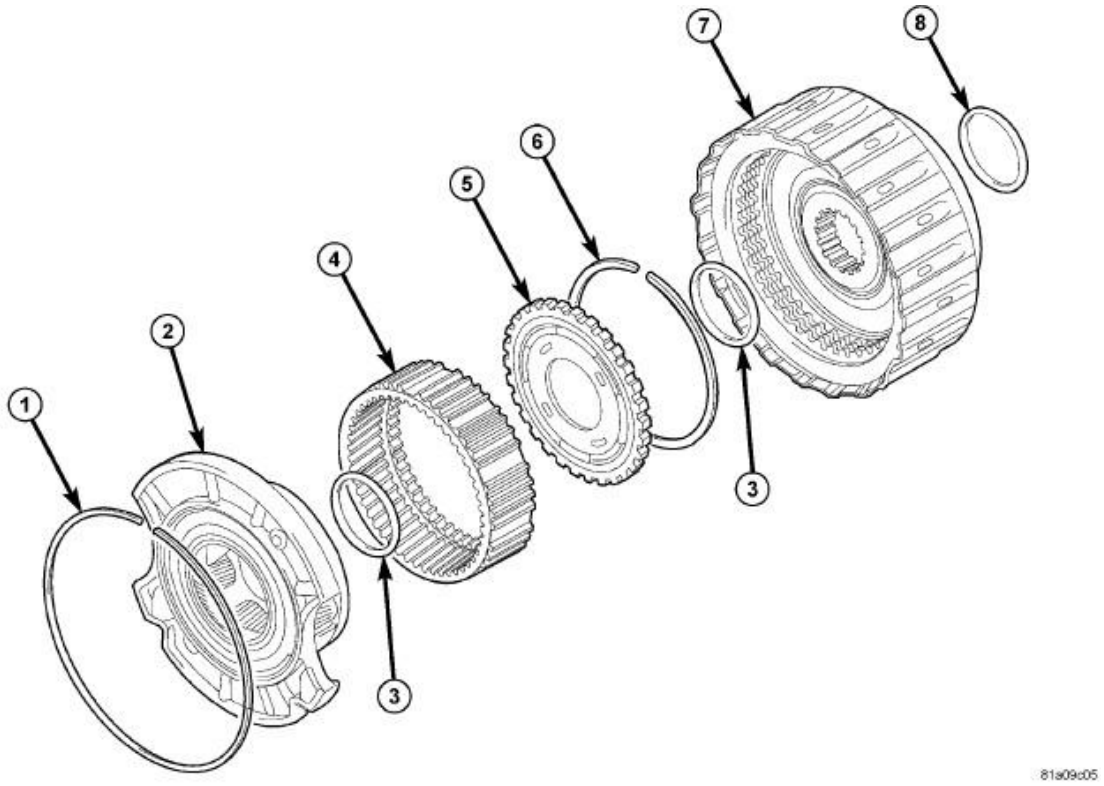

Fig. 244: P1 Planetary Gear Components
Courtesy of CHRYSLER GROUP, LLC

1 - SNAP RING	5 - ANNULUS GEAR FLANGE
2 - P1 PLANETARY GEAR	6 - SNAP RING

3 - THRUST BEARING	7 - C3 CLUTCH ASSEMBLY
4 - ANNULUS GEAR	8 - THRUST BEARING

1. Remove the P1 planetary gear (2) and the ring gear assembly from the C3 clutch assembly (7).
2. Remove the P1 planetary gear (2) and thrust bearing (3) from the ring gear assembly.
3. Remove the snap ring (6) from the ring gear (4).
4. Remove the ring gear flange (5) from the ring gear (4).

P2 PLANETARY GEAR SET

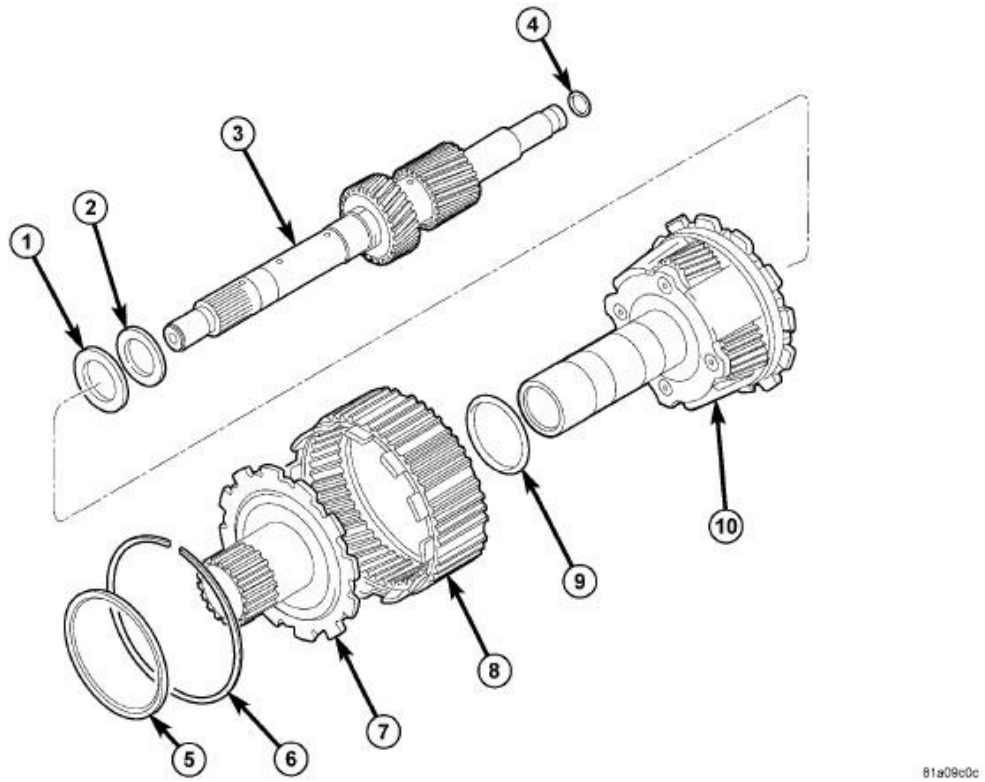

Fig. 245: P2 Planetary Gear Set Components
Courtesy of CHRYSLER GROUP, LLC

1 - THRUST BEARING RACE	6 - SNAP RING
2 - THRUST BEARING	7 - P2 HUB
3 - SUN	

GEAR SHAFT	8 - ANNULUS GEAR
4 - OIL SEAL RING	9 - THRUST BEARING
5 - THRUST BEARING	10 - P2 PLANETARY GEAR

1. Remove the P2 planetary gear (10), thrust bearing race (1), thrust bearing (2) and ring gear assembly from the sun gear shaft (3).
2. Remove the ring gear assembly and thrust bearings (5), (9) from the P2 planetary gear (10).
3. Remove the snap ring (6) from the ring gear (8).
4. Separate the P1 hub (7) from the ring gear (8).

P3 PLANETARY GEAR SET

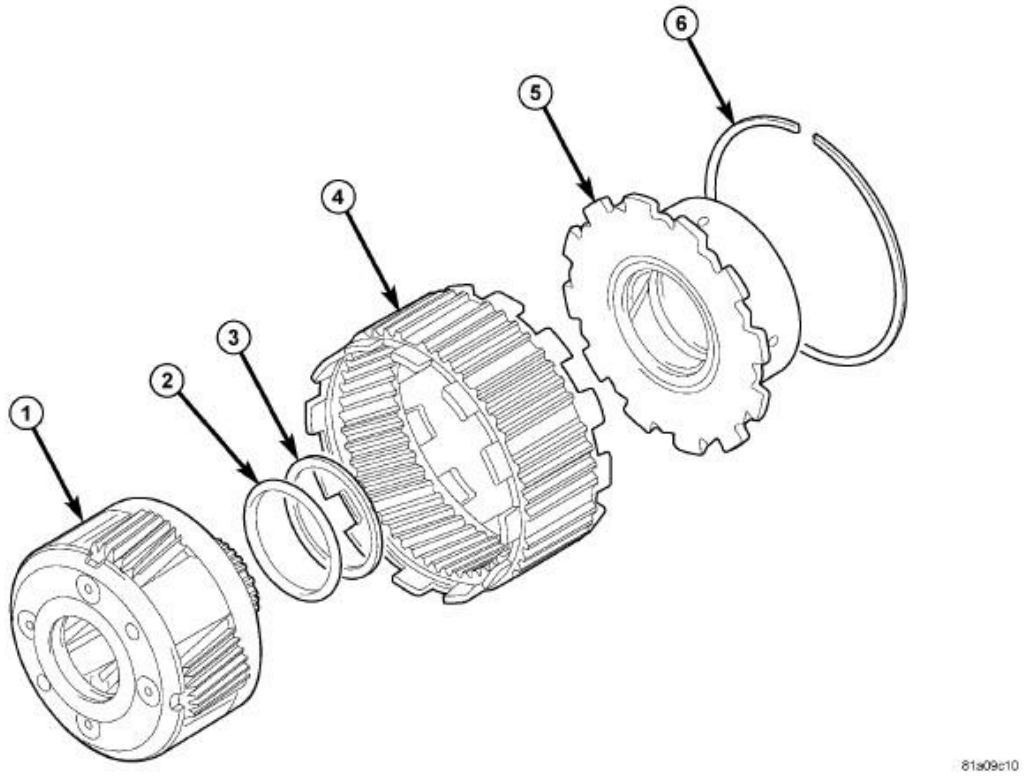

Fig. 246: P3 Planetary Gear Set Components
Courtesy of CHRYSLER GROUP, LLC

1 - P3 PLANETARY GEAR	4 - ANNULUS GEAR
2 - THRUST	5 - P3 hub

BEARING RACE 3 - THRUST BEARING	6 - SNAP RING

1. Remove the P3 planetary gear (1), thrust bearing race (2), thrust bearing (3) from the ring gear assembly.
2. Remove the snap ring (6) from the ring gear assembly.
3. Remove the P2 hub (5) from the ring gear (4).

CLEANING

CLEANING

Clean the planetary components in solvent and dry them with compressed air.

INSPECTION

INSPECTION

Inspect each planetary carrier assembly for damage. Check that each pinion gear rotates freely and smoothly on its shaft. Check that the tabbed thrust washer on each side of each pinion gear is in place. Check that the outer ends of the pinion shafts are not discolored from overheating. Replace the carrier assembly if jammed or sticky pinion gears, spun or missing tabbed washers, or blackened pinion shafts are found.

Check sun gear and driving shell condition. Replace the gear if damaged or if the bushings are scored or worn. The bushings are not serviceable. Replace the driving shell if worn, cracked or damaged.

Replace planetary gear sets if gears, pinion pins, or carrier are damaged in any way. Replace the annulus gears and supports if either component is worn or damaged.

Replace the output shaft if the machined surfaces are scored, pitted, or damaged in any way. Also replace the shaft if the splines are damaged, or exhibits cracks at any location.

ASSEMBLY

ASSEMBLY

NOTE: **Apply trans jell or petroleum jelly to all slide portions, rolling contacts surfaces, thrust surfaces etc. to prevent burnout during initial operation. Lubricate O-rings and O-ring seals with MOPAR® AS68RC ATF. Soak all friction disks in MOPAR® AS68RC ATF for at least two hours before assembly of clutch packs.**

P1 PLANETARY GEAR SET

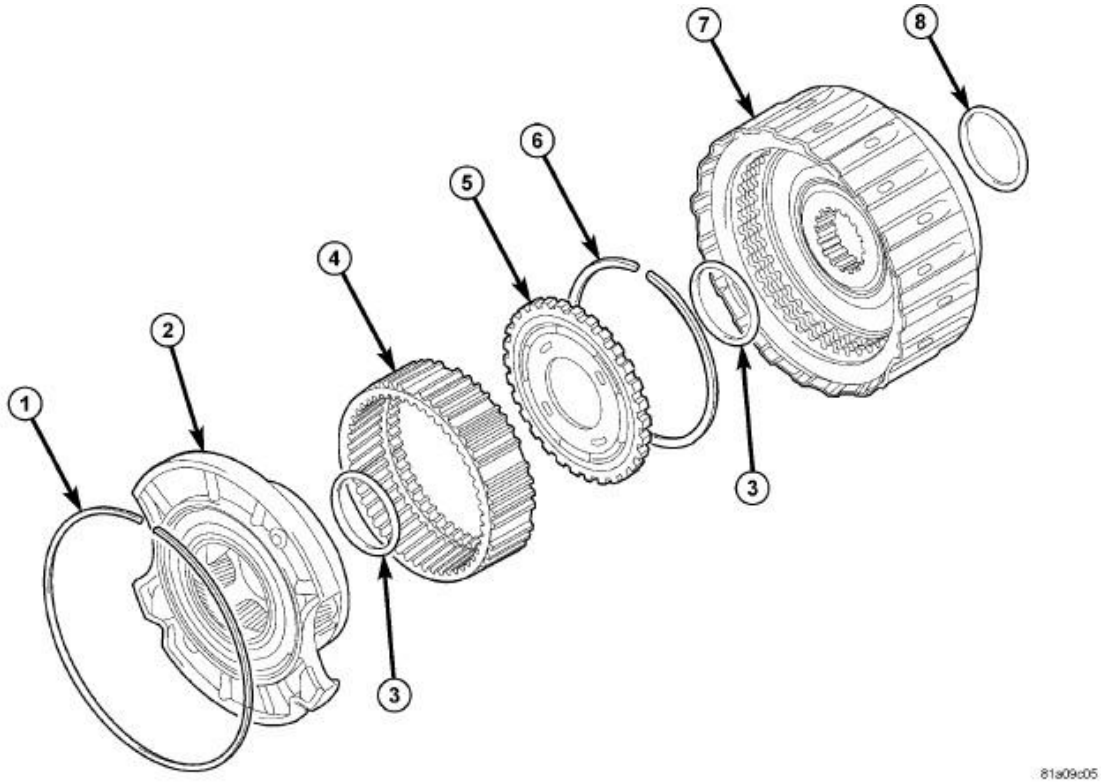

Fig. 247: P1 Planetary Gear Components
Courtesy of CHRYSLER GROUP, LLC

1 - SNAP RING	5 - ANNULUS GEAR FLANGE
2 - P1 PLANETARY GEAR	6 - SNAP RING
3 - THRUST BEARING	7 - C3 CLUTCH ASSEMBLY
4 - ANNULUS GEAR	8 - THRUST BEARING

1. Install the ring gear flange (5) into the ring gear (4).
2. Install the snap ring (6) into the ring gear (4).
3. Install the P1 planetary gear (2) and thrust bearing (3) into the ring gear assembly.
4. Install the P1 planetary gear (2) and ring gear assembly into the C3 clutch assembly (7).

P2 PLANETARY GEAR SET

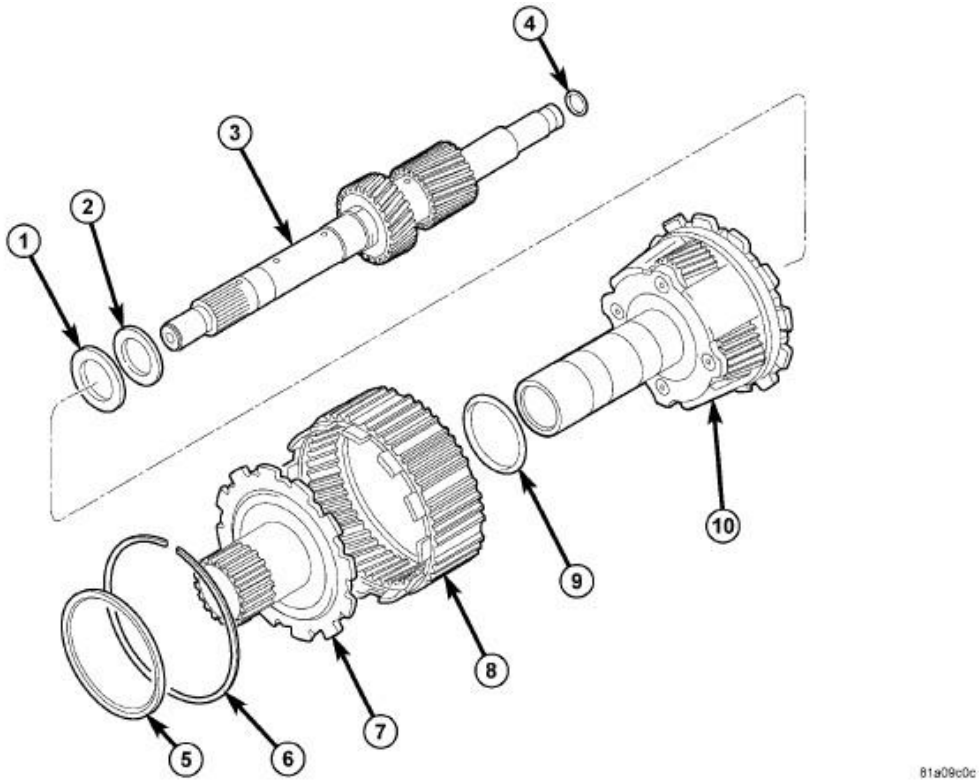

Fig. 248: P2 Planetary Gear Set Components
Courtesy of CHRYSLER GROUP, LLC

1 - THRUST BEARING RACE	6 - SNAP RING
2 - THRUST BEARING	7 - P2 HUB
3 - SUN GEAR SHAFT	8 - ANNULUS GEAR
4 - OIL SEAL RING	9 - THRUST BEARING
5 - THRUST BEARING	10 - P2 PLANETARY GEAR

1. Install the P1 hub (7) into the ring gear (8).
2. Install the snap ring (6) into the ring gear (8).
3. Install the ring gear assembly and thrust bearings (5),(9) onto the P2 planetary gear (10).
4. Install the P2 planetary gear (10), thrust bearing race (1), thrust bearing (2) and ring gear assembly onto

the sun gear shaft (3).

P3 PLANETARY GEAR SET

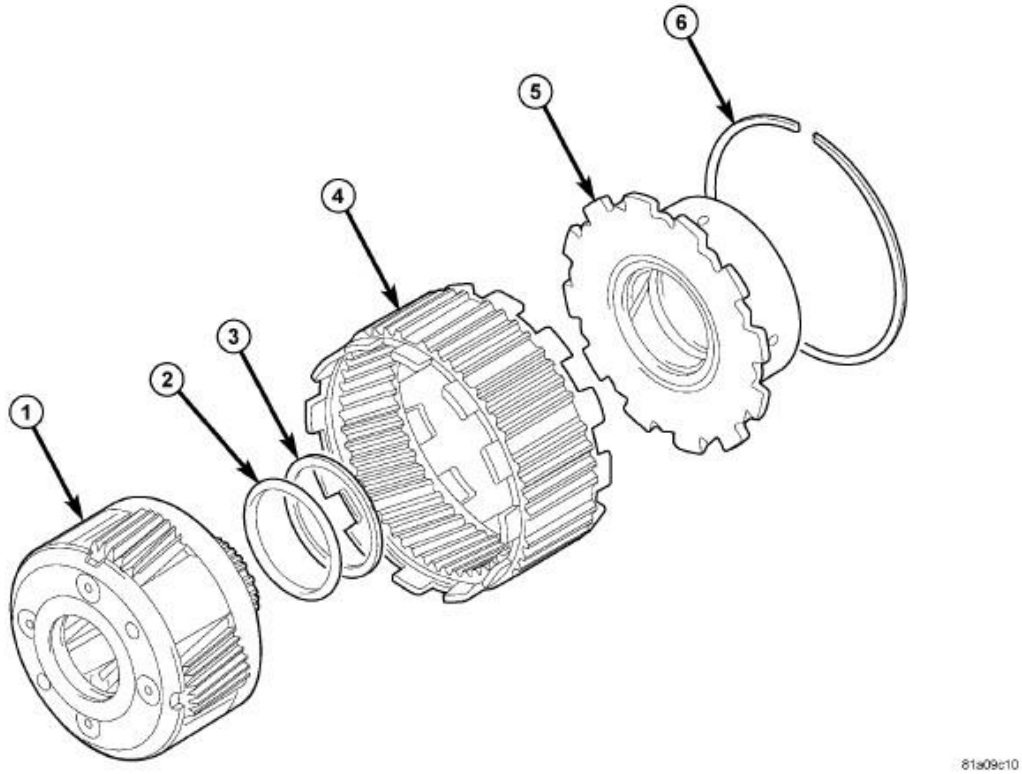

Fig. 249: P3 Planetary Gear Set Components
Courtesy of CHRYSLER GROUP, LLC

1 - P3 PLANETARY GEAR	4 - ANNULUS GEAR
2 - THRUST BEARING RACE	5 - P3 hub
3 - THRUST BEARING	6 - SNAP RING

1. Install the P2 hub (5) into the ring gear (4).
2. Install the snap ring (6) onto the ring gear assembly.
3. Install the P3 planetary gear (1), thrust bearing race (2), thrust bearing (3) into the ring gear assembly.

HOLDING CLUTCHES

DESCRIPTION

DESCRIPTION

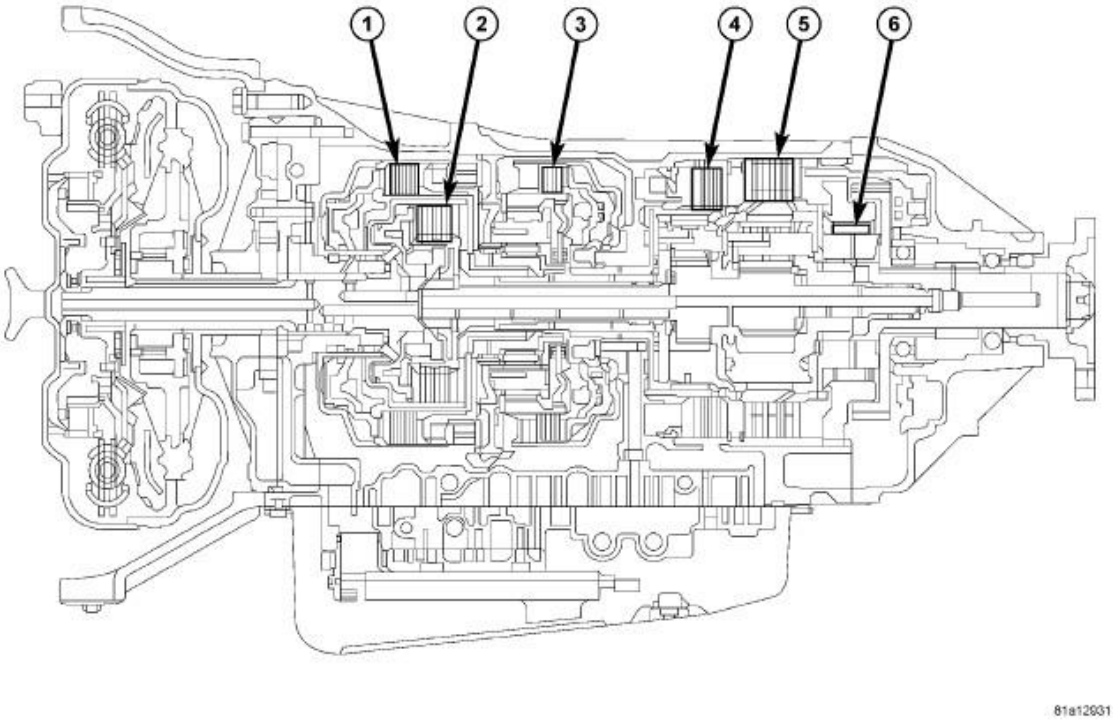

Fig. 250: Orientation Of Clutches
Courtesy of CHRYSLER GROUP, LLC

1 - K2 CLUTCH	4 - B1 BRAKE CLUTCH
2 - K1 CLUTCH	5 - B2 BRAKE CLUTCH
3 - K3 CLUTCH	6 - F1 ONE WAY CLUTCH

The B1 and the B2 brake clutch (holding clutch) assemblies used in the AS68RC transmission are all friction clutches anchored to the transmission case. Brake assemblies are used to hold and prevent rotation of specific components of the P1, P2, P3, planetary gear sets to transmit drive torque.

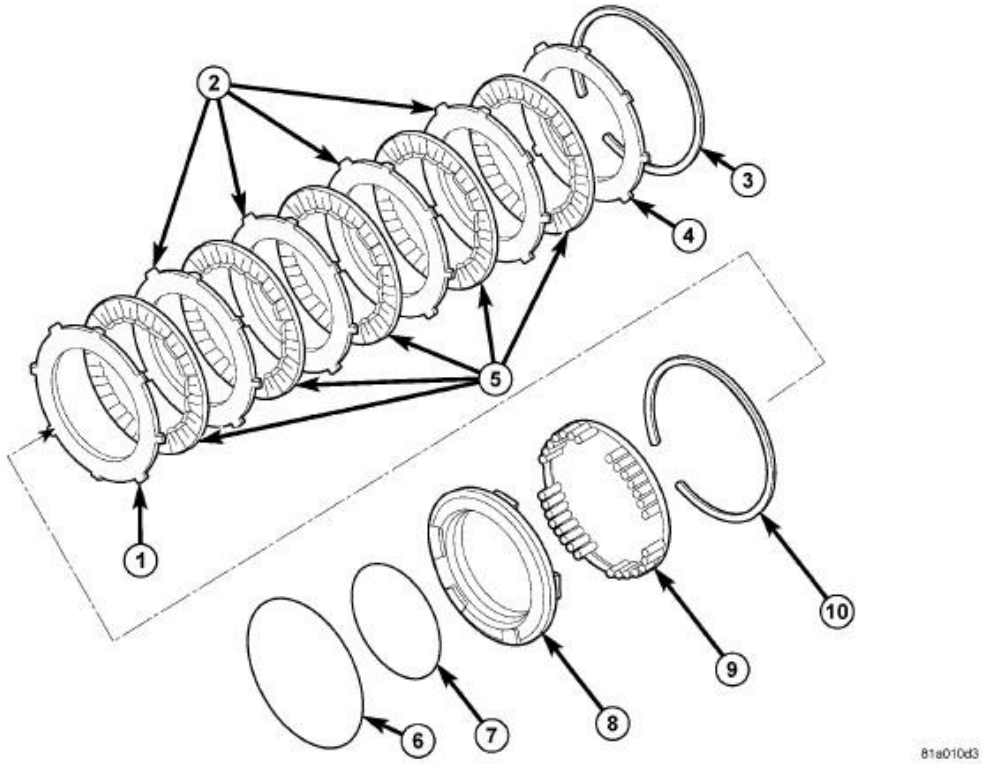

Fig. 251: B1 Brake Clutch & Components
Courtesy of CHRYSLER GROUP, LLC

1 - REACTION PLATE	6 - O-RING
2 - PLATE	7 - O-RING
3 - SNAP RING	8 - PISTON
4 - SELECTABLE REACTION PLATE	9 - PISTON RETURN SPRING
5 - DISC	10 - SNAP RING

NOTE: **The selectable clutch pack reaction plates are identified by an alpha numeric numeral stamped into the face of the plate.**

The B1 brake piston stroke clearance is 1.55 - 1.80 mm (0.061 - 0.71 in.)

The B1 brake clutch pack clearance is 1.25 - 1.50 mm (0.049 -0.059 in.). If the clearance is not within tolerance, choose the correct selectable reaction plate.

- A = 5.40 mm (0.212 in.)
- B = 5.55 mm (0.218 in.)
- C = 5.70 mm (0.224 in.)
- D = 5.85 mm (0.230 in.)
- E = 6.0 mm (0.236 in.)

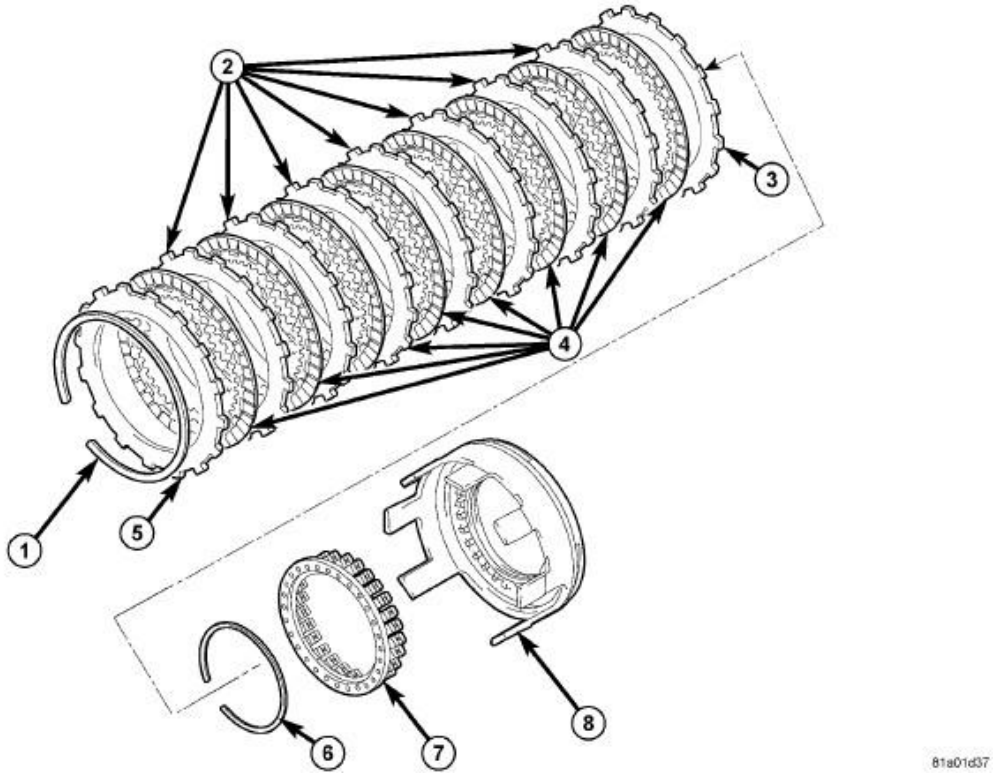

Fig. 252: B2 Brake Clutch & Components
Courtesy of CHRYSLER GROUP, LLC

1 - SNAP RING	6 - SNAP RING
2 - PLATE	7 - PISTON RETURN SPRING
3 - SELECTABLE REACTION PLATE	8 - PISTON
4 - DISC	
5 - PLATE	

NOTE: **The selectable clutch pack reaction plates are identified by an alpha numeric numeral stamped into the face of the plate.**

The B2 brake piston stroke clearance is 1.84 - 2.28 mm (0.072 -0.090 in.).

The B2 brake clutch pack clearance is 1.60 - 2.04 mm (0.063 -0.080 in.). If the clearance is not within tolerance, choose the correct selectable reaction plate.

- A = 5.40 mm (0.212 in.)
- B = 5.60 mm (0.220 in.)
- C = 5.80 mm (0.228 in.)
- D = 6.00 mm (0.236 in.)

OPERATION

OPERATION

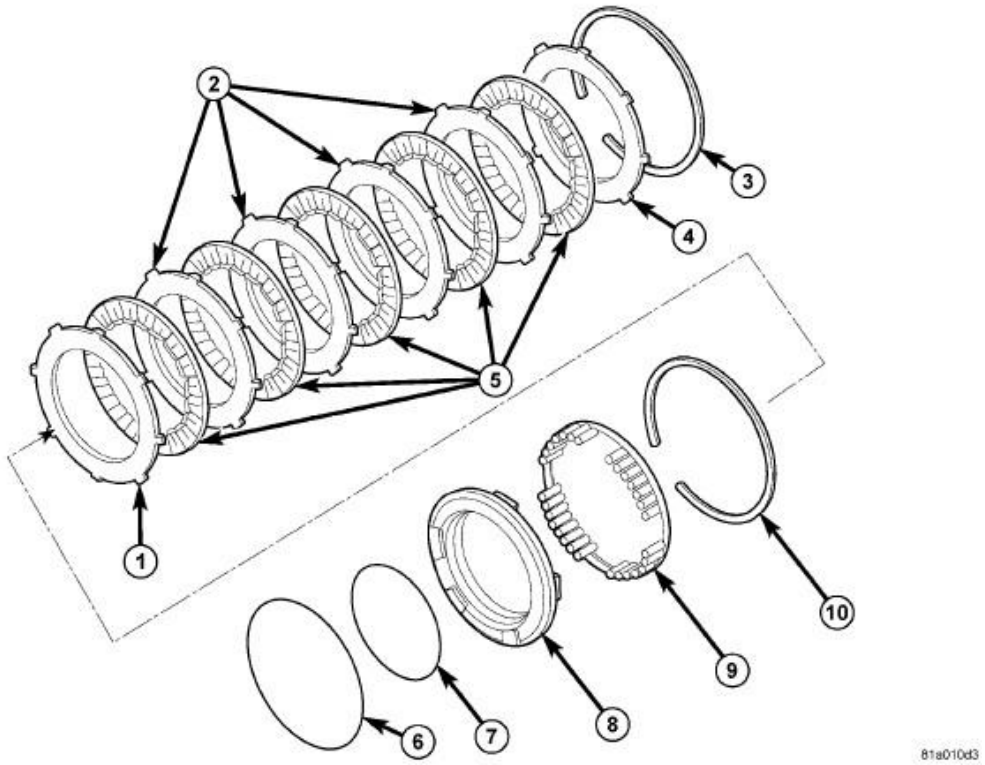

Fig. 253: B1 Brake Clutch & Components
Courtesy of CHRYSLER GROUP, LLC

1 - REACTION PLATE	6 - O-RING
2 - PLATE	7 - O-RING
3 - SNAP RING	8 - PISTON
	9 - PISTON

4 - SELECTABLE REACTION PLATE	RETURN SPRING
5 - DISC	10 - SNAP RING

B1 BRAKE CLUTCH

The B1 brake clutch is hydraulically applied in second and sixth gear by pressurized fluid. When the B1 brake clutch is applied it locks the P2 planetary ring gear. Since the P2 planetary ring gear is fixed by the B1 brake, the P2 planetary pinion gear rotates counterclockwise, and the clockwise turning effect is conveyed to the P2 planetary carrier.

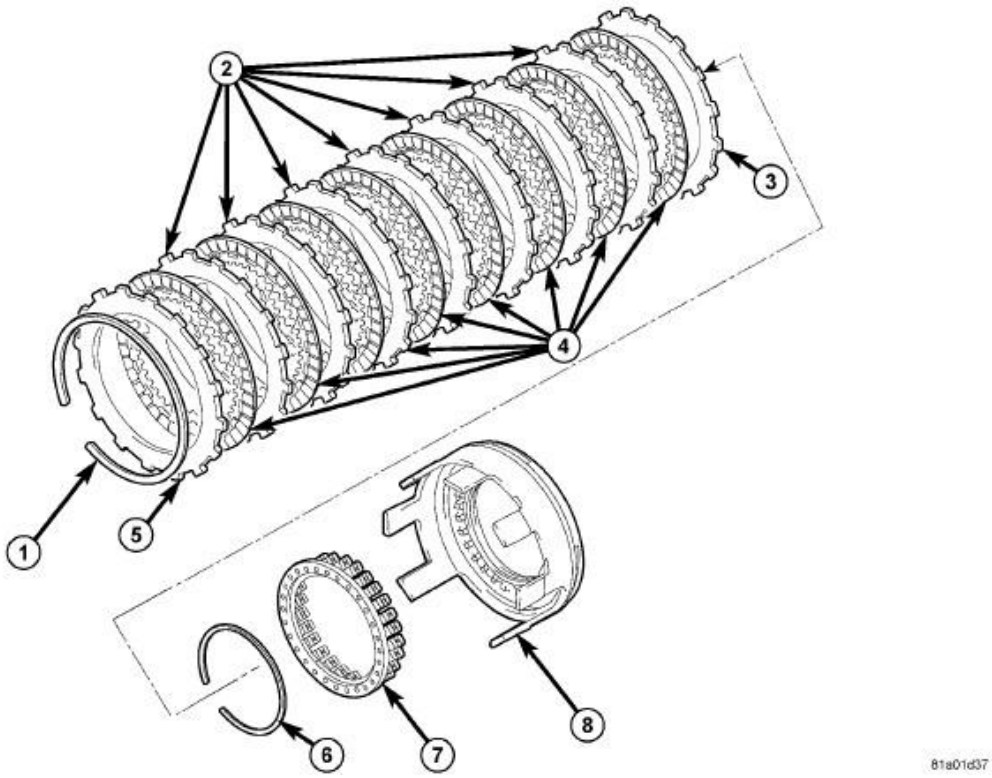

Fig. 254: B2 Brake Clutch & Components
Courtesy of CHRYSLER GROUP, LLC

1 - SNAP RING	6 - SNAP RING
2 - PLATE	7 - PISTON RETURN SPRING
3 - SELECTABLE REACTION PLATE	8 - PISTON
4 - DISC	

5 - PLATE

B2 BRAKE CLUTCH

The B2 brake clutch is hydraulically applied in park, reverse, neutral, first gear by pressurized fluid against the B2 brake clutch piston. When the B2 brake clutch is applied it locks the P2 planetary gear with the P3 planetary ring gear. The rotation of the sun gear shaft is transmitted as counterclockwise turning effect to the P3 planetary pinion gear as it attempts to rotate the P3 planetary ring gear counterclockwise.

PUMP, TRANSMISSION OIL

DESCRIPTION

DESCRIPTION

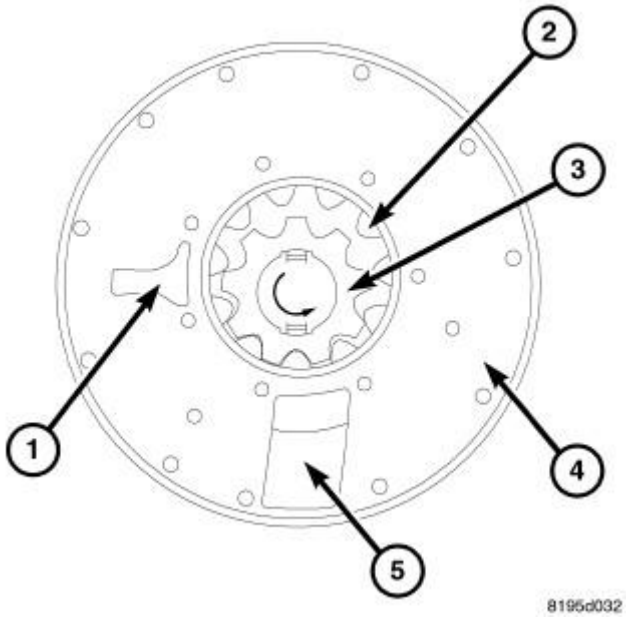

Fig. 255: Oil Pump Components
Courtesy of CHRYSLER GROUP, LLC

1 - OUTLET TO TRANSMISSION	4 - OIL PUMP BODY
2 - DRIVEN GEAR	5 - INLET FROM OIL PAN
3 - DRIVE GEAR	

1. The Oil Pump is mounted in the transmission converter housing.
2. The Oil Pump can only be serviced by disassembling the transmission.
3. The Oil Pump is a high-performance gear type pump with a small number of specially designed gear teeth. The drive gear is fitted into the extension sleeve of the torque converter, so it turns in the same

direction as engine output. Oil drawn into the pump is compressed then expelled.

OPERATION

OPERATION

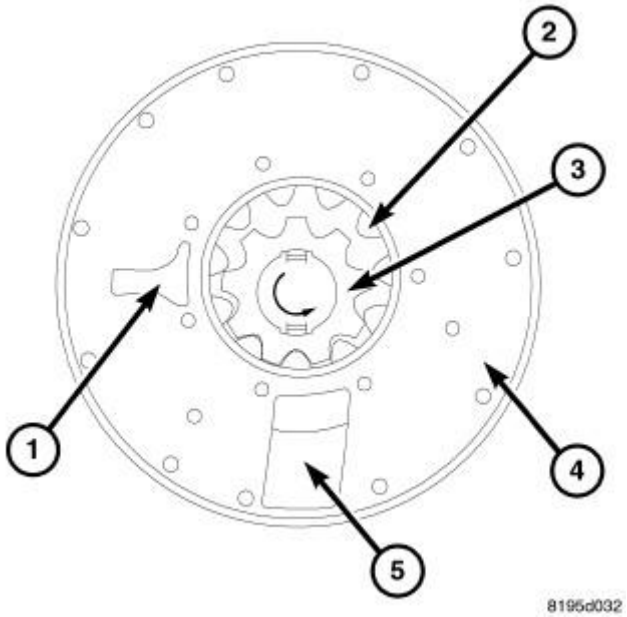

Fig. 256: Oil Pump Components
Courtesy of CHRYSLER GROUP, LLC

1 - OUTLET TO TRANSMISSION	4 - OIL PUMP BODY
2 - DRIVEN GEAR	5 - INLET FROM OIL PAN
3 - DRIVE GEAR	

As the torque converter rotates, the converter hub rotates the oil pump drive gear. As the drive gear rotates both driven gears, a vacuum is created when the gear teeth come out of mesh. This suction draws fluid through the pump inlet from the oil pan. As the gear teeth come back into mesh, pressurized fluid is forced into the pump outlet and to the oil pump valves.

OIL PUMP COVER REGULATOR VALVES

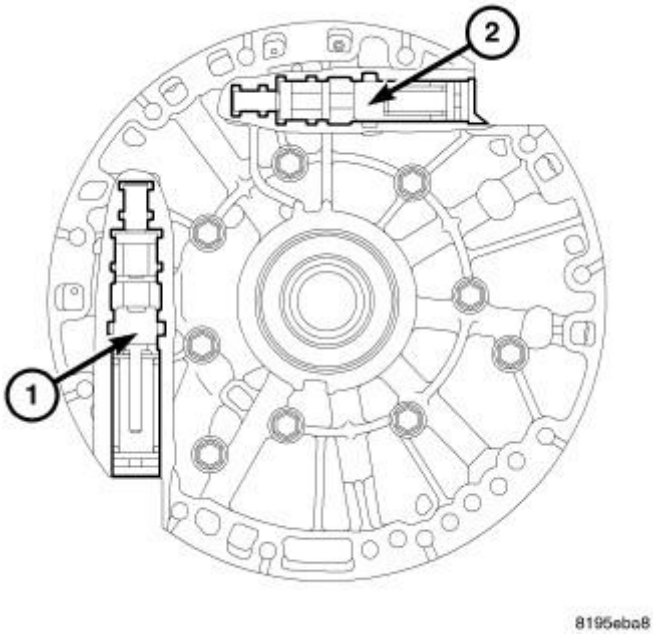

Fig. 257: Primary & Secondary Regulator Valves
Courtesy of CHRYSLER GROUP, LLC

1 - PRIMARY REGULATOR VALVE
2 - SECONDARY REGULATOR VALVE

The Primary Regulator Valve (1) controls line pressure fed to the elements.

The Secondary Regulator Valve (2) controls pressure fed from the Primary Regulator Valve to the torque converter, and controls lubrication pressure for various parts.

DISASSEMBLY

DISASSEMBLY

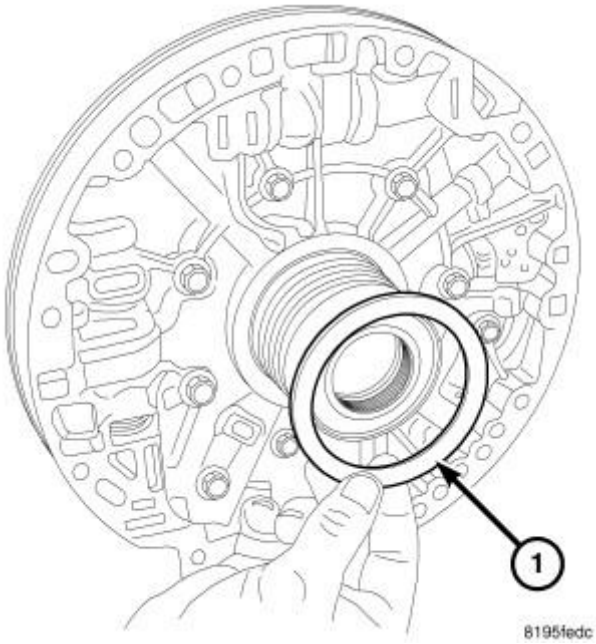

Fig. 258: Oil Pump Nylon Thrust Washer
Courtesy of CHRYSLER GROUP, LLC

1 - NYLON THRUST WASHER

1. Remove the nylon thrust washer (1) from the oil pump.

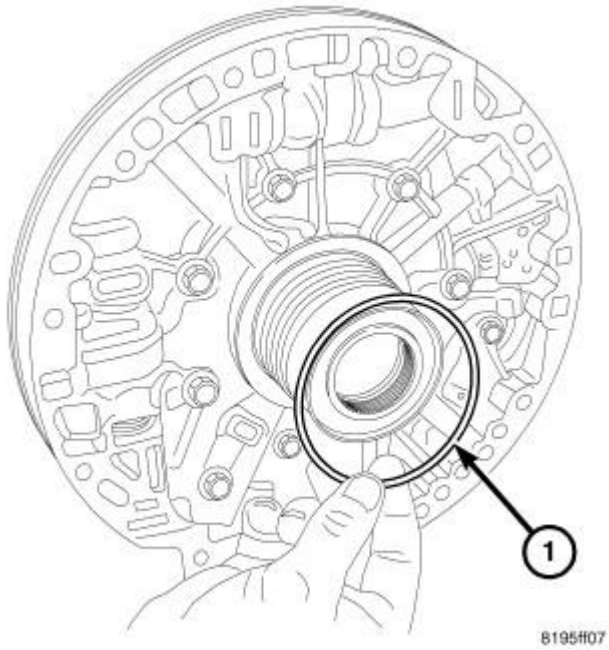

Fig. 259: Oil Pump Seal Rings
Courtesy of CHRYSLER GROUP, LLC

1 - SEAL RING

2. Remove the seal rings (1) from the oil pump.

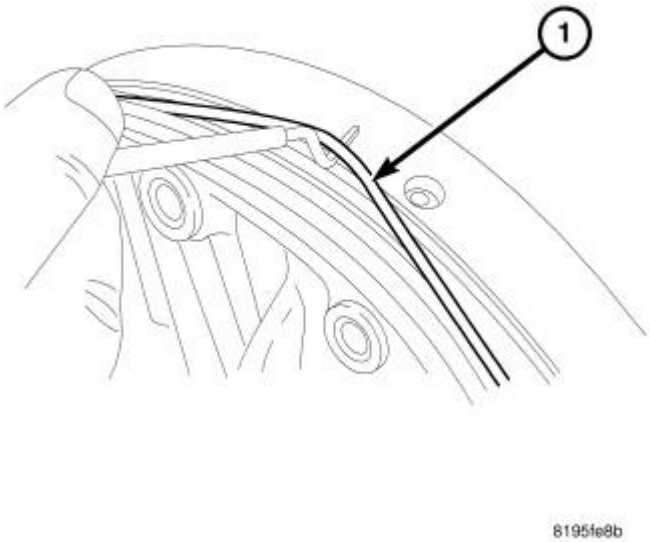

Fig. 260: Oil Pump O-Ring
Courtesy of CHRYSLER GROUP, LLC

1 - O-RING

3. Remove the O-ring (1) from the oil pump.

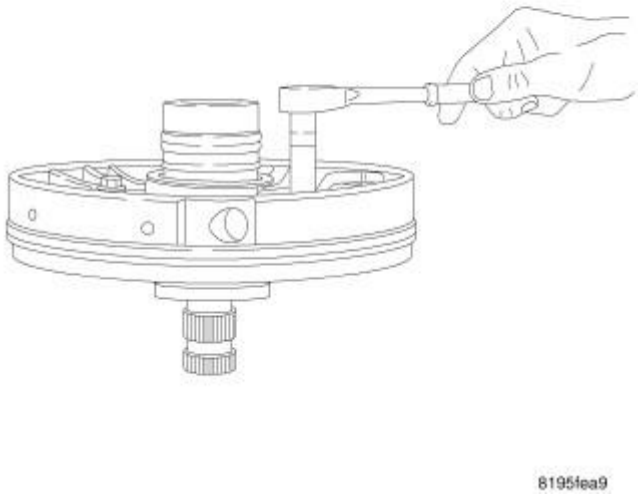

Fig. 261: Oil Pump/Cover Bolts
Courtesy of CHRYSLER GROUP, LLC

4. Remove the bolts securing the oil pump to the oil pump cover.

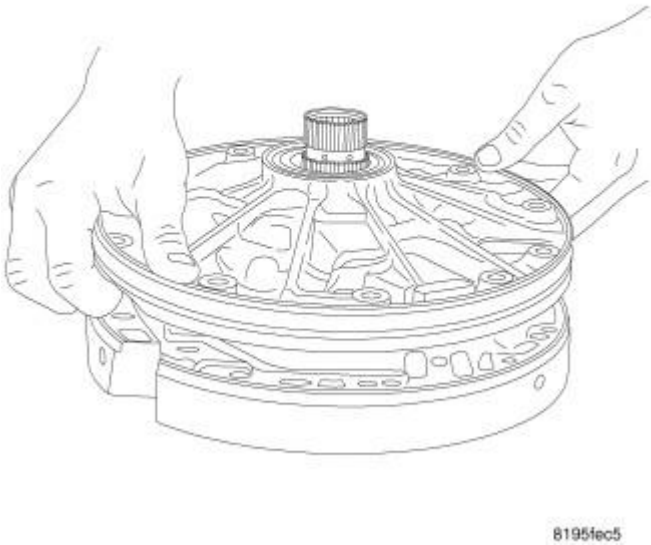

Fig. 262: Separating Oil Pump From Oil Cover
Courtesy of CHRYSLER GROUP, LLC

5. Separate the oil pump from the oil pump cover.

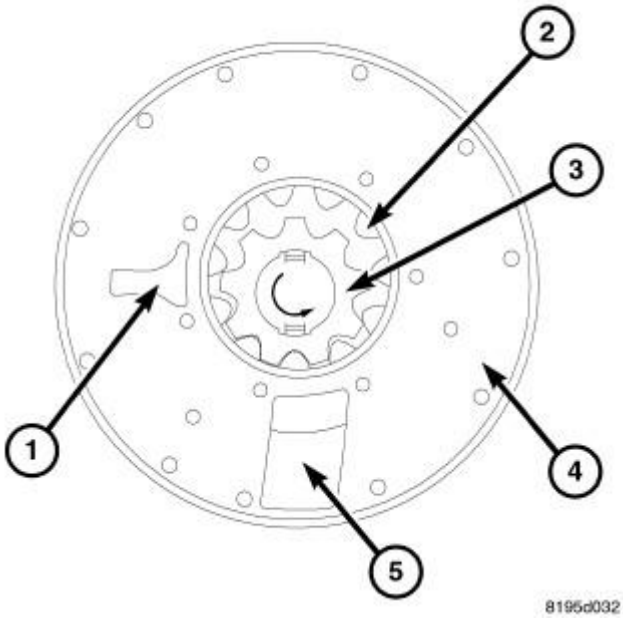

Fig. 263: Oil Pump Components
Courtesy of CHRYSLER GROUP, LLC

1 - OUTLET TO TRANSMISSION	4 - OIL PUMP BODY
2 - DRIVEN GEAR	5 - INLET FROM OIL PAN
3 - DRIVE GEAR	

6. Remove the drive gear (3) and driven gear (2) from the oil pump.

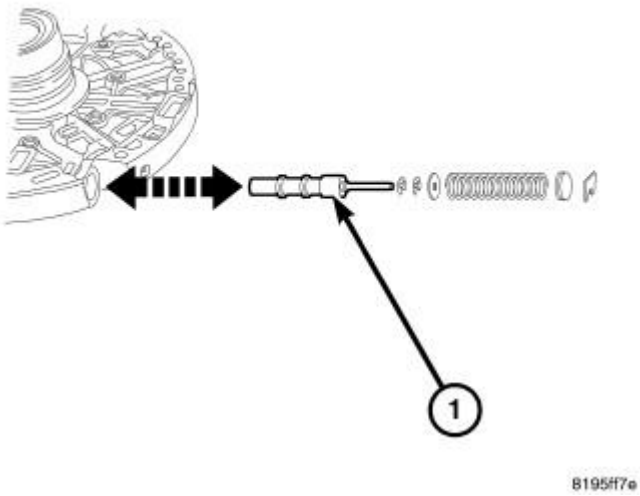

Fig. 264: Primary Regulator Valve
Courtesy of CHRYSLER GROUP, LLC

1 - PRIMARY REGULATOR VALVE

7. Remove the primary regulator valve (1).

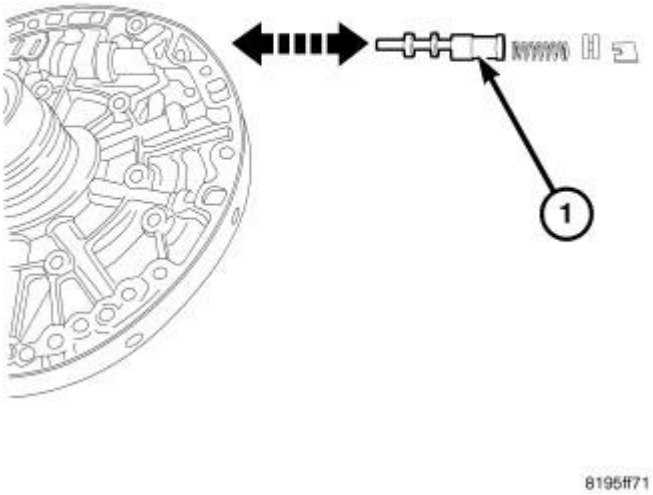

Fig. 265: Secondary Regulator Valve
Courtesy of CHRYSLER GROUP, LLC

1 - SECONDARY REGULATOR VALVE

8. Remove the secondary regulator valve (1).

CLEANING

CLEANING

Clean pump and support components with solvent and dry them with compressed air.

INSPECTION

INSPECTION

Check condition of the seal rings and thrust washer. The seal rings do not need to be replaced unless cracked, broken, or severely worn.

Inspect the pump and support components. Replace the pump or support if the seal ring grooves or machined surfaces are worn, scored, pitted, or damaged. Replace the pump gears if pitted, worn chipped, or damaged.

Inspect the valves and plugs for scratches, burrs, nicks, or scores. Minor surface scratches on steel valves and plugs can be removed with crocus cloth but **do not round off the edges of the valve or plug lands.** Maintaining sharpness of these edges is vitally important. The edges prevent foreign matter from lodging between the valves and plugs and the bore.

Inspect all the valve and plug bores in the oil pump cover. Use a penlight to view the bore interiors. Replace the oil pump if any bores are distorted or scored. Inspect all of the valve springs. The springs must be free of distortion, warped or broken coils.

Trial fit each valve and plug in its bore to check freedom of operation. When clean and dry, the valves and plugs should drop freely into the bores.

SIDE CLEARANCE

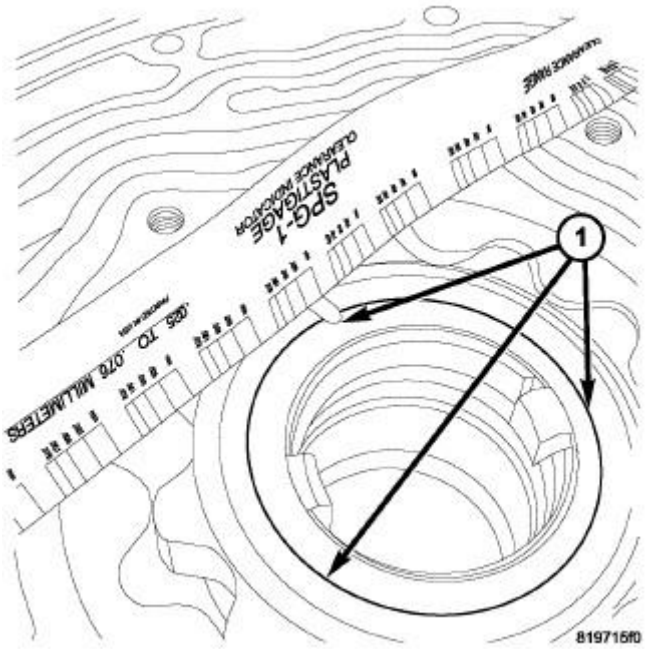

Fig. 266: Checking Oil Pump Side Clearance
Courtesy of CHRYSLER GROUP, LLC

1 - MEASURE AT THESE POINTS

Check the side clearance with Plastigauge®. Measure the clearance at more than three arbitrary points (1). The minimum dimension of these measurements should be the clearance, if the difference between the maximum and minimum clearance is greater than 0.02-0.055 mm (0.0008-0.002 in.), the part is considered defective or worn and should be replaced.

ASSEMBLY

ASSEMBLY

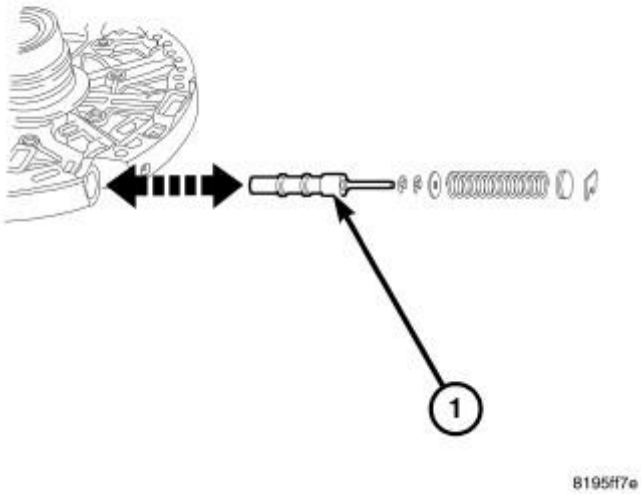

Fig. 267: Primary Regulator Valve
Courtesy of CHRYSLER GROUP, LLC

1 - PRIMARY REGULATOR VALVE

1. Lubricate the primary regulator valve (1) with MOPAR® AS68RC ATF and install it into the oil pump.

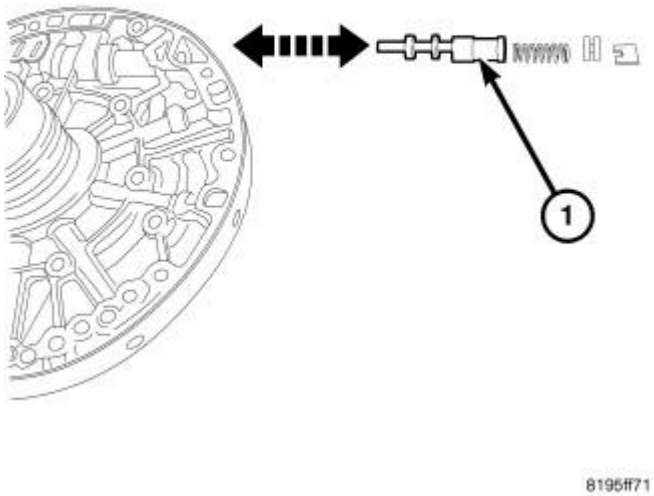

Fig. 268: Secondary Regulator Valve
Courtesy of CHRYSLER GROUP, LLC

1 - SECONDARY REGULATOR VALVE

2. Lubricate the secondary regulator valve (1) with MOPAR® AS68RC ATF and install it into the oil pump.

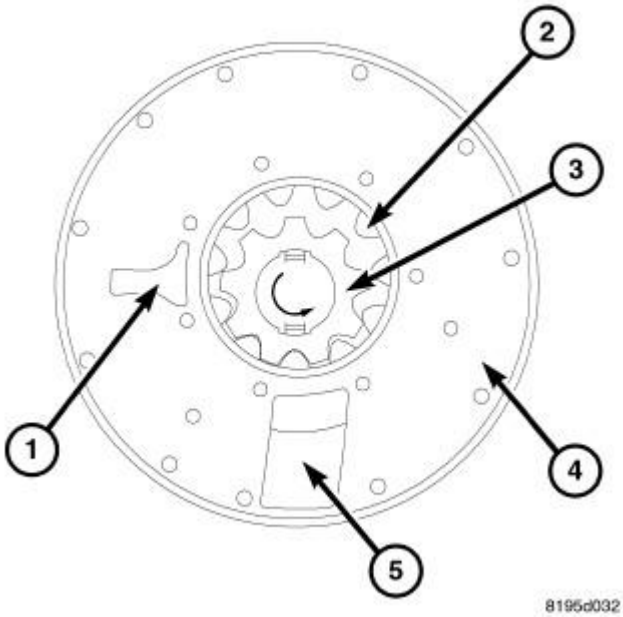

Fig. 269: Oil Pump Components
Courtesy of CHRYSLER GROUP, LLC

1 - OUTLET TO TRANSMISSION	4 - OIL PUMP BODY
2 - DRIVEN GEAR	5 - INLET FROM OIL PAN
3 - DRIVE GEAR	

3. Lubricate the driven gear (2) and the drive gear (3) with MOPAR® AS68RC ATF and install them into the oil pump.

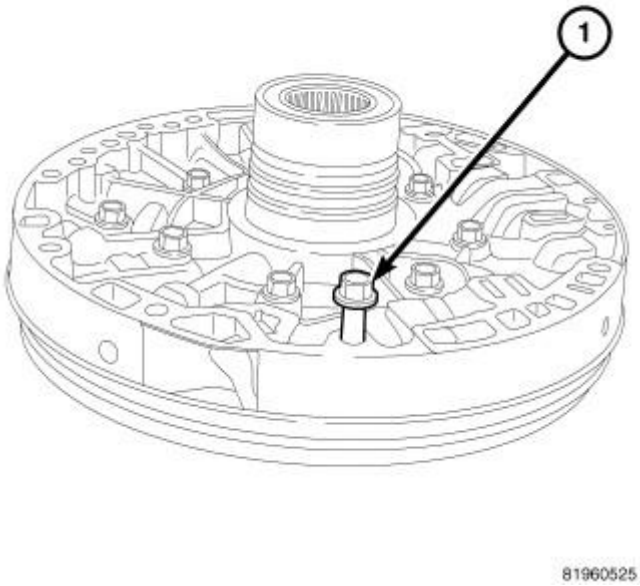

Fig. 270: Assembly Guide Bolt
Courtesy of CHRYSLER GROUP, LLC

1 - GUIDE BOLT

4. Insert a guide bolt (1), or dowel into the oil pump assembly guide hole to properly align both halves of the oil pump.

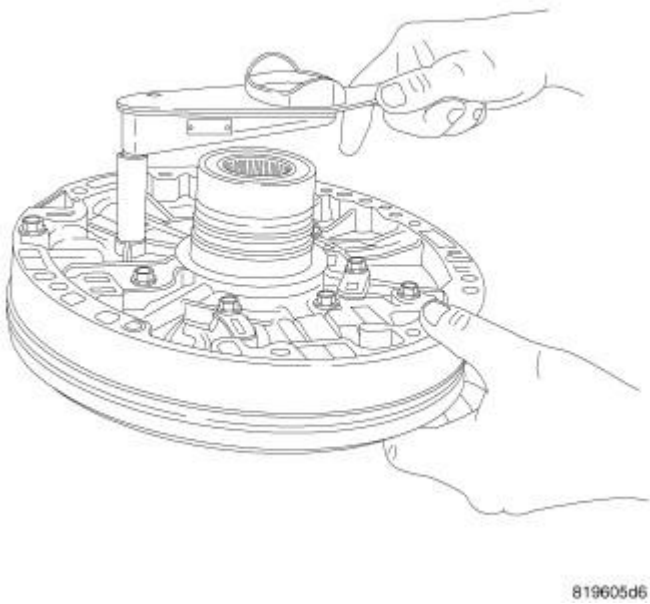

Fig. 271: Tightening Oil Pump Bolts
Courtesy of CHRYSLER GROUP, LLC

5. Install the bolts securing the oil pump to the oil pump cover.
6. Torque bolts in a crisscross pattern to 21 N.m (15 ft.lbs.).

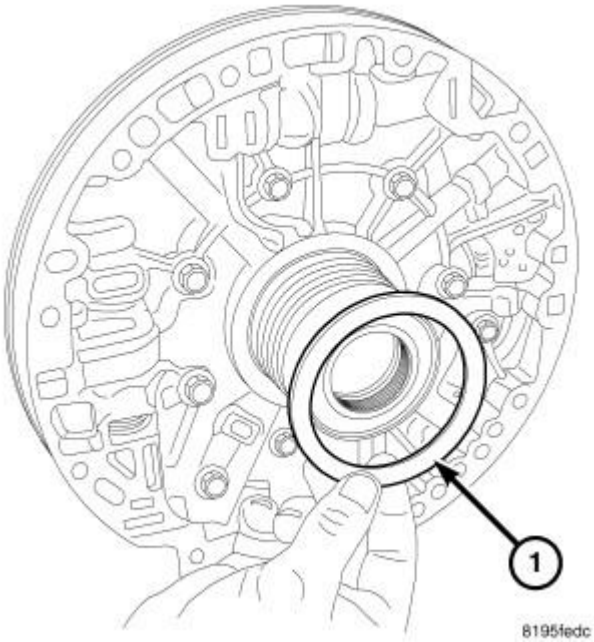

Fig. 272: Oil Pump Nylon Thrust Washer
Courtesy of CHRYSLER GROUP, LLC

1 - NYLON THRUST WASHER

7. Lubricate the nylon thrust washer (1) with MOPAR® AS68RC ATF and install it onto the oil pump.

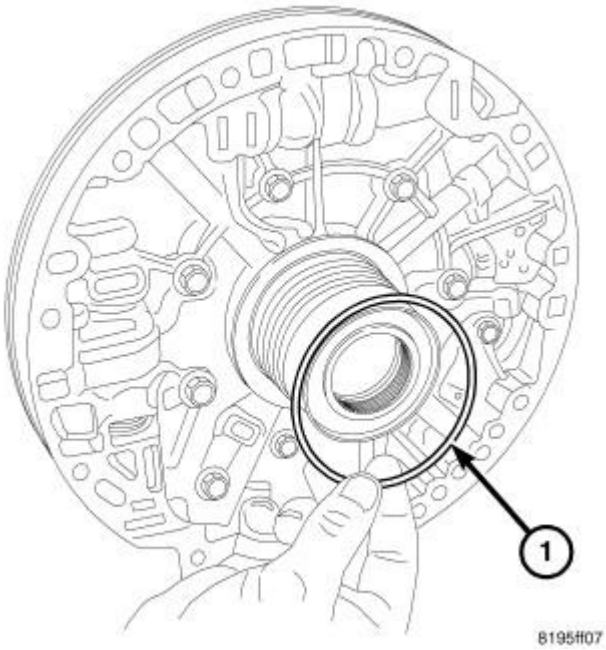

Fig. 273: Oil Pump Seal Rings
Courtesy of CHRYSLER GROUP, LLC

1 - SEAL RING

8. Lubricate the seal rings (1) with MOPAR® AS68RC ATF and install them onto the oil pump.

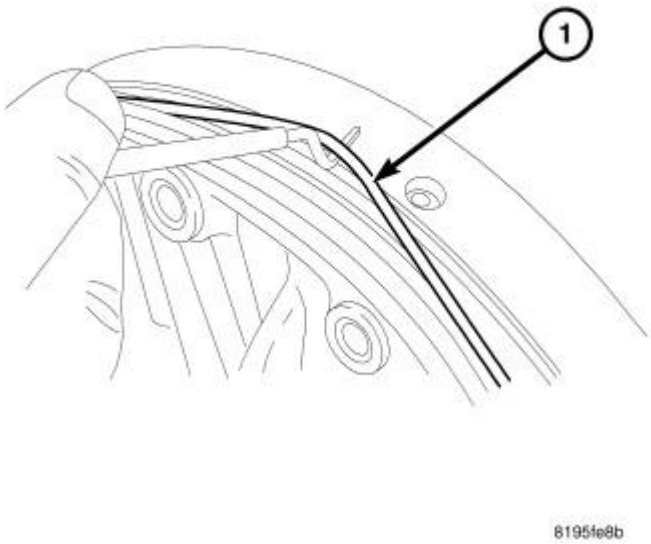

Fig. 274: Oil Pump O-Ring
Courtesy of CHRYSLER GROUP, LLC

1 - O-RING

9. Lubricate the O-ring (1) with MOPAR® AS68RC ATF and install it onto the oil pump.

RELAY, TRANSMISSION CONTROL

DESCRIPTION

DESCRIPTION

The relay is supplied fused B+ voltage, energized by the TIPM, and is used to supply power to the TCM when the transmission is in normal operating mode.

OPERATION

OPERATION

The TIPM energizes the transmission control relay. When the relay is "off", no power is supplied to the TCM

and the transmission will not operate.

SEAL

REMOVAL

REMOVAL

1. Remove the transmission from the vehicle. Refer to **REMOVAL**.
2. Remove the torque converter from the transmission torque converter housing. Refer to **TORQUE CONVERTER, REMOVAL**.
3. Use a pry tool to remove oil pump seal.

INSTALLATION

INSTALLATION

NOTE: Apply trans jell or petroleum jelly to all slide portions, rolling contacts surfaces, thrust surfaces etc. to prevent burnout during initial operation. Lubricate O-rings and O-ring seals with MOPAR® AS68RC ATF. Soak all friction disks in MOPAR® AS68RC ATF for at least two hours before assembly of clutch packs.

1. Clean and inspect oil pump seal seat. Then install seal using Converter Hub Seal Installer (special tool #9987, Installer, Seal).
2. Clean and inspect torque converter hub. If nicks, scratches or hub wear are found, torque converter replacement will be required.

CAUTION: If the torque converter is being replaced, apply a light coating of grease to the crankshaft pilot hole. Also inspect the engine drive plate for cracks. If any cracks are found replace the drive plate. Do not attempt to repair a cracked drive plate. Always use new torque converter to drive plate bolts.

3. Apply a light film of MOPAR® AS68RC ATF oil to the torque converter hub and oil seal lips. Then install torque converter into transmission. Be sure that the hub lugs mesh with the front pump lugs when installing. Refer to **TORQUE CONVERTER, INSTALLATION**.
4. Install the transmission into the vehicle. Refer to **INSTALLATION**.

SENSOR, SPEED

DESCRIPTION

DESCRIPTION

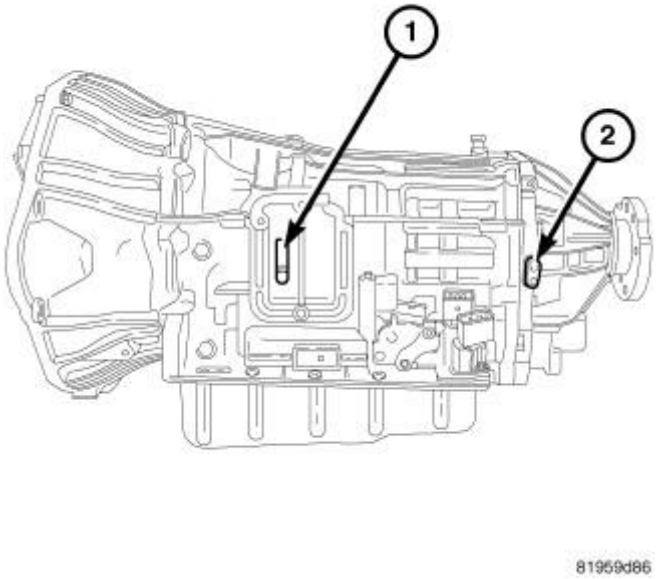

Fig. 275: Input & Output Speed Sensors
Courtesy of CHRYSLER GROUP, LLC

1 - INPUT SPEED SENSOR
2 - OUTPUT SPEED SENSOR

The Input and Output Speed Sensors are two-wire magnetic pickup devices that generate DC square wave signals as rotation occurs. They are mounted in the left side of the transmission case and are considered primary inputs to the Transmission Control Module (TCM).

OPERATION

OPERATION

The Input Speed Sensor provides information on how fast the input shaft is rotating. As the "teeth" of the gear pass by the sensor coil, an DC square wave is generated and sent to the TCM. The TCM interprets this information as input shaft rpm.

The Output Speed Sensor generates an DC signal in a similar fashion, though its coil is excited by rotation of the rear planetary carrier lugs. The TCM interprets this information as output shaft rpm.

The TCM compares the input and output speed signals to determine the following:

- Transmission gear ratio
- Speed ratio error detection
- CVI calculation

The TCM also compares the input speed signal and the engine speed signal to determine the following:

- Torque converter clutch slippage
- Torque converter element speed ratio

REMOVAL

OUTPUT SPEED SENSOR

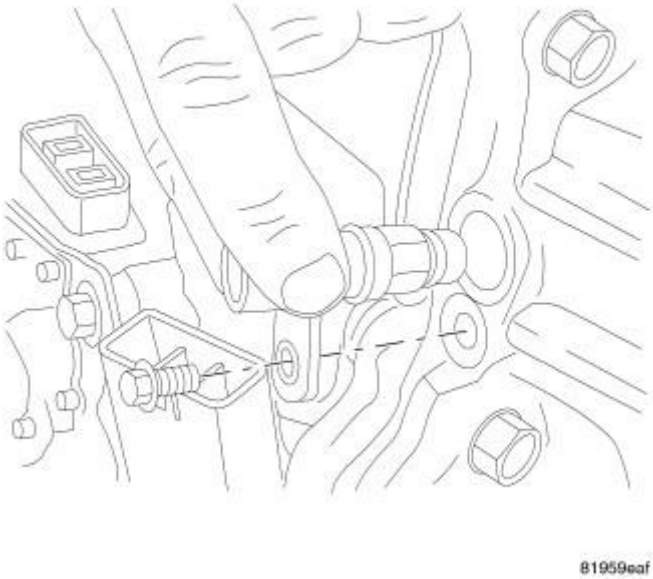

Fig. 276: Output Speed Sensor
Courtesy of CHRYSLER GROUP, LLC

1. Raise and support the vehicle.
2. Place a suitable fluid catch pan under the transmission.
3. Remove the wiring connector from the output speed sensor.
4. Remove the bolt holding the output speed sensor to the transmission case.
5. Remove the output speed sensor from the transmission case.

INPUT SPEED SENSOR

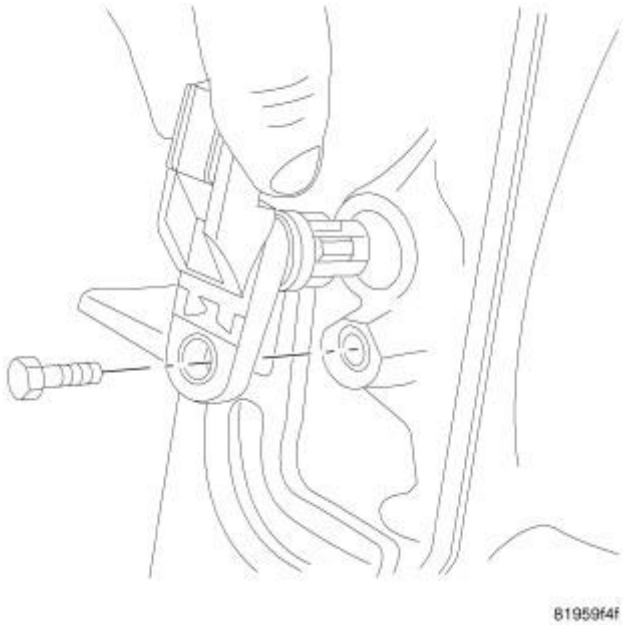

Fig. 277: Input Speed Sensor
Courtesy of CHRYSLER GROUP, LLC

1. Raise and support the vehicle.
2. Place a suitable fluid catch pan under the transmission.
3. Remove the wiring connector from the input speed sensor.
4. Remove the bolt holding the input speed sensor to the transmission case.
5. Remove the input speed sensor from the transmission case.

INSTALLATION

OUTPUT SPEED SENSOR

NOTE: **Apply trans jell to all slide portions, rolling contacts surfaces, thrust surfaces etc. to prevent burnout during initial operation. Lubricate O-rings and O-ring seals with MOPAR® AS68RC ATF. Soak all friction disks in MOPAR® AS68RC ATF for at least two hours before assembly of clutch packs.**

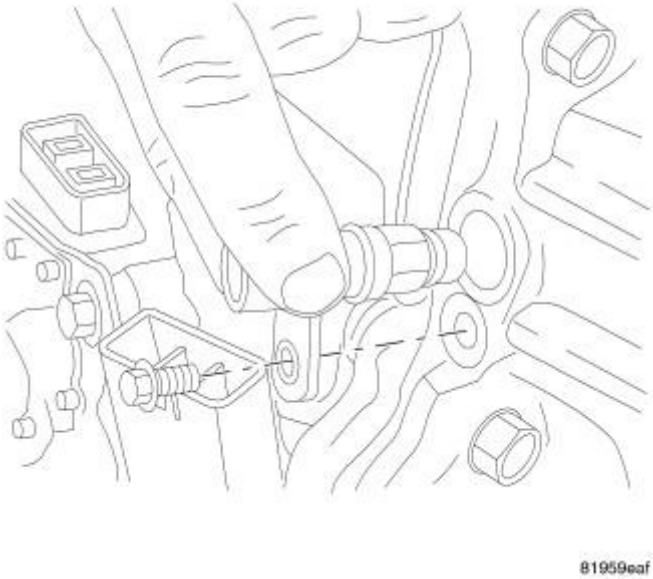

Fig. 278: Output Speed Sensor
Courtesy of CHRYSLER GROUP, LLC

1. Lubricate the output speed sensor o-ring with MOPAR® AS68RC ATF.
2. Install the output speed sensor into the transmission case.
3. Tighten the bolt to 8 N.m (70 in.lbs.).
4. Install the wiring connector onto the output speed sensor.
5. Lower vehicle.
6. Verify the transmission fluid level. Add MOPAR® AS68RC ATF as necessary.

INPUT SPEED SENSOR

NOTE: **Apply trans jell to all slide portions, rolling contacts surfaces, thrust surfaces etc. to prevent burnout during initial operation. Lubricate O-rings and O-ring seals with MOPAR® AS68RC ATF. Soak all friction disks in MOPAR® AS68RC ATF for at least two hours before assembly of clutch packs.**

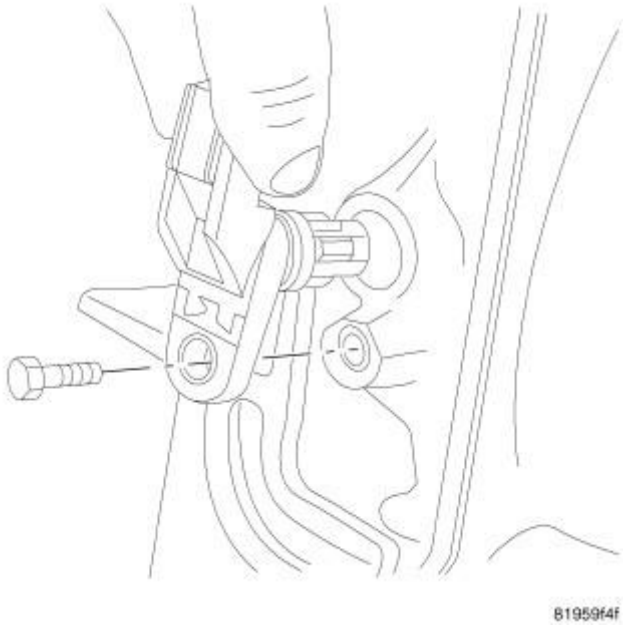

Fig. 279: Input Speed Sensor
Courtesy of CHRYSLER GROUP, LLC

1. Lubricate the output speed sensor o-ring with MOPAR® AS68RC ATF.
2. Install the input speed sensor into the transmission case.
3. Tighten the bolt to 8 N.m (70 in.lbs.).
4. Install the electrical wiring connector onto the input speed sensor.
5. Lower vehicle.
6. Verify the transmission fluid level. Add MOPAR® AS68RC as necessary.

SENSOR, TRANSMISSION RANGE

DESCRIPTION

DESCRIPTION

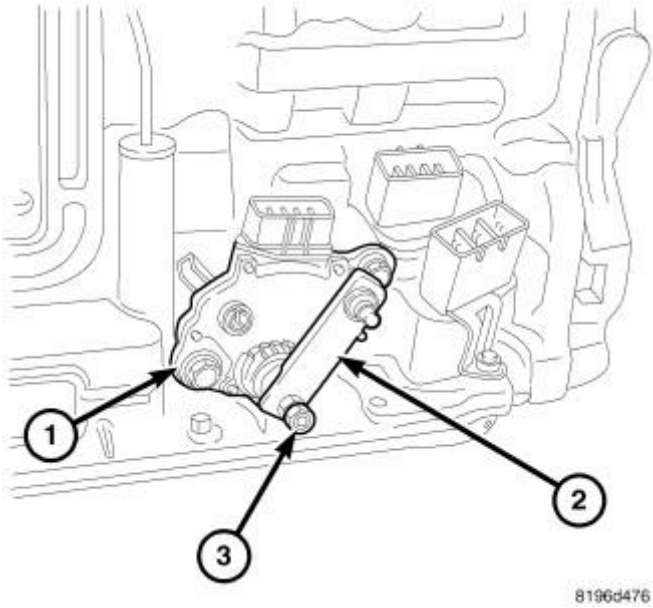

Fig. 280: Transmission Range Sensor
Courtesy of CHRYSLER GROUP, LLC

1 - TRANSMISSION RANGE SENSOR
2 - MANUAL SHIFT LEVER
3 - CONTROL SHAFT NUTS

The transmission range sensor (1) is mounted externally on the left side of the transmission case.

OPERATION

OPERATION

The transmission range sensor prohibits the vehicle from starting in any gear other than park and neutral.

REMOVAL

REMOVAL

NOTE: Be certain the transmission is in the park lock position.

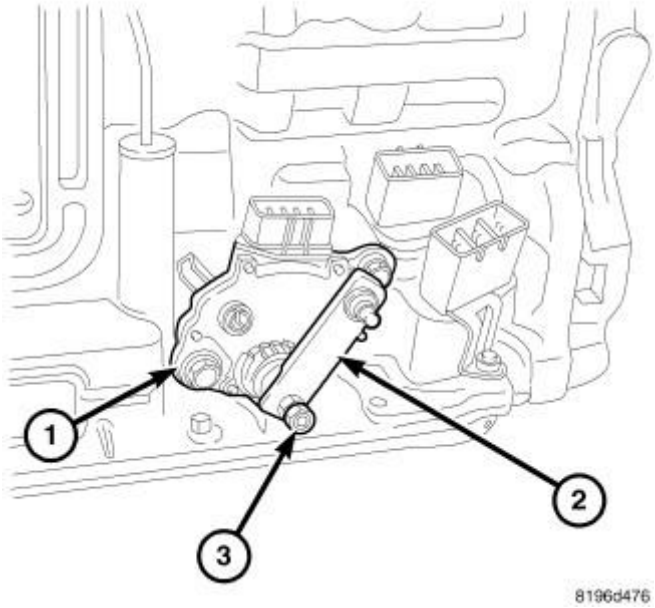

Fig. 281: Transmission Range Sensor
Courtesy of CHRYSLER GROUP, LLC

1 - TRANSMISSION RANGE SENSOR
2 - MANUAL SHIFT LEVER
3 - CONTROL SHAFT NUTS

1. Remove the shift cable from the manual shift lever (2).
2. Disconnect the wire harness from the transmission range sensor.
3. Remove the two nuts (3) from the control shaft.

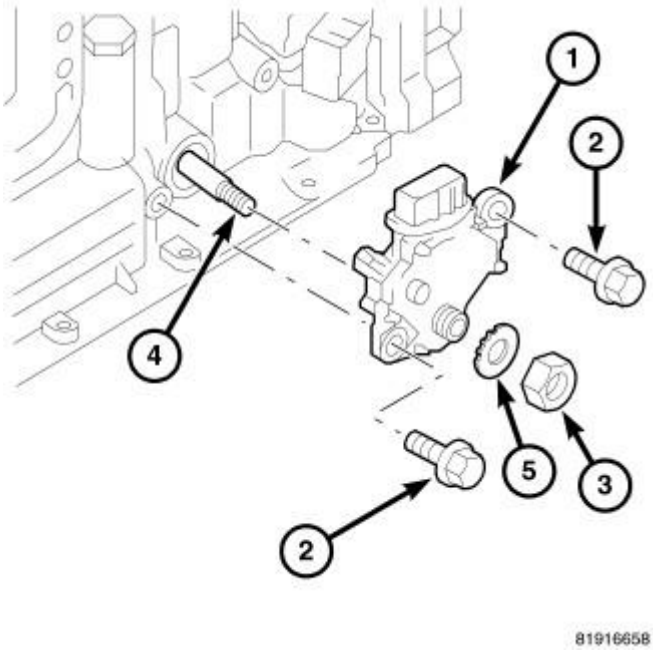

Fig. 282: Transmission Range Sensor Components
Courtesy of CHRYSLER GROUP, LLC

1 - TRANSMISSION RANGE SENSOR	4 - CONTROL SHAFT
2 - BOLTS	5 - STAKE WASHER
3 - NUT	

4. Pry open the tabs on the stake washer (5), remove the nut (3) and the stake washer (5).
5. Remove the bolts (2).
6. Remove the transmission range sensor (1) from the transmission control shaft (4).

INSTALLATION

INSTALLATION

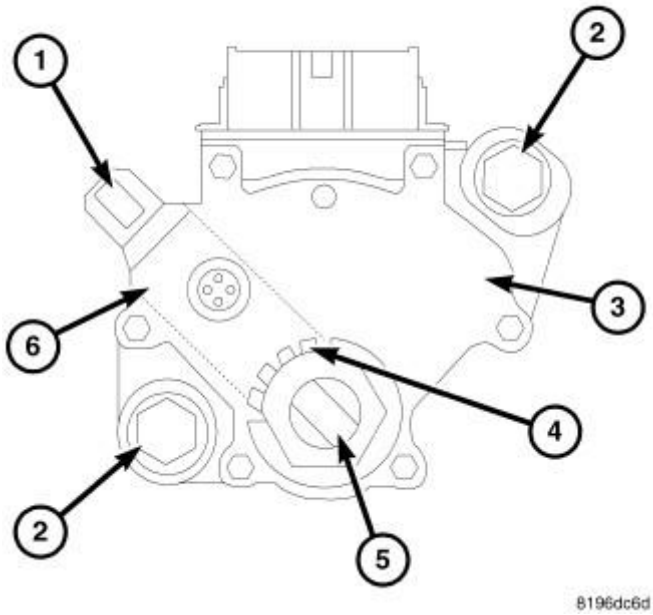

Fig. 283: Transmission Range Sensor Installation & Alignment
Courtesy of CHRYSLER GROUP, LLC

1 - ALIGNMENT HOLE	4 - STAKE WASHER AND NUT
2 - BOLT	5 - CONTROL SHAFT
3 - TRANSMISSION RANGE SENSOR	6 - ALIGNMENT TOOL 9983

1. Install the transmission range sensor (3) onto the control shaft (5).
2. Install the stake washer and the nut (4) and hand tighten.
3. With the transmission in neutral install the alignment tool (special tool #9983, Alignment Tool, TRS) (6) onto the control shaft (5) and into the alignment hole (1).
4. Install the bolts (2).
5. After aligning the transmission range sensor, tighten the bolts (2) 12.5 N.m (9 ft.lbs.)
6. Remove the alignment tool (special tool #9983, Alignment Tool, TRS) (6)
7. Tighten the control shaft nut to 7 N.m (62 in.lbs.)
8. Bend the tabs on the stake washer and nut (4) in at least two places to lock in position.

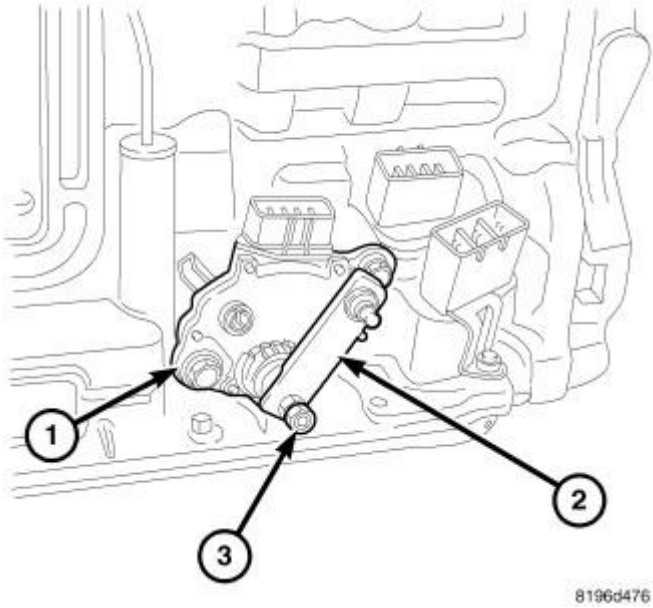

Fig. 284: Transmission Range Sensor
Courtesy of CHRYSLER GROUP, LLC

1 - TRANSMISSION RANGE SENSOR
2 - MANUAL SHIFT LEVER
3 - CONTROL SHAFT NUTS

9. Install the manual shift lever (2) onto the control shaft.
10. Install the inner nut (3) onto the control shaft. Tighten the inner nut to 12.5 N.m (9 ft.lbs).
11. Install the outer nut (3) onto the control shaft. While holding the inner nut, tighten the outer not to 12.5 N.m (9 ft.lbs)

SHIFTER, TRANSMISSION

DESCRIPTION

DESCRIPTION

The gear shift mechanism provides four shift positions which are:

- Park (P)
- Reverse (R)
- Neutral (N)
- Drive (D)

OPERATION

OPERATION

DRIVE range provides FIRST, SECOND, THIRD, FOURTH, OVERDRIVE FIFTH, OVERDRIVE SIXTH gear ranges. The shift into OVERDRIVE FOURTH and FIFTH gear ranges occurs only after the transmission has completed the shift into D THIRD gear range.

The SIXTH gear upshifts occur automatically unless the Tow/Haul or OD Off mode is enabled. No upshift to FIFTH or SIXTH gears will occur if any of the following are true:

- The transmission fluid temperature is below 5° C (41° F).
- The shift to Fourth is not yet complete.
- Vehicle speed is too low for the 4-5 or 5-6 shifts to occur.
- Transfer case is in low range.

Upshifts into FOURTH or FIFTH will be delayed when the transmission fluid temperature is below 4.5° C (40° F) or above 115.5° C (240° F).

SWITCH, TOW\HAUL

DESCRIPTION

DESCRIPTION

The tow/haul overdrive OFF (control) switch is located in the instrument panel switch pod. The switch is a momentary contact device that signals the PCM to toggle current status of the overdrive function. Refer to **POD, SWITCH, DESCRIPTION** .

OPERATION

OPERATION

At key-on, overdrive operation is allowed. Pressing the switch once enables Tow/Haul mode and the Tow/Haul lamp will be illuminated. In Tow/Haul mode, 6th gear is disabled and 4-5 upshifts are delayed. Shifts into 5th gear are still allowed under steady cruise conditions. Closed throttle downshifts (for improved engine braking) may occur during steady braking maneuvers. Pressing the switch a second time enables OD Off mode, where all 5th and 6th gear operation is inhibited. Pressing the switch a third time restores normal operation. Normal operation is always the default at start-up; the switch must be pressed after each key start if Tow/Haul mode is desired.

SYSTEM, SHIFT INTERLOCK

DESCRIPTION

DESCRIPTION

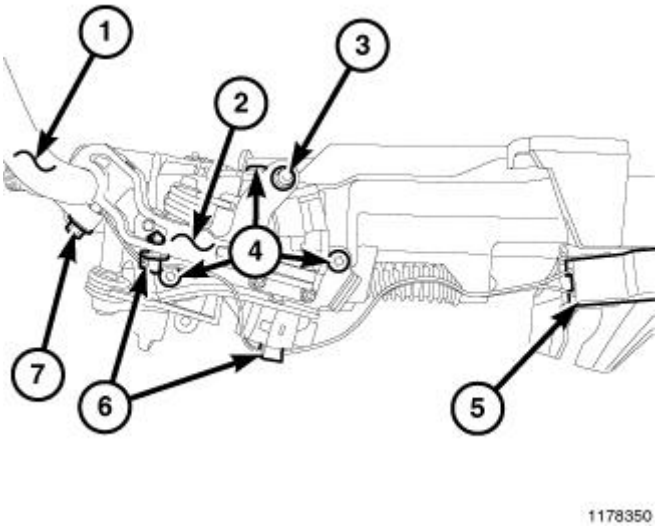

Fig. 285: Gearshift Lever Assembly
Courtesy of CHRYSLER GROUP, LLC

The Brake Transmission Shifter Interlock (BTSI), is a solenoid operated system. It consists of a solenoid permanently mounted on the gearshift lever assembly.

OPERATION

OPERATION

The system locks the shifter into the PARK position. The interlock system is engaged whenever the ignition switch is in the LOCK or ACCESSORY position. An additional electrically activated feature will prevent shifting out of the PARK position unless the brake pedal is depressed approximately one-half an inch. A magnetic holding device in line with the park lock cable is energized when the ignition is in the RUN position. When the key is in the RUN position and the brake pedal is depressed, the shifter is unlocked and will move into any position. The interlock system also prevents the ignition switch from being turned to the LOCK or ACCESSORY position, unless the shifter is fully locked into the PARK position.

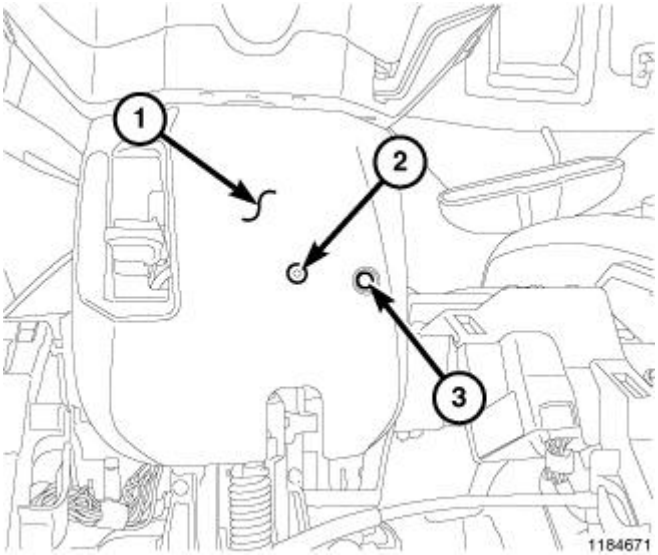

Fig. 286: Steering Column Lower Shroud
Courtesy of CHRYSLER GROUP, LLC

The system override (3) is located on the bottom of the column shroud (1) and requires a long thin screwdriver to depress the release.

DIAGNOSIS AND TESTING

DIAGNOSIS AND TESTING - BRAKE TRANSMISSION SHIFT INTERLOCK

1. Verify that the key can only be removed in the PARK position.
2. When the shift lever is in PARK And the shift handle pushbutton is in the "OUT" position, the ignition key cylinder should rotate freely from OFF to LOCK. When the shifter is in any other gear or neutral position, the ignition key cylinder should not rotate to the LOCK position.
3. Shifting out of PARK should not be possible when the ignition key cylinder is in the OFF position.
4. Shifting out of PARK should not be possible while applying normal pushbutton force and ignition key cylinder is in the RUN or START positions unless the foot brake pedal is depressed approximately 1/2 inch (12mm).
5. Shifting out of PARK should not be possible when the ignition key cylinder is in the ACCESSORY or LOCK positions.
6. Shifting between any gears, NEUTRAL or into PARK may be done without depressing foot brake pedal with ignition switch in RUN or START positions.

ADJUSTMENTS

ADJUSTMENTS

ADJUSTMENT PROCEDURE

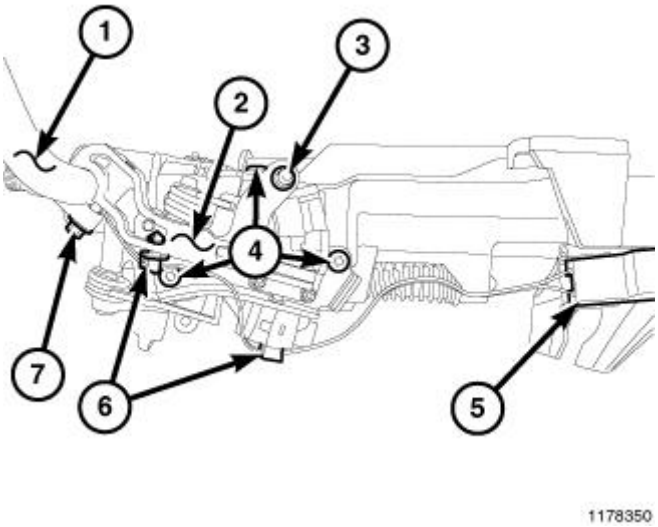

Fig. 287: Gearshift Lever Assembly
Courtesy of CHRYSLER GROUP, LLC

The BTSI is part of the shift lever assembly (2) and is non-adjustable.

BTSI FUNCTION CHECK

1. Verify removal of ignition key allowed in PARK position only.
2. When the shift lever is in PARK, the ignition key cylinder should rotate freely from off to lock. When the shifter is in any other position, the ignition key should not rotate from off to lock.
3. Shifting out of PARK should not be possible when the ignition key cylinder is in the off position.
4. Shifting out of PARK should not be possible while applying normal force, and ignition key cylinder is in the run or start positions, unless the foot brake pedal is depressed approximately 1/2 inch (12mm).
5. Shifting out of PARK should not be possible when the ignition key cylinder is in the accessory or lock position.
6. Shifting between any gear and NEUTRAL, or PARK, may be done without depressing foot brake with ignition switch in run or start positions.
7. Engine starts must be possible with shifter lever in PARK or NEUTRAL positions only. Engine starts must not be possible in any position other than PARK or NEUTRAL.
8. With shifter lever in the:

- PARK position - Apply upward force on the shift arm and remove pressure. Engine starts must be possible.
- PARK position - Apply downward force on the shift arm and remove pressure. Engine starts must be possible.
- NEUTRAL position - Normal position. Engine starts must be possible.
- NEUTRAL position - Engine running and brakes applied, apply upward force on the shift arm. Transmission shall not be able to shift from neutral to reverse.

TORQUE CONVERTER

DESCRIPTION

DESCRIPTION

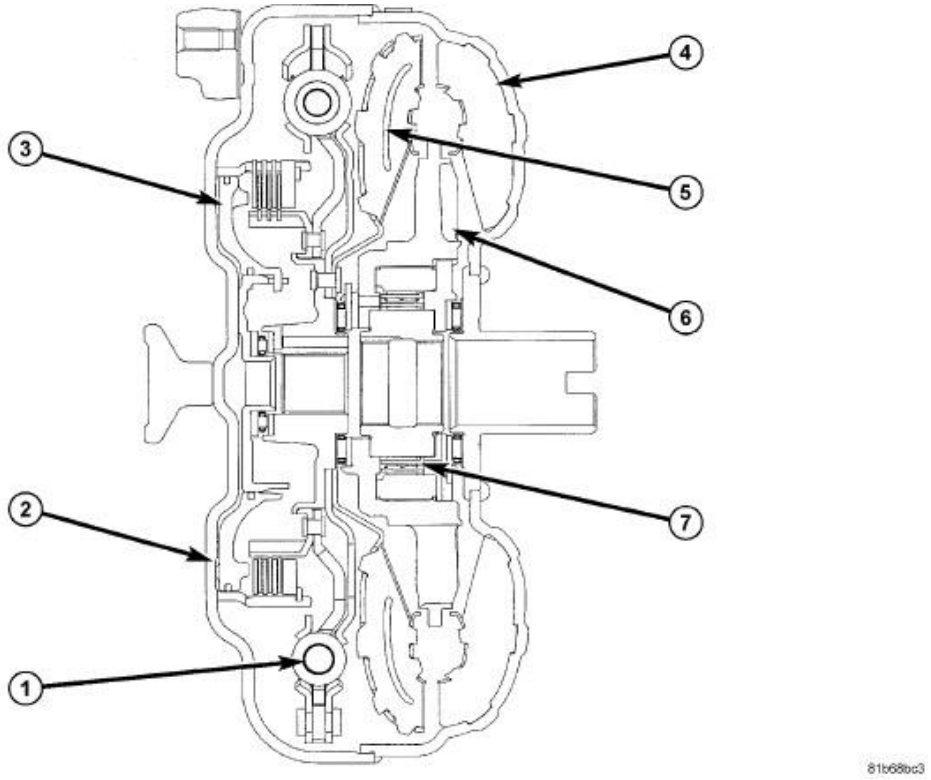

Fig. 288: Cut Away View Of Torque Converter
Courtesy of CHRYSLER GROUP, LLC

1 - LOCK - UP DAMPER	5 - TURBINE RUNNER
2 - CONVERTER FRONT COVER	6 - STATOR
3 - LOCK - UP PISTON	7 - ONE - WAY CLUTCH
4 - PUMP IMPELLER	

The torque converter is a hydraulic device that couples the engine crankshaft to the transmission. The torque converter consists of an outer shell with an lock-up damper (1), lock-up piston (3), pump impeller (4), turbine runner (5), stator (6), and one-way clutch (7). The converter clutch provides reduced engine speed and greater fuel economy when engaged. Clutch engagement also provides reduced transmission fluid temperatures.

The torque converter is a sealed, welded unit that is not repairable and is serviced as an assembly.

CAUTION: The torque converter must be replaced if a transmission failure resulted in large amounts of metal or fiber contamination in the fluid.

IMPELLER

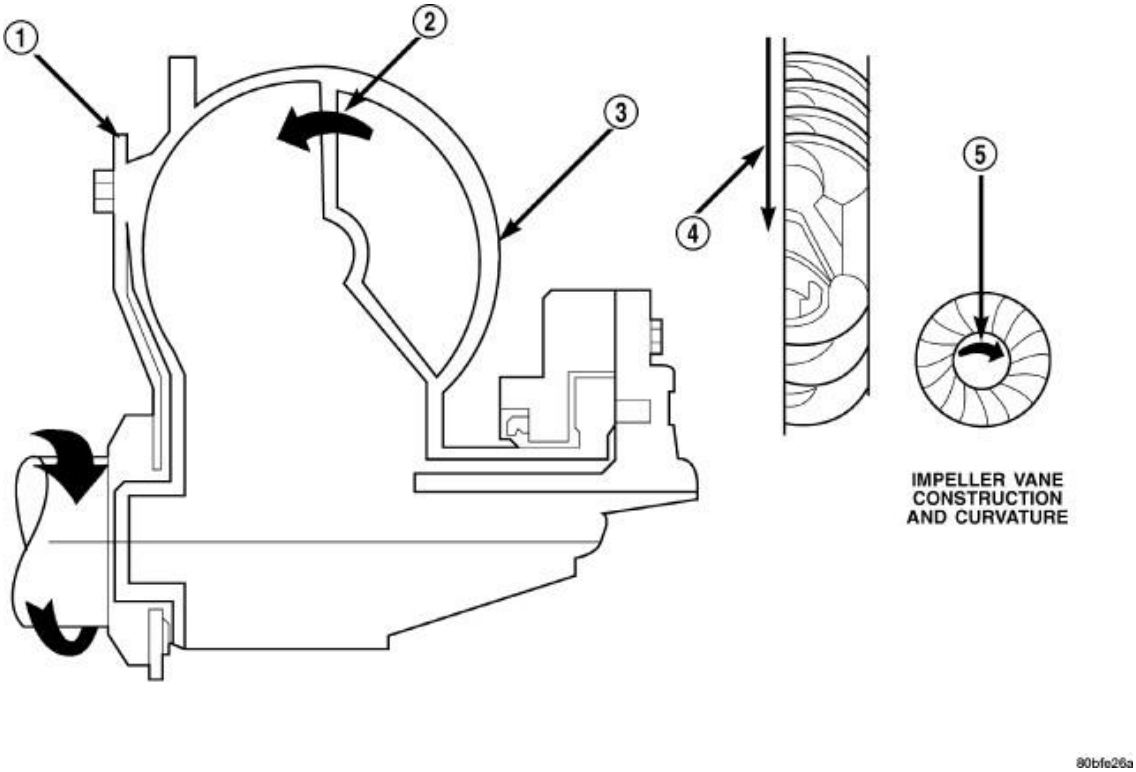

Fig. 289: Impeller
Courtesy of CHRYSLER GROUP, LLC

1 - ENGINE FLEXPLATE	4 - ENGINE ROTATION
2 - OIL FLOW FROM IMPELLER SECTION INTO TURBINE SECTION	5 - ENGINE ROTATION
3 - IMPELLER VANES AND COVER ARE INTEGRAL	

The impeller is an integral part of the converter housing. Refer to **Fig. 289**. The impeller consists of curved blades placed radially along the inside of the housing on the transmission side of the converter. As the converter housing is rotated by the engine, so is the impeller, because they are one and the same and are the driving members of the system.

TURBINE

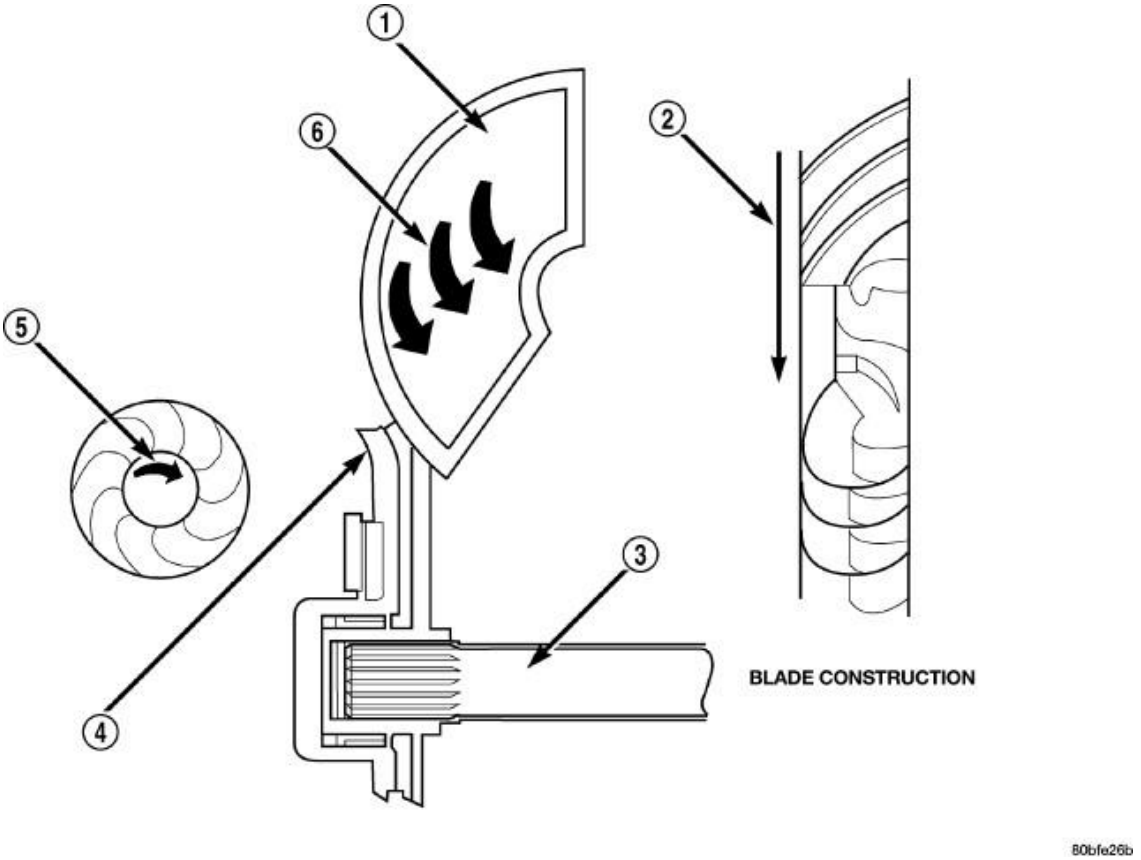

Fig. 290: Turbine
Courtesy of CHRYSLER GROUP, LLC

1 - TURBINE VANE	4 - PORTION OF TORQUE CONVERTER COVER
2 - ENGINE ROTATION	5 - ENGINE ROTATION
3 - INPUT SHAFT	6 - OIL FLOW WITHIN TURBINE SECTION

The turbine is the output, or driven, member of the converter. Refer to **Fig. 290**. The turbine is mounted within the housing opposite the impeller, but is not attached to the housing. The input shaft is inserted through the center of the impeller and splined into the turbine. The design of the turbine is similar to the impeller, except the blades of the turbine are curved in the opposite direction.

STATOR

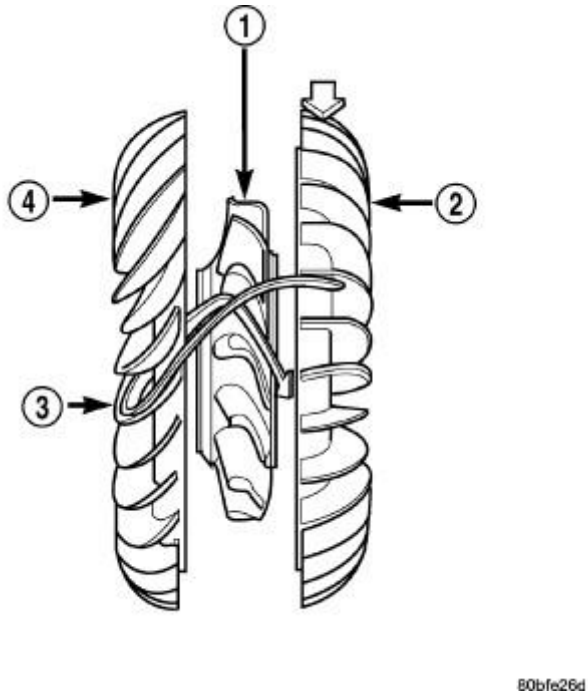

Fig. 291: Stator
Courtesy of CHRYSLER GROUP, LLC

1 - STATOR
2 - IMPELLER
3 - FLUID FLOW
4 - TURBINE

The stator assembly is mounted on a stationary shaft which is an integral part of the oil pump. Refer to **Fig. 291**. The stator (1) is located between the impeller (2) and the turbine (4) within the torque converter case.

The stator contains an one-way clutch (1-4), which allows the stator to rotate only in a clockwise direction. When the stator is locked against the over-running clutch, the torque multiplication feature of the torque converter is operational.

TORQUE CONVERTER SOLENOID

In order to reduce heat build-up in the transmission, the TCM can turn on or off the Torque Converter Solenoid as needed. This function can occur at various times depending on the following variables:

- Shift lever position
- Current gear range
- Transmission fluid temperature
- Input speed
- Throttle angle
- Engine speed

OPERATION

OPERATION

The torque converter transmits engine torque to the transmission. When it is not locked up, it transmits the torque by means of oil. When it is locked up, it transmits the torque by means of the lockup piston.

The lockup damper is designed to soften the impact as the torque converter locks up.

The torque converter is a 3-element, single-stage, 2-phase type.

The term 'single-stage' indicates that there is 1 turbine runner (output element). The term '2-phase' indicates that the mechanism works as a torque converter when the turbine runner is turning slowly relative to the pump impeller and as a fluid coupling when the turbine runner is turning quickly relative to the pump impeller.

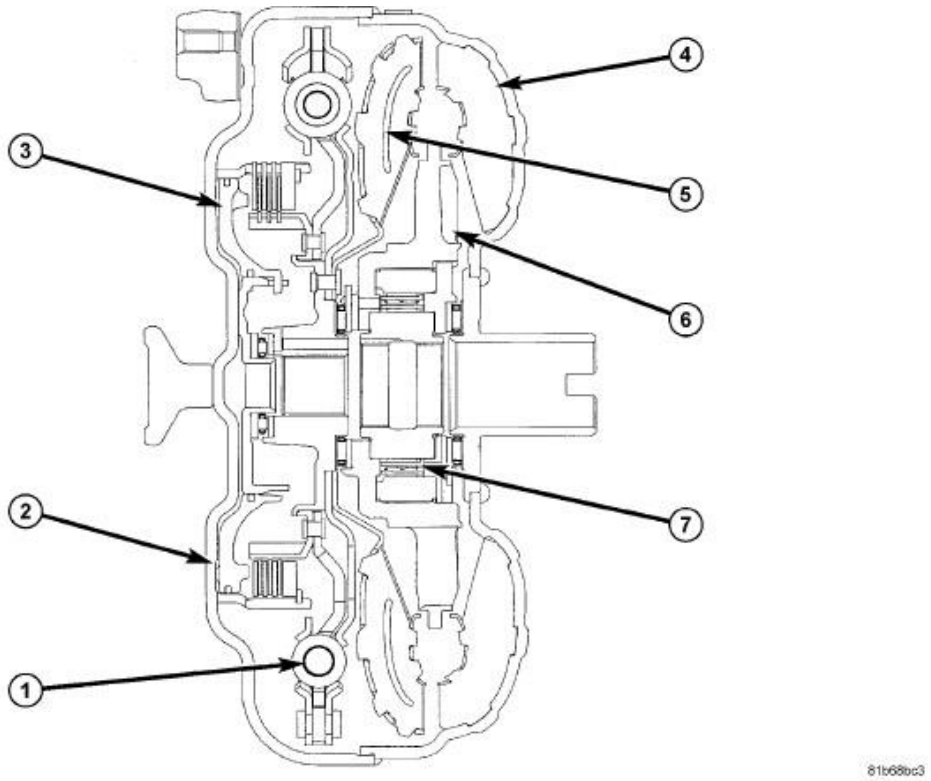

Fig. 292: Cut Away View Of Torque Converter
Courtesy of CHRYSLER GROUP, LLC

1 - LOCK - UP DAMPER	5 - TURBINE RUNNER
2 - CONVERTER FRONT COVER	6 - STATOR
3 - LOCK - UP PISTON	7 - ONE - WAY

CLUTCH
4 - PUMP IMPELLER

TORQUE CONVERTER NOT LOCKED UP

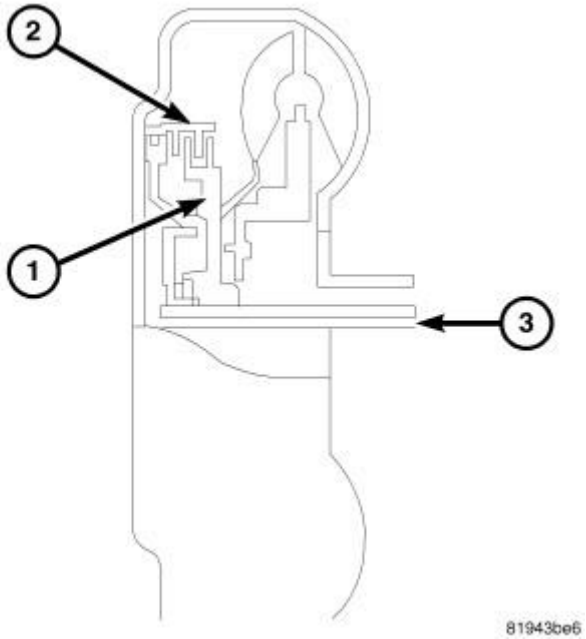

Fig. 293: Torque Converter Not Locked Up
Courtesy of CHRYSLER GROUP, LLC

1 - LOCKUP CLUTCH
2 - PLATE
3 - PASSAGE

The torque converter activation pressure is not supplied between the converter front cover and lockup piston via passage (3). The lockup clutch (1) and the plate (2) are therefore disengaged and the lockup function is inactive.

TORQUE CONVERTER LOCKED UP

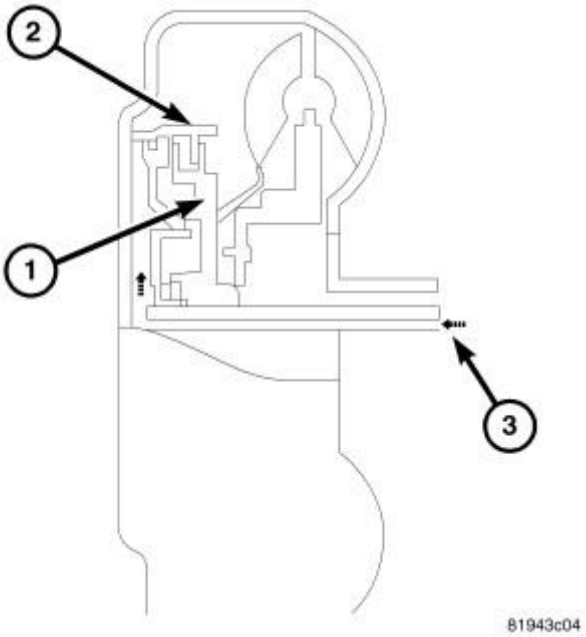

Fig. 294: Torque Converter Locked Up
Courtesy of CHRYSLER GROUP, LLC

1 - LOCKUP CLUTCH 2 - PLATE 3 - PASSAGE

The torque converter activation pressure is supplied between the converter front cover and lockup piston via passage (3). The lockup clutch (1) and the plate (2) are therefore engaged and the lockup function is active.

TURBINE

As the fluid that was put into motion by the impeller blades strikes the blades of the turbine, some of the energy and rotational force is transferred into the turbine and the input shaft. This causes both of them (turbine and input shaft) to rotate in a clockwise direction following the impeller. As the fluid is leaving the trailing edges of the turbine's blades it continues in a "hindering" direction back toward the impeller. If the fluid is not redirected before it strikes the impeller, it will strike the impeller in such a direction that it would tend to slow it down.

STATOR

Torque multiplication is achieved by locking the stator's one-way clutch to its shaft. Under stall conditions (the turbine is stationary), the oil leaving the turbine blades strikes the face of the stator blades and tries to rotate them in a counterclockwise direction. When this happens the one-way clutch of the stator locks and holds the stator from rotating. With the stator locked, the oil strikes the stator blades and is redirected into a "helping" direction before it enters the impeller. This circulation of oil from impeller to turbine, turbine to stator, and stator to impeller, can produce a maximum torque multiplication of about 2.4:1. As the turbine begins to match the speed of the impeller, the fluid that was hitting the stator in such as way as to cause it to lock-up is no longer doing so. In this condition of operation, the stator begins to free wheel and the converter acts as a fluid coupling.

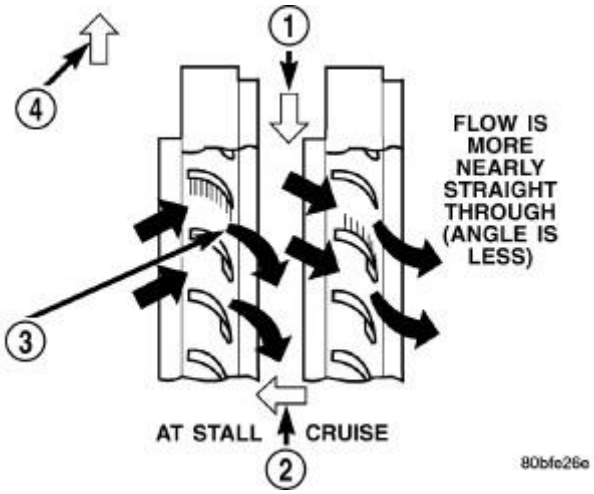

Fig. 295: Stator Operation
Courtesy of CHRYSLER GROUP, LLC

1 - DIRECTION STATOR WILL FREE WHEEL DUE TO OIL PUSHING ON BACKSIDE OF VANES
2 - FRONT OF ENGINE
3 - INCREASED ANGLE AS OIL STRIKES VANES
4 - DIRECTION STATOR IS LOCKED UP DUE TO OIL PUSHING AGAINST STATOR VANES

TORQUE CONVERTER CLUTCH (TCC)

In a standard torque converter, the impeller and turbine are rotating at about the same speed and the stator is freewheeling, providing no torque multiplication. By applying the lockup clutch, the turbine and impeller rotate together removing any slip. The result of this engagement is a direct 1:1 mechanical link between the engine and the transmission.

The clutch can be engaged in second, third, fourth, fifth and, sixth gear ranges.

REMOVAL

REMOVAL

1. Remove transmission from vehicle. Refer to **REMOVAL**.
2. Place a suitable drain pan under the converter housing end of the transmission.

WARNING: **Be certain the transmission is secure when removing the torque converter, the torque converter is very heavy. Failure to follow these instructions may result in personal injury or may be fatal.**

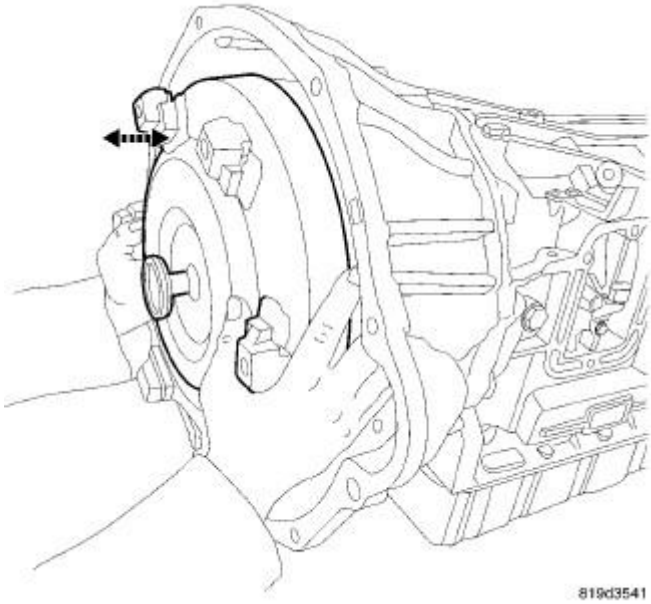

Fig. 296: Removing/Installing Torque Converter From Transmission
Courtesy of CHRYSLER GROUP, LLC

3. Pull the torque converter forward until the center hub clears the oil pump seal.
4. Separate the torque converter from the transmission.

INSTALLATION

INSTALLATION

NOTE: **Check converter hub and drive flats for sharp edges, burrs, scratches, or nicks. Polish the hub and flats with 800/10000 grit paper or crocus cloth if necessary. Verify that the oil pump seal is properly installed and is free from debris. The hub must be smooth to avoid damaging the pump seal at installation.**

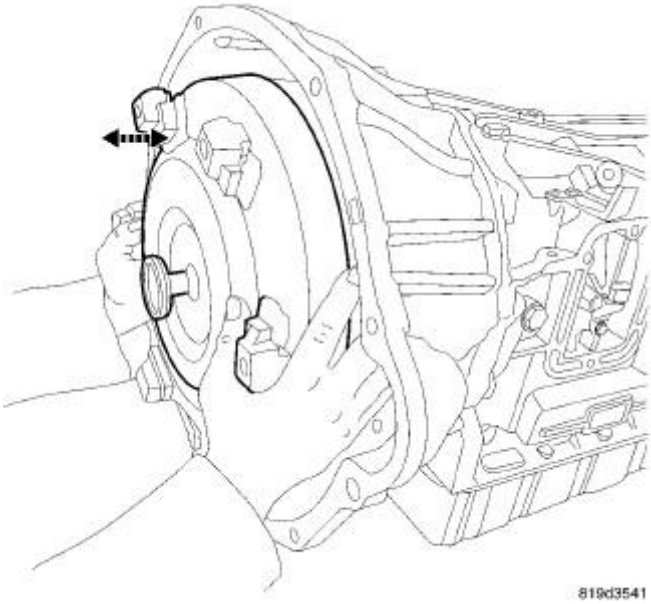

Fig. 297: Removing/Installing Torque Converter From Transmission
Courtesy of CHRYSLER GROUP, LLC

1. Lubricate oil pump seal lip and input shaft seal rings with MOPAR® AS68RC ATF.

WARNING: Be certain the transmission is secure when installing the torque converter, the torque converter is very heavy. Failure to follow these instructions may result in personal injury or may be fatal.

2. Place torque converter in position on transmission.

CAUTION: Do not damage oil pump seal or input shaft seal rings while inserting torque converter into the front of the transmission.

3. Align torque converter to oil pump seal opening.
4. Insert torque converter hub into oil pump.
5. While pushing torque converter inward, rotate converter until converter is fully seated in the oil pump gears.
6. Install the transmission into the vehicle. Refer to **INSTALLATION**.

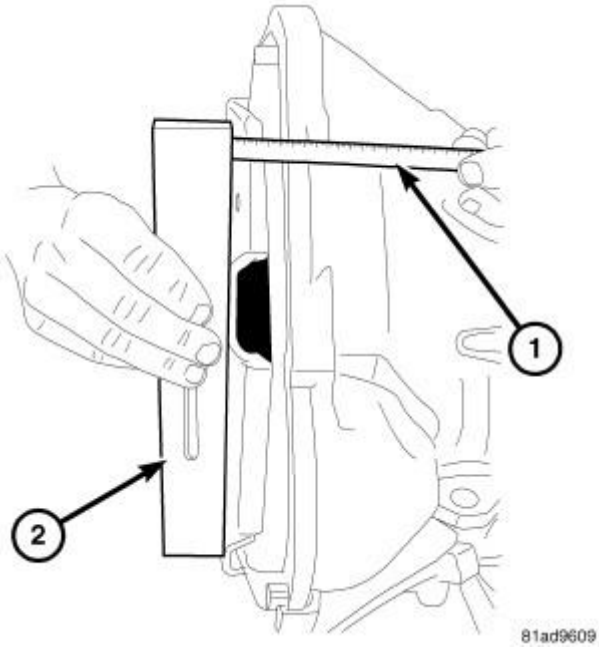

Fig. 298: Checking Torque Converter Seating
Courtesy of CHRYSLER GROUP, LLC

1 - SCALE
2 - STRAIGHTEDGE

7. Check converter seating with a scale (1) and straightedge (2). Surface of converter lugs should be at least 28.2 mm (1.12 in.) to rear of straightedge when converter is fully seated.
8. If necessary, temporarily secure converter with C-clamp attached to the converter housing.
9. Install the transmission in the vehicle. Refer to **INSTALLATION**.
10. Fill the transmission with the recommended fluid. Refer to **FLUID, STANDARD PROCEDURE**.

VALVE BODY

DESCRIPTION

DESCRIPTION

The valve body consists of a two piece aluminum valve body. Extensive electronic control effected by a microcomputer (the automatic transmission electronic control unit) over the hydraulic circuitry enables precise control over gearshifts. The valve body contains valves and pressure sensors that control fluid delivery to the torque converter clutch, forward clutches, and brake clutches.

UPPER VALVE BODY

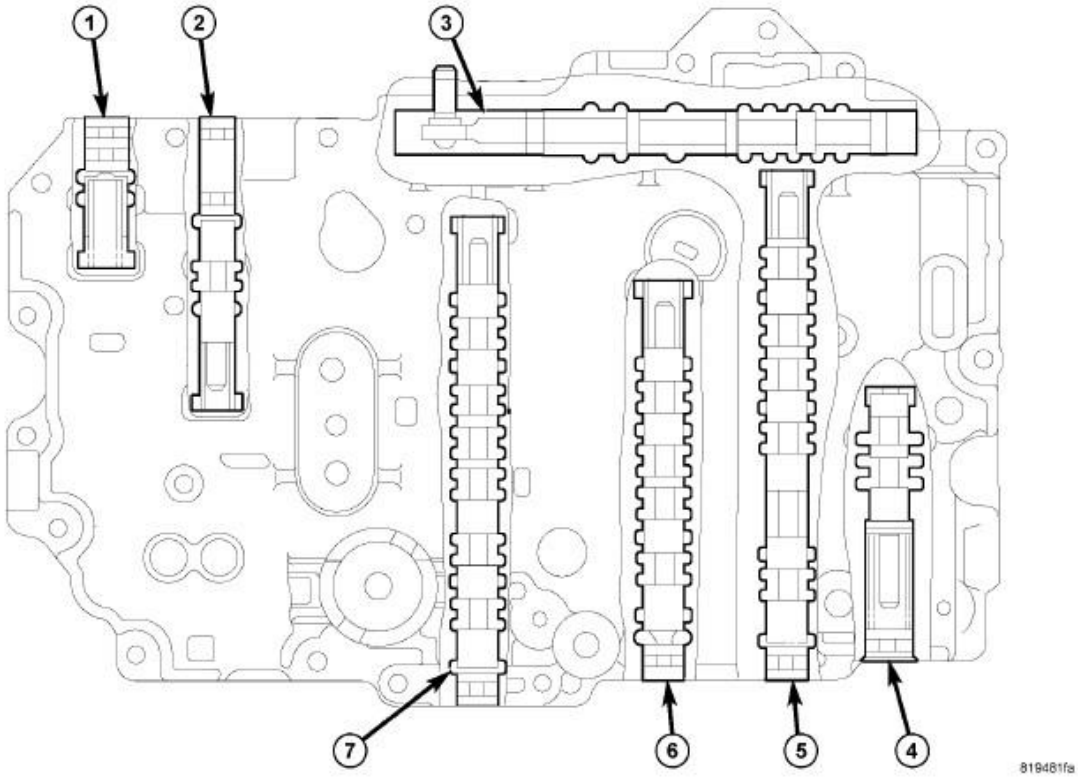

Fig. 299: Upper Valve Body Components
Courtesy of CHRYSLER GROUP, LLC

1 - COMBINED DRAIN	5 - SHIFT SOLENOID VALVE NO. 3
2 - GAIN CHANGE SOLENOID VALVE	6 - SHIFT SOLENOID VALVE NO. 2
3 - MANUAL VALVE	7 - SHIFT VALVE NO. 1
4 - MODULATOR VALVE	

The upper valve body contains the following components:

- 1 = Combined Drain
- 2 = Gain change solenoid valve
- 3 = Manual valve
- 4 = Modulator valve
- 5 = Shift solenoid valve No. 3
- 6 = Shift solenoid valve No. 2

- 7 = Shift valve No. 1

LOWER VALVE BODY

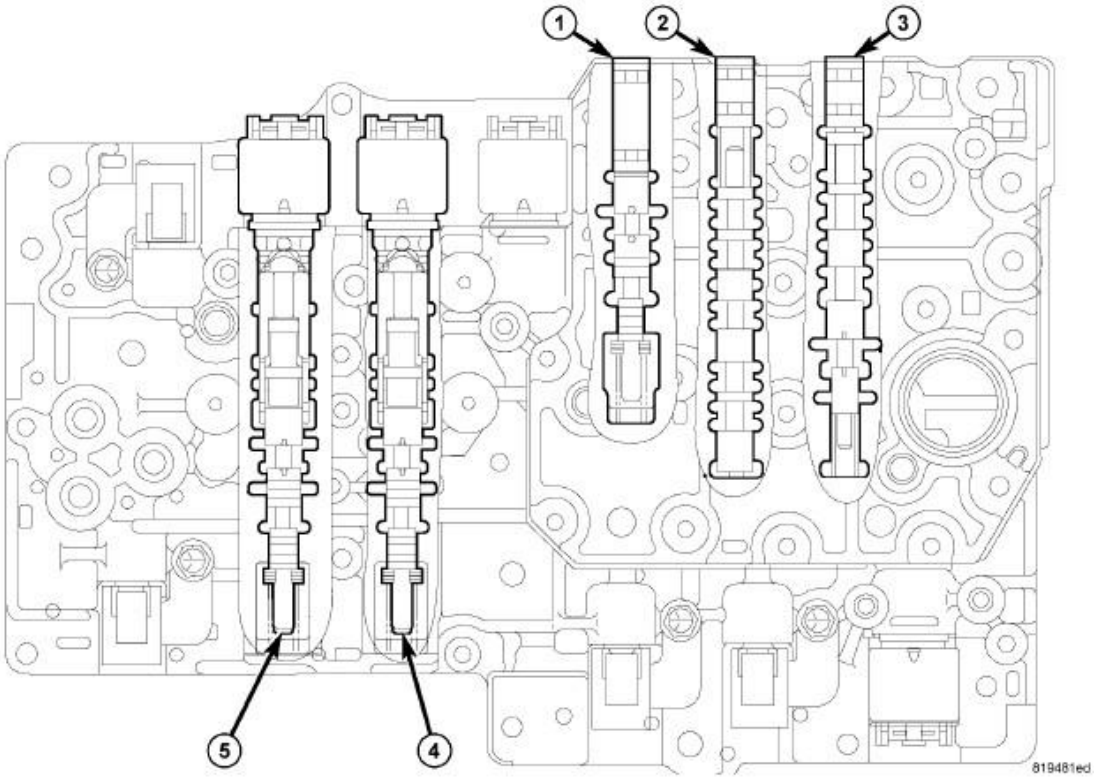

Fig. 300: Lower Valve Body Components
Courtesy of CHRYSLER GROUP, LLC

1 - CONTROL VALVE NO. 3	4 - CONTROL VALVE NO. 1
2 - SHIFT VALVE NO. 4	5 - CONTROL VALVE NO. 2
3 - LOCKUP CONTROL VALVE	

The lower valve body contains the following components:

- 1 = Control valve No. 3
- 2 = Shift solenoid valve No. 4
- 3 = Lockup control valve
- 4 = Control valve No. 1
- 5 = Control valve No. 2

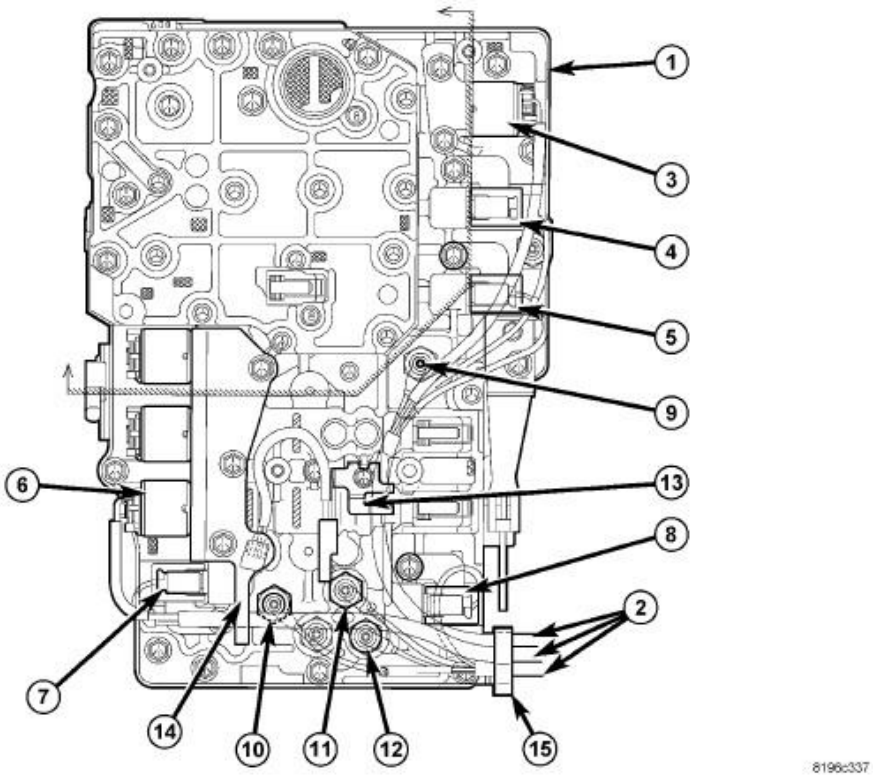

Fig. 301: Valve Body Oil Switch Harness
Courtesy of CHRYSLER GROUP, LLC

1 - VALVE BODY	9 - OIL PRESSURE SWITCH NUMBER 6
2 - VALVE BODY HARNESS	10 - OIL PRESSURE SWITCH NUMBER 3
3 - LINEAR SOLENOID NUMBER 4	11 - OIL PRESSURE SWITCH NUMBER 2
4 - ON/OFF SOLENOID NUMBER 3	12 - OIL PRESSURE SWITCH NUMBER 1

5 - ON/OFF SOLENOID NUMBER 2	13 - CLAMP
6 - LINEAR SOLENOID NUMBER 2	14 - CLAMP
7 - ON/OFF SOLENOID NUMBER 1	15 - CLAMP
8 - ON/OFF SOLENOID NUMBER 4	

There are eight pressure switches and one ATF temperature switch used to inform the Transmission Control Module (TCM) when there is pressure in various hydraulic circuits. Six of them are located on the bottom of the valve body. The remainder are located on the top of the valve body.

SWITCHES AND SOLENOIDS

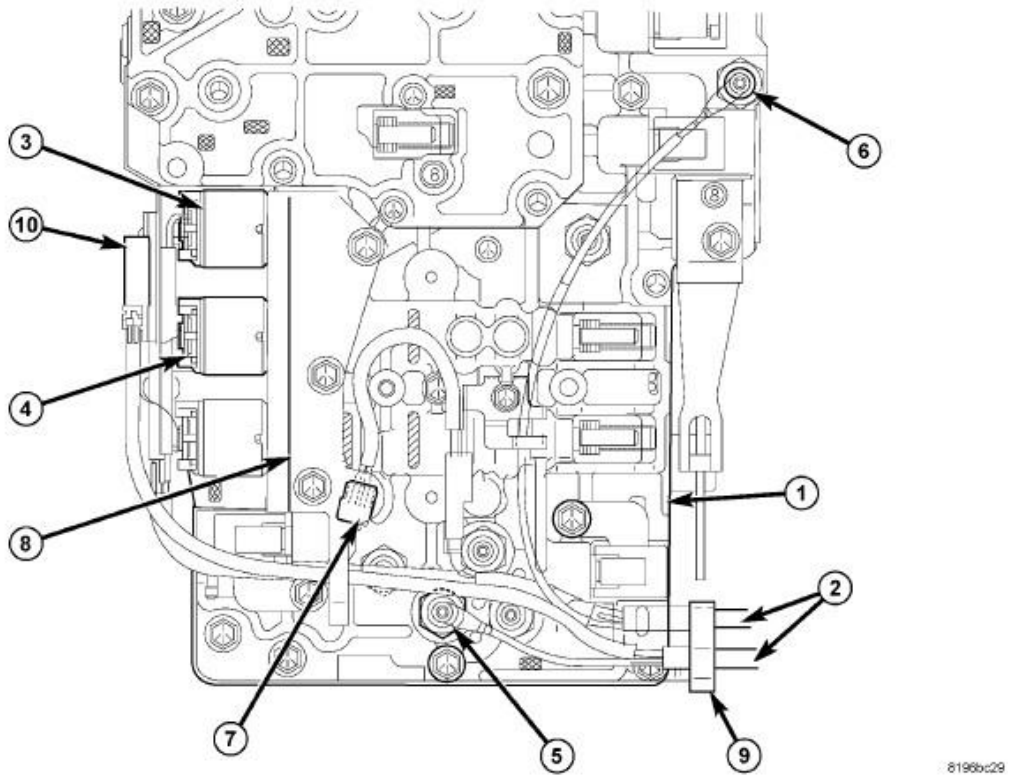

Fig. 302: Valve Body Solenoid Harness
Courtesy of CHRYSLER GROUP, LLC

1 - VALVE BODY	6 - OIL PRESSURE SWITCH NUMBER 8
2 - SOLENOID HARNESS	7 - OIL TEMPERATURE SENSOR
3 - LINEAR SOLENOID NUMBER 3	8 - CLAMP

4 - LINEAR SOLENOID NUMBER 1	9 - CLAMP
5 - OIL PRESSURE SWITCH NUMBER 7	10 - UPPER VALVE BODY JUMPER HARNESS

Eight solenoids are used to control various shift functions in the transmission. Four are located on the top of the valve body (3, 4) and the remainder are located on the bottom of the valve body.

OPERATION

OPERATION

LOWER VALVE BODY

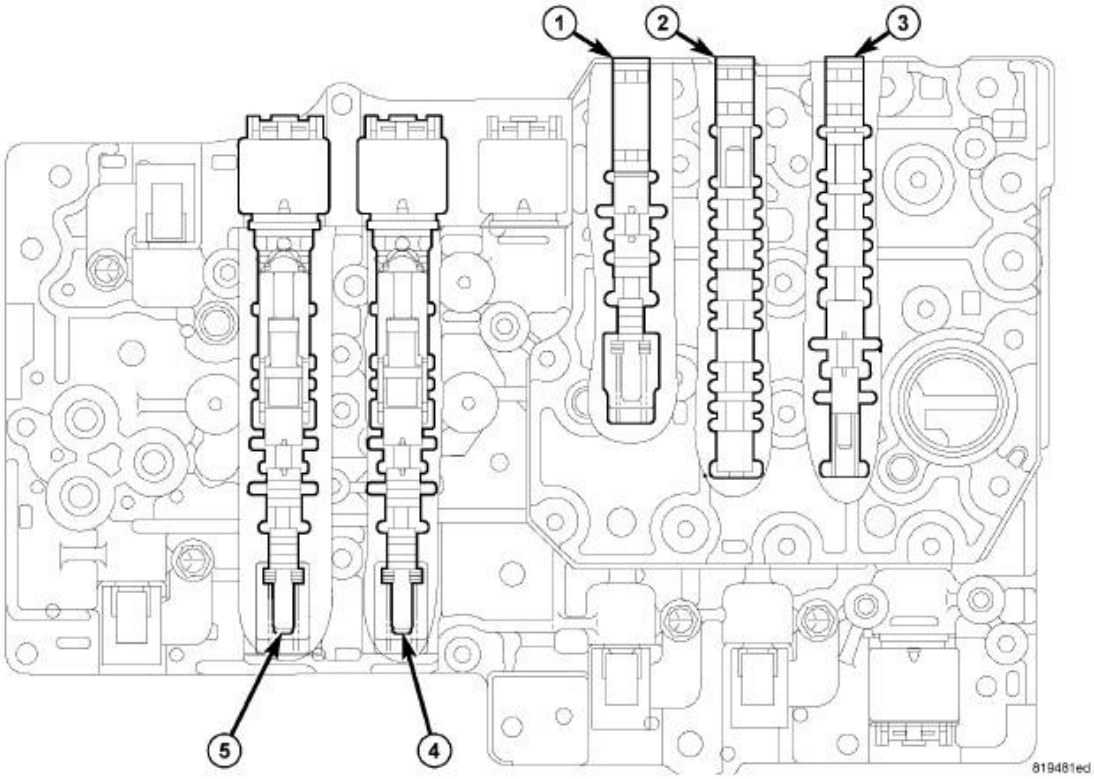

Fig. 303: Lower Valve Body Components
Courtesy of CHRYSLER GROUP, LLC

1 - CONTROL VALVE NO. 3	4 - CONTROL VALVE NO. 1
2 - SHIFT VALVE NO. 4	5 - CONTROL VALVE

3 - LOCKUP CONTROL VALVE	NO. 2

Valve	Function
Lockup control valve	Controls lockup pressure fed to torque converter.
Linear solenoid valve number 1	Controls pressure fed to clutches number 1, 2 and brake number 1
Linear solenoid valve number 2	Controls pressure fed to clutch number 3 and brake number 2.
Linear solenoid valve number 3	Controls pressure fed to clutch number 1, 3.
Shift solenoid valve number 4	Directs line pressure and control pressure for clutch and brake engagement.

UPPER VALVE BODY

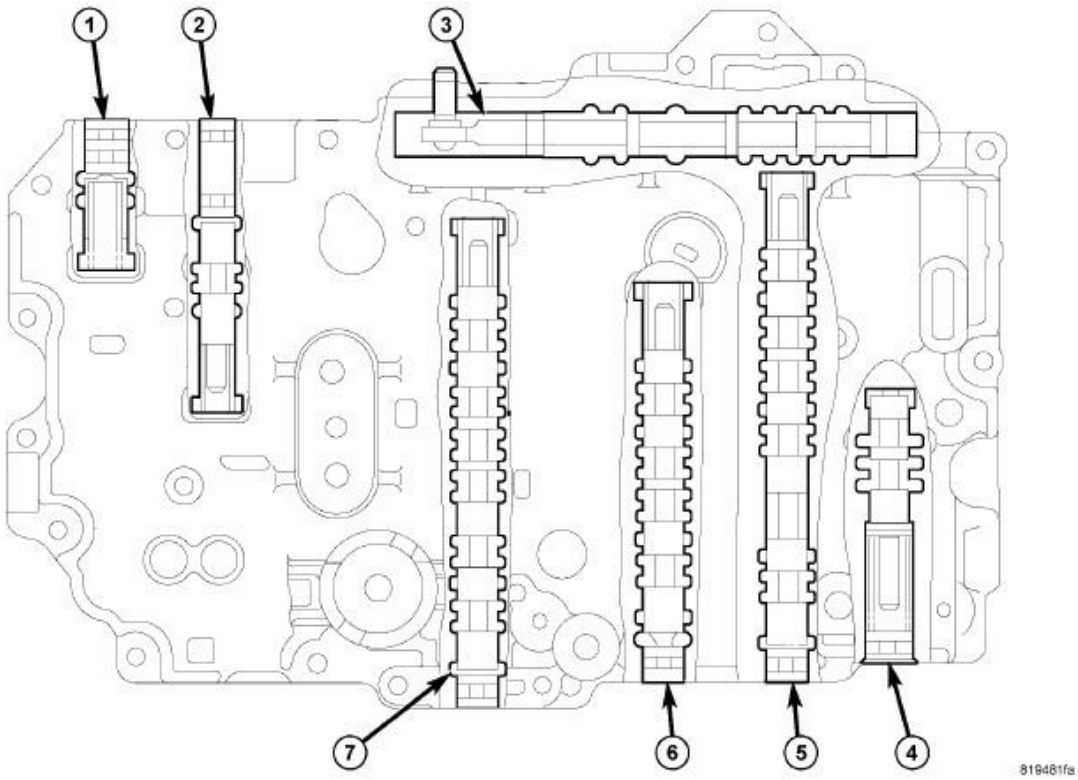

Fig. 304: Upper Valve Body Components
Courtesy of CHRYSLER GROUP, LLC

1 - COMBINED DRAIN	5 - SHIFT SOLENOID VALVE NO. 3
2 - GAIN CHANGE SOLENOID VALVE	6 - SHIFT

3 - MANUAL VALVE 4 - MODULATOR VALVE	SOLENOID VALVE NO. 2 7 - SHIFT VALVE NO. 1

Valve	Function
Manual valve	Selects N, R, and D passages in accordance with drivers movement of the shift lever
Modulator valve	Regulates line pressure and supplies it to the linear and shift solenoids.
Shift solenoid valve number 2	Directs line pressure and control pressure for clutch and brake engagement.
Shift solenoid valve number 3	Directs line pressure and control pressure for clutch and brake engagement.
Gain change solenoid valve	Changes pressure from control pressure to line pressure.
Combined drain	Enables fluid emerging from clutch passages and brake passages to drain away.

SWITCHES AND SOLENOIDS

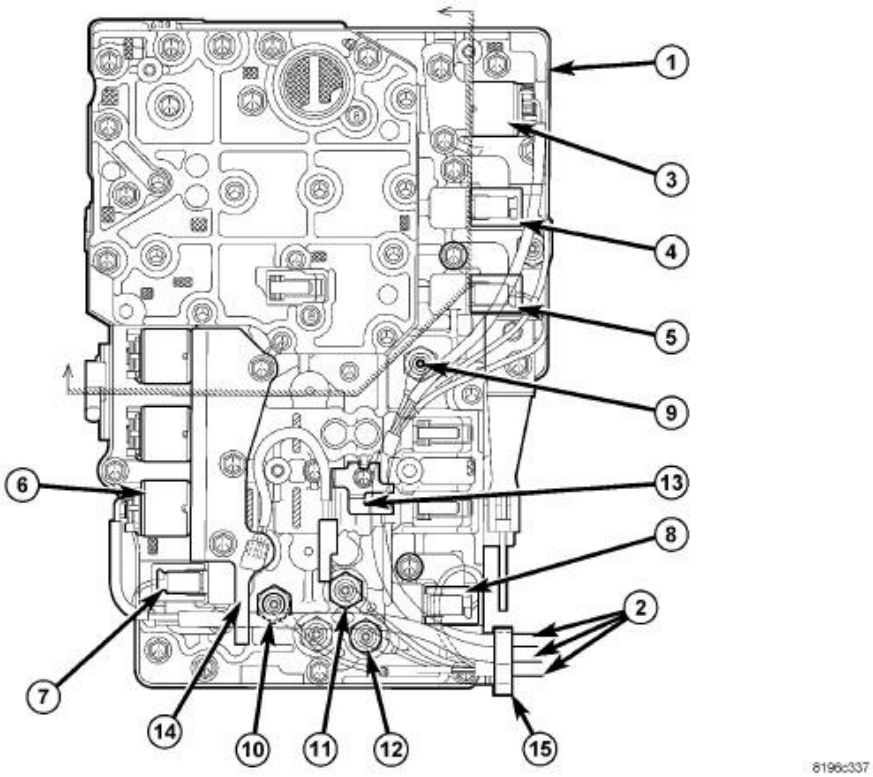

Fig. 305: Valve Body Oil Switch Harness
Courtesy of CHRYSLER GROUP, LLC

1 - VALVE BODY	9 - OIL PRESSURE SWITCH NUMBER 6
2 - VALVE BODY HARNESS	10 - OIL PRESSURE SWITCH NUMBER 3
3 - LINEAR SOLENOID NUMBER 4	11 - OIL PRESSURE SWITCH NUMBER 2
4 - ON/OFF SOLENOID NUMBER 3	12 - OIL PRESSURE SWITCH NUMBER 1
5 - ON/OFF SOLENOID NUMBER 2	13 - CLAMP
6 - LINEAR SOLENOID NUMBER 2	14 - CLAMP
7 - ON/OFF SOLENOID NUMBER 1	15 - CLAMP
8 - ON/OFF SOLENOID NUMBER 4	

OIL PRESSURE SWITCH	**COLOR of WIRE**	**NAME of CONNECTOR**	**FUNCTION**
(5)	White	PSW7	Con No. 3
(6)	Black	PSW8	D Range
LINEAR SOLENOID			
(3)	Blue/White	SLT3	Linear Solenoid No. 3
(4)	Yellow/Black	SLT1	Linear Solenoid No. 1
OIL TEMPERATURE SENSOR			
(7)	Brown/Red	ATF	Oil Temperature sensor
JUMPER HARNESS			
(10)	Orange/Green	PSW4, 5	

SWITCHES AND SOLENOIDS

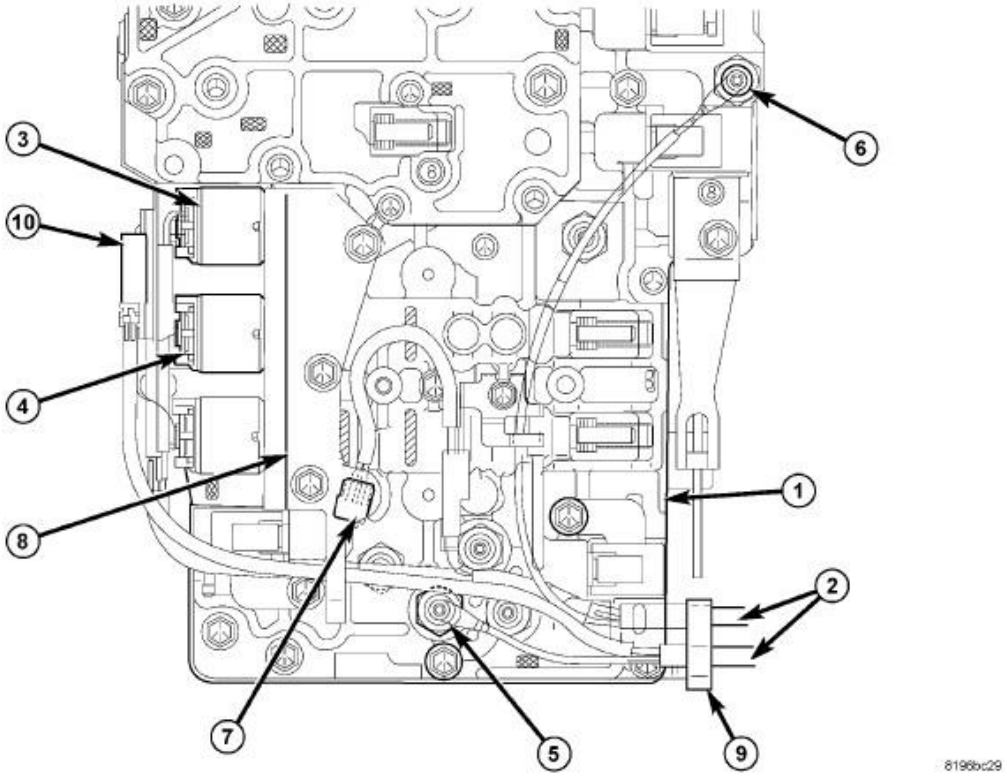

Fig. 306: Valve Body Solenoid Harness
Courtesy of CHRYSLER GROUP, LLC

1 - VALVE BODY	6 - OIL PRESSURE SWITCH NUMBER 8
2 - SOLENOID HARNESS	7 - OIL TEMPERATURE SENSOR
3 - LINEAR SOLENOID NUMBER 3	8 - CLAMP
4 - LINEAR SOLENOID NUMBER 1	9 - CLAMP
5 - OIL PRESSURE SWITCH NUMBER 7	10 - UPPER VALVE BODY JUMPER HARNESS

OIL PRESSURE SWITCH	**COLOR of CONNECTOR WIRE**	**NAME of CONNECTOR**	**FUNCTION**
(9)	Yellow	PSW6	Shift No. 4
(10)	Black	PSW3	Shift No. 1
(11)	Red	PSW2	Con. No. 2
(12)	Brown	PSW1	Con. No. 1
LINEAR SOLENOID			

(3)	Blue/White	SLT4	PL Sol.
(6)	Brown/Red	SLT2	Linear Sol. No. 2
ON/OFF SOLENOID			
(4)	Yellow	SOL3	Shift Sol No. 3
(5)	Black	SOL2	Shift Sol No. 2
(7)	Green	SOL1	Shift Sol No. 1
(8)	Orange	SOL4	Gain Change

REMOVAL

REMOVAL

NOTE: **The valve body can be removed for service without having to remove the transmission assembly. The valve body can be disassembled for cleaning and inspection of the individual components.**

CAUTION: If replacing the valve body an oil pump must be replaced as these are a matched set. Failure to follow these instructions may result in transmission failure and permanent damage.

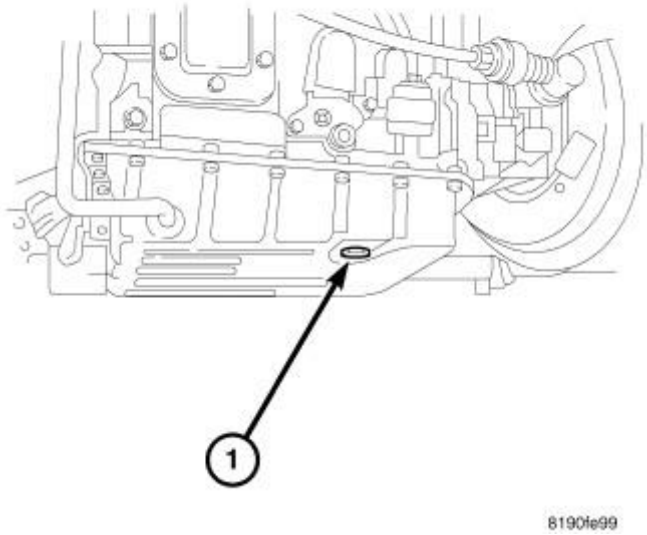

Fig. 307: Drain Plug
Courtesy of CHRYSLER GROUP, LLC

1 - DRAIN PLUG

1. Shift transmission into PARK.

2. Raise vehicle.
3. Position drain pan under transmission oil pan.
4. Remove transmission oil pan drain plug (1) and drain oil.

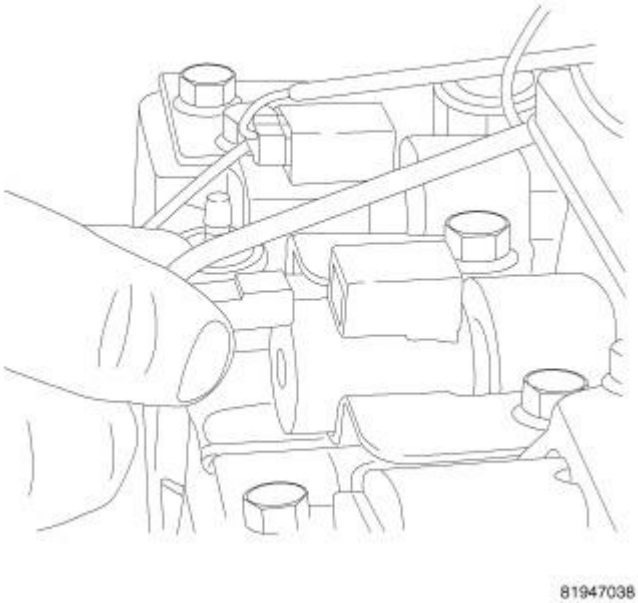

Fig. 308: Disconnecting Valve Body Harness
Courtesy of CHRYSLER GROUP, LLC

5. Remove transmission oil pan.
6. Remove the transmission filter.
7. Disconnect electrical harness connectors from valve body and position harness aside.

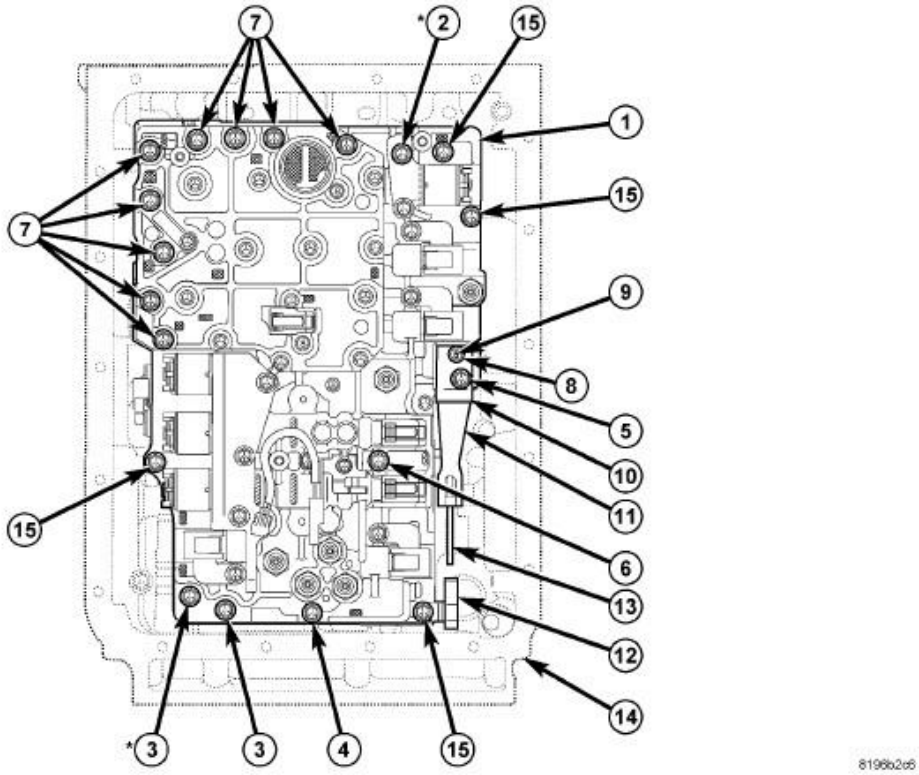

Fig. 309: Valve Body Bolts
Courtesy of CHRYSLER GROUP, LLC

1 - VALVE BODY	9 - WAVE WASHER
2 - 58 MILLIMETER FLANGE BOLT	10 - MANUAL DETENT SPRING COVER
3 - 31.2 MILLIMETER FLANGE BOLT	11 - MANUAL DETENT SPRING
4 - 42.5 MILLIMETER FLANGE BOLT	12 - CLAMP
5 - 43 MILLIMETER FLANGE BOLT	13 - MANUAL VALVE LEVER
6 - 51 MILLIMETER FLANGE BOLT	14 - TRANSMISSION CASE
7 - 57.2 MILLIMETER FLANGE BOLT	15 - 32.2 MILLIMETER FLANGE BOLT
8 - 41.5 MILLIMETER FLANGE BOLT	

8. Remove all the bolts, clamp, wave washer, manual detent spring and cover (2-13, 15), attaching the valve body (1) to the transmission case (14).

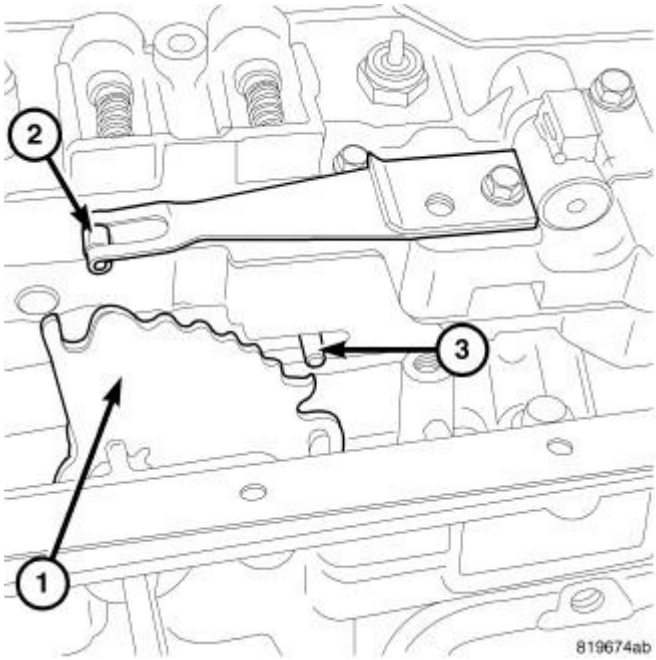

Fig. 310: Manual Shift Valve Shaft
Courtesy of CHRYSLER GROUP, LLC

1 - ROOSTERCOMB
2 - ROLLER DETENT SPRING
3 - MANUAL VALVE SHIFT SHAFT

9. Remove the valve body on a slight angle to clear the manual valve shaft (3) from the roostercomb (1).

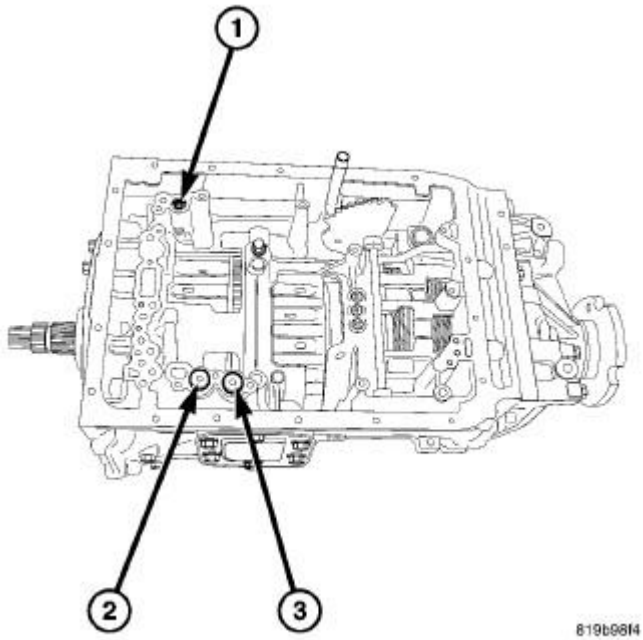

Fig. 311: Accumulator Valves
Courtesy of CHRYSLER GROUP, LLC

10. Remove the three accumulator springs and the three accumulators (1), (2),(3).

CAUTION: Do not remove the valve body electrical harnesses from the transmission case unless replacement is required. Failure to follow these instructions may create an external transmission fluid leak path.

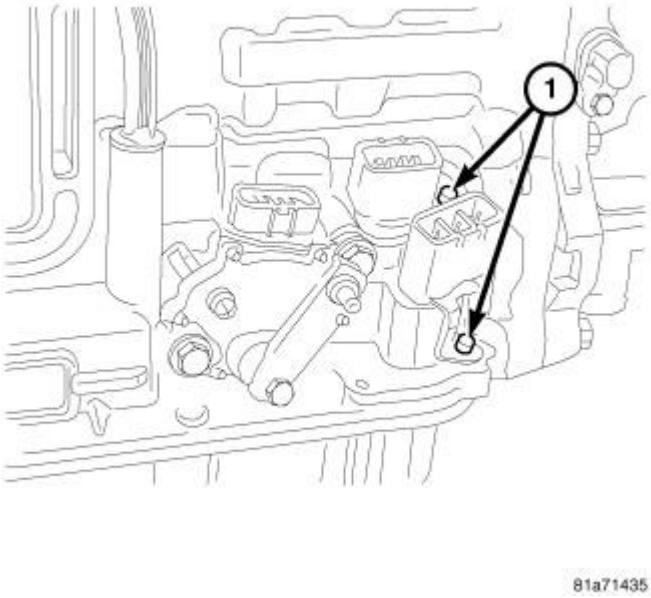

Fig. 312: Connector Bolts
Courtesy of CHRYSLER GROUP, LLC

1 - CONNECTOR BOLTS

11. Remove the bolts (1) securing the valve body electrical harness connectors to the transmission case.

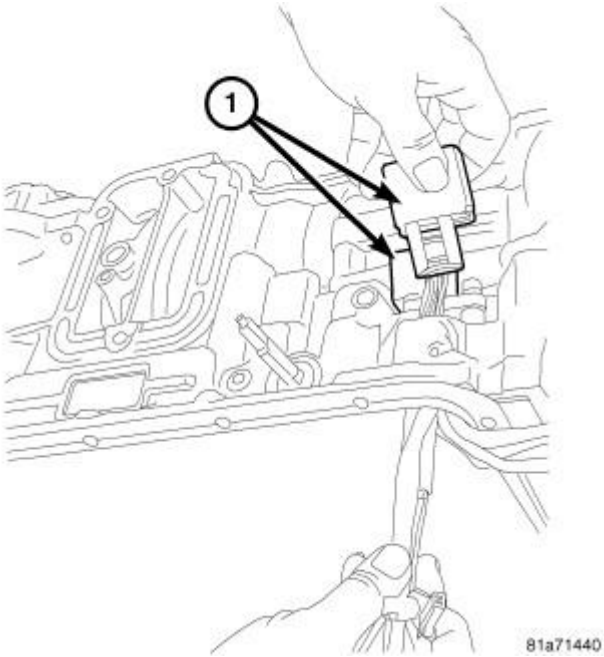

Fig. 313: Valve Body Electrical Harnesses
Courtesy of CHRYSLER GROUP, LLC

1 - HARNESSES

12. Remove both valve body electrical harnesses (1) from the transmission case.

DISASSEMBLY

DISASSEMBLY

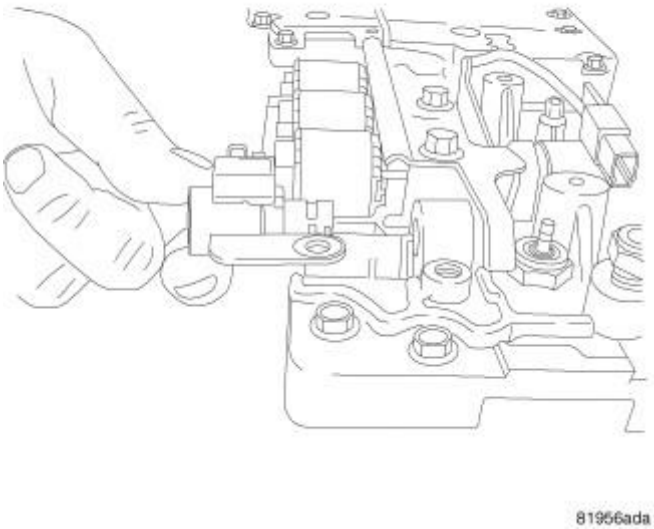

Fig. 314: Removing Valve Body Solenoids
Courtesy of CHRYSLER GROUP, LLC

1. Remove all the bolts holding the on/off solenoids in place.
2. Remove all the on/off solenoids.

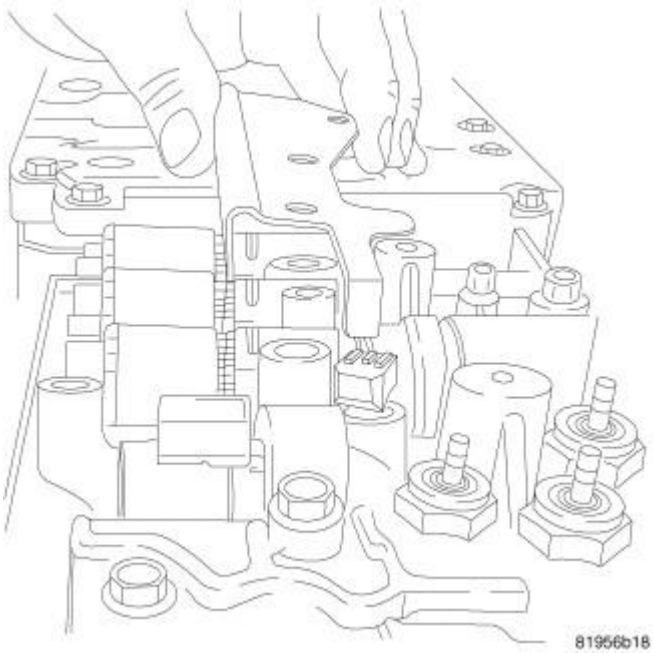

Fig. 315: Removing Solenoid Bracket
Courtesy of CHRYSLER GROUP, LLC

3. Remove the bolts holding the linear solenoid bracket in place and remove solenoid bracket.
4. Remove all the linear solenoids.

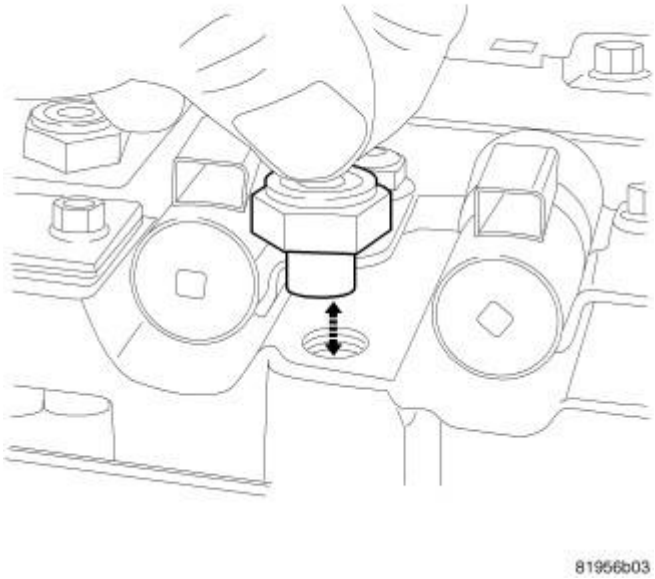

Fig. 316: Valve Body Pressure Sensor
Courtesy of CHRYSLER GROUP, LLC

5. Remove all the pressure sensors from the lower valve body.

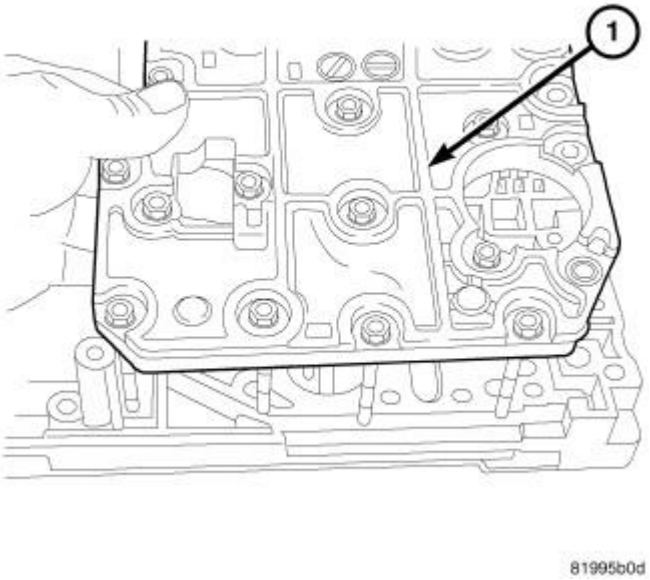

Fig. 317: Separator Plate
Courtesy of CHRYSLER GROUP, LLC

1- SEPARATOR PLATE

6. Remove all the bolts connecting the lower valve body to the upper valve body.
7. Disassemble the lower valve body and separator plate from the upper valve body.
8. Remove the separator plate (1).

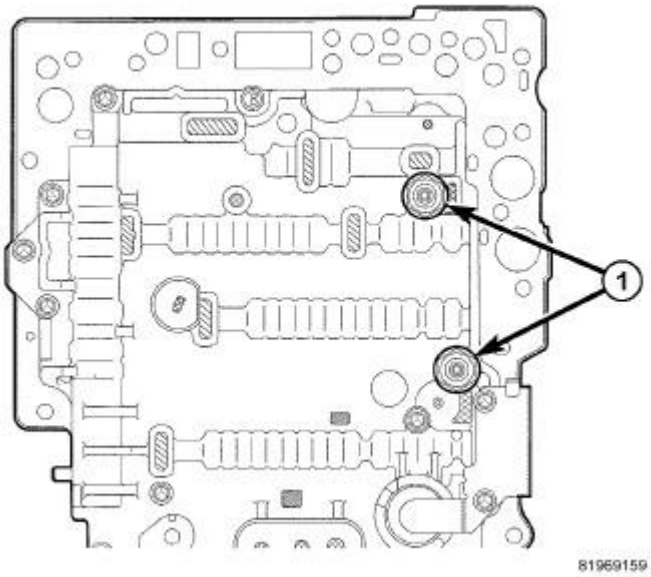

Fig. 318: Upper Valve Body Pressure Sensor
Courtesy of CHRYSLER GROUP, LLC

1 - 1/8 PIPE THREAD OIL PRESSURE SWITCHES

9. Remove the upper valve body pressure sensors (1).

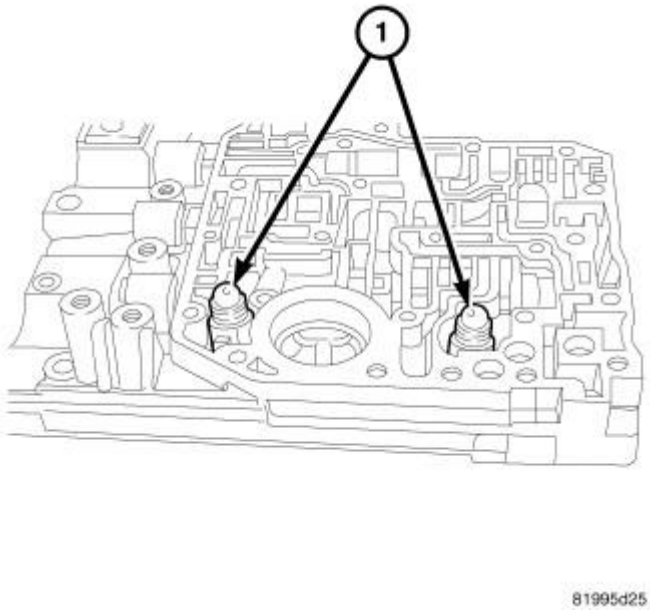

Fig. 319: Check Balls
Courtesy of CHRYSLER GROUP, LLC

1 - CHECK BALLS

10. Remove all the check balls (1).

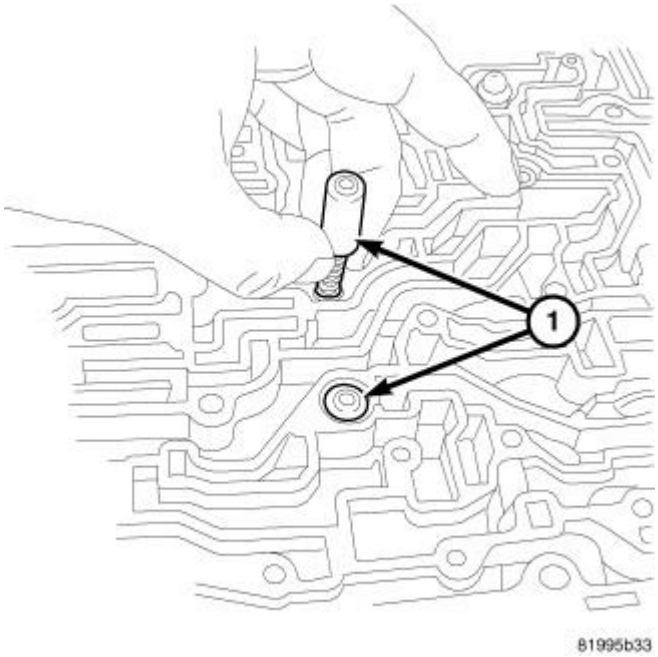

Fig. 320: Check Valves
Courtesy of CHRYSLER GROUP, LLC

1 - CHECK VALVES

11. Remove all check valves.

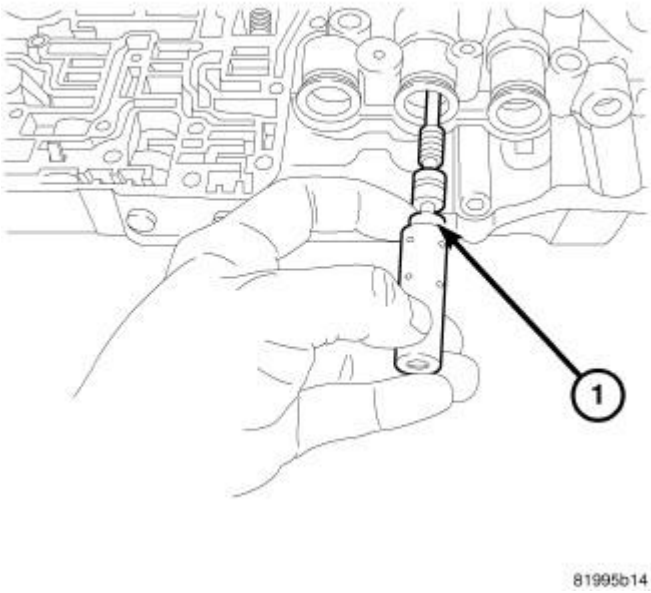

Fig. 321: Removing/Installing Valves
Courtesy of CHRYSLER GROUP, LLC

1 - VALVES

12. Remove all valves (1).

CLEANING

CLEANING

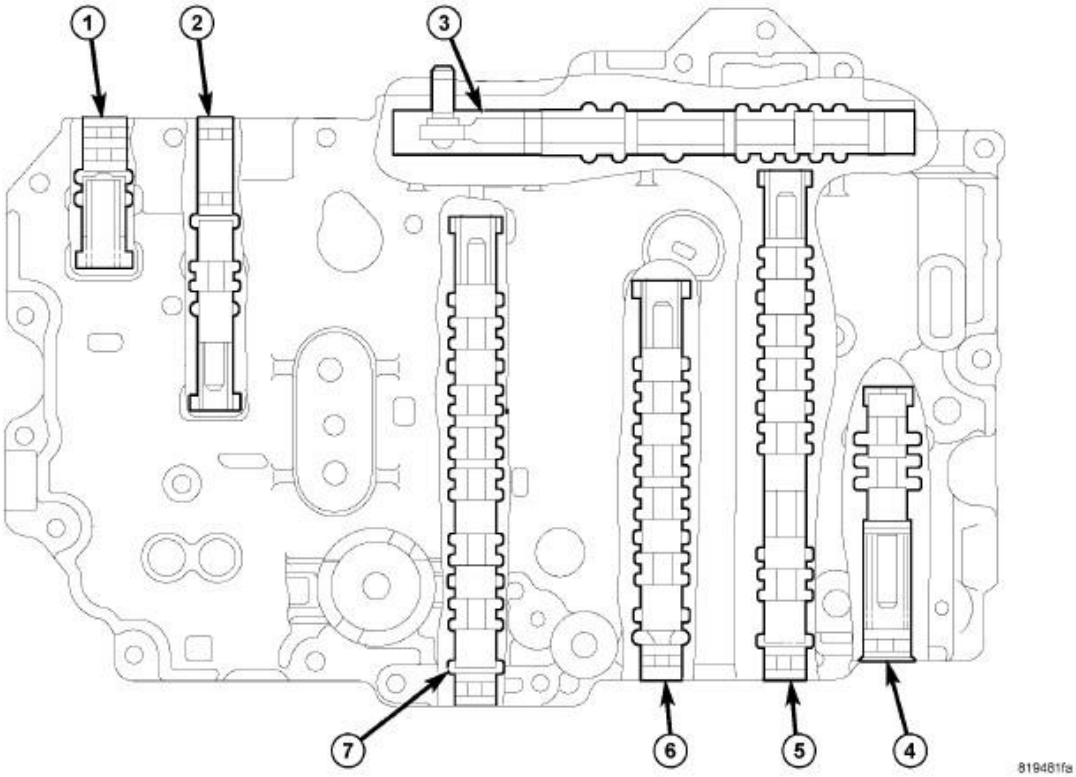

Fig. 322: Upper Valve Body Components
Courtesy of CHRYSLER GROUP, LLC

1 - COMBINED DRAIN	5 - SHIFT SOLENOID VALVE NO. 3
2 - GAIN CHANGE SOLENOID VALVE	6 - SHIFT SOLENOID VALVE NO. 2
3 - MANUAL VALVE	7 - SHIFT VALVE NO. 1
4 - MODULATOR VALVE	

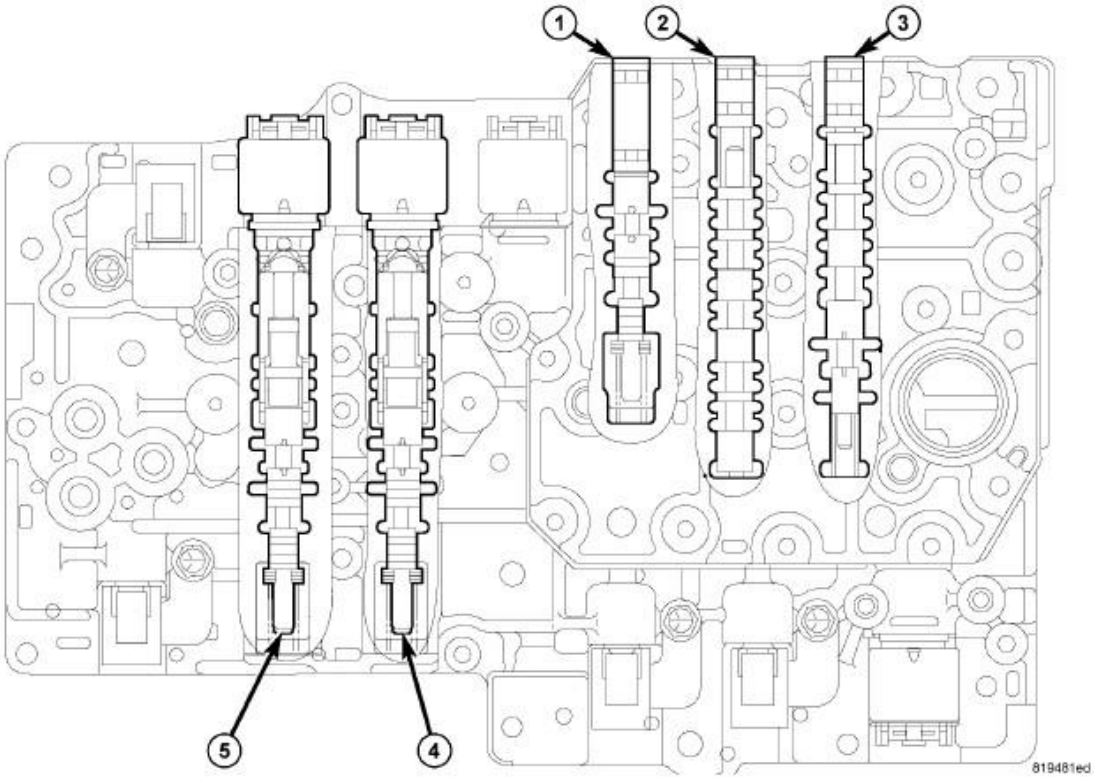

Fig. 323: Lower Valve Body Components
Courtesy of CHRYSLER GROUP, LLC

1 - CONTROL VALVE NO. 3	4 - CONTROL VALVE NO. 1
2 - SHIFT VALVE NO. 4	5 - CONTROL VALVE NO. 2
3 - LOCKUP CONTROL VALVE	

Clean the valve housings, valves, plugs, springs, and separator plates with a standard parts cleaning solution only. Do not use gasoline, kerosene, or any type of caustic solution.

Do not immerse any of the electrical components in cleaning solution. Clean the electrical components by wiping them off with dry shop towels only.

Dry all except the electrical parts with compressed air. Make sure all passages are clean and free from obstructions. **Do not use rags or shop towels to dry or wipe off valve body components. Lint from these materials can stick to valve body parts, interfere with valve operation, and clog filters and fluid passages.**

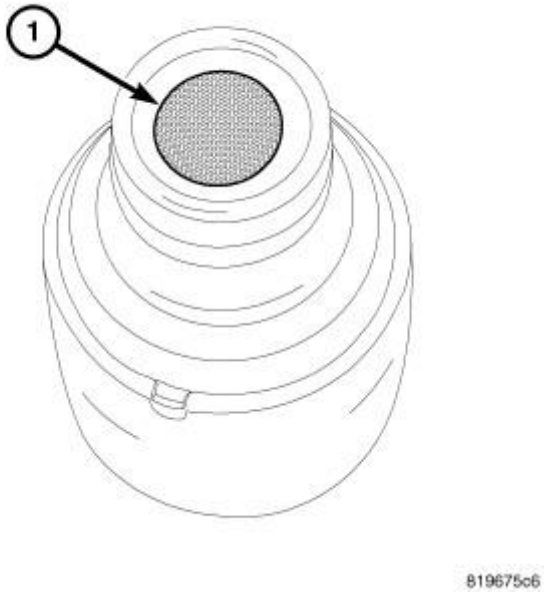

Fig. 324: Solenoid Filter Screen
Courtesy of CHRYSLER GROUP, LLC

1 - SOLENOID FILTER SCREEN

Clean the solenoid filter screen (1), (if equipped).

INSPECTION

INSPECTION

Inspect all of the valve body mating surfaces for scratches, nicks, burrs, or distortion. Use a straightedge to check surface flatness. Minor scratches may be removed with crocus cloth using only very light pressure.

Minor distortion of a valve body mating surface may be corrected by smoothing the surface with a sheet of crocus cloth. Position the crocus cloth on a surface plate, sheet of plate glass or equally flat surface. If distortion is severe or any surfaces are heavily scored, the valve body will have to be replaced.

Inspect the valves and plugs for scratches, burrs, nicks, or scores. Minor surface scratches on steel valves and plugs can be removed with crocus cloth but **do not round off the edges of the valve or plug lands.** Maintaining sharpness of these edges is vitally important. The edges prevent foreign matter from lodging between the valves and plugs and the bore.

Inspect all the valve and plug bores in the valve body. Use a penlight to view the bore interiors. Replace the valve body if any bores are distorted or scored. Inspect all of the valve body springs. The springs must be free of distortion, warpage or broken coils.

Trial fit each valve and plug in its bore to check freedom of operation. When clean and dry, the valves and plugs should drop freely into the bores.

Valve body bores do not change dimensionally with use. If the valve body functioned correctly when new, it will continue to operate properly after cleaning and inspection. It should not be necessary to replace a valve body assembly unless it is damaged in handling.

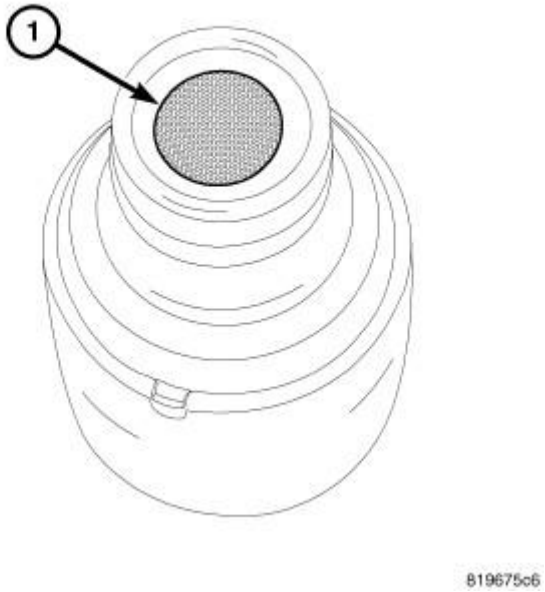

Fig. 325: Solenoid Filter Screen
Courtesy of CHRYSLER GROUP, LLC

1 - SOLENOID FILTER SCREEN

Inspect all solenoid filter screens (1).

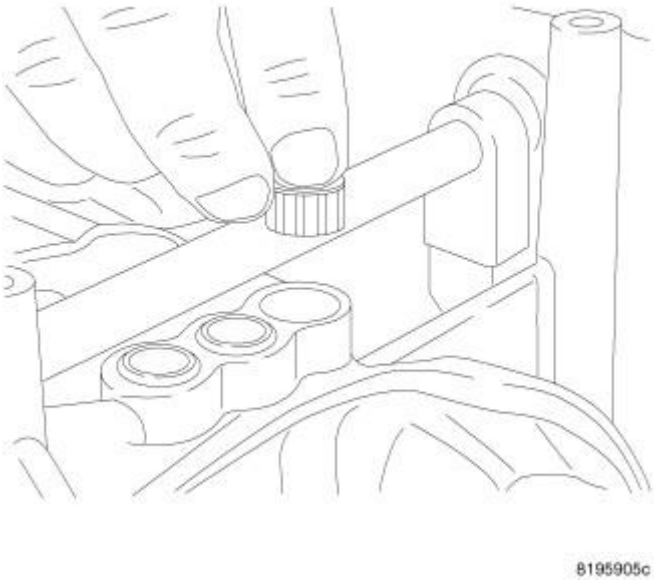

Fig. 326: Fluid Seal Inspection
Courtesy of CHRYSLER GROUP, LLC

Inspect all the fluid seals in the transmission case. Replace any seals that are cracked, distorted, or damaged in any way. These seals pass fluid pressure directly to the clutches. Any pressure leak at these points, may cause transmission performance problems.

ASSEMBLY

ASSEMBLY

NOTE: **Apply petroleum grease to all slide portions, rolling contacts surfaces, thrust surfaces etc. to prevent burnout during initial operation. Lubricate O-rings and O-ring seals with MOPAR® AS68RC ATF. Soak all friction disks in MOPAR® AS68RC ATF for at least two hours before assembly of clutch packs.**

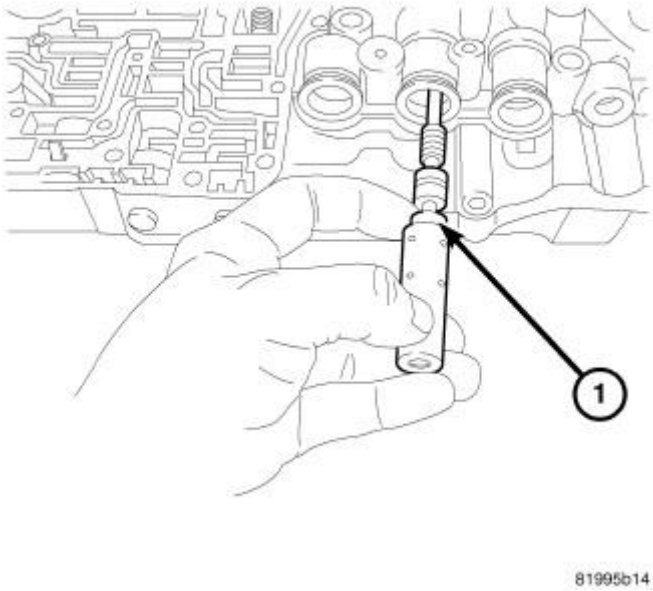

Fig. 327: Removing/Installing Valves
Courtesy of CHRYSLER GROUP, LLC

1 - VALVES

1. Install all the valves (1).

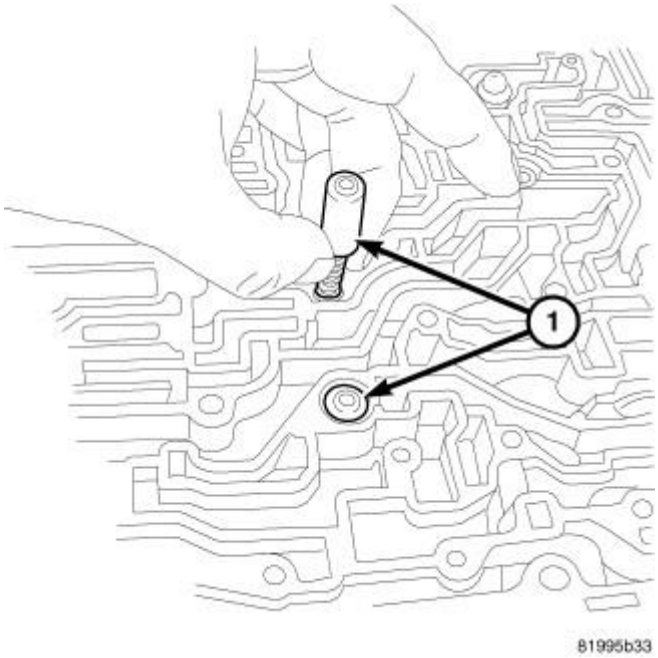

Fig. 328: Check Valves
Courtesy of CHRYSLER GROUP, LLC

1 - CHECK VALVES

2. Install all the check valves (1).

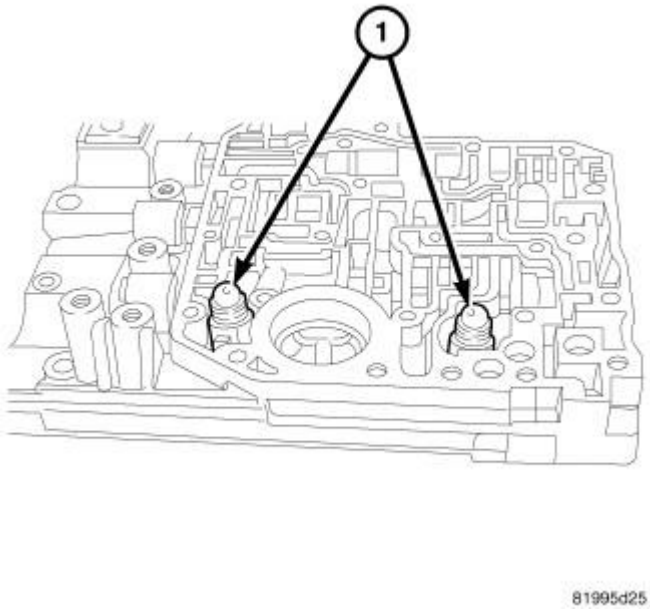

Fig. 329: Check Balls
Courtesy of CHRYSLER GROUP, LLC

1 - CHECK BALLS

3. Install all the check balls (1).

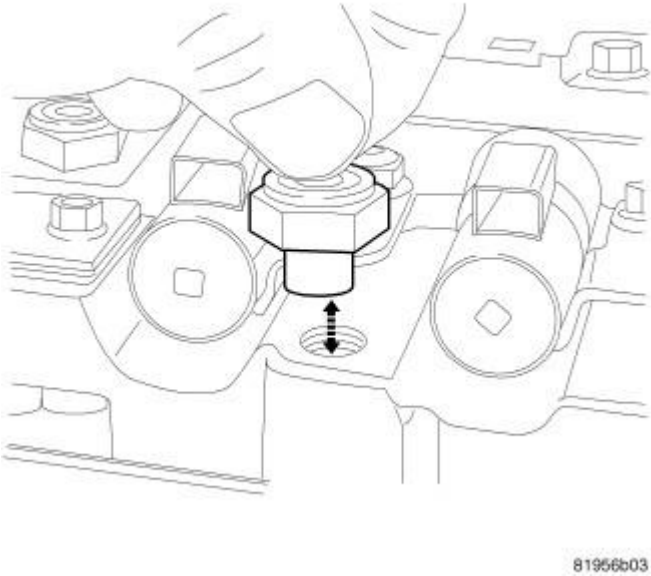

Fig. 330: Valve Body Pressure Sensor
Courtesy of CHRYSLER GROUP, LLC

4. Install the oil pressure switches onto the upper valve body.

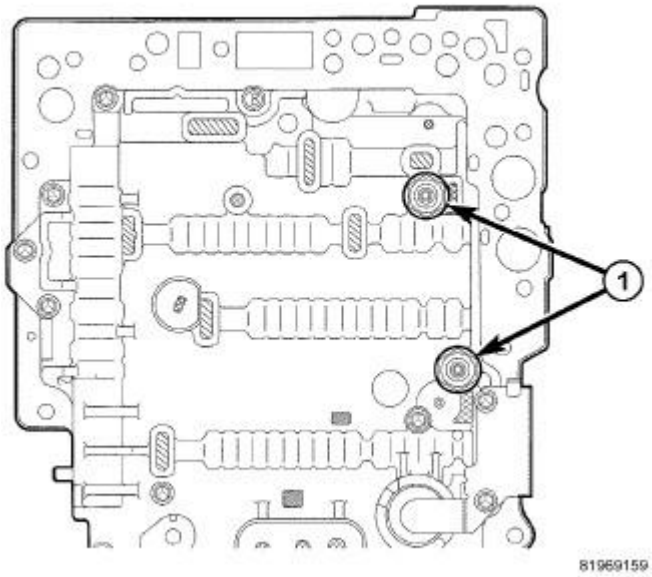

Fig. 331: Upper Valve Body Pressure Sensor
Courtesy of CHRYSLER GROUP, LLC

1 - 1/8 PIPE THREAD OIL PRESSURE SWITCHES

5. Tighten the oil pressure switches (1) to 4.4 N.m (38 in lbs.).

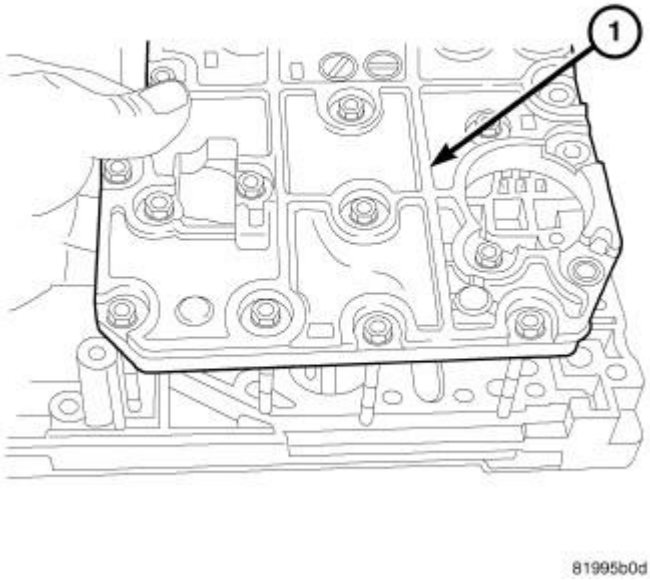

Fig. 332: Separator Plate
Courtesy of CHRYSLER GROUP, LLC

1- SEPARATOR PLATE

6. Install the separator plate onto the lower valve body.
7. Install the separator plate (1) bolts and tighten bolts in a crisscross manner to 10 N.m (88 in. lbs.).

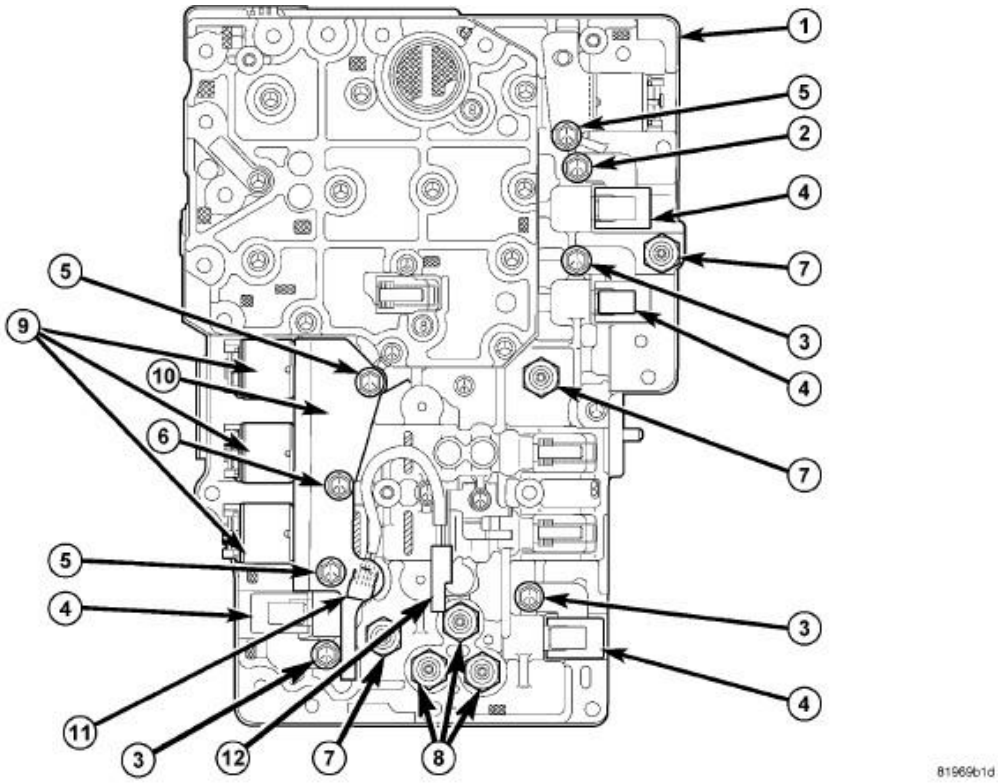

Fig. 333: Switches & Solenoids
Courtesy of CHRYSLER GROUP, LLC

1 - LOWER VALVE BODY	7 - 1/8 PIPE THREAD OIL PRESSURE SWITCH
2 - 42.5 MILLIMETER (1.67 in.) FLANGE BOLT	8 - 1/4 PIPE THREAD OIL PRESSURE SWITCH
3 - 12.5 MILLIMETER (.49 in.) FLANGE BOLT	9 - LINEAR SOLENOID
4 - ON / OFF SOLENOIDS	10 - LINEAR SOLENOID BRACKET
5 - 25 MILLIMETER (.98 in.) FLANGE BOLT	11 - TEMPERATURE SENSOR
6 - 58 MILLIMETER (2.28 in.) FLANGE BOLT	12 - TEMPERATURE SENSOR JUMPER HARNESS

NOTE: Tighten all bolts in order specified.

8. Install the upper valve body onto the lower valve body.
9. Install the valve body bolts and tighten in a crisscross manner to 5.5 N.m (49 in.lbs.).
10. Install oil pressure switch (7) and (8) in the correct positions.
11. Tighten oil pressure switch (7) to 4.4 N.m (39 in.lbs.).
12. Tighten oil pressure switch (8) to 8.5 N.m (75 in.lbs.).
13. Install temperature sensor (11).
14. Install temperature sensor jumper harness (12) onto temperature sensor (11) and secure to valve body.
15. Lubricate o-rings (if equipped) with MOPAR® AS68RC ATF and install on/off solenoids (4).
16. Install on/off solenoid bolts (2) and (3).
17. Tighten bolts (2) to 5.5 N.m (49 in.lbs.) and (3) to 10 N.m (88 in.lbs.).
18. Lubricate o-rings with MOPAR® AS68RC ATF and install linear solenoids (9).
19. Install linear solenoid bracket (10).
20. Install linear solenoid bracket bolts (5) and (6).
21. Tighten linear solenoid bracket bolt (5) to 10 N.m (88 in.lbs.).
22. Tighten linear solenoid bracket bolt (6) to 10 N.m (88 in.lbs.).

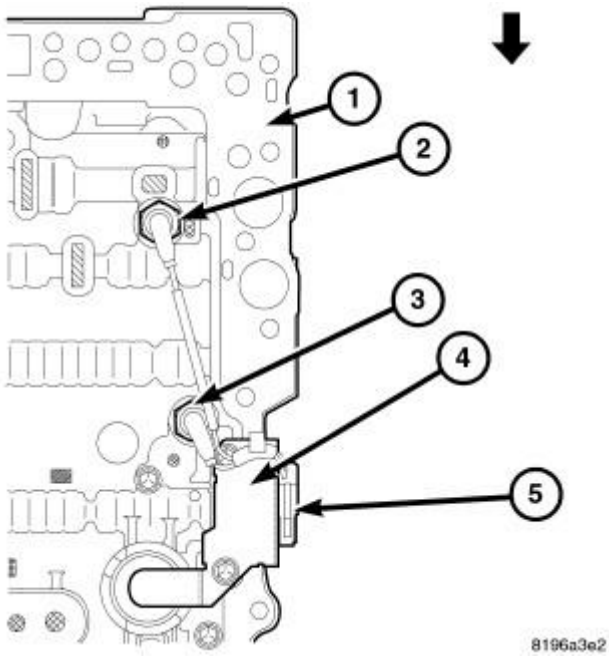

Fig. 334: Upper Valve Body Harness
Courtesy of CHRYSLER GROUP, LLC

1 - UPPER VALVE BODY
2 - 1/8 PIPE THREAD OIL PRESSURE SWITCH
3 - 1/8 PIPE THREAD OIL PRESSURE SWITCH
4 - CLAMP

5 - JUMPER HARNESS

NOTE: **When installing the jumper harness, fix the harness portion that is protected with the clamp.**

23. Install the jumper harness (5) into the clamp (4).

NOTE: **Install the oil pressure switch connector (2) so that the orientation of the connector will be in a range of 0-90 degrees downward.**

24. Connect the green wire of the jumper harness to the oil pressure switch (2).

NOTE: **Install the oil pressure switch connector (3) so that the orientation of the connector will be in a range of 0-45 degrees downward.**

25. Connect the orange wire of the jumper harness to the oil pressure switch (3).

Oil Pressure Switch	Color of Wire	Name of Connector	FUNCTION
(2)	Green	PSW5	Shift No. 3
(3)	Orange	PSW4	Shift No. 2

INSTALLATION

INSTALLATION

CAUTION: **If the valve body is being replaced the oil pump must also be replaced. Failure to follow these instructions will damage the transmission.**

NOTE: **If the valve body is being replaced, a quick learn must be performed using the scan tool. Refer to MODULE, TRANSMISSION CONTROL, STANDARD PROCEDURE .**

NOTE: **Apply petroleum grease to all slide portions, rolling contacts surfaces, thrust surfaces etc. to prevent burnout during initial operation. Lubricate O-rings and O-ring seals with MOPAR® AS68RC ATF. Soak all friction disks in MOPAR® AS68RC ATF for at least two hours before assembly of clutch packs.**

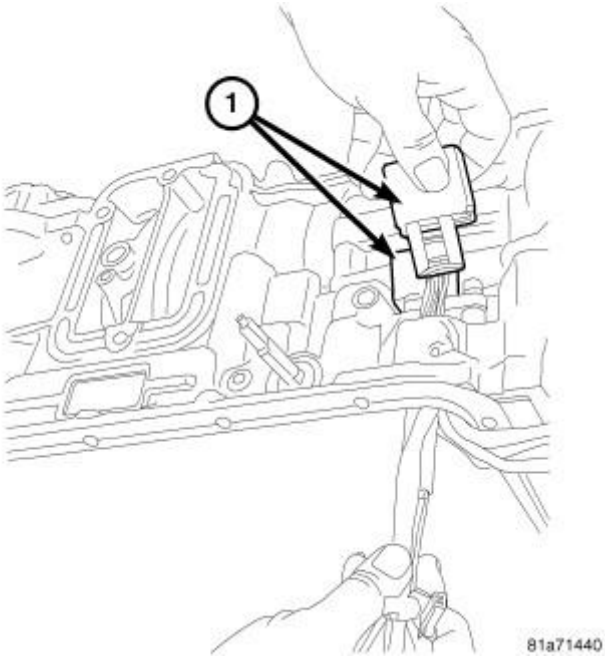

Fig. 335: Valve Body Electrical Harnesses
Courtesy of CHRYSLER GROUP, LLC

1 - HARNESSES

1. Lubricate the seals on the electrical connectors with MOPAR® AS68RC ATF and install the valve body electrical harnesses (1) into the transmission case.

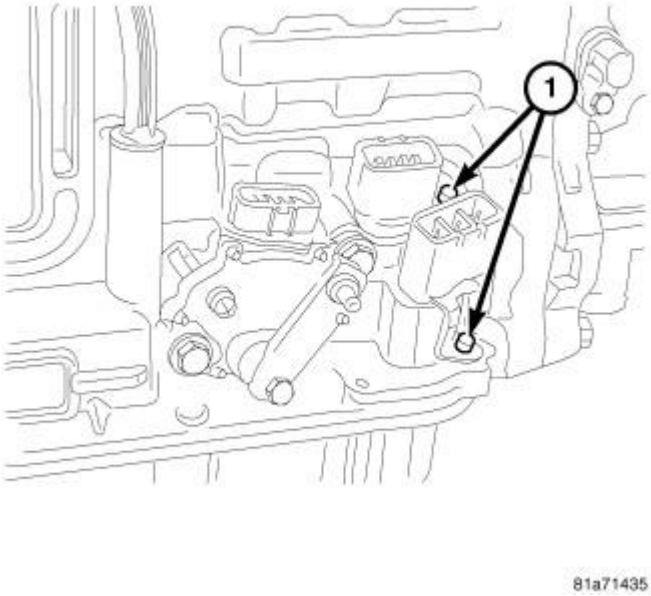

Fig. 336: Connector Bolts
Courtesy of CHRYSLER GROUP, LLC

1 - CONNECTOR BOLTS

2. Install the valve body electrical harness connector bolts. Tighten the bolts to 8 N.m (71 in.lbs.).

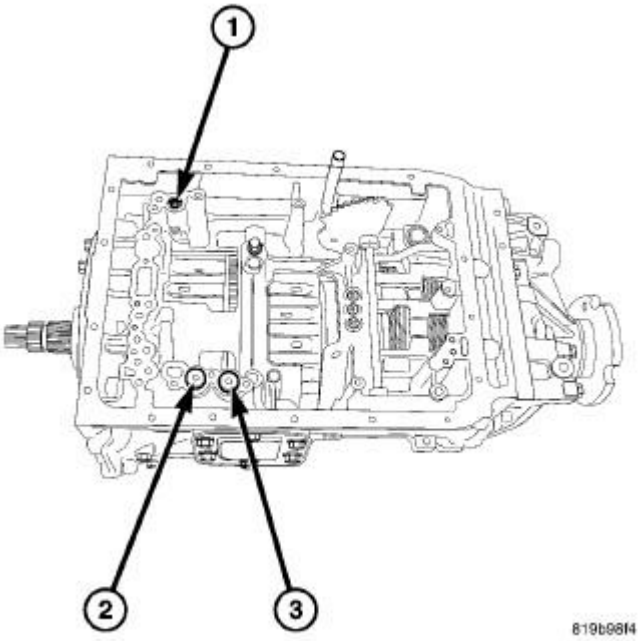

Fig. 337: Accumulator Valves
Courtesy of CHRYSLER GROUP, LLC

	ACCUMULATORS		SPRING COLOR
	DIAMETER	**HEIGHT**	
ACCUMULATOR NO. ONE (1)	16 mm (0.63 in.)	40.18 mm (1.58 in.)	PURPLE
ACCUMULATOR NO. TWO (2)	20 mm (0.79 in.)	38.18 mm (1.50 in.)	PINK
ACCUMULATOR NO. THREE (3)	20 mm (0.79 in.)	39.18 mm (1.54 in.)	BLUE

3. Install the three accumulator springs first and then the three accumulator valves (1), (2),(3).

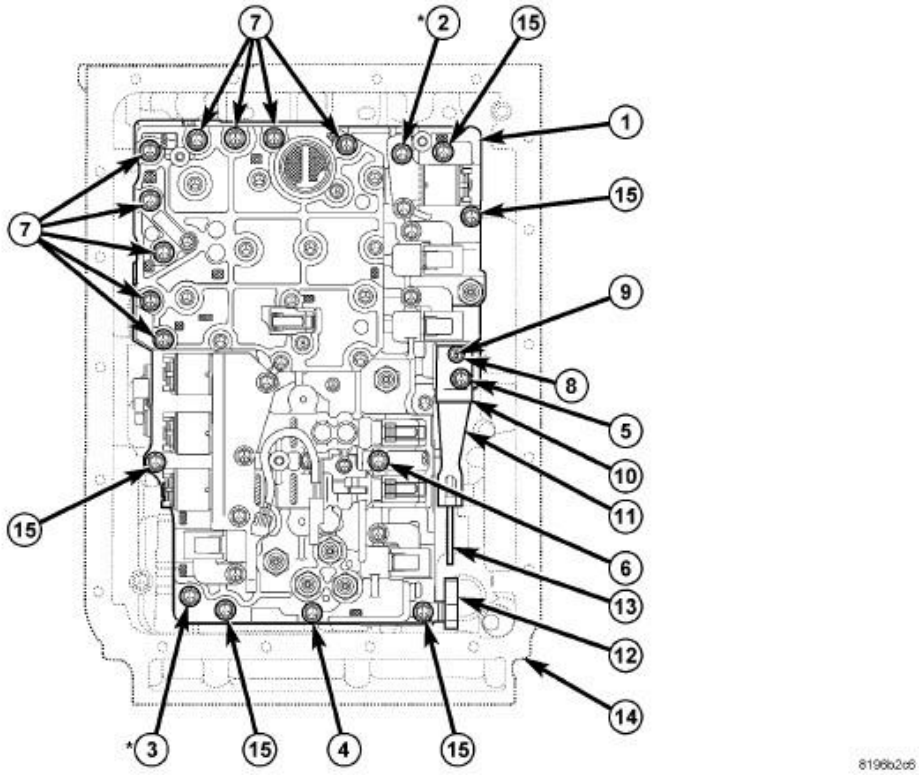

Fig. 338: Valve Body Bolts
Courtesy of CHRYSLER GROUP, LLC

1 - VALVE BODY	9 - WAVE WASHER
2 - 58 MILLIMETER (2.28 in.) FLANGE BOLT	10 - MANUAL DETENT SPRING COVER
3 - 31.2 MILLIMETER (1.23 in.) FLANGE BOLT	11 - MANUAL DETENT SPRING
4 - 42.5 MILLIMETER (1.67 in.) FLANGE BOLT	12 - CLAMP
5 - 43 MILLIMETER (1.69 in.) FLANGE BOLT	13 - MANUAL VALVE LEVER
6 - 51 MILLIMETER (2.00 in.) FLANGE BOLT	14 - TRANSMISSION CASE
7 - 57.2 MILLIMETER (2.25 in.) FLANGE BOLT	15 - 32.2 MILLIMETER (1.27 in.) FLANGE BOLT
8 - 41.5 MILLIMETER (1.63 in.) FLANGE BOLT	
* = temporary hand tighten bolts.	

NOTE: **Install valve body on a slight angle and verify that the shaft on the manual shift valve and the roller detent spring (11) has properly engaged the manual valve lever (13).**

NOTE: **Bolts with conical washers are not reusable.**

4. Install the valve body onto the transmission case.
5. Install and then tighten the bolts in the following order:
    1. Install bolts (2*) and (3*) and tighten by hand in order to hold valve body onto transmission case.
    2. Install detent spring, (10), (11) and bolts (5), (8) with wave washer (9), and tighten by hand.
    3. Install clamp (12) along with bolt (15) on the prescribed position and tighten by hand.
    4. Install bolts (15), (4), (6) and (7) on each correct position and tighten by hand.
    5. Tighten bolts (2*) and (3*) to 10 N.m (88 in.lbs.).
    6. Tighten bolts (4), (5), (6),(7), (15) to 10 N.m (88 in.lbs.) and (8) to 5.5 N.m (49 in. lbs.).

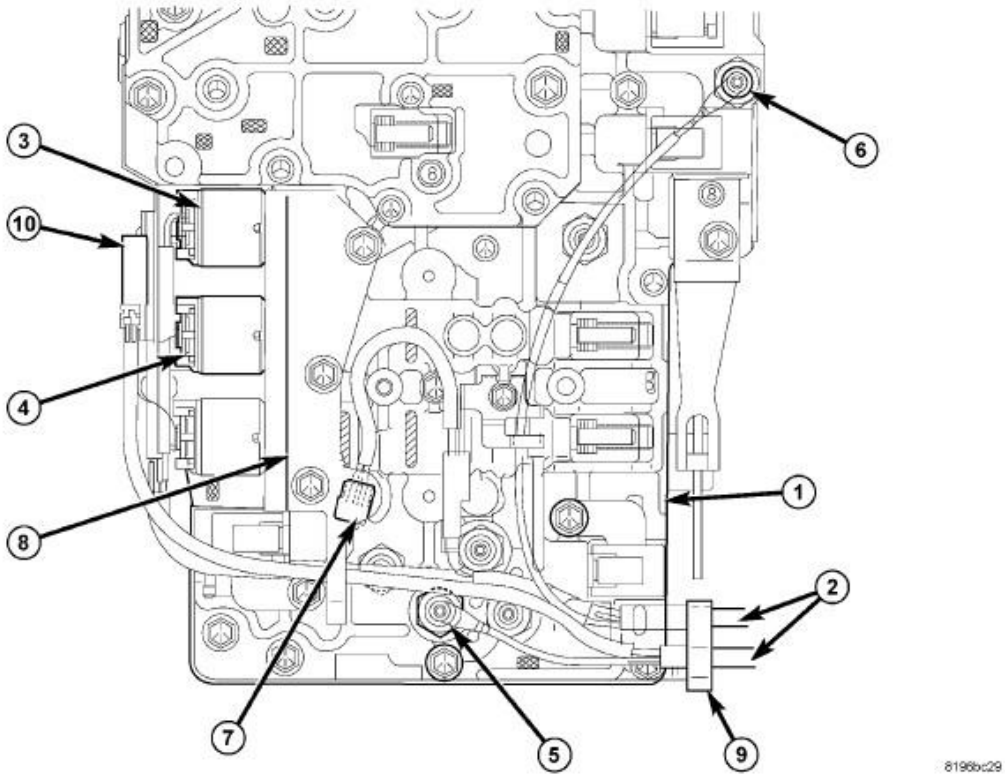

Fig. 339: Valve Body Solenoid Harness
Courtesy of CHRYSLER GROUP, LLC

1 - VALVE BODY	6 - OIL PRESSURE SWITCH NUMBER 8
2 - SOLENOID HARNESS	7 - OIL

	TEMPERATURE SENSOR
3 - LINEAR SOLENOID NUMBER 3	8 - CLAMP
4 - LINEAR SOLENOID NUMBER 1	9 - CLAMP
5 - OIL PRESSURE SWITCH NUMBER 7	10 - UPPER VALVE BODY JUMPER HARNESS

6. Install the white wire onto the oil pressure switch number seven (5).
7. Install the black wire onto the oil pressure switch number eight (6).
8. Connect the blue/white wire into linear solenoid number three (3).
9. Connect the yellow/black wire into linear solenoid number one (4).
10. Connect the brown/red wire to the oil temperature sensor (7) jumper harness.
11. Connect the orange/green to the upper valve body jumper harness (10).
12. Secure the valve body solenoid harness at clamps (8) and (9).

NOTE: There should be no harness wires between the two arrows.

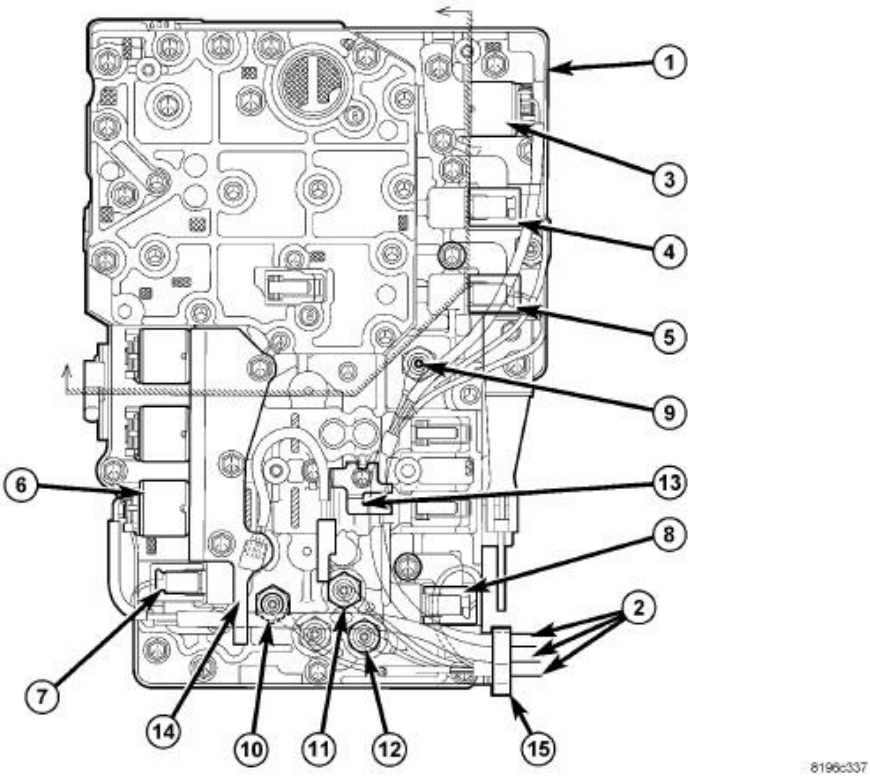

Fig. 340: Valve Body Oil Switch Harness
Courtesy of CHRYSLER GROUP, LLC

1 - VALVE BODY	9 - OIL

	PRESSURE SWITCH NUMBER 6
2 - VALVE BODY HARNESS	10 - OIL PRESSURE SWITCH NUMBER 3
3 - LINEAR SOLENOID NUMBER 4	11 - OIL PRESSURE SWITCH NUMBER 2
4 - ON/OFF SOLENOID NUMBER 3	12 - OIL PRESSURE SWITCH NUMBER 1
5 - ON/OFF SOLENOID NUMBER 2	13 - CLAMP
6 - LINEAR SOLENOID NUMBER 2	14 - CLAMP
7 - ON/OFF SOLENOID NUMBER 1	15 - CLAMP
8 - ON/OFF SOLENOID NUMBER 4	

13. Install the yellow wire onto oil pressure switch number six (9).
14. Install the black wire onto oil pressure switch number three (10).
15. Install the red wire onto oil pressure switch number two (11).
16. Install the brown wire onto oil pressure switch number one (12).
17. Connect the blue/white wire into linear solenoid number four (3).
18. Connect the brown/red wire into linear solenoid number two (6).
19. Connect the yellow wire into the on/off solenoid number three (4).
20. Connect the black wire into the on/off solenoid number two (5).
21. Connect the green wire into the on/off solenoid number one (7).
22. Connect the orange wire into the on/off solenoid number four (8).
23. Secure the oil pressure switch harness that is protected with clamps (13), (14) and (15).

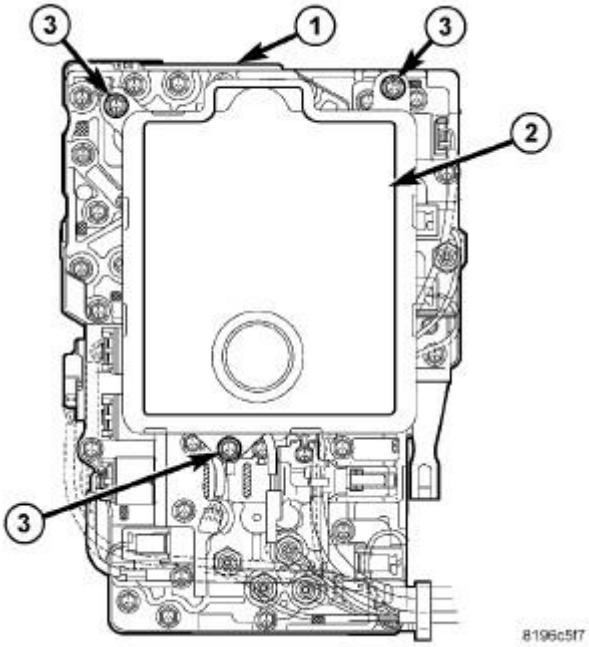

Fig. 341: Transmission Oil Filter
Courtesy of CHRYSLER GROUP, LLC

1 - VALVE BODY
2 - TRANSMISSION OIL FILTER
3 - 19.8 MILLIMETER FLANGE BOLTS

24. Lubricate transmission oil filter o-ring with MOPAR® AS68RC ATF.
25. Install the transmission oil filter (2) into the valve body (1).
26. Install the bolts (3) and tighten to 10 N.m (88 in.lbs.).

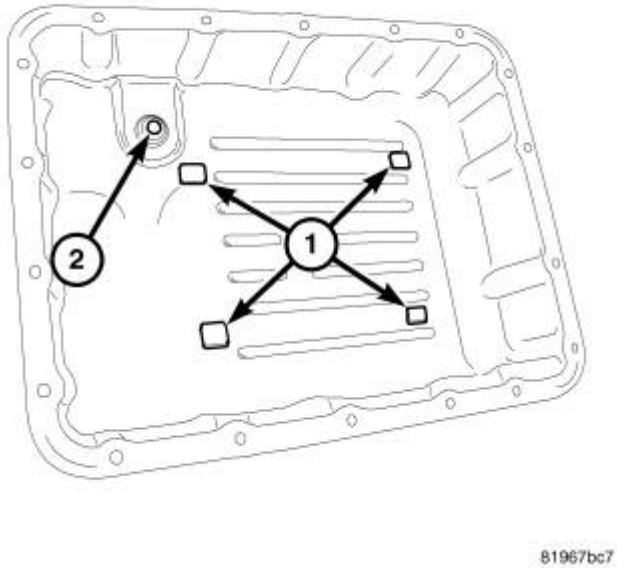

Fig. 342: Oil Pan Magnets
Courtesy of CHRYSLER GROUP, LLC

1 - PICK-UP MAGNETS
2 - MAGNETIC DRAIN PLUG

NOTE: **Before installing the transmission oil pan be certain to inspect and clean the pick-up magnets (1) as well as the magnetic drain plug bolt (2).**

27. Using a new gasket install the oil pan onto the transmission case.
28. Tighten oil pan bolts to 7 N.m (62 in.lbs.).

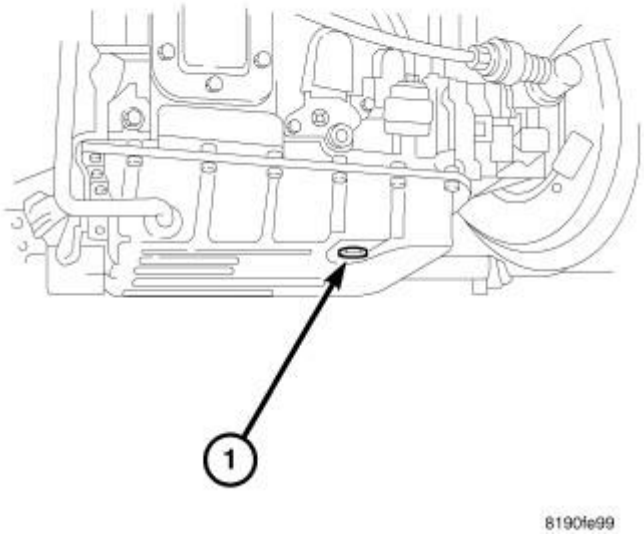

Fig. 343: Drain Plug
Courtesy of CHRYSLER GROUP, LLC

1 - DRAIN PLUG

29. Install oil pan drain plug bolt (1).
30. Tighten oil pan drain plug to 22 N?m (16 ft. lbs.) torque.
31. Lower vehicle and fill transmission with MOPAR® AS68RC ATF.
32. Check and adjust gearshift cable, if necessary.

2012 CLUTCH

Clutch System - Ram Pickup

WARNING

WARNING

WARNING: Chrysler does not manufacture any vehicles or replacement parts that contain asbestos. Aftermarket products may or may not contain asbestos. Refer to aftermarket product packaging for product information. Whether the product contains asbestos or not, dust and dirt can accumulate on manual clutch parts during normal use. Follow practices prescribed by appropriate regulations for the handling, processing and disposing of dust and debris.

DIAGNOSIS AND TESTING

DIAGNOSIS AND TESTING - CLUTCH

Road test and inspect components to determine a clutch problem. Road test the vehicle at normal speeds. Shift the transmission through all gear ranges and observe clutch action. If clutch chatters, grabs, slips or does not release properly, remove and inspect clutch components. If problem is noise or hard shifting, further diagnosis may be needed to the transmission and driveline component.

CLUTCH CONTAMINATION

Contamination is a frequent cause of clutch malfunctions. Oil, water or clutch fluid on the clutch disc and pressure plate surfaces will cause chatter, slip and grab. Oil contamination indicates a leak at either the rear main seal or transmission input shaft. Clutch fluid leaks are usually from damaged slave cylinder push rod seals. Heat buildup caused by slippage between the pressure plate, disc and flywheel can bake the oil residue onto the components. The glaze-like residue ranges in color from amber to black.

Road splash contamination is dirt/water entering the clutch housing due to loose bolts, housing cracks. Driving through deep water puddles can force water/road splash into the housing through such openings.

IMPROPER RELEASE OR CLUTCH ENGAGEMENT

Clutch release or engagement problems can be caused by worn or damaged clutch components.

Release problems can cause hard shifting and noise. Look for leaks at clutch cylinders, connecting line and loose slave cylinder bolts. Also worn/loose release fork, pivot stud, clutch disc, pressure plate or release bearing.

Engagement problems can cause slip, chatter/shudder and noisy operation. The causes may be clutch disc contamination, wear, distortion or flywheel damage.

CLUTCH MISALIGNMENT

Clutch components must be in proper alignment with the crankshaft and transmission input shaft. Misalignment caused by excessive runout or warpage of any clutch component will cause grab, chatter and improper clutch release.

CLUTCH COVER AND DISC RUNOUT

Check the clutch disc before installation. Axial (face) runout of a **new** disc should not exceed 0.50 mm (0.020 in.). Measure runout about 6 mm (1/4 in.) from the outer edge of the disc facing. Obtain another disc if runout is excessive.

Check condition of the clutch before installation. A warped cover or diaphragm spring will cause grab and incomplete release or engagement. Be careful when handling the cover and disc. Impact can distort the cover, diaphragm spring, release fingers and the hub of the clutch disc.

Use an alignment tool when positioning the disc on the flywheel. The tool prevents accidental misalignment which could result in cover distortion and disc damage.

A frequent cause of clutch cover distortion (and consequent misalignment) is improper bolt tightening.

FLYWHEEL RUNOUT

Check flywheel runout whenever misalignment is suspected. Flywheel runout should not exceed 0.08 mm (0.003 in.). Measure runout at the outer edge of the flywheel face with a dial indicator.

Common causes of runout are:

- heat warpage
- improper machining
- incorrect bolt tightening
- improper seating on crankshaft flange shoulder
- foreign material on crankshaft flange

Minor flywheel scoring can be cleaned up by hand with 180 grit emery or with turning equipment. Remove only enough material to reduce scoring (approximately 0.001 - 0.003 in.). Heavy stock removal is **not recommended.** Replace the flywheel if scoring is severe and deeper than 0.076 mm (0.003 in.).

Clean the crankshaft flange before mounting the flywheel. Dirt and grease on the flange surface may cock the flywheel causing excessive runout. Use new bolts when remounting a flywheel and secure the bolts with Mopar™ Lock And Seal or equivalent. Overtightening can distort the flywheel hub causing runout.

DIAGNOSIS CHART

The diagnosis charts describe common clutch problems, causes and correction. Refer to **DIAGNOSIS CHART**.

DIAGNOSIS CHART

CONDITION	POSSIBLE CAUSES	CORRECTION
Disc facing worn out	1. Normal wear.	1. Replace cover and disc.
	2. Driver frequently rides (slips) the clutch. Results in rapid overheating and wear.	2. Replace cover and disc.
	3. Insufficient clutch cover diaphragm spring tension.	3. Replace cover and disc.
Clutch disc facing contaminated with oil, grease, or clutch fluid.	1. Leak at rear main engine seal or transmission input shaft seal.	1. Replace appropriate seal.
	2. Excessive amount of grease applied to the input shaft splines.	2. Remove grease and apply the correct amount of grease.
	3. Road splash, water entering housing.	3. Replace clutch disc. Clean clutch cover and reuse if in good condition.
	4. Slave cylinder leaking.	4. Replace hydraulic clutch linkage.
Clutch is running partially disengaged.	1. Release bearing sticking or binding and does not return to the normal running position. 2. Release lever installed incorrectly. 3. Automatic wear adjustment incorrect.	1. Verify failure. Replace the release bearing and transmission front bearing retainer as necessary.
Flywheel below minimum thickness specification.	1. Improper flywheel machining. Flywheel has excessive taper or excessive material removal.	1. Replace flywheel.
Clutch disc, cover or diaphragm spring warped or distorted.	1. Rough handling. Impact bent cover, spring, or disc.	1. Replace disc or cover as necessary.
	2. Improper bolt tightening procedure.	2. Tighten clutch cover using proper procedure.
Facing on flywheel side of disc torn, gouged or worn.	1. Flywheel surface scored or nicked.	1. Correct surface condition if possible. Replace flywheel and disc as necessary.
	2. Clutch disc sticking or binding on transmission input shaft.	2. Inspect components and correct/replace as necessary.
Clutch disc facing burnt. Flywheel and cover pressure plate surfaces heavily glazed.	1. Frequent operation under high loads or hard acceleration conditions.	1. Correct condition of flywheel and pressure plate surface. Replace clutch cover and disc. Alert driver to problem cause.
	2. Driver frequently rides (slips) clutch. Results in rapid wear and overheating of disc and cover.	2. Correct condition of flywheel and pressure plate surface. Replace clutch cover and disc. Alert driver to problem cause.
Clutch disc binds on input shaft	1. Clutch disc hub splines	1. Clean, smooth and lubricate hub

splines.	damaged during installation.	splines if possible. Replace disc if necessary.
	2. Input shaft splines rough, damaged, or corroded.	2. Clean, smooth, and lubricate shaft splines if possible. Replace input shaft if necessary.
Clutch disc rusted to flywheel or pressure plate.	1. Clutch not used for an extended period of time (e.g. long term vehicle storage).	1. Sand rusted surfaces with 180 grit sanding paper. Replace clutch cover and flywheel if necessary.
Pilot bearing seized, loose or rollers are worn.	1. Bearing cocked during installation.	1. Install a new bearing.
	2. Bearing defective.	2. Install a new bearing.
	3. Bearing not lubricated.	3. Install a new bearing.
	4. Clutch misalignment.	4. Inspect clutch and correct as necessary. Install and lubricate a new bearing.
Clutch will not disengage properly.	1. Low hydraulic linkage fluid level.	1. Add hydraulic linkage fluid.
	2. Clutch cover loose.	2. Follow proper bolt tightening procedure.
	3. Clutch disc bent or distorted.	3. Replace clutch disc.
	4. Clutch cover diaphragm spring bent or warped.	4. Replace clutch cover.
	5. Clutch disc installed backwards.	5. Remove and install clutch disc correctly.
	6. Release fork bent or fork pivot loose or damaged.	6. Replace fork or pivot as necessary.
	7. Clutch master or slave cylinder failure. 8. Incorrect slave cylinder installed.	7. Replace hydraulic linkage assembly.
Clutch pedal squeak.	1. Pivot pin loose.	1. Tighten pivot pin if possible. Replace clutch pedal if necessary.
	2. Master cylinder bushing not lubricated.	2. Lubricate master cylinder bushing.
	3. Pedal bushings worn out or cracked.	3. Replace and lubricate bushings.
	4. Rough surface on front bearing retainer.	4. Replace front bearing retainer.
Clutch master or slave cylinder plunger dragging or binding	1. Master or slave cylinder components worn or corroded.	1. Replace clutch hydraulic linkage assembly.
Release bearing is noisy.	1. Release bearing defective or damaged.	1. Replace release bearing.
Contact surface of release bearing damaged.	1. Clutch cover incorrect or release fingers bent or distorted.	1. Replace clutch cover and release bearing.

	2. Release bearing defective or damaged.	2. Replace the release bearing.
	3. Release bearing misaligned.	3. Check and correct runout of clutch components. Check front bearing sleeve for damage/alignment. Repair as necessary.
Partial engagement of clutch disc. One side of disc is worn and the other side is glazed and lightly worn.	1. Clutch pressure plate position incorrect.	1. Replace clutch disc and cover.
	2. Clutch cover, spring, or release fingers bent or distorted.	2. Replace clutch disc and cover.
	3. Clutch disc damaged or distorted.	2. Replace clutch disc.
	4. Clutch misalignment.	4. Check alignment and runout of flywheel, disc, pressure plate and clutch housing. Correct as necessary.

SPECIFICATIONS

SPECIFICATIONS

TORQUE

DESCRIPTION	N.m	Ft. Lbs.	In. Lbs.
Slave Cylinder Nuts	23	17	-
Clutch Master Cylinder Nuts	28	21	-
Pressure Plate Bolts - Diesel	30	22	-
Release Bearing Pivot	23	17	-
Dual Mass Flywheel To Adapter Bolts	55	40	-
Dual Mass Flywheel Adapter To Crankshaft Bolts	137	100	-

SPECIAL TOOLS

SPECIAL TOOLS

	7471B - Barring Tool (Originally Shipped In Kit Number(s) 6860.)

BEARING, CLUTCH RELEASE

REMOVAL

REMOVAL

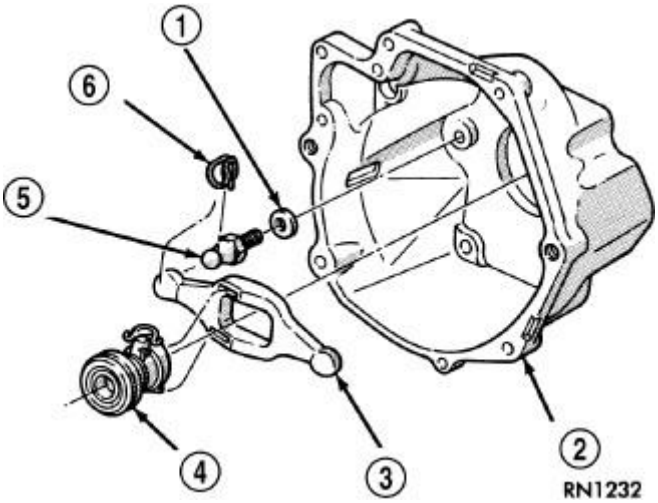

Fig. 1: Clutch Release Components
Courtesy of CHRYSLER GROUP, LLC

1. Remove transmission and transfer case, if equipped.
2. Remove spring clip (6).
3. Disconnect release bearing (4) from release lever (3) and remove bearing.

INSTALLATION

INSTALLATION

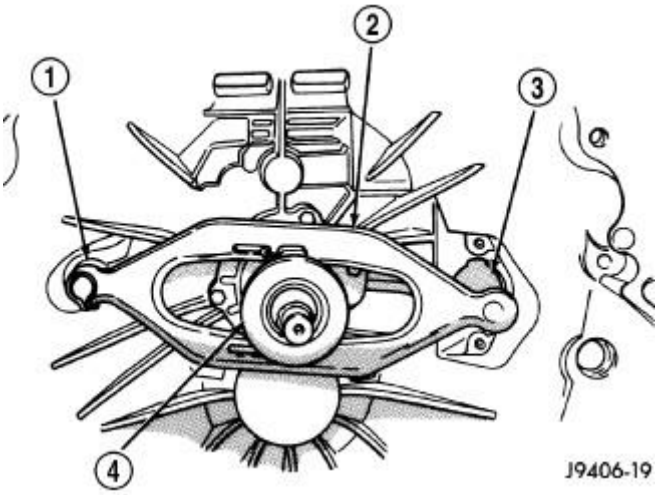

Fig. 2: Release Lever & Pivot Stud
Courtesy of CHRYSLER GROUP, LLC

1. Inspect bearing slide surface on transmission front bearing retainer. Replace retainer if slide surface is

scored, worn, or cracked.

2. Inspect release lever (2) and pivot stud (1). Verify stud is secure and in good condition and lever is not distorted or worn. Replace fork spring clips if bent or damaged.
3. Lubricate input shaft splines, bearing retainer slide surface, pivot stud (1) and release lever pivot surface with Mopar™ high temperature bearing grease.

CAUTION: The release fork is not symmetrical and must be installed with the slots and part number stamping toward the ball stud side. Part number stamping will be right side up when installed correctly. Failure to install the release fork correctly will result in clutch slippage and damage.

4. Install release fork and release bearing. Verify fork and bearing are properly secured by spring clips and release lever is installed properly. Rear side of release lever has one end with a raised area, which goes toward the slave cylinder side of the transmission.
5. Install transmission and transfer case.

DISC, CLUTCH

ADJUSTMENTS

ADJUSTMENTS

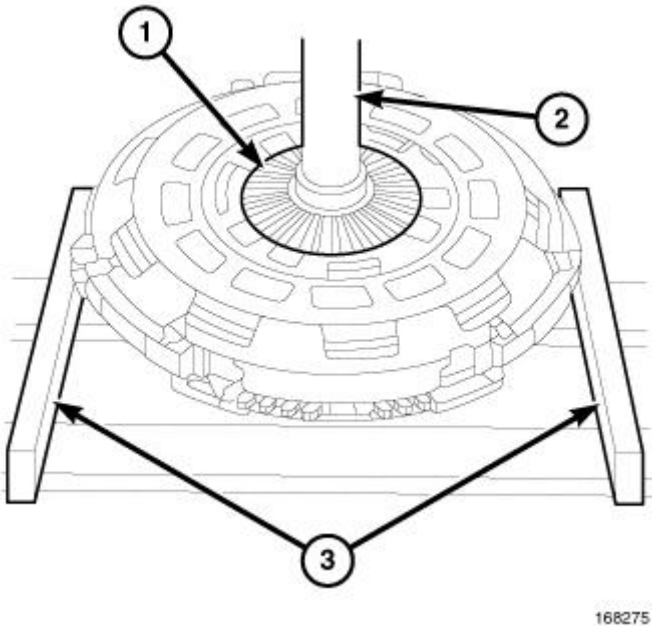

Fig. 3: Compressing Diaphragm Until Tension Is Released
Courtesy of CHRYSLER GROUP, LLC

CAUTION: Improper adjustment will shorten clutch disc life.

NOTE: **Perform the following procedure, when replacing only the clutch disc on Diesel vehicles with Dual Mass Flywheel and the original self-adjusting pressure plate. The pressure plate must be reset before installing a new disc.**

NOTE: **It is recommended that the cover and disc be replaced as a unit. New units sold are pre-adjusted.**

1. Support pressure plate flange with press blocks (3) on a press.
2. Center press ram (2) on the pressure plate diaphragm spring fingers (1).
3. Compress the diaphragm spring fingers (1), until tension is released from the stepped adjusting ring.

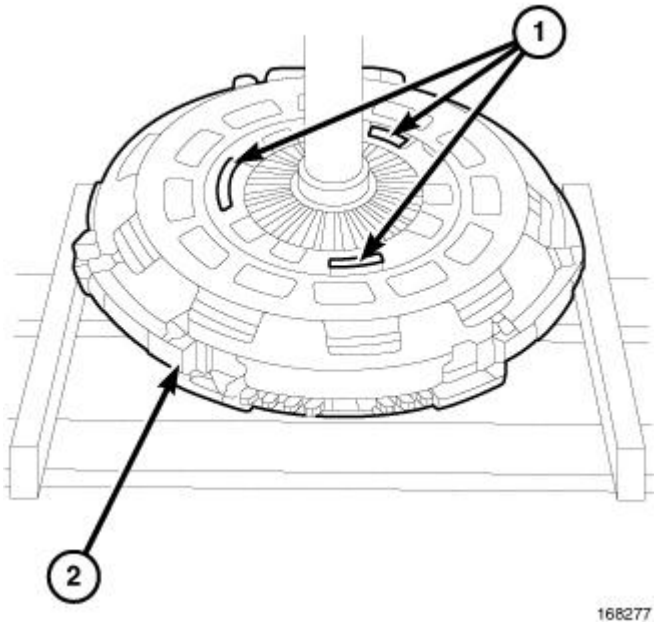

Fig. 4: Stepped Adjusting Rings & Pressure Plate
Courtesy of CHRYSLER GROUP, LLC

4. Place two screwdrivers against two of the three stepped adjusting rings (1) tension spring stops, just ahead of the adjusting ring tension springs on the pressure plate (2).

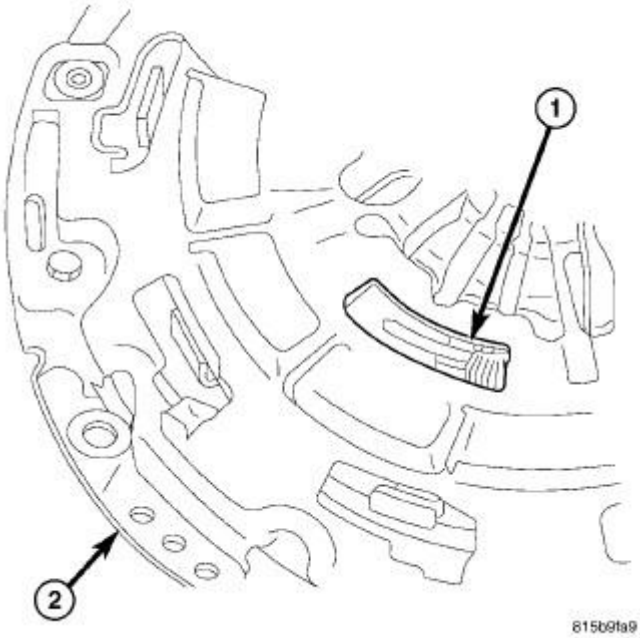

Fig. 5: Stepped Adjust Ring & Pressure Plate
Courtesy of CHRYSLER GROUP, LLC

5. Rotate stepped adjusting ring (1) on the pressure plate (2) counterclockwise until the coil springs are fully compressed. Then hold adjusting ring while releasing the press pressure.
6. Remove the screwdrivers. The pressure plate is know adjusted for a new clutch disc.

REMOVAL

REMOVAL

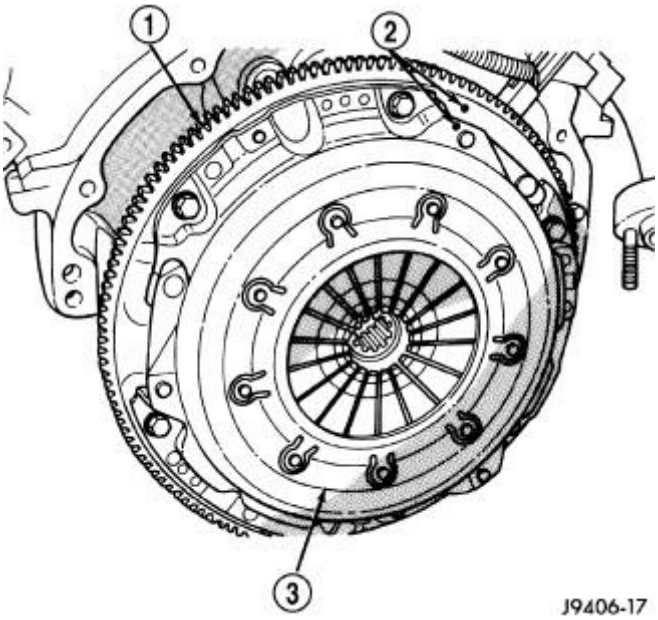

Fig. 6: Marks On Pressure Plate & Flywheel
Courtesy of CHRYSLER GROUP, LLC

1. Support engine with wood block and adjustable jack stand, to prevent strain on engine mounts.
2. Remove transmission and transfer case, if equipped.

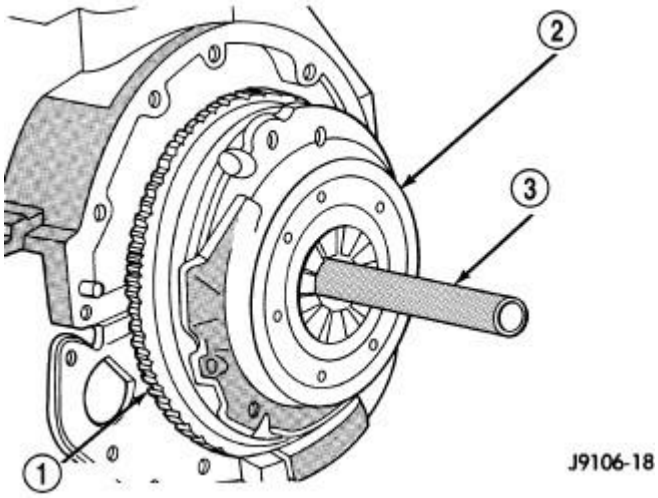

Fig. 7: Alignment Tool & Pressure Plate
Courtesy of CHRYSLER GROUP, LLC

3. Insert clutch alignment tool (3) through pressure plate (2) and into pilot bushing, to hold disc in place while removing bolts.
4. Loosen pressure plate bolts evenly, a few threads at a time and in a diagonal pattern to prevent warping the plate.
5. Remove bolts completely and remove pressure plate, disc and alignment tool.

INSTALLATION

INSTALLATION

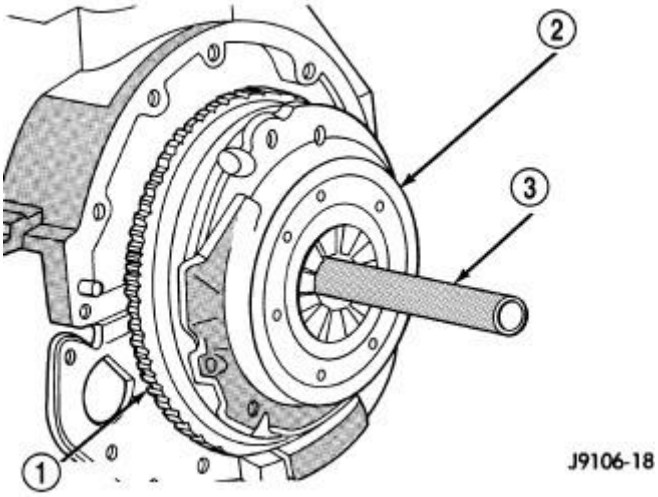

Fig. 8: Alignment Tool & Pressure Plate
Courtesy of CHRYSLER GROUP, LLC

CAUTION: Before installing a new clutch disc on the Diesel engine with Dual Mass Flywheel and the original self-adjusting pressure plate, the pressure plate must be reset. Refer to ADJUSTMENTS. Failure to reset the pressure will result in damage to the clutch disc and loss of function.

NOTE: It is recommended that the cover and disc be replaced as a unit. New units sold are pre-adjusted.

1. Check runout and free operation of new clutch disc.
2. Lubricate crankshaft pilot bearing with a NLGI - 2 rated grease.
3. Install clutch alignment tool in clutch disc hub with the raised side of hub is facing away from the flywheel.

   NOTE: Flywheel side is imprinted on the disc face.

4. Install alignment tool (3) in pilot bearing and position disc on the flywheel (1).
5. Position pressure plate over disc (2) and onto the flywheel.

   NOTE: Over the wear life of a clutch disc the pressure plate will lose some of it's clamp load. It is recommended when replacing a worn clutch, the pressure plate is replaced at the same time.

6. Align and hold pressure plate in position and install bolts finger tight.
7. Tighten bolts evenly and a few threads at a time in a diagonal pattern.

CAUTION: Bolts must be tightened evenly in a star pattern and to specified torque to avoid warping pressure plate cover.

8. Tighten pressure plate bolts to 30 N.m (22 ft. lbs.).

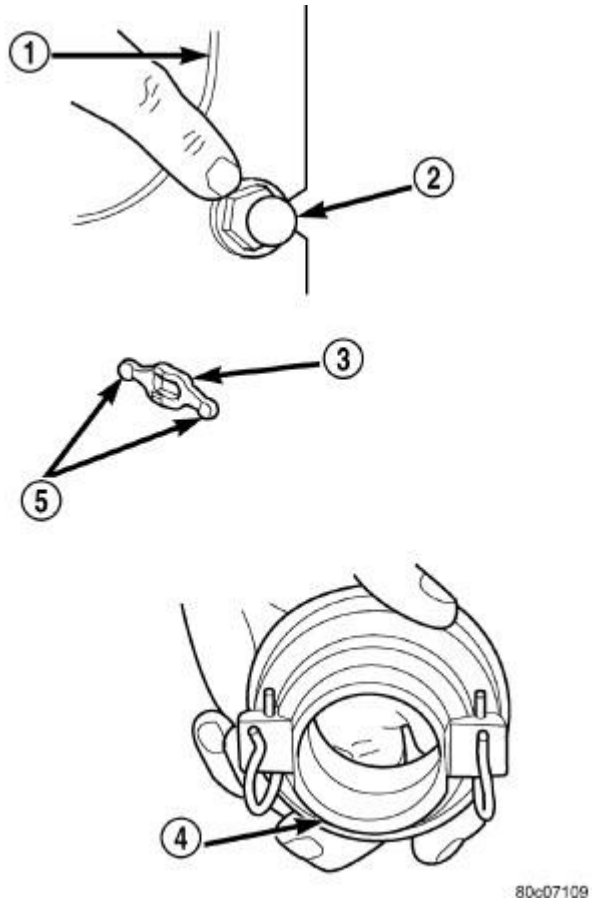

Fig. 9: Identifying Lubrication Points
Courtesy of CHRYSLER GROUP, LLC

9. Remove release lever (3) and release bearing from clutch housing (1). Apply Mopar™ high temperature bearing grease to bore (4) of release bearing, release lever (5) contact surfaces and release lever pivot stud (2).

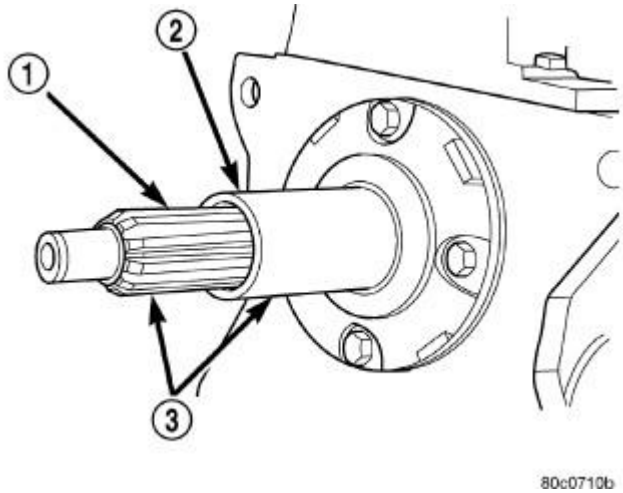

Fig. 10: Input Shaft Lubrication Points
Courtesy of CHRYSLER GROUP, LLC

10. Apply light coat of Mopar™ high temperature bearing grease to splines (3) of transmission input shaft (1) and to release bearing slide surface of the transmission front bearing retainer (2).

CAUTION: Do not over lubricate shaft splines. This can result in grease contamination of the disc.

11. Wipe pilot bearing surface clean.

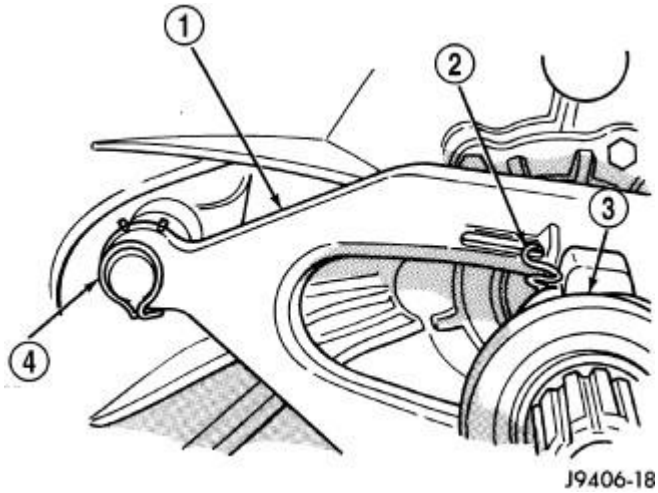

Fig. 11: Pivot Ball, Release Bearing & Spring Clips
Courtesy of CHRYSLER GROUP, LLC

12. Install release lever and bearing in clutch housing. Verify spring clips (2) that retain lever on pivot ball (4) and release bearing (3) are installed properly.

NOTE: If release lever is installed correctly, the lever part number will be toward the bottom of the transmission and right side up. There is also a stamped

"I" in the lever which goes to the pivot ball side of the transmission.

13. Install transmission and transfer case if equipped.
14. Check fluid level in clutch master cylinder and depress clutch pedal several time.

FLYWHEEL

DESCRIPTION

DESCRIPTION

DUAL MASS FLYWHEEL

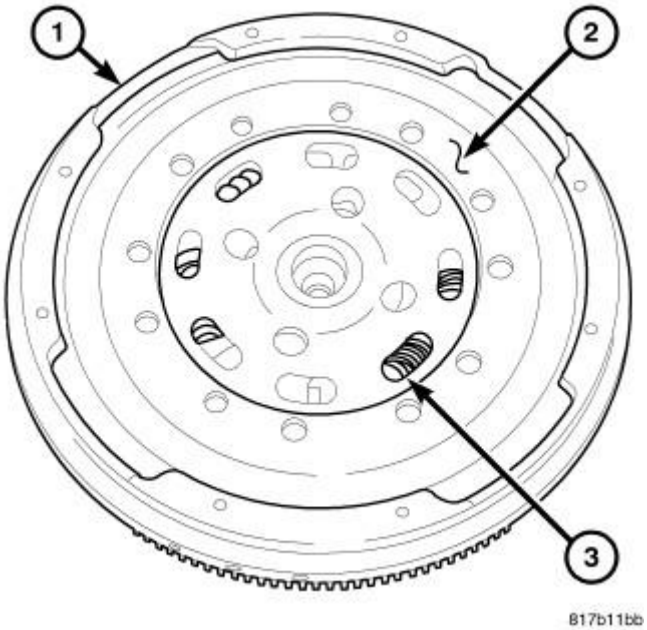

Fig. 12: Dual Mass Flywheel
Courtesy of CHRYSLER GROUP, LLC

The Dual Mass Flywheel (1) is used on the Diesel engine with G56 transmission. The flywheel incorporates the ring gear around the outer circumference to mesh with the starter to permit engine cranking. The primary flywheel side is bolted to an adapter plate which is bolted to the crankshaft. The secondary flywheel side (2) serves as the driving member to the clutch disc. Internal springs (3) are used to dampen energy. The Dual Mass Flywheel is serviced as an assembly only and should never be taken apart.

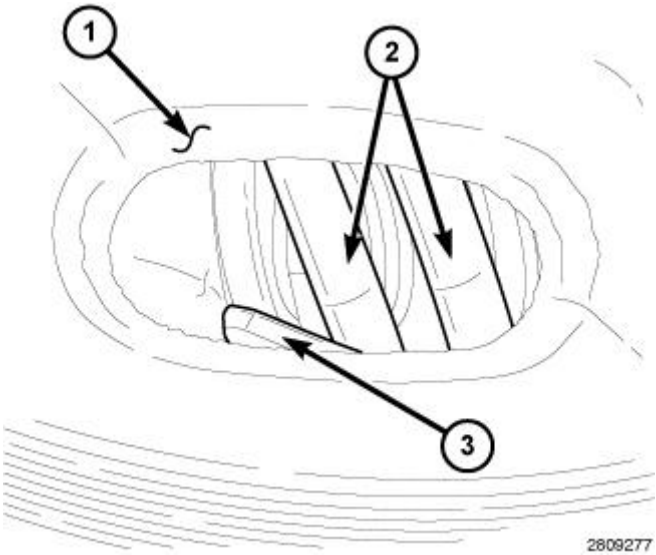

Fig. 13: Internal Springs & Retainer
Courtesy of CHRYSLER GROUP, LLC

The internal springs (2) and retainer (3) will be visible through the sight window (1). A visible retainer is not an indication of a broken spring. It is also normal to have play up to 30 mm (1.18 inches).

DIAGNOSIS AND TESTING

DIAGNOSIS AND TESTING - FLYWHEEL

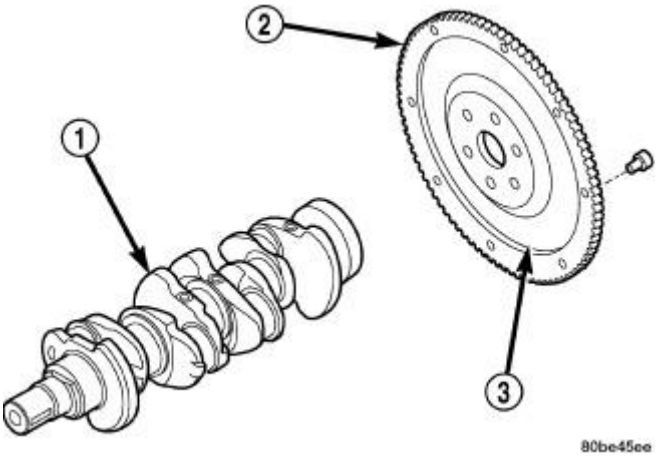

Fig. 14: Flywheel
Courtesy of CHRYSLER GROUP, LLC

Check flywheel (3) runout whenever misalignment is suspected. Flywheel runout should not exceed 0.08 mm (0.003 in.). Measure runout at the outer edge of the flywheel face with a dial indicator. Mount the indicator on a stud installed in place of one of the flywheel bolts.

Common causes of runout are:

- heat warpage
- improper machining
- incorrect bolt tightening
- improper seating on crankshaft flange shoulder
- foreign material on crankshaft flange

Flywheel machining is not recommended. The flywheel clutch surface is machined to a unique contour and machining will negate this feature. Minor flywheel scoring can be cleaned up by hand with 180 grit emery or with surface grinding equipment. Remove only enough material to reduce scoring (approximately 0.001 - 0.003 in.). Heavy stock removal is **not recommended.** Replace the flywheel if scoring is severe and deeper than 0.076 mm (0.003 in.). Excessive stock removal can result in flywheel cracking or warpage after installation; it can also weaken the flywheel and interfere with proper clutch release.

Clean the crankshaft flange before mounting the flywheel. Dirt and grease on the flange surface may cock the flywheel causing excessive runout. Use new bolts when remounting a flywheel and secure the bolts with Mopar™ Lock And Seal or equivalent. Tighten flywheel bolts to specified torque only. Overtightening can distort the flywheel hub causing runout.

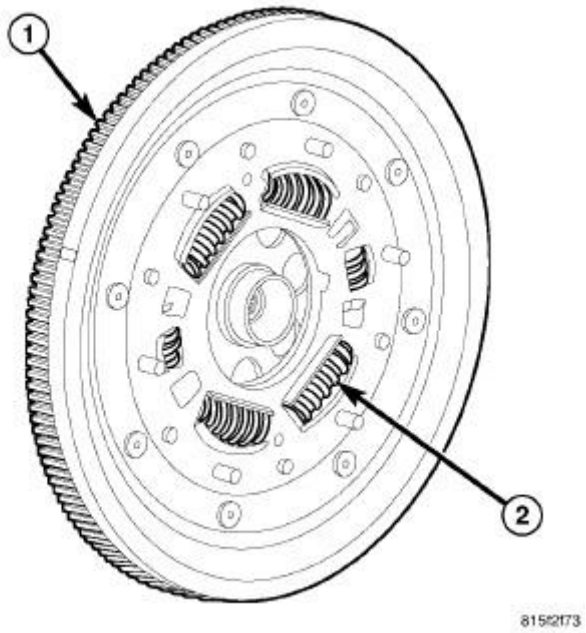

Fig. 15: Dual Mass Flywheel & Springs
Courtesy of CHRYSLER GROUP, LLC

On a Dual Mass Flywheel (1) inspect all springs (2) for damage.

REMOVAL

REMOVAL

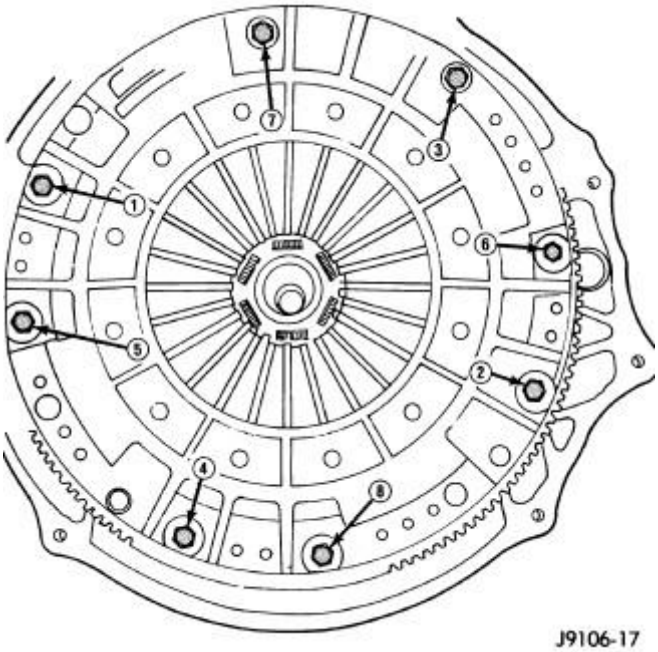

Fig. 16: Pressure Plate Bolts Loosening Sequence
Courtesy of CHRYSLER GROUP, LLC

1. Remove the transmission. Refer to **REMOVAL** .

NOTE: **Vehicles with Dual Mass Flywheel use an adapter plate between the flywheel and crank. This plate does not need to be removed.**

2. Loosen pressure plate bolts (1-8) evenly, a few threads at a time and in a diagonal pattern to prevent warping the plate.
3. Remove the eight pressure plate bolts (1-8) completely and remove pressure plate and disc.

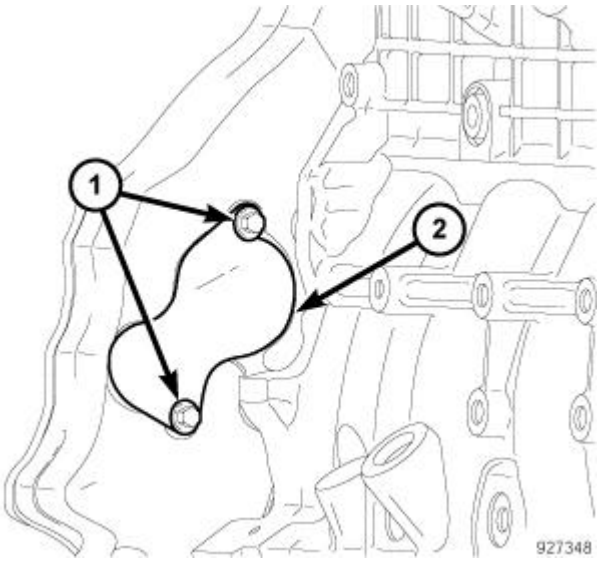

Fig. 17: Dust Cover & Bolts
Courtesy of CHRYSLER GROUP, LLC

4. Remove the dust cover bolts (1) and the dust cover (2).

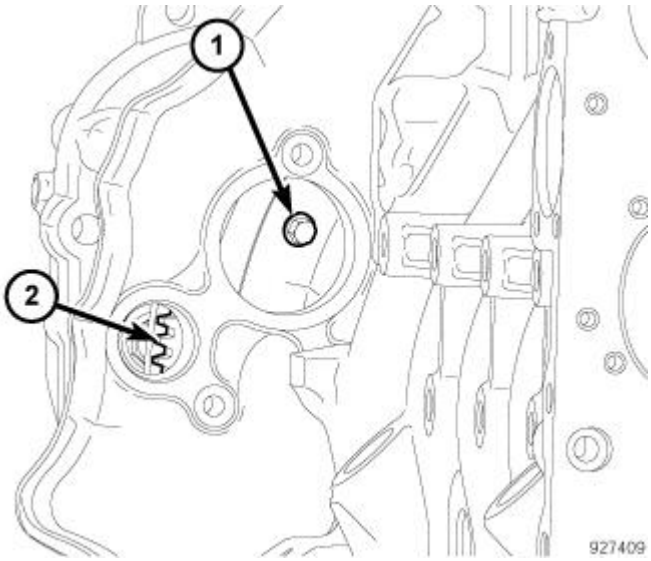

Fig. 18: Identifying Flexplate-To-Flywheel Bolt
Courtesy of CHRYSLER GROUP, LLC

5. Using the access hole, remove each flexplate-to-flywheel bolt (1). Use Barring Tool (special tool #7471B, Barring Tool) to rotate the engine and flywheel.
6. Remove the flywheel.

INSTALLATION

INSTALLATION

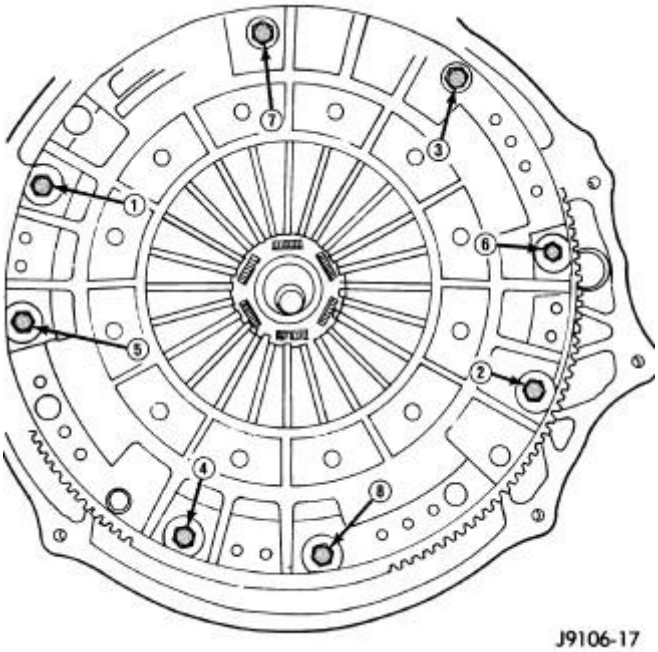

Fig. 19: Pressure Plate Bolts Tightening Sequence
Courtesy of CHRYSLER GROUP, LLC

1. Install adapter plate.
2. Install adapter plate bolts and tighten evenly in sequence to 55 N•m (40 ft. lbs.).
3. Install clutch.
4. Install transmission.

LINKAGE

REMOVAL

REMOVAL

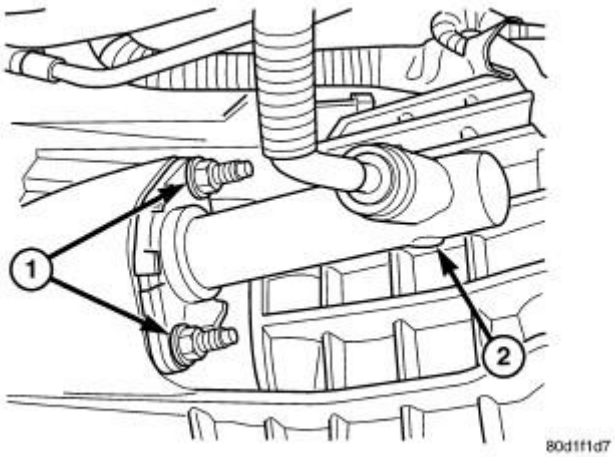

Fig. 20: Slave Cylinder & Nuts
Courtesy of CHRYSLER GROUP, LLC

CAUTION: The hydraulic linkage has a quick disconnect at the slave cylinder. This fitting should never be disconnected or tampered with. Once the hydraulic line is connected to the slave cylinder, it should never be disconnected.

1. Raise and support vehicle.
2. Remove heat shield over hydraulic line.
3. Remove slave cylinder (2) nuts (1) on clutch housing.
4. Remove slave cylinder from clutch housing.

CAUTION: Do not allow release lever plunger to pivot more than 2° in either direction in the slave cylinder bore. Allowing the plunger to pivot more than 2° in the bore will cause fluid to bypass the seal and result in fluid leakage.

5. Remove plastic clip securing the hydraulic line to the dash panel from the lower dash panel flange.
6. Remove plastic clip securing hydraulic line to the dash panel from the upper dash panel stud.
7. Lower vehicle.

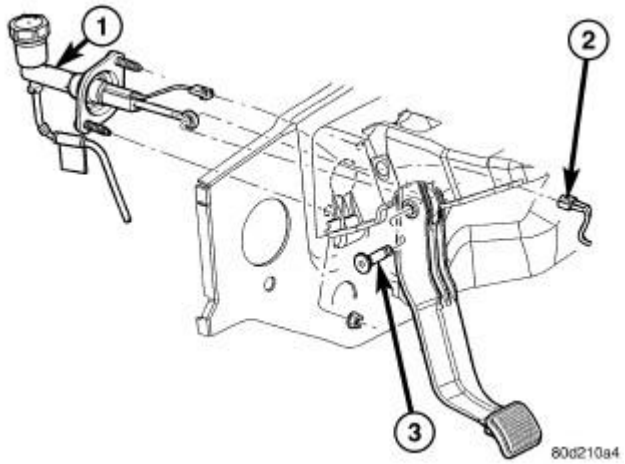

Fig. 21: Clutch Master Cylinder, Rod Pin & Pedal Interlock Switch Connector
Courtesy of CHRYSLER GROUP, LLC

8. Disconnect clutch pedal interlock switch connector (2).
9. Remove clutch master cylinder (1) rod pin (3).
10. Ensure cap on clutch cylinder reservoir is tight.
11. Remove clutch master cylinder nuts holding cylinder to the dash panel.
12. Remove clutch cylinders, reservoir and connecting lines from vehicle.

INSTALLATION

INSTALLATION

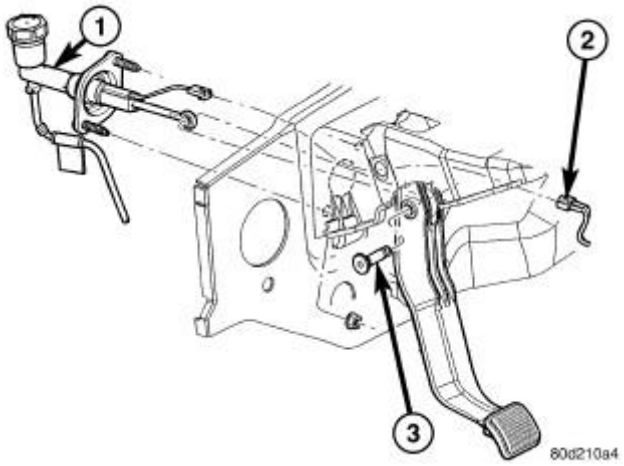

Fig. 22: Clutch Master Cylinder, Rod Pin & Pedal Interlock Switch Connector
Courtesy of CHRYSLER GROUP, LLC

1. Position cylinders and connecting line in vehicle engine compartment. Position clutch hydraulic line against the dash panel and behind all engine hoses and wiring.

2. Apply a light coating of grease to the inside diameter of the master cylinder push rod eye.
3. Install clutch master cylinder (1) on dash panel and tighten clutch master cylinder nuts to 28 N.m (21 ft. lbs.).
4. Install clutch master cylinder push rod pin (3).
5. Connect clutch pedal position interlock switch connector (2).
6. Install plastic clip securing hydraulic line to the dash panel into the lower dash panel flange.
7. Install plastic clip securing hydraulic line to the dash panel onto the upper dash panel stud.
8. Raise vehicle.

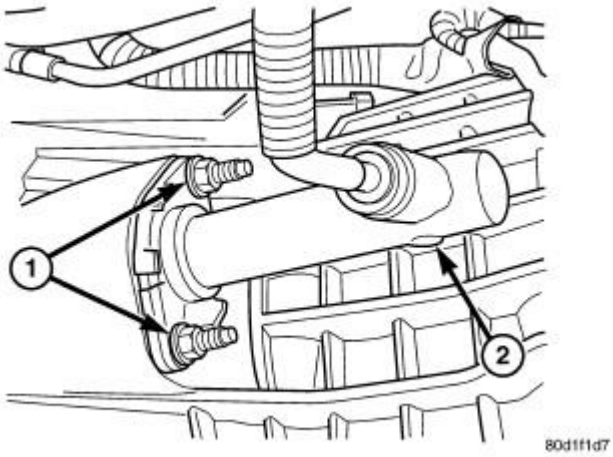

Fig. 23: Slave Cylinder & Nuts
Courtesy of CHRYSLER GROUP, LLC

CAUTION: Do not allow release lever plunger to pivot more than 2° in either direction in the slave cylinder bore. Allowing the plunger to pivot more than 2° in the bore will cause fluid to bypass the seal and result in fluid leakage.

NOTE: Pull the clutch release lever toward the slave cylinder opening to insure proper seating of the slave cylinder plunger to the release lever pocket.

9. Install slave cylinder (2) and verify cylinder rod is properly seated in release lever.
10. Install and tighten slave cylinder nuts (1) to 23 N.m (17 ft. lbs.).
11. If **new** clutch linkage is being installed, connect the clutch hydraulic line to the clutch slave cylinder.

CAUTION: Once the clutch hydraulic line is connected to the slave cylinder, it should never be disconnected.

12. Install heat shield over hydraulic line.
13. Operate linkage several times to verify proper operation.

SWITCH, CLUTCH STARTER INTERLOCK

DIAGNOSIS AND TESTING

SWITCH - CLUTCH STARTER INTERLOCK

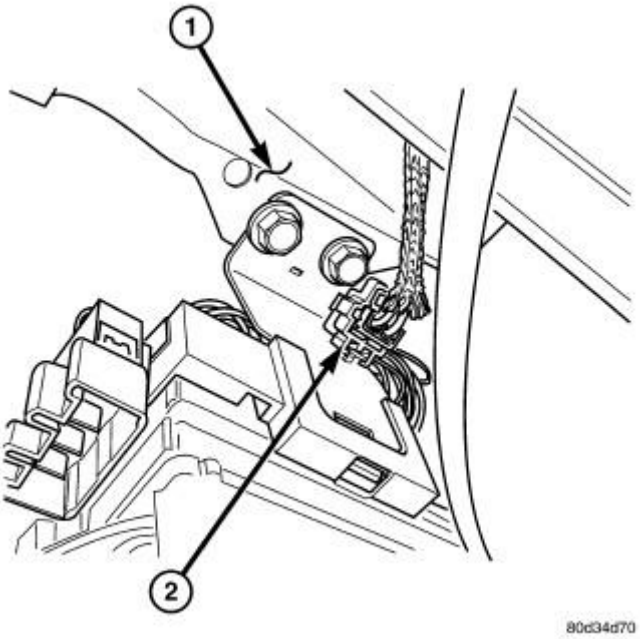

Fig. 24: Clutch Switch Test Point
Courtesy of CHRYSLER GROUP, LLC

1. Disconnect switch 2-wire connector (2) attached to pedal support bracket (1), under instrument panel to left of clutch pedal.
2. Check switch continuity with an ohmmeter while operating clutch pedal.
   - Pedal Depressed - Continuity
   - Pedal Released - No Continuity
3. If continuity is not present or always present, replace clutch master cylinder. Switch is not serviced separately.

DIAGNOSIS AND TESTING

DIAGNOSIS AND TESTING - MANUAL TRANSMISSION - G56

LOW LUBRICANT LEVEL

A low transmission lubricant level is generally the result of a leak, inadequate lubricant fill or incorrect lubricant level check.

Rear transmission leaks will be from the oil seals or component mating surfaces.

Front transmission leaks will be from the front input shaft retainer seal. Lubricant may drip from the clutch housing after extended operation. If leak is severe, it may contaminate the clutch disc.

Lubricant level check can only be made when the vehicle is level and allowing the lubricant to settle for a minute before checking. This will ensure an accurate check and avoid an under or overfill condition.

HARD SHIFTING

Hard shifting is usually caused by low lubricant level, improper or contaminated lubricants. This will cause noise, excessive wear, internal bind, and hard shifting. Substantial lubricant leaks can result in gear, shift rail, synchro, and bearing damage. The first indications of component damage is usually hard shifting and noise.

Shift component damage, clutch adjustment, worn pressure plate or disc are also causes of increased shift effort. If clutch problem is advanced, gear clash during shifts can result. Worn or damaged synchronizer rings can cause gear clash when shifting into any forward gear. In some new or rebuilt transmissions, new synchro rings may tend to stick slightly causing hard or noisy shifts. In most cases, this condition will decline as the rings wear-in.

TRANSMISSION NOISE

Most manual transmissions make some noise during normal operation. Rotating gears generate a mild whine that is audible, but generally only at extreme speeds.

Severe, highly audible transmission noise is generally the initial indicator of a lubricant problem. Insufficient, improper or contaminated lubricant will promote rapid wear of gears, synchronizer rings, shift rails, forks and bearings. The overheating caused by a lubricant problem, can also lead to gear and bearing damage.

STANDARD PROCEDURE

STANDARD PROCEDURE - DRAIN AND FILL

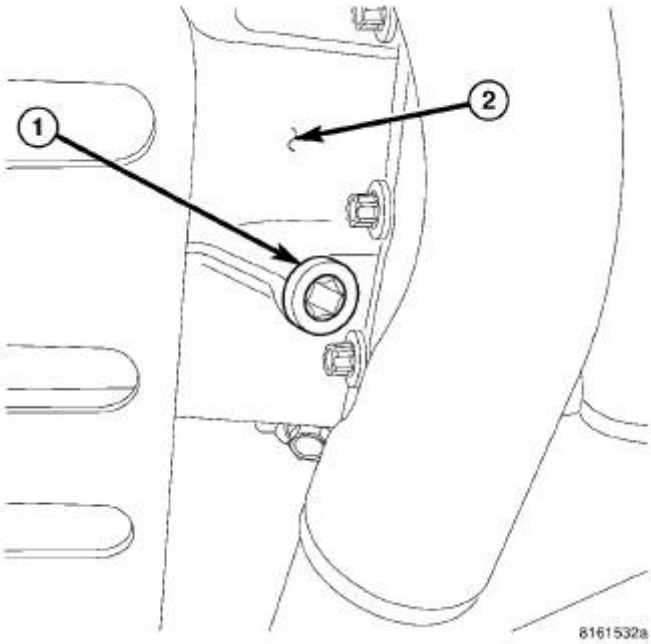

Fig. 1: Drain Plug
Courtesy of CHRYSLER GROUP, LLC

1. Raise and support vehicle.
2. Remove drain plug (1) on transmission (2) and drain fluid.
3. Install drain plug and tighten to 57 N.m (42 ft. lbs.).

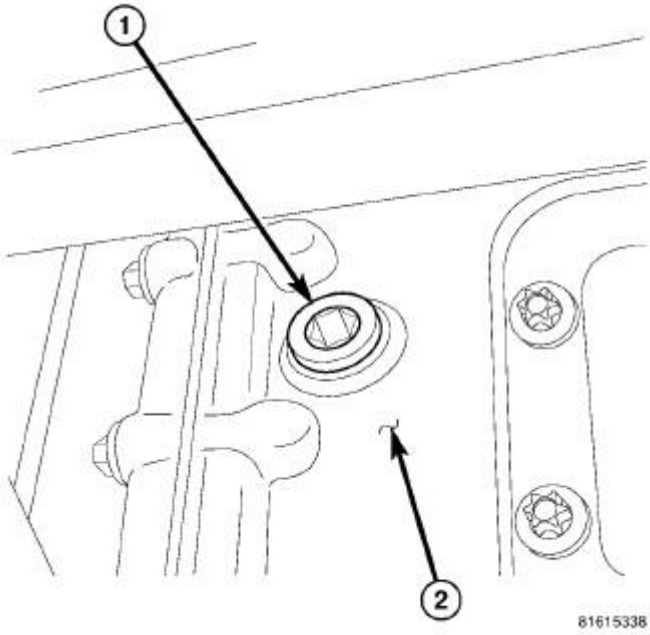

Fig. 2: Fill Plug

Courtesy of CHRYSLER GROUP, LLC

4. Remove fill plug (1) on right side of the transmission (2).
5. Fill transmission to approximately 16 mm (0.625 inch) from the bottom of the fill hole.
6. Install fill plug and tighten to 57 N.m (42 ft. lbs.).

ADJUSTMENTS

ADJUSTMENTS

CAUTION: This procedure must be performed any time a mainshaft, countershaft or input shaft bearing or shaft is replaced. Failure to follow these instructions will result in damaging the transmission.

MAINSHAFT

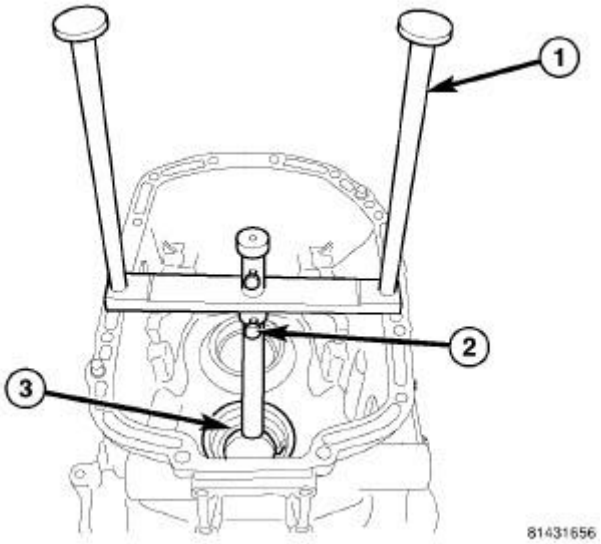

Fig. 3: Identifying Mainshaft Case Measurement
Courtesy of CHRYSLER GROUP, LLC

1. Set mainshaft, input shaft and countershaft into the rear housing. Rotate the shafts to seat bearing in rear housing.
2. Remove mainshaft bearing cup, shims and oiler washer from the front housing.
3. Position Measurement Fixture (special tool #9592, Fixture, End Play) (1) on front housing over the mainshaft bearing cup bore.
4. Loosen the knob (2) on the fixture and lower the shaft onto the mainshaft bearing cup (3) bore shoulder. Then tighten the knob to hold the shaft.
5. Remove the fixture from the front housing.

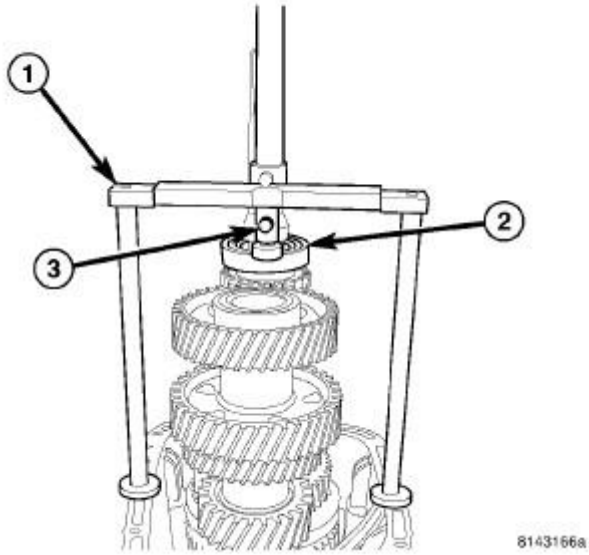

Fig. 4: Identifying Fixture, Knob & Mainshaft Bearing
Courtesy of CHRYSLER GROUP, LLC

6. Place mainshaft shaft bearing cup on mainshaft bearing.
7. Position Fixture (special tool #9592, Fixture, End Play) (1) on rear housing over the mainshaft bearing (2).
8. Loosen the knob (3) on the fixture (1). This will allow the rod plunger to drop down on the bearing cup.

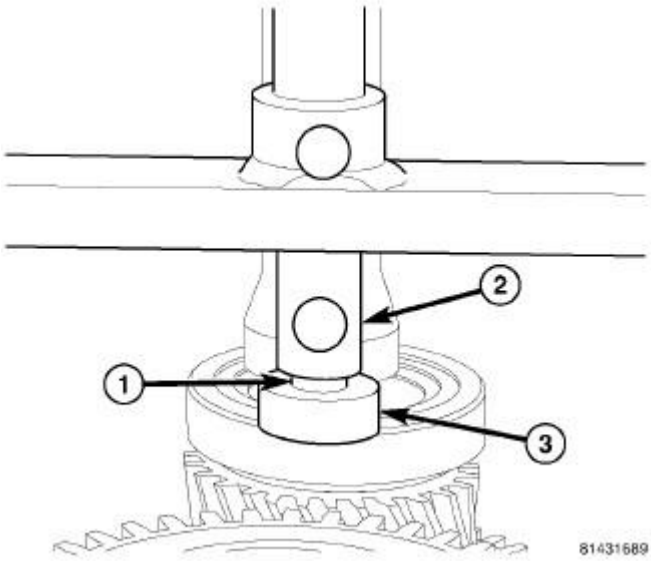

Fig. 5: Measuring Gap Between Fixture Shaft & Fixture Plunger
Courtesy of CHRYSLER GROUP, LLC

9. Measure the gap (1) between the fixture shaft (2) and the fixture plunger (3). Repeat measurement on the opposite side of the mainshaft cup and bearing. The average of the two measurement, will be the size of

the mainshaft select shim.

10. Install new oil supply washer and select shim in front housing mainshaft bearing cup bore and install bearing cup.

COUNTERSHAFT

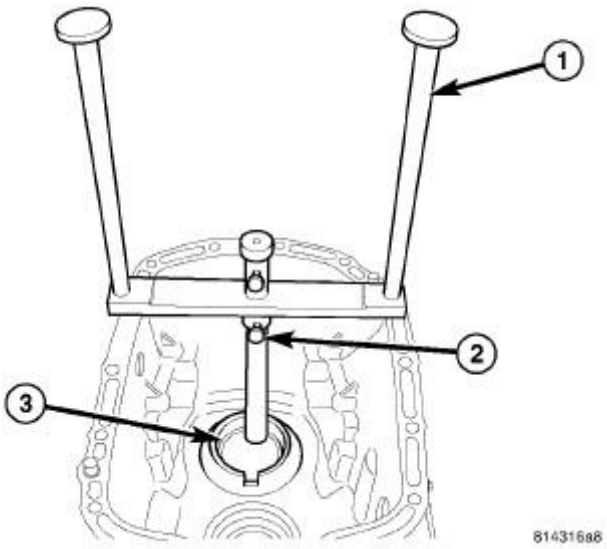

Fig. 6: Countershaft Case Measurement
Courtesy of CHRYSLER GROUP, LLC

1. Remove countershaft bearing cup and shims from the rear housing.
2. Position Fixture (special tool #9592, Fixture, End Play) (1) on rear housing over the countershaft bearing cup bore.
3. Loosen the knob (2) on the fixture and lower the shaft onto the countershaft bearing cup (3) bore shoulder. Then tighten the knob to hold the shaft.
4. Remove the fixture from the front housing.

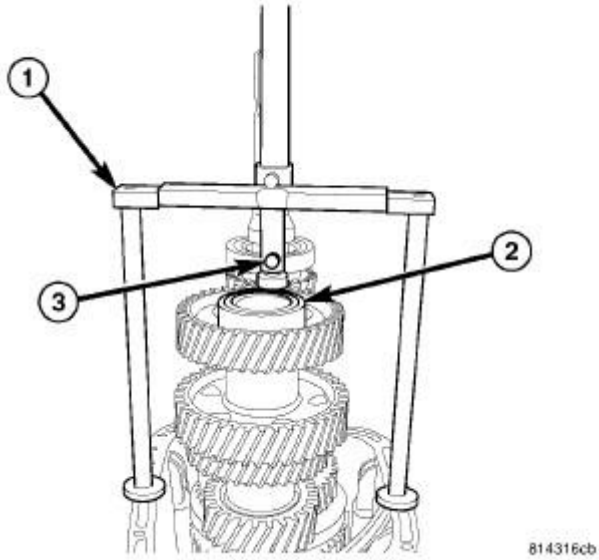

Fig. 7: Positioning Fixture 9592 On Rear Housing Over The Countershaft Bearing
Courtesy of CHRYSLER GROUP, LLC

5. Place countershaft bearing cup on countershaft bearing.
6. Position Fixture (special tool #9592, Fixture, End Play) (1) on rear housing over the countershaft bearing (2).
7. Loosen the knob (3) on the fixture (1). This will allow the rod plunger to drop down on the bearing cup.

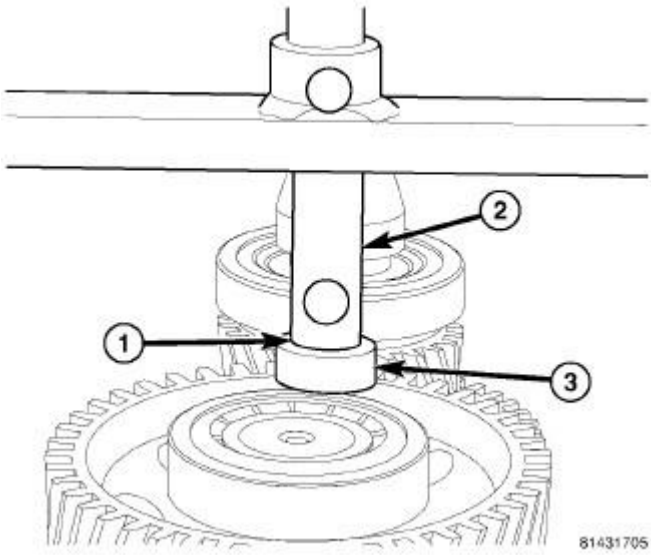

Fig. 8: Measuring Gap Between Fixture Shaft & Fixture Plunger
Courtesy of CHRYSLER GROUP, LLC

8. Measure the gap (1) between the fixture shaft (2) and the fixture plunger (3). Repeat measurement on the opposite side of the countershaft cup and bearing. The average of the two measurements, will be the size

of the countershaft select shim.

9. Install select shim in front housing countershaft bearing cup bore and install bearing cup.

SPECIFICATIONS

SPECIFICATIONS

DESCRIPTION	N.m	Ft. Lbs.	In. Lbs.
Fill Plug	57	42	-
Drain Plug	57	42	-
Front to Rear Housing Bolts	58	43	-
Input Shaft Retainer Bolts	23	17	-
Shift Tower bolts	23	17	-
5-6 Shift Fork Bolts	58	43	-
Shift Rail Support bolts	58	43	-
Reverse Idler Gear Shaft Bolt	58	43	-
P.T.O. Cover Bolts	58	43	-
Clutch Release Pivot Ball	22	16	-
4X2 Output Shaft Flange Bolt	260	190	-

NOTE: **Two different transmission gear ratios are used. To verify, look at the last two letters on the transmission bar code label. The last two letters on the bar code located on the right side of the transmission will be AD or AE.**

AD - GEAR RATIO

GEAR	RATIO
FIRST	6.29
SECOND	3.48
THIRD	2.10
FOURTH	1.38
FIFTH	1.00
SIXTH	0.79
REVERSE	5.74

AE - GEAR RATIO

GEAR	RATIO
FIRST	5.94
SECOND	3.28

THIRD	1.98
FOURTH	1.31
FIFTH	1.00
SIXTH	0.74
REVERSE	5.42

REMOVAL

REMOVAL

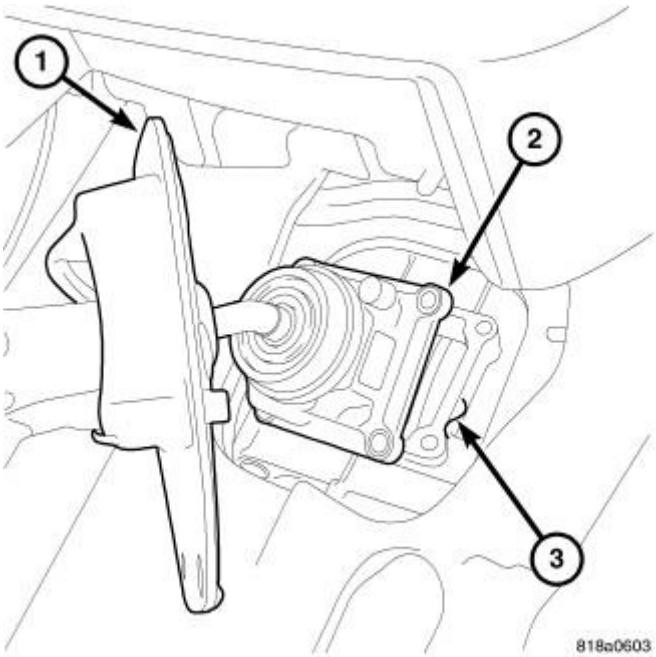

Fig. 9: Identifying Inner Boot, Shift Tower & Transmission
Courtesy of CHRYSLER GROUP, LLC

1. With vehicle in neutral, position vehicle on hoist.
2. Disconnect battery negative cable.
3. Remove shift boot bezel and slide boot upward on shift lever extension.
4. Remove inner boot (1) from floor pan and remove shift tower (2) from transmission (3).
5. Remove 4WD shift boot if equipped.

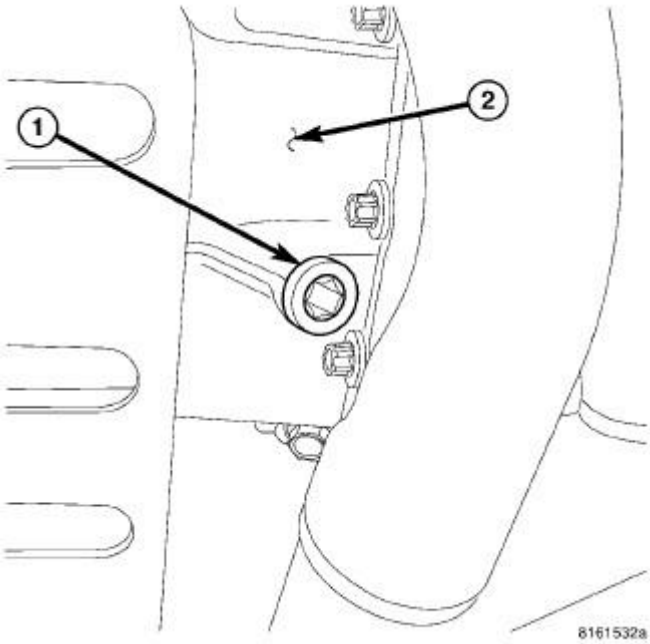

Fig. 10: Drain Plug
Courtesy of CHRYSLER GROUP, LLC

6. Remove skid plate, if equipped.
7. Remove drain plug (1) from transmission (2) and drain fluid.

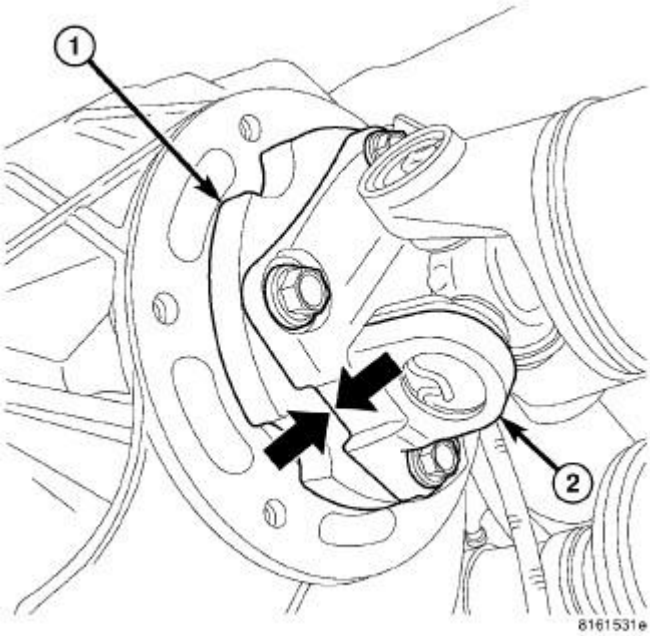

Fig. 11: Marking Manual Transmission Flange & Propeller Shaft Flange
Courtesy of CHRYSLER GROUP, LLC

8. Mark transmission flange (1) and propeller shaft (2) for installation reference before removing propeller shaft. If 4x4 equipped mark transfer case and front propeller shaft before removing shaft.

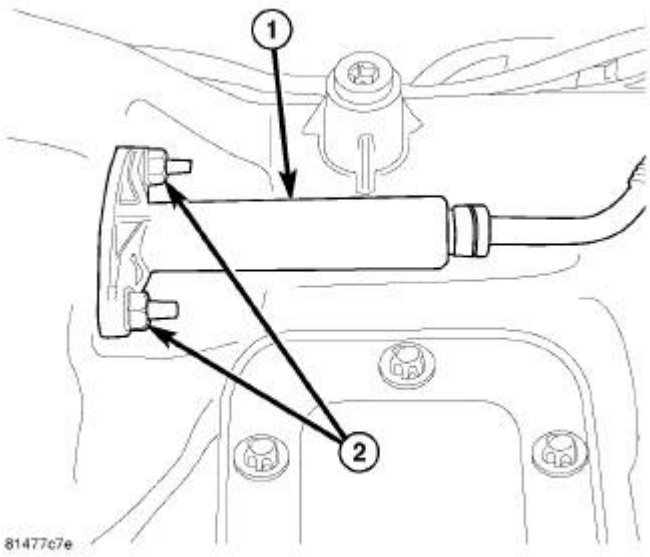

Fig. 12: Slave Cylinder & Mounting Nuts
Courtesy of CHRYSLER GROUP, LLC

9. Disconnect harness from clips on transmission housing.
10. Remove transfer case linkage 4x4 equipped.
11. Remove transfer case mounting nuts and remove transfer case 4x4 equipped.
12. Remove slave cylinder (1) mounting nuts (2) and remove cylinder.

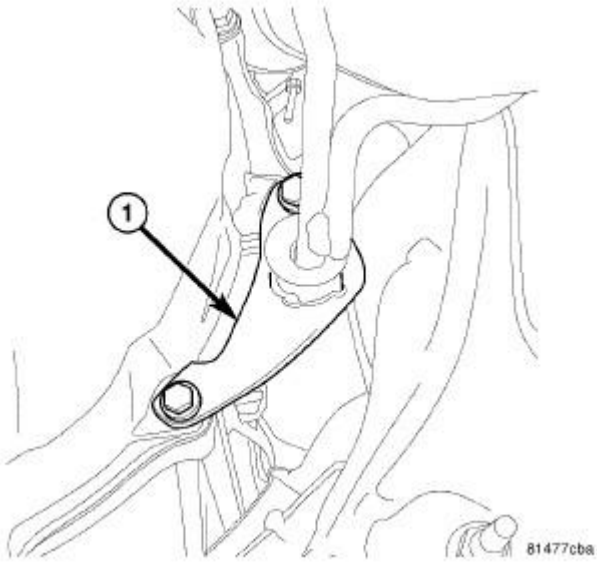

Fig. 13: Exhaust Bracket
Courtesy of CHRYSLER GROUP, LLC

13. Remove exhaust bracket (1) bolts and remove bracket on diesel engine.
14. Remove exhaust pipe. Refer to **PIPE, EXHAUST, REMOVAL** .

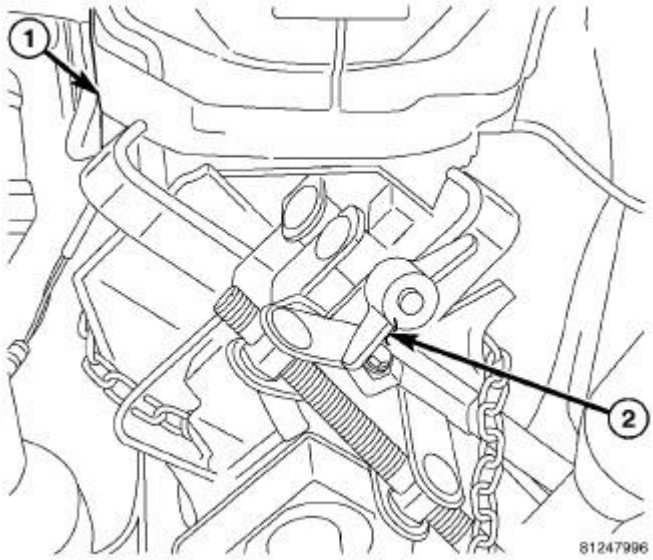

Fig. 14: Securing Transmission To Transmission Jack
Courtesy of CHRYSLER GROUP, LLC

15. Support engine with adjustable jack stand and wood block.
16. Support and secure transmission (1) to a transmission jack (2) with safety chains.

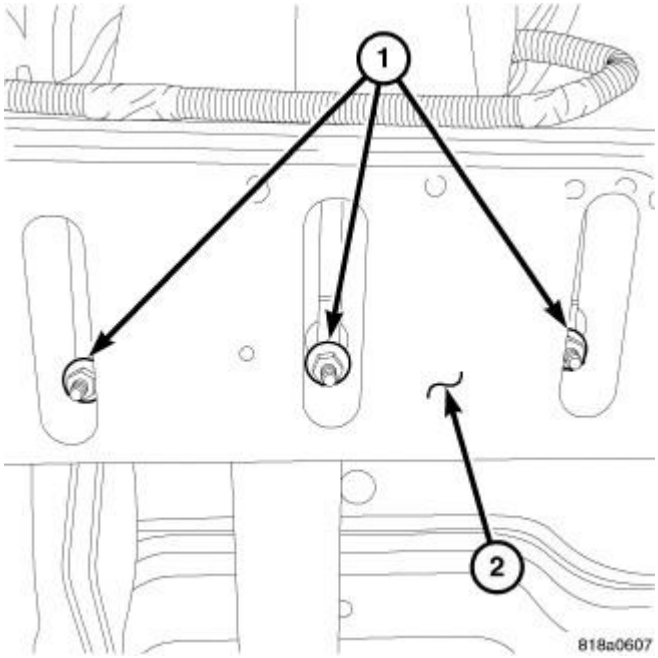

Fig. 15: Transmission Mount Nuts
Courtesy of CHRYSLER GROUP, LLC

17. Remove transmission mount nuts (1) from crossmember (2).

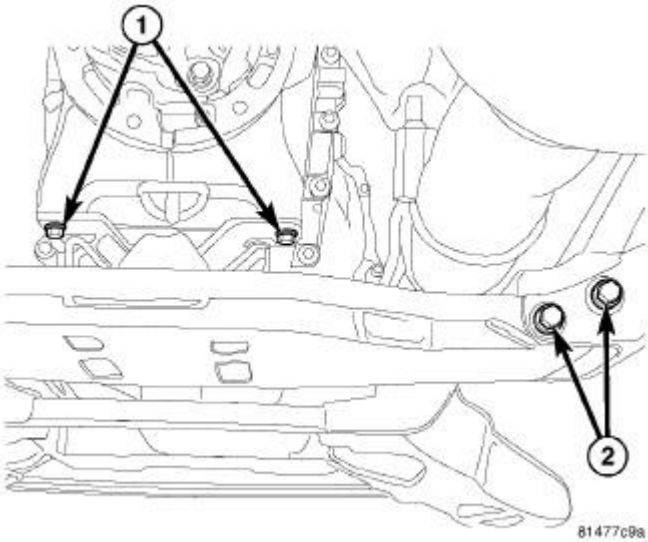

Fig. 16: Crossmember & Bolts
Courtesy of CHRYSLER GROUP, LLC

18. Remove rear crossmember bolts (2) and remove crossmember with transmission mount.
19. Remove bolts attaching transmission to the engine.
20. Move transmission rearward until input shaft is clear of clutch disc and pressure plate. Then lower jack and remove transmission from under vehicle.

DISASSEMBLY

DISASSEMBLY

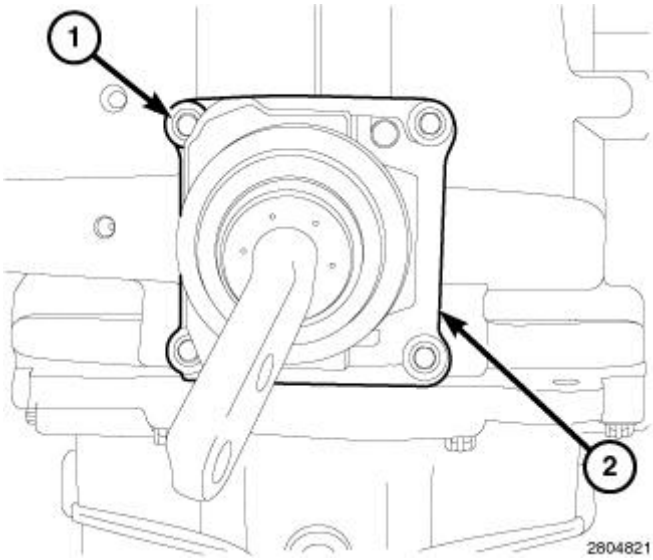

Fig. 17: Shift Tower & Bolts
Courtesy of CHRYSLER GROUP, LLC

1. Set transmission on rear housing.
2. Remove shift tower bolts (1) and shift tower (2).

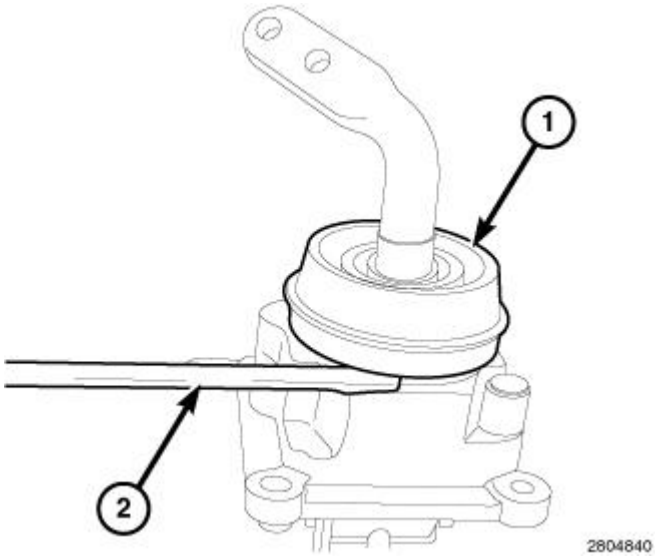

Fig. 18: Shifter Boot
Courtesy of CHRYSLER GROUP, LLC

3. Pry off shift tower boot (1) with a screw driver (2).

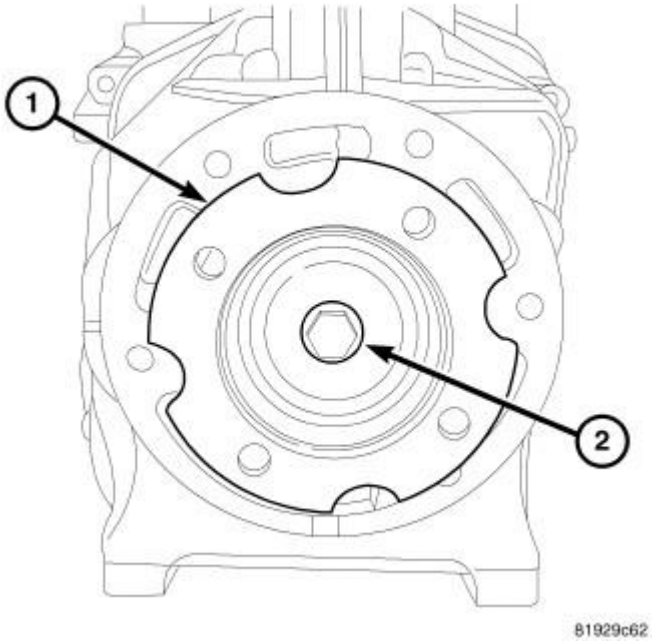

Fig. 19: Flange Bolt
Courtesy of CHRYSLER GROUP, LLC

4. On 4x2 transmissions shift two shift rails to lock the transmission in two gears. Then remove output shaft flange (1) bolt (2). Remove flange from output shaft with a two jaw puller if necessary.

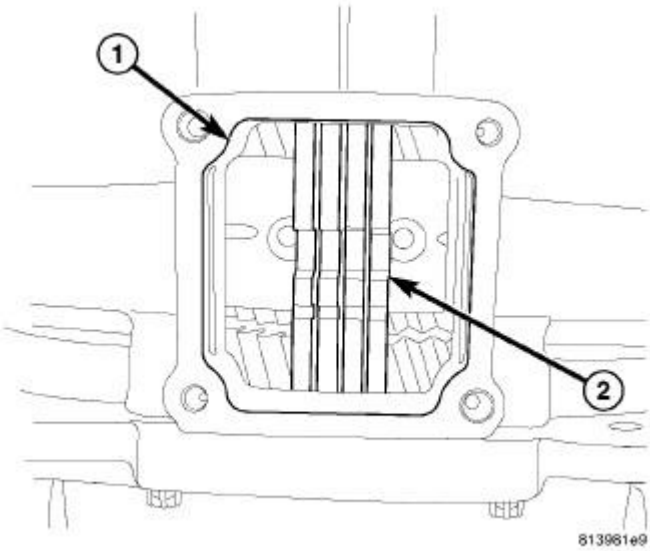

Fig. 20: Aligning Shift Rails In Neutral Position
Courtesy of CHRYSLER GROUP, LLC

5. Through shift tower opening (1) align shift rails in neutral position (2) and install tie strap to shift rails.

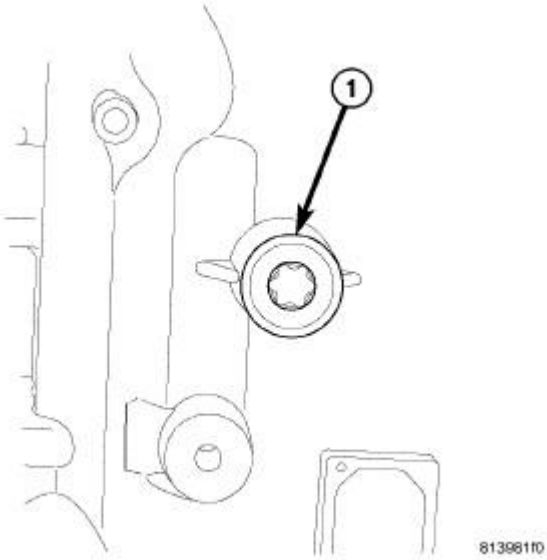

Fig. 21: 5-6 Shift Fork Pivot Pin
Courtesy of CHRYSLER GROUP, LLC

6. Remove 5-6 shift fork pivot pin (1) from both sides of the case.

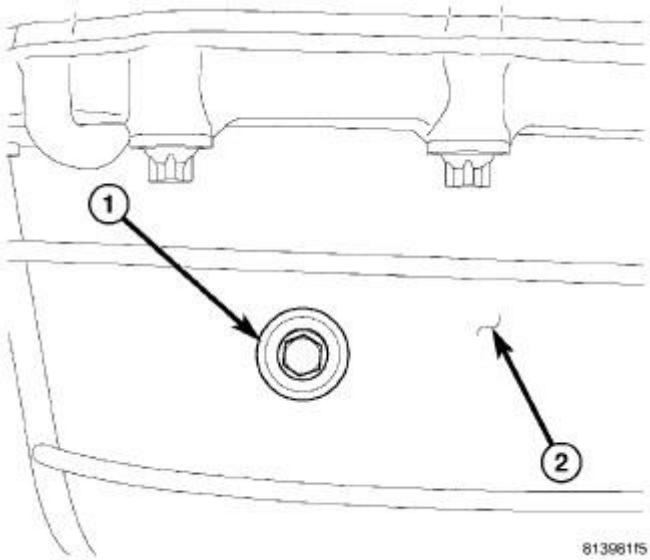

Fig. 22: Reverse Idler Shaft Pin
Courtesy of CHRYSLER GROUP, LLC

7. Remove reverse idler gear shaft pin (1) from the rear housing (2).

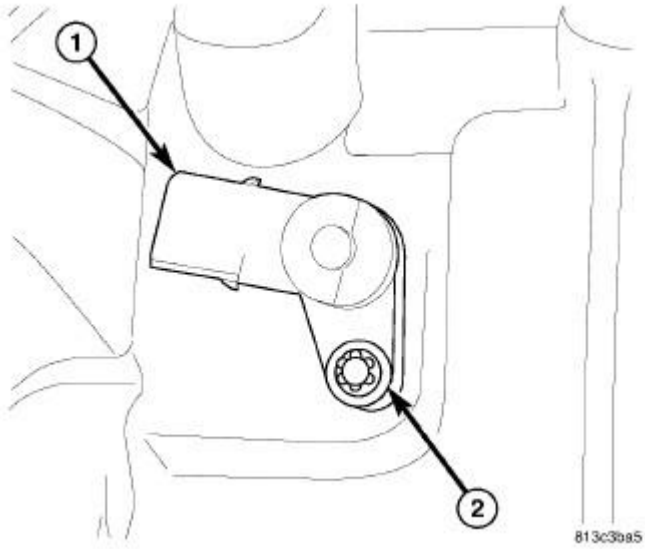

Fig. 23: Back-Up Lamp Switch
Courtesy of CHRYSLER GROUP, LLC

8. Remove back-up lamp switch (1) bolt (2) and remove switch.

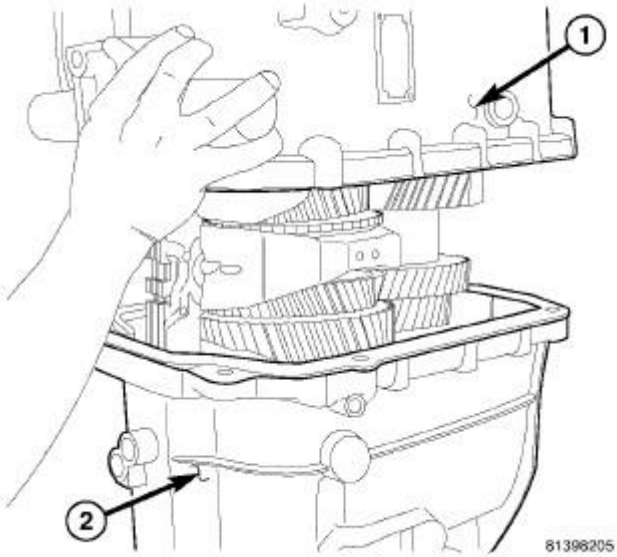

Fig. 24: Front & Rear Housing
Courtesy of CHRYSLER GROUP, LLC

9. Remove transmission housing bolts.
10. Tap housing with dead-blow hammer and lift front housing (1) off rear housing (2).

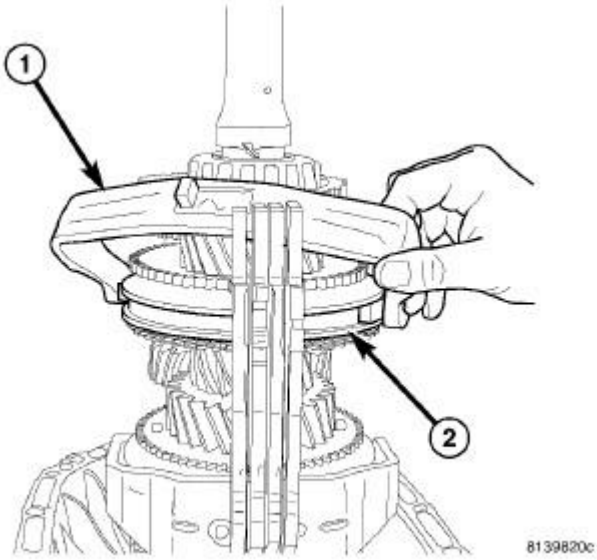

Fig. 25: 5-6 Shift Fork
Courtesy of CHRYSLER GROUP, LLC

11. Remove 5-6 shift fork (1) from shift rail and synchronizer sleeve (2).

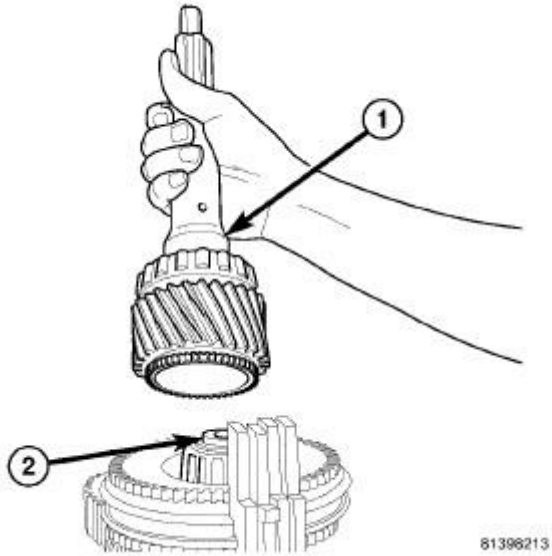

Fig. 26: Removing Input Shaft From Mainshaft
Courtesy of CHRYSLER GROUP, LLC

12. Remove input shaft (1) from mainshaft (2).

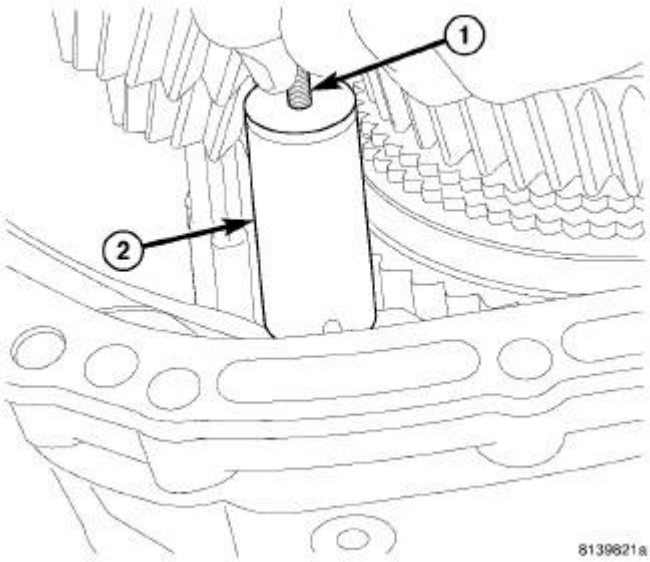

Fig. 27: Reverse Idler Shaft
Courtesy of CHRYSLER GROUP, LLC

13. Thread a M6x1bolt (1) into the reverse idler gear shaft (2) and pull shaft out of rear housing.

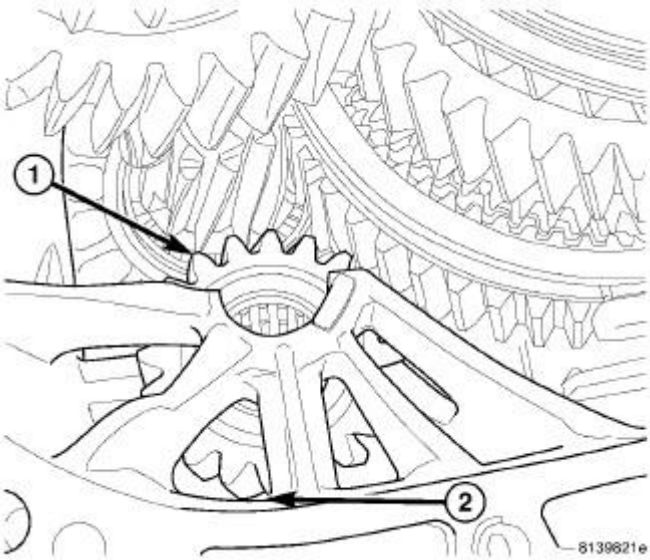

Fig. 28: Sliding Reverse Idler Gear To Side Of Case
Courtesy of CHRYSLER GROUP, LLC

14. Slide reverse idler gear (1) off to the side of the case (2) for disassembly clearance.

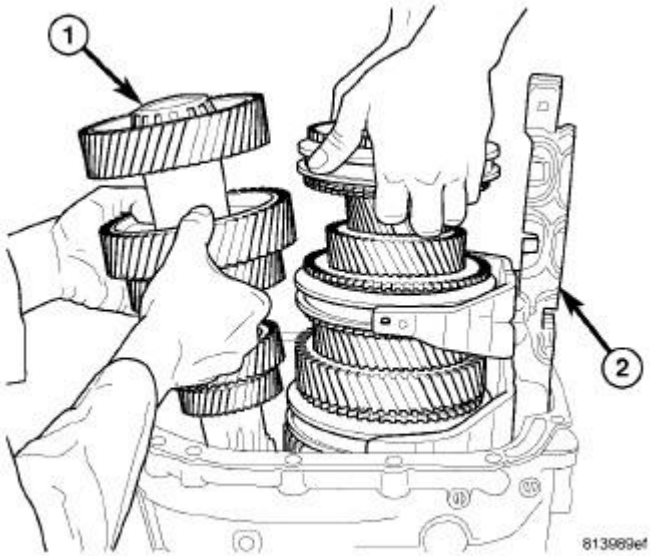

Fig. 29: Countershaft, Mainshaft & Shift Rails
Courtesy of CHRYSLER GROUP, LLC

15. Lift and tilt countershaft (1) then remove mainshaft with shift rails (2).
16. Remove countershaft.

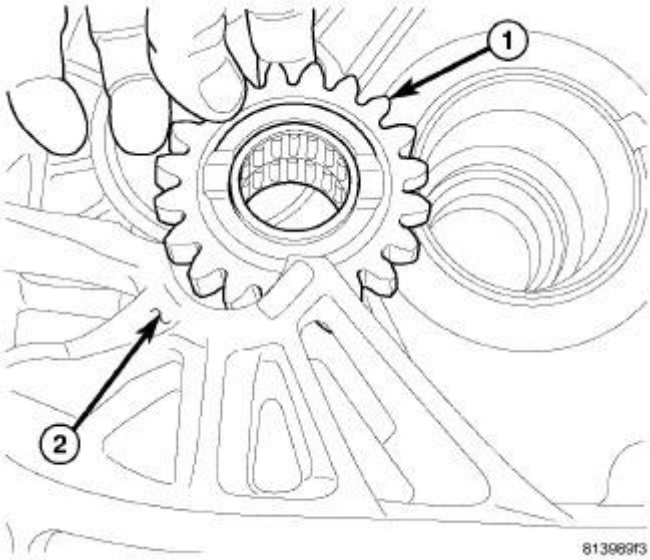

Fig. 30: Reverse Idle Gear
Courtesy of CHRYSLER GROUP, LLC

17. Remove reverse idler gear (1) from rear housing (2).

MAINSHAFT

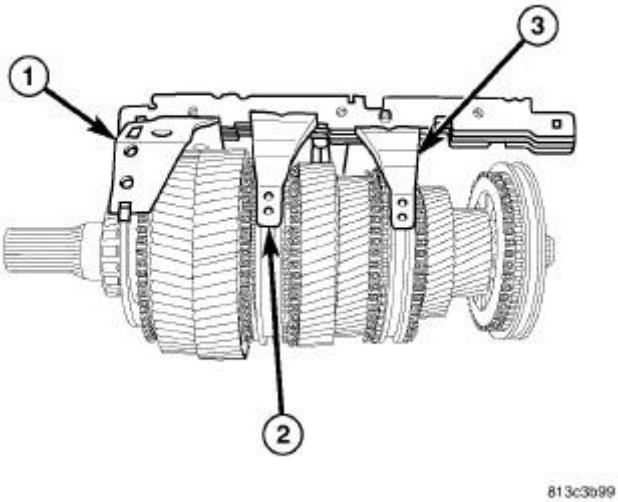

Fig. 31: Identifying Shift Forks
Courtesy of CHRYSLER GROUP, LLC

1. Remove reverse (1) 1-2 (2) and 3-4 (3) shift forks and shift rails as an assembly from mainshaft.

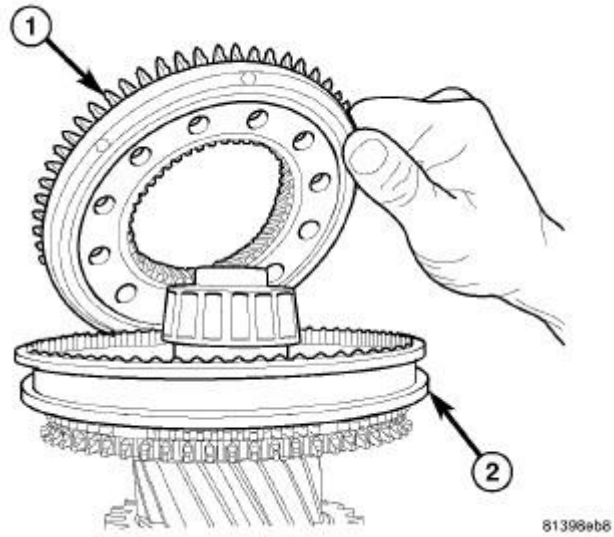

Fig. 32: Fifth Gear Synchronizer
Courtesy of CHRYSLER GROUP, LLC

2. Position mainshaft in Fixture (special tool #9605, Fixture) mounted in a vise with sixth gear up.
3. Remove fifth gear synchronizer rings (1) from 5-6 synchronizer hub (2).

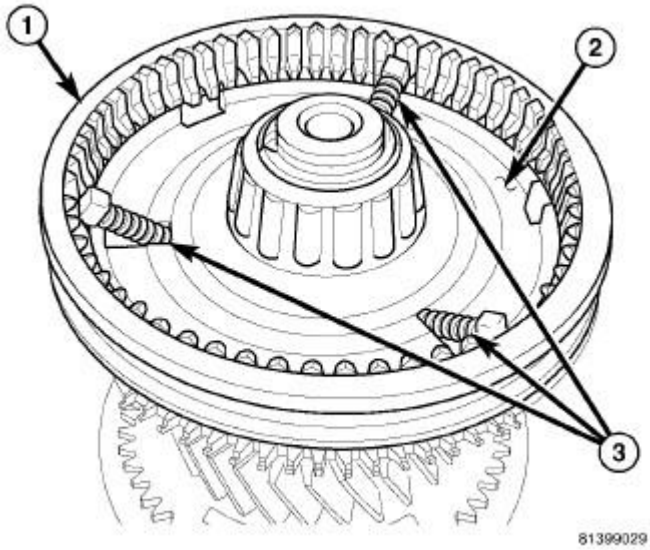

Fig. 33: 5-6 Synchronizer Springs
Courtesy of CHRYSLER GROUP, LLC

4. Slowly pull 5-6 synchronizer sleeve (1) up on hub (2) enough to remove detents and springs (3).

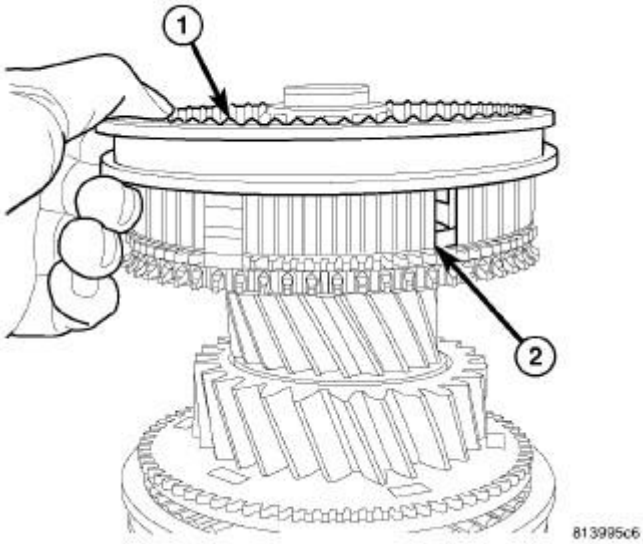

Fig. 34: 5-6 Synchronizer Sleeve
Courtesy of CHRYSLER GROUP, LLC

5. Remove 5-6 synchronizer sleeve (1) from hub (2).

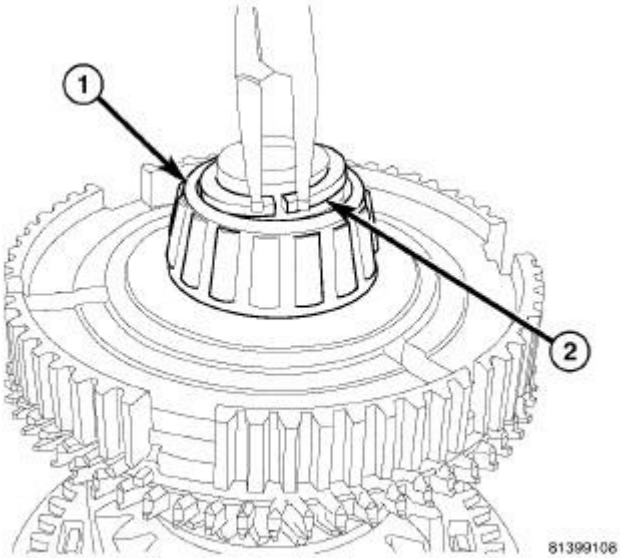

Fig. 35: Mainshaft Bearing Snap Ring
Courtesy of CHRYSLER GROUP, LLC

6. Remove mainshaft bearing (1) snap ring (2).

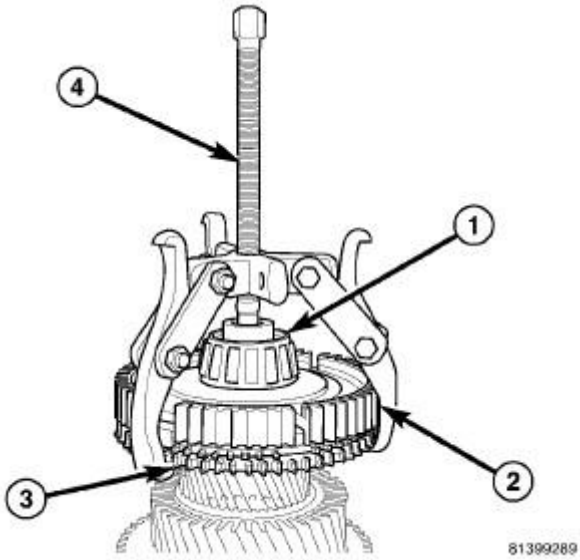

Fig. 36: Removing Mainshaft Bearing, 5-6 Synchronizer Hub & 6th Gear Synchronizer Rings
Courtesy of CHRYSLER GROUP, LLC

7. Remove mainshaft bearing (1), 5-6 synchronizer hub (2), and sixth gear synchronizer rings (3) with three jaw puller (4). Position puller jaws under sixth gear synchronizer rings (3).

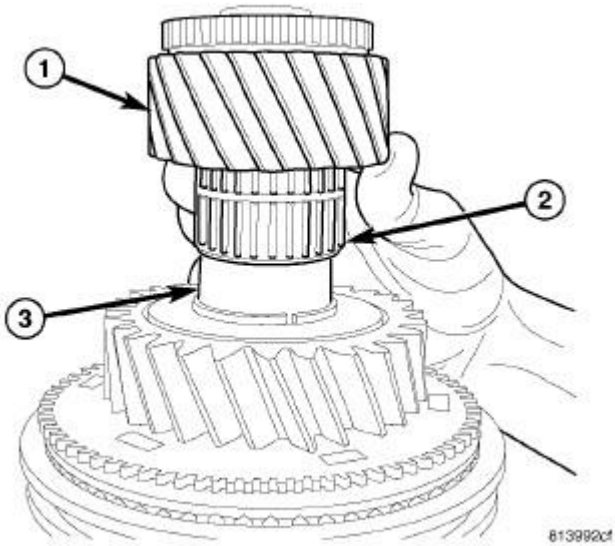

Fig. 37: Sixth Gear & Bearing
Courtesy of CHRYSLER GROUP, LLC

8. Remove sixth gear (1) and bearing (2) from mainshaft (3).

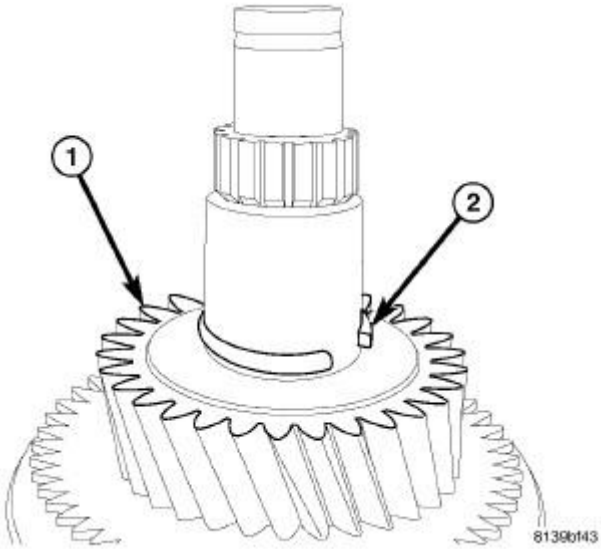

Fig. 38: Fourth Gear Snap Ring
Courtesy of CHRYSLER GROUP, LLC

9. Remove fourth gear (1) snap ring (2).

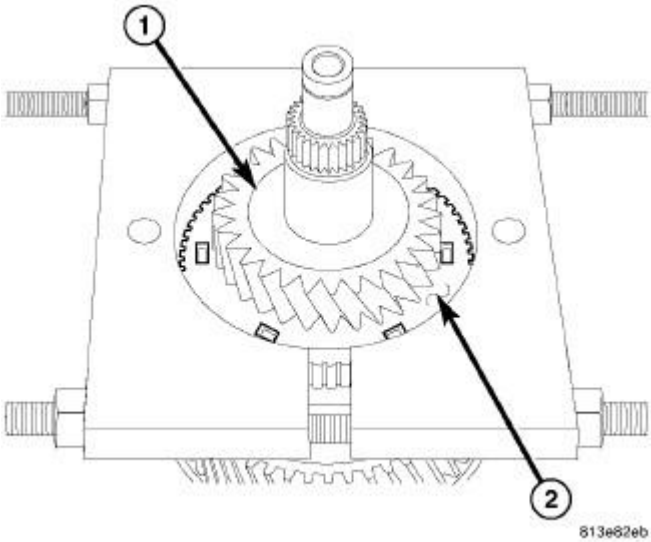

Fig. 39: 4th Gear Thrust Washer & Synchronizer Stop Ring
Courtesy of CHRYSLER GROUP, LLC

10. Remove fourth gear thrust washer (1) with Puller (special tool #9594, Remover, Gear & Synchro). Position puller under fourth gear synchronizer stop ring (2).

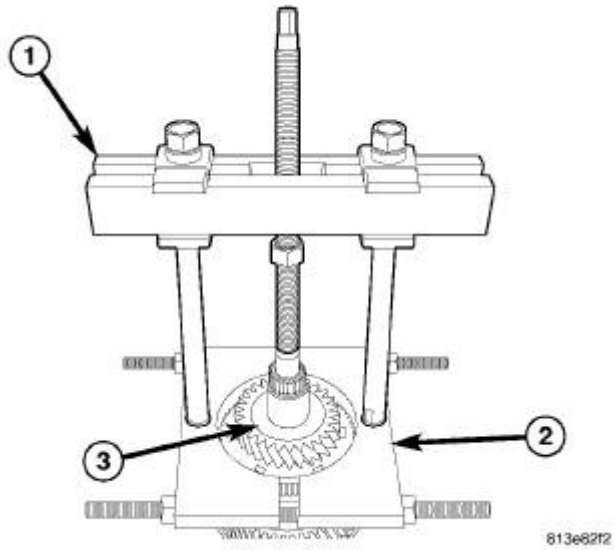

Fig. 40: Removing 4th Gear Thrust Washer
Courtesy of CHRYSLER GROUP, LLC

11. Install Bridge (special tool #938, Bridge) (1) into Puller (special tool #9594, Remover, Gear & Synchro) (2) and remove fourth gear thrust washer (3).

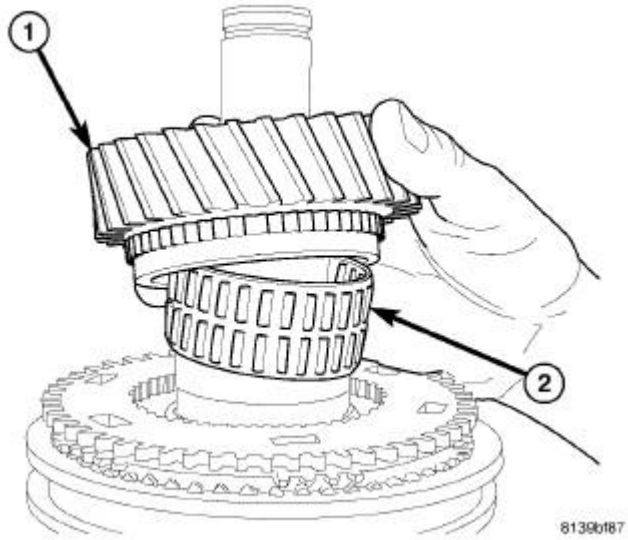

Fig. 41: Fourth Gear & Bearing
Courtesy of CHRYSLER GROUP, LLC

12. Remove fourth gear (1) and bearing (2).

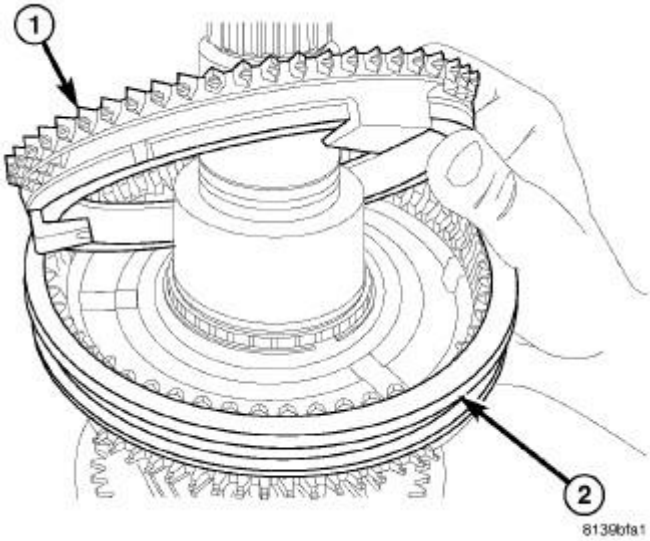

Fig. 42: Fourth Gear Synchronizer Rings
Courtesy of CHRYSLER GROUP, LLC

13. Remove fourth gear synchronizer rings (1) from 3-4 synchronizer hub (2) and mark installation reference.

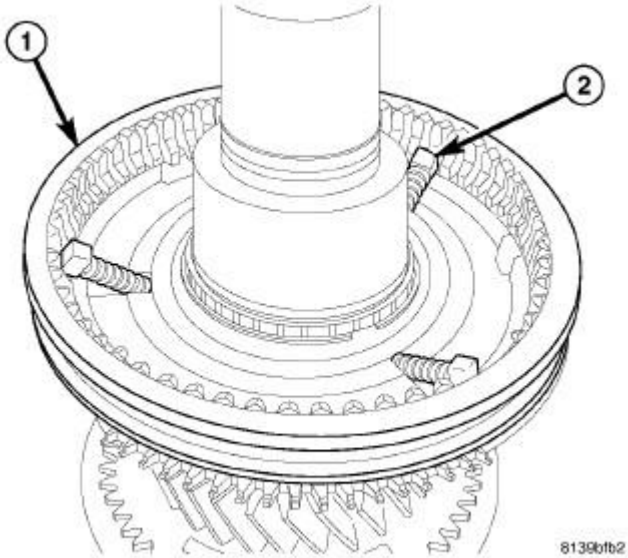

Fig. 43: 3-4 Synchronizer Sleeve & Springs
Courtesy of CHRYSLER GROUP, LLC

14. Slowly pull 3-4 synchronizer sleeve (1) up on hub enough to remove detents and springs (2).
15. Remove 3-4 synchronizer sleeve (1) from hub.

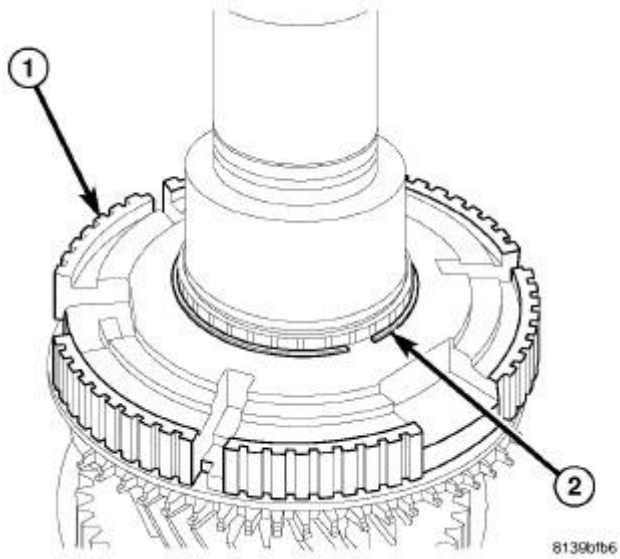

Fig. 44: 3-4 Synchronizer Hub Snap Ring
Courtesy of CHRYSLER GROUP, LLC

16. Remove 3-4 synchronizer hub (1) snap ring (2).

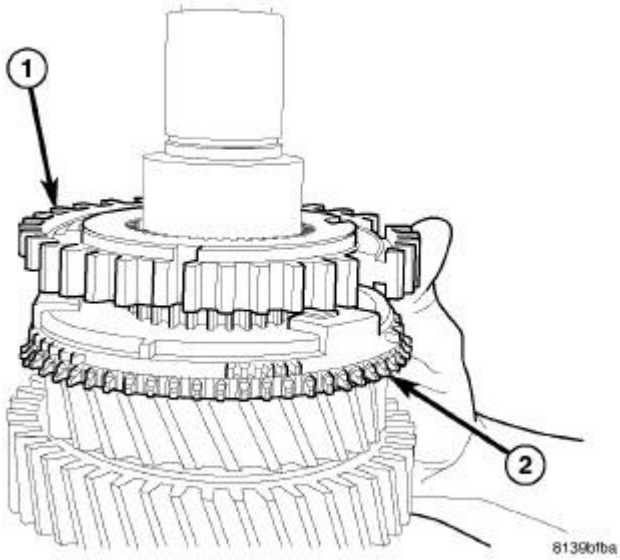

Fig. 45: 3-4 Synchronizer Hub & Third Gear Synchronizer Rings
Courtesy of CHRYSLER GROUP, LLC

17. Remove 3-4 synchronizer hub (1) and third gear synchronizer rings (2). Mark components for installation reference.

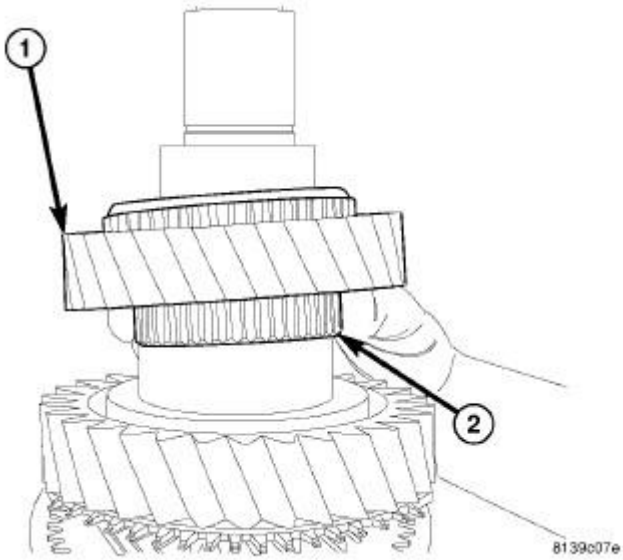

Fig. 46: Third Gear & Bearing
Courtesy of CHRYSLER GROUP, LLC

18. Remove third gear (1) and bearing (2).

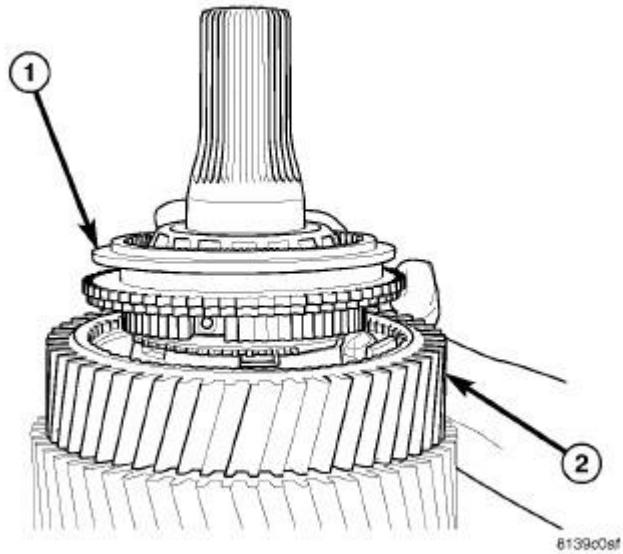

Fig. 47: Reverse Gear & Synchronizer Sleeve
Courtesy of CHRYSLER GROUP, LLC

19. Turn mainshaft and Fixture (special tool #9605, Fixture) and secured in vise.
20. Remove 4x4 mainshaft snap ring.
21. Remove reverse gear synchronizer sleeve (1) from reverse gear (2) synchronizer hub.

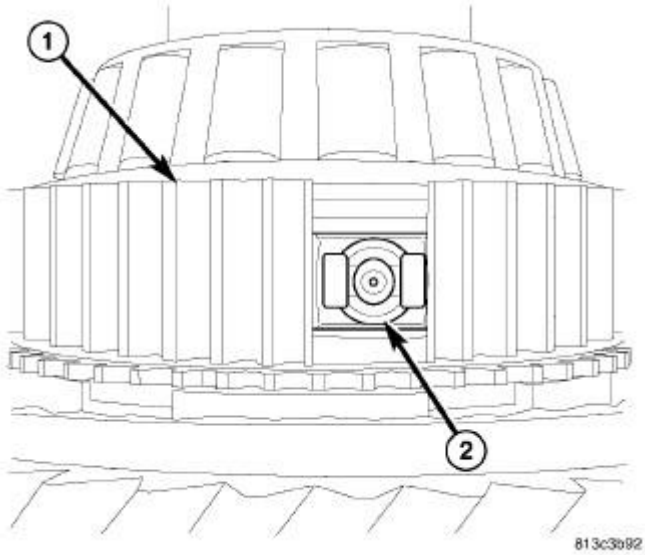

Fig. 48: Reverse Gear Synchronizer Hub & Detents
Courtesy of CHRYSLER GROUP, LLC

22. Remove reverse gear synchronizer hub (1) detents (2).

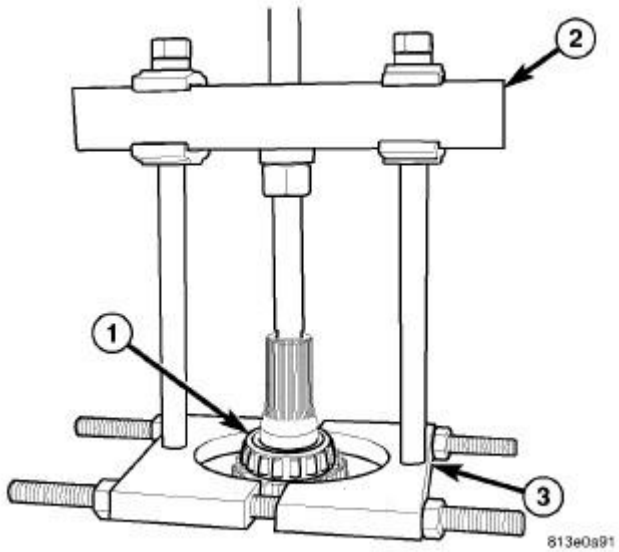

Fig. 49: Removing Mainshaft Bearing
Courtesy of CHRYSLER GROUP, LLC

23. Remove mainshaft bearing (1) with Bridge (special tool #938, Bridge) (2) and bearing Puller (special tool #9647, Puller) (3).

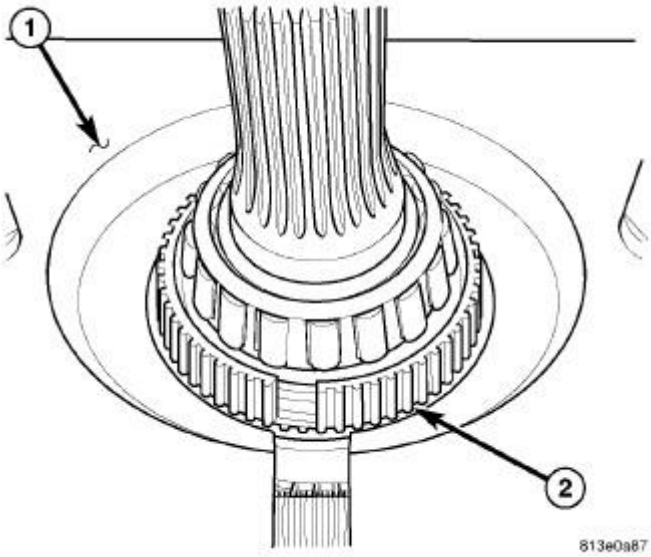

Fig. 50: Positioning Puller Behind Reverse Synchronizer Hub & Outer Blocker Ring
Courtesy of CHRYSLER GROUP, LLC

24. Position puller (1) behind reverse synchronizer hub and outer blocker ring (2).

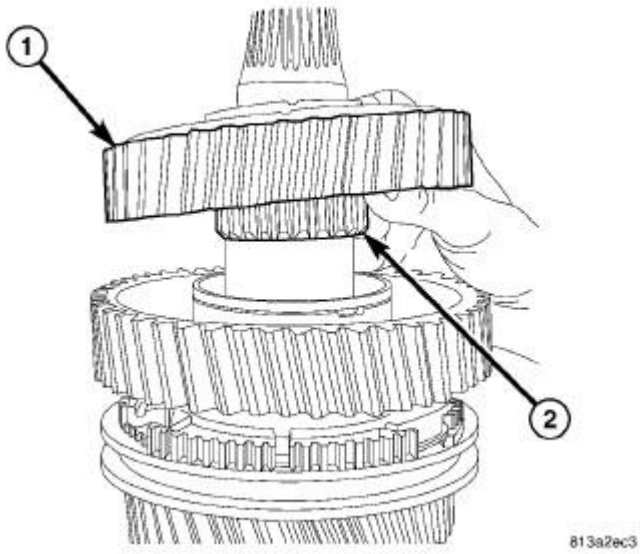

Fig. 51: Reverse Gear & Bearing
Courtesy of CHRYSLER GROUP, LLC

25. Remove reverse gear (1) and bearing (2).

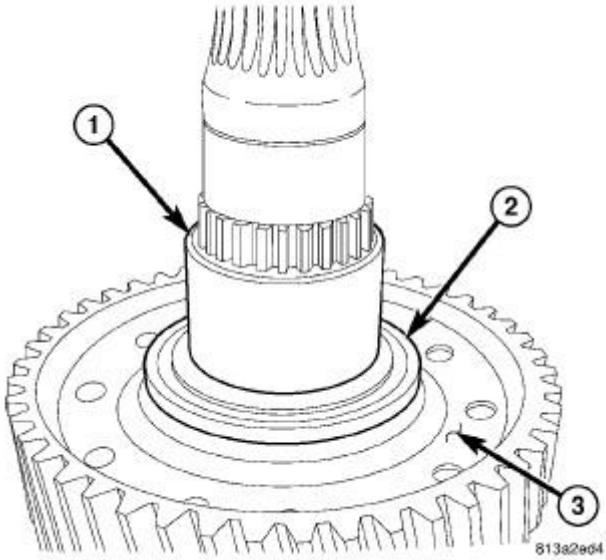

Fig. 52: Reverse Bearing Race & Thrust Washer
Courtesy of CHRYSLER GROUP, LLC

26. Remove reverse gear bearing race (1) and thrust washer (2). Use Puller (special tool #9646, Puller, Gear) and Bridge (special tool #938, Bridge) on first gear (3) to pull off reverse gear bearing race (1) and thrust washer (2).

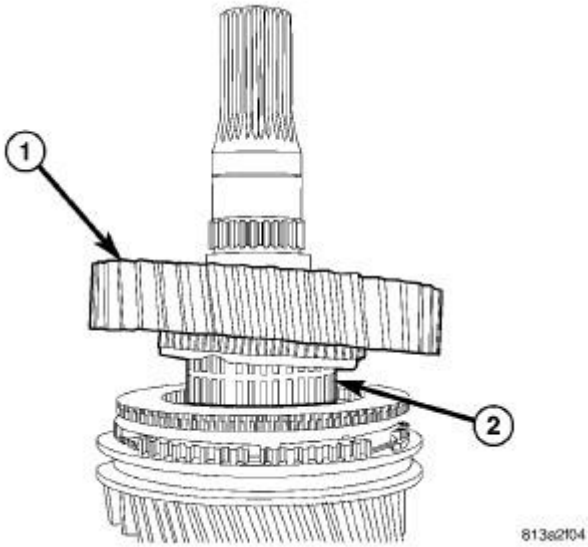

Fig. 53: First Gear & Bearing
Courtesy of CHRYSLER GROUP, LLC

27. Remove first gear (1) and bearing (2).

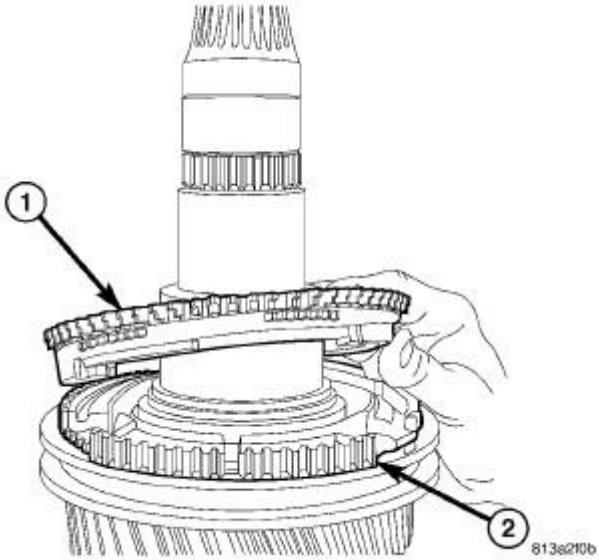

Fig. 54: First Gear Synchronizer Rings & 1-2 Synchronizer Hub
Courtesy of CHRYSLER GROUP, LLC

28. Remove first gear synchronizer rings (1) from 1-2 synchronizer hub (2) and mark for installation reference.

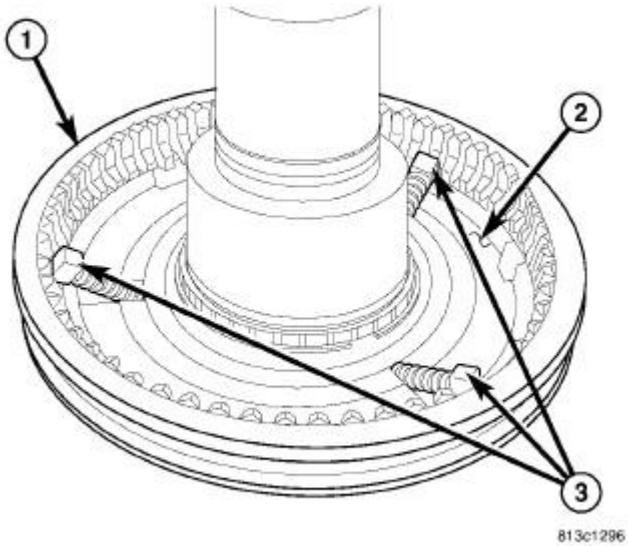

Fig. 55: 1-2 Synchronizer Sleeve & Springs
Courtesy of CHRYSLER GROUP, LLC

29. Slowly pull 1-2 synchronizer sleeve (1) up on hub (2) enough to remove detents and springs (3).

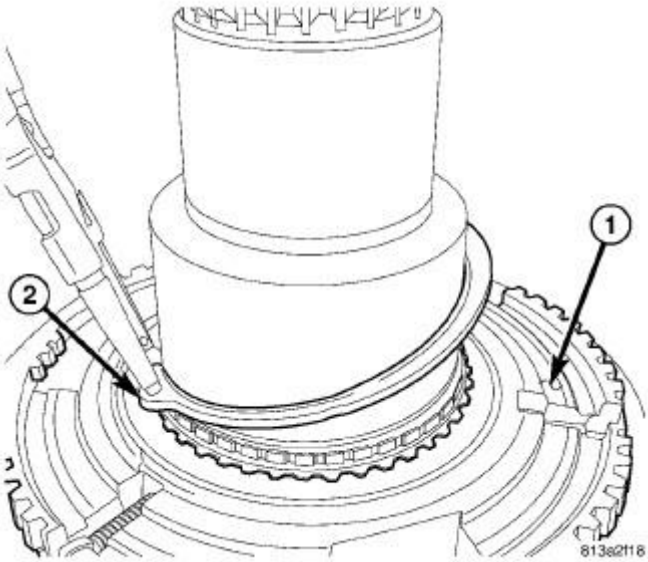

Fig. 56: 1-2 Synchronizer Hub Snap Ring
Courtesy of CHRYSLER GROUP, LLC

30. Remove 1-2 synchronizer hub (1) snap ring (2) and remove hub with second gear synchronizer rings. Mark components for installation reference.

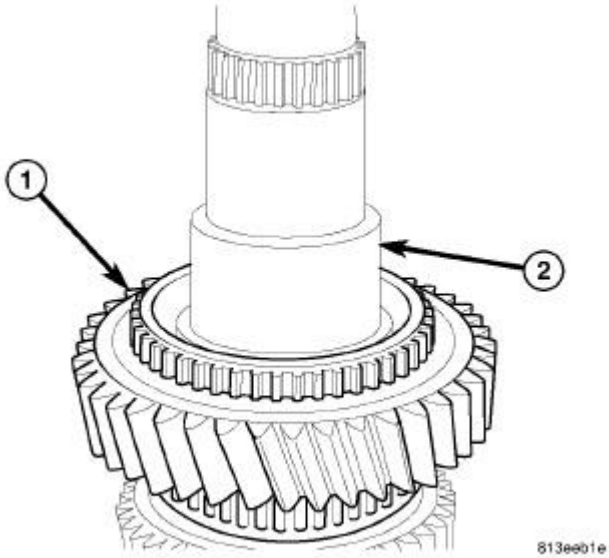

Fig. 57: 2nd Gear
Courtesy of CHRYSLER GROUP, LLC

31. Remove second gear (1) from mainshaft (2).

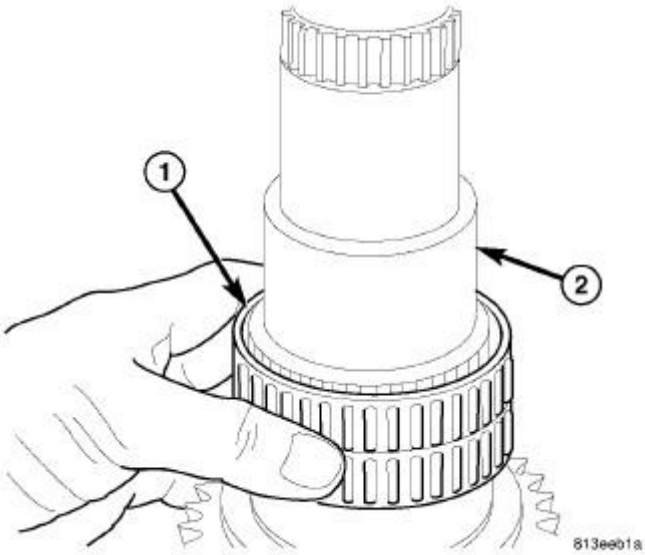

Fig. 58: 2nd Gear Bearing
Courtesy of CHRYSLER GROUP, LLC

32. Remove second gear bearing (1) from mainshaft (2).

COUNTERSHAFT

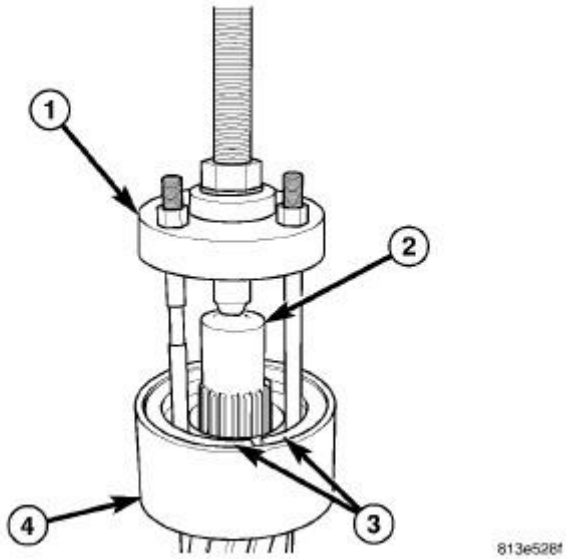

Fig. 59: Removing Countershaft Rear Bearing
Courtesy of CHRYSLER GROUP, LLC

NOTE: Bearings are the only component serviced on the countershaft.

1. Remove countershaft rear housing bearing with Puller (special tool #6444, Puller, Bearing/Gear) (1), Plug (special tool #8513A, Insert, Crankshaft) (2), Puller Jaws (special tool #9597, Remover, Bearing) (3),

Puller Collar (special tool #6444-8, Sleeve) (4), Puller Rods (special tool #6444-3, Rod, Long) and Puller Flange (special tool #6444-1, Puller, Base). Position Puller Jaws (special tool #9597, Remover, Bearing) around bearing and puller flange. Position puller collar around the puller jaws. Tighten the puller bolt and remove countershaft bearing.

2. Remove countershaft first/reverse gear bearing oil slinger from countershaft.

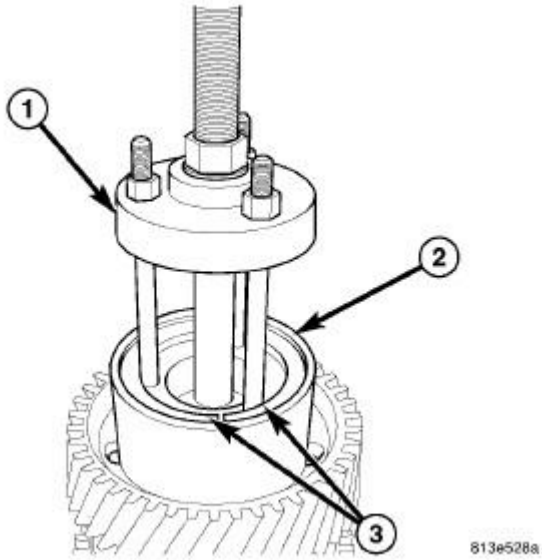

Fig. 60: Removing Countershaft Front Housing Bearing
Courtesy of CHRYSLER GROUP, LLC

3. Remove countershaft front housing bearing with Puller (special tool #6444, Puller, Bearing/Gear) (1), Puller Collar (special tool #6444-8, Sleeve) (2), Puller Jaws (special tool #9597, Remover, Bearing) (3), Puller Rods (special tool #6444-3, Rod, Long) and Puller Flange (special tool #6444-1, Puller, Base). Position puller jaws around bearing and puller flange. Position puller collar around the puller jaws. Tighten the puller bolt and remove countershaft bearing.

INPUT SHAFT

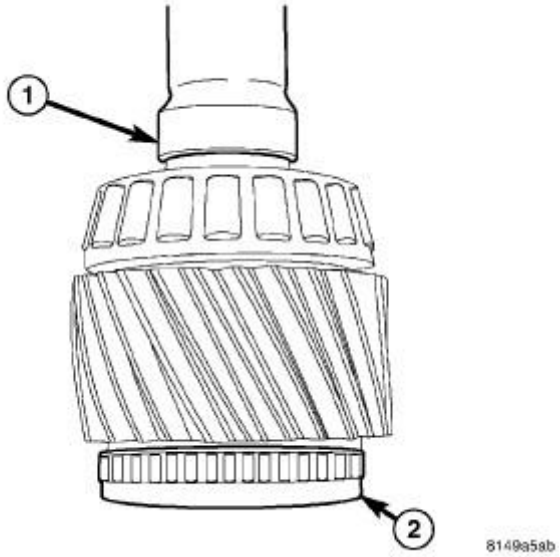

Fig. 61: Input Shaft & Mainshaft Bearing Seal
Courtesy of CHRYSLER GROUP, LLC

1. Position input shaft (1) mainshaft bearing seal (2) in a vice then twist input shaft (1) out of the seal (2).

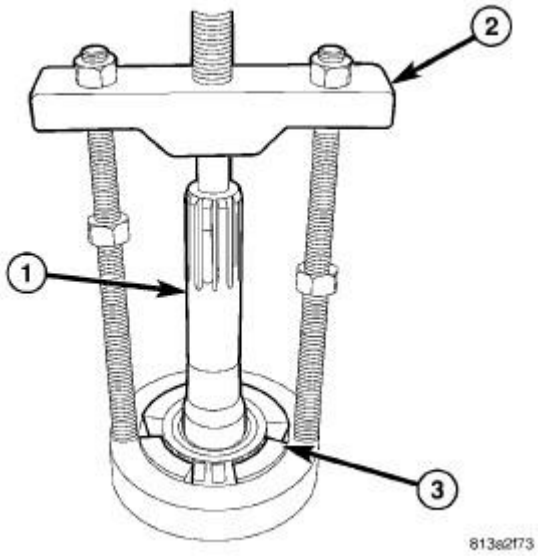

Fig. 62: Removing Input Shaft Bearing
Courtesy of CHRYSLER GROUP, LLC

2. Remove input shaft (1) bearing with Puller (special tool #C-293-PA, Puller, Press) (2) and Adapters (special tool #C-293-47, Block Set, Puller) (3).
3. Remove input shaft mainshaft bearing gasket.

REAR HOUSING

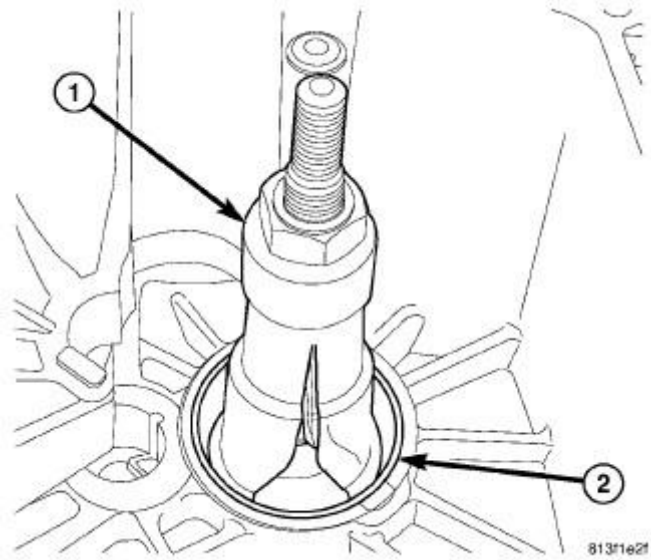

Fig. 63: Removing Countershaft & Mainshaft Bearing Cups
Courtesy of CHRYSLER GROUP, LLC

1. Remove countershaft bearing cup and mainshaft bearing cup with Puller (special tool #9593, Remover, Bearing Cup) (1) installed in cup (2).

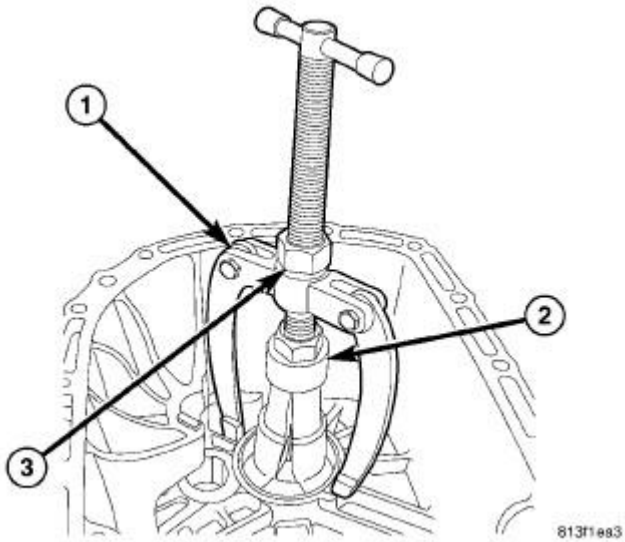

Fig. 64: Identifying Remover, Puller & Remover Nut
Courtesy of CHRYSLER GROUP, LLC

2. Install Remover (special tool #8915, Brace) (1) on puller (2) and tighten remover nut (3) to pull cups out of the housing.

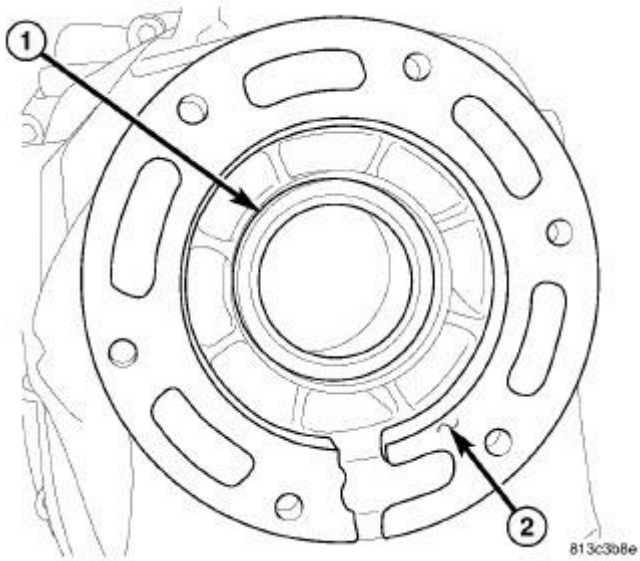

Fig. 65: Output Shaft Seal
Courtesy of CHRYSLER GROUP, LLC

3. Remove output shaft seal (1) from housing (2) with seal pick.

FRONT HOUSING

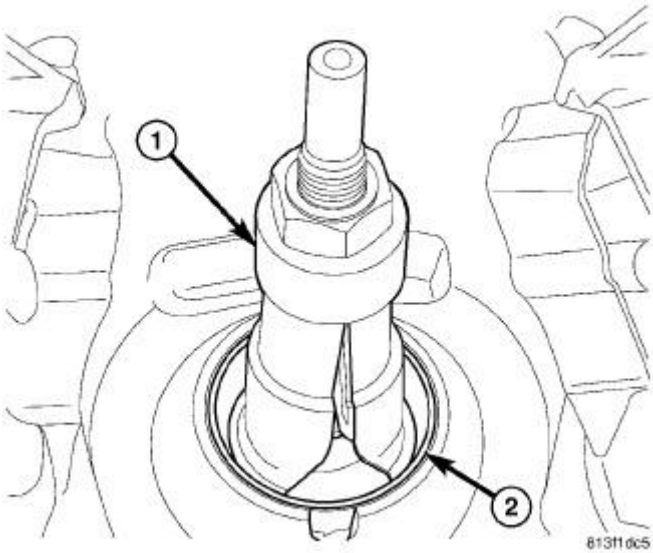

Fig. 66: Front Housing Cup Remover
Courtesy of CHRYSLER GROUP, LLC

1. Remove countershaft bearing cup and mainshaft bearing cup with Puller (special tool #9593, Remover, Bearing Cup) (1) installed in cup (2).

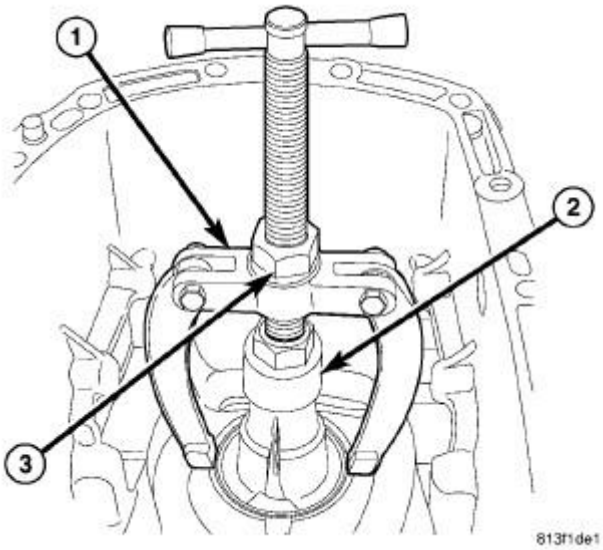

Fig. 67: Pulling Front Housing Cups
Courtesy of CHRYSLER GROUP, LLC

2. Install Remover (special tool #8915, Brace) (1) on puller (2) and tighten remover nut (3) to pull cups out of the housing. Then remove end-play shims from bearing bores and oil supply washer from mainshaft bearing bore.

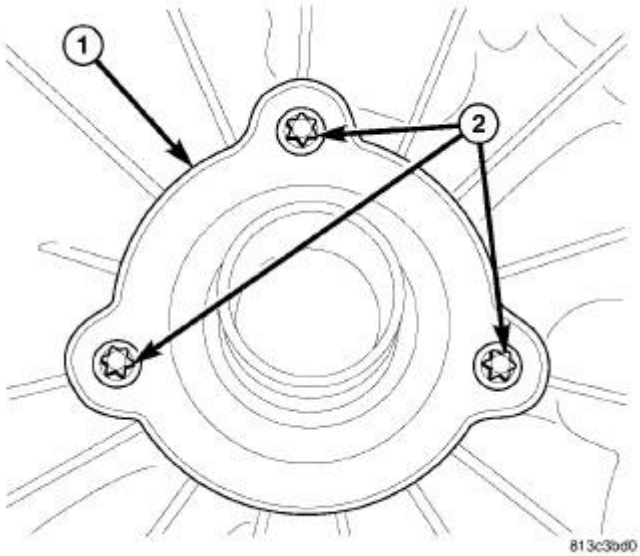

Fig. 68: Input Shaft Seal Retainer & Bolts
Courtesy of CHRYSLER GROUP, LLC

3. Remove input shaft retainer (1) bolts (2) and remove retainer.

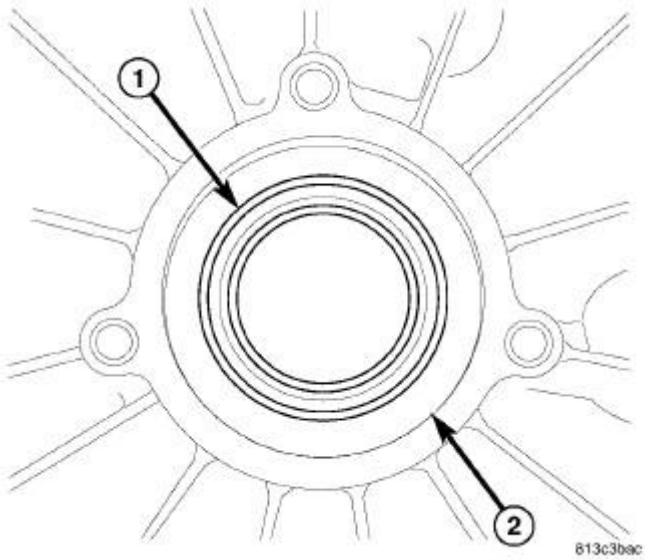

Fig. 69: Input Shaft Seal & Retainer Bore
Courtesy of CHRYSLER GROUP, LLC

4. Remove input shaft seal (1) from retainer bore (2) with a seal pick.

CLEANING

CLEANING

Clean gears, shafts, shift components and transmission housings with a standard parts cleaning solvent. Do not use acid or corrosive base solvents. Dry all parts except bearings with compressed air.

Clean shaft bearings with a mild solvent such as MOPAR® degreasing solvent, Gunk® or similar solvents. Do not dry the bearings with compressed air. Allow the bearings to either air dry or wipe them dry with clean shop towels.

INSPECTION

INSPECTION

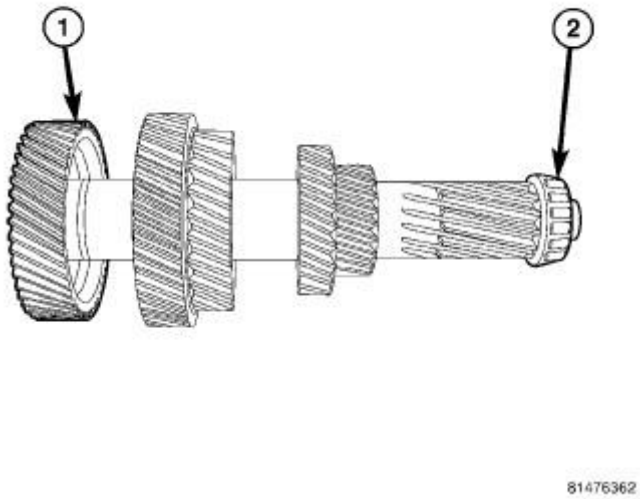

Fig. 70: Identifying Countershaft Teeth & Bearings
Courtesy of CHRYSLER GROUP, LLC

NOTE: **Minor corrosion, nicks, or pitting can be smoothed with 400 grit emery and polished out with crocus cloth.**

Bearings: Inspect for worn, chipped, cracked, flat-spotted or brinnelled.

Gears: Inspect for worn, chipped or cracked teeth. Inspect bearing surfaces for wear or flat-spotted.

Mainshaft: Inspect for worn splines, snap ring grooves and threads.

Countershaft: Inspect all gears for worn, chipped or cracked teeth (1). Inspect all bearings (2) and bearing surfaces for ware or flat-spotted. **The countershaft is serviced as an assembly, except for bearings.**

Oil slinger: Inspect first/reverse oil slinger for cracks.

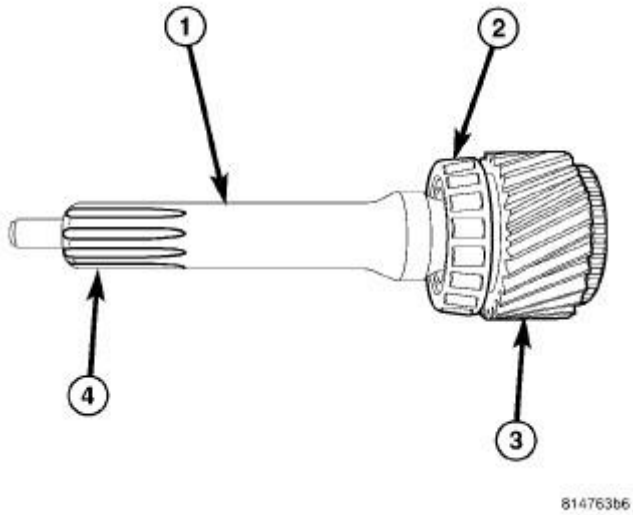

Fig. 71: Identifying Input Shaft, Bearing, Fifth Gear & Splines
Courtesy of CHRYSLER GROUP, LLC

Synchronizer components: Inspect for worn, chipped or cracked teeth and burned or flaking off friction material. **Synchronizer are serviced as an assembly.**

Input Shaft: Inspect shaft (1), bearing (2) surfaces for wear or flat-spotted. Inspect fifth gear (3) for worn, chipped or cracked teeth. Inspect splines (4) for wear and chips.

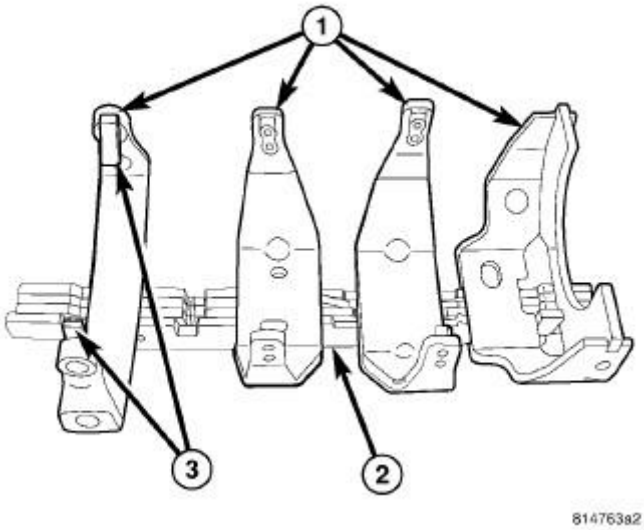

Fig. 72: Identifying Shift Forks & Rails
Courtesy of CHRYSLER GROUP, LLC

Shift forks and Rails: Inspect shift forks (1) and shoes for wear and distortion. Check fit of fork shoes in synchronizer sleeve to ensure parts fit and work smoothly. Inspect shift rails (2), for wear and distortion. **5-6**

shift fork shoes (3) are serviced separately. Inspect 5-6 shift fork pivot pin O-rings.

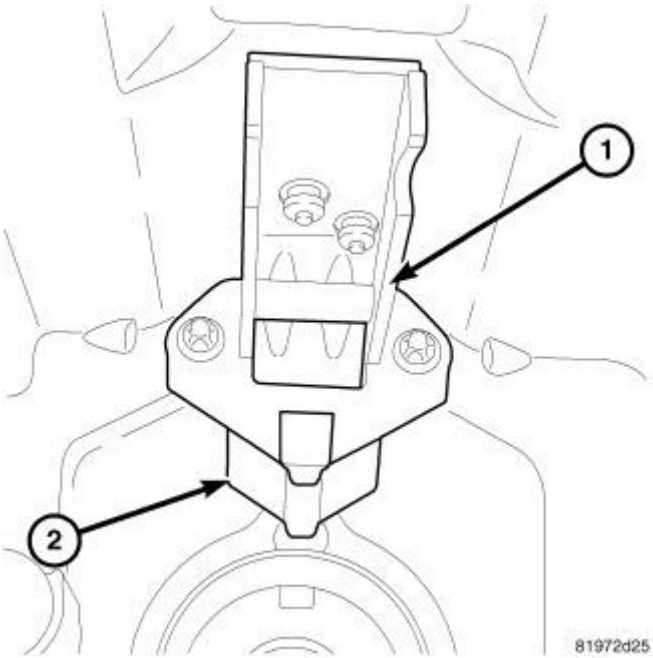

Fig. 73: Identifying Front Shift Rail Guide & Bearing Oil Baffle
Courtesy of CHRYSLER GROUP, LLC

Front Housing: Inspect sealing and mating surfaces are free of burrs and nicks. Inspect alignment dowels are tight and in good condition. Inspect shift rail guide (1) for wear and verify bearing oil baffle (2) is not bent or damaged.

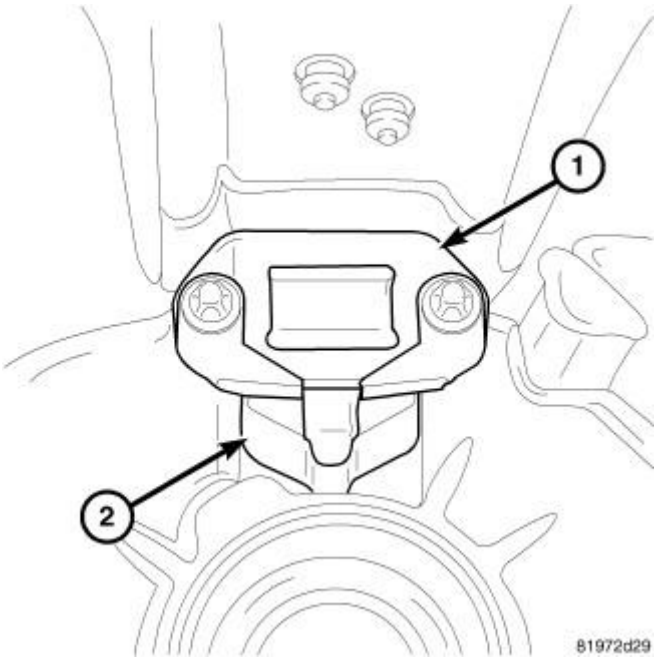

Fig. 74: Identifying Rear Shift Rail Guide & Bearing Oil Baffle
Courtesy of CHRYSLER GROUP, LLC

Rear Housing: Inspect sealing and mating surfaces are free of burrs and nicks. Inspect shift rail guide (1) for wear and verify bearing oil baffle (2) is not bent or damaged.

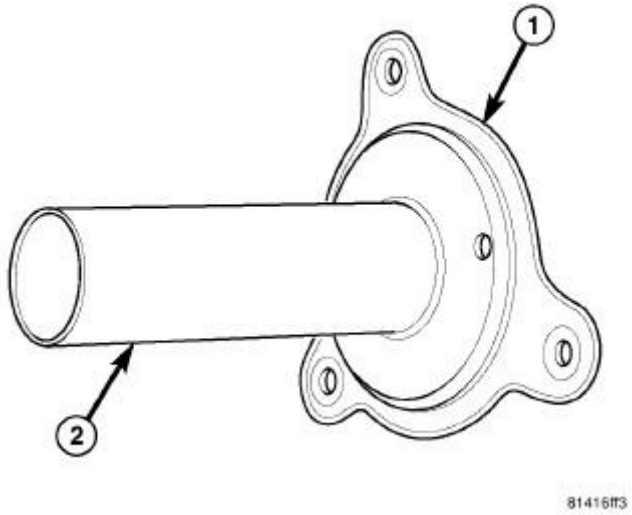

Fig. 75: Identifying Bearing Slide Surface & Sealing Surface
Courtesy of CHRYSLER GROUP, LLC

Input Retainer: Inspect release bearing slide surface (2) and sealing surface.

ASSEMBLY

ASSEMBLY

WARNING: Use welding gloves or tongs when handling heated components. Failure to follow these instructions will result in personal injury.

CAUTION: A bearing heater is used to assembly some components. Use only a bearing heater/hot plate and follow manufacture's instructions. Heat components to 100° - 150° Celsius (212° Min. - 300° Max Fahrenheit). Never use an open flame to heat components. Never leave components on heater for and extended amount of time. If component is discolored after heating, the component has been overheated and must not be used. Failure to follow these instructions will result in component damage.

INPUT SHAFT

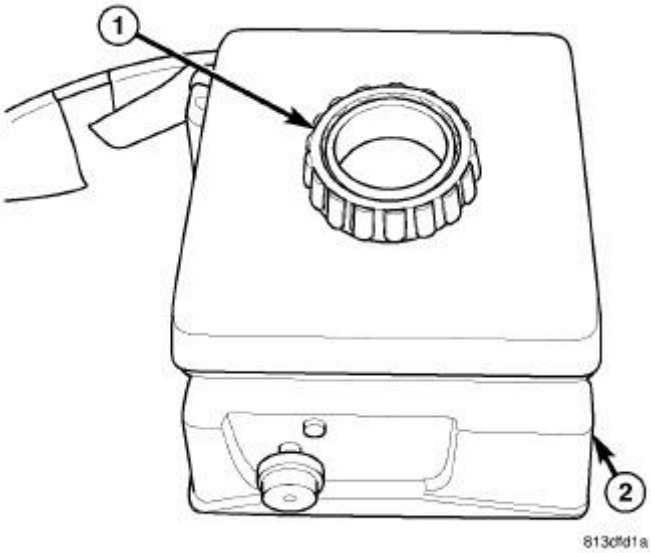

Fig. 76: Heating Bearing
Courtesy of CHRYSLER GROUP, LLC

1. Heat input shaft bearing (1) on bearing heater (2) to a maximum of 150 Celsius (300° Fahrenheit).

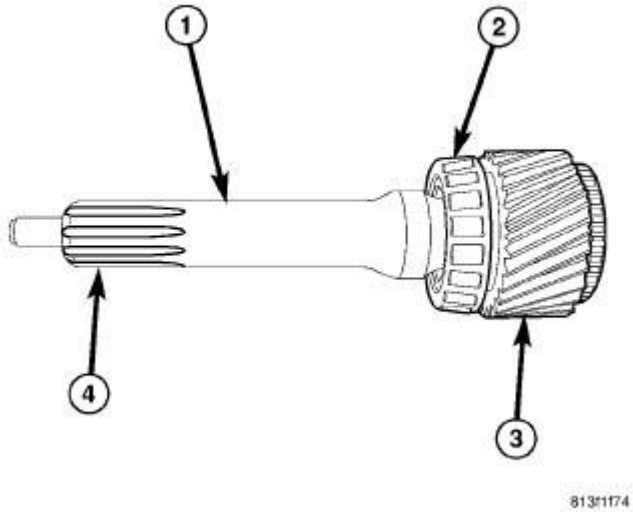

Fig. 77: Input Shaft & Bearing
Courtesy of CHRYSLER GROUP, LLC

2. Using welding gloves or tongs, install bearing (2) on input shaft (1).

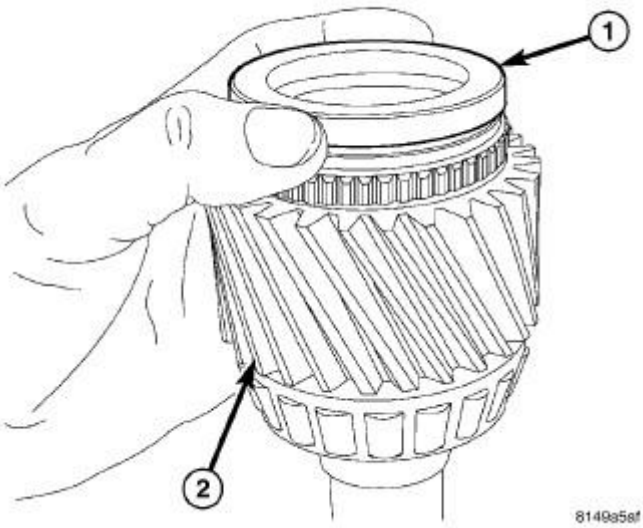

Fig. 78: Input Shaft Mainshaft Bearing Seal
Courtesy of CHRYSLER GROUP, LLC

3. Push input shaft mainshaft bearing seal (1) on the end of fifth gear (2).

COUNTERSHAFT

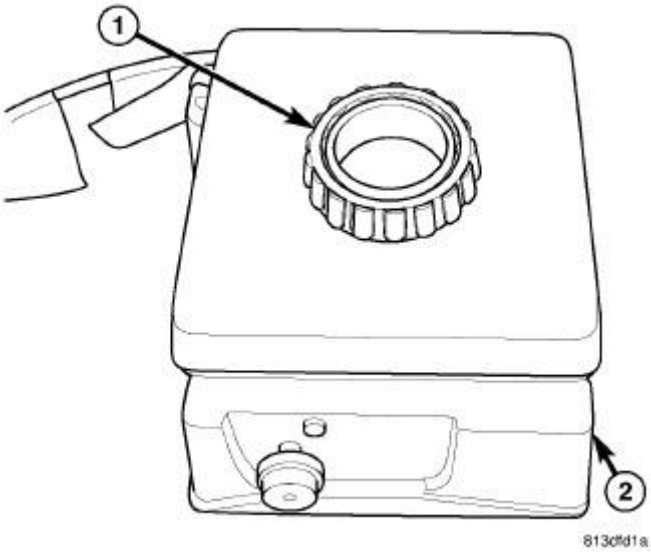

Fig. 79: Heating Bearing
Courtesy of CHRYSLER GROUP, LLC

1. Install first/reverse gear bearing oil slinger on the rear housing end of the countershaft.
2. Heat rear housing countershaft bearing (1) on bearing heater (2) to a maximum of 150 Celsius (300° Fahrenheit).

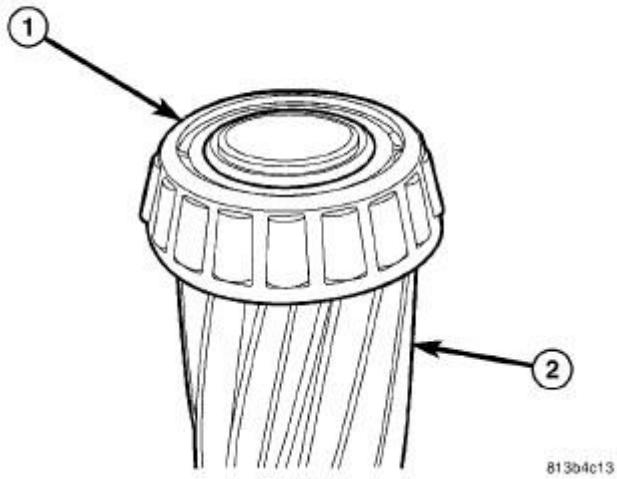

Fig. 80: Installing Countershaft Bearing On Countershaft
Courtesy of CHRYSLER GROUP, LLC

3. Using welding gloves or tongs, install countershaft bearing (1) on countershaft (2).

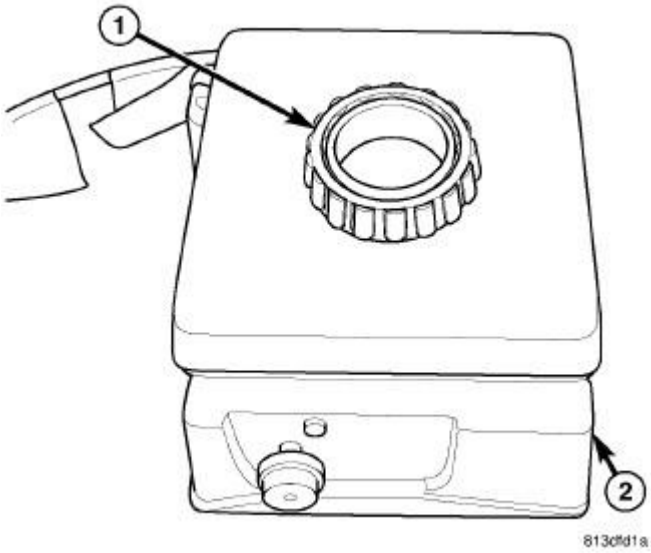

Fig. 81: Heating Bearing
Courtesy of CHRYSLER GROUP, LLC

4. Heat front housing countershaft bearing (1) on bearing heater (2) to a maximum of 150 Celsius (300° Fahrenheit).

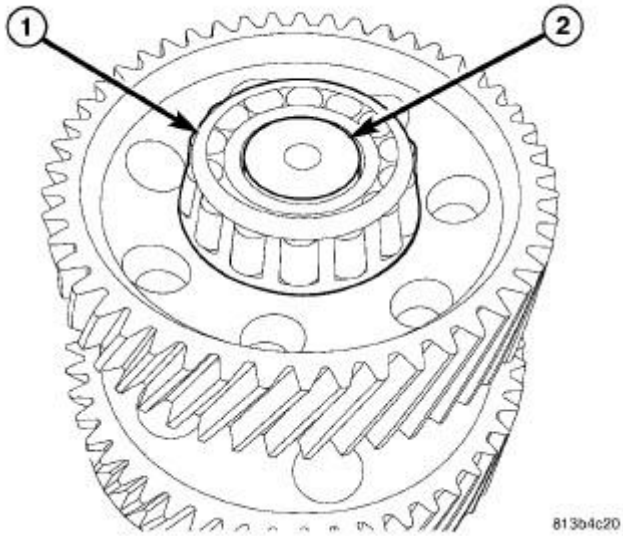

Fig. 82: Installing Front Housing Countershaft Bearing On Countershaft
Courtesy of CHRYSLER GROUP, LLC

5. Using welding gloves or tongs, install front housing countershaft bearing (1) on countershaft (2).

MAINSHAFT

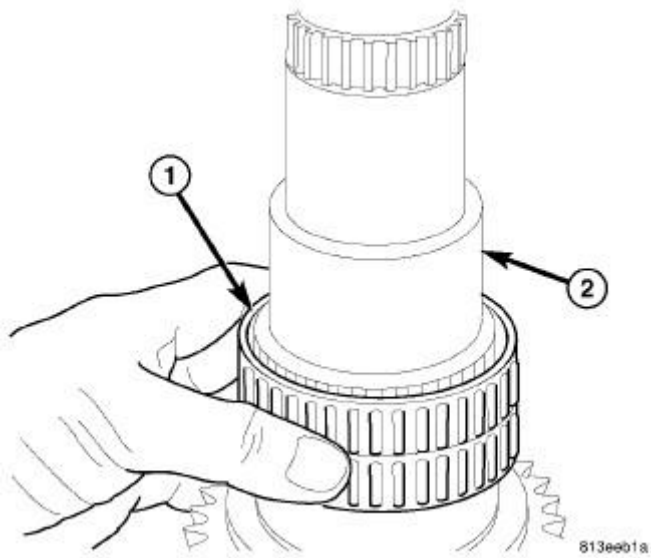

Fig. 83: 2nd Gear Bearing
Courtesy of CHRYSLER GROUP, LLC

1. Position mainshaft in Fixture (special tool #9605, Fixture) mounted in vise.
2. Install second gear bearing (1) on mainshaft (2).

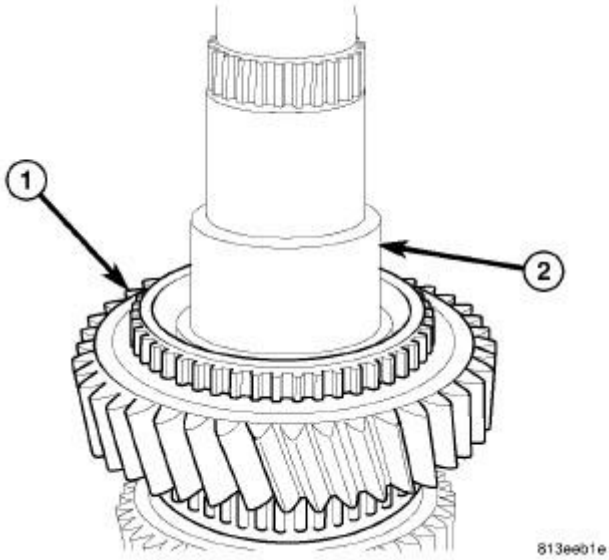

Fig. 84: 2nd Gear
Courtesy of CHRYSLER GROUP, LLC

3. Install second gear (1) on mainshaft (2).

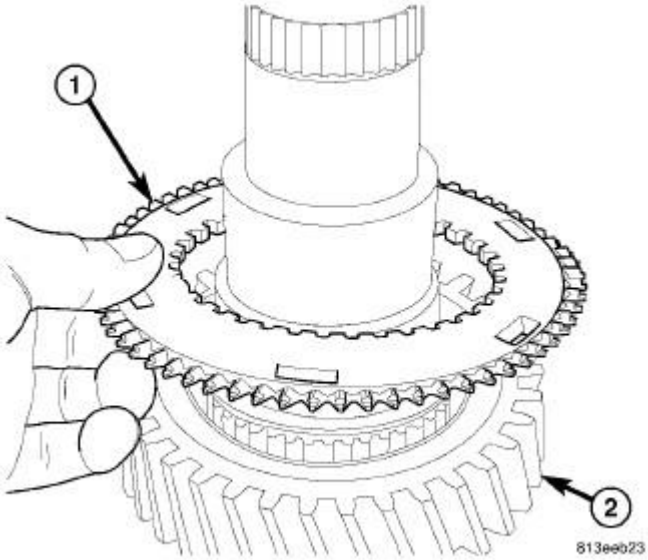

Fig. 85: Installing Second Gear Stop Ring
Courtesy of CHRYSLER GROUP, LLC

4. Install second gear stop ring (1) with teeth pointing up on second gear (2).

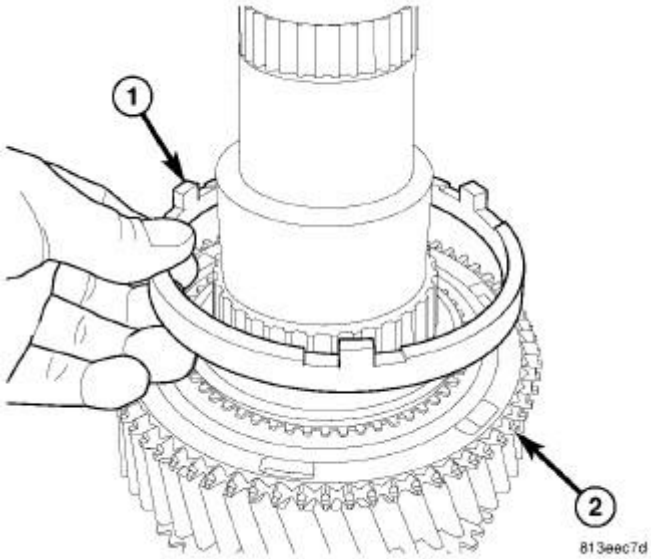

Fig. 86: Installing Second Gear Inner Friction Ring
Courtesy of CHRYSLER GROUP, LLC

5. Install second gear inner friction ring (1) on stop ring (2).

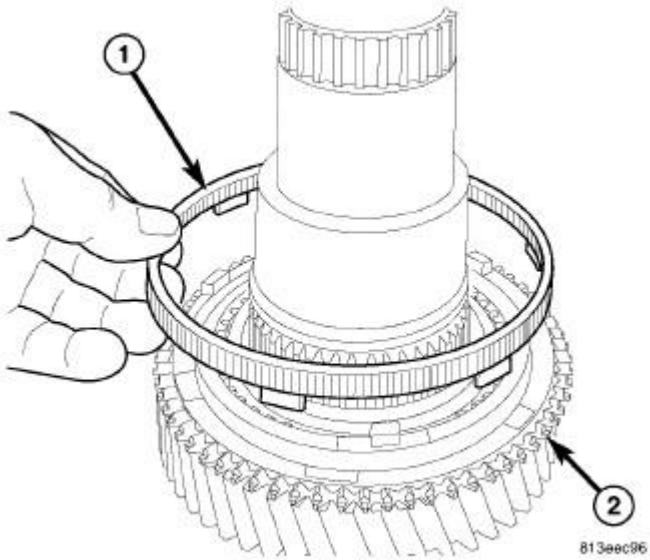

Fig. 87: Installing Second Gear Outer Friction Ring
Courtesy of CHRYSLER GROUP, LLC

6. Install second gear outer friction ring (1) on stop ring (2).

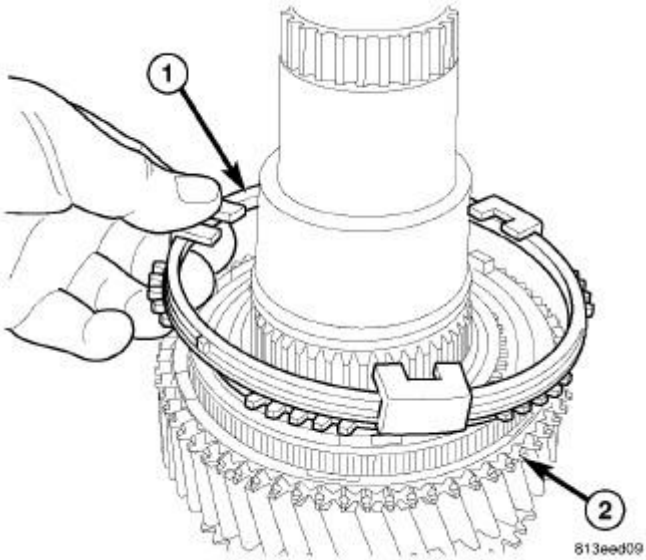

Fig. 88: Installing Second Gear Blocker Ring
Courtesy of CHRYSLER GROUP, LLC

7. Install second gear blocker ring (1) on stop ring (2).

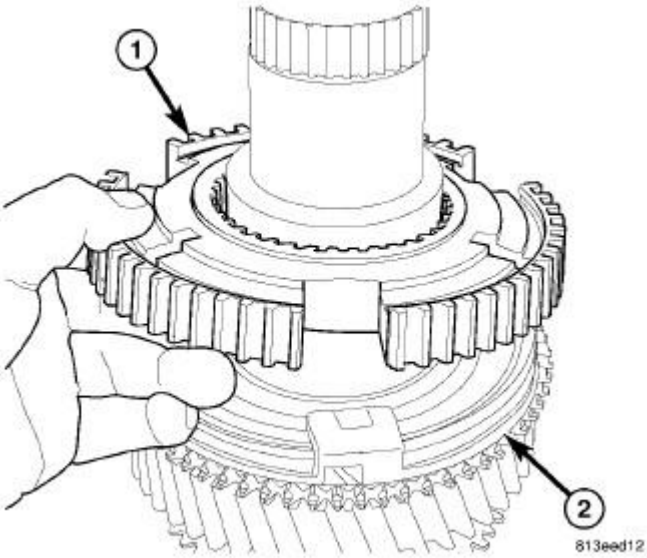

Fig. 89: Installing 1-2 Synchronizer Hub
Courtesy of CHRYSLER GROUP, LLC

8. Install 1-2 synchronizer hub (1) on mainshaft and synchronizer rings (2).

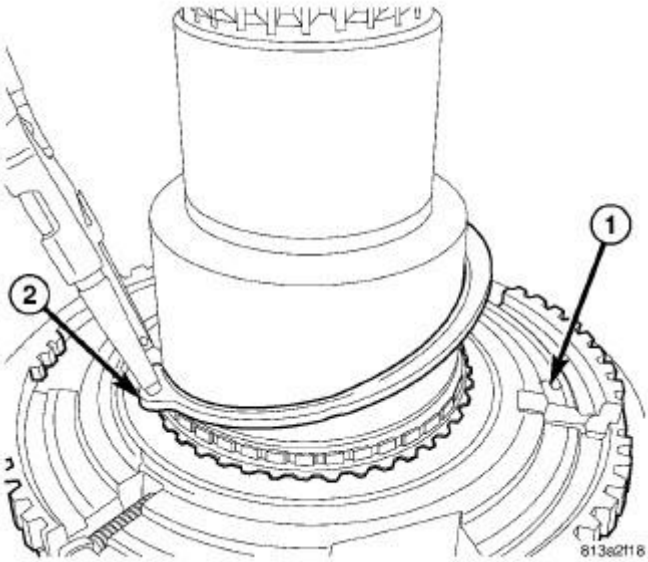

Fig. 90: Installing 1-2 Synchronizer Hub Snap Ring
Courtesy of CHRYSLER GROUP, LLC

9. Install 1-2 synchronizer hub (1) and hub snap ring (2).

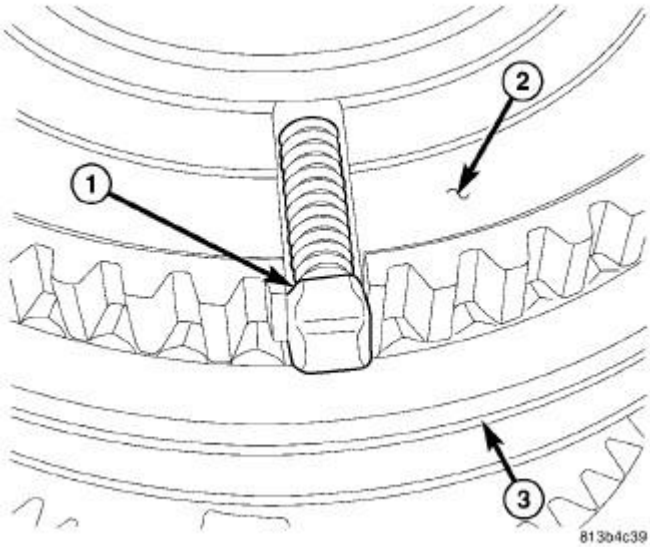

Fig. 91: Synchronizer Detent & Spring
Courtesy of CHRYSLER GROUP, LLC

10. Install 1-2 synchronizer sleeve (3) on the hub (2) and push sleeve to the bottom of the hub.

NOTE: **1-2 synchronizer sleeve (3) and hub (2) have one small tooth. They must be aligned to install synchronizer sleeve (3) on hub (2).**

11. Install 1-2 synchronizer detents and springs (1) into synchronizer hub (2) slots. Then push detents behind synchronizer sleeve (3).

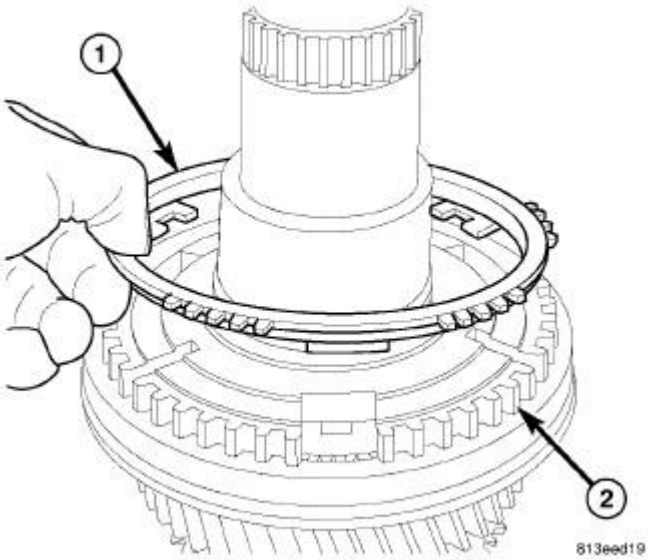

Fig. 92: Installing First Gear Blocker Ring
Courtesy of CHRYSLER GROUP, LLC

12. Install first gear blocker ring (1) on synchronizer hub (2).

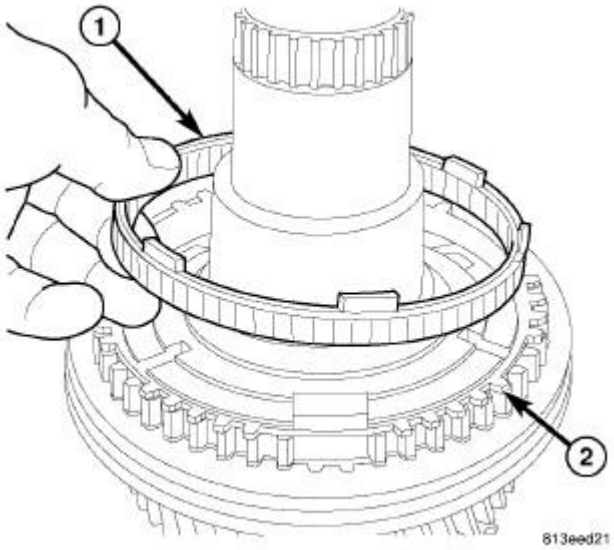

Fig. 93: Installing First Gear Outer Friction Ring
Courtesy of CHRYSLER GROUP, LLC

13. Install first gear outer friction ring (1) on synchronizer hub (2).

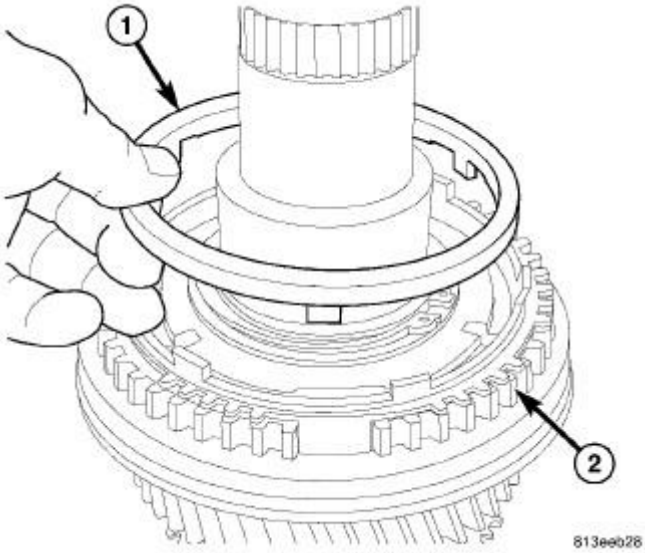

Fig. 94: Installing First Gear Inner Friction Ring
Courtesy of CHRYSLER GROUP, LLC

14. Install first gear inner friction ring (1) on synchronizer hub (2).

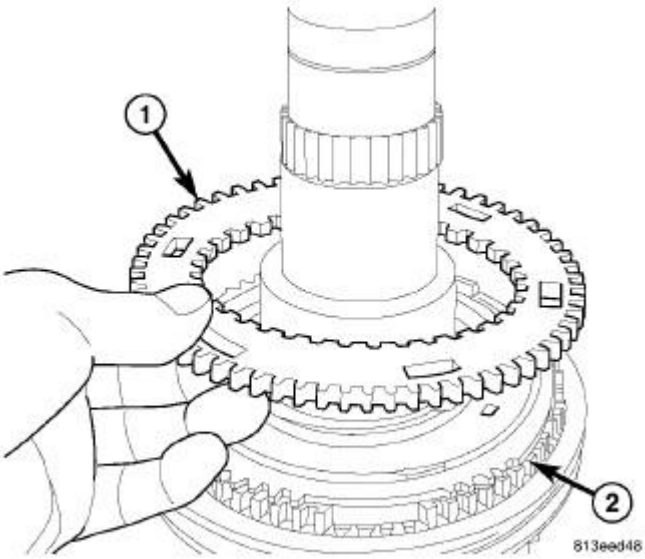

Fig. 95: Installing First Gear Stop Ring
Courtesy of CHRYSLER GROUP, LLC

15. Install first gear stop ring (1) with teeth pointing down on synchronizer rings and hub (2).
16. Hold first gear stop ring (1) on synchronizer rings (2) and center 1-2 synchronizer sleeve on the hub.

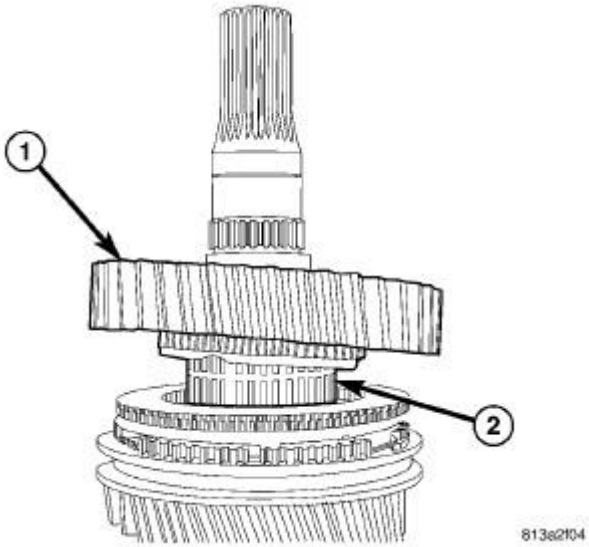

Fig. 96: First Gear & Bearing
Courtesy of CHRYSLER GROUP, LLC

17. Install first gear (1) and bearing (2).

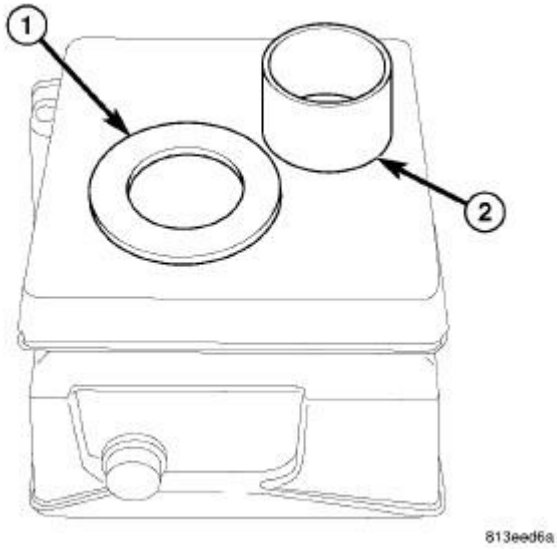

Fig. 97: Heating Thrust Washer & Reverse Gear Bearing Race
Courtesy of CHRYSLER GROUP, LLC

18. Heat thrust washer (1) and reverse gear bearing race (2) on bearing heater to a maximum of 150 Celsius (300° Fahrenheit).

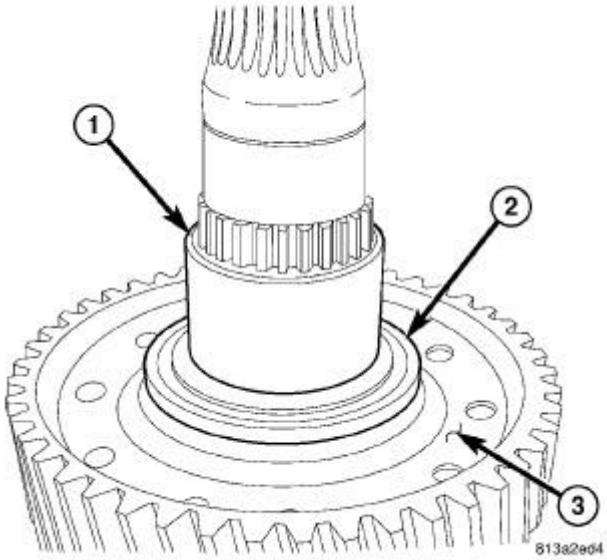

Fig. 98: Reverse Bearing Race & Thrust Washer
Courtesy of CHRYSLER GROUP, LLC

19. Using welding gloves or tongs, install thrust washer (2) and reverse gear bearing race (1) on mainshaft.

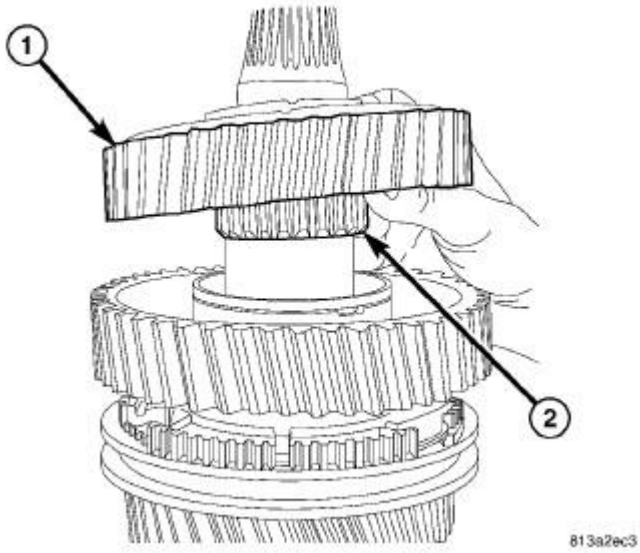

Fig. 99: Reverse Gear & Bearing
Courtesy of CHRYSLER GROUP, LLC

20. Install reverse gear (1) and bearing (2).

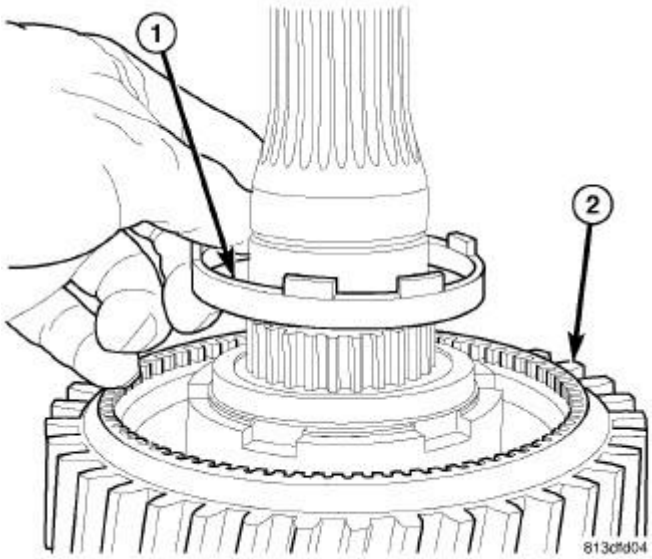

Fig. 100: Installing Reverse Inner Blocker Ring
Courtesy of CHRYSLER GROUP, LLC

21. Install reverse gear inner friction ring (1) on reverse gear (2).

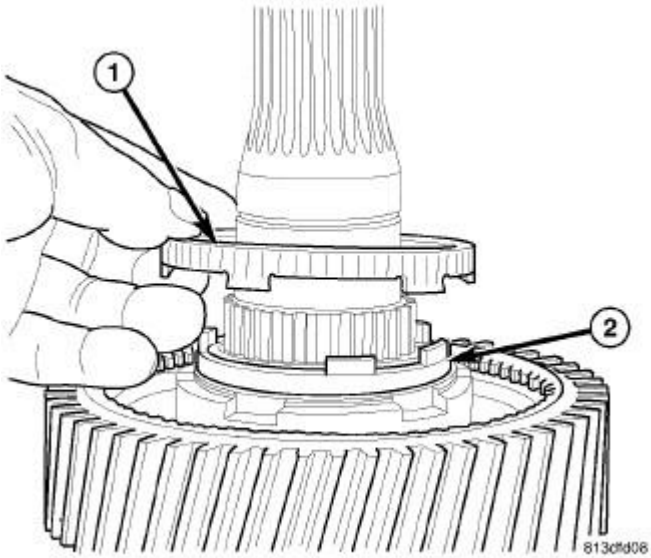

Fig. 101: Installing Reverse Gear Outer Friction Ring
Courtesy of CHRYSLER GROUP, LLC

22. Install reverse gear outer friction ring (1) on inner blocker ring (2).

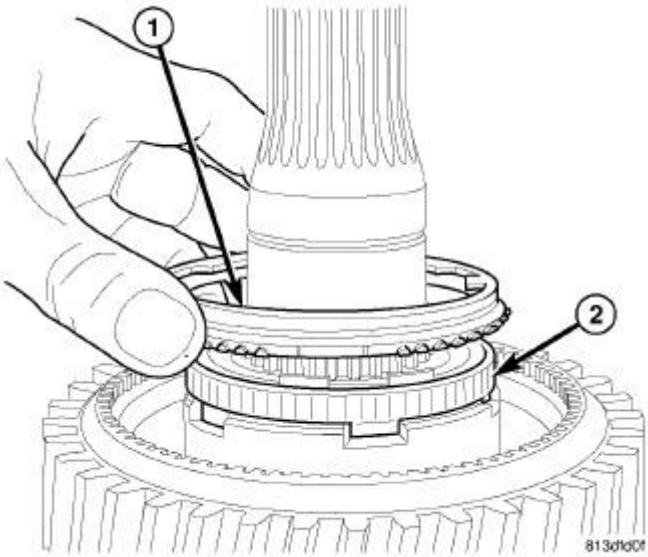

Fig. 102: Installing Reverse Gear Outer Blocker Ring
Courtesy of CHRYSLER GROUP, LLC

23. Install reverse gear blocker ring (1) on friction ring (2).

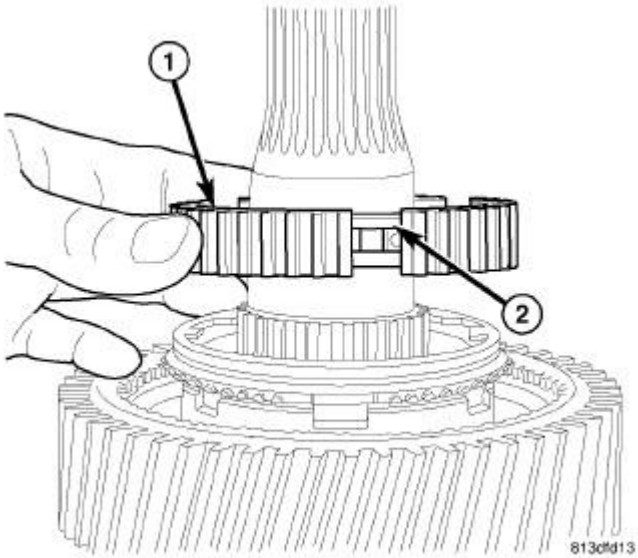

Fig. 103: Installing Reverse Gear Synchronizer Hub & Snap Ring
Courtesy of CHRYSLER GROUP, LLC

24. Install reverse gear synchronizer hub (1) with snap ring (2) on the top on mainshaft.

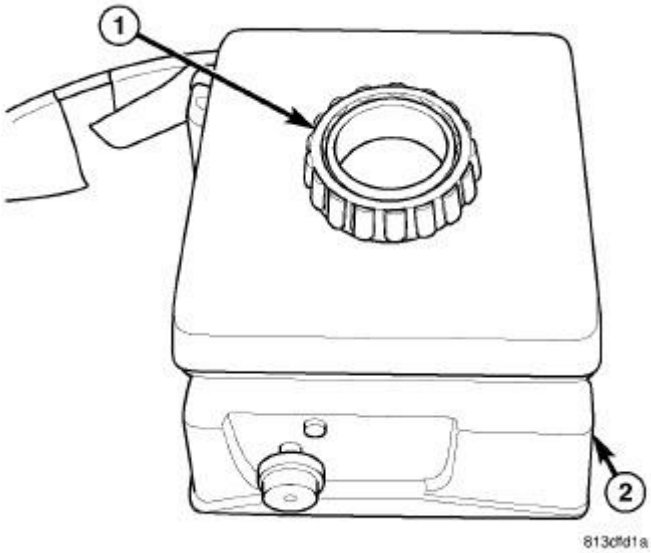

Fig. 104: Heating Bearing
Courtesy of CHRYSLER GROUP, LLC

25. Heat mainshaft bearing (1) on bearing heater (2) to a maximum of 150 Celsius (300° Fahrenheit).

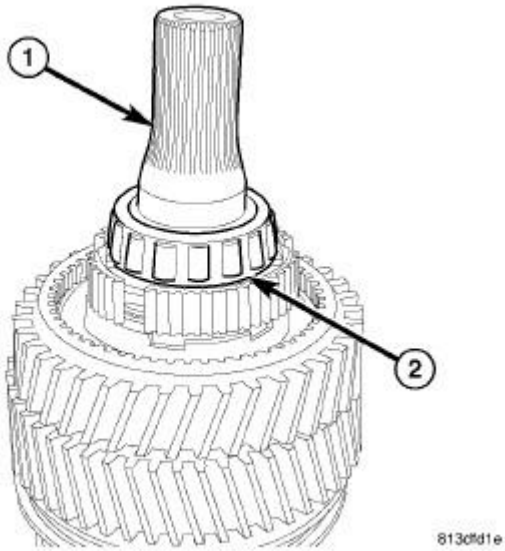

Fig. 105: Installing Mainshaft Bearing On Mainshaft
Courtesy of CHRYSLER GROUP, LLC

26. Using welding gloves or tongs, install mainshaft (1) bearing (2) on mainshaft.
27. On 4x4 transmission install mainshaft (1) bearing (2) snap ring.

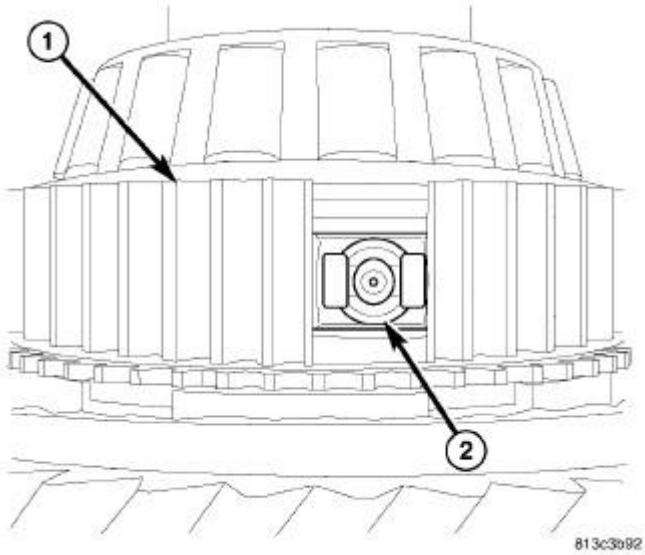

Fig. 106: Reverse Gear Synchronizer Hub & Detents
Courtesy of CHRYSLER GROUP, LLC

28. Install reverse synchronizer hub (1) detents (2).

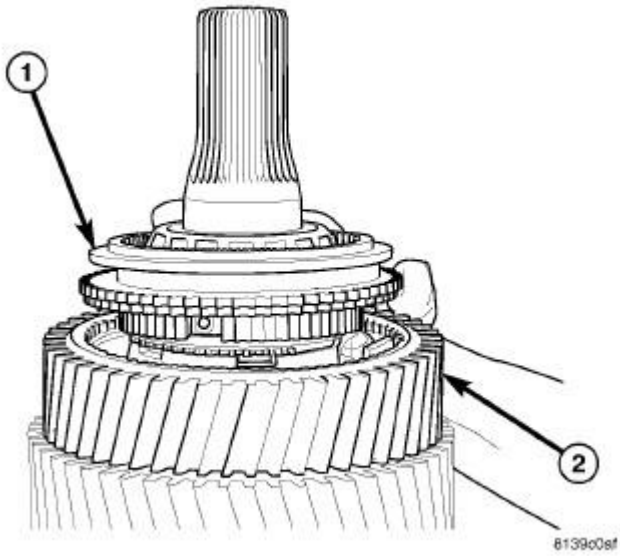

Fig. 107: Reverse Gear & Synchronizer Sleeve
Courtesy of CHRYSLER GROUP, LLC

29. Install reverse gear (2) synchronizer sleeve (1) on hub and center sleeve on hub.

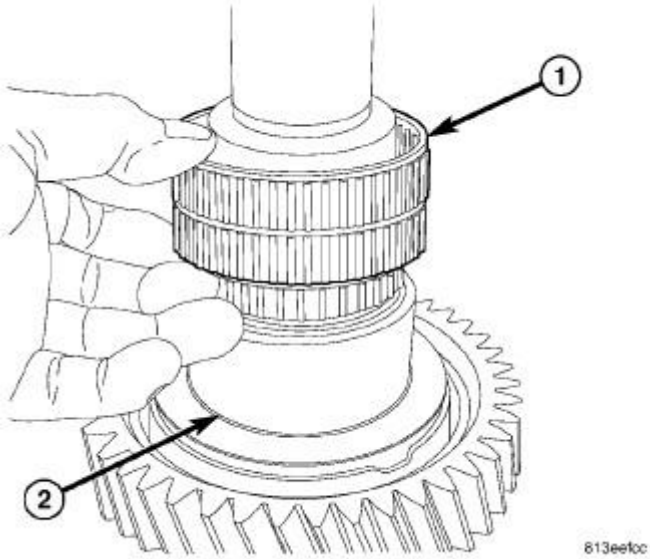

Fig. 108: Installing Third Gear Bearing On Mainshaft
Courtesy of CHRYSLER GROUP, LLC

30. Turn mainshaft and Fixture (special tool #9605, Fixture) over and secure in vise.
31. Install third gear bearing (1) on mainshaft (2).

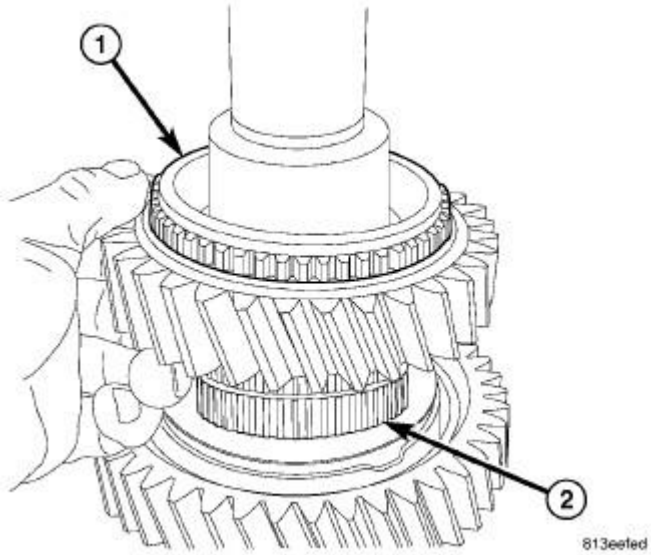

Fig. 109: Installing Third Gear On Mainshaft
Courtesy of CHRYSLER GROUP, LLC

32. Install third gear (1) on mainshaft (2).

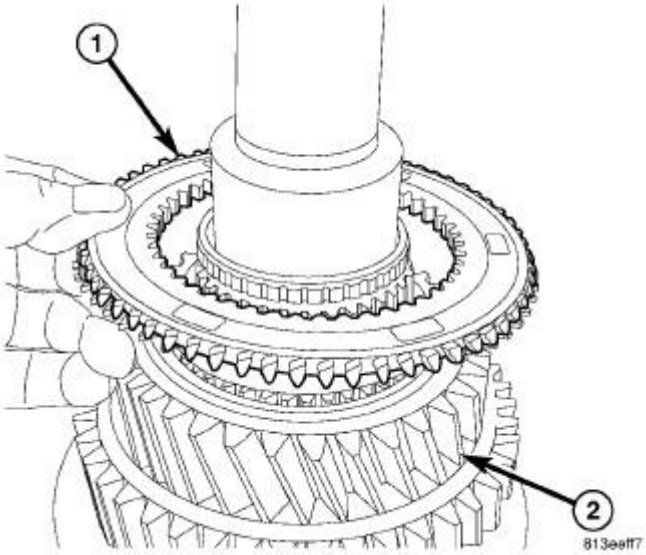

Fig. 110: Installing Third Gear Stop Ring
Courtesy of CHRYSLER GROUP, LLC

33. Install third gear stop ring (1) with teeth pointing up on third gear (2).

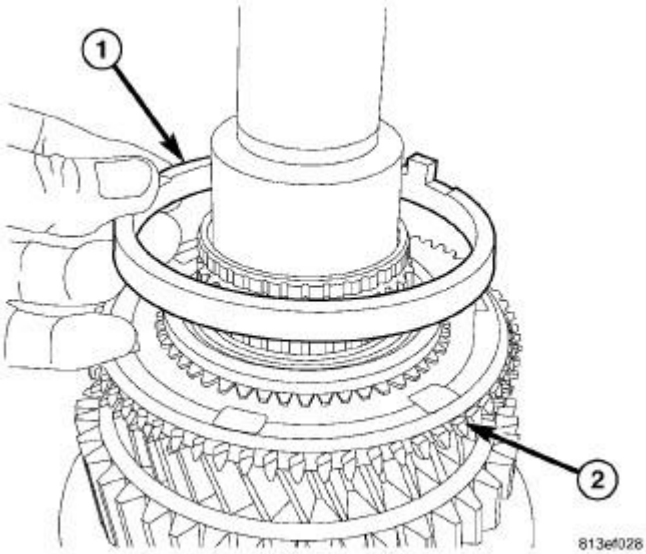

Fig. 111: 3rd Gear Inner Friction Ring
Courtesy of CHRYSLER GROUP, LLC

34. Install third gear inner friction ring (1) on stop ring (2).

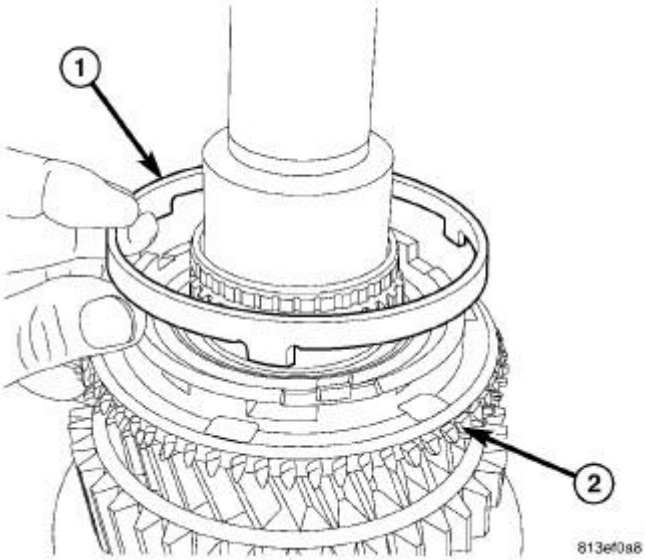

Fig. 112: 3rd Gear Outer Friction Ring
Courtesy of CHRYSLER GROUP, LLC

35. Install third gear outer friction ring (1) on stop ring (2).

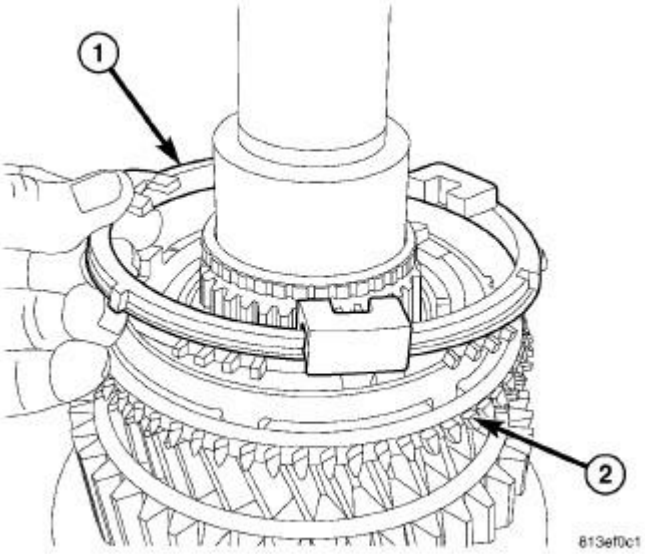

Fig. 113: 3rd Gear Blocker Ring
Courtesy of CHRYSLER GROUP, LLC

36. Install third gear blocker ring (1) on stop ring (2).

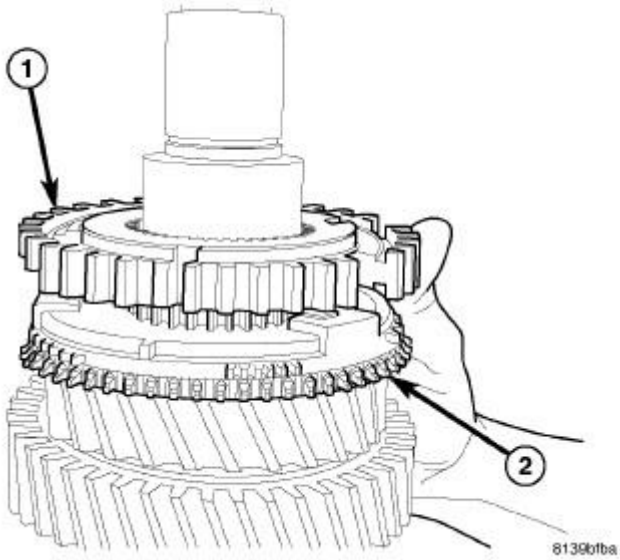

Fig. 114: Installing 3-4 Synchronizer Hub & Third Gear Synchronizer Rings
Courtesy of CHRYSLER GROUP, LLC

37. Install 3-4 synchronizer hub (1) on third gear synchronizer rings (2).

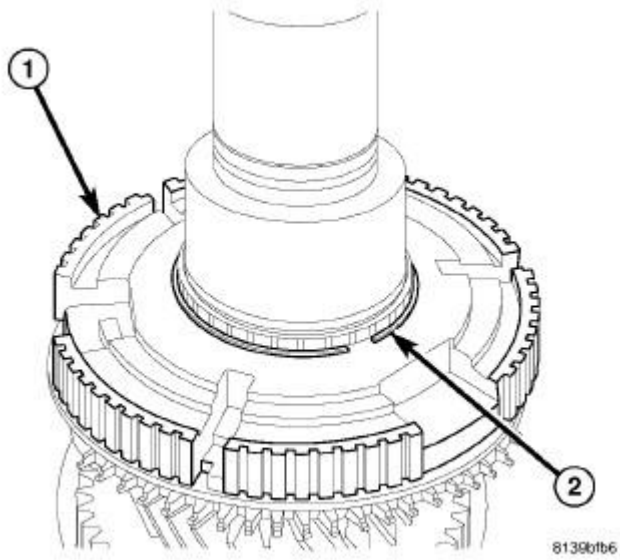

Fig. 115: 3-4 Synchronizer Hub Snap Ring
Courtesy of CHRYSLER GROUP, LLC

38. Install third gear synchronizer hub (1) snap ring (2).

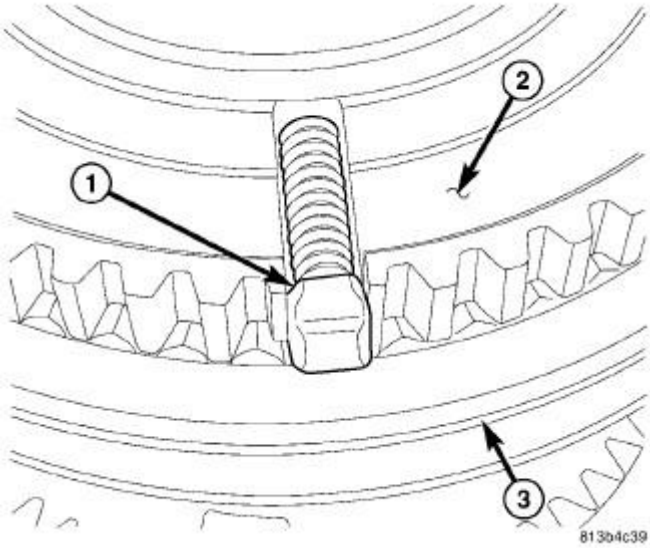

Fig. 116: Synchronizer Detent & Spring
Courtesy of CHRYSLER GROUP, LLC

39. Install 3-4 synchronizer sleeve (3) on hub (2) and push sleeve to the bottom of the hub.

NOTE: **3-4 synchronizer sleeve (3) and hub (2) have one small tooth. They must be aligned to install synchronizer sleeve (3).**

40. Install 3-4 synchronizer detents and springs (1) into synchronizer hub (2) slots. Then push detents (1) behind synchronizer sleeve (3).

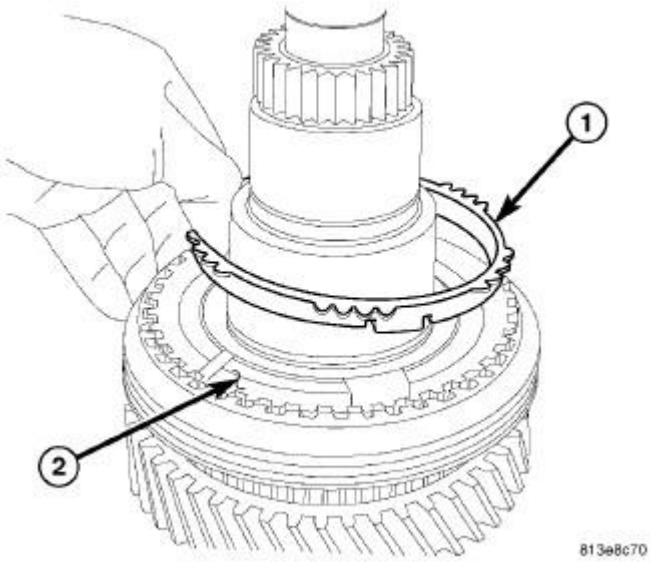

Fig. 117: Installing Fourth Gear Outer Blocker Ring
Courtesy of CHRYSLER GROUP, LLC

41. Install fourth gear blocker ring (1) on synchronizer hub (2).

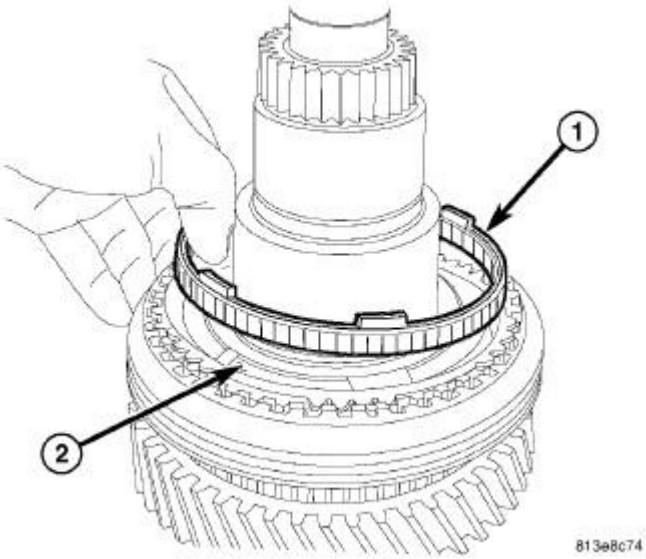

Fig. 118: 4th Outer Friction Ring
Courtesy of CHRYSLER GROUP, LLC

42. Install fourth gear outer friction ring (1) on synchronizer hub (2).

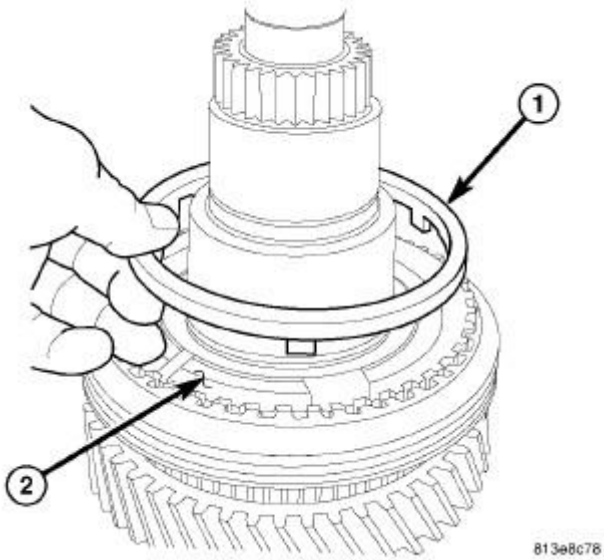

Fig. 119: Installing Fourth Gear Inner Friction Ring
Courtesy of CHRYSLER GROUP, LLC

43. Install fourth gear inner friction ring (1) on synchronizer hub (2).

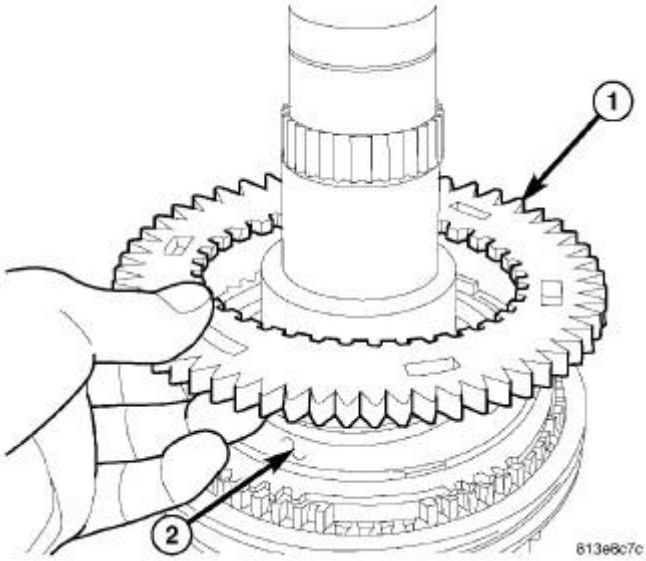

Fig. 120: Installing Fourth Gear Stop Ring
Courtesy of CHRYSLER GROUP, LLC

44. Install fourth gear stop ring (1) with teeth pointing down on synchronizer hub (2).
45. Hold fourth gear stop ring (1) on synchronizer hub (2) and center 3-4 synchronizer sleeve on hub.

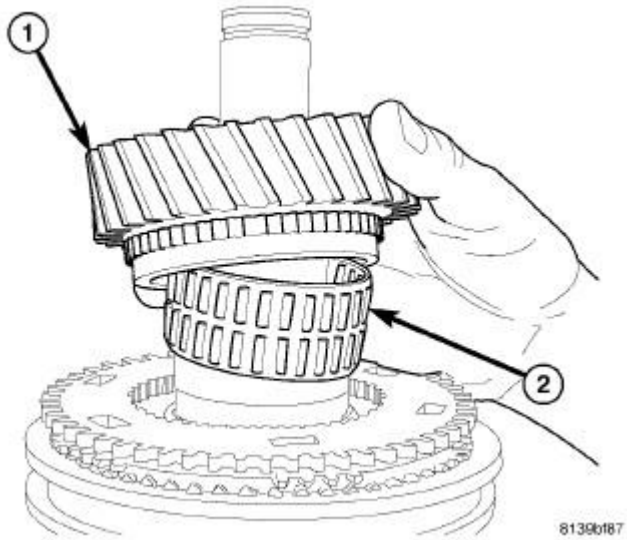

Fig. 121: Fourth Gear & Bearing
Courtesy of CHRYSLER GROUP, LLC

46. Install fourth gear (1) and bearing (2).

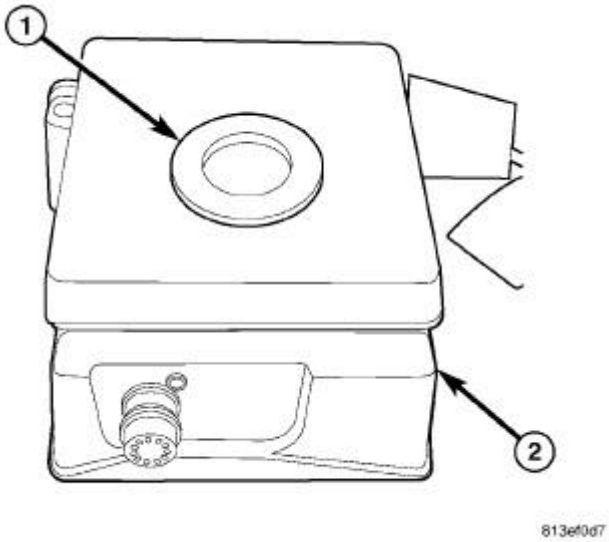

Fig. 122: Heating Fourth Gear Thrust Washer
Courtesy of CHRYSLER GROUP, LLC

47. Heat fourth gear thrust washer (1) on bearing heater (2) to a maximum of 150 Celsius (300° Fahrenheit).

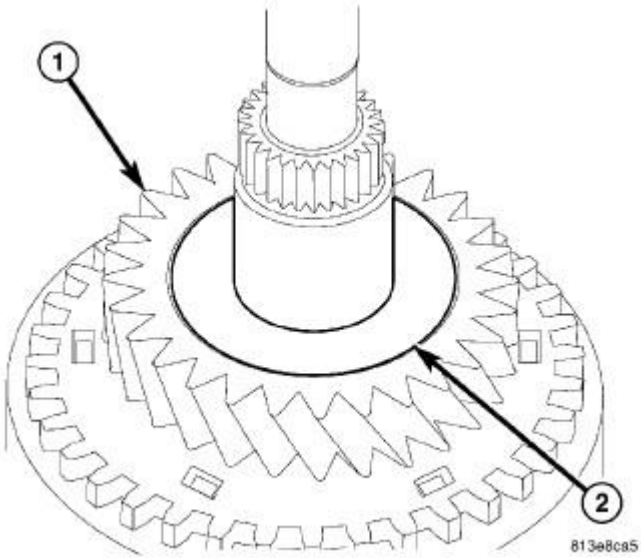

Fig. 123: Installing Fourth Gear Thrust Washer
Courtesy of CHRYSLER GROUP, LLC

48. Using welding gloves or tongs, install fourth gear (1) thrust washer (2).

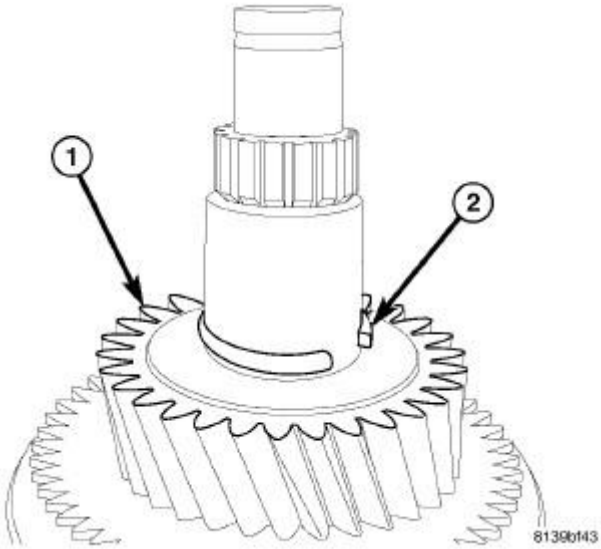

Fig. 124: Fourth Gear Snap Ring
Courtesy of CHRYSLER GROUP, LLC

49. Install fourth gear (1) snap ring (2).

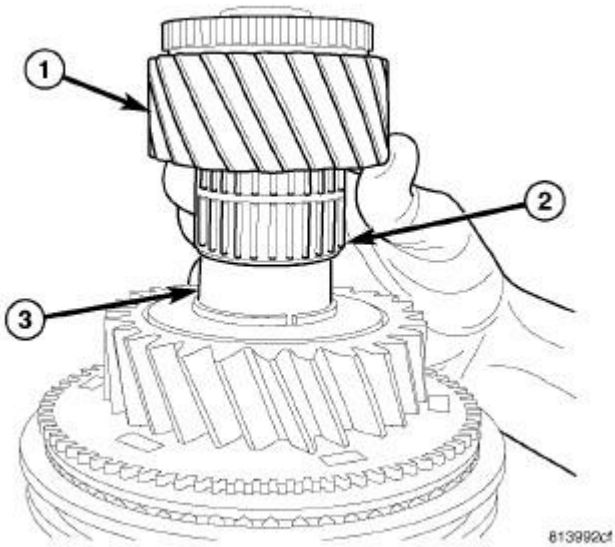

Fig. 125: Sixth Gear & Bearing
Courtesy of CHRYSLER GROUP, LLC

50. Install sixth gear (1) and bearing (2) on mainshaft (3).

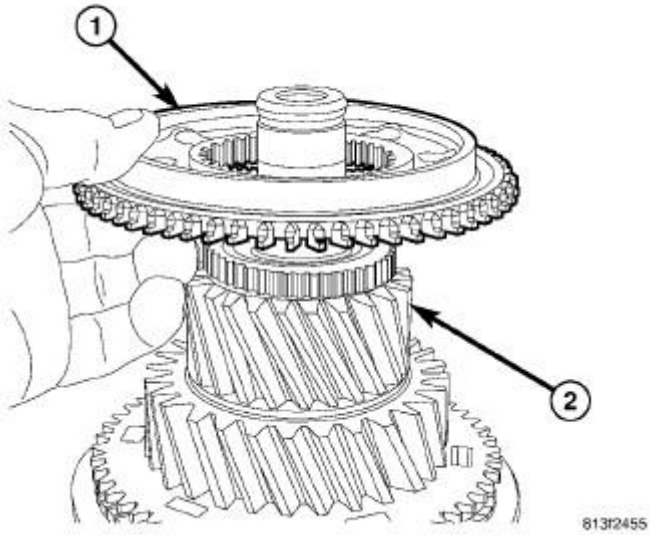

Fig. 126: Installing Sixth Gear Stop Ring
Courtesy of CHRYSLER GROUP, LLC

51. Install sixth gear stop ring (1) on sixth gear (2).

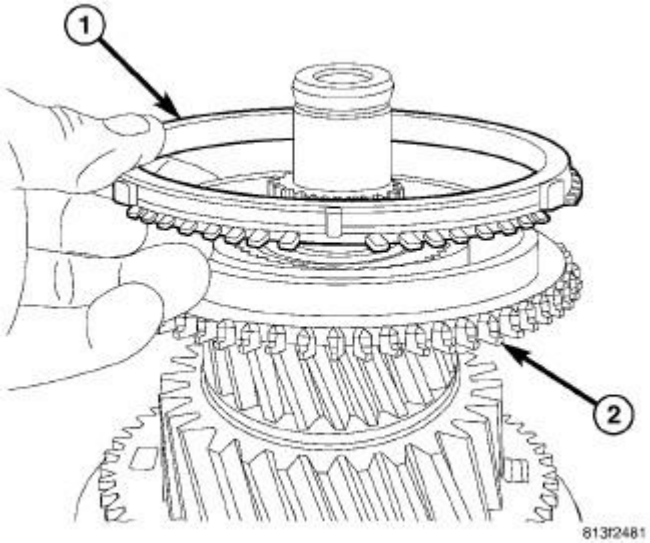

Fig. 127: Installing Sixth Gear Friction Ring
Courtesy of CHRYSLER GROUP, LLC

52. Install sixth gear friction ring (1) on stop ring (2).

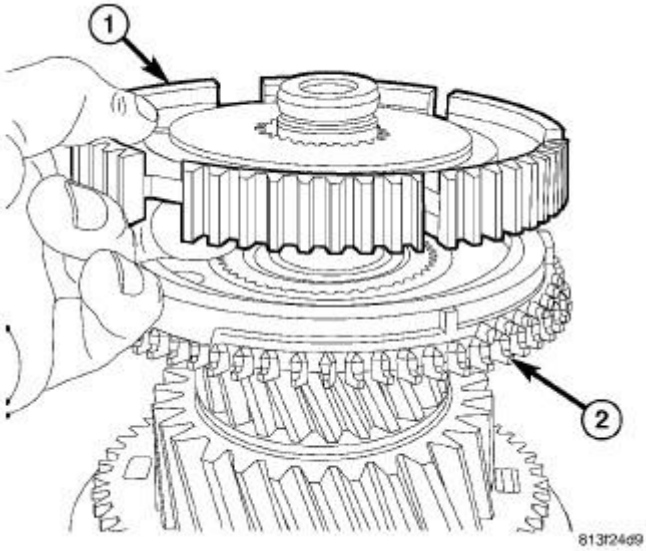

Fig. 128: Installing 5-6 Synchronizer Hub
Courtesy of CHRYSLER GROUP, LLC

53. Install 5-6 synchronizer hub (1) on sixth gear synchronizer rings (2).

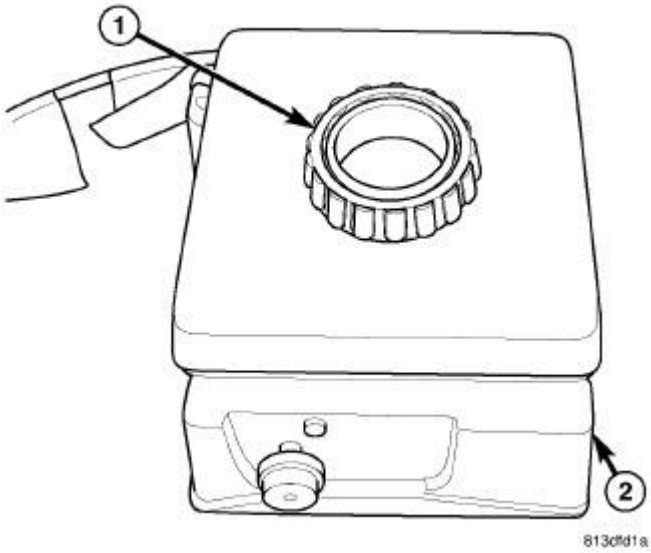

Fig. 129: Heating Bearing
Courtesy of CHRYSLER GROUP, LLC

54. Heat mainshaft bearing (1) on bearing heater to a maximum of 150 Celsius (300° Fahrenheit).

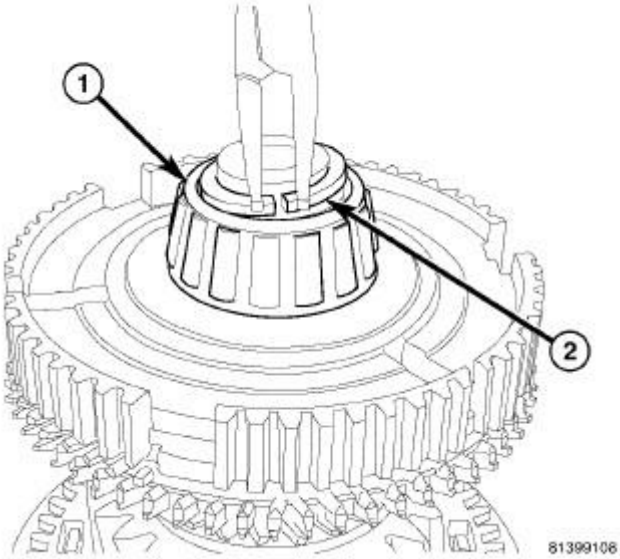

Fig. 130: Mainshaft Bearing Snap Ring
Courtesy of CHRYSLER GROUP, LLC

55. Using welding gloves or tongs, install mainshaft bearing (1) on mainshaft.
56. Install mainshaft bearing (1) snap ring (2).

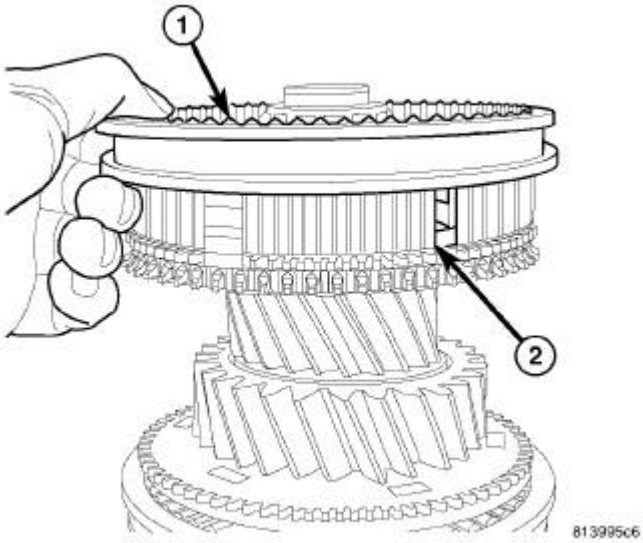

Fig. 131: 5-6 Synchronizer Sleeve
Courtesy of CHRYSLER GROUP, LLC

57. Install 5-6 synchronizer sleeve (1) on hub (2) and push sleeve to the bottom of the hub.

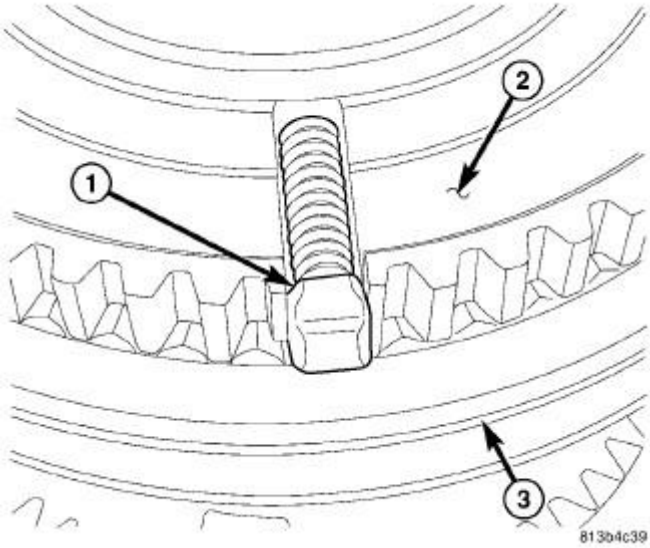

Fig. 132: Synchronizer Detent & Spring
Courtesy of CHRYSLER GROUP, LLC

58. Install 5-6 synchronizer detents and springs (1) into synchronizer hub (2) slots. Then push detents behind synchronizer sleeve (3).

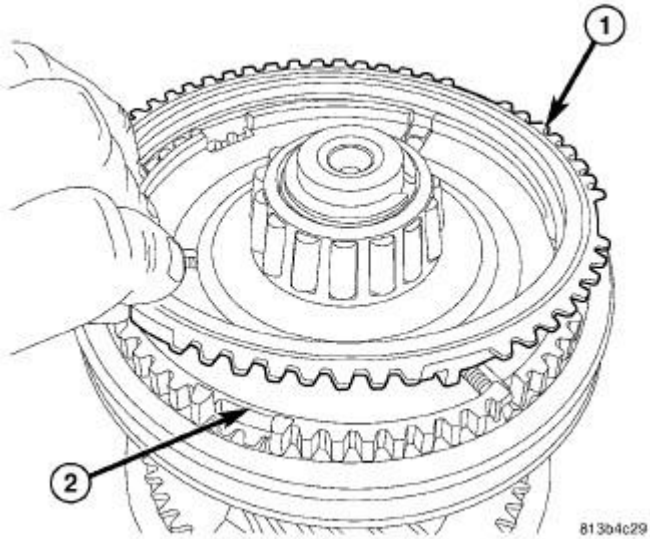

Fig. 133: Installing Fifth Gear Friction Ring
Courtesy of CHRYSLER GROUP, LLC

59. Install fifth gear friction ring (1) onto hub (2).

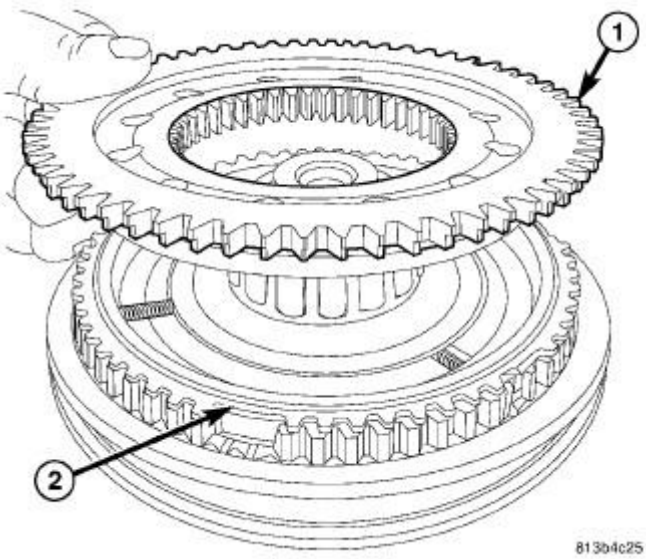

Fig. 134: Installing Fifth Gear Blocker Ring
Courtesy of CHRYSLER GROUP, LLC

60. Install fifth gear blocker ring with teeth pointing down (1) onto hub (2).
61. Hold fifth gear blocker ring (1) onto hub (2) and center 5-6 synchronizer sleeve on hub (2).

REAR HOUSING

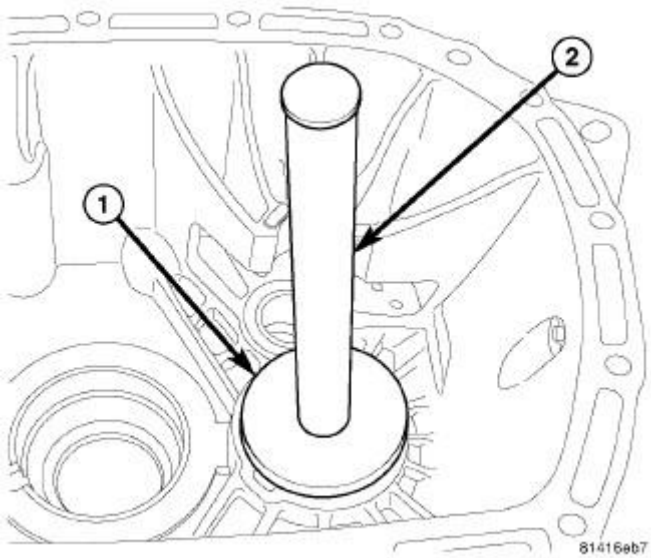

Fig. 135: Installing Countershaft Cup
Courtesy of CHRYSLER GROUP, LLC

1. Install countershaft bearing cup with Installer (special tool #9589, Installer, Bearing Cup) (1) and Handle (special tool #C-4171, Driver Handle, Universal) (2).

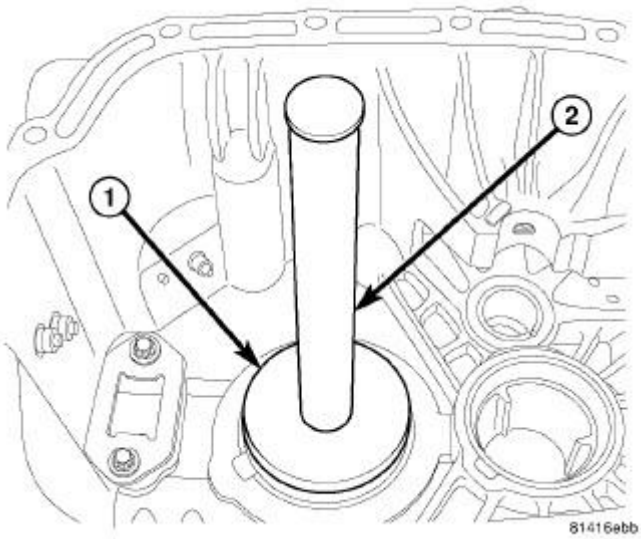

Fig. 136: Installing Mainshaft Cup
Courtesy of CHRYSLER GROUP, LLC

2. Install mainshaft bearing cup with Installer (special tool #9588, Installer, Bearing Cup) (1) and Handle (special tool #C-4171, Driver Handle, Universal) (2).
3. Install output shaft seal with Installer (special tool #9598, Installer, Seal).

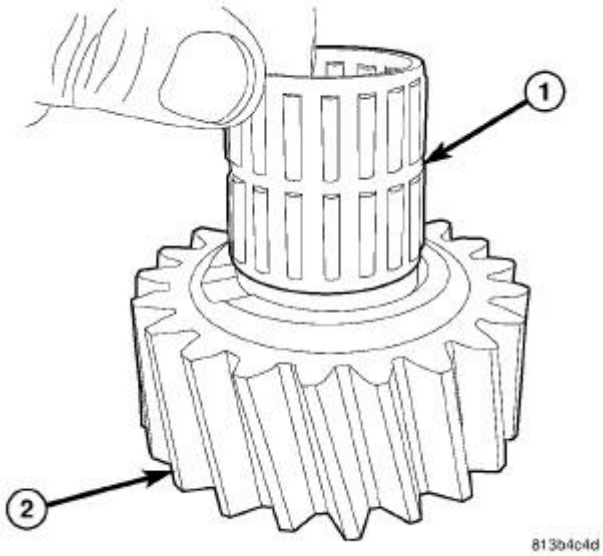

Fig. 137: Installing Reverse Idler Bearing Into Idler Gear
Courtesy of CHRYSLER GROUP, LLC

4. Install reverse idler bearing (1) into idler gear (2).

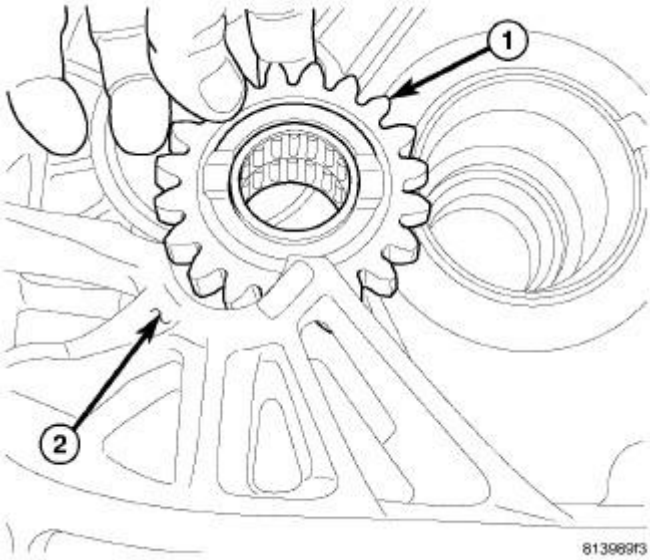

Fig. 138: Reverse Idle Gear
Courtesy of CHRYSLER GROUP, LLC

5. Install idler gear (1) with **taller thrust face up** into rear housing (2) and off to the side. For mainshaft/countershaft installation clearance.

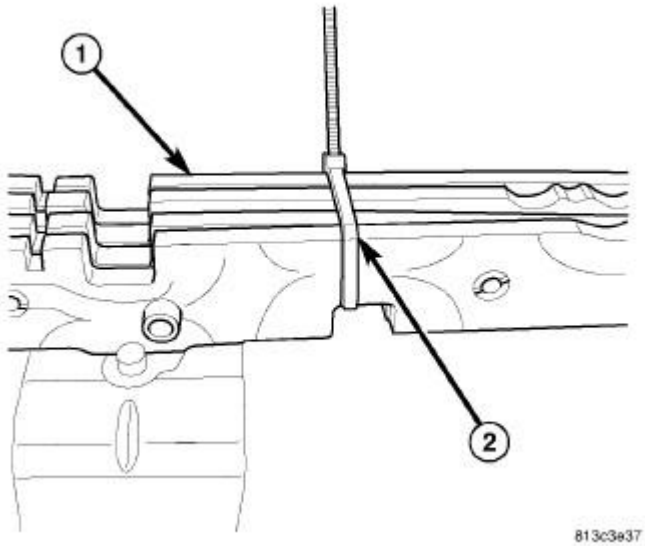

Fig. 139: Identifying Strap & Shift Rails
Courtesy of CHRYSLER GROUP, LLC

6. Tie strap (2) shift rails (1) together.

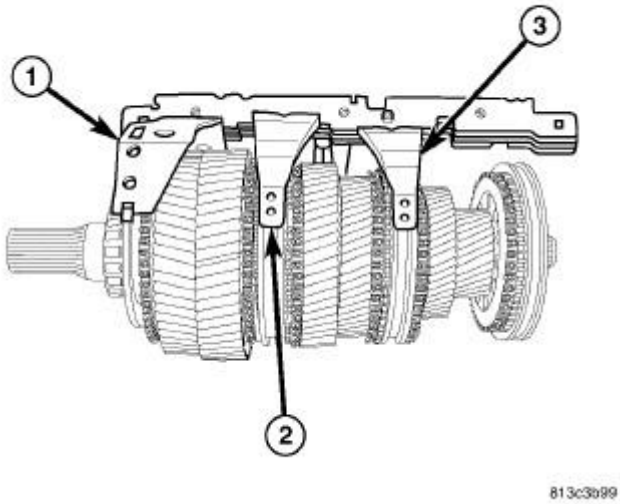

Fig. 140: Identifying Shift Forks
Courtesy of CHRYSLER GROUP, LLC

7. Install reverse (1), 1-2 (2) and 3-4 (3) shift rails and forks as and assembly on synchronizer sleeves.

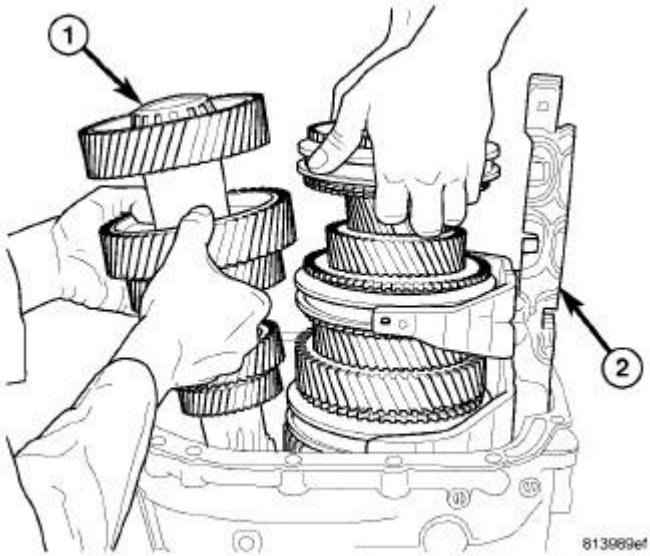

Fig. 141: Countershaft, Mainshaft & Shift Rails
Courtesy of CHRYSLER GROUP, LLC

8. Install mainshaft with shift rails (2) into the rear housing. Tilt the mainshaft then tilt the countershaft (1) into the housing.

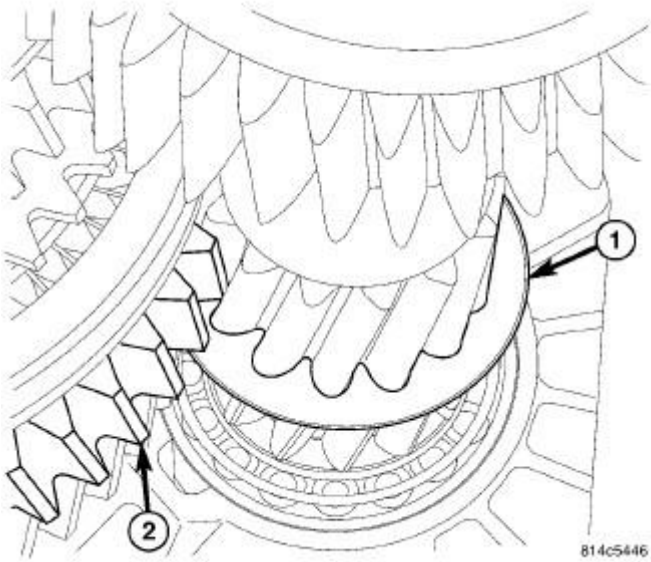

Fig. 142: Identifying Oil Slinger & Mainshaft Gears
Courtesy of CHRYSLER GROUP, LLC

9. Position first/reverse oil slinger (1) between the mainshaft first (2) and reverse gears, then straighten the shafts in the housing.

CAUTION: Oil slinger is fragile and can crack during installation. Failure to follow these instructions will result in cracking the oil slinger and lack of oil to first/reverse bearing.

NOTE: The transmission may or not be equipped with the oil slinger. Service replacement parts will come with an oil slinger. It is not necessary to remove the oil slinger if the original part was not equipped with an oil slinger.

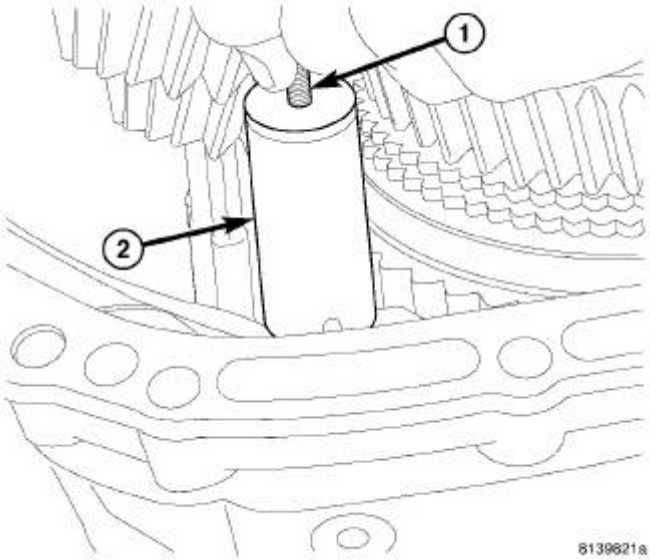

Fig. 143: Reverse Idler Shaft
Courtesy of CHRYSLER GROUP, LLC

10. Position reverse idler gear and install idler shaft (2) with bolt (1).

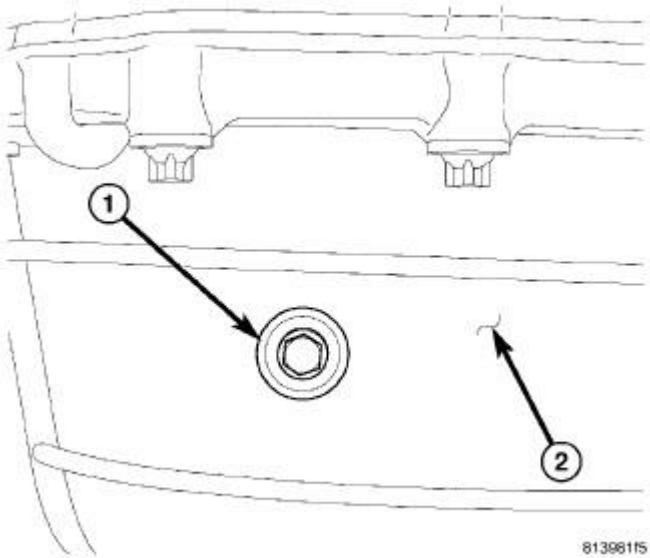

Fig. 144: Reverse Idler Shaft Pin
Courtesy of CHRYSLER GROUP, LLC

11. Install reverse idler gear shaft bolt (1) into rear housing (2) and tighten to 58 N.m (43 ft. lbs.).

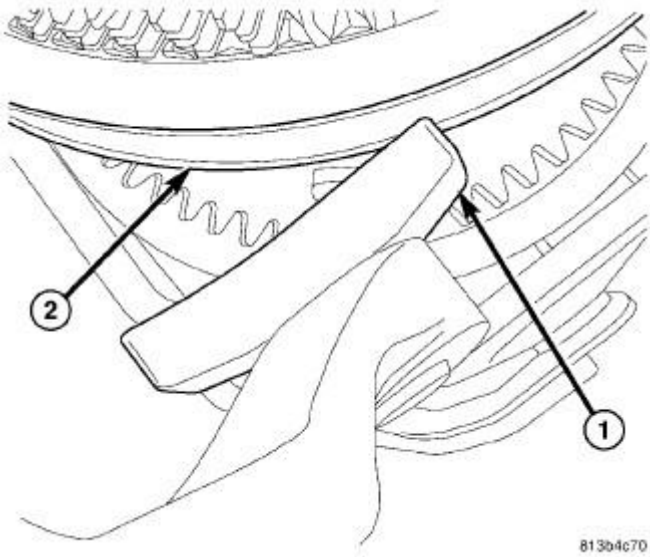

Fig. 145: Installing 5-6 Shift Fork Shoe Narrow Ends
Courtesy of CHRYSLER GROUP, LLC

12. Install 5-6 shift shoe narrow ends (1) into the 5-6 synchronizer sleeves (2).

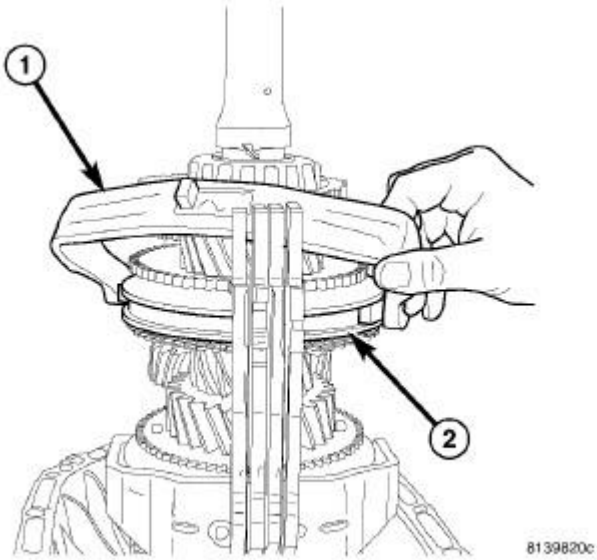

Fig. 146: 5-6 Shift Fork
Courtesy of CHRYSLER GROUP, LLC

13. Install 5-6 shift fork (1) into the shift rail.

FRONT HOUSING

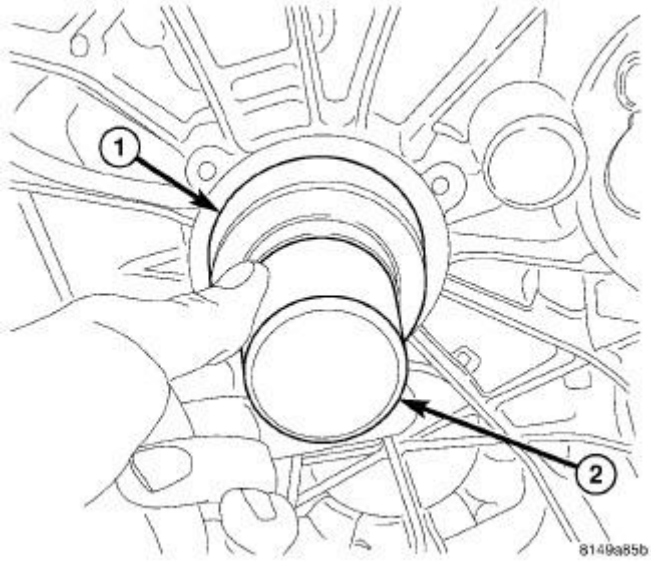

Fig. 147: Installing Input Shaft Seal Front Housing Bore
Courtesy of CHRYSLER GROUP, LLC

CAUTION: If mainshaft/bearings or countershaft/bearings are replaced, end-play measurements must taken to ensure proper bearing preload. Failure to follow these instructions will result in bearing damage.

1. Install input shaft seal front housing bore (1) with Installer (special tool #9595, Installer, Seal) (2).

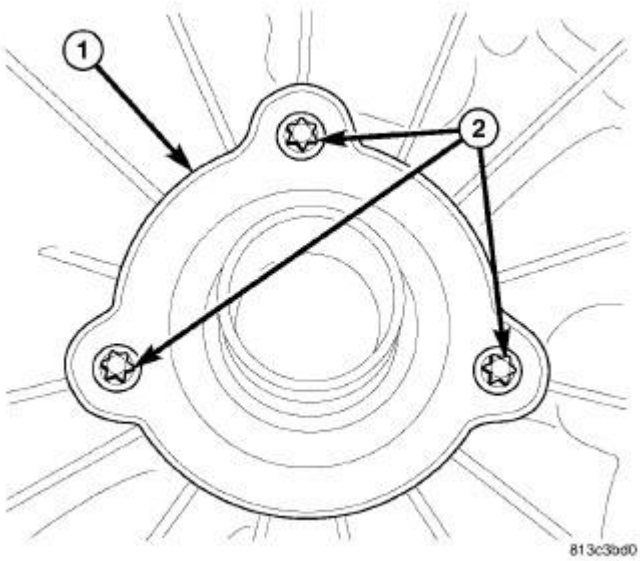

Fig. 148: Input Shaft Seal Retainer & Bolts
Courtesy of CHRYSLER GROUP, LLC

2. Install input shaft retainer (1) and tighten bolts (2) to 23 N.m (17 ft. lbs.).

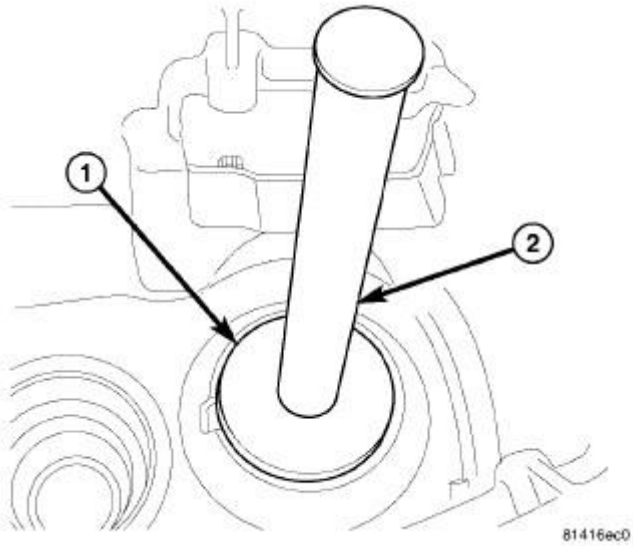

Fig. 149: Installing Countershaft Bearing Cup
Courtesy of CHRYSLER GROUP, LLC

3. Install select end play shims into the countershaft bearing cup bore.
4. Install countershaft bearing cup with Installer (special tool #9589, Installer, Bearing Cup) (1) and Handle (special tool #C-4171, Driver Handle, Universal) (2).

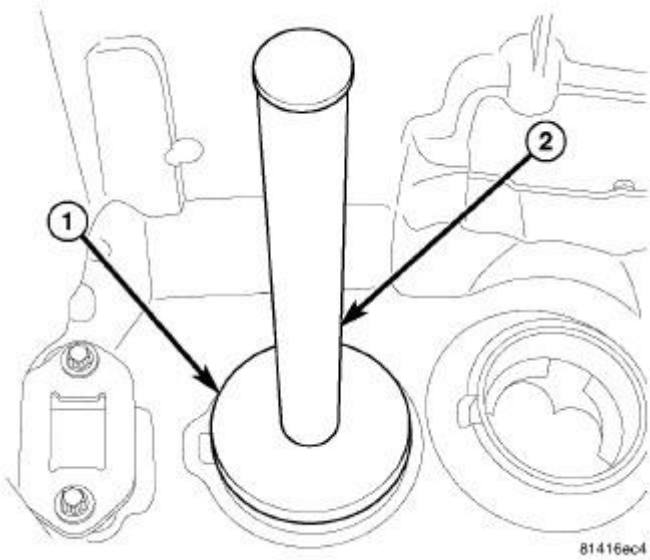

Fig. 150: Installing Mainshaft Bearing Cup
Courtesy of CHRYSLER GROUP, LLC

5. Install input shaft bearing oil supply washer and select end play shims into mainshaft bearing cup bore.
6. Install mainshaft bearing cup with Installer (special tool #9588, Installer, Bearing Cup) (1) and Handle (special tool #C-4171, Driver Handle, Universal) (2).

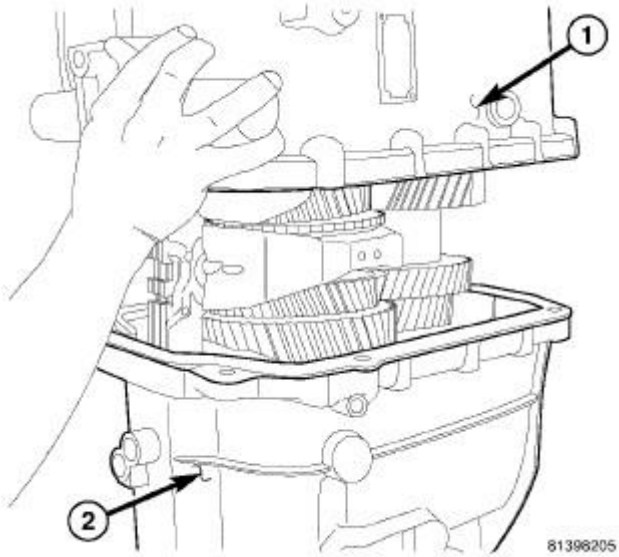

Fig. 151: Front & Rear Housing
Courtesy of CHRYSLER GROUP, LLC

7. Apply Mopar™ Gasket Maker to the rear housing sealing surface.
8. Install front housing (1) onto the rear housing (2).
9. Install housing bolts and tighten to 58 N.m (43 ft. lbs.).

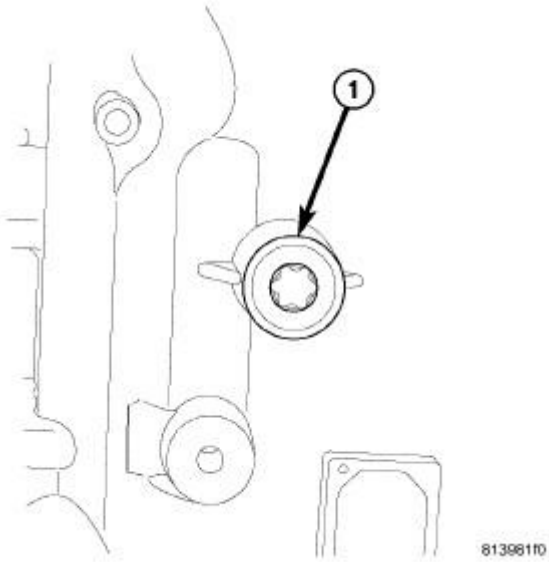

Fig. 152: 5-6 Shift Fork Pivot Pin
Courtesy of CHRYSLER GROUP, LLC

10. Install 5-6 shift fork pin bolts (1) into housing and tighten to 58 N.m (43 ft. lbs.).

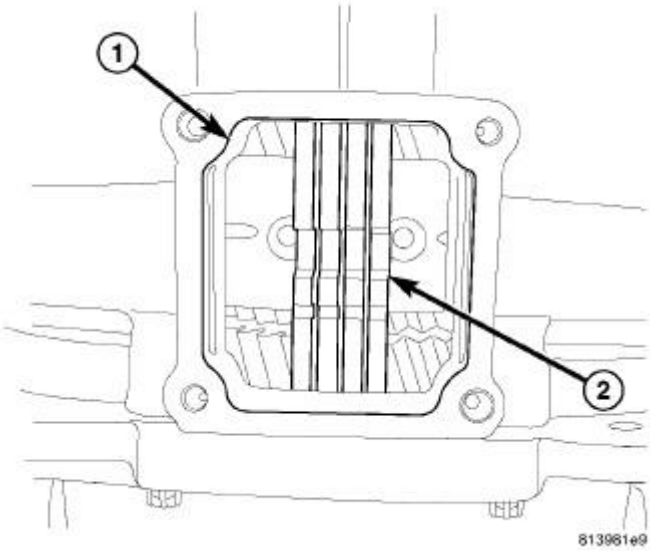

Fig. 153: Aligning Shift Rails In Neutral Position
Courtesy of CHRYSLER GROUP, LLC

11. Remove shift rail (2) tie strap.

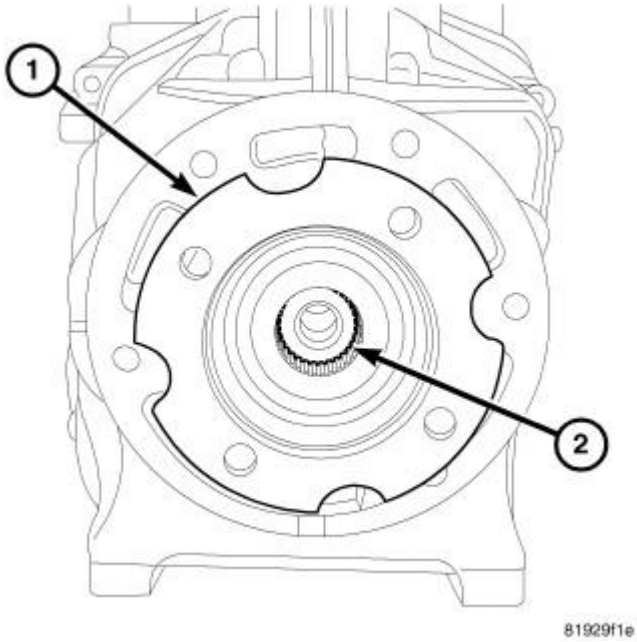

Fig. 154: Flange
Courtesy of CHRYSLER GROUP, LLC

12. On a 4x2 transmission shift two shift rails to lock the transmission in two gears. Then install flange (1) on output shaft (2) and tighten bolt to 260 N.m (190 ft. lbs.). Return shift rails to neutral position.

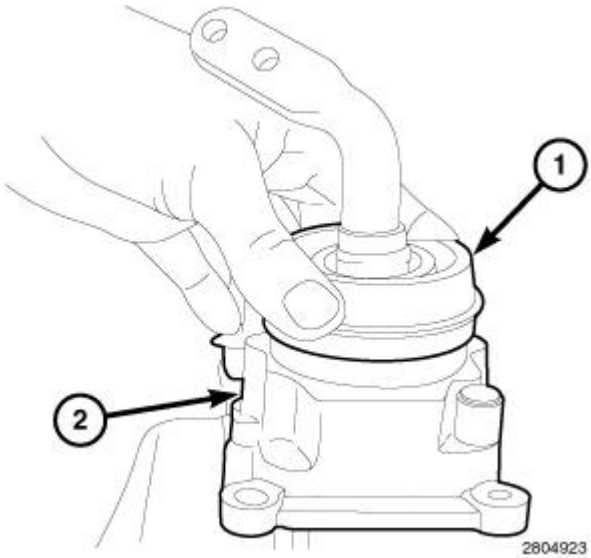

Fig. 155: Shifter Boot & Shift Tower
Courtesy of CHRYSLER GROUP, LLC

13. Push shift tower boot (1) onto shift tower (2).

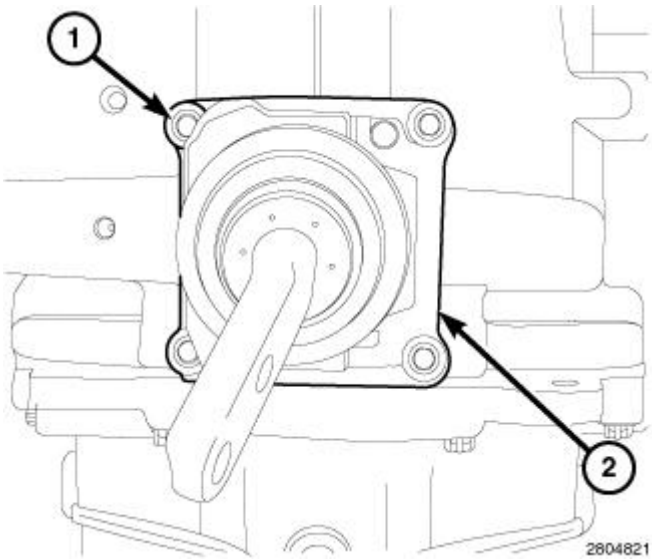

Fig. 156: Shift Tower & Bolts
Courtesy of CHRYSLER GROUP, LLC

14. Apply Mopar™ Gasket Maker to the shift tower opening.
15. Install shift tower (2) and tighten bolts (1) to 23 N.m (17 ft. lbs.).

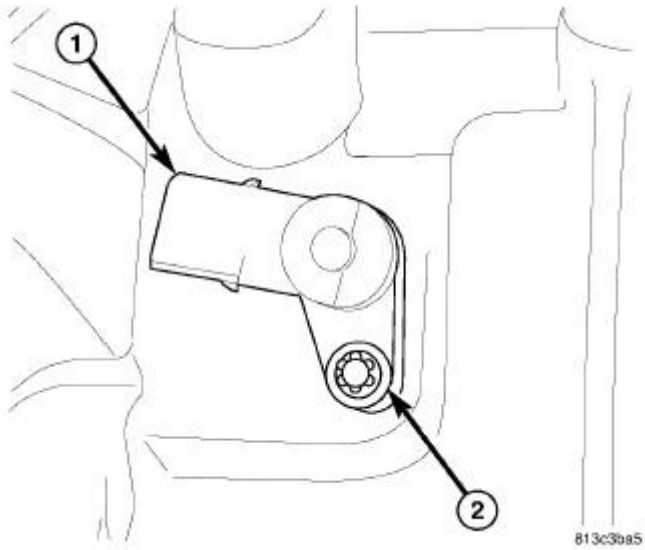

Fig. 157: Back-Up Lamp Switch
Courtesy of CHRYSLER GROUP, LLC

16. Install back up lamp switch (1) and bolt (2).

INSTALLATION

INSTALLATION

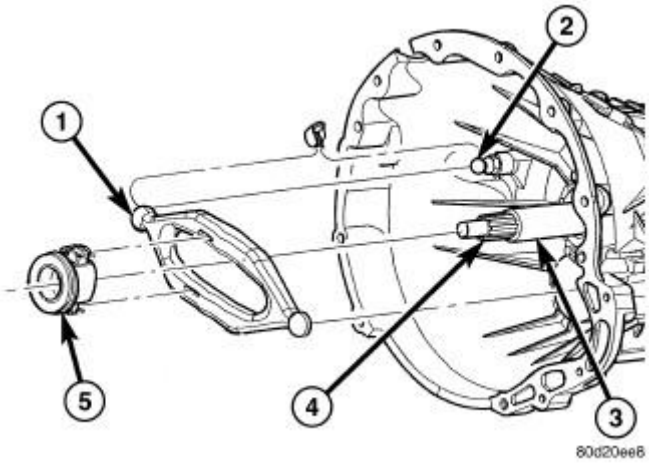

Fig. 158: Identifying Lubrication Points
Courtesy of CHRYSLER GROUP, LLC

CAUTION: The release fork is not symmetrical and must be installed with the slots and part number stamping toward the ball stud side. Part number stamping will be right side up when installed correctly. Failure to install the release fork correctly will result in clutch slippage and damage.

1. Clean transmission front housing mounting surface.
2. Apply light coat of Mopar high temperature bearing grease or equivalent to contact surfaces of following components:
    - Release fork (1) ball stud (2)
    - Release bearing slide surface (3)
    - Input shaft splines (4)
    - Release bearing bore (5)
    - Propeller shaft slip yoke.

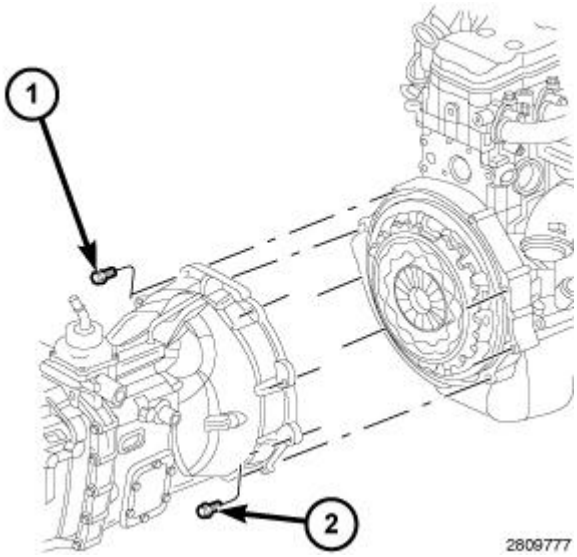

Fig. 159: Transmission Bolts
Courtesy of CHRYSLER GROUP, LLC

3. Support and secure transmission to jack.
4. Raise and align transmission input shaft with clutch disc, then slide transmission into place.
5. Install exhaust bracket diesel engine.
6. Verify front housing is fully seated.
    - Diesel Engine: Install transmission bolts (1, 2) and tighten to 41 N.m (30 ft. lbs.). Tighten the bolts with washers (2) into the transmission to 68 N.m (50 ft. lbs.).

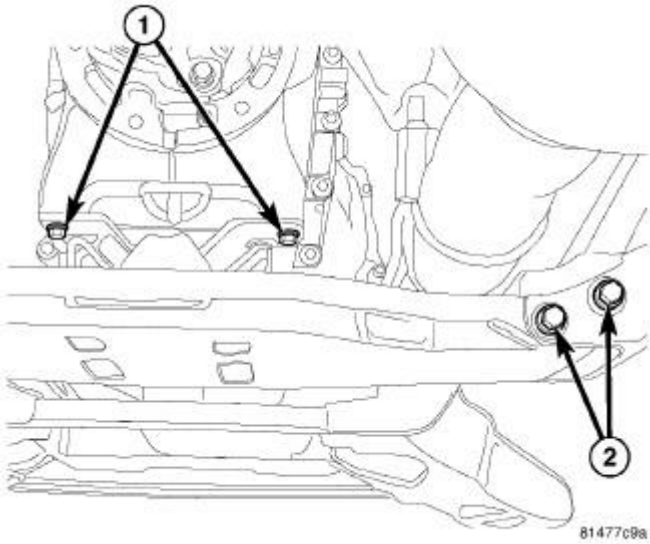

Fig. 160: Crossmember & Bolts
Courtesy of CHRYSLER GROUP, LLC

7. Install crossmember and tighten nuts (2) to 102 N.m (75 ft. lbs.).
8. Install transmission mount bolts (1) and tighten to 68 N.m (50 ft. lbs.).

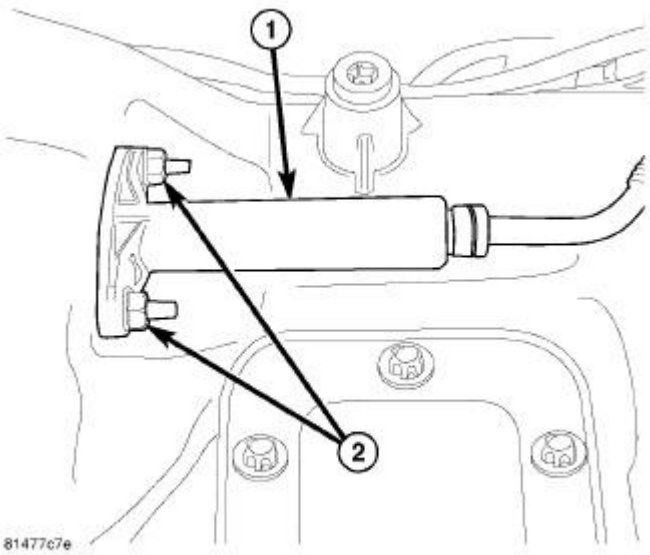

Fig. 161: Slave Cylinder & Mounting Nuts
Courtesy of CHRYSLER GROUP, LLC

9. Connect transmission harnesses to clips on case and connect switches.
10. Install slave cylinder and tighten cylinder nuts to 23 N.m (200 in. lbs.).
11. Install transfer case and transfer case linkage 4x4 equipped.
12. Remove transmission jack.

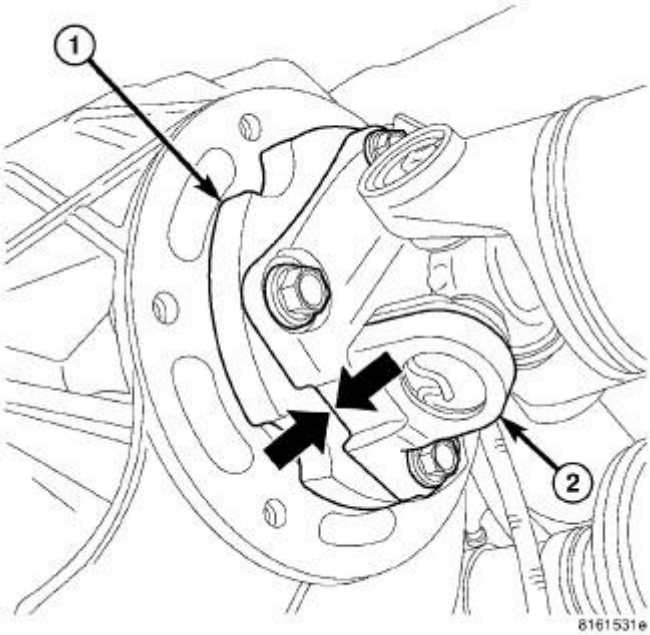

Fig. 162: Marking Manual Transmission Flange & Propeller Shaft Flange
Courtesy of CHRYSLER GROUP, LLC

13. Install propeller shaft/shafts with reference marks aligned.

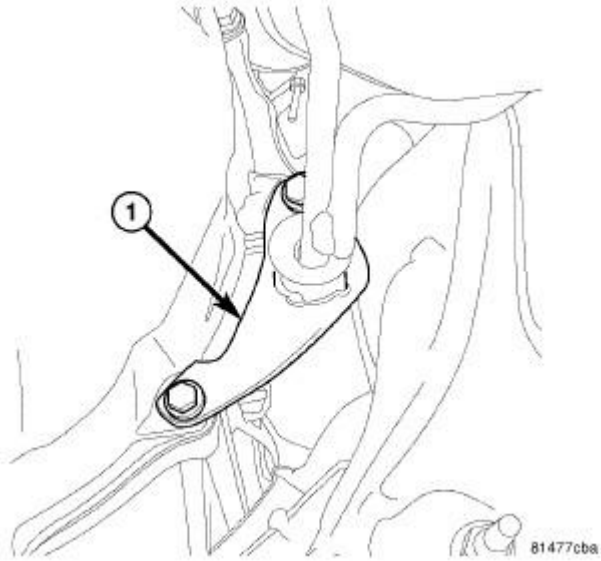

Fig. 163: Exhaust Bracket
Courtesy of CHRYSLER GROUP, LLC

14. Install exhaust pipe. Refer to **PIPE, EXHAUST, INSTALLATION** .
15. Install exhaust bracket (1) and bolts.

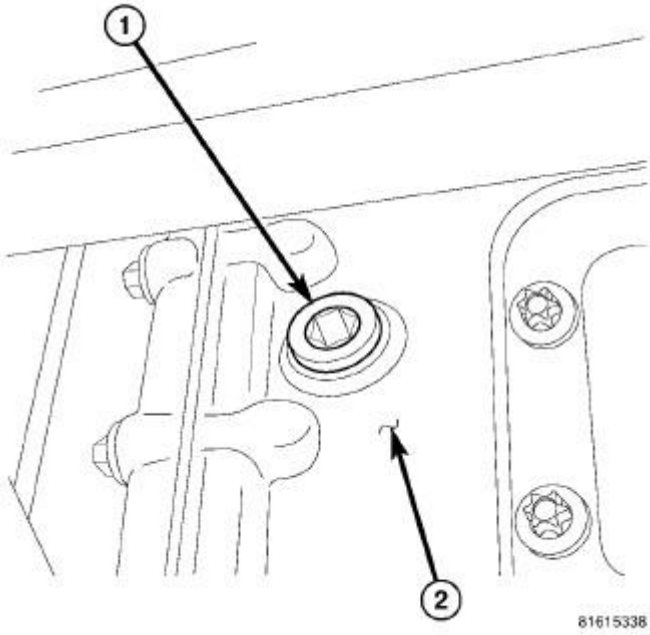

Fig. 164: Fill Plug
Courtesy of CHRYSLER GROUP, LLC

16. Remove fill plug (1) on transmission (2) and fill to approximately 16 mm (0.625 inch) from the bottom of the fill hole.
17. Install fill plug and tighten to 57 N.m (42 ft. lbs.).
18. Connect battery negative cable.
19. Install shift lever extension on shift tower and lever assembly.
20. Slide boot down on shift lever extension and install shift boot bezel and screws.
21. Install skid plate, if equipped.

SPECIAL TOOLS

SPECIAL TOOLS

	6444 - Puller, Bearing/Gear (Originally Shipped In Kit Number(s) 6440, 8847, 8854CC.) 6444-1 - Puller, Base (Originally Shipped In Kit Number(s) 6440, 8847, 8854CC.) 6444-3 - Rod, Long (Originally Shipped In Kit Number(s) 6440, 8847, 8854CC.) 6444-8 - Sleeve (Originally Shipped In Kit Number(s) 6440, 8847, 8854CC.) 8513A - Insert, Crankshaft (Originally Shipped In Kit Number(s) 8283, 8527, 8575, 8999, 8999CC.) 8915 - Brace

	(Originally Shipped In Kit Number(s) 8998, 8998CC, 9763.) 938 - Bridge (Originally Shipped In Kit Number(s) 6745, 6947, 6949, 9202, 9202A-CAN, 9202CC, 9299.) 9588 - Installer, Bearing Cup (Originally Shipped In Kit Number(s) 9692.) 9589 - Installer, Bearing Cup (Originally Shipped In Kit Number(s) 9692.) 9592 - Fixture, End Play (Originally Shipped In Kit Number(s) 9692.) 9593 - Remover, Bearing Cup (Originally Shipped In Kit Number(s) 9692.) 9594 - Remover, Gear & Synchro (Originally Shipped In Kit Number(s) 9692.) 9595 - Installer, Seal (Originally Shipped In Kit Number(s) 9692.) 9597 - Remover, Bearing (Originally Shipped In Kit Number(s) 9692.) 9598 - Installer, Seal (Originally Shipped In Kit Number(s) 9692.) 9605 - Fixture (Originally Shipped In Kit Number(s) 9692.) 9646 - Puller, Gear (Originally Shipped In Kit Number(s) 9526, 9575, 9692.) 9647 - Puller (Originally Shipped In Kit Number(s) 9526, 9575, 9692.) C-293-47 - Block Set, Puller (Originally Shipped In Kit Number(s) 9975, C-293-M, DD-914-CLT-L.) C-293-PA - Puller, Press (Originally Shipped In Kit Number(s) 8418, 8837, C-293-M.) C-4171 - Driver Handle, Universal (Originally Shipped In Kit Number(s) 9202, 9202A-CAN, 9202CC, 9299, 9299CC, 9299CC, 9300A-CAN.)

DIAGNOSTIC CODE INDEX

DIAGNOSTIC CODE INDEX

DTC	Description
P0122	TPS/APP CIRCUIT LOW
P0123	TPS/APP CIRCUIT HIGH
P0124	TPS/APP INTERMITTENT
P0218	HIGH TEMPERATURE OPERATION ACTIVATED
P0562	BATTERY VOLTAGE LOW
P0602	CONTROL MODULE PROGRAMMING ERROR/NOT PROGRAMMED
P0604	INTERNAL CONTROL MODULE RAM
P0605	INTERNAL CONTROL MODULE ROM
P0613	INTERNAL TRANSMISSION PROCESSOR
P0706	TRANSMISSION RANGE SENSOR RATIONALITY
P0711	TRANSMISSION TEMPERATURE SENSOR PERFORMANCE
P0712	TRANSMISSION TEMPERATURE SENSOR LOW
P0713	TRANSMISSION TEMPERATURE SENSOR HIGH
P0714	TRANSMISSION TEMPERATURE SENSOR INTERMITTENT
P0716	INPUT SPEED SENSOR 1 CIRCUIT PERFORMANCE
P0721	OUTPUT SPEED SENSOR CIRCUIT PERFORMANCE
P0726	ENGINE SPEED INPUT CIRCUIT RANGE/PERFORMANCE
P0731	GEAR RATIO ERROR IN 1ST
P0732	GEAR RATIO ERROR IN 2ND
P0733	GEAR RATIO ERROR IN 3RD
P0734	GEAR RATIO ERROR IN 4TH
P0735	GEAR RATIO ERROR IN 5TH
P0736	GEAR RATIO ERROR IN REVERSE
P0740	TCC OUT OF RANGE
P0750	LR SOLENOID CIRCUIT
P0755	2C SOLENOID CIRCUIT
P0765	UD SOLENOID CIRCUIT
P0770	4C SOLENOID CIRCUIT
P0841	LR PRESSURE SWITCH RATIONALITY
P0845	2C HYDRAULIC PRESSURE TEST
P0846	2C PRESSURE SWITCH RATIONALITY
P0868	LINE PRESSURE LOW
P0869	LINE PRESSURE HIGH
P0870	OD HYDRAULIC PRESSURE TEST

P0871	OD PRESSURE SWITCH RATIONALITY
P0875	UD HYDRAULIC PRESSURE TEST
P0876	UD PRESSURE SWITCH RATIONALITY
P0882	TCM POWER INPUT LOW
P0883	TCM POWER INPUT HIGH
P0884	POWER UP AT SPEED
P0890	SWITCHED BATTERY
P0933	HYDRAULIC PRESSURE SENSOR RANGE/PERFORMANCE
P0934	LINE PRESSURE SENSOR CIRCUIT LOW
P0935	LINE PRESSURE SENSOR CIRCUIT HIGH
P0944	LOSS OF HYDRAULIC PUMP PRIME
P0987	4C HYDRAULIC PRESSURE TEST
P0988	4C PRESSURE SWITCH RATIONALITY
P1684	BATTERY WAS DISCONNECTED
P1715	RESTRICTED MANUAL VALVE IN T3 RANGE
P1736	GEAR RATIO ERROR IN 2ND PRIME
P1775	SOLENOID SWITCH VALVE LATCHED IN TCC POSITION
P1776	SOLENOID SWITCH VALVE LATCHED IN LR POSITION
P1794	SPEED SENSOR GROUND ERROR
P2700	INADEQUATE ELEMENT VOLUME LR
P2701	INADEQUATE ELEMENT VOLUME 2C
P2702	INADEQUATE ELEMENT VOLUME OD
P2703	INADEQUATE ELEMENT VOLUME UD
P2704	INADEQUATE ELEMENT VOLUME 4C
P2706	MS SOLENOID CIRCUIT
U0002	CAN C BUS OFF PERFORMANCE
U0100	LOST COMMUNICATION WITH THE ECM/PCM
U0121	LOST COMMUNICATION WITH ABS
U0141	LOST COMMUNICATION WITH IPM (FCM/TIPM)

DIAGNOSIS AND TESTING

P0122-TPS/APP CIRCUIT LOW

For a complete wiring diagram, **refer to appropriate SYSTEM WIRING DIAGRAMS article** .

THEORY OF OPERATION

The three wire (Throttle Position Sensor (TPS) provides the Powertrain Control Module (PCM) with an input signal voltage that represents the throttle blade position of the throttle body. The Throttle Position Sensor (TPS) is connected to the throttle blade shaft. As the position of the throttle blade changes, the output voltage of the TPS changes.

The PCM supplies approximately 5.0 volts to the TPS. The TPS output voltage (input signal to the PCM) represents the throttle blade position. The PCM receives an input signal voltage from the TPS. This will vary in an approximate range from 0.26 of a volt at minimum throttle opening (idle), to 4.49 volts at maximum opening (wide open throttle).

The Accelerator Pedal Position Sensor (APPS) is a linear potentiometer. It provides the PCM/ECM with a voltage signal proportional to the angle, or position of the accelerator pedal. The APPS signal along with inputs from other sensors is used by the PCM/ECM to calculate the throttle plate position.

WHEN MONITORED:

Continuously with the ignition on and engine running.

SET CONDITION:

This DTC will set if the monitored TPS voltage drops below.078 of a volt for the period of 0.48 of a second.

POSSIBLE CAUSES

Possible Causes
RELATED ENGINE TPS/APPS DTCS PRESENT POWERTRAIN CONTROL MODULE (PCM)

Always perform the Pre-Diagnostic Troubleshooting procedure before proceeding. Refer to STANDARD PROCEDURE .

DIAGNOSTIC TEST

1. **CHECK IF RELATED ENGINE TPS/APPS DTCS ARE PRESENT**
    1. With the scan tool, read Engine DTCs.

Are there any Engine TPS/APPS DTCs present?

Yes

- Refer to **DIAGNOSTIC CODE INDEX** and perform the appropriate diagnostic procedure.

No

- Go To 2.

2. **CHECK IF THE DTC IS CURRENT**
   1. With the scan tool, record the Event Data to help identify the conditions in which the DTC was set.
   2. With the scan tool, erase PCM DTCs and the Event Data.

      NOTE: Clearing DTCs does NOT erase the Event Data. To erase the Event Data you must either perform a Quick Learn procedure or battery disconnect (if available) with the scan tool, or manually disconnect the battery. Whatever method used might reset certain learned transmission values to controller defaults and may cause poor shift quality until those values are relearned.

   3. Using the Event Data recorded earlier, test drive the vehicle while trying to duplicate the operating conditions in which the DTC originally set.
   4. With the scan tool, read DTCs.

      Did this DTC reset during the road test?

      Yes

      - Using the schematics as a guide, check the Powertrain Control Module (PCM) terminals for corrosion, damage, or terminal push out. Pay particular attention to all power and ground circuits. If no problems are found, replace and program the PCM in accordance with the Service Information. With the scan tool, perform Quick Learn. Refer to **MODULE, POWERTRAIN CONTROL, REMOVAL** and **MODULE, POWERTRAIN CONTROL, 6.7L DIESEL [ETJ], REMOVAL** .
      - Refer to **STANDARD PROCEDURE** and perform the 545RFE TRANSMISSION VERIFICATION TEST.

      No

      - Go To 3.

3. **CHECK THE WIRING AND CONNECTORS**
   1. The conditions necessary to set the DTC are not present at this time.
   2. Using the schematics as a guide, inspect the wiring and connectors specific to this circuit.
   3. Wiggle the wiring and connectors while checking for shorted and open circuits.

4. With the scan tool, check the Event Data to help identify the conditions in which the DTC was set.

   Were there any problems found?

   Yes

   - Repair as necessary.
   - Refer to **STANDARD PROCEDURE** and perform the 545RFE TRANSMISSION VERIFICATION TEST.

   No

   - Test Complete.

P0123-TPS/APP CIRCUIT HIGH

For a complete wiring diagram, **refer to appropriate SYSTEM WIRING DIAGRAMS article** .

THEORY OF OPERATION

The three wire Throttle Position Sensor (TPS) provides the PCM with an input signal voltage that represents the throttle blade position of the throttle body. The Throttle Position Sensor (TPS) is connected to the throttle blade shaft. As the position of the throttle blade changes, the output voltage of the TPS changes.

The PCM supplies approximately 5.0 volts to the TPS. The TPS output voltage (input signal to the PCM) represents the throttle blade position. The PCM receives an input signal voltage from the TPS. This will vary in an approximate range from 0.26 of a volt at minimum throttle opening (idle), to 4.49 volts at maximum opening (wide open throttle).

The Accelerator Pedal Position Sensor (APPS) is a linear potentiometer. It provides the PCM/ECM with a voltage signal proportional to the angle, or position of the accelerator pedal. The APPS signal along with inputs from other sensors is used by the PCM/ECM to calculate the throttle plate position.

WHEN MONITORED:

Continuously with the ignition on and engine running.

SET CONDITION:

This DTC will set if the monitored TPS voltage rises above 4.94 volts for the period of 0.48 of a second.

POSSIBLE CAUSES

Possible Causes
RELATED ENGINE TPS/APPS DTCS PRESENT POWERTRAIN CONTROL MODULE (PCM)

Always perform the Pre-Diagnostic Troubleshooting procedure before proceeding. Refer to STANDARD PROCEDURE .

DIAGNOSTIC TEST

1. **DETERMINING IF RELATED ENGINE TPS/APPS DTCS ARE PRESENT**
   1. With the scan tool, check Engine DTCs, this includes all one trip failures.

      Are there any Engine TPS/APPS DTCs present?

      Yes

      - Refer to **DIAGNOSTIC CODE INDEX** and perform the appropriate diagnostic procedure.

      No

      - Go To 2.
2. **CHECK IF THE DTC IS CURRENT**
   1. With the scan tool, record the Event Data to help identify the conditions in which the DTC was set.
   2. With the scan tool, erase PCM DTCs and the Event Data.

      NOTE: Clearing DTCs does NOT erase the Event Data. To erase the Event Data you must either perform a Quick Learn procedure or battery disconnect (if available) with the scan tool, or manually disconnect the battery. Whatever method used might reset certain learned transmission values to controller defaults and may cause poor shift quality until those values are relearned.

   3. Using the Event Data recorded earlier, test drive the vehicle while trying to duplicate the operating conditions in which the DTC originally set.
   4. With the scan tool, read DTCs.

      Did this DTC reset during the road test?

      Yes

      - Using the schematics as a guide, check the Powertrain Control Module (PCM) terminals for corrosion, damage, or terminal push out. Pay particular attention to all power and ground circuits. If no problems are found, replace and program the PCM in accordance with the Service Information. With the scan tool, perform Quick Learn. Refer to **MODULE, POWERTRAIN CONTROL, REMOVAL** and **MODULE, POWERTRAIN CONTROL, 6.7L DIESEL [ETJ], REMOVAL** .
      - Refer to **STANDARD PROCEDURE** and perform the 545RFE TRANSMISSION VERIFICATION TEST.

      No

- Go To 3.

3. **CHECK THE WIRING AND CONNECTORS**
    1. The conditions necessary to set the DTC are not present at this time.
    2. Using the schematics as a guide, inspect the wiring and connectors specific to this circuit.
    3. Wiggle the wiring and connectors while checking for shorted and open circuits.
    4. With the scan tool, check the Event Data to help identify the conditions in which the DTC was set.

    Were there any problems found?

    Yes

    - Repair as necessary.
    - Refer to **STANDARD PROCEDURE** and perform the 545RFE TRANSMISSION VERIFICATION TEST.

    No

    - Test Complete.

P0124-TPS/APP INTERMITTENT

For a complete wiring diagram, **refer to appropriate SYSTEM WIRING DIAGRAMS article** .

THEORY OF OPERATION

The three wire Throttle Position Sensor (TPS) provides the Powertrain Control Module (PCM) with an input signal voltage that represents the throttle blade position of the throttle body. The Throttle Position Sensor (TPS) is connected to the throttle blade shaft. As the position of the throttle blade changes, the output voltage of the TPS changes.

The PCM supplies approximately 5.0 volts to the TPS. The TPS output voltage (input signal to the PCM) represents the throttle blade position. The PCM receives an input signal voltage from the TPS. This will vary in an approximate range from 0.26 of a volt at minimum throttle opening (idle), to 4.49 volts at maximum opening (wide open throttle).

The Accelerator Pedal Position Sensor (APPS) is a linear potentiometer. It provides the PCM/ECM with a voltage signal proportional to the angle, or position of the accelerator pedal. The APPS signal along with inputs from other sensors is used by the PCM/ECM to calculate the throttle plate position.

WHEN MONITORED:

Continuously with the ignition on and engine running.

SET CONDITION:

This DTC will set if the monitored TPS throttle angle between the angles of 6° and 120° and the degree change

is greater than 5° within a period of less than 7.0 msec.

POSSIBLE CAUSES

Possible Causes
RELATED TPS ENGINE DTCS PRESENT
THROTTLE POSITION SENSOR (TPS)
POWERTRAIN CONTROL MODULE (PCM)

Always perform the Pre-Diagnostic Troubleshooting procedure before proceeding. Refer to STANDARD PROCEDURE .

DIAGNOSTIC TEST

1. **DETERMINING IF RELATED ENGINE TPS DTCS ARE PRESENT**
    1. With the scan tool, read Engine DTCs.

       Are there any Engine TPS/APPS DTCs present?

       Yes

       - Refer to **DIAGNOSTIC CODE INDEX** and perform the appropriate diagnostic procedure.

       No

       - Go To 2.
2. **CHECK IF THE DTC IS CURRENT**
    1. With the scan tool, record the Event Data to help identify the conditions in which the DTC was set.
    2. With the scan tool, erase PCM DTCs and the Event Data.

       NOTE: Clearing DTCs does NOT erase the Event Data. To erase the Event Data you must either perform a Quick Learn procedure or battery disconnect (if available) with the scan tool, or manually disconnect the battery. Whatever method used might reset certain learned transmission values to controller defaults and may cause poor shift quality until those values are relearned.

    3. Using the Event Data recorded earlier, test drive the vehicle while trying to duplicate the operating conditions in which the DTC originally set.
    4. With the scan tool, read DTCs.

       Did this DTC reset during the road test?

       Yes

- Go To 3.

No

- Go To 4.

3. **CHECK THROTTLE POSITION SENSOR OPERATION**
    1. Ignition On, Engine Not Running.
    2. With the scan tool, under Transmission Sensors, monitor the TPS voltage in the following step.
    3. Slowly open and close the throttle while checking for erratic voltage changes.
    4. If equipped with ETC, use the ETC Throttle Follower test in the scan tool to check for erratic voltage changes.

    Was the TPS voltage change smooth and consistent?

    Yes

    - Using the schematics as a guide, check the Powertrain Control Module (PCM) terminals for corrosion, damage, or terminal push out. Pay particular attention to all power and ground circuits. If no problems are found, replace and program the PCM in accordance with the Service Information. With the scan tool, perform Quick Learn. Refer to **MODULE, POWERTRAIN CONTROL, REMOVAL** and **MODULE, POWERTRAIN CONTROL, 6.7L DIESEL [ETJ], REMOVAL** .
    - Refer to **STANDARD PROCEDURE** and perform the 545RFE TRANSMISSION VERIFICATION TEST.

    No

    - Replace the Throttle Position Sensor in accordance with the Service Information.
    - Refer to **STANDARD PROCEDURE** and perform the 545RFE TRANSMISSION VERIFICATION TEST.

4. **CHECK THE WIRING AND CONNECTORS**
    1. The conditions necessary to set the DTC are not present at this time.
    2. Using the schematics as a guide, inspect the wiring and connectors specific to this circuit.
    3. Wiggle the wiring and connectors while checking for shorted and open circuits.
    4. With the scan tool, check the Event Data to help identify the conditions in which the DTC was set.

    Were there any problems found?

    Yes

    - Repair as necessary.
    - Refer to **STANDARD PROCEDURE** and perform the 545RFE TRANSMISSION VERIFICATION TEST.

No

- Test Complete.

P0218-HIGH TEMPERATURE OPERATION ACTIVATED

For a complete wiring diagram, **refer to appropriate SYSTEM WIRING DIAGRAMS article** .

THEORY OF OPERATION

The DTC is intended as an informational DTC to aid the technician in determining the root cause of a customer driveability issue. The DTC is also intended to alert the technician to determine if a cooling system malfunction has occurred or if an additional transmission air to oil cooler is needed to support the customers driving behavior.

WHEN MONITORED:

Whenever the engine is running.

SET CONDITION:

Immediately after a Overheat shift schedule is activated when the Transmission temperature exceeds 116° C or 240° F.

POSSIBLE CAUSES

Possible Causes
HIGH TEMPERATURE OPERATION ACTIVATED
TORQUE CONVERTER CLUTCH SLIPPING / NOT ACTIVATING
OPERATING VEHICLE WITH TRANSMISSION IN LIMP-IN MODE FOR AN EXTENDED PERIOD OF TIME
EXCESSIVE TIME IDLING IN GEAR

Always perform the Pre-Diagnostic Troubleshooting procedure before proceeding. Refer to STANDARD PROCEDURE .

DIAGNOSTIC TEST

1. **HIGH TEMPERATURE OPERATION**
    1. This DTC is an informational DTC designed to aid the Technician in diagnosing shift quality complaints.
    2. This DTC indicates that the transmission has been operating in the "Overheat" shift schedule which may generate a customer complaint.
    3. The customer driving patterns may indicate the need for an additional transmission oil cooler.
    4. Verify proper Engine cooling system operation which would affect proper transmission operation.
    5. Verify proper torque converter clutch operation.

6. With the scan tool, check the Event Data to help identify the conditions in which the DTC was set.

Repair

- Repair the cause of transmission overheating. Refer to the Service Information for the proper repair procedure. Make sure to check for any Service Bulletins pertaining to this problem. Refer to **DIAGNOSIS AND TESTING** .
- Refer to **STANDARD PROCEDURE** and perform the 545RFE TRANSMISSION VERIFICATION TEST.

P0562-BATTERY VOLTAGE LOW

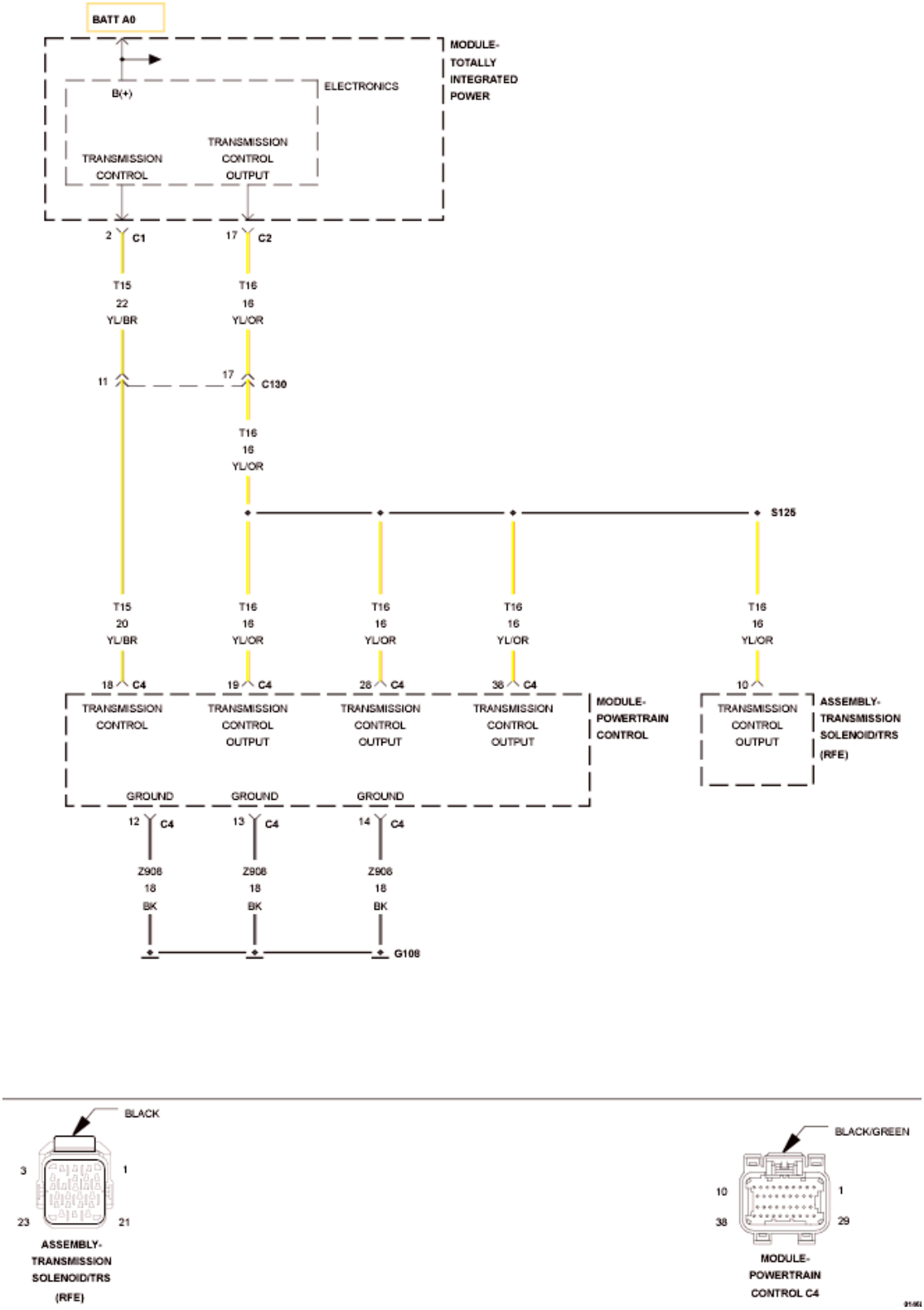

Fig. 1: TCM Power Control Circuit Wiring Diagram
Courtesy of CHRYSLER GROUP, LLC

For a complete wiring diagram, **refer to appropriate SYSTEM WIRING DIAGRAMS article** .

THEORY OF OPERATION

Friction element distress could result from an insufficient supply voltage to properly control the solenoids. To prevent this possibility, the battery voltage is monitored and the system is placed in logical limp-in if the battery voltage drops below the limit.

WHEN MONITORED:

With the engine running and the Powertrain Control Module (PCM) has requested the Totally Integrated Power Module (TIPM) to activate the Transmission Control Output circuit.

SET CONDITION:

If the battery voltage of the Transmission Output circuit(s) to the PCM is less than 10.0 volts for the period of 15 seconds. Note: P0562 generally indicates a gradually falling battery voltage or a resistive connection(s) to the PCM. The DTC will also set if the battery voltage sensed at the PCM is less than 6.5-volts for 200ms or where the Transmission Output circuits are less than 7.2-volts for 200ms.

POSSIBLE CAUSES

Possible Causes
RELATED CHARGING SYSTEM DTCS
(Z908) GROUND CIRCUITS OPEN OR HIGH RESISTANCE
(T16) TRANSMISSION CONTROL OUTPUT CIRCUIT OPEN OR HIGH RESISTANCE
TOTALLY INTEGRATED POWER MODULE (TIPM)
POWERTRAIN CONTROL MODULE (PCM)

Always perform the Pre-Diagnostic Troubleshooting procedure before proceeding. Refer to STANDARD PROCEDURE .

DIAGNOSTIC TEST

1. **RELATED CHARGING SYSTEM DTCS**
    1. With the scan tool, read Powertrain Control Module (PCM) DTCs.

       Are there any related Charging System DTCs also present?

       Yes

       - Refer to **DIAGNOSTIC CODE INDEX** and perform the appropriate diagnostic procedure. NOTE: After repairing the Engine Charging System DTCs, perform the Transmission Verification test to verify the transmission control system was not damaged.
       - Refer to **STANDARD PROCEDURE** and perform the 545RFE TRANSMISSION VERIFICATION TEST.

No

- Go To 2.

2. **CHECK FOR TIPM DTCS**

NOTE: Generator, battery, and charging system must be fully functional before performing this test.

1. With the scan tool, read TIPM DTCs.

   Are there any TIPM TCM Power Control Circuit DTCs present.

   Yes

   - Refer to **DIAGNOSIS AND TESTING** and perform the appropriate diagnostic procedure.

   No

   - Go To 3.

3. **CHECK IF THE DTC IS CURRENT**

1. With the scan tool, read DTCs.

   Is the status Active or is the Starts Since Set counter set at 0 for this DTC?

   Yes

   - Go To 4.

   No

   - Go To 7.

4. **CHECK THE (Z908) GROUND CIRCUITS**

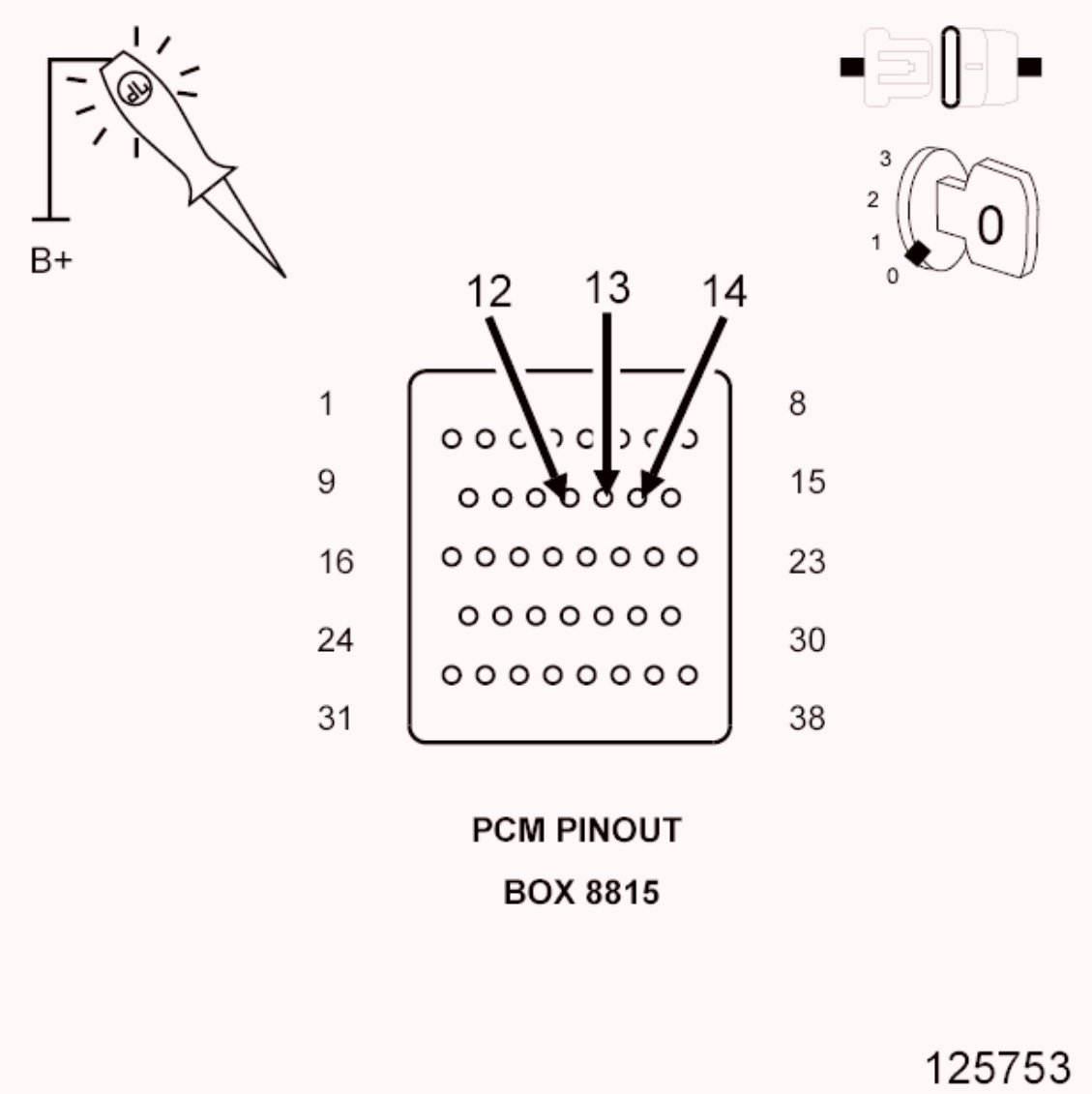

Fig. 2: Checking Ground Circuits
Courtesy of CHRYSLER GROUP, LLC

1. Turn the ignition off to the lock position.
2. Disconnect the PCM C4 harness connector and connect the PCM Pinout Box (special tool #8815A, Kit, NGC, 38 Position).

NOTE: Check connectors - Clean/repair as necessary.

CAUTION: Do not probe the PCM harness connectors. Probing the PCM harness connectors will damage the PCM terminals resulting in poor terminal to pin connection. Install the (special tool #8815A, Kit, NGC, 38 Position) to perform diagnosis.

3. Using a 12-volt test light connected to 12-volts, check the PCM (Z908) Ground circuits at the

appropriate terminals of the PCM Pinout Box (special tool #8815A, Kit, NGC, 38 Position).

NOTE: **The test light must illuminate brightly. Compare the brightness to that of a direct connection to the battery.**

Does the test light illuminate brightly for all of the Ground circuits?

Yes

- Go To 5.

No

- Repair the (Z908) Ground circuit(s) for an open or high resistance.
- Refer to **STANDARD PROCEDURE** and perform the 545RFE TRANSMISSION VERIFICATION TEST.

5. **CHECK THE (T16) TRANSMISSION CONTROL OUTPUT CIRCUIT**

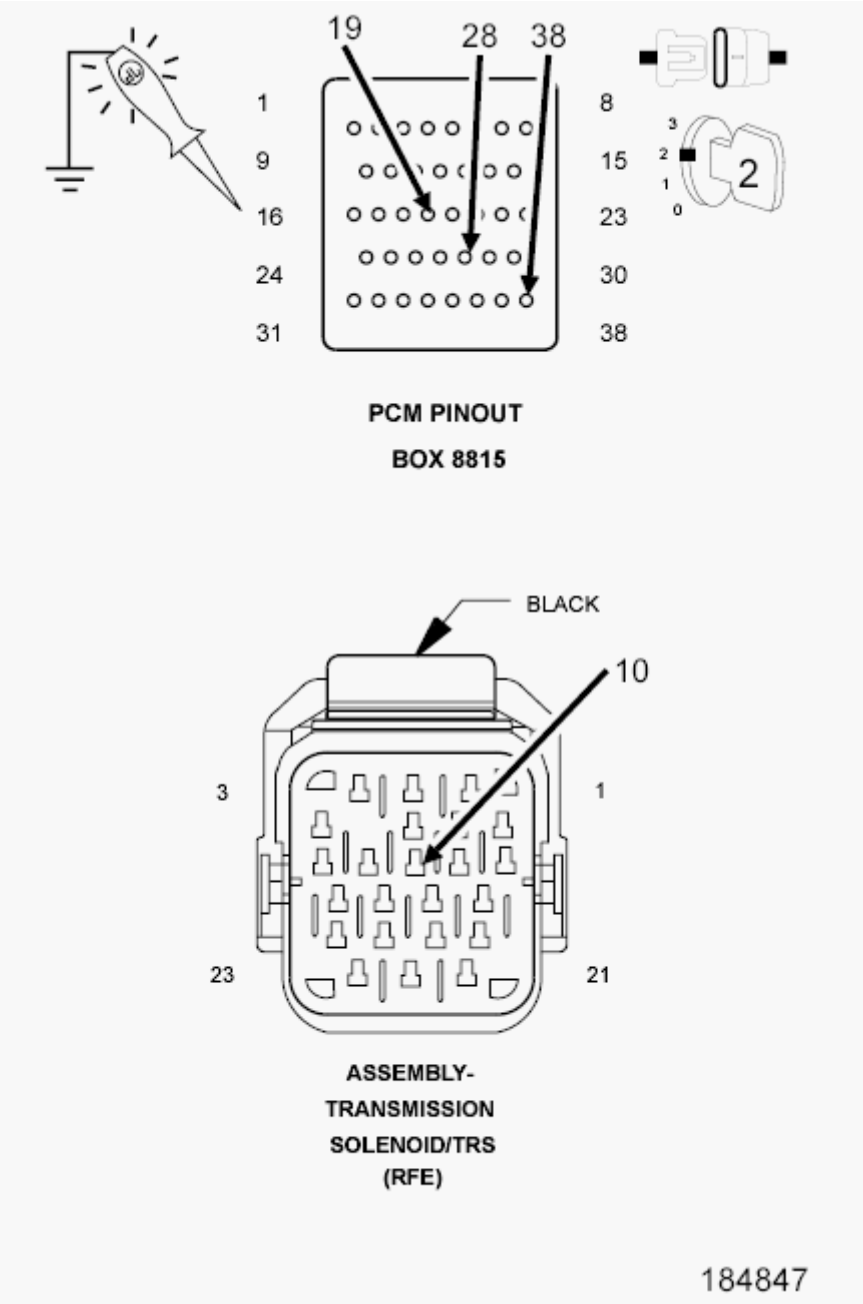

Fig. 3: Checking Transmission Control Output Circuit
Courtesy of CHRYSLER GROUP, LLC

1. Turn the ignition off to the lock position.
2. Disconnect the Transmission Solenoid/TRS Assembly harness connector.
3. Ignition on, engine not running.
4. With the scan tool under TIPM, actuate the Transmission.
5. Using a 12-volt test light connected to ground, check all (T16) Transmission Control Output circuits at the Transmission Solenoid/TRS Assembly harness connector and the appropriate terminals of the PCM Pinout Box (special tool #8815A, Kit, NGC, 38 Position).

NOTE: **The (T16) Transmission Control Output circuit branches off to both Transmission Solenoid/TRS Assembly and the PCM.**

Does the test light illuminate brightly while cycling on and off on all (T16) Transmission Control Output circuits?

Yes

- Go To 6.

No

- Repair the (T16) Transmission Control Output circuit for an open or high resistance.
- Refer to **STANDARD PROCEDURE** and perform the 545RFE TRANSMISSION VERIFICATION TEST.

6. **CHECK THE (T16) TRANSMISSION CONTROL OUTPUT CIRCUIT FOR AN OPEN**

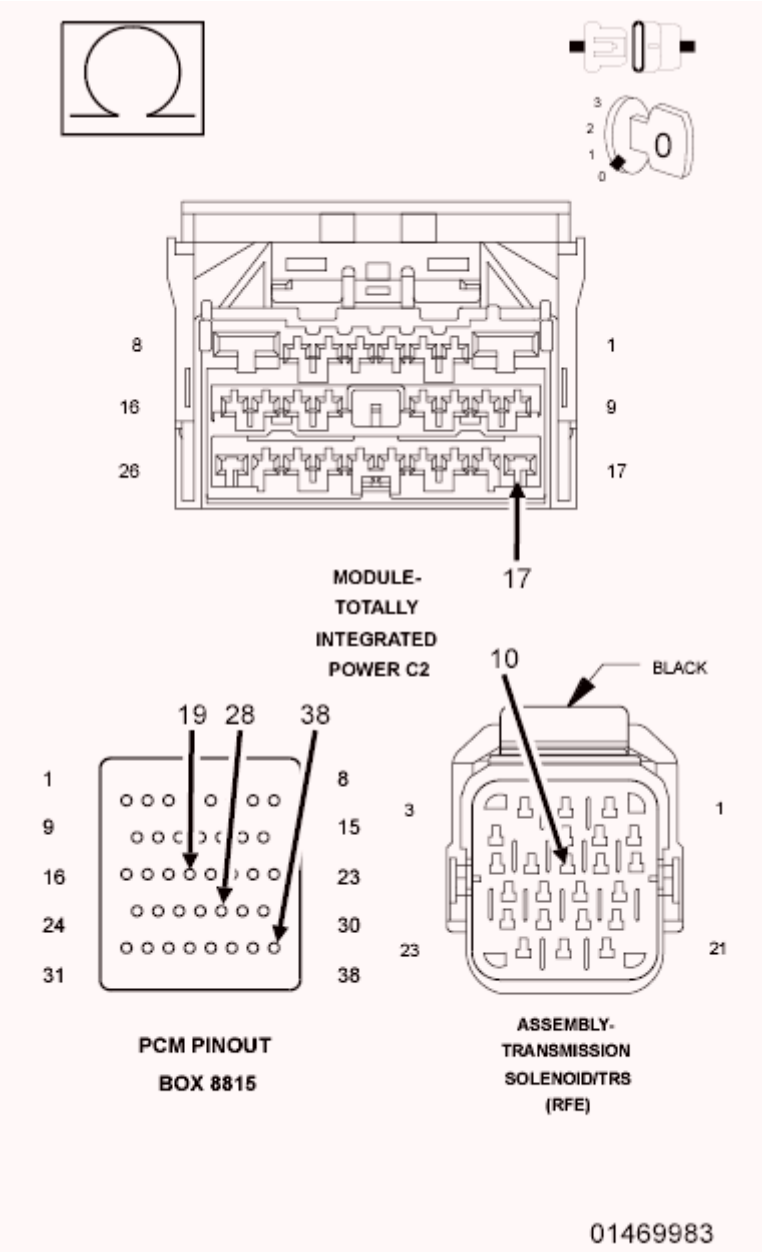

Fig. 4: Checking Transmission Control Output Circuit For Open
Courtesy of CHRYSLER GROUP, LLC

1. Turn the ignition off to the lock position.
2. Disconnect the TIPM C2 harness connector.
3. Measure the resistance of the (T16) Transmission Control Output circuit between the TIPM C2 harness connector and both the Transmission Solenoid/TRS Assembly harness connector and the appropriate terminals of the PCM Pinout Box (special tool #8815A, Kit, NGC, 38 Position).

   Is the resistance above 5.0 Ohms on any circuit?

   Yes

- Repair the (T16) Transmission Control Output circuit for an open or high resistance.
- Refer to **STANDARD PROCEDURE** and perform the 545RFE TRANSMISSION VERIFICATION TEST.

No

- Using the schematics as a guide, check the Powertrain Control Module (PCM) terminals for corrosion, damage, or terminal push out. Pay particular attention to all power and ground circuits. If no problems are found, replace and program the PCM in accordance with the Service Information. With the scan tool, perform Quick Learn.
- Refer to **STANDARD PROCEDURE** and perform the 545RFE TRANSMISSION VERIFICATION TEST.

7. **CHECK THE WIRING AND CONNECTORS**
   1. The conditions necessary to set this DTC are not present at this time.
   2. Using the schematics as a guide, inspect the wiring and connectors specific to this circuit.
   3. Wiggle the wires while checking for shorted and open circuits.
   4. With the scan tool, check the Event Data to help identify the conditions in which the DTC was set.

   Where there any problems found?

   Yes

   - Repair as necessary.
   - Refer to **STANDARD PROCEDURE** and perform the 545RFE TRANSMISSION VERIFICATION TEST.

   No

   - Test Complete.

P0602-CONTROL MODULE PROGRAMMING ERROR/NOT PROGRAMMED

For a complete wiring diagram, **refer to appropriate SYSTEM WIRING DIAGRAMS article** .

THEORY OF OPERATION

The controller is programmed during manufacturing with generic software to facilitate testing. However, generic software does not have the proper calibrations to control a transmission in a vehicle. The check for generic software is made at power-up. If generic software is found, the MIL will light immediately and the MIL will stay on even if the fault is cleared, until the proper software is installed. Note: Transmission will be placed in limp-in mode.

WHEN MONITORED:

Check for generic software is made at power-up

SET CONDITION:

If generic software is found, the MIL will light immediately. This DTC is designed to inform the technician that the controller still has generic software installed.

POSSIBLE CAUSES

Possible Causes
PCM - PROGRAMMING ERROR

Always perform the Pre-Diagnostic Troubleshooting procedure before proceeding. Refer to STANDARD PROCEDURE .

DIAGNOSTIC TEST

1. **CONTROL MODULE PROGRAMMING ERROR**

   NOTE: Controller is programmed with generic software and will not allow the correct vehicle Powertrain management.

   1. With the scan tool.
   2. Record the vehicles controller part number.
   3. Select Use Controller Part Number under the Flash Tab.
   4. Flash the controller with the correct software. Refer to **MODULE, POWERTRAIN CONTROL, STANDARD PROCEDURE** .

      Verify the controller flashed successfully.

      Test Complete

      - Refer to **STANDARD PROCEDURE** and perform the 545RFE TRANSMISSION VERIFICATION TEST.

P0604-INTERNAL CONTROL MODULE RAM

For a complete wiring diagram, **refer to appropriate SYSTEM WIRING DIAGRAMS article** .

THEORY OF OPERATION

After the controller is reset (ignition turned to the RUN position), the microprocessor checks the integrity of each RAM location by writing to it and reading back from it. The read value should be same as value written.

WHEN MONITORED:

One time after the controller is reset (ignition turned to the RUN position).

SET CONDITION:

Whenever the Powertrain Control Module (PCM) detects an internal controller problem.

POSSIBLE CAUSES

Possible Causes
POWER OR GROUND CIRCUIT POWERTRAIN CONTROL MODULE (PCM)

Always perform the Pre-Diagnostic Troubleshooting procedure before proceeding. Refer to STANDARD PROCEDURE .

DIAGNOSTIC TEST

1. **CHECK WIRING AND CONNECTORS FOR INTERMITTENT OPERATION**
    1. Using the schematics as a guide, check the Powertrain Control Module (PCM) terminals for corrosion, damage, or terminal push out. Pay particular attention to all power and ground circuits.
    2. Wiggle the wires while checking for shorted and open circuits.
    3. Check for any Service Bulletins that may apply.

    Were there any problems found?

    Yes

    - Repair the power and/or ground circuits to the PCM and Transmission Control Relay or TIPM (if equipped) as necessary.
    - Refer to **STANDARD PROCEDURE** and perform the 545RFE TRANSMISSION VERIFICATION TEST.

    No

    - Replace the PCM in accordance with the Service Information. With the scan tool, perform Quick Learn. Refer to **MODULE, POWERTRAIN CONTROL, REMOVAL** and **MODULE, POWERTRAIN CONTROL, 6.7L DIESEL [ETJ], REMOVAL** .
    - Refer to **STANDARD PROCEDURE** and perform the 545RFE TRANSMISSION VERIFICATION TEST.

P0605-INTERNAL CONTROL MODULE ROM

For a complete wiring diagram, **refer to appropriate SYSTEM WIRING DIAGRAMS article** .

THEORY OF OPERATION

After the controller is reset (ignition turned to the RUN position) the microprocessor checks the integrity of the program memory (ROM). A checksum is calculated by adding all used bytes in the program memory. The sum

should be the same as a known constant stored in the program memory.

WHEN MONITORED:

One time after the controller is reset (ignition turned to the RUN position).

SET CONDITION:

Whenever the Powertrain Control Module (PCM) detects an internal controller problem.

POSSIBLE CAUSES

Possible Causes
POWER OR GROUND CIRCUIT POWERTRAIN CONTROL MODULE (PCM)

Always perform the Pre-Diagnostic Troubleshooting procedure before proceeding. Refer to STANDARD PROCEDURE .

DIAGNOSTIC TEST

1. **CHECK WIRING AND CONNECTORS FOR INTERMITTENT OPERATION**
    1. Using the schematics as a guide, check the Powertrain Control Module (PCM) terminals for corrosion, damage, or terminal push out. Pay particular attention to all power and ground circuits.
    2. Wiggle the wires while checking for shorted and open circuits.
    3. Check for any Service Bulletins that may apply.

    Were there any problems found?

    Yes

    - Repair the power and/or ground circuits as necessary.
    - Refer to **STANDARD PROCEDURE** and perform the 545RFE TRANSMISSION VERIFICATION TEST.

    No

    - Replace the PCM in accordance with the Service Information. With the scan tool, perform Quick Learn. Refer to **MODULE, POWERTRAIN CONTROL, REMOVAL** and **MODULE, POWERTRAIN CONTROL, 6.7L DIESEL [ETJ], REMOVAL** .
    - Refer to **STANDARD PROCEDURE** and perform the 545RFE TRANSMISSION VERIFICATION TEST.

P0613-INTERNAL TRANSMISSION PROCESSOR

For a complete wiring diagram, **refer to appropriate SYSTEM WIRING DIAGRAMS article** .

THEORY OF OPERATION

The internal Watchdog (WD) is a separate hardware circuit that continuously monitors the microprocessor. To insure the proper operation of the Transmission controller the watchdog must receive a signal from the microprocessor within a specific time window (14 msec ± 1 msec) to prevent a system shutdown after a short delay (570 msec). The microprocessor periodically tests the WDs ability to provide this shutdown function using a three phase test;

1) Send the signal too late > 15 msec

2) Send the signal too early < 13 msec

3) Delay test < 590 msec

If the watchdog input signal arrives too early or too late, the Watchdog Fault line will go low and the watchdog delay will start to time out. The delay will be reset by the correct timing of watchdog signal sent during subsequent operations.

The Delay Test checks the delay time out. The Delay Monitor line is pulled low, which forces the delay to start timing out. At the end of the delay time the Transmission Relay will be turned off. The delay test, upon detection of the relay turning off, will immediately turn the relay back on before shutdown can occur.

WHEN MONITORED:

1) One time after the controller is reset (ignition turned to the RUN position) and every 60 seconds thereafter. The Delay Test is executed after a reset only.

2) Two seconds after an invalid test.

SET CONDITION:

If either of the following conditions occur three times:

1) The watchdog fault line remains high after the period has elapsed for the too early - too late watchdog test.

2) The Transmission Control Relay remains on after the watchdog delay expired.

POSSIBLE CAUSES

Possible Causes
POWER OR GROUND CIRCUIT POWERTRAIN CONTROL MODULE (PCM)

Always perform the Pre-Diagnostic Troubleshooting procedure before proceeding. Refer to STANDARD PROCEDURE .

DIAGNOSTIC TEST

1. **CHECK THE WIRING AND CONNECTORS**
    1. Using the schematics as a guide, check the Powertrain Control Module (PCM) terminals for corrosion, damage, or terminal push out. Pay particular attention to all power and ground circuits.
    2. Wiggle the wires while checking for shorted and open circuits.
    3. Check for any Service Bulletins that may apply.

    Were there any problems found?

    Yes

    - Repair the power and/or ground circuits as necessary.
    - Refer to **STANDARD PROCEDURE** and perform the 545RFE TRANSMISSION VERIFICATION TEST.

    No

    - Replace the PCM in accordance with the Service Information. With the scan tool, perform Quick Learn. Refer to **MODULE, POWERTRAIN CONTROL, REMOVAL** and **MODULE, POWERTRAIN CONTROL, 6.7L DIESEL [ETJ], REMOVAL** .
    - Refer to **STANDARD PROCEDURE** and perform the 545RFE TRANSMISSION VERIFICATION TEST.

P0706-TRANSMISSION RANGE SENSOR RATIONALITY

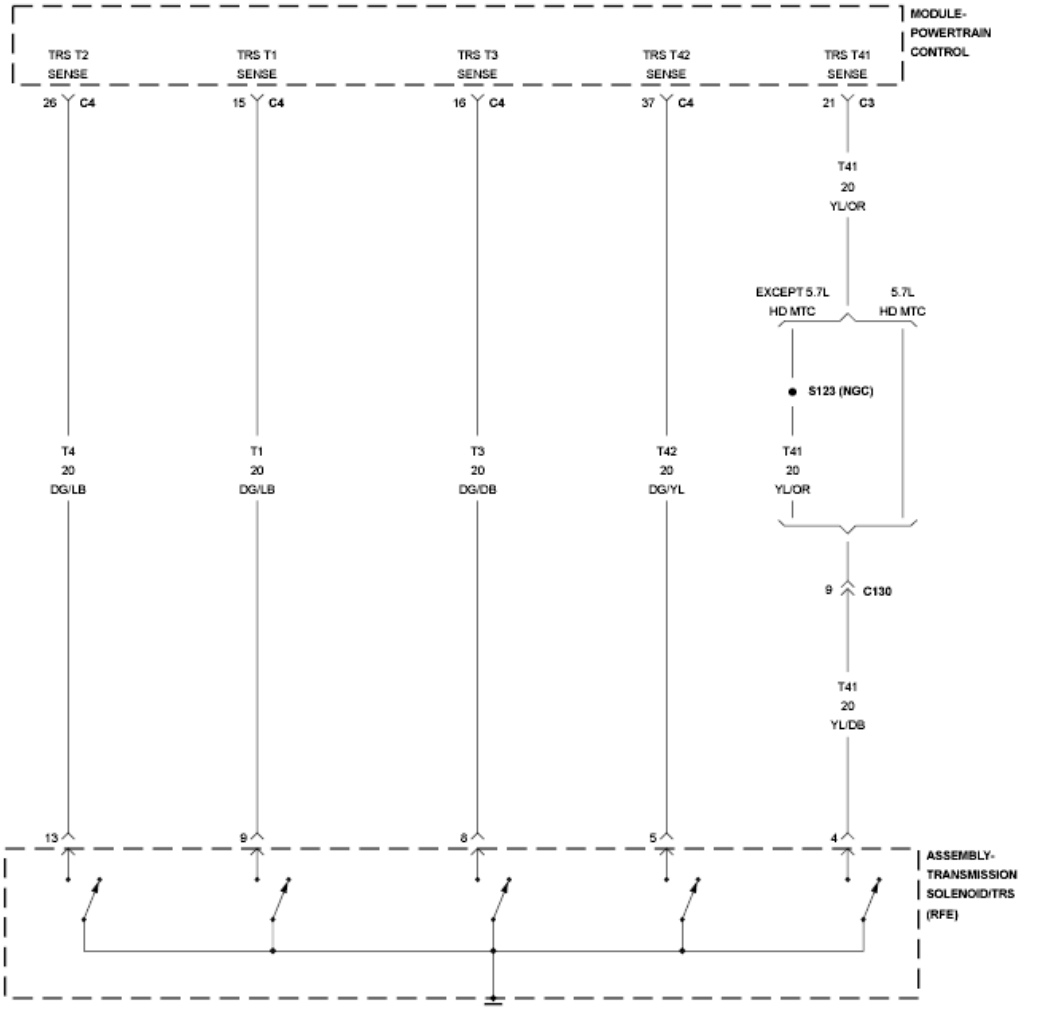

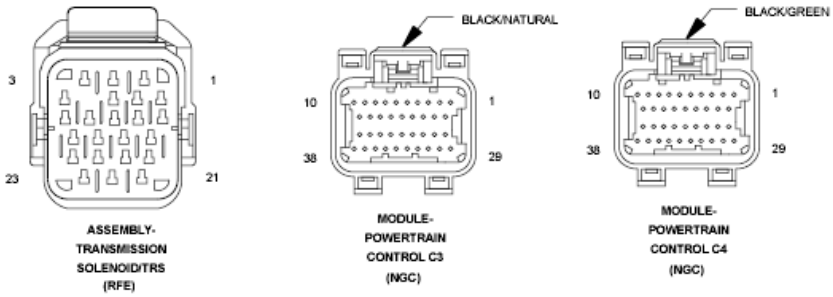

Fig. 5: Transmission Range Sensor Circuit Wiring Diagram
Courtesy of CHRYSLER GROUP, LLC

For a complete wiring diagram, **refer to appropriate SYSTEM WIRING DIAGRAMS article** .

THEORY OF OPERATION

The T41 (C1), T42 (C2), T3 (C3), T1 (C4), T2 (C5) Sense circuits communicate the shift lever position to the Transmission Control System. Each circuit is terminated at the transmission by a switch (TRS). Each switch can be either open or closed, depending on the shift lever position. The Powertrain Control Module (PCM) can decode this information and determine the shift lever position.

Each shift lever position has it own unique combination of closed and open switches. This is called a PRNDL code. There are five switches, therefore: there are many possible combinations of open and closed switches (codes). There are 12 valid codes: two for neutral, one for each other gear position (5), and five temporary (transition zone) codes. The remainder of the codes should never occur, these are called invalid codes.

WHEN MONITORED:

Continuously with the ignition on.

SET CONDITION:

The DTC will set if the controller detects an invalid PRNDL code which lasts for more than 0.042 of a second.

POSSIBLE CAUSES

Possible Causes
TRS SENSE CIRCUIT OPEN
TRS SENSE CIRCUIT SHORTED TO GROUND
TRS SENSE CIRCUIT SHORTED TO VOLTAGE
METAL DEBRIS IN OIL PAN
TRANSMISSION RANGE SENSOR (TRS)
POWERTRAIN CONTROL MODULE (PCM)

Always perform the Pre-Diagnostic Troubleshooting procedure before proceeding. Refer to STANDARD PROCEDURE .

SHIFT LEVER ERROR CODES

ERROR CODE	SWITCH STUCK	POSITION
1	T41 (C1)	OPEN
2	T41 (C1)	CLOSED
3	T42 (C2)	OPEN
4	T42 (C2)	CLOSED
5	T3 (C3)	OPEN
6	T3 (C3)	CLOSED
7	T1 (C4)	OPEN
8	T1 (C4)	CLOSED
9	T2 (C5)	OPEN
10	T2 (C5)	CLOSED
11	OD LOCKOUT	OPEN

12	OD LOCKOUT	CLOSED

TRS SWITCH STATES

	PARK	TMP 1	REV	TMP 2	N1	N2	TMP 3	D	TMP 4	2	TMP 5	L
T41 (C1)	CL	OP	OP	OP	CL	CL	OP	OP	OP	OP	OP	OP
T42 (C2)	CL	CL	CL	CL	CL	CL	CL	OP	OP	OP	OP	OP
T3 (C3)	OP	OP	OP	CL	CL	CL	CL	CL	OP	OP	OP	CL
T1 (C4)	OP	OP	OP	OP	OP	CL	CL	CL	CL	CL	OP	OP
T2 (C5)	CL	CL	OP	OP	OP	OP	OP	OP	OP	CL	CL	CL

Note:
CL indicates that CLOSED should appear on the scan tool
OP indicates that OPEN should appear on the scan tool

DIAGNOSTIC TEST

1. **CHECK TO SEE IF P0706 DTC IS CURRENT**
   1. With the scan tool, perform the Shift Lever Position Test.

      Select the test outcome from the following:

      Test passes:

      - Go To 6.

      Test fails with Error Code:

      - Go To 2.

      Test fails without Error Code:

      - Perform the Gearshift Adjustment Procedure in accordance with the Service Information.
      - Refer to **STANDARD PROCEDURE** and perform the 545RFE TRANSMISSION VERIFICATION TEST.
2. **CHECK THE TRANSMISSION SOLENOID/TRS ASSEMBLY**
   1. Turn the ignition off to the lock position.
   2. Remove the Ignition Switch Feed fuse from the TIPM.

CAUTION: Removal of the Ignition Switch Feed fuse from the TIPM will prevent the vehicle from being started in gear.

WARNING: The Ignition Switch Feed fuse must be removed from the TIPM. Failure to do so can result in possible serious or fatal injury.

3. Install Transmission Simulator (special tool #8333A, Simulator, Transmission).
4. Ignition on, engine not running.
5. With the scan tool, perform the Shift Lever Position Test.
6. When the scan tool instructs you to put the Gear Selector in a particular position, you must do so using the selector switch on the Transmission Simulator.
7. The LED for the gear position in question must be illuminated on the Transmission Simulator prior to pressing "ENTER" on the scan tool.

NOTE: When the scan tool requests the O/D off button be depressed, you must use the O/D OFF button in the vehicle or you will fail the Shift Lever Position Test with an error code 11 or OD-TOW/HALL STUCK OPEN.

NOTE: If the Shift Lever Position test fails, make sure to note the identification of the TRS Sense circuit for future reference.

Did the Shift Lever Position test pass?

Yes

- Remove the Oil Pan and Main Valve Body Assembly in accordance with the Service Information. Check for metal debris on top of the Solenoid/TRS Assembly and the manual valve code plate. If debris is present, determine the cause of the debris and repair the transmission as necessary. If no problems are found, replace the Transmission Solenoid/TRS Assembly in accordance with the Service Information.
- Refer to **STANDARD PROCEDURE** and perform the 545RFE TRANSMISSION VERIFICATION TEST.

No

- Go To 3.

3. **TRS SENSE CIRCUIT OPEN**
   1. Turn the ignition off to the lock position.
   2. Disconnect the Transmission Simulator (special tool #8333A, Simulator, Transmission).
   3. Disconnect the PCM harness connectors and install the PCM Pinout Box (special tool #8815A, Kit, NGC, 38 Position).

CAUTION: Do not probe the PCM harness connectors. Probing the PCM harness connectors will damage the PCM terminals resulting in poor terminal to pin connection. Install the (special tool #8815A, Kit, NGC, 38 Position) to perform diagnosis.

   4. Measure the resistance of the identified (T1, T2, T3, T41, or T42) TRS Sense circuit, from the Transmission Solenoid/TRS Assembly harness connector to the appropriate terminal of the PCM

Pinout Box (special tool #8815A, Kit, NGC, 38 Position).

Is the resistance above 5.0 Ohms?

Yes

- Repair the identified (T41, T42, T3, T1, or T2 (C1-C5) TRS Sense circuit for an open.
- Refer to **STANDARD PROCEDURE** and perform the 545RFE TRANSMISSION VERIFICATION TEST.

No

- Go To 4.

4. **TRS SENSE CIRCUIT SHORT TO GROUND**
   1. Measure the resistance between ground and the identified (T41, T42, T3, T1, or T2 (C1-C5) TRS Sense circuit.

      Is the resistance below 5.0 Ohms?

      Yes

      - Repair the identified (T41, T42, T3, T1, or T2 (C1-C5) TRS Sense circuit for a short to ground.
      - Refer to **STANDARD PROCEDURE** and perform the 545RFE TRANSMISSION VERIFICATION TEST.

      No

      - Go To 5.

5. **TRS SENSE CIRCUIT SHORT TO OTHER CIRCUITS**
   1. Measure the resistance between the identified (T1, T2, T3, T41, or T42) TRS Sense circuit and all other circuits in the Transmission Solenoid/TRS Assembly harness connector.

      Is the resistance below 100k Ohms between the identified (T41, T42, T3, T1, or T2 (C1-C5) TRS Sense circuit and any other circuit(s) in the Transmission Solenoid/TRS Assembly harness connector?

      Yes

      - Repair the identified (T41, T42, T3, T1, or T2 (C1-C5) TRS Sense circuit for a short to other circuit(s).
      - Refer to **STANDARD PROCEDURE** and perform the 545RFE TRANSMISSION VERIFICATION TEST.

      No

- Using the schematics as a guide, check the Powertrain Control Module (PCM) terminals for corrosion, damage, or terminal push out. Pay particular attention to all power and ground circuits. If no problems are found, replace and program the PCM in accordance with the Service Information. With the scan tool, perform Quick Learn.
- Refer to **STANDARD PROCEDURE** and perform the 545RFE TRANSMISSION VERIFICATION TEST.

6. **CHECK THE WIRING AND CONNECTORS**
   1. The conditions necessary to set the DTC are not present at this time.
   2. Using the schematics as a guide, inspect the wiring and connectors specific to this circuit.
   3. Wiggle the wiring and connectors while checking for shorted and open circuits.
   4. With the scan tool, check the Event Data to help identify the conditions in which the DTC was set.

   Were there any problems found?

   Yes

   - Repair as necessary.
   - Refer to **STANDARD PROCEDURE** and perform the 545RFE TRANSMISSION VERIFICATION TEST.

   No

   - Test Complete.

P0711-TRANSMISSION TEMPERATURE SENSOR PERFORMANCE

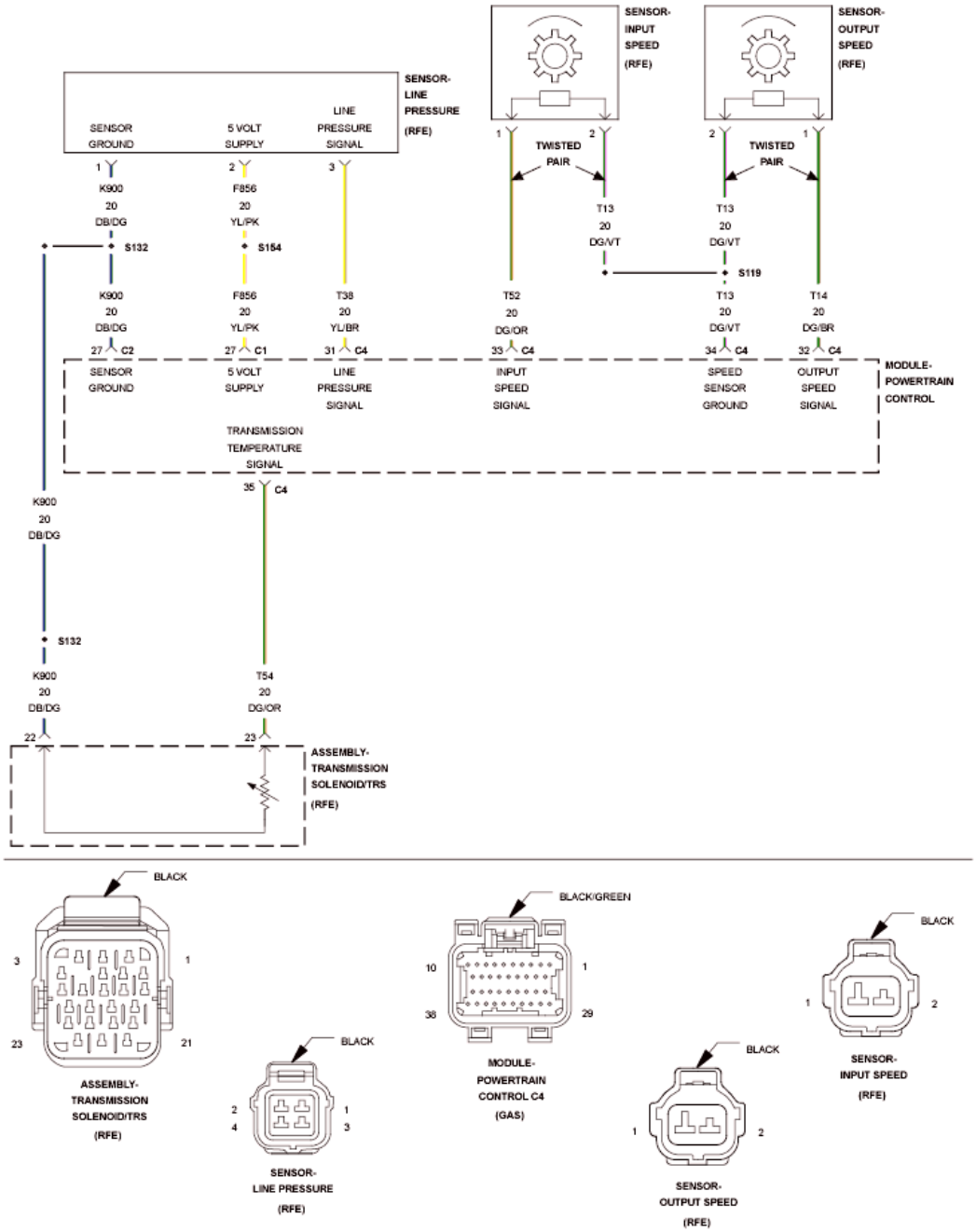

Fig. 6: Line Pressure Sensor Circuit
Courtesy of CHRYSLER GROUP, LLC

For a complete wiring diagram, **refer to appropriate SYSTEM WIRING DIAGRAMS article** .

THEORY OF OPERATION

The Transmission Temperature Sensor is a variable resistor that changes with temperature, or otherwise known as a thermistor. The temperature of the transmission fluid can affect a variety of electronically controlled transmission operations such as shift quality, torque converter lock-up, and when and/or if certain OBDII or

system self-diagnostic test are performed. The Powertrain Control Module (PCM) substitutes a calculated transmission temperature value if a fault is detected in the Transmission Temperature Sensor circuit.

WHEN MONITORED:

Continuously with the ignition on and engine running.

SET CONDITION:

This DTC will set when the desired transmission temperature does not reach a normal operating temperature within a given time frame. Time is variable due to ambient temperature. Approximate times are starting temperature to warm up time: (-40°C [-40°F] - 35 min) (-28°C [-20°F] - 25 min) (-6.6°C [20°F] - 20 min) (15.5°C [60°F] - 10 min)

POSSIBLE CAUSES

Possible Causes
RELATED DTCS PRESENT
TRANSMISSION TEMPERATURE SENSOR (TRS)
POWERTRAIN CONTROL MODULE (PCM)

Always perform the Pre-Diagnostic Troubleshooting procedure before proceeding. Refer to STANDARD PROCEDURE .

DIAGNOSTIC TEST

1. **DETERMINE IF RELATED DTCS ARE PRESENT**
    1. With the scan tool, check Transmission DTCs.

       Are there any other related Transmission Temperature Sensor DTCs present?

       Yes

       - Refer to **DIAGNOSIS AND TESTING** and perform the appropriate diagnostic procedure.

       No

       - Go To 2.
2. **CHECK IF THE DTC IS CURRENT**
    1. With the scan tool, read DTCs.

       Is the status Active or is the Starts Since Set counter 2 or less for this DTC?

       Yes

       - Go To 3.

No

- Go To 4.

3. **TRANSMISSION TEMPERATURE SENSOR**
   1. Turn the ignition off to the lock position.
   2. Remove the Ignition Switch Feed fuse from the TIPM.

CAUTION: Removal of the Ignition Switch Feed fuse from the TIPM will prevent the vehicle from being started in gear.

WARNING: The Ignition Switch Feed fuse must be removed from the TIPM. Failure to do so can result in possible serious or fatal injury.

   3. Install the Transmission Simulator (special tool #8333A, Simulator, Transmission).
   4. Ignition on, engine not running.
   5. With the Transmission Simulator, turn the Input/Output switch to OFF.
   6. With the scan tool, monitor the TRANS TEMP VOLTS while turning the Thermistor Voltage switch to all three positions on the Transmission Simulator.
   7. Compare the scan tool readings to the voltage readings listed on the Transmission Simulator.

   Do the readings on the scan tool match the Transmission Simulator readings ± 0.2 of a volt?

   Yes

   - Replace Transmission Solenoid/TRS Assembly in accordance with the Service Information.
   - Refer to **STANDARD PROCEDURE** and perform the 545RFE TRANSMISSION VERIFICATION TEST.

   No

   - Using the schematics as a guide, check the Powertrain Control Module (PCM) terminals for corrosion, damage, or terminal push out. Pay particular attention to all power and ground circuits. If no problems are found, replace and program the PCM in accordance with the Service Information. With the scan tool, perform Quick Learn.
   - Refer to **STANDARD PROCEDURE** and perform the 545RFE TRANSMISSION VERIFICATION TEST.

4. **CHECK THE WIRING AND CONNECTORS**
   1. The conditions necessary to set this DTC are not present at this time.
   2. Using the schematics as a guide, inspect the wiring and connectors specific to this circuit.
   3. Wiggle the wires while checking for shorted and open circuits.
   4. With the scan tool, check the Event Data to help identify the conditions in which the DTC was set.

Were there any problems found?

Yes

- Repair as necessary.
- Refer to **STANDARD PROCEDURE** and perform the 545RFE TRANSMISSION VERIFICATION TEST.

No

- Test Complete.

P0712-TRANSMISSION TEMPERATURE SENSOR LOW

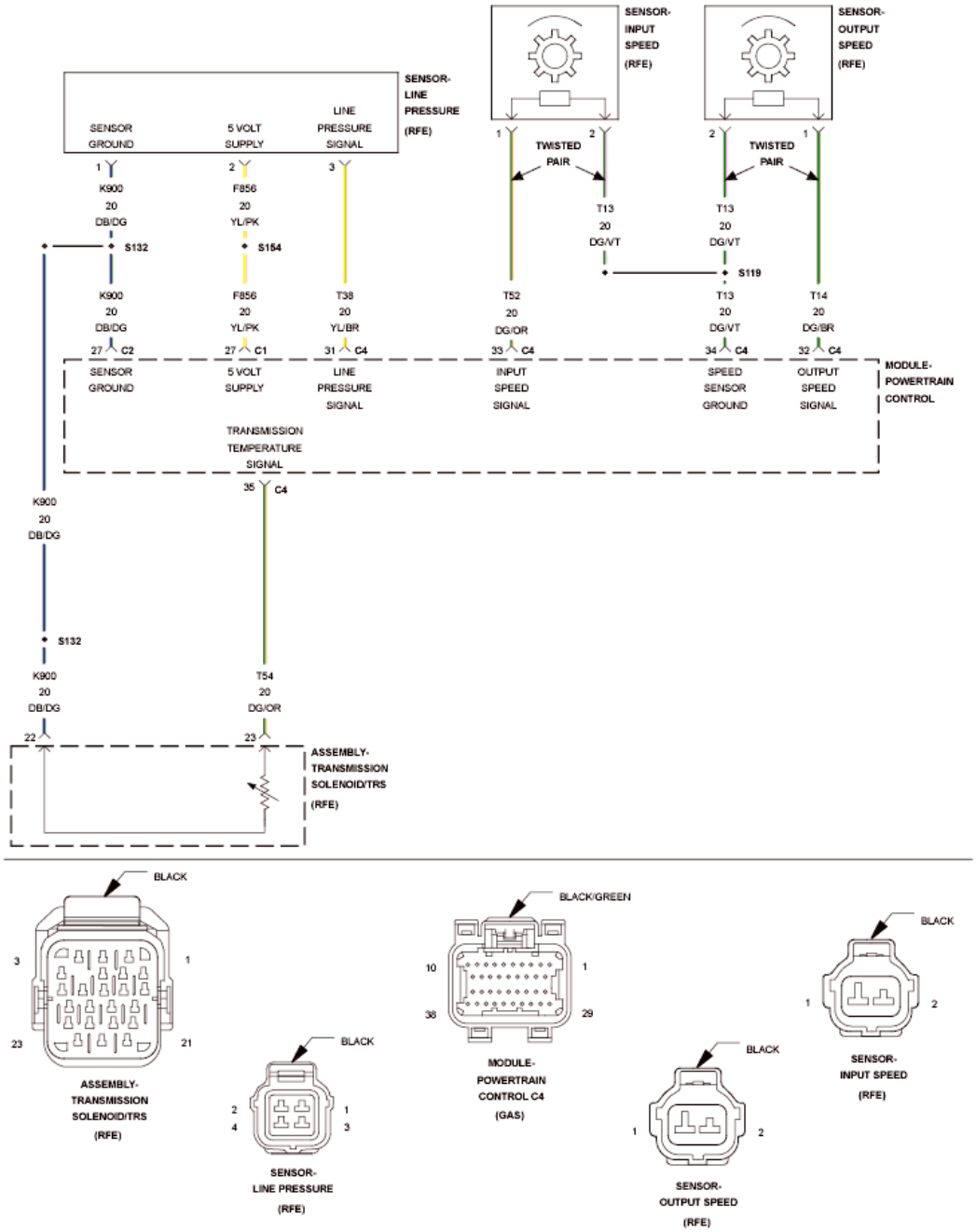

Fig. 7: Line Pressure Sensor Circuit
Courtesy of CHRYSLER GROUP, LLC

For a complete wiring diagram, **refer to appropriate SYSTEM WIRING DIAGRAMS article** .

THEORY OF OPERATION

The Transmission Temperature Sensor is a variable resistor that changes with temperature, or otherwise known as a thermistor. The temperature of the transmission fluid can affect a variety of electronically controlled transmission operations such as shift quality, torque converter lock-up, and when and/or if certain OBDII or

system self-diagnostic test are performed. The Powertrain Control Module (PCM) substitutes a calculated transmission temperature value if a fault is detected in the Transmission Temperature Sensor circuit.

WHEN MONITORED:

Continuously with the ignition on and engine running.

SET CONDITION:

The DTC will set when the monitored Temperature Sensor voltage drops below 0.078 of a volt for the period of 0.45 of a second.

POSSIBLE CAUSES

Possible Causes
RELATED DTCS PRESENT
(T54) TRANSMISSION TEMPERATURE SENSOR SIGNAL CIRCUIT SHORTED TO GROUND
TRANSMISSION TEMPERATURE SENSOR (TRS)
POWERTRAIN CONTROL MODULE (PCM)

Always perform the Pre-Diagnostic Troubleshooting procedure before proceeding. Refer to STANDARD PROCEDURE .

DIAGNOSTIC TEST

1. **DETERMINE IF RELATED DTCS ARE PRESENT**
    1. With the scan tool, read DTCs.

       Are there any line pressure sensor or throttle position sensor DTCs present?

       Yes

       - Refer to **DIAGNOSIS AND TESTING** and perform the appropriate diagnostic procedure.

       No

       - Go To 2.
2. **CHECK IF THE DTC IS CURRENT**
    1. With the scan tool, read DTCs.

       Is the status Active or is the Starts Since Set counter 2 or less for this DTC?

       Yes

       - Go To 3.

No

- Go To 5.

3. **TRANSMISSION TEMPERATURE SENSOR**
   1. Turn the ignition off to the lock position.
   2. Remove the Ignition Switch Feed fuse from the TIPM.

CAUTION: Removal of the Ignition Switch Feed fuse from the TIPM will prevent the vehicle from being started in gear.

WARNING: The Ignition Switch Feed fuse must be removed from the TIPM. Failure to do so can result in possible serious or fatal injury.

   3. Install the Transmission Simulator (special tool #8333A, Simulator, Transmission).
   4. Ignition on, engine not running.
   5. With the Transmission Simulator, turn the Input/Output switch to OFF.
   6. With the scan tool, monitor the TRANS TEMP VOLTS while turning the Thermistor Voltage switch to all three positions on the Transmission Simulator.
   7. Compare the scan tool readings with the numbers listed on the Transmission Simulator.

   Do the readings on the Transmission Simulator match the scan tool readings ± 0.2 of a volt?

   Yes

   - Replace Transmission Solenoid/TRS Assembly in accordance with the Service Information.
   - Refer to **STANDARD PROCEDURE** and perform the 545RFE TRANSMISSION VERIFICATION TEST.

   No

   - Go To 4.

4. **(T54) TRANSMISSION TEMPERATURE SENSOR SIGNAL CIRCUIT SHORTED TO GROUND**

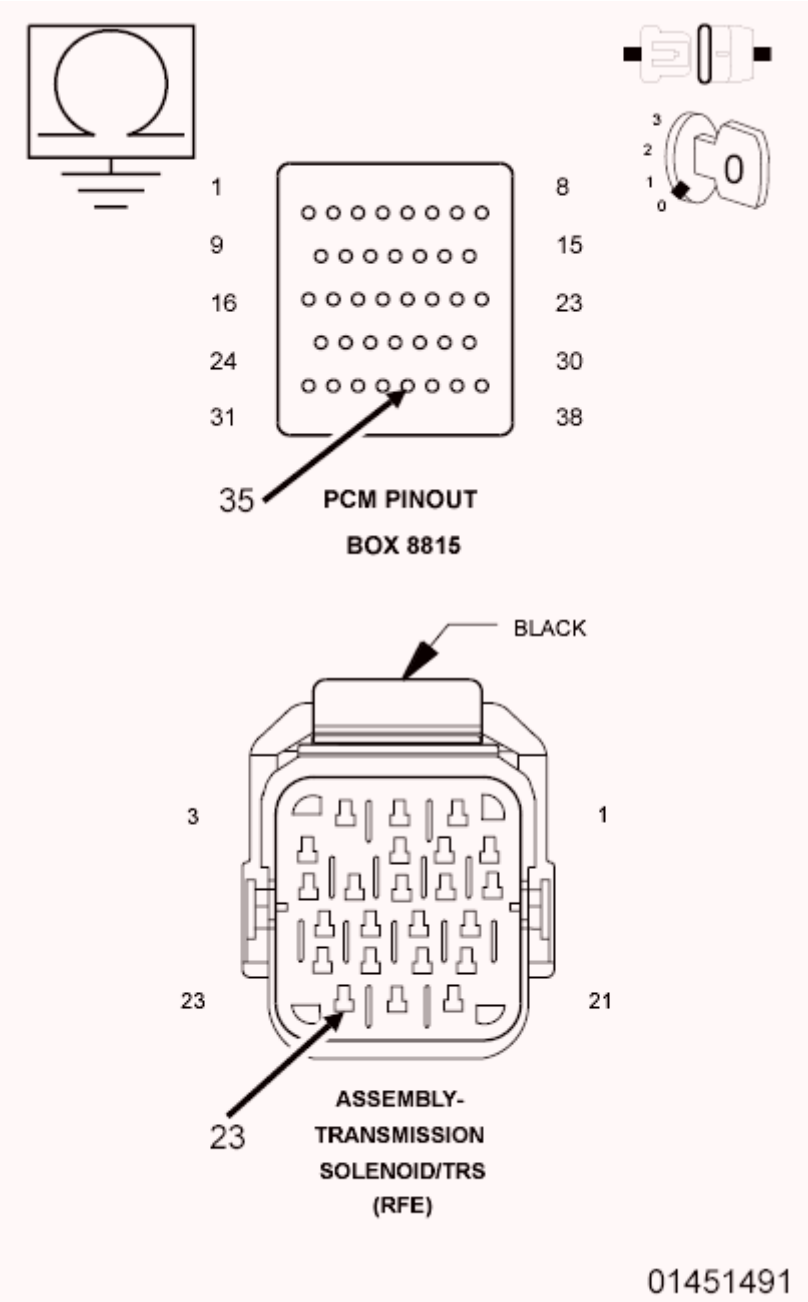

Fig. 8: Checking Transmission Temperature Sensor Signal Circuit For Short To Ground
Courtesy of CHRYSLER GROUP, LLC

1. Turn the ignition off to the lock position.
2. Disconnect the Transmission Simulator (special tool #8333A, Simulator, Transmission).
3. Disconnect the PCM C4 harness connector and connect the PCM Pinout Box (special tool #8815A, Kit, NGC, 38 Position).

NOTE: Check connectors - Clean/repair as necessary.

CAUTION: Do not probe the PCM harness connectors. Probing the PCM harness connectors will damage the PCM terminals resulting in poor terminal to pin connection. Install the (special tool #8815A, Kit, NGC, 38 Position) to perform diagnosis.

4. Measure the resistance between ground and the (T54) Transmission Temperature Sensor Signal circuit.

   Is the resistance below 5.0 Ohms?

   Yes

   - Repair the (T54) Transmission Temperature Sensor Signal circuit for a short to ground.
   - Refer to **STANDARD PROCEDURE** and perform the 545RFE TRANSMISSION VERIFICATION TEST.

   No

   - Using the schematics as a guide, check the Powertrain Control Module (PCM) terminals for corrosion, damage, or terminal push out. Pay particular attention to all power and ground circuits. If no problems are found, replace and program the PCM in accordance with the Service Information. With the scan tool, perform Quick Learn.
   - Refer to **STANDARD PROCEDURE** and perform the 545RFE TRANSMISSION VERIFICATION TEST.

5. **CHECK THE WIRING AND CONNECTORS**
   1. The conditions necessary to set this DTC are not present at this time.
   2. Using the schematics as a guide, inspect the wiring and connectors specific to this circuit.
   3. Wiggle the wires while checking for shorted and open circuits.
   4. With the scan tool, check the Event Data to help identify the conditions in which the DTC was set.

   Were there any problems found?

   Yes

   - Repair as necessary.
   - Refer to **STANDARD PROCEDURE** and perform the 545RFE TRANSMISSION VERIFICATION TEST.

   No

   - Test Complete.

P0713-TRANSMISSION TEMPERATURE SENSOR HIGH

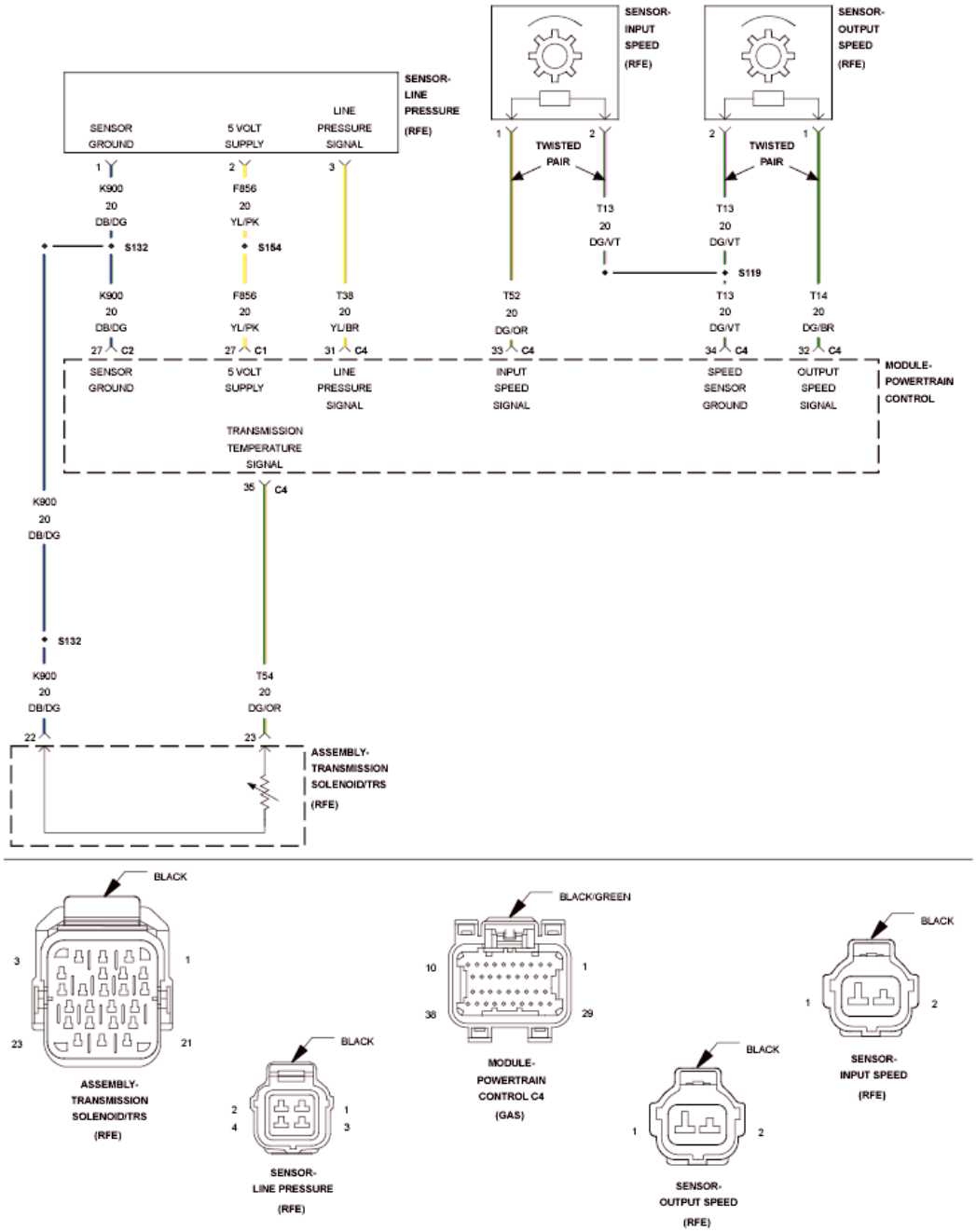

Fig. 9: Line Pressure Sensor Circuit
Courtesy of CHRYSLER GROUP, LLC

For a complete wiring diagram, **refer to appropriate SYSTEM WIRING DIAGRAMS article** .

THEORY OF OPERATION

The Transmission Temperature Sensor is a variable resistor that changes with temperature, or otherwise known as a thermistor. The temperature of the transmission fluid can affect a variety of electronically controlled transmission operations such as shift quality, torque converter lock-up, and when and/or if certain OBDII or

system self-diagnostic test are performed. The Powertrain Control Module (PCM) substitutes a calculated transmission temperature value if a fault is detected in the Transmission Temperature Sensor circuit.

WHEN MONITORED:

Continuously with the ignition on and engine running.

SET CONDITION:

The DTC will set when the monitored Temperature Sensor voltage rises above 4.94 volts for the period of 0.45 of a second.

POSSIBLE CAUSES

Possible Causes
RELATED DTCS PRESENT
(T54) TRANSMISSION TEMPERATURE SENSOR SIGNAL CIRCUIT SHORTED TO OTHER CIRCUITS
TRANSMISSION TEMPERATURE SENSOR (TRS)
POWERTRAIN CONTROL MODULE (PCM)

Always perform the Pre-Diagnostic Troubleshooting procedure before proceeding. Refer to STANDARD PROCEDURE .

DIAGNOSTIC TEST

1. **DETERMINE IF RELATED DTCS ARE PRESENT**
    1. With the scan tool, read DTCs.

       Are there any line pressure sensor or throttle position sensor DTCs present?

       Yes

       - Refer to **DIAGNOSIS AND TESTING** and perform the appropriate diagnostic procedure.

       No

       - Go To 2.
2. **CHECK IF THE DTC IS CURRENT**
    1. With the scan tool, read DTCs.

       Is the status Active or is the Starts Since Set counter 2 or less for this DTC?

       Yes

       - Go To 3.

No

- Go To 5.

3. **TRANSMISSION TEMPERATURE SENSOR**
   1. Turn the ignition off to the lock position.
   2. Remove the Ignition Switch Feed fuse from the TIPM.

CAUTION: Removal of the Ignition Switch Feed fuse from the TIPM will prevent the vehicle from being started in gear.

WARNING: The Ignition Switch Feed fuse must be removed from the TIPM. Failure to do so can result in possible serious or fatal injury.

   3. Install the Transmission Simulator (special tool #8333A, Simulator, Transmission).
   4. Ignition on, engine not running.
   5. With the Transmission Simulator, turn the Input/Output switch to OFF.
   6. With the scan tool, monitor the TRANS TEMP VOLTS while turning the Thermistor Voltage switch to all three positions on the Transmission Simulator.
   7. Compare the scan tool readings with the numbers listed on the Transmission Simulator.

   Do the readings on the Transmission Simulator match the scan tool readings ± 0.2 of a volt?

   Yes

   - Replace Transmission Solenoid/TRS assembly in accordance with the Service Information.
   - Refer to **STANDARD PROCEDURE** and perform the 545RFE TRANSMISSION VERIFICATION TEST.

   No

   - Go To 4.

4. **(T54) TRANSMISSION SENSOR SIGNAL CIRCUIT SHORTED TO ANOTHER CIRCUIT**

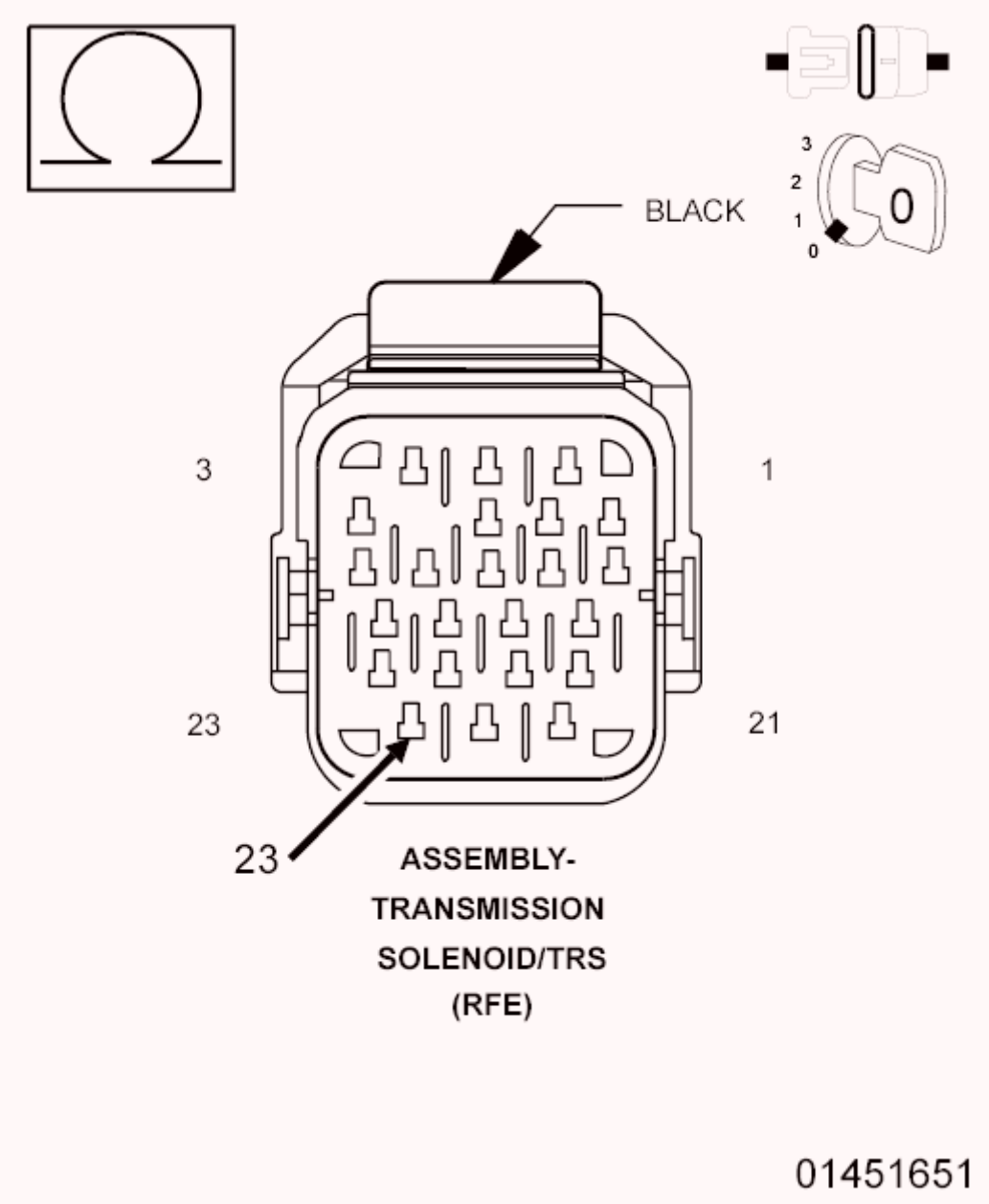

Fig. 10: Checking Transmission Sensor Signal Circuit For Short To Circuit
Courtesy of CHRYSLER GROUP, LLC

1. Turn the ignition off to the lock position.
2. Disconnect the Transmission Simulator (special tool #8333A, Simulator, Transmission).
3. Disconnect the PCM harness connectors.
4. Measure the resistance between the (T54) Transmission Temperature Sensor Signal circuit and all other circuits in the Transmission Solenoid/TRS Assembly harness connector.

   Is the resistance below 5.0 Ohms between the (T54) Transmission Temperature Sensor Signal circuit and any other circuit(s) in the Transmission Solenoid/TRS Assembly harness connector?

Yes

- Repair the Transmission Temperature Sensor Signal circuit for a short to another circuit(s).
- Refer to **STANDARD PROCEDURE** and perform the 545RFE TRANSMISSION VERIFICATION TEST.

No

- Using the schematics as a guide, check the Powertrain Control Module (PCM) terminals for corrosion, damage, or terminal push out. Pay particular attention to all power and ground circuits. If no problems are found, replace and program the PCM in accordance with the Service Information. With the scan tool, perform Quick Learn.
- Refer to **STANDARD PROCEDURE** and perform the 545RFE TRANSMISSION VERIFICATION TEST.

5. **CHECK THE WIRING AND CONNECTORS**
   1. The conditions necessary to set this DTC are not present at this time.
   2. Using the schematics as a guide, inspect the wiring and connectors specific to this circuit.
   3. Wiggle the wires while checking for shorted and open circuits.
   4. With the scan tool, check the Event Data to help identify the conditions in which the DTC was set.

   Were there any problems found?

   Yes

   - Repair as necessary.
   - Refer to **STANDARD PROCEDURE** and perform the 545RFE TRANSMISSION VERIFICATION TEST.

   No

   - Test Complete.

P0714-TRANSMISSION TEMPERATURE SENSOR INTERMITTENT

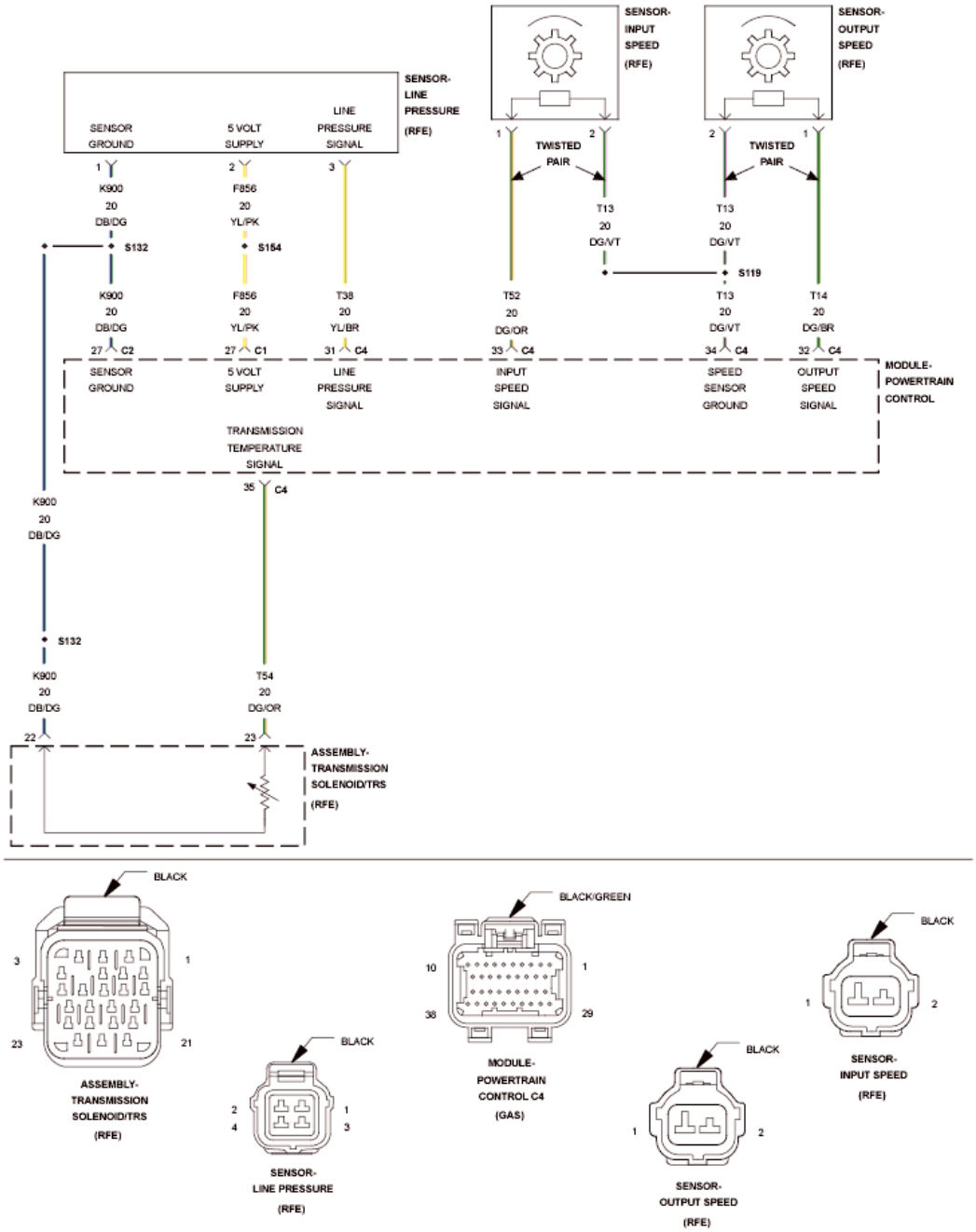

Fig. 11: Line Pressure Sensor Circuit
Courtesy of CHRYSLER GROUP, LLC

For a complete wiring diagram, **refer to appropriate SYSTEM WIRING DIAGRAMS article** .

THEORY OF OPERATION

The Transmission Temperature Sensor is a variable resistor that changes with temperature, or otherwise known as a thermistor. The temperature of the transmission fluid can affect a variety of electronically controlled transmission operations such as shift quality, torque converter lock-up, and when and/or if certain OBDII or

system self-diagnostic test are performed. The Powertrain Control Module (PCM) substitutes a calculated transmission temperature value if a fault is detected in the Transmission Temperature Sensor circuit.

WHEN MONITORED:

Continuously with the ignition on and engine running.

SET CONDITION:

The DTC will set when the monitored Temperature Sensor voltage fluctuates or changes abruptly within a predetermined period of time.

POSSIBLE CAUSES

Possible Causes
RELATED DTCS PRESENT
TRANSMISSION TEMPERATURE SENSOR (TRS)
POWERTRAIN CONTROL MODULE (PCM)

Always perform the Pre-Diagnostic Troubleshooting procedure before proceeding. Refer to STANDARD PROCEDURE .

DIAGNOSTIC TEST

1. **DETERMINE IF RELATED DTCS ARE PRESENT**
    1. With the scan tool, read DTCs.

       Are there any line pressure sensor or throttle position sensor DTCs present?

       Yes

       Refer to **DIAGNOSIS AND TESTING** and perform the appropriate diagnostic procedure.

       No

       - Go To 2.
2. **CHECK IF THE DTC IS CURRENT**
    1. With the scan tool, read DTCs.

       Is the status Active or is the Starts Since Set counter 2 or less for this DTC?

       Yes

       - Go To 3.

       No

- Go To 4.

3. **TRANSMISSION TEMPERATURE SENSOR**
   1. Turn the ignition off to the lock position.
   2. Remove the Ignition Switch Feed fuse from the TIPM.

      CAUTION: Removal of the Ignition Switch Feed fuse from the TIPM will prevent the vehicle from being started in gear.

      WARNING: The Ignition Switch Feed fuse must be removed from the TIPM. Failure to do so can result in possible serious or fatal injury.

   3. Install the Transmission Simulator (special tool #8333A, Simulator, Transmission).
   4. Ignition on, engine not running.
   5. With the Transmission Simulator, turn the Input/Output switch to OFF.
   6. With the scan tool, monitor the TRANS TEMP VOLTS while turning the Thermistor Voltage switch to all three positions on the Transmission Simulator.
   7. Compare the scan tool readings with the numbers listed on the Transmission Simulator.

      Do the readings on the Transmission Simulator match a non-fluctuating scan tool reading ± 0.2 of a volt?

      Yes

      - Replace the Transmission Solenoid/TRS Assembly in accordance with the Service Information.
      - Refer to **STANDARD PROCEDURE** and perform the 545RFE TRANSMISSION VERIFICATION TEST.

      No

      - Using the schematics as a guide, check the Powertrain Control Module (PCM) terminals for corrosion, damage, or terminal push out. Pay particular attention to all power and ground circuits. If no problems are found, replace and program the PCM in accordance with the Service Information. With the scan tool, perform Quick Learn.
      - Refer to **STANDARD PROCEDURE** and perform the 545RFE TRANSMISSION VERIFICATION TEST.

4. **CHECK THE WIRING AND CONNECTORS**
   1. The conditions necessary to set this DTC are not present at this time.
   2. Using the schematics as a guide, inspect the wiring and connectors specific to this circuit.
   3. Wiggle the wires while checking for shorted and open circuits.
   4. With the scan tool, check the Event Data to help identify the conditions in which the DTC was set.

Were there any problems found?

Yes

- Repair as necessary.
- Refer to **STANDARD PROCEDURE** and perform the 545RFE TRANSMISSION VERIFICATION TEST.

No

- Test Complete.

P0716-INPUT SPEED SENSOR 1 CIRCUIT PERFORMANCE

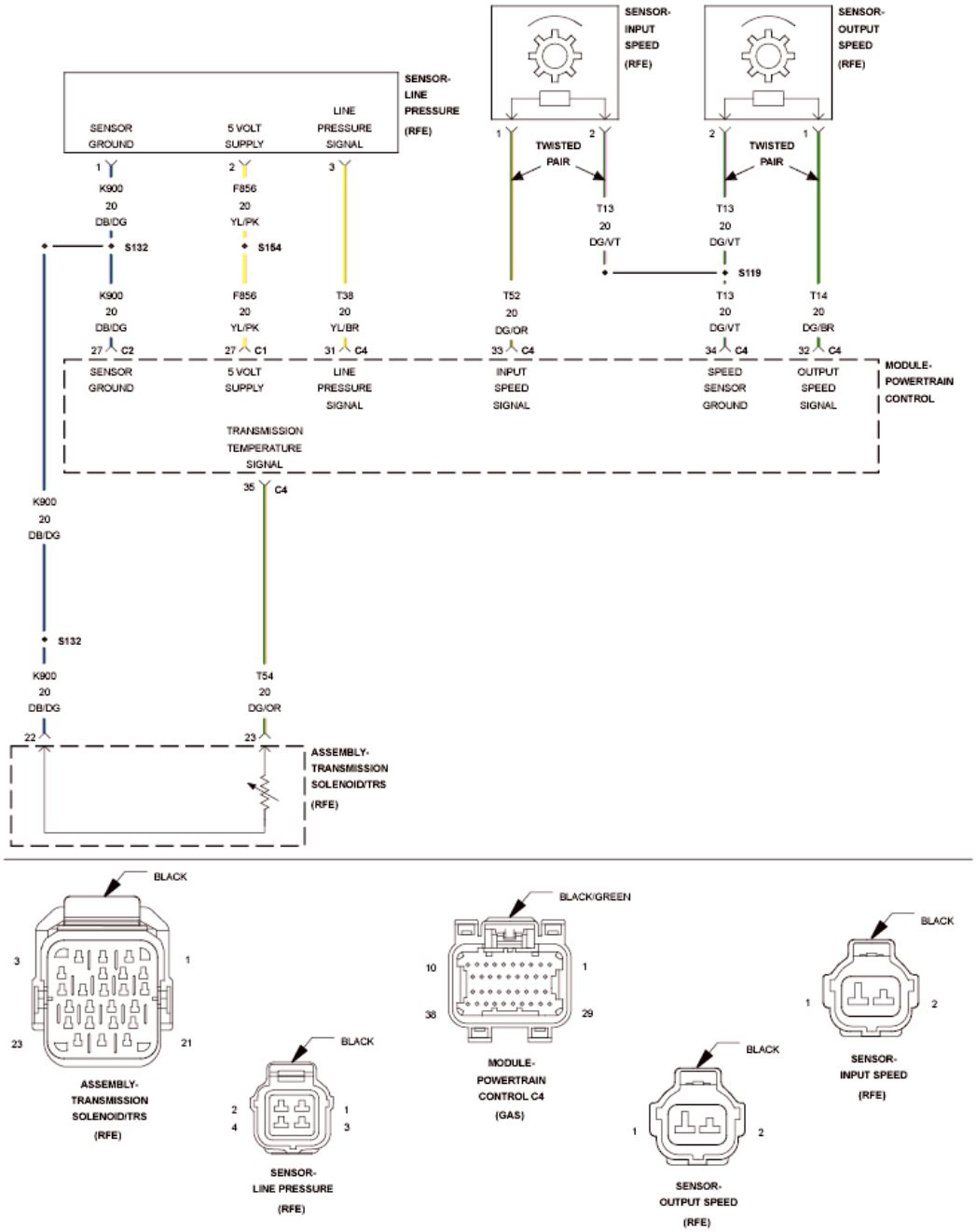

Fig. 12: Line Pressure Sensor Circuit
Courtesy of CHRYSLER GROUP, LLC

For a complete wiring diagram, **refer to appropriate SYSTEM WIRING DIAGRAMS article** .

THEORY OF OPERATION

The transmission system uses two speed sensors, one to measure input rpm and one to measure output rpm. These inputs are essential for proper transmission operation. Therefore, the integrity of this data is verified through the following checks:

1) When in gear, if the gear ratio does not compare to a known gear ratio, the corresponding in-gear trouble code is set (DTCs P0731-36 and P1736).

2) An excessive change in input or output speeds indicating signal intermittent which will result in the DTCs P0716 and/or P0721 being set.

3) If the common speed sensor ground circuit is lost, both sensor inputs will read the signal from the input speed sensor at idle in neutral. Since the input speed sensor reads 60 teeth from the input clutch hub and the output speed sensor reads 30 teeth from the park gear, the result is an apparent speed ratio of 1:2 and may cause the DTC P1794 to set when at a stop.

WHEN MONITORED:

The transmission gear ratio is monitored continuously while the transmission is in gear.

SET CONDITION:

If there is an excessive change in input rpm in any gear. This DTC can take up to five minutes of problem identification before illuminating the MIL.

POSSIBLE CAUSES

Possible Causes
(T52) INPUT SPEED SENSOR SIGNAL CIRCUIT OPEN
(T13) SPEED SENSOR GROUND CIRCUIT OPEN
(T52) INPUT SPEED SENSOR SIGNAL CIRCUIT SHORTED TO GROUND
(T13) SPEED SENSOR GROUND CIRCUIT SHORTED TO GROUND
(T52) INPUT SPEED SENSOR SIGNAL CIRCUIT SHORTED TO VOLTAGE
(T13) SPEED SENSOR GROUND CIRCUIT SHORTED TO VOLTAGE
INPUT SPEED SENSOR
POWERTRAIN CONTROL MODULE (PCM)

Always perform the Pre-Diagnostic Troubleshooting procedure before proceeding. Refer to STANDARD PROCEDURE .

DIAGNOSTIC TEST

1. **CHECK TO SEE IF DTC P0716 IS CURRENT**
    1. Start the engine in park.
    2. With the scan tool, monitor the Input Speed Sensor rpm.

       Is the Input Speed Sensor rpm below 400 rpm?

       Yes

       - Go To 2.

No

- Go To 9.

2. **INPUT SPEED SENSOR**
   1. Turn the ignition off to the lock position.
   2. Remove the Ignition Switch Feed fuse from the TIPM.

      CAUTION: Removal of the Ignition Switch Feed fuse from the TIPM will prevent the vehicle from being started in gear.

      WARNING: The Ignition Switch Feed fuse must be removed from the TIPM. Failure to do so can result in possible serious or fatal injury.

   3. Install the Transmission Simulator (special tool #8333A, Simulator, Transmission).
   4. Ignition on, engine not running.
   5. With the Transmission Simulator, set the selector switch to 3000/1000 and the Input/Output switch to ON.
   6. With the scan tool, monitor the Input and Output Speed Sensor rpm.

      Does the Input speed read 3, 000 rpm and the Output speed read 1, 000 rpm ± 50 rpm?

      Yes

      - Replace the Input Speed Sensor in accordance with the Service Information.
      - Refer to **STANDARD PROCEDURE** and perform the 545RFE TRANSMISSION VERIFICATION TEST.

      No

      - Go To 3.

3. **(T52) INPUT SPEED SENSOR SIGNAL CIRCUIT SHORTED TO VOLTAGE**

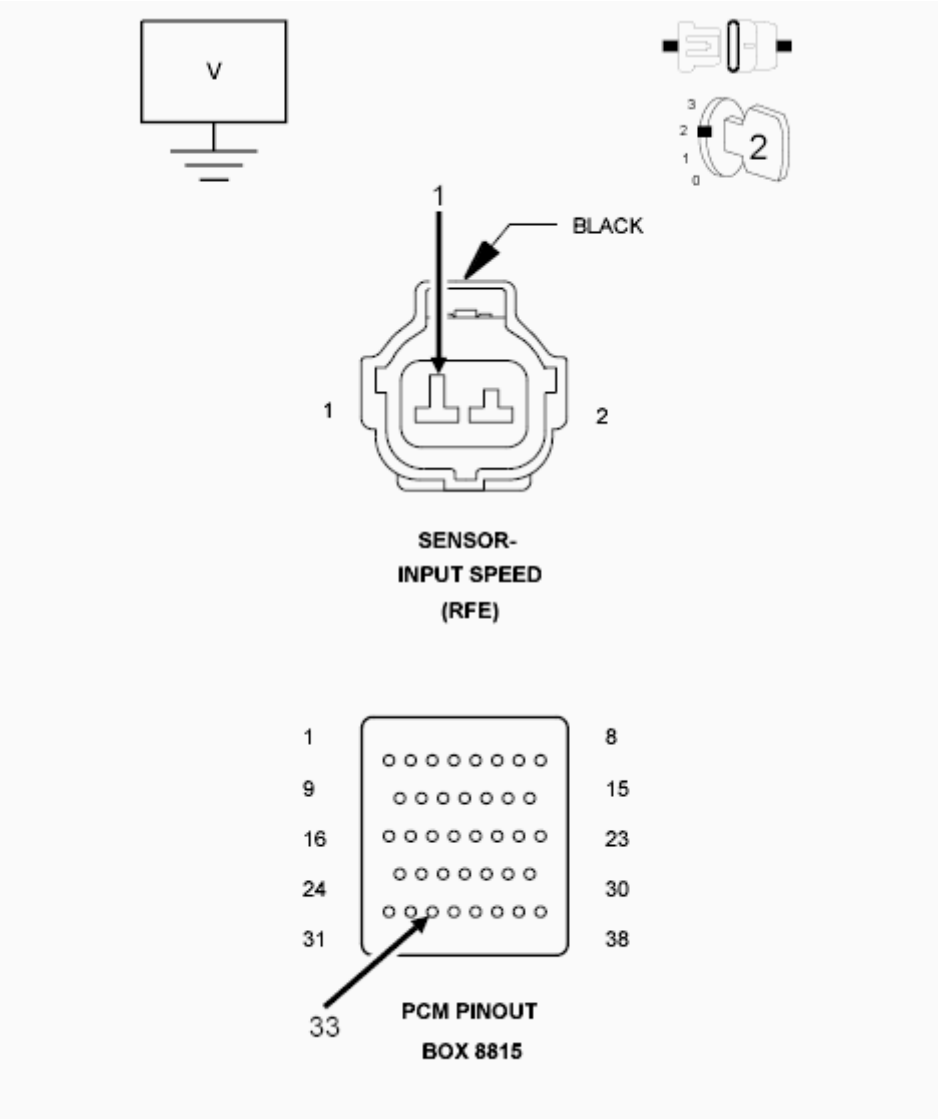

Fig. 13: Checking Input Speed Sensor Signal Circuit For Short To Voltage
Courtesy of CHRYSLER GROUP, LLC

1. Turn the ignition off to the lock position.
2. Disconnect the PCM C4 harness connector and connect the PCM Pinout Box (special tool #8815A, Kit, NGC, 38 Position).

NOTE: **Make sure to leave the Speed Sensor, Transmission Solenoid/TRS Assembly, and Line Pressure Sensor harness connectors disconnected.**

CAUTION: Do not probe the PCM harness connectors. Probing the PCM harness connectors will damage the PCM terminals resulting in poor terminal to pin connection. Install the (special tool #8815A, Kit, NGC, 38 Position) to perform diagnosis.

3. Ignition on, engine not running.
4. With the scan tool in TIPM, actuate the TCM output.
5. Measure the voltage of the (T52) Input Speed Sensor Signal circuit.

   Is the voltage above 0.5 of a volt?

   Yes

   - Repair the (T52) Input Speed Sensor Signal circuit for a short to voltage.
   - Refer to **STANDARD PROCEDURE** and perform the 545RFE TRANSMISSION VERIFICATION TEST.

   No

   - Go To 4.

4. **(T13) SPEED SENSOR GROUND CIRCUIT SHORT TO VOLTAGE**

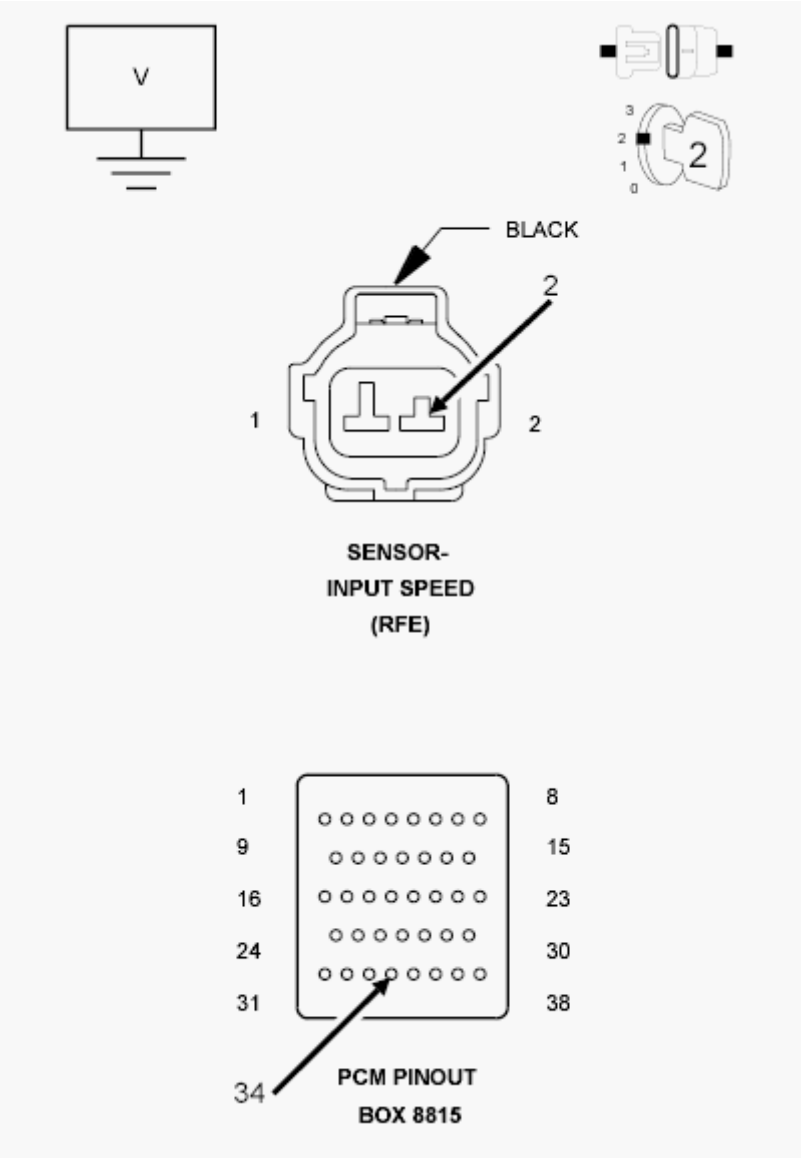

Fig. 14: Checking Speed Sensor Ground Circuit For Short To Voltage
Courtesy of CHRYSLER GROUP, LLC

1. With the scan tool in TIPM, actuate the TCM output.
2. Measure the voltage of the (T13) Speed Sensor Ground circuit.

   Is the voltage above 0.5 of a volt?

   Yes

   - Repair the (T13) Speed Sensor Ground circuit for a short to voltage.
   - Refer to **STANDARD PROCEDURE** and perform the 545RFE TRANSMISSION VERIFICATION TEST.

   No

- Go To 5.

5. **(T52) INPUT SPEED SENSOR SIGNAL CIRCUIT OPEN**

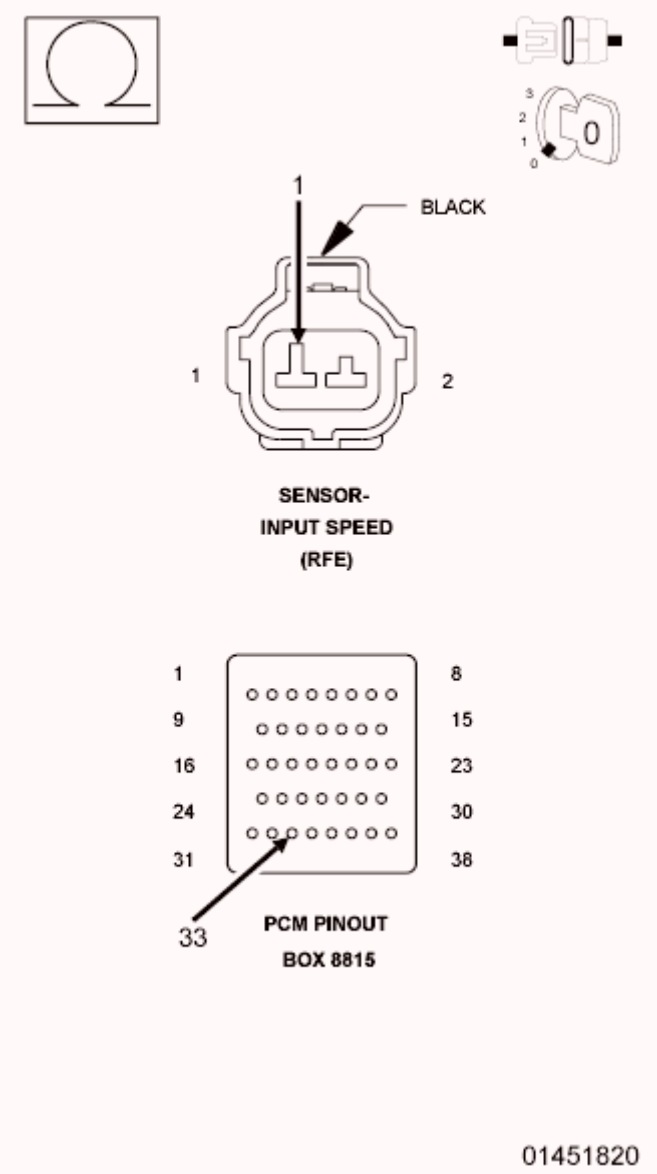

Fig. 15: Checking Input Speed Sensor Signal Circuit For Open
Courtesy of CHRYSLER GROUP, LLC

1. With the scan tool in TIPM, stop the actuation the TCM output.
2. Turn the ignition off to the lock position.
3. Measure the resistance of the (T52) Input Speed Sensor Signal circuit between the Input Speed Sensor harness connector and the appropriate terminal of the PCM Pinout Box (special tool #8815A, Kit, NGC, 38 Position).

   Is the resistance above 5.0 Ohms?

Yes

- Repair the (T52) Input Speed Sensor Signal circuit for an open.
- Refer to **STANDARD PROCEDURE** and perform the 545RFE TRANSMISSION VERIFICATION TEST.

No

- Go To 6.

6. **(T13) SPEED SENSOR GROUND CIRCUIT OPEN**

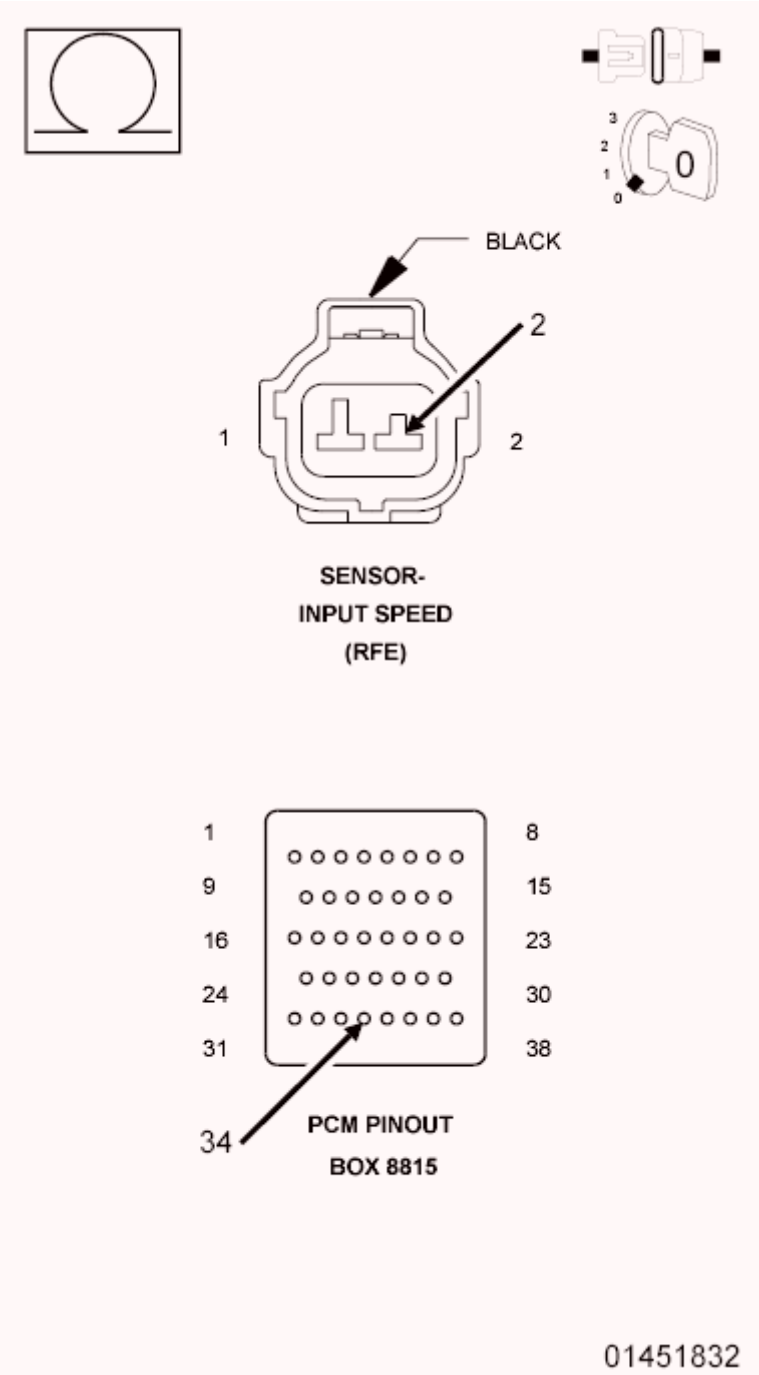

Fig. 16: Checking Speed Sensor Ground Circuit For Open
Courtesy of CHRYSLER GROUP, LLC

1. Measure the resistance of the (T13) Speed Sensor Ground circuit between the Input Speed Sensor harness connector and the appropriate terminal of the PCM Pinout Box (special tool #8815A, Kit, NGC, 38 Position).

   Is the resistance above 5.0 Ohms?

Yes

- Repair the (T13) Speed Sensor Ground circuit for an open.
- Refer to **STANDARD PROCEDURE** and perform the 545RFE TRANSMISSION VERIFICATION TEST.

No

- Go To 7.

7. **(T52) INPUT SPEED SENSOR SIGNAL CIRCUIT SHORT TO GROUND**

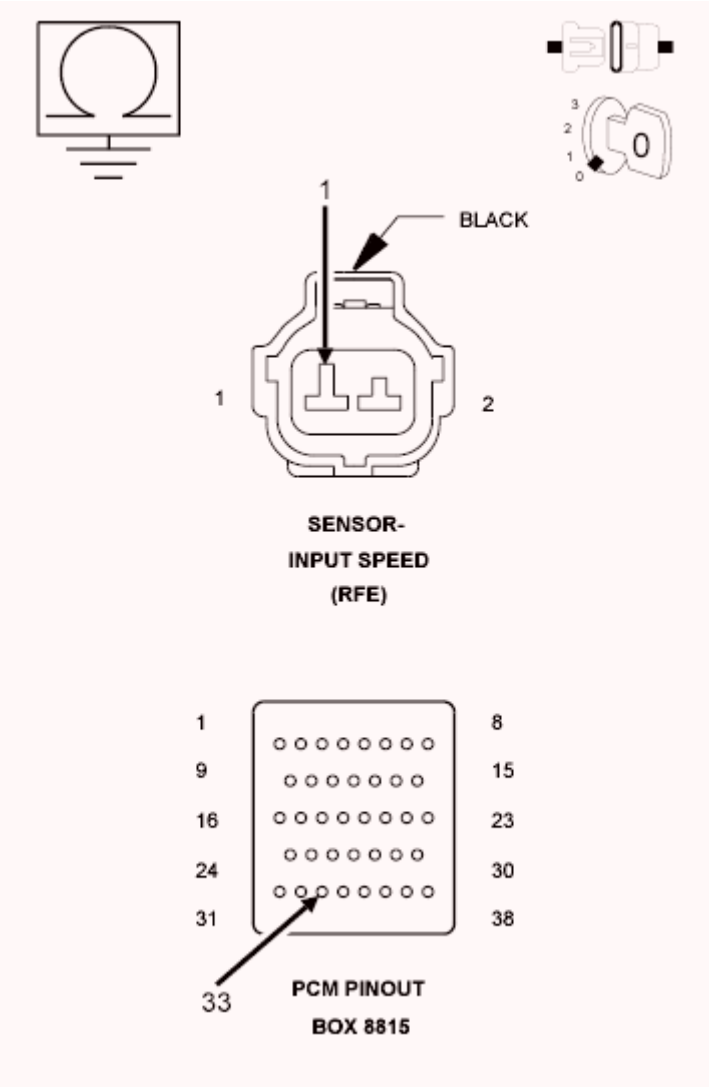

Fig. 17: Checking Input Speed Sensor Signal Circuit For Short To Ground
Courtesy of CHRYSLER GROUP, LLC

1. Measure the resistance between ground and the Input Speed Sensor Signal circuit.

   Is the resistance below 5.0 Ohms?

Yes

- Repair the (T52) Input Speed Sensor Signal circuit for a short to ground.
- Refer to **STANDARD PROCEDURE** and perform the 545RFE TRANSMISSION VERIFICATION TEST.

No

- Go To 8.

8. **(T13) SPEED SENSOR GROUND CIRCUIT SHORTED TO GROUND**

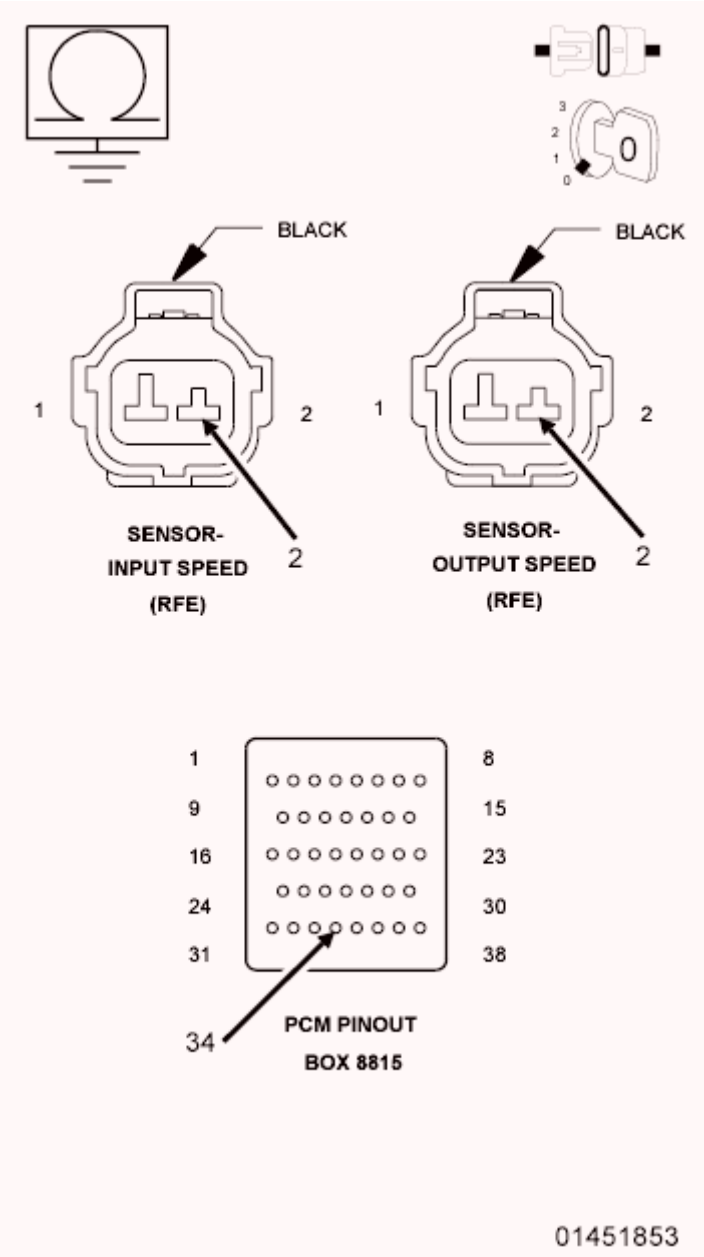

Fig. 18: Checking Speed Sensor Ground Circuit For Short To Ground

Courtesy of CHRYSLER GROUP, LLC

1. Measure the resistance between ground and the (T13) Speed Sensor Ground circuit.

   Is the resistance below 5.0 Ohms?

   Yes

   - Repair the (T13) Speed Sensor Ground circuit for a short to ground.
   - Refer to **STANDARD PROCEDURE** and perform the 545RFE TRANSMISSION VERIFICATION TEST.

   No

   - Using the schematics as a guide, check the Powertrain Control Module (PCM) terminals for corrosion, damage, or terminal push out. Pay particular attention to all power and ground circuits. If no problems are found, replace and program the PCM in accordance with the Service Information. With the scan tool, perform Quick Learn.
   - Refer to **STANDARD PROCEDURE** and perform the 545RFE TRANSMISSION VERIFICATION TEST.

9. **CHECK THE WIRING AND CONNECTORS**
   1. The conditions necessary to set this DTC are not present at this time.
   2. Using the schematics as a guide, inspect the wiring and connectors specific to this circuit.
   3. Wiggle the wires while checking for shorted and open circuits.
   4. With the scan tool, check the Event Data to help identify the conditions in which the DTC was set.

      Were there any problems found?

      Yes

      - Repair as necessary.
      - Refer to **STANDARD PROCEDURE** and perform the 545RFE TRANSMISSION VERIFICATION TEST.

      No

      - Test Complete.

P0721-OUTPUT SPEED SENSOR CIRCUIT PERFORMANCE

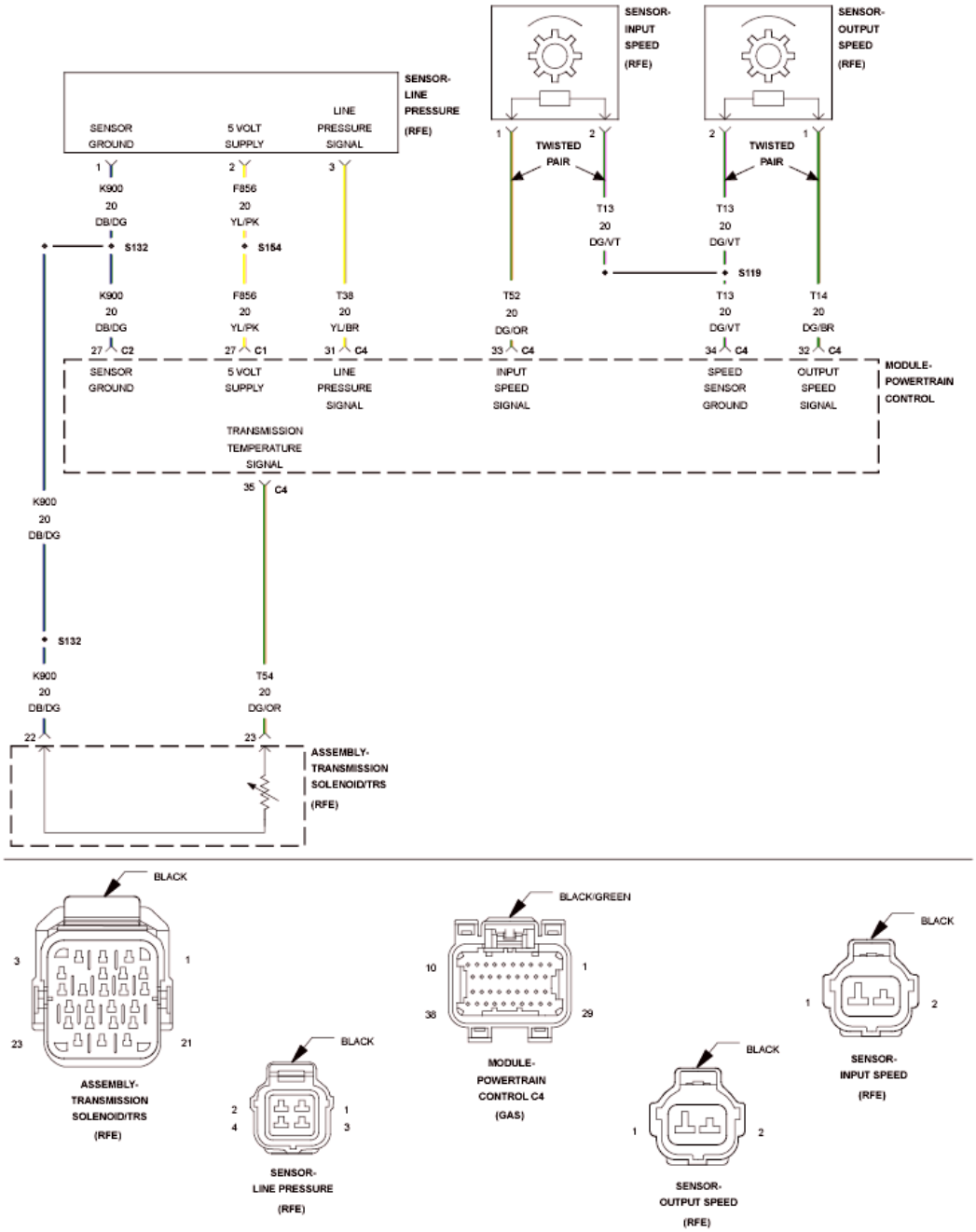

Fig. 19: Line Pressure Sensor Circuit
Courtesy of CHRYSLER GROUP, LLC

For a complete wiring diagram, **refer to appropriate SYSTEM WIRING DIAGRAMS article** .

THEORY OF OPERATION

The transmission system uses two speed sensors, one to measure input rpm and one to measure output rpm. These inputs are essential for proper transmission operation. Therefore, the integrity of this data is verified through the following checks:

1)When in gear, if the gear ratio does not compare to a known gear ratio, the corresponding in-gear trouble code is set (DTCs P0731-36, P1736 and P1776).

2)An excessive change in input or output speeds indicating signal intermittent will result in codes P0716 and/or P0721 being set.

3)If the common speed sensor ground circuit is lost, both sensor inputs will read the signal from the input speed sensor at idle in neutral. Since the input speed sensor has 60 teeth and the output speed sensor has 30 teeth, this results in a an apparent speed ratio of 1:2 and may cause the DTC P1794 to set.

WHEN MONITORED:

The transmission gear ratio is monitored continuously while the transmission is in gear.

SET CONDITION:

If there is an excessive change in output rpm in any gear. This DTC can take up to five minutes of problem identification before illuminating the MIL.

POSSIBLE CAUSES

Possible Causes
(T14) OUTPUT SPEED SENSOR SIGNAL CIRCUIT OPEN
(T13) SPEED SENSOR GROUND CIRCUIT OPEN
(T14) OUTPUT SPEED SENSOR SIGNAL CIRCUIT SHORTED TO GROUND
(T13) SPEED SENSOR GROUND CIRCUIT SHORTED TO GROUND
(T14) OUTPUT SPEED SENSOR SIGNAL CIRCUIT SHORTED TO VOLTAGE
(T13) SPEED SENSOR GROUND CIRCUIT SHORTED TO VOLTAGE
OUTPUT SPEED SENSOR
POWERTRAIN CONTROL MODULE (PCM)

Always perform the Pre-Diagnostic Troubleshooting procedure before proceeding. Refer to STANDARD PROCEDURE .

DIAGNOSTIC TEST

1. **CHECK TO SEE IF DTC P0721 IS CURRENT**
    1. Turn the ignition off to the lock position.

        CAUTION: Properly support the vehicle and raise all drive wheels off the ground.

    2. Release the parking brake.
    3. Start the engine in park.
    4. Place the transmission gear selector in drive, release foot from brake.

WARNING: Be sure to keep hands and feet clear of rotating wheels.

5. With the scan tool, monitor the Output Speed Sensor rpm.

   Is the Output Speed Sensor rpm below 100 rpm?

   Yes

   - Go To 2.

   No

   - Go To 9.

2. **OUTPUT SPEED SENSOR**
   1. Turn the ignition off to the lock position.
   2. Remove the Ignition Switch Feed fuse from the TIPM.

      CAUTION: Removal of the Ignition Switch Feed fuse from the TIPM will prevent the vehicle from being started in gear.

      WARNING: The Ignition Switch Feed fuse must be removed from the TIPM. Failure to do so can result in possible serious or fatal injury.

   3. Install the Transmission Simulator (special tool #8333A, Simulator, Transmission).
   4. Ignition on, engine not running.
   5. With the Transmission Simulator, set the selector switch to 3000/1000 and the Input/Output switch to ON.
   6. With the scan tool, monitor the Input and Output Speed Sensor rpm

      Does the Input Speed read 3, 000 rpm and the Output Speed read 1, 000 rpm, ± 50 rpm?

      Yes

      - Replace the Output Speed Sensor in accordance with the Service Information.
      - Refer to **STANDARD PROCEDURE** and perform the 545RFE TRANSMISSION VERIFICATION TEST.

      No

      - Go To 3.

3. **CHECK THE (T14) OUTPUT SPEED SENSOR SIGNAL CIRCUIT FOR AN OPEN**

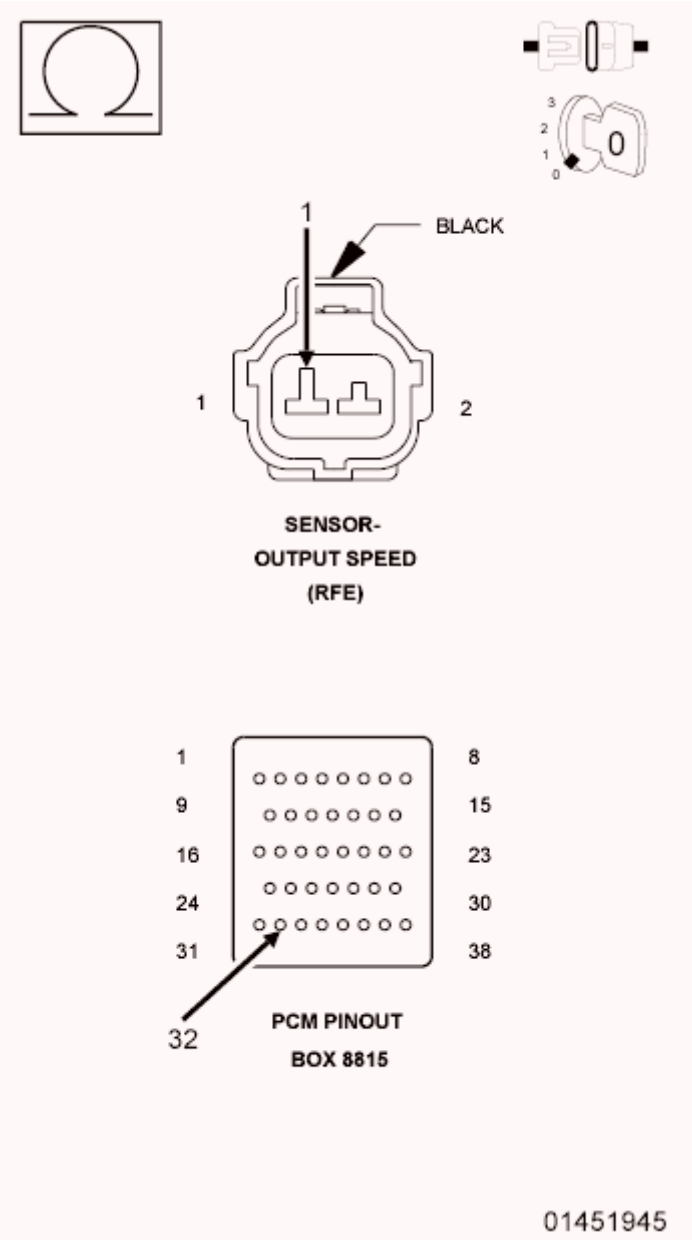

Fig. 20: Checking Output Speed Sensor Signal Circuit For Open
Courtesy of CHRYSLER GROUP, LLC

1. Turn the ignition off to the lock position.
2. Disconnect the Transmission Simulator (special tool #8333A, Simulator, Transmission).
3. Disconnect the PCM harness connectors and connect the PCM Pinout Box (special tool #8815A, Kit, NGC, 38 Position).

CAUTION: Do not probe the PCM harness connectors. Probing the PCM harness connectors will damage the PCM terminals resulting in poor terminal to pin connection. Install the (special tool #8815A, Kit, NGC, 38 Position) to perform diagnosis.

4. Measure the resistance of the (T14) Output Speed Sensor Signal circuit from the Output Speed Sensor harness connector to the appropriate terminal of the PCM Pinout Box (special tool #8815A, Kit, NGC, 38 Position).

   Is the resistance above 5.0 Ohms?

   Yes

   - Repair the (T14) Output Speed Sensor Signal circuit for an open.
   - Refer to **STANDARD PROCEDURE** and perform the 545RFE TRANSMISSION VERIFICATION TEST.

   No

   - Go To 4.

4. **CHECK THE (T13) SPEED SENSOR GROUND CIRCUIT FOR AN OPEN**

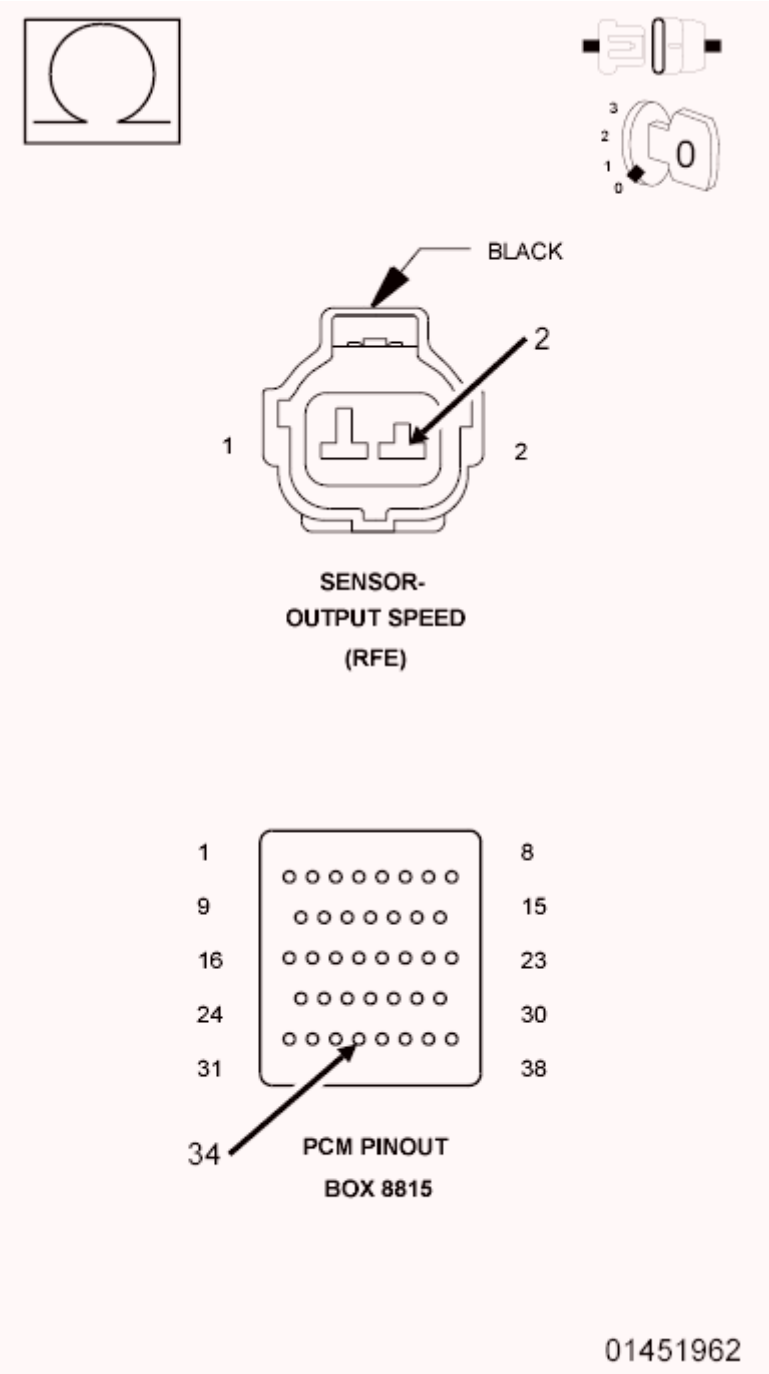

Fig. 21: Checking Output Speed Sensor Signal Circuit For Open
Courtesy of CHRYSLER GROUP, LLC

1. Measure the resistance of the (T13) Speed Sensor Ground circuit from the Output Speed Sensor harness connector to the appropriate terminal in the PCM Pinout Box (special tool #8815A, Kit, NGC, 38 Position).

   Is the resistance above 5.0 Ohms?

Yes

- Repair the (T13) Speed Sensor Ground circuit for an open.
- Refer to **STANDARD PROCEDURE** and perform the 545RFE TRANSMISSION VERIFICATION TEST.

No

- Go To 5.

5. **CHECK THE (T14) OUTPUT SPEED SENSOR SIGNAL CIRCUIT FOR A SHORT TO GROUND**

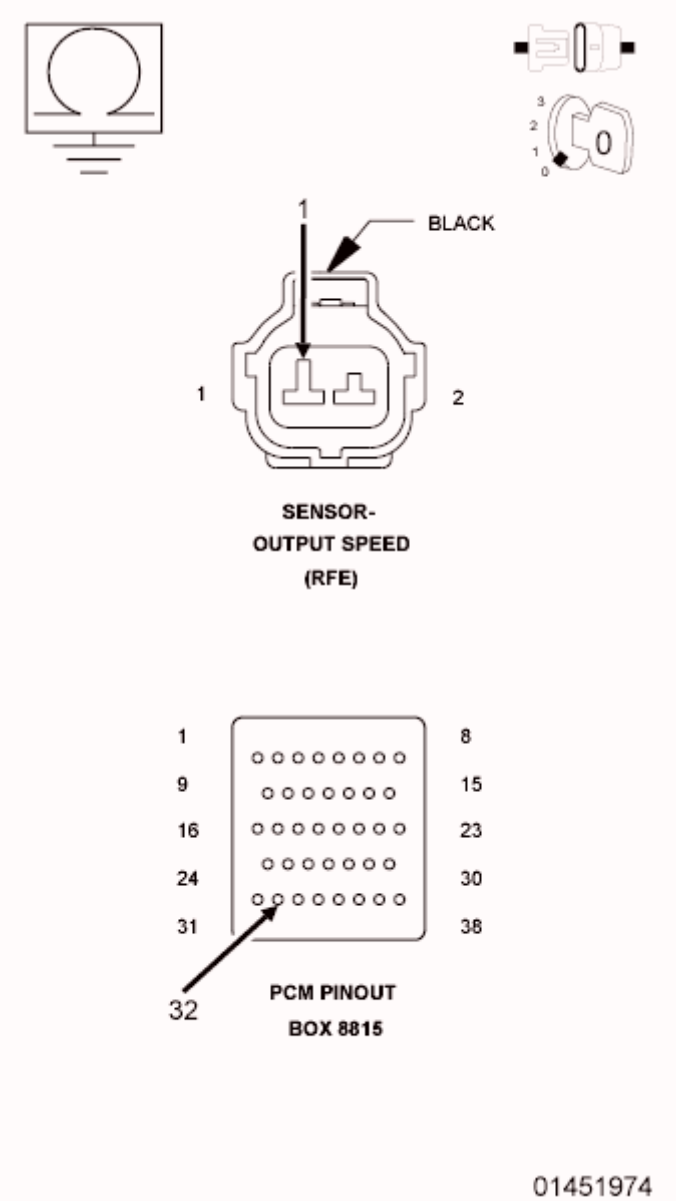

Fig. 22: Checking Output Speed Sensor Signal Circuit For Short To Ground

Courtesy of CHRYSLER GROUP, LLC

1. Measure the resistance between ground and the (T14) Output Speed Sensor Signal circuit.

   Is the resistance below 5.0 Ohms?

   Yes

   - Repair the (T14) Output Speed Sensor Signal circuit for a short to ground.
   - Refer to **STANDARD PROCEDURE** and perform the 545RFE TRANSMISSION VERIFICATION TEST.

   No

   - Go To 6.

6. **CHECK THE (T13) SPEED SENSOR GROUND CIRCUIT FOR A SHORT TO GROUND**

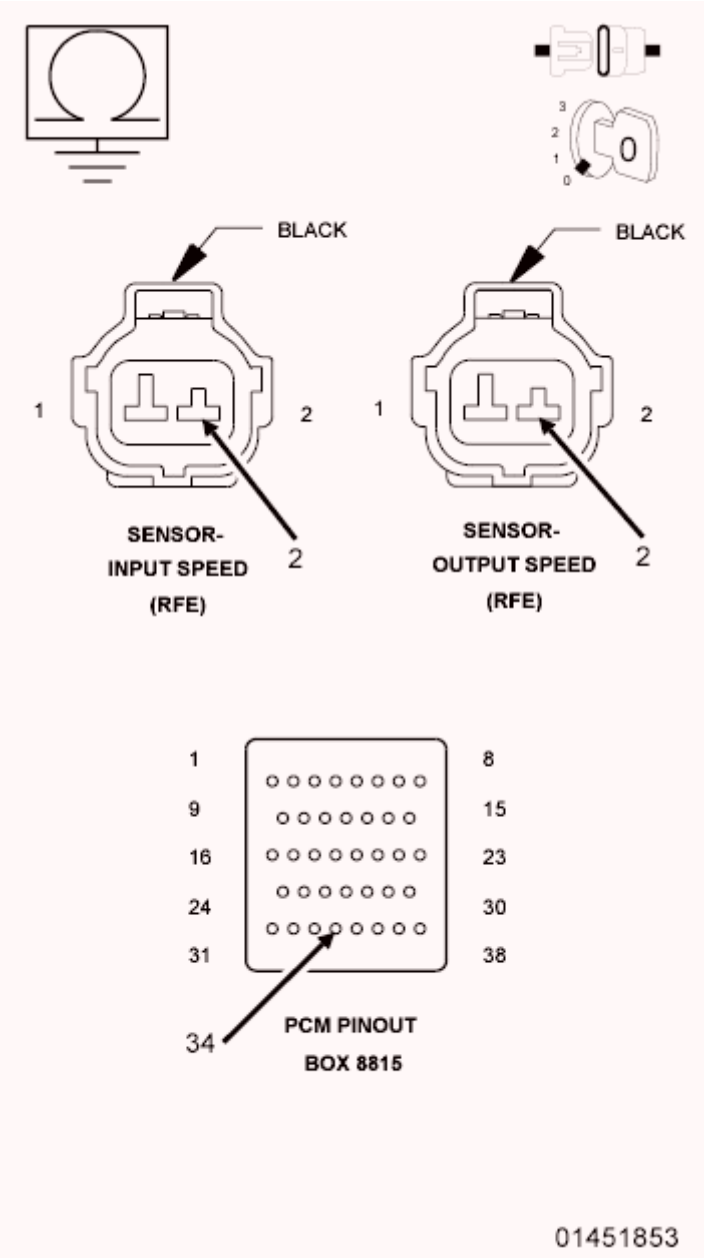

Fig. 23: Checking Speed Sensor Ground Circuit For Short To Ground
Courtesy of CHRYSLER GROUP, LLC

1. Measure the resistance between ground and the (T13) Speed Sensor Ground circuit.

   Is the resistance below 5.0 Ohms?

   Yes

   - Repair the (T13) Speed Sensor Ground circuit for a short to ground.
   - Refer to **STANDARD PROCEDURE** and perform the 545RFE TRANSMISSION VERIFICATION TEST.

No

- Go To 7.

7. **CHECK THE (T14) OUTPUT SPEED SENSOR SIGNAL CIRCUIT SHORT TO VOLTAGE**

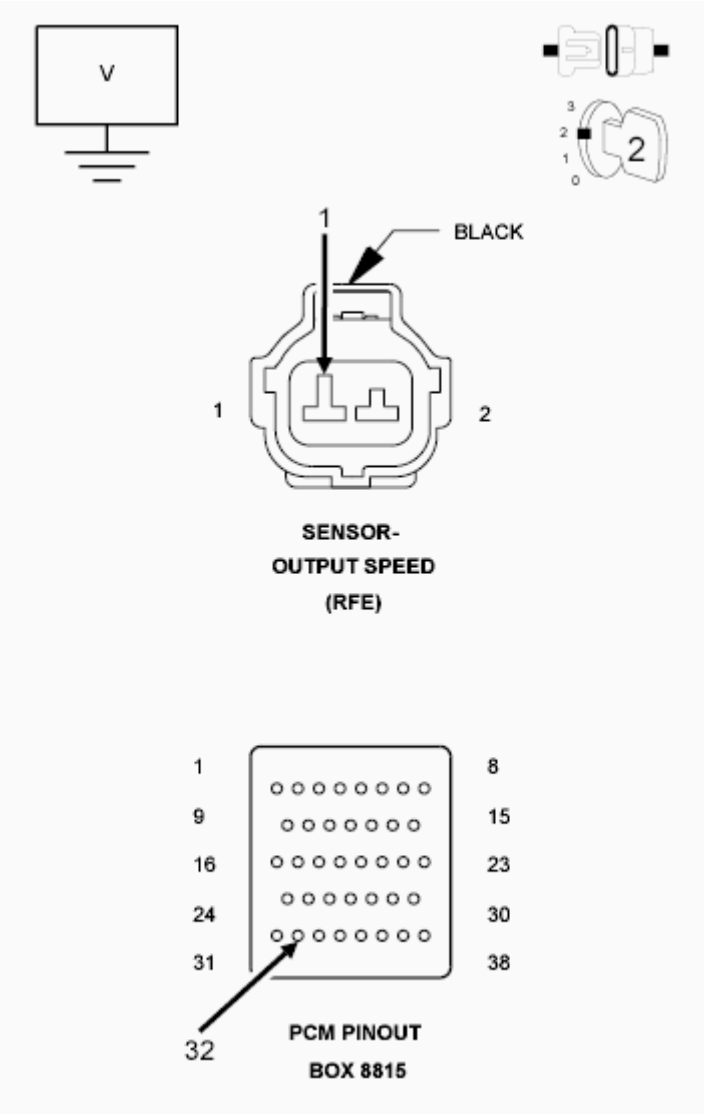

Fig. 24: Checking Output Speed Sensor Signal Circuit For Short To Voltage
Courtesy of CHRYSLER GROUP, LLC

1. Ignition on, engine not running.
2. With the scan tool in TIPM, actuate the TCM output.
3. Measure the voltage of the (T14) Output Speed Sensor Signal circuit.

   Is the voltage above 0.5 of a volt?

   Yes

- Repair the (T14) Output Speed Sensor Signal circuit for a short to voltage.
- Refer to **STANDARD PROCEDURE** and perform the 545RFE TRANSMISSION VERIFICATION TEST.

No

- Go To 8.

8. **CHECK THE (T13) SPEED SENSOR GROUND CIRCUIT FOR A SHORT TO VOLTAGE**

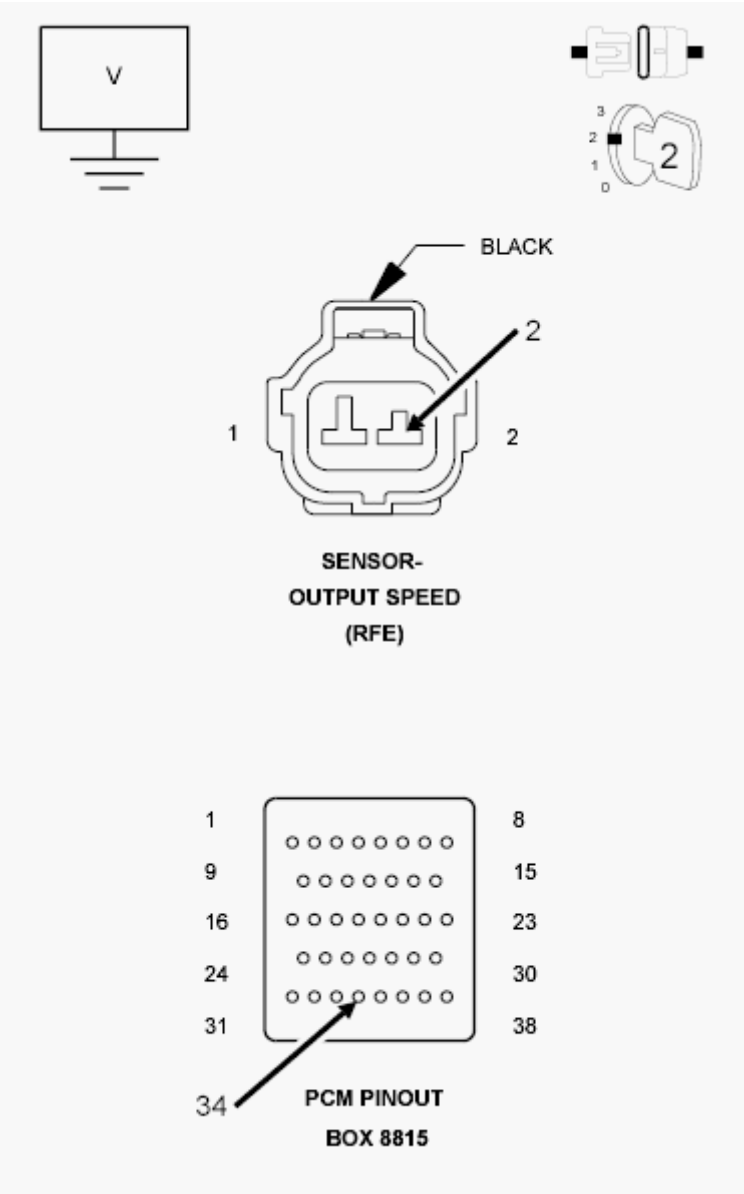

Fig. 25: Checking Output Speed Sensor Ground Circuit For Short To Voltage
Courtesy of CHRYSLER GROUP, LLC

1. With the scan tool in TIPM, actuate the TCM output.

2. Measure the voltage of the (T13) Speed Sensor Ground circuit.

   Is the voltage above 0.5 of a volt?

   Yes

   - Repair the (T13) Speed Sensor Ground circuit for a short to voltage.
   - Refer to **STANDARD PROCEDURE** and perform the 545RFE TRANSMISSION VERIFICATION TEST.

   No

   - Using the schematics as a guide, check the Powertrain Control Module (PCM) terminals for corrosion, damage, or terminal push out. Pay particular attention to all power and ground circuits. If no problems are found, replace and program the PCM in accordance with the Service Information. With the scan tool, perform Quick Learn.
   - Refer to **STANDARD PROCEDURE** and perform the 545RFE TRANSMISSION VERIFICATION TEST.

9. **CHECK THE WIRING AND CONNECTORS**
   1. The conditions necessary to set this DTC are not present at this time.
   2. Using the schematics as a guide, inspect the wiring and connectors specific to this circuit.
   3. Wiggle the wires while checking for shorted and open circuits.
   4. With the scan tool, check the Event Data to help identify the conditions in which the DTC was set.

      Were there any problems found?

      Yes

      - Repair as necessary.
      - Refer to **STANDARD PROCEDURE** and perform the 545RFE TRANSMISSION VERIFICATION TEST.

      No

      - Test Complete.

P0726-ENGINE SPEED INPUT CIRCUIT RANGE/PERFORMANCE

For a complete wiring diagram, **refer to appropriate SYSTEM WIRING DIAGRAMS article** .

THEORY OF OPERATION

The Transmission Control System calculates the engine rpm by directly reading the engine crank position sensor. It compares the calculated value to the engine speed sensor signal transmitted from the Engine Control System over the controllers internal BUS. The calculated engine rpm is also compared to a minimum and a

maximum value. **Note: Due to the integration of the Powertrain Control Module (PCM) and Transmission Control Module (TCM), BUS communication between the modules is internal and unserviceable.**

WHEN MONITORED:

Continuously every 7 msec with the ignition on and engine running.

SET CONDITION:

This DTC will set when the calculated engine speed is less than 390 rpm with the engine running, or greater than 8000 rpm, for the period of 2.0 seconds. The PCM will place the Transmission in Limp-in when this DTC is set. **Note: This is not a Transmission Input Speed Sensor DTC.**

POSSIBLE CAUSES

Possible Causes
RELATED ENGINE DTCS PRESENT
CRANK POSITION SENSOR OR WIRING
POWERTRAIN CONTROL MODULE (PCM)

Always perform the Pre-Diagnostic Troubleshooting procedure before proceeding. Refer to STANDARD PROCEDURE .

DIAGNOSTIC TEST

1. **CHECK FOR RELATED ENGINE DTCS**

   NOTE: This is not a Transmission Input Speed Sensor DTC.

   1. Ignition on, engine not running.
   2. With the scan tool, read all Engine DTCs. This includes any active or stored or one trip DTCs.

      Are there any engine rpm related DTCs present?

      Yes

      - Refer to **DIAGNOSTIC CODE INDEX** and perform the appropriate diagnostic procedure.

      No

      - Go To 2.
2. **CHECK IF DTC IS CURRENT**
   1. Ignition on, engine not running.
   2. With a scan tool, read and record all Event Data.
   3. With the scan tool, erase all active and stored transmission DTCs.

NOTE: **It may be necessary to perform a battery disconnect with the scan tool to clear Event Data.**

4. Using the Event Data, duplicate the conditions in which the original DTC set.
5. With the scan tool, read transmission and engine DTCs.

NOTE: **Refer to all engine DTCs first in the following question.**

Pick the answer below that best describes your findings, (this includes one trip failures).

Transmission DTC P0726 set

- Using the schematics as a guide, check the Powertrain Control Module (PCM) terminals for corrosion, damage, or terminal push out. Also check the Crank Position sensor and wiring. Pay particular attention to all power and ground circuits. If no problems are found, replace and program the PCM in accordance with the Service Information. With the scan tool, perform Quick Learn. Refer to **MODULE, POWERTRAIN CONTROL, REMOVAL** and **MODULE, POWERTRAIN CONTROL, 6.7L DIESEL [ETJ], REMOVAL** .
- Refer to **STANDARD PROCEDURE** and perform the 545RFE TRANSMISSION VERIFICATION TEST.

Engine DTC set

- Refer to **DIAGNOSTIC CODE INDEX** and perform the appropriate diagnostic procedure.
- Refer to **STANDARD PROCEDURE** and perform the 545RFE TRANSMISSION VERIFICATION TEST.

No DTC set at all

- Go To 3.

3. **CHECK WIRING AND CONNECTORS**
   1. The conditions necessary to set this DTC are not present at this time.
   2. Using the schematics as a guide, inspect the wiring and connectors specific to this circuit.
   3. Wiggle the wires while checking for shorted and open circuits.
   4. With the scan tool, check the Event Data to help identify the conditions in which the DTC was set.

   Were there any problems found?

   Yes

   - Repair as necessary.
   - Refer to **STANDARD PROCEDURE** and perform the 545RFE TRANSMISSION VERIFICATION TEST.

No

- Test Complete.

P0731-GEAR RATIO ERROR IN 1ST

For a complete wiring diagram, **refer to appropriate SYSTEM WIRING DIAGRAMS article** .

THEORY OF OPERATION

The transmission system uses two speed sensors, one to measure input rpm and one to measure output rpm. These inputs are essential for proper transmission operation. Therefore, the integrity of this data is verified through the following checks:

NOTE: Various Gear Ratio Error DTCs will set only if the transmission slips after first achieving the correct ratio. Therefore, a transmission with no drive (or reverse) may not set any Gear Ratio Error DTC because it never achieves a correct gear ratio.

1) Once in a particular gear, if the gear ratio varies from the correct gear ratio, the corresponding in-gear trouble code is set (DTCs P0731-36 and P1736).

2) An excessive change in input or output speeds indicating signal intermittent which will result in the DTCs P0716 and/or P0721 being set.

3) If the common speed sensor ground circuit is lost, both sensor inputs will read the pulses from the input speed sensor when at a stop in neutral. Since the input speed sensor reads 60 teeth from the input clutch hub and the output speed sensor reads 30 teeth from the park gear, the result is an apparent speed ratio of 1:2 and may cause the DTC P1794 to set.

WHEN MONITORED:

Continuously with the ignition on, engine running, and after the transmission has achieved the proper gear ratio.

SET CONDITION:

If the ratio of the Input rpm to the Output rpm does not match the current gear ratio. This DTC can take up to five minutes of problem identification before illuminating the MIL

POSSIBLE CAUSES

Possible Causes
CUT UD PISTON SEAL
LOW FLUID LEVEL
CRACKED OR MIS-INSTALLED PRIMARY OIL FILTER OR SEAL
STUCK OR STICKING MAIN REGULATOR VALVE

FAILED OVERRUNNING CLUTCH
CUT UD ACCUMULATOR SEAL RING
BROKEN UD ACCUMULATOR PISTON
BROKEN REACTION SHAFT SUPPORT SEAL RING
LOW LINE PRESSURE
BROKEN / MISSING MAIN VALVE BODY BLEED ORIFICE
BROKEN / MISSING DRIBBLER ORIFICE ASSEMBLY IN REACTION SHAFT SUPPORT
POOR MACHINING ON PUMP VALVE BODY FACE
INPUT OR OUTPUT SPEED SENSOR AND RELATED WIRING
TRANSMISSION SOLENOID/TRS ASSEMBLY
POWERTRAIN CONTROL MODULE (PCM)

Always perform the Pre-Diagnostic Troubleshooting procedure before proceeding. Refer to STANDARD PROCEDURE .

DIAGNOSTIC TEST

1. **CHECK FOR RELATED DTCS**
    1. With the scan tool, check for other transmission DTCs.
    2. If any of these DTCs are present, perform their respective tests first.

    Are there any Transmission solenoid, line pressure, speed sensor, and/or loss of prime DTCs present?

    Yes

    - Refer to **DIAGNOSIS AND TESTING** and perform the appropriate diagnostic procedure. If any of these DTCs are present, they may cause a Gear Ratio Error. Perform the test for P0944 first if it is present.

    No

    - Go To 2.
2. **CHECK IF DTC P0731 IS CURRENT**
    1. With the scan tool, perform the 1st Gear Clutch Test. Follow the instructions on the scan tool.
    2. Increase the throttle angle or TPS Degree to 30° for no more than a few seconds.

    CAUTION: Do not overheat the transmission.

    Did the Clutch Test pass, Input Speed remain at zero?

    Yes

- Go To 3.

No

- Go To 4.

3. **CHECK FOR INTERMITTENT OPERATION**
   1. The conditions to set this DTC are not currently present.
   2. With the scan tool, check the Event Data to help identify the conditions in which the DTC was set.
      - If the Event Data shows fault P0731 was set in Park, Reverse, or Neutral, replace the Powertrain Control Module.
      - If the Event Data shows fault P0731 set with input rpm = zero, check the input speed sensor and related wiring.
      - If the Event Data shows fault P0731 set with line pressure significantly below desired line pressure, check for the cause of low line pressure (i.e., oil level, mis-installed or damaged primary filter or filter seal, sticking main regulator valve in pump, etc.).
      - If the Event Data shows fault P0731 set with the UD pressure switch open (but line pressure matches Desired Line Pressure), air check the UD hydraulic clutch circuit for leakage in accordance with the Service Information. If the UD hydraulic clutch circuit is OK, replace the solenoid/TRS assembly.
   3. Check the gearshift linkage adjustment.
   4. Intermittent Gear Ratio DTCs can be set by problems in the Input and Output Speed Sensor circuits and/or Speed Sensor Ground circuit.
   5. Remove the Ignition Switch Feed fuse from the TIPM.

      CAUTION: Removal of the Ignition Switch Feed fuse from the TIPM will prevent the vehicle from being started in gear.

      WARNING: The Ignition Switch Feed fuse must be removed from the TIPM. Failure to do so can result in possible serious or fatal injury.

   6. Install the Transmission Simulator (special tool #8333A, Simulator, Transmission).
   7. Wiggle wiring and connectors while checking for intermittent operation with the Transmission Simulator.
   8. Gear ratio DTCs can also be set under extreme temperature conditions.
   9. Verify if the problem is only experienced under extreme hot or cold conditions.

      Were there any problems found.

      Yes

      - Repair as necessary.
      - Refer to **STANDARD PROCEDURE** and perform the 545RFE TRANSMISSION

VERIFICATION TEST.

No

- Test Complete.

4. **CHECK INTERNAL TRANSMISSION**
    1. Repair internal transmission as necessary. Refer to the Service Information.
    2. If there were any line pressure DTCs present along with this DTC, make sure to inspect the: Primary oil filter and seal, Transmission Oil Pump, and the Main regulator valve in accordance with the Service Information.
    3. If DTCs P0876 and/or P0875 were present in addition to the P0731, replace the Transmission Solenoid/TRS Assembly in addition to necessary internal repairs.
    4. Pay particular attention to the following list of possible causes when repairing the transmission:
        - Cut UD piston seal
        - Failed overrunning clutch
        - Cut UD accumulator seal ring
        - Burned UD clutch
        - Broken UD accumulator piston
        - Low line pressure
        - Broken/missing main valve body bleed orifice
        - Broken/missing dribbler orifice assembly in reaction shaft support
        - Poor machining on pump valve body face
        - Transmission Solenoid/TRS Assembly

Repair

NOTE: **If the UD clutch has failed but no obvious cause is found (such as a cut piston seal, broken seal ring, stuck regulator valve, low line pressure in Event Data, etc.) replace the Transmission Solenoid/TRS Assembly in addition to any necessary internal repairs.**

- Repair internal transmission in accordance with the Service Information.
- Refer to **STANDARD PROCEDURE** and perform the 545RFE TRANSMISSION VERIFICATION TEST.

P0732-GEAR RATIO ERROR IN 2ND

For a complete wiring diagram, **refer to appropriate SYSTEM WIRING DIAGRAMS article** .

THEORY OF OPERATION

The transmission system uses two speed sensors, one to measure input rpm and one to measure output rpm.

These inputs are essential for proper transmission operation. Therefore, the integrity of this data is verified through the following checks:

1) Once in a particular gear, if the gear ratio varies from the correct gear ratio, the corresponding in-gear trouble code is set (DTCs P0731-36 and P1736).

2) An excessive change in input or output speeds indicating signal intermittent may result in the DTCs P0716 and/or P0721 being set.

3) If the common speed sensor ground circuit is lost, both sensor inputs will read the pulses from the input speed sensor when at a stop in neutral. Since the input speed sensor reads 60 teeth from the input clutch hub and the output speed sensor reads 30 teeth from the park gear, the result is an apparent speed ratio of 1:2 and may cause the DTC P1794 to set.

WHEN MONITORED:

Continuously with the ignition on, engine running, and after the transmission has achieved the proper gear ratio.

SET CONDITION:

If the ratio of the Input rpm to the Output rpm does not match the current gear ratio. This DTC can take up to five minutes of problem identification before illuminating the MIL

POSSIBLE CAUSES

Possible Causes
RELATED DTCS PRESENT
INPUT OR OUTPUT SPEED SENSOR OR WIRING
LOW FLUID LEVEL
CRACKED OR MIS-INSTALLED PRIMARY OIL FILTER OR SEAL
WORN SOLENOID SWITCH VALVE OR PLUGS
STUCK OR STICKING MAIN REGULATOR VALVE
BURNED UD OR 2C CLUTCH
CUT 2C OR UD PISTON SEAL
BROKEN 2C PISTON CASTING
BROKEN OR MISSING 2C BLEED ORIFICE
BROKEN OR MISSING UD BLEED ORIFICE
CUT 2C OR UD ACCUMULATOR PISTON SEAL
CRACKED 2C OR UD ACCUMULATOR PISTON
CUT OR MISSING #5 OR #7 CHECK BALL
TRANSMISSION SOLENOID/TRS ASSEMBLY
BROKEN WELD - REACTION CARRIER TO REVERSE SUN GEAR
MISSING TEETH ON INPUT CLUTCH HUB TONE WHEEL

Always perform the Pre-Diagnostic Troubleshooting procedure before proceeding. Refer to STANDARD

PROCEDURE .

DIAGNOSTIC TEST

1. **CHECK FOR RELATED DTCS**
   1. Using the scan tool, read DTCs.

      Are there any Transmission solenoid, line pressure, speed sensor, and/or loss of prime DTCs present?

      Yes

      - Refer to **DIAGNOSIS AND TESTING** and perform the appropriate diagnostic procedure. Perform the test for P0944-LOSS OF PRIME first if it is present.

      No

      - Go To 2.
2. **CHECK IF DTC IS CURRENT**
   1. Using the scan tool, read and record the Event Data.

      NOTE: Make sure to record all Event Data stored in the scan tool for future reference in this test procedure.

      Does the Event Data display information for the DTC P0732?

      Yes

      - Go To 4.

      No

      - Go To 3.
3. **CHECK EVENT DATA**
   1. In the Event Data, identify the DTC that was recorded earlier.

      Does the Event Data display information for the DTC P1790, with target gear = 2nd, or with both 2C and UD clutches applying?

      Yes

      - Go To 4.

      No

      - Go To 7.

4. **CHECK RPM IN THE EVENT DATA**
    1. Refer to the Event Data recorded earlier.

       Does the Input rpm read zero?

       Yes

       - Check the input speed sensor and wiring. Refer to **P0716-INPUT SPEED SENSOR 1 CIRCUIT PERFORMANCE** and diagnose as if the DTC is current.

       No

       - Go To 5.
5. **CHECK LINE PRESSURE READING**
    1. Refer to the Event Data recorded earlier.

       Is the line pressure reading more than 10 psi below the desired line pressure?

       Yes

       - Go To 6.

       No

       - Go To 7.
6. **CHECK TRANSMISSION OIL FILTER**
    1. Turn the ignition off to the lock position.
    2. Remove and inspect the Transmission Oil Pan for excessive debris in accordance with the Service Information.
    3. Remove and inspect the Primary Oil Filter in accordance with the Service Information.

       NOTE: Make sure the Primary Transmission Oil Filter and seal are properly installed and are not cracked or split.

       Does the Oil Pan contain excessive debris and/or is the Primary Oil Filter cracked, plugged or mis-installed?

       Yes

       - Repair the plugged, cracked, or split Primary Transmission Oil Filter and/or seal. If excessive clutch debris is present, check the clutches for damage. Refer to the Service Information for the proper hydraulic clutch repair procedure.
       - Refer to **STANDARD PROCEDURE** and perform the 545RFE TRANSMISSION VERIFICATION TEST.

No

- Remove the Transmission Oil Pump in accordance with the Service Information. Check the main Regulator Valve for sticking in its bore, scoring, and/or damage and clean and repair as necessary. If no problem is found, replace the Transmission Solenoid/TRS Assembly.
- Refer to **STANDARD PROCEDURE** and perform the 545RFE TRANSMISSION VERIFICATION TEST.

7. **CHECK IF THE DTC P0732 IS CURRENT**
   1. With the scan tool, perform the 2nd Gear Clutch Test. Follow the instructions on the scan tool.
   2. Increase the throttle angle, TPS Degree, to 30° for no more than a few seconds.

CAUTION: Do not overheat the transmission.

NOTE: If the 2C clutch is faulty, the overrunning clutch will hold and the slip test will pass. The 2nd gear clutch test will not detect a faulty 2C clutch. However, it will detect a faulty UD clutch.

Did the clutch test pass, did the Input Speed remain at zero?

Yes

- Go To 8.

No

- Go To 10.

8. **CHECK FOR INTERMITTENT OPERATION**
   1. Check the Shifter adjustment in accordance with the Service Information.
   2. Intermittent gear ratio DTCs can be set by problems in the Input and Output Speed Sensor circuits and/or Speed Sensor Ground circuit.
   3. Check the Speed Sensor wiring and connectors for good connection, then perform a wiggle test using the Transmission Simulator (special tool #8333A, Simulator, Transmission).

Were there any problems found?

Yes

- Repair as necessary.
- Refer to **STANDARD PROCEDURE** and perform the 545RFE TRANSMISSION VERIFICATION TEST.

No

- Go To 9.

9. **CHECK FOR SLIPPAGE**
   1. Using the scan tool, erase Transmission DTCs.
   2. Road test the vehicle.

   Is there an obvious slippage noticed in 2nd gear, or runaway on the 1-2 shift?

   Yes

   - Go To 12.

   No

   - Go To 15.

10. **CHECK THE UD HYDRAULIC CLUTCH CIRCUIT**
    1. Remove Transmission Oil Pan and check for excessive debris.
    2. Remove the Valve Body and air check the UD hydraulic clutch circuit (in the case) in accordance with the Service Information.

    NOTE: The UD clutch passage contains a small bleed orifice, a small amount of air leakage is normal.

    Were there any problems found, excessive debris and/or excessive air leakage in the UD clutch hydraulic circuit?

    Yes

    - Repair as necessary. Check the UD clutch piston seals, reaction shaft support seal rings and the dribbler assembly, and the flatness of the pump valve body and pump housing faces. Check main regulator valve for sticking in the bore.

      NOTE: If the UD clutch has failed but no obvious cause is found (such as a cut piston seal, broken seal ring, stuck regulator valve or any other items listed above) replace the Transmission Solenoid/TRS Assembly in addition to any necessary internal repairs.

    - Refer to **STANDARD PROCEDURE** and perform the 545RFE TRANSMISSION VERIFICATION TEST.

    No

    - Go To 11.

11. **CHECK THE UD ACCUMULATOR PISTON**

1. Check the UD bleed orifice, accumulator piston, and accumulator piston seal in the main valve body.

   Were there any problems found?

   Yes

   - Repair as necessary. Refer to the Service Information for proper repair procedures.
   - Refer to **STANDARD PROCEDURE** and perform the 545RFE TRANSMISSION VERIFICATION TEST.

   No

   - Replace Transmission Solenoid/TRS Assembly in accordance with the Service Information. Refer to **ASSEMBLY, TRANSMISSION SOLENOID AND TRS, REMOVAL** .
   - Refer to **STANDARD PROCEDURE** and perform the 545RFE TRANSMISSION VERIFICATION TEST.

12. **CHECK FOR EXCESSIVE DEBRIS**
    1. Remove the Transmission Oil Pan and check for excessive debris.
    2. If grey sludge is present, check for a improperly assembled 2C clutch with the thick reaction plate not against the case.
    3. Remove the valve body and air check the 2C hydraulic clutch circuit (in the 2C/4C clutch retainer) in accordance with the Service Information.

       NOTE: The 2C clutch passage contains a small bleed orifice, a small amount of air leakage is normal.

       Were there any problems found, excessive debris, improperly assembled 2C clutch and/or excessive air leakage in the 2C hydraulic clutch circuit?

       Yes

       - Repair as necessary. Refer to the Service Information for proper repair procedures. Note: Check the 2C piston seals and bleed orifice.

         NOTE: If the 2C clutch has failed but no obvious cause is found (such as a cut piston seal, stuck regulator valve or any other items listed above) replace the Transmission Solenoid/TRS Assembly in addition to any necessary internal repairs.

       - Refer to **STANDARD PROCEDURE** and perform the 545RFE TRANSMISSION VERIFICATION TEST.

       No

- Go To 13.

13. **CHECK THE 2C ACCUMULATOR**
    1. Check the 2C Accumulator piston for cracks or a cut seal.
    2. Check for a cut or missing #7 or #5 check ball.
    3. Check the Solenoid Switch Valve and its plugs for sticking in its bore or excessive wear.

    Were there any problems found

    Yes

    - Repair as necessary. Refer to the Service Information for proper repair procedures.
    - Refer to **STANDARD PROCEDURE** and perform the 545RFE TRANSMISSION VERIFICATION TEST.

    No

    - Go To 14.

14. **CHECK FOR BROKEN REVERSE SUN GEAR WELD**
    1. Working through the windows in the bottom of the case, check for a broken Reverse Sun gear weld to the reaction carrier as follows:
       - Hold the Transmission Output Shaft by holding the Transmission Manual Lever in the park position.
       - Rotate the Input Annulus gear and drive shell (the drum that encloses the two rearmost carriers).
       - Check to see if the reaction carrier (the front-most carrier, whose outer shell is splined to the 2C clutch) is rotating faster than the drive shell is being turned.

    Is the reaction carrier turning faster than the drive shell?

    Yes

    - Replace Transmission Solenoid/TRS Assembly in accordance with the Service Information. Refer to **ASSEMBLY, TRANSMISSION SOLENOID AND TRS, REMOVAL** .
    - Refer to **STANDARD PROCEDURE** and perform the 545RFE TRANSMISSION VERIFICATION TEST.

    No

    - Replace the reaction carrier in accordance with the Service Information.
    - Refer to **STANDARD PROCEDURE** and perform the 545RFE TRANSMISSION VERIFICATION TEST.

15. **CHECK IF DTC RESETS**

    Did the DTC P0732 reset during the road test?

Yes

- Go To 16.

No

- Go To 17.

16. **LIST OF POSSIBLE CAUSES**
    1. If any other DTCs set during the road test, refer to **DIAGNOSIS AND TESTING**.
    2. If no other DTCs set during the road test, below is a list of possible causes, but not strictly limited to those:
        - Check for excessive debris in the Transmission Oil pan, plugged, cracked, or misinstalled Primary Transmission Oil Filter and/or seal.
        - Check for cut and/or missing #7 and #5 check balls in the main valve body.
        - Check the 2C and UD accumulator pistons and seals, UD bleed orifice, and the Solenoid Switch Valve and Plugs in the main valve body.
        - Check the UD clutch piston seals, reaction shaft support seal rings and dribbler assembly.
        - Check the 2C clutch piston seals, and bleed orifice.
        - Check the main regulator valve for sticking in its bore and the flatness of the pump valve body and pump housing faces.
        - Check for a improperly assembled 2C clutch with the thick reaction plate not against the case.

    Repair

    - Repair as necessary. Refer to the Service Information for proper repair procedures.

    NOTE: **If the UD or 2C clutch has failed but no obvious cause is found (such as a cut piston seal, broken seal ring, stuck regulator valve or any other items listed above) replace the Transmission Solenoid/TRS Assembly in addition to any necessary internal repairs.**

    - Refer to **STANDARD PROCEDURE** and perform the 545RFE TRANSMISSION VERIFICATION TEST.

17. **INTERMITTENT DTC**
    1. The conditions to set this DTC are not currently present.
    2. Using the scan tool, check the Event Data to help identify the conditions in which the DTC was set.
        - If the Event Data shows fault P0732 was set in Park, Reverse, or Neutral, replace the Powertrain Control Module.
        - If the Event Data shows fault P0732 set with input rpm = zero, check the input speed sensor and related wiring.
        - If the Event Data shows fault P0732 set with line pressure significantly below desired line

pressure, check for the cause of low line pressure (i.e., oil level, misinstalled or damaged primary filter or filter seal, sticking main regulator valve in pump, etc.).

- If the Event Data shows fault P0732 set with the UD or 2C pressure switch open (but line pressure matches Desired Line Pressure), air check the UD and 2C hydraulic clutch circuits for leakage in accordance with the Service Information. If the UD and 2C hydraulic clutch circuits are OK, replace the Transmission Solenoid/TRS assembly.

3. Check the gearshift linkage adjustment.
4. Intermittent Gear Ratio DTCs can be set by problems in the Input and Output Speed Sensor circuits and/or Speed Sensor Ground circuit.
5. Remove the Ignition Switch Feed fuse from the TIPM.

CAUTION: Removal of the Ignition Switch Feed fuse from the TIPM will prevent the vehicle from being started in gear.

WARNING: The Ignition Switch Feed fuse must be removed from the TIPM. Failure to do so can result in possible serious or fatal injury.

6. Install the Transmission Simulator (special tool #8333A, Simulator, Transmission).
7. Wiggle wiring and connectors while checking for intermittent operation with the Transmission Simulator.
8. Gear ratio DTCs can also be set under extreme temperature conditions.
9. Verify if the problem is only experienced under extreme hot or cold conditions.

Were there any problems found.

Yes

- Repair as necessary.
- Refer to **STANDARD PROCEDURE** and perform the 545RFE TRANSMISSION VERIFICATION TEST.

No

- Test Complete.

P0733-GEAR RATIO ERROR IN 3RD

For a complete wiring diagram, **refer to appropriate SYSTEM WIRING DIAGRAMS article** .

THEORY OF OPERATION

The transmission system uses two speed sensors, one to measure input rpm and one to measure output rpm. These inputs are essential for proper transmission operation. Therefore, the integrity of this data is verified through the following checks:

1) Once in a particular gear, if the gear ratio varies from the correct gear ratio, the corresponding in-gear trouble code is set (DTCs P0731-36 and P1736).

2) An excessive change in input or output speeds indicating signal intermittent will result in the DTCs P0716 and/or P0721 being set.

3) If the common speed sensor ground circuit is lost, both sensor inputs will read the pulses from the input speed sensor when at a stop in neutral. Since the input speed sensor reads 60 teeth from the input clutch hub and the output speed sensor reads 30 teeth from the park gear, the result is an apparent speed ratio of 1:2 and may cause the DTC P1794 to set.

WHEN MONITORED:

Continuously with the ignition on, engine running, and after the transmission has achieved the proper gear ratio.

SET CONDITION:

If the ratio of the Input rpm to the Output rpm does not match the current gear ratio. This DTC can take up to five minutes of problem identification before illuminating the MIL

POSSIBLE CAUSES

Possible Causes
RELATED DTCS PRESENT
INPUT OR OUTPUT SPEED SENSOR ERRORS
INPUT SPEED SENSOR OR WIRING
LOW FLUID LEVEL
CRACKED OR MIS-INSTALLED PRIMARY OIL FILTER OR SEAL
BENT OR BROKEN ACCUMULATOR COVER ON MAIN VALVE BODY
WORN SOLENOID SWITCH VALVE OR PLUGS
STUCK OR STICKING MAIN REGULATOR VALVE
BURNED UD OR OD CLUTCH
CUT OD OR UD PISTON SEAL
BROKEN OR MISSING UD OR OD BLEED ORIFICE IN MAIN VALVE BODY
BROKEN OR MISSING BLEED ORIFICE IN UD OR OD CLUTCH PISTON
CUT OD OR UD ACCUMULATOR PISTON SEAL
CRACKED OD OR UD ACCUMULATOR PISTON
CUT OR MISSING NO. 6 CHECK BALL
TRANSMISSION SOLENOID/TRS ASSEMBLY
BROKEN WELD - REVERSE CARRIER HUB TO CARRIER
BROKEN REACTION SHAFT SUPPORT SEAL RING
POOR MACHINING ON PUMP VALVE BODY FACE

Always perform the Pre-Diagnostic Troubleshooting procedure before proceeding. Refer to STANDARD PROCEDURE .

DIAGNOSTIC TEST

1. **CHECK IF RELATED DTCS ARE PRESENT**
    1. Using the scan tool, read DTCs

       Are there any Transmission solenoid, line pressure, speed sensor, and/or loss of prime DTCs present?

       Yes

       - Refer to **DIAGNOSIS AND TESTING** and perform the test for P0944-LOSS OF PRIME first if it is present.

       No

       - Go To 2.
2. **CHECK EVENT DATA**
    1. Using the scan tool, read and record the Event Data.

       NOTE: Make sure to record all Event Data stored in the scan tool for future reference in this test procedure.

       Does the Event Data display information for the DTC P0733?

       Yes

       - Go To 4.

       No

       - Go To 3.
3. **CHECK THE TARGET GEAR IN THE EVENT DATA**
    1. In the Event Data, identify the DTC that was recorded earlier.

       Does the Event Data display information for the DTC P1790, with target gear = 3rd, or with both OD and UD clutches applying?

       Yes

       - Go To 4.

       No

       - Go To 7.
4. **CHECK THE INPUT RPM IN THE EVENT DATA**

1. Refer to the Event Data recorded earlier.

   Does the Input rpm read zero?

   Yes

   - Check the input speed sensor and wiring. Refer to test P0716 and diagnose as if the DTC is current.

   No

   - Go To 5.

5. **CHECK LINE PRESSURE READING**
   1. Refer to the Event Data recorded earlier.

      Is the line pressure reading more than 10 psi below the desired line pressure?

      Yes

      - Go To 6.

      No

      - Go To 7.

6. **CHECK TRANSMISSION OIL FILTER**
   1. Turn the ignition off to the lock position.
   2. Remove and inspect the Transmission Oil Pan for excessive debris in accordance with the Service Information.
   3. Remove and inspect the Primary Oil Filter in accordance with the Service Information.

      NOTE: Make sure the Primary Transmission Oil Filter and seal are properly installed and are not cracked or split.

      Does the Oil Pan contain excessive debris and/or is the Primary Oil Filter cracked, plugged or mis-installed?

      Yes

      - Repair the plugged, cracked, or split Primary Transmission Oil Filter and/or seal. If excessive clutch debris is present, check the clutches for damage. Refer to the Service Information for the proper hydraulic clutch repair procedure.
      - Refer to **STANDARD PROCEDURE** and perform the 545RFE TRANSMISSION VERIFICATION TEST.

      No

- Remove the Transmission Oil Pump in accordance with the Service Information. Check the main Regulator Valve for sticking in its bore, scoring, and/or damage and clean and repair as necessary. If no problem is found, replace the Transmission Solenoid/TRS Assembly.
- Refer to **STANDARD PROCEDURE** and perform the 545RFE TRANSMISSION VERIFICATION TEST.

7. **CHECK IF DTC P0733 IS CURRENT**
   1. With the scan tool, perform the 3rd Gear Clutch Test. Follow the instructions on the scan tool.
   2. Increase the throttle angle, TPS Degree, to 30° for no more than a few seconds.

CAUTION: Do not overheat the transmission.

NOTE: If the OD clutch is faulty, the overrunning clutch will hold and the slip test will pass. The 3rd gear clutch test will not detect a faulty OD clutch. However, it will detect a faulty UD clutch.

Did the clutch test pass, did the Input Speed remain at zero?

Yes

- Go To 8.

No

- Go To 10.

8. **CHECK FOR INTERMITTENT OPERATION**
   1. Check the Shifter adjustment in accordance with the Service Information.
   2. Intermittent gear ratio DTCs can be set by problems in the Input and Output Speed Sensor circuits and/or Speed Sensor Ground circuit.
   3. Remove the Ignition Switch Feed fuse from the TIPM.

CAUTION: Removal of the Ignition Switch Feed fuse from the TIPM will prevent the vehicle from being started in gear.

WARNING: The Ignition Switch Feed fuse must be removed from the TIPM. Failure to do so can result in possible serious or fatal injury.

   4. Install the Transmission Simulator (special tool #8333A, Simulator, Transmission).
   5. Check the Speed Sensor wiring and connectors for good connection, then perform a wiggle test using the Transmission Simulator (special tool #8333A, Simulator, Transmission).

Were there any problems found?

Yes

- Repair as necessary.
- Refer to **STANDARD PROCEDURE** and perform the 545RFE TRANSMISSION VERIFICATION TEST.

No

- Go To 9.

9. **CHECK FOR SLIPPAGE**
   1. Using the scan tool, erase Transmission DTCs.
   2. Road test the vehicle. Check operation in 3rd gear, 4th gear, and Reverse.

   Is there an obvious slippage noticed in 3rd gear, or runaway on the 2-3 shift?

   Yes

   - Go To 12.

   No

   - Go To 16.

10. **CHECK THE UD HYDRAULIC CLUTCH CIRCUIT**
    1. Remove Transmission Oil Pan and check for excessive debris.
    2. Remove the Valve Body and air check the UD hydraulic clutch circuit (in the case) in accordance with the Service Information.

    NOTE: The UD clutch passage contains a small bleed orifice, a small amount of air leakage is normal.

    Were there any problems found, excessive debris and/or excessive air leakage in the UD hydraulic clutch circuit?

    Yes

    - Repair as necessary. Check the UD clutch piston seals, reaction shaft support seal rings and dribbler assemblies, and the flatness of the pump valve body and pump housing faces. Check main regulator valve for sticking in the bore.

      NOTE: If the UD clutch has failed but no obvious cause is found (such as a cut piston seal, broken seal ring, stuck regulator valve or any other items listed above) replace the Transmission Solenoid/TRS Assembly in addition to any necessary internal repairs.

- Refer to **STANDARD PROCEDURE** and perform the 545RFE TRANSMISSION VERIFICATION TEST.

No

- Go To 11.

11. **CHECK UD ACCUMULATOR PISTON**
    1. Check the UD bleed orifice, accumulator piston, and accumulator piston seal in the main valve body.

    Were there any problems found?

    Yes

    - Repair as necessary. Refer to the Service Information for proper repair procedures.

    No

    - Replace Transmission Solenoid/TRS Assembly in accordance with the Service Information. Refer to **ASSEMBLY, TRANSMISSION SOLENOID AND TRS, REMOVAL** .
    - Refer to **STANDARD PROCEDURE** and perform the 545RFE TRANSMISSION VERIFICATION TEST.

12. **CHECK FOR EXCESSIVE DEBRIS**
    1. Remove the Transmission Oil Pan and check for excessive debris.
    2. Remove the valve body and check if the accumulator cover is intact.
    3. Air check the OD hydraulic clutch circuit (in the case) in accordance with the Service Information.

    NOTE: The OD clutch passage contains a small bleed orifice which connects to the Reverse clutch hydraulic circuit, a small amount of air leakage into the Reverse clutch passage is normal.

    Were there any problems found, excessive debris, and/or excessive air leakage in the OD hydraulic clutch circuit?

    Yes

    - Repair as necessary. Refer to the Service Information for proper repair procedures. Note: Check the bleed orifice in the OD/Reverse clutch piston.

    NOTE: If the OD clutch has failed but no obvious cause is found (such as a cut piston seal, broken seal ring, stuck regulator valve or any other items listed above) replace the Transmission Solenoid/TRS Assembly in addition to any necessary internal repairs.

- Refer to **STANDARD PROCEDURE** and perform the 545RFE TRANSMISSION VERIFICATION TEST.

No

- Go To 13.

13. **CHECK THE OD ACCUMULATOR**
    1. Check the OD Accumulator piston for cracks or a cut seal.
    2. Check for a cut or missing No. 6 check ball.
    3. Check the Solenoid Switch Valve and its plugs for sticking in its bore or excessive wear.

    Were there any problems found?

    Yes

    - Repair as necessary. Refer to the Service Information for proper repair procedures.
    - Refer to **STANDARD PROCEDURE** and perform the 545RFE TRANSMISSION VERIFICATION TEST.

    No

    - Go To 14.

14. **CHECK FOR NO REVERSE**

    During the road test on a previous test, did the vehicle have no reverse and no 3rd gear, but 1st and 2nd gears were OK?

    Yes

    - Go To 15.

    No

    - Replace Transmission Solenoid/TRS Assembly in accordance with the Service Information. Refer to **ASSEMBLY, TRANSMISSION SOLENOID AND TRS, REMOVAL** .
    - Refer to **STANDARD PROCEDURE** and perform the 545RFE TRANSMISSION VERIFICATION TEST.

15. **CHECK FOR BROKEN REVERSE CARRIER WELD**
    1. Remove the Transmission in accordance with the Service Information and inspect the weld on the reverse carrier hub.

    Were there any problems found?

    Yes

- Repair as necessary.

No

- Disassemble and inspect the input clutch assembly. Check the OD and Reverse clutch seals, discs, and bleed orifice (in the OD/Reverse clutch piston). Check the OD hub and shaft. Repair as necessary. Refer to the Service Information for proper repair procedures.
- Refer to **STANDARD PROCEDURE** and perform the 545RFE TRANSMISSION VERIFICATION TEST.

16. **CHECK IF DTC RESETS**

Did the DTC P0733 reset during the road test?

Yes

- Go To 17.

No

- Go To 18.

17. **LIST OF POSSIBLE CAUSES**
    1. If any other DTCs set during the road test, refer to **DIAGNOSIS AND TESTING**.
    2. If no other DTCs set during the road test, below is a list of possible causes, but not strictly limited to those.
    3. Check for:
        - Excessive debris in the Transmission Oil pan, plugged, cracked, or mis-installed Primary Transmission Oil Filter and/or seal.
        - Cut or missing No. 6 check ball in the main valve body.
        - OD and UD accumulator pistons and seals and bleed orifices, and the Solenoid Switch Valve and Plugs in the main valve body.
        - OD and UD clutch piston seals, reaction shaft support seal rings and dribbler assemblies, and the flatness of the pump valve body and pump housing faces.
        - Main regulator valve for sticking in its bore.

Repair

- Repair as necessary. Refer to the Service Information for proper repair procedures.

NOTE: **If the OD or UD clutch has failed but no obvious cause is found (such as a cut piston seal, broken seal ring, stuck regulator valve or any other items listed above) replace the Transmission Solenoid/TRS Assembly in addition to any necessary internal repairs.**

- Refer to **STANDARD PROCEDURE** and perform the 545RFE TRANSMISSION VERIFICATION TEST.

18. **CHECK FOR INTERMITTENT OPERATION**
    1. The conditions to set this DTC are not currently present.
    2. Using the scan tool, check the Event Data to help identify the conditions in which the DTC was set.
       - If the Event Data shows fault P0733 was set in the Park, Reverse, or Neutral, replace the Powertrain Control Module.
       - If the Event Data shows fault P0733 set with input rpm = zero, check the input speed sensor and related wiring.
       - If the Event Data shows fault P0733 set with line pressure significantly below desired line pressure, check for the cause of low line pressure (i.e., oil level, misinstalled or damaged primary filter or filter seal, sticking main regulator valve in pump, etc.).
       - If the Event Data shows fault P0733 set with the OD or UD pressure switch open (but line pressure matches Desired Line Pressure), air check the OD and UD hydraulic clutch circuits for leakage in accordance with the Service Information. If the OD and UD hydraulic clutch circuits are OK, replace the Transmission Solenoid/TRS assembly.
    3. Check the gearshift linkage adjustment.
    4. Intermittent Gear Ratio DTCs can be set by problems in the Input and Output Speed Sensor circuits and/or Speed Sensor Ground circuit.
    5. Remove the Ignition Switch Feed fuse from the TIPM.

       CAUTION: Removal of the Ignition Switch Feed fuse from the TIPM will prevent the vehicle from being started in gear.

       WARNING: The Ignition Switch Feed fuse must be removed from the TIPM. Failure to do so can result in possible serious or fatal injury.

    6. Install the Transmission Simulator (special tool #8333A, Simulator, Transmission).
    7. Wiggle wiring and connectors while checking for intermittent operation with the Transmission Simulator.
    8. Gear ratio DTCs can also be set under extreme temperature conditions.
    9. Verify if the problem is only experienced under extreme hot or cold conditions.

       Were there any problems found.

       Yes

       - Repair as necessary.
       - Refer to **STANDARD PROCEDURE** and perform the 545RFE TRANSMISSION VERIFICATION TEST.

       No

- Test Complete.

P0734-GEAR RATIO ERROR IN 4TH

For a complete wiring diagram, **refer to appropriate SYSTEM WIRING DIAGRAMS article** .

THEORY OF OPERATION

The transmission system uses two speed sensors, one to measure input rpm and one to measure output rpm. These inputs are essential for proper transmission operation. Therefore, the integrity of this data is verified through the following checks:

1) Once in a particular gear, if the gear ratio varies from the correct gear ratio, the corresponding in-gear trouble code is set (DTCs P0731-36 and P01736).

2) An excessive change in input or output speeds indicating signal intermittent will result in the DTCs P0716 and/or P0721 being set.

3) If the common speed sensor ground circuit is lost, both sensor inputs will read the pulses from the input speed sensor when at a stop in neutral. Since the input speed sensor reads 60 teeth from the input clutch hub and the output speed sensor reads 30 teeth from the park gear, the result is an apparent speed ratio of 1:2 and may cause the DTC P1794 to set.

WHEN MONITORED:

Continuously with the ignition on, engine running, and after the transmission has achieved the proper gear ratio.

SET CONDITION:

If the ratio of the Input rpm to the Output rpm does not match the current gear ratio. This DTC can take up to five minutes of problem identification before illuminating the MIL.

POSSIBLE CAUSES

Possible Causes
LOW FLUID LEVEL
INPUT SPEED SENSOR OR WIRING
VALVE BODY ACCUMULATOR COVER FAILED
CUT OD OR 4C ACCUMULATOR SEAL
CRACKED OD OR 4C ACCUMULATOR PISTON
BROKEN OR MISSING OD BLEED ORIFICE IN MAIN VALVE BODY
CUT 4C TOWER SEAL
TRANSMISSION SOLENOID/TRS ASSEMBLY
CUT OR MISSING NO. 5 OR NO. 6 CHECK BALL
WORN SOLENOID SWITCH VALVE OR PLUGS
CUT OD OR 4C PISTON SEAL

STUCK MAIN REGULATOR VALVE
BURNED OD OR 4C CLUTCH
BROKEN OR MISSING 4C BLEED ORIFICE IN 2C/4C RETAINER
BROKEN REACTION SHAFT SUPPORT SEAL RING
POOR MACHINING ON PUMP VALVE BODY FACE
LOOSE / MISSING DRIBBLER ORIFICE ASSEMBLY IN REACTION SHAFT SUPPORT
CRACKED / LOOSE / MISSING OD/REVERSE PISTON BLEED ORIFICE
BROKEN REVERSE CARRIER HUB WELD
BROKEN REVERSE SUN GEAR WELD TO REACTION CARRIER

Always perform the Pre-Diagnostic Troubleshooting procedure before proceeding. Refer to STANDARD PROCEDURE .

DIAGNOSTIC TEST

1. **CHECK FOR RELATED DTCS**
    1. With the scan tool, check for other transmission DTCs
    2. If any of these DTCs are present, perform their respective tests first.

    Are there any Transmission solenoid, line pressure, speed sensor, and/or loss of prime DTCs present?

    Yes

    - Refer to **DIAGNOSTIC CODE INDEX** and perform the appropriate diagnostic procedure. If any of these DTCs are present, they may cause a Gear Ratio Error. Perform the test for P0944 first if it is present.

    No

    - Go To 2.
2. **CHECK EVENT DATA**
    1. With the scan tool, read and record the Event Data.

    NOTE: Make sure to record all Event Data stored in the scan tool for future reference in this test procedure.

    Does the Event Data display information for the DTC P0734?

    Yes

    - Go To 4.

    No

- Go To 3.

3. **CHECK FOR ANOTHER DTC**

   In the Event Data recorded earlier, does the Event Data show the DTC P1790, with Target Gear = 4th, or with both the 4C and OD clutches applying?

   Yes

   - Go To 4.

   No

   - Go To 6.

4. **CHECK INPUT RPM**

   In the Event Data recorded earlier, does the Input rpm read zero?

   Yes

   - Refer to **DIAGNOSIS AND TESTING** and perform the diagnostic procedure for P0715 (Input Speed Sensor Error). Diagnose the DTC as if it is set and current.

   No

   - Go To 5.

5. **CHECK LINE PRESSURE READING**

   In the Event Data recorded earlier, is the line pressure reading more than 10 PSI below the desired line pressure reading?

   Yes

   - Remove the Transmission Oil pan and check the Transmission Oil filter for improper installation or plugged, if Primary oil filter is OK, check the main regulator valve in pump. If excessive debris is in the oil pan, check clutches and repair as necessary. Refer to **REMOVAL** .
   - Refer to **STANDARD PROCEDURE** and perform the 545RFE TRANSMISSION VERIFICATION TEST.

   No

   - Go To 6.

6. **CHECK TRANSMISSION FOR SLIPPAGE**
   1. Erase DTCs and road test the vehicle.
   2. Check the transmission operation in reverse and all forward gears.

During the road test, was there any obvious slippage noted in 4th gear or a runaway during the 3-4 shift?

Yes

- Go To 8.

No

- Go To 7.

7. **CHECK IF DTC RESETS**
   1. With the scan tool, check for Transmission DTCs after the road test.

      Did the DTC P0734 reset?

      Yes

      - Go To 8.

      No

      - Test Complete.

8. **CHECK INTERNAL TRANSMISSION**
   1. Remove the Transmission Oil Pan and Valve Body in accordance with the Service Information and check for the following:
      - Excessive debris in the oil pan.
      - Remove the Valve Body and check if the accumulator cover is intact and the 4C tower seal is not cut or split.
      - OD and 4C accumulator pistons for cracks and/or cut seals.
      - Solenoid Switch Valve and its plugs for stickiness or wear.
      - Cut or missing No. 5 and/or No. 6 check ball.
      - OD bleed orifice on top of the Valve Body
      - Air check the OD and 4C hydraulic clutch circuits for excessive leakage. Refer to the Service information.

      NOTE: **Both the OD and 4C hydraulic clutch circuits contain a small bleed orifice. A small amount of air leakage is considered normal. The OD hydraulic clutch circuit bleed orifice connects to the Reverse input clutch hydraulic cavity. A small amount of air leakage into the Reverse hydraulic clutch circuit is considered normal.**

      Were there any problems found?

      Yes

- Repair as necessary. Refer to **REMOVAL** .

NOTE: **If the OD or 4C clutch has failed but no obvious cause is found (such as a cut piston seal, broken seal ring, stuck regulator valve or any other items listed above) replace the Transmission Solenoid/TRS Assembly in addition to any necessary internal repairs.**

- Refer to **STANDARD PROCEDURE** and perform the 545RFE TRANSMISSION VERIFICATION TEST.

No

- Go To 9.

9. **CHECK REVERSE GEAR**

Was there no reverse gear during the road test?

Yes (no reverse)

- Go To 10.

No (reverse gear OK)

- Replace Transmission Solenoid/TRS Assembly in accordance with the Service Information. Refer to **ASSEMBLY, TRANSMISSION SOLENOID AND TRS, REMOVAL** .
- Refer to **STANDARD PROCEDURE** and perform the 545RFE TRANSMISSION VERIFICATION TEST.

10. **CHECK ROAD TEST RESULTS**

During the road test, was there no 2nd gear and no 4th gear, but 3rd gear (limp-in) was OK?

Yes

- Go To 11.

No

- Go To 12.

11. **CHECK FOR BROKEN REVERSE SUN GEAR WELD**
    1. Working through the windows in the bottom of the case, check for a broken Reverse Sun gear weld to the reaction carrier as follows:

       Hold the Transmission Output Shaft by holding the Transmission Manual Lever in the park position.

       Rotate the Input Annulus gear and drive shell (the drum that encloses the two rearmost

carriers).

Check to see if the reaction carrier (the front most carrier, whose outer shell is splined to the 2C clutch) is rotating faster than the drive shell is being turned.

Is the reaction carrier turning faster than the drive shell?

Yes

- Replace Transmission Solenoid/TRS Assembly in accordance with the Service Information. Refer to **ASSEMBLY, TRANSMISSION SOLENOID AND TRS, REMOVAL** .
- Refer to **STANDARD PROCEDURE** and perform the 545RFE TRANSMISSION VERIFICATION TEST.

No

- Replace the reaction carrier in accordance with the Service Information. Refer to **REMOVAL** .
- Refer to **STANDARD PROCEDURE** and perform the 545RFE TRANSMISSION VERIFICATION TEST.

12. **CHECK REVERSE CARRIER HUB WELD**
    1. Remove the Transmission in accordance with the Service Information and inspect the weld on the reverse carrier hub.

       Were there any problems found?

       Yes

       - Repair as necessary. Refer to **REMOVAL** .
       - Refer to **STANDARD PROCEDURE** and perform the 545RFE TRANSMISSION VERIFICATION TEST.

       No

       - Disassemble and inspect the input clutch assembly. Check the OD and Reverse clutch seals, discs, and bleed orifice (in the OD/Reverse clutch piston). Check the OD hub and shaft. Repair as necessary. Refer to **REMOVAL** .
       - Refer to **STANDARD PROCEDURE** and perform the 545RFE TRANSMISSION VERIFICATION TEST.

P0735-GEAR RATIO ERROR IN 5TH

For a complete wiring diagram, **refer to appropriate SYSTEM WIRING DIAGRAMS article** .

THEORY OF OPERATION

The transmission system uses two speed sensors, one to measure input rpm and one to measure output rpm.

These inputs are essential for proper transmission operation. Therefore, the integrity of this data is verified through the following checks:

1) Once in a particular gear, if the gear ratio varies from the correct gear ratio, the corresponding in-gear trouble code is set (DTCs P0731-36 and P1736).

2) An excessive change in input or output speeds indicating signal intermittent will result in the DTCs P0716 and/or P0721 being set.

3) If the common speed sensor ground circuit is lost, both sensor inputs will read the pulses from the input speed sensor when at a stop in neutral. Since the input speed sensor reads 60 teeth from the input clutch hub and the output speed sensor reads 30 teeth from the park gear, the result is an apparent speed ratio of 1:2 and may cause the DTC P1794 to set.

WHEN MONITORED:

Continuously with the ignition on, engine running, and after the transmission has achieved the proper gear ratio.

SET CONDITION:

If the ratio of the Input rpm to the Output rpm does not match the current gear ratio. This DTC can take up to five minutes of problem identification before illuminating the MIL.

POSSIBLE CAUSES

Possible Causes
LOW FLUID LEVEL
INPUT SPEED SENSOR OR WIRING
VALVE BODY ACCUMULATOR COVER FAILED
CUT OD OR 2C ACCUMULATOR SEAL
CRACKED OD OR 2C ACCUMULATOR PISTON
BROKEN OR MISSING OD BLEED ORIFICE IN MAIN VALVE BODY
CUT 2C TOWER SEAL
TRANSMISSION SOLENOID/TRS ASSEMBLY
CUT OR MISSING NO. 5, NO. 6, OR NO. 7 CHECK BALL
WORN SOLENOID SWITCH VALVE OR PLUGS
CUT OD OR 2C PISTON SEAL
STUCK MAIN REGULATOR VALVE
BURNED OD OR 2C CLUTCH
BROKEN OR MISSING 2C BLEED ORIFICE IN 2C/4C RETAINER
BROKEN REACTION SHAFT SUPPORT SEAL RING
POOR MACHINING ON PUMP VALVE BODY FACE
LOOSE / MISSING DRIBBLER ORIFICE ASSEMBLY IN REACTION SHAFT SUPPORT
CRACKED / LOOSE / MISSING OD/REVERSE PISTON BLEED ORIFICE
BROKEN REVERSE CARRIER HUB WELD

BROKEN REVERSE SUN GEAR WELD TO REACTION CARRIER

Always perform the Pre-Diagnostic Troubleshooting procedure before proceeding. Refer to STANDARD PROCEDURE .

DIAGNOSTIC TEST

1. **CHECK FOR RELATED DTCS**
   1. With the scan tool, check for other transmission DTCs.
   2. If any of these DTCs are present, perform their respective tests first.

      Are there any Transmission solenoid, line pressure, speed sensor, and/or loss of prime DTCs present?

      Yes

      - Refer to **DIAGNOSTIC CODE INDEX** and perform the appropriate diagnostic procedure. If any of these DTCs are present, they may cause a Gear Ratio Error. Perform the test for P0944 first if it is present.

      No

      - Go To 2.
2. **CHECK EVENT DATA**
   1. With the scan tool, read and record the Event Data.

      NOTE: Make sure to record all Event Data stored in the scan tool for future reference in this test procedure.

      Does the Event Data display information for the DTC P0735?

      Yes

      - Go To 4.

      No

      - Go To 3.
3. **CHECK THE TARGET GEAR**

   In the Event Data recorded earlier, does the Event Data show the DTC P1790, with Target gear = 5th, or with both the 2C and OD clutches applying?

   Yes

- Go To 4.

No

- Go To 6.

4. **CHECK INPUT RPM**

   In the Event Data recorded earlier, does the Input rpm read zero?

   Yes

   - Refer to **DIAGNOSIS AND TESTING** and perform the diagnostic procedure for P0716. Diagnose the DTC as if it is set and current.

   No

   - Go To 5.

5. **CHECK LINE PRESSURE READING**

   In the Event Data recorded earlier, is the line pressure reading more than 10 psi below the desired line pressure reading?

   Yes

   - Remove the Transmission Oil pan and check the Transmission Oil filter for improper installation or plugged, if Primary oil filter is OK, check the main regulator valve in pump. If excessive debris is in the oil pan, check clutches and repair as necessary. Refer to **PUMP, TRANSMISSION OIL, DISASSEMBLY** .
   - Refer to **STANDARD PROCEDURE** and perform the 545RFE TRANSMISSION VERIFICATION TEST.

   No

   - Go To 6.

6. **CHECK TRANSMISSION FOR SLIPPAGE**
   1. Erase DTCs and road test the vehicle.
   2. Check the transmission operation in reverse and all forward gears.

      During the road test, was there any obvious slippage noted in 5th gear or a runaway during the 4-5 shift?

      Yes

      - Go To 8.

No

- Go To 7.

7. **CHECK IF DTC RESETS**
   1. With the scan tool, check for Transmission DTCs after the road test.

      Did the DTC P0735 reset?

      Yes

      - Go To 8.

      No

      - Test Complete.
      - Refer to **STANDARD PROCEDURE** and perform the 545RFE TRANSMISSION VERIFICATION TEST.

8. **CHECK INTERNAL TRANSMISSION**
   1. Remove the Transmission Oil Pan and Valve Body, in accordance with the Service Information, and check for the following:
      - Excessive clutch and or metal debris in the oil pan.
      - If the accumulator cover is intact and the 2C tower seal is not cut or split.
      - OD and 2C accumulator pistons for cracks or cut seals.
      - Solenoid Switch Valve and its plugs for stickiness or wear.
      - Cut or missing No. 5, No. 6, or No. 7 check ball.
      - OD bleed orifice on top of the valve body.
      - Air check the OD and 2C hydraulic clutch circuits for excessive leakage. Refer to the Service information.

      NOTE: Both the OD and 2C hydraulic clutch circuits contain a small bleed orifice. A small amount of air leakage is considered normal. The OD hydraulic clutch circuit bleed orifice connects to the Reverse input clutch hydraulic cavity. A small amount of air leakage into the Reverse hydraulic clutch circuit is considered normal.

      Were there any problems found?

      Yes

      - Repair as necessary. Refer to **REMOVAL** .

        NOTE: If the OD or 2C clutch has failed but no obvious cause is found (such as a cut piston seal, broken seal ring, stuck regulator valve or any other items listed above) replace the Transmission

Solenoid/TRS Assembly in addition to any necessary internal repairs.

- Refer to **STANDARD PROCEDURE** and perform the 545RFE TRANSMISSION VERIFICATION TEST.

No

- Replace Transmission Solenoid/TRS Assembly in accordance with the Service Information. Refer to **ASSEMBLY, TRANSMISSION SOLENOID AND TRS, REMOVAL** .
- Refer to **STANDARD PROCEDURE** and perform the 545RFE TRANSMISSION VERIFICATION TEST.

P0736-GEAR RATIO ERROR IN REVERSE

For a complete wiring diagram, **refer to appropriate SYSTEM WIRING DIAGRAMS article** .

THEORY OF OPERATION

The transmission system uses two speed sensors, one to measure input rpm and one to measure output rpm. These inputs are essential for proper transmission operation. Therefore, the integrity of this data is verified through the following checks:

NOTE: Various Gear Ratio Error DTCs will set only if the transmission slips after first achieving the correct ratio. Therefore, a transmission with no drive (or reverse) may not set any Gear Ratio Error DTC because it never achieves a correct gear ratio.

1) Once in a particular gear, if the gear ratio varies from the correct gear ratio, the corresponding in-gear trouble code is set (DTCs P0731-36 and P1736).

2) An excessive change in input or output speeds indicating signal intermittent which will result in the DTCs P0716 and/or P0721 being set.

3) If the common speed sensor ground circuit is lost, both sensor inputs will read the pulses from the input speed sensor when at a stop in neutral. Since the input speed sensor reads 60 teeth from the input clutch hub and the output speed sensor reads 30 teeth from the park gear, the result is an apparent speed ratio of 1:2 and may cause the DTC P1794 to set.

WHEN MONITORED:

Continuously with the ignition on, engine running, and after the transmission has achieved the proper gear ratio.

SET CONDITION:

If the ratio of the Input rpm to the Output rpm does not match the current gear ratio. This DTC can take up to five minutes of problem identification before illuminating the MIL.

POSSIBLE CAUSES

Possible Causes
INPUT OR OUTPUT SPEED SENSOR ERRORS
LOW FLUID LEVEL
CUT L/R TOWER SEAL ON MAIN VALVE BODY
CUT L/R CLUTCH PISTON SEALS
BROKEN OR MISSING L/R CLUTCH BLEED ORIFICE (IN L/R CLUTCH RETAINER)
CUT L/R ACCUMULATOR PISTON SEAL IN MAIN VALVE BODY
CRACKED L/R ACCUMULATOR PISTON IN MAIN VALVE BODY
CUT OD/REV PISTON SEALS
BROKEN OR MISSING OD/REV BLEED ORIFICE (IN OD/REV CLUTCH PISTON)
BROKEN REVERSE CARRIER HUB WELD
BROKEN REVERSE SUN GEAR WELD TO THE REACTION CARRIER

Always perform the Pre-Diagnostic Troubleshooting procedure before proceeding. Refer to STANDARD PROCEDURE .

DIAGNOSTIC TEST

1. **CHECK FOR RELATED DTCS**
   1. Using the scan tool, check for other transmission DTCs.

      Are there any Transmission solenoid, line pressure, speed sensor, and/or loss of prime DTCs present?

      Yes

      - Refer to **DIAGNOSIS AND TESTING** and perform the appropriate diagnostic procedure. Perform the test for P0944-LOSS OF PRIME first if it is present.

      No

      - Go To 2.
2. **CHECK IF DTC IS CURRENT**
   1. Using the scan tool, perform the Reverse Gear Clutch test. Follow the instructions on the scan tool.
   2. Increase the throttle angle, TPS degree, to 30°, for no more than a few seconds.

CAUTION: Do not overheat the transmission.

NOTE: Make sure to record all Event Data stored in the scan tool for future reference in this test procedure.

Did the clutch test pass, input speed remain at zero?

Yes

- Go To 3.

No

- Go To 4.

3. **CHECK EVENT DATA**
   1. The conditions necessary to set this DTC are not currently present.
   2. Using the scan tool, check the Event Data to help identify the conditions in which the DTC was set.

   Does the Event Data show an input speed reading of zero?

   Yes

   - Go To 8.

   No

   - Go To 4.

4. **POSSIBLE INTERNAL TRANSMISSION CAUSES**
   1. Remove the Transmission Oil Pan and Valve Body and check the following in accordance with the Service Information:
      - Clutch or metal debris in the pan
      - L/R clutch tower seal on the main valve body for cuts and the L/R accumulator piston and seals.
      - Air check the Reverse and L/R Hydraulic Clutch circuits (in the case) for excessive air leakage.

      NOTE: **Both Hydraulic Clutch circuits contain a small bleed orifice, a small amount of air leakage is normal. The Reverse hydraulic clutch circuit bleed orifice connects to the OD hydraulic clutch cavity. A small amount of air leakage into the OD hydraulic clutch circuit is considered normal.**

      Were there any problems found?

      Yes

      - Repair as necessary. If clutch debris is present, remove the transmission and inspect the Reverse and L/R clutches, and inspect the Transmission Oil Pump and Main Regulator Valve for damage or sticking in its bore.

NOTE: **If the L/R clutch has failed but no obvious cause is found (such as a cut piston seal, stuck regulator valve, low line pressure reading in the Event Data, or any other items listed above) replace the Transmission Solenoid/TRS Assembly in addition to any necessary internal repairs.**

- Refer to **STANDARD PROCEDURE** and perform the 545RFE TRANSMISSION VERIFICATION TEST.

No

- Go To 5.

5. **CLUTCH TEST FAILURE**

Did the clutch test fail in reverse?

Yes

- Go To 6.

No

- Test complete.
- Refer to **STANDARD PROCEDURE** and perform the 545RFE TRANSMISSION VERIFICATION TEST.

6. **CHECK FOR BROKEN REVERSE SUN GEAR WELD**
   1. Working through the windows in the bottom of the case, check for a broken Reverse Sun gear weld to the reaction carrier as follows:
      - Hold the Transmission Output Shaft by holding the Transmission Manual Lever in the park position.
      - Rotate the Input Annulus gear and drive shell, (the drum that encloses the two rearmost carriers).
      - Check to see if the reaction carrier (the front-most carrier, whose outer shell is splined to the 2C clutch) is rotating faster than the drive shell is being turned.

   Is the reaction carrier turning faster than the drive shell?

   Yes

   - Go To 7.

   No

   - Replace the reaction carrier in accordance with the Service Information.
   - Refer to **STANDARD PROCEDURE** and perform the 545RFE TRANSMISSION

VERIFICATION TEST.

7. **CHECK REVERSE CARRIER HUB**
    1. Remove the Transmission in accordance with the Service Information and inspect the weld on the reverse carrier hub.

       Were there any problems found?

       Yes

       - Repair as necessary. Refer to the Service Information for proper repair procedures.
       - Refer to **STANDARD PROCEDURE** and perform the 545RFE TRANSMISSION VERIFICATION TEST.

       No

       - Disassemble and inspect the input clutch assembly. Check the Reverse clutch reaction plate snap ring. Check the OD and Reverse clutch seals, discs, and bleed orifice (in the OD/Reverse clutch piston). Check the Reverse hub and shaft. Repair as necessary. Refer to the Service Information for proper repair procedures.
       - Refer to **STANDARD PROCEDURE** and perform the 545RFE TRANSMISSION VERIFICATION TEST.

8. **CHECK FOR INTERMITTENT OPERATION**
    1. Intermittent gear ratio DTCs can be set by problems in the Input and Output Speed Sensor circuits and/or Speed Sensor Ground circuit.
    2. Remove the Ignition Switch Feed fuse from the TIPM.

       CAUTION: Removal of the Ignition Switch Feed fuse from the TIPM will prevent the vehicle from being started in gear.

       WARNING: The Ignition Switch Feed fuse must be removed from the TIPM. Failure to do so can result in possible serious or fatal injury.

    3. Install the Transmission Simulator (special tool #8333A, Simulator, Transmission).
    4. Check the Speed Sensor wiring and connectors for good connection, then perform a wiggle test using the Transmission Simulator (special tool #8333A, Simulator, Transmission).

       Were there any problems found?

       Yes

       - Repair as necessary.
       - Refer to **STANDARD PROCEDURE** and perform the 545RFE TRANSMISSION VERIFICATION TEST.

No

- Test complete.

P0740-TCC OUT OF RANGE

For a complete wiring diagram, **refer to appropriate SYSTEM WIRING DIAGRAMS article** .

THEORY OF OPERATION

When in 2nd, through 5th gear, the torque converter clutch (TCC) can be engaged when certain conditions are met. The L/R-TCC piston is electronically modulated by increasing the duty cycle of the L/R-TCC Solenoid until the torque converter slip difference (difference between engine and transmission input speed) is within 60 rpm. Then the L/R-TCC solenoid is fully energized (FEMCC - 100% duty cycle). Torque converter slip is monitored in FEMCC to ensure adequate clutch capacity.

WHEN MONITORED:

During Electronically Modulated Converter Clutch (EMCC) Operation.

SET CONDITION:

Transmission must be in EMCC, with input speed greater than 1750 rpm. L/R-TCC Solenoid achieves the maximum duty cycle and can not pull engine speed within 60 rpm of input speed. Also when the transmission is in FEMCC and the engine slips TCC more than 100 rpm for 10 seconds. This DTC can take up to five minutes of problem identification before illuminating the MIL.

POSSIBLE CAUSES

Possible Causes
RELATED DTC P0750 PRESENT
L/R-TCC SOLENOID
TCC SWITCH VALVE STUCK
TCC REGULATOR VALVE STUCK
INPUT SHAFT SEAL RING CUT
TORQUE CONVERTER AND/OR INTERNAL TRANSMISSION

Always perform the Pre-Diagnostic Troubleshooting procedure before proceeding. Refer to STANDARD PROCEDURE .

DIAGNOSTIC TEST

1. **CHECK FOR RELATED DTC P0750**
    1. With the scan tool, read transmission DTCs.

       Is the DTC P0750 present also?

Yes

- Refer to **DIAGNOSTIC CODE INDEX** and perform the appropriate diagnostic procedure.

No

- Go To 2.

2. **CHECK IF DTC P0740 IS CURRENT**
   1. With the scan tool, Read and RECORD ALL Transmission DTCs. After recording DTCs, erase DTCs.
   2. Drive the vehicle until the transmission temperature is at least 43° C or 110° F and the engine temperature at least 49° C or 120° F.
   3. Perform the following steps 3 times.
   4. Drive the vehicle to the speed of at least 88 Kmh or 55 mph.
   5. Allow 4th or 5th gear to engage for at least 10 seconds.
   6. Close the throttle.
   7. Tip back into the throttle until the TPS angle is between 25 and 29 degrees.

   NOTE: If the throttle angle goes over 30 degrees, you must close the throttle and try again.

   Did the TCC engage during any of the attempts, Engine speed approximately equal to input speed?

   Yes

   - Go To 3.

   No

   - Go To 4.

3. **CHECK WIRING AND CONNECTORS**
   1. The conditions necessary to set this DTC are not present at this time. Using the schematics as a guide, inspect the wiring and connectors specific to this circuit. Wiggle the wires while checking for shorts and open circuits.
   2. Using the schematics as a guide, inspect the wiring and connectors specific to this circuit.
   3. Wiggle the wires while checking for shorts and open circuits.
   4. With the scan tool, check the Event Data to help identify the conditions in which the DTC was set.

   Were there any problems found?

   Yes

   - Repair as necessary.

- Refer to **STANDARD PROCEDURE** and perform the 545RFE TRANSMISSION VERIFICATION TEST.

No

- Test Complete.

4. **CHECK THE L/R-TCC SOLENOID**
   1. With the scan tool, check for other transmission DTCs.

      Are the DTCs P1775 and P0841 present also?

      Yes

      - Replace Transmission Solenoid/TRS Assembly in accordance with the Service Information.
      - Refer to **STANDARD PROCEDURE** and perform the 545RFE TRANSMISSION VERIFICATION TEST.

      No

      - Go To 5.

5. **CHECK THE TORQUE CONVERTER AND/OR INTERNAL TRANSMISSION**
   1. Repair internal transmission as necessary.
   2. Check for the following possible causes.
   3. Inspect the Transmission Oil Pump Assembly.
   4. Check the Torque Converter Switch Valve and the Torque Converter Clutch Control Valve for sticking in the bore.
   5. Check the Teflon seal rings on the input shaft.

      NOTE: If one of the seal rings is cut, the loose piece will often lodge in the TCC switch valve, causing it to stick in its bore.

   6. If no problems are found, replace the Transmission Solenoid/TRS Assembly.

      Repair

      - In all cases, replace the Torque Converter. Make sure to check all other possible causes in addition to the Torque Converter.
      - Refer to **STANDARD PROCEDURE** and perform the 545RFE TRANSMISSION VERIFICATION TEST.

P0750-LR SOLENOID CIRCUIT

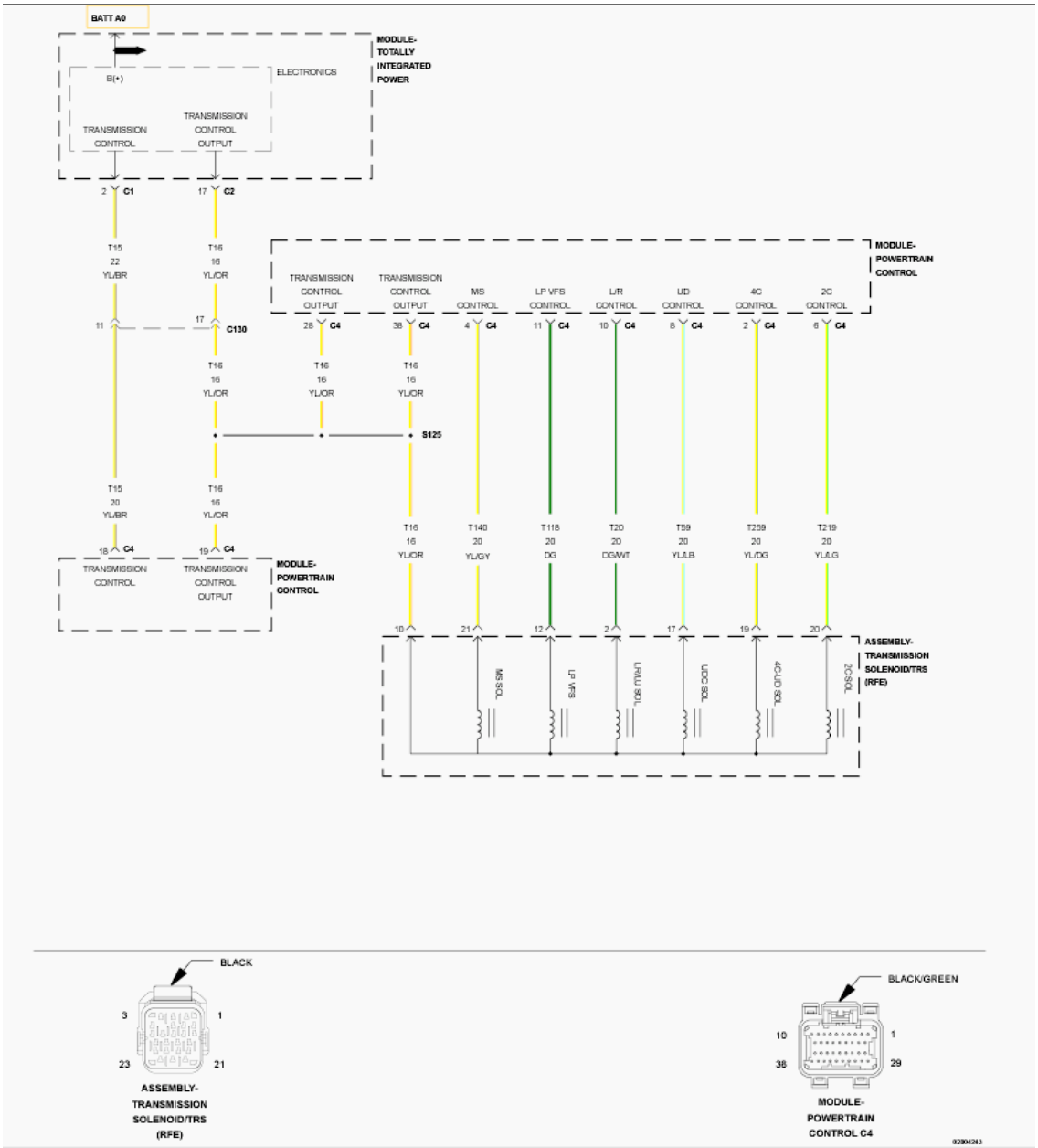

Fig. 26: Solenoid Control Wiring Diagram
Courtesy of CHRYSLER GROUP, LLC

For a complete wiring diagram, **refer to appropriate SYSTEM WIRING DIAGRAMS article** .

THEORY OF OPERATION

The Transmission Control System uses five electronically controlled solenoids that allow hydraulic fluid to be applied to various friction elements (clutches), which enables the gear requested. The continuity of each solenoid circuit is periodically tested. Each inactive solenoid is turned on for a few milliseconds, then off. Each active solenoid is turned off for a few milliseconds, then on. This pulsing of voltage to the solenoid causes an inductive spike which can be sensed by the Transmission Control System. If an inductive spike is not sensed by the Transmission Control System during the continuity check, it is tested again. If the test fails three

consecutive times, the appropriate Diagnostic Trouble Code (DTC) is set. If the solenoid test is run in response to a gear ratio or pressure switch error, one failure will result in setting the appropriate DTC.

WHEN MONITORED:

Initially at power-up, then every 10 seconds thereafter. The solenoid circuits will also be tested immediately after a gear ratio or pressure switch error is detected.

SET CONDITION:

After three consecutive solenoid continuity test failures, or one failure if test is run in response to a gear ratio or pressure switch error.

NOTE: **This DTC is strictly an electrical fault and cannot be caused by any internal transmission failure other than an open in the Transmission Solenoid/TRS Assembly. If the Transmission Solenoid/TRS Assembly is in need of replacement - do not replace the Valve Body.**

POSSIBLE CAUSES

Possible Causes
RELATED DTCS PRESENT
(T20) L/R SOLENOID CONTROL CIRCUIT SHORTED TO OTHER CIRCUITS
(T20) L/R SOLENOID CONTROL CIRCUIT OPEN
(T20) L/R SOLENOID CONTROL CIRCUIT SHORTED TO GROUND
TRANSMISSION SOLENOID/TRS ASSEMBLY
POWERTRAIN CONTROL MODULE (PCM)

Always perform the Pre-Diagnostic Troubleshooting procedure before proceeding. Refer to STANDARD PROCEDURE .

DIAGNOSTIC TEST

1. **CHECK DTCS**
    1. With the scan tool, check DTCs.

       Are there any TIPM TCM Power Control Circuit or TCM Power Input DTCs present?

       Yes

       - Refer to **DIAGNOSIS AND TESTING** and perform the appropriate diagnostic procedure.

       No

       - Go To 2.
2. **CHECK TO SEE IF P0750 IS PRESENT**

1. Ignition on, engine not running.
2. With the scan tool, erase all Transmission DTCs.
3. Turn the ignition off to the lock position.
4. Remove the Ignition Switch Feed fuse from the TIPM.

CAUTION: Removal of the Ignition Switch Feed fuse from the TIPM will prevent the vehicle from being started in gear.

WARNING: The Ignition Switch Feed fuse must be removed from the TIPM. Failure to do so can result in possible serious or fatal injury.

5. Install the Transmission Simulator (special tool #8333A, Simulator, Transmission).
6. Ignition on, engine not running.
7. With the scan tool, actuate the L/R Solenoid.
8. Monitor the L/R Solenoid LED on the Transmission Simulator.

   Did the L/R Solenoid LED on the Transmission Simulator blink on and off?

   Yes

   - Go To 3.

   No

   - Go To 5.

3. **CHECK THE TRANSMISSION SOLENOID/TRS ASSEMBLY**
   1. With the Transmission simulator still connected, continue to actuate the L/R solenoid for two minutes.
   2. After two minutes of actuation, with the scan tool, stop the actuation and check for transmission DTCs.

      Did the DTC P0750 reset during the actuation test?

      Yes

      - Go To 5.

      No

      - Go To 4.

4. **WIGGLE TEST WITH TRANSMISSION SIMULATOR**
   1. With the Transmission simulator still connected, continue to actuate the L/R solenoid for another two minutes while wiggling the related wiring harness and connectors.

2. With the scan tool, stop the actuation and check for transmission DTCs.

   Did the DTC P0750 reset during the actuation test?

   Yes

   - Repair wiring harness or connectors as necessary.
   - Refer to **STANDARD PROCEDURE** and perform the 545RFE TRANSMISSION VERIFICATION TEST.

   No

   - Replace the Transmission Solenoid/TRS Assembly in accordance with the Service Information. **Note: Do NOT replace the entire Valve Body.** . Refer to **ASSEMBLY, TRANSMISSION SOLENOID AND TRS, REMOVAL** .
   - Refer to **STANDARD PROCEDURE** and perform the 545RFE TRANSMISSION VERIFICATION TEST.

5. **CHECK THE (T20) L/R SOLENOID CONTROL CIRCUIT FOR A SHORT TO ANOTHER CIRCUIT**

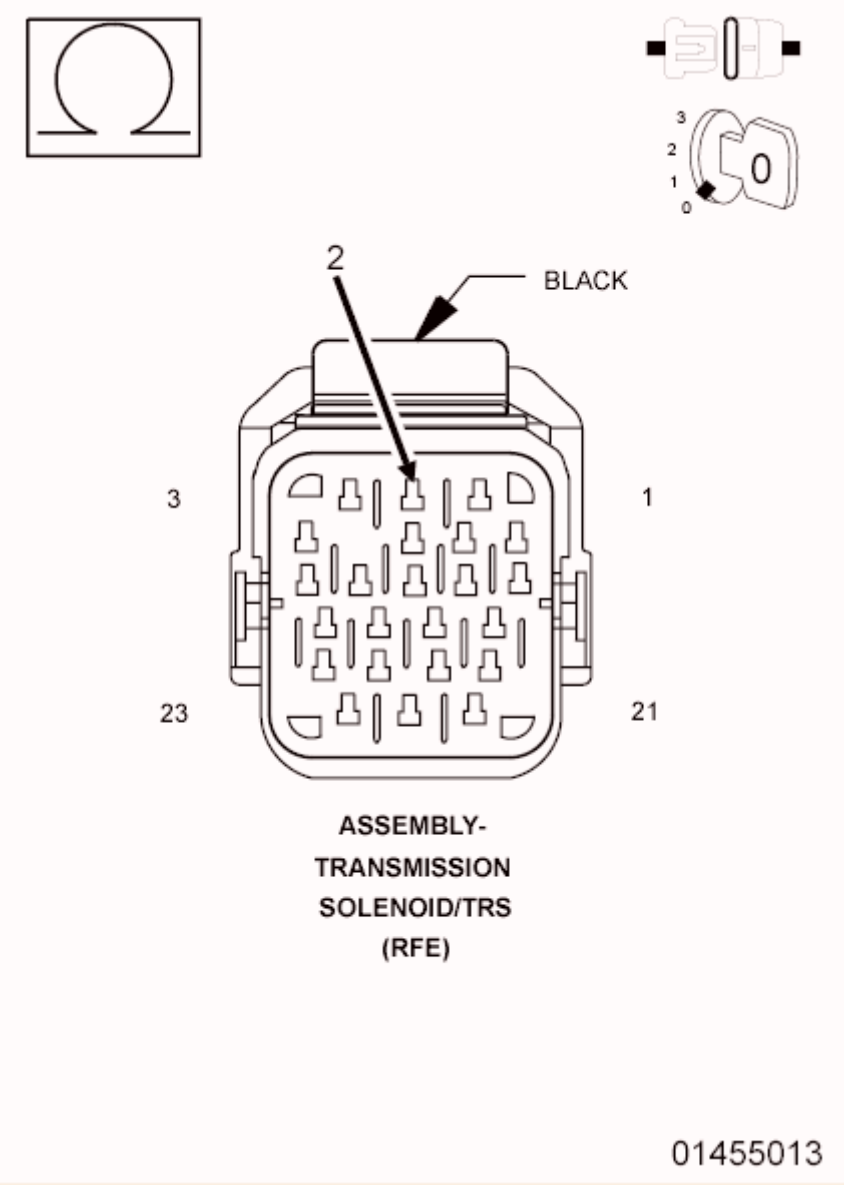

Fig. 27: Checking L/R Solenoid Control Circuit For Short To Circuit
Courtesy of CHRYSLER GROUP, LLC

1. Turn the ignition off to the lock position.
2. Disconnect the Transmission Simulator (special tool #8333A, Simulator, Transmission).
3. Disconnect the PCM harness connectors.
4. Measure the resistance between the (T20) L/R Solenoid Control circuit and all other circuits in the Transmission Solenoid/TRS Assembly harness connector.

   Is the resistance below 5.0 Ohms between the (T20) L/R Solenoid Control circuit and any other circuit(s) in the Transmission Solenoid/TRS Assembly harness connector?

   Yes

- Repair the (T20) L/R Solenoid Control circuit for a short to another circuit(s).
- Refer to **STANDARD PROCEDURE** and perform the 545RFE TRANSMISSION VERIFICATION TEST.

No

- Go To 6.

6. **CHECK THE (T20) L/R SOLENOID CONTROL CIRCUIT FOR AN OPEN**

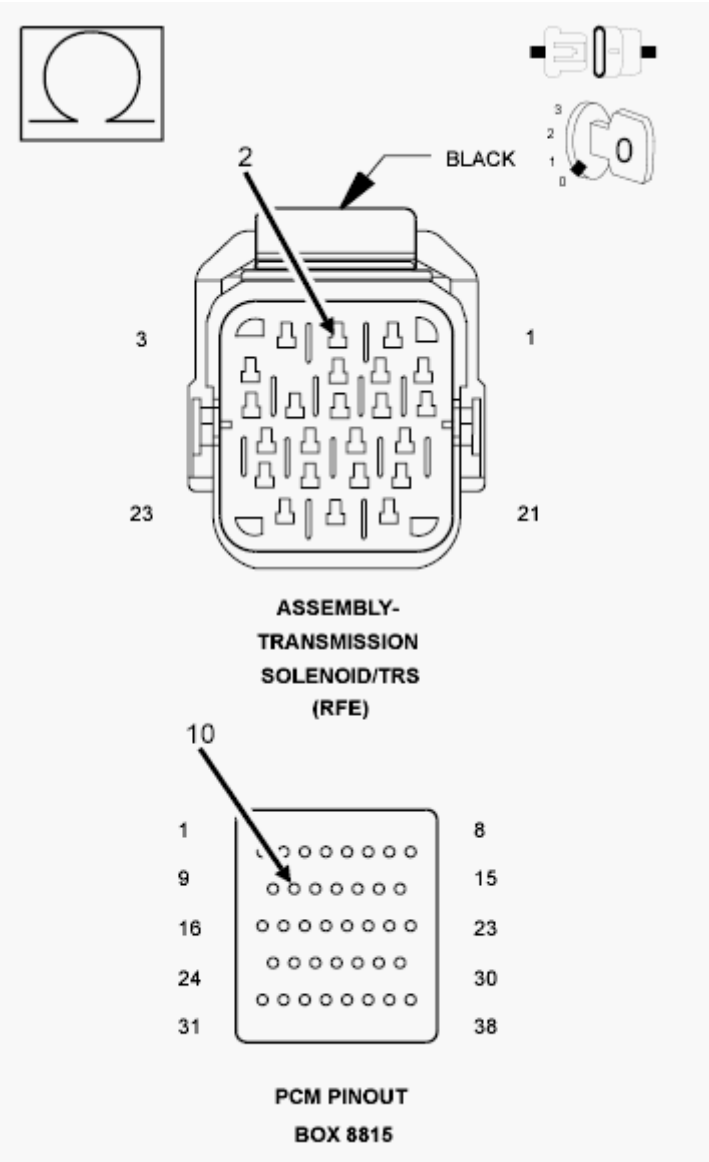

Fig. 28: Checking L/R Solenoid Control Circuit For Open
Courtesy of CHRYSLER GROUP, LLC

1. Connect the PCM Pinout Box (special tool #8815A, Kit, NGC, 38 Position) to the PCM C4 harness connector.

CAUTION: Do not probe the PCM harness connectors. Probing the PCM harness connectors will damage the PCM terminals resulting in poor terminal to pin connection. Install the (special tool #8815A, Kit, NGC, 38 Position) to perform diagnosis.

2. Measure the resistance of the (T20) L/R Solenoid Control circuit between the Transmission Solenoid/TRS Assembly harness connector and the appropriate terminal of the PCM Pinout Box (special tool #8815A, Kit, NGC, 38 Position).

   Is the resistance above 5.0 Ohms?

   Yes

   - Repair the (T20) L/R Solenoid Control circuit for an open.
   - Refer to **STANDARD PROCEDURE** and perform the 545RFE TRANSMISSION VERIFICATION TEST.

   No

   - Go To 7.

7. **CHECK THE (T20) L/R SOLENOID CONTROL CIRCUIT FOR A SHORT TO GROUND**

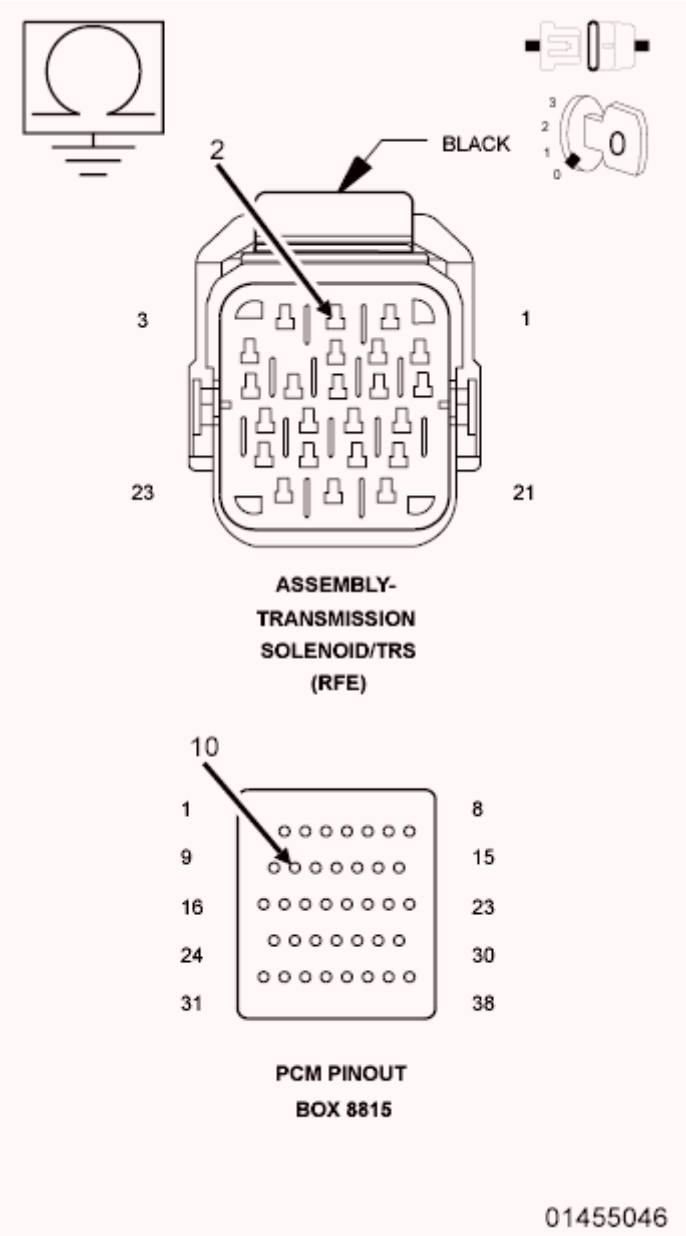

Fig. 29: Checking L/R Solenoid Control Circuit For Short To Ground
Courtesy of CHRYSLER GROUP, LLC

1. Measure the resistance between ground and the (T20) L/R Solenoid Control circuit.

   Is the resistance below 5.0 Ohms?

   Yes

   - Repair the (T20) L/R Solenoid Control circuit for a short to ground.
   - Refer to **STANDARD PROCEDURE** and perform the 545RFE TRANSMISSION VERIFICATION TEST.

No

- Using the schematics as a guide, check the Powertrain Control Module (PCM) terminals for corrosion, damage, or terminal push out. Pay particular attention to all power and ground circuits. If no problems are found, replace and program the PCM in accordance with the Service Information. With the scan tool, perform Quick Learn.
- Refer to **STANDARD PROCEDURE** and perform the 545RFE TRANSMISSION VERIFICATION TEST.

P0755-2C SOLENOID CIRCUIT

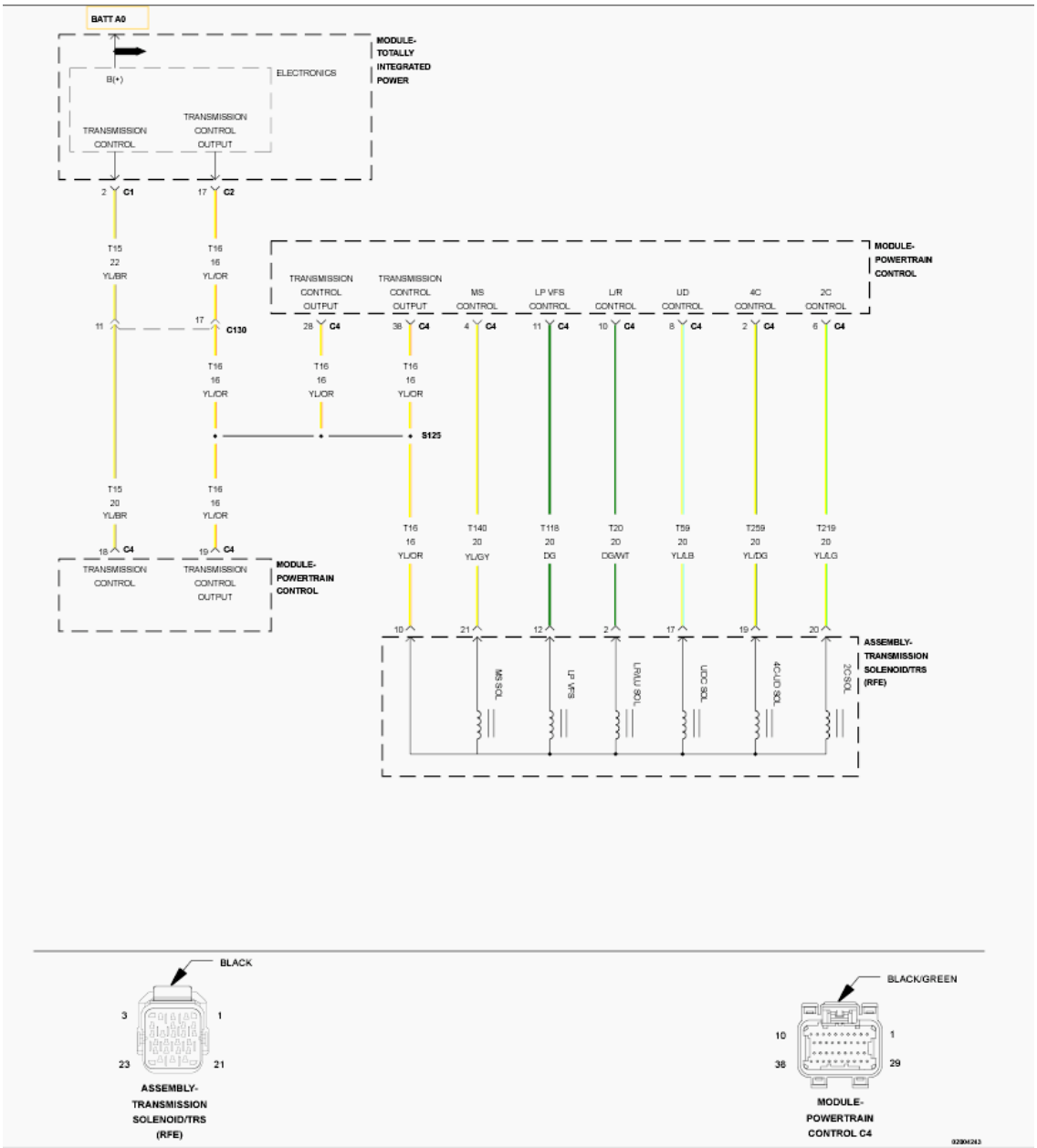

Fig. 30: Solenoid Control Wiring Diagram

Courtesy of CHRYSLER GROUP, LLC

THEORY OF OPERATION

The Transmission Control System uses five electronically controlled solenoids that allow hydraulic fluid to be applied to various friction elements (clutches), which enables the gear requested. The continuity of each solenoid circuit is periodically tested. Each inactive solenoid is turned on for a few milliseconds, then off. Each active solenoid is turned off for a few milliseconds, then on. This pulsing of voltage to the solenoid causes an inductive spike which can be sensed by the Transmission Control System. If an inductive spike is not sensed by the Transmission Control System during the continuity check, it is tested again. If the test fails three consecutive times, the appropriate Diagnostic Trouble Code (DTC) is set. If the solenoid test is run in response to a gear ratio or pressure switch error, one failure will result in setting the appropriate DTC.

WHEN MONITORED:

Initially at power-up, then every 10 seconds thereafter. The solenoid circuits will also be tested immediately after a gear ratio or pressure switch error is detected.

SET CONDITION:

After three consecutive solenoid continuity test failures, or one failure if test is run in response to a gear ratio or pressure switch error.

NOTE: **This DTC is strictly an electrical fault and cannot be caused by any internal transmission failure other than an open in the Transmission Solenoid/TRS Assembly. If the Transmission Solenoid/TRS Assembly is in need of replacement - do not replace the Valve Body.**

POSSIBLE CAUSES

Possible Causes
RELATED DTCS PRESENT
(T219) 2C SOLENOID CONTROL CIRCUIT SHORTED TO OTHER CIRCUITS
(T219) 2C SOLENOID CONTROL CIRCUIT OPEN
(T219) 2C SOLENOID CONTROL CIRCUIT SHORTED TO GROUND
TRANSMISSION SOLENOID/TRS ASSEMBLY
POWERTRAIN CONTROL MODULE (PCM)

Always perform the Pre-Diagnostic Troubleshooting procedure before proceeding. Refer to STANDARD PROCEDURE .

DIAGNOSTIC TEST

1. **CHECK DTCS**
    1. With the scan tool, check DTCs.

Are there any TIPM TCM Power Control Circuit or TCM Power Input DTCs present?

Yes

- Refer to **DIAGNOSIS AND TESTING** and perform the appropriate diagnostic procedure.

No

- Go To 2.

2. **CHECK TO SEE IF P0755 IS PRESENT**
   1. Turn the ignition off to the lock position.
   2. Remove the Ignition Switch Feed fuse from the TIPM.

      CAUTION: Removal of the Ignition Switch Feed fuse from the TIPM will prevent the vehicle from being started in gear.

      WARNING: The Ignition Switch Feed fuse must be removed from the TIPM. Failure to do so can result in possible serious or fatal injury.

   3. Install the Transmission Simulator (special tool #8333A, Simulator, Transmission).
   4. Ignition on, engine not running.
   5. With the scan tool, actuate the 2C Solenoid.

      Did the 2C Solenoid LED blink on and off on the Transmission Simulator?

      Yes

      - Go To 3.

      No

      - Go To 5.

3. **CHECK THE TRANSMISSION SOLENOID/TRS ASSEMBLY**
   1. With the Transmission simulator still connected, continue to actuate the 2C solenoid for two minutes.
   2. After two minutes of actuation, with the scan tool, stop the actuation and check for transmission DTCs.

      Did the DTC P0755 reset during the actuation test?

      Yes

      - Go To 5.

No

- Go To 4.

4. **WIGGLE TEST WITH TRANSMISSION SIMULATOR**
   1. With the Transmission simulator still connected, continue to actuate the 2C solenoid for another two minutes while wiggling the related wiring harness and connectors.
   2. With the scan tool, stop the actuation and check for transmission DTCs.

      Did the DTC P0755 reset during the actuation test?

      Yes

      - Repair wiring harness or connectors as necessary.
      - Refer to **STANDARD PROCEDURE** and perform the 545RFE TRANSMISSION VERIFICATION TEST.

      No

      - Replace the Transmission Solenoid/TRS Assembly in accordance with the Service Information. **Note: Do NOT replace the entire Valve Body.** Refer to **ASSEMBLY, TRANSMISSION SOLENOID AND TRS, REMOVAL** .
      - Refer to **STANDARD PROCEDURE** and perform the 545RFE TRANSMISSION VERIFICATION TEST.

5. **CHECK THE (T219) 2C SOLENOID CONTROL CIRCUIT FOR A SHORT TO ANOTHER CIRCUIT**

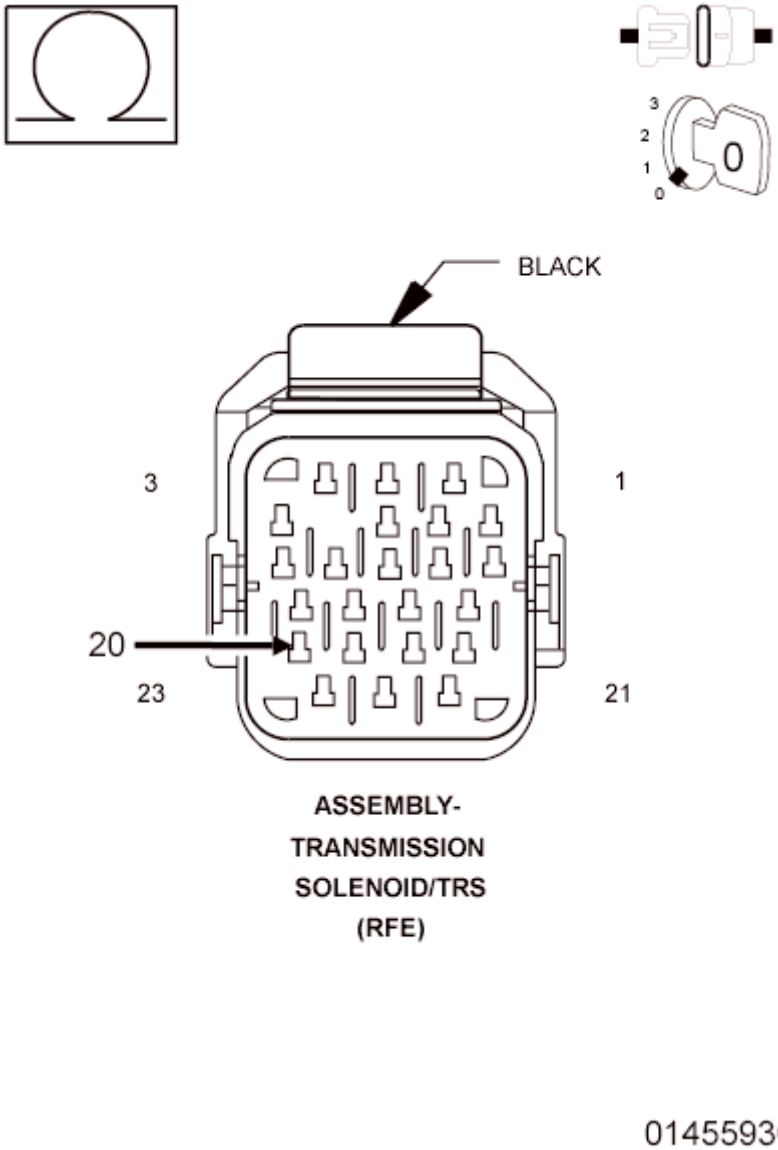

Fig. 31: Checking 2C Solenoid Control Circuit For Short To Circuit
Courtesy of CHRYSLER GROUP, LLC

1. Turn the ignition off to the lock position.
2. Disconnect the Transmission Simulator (special tool #8333A, Simulator, Transmission).
3. Disconnect the PCM harness connectors.
4. Measure the resistance between the (T219) 2C Solenoid Control circuit and all other circuits in the Transmission Solenoid/TRS Assembly harness connector.

   Is the resistance below 5.0 Ohms between the (T219) 2C Solenoid Control circuit and any other circuit(s) in the Transmission Solenoid/TRS Assembly harness connector?

   Yes

- Repair the (T219) 2C Solenoid Control circuit for a short to another circuit(s).
- Refer to **STANDARD PROCEDURE** and perform the 545RFE TRANSMISSION VERIFICATION TEST.

No

- Go To 6.

6. **CHECK THE (T219) 2C SOLENOID CONTROL CIRCUIT FOR AN OPEN**

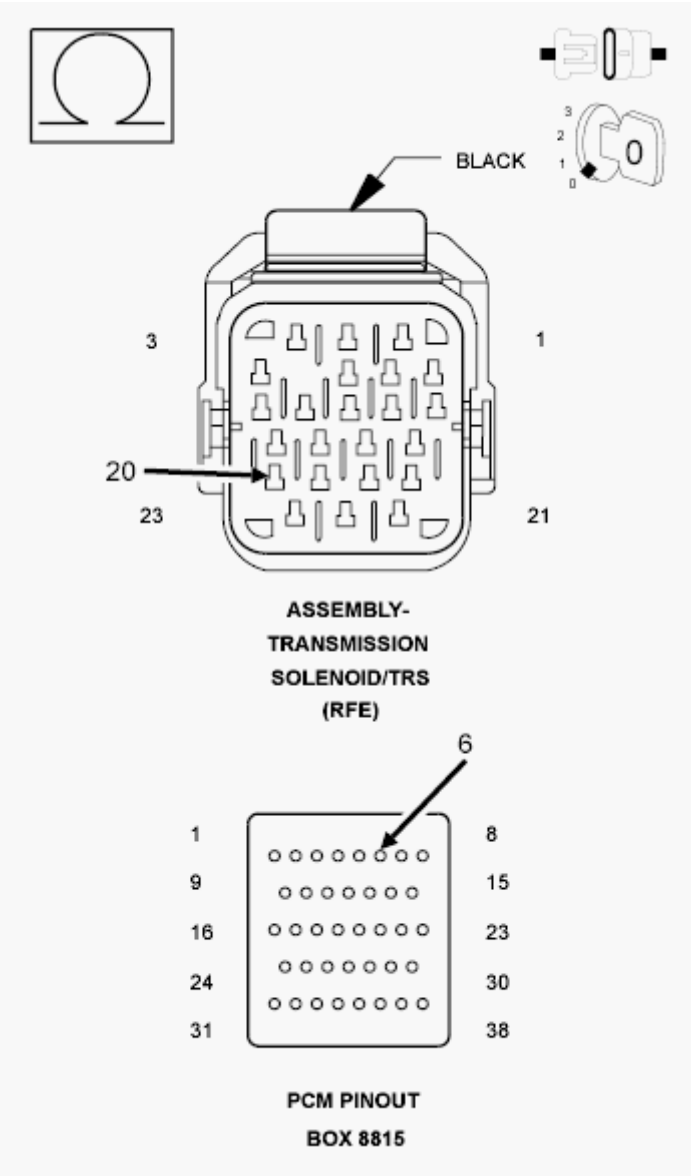

Fig. 32: Checking 2C Solenoid Control Circuit For Open
Courtesy of CHRYSLER GROUP, LLC

1. Connect the PCM Pinout Box (special tool #8815A, Kit, NGC, 38 Position) to the PCM C4 harness connector.

CAUTION: Do not probe the PCM harness connectors. Probing the PCM harness connectors will damage the PCM terminals resulting in poor terminal to pin connection. Install the (special tool #8815A, Kit, NGC, 38 Position) to perform diagnosis.

2. Measure the resistance of the (T219) 2C Solenoid Control circuit between the Transmission Solenoid/TRS Assembly harness connector and the appropriate terminal of the PCM Pinout Box (special tool #8815A, Kit, NGC, 38 Position).

   Is the resistance above 5.0 Ohms?

   Yes

   - Repair the (T219) 2C Solenoid Control circuit for an open.
   - Refer to **STANDARD PROCEDURE** and perform the 545RFE TRANSMISSION VERIFICATION TEST.

   No

   - Go To 7.

7. **CHECK THE (T219) 2C SOLENOID CONTROL CIRCUIT FOR A SHORT TO GROUND**

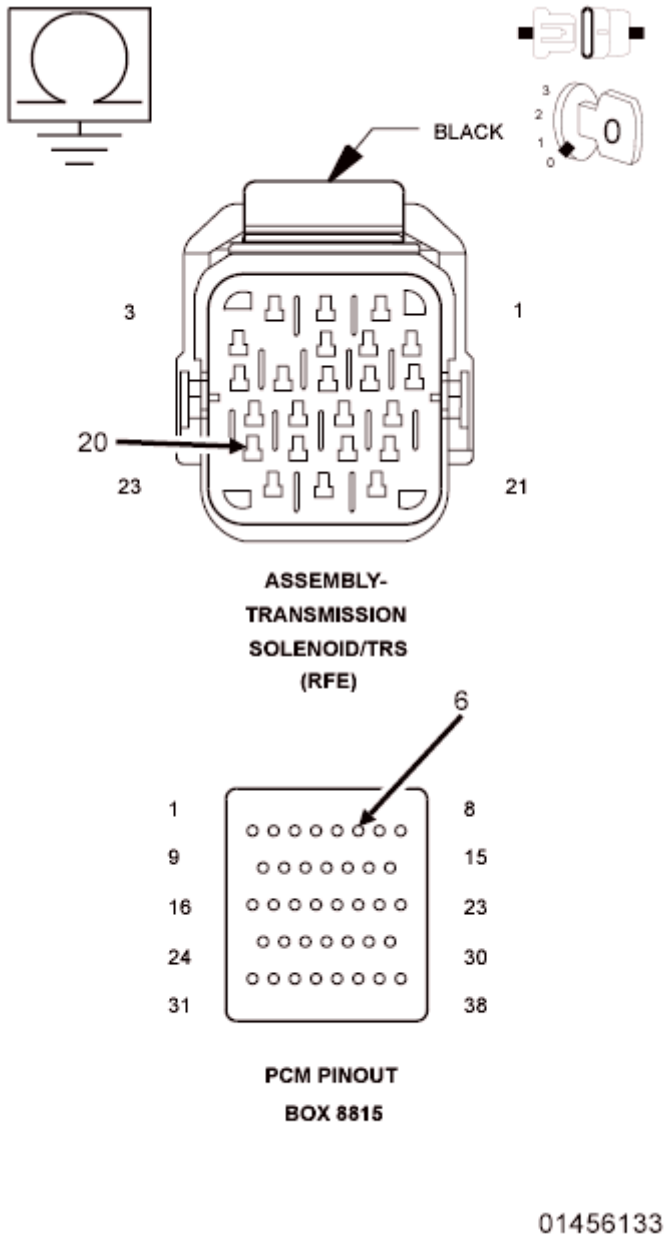

Fig. 33: Checking 2C Solenoid Control Circuit For Short To Ground
Courtesy of CHRYSLER GROUP, LLC

1. Measure the resistance between ground and the (T219) 2C Solenoid Control circuit.

   Is the resistance below 5.0 Ohms?

   Yes

   - Repair the (T219) 2C Solenoid Control circuit for a short to ground.
   - Refer to **STANDARD PROCEDURE** and perform the 545RFE TRANSMISSION VERIFICATION TEST.

No

- Using the schematics as a guide, check the Powertrain Control Module (PCM) terminals for corrosion, damage, or terminal push out. Pay particular attention to all power and ground circuits. If no problems are found, replace and program the PCM in accordance with the Service Information. With the scan tool, perform Quick Learn.
- Refer to **STANDARD PROCEDURE** and perform the 545RFE TRANSMISSION VERIFICATION TEST.

P0765-UD SOLENOID CIRCUIT

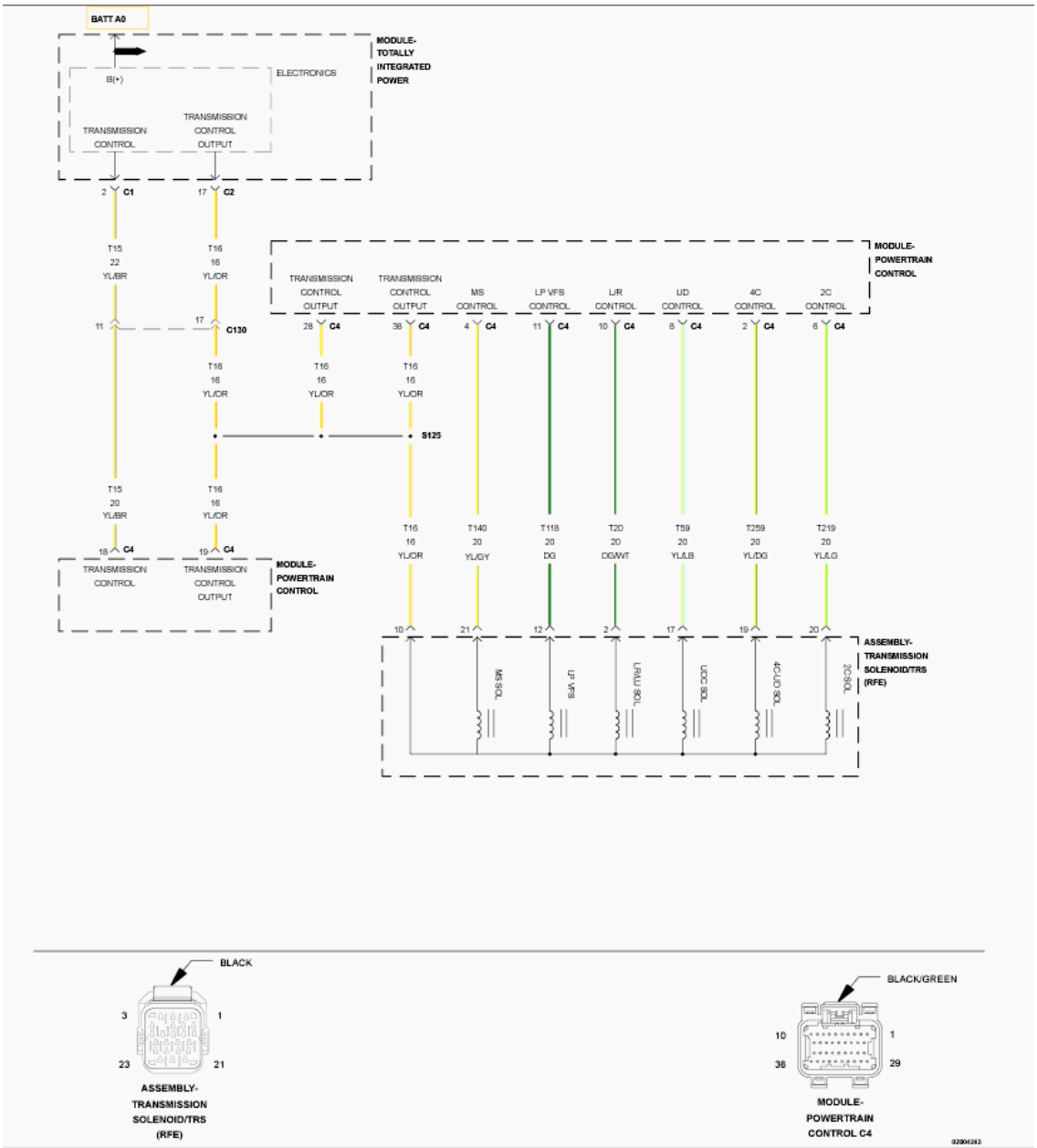

Fig. 34: Solenoid Control Wiring Diagram

Courtesy of CHRYSLER GROUP, LLC

For a complete wiring diagram, **refer to appropriate SYSTEM WIRING DIAGRAMS article** .

THEORY OF OPERATION

The Transmission Control System uses five electronically controlled solenoids that allow hydraulic fluid to be applied to various friction elements (clutches), which enables the gear requested. The continuity of each solenoid circuit is periodically tested. Each inactive solenoid is turned on for a few milliseconds, then off. Each active solenoid is turned off for a few milliseconds, then on. This pulsing of voltage to the solenoid causes an inductive spike which can be sensed by the Transmission Control System. If an inductive spike is not sensed by the Transmission Control System during the continuity check, it is tested again. If the test fails three consecutive times, the appropriate Diagnostic Trouble Code (DTC) is set. If the solenoid test is run in response to a gear ratio or pressure switch error, one failure will result in setting the appropriate DTC.

WHEN MONITORED:

Initially at power-up, then every 10 seconds thereafter. The solenoid circuits will also be tested immediately after a gear ratio or pressure switch error is detected.

SET CONDITION:

After three consecutive solenoid continuity test failures, or one failure if test is run in response to a gear ratio or pressure switch error.

NOTE: **This DTC is strictly an electrical fault and cannot be caused by any internal transmission failure other than an open in the Transmission Solenoid/TRS Assembly. If the Transmission Solenoid/TRS Assembly is in need of replacement - do not replace the Valve Body.**

POSSIBLE CAUSES

Possible Causes
RELATED DTCS PRESENT
(T59) UD SOLENOID CONTROL CIRCUIT SHORTED TO OTHER CIRCUITS
(T59) UD SOLENOID CONTROL CIRCUIT OPEN
(T59) UD SOLENOID CONTROL CIRCUIT SHORTED TO GROUND
TRANSMISSION SOLENOID/TRS ASSEMBLY
POWERTRAIN CONTROL MODULE (PCM)

Always perform the Pre-Diagnostic Troubleshooting procedure before proceeding. Refer to STANDARD PROCEDURE .

DIAGNOSTIC TEST

1. **CHECK DTCS**

1. With the scan tool, check DTCs.

   Are there any TIPM TCM Power Control Circuit or TCM Power Input DTCs present?

   Yes

   - Refer to **DIAGNOSIS AND TESTING** and perform the appropriate diagnostic procedure.

   No

   - Go To 2.

2. **CHECK IF P0765 IS PRESENT**
   1. Turn the ignition off to the lock position.
   2. Remove the Ignition Switch Feed fuse from the TIPM.

      CAUTION: Removal of the Ignition Switch Feed fuse from the TIPM will prevent the vehicle from being started in gear.

      WARNING: The Ignition Switch Feed fuse must be removed from the TIPM. Failure to do so can result in possible serious or fatal injury.

   3. Install Transmission Simulator (special tool #8333A, Simulator, Transmission).
   4. Ignition on, engine not running.
   5. With the scan tool, clear Transmission DTCs.
   6. With the scan tool, actuate the UD Solenoid.
   7. Monitor the UD Solenoid LED on the Transmission Simulator.

      Did the UD Solenoid LED on the Transmission Simulator blink on and off?

      Yes

      - Go To 3.

      No

      - Go To 5.

3. **CHECK THE TRANSMISSION SOLENOID/TRS ASSEMBLY**
   1. With the Transmission simulator still connected, continue to actuate the UD solenoid for two minutes.
   2. After two minutes of actuation, with the scan tool, stop the actuation and check for transmission DTCs.

      Did the DTC P0765 reset during the actuation test?

Yes

- Go To 5.

No

- Go To 4.

4. **WIGGLE TEST WITH TRANSMISSION SIMULATOR**
   1. With the Transmission simulator still connected, continue to actuate the UD solenoid for another two minutes while wiggling the related wiring harness and connectors.
   2. With the scan tool, stop the actuation and check for transmission DTCs.

      Did the DTC P0765 reset during the actuation test?

      Yes

      - Repair wiring harness or connectors as necessary.
      - Refer to **STANDARD PROCEDURE** and perform the 545RFE TRANSMISSION VERIFICATION TEST.

      No

      - Replace the Transmission Solenoid/TRS Assembly in accordance with the Service Information. **Note: Do NOT replace the entire Valve Body.** . Refer to **ASSEMBLY, TRANSMISSION SOLENOID AND TRS, REMOVAL** .
      - Refer to **STANDARD PROCEDURE** and perform the 545RFE TRANSMISSION VERIFICATION TEST.
5. **CHECK THE (T59) UD SOLENOID CONTROL CIRCUIT FOR A SHORT TO ANOTHER CIRCUIT**

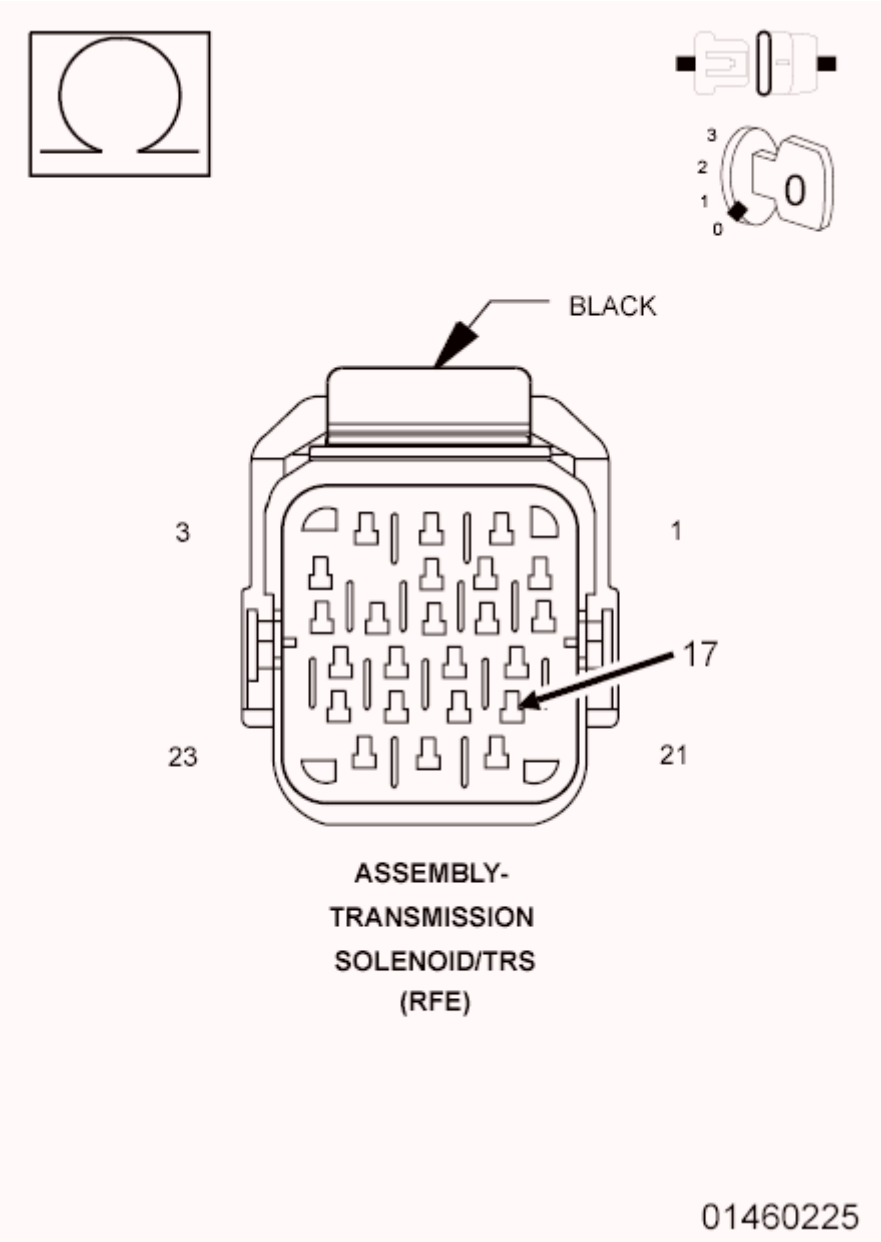

Fig. 35: Checking UD Solenoid Control Circuit For Short To Circuit
Courtesy of CHRYSLER GROUP, LLC

1. Turn the ignition off to the lock position.
2. Disconnect the Transmission Simulator (special tool #8333A, Simulator, Transmission).
3. Disconnect the PCM harness connectors.
4. Measure the resistance between the (T59) UD Solenoid Control circuit and all other circuits in the Transmission Solenoid/TRS Assembly harness connector.

   Is the resistance below 5.0 Ohms between the (T59) UD Solenoid Control circuit and any other circuit(s) in the Transmission Solenoid/TRS Assembly harness connector?

Yes

- Repair the (T59) UD Solenoid Control circuit for a short to another circuit(s).
- Refer to **STANDARD PROCEDURE** and perform the 545RFE TRANSMISSION VERIFICATION TEST.

No

- Go To 6.

6. **CHECK THE (T59) UD SOLENOID CONTROL CIRCUIT FOR AN OPEN**

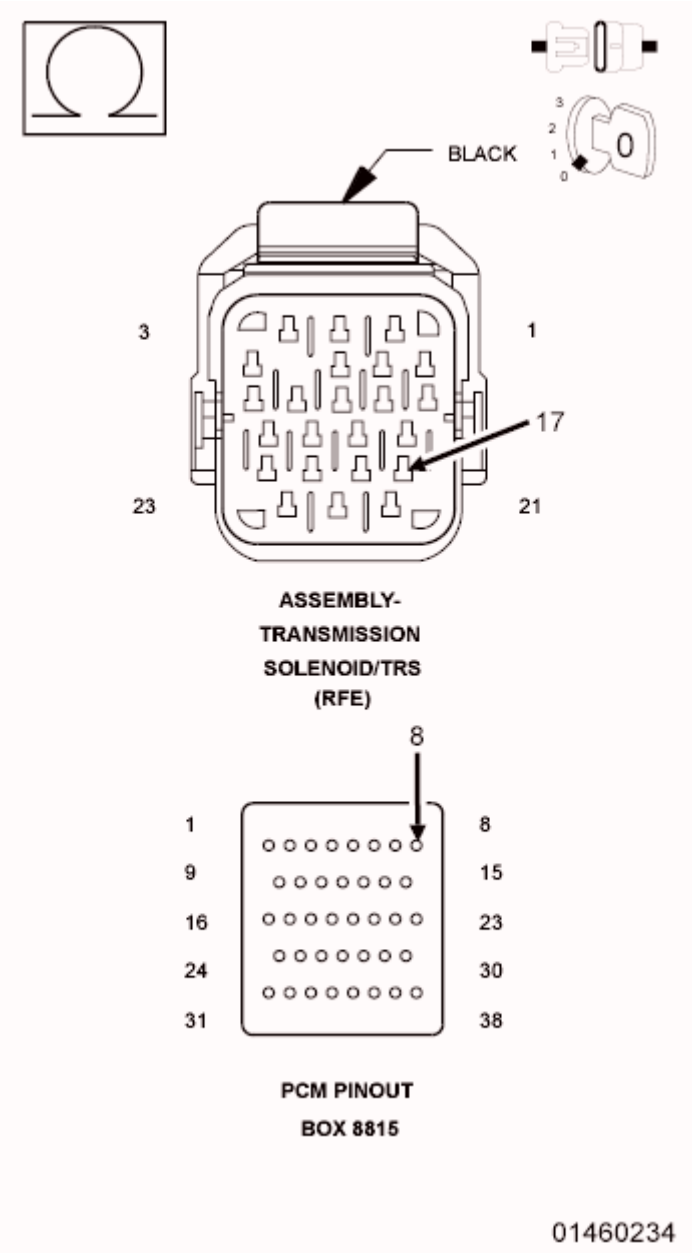

Fig. 36: Checking UD Solenoid Control Circuit For Open

Courtesy of CHRYSLER GROUP, LLC

1. Connect the PCM Pinout Box (special tool #8815A, Kit, NGC, 38 Position) to the PCM C4 harness connector.

   CAUTION: Do not probe the PCM harness connectors. Probing the PCM harness connectors will damage the PCM terminals resulting in poor terminal to pin connection. Install the (special tool #8815A, Kit, NGC, 38 Position) to perform diagnosis.

2. Measure the resistance of the (T59) UD Solenoid Control circuit between the Transmission Solenoid/TRS Assembly harness connector and the appropriate terminal of the PCM Pinout Box (special tool #8815A, Kit, NGC, 38 Position).

   Is the resistance above 5.0 Ohms?

   Yes

   - Repair the (T59) UD Solenoid Control circuit for an open.
   - Refer to **STANDARD PROCEDURE** and perform the 545RFE TRANSMISSION VERIFICATION TEST.

   No

   - Go To 7.

7. **CHECK THE (T59) UD SOLENOID CONTROL CIRCUIT FOR A SHORT TO GROUND**

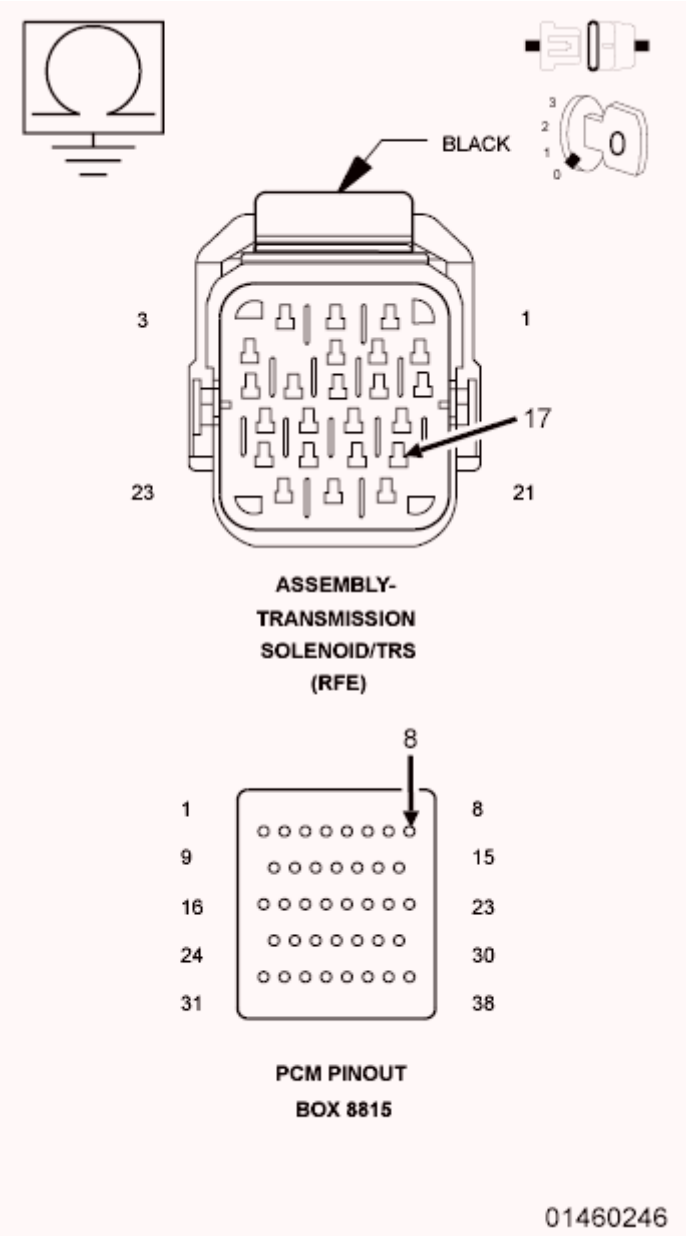

Fig. 37: Checking UD Solenoid Control Circuit For Short
Courtesy of CHRYSLER GROUP, LLC

1. Measure the resistance between ground and the (T59) UD Solenoid Control circuit.

   Is the resistance below 5.0 Ohms?

   Yes

   - Repair the (T59) UD Solenoid Control circuit for a short to ground.
   - Refer to **STANDARD PROCEDURE** and perform the 545RFE TRANSMISSION VERIFICATION TEST.

No

- Using the schematics as a guide, check the Powertrain Control Module (PCM) terminals for corrosion, damage, or terminal push out. Pay particular attention to all power and ground circuits. If no problems are found, replace and program the PCM in accordance with the Service Information. With the scan tool, perform Quick Learn.
- Refer to **STANDARD PROCEDURE** and perform the 545RFE TRANSMISSION VERIFICATION TEST.

P0770-4C SOLENOID CIRCUIT

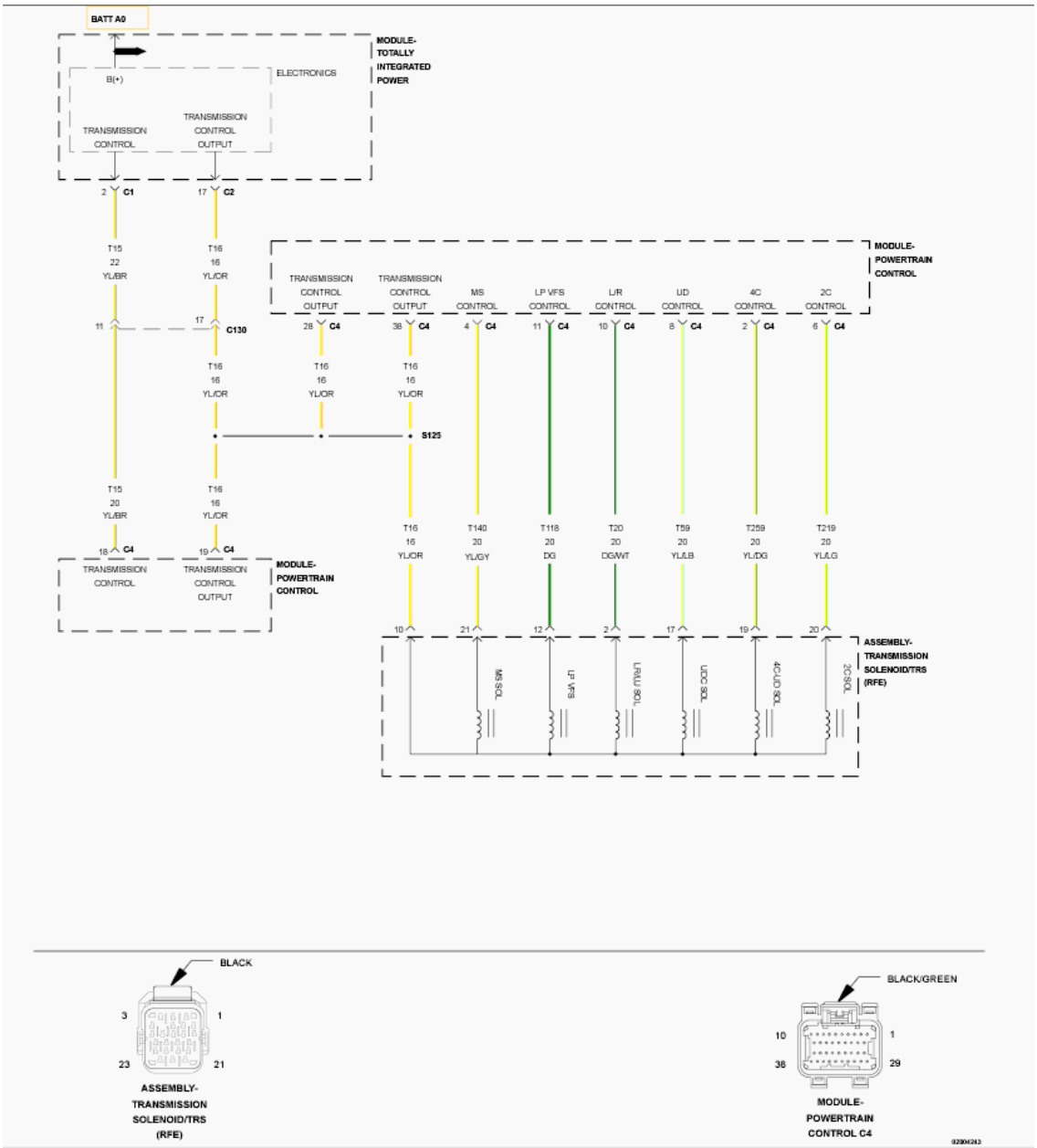

Fig. 38: Solenoid Control Wiring Diagram

Courtesy of CHRYSLER GROUP, LLC

For a complete wiring diagram, **refer to appropriate SYSTEM WIRING DIAGRAMS article** .

THEORY OF OPERATION

The Transmission Control System uses five electronically controlled solenoids that allow hydraulic fluid to be applied to various friction elements (clutches), which enables the gear requested. The continuity of each solenoid circuit is periodically tested. Each inactive solenoid is turned on for a few milliseconds, then off. Each active solenoid is turned off for a few milliseconds, then on. This pulsing of voltage to the solenoid causes an inductive spike which can be sensed by the Transmission Control System. If an inductive spike is not sensed by the Transmission Control System during the continuity check, it is tested again. If the test fails three consecutive times, the appropriate Diagnostic Trouble Code (DTC) is set. If the solenoid test is run in response to a gear ratio or pressure switch error, one failure will result in setting the appropriate DTC.

WHEN MONITORED:

Initially at power-up, then every 10 seconds thereafter. The solenoid circuits will also be tested immediately after a gear ratio or pressure switch error is detected.

SET CONDITION:

After three consecutive solenoid continuity test failures, or one failure if test is run in response to a gear ratio or pressure switch error.

NOTE: **This DTC is strictly an electrical fault and cannot be caused by any internal transmission failure other than an open in the Transmission Solenoid/TRS Assembly. If the Transmission Solenoid/TRS Assembly is in need of replacement - do not replace the Valve Body.**

POSSIBLE CAUSES

Possible Causes
RELATED DTCS PRESENT
(T259) 4C SOLENOID CONTROL CIRCUIT SHORTED TO OTHER CIRCUITS
(T259) 4C SOLENOID CONTROL CIRCUIT OPEN
(T259) 4C SOLENOID CONTROL CIRCUIT SHORTED TO GROUND
TRANSMISSION SOLENOID/TRS ASSEMBLY
POWERTRAIN CONTROL MODULE (PCM)

Always perform the Pre-Diagnostic Troubleshooting procedure before proceeding. Refer to STANDARD PROCEDURE .

DIAGNOSTIC TEST

1. **CHECK DTCS**

1. With the scan tool, check DTCs.

   Are there any TIPM TCM Power Control Circuit or TCM Power Input DTCs present?

   Yes

   - Refer to **DIAGNOSIS AND TESTING** and perform the appropriate diagnostic procedure.

   No

   - Go To 2.

2. **CHECK TO SEE IF P0770 IS PRESENT**
   1. Turn the ignition off to the lock position.
   2. Remove the Ignition Switch Feed fuse from the TIPM.

      CAUTION: Removal of the Ignition Switch Feed fuse from the TIPM will prevent the vehicle from being started in gear.

      WARNING: The Ignition Switch Feed fuse must be removed from the TIPM. Failure to do so can result in possible serious or fatal injury.

   3. Install Transmission Simulator (special tool #8333A, Simulator, Transmission).
   4. Ignition on, engine not running.
   5. With the scan tool, clear Transmission DTCs.
   6. With the scan tool, actuate the 4C Solenoid.
   7. Monitor the 4C Solenoid LED on the Transmission Simulator.

      Did the 4C Solenoid LED on the Transmission Simulator blink on and off?

      Yes

      - Go To 3.

      No

      - Go To 5.

3. **CHECK THE TRANSMISSION SOLENOID/TRS ASSEMBLY**
   1. With the Transmission simulator still connected, continue to actuate the 4C solenoid for two minutes.
   2. After two minutes of actuation, with the scan tool, stop the actuation and check for transmission DTCs.

      Did the DTC P0770 reset during the actuation test?

Yes

- Go To 5.

No

- Go To 4.

4. **WIGGLE TEST WITH TRANSMISSION SIMULATOR**
   1. With the Transmission simulator still connected, continue to actuate the 4C solenoid for another two minutes while wiggling the related wiring harness and connectors.
   2. With the scan tool, stop the actuation and check for transmission DTCs.

   Did the DTC P0770 reset during the actuation test?

   Yes

   - Repair wiring harness or connectors as necessary.
   - Refer to **STANDARD PROCEDURE** and perform the 545RFE TRANSMISSION VERIFICATION TEST.

   No

   - Replace the Transmission Solenoid/TRS Assembly in accordance with the Service Information. **Note: Do NOT replace the entire Valve Body.** Refer to **ASSEMBLY, TRANSMISSION SOLENOID AND TRS, REMOVAL** .
   - Refer to **STANDARD PROCEDURE** and perform the 545RFE TRANSMISSION VERIFICATION TEST.

5. **CHECK THE (T259) 4C SOLENOID CONTROL CIRCUIT FOR A SHORT TO ANOTHER CIRCUIT**

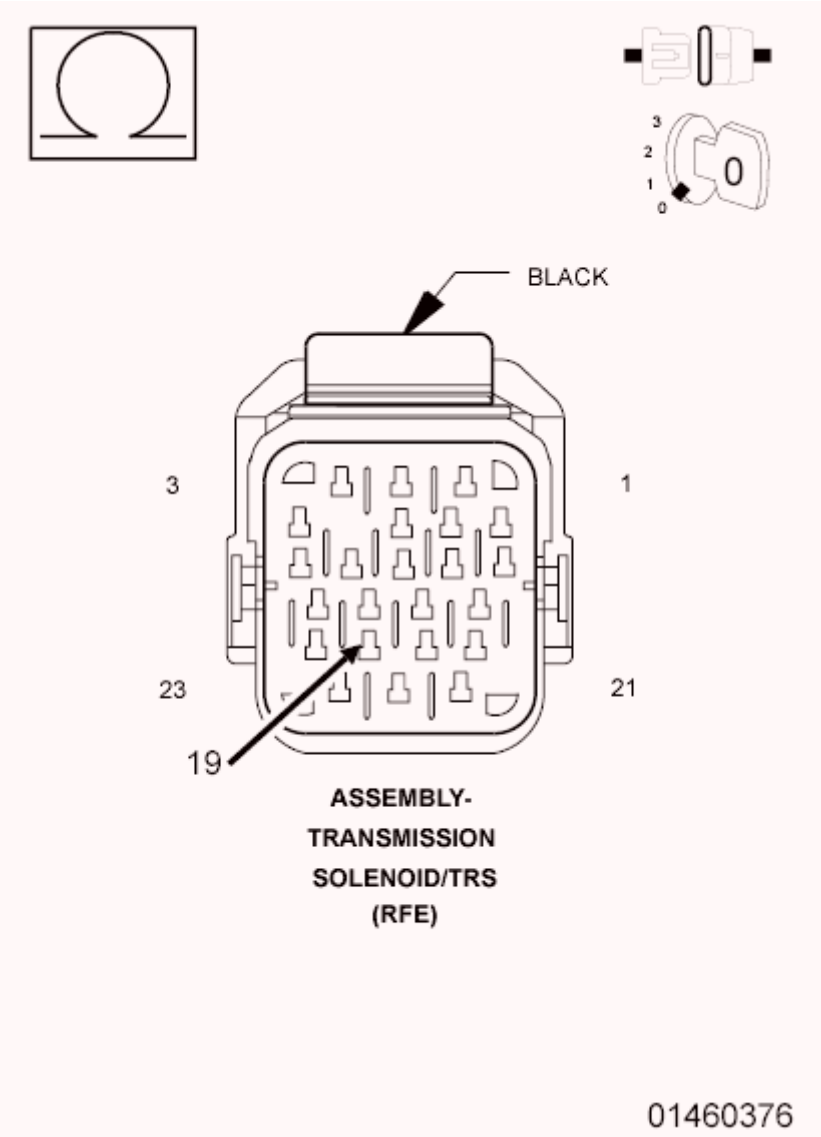

Fig. 39: Checking 4C Solenoid Control Circuit For Short To Circuit
Courtesy of CHRYSLER GROUP, LLC

1. Turn the ignition off to the lock position.
2. Disconnect the Transmission Simulator (special tool #8333A, Simulator, Transmission).
3. Disconnect the PCM harness connectors.
4. Measure the resistance between the (T259) 4C Solenoid Control circuit and all other circuits in the Transmission Solenoid/TRS Assembly harness connector.

   Is the resistance below 5.0 Ohms between the (T259) 4C Solenoid Control circuit and any other circuit(s) in the Transmission Solenoid/TRS Assembly harness connector?

   Yes

   - Repair the (T259) 4C Solenoid Control circuit for a short to another circuit(s).

- Refer to **STANDARD PROCEDURE** and perform the 545RFE TRANSMISSION VERIFICATION TEST.

No

- Go To 6.

6. **CHECK THE (T259) 4C SOLENOID CONTROL CIRCUIT FOR AN OPEN**

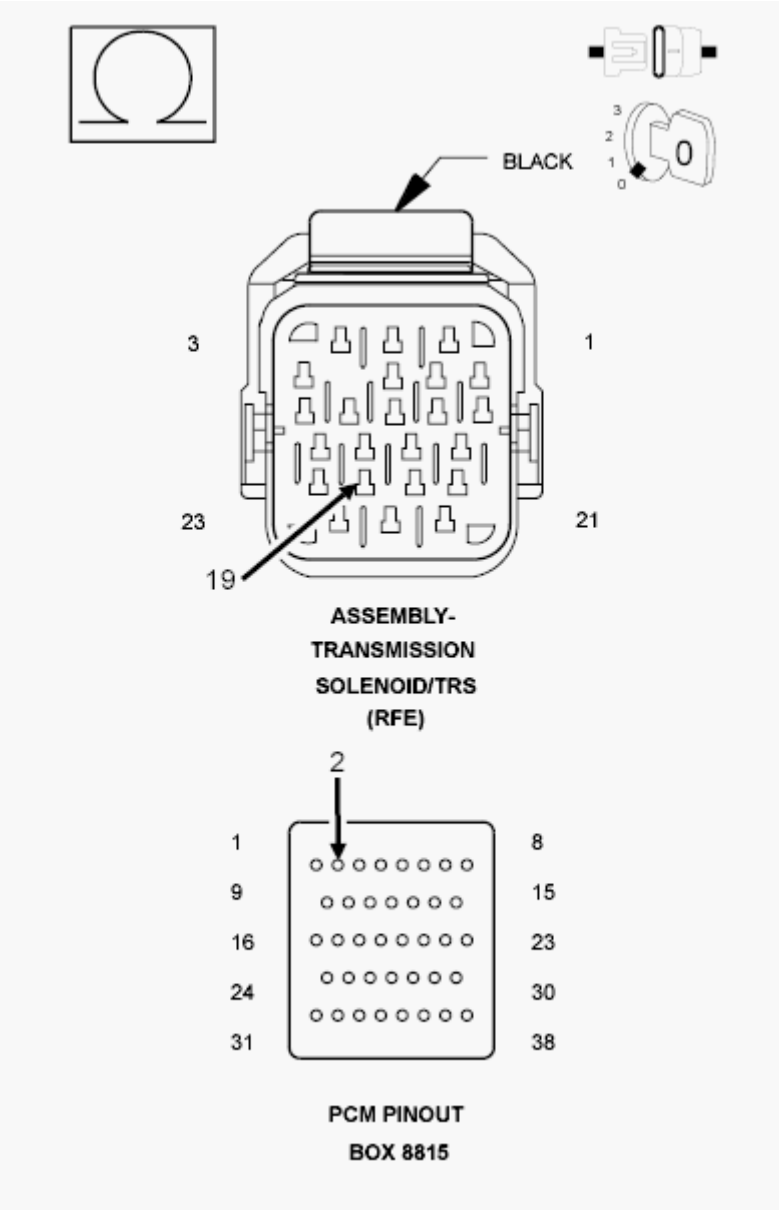

Fig. 40: Checking 4C Solenoid Control Circuit For Open
Courtesy of CHRYSLER GROUP, LLC

1. Connect the PCM Pinout Box (special tool #8815A, Kit, NGC, 38 Position) to the PCM C4 harness connector.

CAUTION: Do not probe the PCM harness connectors. Probing the PCM harness connectors will damage the PCM terminals resulting in poor terminal to pin connection. Install the (special tool #8815A, Kit, NGC, 38 Position) to perform diagnosis.

2. Measure the resistance of the (T259) 4C Solenoid Control circuit between the Transmission Solenoid/TRS Assembly harness connector and the appropriate terminal of PCM Pinout Box (special tool #8815A, Kit, NGC, 38 Position).

   Is the resistance above 5.0 Ohms?

   Yes

   - Repair the (T259) 4C Solenoid Control circuit for an open.
   - Refer to **STANDARD PROCEDURE** and perform the 545RFE TRANSMISSION VERIFICATION TEST.

   No

   - Go To 7.

7. **CHECK THE (T259) 4C SOLENOID CONTROL CIRCUIT FOR A SHORT TO GROUND**

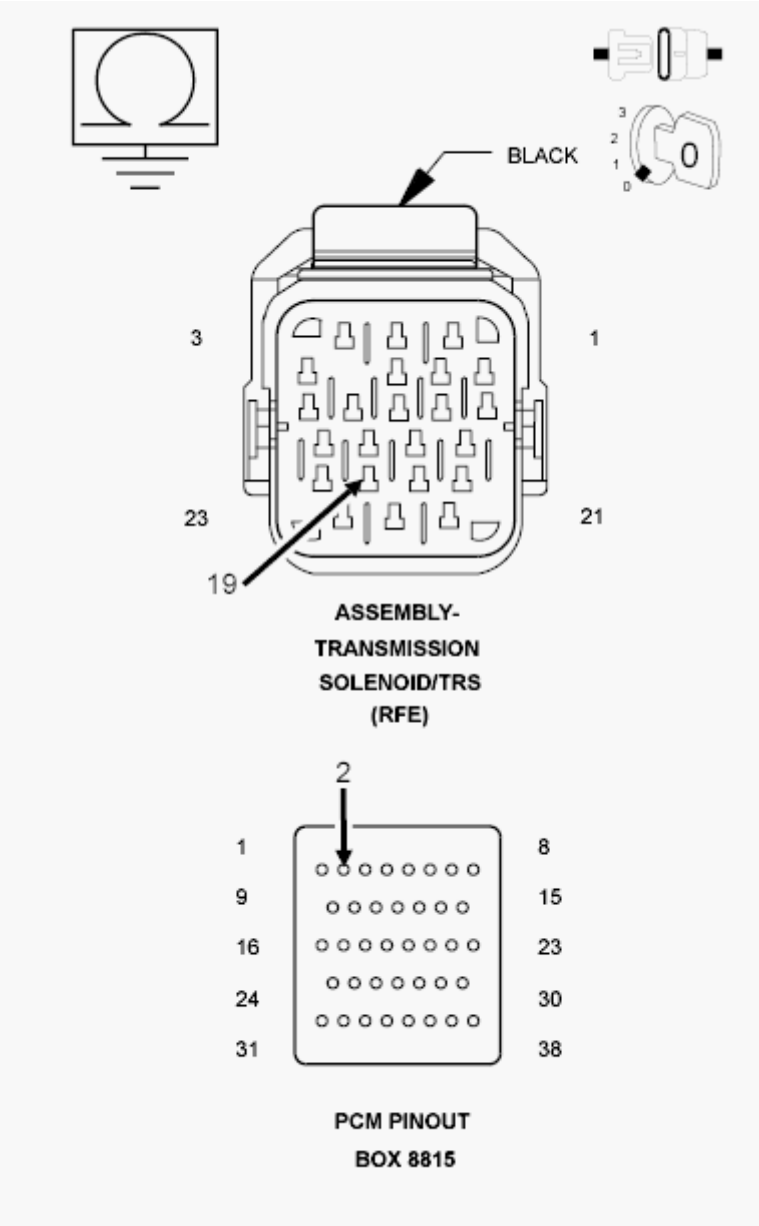

Fig. 41: Checking 4C Solenoid Control Circuit For Short To Ground
Courtesy of CHRYSLER GROUP, LLC

1. Measure the resistance between ground and the (T259) 4C Solenoid Control circuit.

   Is the resistance below 5.0 Ohms?

   Yes

   - Repair the (T259) 4C Solenoid Control circuit for a short to ground.
   - Refer to **STANDARD PROCEDURE** and perform the 545RFE TRANSMISSION VERIFICATION TEST.

No

- Using the schematics as a guide, check the Powertrain Control Module (PCM) terminals for corrosion, damage, or terminal push out. Pay particular attention to all power and ground circuits. If no problems are found, replace and program the PCM in accordance with the Service Information. With the scan tool, perform Quick Learn.
- Refer to **STANDARD PROCEDURE** and perform the 545RFE TRANSMISSION VERIFICATION TEST.

P0841-LR PRESSURE SWITCH RATIONALITY

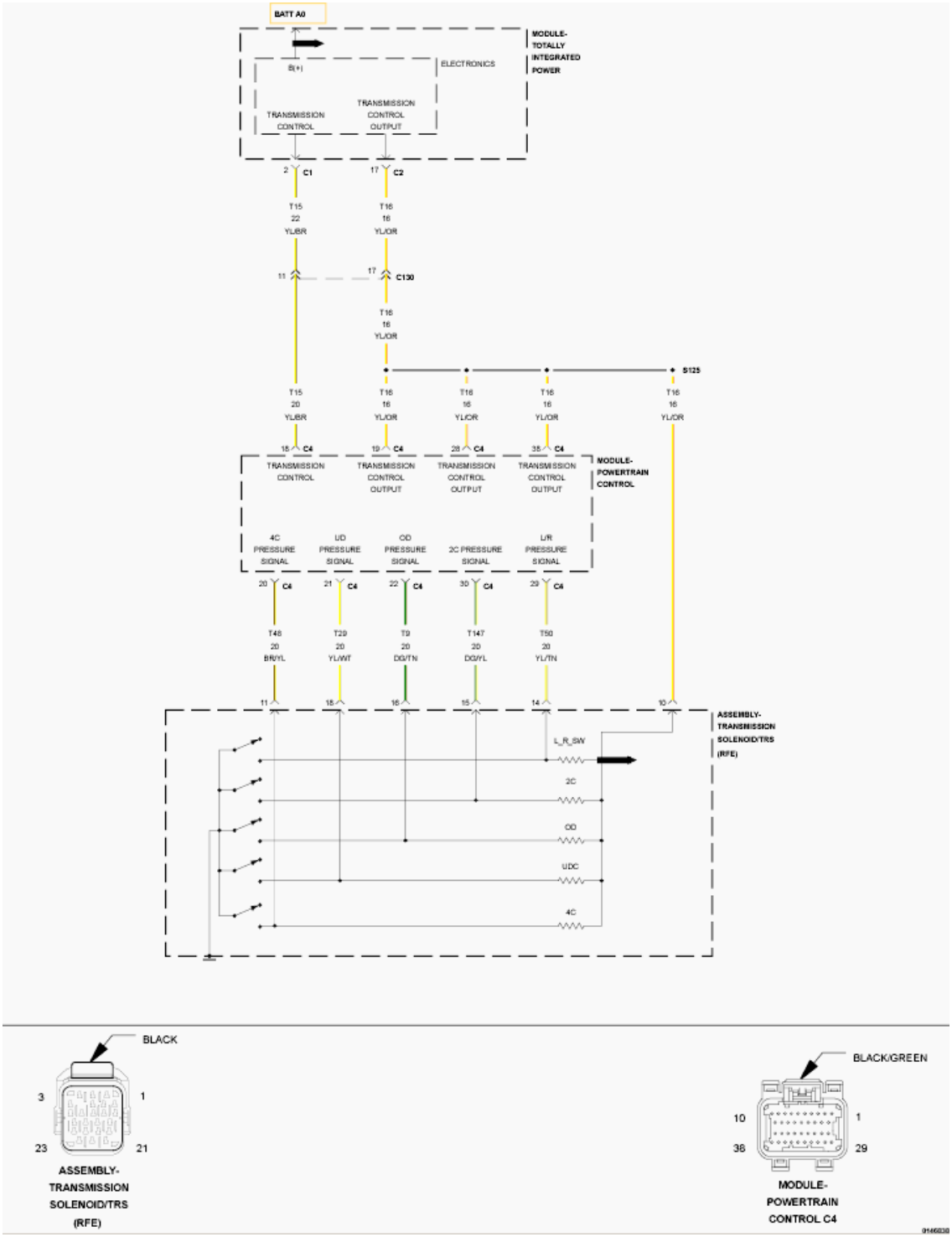

Fig. 42: Pressure Switch Circuit Wiring Diagram
Courtesy of CHRYSLER GROUP, LLC

For a complete wiring diagram, **refer to appropriate SYSTEM WIRING DIAGRAMS article** .

THEORY OF OPERATION

The Transmission system uses five pressure switches to monitor the fluid pressure in the L/R, 2C, 4C, UD, and OD clutch circuits. The pressure switches are continuously monitored for the correct states in each gear as shown.

WHEN MONITORED:

Continuously with the ignition on and engine running.

SET CONDITION:

The DTC will set if the L/R Pressure Switch reads open or closed at the wrong time in a given gear.

POSSIBLE CAUSES

Possible Causes
LOSS OF PRIME AND/OR TIPM DTC PRESENT
LOW FLUID LEVEL
LOW LINE PRESSURE
REVERSE CARRIER SNAP RING DISLODGED
CRACKED OR IMPROPERLY INSTALLED PRIMARY OIL FILTER OR FILTER SEAL
STICKING MAIN REGULATOR VALVE IN PUMP VALVE BODY
NO. 1 CHECK BALL CUT OR DAMAGED
WIRING AND CONNECTORS
(T50) L/R PRESSURE SWITCH SENSE CIRCUIT OPEN
(T50) L/R PRESSURE SWITCH SENSE CIRCUIT SHORTED TO GROUND
(T50) L/R PRESSURE SWITCH SENSE CIRCUIT SHORTED TO VOLTAGE
TRANSMISSION SOLENOID/TRS ASSEMBLY
POWERTRAIN CONTROL MODULE (PCM)

Always perform the Pre-Diagnostic Troubleshooting procedure before proceeding. Refer to STANDARD PROCEDURE .

GEAR	L/R	2C	4C	UD	OD
REVERSE	OPEN	OPEN	OPEN	OPEN	OPEN
P/N	CLOSED**	OPEN	OPEN	OPEN	OPEN
1ST	CLOSED*	OPEN	OPEN	CLOSED	OPEN
2ND	OPEN	CLOSED	OPEN	CLOSED	OPEN
2ND PRIME	OPEN	OPEN	CLOSED	CLOSED	OPEN
3RD	OPEN	OPEN	OPEN	CLOSED	CLOSED
4TH	OPEN	OPEN	CLOSED	OPEN	CLOSED
5TH	OPEN	CLOSED	OPEN	OPEN	CLOSED
*L/R is closed if output speed is below 100 rpm in Drive and Manual 2. L/R is closed in Manual 1.					
**May be open when rolling in Neutral or at low oil temperatures.					

DIAGNOSTIC TEST

1. **CHECK FOR RELATED DTCS**
    1. Ignition on, engine not running.
    2. With the scan tool, read DTCs.

    Are there any Loss of Prime and/or TIPM TCM Power Control Circuit DTCs present?

    Yes

    - Refer to **DIAGNOSIS AND TESTING** and perform the appropriate diagnostic procedure. If the DTC P0944 is present, perform its respective test first.

    No

    - Go To 2.
2. **CHECK IF THE CONDITION P0841 IS PRESENT**
    1. With the scan tool, check the Event Data for P0841.

    NOTE: Make sure to record all Event Data stored in the scan tool for future reference in this test procedure.

    Does the Event Data show the DTC P0841?

    Yes

    - Go To 3.

    No

    - Refer to **DIAGNOSIS AND TESTING** and perform the appropriate diagnostic procedure for the DTC reported in the Event Data.
3. **CHECK IF THE DTC SET IN REVERSE**

    In the Event Data recorded earlier, does the Event Data show the DTC P0841 set while in Reverse?

    Yes

    - Go To 10.

    No

    - Go To 4.
4. **CHECK IF THE L/R PRESSURE SWITCH IS CLOSED**

In the Event Data recorded earlier, does the Event Data show the L/R Pressure Switch reading CLOSED when the DTC P0841 was set?

Yes

- Go To 5.

No

- Go To 14.

5. **CHECK THE PCM AND WIRING**
   1. Turn the ignition off to the lock position.
   2. Remove the Ignition Switch Feed fuse from the TIPM.

      CAUTION: Removal of the Ignition Switch Feed fuse from the TIPM will prevent the vehicle from being started in gear.

      WARNING: The Ignition Switch Feed fuse must be removed from the TIPM. Failure to do so can result in possible serious or fatal injury.

   3. Install the Transmission Simulator (special tool #8333A, Simulator, Transmission).
   4. Ignition on, engine not running.
   5. Turn the Pressure Switch selector to L/R on the Transmission Simulator.
   6. With the scan tool, monitor the L/R Pressure Switch state while pressing the Pressure Switch Test button on the Transmission Simulator.

      Did the L/R Pressure Switch state change from open to closed while pressing the Pressure Switch Test button on the Transmission Simulator?

      Yes

      - Go To 6.

      No

      - Go To 10.

6. **CHECK FOR POOR WIRING AND CONNECTIONS**
   1. Using the schematics as a guide, inspect the wiring and connectors specific to this circuit.
   2. Wiggle the wires while checking for shorted and open circuits.

      Were there any problems found?

      Yes

- Repair as necessary.
- Refer to **STANDARD PROCEDURE** and perform the 545RFE TRANSMISSION VERIFICATION TEST.

No

- Go To 7.

7. **CHECK IF THE DTC SET IN FIRST GEAR**

   In the Event Data recorded earlier, does the Event Data show the Present Gear as first gear when the DTC P0841 was set ?

   Yes

   - Go To 8.

   No

   - Replace the Transmission Solenoid/TRS Assembly in accordance with the Service Information.
   - Refer to **STANDARD PROCEDURE** and perform the 545RFE TRANSMISSION VERIFICATION TEST.

8. **CHECK IF THE NO. 1 CHECK BALL IS CUT OR DAMAGED**
   1. Turn the ignition off to the lock position.
   2. Remove the Transmission Valve Body in accordance with the Service Information.
   3. Check the No. 1 Check Ball for any possible cuts or damage.

      Is the No. 1 Check Ball cut or damaged?

      Yes

      - Replace the No. 1 Check Ball and check for clutch debris in the transmission oil pan. If there is excessive debris, perform internal repairs to the L/R Clutch assembly. Refer to the Service Information for proper repair procedures.
      - Refer to **STANDARD PROCEDURE** and perform the 545RFE TRANSMISSION VERIFICATION TEST.

      No

      - Go To 9.

9. **CHECK IF THE REVERSE CARRIER SNAP RING IS DISLODGED AND THE TRANSMISSION SOLENOID/TRS ASSEMBLY**
   1. Looking through the windows in the bottom of the case, check whether the snap ring at the front of the Reverse (center) Carrier has dislodged.

NOTE: **It may be necessary to pry the Input Annulus Gear Shell rearward to check this snap ring.**

Is the Reverse Carrier Snap Ring dislodged?

Yes

- Repair as necessary.
- Refer to **STANDARD PROCEDURE** and perform the 545RFE TRANSMISSION VERIFICATION TEST.

No

- Replace the Transmission Solenoid/TRS Assembly in accordance with the Service Information.
- Refer to **STANDARD PROCEDURE** and perform the 545RFE TRANSMISSION VERIFICATION TEST.

10. **CHECK THE (T50) L/R PRESSURE SWITCH SENSE CIRCUIT FOR AN OPEN**

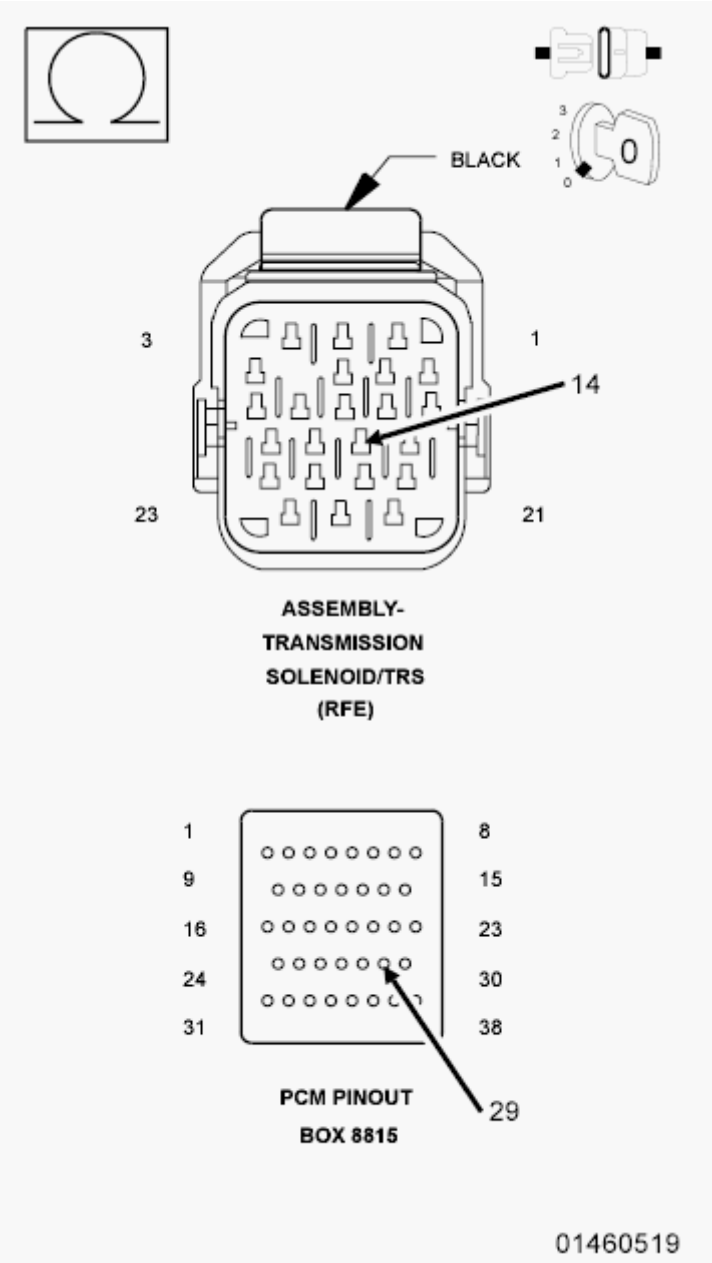

Fig. 43: Checking L/R Pressure Switch Sense Circuit For Open
Courtesy of CHRYSLER GROUP, LLC

1. Turn the ignition off to the lock position.
2. Disconnect the Transmission Simulator (special tool #8333A, Simulator, Transmission) if connected in a previous step or disconnect the Transmission Solenoid/TRS Assembly harness connector.
3. Disconnect the PCM C4 harness connector and connect the PCM Pinout Box (special tool #8815A, Kit, NGC, 38 Position).

NOTE: Check connectors - Clean/repair as necessary.

CAUTION: Do not probe the PCM harness connectors. Probing the PCM harness connectors will damage the PCM terminals resulting in poor terminal to pin connection. Install the (special tool #8815A, Kit, NGC, 38 Position) to perform diagnosis.

4. Measure the resistance of the (T50) L/R Pressure Switch Sense circuit between the Solenoid/TRS Assembly harness connector and the appropriate terminal of the PCM Pinout Box (special tool #8815A, Kit, NGC, 38 Position).

   Is the resistance above 5.0 Ohms?

   Yes

   - Repair the (T50) L/R Pressure Switch Sense circuit for an open.
   - Refer to **STANDARD PROCEDURE** and perform the 545RFE TRANSMISSION VERIFICATION TEST.

   No

   - Go To 11.

11. **CHECK THE (T50) L/R PRESSURE SWITCH SENSE CIRCUIT FOR A SHORT TO GROUND**

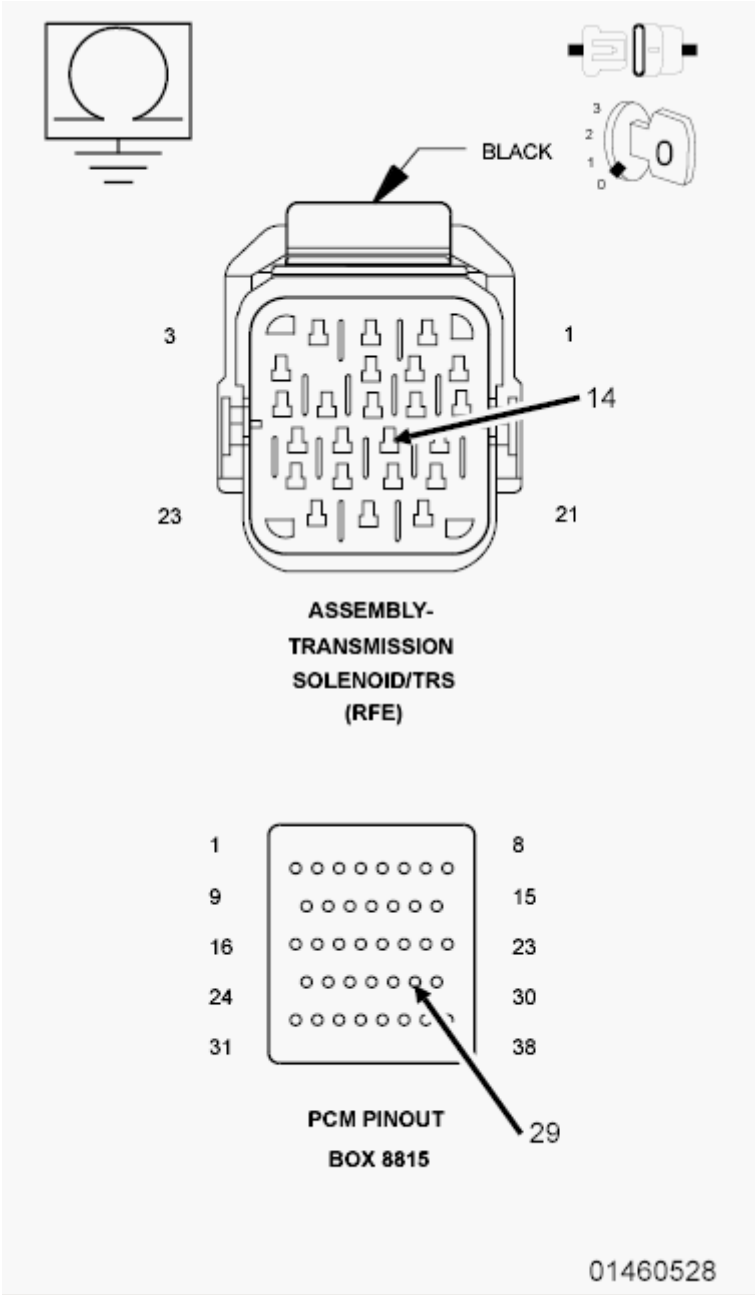

Fig. 44: Checking L/R Pressure Switch Sense Circuit For Short To Ground
Courtesy of CHRYSLER GROUP, LLC

1. Measure the resistance between ground and the (T50) L/R Pressure Switch Sense circuit.

   Is the resistance below 5.0 Ohms?

   Yes

   - Repair the (T50) L/R Pressure Switch Sense circuit for a short to ground.
   - Refer to **STANDARD PROCEDURE** and perform the 545RFE TRANSMISSION

VERIFICATION TEST.

No

- Go To 12.

12. **CHECK THE PCM POWERS AND GROUNDS**
    1. Using the schematics as a guide, check the Powertrain Control Module (PCM) terminals for corrosion, damage, or terminal push out. Pay particular attention to all power and ground circuits.

       Were there any problems found?

       Yes

       - Repair as necessary.
       - Refer to **STANDARD PROCEDURE** and perform the 545RFE TRANSMISSION VERIFICATION TEST.

       No

       - Go To 13.

13. **ROAD TEST THE VEHICLE**
    1. With the scan tool, clear the DTC and road test the vehicle.
    2. Try to duplicate the conditions in which the DTC originally set using the Event Data recorded earlier.

       Did the DTC P0841 reset?

       Yes

       - Using the schematics as a guide, check the Powertrain Control Module (PCM) terminals for corrosion, damage, or terminal push out. Pay particular attention to all power and ground circuits. If no problems are found, replace and program the PCM in accordance with the Service Information. With the scan tool, perform Quick Learn.
       - Refer to **STANDARD PROCEDURE** and perform the 545RFE TRANSMISSION VERIFICATION TEST.

       No

       - Go To 17.

14. **CHECK FOR LOW LINE PRESSURE**
    1. In the Event Data recorded earlier, compare the Line Pressure and the Desired Line Pressure.

       Is the Line Pressure less than 40 psi, and significantly below the Desired Line Pressure?

       Yes

- Repair as necessary to correct low line pressure. Check for low fluid level. Check the Primary Oil Filter seal for a split, crack, or improperly installed. Refer to the Service Information for the proper installation procedure. If the fluid level and Primary Oil Filter are OK, check the Main Regulator Valve in the Oil Pump in accordance with the Service Information.
- Refer to **STANDARD PROCEDURE** and perform the 545RFE TRANSMISSION VERIFICATION TEST.

No

- Go To 15.

15. **CHECK THE (T50) L/R PRESSURE SWITCH SENSE CIRCUIT FOR A SHORT TO ANOTHER CIRCUIT**

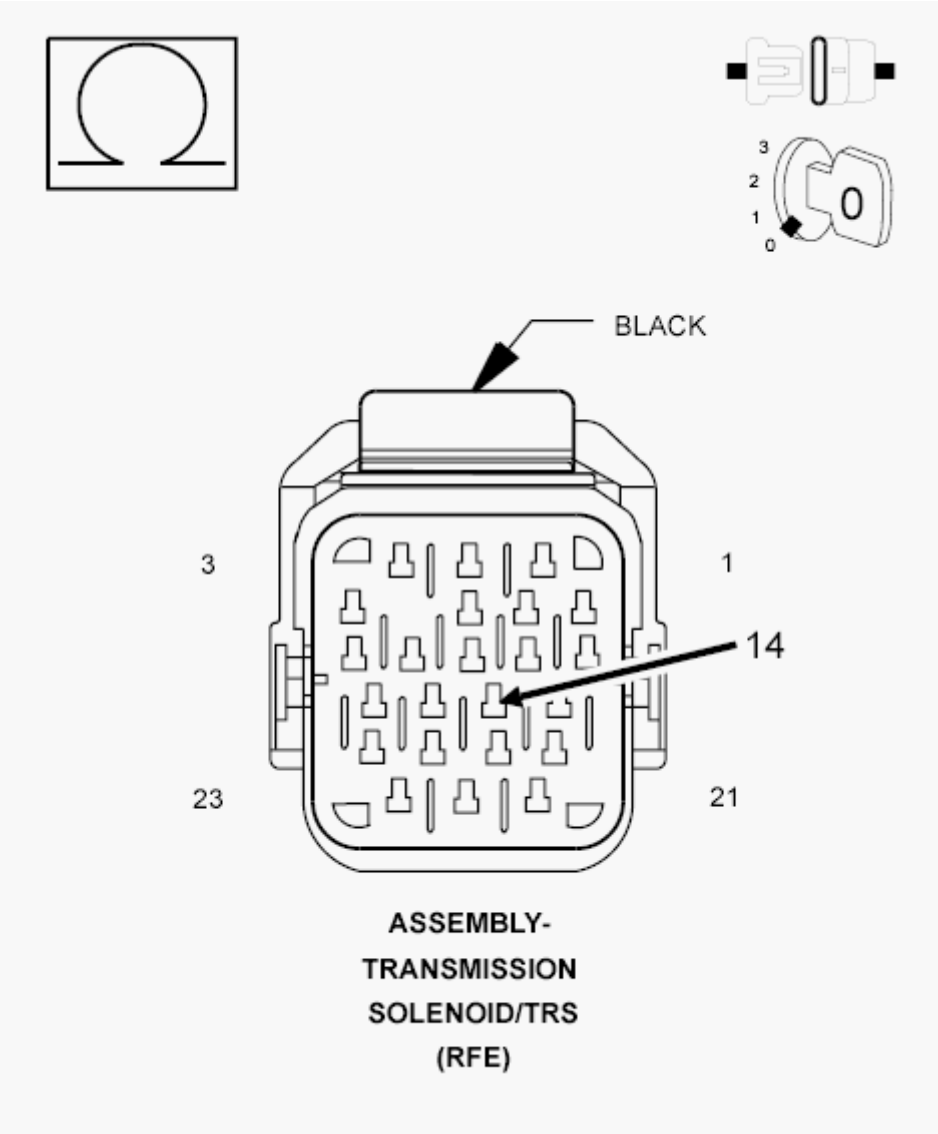

Fig. 45: Checking L/R Pressure Switch Sense Circuit For Short To Circuit

Courtesy of CHRYSLER GROUP, LLC

1. Turn the ignition off to the lock position.
2. Disconnect the Transmission Solenoid/TRS Assembly harness connector.
3. Disconnect all PCM harness connectors.
4. Measure the resistance between the (T50) L/R Pressure Switch Sense circuit and all other circuits in the Transmission Solenoid/TRS Assembly harness connector.

   Is the resistance below 5.0 Ohms between the (T50) L/R Pressure Switch Sense circuit and any other circuit(s) in the Transmission Solenoid/TRS Assembly harness connector?

   Yes

   - Repair the (T50) L/R Pressure Switch Sense circuit for a short to another circuit(s).
   - Refer to **STANDARD PROCEDURE** and perform the 545RFE TRANSMISSION VERIFICATION TEST.

   No

   - Go To 16.

16. **ROAD TEST THE VEHICLE**
    1. With the scan tool, clear the DTC and road test the vehicle.
    2. Try to duplicate the conditions in which the DTC originally set using the Event Data recorded earlier.

       Did the DTC P0841 reset?

       Yes

       - Replace the Transmission Solenoid/TRS Assembly in accordance with the Service Information.
       - Refer to **STANDARD PROCEDURE** and perform the 545RFE TRANSMISSION VERIFICATION TEST.

       No

       - Go To 17.

17. **CHECK THE WIRING AND CONNECTORS**
    1. The conditions necessary to set this DTC are not present at this time.
    2. Using the schematics as a guide, inspect the wiring and connectors specific to this circuit.
    3. Wiggle the wires while checking for shorted and open circuits.
    4. With the scan tool, check the Event Data to help identify the conditions in which the DTC was set.

       Were there any problems found?

Yes

- Repair as necessary.
- Refer to **STANDARD PROCEDURE** and perform the 545RFE TRANSMISSION VERIFICATION TEST.

No

- Test Complete.

P0845-2C HYDRAULIC PRESSURE TEST

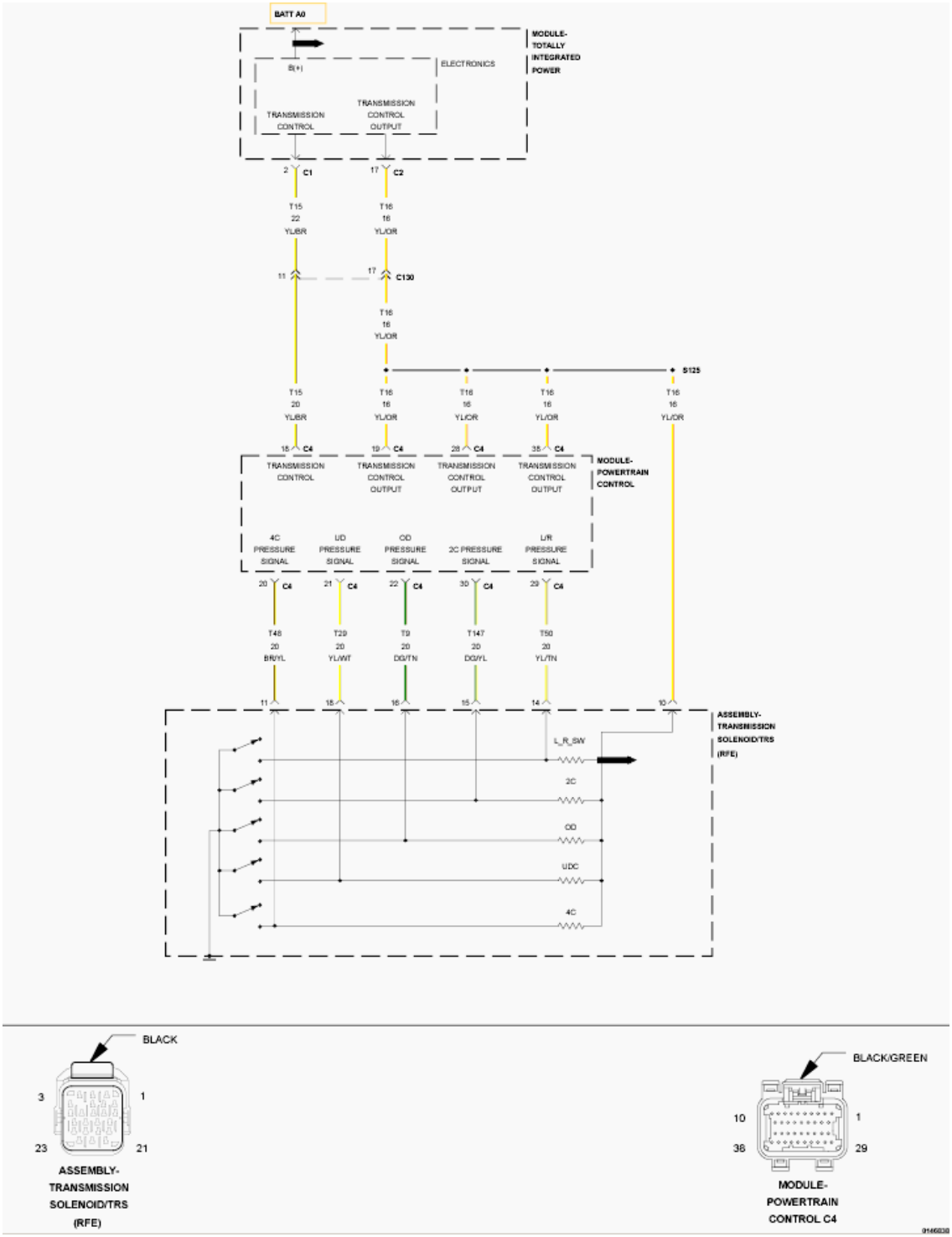

Fig. 46: Pressure Switch Circuit Wiring Diagram
Courtesy of CHRYSLER GROUP, LLC

For a complete wiring diagram, **refer to appropriate SYSTEM WIRING DIAGRAMS article** .

THEORY OF OPERATION

The Transmission Control System tests the pressure switches when they are off. The test verifies that the switches are operational (They will close with pressure applied). The Transmission Control System verifies that the switch closes when the corresponding element is applied. If a switch fails to close, it is re-tested. If it fails the second test, the DTC will set, the MIL will illuminate and the transmission system will default to the orderly Shutdown routine.

WHEN MONITORED:

In any forward gear with engine speed above 1000 rpm shortly after a shift and every minute thereafter.

SET CONDITION:

After a shift into a forward gear, with engine speed above 1000 rpm, the Powertrain Control Module (PCM) momentarily turns on element pressure to the Clutch circuits that don't have pressure to identify the correct Pressure Switch closes. If the Pressure Switch does not close 2 times, the DTC sets.

POSSIBLE CAUSES

Possible Causes
LINE PRESSURE SENSOR
TRANSMISSION FLUID CONTAMINATION
RELATED DTCS PRESENT
EXCESSIVE DEBRIS IN OIL PAN
POOR LINE PRESSURE SENSOR CONNECTION
(T147) 2C PRESSURE SWITCH SENSE CIRCUIT SHORTED TO VOLTAGE
(T147) 2C PRESSURE SWITCH SENSE CIRCUIT SHORTED TO ANOTHER CIRCUIT
(F856) 5-VOLT SUPPLY CIRCUIT OPEN
(F856) 5-VOLT SUPPLY CIRCUIT SHORTED TO GROUND
EXTRA CHECK BALL IN PASSAGE DOWNSTREAM FROM #7 BALL POCKET
TRANSMISSION SOLENOID/TRS ASSEMBLY
INTERNAL TRANSMISSION
POWERTRAIN CONTROL MODULE (PCM)

Always perform the Pre-Diagnostic Troubleshooting procedure before proceeding. Refer to STANDARD PROCEDURE .

DIAGNOSTIC TEST

1. **DETERMINING IF RELATED DTCS ARE PRESENT**
    1. With the scan tool, read DTCs.

       Are there any Loss of Prime, TCM Power Input, Line Pressure Sensor and/or TIPM TCM Power Control circuit DTCs present?

       Yes

- Refer to **DIAGNOSIS AND TESTING** and perform the appropriate diagnostic procedure. If the DTC P0944-LOSS OF PRIME is present, perform its respective test first.

No

- Go To 2.

2. **CHECK IF THE DTC P0755 IS PRESENT**
   1. With the scan tool, read DTCs.

      Is the DTC P0755 also present?

      Yes

      - Refer to **P0755-2C SOLENOID CIRCUIT** and perform diagnostics.

      No

      - Go To 3.

3. **CHECK IF THE DTCS P0732, P0733 AND/OR P0846 ARE PRESENT**
   1. With the scan tool, read DTCs.

      Are the DTCs P0732, P0733, and/or P0846 present also?

      Yes

      - Go To 12.

      No

      - Go To 4.

4. **CHECK IF THE DTC IS CURRENT**
   1. With the scan tool, read DTCs.

      Is the status Active or is the Starts Since Set counter 2 or less for this DTC?

      Yes

      - Go To 5.

      No

      - Go To 15.

5. **CHECK IF THE LINE PRESSURE STAYS THE SAME**
   1. Start the engine.
   2. Warm the transmission to 82° C or 180° F.

3. Firmly apply the brakes.
4. With the scan tool, monitor the Line Pressure during the following step.
5. Move the shift lever to each gear position, pausing momentarily in each position and record the line pressure reading. Allow the pressure to stabilize for at least 5 seconds in each range.

   Did the line pressure remain at a steady value between 585 and 655 kPa (85 and 95 psi) in each position?

   Yes

   - Go To 6.

   No

   - Go To 10.

6. **CHECK THE LINE PRESSURE SENSOR CONNECTION**
   1. Ignition on, **engine not running.**
   2. With the scan tool, monitor the Line Pressure while firmly pushing the Transmission Line Pressure Sensor connector inwards towards the Transmission.

      Did the Line Pressure reading on the scan tool CHANGE to about 207 kPa (30 psi) or 0.7 of a volt when the connector was pushed inward?

      Yes

      - Disconnect and properly reconnect the Line Pressure Sensor connector. Inspect terminals and repair as necessary.
      - Refer to **STANDARD PROCEDURE** and perform the 545RFE TRANSMISSION VERIFICATION TEST.

      No

      - Go To 7.

7. **CHECK THE LINE PRESSURE SENSOR OPERATION**
   1. Turn the ignition off to the lock position.
   2. Remove the Ignition Switch Feed fuse from the TIPM.

CAUTION: Removal of the Ignition Switch Feed fuse from the TIPM will prevent the vehicle from being started in gear.

WARNING: The Ignition Switch Feed fuse must be removed from the TIPM. Failure to do so can result in possible serious or fatal injury.

3. Install the Transmission Simulator (special tool #8333A, Simulator, Transmission).
4. With the Transmission Simulator select the "OFF" position on the "Input/Output Speed" switch.
5. Ignition on, engine not running.
6. With the scan tool, monitor the Line Pressure while turning the Pressure Switch selector to each of three line pressure positions on the Transmission Simulator.

NOTE: All three scan tool Line Pressure readings should be steady and ±14 kPa (2.0 psi) of the reading specified on the Transmission Simulator.

Did the scan tool Line Pressure readings match the specified readings on the Transmission Simulator and remain steady in all three positions?

Yes

- Replace the Line Pressure Sensor in accordance with the Service Information.
- Refer to **STANDARD PROCEDURE** and perform the 545RFE TRANSMISSION VERIFICATION TEST.

No

- Go To 8.

8. **CHECK THE (F856) 5-VOLT SUPPLY CIRCUIT FOR AN OPEN**

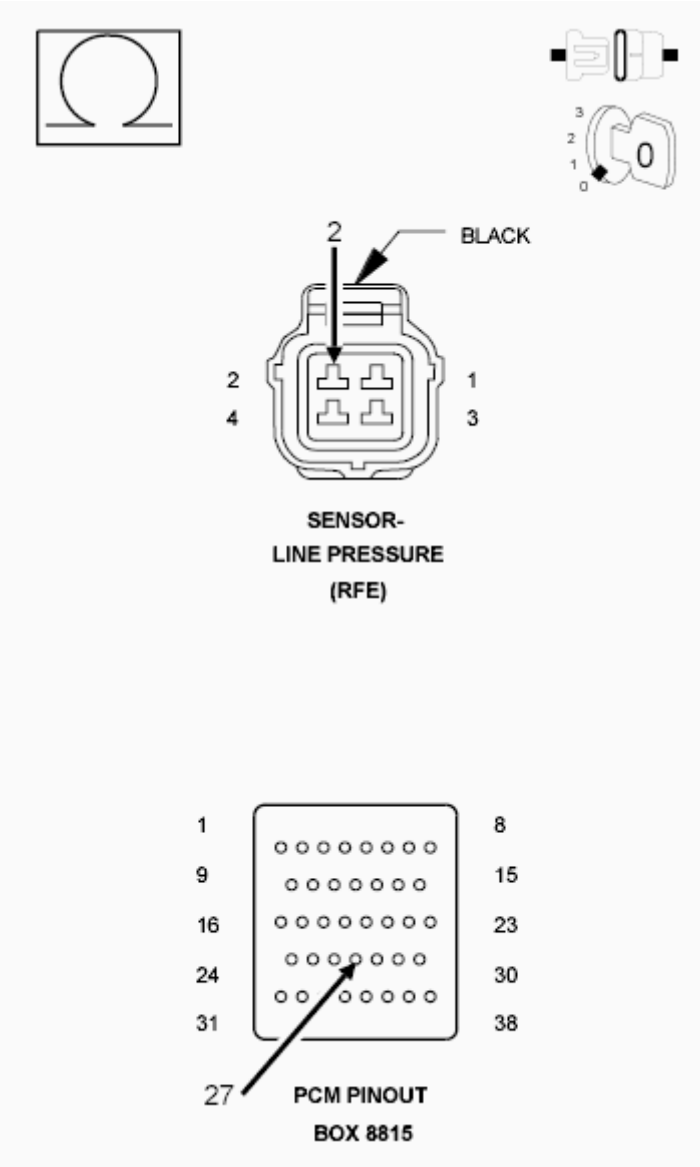

Fig. 47: Checking 5-Volt Supply Circuit For Open
Courtesy of CHRYSLER GROUP, LLC

1. Turn the ignition off to the lock position.
2. Disconnect Transmission Simulator.
3. Disconnect the PCM C1 harness connector and connect the PCM Pinout Box (special tool #8815A, Kit, NGC, 38 Position).

CAUTION: Do not probe the PCM harness connectors. Probing the PCM harness connectors will damage the PCM terminals resulting in poor terminal to pin connection. Install the (special tool #8815A, Kit, NGC, 38 Position) to perform diagnosis.

4. Measure the resistance of the (F856) 5-volt Supply circuit between the Line Pressure Sensor

harness connector and the appropriate terminal of the PCM Pinout Box (special tool #8815A, Kit, NGC, 38 Position).

Is the resistance above 5.0 Ohms?

Yes

- Repair the (F856) 5-volt Supply circuit for an open.
- Refer to **STANDARD PROCEDURE** and perform the 545RFE TRANSMISSION VERIFICATION TEST.

No

- Go To 9.

9. **CHECK THE (F856) 5-VOLT SUPPLY CIRCUIT FOR A SHORT TO GROUND**

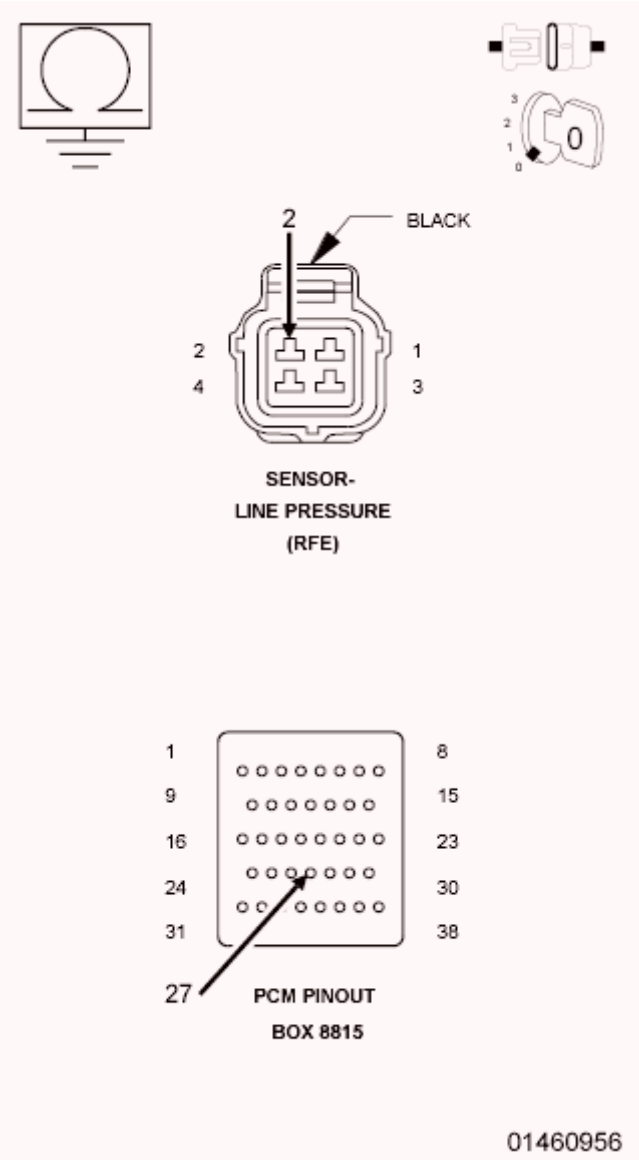

Fig. 48: Checking 5-Volt Supply Circuit For Short To Ground
Courtesy of CHRYSLER GROUP, LLC

1. Measure the resistance between ground and the (F856) 5-volt Supply circuit.

   Is the resistance below 5.0 Ohms?

   Yes

   - Repair the (F856) 5-volt Supply circuit for a short to ground.
   - Refer to **STANDARD PROCEDURE** and perform the 545RFE TRANSMISSION VERIFICATION TEST.

   No

- Using the schematics as a guide, check the Powertrain Control Module (PCM) terminals for corrosion, damage, or terminal push out. Pay particular attention to all power and ground circuits. If no problems are found, replace and program the PCM in accordance with the Service Information. With the scan tool, perform Quick Learn.
- Refer to **STANDARD PROCEDURE** and perform the 545RFE TRANSMISSION VERIFICATION TEST.

10. **COMPARE SCAN TOOL TO PRESSURE GAUGE**
    1. Turn the ignition off to the lock position.
    2. Connect the Line Pressure Adapter (special tool #8259, Adapter, Pressure Test) and 0-300 psi Test Gauge (special tool #C-3293-SP, Gauge, Pressure 0-300 P.S.I.). Refer to the Service Information for proper installation procedure.

       CAUTION: Apply parking brake.

    3. Start the engine.
    4. In the following steps, compare the scan tool Line Pressure to the Pressure Gauge readings in each gear.

       CAUTION: Do not overheat transmission.

    5. With the gear selector in park, raise the rpm to 1500, and compare line pressure readings.
    6. Firmly apply the brakes, move the gear selector into reverse, raise the rpm to 1500, and compare the line pressure readings.
    7. Firmly apply the brakes, move the gear selector into drive, raise the rpm to 1500, and compare the line pressure readings.

       Did the scan tool Line Pressure readings match the Pressure Gauge readings ± 10 psi?

       Yes

       - Go To 11.

       No

       - Replace the Line Pressure Sensor in accordance with the Service Information.
       - Refer to **STANDARD PROCEDURE** and perform the 545RFE TRANSMISSION VERIFICATION TEST.

11. **CHECK THE WIRING AND CONNECTORS**
    1. Turn the ignition off to the lock position.
    2. Remove the Ignition Switch Feed fuse from the TIPM.

CAUTION: Removal of the Ignition Switch Feed fuse from the TIPM will prevent the vehicle from being started in gear.

WARNING: The Ignition Switch Feed fuse must be removed from the TIPM. Failure to do so can result in possible serious or fatal injury.

3. Remove the Line Pressure Adapter (special tool #8259, Adapter, Pressure Test) and 0-300 psi Test Gauge (special tool #C-3293-SP, Gauge, Pressure 0-300 P.S.I.).
4. Install the Transmission Simulator (special tool #8333A, Simulator, Transmission).
5. On the Transmission Simulator, turn the Pressure Switch selector switch to 2C.
6. Ignition on, engine not running.
7. With the scan tool, monitor the 2C Pressure Switch state while pressing and holding the Pressure Switch test button and wiggling the wire harness and connectors that pertain to the 2C Pressure Switch.

   Did the 2C Pressure Switch state change to closed and remain closed while wiggling the wires?

   Yes

   - Go To 12.

   No

   - Go To 14.

12. **CHECK FOR EXCESSIVE DEBRIS**
    1. Turn the ignition off to the lock position.
    2. Remove the Transmission Simulator (special tool #8333A, Simulator, Transmission).
    3. Remove and inspect the Transmission Oil Pan in accordance with the Service Information.

       Does the Transmission Oil Pan contain excessive debris or contamination?

       Yes

       - Repair the cause of the excessive debris in the Transmission Oil Pan. Refer to the Service Information for the proper procedures.
       - Refer to **STANDARD PROCEDURE** and perform the 545RFE TRANSMISSION VERIFICATION TEST.

       No

       - Go To 13.

13. **CHECK THE 2C HYDRAULIC CLUTCH CIRCUIT**
    1. Remove the Valve Body and air check the 2C clutch hydraulic circuit, in the 2C/4C clutch retainer,

for leakage in accordance with the Service Information.

NOTE: **The 2C hydraulic clutch circuit contains a small bleed orifice, a small amount of air leakage is normal.**

Was there excessive air leakage noticed during the air check?

Yes

- Repair as necessary. Check the 2C clutch piston, piston seals and bleed orifice assembly.
- Refer to **STANDARD PROCEDURE** and perform the 545RFE TRANSMISSION VERIFICATION TEST.

No

- Disassemble and inspect the Valve Body and repair as necessary. Inspect the 2C Accumulator piston and seals. Check for an extra check ball downstream from the #7 check ball pocket and repair as necessary. If no problems are found in the Valve Body, replace the Transmission Solenoid/TRS Assembly in accordance with the Service Information.
- Refer to **STANDARD PROCEDURE** and perform the 545RFE TRANSMISSION VERIFICATION TEST.

14. **CHECK THE (T147) 2C PRESSURE SWITCH SENSE CIRCUIT FOR A SHORT TO ANOTHER CIRCUIT**

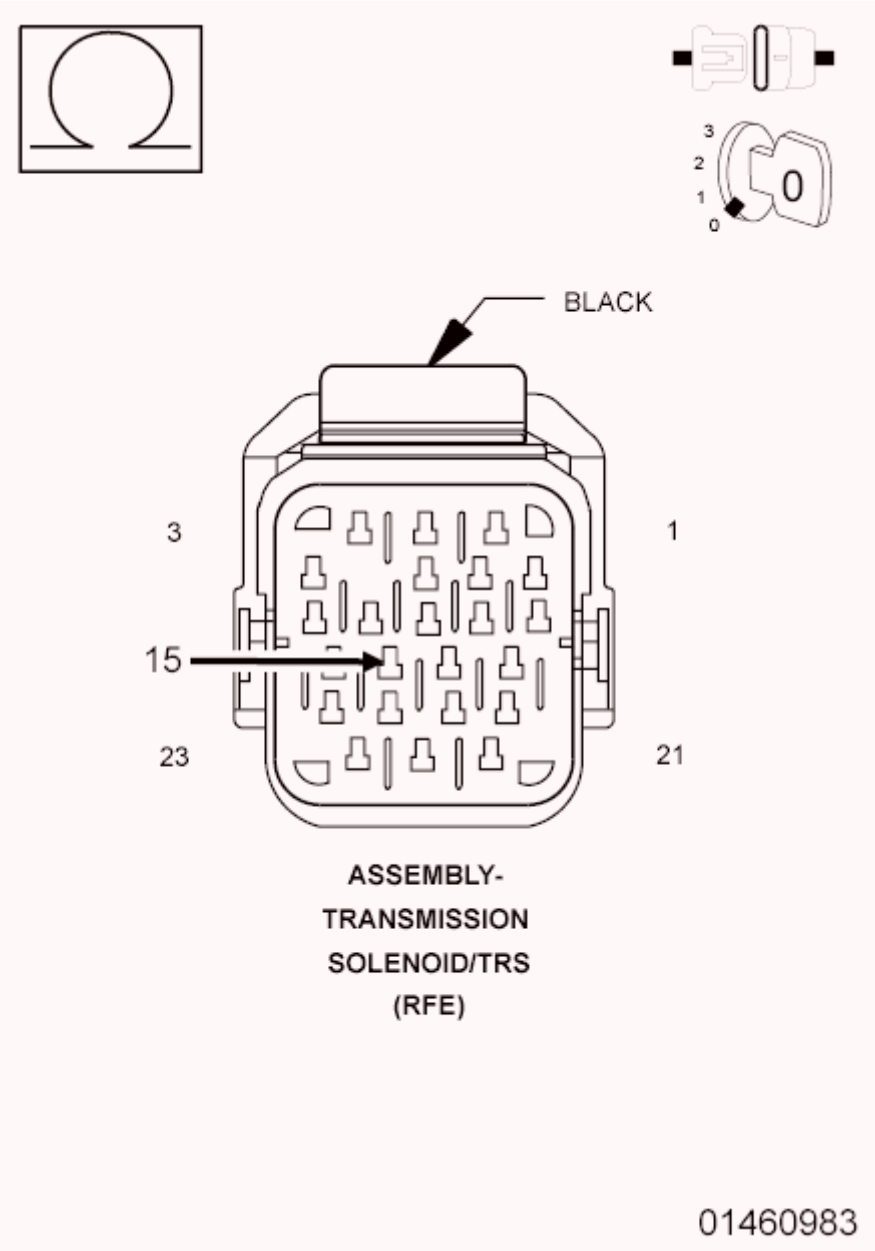

Fig. 49: Checking 2C Pressure Switch Sense Circuit For Short To Circuit
Courtesy of CHRYSLER GROUP, LLC

1. Disconnect all PCM harness connectors.
2. Disconnect the Transmission Solenoid/TRS Assembly harness connector.

NOTE: **Make sure the Transmission Solenoid/TRS Assembly harness connector is disconnected.**

3. Measure the resistance between the (T147) 2C Pressure Switch Sense circuit and all other circuits in the Transmission Solenoid/TRS Assembly harness connector.

Is the resistance below 5.0 Ohms between the (T147) 2C Pressure Switch Sense circuit and any other circuit(s) in the Transmission Solenoid/TRS Assembly harness connector?

Yes

- Repair the (T147) 2C Pressure Switch Sense circuit for a short to another circuit(s).
- Refer to **STANDARD PROCEDURE** and perform the 545RFE TRANSMISSION VERIFICATION TEST.

No

- Using the schematics as a guide, check the Powertrain Control Module (PCM) terminals for corrosion, damage, or terminal push out. Pay particular attention to all power and ground circuits. If no problems are found, replace and program the PCM in accordance with the Service Information. With the scan tool, perform Quick Learn.
- Refer to **STANDARD PROCEDURE** and perform the 545RFE TRANSMISSION VERIFICATION TEST.

15. **CHECK THE WIRING AND CONNECTORS**
    1. The conditions necessary to set this DTC are not present at this time.
    2. Using the schematics as a guide, inspect the wiring and connectors specific to this circuit.
    3. Wiggle the wires while checking for shorted and open circuits.
    4. With the scan tool, check the Event Data to help identify the conditions in which the DTC was set.
    5. If the Event Data shows the DTC P0845 set while the Line Pressure was significantly below the Desired Line Pressure reading, check for causes of low line pressure (low fluid level, broken or improperly installed primary oil filter or filter seal, sticking Main Regulator Valve in the Pump Valve Body etc.). If the data shows the DTC set while the Line Pressure reading was significantly higher than the Desired Line Pressure, check the Line Pressure Sensor and related wiring.

       Where there any problems found?

       Yes

       - Repair as necessary.
       - Refer to **STANDARD PROCEDURE** and perform the 545RFE TRANSMISSION VERIFICATION TEST.

       No

       - Test Complete.

P0846-2C PRESSURE SWITCH RATIONALITY

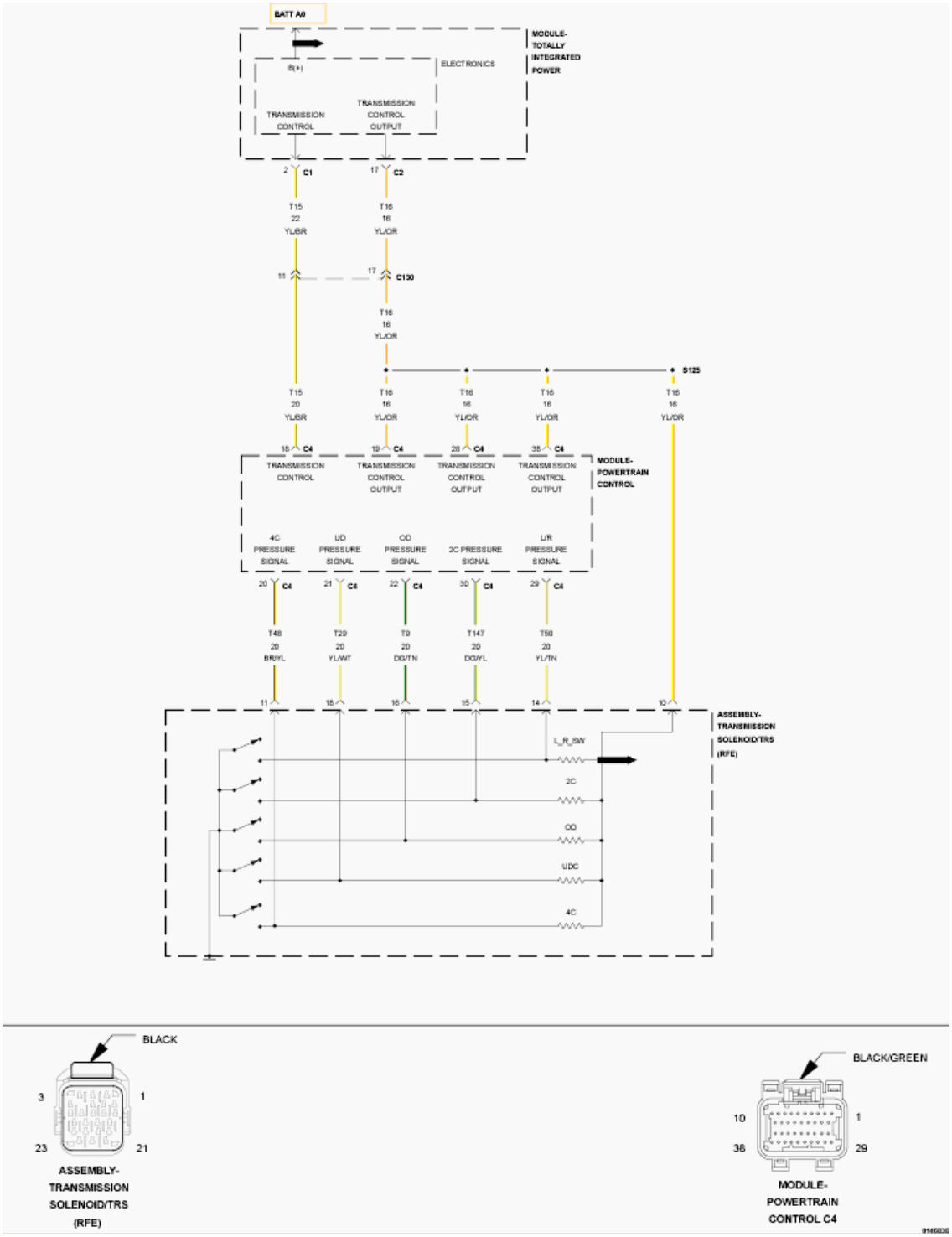

Fig. 50: Pressure Switch Circuit Wiring Diagram
Courtesy of CHRYSLER GROUP, LLC

For a complete wiring diagram, **refer to appropriate SYSTEM WIRING DIAGRAMS article** .

THEORY OF OPERATION

The Transmission system uses five pressure switches to monitor the fluid pressure in the L/R, 2C, 4C, UD, and OD clutch circuits. The pressure switches are continuously monitored for the correct states in each gear as shown.

WHEN MONITORED:

Continuously with the ignition on, engine running, with the transmission in gear.

SET CONDITION:

The DTC is set if the 2C Pressure Switch reads open or closed at the wrong time in a given gear.

POSSIBLE CAUSES

Possible Causes
RELATED DTCS PRESENT
(T147) 2C PRESSURE SWITCH SENSE CIRCUIT OPEN
(T147) 2C PRESSURE SWITCH SENSE CIRCUIT SHORTED TO GROUND
(T147) 2C PRESSURE SWITCH SENSE CIRCUIT SHORTED TO OTHER CIRCUITS
EXCESSIVE FLUID LEAKAGE IN 2C CLUTCH CIRCUIT
NO. 5 AND/OR NO. 7 CHECK BALL CUT OR DAMAGED
EXTRA CHECK BALL DOWNSTREAM OF THE NO. 7 CHECK BALL POCKET
LOW LINE PRESSURE
TRANSMISSION SOLENOID/TRS ASSEMBLY
POWERTRAIN CONTROL MODULE (PCM)
WIRING AND CONNECTORS (PCM)

Always perform the Pre-Diagnostic Troubleshooting procedure before proceeding. Refer to STANDARD PROCEDURE .

GEAR	L/R	2C	4C	UD	OD
REVERSE	OPEN	OPEN	OPEN	OPEN	OPEN
P/N	CLOSED**	OPEN	OPEN	OPEN	OPEN
1ST	CLOSED*	OPEN	OPEN	CLOSED	OPEN
2ND	OPEN	CLOSED	OPEN	CLOSED	OPEN
2ND PRIME	OPEN	OPEN	CLOSED	CLOSED	OPEN
3RD	OPEN	OPEN	OPEN	CLOSED	CLOSED
4TH	OPEN	OPEN	CLOSED	OPEN	CLOSED
5TH	OPEN	CLOSED	OPEN	OPEN	CLOSED
*L/R is closed if output speed is below 100 rpm in Drive and Manual 2. L/R is closed in Manual 1.					
**May be open when rolling in Neutral or at low oil temperatures.					

DIAGNOSTIC TEST

1. **CHECK FOR RELATED DTCS**
    1. With the scan tool, read DTCs.

       Are there any TCM Power Input or TIPM TCM Power Control Circuit DTCs present?

       Yes

       - Refer to **DIAGNOSIS AND TESTING** and perform the appropriate diagnostic procedure.

       No

       - Go To 2.
2. **CHECK IF THE DTC DATA SHOWS THE CURRENT DTC**
    1. With the scan tool, read and record the Transmission Event Data.

       NOTE: Make sure to record all Event Data stored in the scan tool for future reference in this test procedure.

       Does the Event Data show data for DTC P0846?

       Yes

       - Go To 3.

       No

       - Refer to **DIAGNOSIS AND TESTING** and perform the appropriate diagnostic procedure shown in the Event Data.
       - Refer to **STANDARD PROCEDURE** and perform the 545RFE TRANSMISSION VERIFICATION TEST.
3. **CHECK IF MULTIPLE DTCS ARE PRESENT**
    1. With the scan tool, check for other transmission DTCs.

       Are there two or more related pressure switch rationality DTCs present in addition to P0846?

       Yes

       - Go To 4.

       No

       - Go To 7.
4. **CHECK IF ALL THE PRESSURE SWITCHES READ CLOSED**

   In the Event Data recorded earlier, do all the pressure switches read CLOSED in the Event Data for

P0846?

Yes

- Refer to **DIAGNOSIS AND TESTING** and perform the diagnostic procedure for P0882.

No

- Go To 5.

5. **CHECK IF ALL THE PRESSURE SWITCHES READ OPEN**

   In the Event Data recorded earlier, do all the pressure switches read OPEN?

   Yes

   - Go To 6.

   No

   - Go To 7.

6. **CHECK FOR LOW LINE PRESSURE**

   In the Event Data recorded earlier, is the Line Pressure less than 276 kPa (40 psi), and significantly below the Desired Line Pressure?

   Yes

   - Repair as necessary to correct low line pressure. Check fluid level and adjust as necessary. If fluid level is OK, check the Primary Oil Filter seal for a split, crack, or improperly installed. If the filter and seal are OK, check the Main Regulator Valve in the Oil Pump. Refer to the Service Information for the above procedures.
   - Refer to **STANDARD PROCEDURE** and perform the 545RFE TRANSMISSION VERIFICATION TEST.

   No

   - Replace the Transmission Solenoid/TRS Assembly in accordance with the Service Information.
   - Refer to **STANDARD PROCEDURE** and perform the 545RFE TRANSMISSION VERIFICATION TEST.

7. **CHECK IF THE DTC SET IN PARK, NEUTRAL, OR REVERSE**

   In the Event Data recorded earlier, does the Event Data show the DTC P0846 set in Park, Neutral, or Reverse?

   Yes

- Go To 12.

No

- Go To 8.

8. **CHECK IF THE 2C PRESSURE SWITCH READS CLOSED**

   In the Event Data recorded earlier, does the Event Data show the 2C Pressure Switch reading CLOSED?

   Yes

   - Go To 10.

   No

   - Go To 9.

9. **CHECK THE LINE PRESSURE**

   In the Event Data recorded earlier, is the Line Pressure less than 276 kPa (40 psi), and significantly below the Desired Line Pressure?

   Yes

   - Repair as necessary to correct low line pressure. Check fluid level and adjust as necessary. If fluid level is OK, check the Primary Oil Filter seal for a split, crack, or improperly installed. If the filter and seal are OK, check the Main Regulator Valve in the Oil Pump. Refer to the Service Information for the above procedures.
   - Refer to **STANDARD PROCEDURE** and perform the 545RFE TRANSMISSION VERIFICATION TEST.

   No

   - Go To 15.

10. **CHECK THE PCM AND WIRING**
    1. Turn the ignition off to the lock position.
    2. Remove the Ignition Switch Feed fuse from the TIPM.

       CAUTION: Removal of the Ignition Switch Feed fuse from the TIPM will prevent the vehicle from being started in gear.

       WARNING: The Ignition Switch Feed fuse must be removed from the TIPM. Failure to do so can result in possible serious or fatal injury.

    3. Install the Transmission Simulator (special tool #8333A, Simulator, Transmission).

4. Ignition on, engine not running.
5. With the Transmission Simulator, turn the Pressure Switch selector switch to the 2C position.
6. With the scan tool, monitor the 2C Pressure Switch while pressing the Pressure Switch test button on the Transmission Simulator.

   Did the state of the 2C Pressure Switch change while pressing the Pressure Switch Test button?

   Yes

   - Go To 11.

   No

   - Go To 12.

11. **CHECK THE TRANSMISSION SOLENOID/TRS ASSEMBLY**
    1. Using the schematics as a guide, inspect the wiring and connectors specific to this circuit.
    2. Wiggle the wires while checking for shorted and open circuits.

       Where there any problems found?

       Yes

       - Repair as necessary.
       - Refer to **STANDARD PROCEDURE** and perform the 545RFE TRANSMISSION VERIFICATION TEST.

       No

       - Replace the Transmission Solenoid/TRS Assembly in accordance with the Service Information.
       - Refer to **STANDARD PROCEDURE** and perform the 545RFE TRANSMISSION VERIFICATION TEST.

12. **CHECK THE (T147) 2C PRESSURE SWITCH SENSE CIRCUIT FOR AN OPEN**

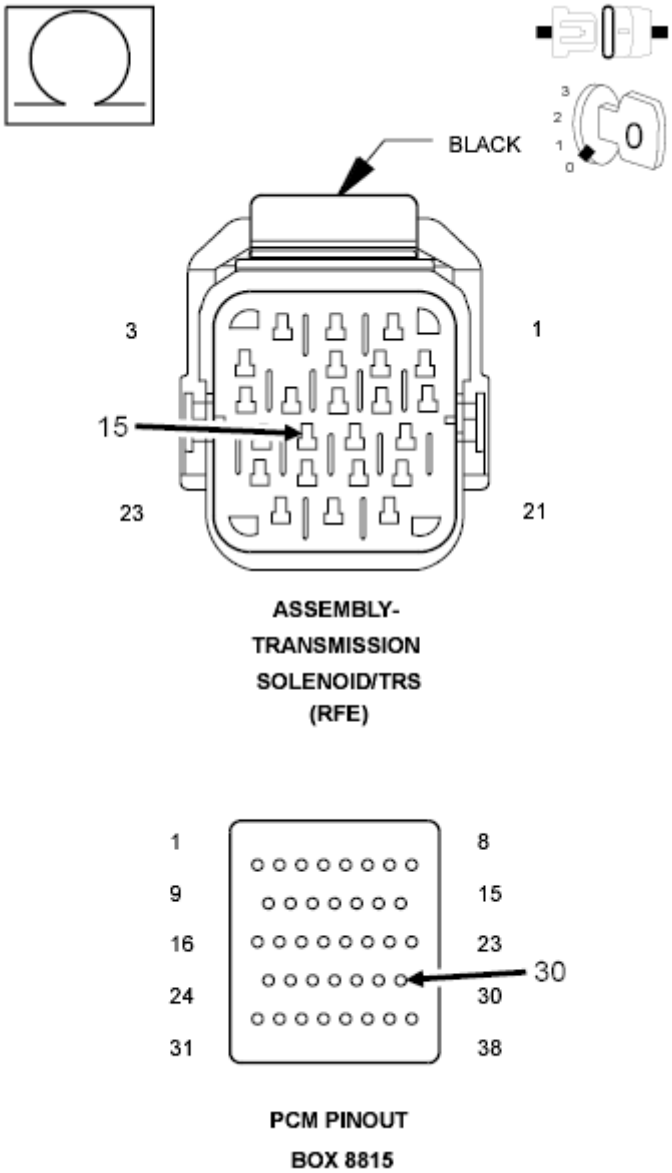

Fig. 51: Checking 2C Pressure Switch Sense Circuit For Open
Courtesy of CHRYSLER GROUP, LLC

1. Turn the ignition off to the lock position.
2. Disconnect the Transmission Simulator (special tool #8333A, Simulator, Transmission).
3. Disconnect the PCM C4 harness connector.
4. Connect the PCM Pinout Box (special tool #8815A, Kit, NGC, 38 Position) to the PCM C4 harness connector.

CAUTION: Do not probe the PCM harness connectors. Probing the PCM harness connectors will damage the PCM terminals resulting in poor terminal to pin connection. Install the (special tool #8815A,

Kit, NGC, 38 Position) to perform diagnosis.

5. Measure the resistance of the (T147) 2C Pressure Switch Sense circuit between the Transmission Solenoid/TRS Assembly harness connect and the appropriate terminal of the PCM Pinout Box (special tool #8815A, Kit, NGC, 38 Position).

   Is the resistance above 5.0 Ohms?

   Yes

   - Repair the (T147) 2C Pressure Switch Sense circuit for an open.
   - Refer to **STANDARD PROCEDURE** and perform the 545RFE TRANSMISSION VERIFICATION TEST.

   No

   - Go To 13.

13. **CHECK THE (T147) 2C PRESSURE SWITCH SENSE CIRCUIT FOR A SHORT TO GROUND**

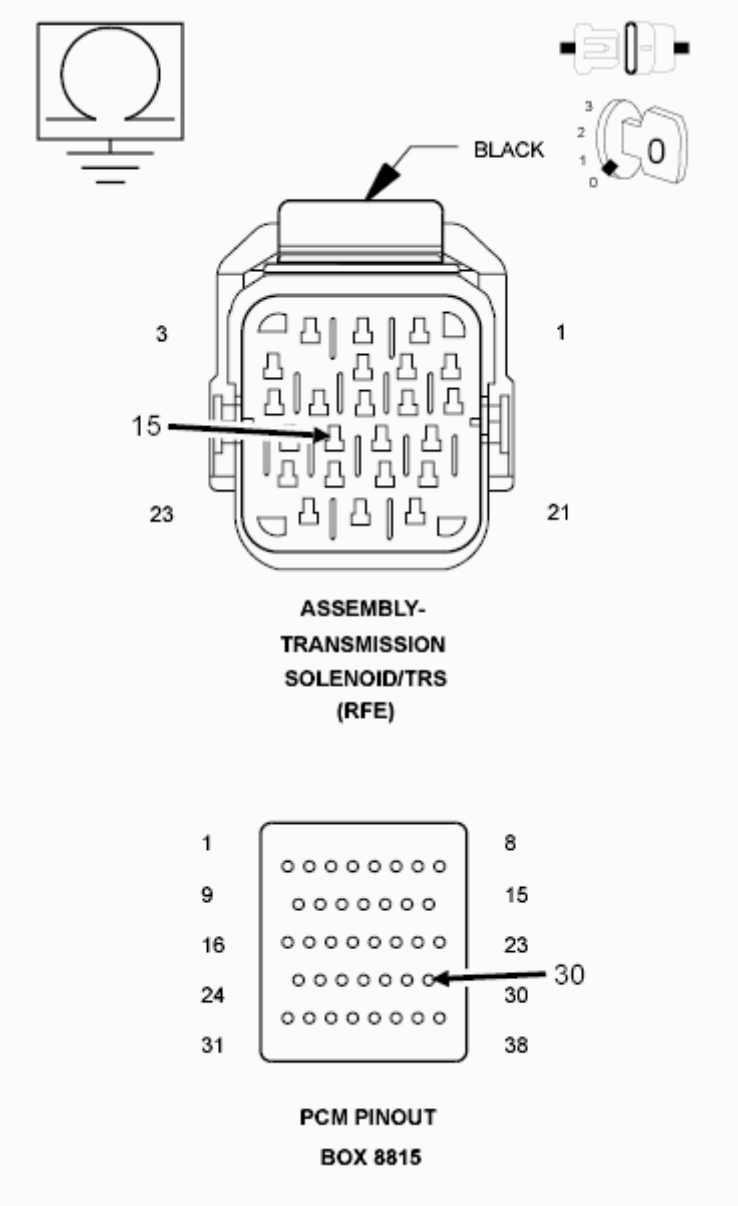

Fig. 52: Checking 2C Pressure Switch Sense Circuit For Short To Ground
Courtesy of CHRYSLER GROUP, LLC

1. Measure the resistance between ground and the (T147) 2C Pressure Switch Sense circuit.

   Is the resistance below 5.0 Ohms?

   Yes

   - Repair the (T147) 2C Pressure Switch Sense circuit for a short to ground.
   - Refer to **STANDARD PROCEDURE** and perform the 545RFE TRANSMISSION VERIFICATION TEST.

   No

- Go To 14.

14. **CHECK THE (T147) 2C PRESSURE SWITCH SENSE CIRCUIT FOR A SHORT TO ANOTHER CIRCUIT**

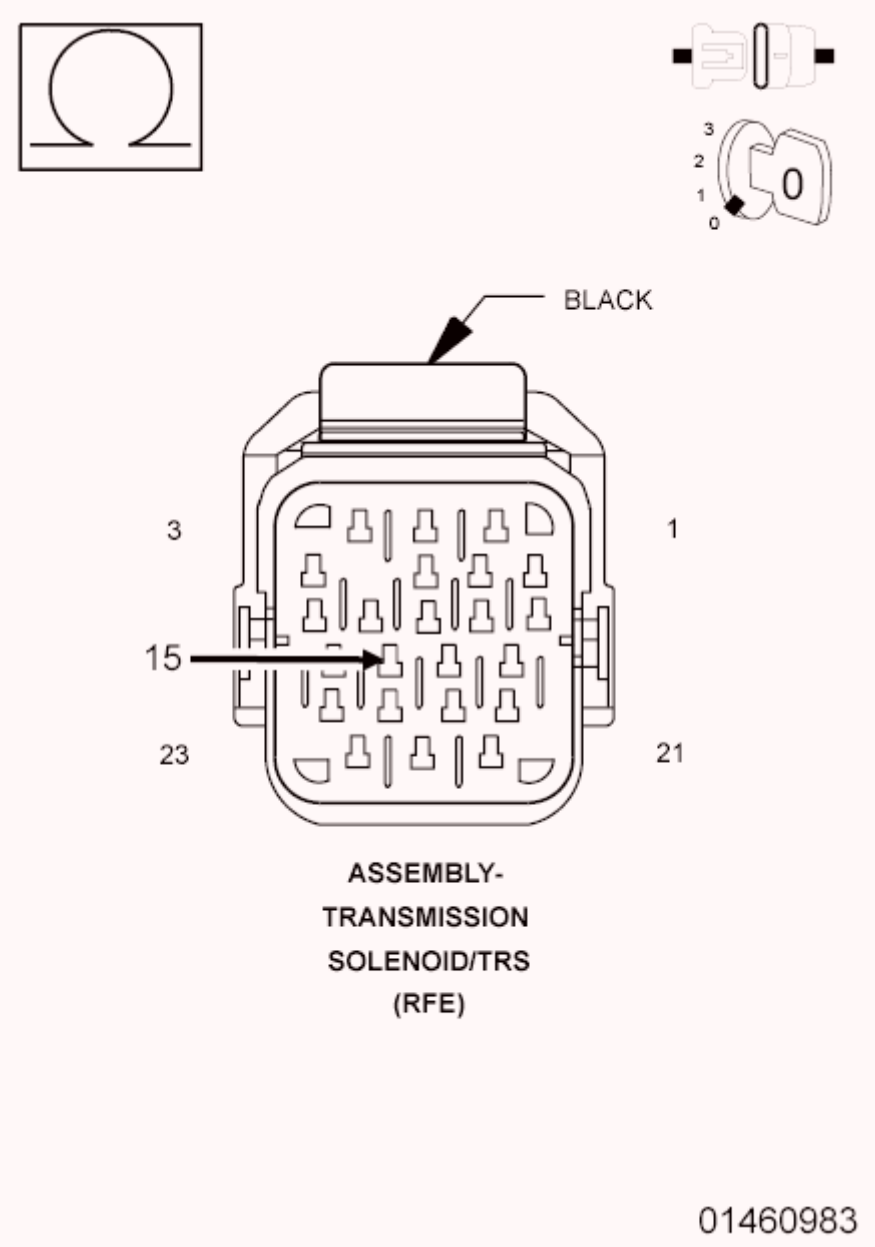

Fig. 53: Checking 2C Pressure Switch Sense Circuit For Short To Circuit
Courtesy of CHRYSLER GROUP, LLC

1. Measure the resistance between the (T147) 2C Pressure Switch Sense circuit and all the other circuits in the Transmission Solenoid/TRS Assembly harness connector.

   Is the resistance below 5.0 Ohms?

Yes

- Repair the (T147) 2C Pressure Switch Sense circuit for a short to another circuit(s).
- Refer to **STANDARD PROCEDURE** and perform the 545RFE TRANSMISSION VERIFICATION TEST.

No

- Using the schematics as a guide, check the Powertrain Control Module (PCM) terminals for corrosion, damage, or terminal push out. Pay particular attention to all power and ground circuits. If no problems are found, replace and program the PCM in accordance with the Service Information. With the scan tool, perform Quick Learn.
- Refer to **STANDARD PROCEDURE** and perform the 545RFE TRANSMISSION VERIFICATION TEST.

15. **CHECK IF THE #5 AND/OR #7 CHECK BALL IS CUT OR DAMAGED**
    1. Turn the Ignition off to the lock position.
    2. Remove the Valve Body Assembly in accordance with the Service Information.
    3. Inspect the No. 5 and No. 7 check balls for any cuts or damage.
    4. Check for an extra check ball in the passage downstream from the #7 check ball pocket.
    5. Inspect the 2C accumulator piston and seals and also the 2C tower seal on top of the valve body. Refer to the Service Information.

    Where there any problems found?

    Yes

    - Repair as necessary. Check for excessive clutch debris in the transmission oil pan. If excessive clutch debris is present, repair 2C clutch as necessary. Refer to the Service Information for proper repair procedures.
    - Refer to **STANDARD PROCEDURE** and perform the 545RFE TRANSMISSION VERIFICATION TEST.

    No

    - Go To 16.
16. **CHECK FOR EXCESSIVE FLUID LEAKAGE WITHIN THE 2C CLUTCH CIRCUIT**
    1. Air check the 2C Clutch hydraulic circuit. Refer to the Service Information.

    NOTE: This hydraulic clutch circuit contains a small bleed orifice. Small leakage is considered normal.

    Was there excessive air leakage in the 2C Clutch hydraulic circuit?

    Yes

- Repair as necessary. Refer to the Service Information.
- Refer to **STANDARD PROCEDURE** and perform the 545RFE TRANSMISSION VERIFICATION TEST.

No

- Replace the Transmission Solenoid/TRS Assembly in accordance with the Service Information.
- Refer to **STANDARD PROCEDURE** and perform the 545RFE TRANSMISSION VERIFICATION TEST.

P0868-LINE PRESSURE LOW

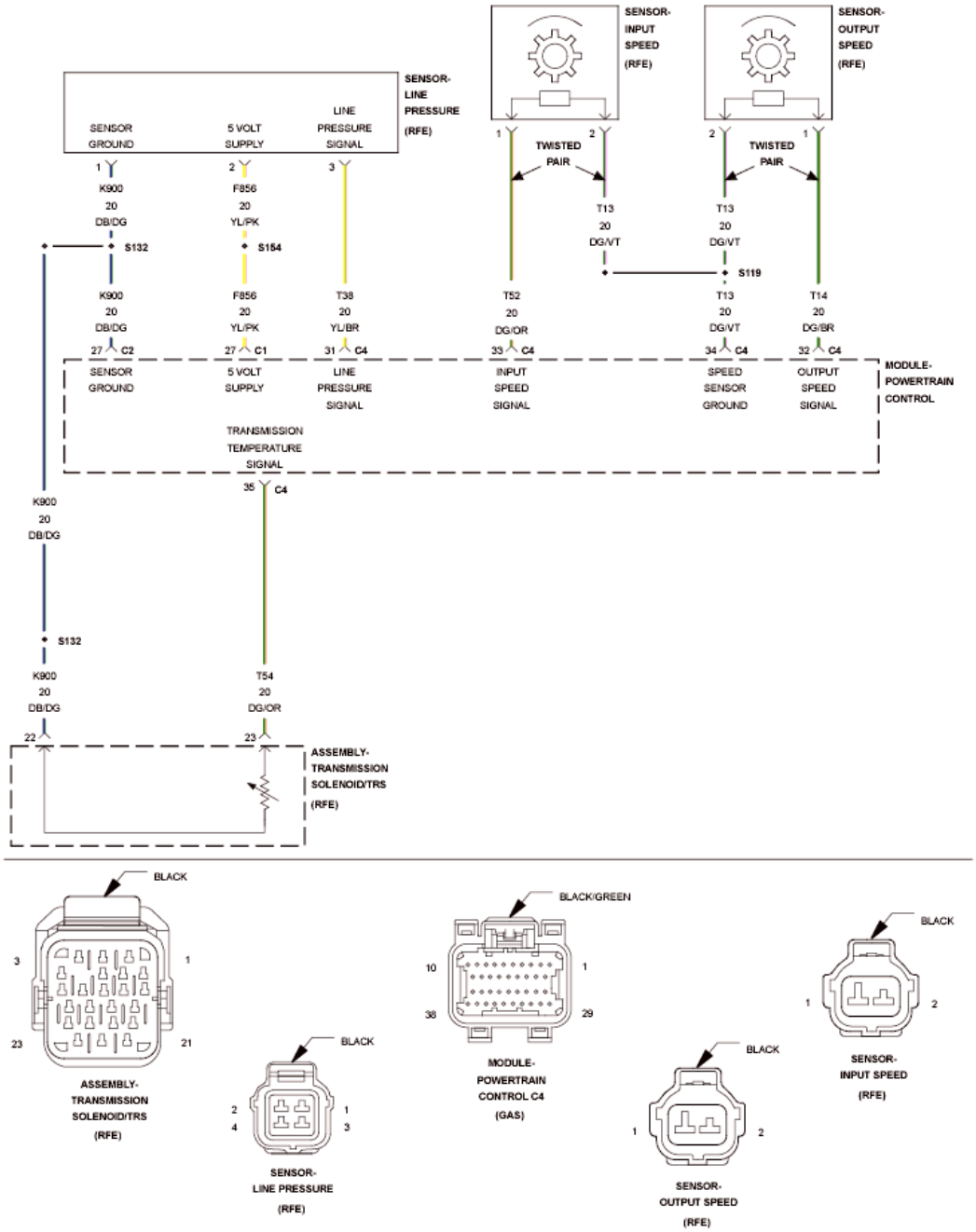

Fig. 54: Line Pressure Sensor Circuit
Courtesy of CHRYSLER GROUP, LLC

For a complete wiring diagram, **refer to appropriate SYSTEM WIRING DIAGRAMS article** .

THEORY OF OPERATION

Line pressure is measured by the Line Pressure Sensor (LPS) and regulation is achieved by changing the duty cycle of the Pressure Control Solenoid (PCS) controlled by the Transmission Control System. (5% duty cycle = solenoid off = Max line pressure, 62% duty cycle = solenoid on = Min line pressure). The Transmission Control

System calculates the desired line pressure based on inputs from both the engine and transmission.

The Transmission Control System calculates torque input to the transmission and uses it as the primary input to the desired line pressure calculation. This is called Torque Based Line Pressure. In addition, the line pressure is set to a preset level 827 or 931 kPa (120 or 135 psi) during shifts and in Park and Neutral to ensure consistent shift quality. The actual line pressure is continuously being compared to the desired (target) line pressure. If the actual line pressure is consistently lower than the target while driving, the line pressure low DTC P0868 will set.

WHEN MONITORED:

Continuously while driving in a forward gear.

SET CONDITION:

The powertrain Control Module (PCM) continuously monitors Actual Line Pressure and compares it to Desired Line Pressure. If the Actual Line Pressure is more than 15 psi below Desired Line Pressure for 3.5 seconds continuously, this DTC will set.

POSSIBLE CAUSES

Possible Causes
CHECK FOR RELATED DTCS
LOW FLUID LEVEL
(F856) 5-VOLT SUPPLY CIRCUIT OPEN
POOR LINE PRESSURE SENSOR CONNECTION
(F856) 5-VOLT SUPPLY CIRCUIT SHORTED TO GROUND
(F856) 5-VOLT SUPPLY CIRCUIT SHORTED TO VOLTAGE
(T118) LINE PRESSURE VARIABLE FORCE SOLENOID CONTROL CIRCUIT SHORTED TO ANOTHER CIRCUIT
INTERNAL TRANSMISSION
LINE PRESSURE SENSOR
CRACKED, PLUGGED, OR MIS-INSTALLED PRIMARY OIL FILTER
LOOSE COOLER RETURN SPIN ON FILTER (IF EQUIPPED)
STUCK OR STICKING MAIN REGULATOR VALVE
POWERTRAIN CONTROL MODULE (PCM)

Always perform the Pre-Diagnostic Troubleshooting procedure before proceeding. Refer to STANDARD PROCEDURE .

DIAGNOSTIC TEST

1. **CHECK FOR RELATED DTCS**
    1. With the scan tool, read DTCs.

Is the DTC P0933 present also?

Yes

- Refer to **DIAGNOSIS AND TESTING** and perform the appropriate diagnostic procedure for DTC P0933.

No

- Go To 2.

2. **CHECK IF THE DTC IS CURRENT**
   1. With the scan tool, read DTCs.

      Is the status Active or is the Starts Since Set counter 2 or less for this DTC?

      Yes

      - Go To 3.

      No

      - Go To 11.

3. **CHECK THE LINE PRESSURE SENSOR CONNECTION**
   1. Ignition on, **engine not running.**
   2. With the scan tool, monitor the Line Pressure while firmly pushing the Transmission Line Pressure Sensor connector inwards towards the Transmission.

      Did the Line Pressure reading on the scan tool CHANGE to about 207 kPa (30 psi) or 0.7 of a volt when the connector was pushed inward?

      Yes (value was higher and changed to 207 kPa (30 psi) or 0.7 of a volt)

      - Disconnect and properly reconnect the Line Pressure Sensor connector. Inspect terminals and repair as necessary.
      - Refer to **STANDARD PROCEDURE** and perform the 545RFE TRANSMISSION VERIFICATION TEST.

      No (value is higher than 207 kPa (30 psi) or 0.7 of a volt and did not change or the value was already 207 kPa (30 psi) or 0.7 of a volt and did not change)

      - Go To 4.

4. **CHECK THE PCM AND WIRING**
   1. Turn the ignition off to the lock position.
   2. Remove the Ignition Switch Feed fuse from the TIPM.

CAUTION: Removal of the Ignition Switch Feed fuse from the TIPM will prevent the vehicle from being started in gear.

WARNING: The Ignition Switch Feed fuse must be removed from the TIPM. Failure to do so can result in possible serious or fatal injury.

3. Install the Transmission Simulator (special tool #8333A, Simulator, Transmission).
4. With the Transmission Simulator select the "OFF" position on the "Input/Output Speed" switch.
5. Ignition on, engine not running.
6. With the scan tool, monitor the Line Pressure during the following steps.
7. Using the Transmission Simulator, set the rotary knob to each of the three line pressure positions.

NOTE: All three scan tool Line Pressure readings should be steady and ± 14 kPa (2.0 psi) or 0.1 of a volt of the reading specified on the Transmission Simulator.

Did the Line Pressure read within ± 14 kPa (2.0 psi) or 0.1 of a volt in all three positions?

Yes

- Go To 5.

No

- Go To 7.

5. **CHECK THE LINE PRESSURE SENSOR**
   1. Turn the ignition off to the lock position.
   2. Disconnect the Transmission Simulator (special tool #8333A, Simulator, Transmission) and reconnect all previously disconnected connectors.
   3. Install the Line Pressure Adaptor (special tool #8259, Adapter, Pressure Test), and the Pressure Gauge (special tool #C-3293-SP, Gauge, Pressure 0-300 P.S.I.), 0 to 2, 000 kPa (0 to 300 psi).
   4. Start the engine in park.
   5. Monitor the line pressure readings of both the scan tool and the pressure gauge and compare the two readings.

   Is the line pressure gauge reading within 34 kPa (5 psi) of the scan tool reading?

   Yes

   - Go To 6.

   No

- Replace the Line Pressure Sensor in accordance with the Service Information.
- Refer to **STANDARD PROCEDURE** and perform the 545RFE TRANSMISSION VERIFICATION TEST.

6. **CHECK FOR A PLUGGED TRANSMISSION OIL FILTER**
   1. Turn the ignition off to the lock position.
   2. Remove and inspect the Transmission Oil Pan for excessive debris in accordance with the Service Information.
   3. Remove and inspect the Primary Oil Filter in accordance with the Service Information.

   NOTE: Make sure the Primary Transmission Oil Filter and/or O-ring is not cracked or split.

   Does the Oil Pan contain excessive debris and/or is the Primary Oil Filter cracked or plugged?

   Yes

   - Repair the plugged, cracked, or split Primary Transmission Oil Filter and/or O-ring. If the Primary Transmission Oil Filter is plugged refer to the Service Information for the proper Hydraulic repair procedure.
   - Refer to **STANDARD PROCEDURE** and perform the 545RFE TRANSMISSION VERIFICATION TEST.

   No

   - Repair internal transmission and inspect the Transmission Oil Pump in accordance with the Service Information and replace if necessary. If no problem is found, replace the Solenoid/TRS Assembly.
   - Refer to **STANDARD PROCEDURE** and perform the 545RFE TRANSMISSION VERIFICATION TEST.

7. **CHECK THE (F856) 5-VOLT SUPPLY CIRCUIT FOR A SHORT TO VOLTAGE**

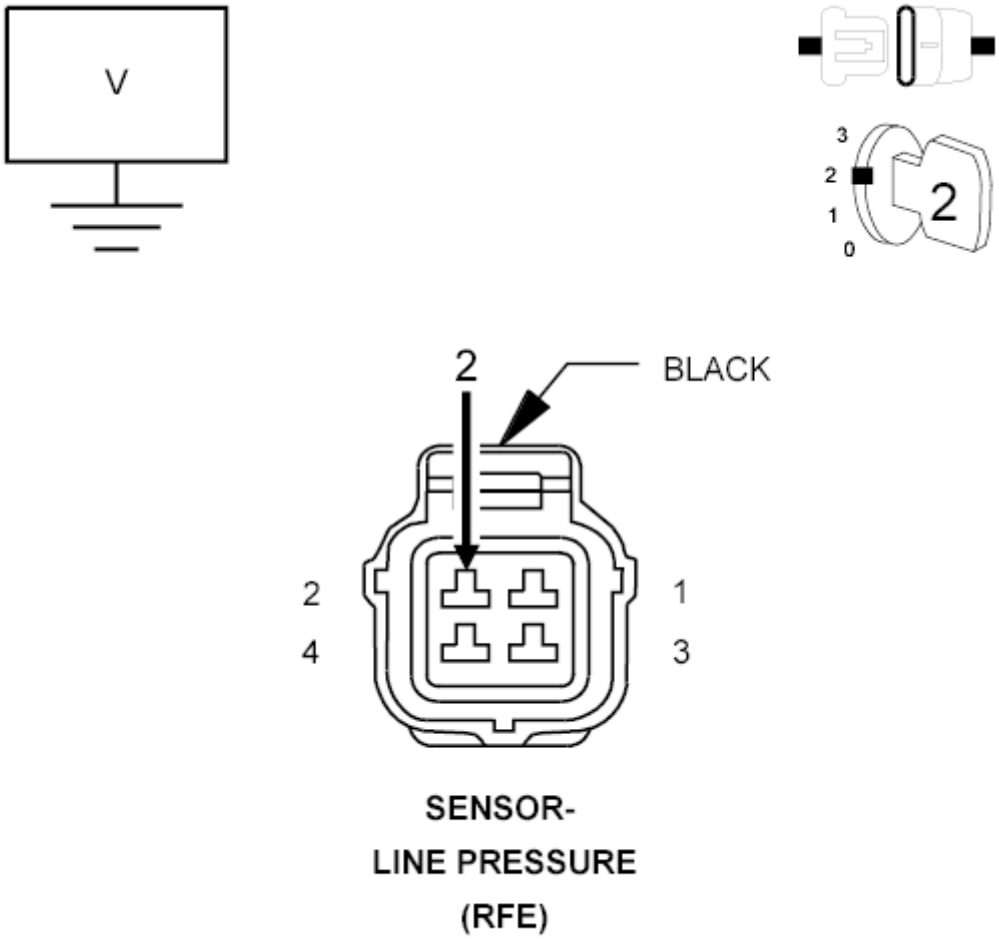

Fig. 55: Checking 5-Volt Supply Circuit For Short To Voltage
Courtesy of CHRYSLER GROUP, LLC

1. Disconnect the Transmission Simulator (special tool #8333A, Simulator, Transmission).
2. Reconnect all previously disconnected connectors except the Line Pressure Sensor harness connector.
3. Ignition on, engine not running.
4. Measure the voltage of the (F856) 5-volt Supply circuit in the Line Pressure Sensor harness connector.

   Is the voltage above 5.5 volts?

   Yes

   - Repair the (F856) 5-volt Supply circuit for a short to voltage.
   - Refer to **STANDARD PROCEDURE** and perform the 545RFE TRANSMISSION VERIFICATION TEST.

No

- Go To 8.

8. **CHECK THE (F856) 5-VOLT SUPPLY CIRCUIT FOR AN OPEN**

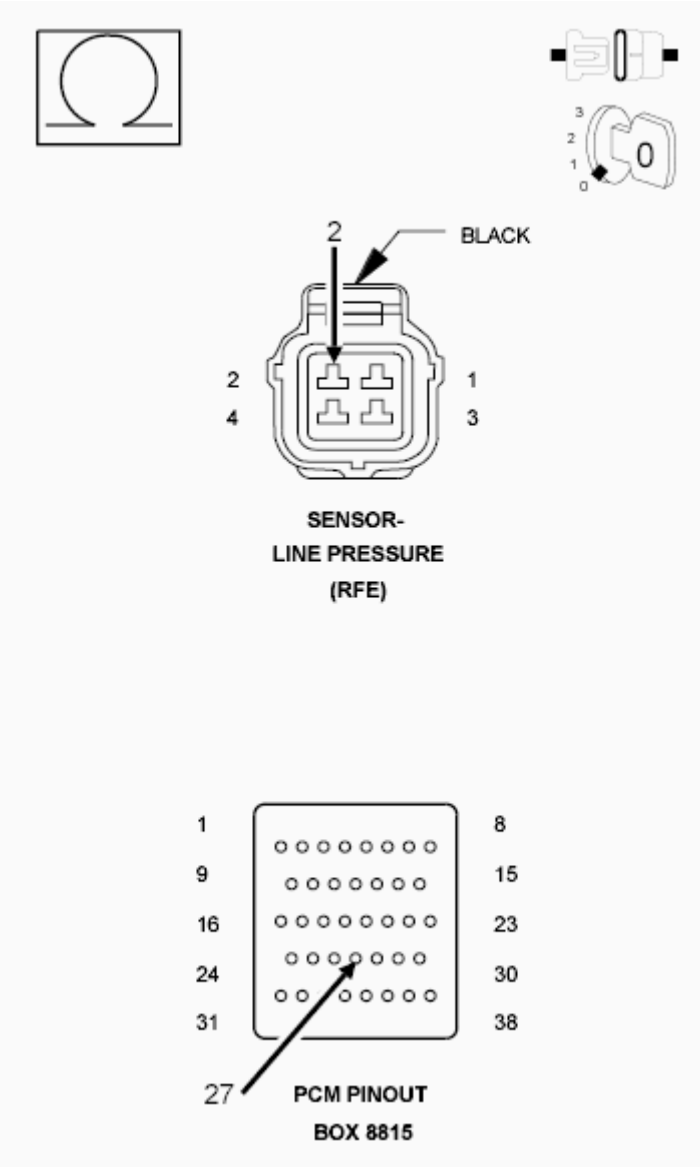

Fig. 56: Checking 5-Volt Supply Circuit For Open
Courtesy of CHRYSLER GROUP, LLC

1. Turn the ignition off to the lock position.
2. Disconnect the PCM C1 harness connector and connect the PCM Pinout Box (special tool #8815A, Kit, NGC, 38 Position).

CAUTION: Do not probe the PCM harness connectors. Probing the PCM harness connectors will damage the PCM terminals resulting in

poor terminal to pin connection. Install the (special tool #8815A, Kit, NGC, 38 Position) to perform diagnosis.

3. Measure the resistance of the (F856) 5-volt Supply circuit between the Line Pressure Sensor harness connector and the appropriate terminal of the PCM Pinout Box (special tool #8815A, Kit, NGC, 38 Position).

   Is the resistance above 5.0 Ohms?

   Yes

   - Repair the (F856) 5-volt Supply circuit for an open.
   - Refer to **STANDARD PROCEDURE** and perform the 545RFE TRANSMISSION VERIFICATION TEST.

   No

   - Go To 9.

9. **CHECK THE (F856) 5-VOLT SUPPLY CIRCUIT FOR A SHORT TO GROUND**

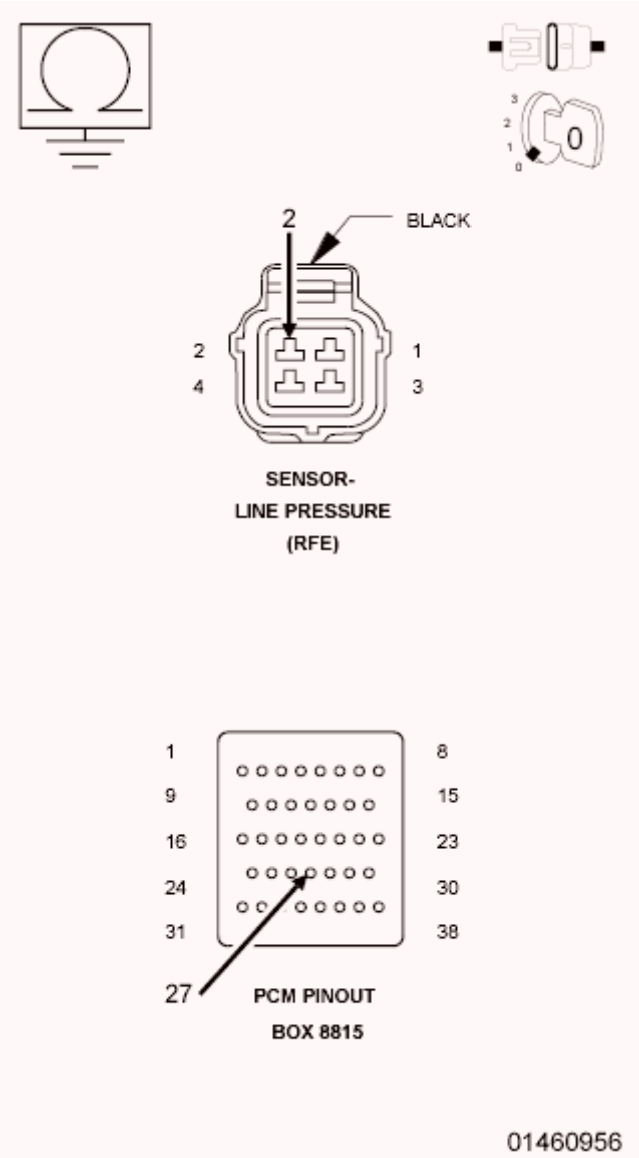

Fig. 57: Checking 5-Volt Supply Circuit For Short To Ground
Courtesy of CHRYSLER GROUP, LLC

1. Measure the resistance between ground and the (F856) 5-volt Supply circuit.

   Is the resistance below 5.0 Ohms?

   Yes

   - Repair the (F856) 5-volt Supply circuit for a short to ground.
   - Refer to **STANDARD PROCEDURE** and perform the 545RFE TRANSMISSION VERIFICATION TEST.

   No

- Go To 10.

10. **CHECK THE (T118) LINE PRESSURE VARIABLE FORCE SOLENOID CONTROL CIRCUIT FOR A SHORT TO ANOTHER CIRCUIT**

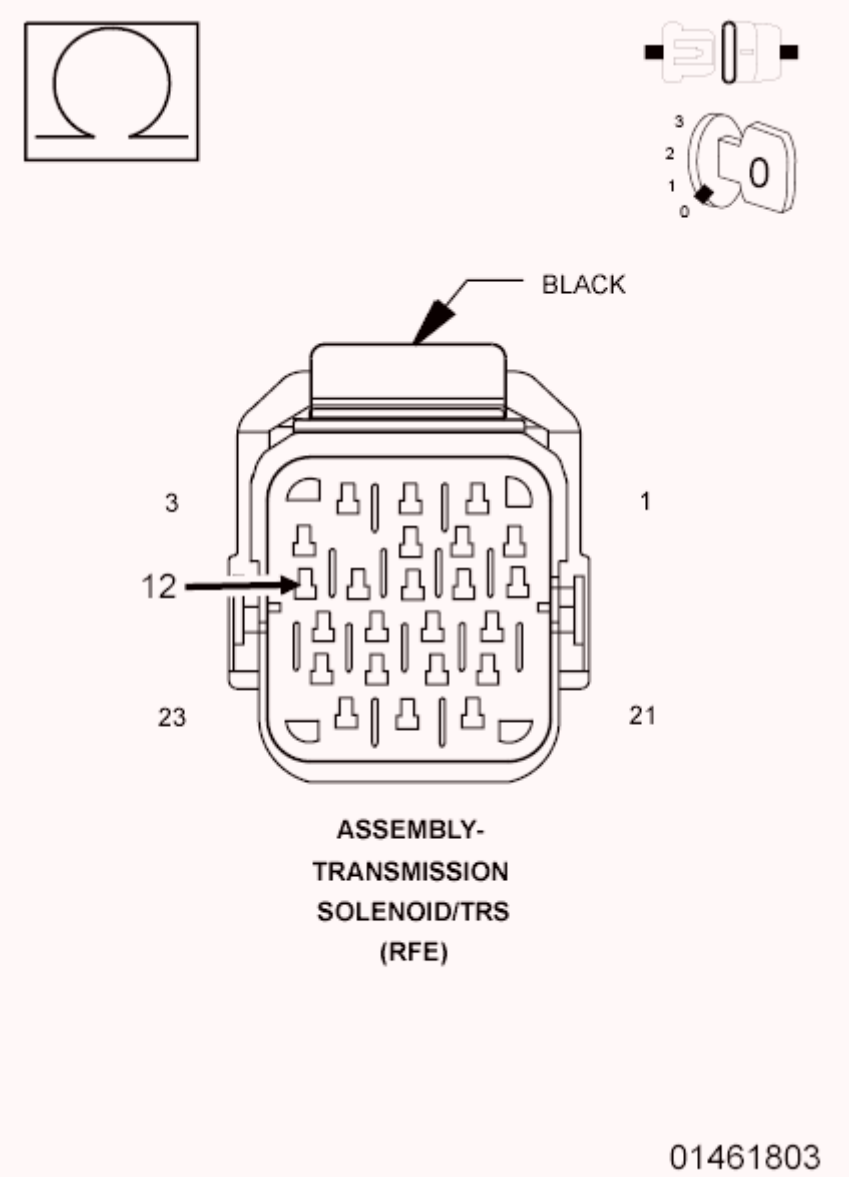

Fig. 58: Checking Line Pressure Variable Force Solenoid Control Circuit For Short To Circuit
Courtesy of CHRYSLER GROUP, LLC

1. Turn the ignition off to the lock position.
2. Disconnect the Transmission Solenoid/TRS Assembly harness connector.
3. Disconnect all PCM harness connectors.
4. Measure the resistance between the (T118) Line Pressure Variable Force Solenoid Control circuit and all other circuits in the Transmission Solenoid/TRS Assembly harness connector.

Is the resistance below 5.0 Ohms between the (T118) Line Pressure Variable Force Solenoid Control circuit and any other circuit(s) in the Transmission Solenoid/TRS Assembly harness connector?

Yes

- Repair the (T118) Line Pressure Variable Force Solenoid Control circuit for a short to another circuit(s).
- Refer to **STANDARD PROCEDURE** and perform the 545RFE TRANSMISSION VERIFICATION TEST.

No

- Using the schematics as a guide, check the Powertrain Control Module (PCM) terminals for corrosion, damage, or terminal push out. Pay particular attention to all power and ground circuits. If no problems are found, replace and program the PCM in accordance with the Service Information. With the scan tool, perform Quick Learn.
- Refer to **STANDARD PROCEDURE** and perform the 545RFE TRANSMISSION VERIFICATION TEST.

11. **CHECK THE WIRING AND CONNECTORS**
    1. The conditions necessary to set this DTC are not present at this time.
    2. Using the schematics as a guide, inspect the wiring and connectors specific to this circuit.
    3. Wiggle the wires while checking for shorted and open circuits.
    4. With the scan tool, check the Event Data to help identify the conditions in which the DTC was set.

    Were there any problems found?

    Yes

    - Repair as necessary.
    - Refer to **STANDARD PROCEDURE** and perform the 545RFE TRANSMISSION VERIFICATION TEST.

    No

    - Test Complete.

DIAGNOSIS AND TESTING

P0869-LINE PRESSURE HIGH

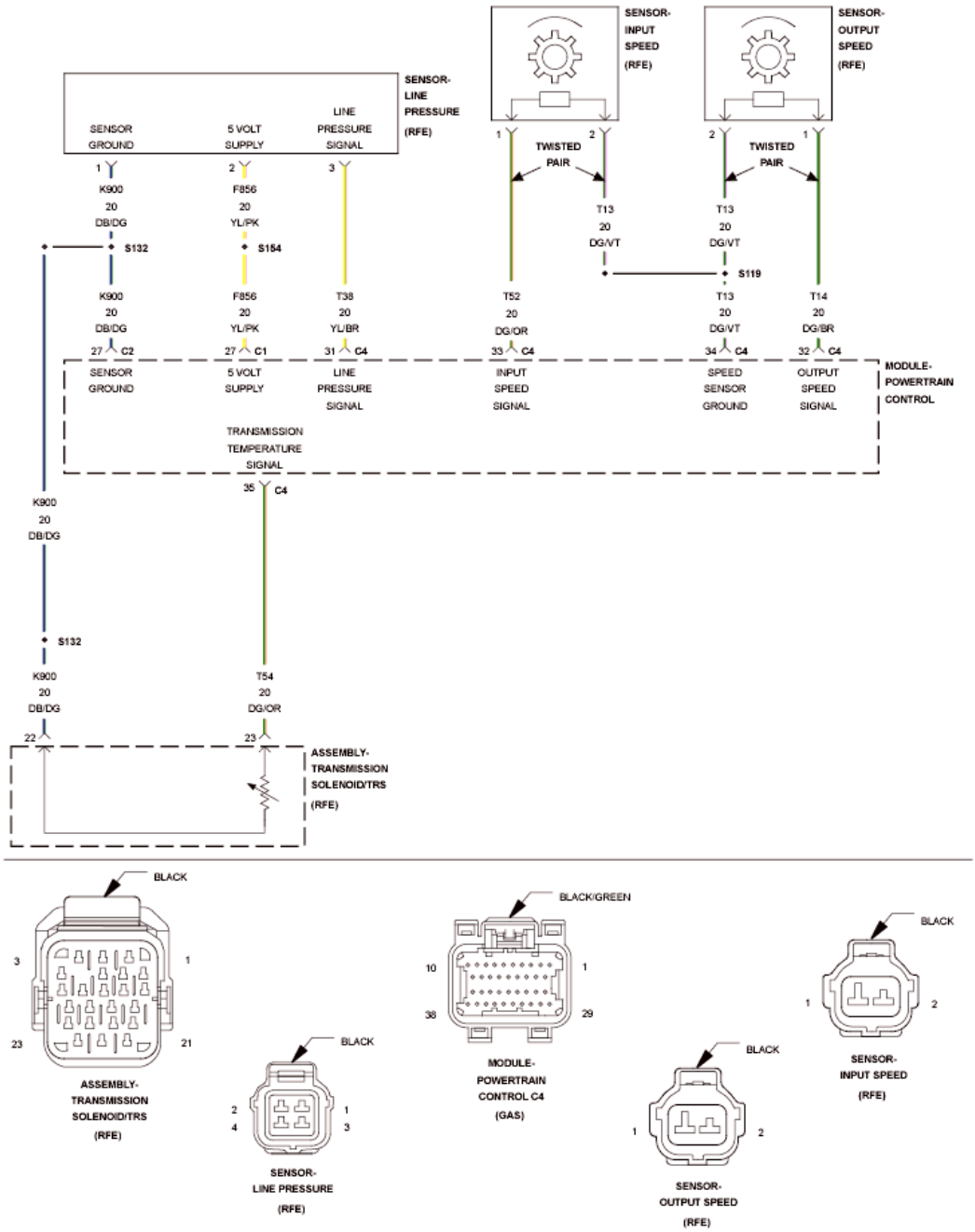

Fig. 1: Transmission Control System Circuit Wiring Diagram
Courtesy of CHRYSLER GROUP, LLC

For a complete wiring diagram, **refer to appropriate SYSTEM WIRING DIAGRAMS article** .

THEORY OF OPERATION

Line pressure is measured by the Line Pressure Sensor (LPS) and regulation is achieved by changing the duty cycle of the Pressure Control Solenoid (PCS) controlled by the Transmission Control System. (5% duty cycle = solenoid off = Max line pressure, 62% duty cycle = solenoid on = Min line pressure). The Transmission Control System calculates the desired line pressure based on inputs from both the engine and transmission.

The Transmission Control System calculates torque input to the transmission and uses it as the primary input to the desired line pressure calculation. This is called Torque Based Line Pressure. In addition, the line pressure is set to a preset level 827 or 931 kPa (120 or 135 psi) during shifts and in Park and Neutral to ensure consistent shift quality. The actual line pressure is continuously being compared to the desired (target) line pressure. If the actual line pressure is consistently higher than the highest desired line pressure ever used in the current gear, the line pressure high DTC P0869 will set.

WHEN MONITORED:

Continuously while driving in a forward gear.

SET CONDITION:

The Powertrain Control Module (PCM) continuously monitors Actual Line Pressure. If the Actual Line Pressure reading is greater than the maximum desired line pressure ever used in the current gear, while the Pressure Control Solenoid duty cycle is at or near its maximum value (which should result in minimum line pressure) for 3.5 seconds continuously, the DTC will set.

POSSIBLE CAUSES

Possible Causes
LINE PRESSURE SENSOR CONNECTION
(F856) 5-VOLT SUPPLY CIRCUIT OPEN
(T118) LINE PRESSURE VARIABLE FORCE SOLENOID CONTROL CIRCUIT OPEN
(F856) 5-VOLT SUPPLY CIRCUIT SHORTED TO GROUND
(T118) LINE PRESSURE VARIABLE FORCE SOLENOID CONTROL CIRCUIT SHORTED TO GROUND
TRANSMISSION CONTROL RELAY OUTPUT CIRCUIT
LINE PRESSURE SENSOR
STUCK OR STICKING MAIN REGULATOR VALVE
POWERTRAIN CONTROL MODULE (PCM)

Always perform the Pre-Diagnostic Troubleshooting Procedure before proceeding. Refer to STANDARD PROCEDURE .

DIAGNOSTIC TEST

1. **CHECK FOR RELATED DTCS**
    1. With the scan tool, read DTCs.

       Is the DTC P0882 or P0933 present also?

       Yes

       - Refer to **DIAGNOSIS AND TESTING** and perform the appropriate diagnostic procedure for DTC P0882 or P0933.

       No

       - Go To 2.
2. **CHECK IF THE DTC IS CURRENT**
    1. With the scan tool, read DTCs.

       Is the status Active or is the Starts Since Set counter 2 or less for this DTC?

       Yes

       - Go To 3.

       No

       - Go To 10.
3. **CHECK THE LINE PRESSURE SENSOR CONNECTION**
    1. Ignition on, **engine not running.**
    2. With the scan tool, monitor the Line Pressure while firmly pushing the Transmission Line Pressure Sensor connector inwards towards the Transmission.

       Did the Line Pressure reading on the scan tool CHANGE to about 207 kPa (30 psi) or 0.7 of a volt when the connector was pushed inward?

       Yes (value was higher and changed to 207 kPa (30 psi) or 0.7 of a volt)

       - Disconnect and properly reconnect the Line Pressure Sensor connector. Inspect terminals and repair as necessary.
       - Refer to **STANDARD PROCEDURE** and perform the 545RFE TRANSMISSION VERIFICATION TEST.

       No (value is higher than 207 kPa (30 psi) or 0.7 of a volt and did not change or the value was already 207 kPa (30 psi) or 0.7 of a volt and did not change)

       - Go To 4.
4. **CHECK THE PCM AND WIRING**

1. Turn the ignition off to the lock position.
2. Remove the Ignition Switch Feed fuse from the TIPM.

CAUTION: Removal of the Ignition Switch Feed fuse from the TIPM will prevent the vehicle from being started in gear.

WARNING: The Ignition Switch Feed fuse must be removed from the TIPM. Failure to do so can result in possible serious or fatal injury.

3. Install the Transmission Simulator (special tool #8333A, Simulator, Transmission).
4. With the Transmission Simulator select the "OFF" position on the "Input/Output Speed" switch.
5. Ignition on, engine not running.
6. With the scan tool, monitor the Line Pressure during the following step.
7. Using the Transmission Simulator, set the rotary switch to each of the 3 line pressure positions.

NOTE: All three scan tool Line Pressure readings should be steady and ±14 kPa (2.0 psi) or 0.1 of a volt of the reading specified on the Transmission Simulator.

Did the Line Pressure read within ±14 kPa (2.0 psi) or 0.1 of a volt in all three positions?

Yes

- Go To 5.

No

- Go To 6.

5. **CHECK THE LINE PRESSURE SENSOR CALIBRATION**
   1. Turn the ignition off to the lock position.
   2. Disconnect the Transmission Simulator (special tool #8333A, Simulator, Transmission) and reconnect all previously disconnected connectors.
   3. Install the Line Pressure Adaptor (special tool #8259, Adapter, Pressure Test), and Pressure Gauge (special tool #C-3293-SP, Gauge, Pressure 0-300 P.S.I.), 0 to 2, 000 kPa (0 to 300 psi).
   4. Start the engine in park.
   5. Monitor the Line Pressure readings on the scan tool and the pressure gauge.
   6. Compare the Line Pressure readings between the scan tool and the pressure gauge.

   Is the pressure gauge reading within 34 kPa (5 psi) of the scan tool reading?

   Yes

- Repair the internal transmission and inspect the Transmission Oil Pump in accordance with the Service Information and replace if necessary. If no problem is found, replace the Transmission Solenoid/TRS Assembly, possible cause is a stuck Pressure Control Solenoid.
- Refer to **STANDARD PROCEDURE** and perform the 545RFE TRANSMISSION VERIFICATION TEST.

No

- Replace the Line Pressure Sensor per the Service information.
- Refer to **STANDARD PROCEDURE** and perform the 545RFE TRANSMISSION VERIFICATION TEST.

6. **CHECK THE (T118) LINE PRESSURE VARIABLE FORCE SOLENOID CONTROL CIRCUIT FOR AN OPEN**

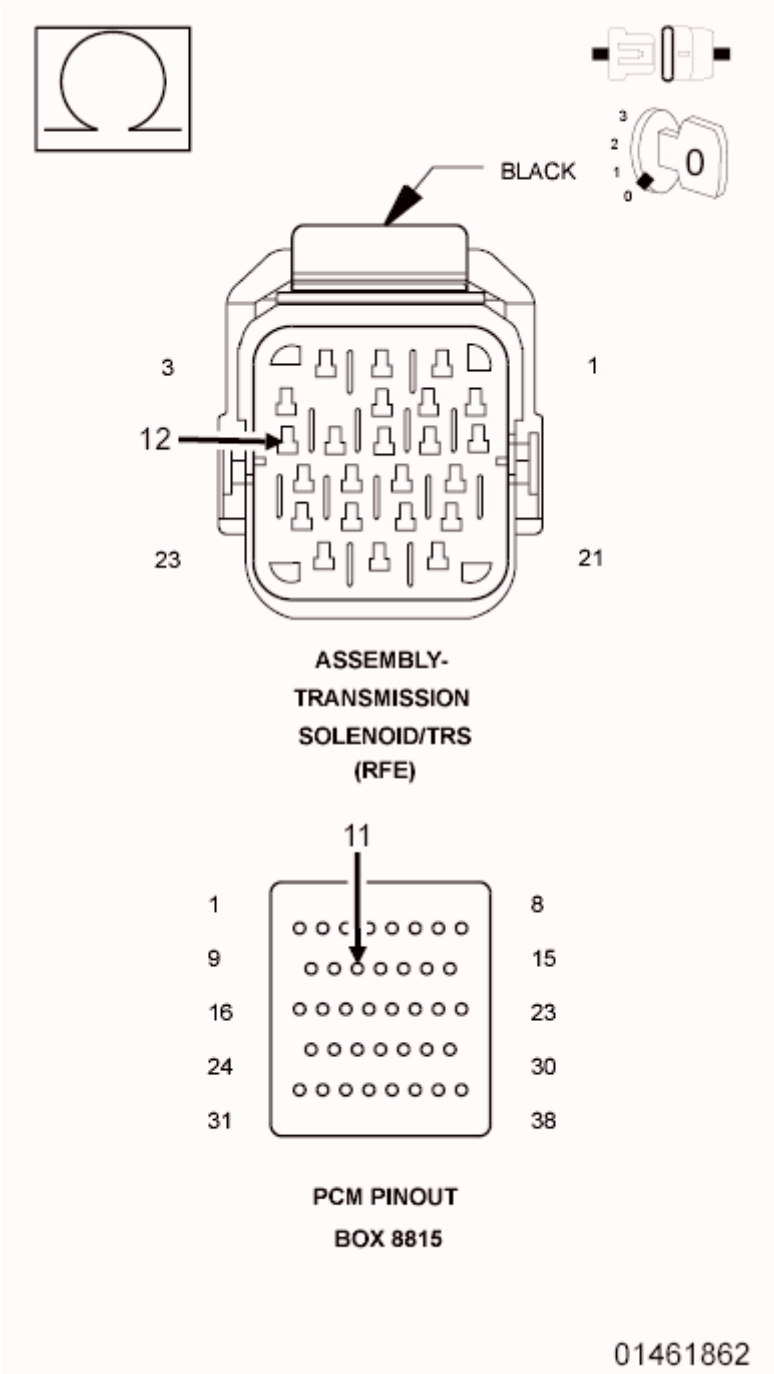

Fig. 2: Checking Line Pressure Variable Force Solenoid Control Circuit For Open
Courtesy of CHRYSLER GROUP, LLC

1. Turn the ignition off to the lock position.
2. Disconnect the Transmission Simulator (special tool #8333A, Simulator, Transmission).
3. Disconnect the Powertrain Control Module C4 harness connector.

CAUTION: Do not probe the PCM harness connectors. Probing the PCM

harness connectors will damage the PCM terminals resulting in poor terminal to pin connection. Install the (special tool #8815A, Kit, NGC, 38 Position) to perform diagnosis.

4. Measure the resistance of the (T118) Line Pressure Variable Force Solenoid Control circuit between the Solenoid/TRS Assembly harness connector and the appropriate terminal of the PCM Pinout Box (special tool #8815A, Kit, NGC, 38 Position).

   Is the resistance above 5.0 Ohms?

   Yes

   - Repair the (T118) Line Pressure Variable Force Solenoid Control circuit for an open.
   - Refer to **STANDARD PROCEDURE** and perform the 545RFE TRANSMISSION VERIFICATION TEST.

   No

   - Go To 7.

7. **CHECK THE (T118) LINE PRESSURE VARIABLE FORCE SOLENOID CONTROL CIRCUIT FOR A SHORT TO GROUND**

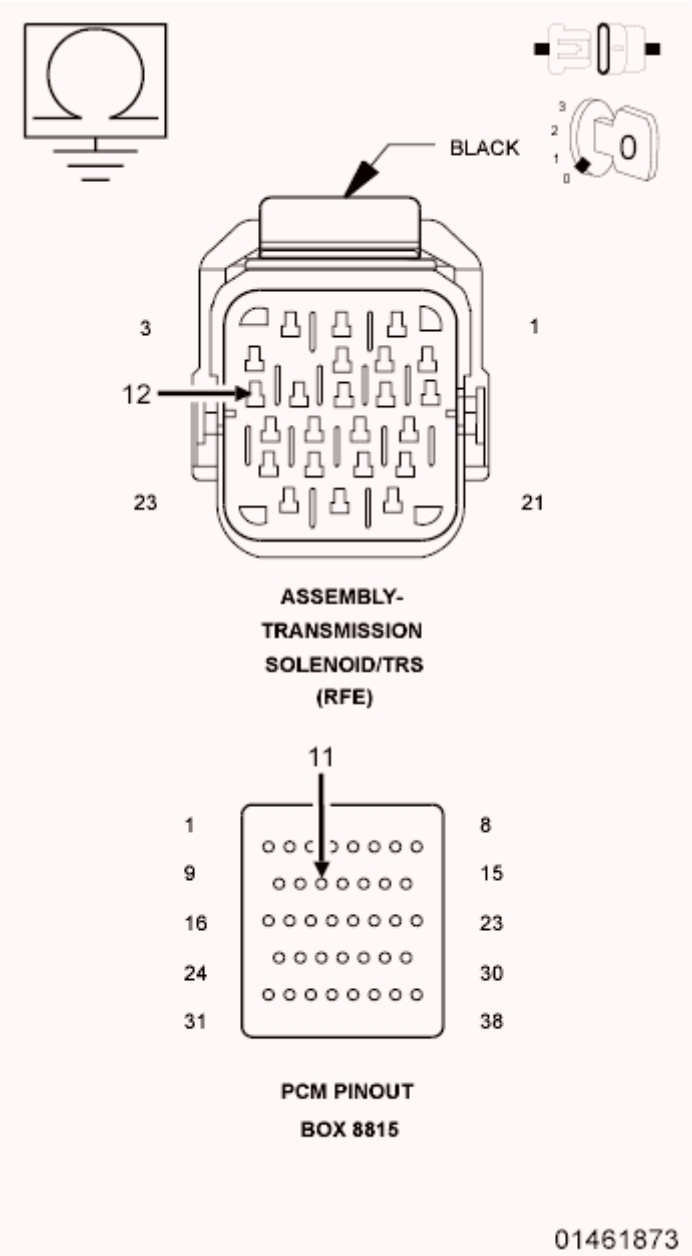

Fig. 3: Checking Line Pressure Variable Force Solenoid Control Circuit For Short To Ground
Courtesy of CHRYSLER GROUP, LLC

1. Measure the resistance between ground and the (T118) Line Pressure Variable Force Solenoid Control circuit.

   Is the resistance below 5.0 Ohms?

   Yes

   - Repair the (T118) Line Pressure Variable Force Solenoid Control circuit for a short to ground.

- Refer to **STANDARD PROCEDURE** and perform the 545RFE TRANSMISSION VERIFICATION TEST.

No

- Go To 8.

8. **CHECK THE (F856) 5-VOLT SUPPLY CIRCUIT FOR AN OPEN**

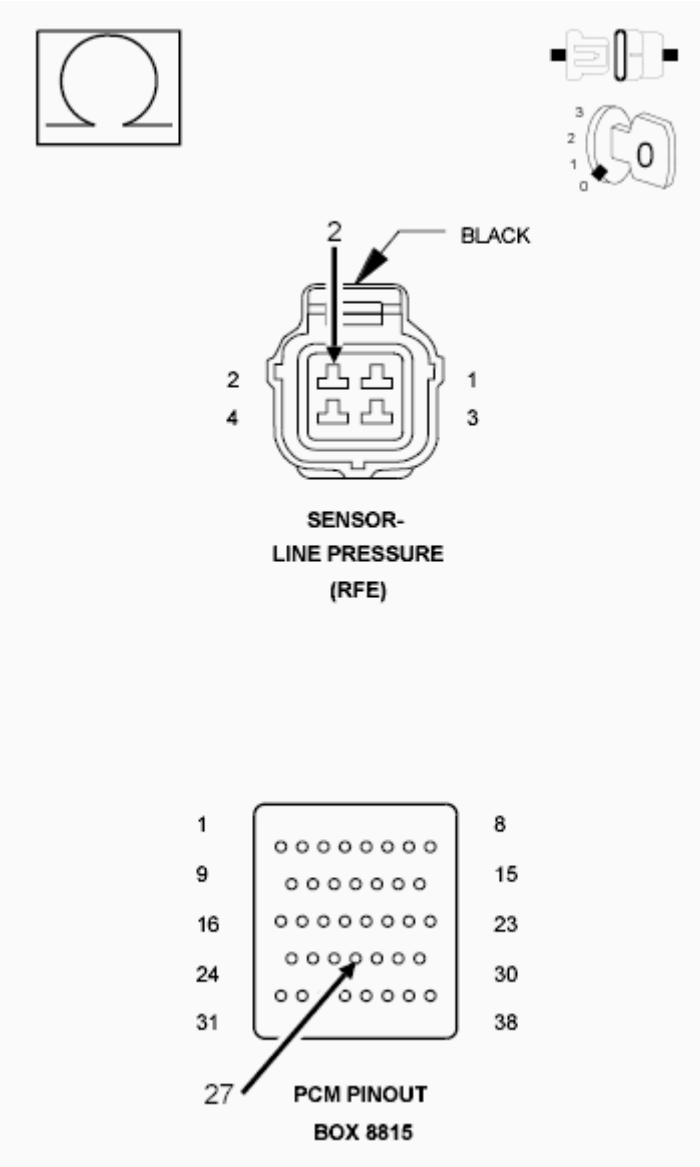

Fig. 4: Checking 5-Volt Supply Circuit For Open
Courtesy of CHRYSLER GROUP, LLC

1. Measure the resistance of the (F856) 5-volt Supply circuit between the Line Pressure Sensor harness connector and the appropriate terminal of the PCM Pinout Box (special tool #8815A, Kit, NGC, 38 Position).

Is the resistance above 5.0 Ohms?

Yes

- Repair the (F856) 5-volt Supply circuit for an open.
- Refer to **STANDARD PROCEDURE** and perform the 545RFE TRANSMISSION VERIFICATION TEST.

No

- Go To 9.

9. **CHECK THE (F856) 5-VOLT SUPPLY CIRCUIT FOR A SHORT TO GROUND**

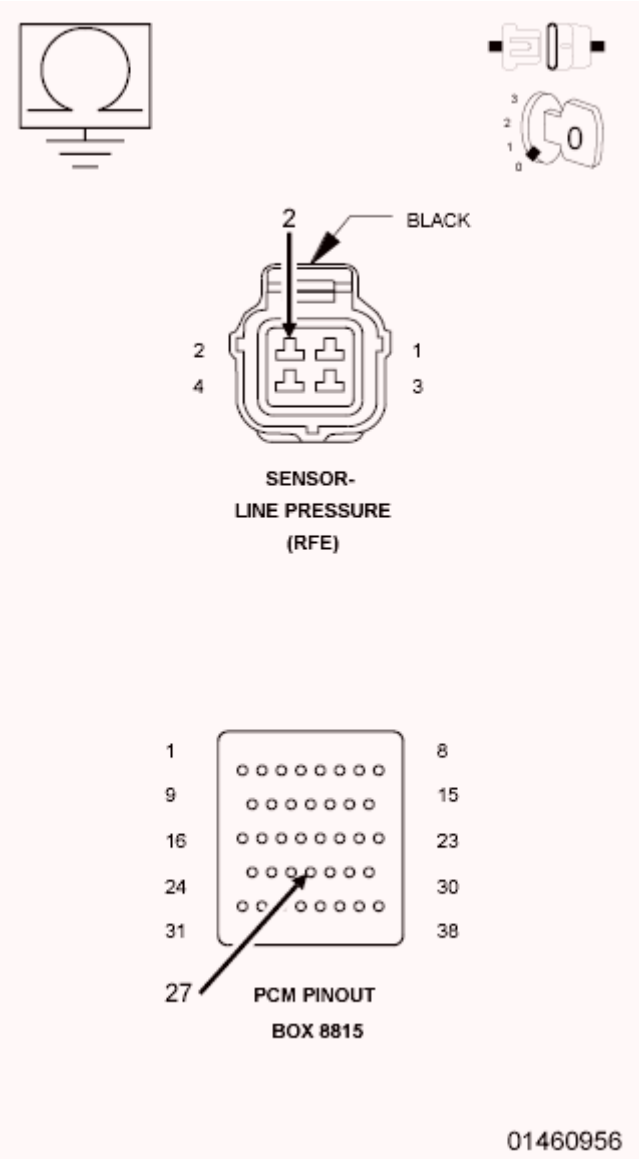

Fig. 5: Checking 5-Volt Supply Circuit For Short To Ground
Courtesy of CHRYSLER GROUP, LLC

1. Disconnect the PCM C1 harness connector.
2. Disconnect the Line Pressure Sensor harness connector.

CAUTION: Do not probe the PCM harness connectors. Probing the PCM harness connectors will damage the PCM terminals resulting in poor terminal to pin connection. Install the (special tool #8815A, Kit, NGC, 38 Position) to perform diagnosis.

3. Measure the resistance between ground and the (F856) 5-volt Supply circuit.

   Is the resistance below 5.0 Ohms?

   Yes

   - Repair the (F856) 5-volt Supply circuit for a short to ground.
   - Refer to **STANDARD PROCEDURE** and perform the 545RFE TRANSMISSION VERIFICATION TEST.

   No

   - Using the schematics as a guide, check the Powertrain Control Module (PCM) terminals for corrosion, damage, or terminal push out. Pay particular attention to all power and ground circuits. If no problems are found, replace and program the PCM in accordance with the Service Information. With the scan tool, perform Quick Learn.
   - Refer to **STANDARD PROCEDURE** and perform the 545RFE TRANSMISSION VERIFICATION TEST.

10. **CHECK THE WIRING AND CONNECTORS**
    1. The conditions necessary to set this DTC are not present at this time.
    2. Using the schematics as a guide, inspect the wiring and connectors specific to this circuit.
    3. Wiggle the wires while checking for shorted and open circuits.
    4. With the scan tool, check the Event Data to help identify the conditions in which the DTC was set.

       Where there any problems found?

       Yes

       - Repair as necessary.
       - Refer to **STANDARD PROCEDURE** and perform the 545RFE TRANSMISSION VERIFICATION TEST.

       No

       - Test Complete.

P0870-OD HYDRAULIC PRESSURE TEST

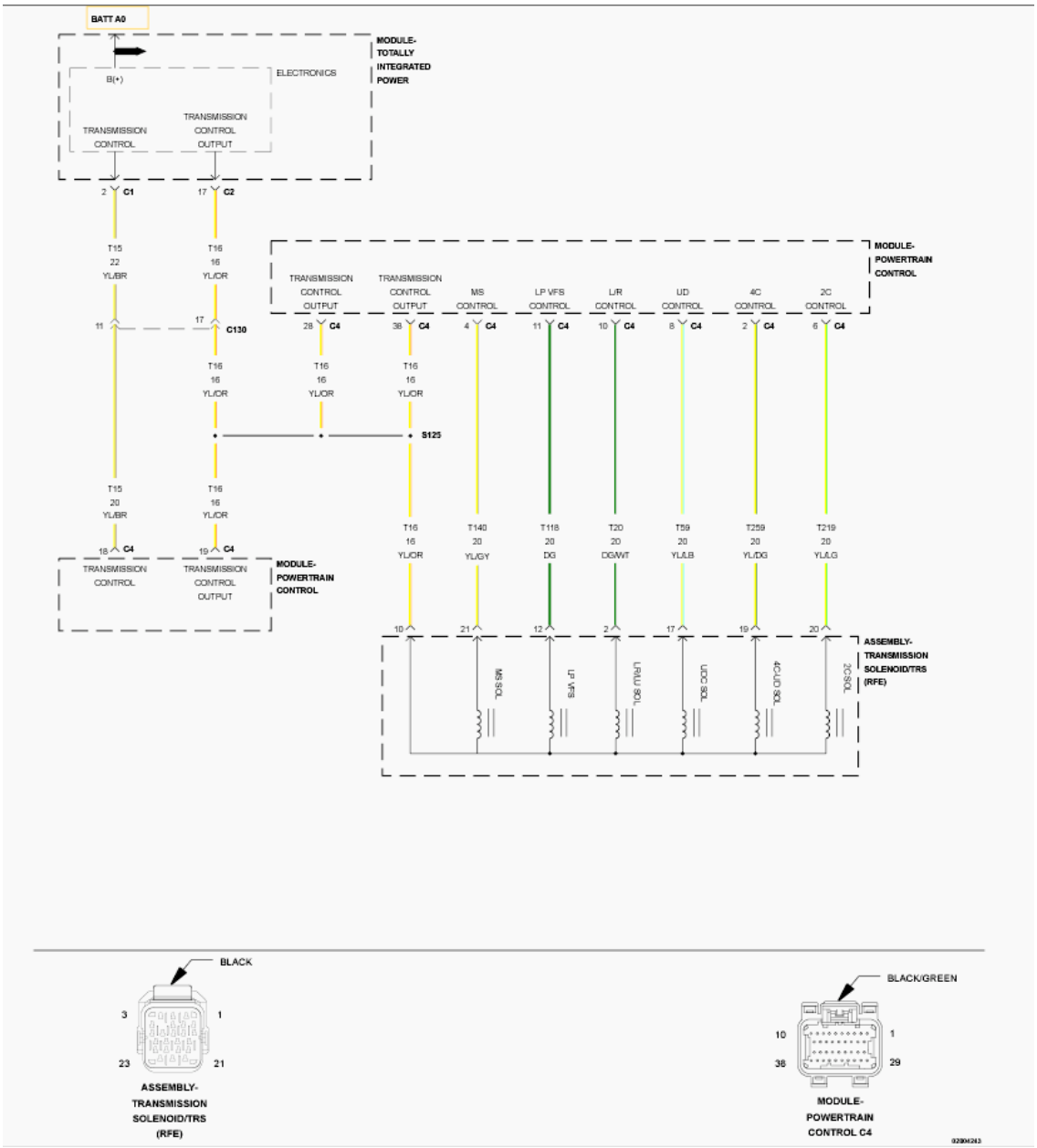

Fig. 6: Solenoid Control Wiring Diagram
Courtesy of CHRYSLER GROUP, LLC

For a complete wiring diagram, **refer to appropriate SYSTEM WIRING DIAGRAMS article** .

THEORY OF OPERATION

The Transmission Control System tests the pressure switches when they are off. The test verifies that the switches are operational (They will close with pressure applied). The Transmission Control System verifies that the switch closes when the corresponding element is applied. If a switch fails to close, it is re-tested. If it fails the second test, the DTC will set, the MIL will illuminate and the transmission system will default to the orderly

Shutdown routine.

WHEN MONITORED:

In any forward gear with engine speed above 1000 rpm shortly after a shift and every minute thereafter.

SET CONDITION:

After a shift into a forward gear, with engine speed above 1000 rpm, the Powertrain Control Module (PCM) momentarily turns on element pressure to the Clutch circuits that don't have pressure to identify the correct Pressure Switch closes. If the Pressure Switch does not close two times, the DTC sets.

POSSIBLE CAUSES

Possible Causes
LINE PRESSURE SENSOR
TRANSMISSION FLUID CONTAMINATION
RELATED DTCS PRESENT
EXCESSIVE DEBRIS IN OIL PAN
POOR LINE PRESSURE SENSOR CONNECTION
TRANSMISSION CONTROL RELAY DTCS PRESENT
(F856) 5-VOLT SUPPLY CIRCUIT OPEN
TRANSMISSION CONTROL RELAY OUTPUT CIRCUIT OPEN
(F856) 5-VOLT SUPPLY CIRCUIT SHORTED TO GROUND
(T9) OD PRESSURE SWITCH SENSE CIRCUIT SHORTED TO OTHER CIRCUITS
TRANSMISSION SOLENOID/TRS ASSEMBLY
INTERNAL TRANSMISSION
POWERTRAIN CONTROL MODULE (PCM)

Always perform the Pre-Diagnostic Troubleshooting Procedure before proceeding. Refer to STANDARD PROCEDURE .

DIAGNOSTIC TEST

1. **CHECK IF RELATED DTCS ARE PRESENT**
    1. With the scan tool, check DTCs.

       Is there any Loss of Prime, TCM Power Input, Line Pressure Sensor and/or TIPM TCM Power Control Circuit DTCs present?

       Yes

       - Refer to **DIAGNOSIS AND TESTING** and perform the appropriate diagnostic procedure. If the DTC P0944-LOSS OF PRIME is present, perform its respective test first. Refer to **DIAGNOSIS AND TESTING**.

No

- Go To 2.

2. **CHECK IF THE DTC P0760 IS PRESENT**
   1. With the scan tool, check DTCs.

      Is the DTC P2706 also present?

      Yes

      - Refer to **DIAGNOSIS AND TESTING** and perform the diagnostics for P2706-MS SOLENOID CIRCUIT.

      No

      - Go To 3.

3. **CHECK IF OTHER DTCS ARE PRESENT**
   1. With the scan tool, check DTCs.

      Are any of the DTCs P0733, P0734, P0735, and/or P0871 present also?

      Yes

      - Go To 12.

      No

      - Go To 4.

4. **CHECK IF THE DTC IS CURRENT**
   1. With the scan tool, read DTCs.

      Is the status Active or is the Starts Since Set counter 2 or less for this DTC?

      Yes

      - Go To 5.

      No

      - Go To 15.

5. **CHECK IF THE LINE PRESSURE STAYS THE SAME**
   1. Start the engine.
   2. Warm the transmission to 82° C (180° F).
   3. Firmly apply the brakes.

4. With the scan tool, monitor the Line Pressure during the following step.
5. Move the shift lever to each gear position, pausing momentarily in each position and record the line pressure reading. Allow the pressure to stabilize for at least five seconds in each range.

   Did the line pressure remain at a steady value between 585 and 655 kPa (85 and 95 psi) in each position?

   Yes

   - Go To 6.

   No

   - Go To 10.

6. **CHECK THE LINE PRESSURE SENSOR CONNECTION**
   1. Ignition on, **engine not running.**
   2. With the scan tool, monitor the Line Pressure while firmly pushing the Transmission Line Pressure Sensor connector inwards towards the Transmission.

      Did the Line Pressure reading on the scan tool CHANGE to about 207 kPa (30 psi) or 0.7 of a volt when the connector was pushed inward?

      Yes (value was higher and changed to 207 kPa (30 psi) or 0.7 of a volt)

      - Disconnect and properly reconnect the Line Pressure Sensor connector. Inspect terminals and repair as necessary.
      - Refer to **STANDARD PROCEDURE** and perform the 545RFE TRANSMISSION VERIFICATION TEST.

      No (value is higher than 207 kPa (30 psi) or 0.7 of a volt and did not change or the value was already 207 kPa (30 psi) or 0.7 of a volt and did not change)

      - Go To 7.

7. **CHECK THE LINE PRESSURE SENSOR OPERATION**
   1. Turn the ignition off to the lock position.
   2. Remove the Ignition Switch Feed fuse from the TIPM.

      CAUTION: Removal of the Ignition Switch Feed fuse from the TIPM will prevent the vehicle from being started in gear.

      WARNING: The Ignition Switch Feed fuse must be removed from the TIPM. Failure to do so can result in possible serious or fatal injury.

   3. Install the Transmission Simulator (special tool #8333A, Simulator, Transmission).

4. With the Transmission Simulator select the "OFF" position on the "Input/Output Speed" switch.
5. Ignition on, engine not running.
6. With the scan tool, monitor the Line Pressure while turning the Pressure Switch selector to each of the three line pressure positions on the Transmission Simulator.

NOTE: **All three scan tool Line Pressure readings should be steady and ±14 kPa (2.0 psi) or 0.1 of a volt of the reading specified on the Transmission Simulator.**

Did the scan tool Line Pressure readings match the specified readings on the Transmission Simulator and remain steady in all three positions?

Yes

- Replace the Line Pressure Sensor in accordance with the Service Information.
- Refer to **STANDARD PROCEDURE** and perform the 545RFE TRANSMISSION VERIFICATION TEST.

No

- Go To 8.

8. **CHECK THE (F856) 5-VOLT SUPPLY CIRCUIT FOR AN OPEN**

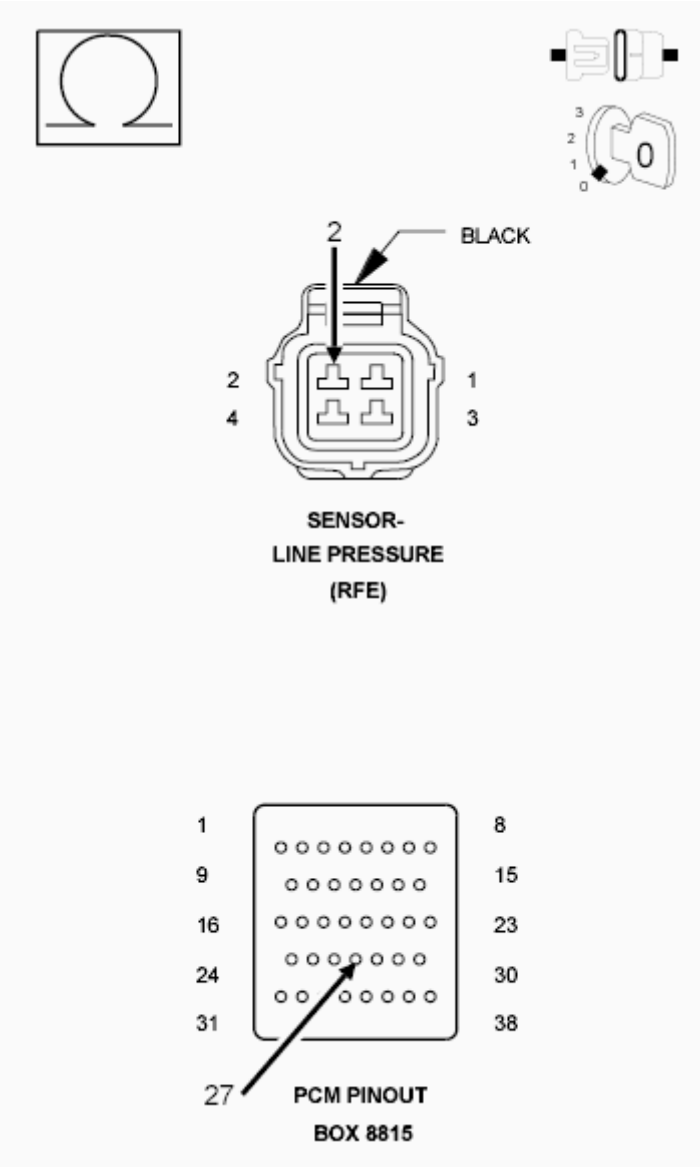

Fig. 7: Checking 5-Volt Supply Circuit For Open
Courtesy of CHRYSLER GROUP, LLC

1. Turn the ignition off to the lock position.
2. Disconnect Transmission Simulator.
3. Disconnect the PCM C4 harness connector and connect the PCM Pinout Box (special tool #8815A, Kit, NGC, 38 Position).

CAUTION: Do not probe the PCM harness connectors. Probing the PCM harness connectors will damage the PCM terminals resulting in poor terminal to pin connection. Install the (special tool #8815A, Kit, NGC, 38 Position) to perform diagnosis.

4. Measure the resistance of the (F856) 5-volt Supply circuit between the Line Pressure Sensor

harness connector and the appropriate terminal of the PCM Pinout Box (special tool #8815A, Kit, NGC, 38 Position).

Is the resistance above 5.0 Ohms?

Yes

- Repair the (F856) 5-volt Supply circuit for an open.
- Refer to **STANDARD PROCEDURE** and perform the 545RFE TRANSMISSION VERIFICATION TEST.

No

- Go To 9.

9. **CHECK THE (F856) 5-VOLT SUPPLY CIRCUIT FOR A SHORT TO GROUND**

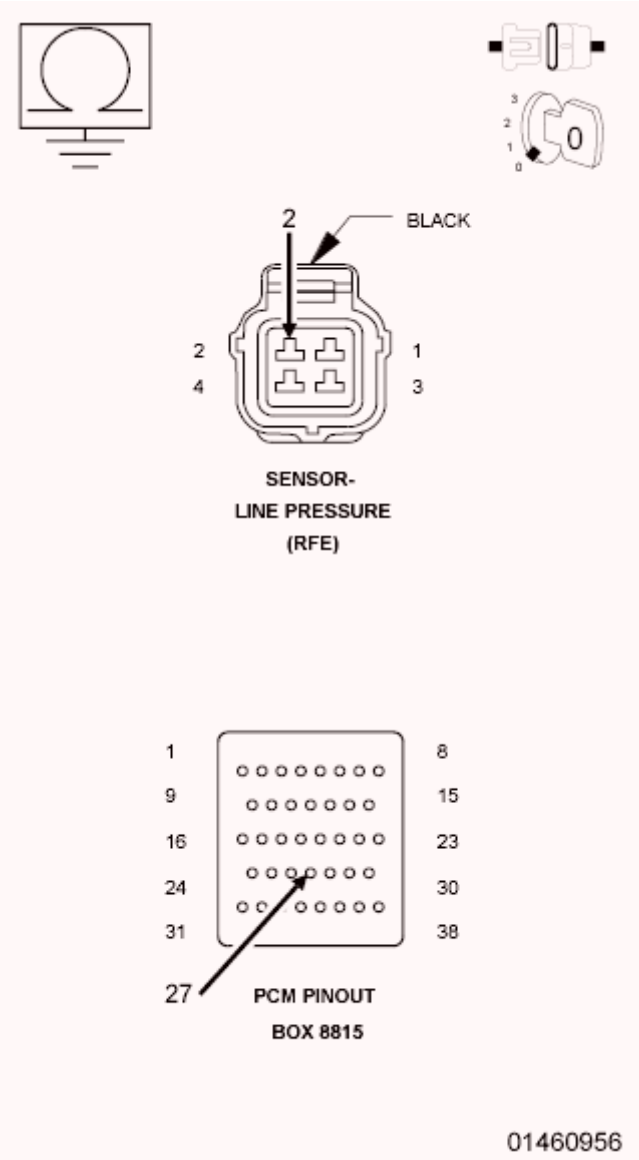

Fig. 8: Checking 5-Volt Supply Circuit For Short To Ground
Courtesy of CHRYSLER GROUP, LLC

1. Measure the resistance between ground and the (F856) 5-volt Supply circuit.

   Is the resistance below 5.0 Ohms?

   Yes

   - Repair the (F856) 5-volt Supply circuit for a short to ground.
   - Refer to **STANDARD PROCEDURE** and perform the 545RFE TRANSMISSION VERIFICATION TEST.

   No

- Using the schematics as a guide, check the Powertrain Control Module (PCM) terminals for corrosion, damage, or terminal push out. Pay particular attention to all power and ground circuits. If no problems are found, replace and program the PCM in accordance with the Service Information. With the scan tool, perform Quick Learn.
- Refer to **STANDARD PROCEDURE** and perform the 545RFE TRANSMISSION VERIFICATION TEST.

10. **COMPARE THE SCAN TOOL TO THE PRESSURE GAUGE**
    1. Turn the ignition off to the lock position.
    2. Connect the Line Pressure Adapter (special tool #8259, Adapter, Pressure Test) and 0-300 psi Test Gauge (special tool #C-3293-SP, Gauge, Pressure 0-300 P.S.I.). Refer to **DIAGNOSIS AND TESTING** .

       CAUTION: Apply parking brake.

    3. Start the engine.
    4. In the following steps, compare the scan tool Line Pressure to the Pressure Gauge readings in each gear.

       CAUTION: Do not overheat transmission.

    5. With the gear selector in park, raise the rpm to 1500, and compare line pressure readings.
    6. Firmly apply the brakes, move the gear selector into reverse, raise the rpm to 1500, and compare the line pressure readings.
    7. Firmly apply the brakes, move the gear selector into drive, raise the rpm to 1500, and compare the line pressure readings.

       Did the scan tool Line Pressure readings match the Pressure Gauge readings ± 10 psi?

       Yes

       - Go To 11.

       No

       - Replace the Line Pressure Sensor in accordance with the Service Information.
       - Refer to **STANDARD PROCEDURE** and perform the 545RFE TRANSMISSION VERIFICATION TEST.

11. **CHECK THE WIRING AND CONNECTORS**
    1. Turn the ignition off to the lock position.
    2. Remove the Line Pressure Adapter (special tool #8259, Adapter, Pressure Test) and 0-300 psi Test Gauge (special tool #C-3293-SP, Gauge, Pressure 0-300 P.S.I.).

3. Remove the Ignition Switch Feed fuse from the TIPM.

CAUTION: Removal of the Ignition Switch Feed fuse from the TIPM will prevent the vehicle from being started in gear.

WARNING: The Ignition Switch Feed fuse must be removed from the TIPM. Failure to do so can result in possible serious or fatal injury.

4. Install the Transmission Simulator (special tool #8333A, Simulator, Transmission).
5. On the Transmission Simulator, turn the Pressure Switch selector switch to OD.
6. Ignition on, engine not running.
7. With the scan tool, monitor the OD Pressure Switch state while pressing and holding the Pressure Switch test button and wiggling the wire harness and connectors that pertain to the OD Pressure Switch.

   Did the OD Pressure Switch state change to closed and remain closed while wiggling the wires?

   Yes

   - Go To 12.

   No

   - Go To 14.

12. **CHECK FOR EXCESSIVE DEBRIS**
    1. Turn the ignition off to the lock position.
    2. Remove the Transmission Simulator (special tool #8333A, Simulator, Transmission).
    3. Remove and inspect the Transmission Oil Pan in accordance with the Service Information.

       Does the Transmission Oil Pan contain excessive debris or contamination?

       Yes

       - Repair the cause of the excessive debris in the Transmission Oil Pan. Refer to the Service Information for the proper procedures.
       - Refer to **STANDARD PROCEDURE** and perform the 545RFE TRANSMISSION VERIFICATION TEST.

       No

       - Go To 13.

13. **CHECK THE OD HYDRAULIC CLUTCH CIRCUIT**
    1. Remove the Valve Body and air check the OD hydraulic clutch circuit (in the case) for leakage in

accordance with the Service Information.

NOTE: **The OD hydraulic clutch circuit contains a small bleed orifice which connects to the Reverse hydraulic clutch circuit. A small amount of air leakage is normal.**

Was there excessive air leakage noticed during the air check?

Yes

- Repair as necessary. Check the OD/Rev clutch piston seals, bleed orifice assembly, reaction shaft support seal rings, and machining of the main mating faces on the pump housing, pump valve body, and reaction shaft support.
- Refer to **STANDARD PROCEDURE** and perform the 545RFE TRANSMISSION VERIFICATION TEST.

No

- Disassemble and inspect the Valve Body and repair as necessary. Inspect the OD Accumulator piston and seals. Check for an extra check ball downstream from the #6 check ball pocket and repair as necessary. If no problems are found in the Valve Body, replace the Transmission Solenoid/TRS Assembly in accordance with the Service Information.
- Refer to **STANDARD PROCEDURE** and perform the 545RFE TRANSMISSION VERIFICATION TEST.

14. **CHECK THE (T9) OD PRESSURE SWITCH SENSE CIRCUIT FOR A SHORT TO ANOTHER CIRCUIT**

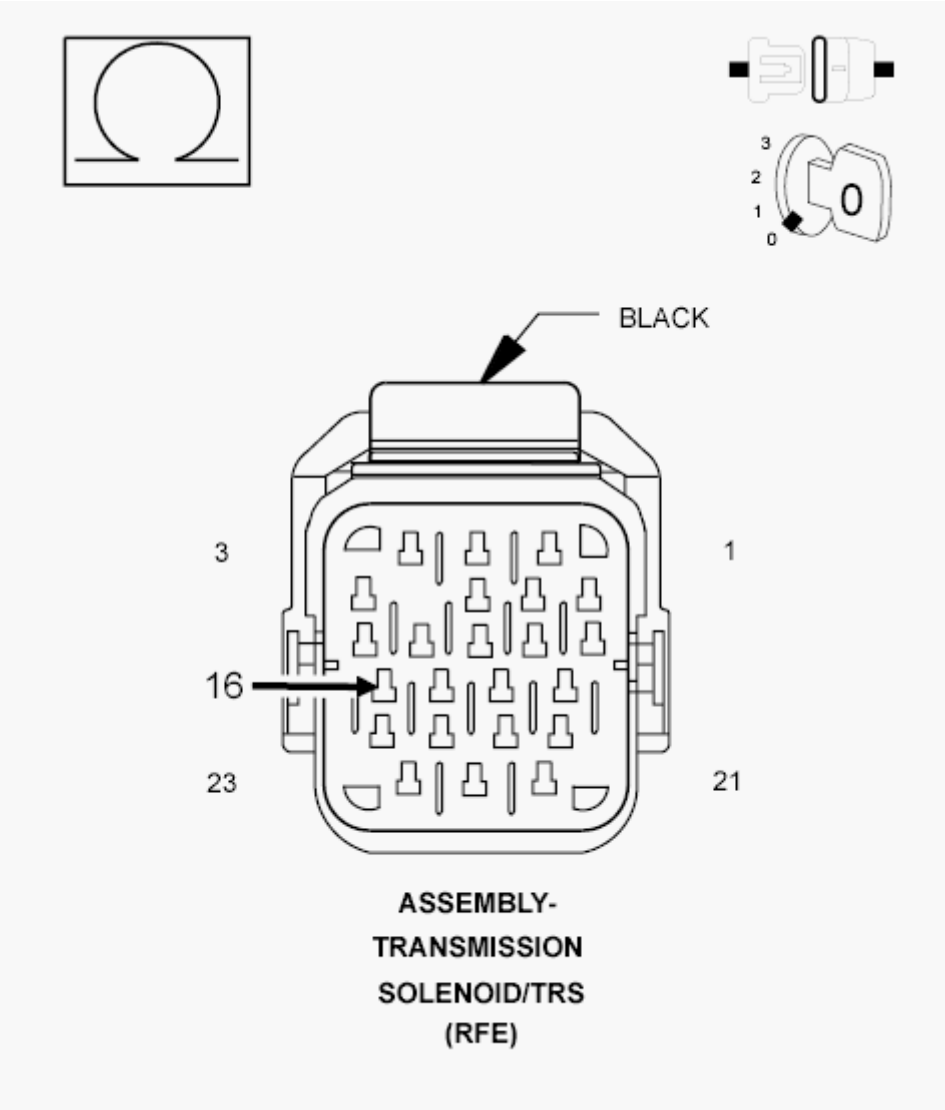

Fig. 9: Checking OD Pressure Switch Sense Circuit For Short To Circuit
Courtesy of CHRYSLER GROUP, LLC

1. Disconnect all PCM harness connectors.
2. Disconnect the Transmission Solenoid/TRS Assembly harness connector.

NOTE: **Make sure the Transmission Solenoid/TRS Assembly harness connector is disconnected.**

NOTE: **Check connectors - Clean/repair as necessary.**

3. Measure the resistance between the (T9) OD Pressure Switch Sense circuit and all other circuits in the Transmission Solenoid/TRS Assembly harness connector.

   Is the resistance below 5.0 Ohms between the (T9) OD Pressure Switch Sense circuit and any other circuit(s) in the Transmission Solenoid/TRS Assembly harness connector?

Yes

- Repair the (T9) OD Pressure Switch Sense circuit for a short to another circuit(s).
- Refer to **STANDARD PROCEDURE** and perform the 545RFE TRANSMISSION VERIFICATION TEST.

No

- Using the schematics as a guide, check the Powertrain Control Module (PCM) terminals for corrosion, damage, or terminal push out. Pay particular attention to all power and ground circuits. If no problems are found, replace and program the PCM in accordance with the Service Information. With the scan tool, perform Quick Learn.
- Refer to **STANDARD PROCEDURE** and perform the 545RFE TRANSMISSION VERIFICATION TEST.

15. **CHECK THE WIRING AND CONNECTORS**
    1. The conditions necessary to set this DTC are not present at this time.
    2. Using the schematics as a guide, inspect the wiring and connectors specific to this circuit.
    3. Wiggle the wires while checking for shorted and open circuits.
    4. With the scan tool, check the Event Data to help identify the conditions in which the DTC was set.
    5. If the Event Data shows the DTC P0870 set while the Line Pressure was significantly below the Desired Line Pressure reading, check for causes of low line pressure (low fluid level, broken or improperly installed primary oil filter or filter seal, sticking Main Regulator Valve in the Pump Valve Body etc.). If the data shows the DTC set while the Line Pressure reading was significantly higher than the Desired Line Pressure, check the Line Pressure Sensor and related wiring.

       Where there any problems found?

       Yes

       - Repair as necessary.
       - Refer to **STANDARD PROCEDURE** and perform the 545RFE TRANSMISSION VERIFICATION TEST.

       No

       - Test Complete.

P0871-OD PRESSURE SWITCH RATIONALITY

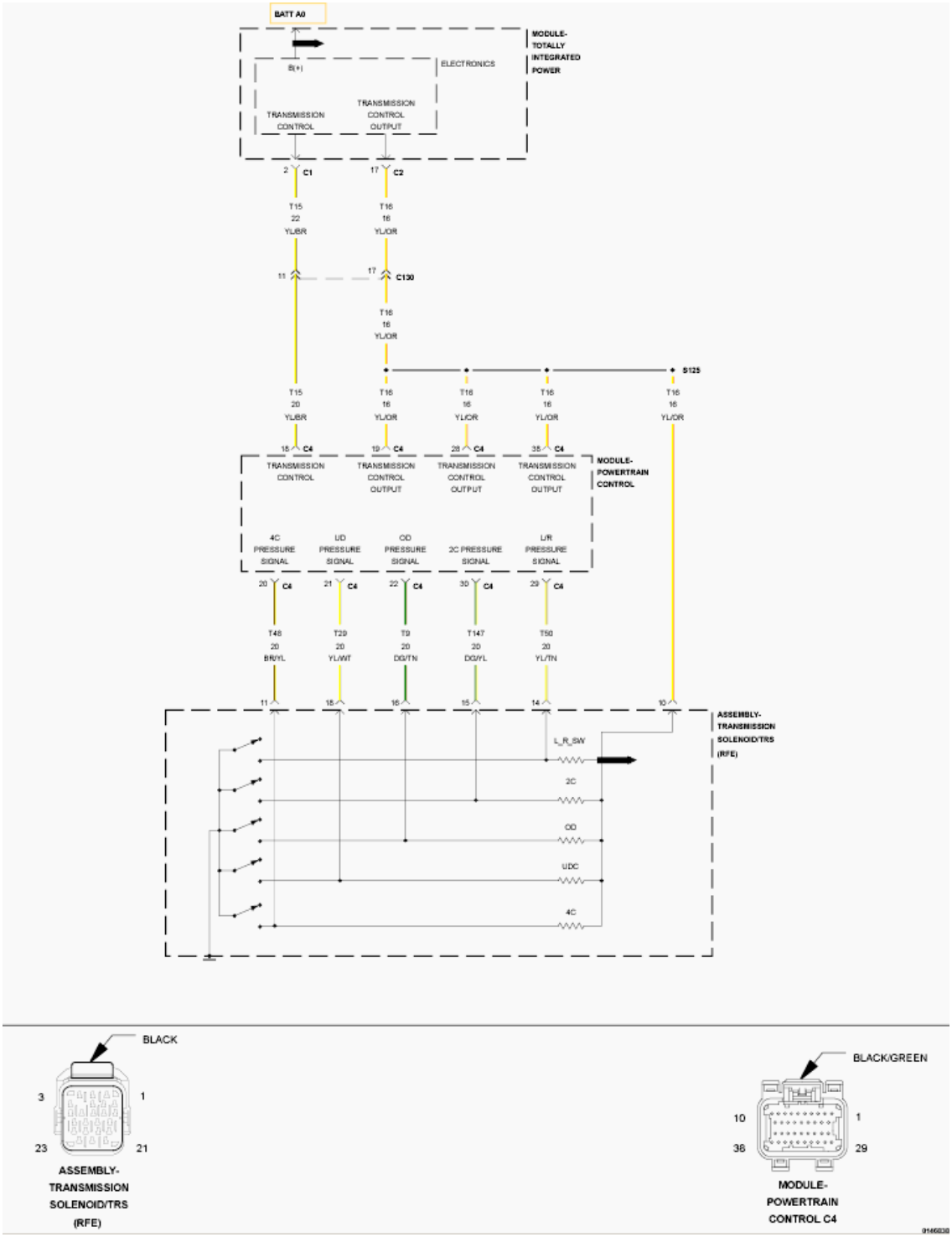

Fig. 10: Pressure Switch Circuit Wiring Diagram
Courtesy of CHRYSLER GROUP, LLC

For a complete wiring diagram, **refer to appropriate SYSTEM WIRING DIAGRAMS article** .

THEORY OF OPERATION

The Transmission system uses five pressure switches to monitor the fluid pressure in the L/R, 2C, 4C, UD, and OD clutch circuits. The pressure switches are continuously monitored for the correct states in each gear as shown.

WHEN MONITORED:

Continuously with the ignition on and engine running.

SET CONDITION:

The appropriate DTC is set if one of the pressure switches are open or closed at the wrong time in a given gear.

POSSIBLE CAUSES

Possible Causes
RELATED TCM POWER INPUT DTCS PRESENT
LINE PRESSURE DTCS PRESENT
NO. 4 OR 6 CHECK BALL CUT OR DAMAGED
(T9) OD PRESSURE SWITCH SENSE CIRCUIT OPEN
(T9) OD PRESSURE SWITCH SENSE CIRCUIT SHORTED TO GROUND
(T9) OD PRESSURE SWITCH SENSE CIRCUIT SHORTED TO OTHER CIRCUITS
LOW LINE PRESSURE
WIRING AND CONNECTORS
CUT OD/REV PISTON SEAL
BROKEN OR MISSING OD/REV PISTON BLEED ORIFICE
BROKEN REACTION SHAFT SUPPORT SEAL RING
POOR MACHINING ON PUMP VALVE BODY FACE
BROKEN OR MISSING DRIBBLER ORIFICE ASSEMBLY IN REACTION SHAFT SUPPORT
TRANSMISSION SOLENOID/TRS ASSEMBLY
CUT OD ACCUMULATOR PISTON SEAL
CRACKED OD ACCUMULATOR PISTON
BROKEN OR MISSING OD BLEED ORIFICE IN MAIN VALVE BODY
POWERTRAIN CONTROL MODULE (PCM)

Always perform the Pre-Diagnostic Troubleshooting Procedure before proceeding. Refer to STANDARD PROCEDURE .

GEAR	L/R	2C	4C	UD	OD
REVERSE	OPEN	OPEN	OPEN	OPEN	OPEN
P/N	CLOSED**	OPEN	OPEN	OPEN	OPEN
1ST	CLOSED*	OPEN	OPEN	CLOSED	OPEN
2ND	OPEN	CLOSED	OPEN	CLOSED	OPEN
2ND PRIME	OPEN	OPEN	CLOSED	CLOSED	OPEN

3RD	OPEN	OPEN	OPEN	CLOSED	CLOSED
4TH	OPEN	OPEN	CLOSED	OPEN	CLOSED
5TH	OPEN	CLOSED	OPEN	OPEN	CLOSED
*L/R is closed if output speed is below 100 rpm in Drive and Manual 2. L/R is closed in Manual 1.					
**May be open when rolling in Neutral or at low oil temperatures.					

DIAGNOSTIC TEST

1. **CHECK FOR RELATED DTCS**
    1. With the scan tool, read DTCs.

       Are there any TIPM TCM Power Control Circuit or TCM Power Input DTCs present?

       Yes

       - Refer to **DIAGNOSIS AND TESTING** and perform the appropriate diagnostic procedure.

       No

       - Go To 2.
2. **CHECK IF LINE PRESSURE DTCS ARE PRESENT**
    1. With the scan tool, read DTCs.

       Are there any Line Pressure DTCs present?

       Yes

       - Refer to **DIAGNOSIS AND TESTING** and perform the appropriate diagnostic procedure.

       No

       - Go To 3.
3. **CHECK FOR OTHER PRESSURE SWITCH DTCS**
    1. With the scan tool, read DTCs.

       Are there two or more other pressure switch rationality DTCs present in addition to P0871?

       Yes

       - Go To 5.

       No

       - Go To 4.
4. **CHECK IF DTC IS CURRENT**

1. With the scan tool, read and record the Event Data.

NOTE: **Make sure to record all Event Data stored in the scan tool for future reference in this test procedure.**

Does the Event Data show data for P0871?

Yes

- Go To 8.

No

- Refer to **DIAGNOSIS AND TESTING** and perform the appropriate diagnostic procedure.

5. **CHECK IF RELATED DTC IS PRESENT**
   1. With the scan tool, read and record the Event Data.

NOTE: **Make sure to record all Event Data stored in the scan tool for future reference in this test procedure.**

Do all the pressure switches read CLOSED in the Event Data?

Yes

- Refer to **DIAGNOSIS AND TESTING** and perform the diagnostic procedure for DTC P0882. Follow instructions as if the DTC is current.

No

- Go To 6.

6. **CHECK IF PRESSURE SWITCHES READ OPEN**

In the Event Data recorded earlier, do all the pressure switches read open?

Yes

- Go To 7.

No

- Go To 8.

7. **CHECK FOR LOW LINE PRESSURE**

In the Event Data recorded earlier, is the Line Pressure less than 40 psi, and significantly below the Desired Line Pressure?

Yes

- Repair as necessary to correct low line pressure. Check fluid level and adjust as necessary. If fluid level is OK, check the Primary Oil Filter weal for a spit, crack, or improperly installed. If the filer and seal are OK, check the Main Regulator Valve in the Oil Pump. Refer to the Service Information for the above procedures.
- Refer to **STANDARD PROCEDURE** and perform the 545RFE TRANSMISSION VERIFICATION TEST.

No

- Replace the Transmission Solenoid/TRS Assembly in accordance with the Service Information.
- Refer to **STANDARD PROCEDURE** and perform the 545RFE TRANSMISSION VERIFICATION TEST.

8. **CHECK IF IN PARK, NEUTRAL, OR REVERSE**

   In the Event Data recorded earlier, does the Event Data show the OD Pressure Switch DTC set while in Park, Neutral, or Reverse?

   Yes

   - Go To 18.

   No

   - Go To 9.

9. **CHECK IF THE OD PRESSURE SWITCH WAS OPEN**

   In the Event Data recorded earlier, did the OD Pressure Switch read OPEN?

   Yes

   - Go To 10.

   No

   - Go To 15.

10. **CHECK FOR LOW LINE PRESSURE**

    In the Event Data recorded earlier, is the Line Pressure less than 40 psi, and significantly below the Desired Line Pressure?

    Yes

    - Repair as necessary to correct low line pressure. Check the fluid level. Check the Primary Oil Filter seal for a split, crack, or improperly installed. Refer to the Service Information for the proper

installation procedure. If the fluid level and filter are OK, check the Main Regulator Valve in the Oil Pump.

- Refer to **STANDARD PROCEDURE** and perform the 545RFE TRANSMISSION VERIFICATION TEST.

No

- Go To 11.

11. **CHECK THE (T9) OD PRESSURE SWITCH SENSE CIRCUIT FOR A SHORT TO ANOTHER CIRCUIT**

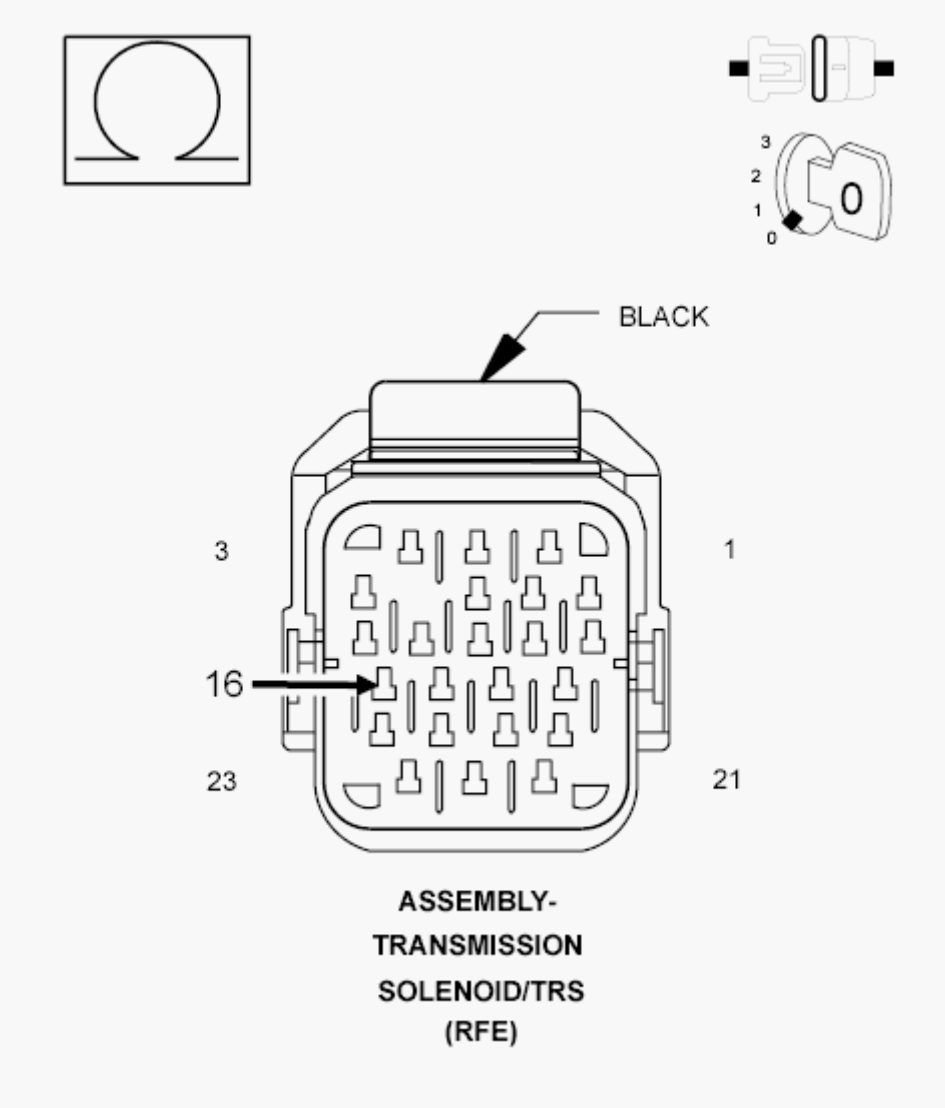

Fig. 11: Checking OD Pressure Switch Sense Circuit For Short To Circuit
Courtesy of CHRYSLER GROUP, LLC

1. Turn the ignition off to the lock position.
2. Disconnect all PCM harness connectors.

3. Disconnect the Transmission Solenoid/TRS Assembly harness connector.
4. Measure the resistance between the (T9) OD Pressure Switch Sense circuit and all other circuits in the Transmission Solenoid/TRS Assembly harness connector.

   Is the resistance below 5.0 Ohms between the (T9) OD Pressure Switch Sense circuit and any other circuit(s) in the Transmission Solenoid/TRS Assembly harness connector?

   Yes

   - Repair the (T9) OD Pressure Switch Sense circuit for a short to another circuit(s).
   - Refer to **STANDARD PROCEDURE** and perform the 545RFE TRANSMISSION VERIFICATION TEST.

   No

   - Go To 12.

12. **CHECK IF THE DTC RESETS**
    1. Reconnect all previously disconnected connectors.
    2. With the scan tool, erase transmission DTCs.
    3. Test drive the vehicle, use the Event Data recorded earlier to help duplicate the conditions when the DTC originality set.

       Does the DTC P0871 reset?

       Yes

       - Go To 13.

       No

       - Go To 22.

13. **CHECK THE POWERTRAIN CONTROL MODULE**
    1. Remove the Transmission Control Relay.
    2. Operate the vehicle in Drive.

       Is the transmission slipping while in Drive?

       Yes

       - Go To 14.

       No

       - Using the schematics as a guide, check the Powertrain Control Module (PCM) terminals for corrosion, damage, or terminal push out. Pay particular attention to all power and ground

circuits. If no problems are found, replace and program the PCM in accordance with the Service Information. With the scan tool, perform Quick Learn.

- Refer to **STANDARD PROCEDURE** and perform the 545RFE TRANSMISSION VERIFICATION TEST.

14. **AIR CHECK TRANSMISSION CLUTCH OPERATION**
    1. Perform an Air Check Transmission Clutch Operation procedure in accordance with the Service Information.

NOTE: The OD/Rev piston contains a small bleed orifice, a small amount of leakage between the OD and Reverse hydraulic clutch circuits is considered normal.

Is there excessive air leakage in any clutch circuit?

Yes

- Check the OD/Rev piston seals and bleed orifice, reaction shaft support seal rings, dribbler orifice assemblies in the reaction shaft support and for poor machine on the pump valve body faces. Refer to the Service Information.
- Refer to **STANDARD PROCEDURE** and perform the 545RFE TRANSMISSION VERIFICATION TEST.

No

- Repair the Valve Body. Check the OD Accumulator piston and seals, OD bleed orifice, and No. 6 check ball for cuts or damage. If no problems are found in the Valve Body, replace the Transmission Solenoid/TRS Assembly. Refer to the Service Information for proper repair procedures.
- Refer to **STANDARD PROCEDURE** and perform the 545RFE TRANSMISSION VERIFICATION TEST.

15. **CHECK THE PCM AND WIRING**
    1. Turn the ignition off to the lock position.
    2. Remove the Ignition Switch Feed fuse from the TIPM.

CAUTION: Removal of the Ignition Switch Feed fuse from the TIPM will prevent the vehicle from being started in gear.

WARNING: The Ignition Switch Feed fuse must be removed from the TIPM. Failure to do so can result in possible serious or fatal injury.

    3. Install Transmission Simulator (special tool #8333A, Simulator, Transmission).
    4. Ignition on, engine not running.
    5. With the Transmission Simulator, turn the Pressure Switch selector switch to OD.

6. With the scan tool, monitor the OD Pressure Switch state while pressing the Pressure Switch Test button on the Transmission Simulator.

   Did the state of the OD Pressure Switch change from OPEN to CLOSED while pressing the Test button?

   Yes

   - Go To 16.

   No

   - Go To 18.

16. **CHECK IF THE NO. 4 AND/OR NO. 6 CHECK BALL IS CUT OR DAMAGED**
    1. With the scan tool, erase previously stored DTCs and test drive the vehicle, use the Event Data to help duplicate the conditions when the DTC originality set. Note any DTCs that may set.
    2. Remove the Transmission Valve Body in accordance with the Service Information.
    3. Check the No. 4 and No. 6 Check Balls for cuts or damage.

       Is the No. 4 and/or No. 6 Check Ball cut or damaged?

       Yes

       - Replace the No. 4 and/or No. 6 Check Ball and check for clutch debris in the transmission oil pan. If there is excessive debris, perform internal repairs to the OD Clutch Assembly. Refer to the Service Information for proper repair procedures.
       - Refer to **STANDARD PROCEDURE** and perform the 545RFE TRANSMISSION VERIFICATION TEST.

       No

       - Go To 17.

17. **CHECK THE TRANSMISSION SOLENOID/TRS ASSEMBLY**

    Did the DTC P0871 reset during the test drive in the previous step?

    Yes

    - Replace the Transmission Solenoid/TRS Assembly in accordance with the Service Information.
    - Refer to **STANDARD PROCEDURE** and perform the 545RFE TRANSMISSION VERIFICATION TEST.

    No

    - Go To 22.

18. **CHECK THE (T9) OD PRESSURE SWITCH SENSE CIRCUIT FOR AN OPEN**

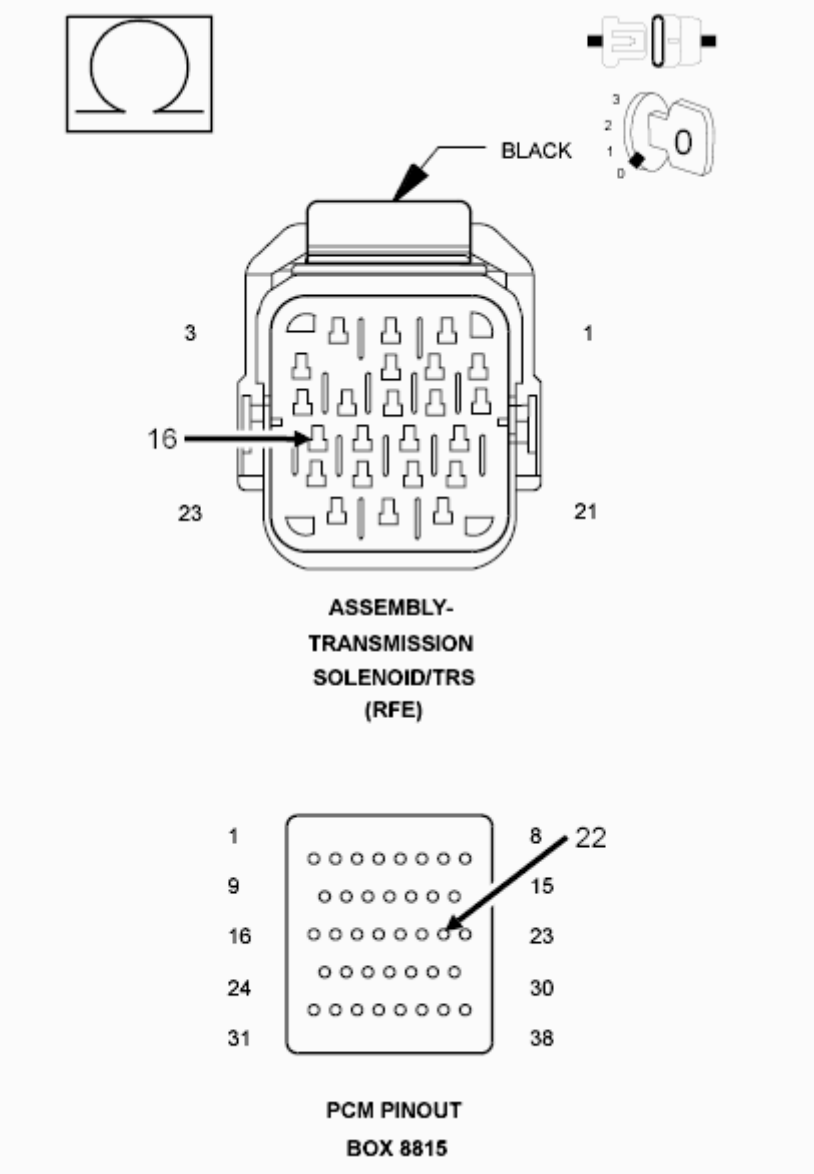

Fig. 12: Checking OD Pressure Switch Sense Circuit For Open
Courtesy of CHRYSLER GROUP, LLC

1. Turn the ignition off to the lock position.
2. Disconnect the PCM C4 harness connector and connect the PCM Pinout Box (special tool #8815A, Kit, NGC, 38 Position).
3. Disconnect the Transmission Solenoid /TRS Assembly harness connector

CAUTION: Do not probe the PCM harness connectors. Probing the PCM harness connectors will damage the PCM terminals resulting in poor terminal to pin connection. Install the (special tool #8815A, Kit, NGC, 38 Position) to perform diagnosis.

4. Measure the resistance of the (T9) OD Pressure Switch Sense circuit from the appropriate terminal of the PCM Pinout Box (special tool #8815A, Kit, NGC, 38 Position) to the Solenoid/TRS Assembly harness connector.

   Is the resistance above 5.0 Ohms?

   Yes

   - Repair the (T9) OD Pressure Switch Sense circuit for an open.
   - Refer to **STANDARD PROCEDURE** and perform the 545RFE TRANSMISSION VERIFICATION TEST.

   No

   - Go To 19.

19. **CHECK THE (T9) OD PRESSURE SWITCH SENSE CIRCUIT FOR A SHORT TO GROUND**

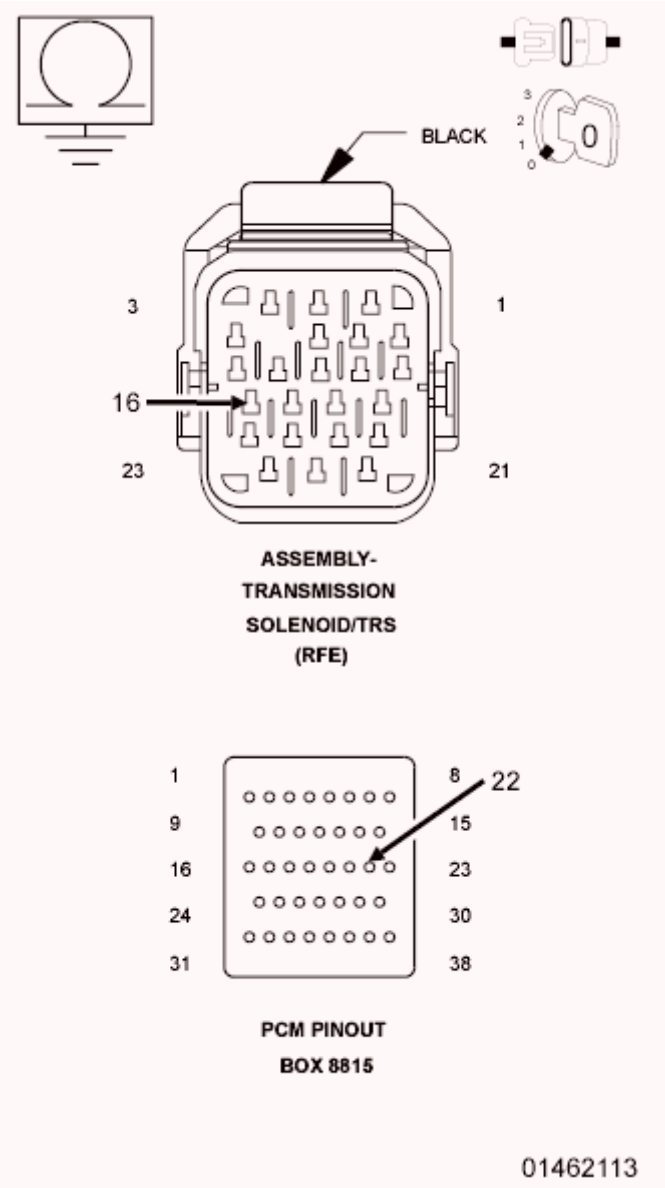

Fig. 13: Checking OD Pressure Switch Sense Circuit For Short To Ground
Courtesy of CHRYSLER GROUP, LLC

1. Measure the resistance between ground and the (T9) OD Pressure Switch Sense circuit.

   Is the resistance below 5.0 Ohms?

   Yes

   - Repair the (T9) OD Pressure Switch Sense circuit for a short to ground.
   - Refer to **STANDARD PROCEDURE** and perform the 545RFE TRANSMISSION VERIFICATION TEST.

   No

- Go To 20.

20. **CHECK WIRING AND CONNECTORS**
    1. Using the schematics as a guide, inspect the wiring and connectors. Pay particular attention to all power and ground circuits.

       Were there any problems found

       Yes

       - Repair as necessary.
       - Refer to **STANDARD PROCEDURE** and perform the 545RFE TRANSMISSION VERIFICATION TEST.

       No

       - Go To 21.

21. **CHECK THE POWERTRAIN CONTROL MODULE**
    1. Reconnect all previously disconnected connectors.
    2. Make sure all Event Data is recorded.
    3. With the scan tool, erase previously stored DTCs and test drive the vehicle, use the Event Data to help duplicate the conditions when the DTC originality set.

       Does the DTC P0871 reset?

       Yes

       - Using the schematics as a guide, check the Powertrain Control Module (PCM) terminals for corrosion, damage, or terminal push out. Pay particular attention to all power and ground circuits. If no problems are found, replace and program the PCM in accordance with the Service Information. With the scan tool, perform Quick Learn.
       - Refer to **STANDARD PROCEDURE** and perform the 545RFE TRANSMISSION VERIFICATION TEST.

       No

       - Go To 22.

22. **CHECK THE WIRING AND CONNECTORS**
    1. The conditions necessary to set this DTC are not present at this time.
    2. Using the schematics as a guide, inspect the wiring and connectors specific to this circuit.
    3. Wiggle the wires while checking for shorted and open circuits.
    4. With the scan tool, check the Event Data to help identify the conditions in which the DTC was set.

       Where there any problems found?

Yes

- Repair as necessary.
- Refer to **STANDARD PROCEDURE** and perform the 545RFE TRANSMISSION VERIFICATION TEST.

No

- Test Complete.

P0875-UD HYDRAULIC PRESSURE TEST

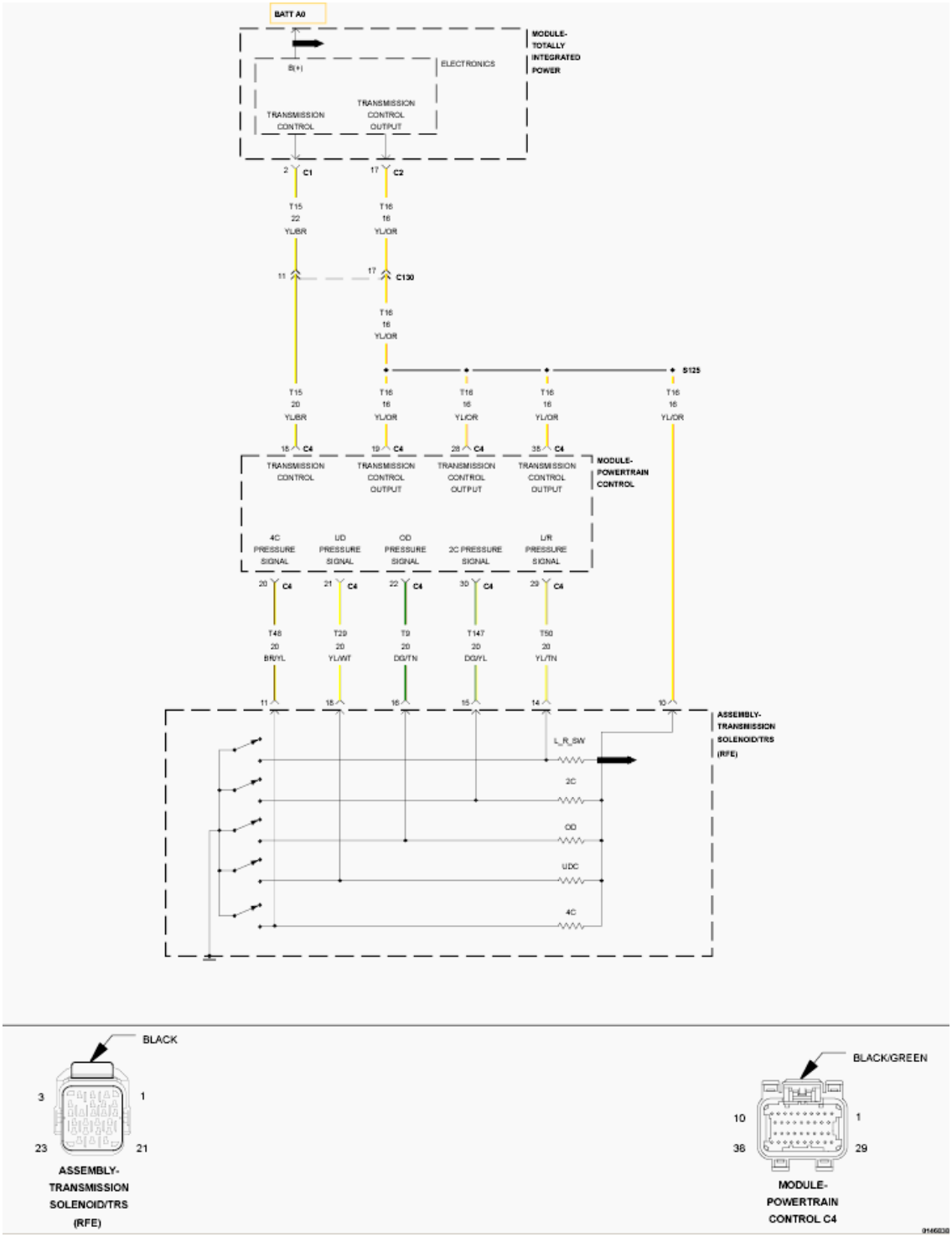

Fig. 14: Pressure Switch Circuit Wiring Diagram
Courtesy of CHRYSLER GROUP, LLC

For a complete wiring diagram, **refer to appropriate SYSTEM WIRING DIAGRAMS article** .

THEORY OF OPERATION

The Transmission Control System tests the pressure switches when they are off. The test verifies that the switches are operational (They will close with pressure applied). The Transmission Control System verifies that the switch closes when the corresponding element is applied. If a switch fails to close, it is re-tested. If it fails the second test, the DTC will set, the MIL will illuminate and the transmission system will default to the orderly Shutdown routine.

WHEN MONITORED:

In any forward gear with engine speed above 1000 rpm shortly after a shift and every minute thereafter.

SET CONDITION:

After a shift into a forward gear, with engine speed above 1000 rpm, the Powertrain Control Module (PCM) momentarily turns on element pressure to the Clutch circuits that don't have pressure to identify the correct Pressure Switch closes. If the Pressure Switch does not close two times, the DTC sets.

POSSIBLE CAUSES

Possible Causes
LINE PRESSURE SENSOR
TRANSMISSION FLUID CONTAMINATION
RELATED DTCS PRESENT
EXCESSIVE DEBRIS IN OIL PAN
POOR LINE PRESSURE SENSOR CONNECTION
(T29) UD PRESSURE SWITCH SENSE CIRCUIT OPEN
TRANSMISSION CONTROL RELAY DTCS PRESENT
(T29) UD PRESSURE SWITCH SENSE CIRCUIT OPEN
(F856) 5-VOLT SUPPLY CIRCUIT OPEN
(T29) UD PRESSURE SWITCH SENSE CIRCUIT SHORTED TO GROUND
(F856) 5-VOLT SUPPLY CIRCUIT SHORTED TO GROUND
(T29) UD PRESSURE SWITCH SENSE CIRCUIT SHORTED TO VOLTAGE
TRANSMISSION SOLENOID/TRS ASSEMBLY
INTERNAL TRANSMISSION
POWERTRAIN CONTROL MODULE (PCM)

Always perform the Pre-Diagnostic Troubleshooting Procedure before proceeding. Refer to STANDARD PROCEDURE .

DIAGNOSTIC TEST

1. **CHECK IF RELATED DTCS ARE PRESENT**
    1. With the scan tool, read DTCs.

       Is there any Loss of Prime, TCM Power Input, TIPM TCM Power Control Circuit and/or Line Pressure Sensor DTCs present?

Yes

- Refer to **DIAGNOSIS AND TESTING** and perform the appropriate diagnostic procedure. If the DTC, P0944-LOSS OF PRIME is present, perform its respective test first.

No

- Go To 2.

2. **CHECK IF THE DTC P0765 IS PRESENT**
   1. With the scan tool, read DTCs.

      Is the DTC P0765 also present?

      Yes

      - Refer to **DIAGNOSIS AND TESTING** and perform the diagnostic procedure for DTC P0765-UD SOLENOID CIRCUIT.

      No

      - Go To 3.

3. **CHECK IF OTHER DTCS ARE PRESENT**
   1. With the scan tool, read DTCs.

      Are any of the DTCs, P0729, P0731, P0732, P0733, and/or P0876 present also?

      Yes

      - Go To 12.

      No

      - Go To 4.

4. **CHECK IF THE DTC IS CURRENT**
   1. With the scan tool, read DTCs.

      Is the status Active or is the Starts Since Set counter 2 or less for this DTC?

      Yes

      - Go To 5.

      No

      - Go To 17.

5. **CHECK IF THE LINE PRESSURE STAYS THE SAME**
    1. Start the engine.
    2. Warm the transmission to 82° C or 180° F.
    3. Firmly apply the brakes.
    4. With the scan tool, monitor the Line Pressure during the following step.
    5. Move the shift lever to each gear position, pausing momentarily in each position and record the line pressure reading. Allow the pressure to stabilize for at least 5 seconds in each range.

       Did the line pressure remain at a steady value between 585 and 655 kPa or 85 and 95 psi in each position?

       Yes

       - Go To 6.

       No

       - Go To 10.
6. **CHECK THE LINE PRESSURE SENSOR CONNECTION**
    1. Ignition on, **engine not running.**
    2. With the scan tool, monitor the Line Pressure while firmly pushing the Transmission Line Pressure Sensor connector inwards towards the Transmission.

       Did the Line Pressure reading on the scan tool change to about 207 kPa or 30 psi when the connector was pushed inward?

       Yes

       - Disconnect and properly reconnect the Line Pressure Sensor connector. Inspect terminals and repair as necessary.
       - Refer to **STANDARD PROCEDURE** and perform the 545RFE TRANSMISSION VERIFICATION TEST.

       No

       - Go To 7.
7. **CHECK THE LINE PRESSURE SENSOR OPERATION**
    1. Turn the ignition off to the lock position.
    2. Remove the Ignition Switch Feed fuse from the TIPM.

CAUTION: Removal of the Ignition Switch Feed fuse from the TIPM will prevent the vehicle from being started in gear.

WARNING: The Ignition Switch Feed fuse must be removed from the TIPM. Failure to do so can result in possible serious or fatal injury.

3. Install the Transmission Simulator (special tool #8333A, Simulator, Transmission).
4. With the Transmission Simulator select the "OFF" position on the "Input/Output Speed" switch.
5. Ignition on, engine not running.
6. With the scan tool, monitor the Line Pressure while turning the Pressure Switch selector to each of the 3 line pressure positions on the Transmission Simulator.

NOTE: All three scan tool Line Pressure readings should be steady and ±14 kPa or 2.0 psi of the reading specified on the Transmission Simulator.

Did the scan tool Line Pressure readings match the specified readings on the Transmission Simulator and remain steady in all three positions?

Yes

- Replace the Line Pressure Sensor in accordance with the Service Information.
- Refer to **STANDARD PROCEDURE** and perform the 545RFE TRANSMISSION VERIFICATION TEST.

No

- Go To 8.

8. **CHECK THE (F856) 5-VOLT SUPPLY CIRCUIT FOR AN OPEN**

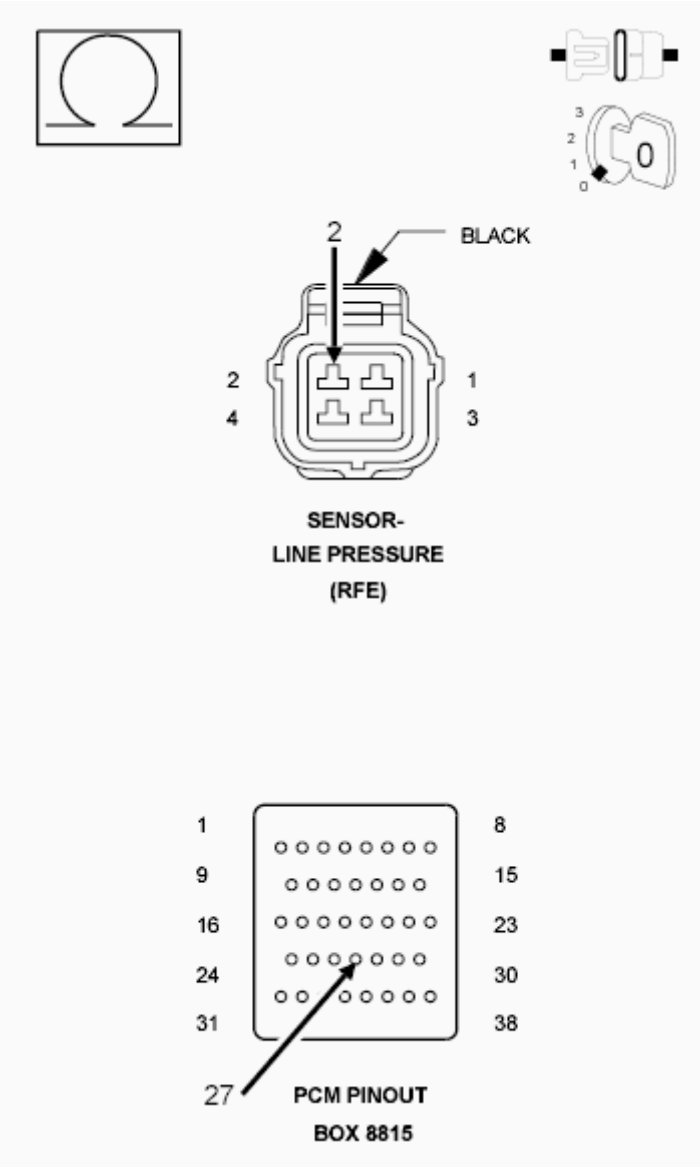

Fig. 15: Checking 5-Volt Supply Circuit For Open
Courtesy of CHRYSLER GROUP, LLC

1. Turn the ignition off to the lock position.
2. Disconnect Transmission Simulator.
3. Disconnect the PCM C1 harness connector and connect the PCM Pinout Box (special tool #8815A, Kit, NGC, 38 Position).

CAUTION: Do not probe the PCM harness connectors. Probing the PCM harness connectors will damage the PCM terminals resulting in poor terminal to pin connection. Install the (special tool #8815A, Kit, NGC, 38 Position) to perform diagnosis.

4. Measure the resistance of the (F856) 5-volt Supply circuit from the Line Pressure Sensor harness

connector to the appropriate terminal of the PCM Pinout Box (special tool #8815A, Kit, NGC, 38 Position).

Is the resistance above 5.0 Ohms?

Yes

- Repair the (F856) 5-volt Supply circuit for an open.
- Refer to **STANDARD PROCEDURE** and perform the 545RFE TRANSMISSION VERIFICATION TEST.

No

- Go To 9.

9. **CHECK THE (F856) 5-VOLT SUPPLY CIRCUIT FOR A SHORT TO GROUND**

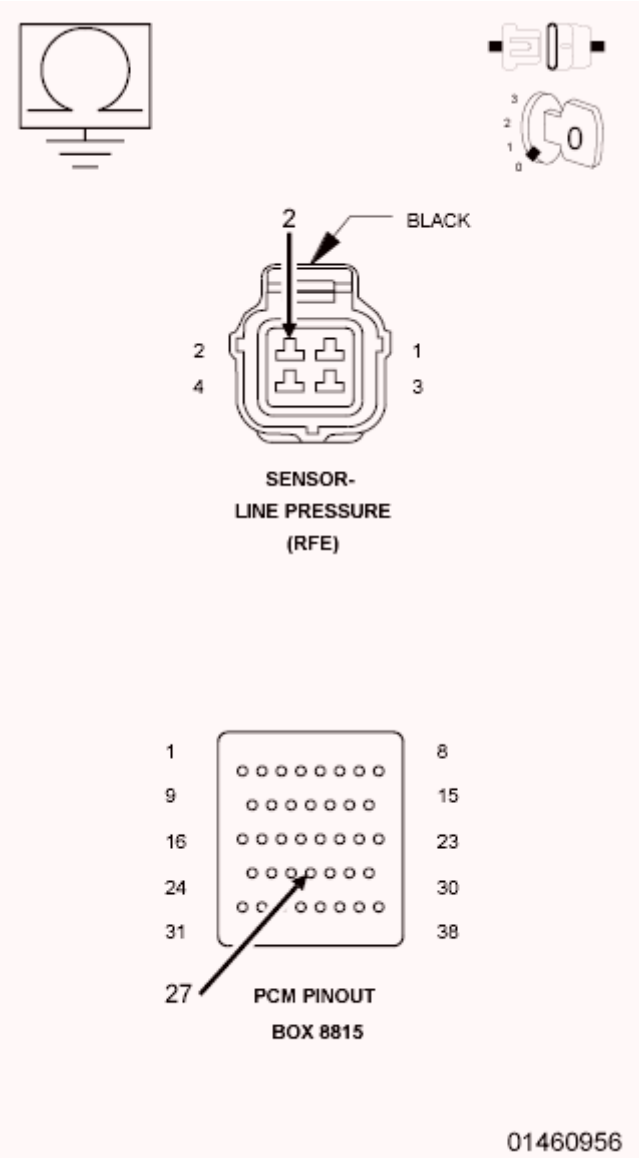

Fig. 16: Checking 5-Volt Supply Circuit For Short To Ground
Courtesy of CHRYSLER GROUP, LLC

1. Measure the resistance between ground and the (F856) 5-volt Supply circuit.

   Is the resistance below 5.0 Ohms?

   Yes

   - Repair the (F856) 5-volt Supply circuit for a short to ground.
   - Refer to **STANDARD PROCEDURE** and perform the 545RFE TRANSMISSION VERIFICATION TEST.

   No

- Using the schematics as a guide, check the Powertrain Control Module (PCM) terminals for corrosion, damage, or terminal push out. Pay particular attention to all power and ground circuits. If no problems are found, replace and program the PCM in accordance with the Service Information. With the scan tool, perform Quick Learn.
- Refer to **STANDARD PROCEDURE** and perform the 545RFE TRANSMISSION VERIFICATION TEST.

10. **COMPARE THE SCAN TOOL READING TO PRESSURE GAUGE READING**
    1. Turn the ignition off to the lock position.
    2. Connect the Line Pressure Adapter (special tool #8259, Adapter, Pressure Test) and 0-300 psi Test Gauge (special tool #C-3293-SP, Gauge, Pressure 0-300 P.S.I.). Refer to the Service Information for proper installation procedure.

       CAUTION: Apply parking brake.

    3. Start the engine.
    4. In the following steps, compare the scan tool Line Pressure to the Pressure Gauge readings in each gear.

       CAUTION: Do not overheat transmission.

    5. With the gear selector in park, raise the rpm to 1500, and compare line pressure readings.
    6. Firmly apply the brakes, move the gear selector into reverse, raise the rpm to 1500, and compare the line pressure readings.
    7. Firmly apply the brakes, move the gear selector into drive, raise the rpm to 1500, and compare the line pressure readings.

       Did the scan tool Line Pressure readings match the Pressure Gauge readings ± 10 psi?

       Yes

       - Go To 11.

       No

       - Replace the Line Pressure Sensor in accordance with the Service Information.
       - Refer to **STANDARD PROCEDURE** and perform the 545RFE TRANSMISSION VERIFICATION TEST.

11. **CHECK THE WIRING AND CONNECTORS**
    1. Turn the ignition off to the lock position.
    2. Remove the Ignition Switch Feed fuse from the TIPM.

CAUTION: Removal of the Ignition Switch Feed fuse from the TIPM will prevent the vehicle from being started in gear.

WARNING: The Ignition Switch Feed fuse must be removed from the TIPM. Failure to do so can result in possible serious or fatal injury.

3. Remove the Line Pressure Adapter (special tool #8259, Adapter, Pressure Test) and 0-300 psi Test Gauge (special tool #C-3293-SP, Gauge, Pressure 0-300 P.S.I.).
4. Install the Transmission Simulator (special tool #8333A, Simulator, Transmission).
5. On the Transmission Simulator, turn the Pressure Switch selector switch to UD.
6. Ignition on, engine not running.
7. With the scan tool, monitor the UD Pressure Switch state while pressing and holding the Pressure Switch test button and wiggling the wire harness and connectors that pertain to the UD Pressure Switch.

   Did the UD Pressure Switch state change to closed and remain closed while wiggling the wires?

   Yes

   - Go To 12.

   No

   - Go To 14.

12. **CHECK FOR EXCESSIVE DEBRIS**
    1. Turn the ignition off to the lock position.
    2. Remove the Transmission Simulator (special tool #8333A, Simulator, Transmission).
    3. Remove and inspect the Transmission Oil Pan in accordance with the Service Information.

       Does the Transmission Oil Pan contain excessive debris or contamination?

       Yes

       - Repair the cause of the excessive debris in the Transmission Oil Pan. Refer to the Service Information for the proper procedures.
       - Refer to **STANDARD PROCEDURE** and perform the 545RFE TRANSMISSION VERIFICATION TEST.

       No

       - Go To 13.

13. **CHECK THE UD HYDRAULIC CLUTCH CIRCUIT**
    1. Remove the Valve Body and air check the UD hydraulic clutch circuit (in the case) for leakage in

accordance with the Service Information.

NOTE: **The UD hydraulic clutch circuit contains a small bleed orifice. A small amount of air leakage is normal.**

Was there excessive air leakage noticed during the air check?

Yes

- Repair as necessary. Check the UD clutch piston, piston seals and bleed orifice, reaction shaft support seal rings, and machining of the main mating faces of the pump housing, pump valve body, and reaction shaft support.
- Refer to **STANDARD PROCEDURE** and perform the 545RFE TRANSMISSION VERIFICATION TEST.

No

- Disassemble and inspect the Valve Body and repair as necessary. Inspect the UD Accumulator piston and seals. If no problems are found in the Valve Body, replace the Transmission Solenoid/TRS Assembly in accordance with the Service Information.
- Refer to **STANDARD PROCEDURE** and perform the 545RFE TRANSMISSION VERIFICATION TEST.

14. **CHECK THE (T29) UD PRESSURE SWITCH SENSE CIRCUIT FOR AN OPEN**

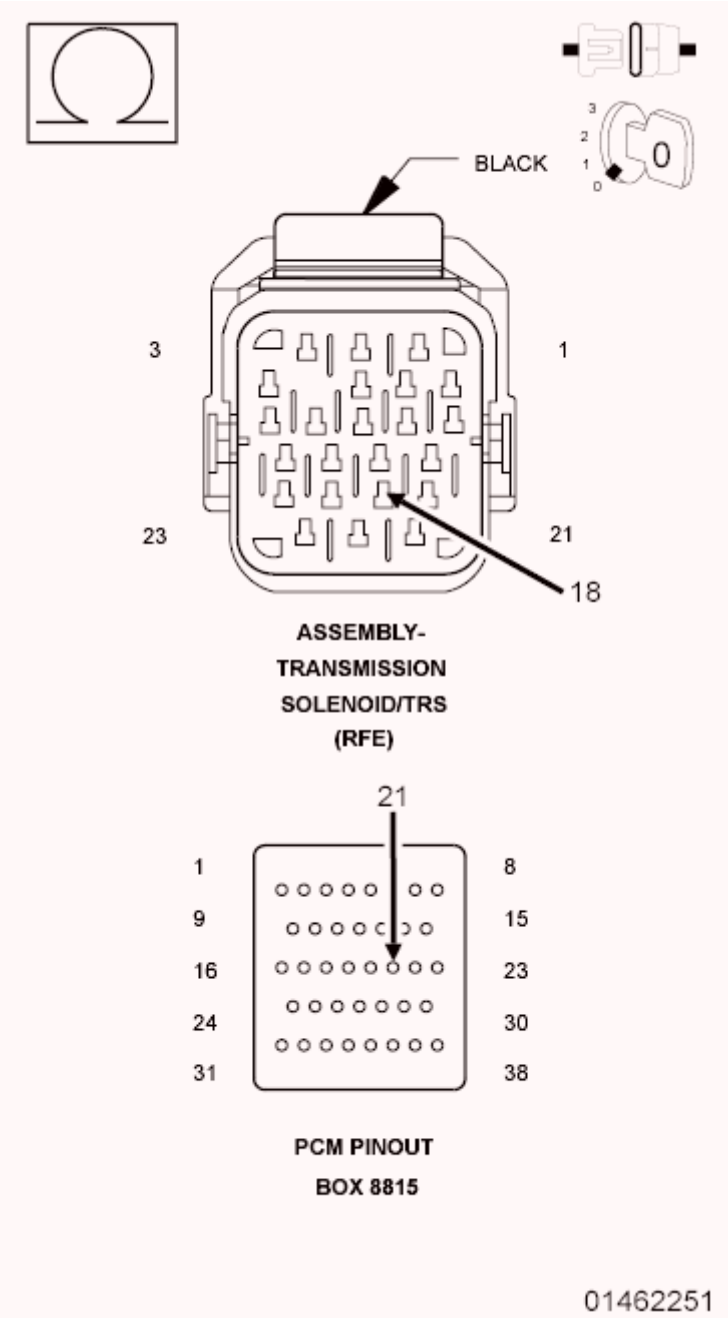

Fig. 17: Checking UD Pressure Switch Sense Circuit For Open
Courtesy of CHRYSLER GROUP, LLC

1. Turn the ignition off to the lock position.
2. Remove the Transmission Simulator (special tool #8333A, Simulator, Transmission).
3. Disconnect the PCM C4 harness connector and connect the PCM Pinout Box (special tool #8815A, Kit, NGC, 38 Position).
4. Measure the resistance of the (T29) UD Pressure Switch Sense circuit between the Transmission Solenoid/TRS Assembly harness connector and the appropriate terminal of the PCM Pinout Box (special tool #8815A, Kit, NGC, 38 Position).

Is the resistance above 5.0 Ohms?

Yes

- Repair the (T29) UD Pressure Switch Sense circuit for an open.
- Refer to **STANDARD PROCEDURE** and perform the 545RFE TRANSMISSION VERIFICATION TEST.

No

- Go To 15.

15. **CHECK THE (T29) UD PRESSURE SWITCH SENSE CIRCUIT FOR A SHORT TO GROUND**

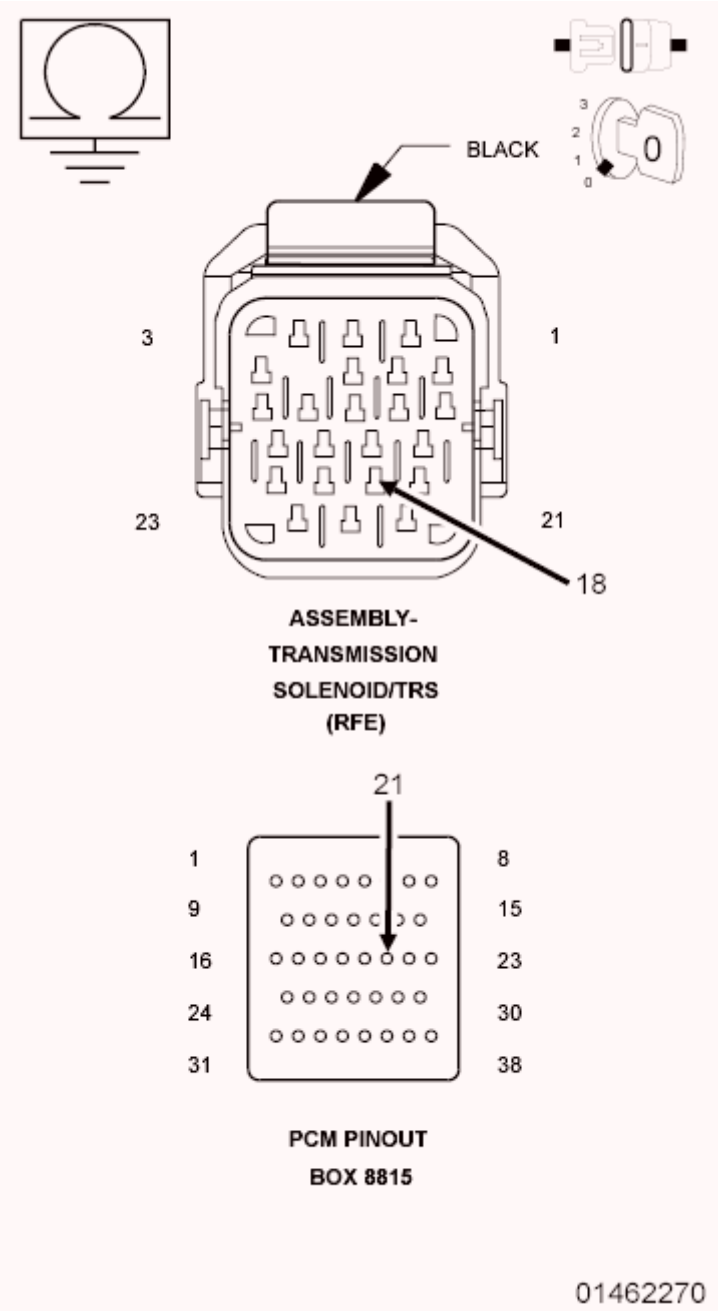

Fig. 18: Checking UD Pressure Switch Sense Circuit For Short To Ground
Courtesy of CHRYSLER GROUP, LLC

1. Measure the resistance between ground and the (T29) UD Pressure Switch Sense circuit.

   Is the resistance below 5.0 Ohms?

   Yes

   - Repair the (T29) UD Pressure Switch Sense circuit for a short to ground.
   - Refer to **STANDARD PROCEDURE** and perform the 545RFE TRANSMISSION

VERIFICATION TEST.

No

- Go To 16.

16. **CHECK THE (T29) UD PRESSURE SWITCH SENSE CIRCUIT FOR A SHORT TO ANOTHER CIRCUIT**

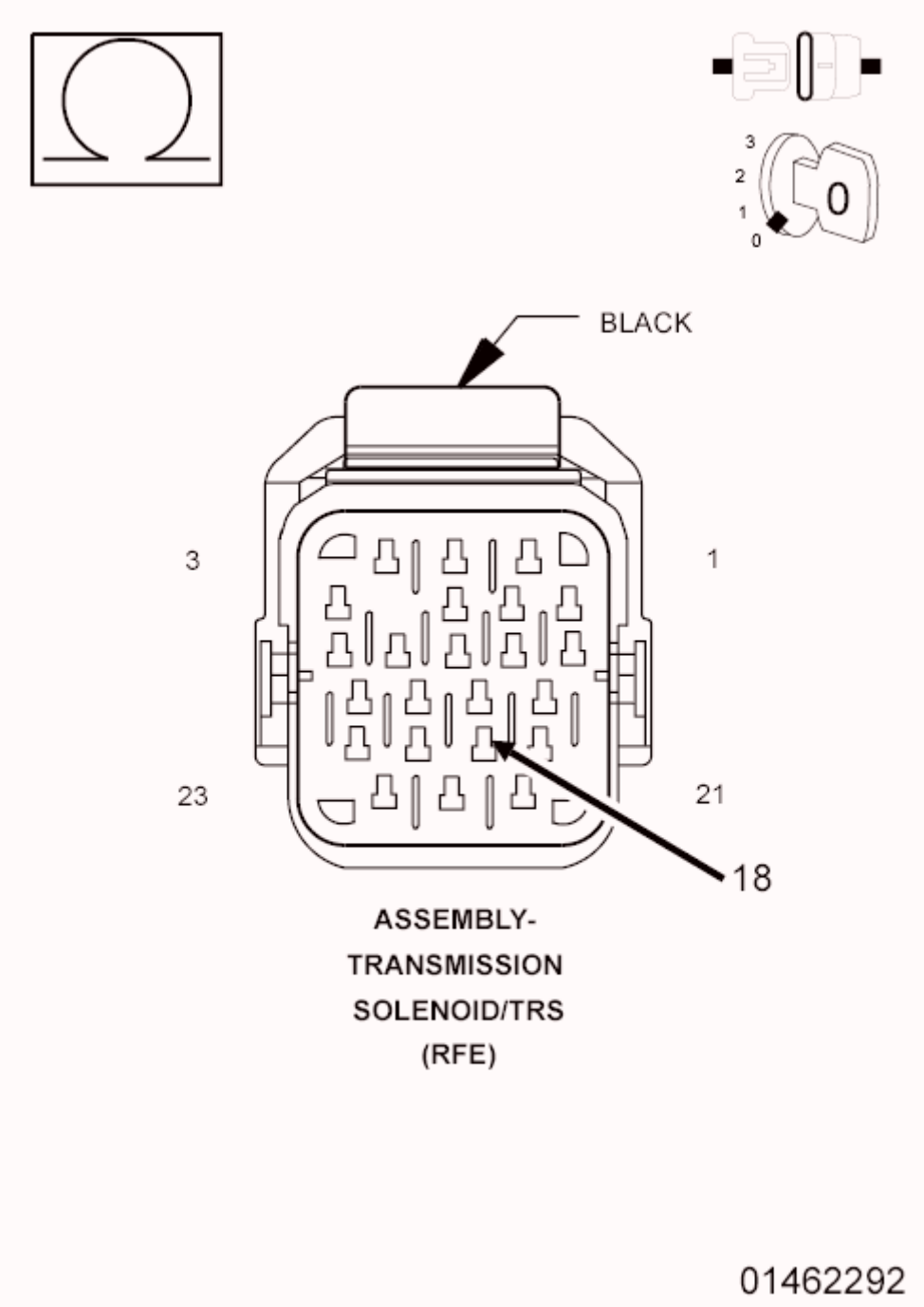

Fig. 19: Checking Ud Pressure Switch Sense Circuit For Short To Circuit

1. Disconnect all PCM harness connectors.
2. Disconnect the Transmission Solenoid/TRS Assembly harness connector.

NOTE: Make sure the Transmission Solenoid/TRS Assembly harness connector is disconnected.

3. Measure the resistance between the (T29) UD Pressure Switch Sense circuit and all other circuits in the Transmission Solenoid/TRS Assembly harness connector.

   Is the resistance below 5.0 Ohms between the (T29) UD Pressure Switch Sense circuit and any other circuit(s) in the Transmission Solenoid/TRS Assembly harness connector?

   Yes

   - Repair the (T29) UD Pressure Switch Sense circuit for a short to another circuit(s).
   - Refer to **STANDARD PROCEDURE** and perform the 545RFE TRANSMISSION VERIFICATION TEST.

   No

   - Using the schematics as a guide, check the Powertrain Control Module (PCM) terminals for corrosion, damage, or terminal push out. Pay particular attention to all power and ground circuits. If no problems are found, replace and program the PCM in accordance with the Service Information. With the scan tool, perform Quick Learn.
   - Refer to **STANDARD PROCEDURE** and perform the 545RFE TRANSMISSION VERIFICATION TEST.

17. **CHECK THE WIRING AND CONNECTORS**
    1. The conditions necessary to set this DTC are not present at this time.
    2. Using the schematics as a guide, inspect the wiring and connectors specific to this circuit.
    3. Wiggle the wires while checking for shorted and open circuits.
    4. With the scan tool, check the Event Data to help identify the conditions in which the DTC was set.
    5. If the Event Data shows the DTC P0875 set while the Line Pressure was significantly below the Desired Line Pressure reading, check for causes of low line pressure (low fluid level, broken or improperly installed primary oil filter or filter seal, sticking Main Regulator Valve in the Pump Valve Body etc.). If the data shows the DTC set while the Line Pressure reading was significantly higher than the Desired Line Pressure, check the Line Pressure Sensor and related wiring.

       Where there any problems found?

       Yes

       - Repair as necessary.
       - Refer to **STANDARD PROCEDURE** and perform the 545RFE TRANSMISSION

VERIFICATION TEST.

No

- Test Complete.

P0876-UD PRESSURE SWITCH RATIONALITY

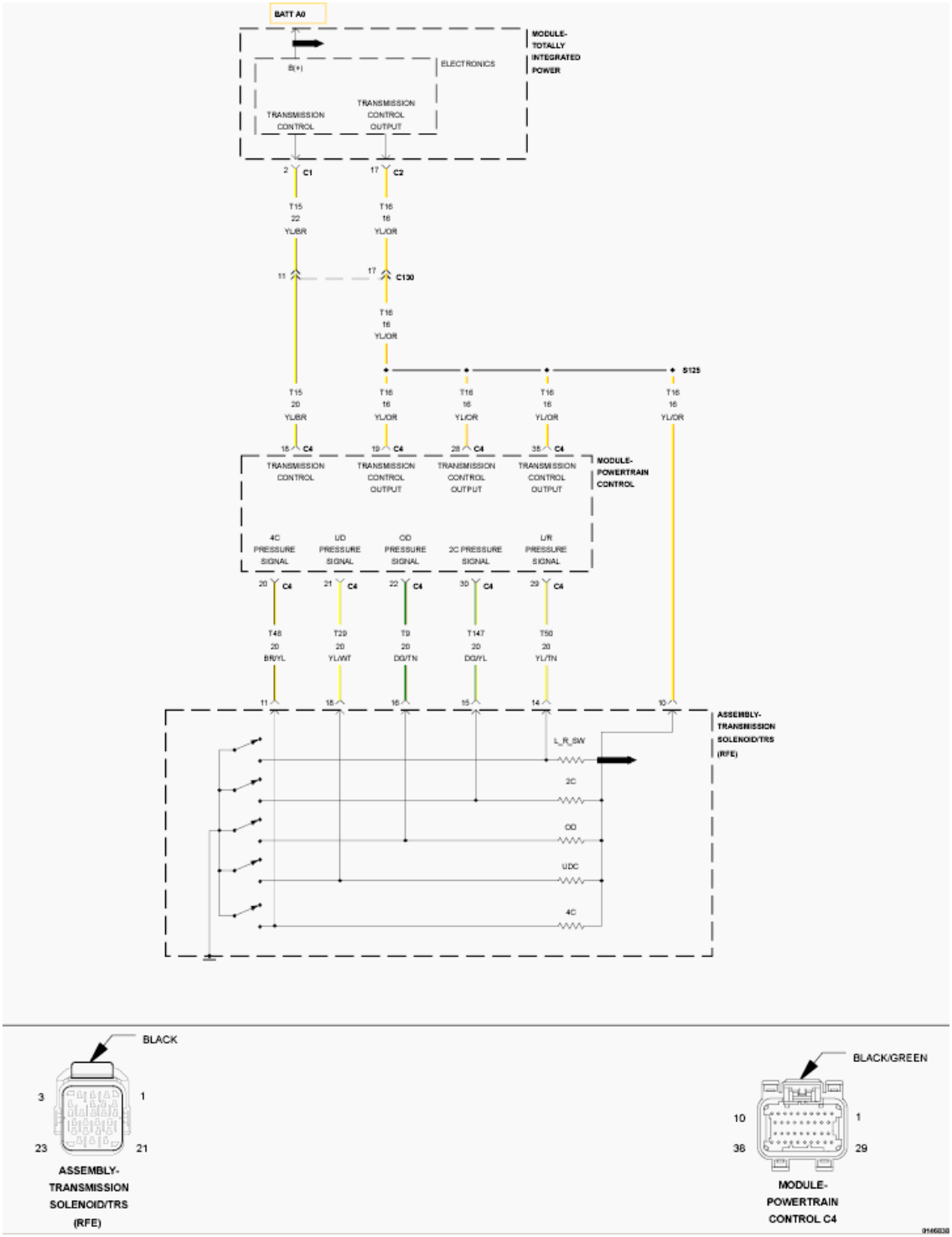

Fig. 20: Pressure Switch Circuit Wiring Diagram
Courtesy of CHRYSLER GROUP, LLC

For a complete wiring diagram, **refer to appropriate SYSTEM WIRING DIAGRAMS article** .

THEORY OF OPERATION

The Transmission system uses five pressure switches to monitor the fluid pressure in the L/R, 2C, 4C, UD, and OD clutch circuits. The pressure switches are continuously monitored for the correct states in each gear as shown.

WHEN MONITORED:

Continuously with the ignition on and engine running.

SET CONDITION:

This DTC is set if the UD pressure switch is in the wrong state for the current gear. For example, this code would be set if the UD pressure switch remained off while the transmission was in second gear.

POSSIBLE CAUSES

Possible Causes
RELATED DTCS PRESENT
LOW FLUID LEVEL
NO. 2 CHECK BALL CUT OR DAMAGED
LOW LINE PRESSURE
CRACKED OR MIS-INSTALLED SUMP FILTER OR SEAL
LOOSE COOLER RETURN SPIN ON FILTER (IF EQUIPPED)
STICKING MAIN REGULATOR VALVE IN PUMP VALVE BODY
(T29) UD PRESSURE SWITCH SENSE CIRCUIT OPEN
(T29) UD PRESSURE SWITCH CIRCUIT SHORTED TO GROUND
(T29) UD PRESSURE SWITCH SENSE CIRCUIT SHORTED TO ANOTHER CIRCUITS
TRANSMISSION SOLENOID/TRS ASSEMBLY
POWERTRAIN CONTROL MODULE (PCM)

Always perform the Pre-Diagnostic Troubleshooting Procedure before proceeding. Refer to STANDARD PROCEDURE .

GEAR	L/R	2C	4C	UD	OD
REVERSE	OPEN	OPEN	OPEN	OPEN	OPEN
P/N	CLOSED**	OPEN	OPEN	OPEN	OPEN
1ST	CLOSED*	OPEN	OPEN	CLOSED	OPEN
2ND	OPEN	CLOSED	OPEN	CLOSED	OPEN
2ND PRIME	OPEN	OPEN	CLOSED	CLOSED	OPEN
3RD	OPEN	OPEN	OPEN	CLOSED	CLOSED
4TH	OPEN	OPEN	CLOSED	OPEN	CLOSED
5TH	OPEN	CLOSED	OPEN	OPEN	CLOSED
*L/R is closed if output speed is below 100 rpm in Drive and Manual 2. L/R is closed in Manual 1.					
**May be open when rolling in Neutral or at low oil temperatures.					

DIAGNOSTIC TEST

1. **CHECK IF RELATED DTCS ARE PRESENT**
   1. With the scan tool, read DTCs.

      Are there any Loss of Prime, TCM Power Input, Line Pressure, and/or TIPM TCM Power Control DTCs present?

      Yes

      - Refer to **DIAGNOSIS AND TESTING** and perform the appropriate diagnostic procedure. If a Loss of Prime DTC is present, perform its respective test first.

      No

      - Go To 2.
2. **CHECK FOR PRESSURE SWITCH DTCS**

   Are there two or more other pressure switch rationality DTCs present in addition to P0876?

   Yes

   - Go To 3.

   No

   - Go To 4.
3. **CHECK IF ALL PRESSURE SWITCHES READ CLOSED**
   1. With the scan tool, read and record all Event Data.

      NOTE: Make sure to record all Event Data stored in the scan tool for future reference in this test procedure.

      Does the Event Data show all pressure switches reading CLOSED?

      Yes

      - Refer to **DIAGNOSIS AND TESTING** and perform the diagnostic procedure for DTC P0882. Diagnose as if the DTC is current.

      No

      - Go To 4.
4. **CHECK FOR OTHER DTCS**
   1. With the scan tool, check DTCs.

Is the DTC P2704 present also?

Yes

- Replace the Transmission Solenoid/TRS Assembly in accordance with the Service Information.
- Refer to **STANDARD PROCEDURE** and perform the 545RFE TRANSMISSION VERIFICATION TEST.

No

- Go To 5.

5. **CHECK THE EVENT DATA**
   1. With the scan tool, read and record the Event Data.

      NOTE: Make sure to record all Event Data stored in the scan tool for future reference in this test procedure.

      Does the Event Data display information for the DTC P0876?

      Yes

      - Go To 6.

      No

      - Refer to **DIAGNOSIS AND TESTING** and perform the diagnostic procedure for the DTC listed in the Event Data.

6. **CHECK IF EVENT DATA WAS SET IN PARK, NEUTRAL OR REVERSE**

   In the Event Data recorded earlier, did the DTC P0876 set in Park, Neutral, or Reverse?

   Yes

   - Go To 10.

   No

   - Go To 7.

7. **CHECK THE UD PRESSURE SWITCH STATUS**

   In the Event Data recorded earlier, did the DTC P0876 set with the UD Pressure Switch closed?

   Yes

   - Go To 10.

No

- Go To 8.

8. **CHECK THE LINE PRESSURE**

   In the Event Data recorded earlier, is the Line Pressure less than 40 psi, and significantly below the Desired Line Pressure?

   Yes

   - Repair as necessary to correct low line pressure. Check fluid level and adjust as necessary. If fluid level is OK, check the Primary Oil Filter seal for a split, crack, or improperly installed. If the filter and seal are OK, check the Main Regulator Valve in the Oil Pump. Refer to the Service Information for the above procedures.
   - Refer to **STANDARD PROCEDURE** and perform the 545RFE TRANSMISSION VERIFICATION TEST.

   No

   - Go To 9.

9. **CHECK THE (T29) UD PRESSURE SWITCH SENSE CIRCUIT FOR A SHORT TO ANOTHER CIRCUIT**

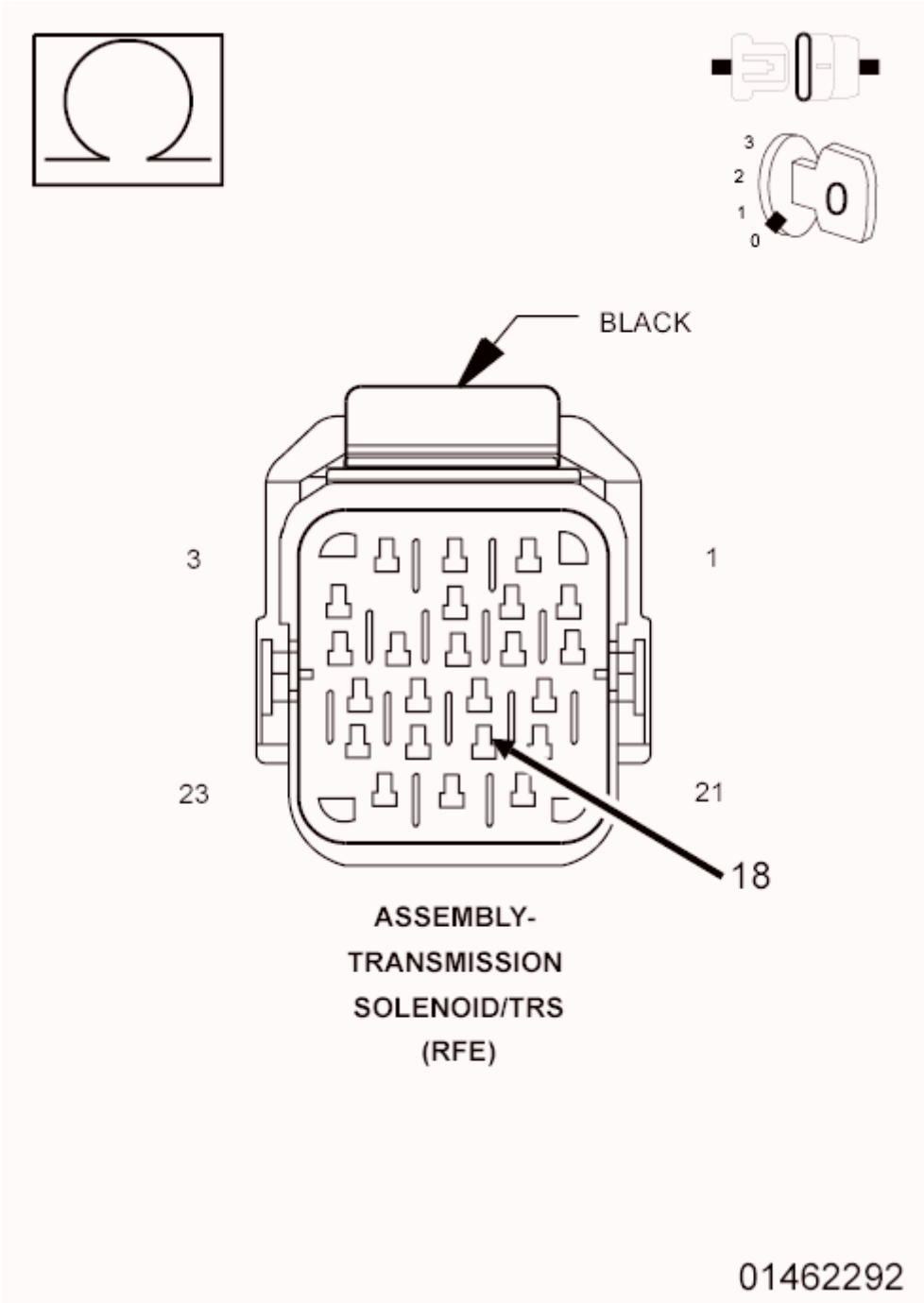

Fig. 21: Checking Ud Pressure Switch Sense Circuit For Short To Circuit
Courtesy of CHRYSLER GROUP, LLC

1. Turn the ignition off to the lock position.
2. Disconnect all PCM harness connectors.
3. Disconnect the Transmission Solenoid/TRS Assembly harness connector.
4. Measure the resistance between the (T29) UD Pressure Switch Sense circuit and all other circuits in the Transmission Solenoid/TRS Assembly harness connector.

Is the resistance below 5.0 Ohms between the (T29) UD Pressure Switch Sense circuit and any other circuit(s) in the Transmission Solenoid/TRS Assembly harness connector?

Yes

- Repair the (T29) UD Pressure Switch Sense circuit for a short to another circuit(s).
- Refer to **STANDARD PROCEDURE** and perform the 545RFE TRANSMISSION VERIFICATION TEST.

No

- Replace the Transmission Solenoid/TRS Assembly in accordance with the Service Information.
- Refer to **STANDARD PROCEDURE** and perform the 545RFE TRANSMISSION VERIFICATION TEST.

10. **CHECK THE PCM AND WIRING**
    1. Turn the ignition off to the lock position.
    2. Remove the Ignition Switch Feed fuse from the TIPM.

CAUTION: Removal of the Ignition Switch Feed fuse from the TIPM will prevent the vehicle from being started in gear.

WARNING: The Ignition Switch Feed fuse must be removed from the TIPM. Failure to do so can result in possible serious or fatal injury.

    3. Install the Transmission Simulator (special tool #8333A, Simulator, Transmission).
    4. Ignition on, engine not running.
    5. With the Transmission Simulator, turn the Pressure Switch selector switch to the UD position.
    6. With the scan tool, monitor the UD Pressure Switch state while pressing the Pressure Switch Test button on the Transmission Simulator.

    Did the state of the UD Pressure Switch change while pressing the Pressure Switch Test button?

    Yes

    - Go To 14.

    No

    - Go To 11.

11. **CHECK THE (T29) UD PRESSURE SWITCH SENSE CIRCUIT FOR AN OPEN**

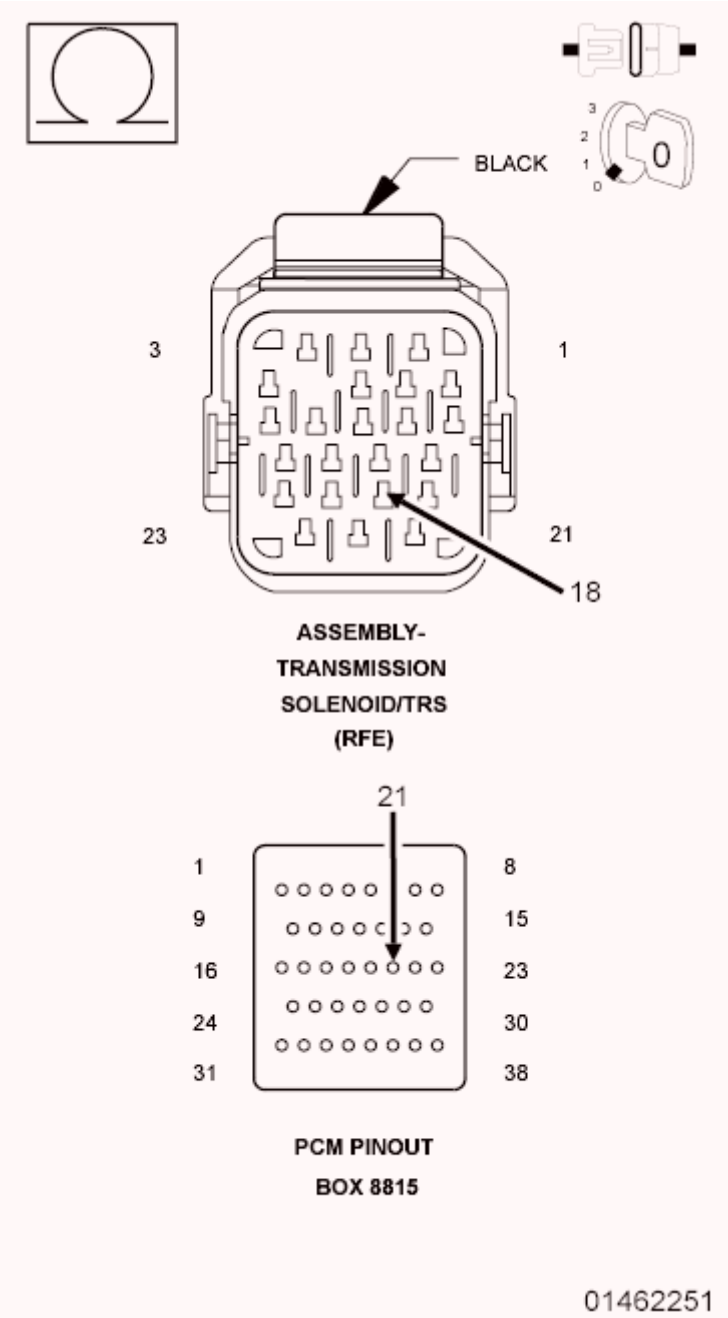

Fig. 22: Checking UD Pressure Switch Sense Circuit For Open
Courtesy of CHRYSLER GROUP, LLC

1. Turn the ignition off to the lock position.
2. Disconnect the Transmission Simulator (special tool #8333A, Simulator, Transmission).
3. Disconnect the PCM C4 harness connector and connect the PCM Pinout Box (special tool #8815A, Kit, NGC, 38 Position).

CAUTION: Do not probe the PCM harness connectors. Probing the PCM harness connectors will damage the PCM terminals resulting in

poor terminal to pin connection. Install the (special tool #8815A, Kit, NGC, 38 Position) to perform diagnosis.

4. Measure the resistance of the (T29) UD Pressure Switch Sense circuit between the Transmission Solenoid/TRS Assembly harness connector and the appropriate terminal of the PCM Pinout Box (special tool #8815A, Kit, NGC, 38 Position).

   Is the resistance above 5.0 Ohms?

   Yes

   - Repair the (T29) UD Pressure Switch Sense circuit for an open.
   - Refer to **STANDARD PROCEDURE** and perform the 545RFE TRANSMISSION VERIFICATION TEST.

   No

   - Go To 12.

12. **CHECK THE (T29) UD PRESSURE SWITCH SENSE CIRCUIT FOR A SHORT TO GROUND**

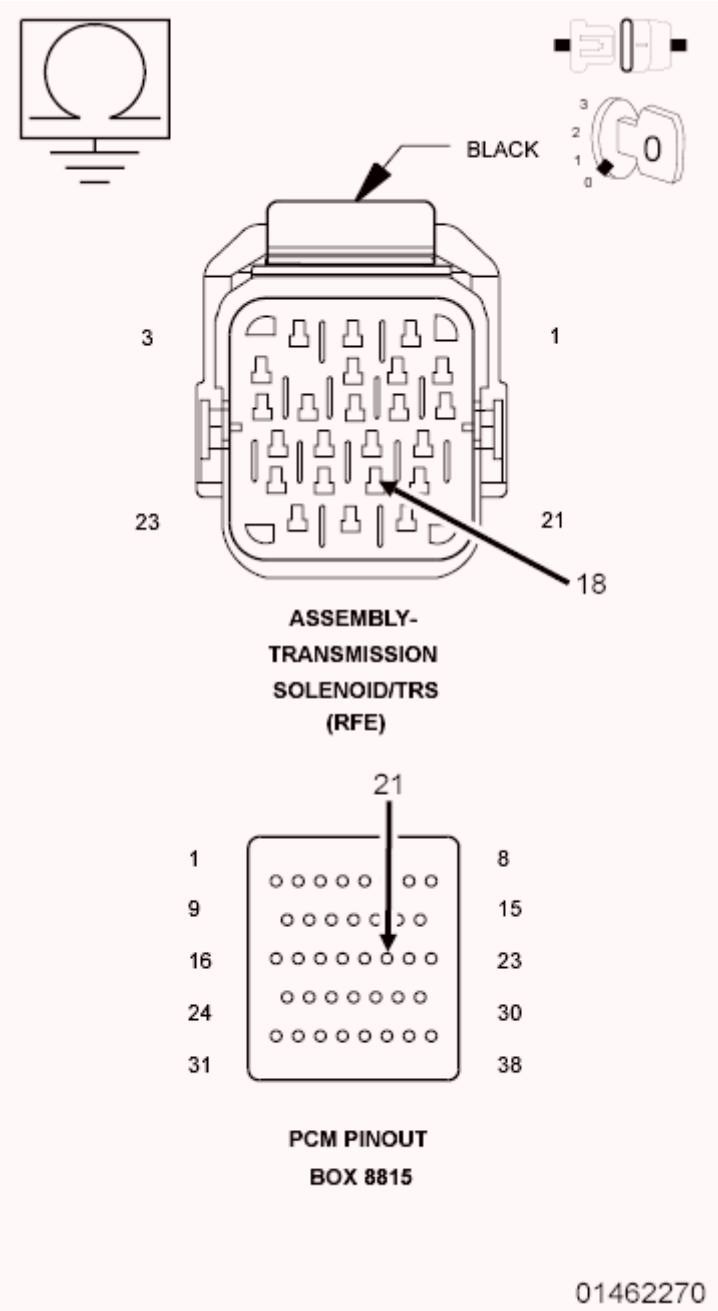

Fig. 23: Checking UD Pressure Switch Sense Circuit For Short To Ground
Courtesy of CHRYSLER GROUP, LLC

1. Measure the resistance between ground and the (T29) UD Pressure Switch Sense circuit.

   Is the resistance below 5.0 Ohms?

   Yes

   - Repair the (T29) UD Pressure Switch Sense circuit for a short to ground.
   - Refer to **STANDARD PROCEDURE** and perform the 545RFE TRANSMISSION

VERIFICATION TEST.

No

- Go To 13.

13. **CHECK THE (T29) UD PRESSURE SWITCH SENSE CIRCUIT FOR A SHORT TO ANOTHER CIRCUIT**

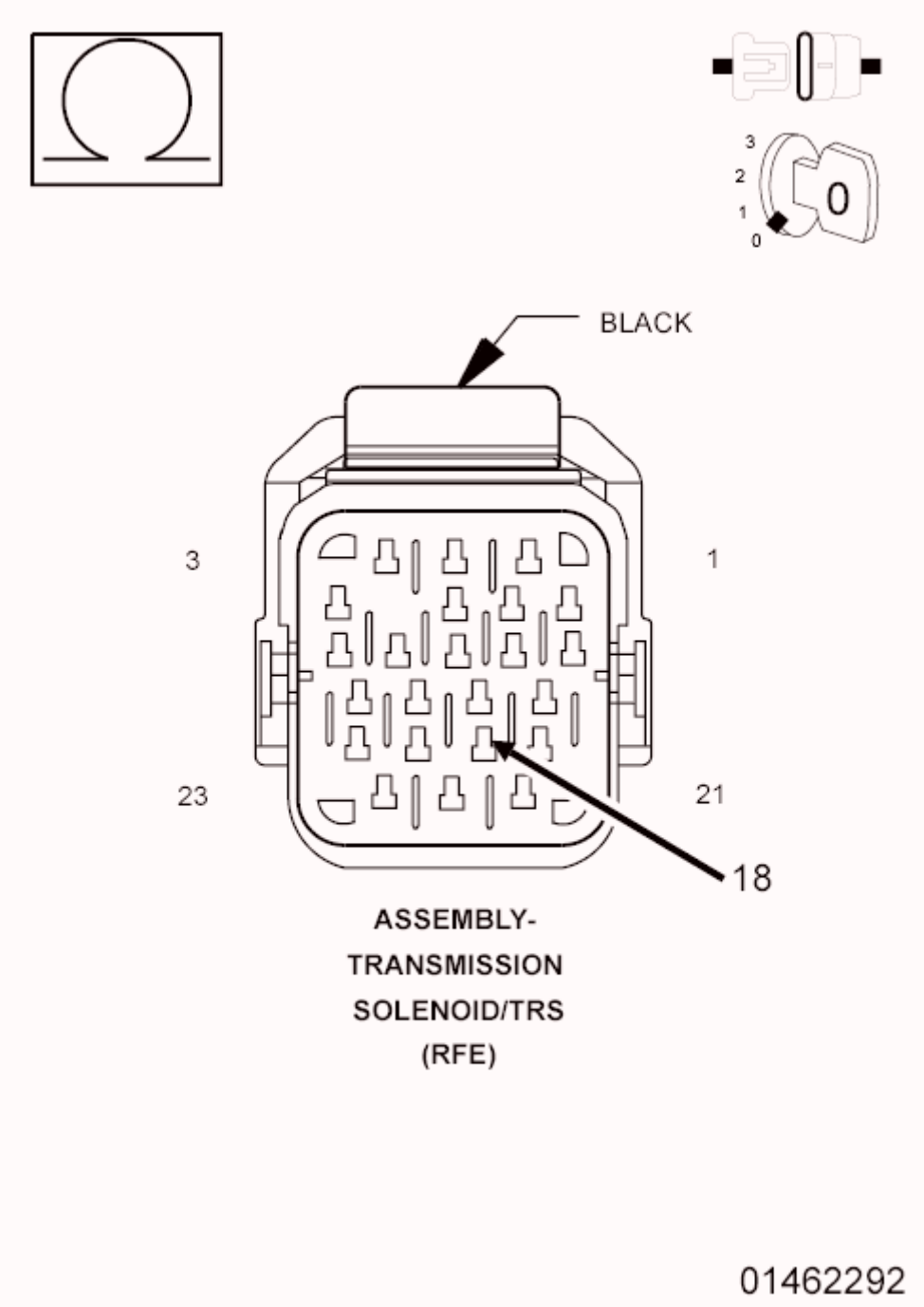

Fig. 24: Checking Ud Pressure Switch Sense Circuit For Short To Circuit

1. Disconnect all PCM harness connectors.

   NOTE: Make sure the Transmission Solenoid/TRS Assembly harness connector is disconnected.

2. Measure the resistance between the (T29) UD Pressure Switch Sense circuit and all other circuits in the Transmission Solenoid/TRS Assembly harness connector.

   Is the resistance below 5.0 Ohms between the (T29) UD Pressure Switch Sense circuit and any other circuit(s) in the Transmission Solenoid/TRS Assembly harness connector?

   Yes

   - Repair the (T29) UD Pressure Switch Sense circuit for a short to another circuit(s).
   - Refer to **STANDARD PROCEDURE** and perform the 545RFE TRANSMISSION VERIFICATION TEST.

   No

   - Using the schematics as a guide, check the Powertrain Control Module (PCM) terminals for corrosion, damage, or terminal push out. Pay particular attention to all power and ground circuits. If no problems are found, replace and program the PCM in accordance with the Service Information. With the scan tool, perform Quick Learn.
   - Refer to **STANDARD PROCEDURE** and perform the 545RFE TRANSMISSION VERIFICATION TEST.

14. **PERFORM A WIGGLE TEST USING THE TRANSMISSION SIMULATOR**

    1. Perform the steps in the previous test while wiggling the wiring harness and connectors pertaining to the UD Pressure Switch.

       Did the state of the UD Pressure Switch change while pressing the Pressure Switch Test button?

       Yes

       - Repair the wiring harness and/or connectors as necessary.
       - Refer to **STANDARD PROCEDURE** and perform the 545RFE TRANSMISSION VERIFICATION TEST.

       No

       - Go To 15.

15. **CHECK THE TRANSMISSION SOLENOID/TRS ASSEMBLY FOR A SHORT TO GROUND**

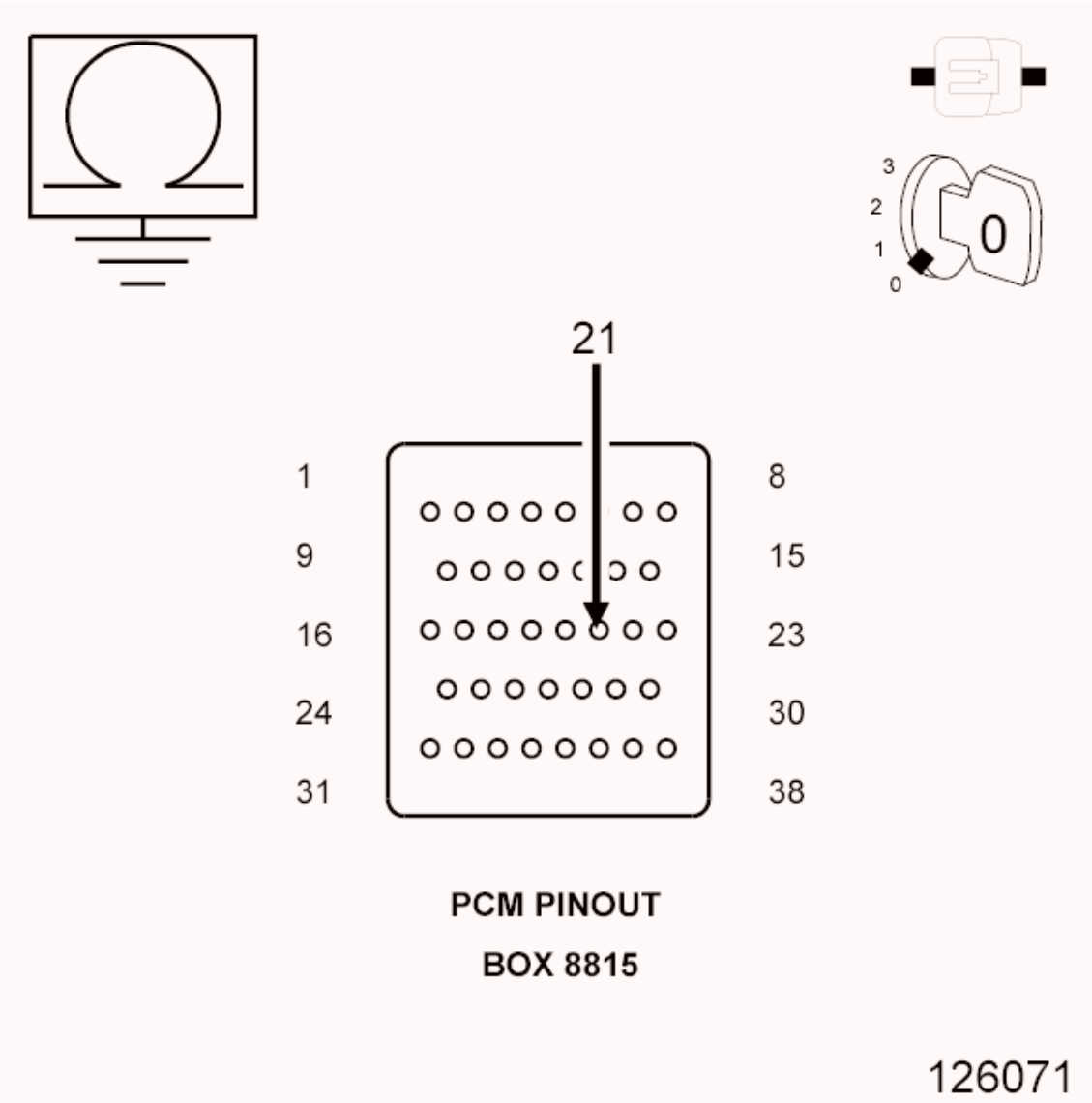

Fig. 25: Checking UD Pressure Switch Sense Circuit For Short To Ground
Courtesy of CHRYSLER GROUP, LLC

1. Disconnect the Transmission Simulator and reconnect the Transmission Solenoid/TRS Assembly harness connector.
2. Disconnect the PCM C4 harness connector and connect the PCM Pinout Box (special tool #8815A, Kit, NGC, 38 Position).
3. Measure the resistance between ground and the (T29) UD Pressure Switch Sense circuit in the appropriate terminal of the PCM Pinout Box (special tool #8815A, Kit, NGC, 38 Position).

   Is the resistance below 5.0 Ohms?

   Yes

   - Replace the Transmission Solenoid/TRS Assembly in accordance with the Service

Information.

- Refer to **STANDARD PROCEDURE** and perform the 545RFE TRANSMISSION VERIFICATION TEST.

No

- Go To 16.

16. **CHECK IF THE DTC RESETS**
    1. Reconnect all previously disconnected connectors.
    2. With the scan tool, erase all transmission DTCs.
    3. Test drive the vehicle. Using the Event Data recorded earlier, try to duplicate the conditions in which the DTC originally set.

    Does the DTC P0876 reset?

    Yes

    - Go To 17.

    No

    - Go To 18.

17. **CHECK FOR A CUT NO. 2 CHECK BALL**
    1. Remove the Valve Body in accordance with the Service Information.
    2. Check the No. 2 check ball for cuts or damage.

    Is the No. 2 check ball cut or damaged?

    Yes

    - Replace the No. 2 check ball. Check for excessive clutch debris in the oil pan. If excessive debris is present, check the UD Clutch and repair as necessary.
    - Refer to **STANDARD PROCEDURE** and perform the 545RFE TRANSMISSION VERIFICATION TEST.

    No

    - Replace the Transmission Solenoid/TRS Assembly in accordance with the Service Information. Check for excessive clutch debris in the oil pan. If excessive debris is present, check the UD Clutch and repair as necessary. Refer to **ASSEMBLY, TRANSMISSION SOLENOID AND TRS, REMOVAL** .
    - Refer to **STANDARD PROCEDURE** and perform the 545RFE TRANSMISSION VERIFICATION TEST.

18. **CHECK FOR CHECK THE WIRING AND CONNECTORS**

1. The conditions necessary to set this DTC are not present at this time.
2. Using the schematics as a guide, inspect the wiring and connectors specific to this circuit.
3. Wiggle the wires while checking for shorted and open circuits.
4. With the scan tool, check the Event Data to help identify the conditions in which the DTC was set.

   Were there any problems found?

   Yes

   - Repair as necessary.
   - Refer to **STANDARD PROCEDURE** and perform the 545RFE TRANSMISSION VERIFICATION TEST.

   No

   - Test Complete.

P0882-TCM POWER INPUT LOW

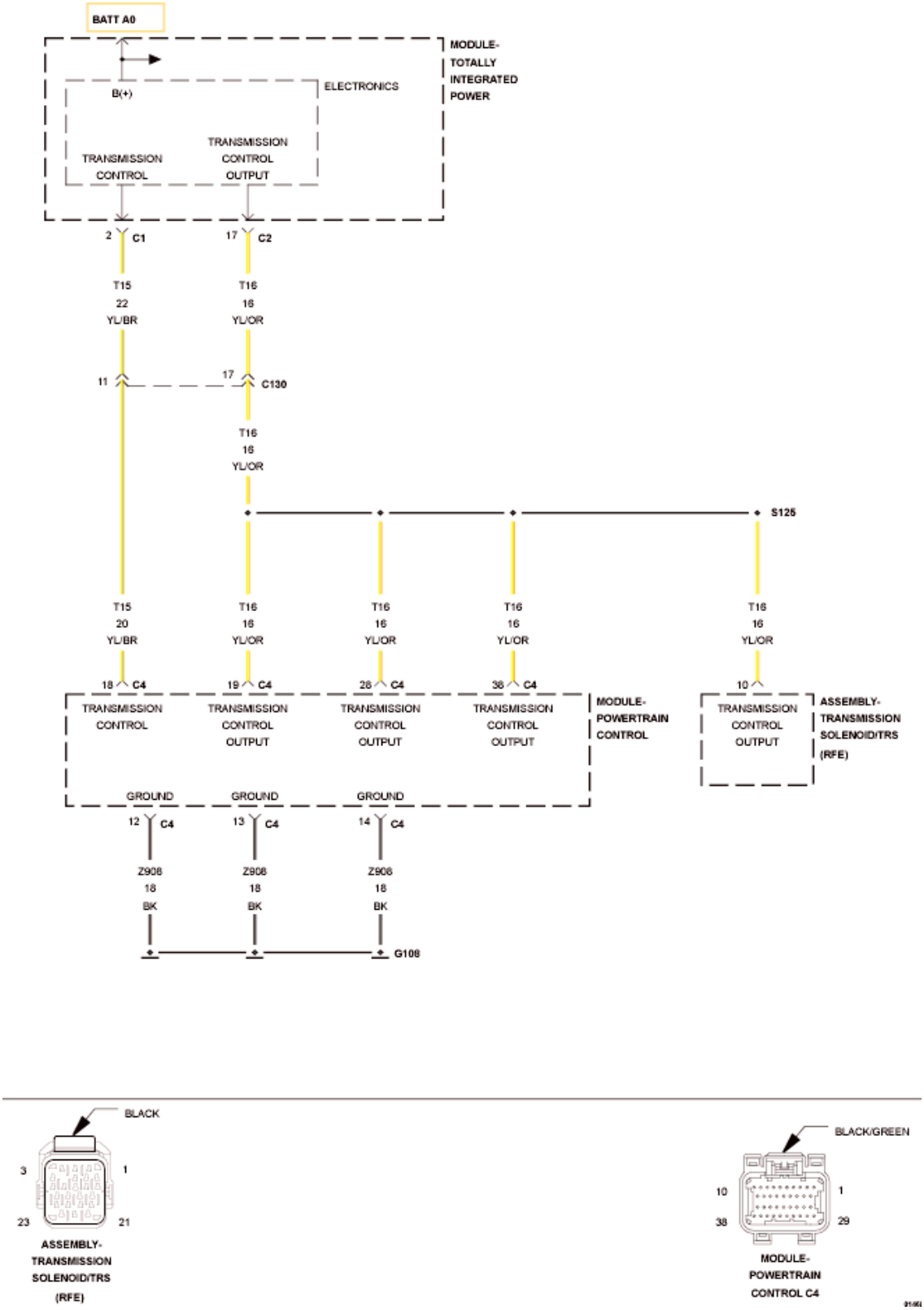

Fig. 26: TCM Power Control Circuit Wiring Diagram
Courtesy of CHRYSLER GROUP, LLC

For a complete wiring diagram, **refer to appropriate SYSTEM WIRING DIAGRAMS article** .

THEORY OF OPERATION

The Transmission Control Output circuit is used to supply power to the Transmission Solenoid/TRS Assembly and to the Powertrain Control Module (PCM) when in normal operating mode. The purpose of the Transmission Output circuit is to allow the Transmission Control System to turn off the power to the Transmission Solenoid/TRS Assembly in event that the transmission should need to be placed into "limp-in" mode due to a DTC.

After a PCM reset, (ignition switch turned to the run position, or after cranking the engine) the Transmission Control System verifies that the Transmission Output circuit is open by checking for voltage on the Transmission Output circuits before the Transmission Control System request for the circuit to be powered up. The request is sent by a direct circuit control from the PCM to the TIPM. If the Transmission Control System detects less that 3.0 volts when the output is commanded on, the DTC will set. **Note: Inadequate Transmission Control Output voltage can also cause DTCs P0846, P0869, P0871, P0876 or P0988 to set. Repairing the P0882 fault should also eliminate the related DTCs.**

WHEN MONITORED:

When the ignition is turned from "OFF" position to "RUN" position and/or the ignition is turned from "START" position to "RUN" position.

SET CONDITION:

This DTC is set when there is less than 3.0 volts present at the transmission control output circuits located in the Powertrain Control Module (PCM) when the Transmission Control System request the power up of those circuits. **Note: Due to the integration of the Transmission Control Module and the Powertrain Control Module, both systems have their own power and ground circuits.** .

POSSIBLE CAUSES

Possible Causes
RELATED TIPM DTCS
(T15) TRANSMISSION CONTROL CIRCUIT SHORTED TO GROUND
(T15) TRANSMISSION CONTROL CIRCUIT OPEN
POWERTRAIN CONTROL MODULE (PCM)

Always perform the Pre-Diagnostic Troubleshooting Procedure before proceeding. Refer to STANDARD PROCEDURE .

DIAGNOSTIC TEST

1. **CHECK IF THE DTC IS CURRENT**
    1. With the scan tool, read DTCs.

       Is the status Active or is the Starts Since Set counter 2 or less for this DTC?

Yes

- Go To 2.

No

- Go To 5.

2. **CHECK FOR TIPM RELATED DTCS**
   1. With the scan tool, read TIPM DTCs.

      Are there any TCM TIPM DTCs present?

      Yes

      - Refer to **DIAGNOSIS AND TESTING** and perform the appropriate diagnostic procedure.

      No

      - Go To 3.

3. **CHECK THE (T15) TRANSMISSION CONTROL CIRCUIT FOR A SHORT TO GROUND**

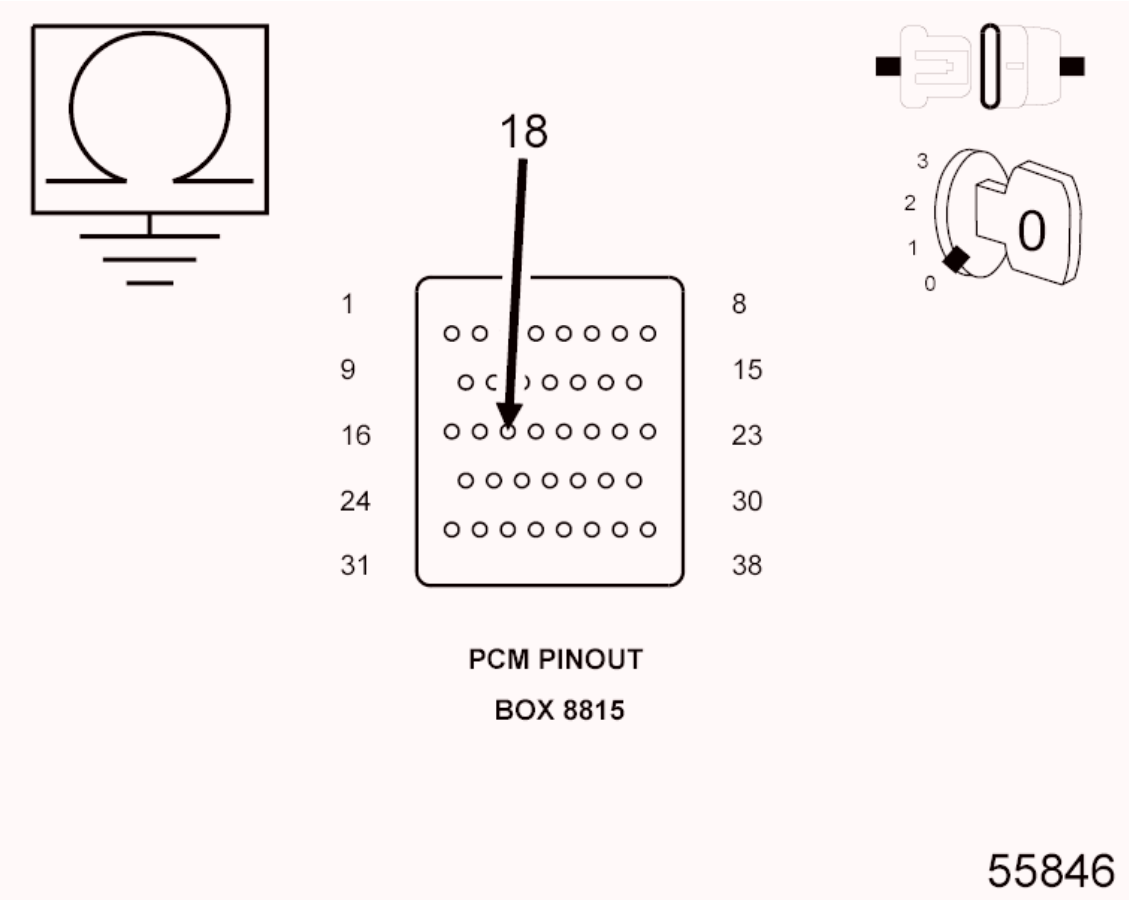

Fig. 27: Checking Transmission Control Circuit For Short To Ground
Courtesy of CHRYSLER GROUP, LLC

1. Turn the ignition off to the lock position.
2. Disconnect the PCM C4 harness connector and connect the PCM Pinout Box (special tool #8815A, Kit, NGC, 38 Position).

CAUTION: Do not probe the PCM harness connectors. Probing the PCM harness connectors will damage the PCM terminals resulting in poor terminal to pin connection. Install the (special tool #8815A, Kit, NGC, 38 Position) to perform diagnosis.

3. Disconnect the TIPM C1 harness connector.
4. Measure the resistance between ground and the (T15) Transmission Control circuit.

   Is the resistance below 5.0 Ohms?

   Yes

   - Repair the (T15) Transmission Control circuit for a short to ground.
   - Refer to **STANDARD PROCEDURE** and perform the 545RFE TRANSMISSION VERIFICATION TEST.

   No

   - Go To 4.

4. **CHECK THE (T15) TRANSMISSION CONTROL CIRCUIT FOR AN OPEN**

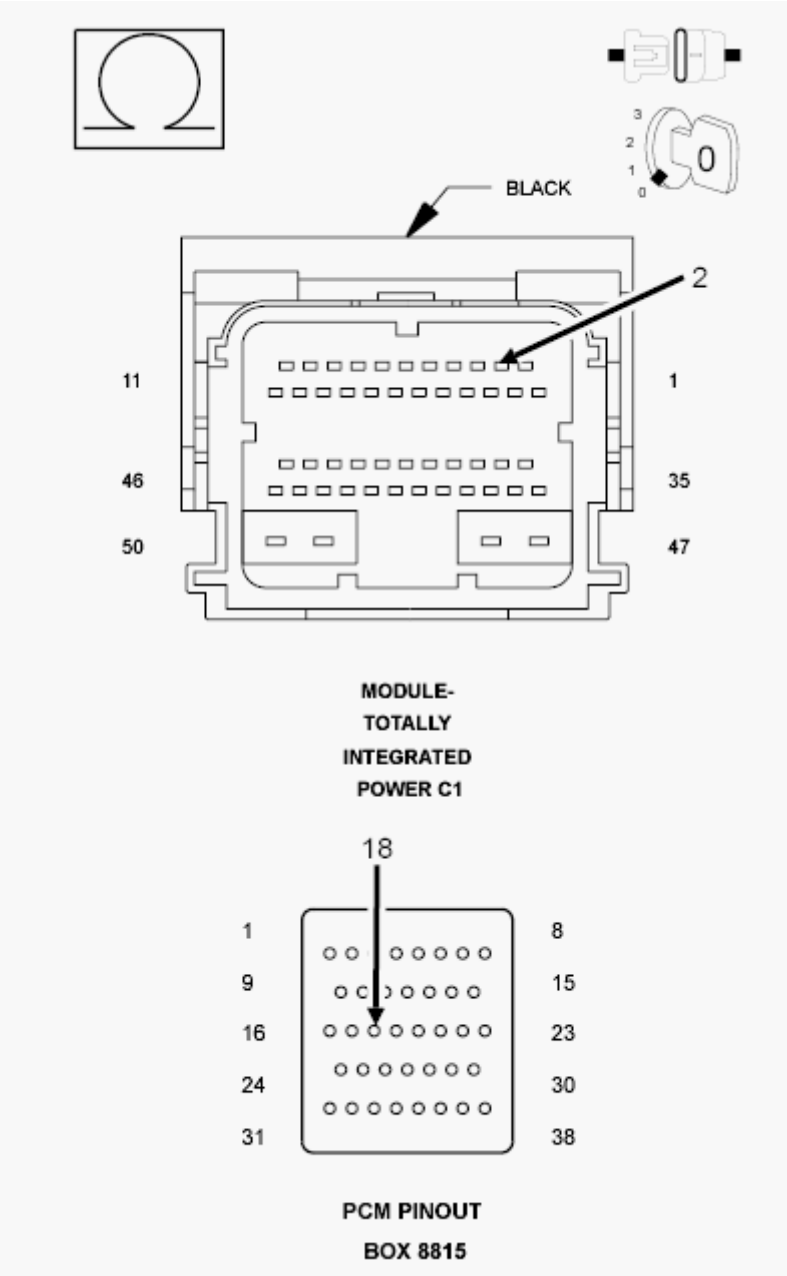

Fig. 28: Checking Transmission Control Circuit For Open
Courtesy of CHRYSLER GROUP, LLC

1. Measure the resistance of the (T15) Transmission Control circuit between the TIPM C1 harness connector and the appropriate terminal of the PCM Pinout Box (special tool #8815A, Kit, NGC, 38 Position).

   Is the resistance above 5.0 Ohms?

   Yes

   - Repair the (T15) Transmission Control circuit for an open.

- Refer to **STANDARD PROCEDURE** and perform the 545RFE TRANSMISSION VERIFICATION TEST.

No

- Using the schematics as a guide, check the Powertrain Control Module (PCM) terminals for corrosion, damage, or terminal push out. Pay particular attention to all power and ground circuits. If no problems are found, replace and program the PCM in accordance with the Service Information. With the scan tool, perform Quick Learn
- Refer to **STANDARD PROCEDURE** and perform the 545RFE TRANSMISSION VERIFICATION TEST.

5. **CHECK THE WIRING AND CONNECTORS**
   1. The conditions necessary to set this DTC are not present at this time.
   2. Using the schematics as a guide, inspect the wiring and connectors specific to this circuit.
   3. Wiggle the wires while checking for shorted and open circuits.
   4. With the scan tool, check the Event Data to help identify the conditions in which the DTC was set.

   Where there any problems found?

   Yes

   - Repair as necessary.
   - Refer to **STANDARD PROCEDURE** and perform the 545RFE TRANSMISSION VERIFICATION TEST.

   No

   - Test Complete.

P0883-TCM POWER INPUT HIGH

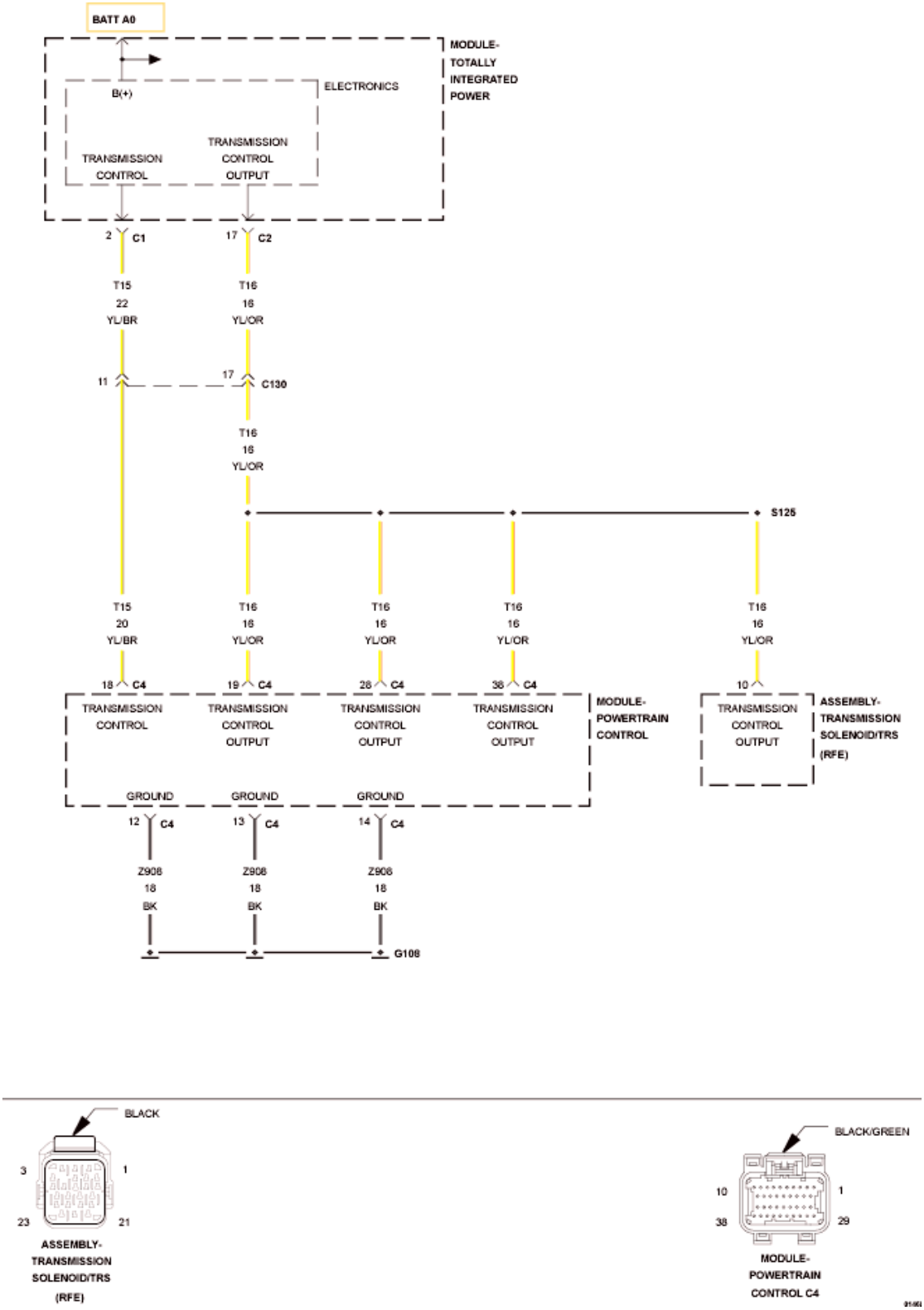

Fig. 29: TCM Power Control Circuit Wiring Diagram
Courtesy of CHRYSLER GROUP, LLC

For a complete wiring diagram, **refer to appropriate SYSTEM WIRING DIAGRAMS article** .

THEORY OF OPERATION

The Transmission Control Output circuit is used to supply power to the Transmission Solenoid/TRS Assembly and to the Powertrain Control Module (PCM) when in normal operating mode. The purpose of the Transmission Output circuit is to allow the Transmission Control System to turn off the power to the Transmission Solenoid/TRS Assembly in event that the transmission should need to be placed into "limp-in" mode due to a DTC.

After a Powertrain Control Module (PCM) reset, (ignition switch turned to the run position, or after cranking the engine) the Transmission Control System verifies that the Transmission Output circuit is open by checking for voltage on the Transmission Output circuits before the Transmission Control System request for the circuit to be powered up. The request is sent by a direct circuit control from the PCM to the Totally Integrated Power Module (TIPM). If voltage is detected on the Transmission Output circuits before the request is sent, the DTC will set.

WHEN MONITORED:

When the ignition is turned from "OFF" position to "RUN" position and/or the ignition is turned from "START" position to "RUN" position.

SET CONDITION:

This DTC is set if the Powertrain Control Module (PCM) senses greater than 3.0 volts on the Transmission Control Relay Output circuits prior to a request from the PCM to Totally Integrated Power Module (TIPM) to energize the Transmission Output circuits.

POSSIBLE CAUSES

Possible Causes
TIPM DTCS PRESENT
(T15) TRANSMISSION CONTROL CIRCUIT SHORTED TO VOLTAGE
(T16) TRANSMISSION CONTROL OUTPUT CIRCUIT SHORTED VOLTAGE
TRANSMISSION SOLENOID/TRS ASSEMBLY
POWERTRAIN CONTROL MODULE (PCM)

Always perform the Pre-Diagnostic Troubleshooting Procedure before proceeding. Refer to STANDARD PROCEDURE .

DIAGNOSTIC TEST

1. **CHECK FOR TCM TIPM DTCS**
    1. With the scan tool, read TIPM DTCs.

       Are there any TIPM TCM Power Control Circuit DTCS present?

Yes

- Refer to **DIAGNOSIS AND TESTING** and perform the appropriate diagnostic procedure.

No

- Go To 2.

2. **CHECK IF THE DTC IS CURRENT**
   1. With the scan tool, read DTCs.

      Is the status Active or is the Starts Since Set counter 0 for this DTC?

      Yes

      - Go To 3.

      No

      - Go To 6.

3. **(T16) TRANSMISSION OUTPUT CIRCUIT SHORTED TO VOLTAGE**

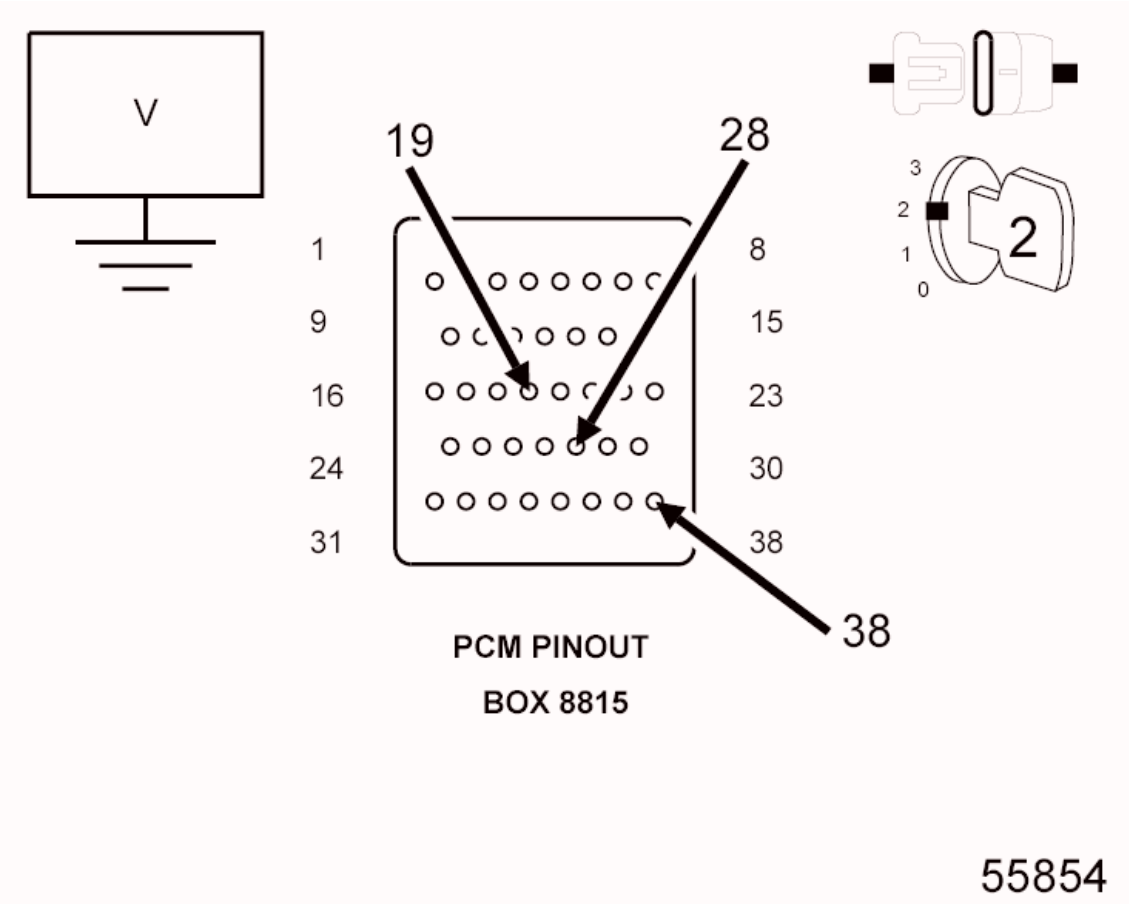

Fig. 30: Checking Transmission Output Circuit For Short To Voltage
Courtesy of CHRYSLER GROUP, LLC

1. Turn the ignition off to the lock position.
2. Disconnect the PCM C4 harness connector.
3. Connect PCM Pinout Box (special tool #8815A, Kit, NGC, 38 Position) to the PCM C4 harness connector.
4. Disconnect the TIPM C2 harness connector.

CAUTION: Do not probe the PCM harness connectors. Probing the PCM harness connectors will damage the PCM terminals resulting in poor terminal to pin connection. Install the (special tool #8815A, Kit, NGC, 38 Position) to perform diagnosis.

5. Ignition on, engine not running.
6. Measure the voltage of the (T16) Transmission Control Output circuits in the PCM Pinout Box (special tool #8815A, Kit, NGC, 38 Position).

   Is the voltage above 0.5 of a volt on any (T16) Transmission Control Output circuit?

   Yes

   - Go To 4.

   No

   - Go To 5.

4. **CHECK THE TRANSMISSION SOLENOID/TRS ASSEMBLY**

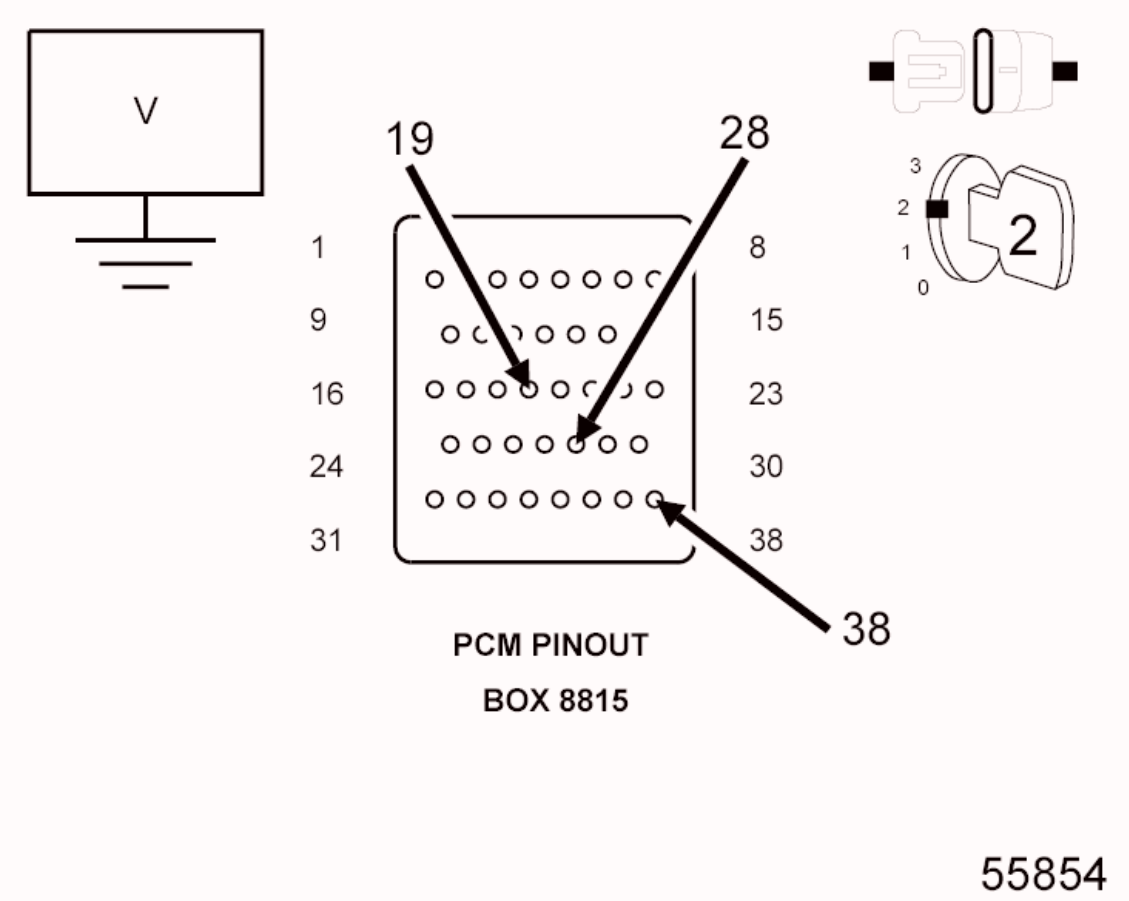

Fig. 31: Checking Transmission Output Circuit For Short To Voltage
Courtesy of CHRYSLER GROUP, LLC

1. Turn the ignition off to the lock position.
2. Disconnect the Transmission Solenoid/TRS Assembly harness connector.
3. Ignition on, engine not running.
4. Measure the voltage of the (T16) Transmission Control Output circuits in the PCM Pinout Box (special tool #8815A, Kit, NGC, 38 Position).

   Is the voltage above 0.5 of a volt?

   Yes

   - Repair the (T16) Transmission Control Output circuit for a short to voltage.
   - Refer to **STANDARD PROCEDURE** and perform the 545RFE TRANSMISSION VERIFICATION TEST.

   No

   - Replace the Transmission Solenoid/TRS Assembly in accordance with the Service Information.

- Refer to **STANDARD PROCEDURE** and perform the 545RFE TRANSMISSION VERIFICATION TEST.

5. **CHECK THE (T15) TRANSMISSION CONTROL CIRCUIT FOR A SHORT TO VOLTAGE**

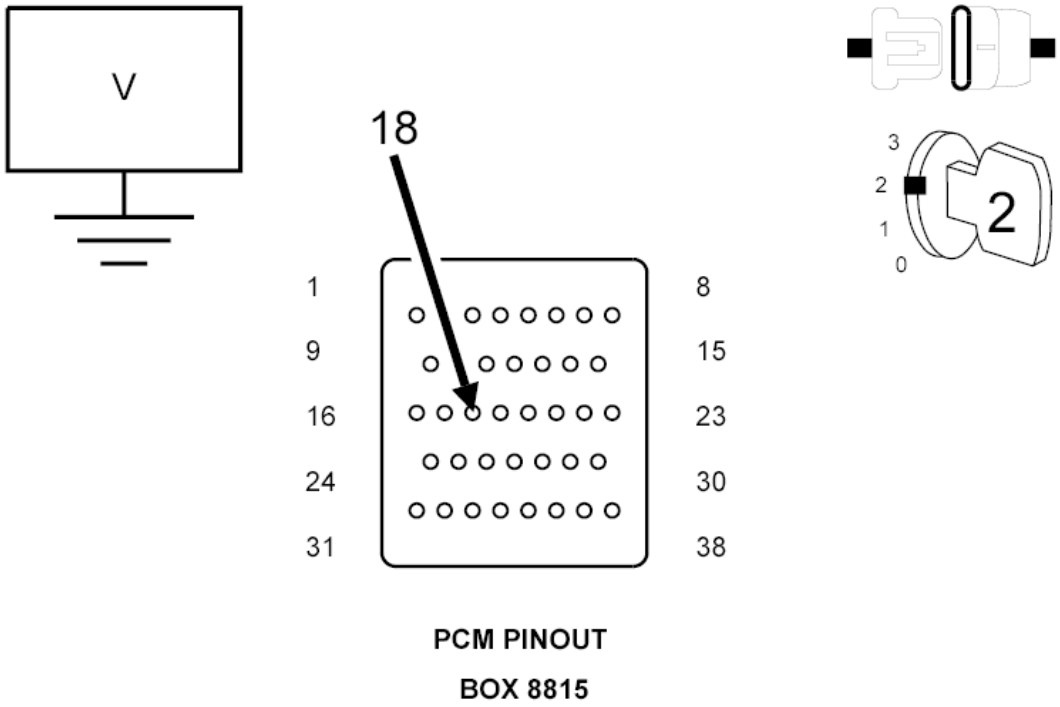

Fig. 32: Checking Transmission Control Circuit For Short To Voltage
Courtesy of CHRYSLER GROUP, LLC

1. Measure the voltage of the (T15) Transmission Control circuit.

   Is the voltage above 0.5 of a volt?

   Yes

   - Repair the (T15) Transmission Control circuit for a short to voltage.
   - Refer to **STANDARD PROCEDURE** and perform the 545RFE TRANSMISSION VERIFICATION TEST.

   No

   - Using the schematics as a guide, check the Powertrain Control Module (PCM) terminals for corrosion, damage, or terminal push out. Pay particular attention to all power and ground circuits. If no problems are found, replace and program the PCM in accordance with the Service Information. With the scan tool, perform Quick Learn.

- Refer to **STANDARD PROCEDURE** and perform the 545RFE TRANSMISSION VERIFICATION TEST.

6. **CHECK WIRING AND CONNECTORS**
    1. The conditions necessary to set this DTC are not present at this time.
    2. Using the schematics as a guide, inspect the wiring and connectors specific to this circuit.
    3. Wiggle the wires while checking for shorted and open circuits.
    4. With the scan tool, check the Event Data to help identify the conditions in which the DTC was set.

    Where there any problems found?

    Yes

    - Repair as necessary.
    - Refer to **STANDARD PROCEDURE** and perform the 545RFE TRANSMISSION VERIFICATION TEST.

    No

    - Test Complete.

P0884-POWER UP AT SPEED

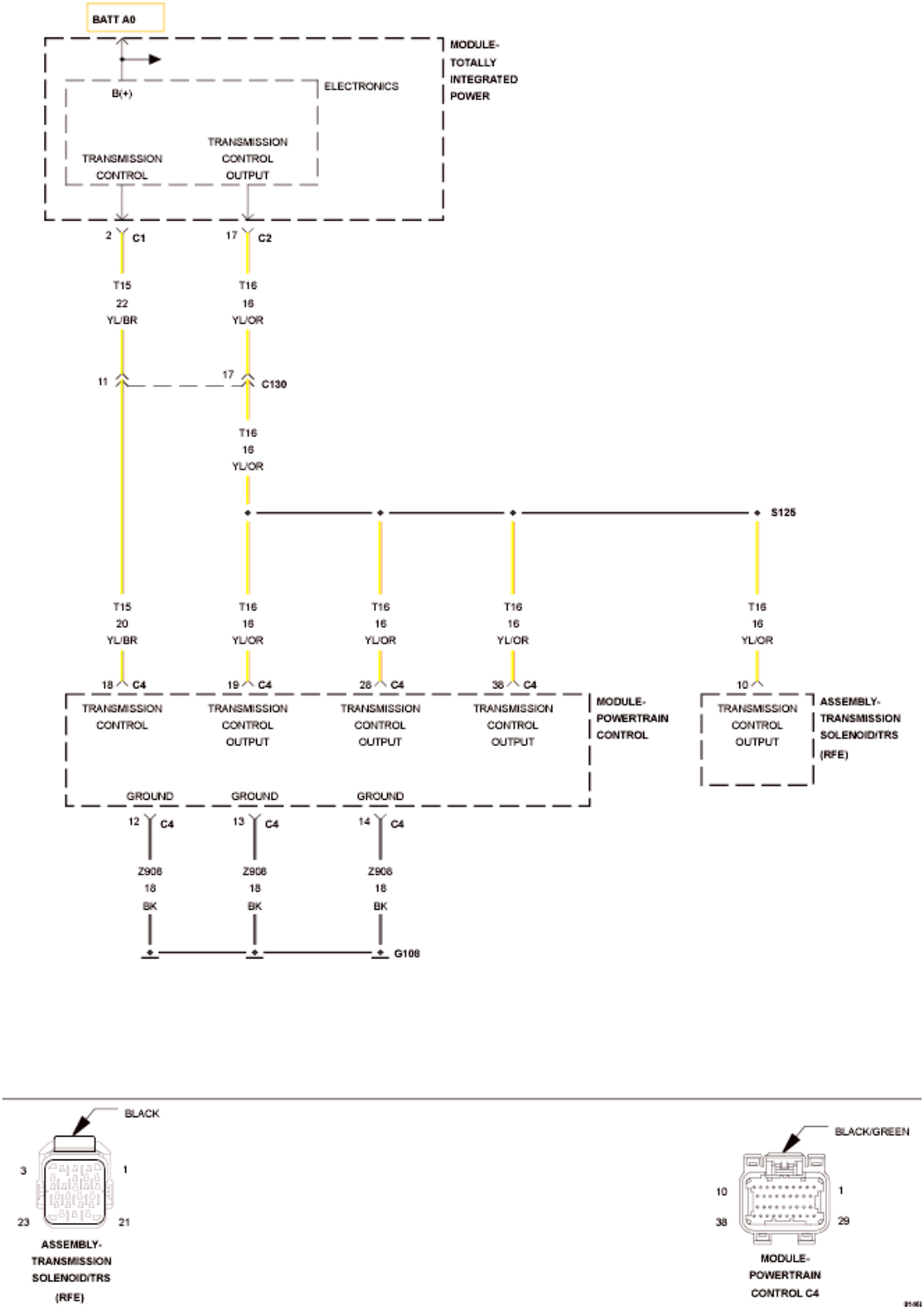

Fig. 33: TCM Power Control Circuit Wiring Diagram
Courtesy of CHRYSLER GROUP, LLC

For a complete wiring diagram, **refer to appropriate SYSTEM WIRING DIAGRAMS article** .

THEORY OF OPERATION

If a vehicle loses power to the Transmission Control System, the solenoids (LR, 2C, OD, UD, 4C) will go to their respective power off state. Some solenoids are normally vented and some are normally applied in their power off state. The transmission is designed to be in 3rd gear with all of the solenoids in this state. However, if power is restored, the Transmission Control System will power-up and normal operation will be restored.

This code identifies that power to the Transmission Control System was restored when the gear selector was in a "Drive" position while the vehicle was moving at speeds above 32 km/h (20 mph). **This DTC does not indicate a problem with the transmission or Transmission Control System,** instead, it suggests intermittent problems in the fused ignition switch output, fused B(+), or ground circuits to the TCM. Alternately, if a person performs a rolling restart maneuver, the DTC can be set. Therefore it is critical that this DTC be investigated if the vehicle is experiencing intermittent 3rd gear operation and a subsequent return to normal operation.

WHEN MONITORED:

When the Powertrain Control Module (PCM) initially powers up. Due to the integration of the Powertrain and Transmission Control Modules, the transmission part of the PCM has its own specific power and ground circuits.

SET CONDITION:

This DTC will set if the Powertrain Control Module (PCM) powers up and senses the vehicle in a valid forward gear, with no PRNDL DTCs, and an output speed above 800 rpm, approximately 32 km/h or 20 mph.

POSSIBLE CAUSES

Possible Causes
POWER UP AT SPEED

Always perform the Pre-Diagnostic Troubleshooting Procedure before proceeding. Refer to STANDARD PROCEDURE .

DIAGNOSTIC TEST

1. **CHECK THE POWER AND GROUND CIRCUITS**
    1. This DTC is set when the Transmission portion of the Powertrain Control Module is initialized while the vehicle is moving down the road in a valid forward gear.
    2. Using the wiring diagram/schematic as a guide, inspect the wiring and connectors.

        NOTE: Due to the integration of the Powertrain and Transmission Control Modules, the transmission part of the PCM has its own specific power and ground circuits.

    3. Check all of the Fused B(+), Fused Ignition Switch Output, and ground circuits to the PCM for an

intermittent open or short to ground.

4. With the scan tool, check the Event Data to help identify the conditions in which the DTC was set.

Repair

- Check all power and ground circuits to the PCM and repair as necessary.
- Refer to **STANDARD PROCEDURE** and perform the 545RFE TRANSMISSION VERIFICATION TEST.

P0890-SWITCHED BATTERY

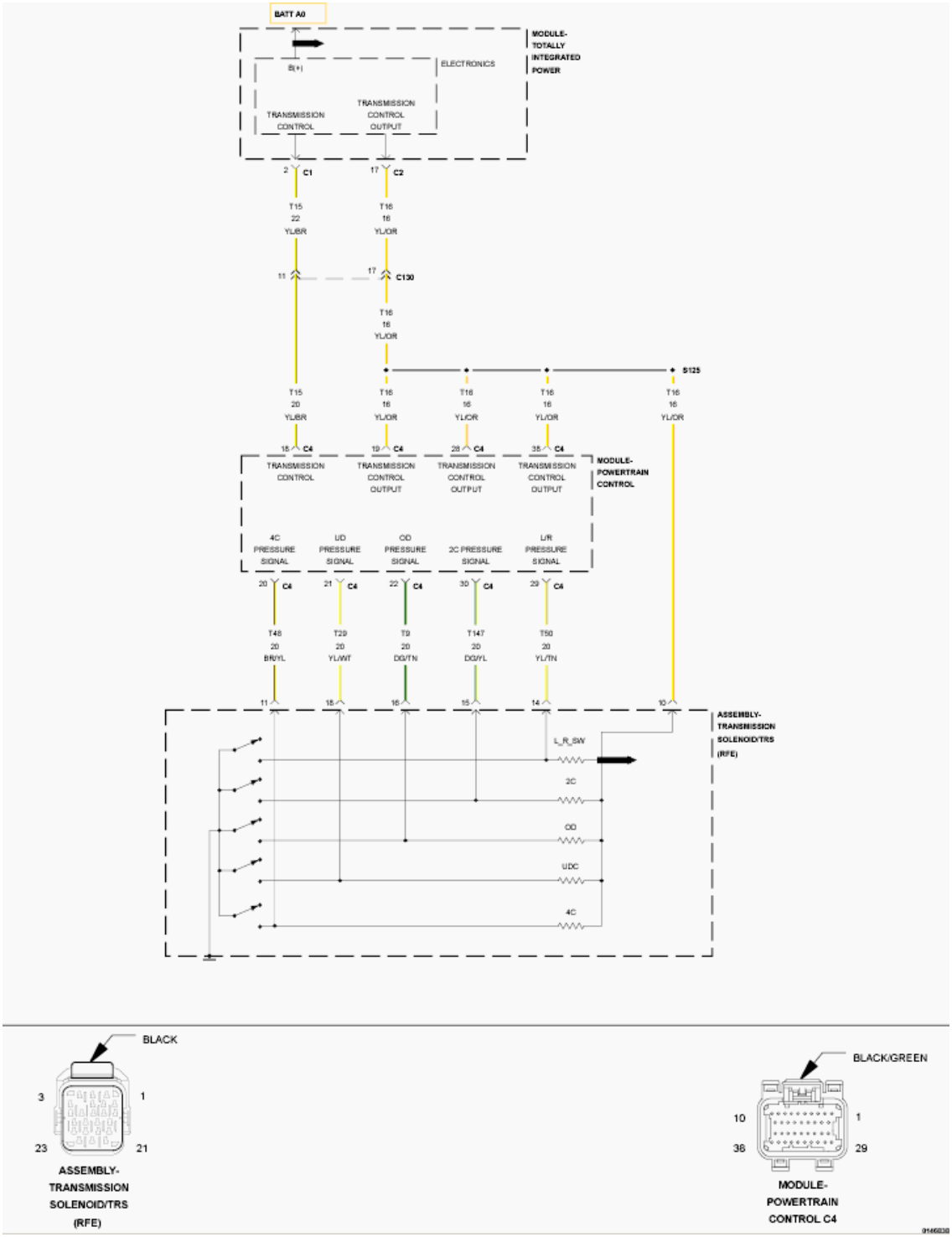

Fig. 34: Pressure Switch Circuit Wiring Diagram
Courtesy of CHRYSLER GROUP, LLC

For a complete wiring diagram, **refer to appropriate SYSTEM WIRING DIAGRAMS article** .

THEORY OF OPERATION

The Totally Integrated Control Module (TIPM) replaces the Transmission control relay. The Transmission Control Output circuit It is used to supply power to the solenoids and pressure switches (Transmission Solenoid/TRS Assembly) when the transmission is in normal operating mode. When the Transmission Control Output circuit is off, no power is supplied and the transmission.

Immediately after a controller reset (ignition key turned to the "run" position or after cranking engine), the TCM verifies that the Transmission Control Output circuits are open by checking for no voltage at the transmission control output terminals at the Powertrain Control Module (PCM). After this is verified, the voltage at the pressure switches are checked. There should be no voltage on the pressure switches at this time. The PCM will then activate the relay.

WHEN MONITORED:

When the ignition is turned from "OFF" position to "RUN" position and/or the ignition is turned from "START" position to "RUN" position.

SET CONDITION:

This DTC is set if the Powertrain Control Module (PCM) senses voltage on any of the pressure switch inputs prior to the Transmission Control Output circuit being energized.

POSSIBLE CAUSES

Possible Causes
PRESSURE SWITCH SENSE CIRCUITS SHORTED TO VOLTAGE
TRANSMISSION SOLENOID/TRS ASSEMBLY
POWERTRAIN CONTROL MODULE (PCM)

Always perform the Pre-Diagnostic Troubleshooting Procedure before proceeding. Refer to STANDARD PROCEDURE .

DIAGNOSTIC TEST

1. **CHECK FOR TIPM TCM DTCS**
    1. With the scan tool, read TIPM DTCs.

       Are there any TCM Power Control DTCs present?

       Yes

       - Refer to **DIAGNOSIS AND TESTING** and perform the appropriate diagnostic procedure.

       No

       - Go To 2.
2. **CHECK IF THE DTC IS CURRENT**

1. With the scan tool, read DTCs.

   Is the status Active or is the Starts Since Set counter 0 for this DTC?

   Yes

   - Go To 3.

   No

   - Go To 5.

3. **CHECK THE PRESSURE SWITCH SENSE CIRCUITS FOR A SHORT TO VOLTAGE**

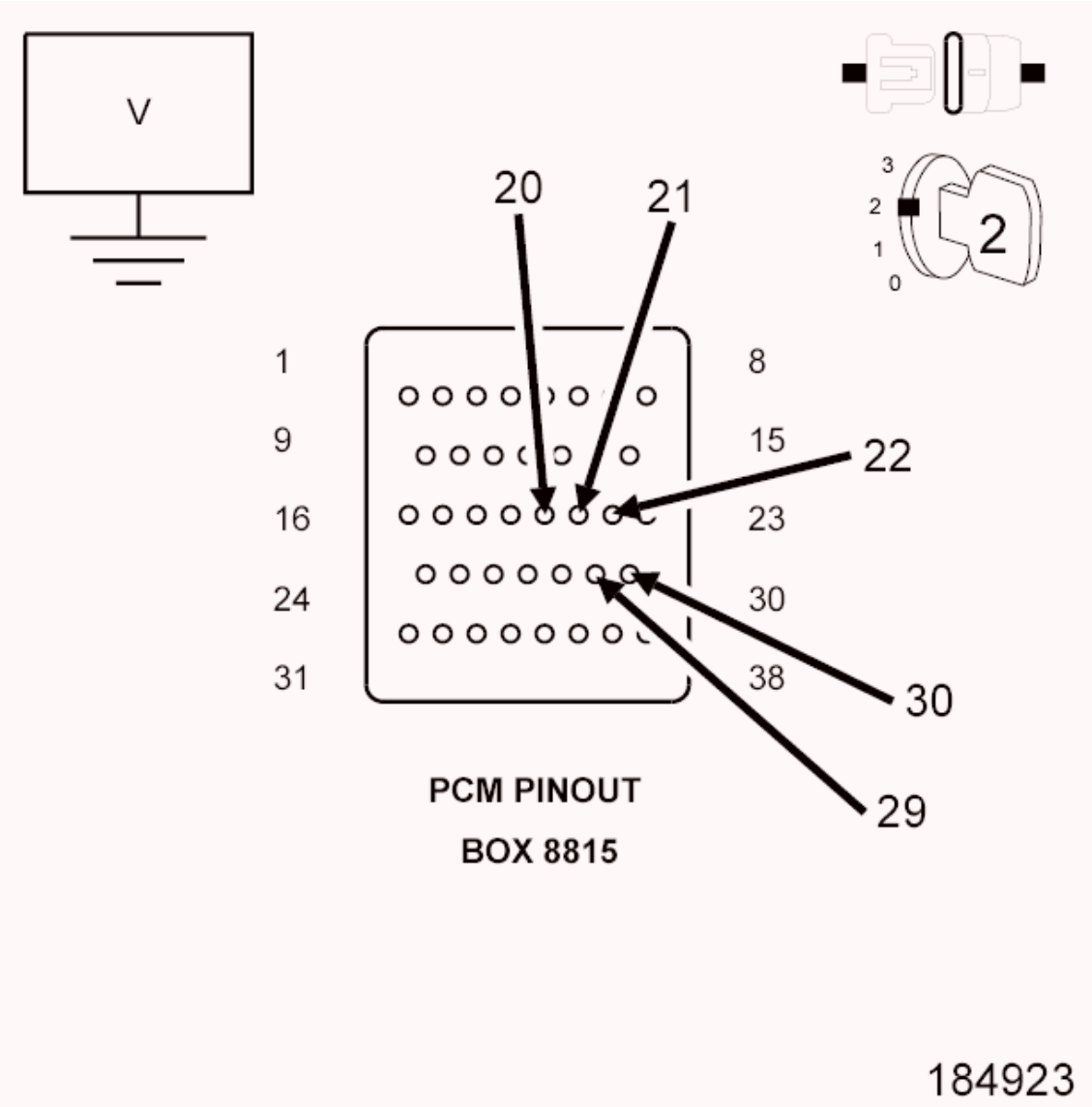

Fig. 35: Checking Pressure Switch Sense Circuit For Short To Voltage
Courtesy of CHRYSLER GROUP, LLC

1. Turn the ignition off to the lock position.
2. Disconnect the PCM C4 harness connector and connect the PCM Pinout Box (special tool #8815A, Kit, NGC, 38 Position).
3. Disconnect the Transmission Solenoid/TRS Assembly harness connector.

CAUTION: Do not probe the PCM harness connectors. Probing the PCM harness connectors will damage the PCM terminals resulting in poor terminal to pin connection. Install the (special tool #8815A, Kit, NGC, 38 Position) to perform diagnosis.

4. Ignition on, engine not running.
5. With the scan tool under TIPM, actuate the Transmission.
6. Measure the voltage of the (T147) 2C, (T48) 4C, (T50) LR, (T9) OD, and (T29) UD Pressure Switch Sense circuits in the PCM Pinout Box (special tool #8815A, Kit, NGC, 38 Position).

   Is the voltage above 0.5 of a volt on any of the measured circuits?

   Yes

   - Repair the (T147) 2C, (T48) 4C, (T50) LR, (T9) OD, and/or (T29) UD Pressure Switch Sense circuit(s) for a short to voltage.
   - Refer to **STANDARD PROCEDURE** and perform the 545RFE TRANSMISSION VERIFICATION TEST.

   No

   - Go To 4.

4. **CHECK THE TRANSMISSION SOLENOID/TRS ASSEMBLY**

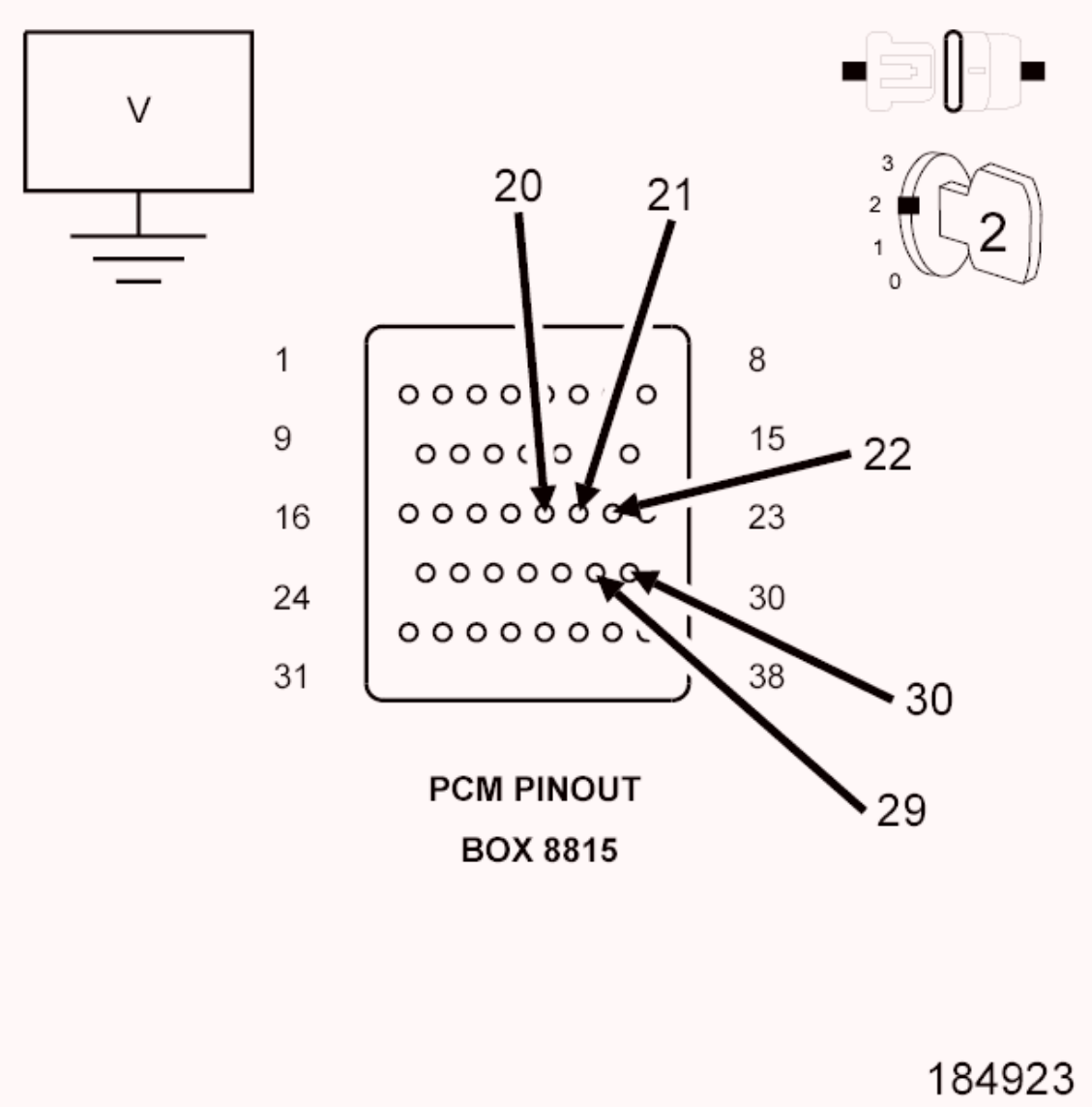

Fig. 36: Checking Pressure Switch Sense Circuit For Short To Voltage
Courtesy of CHRYSLER GROUP, LLC

1. With the scan tool under TIPM, stop the Transmission actuation.
2. Turn the ignition off.
3. Reconnect the Transmission Solenoid/TRS Assembly harness connector.
4. Ignition on, engine not running.
5. Measure the voltage of the (T147) 2C, (T48) 4C, (T50) LR, (T9) OD, and (T29) UD Pressure Switch Sense circuits in the PCM Pinout Box (special tool #8815A, Kit, NGC, 38 Position).

   Is the voltage above 0.5 of a volt on any of the sense circuits?

   Yes

- Replace the Transmission Solenoid/TRS Assembly per the Service Information. Refer to **ASSEMBLY, TRANSMISSION SOLENOID AND TRS, REMOVAL** .
- Refer to **STANDARD PROCEDURE** and perform the 545RFE TRANSMISSION VERIFICATION TEST.

No

- Using the schematics as a guide, check the Powertrain Control Module (PCM) terminals for corrosion, damage, or terminal push out. Pay particular attention to all power and ground circuits. If no problems are found, replace the PCM per the Service Information. With the scan tool, perform Quick Learn.
- Refer to **STANDARD PROCEDURE** and perform the 545RFE TRANSMISSION VERIFICATION TEST.

5. **CHECK THE WIRING AND CONNECTORS**
   1. The conditions necessary to set this DTC are not present at this time.
   2. Using the schematics as a guide, inspect the wiring and connectors specific to this circuit.
   3. Wiggle the wires while checking for shorted and open circuits.
   4. With the scan tool, check the Event Data to help identify the conditions in which the DTC was set.

   Where there any problems found?

   Yes

   - Repair as necessary.
   - Refer to **STANDARD PROCEDURE** and perform the 545RFE TRANSMISSION VERIFICATION TEST.

   No

   - Test Complete.

P0933-HYDRAULIC PRESSURE SENSOR RANGE/PERFORMANCE

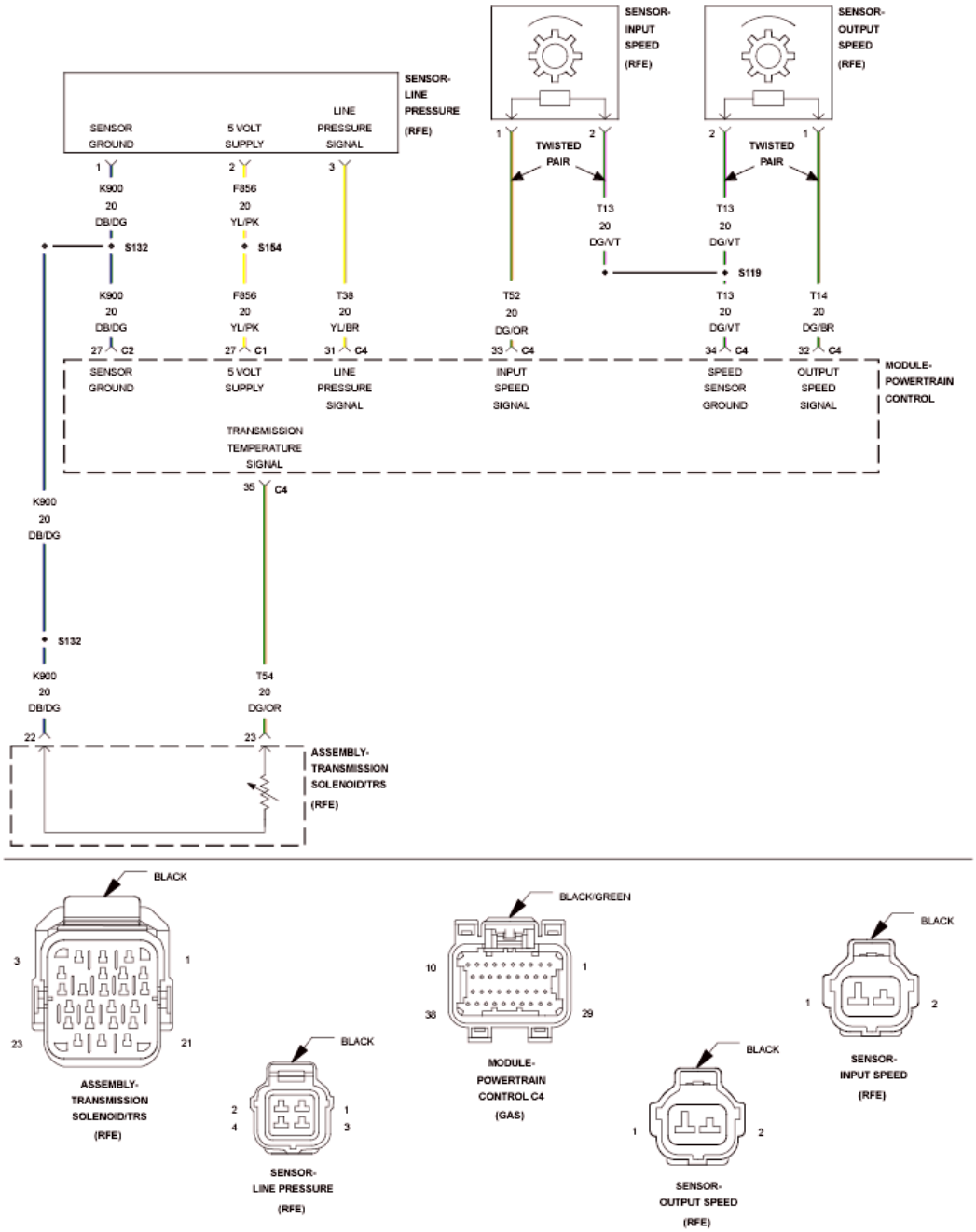

Fig. 37: Transmission Control System Circuit Wiring Diagram
Courtesy of CHRYSLER GROUP, LLC

For a complete wiring diagram, **refer to appropriate SYSTEM WIRING DIAGRAMS article** .

THEORY OF OPERATION

Line pressure is electronically controlled by the Transmission Control System and is measured by the Line Pressure Sensor (LPS). The desired line pressure is continuously being compared to the actual line pressure and is regulated by electronically changing the duty cycle of the Pressure Control Solenoid (PCS). (5% duty cycle =

solenoid off = max line pressure, 62% duty cycle = solenoid on = min line pressure).

The Transmission Control System calculates the desired line pressure based on inputs from the transmission and engine. A calculated torque input to the transmission is used as the primary input of the desired line pressure calculation and is called Torque Based Line Pressure. In addition, the line pressure is set to a preset level 827 to 931 kPa (120 to 135 psi) during shifts and in Park and Neutral to ensure consistent shift quality.

WHEN MONITORED:

Continuously with the ignition on, engine running, with the transmission in gear.

SET CONDITION:

The Powertrain Control Module (PCM) continuously monitors Actual Line Pressure and compares it to Desired Line Pressure. If the Actual Line Pressure reading is more than 172.4 kPa (25 psi) higher than the Desired Line Pressure, but is less than the highest Line Pressure ever used in the current gear, the DTC sets.

POSSIBLE CAUSES

Possible Causes
RELATED DTCS PRESENT
LINE PRESSURE CONNECTOR AND WIRING
INTERNAL TRANSMISSION
POWERTRAIN CONTROL MODULE (PCM)

Always perform the Pre-Diagnostic Troubleshooting Procedure before proceeding. Refer to STANDARD PROCEDURE .

DIAGNOSTIC TEST

1. **DETERMINING IF RELATED DTCS ARE PRESENT**
    1. With the scan tool, check for other transmission DTCs.

       Are there any other line pressure related DTCs present?

       Yes

       - Refer to **DIAGNOSIS AND TESTING** and perform the test for P0934 or P0935 first if present.

       No

       - Go To 2.
2. **COMPARE ACTUAL LINE PRESSURE TO DESIRED LINE PRESSURE**

   CAUTION: Apply Parking Brake

1. Start the engine.

CAUTION: Firmly apply the brakes.

2. With the scan tool, monitor the Line Pressure, Desired Line Pressure and the TPS degrees.
3. While firmly applying the brakes, place the shifter in reverse, then slowly press the accelerator pedal to a TPS degree of 15°.
4. Compare the Line Pressure reading to the Desired Line Pressure reading on the scan tool.

   Does the Line Pressure stay within ± 34 kPa or 5 psi of the Desired Line Pressure?

   No

   - Go To 3.

   Yes

   - Go To 6.

3. **CHECK LINE PRESSURE CONNECTOR AND WIRING**
   1. Ignition on, engine not running.
   2. With the scan tool, monitor the Line Pressure Sensor voltage while wiggling the wiring harness and connectors pertaining to the Line Pressure Sensor and the Transmission Solenoid/TRS Assembly.

      Did the voltage remain steady while wiggling the wiring harness and connectors?

      Yes

      - Go To 4.

      No

      - Disconnect and properly reconnect the Line Pressure Sensor connector. Inspect terminals and repair as necessary.
      - Refer to **STANDARD PROCEDURE** and perform the 545RFE TRANSMISSION VERIFICATION TEST.

4. **CHECK PCM AND WIRING**
   1. Turn the ignition off to the lock position.
   2. Remove the Ignition Switch Feed fuse from the TIPM.

CAUTION: Removal of the Ignition Switch Feed fuse from the TIPM will prevent the vehicle from being started in gear.

WARNING: The Ignition Switch Feed fuse must be removed from the TIPM. Failure to do so can result in possible serious or fatal injury.

3. Install the Transmission Simulator (special tool #8333A, Simulator, Transmission).
4. With the Transmission Simulator select the "OFF" position on the "Input/Output Speed" switch.
5. Ignition on, engine not running.
6. With the scan tool, monitor the Line Pressure during the following step.
7. With the Transmission Simulator, turn the selector switch to each of the three Line Pressure positions.

NOTE: All three scan tool Line Pressure readings should be steady and ±14 kPa or 2.0 psi of the reading specified on the Transmission Simulator.

Does the Line Pressure on the scan tool fluctuate up and down more than 69 kPa or 10 psi at any of the 3 line pressure positions on the Transmission Simulator?

Yes

- Using the schematics as a guide, check the Powertrain Control Module (PCM) terminals for corrosion, damage, or terminal push out. Pay particular attention to all power and ground circuits. If no problems are found, replace and program the PCM in accordance with the Service Information. With the scan tool, perform Quick Learn.
- Refer to **STANDARD PROCEDURE** and perform the 545RFE TRANSMISSION VERIFICATION TEST.

No

- Go To 5.

5. **CHECK THE LINE PRESSURE SENSOR**
   1. Turn the ignition off to the lock position.
   2. Disconnect the Transmission Simulator (special tool #8333A, Simulator, Transmission) and reconnect all previously disconnected connectors.
   3. Install the Line Pressure Adaptor (special tool #8259, Adapter, Pressure Test), and the Pressure Gauge (special tool #C-3293-SP, Gauge, Pressure 0-300 P.S.I.), 0 to 2000 kPa (0 to 300 psi).
   4. Start the engine in park.
   5. Monitor the line pressure readings of both the scan tool and the pressure gauge and compare the two readings.

   Is the line pressure gauge reading within 34 kPa (5 psi) of the scan tool reading?

   Yes

- Repair internal transmission and inspect the oil pump per the Service information and replace if necessary. If no problems are found, replace the Transmission Solenoid/TRS Assembly - possible cause is the Pressure Control Solenoid is stuck.
- Refer to **STANDARD PROCEDURE** and perform the 545RFE TRANSMISSION VERIFICATION TEST.

No

- Replace the Line Pressure Sensor in accordance with the Service Information.
- Refer to **STANDARD PROCEDURE** and perform the 545RFE TRANSMISSION VERIFICATION TEST.

6. **CHECK WIRING AND CONNECTORS**
   1. The conditions necessary to set this DTC are not present at this time.
   2. Using the schematics as a guide, inspect the wiring and connectors specific to this circuit.
   3. Wiggle the wires while checking for shorted and open circuits.
   4. With the scan tool, check the Event Data to help identify the conditions in which the DTC was set.

   Where there any problems found?

   Yes

   - Repair as necessary.
   - Refer to **STANDARD PROCEDURE** and perform the 545RFE TRANSMISSION VERIFICATION TEST.

   No

   - Test Complete.

P0934-LINE PRESSURE SENSOR CIRCUIT LOW

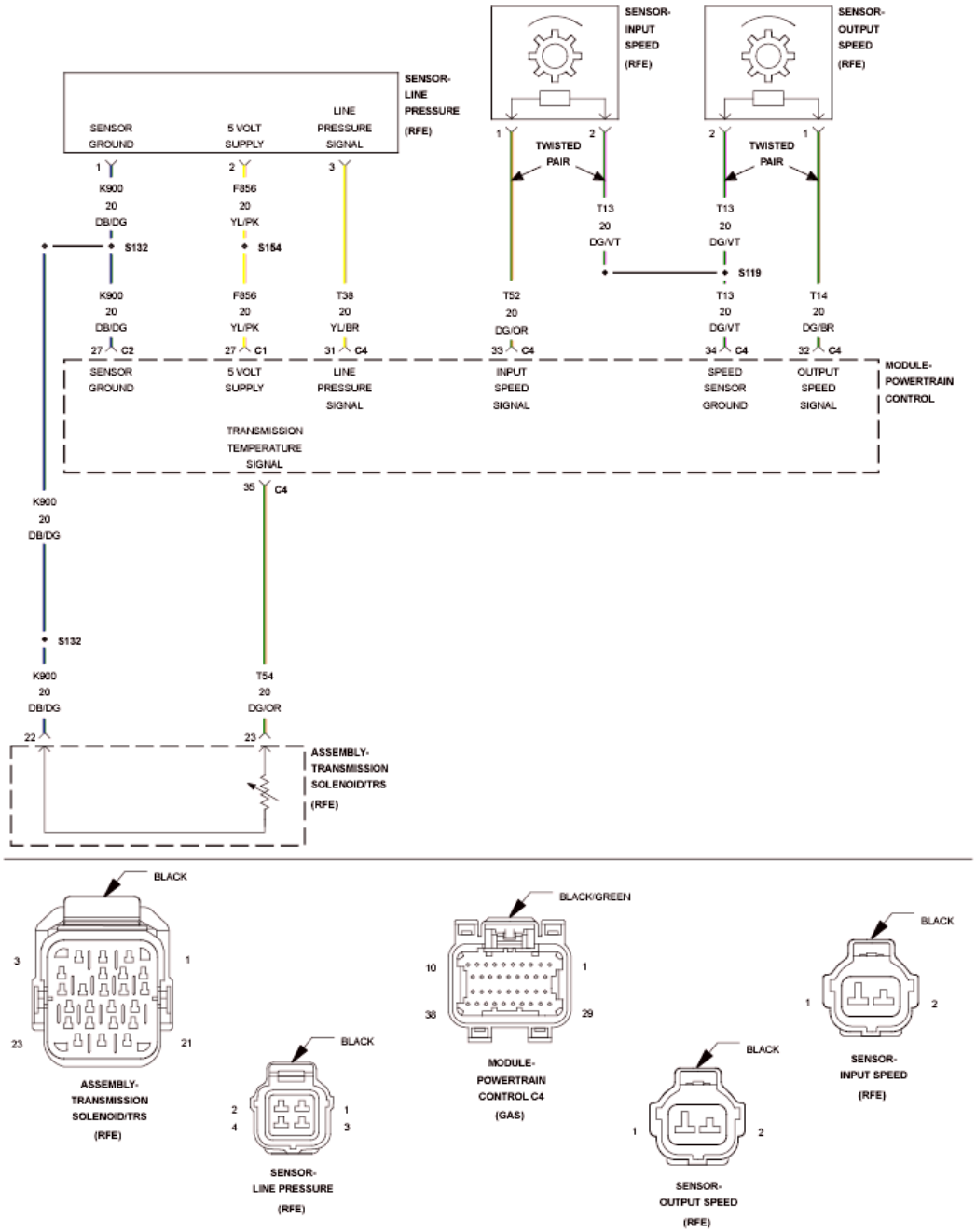

Fig. 38: Transmission Control System Circuit Wiring Diagram
Courtesy of CHRYSLER GROUP, LLC

For a complete wiring diagram, **refer to appropriate SYSTEM WIRING DIAGRAMS article** .

THEORY OF OPERATION

Line pressure is electronically controlled by the Transmission Control System and is measured by the Line Pressure Sensor (LPS). The desired line pressure is continuously being compared to the actual line pressure and is regulated by electronically changing the duty cycle of the Pressure Control Solenoid (PCS). (5% duty cycle =

solenoid off = max line pressure, 62% duty cycle = solenoid on = min line pressure).

The Transmission Control System calculates the desired line pressure based on inputs from the transmission and engine. A calculated torque input to the transmission is used as the primary input of the desired line pressure calculation and is called Torque Based Line Pressure. In addition, the line pressure is set to a preset level 827 to 931 kPa (120 to 135 psi) during shifts and in Park and Neutral to ensure consistent shift quality.

The monitored Line Pressure Sensor voltage should always be between 0.35 and 4.75 volts. Any monitored voltages outside these parameters indicate an Line Pressure Sensor or wiring problem and will cause either DTC P0934 or P0935 to set.

WHEN MONITORED:

Continuously with the ignition on and engine running.

SET CONDITION:

This DTC will set when the monitored Line Pressure Sensor voltage is less than or equal to 0.35 of a volt for 0.18 of a second.

POSSIBLE CAUSES

Possible Causes
(F856) 5-VOLT SUPPLY CIRCUIT OPEN
(F856) 5-VOLT SUPPLY CIRCUIT SHORTED TO GROUND
(T38) LINE PRESSURE SENSOR SIGNAL CIRCUIT OPEN
(T38) LINE PRESSURE SENSOR SIGNAL CIRCUIT SHORTED TO GROUND
LINE PRESSURE SENSOR
POWERTRAIN CONTROL MODULE (PCM)

Always perform the Pre-Diagnostic Troubleshooting Procedure before proceeding. Refer to STANDARD PROCEDURE .

DIAGNOSTIC TEST

1. **CHECK IF THE DTC IS CURRENT**
    1. With the scan tool, read DTCs.

       Is the status Active or is the Starts Since Set counter 2 or less for this DTC?

       Yes

       - Go To 2.

       No

- Go To 7.

2. **CHECK THE PCM AND WIRING**
   1. Turn the ignition off to the lock position.
   2. Remove the Ignition Switch Feed fuse from the Totally Integrated Power Module (TIPM).

      CAUTION: Removal of the Ignition Switch Feed fuse from the TIPM will prevent the vehicle from being started in gear.

      WARNING: The Ignition Switch Feed fuse must be removed from the TIPM. Failure to do so can result in possible serious or fatal injury.

   3. Install the Transmission Simulator (special tool #8333A, Simulator, Transmission).
   4. Ignition on, engine not running.
   5. With the scan tool, under Transmission Sensors, monitor the Line Pressure.
   6. Using the Transmission Simulator, set the rotary switch to each of the three line pressure positions.

      NOTE: The readings should be within ±14 kPa (2.0 psi) on the scan tool to the pressure readings specified on Transmission Simulator.

      Does the Line Pressure on the scan tool match the line pressures on the Transmission Simulator?

      Yes

      - Replace the Line Pressure Sensor in accordance with the Service Information.
      - Refer to **STANDARD PROCEDURE** and perform the 545RFE TRANSMISSION VERIFICATION TEST.

      No

      - Go To 3.

3. **CHECK THE (T38) LINE PRESSURE SENSOR SIGNAL CIRCUIT FOR A SHORT TO GROUND**

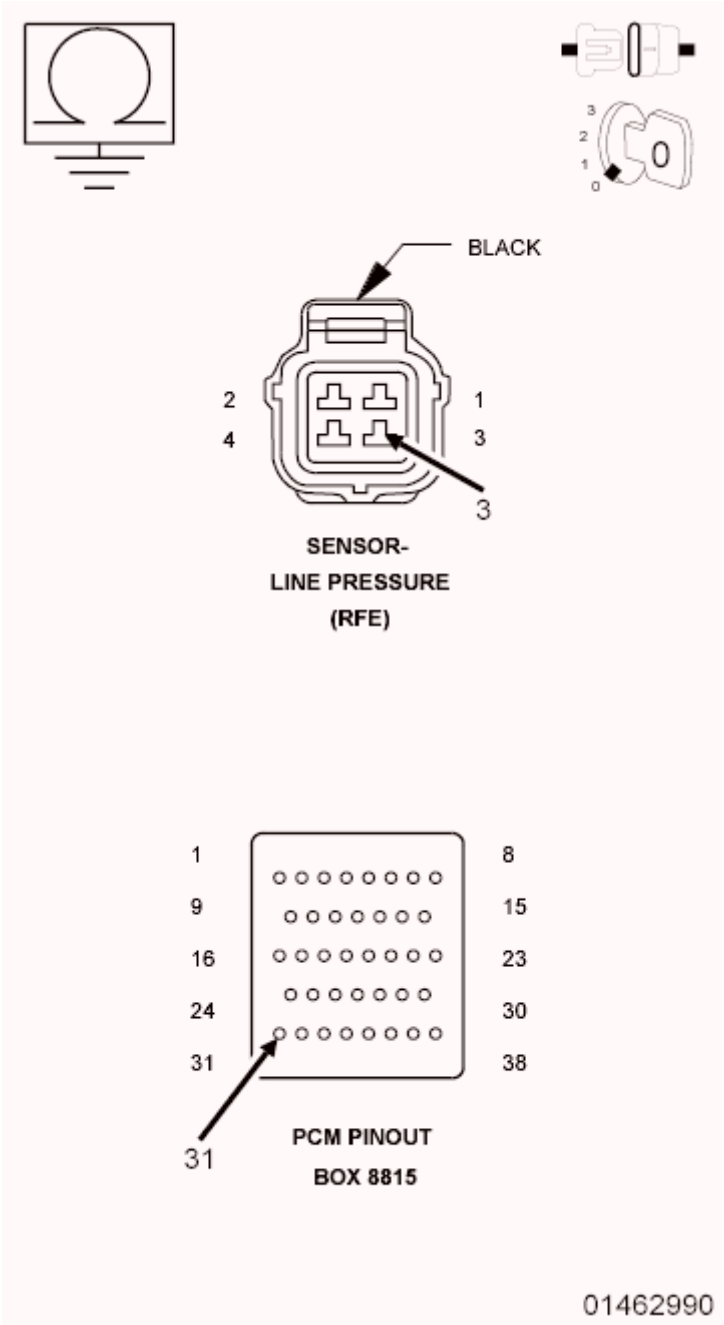

Fig. 39: Checking Line Pressure Sensor Signal Circuit For Short To Ground
Courtesy of CHRYSLER GROUP, LLC

1. Turn the ignition off to the lock position.
2. Disconnect the PCM C4 harness connector and connect the PCM Pinout Box (special tool #8815A, Kit, NGC, 38 Position).
3. Disconnect the Transmission Simulator (special tool #8333A, Simulator, Transmission).

CAUTION: Do not probe the PCM harness connectors. Probing the PCM harness connectors will damage the PCM terminals resulting in

poor terminal to pin connection. Install the (special tool #8815A, Kit, NGC, 38 Position) to perform diagnosis.

4. Measure the resistance between ground and the (T38) Line Pressure Sensor Signal circuit.

   Is the resistance below 5.0 Ohms?

   Yes

   - Repair the (T38) Line Pressure Sensor Signal circuit for a short to ground.
   - Refer to **STANDARD PROCEDURE** and perform the 545RFE TRANSMISSION VERIFICATION TEST.

   No

   - Go To 4.

4. **CHECK THE (T38) LINE PRESSURE SENSOR SIGNAL CIRCUIT FOR AN OPEN**

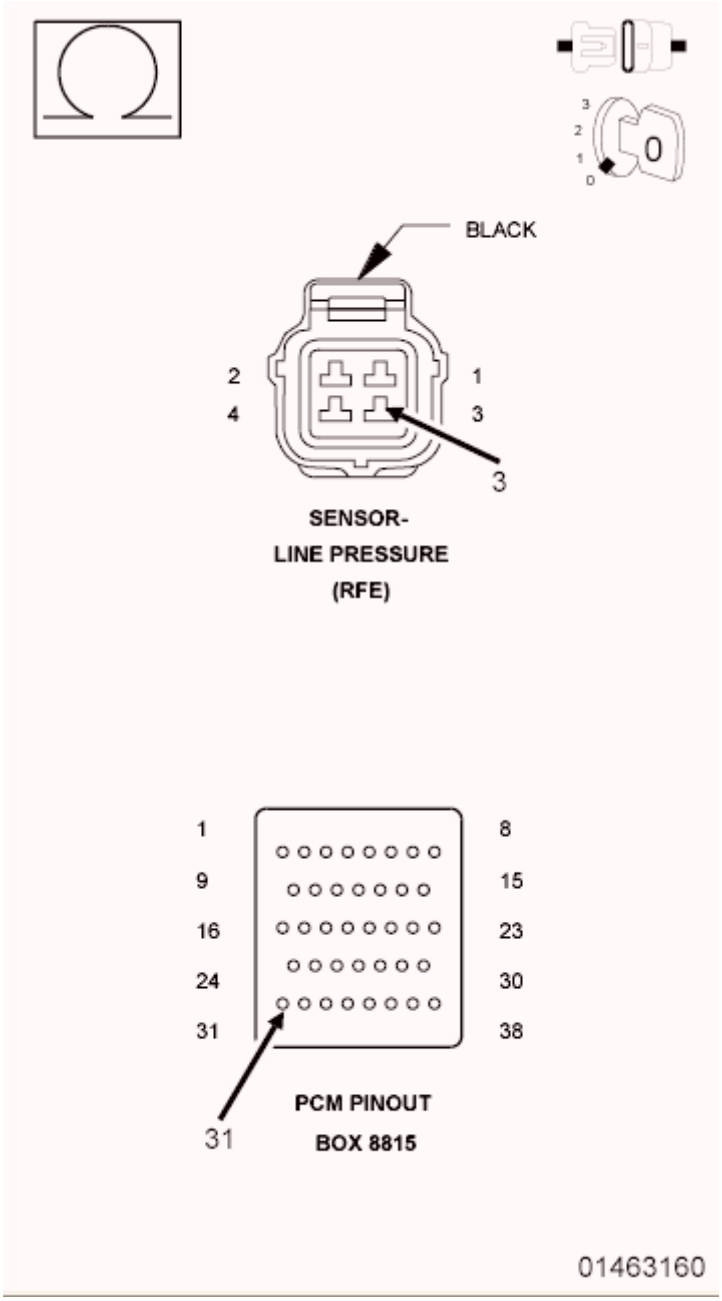

Fig. 40: Checking Line Pressure Sensor Signal Circuit For Open
Courtesy of CHRYSLER GROUP, LLC

1. Connect the PCM Pinout Box (special tool #8815A, Kit, NGC, 38 Position) to the PCM C4 harness connector.
2. Measure the resistance of the (T38) Line Pressure Sensor Signal circuit between the Line Pressure Sensor harness connector and the appropriate terminal of the PCM Pinout Box (special tool #8815A, Kit, NGC, 38 Position).

   Is the resistance above 5.0 Ohms?

Yes

- Repair the (T38) Line Pressure Sensor Signal circuit for an open.
- Refer to **STANDARD PROCEDURE** and perform the 545RFE TRANSMISSION VERIFICATION TEST.

No

- Go To 5.

5. **CHECK THE (F856) 5-VOLT SUPPLY CIRCUIT FOR AN OPEN**

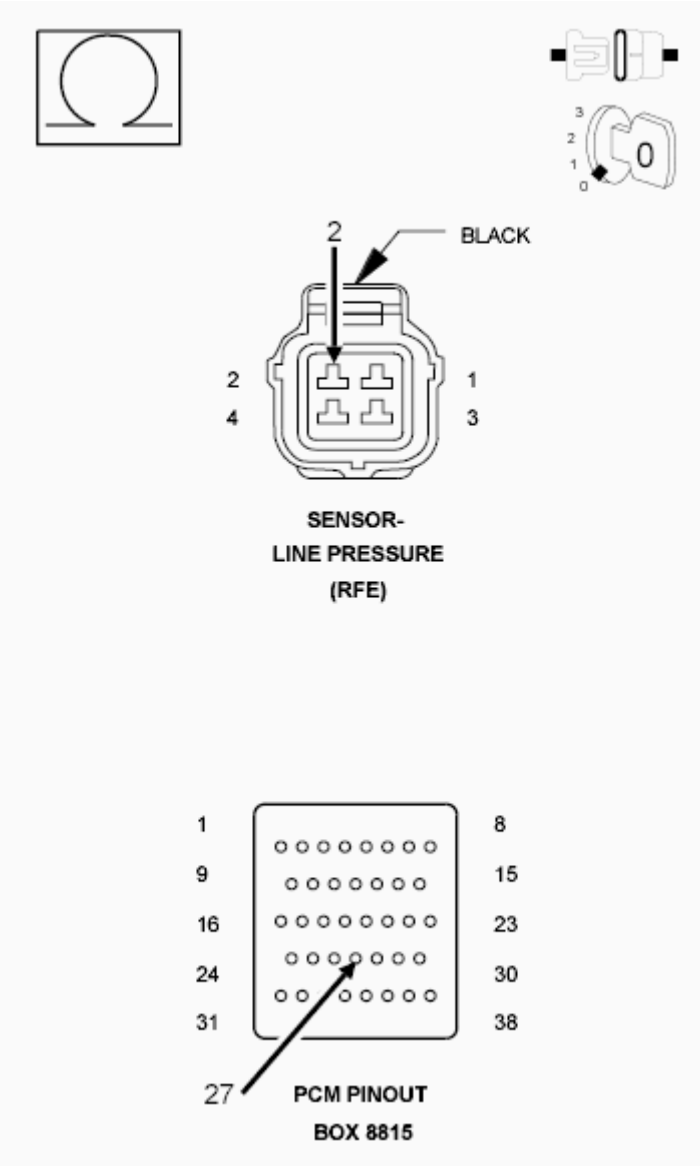

Fig. 41: Checking 5-Volt Supply Circuit For Open
Courtesy of CHRYSLER GROUP, LLC

1. Connect the PCM Pinout Box (special tool #8815A, Kit, NGC, 38 Position) to the PCM C1 harness connector.
2. Measure the resistance of the (F856) 5-volt Supply circuit between the Line Pressure sensor harness connector and the appropriate terminal of the PCM Pinout Box (special tool #8815A, Kit, NGC, 38 Position).

   Is the resistance below 5.0 Ohms?

   Yes

   - Repair the (F856) 5-volt Supply circuit for an open.
   - Refer to **STANDARD PROCEDURE** and perform the 545RFE TRANSMISSION VERIFICATION TEST.

   No

   - Go To 6.

6. **CHECK THE (F856) 5-VOLT SUPPLY CIRCUIT FOR A SHORT TO GROUND**

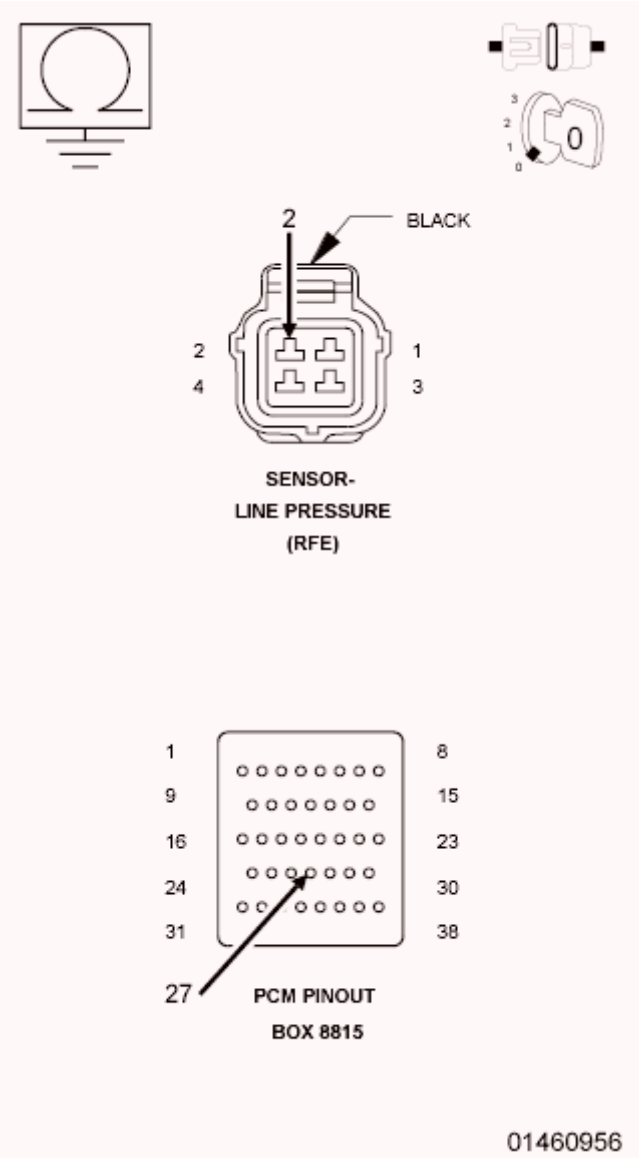

Fig. 42: Checking 5-Volt Supply Circuit For Short To Ground
Courtesy of CHRYSLER GROUP, LLC

1. Disconnect the PCM C1 harness connector and connect the PCM Pinout Box (special tool #8815A, Kit, NGC, 38 Position).
2. Measure the resistance between ground and the (F856) 5-volt Supply circuit.

   Is the resistance below 5.0 Ohms?

   Yes

   - Repair the (F856) 5-volt Supply circuit for a short to ground.
   - Refer to **STANDARD PROCEDURE** and perform the 545RFE TRANSMISSION VERIFICATION TEST.

No

- Using the schematics as a guide, check the Powertrain Control Module (PCM) terminals for corrosion, damage, or terminal push out. Pay particular attention to all power and ground circuits. If no problems are found, replace and program the PCM in accordance with the Service Information. With the scan tool, perform Quick Learn.
- Refer to **STANDARD PROCEDURE** and perform the 545RFE TRANSMISSION VERIFICATION TEST.

7. **CHECK THE WIRING AND CONNECTORS**
   1. The conditions necessary to set this DTC are not present at this time.
   2. Using the schematics as a guide, inspect the wiring and connectors specific to this circuit.
   3. Wiggle the wires while checking for shorted and open circuits.
   4. With the scan tool, check the Event Data to help identify the conditions in which the DTC was set.

   Where there any problems found?

   Yes

   - Repair as necessary.
   - Refer to **STANDARD PROCEDURE** and perform the 545RFE TRANSMISSION VERIFICATION TEST.

   No

   - Test Complete.

P0935-LINE PRESSURE SENSOR CIRCUIT HIGH

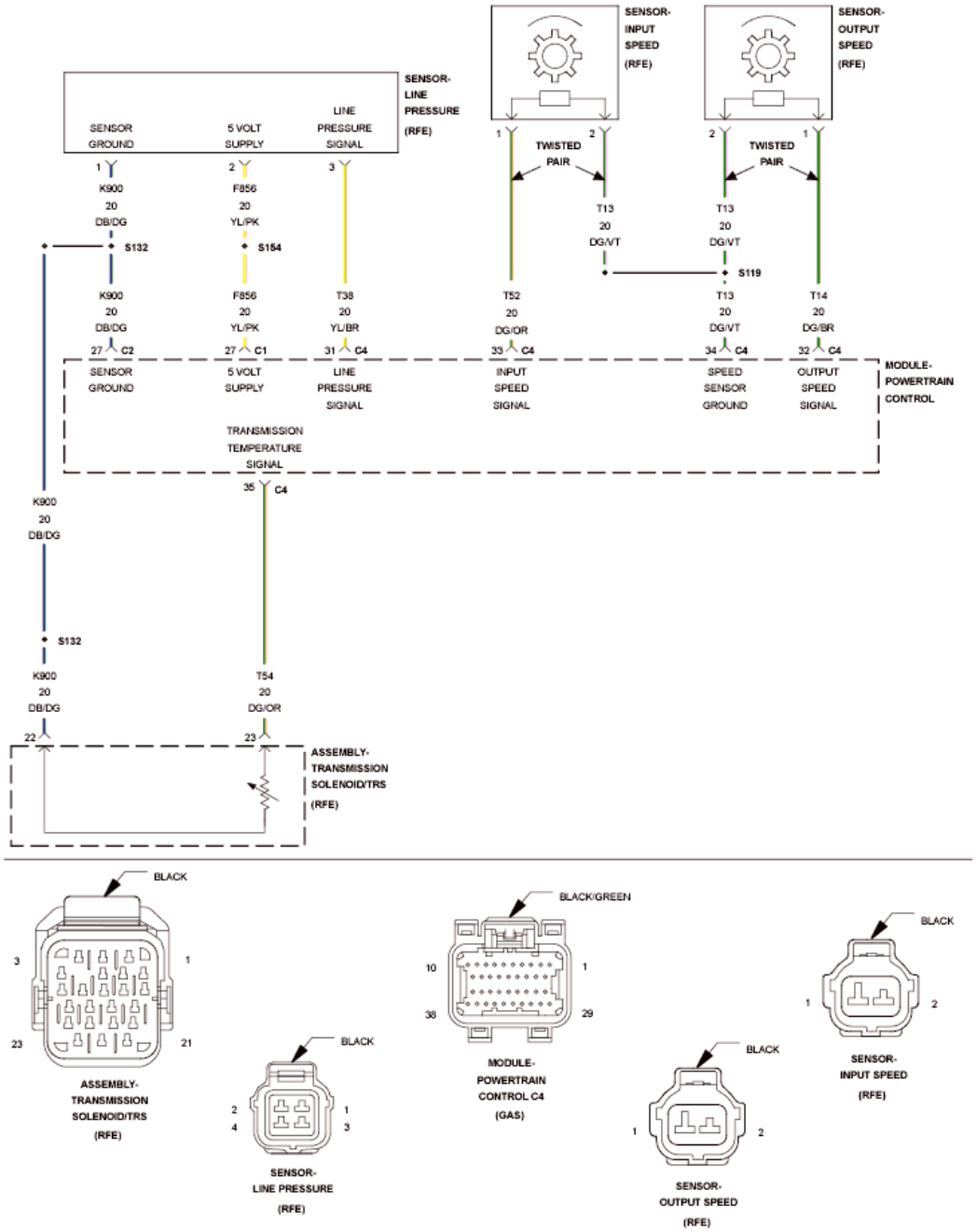

Fig. 43: Transmission Control System Circuit Wiring Diagram
Courtesy of CHRYSLER GROUP, LLC

For a complete wiring diagram, **refer to appropriate SYSTEM WIRING DIAGRAMS article** .

THEORY OF OPERATION

Line pressure is electronically controlled by the Transmission Control System and is measured by the Line Pressure Sensor (LPS). The desired line pressure is continuously being compared to the actual line pressure and is regulated by electronically changing the duty cycle of the Pressure Control Solenoid (PCS). (5% duty cycle =

solenoid off = max line pressure, 62% duty cycle = solenoid on = min line pressure).

The Transmission Control System calculates the desired line pressure based on inputs from the transmission and engine. A calculated torque input to the transmission is used as the primary input of the desired line pressure calculation and is called Torque Based Line Pressure. In addition, the line pressure is set to a preset level 827 to 931 kPa (120 to 135 psi) during shifts and in Park and Neutral to ensure consistent shift quality.

The monitored Line Pressure Sensor voltage should always be between 0.35 and 4.75 volts. Any monitored voltages outside these parameters indicate an Line Pressure Sensor or wiring problem and will cause either DTC P0934 or P0935 to set.

WHEN MONITORED:

Continuously with ignition on and engine running.

SET CONDITION:

This DTC will set if the monitored Line Pressure Sensor voltage is greater than or equal to 4.75 volts for the period of 0.18 of a second.

POSSIBLE CAUSES

Possible Causes
(T38) LINE PRESSURE SENSOR SIGNAL CIRCUIT OPEN
(K900) SENSOR GROUND CIRCUIT OPEN
(T38) LINE PRESSURE SENSOR SIGNAL CIRCUIT SHORTED TO VOLTAGE
LINE PRESSURE SENSOR
POWERTRAIN CONTROL MODULE (PCM)

Always perform the Pre-Diagnostic Troubleshooting Procedure before proceeding. Refer to STANDARD PROCEDURE .

DIAGNOSTIC TEST

1. **CHECK IF THE DTC IS CURRENT**
    1. With the scan tool, read DTCs.

       Is the status Active or is the Starts Since Set counter 2 or less for this DTC?

       Yes

       - Go To 2.

       No

       - Go To 6.

2. **CHECK THE PCM AND WIRING**
   1. Turn the ignition off to the lock position.
   2. Remove the Ignition Switch Feed fuse from the TIPM.

CAUTION: Removal of the Ignition Switch Feed fuse from the TIPM will prevent the vehicle from being started in gear.

WARNING: The Ignition Switch Feed fuse must be removed from the TIPM. Failure to do so can result in possible serious or fatal injury.

   3. Install the Transmission Simulator (special tool #8333A, Simulator, Transmission).
   4. Ignition on, engine not running.
   5. With the scan tool, monitor the Line Pressure.
   6. Using the Transmission Simulator, set the rotary switch to each of the three line pressure positions.

NOTE: The readings should be within ±14 kPa (2.0 psi) on the scan tool of the pressure reading specified on Transmission Simulator.

Does the 3 line pressures on the scan tool match the Line pressure readings on the Transmission Simulator?

Yes

- Replace the Line Pressure Sensor in accordance with the Service Information.
- Refer to **STANDARD PROCEDURE** and perform the 545RFE TRANSMISSION VERIFICATION TEST.

No

- Go To 3.

3. **CHECK THE (K900) SENSOR GROUND CIRCUIT FOR AN OPEN**

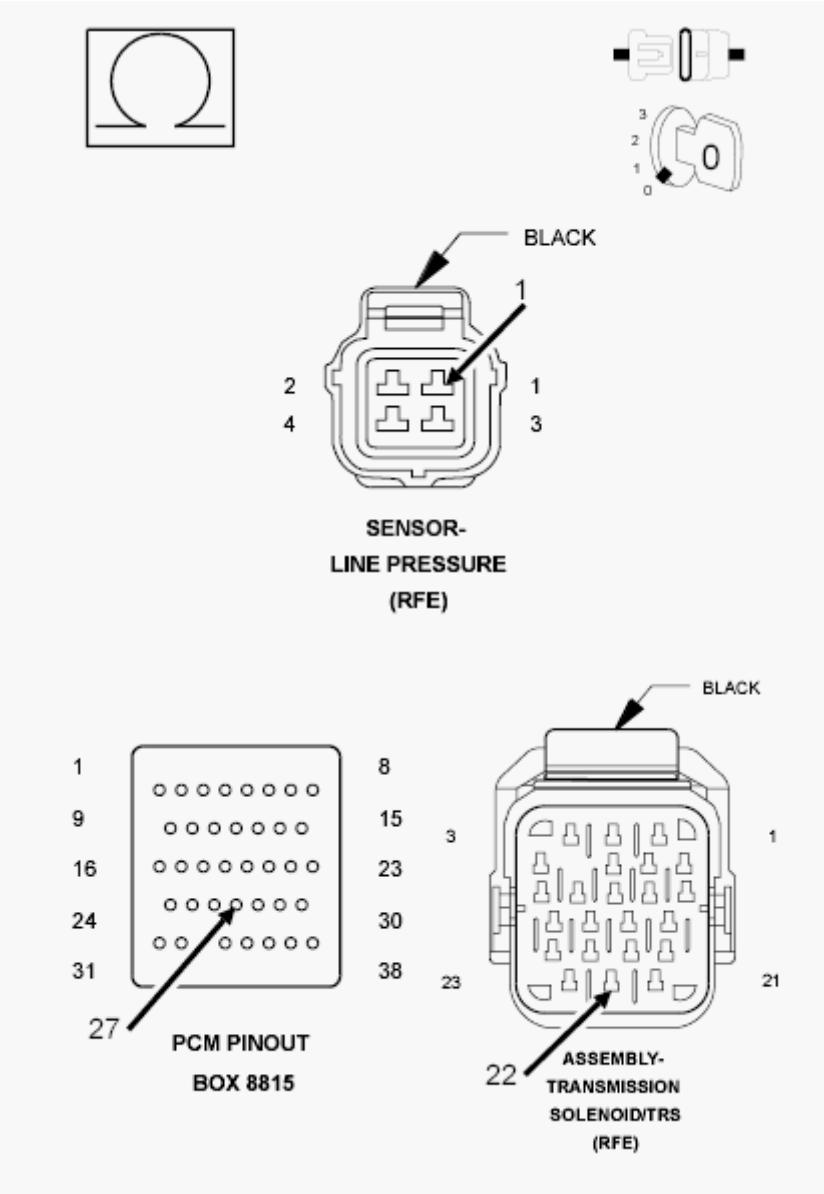

Fig. 44: Checking Sensor Ground Circuit For Open
Courtesy of CHRYSLER GROUP, LLC

1. Turn the ignition off to the lock position.
2. Disconnect the Transmission Simulator (special tool #8333A, Simulator, Transmission).
3. Disconnect the PCM C2 harness connector and connect the PCM Pinout Box (special tool #8815A, Kit, NGC, 38 Position).

CAUTION: Do not probe the PCM harness connectors. Probing the PCM harness connectors will damage the PCM terminals resulting in poor terminal to pin connection. Install the (special tool #8815A, Kit, NGC, 38 Position) to perform diagnosis.

4. Measure the resistance of the (K900) Sensor Ground circuit between the Line Pressure Sensor harness connector and the appropriate terminal of the PCM Pinout Box (special tool #8815A, Kit, NGC, 38 Position).

   Is the resistance above 5.0 Ohms?

   Yes

   - Repair the (K900) Sensor Ground circuit for an open.
   - Refer to **STANDARD PROCEDURE** and perform the 545RFE TRANSMISSION VERIFICATION TEST.

   No

   - Go To 4.

4. **CHECK THE (T38) LINE PRESSURE SENSOR SIGNAL CIRCUIT FOR AN OPEN**

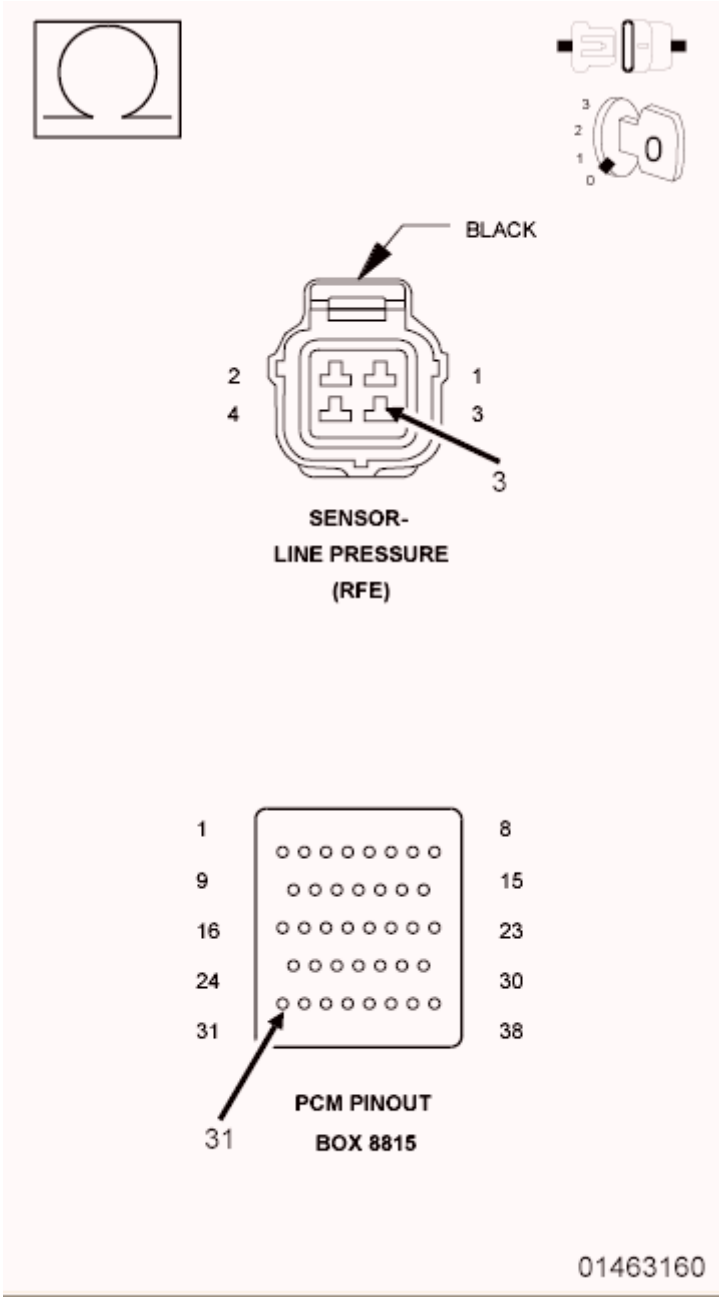

Fig. 45: Checking Line Pressure Sensor Signal Circuit For Open
Courtesy of CHRYSLER GROUP, LLC

1. Disconnect the PCM C4 harness connector and connect the PCM Pinout Box (special tool #8815A, Kit, NGC, 38 Position).
2. Measure the resistance of the (T38) Line Pressure Sensor Signal circuit between the Line Pressure Sensor harness connector and the appropriate terminal of the PCM Pinout Box (special tool #8815A, Kit, NGC, 38 Position).

   Is the resistance above 5.0 Ohms?

Yes

- Repair the (T38) Line Pressure Sensor Signal circuit for an open.
- Refer to **STANDARD PROCEDURE** and perform the 545RFE TRANSMISSION VERIFICATION TEST.

No

- Go To 5.

5. **CHECK THE (T38) LINE PRESSURE SENSOR SIGNAL CIRCUIT FOR A SHORT TO VOLTAGE**

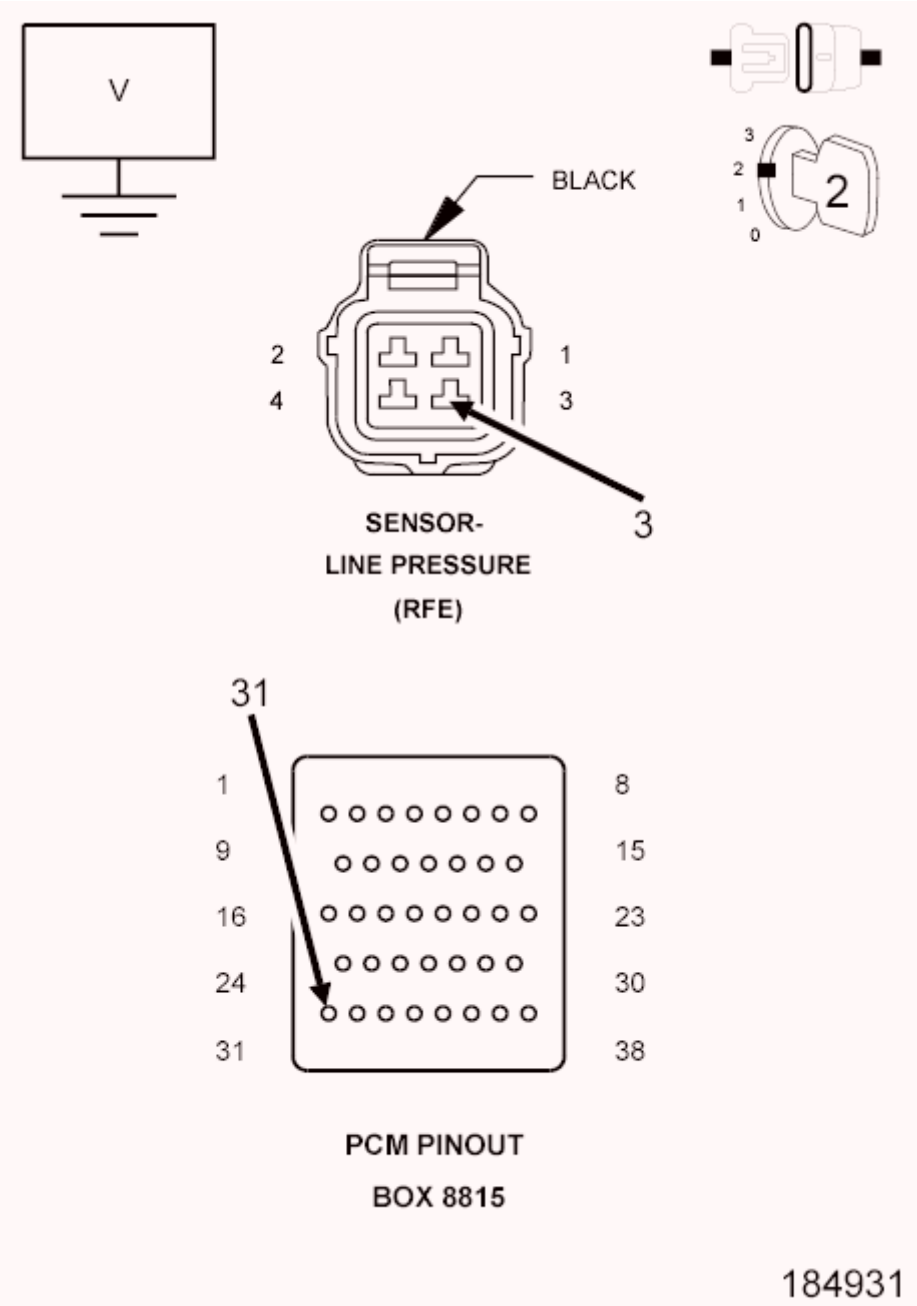

Fig. 46: Checking Line Pressure Sensor Signal Circuit For Short To Voltage
Courtesy of CHRYSLER GROUP, LLC

1. Ignition on, engine not running.
2. With the scan tool under TIPM, actuate the Transmission.
3. Measure the voltage of the (T38) Line Pressure Sensor Signal circuit.

   Is the voltage above 5.5 volts?

   Yes

- Repair the (T38) Line Pressure Sensor Signal circuit for a short to voltage.
- Refer to **STANDARD PROCEDURE** and perform the 545RFE TRANSMISSION VERIFICATION TEST.

No

- Using the schematics as a guide, check the Powertrain Control Module (PCM) terminals for corrosion, damage, or terminal push out. Pay particular attention to all power and ground circuits. If no problems are found, replace and program the PCM in accordance with the Service Information. With the scan tool, perform Quick Learn.
- Refer to **STANDARD PROCEDURE** and perform the 545RFE TRANSMISSION VERIFICATION TEST.

6. **CHECK WIRING AND CONNECTORS**
   1. The conditions necessary to set this DTC are not present at this time.
   2. Using the schematics as a guide, inspect the wiring and connectors specific to this circuit.
   3. Wiggle the wires while checking for shorted and open circuits.
   4. With the scan tool, check the Event Data to help identify the conditions in which the DTC was set.

   Where there any problems found?

   Yes

   - Repair as necessary.
   - Refer to **STANDARD PROCEDURE** and perform the 545RFE TRANSMISSION VERIFICATION TEST.

   No

   - Test Complete.

P0944-LOSS OF HYDRAULIC PUMP PRIME

For a complete wiring diagram, **refer to appropriate SYSTEM WIRING DIAGRAMS article** .

THEORY OF OPERATION

The Loss of prime test is used to prevent transmission defaults and erroneous fault codes during temporary loss of pump prime that may occur with low transmission fluid under severe braking conditions, start-up, etc. and to point towards more subtle problems such as a plugged or cracked oil filter.

The Loss of Prime DTC is set by a loss of hydraulic pressure in the transmission system. This condition, if sustained, will result in the vehicle being unable to move.

WHEN MONITORED:

If the transmission is slipping in any forward gear and all the pressure switches are not indicating pressure, a loss of prime test is run.

SET CONDITION:

If the transmission begins to slip in a forward gear and all the pressure switch(s) that should be closed are open a loss of prime test begins. Available elements are turned on by the Powertrain Control Module (PCM) to see if pump prime exists. The DTC sets if no pressure switch(s) respond.

POSSIBLE CAUSES

Possible Causes
SHIFT LEVER OUT OF ADJUSTMENT
IMPROPER FLUID LEVEL
CRACKED OR IMPROPERLY INSTALLED PRIMARY OIL FILTER OR SEAL
LOOSE COOLER RETURN FILTER
STUCK OR STICKING MAIN REGULATOR VALVE
TRANSMISSION OIL PUMP

Always perform the Pre-Diagnostic Troubleshooting Procedure before proceeding. Refer to STANDARD PROCEDURE .

DIAGNOSTIC TEST

1. **SHIFT LEVER POSITION TEST**
    1. Using the scan tool, perform a Shift Lever Position test. Follow the instructions on the scan tool.

       Did the Shift Lever Position Test pass?

       Yes

       - Go To 2.

       No

       - Refer to **DIAGNOSIS AND TESTING** and perform the appropriate diagnostic procedure.
       - Refer to **STANDARD PROCEDURE** and perform the 545RFE TRANSMISSION VERIFICATION TEST.
2. **CHECK TO SEE IF DTC P0944 IS CURRENT**
    1. Place the gear selector in Park.
    2. Start the engine.
    3. The transmission must be at operating temperature prior to checking pressure. A cold transmission will give higher readings.
    4. Run the engine at 1500 rpm.

5. With the scan tool, monitor the Transmission Line Pressure.

   Does the Line Pressure match the Desired Line Pressure within ± 5 psi?

   No

   - Go To 6.

   Yes

   - Go To 3.

3. **CHECK LINE PRESSURE IN DRIVE AND REVERSE**
   1. Firmly apply the brake and repeat the previous test in both Drive and the Reverse gear positions.
   2. With the scan tool, monitor the Transmission Line Pressure.

      Does the Line Pressure match the Desired Line Pressure within ± 5 psi in all gear ranges?

      Yes

      - Go To 4.

      No

      - Go To 5.

4. **REVIEW CUSTOMER COMMENTS**
   1. The conditions necessary to set this DTC are not present at this time.
   2. Verify with the customer if a delayed engagement and/or an intermittent "No Drive" condition has occurred.
   3. If the customers answer is "No" erase the DTC and return the vehicle to the customer.
   4. Make sure to check for any TSBs or controller flash updates that my apply.
   5. With the scan tool, check the Event Data to help identify the conditions in which the DTC was set.

      Has the customer experienced any delayed engagement and/or "No Drive" conditions?

      Yes

      - Go To 6.

      No

      - Test Complete.

5. **DTC VERIFICATION**
   1. Read and record the DTC and the Event Data information.
   2. Test drive the vehicle and attempt to operate the vehicle within the parameters in which the DTC

set.

3. With the scan tool, read DTCs.

   Did any following DTCs set, P0868, P0944, P0841, P0846, P0871, P0876, or P0988?

   Yes

   - Go To 6.

   No

   - Test Complete.

6. **CHECK TRANSMISSION OIL FILTER**
   1. Remove and inspect the Transmission Oil Pan in accordance with the Service Information.
   2. Remove and inspect the Primary Oil Filter in accordance with the Service Information.
   3. Inspect the oil filter seal for damage and proper installation.

      Does the Oil Pan contain excessive debris, or is the oil filter plugged, loose, or damaged?

      Yes

      - Repair the cause of the plugged transmission oil filter or excessive debris. Check the Transmission Oil Filter seal for improper installation onto filter neck instead of into the pump bore, not fully seated against pump housing, filter neck not engaged into pump. Check that the spin-on cooler return filter (if equipped) is not loose, and that its gasket is in good condition and properly seated. Repair as necessary.
      - Refer to **STANDARD PROCEDURE** and perform the 545RFE TRANSMISSION VERIFICATION TEST.

      No

      - Repair the Transmission Oil Pump as necessary. Check for a stuck main regulator valve and clean if necessary. Refer to the Service Information for the proper repair procedure.
      - Refer to **STANDARD PROCEDURE** and perform the 545RFE TRANSMISSION VERIFICATION TEST.

P0987-4C HYDRAULIC PRESSURE TEST

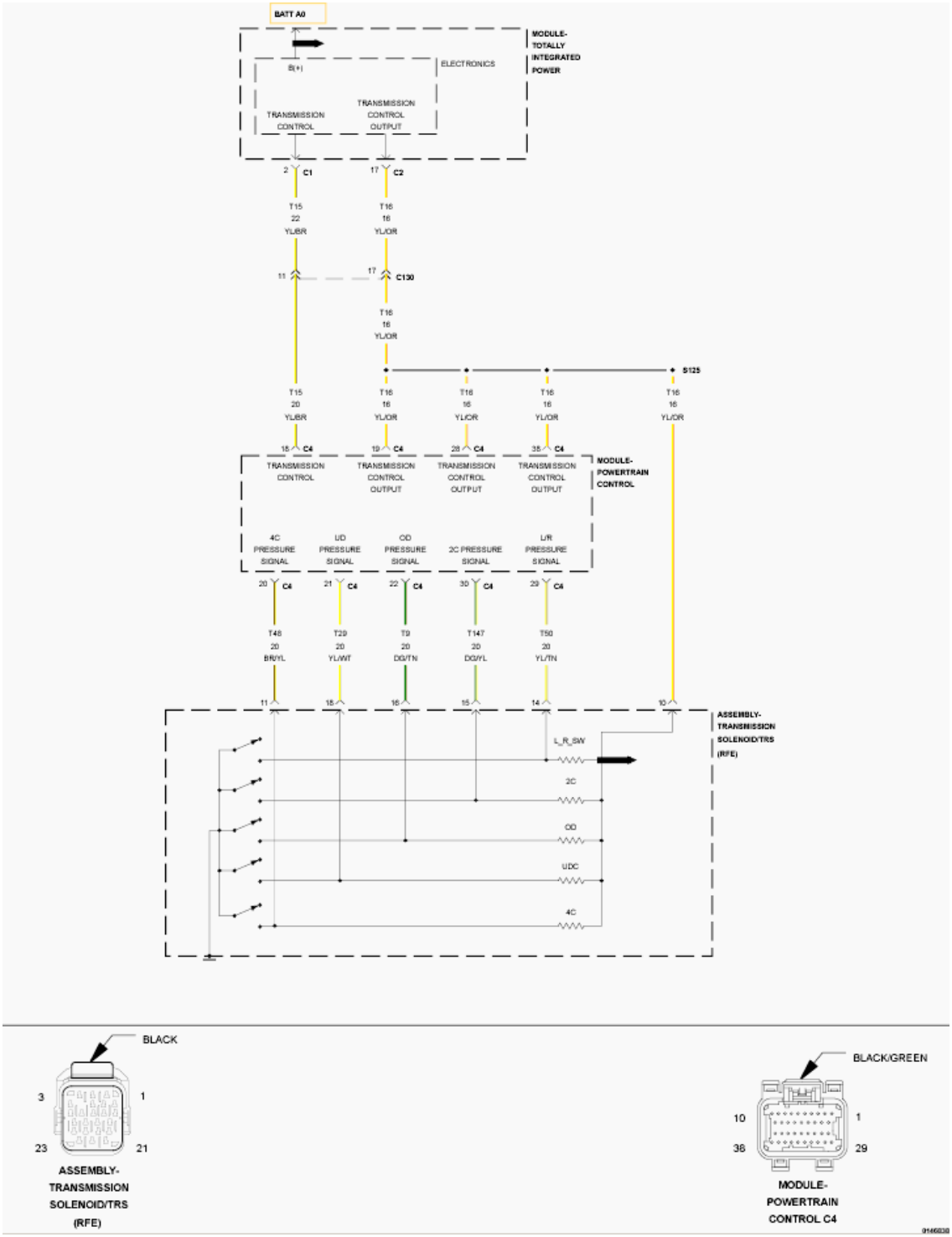

Fig. 47: Pressure Switch Circuit Wiring Diagram
Courtesy of CHRYSLER GROUP, LLC

For a complete wiring diagram, **refer to appropriate SYSTEM WIRING DIAGRAMS article** .

THEORY OF OPERATION

The Transmission Control System tests the pressure switches when they are off. The test verifies that the switches are operational (They will close with pressure applied). The Transmission Control System verifies that the switch closes when the corresponding element is applied. If a switch fails to close, it is re-tested. If it fails the second test, the DTC will set, the MIL will illuminate and the transmission system will default to the orderly Shutdown routine.

WHEN MONITORED:

In any forward gear with engine speed above 1000 rpm shortly after a shift and every minute thereafter.

SET CONDITION:

After a shift into a forward gear, with engine speed above 1000 rpm, the Powertrain Control Module (PCM) momentarily turns on element pressure to the Clutch circuits that don't have pressure to identify the correct Pressure Switch closes. If the Pressure Switch does not close two times, the DTC sets.

POSSIBLE CAUSES

Possible Causes
LINE PRESSURE SENSOR
TRANSMISSION FLUID CONTAMINATION
RELATED DTCS PRESENT
EXCESSIVE DEBRIS IN OIL PAN
POOR LINE PRESSURE SENSOR CONNECTION
RELATED TCM POWER INPUT DTCS PRESENT
(T48) 4C PRESSURE SWITCH SENSE CIRCUIT OPEN
(F856) 5-VOLT SUPPLY CIRCUIT OPEN
(T48) 4C PRESSURE SWITCH SENSE CIRCUIT SHORTED TO GROUND
(F856) 5-VOLT SUPPLY CIRCUIT SHORTED TO GROUND
(T48) 4C PRESSURE SWITCH SENSE CIRCUIT SHORTED TO ANOTHER CIRCUIT
TRANSMISSION SOLENOID/TRS ASSEMBLY
INTERNAL TRANSMISSION
POWERTRAIN CONTROL MODULE (PCM)

Always perform the Pre-Diagnostic Troubleshooting Procedure before proceeding. Refer to STANDARD PROCEDURE .

DIAGNOSTIC TEST

1. **CHECK IF RELATED DTCS ARE PRESENT**
    1. With the scan tool, read DTCs.

       Is there any Loss of Prime, TCM Power Input, and/or Line Pressure Sensor DTCs present?

       Yes

- Refer to **DIAGNOSIS AND TESTING** and perform the appropriate diagnostic procedure. If the DTC P0944 is present, perform its respective test first.

No

- Go To 2.

2. **CHECK FOR DTCS**
   1. With the scan tool, read DTCs.

      Is the DTC P0770 also present?

      Yes

      - Refer to **DIAGNOSIS AND TESTING** and perform the diagnostic procedure for DTC P0770.

      No

      - Go To 3.

3. **OTHER DTCS PRESENT**
   1. With the scan tool, read DTCs.

      Are the DTCs P0988 and/or P1736 present also?

      Yes

      - Go To 12.

      No

      - Go To 4.

4. **CHECK TO SEE IF DTC IS CURRENT**
   1. With the scan tool, check if the DTC P0987-4C HYDRAULIC PRESSURE TEST FAILURE is active or stored.

      Is the DTC P0987-4C HYDRAULIC PRESSURE TEST FAILURE active?

      Yes

      - Go To 5.

      No

      - Go To 17.

5. **CHECK IF THE LINE PRESSURE STAYS THE SAME**

1. Start the engine.
2. Warm the transmission to 82° C or 180° F.
3. Firmly apply the brakes.
4. With the scan tool, monitor the Line Pressure during the following step.
5. Move the shift lever to each gear position, pausing momentarily in each position and record the line pressure reading. Allow the pressure to stabilize for at least 5 seconds in each range.

   Did the line pressure remain at a steady value between 585 and 655 kPa or 85 and 95 psi in each position?

   Yes

   - Go To 6.

   No

   - Go To 10.

6. **CHECK THE LINE PRESSURE SENSOR CONNECTION**
   1. Ignition on, **engine not running.**
   2. With the scan tool, monitor the Line Pressure while firmly pushing the Transmission Line Pressure Sensor connector inwards towards the Transmission.

      Did the Line Pressure reading on the scan tool change to about 207 kPa or 30 psi when the connector was pushed inward?

      Yes

      - Disconnect and properly reconnect the Line Pressure Sensor connector. Inspect terminals and repair as necessary.
      - Refer to **STANDARD PROCEDURE** and perform the 545RFE TRANSMISSION VERIFICATION TEST.

      No

      - Go To 7.

7. **CHECK THE LINE PRESSURE SENSOR OPERATION**
   1. Turn the ignition off to the lock position.
   2. Remove the Ignition Switch Feed fuse from the TIPM.

      CAUTION: Removal of the Ignition Switch Feed fuse from the TIPM will prevent the vehicle from being started in gear.

      WARNING: The Ignition Switch Feed fuse must be removed from the TIPM.

Failure to do so can result in possible serious or fatal injury.

3. Install the Transmission Simulator (special tool #8333A, Simulator, Transmission).
4. With the Transmission Simulator select the "OFF" position on the "Input/Output Speed" switch.
5. Ignition on, engine not running.
6. With the scan tool, monitor the Line Pressure while turning the Pressure Switch selector to each of the 3 line pressure positions on the Transmission Simulator.

NOTE: **All three scan tool Line Pressure readings should be steady and ±14 kPa or 2.0 psi of the reading specified on the Transmission Simulator.**

Did the scan tool Line Pressure readings match the specified readings on the Transmission Simulator and remain steady in all three positions?

Yes

- Replace the Line Pressure Sensor in accordance with the Service Information.
- Refer to **STANDARD PROCEDURE** and perform the 545RFE TRANSMISSION VERIFICATION TEST.

No

- Go To 8.

8. **CHECK THE (F856) 5-VOLT SUPPLY CIRCUIT FOR AN OPEN**

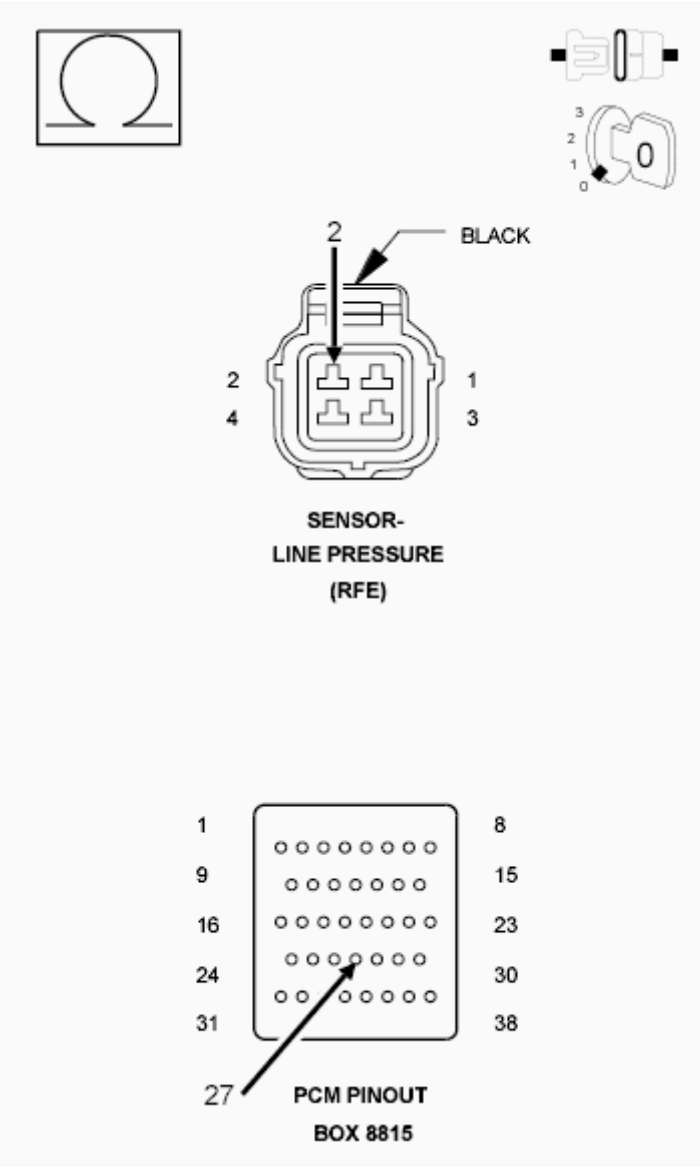

Fig. 48: Checking 5-Volt Supply Circuit For Open
Courtesy of CHRYSLER GROUP, LLC

1. Turn the ignition off to the lock position.
2. Disconnect Transmission Simulator.
3. Disconnect the PCM C1 harness connector and connect the PCM Pinout Box (special tool #8815A, Kit, NGC, 38 Position).

CAUTION: Do not probe the PCM harness connectors. Probing the PCM harness connectors will damage the PCM terminals resulting in poor terminal to pin connection. Install the (special tool #8815A, Kit, NGC, 38 Position) to perform diagnosis.

4. Measure the resistance of the (F856) 5-volt Supply circuit between the Line Pressure Sensor

harness connector and the appropriate terminal of the PCM Pinout Box (special tool #8815A, Kit, NGC, 38 Position).

Is the resistance above 5.0 Ohms?

Yes

- Repair the (F856) 5-volt Supply circuit for an open.
- Refer to **STANDARD PROCEDURE** and perform the 545RFE TRANSMISSION VERIFICATION TEST.

No

- Go To 9.

9. **CHECK THE (F856) 5-VOLT SUPPLY CIRCUIT FOR A SHORT TO GROUND**

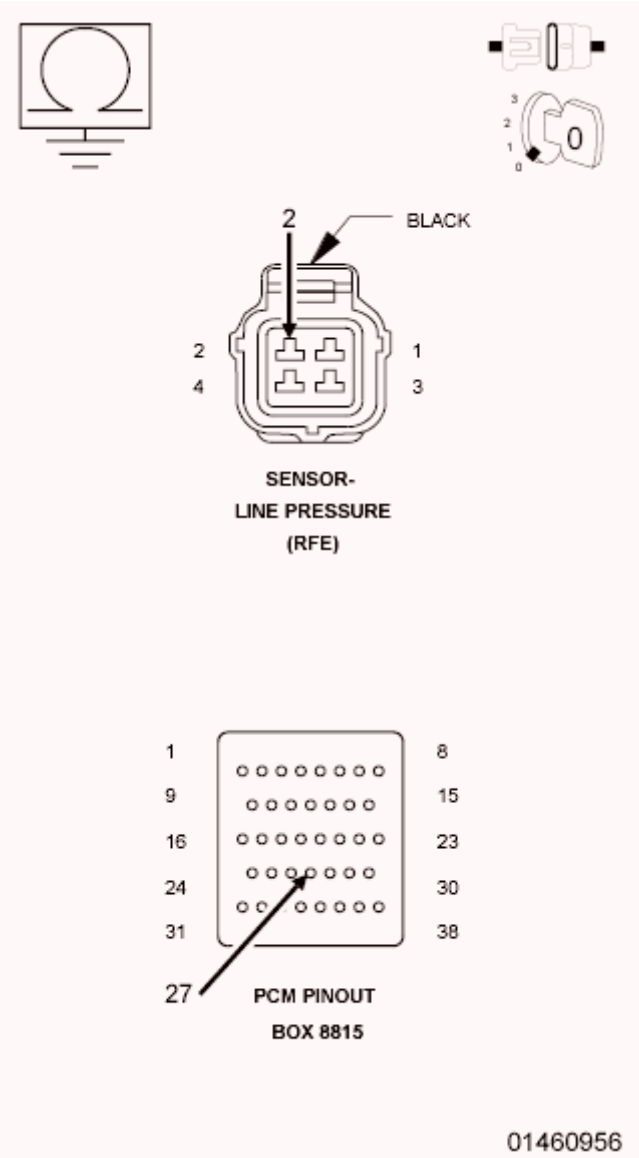

Fig. 49: Checking 5-Volt Supply Circuit For Short To Ground
Courtesy of CHRYSLER GROUP, LLC

1. Measure the resistance between ground and the (F856) 5-volt Supply circuit.

   Is the resistance below 5.0 Ohms?

   Yes

   - Repair the (F856) 5-volt Supply circuit for a short to ground.
   - Refer to **STANDARD PROCEDURE** and perform the 545RFE TRANSMISSION VERIFICATION TEST.

   No

- Using the schematics as a guide, check the Powertrain Control Module (PCM) terminals for corrosion, damage, or terminal push out. Pay particular attention to all power and ground circuits. If no problems are found, replace and program the PCM in accordance with the Service Information. With the scan tool, perform Quick Learn.
- Refer to **STANDARD PROCEDURE** and perform the 545RFE TRANSMISSION VERIFICATION TEST.

10. **COMPARE SCAN TOOL TO PRESSURE GAUGE**
    1. Turn the ignition off to the lock position.
    2. Connect the Line Pressure Adapter (special tool #8259, Adapter, Pressure Test) and 0-300 psi Test Gauge (special tool #C-3293-SP, Gauge, Pressure 0-300 P.S.I.). Refer to the Service Information for proper installation procedure.

       CAUTION: Apply parking brake.

    3. Start the engine.
    4. In the following steps, compare the scan tool Line Pressure to the Pressure Gauge readings in each gear.

       CAUTION: Do not overheat transmission.

    5. With the gear selector in park, raise the RPM to 1500, and compare line pressure readings.
    6. Firmly apply the brakes, move the gear selector into reverse, raise the RPM to 1500, and compare the line pressure readings.
    7. Firmly apply the brakes, move the gear selector into drive, raise the RPM to 1500, and compare the line pressure readings.

       Did the scan tool Line Pressure readings match the Pressure Gauge readings ± 10 psi?

       Yes

       - Go To 11.

       No

       - Replace the Line Pressure Sensor in accordance with the Service Information.
       - Refer to **STANDARD PROCEDURE** and perform the 545RFE TRANSMISSION VERIFICATION TEST.

11. **CHECK PCM AND WIRING**
    1. Turn the ignition off to the lock position.
    2. Remove the Line Pressure Adapter (special tool #8259, Adapter, Pressure Test) and 0-300 psi Test Gauge (special tool #C-3293-SP, Gauge, Pressure 0-300 P.S.I.).

3. Remove the Ignition Switch Feed fuse from the TIPM.

CAUTION: Removal of the Ignition Switch Feed fuse from the TIPM will prevent the vehicle from being started in gear.

WARNING: The Ignition Switch Feed fuse must be removed from the TIPM. Failure to do so can result in possible serious or fatal injury.

4. Install the Transmission Simulator (special tool #8333A, Simulator, Transmission).
5. On the Transmission Simulator, turn the Pressure Switch selector switch to 4C.
6. Ignition on, engine not running.
7. With the scan tool, monitor the 4C Pressure Switch state while pressing and holding the Pressure Switch test button and wiggling the wire harness and connectors that pertain to the 4C Pressure Switch.

   Did the 4C Pressure Switch state change to closed and remain closed while wiggling the wires?

   Yes

   - Go To 12.

   No

   - Go To 14.

12. **CHECK FOR EXCESSIVE DEBRIS**
    1. Turn the ignition off to the lock position.
    2. Remove the Transmission Simulator (special tool #8333A, Simulator, Transmission).
    3. Remove and inspect the Transmission Oil Pan in accordance with the Service Information.

       Does the Transmission Oil Pan contain excessive debris or contamination?

       Yes

       - Repair the cause of the excessive debris in the Transmission Oil Pan. Refer to the Service Information for the proper procedures.
       - Refer to **STANDARD PROCEDURE** and perform the 545RFE TRANSMISSION VERIFICATION TEST.

       No

       - Go To 13.

13. **CHECK 4C HYDRAULIC CLUTCH CIRCUIT**
    1. Remove the Valve Body and air check the 4C hydraulic clutch circuit (in the case) for leakage in

accordance with the Service Information.

NOTE: **The 4C hydraulic clutch circuit contains a small bleed orifice. A small amount of air leakage is normal.**

Was there excessive air leakage noticed during the air check?

Yes

- Repair as necessary. Check the 4C clutch piston, piston seals and bleed orifice assembly.
- Refer to **STANDARD PROCEDURE** and perform the 545RFE TRANSMISSION VERIFICATION TEST.

No

- Disassemble and inspect the Valve Body and repair as necessary. Inspect the 4C Accumulator piston and seals. If no problems are found in the Valve Body, replace the Transmission Solenoid/TRS Assembly in accordance with the Service Information.
- Refer to **STANDARD PROCEDURE** and perform the 545RFE TRANSMISSION VERIFICATION TEST.

14. **CHECK THE (T48) 4C PRESSURE SWITCH SENSE CIRCUIT FOR AN OPEN**

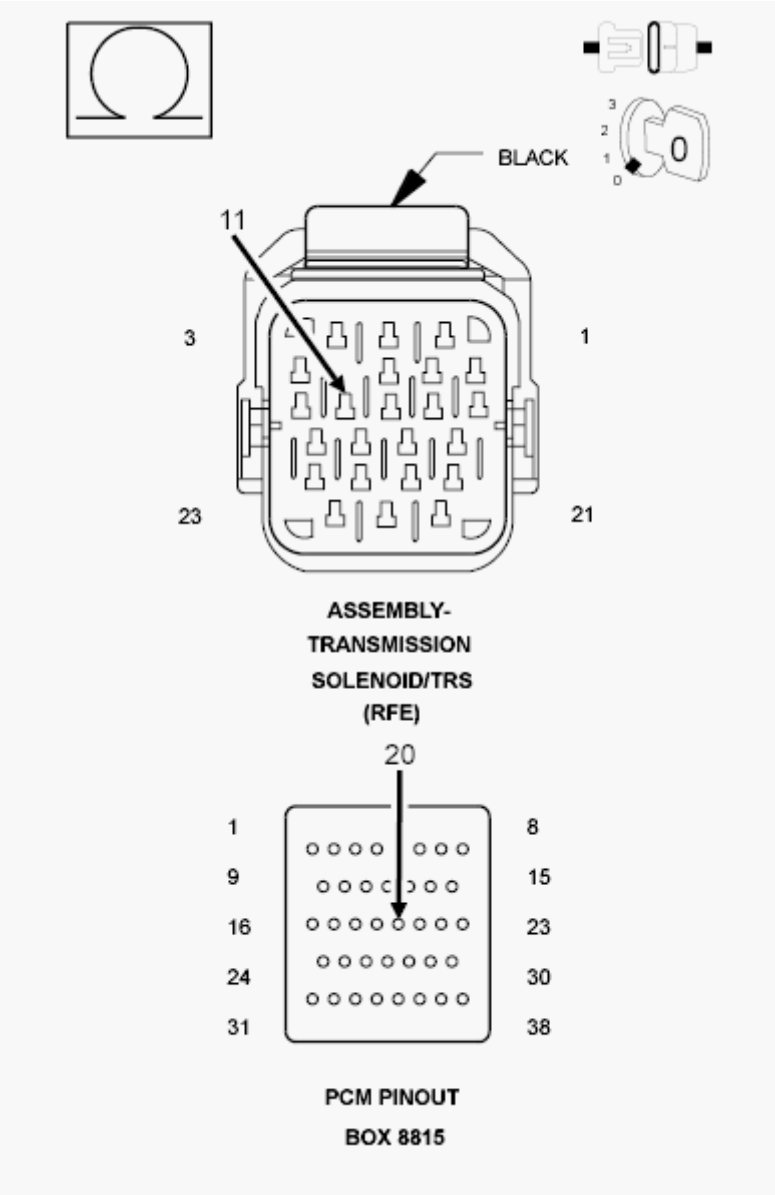

Fig. 50: Checking 4C Pressure Switch Sense Circuit For Open
Courtesy of CHRYSLER GROUP, LLC

1. Turn the ignition off to the lock position.
2. Remove the Transmission Simulator (special tool #8333A, Simulator, Transmission) and connect the PCM Pinout Box (special tool #8815A, Kit, NGC, 38 Position).
3. Disconnect the PCM C4 harness connector.
4. Measure the resistance of the (T48) 4C Pressure Switch Sense circuit between the Transmission Solenoid/TRS Assembly harness connector and the appropriate terminal of the PCM Pinout Box (special tool #8815A, Kit, NGC, 38 Position).

   Is the resistance above 5.0 Ohms?

Yes

- Repair the (T48) 4C Pressure Switch Sense circuit for an open.
- Refer to **STANDARD PROCEDURE** and perform the 545RFE TRANSMISSION VERIFICATION TEST.

No

- Go To 15.

15. **CHECK THE (T48) 4C PRESSURE SWITCH SENSE CIRCUIT FOR A SHORT TO GROUND**

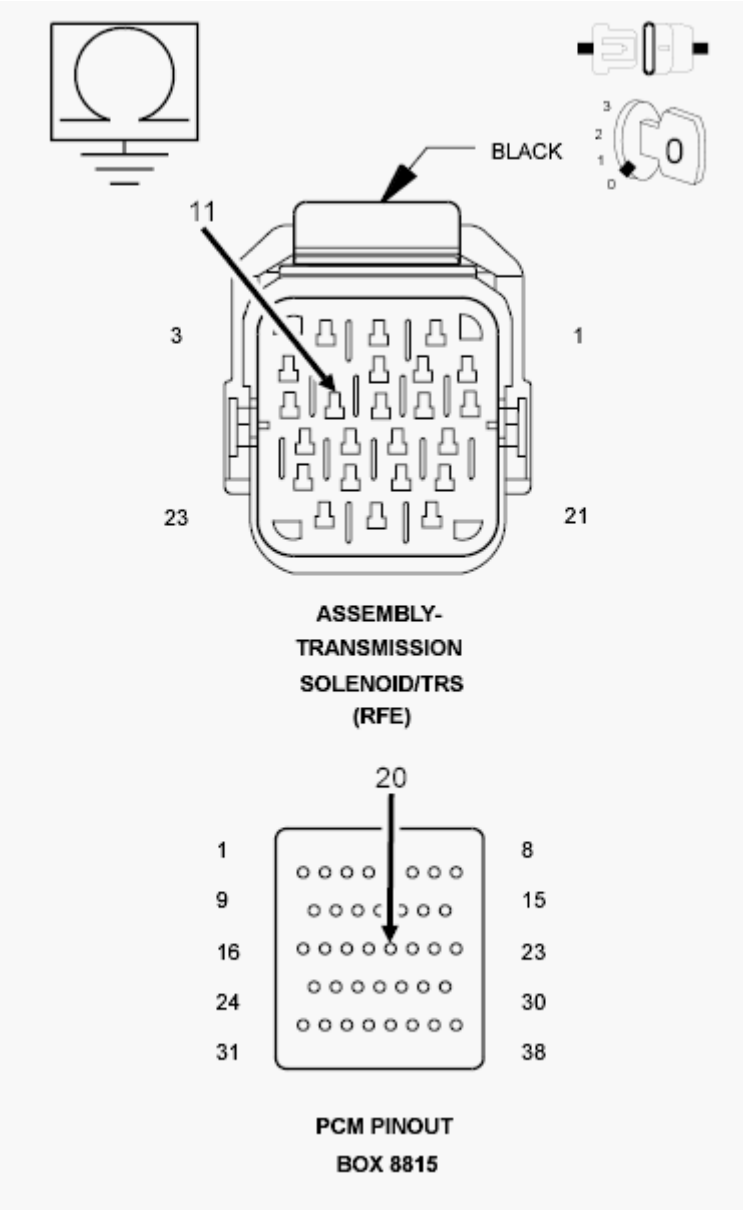

Fig. 51: Checking 4C Pressure Switch Sense Circuit For Short To Ground
Courtesy of CHRYSLER GROUP, LLC

1. Measure the resistance between ground and the (T48) 4C Pressure Switch Sense circuit.

   Is the resistance below 5.0 Ohms?

   Yes

   - Repair the (T48) 4C Pressure Switch Sense circuit for a short to ground.
   - Refer to **STANDARD PROCEDURE** and perform the 545RFE TRANSMISSION VERIFICATION TEST.

   No

   - Go To 16.

16. **CHECK THE (T48) 4C PRESSURE SWITCH SENSE CIRCUIT FOR A SHORT TO ANOTHER CIRCUIT**

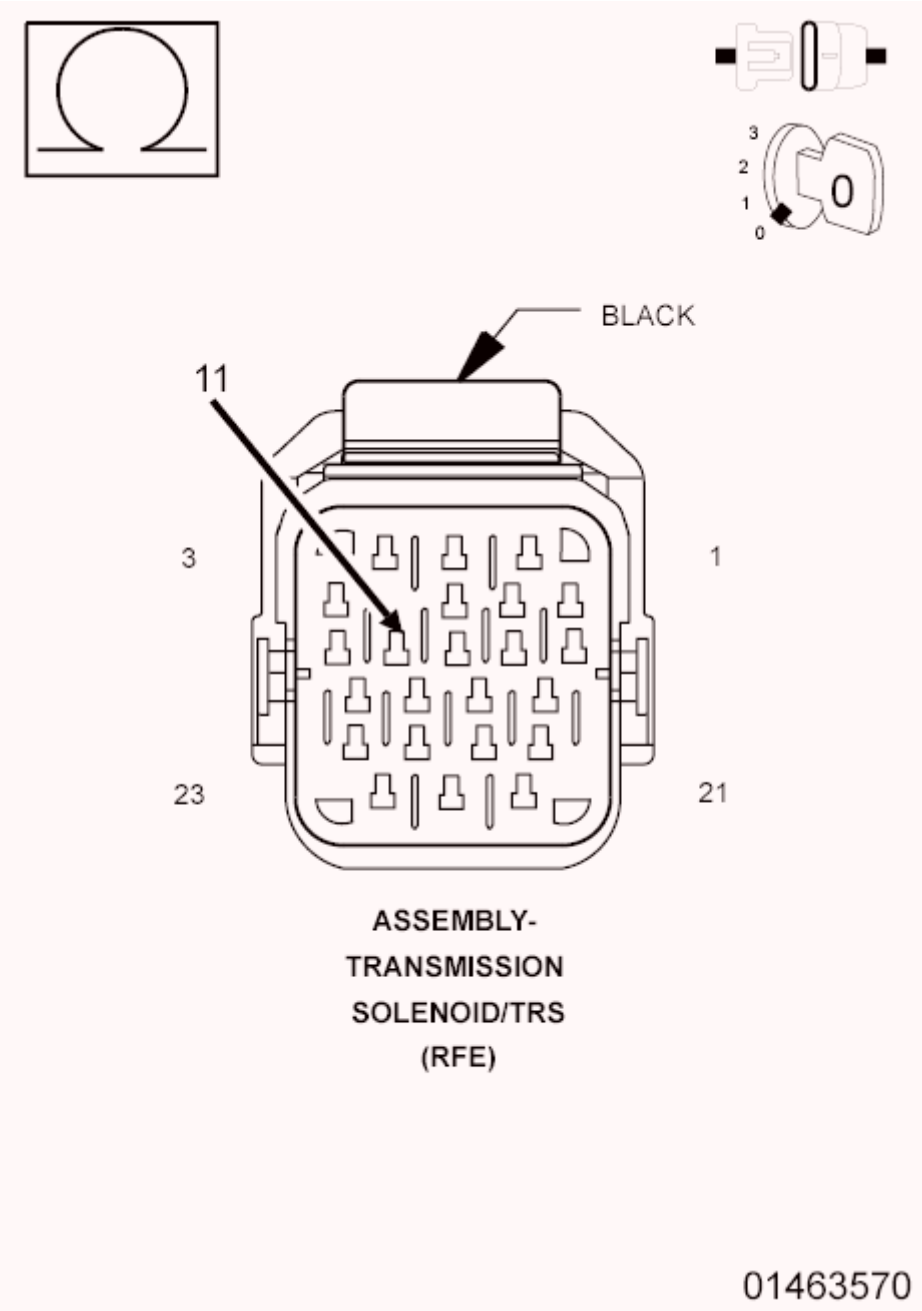

Fig. 52: Checking 4C Pressure Switch Sense Circuit For Short To Circuit
Courtesy of CHRYSLER GROUP, LLC

1. Disconnect all PCM harness connectors.
2. Disconnect the Transmission Solenoid/TRS Assembly harness connector.

NOTE: **Make sure the Transmission Solenoid/TRS Assembly harness connector is disconnected.**

NOTE: **Check connectors - Clean/repair as necessary.**

3. Measure the resistance between the (T48) 4C Pressure Switch Sense circuit and all other circuits in the Transmission Solenoid/TRS Assembly harness connector.

   Is the resistance below 5.0 Ohms between the (T48) 4C Pressure Switch Sense circuit and any other circuit(s) in the Transmission Solenoid/TRS Assembly harness connector?

   Yes

   - Repair the (T48) 4C Pressure Switch Sense circuit for a short to another circuit(s).
   - Refer to **STANDARD PROCEDURE** and perform the 545RFE TRANSMISSION VERIFICATION TEST.

   No

   - Using the schematics as a guide, check the Powertrain Control Module (PCM) terminals for corrosion, damage, or terminal push out. Pay particular attention to all power and ground circuits. If no problems are found, replace and program the PCM in accordance with the Service Information. With the scan tool, perform Quick Learn.
   - Refer to **STANDARD PROCEDURE** and perform the 545RFE TRANSMISSION VERIFICATION TEST.

17. **CHECK WIRING AND CONNECTORS**
    1. The conditions necessary to set this DTC are not present at this time.
    2. Using the schematics as a guide, inspect the wiring and connectors specific to this circuit.
    3. Wiggle the wires while checking for shorted and open circuits.
    4. With the scan tool, check the Event Data to help identify the conditions in which the DTC was set.
    5. If the Event Data shows the DTC Pie set while the Line Pressure was significantly below the Desired Line Pressure reading, check for causes of low line pressure (low fluid level, broken or improperly installed primary oil filter or filter seal, sticking Main Regulator Valve in the Pump Valve Body etc.). If the data shows the DTC set while the Line Pressure reading was significantly higher than the Desired Line Pressure, check the Line Pressure Sensor and related wiring.

       Were there any problems found?

       Yes

       - Repair as necessary.
       - Refer to **STANDARD PROCEDURE** and perform the 545RFE TRANSMISSION VERIFICATION TEST.

       No

       - Test Complete.

P0988-4C PRESSURE SWITCH RATIONALITY

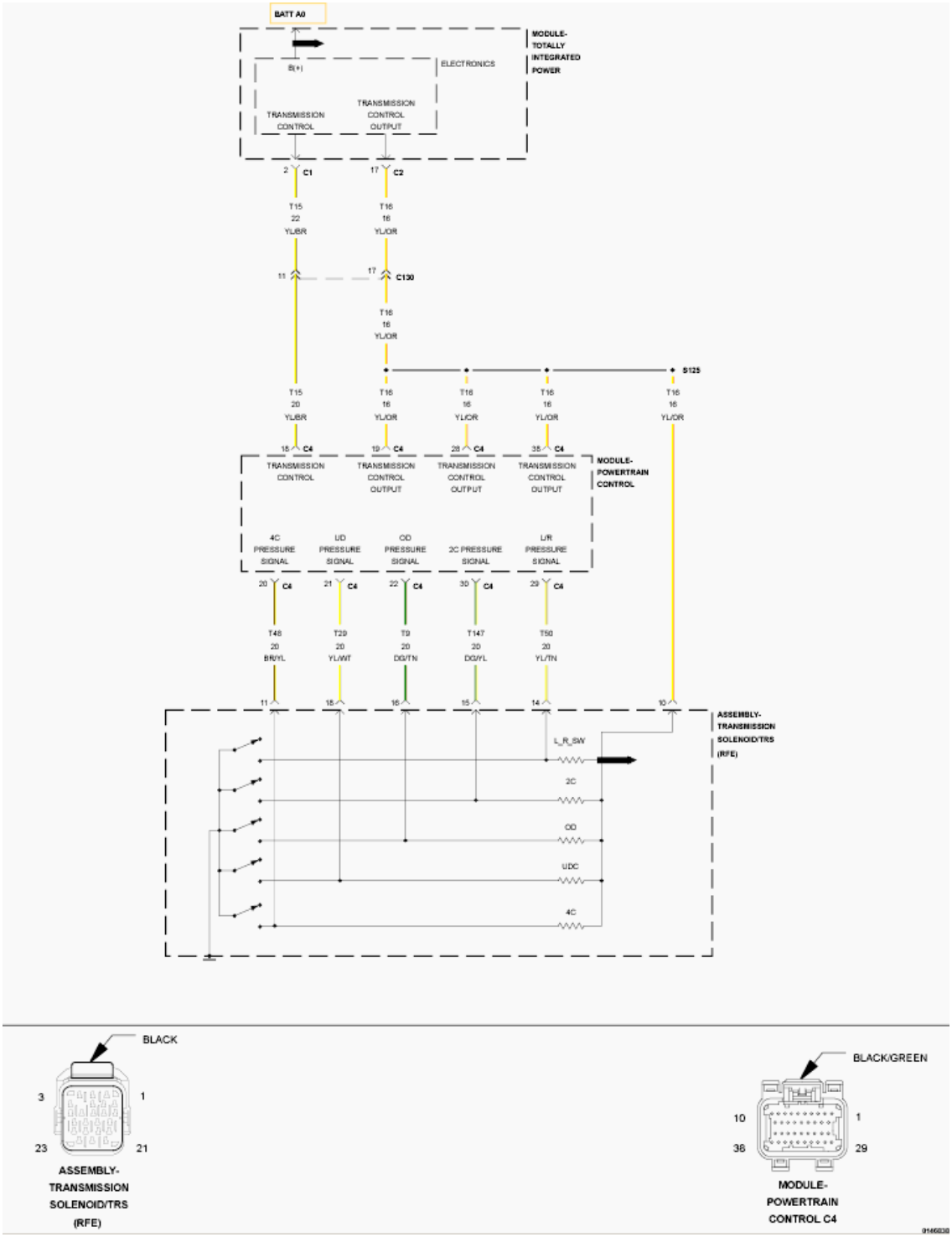

Fig. 53: Pressure Switch Circuit Wiring Diagram
Courtesy of CHRYSLER GROUP, LLC

For a complete wiring diagram, **refer to appropriate SYSTEM WIRING DIAGRAMS article** .

THEORY OF OPERATION

The Transmission system uses five pressure switches to monitor the fluid pressure in the LR, 2C, 4C, UD, and OD clutch circuits. The pressure switches are continuously monitored for the correct states in each gear as shown.

WHEN MONITORED:

Continuously with the ignition on, engine running, with the transmission in gear.

SET CONDITION:

The DTC is set if the 4C Pressure Switch reads open or closed at the wrong time in a given gear.

POSSIBLE CAUSES

Possible Causes
RELATED TCM POWER INPUT DTCS PRESENT
DTC P0871 ALSO PRESENT
LOSS OF 12-VOLT FEED
(T48) 4C PRESSURE SWITCH SENSE CIRCUIT OPEN
(T48) 4C PRESSURE SWITCH SENSE CIRCUIT SHORTED TO GROUND
EXCESSIVE FLUID LEAKAGE WITH 4C CLUTCH CIRCUIT
NO. 5 AND/OR NO. 7 CHECK BALL CUT OR DAMAGED
LOW LINE PRESSURE
TRANSMISSION SOLENOID/TRS ASSEMBLY
POWERTRAIN CONTROL MODULE (PCM)
WIRING AND CONNECTORS

Always perform the Pre-Diagnostic Troubleshooting Procedure before proceeding. Refer to STANDARD PROCEDURE .

GEAR	L/R	2C	4C	UD	OD
REVERSE	OPEN	OPEN	OPEN	OPEN	OPEN
P/N	CLOSED**	OPEN	OPEN	OPEN	OPEN
1ST	CLOSED*	OPEN	OPEN	CLOSED	OPEN
2ND	OPEN	CLOSED	OPEN	CLOSED	OPEN
2ND PRIME	OPEN	OPEN	CLOSED	CLOSED	OPEN
3RD	OPEN	OPEN	OPEN	CLOSED	CLOSED
4TH	OPEN	OPEN	CLOSED	OPEN	CLOSED
5TH	OPEN	CLOSED	OPEN	OPEN	CLOSED
*L/R is closed if output speed is below 100 rpm in Drive and Manual 2. L/R is closed in Manual 1.					
**May be open when rolling in Neutral or at low oil temperatures.					

DIAGNOSTIC TEST

1. **CHECK FOR TCM POWER INPUT SIGNAL DTCS**
    1. With the scan tool, read DTCs.

       Are there any TCM Power Input DTCs present?

       Yes

       - Refer to **DIAGNOSIS AND TESTING** and perform the appropriate diagnostic procedure.

       No

       - Go To 2.
2. **DTC DATA SHOW CURRENT DTC**
    1. With the scan tool, read and record the Event Data.

       NOTE: Make sure to record all Event Data stored in the scan tool for future reference in this test procedure.

       Does the Event Data show data for DTC P0988?

       Yes

       - Go To 3.

       No

       - Refer to **DIAGNOSIS AND TESTING** and perform the appropriate symptom identified in the Event Data.
3. **CHECK IF MULTIPLE DTCS ARE PRESENT**
    1. With the scan tool, read DTCs.

       Are there two or more related Pressure Switch Sense DTCs present in addition to P0988?

       Yes

       - Go To 4.

       No

       - Go To 7.
4. **RELATED DTC PRESENT**

   In the Event Data recorded earlier, do all the pressure switches read CLOSED in the Event Data for P0988?

Yes

- Refer to **DIAGNOSIS AND TESTING** and perform the diagnostic procedure for DTC P0882. Diagnose the DTC as if it is current.

No

- Go To 5.

5. **CHECK IF THE PRESSURE SWITCHES READ OPEN**

   In the Event Data recorded earlier, do all the pressure switches read OPEN?

   Yes

   - Go To 6.

   No

   - Go To 7.

6. **CHECK FOR LOW LINE PRESSURE**

   In the Event Data recorded earlier, is the Line Pressure less than 40 psi, and significantly below the Desired Line Pressure?

   Yes

   - Repair as necessary to correct low line pressure. Check fluid level and adjust as necessary. If fluid level is OK, check the Primary Oil Filter seal for a split, crack, or improperly installed. If the filter and seal are OK, check the Main Regulator Valve in the Oil Pump. Refer to the Service Information for the above procedures.
   - Refer to **STANDARD PROCEDURE** and perform the 545RFE TRANSMISSION VERIFICATION TEST.

   No

   - Replace the Transmission Solenoid/TRS Assembly in accordance with the Service Information.
   - Refer to **STANDARD PROCEDURE** and perform the 545RFE TRANSMISSION VERIFICATION TEST.

7. **CHECK IF THE DTC P0871 ALSO SET**
   1. With the scan tool, read DTCs.

      Is the DTC P0871 also present?

      Yes

      - Refer to **DIAGNOSIS AND TESTING** and perform the appropriate diagnostic procedure.

No

- Go To 8.

8. **CHECK IF THE DTC SET IN PARK, REVERSE OR NEUTRAL**

   In the Event Data recorded earlier, does the Event Data show the DTC set in Park, Neutral, or Reverse for P0988?

   Yes

   - Go To 13.

   No

   - Go To 9.

9. **CHECK IF THE Event Data READS CLOSED**

   In the Event Data recorded earlier, does the Event Data show the 4C Pressure Switch reading CLOSED?

   Yes

   - Go To 11.

   No

   - Go To 10.

10. **CHECK THE PRIMARY OIL FILTER SEAL**

    In the Event Data recorded earlier, is the Line Pressure less than 40 psi, and significantly below the Desired Line Pressure?

    Yes

    - Repair as necessary to correct low line pressure. Check fluid level and adjust as necessary. If fluid level is OK, check the Primary Oil Filter seal for a split, crack, or improperly installed. If the filter and seal are OK, check the Main Regulator Valve in the Oil Pump. Refer to the Service Information for the above procedures.
    - Refer to **STANDARD PROCEDURE** and perform the 545RFE TRANSMISSION VERIFICATION TEST.

    No

    - Go To 15.

11. **CHECK THE PCM AND WIRING**
    1. Turn the ignition off to the lock position.

2. Remove the Ignition Switch Feed fuse from the TIPM.

CAUTION: Removal of the Ignition Switch Feed fuse from the TIPM will prevent the vehicle from being started in gear.

WARNING: The Ignition Switch Feed fuse must be removed from the TIPM. Failure to do so can result in possible serious or fatal injury.

3. Install the Transmission Simulator (special tool #8333A, Simulator, Transmission).
4. Ignition on, engine not running.
5. With the Transmission Simulator, turn the Pressure Switch selector switch to the 4C position.
6. With the scan tool, monitor the 4C Pressure Switch while pressing the Pressure Switch test button on the Transmission Simulator.

   Did the state of the 4C Pressure Switch change while pressing the Pressure Switch Test button?

   Yes

   - Go To 12.

   No

   - Go To 13.

12. **CHECK THE TRANSMISSION SOLENOID/TRS ASSEMBLY**
    1. Using the schematics as a guide, inspect the wiring and connectors specific to this circuit.
    2. Wiggle the wires while checking for shorted and open circuits.

       Where there any problems found?

       Yes

       - Repair as necessary.
       - Refer to **STANDARD PROCEDURE** and perform the 545RFE TRANSMISSION VERIFICATION TEST.

       No

       - Replace the Transmission Solenoid/TRS Assembly in accordance with the Service Information.
       - Refer to **STANDARD PROCEDURE** and perform the 545RFE TRANSMISSION VERIFICATION TEST.

13. **CHECK THE (T48) 4C PRESSURE SWITCH SENSE CIRCUIT FOR AN OPEN**

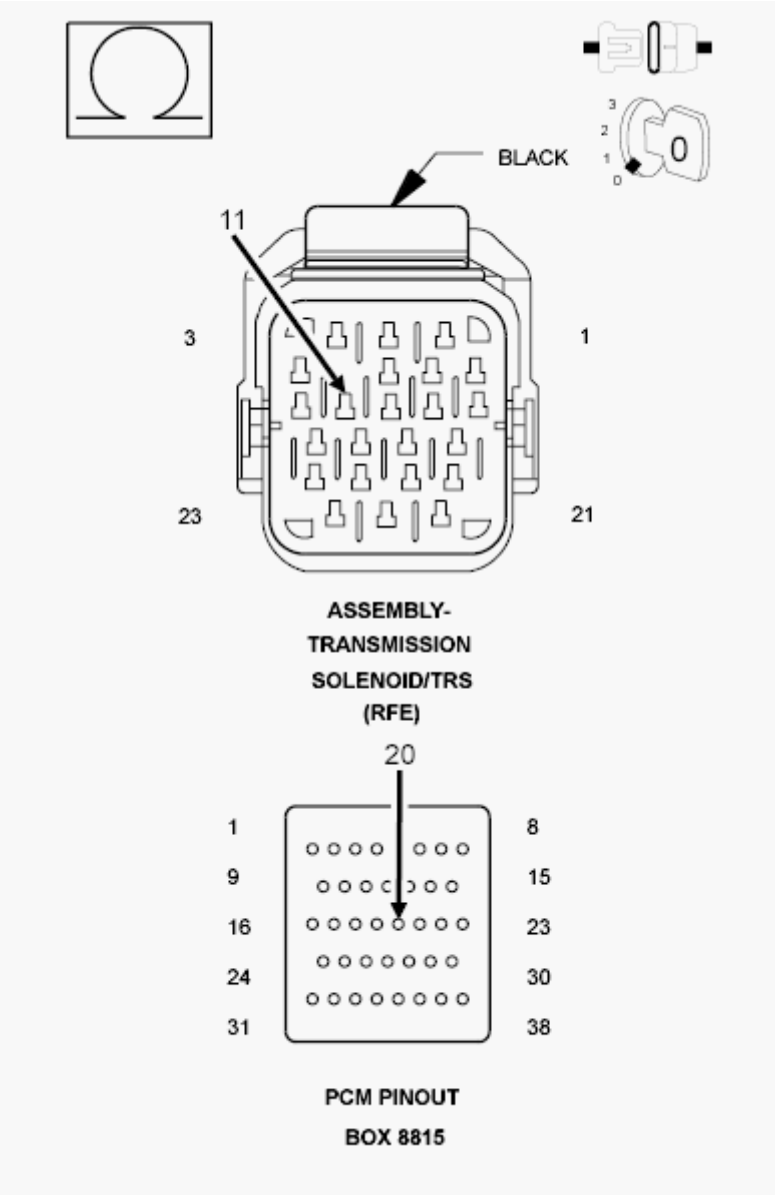

Fig. 54: Checking 4C Pressure Switch Sense Circuit For Open
Courtesy of CHRYSLER GROUP, LLC

1. Turn the ignition off to the lock position.
2. Disconnect the Transmission Simulator (special tool #8333A, Simulator, Transmission).
3. Disconnect the PCM C4 harness connector.
4. Connect the PCM Pinout Box (special tool #8815A, Kit, NGC, 38 Position) to the PCM C4 harness connector.

CAUTION: Do not probe the PCM harness connectors. Probing the PCM harness connectors will damage the PCM terminals resulting in poor terminal to pin connection. Install the (special tool #8815A, Kit, NGC, 38 Position) to perform diagnosis.

5. Measure the resistance of the (T48) 4C Pressure Switch Sense circuit between the Transmission Solenoid/TRS Assembly harness connector and the appropriate terminal of the PCM Pinout Box (special tool #8815A, Kit, NGC, 38 Position).

   Is the resistance above 5.0 Ohms?

   Yes

   - Repair the (T48) 4C Pressure Switch Sense circuit for an open.
   - Refer to **STANDARD PROCEDURE** and perform the 545RFE TRANSMISSION VERIFICATION TEST.

   No

   - Go To 14.

14. **CHECK THE (T48) 4C PRESSURE SWITCH SENSE CIRCUIT FOR A SHORT TO GROUND**

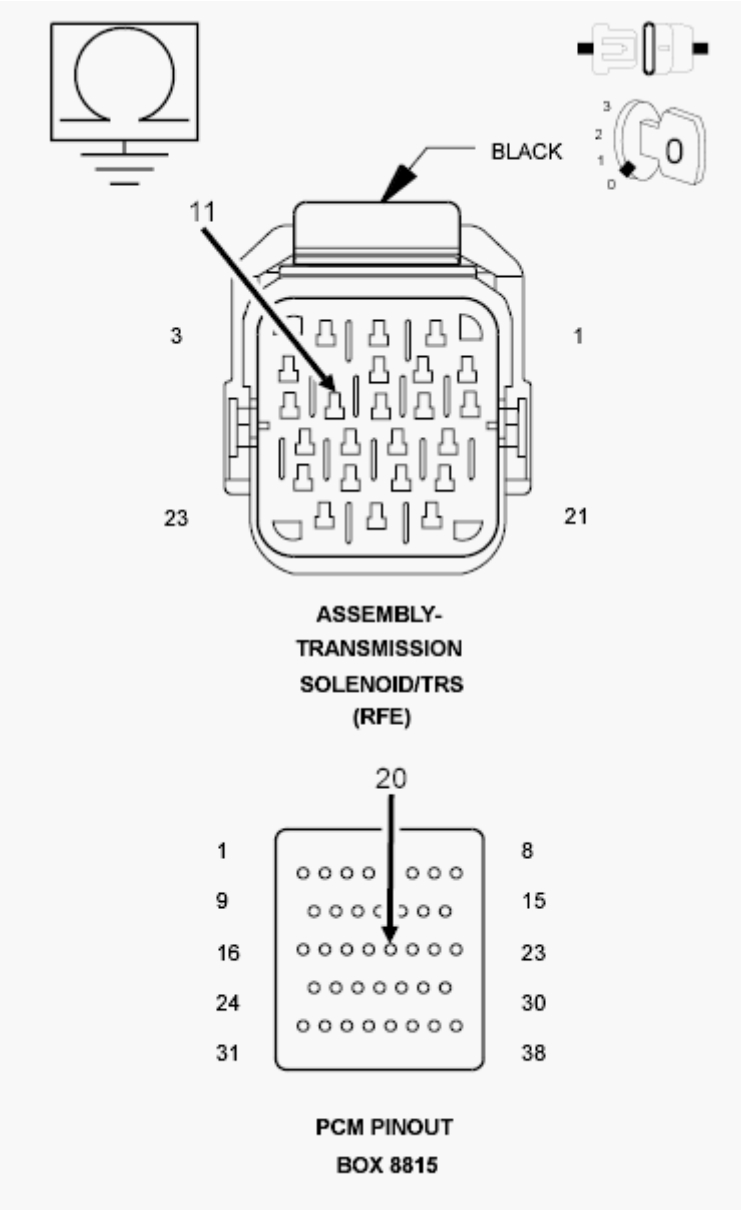

Fig. 55: Checking 4C Pressure Switch Sense Circuit For Short To Ground
Courtesy of CHRYSLER GROUP, LLC

1. Measure the resistance between ground and the (T48) 4C Pressure Switch Sense circuit.

   Is the resistance below 5.0 Ohms?

   Yes

   - Repair the (T48) 4C Pressure Switch Sense circuit for a short to ground.
   - Refer to **STANDARD PROCEDURE** and perform the 545RFE TRANSMISSION VERIFICATION TEST.

No

- Replace the Powertrain Control Module in accordance with the Service Information. With the scan tool, perform the Quick Learn procedure.
- Refer to **STANDARD PROCEDURE** and perform the 545RFE TRANSMISSION VERIFICATION TEST.

15. **CHECK IF THE NO. 5 AND/OR NO. 7 CHECK BALL IS CUT OR DAMAGED**
    1. Turn the Ignition off to the lock position.
    2. Remove the Valve Body Assembly in accordance with the Service Information.
    3. Inspect the No. 5 and No. 7 check balls for any cuts or damage.
    4. Inspect the 4C accumulator piston and seals and also the 4C tower seal on top of the valve body. Refer to the Service Information.

    Were there any problems found?

    Yes

    - Repair as necessary. Check for excessive clutch debris in the transmission oil pan. If excessive clutch debris is present, repair 4C clutch as necessary. Refer to the Service Information for proper repair procedures.
    - Refer to **STANDARD PROCEDURE** and perform the 545RFE TRANSMISSION VERIFICATION TEST.

    No

    - Go To 16.

16. **CHECK FOR EXCESSIVE LEAKAGE WITHIN THE 4C CLUTCH CIRCUIT**
    1. Air check the 4C Clutch hydraulic circuit. Refer to the Service Information.

    NOTE: This hydraulic clutch circuit contains a small bleed orifice. Small leakage is considered normal.

    Was there excessive air leakage in the 4C Clutch hydraulic circuit?

    Yes

    - Repair as necessary. Refer to the Service Information.
    - Refer to **STANDARD PROCEDURE** and perform the 545RFE TRANSMISSION VERIFICATION TEST.

    No

    - Replace the Transmission Solenoid/TRS Assembly in accordance with the Service Information.

- Refer to **STANDARD PROCEDURE** and perform the 545RFE TRANSMISSION VERIFICATION TEST.

P1684-BATTERY WAS DISCONNECTED

For a complete wiring diagram, **refer to appropriate SYSTEM WIRING DIAGRAMS article** .

THEORY OF OPERATION

The PCM uses a battery backed RAM (Random Access Memory) is used to maintain some learned values. When the battery B(+) is disconnected, the memory is lost. When the B(+) is restored, this memory loss is detected by the Transmission Control System. The DTC is set and the learned values are initialized to known constants or previously learned values from EEPROM (Electronic Erasable Programmable Read Only Memory). This results in the re-initialization of some parameters.

WHEN MONITORED:

Whenever the ignition is in the Run/Start position.

SET CONDITION:

This DTC will set whenever Powertrain Control Module (PCM) is disconnected from Fused B(+) or ground. It will also be set using the scan tool to perform a Battery Disconnect and/or Quick Learn procedure.

POSSIBLE CAUSES

Possible Causes
BATTERY WAS DISCONNECTED
SCAN TOOL BATTERY DISCONNECT PERFORMED
PCM WAS REPLACED OR DISCONNECTED
QUICK LEARN WAS PERFORMED

Always perform the Pre-Diagnostic Troubleshooting Procedure before proceeding. Refer to STANDARD PROCEDURE .

DIAGNOSTIC TEST

1. **POSSIBLE CAUSES**
    1. This DTC is an informational DTC only.
    2. This DTC is set due to a momentary loss of power and/or the ground circuits to the PCM.
    3. Below are a list of possible causes associated with this DTC.
    4. Battery was disconnected.
    5. The Battery Disconnect feature (if equipped) on the scan tool was performed.
    6. The Quick Learn feature on the scan tool was performed.
    7. PCM was replaced or disconnected.

Were any of the above possible causes performed?

Yes

- This is the cause of the DTC. Erase the DTC and return vehicle to customer.
- Refer to **STANDARD PROCEDURE** and perform the 545RFE TRANSMISSION VERIFICATION TEST.

No

- Go To 2.

2. **CHECK WIRING AND CONNECTORS**
   1. The conditions necessary to set this DTC are not present at this time.
   2. Using the schematics as a guide, inspect the wiring and connectors specific to this circuit.

      NOTE: Check all power and ground circuits to the PCM for a intermittent or high resistance condition.

   3. Wiggle the wires while checking for shorted and open circuits.
   4. With the scan tool, check the Event Data to help identify the conditions in which the DTC was set.

      Where there any problems found?

      Yes

      - Repair as necessary.
      - Refer to **STANDARD PROCEDURE** and perform the 545RFE TRANSMISSION VERIFICATION TEST.

      No

      - Test Complete.

P1715-RESTRICTED MANUAL VALVE IN T3 RANGE

For a complete wiring diagram, **refer to appropriate SYSTEM WIRING DIAGRAMS article** .

WHEN MONITORED:

Whenever the PRNDL code indicates Temp 3.

SET CONDITION:

This DTC sets when conditions for the DTC P1776 are satisfied or three unsuccessful attempts to engage 1st gear while the shifter is in the temp 3 zone. This indicates a restricted port at the manual valve because the shifter is not fully engaged in the drive position.

POSSIBLE CAUSES

Possible Causes
RELATED TRANSMISSION DTCS PRESENT
CUSTOMER DRIVING HABITS
MISADJUSTED SHIFTER

Always perform the Pre-Diagnostic Troubleshooting Procedure before proceeding. Refer to STANDARD PROCEDURE .

DIAGNOSTIC TEST

1. **DETERMINING IF RELATED DTCS ARE PRESENT**
    1. With the scan tool, check DTCs.

       Are any of the following DTCs P0731, P0732, P0733, P0734, P0736, or P0716 present?

       Yes

       - Refer to **DIAGNOSIS AND TESTING** and perform the appropriate diagnostic procedure.

       No

       - Go To 2.
2. **CHECK SHIFTER ADJUSTMENT**
    1. Check Shifter adjustment in accordance with the Service Information.

       Is the shifter properly adjusted?

       Yes

       - Go To 3.

       No

       - Adjust the Shifter Assembly in accordance with the Service Information.
       - Refer to **STANDARD PROCEDURE** and perform the 545RFE TRANSMISSION VERIFICATION TEST.
3. **CHECK CUSTOMER DRIVING HABIT**
    1. This DTC can be set if the customer rests their hand on the shift lever while they are driving. The transmission can be put in the T3 position if just enough upward pressure towards neutral is exerted on the shift lever.
    2. When this occurs, the feed port to the clutch is restricted, the transmission will declare neutral, and this DTC will be set. The customer should be informed not to rest their hand on the shifter while driving.

3. This DTC can also be set by simply bumping the shift lever toward neutral while accelerating.
4. With the scan tool, check the Event Data to help identify the conditions in which the DTC was set.

Repair

- This DTC can be set by putting too much forward pressure on the shift lever while it is in the OD position. Make sure the customer is informed.
- Refer to **STANDARD PROCEDURE** and perform the 545RFE TRANSMISSION VERIFICATION TEST.

P1736-GEAR RATIO ERROR IN 2ND PRIME

For a complete wiring diagram, **refer to appropriate SYSTEM WIRING DIAGRAMS article** .

THEORY OF OPERATION

The transmission system uses two speed sensors, one to measure input rpm and one to measure output rpm. These inputs are essential for proper transmission operation. Therefore, the integrity of this data is verified through the following checks:

NOTE: Various Gear Ratio Error DTCs will set only if the transmission slips after first achieving the correct ratio. Therefore, a transmission with no drive (or reverse) may not set any Gear Ratio Error DTC because it never achieves a correct gear ratio.

1) Once in a particular gear, if the gear ratio varies from the correct gear ratio, the corresponding in-gear trouble code is set (DTCs P0731-36 and P1736).

2) An excessive change in input or output speeds indicating signal intermittent which will result in the DTCs P0716 and/or P0721 being set.

3) If the common speed sensor ground circuit is lost, both sensor inputs will read the pulses from the input speed sensor when at a stop in neutral. Since the input speed sensor reads 60 teeth from the input clutch hub and the output speed sensor reads 30 teeth from the park gear, the result is an apparent speed ratio of 1:2 and may cause the DTC P1794 to set.

WHEN MONITORED:

Continuously with the ignition on, engine running, and after the transmission has achieved the proper gear ratio.

SET CONDITION:

If the ratio of the Input rpm to the Output rpm does not match the current gear ratio. This DTC can take up to five minutes of problem identification before illuminating the MIL

POSSIBLE CAUSES

Possible Causes
RELATED DTCS PRESENT
INPUT SPEED SENSOR OR WIRING
LOW FLUID LEVEL
CRACKED OR MIS-INSTALLED PRIMARY OIL FILTER OR SEAL
WORN SOLENOID SWITCH VALVE OR PLUGS
STUCK OR STICKING MAIN REGULATOR VALVE
BURNED UD OR 4C CLUTCH
CUT 4C OR UD PISTON SEAL
BROKEN 4C PISTON CASTING
BROKEN OR MISSING 4C BLEED ORIFICE
BROKEN OR MISSING UD BLEED ORIFICE
CUT 4C OR UD ACCUMULATOR PISTON SEAL
CRACKED 4C OR UD ACCUMULATOR PISTON
TRANSMISSION SOLENOID/TRS ASSEMBLY
BROKEN WELD - REACTION CARRIER TO REVERSE SUN GEAR
MISSING TEETH ON INPUT CLUTCH HUB TONE WHEEL

Always perform the Pre-Diagnostic Troubleshooting Procedure before proceeding. Refer to STANDARD PROCEDURE .

DIAGNOSTIC TEST

1. **CHECK IF RELATED DTCS ARE PRESENT**
   1. With the scan tool, read DTCs.

      Are any Transmission solenoid, line pressure, speed sensor, or loss of prime DTCs present?

      Yes

      - Refer to **DIAGNOSIS AND TESTING** and perform the appropriate diagnostic procedure. Perform the test for P0944-LOSS OF PRIME first if it is present.

      No

      - Go To 2.
2. **CHECK THE EVENT DATA**
   1. With the scan tool, read and record the Event Data.

      NOTE: Make sure to record all Event Data stored in the scan tool for future reference in this test procedure.

      Does the Event Data display information for the DTC P1736?

Yes

- Go To 3.

No

- Go To 6.

3. **CHECK INPUT RPM IN THE EVENT DATA**

   In the Event Data recorded earlier, does the Input rpm read zero?

   Yes

   - Check the input speed sensor and wiring. Refer to **DIAGNOSIS AND TESTING** and perform test P0716 and diagnose as if the DTC is current.

   No

   - Go To 4.

4. **CHECK LINE PRESSURE READING**

   In the Event Data recorded earlier, is the line pressure reading more than 10 psi below the desired line pressure?

   Yes

   - Go To 5.

   No

   - Go To 6.

5. **PLUGGED TRANSMISSION OIL FILTER**
   1. Turn the ignition off to the lock position.
   2. Remove and inspect the Transmission Oil Pan for excessive debris in accordance with the Service Information.
   3. Remove and inspect the Primary Oil Filter in accordance with the Service Information.

      NOTE: Make sure the Primary Transmission Oil Filter and/or seal is not cracked or split.

      Does the Oil Pan contain excessive debris and/or is the Primary Oil Filter cracked or plugged?

      Yes

      - Repair the plugged, cracked, or split Primary Transmission Oil Filter and/or seal. If the

Primary Transmission Oil Filter is plugged, refer to the Service Information for the proper hydraulic clutch repair procedure. Refer to **REMOVAL** .

- Refer to **STANDARD PROCEDURE** and perform the 545RFE TRANSMISSION VERIFICATION TEST.

No

- Remove the Transmission Oil Pump in accordance with the Service Information. Check the main Regulator Valve for sticking in its bore, scoring, and/or damage and clean and repair as necessary. If no problem is found, replace the Transmission Solenoid/TRS Assembly. Refer to **ASSEMBLY, TRANSMISSION SOLENOID AND TRS, REMOVAL** .
- Refer to **STANDARD PROCEDURE** and perform the 545RFE TRANSMISSION VERIFICATION TEST.

6. **CHECK IF THE DTC P1736 IS CURRENT**
   1. With the scan tool, perform the 2nd Prime Gear Clutch Test. Follow the instructions on the scan tool.
   2. Increase the throttle angle, TPS Degree, to 30° for no more than a few seconds.

CAUTION: Do not overheat the transmission.

NOTE: If the 4C clutch is faulty, the overrunning clutch will hold and the slip test will pass. The 2nd Prime Gear Clutch Test will not detect a faulty 4C clutch. However, it will detect a faulty UD clutch.

Did the clutch test pass, did the Input Speed remain at zero?

Yes

- Go To 7.

No

- Go To 9.

7. **CHECK FOR INTERMITTENT OPERATION**
   1. Check the Shifter adjustment in accordance with the Service Information.
   2. Intermittent gear ratio DTCs can be set by problems in the Input and Output Speed Sensor circuits and/or Speed Sensor Ground circuit.
   3. Check the Speed Sensor wiring and connectors for good connection, then perform a wiggle test using the Transmission Simulator (special tool #8333A, Simulator, Transmission).

Were there any problems found?

Yes

- Repair as necessary.
- Refer to **STANDARD PROCEDURE** and perform the 545RFE TRANSMISSION VERIFICATION TEST.

No

- Go To 8.

8. **CHECK FOR SLIPPAGE**
   1. With the scan tool, erase Transmission DTCs.
   2. Road test the vehicle.
   3. During the road test, operate in 4th gear, and perform kickdown shifts from 4th to 2nd (prime) gears.

   Is there an obvious slippage noticed in 4th or 2nd prime gears, or runaway on the 4-2 shift?

   Yes

   - Go To 11.

   No

   - Go To 14.

9. **UD CLUTCH HYDRAULIC CIRCUIT**
   1. Remove Transmission Oil Pan and check for excessive debris.
   2. Remove the Valve Body and air check the UD clutch hydraulic circuit (in the case) in accordance with the Service Information.

   NOTE: The UD clutch passage contains a small bleed orifice, a small amount of air leakage is normal.

   Were there any problems found, excessive debris and/or excessive air leakage in the UD clutch hydraulic circuit?

   Yes

   - Repair as necessary. Check the UD clutch piston seals and the dribbler assembly, reaction shaft support seal rings, and the flatness of the pump valve body and pump housing faces. Check main regulator valve for sticking in the bore.

     NOTE: If the UD clutch has failed but no obvious cause is found (such as a cut piston seal, broken seal ring, stuck regulator valve or any other items listed above) replace the Transmission Solenoid/TRS Assembly in addition to any necessary internal repairs. Refer to ASSEMBLY, TRANSMISSION SOLENOID AND

TRS, REMOVAL .

- Refer to **STANDARD PROCEDURE** and perform the 545RFE TRANSMISSION VERIFICATION TEST.

No

- Go To 10.

10. **UD ACCUMULATOR PISTON**
    1. Check the UD bleed orifice, accumulator piston, and accumulator piston seal in the main valve body.

    Were there any problems found?

    Yes

    - Repair as necessary. Refer to **VALVE BODY, REMOVAL** for proper repair procedures.

    No

    - Replace the Transmission Solenoid/TRS Assembly in accordance with the Service Information. Refer to **ASSEMBLY, TRANSMISSION SOLENOID AND TRS, REMOVAL** .
    - Refer to **STANDARD PROCEDURE** and perform the 545RFE TRANSMISSION VERIFICATION TEST.

11. **EXCESSIVE DEBRIS**
    1. Remove the Transmission Oil Pan and check for excessive debris.
    2. Remove the valve body and air check the 4C clutch hydraulic circuit in accordance with the Service Information.

    NOTE: The 4C clutch passage contains a small bleed orifice, a small amount of air leakage is normal.

    Were there any problems found, excessive debris, improperly assembled 4C clutch and/or excessive air leakage in the 4C clutch hydraulic circuit?

    Yes

    - Repair as necessary. Refer to the Service Information for proper repair procedures. Note: Check the 4C piston seals and bleed orifice.

    NOTE: If the 4C clutch has failed but no obvious cause is found (such as a cut piston seal, broken seal ring, stuck regulator valve or any other items listed above) replace the Transmission Solenoid/TRS Assembly in addition to any necessary internal

repairs.

- Refer to **STANDARD PROCEDURE** and perform the 545RFE TRANSMISSION VERIFICATION TEST.

No

- Go To 12.

12. **4C ACCUMULATOR**
    1. Check the 4C Accumulator piston for cracks or a cut seal.
    2. Check for a cut or missing No. 5 check ball.
    3. Check the Solenoid Switch Valve and its plugs for sticking in its bore or excessive wear.

    Were there any problems found?

    Yes

    - Repair as necessary. Refer to **VALVE BODY, REMOVAL** for proper repair procedures.
    - Refer to **STANDARD PROCEDURE** and perform the 545RFE TRANSMISSION VERIFICATION TEST.

    No

    - Go To 13.

13. **CHECK FOR BROKEN REVERSE SUN GEAR WELD**
    1. Working through the windows in the bottom of the case, check for a broken Reverse Sun gear weld to the reaction carrier as follows:
       - Hold the Transmission Output Shaft by holding the Transmission Manual Lever in the park position.
       - Rotate the Input Annulus gear and drive shell, (the drum that encloses the two rearmost carriers).
       - Check to see if the reaction carrier (the front most carrier, whose outer shell is splined to the 4C clutch) is rotating faster than the drive shell is being turned.

    Is the reaction carrier turning faster than the drive shell?

    Yes

    - Replace the Transmission Solenoid/TRS Assembly in accordance with the Service Information. Refer to **ASSEMBLY, TRANSMISSION SOLENOID AND TRS, REMOVAL** .
    - Refer to **STANDARD PROCEDURE** and perform the 545RFE TRANSMISSION VERIFICATION TEST.

No

- Replace the reaction carrier in accordance with the Service Information. Refer to **REMOVAL** .
- Refer to **STANDARD PROCEDURE** and perform the 545RFE TRANSMISSION VERIFICATION TEST.

14. **CHECK IF THE DTC RESET**

Did the DTC P1736 reset during the road test?

Yes

- Go To 15.

No

- Go To 16.

15. **LIST OF POSSIBLE CAUSES**
    1. If any other DTCs set during the road test, refer to **DIAGNOSIS AND TESTING**.
    2. If no other DTCs set during the road test, below is a list of possible causes, but not strictly limited to those:
       - Check for excessive debris in the Transmission Oil pan, plugged, cracked, or split Primary Transmission Oil Filter and/or seal.
       - Check for cuts or missing No. 5 check ball in the main valve body.
       - Check the 4C and UD accumulator pistons and seals, UD bleed orifice, and the Solenoid Switch Valve and Plugs in the main valve body.
       - Check the UD clutch piston seals, reaction shaft support seal rings, and the flatness of the pump valve body and pump housing faces.
       - Check the 4C clutch piston seals, and bleed orifice.
       - Check the UD clutch piston seals, reaction shaft support seal rings, and dribbler assemblies, and the flatness of the pump valve body and pump housing faces.

Repair

- Repair as necessary. Refer to **REMOVAL** for proper repair procedures.

NOTE: **If the UD or 4C clutch has failed but no obvious cause is found (such as a cut piston seal, broken seal ring, stuck regulator valve or any other items listed above) replace the Transmission Solenoid/TRS Assembly in addition to any necessary internal repairs.**

- Refer to **STANDARD PROCEDURE** and perform the 545RFE TRANSMISSION VERIFICATION TEST.

16. **INTERMITTENT DTC**
    1. The conditions necessary to set this DTC are not present at this time.
    2. Use the Event Data to help identify the conditions and/or possible causes that may have caused the DTC to set.
    3. Check for any Service Information Tune-ups or Technical Service Bulletins that may apply.

    Where there any problems found?

    Yes

    - Repair as necessary.
    - Refer to **STANDARD PROCEDURE** and perform the 545RFE TRANSMISSION VERIFICATION TEST.

    No

    - Test Complete.

P1775-SOLENOID SWITCH VALVE LATCHED IN TCC POSITION

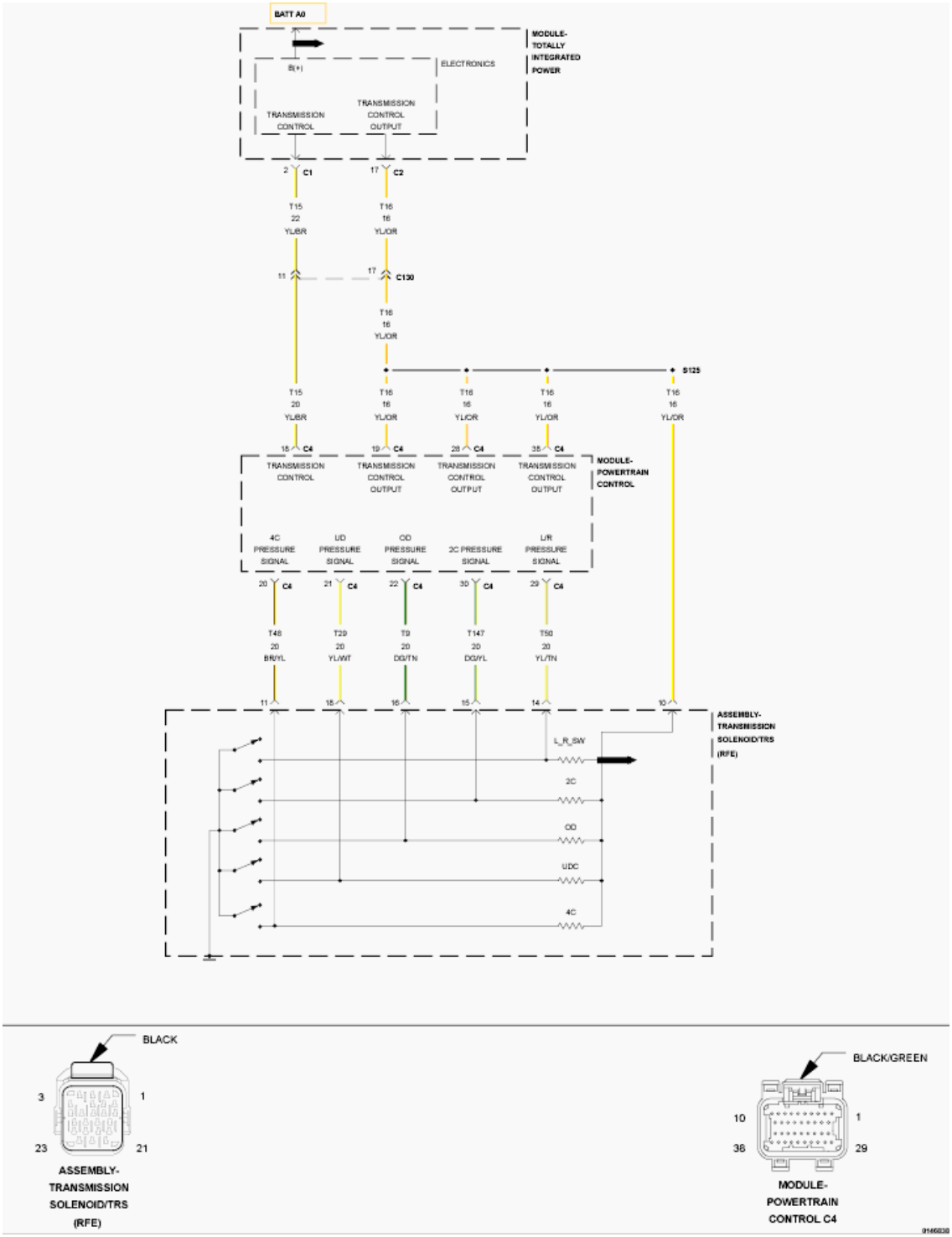

Fig. 56: Pressure Switch Circuit Wiring Diagram
Courtesy of CHRYSLER GROUP, LLC

For a complete wiring diagram, **refer to appropriate SYSTEM WIRING DIAGRAMS article** .

THEORY OF OPERATION

The Solenoid Switch Valve (SSV) controls the direction of the transmission fluid when the L/R Solenoid is energized. The SSV will be in the downshifted position in 1st gear, thus directing the fluid to the L/R clutch circuit. In 2nd through 5th gears, it will be in the upshifted position and directing the fluid into the torque converter clutch (TCC).

When shifting into 1st gear, a special hydraulic sequence is performed to ensure SSV movement into the downshifted position. The L/R Pressure Switch is monitored to confirm SSV movement. If movement is not confirmed (the L/R pressure switch does not close), EMCC is inhibited until SSV operation is confirmed.

WHEN MONITORED:

During an attempted shift into 1st gear.

SET CONDITION:

This DTC is set if three unsuccessful attempts are made to shift the Solenoid Switch Valve (SSV) into the downshifted position in one given ignition start. This DTC can take up to five minutes to mature before illuminating the MIL.

POSSIBLE CAUSES

Possible Causes
RELATED DTC P0841 PRESENT
SOLENOID SWITCH VALVE STICKING
L/R PRESSURE SWITCH SENSE CIRCUIT SHORTED TO OTHER CIRCUITS
TRANSMISSION SOLENOID/TRS ASSEMBLY
POWERTRAIN CONTROL MODULE (PCM)

Always perform the Pre-Diagnostic Troubleshooting Procedure before proceeding. Refer to STANDARD PROCEDURE .

DIAGNOSTIC TEST

1. **CHECK IF RELATED DTCS ARE PRESENT**
    1. With the scan tool, read DTCs.

       Is the DTC P0841 present also?

       Yes

       - Refer to **DIAGNOSIS AND TESTING** and perform the appropriate diagnostic procedure for DTC P0841.

       No

       - Go To 2.

2. **CHECK IF THE DTC IS CURRENT**
    1. Perform a visual inspection of all connectors, wiring, and cooler connections before proceeding. Repair as necessary.
    2. With the scan tool, read DTCs.

       Is the status Active or is the Starts Since Set counter 2 or less for this DTC?

       Yes

       - Go To 3.

       No

       - Go To 6.
3. **CHECK THE PCM AND WIRING**
    1. Turn the ignition off to the lock position.
    2. Remove the Ignition Switch Feed fuse from the TIPM.

       CAUTION: Removal of the Ignition Switch Feed fuse from the TIPM will prevent the vehicle from being started in gear.

       WARNING: The Ignition Switch Feed fuse must be removed from the TIPM. Failure to do so can result in possible serious or fatal injury.

    3. Install the Transmission Simulator (special tool #8333A, Simulator, Transmission).
    4. Ignition on, engine not running.
    5. With the Transmission Simulator, turn the Pressure Switch selector switch to L/R.
    6. With the scan tool, monitor the L/R Pressure Switch state while pressing the Pressure Switch Test button on the Transmission Simulator.

       Did the state of the L/R Pressure Switch change while pressing the Pressure Switch Test button?

       Yes

       - Go To 4.

       No

       - Go To 5.
4. **CHECK IF THE SOLENOID SWITCH VALVE STICKING**
    1. Turn the ignition off to the lock position.
    2. Remove the Transmission Oil Pan in accordance with the Service Information.

3. Remove the Transmission Valve body in accordance with the Service Information.
4. Inspect the Solenoid Switch Valve and Plugs for sticking.

   Is the Solenoid Switch Valve or Plugs sticking?

   Yes

   - Clean and inspect in accordance with the Service Information. Repair as necessary.
   - Refer to **STANDARD PROCEDURE** and perform the 545RFE TRANSMISSION VERIFICATION TEST.

   No

   - Replace the Transmission Solenoid/TRS Assembly in accordance with the Service Information.
   - Refer to **STANDARD PROCEDURE** and perform the 545RFE TRANSMISSION VERIFICATION TEST.

5. **CHECK THE L/R PRESSURE SWITCH SENSE CIRCUIT FOR A SHORT TO ANOTHER CIRCUIT**

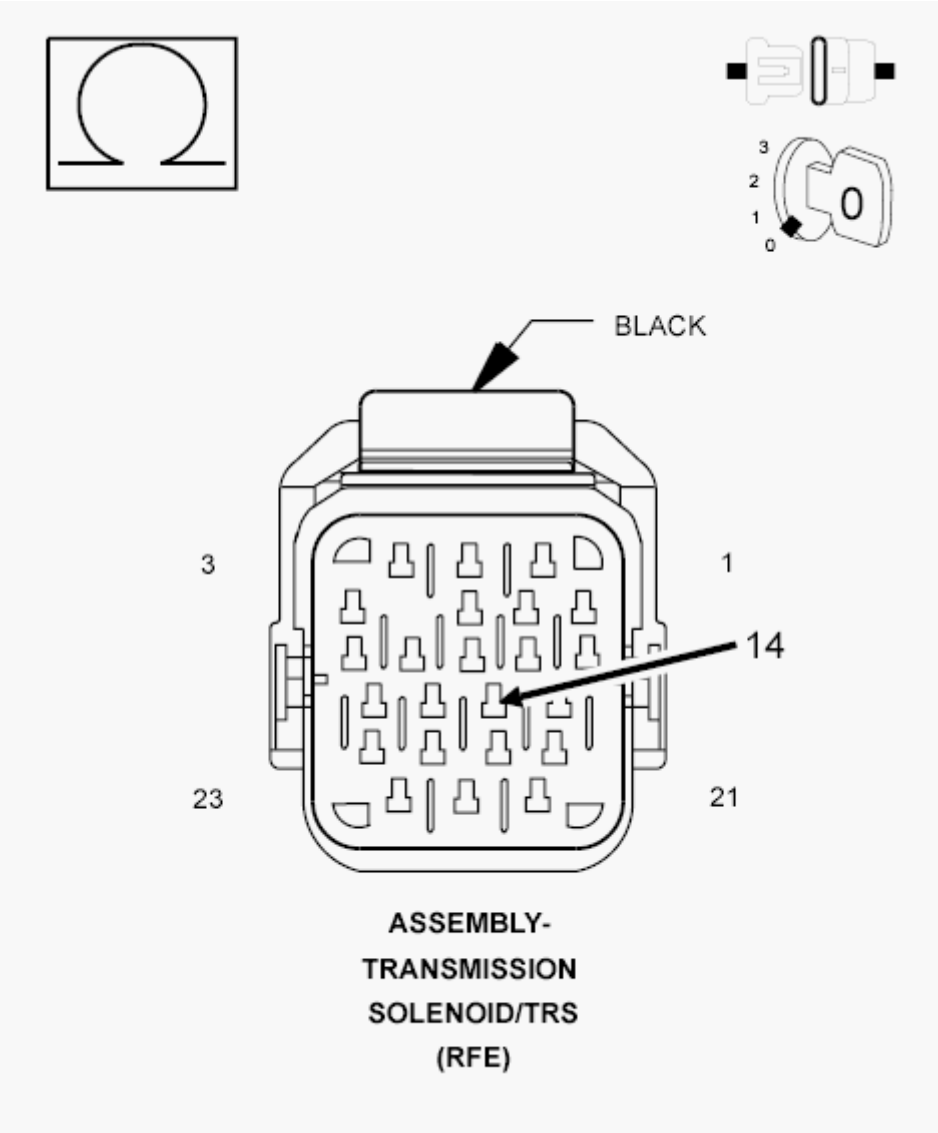

Fig. 57: Checking L/R Pressure Switch Sense Circuit For Short To Circuit
Courtesy of CHRYSLER GROUP, LLC

1. Turn the ignition off to the lock position.
2. Disconnect the Transmission Solenoid/TRS Assembly harness connector.
3. Disconnect all PCM harness connectors.
4. Measure the resistance between the (T50) L/R Pressure Switch Sense circuit and all other circuits in the Transmission Solenoid/TRS Assembly harness connector.

   Is the resistance below 5.0 Ohms between the (T50) L/R Pressure Switch Sense circuit and all other circuit(s) in the Transmission Solenoid/TRS Assembly harness connector?

   Yes

   - Repair the (T50) L/R Pressure Switch Sense circuit for a short to another circuit(s).

- Refer to **STANDARD PROCEDURE** and perform the 545RFE TRANSMISSION VERIFICATION TEST.

No

- Using the schematics as a guide, check the Powertrain Control Module (PCM) terminals for corrosion, damage, or terminal push out. Pay particular attention to all power and ground circuits. If no problems are found, replace and program the PCM in accordance with the Service Information. With the scan tool, perform Quick Learn.
- Refer to **STANDARD PROCEDURE** and perform the 545RFE TRANSMISSION VERIFICATION TEST.

6. **CHECK WIRING AND CONNECTORS**
   1. The conditions necessary to set this DTC are not present at this time.
   2. Using the schematics as a guide, inspect the wiring and connectors specific to this circuit.
   3. Wiggle the wires while checking for shorted and open circuits.
   4. With the scan tool, check the Event Data to help identify the conditions in which the DTC was set.

   Where there any problems found?

   Yes

   - Repair as necessary.
   - Refer to **STANDARD PROCEDURE** and perform the 545RFE TRANSMISSION VERIFICATION TEST.

   No

   - Test Complete.

P1776-SOLENOID SWITCH VALVE LATCHED IN LR POSITION

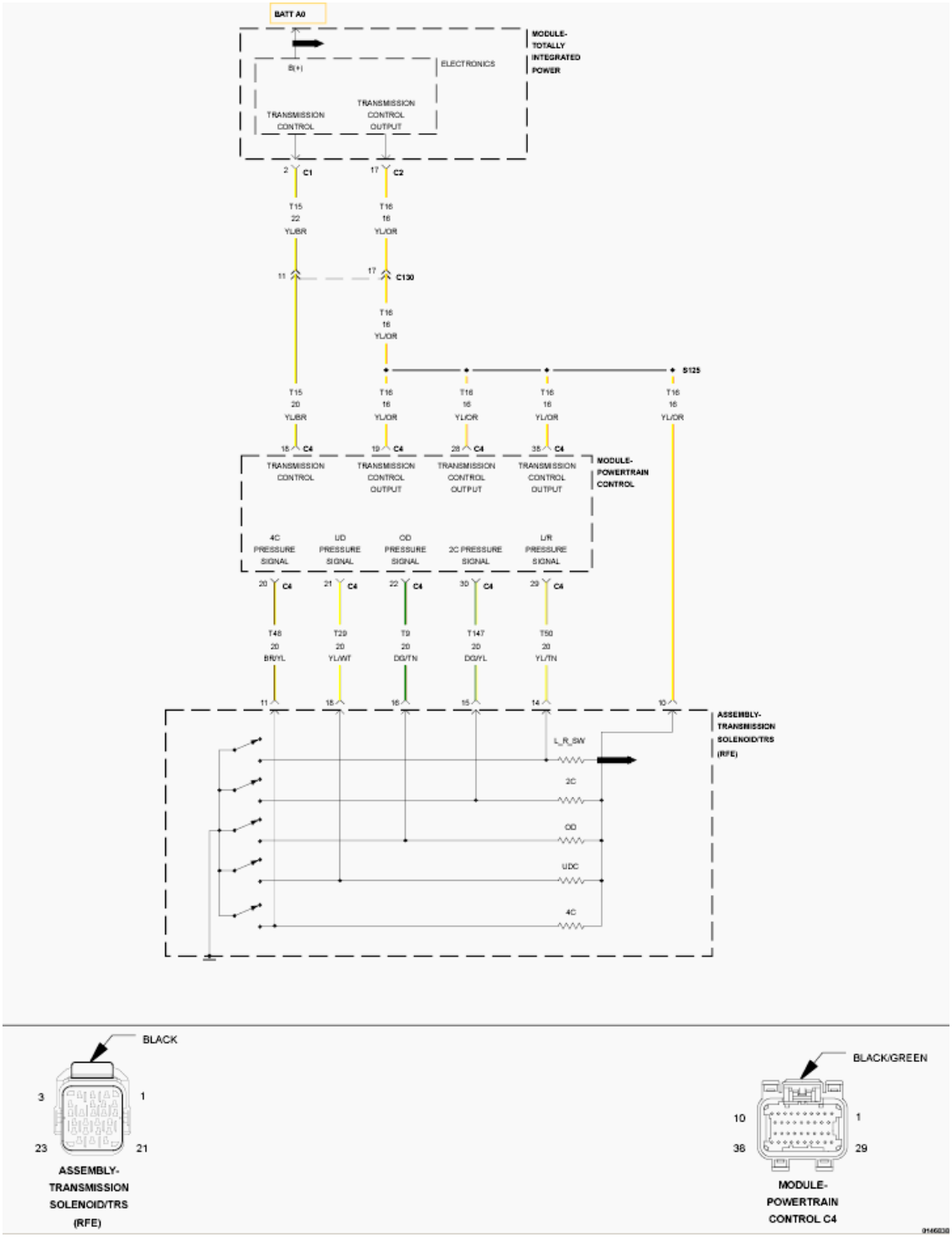

Fig. 58: Pressure Switch Circuit Wiring Diagram
Courtesy of CHRYSLER GROUP, LLC

For a complete wiring diagram, **refer to appropriate SYSTEM WIRING DIAGRAMS article** .

THEORY OF OPERATION

The Solenoid Switch Valve (SSV) controls the direction of the transmission fluid when the L/R Solenoid is energized. The SSV will be in the downshifted position in 1st gear, thus directing the fluid to the L/R clutch circuit. In 2nd through 5th gears, it will be in the upshifted position and directing the fluid into the torque converter clutch (TCC).

When in 2nd, 2nd Prime, 3rd, 4th, or 5th gear, the Torque Converter Clutch (TCC) can be engaged when certain conditions are met. The TCC piston is electronically modulated by increasing the duty cycle of the L/R solenoid until the torque converter slip difference (difference between engine and transmission input speed) is within 60 rpm. Then the L/R solenoid is fully energized (FEMCC - 100% duty cycle). Torque converter slip is monitored in FEMCC to ensure adequate clutch capacity.

WHEN MONITORED:

Continuously when performing partial or full EMCC - PEMCC or FEMCC.

SET CONDITION:

If the transmission senses the L/R pressure switch closing while performing PEMCC or FEMCC. This DTC will set after two unsuccessful attempts to perform PEMCC or FEMCC. This DTC can take up to five minutes of problem identification before illuminating the MIL.

POSSIBLE CAUSES

Possible Causes
RELATED DTC P0841 PRESENT
LR PRESSURE SWITCH SENSE CIRCUIT OPEN
LR PRESSURE SWITCH SENSE CIRCUIT SHORTED TO GROUND
SOLENOID SWITCH VALVE
POWERTRAIN CONTROL MODULE (PCM)
CHECK THE WIRING AND CONNECTORS

Always perform the Pre-Diagnostic Troubleshooting Procedure before proceeding. Refer to STANDARD PROCEDURE .

DIAGNOSTIC TEST

1. **CHECK FOR RELATED DTCS**
    1. With the scan tool, read DTCs.

       Is the DTC P0841 present also?

       Yes

       - Refer to **DIAGNOSIS AND TESTING** and perform the appropriate diagnostic procedure.

       No

- Go To 2.

2. **CHECK IF THE DTC IS CURRENT**
   1. With the scan tool, read DTCs.

      Is the status Active or is the Starts Since Set counter 2 or less for this DTC?

      Yes

      - Go To 3.

      No

      - Go To 7.

3. **CHECK THE PCM AND WIRING**
   1. Turn the ignition off to the lock position.
   2. Remove the Ignition Switch Feed fuse from the TIPM.

      CAUTION: Removal of the Ignition Switch Feed fuse from the TIPM will prevent the vehicle from being started in gear.

      WARNING: The Ignition Switch Feed fuse must be removed from the TIPM. Failure to do so can result in possible serious or fatal injury.

   3. Install the Transmission Simulator (special tool #8333A, Simulator, Transmission).
   4. Ignition on, engine not running.
   5. With the Transmission Simulator, turn the Pressure Switch selector switch to the LR position.
   6. With the scan tool, monitor the LR Pressure Switch state while pressing the Pressure Switch Test button on the Transmission Simulator.

      Did the state of the LR Pressure Switch change while pressing the Pressure Switch Test button?

      Yes

      - Go To 4.

      No

      - Go To 5.

4. **CHECK THE SOLENOID SWITCH VALVE**
   1. Remove the Valve Body in accordance with the Service Information.
   2. Inspect the Solenoid Switch Valve and plugs for sticking in the bore and/or wear.

      Were there any problems found?

Yes

- Clean and repair as necessary in accordance with the Service Information.
- Refer to **STANDARD PROCEDURE** and perform the 545RFE TRANSMISSION VERIFICATION TEST.

No

- Go To 7.

5. **CHECK THE LR PRESSURE SWITCH SENSE CIRCUIT FOR AN OPEN**

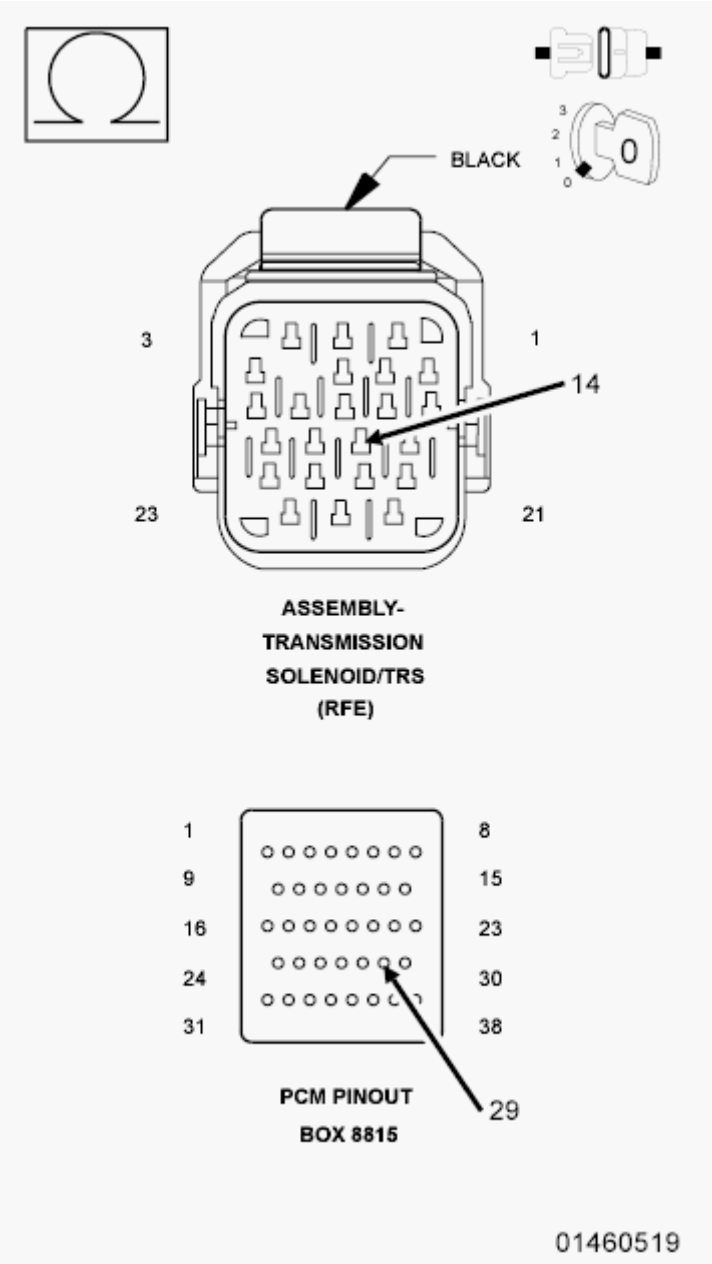

Fig. 59: Checking L/R Pressure Switch Sense Circuit For Open

1. Turn the ignition off to the lock position.
2. Disconnect the Transmission Simulator (special tool #8333A, Simulator, Transmission).
3. Disconnect the PCM C4 harness connector and connect the PCM Pinout Box (special tool #8815A, Kit, NGC, 38 Position).

CAUTION: Do not probe the PCM harness connectors. Probing the PCM harness connectors will damage the PCM terminals resulting in poor terminal to pin connection. Install the (special tool #8815A, Kit, NGC, 38 Position) to perform diagnosis.

4. Measure the resistance of the (T50) LR Pressure Switch Sense circuit between the Solenoid/TRS Assembly harness connector and the appropriate terminal of the PCM Pinout Box (special tool #8815A, Kit, NGC, 38 Position).

   Is the resistance above 5.0 Ohms?

   Yes

   - Repair the (T50) LR Pressure Switch Sense circuit for an open.
   - Refer to **STANDARD PROCEDURE** and perform the 545RFE TRANSMISSION VERIFICATION TEST.

   No

   - Go To 6.

6. **CHECK THE (T50) LR PRESSURE SWITCH SENSE CIRCUIT FOR A SHORT TO GROUND**

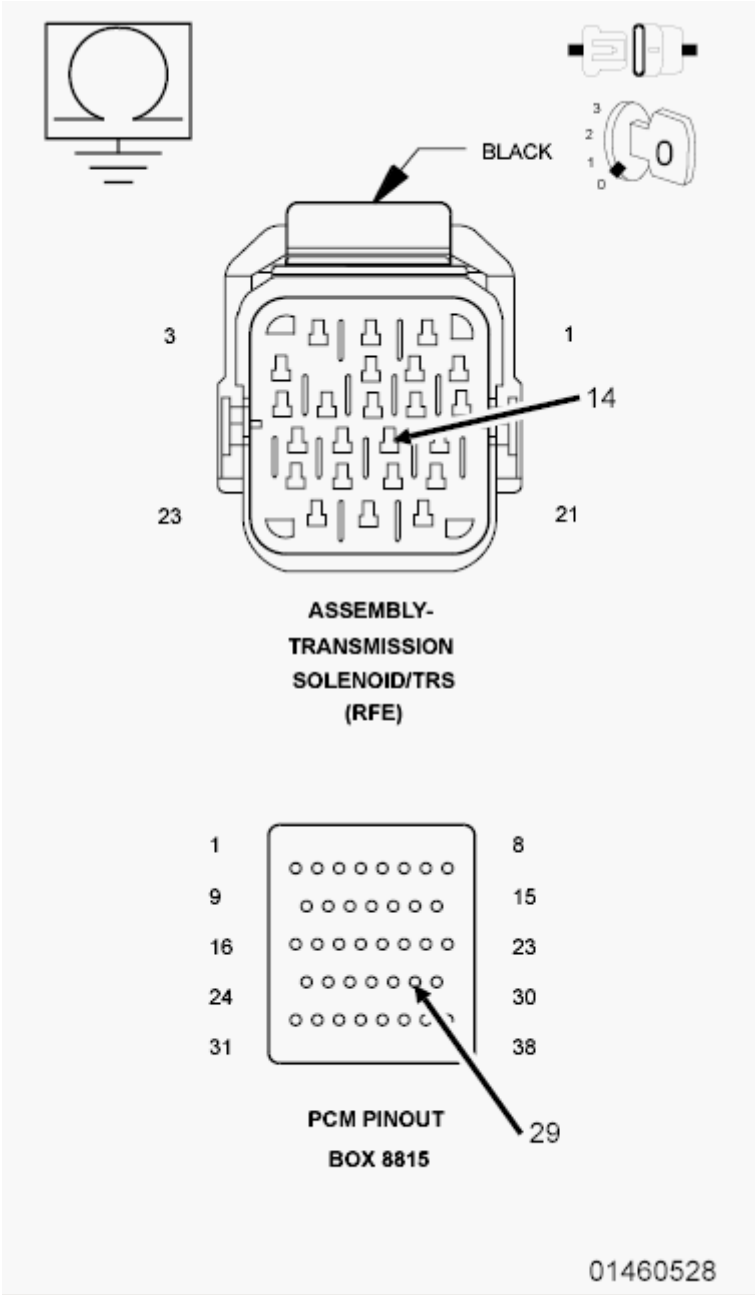

Fig. 60: Checking L/R Pressure Switch Sense Circuit For Short To Ground
Courtesy of CHRYSLER GROUP, LLC

1. Measure the resistance between ground and the (T50) LR Pressure Switch Sense circuit.

   Is the resistance below 5.0 Ohms?

   Yes

   - Repair the (T50) LR Pressure Switch Sense circuit for a short to ground.
   - Refer to **STANDARD PROCEDURE** and perform the 545RFE TRANSMISSION

VERIFICATION TEST.

No

- Using the schematics as a guide, check the Powertrain Control Module (PCM) terminals for corrosion, damage, or terminal push out. Pay particular attention to all power and ground circuits. If no problems are found, replace and program the PCM in accordance with the Service Information. With the scan tool, perform Quick Learn.
- Refer to **STANDARD PROCEDURE** and perform the 545RFE TRANSMISSION VERIFICATION TEST.

7. **CHECK WIRING AND CONNECTORS**
   1. The conditions necessary to set this DTC are not present at this time.
   2. Using the schematics as a guide, inspect the wiring and connectors specific to this circuit.
   3. Wiggle the wires while checking for shorted and open circuits.
   4. This DTC can also be set by the Solenoid Switch Valve intermittently sticking in it's bore under extreme temperature conditions, or by a worn Solenoid Switch Valve or plugs.
   5. With the scan tool, check the Event Data to help identify the conditions in which the DTC was set.

   Where there any problems found?

   Yes

   - Repair as necessary.
   - Refer to **STANDARD PROCEDURE** and perform the 545RFE TRANSMISSION VERIFICATION TEST.

   No

   - Test Complete.

P1794-SPEED SENSOR GROUND ERROR

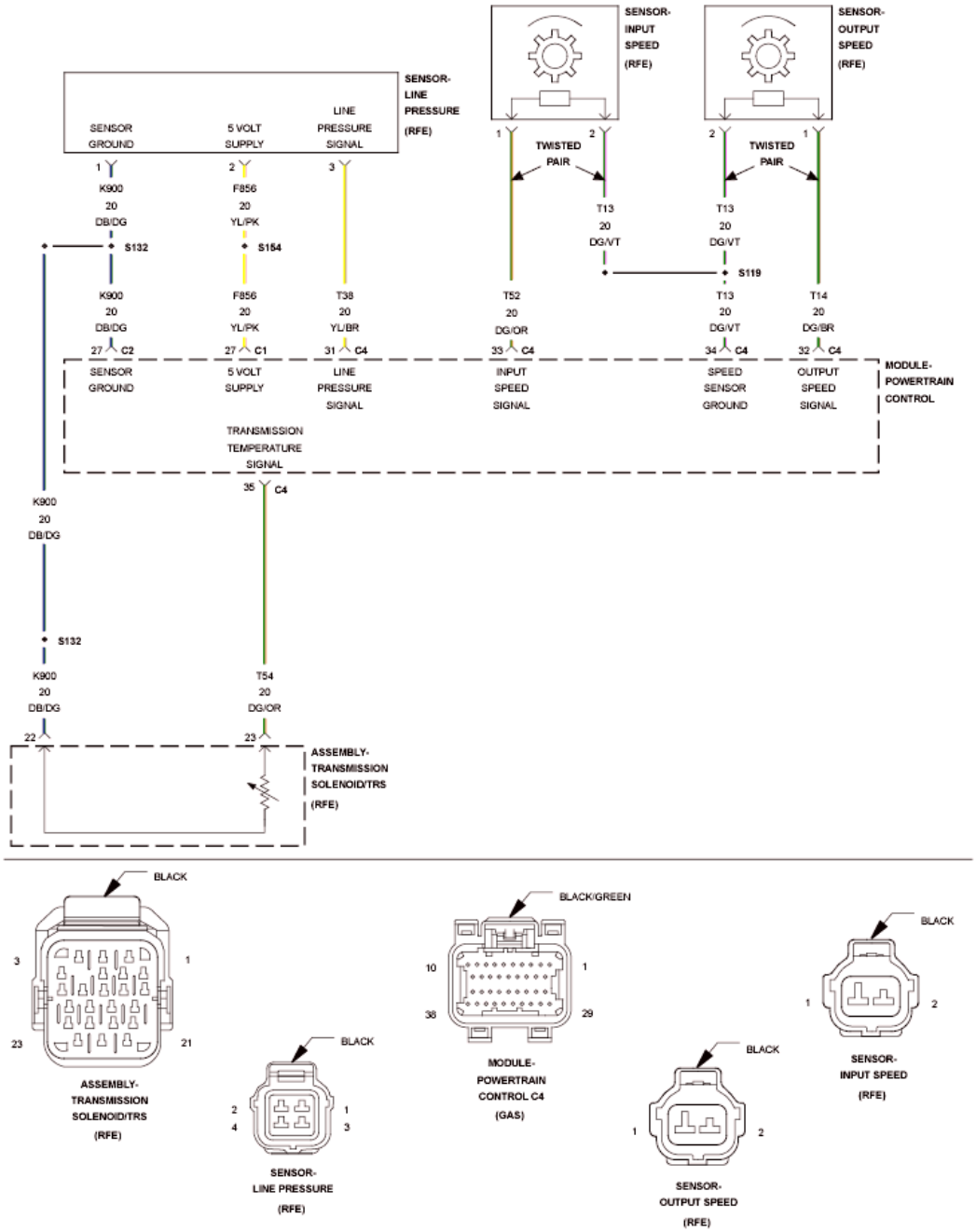

Fig. 61: Transmission Control System Circuit Wiring Diagram
Courtesy of CHRYSLER GROUP, LLC

For a complete wiring diagram, **refer to appropriate SYSTEM WIRING DIAGRAMS article** .

THEORY OF OPERATION

The transmission system uses two speed sensors, one to measure input rpm and one to measure output rpm. These inputs are essential for proper transmission operation. Therefore, the integrity of this data is verified through the following checks:

1) When in gear, if the gear ratio does not compare to a known gear ratio, the corresponding in-gear trouble code is set (DTCs P0729 and P0731-36).

2) An excessive change in input or output speeds indicating signal intermittent which will result in the DTCs P0716 and/or P0721 being set.

3) If the common speed sensor ground circuit is lost, both sensor inputs will read the signal from the input speed sensor at idle in neutral. Since the input speed sensor reads 60 teeth from the input clutch hub and the output speed sensor reads 30 teeth from the park gear, the result is an apparent speed ratio of 1:2 and may cause the DTC P1794 to set when at a stop.

WHEN MONITORED:

The gear ratio is monitored continuously while the Transmission is in gear.

SET CONDITION:

After a controller reset in neutral and a ratio of input to output, of 1 to 2. This DTC can take up to five minutes of problem identification before illuminating the MIL.

POSSIBLE CAUSES

Possible Causes
(T13) SPEED SENSOR GROUND CIRCUIT OPEN
(T13) SPEED SENSOR GROUND CIRCUIT SHORTED TO GROUND
(T13) SPEED SENSOR GROUND CIRCUIT SHORTED TO VOLTAGE
POWERTRAIN CONTROL MODULE (PCM)

Always perform the Pre-Diagnostic Troubleshooting Procedure before proceeding. Refer to STANDARD PROCEDURE .

DIAGNOSTIC TEST

1. **CHECK IF THE DTC IS CURRENT**
    1. Engine Running, Shift lever in park.
    2. With the scan tool, read the Transmission Output and Input Speed Sensor states.

       Is the Output Speed Sensor reading twice the Input Speed Sensor reading?

       Yes

       - Go To 2.

       No

       - Go To 6.

2. **CHECK THE PCM AND WIRING**
    1. Turn the ignition off to the lock position.
    2. Remove the Ignition Switch Feed fuse from the TIPM.

        CAUTION: Removal of the Ignition Switch Feed fuse from the TIPM will prevent the vehicle from being started in gear.

        WARNING: The Ignition Switch Feed fuse must be removed from the TIPM. Failure to do so can result in possible serious or fatal injury.

    3. Install the Transmission Simulator (special tool #8333A, Simulator, Transmission).
    4. With the Transmission Simulator, set the Input/Output Speed selector switch to the "3000/1000" position. Turn the Input/Output Speed switch to "ON".
    5. Ignition on, engine not running.
    6. With the scan tool, monitor the Input and Output Speed Sensor state.

        Does the Input speed read 3000 rpm and the Output speed read 1000 rpm, within 50 rpm?

        Yes

        - Go To 6.

        No

        - Go To 3.
3. **(T13) SPEED SENSOR GROUND CIRCUIT OPEN**

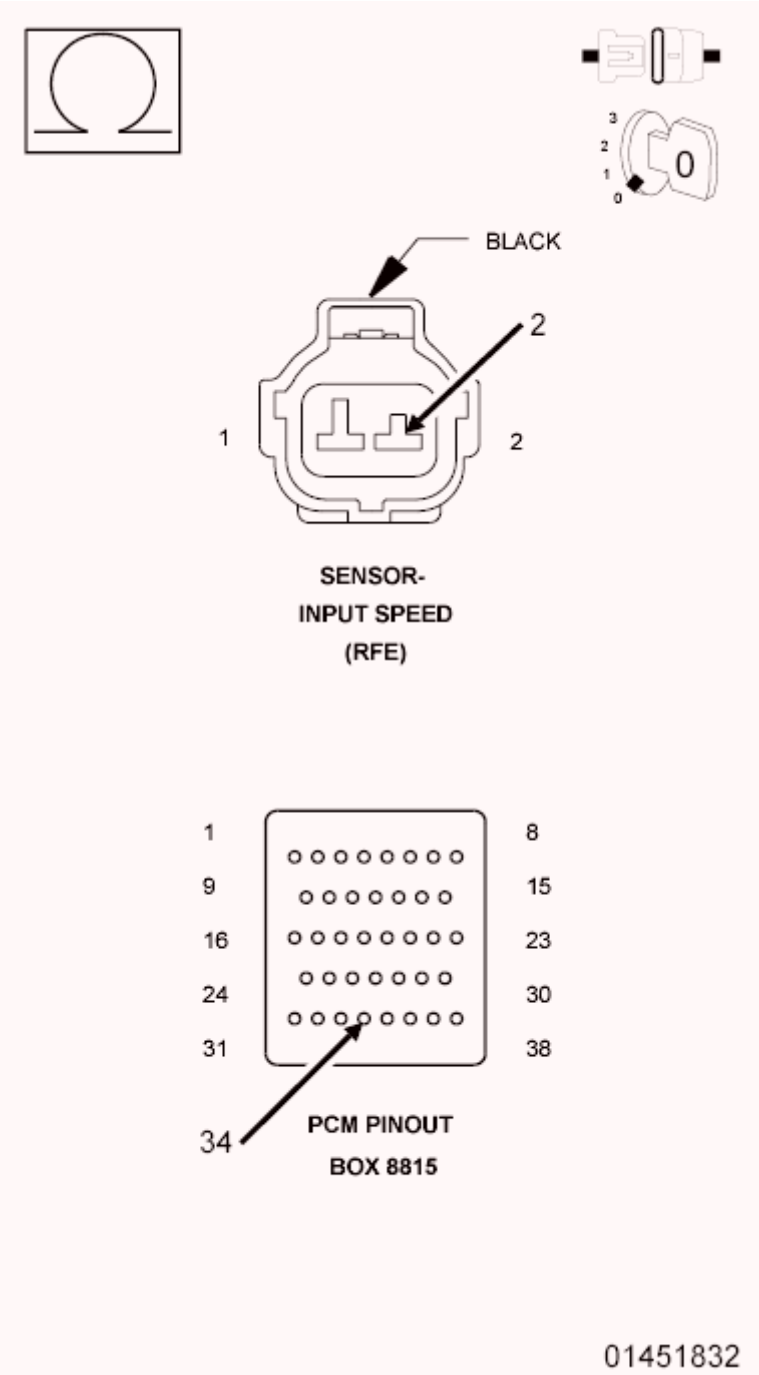

Fig. 62: Checking Speed Sensor Ground Circuit For Open
Courtesy of CHRYSLER GROUP, LLC

1. Turn the ignition off to the lock position.
2. Disconnect the PCM C4 harness connector and connect the PCM Pinout Box (special tool #8815A, Kit, NGC, 38 Position).
3. Disconnect the Transmission Simulator (special tool #8333A, Simulator, Transmission).

CAUTION: Do not probe the PCM harness connectors. Probing the PCM harness connectors will damage the PCM terminals resulting in poor terminal to pin connection. Install the (special tool #8815A, Kit, NGC, 38 Position) to perform diagnosis.

4. Measure the resistance of the (T13) Speed Sensor Ground circuit between both Input and Output Speed Sensor harness connectors and the appropriate terminal of the PCM Pinout Box (special tool #8815A, Kit, NGC, 38 Position).

   Is the resistance above 5.0 Ohms on any of the above measurements?

   Yes

   - Repair the (T13) Speed Sensor Ground circuit for an open.
   - Refer to **STANDARD PROCEDURE** and perform the 545RFE TRANSMISSION VERIFICATION TEST.

   No

   - Go To 4.

4. **(T13) SPEED SENSOR GROUND CIRCUIT SHORTED TO GROUND**

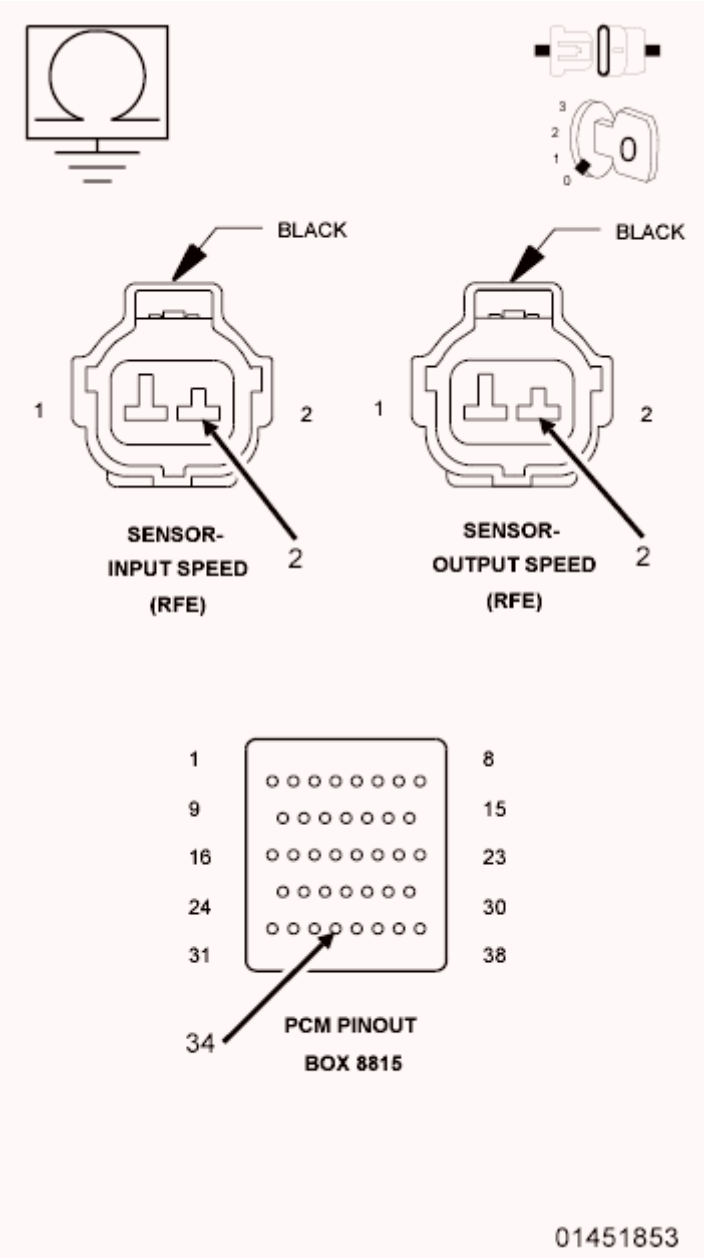

Fig. 63: Checking Speed Sensor Ground Circuit For Short To Ground
Courtesy of CHRYSLER GROUP, LLC

1. Measure the resistance between ground and the (T13) Speed Sensor Ground circuit.

   Is the resistance below 5.0 Ohms?

   Yes

   - Repair the (T13) Speed Sensor Ground circuit for a short to ground.
   - Refer to **STANDARD PROCEDURE** and perform the 545RFE TRANSMISSION VERIFICATION TEST.

No

- Go To 5.

5. **(T13) SPEED SENSOR GROUND CIRCUIT SHORTED TO VOLTAGE**

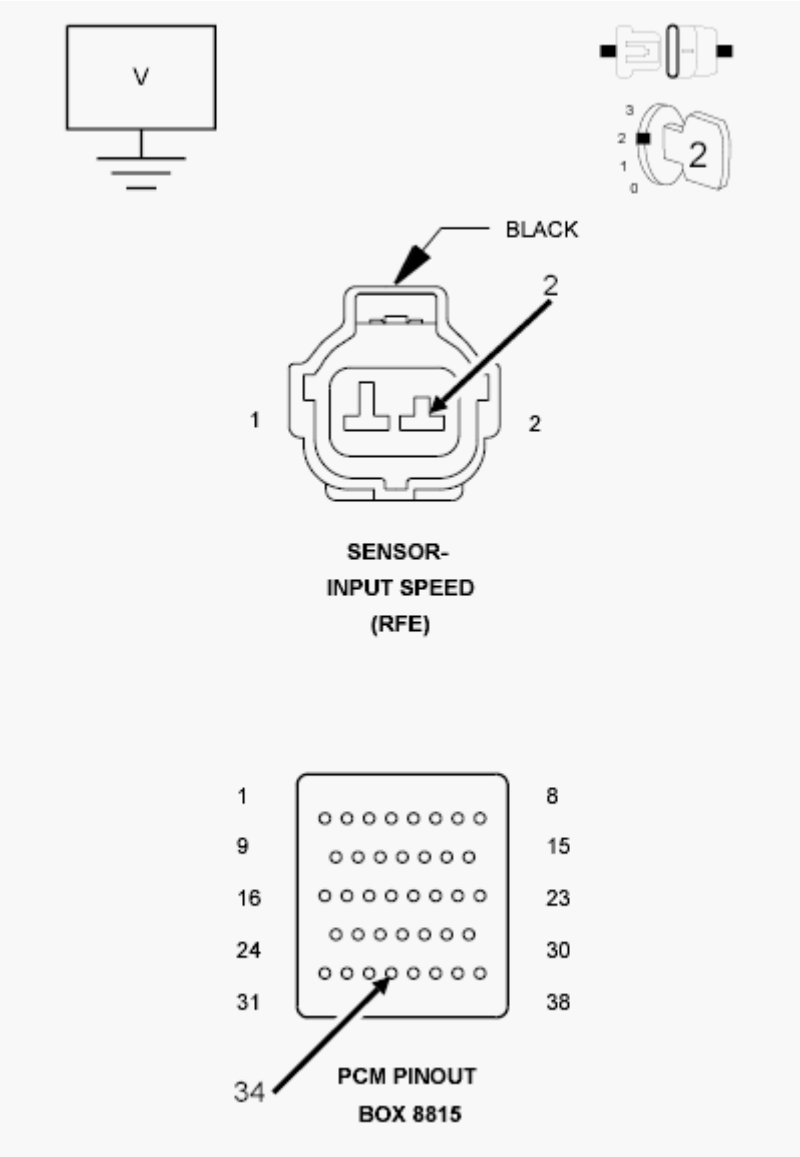

Fig. 64: Checking Speed Sensor Ground Circuit For Short To Voltage
Courtesy of CHRYSLER GROUP, LLC

1. Ignition on, engine not running.
2. With the scan tool under TIPM, actuate the Transmission.
3. Measure the voltage of the (T13) Speed Sensor Ground circuit.

   Is the voltage above 0.5 of a volt?

Yes

- Repair the (T13) Speed Sensor Ground circuit for a short to voltage.
- Refer to **STANDARD PROCEDURE** and perform the 545RFE TRANSMISSION VERIFICATION TEST.

No

- Using the schematics as a guide, check the Powertrain Control Module (PCM) terminals for corrosion, damage, or terminal push out. Pay particular attention to all power and ground circuits. If no problems are found, replace and program the PCM in accordance with the Service Information. With the scan tool, perform Quick Learn.
- Refer to **STANDARD PROCEDURE** and perform the 545RFE TRANSMISSION VERIFICATION TEST.

6. **CHECK THE WIRING AND CONNECTORS**
   1. The conditions necessary to set this DTC are not present at this time.
   2. Using the schematics as a guide, inspect the wiring and connectors specific to this circuit.
   3. Wiggle the wires while checking for shorted and open circuits.
   4. With the scan tool, check the Event Data to help identify the conditions in which the DTC was set.

   Were there any problems found?

   Yes

   - Repair as necessary.
   - Refer to **STANDARD PROCEDURE** and perform the 545RFE TRANSMISSION VERIFICATION TEST.

   No

   - Test Complete.

P2700-INADEQUATE ELEMENT VOLUME LR

For a complete wiring diagram, **refer to appropriate SYSTEM WIRING DIAGRAMS article** .

THEORY OF OPERATION

The volumes of the transmission fluid needed to apply the friction elements are continuously monitored and learned for adaptive controls. As the clutch friction material wears, the volume of fluid needed to apply the clutch increases. Certain transmission mechanical problems can cause near-zero learned volumes resulting in setting a DTC. The DTC will usually set with other DTCs, which indicates an internal transmission problem.

WHEN MONITORED:

Whenever the engine is running. The L/R clutch volume index (CVI) is updated during a 3-1 or 2-1 manual

downshift with throttle angle below 5 degrees. Transmission temperature must be at least 43° C (110° F).

SET CONDITION:

When the L/R clutch volume index (CVI) falls below 16.

POSSIBLE CAUSES

Possible Causes
HYDRAULIC LEAK IN THE VALVE BODY
BROKEN L/R CLUTCH PISTON RETURN SPRING OR SPRING RETAINERS
BROKEN L/R ACCUMULATOR SPRING(S)
TRANSMISSION SOLENOID/TRS ASSEMBLY
POWERTRAIN CONTROL MODULE (PCM)

Always perform the Pre-Diagnostic Troubleshooting Procedure before proceeding. Refer to STANDARD PROCEDURE .

DIAGNOSTIC TEST

1. **OTHER DTCS PRESENT**
    1. With the scan tool, read DTCs.

       Are there any Pressure Switch Sense circuit DTCs present also?

       Yes

       - Refer to **DIAGNOSIS AND TESTING** and perform the appropriate diagnostic procedure.

       No

       - Go To 2.
2. **CHECK L/R CLUTCH VOLUME INDEX**
    1. With the scan tool, erase DTCs.
    2. Start the engine and warm the transmission.

       NOTE: The TRANS TEMP DEG must be at least 43° C or 110° F before performing the following steps.

    3. Drive the vehicle and perform at least ten 3-1 manual downshifts at closed throttle from speeds of about 32 Km/h or 20 mph.
    4. With the scan tool, read the L/R CL VOL INDEX.

       Is the L/R CL VOL INDEX below 20?

Yes

- Go To 3.

No

- Go To 5.

3. **L/R CLUTCH CIRCUIT LEAKS IN THE VALVE BODY**
    1. Turn the ignition off to the lock position.
    2. Remove the transmission oil pan in accordance with the Service Information.
    3. Remove the valve body per the service information.
    4. Check condition of the L/R accumulator springs.
    5. Look for possible leak paths into the L/R clutch hydraulics circuit within the valve body.

    Were any problems found?

    Yes

    - Repair as necessary. Refer to **VALVE BODY, REMOVAL** .
    - Refer to **STANDARD PROCEDURE** and perform the 545RFE TRANSMISSION VERIFICATION TEST.

    No

    - Go To 4.

4. **AIR CHECK L/R CLUTCH CIRCUITS**
    1. Perform an air check on the L/R Clutch circuit in accordance with the Service Information.
    2. Watch and listen for L/R Clutch piston movement.

    Does the L/R piston stroke and return properly?

    Yes

    - Replace the Transmission/TRS Solenoid Assembly per the service information. With the scan tool, perform Quick Learn. Refer to **ASSEMBLY, TRANSMISSION SOLENOID AND TRS, REMOVAL** .
    - Refer to **STANDARD PROCEDURE** and perform the 545RFE TRANSMISSION VERIFICATION TEST.

    No

    - Repair internal transmission as necessary. Pay attention to the components related to the L/R clutch. A broken or weak L/R clutch return spring, Accumulator Spring, and/or dislocated snap ring could cause this problem. Refer to **REMOVAL** .

- Refer to **STANDARD PROCEDURE** and perform the 545RFE TRANSMISSION VERIFICATION TEST.

5. **VERIFY PCM OPERATION**

NOTE: The TRANS TEMP DEG must be at least 43° C (110° F) before performing the following steps.

1. Perform eight learnable starts. A learnable start is defined as follows: Start engine. From a standstill, accelerate lightly to 80 Km/h or 50 mph, then brake lightly to a stop. Turn off engine.
2. With the scan tool, record the CL VOL INDEX (CVI) for all clutches
3. With the scan tool, perform a BATTERY DISCONNECT.
4. With the scan tool, read the CVIs and compare them to the readings recorded before the BATTERY DISCONNECT.

   Are any of the CVIs less than 5 or different than before the BATTERY DISCONNECT?

   Yes

   - Using the schematics as a guide, check the Powertrain Control Module (PCM) terminals for corrosion, damage, or terminal push out. Pay particular attention to all power and ground circuits. If no problems are found, replace and program the PCM in accordance with the Service Information. With the scan tool, perform Quick Learn. Refer to **MODULE, POWERTRAIN CONTROL, REMOVAL** and **MODULE, POWERTRAIN CONTROL, 6.7L DIESEL [ETJ], REMOVAL** .
   - Refer to **STANDARD PROCEDURE** and perform the 545RFE TRANSMISSION VERIFICATION TEST.

   No

   - Test Complete.

P2701-INADEQUATE ELEMENT VOLUME 2C

For a complete wiring diagram, **refer to appropriate SYSTEM WIRING DIAGRAMS article** .

THEORY OF OPERATION

The volumes of the transmission fluid needed to apply the friction elements are continuously monitored and learned for adaptive controls. As the clutch friction material wears, the volume of fluid needed to apply the clutch increases. Certain transmission mechanical problems can cause near-zero learned volumes resulting in setting a DTC. The DTC will usually set with other DTCs, which indicates an internal transmission problem.

WHEN MONITORED:

Whenever the engine is running. The 2C clutch volume index (CVI) is updated during a 3-2 kickdown with throttle angle between 10 and 54 degrees. Transmission temperature must be at least 43° C (110° F).

SET CONDITION:

When the 2C CVI falls below 5.

POSSIBLE CAUSES

Possible Causes
HYDRAULIC LEAK IN THE VALVE BODY
BROKEN 2C CLUTCH PISTON RETURN SPRING / DISLODGED SNAP RING
BROKEN ACCUMULATOR SPRING(S)
TRANSMISSION SOLENOID/TRS ASSEMBLY
POWERTRAIN CONTROL MODULE (PCM)

Always perform the Pre-Diagnostic Troubleshooting Procedure before proceeding. Refer to STANDARD PROCEDURE .

DIAGNOSTIC TEST

1. **OTHER DTCS PRESENT**
   1. With the scan tool, read DTCs.

      Are there any Pressure Switch Sense circuit DTCs present also?

      Yes

      - Refer to **DIAGNOSIS AND TESTING** and perform the appropriate diagnostic procedure.

      No

      - Go To 2.
2. **CHECK 2C CLUTCH VOLUME INDEX**
   1. With the scan tool, erase Transmission DTCs.
   2. Drive the vehicle at about 80 Km/h (50 mph), then depress the OD off button. This will put the vehicle into third gear.

      NOTE: The TRANS TEMP DEG must be at least 43° C (110° F) before performing the following steps.

   3. Perform at least ten 3-2 kickdowns by depressing the throttle between 10 and 54 TPS Degrees at speeds of about 80 Km/h (50 mph).
   4. With the scan tool, read the 2C CL VOL INDEX.

      Is the 2C CL VOL INDEX below 10?

      Yes

- Go To 3.

No

- Go To 5.

3. **2C CLUTCH CIRCUIT LEAKS IN THE VALVE BODY**
    1. Turn the ignition off to the lock position.
    2. Remove the transmission oil pan in accordance with the Service Information.
    3. Remove the valve body per the service information.
    4. Check condition of the 2C accumulator springs.
    5. Look for possible leak paths into the 2C clutch hydraulics circuit within the valve body.

    Were any problems found?

    Yes

    - Repair as necessary. Refer to **VALVE BODY, REMOVAL** .
    - Refer to **STANDARD PROCEDURE** and perform the 545RFE TRANSMISSION VERIFICATION TEST.

    No

    - Go To 4.

4. **AIR CHECK 2C CLUTCH CIRCUIT**
    1. Turn the ignition off to the lock position.
    2. Perform an air check on the 2C Clutch circuit in accordance with the Service Information.
    3. Watch and listen for 2C Clutch piston movement.

    Dose the piston stroke and return properly?

    Yes

    - Replace the Transmission/TRS Solenoid Assembly per the service information. With the scan tool, perform Quick Learn. Refer to **ASSEMBLY, TRANSMISSION SOLENOID AND TRS, REMOVAL** .
    - Refer to **STANDARD PROCEDURE** and perform the 545RFE TRANSMISSION VERIFICATION TEST.

    No

    - Repair internal transmission as necessary. Pay attention to the components related to the 2C clutch. A broken or dislodged 2C return spring, snap ring or broken 2C Accumulator Spring could cause this problem. Refer to **REMOVAL** .
    - Refer to **STANDARD PROCEDURE** and perform the 545RFE TRANSMISSION

VERIFICATION TEST.

5. **VERIFY PCM OPERATION**

NOTE: The TRANS TEMP DEG must be at least 43° C or 110° F before performing the following steps.

1. Perform eight learnable starts. A learnable start is defined as follows: Start engine. From a standstill, accelerate lightly to 80 Km/h or 50 mph, then brake lightly to a stop. Turn off engine.
2. With the scan tool, record the CL VOL INDEX (CVI) for all clutches
3. With the scan tool, perform a BATTERY DISCONNECT.
4. With the scan tool, read the CVIs and compare them to the readings recorded before the BATTERY DISCONNECT.

   Are any of the CVIs less than 5 or different than before the BATTERY DISCONNECT?

   Yes

   - Using the schematics as a guide, check the Powertrain Control Module (PCM) terminals for corrosion, damage, or terminal push out. Pay particular attention to all power and ground circuits. If no problems are found, replace and program the PCM in accordance with the Service Information. With the scan tool, perform Quick Learn. Refer to **MODULE, POWERTRAIN CONTROL, REMOVAL** and **MODULE, POWERTRAIN CONTROL, 6.7L DIESEL [ETJ], REMOVAL** .
   - Refer to **STANDARD PROCEDURE** and perform the 545RFE TRANSMISSION VERIFICATION TEST.

   No

   - Test Complete.

P2702-INADEQUATE ELEMENT VOLUME OD

For a complete wiring diagram, **refer to appropriate SYSTEM WIRING DIAGRAMS article** .

THEORY OF OPERATION

The volumes of the transmission fluid needed to apply the friction elements are continuously monitored and learned for adaptive controls. As the clutch friction material wears, the volume of fluid needed to apply the clutch increases. Certain transmission mechanical problems can cause near-zero learned volumes resulting in setting a DTC. The DTC will usually set with other DTCs, which indicates an internal transmission problem.

WHEN MONITORED:

Whenever the engine is running. The OD clutch volume index (CVI) is updated during a 2-3 upshift with throttle angle between 10 and 54 degrees. Transmission temperature must be at least 43° C (110° F).

SET CONDITION:

When the OD CVI falls below 5.

POSSIBLE CAUSES

Possible Causes
HYDRAULIC LEAK IN THE VALVE BODY
BROKEN OD ACCUMULATOR SPRING
BROKEN OD/REV PISTON BELLEVILLE SPRING OR DISLODGED SNAP RING
INTERNAL LEAKAGE IN PUMP ASSEMBLY
TRANSMISSION SOLENOID/TRS ASSEMBLY
POWERTRAIN CONTROL MODULE (PCM)

Always perform the Pre-Diagnostic Troubleshooting Procedure before proceeding. Refer to STANDARD PROCEDURE .

DIAGNOSTIC TEST

1. **OTHER DTCS PRESENT**
   1. With the scan tool, check DTCs.

      Are there any Pressure Switch Sense circuit DTCs present also?

      Yes

      - Refer to **DIAGNOSIS AND TESTING** and perform the appropriate diagnostic procedure.

      No

      - Go To 2.
2. **CHECK THE OD CLUTCH VOLUME INDEX**
   1. With the scan tool, erase DTCs.

      NOTE: The TRANS TEMP DEG must be at least 43° C (110° F) before performing the following steps.

   2. Drive the vehicle and perform at least ten 2-3 upshifts with the TPS degree between 10 and 54.
   3. With the scan tool, read the OD CL VOL INDEX.

      Is the OD CL VOL INDEX below 10?

      Yes

      - Go To 3.

No

- Go To 5.

3. **OD CLUTCH CIRCUIT LEAKS IN THE VALVE BODY**
    1. Turn the ignition off to the lock position.
    2. Remove the transmission oil pan in accordance with the Service Information.
    3. Remove the valve body per the service information.
    4. Check condition of the OD accumulator spring.
    5. Look for possible leak paths into the OD clutch hydraulics circuit within the valve body.

    Were any problems found?

    Yes

    - Repair as necessary. Refer to **VALVE BODY, REMOVAL** .
    - Refer to **STANDARD PROCEDURE** and perform the 545RFE TRANSMISSION VERIFICATION TEST.

    No

    - Go To 4.

4. **AIR CHECK OD CLUTCH CIRCUIT**
    1. Perform an air check on the OD Clutch circuit in accordance with the Service Information.
    2. Watch and listen for OD Clutch piston movement.
    3. Air check all other pump passages and watch for air leakage into the OD clutch passage.

    NOTE: There is a bleed orifice between the OD and Reverse Clutch passages, so a small amount of air leakage from Reverse to OD is normal.

    Were any problems found?

    Yes

    - Repair internal transmission. Pay attention to the OD Clutch. Broken or weak return spring or a dislocated snap ring could cause this problem. If no problems were found in the OD clutch, or if leakage into the OD passage was noted, replace Pump Assembly in accordance with the Service Information. Refer to **REMOVAL** .
    - Refer to **STANDARD PROCEDURE** and perform the 545RFE TRANSMISSION VERIFICATION TEST.

    No

    - Replace the Transmission/TRS Solenoid Assembly in accordance with the Service

Information. With the scan tool, perform Quick Learn. Refer to **ASSEMBLY, TRANSMISSION SOLENOID AND TRS, REMOVAL** .

- Refer to **STANDARD PROCEDURE** and perform the 545RFE TRANSMISSION VERIFICATION TEST.

5. **VERIFY PCM OPERATION**

NOTE: The TRANS TEMP DEG must be at least 43° C or 110° F before performing the following steps.

1. Perform eight learnable starts. A learnable start is defined as follows: Start engine. From a standstill, accelerate lightly to 80 Kmh or 50 MPH, then brake lightly to a stop. Turn off engine.
2. With the scan tool, record the CL VOL INDEX (CVI) for all clutches.
3. With the scan tool, perform a BATTERY DISCONNECT.
4. With the scan tool, read the CVIs and compare them to the readings recorded before the BATTERY DISCONNECT.

   Are any of the CVIs less than 5 or different than before the BATTERY DISCONNECT?

   Yes

   - Using the schematics as a guide, check the Powertrain Control Module (PCM) terminals for corrosion, damage, or terminal push out. Pay particular attention to all power and ground circuits. If no problems are found, replace and program the PCM in accordance with the Service Information. With the scan tool, perform Quick Learn. Refer to **MODULE, POWERTRAIN CONTROL, REMOVAL** and **MODULE, POWERTRAIN CONTROL, 6.7L DIESEL [ETJ], REMOVAL** .
   - Refer to **STANDARD PROCEDURE** and perform the 545RFE TRANSMISSION VERIFICATION TEST.

   No

   - Test Complete.

P2703-INADEQUATE ELEMENT VOLUME UD

For a complete wiring diagram, **refer to appropriate SYSTEM WIRING DIAGRAMS article** .

THEORY OF OPERATION

The volumes of the transmission fluid needed to apply the friction elements are continuously monitored and learned for adaptive controls. As the clutch friction material wears, the volume of fluid needed to apply the clutch increases. Certain transmission mechanical problems can cause near-zero learned volumes resulting in setting a DTC. The DTC will usually set with other DTCs, which indicates an internal transmission problem.

WHEN MONITORED:

Whenever the engine is running. The UD clutch volume index (CVI) is updated during a 4-3 kickdown with throttle angle between 10 and 54 degrees. Transmission temperature must be at least 43° C (110° F).

SET CONDITION:

When the UD CVI falls below 11.

POSSIBLE CAUSES

Possible Causes
BROKEN UD ACCUMULATOR SPRING(S)
BROKEN UD CLUTCH PISTON SPRING OR DISLODGED SNAP RING
INTERNAL LEAKAGE IN PUMP OR VALVE BODY ASSEMBLIES
TRANSMISSION SOLENOID/TRS ASSEMBLY
POWERTRAIN CONTROL MODULE (PCM)

Always perform the Pre-Diagnostic Troubleshooting Procedure before proceeding. Refer to STANDARD PROCEDURE .

DIAGNOSTIC TEST

1. **OTHER DTCS PRESENT**
   1. With the scan tool, check DTCs.

      Are there any Pressure Switch Sense circuit DTCs present also?

      Yes

      - Refer to **DIAGNOSIS AND TESTING** and perform the appropriate diagnostic procedure.

      No

      - Go To 2.
2. **CHECK UD CLUTCH VOLUME INDEX**
   1. With the scan tool, erase Transmission DTCs.

      NOTE: The TRANS TEMP DEG must be at least 43° C or 110° F before performing the following steps.

   2. Drive the vehicle and perform at least ten 4-3 kickdowns by depressing the throttle between 30 and 54 TPS degrees at speeds about 80 Km/h or 50 mph.
   3. With the scan tool, read the UD clutch volume index (CVI).

      Is the UD CVI below 10?

Yes

- Go To 3.

No

- Go To 5.

3. **UD CLUTCH CIRCUIT LEAKS IN THE VALVE BODY**
    1. Turn the ignition off to the lock position.
    2. Remove the transmission oil pan and valve body in accordance with the Service Information.
    3. Check the condition of the UD accumulator springs.
    4. Look for possible leak paths into the UD clutch hydraulics circuit within the valve body.

    Were there any problems found?

    Yes

    - Repair as necessary. Refer to **VALVE BODY, REMOVAL** .
    - Refer to **STANDARD PROCEDURE** and perform the 545RFE TRANSMISSION VERIFICATION TEST.

    No

    - Go To 4.

4. **AIR CHECK UD CLUTCH CIRCUIT**
    1. Perform an air check on the UD Clutch circuit in accordance with the Service Information.
    2. Watch and listen for UD Clutch piston movement.
    3. Air check all other pump passages for air leakage into the UD Clutch circuit.

    Were any problems found?

    Yes

    - Repair internal transmission. Pay attention to components related to the UD clutch. Broken or weak return spring or a dislocated snap ring. If no trouble is found in UD clutch component or UD clutch leakage was noted in passage, replace the Pump Assembly. Refer to **REMOVAL** .
    - Refer to **STANDARD PROCEDURE** and perform the 545RFE TRANSMISSION VERIFICATION TEST.

    No

    - Replace the Transmission/TRS Solenoid Assembly per the service information. With the scan tool, perform Quick Learn. Refer to **ASSEMBLY, TRANSMISSION SOLENOID**

AND TRS, REMOVAL .

- Refer to **STANDARD PROCEDURE** and perform the 545RFE TRANSMISSION VERIFICATION TEST.

5. **VERIFY PCM OPERATION**

NOTE: The TRANS TEMP DEG must be at least 43° C or 110° F before performing the following steps.

1. Perform eight learnable starts. A learnable start is defined as follows: Start engine. From a standstill, accelerate lightly to 80 Km/h or 50 mph, then brake lightly to a stop. Turn off engine.
2. With the scan tool, record the clutch volume index (CVI) for all clutches.
3. With the scan tool, perform a BATTERY DISCONNECT.
4. With the scan tool, read the CVIs and compare them to the readings recorded before the BATTERY DISCONNECT.

   Are any of the CVIs less than 5 or different than before the BATTERY DISCONNECT?

   Yes

   - Using the schematics as a guide, check the Powertrain Control Module (PCM) terminals for corrosion, damage, or terminal push out. Pay particular attention to all power and ground circuits. If no problems are found, replace and program the PCM in accordance with the Service Information. With the scan tool, perform Quick Learn. Refer to **MODULE, POWERTRAIN CONTROL, REMOVAL** and **MODULE, POWERTRAIN CONTROL, 6.7L DIESEL [ETJ], REMOVAL** .
   - Refer to **STANDARD PROCEDURE** and perform the 545RFE TRANSMISSION VERIFICATION TEST.

   No

   - Test Complete.

P2704-INADEQUATE ELEMENT VOLUME 4C

For a complete wiring diagram, **refer to appropriate SYSTEM WIRING DIAGRAMS article** .

THEORY OF OPERATION

The volumes of the transmission fluid needed to apply the friction elements are continuously monitored and learned for adaptive controls. As the clutch friction material wears, the volume of fluid needed to apply the clutch increases. Certain transmission mechanical problems can cause near-zero learned volumes resulting in setting a DTC. The DTC will usually set with other DTCs, which indicates an internal transmission problem.

WHEN MONITORED:

Whenever the engine is running. The 4C clutch volume index (CVI) is updated during a 3-4 upshift with throttle

angle between 10 and 54 degrees. Transmission temperature must be at least 43° C (110° F).

SET CONDITION:

When the 4C CVI falls below 5.

POSSIBLE CAUSES

Possible Causes
BROKEN 4C RETURN SPRING OR DISLODGED SNAP RING
BROKEN 4C ACCUMULATOR SPRING(S)
HYDRAULIC LEAK IN THE VALVE BODY
TRANSMISSION SOLENOID/TRS ASSEMBLY
POWERTRAIN CONTROL MODULE (PCM)

Always perform the Pre-Diagnostic Troubleshooting Procedure before proceeding. Refer to STANDARD PROCEDURE .

DIAGNOSTIC TEST

1. **CHECK THE 4C CLUTCH VOLUME**
    1. With the scan tool, record the 4C clutch volume index (CVI) and erase DTCs.
    2. Perform at least 10, 3-4 upshifts with the throttle between 10 and 54 degrees. The Transmission temperature must be at least 43° C or 110° F.
    3. With the scan tool, read the 4C CVI.

    Is the current 4C CVI below 10?

    Yes

    - Go To 2.

    No

    - Go To 5.
2. **DTC P0876 PRESENT**
    1. With the scan tool, check DTCs.

    NOTE: The DTC P0876 must also be set with P2704 in order for this test to be valid.

    Is the DTC P0876 also present?

    Yes

- Replace the Transmission Solenoid/TRS Assembly in accordance with the Service Information. Refer to **ASSEMBLY, TRANSMISSION SOLENOID AND TRS, REMOVAL** .
- Refer to **STANDARD PROCEDURE** and perform the 545RFE TRANSMISSION VERIFICATION TEST.

No

- Go To 3.

3. **4C CLUTCH CIRCUIT LEAKS IN THE VALVE BODY**
   1. Turn the ignition off to the lock position.
   2. Remove the transmission oil pan in accordance with the Service Information.
   3. Remove the valve body in accordance with the Service Information.
   4. Check condition of the 4C accumulator springs.
   5. Look for possible leak paths into the 4C clutch hydraulics circuit within the valve body.

   Were any problems found?

   Yes

   - Repair as necessary. Refer to **VALVE BODY, REMOVAL** .
   - Refer to **STANDARD PROCEDURE** and perform the 545RFE TRANSMISSION VERIFICATION TEST.

   No

   - Go To 4.

4. **AIR CHECK 4C CLUTCH CIRCUIT**
   1. Perform an air check on the 4C Clutch circuit in accordance with the Service Information.
   2. Listen for proper 4C Clutch piston movement.

   Were any problems found?

   Yes

   - Repair Internal transmission as necessary. Pay attention to the mechanical components related to the 4th clutch. A broken or weak return spring or a dislocated snap ring could cause this problem. Refer to **REMOVAL** .
   - Refer to **STANDARD PROCEDURE** and perform the 545RFE TRANSMISSION VERIFICATION TEST.

   No

   - Replace the Transmission Solenoid/TRS Assembly in accordance with the service

information. Refer to **ASSEMBLY, TRANSMISSION SOLENOID AND TRS, REMOVAL** . With the scan tool, perform Quick Learn.

- Refer to **STANDARD PROCEDURE** and perform the 545RFE TRANSMISSION VERIFICATION TEST.

5. **VERIFY PCM OPERATION**
    1. Perform eight learnable starts. A learnable start is defined as follows: Start engine. From a standstill, accelerate lightly to 50 MPH, then brake lightly to a stop. Turn off engine.
    2. With the scan tool, record Transmission CL VOL INDEX (CVI) for all clutches.
    3. With the scan tool, perform a BATTERY DISCONNECT.
    4. With the scan tool, read the CVIs and compare them to the reading recorded before the BATTERY DISCONNECT.

    Are any of the CVIs less than 5 or are they different than before the battery disconnect?

    Yes

    - Using the schematics as a guide, check the Powertrain Control Module (PCM) terminals for corrosion, damage, or terminal push out. Pay particular attention to all power and ground circuits. If no problems are found, replace and program the PCM in accordance with the Service Information. Refer to **MODULE, POWERTRAIN CONTROL, REMOVAL** and **MODULE, POWERTRAIN CONTROL, 6.7L DIESEL [ETJ], REMOVAL** . With the scan tool, perform Quick Learn.
    - Refer to **STANDARD PROCEDURE** and perform the 545RFE TRANSMISSION VERIFICATION TEST.

    No

    - Test Complete.

P2706-MS SOLENOID CIRCUIT

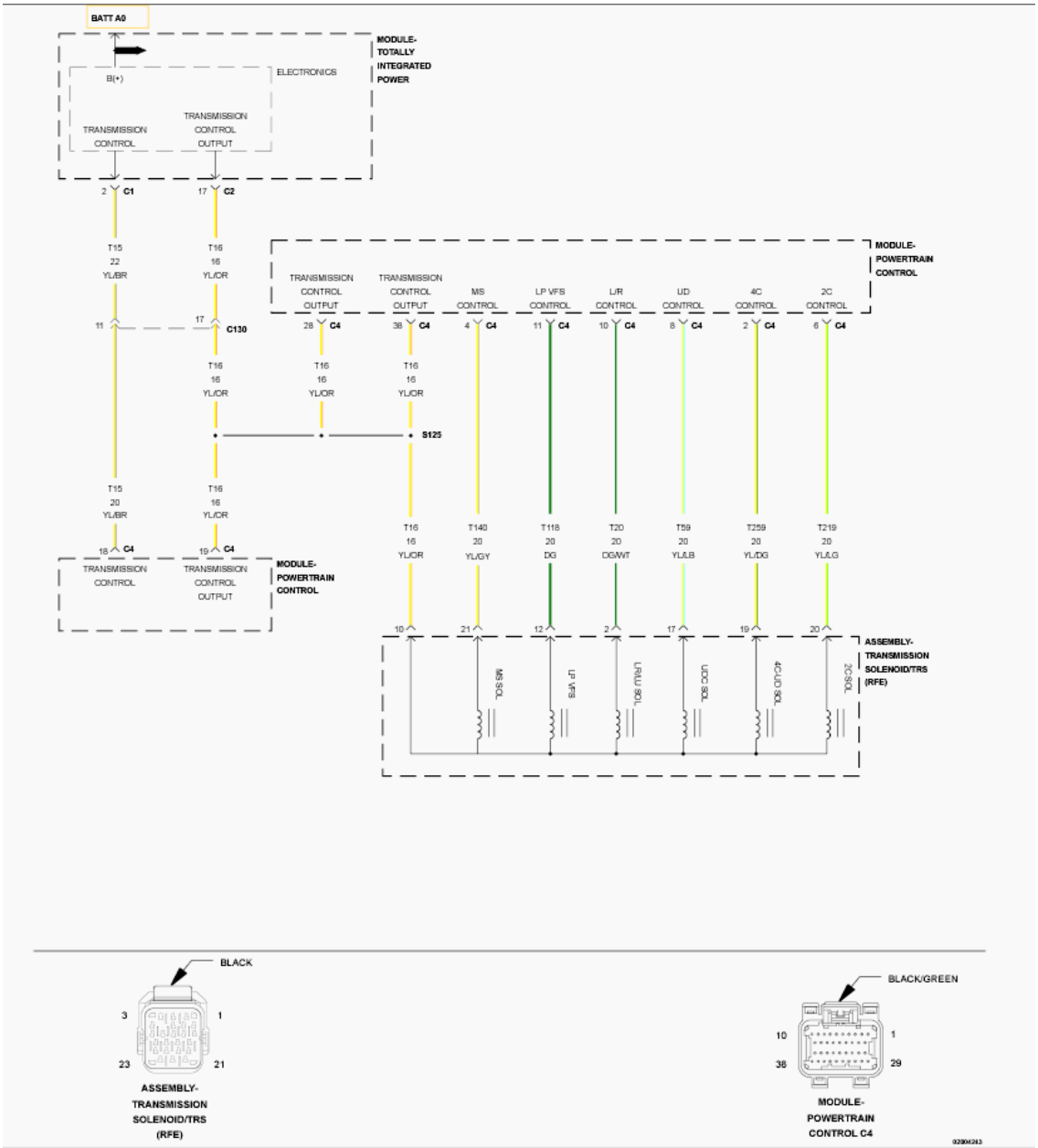

Fig. 65: Solenoid Control Wiring Diagram
Courtesy of CHRYSLER GROUP, LLC

For a complete wiring diagram, **refer to appropriate SYSTEM WIRING DIAGRAMS article** .

THEORY OF OPERATION

The Transmission Control System uses five electronically controlled solenoids that allow hydraulic fluid to be applied to various friction elements (clutches), which enables the gear requested. The continuity of each solenoid circuit is periodically tested. Each inactive solenoid is turned on for a few milliseconds, then off. Each active solenoid is turned off for a few milliseconds, then on. This pulsing of voltage to the solenoid causes an inductive spike which can be sensed by the Transmission Control System. If an inductive spike is not sensed by the Transmission Control System during the continuity check, it is tested again. If the test fails three

consecutive times, the appropriate Diagnostic Trouble Code (DTC) is set. If the solenoid test is run in response to a gear ratio or pressure switch error, one failure will result in setting the appropriate DTC.

WHEN MONITORED:

Initially at power-up, then every 10 seconds thereafter. The solenoid circuits will also be tested immediately after a gear ratio or pressure switch error is detected.

SET CONDITION:

After three consecutive solenoid continuity test failures, or one failure if test is run in response to a gear ratio or pressure switch error.

NOTE: **This DTC is strictly an electrical fault and cannot be caused by any internal transmission failure other than an open in the Transmission Solenoid/TRS Assembly. If the Transmission Solenoid/TRS Assembly is in need of replacement - do not replace the Valve Body.**

POSSIBLE CAUSES

Possible Causes
RELATED DTCS PRESENT
(T140) MS SOLENOID CONTROL CIRCUIT SHORTED TO OTHER CIRCUITS
(T140) MS SOLENOID CONTROL CIRCUIT OPEN
(T140) MS SOLENOID CONTROL CIRCUIT SHORTED TO GROUND
TRANSMISSION SOLENOID/TRS ASSEMBLY
POWERTRAIN CONTROL MODULE (PCM)

Always perform the Pre-Diagnostic Troubleshooting Procedure before proceeding. Refer to STANDARD PROCEDURE .

DIAGNOSTIC TEST

1. **RELATED TCM POWER INPUT DTCS PRESENT**
    1. With the scan tool, check DTCs.

       Are there any TIPM TCM Power Control Circuit or TCM Power Input DTCs present?

       Yes

       - Refer to **DIAGNOSIS AND TESTING** and perform the appropriate diagnostic procedure.

       No

       - Go To 2.
2. **TRANSMISSION SOLENOID/TRS ASSEMBLY**

1. Turn the ignition off to the lock position.
2. Remove the Ignition Switch Feed fuse from the TIPM.

CAUTION: Removal of the Ignition Switch Feed fuse from the TIPM will prevent the vehicle from being started in gear.

WARNING: The Ignition Switch Feed fuse must be removed from the TIPM. Failure to do so can result in possible serious or fatal injury.

3. Install Transmission Simulator (special tool #8333A, Simulator, Transmission).
4. Ignition on, engine not running.
5. With the scan tool, actuate the MS Solenoid.
6. Monitor the MS Solenoid LED on the Transmission Simulator.

   Did the MS Solenoid LED on the Transmission Simulator blink on and off?

   Yes

   - Go To 3.

   No

   - Go To 5.

3. **TRANSMISSION SOLENOID/TRS ASSEMBLY**
   1. With the scan tool, continue to actuate the MS Solenoid for the period of two minutes with the Transmission Simulator still connected.
   2. After two minutes of actuation, with the scan tool, stop the actuation and check for transmission DTCs.

      Did the DTC P2706 reset during the actuation test?

      Yes

      - Go To 5.

      No

      - Go To 4.

4. **WIGGLE TEST WITH TRANSMISSION SIMULATOR**
   1. With the Transmission simulator still connected, continue to actuate the MS Solenoid for another two minutes while wiggling the related wiring harness and connectors.
   2. With the scan tool, stop the actuation and check for transmission DTCs.

Did the DTC P2706 reset during the actuation test?

Yes

- Repair wiring harness or connectors as necessary.
- Refer to **STANDARD PROCEDURE** and perform the 545RFE TRANSMISSION VERIFICATION TEST.

No

- Replace the Transmission Solenoid/TRS Assembly in accordance with the Service Information. **Note: Do NOT replace the entire Valve Body.** . Refer to **ASSEMBLY, TRANSMISSION SOLENOID AND TRS, REMOVAL** .
- Refer to **STANDARD PROCEDURE** and perform the 545RFE TRANSMISSION VERIFICATION TEST.

5. **(T140) MS SOLENOID CONTROL CIRCUIT SHORTED TO OTHER CIRCUITS**

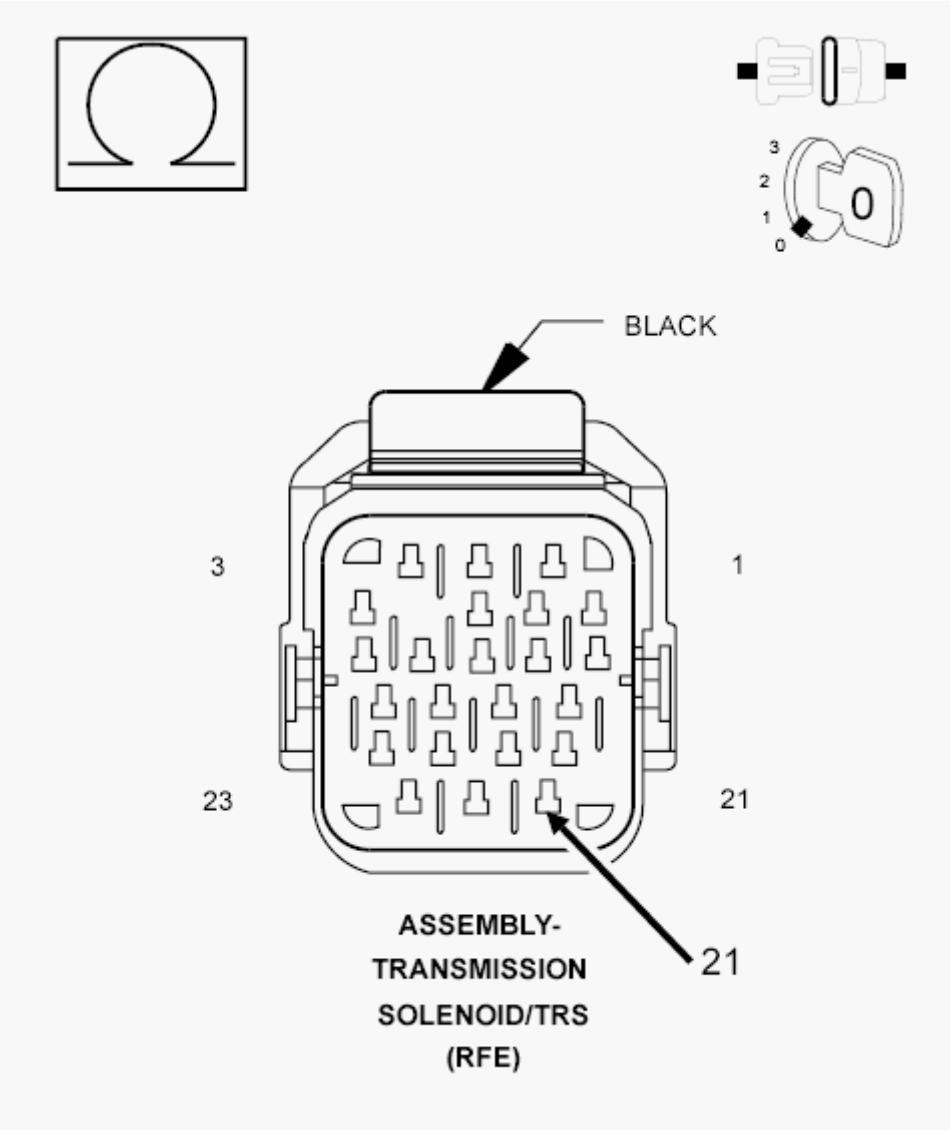

Fig. 66: Checking MS Solenoid Control Circuit For Short To Circuit
Courtesy of CHRYSLER GROUP, LLC

1. Turn the ignition off to the lock position.
2. Disconnect the Transmission Simulator (special tool #8333A, Simulator, Transmission).
3. Disconnect the PCM harness connectors.
4. Measure the resistance between the (T140) MS Solenoid Control circuit and all other circuits in the Transmission Solenoid/TRS Assembly harness connector.

   Is the resistance below 5.0 Ohms between the (T140) MS Solenoid Control circuit and any other circuit(s) in the Transmission Solenoid/TRS Assembly harness connector?

   Yes

   - Repair the (T140) MS Solenoid Control circuit for a short to other circuit(s).

- Refer to **STANDARD PROCEDURE** and perform the 545RFE TRANSMISSION VERIFICATION TEST.

No

- Go To 6.

6. **(T140) MS SOLENOID CONTROL CIRCUIT OPEN**

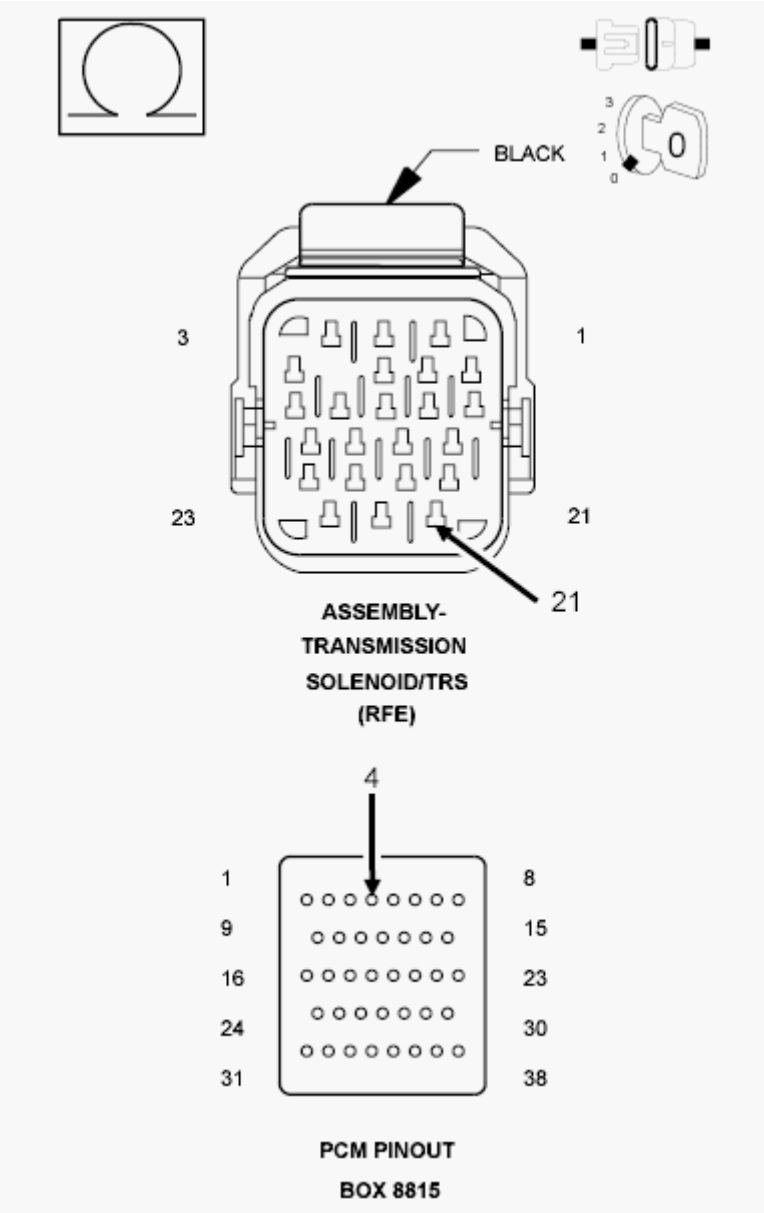

Fig. 67: Checking MS Solenoid Control Circuit For Open
Courtesy of CHRYSLER GROUP, LLC

1. Connect the PCM Pinout Box (special tool #8815A, Kit, NGC, 38 Position) to the PCM C4 harness connector.

CAUTION: Do not probe the PCM harness connectors. Probing the PCM harness connectors will damage the PCM terminals resulting in poor terminal to pin connection. Install the (special tool #8815A, Kit, NGC, 38 Position) to perform diagnosis.

2. Measure the resistance of the (T140) MS Solenoid Control circuit from the Transmission Solenoid/TRS Assembly harness connector to the appropriate terminal of the PCM Pinout Box (special tool #8815A, Kit, NGC, 38 Position).

   Is the resistance above 5.0 Ohms?

   Yes

   - Repair the (T140) MS Solenoid Control circuit for an open.
   - Refer to **STANDARD PROCEDURE** and perform the 545RFE TRANSMISSION VERIFICATION TEST.

   No

   - Go To 7.

7. **(T140) MS SOLENOID CONTROL CIRCUIT SHORTED TO GROUND**

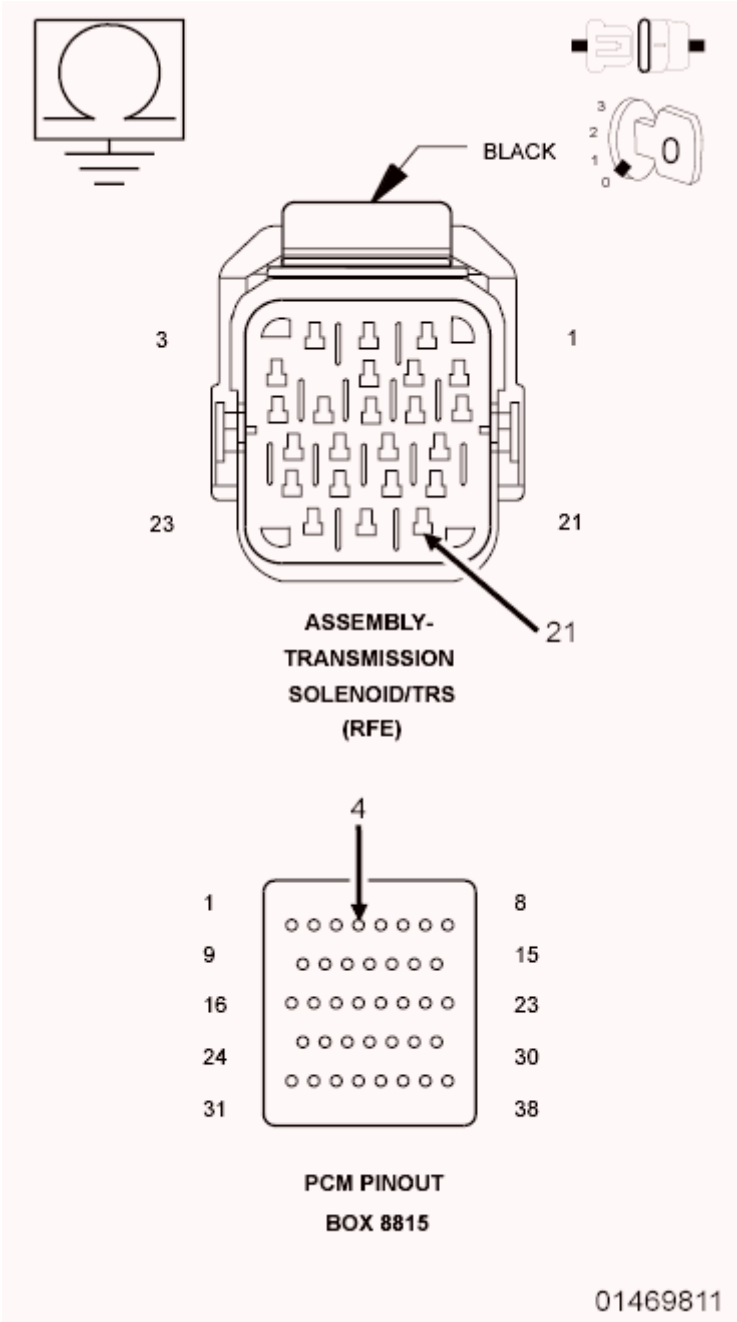

Fig. 68: Checking MS Solenoid Control Circuit For Short To Ground
Courtesy of CHRYSLER GROUP, LLC

1. Measure the resistance between ground and the (T140) MS Solenoid Control circuit.

   Is the resistance below 5.0 Ohms?

   Yes

   - Repair the (T140) MS Solenoid Control circuit for a short to ground.

- Refer to **STANDARD PROCEDURE** and perform the 545RFE TRANSMISSION VERIFICATION TEST.

No

- Using the schematics as a guide, check the Powertrain Control Module (PCM) terminals for corrosion, damage, or terminal push out. Pay particular attention to all power and ground circuits. If no problems are found, replace and program the PCM in accordance with the Service Information. With the scan tool, perform Quick Learn. Refer to **MODULE, POWERTRAIN CONTROL, REMOVAL** and **MODULE, POWERTRAIN CONTROL, 6.7L DIESEL [ETJ], REMOVAL** .
- Refer to **STANDARD PROCEDURE** and perform the 545RFE TRANSMISSION VERIFICATION TEST.

U0002-CAN C BUS OFF PERFORMANCE

For a complete wiring diagram, **refer to appropriate SYSTEM WIRING DIAGRAMS article** .

WHEN MONITORED:

Ignition run time is greater than one second.

Battery voltage between 9 and 16 volts.

Engine run time greater than three seconds.

SET CONDITION:

Bus messages not received from the Totally Integrated Power Module (TIPM) for approximately two to five seconds.

POSSIBLE CAUSES

Possible Causes
CAN BUS CIRCUITS OPEN OR SHORTED
DTCS RELATED TO BATTERY VOLTAGE, IGNITION, OR VIN MESSAGES
TOTALLY INTEGRATED POWER MODULE POWER AND GROUND
TIPM NOT CONFIGURED CORRECTLY
TOTALLY INTEGRATED POWER MODULE (TIPM)
MODULE THAT SET THIS DTC

DIAGNOSTIC TEST

1. **ACTIVE DTC**
    1. Ignition on, engine not running.
    2. With the scan tool, select view DTCs.

Is the DTC Active at this time?

Yes

- **Diagnose the U0002-CAN C BUS OFF PERFORMANCE as the U0001-CAN C BUS CIRCUIT test. Refer to DIAGNOSIS AND TESTING** and perform the U0001-CAN C Bus diagnostic procedure.

No

- **Refer to DIAGNOSIS AND TESTING** and perform the Stored Lost Communication DTCs diagnostic procedure.

U0100-LOST COMMUNICATION WITH THE ECM/PCM

For a complete wiring diagram, **refer to appropriate SYSTEM WIRING DIAGRAMS article** .

WHEN MONITORED:

Ignition run time is greater than one second.

Battery voltage between 9 and 16 volts.

Engine run time greater than three seconds.

SET CONDITION:

Bus messages not received from the Powertrain Control Module (ECM/PCM) for approximately two to five seconds.

POSSIBLE CAUSES

Possible Causes
CAN BUS CIRCUITS OPEN OR SHORTED
DTCS RELATED TO BATTERY VOLTAGE, IGNITION, OR VIN MESSAGES
POWERTRAIN CONTROL MODULE POWER AND GROUND
TIPM NOT CONFIGURED CORRECTLY
POWERTRAIN CONTROL MODULE (ECM/PCM)
MODULE THAT SET THIS DTC

DIAGNOSTIC TEST

1. **ACTIVE DTC**
    1. Ignition on, engine not running.
    2. With the scan tool, select view DTCs.

Is the DTC Active at this time?

Yes

- **Refer to DIAGNOSIS AND TESTING** and perform the U0100-Lost Communication with ECM/PCM diagnostic procedure.

No

- **Refer to DIAGNOSIS AND TESTING** and perform the Stored Lost Communication DTCs diagnostic procedure.

U0121-LOST COMMUNICATION WITH ABS

For a complete wiring diagram, **refer to appropriate SYSTEM WIRING DIAGRAMS article** .

WHEN MONITORED:

Ignition run time is greater than one second.

Battery voltage between 9 and 16 volts.

Engine run time greater than three seconds.

SET CONDITION:

Bus messages not received from the Totally Integrated Power Module (TIPM) for approximately two to five seconds.

POSSIBLE CAUSES

Possible Causes
CAN BUS CIRCUITS OPEN OR SHORTED
ABS MODULE
DTCS RELATED TO BATTERY VOLTAGE, IGNITION, OR VIN MESSAGES
TOTALLY INTEGRATED POWER MODULE POWER AND GROUND
TIPM NOT CONFIGURED CORRECTLY
TOTALLY INTEGRATED POWER MODULE (TIPM)
MODULE THAT SET THIS DTC

DIAGNOSTIC TEST

1. **ACTIVE DTC**
    1. Ignition on, engine not running.
    2. With the scan tool, select view DTCs.

Is the DTC Active at this time?

Yes

- **Refer to DIAGNOSIS AND TESTING** and perform the U0121-Lost Communication with Anti-Lock Brake Module diagnostic procedure.

No

- **Refer to DIAGNOSIS AND TESTING** and perform the Stored Lost Communication DTCs diagnostic procedure.

U0141-LOST COMMUNICATION WITH IPM (FCM/TIPM)

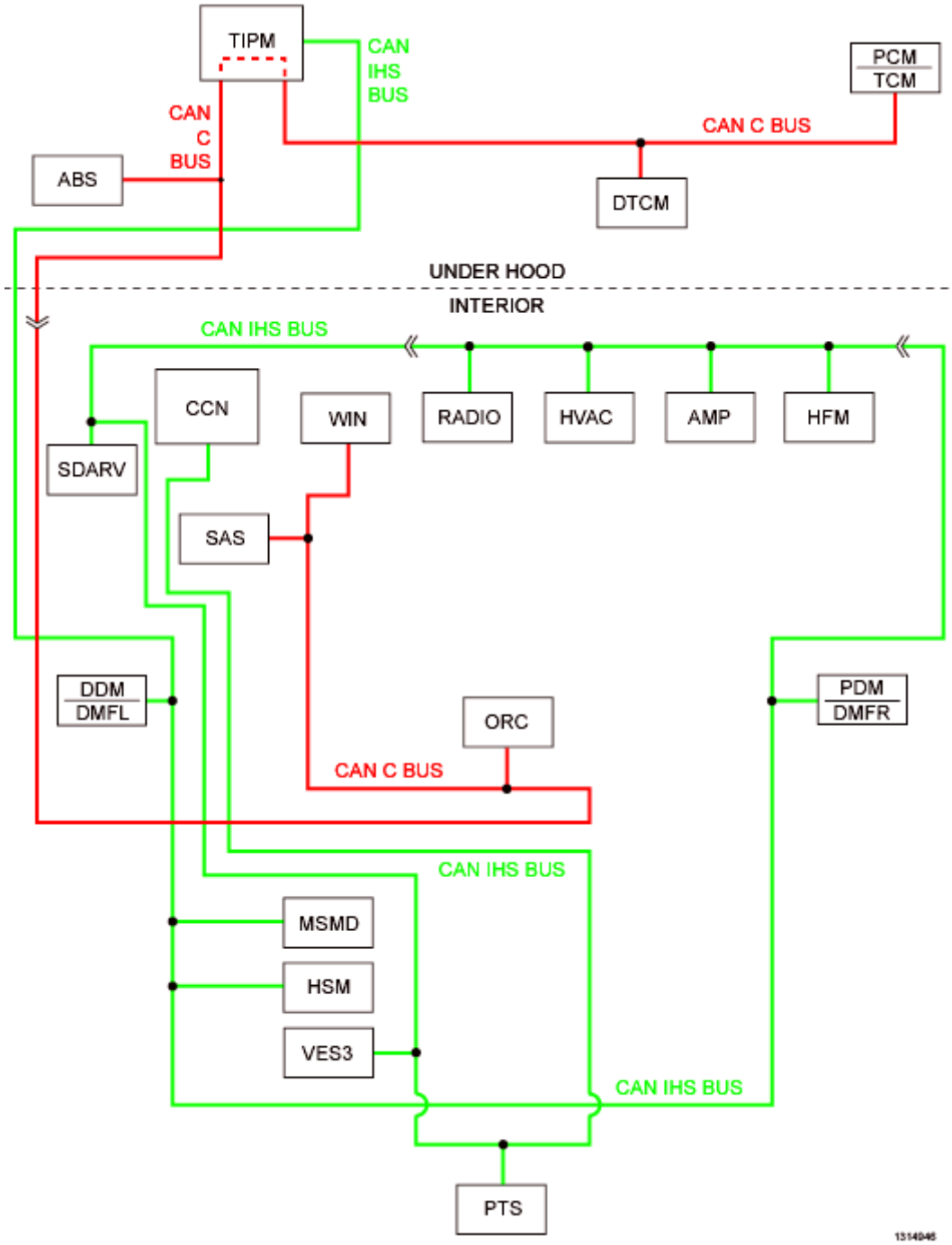

Fig. 69: CAN IHS Bus & TIPM CAN C Bus Wiring Diagram
Courtesy of CHRYSLER GROUP, LLC

For a complete wiring diagram, **refer to appropriate SYSTEM WIRING DIAGRAMS article** .

WHEN MONITORED:

Ignition run time is greater than one second. Battery voltage between 9 and 16 volts. Engine run time greater than three seconds.

SET CONDITION:

The Transmission Control Module (TCM) loses communication over the CAN C Bus circuit. The circuit is continuously monitored. One Trip fault.

POSSIBLE CAUSES

Possible Causes
CAN C BUS OPEN OR SHORTED CONDITION TOTALLY INTEGRATED POWER MODULE (TIPM) TRANSMISSION CONTROL MODULE (TCM)

DIAGNOSTIC TEST

1. **ACTIVE DTC**
    1. Ignition on, engine not running.
    2. With the scan tool, select view TCM DTCs.

    Is the DTC Active at this time?

    Yes

    - Refer to **DIAGNOSIS AND TESTING** and perform the U0141-Lost Communication with IPM (FCM/TIPM) diagnostic procedure.

    No

    - Refer to **DIAGNOSIS AND TESTING** and perform the Stored Lost Communication DTCs diagnostic procedure.

STANDARD PROCEDURE

545RFE TRANSMISSION VERIFICATION TEST

For a complete wiring diagram, **refer to appropriate SYSTEM WIRING DIAGRAMS article** .

DIAGNOSTIC TEST

1.
    1. Perform the following after completion of a diagnostic repair:
        - **After completion of the Transmission Verification Test, the Powertrain Verification Test must be performed.**
        - With the scan tool check pinion factor (if equipped) for proper tire identification and program or reprogram if necessary.
        - Connect the scan tool to the Data Link Connector (DLC).
        - Reconnect any disconnected components.
        - If the PCM has been replaced or updated (flashed), or the transmission has been repaired or replaced, using the scan tool, perform a Quick Learn Procedure.
        - With the scan tool, erase all Transmission and Engine DTCs.
        - With the scan tool, perform a BATTERY DISCONNECT, this will clear the Event Data
        - With the scan tool, display Transmission Temperature. Start and run the engine until the Transmission Temperature is HOT.
        - Check the Transmission fluid level and adjust if necessary. Refer to **STANDARD PROCEDURE** for the Fluid Fill procedure.
        - Road test the vehicle.
        - Perform the following shifts from a standing start with a constant throttle opening of 20 to 25 degrees to the speeds of 97 Km/h (60 mph); make fifteen to twenty 1 to 2, 2 to 3, 3 to 4, 4 to 5 upshifts.
        - Perform the following shifts with speeds below 40 Km/h (25 mph); make five to eight wide open throttle kickdowns to 1st gear. Allow at least 5 seconds each in 2nd and 3rd gear between each kickdown.
        - Check for DTCs during and after the road test.
        - If after performing the road test, if any shift concerns are noted, perform the drive learn procedure for those affected shifts.
        - **Use the EATX OBDII task manager to run Good Trip time in each gear, this will confirm the repair and to make sure that the DTC does not re-mature.**

    Were there any Diagnostic Trouble Codes (DTCs) set during the road test?

Yes

- Refer to **DIAGNOSTIC CODE INDEX** or **DIAGNOSIS AND TESTING** and perform the appropriate diagnostic procedure.

No

- Repair is complete.

545RFE PRE-DIAGNOSTIC TROUBLESHOOTING PROCEDURE

For a complete wiring diagram, **refer to appropriate SYSTEM WIRING DIAGRAMS article** .

DIAGNOSTIC TEST

1.
    1. Perform the following before attempting any diagnostic procedures:
        - With the scan tool check pinion factor (if equipped) for proper tire identification and program or reprogram if necessary.
        - Check the transmission fluid level. If the fluid level is low, locate and repair any leaks and fill the transmission to the proper level. Refer to **STANDARD PROCEDURE** for procedures. Many transmission symptoms can be caused by a low fluid level.
        - Check the battery. To avoid false diagnosis, testing should only be performed with the battery fully charged.
        - With the scan tool, read Engine (PCM) DTCs. If DTCs are present, refer to **DIAGNOSTIC CODE INDEX** for 3.7L/4.7L/5.7L or **DIAGNOSTIC CODE INDEX** for 6.7L and perform to the appropriate diagnostic procedure(s) before proceeding.
        - With the scan tool, read Transmission (TCM) DTCs. Record all Stored, Active, and Pending DTC information. Diagnose any Pending DTC as a matured DTC.
        - With the scan tool, read and record the Event Data. Use this data to identify the conditions in which the DTC was set.

NOTE: **DTC Event Data may exist even if no DTCs are stored. DTC Event Data is only erased by a Battery Disconnect, reflash, Quick Learn procedure or an actual disconnection of the battery. Clearing DTCs does NOT erase the DTC Event Data. Some DTCs require two "bad trips" before they are stored (and the MIL illuminates). The transmission may enter "limp-in" mode during the first "bad trip," but if the fault condition is not present after the vehicle is restarted, the pending DTC may be cleared without lighting the MIL. Nevertheless, the DTC Event Data for the pending DTC will remain stored and can still be retrieved with the scan tool. If the customer reports a "limp-in" event but no DTCs are present, check the DTC Event Data.**

-
- Performing a Battery Disconnect will clear all Event Data and reset all learned Transmission values to the default values, which may temporarily result in erratic shift schedules.
- With the scan tool, perform the Shift Lever Position Test. If the test does not pass, refer to **P0706-TRANSMISSION RANGE SENSOR RATIONALITY** .
- For Gear Ratio Error DTCs, use the scan tool to view CVI Monitor data. Read and record the Clutch Volume Index information.
- Use the wiring diagram as a guide. Inspect the wiring and connectors related to this circuit. Repair as necessary.
- Refer to the When Monitored and Set Conditions for this DTC. DTCs can set at ignition on, at start up, after driving under specific conditions and after diagnostic monitors have been run.
- Perform any applicable Technical Service Bulletins (TSBs) for controller software update information. Some conditions can be corrected by upgrading the Engine (PCM) or Transmission (TCM) controller software.
- Refer to any Service Information Tune Ups or Technical Service Bulletins that apply.

Were there any repairs made that fixed the vehicle?

Yes

- Testing complete.
- Refer to **STANDARD PROCEDURE** and perform the 545RFE TRANSMISSION VERIFICATION TEST.

No

- Refer to **DIAGNOSTIC CODE INDEX** or **DIAGNOSIS AND TESTING** and perform the appropriate diagnostic procedure.

DIAGNOSTIC CODE INDEX

DIAGNOSTIC CODE INDEX

DTC	Description
P0218	HIGH TEMPERATURE OPERATION ACTIVATED
P0562	BATTERY VOLTAGE LOW
P0602	CONTROL MODULE PROGRAMMING ERROR/NOT PROGRAMMED
P0604	INTERNAL CONTROL MODULE RAM
P0605	INTERNAL CONTROL MODULE ROM
P0613	INTERNAL TCM
P0706	TRANSMISSION RANGE SENSOR RATIONALITY
P0711	TRANSMISSION TEMPERATURE SENSOR PERFORMANCE
P0712	TRANSMISSION TEMPERATURE SENSOR LOW
P0713	TRANSMISSION TEMPERATURE SENSOR HIGH
P0714	TRANSMISSION TEMPERATURE SENSOR INTERMITTENT
P0716	INPUT SPEED SENSOR 1 CIRCUIT PERFORMANCE
P0721	OUTPUT SPEED SENSOR CIRCUIT PERFORMANCE
P0729	GEAR RATIO ERROR IN 6TH
P0731	GEAR RATIO ERROR IN 1ST
P0732	GEAR RATIO ERROR IN 2ND
P0733	GEAR RATIO ERROR IN 3RD
P0734	GEAR RATIO ERROR IN 4TH
P0735	GEAR RATIO ERROR IN 5TH
P0736	GEAR RATIO ERROR IN REVERSE
P0740	TCC OUT OF RANGE
P0750	LR SOLENOID CIRCUIT
P0755	2C SOLENOID CIRCUIT
P0765	UD SOLENOID CIRCUIT
P0770	4C SOLENOID CIRCUIT
P0841	LR PRESSURE SWITCH RATIONALITY
P0845	2C HYDRAULIC PRESSURE TEST
P0846	2C PRESSURE SWITCH RATIONALITY
P0868	LINE PRESSURE LOW
P0869	LINE PRESSURE HIGH
P0870	OD HYDRAULIC PRESSURE TEST
P0871	OD PRESSURE SWITCH RATIONALITY
P0875	UD HYDRAULIC PRESSURE TEST
P0876	UD PRESSURE SWITCH RATIONALITY

P0882	TCM POWER INPUT LOW
P0883	TCM POWER INPUT HIGH
P0884	POWER UP AT SPEED
P0890	SWITCHED BATTERY
P0933	HYDRAULIC PRESSURE SENSOR RANGE/PERFORMANCE
P0934	LINE PRESSURE SENSOR CIRCUIT LOW
P0935	LINE PRESSURE SENSOR CIRCUIT HIGH
P0944	LOSS OF HYDRAULIC PUMP PRIME
P0987	4C HYDRAULIC PRESSURE TEST
P0988	4C PRESSURE SWITCH RATIONALITY
P1684	BATTERY WAS DISCONNECTED
P1715	RESTRICTED MANUAL VALVE IN T3 RANGE
P1775	SOLENOID SWITCH VALVE LATCHED IN TCC POSITION
P1776	SOLENOID SWITCH VALVE LATCHED IN LR POSITION
P1794	SPEED SENSOR GROUND ERROR
P2700	INADEQUATE ELEMENT VOLUME LR
P2701	INADEQUATE ELEMENT VOLUME 2C
P2702	INADEQUATE ELEMENT VOLUME OD
P2703	INADEQUATE ELEMENT VOLUME UD
P2704	INADEQUATE ELEMENT VOLUME 4C
P2706	MS SOLENOID CIRCUIT
U0002	CAN C BUS OFF PERFORMANCE
U0100	LOST COMMUNICATION WITH THE ECM/PCM
U0121	LOST COMMUNICATION WITH ABS
U0141	LOST COMMUNICATION WITH IPM (FCM/TIPM)
U1449	IMPLAUSIBLE ERS MESSAGE RECEIVED

DIAGNOSIS AND TESTING

P0218-HIGH TEMPERATURE OPERATION ACTIVATED

For a complete wiring diagram, **refer to appropriate SYSTEM WIRING DIAGRAMS article** .

THEORY OF OPERATION

The DTC is intended as an informational DTC to aid the technician in determining the root cause of a customer driveability issue. The DTC is also intended to alert the technician to determine if a cooling system malfunction has occurred or if an additional transmission air to oil cooler is needed to support the customers driving behavior.

WHEN MONITORED:

Whenever the engine is running.

SET CONDITION:

Immediately after a Overheat shift schedule is activated when the Transmission temperature exceeds 116° C or 240° F.

POSSIBLE CAUSES

Possible Causes
HIGH TEMPERATURE OPERATION ACTIVATED
TORQUE CONVERTER CLUTCH SLIPPING / NOT ACTIVATING
OPERATING VEHICLE WITH TRANSMISSION IN LIMP-IN MODE FOR AN EXTENDED PERIOD OF TIME
EXCESSIVE TIME IDLING IN GEAR

Always perform the Pre-Diagnostic Troubleshooting procedure before proceeding. Refer to 66RFE PRE-DIAGNOSTIC TROUBLESHOOTING PROCEDURE.

DIAGNOSTIC TEST

1. **HIGH TEMPERATURE OPERATION**
    1. This DTC is an informational DTC designed to aid the Technician in diagnosing shift quality complaints.
    2. This DTC indicates that the transmission has been operating in the "Overheat" shift schedule which may generate a customer complaint.
    3. The customer driving patterns may indicate the need for an additional transmission oil cooler.
    4. Verify proper Engine cooling system operation which would affect proper transmission operation.
    5. Verify proper torque converter clutch operation.
    6. With the scan tool, check the Event Data to help identify the conditions in which the DTC was set.

    Repair

    - Repair the cause of transmission overheating. Refer to the Service Information for the proper repair procedure. Make sure to check for any Service Bulletins pertaining to this problem. Refer to **COOLING SYSTEM - DIAGNOSIS AND TESTING** .
    - Perform the 66RFE TRANSMISSION VERIFICATION TEST. Refer to **66RFE TRANSMISSION VERIFICATION TEST**.

P0562-BATTERY VOLTAGE LOW

For a complete wiring diagram, **refer to appropriate SYSTEM WIRING DIAGRAMS article** .

THEORY OF OPERATION

Friction element distress could result from an insufficient supply voltage to properly control the solenoids. To prevent this possibility, the battery voltage is monitored and the system is placed in logical limp-in if the battery

voltage drops below the limit.

WHEN MONITORED:

With the engine running and the PCM commanded the Transmission Control Relay closed.

SET CONDITION:

If battery voltage on the Transmission Control Relay Output Sense circuit(s) to the Powertrain Control Module (PCM) is less than 10.0 volts for 15 seconds. Note: P0562 generally indicates a gradually falling battery voltage or a resistive connection(s) to the PCM. The DTC will set if the battery voltage sensed at the PCM is less than 6.5 volts for 200ms or where Transmission Control Relay Output circuits are less than 7.2 volts for 200ms.

POSSIBLE CAUSES

Possible Causes
RELATED CHARGING SYSTEM DTCS
(Z908) GROUND CIRCUIT OPEN OR HIGH RESISTANCE
(T16) TRANSMISSION CONTROL OUTPUT CIRCUIT OPEN OR HIGH RESISTANCE
POWERTRAIN CONTROL MODULE (PCM)

Always perform the Pre-Diagnostic Troubleshooting procedure before proceeding. Refer to 66RFE PRE-DIAGNOSTIC TROUBLESHOOTING PROCEDURE.

DIAGNOSTIC TEST

1. **RELATED CHARGING SYSTEM DTCS**
    1. With the scan tool, read PCM DTCs.

       Are any related Charging System DTCs present?

       Yes

       - Refer to **3.7L/4.7L/5.7L - DIAGNOSTIC CODE INDEX - NGC - 1500 & 2500** or **5.7L - DIAGNOSTIC CODE INDEX - 3500 CAB & CHASSIS** and perform the appropriate charging related DTC diagnostic procedure.
       - Perform the 66RFE TRANSMISSION VERIFICATION TEST. Refer to **66RFE TRANSMISSION VERIFICATION TEST**.

       No

       - Go To 2.
2. **CHECK FOR TIPM DTCS**

   NOTE: Generator, battery and charging system must be fully functional before performing this test.

1. With the scan tool, read TIPM DTCs.

   Are any TIPM TCM Power Control Circuit DTCs present?

   Yes

   - Refer to **TIPM - DIAGNOSIS AND TESTING** and perform the appropriate diagnostic procedure.

   No

   - Go To 3.

3. **P0562 ACTIVE**
   1. With the scan tool, read DTCs.

      Is the status Active or is the Starts Since Set counter set at 0 for this DTC?

      Yes

      - Go To 4.

      No

      - Go To 7.

4. **CHECK THE GROUND CIRCUITS**

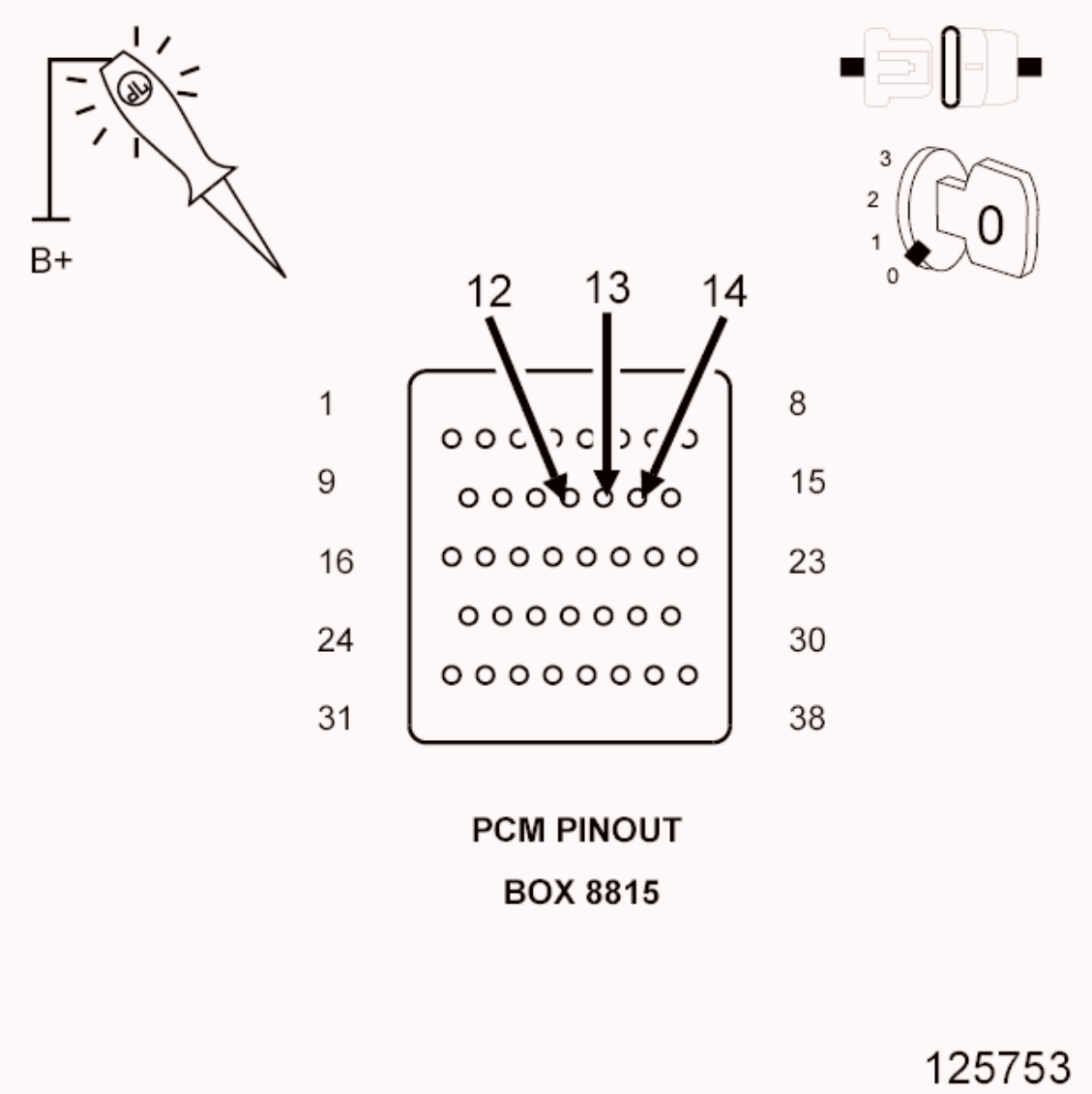

Fig. 1: Checking Ground Circuits
Courtesy of CHRYSLER GROUP, LLC

1. Turn the ignition off to the lock position.
2. Disconnect the PCM C4 harness connector and connect the (special tool #8815A, Kit, NGC, 38 Position).

CAUTION: Do not probe the PCM harness connectors. Probing the PCM harness connectors will damage the PCM terminals resulting in poor terminal to pin connection. Install the (special tool #8815A, Kit, NGC, 38 Position) to perform diagnosis.

3. Using a 12-volt test light connected to 12-volts, check the PCM Ground circuits at the appropriate terminals of the (special tool #8815A, Kit, NGC, 38 Position).

NOTE: **The test light must illuminate brightly. Compare the brightness to that of a direct connection to the battery.**

Does the test light illuminate brightly for the PCM Ground circuits?

Yes

- Go To 5.

No

- Repair the Ground circuit(s) for an open or high resistance.
- Perform the 66RFE TRANSMISSION VERIFICATION TEST. Refer to **66RFE TRANSMISSION VERIFICATION TEST**.

5. **CHECK THE (T16) TRANSMISSION CONTROL OUTPUT CIRCUIT**

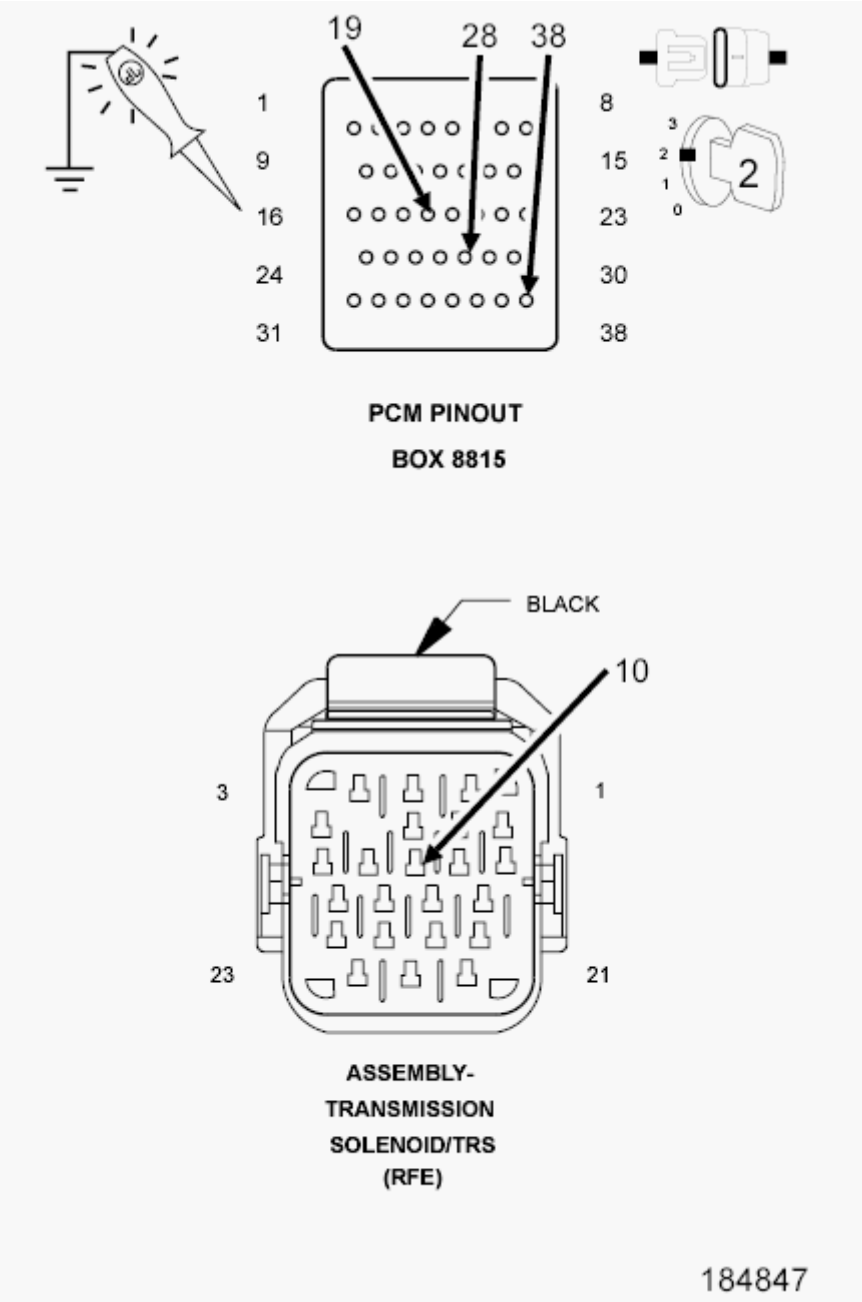

Fig. 2: Checking Transmission Control Output Circuit
Courtesy of CHRYSLER GROUP, LLC

1. Turn the ignition off to the lock position.

NOTE: Check connectors - Clean/repair as necessary.

2. Disconnect the Transmission Solenoid/TRS Assembly harness connector.
3. Ignition on, engine not running.
4. Using a scan tool under TIPM, actuate the transmission control circuit.

5. Using a 12-volt test light connected to ground, check all the (T16) Transmission Control Output circuits at the Transmission Solenoid/TRS Assembly harness connector and the appropriate terminals of the (special tool #8815A, Kit, NGC, 38 Position).

NOTE: The (T16) Transmission Control Output circuit branches off to both the Transmission Solenoid/TRS Assembly and PCM.

Does the test light illuminate brightly during the actuation for all (T16) Transmission Control Output circuits?

Yes

- Go To 6.

No

- Repair the excessive resistance in the (T16) Transmission Control Output circuit.
- Perform the 66RFE TRANSMISSION VERIFICATION TEST. Refer to **66RFE TRANSMISSION VERIFICATION TEST**.

6. **CHECK THE (T16) TRANSMISSION CONTROL OUTPUT CIRCUIT FOR AN OPEN**

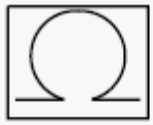

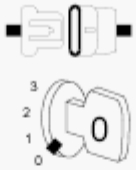

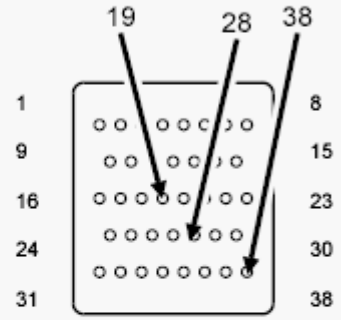

PCM PINOUT

BOX 8815

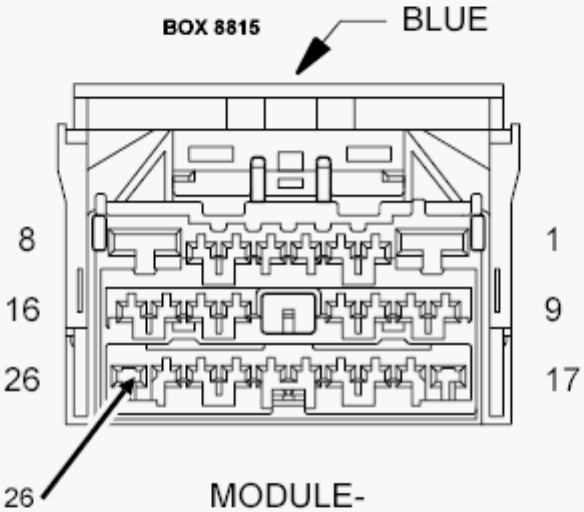

MODULE-
TOTALLY
INTEGRATED
POWER C2

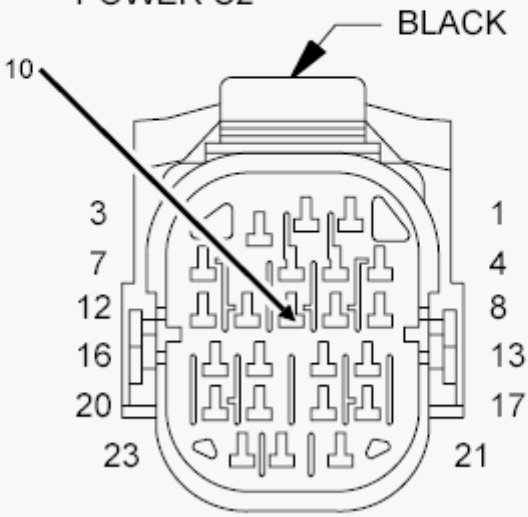

ASSEMBLY-

Fig. 3: Checking Transmission Control Output Circuit For An Open
Courtesy of CHRYSLER GROUP, LLC

1. Turn the ignition off to the lock position.
2. Disconnect the TIPM C2 harness connector.
3. Measure the resistance of the (T16) Transmission Control Output circuits from the TIPM C2 harness connector to the Transmission Solenoid/TRS Assembly harness connector and the appropriate terminals of the (special tool #8815A, Kit, NGC, 38 Position).

   Is the resistance above 5.0 ohms on any circuit?

   Yes

   - Repair the excessive resistance in the (T16) Transmission Control Output circuit.
   - Perform the 66RFE TRANSMISSION VERIFICATION TEST. Refer to **66RFE TRANSMISSION VERIFICATION TEST**.

   No

   - Using the schematics as a guide, check the Powertrain Control Module (PCM) terminals for corrosion, damage or terminal push out. Pay particular attention to all power and ground circuits. If no problems are found, replace and program the PCM in accordance with the Service Information. With the scan tool, perform a Quick Learn. Refer to **3.7L, 4.7L & 5.7L - MODULE, POWERTRAIN CONTROL, REMOVAL** .
   - Perform the 66RFE TRANSMISSION VERIFICATION TEST. Refer to **66RFE TRANSMISSION VERIFICATION TEST**.

7. **CHECK WIRING AND CONNECTORS**
   1. The conditions necessary to set this DTC are not present at this time.
   2. Using the schematics as a guide, inspect the wiring and connectors specific to this circuit.
   3. Wiggle the wires while checking for shorted and open circuits.
   4. With the scan tool, check the Event Data to help identify the conditions in which the DTC set.

      Where there any problems found?

      Yes

      - Repair as necessary.
      - Perform the 66RFE TRANSMISSION VERIFICATION TEST. Refer to **66RFE TRANSMISSION VERIFICATION TEST**.

      No

      - Test Complete.

P0602-CONTROL MODULE PROGRAMMING ERROR/NOT PROGRAMMED

For a complete wiring diagram, **refer to appropriate SYSTEM WIRING DIAGRAMS article** .

THEORY OF OPERATION

The controller is programmed during manufacturing with generic software to facilitate testing. However, generic software does not have the proper calibrations to control a transmission in a vehicle. Generic software checked at power-up. If generic software is found the Malfunction Indicator Lamp (MIL) will light immediately and the MIL will stay on if the fault is cleared until the proper software is installed. Note: Transmission will be placed in limp-in mode.

WHEN MONITORED:

Generic software is checked at power-up

SET CONDITION:

If generic software is found the MIL will light immediately. This DTC is designed to inform the technician that the controller has generic software installed.

POSSIBLE CAUSES

Possible Causes
PCM - PROGRAMMING ERROR

Always perform the Pre-Diagnostic Troubleshooting procedure before proceeding. Refer to 66RFE PRE-DIAGNOSTIC TROUBLESHOOTING PROCEDURE.

DIAGNOSTIC TEST

1. **CONTROL MODULE PROGRAMMING ERROR**

   NOTE: Controller is programmed with generic software and will not allow the correct vehicle Powertrain management.

   1. With the scan tool.
   2. Record the vehicles controller part number.
   3. Select Use Controller Part Number under the Flash Tab.
   4. Flash the controller with the correct software.

   Verify the controller flashed successfully.

   Test Complete

   - Perform the 66RFE TRANSMISSION VERIFICATION TEST. Refer to **66RFE TRANSMISSION VERIFICATION TEST**.

P0604-INTERNAL CONTROL MODULE RAM

For a complete wiring diagram, **refer to appropriate SYSTEM WIRING DIAGRAMS article** .

THEORY OF OPERATION

After the controller is reset (ignition turned to the RUN position), the microprocessor checks the integrity of each Random Access Memory (RAM) location by writing to it and reading back from it. The read value should be same as value written.

WHEN MONITORED:

One time after the controller is reset (ignition turned to the RUN position).

SET CONDITION:

When the Powertrain Control Module (PCM) detects an internal controller problem.

POSSIBLE CAUSES

Possible Causes
POWER OR GROUND CIRCUIT
POWERTRAIN CONTROL MODULE (PCM)

Always perform the Pre-Diagnostic Troubleshooting procedure before proceeding. Refer to 66RFE PRE-DIAGNOSTIC TROUBLESHOOTING PROCEDURE.

DIAGNOSTIC TEST

1. **CHECK WIRING AND CONNECTORS FOR INTERMITTENT OPERATION**
    1. Using the schematics as a guide, check the PCM terminals for corrosion, damage or terminal push out. Pay particular attention to all power and ground circuits.
    2. Wiggle the wires while checking for shorted and open circuits.
    3. Check Service Bulletins that may apply.

    Were there any problems found?

    Yes

    - Repair the power and/or ground circuits to the PCM as necessary.
    - Perform the 66RFE TRANSMISSION VERIFICATION TEST. Refer to **66RFE TRANSMISSION VERIFICATION TEST**.

    No

    - Replace the PCM in accordance with the Service Information. With the scan tool, perform

Quick Learn.

- Perform the 66RFE TRANSMISSION VERIFICATION TEST. Refer to **66RFE TRANSMISSION VERIFICATION TEST**.

P0605-INTERNAL CONTROL MODULE ROM

For a complete wiring diagram, **refer to appropriate SYSTEM WIRING DIAGRAMS article** .

THEORY OF OPERATION

After the controller is reset (ignition turned to the RUN position) the microprocessor checks the integrity of the program memory Read Only Memory (ROM). A checksum is calculated by adding all used bytes in the program memory. The sum should be the same as a known constant stored in the program memory.

WHEN MONITORED:

One time after the controller is reset (ignition turned to the RUN position).

SET CONDITION:

When the Powertrain Control Module (PCM) detects an internal controller problem.

POSSIBLE CAUSES

Possible Causes
POWER OR GROUND CIRCUIT POWERTRAIN CONTROL MODULE (PCM)

Always perform the Pre-Diagnostic Troubleshooting procedure before proceeding. Refer to 66RFE PRE-DIAGNOSTIC TROUBLESHOOTING PROCEDURE.

DIAGNOSTIC TEST

1. **CHECK WIRING AND CONNECTORS FOR INTERMITTENT OPERATION**
    1. Using the schematics as a guide, check the PCM terminals for corrosion, damage or terminal push out. Pay particular attention to all power and ground circuits.
    2. Wiggle the wires while checking for shorted and open circuits.
    3. Check Service Bulletins that may apply.

    Were there any problems found?

    Yes

    - Repair the power and/or ground circuits as necessary.
    - Perform the 66RFE TRANSMISSION VERIFICATION TEST. Refer to **66RFE TRANSMISSION VERIFICATION TEST**.

No

- Replace the PCM in accordance with the Service Information. With the scan tool, perform Quick Learn.
- Perform the 66RFE TRANSMISSION VERIFICATION TEST. Refer to **66RFE TRANSMISSION VERIFICATION TEST**.

P0613-INTERNAL TCM

For a complete wiring diagram, **refer to appropriate SYSTEM WIRING DIAGRAMS article** .

THEORY OF OPERATION

The internal Watchdog (WD) is a separate hardware circuit that continuously monitors the microprocessor. To insure the proper operation of the Transmission controller the watchdog must receive a signal from the microprocessor within a specific time window (14 msec ± 1 msec) to prevent a system shutdown after a short delay (570 msec). The microprocessor periodically tests the watchdogs ability to provide this shutdown function using a three phase test;

1) Send the signal too late > 15 msec

2) Send the signal too early < 13 msec

3) Delay test < 590 msec

If the watchdog input signal arrives too early or too late, the Watchdog Fault line will go low and the watchdog delay will start to time out. The delay will be reset by the correct timing of watchdog signal sent during subsequent operations.

The Delay Test checks the delay time out. The Delay Monitor line is pulled low which forces the delay to start timing out. At the end of the delay time the Transmission Relay will be turned off. The delay test, upon detection of the relay turning off will immediately turn the relay back on before shutdown can occur.

WHEN MONITORED:

1) One time after the controller is reset (ignition turned to the RUN position) and every 60 seconds thereafter. The Delay Test is executed after a reset only.

2) Two seconds after an invalid test.

SET CONDITION:

If either of the following conditions occur three times:

1) The watchdog fault line remains high after the period has elapsed for the too early - too late watchdog test.

2) The Transmission Control Output remains on after the watchdog delay expired.

POSSIBLE CAUSES

Possible Causes
POWER OR GROUND CIRCUIT POWERTRAIN CONTROL MODULE (PCM)

Always perform the Pre-Diagnostic Troubleshooting procedure before proceeding. Refer to 66RFE PRE-DIAGNOSTIC TROUBLESHOOTING PROCEDURE.

DIAGNOSTIC TEST

1. **CHECK THE WIRING AND CONNECTORS**
    1. Using the schematics as a guide, check the Powertrain Control Module (PCM) terminals for corrosion, damage or terminal push out. Pay particular attention to all power and ground circuits.
    2. Wiggle the wires while checking for shorted and open circuits.
    3. Check Service Bulletins that may apply.

    Were there any problems found?

    Yes

    - Repair the power and/or ground circuits as necessary.
    - Perform the 66RFE TRANSMISSION VERIFICATION TEST. Refer to **66RFE TRANSMISSION VERIFICATION TEST**.

    No

    - Replace the PCM in accordance with the Service Information. With the scan tool, perform Quick Learn.
    - Perform the 66RFE TRANSMISSION VERIFICATION TEST. Refer to **66RFE TRANSMISSION VERIFICATION TEST**.

P0706-TRANSMISSION RANGE SENSOR RATIONALITY

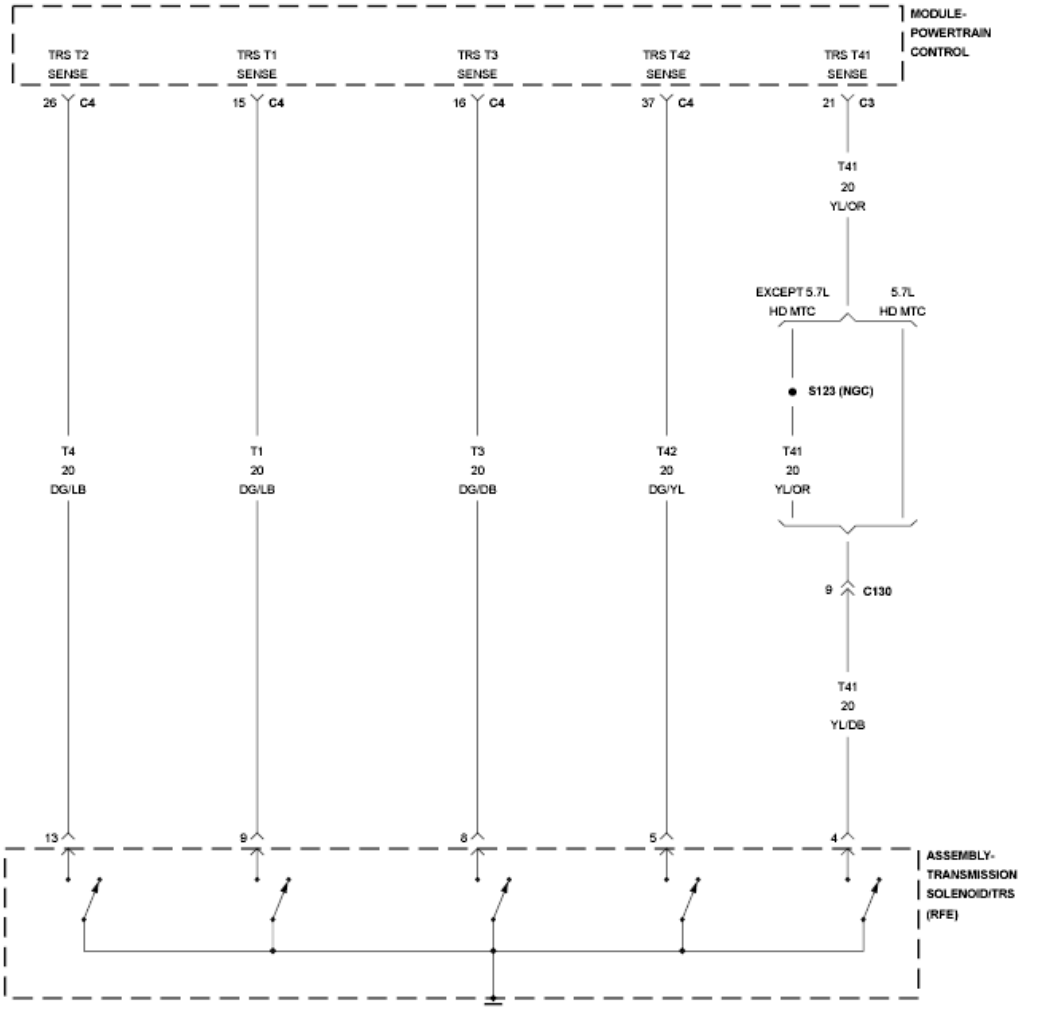

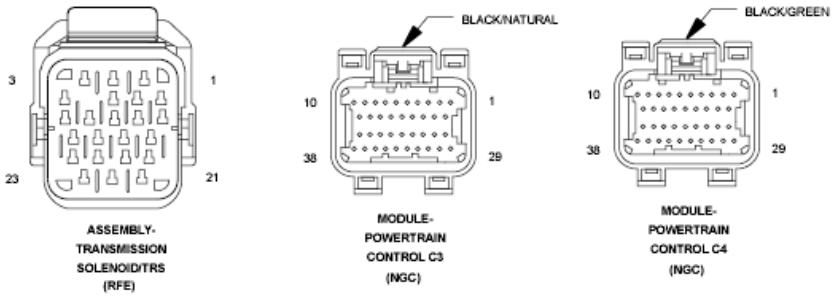

Fig. 4: Transmission Range Sensor Wiring Diagram
Courtesy of CHRYSLER GROUP, LLC

For a complete wiring diagram, **refer to appropriate SYSTEM WIRING DIAGRAMS article** .

THEORY OF OPERATION

The T41 (C1), T42 (C2), T3 (C3), T1 (C4), T2 (C5) Sense circuits communicate the shift lever position to the Transmission Control System. Each circuit is terminated at the transmission by the Transmission Range Sensor (TRS) switch. Each switch can be open or closed depending on the shift lever position. The Powertrain Control Module (PCM) decodes this information and determines the shift lever position.

Each shift lever position has it own unique combination of closed and open switches, this is called PRNDL code. There are five switches, therefore: there are many possible combinations of open and closed switches (codes). There are 12 valid codes: two for neutral, one for each gear position (5), and five temporary (transition zone) codes. The remainder of the codes should never occur, these are called invalid codes.

WHEN MONITORED:

Continuously with the ignition on.

SET CONDITION:

The DTC will set if the controller detects an invalid PRNDL code which lasts for more than 0.042 of a second.

POSSIBLE CAUSES

Possible Causes
TRS SENSE CIRCUIT OPEN
TRS SENSE CIRCUIT SHORTED TO GROUND
TRS SENSE CIRCUIT SHORTED TO VOLTAGE
METAL DEBRIS IN OIL PAN
TRANSMISSION RANGE SENSOR (TRS)
POWERTRAIN CONTROL MODULE (PCM)

Always perform the Pre-Diagnostic Troubleshooting procedure before proceeding. Refer to 66RFE PRE-DIAGNOSTIC TROUBLESHOOTING PROCEDURE.

SHIFT LEVER ERROR CODES

ERROR CODE	SWITCH STUCK	POSITION
1	T41 (C1)	OPEN
2	T41 (C1)	CLOSED
3	T42 (C2)	OPEN
4	T42 (C2)	CLOSED
5	T3 (C3)	OPEN
6	T3 (C3)	CLOSED
7	T1 (C4)	OPEN
8	T1 (C4)	CLOSED
9	T2 (C5)	OPEN
10	T2 (C5)	CLOSED
11	OD LOCKOUT	OPEN

12	OD LOCKOUT	CLOSED

TRS SWITCH STATES

	PARK	TMP 1	REV	TMP 2	N1	N2	TMP 3	D	TMP 4	2	TMP 5	L
T41 (C1)	CL	OP	OP	OP	CL	CL	OP	OP	OP	OP	OP	OP
T42 (C2)	CL	CL	CL	CL	CL	CL	CL	OP	OP	OP	OP	OP
T3 (C3)	OP	OP	OP	CL	CL	CL	CL	CL	OP	OP	OP	CL
T1 (C4)	OP	OP	OP	OP	OP	CL	CL	CL	CL	CL	OP	OP
T2 (C5)	CL	CL	OP	OP	OP	OP	OP	OP	OP	CL	CL	CL

Note:
CL indicates that CLOSED should appear on the scan tool
OP indicates that OPEN should appear on the scan tool

DIAGNOSTIC TEST

1. **VERIFY DTC P0706 IS CURRENT**
   1. With the scan tool, perform the Shift Lever Position Test.

      Select the test outcome from the following:

      Test passes:

      - Go To 6.

      Test fails with Error Code:

      - Go To 2.

      Test fails without Error Code:

      - Perform the Gearshift Adjustment Procedure in accordance with the Service Information.
      - Perform the 66RFE TRANSMISSION VERIFICATION TEST. Refer to **66RFE TRANSMISSION VERIFICATION TEST**.
2. **CHECK THE TRANSMISSION SOLENOID/TRS ASSEMBLY**
   1. Turn the ignition off to the lock position.
   2. Remove the Ignition Switch Feed fuse from the TIPM.

CAUTION: Removal of the Ignition Switch Feed fuse from the TIPM will prevent the vehicle from being started in gear.

WARNING: The Ignition Switch Feed fuse must be removed from the TIPM. Failure to do so can result in possible serious or fatal injury.

3. Install (special tool #8333A, Simulator, Transmission).
4. Ignition ON, Engine Not Running.
5. With the scan tool, perform the Shift Lever Position Test.
6. When the scan tool instructs to put the Gear Selector in a particular position, this must be done using the selector switch on the Transmission Simulator.
7. The LED for the gear position in question must illuminate on the Transmission Simulator prior to pressing "ENTER" on the scan tool.

NOTE: When the scan tool requests the O/D off button be depressed, this must be done using the O/D OFF button in the vehicle or this will fail the Shift Lever Position Test with an error code 11 or OD-TOW/HALL STUCK OPEN.

NOTE: If the Shift Lever Position Test fails, make sure to note the identification of the TRS Sense circuit for future reference.

Did the Shift Lever Position Test pass?

Yes

- Remove the Oil Pan and Main Valve Body Assembly in accordance with the Service Information. Check for metal debris on top of the Solenoid/TRS Assembly and the manual valve code plate. If debris is present, determine the cause of the debris and repair the transmission as necessary. If no problems are found, replace the Transmission Solenoid/TRS Assembly in accordance with the Service Information.
- Perform the 66RFE TRANSMISSION VERIFICATION TEST. Refer to **66RFE TRANSMISSION VERIFICATION TEST**.

No

- Go To 3.

3. **TRS SENSE CIRCUIT OPEN**
   1. Turn the ignition off to the lock position.
   2. Disconnect the (special tool #8333A, Simulator, Transmission).
   3. Disconnect the PCM harness connectors and install the (special tool #8815A, Kit, NGC, 38 Position).

CAUTION: Do not probe the PCM harness connectors. Probing the PCM harness connectors will damage the PCM terminals resulting in poor terminal to pin connection. Install the (special tool #8815A, Kit, NGC, 38 Position) to perform diagnosis.

   4. Measure the resistance of the identified (T1, T2, T3, T41 or T42) TRS Sense circuit from the Transmission Solenoid/TRS Assembly harness connector to the appropriate terminal of the (special

tool #8815A, Kit, NGC, 38 Position).

Is the resistance above 5.0 ohms?

Yes

- Repair the identified (T41, T42, T3, T1 or T2 (C1-C5) TRS Sense circuit for an open.
- Perform the 66RFE TRANSMISSION VERIFICATION TEST. Refer to **66RFE TRANSMISSION VERIFICATION TEST**.

No

- Go To 4.

4. **TRS SENSE CIRCUIT SHORT TO GROUND**
   1. Measure the resistance between ground and the identified (T41, T42, T3, T1 or T2 (C1-C5) TRS Sense circuit.

      Is the resistance below 5.0 ohms?

      Yes

      - Repair the identified (T41, T42, T3, T1, or T2 (C1-C5) TRS Sense circuit for a short to ground.
      - Perform the 66RFE TRANSMISSION VERIFICATION TEST. Refer to **66RFE TRANSMISSION VERIFICATION TEST**.

      No

      - Go To 5.

5. **TRS SENSE CIRCUIT SHORT TO OTHER CIRCUITS**
   1. Measure the resistance between the identified (T1, T2, T3, T41, or T42) TRS Sense circuit and all other circuits in the Transmission Solenoid/TRS Assembly harness connector.

      Is the resistance below 100k ohms between the identified (T41, T42, T3, T1 or T2 (C1-C5) TRS Sense circuit and any other circuit(s) in the Transmission Solenoid/TRS Assembly harness connector?

      Yes

      - Repair the identified (T41, T42, T3, T1, or T2 (C1-C5) TRS Sense circuit for a short to other circuit(s).
      - Perform the 66RFE TRANSMISSION VERIFICATION TEST. Refer to **66RFE TRANSMISSION VERIFICATION TEST**.

      No

- Using the schematics as a guide, check the Powertrain Control Module (PCM) terminals for corrosion, damage or terminal push out. Pay particular attention to all power and ground circuits. If no problems are found, replace and program the PCM in accordance with the Service Information. With the scan tool, perform a Quick Learn.
- Perform the 66RFE TRANSMISSION VERIFICATION TEST. Refer to **66RFE TRANSMISSION VERIFICATION TEST**.

6. **CHECK THE WIRING AND CONNECTORS**
   1. The conditions necessary to set the DTC are not present at this time.
   2. Using the schematics as a guide, inspect the wiring and connectors specific to this circuit.
   3. Wiggle the wiring and connectors while checking for shorted and open circuits.
   4. With the scan tool, check the Event Data to help identify the conditions in which the DTC set.

   Were any problems found?

   Yes

   - Repair as necessary.
   - Perform the 66RFE TRANSMISSION VERIFICATION TEST. Refer to **66RFE TRANSMISSION VERIFICATION TEST**.

   No

   - Test Complete.

P0711-TRANSMISSION TEMPERATURE SENSOR PERFORMANCE

For a complete wiring diagram, **refer to appropriate SYSTEM WIRING DIAGRAMS article** .

THEORY OF OPERATION

The Transmission Temperature Sensor is a variable resistor that changes with temperature or otherwise known as a thermistor. The temperature of the transmission fluid can affect a variety of electronically controlled transmission operations such as shift quality, torque converter lock-up and/or when certain OBDII system self-diagnostic tests are performed. The Powertrain Control Module (PCM) substitutes a calculated transmission temperature value if a fault is detected in the Transmission Temperature Sensor circuit.

WHEN MONITORED:

Continuously with the ignition on and engine running.

SET CONDITION:

This DTC will set when the desired transmission temperature does not reach a normal operating temperature within a given time. Time is variable due to ambient temperature. Approximate times are starting temperature to warm up: (-40°C [-40°F] - 35 min) (-28°C [-20°F] - 25 min) (-6.6°C [20°F] - 20 min) (15.5°C [60°F] - 10 min).

POSSIBLE CAUSES

Possible Causes
RELATED DTCS PRESENT
TRANSMISSION TEMPERATURE SENSOR (TRS)
POWERTRAIN CONTROL MODULE (PCM)

Always perform the Pre-Diagnostic Troubleshooting procedure before proceeding. Refer to 66RFE PRE-DIAGNOSTIC TROUBLESHOOTING PROCEDURE.

DIAGNOSTIC TEST

1. **DETERMINE IF RELATED DTCS ARE PRESENT**
    1. With the scan tool, check Transmission DTCs.

       Are any other related Transmission Temperature Sensor DTCs present?

       Yes

       - Refer to DTC Based Diagnostics and perform the appropriate diagnostic procedure.

       No

       - Go To 2.
2. **CHECK IF THE DTC IS CURRENT**
    1. With the scan tool, read DTCs.

       Is the status Active or is the Starts Since Set counter 2 or less for this DTC?

       Yes

       - Go To 3.

       No

       - Go To 4.
3. **TRANSMISSION TEMPERATURE SENSOR**
    1. Turn the ignition OFF to the LOCK position.
    2. Remove the Ignition Switch Feed fuse from the TIPM.

       CAUTION: Removal of the Ignition Switch Feed fuse from the TIPM will prevent the vehicle from being started in gear.

       WARNING: The Ignition Switch Feed fuse must be removed from the TIPM.

Failure to do so can result in possible serious or fatal injury.

3. Install the (special tool #8333A, Simulator, Transmission).
4. Ignition ON, Engine Not Running.
5. With the Transmission Simulator, turn the Input/Output switch to OFF.
6. With the scan tool, monitor the TRANS TEMP VOLTS while turning the Thermistor Voltage switch to all three positions on the Transmission Simulator.
7. Compare the scan tool readings to the voltage readings listed on the Transmission Simulator.

   Do the readings on the scan tool match the Transmission Simulator readings ± 0.2 volts?

   Yes

   - Replace Transmission Solenoid/TRS Assembly in accordance with the Service Information.
   - Perform the 66RFE TRANSMISSION VERIFICATION TEST. Refer to **66RFE TRANSMISSION VERIFICATION TEST**.

   No

   - Using the schematics as a guide, check the Powertrain Control Module (PCM) terminals for corrosion, damage or terminal push out. Pay particular attention to all power and ground circuits. If no problems are found, replace and program the PCM in accordance with the Service Information. With the scan tool, perform a Quick Learn.
   - Perform the 66RFE TRANSMISSION VERIFICATION TEST. Refer to **66RFE TRANSMISSION VERIFICATION TEST**.

4. **CHECK THE WIRING AND CONNECTORS**
   1. The conditions necessary to set this DTC are not present at this time.
   2. Using the schematics as a guide, inspect the wiring and connectors specific to this circuit.
   3. Wiggle the wires while checking for shorted and open circuits.
   4. With the scan tool, check the Event Data to help identify the conditions in which the DTC set.

      Were any problems found?

      Yes

      - Repair as necessary.
      - Perform the 66RFE TRANSMISSION VERIFICATION TEST. Refer to **66RFE TRANSMISSION VERIFICATION TEST**.

      No

      - Test Complete.

P0712-TRANSMISSION TEMPERATURE SENSOR LOW

For a complete wiring diagram, **refer to appropriate SYSTEM WIRING DIAGRAMS article** .

THEORY OF OPERATION

The Transmission Temperature Sensor is a variable resistor that changes with temperature or otherwise known as a thermistor. The temperature of the transmission fluid can affect a variety of electronically controlled transmission operations such as shift quality, torque converter lock-up and/or when certain OBDII system self-diagnostic tests are performed. The Powertrain Control Module (PCM) substitutes a calculated transmission temperature value if a fault is detected in the Transmission Temperature Sensor circuit.

WHEN MONITORED:

Continuously with the ignition on and engine running.

SET CONDITION:

The DTC will set when the monitored Temperature Sensor voltage drops below 0.078 volts for 0.45 of a second.

POSSIBLE CAUSES

Possible Causes
RELATED DTCS PRESENT
(T54) TRANSMISSION TEMPERATURE SENSOR SIGNAL CIRCUIT SHORTED TO GROUND
TRANSMISSION TEMPERATURE SENSOR (TRS)
POWERTRAIN CONTROL MODULE (PCM)

Always perform the Pre-Diagnostic Troubleshooting procedure before proceeding. Refer to 66RFE PRE-DIAGNOSTIC TROUBLESHOOTING PROCEDURE.

DIAGNOSTIC TEST

1. **DETERMINE IF RELATED DTCS ARE PRESENT**
    1. With the scan tool, read DTCs.

       Are any line pressure sensor or throttle position sensor DTCs present?

       Yes

       - Perform the appropriate diagnostic procedure.

       No

       - Go To 2.
2. **CHECK IF THE DTC IS CURRENT**
    1. With the scan tool, read DTCs.

Is the status Active or is the Starts Since Set counter 2 or less for this DTC?

Yes

- Go To 3.

No

- Go To 5.

3. **TRANSMISSION TEMPERATURE SENSOR**
   1. Turn the ignition OFF to the LOCK position.
   2. Remove the Ignition Switch Feed fuse from the TIPM.

      CAUTION: Removal of the Ignition Switch Feed fuse from the TIPM will prevent the vehicle from being started in gear.

      WARNING: The Ignition Switch Feed fuse must be removed from the TIPM. Failure to do so can result in possible serious or fatal injury.

   3. Install the (special tool #8333A, Simulator, Transmission).
   4. Ignition ON, Engine Not Running.
   5. With the Transmission Simulator, turn the Input/Output switch to OFF.
   6. With the scan tool, monitor the TRANS TEMP VOLTS while turning the Thermistor Voltage switch to all three positions on the Transmission Simulator.
   7. Compare the scan tool readings with the numbers listed on the Transmission Simulator.

      Do the readings on the Transmission Simulator match the scan tool readings ± 0.2 volts?

      Yes

      - Replace Transmission Solenoid/TRS Assembly in accordance with the Service Information.
      - Perform the 66RFE TRANSMISSION VERIFICATION TEST. Refer to **66RFE TRANSMISSION VERIFICATION TEST**.

      No

      - Go To 4.

4. **(T54) TRANSMISSION TEMPERATURE SENSOR SIGNAL CIRCUIT SHORTED TO GROUND**

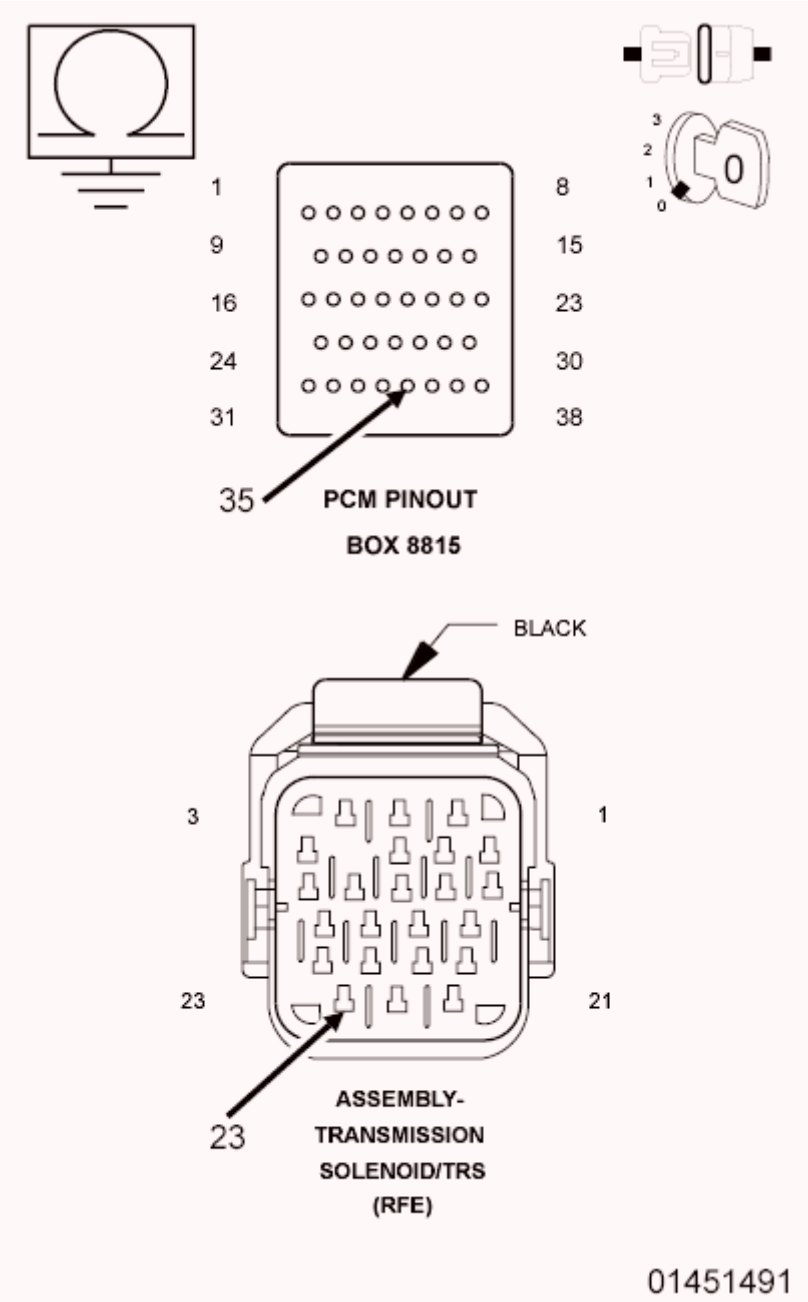

Fig. 5: Checking Transmission Temperature Sensor Signal Circuit For A Short To Ground
Courtesy of CHRYSLER GROUP, LLC

1. Turn the ignition OFF to the LOCK position.
2. Disconnect the (special tool #8333A, Simulator, Transmission).
3. Disconnect the PCM C4 harness connector and connect the (special tool #8815A, Kit, NGC, 38 Position).

NOTE: Check connectors - Clean/repair as necessary.

CAUTION: Do not probe the PCM harness connectors. Probing the PCM harness connectors will damage the PCM terminals resulting in poor terminal to pin connection. Install the (special tool #8815A, Kit, NGC, 38 Position) to perform diagnosis.

4. Measure the resistance between ground and the (T54) Transmission Temperature Sensor Signal circuit.

   Is the resistance below 5.0 ohms?

   Yes

   - Repair the (T54) Transmission Temperature Sensor Signal circuit for a short to ground.
   - Perform the 66RFE TRANSMISSION VERIFICATION TEST. Refer to **66RFE TRANSMISSION VERIFICATION TEST**.

   No

   - Using the schematics as a guide, check the Powertrain Control Module (PCM) terminals for corrosion, damage or terminal push out. Pay particular attention to all power and ground circuits. If no problems are found, replace and program the PCM in accordance with the Service Information. With the scan tool, perform a Quick Learn.
   - Perform the 66RFE TRANSMISSION VERIFICATION TEST. Refer to **66RFE TRANSMISSION VERIFICATION TEST**.

5. **CHECK THE WIRING AND CONNECTORS**
   1. The conditions necessary to set this DTC are not present at this time.
   2. Using the schematics as a guide, inspect the wiring and connectors specific to this circuit.
   3. Wiggle the wires while checking for shorted and open circuits.
   4. With the scan tool, check the Event Data to help identify the conditions in which the DTC set.

      Were any problems found?

      Yes

      - Repair as necessary.
      - Perform the 66RFE TRANSMISSION VERIFICATION TEST. Refer to **66RFE TRANSMISSION VERIFICATION TEST**.

      No

      - Test Complete.

P0713-TRANSMISSION TEMPERATURE SENSOR HIGH

For a complete wiring diagram, **refer to appropriate SYSTEM WIRING DIAGRAMS article** .

THEORY OF OPERATION

The Transmission Temperature Sensor is a variable resistor that changes with temperature or otherwise known as a thermistor. The temperature of the transmission fluid can affect a variety of electronically controlled transmission operations such as shift quality, torque converter lock-up and/or when certain OBDII system self-diagnostic tests are performed. The Powertrain Control Module (PCM) substitutes a calculated transmission temperature value if a fault is detected in the Transmission Temperature Sensor circuit.

WHEN MONITORED:

Continuously with the ignition on and engine running.

SET CONDITION:

The DTC will set when the monitored Temperature Sensor voltage rises above 4.94 volts for 0.45 of a second.

POSSIBLE CAUSES

Possible Causes
RELATED DTCS PRESENT
(T54) TRANSMISSION TEMPERATURE SENSOR SIGNAL CIRCUIT SHORTED TO OTHER CIRCUITS
TRANSMISSION TEMPERATURE SENSOR (TRS)
POWERTRAIN CONTROL MODULE (PCM)

Always perform the Pre-Diagnostic Troubleshooting procedure before proceeding. Refer to 66RFE PRE-DIAGNOSTIC TROUBLESHOOTING PROCEDURE.

DIAGNOSTIC TEST

1. **DETERMINE IF RELATED DTCS ARE PRESENT**
    1. With the scan tool, read DTCs.

       Are any line pressure sensor or throttle position sensor DTCs present?

       Yes

       - Perform the appropriate diagnostic procedure.

       No

       - Go To 2.
2. **CHECK IF THE DTC IS CURRENT**
    1. With the scan tool, read DTCs.

       Is the status Active or is the Starts Since Set counter 2 or less for this DTC?

Yes

- Go To 3.

No

- Go To 5.

3. **TRANSMISSION TEMPERATURE SENSOR**
   1. Turn the ignition OFF to the LOCK position.
   2. Remove the Ignition Switch Feed fuse from the TIPM.

      CAUTION: Removal of the Ignition Switch Feed fuse from the TIPM will prevent the vehicle from being started in gear.

      WARNING: The Ignition Switch Feed fuse must be removed from the TIPM. Failure to do so can result in possible serious or fatal injury.

   3. Install the (special tool #8333A, Simulator, Transmission).
   4. Ignition ON, Engine Not Running.
   5. With the Transmission Simulator, turn the Input/Output switch to OFF.
   6. With the scan tool, monitor the TRANS TEMP VOLTS while turning the Thermistor Voltage switch to all three positions on the Transmission Simulator.
   7. Compare the scan tool readings with the numbers listed on the Transmission Simulator.

      Do the readings on the Transmission Simulator match the scan tool readings ± 0.2 volts?

      Yes

      - Replace Transmission Solenoid/TRS assembly in accordance with the Service Information.
      - Perform the 66RFE TRANSMISSION VERIFICATION TEST. Refer to **66RFE TRANSMISSION VERIFICATION TEST**.

      No

      - Go To 4.

4. **(T54) TRANSMISSION SENSOR SIGNAL CIRCUIT SHORTED TO ANOTHER CIRCUIT**

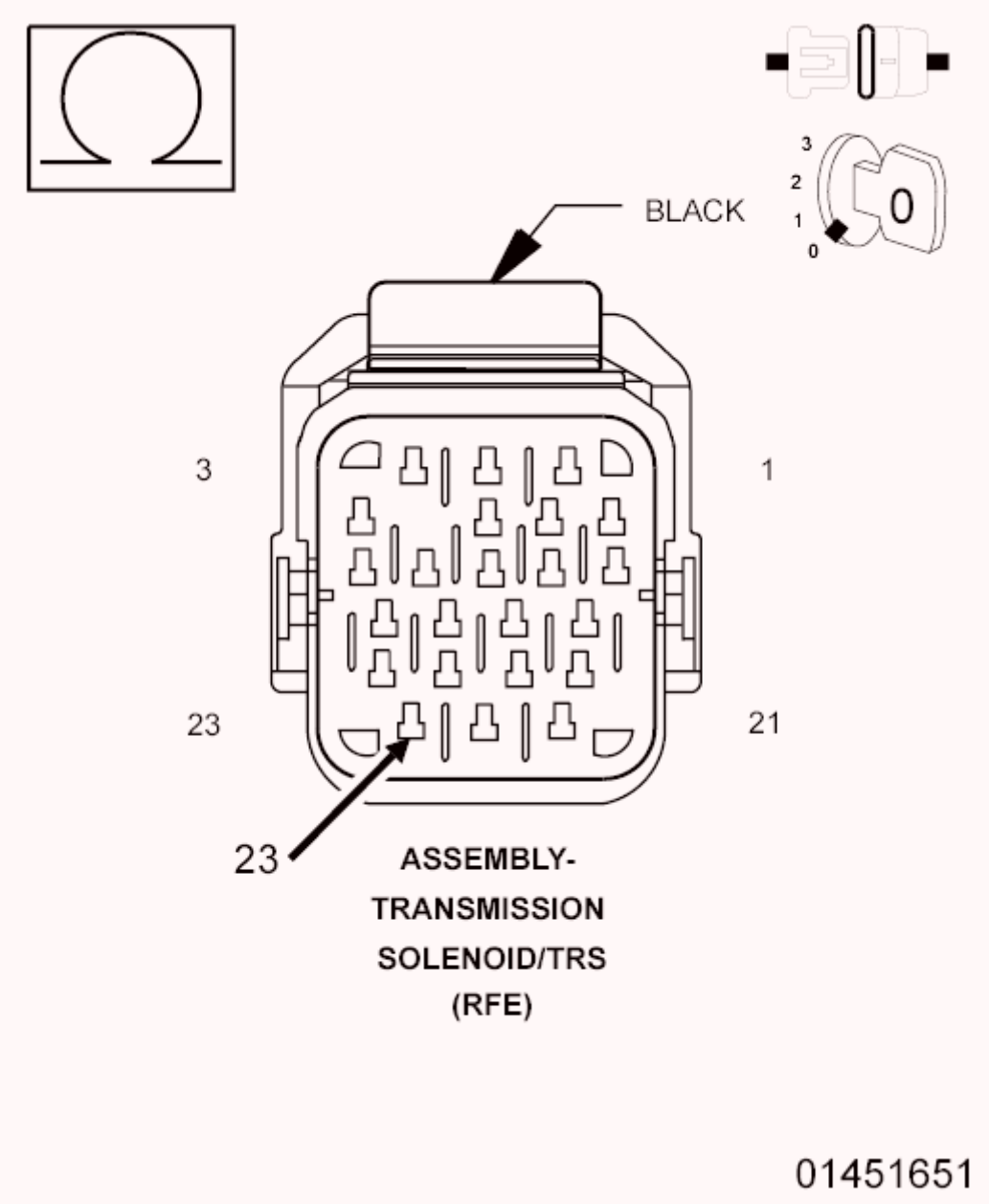

Fig. 6: Checking Transmission Sensor Signal Circuit For A Short To Another Circuit
Courtesy of CHRYSLER GROUP, LLC

1. Turn the ignition OFF to the LOCK position.
2. Disconnect the (special tool #8333A, Simulator, Transmission).
3. Disconnect the PCM harness connectors.
4. Measure the resistance between the (T54) Transmission Temperature Sensor Signal circuit and all other circuits in the Transmission Solenoid/TRS Assembly harness connector.

   Is the resistance below 5.0 ohms between the (T54) Transmission Temperature Sensor Signal circuit and any other circuit(s) in the Transmission Solenoid/TRS Assembly harness connector?

Yes

- Repair the Transmission Temperature Sensor Signal circuit for a short to another circuit(s).
- Perform the 66RFE TRANSMISSION VERIFICATION TEST. Refer to **66RFE TRANSMISSION VERIFICATION TEST**.

No

- Using the schematics as a guide, check the Powertrain Control Module (PCM) terminals for corrosion, damage or terminal push out. Pay particular attention to all power and ground circuits. If no problems are found, replace and program the PCM in accordance with the Service Information. With the scan tool, perform a Quick Learn.
- Perform the 66RFE TRANSMISSION VERIFICATION TEST. Refer to **66RFE TRANSMISSION VERIFICATION TEST**.

5. **CHECK THE WIRING AND CONNECTORS**
   1. The conditions necessary to set this DTC are not present at this time.
   2. Using the schematics as a guide, inspect the wiring and connectors specific to this circuit.
   3. Wiggle the wires while checking for shorted and open circuits.
   4. With the scan tool, check the Event Data to help identify the conditions in which the DTC set.

   Were any problems found?

   Yes

   - Repair as necessary.
   - Perform the 66RFE TRANSMISSION VERIFICATION TEST. Refer to **66RFE TRANSMISSION VERIFICATION TEST**.

   No

   - Test Complete.

P0714-TRANSMISSION TEMPERATURE SENSOR INTERMITTENT

For a complete wiring diagram, **refer to appropriate SYSTEM WIRING DIAGRAMS article** .

THEORY OF OPERATION

The Transmission Temperature Sensor is a variable resistor that changes with temperature or otherwise known as a thermistor. The temperature of the transmission fluid can affect a variety of electronically controlled transmission operations such as shift quality, torque converter lock-up and/or when certain OBDII system self-diagnostic tests are performed. The Powertrain Control Module (PCM) substitutes a calculated transmission temperature value if a fault is detected in the Transmission Temperature Sensor circuit.

WHEN MONITORED:

Continuously with the ignition on and engine running.

SET CONDITION:

The DTC will set when the monitored Temperature Sensor voltage fluctuates or changes abruptly within a predetermined period of time.

POSSIBLE CAUSES

Possible Causes
RELATED DTCS PRESENT
TRANSMISSION TEMPERATURE SENSOR (TRS)
POWERTRAIN CONTROL MODULE (PCM)

Always perform the Pre-Diagnostic Troubleshooting procedure before proceeding. Refer to 66RFE PRE-DIAGNOSTIC TROUBLESHOOTING PROCEDURE.

DIAGNOSTIC TEST

1. **DETERMINE IF RELATED DTCS ARE PRESENT**
    1. With the scan tool, read DTCs.

       Are any line pressure sensor or throttle position sensor DTCs present?

       Yes

       Perform the appropriate diagnostic procedure.

       No

       - Go To 2.
2. **CHECK IF THE DTC IS CURRENT**
    1. With the scan tool, read DTCs.

       Is the status Active or is the Starts Since Set counter 2 or less for this DTC?

       Yes

       - Go To 3.

       No

       - Go To 4.
3. **TRANSMISSION TEMPERATURE SENSOR**
    1. Turn the ignition OFF to the LOCK position.

2. Remove the Ignition Switch Feed fuse from the TIPM.

CAUTION: Removal of the Ignition Switch Feed fuse from the TIPM will prevent the vehicle from being started in gear.

WARNING: The Ignition Switch Feed fuse must be removed from the TIPM. Failure to do so can result in possible serious or fatal injury.

3. Install the (special tool #8333A, Simulator, Transmission).
4. Ignition ON, Engine Not Running.
5. With the Transmission Simulator, turn the Input/Output switch to OFF.
6. With the scan tool, monitor the TRANS TEMP VOLTS while turning the Thermistor Voltage switch to all three positions on the Transmission Simulator.
7. Compare the scan tool readings with the numbers listed on the Transmission Simulator.

   Do the readings on the Transmission Simulator match a non-fluctuating scan tool reading ± 0.2 volts?

   Yes

   - Replace the Transmission Solenoid/TRS Assembly in accordance with the Service Information.
   - Perform the 66RFE TRANSMISSION VERIFICATION TEST. Refer to **66RFE TRANSMISSION VERIFICATION TEST**.

   No

   - Using the schematics as a guide, check the Powertrain Control Module (PCM) terminals for corrosion, damage or terminal push out. Pay particular attention to all power and ground circuits. If no problems are found, replace and program the PCM in accordance with the Service Information. With the scan tool, perform a Quick Learn.
   - Perform the 66RFE TRANSMISSION VERIFICATION TEST. Refer to **66RFE TRANSMISSION VERIFICATION TEST**.

4. **CHECK THE WIRING AND CONNECTORS**
   1. The conditions necessary to set this DTC are not present at this time.
   2. Using the schematics as a guide, inspect the wiring and connectors specific to this circuit.
   3. Wiggle the wires while checking for shorted and open circuits.
   4. With the scan tool, check the Event Data to help identify the conditions in which the DTC set.

   Were any problems found?

   Yes

- Repair as necessary.
- Perform the 66RFE TRANSMISSION VERIFICATION TEST. Refer to **66RFE TRANSMISSION VERIFICATION TEST**.

No

- Test Complete.

P0716-INPUT SPEED SENSOR 1 CIRCUIT PERFORMANCE

For a complete wiring diagram, **refer to appropriate SYSTEM WIRING DIAGRAMS article** .

THEORY OF OPERATION

The transmission system uses two speed sensors, one to measure input RPM and one to measure output RPM. These inputs are essential for proper transmission operation. Therefore, the integrity of this data is verified through the following checks:

1) When in gear, if the gear ratio does not compare to a known gear ratio the corresponding in-gear DTCs P0731-36 and P1736 is set.

2) An excessive change in input or output speeds indicating an intermittent signal which results in DTCs P0716 and/or P0721 setting.

3) If the common speed sensor ground circuit is lost, both sensor inputs will read the signal from the input speed sensor at idle in neutral. Since the input speed sensor reads 60 teeth from the input clutch hub and the output speed sensor reads 30 teeth from the park gear the result is an apparent speed ratio of 1:2 and may cause DTC P1794 to set when at a stop.

WHEN MONITORED:

The transmission gear ratio is monitored continuously while the transmission is in gear.

SET CONDITION:

If there is an excessive change in input RPM in any gear. This DTC can take up to five minutes of problem identification before illuminating the MIL.

POSSIBLE CAUSES

Possible Causes
(T52) INPUT SPEED SENSOR SIGNAL CIRCUIT OPEN
(T13) SPEED SENSOR GROUND CIRCUIT OPEN
(T52) INPUT SPEED SENSOR SIGNAL CIRCUIT SHORTED TO GROUND
(T13) SPEED SENSOR GROUND CIRCUIT SHORTED TO GROUND
(T52) INPUT SPEED SENSOR SIGNAL CIRCUIT SHORTED TO VOLTAGE

(T13) SPEED SENSOR GROUND CIRCUIT SHORTED TO VOLTAGE
INPUT SPEED SENSOR
POWERTRAIN CONTROL MODULE (PCM)

Always perform the Pre-Diagnostic Troubleshooting procedure before proceeding. Refer to 66RFE PRE-DIAGNOSTIC TROUBLESHOOTING PROCEDURE.

DIAGNOSTIC TEST

1. **CHECK TO SEE IF DTC P0716 IS CURRENT**
   1. Start the engine in park.
   2. With the scan tool, monitor the Input Speed Sensor RPM.

      Is the Input Speed Sensor RPM below 400 RPM?

      Yes

      - Go To 2.

      No

      - Go To 9.
2. **INPUT SPEED SENSOR**
   1. Turn the ignition OFF to the LOCK position.
   2. Remove the Ignition Switch Feed fuse from the TIPM.

      CAUTION: Removal of the Ignition Switch Feed fuse from the TIPM will prevent the vehicle from being started in gear.

      WARNING: The Ignition Switch Feed fuse must be removed from the TIPM. Failure to do so can result in possible serious or fatal injury.

   3. Install the (special tool #8333A, Simulator, Transmission).
   4. Ignition ON, Engine Not Running.
   5. With the Transmission Simulator, set the selector switch to 3000/1000 and the Input/Output switch to ON.
   6. With the scan tool, monitor the Input and Output Speed Sensor RPM.

      Does the Input speed read 3, 000 RPM and the Output speed read 1, 000 RPM ± 50 RPM?

      Yes

      - Replace the Input Speed Sensor in accordance with the Service Information.

- Perform the 66RFE TRANSMISSION VERIFICATION TEST. Refer to **66RFE TRANSMISSION VERIFICATION TEST**.

No

- Go To 3.

3. **(T52) INPUT SPEED SENSOR SIGNAL CIRCUIT SHORTED TO VOLTAGE**

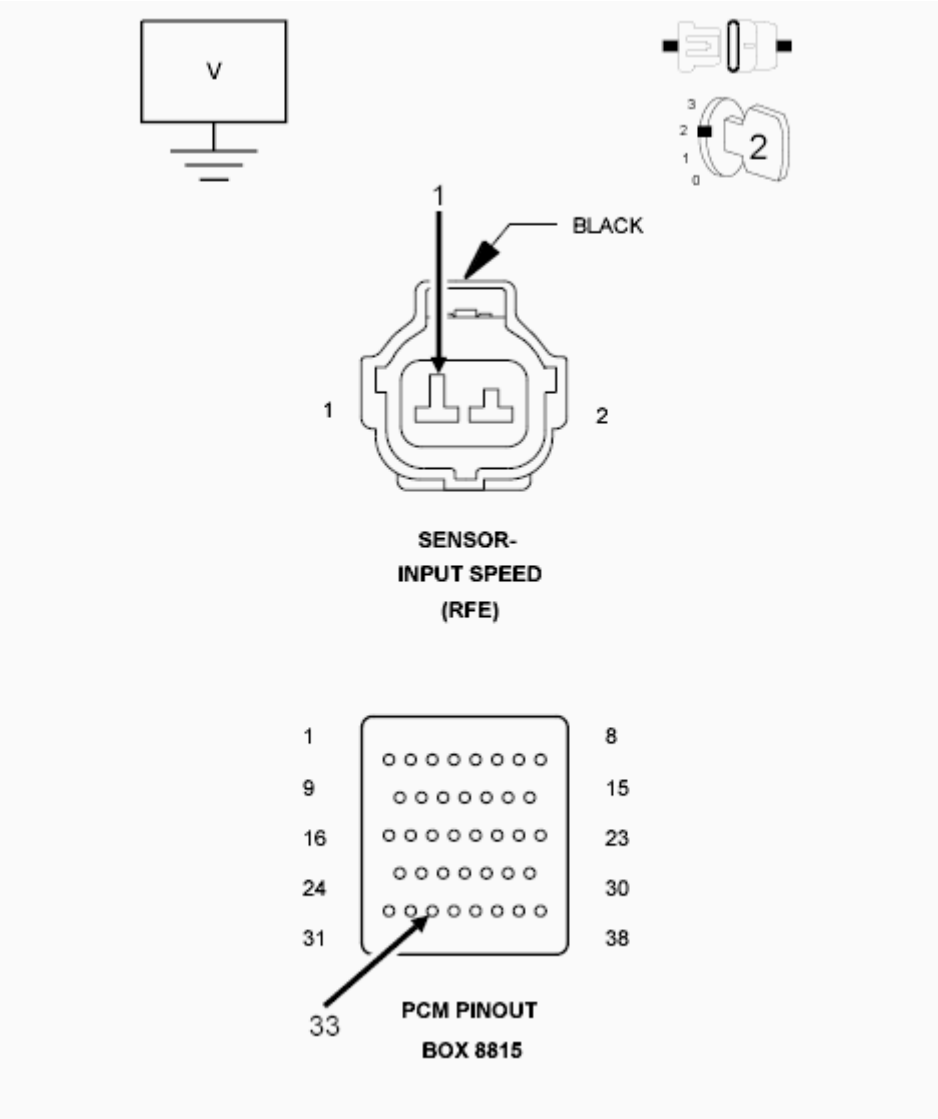

Fig. 7: Checking Input Speed Sensor Signal Circuit For A Short To Voltage
Courtesy of CHRYSLER GROUP, LLC

1. Turn the ignition OFF to the LOCK position.
2. Disconnect the PCM C4 harness connector and connect the (special tool #8815A, Kit, NGC, 38 Position).

NOTE: **Make sure to leave the Speed Sensor, Transmission Solenoid/TRS Assembly, and Line Pressure Sensor harness connectors disconnected.**

CAUTION: Do not probe the PCM harness connectors. Probing the PCM harness connectors will damage the PCM terminals resulting in poor terminal to pin connection. Install the (special tool #8815A, Kit, NGC, 38 Position) to perform diagnosis.

3. Ignition ON, Engine Not Running.
4. With the scan tool in TIPM, actuate the TCM output.
5. Measure the voltage of the (T52) Input Speed Sensor Signal circuit.

   Is the voltage above 0.5 volts?

   Yes

   - Repair the (T52) Input Speed Sensor Signal circuit for a short to voltage.
   - Perform the 66RFE TRANSMISSION VERIFICATION TEST. Refer to **66RFE TRANSMISSION VERIFICATION TEST**.

   No

   - Go To 4.

4. **(T13) SPEED SENSOR GROUND CIRCUIT SHORT TO VOLTAGE**

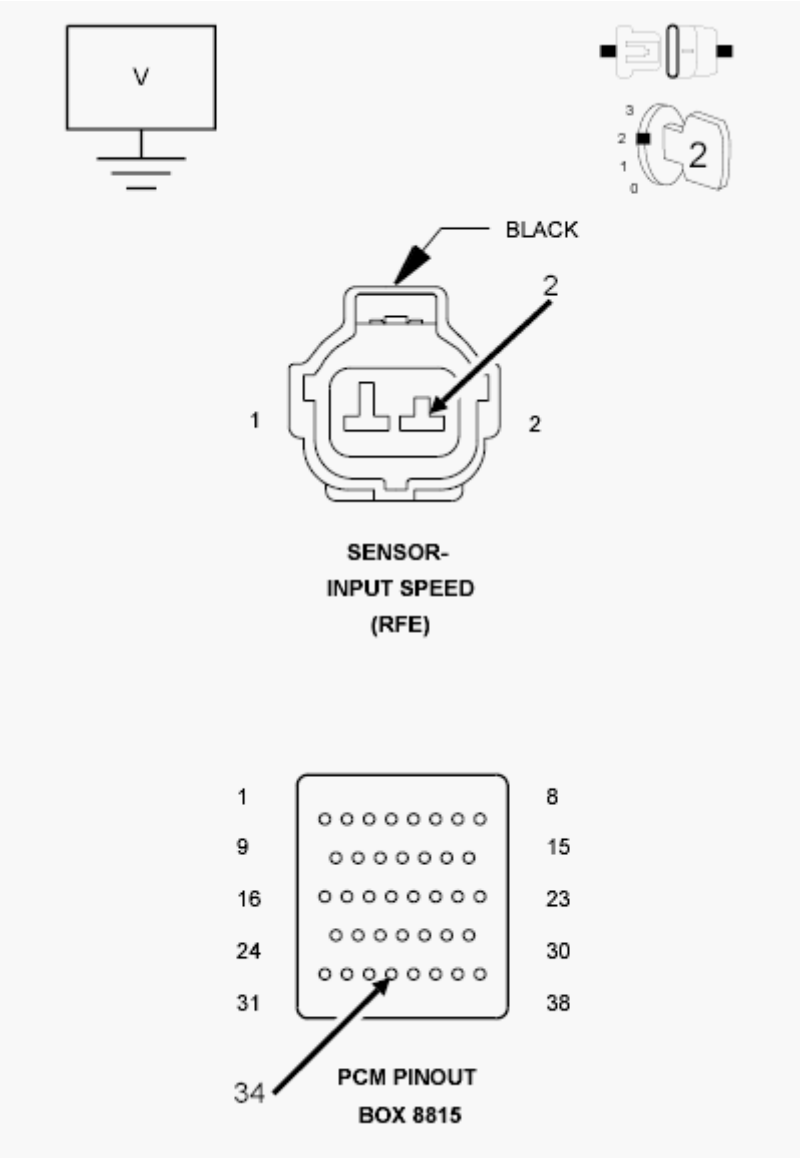

Fig. 8: Checking Speed Sensor Ground Circuit For A Short To Voltage
Courtesy of CHRYSLER GROUP, LLC

1. With the scan tool in TIPM, actuate the TCM output.
2. Measure the voltage of the (T13) Speed Sensor Ground circuit.

   Is the voltage above 0.5 volts?

   Yes

   - Repair the (T13) Speed Sensor Ground circuit for a short to voltage.
   - Perform the 66RFE TRANSMISSION VERIFICATION TEST. Refer to **66RFE TRANSMISSION VERIFICATION TEST**.

   No

- Go To 5.

5. **(T52) INPUT SPEED SENSOR SIGNAL CIRCUIT OPEN**

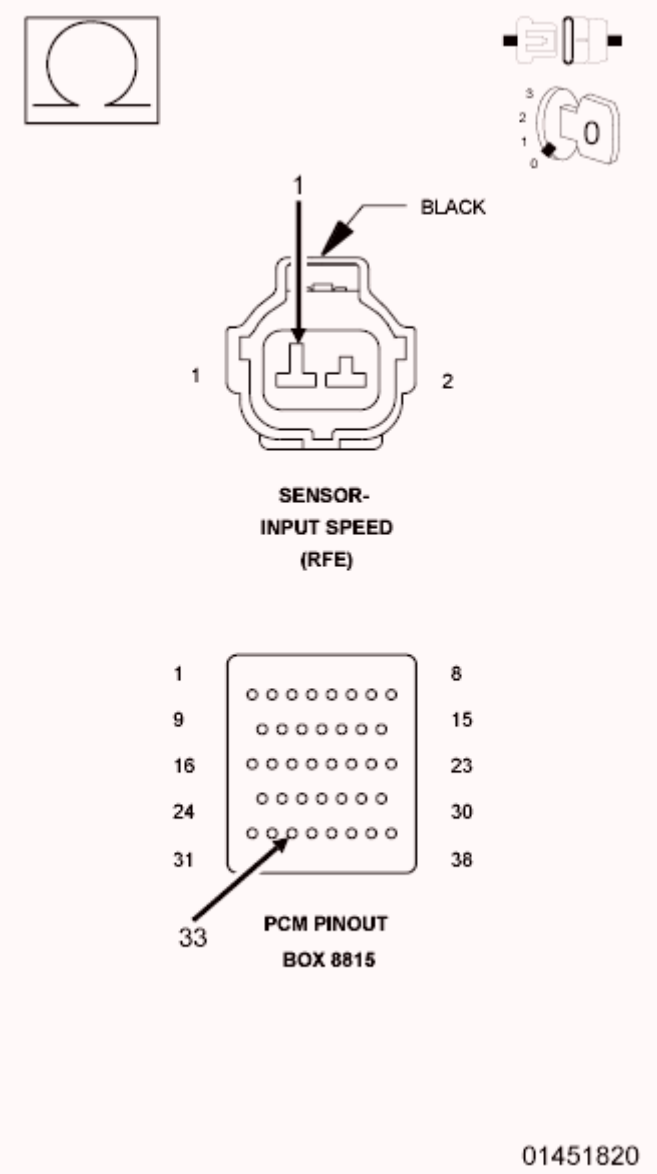

Fig. 9: Checking Input Speed Sensor Signal Circuit For An Open
Courtesy of CHRYSLER GROUP, LLC

1. With the scan tool in TIPM, stop the actuation the TCM output.
2. Turn the ignition OFF to the LOCK position.
3. Measure the resistance of the (T52) Input Speed Sensor Signal circuit between the Input Speed Sensor harness connector and the appropriate terminal of the (special tool #8815A, Kit, NGC, 38 Position).

   Is the resistance above 5.0 ohms?

Yes

- Repair the (T52) Input Speed Sensor Signal circuit for an open.
- Perform the 66RFE TRANSMISSION VERIFICATION TEST. Refer to **66RFE TRANSMISSION VERIFICATION TEST**.

No

- Go To 6.

6. **(T13) SPEED SENSOR GROUND CIRCUIT OPEN**

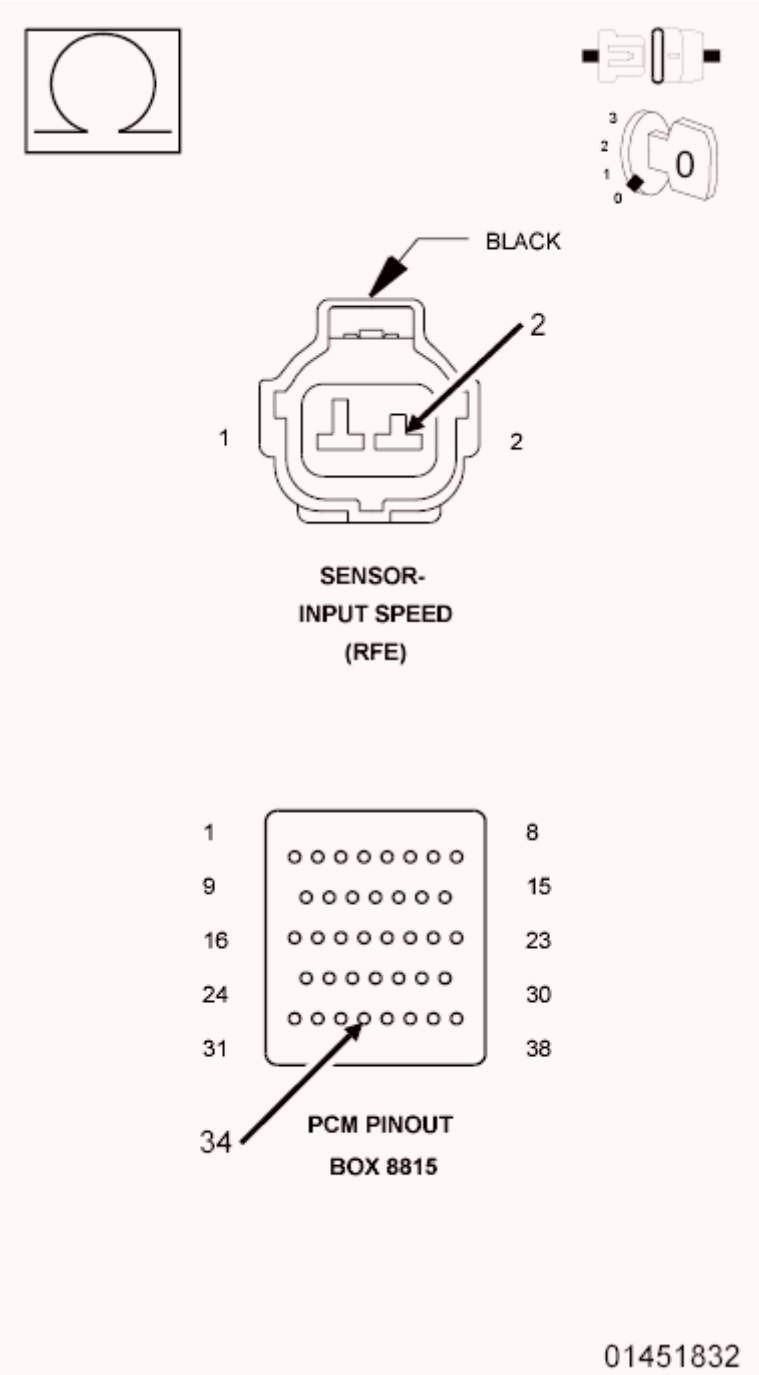

Fig. 10: Checking Speed Sensor Ground Circuit For An Open
Courtesy of CHRYSLER GROUP, LLC

1. Measure the resistance of the (T13) Speed Sensor Ground circuit between the Input Speed Sensor harness connector and the appropriate terminal of the (special tool #8815A, Kit, NGC, 38 Position).

   Is the resistance above 5.0 ohms?

   Yes

- Repair the (T13) Speed Sensor Ground circuit for an open.
- Perform the 66RFE TRANSMISSION VERIFICATION TEST. Refer to **66RFE TRANSMISSION VERIFICATION TEST**.

No

- Go To 7.

7. **(T52) INPUT SPEED SENSOR SIGNAL CIRCUIT SHORT TO GROUND**

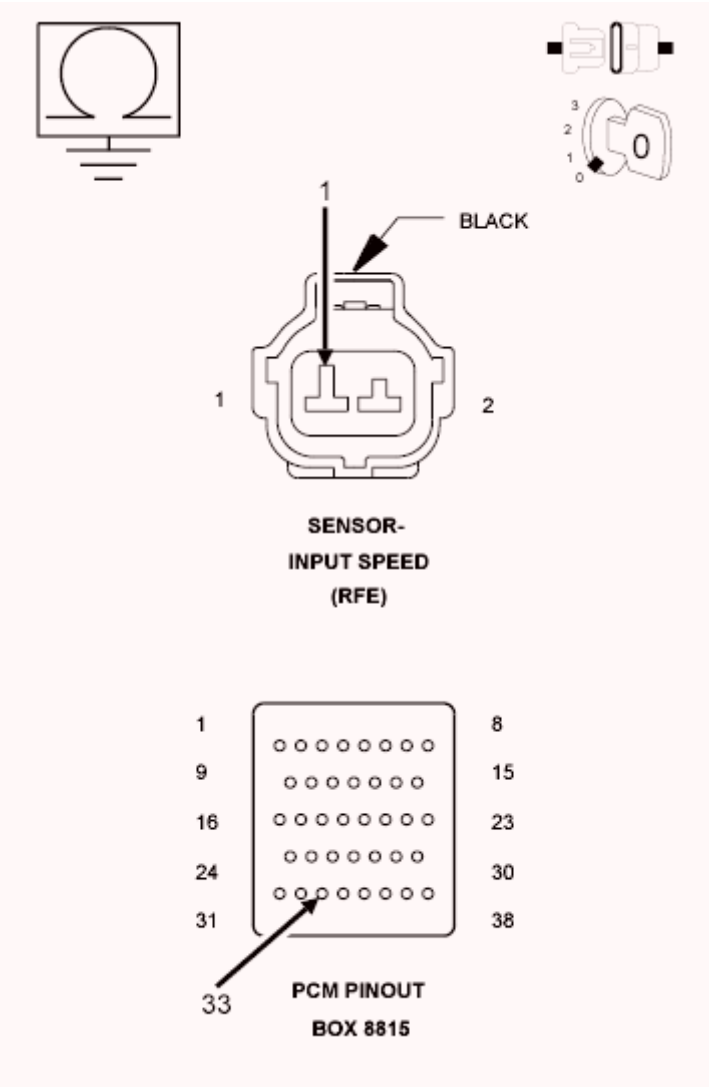

Fig. 11: Checking Input Speed Sensor Signal Circuit For A Short To Ground
Courtesy of CHRYSLER GROUP, LLC

1. Measure the resistance between ground and the Input Speed Sensor Signal circuit.

   Is the resistance below 5.0 ohms?

Yes

- Repair the (T52) Input Speed Sensor Signal circuit for a short to ground.
- Perform the 66RFE TRANSMISSION VERIFICATION TEST. Refer to **66RFE TRANSMISSION VERIFICATION TEST**.

No

- Go To 8.

8. **(T13) SPEED SENSOR GROUND CIRCUIT SHORTED TO GROUND**

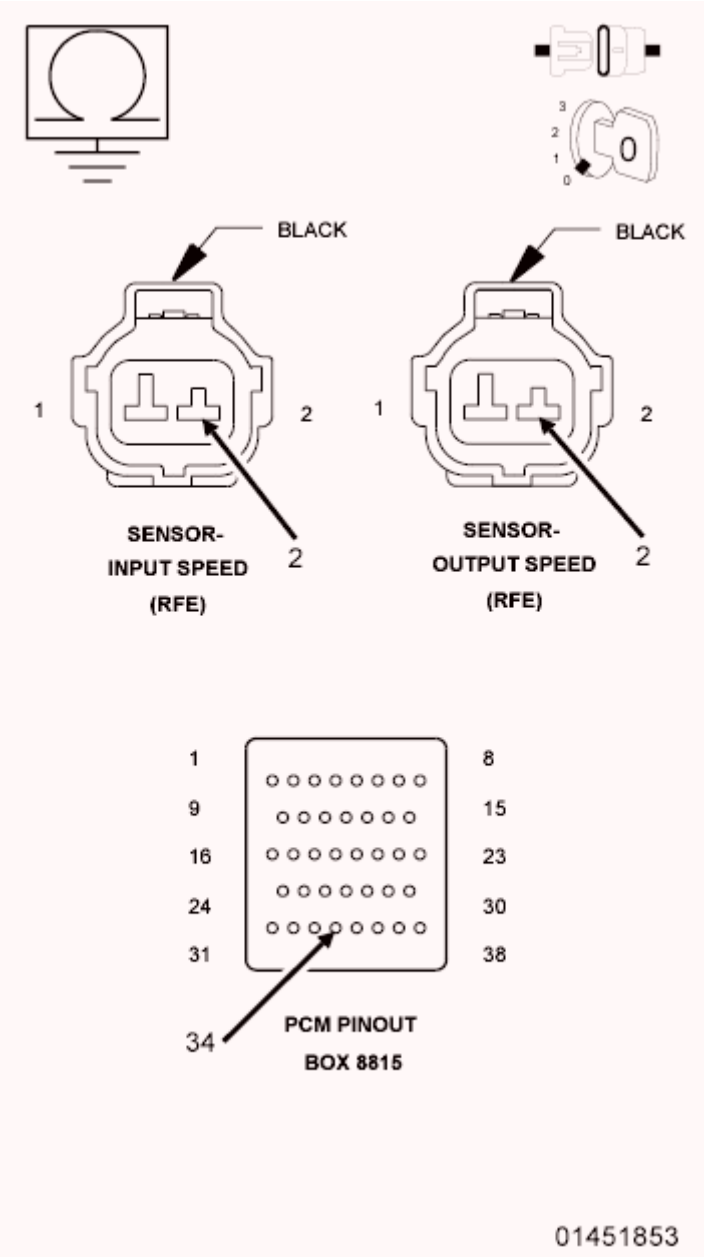

Fig. 12: Checking Speed Sensor Ground Circuit For Short To Ground

Courtesy of CHRYSLER GROUP, LLC

1. Measure the resistance between ground and the (T13) Speed Sensor Ground circuit.

   Is the resistance below 5.0 ohms?

   Yes

   - Repair the (T13) Speed Sensor Ground circuit for a short to ground.
   - Perform the 66RFE TRANSMISSION VERIFICATION TEST. Refer to **66RFE TRANSMISSION VERIFICATION TEST**.

   No

   - Using the schematics as a guide, check the Powertrain Control Module (PCM) terminals for corrosion, damage or terminal push out. Pay particular attention to all power and ground circuits. If no problems are found, replace and program the PCM in accordance with the Service Information. With the scan tool, perform a Quick Learn.
   - Perform the 66RFE TRANSMISSION VERIFICATION TEST. Refer to **66RFE TRANSMISSION VERIFICATION TEST**.

9. **CHECK THE WIRING AND CONNECTORS**
   1. The conditions necessary to set this DTC are not present at this time.
   2. Using the schematics as a guide, inspect the wiring and connectors specific to this circuit.
   3. Wiggle the wires while checking for shorted and open circuits.
   4. With the scan tool, check the Event Data to help identify the conditions in which the DTC set.

      Were any problems found?

      Yes

      - Repair as necessary.
      - Perform the 66RFE TRANSMISSION VERIFICATION TEST. Refer to **66RFE TRANSMISSION VERIFICATION TEST**.

      No

      - Test Complete.

P0721-OUTPUT SPEED SENSOR CIRCUIT PERFORMANCE

For a complete wiring diagram, **refer to appropriate SYSTEM WIRING DIAGRAMS article** .

THEORY OF OPERATION

The transmission system uses two speed sensors, one to measure input RPM and one to measure output RPM.

These inputs are essential for proper transmission operation. Therefore, the integrity of this data is verified through the following checks:

1)When in gear, if the gear ratio does not compare to a known gear ratio, the corresponding in-gear DTCs P0731-36, P1736 and P1776 is set.

2)An excessive change in input or output speeds indicating an intermittent signal results in DTCs P0716 and/or P0721 setting.

3)If the common speed sensor ground circuit is lost, both sensor inputs will read the signal from the input speed sensor at idle in neutral. Since the input speed sensor has 60 teeth and the output speed sensor has 30 teeth, this results in a an apparent speed ratio of 1:2 and may cause DTC P1794 to set.

WHEN MONITORED:

The transmission gear ratio is monitored continuously while the transmission is in gear.

SET CONDITION:

If there is an excessive change in output RPM in any gear. This DTC can take up to five minutes of problem identification before illuminating the MIL.

POSSIBLE CAUSES

Possible Causes
(T14) OUTPUT SPEED SENSOR SIGNAL CIRCUIT OPEN
(T13) SPEED SENSOR GROUND CIRCUIT OPEN
(T14) OUTPUT SPEED SENSOR SIGNAL CIRCUIT SHORTED TO GROUND
(T13) SPEED SENSOR GROUND CIRCUIT SHORTED TO GROUND
(T14) OUTPUT SPEED SENSOR SIGNAL CIRCUIT SHORTED TO VOLTAGE
(T13) SPEED SENSOR GROUND CIRCUIT SHORTED TO VOLTAGE
OUTPUT SPEED SENSOR
POWERTRAIN CONTROL MODULE (PCM)

Always perform the Pre-Diagnostic Troubleshooting procedure before proceeding. Refer to 66RFE PRE-DIAGNOSTIC TROUBLESHOOTING PROCEDURE.

DIAGNOSTIC TEST

1. **CHECK TO SEE IF DTC P0721 IS CURRENT**
    1. Turn the ignition OFF to the LOCK position.

CAUTION: Properly support the vehicle and raise all drive wheels off the ground.

2. Release the parking brake.
3. Start the engine in park.
4. Place the transmission gear selector in drive and release foot from brake.

WARNING: Be sure to keep hands and feet clear of rotating wheels.

5. With the scan tool, monitor the Output Speed Sensor RPM.

   Is the Output Speed Sensor RPM below 100 RPM?

   Yes

   - Go To 2.

   No

   - Go To 9.

2. **OUTPUT SPEED SENSOR**
   1. Turn the ignition OFF to the LOCK position.
   2. Remove the Ignition Switch Feed fuse from the TIPM.

      CAUTION: Removal of the Ignition Switch Feed fuse from the TIPM will prevent the vehicle from being started in gear.

      WARNING: The Ignition Switch Feed fuse must be removed from the TIPM. Failure to do so can result in possible serious or fatal injury.

   3. Install the (special tool #8333A, Simulator, Transmission).
   4. Ignition ON, Engine Not Running.
   5. With the Transmission Simulator, set the selector switch to 3000/1000 and the Input/Output switch to ON.
   6. With the scan tool, monitor the Input and Output Speed Sensor RPM

      Does the Input Speed read 3, 000 RPM and the Output Speed read 1, 000 RPM, ± 50 RPM?

      Yes

      - Replace the Output Speed Sensor in accordance with the Service Information.
      - Perform the 66RFE TRANSMISSION VERIFICATION TEST. Refer to **66RFE TRANSMISSION VERIFICATION TEST**.

No

- Go To 3.

3. **CHECK THE (T14) OUTPUT SPEED SENSOR SIGNAL CIRCUIT FOR AN OPEN**

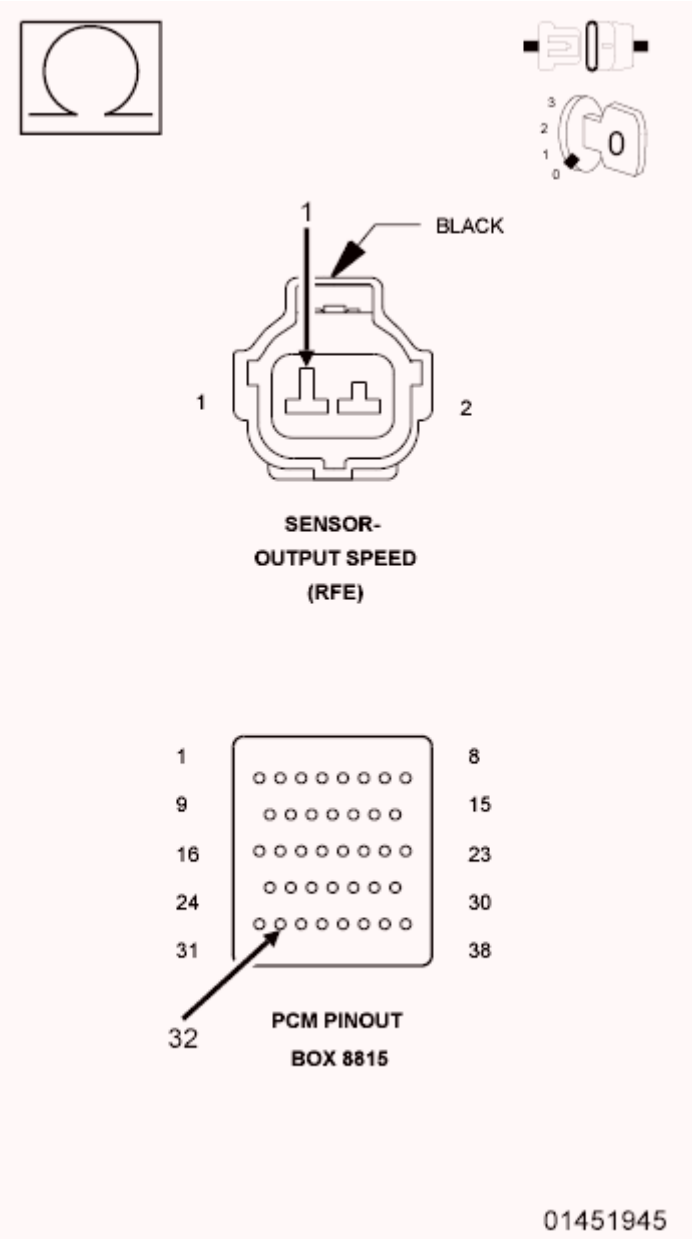

Fig. 13: Checking Output Speed Sensor Signal Circuit For Open
Courtesy of CHRYSLER GROUP, LLC

1. Turn the ignition OFF to the LOCK position.
2. Disconnect the (special tool #8333A, Simulator, Transmission).
3. Disconnect the PCM harness connectors and connect the (special tool #8815A, Kit, NGC, 38 Position).

CAUTION: Do not probe the PCM harness connectors. Probing the PCM harness connectors will damage the PCM terminals resulting in poor terminal to pin connection. Install the (special tool #8815A, Kit, NGC, 38 Position) to perform diagnosis.

4. Measure the resistance of the (T14) Output Speed Sensor Signal circuit from the Output Speed Sensor harness connector to the appropriate terminal of the (special tool #8815A, Kit, NGC, 38 Position).

   Is the resistance above 5.0 Ohms?

   Yes

   - Repair the (T14) Output Speed Sensor Signal circuit for an open.
   - Perform the 66RFE TRANSMISSION VERIFICATION TEST. Refer to **66RFE TRANSMISSION VERIFICATION TEST**.

   No

   - Go To 4.

4. **CHECK THE (T13) SPEED SENSOR GROUND CIRCUIT FOR AN OPEN**

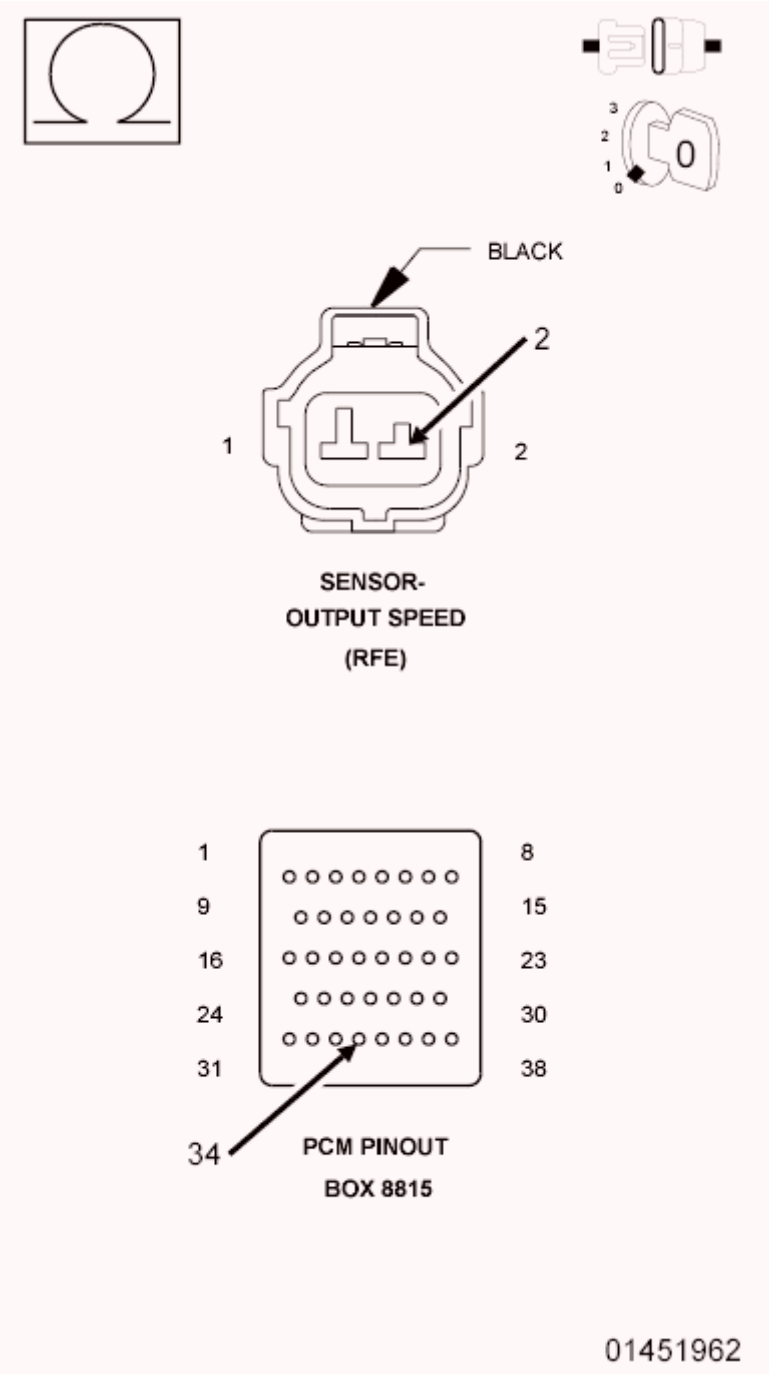

Fig. 14: Checking Output Speed Sensor Signal Circuit For Open
Courtesy of CHRYSLER GROUP, LLC

1. Measure the resistance of the (T13) Speed Sensor Ground circuit from the Output Speed Sensor harness connector to the appropriate terminal in the (special tool #8815A, Kit, NGC, 38 Position).

   Is the resistance above 5.0 ohms?

   Yes

- Repair the (T13) Speed Sensor Ground circuit for an open.
- Perform the 66RFE TRANSMISSION VERIFICATION TEST. Refer to **66RFE TRANSMISSION VERIFICATION TEST**.

No

- Go To 5.

5. **CHECK THE (T14) OUTPUT SPEED SENSOR SIGNAL CIRCUIT FOR A SHORT TO GROUND**

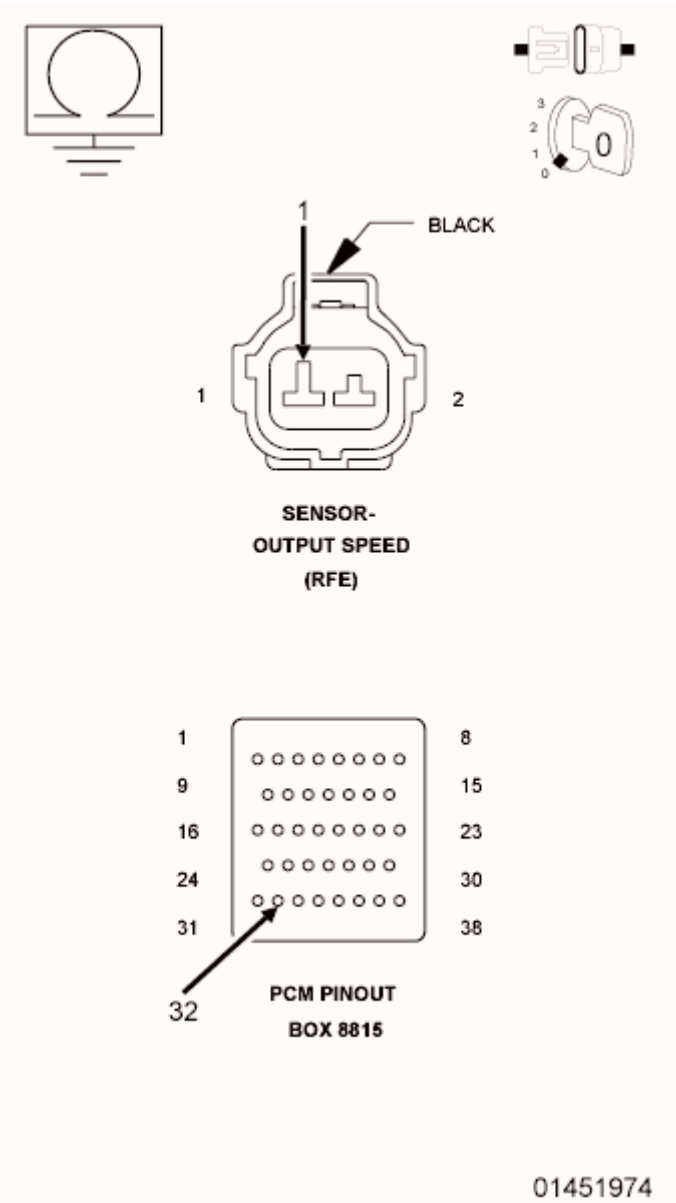

Fig. 15: Checking Output Speed Sensor Signal Circuit For Short To Ground
Courtesy of CHRYSLER GROUP, LLC

1. Measure the resistance between ground and the (T14) Output Speed Sensor Signal circuit.

   Is the resistance below 5.0 ohms?

   Yes

   - Repair the (T14) Output Speed Sensor Signal circuit for a short to ground.
   - Perform the 66RFE TRANSMISSION VERIFICATION TEST. Refer to **66RFE TRANSMISSION VERIFICATION TEST**.

   No

   - Go To 6.

6. **CHECK THE (T13) SPEED SENSOR GROUND CIRCUIT FOR A SHORT TO GROUND**

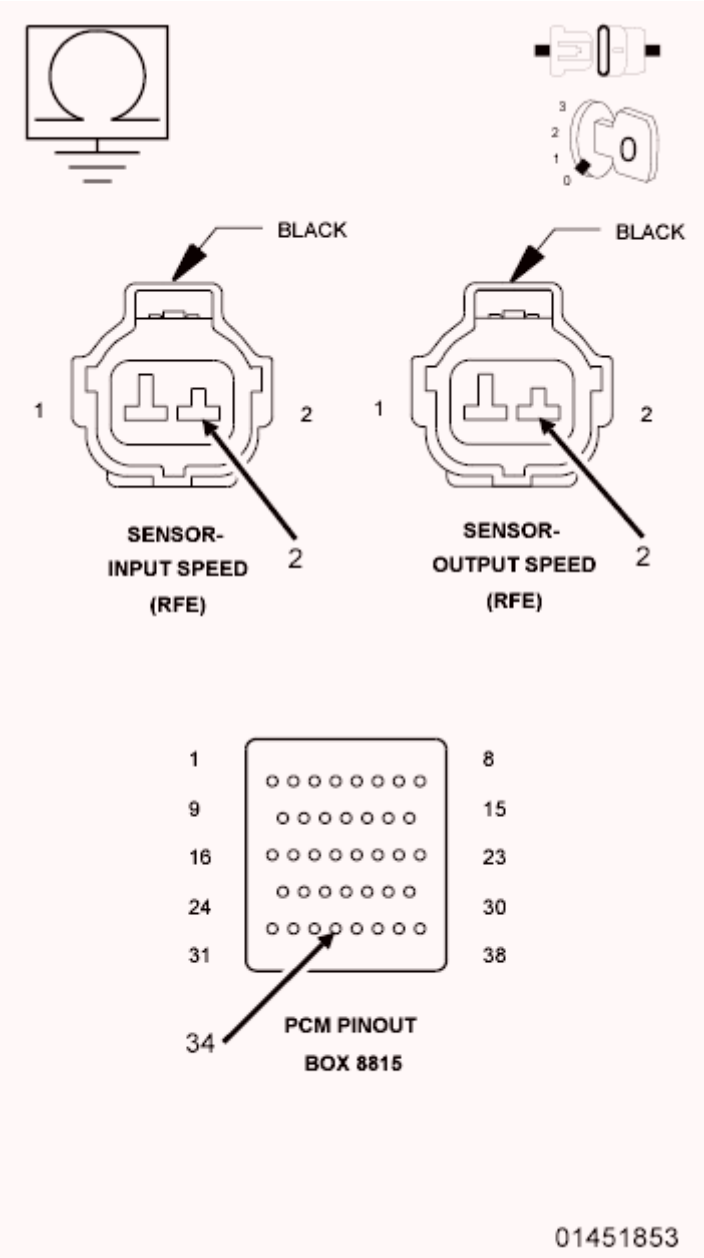

Fig. 16: Checking Speed Sensor Ground Circuit For Short To Ground
Courtesy of CHRYSLER GROUP, LLC

1. Measure the resistance between ground and the (T13) Speed Sensor Ground circuit.

   Is the resistance below 5.0 ohms?

   Yes

   - Repair the (T13) Speed Sensor Ground circuit for a short to ground.
   - Perform the 66RFE TRANSMISSION VERIFICATION TEST. Refer to **66RFE TRANSMISSION VERIFICATION TEST**.

No

- Go To 7.

7. **CHECK THE (T14) OUTPUT SPEED SENSOR SIGNAL CIRCUIT SHORT TO VOLTAGE**

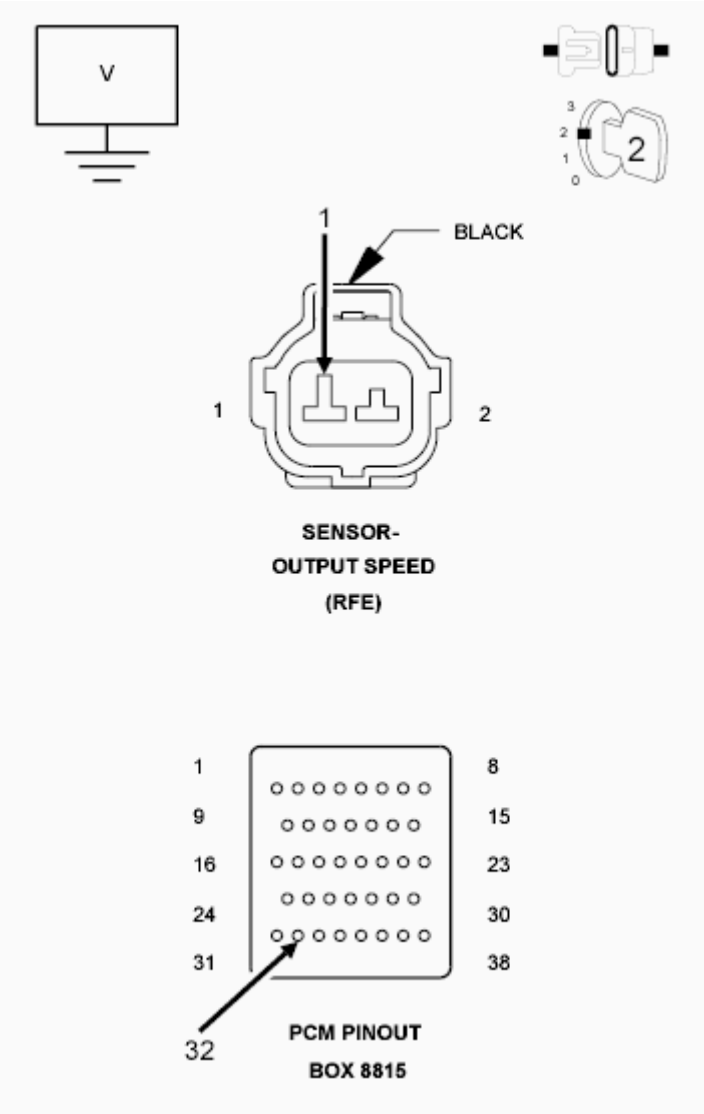

Fig. 17: Checking Output Speed Sensor Signal Circuit For Short To Voltage
Courtesy of CHRYSLER GROUP, LLC

1. Ignition ON, Engine Not Running.
2. With the scan tool in TIPM, actuate the TCM output.
3. Measure the voltage of the (T14) Output Speed Sensor Signal circuit.

   Is the voltage above 0.5 volts?

   Yes

- Repair the (T14) Output Speed Sensor Signal circuit for a short to voltage.
- Perform the 66RFE TRANSMISSION VERIFICATION TEST. Refer to **66RFE TRANSMISSION VERIFICATION TEST**.

No

- Go To 8.

8. **CHECK THE (T13) SPEED SENSOR GROUND CIRCUIT FOR A SHORT TO VOLTAGE**

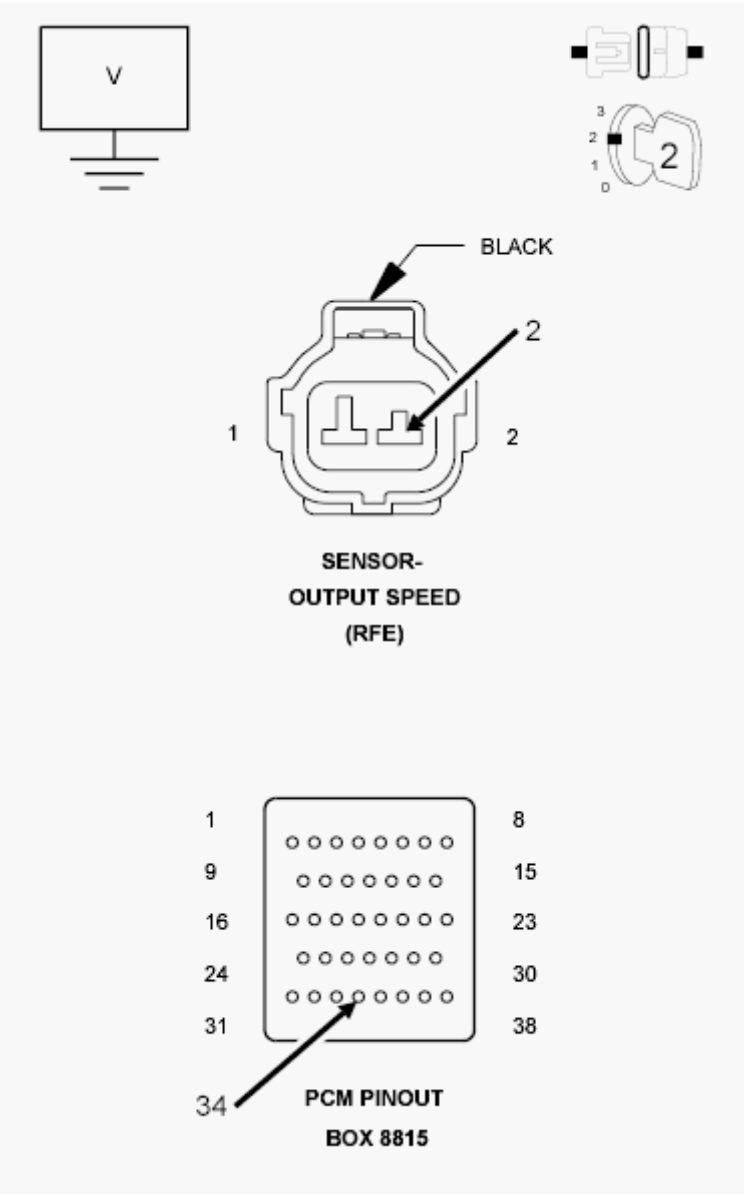

Fig. 18: Checking Output Speed Sensor Ground Circuit For Short To Voltage
Courtesy of CHRYSLER GROUP, LLC

1. With the scan tool in TIPM, actuate the TCM output.

2. Measure the voltage of the (T13) Speed Sensor Ground circuit.

   Is the voltage above 0.5 volts?

   Yes

   - Repair the (T13) Speed Sensor Ground circuit for a short to voltage.
   - Perform the 66RFE TRANSMISSION VERIFICATION TEST. Refer to **66RFE TRANSMISSION VERIFICATION TEST**.

   No

   - Using the schematics as a guide, check the Powertrain Control Module (PCM) terminals for corrosion, damage or terminal push out. Pay particular attention to all power and ground circuits. If no problems are found, replace and program the PCM in accordance with the Service Information. With the scan tool, perform a Quick Learn.
   - Perform the 66RFE TRANSMISSION VERIFICATION TEST. Refer to **66RFE TRANSMISSION VERIFICATION TEST**.

9. **CHECK THE WIRING AND CONNECTORS**
   1. The conditions necessary to set this DTC are not present at this time.
   2. Using the schematics as a guide, inspect the wiring and connectors specific to this circuit.
   3. Wiggle the wires while checking for shorted and open circuits.
   4. With the scan tool, check the Event Data to help identify the conditions in which the DTC set.

      Were any problems found?

      Yes

      - Repair as necessary.
      - Perform the 66RFE TRANSMISSION VERIFICATION TEST. Refer to **66RFE TRANSMISSION VERIFICATION TEST**.

      No

      - Test Complete.

P0729-GEAR RATIO ERROR IN 6TH

For a complete wiring diagram, **refer to appropriate SYSTEM WIRING DIAGRAMS article** .

THEORY OF OPERATION

The transmission system uses two speed sensors, one to measure input RPM and one to measure output RPM. These inputs are essential for proper transmission operation. Therefore the integrity of this data is verified through the following checks:

NOTE: **Various Gear Ratio Error DTCs will set only if the transmission slips after first achieving the correct ratio. Therefore, a transmission with no drive (or reverse) may not set any Gear Ratio Error DTC because it never achieves a correct gear ratio.**

1) Once in a particular gear, if the gear ratio varies from the correct gear ratio, the corresponding in-gear DTCs P0729 and P0731-36 is set.

2) An excessive change in input or output speeds indicating an intermittent signal which results in DTCs P0716 and/or P0721 setting.

3) If the common speed sensor ground circuit is lost, both sensor inputs reads the pulses from the input speed sensor when at a stop in neutral. Since the input speed sensor reads 60 teeth from the input clutch hub and the output speed sensor reads 30 teeth from the park gear, the result is an apparent speed ratio of 1:2 and may cause DTC P1794 to set.

WHEN MONITORED:

Continuously with the ignition on, engine running and after the transmission achieves the correct gear ratio.

SET CONDITION:

If the ratio of the Input RPM to the Output RPM does not match the current gear ratio then DTC P0729 will set. This DTC can take up to five minutes of problem identification before illuminating the MIL.

POSSIBLE CAUSES

Possible Causes
LOW FLUID LEVEL
INPUT OR OUTPUT SPEED SENSOR(S) OR WIRING
VALVE BODY ACCUMULATOR COVER FAILED
CUT OD OR 2C ACCUMULATOR SEAL
CRACKED OD OR 2C ACCUMULATOR PISTON
BROKEN OR MISSING OD BLEED ORIFICE IN MAIN VALVE BODY
CUT 2C TOWER SEAL
TRANSMISSION SOLENOID/TRS ASSEMBLY
CUT OR MISSING NO. 5, NO. 6, OR NO. 7 CHECK BALL
WORN SOLENOID SWITCH VALVE OR PLUGS
CUT OD OR 2C PISTON SEAL
STUCK MAIN REGULATOR VALVE
BURNED OD OR 2C CLUTCH
BROKEN OR MISSING 2C BLEED ORIFICE IN 2C/4C RETAINER
BROKEN REACTION SHAFT SUPPORT SEAL RING
POOR MACHINING ON PUMP VALVE BODY FACE
LOOSE / MISSING DRIBBLER ORIFICE ASSEMBLY IN REACTION SHAFT SUPPORT

CRACKED / LOOSE / MISSING OD/REVERSE PISTON BLEED ORIFICE
FAILED OD SHAFT
FAILED REVERSE ANNULUS GEAR SPLINE
FAILED REVERSE CARRIER HUB SPLINE
FAILED REVERSE SUN GEAR SPLINE TO REACTION CARRIER

Always perform the Pre-Diagnostic Troubleshooting procedure before proceeding. Refer to 66RFE PRE-DIAGNOSTIC TROUBLESHOOTING PROCEDURE.

DIAGNOSTIC TEST

1. **CHECK FOR RELATED DTCS**
   1. With the scan tool, check for other transmission DTCs
   2. If any related DTCs are present, perform their respective tests first.

      Are any Transmission solenoid, line pressure, speed sensor and/or loss of prime DTCs present?

      Yes

      - If any related DTCs are present they may cause a Speed Ratio Error. Perform test for **P0944-LOSS OF HYDRAULIC PUMP PRIME** first if it is present. Refer to **DIAGNOSIS AND TESTING**.

      No

      - Go To 2.
2. **CHECK THE EVENT DATA**
   1. With the scan tool, read and record the Event Data.

      NOTE: Make sure to record all Event Data stored in the scan tool for future reference in this test procedure.

      Does the Event Data display information for DTC P0729?

      Yes

      - Go To 4.

      No

      - Go To 3.
3. **CHECK THE TARGET GEAR**

   In the Event Data recorded earlier, does the Event Data show the DTC P1790 with Target gear = 6th or with both the 2C and OD clutches applying?

Yes

- Go To 4.

No

- Go To 6.

4. **CHECK INPUT RPM**

   In the Event Data recorded earlier, does the Input RPM read zero?

   Yes

   - Perform the diagnostic procedure for P0716-Input Speed Sensor Circuit Performance. Diagnose the DTC as if it is set and current. Refer to **DIAGNOSIS AND TESTING**.

   No

   - Go To 5.

5. **CHECK LINE PRESSURE READING**

   In the Event Data recorded earlier, is the line pressure reading more than 10 psi below the desired line pressure reading?

   Yes

   - Remove the Transmission Oil pan and check the Transmission Oil filter for improper installation or plugged. If the Primary oil filter is OK, check the main regulator valve in pump. If excessive debris is in the oil pan, check clutches and repair as necessary. Refer to the Service Information for proper repair procedures.
   - Perform the 66RFE TRANSMISSION VERIFICATION TEST. Refer to **66RFE TRANSMISSION VERIFICATION TEST**.

   No

   - Go To 6.

6. **CHECK TRANSMISSION FOR SLIPPAGE**
   1. Erase DTCs and road test the vehicle.
   2. Check the transmission operation in reverse and all forward gears.

      During the road test, was there any obvious slippage noted in any gear or did the transmission fail to make a 1-2 upshift?

      Yes

      - Go To 8.

No

- Go To 7.

7. **CHECK IF THE DTC RESETS**
   1. With the scan tool, check for Transmission DTCs after the road test.

      Did DTC P0729 reset?

      Yes

      - Go To 8.

      No

      - Test Complete.
      - Perform the 66RFE TRANSMISSION VERIFICATION TEST. Refer to **66RFE TRANSMISSION VERIFICATION TEST**.

8. **CHECK INTERNAL TRANSMISSION**
   1. Remove the Transmission Oil Pan and Valve Body in accordance with the Service Information, and check for the following:
      - Excessive clutch and or metal debris in the oil pan.
      - If the accumulator cover is intact and the 2C tower seal is not cut or split.
      - OD and 2C accumulator pistons for cracks or cut seals.
      - Solenoid Switch Valve and its plugs for stickiness or wear.
      - Cut or missing No. 5, No. 6 or No. 7 check ball.
      - OD bleed orifice (on top of the main valve body) is intact.
      - Air check the OD and 2C hydraulic clutch circuits for excessive leakage. Refer to the Service information.

      NOTE: Both OD and 2C hydraulic clutch circuits contain a small bleed orifice. A small amount of air leakage is considered normal. The OD hydraulic clutch circuit bleed orifice connects to the Reverse input clutch hydraulic cavity. A small amount of air leakage into the Reverse hydraulic clutch circuit is considered normal.

      Were there any problems found?

      Yes

      - Repair as necessary. Refer to the Service Information for proper repair procedures.

        NOTE: If the OD or 2C clutch has failed but no obvious cause is found (such as a cut piston seal, broken seal ring, stuck regulator valve or any other items listed above) replace the Transmission

Solenoid/TRS Assembly in addition to any necessary internal repairs.

- Perform the 66RFE TRANSMISSION VERIFICATION TEST. Refer to **66RFE TRANSMISSION VERIFICATION TEST**.

No

- Go To 9.

9. **CHECK ROAD TEST RESULTS**

During the road test, was Reverse, 1st, 2nd and 3rd gears OK but the transmission slipped in 4th, 5th and 6th gears?

Yes

- Go To 10.

No

- Go To 11.

10. **CHECK THE OD SHAFT AND REVERSE CARRIER SPLINE**
    1. Remove the Transmission in accordance with the Service Information and inspect the OD shaft and its spline to the reverse carrier hub.

    Were any problems found?

    Yes

    - Repair as necessary. Refer to the Service Information for proper repair procedures.
    - Perform the 66RFE TRANSMISSION VERIFICATION TEST. Refer to **66RFE TRANSMISSION VERIFICATION TEST**.

    No

    - Disassemble and inspect the input clutch assembly. Check the OD and Reverse clutch seals, discs and bleed orifice (in the OD/Reverse clutch piston) and repair as necessary in accordance with the Service Information.

    NOTE: **If the OD clutch has failed but no obvious cause is found (such as a cut piston seal, broken seal ring, stuck regulator valve, etc.), replace the Transmission Solenoid/TRS Assembly in addition to any other necessary repairs.**

    - Perform the 66RFE TRANSMISSION VERIFICATION TEST. Refer to **66RFE TRANSMISSION VERIFICATION TEST**.

11. **CHECK FOR FAILED REVERSE GEARSET SPLINES**

Working through the windows in the bottom of the case, check for a failed Reverse Sun or Annulus gear spline as follows:

1. Hold the Transmission Output Shaft by holding the Transmission Manual Lever in the park position.
2. Apply the 4C clutch using 30-40 psi shop air at the apply port in the center bulkhead.
3. Attempt to rotate the input annulus gear and drive shell (the drum that encloses the two rearmost gearsets).

NOTE: Due to the overrunning clutch the gear and drive shell normally rotates in one direction only.

Can the drive shell be rotated?

Yes

- Repair internal transmission as necessary in accordance with the Service Information. Check the reverse annulus gear spline to the input carrier and the reverse sun gear spline to the reaction carrier hub.
- Perform the 66RFE TRANSMISSION VERIFICATION TEST. Refer to **66RFE TRANSMISSION VERIFICATION TEST**.

No

- Replace Transmission Solenoid/TRS Assembly in accordance with the Service Information. Perform the 66RFE TRANSMISSION VERIFICATION TEST. Refer to **66RFE TRANSMISSION VERIFICATION TEST**.

NOTE: If continued slippage is noted in 2nd and/or 6th gear during the verification test, remove the transmission and inspect the 2C clutch and repair as necessary in accordance with the Service Information.

P0731-GEAR RATIO ERROR IN 1ST

For a complete wiring diagram, **refer to appropriate SYSTEM WIRING DIAGRAMS article** .

THEORY OF OPERATION

The transmission system uses two speed sensors, one to measure input RPM and one to measure output RPM. These inputs are essential for proper transmission operation. Therefore the integrity of this data is verified through the following checks:

NOTE: Various Gear Ratio Error DTCs will set only if the transmission slips after first

achieving the correct ratio. Therefore a transmission with no drive (or reverse) may not set any Gear Ratio Error DTC because it never achieves a correct gear ratio.

1) Once in a particular gear, if the gear ratio varies from the correct gear ratio the corresponding in-gear DTCs P0729 and P0731-36 is set.

2) An excessive change in input or output speeds indicating an intermittent signal which results in DTCs P0716 and/or P0721 setting.

3) If the common speed sensor ground circuit is lost, both sensor inputs will read the pulses from the input speed sensor when at a stop in neutral. Since the input speed sensor reads 60 teeth from the input clutch hub and the output speed sensor reads 30 teeth from the park gear, the result is an apparent speed ratio of 1:2 and may cause DTC P1794 to set.

WHEN MONITORED:

Continuously with the ignition on, engine running and after the transmission achieves the correct gear ratio.

SET CONDITION:

If the ratio of the Input RPM to the Output RPM does not match the current gear ratio then DTC P0731 will set. This DTC can take up to five minutes of problem identification before illuminating the MIL

POSSIBLE CAUSES

Possible Causes
CUT UD PISTON SEAL
LOW FLUID LEVEL
CRACKED OR MIS-INSTALLED PRIMARY OIL FILTER OR SEAL
STUCK OR STICKING MAIN REGULATOR VALVE
FAILED OVERRUNNING CLUTCH
BURNED UD CLUTCH
CUT UD ACCUMULATOR SEAL RING
CRACKED UD ACCUMULATOR PISTON
BROKEN REACTION SHAFT SUPPORT SEAL RING
LOW LINE PRESSURE
BROKEN / MISSING MAIN VALVE BODY BLEED ORIFICE
BROKEN / MISSING DRIBBLER ORIFICE ASSEMBLY IN REACTION SHAFT SUPPORT
POOR MACHINING ON PUMP VALVE BODY FACE
FAILED UD SHAFT
BROKEN OUTPUT SHAFT WELD
FAILED INPUT GEARSET
INPUT OR OUTPUT SPEED SENSOR(S) AND RELATED WIRING

TRANSMISSION SOLENOID/TRS ASSEMBLY
POWERTRAIN CONTROL MODULE (PCM)

Always perform the Pre-Diagnostic Troubleshooting procedure before proceeding. Refer to 66RFE PRE-DIAGNOSTIC TROUBLESHOOTING PROCEDURE.

DIAGNOSTIC TEST

1. **CHECK FOR RELATED DTCS**
    1. With the scan tool, read DTCs.
    2. If any of these DTCs are present, perform their respective tests first.

    Are any Transmission solenoid, line pressure, speed sensor and/or loss of prime DTCs present?

    Yes

    - If any of these DTCs are present, they may cause a Speed Ratio Error. Perform test for P0944 first if it is present. Refer to **DIAGNOSIS AND TESTING** and perform the appropriate diagnostic procedure.

    No

    - Go To 2.
2. **CHECK THE L/R CLUTCH STATE**
    1. Start the vehicle, with the brakes firmly applied and the vehicle stationary, place the shift lever in Drive. Using the scan tool, check the L/R Clutch State.

    Did the L/R Clutch state read Applied?

    Yes

    - Go To 4.

    No

    - Go To 3.
3. **CHECK THE POWERTRAIN CONTROL MODULE**
    1. Turn the ignition off to the lock position for at least 30 seconds.
    2. Start the vehicle, with the brakes firmly applied and the vehicle stationary, place the shift lever in Drive. Using the scan tool, check the L/R Clutch State.

    Did the L/R Clutch state read Applied?

    Yes

- Go To 4.

No

- Using the schematics as a guide, check the Powertrain Control Module (PCM) terminals for corrosion, damage or terminal push out. Pay particular attention to all power and ground circuits. If no problems are found, replace and program the PCM in accordance with the Service Information. With the scan tool, perform a Quick Learn.
- Perform the 66RFE TRANSMISSION VERIFICATION TEST. Refer to **66RFE TRANSMISSION VERIFICATION TEST**.

4. **CHECK FOR SLIPPAGE IN 1ST GEAR**
   1. With the scan tool, perform the 1st Gear Clutch Test. Follow the instructions on the scan tool.
   2. Increase the throttle angle or TPS Degree to 30° for no more than a few seconds.

CAUTION: Do not overheat the transmission.

Did the Clutch Test pass, Input Speed remain at zero?

Yes

- Go To 6.

No

- Go To 5.

5. **CHECK THE OVERRUNNING CLUTCH**
   1. With the scan tool, monitor the L/R Clutch state while launching the vehicle from a stop in 1st gear.

   Does the transmission slip (neutral out) when the L/R Clutch state changes to Not Applied?

Yes

- Remove transmission and inspect for failed overrunning clutch (rotates in both directions). Refer to the Service Information for proper repair procedures.
- Perform the 66RFE TRANSMISSION VERIFICATION TEST. Refer to **66RFE TRANSMISSION VERIFICATION TEST**.

No

- Go To 7.

6. **CHECK FOR INTERMITTENT OPERATION**
   1. The conditions to set this DTC are not currently present.
   2. With the scan tool, check the Event Data to help identify the conditions in which the DTC set.

- If the Event Data shows DTC P0731 was set in Park, Reverse or Neutral, replace the Powertrain Control Module.
- If the Event Data shows DTC P0731 set with input RPM = zero, check the input speed sensor and related wiring.
- If the Event Data shows DTC P0731 set with line pressure significantly below desired line pressure, check for the cause of low line pressure (i.e. oil level, mis-installed or damaged primary filter or filter seal, sticking main regulator valve in pump, etc.).
- If the Event Data shows DTC P0731 set with the UD pressure switch open (but line pressure matches Desired Line Pressure), air check the UD hydraulic clutch circuit for leakage in accordance with the Service Information. If the UD hydraulic clutch circuit is OK, replace the solenoid/TRS assembly.

3. Check the gearshift linkage adjustment.
4. Intermittent Gear Ratio DTCs can be set by problems in the Input and Output Speed Sensor circuits and/or Speed Sensor Ground circuit.
5. Remove the Ignition Switch Feed fuse from the TIPM.

CAUTION: Removal of the Ignition Switch Feed fuse from the TIPM will prevent the vehicle from being started in gear.

WARNING: The Ignition Switch Feed fuse must be removed from the TIPM. Failure to do so can result in possible serious or fatal injury.

6. Install the Transmission Simulator (special tool #8333A, Simulator, Transmission).
7. Wiggle wiring and connectors while checking for intermittent operation with the Transmission Simulator.
8. Gear ratio DTCs can also be set under extreme temperature conditions.
9. Verify if the problem is only experienced under extreme hot or cold conditions.

Were any problems found.

Yes

- Repair as necessary.
- Perform the 66RFE TRANSMISSION VERIFICATION TEST. Refer to **66RFE TRANSMISSION VERIFICATION TEST**.

No

- Test complete.

7. **CHECK INTERNAL TRANSMISSION**
   1. Repair internal transmission as necessary. Refer to the Service Information.
   2. If there were any line pressure DTCs present along with this DTC, make sure to inspect the:

Primary oil filter and seal, Transmission Oil Pump and the Main regulator valve in accordance with the Service Information.

3. If DTCs P0876 and/or P0875 were present in addition to P0731, replace the Transmission Solenoid/TRS Assembly in addition to necessary internal repairs.
4. Pay particular attention to the following list of possible causes when repairing the transmission:
   - Cut UD piston seal
   - Failed overrunning clutch
   - Burned UD clutch
   - Cut UD accumulator seal ring
   - Broken UD accumulator piston
   - Low line pressure
   - Broken/missing main valve body bleed orifice
   - Broken/missing dribbler orifice assembly in reaction shaft support
   - Poor machining on pump valve body face
   - Transmission Solenoid/TRS Assembly

Repair

NOTE: **If the UD clutch has failed but no obvious cause is found (such as a cut piston seal, broken seal ring, low line pressure in Event Data or other items listed above) replace the Transmission Solenoid/TRS Assembly in addition to any necessary internal repairs.**

- Repair internal transmission in accordance with the Service Information.
- Perform the 66RFE TRANSMISSION VERIFICATION TEST. Refer to **66RFE TRANSMISSION VERIFICATION TEST**.

P0732-GEAR RATIO ERROR IN 2ND

For a complete wiring diagram, **refer to appropriate SYSTEM WIRING DIAGRAMS article**

THEORY OF OPERATION

The transmission system uses two speed sensors, one to measure input RPM and one to measure output RPM. These inputs are essential for proper transmission operation. Therefore the integrity of this data is verified through the following checks:

NOTE: **Various Gear Ratio Error DTCs will set only if the transmission slips after first achieving the correct ratio. Therefore, a transmission with no drive (or reverse) may not set any Gear Ratio Error DTC because it never achieves a correct gear ratio.**

1) Once in a particular gear, if the gear ratio varies from the correct gear ratio, the corresponding in-gear DTCs P0729 and P0731-36 is set.

2) An excessive change in input or output speeds indicating an intermittent signal which results in DTCs P0716 and/or P0721 setting.

3) If the common speed sensor ground circuit is lost, both sensor inputs read the pulses from the input speed sensor when at a stop in neutral. Since the input speed sensor reads 60 teeth from the input clutch hub and the output speed sensor reads 30 teeth from the park gear, the result is an apparent speed ratio of 1:2 and may cause DTC P1794 to set.

WHEN MONITORED:

Continuously with the ignition on, engine running, with the transmission in gear.

SET CONDITION:

If the ratio of the Input RPM to the Output RPM does not match the current gear ratio then DTC P0732 will set. This DTC can take up to five minutes of problem identification before illuminating the MIL

POSSIBLE CAUSES

Possible Causes
RELATED DTCS PRESENT
INPUT OR OUTPUT SPEED SENSOR(S) OR WIRING
LOW FLUID LEVEL
CRACKED OR MIS-INSTALLED PRIMARY OIL FILTER OR SEAL
WORN SOLENOID SWITCH VALVE OR PLUGS
STUCK OR STICKING MAIN REGULATOR VALVE
BURNED UD OR 2C CLUTCH
CUT 2C OR UD PISTON SEAL
BROKEN 2C PISTON CASTING
BROKEN OR MISSING 2C BLEED ORIFICE
BROKEN OR MISSING UD BLEED ORIFICE
CUT 2C OR UD ACCUMULATOR PISTON SEAL
CRACKED 2C OR UD ACCUMULATOR PISTON
CUT OR MISSING NO. 5 OR NO. 7 CHECK BALL
TRANSMISSION SOLENOID/TRS ASSEMBLY
BROKEN INPUT ANNULUS TO DRIVE SHELL WELD
FAILED SPLINE - REVERSE ANNULUS GEAR TO INPUT CARRIER
FAILED SPLINE - REACTION CARRIER TO REVERSE SUN GEAR
MISSING TEETH ON INPUT CLUTCH HUB TONE WHEEL

Always perform the Pre-Diagnostic Troubleshooting procedure before proceeding. Refer to <u>66RFE PRE-DIAGNOSTIC TROUBLESHOOTING PROCEDURE</u>.

DIAGNOSTIC TEST

1. **CHECK FOR RELATED DTCS**
    1. With the scan tool, check for other transmission DTCs.

       Are any Transmission solenoid, line pressure, speed sensor and/or loss of prime DTCs present?

       Yes

       - Perform the test for P0944-LOSS OF PRIME first if it is present. Refer to **P0944-LOSS OF HYDRAULIC PUMP PRIME**.

       No

       - Go To 2.
2. **CHECK IF DTC IS CURRENT**
    1. With the scan tool, read and record the Event Data.

       NOTE: Make sure to record all Event Data stored in the scan tool for future reference in this test procedure.

       Does the Event Data display information for DTC P0732?

       Yes

       - Go To 4.

       No

       - Go To 3.
3. **CHECK THE EVENT DATA**
    1. In the Event Data, identify the DTC that was recorded earlier.

       In the Event Data recorded earlier, does the Event Data display information for DTC P1790 with target gear = 2nd or with both 2C and UD clutches applying?

       Yes

       - Go To 4.

       No

       - Go To 7.
4. **CHECK RPM IN EVENT DATA**

In the Event Data recorded earlier, does the Input RPM read zero?

Yes

- Check the input speed sensor and wiring. Perform the test for P0716 and diagnose as if the DTC is current. Refer to **DIAGNOSIS AND TESTING**.

No

- Go To 5.

5. **CHECK LINE PRESSURE READING**

In the Event Data recorded earlier, is the line pressure reading more than 10 psi below the desired line pressure?

Yes

- Go To 6.

No

- Go To 7.

6. **CHECK TRANSMISSION OIL FILTER**
   1. Turn the ignition off to the lock position.
   2. Remove and inspect the Transmission Oil Pan for excessive debris in accordance with the Service Information.
   3. Remove and inspect the Primary Oil Filter in accordance with the Service Information.

NOTE: **Make sure the Primary Transmission Oil Filter and seal are properly installed and are not cracked or split.**

Does the Oil Pan contain excessive debris and/or is the Primary Oil Filter cracked, plugged or mis-installed?

Yes

- Repair the plugged, cracked, or split Primary Transmission Oil Filter and/or seal. If excessive clutch debris is present, check the clutches for damage. Refer to the Service Information for the proper hydraulic clutch repair procedure.
- Perform the 66RFE TRANSMISSION VERIFICATION TEST. Refer to **66RFE TRANSMISSION VERIFICATION TEST**.

No

- Remove the Transmission Oil Pump in accordance with the Service Information. Check the

main Regulator Valve for sticking in its bore, scoring and/or damage and clean and repair as necessary. If no problem is found, replace the Transmission Solenoid/TRS Assembly.

- Perform the 66RFE TRANSMISSION VERIFICATION TEST. Refer to **66RFE TRANSMISSION VERIFICATION TEST**.

7. **CHECK IF THE DTC P0732 IS CURRENT**
   1. With the scan tool, perform the 2nd Gear Clutch Test. Follow the scan tool instructions.
   2. Increase the throttle angle, TPS Degree to 30° for no more than a few seconds.

CAUTION: Do not overheat the transmission.

NOTE: If the 2C clutch is faulty the overrunning clutch will hold and the slip test will pass. The 2nd gear clutch test will not detect a faulty 2C clutch. However, it will detect a faulty UD clutch.

Did the clutch test pass, did the Input Speed remain at zero?

Yes

- Go To 8.

No

- Go To 10.

8. **CHECK FOR INTERMITTENT OPERATION**
   1. Check the Shifter adjustment in accordance with the Service Information.
   2. Intermittent gear ratio DTCs can set by problems in the Input and Output Speed Sensor circuits and/or Speed Sensor Ground circuit.
   3. Remove the Ignition Switch Feed fuse from the TIPM.

CAUTION: Removal of the Ignition Switch Feed fuse from the TIPM will prevent the vehicle from being started in gear.

WARNING: The Ignition Switch Feed fuse must be removed from the TIPM. Failure to do so can result in possible serious or fatal injury.

   4. Check the Speed Sensor wiring and connectors for good connection then perform a wiggle test using the Transmission Simulator (special tool #8333A, Simulator, Transmission).

Were any problems found?

Yes

- Repair as necessary.
- Perform the 66RFE TRANSMISSION VERIFICATION TEST. Refer to **66RFE TRANSMISSION VERIFICATION TEST**.

No

- Go To 9.

9. **CHECK FOR SLIPPAGE**
   1. With the scan tool, erase Transmission DTCs.
   2. Road test the vehicle.

   Does the Transmission fail to make a 1-2 upshift (stays in 1st gear and then shifts to direct gear) or is there obvious slippage noticed in 2nd gear?

   Yes

   - Go To 12.

   No

   - Go To 16.

10. **CHECK THE UD HYDRAULIC CLUTCH CIRCUIT**
    1. Remove Transmission Oil Pan and check for excessive debris.
    2. Remove the Valve Body and air check the UD hydraulic clutch circuit (in the case) in accordance with the Service Information.

    NOTE: The UD clutch passage contains a small bleed orifice and a small amount of air leakage is normal.

    Were any problems found, excessive debris and/or excessive air leakage in the UD clutch hydraulic circuit?

    Yes

    - Repair as necessary. Check the UD clutch piston seals, reaction shaft support seal rings and the dribbler assembly and the flatness of the pump valve body and pump housing faces. Check main regulator valve for sticking in the bore.

      NOTE: If the UD clutch has failed but no obvious cause is found (such as a cut piston seal, broken seal ring, low line pressure in Event Data or any other items listed above) replace the Transmission Solenoid/TRS Assembly in addition to any necessary internal repairs.

    - Perform the 66RFE TRANSMISSION VERIFICATION TEST. Refer to **66RFE**

TRANSMISSION VERIFICATION TEST.

No

- Go To 11.

11. **CHECK THE UD ACCUMULATOR PISTON**
    1. Check the UD bleed orifice, accumulator piston and accumulator piston seal in the main valve body.

    Were any problems found?

    Yes

    - Repair as necessary. Refer to the Service Information for proper repair procedures.
    - Perform the 66RFE TRANSMISSION VERIFICATION TEST. Refer to **66RFE TRANSMISSION VERIFICATION TEST**.

    No

    - Replace Transmission Solenoid/TRS Assembly in accordance with the Service Information.
    - Perform the 66RFE TRANSMISSION VERIFICATION TEST. Refer to **66RFE TRANSMISSION VERIFICATION TEST**.

12. **CHECK FOR EXCESSIVE DEBRIS**
    1. Remove the Transmission Oil Pan and check for excessive debris.
    2. If grey sludge is present, check for a improperly assembled 2C clutch with the thick reaction plate not against the case.
    3. Remove the valve body and air check the 2C hydraulic clutch circuit (in the 2C/4C clutch retainer) in accordance with the Service Information.

    NOTE: The 2C clutch passage contains a small bleed orifice and a small amount of air leakage is normal.

    Were any problems found, excessive debris, improperly assembled 2C clutch and/or excessive air leakage in the 2C hydraulic clutch circuit?

    Yes

    - Repair as necessary. Refer to the Service Information for proper repair procedures. Note: Check the 2C piston seals and bleed orifice.

    NOTE: If the 2C clutch has failed but no obvious cause is found (such as a cut piston seal, cut tower seal, stuck regulator valve, etc.) replace the Transmission Solenoid/TRS Assembly in addition to any necessary internal repairs.

- Perform the 66RFE TRANSMISSION VERIFICATION TEST. Refer to **66RFE TRANSMISSION VERIFICATION TEST**.

No

- Go To 13.

13. **CHECK THE 2C ACCUMULATOR**
    1. Check the 2C Accumulator piston for cracks or a cut seal.
    2. Check for a cut or missing No. 7 or No. 5 check ball.
    3. Check the Solenoid Switch Valve and Plugs for sticking in its bore or excessive wear.

    Were any problems found

    Yes

    - Repair as necessary. Refer to the Service Information for proper repair procedures.
    - Perform the 66RFE TRANSMISSION VERIFICATION TEST. Refer to **66RFE TRANSMISSION VERIFICATION TEST**.

    No

    - Go To 14.

14. **CHECK FOR FAILED REVERSE GEARSET SPLINES**

    Working through the windows in the bottom of the case, check for a failed Reverse Sun or Annulus spline as follows:

    1. Hold the Transmission Output Shaft by holding the Transmission Manual Lever in the park position.
    2. Apply the 4C clutch using 30-40 psi shop air at the apply port in the center bulkhead.
    3. Attempt to rotate the input annulus gear and drive shell (the drum that encloses the two rearmost gearsets).

    NOTE: Due to the overrunning clutch, the gear and drive shell normally rotates in one direction only.

    Can the drive shell be rotated?

    Yes

    - Repair internal transmission as necessary in accordance with the Service Information. Check the reverse annulus gear spline to the input carrier, and the reverse sun gear spline to the reaction carrier hub.
    - Perform the 66RFE TRANSMISSION VERIFICATION TEST. Refer to **66RFE**

TRANSMISSION VERIFICATION TEST.

No

- Go To 15.

15. **CHECK THE DRIVE SHELL WELD**
    1. Release the output shaft and the 4C clutch.
    2. Apply the L/R Clutch only using 30-40 psi of shop air.
    3. Attempt to rotate the drive shell as in the previous step.

    Can the drive shell be rotated?

    Yes

    - Repair Transmission as necessary in accordance with the Service Information. Check the drive shell weld to input annulus gear.
    - Perform the 66RFE TRANSMISSION VERIFICATION TEST. Refer to **66RFE TRANSMISSION VERIFICATION TEST**.

    No

    - Replace the Transmission Solenoid/TRS Assembly in accordance with the Service Information.
    - Perform the 66RFE TRANSMISSION VERIFICATION TEST. Refer to **66RFE TRANSMISSION VERIFICATION TEST**.

16. **CHECK IF DTC RESETS**

    Did DTC P0732 reset during the road test?

    Yes

    - Go To 17.

    No

    - Go To 18.

17. **LIST OF POSSIBLE CAUSES**
    1. If any other DTCs set during the road test, refer to the appropriate symptom in the appropriate Transmission Electrical Diagnostic Information.
    2. If no other DTCs set during the road test, below is a list of possible causes, but not strictly limited to those:
        - Check for excessive debris in the Transmission Oil pan, plugged, cracked, or misinstalled Primary Transmission Oil Filter and/or seal.
        - Check for cut and/or missing No. 7 and No. 5 check balls in the main valve body.

- Check the 2C and UD accumulator pistons and seals, UD bleed orifice and the Solenoid Switch Valve and Plugs in the main valve body.
- Check the UD clutch piston seals, reaction shaft support seal rings and dribbler assembly.
- Check the 2C clutch piston seals and bleed orifice.
- Check the main regulator valve for sticking in its bore and the flatness of the pump valve body and pump housing faces.
- Check for a improperly assembled 2C clutch with the thick reaction plate not against the case.

Repair

- Repair as necessary. Refer to the Service Information for proper repair procedures.

NOTE: If the UD or 2C clutch has failed but no obvious cause is found (such as a cut piston seal, broken seal ring, stuck regulator valve or any other items listed above) replace the Transmission Solenoid/TRS Assembly in addition to any necessary internal repairs.

- Perform the 66RFE TRANSMISSION VERIFICATION TEST. Refer to **66RFE TRANSMISSION VERIFICATION TEST**.

18. **INTERMITTENT DTC**
    1. The conditions to set this DTC are not currently present.
    2. With the scan tool, check the Event Data to help identify the conditions in which the DTC was set.
       - If the Event Data shows DTC P0732 was set in Park, Reverse or Neutral, replace the Powertrain Control Module.
       - If the Event Data shows DTC P0732 set with input RPM = zero, check the input speed sensor and related wiring.
       - If the Event Data shows DTC P0732 set with line pressure significantly below desired line pressure, check for the cause of low line pressure (i.e., oil level, misinstalled or damaged primary filter or filter seal, sticking main regulator valve in pump, etc.).
       - If the Event Data shows DTC P0732 set with the UD or 2C pressure switch open (but line pressure matches Desired Line Pressure), air check the UD and 2C hydraulic clutch circuits for leakage in accordance with the Service Information. If the UD and 2C hydraulic clutch circuits are OK, replace the Transmission Solenoid/TRS assembly.
    3. Check the gearshift linkage adjustment.
    4. Intermittent Gear Ratio DTCs can set by problems in the Input and Output Speed Sensor circuits and/or Speed Sensor Ground circuit.
    5. Remove the Ignition Switch Feed fuse from the TIPM.

CAUTION: Removal of the Ignition Switch Feed fuse from the TIPM will prevent the vehicle from being started in gear.

WARNING: The Ignition Switch Feed fuse must be removed from the TIPM. Failure to do so can result in possible serious or fatal injury.

6. Install Transmission Simulator (special tool #8333A, Simulator, Transmission).
7. Wiggle wiring and connectors while checking for intermittent operation with the Transmission Simulator.
8. Gear ratio DTCs can also set under extreme temperature conditions.
9. Verify the problem is only experienced under extreme hot or cold conditions.

Were there any problems found.

Yes

- Repair as necessary.
- Perform the 66RFE TRANSMISSION VERIFICATION TEST. Refer to **66RFE TRANSMISSION VERIFICATION TEST**.

No

- Test Complete.

P0733-GEAR RATIO ERROR IN 3RD

For a complete wiring diagram, **refer to appropriate SYSTEM WIRING DIAGRAMS article** .

THEORY OF OPERATION

The transmission system uses two speed sensors, one to measure input RPM and one to measure output RPM. These inputs are essential for proper transmission operation. Therefore the integrity of this data is verified through the following checks:

NOTE: Various Gear Ratio Error DTCs will set only if the transmission slips after first achieving the correct ratio. Therefore, a transmission with no drive (or reverse) may not set any Gear Ratio Error DTC because it never achieves a correct gear ratio.

1) When in gear, if the gear ratio does not compare to a known gear ratio the corresponding in-gear DTCs P0729 and P0731-36 is set.

2) An excessive change in input or output speeds indicating an intermittent signal which results in DTCs P0716 and/or P0721 setting.

3) If the common speed sensor ground circuit is lost, both sensor inputs will read the signal from the input speed sensor at idle in neutral. Since the input speed sensor reads 60 teeth from the input clutch hub and the output speed sensor reads 30 teeth from the park gear, the result is an apparent speed ratio of 1:2 and may cause DTC

P1794 to set when at a stop.

WHEN MONITORED:

Continuously with the ignition on, engine running, and after the transmission achieves the correct gear ratio.

SET CONDITION:

If the ratio of the Input RPM to the Output RPM does not match the current gear ratio then DTC P0733 will set. This DTC can take up to five minutes of problem identification before illuminating the MIL

POSSIBLE CAUSES

Possible Causes
RELATED DTCS PRESENT
INPUT OR OUTPUT SPEED SENSOR(S) OR WIRING
LOW FLUID LEVEL
CRACKED OR MIS-INSTALLED PRIMARY OIL FILTER OR SEAL
WORN SOLENOID SWITCH VALVE OR PLUGS
STUCK OR STICKING MAIN REGULATOR VALVE
BURNED UD OR 4C CLUTCH
CUT 4C OR UD PISTON SEAL
BROKEN 4C PISTON CASTING
BROKEN OR MISSING 4C BLEED ORIFICE
BROKEN OR MISSING UD BLEED ORIFICE
CUT 4C OR UD ACCUMULATOR PISTON SEAL
CRACKED 4C OR UD ACCUMULATOR PISTON
TRANSMISSION SOLENOID/TRS ASSEMBLY
BROKEN REACTION SUN GEAR WELD
BROKEN REACTION ANNULUS GEAR WELD
FAILED REVERSE SUN GEAR SPLINE
FAILED REVERSE ANNULUS GEAR SPLINE
MISSING TEETH ON INPUT CLUTCH HUB TONE WHEEL

Always perform the Pre-Diagnostic Troubleshooting procedure before proceeding. Refer to 66RFE PRE-DIAGNOSTIC TROUBLESHOOTING PROCEDURE.

DIAGNOSTIC TEST

1. **DETERMINING IF RELATED DTCS ARE PRESENT**
    1. With the scan tool, check for other transmission DTCs.

       Are any Transmission solenoid, line pressure, speed sensor or loss of prime DTCs present?

Yes

- Perform the test for P0944-LOSS OF PRIME first if it is present. Refer to **P0944-LOSS OF HYDRAULIC PUMP PRIME**.

No

- Go To 2.

2. **CHECK EVENT DATA**
   1. With the scan tool, read and record the Event Data.

      NOTE: Make sure to record all Event Data stored in the scan tool for future reference in this test procedure.

      Does the Event Data display information for DTC P0733?

      Yes

      - Go To 3.

      No

      - Go To 6.

3. **CHECK RPM IN THE EVENT DATA**

   In the Event Data recorded earlier, does the Input RPM read zero?

   Yes

   - Check the input speed sensor and wiring. Perform the test for P0716 and diagnose as if that DTC is current. Refer to **DIAGNOSIS AND TESTING**.

   No

   - Go To 4.

4. **CHECK LINE PRESSURE READING**

   In the Event Data recorded earlier, is the line pressure reading more than 10 psi below the desired line pressure?

   Yes

   - Go To 5.

   No

- Go To 6.

5. **PLUGGED TRANSMISSION OIL FILTER**
    1. Turn the ignition off to the lock position.
    2. Remove and inspect the Transmission Oil Pan for excessive debris in accordance with the Service Information.
    3. Remove and inspect the Primary Oil Filter in accordance with the Service Information.

    NOTE: Make sure the Primary Transmission Oil Filter and/or seal is not cracked or split.

    Does the Oil Pan contain excessive debris and/or is the Primary Oil Filter cracked or plugged?

    Yes

    - Repair the plugged, cracked, or split Primary Transmission Oil Filter and/or seal. If the Primary Transmission Oil Filter is plugged, refer to the Service Information for the proper hydraulic clutch repair procedure.
    - Perform the 66RFE TRANSMISSION VERIFICATION TEST. Refer to **66RFE TRANSMISSION VERIFICATION TEST**.

    No

    - Remove the Transmission Oil Pump in accordance with the Service Information. Check the main Regulator Valve for sticking in its bore, scoring and/or damage and clean and repair as necessary. If no problem is found, replace the Transmission Solenoid/TRS Assembly.
    - Perform the 66RFE TRANSMISSION VERIFICATION TEST. Refer to **66RFE TRANSMISSION VERIFICATION TEST**.

6. **CHECK TO SEE IF DTC P0733 IS CURRENT**
    1. With the scan tool, perform the 3rd Gear Clutch Test. Follow the scan tool instructions.
    2. Increase the throttle angle, TPS Degree to 30° for no more than a few seconds.

    CAUTION: Do not overheat the transmission.

    NOTE: If the 4C clutch is faulty, the overrunning clutch will hold and the slip test will pass. The 3rd Gear Clutch Test will not detect a faulty 4C clutch. However, it will detect a faulty UD clutch.

    Did the clutch test pass, did the Input Speed remain at zero?

    Yes

    - Go To 7.

No

- Go To 9.

7. **CHECK FOR INTERMITTENT OPERATION**
   1. Check the Shifter adjustment in accordance with the Service Information.
   2. Intermittent gear ratio DTCs can set by problems in the Input and Output Speed Sensor circuits and/or Speed Sensor Ground circuit.
   3. Check the Speed Sensor wiring and connectors for good connection then perform a wiggle test using the Transmission Simulator (special tool #8333A, Simulator, Transmission).

   Were there any problems found?

   Yes

   - Repair as necessary.
   - Perform the 66RFE TRANSMISSION VERIFICATION TEST. Refer to **66RFE TRANSMISSION VERIFICATION TEST**.

   No

   - Go To 8.

8. **CHECK FOR SLIPPAGE**
   1. With the scan tool, erase Transmission DTCs.
   2. Road test the vehicle.
   3. Check the Transmission is Reverse and all forward gears.

   Is there an obvious slippage noted in any gear?

   Yes

   - Go To 11.

   No

   - Go To 14.

9. **UD CLUTCH HYDRAULIC CIRCUIT**
   1. Remove Transmission Oil Pan and check for excessive debris.
   2. Remove the Valve Body and air check the UD clutch hydraulic circuit (in the case) in accordance with the Service Information.

   NOTE: The UD clutch passage contains a small bleed orifice and a small amount of air leakage is normal.

   Were there any problems found, excessive debris and/or excessive air leakage in the UD clutch

hydraulic circuit?

Yes

- Repair as necessary. Check the UD clutch piston seals and the dribbler assembly, reaction shaft support seal rings and the flatness of the pump valve body and pump housing faces. Check main regulator valve for sticking in the bore.

NOTE: **If the UD clutch has failed but no obvious cause is found (such as a cut piston seal, broken seal ring, stuck regulator valve, etc.) replace the Transmission Solenoid/TRS Assembly in addition to any necessary internal repairs.**

- Perform the 66RFE TRANSMISSION VERIFICATION TEST. Refer to **66RFE TRANSMISSION VERIFICATION TEST**.

No

- Go To 10.

10. **UD ACCUMULATOR PISTON**
    1. Check the UD bleed orifice, accumulator piston and accumulator piston seal in the main valve body.

    Were any problems found?

    Yes

    - Repair as necessary. Refer to the Service Information for proper repair procedures.
    - Perform the 66RFE TRANSMISSION VERIFICATION TEST. Refer to **66RFE TRANSMISSION VERIFICATION TEST**.

    No

    - Go To 11.

11. **EXCESSIVE DEBRIS**
    1. Remove the Transmission Oil Pan and check for excessive debris.
    2. Remove the valve body and air check the 4C clutch hydraulic circuit in accordance with the Service Information.

    NOTE: **The 4C clutch passage contains a small bleed orifice and a small amount of air leakage is normal.**

    Were any problems found, excessive debris, improperly assembled 4C clutch and/or excessive air leakage in the 4C clutch hydraulic circuit?

Yes

- Repair as necessary. Refer to the Service Information for proper repair procedures. Note: Check the 4C piston seals and bleed orifice.

NOTE: **If the 4C clutch has failed but no obvious cause is found (such as a cut piston seal, broken seal ring, low line pressure in Event Data, etc.) replace the Transmission Solenoid/TRS Assembly in addition to any necessary internal repairs.**

- Perform the 66RFE TRANSMISSION VERIFICATION TEST. Refer to **66RFE TRANSMISSION VERIFICATION TEST**.

No

- Go To 12.

12. **4C ACCUMULATOR**
    1. Check the 4C Accumulator piston for cracks or a cut seal.
    2. Check for a cut or missing No. 5 check ball.
    3. Check the Solenoid Switch Valve and Plugs for sticking in its bore or excessive wear.

    Were any problems found?

    Yes

    - Repair as necessary. Refer to the Service Information for proper repair procedures.
    - Perform the 66RFE TRANSMISSION VERIFICATION TEST. Refer to **66RFE TRANSMISSION VERIFICATION TEST**.

    No

    - Go To 13.

13. **CHECK FOR BROKEN REVERSE SUN GEAR WELD**

    Working through the windows in the bottom of the case, check the failed Reverse or reaction gear set connections follows:

    1. Hold the Transmission Output Shaft by holding the Transmission Manual Lever in the park position.
    2. Apply the 4C clutch using 30-40 psi shop air at the apply port in the center bulkhead.
    3. Attempt to rotate the input annulus gear and drive shell (the drum that encloses the to rearmost gearsets). Note that (due to the overrunning clutch) the gear and drive shell normally rotates in one direction only.

    Can the drive shell be rotated?

Yes

- Repair Transmission as necessary in accordance with the Service Information. Check the reverse annulus gear spline to the input carrier the reverse sun gear spline to the reaction carrier hub, and the reaction sun gear weld to the 4C clutch hub.
- Perform the 66RFE TRANSMISSION VERIFICATION TEST. Refer to **66RFE TRANSMISSION VERIFICATION TEST**.

No

- Go To 17.

14. **CHECK IF DTC RESET**

Did DTC P0733 reset during the road test?

Yes

- Go To 15.

No

- Go To 16.

15. **LIST OF POSSIBLE CAUSES**
    1. If any other DTCs set during the road test, refer to the appropriate symptom in the appropriate Transmission Electrical Diagnostic Information.
    2. If no other DTCs set during the road test, below is a list of possible causes but not strictly limited to those:
    3. Check for excessive debris in the Transmission Oil pan, plugged, cracked or split Primary Transmission Oil Filter and/or seal.
    4. Check for cuts or missing No. 5 check ball in the main valve body.
    5. Check the 4C and UD accumulator pistons and seals, UD bleed orifice and the Solenoid Switch Valve and Plugs in the main valve body.
    6. Check the UD clutch piston seals, reaction shaft support seal rings and the flatness of the pump valve body and pump housing faces.
    7. Check the 4C clutch piston seals and bleed orifice.
    8. Check the UD clutch piston seals, reaction shaft support seal rings, dribbler assemblies and the flatness of the pump valve body and pump housing faces.

    Repair

    - Repair as necessary. Refer to the Service Information for proper repair procedures.

    NOTE: **If the UD or 4C clutch has failed but no obvious cause is found (such as a cut piston seal, broken seal ring, stuck regulator**

valve or other items listed above) replace the Transmission Solenoid/TRS Assembly in addition to any necessary internal repairs.

- Perform the 66RFE TRANSMISSION VERIFICATION TEST. Refer to **66RFE TRANSMISSION VERIFICATION TEST**.

16. **INTERMITTENT DTC**
    1. The conditions necessary to set this DTC are not present at this time.
    2. Use the Event Data to help identify the conditions and/or possible causes that may have caused the DTC to set.
    3. Check Service Information Tune-ups or Technical Service Bulletins that may apply.

    Where any problems found?

    Yes

    - Repair as necessary.
    - Perform the 66RFE TRANSMISSION VERIFICATION TEST. Refer to **66RFE TRANSMISSION VERIFICATION TEST**.

    No

    - Test Complete.

17. **INTERMITTENT DTC**
    1. The conditions to set this DTC are not currently present.
    2. With the scan tool, check the Event Data to help identify the conditions in which the DTC set.
       - If the Event Data shows DTC P0733 was set in Park, Reverse or Neutral, replace the Powertrain Control Module.
       - If the Event Data shows DTC P0733 set with input RPM = zero, check the input speed sensor and related wiring.
       - If the Event Data shows DTC P0733 set with line pressure significantly below desired line pressure, check for the cause of low line pressure (i.e. oil level, misinstalled or damaged primary filter or filter seal, sticking main regulator valve in pump, etc.).
       - If the Event Data shows DTC P0733 set with the UD or 4C pressure switch open (but line pressure matches Desired Line Pressure), air check the UD and 4C hydraulic clutch circuits for leakage in accordance with the Service Information. If the UD and 4C hydraulic clutch circuits are OK, replace the Transmission Solenoid/TRS assembly.
    3. Check the gearshift linkage adjustment.
    4. Intermittent Gear Ratio DTCs can be set by problems in the Input and Output Speed Sensor circuits and/or Speed Sensor Ground circuit.
    5. Remove the Ignition Switch Feed fuse from the TIPM.

CAUTION: Removal of the Ignition Switch Feed fuse from the TIPM will

prevent the vehicle from being started in gear.

WARNING: The Ignition Switch Feed fuse must be removed from the TIPM. Failure to do so can result in possible serious or fatal injury.

6. Install Transmission Simulator (special tool #8333A, Simulator, Transmission).
7. Wiggle wiring and connectors while checking for intermittent operation with the Transmission Simulator.
8. Gear ratio DTCs can also be set under extreme temperature conditions.
9. Verify if the problem is only experienced under extreme hot or cold conditions.

Were any problems found.

Yes

- Repair as necessary.
- Perform the 66RFE TRANSMISSION VERIFICATION TEST. Refer to **66RFE TRANSMISSION VERIFICATION TEST**.

No

- Test Complete.

P0734-GEAR RATIO ERROR IN 4TH

For a complete wiring diagram, **refer to appropriate SYSTEM WIRING DIAGRAMS article**

THEORY OF OPERATION

The transmission system uses two speed sensors, one to measure input RPM and one to measure output RPM. These inputs are essential for proper transmission operation. Therefore the integrity of this data is verified through the following checks:

NOTE: Various Gear Ratio Error DTCs will set only if the transmission slips after first achieving the correct ratio. Therefore a transmission with no drive (or reverse) may not set any Gear Ratio Error DTC because it never achieves a correct gear ratio.

1) Once in a particular gear, if the gear ratio varies from the correct gear ratio the corresponding in-gear DTCs P0729 and P0731-36 is set.

2) An excessive change in input or output speeds indicating an intermittent signal which result in DTCs P0716 and/or P0721 setting.

3) If the common speed sensor ground circuit is lost, both sensor inputs will read the pulses from the input

speed sensor when at a stop in neutral. Since the input speed sensor reads 60 teeth from the input clutch hub and the output speed sensor reads 30 teeth from the park gear, the result is an apparent speed ratio of 1:2 and may cause DTC P1794 to set.

WHEN MONITORED:

Continuously with the ignition on, engine running and after the transmission achieves the correct gear ratio.

SET CONDITION:

If the ratio of the Input RPM to the Output RPM does not match the current gear ratio then DTC P0734 will set. This DTC can take up to five minutes of problem identification before illuminating the MIL

POSSIBLE CAUSES

Possible Causes
RELATED DTCS PRESENT
INPUT OR OUTPUT SPEED SENSOR(S) OR WIRING
LOW FLUID LEVEL
CRACKED OR MIS-INSTALLED PRIMARY OIL FILTER OR SEAL
BENT OR BROKEN ACCUMULATOR COVER ON MAIN VALVE BODY
WORN SOLENOID SWITCH VALVE OR PLUGS
STUCK OR STICKING MAIN REGULATOR VALVE
BURNED UD OR OD CLUTCH
CUT OD OR UD PISTON SEAL
BROKEN OR MISSING UD OR OD BLEED ORIFICE IN MAIN VALVE BODY
BROKEN OR MISSING BLEED ORIFICE IN UD OR OD CLUTCH PISTON
CUT OD OR UD ACCUMULATOR PISTON SEAL
CRACKED OD OR UD ACCUMULATOR PISTON
CUT OR MISSING #6 CHECK BALL
TRANSMISSION SOLENOID/TRS ASSEMBLY
FAILED OD SHAFT
FAILED SPLINE ON REVERSE CARRIER HUB
BROKEN REACTION SHAFT SUPPORT SEAL RING
POOR MACHINING ON PUMP VALVE BODY FACE

Always perform the Pre-Diagnostic Troubleshooting procedure before proceeding. Refer to 66RFE PRE-DIAGNOSTIC TROUBLESHOOTING PROCEDURE.

DIAGNOSTIC TEST

1. **CHECK IF RELATED DTCS ARE PRESENT**
    1. With the scan tool, check for other transmission DTCs

Are any Transmission; solenoid, line pressure, speed sensor and/or loss of prime DTCs present?

Yes

- Perform the test for P0944-LOSS OF PRIME first if it is present. Refer to **P0944-LOSS OF HYDRAULIC PUMP PRIME**.

No

- Go To 2.

2. **CHECK Event Data**
   1. With the scan tool, read and record the Event Data.

      NOTE: Make sure to record all Event Data stored in the scan tool for future reference in this test procedure.

      Does the Event Data display information for DTC P0734?

      Yes

      - Go To 4.

      No

      - Go To 3.

3. **CHECK THE TARGET GEAR IN Event Data**
   1. In the Event Data, identify the DTC that was recorded earlier.

      Does the Event Data display information for DTC P1790 with target gear = 4th or with both OD and UD clutches applying?

      Yes

      - Go To 4.

      No

      - Go To 7.

4. **CHECK INPUT RPM IN Event Data**
   1. Refer to the Event Data recorded earlier.

      Does the Input RPM read zero?

      Yes

- Check the input speed sensor and wiring. Refer to test P0716 and diagnose as if the DTC is current. Refer to **DIAGNOSIS AND TESTING**.

No

- Go To 5.

5. **CHECK LINE PRESSURE READING**
   1. Refer to the Event Data recorded earlier.

      Is the line pressure reading more than 10 psi below the desired line pressure?

      Yes

      - Go To 6.

      No

      - Go To 7.

6. **CHECK TRANSMISSION OIL FILTER**
   1. Turn the ignition off to the lock position.
   2. Remove and inspect the Transmission Oil Pan for excessive debris in accordance with the Service Information.
   3. Remove and inspect the Primary Oil Filter in accordance with the Service Information.

      NOTE: Make sure the Primary Transmission Oil Filter and seal are properly installed and are not cracked or split.

      Does the Oil Pan contain excessive debris and/or is the Primary Oil Filter cracked, plugged or mis-installed?

      Yes

      - Repair the plugged, cracked or split Primary Transmission Oil Filter and/or seal. If excessive clutch debris is present, check the clutches for damage. Refer to the Service Information for the proper hydraulic clutch repair procedure.
      - Perform the 66RFE TRANSMISSION VERIFICATION TEST. Refer to **66RFE TRANSMISSION VERIFICATION TEST**.

      No

      - Remove the Transmission Oil Pump in accordance with the Service Information. Check the main Regulator Valve for sticking in its bore, scoring and/or damage and clean and repair as necessary. If no problem is found, replace the Transmission Solenoid/TRS Assembly.
      - Perform the 66RFE TRANSMISSION VERIFICATION TEST. Refer to **66RFE TRANSMISSION VERIFICATION TEST**.

7. **CHECK FOR CLUTCH SLIPPAGE**
   1. With the scan tool, perform the Direct Gear Clutch Test. Follow the scan tool instructions.
   2. Increase the throttle angle, TPS Degree to 30° for no more than a few seconds.

CAUTION: Do not overheat the transmission.

NOTE: If the OD clutch is faulty, the overrunning clutch will hold and the slip test will pass. The Direct gear clutch test will not detect a faulty OD clutch. However, it will detect a faulty UD clutch.

Did the clutch test pass, did the Input Speed remain at zero?

Yes

- Go To 8.

No

- Go To 10.

8. **CHECK FOR INTERMITTENT OPERATION**
   1. Check the Shifter adjustment in accordance with the Service Information.
   2. Intermittent gear ratio DTCs can be set by problems in the Input and Output Speed Sensor circuits and/or Speed Sensor Ground circuit.
   3. Remove the Ignition Switch Feed fuse from the TIPM.

CAUTION: Removal of the Ignition Switch Feed fuse from the TIPM will prevent the vehicle from being started in gear.

WARNING: The Ignition Switch Feed fuse must be removed from the TIPM. Failure to do so can result in possible serious or fatal injury.

   4. Install the Transmission Simulator (special tool #8333A, Simulator, Transmission).
   5. Check the Speed Sensor wiring and connectors for good connection then perform a wiggle test using the Transmission Simulator (special tool #8333A, Simulator, Transmission).

Were any problems found?

Yes

- Repair as necessary.
- Perform the 66RFE TRANSMISSION VERIFICATION TEST. Refer to **66RFE**

TRANSMISSION VERIFICATION TEST.

No

- Go To 9.

9. **ROAD TEST THE VEHICLE AND CHECK FOR SLIPPAGE**
    1. With the scan tool, erase Transmission DTCs.
    2. Road test the vehicle. Check operation in all forward gears and Reverse.
    3. If slippage is detected, check whether the line pressure is more than 10 psi below the desired line pressure reading on the scan tool.
    4. Check and record any transmission DTCs.
    5. Disconnect the Transmission Solenoid/TRS Assembly harness connector to induce Limp-in.
    6. Again test drive the vehicle and check the transmission operation in Drive and Reverse while in Limp-in.
    7. Note whether Drive Limp-in provides 1st gear or 4th (direct) gear.
    8. Reconnect all disconnected connectors and erase Transmission DTCs.

    Perform the appropriate procedure that best describes your road test results:

    No obvious slippage noted in any gear

    - Go To 15.

    Obvious slippage noted in one or more gears and line pressure (actual) is often more than 10 psi below the Desired Line Pressure reading on the scan tool

    - Go To 6.

    Slippage noted in 4th gear and Drive Limp-in provides 1st gear

    - Go To 12.

    Slippage noted in Reverse gear and Drive Limp-in provides 1st gear

    - Replace the Transmission Solenoid/TRS Assembly in accordance with the Service Information.
    - Perform the 66RFE TRANSMISSION VERIFICATION TEST. Refer to **66RFE TRANSMISSION VERIFICATION TEST**.

    Slippage noted in 4th gear while Drive Limp-in allows 4th gear WITHOUT slippage

    - Replace the Transmission Solenoid/TRS Assembly in accordance with the Service Information.
    - Perform the 66RFE TRANSMISSION VERIFICATION TEST. Refer to **66RFE**

TRANSMISSION VERIFICATION TEST.

All other possible conditions

- Go To 12.

10. **CHECK THE UD HYDRAULIC CLUTCH CIRCUIT**
    1. Remove Transmission Oil Pan and check for excessive debris.
    2. Remove the Valve Body and air check the UD hydraulic clutch circuit (in the case) in accordance with the Service Information.

    NOTE: The UD clutch passage contains a small bleed orifice and a small amount of air leakage is normal.

    Were any problems found, excessive debris and/or excessive air leakage in the UD hydraulic clutch circuit?

    Yes

    - Repair as necessary. Check the UD clutch piston seals, reaction shaft support seal rings and dribbler assemblies, and the flatness of the pump valve body and pump housing faces. Check main regulator valve for sticking in the bore.

      NOTE: If the UD clutch has failed but no obvious cause is found (such as a cut piston seal, broken seal ring, low line pressure in DTC Event Data, etc.) replace the Transmission Solenoid/TRS Assembly in addition to any necessary internal repairs.

    - Perform the 66RFE TRANSMISSION VERIFICATION TEST. Refer to **66RFE TRANSMISSION VERIFICATION TEST**.

    No

    - Go To 11.

11. **CHECK UD ACCUMULATOR PISTON**
    1. Check the UD bleed orifice, accumulator piston and accumulator piston seal in the main valve body.

    Were any problems found?

    Yes

    - Repair as necessary. Refer to the Service Information for proper repair procedures.

    No

- Replace Transmission Solenoid/TRS Assembly in accordance with the Service Information.
- Perform the 66RFE TRANSMISSION VERIFICATION TEST. Refer to **66RFE TRANSMISSION VERIFICATION TEST**.

12. **CHECK FOR EXCESSIVE DEBRIS**
    1. Remove the Transmission Oil Pan and check for excessive debris.
    2. Remove the valve body and check if the accumulator cover is intact.
    3. Air check the OD hydraulic clutch circuit (in the case) in accordance with the Service Information.

    NOTE: The OD clutch passage contains a small bleed orifice which connects to the Reverse clutch hydraulic circuit and a small amount of air leakage into the Reverse clutch passage is normal.

    Were any problems found, excessive debris and/or excessive air leakage in the OD hydraulic clutch circuit?

    Yes

    - Repair as necessary. Refer to the Service Information for proper repair procedures. Note: Check the bleed orifice in the OD/Reverse clutch piston.

      NOTE: If the OD clutch has failed but no obvious cause is found (such as a cut piston seal, broken seal ring, low line pressure in DTC Event Data, etc.) replace the Transmission Solenoid/TRS Assembly in addition to any necessary internal repairs.

    - Perform the 66RFE TRANSMISSION VERIFICATION TEST. Refer to **66RFE TRANSMISSION VERIFICATION TEST**.

    No

    - Go To 13.

13. **CHECK THE OD ACCUMULATOR**
    1. Check the OD Accumulator piston for cracks or a cut seal.
    2. Check for a cut or missing #6 check ball.
    3. Check the Solenoid Switch Valve and Plugs for sticking in its bore or excessive wear.

    Were any problems found?

    Yes

    - Repair as necessary. Refer to the Service Information for proper repair procedures.
    - Perform the 66RFE TRANSMISSION VERIFICATION TEST. Refer to **66RFE TRANSMISSION VERIFICATION TEST**.

No

- Go To 14.

14. **CHECK FOR FAILED OD SHAFT/SPLINE**
    1. Remove the Transmission in accordance with the Service Information and inspect the OD shaft and its spline to the reverse carrier hub.

       Were any problems found?

       Yes

       - Repair as necessary.

       No

       - Disassemble and inspect the input clutch assembly. Check the OD and Reverse clutch seals, discs and bleed orifice (in the OD/Reverse clutch piston). Check the OD hub and shaft, repair as necessary. Refer to the Service Information for proper repair procedures.

         NOTE: If the OD clutch has failed but no obvious cause is found (such as a cut piston seal, broken seal ring, stuck regulator valve, etc.), replace the Transmission Solenoid/TRS Assembly in addition to any other necessary repairs.

       - Perform the 66RFE TRANSMISSION VERIFICATION TEST. Refer to **66RFE TRANSMISSION VERIFICATION TEST**.

15. **CHECK IF DTC RESETS**

    Did DTC P0734 reset during the road test?

    Yes

    - Go To 16.

    No

    - Go To 17.

16. **LIST OF POSSIBLE CAUSES**
    1. If other DTCs set during the road test, refer to the appropriate symptom in the appropriate Transmission Electrical Diagnostic Information.
    2. If no other DTCs set during the road test, below is a list of possible causes but not strictly limited to those.
    3. Check for:
       - Excessive debris in the Transmission Oil pan, plugged, cracked or mis-installed Primary Transmission Oil Filter and/or seal.

- Cut or missing #6 check ball in the main valve body.
- OD and UD accumulator pistons and seals and bleed orifices and the Solenoid Switch Valve and Plugs in the main valve body.
- OD and UD clutch piston seals, reaction shaft support seal rings, dribbler assemblies and the flatness of the pump valve body and pump housing faces.
- Main regulator valve for sticking in its bore.

Repair

- Repair as necessary. Refer to the Service Information for proper repair procedures.

NOTE: **If the OD or UD clutch has failed but no obvious cause is found (such as a cut piston seal, broken seal ring, stuck regulator valve or other items listed above) replace the Transmission Solenoid/TRS Assembly in addition to any necessary internal repairs.**

- Perform the 66RFE TRANSMISSION VERIFICATION TEST. Refer to **66RFE TRANSMISSION VERIFICATION TEST**.

17. **CHECK FOR INTERMITTENT OPERATION**
    1. The conditions to set this DTC are not currently present.
    2. With the scan tool, check the Event Data to help identify the conditions in which the DTC set.
       - If the DTC Event Data shows DTC P0734 was set in the Park, Reverse or Neutral, replace the Powertrain Control Module.
       - If the DTC Event Data shows DTC P0734 set with input RPM = zero, check the input speed sensor and related wiring.
       - If the DTC Event Data shows DTC P0734 set with line pressure significantly below desired line pressure, check for the cause of low line pressure (i.e. oil level, misinstalled or damaged primary filter or filter seal, sticking main regulator valve in pump, etc.).
       - If the DTC Event Data shows DTC P0734 set with the OD or UD pressure switch open (but line pressure matches Desired Line Pressure), air check the OD and UD hydraulic clutch circuits for leakage in accordance with the Service Information. If the OD and UD hydraulic clutch circuits are OK, replace the Transmission Solenoid/TRS assembly.
    3. Check the gearshift linkage adjustment.
    4. Intermittent Gear Ratio DTCs can set by problems in the Input and Output Speed Sensor circuits and/or Speed Sensor Ground circuit.
    5. Remove the Ignition Switch Feed fuse from the TIPM.

CAUTION: **Removal of the Ignition Switch Feed fuse from the TIPM will prevent the vehicle from being started in gear.**

WARNING: **The Ignition Switch Feed fuse must be removed from the TIPM.**

Failure to do so can result in possible serious or fatal injury.

6. Install the Transmission Simulator (special tool #8333A, Simulator, Transmission).
7. Wiggle wiring and connectors while checking for intermittent operation with the Transmission Simulator.
8. Gear ratio DTCs can also set under extreme temperature conditions.
9. Verify the problem is only experienced under extreme hot or cold conditions.

   Were there any problems found.

   Yes

   - Repair as necessary.
   - Perform the 66RFE TRANSMISSION VERIFICATION TEST. Refer to **66RFE TRANSMISSION VERIFICATION TEST**.

   No

   - Test Complete.

P0735-GEAR RATIO ERROR IN 5TH

For a complete wiring diagram, **refer to appropriate SYSTEM WIRING DIAGRAMS article**

THEORY OF OPERATION

The transmission system uses two speed sensors, one to measure input RPM and one to measure output RPM. These inputs are essential for proper transmission operation. Therefore the integrity of this data is verified through the following checks:

NOTE: **Various Gear Ratio Error DTCs will set only if the transmission slips after first achieving the correct ratio. Therefore a transmission with no drive (or reverse) may not set any Gear Ratio Error DTC because it never achieves a correct gear ratio.**

1) Once in a particular gear, if the gear ratio varies from the correct gear ratio the corresponding in-gear DTCs P0729 and P0731-36 is set.

2) An excessive change in input or output speeds indicating an intermittent signal which results in DTCs P0716 and/or P0721 setting.

3) If the common speed sensor ground circuit is lost, both sensor inputs read the pulses from the input speed sensor when at a stop in neutral. Since the input speed sensor reads 60 teeth from the input clutch hub and the output speed sensor reads 30 teeth from the park gear, the result is an apparent speed ratio of 1:2 and may cause DTC P1794 to set.

WHEN MONITORED:

Continuously with the ignition on, engine running and after the transmission achieves the correct gear ratio.

SET CONDITION:

If the ratio of the Input RPM to the Output RPM does not match the current gear ratio then DTC P0735 will set. This DTC can take up to five minutes of problem identification before illuminating the MIL.

POSSIBLE CAUSES

Possible Causes
LOW FLUID LEVEL
INPUT OR OUTPUT SPEED SENSOR(S) OR WIRING
VALVE BODY ACCUMULATOR COVER FAILED
CUT OD OR 4C ACCUMULATOR SEAL
CRACKED OD OR 4C ACCUMULATOR PISTON
BROKEN OR MISSING OD BLEED ORIFICE IN MAIN VALVE BODY
CUT 4C TOWER SEAL
TRANSMISSION SOLENOID/TRS ASSEMBLY
CUT OR MISSING NO. 5 OR NO. 6 CHECK BALL
WORN SOLENOID SWITCH VALVE OR PLUGS
CUT OD OR 4C PISTON SEAL
STUCK MAIN REGULATOR VALVE
BURNED OD OR 4C CLUTCH
BROKEN OR MISSING 4C BLEED ORIFICE IN 2C/4C RETAINER
BROKEN REACTION SHAFT SUPPORT SEAL RING
POOR MACHINING ON PUMP VALVE BODY FACE
LOOSE / MISSING DRIBBLER ORIFICE ASSEMBLY IN REACTION SHAFT SUPPORT
CRACKED / LOOSE / MISSING OD/REVERSE PISTON BLEED ORIFICE
FAILED OD SHAFT
BROKEN REACTION ANNULUS GEAR WELD
FAILED REVERSE ANNULUS GEAR SPLINE
BROKEN REACTION SUN GEAR WELD
FAILED REVERSE CARRIER HUB SPLINE
FAILED REVERSE SUN GEAR SPLINE TO REACTION CARRIER

Always perform the Pre-Diagnostic Troubleshooting procedure before proceeding. Refer to 66RFE PRE-DIAGNOSTIC TROUBLESHOOTING PROCEDURE.

DIAGNOSTIC TEST

1. **CHECK FOR RELATED DTCS**
    1. With the scan tool, check for other transmission DTCs

2. If any of these DTCs are present, perform their respective tests first.

   Are any Transmission solenoid, line pressure, speed sensor and/or loss of prime DTCs present?

   Yes

   - If these DTCs are present they may cause a Speed Ratio Error. Perform the test for P0944 first if it is present. Refer to **DIAGNOSIS AND TESTING**.

   No

   - Go To 2.

2. **CHECK THE EVENT DATA**
   1. With the scan tool, read and record the Event Data.

      NOTE: Make sure to record all Event Data stored in the scan tool for future reference in this test procedure.

      Does the Event Data display information for DTC P0735?

      Yes

      - Go To 4.

      No

      - Go To 3.

3. **CHECK FOR ANOTHER DTC**

   In the Event Data recorded earlier, does the Event Data show DTC P1790 with Target Gear = 5th or with both the 4C and OD clutches applying?

   Yes

   - Go To 4.

   No

   - Go To 6.

4. **CHECK THE INPUT RPM**

   In the Event Data recorded earlier, does the Input RPM read zero?

   Yes

- Refer to **DIAGNOSIS AND TESTING** and perform the diagnostic procedure for P0716-Input Speed Sensor Circuit Performance. Diagnose the DTC as if it is set and current.

No

- Go To 5.

5. **CHECK THE LINE PRESSURE READING**

   In the Event Data recorded earlier, is the line pressure reading more than 10 psi below the desired line pressure reading?

   Yes

   - Remove the Transmission Oil pan and check the Transmission Oil filter for improper installation or plugged. If the Primary oil filter is OK, check the main regulator valve in pump. If excessive debris is in the oil pan, check clutches and repair as necessary. Refer to the Service Information for proper repair procedures.
   - Perform the 66RFE TRANSMISSION VERIFICATION TEST. Refer to **66RFE TRANSMISSION VERIFICATION TEST**.

   No

   - Go To 6.

6. **CHECK TRANSMISSION FOR SLIPPAGE**
   1. Erase DTCs and road test the vehicle.
   2. Check the transmission operation in forward and reverse gears.

      During the road test, was there obvious slippage noted in any gear?

      Yes

      - Go To 8.

      No

      - Go To 7.

7. **CHECK IF THE DTC RESETS**
   1. With the scan tool, check for transmission DTCs after the road test.

      Did DTC P0735 reset?

      Yes

      - Go To 8.

No

- Test Complete.

8. **CHECK INTERNAL TRANSMISSION**
   1. Remove the Transmission Oil Pan and Valve Body in accordance with the Service Information and check for the following:
      - Excessive debris in the oil pan.
      - Remove the Valve Body and check if the accumulator cover is intact and the 4C tower seal is not cut or split.
      - OD and 4C accumulator pistons for cracks and/or cut seals.
      - Solenoid Switch Valve and its plugs for stickiness or wear.
      - Cut or missing No. 5 and/or No. 6 check ball.
      - OD bleed orifice (on top of the main valve body) is intact.
      - Air check the OD and 4C hydraulic clutch circuits for excessive leakage. Refer to the Service information.

NOTE: **Both the OD and 4C hydraulic clutch circuits contain a small bleed orifice. A small amount of air leakage is considered normal. The OD hydraulic clutch circuit bleed orifice connects to the Reverse input clutch hydraulic cavity. A small amount of air leakage into the Reverse hydraulic clutch circuit is considered normal.**

Were any problems found?

Yes

- Repair as necessary. Refer to the Service Information for proper repair procedures.

NOTE: **If the OD or 4C clutch has failed but no obvious cause is found (such as a cut piston seal, broken seal ring, stuck regulator valve or any other items listed above) replace the Transmission Solenoid/TRS Assembly in addition to any necessary internal repairs.**

- Perform the 66RFE TRANSMISSION VERIFICATION TEST. Refer to **66RFE TRANSMISSION VERIFICATION TEST**.

No

- Go To 9.

9. **CHECK ROAD TEST RESULTS**

Perform the appropriate action for the condition(s) which best describe the road test results:

1st gear was OK. Slipped in 2nd (or failed to make the 1-2 upshift and went into Limp-in) and slipped in Reverse

- Go To 10.

1st and 2nd gears were OK. Slipped in 3rd gear AND in Reverse

- Remove the Transmission in accordance with the Service Information. Inspect the reaction annulus gear weld to the reverse carrier and the reaction sun gear weld to the 4C clutch hub and repair as necessary.
- Perform the 66RFE TRANSMISSION VERIFICATION TEST. Refer to **66RFE TRANSMISSION VERIFICATION TEST**.

1st and 2nd gears were OK. Slipped in 3rd gear but NOT in Reverse.

- Replace Transmission Solenoid/TRS Assembly in accordance with the Service Information. Perform the 66RFE TRANSMISSION VERIFICATION TEST. Refer to **66RFE TRANSMISSION VERIFICATION TEST**. If a continued Slippage is noted in 3rd gear during the Verification test, Remove the Transmission and inspect the 4C clutch and repair as necessary in accordance with the Service Information.

1st through 3rd gears were OK. Slipped in 4th, 5th or 6th gear. Reverse was OK

- Go To 11.

10. **CHECK FOR FAILED REVERSE GEARSET SPLINES**

Working through the windows in the bottom of the case, check for a failed Reverse Sun or Annulus gear spline as follows:

1. Hold the Transmission Output Shaft by holding the Transmission Manual Lever in the park position.
2. Apply the 4C clutch using 30-40 psi shop air at the apply port in the center bulkhead. Refer to appropriate Transmission Service Information article.
3. Attempt to rotate the input annulus gear and drive shell (the drum that encloses the two rearmost gearsets).

NOTE: Due to the overrunning clutch, the gear and drive shell normally rotates in one direction only.

Can the drive shell be rotated?

Yes

- Repair internal transmission as necessary in accordance with the Service Information. Check the reverse annulus gear spline to the input carrier, and the reverse sun gear spline to the reaction carrier hub.

- Perform the 66RFE TRANSMISSION VERIFICATION TEST. Refer to **66RFE TRANSMISSION VERIFICATION TEST**.

No

- Replace the Transmission Solenoid/TRS Assembly in accordance with the Service Information.
- Perform the 66RFE TRANSMISSION VERIFICATION TEST. Refer to **66RFE TRANSMISSION VERIFICATION TEST**.

11. **CHECK THE OD SHAFT AND REVERSE CARRIER SPLINE**
    1. Remove the Transmission in accordance with the Service Information and inspect the OD shaft and its spline to the reverse carrier hub.

       Were any problems found?

       Yes

       - Repair as necessary. Refer to the Service Information for proper repair procedures.
       - Perform the 66RFE TRANSMISSION VERIFICATION TEST. Refer to **66RFE TRANSMISSION VERIFICATION TEST**.

       No

       - Disassemble and inspect the input clutch assembly. Check the OD and Reverse clutch seals, discs and bleed orifice (in the OD/Reverse clutch piston) and repair as necessary in accordance with the Service Information.

         NOTE: If the OD clutch has failed but no obvious cause is found (such as a cut piston seal, broken seal ring, stuck regulator valve, etc.) replace the Transmission Solenoid/TRS Assembly in addition to any other necessary repairs.

       - Perform the 66RFE TRANSMISSION VERIFICATION TEST. Refer to **66RFE TRANSMISSION VERIFICATION TEST**.

P0736-GEAR RATIO ERROR IN REVERSE

For a complete wiring diagram, **refer to appropriate SYSTEM WIRING DIAGRAMS article**

THEORY OF OPERATION

The transmission system uses two speed sensors, one to measure input RPM and one to measure output RPM. These inputs are essential for proper transmission operation. Therefore the integrity of this data is verified through the following checks:

NOTE: Various Gear Ratio Error DTCs will set only if the transmission slips after first achieving the correct ratio. Therefore a transmission with no drive (or reverse)

may not set any Gear Ratio Error DTC because it never achieves a correct gear ratio.

1) Once in a particular gear, if the gear ratio varies from the correct gear ratio the corresponding in-gear DTCs P0729 and P0731-36 is set.

2) An excessive change in input or output speeds indicating an intermittent signal which results in DTCs P0716 and/or P0721 setting.

3) If the common speed sensor ground circuit is lost, both sensor inputs read the pulses from the input speed sensor when at a stop in neutral. Since the input speed sensor reads 60 teeth from the input clutch hub and the output speed sensor reads 30 teeth from the park gear, the result is an apparent speed ratio of 1:2 and may cause DTC P1794 to set.

WHEN MONITORED:

Continuously with the ignition on, engine running and after the transmission achieves the correct gear ratio.

SET CONDITION:

If the ratio of the Input RPM to the Output RPM does not match the current gear ratio then DTC P0736 will set. This DTC can take up to five minutes of problem identification before illuminating the MIL

POSSIBLE CAUSES

Possible Causes
LOW FLUID LEVEL
CUT L/R TOWER SEAL ON MAIN VALVE BODY
CUT L/R CLUTCH PISTON SEALS
BROKEN OR MISSING L/R CLUTCH BLEED ORIFICE (IN L/R CLUTCH RETAINER)
CUT L/R ACCUMULATOR PISTON SEAL IN MAIN VALVE BODY
CRACKED L/R ACCUMULATOR PISTON IN MAIN VALVE BODY
BURNED REVERSE OR L/R CLUTCH
CUT OD/REV PISTON SEALS
BROKEN OR MISSING OD/REV BLEED ORIFICE (IN OD/REV CLUTCH PISTON)
BROKEN REACTION ANNULUS GEAR WELD
BROKEN REACTION SUN GEAR WELD
BROKEN INPUT ANNULUS TO DRIVE SHELL WELD
FAILED REVERSE ANNULUS SPLINE TO INPUT CARRIER
FAILED REVERSE SUN GEAR SPLINE TO THE REACTION CARRIER

Always perform the Pre-Diagnostic Troubleshooting procedure before proceeding. Refer to 66RFE PRE-DIAGNOSTIC TROUBLESHOOTING PROCEDURE.

DIAGNOSTIC TEST

1. **CHECK FOR RELATED DTCS**
    1. With the scan tool, check for other transmission DTCs.

       Are any Transmission solenoid, line pressure, speed sensor and/or loss of prime DTCs present?

       Yes

       - Perform the test for P0944-LOSS OF PRIME first if it is present. Refer to **P0944-LOSS OF HYDRAULIC PUMP PRIME**.

       No

       - Go To 2.
2. **CHECK IF DTC IS CURRENT**

   NOTE: Make sure to record all Event Data stored in the scan tool for future reference in this test procedure.

   1. With the scan tool, perform the Reverse Gear Clutch test. Follow the scan tool instructions.
   2. Increase the throttle angle, TPS degree to 30° for no more than a few seconds.

      CAUTION: Do not overheat the transmission.

      Did the clutch test pass, input speed remain at zero?

      Yes

      - Go To 3.

      No

      - Go To 4.
3. **CHECK THE EVENT DATA**
   1. The conditions necessary to set this DTC are not currently present.
   2. With the scan tool, check the Event Data to help identify the conditions in which the DTC set.

      Does the Event Data show an input speed reading of zero?

      Yes

      - Go To 8.

      No

- Go To 4.

4. **POSSIBLE INTERNAL TRANSMISSION CAUSES**
    1. Remove the Transmission Oil Pan and Valve Body and check the following in accordance with the Service Information:
        - Clutch or metal debris in the pan
        - L/R clutch tower seal on the main valve body or cuts and the L/R accumulator piston and seals.
        - Air check the Reverse and L/R Hydraulic Clutch circuits (in the case) for excessive air leakage.

        NOTE: **Both Hydraulic Clutch circuits contain a small bleed orifice and a small amount of air leakage is normal. The Reverse hydraulic clutch circuit bleed orifice connects to the OD hydraulic clutch cavity. A small amount of air leakage into the OD hydraulic clutch circuit is considered normal.**

        Were any problems found?

        Yes

        - Repair as necessary. If clutch debris is present, remove the transmission and inspect the Reverse and L/R clutches and inspect the Transmission Oil Pump and Main Regulator Valve for damage or sticking in its bore.

            NOTE: **If the L/R clutch has failed but no obvious cause is found (such as a cut piston seal, cut tower seal, stuck regulator valve or any other items listed above) replace the Transmission Solenoid/TRS Assembly in addition to any necessary internal repairs.**

        - Perform the 66RFE TRANSMISSION VERIFICATION TEST. Refer to **66RFE TRANSMISSION VERIFICATION TEST**.

        No

        - Go To 5.

5. **CLUTCH TEST FAILURE**

    Did the clutch test fail in reverse?

    Yes

    - Go To 6.

    No

- Test complete.
- Perform the 66RFE TRANSMISSION VERIFICATION TEST. Refer to **66RFE TRANSMISSION VERIFICATION TEST**.

6. **CHECK FOR FAILED REVERSE GEARSET SPLINES**

Working through the windows in the bottom of the case, check for a failed Reverse Sun or Annulus spline as follows:

1. Hold the Transmission Output Shaft by holding the Transmission Manual Lever in the park position.
2. Apply the 4C clutch using 30-40 psi shop air at the apply port in the center bulkhead.
3. Attempt to rotate the input annulus gear and drive shell (the drum that encloses the two rearmost gearsets).

NOTE: Due to the overrunning clutch, the gear and drive shell normally rotates in one direction only.

Can the drive shell be rotated?

Yes

- Repair internal transmission as necessary in accordance with the Service Information. Check the reaction annulus gear weld to the reverse carrier and the reaction sun gear weld to the 4C clutch hub.
- Perform the 66RFE TRANSMISSION VERIFICATION TEST. Refer to **66RFE TRANSMISSION VERIFICATION TEST**.

No

- Go To 7.

7. **CHECK THE DRIVE SHELL WELD**
   1. Release the output shaft and the 4C clutch.
   2. Apply the L/R Clutch only using 30-40 psi of shop air.
   3. Attempt to rotate the drive shell as in the previous step.

   Can the drive shell be rotated?

   Yes

   - Repair Transmission as necessary in accordance with the Service Information. Check the drive shell weld to input annulus gear.
   - Perform the 66RFE TRANSMISSION VERIFICATION TEST. Refer to **66RFE TRANSMISSION VERIFICATION TEST**.

No

- Disassemble and inspect the input clutch assembly. Check the Reverse clutch reaction plate snap ring. Check the OD and Reverse clutch seals, discs and bleed orifice (in the OD/Reverse clutch piston). Check the Reverse hub and shaft. If no problems are found, check the L/R clutch assembly and repair as necessary. If all clutches are OK, replace the Transmission Solenoid/TRS assembly in accordance with the Service Information.
- Perform the 66RFE TRANSMISSION VERIFICATION TEST. Refer to **66RFE TRANSMISSION VERIFICATION TEST**.

8. **CHECK FOR INTERMITTENT OPERATION**
   1. Intermittent gear ratio DTCs can set by problems in the Input and Output Speed Sensor circuits and/or Speed Sensor Ground circuit.
   2. Remove the Ignition Switch Feed fuse from the TIPM.

CAUTION: Removal of the Ignition Switch Feed fuse from the TIPM will prevent the vehicle from being started in gear.

WARNING: The Ignition Switch Feed fuse must be removed from the TIPM. Failure to do so can result in possible serious or fatal injury.

   3. Install the Transmission Simulator (special tool #8333A, Simulator, Transmission).
   4. Check the Speed Sensor wiring and connectors for good connection then perform a wiggle test using the Transmission Simulator (special tool #8333A, Simulator, Transmission).

   Were any problems found?

   Yes

   - Repair as necessary.
   - Perform the 66RFE TRANSMISSION VERIFICATION TEST. Refer to **66RFE TRANSMISSION VERIFICATION TEST**.

   No

   - Test complete.

P0740-TCC OUT OF RANGE

For a complete wiring diagram, **refer to appropriate SYSTEM WIRING DIAGRAMS article** .

THEORY OF OPERATION

When the transmission is in 2nd gear through 6th gear, the Torque Converter Clutch (TCC) can be engaged when certain conditions are met. The TCC piston is electronically modulated by increasing the duty cycle of the

L/R-TCC Solenoid until the torque converter slip difference (difference between engine and transmission input speed) is within 60 RPM. Then the L/R-TCC solenoid is fully energized (FEMCC - 100% duty cycle). Torque converter slip is monitored in FEMCC to ensure adequate clutch capacity.

WHEN MONITORED:

During Electronically Modulated Converter Clutch (EMCC) Operation.

SET CONDITION:

Transmission must be in EMCC with input speed greater than 1750 RPM. The L/R-TCC Solenoid achieves the maximum duty cycle and can not pull engine speed within 60 RPM of input speed. Also when the transmission is in FEMCC and the engine slips TCC more than 100 RPM for 10 seconds then DTC P0740 will set. This DTC can take up to five minutes of problem identification before illuminating the MIL.

POSSIBLE CAUSES

Possible Causes
RELATED DTC PRESENT
L/R-TCC SOLENOID
TCC SWITCH VALVE STUCK
TCC REGULATOR VALVE STUCK
INPUT SHAFT SEAL RING CUT
TORQUE CONVERTER AND/OR INTERNAL TRANSMISSION
POWERTRAIN CONTROL MODULE (PCM)

Always perform the Pre-Diagnostic Troubleshooting procedure before proceeding. Refer to 66RFE PRE-DIAGNOSTIC TROUBLESHOOTING PROCEDURE.

DIAGNOSTIC TEST

1. **CHECK FOR RELATED DTC P0750**
    1. With the scan tool, read DTCs.

       Is DTC P0750 present?

       Yes

       - Refer to **3.7L/4.7L/5.7L - DIAGNOSTIC CODE INDEX - NGC - 1500 & 2500** or **5.7L - DIAGNOSTIC CODE INDEX - 3500 CAB & CHASSIS** and perform the appropriate diagnostic procedure.

       No

       - Go To 2.
2. **CHECK IF THE DTC IS CURRENT**

1. With the scan tool, read and **RECORD ALL** Transmission DTCs. After recording DTCs, erase DTCs.
2. Drive the vehicle until the transmission temperature is at least 43° C or 110° F and the engine temperature at least 49° C or 120° F.
3. Perform the following steps 3 times.
4. Using the AutoStick® (ERS) to place the transmission in 3rd gear.
5. While monitoring the Torque convertor slip on the scan tool, accelerate smoothly at light to moderate throttle from 1200 to 2500 engine RPM and watch for TCC engagement.

NOTE: Normal torque converter clutch slippage is 0 (± 20 RPM) in full lock-up.

Pick the one that best describes your findings:

TCC State remained at "Unlock" (controller never commanded TCC engagement)

- Go To 3.

Torque Converter Slip dropped properly to 0 (± 20 RPM)

- Go To 4.

TCC State showed "Transitioning" or "Full EMCC", but there was little or no change in T/C Slip

- Go To 5.

TCC tried to engage but had significant positive slip (60-150 RPM)

- Replace the Torque Converter and remove inspect the Transmission Oil Pump Assembly in accordance with the Service Information.

NOTE: Check the input shaft end play before removing the pump. HOLD the input shaft during pump removal to prevent thrust bearings in the input clutches from falling out of position. Split the pump assembly and inspect for torque converter debris. Clean as necessary. Verify the Torque Converter Switch Valve and the Torque Converter Clutch Control Valve (located in the Transmission Oil Pump Valve Body) are not sticking in their bores. Reinstall Transmission Oil Pump Assembly and verify proper input shaft end play.

- Perform the 66RFE TRANSMISSION VERIFICATION TEST. Refer to **66RFE TRANSMISSION VERIFICATION TEST**.

3. **CHECK FOR TCC ENGAGEMENT COMMANDED**

1. Verify the transmission temperature is at least 43° C or 110° F and the engine temperature at least 49° C or 120° F.
2. Using the scan tool, monitor the "Target Gear TCC State" in the following steps.
3. Road test the vehicle. Using the AutoStick® (ERS) in ERS "3", ERS "4", ERS "5" and Drive with an engine speed up to 2500 RPM in each position.

   Pick the one that best describes your findings:

   TCC would engage properly when commanded

   - Go To 4.

   TCC would NOT engage properly when commanded

   - Go To 5.

   Target Gear TCC State remained in the "Unlock" state continuously

   - Using the schematics as a guide, check the Powertrain Control Module (PCM) terminals for corrosion, damage or terminal push out. Pay particular attention to all power and ground circuits. If no problems are found, replace and program the PCM in accordance with the Service Information. With the scan tool, perform a Quick Learn.
   - Perform the 66RFE TRANSMISSION VERIFICATION TEST. Refer to **66RFE TRANSMISSION VERIFICATION TEST**.

4. **CHECK WIRING AND CONNECTORS**
   1. The conditions necessary to set this DTC are not present at this time. Using the schematics as a guide, inspect the wiring and connectors specific to this circuit. Wiggle the wires while checking for shorts and open circuits.
   2. Using the schematics as a guide, inspect the wiring and connectors specific to this circuit.
   3. Wiggle the wires while checking for shorts and open circuits.
   4. With the scan tool, check the Event Data to help identify the conditions in which the DTC set.

      Were any problems found?

      Yes

      - Repair as necessary.
      - Perform the 66RFE TRANSMISSION VERIFICATION TEST. Refer to **66RFE TRANSMISSION VERIFICATION TEST**.

      No

      - Test Complete.

5. **CHECK THE L/R-TCC SOLENOID**

1. With the scan tool, check for other transmission DTCs.

   Are DTCs P1775 and P0841 present?

   Yes

   - Replace Transmission Solenoid/TRS Assembly in accordance with the Service Information.
   - Perform the 66RFE TRANSMISSION VERIFICATION TEST. Refer to **66RFE TRANSMISSION VERIFICATION TEST**.

   No

   - Go To 6.

6. **CHECK THE TORQUE CONVERTER AND/OR INTERNAL TRANSMISSION**
   1. Repair internal transmission as necessary.
   2. Check for the following possible causes. Refer to the Service information for the proper repair procedures.
   3. Inspect the Transmission Oil Pump Assembly. **Note:** Check the input shaft end play before removing the pump. HOLD the input shaft during pump removal to prevent thrust bearings in the input clutches from falling out of position. Split the pump assembly and inspect for torque converter debris. Clean as necessary. Verify that the Torque Converter Switch Valve and the Torque Converter Clutch Control Valve (located in the Transmission Oil Pump Valve Body) are not sticking in their bores. Reinstall Transmission Oil Pump Assembly and verify proper input shaft end play.
   4. Check the Teflon seal rings on the input shaft. **Note:** If one of the seal rings is cut the loose piece will often lodge in the TCC switch valve causing it to stick in its bore.
   5. If no problems are found, replace the Transmission Solenoid/TRS Assembly.

      Repair

      - In all cases, replace the Torque Converter in accordance with the Service Information.
      - Perform the 66RFE TRANSMISSION VERIFICATION TEST. Refer to **66RFE TRANSMISSION VERIFICATION TEST**.

P0750-LR SOLENOID CIRCUIT

For a complete wiring diagram, **refer to appropriate SYSTEM WIRING DIAGRAMS article** .

THEORY OF OPERATION

The Transmission Control System uses five electronically controlled solenoids that allow hydraulic fluid to be applied to various friction elements (clutches), which enables the gear requested. The continuity of each solenoid circuit is periodically tested. Each inactive solenoid is turned on for a few milliseconds, then off. Each active solenoid is turned off for a few milliseconds, then on. This pulsing of voltage to the solenoid causes an inductive spike which is sensed by the Transmission Control System. If an inductive spike is not sensed by the

Transmission Control System during the continuity check, it is tested again. If the test fails three consecutive times, the appropriate Diagnostic Trouble Code (DTC) is set. If the solenoid test is run in response to a gear ratio or pressure switch error, one failure will result in setting the appropriate DTC.

WHEN MONITORED:

Initially at power-up, then every 10 seconds after. The solenoid circuits will be tested immediately after a gear ratio or pressure switch error is detected.

SET CONDITION:

After three consecutive solenoid continuity test failures or one failure if test is run in response to a gear ratio or pressure switch error.

NOTE: **This DTC is strictly an electrical fault and cannot be caused by any internal transmission failure other than an open in the Transmission Solenoid/TRS Assembly. If the Transmission Solenoid/TRS Assembly is in need of replacement - do not replace the Valve Body.**

POSSIBLE CAUSES

Possible Causes
RELATED DTCS PRESENT
(T20) L/R SOLENOID CONTROL CIRCUIT SHORTED TO OTHER CIRCUITS
(T20) L/R SOLENOID CONTROL CIRCUIT OPEN
(T20) L/R SOLENOID CONTROL CIRCUIT SHORTED TO GROUND
TRANSMISSION SOLENOID/TRS ASSEMBLY
POWERTRAIN CONTROL MODULE (PCM)

Always perform the Pre-Diagnostic Troubleshooting procedure before proceeding. Refer to 66RFE PRE-DIAGNOSTIC TROUBLESHOOTING PROCEDURE.

DIAGNOSTIC TEST

1. **CHECK DTCS**
    1. With the scan tool, read DTCs.

       Are any TIPM TCM Power Control Circuit or TCM Power Input DTCs present?

       Yes

       - Refer to **TIPM - DIAGNOSIS AND TESTING** and perform the appropriate diagnostic procedure.

       No

- Go To 2.

2. **CHECK IF DTC P0750 IS PRESENT**
   1. Ignition ON, Engine Not Running.
   2. With the scan tool, erase all Transmission DTCs.
   3. Turn the ignition OFF to the LOCK position.
   4. Remove the Starter Relay.

CAUTION: Removal of the Starter Relay will prevent the vehicle from being started in gear.

WARNING: The Starter Relay must be removed from the PDC. Failure to do so may result in possible serious or fatal injury.

NOTE: Failure to remove the Starter Relay can cause a Transmission - No Response condition.

   5. Install the (special tool #8333A, Simulator, Transmission).
   6. Ignition ON, Engine Not Running.
   7. With the scan tool, actuate the L/R Solenoid.
   8. Monitor the L/R Solenoid LED on the Transmission Simulator.

   Did the L/R Solenoid LED on the Transmission Simulator blink on and off?

   Yes

   - Go To 3.

   No

   - Go To 5.

3. **CHECK THE TRANSMISSION SOLENOID/TRS ASSEMBLY**
   1. With the Transmission Simulator connected, continue to actuate the L/R solenoid for two minutes.
   2. After two minutes of actuation, with the scan tool, stop the actuation and check for transmission DTCs.

   Did DTC P0750 reset during the actuation test?

   Yes

   - Go To 5.

   No

- Go To 4.

4. **CHECK THE TRANSMISSION SOLENOID/TRS ASSEMBLY**
    1. With the Transmission Simulator connected, continue to actuate the L/R solenoid for another two minutes while wiggling the related wiring harness and connectors.
    2. Stop the actuation and check for transmission DTCs.

    Did DTC P0750 reset during the actuation test?

    Yes

    - Repair wiring harness or connectors as necessary.
    - Perform the 66RFE TRANSMISSION VERIFICATION TEST. Refer to **66RFE TRANSMISSION VERIFICATION TEST**.

    No

    - Replace the Transmission Solenoid/TRS Assembly in accordance with the Service Information. **Note: Do NOT replace the entire Valve Body.**
    - Perform the 66RFE TRANSMISSION VERIFICATION TEST. Refer to **66RFE TRANSMISSION VERIFICATION TEST**.

5. **CHECK THE (T20) L/R SOLENOID CONTROL CIRCUIT FOR A SHORT TO ANOTHER CIRCUIT**

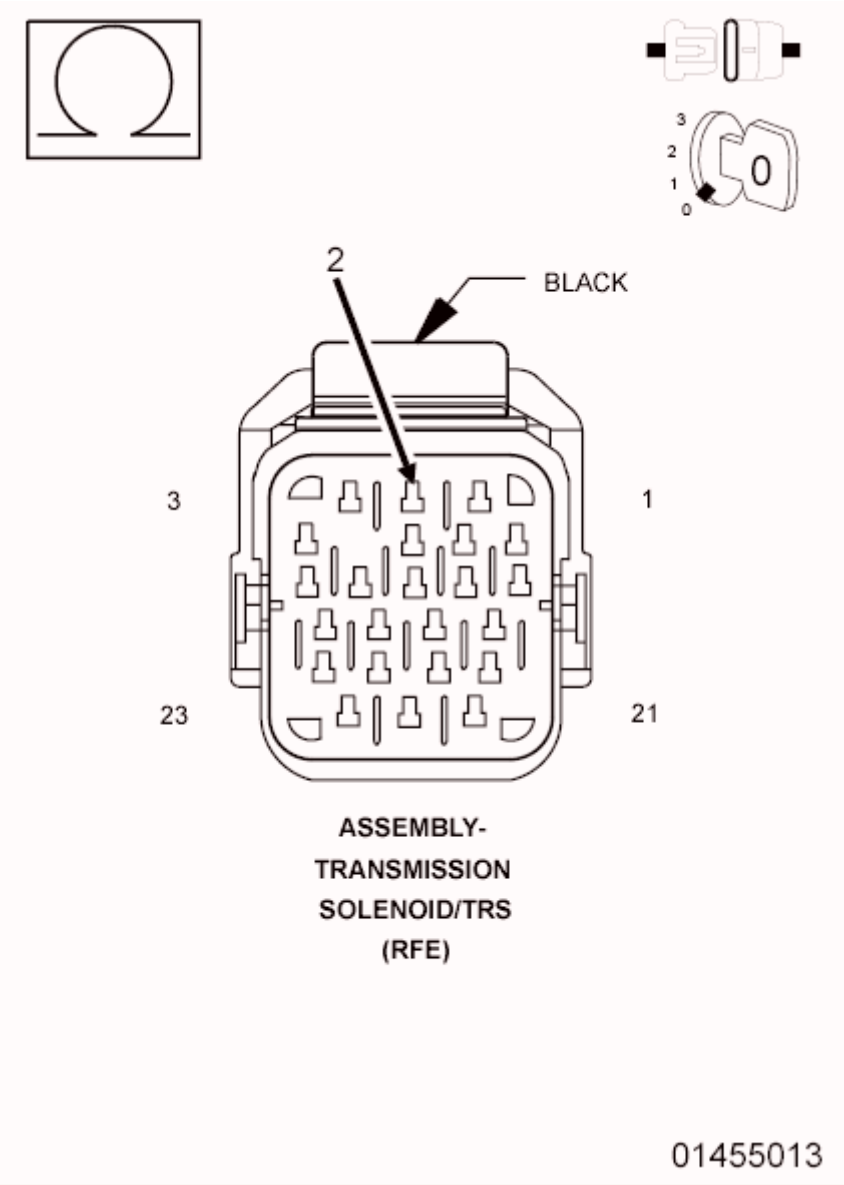

Fig. 19: Checking L/R Solenoid Control Circuit For A Short To Another Circuit
Courtesy of CHRYSLER GROUP, LLC

1. Turn the ignition OFF to the LOCK position.
2. Disconnect the (special tool #8333A, Simulator, Transmission).
3. Disconnect the PCM harness connectors.
4. Measure the resistance between the (T20) L/R Solenoid Control circuit and all other circuits in the Transmission Solenoid/TRS Assembly harness connector.

   Is the resistance below 5.0 ohms between the (T20) L/R Solenoid Control circuit and any other circuit(s) in the Transmission Solenoid/TRS Assembly harness connector?

   Yes

- Repair the (T20) L/R Solenoid Control circuit for a short to another circuit(s).
- Perform the 66RFE TRANSMISSION VERIFICATION TEST. Refer to **66RFE TRANSMISSION VERIFICATION TEST**.

No

- Go To 6.

6. **CHECK THE (T20) L/R SOLENOID CONTROL CIRCUIT FOR AN OPEN**

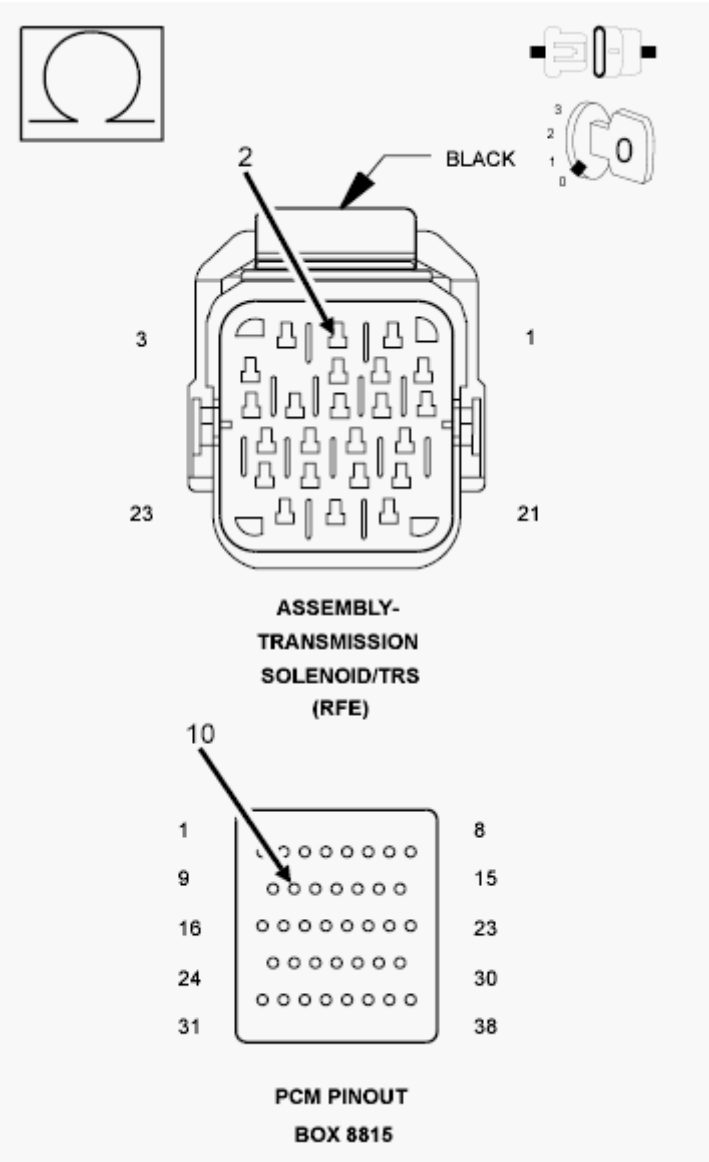

Fig. 20: Checking L/R Solenoid Control Circuit For An Open
Courtesy of CHRYSLER GROUP, LLC

1. Connect the (special tool #8815A, Kit, NGC, 38 Position) to the PCM C4 harness connector.

CAUTION: Do not probe the PCM harness connectors. Probing the PCM harness connectors will damage the PCM terminals resulting in poor terminal to pin connection. Install the (special tool #8815A, Kit, NGC, 38 Position) to perform diagnosis.

2. Measure the resistance of the (T20) L/R Solenoid Control circuit between the Transmission Solenoid/TRS Assembly harness connector and the appropriate terminal of the (special tool #8815A, Kit, NGC, 38 Position).

   Is the resistance above 5.0 ohms?

   Yes

   - Repair the (T20) L/R Solenoid Control circuit for an open.
   - Perform the 66RFE TRANSMISSION VERIFICATION TEST. Refer to **66RFE TRANSMISSION VERIFICATION TEST**.

   No

   - Go To 7.

7. **CHECK THE (T20) L/R SOLENOID CONTROL CIRCUIT FOR A SHORT TO GROUND**

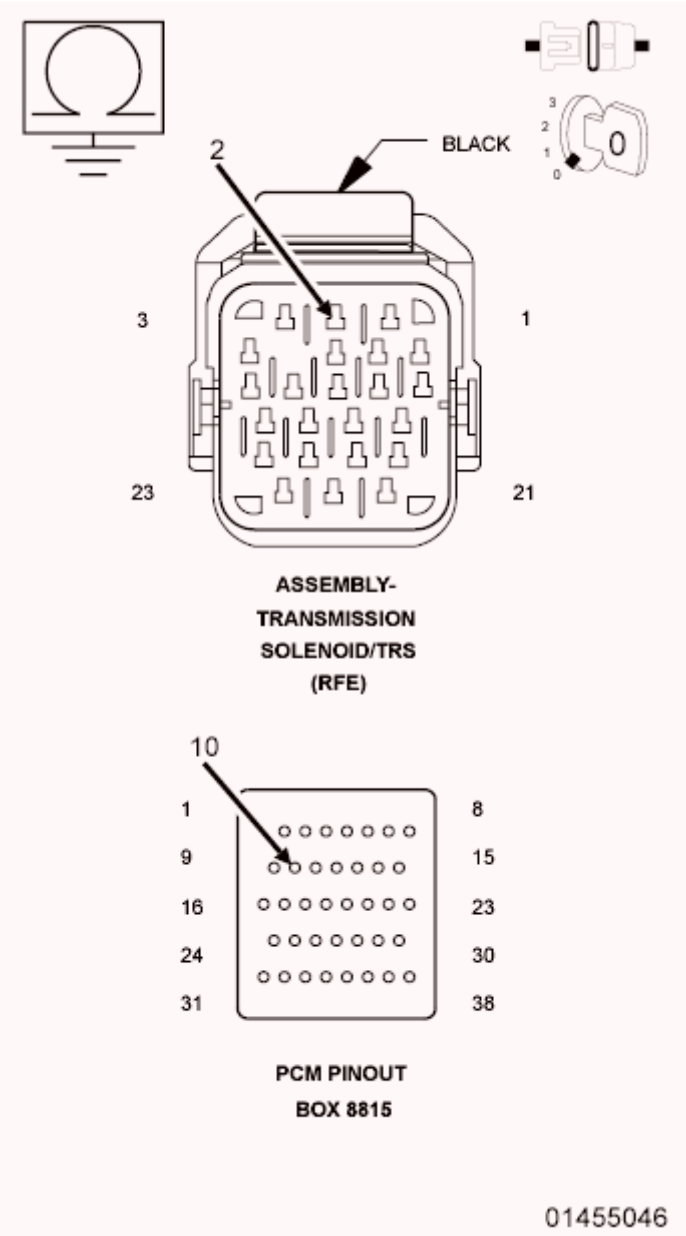

Fig. 21: Checking L/R Solenoid Control Circuit For Short To Ground
Courtesy of CHRYSLER GROUP, LLC

1. Measure the resistance between ground and the (T20) L/R Solenoid Control circuit.

   Is the resistance below 5.0 ohms?

   Yes

   - Repair the (T20) L/R Solenoid Control circuit for a short to ground.
   - Perform the 66RFE TRANSMISSION VERIFICATION TEST. Refer to **66RFE TRANSMISSION VERIFICATION TEST**.

No

- Using the schematics as a guide, check the Powertrain Control Module (PCM) terminals for corrosion, damage or terminal push out. Pay particular attention to all power and ground circuits. If no problems are found, replace and program the PCM in accordance with the Service Information. With the scan tool, perform a Quick Learn.
- Perform the 66RFE TRANSMISSION VERIFICATION TEST. Refer to **66RFE TRANSMISSION VERIFICATION TEST**.

P0755-2C SOLENOID CIRCUIT

For a complete wiring diagram, **refer to appropriate SYSTEM WIRING DIAGRAMS article** .

THEORY OF OPERATION

The Transmission Control System uses five electronically controlled solenoids that allow hydraulic fluid to be applied to various friction elements (clutches), which enables the gear requested. The continuity of each solenoid circuit is periodically tested. Each inactive solenoid is turned on for a few milliseconds, then off. Each active solenoid is turned off for a few milliseconds, then on. This pulsing of voltage to the solenoid causes an inductive spike which is sensed by the Transmission Control System. If an inductive spike is not sensed by the Transmission Control System during the continuity check, it is tested again. If the test fails three consecutive times, the appropriate Diagnostic Trouble Code (DTC) is set. If the solenoid test is run in response to a gear ratio or pressure switch error, one failure will result in setting the appropriate DTC.

WHEN MONITORED:

Initially at power-up, then every 10 seconds after. The solenoid circuits will be tested immediately after a gear ratio or pressure switch error is detected.

SET CONDITION:

After three consecutive solenoid continuity test failures, or one failure if test is run in response to a gear ratio or pressure switch error.

NOTE: **This DTC is strictly an electrical fault and cannot be caused by any internal transmission failure other than an open in the Transmission Solenoid/TRS Assembly. If the Transmission Solenoid/TRS Assembly is in need of replacement - do not replace the Valve Body.**

POSSIBLE CAUSES

Possible Causes
RELATED DTCS PRESENT
(T219) 2C CONTROL CIRCUIT SHORTED TO OTHER CIRCUITS
(T219) 2C CONTROL CIRCUIT OPEN
(T219) 2C CONTROL CIRCUIT SHORTED TO GROUND

TRANSMISSION SOLENOID/TRS ASSEMBLY
POWERTRAIN CONTROL MODULE (PCM)

Always perform the Pre-Diagnostic Troubleshooting procedure before proceeding. Refer to 66RFE PRE-DIAGNOSTIC TROUBLESHOOTING PROCEDURE.

DIAGNOSTIC TEST

1. **CHECK DTCS**
   1. With the scan tool, read DTCs.

      Are any TIPM TCM Power Control Circuit or TCM Power Input DTCs present?

      Yes

      - Refer to **TIPM - DIAGNOSIS AND TESTING** and perform the appropriate diagnostic procedure.

      No

      - Go To 2.
2. **CHECK IF DTC P0755 IS PRESENT**
   1. Ignition ON, Engine Not Running.
   2. With the scan tool, erase all Transmission DTCs.
   3. Turn the ignition OFF to the LOCK position.
   4. Remove the Starter Relay.

      CAUTION: Removal of the Starter Relay will prevent the vehicle from being started in gear.

      WARNING: The Starter Relay must be removed from the PDC. Failure to do so may result in possible serious or fatal injury.

      NOTE: Failure to remove the Starter Relay can cause a Transmission - No Response condition.

   5. Install the (special tool #8333A, Simulator, Transmission).
   6. Ignition ON, Engine Not Running.
   7. With the scan tool, actuate the 2C Solenoid.

      Did the 2C Solenoid LED blink on and off on the Transmission Simulator?

      Yes

- Go To 3.

No

- Go To 5.

3. **CHECK THE TRANSMISSION SOLENOID/TRS ASSEMBLY**
   1. With the Transmission simulator connected, continue to actuate the 2C solenoid for two minutes.
   2. After two minutes of actuation, with the scan tool, stop the actuation and check for transmission DTCs.

      Did DTC P0755 reset during the actuation test?

      Yes

      - Go To 5.

      No

      - Go To 4.
4. **CHECK THE TRANSMISSION SOLENOID/TRS ASSEMBLY**
   1. With the Transmission simulator connected, continue to actuate the 2C solenoid for another two minutes while wiggling the related wiring harness and connectors.
   2. Stop the actuation and check for transmission DTCs.

      Did DTC P0755 reset during the actuation test?

      Yes

      - Repair wiring harness or connectors as necessary.
      - Perform the 66RFE TRANSMISSION VERIFICATION TEST. Refer to **66RFE TRANSMISSION VERIFICATION TEST**.

      No

      - Replace the Transmission Solenoid/TRS Assembly in accordance with the Service Information. **Note: Do NOT replace the entire Valve Body.**
      - Perform the 66RFE TRANSMISSION VERIFICATION TEST. Refer to **66RFE TRANSMISSION VERIFICATION TEST**.
5. **CHECK THE (T219) 2C CONTROL CIRCUIT SHORT FOR A SHORT TO ANOTHER CIRCUIT**

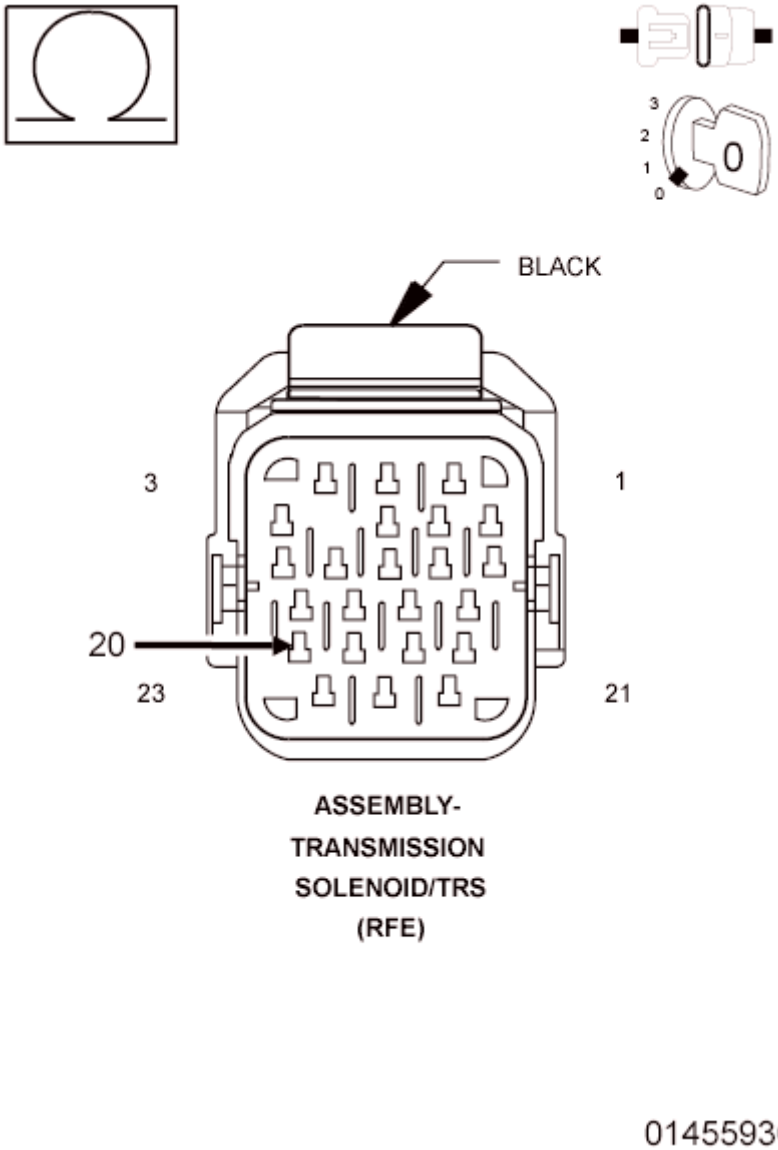

Fig. 22: Checking 2C Solenoid Control Circuit For A Short To Another Circuit
Courtesy of CHRYSLER GROUP, LLC

1. Turn the ignition OFF to the LOCK position.
2. Disconnect the (special tool #8333A, Simulator, Transmission).
3. Disconnect the PCM harness connectors.
4. Measure the resistance between the (T219) 2C Control circuit and all other circuits in the Transmission Solenoid/TRS Assembly harness connector.

   Is the resistance below 5.0 ohms between the (T219) 2C Control circuit and any other circuit(s) in the Transmission Solenoid/TRS Assembly harness connector?

   Yes

- Repair the (T219) 2C Control circuit for a short to another circuit(s).
- Perform the 66RFE TRANSMISSION VERIFICATION TEST. Refer to **66RFE TRANSMISSION VERIFICATION TEST**.

No

- Go To 6.

6. **CHECK THE (T219) 2C CONTROL CIRCUIT FOR AN OPEN**

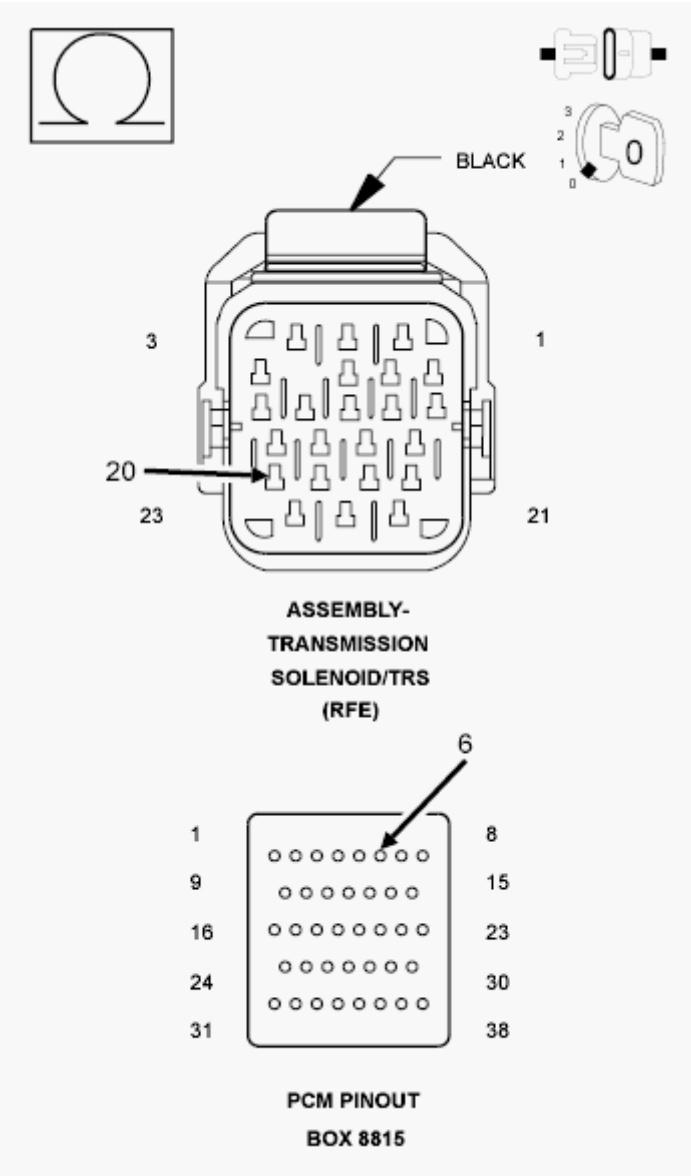

Fig. 23: Checking 2C Solenoid Control Circuit For An Open
Courtesy of CHRYSLER GROUP, LLC

1. Connect the (special tool #8815A, Kit, NGC, 38 Position) to the PCM C4 harness connector.

CAUTION: Do not probe the PCM harness connectors. Probing the PCM harness connectors will damage the PCM terminals resulting in poor terminal to pin connection. Install the (special tool #8815A, Kit, NGC, 38 Position) to perform diagnosis.

2. Measure the resistance of the (T219) 2C Control circuit between the Transmission Solenoid/TRS Assembly harness connector and the appropriate terminal of the (special tool #8815A, Kit, NGC, 38 Position).

   Is the resistance above 5.0 ohms?

   Yes

   - Repair the (T219) 2C Control circuit for an open.
   - Perform the 66RFE TRANSMISSION VERIFICATION TEST. Refer to **66RFE TRANSMISSION VERIFICATION TEST**.

   No

   - Go To 7.

7. **CHECK THE (T219) 2C CONTROL CIRCUIT FOR A SHORT TO GROUND**

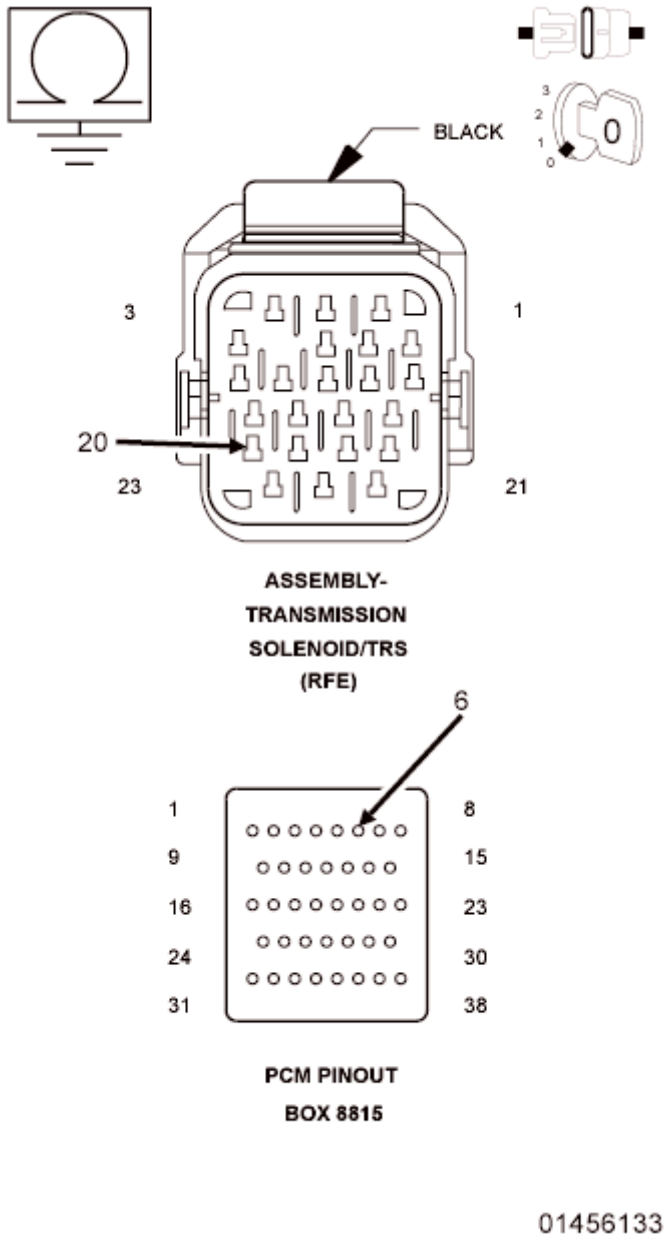

Fig. 24: Checking 2C Solenoid Control Circuit For A Short To Ground
Courtesy of CHRYSLER GROUP, LLC

1. Measure the resistance between ground and the (T219) 2C Control circuit.

   Is the resistance below 5.0 ohms?

   Yes

   - Repair the (T219) 2C Control circuit for a short to ground.
   - Perform the 66RFE TRANSMISSION VERIFICATION TEST. Refer to **66RFE TRANSMISSION VERIFICATION TEST**.

No

- Using the schematics as a guide, check the Powertrain Control Module (PCM) terminals for corrosion, damage or terminal push out. Pay particular attention to all power and ground circuits. If no problems are found, replace and program the PCM in accordance with the Service Information. With the scan tool, perform a Quick Learn.
- Perform the 66RFE TRANSMISSION VERIFICATION TEST. Refer to **66RFE TRANSMISSION VERIFICATION TEST**.

P0765-UD SOLENOID CIRCUIT

For a complete wiring diagram, **refer to appropriate SYSTEM WIRING DIAGRAMS article** .

THEORY OF OPERATION

The Transmission Control System uses five electronically controlled solenoids that allow hydraulic fluid to be applied to various friction elements (clutches), which enables the gear requested. The continuity of each solenoid circuit is periodically tested. Each inactive solenoid is turned on for a few milliseconds, then off. Each active solenoid is turned off for a few milliseconds, then on. This pulsing of voltage to the solenoid causes an inductive spike which is sensed by the Transmission Control System. If an inductive spike is not sensed by the Transmission Control System during the continuity check, it is tested again. If the test fails three consecutive times, the appropriate Diagnostic Trouble Code (DTC) is set. If the solenoid test is run in response to a gear ratio or pressure switch error, one failure will result in setting the appropriate DTC.

WHEN MONITORED:

Initially at power-up, then every 10 seconds after. The solenoid circuits will be tested immediately after a gear ratio or pressure switch error is detected.

SET CONDITION:

After three consecutive solenoid continuity test failures, or one failure if test is run in response to a gear ratio or pressure switch error.

NOTE: **This DTC is strictly an electrical fault and cannot be caused by any internal transmission failure other than an open in the Transmission Solenoid/TRS Assembly. If the Transmission Solenoid/TRS Assembly is in need of replacement - do not replace the Valve Body.**

POSSIBLE CAUSES

Possible Causes
RELATED DTCS PRESENT
(T59) UD CONTROL CIRCUIT SHORTED TO OTHER CIRCUITS
(T59) UD CONTROL CIRCUIT OPEN
(T59) UD CONTROL CIRCUIT SHORTED TO GROUND

TRANSMISSION SOLENOID/TRS ASSEMBLY
POWERTRAIN CONTROL MODULE (PCM)

Always perform the Pre-Diagnostic Troubleshooting procedure before proceeding. Refer to 66RFE PRE-DIAGNOSTIC TROUBLESHOOTING PROCEDURE.

DIAGNOSTIC TEST

1. **CHECK DTCS**
   1. With the scan tool, read DTCs.

      Are any TIPM TCM Power Control Circuit or TCM Power Input DTCs present?

      Yes

      - Refer to **TIPM - DIAGNOSIS AND TESTING** and perform the appropriate diagnostic procedure.

      No

      - Go To 2.
2. **CHECK IF DTC P0765 IS PRESENT**
   1. Ignition ON, Engine Not Running.
   2. With the scan tool, erase all Transmission DTCs.
   3. Turn the ignition OFF to the LOCK position.
   4. Remove the Starter Relay.

      CAUTION: Removal of the Starter Relay will prevent the vehicle from being started in gear.

      WARNING: The Starter Relay must be removed from the PDC. Failure to do so may result in possible serious or fatal injury.

      NOTE: Failure to remove the Starter Relay can cause a Transmission - No Response condition.

   5. Install (special tool #8333A, Simulator, Transmission).
   6. Ignition ON, Engine Not Running.
   7. With the scan tool, actuate the UD Solenoid.
   8. Monitor the UD Solenoid LED on the Transmission Simulator.

      Did the UD Solenoid LED on the Transmission Simulator blink on and off?

Yes

- Go To 3.

No

- Go To 5.

3. **CHECK THE TRANSMISSION SOLENOID/TRS ASSEMBLY**
   1. With the Transmission simulator connected, continue to actuate the UD solenoid for two minutes.
   2. After two minutes of actuation, with the scan tool, stop the actuation and check for transmission DTCs.

   Did DTC P0765 reset during the actuation test?

   Yes

   - Go To 5.

   No

   - Go To 4.

4. **CHECK THE TRANSMISSION SOLENOID/TRS ASSEMBLY**
   1. With the Transmission Simulator connected, continue to actuate the UD solenoid for another two minutes while wiggling the related wiring harness and connectors.
   2. Stop the actuation and check for transmission DTCs.

   Did DTC P0765 reset during the actuation test?

   Yes

   - Repair wiring harness or connectors as necessary.
   - Perform the 66RFE TRANSMISSION VERIFICATION TEST. Refer to **66RFE TRANSMISSION VERIFICATION TEST**.

   No

   - Replace the Transmission Solenoid/TRS Assembly in accordance with the Service Information. **Note: Do NOT replace the entire Valve Body.**
   - Perform the 66RFE TRANSMISSION VERIFICATION TEST. Refer to **66RFE TRANSMISSION VERIFICATION TEST**.

5. **CHECK THE (T59) UD CONTROL CIRCUIT FOR A SHORT TO ANOTHER CIRCUIT**

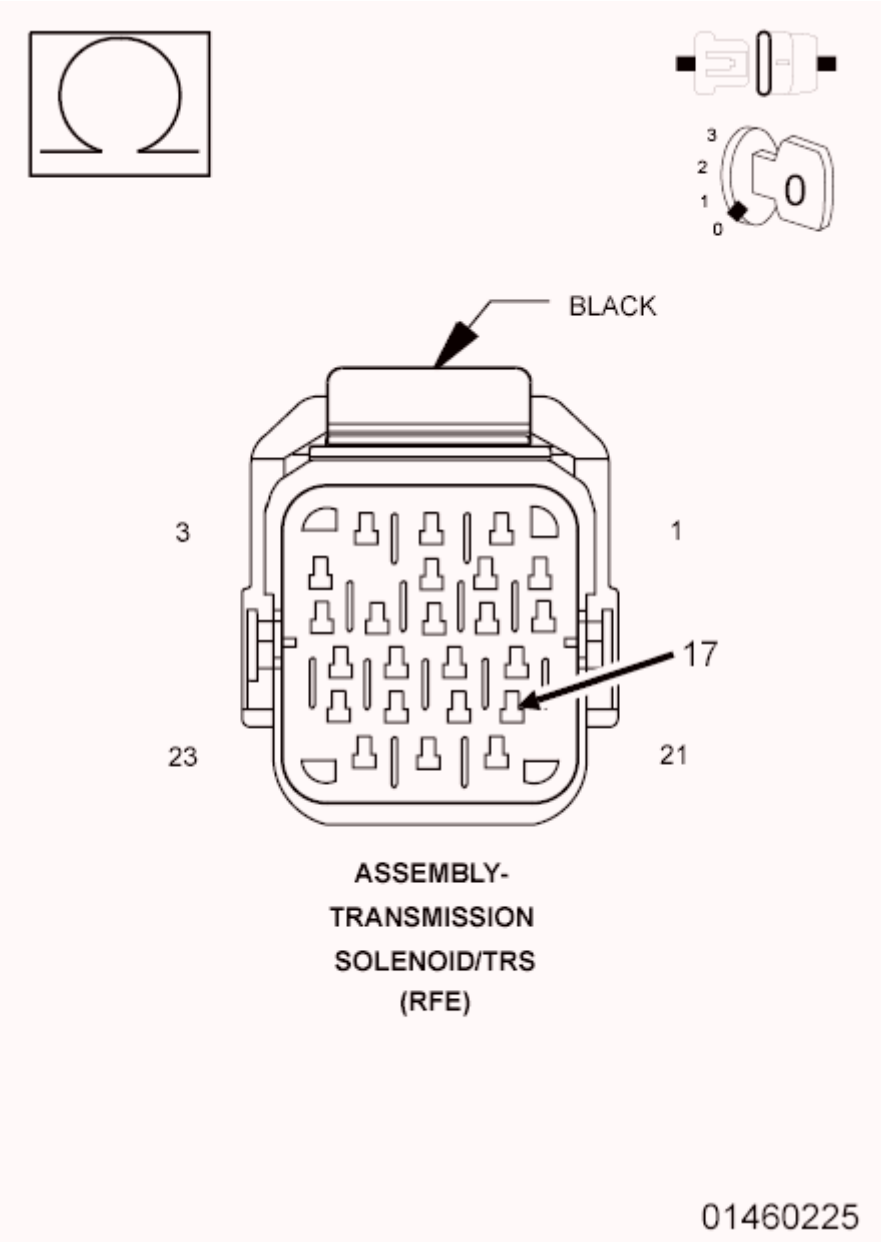

Fig. 25: Checking UD Solenoid Control Circuit For A Short To Another Circuit
Courtesy of CHRYSLER GROUP, LLC

1. Turn the ignition OFF to the LOCK position.
2. Disconnect the (special tool #8333A, Simulator, Transmission).
3. Disconnect the PCM harness connectors.
4. Measure the resistance between the (T59) UD Control circuit and all other circuits in the Transmission Solenoid/TRS Assembly harness connector.

   Is the resistance below 5.0 ohms between the (T59) UD Control circuit and any other circuit(s) in the Transmission Solenoid/TRS Assembly harness connector?

Yes

- Repair the (T59) UD Control circuit for a short to another circuit(s).
- Perform the 66RFE TRANSMISSION VERIFICATION TEST. Refer to **66RFE TRANSMISSION VERIFICATION TEST**.

No

- Go To 6.

6. **CHECK THE (T59) UD CONTROL CIRCUIT FOR AN OPEN**

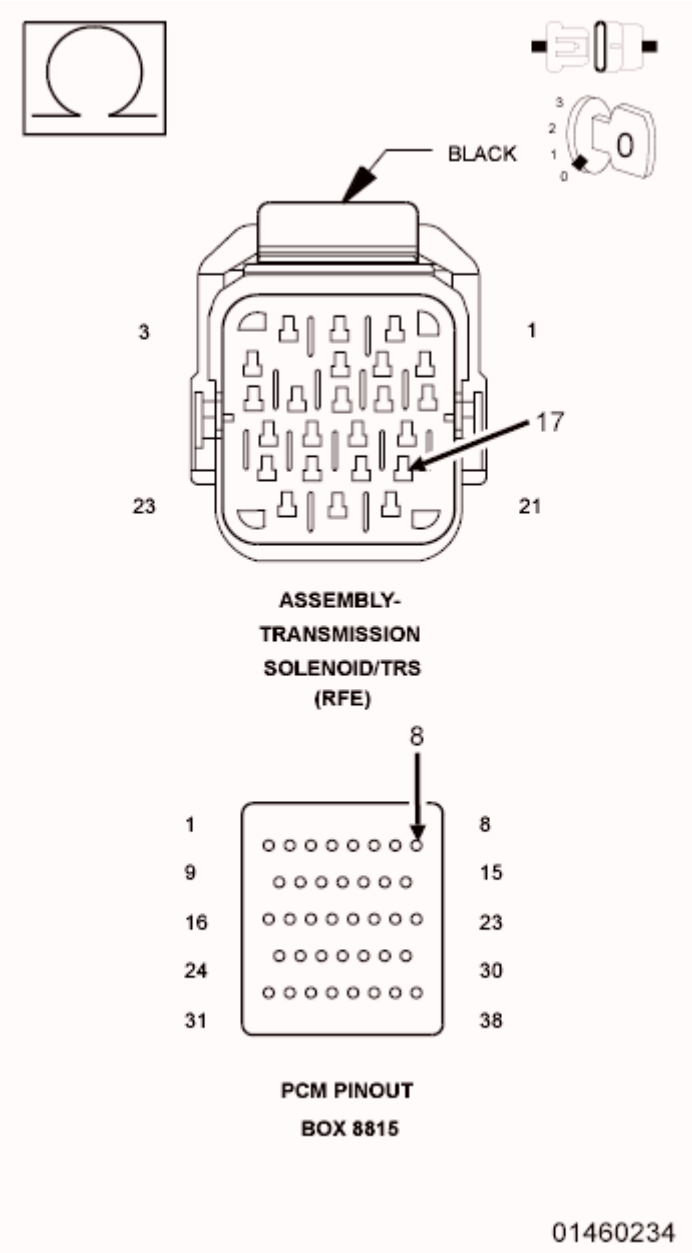

Fig. 26: Checking UD Solenoid Control Circuit For An Open

Courtesy of CHRYSLER GROUP, LLC

1. Connect the (special tool #8815A, Kit, NGC, 38 Position) to the PCM C4 harness connector.

   CAUTION: Do not probe the PCM harness connectors. Probing the PCM harness connectors will damage the PCM terminals resulting in poor terminal to pin connection. Install the (special tool #8815A, Kit, NGC, 38 Position) to perform diagnosis.

2. Measure the resistance of the (T59) UD Control circuit from the Transmission Solenoid/TRS Assembly harness connector to the appropriate terminal of the (special tool #8815A, Kit, NGC, 38 Position).

   Is the resistance above 5.0 ohms?

   Yes

   - Repair the (T59) UD Control circuit for an open.
   - Perform the 66RFE TRANSMISSION VERIFICATION TEST. Refer to **66RFE TRANSMISSION VERIFICATION TEST**.

   No

   - Go To 7.

7. **CHECK THE (T59) UD CONTROL CIRCUIT FOR A SHORT TO GROUND**

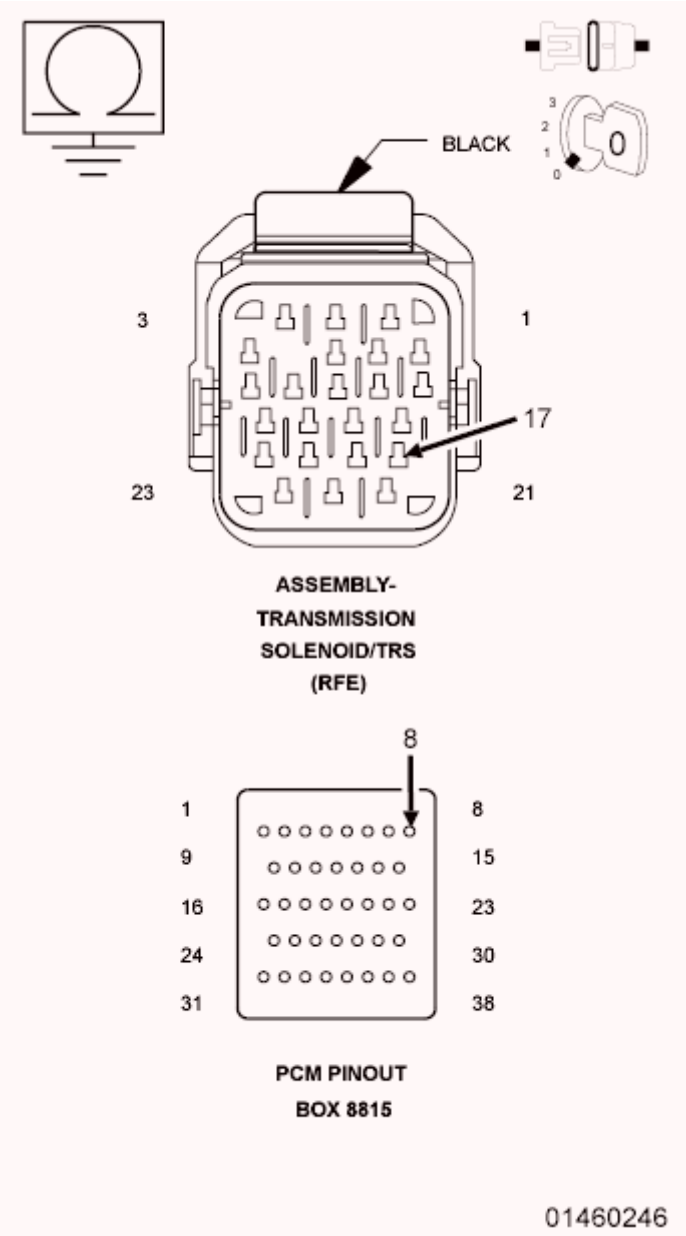

Fig. 27: Checking UD Solenoid Control Circuit For A Short To Ground
Courtesy of CHRYSLER GROUP, LLC

1. Measure the resistance between ground and the (T59) UD Control circuit.

   Is the resistance below 5.0 ohms?

   Yes

   - Repair the (T59) UD Control circuit for a short to ground.
   - Perform the 66RFE TRANSMISSION VERIFICATION TEST. Refer to **66RFE TRANSMISSION VERIFICATION TEST**.

No

- Using the schematics as a guide, check the Powertrain Control Module (PCM) terminals for corrosion, damage or terminal push out. Pay particular attention to all power and ground circuits. If no problems are found, replace and program the PCM in accordance with the Service Information. With the scan tool, perform a Quick Learn.
- Perform the 66RFE TRANSMISSION VERIFICATION TEST. Refer to **66RFE TRANSMISSION VERIFICATION TEST**.

P0770-4C SOLENOID CIRCUIT

For a complete wiring diagram, **refer to appropriate SYSTEM WIRING DIAGRAMS article** .

THEORY OF OPERATION

The Transmission Control System uses five electronically controlled solenoids that allow hydraulic fluid to be applied to various friction elements (clutches), which enables the gear requested. The continuity of each solenoid circuit is periodically tested. Each inactive solenoid is turned on for a few milliseconds, then off. Each active solenoid is turned off for a few milliseconds, then on. This pulsing of voltage to the solenoid causes an inductive spike which is sensed by the Transmission Control System. If an inductive spike is not sensed by the Transmission Control System during the continuity check, it is tested again. If the test fails three consecutive times, the appropriate Diagnostic Trouble Code (DTC) is set. If the solenoid test is run in response to a gear ratio or pressure switch error, one failure will result in setting the appropriate DTC.

WHEN MONITORED:

Initially at power-up, then every 10 seconds after. The solenoid circuits will be tested immediately after a gear ratio or pressure switch error is detected.

SET CONDITION:

After three consecutive solenoid continuity test failures, or one failure if test is run in response to a gear ratio or pressure switch error.

NOTE: **This DTC is strictly an electrical fault and cannot be caused by any internal transmission failure other than an open in the Transmission Solenoid/TRS Assembly. If the Transmission Solenoid/TRS Assembly is in need of replacement - do not replace the Valve Body.**

POSSIBLE CAUSES

Possible Causes
RELATED DTCS PRESENT
(T259) 4C CONTROL CIRCUIT SHORTED TO OTHER CIRCUITS
(T259) 4C CONTROL CIRCUIT OPEN
(T259) 4C CONTROL CIRCUIT SHORTED TO GROUND

TRANSMISSION SOLENOID/TRS ASSEMBLY
POWERTRAIN CONTROL MODULE (PCM)

Always perform the Pre-Diagnostic Troubleshooting procedure before proceeding. Refer to 66RFE PRE-DIAGNOSTIC TROUBLESHOOTING PROCEDURE.

DIAGNOSTIC TEST

1. **CHECK DTCS**
   1. With the scan tool, read DTCs.

      Are any TIPM TCM Power Control Circuit or TCM Power Input DTCs present?

      Yes

      - Refer to **TIPM - DIAGNOSIS AND TESTING** and perform the appropriate diagnostic procedure.

      No

      - Go To 2.
2. **CHECK IF DTC P0770 IS PRESENT**
   1. Ignition ON, Engine Not Running.
   2. With the scan tool, erase all Transmission DTCs.
   3. Turn the ignition OFF to the LOCK position.
   4. Remove the Starter Relay.

      CAUTION: Removal of the Starter Relay will prevent the vehicle from being started in gear.

      WARNING: The Starter Relay must be removed from the PDC. Failure to do so may result in possible serious or fatal injury.

      NOTE: Failure to remove the Starter Relay can cause a Transmission - No Response condition.

   5. Install (special tool #8333A, Simulator, Transmission).
   6. Ignition ON, Engine Not Running.
   7. With the scan tool, actuate the 4C Solenoid.
   8. Monitor the 4C Solenoid LED on the Transmission Simulator.

      Did the 4C Solenoid LED on the Transmission Simulator blink on and off?

Yes

- Go To 3.

No

- Go To 5.

3. **CHECK THE TRANSMISSION SOLENOID/TRS ASSEMBLY**
   1. With the Transmission Simulator connected, continue to actuate the 4C solenoid for two minutes.
   2. After two minutes of actuation, with the scan tool, stop the actuation and check for transmission DTCs.

   Did DTC P0770 reset during the actuation test?

   Yes

   - Go To 5.

   No

   - Go To 4.

4. **CHECK THE TRANSMISSION SOLENOID/TRS ASSEMBLY**
   1. With the Transmission Simulator connected, continue to actuate the 4C solenoid for another two minutes while wiggling the related wiring harness and connectors.
   2. With the scan tool, stop the actuation and check for transmission DTCs.

   Did DTC P0770 reset during the actuation test?

   Yes

   - Repair wiring harness or connectors as necessary.
   - Perform the 66RFE TRANSMISSION VERIFICATION TEST. Refer to **66RFE TRANSMISSION VERIFICATION TEST**.

   No

   - Replace the Transmission Solenoid/TRS Assembly in accordance with the Service Information. **Note: Do NOT replace the entire Valve Body.**
   - Perform the 66RFE TRANSMISSION VERIFICATION TEST. Refer to **66RFE TRANSMISSION VERIFICATION TEST**.

5. **CHECK THE (T259) 4C CONTROL CIRCUIT FOR A SHORT TO ANOTHER CIRCUIT**

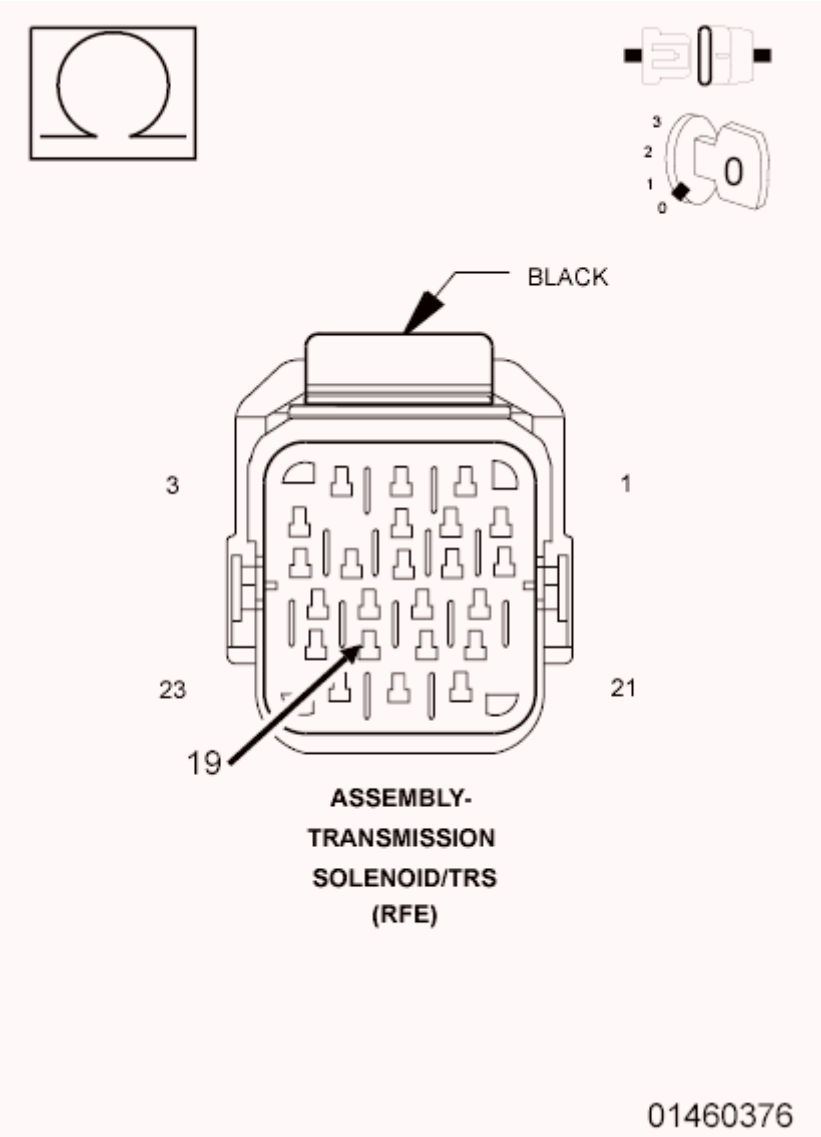

Fig. 28: Checking 4C Solenoid Control Circuit For A Short To Another Circuit
Courtesy of CHRYSLER GROUP, LLC

1. Turn the ignition OFF to the LOCK position.
2. Disconnect the (special tool #8333A, Simulator, Transmission).
3. Disconnect the PCM harness connectors.
4. Measure the resistance between the (T259) 4C Control circuit and all other circuits in the Transmission Solenoid/TRS Assembly harness connector.

   Is the resistance below 5.0 ohms between the (T259) 4C Control circuit and any other circuit(s) in the Transmission Solenoid/TRS Assembly harness connector?

   Yes

   - Repair the (T259) 4C Control circuit for a short to another circuit(s).

- Perform the 66RFE TRANSMISSION VERIFICATION TEST. Refer to **66RFE TRANSMISSION VERIFICATION TEST**.

No

- Go To 6.

6. **CHECK THE (T259) 4C CONTROL CIRCUIT FOR AN OPEN**

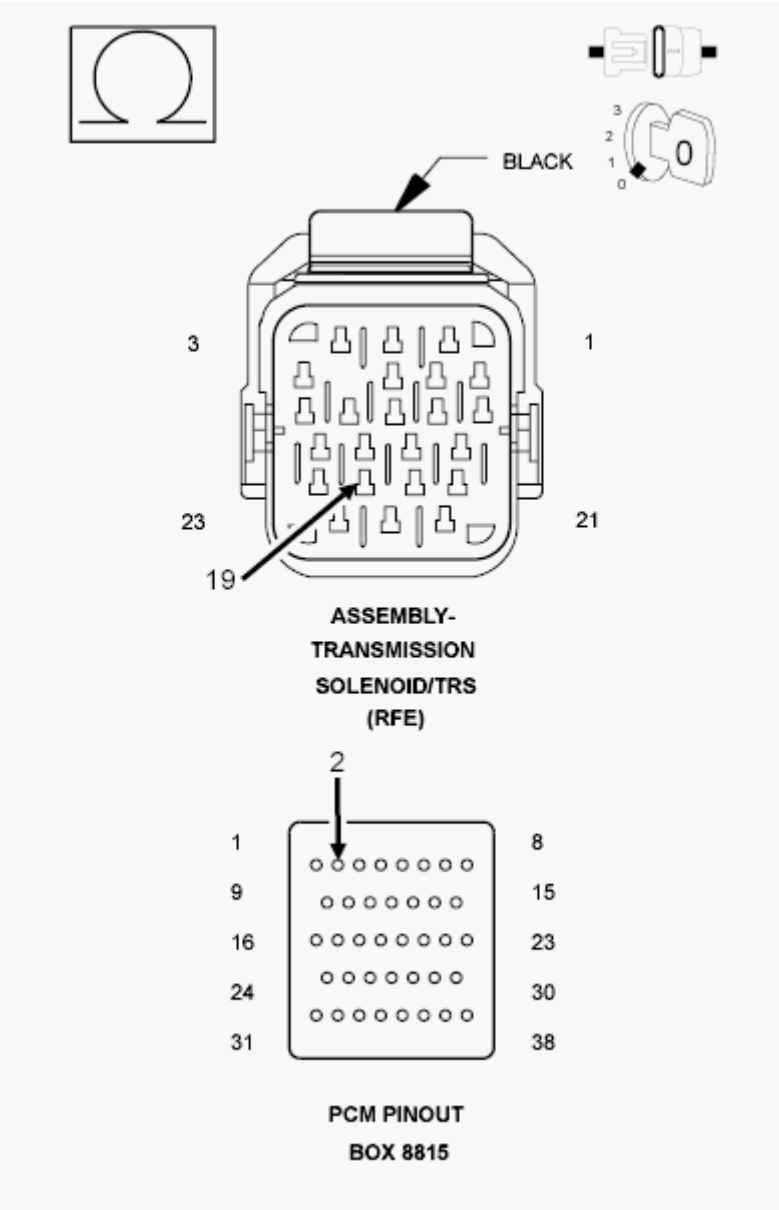

Fig. 29: Checking 4C Solenoid Control Circuit For An Open
Courtesy of CHRYSLER GROUP, LLC

1. Connect the (special tool #8815A, Kit, NGC, 38 Position) to the PCM C4 harness connector.

CAUTION: Do not probe the PCM harness connectors. Probing the PCM harness connectors will damage the PCM terminals resulting in poor terminal to pin connection. Install the (special tool #8815A, Kit, NGC, 38 Position) to perform diagnosis.

2. Measure the resistance of the (T259) 4C Control circuit between the Transmission Solenoid/TRS Assembly harness connector and the appropriate terminal of the (special tool #8815A, Kit, NGC, 38 Position).

   Is the resistance above 5.0 ohms?

   Yes

   - Repair the (T259) 4C Control circuit for an open.
   - Perform the 66RFE TRANSMISSION VERIFICATION TEST. Refer to **66RFE TRANSMISSION VERIFICATION TEST**.

   No

   - Go To 7.

7. **CHECK THE (T259) 4C CONTROL CIRCUIT FOR A SHORT TO GROUND**

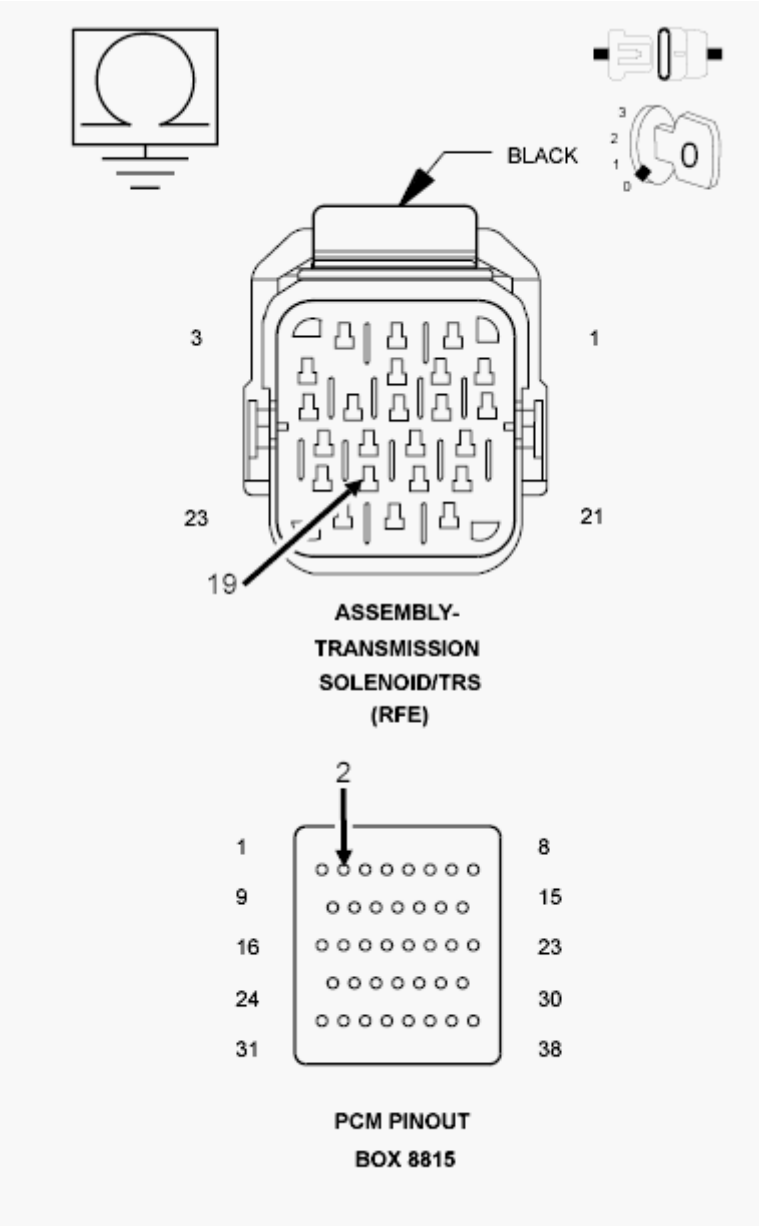

Fig. 30: Checking 4C Solenoid Control Circuit For A Short To Ground
Courtesy of CHRYSLER GROUP, LLC

1. Measure the resistance between ground and the (T259) 4C Control circuit.

   Is the resistance below 5.0 ohms?

   Yes

   - Repair the (T259) 4C Control circuit for a short to ground.
   - Perform the 66RFE TRANSMISSION VERIFICATION TEST. Refer to **66RFE TRANSMISSION VERIFICATION TEST**.

No

- Using the schematics as a guide, check the Powertrain Control Module (PCM) terminals for corrosion, damage or terminal push out. Pay particular attention to all power and ground circuits. If no problems are found, replace and program the PCM in accordance with the Service Information. With the scan tool, perform a Quick Learn.
- Perform the 66RFE TRANSMISSION VERIFICATION TEST. Refer to **66RFE TRANSMISSION VERIFICATION TEST**.

P0841-LR PRESSURE SWITCH RATIONALITY

For a complete wiring diagram, **refer to appropriate SYSTEM WIRING DIAGRAMS article** .

THEORY OF OPERATION

The Transmission system uses five pressure switches to monitor the fluid pressure in the L/R, 2C, 4C, UD and OD clutch circuits. The pressure switches are continuously monitored for the correct states in each gear as shown in chart.

WHEN MONITORED:

Continuously with the ignition on and engine running.

SET CONDITION:

The DTC will set if the L/R Pressure Switch reads open or closed at the wrong time in a given gear.

POSSIBLE CAUSES

Possible Causes
LOSS OF PRIME AND/OR TCM POWER INPUT DTCS PRESENT
LOW FLUID LEVEL
LOW LINE PRESSURE
REVERSE CARRIER SNAP RING DISLODGED
CRACKED OR MIS-INSTALLED PRIMARY OIL FILTER OR FILTER SEAL
STICKING MAIN REGULATOR VALVE IN PUMP VALVE BODY
NO. 1 CHECK BALL CUT OR DAMAGED
WIRING AND CONNECTORS
(T50) L/R PRESSURE CONTROL CIRCUIT OPEN
(T50) L/R PRESSURE CONTROL CIRCUIT SHORTED TO GROUND
(T50) L/R PRESSURE CONTROL CIRCUIT SHORTED TO VOLTAGE
TRANSMISSION SOLENOID/TRS ASSEMBLY
POWERTRAIN CONTROL MODULE (PCM)

Always perform the Pre-Diagnostic Troubleshooting procedure before proceeding. Refer to 66RFE PRE-

DIAGNOSTIC TROUBLESHOOTING PROCEDURE.

GEAR	L/R	2C	4C	UD	OD
REVERSE	OPEN	OPEN	OPEN	OPEN	OPEN
P/N	CLOSED**	OPEN	OPEN	OPEN	OPEN
1ST	CLOSED*	OPEN	OPEN	CLOSED	OPEN
2ND	OPEN	CLOSED	OPEN	CLOSED	OPEN
2ND PRIME	OPEN	OPEN	CLOSED	CLOSED	OPEN
3RD	OPEN	OPEN	OPEN	CLOSED	CLOSED
4TH	OPEN	OPEN	CLOSED	OPEN	CLOSED
5TH	OPEN	CLOSED	OPEN	OPEN	CLOSED
*L/R is closed if output speed is below 100 RPM in Drive and Manual 2. L/R is closed in Manual 1.					
**May be open when rolling in Neutral or at low oil temperatures.					

DIAGNOSTIC TEST

1. **CHECK FOR OTHER DTCS**
    1. Ignition ON, Engine Not Running.
    2. With the scan tool, check for transmission DTCs.

    Are any Transmission Loss of Prime, TCM Power Input and/or TIPM TCM Power Control Circuit DTCs present?

    Yes

    - Refer to **3.7L/4.7L/5.7L - DIAGNOSTIC CODE INDEX - NGC - 1500 & 2500** or **5.7L - DIAGNOSTIC CODE INDEX - 3500 CAB & CHASSIS** and perform the appropriate diagnostic procedure. If the DTC P0944 is present, perform its respective test first.

    No

    - Go To 2.
2. **CHECK IF DTC P0841 IS PRESENT**
    1. With the scan tool, check the Event Data for P0841.

    NOTE: Make sure to record all Event Data stored in the scan tool for future reference in this test procedure.

    Does the Event Data show DTC P0841?

    Yes

    - Go To 3.

No

- Refer to **3.7L/4.7L/5.7L - DIAGNOSTIC CODE INDEX - NGC - 1500 & 2500** or **5.7L - DIAGNOSTIC CODE INDEX - 3500 CAB & CHASSIS** and perform diagnostics for the DTC reported in the Event Data.

3. **CHECK IF DTC SET IN REVERSE**

   Does the Event Data show DTC P0841 set while in Reverse?

   Yes

   - Go To 10.

   No

   - Go To 4.

4. **CHECK IF THE L/R PRESSURE SWITCH WAS CLOSED**

   Does the Event Data show the L/R Pressure Switch reading CLOSED when DTC P0841 set?

   Yes

   - Go To 5.

   No

   - Go To 14.

5. **CHECK THE PCM AND WIRING**
   1. Turn the ignition OFF to the LOCK position.
   2. Remove the Starter Relay.

CAUTION: Removal of the Starter Relay will prevent the vehicle from being started in gear.

WARNING: The Starter Relay must be removed from the PDC. Failure to do so may result in possible serious or fatal injury.

NOTE: Failure to remove the Starter Relay can cause a Transmission - No Response condition.

   3. Install (special tool #8333A, Simulator, Transmission).
   4. Ignition ON, Engine Not Running.
   5. Turn the Pressure Switch selector to L/R on the Transmission Simulator.

6. With the scan tool, monitor the L/R Pressure Switch state while pressing the Pressure Switch Test button on the Transmission Simulator.

   Did the L/R Pressure Switch state change from open to closed while pressing the Pressure Switch Test button on the Transmission Simulator?

   Yes

   - Go To 6.

   No

   - Go To 10.

6. **CHECK WIRING AND CONNECTORS**
   1. Using the schematics as a guide, inspect the wiring and connectors specific to this circuit.
   2. Wiggle the wires while checking for shorted and open circuits.

      Were any problems found?

      Yes

      - Repair as necessary.
      - Perform the 66RFE TRANSMISSION VERIFICATION TEST. Refer to **66RFE TRANSMISSION VERIFICATION TEST**.

      No

      - Go To 7.

7. **CHECK IF DTC SET IN FIRST GEAR**

   In the Event Data recorded earlier, does the Event Data show the Present Gear as first gear when DTC P0841 set ?

   Yes

   - Go To 8.

   No

   - Replace the Transmission Solenoid/TRS Assembly in accordance with the Service Information. Refer to **ASSEMBLY, TRANSMISSION SOLENOID AND TRS, REMOVAL** .
   - Perform the 66RFE TRANSMISSION VERIFICATION TEST. Refer to **66RFE TRANSMISSION VERIFICATION TEST**.

8. **CHECK IF THE NO. 1 CHECK BALL IS CUT OR DAMAGED**
   1. Turn the ignition OFF to the LOCK position.

2. Remove the Transmission Valve Body in accordance with the Service Information.
3. Check the No. 1 Check Ball for any possible cuts or damage.

   Is the No. 1 Check Ball cut or damaged?

   Yes

   - Replace the No. 1 Check Ball and check for clutch debris in the transmission oil pan. If there is excessive debris, perform internal repairs to the L/R Clutch assembly. Refer to **REMOVAL** .
   - Perform the 66RFE TRANSMISSION VERIFICATION TEST. Refer to **66RFE TRANSMISSION VERIFICATION TEST**.

   No

   - Go To 9.

9. **CHECK IF THE REVERSE CARRIER SNAP RING IS DISLODGED**
   1. Looking through the windows in the bottom of the case, check whether the snap ring at the front of the Reverse (center) Carrier has dislodged.

      NOTE: It may be necessary to pry the Input Annulus Gear Shell rearward to check this snap ring.

      Is the Reverse Carrier Snap Ring dislodged?

      Yes

      - Repair as necessary.
      - Perform the 66RFE TRANSMISSION VERIFICATION TEST. Refer to **66RFE TRANSMISSION VERIFICATION TEST**.

      No

      - Replace the Transmission Solenoid/TRS Assembly in accordance with the Service Information. Refer to **ASSEMBLY, TRANSMISSION SOLENOID AND TRS, REMOVAL** .
      - Perform the 66RFE TRANSMISSION VERIFICATION TEST. Refer to **66RFE TRANSMISSION VERIFICATION TEST**.

10. **CHECK THE (T50) L/R PRESSURE CONTROL CIRCUIT FOR AN OPEN**

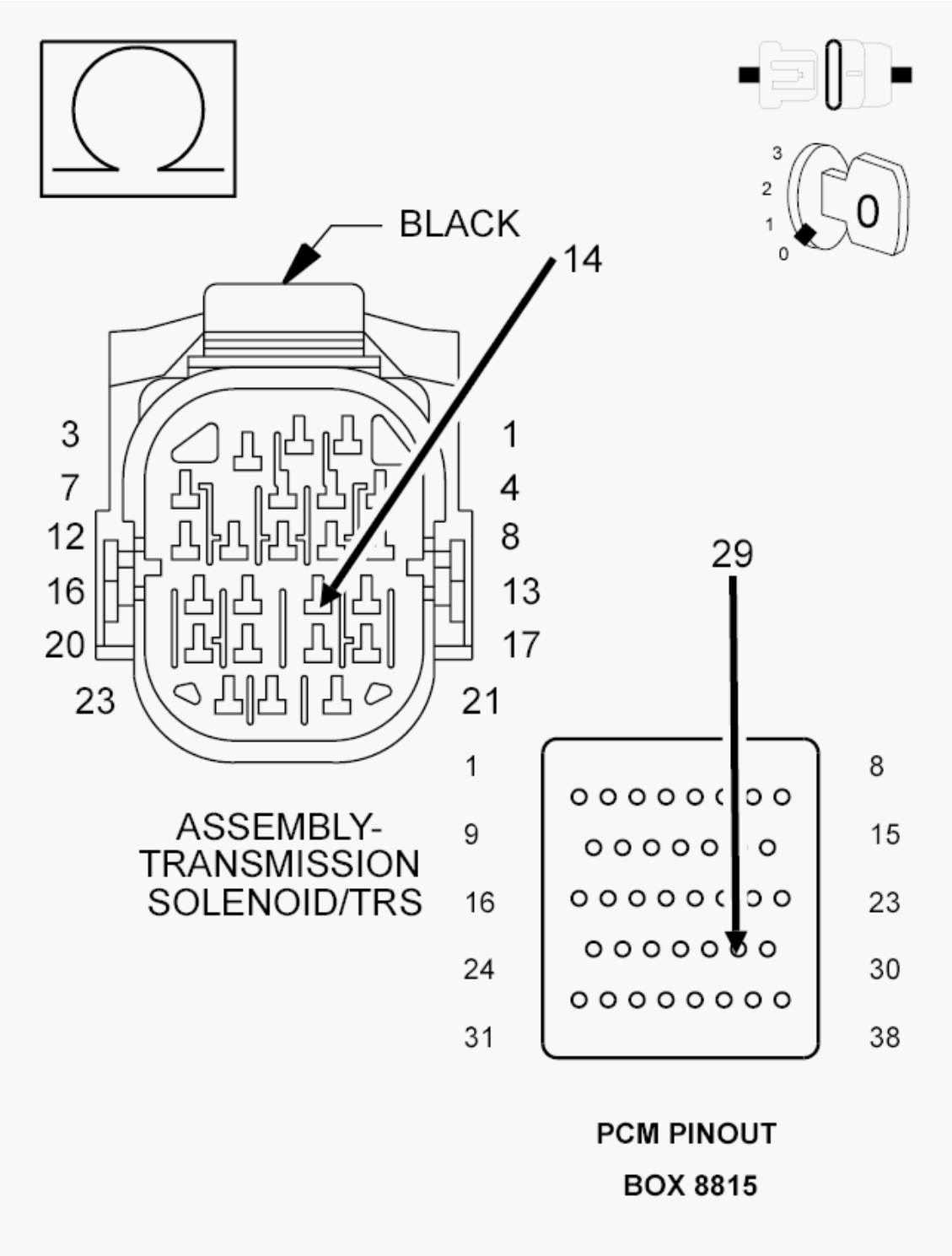

Fig. 31: Checking L/R Pressure Switch Sense Circuit For An Open
Courtesy of CHRYSLER GROUP, LLC

1. Turn the ignition OFF to the LOCK position.
2. Disconnect the (special tool #8333A, Simulator, Transmission) if connected in a previous step or disconnect the Transmission Solenoid/TRS Assembly harness connector.

3. Disconnect the PCM C4 harness connector and connect the (special tool #8815A, Kit, NGC, 38 Position).

CAUTION: Do not probe the PCM harness connectors. Probing the PCM harness connectors will damage the PCM terminals resulting in poor terminal to pin connection. Install the (special tool #8815A, Kit, NGC, 38 Position) to perform diagnosis.

4. Measure the resistance of the (T50) L/R Pressure Control circuit between the Transmission Solenoid/TRS Assembly harness connector and the appropriate terminal of the (special tool #8815A, Kit, NGC, 38 Position).

   Is the resistance above 5.0 ohms?

   Yes

   - Repair the (T50) L/R Pressure Control circuit for an open.
   - Perform the 66RFE TRANSMISSION VERIFICATION TEST. Refer to **66RFE TRANSMISSION VERIFICATION TEST**.

   No

   - Go To 11.

11. **CHECK THE (T50) L/R PRESSURE CONTROL CIRCUIT FOR A SHORT TO GROUND**

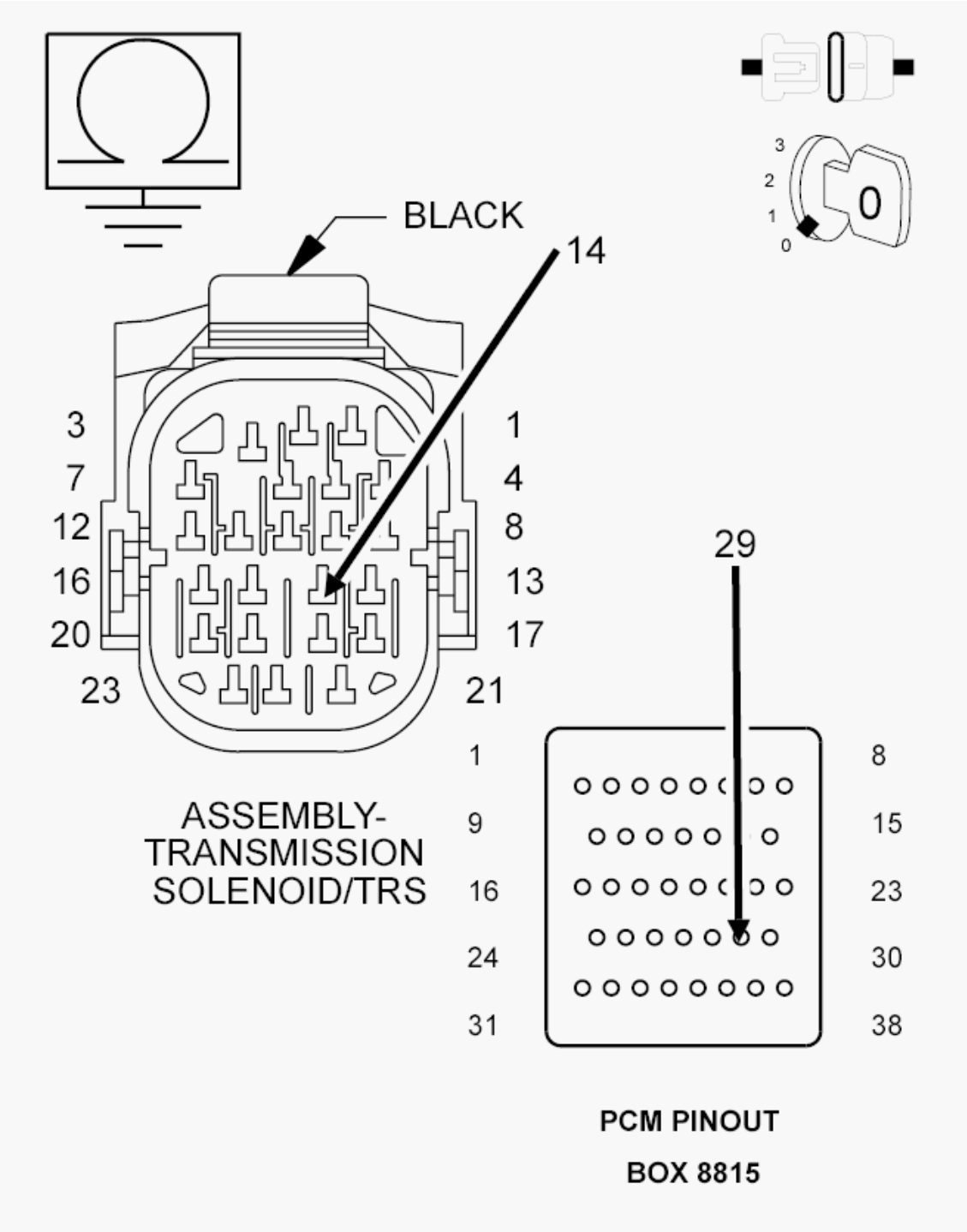

Fig. 32: Checking L/R Pressure Switch Sense Circuit For A Short To Ground
Courtesy of CHRYSLER GROUP, LLC

1. Measure the resistance between ground and the (T50) L/R Pressure Control circuit.

   Is the resistance below 5.0 ohms?

Yes

- Repair the (T50) L/R Pressure Control circuit for a short to ground.
- Perform the 66RFE TRANSMISSION VERIFICATION TEST. Refer to **66RFE TRANSMISSION VERIFICATION TEST**.

No

- Go To 12.

12. **CHECK THE PCM POWERS AND GROUNDS**
    1. Using the schematics as a guide, check the Powertrain Control Module (PCM) terminals for corrosion, damage or terminal push out. Pay particular attention to all power and ground circuits.

    Were any problems found?

    Yes

    - Repair as necessary.
    - Perform the 66RFE TRANSMISSION VERIFICATION TEST. Refer to **66RFE TRANSMISSION VERIFICATION TEST**.

    No

    - Go To 13.

13. **CHECK IF THE DTC RESETS**
    1. With the scan tool, clear the DTC and road test the vehicle.
    2. Try to duplicate the conditions in which the DTC set using the Event Data recorded earlier.

    Did DTC P0841 reset?

    Yes

    - Replace and program the Powertrain Control Module (PCM) in accordance with the Service Information. With the scan tool, perform a Quick Learn. Refer to **MODULE, POWERTRAIN CONTROL, REMOVAL** .
    - Perform the 66RFE TRANSMISSION VERIFICATION TEST. Refer to **66RFE TRANSMISSION VERIFICATION TEST**.

    No

    - Go To 17.

14. **CHECK FOR LOW LINE PRESSURE**
    1. In the Event Data recorded earlier, compare the Line Pressure and the Desired Line Pressure.

    Is the Line Pressure less than 40 psi, and significantly below the Desired Line Pressure?

Yes

- Repair as necessary to correct low line pressure. Check for low fluid level. Check the Primary Oil Filter seal for a split, crack or improperly installed. Refer to the Service Information for the proper installation procedure. If the fluid level and Primary Oil Filter are OK, check the Main Regulator Valve in the Oil Pump in accordance with the Service Information. Refer to **PUMP, TRANSMISSION OIL, DISASSEMBLY** .
- Perform the 66RFE TRANSMISSION VERIFICATION TEST. Refer to **66RFE TRANSMISSION VERIFICATION TEST**.

No

- Go To 15.

15. **CHECK THE (T50) L/R PRESSURE CONTROL CIRCUIT FOR A SHORT TO ANOTHER CIRCUIT**

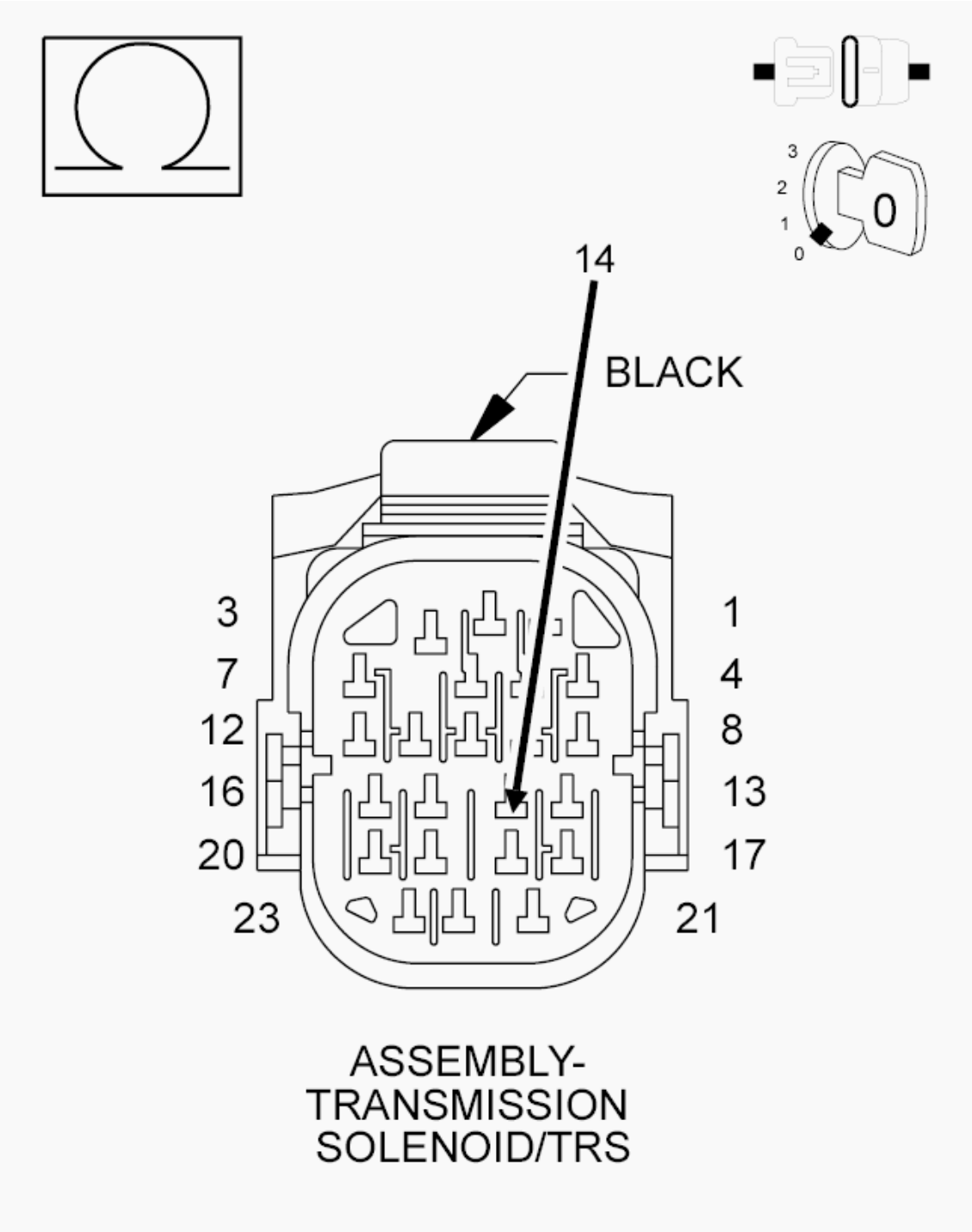

Fig. 33: Checking L/R Pressure Control Circuit For A Short To Another Circuit
Courtesy of CHRYSLER GROUP, LLC

1. Turn the ignition OFF to the LOCK position.
2. Disconnect the Transmission Solenoid/TRS Assembly harness connector.
3. Disconnect all PCM harness connectors.
4. Measure the resistance between the (T50) L/R Pressure Control circuit and all other circuits in the

Transmission Solenoid/TRS Assembly harness connector.

Is the resistance below 5.0 ohms between the (T50) L/R Pressure Control circuit and all other circuit(s) in the Transmission Solenoid/TRS Assembly harness connector?

Yes

- Repair the (T50) L/R Pressure Control circuit for a short to other circuit(s).
- Perform the 66RFE TRANSMISSION VERIFICATION TEST. Refer to **66RFE TRANSMISSION VERIFICATION TEST**.

No

- Go To 16.

16. **CHECK IF DTC RESETS**
    1. With the scan tool, clear the DTC and road test the vehicle.
    2. Try to duplicate the conditions in which the DTC set using the Event Data recorded earlier.

    Did DTC P0841 reset?

    Yes

    - Replace the Transmission Solenoid/TRS Assembly in accordance with the Service Information. Refer to **ASSEMBLY, TRANSMISSION SOLENOID AND TRS, REMOVAL** .
    - Perform the 66RFE TRANSMISSION VERIFICATION TEST. Refer to **66RFE TRANSMISSION VERIFICATION TEST**.

    No

    - Go To 17.

17. **CHECK WIRING AND CONNECTORS**
    1. The conditions necessary to set this DTC are not present at this time.
    2. Using the schematics as a guide, inspect the wiring and connectors specific to this circuit.
    3. Wiggle the wires while checking for shorted and open circuits.
    4. With the scan tool, check the Event Data to help identify the conditions in which the DTC set.

    Were any problems found?

    Yes

    - Repair as necessary.
    - Perform the 66RFE TRANSMISSION VERIFICATION TEST. Refer to **66RFE TRANSMISSION VERIFICATION TEST**.

No

- Test Complete.

P0845-2C HYDRAULIC PRESSURE TEST

For a complete wiring diagram, **refer to appropriate SYSTEM WIRING DIAGRAMS article** .

THEORY OF OPERATION

The Transmission Control System tests the pressure switches when they are off. The test verifies the switches are operational (Close with pressure applied). The Transmission Control System verifies the switch closes when the corresponding element is applied. If a switch fails to close, it is re-tested. If it fails the second test, the DTC will set, the MIL will illuminate and the transmission system will default to the orderly Shutdown routine.

WHEN MONITORED:

In any forward gear with engine speed above 1000 RPM, shortly after a shift and every minute after.

SET CONDITION:

After a shift into a forward gear, with engine speed above 1000 RPM, the Powertrain Control Module (PCM) momentarily turns on element pressure to the clutch circuits that does not have pressure to identify the correct Pressure Switch closes. If the Pressure Switch does not close two times, the DTC sets.

POSSIBLE CAUSES

Possible Causes
LINE PRESSURE SENSOR
TRANSMISSION FLUID CONTAMINATION
RELATED DTCS PRESENT
EXCESSIVE DEBRIS IN OIL PAN
POOR LINE PRESSURE SENSOR CONNECTION
(F856) 5-VOLT SUPPLY CIRCUIT OPEN
(F856) 5-VOLT SUPPLY CIRCUIT SHORTED TO GROUND
(T147) 2C PRESSURE SWITCH SENSE CIRCUIT SHORTED TO ANOTHER CIRCUIT
EXTRA CHECK BALL IN PASSAGE DOWNSTREAM FROM NO. 7 BALL POCKET
TRANSMISSION SOLENOID/TRS ASSEMBLY
INTERNAL TRANSMISSION
POWERTRAIN CONTROL MODULE (PCM)

Always perform the Pre-Diagnostic Troubleshooting procedure before proceeding. Refer to 66RFE PRE-DIAGNOSTIC TROUBLESHOOTING PROCEDURE.

DIAGNOSTIC TEST

1. **CHECK FOR RELATED DTCS**
    1. With the scan tool, check for transmission DTCs

       Are any Loss of Prime, TIPM TCM Power Control Circuit and/or TCM Power Input DTCs present also?

       Yes

       - Refer to **3.7L/4.7L/5.7L - DIAGNOSTIC CODE INDEX - NGC - 1500 & 2500** or **5.7L - DIAGNOSTIC CODE INDEX - 3500 CAB & CHASSIS** and perform the appropriate diagnostic procedure. If DTC, P0944-LOSS OF PRIME is present, perform its respective test first.

       No

       - Go To 2.
2. **CHECK IF DTC P0755 IS PRESENT**
    1. With the scan tool, read DTCs.

       Is DTC P0755 present?

       Yes

       - Refer to **3.7L/4.7L/5.7L - DIAGNOSTIC CODE INDEX - NGC - 1500 & 2500** or **5.7L - DIAGNOSTIC CODE INDEX - 3500 CAB & CHASSIS** and perform the appropriate diagnostic procedure.

       No

       - Go To 3.
3. **CHECK IF DTCS P0732, P0735 AND/OR P0846 ARE PRESENT**
    1. With the scan tool, read DTCs.

       Are DTCs P0732, P0735 and/or P0846 present?

       Yes

       - Go To 12.

       No

       - Go To 4.
4. **CHECK IF THE DTC IS CURRENT**
    1. With the scan tool, read DTCs.

Is the status Active or is the Starts Since Set counter 2 or less for this DTC?

Yes

- Go To 5.

No

- Go To 15.

5. **CHECK IF THE LINE PRESSURE STAYS THE SAME**
   1. Start the engine.
   2. Warm the transmission to 82° C or 180° F.
   3. Firmly apply the brakes.
   4. With the scan tool, monitor the Line Pressure during the following step.
   5. Move the shift lever to each gear position, pausing momentarily in each position and record the line pressure reading. Allow the pressure to stabilize for at least five seconds in each range.

      Did the line pressure remain at a steady value between 585 and 655 kPa or 85 and 95 psi in each position?

      Yes

      - Go To 6.

      No

      - Go To 10.

6. **CHECK THE LINE PRESSURE SENSOR CONNECTION**
   1. Ignition ON, Engine Not Running.
   2. With the scan tool, monitor the Line Pressure while firmly pushing the Transmission Line Pressure Sensor connector inwards towards the Transmission.

      Did the Line Pressure reading on the scan tool change to about 207 kPa (30 psi) or 0.7 volts when the connector was pushed inward?

      Yes

      - Disconnect and properly reconnect the Line Pressure Sensor connector. Inspect the terminals and repair as necessary.
      - Perform the 66RFE TRANSMISSION VERIFICATION TEST. Refer to **66RFE TRANSMISSION VERIFICATION TEST**.

      No

      - Go To 7.

7. **CHECK THE LINE PRESSURE SENSOR OPERATION**
   1. Turn the ignition OFF to the LOCK position.
   2. Remove the Starter Relay.

CAUTION: Removal of the Starter Relay will prevent the vehicle from being started in gear.

WARNING: The Starter Relay must be removed from the PDC. Failure to do so may result in possible serious or fatal injury.

NOTE: Failure to remove the Starter Relay can cause a Transmission - No Response condition.

   3. Install the (special tool #8333A, Simulator, Transmission).
   4. With the Transmission Simulator select the "OFF" position on the "Input/Output Speed" switch.
   5. Ignition ON, Engine Not Running.
   6. With the scan tool, monitor the Line Pressure while turning the Pressure Switch selector to each of the three line pressure positions on the Transmission Simulator.

NOTE: All three scan tool Line Pressure readings should be steady and ±14 kPa (2.0 psi) or 1.0 volt of the reading specified on the Transmission Simulator.

Did the scan tool Line Pressure readings match the specified readings on the Transmission Simulator and remain steady in all three positions?

Yes

- Replace the Line Pressure Sensor in accordance with the Service Information. Refer to **SENSOR, VARIABLE LINE PRESSURE, REMOVAL** .
- Perform the 66RFE TRANSMISSION VERIFICATION TEST. Refer to **66RFE TRANSMISSION VERIFICATION TEST**.

No

- Go To 8.

8. **CHECK THE (F856) 5-VOLT SUPPLY CIRCUIT FOR AN OPEN**

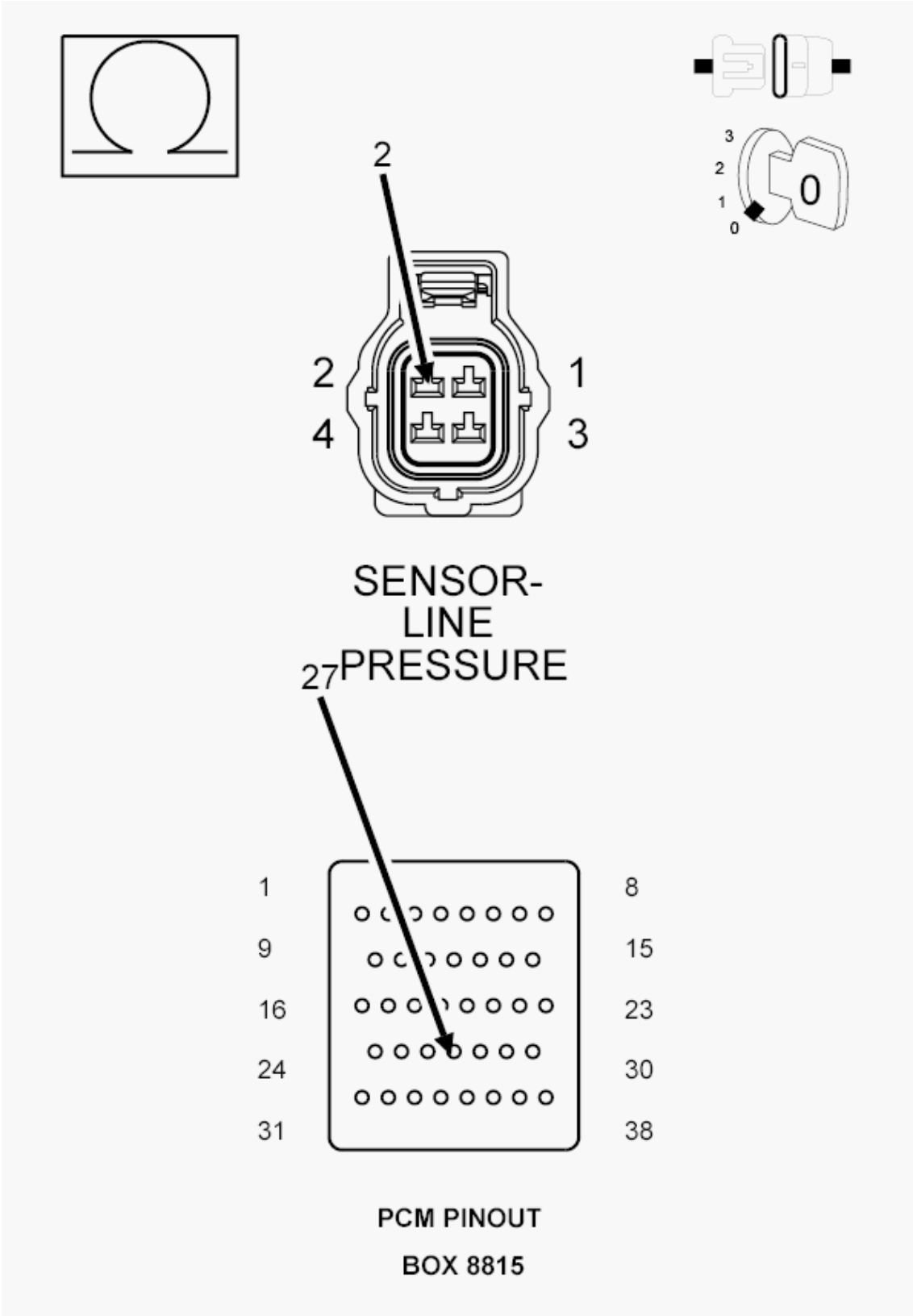

Fig. 34: Checking 5-Volt Supply Circuit For An Open
Courtesy of CHRYSLER GROUP, LLC

1. Turn the ignition OFF to the LOCK position.
2. Disconnect Transmission Simulator.
3. Disconnect the PCM C1 harness connector and connect the (special tool #8815A, Kit, NGC, 38 Position).

CAUTION: Do not probe the PCM harness connectors. Probing the PCM harness connectors will damage the PCM terminals resulting in poor terminal to pin connection. Install the (special tool #8815A, Kit, NGC, 38 Position) to perform diagnosis.

4. Measure the resistance of the (F856) 5-volt Supply circuit between the Line Pressure Sensor harness connector and the appropriate terminal of the (special tool #8815A, Kit, NGC, 38 Position).

   Is the resistance above 5.0 ohms?

   Yes

   - Repair the (F856) 5-volt Supply circuit for an open.
   - Perform the 66RFE TRANSMISSION VERIFICATION TEST. Refer to **66RFE TRANSMISSION VERIFICATION TEST**.

   No

   - Go To 9.

9. **CHECK THE (F856) 5-VOLT SUPPLY CIRCUIT FOR A SHORT TO GROUND**

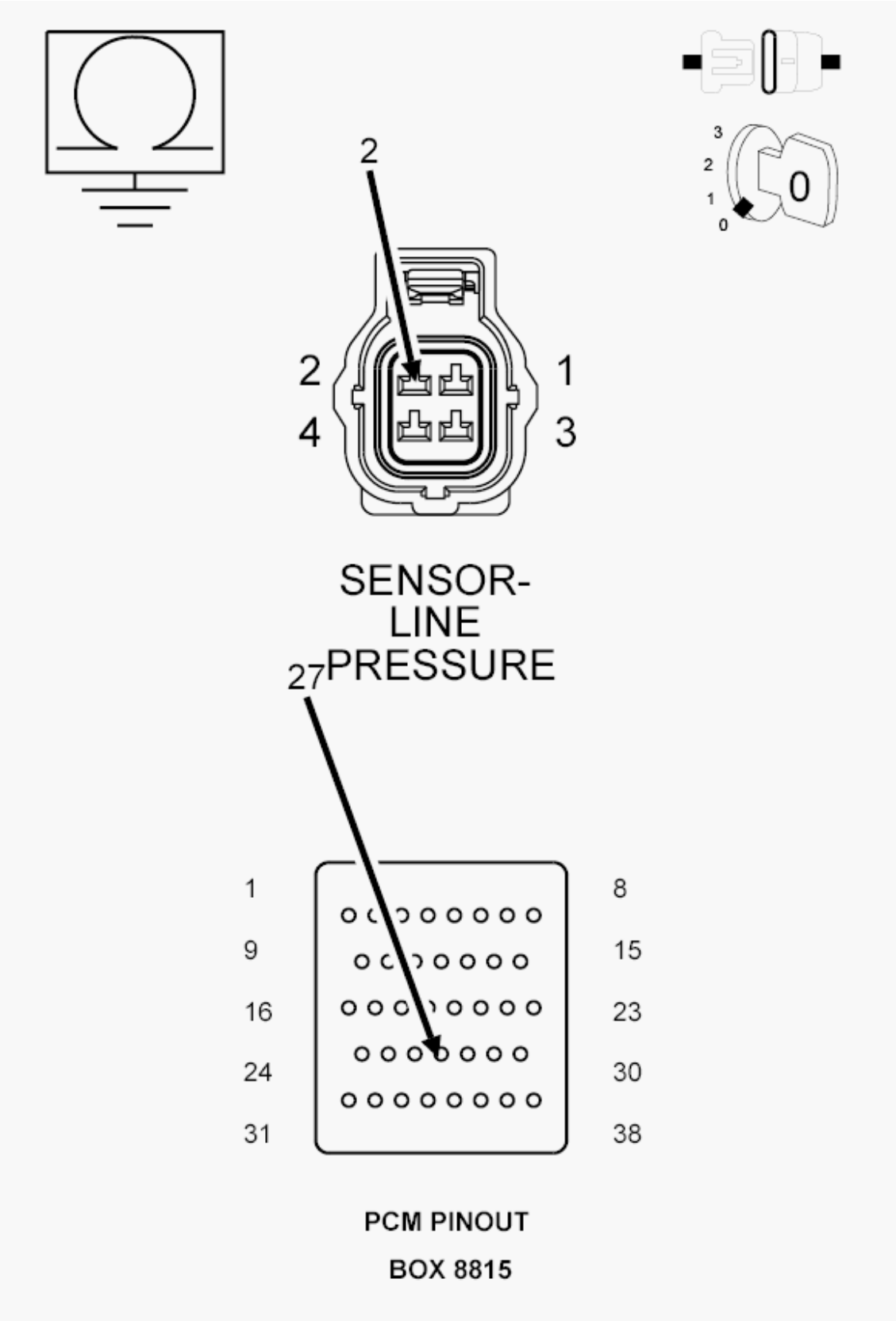

Fig. 35: Checking 5-Volt Supply Circuit For A Short To Ground

Courtesy of CHRYSLER GROUP, LLC

1. Measure the resistance between ground and the (F856) 5-volt Supply circuit.

   Is the resistance below 5.0 ohms?

   Yes

   - Repair the (F856) 5-volt Supply circuit for a short to ground.
   - Perform the 66RFE TRANSMISSION VERIFICATION TEST. Refer to **66RFE TRANSMISSION VERIFICATION TEST**.

   No

   - Using the schematics as a guide, check the Powertrain Control Module (PCM) terminals for corrosion, damage or terminal push out. Pay particular attention to all power and ground circuits. If no problems are found, replace the and program the PCM in accordance with the Service Information. With the scan tool, perform a Quick Learn. Refer to **MODULE, POWERTRAIN CONTROL, REMOVAL** .
   - Perform the 66RFE TRANSMISSION VERIFICATION TEST. Refer to **66RFE TRANSMISSION VERIFICATION TEST**.

10. **COMPARE SCAN TOOL TO THE PRESSURE GAUGE**
    1. Turn the ignition OFF to the LOCK position.
    2. Connect the (special tool #8259, Adapter, Pressure Test) and 0-300 psi (special tool #C-3293-SP, Gauge, Pressure 0-300 P.S.I.). Refer to the Service Information for proper installation procedure.

       CAUTION: Apply parking brake.

    3. Start the engine.
    4. In the following steps, compare the scan tool Line Pressure to the Pressure Gauge readings in each gear.

       CAUTION: Do not overheat transmission.

    5. With the gear selector in park, raise the RPM to 1500 and compare line pressure readings.
    6. Firmly apply the brakes, move the gear selector into reverse, raise the RPM to 1500 and compare the line pressure readings.
    7. Firmly apply the brakes, move the gear selector into drive, raise the RPM to 1500 and compare the line pressure readings.

       Does the scan tool Line Pressure readings match the Pressure Gauge readings ± 10 psi?

Yes

- Go To 11.

No

- Replace the Line Pressure Sensor in accordance with the Service Information. Refer to **SENSOR, VARIABLE LINE PRESSURE, REMOVAL** .
- Perform the 66RFE TRANSMISSION VERIFICATION TEST. Refer to **66RFE TRANSMISSION VERIFICATION TEST**.

11. **CHECK WIRING AND CONNECTORS**
    1. Turn the ignition OFF to the LOCK position.
    2. Remove the Starter Relay.

CAUTION: Removal of the Starter Relay will prevent the vehicle from being started in gear.

WARNING: The Starter Relay must be removed from the PDC. Failure to do so may result in possible serious or fatal injury.

NOTE: Failure to remove the Starter Relay can cause a Transmission - No Response condition.

    3. Remove the (special tool #8259, Adapter, Pressure Test) and 0-300 psi (special tool #C-3293-SP, Gauge, Pressure 0-300 P.S.I.).
    4. Install the (special tool #8333A, Simulator, Transmission).
    5. On the Transmission Simulator, turn the Pressure Switch selector switch to 2C.
    6. Ignition ON, Engine Not Running.
    7. With the scan tool, monitor the 2C Pressure Switch state while pressing and holding the Pressure Switch test button and wiggling the wire harness and connectors that pertain to the 2C Pressure Switch.

    Did the 2C Pressure Switch state change to closed and remain closed while wiggling the wires?

    Yes

    - Go To 12.

    No

    - Go To 14.

12. **CHECK FOR EXCESSIVE DEBRIS**
    1. Turn the ignition OFF to the LOCK position.

2. Remove the (special tool #8333A, Simulator, Transmission).
3. Remove and inspect the Transmission Oil Pan in accordance with the Service Information.

   Does the Transmission Oil Pan contain excessive debris or contamination?

   Yes

   - Repair the cause of the excessive debris in the Transmission Oil Pan.
   - Perform the 66RFE TRANSMISSION VERIFICATION TEST. Refer to **66RFE TRANSMISSION VERIFICATION TEST**.

   No

   - Go To 13.

13. **CHECK THE 2C HYDRAULIC CLUTCH CIRCUIT**
    1. Remove the Valve Body and air check the 2C clutch hydraulic circuit in the 2C/4C clutch retainer for leakage in accordance with the Service Information.

       NOTE: The 2C hydraulic clutch circuit contains a small bleed orifice and a small amount of air leakage is normal.

       Was there excessive air leakage noticed during the air check?

       Yes

       - Repair as necessary. Check the 2C clutch piston, piston seals and bleed orifice assembly. Refer to **VALVE BODY, REMOVAL** .
       - Perform the 66RFE TRANSMISSION VERIFICATION TEST. Refer to **66RFE TRANSMISSION VERIFICATION TEST**.

       No

       - Disassemble and inspect the Valve Body and repair as necessary. Inspect the 2C Accumulator piston and seals. Check for an extra check ball downstream from the No. 7 check ball pocket and repair as necessary. If no problems are found in the Valve Body, replace the Transmission Solenoid/TRS Assembly in accordance with the Service Information. Refer to **ASSEMBLY, TRANSMISSION SOLENOID AND TRS, REMOVAL** .
       - Perform the 66RFE TRANSMISSION VERIFICATION TEST. Refer to **66RFE TRANSMISSION VERIFICATION TEST**.

14. **CHECK THE (T147) 2C PRESSURE SIGNAL CIRCUIT FOR A SHORT TO ANOTHER CIRCUIT**

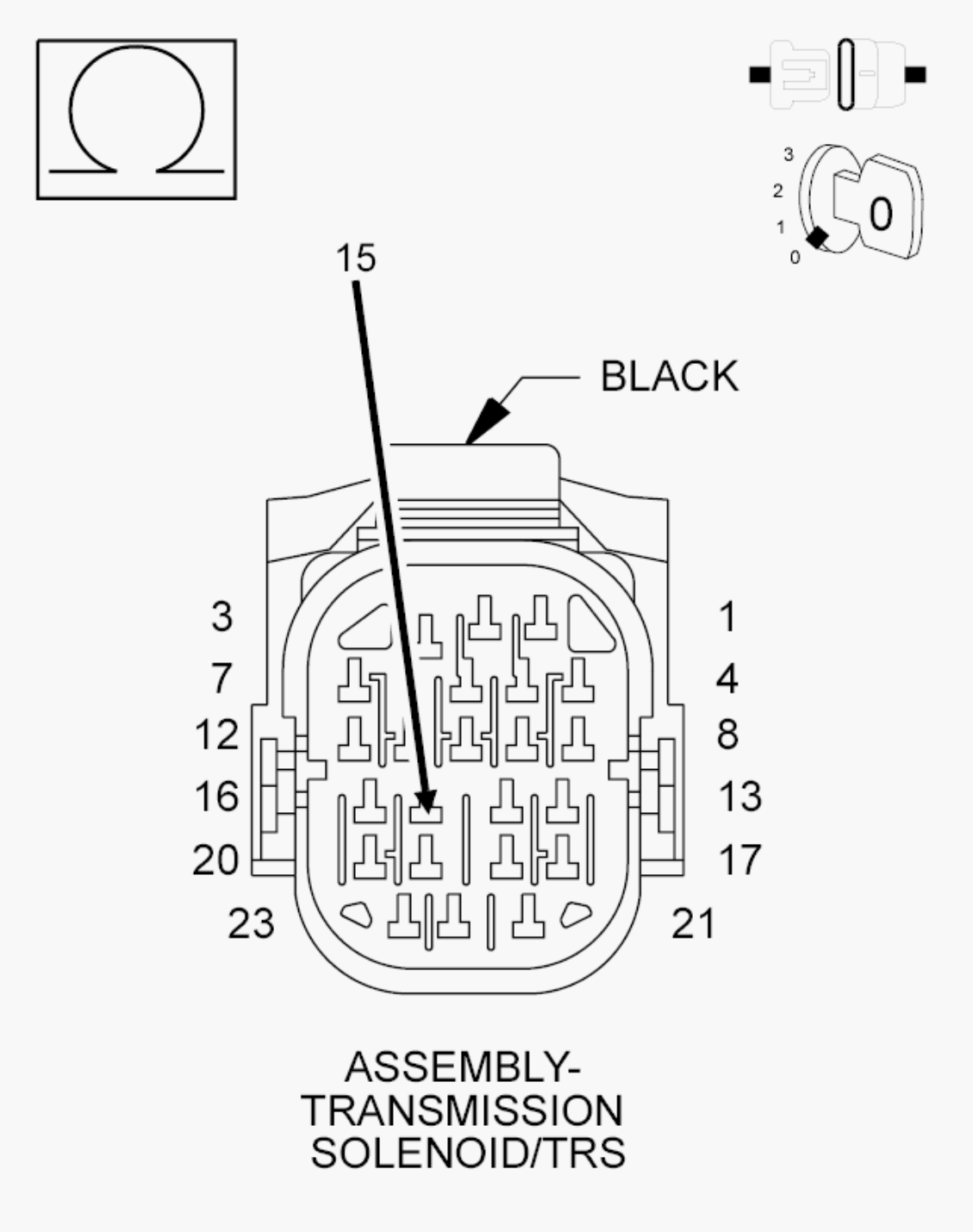

Fig. 36: Checking 2C Pressure Signal Circuit For A Short To Another Circuit
Courtesy of CHRYSLER GROUP, LLC

1. Disconnect all PCM harness connectors.
2. Disconnect the Transmission Solenoid/TRS Assembly harness connector.

NOTE: Make sure the Transmission Solenoid/TRS Assembly harness

connector is disconnected.

3. Measure the resistance between the (T147) 2C Pressure Signal circuit and all other circuits in the Transmission Solenoid/TRS Assembly harness connector.

   Is the resistance below 5.0 ohms between the (T147) 2C Pressure Signal circuit and any other circuit(s) in the Transmission Solenoid/TRS Assembly harness connector?

   Yes

   - Repair the (T147) 2C Pressure Signal circuit for a short to another circuit(s).
   - Perform the 66RFE TRANSMISSION VERIFICATION TEST. Refer to **66RFE TRANSMISSION VERIFICATION TEST**.

   No

   - Using the schematics as a guide, check the Powertrain Control Module (PCM) terminals for corrosion, damage or terminal push out. Pay particular attention to all power and ground circuits. If no problems are found, replace and program the PCM in accordance with the Service Information. With the scan tool, perform a Quick Learn. Refer to **MODULE, POWERTRAIN CONTROL, REMOVAL** .
   - Perform the 66RFE TRANSMISSION VERIFICATION TEST. Refer to **66RFE TRANSMISSION VERIFICATION TEST**.

15. **CHECK WIRING AND CONNECTORS**
    1. The conditions necessary to set this DTC are not present at this time.
    2. Using the schematics as a guide, inspect the wiring and connectors specific to this circuit.
    3. Wiggle the wires while checking for shorted and open circuits.
    4. With the scan tool, check the Event Data to help identify the conditions in which the DTC set.
    5. If the Event Data shows DTC P0845 set while the Line Pressure was significantly below the Desired Line Pressure reading, check for causes of low line pressure (low fluid level, broken or mis-installed primary oil filter or filter seal, sticking Main Regulator Valve in the Pump Valve Body etc.). If the data shows the DTC set while the Line Pressure reading was significantly higher than the Desired Line Pressure, check the Line Pressure Sensor and related wiring.

       Where any problems found?

       Yes

       - Repair as necessary.
       - Perform the 66RFE TRANSMISSION VERIFICATION TEST. Refer to **66RFE TRANSMISSION VERIFICATION TEST**.

       No

       - Test Complete.

P0846-2C PRESSURE SWITCH RATIONALITY

For a complete wiring diagram, **refer to appropriate SYSTEM WIRING DIAGRAMS article** .

THEORY OF OPERATION

The Transmission system uses five pressure switches to monitor the fluid pressure in the L/R, 2C, 4C, UD and OD clutch circuits. The pressure switches are continuously monitored for the correct states in each gear as shown in chart.

WHEN MONITORED:

Continuously with the ignition on, engine running and the transmission in gear.

SET CONDITION:

The DTC is set if the 2C Pressure Switch reads open or closed at the wrong time in a given gear.

POSSIBLE CAUSES

Possible Causes
RELATED DTCS PRESENT
(T147) 2C PRESSURE SIGNAL CIRCUIT OPEN
(T147) 2C PRESSURE SIGNAL CIRCUIT SHORTED TO GROUND
(T147) 2C PRESSURE SIGNAL CIRCUIT SHORTED TO OTHER CIRCUITS
EXCESSIVE FLUID LEAKAGE IN 2C CLUTCH CIRCUIT
NO. 5 AND/OR NO. 7 CHECK BALL CUT OR DAMAGED
EXTRA CHECK BALL DOWNSTREAM OF THE NO. 7 CHECK BALL POCKET
LOW LINE PRESSURE
TRANSMISSION SOLENOID/TRS ASSEMBLY
POWERTRAIN CONTROL MODULE (PCM)
WIRING AND CONNECTORS

Always perform the Pre-Diagnostic Troubleshooting procedure before proceeding. Refer to 66RFE PRE-DIAGNOSTIC TROUBLESHOOTING PROCEDURE.

GEAR	L/R	2C	4C	UD	OD
REVERSE	OPEN	OPEN	OPEN	OPEN	OPEN
P/N	CLOSED**	OPEN	OPEN	OPEN	OPEN
1ST	CLOSED*	OPEN	OPEN	CLOSED	OPEN
2ND	OPEN	CLOSED	OPEN	CLOSED	OPEN
2ND PRIME	OPEN	OPEN	CLOSED	CLOSED	OPEN
3RD	OPEN	OPEN	OPEN	CLOSED	CLOSED
4TH	OPEN	OPEN	CLOSED	OPEN	CLOSED

5TH	OPEN	CLOSED	OPEN	OPEN	CLOSED
		*L/R is closed if output speed is below 100 RPM in Drive and Manual 2. L/R is closed in Manual 1.			
		**May be open when rolling in Neutral or at low oil temperatures.			

DIAGNOSTIC TEST

1. **DETERMINE IF RELATED TCM POWER INPUT DTCS ARE PRESENT**
    1. Using the scan tool, check for transmission DTCs.

       Are TCM Power Input DTCs present?

       Yes

       - Refer to **3.7L/4.7L/5.7L - DIAGNOSTIC CODE INDEX - NGC - 1500 & 2500** or **5.7L - DIAGNOSTIC CODE INDEX - 3500 CAB & CHASSIS** and perform the appropriate diagnostic procedure.

       No

       - Go To 2.
2. **CHECK IF THE DTC IS CURRENT**
    1. Using the scan tool, check the Event Data.

       Does the Event Data show data for DTC P0846?

       Yes

       - Go To 3.

       No

       - Refer to **3.7L/4.7L/5.7L - DIAGNOSTIC CODE INDEX - NGC - 1500 & 2500** or **5.7L - DIAGNOSTIC CODE INDEX - 3500 CAB & CHASSIS** and perform the appropriate symptom shown in the Event Data.
3. **CHECK FOR MULTIPLE DTCS**
    1. Using the scan tool, check for transmission DTCs.

       Are there two or more related pressure switch rationality DTCs present in addition to P0846?

       Yes

       - Go To 4.

       No

- Go To 7.

4. **CHECK IF ALL PRESSURE SWITCHES READ CLOSED**
   1. Using the scan tool, check the Event Data for P0846.

      NOTE: Make sure to record all Event Data stored in the scan tool for future reference in this test procedure.

      Do all the pressure switches read CLOSED in the Event Data for P0846?

      Yes

      - Refer to **DIAGNOSIS AND TESTING** and perform the diagnostics for P0882.

      No

      - Go To 5.

5. **CHECK IF ALL PRESSURE SWITCHES READ OPEN**

   In the Event Data recorded earlier, do all the pressure switches read OPEN?

   Yes

   - Go To 6.

   No

   - Go To 7.

6. **CHECK FOR LOW LINE PRESSURE**

   In the Event Data recorded earlier, is the Line Pressure less than 40 psi and significantly below the Desired Line Pressure?

   Yes

   - Repair as necessary to correct low line pressure. Check the fluid level and adjust as necessary. If the fluid level is OK, check the Primary Oil Filter seal for a split, crack or improperly installed. If the filter and seal are OK, check the Main Regulator Valve in the Oil Pump. Refer to the Service Information for the above procedures. Refer to **PUMP, TRANSMISSION OIL, DISASSEMBLY** .
   - Perform the 66RFE TRANSMISSION VERIFICATION TEST. Refer to **66RFE TRANSMISSION VERIFICATION TEST**.

   No

   - Replace the Transmission Solenoid/TRS Assembly in accordance with the Service Information.

Refer to **ASSEMBLY, TRANSMISSION SOLENOID AND TRS, REMOVAL** .

- Perform the 66RFE TRANSMISSION VERIFICATION TEST. Refer to **66RFE TRANSMISSION VERIFICATION TEST**.

7. **CHECK IF THE DTC SET IN PARK REVERSE OR NEUTRAL**
   1. Using the scan tool, check the Event Data for P0846.

      NOTE: Make sure to record all Event Data stored in the scan tool for future reference in this test procedure.

      Does the Event Data show DTC P0846 set in Park, Reverse or Neutral?

      Yes

      - Go To 12.

      No

      - Go To 8.

8. **CHECK IF THE 2C PRESSURE SWITCH READS CLOSED**

   In the Event Data recorded earlier, does the Event Data show the 2C Pressure Switch reading CLOSED?

   Yes

   - Go To 10.

   No

   - Go To 9.

9. **COMPARE THE LINE PRESSURE TO THE DESIRED LINE PRESSURE**
   1. In the Event Data recorded earlier, compare the Line Pressure and the Desired Line Pressure.

      Is the Line Pressure less than 40 psi and significantly below the Desired Line Pressure?

      Yes

      - Repair as necessary to correct low line pressure. Check the fluid level and adjust as necessary. If the fluid level is OK, check the Primary Oil Filter seal for a split, crack or improperly installed. If the filter and seal are OK, check the Main Regulator Valve in the Oil Pump. Refer to **PUMP, TRANSMISSION OIL, DISASSEMBLY** .
      - Perform the 66RFE TRANSMISSION VERIFICATION TEST. Refer to **66RFE TRANSMISSION VERIFICATION TEST**.

      No

- Go To 15.

10. **CHECK THE PCM AND WIRING**
    1. Turn the ignition OFF to the LOCK position.
    2. Remove the Starter Relay.

CAUTION: Removal of the Starter Relay will prevent the vehicle from being started in gear.

WARNING: The Starter Relay must be removed from the PDC. Failure to do so may result in possible serious or fatal injury.

NOTE: Failure to remove the Starter Relay can cause a Transmission - No Response condition.

    3. Install the (special tool #8333A, Simulator, Transmission).
    4. Ignition ON, Engine Not Running.
    5. With the Transmission Simulator, turn the Pressure Switch selector switch to the 2C position.
    6. Using the scan tool, monitor the 2C Pressure Switch while pressing the Pressure Switch test button on the Transmission Simulator.

    Did the state of the 2C Pressure Switch change while pressing the Pressure Switch Test button?

    Yes

    - Go To 11.

    No

    - Go To 12.

11. **CHECK THE TRANSMISSION SOLENOID/TRS ASSEMBLY**
    1. Using the schematics as a guide, inspect the wiring and connectors specific to this circuit.
    2. Wiggle the wires while checking for shorted and open circuits.

    Where any problems found?

    Yes

    - Repair as necessary.
    - Perform the 66RFE TRANSMISSION VERIFICATION TEST. Refer to **66RFE TRANSMISSION VERIFICATION TEST**.

    No

- Replace the Transmission Solenoid/TRS Assembly in accordance with the Service Information. Refer to **ASSEMBLY, TRANSMISSION SOLENOID AND TRS, REMOVAL** .
- Perform the 66RFE TRANSMISSION VERIFICATION TEST. Refer to **66RFE TRANSMISSION VERIFICATION TEST**.

12. **CHECK THE (T147) 2C PRESSURE SIGNAL CIRCUIT FOR AN OPEN**

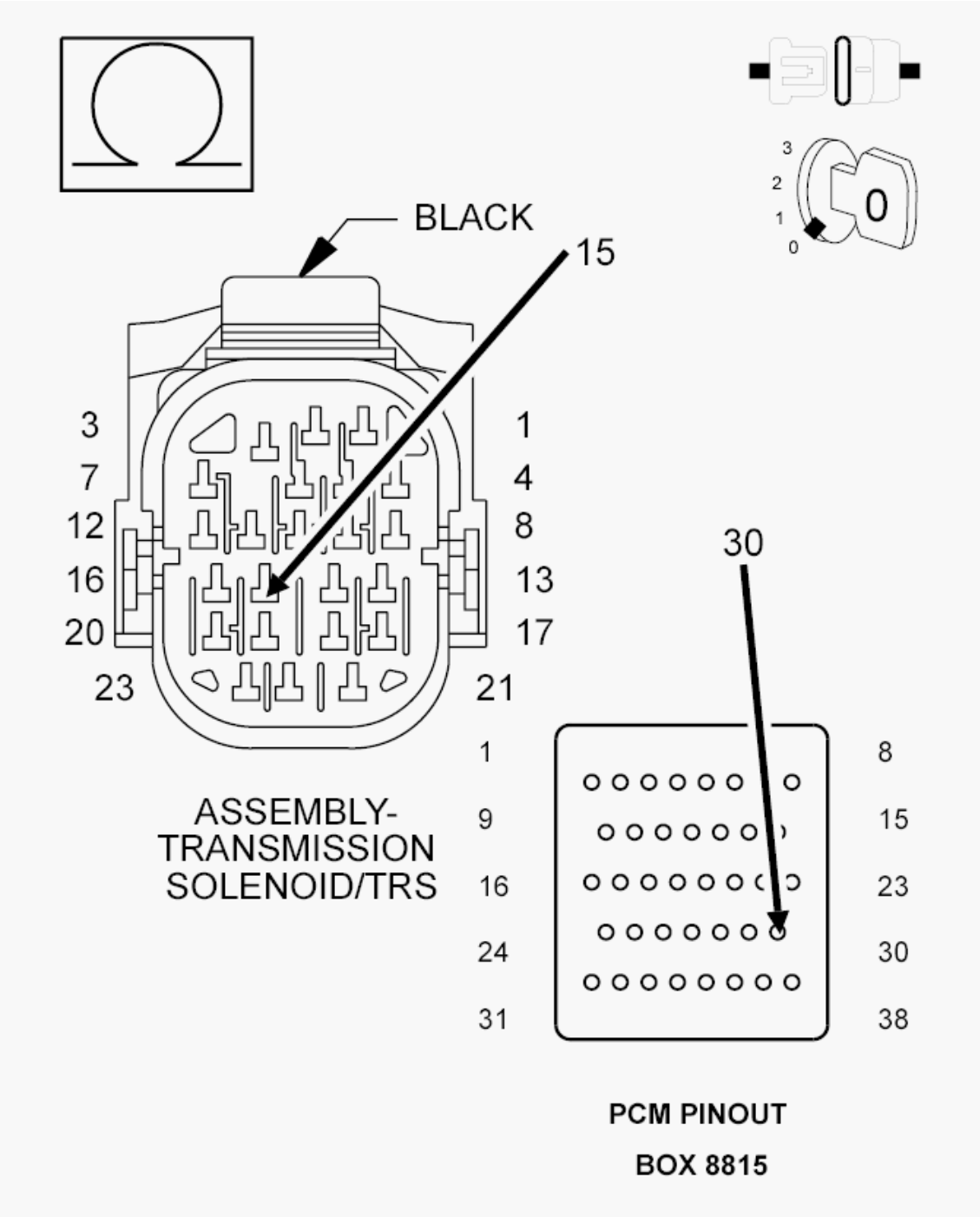

Fig. 37: Checking 2C Pressure Signal Circuit For An Open

1. Turn the ignition OFF to the LOCK position.
2. Disconnect the (special tool #8333A, Simulator, Transmission).
3. Disconnect the PCM C4 harness connector.
4. Connect the (special tool #8815A, Kit, NGC, 38 Position) to the PCM C4 harness connector.

CAUTION: Do not probe the PCM harness connectors. Probing the PCM harness connectors will damage the PCM terminals resulting in poor terminal to pin connection. Install the (special tool #8815A, Kit, NGC, 38 Position) to perform diagnosis.

5. Measure the resistance of the (T147) 2C Pressure Switch Sense circuit between the Transmission Solenoid/TRS Assembly harness connector and the appropriate terminal of the (special tool #8815A, Kit, NGC, 38 Position).

   Is the resistance above 5.0 ohms?

   Yes

   - Repair the (T147) 2C Pressure Switch Sense circuit for an open.
   - Perform the 66RFE TRANSMISSION VERIFICATION TEST. Refer to **66RFE TRANSMISSION VERIFICATION TEST**.

   No

   - Go To 13.

13. **CHECK THE (T147) 2C PRESSURE SIGNAL CIRCUIT FOR A SHORT TO GROUND**

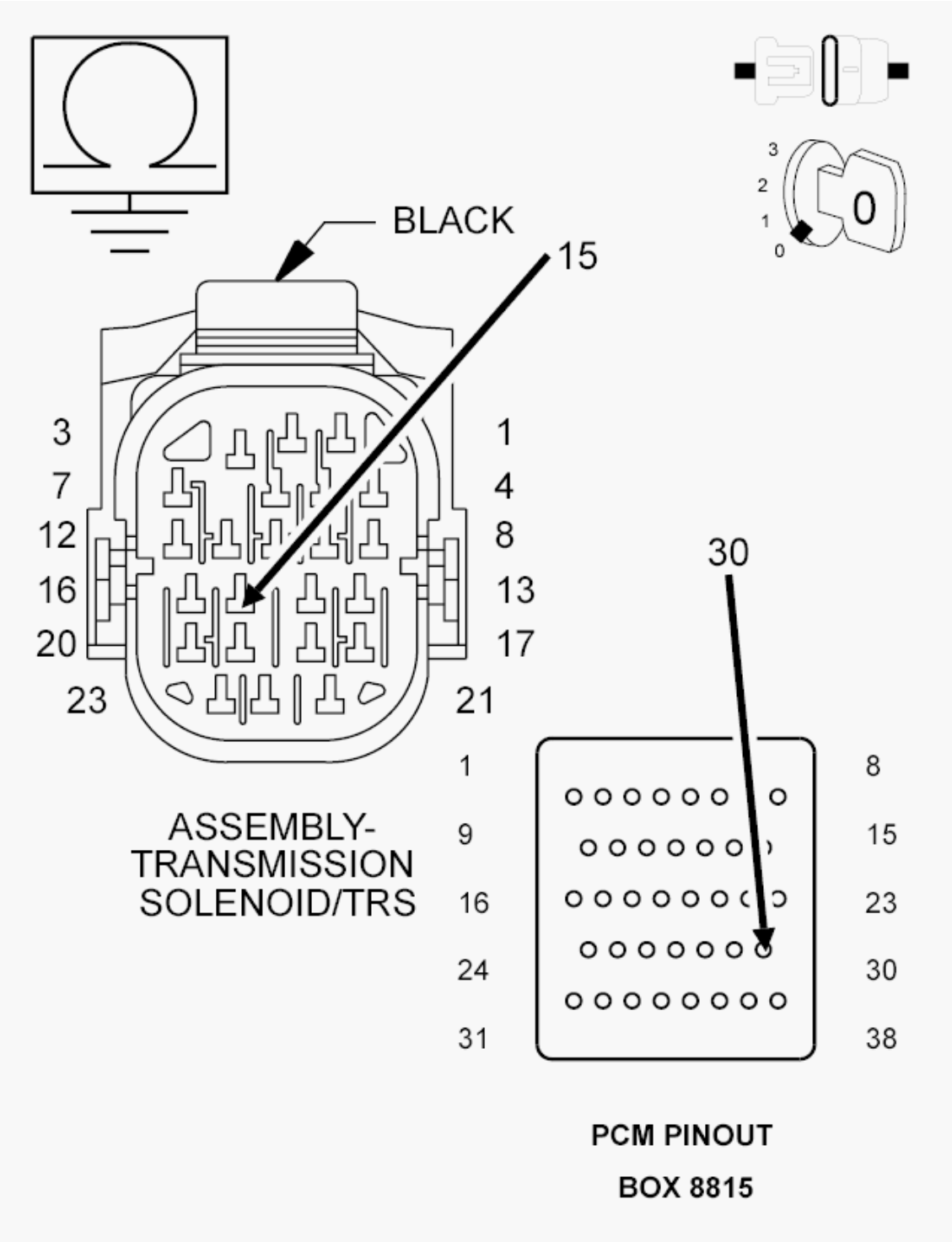

Fig. 38: Checking 2C Pressure Signal Circuit For A Short To Ground
Courtesy of CHRYSLER GROUP, LLC

1. Measure the resistance between ground and the (T147) 2C Pressure Switch Sense circuit.

   Is the resistance below 5.0 ohms?

Yes

- Repair the (T147) 2C Pressure Switch Sense circuit for a short to ground.
- Perform the 66RFE TRANSMISSION VERIFICATION TEST. Refer to **66RFE TRANSMISSION VERIFICATION TEST**.

No

- Go To 14.

14. **CHECK THE (T147) 2C PRESSURE SIGNAL CIRCUIT FOR A SHORT TO ANOTHER CIRCUIT**

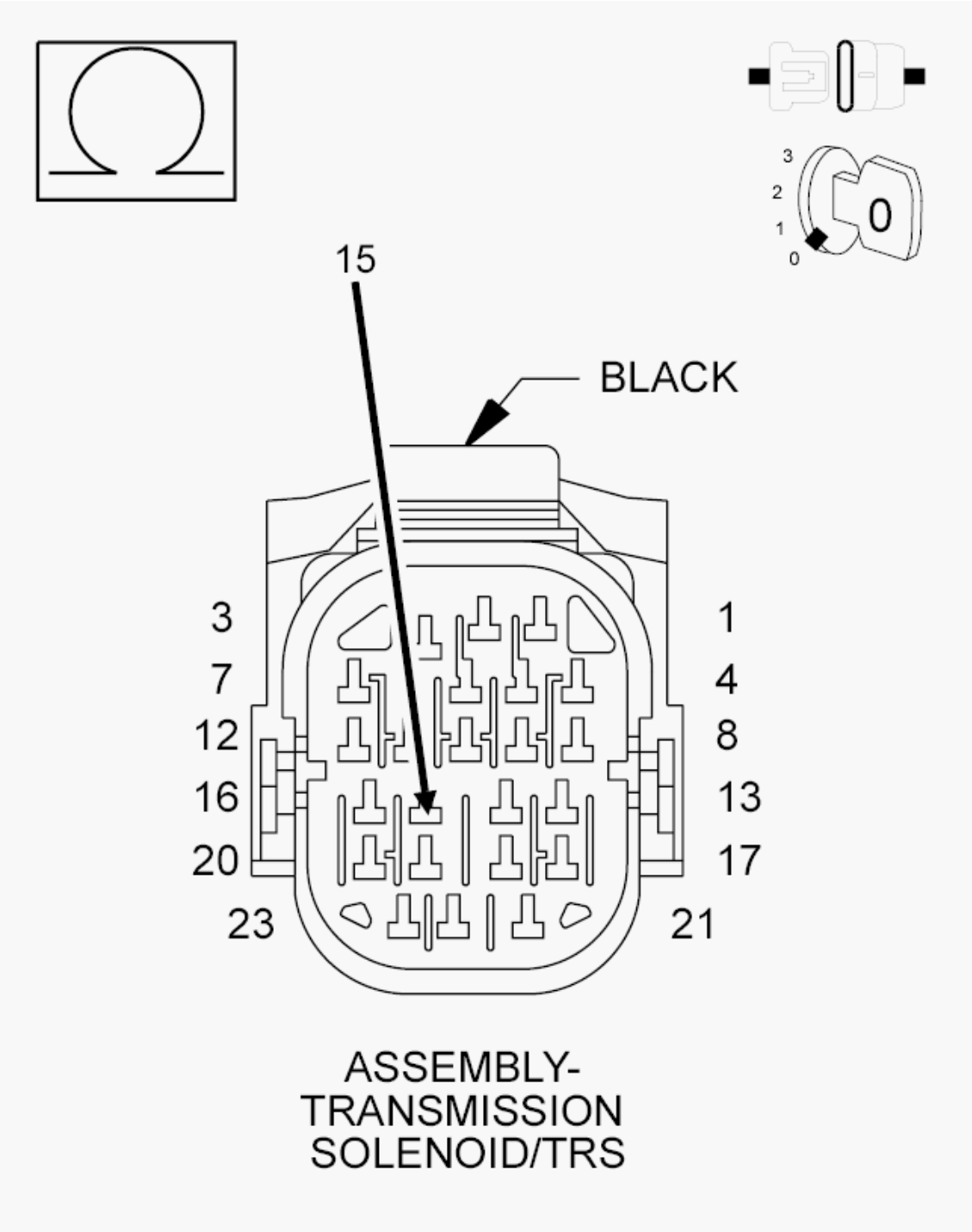

Fig. 39: Checking 2C Pressure Signal Circuit For A Short To Another Circuit
Courtesy of CHRYSLER GROUP, LLC

1. Measure the resistance between the (T147) 2C Pressure Switch Sense circuit and all the other circuits in the Transmission Solenoid/TRS Assembly harness connector.

   Is the resistance below 5.0 ohms?

Yes

- Repair the (T147) 2C Pressure Switch Sense circuit for a short to another circuit(s).
- Perform the 66RFE TRANSMISSION VERIFICATION TEST. Refer to **66RFE TRANSMISSION VERIFICATION TEST**.

No

- Replace and program the Powertrain Control Module (PCM) in accordance with the Service Information. Using the scan tool, perform a Quick Learn procedure. Refer to **MODULE, POWERTRAIN CONTROL, REMOVAL** .
- Perform the 66RFE TRANSMISSION VERIFICATION TEST. Refer to **66RFE TRANSMISSION VERIFICATION TEST**.

15. **CHECK IF THE NO. 5 AND/OR NO. 7 CHECK BALL IS CUT OR DAMAGED**
    1. Turn the Ignition OFF to the LOCK position.
    2. Remove the Valve Body Assembly in accordance with the Service Information.
    3. Inspect the No. 5 and No. 7 check balls for any cuts or damage.
    4. Check for an extra check ball in the passage downstream from the No. 7 check ball pocket.
    5. Inspect the 2C accumulator piston and seals and also the 2C tower seal on top of the valve body.

    Where any problems found?

    Yes

    - Repair as necessary. Check for excessive clutch debris in the transmission oil pan. If excessive clutch debris is present, repair 2C clutch as necessary. Refer to **A/T - REMOVAL** .
    - Perform the 66RFE TRANSMISSION VERIFICATION TEST. Refer to **66RFE TRANSMISSION VERIFICATION TEST**.

    No

    - Go To 16.

16. **CHECK FOR EXCESSIVE FLUID LEAKAGE WITHIN 2C CLUTCH CIRCUIT**
    1. Air check the 2C Clutch hydraulic circuit. Refer to the Service Information.

    NOTE: **This hydraulic clutch circuit contains a small bleed orifice. Small leakage is considered normal.**

    Was there excessive air leakage in the 2C Clutch hydraulic circuit?

    Yes

    - Repair as necessary. Refer to **A/T - REMOVAL** .

- Perform the 66RFE TRANSMISSION VERIFICATION TEST. Refer to **66RFE TRANSMISSION VERIFICATION TEST**.

No

- Replace the Transmission Solenoid/TRS Assembly in accordance with the Service Information. Refer to **ASSEMBLY, TRANSMISSION SOLENOID AND TRS, REMOVAL** .
- Perform the 66RFE TRANSMISSION VERIFICATION TEST. Refer to **66RFE TRANSMISSION VERIFICATION TEST**.

P0868-LINE PRESSURE LOW

For a complete wiring diagram, **refer to appropriate SYSTEM WIRING DIAGRAMS article** .

THEORY OF OPERATION

Line pressure is measured by the Line Pressure Sensor (LPS) and regulation is achieved by changing the duty cycle of the Pressure Control Solenoid (PCS) controlled by the Transmission Control System, (5% duty cycle = solenoid off = Max line pressure, 62% duty cycle = solenoid on = Min line pressure). The Transmission Control System calculates the desired line pressure based on engine and transmission inputs.

The Transmission Control System calculates torque input to the transmission and uses this as the primary input for the desired line pressure calculation. This is called Torque Based Line Pressure. In addition, the line pressure is set to a preset level of 827 or 931 kPa (120 or 135 psi) during shifts and in Park or Neutral to ensure consistent shift quality. The actual line pressure is continuously being compared to the desired target line pressure. If the actual line pressure is consistently lower than the target while driving, the line pressure low DTC P0868 will set.

WHEN MONITORED:

Continuously while driving in a forward gear.

SET CONDITION:

The Powertrain Control Module (PCM) continuously monitors Actual Line Pressure and compares this to Desired Line Pressure. If the Actual Line Pressure is more than 15 psi below Desired Line Pressure for 3.5 seconds continuously, this DTC will set.

POSSIBLE CAUSES

Possible Causes
CHECK FOR RELATED DTCS
LOW FLUID LEVEL
(F856) 5-VOLT SUPPLY CIRCUIT OPEN
POOR LINE PRESSURE SENSOR CONNECTION

(F856) 5-VOLT SUPPLY CIRCUIT SHORTED TO GROUND
(F856) 5-VOLT SUPPLY CIRCUIT SHORTED TO VOLTAGE
(T118) LINE PRESSURE VARIABLE FORCE SOLENOID CONTROL CIRCUIT SHORTED TO ANOTHER CIRCUIT
INTERNAL TRANSMISSION
LINE PRESSURE SENSOR
CRACKED, PLUGGED, OR MIS-INSTALLED PRIMARY OIL FILTER
LOOSE COOLER RETURN SPIN ON FILTER (IF EQUIPPED)
STUCK OR STICKING MAIN REGULATOR VALVE
POWERTRAIN CONTROL MODULE (PCM)

Always perform the Pre-Diagnostic Troubleshooting procedure before proceeding. Refer to 66RFE PRE-DIAGNOSTIC TROUBLESHOOTING PROCEDURE.

DIAGNOSTIC TEST

1. **CHECK FOR RELATED DTCS**
   1. With the scan tool, read DTCs.

      Is DTC P0933 present?

      Yes

      - Refer to **DIAGNOSIS AND TESTING** and perform the appropriate diagnostic procedure for DTC P0933.

      No

      - Go To 2.
2. **CHECK IF THE DTC IS CURRENT**
   1. With the scan tool, read DTCs.

      Is the status Active or is the Starts Since Set counter 2 or less for this DTC?

      Yes

      - Go To 3.

      No

      - Go To 11.
3. **CHECK THE LINE PRESSURE SENSOR CONNECTION**
   1. Ignition ON, Engine Not Running.
   2. With the scan tool, monitor the Line Pressure while firmly pushing the Transmission Line Pressure

Sensor connector inwards towards the Transmission.

Did the Line Pressure reading on the scan tool CHANGE to about 207 kPa (30 psi) or 0.7 volts when the connector was pushed inward?

Yes (value was higher and changed to 207 kPa (30 psi) or 0.7 volts)

- Disconnect and properly reconnect the Line Pressure Sensor connector. Inspect terminals and repair as necessary.
- Perform the 66RFE TRANSMISSION VERIFICATION TEST. Refer to **66RFE TRANSMISSION VERIFICATION TEST**.

No (value is higher than 207 kPa (30 psi) or 0.7 volts and did not change or the value was already 207 kPa (30 psi) or 0.7 volts and did not change)

- Go To 4.

4. **CHECK THE PCM AND WIRING**
   1. Turn the ignition OFF to the LOCK position.
   2. Remove the Ignition Switch Feed fuse from the TIPM.

CAUTION: Removal of the Ignition Switch Feed fuse from the TIPM will prevent the vehicle from being started in gear.

WARNING: The Ignition Switch Feed fuse must be removed from the TIPM. Failure to do so can result in possible serious or fatal injury.

   3. Install the (special tool #8333A, Simulator, Transmission).
   4. With the Transmission Simulator select the "OFF" position on the "Input/Output Speed" switch.
   5. Ignition ON, Engine Not Running.
   6. With the scan tool, monitor the Line Pressure during the following steps.
   7. Using the Transmission Simulator, set the rotary knob to each of the three line pressure positions.

NOTE: All three scan tool Line Pressure readings should be steady and ± 14 kPa (2.0 psi) or 0.1 volts of the reading specified on the Transmission Simulator.

Did the Line Pressure read within ± 14 kPa (2.0 psi) or 0.1 volts in all three positions?

Yes

- Go To 5.

No

- Go To 7.

5. **CHECK THE LINE PRESSURE SENSOR**
    1. Turn the ignition OFF to the LOCK position.
    2. Disconnect the (special tool #8333A, Simulator, Transmission) and reconnect all previously disconnected connectors.
    3. Install the (special tool #8259, Adapter, Pressure Test), and the (special tool #C-3293-SP, Gauge, Pressure 0-300 P.S.I.).
    4. Start the engine in park.
    5. Monitor the line pressure readings of both the scan tool and the pressure gauge and compare the two readings.

    Is the line pressure gauge reading within 34 kPa (5 psi) of the scan tool reading?

    Yes

    - Go To 6.

    No

    - Replace the Line Pressure Sensor in accordance with the Service Information.
    - Perform the 66RFE TRANSMISSION VERIFICATION TEST. Refer to **66RFE TRANSMISSION VERIFICATION TEST**.

6. **CHECK FOR A PLUGGED TRANSMISSION OIL FILTER**
    1. Turn the ignition OFF to the LOCK position.
    2. Remove and inspect the Transmission Oil Pan for excessive debris in accordance with the Service Information.
    3. Remove and inspect the Primary Oil Filter in accordance with the Service Information.

    NOTE: Make sure the Primary Transmission Oil Filter and/or O-ring is not cracked or split.

    Does the Oil Pan contain excessive debris and/or is the Primary Oil Filter cracked or plugged?

    Yes

    - Repair the plugged, cracked or split Primary Transmission Oil Filter and/or O-ring. If the Primary Transmission Oil Filter is plugged, refer to the Service Information for the proper Hydraulic repair procedure.
    - Perform the 66RFE TRANSMISSION VERIFICATION TEST. Refer to **66RFE TRANSMISSION VERIFICATION TEST**.

    No

    - Repair internal transmission and inspect the Transmission Oil Pump in accordance with the

Service Information and replace if necessary. If no problem is found, replace the Solenoid/TRS Assembly.

- Perform the 66RFE TRANSMISSION VERIFICATION TEST. Refer to **66RFE TRANSMISSION VERIFICATION TEST**.

7. **CHECK THE (F856) 5-VOLT SUPPLY CIRCUIT FOR A SHORT TO VOLTAGE**

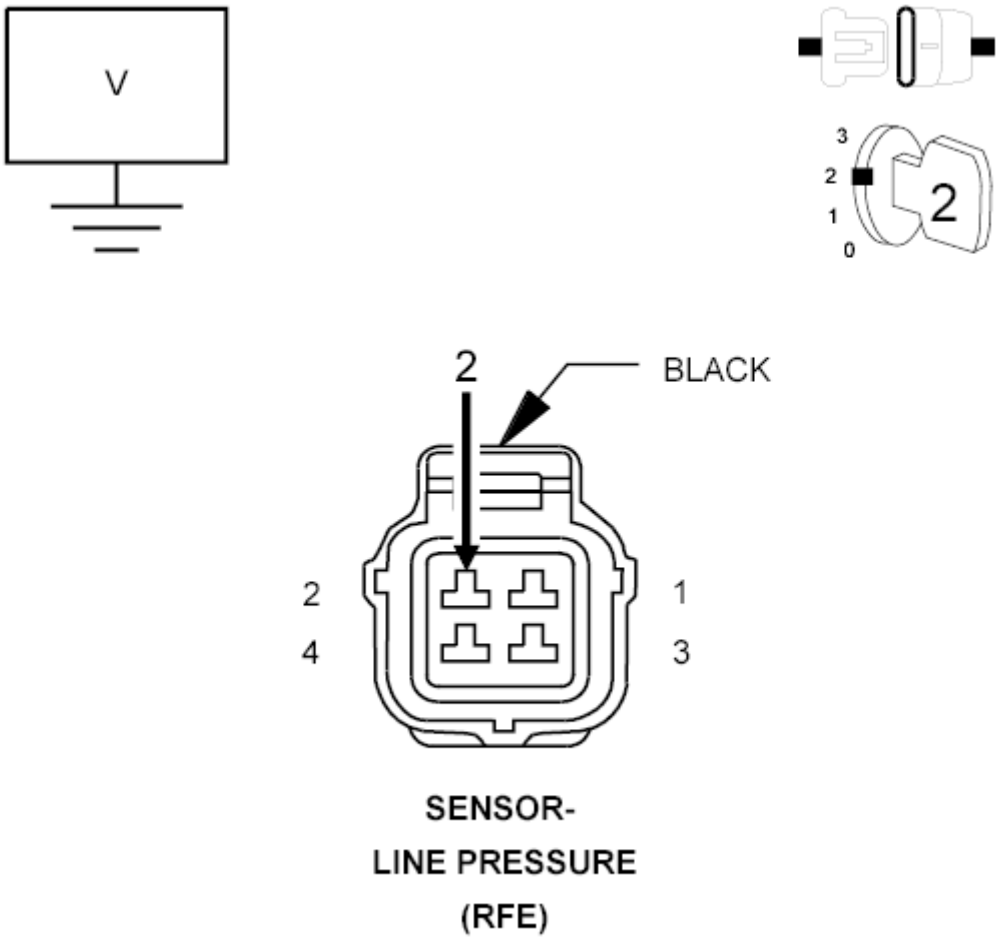

Fig. 40: Checking 5-Volt Supply Circuit For A Short To Voltage
Courtesy of CHRYSLER GROUP, LLC

1. Disconnect the (special tool #8333A, Simulator, Transmission).
2. Reconnect all previously disconnected connectors except the Line Pressure Sensor harness connector.
3. Ignition ON, Engine Not Running.
4. Measure the voltage of the (F856) 5-volt Supply circuit in the Line Pressure Sensor harness connector.

   Is the voltage above 5.5 volts?

Yes

- Repair the (F856) 5-volt Supply circuit for a short to voltage.
- Perform the 66RFE TRANSMISSION VERIFICATION TEST. Refer to **66RFE TRANSMISSION VERIFICATION TEST**.

No

- Go To 8.

8. **CHECK THE (F856) 5-VOLT SUPPLY CIRCUIT FOR AN OPEN**

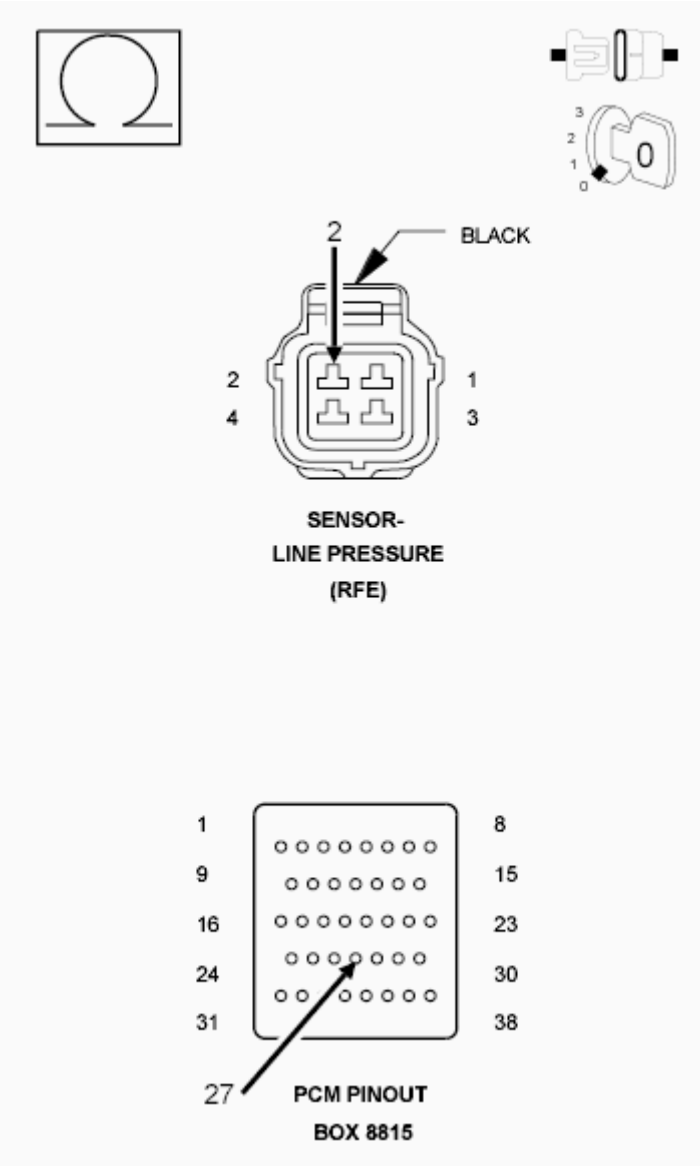

Fig. 41: Checking 5-Volt Supply Circuit For An Open
Courtesy of CHRYSLER GROUP, LLC

1. Turn the ignition OFF to the LOCK position.
2. Disconnect the PCM C1 harness connector and connect the (special tool #8815A, Kit, NGC, 38 Position).

CAUTION: Do not probe the PCM harness connectors. Probing the PCM harness connectors will damage the PCM terminals resulting in poor terminal to pin connection. Install the (special tool #8815A, Kit, NGC, 38 Position) to perform diagnosis.

3. Measure the resistance of the (F856) 5-volt Supply circuit between the Line Pressure Sensor harness connector and the appropriate terminal of the (special tool #8815A, Kit, NGC, 38 Position).

   Is the resistance above 5.0 ohms?

   Yes

   - Repair the (F856) 5-volt Supply circuit for an open.
   - Perform the 66RFE TRANSMISSION VERIFICATION TEST. Refer to **66RFE TRANSMISSION VERIFICATION TEST**.

   No

   - Go To 9.

9. **CHECK THE (F856) 5-VOLT SUPPLY CIRCUIT FOR A SHORT TO GROUND**

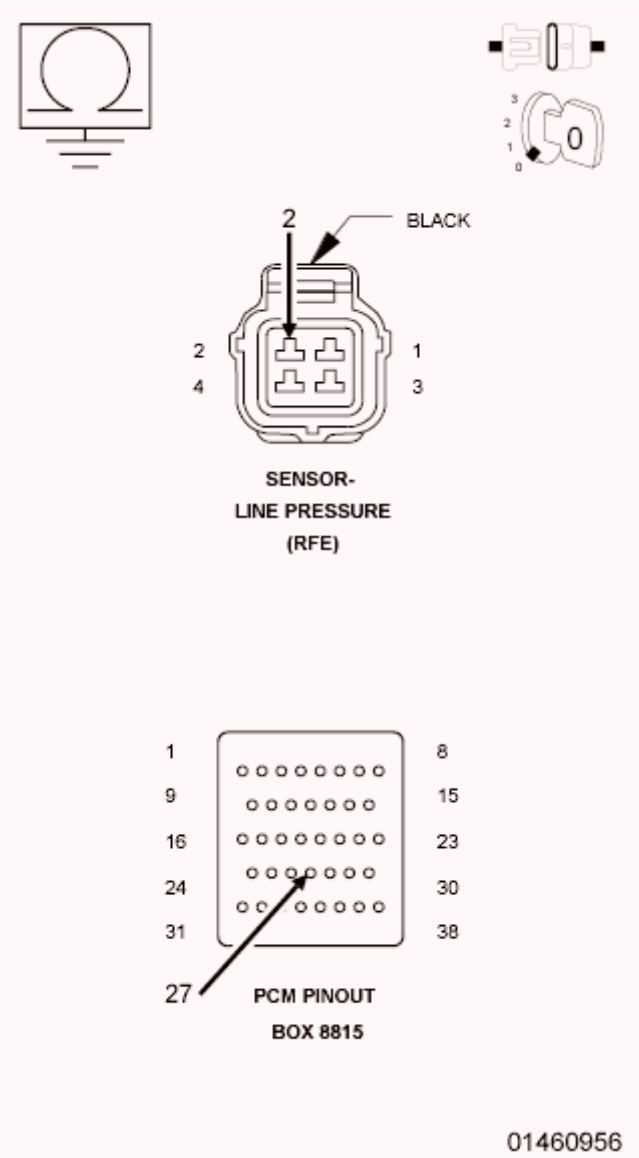

Fig. 42: Checking 5-Volt Supply Circuit For A Short To Ground
Courtesy of CHRYSLER GROUP, LLC

1. Measure the resistance between ground and the (F856) 5-volt Supply circuit.

   Is the resistance below 5.0 ohms?

   Yes

   - Repair the (F856) 5-volt Supply circuit for a short to ground.
   - Perform the 66RFE TRANSMISSION VERIFICATION TEST. Refer to **66RFE TRANSMISSION VERIFICATION TEST**.

   No

- Go To 10.

10. **CHECK THE (T118) LINE PRESSURE VARIABLE FORCE SOLENOID CONTROL CIRCUIT FOR A SHORT TO ANOTHER CIRCUIT**

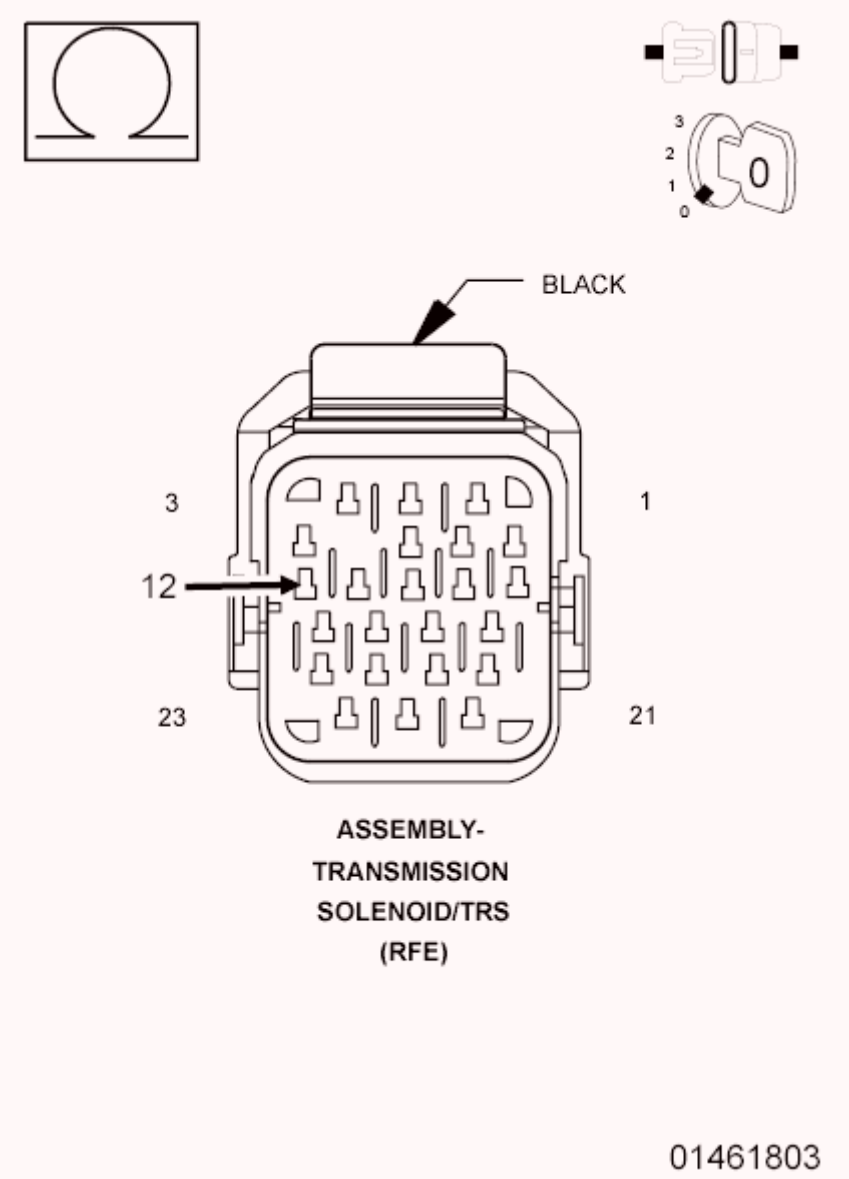

Fig. 43: Checking Line Pressure Variable Force Solenoid Control Circuit For A Short To Another Circuit
Courtesy of CHRYSLER GROUP, LLC

1. Turn the ignition OFF to the LOCK position.
2. Disconnect the Transmission Solenoid/TRS Assembly harness connector.
3. Disconnect all PCM harness connectors.
4. Measure the resistance between the (T118) Line Pressure Variable Force Solenoid Control circuit and all other circuits in the Transmission Solenoid/TRS Assembly harness connector.

Is the resistance below 5.0 ohms between the (T118) Line Pressure Variable Force Solenoid Control circuit and any other circuit(s) in the Transmission Solenoid/TRS Assembly harness connector?

Yes

- Repair the (T118) Line Pressure Variable Force Solenoid Control circuit for a short to another circuit(s).
- Perform the 66RFE TRANSMISSION VERIFICATION TEST. Refer to **66RFE TRANSMISSION VERIFICATION TEST**.

No

- Using the schematics as a guide, check the Powertrain Control Module (PCM) terminals for corrosion, damage or terminal push out. Pay particular attention to all power and ground circuits. If no problems are found, replace and program the PCM in accordance with the Service Information. With the scan tool, perform a Quick Learn.
- Perform the 66RFE TRANSMISSION VERIFICATION TEST. Refer to **66RFE TRANSMISSION VERIFICATION TEST**.

11. **CHECK THE WIRING AND CONNECTORS**
    1. The conditions necessary to set this DTC are not present at this time.
    2. Using the schematics as a guide, inspect the wiring and connectors specific to this circuit.
    3. Wiggle the wires while checking for shorted and open circuits.
    4. With the scan tool, check the Event Data to help identify the conditions in which the DTC set.

    Were any problems found?

    Yes

    - Repair as necessary.
    - Perform the 66RFE TRANSMISSION VERIFICATION TEST. Refer to **66RFE TRANSMISSION VERIFICATION TEST**.

    No

    - Test Complete.

P0869-LINE PRESSURE HIGH

For a complete wiring diagram, **refer to appropriate SYSTEM WIRING DIAGRAMS article** .

THEORY OF OPERATION

Line pressure is measured by the Line Pressure Sensor (LPS) and regulation is achieved by changing the duty cycle of the Pressure Control Solenoid (PCS) controlled by the Transmission Control System, (5% duty cycle =

solenoid off = Max line pressure, 62% duty cycle = solenoid on = Min line pressure). The Transmission Control System calculates the desired line pressure based on engine and transmission inputs.

The Transmission Control System calculates torque input to the transmission and uses this as the primary input for the desired line pressure calculation. This is called Torque Based Line Pressure. In addition, the line pressure is set to a preset level of 827 or 931 kPa (120 or 135 psi) during shifts and in Park or Neutral to ensure consistent shift quality. The actual line pressure is continuously being compared to the desired target line pressure. If the actual line pressure is consistently higher than the highest desired line pressure used in the current gear, the line pressure high DTC P0869 will set.

WHEN MONITORED:

Continuously while driving in a forward gear.

SET CONDITION:

The Powertrain Control Module (PCM) continuously monitors Actual Line Pressure. If the Actual Line Pressure reading is greater than the maximum desired line pressure used in the current gear, while the Pressure Control Solenoid duty cycle is at or near its maximum value (which should result in minimum line pressure) for 3.5 seconds continuously, the DTC will set.

POSSIBLE CAUSES

Possible Causes
LINE PRESSURE SENSOR CONNECTION
(F856) 5-VOLT SUPPLY CIRCUIT OPEN
(T118) LINE PRESSURE VARIABLE FORCE SOLENOID CONTROL CIRCUIT OPEN
(F856) 5-VOLT SUPPLY CIRCUIT SHORTED TO GROUND
(T118) LINE PRESSURE VARIABLE FORCE SOLENOID CONTROL CIRCUIT SHORTED TO GROUND
TRANSMISSION CONTROL RELAY OUTPUT CIRCUIT
LINE PRESSURE SENSOR
STUCK OR STICKING MAIN REGULATOR VALVE
POWERTRAIN CONTROL MODULE (PCM)

Always perform the Pre-Diagnostic Troubleshooting procedure before proceeding. Refer to 66RFE PRE-DIAGNOSTIC TROUBLESHOOTING PROCEDURE.

DIAGNOSTIC TEST

1. **CHECK FOR RELATED DTCS**
    1. With the scan tool, read DTCs.

       Is DTC P0882 or P0933 present?

       Yes

- Refer to **DIAGNOSIS AND TESTING** and perform the appropriate diagnostic procedure for DTC P0882 or P0933.

No

- Go To 2.

2. **CHECK IF THE DTC IS CURRENT**
   1. With the scan tool, read DTCs.

      Is the status Active or is the Starts Since Set counter 2 or less for this DTC?

      Yes

      - Go To 3.

      No

      - Go To 10.

3. **CHECK THE LINE PRESSURE SENSOR CONNECTION**
   1. Ignition ON, Engine Not Running.
   2. With the scan tool, monitor the Line Pressure while firmly pushing the Transmission Line Pressure Sensor connector inwards towards the transmission.

      Did the Line Pressure reading on the scan tool CHANGE to about 207 kPa (30 psi) or 0.7 volts when the connector was pushed inward?

      Yes (value was higher and changed to 207 kPa (30 psi) or 0.7 volts)

      - Disconnect and properly reconnect the Line Pressure Sensor connector. Inspect terminals and repair as necessary.
      - Perform the 66RFE TRANSMISSION VERIFICATION TEST. Refer to **66RFE TRANSMISSION VERIFICATION TEST**.

      No (value is higher than 207 kPa (30 psi) or 0.7 volts and did not change or the value was already 207 kPa (30 psi) or 0.7 volts and did not change)

      - Go To 4.

4. **CHECK THE PCM AND WIRING**
   1. Turn the ignition OFF to the LOCK position.
   2. Remove the Ignition Switch Feed fuse from the TIPM.

      CAUTION: Removal of the Ignition Switch Feed fuse from the TIPM will prevent the vehicle from being started in gear.

WARNING: The Ignition Switch Feed fuse must be removed from the TIPM. Failure to do so can result in possible serious or fatal injury.

3. Install the (special tool #8333A, Simulator, Transmission).
4. With the Transmission Simulator select the "OFF" position on the "Input/Output Speed" switch.
5. Ignition ON, Engine Not Running.
6. With the scan tool, monitor the Line Pressure during the following step.
7. Using the Transmission Simulator, set the rotary switch to each of the 3 line pressure positions.

NOTE: All three scan tool Line Pressure readings should be steady and ±14 kPa (2.0 psi) or 0.1 volts of the reading specified on the Transmission Simulator.

Did the Line Pressure read within ±14 kPa (2.0 psi) or 0.1 volts in all three positions?

Yes

- Go To 5.

No

- Go To 6.

5. **CHECK THE LINE PRESSURE SENSOR CALIBRATION**
   1. Turn the ignition OFF to the LOCK position.
   2. Disconnect the (special tool #8333A, Simulator, Transmission) and reconnect all previously disconnected connectors.
   3. Install the (special tool #8259, Adapter, Pressure Test), and (special tool #C-3293-SP, Gauge, Pressure 0-300 P.S.I.).
   4. Start the engine in park.
   5. Monitor the Line Pressure readings on the scan tool and the pressure gauge.
   6. Compare the Line Pressure readings between the scan tool and the pressure gauge.

   Is the pressure gauge reading within 34 kPa (5 psi) of the scan tool reading?

   Yes

   - Repair the internal transmission and inspect the Transmission Oil Pump in accordance with the Service Information and replace if necessary. If no problem is found, replace the Transmission Solenoid/TRS Assembly, possible cause is a stuck Pressure Control Solenoid.
   - Perform the 66RFE TRANSMISSION VERIFICATION TEST. Refer to **66RFE TRANSMISSION VERIFICATION TEST**.

   No

- Replace the Line Pressure Sensor per the Service information.
- Perform the 66RFE TRANSMISSION VERIFICATION TEST. Refer to **66RFE TRANSMISSION VERIFICATION TEST**.

6. **CHECK THE (T118) LINE PRESSURE VARIABLE FORCE SOLENOID CONTROL CIRCUIT FOR AN OPEN**

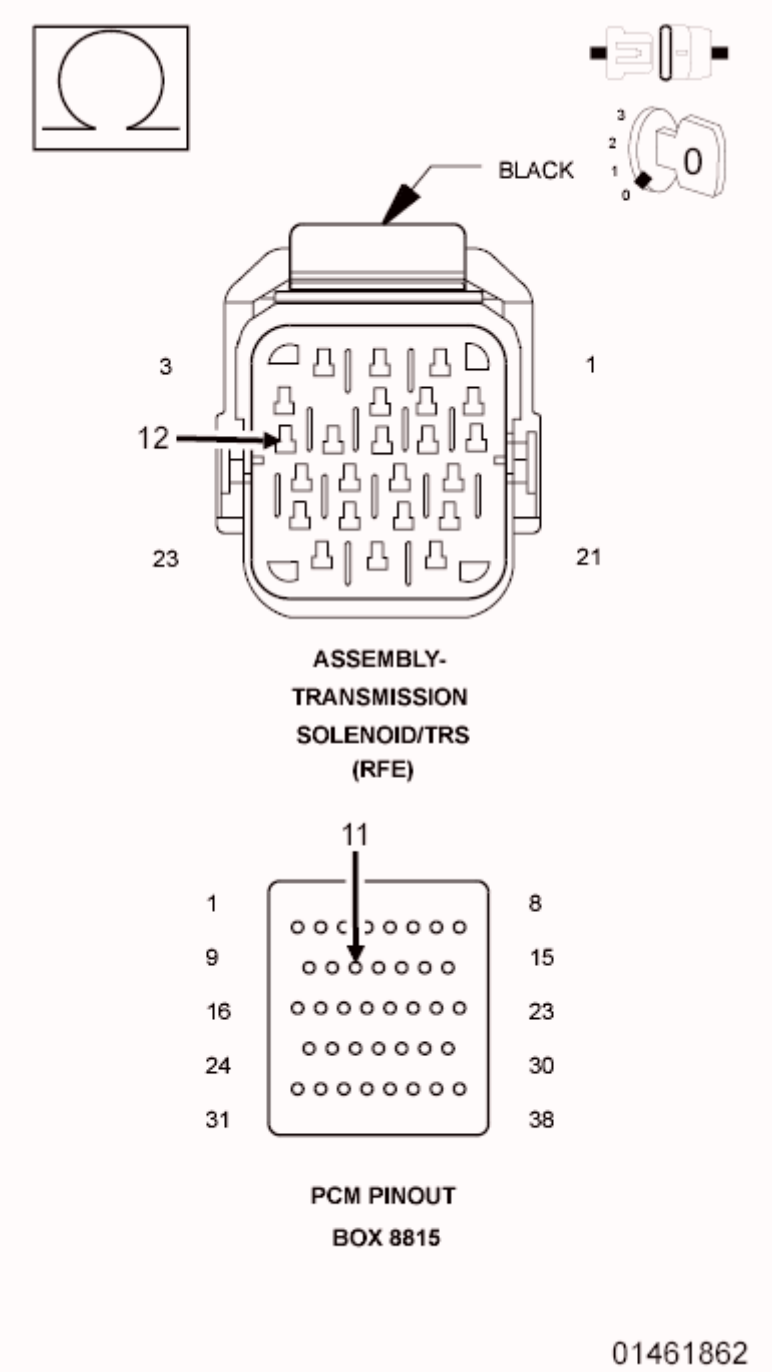

Fig. 44: Checking Line Pressure Variable Force Solenoid Control Circuit For An Open
Courtesy of CHRYSLER GROUP, LLC

1. Turn the ignition OFF to the LOCK position.
2. Disconnect the (special tool #8333A, Simulator, Transmission).
3. Disconnect the Powertrain Control Module C4 harness connector.

CAUTION: Do not probe the PCM harness connectors. Probing the PCM harness connectors will damage the PCM terminals resulting in poor terminal to pin connection. Install the (special tool #8815A, Kit, NGC, 38 Position) to perform diagnosis.

4. Measure the resistance of the (T118) Line Pressure Variable Force Solenoid Control circuit between the Solenoid/TRS Assembly harness connector and the appropriate terminal of the (special tool #8815A, Kit, NGC, 38 Position).

   Is the resistance above 5.0 ohms?

   Yes

   - Repair the (T118) Line Pressure Variable Force Solenoid Control circuit for an open.
   - Perform the 66RFE TRANSMISSION VERIFICATION TEST. Refer to **66RFE TRANSMISSION VERIFICATION TEST**.

   No

   - Go To 7.

7. **CHECK THE (T118) LINE PRESSURE VARIABLE FORCE SOLENOID CONTROL CIRCUIT FOR A SHORT TO GROUND**

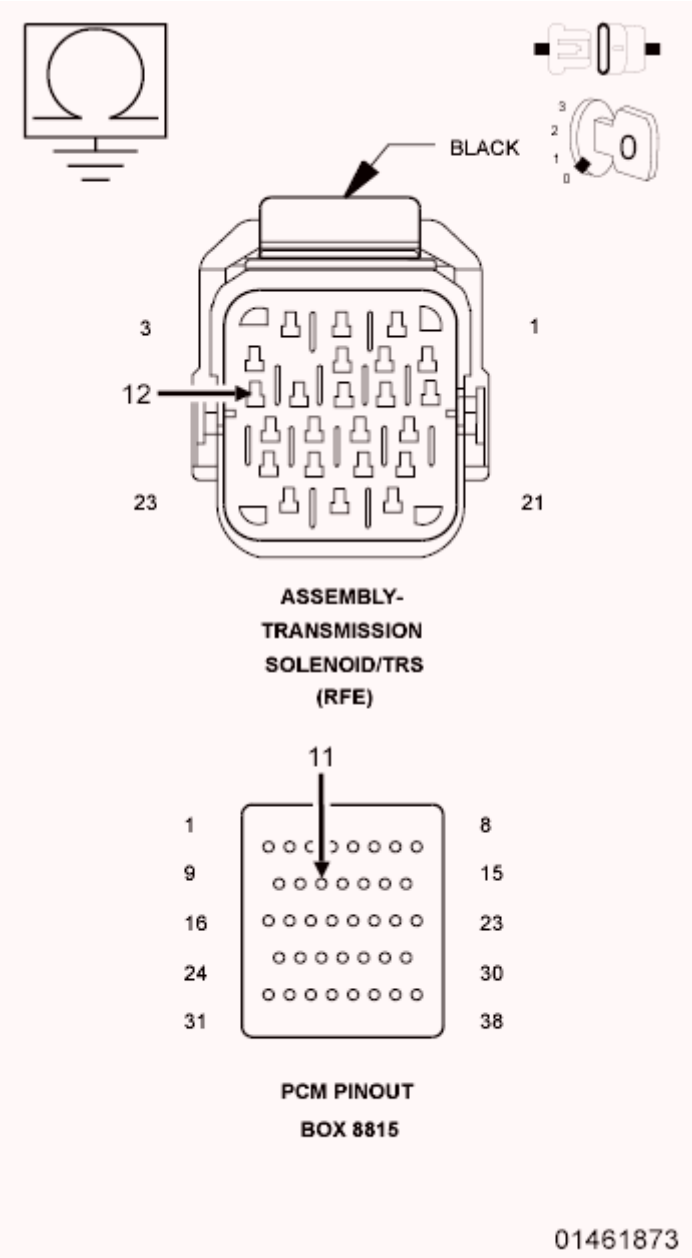

Fig. 45: Checking Line Pressure Variable Force Solenoid Control Circuit For A Short To Ground
Courtesy of CHRYSLER GROUP, LLC

1. Measure the resistance between ground and the (T118) Line Pressure Variable Force Solenoid Control circuit.

   Is the resistance below 5.0 ohms?

   Yes

   - Repair the (T118) Line Pressure Variable Force Solenoid Control circuit for a short to ground.

- Perform the 66RFE TRANSMISSION VERIFICATION TEST. Refer to **66RFE TRANSMISSION VERIFICATION TEST**.

No

- Go To 8.

8. **CHECK THE (F856) 5-VOLT SUPPLY CIRCUIT FOR AN OPEN**

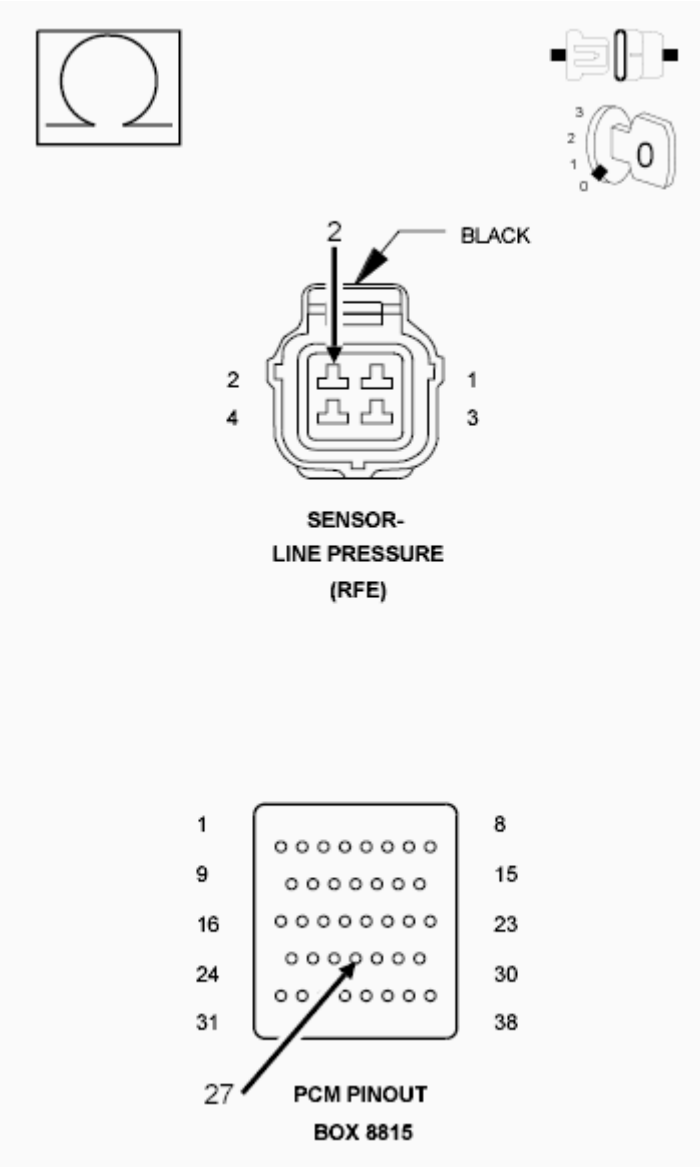

Fig. 46: Checking 5-Volt Supply Circuit For An Open
Courtesy of CHRYSLER GROUP, LLC

1. Measure the resistance of the (F856) 5-volt Supply circuit between the Line Pressure Sensor harness connector and the appropriate terminal of the (special tool #8815A, Kit, NGC, 38 Position).

Is the resistance above 5.0 ohms?

Yes

- Repair the (F856) 5-volt Supply circuit for an open.
- Perform the 66RFE TRANSMISSION VERIFICATION TEST. Refer to **66RFE TRANSMISSION VERIFICATION TEST**.

No

- Go To 9.

9. **CHECK THE (F856) 5-VOLT SUPPLY CIRCUIT FOR A SHORT TO GROUND**

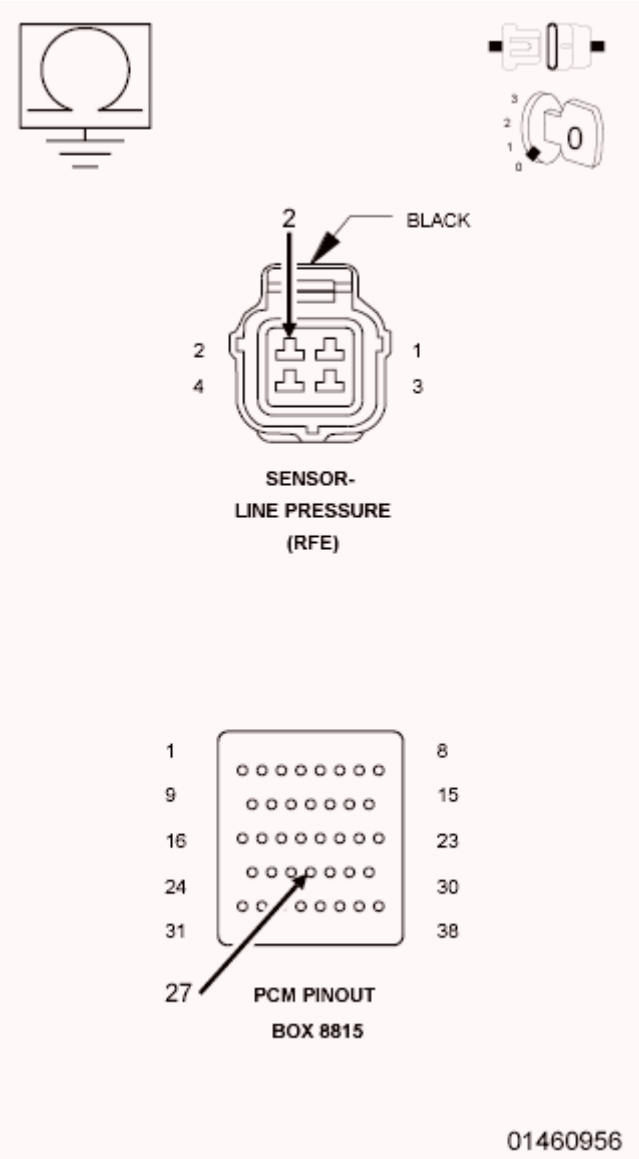

Fig. 47: Checking 5-Volt Supply Circuit For A Short To Ground
Courtesy of CHRYSLER GROUP, LLC

1. Disconnect the PCM C1 harness connector.
2. Disconnect the Line Pressure Sensor harness connector.

CAUTION: Do not probe the PCM harness connectors. Probing the PCM harness connectors will damage the PCM terminals resulting in poor terminal to pin connection. Install the (special tool #8815A, Kit, NGC, 38 Position) to perform diagnosis.

3. Measure the resistance between ground and the (F856) 5-volt Supply circuit.

   Is the resistance below 5.0 ohms?

   Yes

   - Repair the (F856) 5-volt Supply circuit for a short to ground.
   - Perform the 66RFE TRANSMISSION VERIFICATION TEST. Refer to **66RFE TRANSMISSION VERIFICATION TEST**.

   No

   - Using the schematics as a guide, check the Powertrain Control Module (PCM) terminals for corrosion, damage or terminal push out. Pay particular attention to all power and ground circuits. If no problems are found, replace and program the PCM in accordance with the Service Information. With the scan tool, perform a Quick Learn.
   - Perform the 66RFE TRANSMISSION VERIFICATION TEST. Refer to **66RFE TRANSMISSION VERIFICATION TEST**.

10. **CHECK THE WIRING AND CONNECTORS**
    1. The conditions necessary to set this DTC are not present at this time.
    2. Using the schematics as a guide, inspect the wiring and connectors specific to this circuit.
    3. Wiggle the wires while checking for shorted and open circuits.
    4. With the scan tool, check the Event Data to help identify the conditions in which the DTC set.

       Where any problems found?

       Yes

       - Repair as necessary.
       - Perform the 66RFE TRANSMISSION VERIFICATION TEST. Refer to **66RFE TRANSMISSION VERIFICATION TEST**.

       No

       - Test Complete.

P0870-OD HYDRAULIC PRESSURE TEST

For a complete wiring diagram, **refer to appropriate SYSTEM WIRING DIAGRAMS article** .

THEORY OF OPERATION

The Transmission Control System tests the pressure switches when they are off. The test verifies the switches are operational (Close with pressure applied). The Transmission Control System verifies the switch closes when the corresponding element is applied. If a switch fails to close, it is re-tested. If it fails the second test, the DTC will set, the MIL will illuminate and the transmission system will default to the orderly Shutdown routine.

WHEN MONITORED:

In a forward gear with engine speed above 1000 RPM, shortly after a shift and every minute after.

SET CONDITION:

After a shift into a forward gear, with engine speed above 1000 RPM, the PCM momentarily turns on element pressure to the clutch circuits that does not have pressure to identify the correct Pressure Switch closes. If the Pressure Switch does not close 2 times, the DTC sets.

POSSIBLE CAUSES

Possible Causes
LINE PRESSURE SENSOR
TRANSMISSION FLUID CONTAMINATION
RELATED DTCS PRESENT
EXCESSIVE DEBRIS IN OIL PAN
POOR LINE PRESSURE SENSOR CONNECTION
(K856) 5-VOLT SUPPLY CIRCUIT OPEN
(K856) 5-VOLT SUPPLY CIRCUIT SHORTED TO GROUND
(T9) OD PRESSURE SIGNAL CIRCUIT SHORTED TO ANOTHER CIRCUIT
TRANSMISSION SOLENOID/TRS ASSEMBLY
INTERNAL TRANSMISSION
POWERTRAIN CONTROL MODULE (PCM)

Always perform the Pre-Diagnostic Troubleshooting procedure before proceeding. Refer to 66RFE PRE-DIAGNOSTIC TROUBLESHOOTING PROCEDURE.

DIAGNOSTIC TEST

1. **CHECK FOR RELATED DTCS**
    1. With the scan tool, check for transmission DTCs.

       Are any Loss of Prime, TCM Power Input and/or Line Pressure Sensor DTCs present?

Yes

- Refer to **3.7L/4.7L/5.7L - DIAGNOSTIC CODE INDEX - NGC - 1500 & 2500** or **5.7L - DIAGNOSTIC CODE INDEX - 3500 CAB & CHASSIS** and perform the appropriate diagnostic procedure. If DTC P0944-LOSS OF PRIME is present, perform its respective test first.

No

- Go To 2.

2. **CHECK FOR RELATED DTCS**
   1. With the scan tool, read DTCs.

      Is DTC P2706 present?

      Yes

      - Refer to **P2706-MS SOLENOID CIRCUIT** and perform diagnostics for P2706-MS SOLENOID CIRCUIT.

      No

      - Go To 3.

3. **CHECK FOR RELATED DTCS**
   1. With the scan tool, check for transmission DTCs.

      Are DTCs, P0733, P0734, P0735 and/or P0871 present?

      Yes

      - Go To 12.

      No

      - Go To 4.

4. **CHECK IF THE DTC IS CURRENT**
   1. With the scan tool, read DTCs.

      Is the status Active or is the Starts Since Set counter 2 or less for this DTC?

      Yes

      - Go To 5.

      No

- Go To 15.

5. **CHECK LINE PRESSURE**
    1. Start the engine.
    2. Warm the transmission to 82° C or 180° F.
    3. Firmly apply the brakes.
    4. With the scan tool, monitor the Line Pressure during the following step.
    5. Move the shift lever to each gear position, pausing momentarily in each position and record the line pressure reading. Allow the pressure to stabilize for at least five seconds in each range.

    Did the line pressure remain at a steady value between 585 and 655 kPa (85 and 95 psi) in each position?

    Yes

    - Go To 6.

    No

    - Go To 10.

6. **CHECK THE LINE PRESSURE SENSOR CONNECTION**
    1. Ignition ON, Engine Not Running.
    2. With the scan tool, monitor the Line Pressure while firmly pushing the Transmission Line Pressure Sensor connector inwards towards the transmission.

    Did the Line Pressure reading on the scan tool change to about 207 kPa (30 psi) or 0.7 volts when the connector was pushed inward?

    Yes

    - Disconnect and properly reconnect the Line Pressure Sensor connector. Inspect terminals and repair as necessary.
    - Perform the 66RFE TRANSMISSION VERIFICATION TEST. Refer to **66RFE TRANSMISSION VERIFICATION TEST**.

    No

    - Go To 7.

7. **CHECK THE LINE PRESSURE SENSOR OPERATION**
    1. Turn the ignition OFF to the LOCK position.
    2. Remove the Starter Relay.

CAUTION: Removal of the Starter Relay will prevent the vehicle from being started in gear.

WARNING: The Starter Relay must be removed from the PDC. Failure to do so may result in possible serious or fatal injury.

NOTE: Failure to remove the Starter Relay can cause a Transmission - No Response condition.

3. Install the (special tool #8333A, Simulator, Transmission).
4. With the Transmission Simulator select the "OFF" position on the "Input/Output Speed" switch.
5. Ignition ON, Engine Not Running.
6. With the scan tool, monitor the Line Pressure while turning the Pressure Switch selector to each of the three line pressure positions on the Transmission Simulator.

NOTE: All three scan tool Line Pressure readings should be steady and ±14 kPa (2.0 psi) or 0.1 volts of the reading specified on the Transmission Simulator.

Did the scan tool Line Pressure readings match the specified readings on the Transmission Simulator and remain steady in all three positions?

Yes

- Replace the Line Pressure Sensor in accordance with the Service Information. Refer to **SENSOR, VARIABLE LINE PRESSURE, REMOVAL** .
- Perform the 66RFE TRANSMISSION VERIFICATION TEST. Refer to **66RFE TRANSMISSION VERIFICATION TEST**.

No

- Go To 8.

8. **CHECK THE (K856) 5-VOLT SUPPLY CIRCUIT FOR AN OPEN**

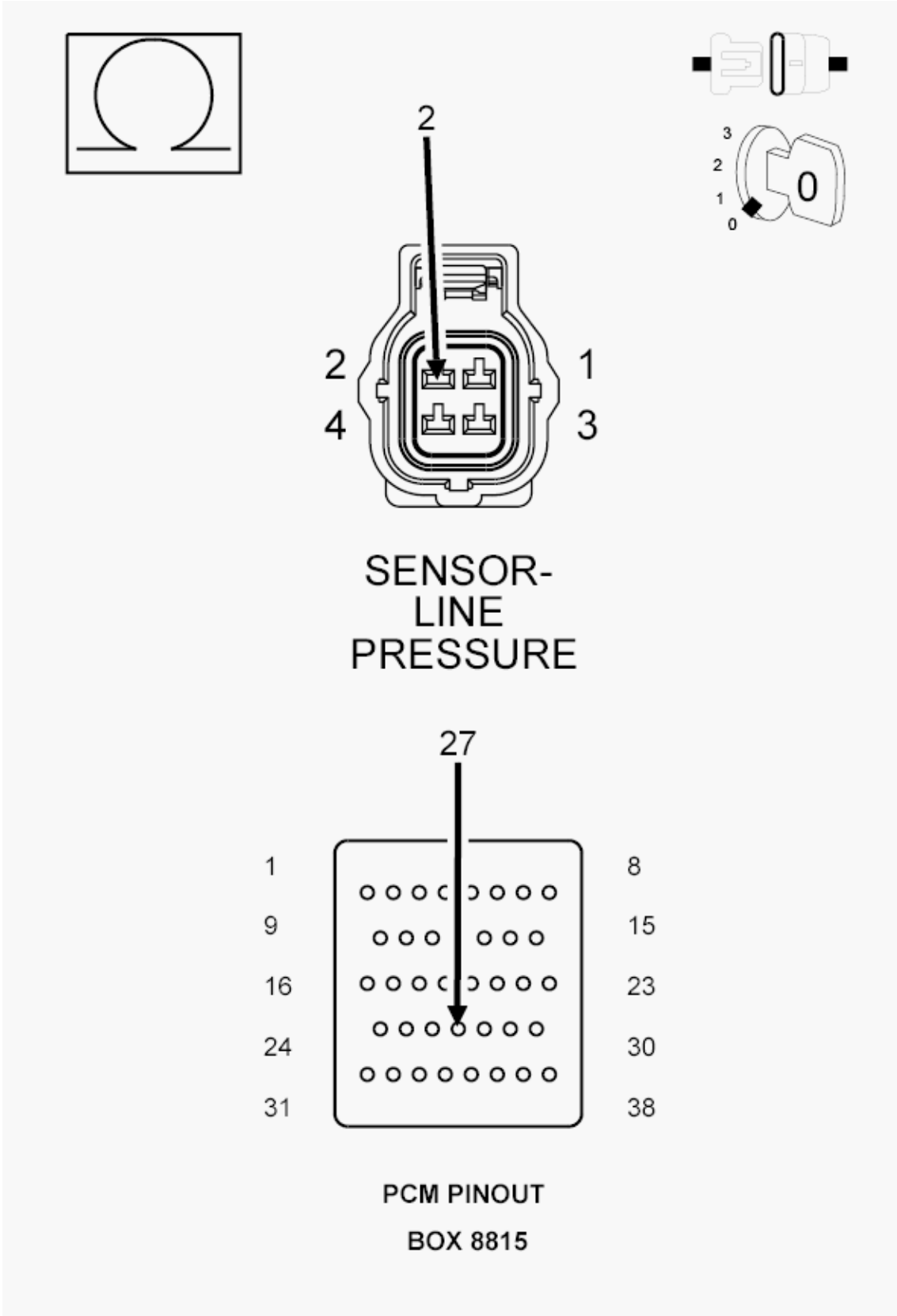

Fig. 48: Checking 5-Volt Supply Circuit For An Open

1. Turn the ignition OFF to the LOCK position.
2. Disconnect Transmission Simulator.
3. Disconnect the PCM C1 harness connector and connect the (special tool #8815A, Kit, NGC, 38 Position).

CAUTION: Do not probe the PCM harness connectors. Probing the PCM harness connectors will damage the PCM terminals resulting in poor terminal to pin connection. Install the (special tool #8815A, Kit, NGC, 38 Position) to perform diagnosis.

4. Measure the resistance of the (K856) 5-volt Supply circuit between the Line Pressure Sensor harness connector and the appropriate terminal of the (special tool #8815A, Kit, NGC, 38 Position).

   Is the resistance above 5.0 ohms?

   Yes

   - Repair the (K856) 5-volt Supply circuit for an open.
   - Perform the 66RFE TRANSMISSION VERIFICATION TEST. Refer to **66RFE TRANSMISSION VERIFICATION TEST**.

   No

   - Go To 9.

9. **CHECK THE (K856) 5-VOLT SUPPLY CIRCUIT FOR A SHORT TO GROUND**

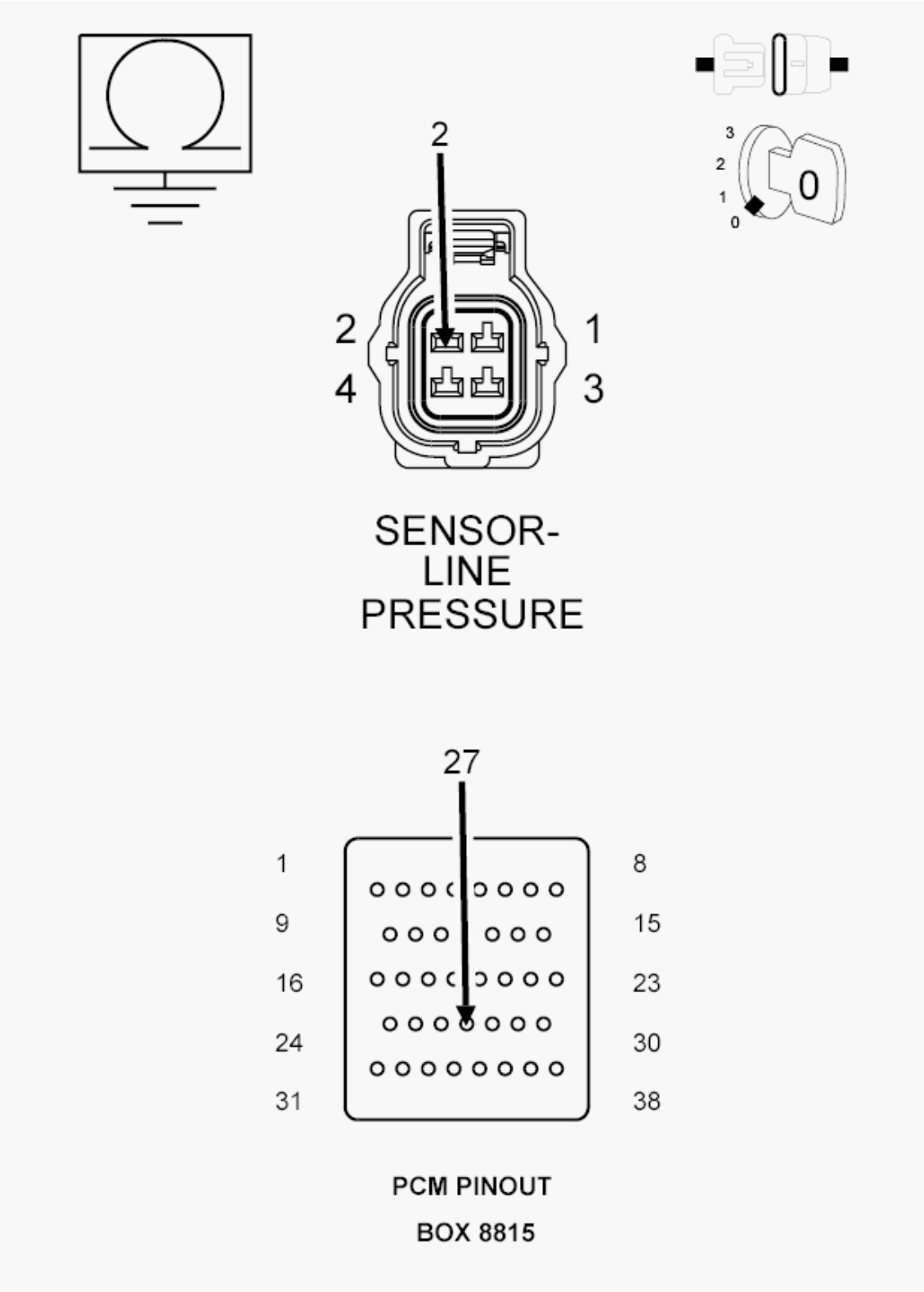

Fig. 49: Checking 5-Volt Supply Circuit For A Short To Ground
Courtesy of CHRYSLER GROUP, LLC

1. Measure the resistance between ground and the (K856) 5-volt Supply circuit.

   Is the resistance below 5.0 ohms?

   Yes

   - Repair the (K856) 5-volt Supply circuit for a short to ground.
   - Perform the 66RFE TRANSMISSION VERIFICATION TEST. Refer to **66RFE TRANSMISSION VERIFICATION TEST**.

   No

   - Using the schematics as a guide, check the Powertrain Control Module (PCM) terminals for corrosion, damage or terminal push out. Pay particular attention to all power and ground circuits. If no problems are found, replace and program the PCM in accordance with the Service Information. With the scan tool, perform a Quick Learn. Refer to **MODULE, POWERTRAIN CONTROL, REMOVAL** .
   - Perform the 66RFE TRANSMISSION VERIFICATION TEST. Refer to **66RFE TRANSMISSION VERIFICATION TEST**.

10. **COMPARE SCAN TOOL TO PRESSURE GAUGE**
    1. Turn the ignition OFF to the LOCK position.
    2. Connect the (special tool #8259, Adapter, Pressure Test) and (special tool #C-3293-SP, Gauge, Pressure 0-300 P.S.I.). Refer to the Service Information for proper installation procedure.

       CAUTION: Apply parking brake.

    3. Start the engine.
    4. In the following steps, compare the scan tool Line Pressure to the Pressure Gauge readings in each gear.

       CAUTION: Do not overheat transmission.

    5. With the gear selector in park, raise the RPM to 1500 and compare line pressure readings.
    6. Firmly apply the brakes, move the gear selector into reverse, raise the RPM to 1500 and compare the line pressure readings.
    7. Firmly apply the brakes, move the gear selector into drive, raise the RPM to 1500 and compare the line pressure readings.

       Does the scan tool Line Pressure readings match the Pressure Gauge readings ± 10 psi?

       Yes

- Go To 11.

No

- Replace the Line Pressure Sensor in accordance with the Service Information. Refer to **SENSOR, VARIABLE LINE PRESSURE, REMOVAL** .
- Perform the 66RFE TRANSMISSION VERIFICATION TEST. Refer to **66RFE TRANSMISSION VERIFICATION TEST**.

11. **CHECK PCM AND WIRING**
    1. Turn the ignition OFF to the LOCK position.
    2. Remove the (special tool #8259, Adapter, Pressure Test) and (special tool #C-3293-SP, Gauge, Pressure 0-300 P.S.I.).
    3. Remove the Starter Relay.

CAUTION: Removal of the Starter Relay will prevent the vehicle from being started in gear.

WARNING: The Starter Relay must be removed from the PDC. Failure to do so may result in possible serious or fatal injury.

NOTE: Failure to remove the Starter Relay can cause a Transmission - No Response condition.

    4. Install the (special tool #8333A, Simulator, Transmission).
    5. On the Transmission Simulator, turn the Pressure Switch selector switch to OD.
    6. Ignition ON, Engine Not Running.
    7. With the scan tool, monitor the OD Pressure Switch state while pressing and holding the Pressure Switch test button and wiggling the wire harness and connectors that pertain to the OD Pressure Switch.

       Did the OD Pressure Switch state change to closed and remain closed while wiggling the wires?

       Yes

       - Go To 12.

       No

       - Go To 14.

12. **CHECK FOR EXCESSIVE DEBRIS**
    1. Turn the ignition OFF to the LOCK position.
    2. Remove the (special tool #8333A, Simulator, Transmission).

3. Remove and inspect the Transmission Oil Pan in accordance with the Service Information.

   Does the Transmission Oil Pan contain excessive debris or contamination?

   Yes

   - Repair the cause of the excessive debris in the Transmission Oil Pan. Refer to the Service Information for the proper procedures.
   - Perform the 66RFE TRANSMISSION VERIFICATION TEST. Refer to **66RFE TRANSMISSION VERIFICATION TEST**.

   No

   - Go To 13.

13. **CHECK THE OD HYDRAULIC CLUTCH CIRCUIT**
    1. Remove the Valve Body and air check the OD hydraulic clutch circuit (in the case) for leakage in accordance with the Service Information.

       NOTE: The OD hydraulic clutch circuit contains a small bleed orifice which connects to the Reverse hydraulic clutch circuit. A small amount of air leakage is normal.

       Was excessive air leakage noticed during the air check?

       Yes

       - Repair as necessary. Check the OD/Rev clutch piston seals, bleed orifice assembly, reaction shaft support seal rings, and machining of the main mating faces on the pump housing, pump valve body and reaction shaft support. Refer to **REMOVAL** .
       - Perform the 66RFE TRANSMISSION VERIFICATION TEST. Refer to **66RFE TRANSMISSION VERIFICATION TEST**.

       No

       - Disassemble and inspect the Valve Body and repair as necessary. Inspect the OD Accumulator piston and seals. Check for an extra check ball downstream from the No. 6 check ball pocket and repair as necessary. If no problems are found in the Valve Body, replace the Transmission Solenoid/TRS Assembly in accordance with the Service Information. Refer to **ASSEMBLY, TRANSMISSION SOLENOID AND TRS, REMOVAL** .
       - Perform the 66RFE TRANSMISSION VERIFICATION TEST. Refer to **66RFE TRANSMISSION VERIFICATION TEST**.

14. **CHECK THE (T9) OD PRESSURE SIGNAL CIRCUIT FOR A SHORT TO ANOTHER CIRCUIT**

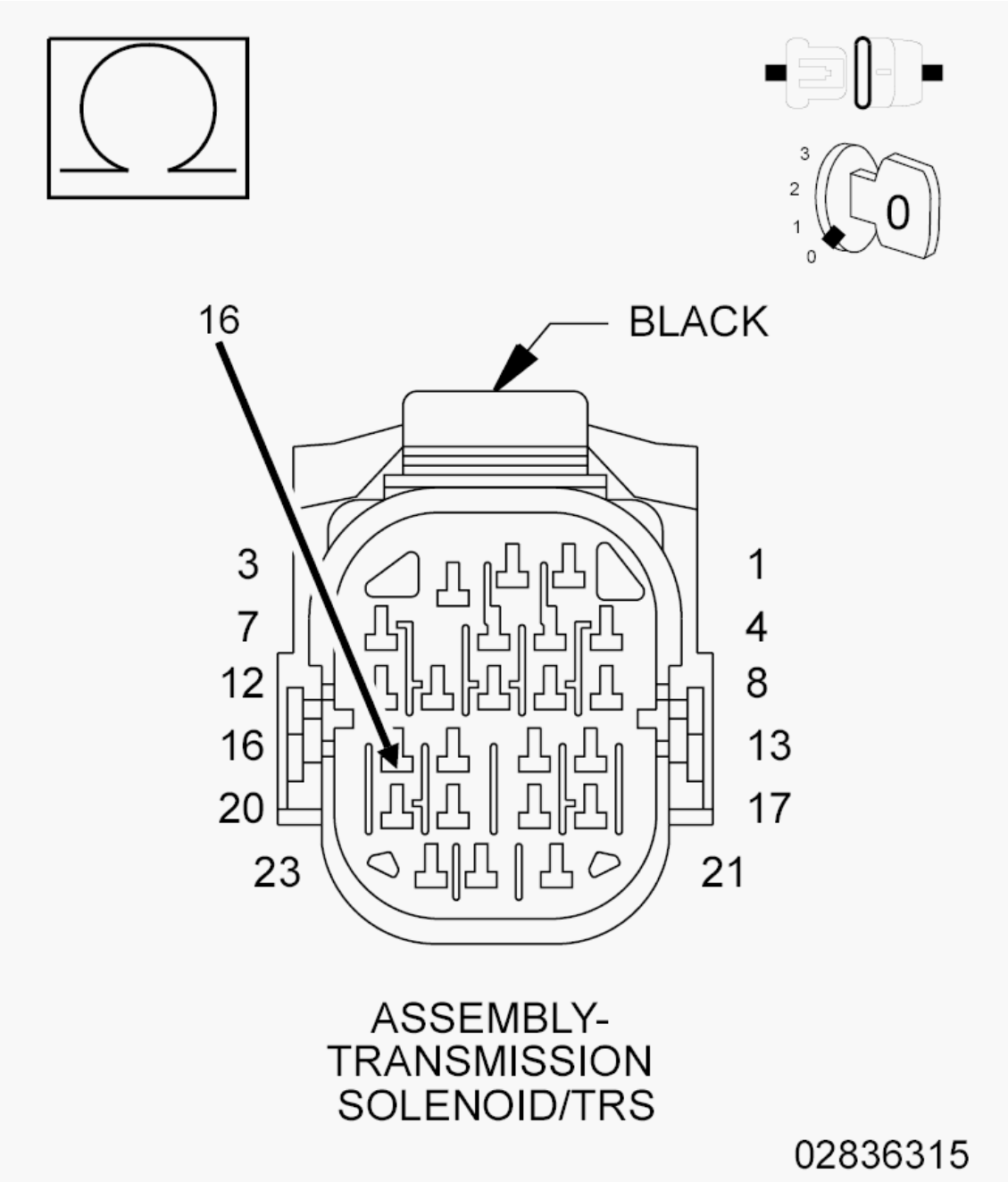

Fig. 50: Checking OD Pressure Signal Circuit For A Short To Another Circuit
Courtesy of CHRYSLER GROUP, LLC

1. Disconnect all PCM harness connectors.
2. Disconnect the Transmission Solenoid/TRS Assembly harness connector.

NOTE: **Make sure the Transmission Solenoid/TRS Assembly harness connector is disconnected.**

3. Measure the resistance between the (T9) OD Pressure Signal circuit and all other circuits in the

Transmission Solenoid/TRS Assembly harness connector.

Is the resistance below 5.0 ohms between the (T9) OD Pressure Signal circuit and any other circuit (s) in the Transmission Solenoid/TRS Assembly harness connector?

Yes

- Repair the (T9) OD Pressure Signal circuit for a short to another circuit(s).
- Perform the 66RFE TRANSMISSION VERIFICATION TEST. Refer to **66RFE TRANSMISSION VERIFICATION TEST**.

No

- Using the schematics as a guide, check the Powertrain Control Module (PCM) terminals for corrosion, damage, or terminal push out. Pay particular attention to all power and ground circuits. If no problems are found, replace and program the PCM in accordance with the Service Information. With the scan tool, perform a Quick Learn. Refer to **MODULE, POWERTRAIN CONTROL, REMOVAL** .
- Perform the 66RFE TRANSMISSION VERIFICATION TEST. Refer to **66RFE TRANSMISSION VERIFICATION TEST**.

15. **CHECK WIRING AND CONNECTORS**
    1. The conditions necessary to set this DTC are not present at this time.
    2. Using the schematics as a guide, inspect the wiring and connectors specific to this circuit.
    3. Wiggle the wires while checking for shorted and open circuits.
    4. With the scan tool, check the Event Data to help identify the conditions in which the DTC set.
    5. If the Event Data shows DTC P0870 set while the Line Pressure was significantly below the Desired Line Pressure reading, check for causes of low line pressure (low fluid level, broken or mis-installed primary oil filter or filter seal, sticking Main Regulator Valve in the Pump Valve Body etc.). If the data shows the DTC set while the Line Pressure reading was significantly higher than the Desired Line Pressure, check the Line Pressure Sensor and related wiring.

    Where any problems found?

    Yes

    - Repair as necessary.
    - Perform the 66RFE TRANSMISSION VERIFICATION TEST. Refer to **66RFE TRANSMISSION VERIFICATION TEST**.

    No

    - Test Complete.

P0871-OD PRESSURE SWITCH RATIONALITY

For a complete wiring diagram, **refer to appropriate SYSTEM WIRING DIAGRAMS article** .

THEORY OF OPERATION

The Transmission system uses five pressure switches to monitor the fluid pressure in the L/R, 2C, 4C, UD and OD clutch circuits. The pressure switches are continuously monitored for the correct states in each gear as shown in chart.

WHEN MONITORED:

Continuously with the ignition on and engine running.

SET CONDITION:

The appropriate DTC is set if one of the pressure switches are open or closed at the wrong time in a given gear.

POSSIBLE CAUSES

Possible Causes
RELATED DTCS PRESENT
NO. 4 OR NO. 6 CHECK BALL CUT OR DAMAGED
(T9) OD PRESSURE SIGNAL CIRCUIT OPEN
(T9) OD PRESSURE SIGNAL CIRCUIT SHORTED TO GROUND
(T9) OD PRESSURE SIGNAL CIRCUIT SHORTED TO OTHER CIRCUITS
LOW LINE PRESSURE
WIRING AND CONNECTORS
CUT OD/REV PISTON SEAL
BROKEN OR MISSING OD/REV PISTON BLEED ORIFICE
BROKEN REACTION SHAFT SUPPORT SEAL RING
POOR MACHINING ON PUMP VALVE BODY FACE
BROKEN OR MISSING DRIBBLER ORIFICE ASSEMBLY IN REACTION SHAFT SUPPORT
TRANSMISSION SOLENOID/TRS ASSEMBLY
CUT OD ACCUMULATOR PISTON SEAL
CRACKED OD ACCUMULATOR PISTON
BROKEN OR MISSING OD BLEED ORIFICE IN MAIN VALVE BODY
POWERTRAIN CONTROL MODULE (PCM)

Always perform the Pre-Diagnostic Troubleshooting procedure before proceeding. Refer to 66RFE PRE-DIAGNOSTIC TROUBLESHOOTING PROCEDURE.

GEAR	L/R	2C	4C	UD	OD
REVERSE	OPEN	OPEN	OPEN	OPEN	OPEN
P/N	CLOSED**	OPEN	OPEN	OPEN	OPEN
1ST	CLOSED*	OPEN	OPEN	CLOSED	OPEN

2ND	OPEN	CLOSED	OPEN	CLOSED	OPEN
2ND PRIME	OPEN	OPEN	CLOSED	CLOSED	OPEN
3RD	OPEN	OPEN	OPEN	CLOSED	CLOSED
4TH	OPEN	OPEN	CLOSED	OPEN	CLOSED
5TH	OPEN	CLOSED	OPEN	OPEN	CLOSED
*L/R is closed if output speed is below 100 RPM in Drive and Manual 2. L/R is closed in Manual 1. **May be open when rolling in Neutral or at low oil temperatures.					

DIAGNOSTIC TEST

1. **CHECK DTCS**
    1. With the scan tool, read DTCs.

       Are TCM Power Input DTCs present?

       Yes

       - Refer to **3.7L/4.7L/5.7L - DIAGNOSTIC CODE INDEX - NGC - 1500 & 2500** or **5.7L - DIAGNOSTIC CODE INDEX - 3500 CAB & CHASSIS** and perform the appropriate diagnostic procedure.

       No

       - Go To 2.
2. **CHECK FOR LINE PRESSURE DTCS**
    1. With the scan tool, read DTCs.

       Are Line Pressure DTCs present?

       Yes

       - Refer to **3.7L/4.7L/5.7L - DIAGNOSTIC CODE INDEX - NGC - 1500 & 2500** or **5.7L - DIAGNOSTIC CODE INDEX - 3500 CAB & CHASSIS** and perform the appropriate diagnostic procedure.

       No

       - Go To 3.
3. **CHECK FOR OTHER PRESSURE SWITCH DTCS**
    1. With the scan tool, check Transmission DTCs.

       Are there two or more pressure switch rationality DTCs present in addition to P0871?

       Yes

- Go To 5.

No

- Go To 4.

4. **CHECK IF DTC IS CURRENT**
   1. With the scan tool, check and record the Event Data.

      NOTE: Make sure to record all Event Data stored in the scan tool for future reference in this test procedure.

      Does the Event Data show data for P0871?

      Yes

      - Go To 8.

      No

      - Refer to **3.7L/4.7L/5.7L - DIAGNOSTIC CODE INDEX - NGC - 1500 & 2500** or **5.7L - DIAGNOSTIC CODE INDEX - 3500 CAB & CHASSIS** and perform the appropriate diagnostic procedure.

5. **CHECK IF PRESSURE SWITCHES READ CLOSED**
   1. With the scan tool, check and record the Event Data.

      NOTE: Make sure to record all Event Data stored in the scan tool for future reference in this test procedure.

      Do all the pressure switches read CLOSED in the Event Data?

      Yes

      - Refer to **DIAGNOSIS AND TESTING** and perform the diagnostic procedure for P0882. Follow instructions as if the DTC is current.

      No

      - Go To 6.

6. **CHECK IF PRESSURE SWITCHES READ OPEN**

   In the Event Data recorded earlier, do all the pressure switches read open?

   Yes

   - Go To 7.

No

- Go To 8.

7. **CHECK FOR LOW LINE PRESSURE**

In the Event Data recorded earlier, is the Line Pressure less than 40 psi and significantly below the Desired Line Pressure?

Yes

- Repair as necessary to correct low line pressure. Check the fluid level and adjust as necessary. If the fluid level is OK, check the Primary Oil Filter weal for a spit, crack or improperly installed. If the filer and seal are OK, check the Main Regulator Valve in the Oil Pump. Refer to the Service Information for the above procedures. Refer to **PUMP, TRANSMISSION OIL, DISASSEMBLY** .
- Perform the 66RFE TRANSMISSION VERIFICATION TEST. Refer to **66RFE TRANSMISSION VERIFICATION TEST**.

No

- Replace the Transmission Solenoid/TRS Assembly in accordance with the Service Information. Refer to **ASSEMBLY, TRANSMISSION SOLENOID AND TRS, REMOVAL** .
- Perform the 66RFE TRANSMISSION VERIFICATION TEST. Refer to **66RFE TRANSMISSION VERIFICATION TEST**.

8. **CHECK IF IN DTC SET IN PARK, NEUTRAL, OR REVERSE**

In the Event Data recorded earlier, does the Event Data show the OD Pressure Switch DTC set while in Park, Neutral or Reverse?

Yes

- Go To 18.

No

- Go To 9.

9. **CHECK IF THE OD PRESSURE SWITCH IS OPEN**

In the Event Data recorded earlier, did the OD Pressure Switch read OPEN?

Yes

- Go To 10.

No

- Go To 15.

10. **CHECK FOR LOW LINE PRESSURE**

    In the Event Data recorded earlier, is the Line Pressure less than 40 psi and significantly below the Desired Line Pressure?

    Yes

    - Repair as necessary to correct low line pressure. Check the fluid level. Check the Primary Oil Filter seal for a split, crack or improperly installed. Refer to the Service Information for the proper installation procedure. If the fluid level and filter are OK, check the Main Regulator Valve in the Oil Pump. Refer to **PUMP, TRANSMISSION OIL, DISASSEMBLY** .
    - Perform the 66RFE TRANSMISSION VERIFICATION TEST. Refer to **66RFE TRANSMISSION VERIFICATION TEST**.

    No

    - Go To 11.

11. **CHECK THE (T9) OD PRESSURE SIGNAL CIRCUIT FOR A SHORT TO ANOTHER CIRCUIT**

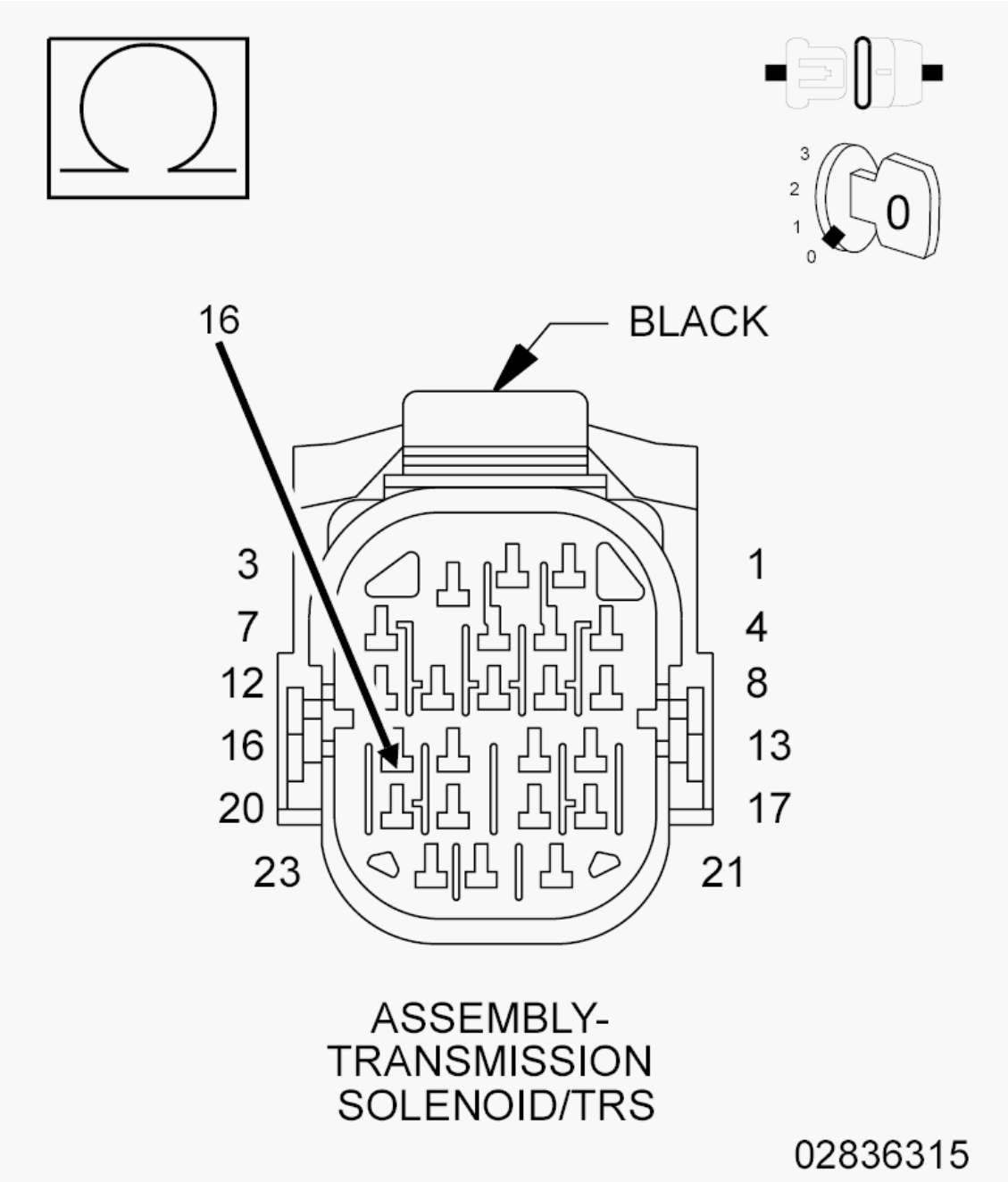

Fig. 51: Checking OD Pressure Signal Circuit For A Short To Another Circuit
Courtesy of CHRYSLER GROUP, LLC

1. Turn the ignition off to the lock position.
2. Disconnect all PCM harness connectors.
3. Disconnect the Transmission Solenoid/TRS Assembly harness connector.
4. Measure the resistance between the (T9) OD Pressure Signal circuit and all other circuits in the Transmission Solenoid/TRS Assembly harness connector.

   Is the resistance below 5.0 ohms between the (T9) OD Pressure Signal circuit and any other circuit

(s) in the Transmission Solenoid/TRS Assembly harness connector?

Yes

- Repair the (T9) OD Pressure Signal circuit for a short to another circuit(s).
- Perform the 66RFE TRANSMISSION VERIFICATION TEST. Refer to **66RFE TRANSMISSION VERIFICATION TEST**.

No

- Go To 12.

12. **CHECK IF THE DTC RESETS**
    1. Reconnect all previously disconnected connectors.
    2. With the scan too, erase transmission DTCs.
    3. Test drive the vehicle, use the Event Data recorded earlier to help duplicate the conditions when the DTC set.

    Does DTC P0871 reset?

    Yes

    - Go To 13.

    No

    - Go To 22.

13. **CHECK THE POWERTRAIN CONTROL MODULE (PCM)**
    1. Remove the Transmission Control Relay.
    2. Operate the vehicle in Drive.

    Is the transmission slipping while in Drive?

    Yes

    - Go To 14.

    No

    - Using the schematics as a guide, check the Powertrain Control Module (PCM) terminals for corrosion, damage or terminal push out. Pay particular attention to all power and ground circuits. If no problems are found, replace the and program PCM in accordance with the Service Information. With the scan tool, perform a Quick Learn. Refer to **MODULE, POWERTRAIN CONTROL, REMOVAL** .
    - Perform the 66RFE TRANSMISSION VERIFICATION TEST. Refer to **66RFE TRANSMISSION VERIFICATION TEST**.

14. **CHECK INTERNAL TRANSMISSION**
    1. Perform an Air Check Transmission Clutch Operation procedure in accordance with the Service Information.

NOTE: **The OD/Rev piston contains a small bleed orifice and a small amount of leakage between the OD and Reverse hydraulic clutch circuits is considered normal.**

Is there excessive air leakage in any clutch circuit?

Yes

- Check the OD/Rev piston seals and bleed orifice, reaction shaft support seal rings, dribbler orifice assemblies in the reaction shaft support and for poor machine on the pump valve body faces. Refer to **REMOVAL** .
- Perform the 66RFE TRANSMISSION VERIFICATION TEST. Refer to **66RFE TRANSMISSION VERIFICATION TEST**.

No

- Repair the Valve Body. Check the OD Accumulator piston and seals, OD bleed orifice and No. 6 check ball cuts or damage. If no problems are found in the Valve Body, replace the Transmission Solenoid/TRS Assembly. Refer to **ASSEMBLY, TRANSMISSION SOLENOID AND TRS, REMOVAL** .
- Perform the 66RFE TRANSMISSION VERIFICATION TEST. Refer to **66RFE TRANSMISSION VERIFICATION TEST**.

15. **CHECK PCM AND WIRING**
    1. Turn the ignition OFF to the LOCK position.
    2. Remove the Starter Relay.

CAUTION: **Removal of the Starter Relay will prevent the vehicle from being started in gear.**

WARNING: **The Starter Relay must be removed from the PDC. Failure to do so may result in possible serious or fatal injury.**

NOTE: **Failure to remove the Starter Relay can cause a Transmission - No Response condition.**

    3. Install (special tool #8333A, Simulator, Transmission).
    4. Ignition ON, Engine Not Running.
    5. With the Transmission Simulator, turn the Pressure Switch selector switch to OD.
    6. With the scan tool, monitor the OD Pressure Switch state while pressing the Pressure Switch Test

button on the Transmission Simulator.

Did the state of the OD Pressure Switch change from OPEN to CLOSED while pressing the Test button?

Yes

- Go To 16.

No

- Go To 18.

16. **CHECK IF THE NO. 4 AND/OR NO. 6 CHECK BALL IS CUT OR DAMAGED**
    1. With the scan tool, erase previously stored DTCs and test drive the vehicle, use the Event Data to help duplicate the conditions when the DTC set. Note any DTCs that may set.
    2. Remove the Transmission Valve Body in accordance with the Service Information.
    3. Check the No. 4 and No. 6 Check Balls for cuts or damage.

    Is the No. 4 and/or No. 6 Check Ball cut or damaged?

    Yes

    - Replace the No. 4 and/or No. 6 Check Ball and check for clutch debris in the transmission oil pan. If there is excessive debris, perform internal repairs to the OD Clutch Assembly. Refer to **ASSEMBLY, TRANSMISSION SOLENOID AND TRS, REMOVAL** .
    - Perform the 66RFE TRANSMISSION VERIFICATION TEST. Refer to **66RFE TRANSMISSION VERIFICATION TEST**.

    No

    - Go To 17.

17. **TRANSMISSION SOLENOID/TRS ASSEMBLY**

    Did DTC P0871 reset during the test drive in the previous step?

    Yes

    - Replace the Transmission Solenoid/TRS Assembly in accordance with the Service Information. Refer to **ASSEMBLY, TRANSMISSION SOLENOID AND TRS, REMOVAL** .
    - Perform the 66RFE TRANSMISSION VERIFICATION TEST. Refer to **66RFE TRANSMISSION VERIFICATION TEST**.

    No

    - Go To 22.

18. **CHECK THE (T9) OD PRESSURE SIGNAL CIRCUIT FOR AN OPEN**

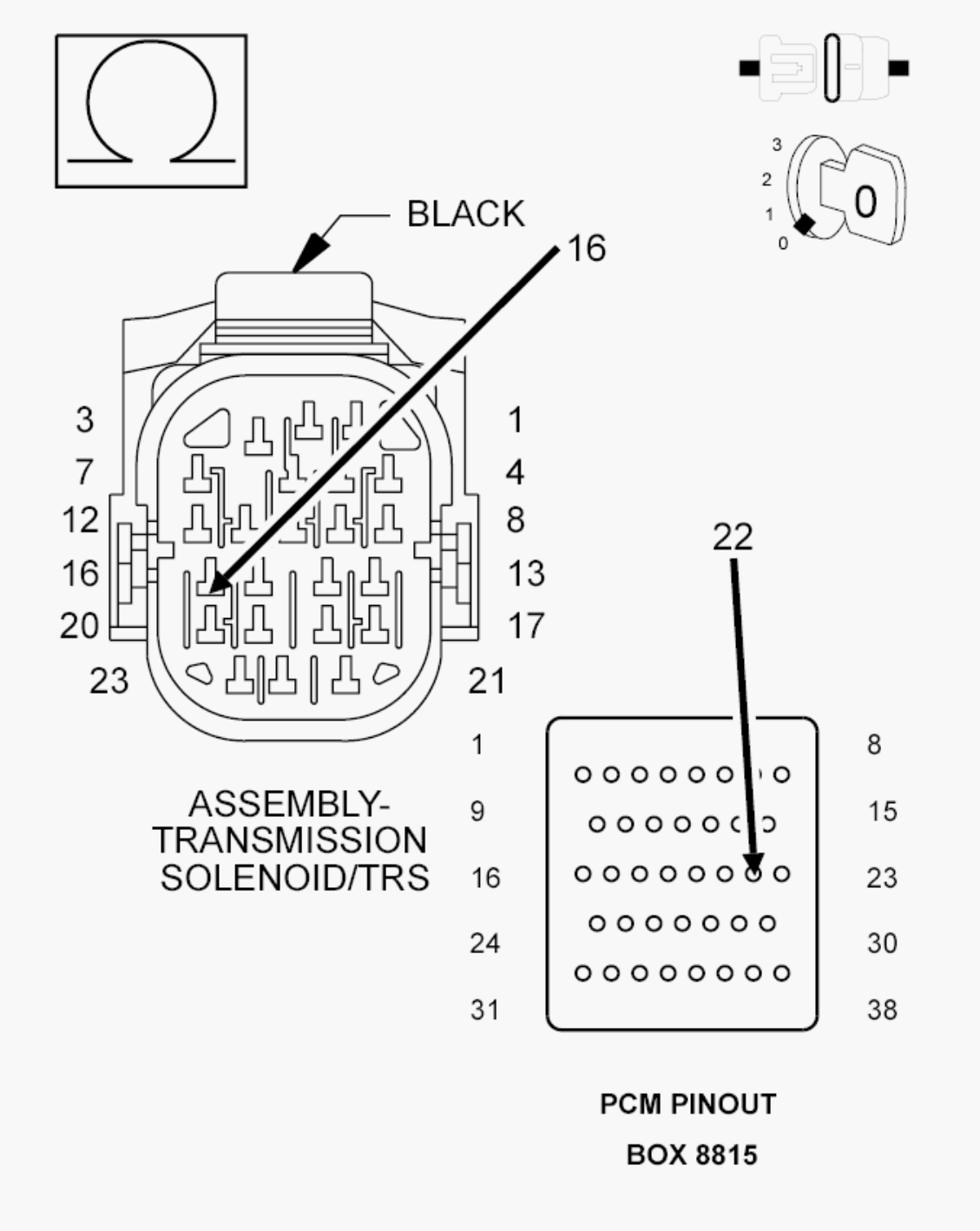

Fig. 52: Checking OD Pressure Signal Circuit For An Open
Courtesy of CHRYSLER GROUP, LLC

1. Turn the ignition OFF to the LOCK position.
2. Disconnect the PCM C4 harness connector and connect the (special tool #8815A, Kit, NGC, 38

Position).

3. Disconnect the Transmission Solenoid/TRS Assembly harness connector

CAUTION: Do not probe the PCM harness connectors. Probing the PCM harness connectors will damage the PCM terminals resulting in poor terminal to pin connection. Install the (special tool #8815A, Kit, NGC, 38 Position) to perform diagnosis.

4. Measure the resistance of the (T9) OD Pressure Signal circuit between the Solenoid/TRS Assembly harness connector and the appropriate terminal of the (special tool #8815A, Kit, NGC, 38 Position).

   Is the resistance above 5.0 ohms?

   Yes

   - Repair the (T9) OD Pressure Signal circuit for an open.
   - Perform the 66RFE TRANSMISSION VERIFICATION TEST. Refer to **66RFE TRANSMISSION VERIFICATION TEST**.

   No

   - Go To 19.

19. **CHECK THE (T9) OD PRESSURE SIGNAL CIRCUIT FOR A SHORT TO GROUND**

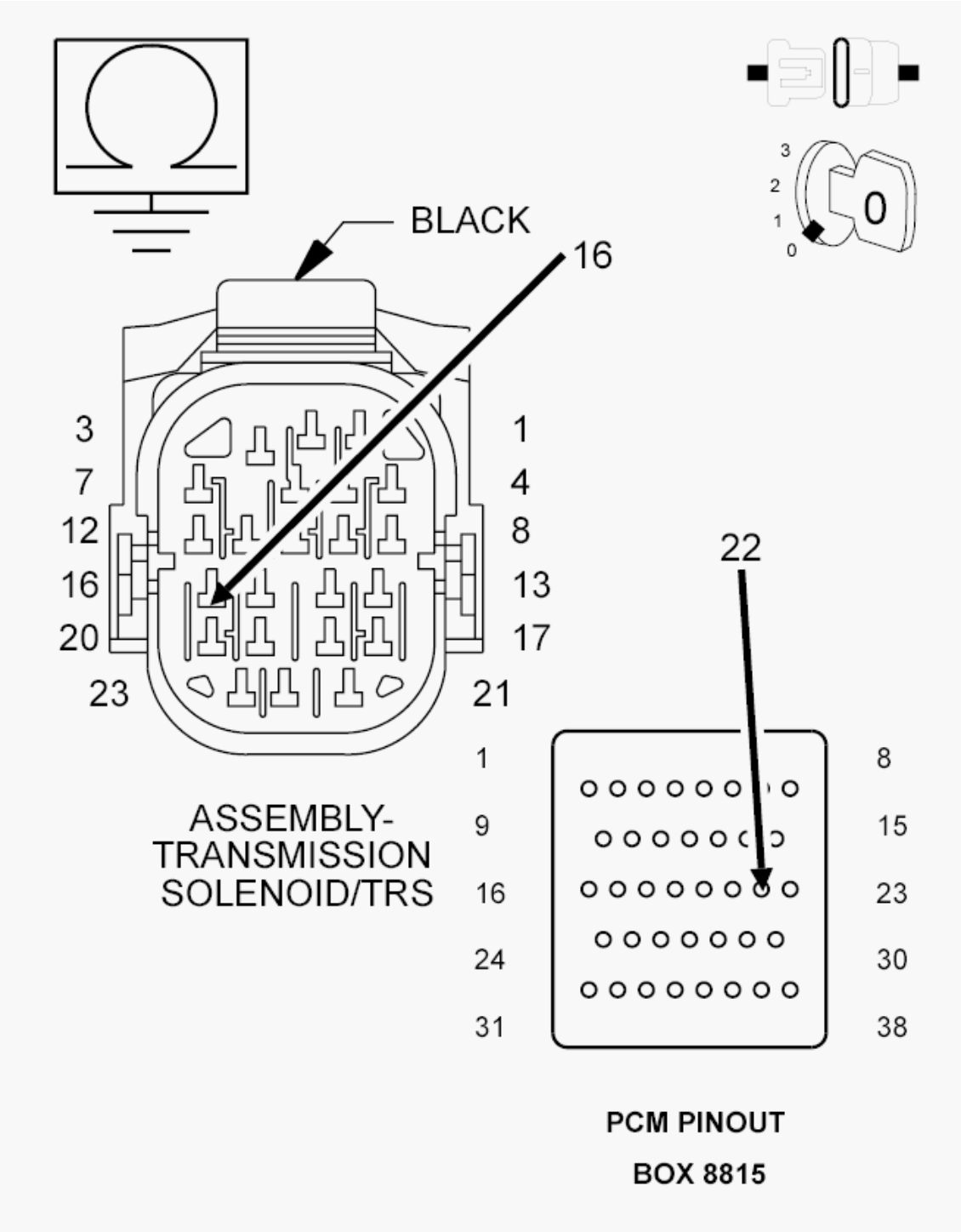

Fig. 53: Checking OD Pressure Signal Circuit For A Short To Ground
Courtesy of CHRYSLER GROUP, LLC

1. Measure the resistance between ground and the (T9) OD Pressure Signal circuit.

   Is the resistance below 5.0 ohms?

Yes

- Repair the (T9) OD Pressure Signal circuit for a short to ground.
- Perform the 66RFE TRANSMISSION VERIFICATION TEST. Refer to **66RFE TRANSMISSION VERIFICATION TEST**.

No

- Go To 20.

20. **CHECK WIRING AND CONNECTORS**
    1. Using the schematics as a guide, inspect the wiring and connectors. Pay particular attention to all power and ground circuits.

    Were any problems found

    Yes

    - Repair as necessary.
    - Perform the 66RFE TRANSMISSION VERIFICATION TEST. Refer to **66RFE TRANSMISSION VERIFICATION TEST**.

    No

    - Go To 21.

21. **CHECK IF DTC RESETS**
    1. Reconnect all previously disconnected connectors.
    2. Make sure all Event Data is recorded.
    3. With the scan tool, erase previously stored DTCs and test drive the vehicle, use the Event Data to help duplicate the conditions when the DTC set.

    Does DTC P0871 reset?

    Yes

    - Using the schematics as a guide, check the Powertrain Control Module (PCM) terminals for corrosion, damage or terminal push out. Pay particular attention to all power and ground circuits. If no problems are found, replace and program the PCM in accordance with the Service Information. With the scan tool, perform a Quick Learn. Refer to **MODULE, POWERTRAIN CONTROL, REMOVAL** .
    - Perform the 66RFE TRANSMISSION VERIFICATION TEST. Refer to **66RFE TRANSMISSION VERIFICATION TEST**.

    No

    - Go To 22.

22. **CHECK WIRING AND CONNECTORS**
    1. The conditions necessary to set this DTC are not present at this time.
    2. Using the schematics as a guide, inspect the wiring and connectors specific to this circuit.
    3. Wiggle the wires while checking for shorted and open circuits.
    4. With the scan tool, check the Event Data to help identify the conditions in which the DTC set.

    Where any problems found?

    Yes

    - Repair as necessary.
    - Perform the 66RFE TRANSMISSION VERIFICATION TEST. Refer to **66RFE TRANSMISSION VERIFICATION TEST**.

    No

    - Test Complete.

P0875-UD HYDRAULIC PRESSURE TEST

For a complete wiring diagram, **refer to appropriate SYSTEM WIRING DIAGRAMS article** .

THEORY OF OPERATION

The Transmission Control System tests the pressure switches when they are off. The test verifies that the switches are operational (Close with pressure applied). The Transmission Control System verifies that the switch closes when the corresponding element is applied. If a switch fails to close, it is re-tested. If it fails the second test, the DTC will set, the MIL will illuminate and the transmission system will default to the orderly Shutdown routine.

WHEN MONITORED:

In a forward gear with engine speed above 1000 RPM, shortly after a shift and every minute after.

SET CONDITION:

After a shift into a forward gear, with engine speed above 1000 RPM, the Powertrain Control Module (PCM) momentarily turns on element pressure to the clutch circuits that does not have pressure to identify the correct Pressure Switch closes. If the Pressure Switch does not close two times, the DTC sets.

POSSIBLE CAUSES

Possible Causes
LINE PRESSURE SENSOR
TRANSMISSION FLUID CONTAMINATION

RELATED DTCS PRESENT
EXCESSIVE DEBRIS IN OIL PAN
POOR LINE PRESSURE SENSOR CONNECTION
TRANSMISSION CONTROL RELAY DTCS PRESENT
(F856) 5-VOLT SUPPLY CIRCUIT OPEN
(F856) 5-VOLT SUPPLY CIRCUIT SHORTED TO GROUND
(T29) UD PRESSURE SIGNAL CIRCUIT SHORTED TO ANOTHER CIRCUIT
TRANSMISSION SOLENOID/TRS ASSEMBLY
INTERNAL TRANSMISSION
POWERTRAIN CONTROL MODULE (PCM)

Always perform the Pre-Diagnostic Troubleshooting procedure before proceeding. Refer to 66RFE PRE-DIAGNOSTIC TROUBLESHOOTING PROCEDURE.

DIAGNOSTIC TEST

1. **CHECK FOR RELATED DTCS**
    1. With the scan tool, read DTCs.

       Are any Loss of Prime, TCM Power Input, and/or Line Pressure Sensor DTCs present?

       Yes

       - Refer to **3.7L/4.7L/5.7L - DIAGNOSTIC CODE INDEX - NGC - 1500 & 2500** or **5.7L - DIAGNOSTIC CODE INDEX - 3500 CAB & CHASSIS** and perform the appropriate diagnostic procedure. If DTC, P0944-LOSS OF PRIME is present, perform its respective test first.

       No

       - Go To 2.
2. **CHECK FOR DTC P0765**
    1. With the scan tool, read DTCs.

       Is DTC P0765 present?

       Yes

       - Refer to **3.7L/4.7L/5.7L - DIAGNOSTIC CODE INDEX - NGC - 1500 & 2500** or **5.7L - DIAGNOSTIC CODE INDEX - 3500 CAB & CHASSIS** and perform the appropriate diagnostic procedure.

       No

       - Go To 3.

3. **CHECK FOR OTHER DTCS**
    1. With the scan tool, read DTCs.

       Are DTCs, P0731, P0732, P0733, P0876 and/or P1736 present?

       Yes

       - Go To 12.

       No

       - Go To 4.
4. **CHECK IF THE DTC IS CURRENT**
    1. With the scan tool, read DTCs.

       Is the status Active or is the Starts Since Set counter 2 or less for this DTC?

       Yes

       - Go To 5.

       No

       - Go To 15.
5. **CHECK LINE PRESSURE**
    1. Start the engine.
    2. Warm the transmission to 82° C (180° F).
    3. Firmly apply the brakes.
    4. With the scan tool, monitor the Line Pressure during the following step.
    5. Move the shift lever to each gear position, pausing momentarily in each position and record the line pressure reading. Allow the pressure to stabilize for at least five seconds in each range.

       Did the line pressure remain at a steady value between 585 and 655 kPa (85 and 95 psi) in each position?

       Yes

       - Go To 6.

       No

       - Go To 10.
6. **CHECK LINE PRESSURE SENSOR CONNECTION**
    1. Ignition ON, Engine Not Running.

2. With the scan tool, monitor the Line Pressure while firmly pushing the Transmission Line Pressure Sensor connector inwards towards the transmission.

   Did the Line Pressure reading on the scan tool change to about 207 kPa (30 psi) or 0.7 volts when the connector was pushed inward?

   Yes

   - Disconnect and properly reconnect the Line Pressure Sensor connector. Inspect terminals and repair as necessary.
   - Perform the 66RFE TRANSMISSION VERIFICATION TEST. Refer to **66RFE TRANSMISSION VERIFICATION TEST**.

   No

   - Go To 7.

7. **CHECK LINE PRESSURE SENSOR OPERATION**
   1. Turn the ignition OFF to the LOCK position.
   2. Remove the Starter Relay.

      CAUTION: Removal of the Starter Relay will prevent the vehicle from being started in gear.

      WARNING: The Starter Relay must be removed from the PDC. Failure to do so may result in possible serious or fatal injury.

      NOTE: Failure to remove the Starter Relay can cause a Transmission - No Response condition.

   3. Install the (special tool #8333A, Simulator, Transmission).
   4. With the Transmission Simulator select the "OFF" position on the "Input/Output Speed" switch.
   5. Ignition ON, Engine Not Running.
   6. With the scan tool, monitor the Line Pressure while turning the Pressure Switch selector to each of the three line pressure positions on the Transmission Simulator.

      NOTE: All three scan tool Line Pressure readings should be steady and ±14 kPa (2.0 psi) 0.1 volts of the reading specified on the Transmission Simulator.

      Did the scan tool Line Pressure readings match the specified readings on the Transmission Simulator and remain steady in all three positions?

      Yes

- Replace the Line Pressure Sensor in accordance with the Service Information. Refer to **SENSOR, VARIABLE LINE PRESSURE, REMOVAL** .
- Perform the 66RFE TRANSMISSION VERIFICATION TEST. Refer to **66RFE TRANSMISSION VERIFICATION TEST**.

No

- Go To 8.

8. **CHECK THE (F856) 5-VOLT SUPPLY CIRCUIT FOR AN OPEN**

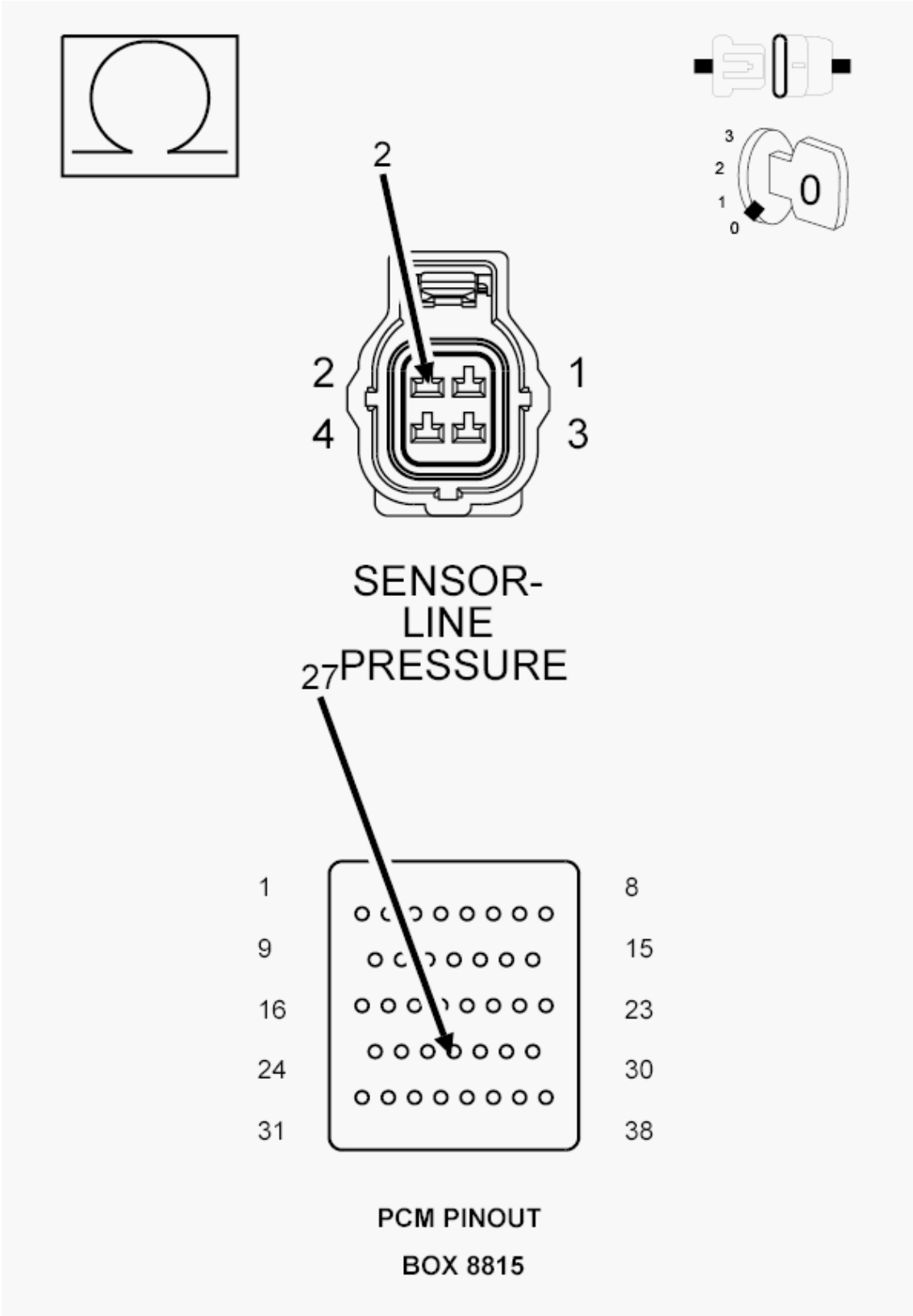

Fig. 54: Checking 5-Volt Supply Circuit For An Open
Courtesy of CHRYSLER GROUP, LLC

1. Turn the ignition OFF to the LOCK position.
2. Disconnect Transmission Simulator.
3. Disconnect the PCM C1 harness connector and connect the (special tool #8815A, Kit, NGC, 38 Position).

CAUTION: Do not probe the PCM harness connectors. Probing the PCM harness connectors will damage the PCM terminals resulting in poor terminal to pin connection. Install the (special tool #8815A, Kit, NGC, 38 Position) to perform diagnosis.

4. Measure the resistance of the (F856) 5-volt Supply circuit between the Line Pressure Sensor harness connector and the appropriate terminal of the (special tool #8815A, Kit, NGC, 38 Position).

   Is the resistance above 5.0 ohms?

   Yes

   - Repair the (F856) 5-volt Supply circuit for an open.
   - Perform the 66RFE TRANSMISSION VERIFICATION TEST. Refer to **66RFE TRANSMISSION VERIFICATION TEST**.

   No

   - Go To 9.

9. **CHECK THE (F856) 5-VOLT SUPPLY CIRCUIT FOR A SHORT TO GROUND**

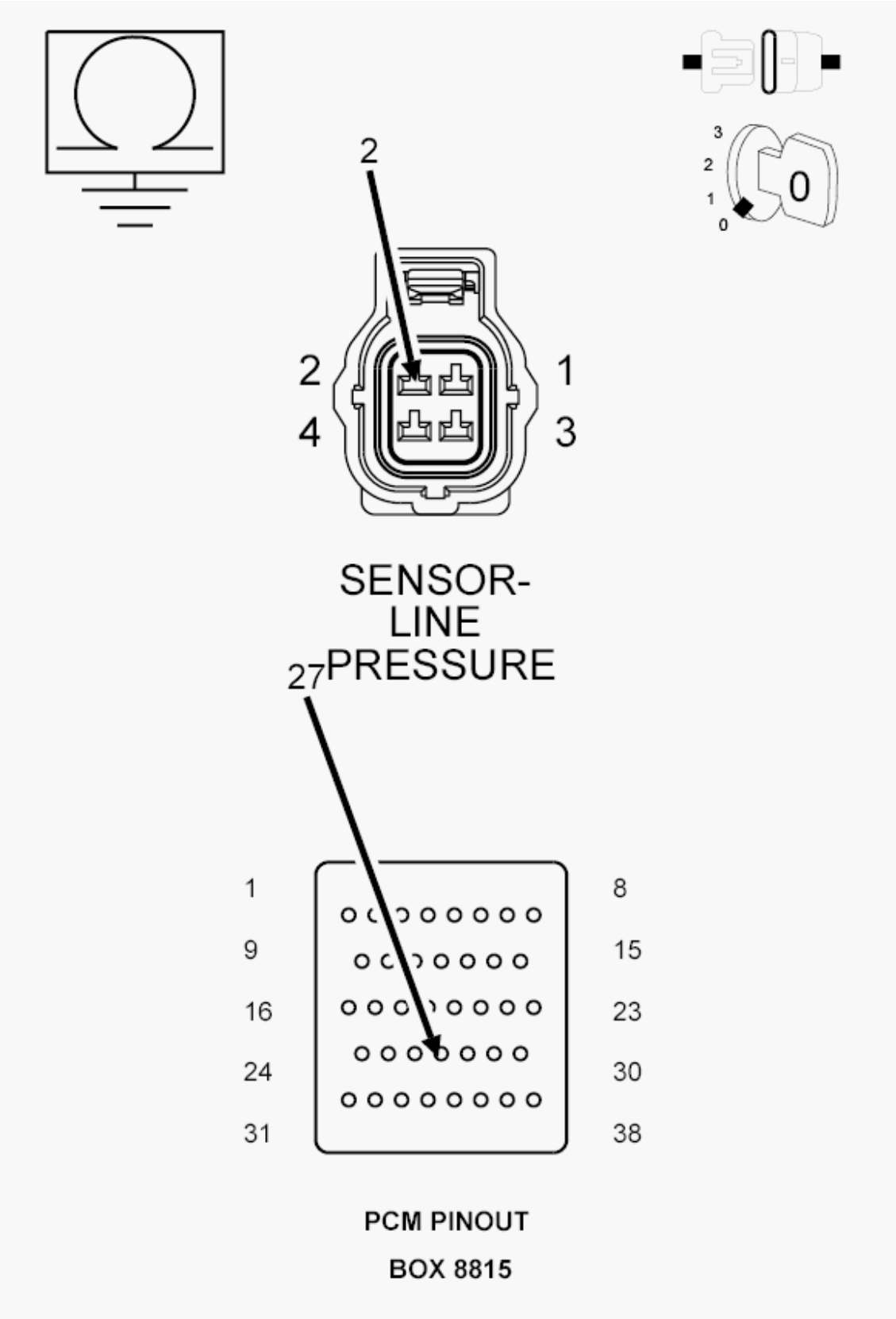

Fig. 55: Checking 5-Volt Supply Circuit For A Short To Ground

Courtesy of CHRYSLER GROUP, LLC

1. Measure the resistance between ground and the (F856) 5-volt Supply circuit.

   Is the resistance below 5.0 ohms?

   Yes

   - Repair the (F856) 5-volt Supply circuit for a short to ground.
   - Perform the 66RFE TRANSMISSION VERIFICATION TEST. Refer to **66RFE TRANSMISSION VERIFICATION TEST**.

   No

   - Using the schematics as a guide, check the Powertrain Control Module (PCM) terminals for corrosion, damage or terminal push out. Pay particular attention to all power and ground circuits. If no problems are found, replace and program the PCM in accordance with the Service Information. With the scan tool, perform a Quick Learn. Refer to **MODULE, POWERTRAIN CONTROL, REMOVAL** .
   - Perform the 66RFE TRANSMISSION VERIFICATION TEST. Refer to **66RFE TRANSMISSION VERIFICATION TEST**.

10. **COMPARE SCAN TOOL TO PRESSURE GAUGE**
    1. Turn the ignition OFF to the LOCK position.
    2. Connect the (special tool #8259, Adapter, Pressure Test) and (special tool #C-3293-SP, Gauge, Pressure 0-300 P.S.I.). Refer to the Service Information for proper installation procedure.

       CAUTION: Apply parking brake.

    3. Start the engine.
    4. In the following steps, compare the scan tool Line Pressure to the Pressure Gauge readings in each gear.

       CAUTION: Do not overheat transmission.

    5. With the gear selector in park, raise the RPM to 1500 and compare line pressure readings.
    6. Firmly apply the brakes, move the gear selector into reverse, raise the RPM to 1500 and compare the line pressure readings.
    7. Firmly apply the brakes, move the gear selector into drive and raise the RPM to 1500 and compare the line pressure readings.

       Does the scan tool Line Pressure readings match the Pressure Gauge readings ± 10 psi?

Yes

- Go To 11.

No

- Replace the Line Pressure Sensor in accordance with the Service Information. Refer to **SENSOR, VARIABLE LINE PRESSURE, REMOVAL** .
- Perform the 66RFE TRANSMISSION VERIFICATION TEST. Refer to **66RFE TRANSMISSION VERIFICATION TEST**.

11. **CHECK WIRING AND CONNECTORS**
    1. Turn the ignition OFF to the LOCK position.
    2. Remove the (special tool #8259, Adapter, Pressure Test) and (special tool #C-3293-SP, Gauge, Pressure 0-300 P.S.I.).
    3. Remove the Starter Relay.

CAUTION: Removal of the Starter Relay will prevent the vehicle from being started in gear.

WARNING: The Starter Relay must be removed from the PDC. Failure to do so may result in possible serious or fatal injury.

NOTE: Failure to remove the Starter Relay can cause a Transmission - No Response condition.

    4. Install the (special tool #8333A, Simulator, Transmission).
    5. On the Transmission Simulator, turn the Pressure Switch selector switch to UD.
    6. Ignition ON, Engine Not Running.
    7. With the scan tool, monitor the UD Pressure Switch state while pressing and holding the Pressure Switch test button and wiggling the wire harness and connectors that pertain to the UD Pressure Switch.

    Did the UD Pressure Switch state change to closed and remain closed while wiggling the wires?

    Yes

    - Go To 12.

    No

    - Go To 14.

12. **CHECK FOR EXCESSIVE DEBRIS**
    1. Turn the ignition OFF to the LOCK position.

2. Remove the (special tool #8333A, Simulator, Transmission).
3. Remove and inspect the Transmission Oil Pan in accordance with the Service Information.

   Does the Transmission Oil Pan contain excessive debris or contamination?

   Yes

   - Repair the cause of the excessive debris in the Transmission Oil Pan.
   - Perform the 66RFE TRANSMISSION VERIFICATION TEST. Refer to **66RFE TRANSMISSION VERIFICATION TEST**.

   No

   - Go To 13.

13. **CHECK THE UD HYDRAULIC CLUTCH CIRCUIT**
    1. Remove the Valve Body and air check the UD hydraulic clutch circuit (in the case) for leakage in accordance with the Service Information.

       NOTE: The UD hydraulic clutch circuit contains a small bleed orifice. A small amount of air leakage is normal.

       Was there excessive air leakage noticed during the air check?

       Yes

       - Repair as necessary. Check the UD clutch piston, piston seals and bleed orifice, reaction shaft support seal rings and machining of the main mating faces of the pump housing, pump valve body and reaction shaft support. Refer to **REMOVAL** .
       - Perform the 66RFE TRANSMISSION VERIFICATION TEST. Refer to **66RFE TRANSMISSION VERIFICATION TEST**.

       No

       - Disassemble and inspect the Valve Body and repair as necessary. Inspect the UD Accumulator piston and seals. If no problems are found in the Valve Body, replace the Transmission Solenoid/TRS Assembly in accordance with the Service Information. Refer to **ASSEMBLY, TRANSMISSION SOLENOID AND TRS, REMOVAL** .
       - Perform the 66RFE TRANSMISSION VERIFICATION TEST. Refer to **66RFE TRANSMISSION VERIFICATION TEST**.

14. **CHECK THE (T29) UD PRESSURE SIGNAL CIRCUIT FOR A SHORT TO ANOTHER CIRCUIT**

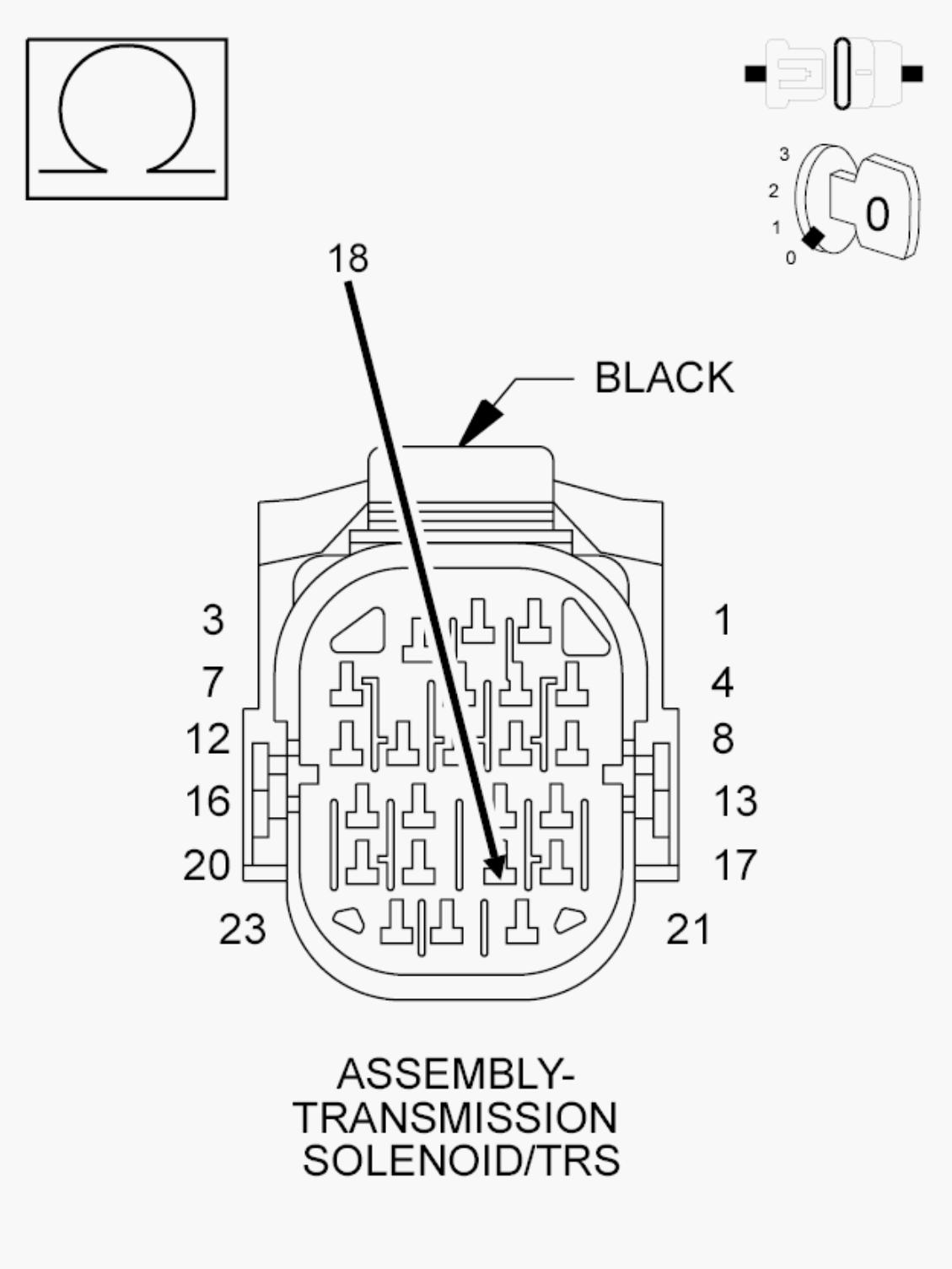

Fig. 56: Checking UD Pressure Signal Circuit For A Short To Another Circuit
Courtesy of CHRYSLER GROUP, LLC

1. Disconnect all PCM harness connectors.
2. Disconnect the Transmission Solenoid/TRS Assembly harness connector.

NOTE: **Make sure the Transmission Solenoid/TRS Assembly harness connector is disconnected.**

3. Measure the resistance between the (T29) UD Pressure Switch Sense circuit and all other circuits in the Transmission Solenoid/TRS Assembly harness connector.

   Is the resistance below 5.0 ohms between the (T29) UD Pressure Signal circuit and any other circuit(s) in the Transmission Solenoid/TRS Assembly harness connector?

   Yes

   - Repair the (T29) UD Pressure Signal circuit for a short to another circuit(s).
   - Perform the 66RFE TRANSMISSION VERIFICATION TEST. Refer to **66RFE TRANSMISSION VERIFICATION TEST**.

   No

   - Using the schematics as a guide, check the Powertrain Control Module (PCM) terminals for corrosion, damage or terminal push out. Pay particular attention to all power and ground circuits. If no problems are found, replace and program the PCM in accordance with the Service Information. With the scan tool, perform a Quick Learn. Refer to **MODULE, POWERTRAIN CONTROL, REMOVAL** .
   - Perform the 66RFE TRANSMISSION VERIFICATION TEST. Refer to **66RFE TRANSMISSION VERIFICATION TEST**.

15. **CHECK WIRING AND CONNECTORS**
    1. The conditions necessary to set this DTC are not present at this time.
    2. Using the schematics as a guide, inspect the wiring and connectors specific to this circuit.
    3. Wiggle the wires while checking for shorted and open circuits.
    4. With the scan tool, check the Event Data to help identify the conditions in which the DTC set.
    5. If the Event Data shows DTC P0875 set while the Line Pressure was significantly below the Desired Line Pressure reading, check for causes of low line pressure (low fluid level, broken or mis-installed primary oil filter or filter seal, sticking Main Regulator Valve in the Pump Valve Body etc.). If the data shows the DTC set while the Line Pressure reading was significantly higher than the Desired Line Pressure, check the Line Pressure Sensor and related wiring.

       Where any problems found?

       Yes

       - Repair as necessary.
       - Perform the 66RFE TRANSMISSION VERIFICATION TEST. Refer to **66RFE TRANSMISSION VERIFICATION TEST**.

       No

- Test Complete.

P0876-UD PRESSURE SWITCH RATIONALITY

For a complete wiring diagram, **refer to appropriate SYSTEM WIRING DIAGRAMS article** .

THEORY OF OPERATION

The Transmission system uses five pressure switches to monitor the fluid pressure in the L/R, 2C, 4C, UD and OD clutch circuits. The pressure switches are continuously monitored for the correct states in each gear as shown in chart.

WHEN MONITORED:

Continuously with the ignition on and engine running.

SET CONDITION:

This DTC sets when the UD pressure switch is in the wrong state for the current gear. For example, this code would set if the UD pressure switch remained off while the transmission was in second gear.

POSSIBLE CAUSES

Possible Causes
RELATED RELAY DTCS PRESENT
LOW FLUID LEVEL
NO. 2 CHECK BALL CUT OR DAMAGED
LOW LINE PRESSURE
CRACKED OR MIS-INSTALLED SUMP FILTER OR SEAL
LOOSE COOLER RETURN SPIN ON FILTER (IF EQUIPPED)
STICKING MAIN REGULATOR VALVE IN PUMP VALVE BODY
(T29) UD PRESSURE SIGNAL CIRCUIT OPEN
(T29) UD PRESSURE SIGNAL CIRCUIT SHORTED TO GROUND
(T29) UD PRESSURE SIGNAL CIRCUIT SHORTED TO ANOTHER CIRCUITS
TRANSMISSION SOLENOID/TRS ASSEMBLY
POWERTRAIN CONTROL MODULE (PCM)

Always perform the Pre-Diagnostic Troubleshooting procedure before proceeding. Refer to 66RFE PRE-DIAGNOSTIC TROUBLESHOOTING PROCEDURE.

GEAR	L/R	2C	4C	UD	OD
REVERSE	OPEN	OPEN	OPEN	OPEN	OPEN
P/N	CLOSED**	OPEN	OPEN	OPEN	OPEN
1ST	CLOSED*	OPEN	OPEN	CLOSED	OPEN

2ND	OPEN	CLOSED	OPEN	CLOSED	OPEN
2ND PRIME	OPEN	OPEN	CLOSED	CLOSED	OPEN
3RD	OPEN	OPEN	OPEN	CLOSED	CLOSED
4TH	OPEN	OPEN	CLOSED	OPEN	CLOSED
5TH	OPEN	CLOSED	OPEN	OPEN	CLOSED
*L/R is closed if output speed is below 100 RPM in Drive and Manual 2. L/R is closed in Manual 1.					
**May be open when rolling in Neutral or at low oil temperatures.					

DIAGNOSTIC TEST

1. **CHECK FOR RELATED DTCS**
   1. With the scan tool, read DTCs.

      Are any TCM Power Input, Line Pressure, and/or Loss of Prime DTCs present?

      Yes

      - Refer to **3.7L/4.7L/5.7L - DIAGNOSTIC CODE INDEX - NGC - 1500 & 2500** or **5.7L - DIAGNOSTIC CODE INDEX - 3500 CAB & CHASSIS** and perform the appropriate diagnostic procedure. If a Loss of Prime DTC is present, perform its respective test first.
      -

      No

      - Go To 2.
2. **CHECK FOR PRESSURE SWITCH DTCS**

   Are two or more pressure switch rationality DTCs present in addition to P0876?

   Yes

   - Go To 3.

   No

   - Go To 4.
3. **CHECK IF ALL PRESSURE SWITCHES READ CLOSED**
   1. With the scan tool, read and record all Event Data.

      NOTE: Make sure to record all Event Data stored in the scan tool for future reference in this test procedure.

      Does the Event Data show all pressure switches reading CLOSED?

Yes

- Refer to **DIAGNOSIS AND TESTING** and perform diagnostics for P0882. Diagnose the symptom as if the DTC is current.

No

- Go To 4.

4. **CHECK FOR OTHER DTCS**
   1. With the scan tool, read DTCs.

      Is DTC P2704 present?

      Yes

      - Replace the Transmission Solenoid/TRS Assembly in accordance with the Service Information. Refer to **ASSEMBLY, TRANSMISSION SOLENOID AND TRS, REMOVAL** .
      - Perform the 66RFE TRANSMISSION VERIFICATION TEST. Refer to **66RFE TRANSMISSION VERIFICATION TEST**.

      No

      - Go To 5.

5. **CHECK THE EVENT DATA**

   In the Event Data recorded earlier, does the Event Data display information for DTC P0876?

   Yes

   - Go To 6.

   No

   - Refer to **DIAGNOSIS AND TESTING** and perform diagnostics for the DTC listed in the Event Data.

6. **CHECK IF EVENT DATA WAS SET IN PARK, NEUTRAL OR REVERSE**

   In the Event Data recorded earlier, did DTC P0876 set in Park, Neutral or Reverse?

   Yes

   - Go To 10.

   No

- Go To 7.

7. **CHECK FOR UD PRESSURE SWITCH STATUS**

   In the Event Data recorded earlier, did DTC P0876 set with the UD Pressure Switch closed?

   Yes

   - Go To 10.

   No

   - Go To 8.

8. **CHECK LINE PRESSURE**

   In the Event Data recorded earlier, is the Line Pressure less than 40 psi and significantly below the Desired Line Pressure?

   Yes

   - Repair as necessary to correct low line pressure. Check the fluid level and adjust as necessary. If the fluid level is OK, check the Primary Oil Filter seal for a split, crack or improperly installed. If the filter and seal are OK, check the Main Regulator Valve in the Oil Pump. Refer to the Service Information for the above procedures. Refer to **PUMP, TRANSMISSION OIL, DISASSEMBLY** .
   - Perform the 66RFE TRANSMISSION VERIFICATION TEST. Refer to **66RFE TRANSMISSION VERIFICATION TEST**.

   No

   - Go To 9.

9. **CHECK THE (T29) UD PRESSURE SIGNAL CIRCUIT FOR A SHORT TO ANOTHER CIRCUIT**

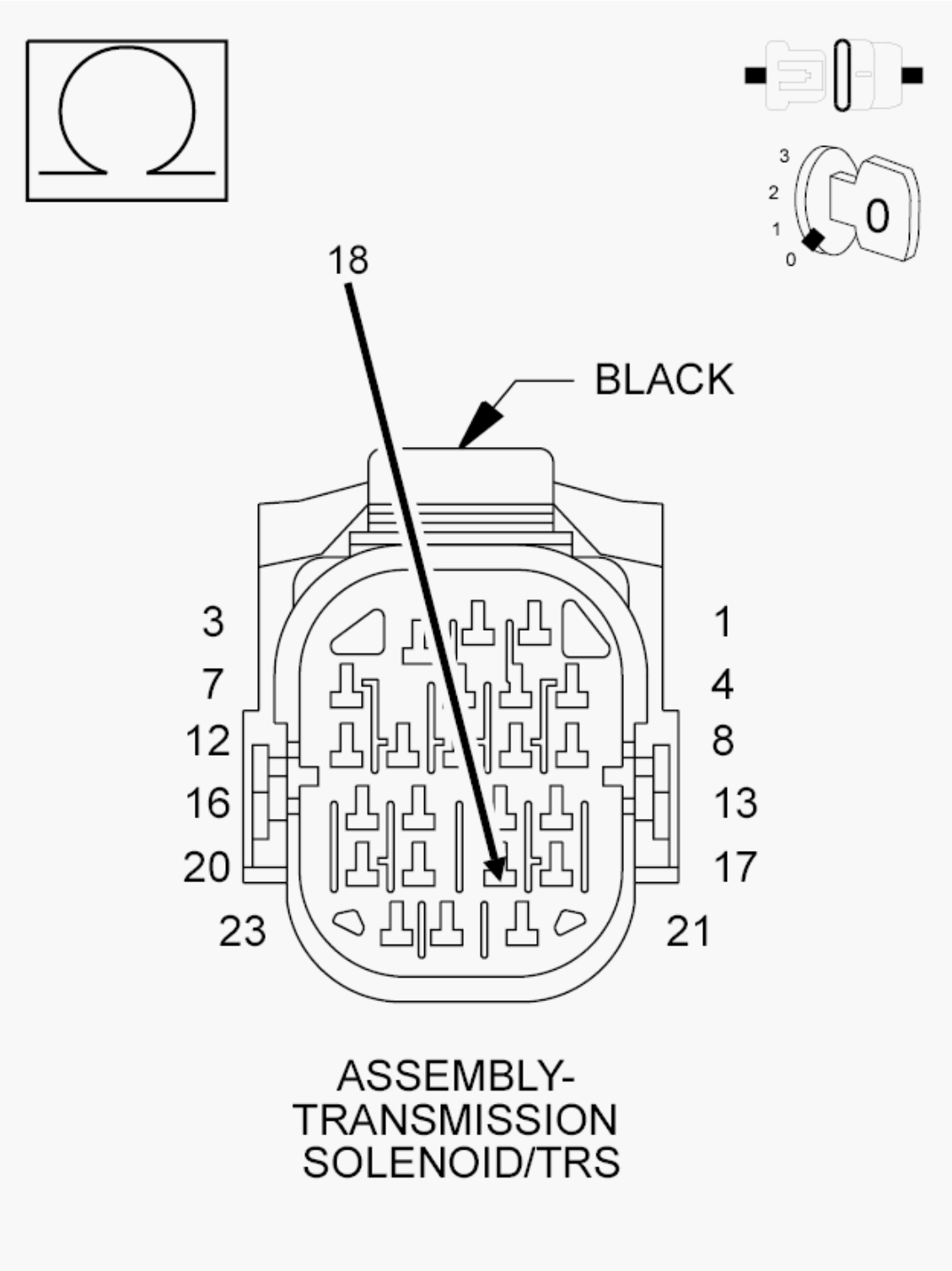

Fig. 57: Checking UD Pressure Signal Circuit For A Short To Another Circuit
Courtesy of CHRYSLER GROUP, LLC

1. Turn the ignition OFF to the LOCK position.
2. Disconnect all PCM harness connectors.

3. Disconnect the Transmission Solenoid/TRS Assembly harness connector.
4. Measure the resistance between the (T29) UD Pressure Signal circuit and all other circuits in the Transmission Solenoid/TRS Assembly harness connector.

   Is the resistance below 5.0 ohms between the (T29) UD Pressure Signal circuit and any other circuit(s) in the Transmission Solenoid/TRS Assembly harness connector?

   Yes

   - Repair the (T29) UD Pressure Signal circuit for a short to another circuit(s).
   - Perform the 66RFE TRANSMISSION VERIFICATION TEST. Refer to **66RFE TRANSMISSION VERIFICATION TEST**.

   No

   - Replace the Transmission Solenoid/TRS Assembly in accordance with the Service Information. Refer to **ASSEMBLY, TRANSMISSION SOLENOID AND TRS, REMOVAL** .
   - Perform the 66RFE TRANSMISSION VERIFICATION TEST. Refer to **66RFE TRANSMISSION VERIFICATION TEST**.

10. **CHECK THE PCM AND WIRING**
    1. Turn the ignition OFF to the LOCK position.
    2. Remove the Starter Relay.

       CAUTION: Removal of the Starter Relay will prevent the vehicle from being started in gear.

       WARNING: The Starter Relay must be removed from the PDC. Failure to do so may result in possible serious or fatal injury.

       NOTE: Failure to remove the Starter Relay can cause a Transmission - No Response condition.

    3. Install the (special tool #8333A, Simulator, Transmission).
    4. Ignition ON, Engine Not Running.
    5. With the Transmission Simulator, turn the Pressure Switch selector switch to the UD position.
    6. With the scan tool, monitor the UD Pressure Switch state while pressing the Pressure Switch Test button on the Transmission Simulator.

       Did the state of the UD Pressure Switch change while pressing the Pressure Switch Test button?

       Yes

- Go To 14.

No

- Go To 11.

11. **CHECK THE (T29) UD PRESSURE SIGNAL CIRCUIT FOR AN OPEN**

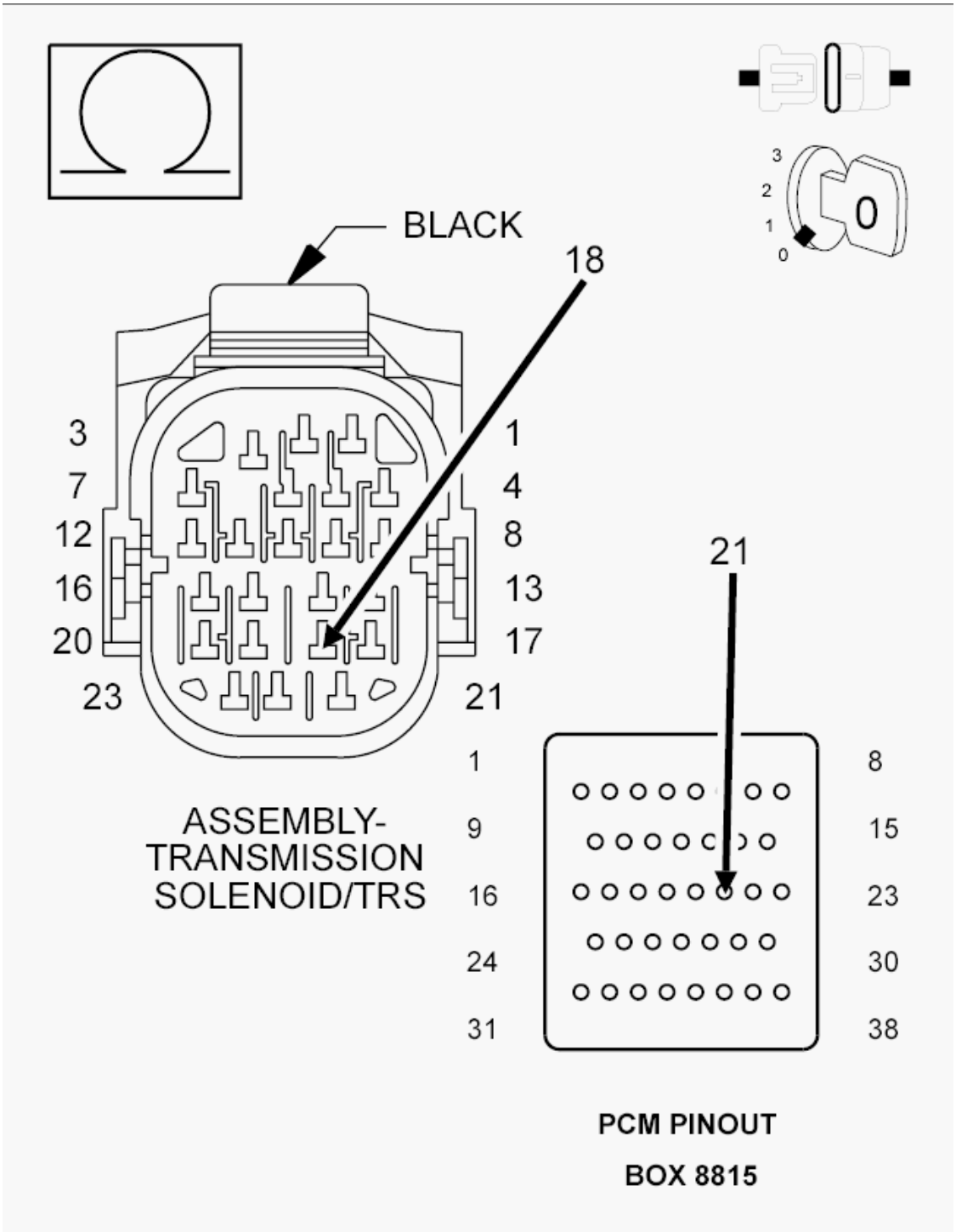

Fig. 58: Checking UD Pressure Signal Circuit For An Open
Courtesy of CHRYSLER GROUP, LLC

1. Turn the ignition OFF to the LOCK position.
2. Disconnect the (special tool #8333A, Simulator, Transmission).
3. Disconnect the PCM C4 harness connector and connect the (special tool #8815A, Kit, NGC, 38

Position).

CAUTION: Do not probe the PCM harness connectors. Probing the PCM harness connectors will damage the PCM terminals resulting in poor terminal to pin connection. Install the (special tool #8815A, Kit, NGC, 38 Position) to perform diagnosis.

4. Measure the resistance of the (T29) UD Pressure Signal circuit from the Transmission Solenoid/TRS Assembly harness connector and the appropriate terminal of the (special tool #8815A, Kit, NGC, 38 Position).

   Is the resistance above 5.0 ohms?

   Yes

   - Repair the (T29) UD Pressure Signal circuit for an open.
   - Perform the 66RFE TRANSMISSION VERIFICATION TEST. Refer to **66RFE TRANSMISSION VERIFICATION TEST**.

   No

   - Go To 12.

12. **CHECK THE (T29) UD PRESSURE SIGNAL CIRCUIT FOR A SHORT TO GROUND**

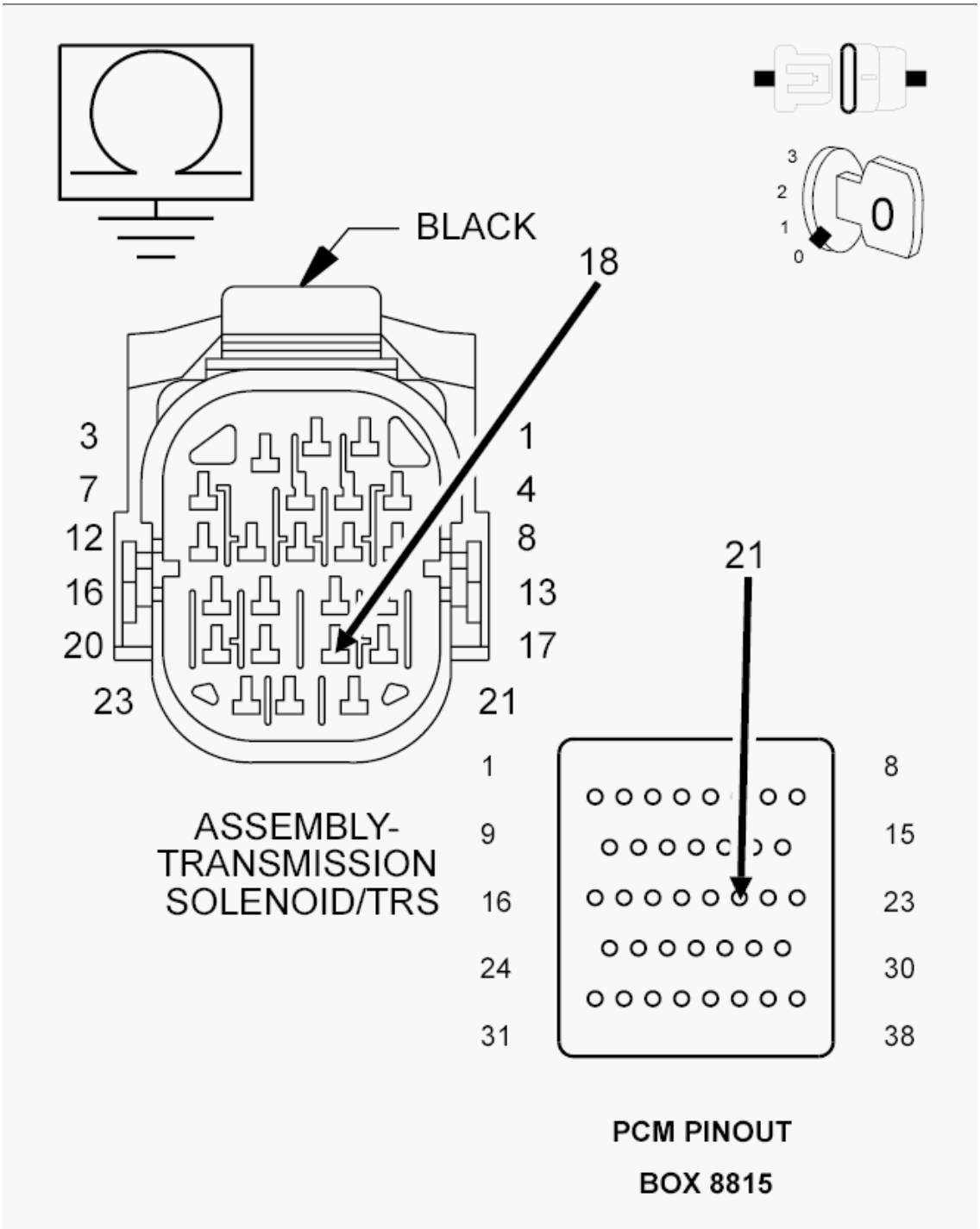

Fig. 59: Checking UD Pressure Signal Circuit For A Short To Ground
Courtesy of CHRYSLER GROUP, LLC

1. Measure the resistance between ground and the (T29) UD Pressure Signal circuit.

   Is the resistance below 5.0 ohms?

   Yes

- Repair the (T29) UD Pressure Signal circuit for a short to ground.
- Perform the 66RFE TRANSMISSION VERIFICATION TEST. Refer to **66RFE TRANSMISSION VERIFICATION TEST**.

No

- Go To 13.

13. **CHECK THE (T29) UD PRESSURE SIGNAL CIRCUIT FOR A SHORT TO ANOTHER CIRCUIT**

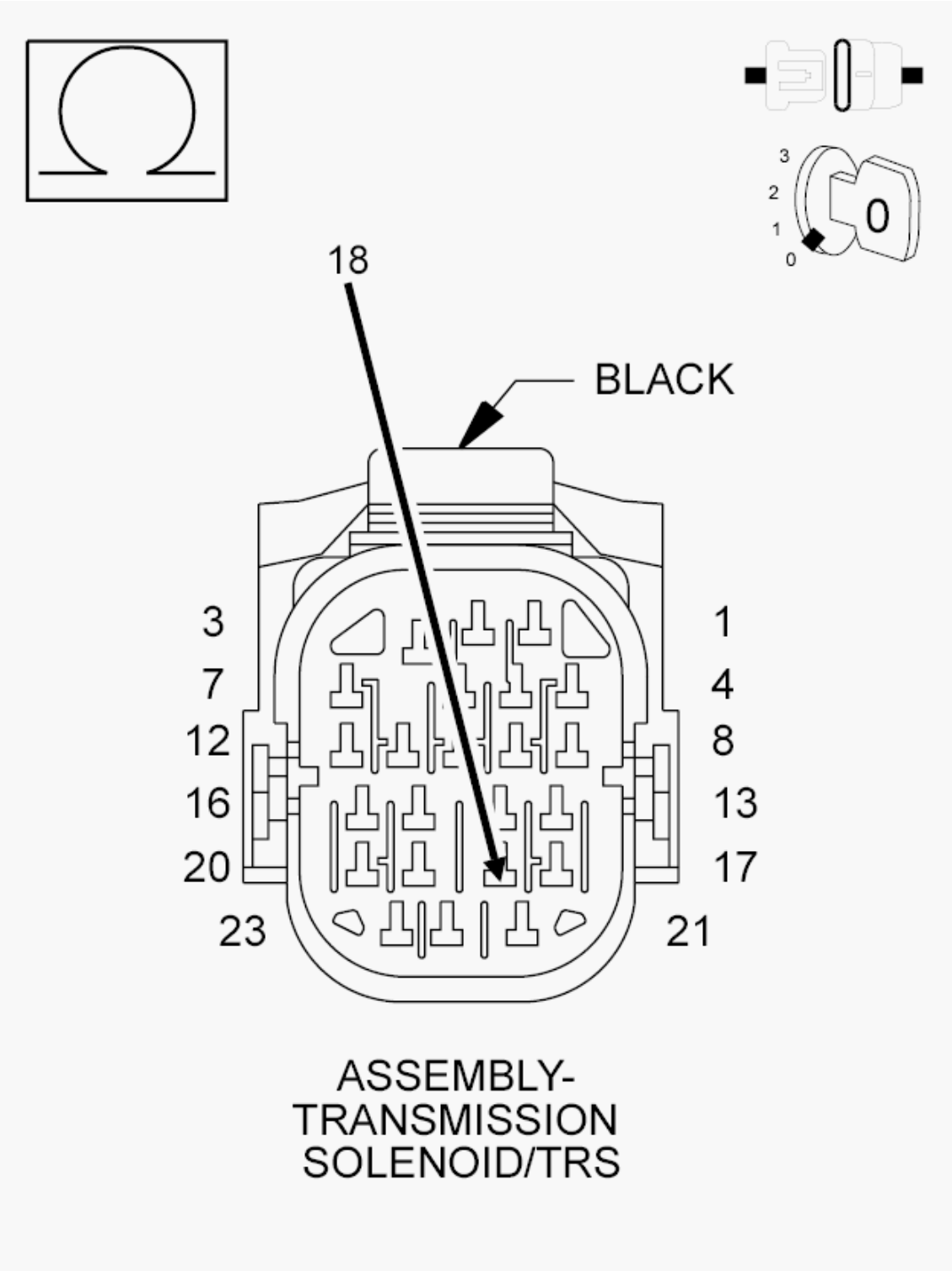

Fig. 60: Checking UD Pressure Signal Circuit For A Short To Another Circuit
Courtesy of CHRYSLER GROUP, LLC

1. Disconnect all PCM harness connectors.

NOTE: **Make sure the Transmission Solenoid/TRS Assembly harness connector is disconnected.**

2. Measure the resistance between the (T29) UD Pressure Signal circuit and all other circuits in the Transmission Solenoid/TRS Assembly harness connector.

   Is the resistance below 5.0 ohms between the (T29) UD Pressure Signal circuit and any other circuit(s) in the Transmission Solenoid/TRS Assembly harness connector?

   Yes

   - Repair the (T29) UD Pressure Signal circuit for a short to another circuit(s).
   - Perform the 66RFE TRANSMISSION VERIFICATION TEST. Refer to **66RFE TRANSMISSION VERIFICATION TEST**.

   No

   - Using the schematics as a guide, check the Powertrain Control Module (PCM) terminals for corrosion, damage or terminal push out. Pay particular attention to all power and ground circuits. If no problems are found, replace and program the PCM in accordance with the Service Information. With the scan tool, perform a Quick Learn.
   - Perform the 66RFE TRANSMISSION VERIFICATION TEST. Refer to **66RFE TRANSMISSION VERIFICATION TEST**.

14. **WIGGLE TEST USING THE TRANSMISSION SIMULATOR**
    1. Perform the steps in the previous test while wiggling the wiring harness and connectors pertaining to the UD Pressure Switch.

       Did the state of the UD Pressure Switch change while pressing the Pressure Switch Test button?

       Yes

       - Repair the wiring harness and/or connectors as necessary.
       - Perform the 66RFE TRANSMISSION VERIFICATION TEST. Refer to **66RFE TRANSMISSION VERIFICATION TEST**.

       No

       - Go To 15.

15. **CHECK THE TRANSMISSION SOLENOID/TRS ASSEMBLY**

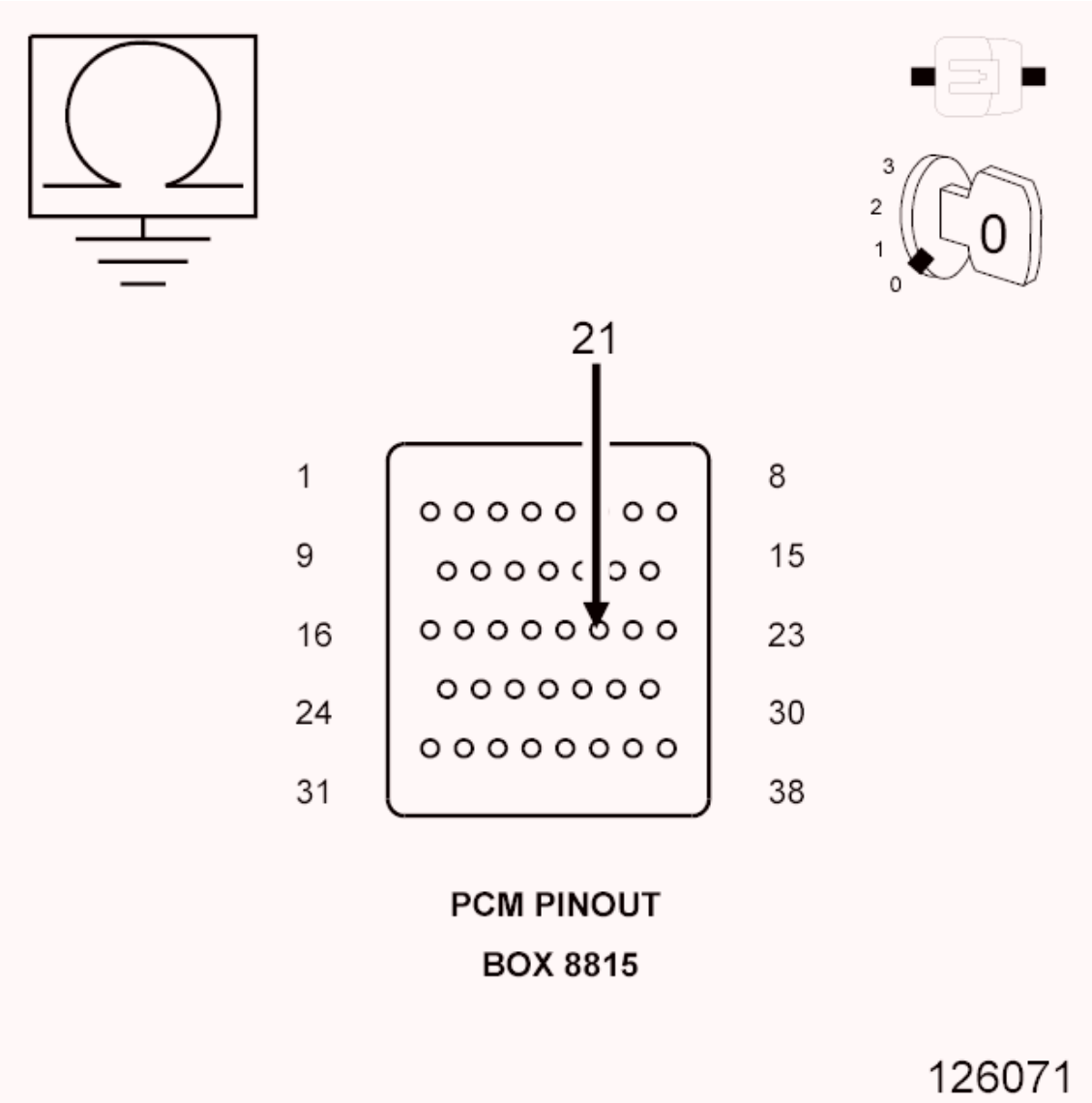

Fig. 61: Checking The Transmission Solenoid/TRS Assembly
Courtesy of CHRYSLER GROUP, LLC

1. Disconnect the Transmission Simulator and reconnect the Transmission Solenoid/TRS Assembly harness connector.
2. Disconnect the PCM C4 harness connector and connect the (special tool #8815A, Kit, NGC, 38 Position).
3. Measure the resistance between ground and the (T29) UD Pressure Signal circuit in the appropriate terminal of the (special tool #8815A, Kit, NGC, 38 Position).

   Is the resistance below 5.0 ohms?

   Yes

   - Replace the Transmission Solenoid/TRS Assembly in accordance with the Service

Information. Refer to **ASSEMBLY, TRANSMISSION SOLENOID AND TRS, REMOVAL** .

- Perform the 66RFE TRANSMISSION VERIFICATION TEST. Refer to **66RFE TRANSMISSION VERIFICATION TEST**.

No

- Go To 16.

16. **CHECK IF THE DTC RESETS**
    1. Reconnect all previously disconnected connectors.
    2. With the scan tool, erase all transmission DTCs.
    3. Test drive the vehicle. Using the Event Data recorded earlier, try to duplicate the conditions in which the DTC set.

    Does DTC P0876 reset?

    Yes

    - Go To 17.

    No

    - Go To 18.

17. **CHECK FOR A CUT NO. 2 CHECK BALL**
    1. Remove the Valve Body in accordance with the Service Information.
    2. Check the No. 2 check ball for cuts or damage.

    Is the No. 2 check ball cut or damaged?

    Yes

    - Replace the No. 2 check ball. Check for excessive clutch debris in the oil pan. If excessive debris is present, check the UD Clutch and repair as necessary. Refer to **VALVE BODY, REMOVAL** .
    - Perform the 66RFE TRANSMISSION VERIFICATION TEST. Refer to **66RFE TRANSMISSION VERIFICATION TEST**.

    No

    - Replace the Transmission Solenoid/TRS Assembly in accordance with the Service Information. Refer to **ASSEMBLY, TRANSMISSION SOLENOID AND TRS, REMOVAL** . Check for excessive clutch debris in the oil pan. If excessive debris is present, check the UD Clutch and repair as necessary.
    - Perform the 66RFE TRANSMISSION VERIFICATION TEST. Refer to **66RFE TRANSMISSION VERIFICATION TEST**.

18. **CHECK WIRING AND CONNECTORS**
    1. The conditions necessary to set this DTC are not present at this time.
    2. Using the schematics as a guide, inspect the wiring and connectors specific to this circuit.
    3. Wiggle the wires while checking for shorted and open circuits.
    4. With the scan tool, check the Event Data to help identify the conditions in which the DTC set.

    Were any problems found?

    Yes

    - Repair as necessary.
    - Perform the 66RFE TRANSMISSION VERIFICATION TEST. Refer to **66RFE TRANSMISSION VERIFICATION TEST**.

    No

    - Test Complete.

P0882-TCM POWER INPUT LOW

For a complete wiring diagram, **refer to appropriate SYSTEM WIRING DIAGRAMS article** .

THEORY OF OPERATION

The Transmission Control Relay is used to supply power to the solenoids and pressure switches when the transmission is in normal operating mode. The relay output is fed back to the TCM through pins 16, 17 and 36. It is referred to as "Transmission Control Relay Output". This circuit does not supply power to the TCM, it is only a sense circuit. When the relay is off, no power is supplied to the solenoids or pressure switches and the transmission is in "limp-in" or "default" mode. **Note: Inadequate Transmission Control Relay Output voltage can cause DTCs P0846, P0869, P0871, P0876 or P0988 to set. This does not indicate an internal transmission or solenoid/TRS problem. Repairing the P0882 fault should eliminate the related DTCs.**

WHEN MONITORED:

When the ignition is turned from OFF position to RUN position and/or the ignition is turned from START position to RUN position.

SET CONDITION:

This DTC is set when less than 3.0 volts are present at the transmission control relay output circuits at the Powertrain Control Module when the PCM is energizing the relay.

POSSIBLE CAUSES

Possible Causes
TIPM INTERNAL FUSED B(+) CIRCUIT OPEN

(T16) TRANSMISSION CONTROL OUTPUT CIRCUIT OPEN
(T16) TRANSMISSION CONTROL OUTPUT CIRCUIT SHORTED TO GROUND
(T15) TRANSMISSION CONTROL CIRCUIT OPEN
(T15) TRANSMISSION CONTROL CIRCUIT SHORTED TO GROUND
TRANSMISSION CONTROL RELAY
POWERTRAIN CONTROL MODULE (PCM)

Always perform the Pre-Diagnostic Troubleshooting procedure before proceeding. Refer to 66RFE PRE-DIAGNOSTIC TROUBLESHOOTING PROCEDURE.

DIAGNOSTIC TEST

1. **CHECK IF THE DTC IS CURRENT**
    1. With the scan tool, read DTCs.

       Is the status Active or is the Starts Since Set counter 0 for this DTC?

       Yes

       - Go To 2.

       No

       - Go To 8.
2. **CHECK THE INTERNAL FUSED B(+) CIRCUIT FOR AN OPEN**

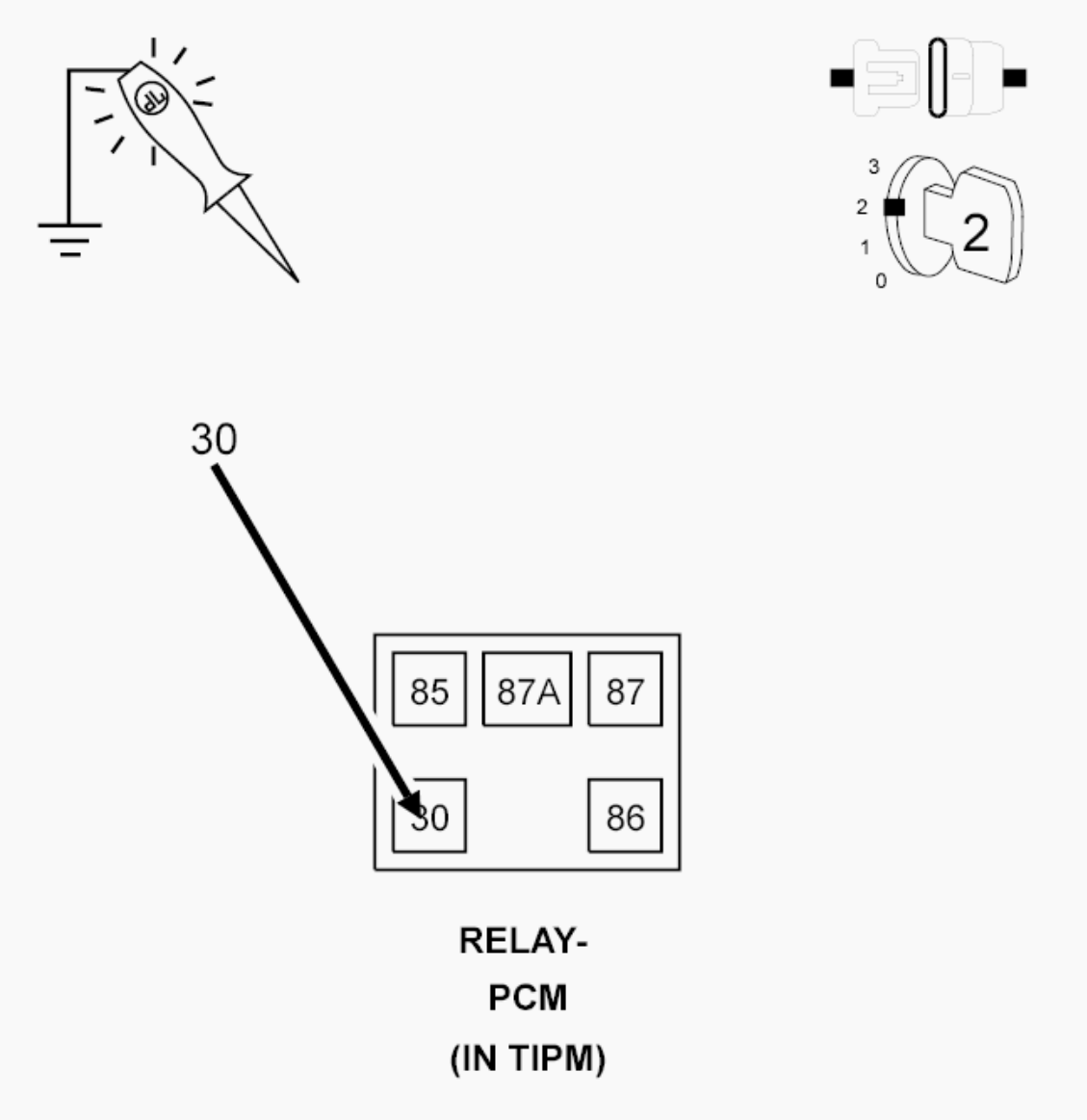

Fig. 62: Checking Internal Fused B(+) Circuit For An Open
Courtesy of CHRYSLER GROUP, LLC

1. Turn the ignition OFF to the LOCK position.
2. Remove the Transmission Control Relay.

NOTE: Check connectors - Clean/repair as necessary.

3. Ignition ON, Engine Not Running.
4. Using a 12-volt test light connected to ground, check the internal Fused B(+) circuit in the Transmission Control Relay connector.

NOTE: The test light must illuminate brightly. Compare the brightness to that of a direct connection to the battery.

Does the test light illuminate brightly?

Yes

- Go To 3.

No

- Repair the internal Fused B(+) circuit for an open. If the fuse is open make sure to check for a short to ground.
- Perform the 66RFE TRANSMISSION VERIFICATION TEST. Refer to **66RFE TRANSMISSION VERIFICATION TEST**.

3. **CHECK THE TRANSMISSION CONTROL RELAY**
   1. Turn the ignition OFF to the LOCK position.
   2. Install a substitute relay in place of the Transmission Control Relay.
   3. Start the vehicle.
   4. With the scan tool, read DTCs.

   Did DTC P0882 reset?

   Yes

   - Go To 4.

   No

   - Replace the Transmission Control Relay.
   - Perform the 66RFE TRANSMISSION VERIFICATION TEST. Refer to **66RFE TRANSMISSION VERIFICATION TEST**.
4. **CHECK THE (T16) TRANSMISSION CONTROL OUTPUT CIRCUIT FOR AN OPEN**

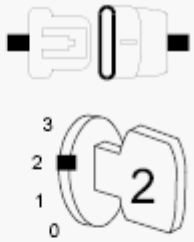

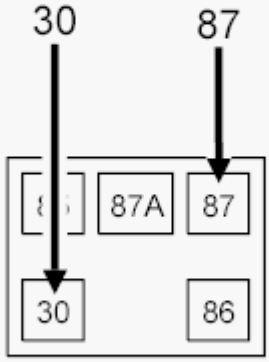

RELAY-
PCM
(IN TIPM)

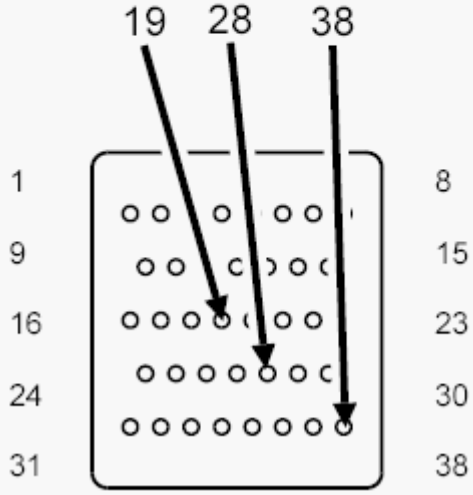

PCM PINOUT
BOX 8815

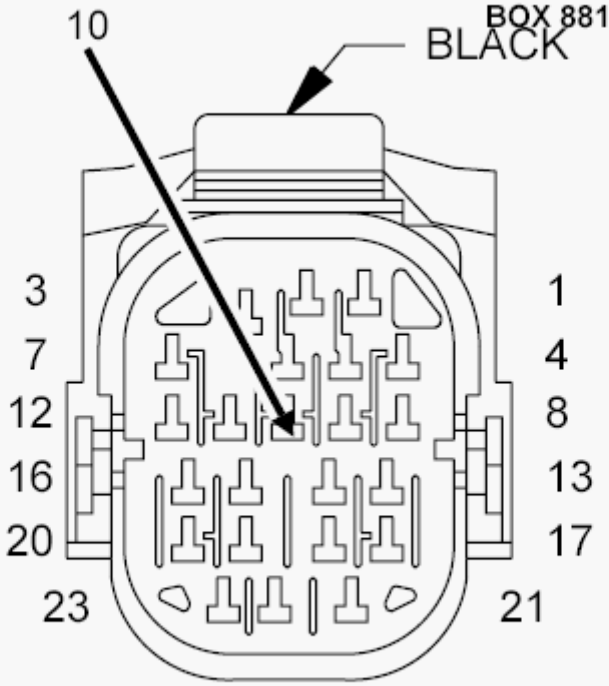

ASSEMBLY-
TRANSMISSION

Fig. 63: Checking Transmission Control Output Circuit For An Open
Courtesy of CHRYSLER GROUP, LLC

1. Turn the ignition OFF to the LOCK position.
2. Disconnect the PCM C4 harness connector and connect the (special tool #8815A, Kit, NGC, 38 Position).
3. Disconnect the Transmission Solenoid/TRS Assembly harness connector.

CAUTION: Do not probe the PCM harness connectors. Probing the PCM harness connectors will damage the PCM terminals resulting in poor terminal to pin connection. Install the (special tool #8815A, Kit, NGC, 38 Position) to perform diagnosis.

4. Connect a jumper wire between the internal Fused B(+) circuit and the (T16) Transmission Control Output circuit in the Transmission Control Relay connector.
5. Ignition ON, Engine Not Running.
6. Using a 12-volt test light connected to ground, check all four (T16) Transmission Control Output circuits in the PCM C4 harness connector and Transmission Solenoid/TRS Assembly harness connector.

   Does the test light illuminate brightly on all four (T16) Transmission Control Output circuits?

   Yes

   - Go To 5.

   No

   - Repair the (T16) Transmission Control Output circuit(s) for an open or high resistance.
   - Perform the 66RFE TRANSMISSION VERIFICATION TEST. Refer to **66RFE TRANSMISSION VERIFICATION TEST**.

5. **CHECK THE (T16) TRANSMISSION CONTROL OUTPUT CIRCUIT FOR A SHORT TO GROUND**

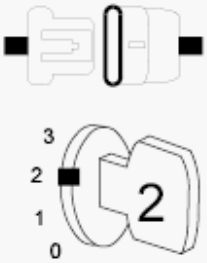

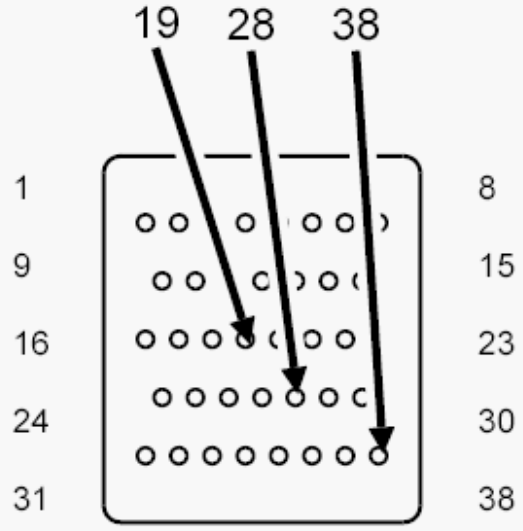

PCM PINOUT

BOX 8815

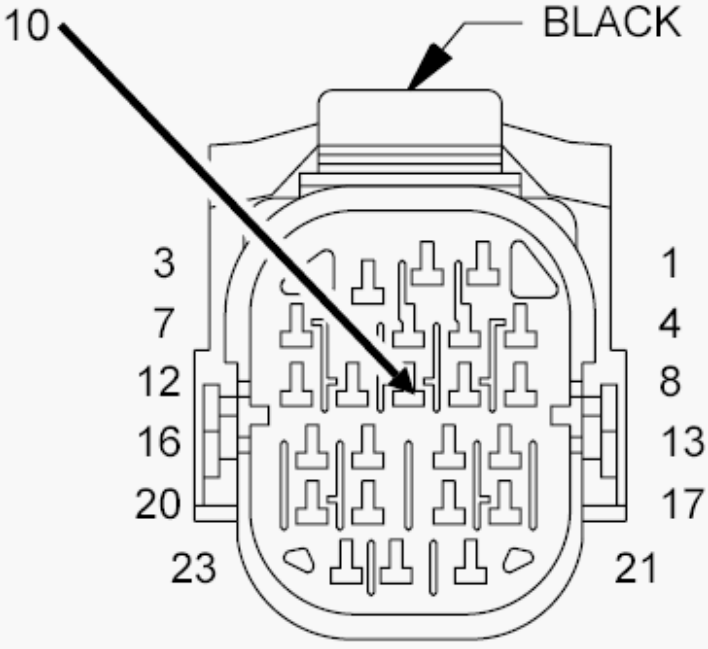

ASSEMBLY-
TRANSMISSION
SOLENOID/TRS

Fig. 64: Checking Transmission Control Output Circuit For A Short To Ground
Courtesy of CHRYSLER GROUP, LLC

1. Turn the ignition OFF to the LOCK position.
2. Disconnect the TIPM C2 harness connector.
3. Measure the resistance between ground and the (T16) Transmission Control Output circuit.

   Is the resistance below 5.0 ohms?

   Yes

   - Repair the (T16) Transmission Control Output circuit for a short to ground.
   - Perform the 66RFE TRANSMISSION VERIFICATION TEST. Refer to **66RFE TRANSMISSION VERIFICATION TEST**.

   No

   - Go To 6.

6. **CHECK THE (T15) TRANSMISSION CONTROL CIRCUIT FOR A SHORT TO GROUND**

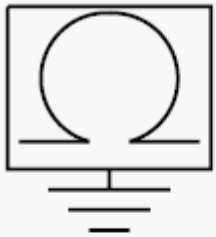

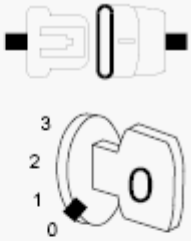

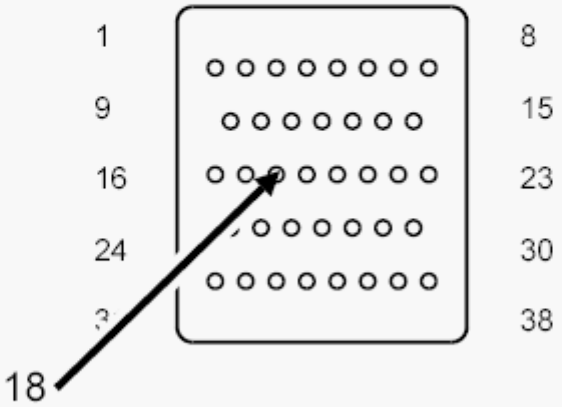

PCM PINOUT

BOX 8815

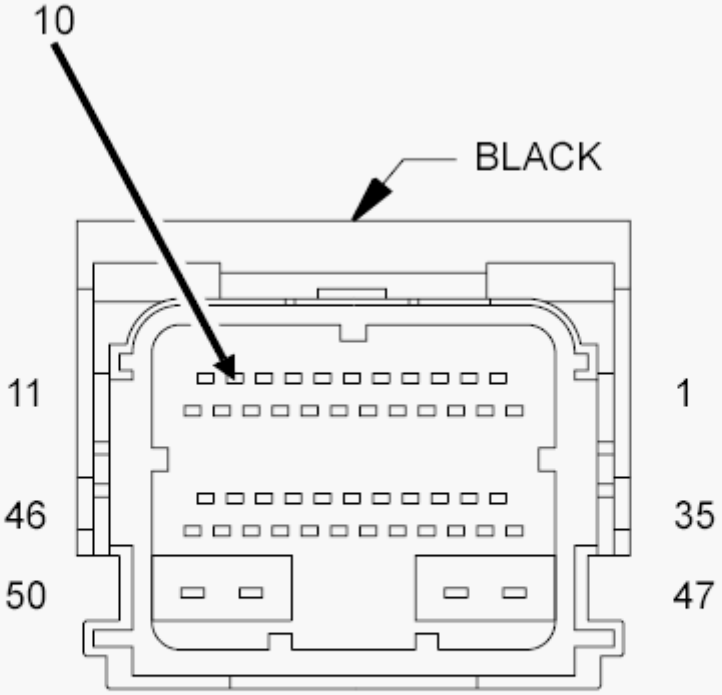

MODULE-
TOTALLY
INTEGRATED

Fig. 65: Checking Transmission Control Circuit For A Short To Ground
Courtesy of CHRYSLER GROUP, LLC

1. Disconnect the TIPM C1 harness connector.
2. Measure the resistance of the (T15) Transmission Control circuit between ground and the appropriate terminal of the (special tool #8815A, Kit, NGC, 38 Position).

   Is the resistance below 5.0 Ohms?

   Yes

   - Repair the (T15) Transmission Control circuit for a short to ground.
   - Perform the 66RFE TRANSMISSION VERIFICATION TEST. Refer to **66RFE TRANSMISSION VERIFICATION TEST**.

   No

   - Go To 7.

7. **CHECK THE (T15) TRANSMISSION CONTROL CIRCUIT FOR AN OPEN**

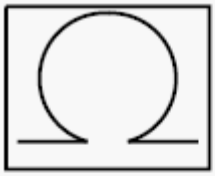

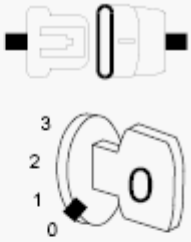

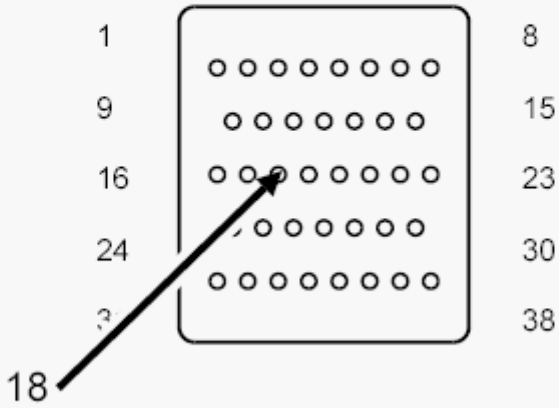

PCM PINOUT

BOX 8815

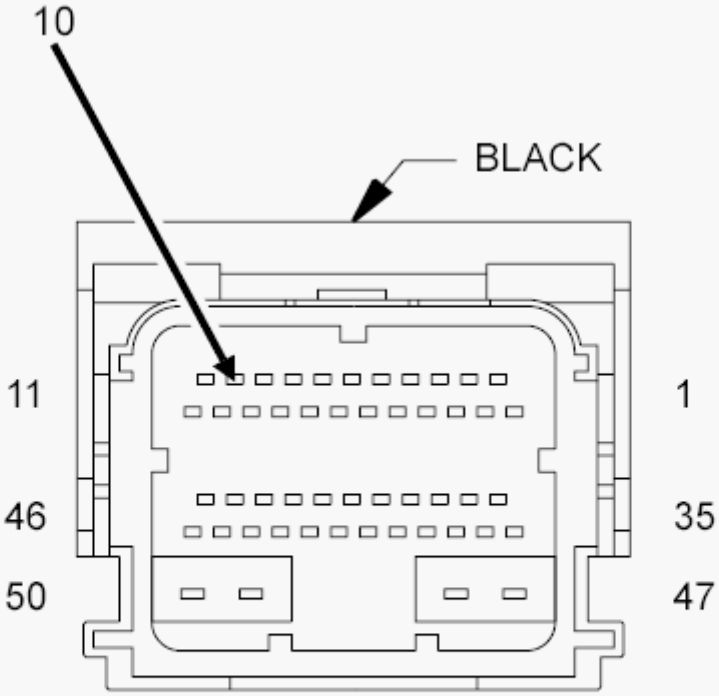

MODULE-
TOTALLY
INTEGRATED

Fig. 66: Checking Transmission Control Circuit For An Open
Courtesy of CHRYSLER GROUP, LLC

1. Measure the resistance of the (T15) Transmission Control circuit between the TIPM C1 harness connector and the appropriate terminal of the (special tool #8815A, Kit, NGC, 38 Position).

   Is the resistance above 5.0 ohms?

   Yes

   - Repair the (T15) Transmission Control circuit for an open.
   - Perform the 66RFE TRANSMISSION VERIFICATION TEST. Refer to **66RFE TRANSMISSION VERIFICATION TEST**.

   No

   - Using the schematics as a guide, check the Powertrain Control Module (PCM) terminals for corrosion, damage or terminal push out. Pay particular attention to all power and ground circuits. If no problems are found, replace and program the PCM in accordance with the Service Information. With the scan tool, perform a Quick Learn.
   - Perform the 66RFE TRANSMISSION VERIFICATION TEST. Refer to **66RFE TRANSMISSION VERIFICATION TEST**.

8. **CHECK WIRING AND CONNECTORS**
   1. The conditions necessary to set this DTC are not present at this time.
   2. Using the schematics as a guide, inspect the wiring and connectors specific to this circuit.
   3. Wiggle the wires while checking for shorted and open circuits.
   4. With the scan tool, check the Event Data to help identify the conditions in which the DTC set.

      Where any problems found?

      Yes

      - Repair as necessary.
      - Perform the 66RFE TRANSMISSION VERIFICATION TEST. Refer to **66RFE TRANSMISSION VERIFICATION TEST**.

      No

      - Test Complete.

P0883-TCM POWER INPUT HIGH

For a complete wiring diagram, **refer to appropriate SYSTEM WIRING DIAGRAMS article** .

THEORY OF OPERATION

The Transmission Control Relay is used to supply power (Transmission Control Output) to the Transmission Solenoid/TRS Assembly when in normal operating mode and to pins C4-19, C4-28 and C4-38 of the PCM. The purpose of the Transmission Control Relay is to allow the Powertrain Control Module (PCM) to turn off power to the Transmission Solenoid/TRS Assembly in event the transmission should need to be placed into "limp-in" mode due to a DTC.

After a PCM reset, (ignition switch turned to the run position or after cranking engine) the PCM verifies the Transmission Control Relay contacts are open by checking for voltage on the Transmission Control Relay Output circuit before the Transmission Control Relay is energized. If voltage is detected, the DTC will set.

WHEN MONITORED:

When the ignition is turned from OFF position to RUN position and/or the ignition is turned from START position to RUN position.

SET CONDITION:

This DTC is set if the Powertrain Control Module (PCM) senses greater than 3.0 volts on the Transmission Control Relay Output circuits prior to a request from the PCM to energize the Transmission Control Relay.

POSSIBLE CAUSES

Possible Causes
(T15) TRANSMISSION CONTROL CIRCUIT SHORTED TO VOLTAGE
(T16) TRANSMISSION CONTROL OUTPUT CIRCUIT SHORTED VOLTAGE
TRANSMISSION CONTROL RELAY
TRANSMISSION SOLENOID/TRS ASSEMBLY
POWERTRAIN CONTROL MODULE (PCM)

Always perform the Pre-Diagnostic Troubleshooting procedure before proceeding. Refer to 66RFE PRE-DIAGNOSTIC TROUBLESHOOTING PROCEDURE.

DIAGNOSTIC TEST

1. **CHECK IF THE DTC IS CURRENT**
    1. With the scan tool, read DTCs.

       Is the status Active or is the Starts Since Set counter 0 for this DTC?

       Yes

       - Go To 2.

       No

       - Go To 5.

2. **CHECK THE TRANSMISSION CONTROL RELAY**
    1. Turn the ignition OFF to the LOCK position.
    2. Disconnect the Transmission Control Relay.
    3. Install a substitute relay.
    4. Ignition ON, Engine Not Running.
    5. With the scan tool, read DTCs.

    Is the status Active or is the Starts Since Set counter 0 for this DTC?

    Yes

    - Go To 3.

    No

    - Replace the Transmission Control Relay.
    - Perform the 66RFE TRANSMISSION VERIFICATION TEST. Refer to **66RFE TRANSMISSION VERIFICATION TEST**.
3. **CHECK THE (T16) TRANSMISSION CONTROL OUTPUT CIRCUIT FOR A SHORT TO VOLTAGE**

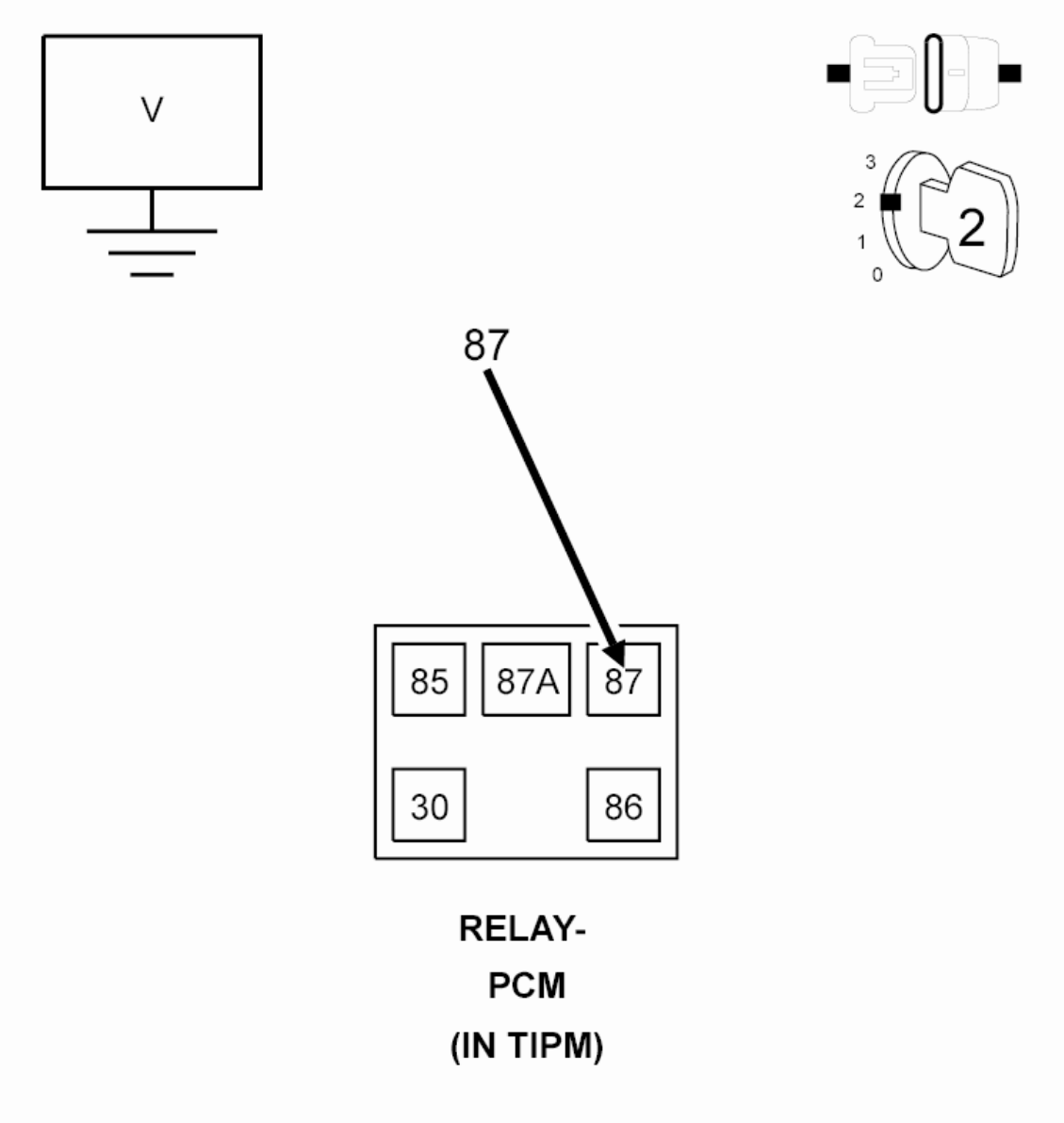

Fig. 67: Checking Transmission Control Output Circuit For A Short To Voltage
Courtesy of CHRYSLER GROUP, LLC

1. Remove the Transmission Control Relay.
2. Ignition ON, Engine Not Running.
3. Measure the voltage at the (T16) Transmission Control Output circuit in the Transmission Control Relay connector.

   Is the voltage above 0.5 volts?

   Yes

   - Repair the (T16) Transmission Control Output circuit for a short to voltage.

- Perform the 66RFE TRANSMISSION VERIFICATION TEST. Refer to **66RFE TRANSMISSION VERIFICATION TEST**.

No

- Go To 4.

4. **CHECK THE (T15) TRANSMISSION CONTROL CIRCUIT FOR A SHORT TO VOLTAGE**

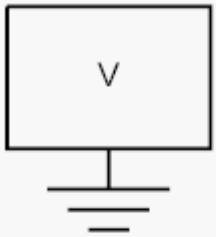

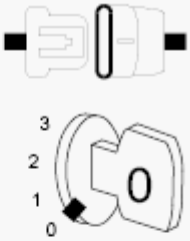

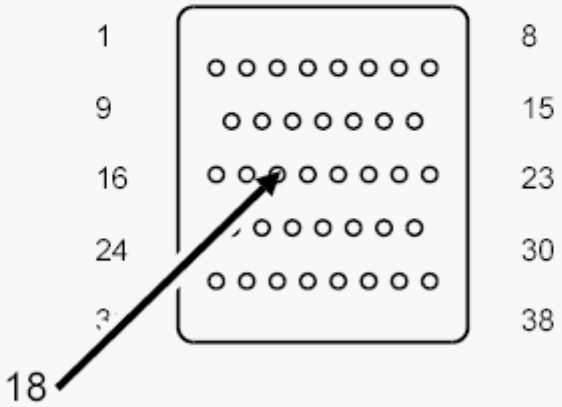

PCM PINOUT

BOX 8815

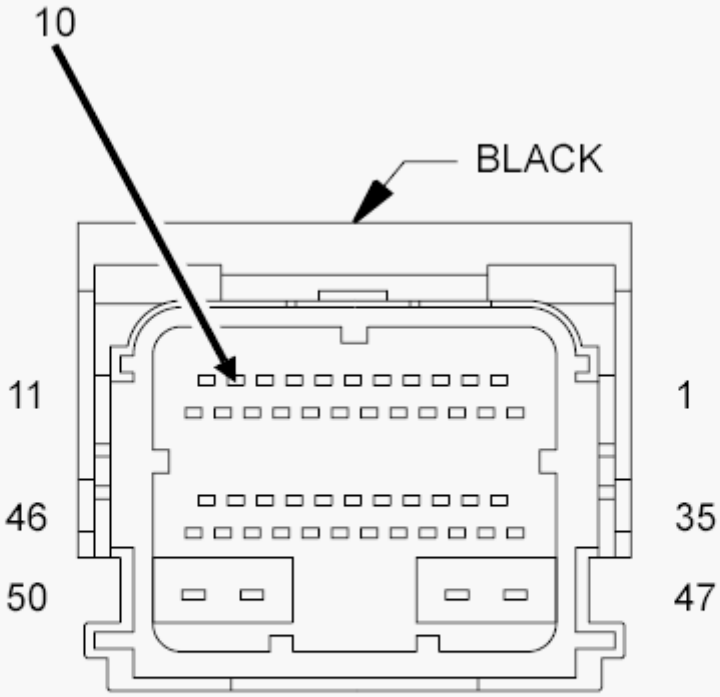

MODULE-
TOTALLY
INTEGRATED

Fig. 68: Checking Transmission Control Circuit For A Short To Voltage
Courtesy of CHRYSLER GROUP, LLC

1. Turn the ignition OFF to the LOCK position.
2. Disconnect the PCM C4 harness connector and connect the (special tool #8815A, Kit, NGC, 38 Position).

CAUTION: Do not probe the PCM harness connectors. Probing the PCM harness connectors will damage the PCM terminals resulting in poor terminal to pin connection. Install the (special tool #8815A, Kit, NGC, 38 Position) to perform diagnosis.

3. Disconnect the Transmission Solenoid/TRS Assembly harness connector.
4. Disconnect the TIPM C1 harness connector.
5. Ignition ON, Engine Not Running.
6. Measure the voltage of the (T15) Transmission Control circuit.

   Is the voltage above 0.5 volts?

   Yes

   - Repair the (T15) Transmission Control circuit for a short to voltage.
   - Perform the 66RFE TRANSMISSION VERIFICATION TEST. Refer to **66RFE TRANSMISSION VERIFICATION TEST**.

   No

   - Using the schematics as a guide, check the Powertrain Control Module (PCM) terminals for corrosion, damage or terminal push out. Pay particular attention to all power and ground circuits. If no problems are found, replace and program the PCM in accordance with the Service Information. With the scan tool, perform a Quick Learn.
   - Perform the 66RFE TRANSMISSION VERIFICATION TEST. Refer to **66RFE TRANSMISSION VERIFICATION TEST**.

5. **CHECK WIRING AND CONNECTORS**
   1. The conditions necessary to set this DTC are not present at this time.
   2. Using the schematics as a guide, inspect the wiring and connectors specific to this circuit.
   3. Wiggle the wires while checking for shorted and open circuits.
   4. With the scan tool, check the Event Data to help identify the conditions in which the DTC set.

   Where any problems found?

   Yes

   - Repair as necessary.

- Perform the 66RFE TRANSMISSION VERIFICATION TEST. Refer to **66RFE TRANSMISSION VERIFICATION TEST**.

No

- Test Complete.

P0884-POWER UP AT SPEED

For a complete wiring diagram, **refer to appropriate SYSTEM WIRING DIAGRAMS article** .

THEORY OF OPERATION

If a vehicle loses power to the Transmission Control System, the solenoids (L/R, 2C, OD, UD, 4C) will go to their respective power off state. Some solenoids are normally vented and some are normally applied in their power off state. The transmission is designed to be in 4th gear with all of the solenoids in this state. However, if power is restored the Transmission Control System will power-up and normal operation is restored.

This code identifies that power to the Transmission Control System was restored when the gear selector is in a "Drive" position while the vehicle is moving at speeds above 32 Km/h (20 mph). **This DTC does not indicate a problem with the transmission or Transmission Control System,** instead, it suggests intermittent problems in the fused ignition switch output, fused B(+) or ground circuits to the PCM. Alternately, if a rolling restart maneuver is performed, the DTC can set. Therefore it is critical that this DTC be investigated if the vehicle is experiencing intermittent 4th gear operation and a subsequent return to normal operation.

WHEN MONITORED:

When Powertrain Control Module (PCM) initially powers up.

SET CONDITION:

This DTC will set if the PCM powers up and senses the vehicle in a valid forward gear with no PRNDL DTCs and an output speed above 800 RPM, approximately 32 Km/h or 20 mph.

POSSIBLE CAUSES

Possible Causes
POWER UP AT SPEED

Always perform the Pre-Diagnostic Troubleshooting procedure before proceeding. Refer to 66RFE PRE-DIAGNOSTIC TROUBLESHOOTING PROCEDURE.

DIAGNOSTIC TEST

1. **CHECK THE POWER AND GROUND CIRCUITS**
    1. This DTC is set when the transmission portion of the PCM is initialized while the vehicle is moving down the road in a valid forward gear.

2. Using the wiring diagram/schematic as a guide, inspect the wiring and connectors.
3. Check all of the Fused B(+), Fused Ignition Switch Output and ground circuits to the PCM for an intermittent open or short to ground.
4. With the scan tool, check the Event Data to help identify the conditions in which the DTC set.

Repair

- Check all power and ground circuits to the PCM and repair as necessary.
- Perform the 66RFE TRANSMISSION VERIFICATION TEST. Refer to **66RFE TRANSMISSION VERIFICATION TEST**.

P0890-SWITCHED BATTERY

For a complete wiring diagram, **refer to appropriate SYSTEM WIRING DIAGRAMS article** .

THEORY OF OPERATION

The Transmission Control Relay is used to supply power to the solenoids and pressure switches (Transmission Solenoid/TRS Assembly) when the transmission is in normal operating mode. When the relay is off, no power is supplied and the transmission is in "limp-in" mode. The relay output is fed back to the PCM through pins C4-19, C4-28 and C4-38 and are referred to as "Transmission Control Relay Output".

Immediately after a controller reset (ignition key turned to the RUN position or after cranking engine), the TCM verifies the relay contacts are open by checking for no voltage at the transmission control relay output terminals. After this is verified, the voltage at the pressure switches are checked. There should be no voltage on the pressure switches at this time. The Powertrain Control Module (PCM) will activate the relay.

WHEN MONITORED:

When the ignition is turned from OFF position to RUN position and/or the ignition is turned from START position to RUN position.

SET CONDITION:

This DTC is set if the Powertrain Control Module (PCM) senses voltage on any of the pressure switch inputs prior to the Transmission Control Relay being energized.

POSSIBLE CAUSES

Possible Causes
PRESSURE SIGNAL CIRCUITS SHORTED TO VOLTAGE
TRANSMISSION SOLENOID/TRS ASSEMBLY
POWERTRAIN CONTROL MODULE (PCM)

Always perform the Pre-Diagnostic Troubleshooting procedure before proceeding. Refer to 66RFE PRE-DIAGNOSTIC TROUBLESHOOTING PROCEDURE.

DIAGNOSTIC TEST

1. **CHECK IF THE DTC IS CURRENT**
    1. With the scan tool, read DTCs.

       Is the status Active or is the Starts Since Set counter 0 for this DTC?

       Yes

       - Go To 2.

       No

       - Go To 4.
2. **PRESSURE SIGNAL CIRCUITS SHORTED TO VOLTAGE**

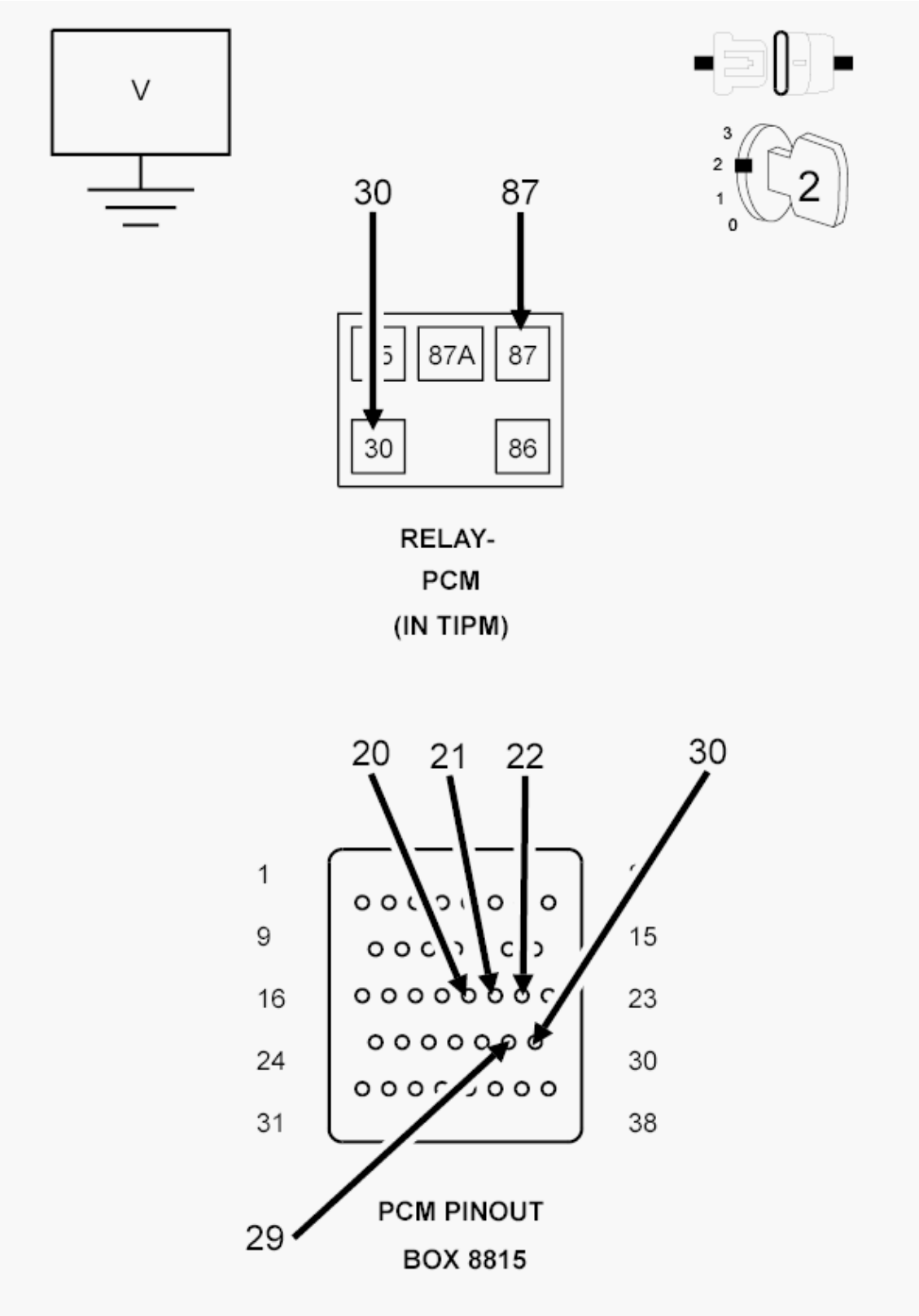

Fig. 69: Checking Pressure Signal Circuits For A Short To Voltage
Courtesy of CHRYSLER GROUP, LLC

1. Turn the ignition OFF to the LOCK position.
2. Disconnect the PCM C4 harness connector and connect the (special tool #8815A, Kit, NGC, 38 Position).
3. Disconnect the Transmission Solenoid/TRS Assembly harness connector.
4. Remove the Transmission Control Relay.

NOTE: Note: Check connectors - Clean/repair as necessary.

CAUTION: Do not probe the PCM harness connectors. Probing the PCM harness connectors will damage the PCM terminals resulting in poor terminal to pin connection. Install the (special tool #8815A, Kit, NGC, 38 Position) to perform diagnosis.

5. Connect a jumper wire between the internal Fused B(+) circuit and the Transmission Control Output circuit in the Transmission Control Relay connector.
6. Ignition ON, Engine Not Running.
7. Measure the voltage of the (T147) 2C, (T48) 4C, (T50) L/R, (T9) OD and (T29) UD Pressure Signal circuits in the (special tool #8815A, Kit, NGC, 38 Position).

   Is the voltage above 0.5 volts on any of the measured circuits?

   Yes

   - Repair the (T147) 2C, (T48) 4C, (T50) L/R, (T9) OD and/or (T29) UD Pressure Signal circuit(s) for a short to voltage.
   - Perform the 66RFE TRANSMISSION VERIFICATION TEST. Refer to **66RFE TRANSMISSION VERIFICATION TEST**.

   No

   - Go To 3.

3. **TRANSMISSION SOLENOID/TRS ASSEMBLY**

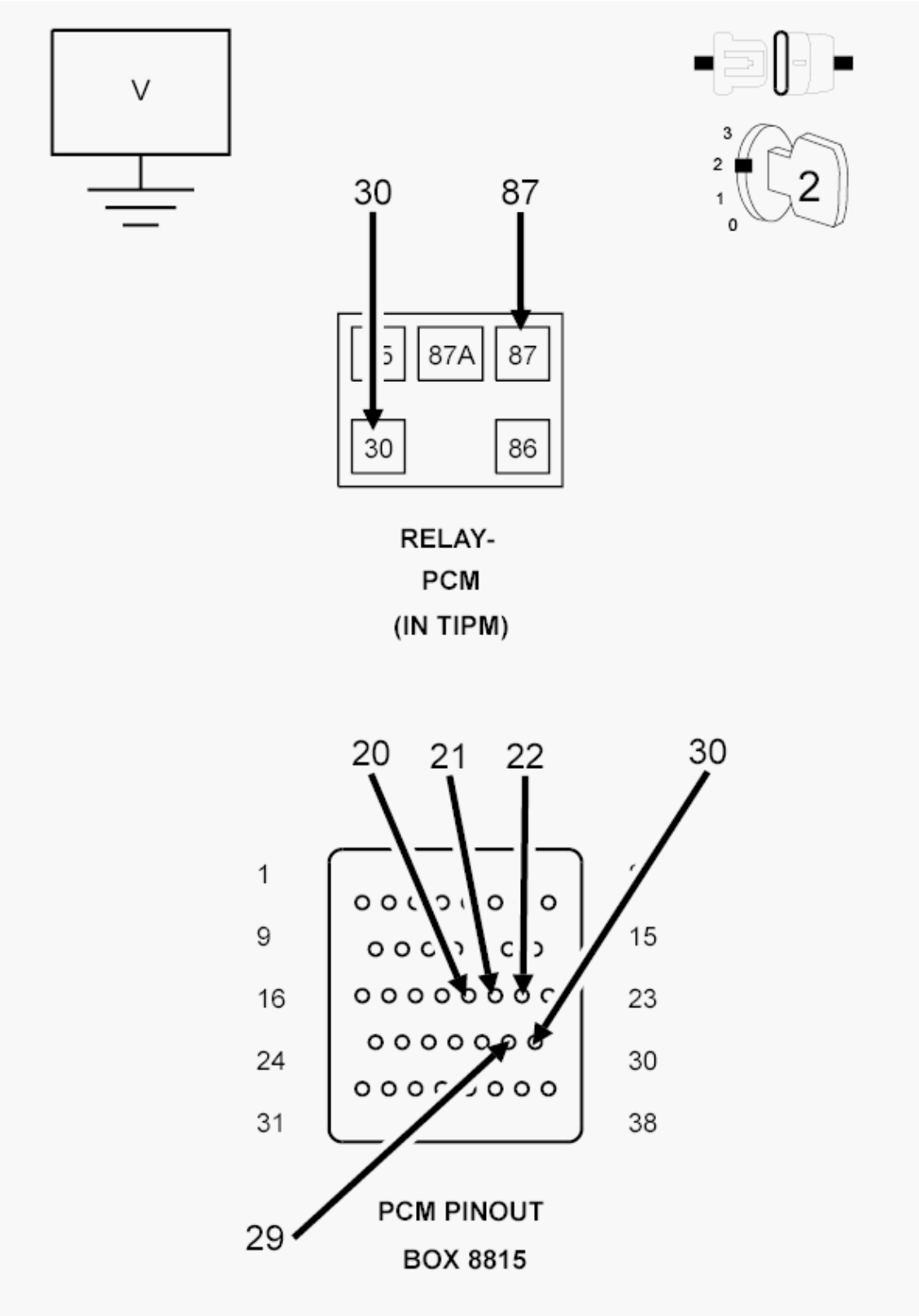

Fig. 70: Checking Pressure Signal Circuits For A Short To Voltage
Courtesy of CHRYSLER GROUP, LLC

1. Turn the ignition OFF to the LOCK position.
2. Remove the jumper wire.

NOTE: Do not reinstall the Transmission Relay.

3. Reconnect the Transmission Solenoid/TRS Assembly harness connector.
4. Ignition ON, Engine Not Running.
5. Measure the voltage of the (T147) 2C, (T48) 4C, (T50) L/R, (T9) OD and (T29) UD Pressure Signal circuits in the (special tool #8815A, Kit, NGC, 38 Position).

   Is the voltage above 0.5 volts on any of the sense circuits?

   Yes

   - Replace the Transmission Solenoid/TRS Assembly in accordance with the Service Information. Refer to **ASSEMBLY, TRANSMISSION SOLENOID AND TRS, REMOVAL** .
   - Perform the 66RFE TRANSMISSION VERIFICATION TEST. Refer to **66RFE TRANSMISSION VERIFICATION TEST**.

   No

   - Using the schematics as a guide, check the Powertrain Control Module (PCM) terminals for corrosion, damage or terminal push out. Pay particular attention to all power and ground circuits. If no problems are found, replace and program the PCM in accordance with the Service Information. With the scan tool, perform a Quick Learn. Refer to **MODULE, POWERTRAIN CONTROL, REMOVAL** .
   - Perform the 66RFE TRANSMISSION VERIFICATION TEST. Refer to **66RFE TRANSMISSION VERIFICATION TEST**.

4. **CHECK THE WIRING AND CONNECTORS**
   1. The conditions necessary to set this DTC are not present at this time.
   2. Using the schematics as a guide, inspect the wiring and connectors specific to this circuit.
   3. Wiggle the wires while checking for shorted and open circuits.
   4. With the scan tool, check the Event Data to help identify the conditions in which the DTC set.

   Where any problems found?

   Yes

   - Repair as necessary.
   - Perform the 66RFE TRANSMISSION VERIFICATION TEST. Refer to **66RFE TRANSMISSION VERIFICATION TEST**.

   No

- Test Complete.

P0933-HYDRAULIC PRESSURE SENSOR RANGE/PERFORMANCE

For a complete wiring diagram, **refer to appropriate SYSTEM WIRING DIAGRAMS article** .

THEORY OF OPERATION

Line pressure is electronically controlled by the Transmission Control System and is measured by the Line Pressure Sensor (LPS). The desired line pressure is continuously being compared to the actual line pressure and is regulated by electronically changing the duty cycle of the Pressure Control Solenoid (PCS), (5% duty cycle = solenoid off = max line pressure, 62% duty cycle = solenoid on = min line pressure).

The Transmission Control System calculates the desired line pressure based on inputs from the transmission and engine. A calculated torque input to the transmission is used as the primary input of the desired line pressure calculation and is called Torque Based Line Pressure. In addition, the line pressure is set to a preset level of 1034 to 1103 kPa (150 to 160 psi) during shifts to ensure consistent shift quality.

WHEN MONITORED:

Continuously with the ignition on, engine running and the transmission in gear.

SET CONDITION:

The Powertrain Control Module (PCM) continuously monitors actual Line Pressure and compares it to Desired Target Line Pressure. If the Line Pressure reading is more than 172.4 kPa (25 psi) higher than the Desired Line Pressure, but is less than the highest Line Pressure used in the current gear, the DTC sets.

POSSIBLE CAUSES

Possible Causes
RELATED DTCS PRESENT
LINE PRESSURE CONNECTOR AND WIRING
LINE PRESSURE SENSOR
INTERNAL TRANSMISSION
POWERTRAIN CONTROL MODULE (PCM)

Always perform the Pre-Diagnostic Troubleshooting procedure before proceeding. Refer to 66RFE PRE-DIAGNOSTIC TROUBLESHOOTING PROCEDURE.

DIAGNOSTIC TEST

1. **CHECK FOR RELATED DTCS**
    1. With the scan tool, read DTCs.

       Are any other line pressure DTCs present?

Yes

- Refer to **3.7L/4.7L/5.7L - DIAGNOSTIC CODE INDEX - NGC - 1500 & 2500** or **5.7L - DIAGNOSTIC CODE INDEX - 3500 CAB & CHASSIS** and perform the appropriate diagnostic procedure. Perform the test for P0934 and/or P0935 first if they are present.

No

- Go To 2.

2. **COMPARE ACTUAL LINE PRESSURE TO DESIRED LINE PRESSURE**

CAUTION: Apply Parking Brake

1. Start the engine.

CAUTION: Firmly apply the brakes.

2. With the scan tool, monitor the Line Pressure, Desired Line Pressure and the TPS degrees.
3. While firmly applying the brakes, place the shifter in reverse, then slowly press the accelerator pedal to a TPS degree of 15°.
4. Compare the Line Pressure reading to the Desired Line Pressure reading on the scan tool.

Does the Line Pressure stay within ± 34 kPa (5 psi) of the Desired Line Pressure?

No

- Go To 3.

Yes

- Go To 6.

3. **CHECK LINE PRESSURE CONNECTOR AND WIRING**

1. Ignition on, engine not running.
2. With the scan tool, monitor the Line Pressure Sensor voltage while wiggling the wiring harness and connectors pertaining to the Line Pressure Sensor and the Transmission Solenoid/TRS Assembly.

Did the voltage remain steady while wiggling the wiring harness and connectors?

Yes

- Go To 4.

No

- Disconnect and properly reconnect the Line Pressure Sensor connector. Inspect terminals and repair as necessary.
- Perform the 66RFE TRANSMISSION VERIFICATION TEST. Refer to **66RFE TRANSMISSION VERIFICATION TEST**.

4. **CHECK PCM AND WIRING USING THE TRANSMISSION SIMULATOR**
   1. Turn the ignition off to the lock position.
   2. Remove the Ignition Switch Feed fuse from the TIPM.

CAUTION: Removal of the Ignition Switch Feed fuse from the TIPM will prevent the vehicle from being started in gear.

WARNING: The Ignition Switch Feed fuse must be removed from the TIPM. Failure to do so can result in possible serious or fatal injury.

   3. Install the Transmission Simulator (special tool #8333A, Simulator, Transmission).
   4. With the Transmission Simulator select the "OFF" position on the "Input/Output Speed" switch.
   5. Ignition on, engine not running.
   6. With the scan tool, monitor the Line Pressure during the following step.
   7. With the Transmission Simulator, turn the selector switch to each of the three Line Pressure positions.

NOTE: All three scan tool Line Pressure readings should be steady and ±14 kPa (2.0 psi) or 0.1 volts of the reading specified on the Transmission Simulator.

Does the Line Pressure on the scan tool fluctuate up and down more than 69 kPa (10 psi) or 0.25 volts at any of the 3 line pressure positions on the Transmission Simulator?

Yes

- Using the schematics as a guide, check the Powertrain Control Module (PCM) terminals for corrosion, damage or terminal push out. Pay particular attention to all power and ground circuits. If no problems are found, replace and program the PCM in accordance with the Service Information. With the scan tool, perform a Quick Learn.
- Perform the 66RFE TRANSMISSION VERIFICATION TEST. Refer to **66RFE TRANSMISSION VERIFICATION TEST**.

No

- Go To 5.

5. **CHECK THE LINE PRESSURE SENSOR**

1. Turn the ignition off to the lock position.
2. Disconnect the Transmission Simulator (special tool #8333A, Simulator, Transmission) and reconnect all previously disconnected connectors.
3. Install the Line Pressure Adaptor (special tool #8259, Adapter, Pressure Test), and the Pressure Gauge (special tool #C-3293-SP, Gauge, Pressure 0-300 P.S.I.), 0 to 2000 kPa (0 to 300 psi).
4. Start the engine in park.
5. Monitor the line pressure readings of the scan tool and the pressure gauge and compare the two readings.

   Is the line pressure gauge reading within 34 kPa (5 psi) of the scan tool reading?

   Yes

   - Repair internal transmission and inspect the oil pump in accordance with the Service information and replace if necessary. If no problems are found, replace the Transmission Solenoid/TRS Assembly - possible cause is the Pressure Control Solenoid is stuck.
   - Perform the 66RFE TRANSMISSION VERIFICATION TEST. Refer to **66RFE TRANSMISSION VERIFICATION TEST**.

   No

   - Replace the Line Pressure Sensor in accordance with the Service Information.
   - Perform the 66RFE TRANSMISSION VERIFICATION TEST. Refer to **66RFE TRANSMISSION VERIFICATION TEST**.

6. **CHECK WIRING AND CONNECTORS**
   1. The conditions necessary to set this DTC are not present at this time.
   2. Using the schematics as a guide, inspect the wiring and connectors specific to this circuit.
   3. Wiggle the wires while checking for shorted and open circuits.
   4. With the scan tool, check the Event Data to help identify the conditions in which the DTC set.

      Where any problems found?

      Yes

      - Repair as necessary.
      - Perform the 66RFE TRANSMISSION VERIFICATION TEST. Refer to **66RFE TRANSMISSION VERIFICATION TEST**.

      No

      - Test Complete.

P0934-LINE PRESSURE SENSOR CIRCUIT LOW

For a complete wiring diagram, **refer to appropriate SYSTEM WIRING DIAGRAMS article** .

THEORY OF OPERATION

Line pressure is electronically controlled by the Transmission Control System and is measured by the Line Pressure Sensor (LPS). The desired line pressure is continuously being compared to the actual line pressure and is regulated by electronically changing the duty cycle of the Pressure Control Solenoid (PCS), (5% duty cycle = solenoid off = max line pressure, 62% duty cycle = solenoid on = min line pressure).

The Transmission Control System calculates the desired line pressure based on transmission and engine inputs. A calculated torque input to the transmission is used as the primary input of the desired line pressure calculation and is called Torque Based Line Pressure. In addition, the line pressure is set to a preset level 827 to 931 kPa (120 to 135 psi) during shifts and in Park or Neutral to ensure consistent shift quality.

The monitored Line Pressure Sensor voltage should be between 0.35 and 4.75 volts. Any monitored voltages outside these parameters indicate a Line Pressure Sensor or wiring problem and will cause DTC P0934 or P0935 to set.

WHEN MONITORED:

Continuously with the ignition on and engine running.

SET CONDITION:

This DTC will set when the monitored Line Pressure Sensor voltage is less than or equal to 0.35 volts for 0.18 of a second.

POSSIBLE CAUSES

Possible Causes
(F856) 5-VOLT SUPPLY CIRCUIT OPEN
(F856) 5-VOLT SUPPLY CIRCUIT SHORTED TO GROUND
(T38) LINE PRESSURE SENSOR SIGNAL CIRCUIT OPEN
(T38) LINE PRESSURE SENSOR SIGNAL CIRCUIT SHORTED TO GROUND
LINE PRESSURE SENSOR
POWERTRAIN CONTROL MODULE (PCM)

Always perform the Pre-Diagnostic Troubleshooting procedure before proceeding. Refer to 66RFE PRE-DIAGNOSTIC TROUBLESHOOTING PROCEDURE.

DIAGNOSTIC TEST

1. **CHECK IF THE DTC IS CURRENT**
    1. With the scan tool, read DTCs.

       Is the status Active or is the Starts Since Set counter 2 or less for this DTC?

Yes

- Go To 2.

No

- Go To 7.

2. **CHECK THE PCM AND WIRING**
   1. Turn the ignition OFF to the LOCK position.
   2. Remove the Ignition Switch Feed fuse from the Totally Integrated Power Module (TIPM).

      CAUTION: Removal of the Ignition Switch Feed fuse from the TIPM will prevent the vehicle from being started in gear.

      WARNING: The Ignition Switch Feed fuse must be removed from the TIPM. Failure to do so can result in possible serious or fatal injury.

   3. Install the (special tool #8333A, Simulator, Transmission).
   4. Ignition ON, Engine Not Running.
   5. With the scan tool, under Transmission Sensors, monitor the Line Pressure.
   6. Using the Transmission Simulator, set the rotary switch to each of the three line pressure positions.

      NOTE: The readings should be within ±14 kPa (2.0 psi) on the scan tool to the pressure readings specified on Transmission Simulator.

      Does the Line Pressure on the scan tool match the line pressures on the Transmission Simulator?

      Yes

      - Replace the Line Pressure Sensor in accordance with the Service Information.
      - Perform the 66RFE TRANSMISSION VERIFICATION TEST. Refer to **66RFE TRANSMISSION VERIFICATION TEST**.

      No

      - Go To 3.

3. **CHECK THE (T38) LINE PRESSURE SENSOR SIGNAL CIRCUIT FOR A SHORT TO GROUND**

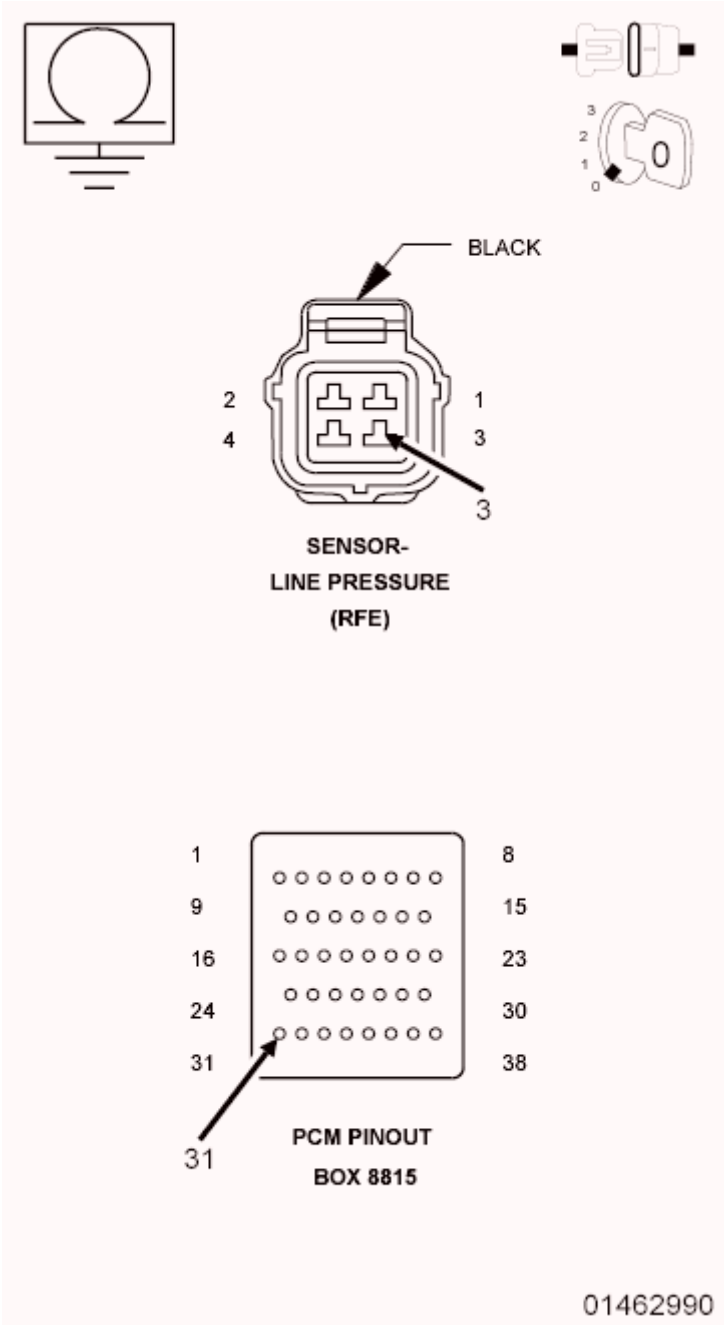

Fig. 71: Checking Line Pressure Sensor Signal Circuit For A Short To Ground
Courtesy of CHRYSLER GROUP, LLC

1. Turn the ignition OFF to the LOCK position.
2. Disconnect the PCM C4 harness connector and connect the (special tool #8815A, Kit, NGC, 38 Position).
3. Disconnect the (special tool #8333A, Simulator, Transmission).

CAUTION: Do not probe the PCM harness connectors. Probing the PCM harness connectors will damage the PCM terminals resulting in

poor terminal to pin connection. Install the (special tool #8815A, Kit, NGC, 38 Position) to perform diagnosis.

4. Measure the resistance between ground and the (T38) Line Pressure Sensor Signal circuit.

   Is the resistance below 5.0 ohms?

   Yes

   - Repair the (T38) Line Pressure Sensor Signal circuit for a short to ground.
   - Perform the 66RFE TRANSMISSION VERIFICATION TEST. Refer to **66RFE TRANSMISSION VERIFICATION TEST**.

   No

   - Go To 4.

4. **CHECK THE (T38) LINE PRESSURE SENSOR SIGNAL CIRCUIT FOR AN OPEN**

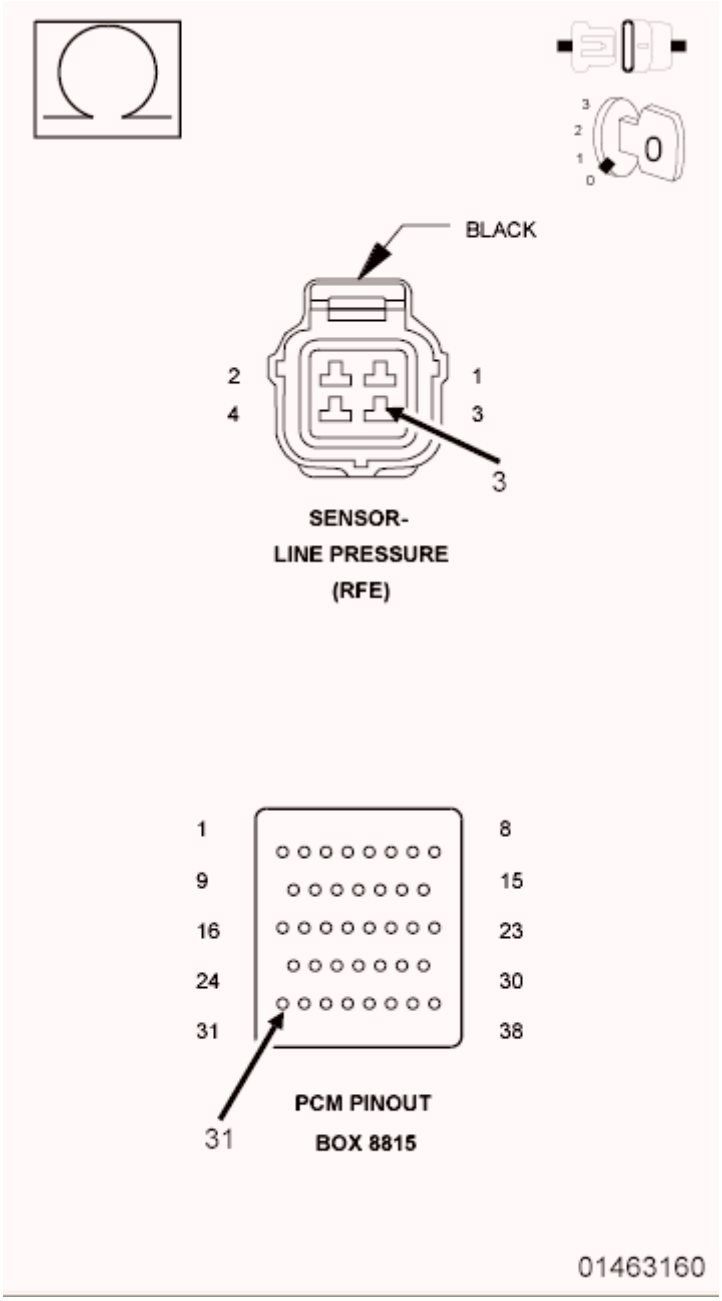

Fig. 72: Checking Line Pressure Sensor Signal Circuit For An Open
Courtesy of CHRYSLER GROUP, LLC

1. Connect the (special tool #8815A, Kit, NGC, 38 Position) to the PCM C4 harness connector.
2. Measure the resistance of the (T38) Line Pressure Sensor Signal circuit between the Line Pressure Sensor harness connector and the appropriate terminal of the (special tool #8815A, Kit, NGC, 38 Position).

   Is the resistance above 5.0 Ohms?

   Yes

- Repair the (T38) Line Pressure Sensor Signal circuit for an open.
- Perform the 66RFE TRANSMISSION VERIFICATION TEST. Refer to **66RFE TRANSMISSION VERIFICATION TEST**.

No

- Go To 5.

5. **CHECK THE (F856) 5-VOLT SUPPLY CIRCUIT FOR AN OPEN**

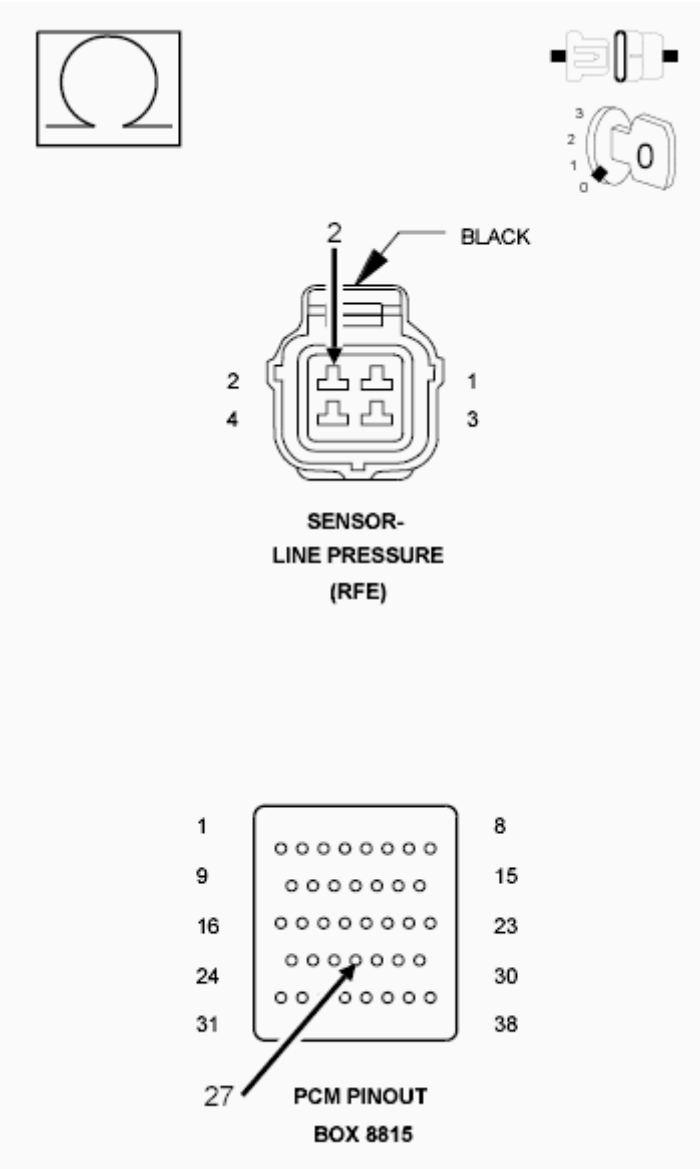

Fig. 73: Checking 5-Volt Supply Circuit For An Open
Courtesy of CHRYSLER GROUP, LLC

1. Connect the (special tool #8815A, Kit, NGC, 38 Position) to the PCM C1 harness connector.
2. Measure the resistance of the (F856) 5-volt Supply circuit between the Line Pressure sensor harness

connector and the appropriate terminal of the (special tool #8815A, Kit, NGC, 38 Position).

Is the resistance below 5.0 ohms?

Yes

- Repair the (F856) 5-volt Supply circuit for an open.
- Perform the 66RFE TRANSMISSION VERIFICATION TEST. Refer to **66RFE TRANSMISSION VERIFICATION TEST**.

No

- Go To 6.

6. **CHECK THE (F856) 5-VOLT SUPPLY CIRCUIT FOR A SHORT TO GROUND**

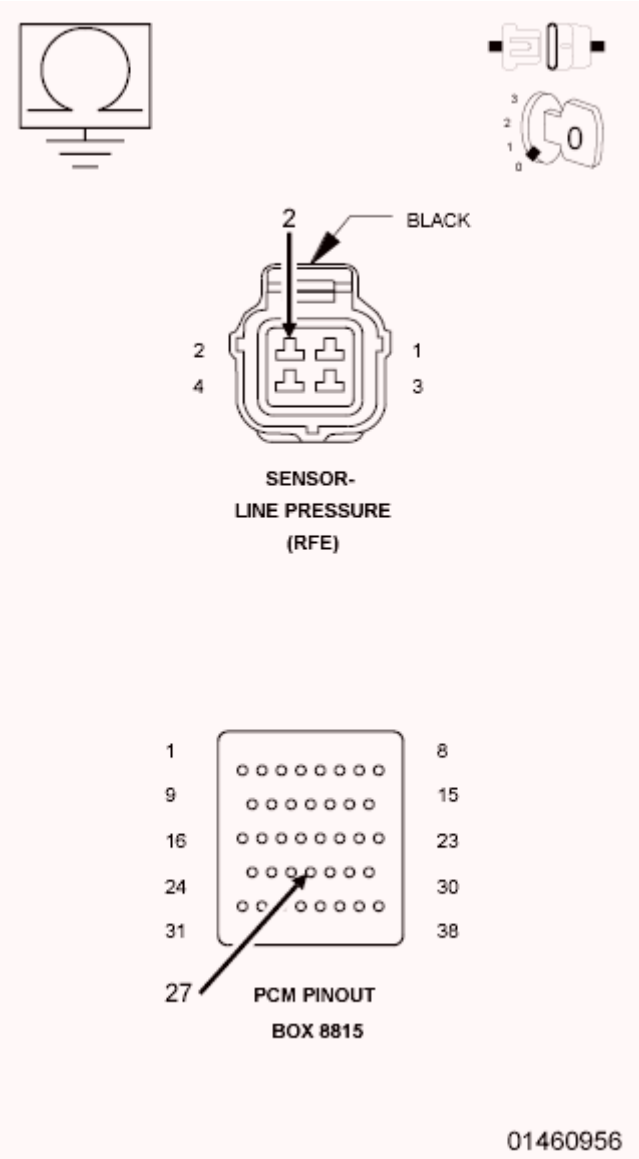

Fig. 74: Checking 5-Volt Supply Circuit For A Short To Ground
Courtesy of CHRYSLER GROUP, LLC

1. Disconnect the PCM C1 harness connector and connect the (special tool #8815A, Kit, NGC, 38 Position).
2. Measure the resistance between ground and the (F856) 5-volt Supply circuit.

   Is the resistance below 5.0 ohms?

   Yes

   - Repair the (F856) 5-volt Supply circuit for a short to ground.
   - Perform the 66RFE TRANSMISSION VERIFICATION TEST. Refer to **66RFE TRANSMISSION VERIFICATION TEST**.

   No

   - Using the schematics as a guide, check the Powertrain Control Module (PCM) terminals for corrosion, damage or terminal push out. Pay particular attention to all power and ground circuits. If no problems are found, replace and program the PCM in accordance with the Service Information. With the scan tool, perform a Quick Learn.
   - Perform the 66RFE TRANSMISSION VERIFICATION TEST. Refer to **66RFE TRANSMISSION VERIFICATION TEST**.

7. **CHECK THE WIRING AND CONNECTORS**
   1. The conditions necessary to set this DTC are not present at this time.
   2. Using the schematics as a guide, inspect the wiring and connectors specific to this circuit.
   3. Wiggle the wires while checking for shorted and open circuits.
   4. With the scan tool, check the Event Data to help identify the conditions in which the DTC set.

      Where any problems found?

      Yes

      - Repair as necessary.
      - Perform the 66RFE TRANSMISSION VERIFICATION TEST. Refer to **66RFE TRANSMISSION VERIFICATION TEST**.

      No

      - Test Complete.

P0935-LINE PRESSURE SENSOR CIRCUIT HIGH

For a complete wiring diagram, **refer to appropriate SYSTEM WIRING DIAGRAMS article** .

THEORY OF OPERATION

Line pressure is electronically controlled by the Transmission Control System and is measured by the Line Pressure Sensor (LPS). The desired line pressure is continuously being compared to the actual line pressure and is regulated by electronically changing the duty cycle of the Pressure Control Solenoid (PCS), (5% duty cycle = solenoid off = max line pressure, 62% duty cycle = solenoid on = min line pressure).

The Transmission Control System calculates the desired line pressure based on transmission and engine inputs. A calculated torque input to the transmission is used as the primary input of the desired line pressure calculation and is called Torque Based Line Pressure. In addition, the line pressure is set to a preset level 827 to 931 kPa (120 to 135 psi) during shifts and in Park or Neutral to ensure consistent shift quality.

The monitored Line Pressure Sensor voltage should be between 0.35 and 4.75 volts. Any monitored voltages outside these parameters indicate a Line Pressure Sensor or wiring problem and will cause DTC P0934 or P0935 to set.

WHEN MONITORED:

Continuously with ignition on and engine running.

SET CONDITION:

This DTC will set if the monitored Line Pressure Sensor voltage is greater than or equal to 4.75 volts for 0.18 of a second.

POSSIBLE CAUSES

Possible Causes
(T38) LINE PRESSURE SENSOR SIGNAL CIRCUIT OPEN
(K900) SENSOR GROUND CIRCUIT OPEN
(T38) LINE PRESSURE SENSOR SIGNAL CIRCUIT SHORTED TO VOLTAGE
LINE PRESSURE SENSOR
POWERTRAIN CONTROL MODULE (PCM)

Always perform the Pre-Diagnostic Troubleshooting procedure before proceeding. Refer to 66RFE PRE-DIAGNOSTIC TROUBLESHOOTING PROCEDURE.

DIAGNOSTIC TEST

1. **CHECK IF THE DTC IS CURRENT**
    1. With the scan tool, read DTCs.

       Is the status Active or is the Starts Since Set counter 2 or less for this DTC?

       Yes

       - Go To 2.

No

- Go To 6.

2. **CHECK THE PCM AND WIRING**
   1. Turn the ignition OFF to the LOCK position.
   2. Remove the Ignition Switch Feed fuse from the TIPM.

CAUTION: Removal of the Ignition Switch Feed fuse from the TIPM will prevent the vehicle from being started in gear.

WARNING: The Ignition Switch Feed fuse must be removed from the TIPM. Failure to do so can result in possible serious or fatal injury.

   3. Install the (special tool #8333A, Simulator, Transmission).
   4. Ignition ON, Engine Not Running.
   5. With the scan tool, monitor the Line Pressure.
   6. Using the Transmission Simulator, set the rotary switch to each of the three line pressure positions.

NOTE: The readings should be within ±14 kPa (2.0 psi) on the scan tool of the pressure reading specified on Transmission Simulator.

Does the 3 line pressures on the scan tool match the Line pressure readings on the Transmission Simulator?

Yes

- Replace the Line Pressure Sensor in accordance with the Service Information.
- Perform the 66RFE TRANSMISSION VERIFICATION TEST. Refer to **66RFE TRANSMISSION VERIFICATION TEST**.

No

- Go To 3.

3. **CHECK THE (K900) SENSOR GROUND CIRCUIT FOR AN OPEN**

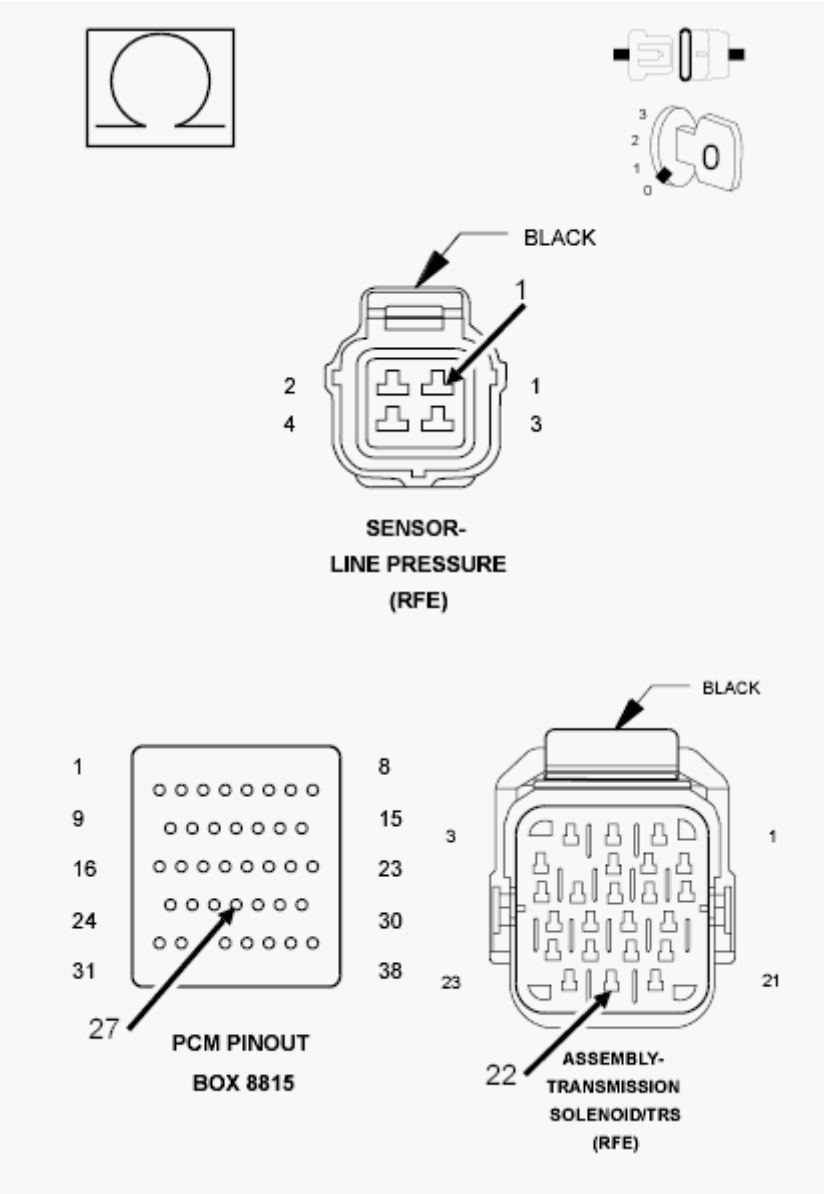

Fig. 75: Checking Sensor Ground Circuit For An Open
Courtesy of CHRYSLER GROUP, LLC

1. Turn the ignition OFF to the LOCK position.
2. Disconnect the (special tool #8333A, Simulator, Transmission).
3. Disconnect the PCM C2 harness connector and connect the (special tool #8815A, Kit, NGC, 38 Position).

CAUTION: Do not probe the PCM harness connectors. Probing the PCM harness connectors will damage the PCM terminals resulting in poor terminal to pin connection. Install the (special tool #8815A, Kit, NGC, 38 Position) to perform diagnosis.

4. Measure the resistance of the (K900) Sensor Ground circuit between the Line Pressure Sensor harness connector and the appropriate terminal of the (special tool #8815A, Kit, NGC, 38 Position).

   Is the resistance above 5.0 ohms?

   Yes

   - Repair the (K900) Sensor Ground circuit for an open.
   - Perform the 66RFE TRANSMISSION VERIFICATION TEST. Refer to **66RFE TRANSMISSION VERIFICATION TEST**.

   No

   - Go To 4.

4. **CHECK THE (T38) LINE PRESSURE SENSOR SIGNAL CIRCUIT FOR AN OPEN**

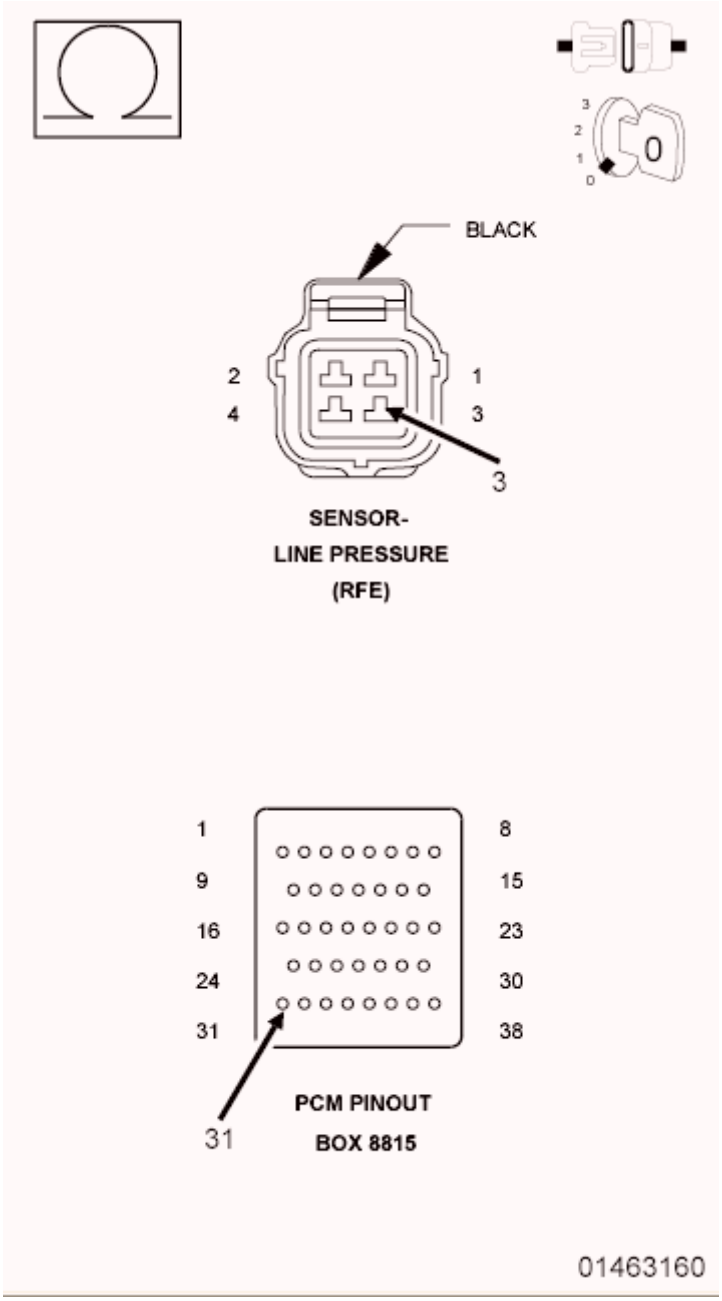

Fig. 76: Checking Line Pressure Sensor Signal Circuit For An Open
Courtesy of CHRYSLER GROUP, LLC

1. Disconnect the PCM C4 harness connector and connect the (special tool #8815A, Kit, NGC, 38 Position).
2. Measure the resistance of the (T38) Line Pressure Sensor Signal circuit between the Line Pressure Sensor harness connector and the appropriate terminal of the (special tool #8815A, Kit, NGC, 38 Position).

   Is the resistance above 5.0 ohms?

Yes

- Repair the (T38) Line Pressure Sensor Signal circuit for an open.
- Perform the 66RFE TRANSMISSION VERIFICATION TEST. Refer to **66RFE TRANSMISSION VERIFICATION TEST**.

No

- Go To 5.

5. **CHECK THE (T38) LINE PRESSURE SENSOR SIGNAL CIRCUIT FOR A SHORT TO VOLTAGE**

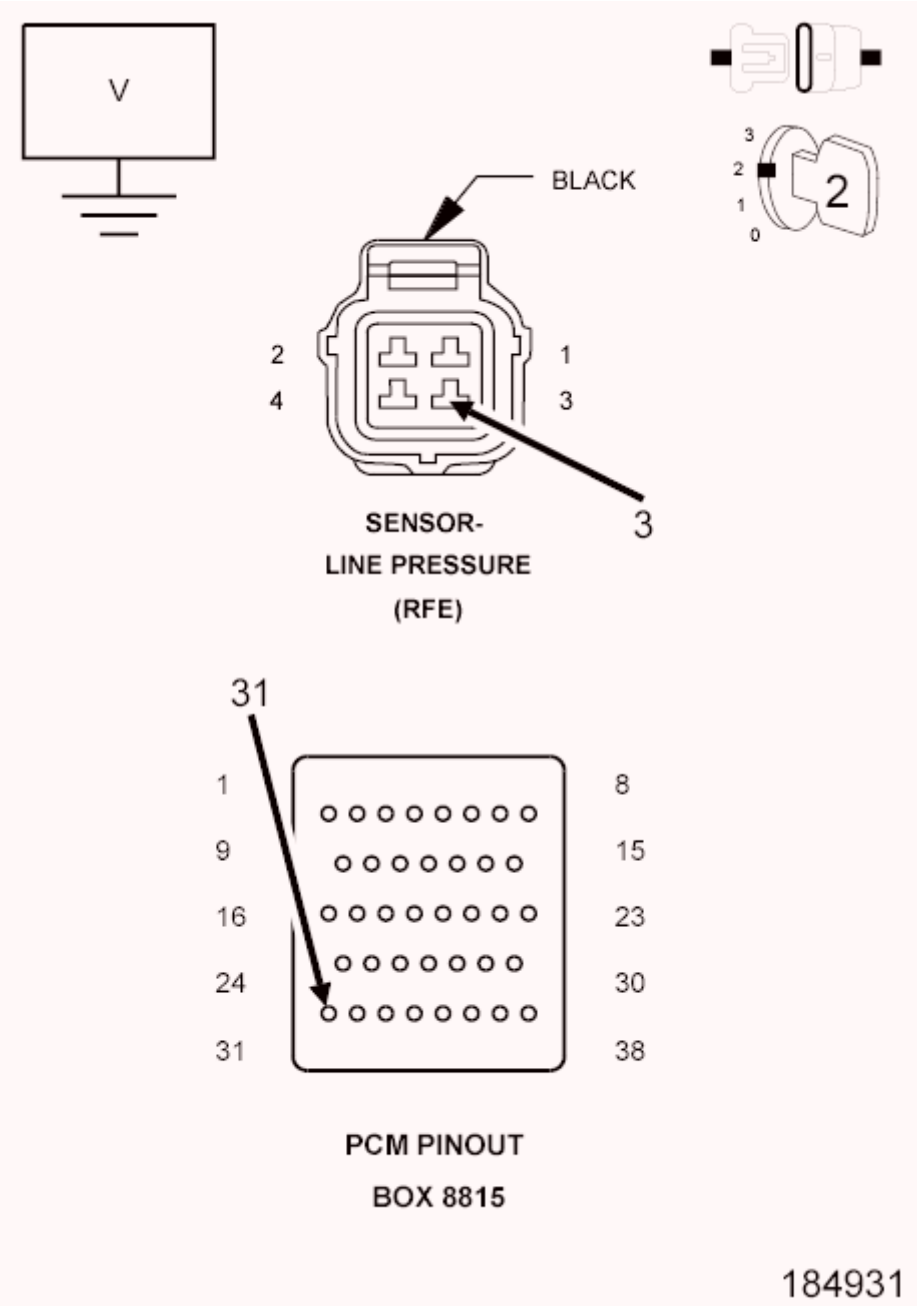

Fig. 77: Checking Line Pressure Sensor Signal Circuit For A Short To Voltage
Courtesy of CHRYSLER GROUP, LLC

1. Ignition ON, Engine Not Running.
2. With the scan tool under TIPM, actuate the Transmission.
3. Measure the voltage of the (T38) Line Pressure Sensor Signal circuit.

   Is the voltage above 5.5 volts?

   Yes

- Repair the (T38) Line Pressure Sensor Signal circuit for a short to voltage.
- Perform the 66RFE TRANSMISSION VERIFICATION TEST. Refer to **66RFE TRANSMISSION VERIFICATION TEST**.

No

- Using the schematics as a guide, check the Powertrain Control Module (PCM) terminals for corrosion, damage or terminal push out. Pay particular attention to all power and ground circuits. If no problems are found, replace and program the PCM in accordance with the Service Information. With the scan tool, perform a Quick Learn.
- Perform the 66RFE TRANSMISSION VERIFICATION TEST. Refer to **66RFE TRANSMISSION VERIFICATION TEST**.

6. **CHECK WIRING AND CONNECTORS**
   1. The conditions necessary to set this DTC are not present at this time.
   2. Using the schematics as a guide, inspect the wiring and connectors specific to this circuit.
   3. Wiggle the wires while checking for shorted and open circuits.
   4. With the scan tool, check the Event Data to help identify the conditions in which the DTC set.

   Where any problems found?

   Yes

   - Repair as necessary.
   - Perform the 66RFE TRANSMISSION VERIFICATION TEST. Refer to **66RFE TRANSMISSION VERIFICATION TEST**.

   No

   - Test Complete.

P0944-LOSS OF HYDRAULIC PUMP PRIME

For a complete wiring diagram, **refer to appropriate SYSTEM WIRING DIAGRAMS article** .

THEORY OF OPERATION

The Loss of Prime Test is used to prevent transmission defaults and erroneous fault codes during temporary loss of pump prime that may occur with low transmission fluid under severe braking conditions, start-up, etc. and to point towards more subtle problems such as a plugged or cracked oil filter.

The Loss of Hydraulic Pump Prime DTC is set by a loss of hydraulic pressure in the transmission system. This condition, if sustained, will result in the vehicle being unable to move.

WHEN MONITORED:

If the transmission is slipping in any forward gear and all the pressure switches are not indicating pressure, a loss of prime test is run.

SET CONDITION:

If the transmission begins to slip in a forward gear and all the pressure switches are open a loss of prime test begins. Available elements are turned on by the PCM to see if pump prime exists. The DTC sets if no pressure switches respond.

POSSIBLE CAUSES

Possible Causes
SHIFT LEVER OUT OF ADJUSTMENT
IMPROPER FLUID LEVEL
CRACKED OR IMPROPERLY INSTALLED PRIMARY OIL FILTER OR SEAL
LOOSE COOLER RETURN FILTER
STUCK OR STICKING MAIN REGULATOR VALVE
TRANSMISSION OIL PUMP

Always perform the Pre-Diagnostic Troubleshooting procedure before proceeding. Refer to 66RFE PRE-DIAGNOSTIC TROUBLESHOOTING PROCEDURE.

DIAGNOSTIC TEST

1. **SHIFT LEVER POSITION TEST**
    1. Using the scan tool, perform a Shift Lever Position Test. Follow the scan tool instructions.

       Did the Shift Lever Position Test pass?

       Yes

       - Go To 2.

       No

       - Refer to **3.7L/4.7L/5.7L - DIAGNOSTIC CODE INDEX - NGC - 1500 & 2500** or **5.7L - DIAGNOSTIC CODE INDEX - 3500 CAB & CHASSIS** and perform the appropriate diagnostic procedure.
       - Perform the 66RFE TRANSMISSION VERIFICATION TEST. Refer to **66RFE TRANSMISSION VERIFICATION TEST**.
2. **CHECK TO SEE IF DTC P0944 IS CURRENT**
    1. Place the gear selector in Park.
    2. Start the engine.
    3. The transmission must be at operating temperature prior to checking pressure. A cold transmission will give higher readings.

4. Run the engine at 1500 RPM.
5. With the scan tool, monitor the Transmission Line Pressure.

   Does the Actual Line Pressure match the Desired Line Pressure within ± 34 kPa (5 psi)?

   No

   - Go To 6.

   Yes

   - Go To 3.

3. **CHECK LINE PRESSURE IN DRIVE AND REVERSE**
   1. Firmly apply the brake and repeat the previous test in both Drive and the Reverse gear positions.
   2. With the scan tool, monitor the Transmission Line Pressure.

      Does the Line Pressure match the Desired Line Pressure within ± 5 psi in all gear ranges?

      Yes

      - Go To 4.

      No

      - Go To 5.

4. **REVIEW CUSTOMER COMMENTS**
   1. The conditions necessary to set this DTC are not present at this time.
   2. Verify with the customer if a delayed engagement and/or an intermittent "No Drive" condition has occurred.
   3. If the customers answer is "No" erase the DTC and return the vehicle to the customer.
   4. Make sure to check for TSBs or controller flash updates that my apply.
   5. With the scan tool, check the Event Data to help identify the conditions in which the DTC set.

      Has the customer experienced any delayed engagement and/or "No Drive" conditions?

      Yes

      - Go To 6.

      No

      - Test Complete.

5. **DTC VERIFICATION**
   1. Read and record the DTC and the Event Data information.

2. Test drive the vehicle and attempt to operate the vehicle within the parameters in which the DTC set.
3. With the scan tool, read DTCs.

   Did any following DTCs set, P0868, P0944, P0841, P0846, P0871, P0876 or P0988?

   Yes

   - Go To 6.

   No

   - Test Complete.

6. **CHECK TRANSMISSION OIL FILTER**
   1. Remove and inspect the Transmission Oil Pan in accordance with the Service Information.
   2. Remove and inspect the Primary Oil Filter in accordance with the Service Information.
   3. Inspect the oil filter seal for damage and proper installation.

      Does the Oil Pan contain excessive debris, or is the oil filter plugged, loose or damaged?

      Yes

      - Repair the cause of the plugged transmission oil filter or excessive debris. Check the Transmission Oil Filter seal for improper installation onto filter neck instead of into the pump bore, not fully seated against pump housing, filter neck not engaged into pump. Check that the spin-on cooler return filter (if equipped) is not loose, and that its gasket is in good condition and properly seated. Repair as necessary.
      - Perform the 66RFE TRANSMISSION VERIFICATION TEST. Refer to **66RFE TRANSMISSION VERIFICATION TEST**.

      No

      - Repair the Transmission Oil Pump as necessary. Check for a stuck main regulator valve and clean if necessary. Refer to the Service Information for the proper repair procedure.
      - Perform the 66RFE TRANSMISSION VERIFICATION TEST. Refer to **66RFE TRANSMISSION VERIFICATION TEST**.

P0987-4C HYDRAULIC PRESSURE TEST

For a complete wiring diagram, **refer to appropriate SYSTEM WIRING DIAGRAMS article** .

THEORY OF OPERATION

The Transmission Control System tests the pressure switches when they are off. The test verifies the switches are operational (Close with pressure applied). The Transmission Control System verifies the switch closes when

the corresponding element is applied. If a switch fails to close, it is re-tested. If it fails the second test, the DTC will set, the MIL will illuminate and the transmission system will default to the orderly Shutdown routine.

WHEN MONITORED:

In a forward gear with engine speed above 1000 RPM, shortly after a shift and every minute after.

SET CONDITION:

After a shift into a forward gear, with engine speed above 1000 RPM, the PCM momentarily turns on element pressure to the clutch circuits that does not have pressure to identify the correct Pressure Switch closes. If the Pressure Switch does not close two times, the DTC sets.

POSSIBLE CAUSES

Possible Causes
RELATED DTCS PRESENT
POOR LINE PRESSURE SENSOR CONNECTION
LINE PRESSURE SENSOR
TRANSMISSION FLUID CONTAMINATION
EXCESSIVE DEBRIS IN OIL PAN
(F856) 5-VOLT SUPPLY CIRCUIT OPEN
(F856) 5-VOLT SUPPLY CIRCUIT SHORTED TO GROUND
(T48) 4C PRESSURE SIGNAL CIRCUIT SHORTED TO ANOTHER CIRCUIT
TRANSMISSION SOLENOID/TRS ASSEMBLY
INTERNAL TRANSMISSION
POWERTRAIN CONTROL MODULE (PCM)

Always perform the Pre-Diagnostic Troubleshooting procedure before proceeding. Refer to 66RFE PRE-DIAGNOSTIC TROUBLESHOOTING PROCEDURE.

DIAGNOSTIC TEST

1. **DETERMINING IF RELATED DTCS ARE PRESENT**
    1. With the scan tool, read DTCs.

       Are any Loss of Prime, TCM Control Input and/or Line Pressure Sensor DTCs present?

       Yes

       - Refer to **3.7L/4.7L/5.7L - DIAGNOSTIC CODE INDEX - NGC - 1500 & 2500** or **5.7L - DIAGNOSTIC CODE INDEX - 3500 CAB & CHASSIS** and perform the appropriate diagnostic procedure. If DTC P0944 is present, perform its respective test first.

       No

- Go To 2.

2. **DTC P0770 PRESENT**
    1. With the scan tool, read DTCs.

       Is DTC P0770 also present?

       Yes

       - Refer to **3.7L/4.7L/5.7L - DIAGNOSTIC CODE INDEX - NGC - 1500 & 2500** or **5.7L - DIAGNOSTIC CODE INDEX - 3500 CAB & CHASSIS** and perform the appropriate diagnostic procedure.

       No

       - Go To 3.

3. **OTHER DTCS PRESENT**
    1. With the scan tool, read DTCs.

       Are DTCs P0988 and/or P1736 present?

       Yes

       - Go To 12.

       No

       - Go To 4.

4. **CHECK IF THE DTC IS CURRENT**
    1. With the scan tool, read DTCs.

       Is the status Active or is the Starts Since Set counter 0 for this DTC?

       Yes

       - Go To 5.

       No

       - Go To 15.

5. **LINE PRESSURE STAYS THE SAME**
    1. Start the engine.
    2. Warm the transmission to 82° C (180° F).
    3. Firmly apply the brakes.
    4. With the scan tool, monitor the Line Pressure during the following step.

5. Move the shift lever to each gear position, pausing momentarily in each position and record the line pressure reading. Allow the pressure to stabilize for at least five seconds in each range.

   Did the line pressure remain at a steady value between 585 and 655 kPa (85 and 95 psi) in each position?

   Yes

   - Go To 6.

   No

   - Go To 10.

6. **CHECK LINE PRESSURE SENSOR CONNECTION**
   1. Ignition ON, Engine Not Running.
   2. With the scan tool, monitor the Line Pressure while firmly pushing the Transmission Line Pressure Sensor connector inwards towards the transmission.

      Did the Line Pressure reading on the scan tool change to about 207 kPa (30 psi) when the connector was pushed inward?

      Yes

      - Disconnect and properly reconnect the Line Pressure Sensor connector. Inspect terminals and repair as necessary.
      - Perform the 66RFE TRANSMISSION VERIFICATION TEST. Refer to **66RFE TRANSMISSION VERIFICATION TEST**.

      No

      - Go To 7.

7. **LINE PRESSURE SENSOR OPERATION**
   1. Turn the ignition OFF to the LOCK position.
   2. Remove the Starter Relay.

CAUTION: Removal of the Starter Relay will prevent the vehicle from being started in gear.

WARNING: The Starter Relay must be removed from the PDC. Failure to do so may result in possible serious or fatal injury.

NOTE: Failure to remove the Starter Relay can cause a Transmission - No Response condition.

3. Install the (special tool #8333A, Simulator, Transmission).
4. With the Transmission Simulator select the "OFF" position on the "Input/Output Speed" switch.
5. Ignition ON, Engine Not Running.
6. With the scan tool, monitor the Line Pressure while turning the Pressure Switch selector to each of the three line pressure positions on the Transmission Simulator.

NOTE: **All three scan tool Line Pressure readings should be steady and ±14 kPa (2.0 psi) or 0.1 volts of the reading specified on the Transmission Simulator.**

Did the scan tool Line Pressure readings match the specified readings on the Transmission Simulator and remain steady in all three positions?

Yes

- Replace the Line Pressure Sensor in accordance with the Service Information. Refer to **SHIFTER, TRANSMISSION, REMOVAL** .
- Perform the 66RFE TRANSMISSION VERIFICATION TEST. Refer to **66RFE TRANSMISSION VERIFICATION TEST**.

No

- Go To 8.

8. **(F856) 5-VOLT SUPPLY CIRCUIT OPEN**

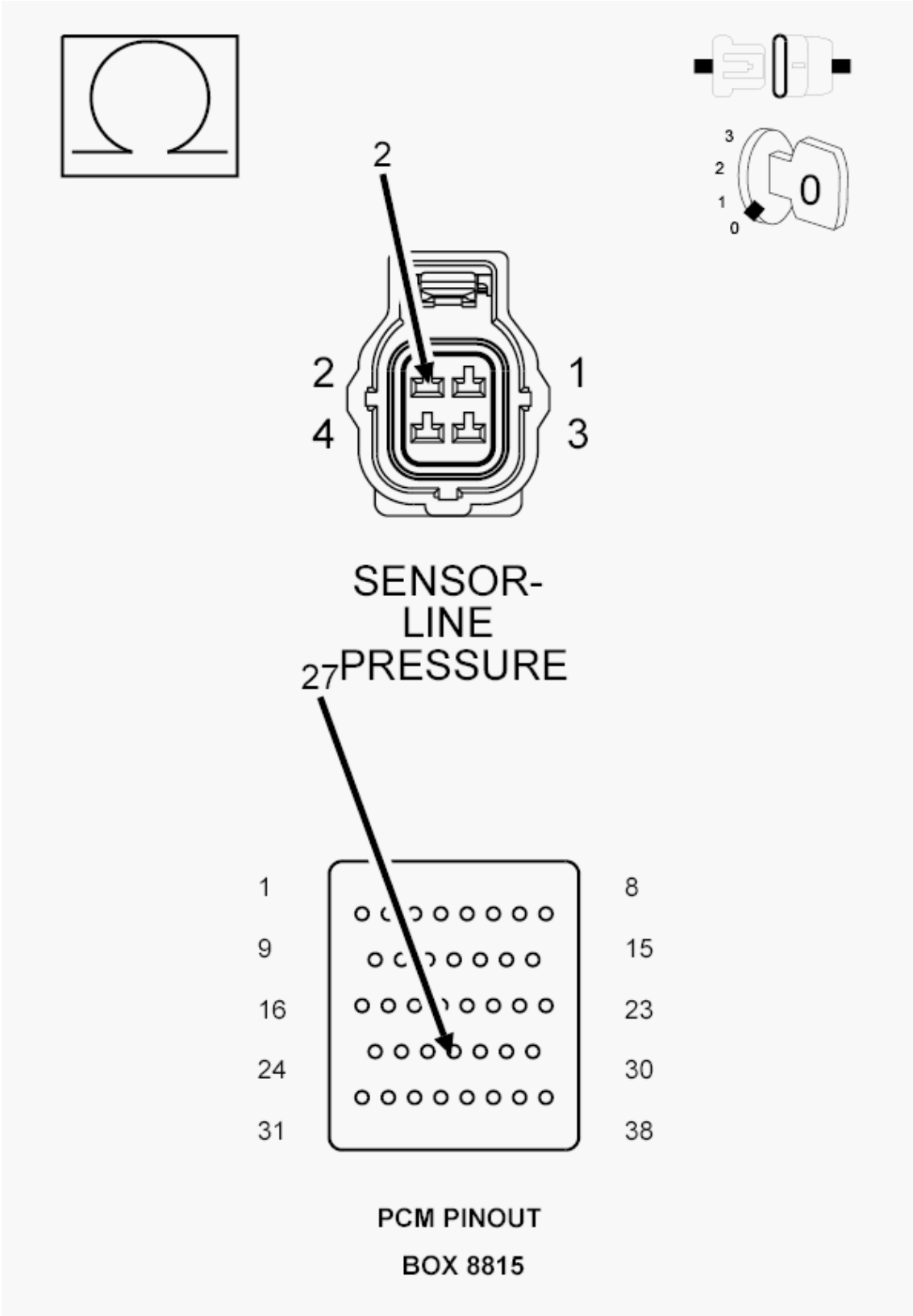

Fig. 78: Checking 5-Volt Supply Circuit For An Open
Courtesy of CHRYSLER GROUP, LLC

1. Turn the ignition OFF to the LOCK position.
2. Disconnect Transmission Simulator.
3. Disconnect the PCM C1 harness connector and connect the (special tool #8815A, Kit, NGC, 38 Position).

CAUTION: Do not probe the PCM harness connectors. Probing the PCM harness connectors will damage the PCM terminals resulting in poor terminal to pin connection. Install the (special tool #8815A, Kit, NGC, 38 Position) to perform diagnosis.

4. Measure the resistance of the (F856) 5-volt Supply circuit between the Line Pressure Sensor harness connector and the appropriate terminal of the (special tool #8815A, Kit, NGC, 38 Position).

   Is the resistance above 5.0 ohms?

   Yes

   - Repair the (F856) 5-volt Supply circuit for an open.
   - Perform the 66RFE TRANSMISSION VERIFICATION TEST. Refer to **66RFE TRANSMISSION VERIFICATION TEST**.

   No

   - Go To 9.

9. **(F856) 5-VOLT SUPPLY CIRCUIT SHORT TO GROUND**

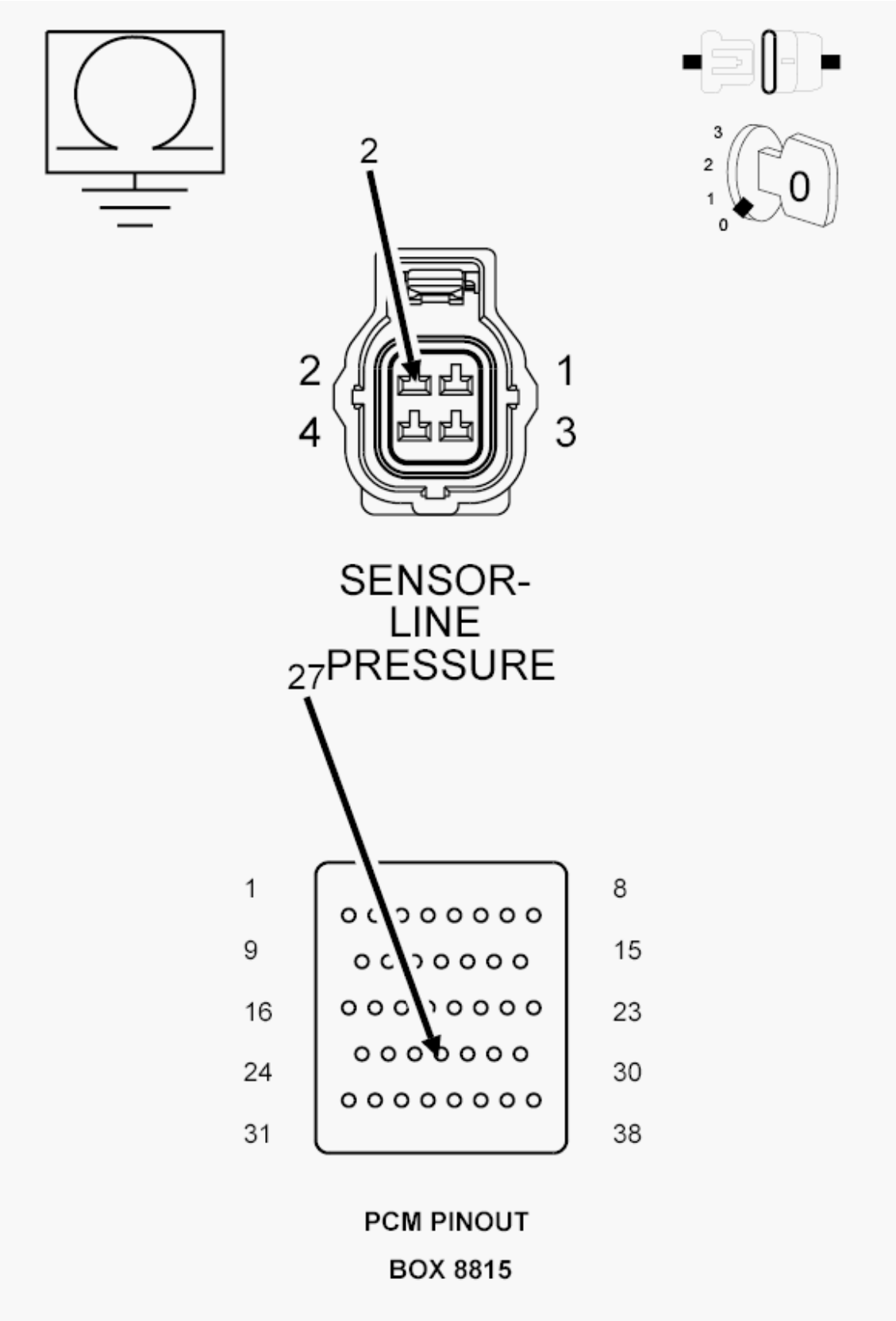

Fig. 79: Checking 5-Volt Supply Circuit For A Short To Ground

Courtesy of CHRYSLER GROUP, LLC

1. Measure the resistance between ground and the (F856) 5-volt Supply circuit.

   Is the resistance below 5.0 ohms?

   Yes

   - Repair the (F856) 5-volt Supply circuit for a short to ground.
   - Perform the 66RFE TRANSMISSION VERIFICATION TEST. Refer to **66RFE TRANSMISSION VERIFICATION TEST**.

   No

   - Using the schematics as a guide, check the Powertrain Control Module (PCM) terminals for corrosion, damage or terminal push out. Pay particular attention to all power and ground circuits. If no problems are found, replace and program the PCM in accordance with the Service Information. With the scan tool, perform a Quick Learn. Refer to **MODULE, POWERTRAIN CONTROL, REMOVAL** .
   - Perform the 66RFE TRANSMISSION VERIFICATION TEST. Refer to **66RFE TRANSMISSION VERIFICATION TEST**.

10. **COMPARE SCAN TOOL TO PRESSURE GAUGE**
    1. Turn the ignition OFF to the LOCK position.
    2. Connect the (special tool #8259, Adapter, Pressure Test) and (special tool #C-3293-SP, Gauge, Pressure 0-300 P.S.I.). Refer to the Service Information for proper installation procedure.

       CAUTION: Apply parking brake.

    3. Start the engine.
    4. In the following steps, compare the scan tool Line Pressure to the Pressure Gauge readings in each gear.

       CAUTION: Do not overheat transmission.

    5. With the gear selector in park, raise the RPM to 1500 and compare line pressure readings.
    6. Firmly apply the brakes, move the gear selector into reverse, raise the RPM to 1500 and compare the line pressure readings.
    7. Firmly apply the brakes, move the gear selector into drive, raise the RPM to 1500 and compare the line pressure readings.

       Does the scan tool Line Pressure readings match the Pressure Gauge readings ± 10 psi?

Yes

- Go To 11.

No

- Replace the Line Pressure Sensor in accordance with the Service Information. Refer to **SENSOR, VARIABLE LINE PRESSURE, REMOVAL** .
- Perform the 66RFE TRANSMISSION VERIFICATION TEST. Refer to **66RFE TRANSMISSION VERIFICATION TEST**.

11. **WIRING AND CONNECTORS**
    1. Turn the ignition off to the lock position.
    2. Remove the Starter Relay.

CAUTION: Removal of the Starter Relay will prevent the vehicle from being started in gear.

WARNING: The Starter Relay must be removed from the PDC. Failure to do so may result in possible serious or fatal injury.

NOTE: Failure to remove the Starter Relay can cause a Transmission - No Response condition.

    3. Remove the (special tool #8259, Adapter, Pressure Test) and (special tool #C-3293-SP, Gauge, Pressure 0-300 P.S.I.).
    4. Install the (special tool #8333A, Simulator, Transmission).
    5. On the Transmission Simulator, turn the Pressure Switch selector switch to 4C.
    6. Ignition ON, Engine Not Running.
    7. With the scan tool, monitor the 4C Pressure Switch state while pressing and holding the Pressure Switch test button and wiggling the wire harness and connectors that pertain to the 4C Pressure Switch.

    Did the 4C Pressure Switch state change to closed and remain closed while wiggling the wires?

    Yes

    - Go To 12.

    No

    - Go To 14.

12. **CHECK FOR EXCESSIVE DEBRIS**
    1. Turn the ignition OFF to the LOCK position.

2. Remove the (special tool #8333A, Simulator, Transmission).
3. Remove and inspect the Transmission Oil Pan in accordance with the Service Information.

   Does the Transmission Oil Pan contain excessive debris or contamination?

   Yes

   - Repair the cause of the excessive debris in the Transmission Oil Pan. Refer to the Service Information for the proper procedures.
   - Perform the 66RFE TRANSMISSION VERIFICATION TEST. Refer to **66RFE TRANSMISSION VERIFICATION TEST**.

   No

   - Go To 13.

13. **CHECK 4C HYDRAULIC CLUTCH CIRCUIT**
    1. Remove the Valve Body and air check the 4C hydraulic clutch circuit (in the case) for leakage in accordance with the Service Information.

       NOTE: The 4C hydraulic clutch circuit contains a small bleed orifice. A small amount of air leakage is normal.

       Was there excessive air leakage noticed during the air check?

       Yes

       - Repair as necessary. Check the 4C clutch piston, piston seals and bleed orifice assembly. Refer to **REMOVAL** .
       - Perform the 66RFE TRANSMISSION VERIFICATION TEST. Refer to **66RFE TRANSMISSION VERIFICATION TEST**.

       No

       - Disassemble and inspect the Valve Body and repair as necessary. Inspect the 4C Accumulator piston and seals. If no problems are found in the Valve Body, replace the Transmission Solenoid/TRS Assembly in accordance with the Service Information. Refer to **ASSEMBLY, TRANSMISSION SOLENOID AND TRS, REMOVAL** .
       - Perform the 66RFE TRANSMISSION VERIFICATION TEST. Refer to **66RFE TRANSMISSION VERIFICATION TEST**.

14. **(T48) 4C PRESSURE SIGNAL CIRCUIT SHORT TO ANOTHER CIRCUIT**

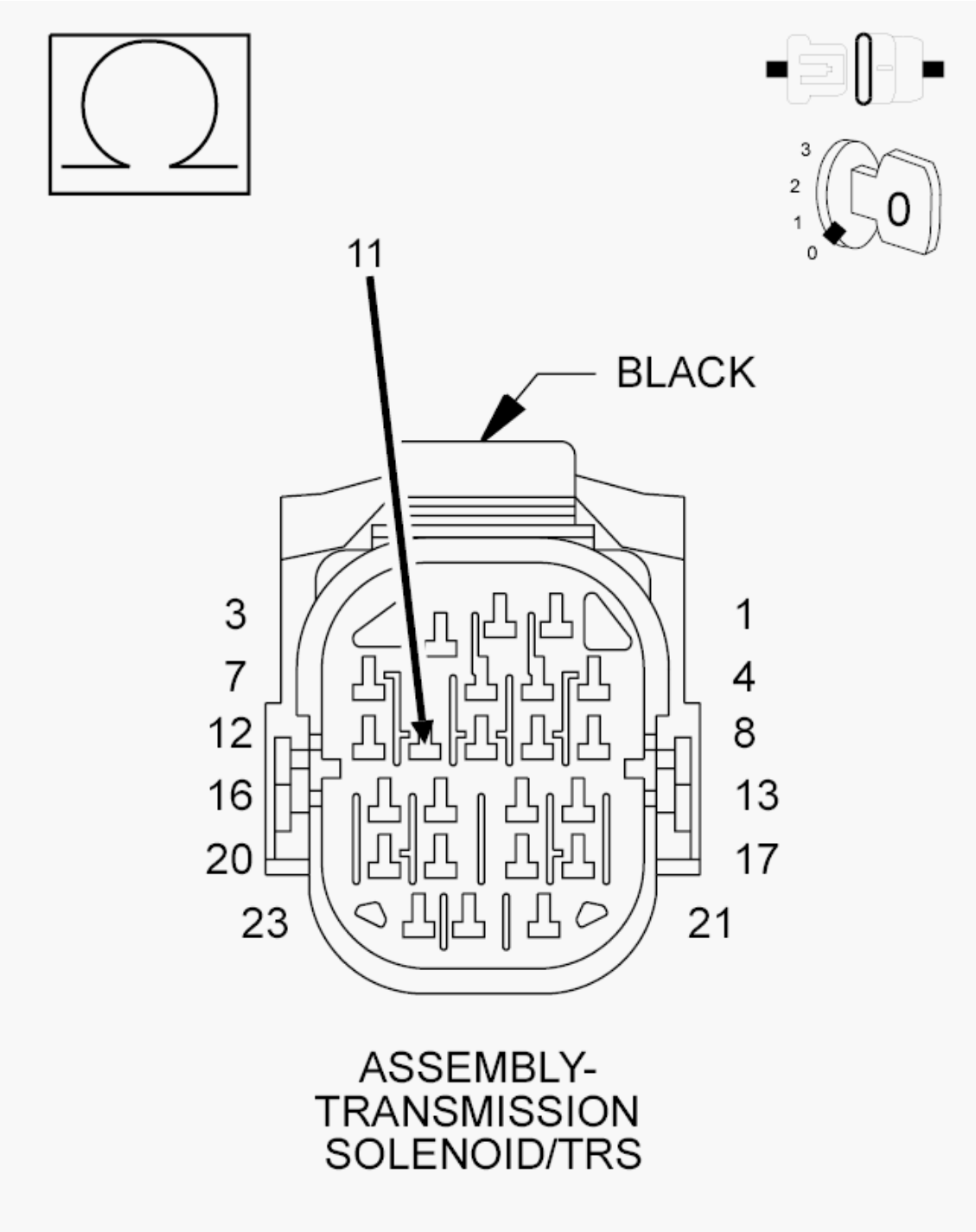

Fig. 80: Checking 4C Pressure Signal Circuit For A Short To Another Circuit
Courtesy of CHRYSLER GROUP, LLC

1. Disconnect all PCM harness connectors.
2. Disconnect the Transmission Solenoid/TRS Assembly harness connector.

NOTE: Make sure the Transmission Solenoid/TRS Assembly harness

connector is disconnected.

3. Measure the resistance between the (T48) 4C Pressure Signal circuit and all other circuits in the Transmission Solenoid/TRS Assembly harness connector.

   Is the resistance below 5.0 ohms between the (T48) 4C Pressure Signal circuit and any other circuit (s) in the Transmission Solenoid/TRS Assembly harness connector?

   Yes

   - Repair the (T48) 4C Pressure Signal circuit for a short to another circuit(s).
   - Perform the 66RFE TRANSMISSION VERIFICATION TEST. Refer to **66RFE TRANSMISSION VERIFICATION TEST**.

   No

   - Using the schematics as a guide, check the Powertrain Control Module (PCM) terminals for corrosion, damage or terminal push out. Pay particular attention to all power and ground circuits. If no problems are found, replace and program the PCM in accordance with the Service Information. With the scan tool, perform a Quick Learn. Refer to **MODULE, POWERTRAIN CONTROL, REMOVAL** .
   - Perform the 66RFE TRANSMISSION VERIFICATION TEST. Refer to **66RFE TRANSMISSION VERIFICATION TEST**.

15. **CHECK THE WIRING AND CONNECTORS**
    1. The conditions necessary to set this DTC are not present at this time.
    2. Using the schematics as a guide, inspect the wiring and connectors specific to this circuit.
    3. Wiggle the wires while checking for shorted and open circuits.
    4. With the scan tool, check the Event Data to help identify the conditions in which the DTC set.
    5. If the Event Data shows DTC P0987 set while the Line Pressure was significantly below the Desired Line Pressure reading, check for causes of low line pressure (low fluid level, broken or mis-installed primary oil filter or filter seal, sticking Main Regulator Valve in the Pump Valve Body etc.). If the data shows the DTC set while the Line Pressure reading was significantly higher than the Desired Line Pressure, check the Line Pressure Sensor and related wiring.

       Where any problems found?

       Yes

       - Repair as necessary.
       - Perform the 66RFE TRANSMISSION VERIFICATION TEST. Refer to **66RFE TRANSMISSION VERIFICATION TEST**.

       No

       - Test Complete.

P0988-4C PRESSURE SWITCH RATIONALITY

For a complete wiring diagram, **refer to appropriate SYSTEM WIRING DIAGRAMS article** .

THEORY OF OPERATION

The Transmission System uses five pressure switches to monitor the fluid pressure in the L/R, 2C, 4C, UD and OD clutch circuits. The pressure switches are continuously monitored for the correct states in each gear as shown in chart.

WHEN MONITORED:

Continuously with the ignition on, engine running and the transmission in gear.

SET CONDITION:

The DTC is set if the 4C Pressure Switch reads open or closed at the wrong time in a given gear.

POSSIBLE CAUSES

Possible Causes
RELATED DTCS PRESENT
LOSS OF 12 VOLT FEED
(T48) 4C PRESSURE SIGNAL CIRCUIT OPEN
(T48) 4C PRESSURE SIGNAL CIRCUIT SHORTED TO GROUND
EXCESSIVE FLUID LEAKAGE IN THE 4C CLUTCH CIRCUIT
NO. 5 CHECK BALL CUT OR DAMAGED
LOW LINE PRESSURE
TRANSMISSION SOLENOID/TRS ASSEMBLY
POWERTRAIN CONTROL MODULE (PCM)
WIRING AND CONNECTORS

Always perform the Pre-Diagnostic Troubleshooting procedure before proceeding. Refer to <u>66RFE PRE-DIAGNOSTIC TROUBLESHOOTING PROCEDURE</u>.

GEAR	L/R	2C	4C	UD	OD
REVERSE	OPEN	OPEN	OPEN	OPEN	OPEN
P/N	CLOSED**	OPEN	OPEN	OPEN	OPEN
1ST	CLOSED*	OPEN	OPEN	CLOSED	OPEN
2ND	OPEN	CLOSED	OPEN	CLOSED	OPEN
2ND PRIME	OPEN	OPEN	CLOSED	CLOSED	OPEN
3RD	OPEN	OPEN	OPEN	CLOSED	CLOSED
4TH	OPEN	OPEN	CLOSED	OPEN	CLOSED
5TH	OPEN	CLOSED	OPEN	OPEN	CLOSED

*L/R is closed if output speed is below 100 RPM in Drive and Manual 2. L/R is closed in Manual 1.
**May be open when rolling in Neutral or at low oil temperatures.

DIAGNOSTIC TEST

1. **DETERMINE IF RELATED TCM POWER INPUT DTCS ARE PRESENT**
    1. With the scan tool, read DTCs.

       Are TCM Power Input DTCs present?

       Yes

       - Refer to **DIAGNOSIS AND TESTING** and perform the appropriate diagnostic procedure.

       No

       - Go To 2.
2. **CHECK THE EVENT DATA**
    1. With the scan tool, check the Event Data.

       Does the Event Data show data for DTC P0988?

       Yes

       - Go To 3.

       No

       - Refer to **DIAGNOSIS AND TESTING** and perform the appropriate diagnostic procedure.
3. **MULTIPLE DTCS PRESENT**
    1. With the scan tool, read DTCs.

       Are there two or more related Pressure Switch DTCs present in addition to P0988?

       Yes

       - Go To 4.

       No

       - Go To 7.
4. **RELATED DTC PRESENT**
    1. With the scan tool, check the Event Data for P0988.

       NOTE: Make sure to record all Event Data stored in the scan tool for future

reference in this test procedure.

Do all the pressure switches read CLOSED in the Event Data for P0988?

Yes

- Refer to **DIAGNOSIS AND TESTING** and perform diagnostics for DTC P0882.

No

- Go To 5.

5. **EVENT DATA READ OPEN**

In the Event Data recorded earlier, do all the pressure switches read OPEN?

Yes

- Go To 6.

No

- Go To 7.

6. **LOW LINE PRESSURE**

In the Event Data recorded earlier, is the Line Pressure less than 40 psi and significantly below the Desired Line Pressure?

Yes

- Repair as necessary to correct low line pressure. Check the fluid level and adjust as necessary. If the fluid level is OK, check the Primary Oil Filter seal for a split, crack or improperly installed. If the filter and seal are OK, check the Main Regulator Valve in the Oil Pump. Refer to **PUMP, TRANSMISSION OIL, DISASSEMBLY** .
- Perform the 66RFE TRANSMISSION VERIFICATION TEST. Refer to **66RFE TRANSMISSION VERIFICATION TEST**.

No

- Replace the Transmission Solenoid/TRS Assembly in accordance with the Service Information. Refer to **ASSEMBLY, TRANSMISSION SOLENOID AND TRS, REMOVAL** .
- Perform the 66RFE TRANSMISSION VERIFICATION TEST. Refer to **66RFE TRANSMISSION VERIFICATION TEST**.

7. **DTC P0871 ALSO PRESENT**
   1. With the scan tool, read DTCs.

Is DTC P0871 present?

Yes

- Refer to **DIAGNOSIS AND TESTING** and perform the appropriate diagnostic procedure.

No

- Go To 8.

8. **EVENT DATA READ PARK REVERSE OR NEUTRAL**

   In the Event Data recorded earlier, does the Event Data show the DTC set in Park, Neutral or Reverse for P0988?

   Yes

   - Go To 13.

   No

   - Go To 9.

9. **EVENT DATA READ CLOSED**

   In the Event Data recorded earlier, does the Event Data show the 4C Pressure Switch reading CLOSED?

   Yes

   - Go To 11.

   No

   - Go To 10.

10. **PRIMARY OIL FILTER SEAL**

    In the Event Data recorded earlier, is the Line Pressure less than 40 psi and significantly below the Desired Line Pressure?

    Yes

    - Repair as necessary to correct low line pressure. Check the fluid level and adjust as necessary. If the fluid level is OK, check the Primary Oil Filter seal for a split, crack or improperly installed. If the filter and seal are OK, check the Main Regulator Valve in the Oil Pump. Refer to **PUMP, TRANSMISSION OIL, DISASSEMBLY** .
    - Perform the 66RFE TRANSMISSION VERIFICATION TEST. Refer to **66RFE TRANSMISSION VERIFICATION TEST**.

No

- Go To 15.

11. **CHECK THE PCM AND WIRING USING THE TRANSMISSION SIMULATOR**
    1. Turn the ignition OFF to the LOCK position.
    2. Remove the Starter Relay.

CAUTION: Removal of the Starter Relay will prevent the vehicle from being started in gear.

WARNING: The Starter Relay must be removed from the PDC. Failure to do so may result in possible serious or fatal injury.

NOTE: Failure to remove the Starter Relay can cause a Transmission - No Response condition.

    3. Install the (special tool #8333A, Simulator, Transmission).
    4. Ignition ON, Engine Not Running.
    5. With the Transmission Simulator, turn the Pressure Switch selector switch to the 4C position.
    6. With the scan tool, monitor the 4C Pressure Switch while pressing the Pressure Switch test button on the Transmission Simulator.

    Did the state of the 4C Pressure Switch change while pressing the Pressure Switch Test button?

    Yes

    - Go To 12.

    No

    - Go To 13.

12. **TRANSMISSION SOLENOID/TRS ASSEMBLY**
    1. Using the schematics as a guide, inspect the wiring and connectors specific to this circuit.
    2. Wiggle the wires while checking for shorted and open circuits.

    Where any problems found?

    Yes

    - Repair as necessary.
    - Perform the 66RFE TRANSMISSION VERIFICATION TEST. Refer to **66RFE TRANSMISSION VERIFICATION TEST**.

No

- Replace the Transmission Solenoid/TRS Assembly in accordance with the Service Information. Refer to **MODULE, POWERTRAIN CONTROL, REMOVAL** .
- Perform the 66RFE TRANSMISSION VERIFICATION TEST. Refer to **66RFE TRANSMISSION VERIFICATION TEST**.

13. **CHECK THE (T48) 4C PRESSURE SIGNAL CIRCUIT FOR AN OPEN**

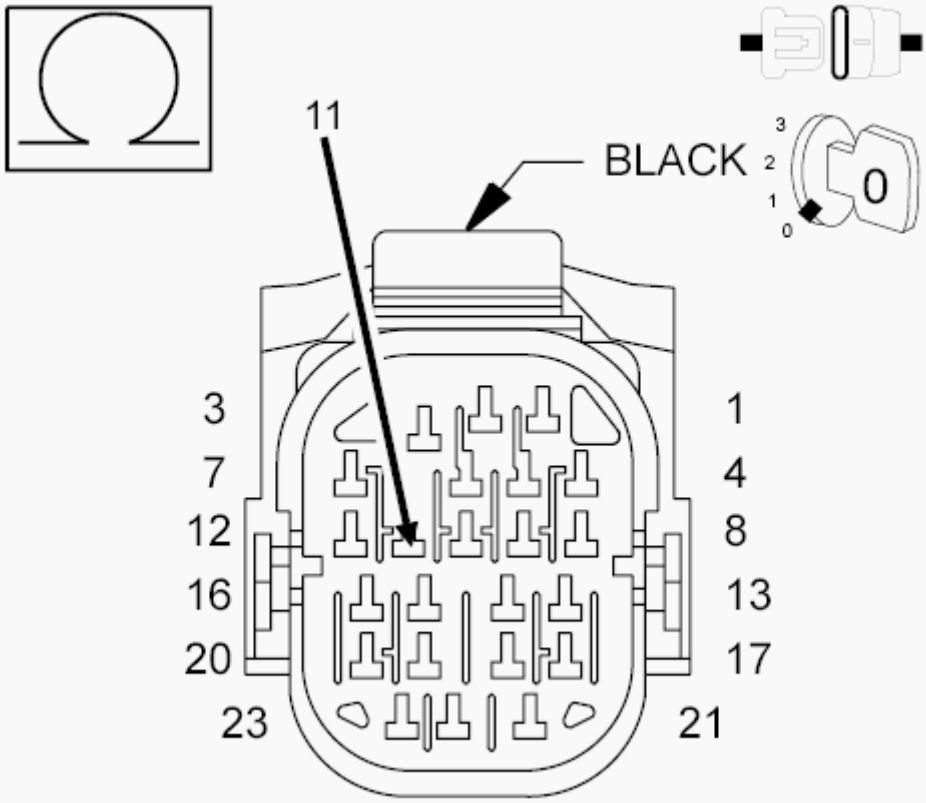

ASSEMBLY-
TRANSMISSION
SOLENOID/TRS

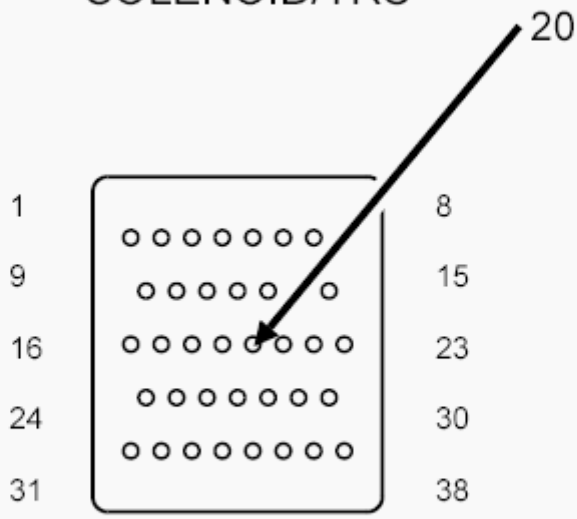

PCM PINOUT

BOX 8815

Fig. 81: Checking 4C Pressure Signal Circuit For An Open
Courtesy of CHRYSLER GROUP, LLC

1. Turn the ignition OFF to the LOCK position.
2. Disconnect the (special tool #8333A, Simulator, Transmission).
3. Disconnect the PCM C4 harness connector.
4. Connect the (special tool #8815A, Kit, NGC, 38 Position) to the PCM C4 harness connector.

CAUTION: Do not probe the PCM harness connectors. Probing the PCM harness connectors will damage the PCM terminals resulting in poor terminal to pin connection. Install the (special tool #8815A, Kit, NGC, 38 Position) to perform diagnosis.

5. Measure the resistance of the (T48) 4C Pressure Signal circuit between the Transmission Solenoid/TRS Assembly harness connector and the appropriate terminal of the (special tool #8815A, Kit, NGC, 38 Position).

   Is the resistance above 5.0 ohms?

   Yes

   - Repair the (T48) 4C Pressure Signal circuit for an open.
   - Perform the 66RFE TRANSMISSION VERIFICATION TEST. Refer to **66RFE TRANSMISSION VERIFICATION TEST**.

   No

   - Go To 14.

14. **CHECK THE (T48) 4C PRESSURE SIGNAL CIRCUIT FOR A SHORT TO GROUND**

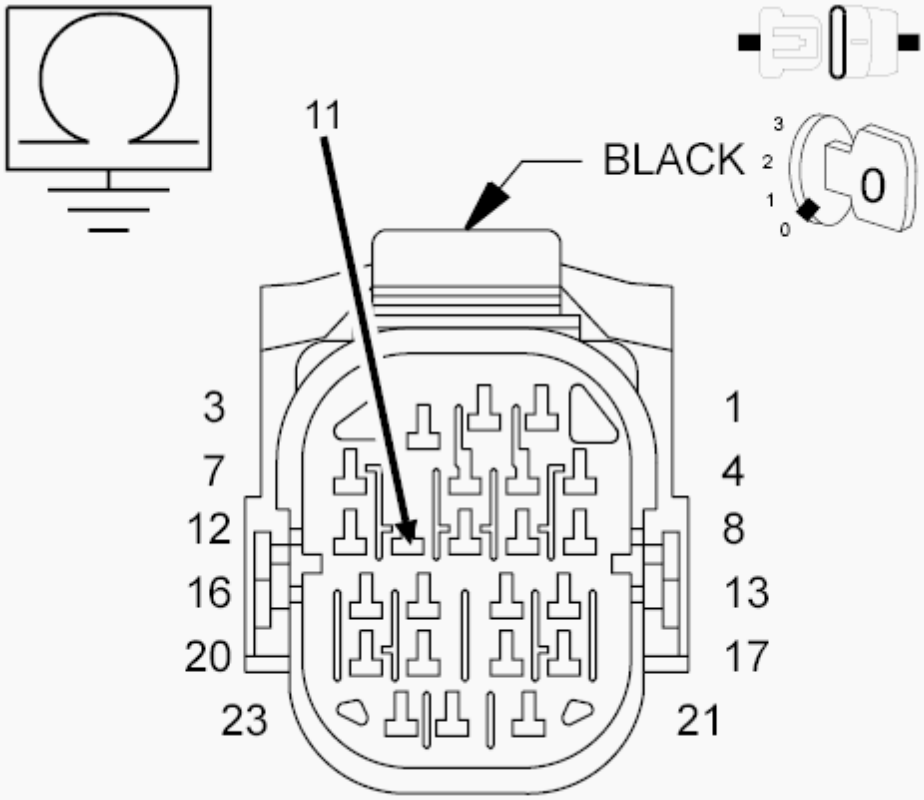

ASSEMBLY-
TRANSMISSION
SOLENOID/TRS

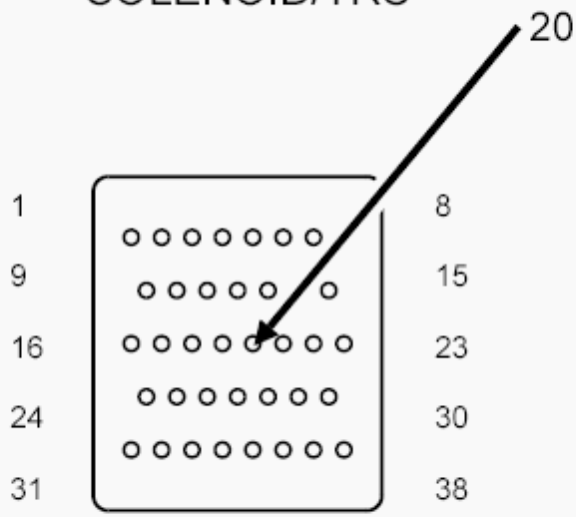

PCM PINOUT

BOX 8815

Fig. 82: Checking 4C Pressure Signal Circuit For A Short To Ground
Courtesy of CHRYSLER GROUP, LLC

1. Measure the resistance between ground and the (T48) 4C Pressure Signal circuit.

   Is the resistance below 5.0 ohms?

   Yes

   - Repair the (T48) 4C Pressure Signal circuit for a short to ground.
   - Perform the 66RFE TRANSMISSION VERIFICATION TEST. Refer to **66RFE TRANSMISSION VERIFICATION TEST**.

   No

   - Using the schematics as a guide, check the Powertrain Control Module (PCM) terminals for corrosion, damage or terminal push out. Pay particular attention to all power and ground circuits. If no problems are found, replace and program the PCM in accordance with the Service Information. With the scan tool, perform a Quick Learn. Refer to **MODULE, POWERTRAIN CONTROL, REMOVAL** .
   - Perform the 66RFE TRANSMISSION VERIFICATION TEST. Refer to **66RFE TRANSMISSION VERIFICATION TEST**.

15. **NO. 5 CHECK BALL CUT OR DAMAGED**
    1. Turn the Ignition off to the lock position.
    2. Remove the Valve Body Assembly in accordance with the Service Information.
    3. Inspect the No. 5 check ball for any cuts or damage.
    4. Inspect the 4C accumulator piston and seals and also the 4C tower seal on top of the valve body.

       Where any problems found?

       Yes

       - Repair as necessary. Check for excessive clutch debris in the transmission oil pan. If excessive clutch debris is present, repair 4C clutch as necessary. Refer to the Service Information for proper repair procedures. Refer to **VALVE BODY, DISASSEMBLY** .
       - Perform the 66RFE TRANSMISSION VERIFICATION TEST. Refer to **66RFE TRANSMISSION VERIFICATION TEST**.

       No

       - Go To 16.

16. **EXCESSIVE FLUID LEAKAGE WITH 4C CLUTCH CIRCUIT**
    1. Air check the 4C Clutch hydraulic circuit. Refer to the Service Information.

NOTE: **This hydraulic clutch circuit contains a small bleed orifice. Small leakage is considered normal.**

Was there excessive air leakage in the 4C Clutch hydraulic circuit?

Yes

- Repair as necessary. Refer to the Service Information.
- Perform the 66RFE TRANSMISSION VERIFICATION TEST. Refer to **66RFE TRANSMISSION VERIFICATION TEST**.

No

- Replace the Transmission Solenoid/TRS Assembly in accordance with the Service Information. Refer to **ASSEMBLY, TRANSMISSION SOLENOID AND TRS, REMOVAL** .
- Perform the 66RFE TRANSMISSION VERIFICATION TEST. Refer to **66RFE TRANSMISSION VERIFICATION TEST**.

P1684-BATTERY WAS DISCONNECTED

For a complete wiring diagram, **refer to appropriate SYSTEM WIRING DIAGRAMS article** .

THEORY OF OPERATION

The PCM uses a battery backed Random Access Memory (RAM) to maintain some learned values. When the battery is disconnected the memory is lost. When the battery is restored this memory loss is detected by the Transmission Control System. The DTC is set and the learned values are initialized to known constants or previously learned values from Electronic Erasable Programmable Read Only Memory (EEPROM). This results in the reinitialization of some parameters.

WHEN MONITORED:

When the ignition is in the Run/Start position.

SET CONDITION:

This DTC will set when the Powertrain Control Module (PCM) is disconnected from Fused B(+) or ground. It also sets while using the scan tool to perform a Battery Disconnect and/or Quick Learn procedure.

POSSIBLE CAUSES

Possible Causes
BATTERY WAS DISCONNECTED
SCAN TOOL BATTERY DISCONNECT PERFORMED
PCM WAS REPLACED OR DISCONNECTED

QUICK LEARN WAS PERFORMED

Always perform the Pre-Diagnostic Troubleshooting procedure before proceeding. Refer to 66RFE PRE-DIAGNOSTIC TROUBLESHOOTING PROCEDURE.

POSSIBLE CAUSES

1. **POSSIBLE CAUSES**
    1. This DTC is an informational DTC only.
    2. This DTC is set due to a momentary loss of power and/or the ground circuits to the PCM.
    3. Below are a list of possible causes associated with this DTC.
    4. Battery was disconnected.
    5. The battery disconnect feature (if equipped) on the scan tool was performed.
    6. A Quick Learn using the scan tool was performed.
    7. PCM was replaced or disconnected.

    Were any of the above possible causes performed?

    Yes

    - This is the cause of the DTC. Erase the DTC and return vehicle to customer.
    - Perform the 66RFE TRANSMISSION VERIFICATION TEST. Refer to **66RFE TRANSMISSION VERIFICATION TEST**.

    No

    - Go To 2.
2. **CHECK WIRING AND CONNECTORS**
    1. The conditions necessary to set this DTC are not present at this time.
    2. Using the schematics as a guide, inspect the wiring and connectors specific to this circuit.

    NOTE: Check all power and ground circuits to the PCM for a intermittent or high resistance condition.

    3. Wiggle the wires while checking for shorted and open circuits.
    4. With the scan tool, check the Event Data to help identify the conditions in which the DTC set.

    Where any problems found?

    Yes

    - Repair as necessary.
    - Perform the 66RFE TRANSMISSION VERIFICATION TEST. Refer to **66RFE**

TRANSMISSION VERIFICATION TEST.

No

- Test Complete.

P1715-RESTRICTED MANUAL VALVE IN T3 RANGE

For a complete wiring diagram, **refer to appropriate SYSTEM WIRING DIAGRAMS article** .

WHEN MONITORED:

When the PRNDL code indicates Temp 3.

SET CONDITION:

This DTC sets when conditions for DTC P1776 are satisfied or 3 unsuccessful attempts to engage 1st gear while the shifter is in the temp 3 zone. This indicates a restricted port at the manual valve because the shifter is not fully engaged in the drive position.

POSSIBLE CAUSES

Possible Causes
RELATED TRANSMISSION DTCS PRESENT
CUSTOMER DRIVING HABITS
MISADJUSTED SHIFTER

Always perform the Pre-Diagnostic Troubleshooting procedure before proceeding. Refer to 66RFE PRE-DIAGNOSTIC TROUBLESHOOTING PROCEDURE.

DIAGNOSTIC TEST

1. **CHECK FOR RELATED DTCS**
    1. With the scan tool, read DTCs.

       Are DTCs P0729, P0731, P0732, P0733, P0734, P0735 or P0716 present?

       Yes

       - Refer to **3.7L/4.7L/5.7L - DIAGNOSTIC CODE INDEX - NGC - 1500 & 2500** or **5.7L - DIAGNOSTIC CODE INDEX - 3500 CAB & CHASSIS** and perform the appropriate diagnostic procedure for the reported DTC(s).

       No

       - Go To 2.

2. **CHECK SHIFTER ADJUSTMENT**
    1. Check Shift Lever adjustment in accordance with the Service Information.

       Is the shifter properly adjusted?

       Yes

       - Go To 3.

       No

       - Adjust the Shifter Assembly in accordance with the Service Information.
       - Perform the 66RFE TRANSMISSION VERIFICATION TEST. Refer to **66RFE TRANSMISSION VERIFICATION TEST**.
3. **CHECK CUSTOMER DRIVING HABIT**
    1. This DTC can set if the customer rests their hand on the shift lever while they are driving. The transmission can be put in the T3 position if just enough upward pressure towards neutral is exerted on the shift lever.
    2. When this occurs, the feed port to the clutch is restricted, the transmission will declare neutral and this DTC will set. The customer should be informed not to rest their hand on the shifter while driving.
    3. This DTC can set by simply bumping the shift lever toward neutral while accelerating.
    4. With the scan tool, check the Event Data to help identify the conditions in which the DTC set.

       If there are no possible causes remaining, view repair.

       Repair

       - This DTC can set by putting too much forward pressure on the shift lever while it is in the OD position. Make sure the customer is informed.
       - Perform the 66RFE TRANSMISSION VERIFICATION TEST. Refer to **66RFE TRANSMISSION VERIFICATION TEST**.

P1775-SOLENOID SWITCH VALVE LATCHED IN TCC POSITION

For a complete wiring diagram, **refer to appropriate SYSTEM WIRING DIAGRAMS article** .

THEORY OF OPERATION

The Solenoid Switch Valve (SSV) controls the direction of the transmission fluid when the L/R Solenoid is energized. The SSV will be in the downshifted position in 1st gear, directing the fluid to the L/R clutch circuit. In 2nd through 6th gears, it will be in the upshifted position and directing the fluid to the Torque Converter Clutch (TCC) control circuit.

When shifting into 1st gear, a special hydraulic sequence is performed to ensure SSV movement into the

downshifted position. The L/R Pressure Switch is monitored to confirm SSV movement. If movement is not confirmed (the L/R pressure switch does not close), EMCC is inhibited until SSV operation is confirmed.

WHEN MONITORED:

During an attempted shift into 1st gear.

SET CONDITION:

This DTC is set if three unsuccessful attempts are made to shift the Solenoid Switch Valve (SSV) into the downshifted position in one given ignition start. This DTC can take up to five minutes before illuminating the MIL.

POSSIBLE CAUSES

Possible Causes
RELATED DTC PRESENT
SOLENOID SWITCH VALVE STICKING
L/R PRESSURE SWITCH SENSE CIRCUIT SHORTED TO OTHER CIRCUITS
TRANSMISSION SOLENOID/TRS ASSEMBLY
POWERTRAIN CONTROL MODULE (PCM)

Always perform the Pre-Diagnostic Troubleshooting procedure before proceeding. Refer to 66RFE PRE-DIAGNOSTIC TROUBLESHOOTING PROCEDURE.

DIAGNOSTIC TEST

1. **CHECK FOR RELATED DTCS**
    1. With the scan tool, check for other transmission DTCs.

       Is DTC P0841 also present?

       Yes

       - Refer to **3.7L/4.7L/5.7L - DIAGNOSTIC CODE INDEX - NGC - 1500 & 2500** or **5.7L - DIAGNOSTIC CODE INDEX - 3500 CAB & CHASSIS** and perform the appropriate diagnostic procedure.

       No

       - Go To 2.
2. **CHECK IF THE DTC IS CURRENT**
    1. With the scan tool, read DTCs.

       Is the status Active or is the Starts Since Set counter 2 or less for this DTC?

Yes

- Go To 3.

No

- Go To 6.

3. **CHECK THE PCM AND WIRING**
   1. Turn the ignition off to the lock position.
   2. Remove the Ignition Switch Feed fuse from the TIPM.

      CAUTION: Removal of the Ignition Switch Feed fuse from the TIPM will prevent the vehicle from being started in gear.

      WARNING: The Ignition Switch Feed fuse must be removed from the TIPM. Failure to do so can result in possible serious or fatal injury.

   3. Install the Transmission Simulator (special tool #8333A, Simulator, Transmission).
   4. Ignition on, engine not running.
   5. With the Transmission Simulator, turn the Pressure Switch selector switch to L/R.
   6. With the scan tool, monitor the L/R Pressure Switch state while pressing the Pressure Switch Test button on the Transmission Simulator.

      Did the state of the L/R Pressure Switch change while pressing the Pressure Switch Test button?

      Yes

      - Go To 4.

      No

      - Go To 5.

4. **CHECK IF THE SOLENOID SWITCH VALVE STICKING**
   1. Turn the ignition off to the lock position.
   2. Remove the Transmission Oil Pan in accordance with the Service Information.
   3. Remove the Transmission Valve body in accordance with the Service Information.
   4. Inspect the Solenoid Switch Valve and Plugs for sticking.

      Is the Solenoid Switch Valve or Plugs sticking?

      Yes

      - Clean and inspect in accordance with the Service Information. Repair as necessary.

- Perform the 66RFE TRANSMISSION VERIFICATION TEST. Refer to **66RFE TRANSMISSION VERIFICATION TEST**.

No

- Replace the Transmission Solenoid/TRS Assembly in accordance with the Service Information.
- Perform the 66RFE TRANSMISSION VERIFICATION TEST. Refer to **66RFE TRANSMISSION VERIFICATION TEST**.

5. **CHECK THE L/R PRESSURE SWITCH SENSE CIRCUIT FOR A SHORT TO ANOTHER CIRCUIT**

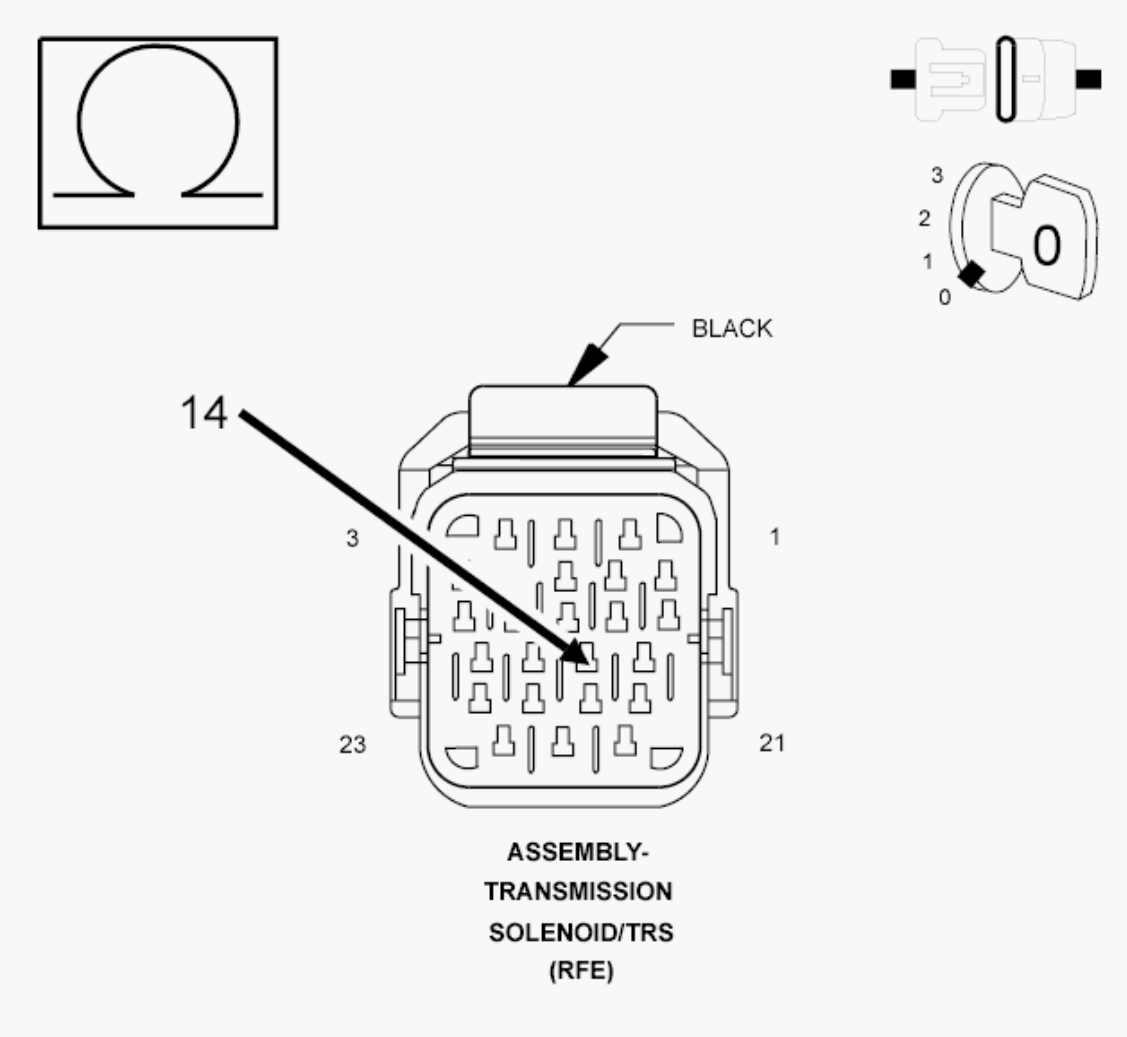

Fig. 83: Checking L/R Pressure Switch Sense Circuit For A Short To Another Circuit
Courtesy of CHRYSLER GROUP, LLC

1. Turn the ignition off to the lock position.
2. Disconnect the Transmission Solenoid/TRS Assembly harness connector.

3. Disconnect all PCM harness connectors.
4. Measure the resistance between the (T50) L/R Pressure Switch Sense circuit and all other circuits in the Transmission Solenoid/TRS Assembly harness connector.

   Is the resistance below 5.0 ohms between the (T50) L/R Pressure Switch Sense circuit and all other circuit(s) in the Transmission Solenoid/TRS Assembly harness connector?

   Yes

   - Repair the (T50) L/R Pressure Switch Sense circuit for a short to another circuit(s).
   - Perform the 66RFE TRANSMISSION VERIFICATION TEST. Refer to **66RFE TRANSMISSION VERIFICATION TEST**.

   No

   - Using the schematics as a guide, check the Powertrain Control Module (PCM) terminals for corrosion, damage or terminal push out. Pay particular attention to all power and ground circuits. If no problems are found, replace the PCM in accordance with the Service Information. With the scan tool, perform a Quick Learn.
   - Perform the 66RFE TRANSMISSION VERIFICATION TEST. Refer to **66RFE TRANSMISSION VERIFICATION TEST**.

6. **CHECK WIRING AND CONNECTORS**
   1. The conditions necessary to set this DTC are not present at this time.
   2. Using the schematics as a guide, inspect the wiring and connectors specific to this circuit.
   3. Wiggle the wires while checking for shorted and open circuits.
   4. With the scan tool, check the Event Data to help identify the conditions in which the DTC set.

      Where any problems found?

      Yes

      - Repair as necessary.
      - Perform the 66RFE TRANSMISSION VERIFICATION TEST. Refer to **66RFE TRANSMISSION VERIFICATION TEST**.

      No

      - Test Complete.

P1776-SOLENOID SWITCH VALVE LATCHED IN LR POSITION

For a complete wiring diagram, **refer to appropriate SYSTEM WIRING DIAGRAMS article** .

THEORY OF OPERATION

The Solenoid Switch Valve (SSV) controls the direction of the transmission fluid when the L/R Solenoid is energized. The SSV will be in the downshifted position in 1st gear, thus directing fluid to the L/R clutch circuit. In 2nd gear through 5th gear, it will be in the upshifted position and directing fluid into the Torque Converter Clutch (TCC).

When in 2nd, 2nd Prime, 3rd, 4th or 5th gear, the Torque Converter Clutch (TCC) will engage when certain conditions are met. The TCC piston is electronically modulated by increasing the duty cycle of the L/R solenoid until the torque converter slip difference (difference between engine and transmission input speed) is within 60 RPM. Then the L/R solenoid is fully energized (FEMCC / 100% duty cycle). Torque converter slip is monitored in FEMCC to ensure adequate clutch capacity.

WHEN MONITORED:

Continuously when performing partial or full EMCC - PEMCC or FEMCC.

SET CONDITION:

If the transmission senses the L/R pressure switch closing while performing PEMCC or FEMCC. This DTC will set after two unsuccessful attempts to perform PEMCC or FEMCC. This DTC can take up to five minutes of problem identification before illuminating the MIL.

POSSIBLE CAUSES

Possible Causes
RELATED DTC P0841 PRESENT
L/R PRESSURE SWITCH SENSE CIRCUIT OPEN
L/R PRESSURE SWITCH SENSE CIRCUIT SHORTED TO GROUND
SOLENOID SWITCH VALVE
POWERTRAIN CONTROL MODULE (PCM)
CHECK THE WIRING AND CONNECTORS

Always perform the Pre-Diagnostic Troubleshooting procedure before proceeding. Refer to 66RFE PRE-DIAGNOSTIC TROUBLESHOOTING PROCEDURE.

DIAGNOSTIC TEST

1. **DETERMINING IF RELATED DTCS ARE PRESENT**
    1. With the scan tool, check for transmission DTCs

       Is DTC P0841 present?

       Yes

       - Refer to **3.7L/4.7L/5.7L - DIAGNOSTIC CODE INDEX - NGC - 1500 & 2500** or **5.7L - DIAGNOSTIC CODE INDEX - 3500 CAB & CHASSIS** and perform the appropriate diagnostic procedure.

No

- Go To 2.

2. **CHECK TO SEE IF DTC P1776 IS CURRENT**
   1. With the scan tool, Check the Starts Since Set counter.

      NOTE: NOTE: This counter only applies to the last DTC set.

      Is the Starts Since Set counter 2 or less?

      Yes

      - Go To 3.

      No

      - Go To 7.

3. **PCM AND WIRING**
   1. Turn the ignition OFF to the LOCK position.
   2. Remove the Starter Relay.

      CAUTION: Removal of the Starter Relay will prevent the vehicle from being started in gear.

      WARNING: The Starter Relay must be removed from the PDC. Failure to do so may result in possible serious or fatal injury.

      NOTE: Failure to remove the Starter Relay can cause a Transmission - No Response condition.

   3. Install the (special tool #8333A, Simulator, Transmission).
   4. Ignition ON, Engine Not Running.
   5. With the Transmission Simulator, turn the Pressure Switch selector switch to the L/R position.
   6. With the scan tool, monitor the L/R Pressure Switch state while pressing the Pressure Switch Test button on the Transmission Simulator.

      Did the state of the L/R Pressure Switch change while pressing the Pressure Switch Test button?

      Yes

      - Go To 4.

      No

- Go To 5.

4. **SOLENOID SWITCH VALVE**
    1. Remove the Valve Body in accordance with the Service Information.
    2. Inspect the Solenoid Switch Valve and Plugs for sticking in the bore and/or wear.

    Were any problems found?

    Yes

    - Clean and repair as necessary in accordance with the Service Information. Refer to **VALVE BODY, REMOVAL** .
    - Perform the 66RFE TRANSMISSION VERIFICATION TEST. Refer to **66RFE TRANSMISSION VERIFICATION TEST**.

    No

    - Go To 7.

5. **L/R PRESSURE SWITCH SENSE CIRCUIT OPEN**

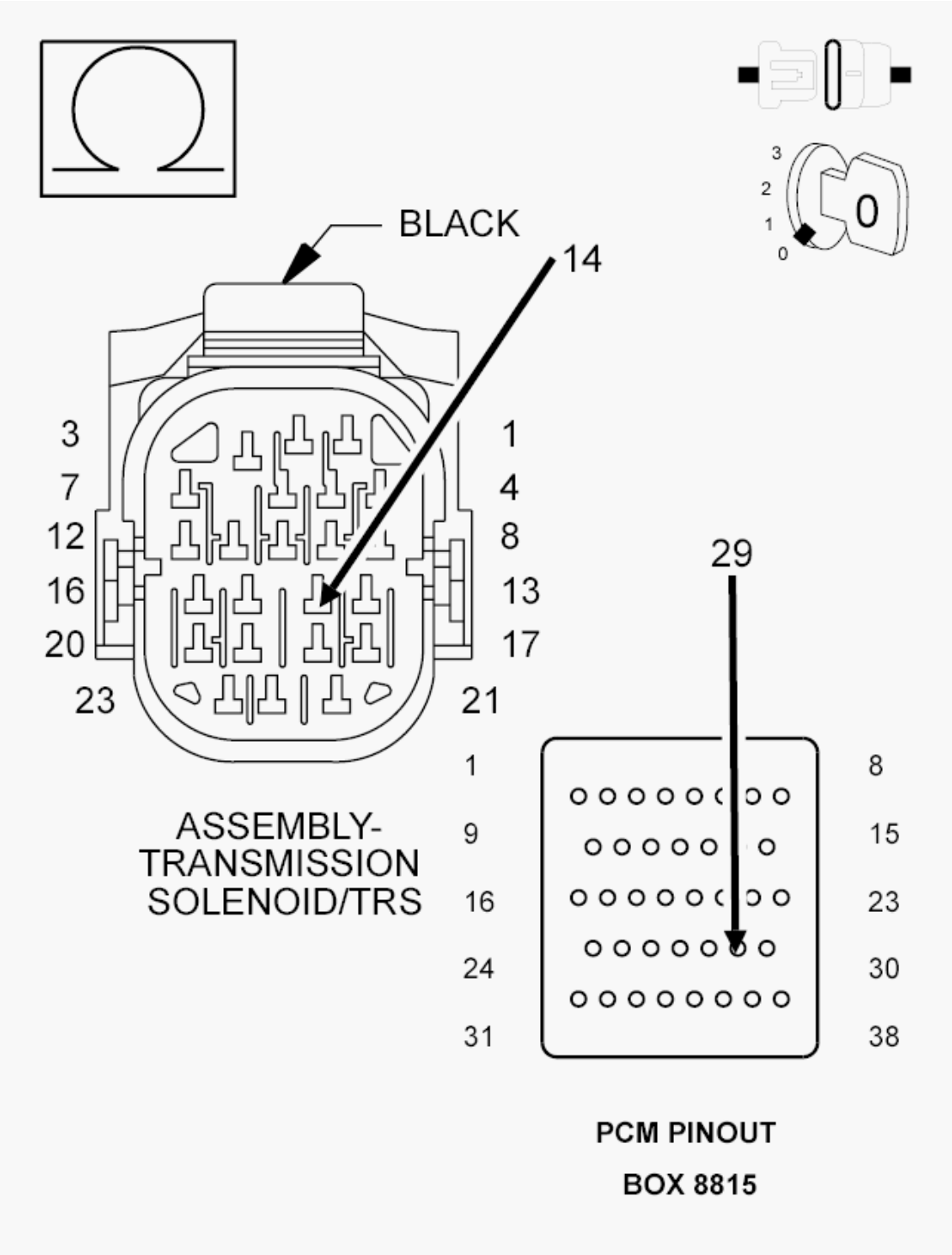

Fig. 84: Checking L/R Pressure Switch Sense Circuit For An Open
Courtesy of CHRYSLER GROUP, LLC

1. Turn the ignition OFF to the LOCK position.
2. Disconnect the (special tool #8333A, Simulator, Transmission).

3. Disconnect the PCM C4 harness connector and connect the (special tool #8815A, Kit, NGC, 38 Position).

NOTE: Note: Check connectors - Clean/repair as necessary.

CAUTION: Do not probe the PCM harness connectors. Probing the PCM harness connectors will damage the PCM terminals resulting in poor terminal to pin connection. Install the (special tool #8815A, Kit, NGC, 38 Position) to perform diagnosis.

4. Measure the resistance of the (T50) L/R Pressure Switch Sense circuit between the appropriate terminal of the (special tool #8815A, Kit, NGC, 38 Position) to the Solenoid/TRS Assembly harness connector.

   Is the resistance above 5.0 ohms?

   Yes

   - Repair the (T50) L/R Pressure Switch Sense circuit for an open.
   - Perform the 66RFE TRANSMISSION VERIFICATION TEST. Refer to **66RFE TRANSMISSION VERIFICATION TEST**.

   No

   - Go To 6.

6. **(T50) L/R PRESSURE SWITCH SENSE CIRCUIT SHORTED TO GROUND**

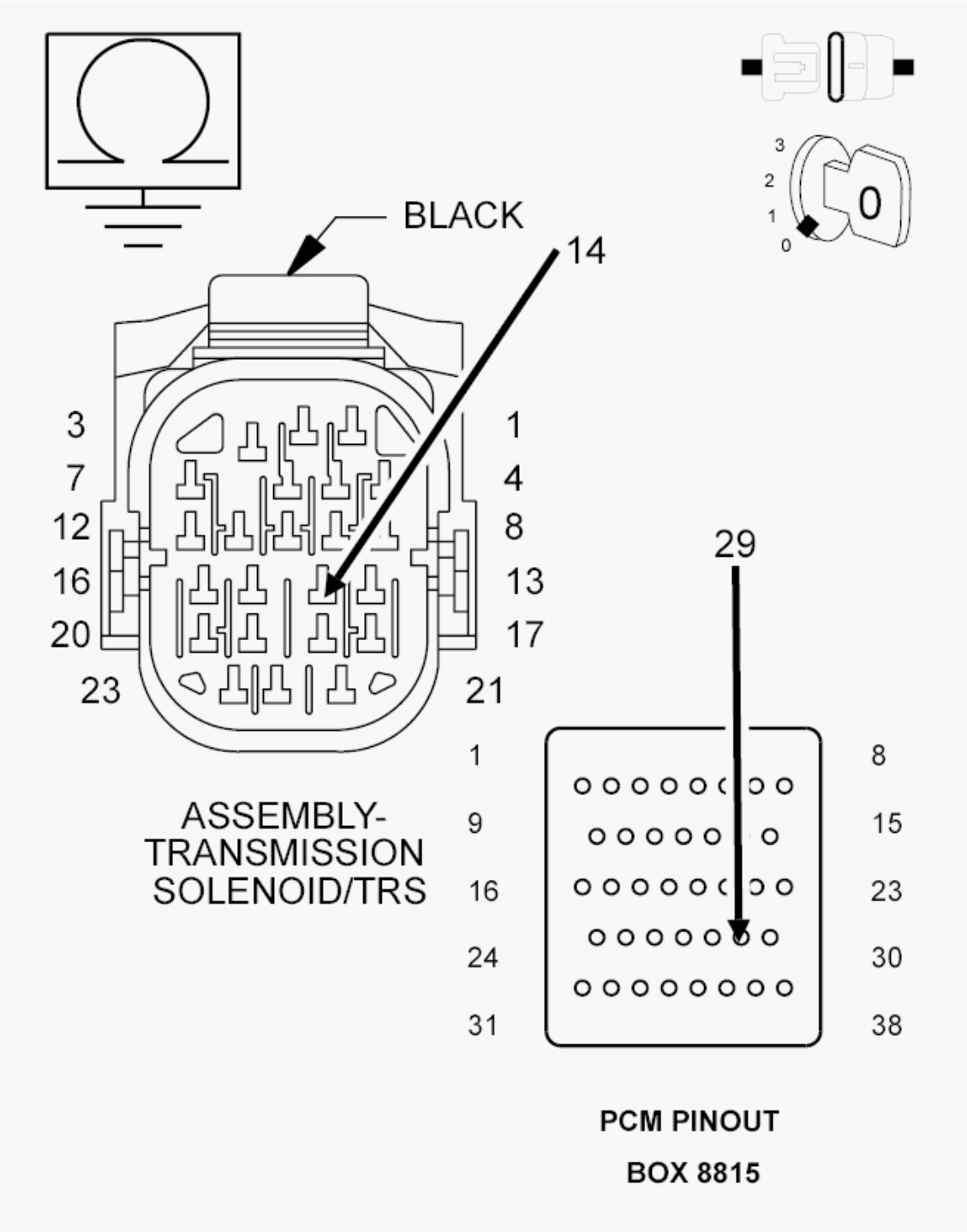

Fig. 85: Checking L/R Pressure Switch Sense Circuit For A Short To Ground
Courtesy of CHRYSLER GROUP, LLC

1. Measure the resistance between ground and the (T50) L/R Pressure Switch Sense circuit.

   Is the resistance below 5.0 ohms?

Yes

- Repair the (T50) L/R Pressure Switch Sense circuit for a short to ground.
- Perform the 66RFE TRANSMISSION VERIFICATION TEST. Refer to **66RFE TRANSMISSION VERIFICATION TEST**.

No

- Using the schematics as a guide, check the Powertrain Control Module (PCM) terminals for corrosion, damage, or terminal push out. Pay particular attention to all power and ground circuits. If no problems are found, replace and program the PCM in accordance with the Service Information. With the scan tool, perform a Quick Learn. Refer to **MODULE, POWERTRAIN CONTROL, REMOVAL** .
- Perform the 66RFE TRANSMISSION VERIFICATION TEST. Refer to **66RFE TRANSMISSION VERIFICATION TEST**.

7. **CHECK THE WIRING AND CONNECTORS**
   1. The conditions necessary to set this DTC are not present at this time.
   2. Using the schematics as a guide, inspect the wiring and connectors specific to this circuit.
   3. Wiggle the wires while checking for shorted and open circuits.
   4. This DTC can also be set by the Solenoid Switch Valve intermittently sticking in it's bore under extreme temperature conditions or by a worn Solenoid Switch Valve or Plugs.
   5. With the scan tool, check the Event Data to help identify the conditions in which the DTC set.

   Where any problems found?

   Yes

   - Repair as necessary.
   - Perform the 66RFE TRANSMISSION VERIFICATION TEST. Refer to **66RFE TRANSMISSION VERIFICATION TEST**.

   No

   - Test Complete.

P1794-SPEED SENSOR GROUND ERROR

For a complete wiring diagram, **refer to appropriate SYSTEM WIRING DIAGRAMS article** .

THEORY OF OPERATION

The transmission system uses two speed sensors, one to measure input RPM and one to measure output RPM. These inputs are essential for proper transmission operation. Therefore, the integrity of this data is verified through the following checks:

1) When in gear, if the gear ratio does not compare to a known gear ratio, the corresponding in-gear DTCs P0729 and P0731-36 is set.

2) An excessive change in input or output speeds indicating an intermittent signal which results in DTCs P0716 and/or P0721 set.

3) If the common speed sensor ground circuit is lost, both sensor inputs will read the signal from the input speed sensor at idle in neutral. Since the input speed sensor reads 60 teeth from the input clutch hub and the output speed sensor reads 30 teeth from the park gear, the result is an apparent speed ratio of 1:2 and may cause DTC P1794 to set when at a stop.

WHEN MONITORED:

The gear ratio is monitored continuously while the transmission is in gear.

SET CONDITION:

After a controller reset in neutral and a ratio of input to output, of 1:2. This DTC can take up to five minutes of problem identification before illuminating the MIL.

POSSIBLE CAUSES

Possible Causes
(T13) SPEED SENSOR GROUND CIRCUIT OPEN
(T13) SPEED SENSOR GROUND CIRCUIT SHORTED TO GROUND
(T13) SPEED SENSOR GROUND CIRCUIT SHORTED TO VOLTAGE
POWERTRAIN CONTROL MODULE (PCM)

Always perform the Pre-Diagnostic Troubleshooting procedure before proceeding. Refer to 66RFE PRE-DIAGNOSTIC TROUBLESHOOTING PROCEDURE.

DIAGNOSTIC TEST

1. **CHECK IF THE DTC IS CURRENT**
    1. Engine Running, Shift lever in park.
    2. With the scan tool, read the Transmission Output and Input Speed Sensor states.

       Is the Output Speed Sensor reading twice the Input Speed Sensor reading?

       Yes

       - Go To 2.

       No

       - Go To 6.

2. **CHECK THE PCM AND WIRING**
    1. Turn the ignition OFF to the LOCK position.
    2. Remove the Ignition Switch Feed fuse from the TIPM.

        CAUTION: Removal of the Ignition Switch Feed fuse from the TIPM will prevent the vehicle from being started in gear.

        WARNING: The Ignition Switch Feed fuse must be removed from the TIPM. Failure to do so can result in possible serious or fatal injury.

    3. Install the (special tool #8333A, Simulator, Transmission).
    4. With the Transmission Simulator, set the Input/Output Speed selector switch to the "3000/1000" position. Turn the Input/Output Speed switch to "ON".
    5. Ignition ON, Engine Not Running.
    6. With the scan tool, monitor the Input and Output Speed Sensor state.

        Does the Input speed read 3000 RPM and the Output speed read 1000 RPM, within 50 RPM?

        Yes

        - Go To 6.

        No

        - Go To 3.
3. **(T13) SPEED SENSOR GROUND CIRCUIT OPEN**

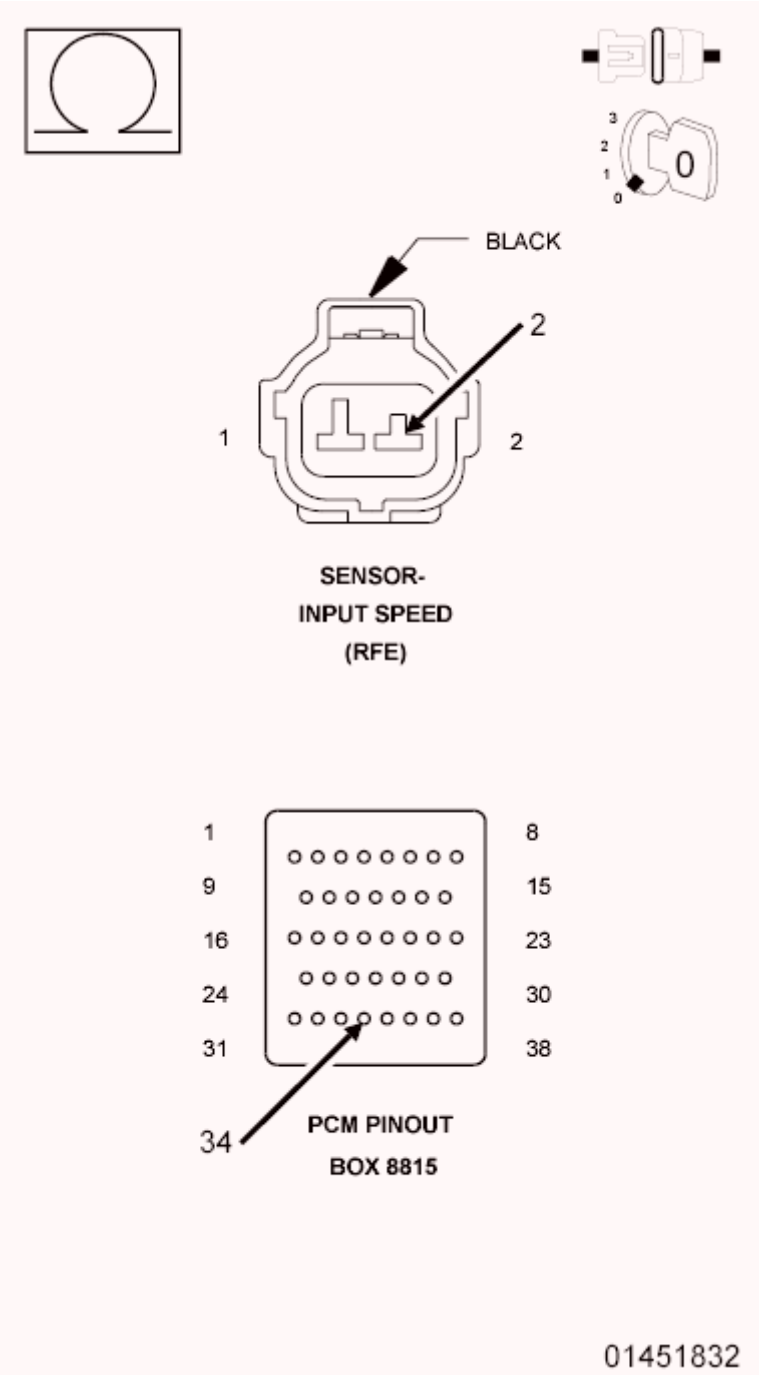

Fig. 86: Checking Speed Sensor Ground Circuit For An Open
Courtesy of CHRYSLER GROUP, LLC

1. Turn the ignition OFF to the LOCK position.
2. Disconnect the PCM C4 harness connector and connect the (special tool #8815A, Kit, NGC, 38 Position).
3. Disconnect the (special tool #8333A, Simulator, Transmission).

CAUTION: Do not probe the PCM harness connectors. Probing the PCM harness connectors will damage the PCM terminals resulting in poor terminal to pin connection. Install the (special tool #8815A, Kit, NGC, 38 Position) to perform diagnosis.

4. Measure the resistance of the (T13) Speed Sensor Ground circuit between both Input and Output Speed Sensor harness connectors and the appropriate terminal of the (special tool #8815A, Kit, NGC, 38 Position).

   Is the resistance above 5.0 ohms on any of the above measurements?

   Yes

   - Repair the (T13) Speed Sensor Ground circuit for an open.
   - Perform the 66RFE TRANSMISSION VERIFICATION TEST. Refer to **66RFE TRANSMISSION VERIFICATION TEST**.

   No

   - Go To 4.

4. **(T13) SPEED SENSOR GROUND CIRCUIT SHORTED TO GROUND**

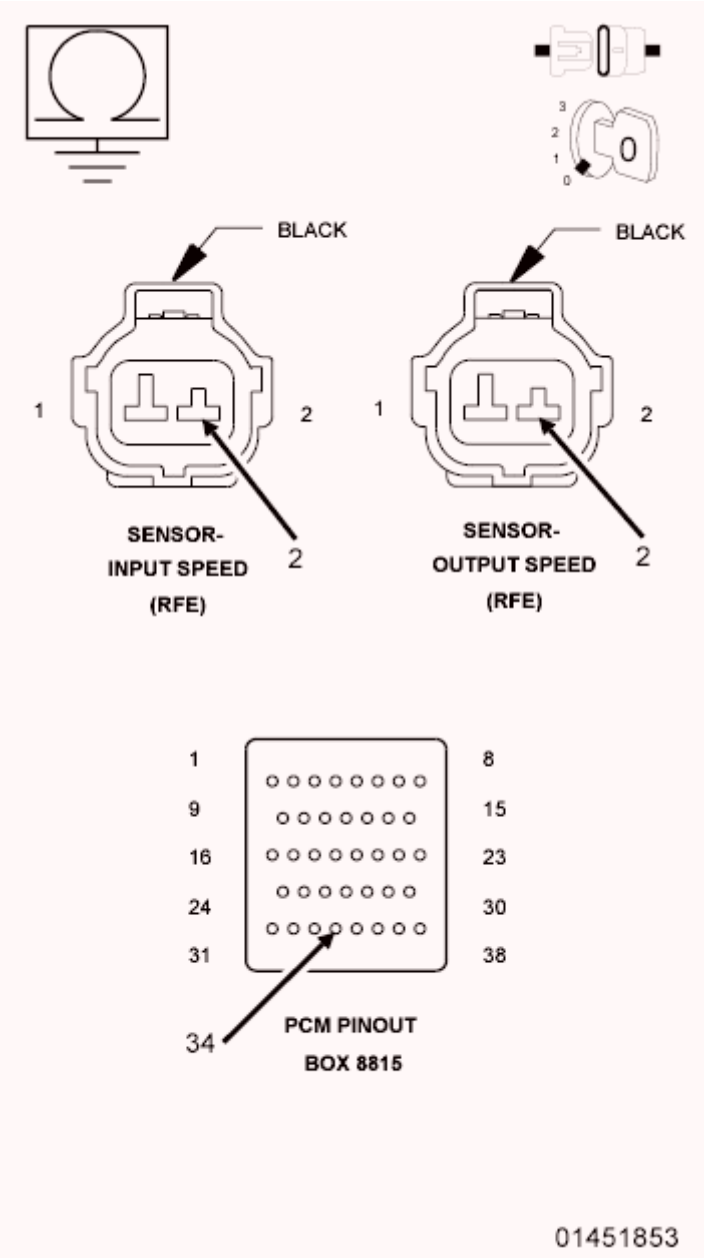

Fig. 87: Checking Speed Sensor Ground Circuit For Short To Ground
Courtesy of CHRYSLER GROUP, LLC

1. Measure the resistance between ground and the (T13) Speed Sensor Ground circuit.

   Is the resistance below 5.0 ohms?

   Yes

   - Repair the (T13) Speed Sensor Ground circuit for a short to ground.
   - Perform the 66RFE TRANSMISSION VERIFICATION TEST. Refer to **66RFE TRANSMISSION VERIFICATION TEST**.

No

- Go To 5.

5. **(T13) SPEED SENSOR GROUND CIRCUIT SHORTED TO VOLTAGE**

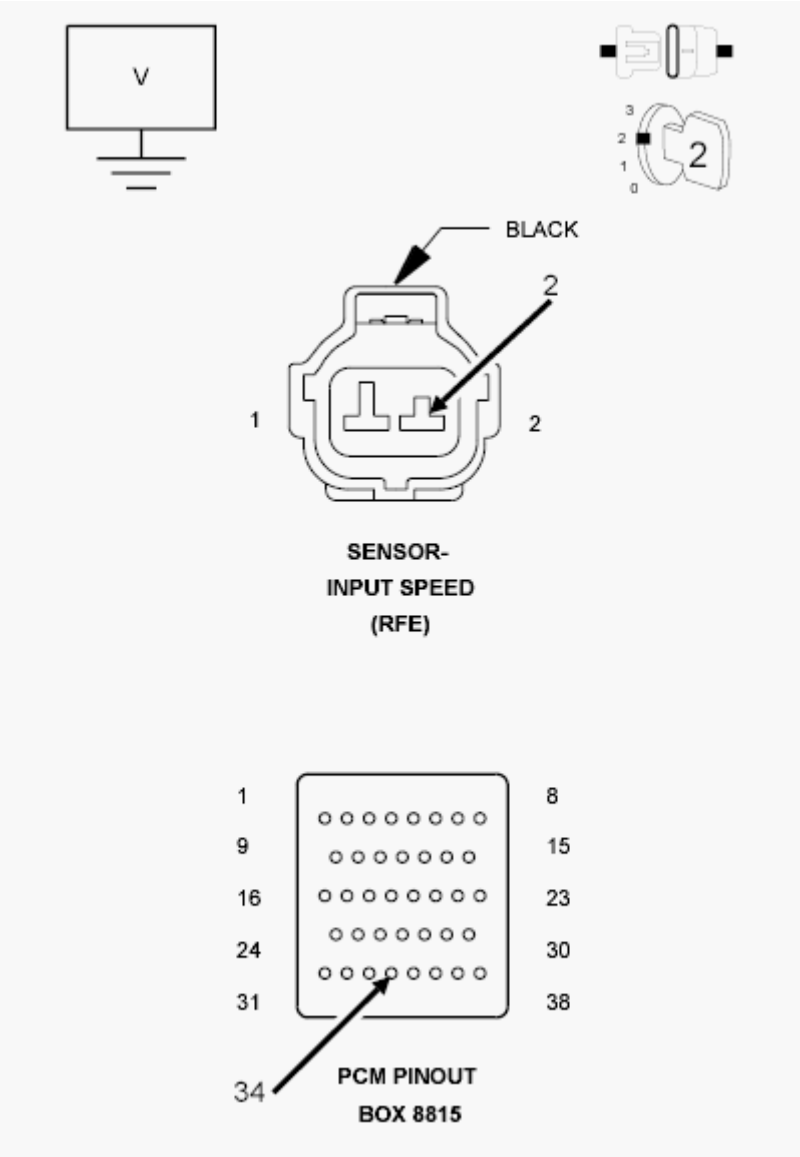

Fig. 88: Checking Speed Sensor Ground Circuit For A Short To Voltage
Courtesy of CHRYSLER GROUP, LLC

1. Ignition ON, Engine Not Running.
2. With the scan tool under TIPM, actuate the Transmission.
3. Measure the voltage of the (T13) Speed Sensor Ground circuit.

   Is the voltage above 0.5 volts?

Yes

- Repair the (T13) Speed Sensor Ground circuit for a short to voltage.
- Perform the 66RFE TRANSMISSION VERIFICATION TEST. Refer to **66RFE TRANSMISSION VERIFICATION TEST**.

No

- Using the schematics as a guide, check the Powertrain Control Module (PCM) terminals for corrosion, damage or terminal push out. Pay particular attention to all power and ground circuits. If no problems are found, replace and program the PCM in accordance with the Service Information. With the scan tool, perform a Quick Learn.
- Perform the 66RFE TRANSMISSION VERIFICATION TEST. Refer to **66RFE TRANSMISSION VERIFICATION TEST**.

6. **CHECK THE WIRING AND CONNECTORS**
   1. The conditions necessary to set this DTC are not present at this time.
   2. Using the schematics as a guide, inspect the wiring and connectors specific to this circuit.
   3. Wiggle the wires while checking for shorted and open circuits.
   4. With the scan tool, check the Event Data to help identify the conditions in which the DTC set.

   Were any problems found?

   Yes

   - Repair as necessary.
   - Perform the 66RFE TRANSMISSION VERIFICATION TEST. Refer to **66RFE TRANSMISSION VERIFICATION TEST**.

   No

   - Test Complete.

P2700-INADEQUATE ELEMENT VOLUME LR

For a complete wiring diagram, **refer to appropriate SYSTEM WIRING DIAGRAMS article** .

THEORY OF OPERATION

The volume of transmission fluid needed to apply the friction elements are continuously monitored and learned for adaptive controls. As the clutch friction material wears, the volume of fluid needed to apply the clutch increases. Certain transmission mechanical problems can cause near-zero learned volume resulting in setting a DTC. The DTC will usually set with other DTCs which indicates an internal transmission problem.

WHEN MONITORED:

When the engine is running. The L/R Clutch Volume Index (CVI) is updated during a 3-1 or 2-1 manual

AutoStick® (ERS) downshift with throttle angle below 5 degrees. Transmission temperature must be at least 43° C (110° F).

SET CONDITION:

When the L/R clutch volume index CVI falls below 16.

POSSIBLE CAUSES

Possible Causes
HYDRAULIC LEAK IN THE VALVE BODY
BROKEN L/R CLUTCH PISTON RETURN SPRING OR SPRING RETAINERS
BROKEN L/R ACCUMULATOR SPRING(S)
TRANSMISSION SOLENOID/TRS ASSEMBLY
POWERTRAIN CONTROL MODULE (PCM)

Always perform the Pre-Diagnostic Troubleshooting procedure before proceeding. Refer to 66RFE PRE-DIAGNOSTIC TROUBLESHOOTING PROCEDURE.

DIAGNOSTIC TEST

1. **OTHER DTCS PRESENT**
   1. With the scan tool, check for transmission DTCs.

      Are any Pressure Switch Sense circuit DTCs present?

      Yes

      - Refer to **3.7L/4.7L/5.7L - DIAGNOSTIC CODE INDEX - NGC - 1500 & 2500** or **5.7L - DIAGNOSTIC CODE INDEX - 3500 CAB & CHASSIS** and perform the appropriate diagnostic procedure.

      No

      - Go To 2.
2. **CHECK L/R CLUTCH VOLUME INDEX**
   1. With the scan tool, erase DTCs.
   2. Start the engine and warm the transmission.

      NOTE: The TRANS TEMP DEG must be at least 43° C or 110° F before performing the following steps.

   3. Drive the vehicle and perform at least ten 3-1 manual (ERS) downshifts at closed throttle from speeds of about 16 to 24 Km/h (10 to 15 mph).
   4. With the scan tool, read the L/R CL VOL INDEX.

Is the L/R CL VOL INDEX below 20?

Yes

- Go To 3.

No

- Go To 5.

3. **L/R CLUTCH CIRCUIT LEAKS IN THE VALVE BODY**
    1. Turn the ignition off to the lock position.
    2. Remove the transmission oil pan in accordance with the Service Information.
    3. Remove the valve body in accordance with the service information.
    4. Check condition of the L/R accumulator springs.
    5. Look for possible leak paths into the L/R clutch hydraulics circuit within the valve body.

    Were any problems found?

    Yes

    - Repair as necessary.
    - Perform the 66RFE TRANSMISSION VERIFICATION TEST. Refer to **66RFE TRANSMISSION VERIFICATION TEST**.

    No

    - Go To 4.

4. **AIR CHECK L/R CLUTCH CIRCUITS**
    1. Perform an air check on the L/R Clutch circuit in accordance with the Service Information.
    2. Watch and listen for L/R Clutch piston movement.

    Does the L/R piston stroke and return properly?

    Yes

    - Replace the Transmission/TRS Solenoid Assembly in accordance with the service information. With the scan tool, perform a Quick Learn.
    - Perform the 66RFE TRANSMISSION VERIFICATION TEST. Refer to **66RFE TRANSMISSION VERIFICATION TEST**.

    No

    - Repair internal transmission as necessary. Pay attention to the components related to the L/R clutch. A broken or weak L/R clutch return spring, Accumulator Spring and/or dislocated

snap ring could cause this problem.

- Perform the 66RFE TRANSMISSION VERIFICATION TEST. Refer to **66RFE TRANSMISSION VERIFICATION TEST**.

5. **VERIFY PCM OPERATION**

NOTE: The TRANS TEMP DEG must be at least 43° C (110° F) before performing the following steps.

1. Perform eight learnable starts. A learnable start is defined as follows: Start the engine and accelerate lightly to 80 Km/h or 50 mph then brake lightly to a stop. Turn engine off.
2. With the scan tool, record the CL VOL INDEX (CVI) for all clutches
3. With the scan tool, perform a BATTERY DISCONNECT.
4. With the scan tool, read the CVIs and compare them to the readings recorded before the BATTERY DISCONNECT.

   Are any of the CVIs less than 5 or different than before the BATTERY DISCONNECT?

   Yes

   - Using the schematics as a guide, check the Powertrain Control Module (PCM) terminals for corrosion, damage or terminal push out. Pay particular attention to all power and ground circuits. If no problems are found, replace the PCM in accordance with the Service Information. With the scan tool, perform a Quick Learn.
   - Perform the 66RFE TRANSMISSION VERIFICATION TEST. Refer to **66RFE TRANSMISSION VERIFICATION TEST**.

   No

   - Test Complete.

P2701-INADEQUATE ELEMENT VOLUME 2C

For a complete wiring diagram, **refer to appropriate SYSTEM WIRING DIAGRAMS article** .

THEORY OF OPERATION

The volume of transmission fluid needed to apply the friction elements are continuously monitored and learned for adaptive controls. As the clutch friction material wears, the volume of fluid needed to apply the clutch increases. Certain transmission mechanical problems can cause near-zero learned volume resulting in setting a DTC. The DTC will usually set with other DTCs which indicates an internal transmission problem.

WHEN MONITORED:

When the engine is running. The 2C Clutch Volume Index (CVI) is updated during a 3-2 or 4-2 kickdown with throttle angle between 10 and 54 degrees. Transmission temperature must be at least 43° C (110° F).

SET CONDITION:

When the 2C CVI falls below 5.

POSSIBLE CAUSES

Possible Causes
HYDRAULIC LEAK IN THE VALVE BODY
BROKEN 2C CLUTCH PISTON RETURN SPRING / DISLODGED SNAP RING
BROKEN ACCUMULATOR SPRING(S)
TRANSMISSION SOLENOID/TRS ASSEMBLY
POWERTRAIN CONTROL MODULE (PCM)

Always perform the Pre-Diagnostic Troubleshooting procedure before proceeding. Refer to 66RFE PRE-DIAGNOSTIC TROUBLESHOOTING PROCEDURE.

DIAGNOSTIC TEST

1. **OTHER DTCS PRESENT**
   1. With the scan tool, check for transmission DTCs.

      Are any Pressure Switch Sense circuit DTCs present?

      Yes

      - Refer to **3.7L/4.7L/5.7L - DIAGNOSTIC CODE INDEX - NGC - 1500 & 2500** or **5.7L - DIAGNOSTIC CODE INDEX - 3500 CAB & CHASSIS** and perform the appropriate diagnostic procedure.

      No

      - Go To 2.
2. **CHECK 2C CLUTCH VOLUME INDEX**
   1. With the scan tool, erase transmission DTCs.
   2. Drive the vehicle at about 1000 RPM on the Output Speed sensor then use the AutoStick® (ERS) and select 3rd gear. This will put the vehicle into third gear.

      NOTE: The TRANS TEMP DEG must be at least 43° C (110° F) before performing the following steps.

   3. Perform at least ten 3-2 kickdowns by allowing the vehicle to coast down to 650 to 550 RPM on the Output Speed sensor then apply the throttle between 40 and 50 Degrees.

      NOTE: Do not exceed 54 Degrees of Throttle Angle.

4. With the scan tool, read the 2C CL VOL INDEX.

   Is the 2C CL VOL INDEX below 10?

   Yes

   - Go To 3.

   No

   - Go To 5.

3. **2C CLUTCH CIRCUIT LEAKS IN THE VALVE BODY**
   1. Turn the ignition off to the lock position.
   2. Remove the transmission oil pan in accordance with the Service Information.
   3. Remove the valve body in accordance with the service information.
   4. Check condition of the 2C accumulator springs.
   5. Look for possible leak paths into the 2C clutch hydraulics circuit within the valve body.

      Were any problems found?

      Yes

      - Repair as necessary.
      - Perform the 66RFE TRANSMISSION VERIFICATION TEST. Refer to **66RFE TRANSMISSION VERIFICATION TEST**.

      No

      - Go To 4.

4. **AIR CHECK 2C CLUTCH CIRCUIT**
   1. Turn the ignition off to the lock position.
   2. Perform an air check on the 2C Clutch circuit in accordance with the Service Information.
   3. Watch and listen for 2C Clutch piston movement.

      Dose the piston stroke and return properly?

      Yes

      - Replace the Transmission/TRS Solenoid Assembly in accordance with the service information. With the scan tool, perform a Quick Learn.
      - Perform the 66RFE TRANSMISSION VERIFICATION TEST. Refer to **66RFE TRANSMISSION VERIFICATION TEST**.

      No

- Repair internal transmission as necessary. Pay attention to the components related to the 2C clutch. A broken or dislodged 2C return spring, snap ring or broken 2C Accumulator Spring could cause this problem.
- Perform the 66RFE TRANSMISSION VERIFICATION TEST. Refer to **66RFE TRANSMISSION VERIFICATION TEST**.

5. **VERIFY PCM OPERATION**

NOTE: The TRANS TEMP DEG must be at least 43° C or 110° F before performing the following steps.

1. Perform eight learnable starts. A learnable start is defined as follows: Start the engine. Accelerate lightly to 80 Km/h or 50 mph then brake lightly to a stop. Turn off the engine.
2. With the scan tool, record the CL VOL INDEX (CVI) for all clutches
3. With the scan tool, perform a BATTERY DISCONNECT.
4. With the scan tool, read the CVIs and compare them to the readings recorded before the BATTERY DISCONNECT.

   Are any of the CVIs less than 5 or different than before the BATTERY DISCONNECT?

   Yes

   - Using the schematics as a guide, check the Powertrain Control Module (PCM) terminals for corrosion, damage or terminal push out. Pay particular attention to all power and ground circuits. If no problems are found, replace the PCM in accordance with the Service Information. With the scan tool, perform a Quick Learn.
   - Perform the 66RFE TRANSMISSION VERIFICATION TEST. Refer to **66RFE TRANSMISSION VERIFICATION TEST**.

   No

   - Test Complete.

P2702-INADEQUATE ELEMENT VOLUME OD

For a complete wiring diagram, **refer to appropriate SYSTEM WIRING DIAGRAMS article** .

THEORY OF OPERATION

The volume of transmission fluid needed to apply the friction elements are continuously monitored and learned for adaptive controls. As the clutch friction material wears, the volume of fluid needed to apply the clutch increases. Certain transmission mechanical problems can cause near-zero learned volume resulting in setting a DTC. The DTC will usually set with other DTCs which indicates an internal transmission problem.

WHEN MONITORED:

When the engine is running. The OD Clutch Volume Index (CVI) is updated during a 3-4 upshift with throttle angle between 10 and 54 degrees. Transmission temperature must be at least 43° C (110° F).

SET CONDITION:

When the OD CVI falls below 5.

POSSIBLE CAUSES

Possible Causes
HYDRAULIC LEAK IN THE VALVE BODY
BROKEN OD ACCUMULATOR SPRING
BROKEN OD/REV PISTON BELLEVILLE SPRING OR DISLODGED SNAP RING
INTERNAL LEAKAGE IN PUMP ASSEMBLY
TRANSMISSION SOLENOID/TRS ASSEMBLY
POWERTRAIN CONTROL MODULE (PCM)

Always perform the Pre-Diagnostic Troubleshooting procedure before proceeding. Refer to 66RFE PRE-DIAGNOSTIC TROUBLESHOOTING PROCEDURE.

DIAGNOSTIC TEST

1. **OTHER DTCS PRESENT**
   1. With the scan tool, check for transmission DTCs.

      Are any Pressure Switch Sense circuit DTCs present?

      Yes

      - Refer to **3.7L/4.7L/5.7L - DIAGNOSTIC CODE INDEX - NGC - 1500 & 2500** or **5.7L - DIAGNOSTIC CODE INDEX - 3500 CAB & CHASSIS** and perform the appropriate diagnostic procedure.

      No

      - Go To 2.
2. **CHECK THE OD CLUTCH VOLUME INDEX**
   1. With the scan tool, erase DTCs.

      NOTE: The TRANS TEMP DEG must be at least 43° C (110° F) before performing the following steps.

   2. Drive the vehicle and perform ten 3-4 upshifts with the TPS degree between 10 and 54.
   3. With the scan tool, read the OD CL VOL INDEX.

Is the OD CL VOL INDEX below 10?

Yes

- Go To 3.

No

- Go To 5.

3. **OD CLUTCH CIRCUIT LEAKS IN THE VALVE BODY**
   1. Turn the ignition off to the lock position.
   2. Remove the transmission oil pan in accordance with the Service Information.
   3. Remove the valve body in accordance with the Service Information.
   4. Check condition of the OD accumulator spring.
   5. Look for possible leak paths into the OD clutch hydraulics circuit within the valve body.

   Were any problems found?

   Yes

   - Repair as necessary.
   - Perform the 66RFE TRANSMISSION VERIFICATION TEST. Refer to **66RFE TRANSMISSION VERIFICATION TEST**.

   No

   - Go To 4.

4. **AIR CHECK OD CLUTCH CIRCUIT**
   1. Perform an air check on the OD Clutch circuit in accordance with the Service Information.
   2. Watch and listen for OD Clutch piston movement.
   3. Air check all pump passages and watch for air leakage into the OD clutch passage.

   NOTE: **There is a bleed orifice between the OD and Reverse Clutch passages, so a small amount of air leakage from Reverse to OD is normal.**

   Were any problems found?

   Yes

   - Repair internal transmission. Pay attention to the OD Clutch. Broken or weak return spring or a dislocated snap ring could cause this problem. If no problems were found in the OD clutch or if leakage into the OD passage was noted, replace Pump Assembly in accordance with the Service Information.

- Perform the 66RFE TRANSMISSION VERIFICATION TEST. Refer to **66RFE TRANSMISSION VERIFICATION TEST**.

No

- Replace the Transmission/TRS Solenoid Assembly in accordance with the service information. With the scan tool, perform a Quick Learn.
- Perform the 66RFE TRANSMISSION VERIFICATION TEST. Refer to **66RFE TRANSMISSION VERIFICATION TEST**.

5. **VERIFY PCM OPERATION**

NOTE: The TRANS TEMP DEG must be at least 43° C or 110° F before performing the following steps.

1. Perform eight learnable starts. A learnable start is defined as follows: Start the engine and accelerate lightly to 80 Kmh or 50 MPH then brake lightly to a stop. Turn the engine off.
2. With the scan tool, record the CL VOL INDEX (CVI) for all clutches.
3. With the scan tool, perform a BATTERY DISCONNECT.
4. With the scan tool, read the CVIs and compare them to the readings recorded before the BATTERY DISCONNECT.

   Are any of the CVIs less than 5 or different than before the BATTERY DISCONNECT?

   Yes

   - Using the schematics as a guide, check the Powertrain Control Module (PCM) terminals for corrosion, damage or terminal push out. Pay particular attention to all power and ground circuits. If no problems are found, replace the PCM in accordance with the Service Information. With the scan tool, perform a Quick Learn.
   - Perform the 66RFE TRANSMISSION VERIFICATION TEST. Refer to **66RFE TRANSMISSION VERIFICATION TEST**.

   No

   - Test Complete.

P2703- INADEQUATE ELEMENT VOLUME UD

For a complete wiring diagram, **refer to appropriate SYSTEM WIRING DIAGRAMS article** .

THEORY OF OPERATION

The volume of transmission fluid needed to apply the friction elements are continuously monitored and learned for adaptive controls. As the clutch friction material wears, the volume of fluid needed to apply the clutch increases. Certain transmission mechanical problems can cause near-zero learned volume resulting in setting a

DTC. The DTC will usually set with other DTCs which indicates an internal transmission problem.

WHEN MONITORED:

When the engine is running. The UD Clutch Volume Index (CVI) is updated during a 5-4 kickdown with throttle angle between 10 and 54 degrees. Transmission temperature must be at least 43° C (110° F).

SET CONDITION:

When the UD CVI falls below 11.

POSSIBLE CAUSES

Possible Causes
BROKEN UD ACCUMULATOR SPRING(S)
BROKEN UD CLUTCH PISTON SPRING OR DISLODGED SNAP RING
INTERNAL LEAKAGE IN PUMP OR VALVE BODY ASSEMBLIES
TRANSMISSION SOLENOID/TRS ASSEMBLY
POWERTRAIN CONTROL MODULE (PCM)

Always perform the Pre-Diagnostic Troubleshooting procedure before proceeding. Refer to 66RFE PRE-DIAGNOSTIC TROUBLESHOOTING PROCEDURE.

DIAGNOSTIC TEST

1. **OTHER DTCS PRESENT**
   1. With the scan tool, check for transmission DTCs.

      Are any Pressure Switch Sense circuit DTCs present?

      Yes

      - Refer to **3.7L/4.7L/5.7L - DIAGNOSTIC CODE INDEX - NGC - 1500 & 2500** or **5.7L - DIAGNOSTIC CODE INDEX - 3500 CAB & CHASSIS** and perform the appropriate diagnostic procedure.

      No

      - Go To 2.
2. **CHECK UD CLUTCH VOLUME INDEX**
   1. With the scan tool, erase transmission DTCs.

      NOTE: The TRANS TEMP DEG must be at least 43° C or 110° F before performing the following steps.

   2. Drive the vehicle and perform ten 5-4 kickdowns by applying the throttle between 40 and 50 TPS

degrees at speeds about 1500 to 1700 RPM on the Output Speed sensor.

3. With the scan tool, read the UD CVI.

   Is the UD CVI below 10?

   Yes

   - Go To 3.

   No

   - Go To 5.

3. **UD CLUTCH CIRCUIT LEAKS IN THE VALVE BODY**
   1. Turn the ignition off to the lock position.
   2. Remove the transmission oil pan and valve body in accordance with the Service Information.
   3. Check the condition of the UD accumulator springs.
   4. Look for possible leak paths into the UD clutch hydraulics circuit within the valve body.

      Were any problems found?

      Yes

      - Repair as necessary.
      - Perform the 66RFE TRANSMISSION VERIFICATION TEST. Refer to **66RFE TRANSMISSION VERIFICATION TEST**.

      No

      - Go To 4.

4. **AIR CHECK UD CLUTCH CIRCUIT**
   1. Perform an air check on the UD Clutch circuit in accordance with the Service Information.
   2. Watch and listen for UD Clutch piston movement.
   3. Air check all other pump passages for air leakage into the UD Clutch circuit.

      Were any problems found?

      Yes

      - Repair internal transmission. Pay attention to components related to the UD clutch. Broken or weak return spring or a dislocated snap ring. If no trouble is found in UD clutch component or UD clutch leakage was noted in passage, replace the Pump Assembly.
      - Perform the 66RFE TRANSMISSION VERIFICATION TEST. Refer to **66RFE TRANSMISSION VERIFICATION TEST**.

No

- Replace the Transmission/TRS Solenoid Assembly in accordance with the service information. With the scan tool, perform a Quick Learn.
- Perform the 66RFE TRANSMISSION VERIFICATION TEST. Refer to **66RFE TRANSMISSION VERIFICATION TEST**.

5. **VERIFY PCM OPERATION**

NOTE: The TRANS TEMP DEG must be at least 43° C or 110° F before performing the following steps.

1. Perform eight learnable starts. A learnable start is defined as follows: Start the engine and accelerate lightly to 80 Km/h or 50 mph then brake lightly to a stop. Turn the engine off.
2. With the scan tool, record the clutch volume index CVI for all clutches.
3. With the scan tool, perform a BATTERY DISCONNECT.
4. With the scan tool, read the CVIs and compare them to the readings recorded before the BATTERY DISCONNECT.

   Are any of the CVIs less than 5 or different than before the BATTERY DISCONNECT?

   Yes

   - Using the schematics as a guide, check the Powertrain Control Module (PCM) terminals for corrosion, damage or terminal push out. Pay particular attention to all power and ground circuits. If no problems are found, replace the PCM in accordance with the Service Information. With the scan tool, perform a Quick Learn.
   - Perform the 66RFE TRANSMISSION VERIFICATION TEST. Refer to **66RFE TRANSMISSION VERIFICATION TEST**.

   No

   - Test Complete.

P2704-INADEQUATE ELEMENT VOLUME 4C

For a complete wiring diagram, **refer to appropriate SYSTEM WIRING DIAGRAMS article** .

THEORY OF OPERATION

The volume of transmission fluid needed to apply the friction elements are continuously monitored and learned for adaptive controls. As the clutch friction material wears, the volume of fluid needed to apply the clutch increases. Certain transmission mechanical problems can cause near-zero learned volume resulting in setting a DTC. The DTC will usually set with other DTCs which indicates an internal transmission problem.

WHEN MONITORED:

When the engine is running. The 4C Clutch Volume Index (CVI) is updated during a 4-5 upshift with throttle angle between 10 and 54 degrees. Transmission temperature must be at least 43° C (110° F).

SET CONDITION:

When the 4C CVI falls below 5.

POSSIBLE CAUSES

Possible Causes
BROKEN 4C RETURN SPRING OR DISLODGED SNAP RING
BROKEN 4C ACCUMULATOR SPRING(S)
HYDRAULIC LEAK IN THE VALVE BODY
TRANSMISSION SOLENOID/TRS ASSEMBLY
POWERTRAIN CONTROL MODULE (PCM)

Always perform the Pre-Diagnostic Troubleshooting procedure before proceeding. Refer to 66RFE PRE-DIAGNOSTIC TROUBLESHOOTING PROCEDURE.

DIAGNOSTIC TEST

1. **CHECK THE 4C CLUTCH VOLUME**
    1. With the scan tool, record the 4C Clutch Volume Index (CVI) and erase DTCs.
    2. Perform ten, 4-5 upshifts with the throttle between 10 and 54 degrees. The Transmission temperature must be at least 43° C or 110° F.
    3. With the scan tool, read the 4C CVI.

    Is the current 4C CVI below 10?

    Yes

    - Go To 2.

    No

    - Go To 5.
2. **DTC P0876 PRESENT**
    1. With the scan tool, read DTCs.

    NOTE: DTC P0876 must be set with P2704 in order for this test to be valid.

    Is DTC P0876 present?

    Yes

- Replace the Transmission Solenoid/TRS Assembly in accordance with the Service Information.
- Perform the 66RFE TRANSMISSION VERIFICATION TEST. Refer to **66RFE TRANSMISSION VERIFICATION TEST**.

No

- Go To 3.

3. **4C CLUTCH CIRCUIT LEAKS IN THE VALVE BODY**
   1. Turn the ignition off to the lock position.
   2. Remove the transmission oil pan in accordance with the Service Information.
   3. Remove the valve body in accordance with the Service Information.
   4. Check condition of the 4C accumulator springs.
   5. Look for possible leak paths into the 4C clutch hydraulics circuit within the valve body.

   Were any problems found?

   Yes

   - Repair as necessary.
   - Perform the 66RFE TRANSMISSION VERIFICATION TEST. Refer to **66RFE TRANSMISSION VERIFICATION TEST**.

   No

   - Go To 4.

4. **AIR CHECK 4C CLUTCH CIRCUIT**
   1. Perform an air check on the 4C Clutch circuit in accordance with the Service Information.
   2. Listen for proper 4C Clutch piston movement.

   Were any problems found?

   Yes

   - Repair Internal transmission as necessary. Pay attention to the mechanical components related to the 4th clutch. A broken or weak return spring or a dislocated snap ring could cause this problem.
   - Perform the 66RFE TRANSMISSION VERIFICATION TEST. Refer to **66RFE TRANSMISSION VERIFICATION TEST**.

   No

   - Replace the Transmission Solenoid/TRS Assembly in accordance with the service information. With the scan tool, perform a Quick Learn.

- Perform the 66RFE TRANSMISSION VERIFICATION TEST. Refer to **66RFE TRANSMISSION VERIFICATION TEST**.

5. **VERIFY PCM OPERATION**
    1. Perform eight learnable starts. A learnable start is defined as follows: Start the engine and accelerate lightly to 50 MPH then brake lightly to a stop. Turn the engine off.
    2. With the scan tool, record Transmission CL VOL INDEX (CVI) for all clutches.
    3. With the scan tool, perform a BATTERY DISCONNECT.
    4. With the scan tool, read the CVIs and compare them to the reading recorded before the BATTERY DISCONNECT.

       Are any of the CVIs less than 5 or are they different than before the battery disconnect?

       Yes

       - Using the schematics as a guide, check the Powertrain Control Module (PCM) terminals for corrosion, damage or terminal push out. Pay particular attention to all power and ground circuits. If no problems are found, replace and program the PCM in accordance with the Service Information. With the scan tool, perform a Quick Learn.
       - Perform the 66RFE TRANSMISSION VERIFICATION TEST. Refer to **66RFE TRANSMISSION VERIFICATION TEST**.

       No

       - Test Complete.

P2706-MS SOLENOID CIRCUIT

For a complete wiring diagram, **refer to appropriate SYSTEM WIRING DIAGRAMS article** .

THEORY OF OPERATION

The Transmission Control System uses five electronically controlled solenoids that allow hydraulic fluid to be applied to various friction elements (clutches), which enables the gear requested. The continuity of each solenoid circuit is periodically tested. Each inactive solenoid is turned on for a few milliseconds, then off. Each active solenoid is turned off for a few milliseconds, then on. This pulsing of voltage to the solenoid causes an inductive spike which is sensed by the Transmission Control System. If an inductive spike is not sensed by the Transmission Control System during the continuity check, it is tested again. If the test fails three consecutive times, the appropriate Diagnostic Trouble Code (DTC) is set. If the solenoid test is run in response to a gear ratio or pressure switch error, one failure will result in setting the appropriate DTC. **Note: This DTC is strictly an electrical fault and does not apply to any internal transmission failures.**

WHEN MONITORED:

Initially at power-up, then every 10 seconds after. The solenoid circuits will be tested immediately after a gear ratio or pressure switch error is detected.

SET CONDITION:

After three consecutive solenoid continuity test failures or one failure if test is run in response to a gear ratio or pressure switch error. **Note: This DTC is strictly an electrical fault and does not apply to any internal transmission failures.**

POSSIBLE CAUSES

Possible Causes
RELATED TCM POWER INPUT DTCS PRESENT
(T118) MS SOLENOID CONTROL CIRCUIT SHORTED TO ANOTHER CIRCUITS
(T118) MS SOLENOID CONTROL CIRCUIT OPEN
(T118) MS SOLENOID CONTROL CIRCUIT SHORTED TO GROUND
TRANSMISSION SOLENOID/TRS ASSEMBLY
POWERTRAIN CONTROL MODULE (PCM)

Always perform the Pre-Diagnostic Troubleshooting procedure before proceeding. Refer to 66RFE PRE-DIAGNOSTIC TROUBLESHOOTING PROCEDURE.

DIAGNOSTIC TEST

1. **DETERMINE IF RELATED TCM POWER INPUT DTCS ARE PRESENT**
    1. With the scan tool, read Transmission DTCs

       Are any TCM Power Input DTCs present?

       Yes

       - Refer to **3.7L/4.7L/5.7L - DIAGNOSTIC CODE INDEX - NGC - 1500 & 2500** or **5.7L - DIAGNOSTIC CODE INDEX - 3500 CAB & CHASSIS** and perform the appropriate diagnostic procedure.

       No

       - Go To 2.
2. **TRANSMISSION SOLENOID/TRS ASSEMBLY**
    1. Turn the ignition OFF to the LOCK position.
    2. Remove the Starter Relay.

CAUTION: Removal of the Starter Relay will prevent the vehicle from being started in gear.

WARNING: The Starter Relay must be removed from the PDC. Failure to do so may result in possible serious or fatal injury.

NOTE: **Failure to remove the Starter Relay can cause a Transmission - No Response condition.**

3. Install (special tool #8333A, Simulator, Transmission).
4. Ignition ON, Engine Not Running.
5. With the scan tool, actuate the MS Solenoid.
6. Monitor the MS Solenoid LED on the Transmission Simulator.

   Did the MS Solenoid LED on the Transmission Simulator blink on and off?

   Yes

   - Replace the Transmission Solenoid/TRS Assembly in accordance with the Service Information.
   - Perform the 66RFE TRANSMISSION VERIFICATION TEST. Refer to **66RFE TRANSMISSION VERIFICATION TEST**.

   No

   - Go To 3.

3. **TRANSMISSION SOLENOID/TRS ASSEMBLY**
   1. With the scan tool, continue to actuate the MS Solenoid for the period of two minutes using the Transmission Simulator.
   2. After two minutes of actuation, with the scan tool, stop the actuation and check for transmission DTCs.

      Did DTC P2706 reset during the actuation test?

      Yes

      - Go To 4.

      No

      - Replace the Transmission Solenoid/TRS Assembly in accordance with the Service Information.
      - Perform the 66RFE TRANSMISSION VERIFICATION TEST. Refer to **66RFE TRANSMISSION VERIFICATION TEST**.

4. **(T118) MS SOLENOID CONTROL CIRCUIT SHORTED TO ANOTHER CIRCUIT**

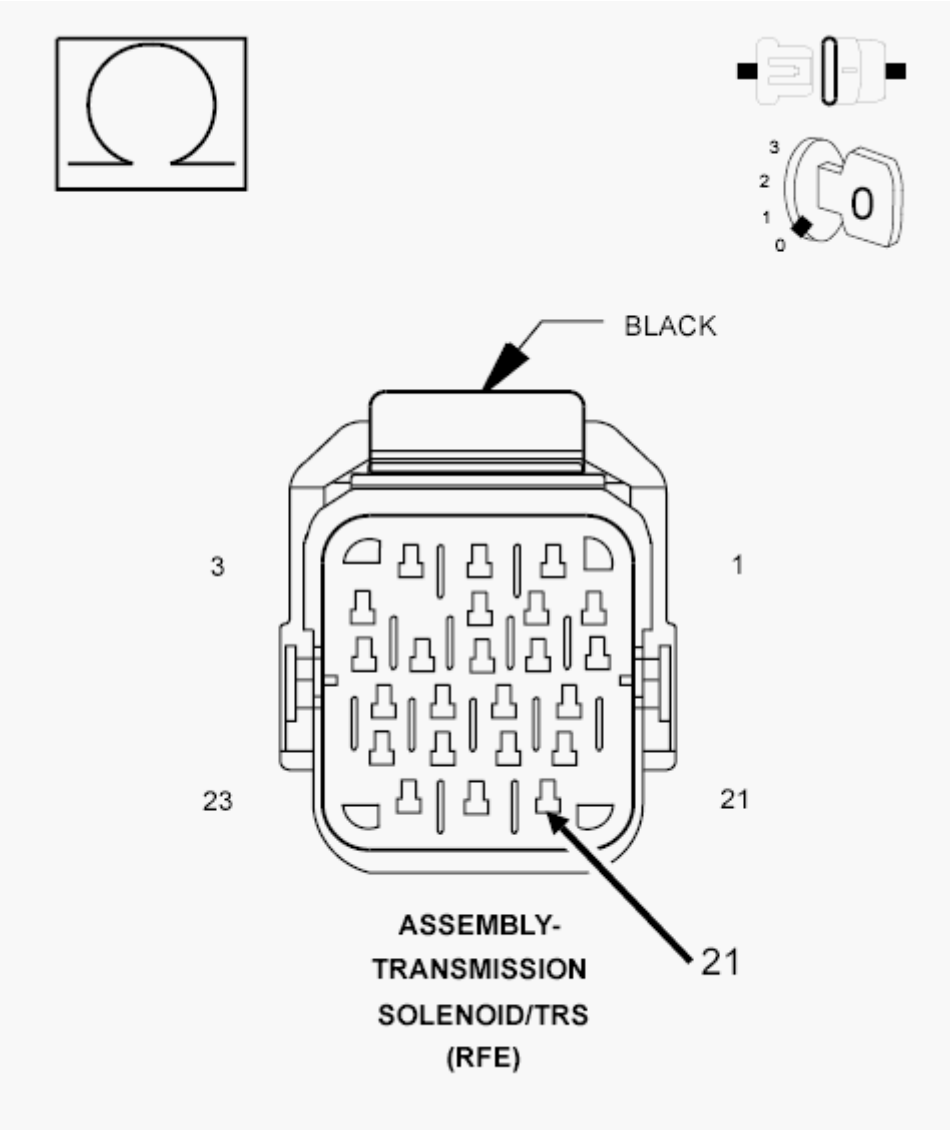

Fig. 89: Checking MS Solenoid Control Circuit For A Short To Another Circuit
Courtesy of CHRYSLER GROUP, LLC

1. Turn the ignition OFF to the LOCK position.
2. Disconnect the (special tool #8333A, Simulator, Transmission).
3. Disconnect the PCM harness connectors.
4. Measure the resistance between the (T118) MS Solenoid Control circuit and all other circuits in the Transmission Solenoid/TRS Assembly harness connector.

   Is the resistance below 5.0 ohms between the (T118) MS Solenoid Control circuit and any other circuit(s) in the Transmission Solenoid/TRS Assembly harness connector?

   Yes

   - Repair the (T118) MS Solenoid Control circuit for a short to another circuit(s).

- Perform the 66RFE TRANSMISSION VERIFICATION TEST. Refer to **66RFE TRANSMISSION VERIFICATION TEST**.

No

- Go To 5.

5. **(T118) MS SOLENOID CONTROL CIRCUIT OPEN**

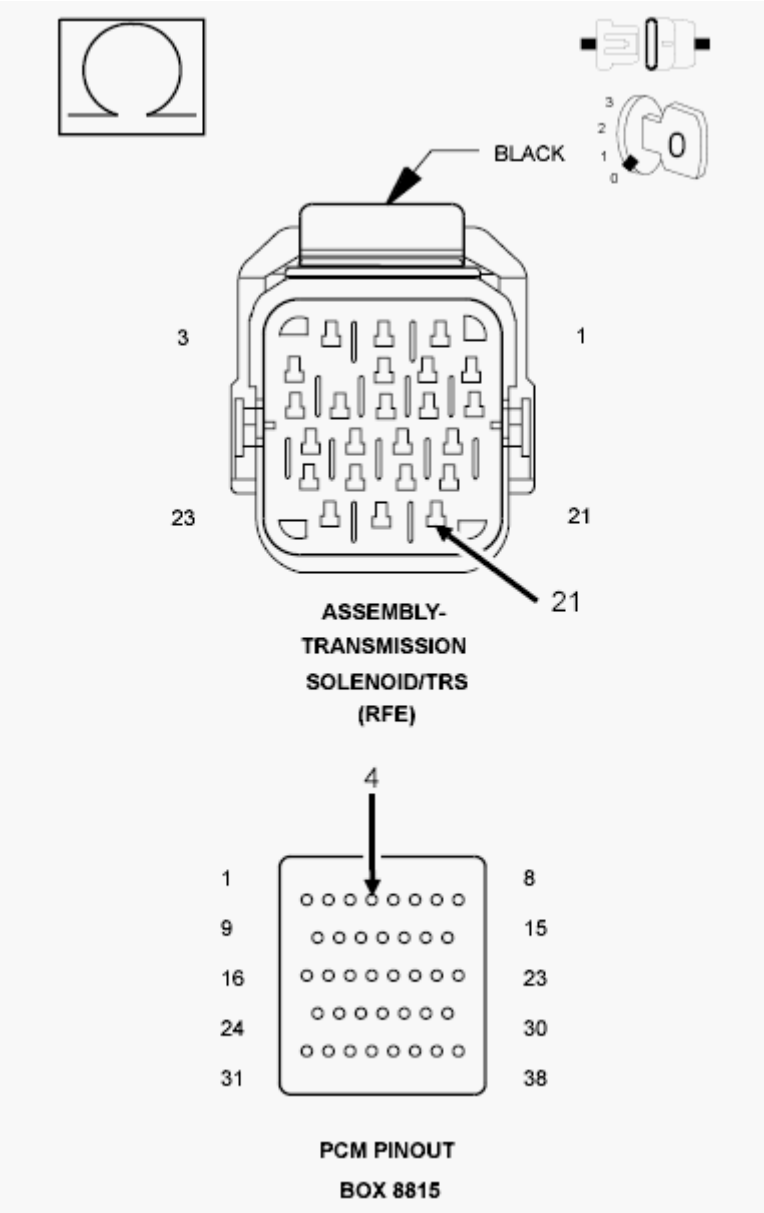

Fig. 90: Checking MS Solenoid Control Circuit For An Open
Courtesy of CHRYSLER GROUP, LLC

1. Connect the (special tool #8815A, Kit, NGC, 38 Position) to the PCM C4 harness connector.

CAUTION: Do not probe the PCM harness connectors. Probing the PCM harness connectors will damage the PCM terminals resulting in poor terminal to pin connection. Install the (special tool #8815A, Kit, NGC, 38 Position) to perform diagnosis.

2. Measure the resistance of the (T118) MS Solenoid Control circuit between the Transmission Solenoid/TRS Assembly harness connector and the appropriate terminal of the (special tool #8815A, Kit, NGC, 38 Position).

   Is the resistance above 5.0 ohms?

   Yes

   - Repair the (T118) MS Solenoid Control circuit for an open.
   - Perform the 66RFE TRANSMISSION VERIFICATION TEST. Refer to **66RFE TRANSMISSION VERIFICATION TEST**.

   No

   - Go To 6.

6. **(T118) MS SOLENOID CONTROL CIRCUIT SHORTED TO GROUND**

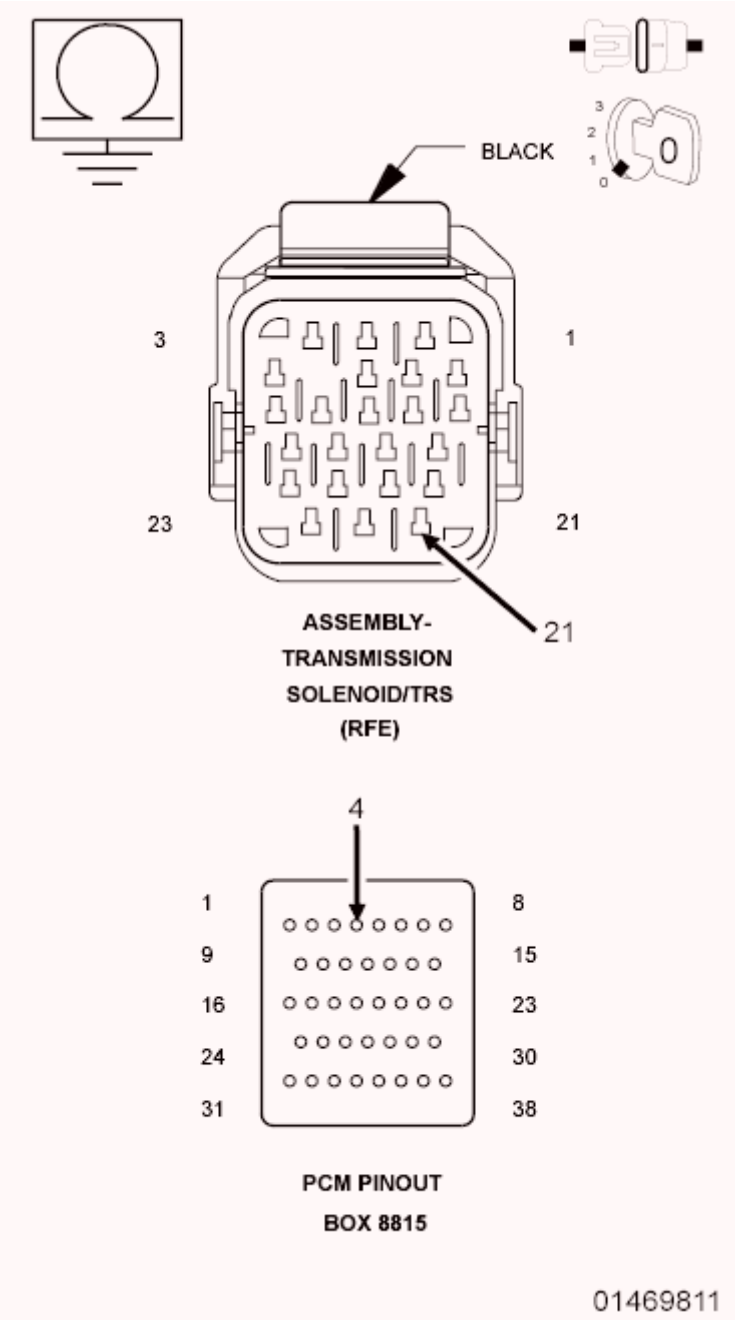

Fig. 91: Checking MS Solenoid Control Circuit For A Short To Ground
Courtesy of CHRYSLER GROUP, LLC

1. Measure the resistance between ground and the (T118) MS Solenoid Control circuit.

   Is the resistance below 5.0 ohms?

   Yes

   - Repair the (T118) MS Solenoid Control circuit for a short to ground.

- Perform the 66RFE TRANSMISSION VERIFICATION TEST. Refer to **66RFE TRANSMISSION VERIFICATION TEST**.

No

- Using the schematics as a guide, check the Powertrain Control Module (PCM) terminals for corrosion, damage or terminal push out. Pay particular attention to all power and ground circuits. If no problems are found, replace and program the PCM in accordance with the Service Information. With the scan tool, perform a Quick Learn.
- Perform the 66RFE TRANSMISSION VERIFICATION TEST. Refer to **66RFE TRANSMISSION VERIFICATION TEST**.

U0002-CAN C BUS OFF PERFORMANCE

For a complete wiring diagram, **refer to appropriate SYSTEM WIRING DIAGRAMS article** .

WHEN MONITORED:

Ignition on time is greater than one second.

Battery voltage between 9 and 16 volts.

Engine run time greater than three seconds.

SET CONDITION:

Bus messages not received from the Totally Integrated Power Module (TIPM) for approximately two to five seconds.

POSSIBLE CAUSES

Possible Causes
CAN BUS CIRCUITS OPEN OR SHORTED
DTCS RELATED TO BATTERY VOLTAGE, IGNITION, OR VIN MESSAGES
TOTALLY INTEGRATED POWER MODULE POWER AND GROUND
TIPM NOT CONFIGURED CORRECTLY
TOTALLY INTEGRATED POWER MODULE (TIPM)
MODULE THAT SET THIS DTC

DIAGNOSTIC TEST

1. **ACTIVE DTC**
    1. Ignition on, engine not running.
    2. With the scan tool, select view DTCs.

    Is the DTC Active at this time?

Yes

- **Diagnose the U0002-CAN C BUS OFF PERFORMANCE as the U0001-CAN C BUS CIRCUIT test. Refer to TIPM - DIAGNOSIS AND TESTING** and perform the U0001-CAN C Bus diagnostic procedure.

No

- **Refer to COMMUNICATION - DIAGNOSIS AND TESTING** and perform the Stored Lost Communication DTCs diagnostic procedure.

U0100-LOST COMMUNICATION WITH THE ECM/PCM

For a complete wiring diagram, **refer to appropriate SYSTEM WIRING DIAGRAMS article** .

WHEN MONITORED:

Ignition on time is greater than one second.

Battery voltage between 9 and 16 volts.

Engine run time greater than three seconds.

SET CONDITION:

Bus messages not received from the Powertrain Control Module (PCM) for approximately two to five seconds.

POSSIBLE CAUSES

Possible Causes
CAN BUS CIRCUITS OPEN OR SHORTED
DTCS RELATED TO BATTERY VOLTAGE, IGNITION, OR VIN MESSAGES
POWERTRAIN CONTROL MODULE POWER AND GROUND
TIPM NOT CONFIGURED CORRECTLY
POWERTRAIN CONTROL MODULE (PCM)
MODULE THAT SET THIS DTC

DIAGNOSTIC TEST

1. **ACTIVE DTC**
    1. Ignition on, engine not running.
    2. With the scan tool, select view DTCs.

    Is the DTC Active at this time?

    Yes

- **Refer to TIPM - DIAGNOSIS AND TESTING** and perform the U0100-Lost Communication with ECM/PCM diagnostic procedure.

No

- **Refer to COMMUNICATION - DIAGNOSIS AND TESTING** and perform the Stored Lost Communication DTCs diagnostic procedure.

U0121-LOST COMMUNICATION WITH ABS

For a complete wiring diagram, **refer to appropriate SYSTEM WIRING DIAGRAMS article** .

WHEN MONITORED:

Ignition on time is greater than one second.

Battery voltage between 9 and 16 volts.

Engine run time greater than three seconds.

SET CONDITION:

Bus messages not received from the Totally Integrated Power Module (TIPM) for approximately two to five seconds.

POSSIBLE CAUSES

Possible Causes
CAN BUS CIRCUITS OPEN OR SHORTED
ABS MODULE
DTCS RELATED TO BATTERY VOLTAGE, IGNITION, OR VIN MESSAGES
TOTALLY INTEGRATED POWER MODULE POWER AND GROUND
TIPM NOT CONFIGURED CORRECTLY
TOTALLY INTEGRATED POWER MODULE (TIPM)
MODULE THAT SET THIS DTC

DIAGNOSTIC TEST

1. **ACTIVE DTC**
    1. Ignition on, engine not running.
    2. With the scan tool, select view DTCs.

    Is the DTC Active at this time?

    Yes

- **Refer to TIPM - DIAGNOSIS AND TESTING** and perform the U0121-Lost Communication with Anti-Lock Brake Module diagnostic procedure.

No

- **Refer to COMMUNICATION - DIAGNOSIS AND TESTING** and perform the Stored Lost Communication DTCs diagnostic procedure.

U0141-LOST COMMUNICATION WITH IPM (FCM/TIPM)

For a complete wiring diagram, **refer to appropriate SYSTEM WIRING DIAGRAMS article** .

WHEN MONITORED:

Continuously when the ignition is on.

The battery voltage between 10.0 and 16.0 Volts.

Ignition Off Draw (IOD) fuse installed.

Totally Integrated Power Module (TIPM) is configured correctly.

SET CONDITION:

Bus messages not received from the Totally Integrated Power Module (TIPM) for approximately two to five seconds.

POSSIBLE CAUSES

Possible Causes
CAN BUS CIRCUITS OPEN OR SHORTED
DTCS RELATED TO BATTERY VOLTAGE, IGNITION, OR VIN MESSAGES
TOTALLY INTEGRATED POWER MODULE POWER AND GROUND
TIPM NOT CONFIGURED CORRECTLY
TOTALLY INTEGRATED POWER MODULE (TIPM)
MODULE THAT SET THIS DTC

DIAGNOSTIC TEST

1. **VERIFY DTC IS ACTIVE**

NOTE: Make sure the IOD fuse is installed and the battery is fully charged before proceeding.

1. Turn the ignition on.
2. With the scan tool, read active DTCs.

Is this DTC active?

Yes

- **Refer to TIPM - DIAGNOSIS AND TESTING** and perform the U0141-Lost Communication with IPM (FCM/TIPM) diagnostic procedure.

No

- **Refer to COMMUNICATION - DIAGNOSIS AND TESTING** and perform the Stored Lost Communication DTCs diagnostic procedure.

U1449-IMPLAUSIBLE ERS MESSAGE RECEIVED

For a complete wiring diagram, **refer to appropriate SYSTEM WIRING DIAGRAMS article** .

THEORY OF OPERATION

This message is used by the Powertrain Control Module (PCM) for Electronic Range Select (ERS) operation. The ERS switch is hard wired to the Cabin Compartment Node (CCN). The CCN then sends a CAN bus message to the PCM.

WHEN MONITORED:

Continuously with the ignition on.

SET CONDITION:

This DTC is set when the ERS message is not received or invalid.

POSSIBLE CAUSES

Possible Causes
TIPM CAN BUS DTCS PRESENT
CABIN COMPARTMENT NODE (CCN)
POWERTRAIN CONTROL MODULE (PCM)

Always perform the Pre-Diagnostic Troubleshooting procedure before proceeding. Refer to 66RFE PRE-DIAGNOSTIC TROUBLESHOOTING PROCEDURE.

DIAGNOSTIC TEST

1. **CHECK FOR TIPM CAN BUS DTCS**
    1. With the scan tool, read TIPM DTCs.

       Are there TIPM CAN BUS DTCs?

Yes

- Refer to **TIPM - DIAGNOSIS AND TESTING** and perform the appropriate diagnostic procedure.

No

- Go To 2.

2. **CHECK IF CCN DTCS ARE PRESENT**
   1. With the scan tool, read CCN DTCs.

      Are there CCN DTCs?

      Yes

      - Refer to **CCN - DIAGNOSIS AND TESTING** and perform the appropriate diagnostic procedure.
      - Perform the 66RFE TRANSMISSION VERIFICATION TEST. Refer to **66RFE TRANSMISSION VERIFICATION TEST**.

      No

      - Using the schematics as a guide, check the Powertrain Control Module (PCM) pins, terminals and connectors for corrosion, damage or terminal push out. Pay particular attention to all power and ground circuits. If no problems are found, replace and program the PCM in accordance with the Service Information.
      - Perform the 66RFE TRANSMISSION VERIFICATION TEST. Refer to **66RFE TRANSMISSION VERIFICATION TEST** **66RFE TRANSMISSION VERIFICATION TEST**.

STANDARD PROCEDURE

66RFE PRE-DIAGNOSTIC TROUBLESHOOTING PROCEDURE

For a complete wiring diagram, **refer to appropriate SYSTEM WIRING DIAGRAMS article** .

NOTE: **This vehicle uses a Cummins Control Module which controls the Transmission operation and the Diesel engine operation. In these procedures, the Cummins Control Module is referred to as the Powertrain Control Module (PCM).**

DIAGNOSTIC TEST

1.
   1. Perform the following before attempting any diagnostic procedures:
      1. With the scan tool check pinion factor (if equipped) for proper tire identification and program

or reprogram if necessary.

2. Check the transmission fluid level. If the fluid level is low, locate and repair any leaks and fill the transmission to the proper level. Refer to the appropriate Service Information for procedures. Many transmission symptoms are caused by low fluid level.
3. Check the battery. To avoid false diagnosis, testing should only be performed with the battery fully charged.
4. With the scan tool, read Engine (PCM) DTCs. If DTCs are present, refer to the **3.7L/4.7L/5.7L - DIAGNOSTIC CODE INDEX - NGC - 1500 & 2500** or **5.7L - DIAGNOSTIC CODE INDEX - 3500 CAB & CHASSIS** and perform to the appropriate diagnostic procedure(s) before proceeding.
5. With the scan tool, read Transmission (PCM) DTCs. Record all Stored, Active and Pending DTC information. Diagnose any Pending DTC as a matured DTC.
6. With the scan tool, read and record the Event Data. Use this data to identify the conditions in which the DTC set.

NOTE: **DTC Event Data may exist even if no DTCs are stored. DTC Event Data is only erased by a Battery Disconnect, reflash or a Quick Learn procedure. Clearing DTCs does NOT erase the DTC Event Data. Some DTCs require two "bad trips" before they are stored (and the MIL illuminates). The transmission may enter "limp-in" mode during the first "bad trip," but if the fault condition is not present after the vehicle is restarted, the pending DTC may be cleared without lighting the MIL. Nevertheless, the DTC Event Data for the pending DTC will remain stored and can still be retrieved with the scan tool. If the customer reports a "limp-in" event but no DTCs are present, check the DTC Event Data.**

7.
8. Performing a Battery Disconnect will clear all Event Data and reset all learned Transmission values to the default values which may temporarily result in erratic shift schedules.
9. With the scan tool, perform the Shift Lever Position Test. If the test fails with an error code, refer to the diagnostic procedure for P0706 Transmission Range Sensor Rationality. If the test fails without an error code, adjust the shift linkage in accordance with the Service Information.
10. For Gear Ratio Error DTCs or shift quality complaints, use the scan tool to view Clutch Volume Index (CVI) Monitor data. Read and record the CVI information.
11. Use the wiring diagram as a guide. Inspect the wiring and connectors related to this circuit. Repair as necessary.
12. Refer to the When Monitored and Set Conditions for this DTC. DTCs can set at ignition on, engine start up, after driving under specific conditions and after diagnostic monitors have been run.
13. Review Technical Service Bulletins (TSBs) for controller software update information. Some conditions can be corrected by upgrading the PCM controller software.

Were any repairs made that fixed the vehicle?

Yes

- Testing complete.
- Perform the 66RFE TRANSMISSION VERIFICATION TEST. Refer to **66RFE TRANSMISSION VERIFICATION TEST**.

No

- Refer to **3.7L/4.7L/5.7L - DIAGNOSTIC CODE INDEX - NGC - 1500 & 2500** or **5.7L - DIAGNOSTIC CODE INDEX - 3500 CAB & CHASSIS** and perform the appropriate diagnostic procedure.

66RFE TRANSMISSION VERIFICATION TEST

For a complete wiring diagram, **refer to appropriate SYSTEM WIRING DIAGRAMS article** .

DIAGNOSTIC TEST

1. Perform the following after completion of a diagnostic repair:
    1. With the scan tool check pinion factor (if equipped) for proper tire identification and program or reprogram if necessary.
    2. Connect the scan tool to the Data Link Connector (DLC).
    3. Reconnect any disconnected components.
    4. If the PCM has been replaced or updated (flashed) or the transmission has been repaired or replaced, using the scan tool perform a Quick Learn Procedure.
    5. With the scan tool, erase all Transmission and Engine DTCs.
    6. With the scan tool, perform a BATTERY DISCONNECT, this will clear the Event Data
    7. With the scan tool, display Transmission Temperature. Start and run the engine until the Transmission Temperature is HOT.
    8. Check the transmission fluid level and adjust if necessary. Refer to the Service Information for the Fluid Fill procedure.
    9. Road test the vehicle.
    10. Perform the following shifts from a standing start with a constant throttle opening of 20 to 25 degrees to the speeds of 97 km/h (60 mph); make fifteen to twenty 1 to 2, 2 to 3, 3 to 4, 4 to 5, 5 to 6 upshifts.
    11. Perform the following shifts with speeds below 40 km/h (25 mph); make five to eight wide open throttle kickdowns to 2nd gear. Allow at least 5 seconds each in 3rd and 4th gear between each kickdown.
    12. Check for DTCs during and after the road test.
    13. After performing the road test, if any shift concerns are noted, perform the drive learn procedure for those affected shifts.
    14. **Use the OBDII task manager to run Good Trip time in each gear, this will confirm the repair**

and to ensure that the DTC does not re-mature.

Were any DTCs set during the road test?

Yes

- Refer to **DIAGNOSIS AND TESTING** and perform the appropriate diagnostic procedure.

No

- Repair is complete.

DIAGNOSTIC CODE INDEX

DIAGNOSTIC CODE INDEX

DTC	Description
P0218	HIGH TEMPERATURE OPERATION ACTIVATED
P0562	BATTERY VOLTAGE LOW
P0602	CONTROL MODULE PROGRAMMING ERROR/NOT PROGRAMMED
P0604	INTERNAL CONTROL MODULE RAM
P0605	INTERNAL CONTROL MODULE ROM
P0613	INTERNAL TCM
P0706	TRANSMISSION RANGE SENSOR RATIONALITY
P0711	TRANSMISSION TEMPERATURE SENSOR PERFORMANCE
P0712	TRANSMISSION TEMPERATURE SENSOR LOW
P0713	TRANSMISSION TEMPERATURE SENSOR HIGH
P0714	TRANSMISSION TEMPERATURE SENSOR INTERMITTENT
P0716	INPUT SPEED SENSOR 1 CIRCUIT PERFORMANCE
P0721	OUTPUT SPEED SENSOR CIRCUIT PERFORMANCE
P0729	GEAR RATIO ERROR IN 6TH
P0731	GEAR RATIO ERROR IN 1ST
P0732	GEAR RATIO ERROR IN 2ND
P0733	GEAR RATIO ERROR IN 3RD
P0734	GEAR RATIO ERROR IN 4TH
P0735	GEAR RATIO ERROR IN 5TH
P0736	GEAR RATIO ERROR IN REVERSE
P0740	TCC OUT OF RANGE
P0750	LR SOLENOID CIRCUIT
P0755	2C SOLENOID CIRCUIT
P0765	UD SOLENOID CIRCUIT
P0770	4C SOLENOID CIRCUIT
P0841	LR PRESSURE SWITCH RATIONALITY
P0845	2C HYDRAULIC PRESSURE TEST
P0846	2C PRESSURE SWITCH RATIONALITY
P0868	LINE PRESSURE LOW
P0869	LINE PRESSURE HIGH
P0870	OD HYDRAULIC PRESSURE TEST
P0871	OD PRESSURE SWITCH RATIONALITY
P0875	UD HYDRAULIC PRESSURE TEST
P0876	UD PRESSURE SWITCH RATIONALITY

P0882	TCM POWER INPUT LOW
P0883	TCM POWER INPUT HIGH
P0884	POWER UP AT SPEED
P0890	SWITCHED BATTERY
P0933	HYDRAULIC PRESSURE SENSOR RANGE/PERFORMANCE
P0934	LINE PRESSURE SENSOR CIRCUIT LOW
P0935	LINE PRESSURE SENSOR CIRCUIT HIGH
P0944	LOSS OF HYDRAULIC PUMP PRIME
P0987	4C HYDRAULIC PRESSURE TEST
P0988	4C PRESSURE SWITCH RATIONALITY
P1684	BATTERY WAS DISCONNECTED
P1715	RESTRICTED MANUAL VALVE IN T3 RANGE
P1775	SOLENOID SWITCH VALVE LATCHED IN TCC POSITION
P1776	SOLENOID SWITCH VALVE LATCHED IN LR POSITION
P1794	SPEED SENSOR GROUND ERROR
P2700	INADEQUATE ELEMENT VOLUME LR
P2701	INADEQUATE ELEMENT VOLUME 2C
P2702	INADEQUATE ELEMENT VOLUME OD
P2703	INADEQUATE ELEMENT VOLUME UD
P2704	INADEQUATE ELEMENT VOLUME 4C
P2706	MS SOLENOID CIRCUIT
U0002	CAN C BUS OFF PERFORMANCE
U0100	LOST COMMUNICATION WITH THE ECM/PCM
U0121	LOST COMMUNICATION WITH ABS
U0141	LOST COMMUNICATION WITH IPM (FCM/TIPM)
U1449	IMPLAUSIBLE ERS MESSAGE RECEIVED

DIAGNOSIS AND TESTING

P0218-HIGH TEMPERATURE OPERATION ACTIVATED

For a complete wiring diagram, **refer to appropriate SYSTEM WIRING DIAGRAMS article** .

THEORY OF OPERATION

The DTC is intended as an informational DTC to aid the technician in determining the root cause of a customer driveability issue. The DTC is also intended to alert the technician to determine if a cooling system malfunction has occurred or if an additional transmission air to oil cooler is needed to support the customers driving behavior.

WHEN MONITORED:

Whenever the engine is running.

SET CONDITION:

Immediately after a Overheat shift schedule is activated when the Transmission temperature exceeds 116° C or 240° F.

POSSIBLE CAUSES

Possible Causes
HIGH TEMPERATURE OPERATION ACTIVATED
TORQUE CONVERTER CLUTCH SLIPPING / NOT ACTIVATING
OPERATING VEHICLE WITH TRANSMISSION IN LIMP-IN MODE FOR AN EXTENDED PERIOD OF TIME
EXCESSIVE TIME IDLING IN GEAR

Always perform the Pre-Diagnostic Troubleshooting procedure before proceeding. Refer to STANDARD PROCEDURE.

DIAGNOSTIC TEST

1. **HIGH TEMPERATURE OPERATION**
    1. This DTC is an informational DTC designed to aid the Technician in diagnosing shift quality complaints.
    2. This DTC indicates that the transmission has been operating in the "Overheat" shift schedule which may generate a customer complaint.
    3. The customer driving patterns may indicate the need for an additional transmission oil cooler.
    4. Verify proper Engine cooling system operation which would affect proper transmission operation.
    5. Verify proper torque converter clutch operation.
    6. With the scan tool, check the Event Data to help identify the conditions in which the DTC was set.

    Repair

    - Repair the cause of transmission overheating. Refer to **STANDARD PROCEDURE** for the proper repair procedure. Make sure to check for any Service Bulletins pertaining to this problem. Refer to **DIAGNOSIS AND TESTING** .
    - Refer to **STANDARD PROCEDURE** and perform the appropriate TRANSMISSION VERIFICATION TEST.

P0562-BATTERY VOLTAGE LOW

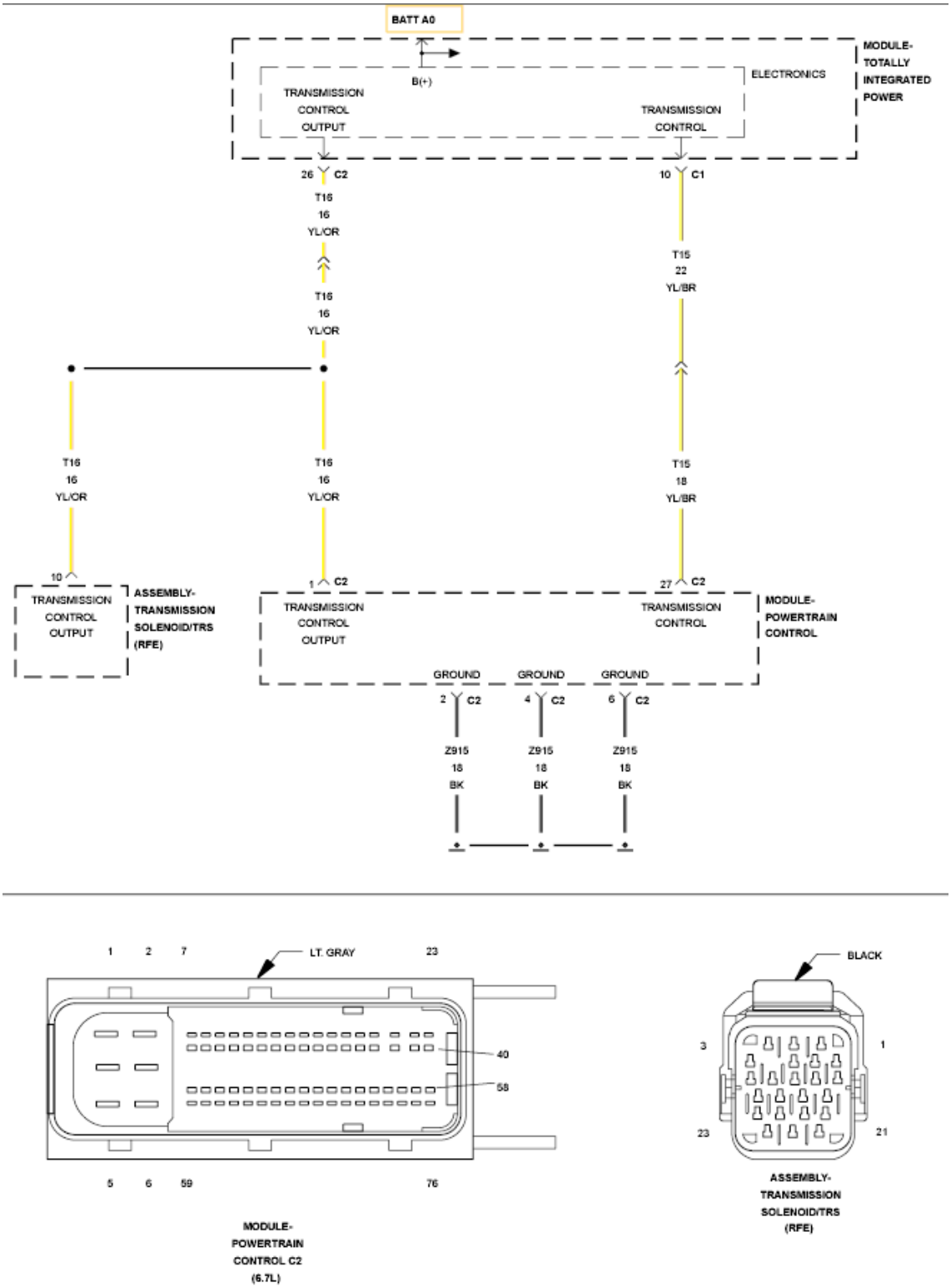

Fig. 1: PCM Circuit Wiring Diagram
Courtesy of CHRYSLER GROUP, LLC

For a complete wiring diagram, **refer to appropriate SYSTEM WIRING DIAGRAMS article** .

THEORY OF OPERATION

Friction element distress could result from an insufficient supply voltage to properly control the solenoids. To prevent this possibility, the battery voltage is monitored and the system is placed in logical limp-in if the battery voltage drops below the limit.

WHEN MONITORED:

With the engine running and the (Powertrain Control Module (PCM) has requested the Totally Integrated Power Module (TIPM) to activate the Transmission Control Output circuit.

SET CONDITION:

If the battery voltage of the Transmission Output circuit to the PCM is less than 10.0 volts for the period of 15 seconds. Note: P0562 generally indicates a gradually falling battery voltage or a resistive connection(s) to the PCM. The DTC will also set if the battery voltage sensed at the PCM is less than 6.5 volts for 200ms or where the Transmission Output circuits are less than 7.2 volts for 200ms.

POSSIBLE CAUSES

Possible Causes
RELATED CHARGING SYSTEM DTCS
(Z915) GROUND CIRCUITS OPEN OR HIGH RESISTANCE
(T16) TRANSMISSION CONTROL OUTPUT CIRCUIT OPEN OR HIGH RESISTANCE
PCM/TCM RELAY
TOTALLY INTEGRATED POWER MODULE (TIPM)
POWERTRAIN CONTROL MODULE (PCM)

Always perform the Pre-Diagnostic Troubleshooting procedure before proceeding. Refer to STANDARD PROCEDURE.

DIAGNOSTIC TEST

1. **RELATED CHARGING SYSTEM DTCS**
    1. With the scan tool, read the Powertrain Control Module (PCM) DTCs.

       Are there any related Charging System DTCs also present?

       Yes

       - Refer to **DIAGNOSTIC CODE INDEX** and perform the appropriate charging related DTC diagnostic procedure.
       - Refer to **STANDARD PROCEDURE** and perform the 68RFE TRANSMISSION VERIFICATION TEST.

       No

- Go To 2.

2. **CHECK FOR TIPM DTCS**

NOTE: Generator, battery, and charging system must be fully functional before performing this test.

1. With the scan tool, read TIPM DTCs.

   Are there any TIPM TCM Power Control circuit DTCs present.

   Yes

   - Refer to **DIAGNOSIS AND TESTING** and perform the appropriate diagnostic procedure.

   No

   - Go To 3.

3. **CHECK IF THE DTC IS CURRENT**
   1. With the scan tool, read DTCs.

      Is the status Active or is the Starts Since Set counter 0 for this DTC?

      Yes

      - Go To 4.

      No

      - Go To 7.

4. **CHECKING (Z915) GROUND CIRCUITS**

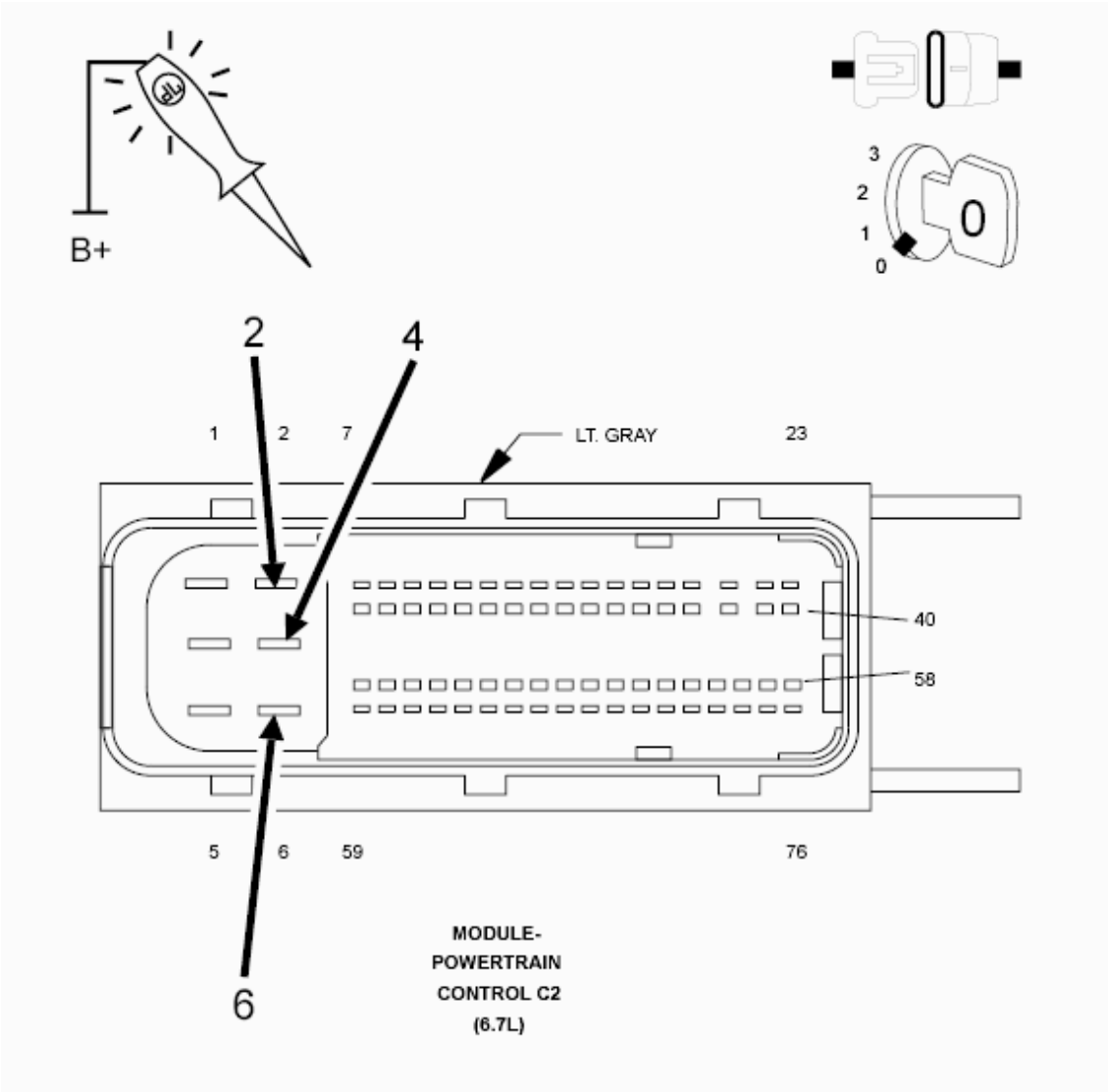

Fig. 2: Checking PCM Ground Circuits
Courtesy of CHRYSLER GROUP, LLC

1. Turn the ignition off to the lock position.
2. Disconnect the PCM C2 harness connector.

NOTE: Check connectors - Clean/repair as necessary.

3. Using a 12-volt test light connected to 12-volts, check the (Z915) Ground circuits at the appropriate terminals of the PCM C2 harness connector.

NOTE: The test light must illuminate brightly. Compare the brightness to that of a direct connection to the battery.

Does the test light illuminate brightly for all of the Ground circuits?

Yes

- Go To 5.

No

- Repair the (Z915) Ground circuit(s) for an open or high resistance.
- Refer to **STANDARD PROCEDURE** and perform the 68RFE TRANSMISSION VERIFICATION TEST.

5. **(T16) TRANSMISSION CONTROL OUTPUT CIRCUIT OPEN TO PCM**

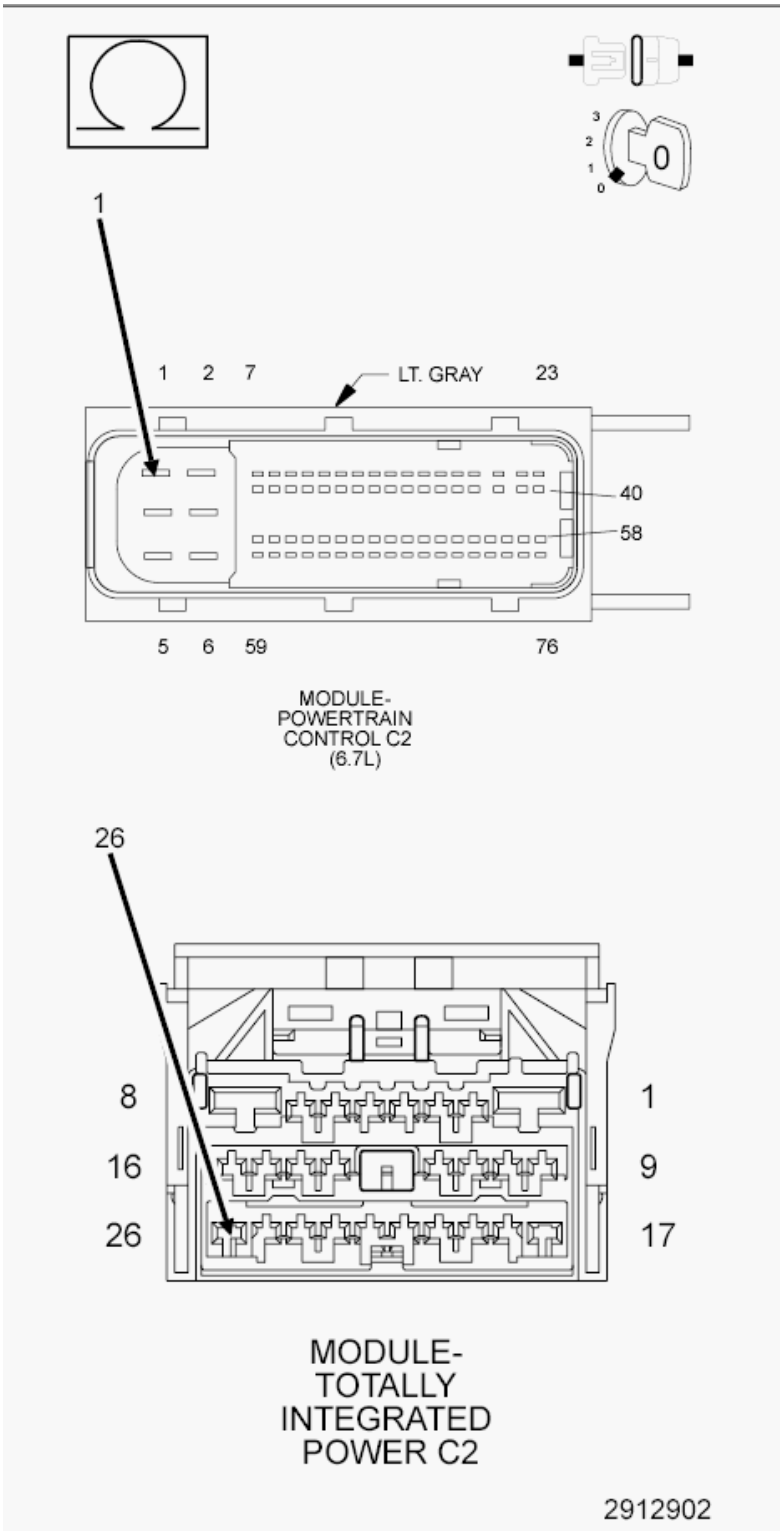

Fig. 3: Checking Transmission Control Output Circuit For Open
Courtesy of CHRYSLER GROUP, LLC

1. Turn the ignition off to the lock position.
2. Disconnect the TIPM C2 harness connector.

3. Disconnect the PCM C2 harness connector.
4. Measure the resistance of the (T16) Transmission Control Output circuit between the TIPM C2 harness connector and the PCM C2 harness connector.

   Is the resistance below 5.0 Ohms?

   Yes

   - Go To 6.

   No

   - Repair the (T16) Transmission Control Output circuit for an open.
   - Refer to **STANDARD PROCEDURE** and perform the 68RFE TRANSMISSION VERIFICATION TEST.

6. **(T16) TRANSMISSION CONTROL OUTPUT CIRCUIT OPEN TO THE TRANSMISSION SOLENOID ASSEMBLY**

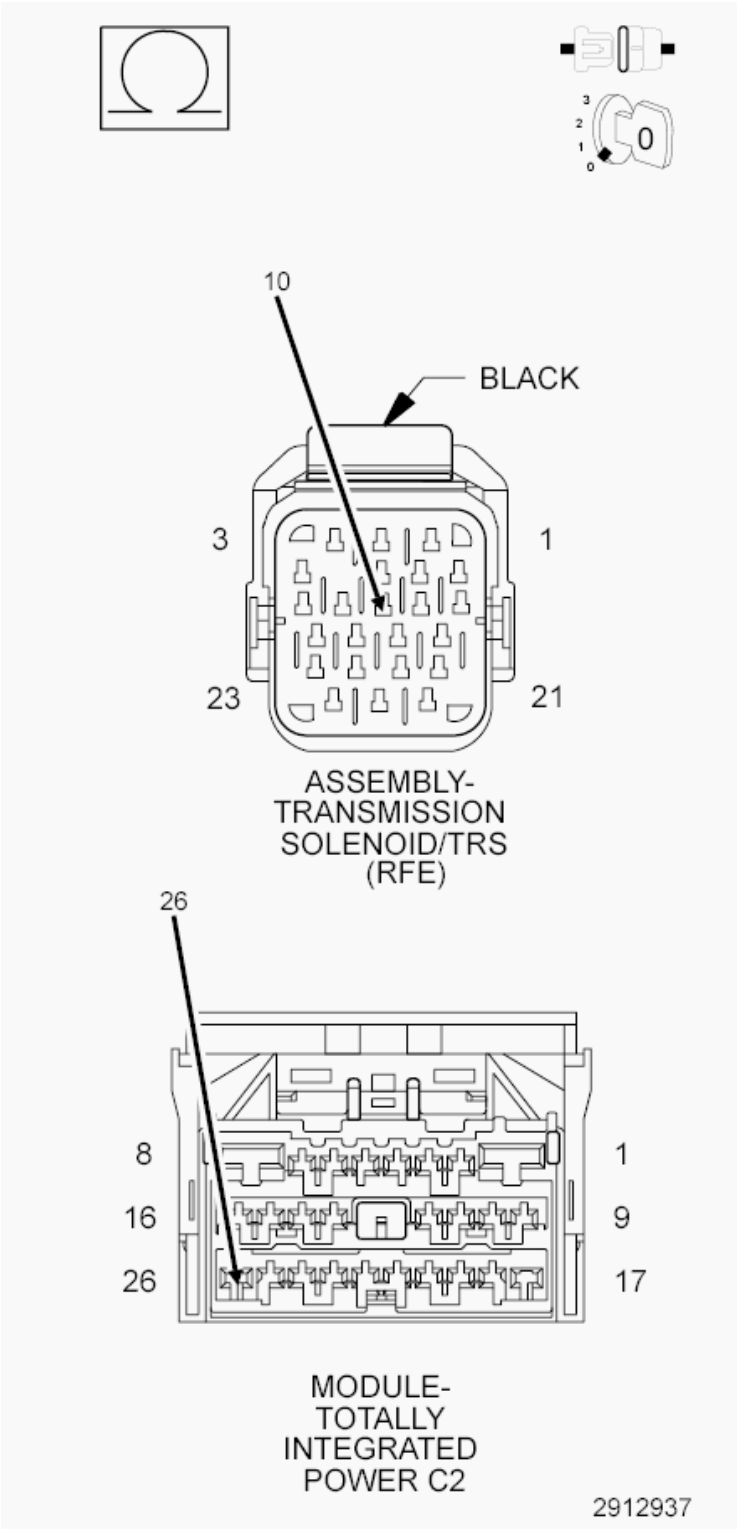

Fig. 4: Checking Transmission Control Output Circuit For Open To Transmission Solenoid Assembly
Courtesy of CHRYSLER GROUP, LLC

1. Disconnect the Transmission Solenoid/TRS Assembly harness connector.

2. Measure the resistance of the (T16) Transmission Control Output circuit between the TIPM C2 harness connector and the Transmission Solenoid/TRS harness connector.

   Is the resistance below 5.0 Ohms?

   Yes

   - Using the schematics as a guide, check the Powertrain Control Module (PCM) terminals for corrosion, damage, or terminal push out. Pay particular attention to all power and ground circuits. If no problems are found, replace and program the PCM in accordance with the Service Information. With the scan tool, perform Quick Learn.
   - Refer to **STANDARD PROCEDURE** and perform the 68RFE TRANSMISSION VERIFICATION TEST.

   No

   - Repair the (T16) Transmission Control Output circuit for an open.
   - Refer to **STANDARD PROCEDURE** and perform the 68RFE TRANSMISSION VERIFICATION TEST.

7. **CHECK THE WIRING AND CONNECTORS**
   1. The conditions necessary to set this DTC are not present at this time.
   2. Using the schematics as a guide, inspect the wiring and connectors specific to this circuit.
   3. Wiggle the wires while checking for shorted and open circuits.
   4. With the scan tool, check the Event Data to help identify the conditions in which the DTC was set.

      Where there any problems found?

      Yes

      - Repair as necessary.
      - Refer to **STANDARD PROCEDURE** and perform the 68RFE TRANSMISSION VERIFICATION TEST.

      No

      - Test Complete.

P0602-CONTROL MODULE PROGRAMMING ERROR/NOT PROGRAMMED

For a complete wiring diagram, **refer to appropriate SYSTEM WIRING DIAGRAMS article** .

THEORY OF OPERATION

The controller is programmed during manufacturing with generic software to facilitate testing. However, generic software does not have the proper calibrations to control a transmission in a vehicle. The check for

generic software is made at power-up. If generic software is found, the MIL will light immediately and the MIL will stay on even if the fault is cleared, until the proper software is installed. Note: Transmission will be placed in limp-in mode.

WHEN MONITORED:

Check for generic software is made at power-up

SET CONDITION:

If generic software is found, the MIL will light immediately. This DTC is designed to inform the technician that the controller still has generic software installed.

POSSIBLE CAUSES

Possible Causes
PCM - PROGRAMMING ERROR

Always perform the Pre-Diagnostic Troubleshooting procedure before proceeding. Refer to STANDARD PROCEDURE.

DIAGNOSTIC TEST

1. **CONTROL MODULE PROGRAMMING ERROR**

   NOTE: Controller is programmed with generic software and will not allow the correct vehicle Powertrain management.

   1. With the scan tool.
   2. Record the vehicles controller part number.
   3. Select Use Controller Part Number under the Flash Tab.
   4. Flash the controller with the correct software.

      Verify the controller flashed successfully.

      Test Complete

      - Refer to **STANDARD PROCEDURE** and perform the 68RFE TRANSMISSION VERIFICATION TEST.

P0604-INTERNAL CONTROL MODULE RAM

For a complete wiring diagram, **refer to appropriate SYSTEM WIRING DIAGRAMS article** .

THEORY OF OPERATION

After the controller is reset (ignition turned to the RUN position), the microprocessor checks the integrity of each RAM location by writing to it and reading back from it. The read value should be same as value written.

WHEN MONITORED:

One time after the controller is reset (ignition turned to the RUN position).

SET CONDITION:

Whenever the Powertrain Control Module (PCM) detects an internal controller problem.

POSSIBLE CAUSES

Possible Causes
POWER OR GROUND CIRCUIT POWERTRAIN CONTROL MODULE (PCM)

Always perform the Pre-Diagnostic Troubleshooting procedure before proceeding. Refer to STANDARD PROCEDURE.

DIAGNOSTIC TEST

1. **CHECK WIRING AND CONNECTORS FOR INTERMITTENT OPERATION**
    1. Using the schematics as a guide, check the Powertrain Control Module (PCM) terminals for corrosion, damage, or terminal push out. Pay particular attention to all power and ground circuits.
    2. Wiggle the wires while checking for shorted and open circuits.
    3. Check for any Service Bulletins that may apply.

    Were there any problems found?

    Yes

    - Repair the power and/or ground circuits to the PCM as necessary.
    - Refer to **STANDARD PROCEDURE** and perform the 68RFE TRANSMISSION VERIFICATION TEST.

    No

    - Replace the PCM in accordance with the Service Information. With the scan tool, perform Quick Learn.
    - Refer to **STANDARD PROCEDURE** and perform the 68RFE TRANSMISSION VERIFICATION TEST.

P0605-INTERNAL CONTROL MODULE ROM

For a complete wiring diagram, **refer to appropriate SYSTEM WIRING DIAGRAMS article** .

THEORY OF OPERATION

After the controller is reset (ignition turned to the RUN position) the microprocessor checks the integrity of the program memory (ROM). A checksum is calculated by adding all used bytes in the program memory. The sum should be the same as a known constant stored in the program memory.

WHEN MONITORED:

One time after the controller is reset (ignition turned to the RUN position).

SET CONDITION:

Whenever the Powertrain Control Module (PCM) detects an internal controller problem.

POSSIBLE CAUSES

Possible Causes
POWER OR GROUND CIRCUIT POWERTRAIN CONTROL MODULE (PCM)

Always perform the Pre-Diagnostic Troubleshooting procedure before proceeding. Refer to STANDARD PROCEDURE.

DIAGNOSTIC TEST

1. **CHECK WIRING AND CONNECTORS FOR INTERMITTENT OPERATION**
    1. Using the schematics as a guide, check the Powertrain Control Module (PCM) terminals for corrosion, damage, or terminal push out. Pay particular attention to all power and ground circuits.
    2. Wiggle the wires while checking for shorted and open circuits.
    3. Check for any Service Bulletins that may apply.

    Were there any problems found?

    Yes

    - Repair the power and/or ground circuits as necessary.
    - Refer to **STANDARD PROCEDURE** and perform the 68RFE TRANSMISSION VERIFICATION TEST.

    No

    - Replace the PCM in accordance with the Service Information. With the scan tool, perform Quick Learn.
    - Refer to **STANDARD PROCEDURE** and perform the 68RFE TRANSMISSION VERIFICATION TEST.

P0613-INTERNAL TCM

For a complete wiring diagram, **refer to appropriate SYSTEM WIRING DIAGRAMS article** .

THEORY OF OPERATION

The internal Watchdog (WD) is a separate hardware circuit that continuously monitors the microprocessor. To insure the proper operation of the Transmission controller the watchdog must receive a signal from the microprocessor within a specific time window (14 msec ± 1 msec) to prevent a system shutdown after a short delay (570 msec). The microprocessor periodically tests the WD's ability to provide this shutdown function using a three phase test;

1) Send the signal too late > 15 msec

2) Send the signal too early < 13 msec

3) Delay test < 590 msec

If the watchdog input signal arrives too early or too late, the Watchdog Fault line will go low and the watchdog delay will start to time out. The delay will be reset by the correct timing of watchdog signal sent during subsequent operations.

The Delay Test checks the delay time out. The Delay Monitor line is pulled low, which forces the delay to start timing out. At the end of the delay time the Transmission Relay will be turned off. The delay test, upon detection of the relay turning off, will immediately turn the relay back on before shutdown can occur.

WHEN MONITORED:

1) One time after the controller is reset (ignition turned to the RUN position) and every 60 seconds thereafter. The Delay Test is executed after a reset only.

2) Two seconds after an invalid test.

SET CONDITION:

If either of the following conditions occur three times:

1) The watchdog fault line remains high after the period has elapsed for the too early - too late watchdog test.

2) The Transmission Control Output remains on after the watchdog delay expired.

POSSIBLE CAUSES

Possible Causes
POWER OR GROUND CIRCUIT
POWERTRAIN CONTROL MODULE (PCM)

Always perform the Pre-Diagnostic Troubleshooting procedure before proceeding. Refer to STANDARD PROCEDURE.

DIAGNOSTIC TEST

1. **CHECK THE WIRING AND CONNECTORS**
    1. Using the schematics as a guide, check the Powertrain Control Module (PCM) terminals for corrosion, damage, or terminal push out. Pay particular attention to all power and ground circuits.
    2. Wiggle the wires while checking for shorted and open circuits.
    3. Check for any Service Bulletins that may apply.

    Were there any problems found?

    Yes

    - Repair the power and/or ground circuits as necessary.
    - Refer to **STANDARD PROCEDURE** and perform the 68RFE TRANSMISSION VERIFICATION TEST.

    No

    - Replace the PCM in accordance with the Service Information. With the scan tool, perform Quick Learn.
    - Refer to **STANDARD PROCEDURE** and perform the 68RFE TRANSMISSION VERIFICATION TEST.

P0706-TRANSMISSION RANGE SENSOR RATIONALITY

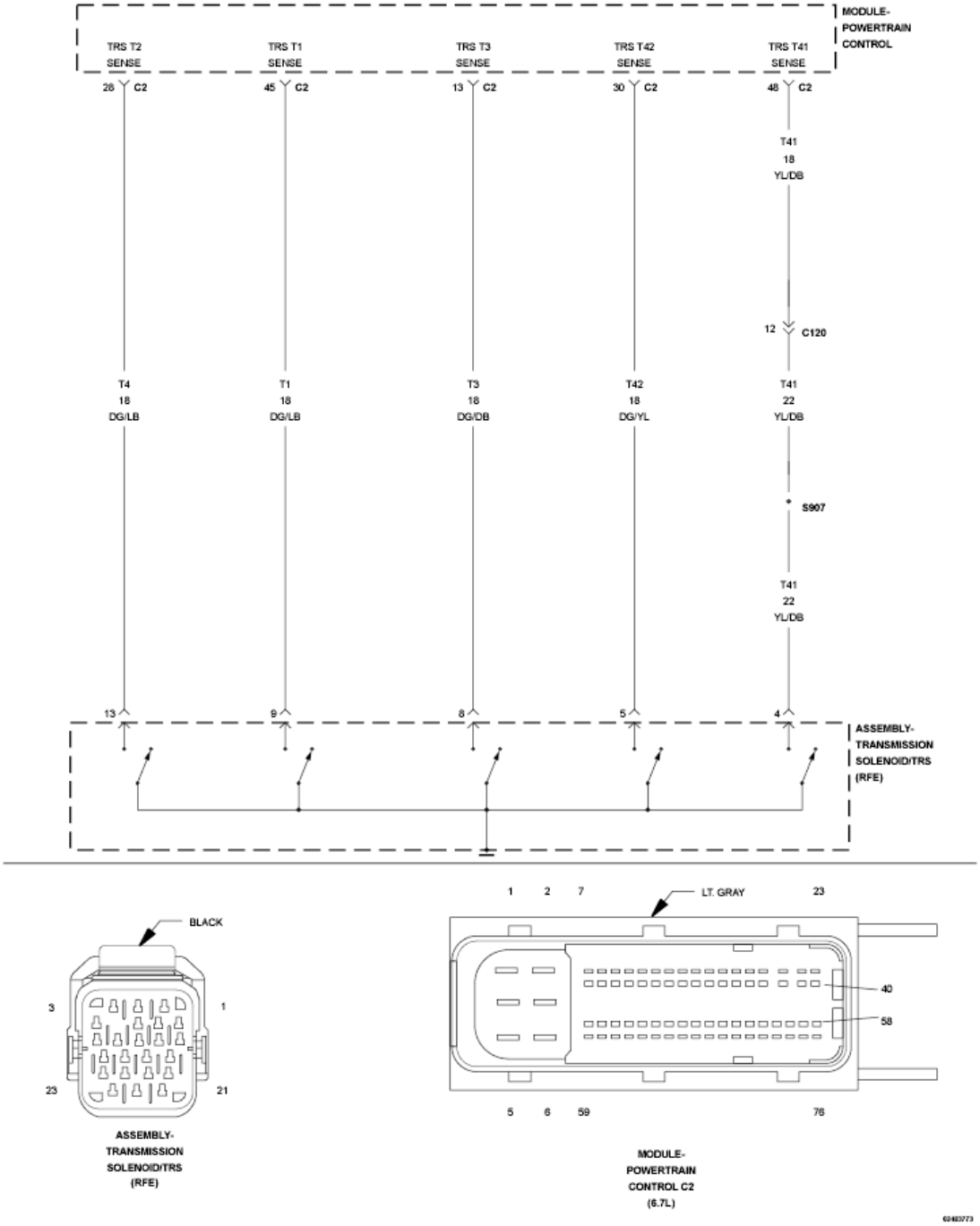

Fig. 5: Transmission Range Sensor Circuit Wiring Diagram
Courtesy of CHRYSLER GROUP, LLC

For a complete wiring diagram, **refer to appropriate SYSTEM WIRING DIAGRAMS article** .

THEORY OF OPERATION

The T41 (C1), T42 (C2), T3 (C3), T1 (C4), T2 (C5) Signal circuits communicate the shift lever position to the Transmission Control System. Each circuit is terminated at the transmission by a switch (TRS). Each switch can

be either open or closed, depending on the shift lever position. The PCM can decode this information and determine the shift lever position.

Each shift lever position has it own unique combination of closed and open switches. This is called a PRNDL code. There are five switches, therefore: there are many possible combinations of open and closed switches (codes). There are eight valid codes: two for neutral, one for each other gear position (3), and three temporary (transition zone) codes. The remainder of the codes should never occur, these are called invalid codes.

WHEN MONITORED:

Continuously with the ignition on.

SET CONDITION:

The DTC will set if the controller detects an invalid PRNDL code which lasts for more than 0.042 of a second.

POSSIBLE CAUSES

Possible Causes
TRS SIGNAL CIRCUIT OPEN
TRS SIGNAL CIRCUIT SHORTED TO GROUND
TRS SIGNAL CIRCUIT SHORTED TO VOLTAGE
METAL DEBRIS IN OIL PAN
TRANSMISSION RANGE SENSOR
POWERTRAIN CONTROL MODULE (PCM)

Always perform the Pre-Diagnostic Troubleshooting procedure before proceeding. Refer to STANDARD PROCEDURE.

SHIFT LEVER ERROR CODES

ERROR CODE	SWITCH STUCK	POSITION
1	T41 (C1)	OPEN
2	T41 (C1)	CLOSED
3	T42 (C2)	OPEN
4	T42 (C2)	CLOSED
5	T3 (C3)	OPEN
6	T3 (C3)	CLOSED
7	T1 (C4)	OPEN
8	T1 (C4)	CLOSED
9	T2 (C5)	OPEN
10	T2 (C5)	CLOSED
11	TOW/HAUL	OPEN
12	TOW/HAUL	CLOSED

TRS SWITCH STATES

	PARK	TMP 1	REV	TMP 2	N1	N2	TMP 3	D
T41 (C1)	CLOSED	OPEN	OPEN	OPEN	CLOSED	CLOSED	OPEN	OPEN
T42 (C2)	CLOSED	CLOSED	CLOSED	CLOSED	CLOSED	CLOSED	CLOSED	OPEN
T3 (C3)	OPEN	OPEN	OPEN	CLOSED	CLOSED	CLOSED	CLOSED	CLOSED
T1 (C4)	OPEN	OPEN	OPEN	OPEN	OPEN	CLOSED	CLOSED	CLOSED
T2 (C5)	CLOSED	CLOSED	OPEN	OPEN	OPEN	OPEN	OPEN	OPEN

DIAGNOSTIC TEST

1. **CHECK TO SEE IF P0706 DTC IS CURRENT**
   1. With the scan tool, perform the Shift Lever Position Test.

      Select the test outcome from the following:

      Test passes:

      - Go To 6.

      Test fails with Error Code:

      - Go To 2.

      Test fails without Error Code:

      - Refer to **STANDARD PROCEDURE** and perform the Gearshift Adjustment Procedure
      - Refer to **STANDARD PROCEDURE** and perform the 68RFE TRANSMISSION VERIFICATION TEST.
2. **CHECK THE TRANSMISSION SOLENOID/TRS ASSEMBLY**
   1. Turn the ignition off to the lock position.
   2. Remove the Ignition Switch Feed fuse from the TIPM.

      CAUTION: Removal of the Ignition Switch Feed fuse from the TIPM will prevent the vehicle from being started in gear.

      WARNING: The Ignition Switch Feed fuse must be removed from the TIPM. Failure to do so can result in possible serious or fatal injury.

   3. Install Transmission Simulator (special tool #8333A, Simulator, Transmission).
   4. Ignition on, engine not running.
   5. With the scan tool, perform the Shift Lever Position Test.
   6. When the scan tool instructs you to put the Gear Selector in a particular position, you must do so using the selector switch on the Transmission Simulator.

7. The LED for the gear position in question must be illuminated on the Transmission Simulator prior to pressing "ENTER" on the scan tool.

NOTE: **When the scan tool requests the O/D off button be depressed, you must use the TOW/HAUL button in the vehicle or you will fail the Shift Lever Position Test with an error code 11 or OD-TOW/HALL STUCK OPEN.**

NOTE: **If the Shift Lever Position test fails, make sure to note the identification of the TRS Signal circuit for future reference.**

Did the Shift Lever Position test pass?

Yes

- Remove the Oil Pan and Main Valve Body Assembly in accordance with the Service Information. Check for metal debris on top of the Solenoid/TRS Assembly and the manual valve code plate. If debris is present, determine the cause of the debris and repair the transmission as necessary. If no problems are found, replace the Transmission Solenoid/TRS Assembly in accordance with the Service Information.
- Refer to **STANDARD PROCEDURE** and perform the 68RFE TRANSMISSION VERIFICATION TEST.

No

- Go To 3.

3. **TRS SIGNAL CIRCUIT OPEN**
   1. Turn the ignition off to the lock position.
   2. Disconnect the Transmission Simulator, Miller tool # (special tool #8333A, Simulator, Transmission).
   3. Disconnect the PCM C2 harness connector.
   4. Measure the resistance of the identified (T1, T2, T3, T41, or T42) TRS Signal circuit, from the Transmission Solenoid/TRS Assembly harness connector to the appropriate terminal of the PCM C2 harness connector.

   Is the resistance above 5.0 Ohms?

   Yes

   - Repair the identified (T41, T42, T3, T1, or T2 (C1-C5) TRS Signal circuit for an open.
   - Refer to **STANDARD PROCEDURE** and perform the 68RFE TRANSMISSION VERIFICATION TEST.

   No

- Go To 4.

4. **TRS SIGNAL CIRCUIT SHORTED TO GROUND**
    1. Measure the resistance between ground and the identified (T41, T42, T3, T1, or T2 (C1-C5) TRS Signal circuit.

       Is the resistance below 5.0 Ohms?

       Yes

       - Repair the identified (T41, T42, T3, T1, or T2 (C1-C5) TRS Signal circuit for a short to ground.
       - Refer to **STANDARD PROCEDURE** and perform the 68RFE TRANSMISSION VERIFICATION TEST.

       No

       - Go To 5.

5. **TRS SIGNAL CIRCUIT SHORTED TO OTHER CIRCUITS**
    1. Measure the resistance between the identified (T1, T2, T3, T41, or T42) TRS Signal circuit and all other circuits in the Transmission Solenoid/TRS Assembly harness connector.

       Is the resistance below 100k Ohms between the identified (T41, T42, T3, T1, or T2 (C1-C5) TRS Signal circuit and any other circuit(s) in the Transmission Solenoid/TRS Assembly harness connector?

       Yes

       - Repair the identified (T41, T42, T3, T1, or T2 (C1-C5) TRS Signal circuit for a short to other circuit(s).
       - Refer to **STANDARD PROCEDURE** and perform the 68RFE TRANSMISSION VERIFICATION TEST.

       No

       - Using the schematics as a guide, check the Powertrain Control Module (PCM) terminals for corrosion, damage, or terminal push out. Pay particular attention to all power and ground circuits. If no problems are found, replace the PCM in accordance with the Service Information. With the scan tool, perform Quick Learn.
       - Refer to **STANDARD PROCEDURE** and perform the 68RFE TRANSMISSION VERIFICATION TEST.

6. **CHECK THE WIRING AND CONNECTORS**
    1. The conditions necessary to set the DTC are not present at this time.
    2. Using the schematics as a guide, inspect the wiring and connectors specific to this circuit.
    3. Wiggle the wiring and connectors while checking for shorted and open circuits.

4. With the scan tool, check the Event Data to help identify the conditions in which the DTC was set.

   Were there any problems found?

   Yes

   - Repair as necessary.
   - Refer to **STANDARD PROCEDURE** and perform the 68RFE TRANSMISSION VERIFICATION TEST.

   No

   - Test Complete.

P0711-TRANSMISSION TEMPERATURE SENSOR PERFORMANCE

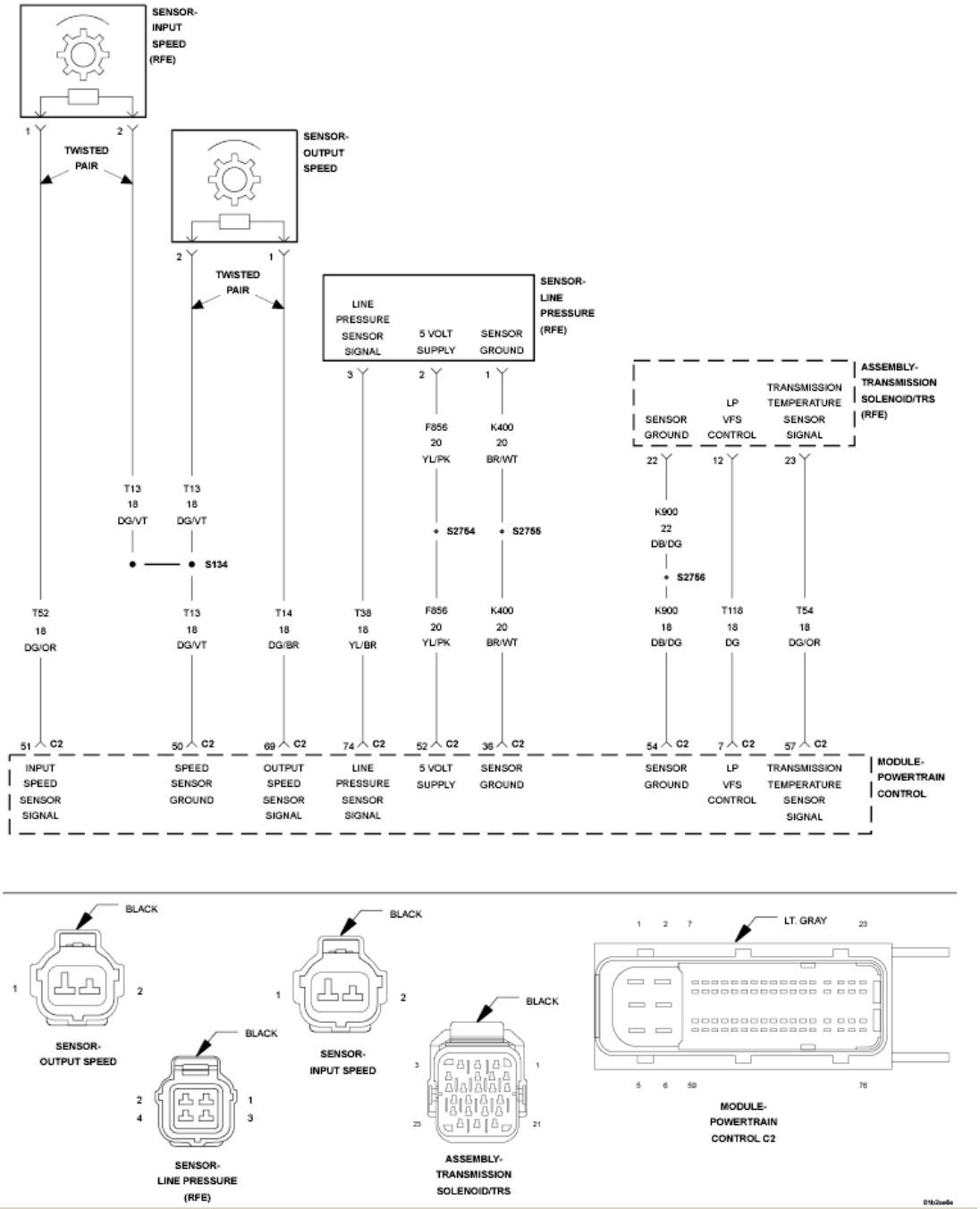

Fig. 6: Input/Output Speed Sensor, Line Pressure Sensor & Transmission Temperature Sensor Circuit Wiring Diagram
Courtesy of CHRYSLER GROUP, LLC

For a complete wiring diagram, **refer to appropriate SYSTEM WIRING DIAGRAMS article** .

THEORY OF OPERATION

The Transmission Temperature Sensor is a variable resistor that changes with temperature, or otherwise known as a thermistor. The temperature of the transmission fluid can affect a variety of electronically controlled

transmission operations such as shift quality, torque converter clutch engagement, and when and/or if certain OBDII or system self-diagnostic test are performed. The Powertrain Control Module (PCM) substitutes a calculated transmission temperature value if a fault is detected in the Transmission Temperature Sensor circuit.

WHEN MONITORED:

Continuously with the ignition on and engine running.

SET CONDITION:

This DTC will set when the desired transmission temperature does not reach a normal operating temperature within a given time frame. Time is variable due to ambient temperature. Approximate times are starting temperature to warm up time: (-40° F / -40° C - 35 min) (-20° F / -28° C - 25 min) (20° F / -6.6° C - 20 min) (60° F / 15.5 ° C - 10 min)

POSSIBLE CAUSES

Possible Causes
RELATED DTCS PRESENT
TRANSMISSION TEMPERATURE SENSOR
POWERTRAIN CONTROL MODULE (PCM)

Always perform the Pre-Diagnostic Troubleshooting procedure before proceeding. Refer to STANDARD PROCEDURE.

DIAGNOSTIC TEST

1. **DETERMINE IF RELATED DTCS ARE PRESENT**
    1. With the scan tool, read DTCs.

       Are there any other Transmission Temperature Sensor DTCs present?

       Yes

       - Refer to **DIAGNOSTIC CODE INDEX** and perform the appropriate diagnostic procedure.

       No

       - Go To 2.
2. **CHECK IF THE DTC IS CURRENT**
    1. With the scan tool, read DTCs.

       Is the status Active or is the Starts Since Set counter 2 or less for this DTC?

       Yes

- Go To 3.

No

- Go To 4.

3. **TRANSMISSION TEMPERATURE SENSOR**
   1. Turn the ignition off to the lock position.
   2. Remove the Ignition Switch Feed fuse from the TIPM.

      CAUTION: Removal of the Ignition Switch Feed fuse from the TIPM will prevent the vehicle from being started in gear.

      WARNING: The Ignition Switch Feed fuse must be removed from the TIPM. Failure to do so can result in possible serious or fatal injury.

   3. Install the Transmission Simulator (special tool #8333A, Simulator, Transmission).
   4. Ignition on, engine not running.
   5. With the Transmission Simulator, turn the Input/Output switch to OFF.
   6. With the scan tool, monitor the TRANS TEMP VOLTS while turning the Thermistor Voltage switch to all three positions on the Transmission Simulator.
   7. Compare the scan tool readings to the voltage readings listed on the Transmission Simulator.

      Do the readings on the scan tool match the Transmission Simulator readings ± 0.2 of a volt?

      Yes

      - Replace Transmission Solenoid/TRS Assembly in accordance with the Service Information.
      - Refer to **STANDARD PROCEDURE** and perform the 68RFE TRANSMISSION VERIFICATION TEST.

      No

      - Using the schematics as a guide, check the Powertrain Control Module (PCM) terminals for corrosion, damage, or terminal push out. Pay particular attention to all power and ground circuits. If no problems are found, replace and program the PCM in accordance with the Service Information. With the scan tool, perform Quick Learn.
      - Refer to **STANDARD PROCEDURE** and perform the 68RFE TRANSMISSION VERIFICATION TEST.

4. **CHECK THE WIRING AND CONNECTORS**
   1. The conditions necessary to set this DTC are not present at this time.
   2. Using the schematics as a guide, inspect the wiring and connectors specific to this circuit.
   3. Wiggle the wires while checking for shorted and open circuits.

4. With the scan tool, check the Event Data to help identify the conditions in which the DTC was set.

   Were there any problems found?

   Yes

   - Repair as necessary.
   - Refer to **STANDARD PROCEDURE** and perform the 68RFE TRANSMISSION VERIFICATION TEST.

   No

   - Test Complete.

P0712-TRANSMISSION TEMPERATURE SENSOR LOW

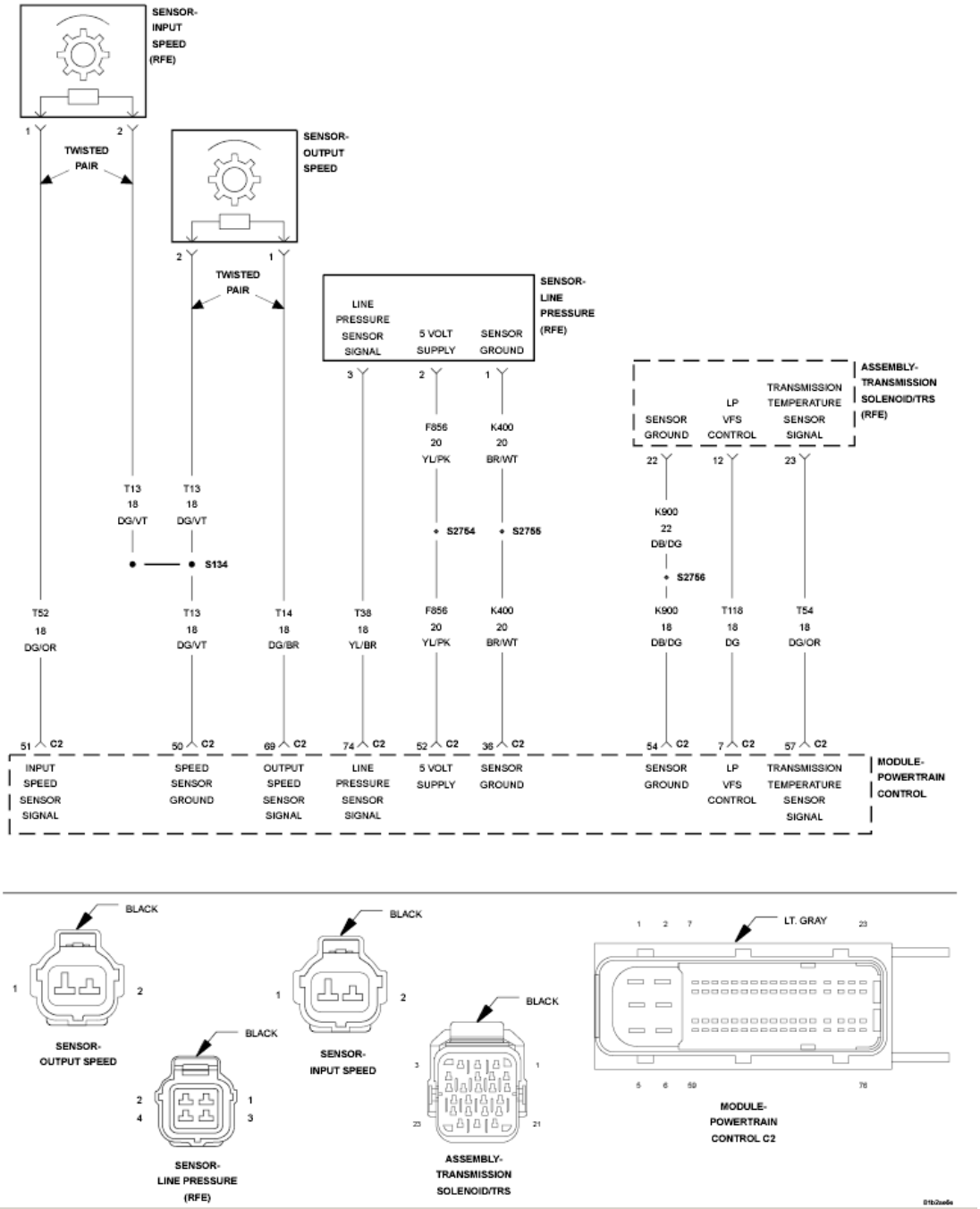

Fig. 7: Input/Output Speed Sensor, Line Pressure Sensor & Transmission Temperature Sensor Circuit Wiring Diagram
Courtesy of CHRYSLER GROUP, LLC

For a complete wiring diagram, **refer to appropriate SYSTEM WIRING DIAGRAMS article** .

THEORY OF OPERATION

The Transmission Temperature Sensor is a variable resistor that changes with temperature, or otherwise known as a thermister. The temperature of the transmission fluid can affect a variety of electronically controlled

transmission operations such as shift quality, torque converter clutch engagement, and when and/or if certain OBDII or system self-diagnostic test are performed. The Powertrain Control Module (PCM) substitutes a calculated transmission temperature value if a fault is detected in the Transmission Temperature Sensor circuit.

WHEN MONITORED:

Continuously with the ignition on and engine running.

SET CONDITION:

The DTC will set when the monitored Temperature Sensor voltage drops below 0.078 of a volt for the period of 0.45 of a second.

POSSIBLE CAUSES

Possible Causes
RELATED DTCS PRESENT
(T54) TRANSMISSION TEMPERATURE SENSOR SIGNAL CIRCUIT SHORTED TO GROUND
TRANSMISSION TEMPERATURE SENSOR
POWERTRAIN CONTROL MODULE (PCM)

Always perform the Pre-Diagnostic Troubleshooting procedure before proceeding. Refer to STANDARD PROCEDURE.

DIAGNOSTIC TEST

1. **CHECK FOR RELATED DTCS**
    1. With the scan tool, read DTCs.

       Are there any line pressure sensor or throttle position sensor DTCs present?

       Yes

       - Refer to **DIAGNOSTIC CODE INDEX** and perform the appropriate charging related DTC diagnostic procedure.

       No

       - Go To 2.
2. **CHECK IF THE DTC IS CURRENT**
    1. With the scan tool, read DTCs.

       Is the status Active or is the Starts Since Set counter 2 or less for this DTC?

       Yes

- Go To 3.

No

- Go To 5.

3. **TRANSMISSION TEMPERATURE SENSOR**
   1. Turn the ignition off to the lock position.
   2. Remove the Ignition Switch Feed fuse from the TIPM.

CAUTION: Removal of the Ignition Switch Feed fuse from the TIPM will prevent the vehicle from being started in gear.

WARNING: The Ignition Switch Feed fuse must be removed from the TIPM. Failure to do so can result in possible serious or fatal injury.

   3. Install the Transmission Simulator (special tool #8333A, Simulator, Transmission).
   4. Ignition on, engine not running.
   5. With the Transmission Simulator, turn the Input/Output switch to OFF.
   6. With the scan tool, monitor the Transmission Temperature voltage while turning the Thermistor Voltage switch to all three positions on the Transmission Simulator.
   7. Compare the scan tool readings with the numbers listed on the Transmission Simulator.

   Do the readings on the Transmission Simulator match the scan tool readings ± 0.2 of a volt?

   Yes

   - Replace Transmission Solenoid/TRS Assembly in accordance with the Service Information.
   - Refer to **STANDARD PROCEDURE** and perform the 68RFE TRANSMISSION VERIFICATION TEST.

   No

   - Go To 4.

4. **CHECK THE (T54) TRANSMISSION TEMPERATURE SENSOR SIGNAL CIRCUIT FOR A SHORT TO GROUND**

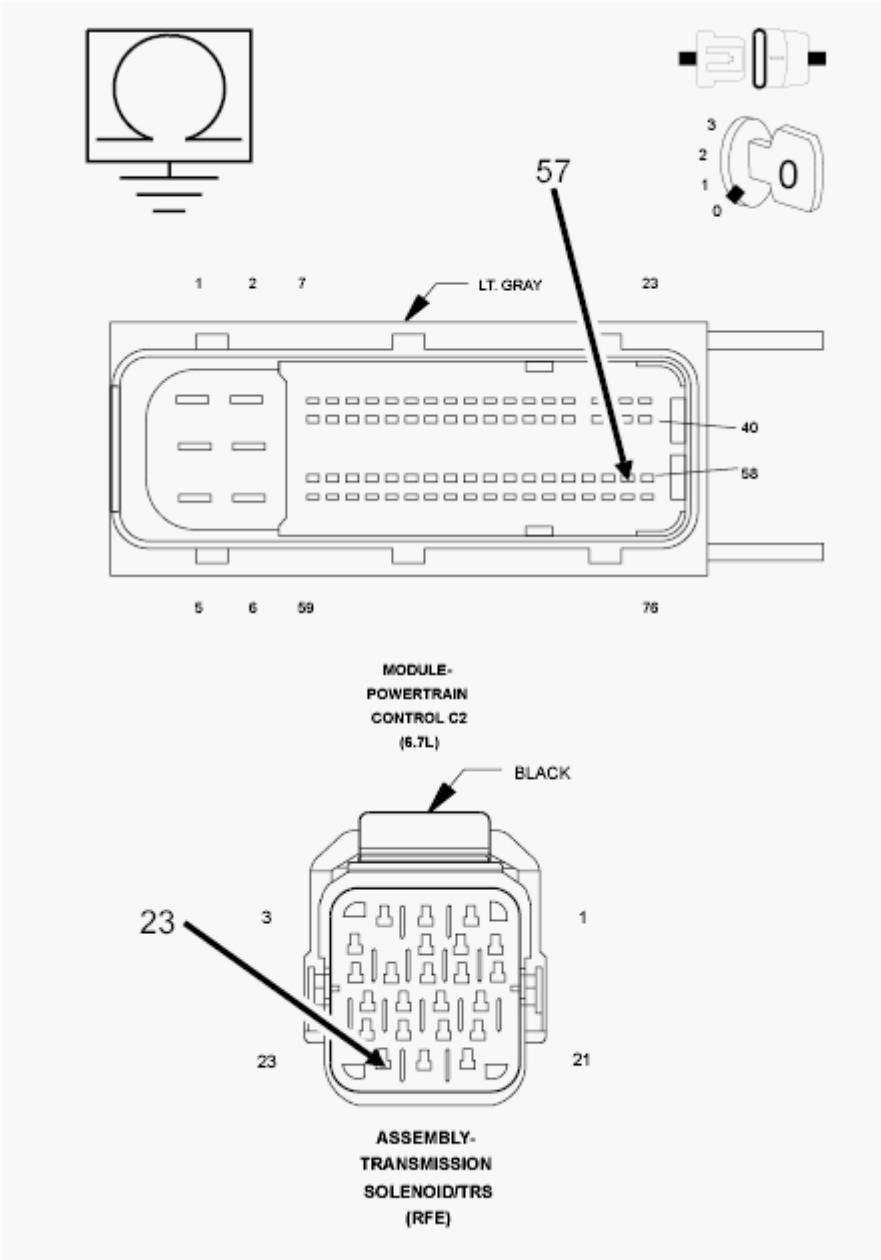

Fig. 8: Checking Transmission Temperature Sensor Signal Circuit For Short To Ground
Courtesy of CHRYSLER GROUP, LLC

1. Turn the ignition off to the lock position.
2. Disconnect the Transmission Simulator (special tool #8333A, Simulator, Transmission).
3. Disconnect the PCM C2 harness connector.

NOTE: Check connectors - Clean/repair as necessary.

4. Measure the resistance between ground and the (T54) Transmission Temperature Sensor Signal circuit.

Is the resistance below 5.0 Ohms?

Yes

- Repair the (T54) Transmission Temperature Sensor Signal circuit for a short to ground.
- Refer to **STANDARD PROCEDURE** and perform the 68RFE TRANSMISSION VERIFICATION TEST.

No

- Using the schematics as a guide, check the Powertrain Control Module (PCM) terminals for corrosion, damage, or terminal push out. Pay particular attention to all power and ground circuits. If no problems are found, replace the PCM in accordance with the Service Information. With the scan tool, perform Quick Learn.
- Refer to **STANDARD PROCEDURE** and perform the 68RFE TRANSMISSION VERIFICATION TEST.

5. **CHECK THE WIRING AND CONNECTORS**
   1. The conditions necessary to set this DTC are not present at this time.
   2. Using the schematics as a guide, inspect the wiring and connectors specific to this circuit.
   3. Wiggle the wires while checking for shorted and open circuits.
   4. With the scan tool, check the Event Data to help identify the conditions in which the DTC was set.

   Were there any problems found?

   Yes

   - Repair as necessary.
   - Refer to **STANDARD PROCEDURE** and perform the 68RFE TRANSMISSION VERIFICATION TEST.

   No

   - Test Complete.

P0713-TRANSMISSION TEMPERATURE SENSOR HIGH

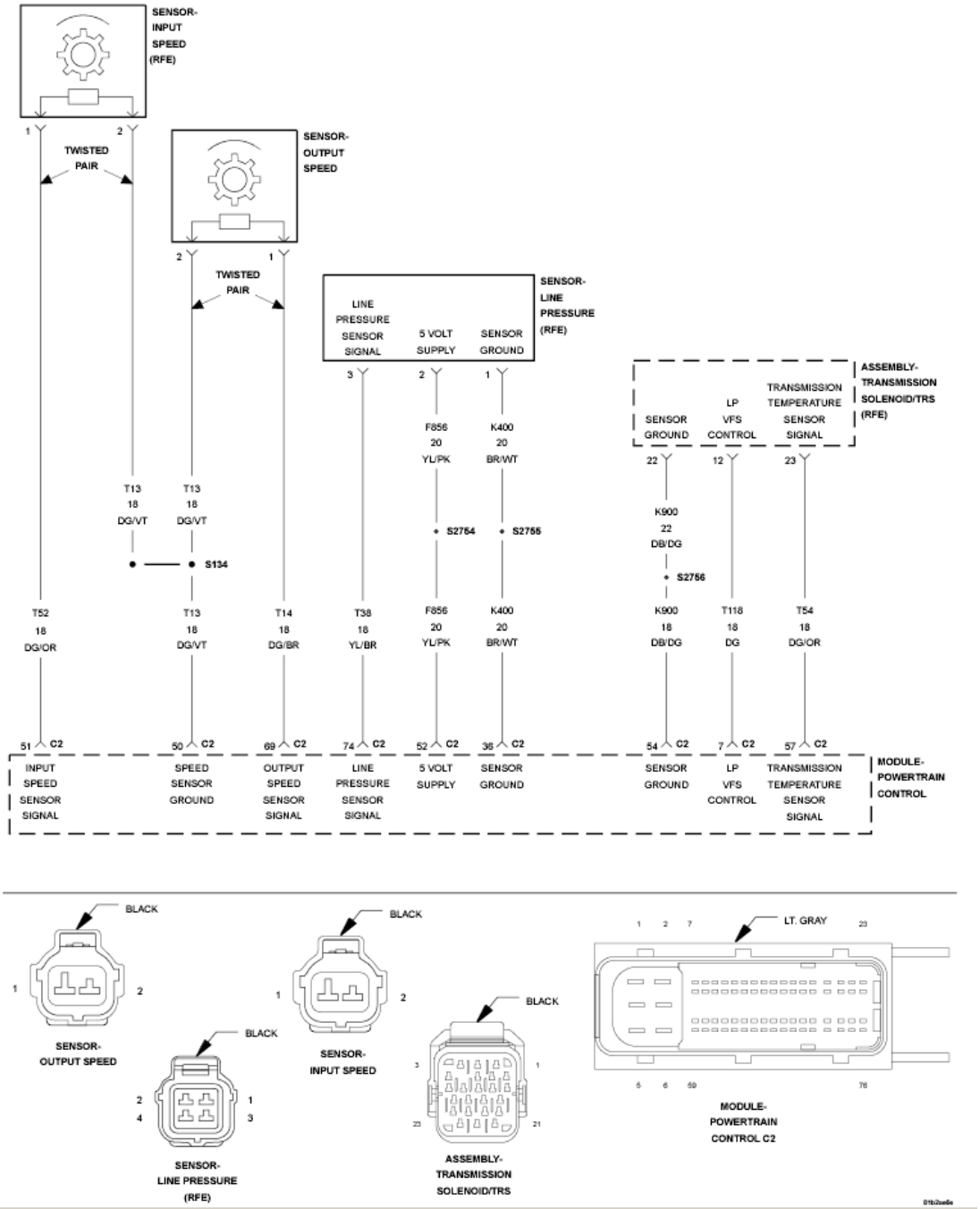

Fig. 9: Input/Output Speed Sensor, Line Pressure Sensor & Transmission Temperature Sensor Circuit Wiring Diagram
Courtesy of CHRYSLER GROUP, LLC

For a complete wiring diagram, **refer to appropriate SYSTEM WIRING DIAGRAMS article** .

THEORY OF OPERATION

The Transmission Temperature Sensor is a variable resistor that changes with temperature, or otherwise known as a thermister. The temperature of the transmission fluid can affect a variety of electronically controlled

transmission operations such as shift quality, torque converter clutch engagement, and when and/or if certain OBDII or system self-diagnostic test are performed. The Powertrain Control Module (PCM) substitutes a calculated transmission temperature value if a fault is detected in the Transmission Temperature Sensor circuit.

WHEN MONITORED:

Continuously with the ignition on and engine running.

SET CONDITION:

The DTC will set when the monitored Temperature Sensor voltage rises above 4.94 volts for the period of 0.45 of a second.

POSSIBLE CAUSES

Possible Causes
RELATED DTCS PRESENT
(T54) TRANSMISSION TEMPERATURE SENSOR SIGNAL CIRCUIT SHORTED TO OTHER CIRCUITS
TRANSMISSION TEMPERATURE SENSOR
POWERTRAIN CONTROL MODULE (PCM)

Always perform the Pre-Diagnostic Troubleshooting procedure before proceeding. Refer to STANDARD PROCEDURE.

DIAGNOSTIC TEST

1. **DETERMINE IF RELATED DTCS ARE PRESENT**
    1. With the scan tool, read DTCs.

       Are there any line pressure sensor DTCs present?

       Yes

       - Refer to **DIAGNOSTIC CODE INDEX** and perform the appropriate charging related DTC diagnostic procedure.

       No

       - Go To 2.
2. **CHECK IF THE DTC IS CURRENT**
    1. With the scan tool, read DTCs.

       Is the status Active or is the Starts Since Set counter 2 or less for this DTC?

       Yes

- Go To 3.

No

- Go To 5.

3. **TRANSMISSION TEMPERATURE SENSOR**
   1. Turn the ignition off to the lock position.
   2. Remove the Ignition Switch Feed fuse from the TIPM.

      CAUTION: Removal of the Ignition Switch Feed fuse from the TIPM will prevent the vehicle from being started in gear.

      WARNING: The Ignition Switch Feed fuse must be removed from the TIPM. Failure to do so can result in possible serious or fatal injury.

   3. Install the Transmission Simulator (special tool #8333A, Simulator, Transmission).
   4. Ignition on, engine not running.
   5. With the Transmission Simulator, turn the Input/Output switch to OFF.
   6. With the scan tool, monitor the Transmission Temperature voltage while turning the Thermistor Voltage switch to all three positions on the Transmission Simulator.
   7. Compare the scan tool readings with the numbers listed on the Transmission Simulator.

      Do the readings on the Transmission Simulator match the scan tool readings ± 0.2 of a volt?

      Yes

      - Replace Transmission Solenoid/TRS assembly in accordance with the Service Information.
      - Refer to **STANDARD PROCEDURE** and perform the 68RFE TRANSMISSION VERIFICATION TEST.

      No

      - Go To 4.

4. **CHECK THE (T54) TRANSMISSION TEMPERATURE SENSOR SIGNAL CIRCUIT FOR A SHORT TO ANOTHER CIRCUIT**

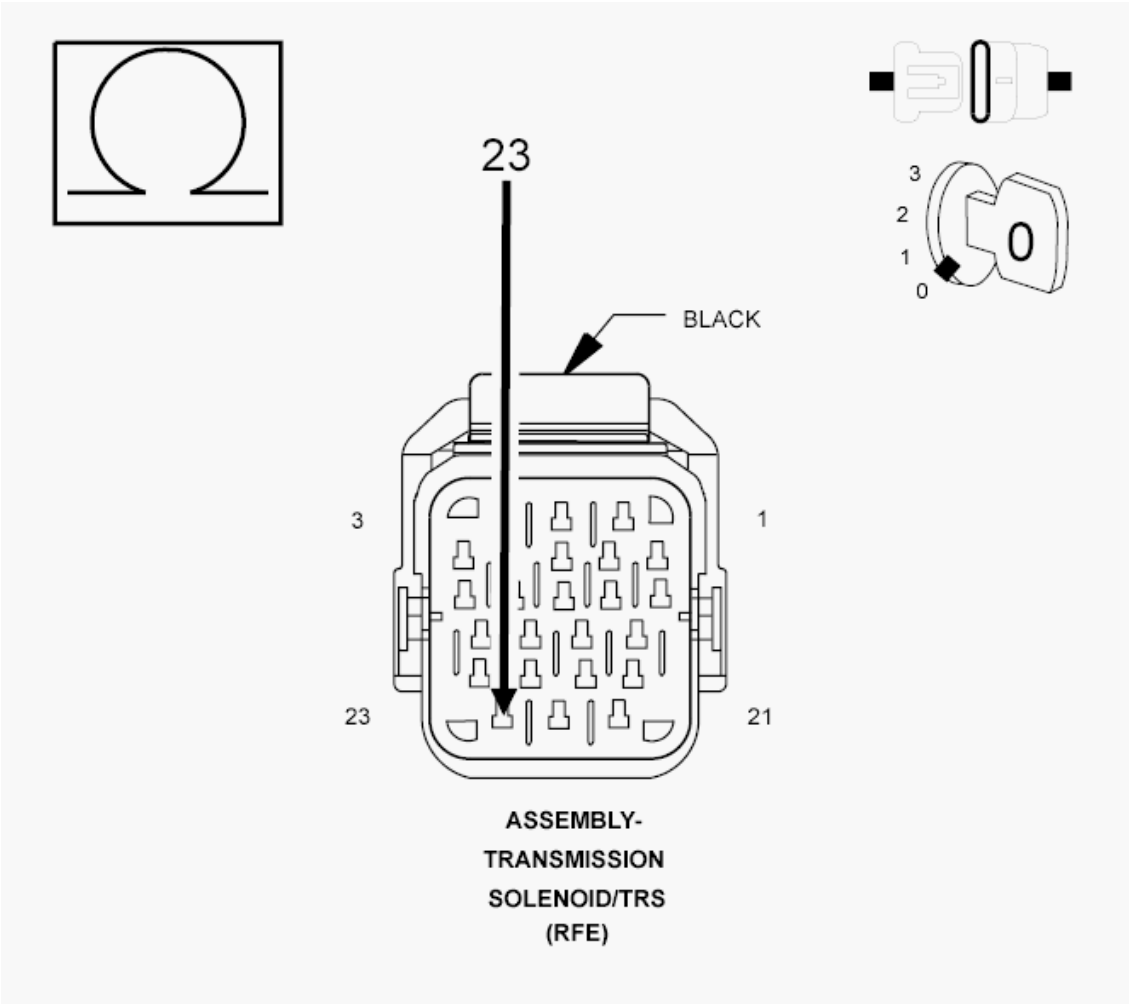

Fig. 10: Measuring Resistance Between Transmission Temperature Sensor Signal Circuit
Courtesy of CHRYSLER GROUP, LLC

1. Turn the ignition off to the lock position.
2. Disconnect the Transmission Simulator, Miller tool # (special tool #8333A, Simulator, Transmission).
3. Disconnect the PCM C2 harness connector.
4. Measure the resistance between the (T54) Transmission Temperature Sensor Signal circuit and all other circuits in the Transmission Solenoid/TRS Assembly harness connector.

   Is the resistance below 5.0 Ohms between the (T54) Transmission Temperature Sensor Signal circuit and any other circuit(s) in the Transmission Solenoid/TRS Assembly harness connector?

   Yes

   - Repair the Transmission Temperature Sensor Signal circuit for a short to another circuit(s).
   - Refer to **STANDARD PROCEDURE** and perform the 68RFE TRANSMISSION VERIFICATION TEST.

No

- Using the schematics as a guide, check the Powertrain Control Module (PCM) terminals for corrosion, damage, or terminal push out. Pay particular attention to all power and ground circuits. If no problems are found, replace the PCM in accordance with the Service Information. With the scan tool, perform Quick Learn.
- Refer to **STANDARD PROCEDURE** and perform the 68RFE TRANSMISSION VERIFICATION TEST.

5. **CHECK THE WIRING AND CONNECTORS**
   1. The conditions necessary to set this DTC are not present at this time.
   2. Using the schematics as a guide, inspect the wiring and connectors specific to this circuit.
   3. Wiggle the wires while checking for shorted and open circuits.
   4. With the scan tool, check the Event Data to help identify the conditions in which the DTC was set.

   Were there any problems found?

   Yes

   - Repair as necessary.
   - Refer to **STANDARD PROCEDURE** and perform the 68RFE TRANSMISSION VERIFICATION TEST.

   No

   - Test Complete.

P0714-TRANSMISSION TEMPERATURE SENSOR INTERMITTENT

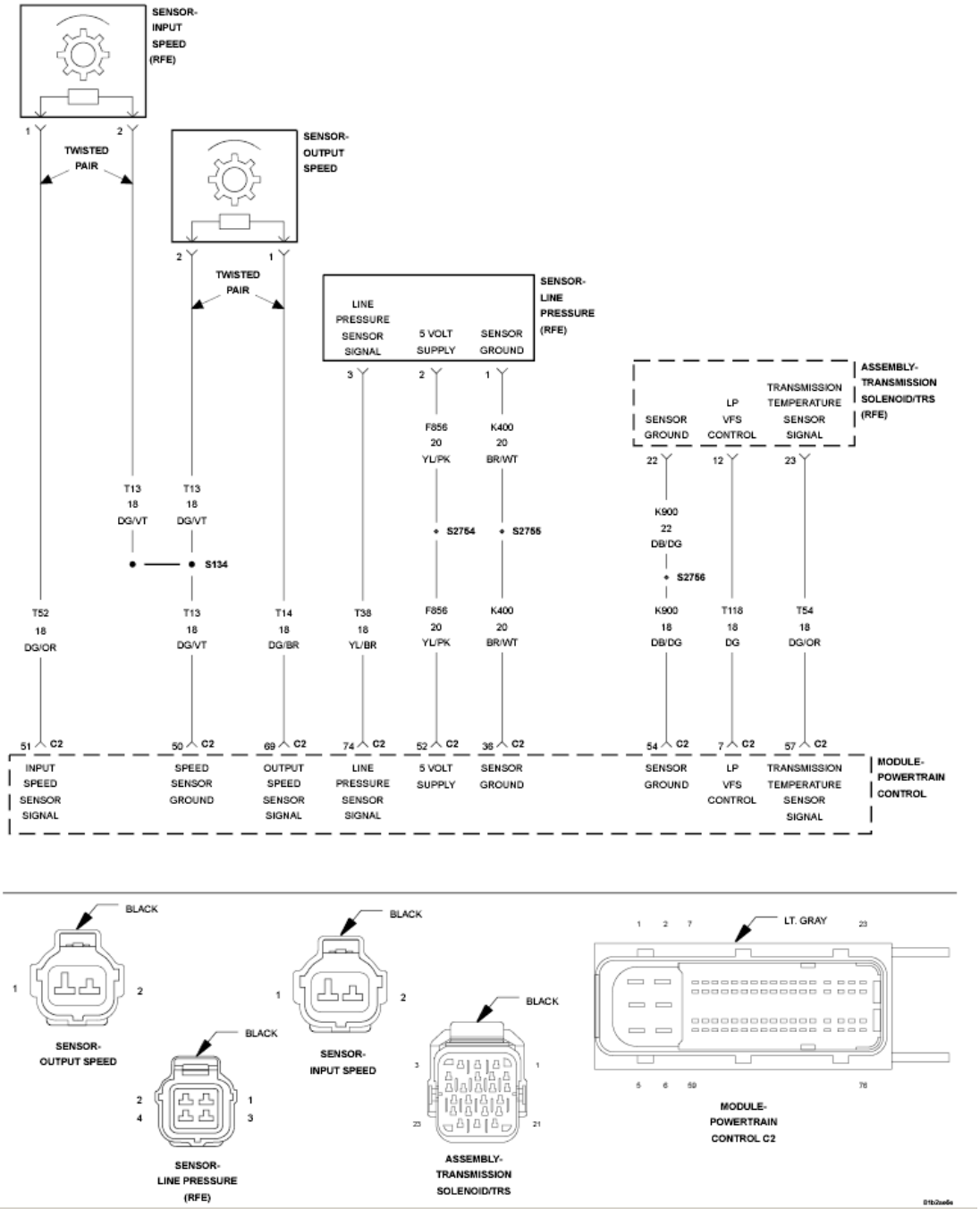

Fig. 11: Input/Output Speed Sensor, Line Pressure Sensor & Transmission Temperature Sensor Circuit Wiring Diagram
Courtesy of CHRYSLER GROUP, LLC

For a complete wiring diagram, **refer to appropriate SYSTEM WIRING DIAGRAMS article** .

THEORY OF OPERATION

The Transmission Temperature Sensor is a variable resistor that changes with temperature, or otherwise known as a thermister. The temperature of the transmission fluid can affect a variety of electronically controlled

transmission operations such as shift quality, torque converter clutch engagement, and when and/or if certain OBDII or system self-diagnostic test are performed. The Powertrain Control Module (PCM) substitutes a calculated transmission temperature value if a fault is detected in the Transmission Temperature Sensor circuit.

WHEN MONITORED:

Continuously with the ignition on and engine running.

SET CONDITION:

The DTC will set when the monitored Temperature Sensor voltage fluctuates or changes abruptly within a predetermined period of time.

POSSIBLE CAUSES

Possible Causes
RELATED DTCS PRESENT
TRANSMISSION TEMPERATURE SENSOR
POWERTRAIN CONTROL MODULE (PCM)

Always perform the Pre-Diagnostic Troubleshooting procedure before proceeding. Refer to STANDARD PROCEDURE.

DIAGNOSTIC TEST

1. **CHECK FOR RELATED DTCS**
    1. With the scan tool, read DTCs.

       Are there any line pressure sensor or throttle position sensor DTCs present?

       Yes

       - Refer to **DIAGNOSTIC CODE INDEX** and perform the appropriate charging related DTC diagnostic procedure.

       No

       - Go To 2.
2. **CHECK IF THE DTC IS CURRENT**
    1. With the scan tool, read DTCs.

       Is the status Active or is the Starts Since Set counter 2 or less for this DTC?

       Yes

       - Go To 3.

No

- Go To 4.

3. **TRANSMISSION TEMPERATURE SENSOR**
   1. Turn the ignition off to the lock position.
   2. Remove the Ignition Switch Feed fuse from the TIPM.

      CAUTION: Removal of the Ignition Switch Feed fuse from the TIPM will prevent the vehicle from being started in gear.

      WARNING: The Ignition Switch Feed fuse must be removed from the TIPM. Failure to do so can result in possible serious or fatal injury.

   3. Install the Transmission Simulator (special tool #8333A, Simulator, Transmission).
   4. Ignition on, engine not running.
   5. With the Transmission Simulator, turn the Input/Output switch to OFF.
   6. With the scan tool, monitor the Transmission Temperature voltage while turning the Thermistor Voltage switch to all three positions on the Transmission Simulator.
   7. Compare the scan tool readings with the numbers listed on the Transmission Simulator.

      Do the readings on the Transmission Simulator match a non-fluctuating scan tool reading ± 0.2 of a volt?

      Yes

      - Replace the Transmission Solenoid/TRS Assembly in accordance with the Service Information.
      - Refer to **STANDARD PROCEDURE** and perform the 68RFE TRANSMISSION VERIFICATION TEST.

      No

      - Using the schematics as a guide, check the Powertrain Control Module (PCM) terminals for corrosion, damage, or terminal push out. Pay particular attention to all power and ground circuits. If no problems are found, replace the PCM in accordance with the Service Information. With the scan tool, perform Quick Learn.
      - Refer to **STANDARD PROCEDURE** and perform the 68RFE TRANSMISSION VERIFICATION TEST.

4. **CHECK THE WIRING AND CONNECTORS**
   1. The conditions necessary to set this DTC are not present at this time.
   2. Using the schematics as a guide, inspect the wiring and connectors specific to this circuit.
   3. Wiggle the wires while checking for shorted and open circuits.

4. With the scan tool, check the Event Data to help identify the conditions in which the DTC was set.

   Were there any problems found?

   Yes

   - Repair as necessary.
   - Refer to **STANDARD PROCEDURE** and perform the 68RFE TRANSMISSION VERIFICATION TEST.

   No

   - Test Complete.

P0716-INPUT SPEED SENSOR 1 CIRCUIT PERFORMANCE

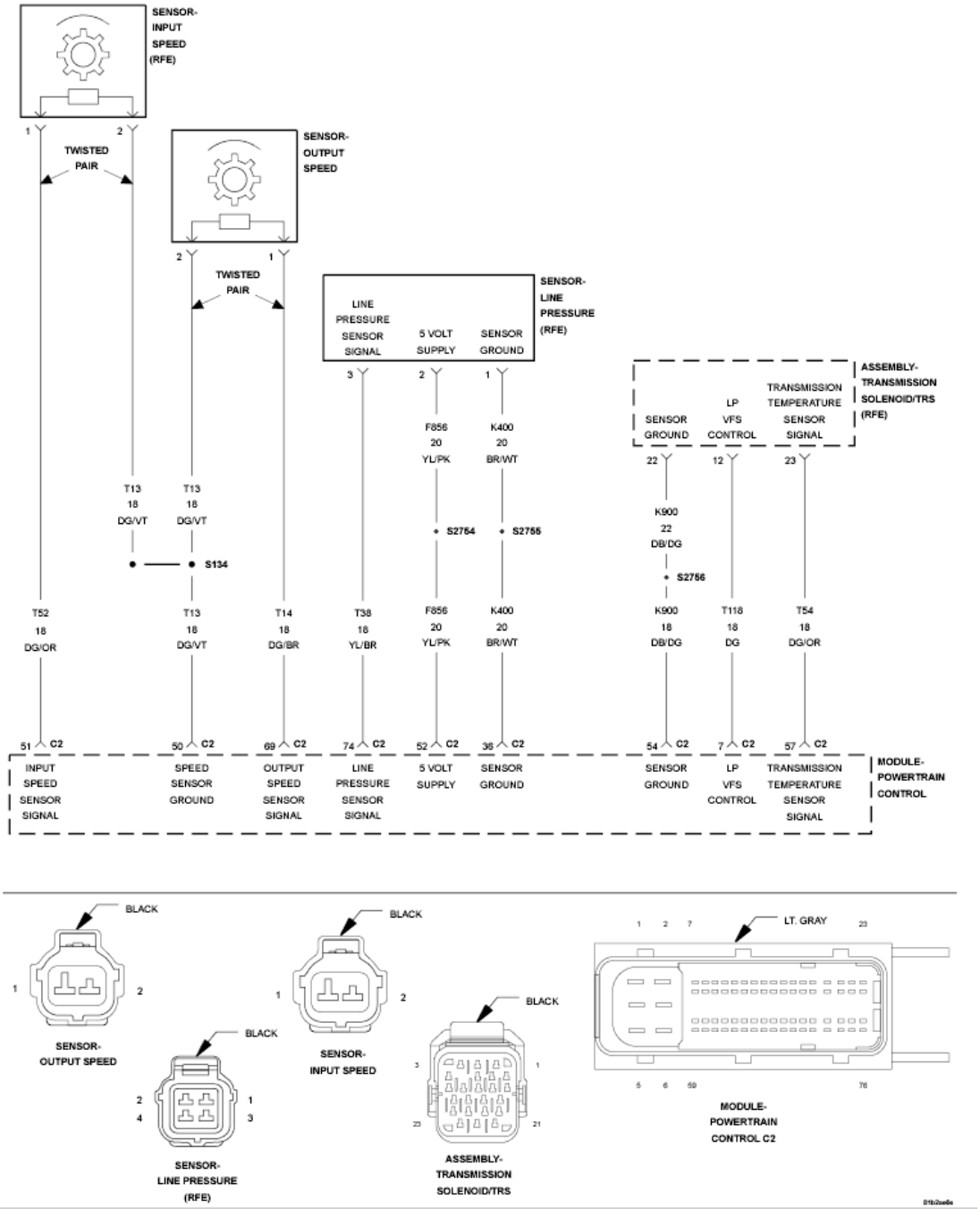

Fig. 12: Input/Output Speed Sensor, Line Pressure Sensor & Transmission Temperature Sensor Circuit Wiring Diagram
Courtesy of CHRYSLER GROUP, LLC

For a complete wiring diagram, **refer to appropriate SYSTEM WIRING DIAGRAMS article** .

THEORY OF OPERATION

The transmission system uses two speed sensors, one to measure input rpm and one to measure output rpm. These inputs are essential for proper transmission operation. Therefore, the integrity of this data is verified

through the following checks:

1) When in gear, if the gear ratio does not compare to a known gear ratio, the corresponding in-gear trouble code is set (DTCs P0729 and P0731-36).

2) An excessive change in input or output speeds indicating signal intermittent which will result in the DTCs P0716 and/or P0721 being set.

3) If the common speed sensor ground circuit is lost, both sensor inputs will read the signal from the input speed sensor at idle in neutral. Since the input speed sensor reads 60 teeth from the input clutch hub and the output speed sensor reads 30 teeth from the park gear, the result is an apparent speed ratio of 1:2 and may cause the DTC P1794 to set when at a stop.

WHEN MONITORED:

The transmission gear ratio is monitored continuously while the transmission is in gear.

SET CONDITION:

If there is an excessive change in input rpm in any gear. This DTC can take up to five minutes of problem identification before illuminating the MIL.

POSSIBLE CAUSES

Possible Causes
(T52) INPUT SPEED SENSOR SIGNAL CIRCUIT OPEN
(T13) SPEED SENSOR GROUND CIRCUIT OPEN
(T52) INPUT SPEED SENSOR SIGNAL CIRCUIT SHORTED TO GROUND
(T13) SPEED SENSOR GROUND CIRCUIT SHORTED TO GROUND
(T52) INPUT SPEED SENSOR SIGNAL CIRCUIT SHORTED TO VOLTAGE
(T13) SPEED SENSOR GROUND CIRCUIT SHORTED TO VOLTAGE
INPUT SPEED SENSOR
POWERTRAIN CONTROL MODULE (PCM)

Always perform the Pre-Diagnostic Troubleshooting procedure before proceeding. Refer to STANDARD PROCEDURE.

DIAGNOSTIC TEST

1. **CHECK IF THE DTC IS CURRENT**
    1. Start the engine in park.
    2. With the scan tool, monitor the Input Speed Sensor rpm.

       Is the Input Speed Sensor rpm below 400 rpm?

       Yes

- Go To 2.

No

- Go To 9.

2. **INPUT SPEED SENSOR**
   1. Turn the ignition off to the lock position.
   2. Remove the Ignition Switch Feed fuse from the TIPM.

      CAUTION: Removal of the Ignition Switch Feed fuse from the TIPM will prevent the vehicle from being started in gear.

      WARNING: The Ignition Switch Feed fuse must be removed from the TIPM. Failure to do so can result in possible serious or fatal injury.

   3. Install the Transmission Simulator (special tool #8333A, Simulator, Transmission).
   4. Ignition on, engine not running.
   5. With the Transmission Simulator, set the selector switch to 3000/1000 and the Input/Output switch to ON.
   6. With the scan tool, monitor the Input and Output Speed Sensor rpm.

      Does the Input speed read 3000 rpm and the Output speed read 1000 rpm ± 50 rpm?

      Yes

      - Replace the Input Speed Sensor in accordance with the Service Information.
      - Refer to **STANDARD PROCEDURE** and perform the 68RFE TRANSMISSION VERIFICATION TEST.

      No

      - Go To 3.

3. **CHECK THE (T52) INPUT SPEED SENSOR SIGNAL CIRCUIT FOR A SHORT TO VOLTAGE**

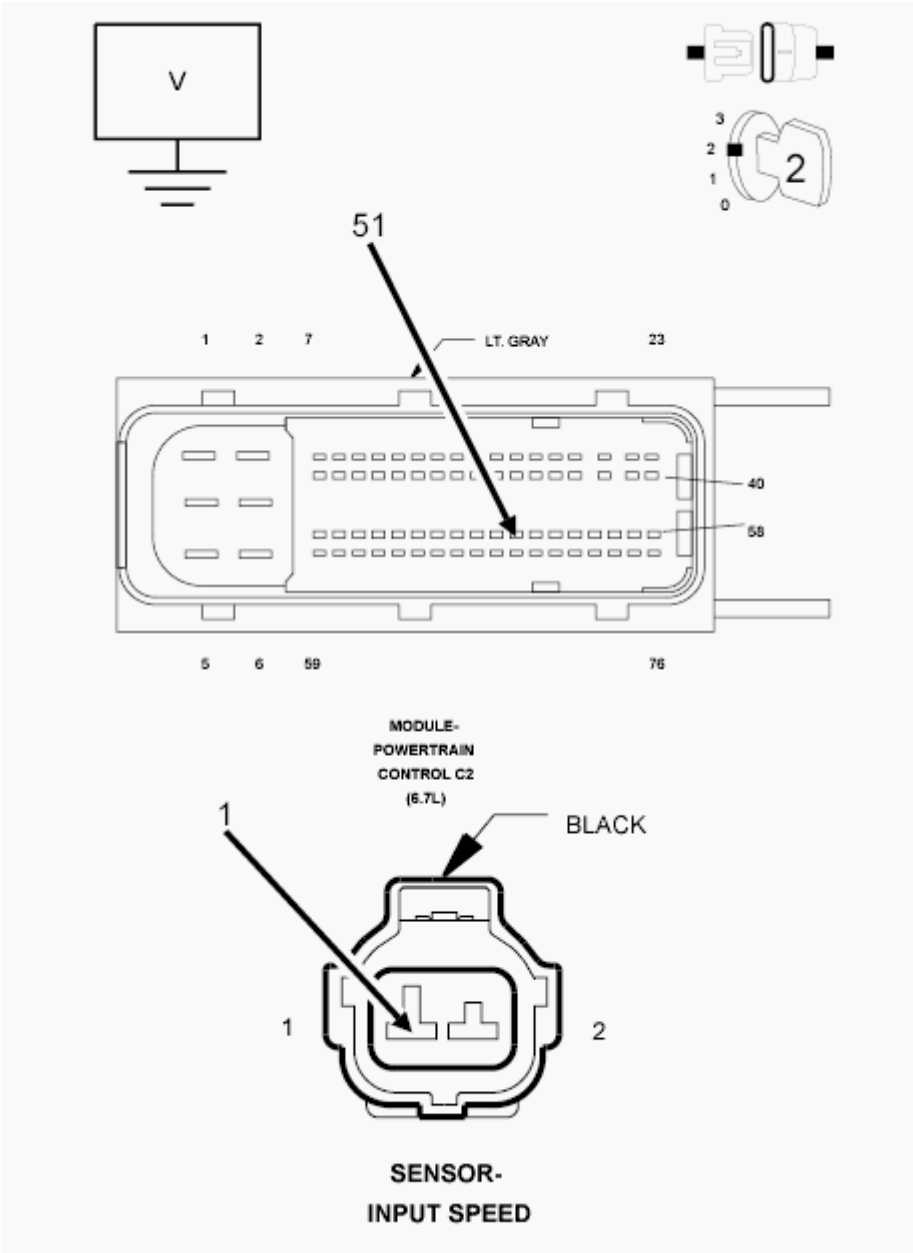

Fig. 13: Checking Input Speed Sensor Signal Circuit For Short To Voltage
Courtesy of CHRYSLER GROUP, LLC

1. Turn the ignition off to the lock position.
2. Disconnect the PCM C2 harness connector.

NOTE: **Make sure to leave the Speed Sensor, Transmission Solenoid/TRS Assembly, and Line Pressure Sensor harness connectors disconnected.**

3. Ignition on, engine not running.
4. With the scan tool in TIPM, actuate the Transmission.

5. Measure the voltage of the (T52) Input Speed Sensor Signal circuit.

   Is the voltage above 0.5 of a volt?

   Yes

   - Repair the (T52) Input Speed Sensor Signal circuit for a short to voltage.
   - Refer to **STANDARD PROCEDURE** and perform the 68RFE TRANSMISSION VERIFICATION TEST.

   No

   - Go To 4.

4. **CHECK THE (T13) SPEED SENSOR GROUND CIRCUIT FOR A SHORT TO VOLTAGE**

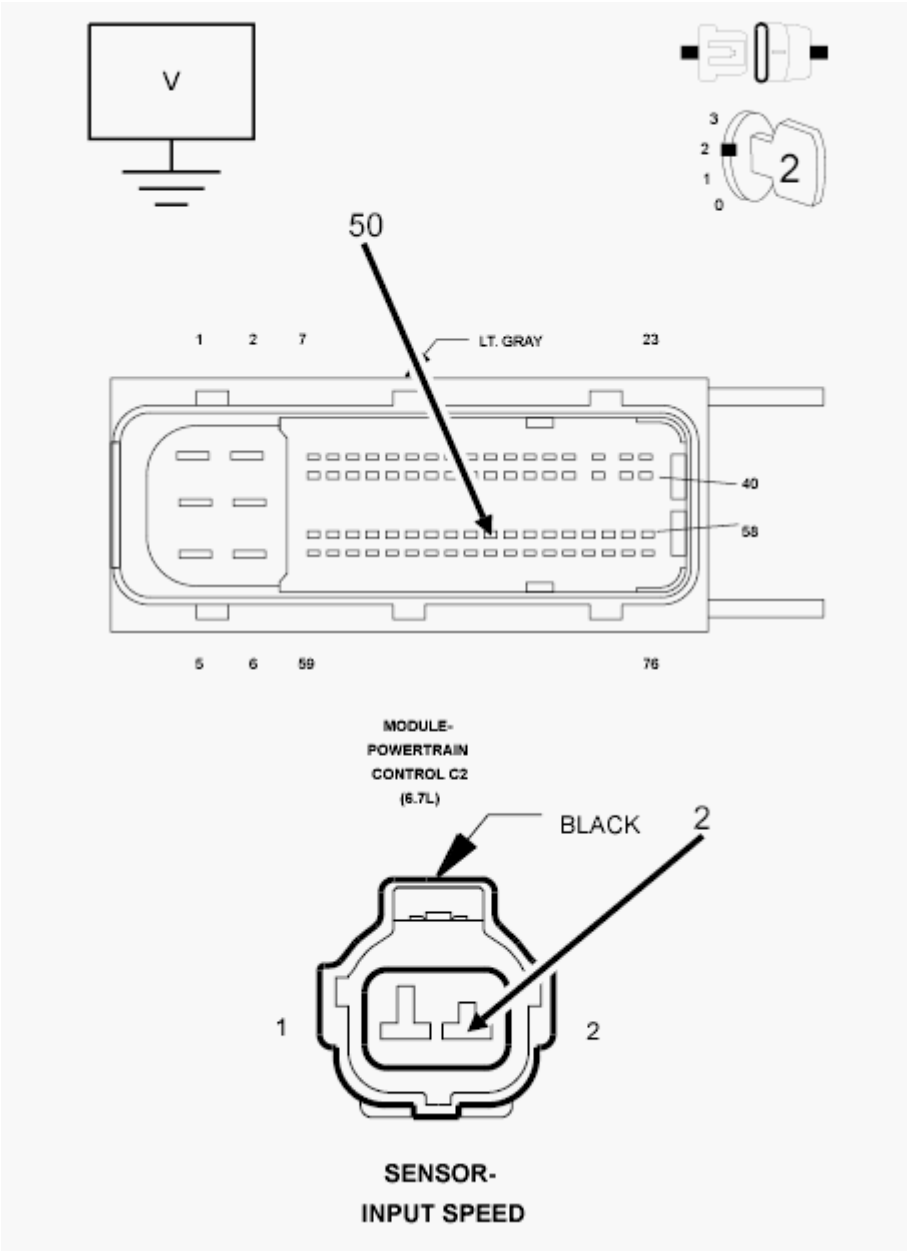

Fig. 14: Checking Input Speed Sensor Ground Circuit For Open Or Short To Voltage
Courtesy of CHRYSLER GROUP, LLC

1. With the scan tool under TIPM, actuate the TCM output.
2. Measure the voltage of the (T13) Speed Sensor Ground circuit.

   Is the voltage above 0.5 of a volt?

   Yes

   - Repair the (T13) Speed Sensor Ground circuit for a short to voltage.
   - Refer to **STANDARD PROCEDURE** and perform the 68RFE TRANSMISSION

VERIFICATION TEST.

No

- Go To 5.

5. **CHECK THE (T52) INPUT SPEED SENSOR SIGNAL CIRCUIT FOR AN OPEN**

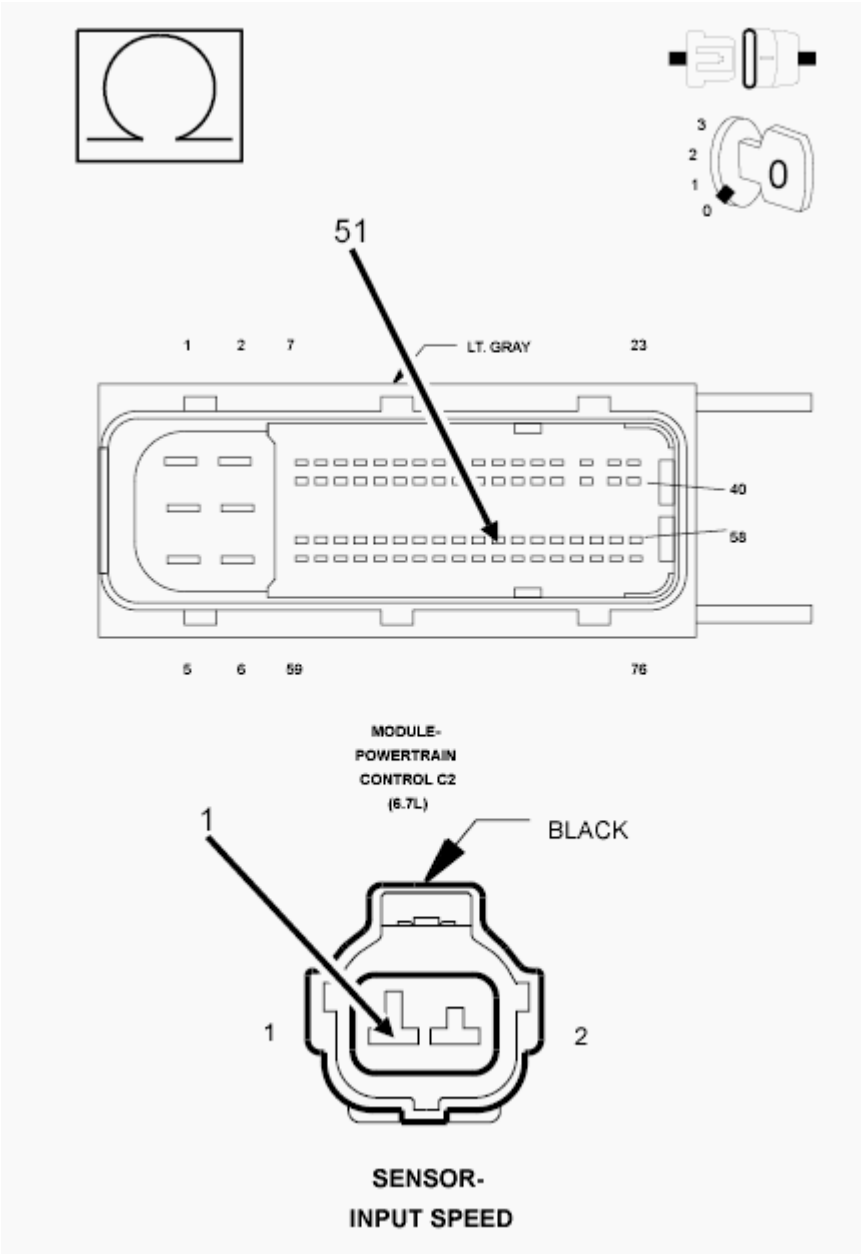

Fig. 15: Checking Input Speed Sensor Signal Circuit For Open
Courtesy of CHRYSLER GROUP, LLC

1. With the scan tool in TIPM, stop the actuation the TCM output.
2. Turn the ignition off to the lock position.

3. Measure the resistance of the (T52) Input Speed Sensor Signal circuit between the Input Speed Sensor harness connector and the appropriate terminal of the PCM C2 harness connector.

   Is the resistance above 5.0 Ohms?

   Yes

   - Repair the (T52) Input Speed Sensor Signal circuit for an open.
   - Refer to **STANDARD PROCEDURE** and perform the 68RFE TRANSMISSION VERIFICATION TEST.

   No

   - Go To 6.

6. **CHECK THE (T13) SPEED SENSOR GROUND CIRCUIT FOR AN OPEN**

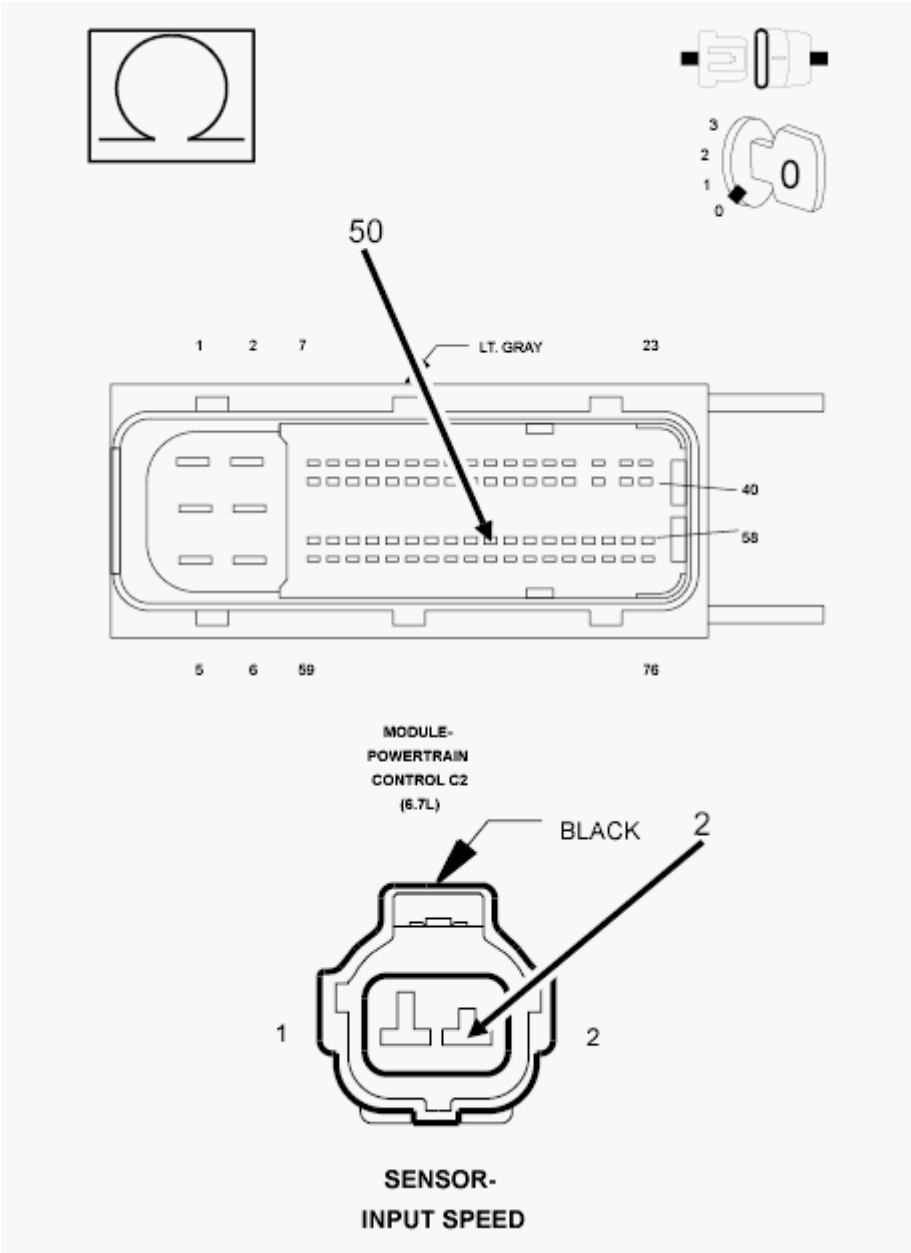

Fig. 16: Checking Input Speed Sensor Ground Circuit For Open
Courtesy of CHRYSLER GROUP, LLC

1. Measure the resistance of the (T13) Speed Sensor Ground circuit between the Input Speed Sensor harness connector and the appropriate terminal of the PCM C2 harness connector.

   Is the resistance above 5.0 Ohms?

   Yes

   - Repair the (T13) Speed Sensor Ground circuit for an open.
   - Refer to **STANDARD PROCEDURE** and perform the 68RFE TRANSMISSION

VERIFICATION TEST.

No

- Go To 7.

7. **CHECK THE (T52) INPUT SPEED SENSOR SIGNAL CIRCUIT FOR A SHORT TO GROUND**

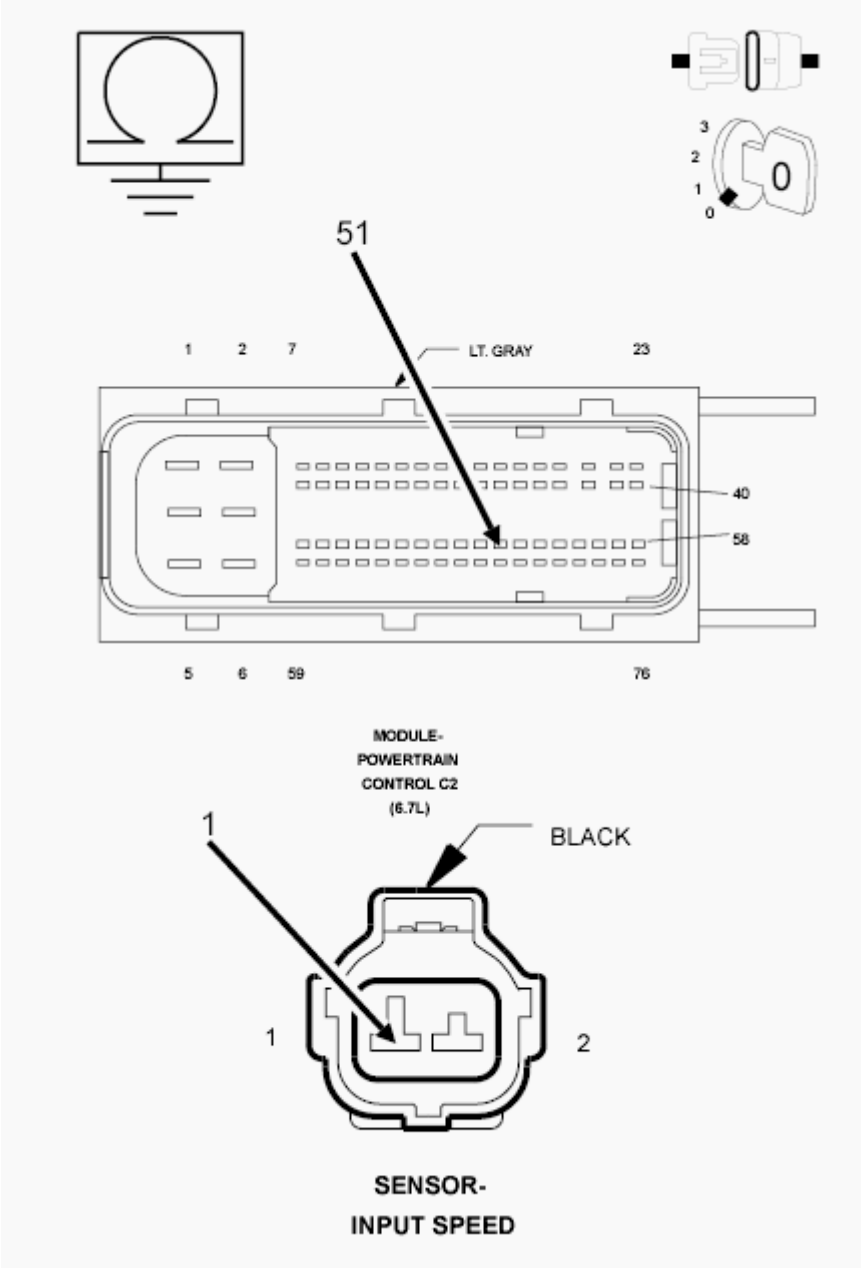

Fig. 17: Checking Input Speed Sensor Signal Circuit For Short To Ground
Courtesy of CHRYSLER GROUP, LLC

1. Measure the resistance between ground and the Input Speed Sensor Signal circuit.

Is the resistance below 5.0 Ohms?

Yes

- Repair the (T52) Input Speed Sensor Signal circuit for a short to ground.
- Refer to **STANDARD PROCEDURE** and perform the 68RFE TRANSMISSION VERIFICATION TEST.

No

- Go To 8.

8. **CHECK THE (T13) SPEED SENSOR GROUND CIRCUIT FOR A SHORT TO GROUND**

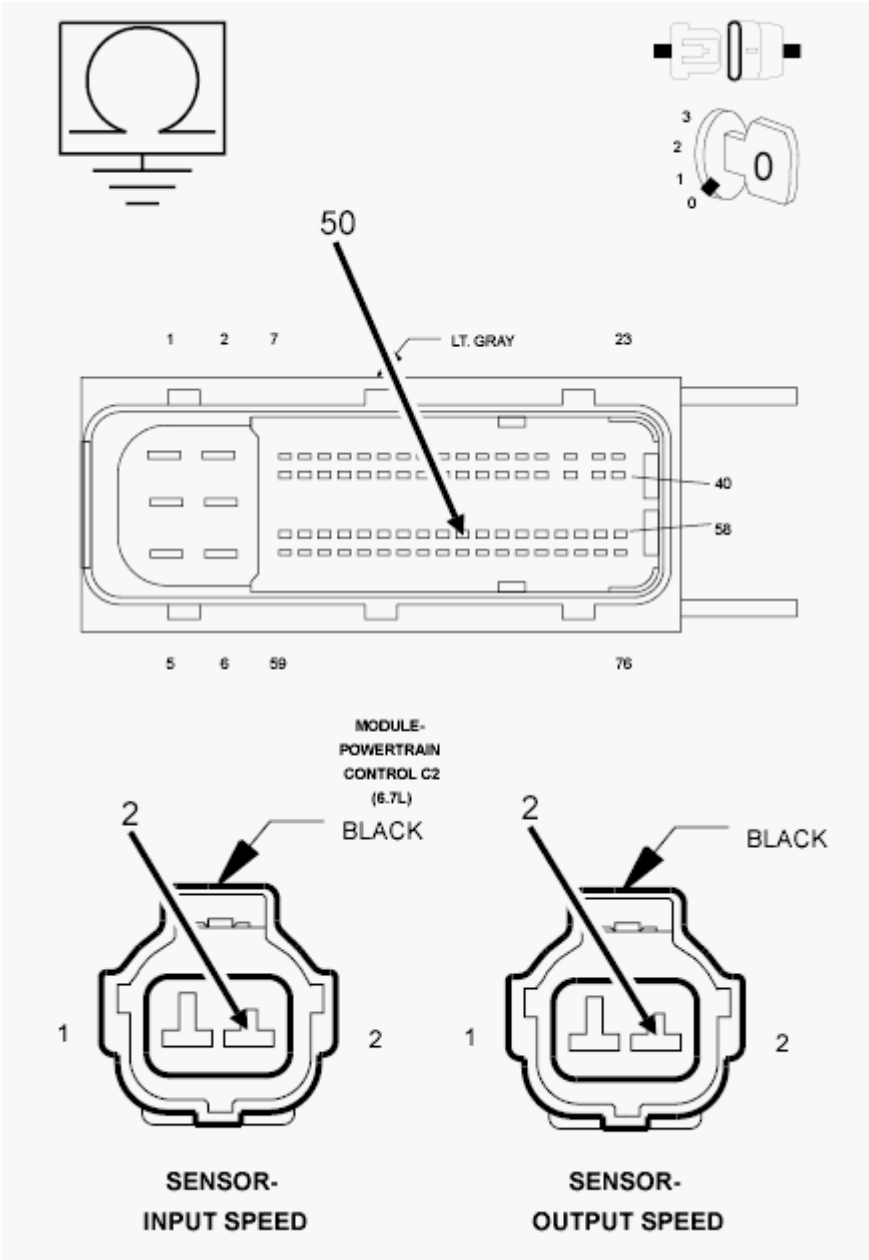

Fig. 18: Checking Speed Sensor Ground Circuit For Short To Ground
Courtesy of CHRYSLER GROUP, LLC

1. Measure the resistance between ground and the (T13) Speed Sensor Ground circuit.

   Is the resistance below 5.0 Ohms?

   Yes

   - Repair the (T13) Speed Sensor Ground circuit for a short to ground.
   - Refer to **STANDARD PROCEDURE** and perform the 68RFE TRANSMISSION VERIFICATION TEST.

No

- Using the schematics as a guide, check the Powertrain Control Module (PCM) terminals for corrosion, damage, or terminal push out. Pay particular attention to all power and ground circuits. If no problems are found, replace and program the PCM in accordance with the Service Information. With the scan tool, perform Quick Learn.
- Refer to **STANDARD PROCEDURE** and perform the 68RFE TRANSMISSION VERIFICATION TEST.

9. **CHECK THE WIRING AND CONNECTORS**
   1. The conditions necessary to set this DTC are not present at this time.
   2. Using the schematics as a guide, inspect the wiring and connectors specific to this circuit.
   3. Wiggle the wires while checking for shorted and open circuits.
   4. With the scan tool, check the Event Data to help identify the conditions in which the DTC was set.

   Were there any problems found?

   Yes

   - Repair as necessary.
   - Refer to **STANDARD PROCEDURE** and perform the 68RFE TRANSMISSION VERIFICATION TEST.

   No

   - Test Complete.

P0721-OUTPUT SPEED SENSOR CIRCUIT PERFORMANCE

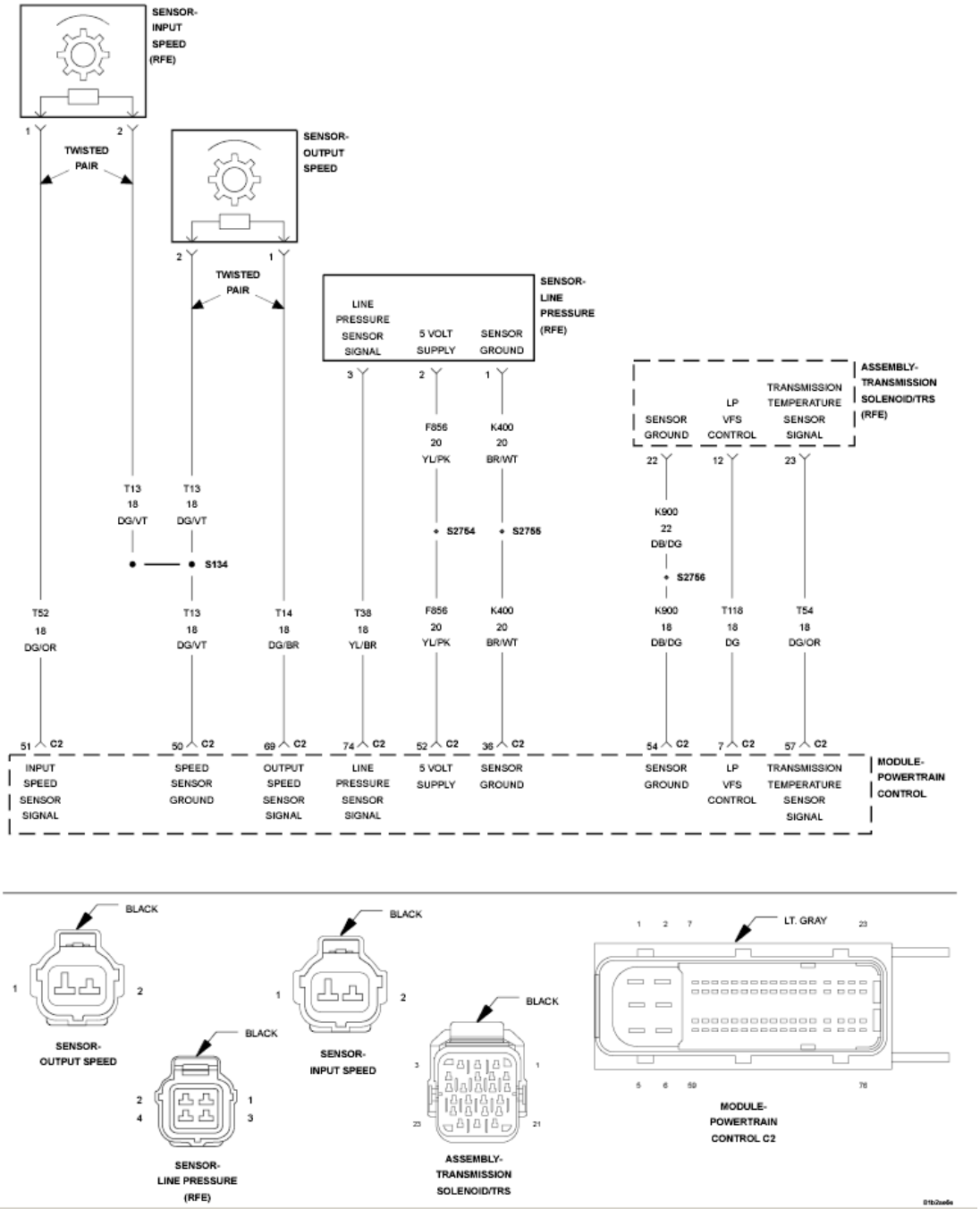

Fig. 19: Input/Output Speed Sensor, Line Pressure Sensor & Transmission Temperature Sensor Circuit Wiring Diagram
Courtesy of CHRYSLER GROUP, LLC

For a complete wiring diagram, **refer to appropriate SYSTEM WIRING DIAGRAMS article** .

THEORY OF OPERATION

The transmission system uses two speed sensors, one to measure input rpm and one to measure output rpm. These inputs are essential for proper transmission operation. Therefore, the integrity of this data is verified

through the following checks:

1) When in gear, if the gear ratio does not compare to a known gear ratio, the corresponding in-gear trouble code is set (DTCs P0729 and P0731- P0736).

2) An excessive change in input or output speeds indicating signal intermittent will result in codes P0716 and/or P0721 being set.

3) If the common speed sensor ground circuit is lost, both sensor inputs will read the signal from the input speed sensor at idle in neutral. Since the input speed sensor has 60 teeth and the output speed sensor has 30 teeth, this results in a an apparent speed ratio of 1:2 and may cause the DTC P1794 to set.

WHEN MONITORED:

The transmission gear ratio is monitored continuously while the transmission is in gear.

SET CONDITION:

If there is an excessive change in output rpm in any gear. This DTC can take up to five minutes of problem identification before illuminating the MIL.

POSSIBLE CAUSES

Possible Causes
(T14) OUTPUT SPEED SENSOR SIGNAL CIRCUIT OPEN
(T13) SPEED SENSOR GROUND CIRCUIT OPEN
(T14) OUTPUT SPEED SENSOR SIGNAL CIRCUIT SHORTED TO GROUND
(T13) SPEED SENSOR GROUND CIRCUIT SHORTED TO GROUND
(T14) OUTPUT SPEED SENSOR SIGNAL CIRCUIT SHORTED TO VOLTAGE
(T13) SPEED SENSOR GROUND CIRCUIT SHORTED TO VOLTAGE
OUTPUT SPEED SENSOR
POWERTRAIN CONTROL MODULE (PCM)

Always perform the Pre-Diagnostic Troubleshooting procedure before proceeding. Refer to STANDARD PROCEDURE.

DIAGNOSTIC TEST

1. **CHECK TO SEE IF DTC P0721 IS CURRENT**
    1. Turn the ignition off to the lock position.

        CAUTION: Properly support the vehicle and raise all drive wheels off the ground.

    2. Release the parking brake.

3. Start the engine in park.
4. Place the transmission gear selector in drive, release foot from brake.

WARNING: Be sure to keep hands and feet clear of rotating wheels.

5. With the scan tool, monitor the Output Speed Sensor rpm.

   Is the Output Speed Sensor rpm below 100 rpm?

   Yes

   - Go To 2.

   No

   - Go To 9.

2. **OUTPUT SPEED SENSOR**
   1. Turn the ignition off to the lock position.
   2. Remove the Ignition Switch Feed fuse from the TIPM.

      CAUTION: Removal of the Ignition Switch Feed fuse from the TIPM will prevent the vehicle from being started in gear.

      WARNING: The Ignition Switch Feed fuse must be removed from the TIPM. Failure to do so can result in possible serious or fatal injury.

   3. Install the Transmission Simulator (special tool #8333A, Simulator, Transmission).
   4. Ignition on, engine not running.
   5. With the Transmission Simulator, set the selector switch to 3000/1000 and the Input/Output switch to ON.
   6. With the scan tool, monitor the Input and Output Speed Sensor rpm

      Does the Input Speed read 3000 rpm and the Output Speed read 1000 rpm, ± 50 rpm?

      Yes

      - Replace the Output Speed Sensor in accordance with the Service Information.
      - Refer to **STANDARD PROCEDURE** and perform the 68RFE TRANSMISSION VERIFICATION TEST.

      No

- Go To 3.

3. **CHECK THE (T14) OUTPUT SPEED SENSOR SIGNAL CIRCUIT FOR AN OPEN**

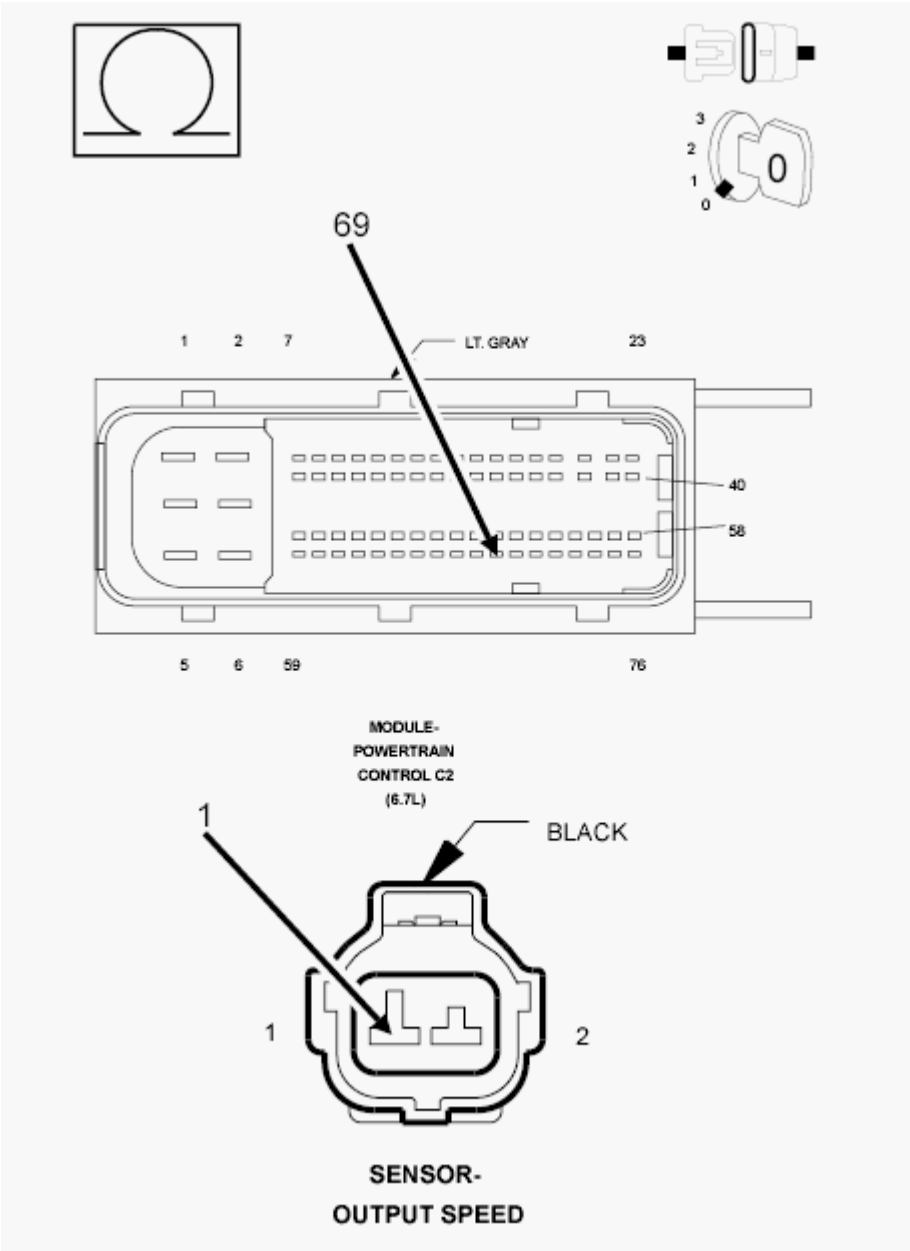

Fig. 20: Checking Output Speed Sensor Signal Circuit For Open
Courtesy of CHRYSLER GROUP, LLC

1. Turn the ignition off to the lock position.
2. Disconnect the Transmission Simulator (special tool #8333A, Simulator, Transmission).
3. Disconnect the PCM C2 harness connector.
4. Measure the resistance of the (T14) Output Speed Sensor Signal circuit from the Output Speed Sensor harness connector to the appropriate terminal of the PCM C2 harness connector.

Is the resistance above 5.0 Ohms?

Yes

- Repair the (T14) Output Speed Sensor Signal circuit for an open.
- Refer to **STANDARD PROCEDURE** and perform the 68RFE TRANSMISSION VERIFICATION TEST.

No

- Go To 4.

4. **CHECK THE (T13) SPEED SENSOR GROUND CIRCUIT FOR AN OPEN**

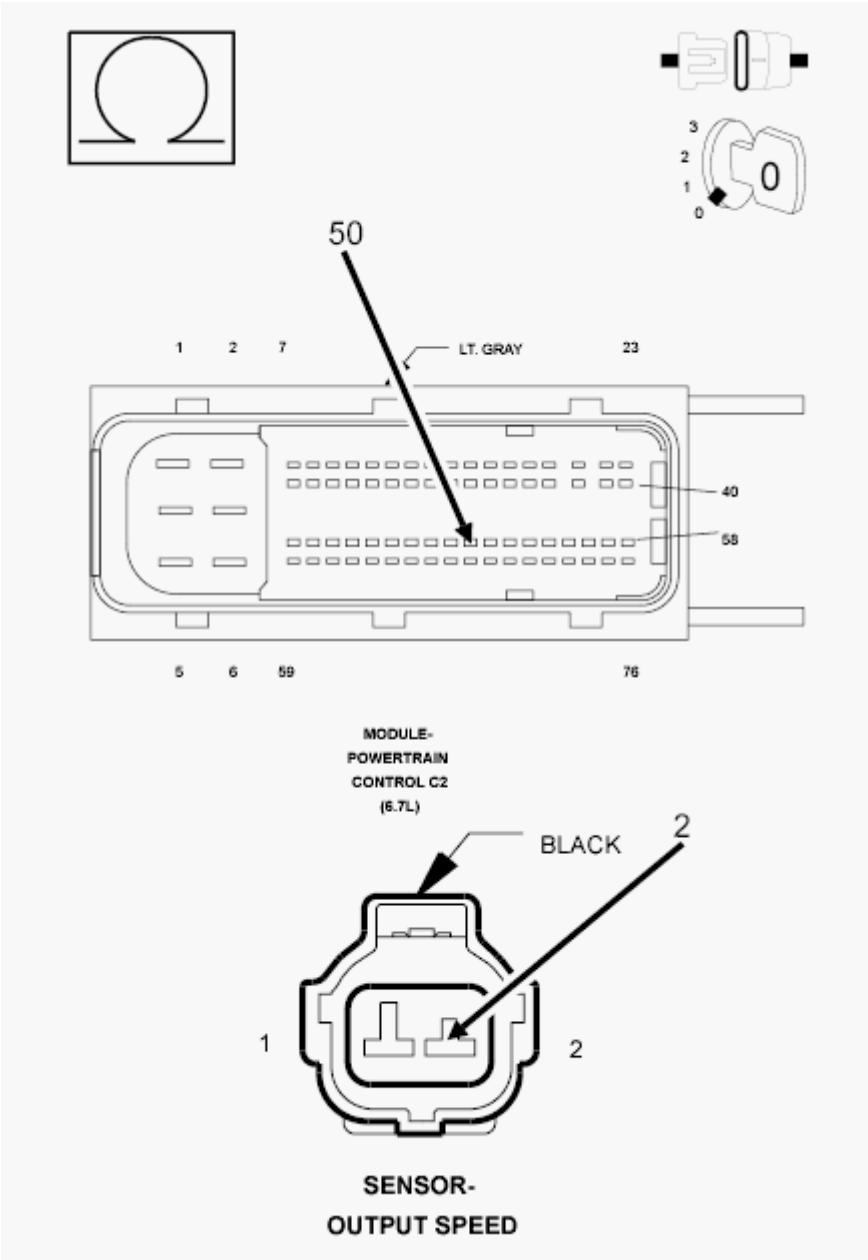

Fig. 21: Checking Output Speed Sensor Ground Circuit For Open
Courtesy of CHRYSLER GROUP, LLC

1. Measure the resistance of the (T13) Speed Sensor Ground circuit from the Output Speed Sensor harness connector to the appropriate terminal in the PCM C2 harness connector.

   Is the resistance above 5.0 Ohms?

   Yes

   - Repair the (T13) Speed Sensor Ground circuit for an open.
   - Refer to **STANDARD PROCEDURE** and perform the 68RFE TRANSMISSION

VERIFICATION TEST.

No

- Go To 5.

5. **CHECK THE (T14) OUTPUT SPEED SENSOR SIGNAL CIRCUIT FOR A SHORT TO GROUND**

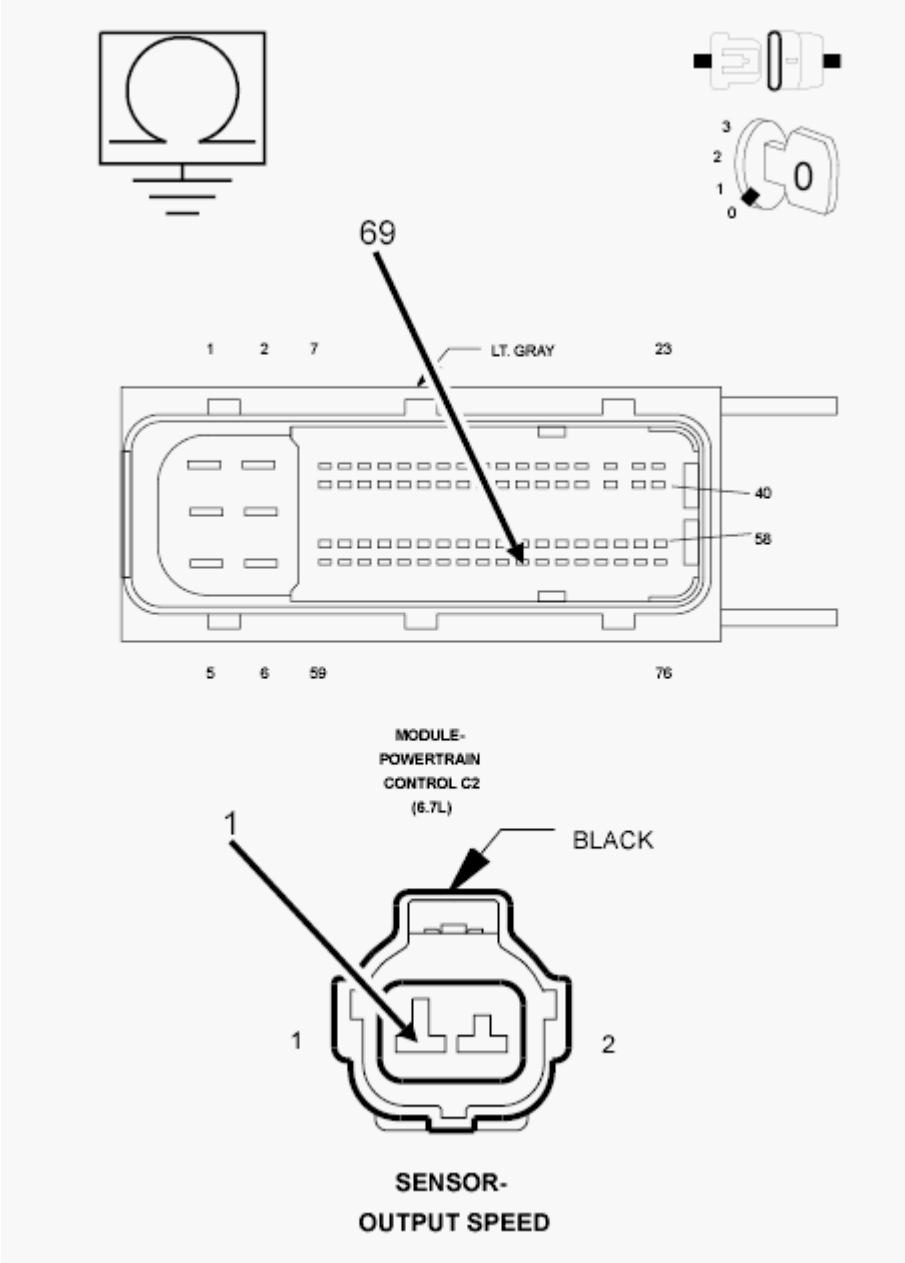

Fig. 22: Checking Output Speed Sensor Signal Circuit For Short To Ground
Courtesy of CHRYSLER GROUP, LLC

1. Measure the resistance between ground and the (T14) Output Speed Sensor Signal circuit.

Is the resistance below 5.0 Ohms?

Yes

- Repair the (T14) Output Speed Sensor Signal circuit for a short to ground.
- Refer to **STANDARD PROCEDURE** and perform the 68RFE TRANSMISSION VERIFICATION TEST.

No

- Go To 6.

6. **CHECK THE (T13) SPEED SENSOR GROUND CIRCUIT FOR A SHORT TO GROUND**

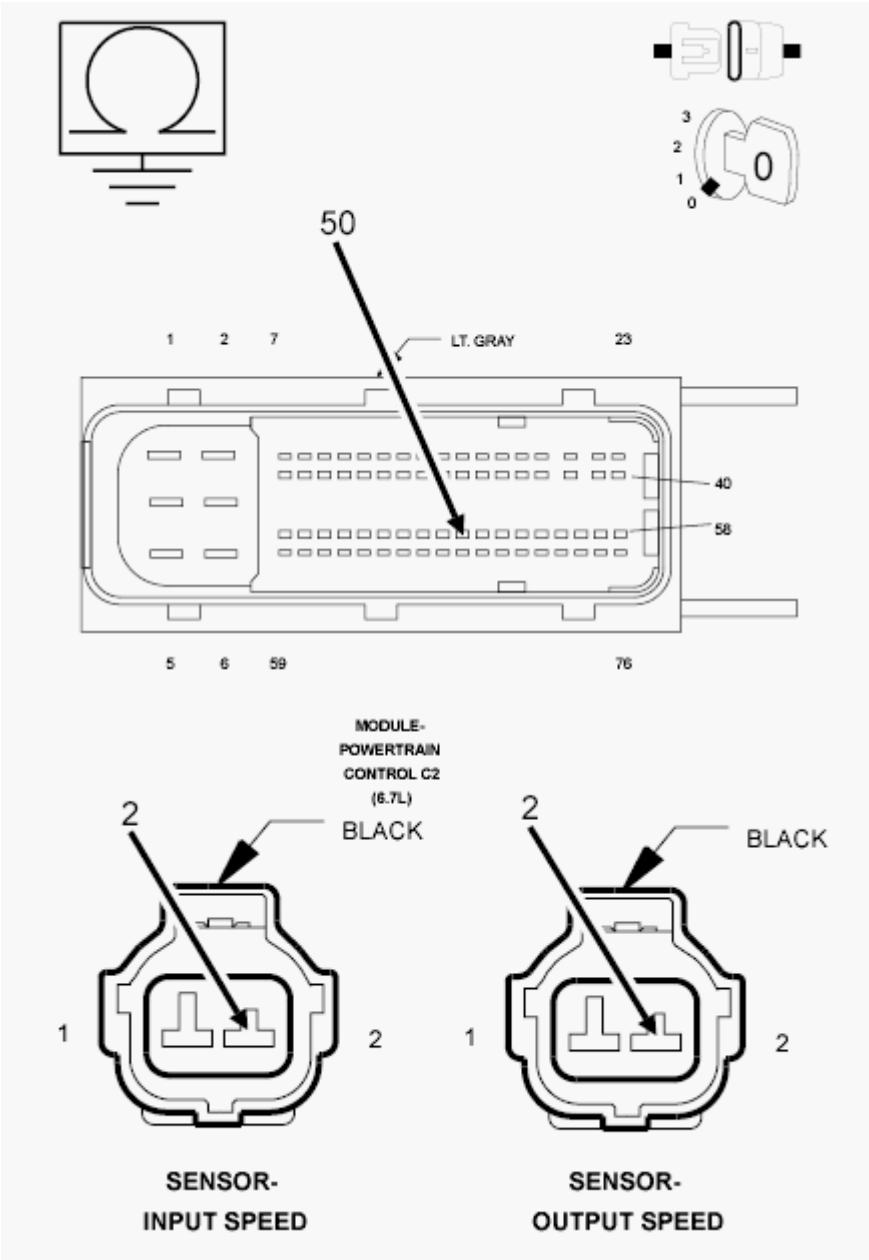

Fig. 23: Checking Speed Sensor Ground Circuit For Short To Ground
Courtesy of CHRYSLER GROUP, LLC

1. Measure the resistance between ground and the (T13) Speed Sensor Ground circuit.

   Is the resistance below 5.0 Ohms?

   Yes

   - Repair the (T13) Speed Sensor Ground circuit for a short to ground.
   - Refer to **STANDARD PROCEDURE** and perform the 68RFE TRANSMISSION VERIFICATION TEST.

No

- Go To 7.

7. **CHECK THE (T14) OUTPUT SPEED SENSOR SIGNAL CIRCUIT SHORT TO VOLTAGE**

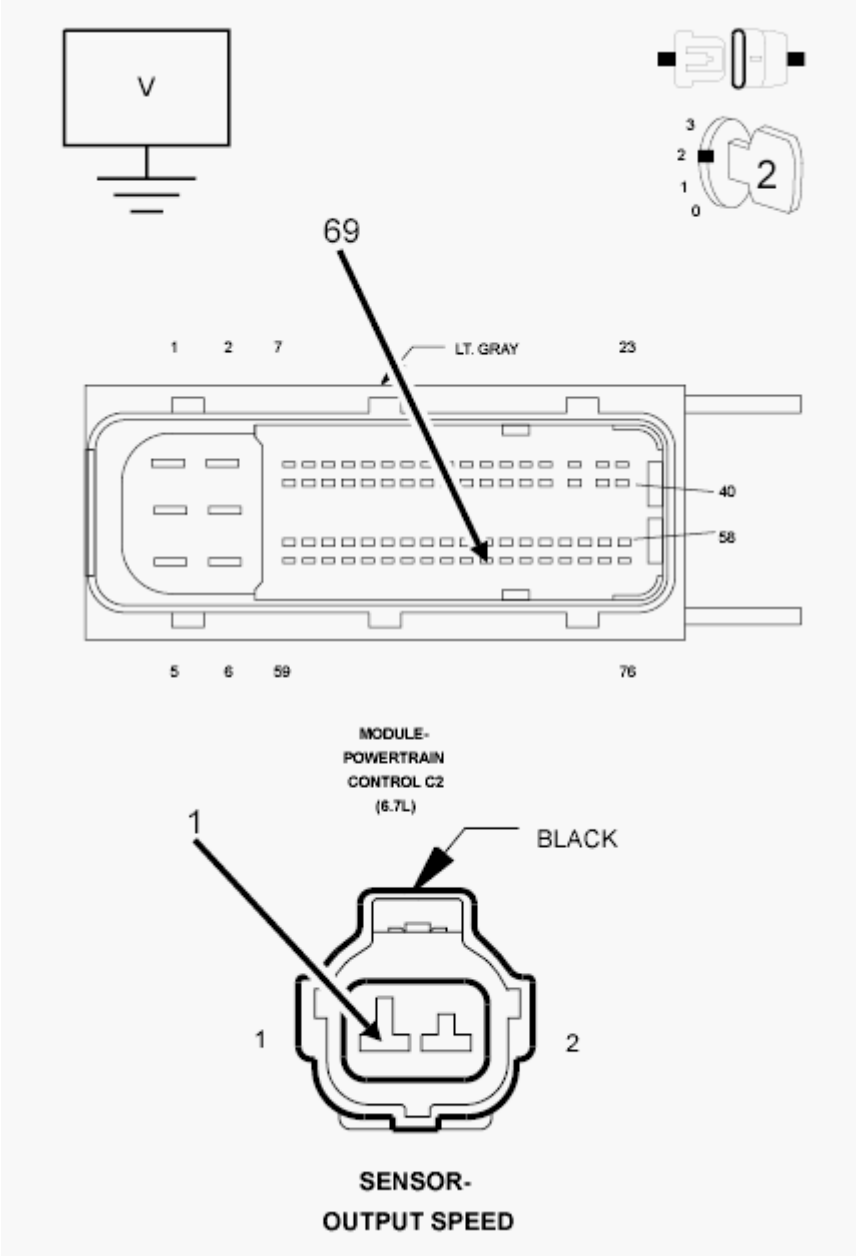

Fig. 24: Checking Output Speed Sensor Signal Circuit For Short To Voltage
Courtesy of CHRYSLER GROUP, LLC

1. Ignition on, engine not running.
2. With the scan tool in TIPM, actuate the TCM output.
3. Measure the voltage of the (T14) Output Speed Sensor Signal circuit.

Is the voltage above 0.5 of a volt?

Yes

- Repair the (T14) Output Speed Sensor Signal circuit for a short to voltage.
- Refer to **STANDARD PROCEDURE** and perform the 68RFE TRANSMISSION VERIFICATION TEST.

No

- Go To 8.

8. **CHECK THE (T13) SPEED SENSOR GROUND CIRCUIT FOR A SHORT TO VOLTAGE**

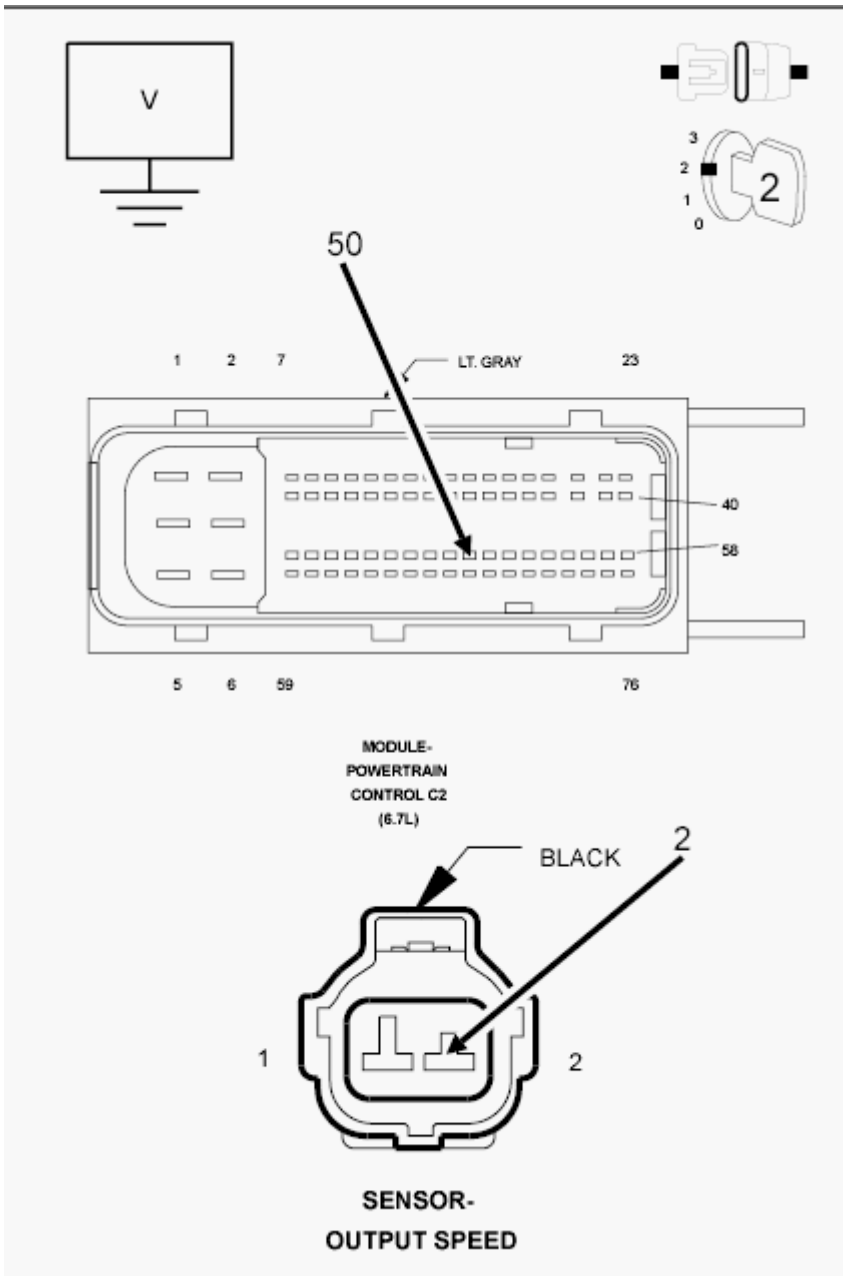

Fig. 25: Checking Output Speed Sensor Ground Circuit For Short To Voltage
Courtesy of CHRYSLER GROUP, LLC

1. With the scan tool in TIPM, actuate the TCM output.
2. Measure the voltage of the (T13) Speed Sensor Ground circuit.

   Is the voltage above 0.5 of a volt?

   Yes

   - Repair the (T13) Speed Sensor Ground circuit for a short to voltage.

- Refer to **STANDARD PROCEDURE** and perform the 68RFE TRANSMISSION VERIFICATION TEST.

No

- Using the schematics as a guide, check the Powertrain Control Module (PCM) terminals for corrosion, damage, or terminal push out. Pay particular attention to all power and ground circuits. If no problems are found, replace and program the PCM in accordance with the Service Information. With the scan tool, perform Quick Learn.
- Refer to **STANDARD PROCEDURE** and perform the 68RFE TRANSMISSION VERIFICATION TEST.

9. **CHECK THE WIRING AND CONNECTORS**
    1. The conditions necessary to set this DTC are not present at this time.
    2. Using the schematics as a guide, inspect the wiring and connectors specific to this circuit.
    3. Wiggle the wires while checking for shorted and open circuits.
    4. With the scan tool, check the Event Data to help identify the conditions in which the DTC was set.

    Were there any problems found?

    Yes

    - Repair as necessary.
    - Refer to **STANDARD PROCEDURE** and perform the 68RFE TRANSMISSION VERIFICATION TEST.

    No

    - Test Complete.

P0729-GEAR RATIO ERROR IN 6TH

For a complete wiring diagram, **refer to appropriate SYSTEM WIRING DIAGRAMS article** .

THEORY OF OPERATION

The transmission system uses two speed sensors, one to measure input rpm and one to measure output rpm. These inputs are essential for proper transmission operation. Therefore, the integrity of this data is verified through the following checks:

NOTE: **Various Gear Ratio Error DTCs will set only if the transmission slips after first achieving the correct ratio. Therefore, a transmission with no drive (or reverse) may not set any Gear Ratio Error DTC because it never achieves a correct gear ratio.**

1) Once in a particular gear, if the gear ratio varies from the correct gear ratio, the corresponding in-gear trouble

code is set (DTCs P0729 and P0731-36).

2) An excessive change in input or output speeds indicating signal intermittent will result in the DTCs P0716 and/or P0721 being set.

3) If the common speed sensor ground circuit is lost, both sensor inputs will read the pulses from the input speed sensor when at a stop in neutral. Since the input speed sensor reads 60 teeth from the input clutch hub and the output speed sensor reads 30 teeth from the park gear, the result is an apparent speed ratio of 1:2 and may cause the DTC P1794 to set.

WHEN MONITORED:

Continuously with the ignition on, engine running, and after the transmission achieves the correct gear ratio.

SET CONDITION:

If the ratio of the Input rpm to the Output rpm does not match the current gear ratio. This DTC can take up to five minutes of problem identification before illuminating the MIL.

POSSIBLE CAUSES

Possible Causes
LOW FLUID LEVEL
INPUT OR OUTPUT SPEED SENSOR(S) OR WIRING
VALVE BODY ACCUMULATOR COVER FAILED
CUT OD OR 2C ACCUMULATOR SEAL
CRACKED OD OR 2C ACCUMULATOR PISTON
BROKEN OR MISSING OD BLEED ORIFICE IN MAIN VALVE BODY
CUT 2C TOWER SEAL
TRANSMISSION SOLENOID/TRS ASSEMBLY
CUT OR MISSING NO. 5, NO. 6, OR NO. 7 CHECK BALL
WORN SOLENOID SWITCH VALVE OR PLUGS
CUT OD OR 2C PISTON SEAL
STUCK MAIN REGULATOR VALVE
BURNED OD OR 2C CLUTCH
BROKEN OR MISSING 2C BLEED ORIFICE IN 2C/4C RETAINER
BROKEN REACTION SHAFT SUPPORT SEAL RING
POOR MACHINING ON PUMP VALVE BODY FACE
LOOSE / MISSING DRIBBLER ORIFICE ASSEMBLY IN REACTION SHAFT SUPPORT
CRACKED / LOOSE / MISSING OD/REVERSE PISTON BLEED ORIFICE
FAILED OD SHAFT
FAILED REVERSE ANNULUS GEAR SPLINE
FAILED REVERSE CARRIER HUB SPLINE
FAILED REVERSE SUN GEAR SPLINE TO REACTION CARRIER

Always perform the Pre-Diagnostic Troubleshooting procedure before proceeding. Refer to STANDARD PROCEDURE.

DIAGNOSTIC TEST

1. **CHECK FOR RELATED DTCS**
   1. With the scan tool, check for other transmission DTCs
   2. If any of these DTCs are present, perform their respective tests first.

      Are there any Transmission solenoid, line pressure, speed sensor, and/or loss of prime DTCs present?

      Yes

      - If any of these DTCs are present, they may cause a Speed Ratio Error. Refer to **DIAGNOSTIC CODE INDEX** and perform the test for P0944 first if it is present.

      No

      - Go To 2.
2. **CHECK THE EVENT DATA**
   1. With the scan tool, read and record the Event Data.

      NOTE: Make sure to record all Event Data stored in the scan tool for future reference in this test procedure.

      Does the Event Data display information for the DTC P0729?

      Yes

      - Go To 4.

      No

      - Go To 3.
3. **CHECK THE TARGET GEAR**

   In the Event Data recorded earlier, does the Event Data show the DTC P1790, with Target gear = 6th, or with both the 2C and OD clutches applying?

   Yes

   - Go To 4.

   No

- Go To 6.

4. **CHECK INPUT RPM**

   In the Event Data recorded earlier, does the Input rpm read zero?

   Yes

   - Refer to **DIAGNOSTIC CODE INDEX** and perform the diagnostic procedure for P0716-Input Speed Sensor Circuit Performance. Diagnose the DTC as if it is set and current.

   No

   - Go To 5.

5. **CHECK LINE PRESSURE READING**

   In the Event Data recorded earlier, is the line pressure reading more than 10 psi below the desired line pressure reading?

   Yes

   - Remove the Transmission Oil pan and check the Transmission Oil filter for improper installation or plugged, if Primary oil filter is OK, check the main regulator valve in pump. If excessive debris is in the oil pan, check clutches and repair as necessary. Refer to **STANDARD PROCEDURE** for proper repair procedures.
   - Refer to **STANDARD PROCEDURE** and perform the 68RFE TRANSMISSION VERIFICATION TEST.

   No

   - Go To 6.

6. **CHECK TRANSMISSION FOR SLIPPAGE**
   1. Erase DTCs and road test the vehicle.
   2. Check the transmission operation in reverse and all forward gears.

      During the road test, was there any obvious slippage noted in any gear, or did the transmission fail to make a 1-2 upshift?

      Yes

      - Go To 8.

      No

      - Go To 7.

7. **CHECK IF THE DTC RESETS**

1. With the scan tool, check for Transmission DTCs after the road test.

   Did the DTC P0729 reset?

   Yes

   - Go To 8.

   No

   - Test Complete.
   - Refer to **STANDARD PROCEDURE** and perform the 68RFE TRANSMISSION VERIFICATION TEST.

8. **CHECK INTERNAL TRANSMISSION**
   1. Remove the Transmission Oil Pan and Valve Body, in accordance with the Service Information, and check for the following:
      - Excessive clutch and or metal debris in the oil pan.
      - If the accumulator cover is intact and the 2C tower seal is not cut or split.
      - OD and 2C accumulator pistons for cracks or cut seals.
      - Solenoid Switch Valve and its plugs for stickiness or wear.
      - Cut or missing No. 5, No. 6, or No. 7 check ball.
      - OD bleed orifice (on top of the main valve body) is intact.
      - Air check the OD and 2C hydraulic clutch circuits for excessive leakage. Refer to **STANDARD PROCEDURE** .

      NOTE: Both the OD and 2C hydraulic clutch circuits contain a small bleed orifice. A small amount of air leakage is considered normal. The OD hydraulic clutch circuit bleed orifice connects to the Reverse input clutch hydraulic cavity. A small amount of air leakage into the Reverse hydraulic clutch circuit is considered normal.

      Were there any problems found?

      Yes

      - Repair as necessary. Refer to **STANDARD PROCEDURE** for proper repair procedures.

        NOTE: If the OD or 2C clutch has failed but no obvious cause is found (such as a cut piston seal, broken seal ring, stuck regulator valve or any other items listed above) replace the Transmission Solenoid/TRS Assembly in addition to any necessary internal repairs.

      - Refer to **STANDARD PROCEDURE** and perform the 68RFE TRANSMISSION

VERIFICATION TEST.

No

- Go To 9.

9. **CHECK ROAD TEST RESULTS**

During the road test, were Reverse, 1st, 2nd, and 3rd gears OK, but the transmission slipped in 4th, 5th, and 6th gears?

Yes

- Go To 10.

No

- Go To 11.

10. **CHECK THE OD SHAFT AND REVERSE CARRIER SPLINE**
    1. Remove the Transmission in accordance with the Service Information and inspect the OD shaft and its spline to the reverse carrier hub.

       Were there any problems found?

       Yes

       - Repair as necessary. Refer to **STANDARD PROCEDURE** for proper repair procedures.
       - Refer to **STANDARD PROCEDURE** and perform the 68RFE TRANSMISSION VERIFICATION TEST.

       No

       - Disassemble and inspect the input clutch assembly. Check the OD and Reverse clutch seals, discs, and bleed orifice (in the OD/Reverse clutch piston) and repair as necessary in accordance with the Service Information.

         NOTE: If the OD clutch has failed but no obvious cause is found (such as a cut piston seal, broken seal ring, stuck regulator valve, etc.), replace the Transmission Solenoid/TRS Assembly in addition to any other necessary repairs.

       - Refer to **STANDARD PROCEDURE** and perform the 68RFE TRANSMISSION VERIFICATION TEST.

11. **CHECK FOR FAILED REVERSE GEARSET SPLINES**

Working through the windows in the bottom of the case, check for a failed Reverse Sun or Annulus gear spline as follows:

1. Hold the Transmission Output Shaft by holding the Transmission Manual Lever in the park position.
2. Apply the 4C clutch using 30-40 psi shop air at the apply port in the center bulkhead.
3. Attempt to rotate the input annulus gear and drive shell (the drum that encloses the two rearmost gearsets).

NOTE: Due to the overrunning clutch, the gear and drive shell normally rotates in one direction only.

Can the drive shell be rotated?

Yes

- Repair internal transmission as necessary in accordance with the Service Information. Check the reverse annulus gear spline to the input carrier, and the reverse sun gear spline to the reaction carrier hub.
- Refer to **STANDARD PROCEDURE** and perform the 68RFE TRANSMISSION VERIFICATION TEST.

No

- Replace Transmission Solenoid/TRS Assembly in accordance with the Service Information and Refer to **STANDARD PROCEDURE** and perform the 68RFE TRANSMISSION VERIFICATION TEST.

NOTE: If continued slippage is noted in 2nd and/or 6th gear during the verification test, remove the transmission and inspect the 2C clutch and repair as necessary in accordance with the Service Information.

P0731-GEAR RATIO ERROR IN 1ST

For a complete wiring diagram, **refer to appropriate SYSTEM WIRING DIAGRAMS article** .

THEORY OF OPERATION

The transmission system uses two speed sensors, one to measure input rpm and one to measure output rpm. These inputs are essential for proper transmission operation. Therefore, the integrity of this data is verified through the following checks:

NOTE: Various Gear Ratio Error DTCs will set only if the transmission slips after first achieving the correct ratio. Therefore, a transmission with no drive (or reverse) may not set any Gear Ratio Error DTC because it never achieves a correct gear ratio.

1) Once in a particular gear, if the gear ratio varies from the correct gear ratio, the corresponding in-gear trouble

code is set (DTCs P0729 and P0731-36).

2) An excessive change in input or output speeds indicating signal intermittent will result in the DTCs P0716 and/or P0721 being set.

3) If the common speed sensor ground circuit is lost, both sensor inputs will read the pulses from the input speed sensor when at a stop in neutral. Since the input speed sensor reads 60 teeth from the input clutch hub and the output speed sensor reads 30 teeth from the park gear, the result is an apparent speed ratio of 1:2 and may cause the DTC P1794 to set.

WHEN MONITORED:

Continuously with the ignition on, engine running, and after the transmission achieves the correct gear ratio.

SET CONDITION:

If the ratio of the Input rpm to the Output rpm does not match the current gear ratio. This DTC can take up to five minutes of problem identification before illuminating the MIL

POSSIBLE CAUSES

Possible Causes
CUT UD PISTON SEAL
LOW FLUID LEVEL
CRACKED OR MIS-INSTALLED PRIMARY OIL FILTER OR SEAL
STUCK OR STICKING MAIN REGULATOR VALVE
FAILED OVERRUNNING CLUTCH
BURNED UD CLUTCH
CUT UD ACCUMULATOR SEAL RING
CRACKED UD ACCUMULATOR PISTON
BROKEN REACTION SHAFT SUPPORT SEAL RING
LOW LINE PRESSURE
BROKEN / MISSING MAIN VALVE BODY BLEED ORIFICE
BROKEN / MISSING DRIBBLER ORIFICE ASSEMBLY IN REACTION SHAFT SUPPORT
POOR MACHINING ON PUMP VALVE BODY FACE
FAILED UD SHAFT
BROKEN OUTPUT SHAFT WELD
FAILED INPUT GEARSET
INPUT OR OUTPUT SPEED SENSOR(S) AND RELATED WIRING
TRANSMISSION SOLENOID/TRS ASSEMBLY
POWERTRAIN CONTROL MODULE (PCM)

Always perform the Pre-Diagnostic Troubleshooting procedure before proceeding. Refer to STANDARD PROCEDURE.

DIAGNOSTIC TEST

1. **CHECK FOR RELATED DTCS**
    1. With the scan tool, read DTCs.
    2. If any of these DTCs are present, perform their respective tests first.

    Are there any Transmission solenoid, line pressure, speed sensor, and/or loss of prime DTCs present?

    Yes

    - If any of these DTCs are present, they may cause a Speed Ratio Error. Refer to **DIAGNOSTIC CODE INDEX** and perform the test for P0944 first if it is present.

    No

    - Go To 2.
2. **CHECK THE L/R CLUTCH STATE**
    1. Start the vehicle, with the brakes firmly applied and the vehicle stationary, place the shift lever in Drive. Using the scan tool, check the L/R Clutch State.

    Did the L/R Clutch state read Applied?

    Yes

    - Go To 4.

    No

    - Go To 3.
3. **CHECK THE POWERTRAIN CONTROL MODULE**
    1. Turn the ignition off to the lock position for at least 30 seconds.
    2. Again, start the vehicle, with the brakes firmly applied and the vehicle stationary, place the shift lever in Drive. Using the scan tool, check the L/R Clutch State.

    Did the L/R Clutch state read Applied?

    Yes

    - Go To 4.

    No

    - Using the schematics as a guide, check the Powertrain Control Module (PCM) terminals for corrosion, damage, or terminal push out. Pay particular attention to all power and ground circuits. If no problems are found, replace and program the PCM in accordance with the

Service Information. With the scan tool, perform Quick Learn.

- Refer to **STANDARD PROCEDURE** and perform the 68RFE TRANSMISSION VERIFICATION TEST.

4. **CHECK FOR SLIPPAGE IN 1ST GEAR**
   1. With the scan tool, perform the 1st Gear Clutch Test. Follow the instructions on the scan tool.
   2. Increase the throttle angle or TPS Degree to 30° for no more than a few seconds.

      CAUTION: Do not overheat the transmission.

      Did the Clutch Test pass, Input Speed remain at zero?

      Yes

      - Go To 6.

      No

      - Go To 5.

5. **CHECK THE OVERRUNNING CLUTCH**
   1. With the scan tool, monitor the L/R Clutch state while launching the vehicle from a stop in 1st gear.

      Does the transmission slip (neutral out) when the L/R Clutch state changes to Not Applied?

      Yes

      - Remove transmission and inspect for failed overrunning clutch (rotates in both directions). Refer to **STANDARD PROCEDURE** for proper repair procedures.
      - Refer to **STANDARD PROCEDURE** and perform the 68RFE TRANSMISSION VERIFICATION TEST.

      No

      - Go To 7.

6. **CHECK FOR INTERMITTENT OPERATION**
   1. The conditions to set this DTC are not currently present.
   2. With the scan tool, check the Event Data to help identify the conditions in which the DTC was set.
      - If the Event Data shows fault P0731 was set in Park, Reverse, or Neutral, replace the Powertrain Control Module.
      - If the Event Data shows fault P0731 set with input rpm = zero, check the input speed sensor and related wiring.
      - If the Event Data shows fault P0731 set with line pressure significantly below desired line pressure, check for the cause of low line pressure (i.e., oil level, mis-installed or damaged

primary filter or filter seal, sticking main regulator valve in pump, etc.).

- If the Event Data shows fault P0731 set with the UD pressure switch open (but line pressure matches Desired Line Pressure), air check the UD hydraulic clutch circuit for leakage in accordance with the Service Information. If the UD hydraulic clutch circuit is OK, replace the solenoid/TRS assembly.

3. Check the gearshift linkage adjustment.
4. Intermittent Gear Ratio DTCs can be set by problems in the Input and Output Speed Sensor circuits and/or Speed Sensor Ground circuit.
5. Remove the Ignition Switch Feed fuse from the TIPM.

CAUTION: Removal of the Ignition Switch Feed fuse from the TIPM will prevent the vehicle from being started in gear.

WARNING: The Ignition Switch Feed fuse must be removed from the TIPM. Failure to do so can result in possible serious or fatal injury.

6. Install the Transmission Simulator (special tool #8333A, Simulator, Transmission).
7. Wiggle wiring and connectors while checking for intermittent operation with the Transmission Simulator.
8. Gear ratio DTCs can also be set under extreme temperature conditions.
9. Verify if the problem is only experienced under extreme hot or cold conditions.

Were there any problems found.

Yes

- Repair as necessary.
- Refer to **STANDARD PROCEDURE** and perform the 68RFE TRANSMISSION VERIFICATION TEST.

No

- Test complete.

7. **CHECK INTERNAL TRANSMISSION**
   1. Repair internal transmission as necessary. Refer to **STANDARD PROCEDURE** .
   2. If there were any line pressure DTCs present along with this DTC, make sure to inspect the: Primary oil filter and seal, Transmission Oil Pump, and the Main regulator valve in accordance with the Service Information.
   3. If DTCs P0876 and/or P0875 were present in addition to the P0731, replace the Transmission Solenoid/TRS Assembly in addition to necessary internal repairs.
   4. Pay particular attention to the following list of possible causes when repairing the transmission:
      - Cut UD piston seal

- Failed overrunning clutch
- Burned UD clutch
- Cut UD accumulator seal ring
- Broken UD accumulator piston
- Low line pressure
- Broken/missing main valve body bleed orifice
- Broken/missing dribbler orifice assembly in reaction shaft support
- Poor machining on pump valve body face
- Transmission Solenoid/TRS Assembly

Repair

NOTE: **If the UD clutch has failed but no obvious cause is found (such as a cut piston seal, broken seal ring, low line pressure in Event Data, or other items listed above) replace the Transmission Solenoid/TRS Assembly in addition to any necessary internal repairs.**

- Repair internal transmission in accordance with the Service Information.
- Refer to **STANDARD PROCEDURE** and perform the 68RFE TRANSMISSION VERIFICATION TEST.

P0732-GEAR RATIO ERROR IN 2ND

For a complete wiring diagram, **refer to appropriate SYSTEM WIRING DIAGRAMS article**

THEORY OF OPERATION

The transmission system uses two speed sensors, one to measure input rpm and one to measure output rpm. These inputs are essential for proper transmission operation. Therefore, the integrity of this data is verified through the following checks:

NOTE: **Various Gear Ratio Error DTCs will set only if the transmission slips after first achieving the correct ratio. Therefore, a transmission with no drive (or reverse) may not set any Gear Ratio Error DTC because it never achieves a correct gear ratio.**

1) Once in a particular gear, if the gear ratio varies from the correct gear ratio, the corresponding in-gear trouble code is set (DTCs P0729 and P0731-36).

2) An excessive change in input or output speeds indicating signal intermittent will result in the DTCs P0716 and/or P0721 being set.

3) If the common speed sensor ground circuit is lost, both sensor inputs will read the pulses from the input

speed sensor when at a stop in neutral. Since the input speed sensor reads 60 teeth from the input clutch hub and the output speed sensor reads 30 teeth from the park gear, the result is an apparent speed ratio of 1:2 and may cause the DTC P1794 to set.

WHEN MONITORED:

Continuously with the ignition on, engine running, with the transmission in gear.

SET CONDITION:

If the ratio of the Input rpm to the Output rpm does not match the current gear ratio. This DTC can take up to five minutes of problem identification before illuminating the MIL

POSSIBLE CAUSES

Possible Causes
RELATED DTCS PRESENT
INPUT OR OUTPUT SPEED SENSOR(S) OR WIRING
LOW FLUID LEVEL
CRACKED OR MIS-INSTALLED PRIMARY OIL FILTER OR SEAL
WORN SOLENOID SWITCH VALVE OR PLUGS
STUCK OR STICKING MAIN REGULATOR VALVE
BURNED UD OR 2C CLUTCH
CUT 2C OR UD PISTON SEAL
BROKEN 2C PISTON CASTING
BROKEN OR MISSING 2C BLEED ORIFICE
BROKEN OR MISSING UD BLEED ORIFICE
CUT 2C OR UD ACCUMULATOR PISTON SEAL
CRACKED 2C OR UD ACCUMULATOR PISTON
CUT OR MISSING NO. 5 OR NO. 7 CHECK BALL
TRANSMISSION SOLENOID/TRS ASSEMBLY
BROKEN INPUT ANNULUS TO DRIVE SHELL WELD
FAILED SPLINE - REVERSE ANNULUS GEAR TO INPUT CARRIER
FAILED SPLINE - REACTION CARRIER TO REVERSE SUN GEAR
MISSING TEETH ON INPUT CLUTCH HUB TONE WHEEL

Always perform the Pre-Diagnostic Troubleshooting procedure before proceeding. Refer to STANDARD PROCEDURE.

DIAGNOSTIC TEST

1. **CHECK FOR RELATED DTCS**
    1. With the scan tool, check for other transmission DTCs.

Are there any Transmission solenoid, line pressure, speed sensor, and/or loss of prime DTCs present?

Yes

- Refer to **DIAGNOSTIC CODE INDEX** and perform the test for P0944-LOSS OF PRIME first if it is present.

No

- Go To 2.

2. **CHECK IF DTC IS CURRENT**
   1. With the scan tool, read and record the Event Data.

      NOTE: Make sure to record all Event Data stored in the scan tool for future reference in this test procedure.

      Does the Event Data display information for the DTC P0732?

      Yes

      - Go To 4.

      No

      - Go To 3.

3. **CHECK THE EVENT DATA**
   1. In the Event Data, identify the DTC that was recorded earlier.

      In the Event Data recorded earlier, does the Event Data display information for the DTC P1790, with target gear = 2nd, or with both 2C and UD clutches applying?

      Yes

      - Go To 4.

      No

      - Go To 7.

4. **CHECK RPM IN EVENT DATA**

   In the Event Data recorded earlier, does the Input rpm read zero?

   Yes

   - Check the input speed sensor and wiring. Refer to **DIAGNOSTIC CODE INDEX** and test P0716

and diagnose as if the DTC is current.

No

- Go To 5.

5. **CHECK LINE PRESSURE READING**

In the Event Data recorded earlier, is the line pressure reading more than 10 psi below the desired line pressure?

Yes

- Go To 6.

No

- Go To 7.

6. **CHECK TRANSMISSION OIL FILTER**
   1. Turn the ignition off to the lock position.
   2. Remove and inspect the Transmission Oil Pan for excessive debris in accordance with the Service Information.
   3. Remove and inspect the Primary Oil Filter in accordance with the Service Information.

NOTE: **Make sure the Primary Transmission Oil Filter and seal are properly installed and are not cracked or split.**

Does the Oil Pan contain excessive debris and/or is the Primary Oil Filter cracked, plugged or mis-installed?

Yes

- Repair the plugged, cracked, or split Primary Transmission Oil Filter and/or seal. If excessive clutch debris is present, check the clutches for damage. Refer to **STANDARD PROCEDURE** for the proper hydraulic clutch repair procedure.
- Refer to **STANDARD PROCEDURE** and perform the 68RFE TRANSMISSION VERIFICATION TEST.

No

- Remove the Transmission Oil Pump in accordance with the Service Information. Check the main Regulator Valve for sticking in its bore, scoring, and/or damage and clean and repair as necessary. If no problem is found, replace the Transmission Solenoid/TRS Assembly.
- Refer to **STANDARD PROCEDURE** and perform the 68RFE TRANSMISSION VERIFICATION TEST.

7. **CHECK IF THE DTC P0732 IS CURRENT**

1. With the scan tool, perform the 2nd Gear Clutch Test. Follow the instructions on the scan tool.
2. Increase the throttle angle, TPS Degree, to 30° for no more than a few seconds.

CAUTION: Do not overheat the transmission.

NOTE: If the 2C clutch is faulty, the overrunning clutch will hold and the slip test will pass. The 2nd gear clutch test will not detect a faulty 2C clutch. However, it will detect a faulty UD clutch.

Did the clutch test pass, did the Input Speed remain at zero?

Yes

- Go To 8.

No

- Go To 10.

8. **CHECK FOR INTERMITTENT OPERATION**
   1. Check the Shifter adjustment in accordance with the Service Information.
   2. Intermittent gear ratio DTCs can be set by problems in the Input and Output Speed Sensor circuits and/or Speed Sensor Ground circuit.
   3. Remove the Ignition Switch Feed fuse from the TIPM.

CAUTION: Removal of the Ignition Switch Feed fuse from the TIPM will prevent the vehicle from being started in gear.

WARNING: The Ignition Switch Feed fuse must be removed from the TIPM. Failure to do so can result in possible serious or fatal injury.

   4. Check the Speed Sensor wiring and connectors for good connection, then perform a wiggle test using the Transmission Simulator (special tool #8333A, Simulator, Transmission).

   Were there any problems found?

   Yes

   - Repair as necessary.
   - Refer to **STANDARD PROCEDURE** and perform the 68RFE TRANSMISSION VERIFICATION TEST.

   No

- Go To 9.

9. **CHECK FOR SLIPPAGE**
    1. With the scan tool, erase Transmission DTCs.
    2. Road test the vehicle.

    Does the Transmission fail to make a 1-2 upshift (stays in 1st gear and then shifts to direct gear), or is there obvious slippage noticed in 2nd gear?

    Yes

    - Go To 12.

    No

    - Go To 16.

10. **CHECK THE UD HYDRAULIC CLUTCH CIRCUIT**
    1. Remove Transmission Oil Pan and check for excessive debris.
    2. Remove the Valve Body and air check the UD hydraulic clutch circuit (in the case) in accordance with the Service Information.

    NOTE: The UD clutch passage contains a small bleed orifice, a small amount of air leakage is normal.

    Were there any problems found, excessive debris and/or excessive air leakage in the UD clutch hydraulic circuit?

    Yes

    - Repair as necessary. Check the UD clutch piston seals, reaction shaft support seal rings and the dribbler assembly, and the flatness of the pump valve body and pump housing faces. Check main regulator valve for sticking in the bore.

      NOTE: If the UD clutch has failed but no obvious cause is found (such as a cut piston seal, broken seal ring, low line pressure in Event Data, or any other items listed above) replace the Transmission Solenoid/TRS Assembly in addition to any necessary internal repairs.

    - Refer to **STANDARD PROCEDURE** and perform the 68RFE TRANSMISSION VERIFICATION TEST.

    No

    - Go To 11.

11. **CHECK THE UD ACCUMULATOR PISTON**

1. Check the UD bleed orifice, accumulator piston, and accumulator piston seal in the main valve body.

   Were there any problems found?

   Yes

   - Repair as necessary. Refer to **STANDARD PROCEDURE** for proper repair procedures.
   - Refer to **STANDARD PROCEDURE** and perform the 68RFE TRANSMISSION VERIFICATION TEST.

   No

   - Replace Transmission Solenoid/TRS Assembly in accordance with the Service Information.
   - Refer to **STANDARD PROCEDURE** and perform the 68RFE TRANSMISSION VERIFICATION TEST.

12. **CHECK FOR EXCESSIVE DEBRIS**
    1. Remove the Transmission Oil Pan and check for excessive debris.
    2. If grey sludge is present, check for a improperly assembled 2C clutch with the thick reaction plate not against the case.
    3. Remove the valve body and air check the 2C hydraulic clutch circuit (in the 2C/4C clutch retainer) in accordance with the Service Information.

       NOTE: The 2C clutch passage contains a small bleed orifice, a small amount of air leakage is normal.

       Were there any problems found, excessive debris, improperly assembled 2C clutch and/or excessive air leakage in the 2C hydraulic clutch circuit?

       Yes

       - Repair as necessary. Refer to **STANDARD PROCEDURE** for proper repair procedures. Note: Check the 2C piston seals and bleed orifice.

         NOTE: If the 2C clutch has failed but no obvious cause is found (such as a cut piston seal, cut tower seal, stuck regulator valve, etc.) replace the Transmission Solenoid/TRS Assembly in addition to any necessary internal repairs.

       - Refer to **STANDARD PROCEDURE** and perform the 68RFE TRANSMISSION VERIFICATION TEST.

       No

       - Go To 13.

13. **CHECK THE 2C ACCUMULATOR**
    1. Check the 2C Accumulator piston for cracks or a cut seal.
    2. Check for a cut or missing No. 7 or No. 5 check ball.
    3. Check the Solenoid Switch Valve and its plugs for sticking in its bore or excessive wear.

    Were there any problems found

    Yes

    - Repair as necessary. Refer to **STANDARD PROCEDURE** for proper repair procedures.
    - Refer to **STANDARD PROCEDURE** and perform the 68RFE TRANSMISSION VERIFICATION TEST.

    No

    - Go To 14.
14. **CHECK FOR FAILED REVERSE GEARSET SPLINES**

    Working through the windows in the bottom of the case, check for a failed Reverse Sun or Annulus spline as follows:

    1. Hold the Transmission Output Shaft by holding the Transmission Manual Lever in the park position.
    2. Apply the 4C clutch using 30-40 psi shop air at the apply port in the center bulkhead.
    3. Attempt to rotate the input annulus gear and drive shell (the drum that encloses the two rearmost gearsets).

    NOTE: Due to the overrunning clutch, the gear and drive shell normally rotates in one direction only.

    Can the drive shell be rotated?

    Yes

    - Repair internal transmission as necessary in accordance with the Service Information. Check the reverse annulus gear spline to the input carrier, and the reverse sun gear spline to the reaction carrier hub.
    - Refer to **STANDARD PROCEDURE** and perform the 68RFE TRANSMISSION VERIFICATION TEST.

    No

    - Go To 15.
15. **CHECK THE DRIVE SHELL WELD**

1. Release the output shaft and the 4C clutch.
2. Apply the L/R Clutch only using 30-40 psi of shop air.
3. Attempt to rotate the drive shell as in the previous step.

   Can the drive shell be rotated?

   Yes

   - Repair Transmission as necessary in accordance with the Service Information. Check the drive shell weld to input annulus gear.
   - Refer to **STANDARD PROCEDURE** and perform the 68RFE TRANSMISSION VERIFICATION TEST.

   No

   - Replace the Transmission Solenoid/TRS Assembly in accordance with the Service Information.
   - Refer to **STANDARD PROCEDURE** and perform the 68RFE TRANSMISSION VERIFICATION TEST.

16. **CHECK IF DTC RESETS**

    Did the DTC P0732 reset during the road test?

    Yes

    - Go To 17.

    No

    - Go To 18.

17. **LIST OF POSSIBLE CAUSES**
    1. If any other DTCs set during the road test, refer to **DIAGNOSTIC CODE INDEX**.
    2. If no other DTCs set during the road test, below is a list of possible causes, but not strictly limited to those:
       - Check for excessive debris in the Transmission Oil pan, plugged, cracked, or misinstalled Primary Transmission Oil Filter and/or seal.
       - Check for cut and/or missing No. 7 and No. 5 check balls in the main valve body.
       - Check the 2C and UD accumulator pistons and seals, UD bleed orifice, and the Solenoid Switch Valve and Plugs in the main valve body.
       - Check the UD clutch piston seals, reaction shaft support seal rings and dribbler assembly.
       - Check the 2C clutch piston seals, and bleed orifice.
       - Check the main regulator valve for sticking in its bore and the flatness of the pump valve body and pump housing faces.

- Check for a improperly assembled 2C clutch with the thick reaction plate not against the case.

Repair

- Repair as necessary. Refer to **STANDARD PROCEDURE** for proper repair procedures.

NOTE: If the UD or 2C clutch has failed but no obvious cause is found (such as a cut piston seal, broken seal ring, stuck regulator valve or any other items listed above) replace the Transmission Solenoid/TRS Assembly in addition to any necessary internal repairs.

- Refer to **STANDARD PROCEDURE** and perform the 68RFE TRANSMISSION VERIFICATION TEST.

18. **INTERMITTENT DTC**
    1. The conditions to set this DTC are not currently present.
    2. With the scan tool, check the Event Data to help identify the conditions in which the DTC was set.
       - If the Event Data shows fault P0732 was set in Park, Reverse, or Neutral, replace the Powertrain Control Module.
       - If the Event Data shows fault P0732 set with input rpm = zero, check the input speed sensor and related wiring.
       - If the Event Data shows fault P0732 set with line pressure significantly below desired line pressure, check for the cause of low line pressure (i.e., oil level, misinstalled or damaged primary filter or filter seal, sticking main regulator valve in pump, etc.).
       - If the Event Data shows fault P0732 set with the UD or 2C pressure switch open (but line pressure matches Desired Line Pressure), air check the UD and 2C hydraulic clutch circuits for leakage in accordance with the Service Information. If the UD and 2C hydraulic clutch circuits are OK, replace the Transmission Solenoid/TRS assembly.
    3. Check the gearshift linkage adjustment.
    4. Intermittent Gear Ratio DTCs can be set by problems in the Input and Output Speed Sensor circuits and/or Speed Sensor Ground circuit.
    5. Remove the Ignition Switch Feed fuse from the TIPM.

CAUTION: Removal of the Ignition Switch Feed fuse from the TIPM will prevent the vehicle from being started in gear.

WARNING: The Ignition Switch Feed fuse must be removed from the TIPM. Failure to do so can result in possible serious or fatal injury.

    6. Install Transmission Simulator (special tool #8333A, Simulator, Transmission).
    7. Wiggle wiring and connectors while checking for intermittent operation with the Transmission Simulator.

8. Gear ratio DTCs can also be set under extreme temperature conditions.
9. Verify if the problem is only experienced under extreme hot or cold conditions.

   Were there any problems found.

   Yes

   - Repair as necessary.
   - Refer to **STANDARD PROCEDURE** and perform the 68RFE TRANSMISSION VERIFICATION TEST.

   No

   - Test Complete.

P0733-GEAR RATIO ERROR IN 3RD

For a complete wiring diagram, **refer to appropriate SYSTEM WIRING DIAGRAMS article** .

THEORY OF OPERATION

The transmission system uses two speed sensors, one to measure input rpm and one to measure output rpm. These inputs are essential for proper transmission operation. Therefore, the integrity of this data is verified through the following checks:

NOTE: Various Gear Ratio Error DTCs will set only if the transmission slips after first achieving the correct ratio. Therefore, a transmission with no drive (or reverse) may not set any Gear Ratio Error DTC because it never achieves a correct gear ratio.

1) When in gear, if the gear ratio does not compare to a known gear ratio, the corresponding in-gear trouble code is set (DTCs P0729 and P0731-36).

2) An excessive change in input or output speeds indicating signal intermittent will result in the DTCs P0716 and/or P0721 being set.

3) If the common speed sensor ground circuit is lost, both sensor inputs will read the signal from the input speed sensor at idle in neutral. Since the input speed sensor reads 60 teeth from the input clutch hub and the output speed sensor reads 30 teeth from the park gear, the result is an apparent speed ratio of 1:2 and may cause the DTC P1794 to set when at a stop.

WHEN MONITORED:

Continuously with the ignition on, engine running, and after the transmission achieves the correct gear ratio.

SET CONDITION:

If the ratio of the Input rpm to the Output rpm does not match the current gear ratio. This DTC can take up to five minutes of problem identification before illuminating the MIL

POSSIBLE CAUSES

Possible Causes
RELATED DTCS PRESENT
INPUT OR OUTPUT SPEED SENSOR(S) OR WIRING
LOW FLUID LEVEL
CRACKED OR MIS-INSTALLED PRIMARY OIL FILTER OR SEAL
WORN SOLENOID SWITCH VALVE OR PLUGS
STUCK OR STICKING MAIN REGULATOR VALVE
BURNED UD OR 4C CLUTCH
CUT 4C OR UD PISTON SEAL
BROKEN 4C PISTON CASTING
BROKEN OR MISSING 4C BLEED ORIFICE
BROKEN OR MISSING UD BLEED ORIFICE
CUT 4C OR UD ACCUMULATOR PISTON SEAL
CRACKED 4C OR UD ACCUMULATOR PISTON
TRANSMISSION SOLENOID/TRS ASSEMBLY
BROKEN REACTION SUN GEAR WELD
BROKEN REACTION ANNULUS GEAR WELD
FAILED REVERSE SUN GEAR SPLINE
FAILED REVERSE ANNULUS GEAR SPLINE
MISSING TEETH ON INPUT CLUTCH HUB TONE WHEEL

Always perform the Pre-Diagnostic Troubleshooting procedure before proceeding. Refer to STANDARD PROCEDURE.

DIAGNOSTIC TEST

1. **DETERMINING IF RELATED DTCS ARE PRESENT**
    1. With the scan tool, check for other transmission DTCs.

       Are any Transmission solenoid, line pressure, speed sensor, or loss of prime DTCs present?

       Yes

       - Refer to **DIAGNOSTIC CODE INDEX** and perform the test for P0944-LOSS OF PRIME first if it is present.

       No

       - Go To 2.

2. **CHECK EVENT DATA**
   1. With the scan tool, read and record the Event Data.

      NOTE: Make sure to record all Event Data stored in the scan tool for future reference in this test procedure.

      Does the Event Data display information for the DTC P0733?

      Yes

      - Go To 3.

      No

      - Go To 6.
3. **CHECK RPM IN THE EVENT DATA**

   In the Event Data recorded earlier, does the Input rpm read zero?

   Yes

   - Check the input speed sensor and wiring. Refer to **DIAGNOSTIC CODE INDEX** and test P0716 and diagnose as if that DTC is current.

   No

   - Go To 4.
4. **CHECK LINE PRESSURE READING**

   In the Event Data recorded earlier, is the line pressure reading more than 10 psi below the desired line pressure?

   Yes

   - Go To 5.

   No

   - Go To 6.
5. **PLUGGED TRANSMISSION OIL FILTER**
   1. Turn the ignition off to the lock position.
   2. Remove and inspect the Transmission Oil Pan for excessive debris in accordance with the Service Information.
   3. Remove and inspect the Primary Oil Filter in accordance with the Service Information.

NOTE: **Make sure the Primary Transmission Oil Filter and/or seal is not cracked or split.**

Does the Oil Pan contain excessive debris and/or is the Primary Oil Filter cracked or plugged?

Yes

- Repair the plugged, cracked, or split Primary Transmission Oil Filter and/or seal. If the Primary Transmission Oil Filter is plugged, Refer to **STANDARD PROCEDURE** for the proper hydraulic clutch repair procedure.
- Refer to **STANDARD PROCEDURE** and perform the 68RFE TRANSMISSION VERIFICATION TEST.

No

- Remove the Transmission Oil Pump in accordance with the Service Information. Check the main Regulator Valve for sticking in its bore, scoring, and/or damage and clean and repair as necessary. If no problem is found, replace the Transmission Solenoid/TRS Assembly.
- Refer to **STANDARD PROCEDURE** and perform the 68RFE TRANSMISSION VERIFICATION TEST.

6. **CHECK TO SEE IF DTC P0733 IS CURRENT**
   1. With the scan tool, perform the 3rd Gear Clutch Test. Follow the instructions on the scan tool.
   2. Increase the throttle angle, TPS Degree, to 30° for no more than a few seconds.

CAUTION: Do not overheat the transmission.

NOTE: **If the 4C clutch is faulty, the overrunning clutch will hold and the slip test will pass. The 3rd Gear Clutch Test will not detect a faulty 4C clutch. However, it will detect a faulty UD clutch.**

Did the clutch test pass, did the Input Speed remain at zero?

Yes

- Go To 7.

No

- Go To 9.

7. **CHECK FOR INTERMITTENT OPERATION**
   1. Check the Shifter adjustment in accordance with the Service Information.
   2. Intermittent gear ratio DTCs can be set by problems in the Input and Output Speed Sensor circuits and/or Speed Sensor Ground circuit.

3. Check the Speed Sensor wiring and connectors for good connection, then perform a wiggle test using the Transmission Simulator (special tool #8333A, Simulator, Transmission).

   Were there any problems found?

   Yes

   - Repair as necessary.
   - Refer to **STANDARD PROCEDURE** and perform the 68RFE TRANSMISSION VERIFICATION TEST.

   No

   - Go To 8.

8. **CHECK FOR SLIPPAGE**
   1. With the scan tool, erase Transmission DTCs.
   2. Road test the vehicle.
   3. Check the Transmission is Reverse and all forward gears.

      Is there an obvious slippage noted in any gear?

      Yes

      - Go To 11.

      No

      - Go To 14.

9. **UD CLUTCH HYDRAULIC CIRCUIT**
   1. Remove Transmission Oil Pan and check for excessive debris.
   2. Remove the Valve Body and air check the UD clutch hydraulic circuit (in the case) in accordance with the Service Information.

      NOTE: The UD clutch passage contains a small bleed orifice, a small amount of air leakage is normal.

      Were there any problems found, excessive debris and/or excessive air leakage in the UD clutch hydraulic circuit?

      Yes

      - Repair as necessary. Check the UD clutch piston seals and the dribbler assembly, reaction shaft support seal rings, and the flatness of the pump valve body and pump housing faces. Check main regulator valve for sticking in the bore.

NOTE: **If the UD clutch has failed but no obvious cause is found (such as a cut piston seal, broken seal ring, stuck regulator valve, etc.) replace the Transmission Solenoid/TRS Assembly in addition to any necessary internal repairs.**

- Refer to **STANDARD PROCEDURE** and perform the 68RFE TRANSMISSION VERIFICATION TEST.

No

- Go To 10.

10. **UD ACCUMULATOR PISTON**
    1. Check the UD bleed orifice, accumulator piston, and accumulator piston seal in the main valve body.

    Were there any problems found?

    Yes

    - Repair as necessary. Refer to **STANDARD PROCEDURE** for proper repair procedures.
    - Refer to **STANDARD PROCEDURE** and perform the 68RFE TRANSMISSION VERIFICATION TEST.

    No

    - Go To 11.

11. **EXCESSIVE DEBRIS**
    1. Remove the Transmission Oil Pan and check for excessive debris.
    2. Remove the valve body and air check the 4C clutch hydraulic circuit in accordance with the Service Information.

    NOTE: **The 4C clutch passage contains a small bleed orifice, a small amount of air leakage is normal.**

    Were there any problems found, excessive debris, improperly assembled 4C clutch and/or excessive air leakage in the 4C clutch hydraulic circuit?

    Yes

    - Repair as necessary. Refer to **STANDARD PROCEDURE** for proper repair procedures. Note: Check the 4C piston seals and bleed orifice.

    NOTE: **If the 4C clutch has failed but no obvious cause is found (such as a cut piston seal, broken seal ring, low line pressure in Event Data, etc.) replace the Transmission Solenoid/TRS Assembly in**

addition to any necessary internal repairs.

- Refer to **STANDARD PROCEDURE** and perform the 68RFE TRANSMISSION VERIFICATION TEST.

No

- Go To 12.

12. **4C ACCUMULATOR**
    1. Check the 4C Accumulator piston for cracks or a cut seal.
    2. Check for a cut or missing No. 5 check ball.
    3. Check the Solenoid Switch Valve and its plugs for sticking in its bore or excessive wear.

    Were there any problems found?

    Yes

    - Repair as necessary. Refer to **STANDARD PROCEDURE** for proper repair procedures.
    - Refer to **STANDARD PROCEDURE** and perform the 68RFE TRANSMISSION VERIFICATION TEST.

    No

    - Go To 13.

13. **CHECK FOR BROKEN REVERSE SUN GEAR WELD**

    Working through the windows in the bottom of the case, check the failed Reverse or reaction gear set connections follows:

    1. Hold the Transmission Output Shaft by holding the Transmission Manual Lever in the park position.
    2. Apply the 4C clutch using 30-40 psi shop air at the apply port in the center bulkhead.
    3. Attempt to rotate the input annulus gear and drive shell (the drum that encloses the to rearmost gearsets). Note that (due to the overrunning clutch) the gear and drive shell normally rotates in one direction only.

    Can the drive shell be rotated?

    Yes

    - Repair Transmission as necessary in accordance with the Service Information. Check the reverse annulus gear spline to the input carrier, the reverse sun gear spline to the reaction carrier hub, and the reaction sun gear weld to the 4C clutch hub.
    - Refer to **STANDARD PROCEDURE** and perform the 68RFE TRANSMISSION VERIFICATION TEST.

No

- Go To 17.

14. **CHECK IF DTC RESET**

Did the DTC P0733 reset during the road test?

Yes

- Go To 15.

No

- Go To 16.

15. **LIST OF POSSIBLE CAUSES**
    1. If any other DTCs set during the road test, refer to **DIAGNOSTIC CODE INDEX**.
    2. If no other DTCs set during the road test, below is a list of possible causes, but not strictly limited to those:
    3. Check for excessive debris in the Transmission Oil pan, plugged, cracked, or split Primary Transmission Oil Filter and/or seal.
    4. Check for cuts or missing No. 5 check ball in the main valve body.
    5. Check the 4C and UD accumulator pistons and seals, UD bleed orifice, and the Solenoid Switch Valve and Plugs in the main valve body.
    6. Check the UD clutch piston seals, reaction shaft support seal rings, and the flatness of the pump valve body and pump housing faces.
    7. Check the 4C clutch piston seals, and bleed orifice.
    8. Check the UD clutch piston seals, reaction shaft support seal rings, and dribbler assemblies, and the flatness of the pump valve body and pump housing faces.

    Repair

    - Repair as necessary. Refer to **STANDARD PROCEDURE** for proper repair procedures.

    NOTE: **If the UD or 4C clutch has failed but no obvious cause is found (such as a cut piston seal, broken seal ring, stuck regulator valve, or other items listed above) replace the Transmission Solenoid/TRS Assembly in addition to any necessary internal repairs.**

    - Refer to **STANDARD PROCEDURE** and perform the 68RFE TRANSMISSION VERIFICATION TEST.

16. **INTERMITTENT DTC**
    1. The conditions necessary to set this DTC are not present at this time.
    2. Use the Event Data to help identify the conditions and/or possible causes that may have caused the

DTC to set.

3. Check for any Service Information Tune-ups or Technical Service Bulletins that may apply.

   Where there any problems found?

   Yes

   - Repair as necessary.
   - Refer to **STANDARD PROCEDURE** and perform the 68RFE TRANSMISSION VERIFICATION TEST.

   No

   - Test Complete.

17. **INTERMITTENT DTC**
    1. The conditions to set this DTC are not currently present.
    2. With the scan tool, check the Event Data to help identify the conditions in which the DTC was set.
       - If the Event Data shows fault P0733 was set in Park, Reverse, or Neutral, replace the Powertrain Control Module.
       - If the Event Data shows fault P0733 set with input rpm = zero, check the input speed sensor and related wiring.
       - If the Event Data shows fault P0733 set with line pressure significantly below desired line pressure, check for the cause of low line pressure (i.e., oil level, misinstalled or damaged primary filter or filter seal, sticking main regulator valve in pump, etc.).
       - If the Event Data shows fault P0733 set with the UD or 4C pressure switch open (but line pressure matches Desired Line Pressure), air check the UD and 4C hydraulic clutch circuits for leakage in accordance with the Service Information. If the UD and 4C hydraulic clutch circuits are OK, replace the Transmission Solenoid/TRS assembly.
    3. Check the gearshift linkage adjustment.
    4. Intermittent Gear Ratio DTCs can be set by problems in the Input and Output Speed Sensor circuits and/or Speed Sensor Ground circuit.
    5. Remove the Ignition Switch Feed fuse from the TIPM.

       CAUTION: Removal of the Ignition Switch Feed fuse from the TIPM will prevent the vehicle from being started in gear.

       WARNING: The Ignition Switch Feed fuse must be removed from the TIPM. Failure to do so can result in possible serious or fatal injury.

    6. Install Transmission Simulator (special tool #8333A, Simulator, Transmission).
    7. Wiggle wiring and connectors while checking for intermittent operation with the Transmission Simulator.

8. Gear ratio DTCs can also be set under extreme temperature conditions.
9. Verify if the problem is only experienced under extreme hot or cold conditions.

   Were there any problems found.

   Yes

   - Repair as necessary.
   - Refer to **STANDARD PROCEDURE** and perform the 68RFE TRANSMISSION VERIFICATION TEST.

   No

   - Test Complete.

P0734-GEAR RATIO ERROR IN 4TH

For a complete wiring diagram, **refer to appropriate SYSTEM WIRING DIAGRAMS article**

THEORY OF OPERATION

The transmission system uses two speed sensors, one to measure input rpm and one to measure output rpm. These inputs are essential for proper transmission operation. Therefore, the integrity of this data is verified through the following checks:

NOTE: Various Gear Ratio Error DTCs will set only if the transmission slips after first achieving the correct ratio. Therefore, a transmission with no drive (or reverse) may not set any Gear Ratio Error DTC because it never achieves a correct gear ratio.

1) Once in a particular gear, if the gear ratio varies from the correct gear ratio, the corresponding in-gear trouble code is set (DTCs P0729 and P0731-36).

2) An excessive change in input or output speeds indicating signal intermittent will result in the DTCs P0716 and/or P0721 being set.

3) If the common speed sensor ground circuit is lost, both sensor inputs will read the pulses from the input speed sensor when at a stop in neutral. Since the input speed sensor reads 60 teeth from the input clutch hub and the output speed sensor reads 30 teeth from the park gear, the result is an apparent speed ratio of 1:2 and may cause the DTC P1794 to set.

WHEN MONITORED:

Continuously with the ignition on, engine running, and after the transmission achieves the correct gear ratio.

SET CONDITION:

If the ratio of the Input rpm to the Output rpm does not match the current gear ratio. This DTC can take up to five minutes of problem identification before illuminating the MIL

POSSIBLE CAUSES

Possible Causes
RELATED DTCS PRESENT
INPUT OR OUTPUT SPEED SENSOR(S) OR WIRING
LOW FLUID LEVEL
CRACKED OR MIS-INSTALLED PRIMARY OIL FILTER OR SEAL
BENT OR BROKEN ACCUMULATOR COVER ON MAIN VALVE BODY
WORN SOLENOID SWITCH VALVE OR PLUGS
STUCK OR STICKING MAIN REGULATOR VALVE
BURNED UD OR OD CLUTCH
CUT OD OR UD PISTON SEAL
BROKEN OR MISSING UD OR OD BLEED ORIFICE IN MAIN VALVE BODY
BROKEN OR MISSING BLEED ORIFICE IN UD OR OD CLUTCH PISTON
CUT OD OR UD ACCUMULATOR PISTON SEAL
CRACKED OD OR UD ACCUMULATOR PISTON
CUT OR MISSING #6 CHECK BALL
TRANSMISSION SOLENOID/TRS ASSEMBLY
FAILED OD SHAFT
FAILED SPLINE ON REVERSE CARRIER HUB
BROKEN REACTION SHAFT SUPPORT SEAL RING
POOR MACHINING ON PUMP VALVE BODY FACE

Always perform the Pre-Diagnostic Troubleshooting procedure before proceeding. Refer to STANDARD PROCEDURE.

DIAGNOSTIC TEST

1. **CHECK IF RELATED DTCS ARE PRESENT**
    1. With the scan tool, check for other transmission DTCs

       Are there any Transmission; solenoid, line pressure, speed sensor, and/or loss of prime DTCs present?

       Yes

       - Refer to **DIAGNOSTIC CODE INDEX** and perform the test for P0944-LOSS OF PRIME first if it is present.

       No

- Go To 2.

2. **CHECK Event Data**
   1. With the scan tool, read and record the Event Data.

      NOTE: Make sure to record all Event Data stored in the scan tool for future reference in this test procedure.

      Does the Event Data display information for the DTC P0734?

      Yes

      - Go To 4.

      No

      - Go To 3.

3. **CHECK THE TARGET GEAR IN Event Data**
   1. In the Event Data, identify the DTC that was recorded earlier.

      Does the Event Data display information for the DTC P1790, with target gear = 4th, or with both OD and UD clutches applying?

      Yes

      - Go To 4.

      No

      - Go To 7.

4. **CHECK INPUT RPM IN Event Data**
   1. Refer to the Event Data recorded earlier.

      Does the Input rpm read zero?

      Yes

      - Check the input speed sensor and wiring. Refer to **DIAGNOSTIC CODE INDEX** and test P0716 and diagnose as if the DTC is current.

      No

      - Go To 5.

5. **CHECK LINE PRESSURE READING**
   1. Refer to the Event Data recorded earlier.

Is the line pressure reading more than 10 psi below the desired line pressure?

Yes

- Go To 6.

No

- Go To 7.

6. **CHECK TRANSMISSION OIL FILTER**
   1. Turn the ignition off to the lock position.
   2. Remove and inspect the Transmission Oil Pan for excessive debris in accordance with the Service Information.
   3. Remove and inspect the Primary Oil Filter in accordance with the Service Information.

NOTE: Make sure the Primary Transmission Oil Filter and seal are properly installed and are not cracked or split.

Does the Oil Pan contain excessive debris and/or is the Primary Oil Filter cracked, plugged or mis-installed?

Yes

- Repair the plugged, cracked, or split Primary Transmission Oil Filter and/or seal. If excessive clutch debris is present, check the clutches for damage. Refer to **STANDARD PROCEDURE** for the proper hydraulic clutch repair procedure.
- Refer to **STANDARD PROCEDURE** and perform the 68RFE TRANSMISSION VERIFICATION TEST.

No

- Remove the Transmission Oil Pump in accordance with the Service Information. Check the main Regulator Valve for sticking in its bore, scoring, and/or damage and clean and repair as necessary. If no problem is found, replace the Transmission Solenoid/TRS Assembly.
- Refer to **STANDARD PROCEDURE** and perform the 68RFE TRANSMISSION VERIFICATION TEST.

7. **CHECK FOR CLUTCH SLIPPAGE**
   1. With the scan tool, perform the Direct Gear Clutch Test. Follow the instructions on the scan tool.
   2. Increase the throttle angle, TPS Degree, to 30° for no more than a few seconds.

CAUTION: Do not overheat the transmission.

NOTE: If the OD clutch is faulty, the overrunning clutch will hold and the slip

test will pass. The Direct gear clutch test will not detect a faulty OD clutch. However, it will detect a faulty UD clutch.

Did the clutch test pass, did the Input Speed remain at zero?

Yes

- Go To 8.

No

- Go To 10.

8. **CHECK FOR INTERMITTENT OPERATION**
   1. Check the Shifter adjustment in accordance with the Service Information.
   2. Intermittent gear ratio DTCs can be set by problems in the Input and Output Speed Sensor circuits and/or Speed Sensor Ground circuit.
   3. Remove the Ignition Switch Feed fuse from the TIPM.

      CAUTION: Removal of the Ignition Switch Feed fuse from the TIPM will prevent the vehicle from being started in gear.

      WARNING: The Ignition Switch Feed fuse must be removed from the TIPM. Failure to do so can result in possible serious or fatal injury.

   4. Install the Transmission Simulator (special tool #8333A, Simulator, Transmission).
   5. Check the Speed Sensor wiring and connectors for good connection, then perform a wiggle test using the Transmission Simulator (special tool #8333A, Simulator, Transmission).

      Were there any problems found?

      Yes

      - Repair as necessary.
      - Refer to **STANDARD PROCEDURE** and perform the 68RFE TRANSMISSION VERIFICATION TEST.

      No

      - Go To 9.

9. **ROAD TEST THE VEHICLE AND CHECK FOR SLIPPAGE**
   1. With the scan tool, erase Transmission DTCs.
   2. Road test the vehicle. Check operation in all forward gears and Reverse.
   3. If slippage is detected, check whether the line pressure is more than 10 psi below the desired line

pressure reading on the scan tool.

4. Check and record any transmission DTCs.
5. Disconnect the Transmission Solenoid/TRS Assembly harness connector to induce Limp-in.
6. Again test drive the vehicle and check the transmission operation in Drive and Reverse while in Limp-in.
7. Note whether Drive Limp-in provides 1st gear or 4th (direct) gear.
8. Reconnect all disconnected connectors and erase any Transmission DTCs.

Refer to **DIAGNOSTIC CODE INDEX** and perform the appropriate procedure that best describes your road test results:

No obvious slippage noted in any gear

- Go To 15.

Obvious slippage noted in one or more gears, and line pressure (actual) is often more than 10 psi below the Desired Line Pressure reading on the scan tool

- Go To 6.

Slippage noted in 4th gear and Drive Limp-in provides 1st gear

- Go To 12.

Slippage noted in Reverse gear and Drive Limp-in provides 1st gear

- Replace the Transmission Solenoid/TRS Assembly in accordance with the Service Information.
- Refer to **STANDARD PROCEDURE** and perform the 68RFE TRANSMISSION VERIFICATION TEST.

Slippage noted in 4th gear while Drive Limp-in allows 4th gear WITHOUT slippage

- Replace the Transmission Solenoid/TRS Assembly in accordance with the Service Information.
- Refer to **STANDARD PROCEDURE** and perform the 68RFE TRANSMISSION VERIFICATION TEST.

All other possible conditions

- Go To 12.

10. **CHECK THE UD HYDRAULIC CLUTCH CIRCUIT**
    1. Remove Transmission Oil Pan and check for excessive debris.
    2. Remove the Valve Body and air check the UD hydraulic clutch circuit (in the case) in accordance with the Service Information.

NOTE: **The UD clutch passage contains a small bleed orifice, a small amount of air leakage is normal.**

Were there any problems found, excessive debris and/or excessive air leakage in the UD hydraulic clutch circuit?

Yes

- Repair as necessary. Check the UD clutch piston seals, reaction shaft support seal rings and dribbler assemblies, and the flatness of the pump valve body and pump housing faces. Check main regulator valve for sticking in the bore.

  NOTE: **If the UD clutch has failed but no obvious cause is found (such as a cut piston seal, broken seal ring, low line pressure in DTC Event Data, etc.) replace the Transmission Solenoid/TRS Assembly in addition to any necessary internal repairs.**

- Refer to **STANDARD PROCEDURE** and perform the 68RFE TRANSMISSION VERIFICATION TEST.

No

- Go To 11.

11. **CHECK UD ACCUMULATOR PISTON**
    1. Check the UD bleed orifice, accumulator piston, and accumulator piston seal in the main valve body.

    Were there any problems found?

    Yes

    - Repair as necessary. Refer to **STANDARD PROCEDURE** for proper repair procedures.

    No

    - Replace Transmission Solenoid/TRS Assembly in accordance with the Service Information.
    - Refer to **STANDARD PROCEDURE** and perform the 68RFE TRANSMISSION VERIFICATION TEST.

12. **CHECK FOR EXCESSIVE DEBRIS**
    1. Remove the Transmission Oil Pan and check for excessive debris.
    2. Remove the valve body and check if the accumulator cover is intact.
    3. Air check the OD hydraulic clutch circuit (in the case) in accordance with the Service Information.

    NOTE: **The OD clutch passage contains a small bleed orifice which connects to the Reverse clutch hydraulic circuit, a small amount of air leakage**

into the Reverse clutch passage is normal.

Were there any problems found, excessive debris, and/or excessive air leakage in the OD hydraulic clutch circuit?

Yes

- Repair as necessary. Refer to **STANDARD PROCEDURE** for proper repair procedures. Note: Check the bleed orifice in the OD/Reverse clutch piston.

NOTE: **If the OD clutch has failed but no obvious cause is found (such as a cut piston seal, broken seal ring, low line pressure in DTC Event Data, etc.) replace the Transmission Solenoid/TRS Assembly in addition to any necessary internal repairs.**

- Refer to **STANDARD PROCEDURE** and perform the 68RFE TRANSMISSION VERIFICATION TEST.

No

- Go To 13.

13. **CHECK THE OD ACCUMULATOR**
    1. Check the OD Accumulator piston for cracks or a cut seal.
    2. Check for a cut or missing #6 check ball.
    3. Check the Solenoid Switch Valve and its plugs for sticking in its bore or excessive wear.

    Were there any problems found?

    Yes

    - Repair as necessary. Refer to **STANDARD PROCEDURE** for proper repair procedures.
    - Refer to **STANDARD PROCEDURE** and perform the 68RFE TRANSMISSION VERIFICATION TEST.

    No

    - Go To 14.

14. **CHECK FOR FAILED OD SHAFT/SPLINE**
    1. Remove the Transmission in accordance with the Service Information and inspect the OD shaft and its spline to the reverse carrier hub.

    Were there any problems found?

    Yes

- Repair as necessary.

No

- Disassemble and inspect the input clutch assembly. Check the OD and Reverse clutch seals, discs, and bleed orifice (in the OD/Reverse clutch piston). Check the OD hub and shaft. Repair as necessary. Refer to **STANDARD PROCEDURE** for proper repair procedures.

NOTE: **If the OD clutch has failed but no obvious cause is found (such as a cut piston seal, broken seal ring, stuck regulator valve, etc.), replace the Transmission Solenoid/TRS Assembly in addition to any other necessary repairs.**

- Refer to **STANDARD PROCEDURE** and perform the 68RFE TRANSMISSION VERIFICATION TEST.

15. **CHECK IF DTC RESETS**

Did the DTC P0734 reset during the road test?

Yes

- Go To 16.

No

- Go To 17.

16. **LIST OF POSSIBLE CAUSES**
    1. If any other DTCs set during the road test, refer to **DIAGNOSTIC CODE INDEX**.
    2. If no other DTCs set during the road test, below is a list of possible causes, but not strictly limited to those.
    3. Check for:
        - Excessive debris in the Transmission Oil pan, plugged, cracked, or mis-installed Primary Transmission Oil Filter and/or seal.
        - Cut or missing #6 check ball in the main valve body.
        - OD and UD accumulator pistons and seals and bleed orifices, and the Solenoid Switch Valve and Plugs in the main valve body.
        - OD and UD clutch piston seals, reaction shaft support seal rings and dribbler assemblies, and the flatness of the pump valve body and pump housing faces.
        - Main regulator valve for sticking in its bore.

Repair

- Repair as necessary. Refer to **STANDARD PROCEDURE** for proper repair procedures.

NOTE: **If the OD or UD clutch has failed but no obvious cause is found (such as a cut piston seal, broken seal ring, stuck regulator valve, or other items listed above) replace the Transmission Solenoid/TRS Assembly in addition to any necessary internal repairs.**

- Refer to **STANDARD PROCEDURE** and perform the 68RFE TRANSMISSION VERIFICATION TEST.

17. **CHECK FOR INTERMITTENT OPERATION**
    1. The conditions to set this DTC are not currently present.
    2. With the scan tool, check the Event Data to help identify the conditions in which the DTC was set.
       - If the DTC Event Data shows fault P0734 was set in the Park, Reverse, or Neutral, replace the Powertrain Control Module.
       - If the DTC Event Data shows fault P0734 set with input rpm = zero, check the input speed sensor and related wiring.
       - If the DTC Event Data shows fault P0734 set with line pressure significantly below desired line pressure, check for the cause of low line pressure (i.e., oil level, misinstalled or damaged primary filter or filter seal, sticking main regulator valve in pump, etc.).
       - If the DTC Event Data shows fault P0734 set with the OD or UD pressure switch open (but line pressure matches Desired Line Pressure), air check the OD and UD hydraulic clutch circuits for leakage in accordance with the Service Information. If the OD and UD hydraulic clutch circuits are OK, replace the Transmission Solenoid/TRS assembly.
    3. Check the gearshift linkage adjustment.
    4. Intermittent Gear Ratio DTCs can be set by problems in the Input and Output Speed Sensor circuits and/or Speed Sensor Ground circuit.
    5. Remove the Ignition Switch Feed fuse from the TIPM.

CAUTION: **Removal of the Ignition Switch Feed fuse from the TIPM will prevent the vehicle from being started in gear.**

WARNING: **The Ignition Switch Feed fuse must be removed from the TIPM. Failure to do so can result in possible serious or fatal injury.**

    6. Install the Transmission Simulator (special tool #8333A, Simulator, Transmission).
    7. Wiggle wiring and connectors while checking for intermittent operation with the Transmission Simulator.
    8. Gear ratio DTCs can also be set under extreme temperature conditions.
    9. Verify if the problem is only experienced under extreme hot or cold conditions.

    Were there any problems found.

    Yes

- Repair as necessary.
- Refer to **STANDARD PROCEDURE** and perform the 68RFE TRANSMISSION VERIFICATION TEST.

No

- Test Complete.

P0735-GEAR RATIO ERROR IN 5TH

For a complete wiring diagram, **refer to appropriate SYSTEM WIRING DIAGRAMS article**

THEORY OF OPERATION

The transmission system uses two speed sensors, one to measure input rpm and one to measure output rpm. These inputs are essential for proper transmission operation. Therefore, the integrity of this data is verified through the following checks:

NOTE: Various Gear Ratio Error DTCs will set only if the transmission slips after first achieving the correct ratio. Therefore, a transmission with no drive (or reverse) may not set any Gear Ratio Error DTC because it never achieves a correct gear ratio.

1) Once in a particular gear, if the gear ratio varies from the correct gear ratio, the corresponding in-gear trouble code is set (DTCs P0729 and P0731-36).

2) An excessive change in input or output speeds indicating signal intermittent will result in the DTCs P0716 and/or P0721 being set.

3) If the common speed sensor ground circuit is lost, both sensor inputs will read the pulses from the input speed sensor when at a stop in neutral. Since the input speed sensor reads 60 teeth from the input clutch hub and the output speed sensor reads 30 teeth from the park gear, the result is an apparent speed ratio of 1:2 and may cause the DTC P1794 to set.

WHEN MONITORED:

Continuously with the ignition on, engine running, and after the transmission achieves the correct gear ratio.

SET CONDITION:

If the ratio of the Input rpm to the Output rpm does not match the current gear ratio. This DTC can take up to five minutes of problem identification before illuminating the MIL.

POSSIBLE CAUSES

Possible Causes

LOW FLUID LEVEL
INPUT OR OUTPUT SPEED SENSOR(S) OR WIRING
VALVE BODY ACCUMULATOR COVER FAILED
CUT OD OR 4C ACCUMULATOR SEAL
CRACKED OD OR 4C ACCUMULATOR PISTON
BROKEN OR MISSING OD BLEED ORIFICE IN MAIN VALVE BODY
CUT 4C TOWER SEAL
TRANSMISSION SOLENOID/TRS ASSEMBLY
CUT OR MISSING NO. 5 OR NO. 6 CHECK BALL
WORN SOLENOID SWITCH VALVE OR PLUGS
CUT OD OR 4C PISTON SEAL
STUCK MAIN REGULATOR VALVE
BURNED OD OR 4C CLUTCH
BROKEN OR MISSING 4C BLEED ORIFICE IN 2C/4C RETAINER
BROKEN REACTION SHAFT SUPPORT SEAL RING
POOR MACHINING ON PUMP VALVE BODY FACE
LOOSE / MISSING DRIBBLER ORIFICE ASSEMBLY IN REACTION SHAFT SUPPORT
CRACKED / LOOSE / MISSING OD/REVERSE PISTON BLEED ORIFICE
FAILED OD SHAFT
BROKEN REACTION ANNULUS GEAR WELD
FAILED REVERSE ANNULUS GEAR SPLINE
BROKEN REACTION SUN GEAR WELD
FAILED REVERSE CARRIER HUB SPLINE
FAILED REVERSE SUN GEAR SPLINE TO REACTION CARRIER

Always perform the Pre-Diagnostic Troubleshooting procedure before proceeding. Refer to STANDARD PROCEDURE.

DIAGNOSTIC TEST

1. **CHECK FOR RELATED DTCS**
    1. With the scan tool, check for other transmission DTCs
    2. If any of these DTCs are present, perform their respective tests first.

    Are there any Transmission solenoid, line pressure, speed sensor, and/or loss of prime DTCs present?

    Yes

    - If any of these DTCs are present, they may cause a Speed Ratio Error. Refer to **DIAGNOSTIC CODE INDEX** and perform the test for P0944 first if it is present.

    No

- Go To 2.

2. **CHECK THE EVENT DATA**
   1. With the scan tool, read and record the Event Data.

      NOTE: Make sure to record all Event Data stored in the scan tool for future reference in this test procedure.

      Does the Event Data display information for the DTC P0735?

      Yes

      - Go To 4.

      No

      - Go To 3.

3. **CHECK FOR ANOTHER DTC**

   In the Event Data recorded earlier, does the Event Data show the DTC P1790, with Target Gear = 5th, or with both the 4C and OD clutches applying?

   Yes

   - Go To 4.

   No

   - Go To 6.

4. **CHECK THE INPUT RPM**

   In the Event Data recorded earlier, does the Input rpm read zero?

   Yes

   - Refer to **DIAGNOSTIC CODE INDEX** and perform the diagnostic procedure for P0716-Input Speed Sensor Circuit Performance. Diagnose the DTC as if it is set and current.

   No

   - Go To 5.

5. **CHECK THE LINE PRESSURE READING**

   In the Event Data recorded earlier, is the line pressure reading more than 10 psi below the desired line pressure reading?

Yes

- Remove the Transmission Oil pan and check the Transmission Oil filter for improper installation or plugged, if Primary oil filter is OK, check the main regulator valve in pump. If excessive debris is in the oil pan, check clutches and repair as necessary. Refer to **STANDARD PROCEDURE** for proper repair procedures.
- Refer to **STANDARD PROCEDURE** and perform the 68RFE TRANSMISSION VERIFICATION TEST.

No

- Go To 6.

6. **CHECK TRANSMISSION FOR SLIPPAGE**
   1. Erase DTCs and road test the vehicle.
   2. Check the transmission operation in reverse and all forward gears.

      During the road test, was there any obvious slippage noted in any gear?

      Yes

      - Go To 8.

      No

      - Go To 7.

7. **CHECK IF THE DTC RESETS**
   1. With the scan tool, check for Transmission DTCs after the road test.

      Did the DTC P0735 reset?

      Yes

      - Go To 8.

      No

      - Test Complete.

8. **CHECK INTERNAL TRANSMISSION**
   1. Remove the Transmission Oil Pan and Valve Body in accordance with the Service Information and check for the following:
      - Excessive debris in the oil pan.
      - Remove the Valve Body and check if the accumulator cover is intact and the 4C tower seal is not cut or split.
      - OD and 4C accumulator pistons for cracks and/or cut seals.

- Solenoid Switch Valve and its plugs for stickiness or wear.
- Cut or missing No. 5 and/or No. 6 check ball.
- OD bleed orifice (on top of the main valve body) is intact.
- Air check the OD and 4C hydraulic clutch circuits for excessive leakage. Refer to **STANDARD PROCEDURE** .

NOTE: **Both the OD and 4C hydraulic clutch circuits contain a small bleed orifice. A small amount of air leakage is considered normal. The OD hydraulic clutch circuit bleed orifice connects to the Reverse input clutch hydraulic cavity. A small amount of air leakage into the Reverse hydraulic clutch circuit is considered normal.**

Were there any problems found?

Yes

- Repair as necessary. Refer to **STANDARD PROCEDURE** for proper repair procedures.

NOTE: **If the OD or 4C clutch has failed but no obvious cause is found (such as a cut piston seal, broken seal ring, stuck regulator valve or any other items listed above) replace the Transmission Solenoid/TRS Assembly in addition to any necessary internal repairs.**

- Refer to **STANDARD PROCEDURE** and perform the 68RFE TRANSMISSION VERIFICATION TEST.

No

- Go To 9.

9. **CHECK ROAD TEST RESULTS**

Perform the appropriate action for the condition(s) which best describe the road test results:

1st gear was OK. Slipped in 2nd (or failed to make the 1-2 upshift and went into Limp-in) and slipped in Reverse

- Go To 10.

1st and 2nd gears were OK. Slipped in 3rd gear AND in Reverse

- Remove the Transmission in accordance with the Service Information. Inspect the reaction annulus gear weld to the reverse carrier, and the reaction sun gear weld to the 4C clutch hub and repair as necessary.
- Refer to **STANDARD PROCEDURE** and perform the 68RFE TRANSMISSION

VERIFICATION TEST.

1st and 2nd gears were OK. Slipped in 3rd gear but NOT in Reverse.

- Replace Transmission Solenoid/TRS Assembly in accordance with the Service Information and Perform 68RFE TRANSMISSION VERIFICATION TEST. Refer to **STANDARD PROCEDURE**. If a continued Slippage is noted in 3rd gear during the Verification test, Remove the Transmission and inspect the 4C clutch and repair as necessary in accordance with the Service Information.

1st through 3rd gears were OK. Slipped in 4th, 5th, or 6th gear. Reverse was OK

- Go To 11.

10. **CHECK FOR FAILED REVERSE GEARSET SPLINES**

Working through the windows in the bottom of the case, check for a failed Reverse Sun or Annulus gear spline as follows:

1. Hold the Transmission Output Shaft by holding the Transmission Manual Lever in the park position.
2. Apply the 4C clutch using 30-40 psi shop air at the apply port in the center bulkhead. Refer to **STANDARD PROCEDURE** .
3. Attempt to rotate the input annulus gear and drive shell (the drum that encloses the two rearmost gearsets).

NOTE: Due to the overrunning clutch, the gear and drive shell normally rotates in one direction only.

Can the drive shell be rotated?

Yes

- Repair internal transmission as necessary in accordance with the Service Information. Check the reverse annulus gear spline to the input carrier, and the reverse sun gear spline to the reaction carrier hub.
- Refer to **STANDARD PROCEDURE** and perform the 68RFE TRANSMISSION VERIFICATION TEST.

No

- Replace the Transmission Solenoid/TRS Assembly in accordance with the Service Information.
- Refer to **STANDARD PROCEDURE** and perform the 68RFE TRANSMISSION VERIFICATION TEST.

11. **CHECK THE OD SHAFT AND REVERSE CARRIER SPLINE**

1. Remove the Transmission in accordance with the Service Information and inspect the OD shaft and

its spline to the reverse carrier hub.

Were there any problems found?

Yes

- Repair as necessary. Refer to **STANDARD PROCEDURE** for proper repair procedures.
- Refer to **STANDARD PROCEDURE** and perform the 68RFE TRANSMISSION VERIFICATION TEST.

No

- Disassemble and inspect the input clutch assembly. Check the OD and Reverse clutch seals, discs, and bleed orifice (in the OD/Reverse clutch piston) and repair as necessary in accordance with the Service Information.

  NOTE: If the OD clutch has failed but no obvious cause is found (such as a cut piston seal, broken seal ring, stuck regulator valve, etc.), replace the Transmission Solenoid/TRS Assembly in addition to any other necessary repairs.

- Refer to **STANDARD PROCEDURE** and perform the 68RFE TRANSMISSION VERIFICATION TEST.

P0736-GEAR RATIO ERROR IN REVERSE

For a complete wiring diagram, **refer to appropriate SYSTEM WIRING DIAGRAMS article**

THEORY OF OPERATION

The transmission system uses two speed sensors, one to measure input rpm and one to measure output rpm. These inputs are essential for proper transmission operation. Therefore, the integrity of this data is verified through the following checks:

NOTE: Various Gear Ratio Error DTCs will set only if the transmission slips after first achieving the correct ratio. Therefore, a transmission with no drive (or reverse) may not set any Gear Ratio Error DTC because it never achieves a correct gear ratio.

1) Once in a particular gear, if the gear ratio varies from the correct gear ratio, the corresponding in-gear trouble code is set (DTCs P0729 and P0731-36).

2) An excessive change in input or output speeds indicating signal intermittent will result in the DTCs P0716 and/or P0721 being set.

3) If the common speed sensor ground circuit is lost, both sensor inputs will read the pulses from the input speed sensor when at a stop in neutral. Since the input speed sensor reads 60 teeth from the input clutch hub and

the output speed sensor reads 30 teeth from the park gear, the result is an apparent speed ratio of 1:2 and may cause the DTC P1794 to set.

WHEN MONITORED:

Continuously with the ignition on, engine running, and after the transmission achieves the correct gear ratio.

SET CONDITION:

If the ratio of the Input rpm to the Output rpm does not match the current gear ratio. This DTC can take up to five minutes of problem identification before illuminating the MIL

POSSIBLE CAUSES

Possible Causes
LOW FLUID LEVEL
CUT L/R TOWER SEAL ON MAIN VALVE BODY
CUT L/R CLUTCH PISTON SEALS
BROKEN OR MISSING L/R CLUTCH BLEED ORIFICE (IN L/R CLUTCH RETAINER)
CUT L/R ACCUMULATOR PISTON SEAL IN MAIN VALVE BODY
CRACKED L/R ACCUMULATOR PISTON IN MAIN VALVE BODY
BURNED REVERSE OR L/R CLUTCH
CUT OD/REV PISTON SEALS
BROKEN OR MISSING OD/REV BLEED ORIFICE (IN OD/REV CLUTCH PISTON)
BROKEN REACTION ANNULUS GEAR WELD
BROKEN REACTION SUN GEAR WELD
BROKEN INPUT ANNULUS TO DRIVE SHELL WELD
FAILED REVERSE ANNULUS SPLINE TO INPUT CARRIER
FAILED REVERSE SUN GEAR SPLINE TO THE REACTION CARRIER

Always perform the Pre-Diagnostic Troubleshooting procedure before proceeding. Refer to STANDARD PROCEDURE.

DIAGNOSTIC TEST

1. **CHECK FOR RELATED DTCS**
    1. With the scan tool, check for other transmission DTCs.

       Are there any Transmission solenoid, line pressure, speed sensor, and/or loss of prime DTCs present?

       Yes

       - Refer to **DIAGNOSTIC CODE INDEX** and perform the test for P0944-LOSS OF PRIME first if it is present.

No

- Go To 2.

2. **CHECK IF DTC IS CURRENT**

NOTE: Make sure to record all Event Data stored in the scan tool for future reference in this test procedure.

1. With the scan tool, perform the Reverse Gear Clutch test. Follow the instructions on the scan tool.
2. Increase the throttle angle, TPS degree, to 30°, for no more than a few seconds.

CAUTION: Do not overheat the transmission.

Did the clutch test pass, input speed remain at zero?

Yes

- Go To 3.

No

- Go To 4.

3. **CHECK THE EVENT DATA**
   1. The conditions necessary to set this DTC are not currently present.
   2. With the scan tool, check the Event Data to help identify the conditions in which the DTC was set.

   Does the Event Data show an input speed reading of zero?

   Yes

   - Go To 8.

   No

   - Go To 4.

4. **POSSIBLE INTERNAL TRANSMISSION CAUSES**
   1. Remove the Transmission Oil Pan and Valve Body and check the following in accordance with the Service Information:
      - Clutch or metal debris in the pan
      - L/R clutch tower seal on the main valve body or cuts and the L/R accumulator piston and seals.
      - Air check the Reverse and L/R Hydraulic Clutch circuits (in the case) for excessive air leakage.

NOTE: **Both Hydraulic Clutch circuits contain a small bleed orifice, a small amount of air leakage is normal. The Reverse hydraulic clutch circuit bleed orifice connects to the OD hydraulic clutch cavity. A small amount of air leakage into the OD hydraulic clutch circuit is considered normal.**

Were there any problems found?

Yes

- Repair as necessary. If clutch debris is present, remove the transmission and inspect the Reverse and L/R clutches, and inspect the Transmission Oil Pump and Main Regulator Valve for damage or sticking in its bore.

  NOTE: **If the L/R clutch has failed but no obvious cause is found (such as a cut piston seal, cut tower seal, stuck regulator valve or any other items listed above) replace the Transmission Solenoid/TRS Assembly in addition to any necessary internal repairs.**

- Refer to **STANDARD PROCEDURE** and perform the 68RFE TRANSMISSION VERIFICATION TEST.

No

- Go To 5.

5. **CLUTCH TEST FAILURE**

Did the clutch test fail in reverse?

Yes

- Go To 6.

No

- Test complete.
- Refer to **STANDARD PROCEDURE** and perform the 68RFE TRANSMISSION VERIFICATION TEST.

6. **CHECK FOR FAILED REVERSE GEARSET SPLINES**

Working through the windows in the bottom of the case, check for a failed Reverse Sun or Annulus spline as follows:

1. Hold the Transmission Output Shaft by holding the Transmission Manual Lever in the park position.

2. Apply the 4C clutch using 30-40 psi shop air at the apply port in the center bulkhead.
3. Attempt to rotate the input annulus gear and drive shell (the drum that encloses the two rearmost gearsets).

NOTE: Due to the overrunning clutch, the gear and drive shell normally rotates in one direction only.

Can the drive shell be rotated?

Yes

- Repair internal transmission as necessary in accordance with the Service Information. Check the reaction annulus gear weld to the revers carrier, and the reaction sun gear weld to the 4C clutch hub.
- Refer to **STANDARD PROCEDURE** and perform the 68RFE TRANSMISSION VERIFICATION TEST.

No

- Go To 7.

7. **CHECK THE DRIVE SHELL WELD**
   1. Release the output shaft and the 4C clutch.
   2. Apply the L/R Clutch only using 30-40 psi of shop air.
   3. Attempt to rotate the drive shell as in the previous step.

      Can the drive shell be rotated?

      Yes

      - Repair Transmission as necessary in accordance with the Service Information. Check the drive shell weld to input annulus gear.
      - Refer to **STANDARD PROCEDURE** and perform the 68RFE TRANSMISSION VERIFICATION TEST.

      No

      - Disassemble and inspect the input clutch assembly. Check the Reverse clutch reaction plate snap ring. Check the OD and Reverse clutch seals, discs, and bleed orifice (in the OD/Reverse clutch piston). Check the Reverse hub and shaft. If no problems are found, check the L/R clutch assembly and repair as necessary. If all clutches are OK, replace the Transmission Solenoid/TRS assembly in accordance with the Service Information.
      - Refer to **STANDARD PROCEDURE** and perform the 68RFE TRANSMISSION VERIFICATION TEST.

8. **CHECK FOR INTERMITTENT OPERATION**

1. Intermittent gear ratio DTCs can be set by problems in the Input and Output Speed Sensor circuits and/or Speed Sensor Ground circuit.
2. Remove the Ignition Switch Feed fuse from the TIPM.

CAUTION: Removal of the Ignition Switch Feed fuse from the TIPM will prevent the vehicle from being started in gear.

WARNING: The Ignition Switch Feed fuse must be removed from the TIPM. Failure to do so can result in possible serious or fatal injury.

3. Install the Transmission Simulator (special tool #8333A, Simulator, Transmission).
4. Check the Speed Sensor wiring and connectors for good connection, then perform a wiggle test using the Transmission Simulator (special tool #8333A, Simulator, Transmission).

   Were there any problems found?

   Yes

   - Repair as necessary.
   - Refer to **STANDARD PROCEDURE** and perform the 68RFE TRANSMISSION VERIFICATION TEST.

   No

   - Test complete.

P0740-TCC OUT OF RANGE

For a complete wiring diagram, **refer to appropriate SYSTEM WIRING DIAGRAMS article** .

THEORY OF OPERATION

When in 2nd through 6th gear, the torque converter clutch (TCC) can be engaged when certain conditions are met. The TCC piston is electronically modulated by increasing the duty cycle of the L/R-TCC Solenoid until the torque converter slip difference (difference between engine and transmission input speed) is within 60 rpm. Then the L/R-TCC solenoid is fully energized (FEMCC - 100% duty cycle). Torque converter slip is monitored in FEMCC to ensure adequate clutch capacity.

WHEN MONITORED:

During Electronically Modulated Converter Clutch (EMCC) Operation.

SET CONDITION:

Transmission must be in EMCC, with input speed greater than 1750 rpm. L/R-TCC Solenoid achieves the

maximum duty cycle and can not pull engine speed within 60 rpm of input speed. Also when the transmission is in FEMCC and the engine slips TCC more than 100 rpm for 10 seconds. This DTC can take up to five minutes of problem identification before illuminating the MIL.

POSSIBLE CAUSES

Possible Causes
RELATED DTC PRESENT
L/R-TCC SOLENOID
TCC SWITCH VALVE STUCK
TCC REGULATOR VALVE STUCK
INPUT SHAFT SEAL RING CUT
TORQUE CONVERTER AND/OR INTERNAL TRANSMISSION
POWERTRAIN CONTROL MODULE (PCM)

Always perform the Pre-Diagnostic Troubleshooting procedure before proceeding. Refer to STANDARD PROCEDURE.

DIAGNOSTIC TEST

1. **CHECK FOR RELATED DTC P0750**
    1. With the scan tool, read DTCs.

       Is the DTC P0750 present also?

       Yes

       - Refer to **DIAGNOSTIC CODE INDEX** and perform the appropriate diagnostic procedure.

       No

       - Go To 2.
2. **CHECK IF THE DTC IS CURRENT**
    1. With the scan tool, read and **RECORD ALL** Transmission DTCs. After recording DTCs, erase DTCs.
    2. Drive the vehicle until the transmission temperature is at least 43° C or 110° F and the engine temperature at least 49° C or 120° F.
    3. Perform the following steps 3 times.
    4. Using the AutoStick® (ERS) to place the transmission in 3rd gear.
    5. While monitoring the Torque convertor slip on the scan tool, accelerate smoothly at light to moderate throttle from 1200 to 2500 engine rpm and watch for TCC engagement.

       NOTE: Normal torque converter clutch slippage is 0 (± 20 rpm) in full lock-up.

Pick the one that best describes your findings:

TCC State remained at "Unlock" (controller never commanded TCC engagement)

- Go To 3.

Torque Converter Slip dropped properly to 0 (± 20 rpm)

- Go To 4.

TCC State showed "Transitioning" or "Full EMCC", but there was little or no change in T/C Slip

- Go To 5.

TCC tried to engage but had significant positive slip (60-150 rpm)

- Replace the Torque Converter and remove inspect the Transmission Oil Pump Assembly in accordance with the Service Information.

  NOTE: **Check the input shaft end play before removing the pump. HOLD the input shaft during pump removal to prevent thrust bearings in the input clutches from falling out of position. Split the pump assembly and inspect for torque converter debris. Clean as necessary. Verify that the Torque Converter Switch Valve and the Torque Converter Clutch Control Valve (located in the Transmission Oil Pump Valve Body) are not sticking in their bores. Reinstall Transmission Oil Pump Assembly and verify proper input shaft end play.**

- Refer to **STANDARD PROCEDURE** and perform the 68RFE TRANSMISSION VERIFICATION TEST.

3. **CHECK FOR TCC ENGAGEMENT COMMANDED**
   1. Verify that the transmission temperature is at least 43° C or 110° F and the engine temperature at least 49° C or 120° F.
   2. Using the scan tool, monitor the "Target Gear TCC State" in the following steps.
   3. Road test the vehicle. Using the AutoStick® (ERS) in ERS "3", ERS "4", ERS "5", and Drive with an engine speed up to 2500 rpm in each position.

   Pick the one that best describes your findings:

   TCC would engage properly when commanded

   - Go To 4.

   TCC would NOT engage properly when commanded

- Go To 5.

Target Gear TCC State remained in the "Unlock" state continuously

- Using the schematics as a guide, check the Powertrain Control Module (PCM) terminals for corrosion, damage, or terminal push out. Pay particular attention to all power and ground circuits. If no problems are found, replace and program the PCM in accordance with the Service Information. With the scan tool, perform Quick Learn.
- Refer to **STANDARD PROCEDURE** and perform the 68RFE TRANSMISSION VERIFICATION TEST.

4. **CHECK WIRING AND CONNECTORS**
   1. The conditions necessary to set this DTC are not present at this time. Using the schematics as a guide, inspect the wiring and connectors specific to this circuit. Wiggle the wires while checking for shorts and open circuits.
   2. Using the schematics as a guide, inspect the wiring and connectors specific to this circuit.
   3. Wiggle the wires while checking for shorts and open circuits.
   4. With the scan tool, check the Event Data to help identify the conditions in which the DTC was set.

   Were there any problems found?

   Yes

   - Repair as necessary.
   - Refer to **STANDARD PROCEDURE** and perform the 68RFE TRANSMISSION VERIFICATION TEST.

   No

   - Test Complete.

5. **CHECK THE L/R-TCC SOLENOID**
   1. With the scan tool, check for other transmission DTCs.

   Are the DTCs P1775 and P0841 present also?

   Yes

   - Replace Transmission Solenoid/TRS Assembly in accordance with the Service Information.
   - Refer to **STANDARD PROCEDURE** and perform the 68RFE TRANSMISSION VERIFICATION TEST.

   No

   - Go To 6.

6. **CHECK THE TORQUE CONVERTER AND/OR INTERNAL TRANSMISSION**

1. Repair internal transmission as necessary.
2. Check for the following possible causes. Refer to **STANDARD PROCEDURE** for the proper repair procedures.
3. Inspect the Transmission Oil Pump Assembly. **Note:** Check the input shaft end play before removing the pump. HOLD the input shaft during pump removal to prevent thrust bearings in the input clutches from falling out of position. Split the pump assembly and inspect for torque converter debris. Clean as necessary. Verify that the Torque Converter Switch Valve and the Torque Converter Clutch Control Valve (located in the Transmission Oil Pump Valve Body) are not sticking in their bores. Reinstall Transmission Oil Pump Assembly and verify proper input shaft end play.
4. Check the Teflon seal rings on the input shaft. **Note:** If one of the seal rings is cut, the loose piece will often lodge in the TCC switch valve, causing it to stick in its bore.
5. If no problems are found, replace the Transmission Solenoid/TRS Assembly.

Repair

- In all cases, replace the Torque Converter in accordance with the Service Information.
- Refer to **STANDARD PROCEDURE** and perform the 68RFE TRANSMISSION VERIFICATION TEST.

P0750-LR SOLENOID CIRCUIT

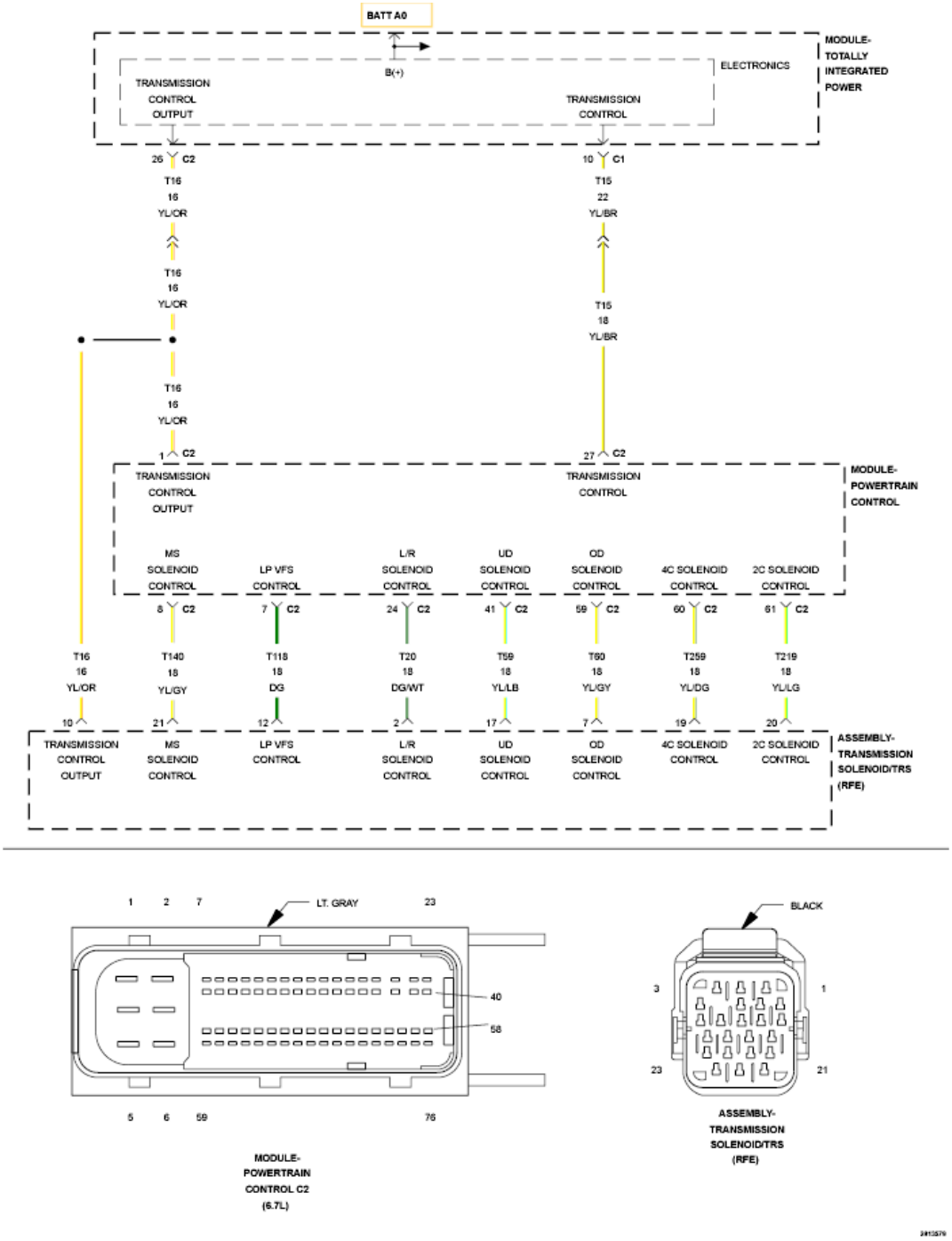

Fig. 26: Solenoid Control Wiring Diagram
Courtesy of CHRYSLER GROUP, LLC

For a complete wiring diagram, **refer to appropriate SYSTEM WIRING DIAGRAMS article** .

THEORY OF OPERATION

The Transmission Control System uses five electronically controlled solenoids that allow hydraulic fluid to be applied to various friction elements (clutches), which enables the gear requested. The continuity of each

solenoid circuit is periodically tested. Each inactive solenoid is turned on for a few milliseconds, then off. Each active solenoid is turned off for a few milliseconds, then on. This pulsing of voltage to the solenoid causes an inductive spike which can be sensed by the Transmission Control System. If an inductive spike is not sensed by the Transmission Control System during the continuity check, it is tested again. If the test fails three consecutive times, the appropriate Diagnostic Trouble Code (DTC) is set. If the solenoid test is run in response to a gear ratio or pressure switch error, one failure will result in setting the appropriate DTC.

WHEN MONITORED:

Initially at power-up, then every 10 seconds thereafter. The solenoid circuits will also be tested immediately after a gear ratio or pressure switch error is detected.

SET CONDITION:

After three consecutive solenoid continuity test failures, or one failure if test is run in response to a gear ratio or pressure switch error.

NOTE: **This DTC is strictly an electrical fault and cannot be caused by any internal transmission failure other than an open in the Transmission Solenoid/TRS Assembly. If the Transmission Solenoid/TRS Assembly is in need of replacement - do not replace the Valve Body.**

POSSIBLE CAUSES

Possible Causes
RELATED DTCS PRESENT
(T20) L/R SOLENOID CONTROL CIRCUIT SHORTED TO OTHER CIRCUITS
(T20) L/R SOLENOID CONTROL CIRCUIT OPEN
(T20) L/R SOLENOID CONTROL CIRCUIT SHORTED TO GROUND
TRANSMISSION SOLENOID/TRS ASSEMBLY
POWERTRAIN CONTROL MODULE (PCM)

Always perform the Pre-Diagnostic Troubleshooting procedure before proceeding. Refer to STANDARD PROCEDURE.

DIAGNOSTIC TEST

1. **CHECK DTCS**
    1. With the scan tool, read DTCs.

       Are there any TIPM TCM Power Control Circuit or TCM Power Input DTCs present?

       Yes

       - Refer to **DIAGNOSIS AND TESTING** and perform the appropriate diagnostic procedure.

No

- Go To 2.

2. **CHECK TO SEE IF P0750 IS PRESENT**
   1. Ignition on, engine not running.
   2. With the scan tool, erase all Transmission DTCs.
   3. Turn the ignition off to the lock position.
   4. Remove the Ignition Switch Feed fuse from the TIPM.

      CAUTION: Removal of the Ignition Switch Feed fuse from the TIPM will prevent the vehicle from being started in gear.

      WARNING: The Ignition Switch Feed fuse must be removed from the TIPM. Failure to do so can result in possible serious or fatal injury.

   5. Install the Transmission Simulator (special tool #8333A, Simulator, Transmission).
   6. Ignition on, engine not running.
   7. With the scan tool, actuate the L/R Solenoid.
   8. Monitor the L/R Solenoid LED on the Transmission Simulator.

      Did the L/R Solenoid LED on the Transmission Simulator blink on and off?

      Yes

      - Go To 3.

      No

      - Go To 5.

3. **CHECK THE TRANSMISSION SOLENOID/TRS ASSEMBLY**
   1. With the Transmission simulator still connected, continue to actuate the L/R solenoid for two minutes.
   2. After two minutes of actuation, with the scan tool, stop the actuation and check for transmission DTCs.

      Did the DTC P0750 reset during the actuation test?

      Yes

      - Go To 5.

      No

- Go To 4.

4. **WIGGLE TEST WITH TRANSMISSION SIMULATOR**
    1. With the Transmission simulator still connected, continue to actuate the L/R solenoid for another two minutes while wiggling the related wiring harness and connectors.
    2. With the scan tool, stop the actuation and check for transmission DTCs.

    Did the DTC P0750 reset during the actuation test?

    Yes

    - Repair wiring harness or connectors as necessary.
    - Refer to **STANDARD PROCEDURE** and perform the 68RFE TRANSMISSION VERIFICATION TEST.

    No

    - Replace the Transmission Solenoid/TRS Assembly in accordance with the Service Information. **Note: Do NOT replace the entire Valve Body.**
    - Refer to **STANDARD PROCEDURE** and perform the 68RFE TRANSMISSION VERIFICATION TEST.

5. **CHECK THE (T20) L/R SOLENOID CONTROL CIRCUIT FOR A SHORT TO ANOTHER CIRCUIT**

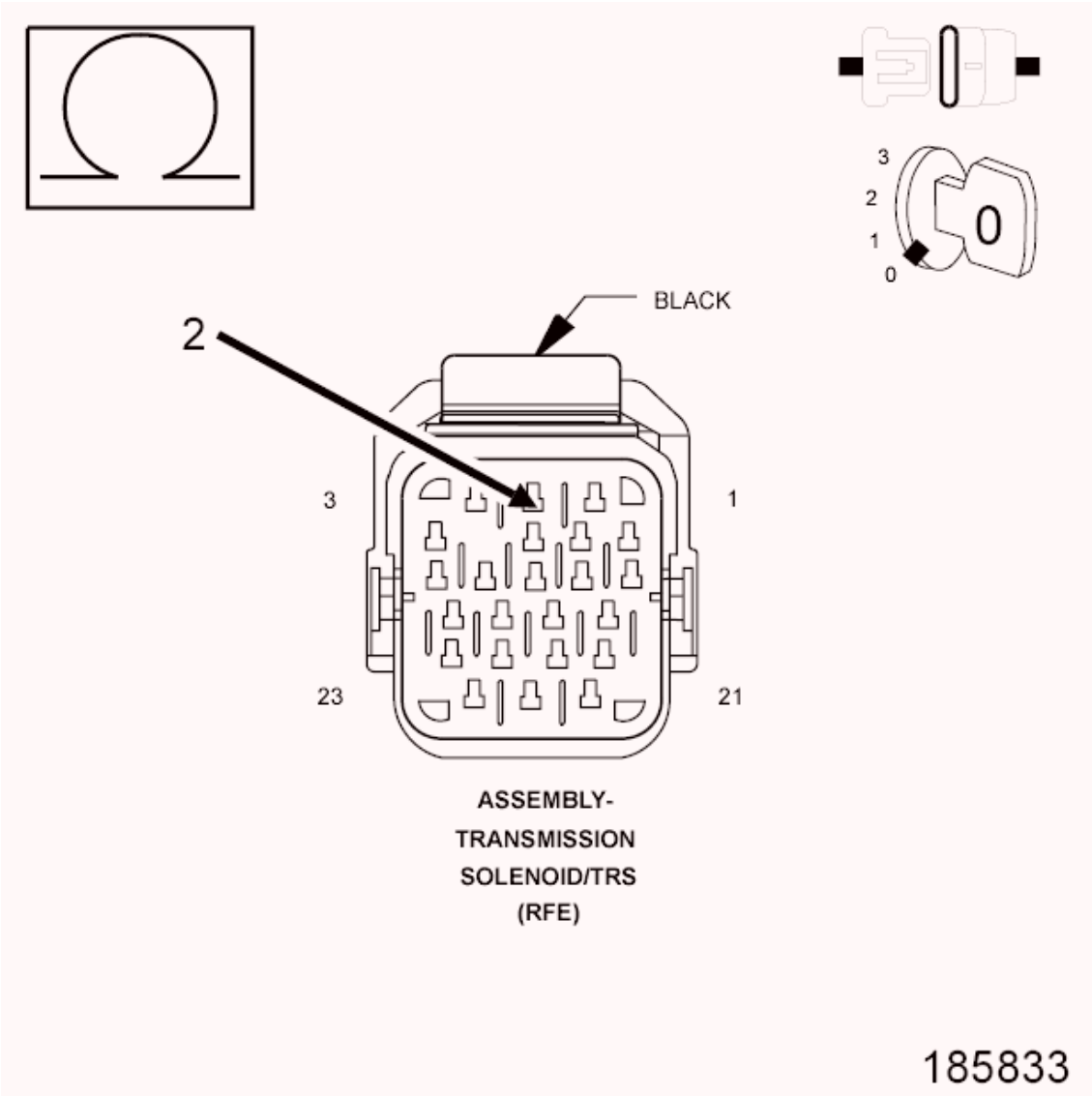

Fig. 27: Checking L/R Solenoid Control Circuit For A Short To Another Circuit
Courtesy of CHRYSLER GROUP, LLC

1. Turn the ignition off to the lock position.
2. Disconnect the Transmission Simulator (special tool #8333A, Simulator, Transmission).
3. Disconnect the PCM C2 harness connector.
4. Measure the resistance between the (T20) L/R Solenoid Control circuit and all other circuits in the Transmission Solenoid/TRS Assembly harness connector.

   Is the resistance below 5.0 Ohms between the (T20) L/R Solenoid Control circuit and any other circuit(s) in the Transmission Solenoid/TRS Assembly harness connector?

   Yes

   - Repair the (T20) L/R Solenoid Control circuit for a short to another circuit(s).

- Refer to **STANDARD PROCEDURE** and perform the 68RFE TRANSMISSION VERIFICATION TEST.

No

- Go To 6.

6. **CHECK THE (T20) L/R SOLENOID CONTROL CIRCUIT FOR AN OPEN**

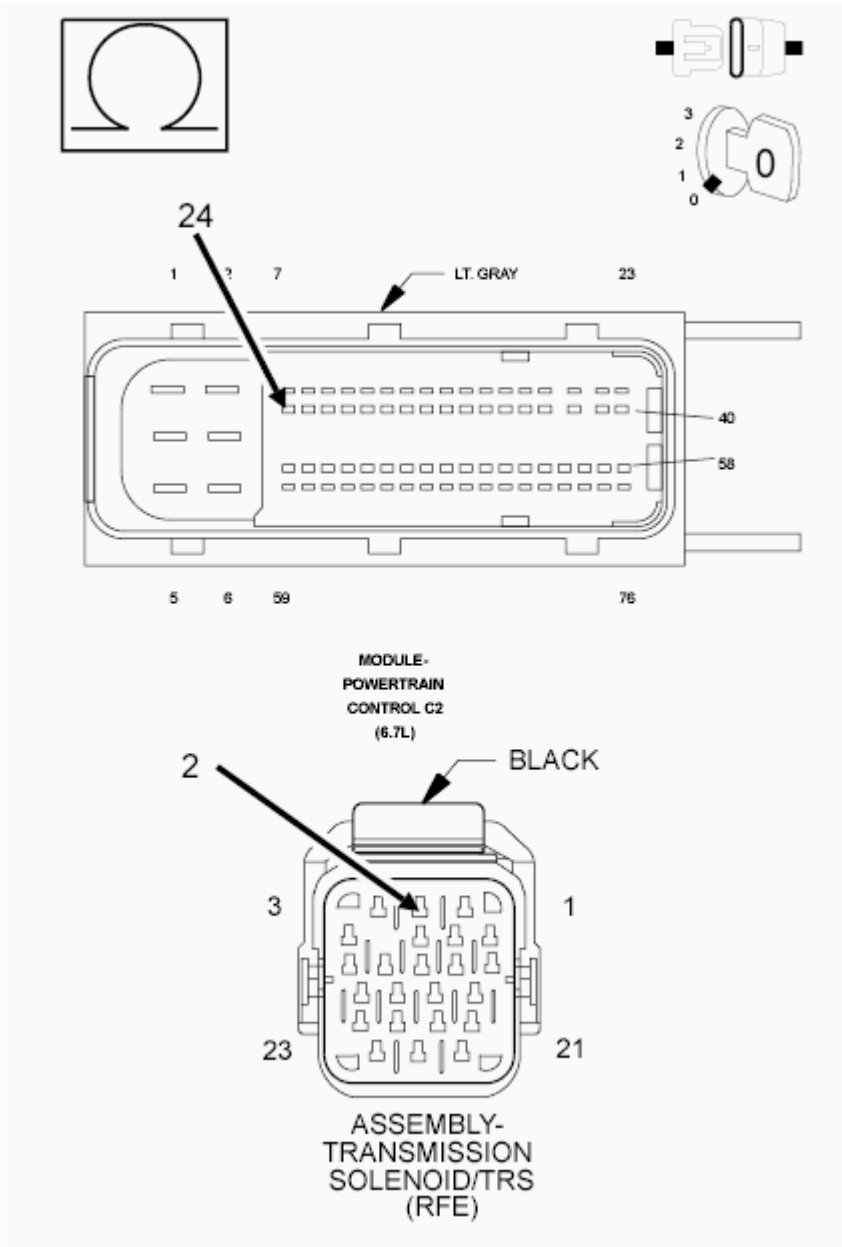

Fig. 28: Checking L/R Solenoid Control Circuit For Open
Courtesy of CHRYSLER GROUP, LLC

1. Measure the resistance of the (T20) L/R Solenoid Control circuit between the Transmission

Solenoid/TRS Assembly harness connector and the appropriate terminal of the PCM C2 harness connector.

Is the resistance above 5.0 Ohms?

Yes

- Repair the (T20) L/R Solenoid Control circuit for an open.
- Refer to **STANDARD PROCEDURE** and perform the 68RFE TRANSMISSION VERIFICATION TEST.

No

- Go To 7.

7. **CHECK THE (T20) L/R SOLENOID CONTROL CIRCUIT FOR A SHORT TO GROUND**

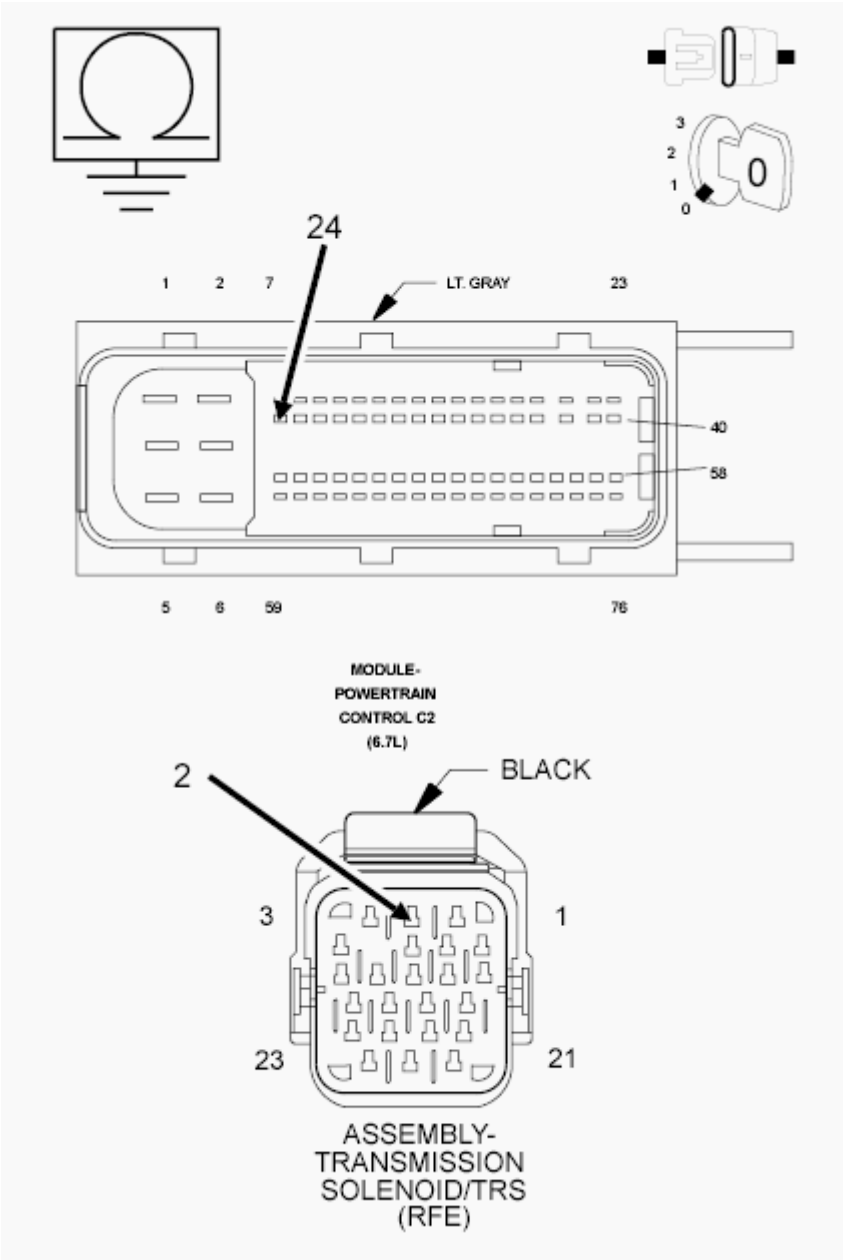

Fig. 29: Checking L/R Solenoid Control Circuit For Short To Ground
Courtesy of CHRYSLER GROUP, LLC

1. Measure the resistance between ground and the (T20) L/R Solenoid Control circuit.

   Is the resistance below 5.0 Ohms?

   Yes

   - Repair the (T20) L/R Solenoid Control circuit for a short to ground.
   - Refer to **STANDARD PROCEDURE** and perform the 68RFE TRANSMISSION VERIFICATION TEST.

No

- Using the schematics as a guide, check the Powertrain Control Module (PCM) terminals for corrosion, damage, or terminal push out. Pay particular attention to all power and ground circuits. If no problems are found, replace and program the PCM in accordance with the Service Information. With the scan tool, perform Quick Learn.
- Refer to **STANDARD PROCEDURE** and perform the 68RFE TRANSMISSION VERIFICATION TEST.

P0755-2C SOLENOID CIRCUIT

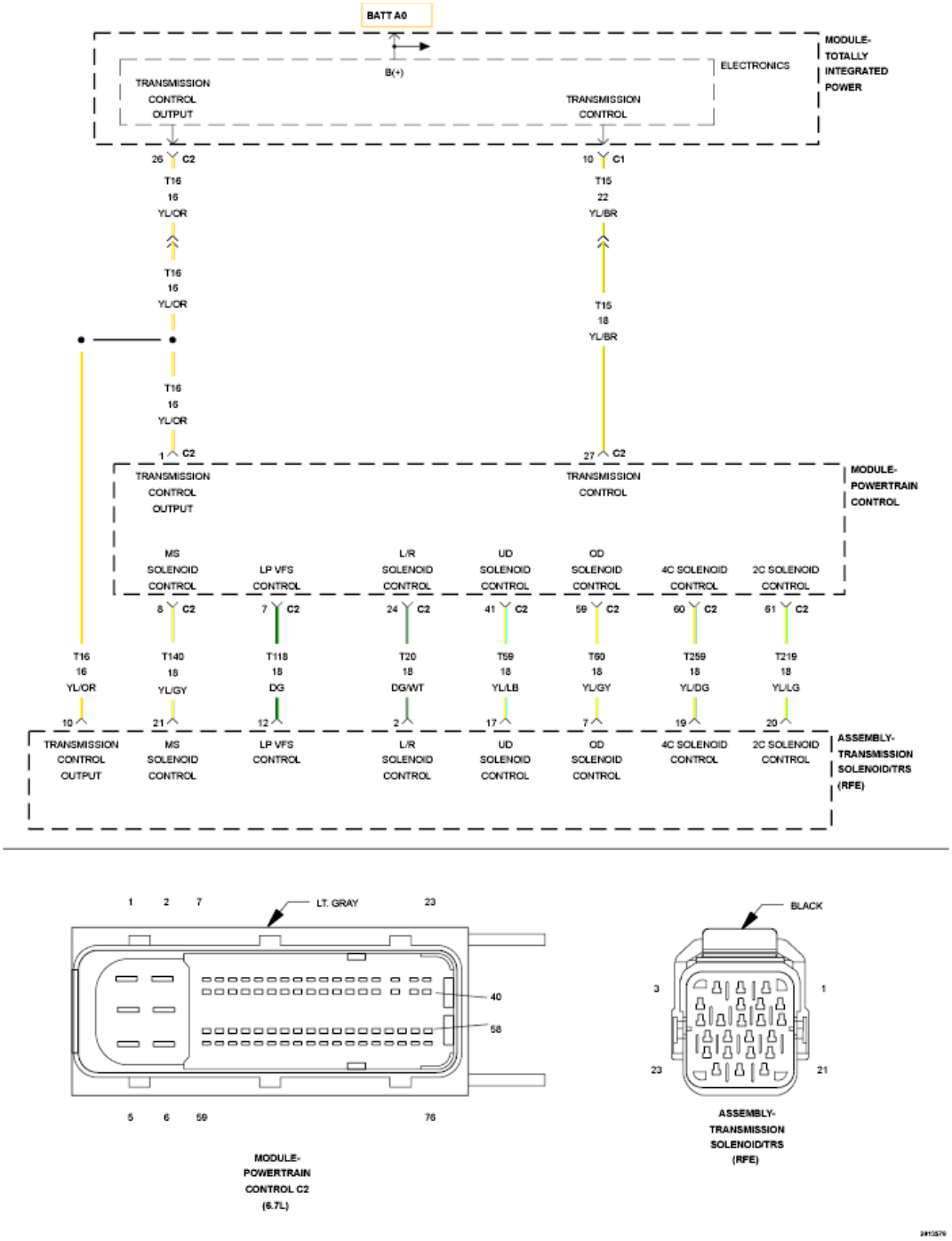

Fig. 30: Solenoid Control Wiring Diagram
Courtesy of CHRYSLER GROUP, LLC

THEORY OF OPERATION

The Transmission Control System uses five electronically controlled solenoids that allow hydraulic fluid to be applied to various friction elements (clutches), which enables the gear requested. The continuity of each solenoid circuit is periodically tested. Each inactive solenoid is turned on for a few milliseconds, then off. Each active solenoid is turned off for a few milliseconds, then on. This pulsing of voltage to the solenoid causes an

inductive spike which can be sensed by the Transmission Control System. If an inductive spike is not sensed by the Transmission Control System during the continuity check, it is tested again. If the test fails three consecutive times, the appropriate Diagnostic Trouble Code (DTC) is set. If the solenoid test is run in response to a gear ratio or pressure switch error, one failure will result in setting the appropriate DTC.

WHEN MONITORED:

Initially at power-up, then every 10 seconds thereafter. The solenoid circuits will also be tested immediately after a gear ratio or pressure switch error is detected.

SET CONDITION:

After three consecutive solenoid continuity test failures, or one failure if test is run in response to a gear ratio or pressure switch error.

NOTE: **This DTC is strictly an electrical fault and cannot be caused by any internal transmission failure other than an open in the Transmission Solenoid/TRS Assembly. If the Transmission Solenoid/TRS Assembly is in need of replacement - do not replace the Valve Body.**

POSSIBLE CAUSES

Possible Causes
RELATED DTCS PRESENT
(T219) 2C SOLENOID CONTROL CIRCUIT SHORTED TO OTHER CIRCUITS
(T219) 2C SOLENOID CONTROL CIRCUIT OPEN
(T219) 2C SOLENOID CONTROL CIRCUIT SHORTED TO GROUND
TRANSMISSION SOLENOID/TRS ASSEMBLY
POWERTRAIN CONTROL MODULE

Always perform the Pre-Diagnostic Troubleshooting procedure before proceeding. Refer to STANDARD PROCEDURE.

DIAGNOSTIC TEST

1. **CHECK DTCS**
    1. With the scan tool, read DTCs.

       Are there any TIPM TCM Power Control Circuit or TCM Power Input DTCs present?

       Yes

       - Refer to **DIAGNOSIS AND TESTING** and perform the appropriate diagnostic procedure.

       No

- Go To 2.

2. **CHECK THE 2C SOLENOID USING THE TRANSMISSION SIMULATOR**
   1. Turn the ignition off to the lock position.
   2. Remove the Ignition Switch Feed fuse from the TIPM.

      CAUTION: Removal of the Ignition Switch Feed fuse from the TIPM will prevent the vehicle from being started in gear.

      WARNING: The Ignition Switch Feed fuse must be removed from the TIPM. Failure to do so can result in possible serious or fatal injury.

   3. Install the Transmission Simulator (special tool #8333A, Simulator, Transmission).
   4. Ignition on, engine not running.
   5. With the scan tool, actuate the 2C Solenoid.

      Did the 2C Solenoid LED blink on and off on the Transmission Simulator?

      Yes

      - Go To 3.

      No

      - Go To 5.

3. **CHECK THE TRANSMISSION SOLENOID/TRS ASSEMBLY**
   1. With the Transmission simulator still connected, continue to actuate the 2C solenoid for two minutes.
   2. After two minutes of actuation, with the scan tool, stop the actuation and check for transmission DTCs.

      Did the DTC P0755 reset during the actuation test?

      Yes

      - Go To 5.

      No

      - Go To 4.

4. **WIGGLE TEST WITH TRANSMISSION SIMULATOR**
   1. With the Transmission simulator still connected, continue to actuate the 2C solenoid for another two minutes while wiggling the related wiring harness and connectors.
   2. With the scan tool, stop the actuation and check for transmission DTCs.

Did the DTC P0755 reset during the actuation test?

Yes

- Repair wiring harness or connectors as necessary.
- Refer to **STANDARD PROCEDURE** and perform the 68RFE TRANSMISSION VERIFICATION TEST.

No

- Replace the Transmission Solenoid/TRS Assembly in accordance with the Service Information. **Note: Do NOT replace the entire Valve Body.**
- Refer to **STANDARD PROCEDURE** and perform the 68RFE TRANSMISSION VERIFICATION TEST.

5. **CHECK THE (T219) 2C SOLENOID CONTROL CIRCUIT FOR A SHORT TO ANOTHER CIRCUIT**

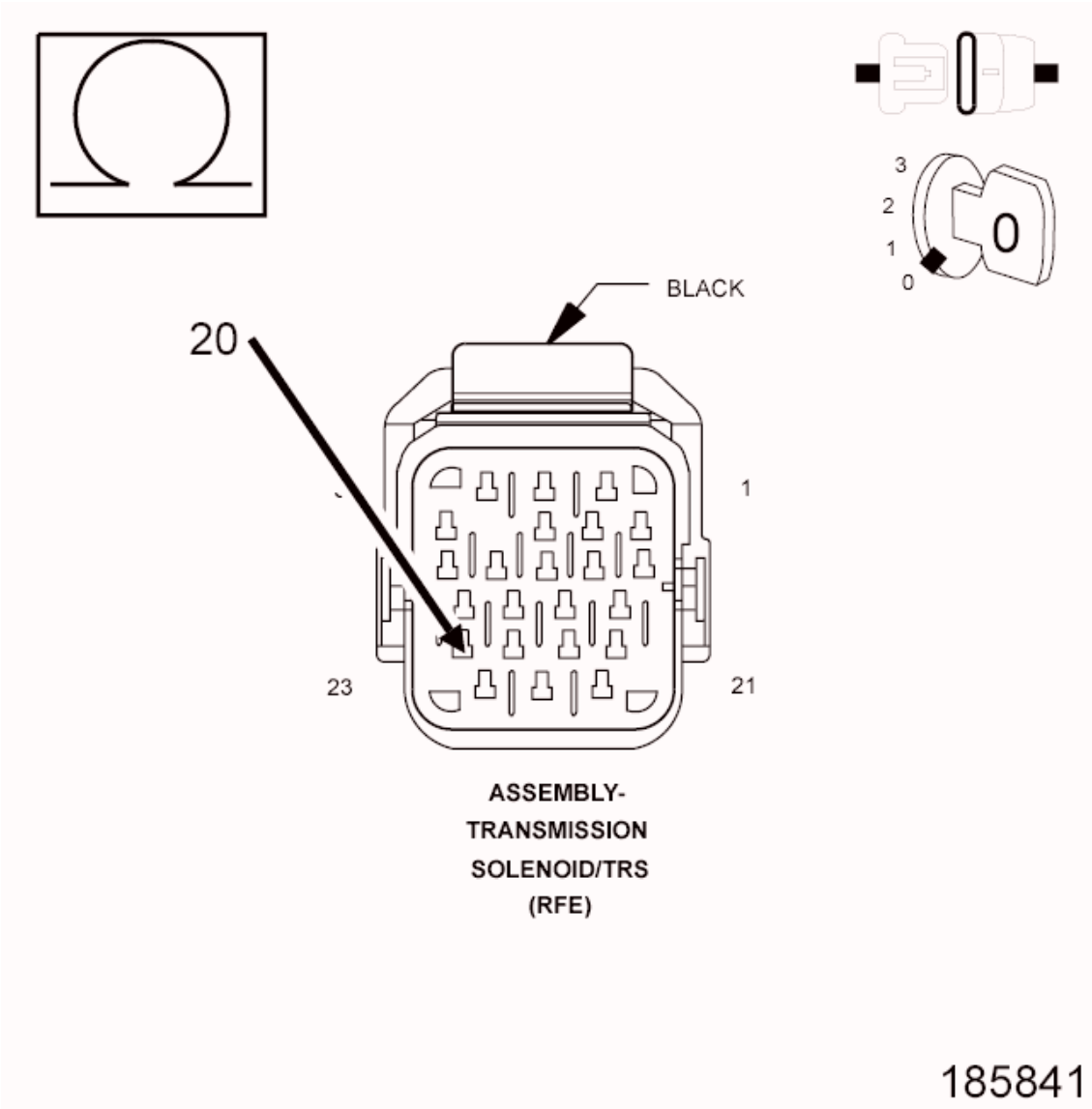

Fig. 31: Checking 2C Solenoid Control Circuit For A Short To Another Circuit
Courtesy of CHRYSLER GROUP, LLC

1. Turn the ignition off to the lock position.
2. Disconnect the Transmission Simulator (special tool #8333A, Simulator, Transmission).
3. Disconnect the PCM C2 harness connector.
4. Measure the resistance between the (T219) 2C Solenoid Control circuit and all other circuits in the Transmission Solenoid/TRS Assembly harness connector.

   Is the resistance below 5.0 Ohms between the (T219) 2C Solenoid Control circuit and any other circuit(s) in the Transmission Solenoid/TRS Assembly harness connector?

   Yes

   - Repair the (T219) 2C Solenoid Control circuit for a short to another circuit(s).

- Refer to **STANDARD PROCEDURE** and perform the 68RFE TRANSMISSION VERIFICATION TEST.

No

- Go To 6.

6. **CHECK THE (T219) 2C SOLENOID CONTROL CIRCUIT FOR AN OPEN**

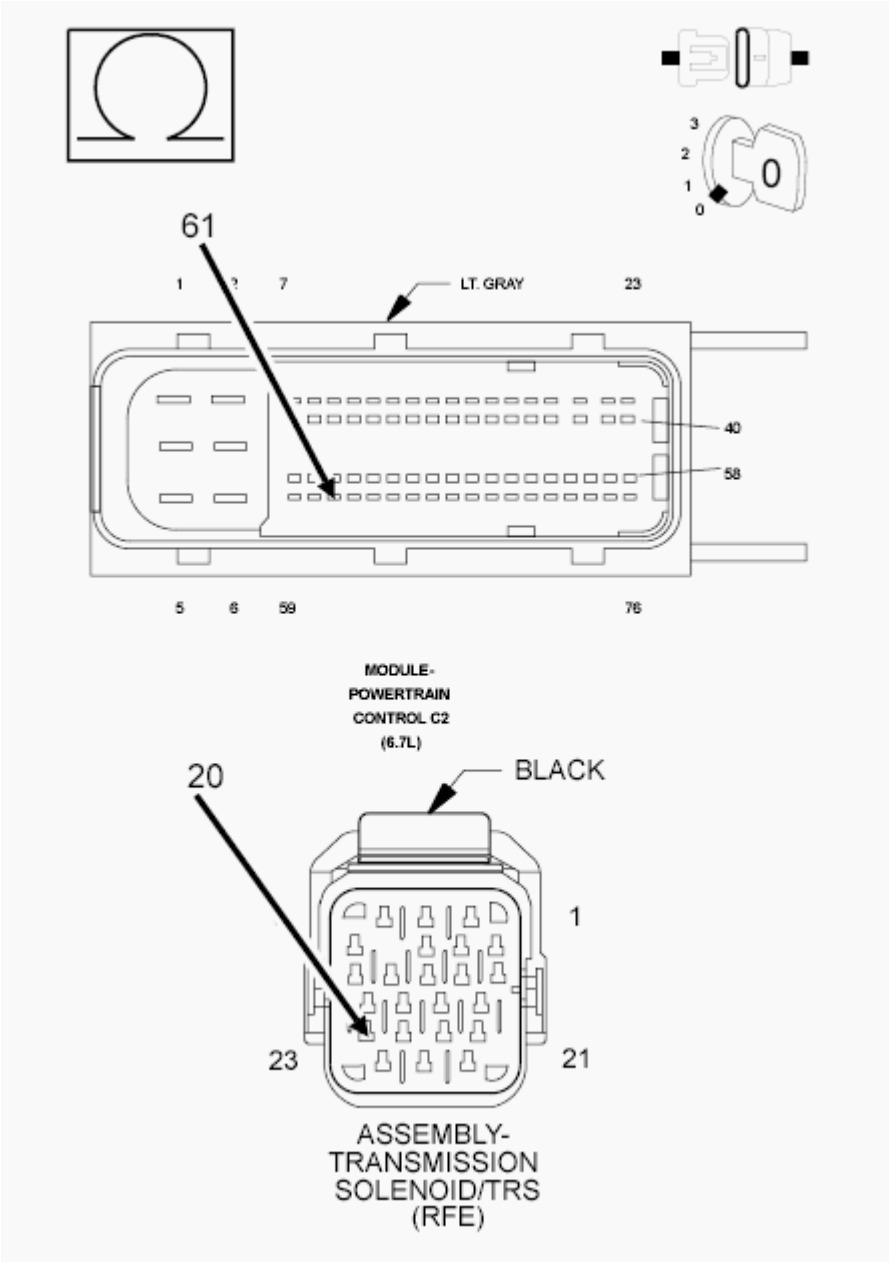

Fig. 32: Checking 2C Solenoid Control Circuit For Open
Courtesy of CHRYSLER GROUP, LLC

1. Measure the resistance of the (T219) 2C Solenoid Control circuit between the Transmission

Solenoid/TRS Assembly harness connector and the appropriate terminal of the PCM C2 harness connector.

Is the resistance above 5.0 Ohms?

Yes

- Repair the (T219) 2C Solenoid Control circuit for an open.
- Refer to **STANDARD PROCEDURE** and perform the 68RFE TRANSMISSION VERIFICATION TEST.

No

- Go To 7.

7. **CHECK THE (T219) 2C SOLENOID CONTROL CIRCUIT FOR A SHORT TO GROUND**

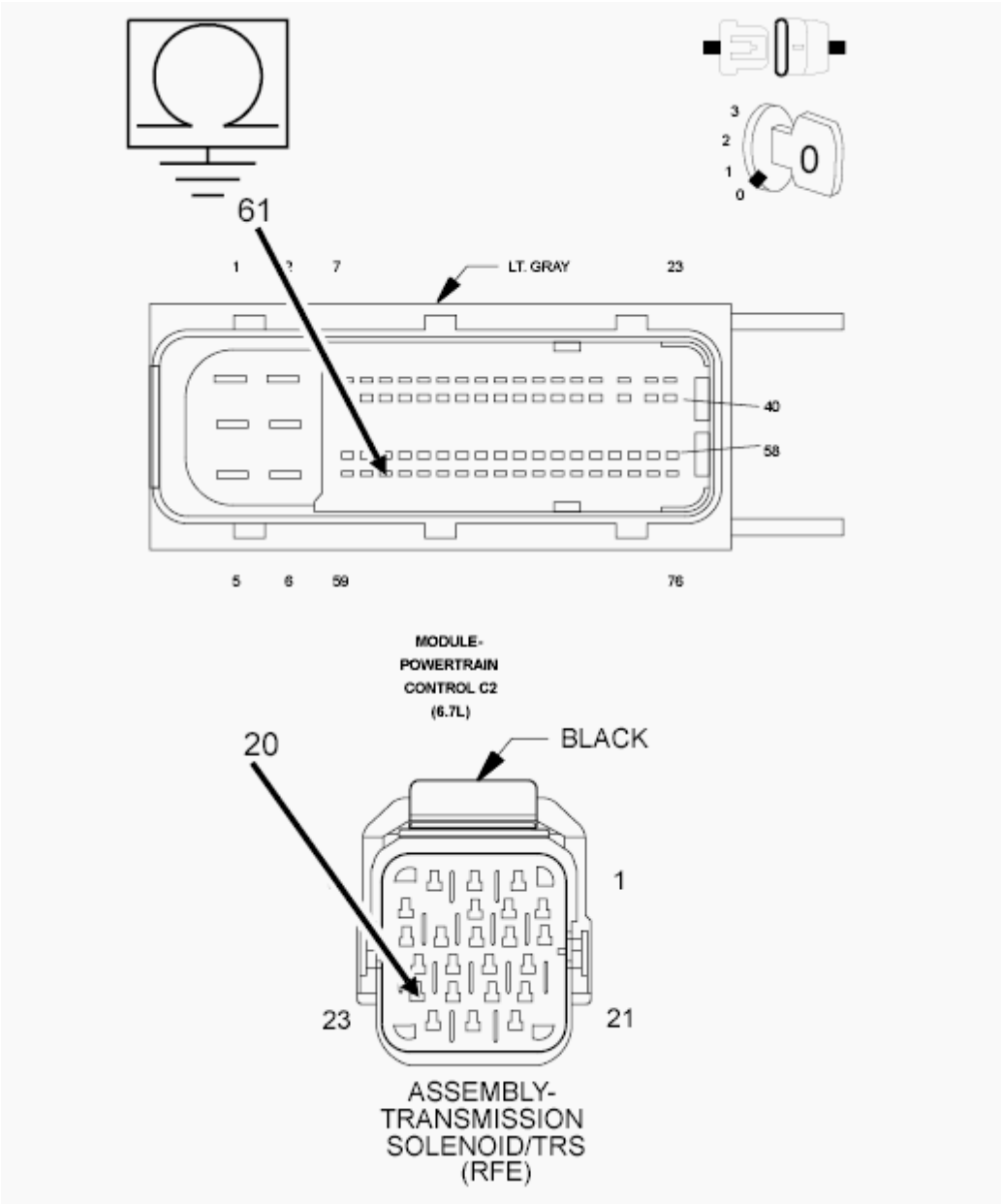

Fig. 33: Checking 2C Solenoid Control Circuit For Short To Ground
Courtesy of CHRYSLER GROUP, LLC

1. Measure the resistance between ground and the (T219) 2C Solenoid Control circuit.

   Is the resistance below 5.0 Ohms?

   Yes

   - Repair the (T219) 2C Solenoid Control circuit for a short to ground.
   - Refer to **STANDARD PROCEDURE** and perform the 68RFE TRANSMISSION VERIFICATION TEST.

No

- Using the schematics as a guide, check the Powertrain Control Module (PCM) terminals for corrosion, damage, or terminal push out. Pay particular attention to all power and ground circuits. If no problems are found, replace and program the PCM in accordance with the Service Information. With the scan tool, perform Quick Learn.
- Refer to **STANDARD PROCEDURE** and perform the 68RFE TRANSMISSION VERIFICATION TEST.

P0765-UD SOLENOID CIRCUIT

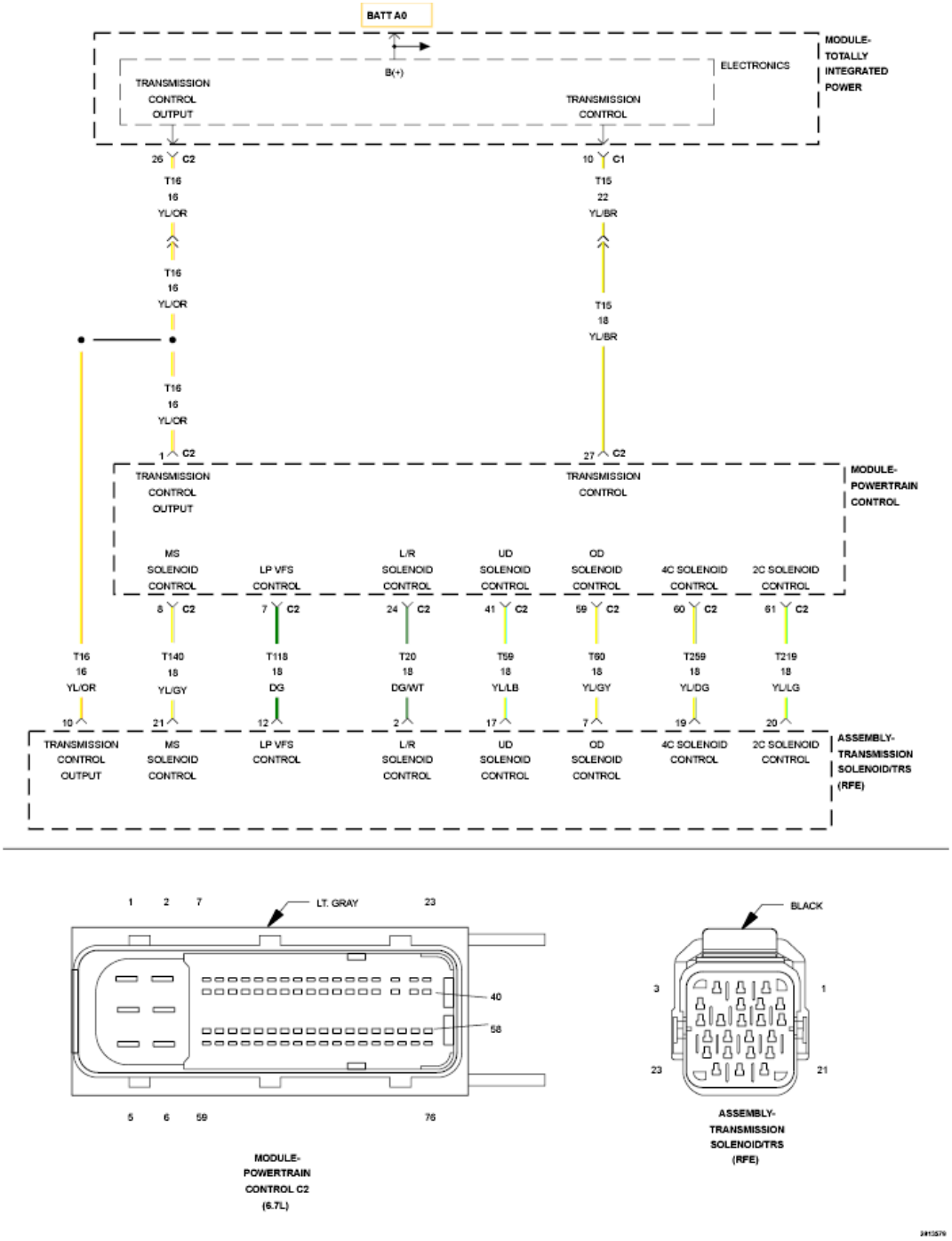

Fig. 34: Solenoid Control Wiring Diagram
Courtesy of CHRYSLER GROUP, LLC

For a complete wiring diagram, **refer to appropriate SYSTEM WIRING DIAGRAMS article** .

THEORY OF OPERATION

The Transmission Control System uses five electronically controlled solenoids that allow hydraulic fluid to be applied to various friction elements (clutches), which enables the gear requested. The continuity of each

solenoid circuit is periodically tested. Each inactive solenoid is turned on for a few milliseconds, then off. Each active solenoid is turned off for a few milliseconds, then on. This pulsing of voltage to the solenoid causes an inductive spike which can be sensed by the Transmission Control System. If an inductive spike is not sensed by the Transmission Control System during the continuity check, it is tested again. If the test fails three consecutive times, the appropriate Diagnostic Trouble Code (DTC) is set. If the solenoid test is run in response to a gear ratio or pressure switch error, one failure will result in setting the appropriate DTC.

WHEN MONITORED:

Initially at power-up, then every 10 seconds thereafter. The solenoid circuits will also be tested immediately after a gear ratio or pressure switch error is detected.

SET CONDITION:

After three consecutive solenoid continuity test failures, or one failure if test is run in response to a gear ratio or pressure switch error.

NOTE: **This DTC is strictly an electrical fault and cannot be caused by any internal transmission failure other than an open in the Transmission Solenoid/TRS Assembly. If the Transmission Solenoid/TRS Assembly is in need of replacement - do not replace the Valve Body.**

POSSIBLE CAUSES

Possible Causes
RELATED DTCS PRESENT
(T59) UD SOLENOID CONTROL CIRCUIT SHORTED TO OTHER CIRCUITS
(T59) UD SOLENOID CONTROL CIRCUIT OPEN
(T59) UD SOLENOID CONTROL CIRCUIT SHORTED TO GROUND
TRANSMISSION SOLENOID/TRS ASSEMBLY
POWERTRAIN CONTROL MODULE (PCM)

Always perform the Pre-Diagnostic Troubleshooting procedure before proceeding. Refer to STANDARD PROCEDURE.

DIAGNOSTIC TEST

1. **CHECK FOR RELATED DTCS**
    1. With the scan tool, read DTCs.

       Are there any TIPM TCM Power Control Circuit or TCM Power Input DTCs present?

       Yes

       - Refer to **DIAGNOSIS AND TESTING** and perform the appropriate diagnostic procedure.

No

- Go To 2.

2. **CHECK THE UD SOLENOID USING THE TRANSMISSION SIMULATOR**
   1. Turn the ignition off to the lock position.
   2. Remove the Ignition Switch Feed fuse from the TIPM.

      CAUTION: Removal of the Ignition Switch Feed fuse from the TIPM will prevent the vehicle from being started in gear.

      WARNING: The Ignition Switch Feed fuse must be removed from the TIPM. Failure to do so can result in possible serious or fatal injury.

   3. Install Transmission Simulator (special tool #8333A, Simulator, Transmission).
   4. Ignition on, engine not running.
   5. With the scan tool, clear Transmission DTCs.
   6. With the scan tool, actuate the UD Solenoid.
   7. Monitor the UD Solenoid LED on the Transmission Simulator.

      Did the UD Solenoid LED on the Transmission Simulator blink on and off?

      Yes

      - Go To 3.

      No

      - Go To 5.

3. **CHECK THE TRANSMISSION SOLENOID/TRS ASSEMBLY**
   1. With the Transmission simulator still connected, continue to actuate the UD solenoid for two minutes.
   2. After two minutes of actuation, with the scan tool, stop the actuation and check for transmission DTCs.

      Did the DTC P0765 reset during the actuation test?

      Yes

      - Go To 5.

      No

      - Go To 4.

4. **WIGGLE TEST WITH TRANSMISSION SIMULATOR**
    1. With the Transmission simulator still connected, continue to actuate the UD solenoid for another two minutes while wiggling the related wiring harness and connectors.
    2. With the scan tool, stop the actuation and check for transmission DTCs.

    Did the DTC P0765 reset during the actuation test?

    Yes

    - Repair wiring harness or connectors as necessary.
    - Refer to **STANDARD PROCEDURE** and perform the 68RFE TRANSMISSION VERIFICATION TEST.

    No

    - Replace the Transmission Solenoid/TRS Assembly in accordance with the Service Information. **Note: Do NOT replace the entire Valve Body.**
    - Refer to **STANDARD PROCEDURE** and perform the 68RFE TRANSMISSION VERIFICATION TEST.
5. **CHECK THE (T59) UD SOLENOID CONTROL CIRCUIT FOR A SHORT TO ANOTHER CIRCUIT**

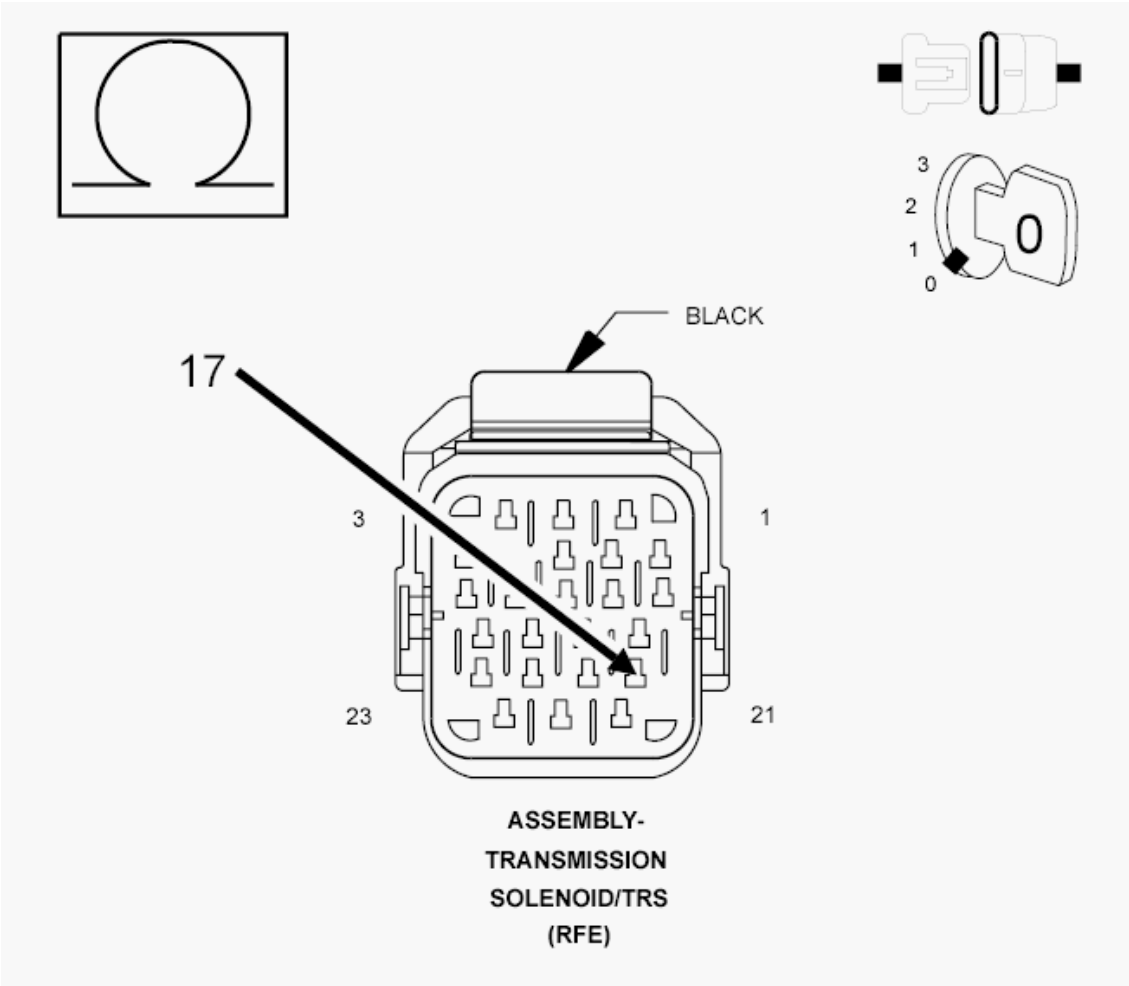

Fig. 35: Checking UD Solenoid Control Circuit For A Short To Another Circuit
Courtesy of CHRYSLER GROUP, LLC

1. Turn the ignition off to the lock position.
2. Disconnect the Transmission Simulator (special tool #8333A, Simulator, Transmission).
3. Disconnect the PCM C2 harness connector.
4. Measure the resistance between the (T59) UD Solenoid Control circuit and all other circuits in the Transmission Solenoid/TRS Assembly harness connector.

   Is the resistance below 5.0 Ohms between the (T59) UD Solenoid Control circuit and any other circuit(s) in the Transmission Solenoid/TRS Assembly harness connector?

   Yes

   - Repair the (T59) UD Solenoid Control circuit for a short to another circuit(s).
   - Refer to **STANDARD PROCEDURE** and perform the 68RFE TRANSMISSION VERIFICATION TEST.

   No

- Go To 6.

6. **CHECK THE (T59) UD SOLENOID CONTROL CIRCUIT FOR AN OPEN**

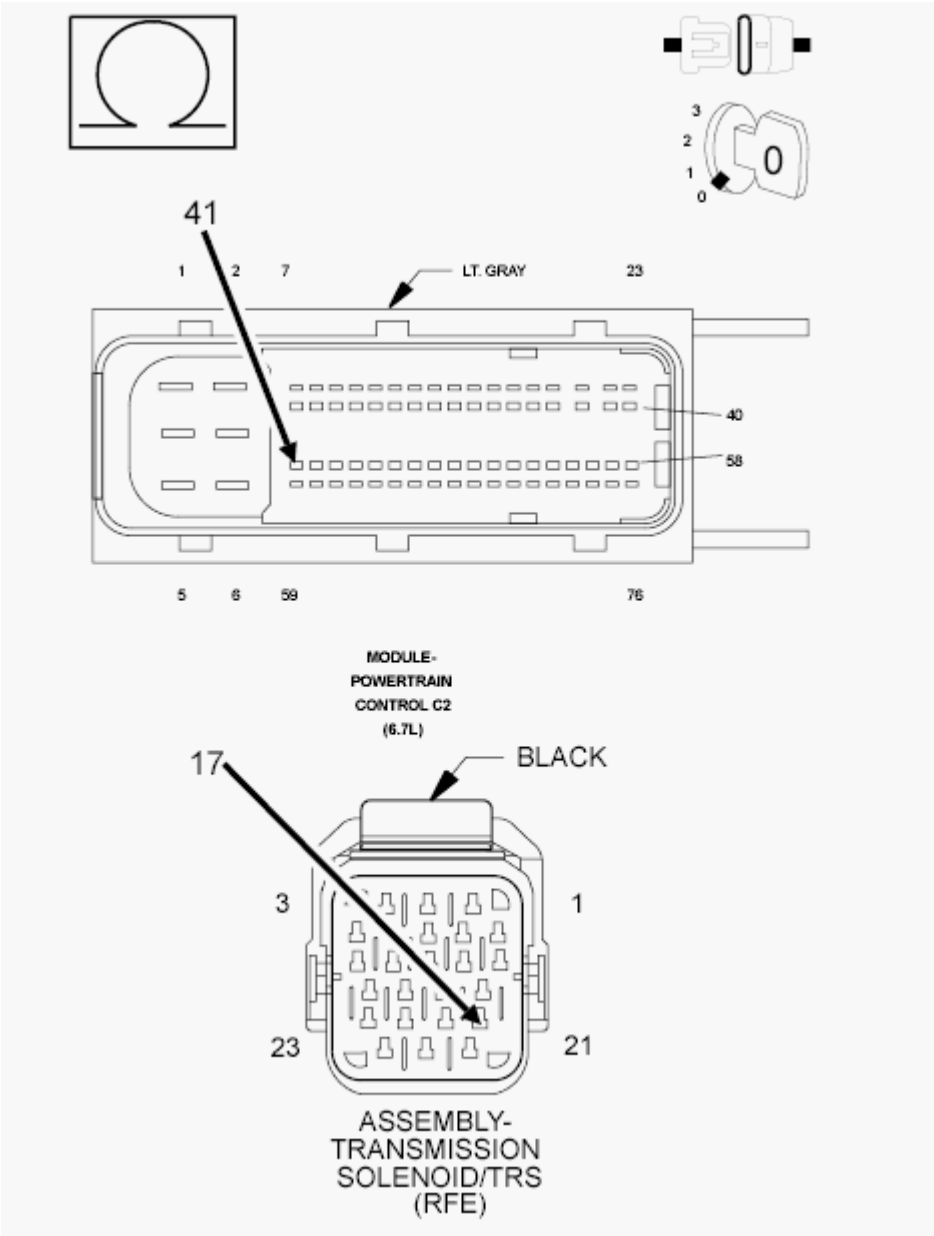

Fig. 36: Checking UD Solenoid Control Circuit For Open
Courtesy of CHRYSLER GROUP, LLC

1. Measure the resistance of the (T59) UD Solenoid Control circuit between the Transmission Solenoid/TRS Assembly harness connector and the appropriate terminal of the PCM C2 harness connector.

   Is the resistance above 5.0 Ohms?

Yes

- Repair the (T59) UD Solenoid Control circuit for an open.
- Refer to **STANDARD PROCEDURE** and perform the 68RFE TRANSMISSION VERIFICATION TEST.

No

- Go To 7.

7. **CHECK THE (T59) UD SOLENOID CONTROL CIRCUIT FOR A SHORT TO GROUND**

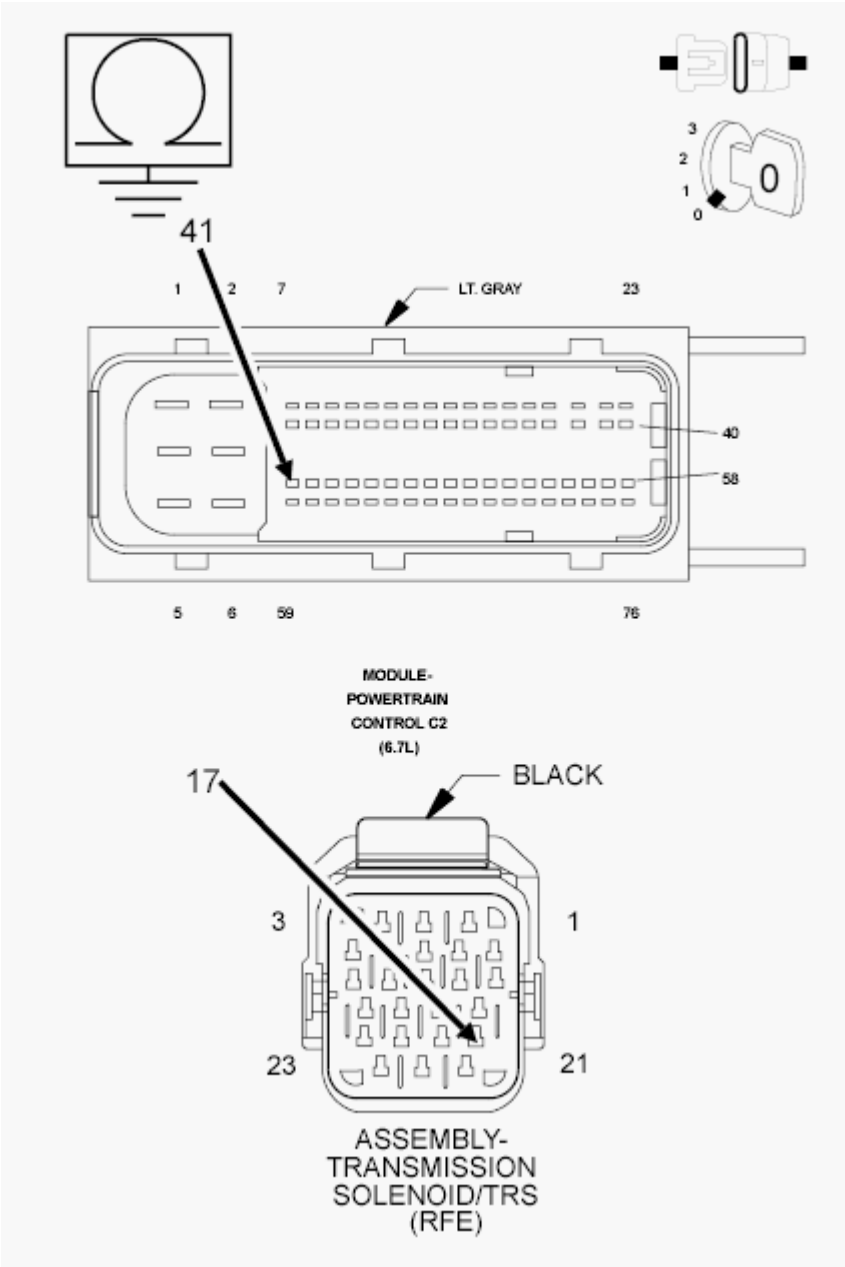

Fig. 37: Checking UD Solenoid Control Circuit For Short To Ground

Courtesy of CHRYSLER GROUP, LLC

1. Measure the resistance between ground and the (T59) UD Solenoid Control circuit.

   Is the resistance below 5.0 Ohms?

   Yes

   - Repair the (T59) UD Solenoid Control circuit for a short to ground.
   - Refer to **STANDARD PROCEDURE** and perform the 68RFE TRANSMISSION VERIFICATION TEST.

   No

   - Using the schematics as a guide, check the Powertrain Control Module (PCM) terminals for corrosion, damage, or terminal push out. Pay particular attention to all power and ground circuits. If no problems are found, replace and program the PCM in accordance with the Service Information. With the scan tool, perform Quick Learn.
   - Refer to **STANDARD PROCEDURE** and perform the 68RFE TRANSMISSION VERIFICATION TEST.

P0770-4C SOLENOID CIRCUIT

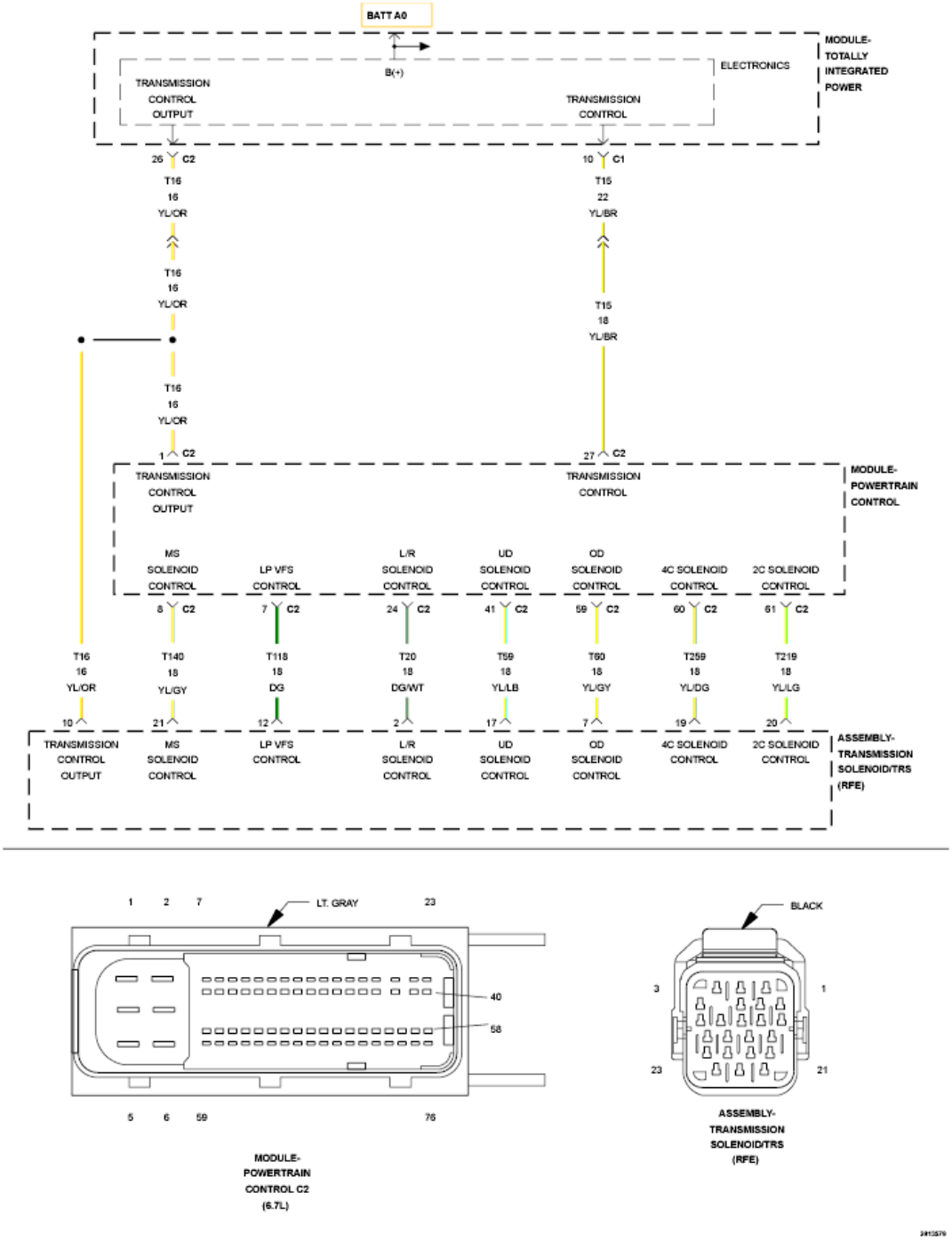

Fig. 38: Solenoid Control Wiring Diagram
Courtesy of CHRYSLER GROUP, LLC

For a complete wiring diagram, **refer to appropriate SYSTEM WIRING DIAGRAMS article** .

THEORY OF OPERATION

The Transmission Control System uses five electronically controlled solenoids that allow hydraulic fluid to be applied to various friction elements (clutches), which enables the gear requested. The continuity of each

solenoid circuit is periodically tested. Each inactive solenoid is turned on for a few milliseconds, then off. Each active solenoid is turned off for a few milliseconds, then on. This pulsing of voltage to the solenoid causes an inductive spike which can be sensed by the Transmission Control System. If an inductive spike is not sensed by the Transmission Control System during the continuity check, it is tested again. If the test fails three consecutive times, the appropriate Diagnostic Trouble Code (DTC) is set. If the solenoid test is run in response to a gear ratio or pressure switch error, one failure will result in setting the appropriate DTC.

WHEN MONITORED:

Initially at power-up, then every 10 seconds thereafter. The solenoid circuits will also be tested immediately after a gear ratio or pressure switch error is detected.

SET CONDITION:

After three consecutive solenoid continuity test failures, or one failure if test is run in response to a gear ratio or pressure switch error.

NOTE: **This DTC is strictly an electrical fault and cannot be caused by any internal transmission failure other than an open in the Transmission Solenoid/TRS Assembly. If the Transmission Solenoid/TRS Assembly is in need of replacement - do not replace the Valve Body.**

POSSIBLE CAUSES

Possible Causes
RELATED DTCS PRESENT
(T259) 4C SOLENOID CONTROL CIRCUIT SHORTED TO OTHER CIRCUITS
(T259) 4C SOLENOID CONTROL CIRCUIT OPEN
(T259) 4C SOLENOID CONTROL CIRCUIT SHORTED TO GROUND
TRANSMISSION SOLENOID/TRS ASSEMBLY
POWERTRAIN CONTROL MODULE (PCM)

Always perform the Pre-Diagnostic Troubleshooting procedure before proceeding. Refer to STANDARD PROCEDURE.

DIAGNOSTIC TEST

1. **CHECK FOR RELATED DTCS**
    1. With the scan tool, read DTCs.

       Are there any TIPM TCM Power Control Circuit or TCM Power Input DTCs present?

       Yes

       - Refer to **DIAGNOSIS AND TESTING** and perform the appropriate diagnostic procedure.

No

- Go To 2.

2. **CHECK THE 4C SOLENOID USING THE TRANSMISSION SIMULATOR**
   1. Turn the ignition off to the lock position.
   2. Remove the Ignition Switch Feed fuse from the TIPM.

      CAUTION: Removal of the Ignition Switch Feed fuse from the TIPM will prevent the vehicle from being started in gear.

      WARNING: The Ignition Switch Feed fuse must be removed from the TIPM. Failure to do so can result in possible serious or fatal injury.

   3. Install Transmission Simulator (special tool #8333A, Simulator, Transmission).
   4. Ignition on, engine not running.
   5. With the scan tool, clear Transmission DTCs.
   6. With the scan tool, actuate the 4C Solenoid.
   7. Monitor the 4C Solenoid LED on the Transmission Simulator.

      Did the 4C Solenoid LED on the Transmission Simulator blink on and off?

      Yes

      - Go To 3.

      No

      - Go To 5.

3. **CHECK THE TRANSMISSION SOLENOID/TRS ASSEMBLY**
   1. With the Transmission simulator still connected, continue to actuate the 4C solenoid for two minutes.
   2. After two minutes of actuation, with the scan tool, stop the actuation and check for transmission DTCs.

      Did the DTC P0770 reset during the actuation test?

      Yes

      - Go To 5.

      No

      - Go To 4.

4. **WIGGLE TEST WITH TRANSMISSION SIMULATOR**
    1. With the Transmission simulator still connected, continue to actuate the 4C solenoid for another two minutes while wiggling the related wiring harness and connectors.
    2. With the scan tool, stop the actuation and check for transmission DTCs.

    Did the DTC P0770 reset during the actuation test?

    Yes

    - Repair wiring harness or connectors as necessary.
    - Refer to **STANDARD PROCEDURE** and perform the 68RFE TRANSMISSION VERIFICATION TEST.

    No

    - Replace the Transmission Solenoid/TRS Assembly in accordance with the Service Information. **Note: Do NOT replace the entire Valve Body.**
    - Refer to **STANDARD PROCEDURE** and perform the 68RFE TRANSMISSION VERIFICATION TEST.
5. **CHECK THE (T259) 4C SOLENOID CONTROL CIRCUIT FOR A SHORT TO ANOTHER CIRCUIT**

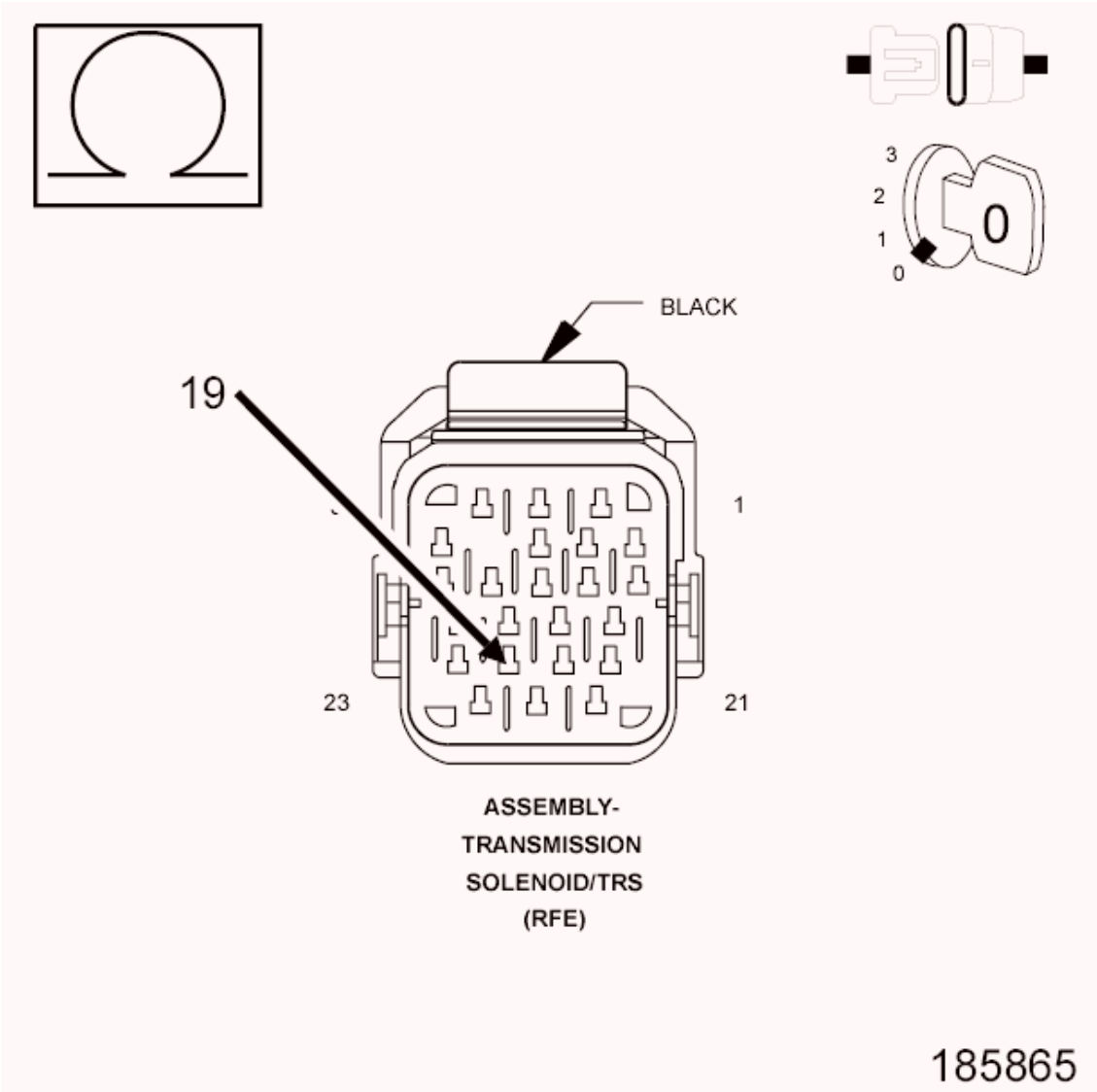

Fig. 39: Checking 4C Solenoid Control Circuit For A Short To Another Circuit
Courtesy of CHRYSLER GROUP, LLC

1. Turn the ignition off to the lock position.
2. Disconnect the Transmission Simulator (special tool #8333A, Simulator, Transmission).
3. Disconnect the PCM harness connectors.
4. Measure the resistance between the (T259) 4C Solenoid Control circuit and all other circuits in the Transmission Solenoid/TRS Assembly harness connector.

   Is the resistance below 5.0 Ohms between the (T259) 4C Solenoid Control circuit and any other circuit(s) in the Transmission Solenoid/TRS Assembly harness connector?

   Yes

   - Repair the (T259) 4C Solenoid Control circuit for a short to another circuit(s).

- Refer to **STANDARD PROCEDURE** and perform the 68RFE TRANSMISSION VERIFICATION TEST.

No

- Go To 6.

6. **CHECK THE (T259) 4C SOLENOID CONTROL CIRCUIT FOR AN OPEN**

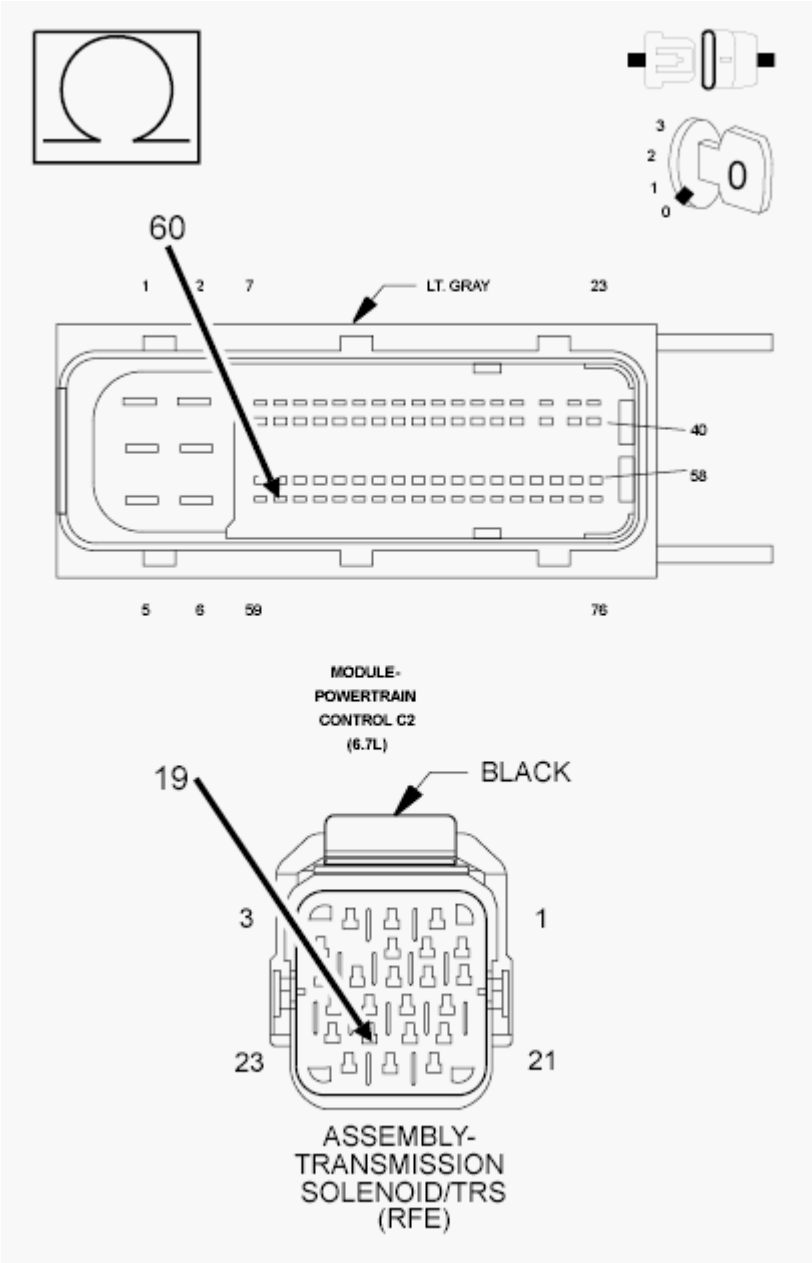

Fig. 40: Checking 4C Solenoid Control Circuit For Open
Courtesy of CHRYSLER GROUP, LLC

1. Measure the resistance of the (T259) 4C Solenoid Control circuit between the Transmission

Solenoid/TRS Assembly harness connector and the appropriate terminal of the PCM C2 harness connector.

Is the resistance above 5.0 Ohms?

Yes

- Repair the (T259) 4C Solenoid Control circuit for an open.
- Refer to **STANDARD PROCEDURE** and perform the 68RFE TRANSMISSION VERIFICATION TEST.

No

- Go To 7.

7. **CHECK THE (T259) 4C SOLENOID CONTROL CIRCUIT FOR A SHORT TO GROUND**

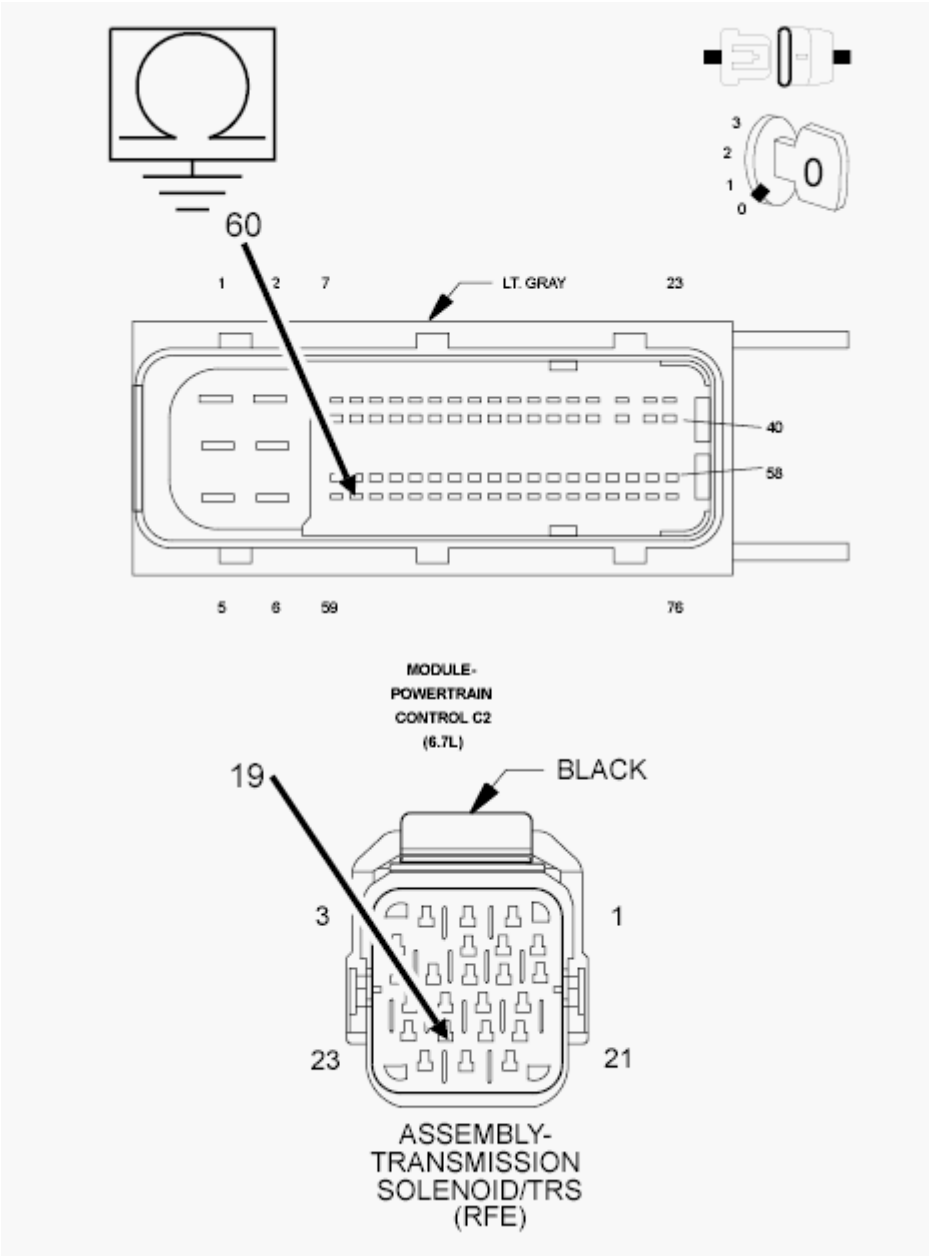

Fig. 41: Checking 4C Solenoid Control Circuit For Short To Ground
Courtesy of CHRYSLER GROUP, LLC

1. Measure the resistance between ground and the (T259) 4C Solenoid Control circuit.

   Is the resistance below 5.0 Ohms?

   Yes

   - Repair the (T259) 4C Solenoid Control circuit for a short to ground.
   - Refer to **STANDARD PROCEDURE** and perform the 68RFE TRANSMISSION VERIFICATION TEST.

No

- Using the schematics as a guide, check the Powertrain Control Module (PCM) terminals for corrosion, damage, or terminal push out. Pay particular attention to all power and ground circuits. If no problems are found, replace and program the PCM in accordance with the Service Information. With the scan tool, perform Quick Learn.
- Refer to **STANDARD PROCEDURE** and perform the 68RFE TRANSMISSION VERIFICATION TEST.

P0841-LR PRESSURE SWITCH RATIONALITY

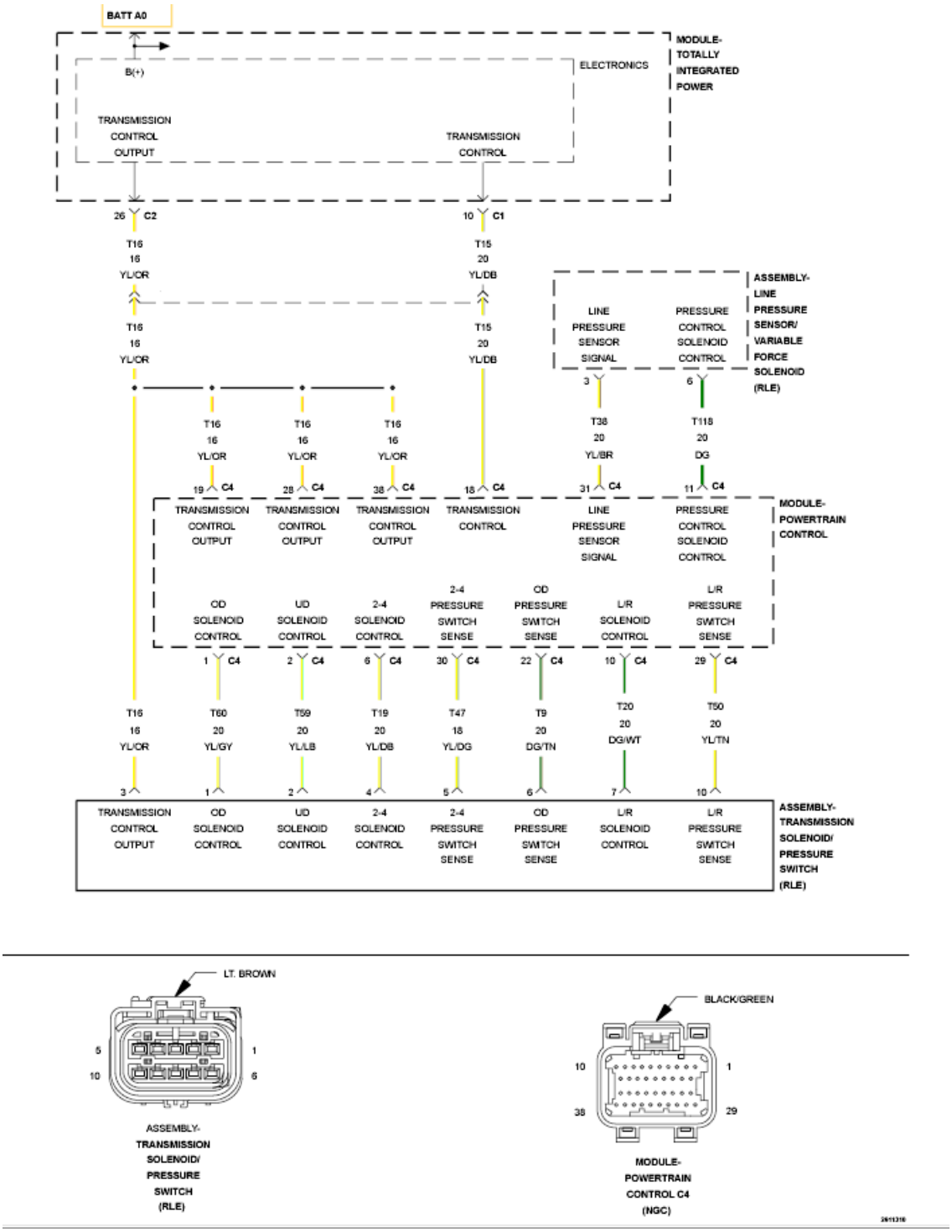

Fig. 42: Solenoid Control Wiring Diagram
Courtesy of CHRYSLER GROUP, LLC

For a complete wiring diagram, **refer to appropriate SYSTEM WIRING DIAGRAMS article** .

THEORY OF OPERATION

The Transmission system uses five pressure switches to monitor the fluid pressure in the L/R, 2C, 4C, UD, and OD clutch circuits. The pressure switches are continuously monitored for the correct states in each gear as shown.

WHEN MONITORED:

Continuously with the ignition on and engine running.

SET CONDITION:

The DTC will set if the L/R Pressure Switch reads open or closed at the wrong time in a given gear.

POSSIBLE CAUSES

Possible Causes
LOSS OF PRIME AND/OR TIPM DTC PRESENT
LOW FLUID LEVEL
LOW LINE PRESSURE
CRACKED OR MISINSTALLED PRIMARY OIL FILTER OR FILTER SEAL
STICKING MAIN REGULATOR VALVE IN PUMP VALVE BODY
NO. 1 CHECK BALL CUT OR DAMAGED
WIRING AND CONNECTORS
(T50) L/R PRESSURE SWITCH SENSE CIRCUIT OPEN
(T50) L/R PRESSURE SWITCH SENSE CIRCUIT SHORTED TO GROUND
(T50) L/R PRESSURE SWITCH SENSE CIRCUIT SHORTED TO VOLTAGE
TRANSMISSION SOLENOID/TRS ASSEMBLY
POWERTRAIN CONTROL MODULE (PCM)
REAR ANNULUS GEAR DRIVE SHELL SNAP RING DISLODGED

Always perform the Pre-Diagnostic Troubleshooting procedure before proceeding. Refer to STANDARD PROCEDURE.

GEAR	L/R	2C	4C	UD	OD
REVERSE	OPEN	OPEN	OPEN	OPEN	OPEN
P/N	CLOSED**	OPEN	OPEN	OPEN	OPEN
1ST	CLOSED*	OPEN	OPEN	CLOSED	OPEN
2ND	OPEN	CLOSED	OPEN	CLOSED	OPEN
3RD	OPEN	OPEN	CLOSED	CLOSED	OPEN
4TH	OPEN	OPEN	OPEN	CLOSED	CLOSED
5TH	OPEN	OPEN	CLOSED	OPEN	CLOSED
6TH	OPEN	CLOSED	OPEN	OPEN	CLOSED
*L/R is closed if output speed is below 100 rpm in Drive. L/R is closed in Manual (ERS) 1st.					
**May be open when rolling in Neutral or at low oil temperatures.					

DIAGNOSTIC TEST

1. **CHECK FOR RELATED DTCS**
    1. Ignition on, engine not running.
    2. With the scan tool, check for other transmission DTCs.

    Are there any Loss of Prime, TCM Power Input, and/or TIPM TCM Power Control circuit DTCs present?

    Yes

    - If the DTC P0944 is present, perform its respective test first. For the TIPM related DTCs, Refer to **DIAGNOSIS AND TESTING** and perform the appropriate diagnostic procedure.

    No

    - Go To 2.
2. **CHECK IF THE CONDITION FOR P0841 IS PRESENT**
    1. With the scan tool, check the Event Data for P0841.

    NOTE: Make sure to record all Event Data stored in the scan tool for future reference in this test procedure.

    Does the Event Data show the DTC P0841?

    Yes

    - Go To 3.

    No

    - Refer to **DIAGNOSTIC CODE INDEX** and perform diagnostics for the DTC reported in the Event Data.
3. **CHECK IF THE DTC SET IN REVERSE**

    Does the Event Data show the DTC P0841 set while in Reverse?

    Yes

    - Go To 10.

    No

    - Go To 4.
4. **CHECK IF THE L/R PRESSURE SWITCH IS CLOSED**

Does the Event Data show the L/R Pressure Switch reading CLOSED when the DTC P0841 was set?

Yes

- Go To 5.

No

- Go To 14.

5. **CHECK THE PCM AND WIRING USING THE TRANSMISSION SIMULATOR**
   1. Turn the ignition off to the lock position.
   2. Remove the Ignition Switch Feed fuse from the TIPM.

      CAUTION: Removal of the Ignition Switch Feed fuse from the TIPM will prevent the vehicle from being started in gear.

      WARNING: The Ignition Switch Feed fuse must be removed from the TIPM. Failure to do so can result in possible serious or fatal injury.

   3. Install the Transmission Simulator (special tool #8333A, Simulator, Transmission).
   4. Ignition on, engine not running.
   5. Turn the Pressure Switch selector to L/R on the Transmission Simulator.
   6. With the scan tool, monitor the L/R Pressure Switch state while pressing the Pressure Switch Test button on the Transmission Simulator.

      Did the L/R Pressure Switch state change from open to closed while pressing the Pressure Switch Test button on the Transmission Simulator?

      Yes

      - Go To 6.

      No

      - Go To 10.

6. **CHECK FOR POOR WIRING AND CONNECTIONS**
   1. Using the schematics as a guide, inspect the wiring and connectors specific to this circuit.
   2. Wiggle the wires while checking for shorted and open circuits.

      Were there any problems found?

      Yes

- Repair as necessary.
- Refer to **STANDARD PROCEDURE** and perform the 68RFE TRANSMISSION VERIFICATION TEST.

No

- Go To 7.

7. **CHECK IF THE DTC SET IN FIRST GEAR**

   In the Event Data recorded earlier, does the Event Data show the Present Gear as first gear when the DTC P0841 set ?

   Yes

   - Go To 8.

   No

   - Replace the Transmission Solenoid/TRS Assembly in accordance with the Service Information.
   - Refer to **STANDARD PROCEDURE** and perform the 68RFE TRANSMISSION VERIFICATION TEST.

8. **CHECK IF THE NO. 1 CHECK BALL IS CUT OR DAMAGED**
   1. Turn the ignition off to the lock position.
   2. Remove the Transmission Valve Body in accordance with the Service Information.
   3. Check the No. 1 Check Ball for any possible cuts or damage.

      Is the No. 1 Check Ball cut or damaged?

      Yes

      - Replace the No. 1 Check Ball and check for clutch debris in the transmission oil pan. If there is excessive debris, perform internal repairs to the L/R Clutch assembly. Refer to **STANDARD PROCEDURE** for proper repair procedures.
      - Refer to **STANDARD PROCEDURE** and perform the 68RFE TRANSMISSION VERIFICATION TEST.

      No

      - Go To 9.

9. **CHECK IF THE DRIVE SHELL SNAP RING IS DISLODGED AND THE TRANSMISSION SOLENOID/TRS ASSEMBLY**
   1. Looking through the windows in the bottom of the case, check whether the snap ring at the front of the input annulus gear drive shell and Reverse (center) Carrier has dislodged.

NOTE: **It may be necessary to pry the Input Annulus Gear Drive Shell rearward to check this snap ring.**

Is the Drive Shell Snap Ring dislodged?

Yes

- Repair as necessary.
- Refer to **STANDARD PROCEDURE** and perform the 68RFE TRANSMISSION VERIFICATION TEST.

No

- Replace the Transmission Solenoid/TRS Assembly in accordance with the Service Information.
- Refer to **STANDARD PROCEDURE** and perform the 68RFE TRANSMISSION VERIFICATION TEST.

10. **CHECK THE (T50) L/R PRESSURE SWITCH SENSE CIRCUIT FOR AN OPEN**

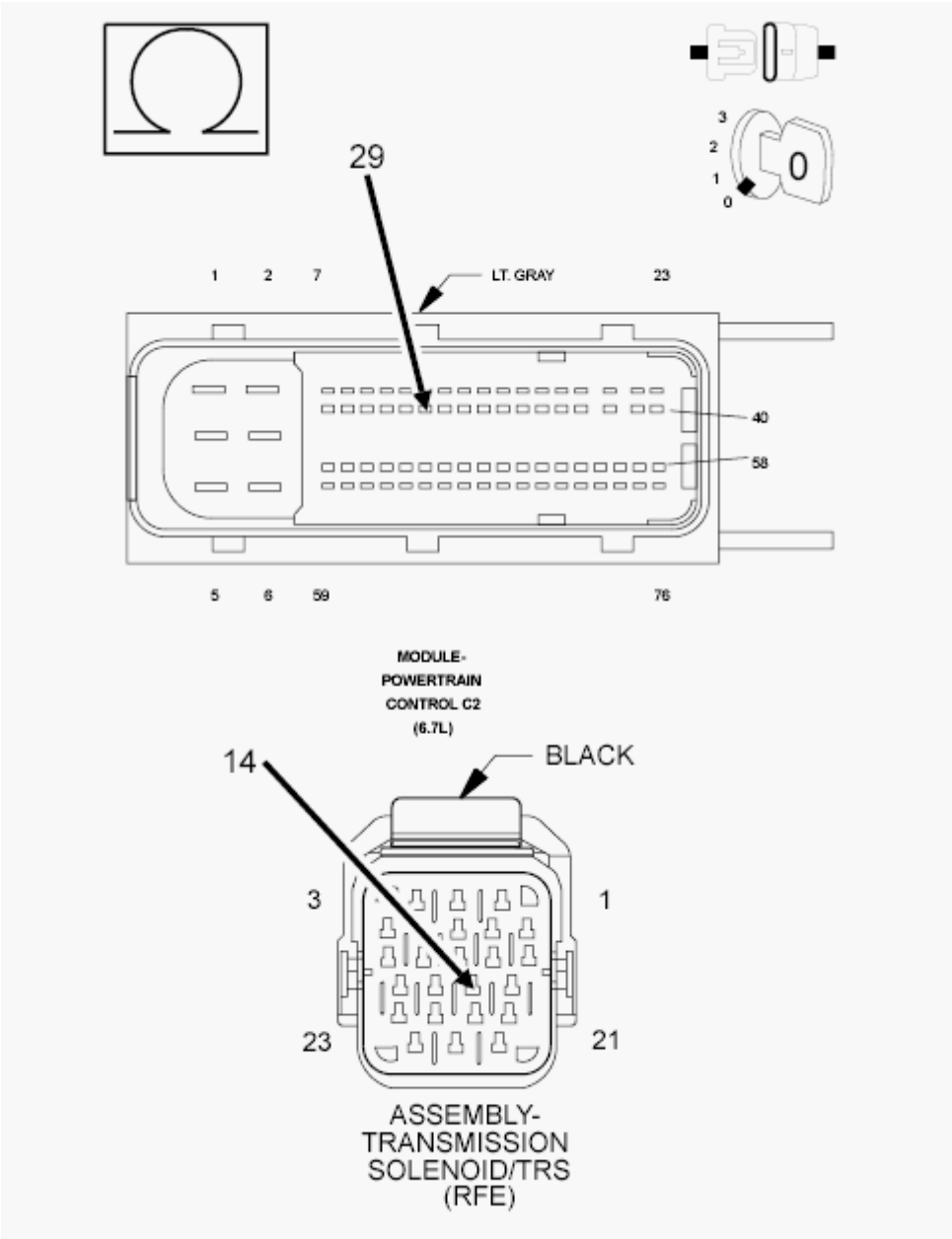

Fig. 43: Checking L/R Pressure Switch Sense & Signal Circuit For Open
Courtesy of CHRYSLER GROUP, LLC

1. Turn the ignition off to the lock position.
2. Disconnect the Transmission Simulator (special tool #8333A, Simulator, Transmission) if connected in a previous step or disconnect the Transmission Solenoid/TRS Assembly harness connector.
3. Disconnect the PCM C2 harness connector.

NOTE: Check connectors - Clean/repair as necessary.

4. Measure the resistance of the (T50) L/R Pressure Switch Sense circuit between the Transmission

Solenoid/TRS Assembly harness connector and the appropriate terminal of the PCM C2 harness connector.

Is the resistance above 5.0 Ohms?

Yes

- Repair the (T50) L/R Pressure Switch Sense circuit for an open.
- Refer to **STANDARD PROCEDURE** and perform the 68RFE TRANSMISSION VERIFICATION TEST.

No

- Go To 11.

11. **CHECK THE (T50) L/R PRESSURE SWITCH SENSE CIRCUIT FOR A SHORT TO GROUND**

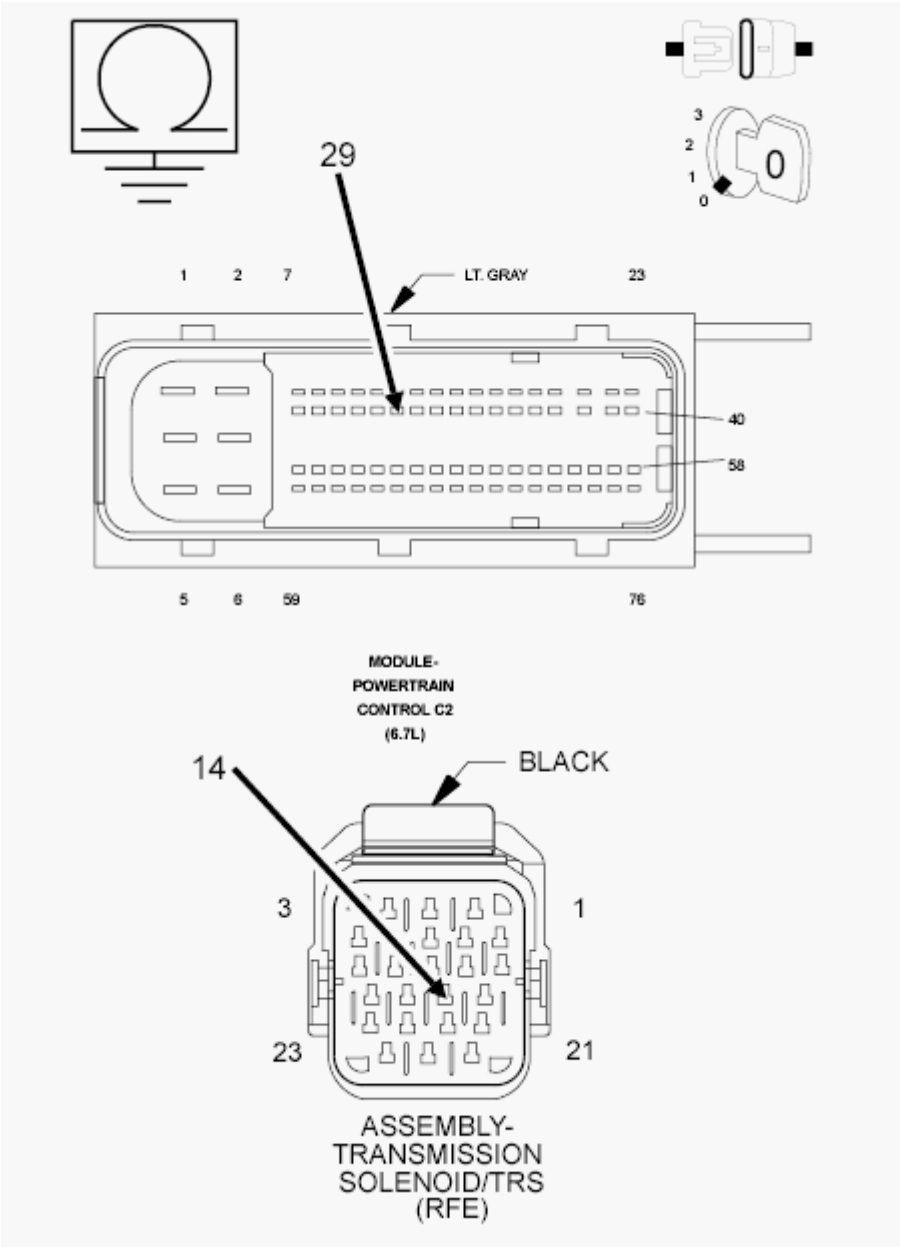

Fig. 44: Checking L/R Pressure Switch Sense & Signal Circuit For Short To Ground
Courtesy of CHRYSLER GROUP, LLC

1. Measure the resistance between ground and the (T50) L/R Pressure Switch Sense circuit.

   Is the resistance below 5.0 Ohms?

   Yes

   - Repair the (T50) L/R Pressure Switch Sense circuit for a short to ground.
   - Refer to **STANDARD PROCEDURE** and perform the 68RFE TRANSMISSION VERIFICATION TEST.

No

- Go To 12.

12. **CHECK THE PCM POWERS AND GROUNDS**
    1. Using the schematics as a guide, check the Powertrain Control Module (PCM) terminals for corrosion, damage, or terminal push out. Pay particular attention to all power and ground circuits.

    Were there any problems found?

    Yes

    - Repair as necessary.
    - Refer to **STANDARD PROCEDURE** and perform the 68RFE TRANSMISSION VERIFICATION TEST.

    No

    - Go To 13.

13. **ROAD TEST THE VEHICLE**
    1. With the scan tool, clear the DTC and road test the vehicle.
    2. Using the Event Data recorded earlier, try to duplicate the conditions in which the DTC originally set.

    Did the DTC P0841 reset?

    Yes

    - Using the schematics as a guide, check the Powertrain Control Module (PCM) terminals for corrosion, damage, or terminal push out. Pay particular attention to all power and ground circuits. If no problems are found, replace and program the PCM in accordance with the Service Information. With the scan tool, perform Quick Learn.
    - Refer to **STANDARD PROCEDURE** and perform the 68RFE TRANSMISSION VERIFICATION TEST.

    No

    - Go To 17.

14. **CHECK FOR LOW LINE PRESSURE**

    In the Event Data recorded earlier, is the Line Pressure less than 40 psi, and significantly below the Desired Line Pressure?

    Yes

    - Repair as necessary to correct low line pressure. Check for low fluid level. Check the Primary Oil

Filter seal for a split, crack, or improperly installed. Refer to **STANDARD PROCEDURE** for the proper installation procedure. If the fluid level and Primary Oil Filter are OK, check the Main Regulator Valve in the Oil Pump in accordance with the Service Information.

- Refer to **STANDARD PROCEDURE** and perform the 68RFE TRANSMISSION VERIFICATION TEST.

No

- Go To 15.

15. **CHECK THE (T50) L/R PRESSURE SWITCH SENSE CIRCUIT FOR A SHORT TO ANOTHER CIRCUIT**

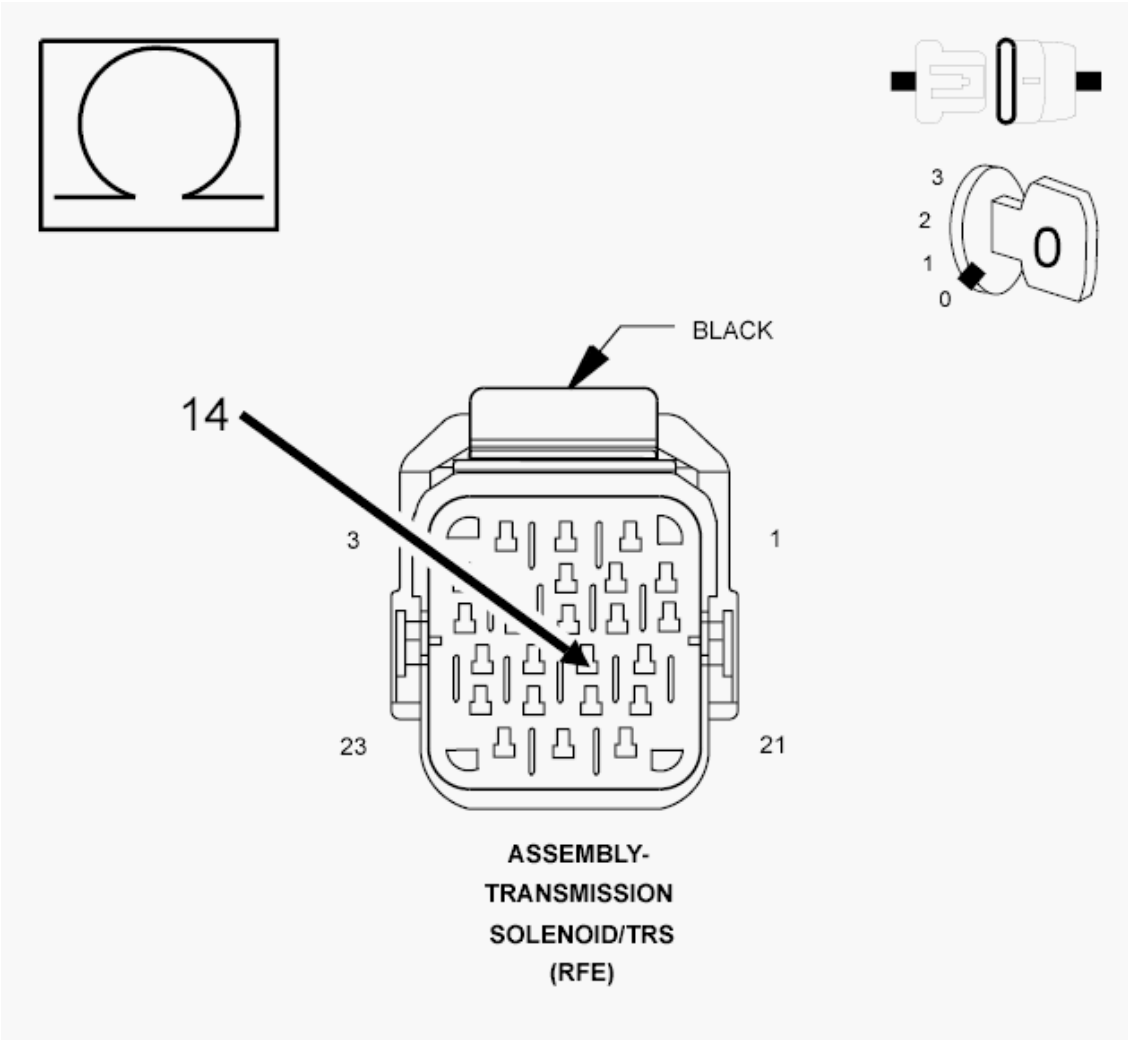

Fig. 45: Checking L/R Pressure Switch Sense Circuit For A Short To Another Circuit
Courtesy of CHRYSLER GROUP, LLC

1. Turn the ignition off to the lock position.
2. Disconnect the Transmission Solenoid/TRS Assembly harness connector.

3. Disconnect all PCM harness connectors.
4. Measure the resistance between the (T50) L/R Pressure Switch Sense circuit and all other circuits in the Transmission Solenoid/TRS Assembly harness connector.

   Is the resistance below 5.0 Ohms between the (T50) L/R Pressure Switch Sense circuit and any other circuit(s) in the Transmission Solenoid/TRS Assembly harness connector?

   Yes

   - Repair the (T50) L/R Pressure Switch Sense circuit for a short to another circuit(s).
   - Refer to **STANDARD PROCEDURE** and perform the 68RFE TRANSMISSION VERIFICATION TEST.

   No

   - Go To 16.

16. **ROAD TEST THE VEHICLE**
    1. With the scan tool, clear the DTC and road test the vehicle.
    2. Using the Event Data recorded earlier, try to duplicate the conditions in which the DTC originally set.

       Did the DTC P0841 reset?

       Yes

       - Replace the Transmission Solenoid/TRS Assembly in accordance with the Service Information.
       - Refer to **STANDARD PROCEDURE** and perform the 68RFE TRANSMISSION VERIFICATION TEST.

       No

       - Go To 17.

17. **CHECK THE WIRING AND CONNECTORS**
    1. The conditions necessary to set this DTC are not present at this time.
    2. Using the schematics as a guide, inspect the wiring and connectors specific to this circuit.
    3. Wiggle the wires while checking for shorted and open circuits.
    4. With the scan tool, check the Event Data to help identify the conditions in which the DTC was set.

       Were there any problems found?

       Yes

       - Repair as necessary.

- Refer to **STANDARD PROCEDURE** and perform the 68RFE TRANSMISSION VERIFICATION TEST.

No

- Test Complete.

P0845-2C HYDRAULIC PRESSURE TEST

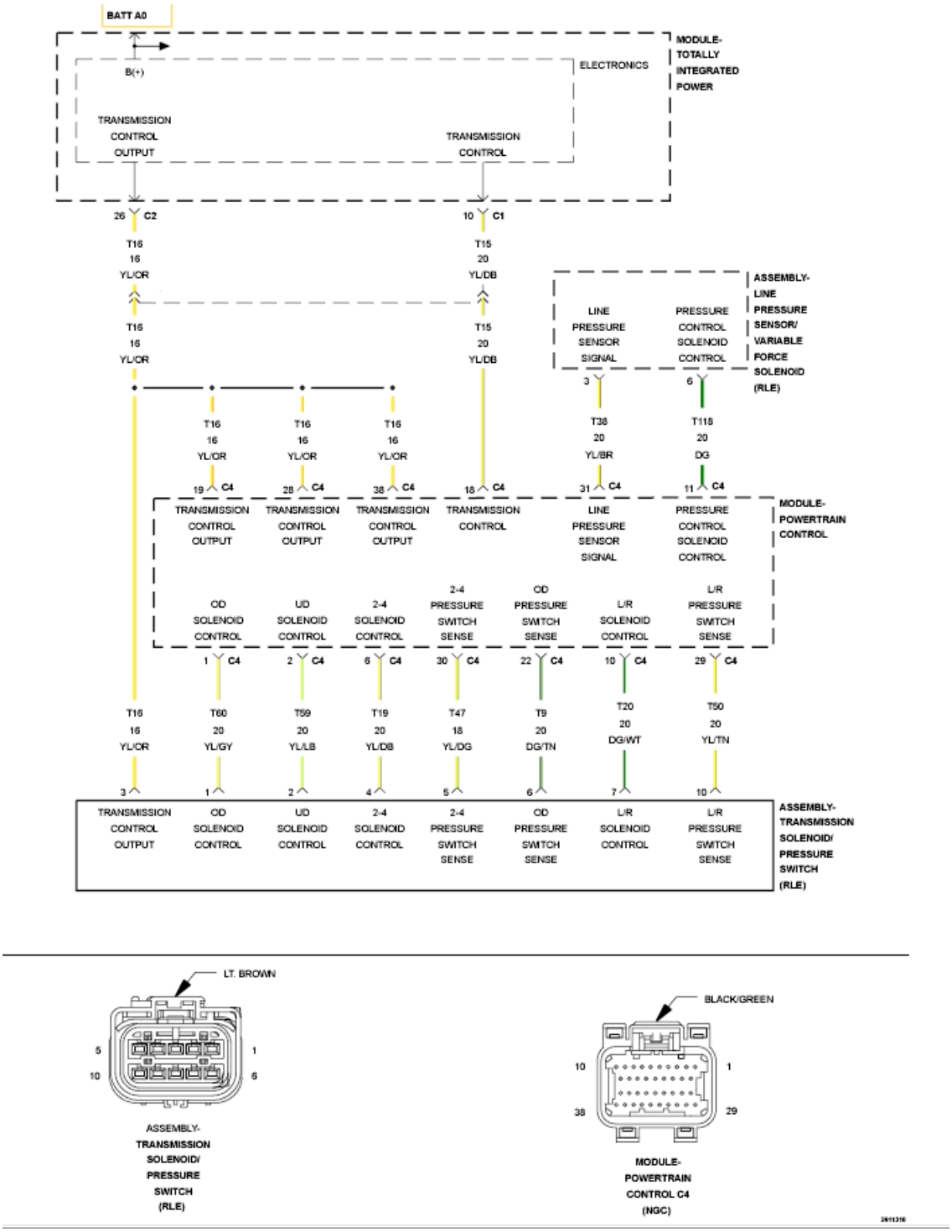

Fig. 46: Solenoid Control Wiring Diagram
Courtesy of CHRYSLER GROUP, LLC

For a complete wiring diagram, **refer to appropriate SYSTEM WIRING DIAGRAMS article** .

THEORY OF OPERATION

The Transmission Control System tests the pressure switches when they are off. The test verifies that the switches are operational (They will close with pressure applied). The Transmission Control System verifies that the switch closes when the corresponding element is applied. If a switch fails to close, it is re-tested. If it fails the second test, the DTC will set, the MIL will illuminate and the transmission system will default to the orderly Shutdown routine.

WHEN MONITORED:

In any forward gear with engine speed above 1000 RPM shortly after a shift and every minute thereafter.

SET CONDITION:

After a shift into a forward gear, with engine speed above 1000 RPM, the Powertrain Control Module (PCM) momentarily turns on element pressure to the Clutch circuits that don't have pressure to identify the correct Pressure Switch closes. If the Pressure Switch does not close two times, the DTC sets.

POSSIBLE CAUSES

Possible Causes
LINE PRESSURE SENSOR
TRANSMISSION FLUID CONTAMINATION
RELATED DTCS PRESENT
EXCESSIVE DEBRIS IN OIL PAN
POOR LINE PRESSURE SENSOR CONNECTION
(T147) 2C PRESSURE SIGNAL CIRCUIT SHORTED TO ANOTHER CIRCUIT
(F856) 5-VOLT SUPPLY CIRCUIT OPEN
(F856) 5-VOLT SUPPLY CIRCUIT SHORTED TO GROUND
TRANSMISSION SOLENOID/TRS ASSEMBLY
INTERNAL TRANSMISSION
POWERTRAIN CONTROL MODULE (PCM)

Always perform the Pre-Diagnostic Troubleshooting procedure before proceeding. Refer to STANDARD PROCEDURE.

DIAGNOSTIC TEST

1. **CHECK FOR RELATED DTCS**
    1. With the scan tool, read DTCs.

       Is there any Loss of Prime, TCM Power Input, Line Pressure Sensor and/or TIPM TCM Power Control Circuit DTCs present?

       Yes

       - If the DTC P0944-LOSS OF PRIME is present, perform its respective test first. For the TIPM related DTCs, Refer to **DIAGNOSIS AND TESTING** and perform the appropriate

diagnostic procedure.

No

- Go To 2.

2. **CHECK IT THE DTC P0755 IS PRESENT**
   1. With the scan tool, read DTCs.

      Is the DTC P0755 also present?

      Yes

      - Refer to **DIAGNOSTIC CODE INDEX** and perform diagnostics for P0755-2C SOLENOID CIRCUIT.

      No

      - Go To 3.

3. **CHECK IF THE DTCS P0729, P0732, AND/OR P0846 ARE PRESENT**
   1. With the scan tool, read DTCs.

      Are the DTCs P0729, P0732, and/or P0846 present also?

      Yes

      - Go To 12.

      No

      - Go To 4.

4. **CHECK IF THE DTC IS CURRENT**
   1. With the scan tool, read DTCs.

      Is the status Active or is the Starts Since Set counter 2 or less for this DTC?

      Yes

      - Go To 5.

      No

      - Go To 15.

5. **CHECK IF THE LINE PRESSURE STAYS THE SAME**
   1. Start the engine.
   2. Warm the transmission to 82° C (180° F).

3. Firmly apply the brakes.
4. With the scan tool, monitor the Line Pressure during the following step.
5. Move the shift lever to each gear position, pausing momentarily in each position and record the line pressure reading. Allow the pressure to stabilize for at least five seconds in each range.

   Did the line pressure remain at a steady value between 585 and 655 kPa (85 and 95 psi) in each position?

   Yes

   - Go To 6.

   No

   - Go To 10.

6. **CHECK THE LINE PRESSURE SENSOR CONNECTION**
   1. Ignition on, **engine not running.**
   2. With the scan tool, monitor the Line Pressure while firmly pushing the Transmission Line Pressure Sensor connector inward towards the Transmission.

      Did the Line Pressure reading on the scan tool CHANGE to about 207 kPa (30 psi or 0.7 of a volt) when the connector was pushed inward?

      Yes (value was higher and changed to 30 psi or 0.7 of a volt)

      - Disconnect and properly reconnect the Line Pressure Sensor connector. Inspect terminals and repair as necessary.
      - Refer to **STANDARD PROCEDURE** and perform the 68RFE TRANSMISSION VERIFICATION TEST.

      No (value is higher than 30 psi or 0.7 of a volt and did not change, or the value was already 30 psi or 0.7 of a volt and did not change)

      - Go To 7.

7. **CHECK THE LINE PRESSURE SENSOR OPERATION**
   1. Turn the ignition off to the lock position.
   2. Remove the Ignition Switch Feed fuse from the TIPM.

      CAUTION: Removal of the Ignition Switch Feed fuse from the TIPM will prevent the vehicle from being started in gear.

      WARNING: The Ignition Switch Feed fuse must be removed from the TIPM. Failure to do so can result in possible serious or fatal injury.

3. Install the Transmission Simulator (special tool #8333A, Simulator, Transmission).
4. With the Transmission Simulator select the "OFF" position on the "Input/Output Speed" switch.
5. Ignition on, engine not running.
6. With the scan tool, monitor the Line Pressure while turning the Pressure Switch selector to each of the 3 line pressure positions on the Transmission Simulator.

NOTE: **All three scan tool Line Pressure readings should be steady and ±14 kPa (2.0 psi) or 0.2 of a volt of the reading specified on the Transmission Simulator.**

Did the scan tool Line Pressure readings match the specified readings on the Transmission Simulator and remain steady in all three positions?

Yes

- Replace the Line Pressure Sensor in accordance with the Service Information.
- Refer to **STANDARD PROCEDURE** and perform the 68RFE TRANSMISSION VERIFICATION TEST.

No

- Go To 8.

8. **CHECK THE (F856) 5-VOLT SUPPLY CIRCUIT FOR AN OPEN**

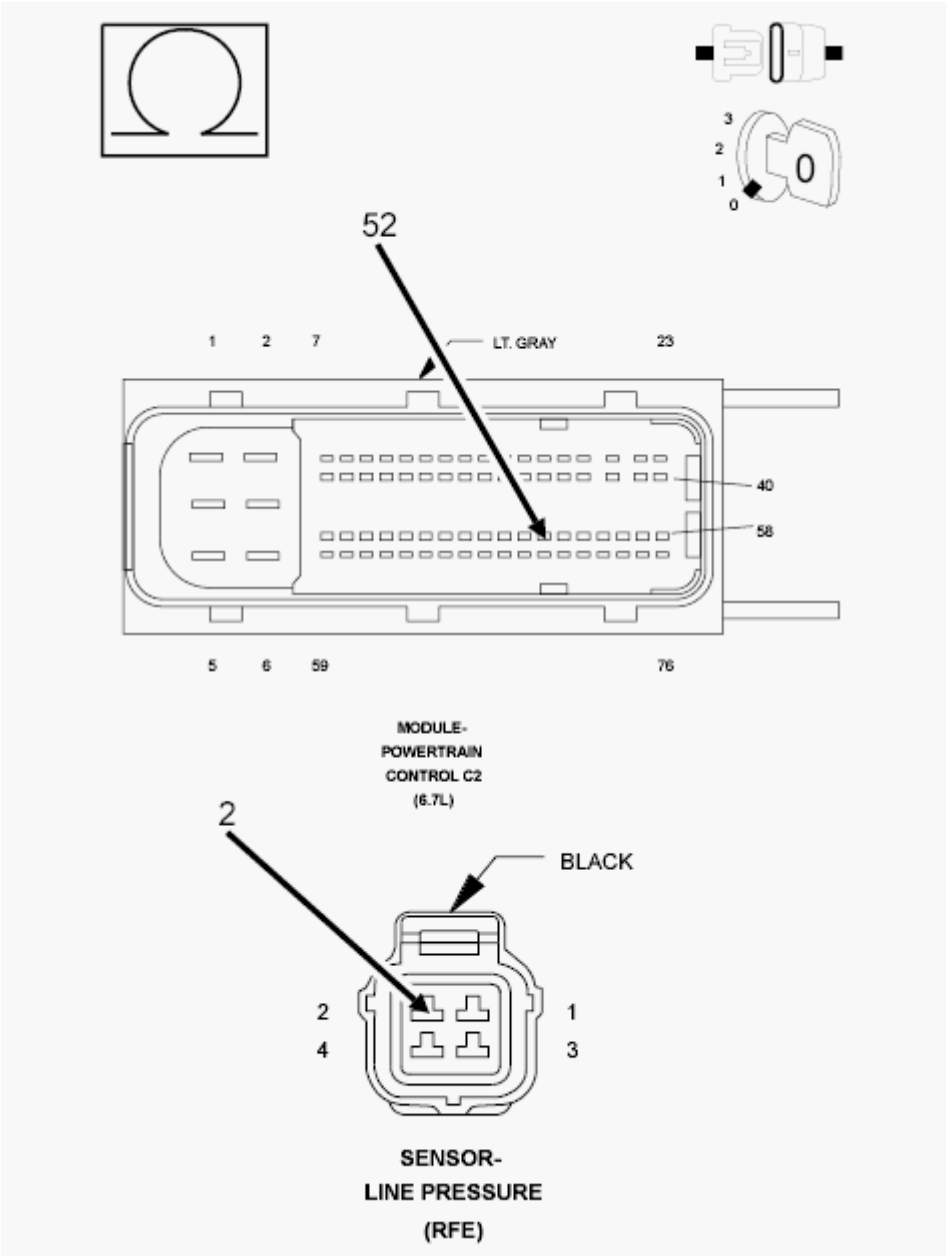

Fig. 47: Checking 5-Volt Supply Circuit For Open
Courtesy of CHRYSLER GROUP, LLC

1. Turn the ignition off to the lock position.
2. Disconnect Transmission Simulator.
3. Disconnect the PCM C2 harness connector.
4. Measure the resistance of the (F856) 5-volt Supply circuit between the Line Pressure Sensor harness connector and the appropriate terminal of the PCM C2 harness connector.

   Is the resistance above 5.0 Ohms?

   Yes

- Repair the (F856) 5-volt Supply circuit for an open.
- Refer to **STANDARD PROCEDURE** and perform the 68RFE TRANSMISSION VERIFICATION TEST.

No

- Go To 9.

9. **CHECK THE (F856) 5-VOLT SUPPLY CIRCUIT FOR A SHORT TO GROUND**

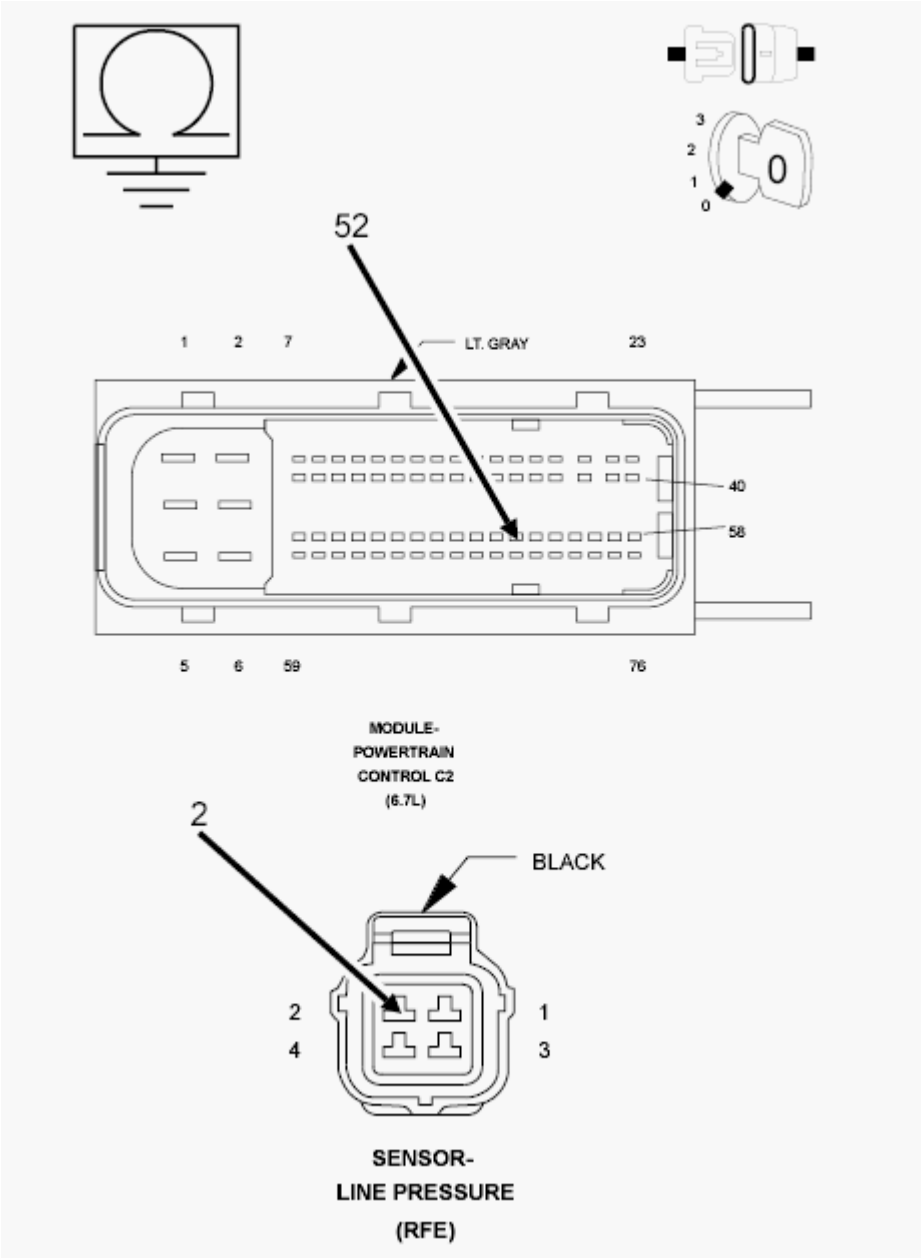

Fig. 48: Checking 5-Volt Supply Circuit For Short To Ground
Courtesy of CHRYSLER GROUP, LLC

1. Measure the resistance between ground and the (F856) 5-volt Supply circuit.

   Is the resistance below 5.0 Ohms?

   Yes

   - Repair the (F856) 5-volt Supply circuit for a short to ground.
   - Refer to **STANDARD PROCEDURE** and perform the 68RFE TRANSMISSION VERIFICATION TEST.

   No

   - Using the schematics as a guide, check the Powertrain Control Module (PCM) terminals for corrosion, damage, or terminal push out. Pay particular attention to all power and ground circuits. If no problems are found, replace the PCM in accordance with the Service Information. With the scan tool, perform Quick Learn.
   - Refer to **STANDARD PROCEDURE** and perform the 68RFE TRANSMISSION VERIFICATION TEST.

10. **COMPARE SCAN TOOL TO PRESSURE GAUGE**
    1. Turn the ignition off to the lock position.
    2. Connect the Line Pressure Adapter (special tool #8259, Adapter, Pressure Test) and 0-300 psi Test Gauge (special tool #C-3293-SP, Gauge, Pressure 0-300 P.S.I.). Refer to **STANDARD PROCEDURE** for proper installation procedure.

       CAUTION: Apply parking brake.

    3. Start the engine.
    4. In the following steps, compare the scan tool Line Pressure to the Pressure Gauge readings in each gear.

       CAUTION: Do not overheat transmission.

    5. With the gear selector in park, raise the RPM to 1500, and compare line pressure readings.
    6. Firmly apply the brakes, move the gear selector into reverse, raise the RPM to 1500, and compare the line pressure readings.
    7. Firmly apply the brakes, move the gear selector into drive, raise the RPM to 1500, and compare the line pressure readings.

       Did the scan tool Line Pressure readings match the Pressure Gauge readings ± 10 psi?

       Yes

- Go To 11.

No

- Replace the Line Pressure Sensor in accordance with the Service Information.
- Refer to **STANDARD PROCEDURE** and perform the 68RFE TRANSMISSION VERIFICATION TEST.

11. **CHECK THE WIRING AND CONNECTORS**
    1. Turn the ignition off to the lock position.
    2. Remove the Ignition Switch Feed fuse from the TIPM.

CAUTION: Removal of the Ignition Switch Feed fuse from the TIPM will prevent the vehicle from being started in gear.

WARNING: The Ignition Switch Feed fuse must be removed from the TIPM. Failure to do so can result in possible serious or fatal injury.

    3. Remove the Line Pressure Adapter (special tool #8259, Adapter, Pressure Test) and 0-300 psi Test Gauge (special tool #C-3293-SP, Gauge, Pressure 0-300 P.S.I.).
    4. Install the Transmission Simulator (special tool #8333A, Simulator, Transmission).
    5. On the Transmission Simulator, turn the Pressure Switch selector switch to 2C.
    6. Ignition on, engine not running.
    7. With the scan tool, monitor the 2C Pressure Switch state while pressing and holding the Pressure Switch test button and wiggling the wire harness and connectors that pertain to the 2C Pressure Switch.

    Did the 2C Pressure Switch state change to closed and remain closed while wiggling the wires?

    Yes

    - Go To 12.

    No

    - Go To 14.

12. **CHECK FOR EXCESSIVE DEBRIS**
    1. Turn the ignition off to the lock position.
    2. Remove the Transmission Simulator (special tool #8333A, Simulator, Transmission).
    3. Remove and inspect the Transmission Oil Pan in accordance with the Service Information.

    Does the Transmission Oil Pan contain excessive debris or contamination?

Yes

- Repair the cause of the excessive debris in the Transmission Oil Pan. Refer to **STANDARD PROCEDURE** for the proper procedures.
- Refer to **STANDARD PROCEDURE** and perform the 68RFE TRANSMISSION VERIFICATION TEST.

No

- Go To 13.

13. **CHECK THE 2C HYDRAULIC CLUTCH CIRCUIT**
    1. Remove the Valve Body and air check the 2C clutch hydraulic circuit, in the 2C/4C clutch retainer, for leakage in accordance with the Service Information.

    NOTE: The 2C hydraulic clutch circuit contains a small bleed orifice, a small amount of air leakage is normal.

    Was there excessive air leakage noticed during the air check?

    Yes

    - Repair as necessary. Check the 2C clutch piston, piston seals and bleed orifice assembly.
    - Refer to **STANDARD PROCEDURE** and perform the 68RFE TRANSMISSION VERIFICATION TEST.

    No

    - Disassemble and inspect the Valve Body and repair as necessary. Inspect the 2C Accumulator piston and seals. Check for an extra check ball downstream from the No. 7 check ball pocket and repair as necessary. If no problems are found in the Valve Body, replace the Transmission Solenoid/TRS Assembly in accordance with the Service Information.
    - Refer to **STANDARD PROCEDURE** and perform the 68RFE TRANSMISSION VERIFICATION TEST.

14. **CHECK THE (T147) 2C PRESSURE SIGNAL CIRCUIT FOR A SHORT TO ANOTHER CIRCUIT**

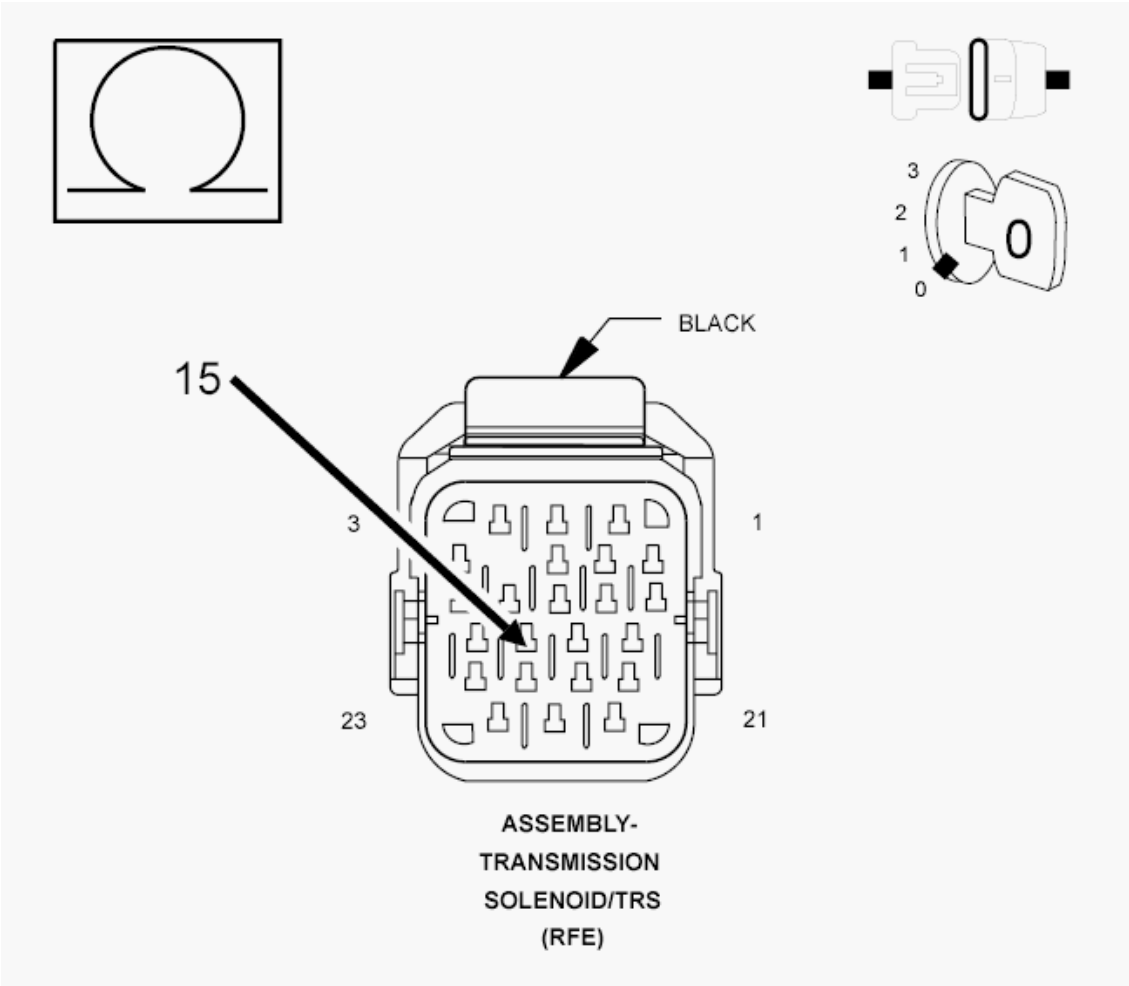

Fig. 49: Checking 2C Pressure Switch Sense Circuit For A Short To Another Circuit
Courtesy of CHRYSLER GROUP, LLC

1. Disconnect all PCM harness connectors.
2. Disconnect the Transmission Solenoid/TRS Assembly harness connector.

NOTE: **Make sure the Transmission Solenoid/TRS Assembly harness connector is disconnected.**

3. Measure the resistance between the (T147) 2C Pressure Signal circuit and all other circuits in the Transmission Solenoid/TRS Assembly harness connector.

   Is the resistance below 5.0 Ohms between the (T147) 2C Pressure Signal circuit and any other circuit(s) in the Transmission Solenoid/TRS Assembly harness connector?

   Yes

   - Repair the (T147) 2C Pressure Signal circuit for a short to another circuit(s).
   - Refer to **STANDARD PROCEDURE** and perform the 68RFE TRANSMISSION

VERIFICATION TEST.

No

- Using the schematics as a guide, check the Powertrain Control Module (PCM) terminals for corrosion, damage, or terminal push out. Pay particular attention to all power and ground circuits. If no problems are found, replace and program the PCM in accordance with the Service Information. With the scan tool, perform Quick Learn.
- Refer to **STANDARD PROCEDURE** and perform the 68RFE TRANSMISSION VERIFICATION TEST.

15. **CHECK THE WIRING AND CONNECTORS**
    1. The conditions necessary to set this DTC are not present at this time.
    2. Using the schematics as a guide, inspect the wiring and connectors specific to this circuit.
    3. Wiggle the wires while checking for shorted and open circuits.
    4. With the scan tool, check the Event Data to help identify the conditions in which the DTC was set.
    5. If the Event Data shows the DTC P0845 set while the Line Pressure was significantly below the Desired Line Pressure reading, check for causes of low line pressure (low fluid level, broken or mis-installed primary oil filter or filter seal, sticking Main Regulator Valve in the Pump Valve Body etc.). If the data shows the DTC set while the Line Pressure reading was significantly higher than the Desired Line Pressure, check the Line Pressure Sensor and related wiring.

    Where there any problems found?

    Yes

    - Repair as necessary.
    - Refer to **STANDARD PROCEDURE** and perform the 68RFE TRANSMISSION VERIFICATION TEST.

    No

    - Test Complete.

P0846-2C PRESSURE SWITCH RATIONALITY

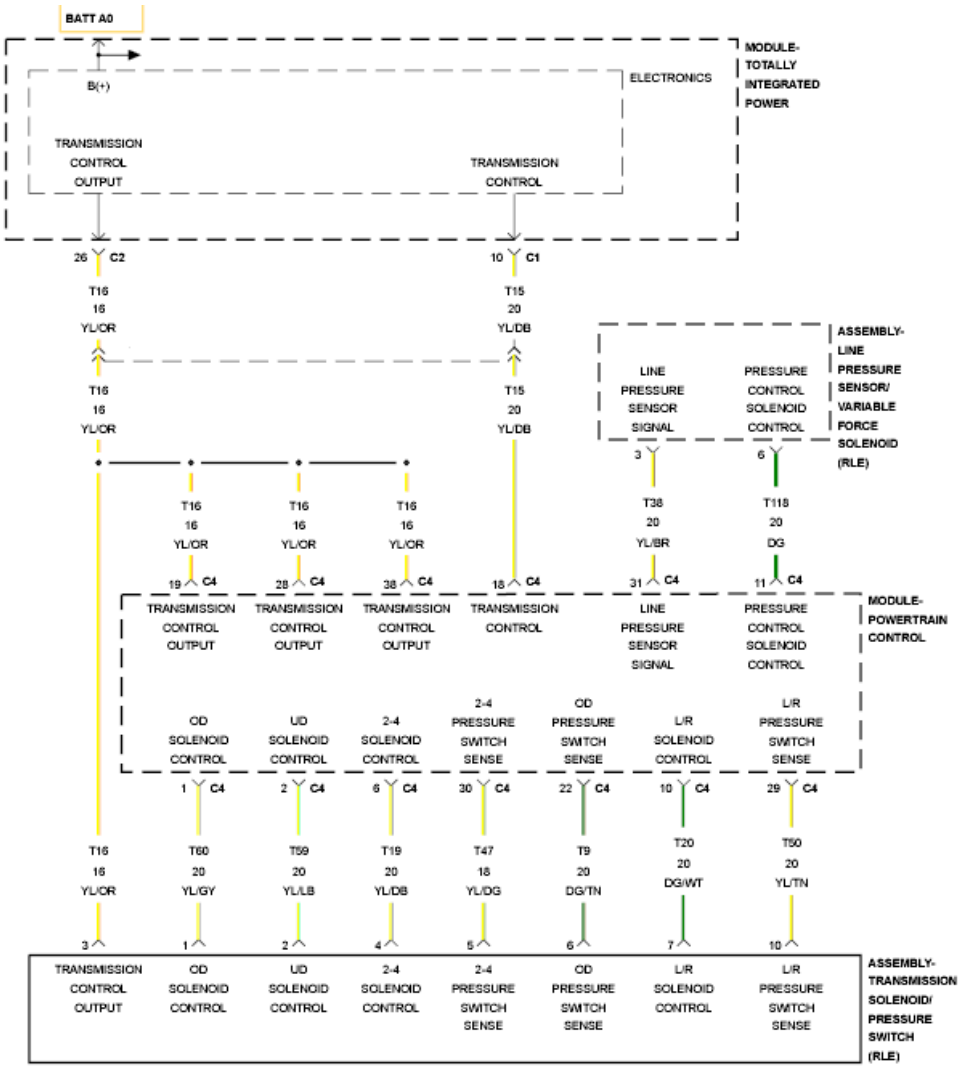

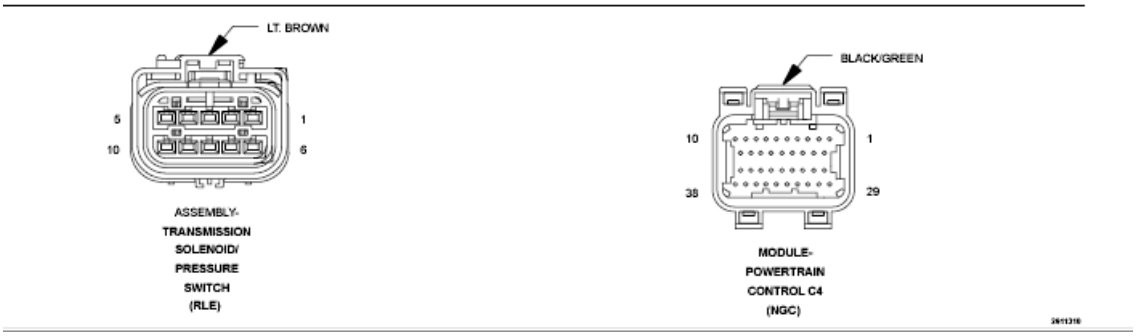

Fig. 50: Solenoid Control Wiring Diagram
Courtesy of CHRYSLER GROUP, LLC

For a complete wiring diagram, **refer to appropriate SYSTEM WIRING DIAGRAMS article** .

THEORY OF OPERATION

The Transmission system uses five pressure switches to monitor the fluid pressure in the L/R, 2C, 4C, UD, and OD clutch circuits. The pressure switches are continuously monitored for the correct states in each gear as shown.

WHEN MONITORED:

Continuously with the ignition on, engine running, with the transmission in gear.

SET CONDITION:

The DTC is set if the 2C Pressure Switch reads open or closed at the wrong time in a given gear.

POSSIBLE CAUSES

Possible Causes
RELATED TIPM TCM DTCS PRESENT
(T147) 2C PRESSURE SWITCH SENSE CIRCUIT OPEN
(T147) 2C PRESSURE SWITCH SENSE CIRCUIT SHORTED TO GROUND
(T147) 2C PRESSURE SWITCH SENSE CIRCUIT SHORTED TO OTHER CIRCUIT
EXCESSIVE FLUID LEAKAGE IN 2C CLUTCH CIRCUIT
NO. 5 AND/OR NO. 7 CHECK BALL CUT OR DAMAGED
EXTRA CHECK BALL DOWNSTREAM OF THE NO. 7 CHECK BALL SOCKET
LOW LINE PRESSURE
TRANSMISSION SOLENOID/TRS ASSEMBLY
POWERTRAIN CONTROL MODULE (PCM)
WIRING AND CONNECTORS

Always perform the Pre-Diagnostic Troubleshooting procedure before proceeding. Refer to STANDARD PROCEDURE.

GEAR	L/R	2C	4C	UD	OD
REVERSE	OPEN	OPEN	OPEN	OPEN	OPEN
P/N	CLOSED**	OPEN	OPEN	OPEN	OPEN
1ST	CLOSED*	OPEN	OPEN	CLOSED	OPEN
2ND	OPEN	CLOSED	OPEN	CLOSED	OPEN
3RD	OPEN	OPEN	CLOSED	CLOSED	OPEN
4TH	OPEN	OPEN	OPEN	CLOSED	CLOSED
5TH	OPEN	OPEN	CLOSED	OPEN	CLOSED
6TH	OPEN	CLOSED	OPEN	OPEN	CLOSED
*L/R is closed if output speed is below 100 rpm in Drive. L/R is closed in Manual (ERS) 1st.					
**May be open when rolling in Neutral or at low oil temperatures.					

DIAGNOSTIC TEST

1. **CHECK FOR TIPM DTCS**
    1. With the scan tool, read DTCs.

       Are there any TIPM TCM Power Control circuit or TCM Power Input DTCs present?

       Yes

       - Refer to **DIAGNOSIS AND TESTING** and perform the appropriate diagnostic procedure.
       - Refer to **STANDARD PROCEDURE** and perform the 68RFE TRANSMISSION VERIFICATION TEST.

       No

       - Go To 2.
2. **CHECK IF THE DTC DATA SHOWS THE CURRENT DTC**
    1. With the scan tool, read and record the Event Data.

       NOTE: Make sure to record all Event Data stored in the scan tool for future reference in this test procedure.

       Does the Event Data show data for DTC P0846?

       Yes

       - Go To 3.

       No

       - Refer to **DIAGNOSTIC CODE INDEX** and perform the appropriate diagnostic procedure shown in the Event Data.
       - Refer to **STANDARD PROCEDURE** and perform the 68RFE TRANSMISSION VERIFICATION TEST.
3. **CHECK IF MULTIPLE DTCS ARE PRESENT**
    1. With the scan tool, read DTCs.

       Are there two or more related pressure switch rationality DTCs present in addition to P0846?

       Yes

       - Go To 4.

       No

       - Go To 7.
4. **CHECK IF ALL THE PRESSURE SWITCHES READ CLOSED**

1. With the scan tool, check the Event Data for P0846.

   NOTE: Make sure to record all Event Data stored in the scan tool for future reference in this test procedure.

   Do all the pressure switches read CLOSED in the Event Data for P0846?

   Yes

   - Refer to **DIAGNOSTIC CODE INDEX** and perform diagnostics for P0882.

   No

   - Go To 5.

5. **CHECK IF ALL THE PRESSURE SWITCHES READ OPEN**

   In the Event Data recorded earlier, do all the pressure switches read OPEN?

   Yes

   - Go To 6.

   No

   - Go To 7.

6. **CHECK FOR LOW LINE PRESSURE**

   In the Event Data recorded earlier, is the (actual) Line Pressure less than 276 kPa (40 psi), and significantly below the Desired (target) Line Pressure?

   Yes

   - Repair as necessary to correct low line pressure. Check fluid level and adjust as necessary. If fluid level is OK, check the Primary Oil Filter seal for a split, crack, or improperly installed. If the filter and seal are OK, check the Main Regulator Valve in the Oil Pump. Refer to **STANDARD PROCEDURE** for the above procedures.
   - Refer to **STANDARD PROCEDURE** and perform the 68RFE TRANSMISSION VERIFICATION TEST.

   No

   - Replace the Transmission Solenoid/TRS Assembly in accordance with the Service Information.
   - Refer to **STANDARD PROCEDURE** and perform the 68RFE TRANSMISSION VERIFICATION TEST.

7. **CHECK IF THE DTC SET IN PARK, NEUTRAL, OR REVERSE**

1. With the scan tool, read and record the Event Data for P0846.

   NOTE: Make sure to record all Event Data stored in the scan tool for future reference in this test procedure.

   Does the Event Data show the DTC P0846 set in Park, Neutral, or Reverse?

   Yes

   - Go To 12.

   No

   - Go To 8.

8. **CHECK IF THE 2C PRESSURE SWITCH READS CLOSED**

   In the Event Data recorded earlier, does the Event Data show the 2C Pressure Switch reading CLOSED?

   Yes

   - Go To 10.

   No

   - Go To 9.

9. **CHECK THE LINE PRESSURE**

   In the Event Data recorded earlier, is the (actual) Line Pressure less than 276 kPa (40 psi), and significantly below the Desired (target) Line Pressure?

   Yes

   - Repair as necessary to correct low line pressure. Check fluid level and adjust as necessary. If fluid level is OK, check the Primary Oil Filter seal for a split, crack, or improperly installed. If the filter and seal are OK, check the Main Regulator Valve in the Oil Pump. Refer to **STANDARD PROCEDURE** for the above procedures.
   - Refer to **STANDARD PROCEDURE** and perform the 68RFE TRANSMISSION VERIFICATION TEST.

   No

   - Go To 15.

10. **CHECK THE PCM AND WIRING USING THE TRANSMISSION SIMULATOR**
    1. Turn the ignition off to the lock position.
    2. Remove the Ignition Switch Feed fuse from the TIPM.

CAUTION: Removal of the Ignition Switch Feed fuse from the TIPM will prevent the vehicle from being started in gear.

WARNING: The Ignition Switch Feed fuse must be removed from the TIPM. Failure to do so can result in possible serious or fatal injury.

3. Install the Transmission Simulator (special tool #8333A, Simulator, Transmission).
4. Ignition on, engine not running.
5. With the Transmission Simulator, turn the Pressure Switch selector switch to the 2C position.
6. With the scan tool, monitor the 2C Pressure Switch while pressing the Pressure Switch test button on the Transmission Simulator.

   Did the state of the 2C Pressure Switch change while pressing the Pressure Switch Test button?

   Yes

   - Go To 11.

   No

   - Go To 12.

11. **CHECK THE TRANSMISSION SOLENOID/TRS ASSEMBLY**
    1. Using the schematics as a guide, inspect the wiring and connectors specific to this circuit.
    2. Wiggle the wires while checking for shorted and open circuits.

    Where there any problems found?

    Yes

    - Repair as necessary.
    - Refer to **STANDARD PROCEDURE** and perform the 68RFE TRANSMISSION VERIFICATION TEST.

    No

    - Replace the Transmission Solenoid/TRS Assembly in accordance with the Service Information.
    - Refer to **STANDARD PROCEDURE** and perform the 68RFE TRANSMISSION VERIFICATION TEST.

12. **CHECK THE (T147) 2C PRESSURE SWITCH SENSE CIRCUIT FOR AN OPEN**

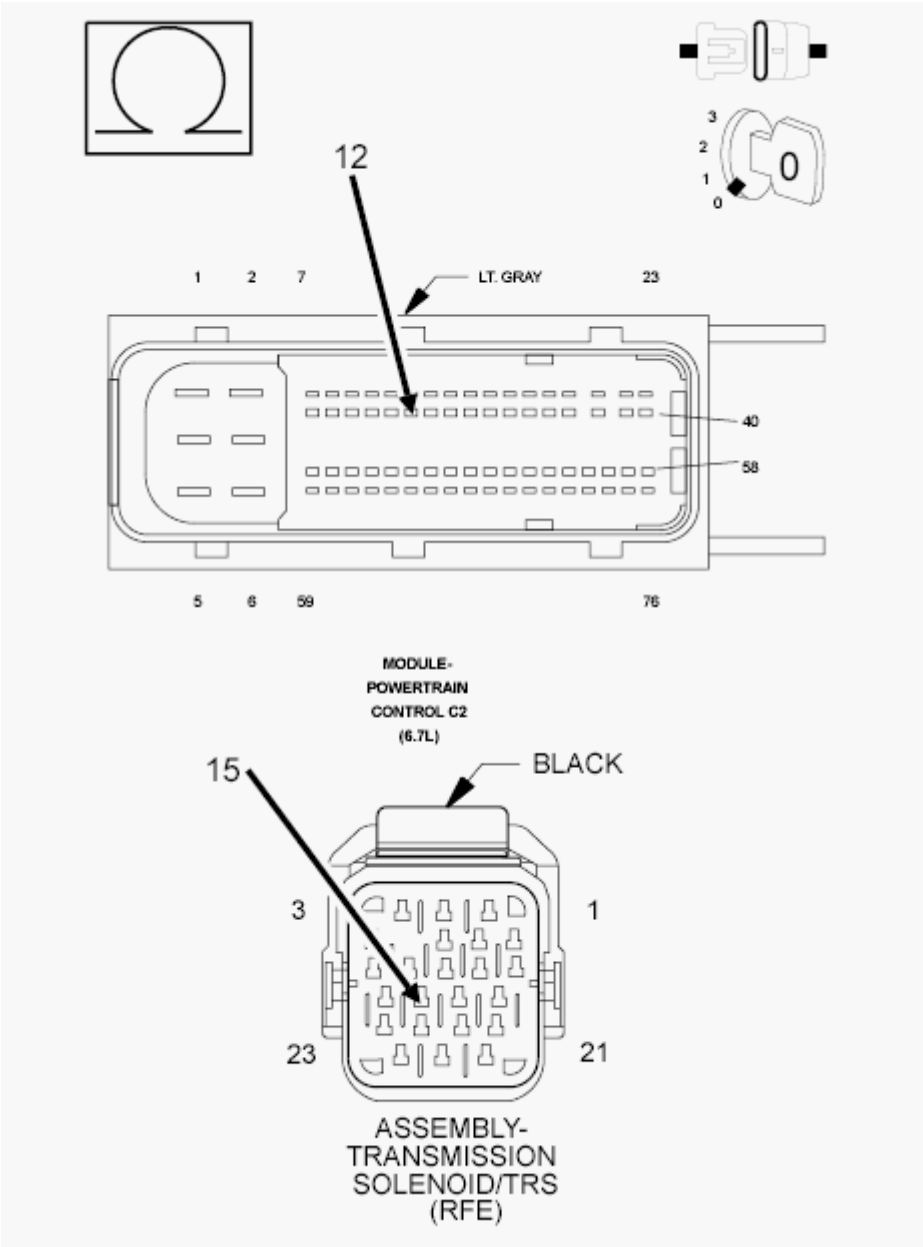

Fig. 51: Checking 2C Pressure Switch Sense Circuit For Open
Courtesy of CHRYSLER GROUP, LLC

1. Turn the ignition off to the lock position.
2. Disconnect the Transmission Simulator (special tool #8333A, Simulator, Transmission).
3. Disconnect the PCM C2 harness connector.
4. Measure the resistance of the (T147) 2C Pressure Switch Sense circuit between the Transmission Solenoid/TRS Assembly harness connect and the appropriate terminal of the PCM C2 harness connector.

   Is the resistance above 5.0 Ohms?

Yes

- Repair the (T147) 2C Pressure Switch Sense circuit for an open.
- Refer to **STANDARD PROCEDURE** and perform the 68RFE TRANSMISSION VERIFICATION TEST.

No

- Go To 13.

13. **CHECK THE (T147) 2C PRESSURE SWITCH SENSE CIRCUIT FOR A SHORT TO GROUND**

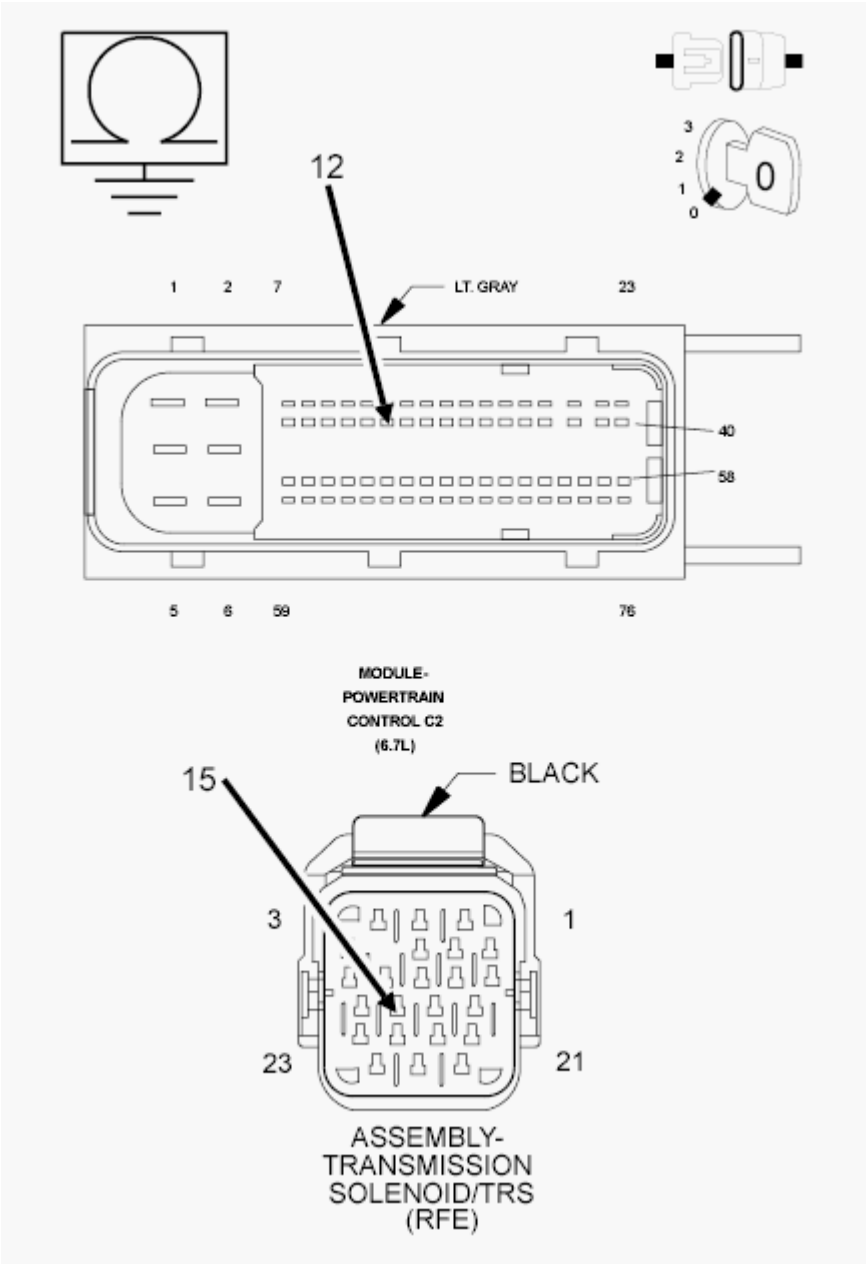

Fig. 52: Checking 2C Pressure Switch Sense Circuit For Short To Ground

Courtesy of CHRYSLER GROUP, LLC

1. Measure the resistance between ground and the (T147) 2C Pressure Switch Sense circuit.

   Is the resistance below 5.0 Ohms?

   Yes

   - Repair the (T147) 2C Pressure Switch Sense circuit for a short to ground.
   - Refer to **STANDARD PROCEDURE** and perform the 68RFE TRANSMISSION VERIFICATION TEST.

   No

   - Go To 14.

14. **CHECK THE (T147) 2C PRESSURE SWITCH SENSE CIRCUIT FOR A SHORT TO ANOTHER CIRCUIT**

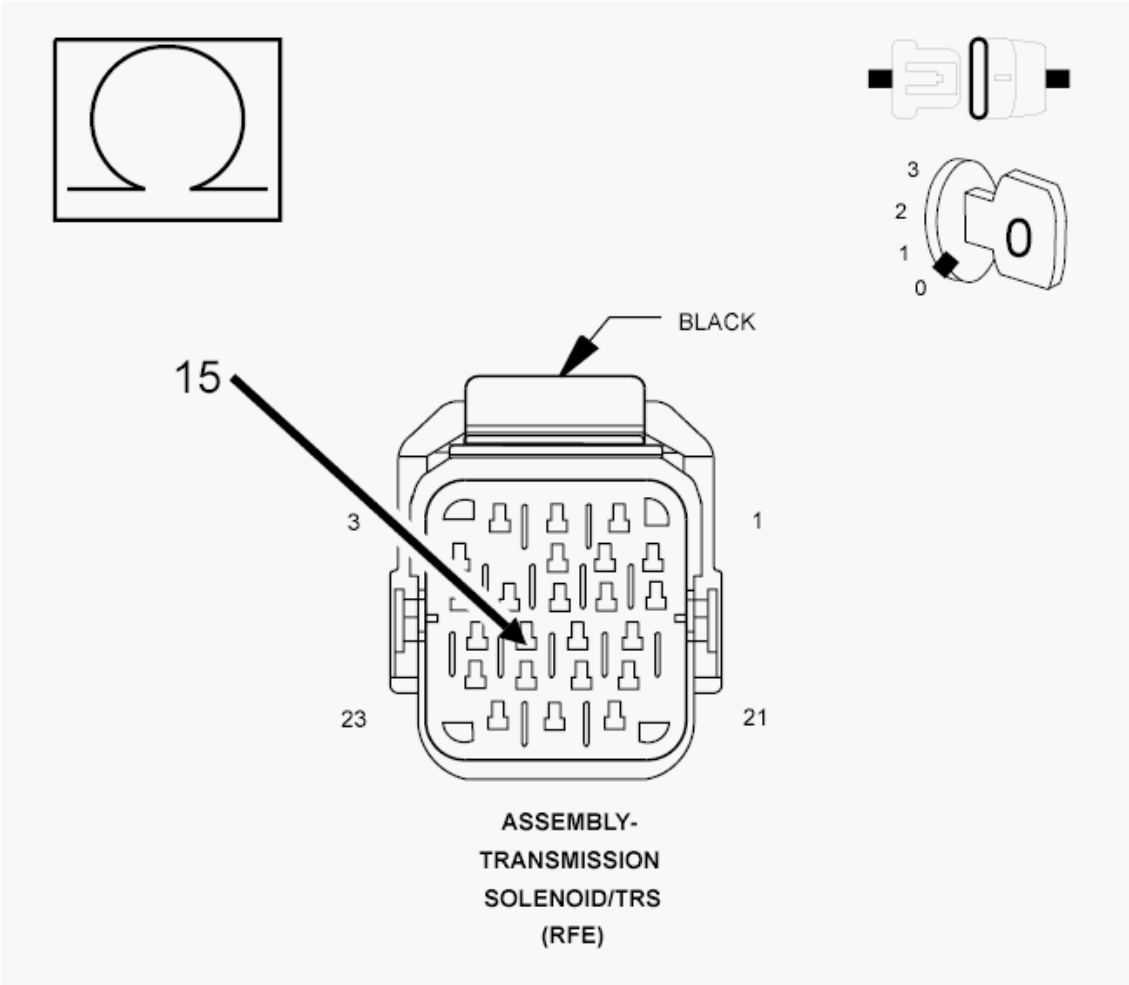

Fig. 53: Checking 2C Pressure Switch Sense Circuit For A Short To Another Circuit

Courtesy of CHRYSLER GROUP, LLC

1. Measure the resistance between the (T147) 2C Pressure Switch Sense circuit and all the other circuits in the Transmission Solenoid/TRS Assembly harness connector.

   Is the resistance below 5.0 Ohms?

   Yes

   - Repair the (T147) 2C Pressure Switch Sense circuit for a short to another circuit(s).
   - Refer to **STANDARD PROCEDURE** and perform the 68RFE TRANSMISSION VERIFICATION TEST.

   No

   - Using the schematics as a guide, check the Powertrain Control Module (PCM) terminals for corrosion, damage, or terminal push out. Pay particular attention to all power and ground circuits. If no problems are found, replace the PCM in accordance with the Service Information. With the scan tool, perform Quick Learn.
   - Refer to **STANDARD PROCEDURE** and perform the 68RFE TRANSMISSION VERIFICATION TEST.

15. **CHECK IF THE NO. 5 AND/OR NO. 7 CHECK BALL IS CUT OR DAMAGED**
    1. Turn the Ignition off to the lock position.
    2. Remove the Valve Body Assembly in accordance with the Service Information.
    3. Inspect the No. 5 and No. 7 check balls for any cuts or damage.
    4. Check for an extra check ball in the passage downstream from the No. 7 check ball pocket.
    5. Inspect the 2C accumulator piston and seals and also the 2C tower seal on top of the valve body. Refer to **STANDARD PROCEDURE** .

       Where there any problems found?

       Yes

       - Repair as necessary. Check for excessive clutch debris in the transmission oil pan. If excessive clutch debris is present, repair 2C clutch as necessary. Refer to **STANDARD PROCEDURE** for proper repair procedures.
       - Refer to **STANDARD PROCEDURE** and perform the 68RFE TRANSMISSION VERIFICATION TEST.

       No

       - Go To 16.

16. **CHECK FOR EXCESSIVE FLUID LEAKAGE WITHIN THE 2C CLUTCH CIRCUIT**
    1. Air check the 2C Clutch hydraulic circuit. Refer to **STANDARD PROCEDURE** .

NOTE: **This hydraulic clutch circuit contains a small bleed orifice. Small leakage is considered normal.**

Was there excessive air leakage in the 2C Clutch hydraulic circuit?

Yes

- Repair as necessary. Refer to **STANDARD PROCEDURE** .
- Refer to **STANDARD PROCEDURE** and perform the 68RFE TRANSMISSION VERIFICATION TEST.

No

- Replace the Transmission Solenoid/TRS Assembly in accordance with the Service Information.
- Refer to **STANDARD PROCEDURE** and perform the 68RFE TRANSMISSION VERIFICATION TEST.

P0868-LINE PRESSURE LOW

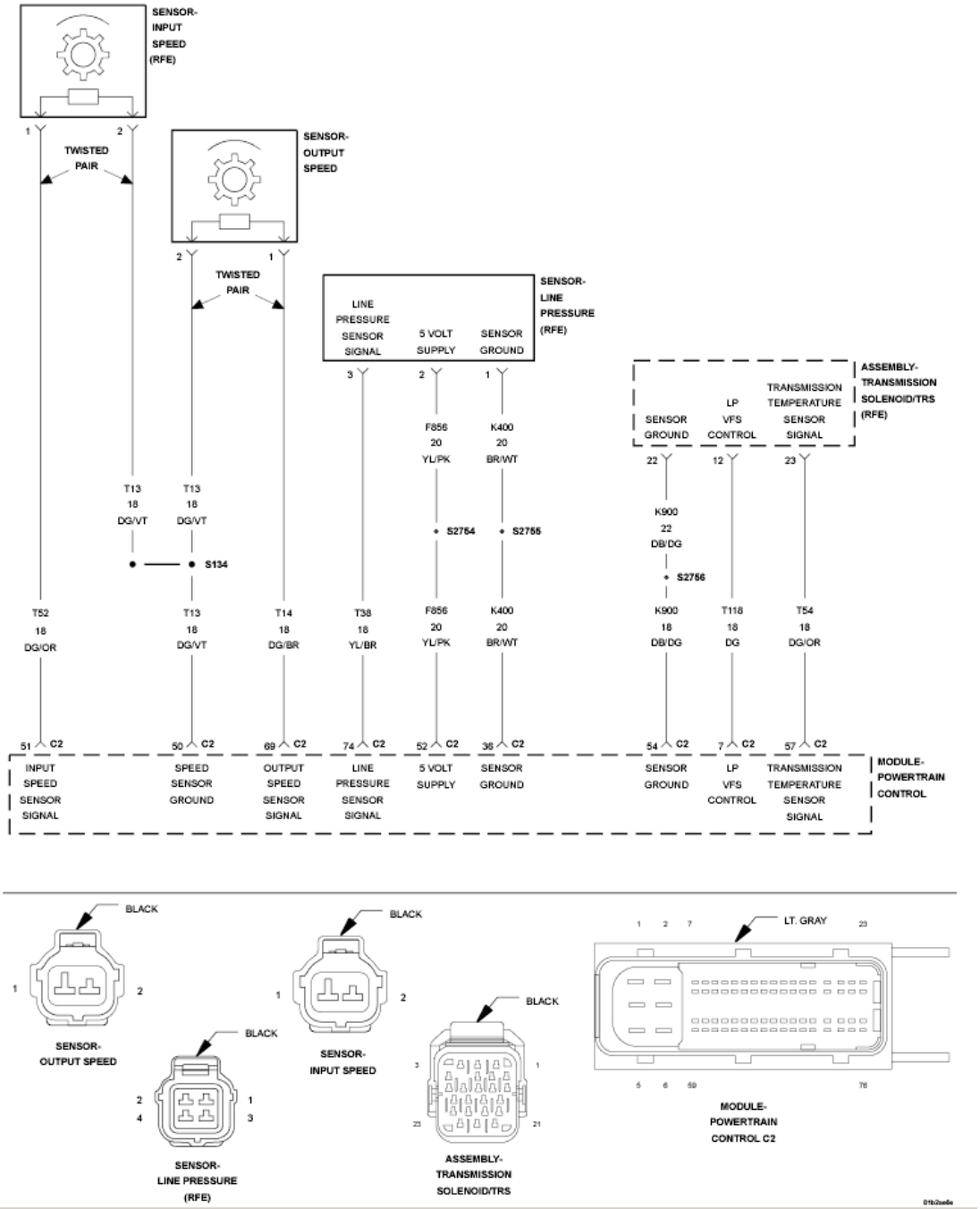

Fig. 54: Input/Output Speed Sensor, Line Pressure Sensor & Transmission Temperature Sensor Circuit Wiring Diagram
Courtesy of CHRYSLER GROUP, LLC

For a complete wiring diagram, **refer to appropriate SYSTEM WIRING DIAGRAMS article** .

THEORY OF OPERATION

Line pressure is measured by the Line Pressure Sensor (LPS) and regulation is achieved by changing the duty cycle of the Pressure Control Solenoid (PCS) controlled by the Transmission Control System. (5% duty cycle =

solenoid off = Max line pressure, 62% duty cycle = solenoid on = Min line pressure). The Transmission Control System calculates the desired line pressure based on inputs from both the engine and transmission.

The Transmission Control System calculates torque input to the transmission and uses it as the primary input to the desired line pressure calculation. This is called Torque Based Line Pressure. In addition, the line pressure is set to a preset level 1034 or 1103 kPa (150 or 160 psi) during shifts to ensure consistent shift quality. The actual line pressure is continuously being compared to the desired (target) line pressure. If the actual line pressure is consistently lower than the target while driving, the line pressure low DTC P0868 will set.

WHEN MONITORED:

Continuously while driving in a forward gear.

SET CONDITION:

The PCM continuously monitors Actual Line Pressure and compares it to Desired Line Pressure. If the Actual Line Pressure is more than 15 psi below Desired Line Pressure for 3.5 seconds continuously, this DTC will set.

POSSIBLE CAUSES

Possible Causes
CHECK FOR RELATED DTCS
LOW FLUID LEVEL
(F856) 5-VOLT SUPPLY CIRCUIT OPEN
POOR LINE PRESSURE SENSOR CONNECTION
(F856) 5-VOLT SUPPLY CIRCUIT SHORTED TO GROUND
(F856) 5-VOLT SUPPLY CIRCUIT SHORTED TO VOLTAGE
(T118) PRESSURE CONTROL SOLENOID CONTROL CIRCUIT SHORTED TO ANOTHER CIRCUIT
INTERNAL TRANSMISSION
LINE PRESSURE SENSOR
CRACKED, PLUGGED, OR MIS-INSTALLED PRIMARY OIL FILTER
LOOSE COOLER RETURN SPIN ON FILTER (IF EQUIPPED)
STUCK OR STICKING MAIN REGULATOR VALVE
POWERTRAIN CONTROL MODULE (PCM)

Always perform the Pre-Diagnostic Troubleshooting procedure before proceeding. Refer to STANDARD PROCEDURE.

DIAGNOSTIC TEST

1. **CHECK FOR RELATED DTCS**
    1. With the scan tool, read and record all DTCs.

       Is the DTC P0933 present also?

Yes

- Refer to **DIAGNOSTIC CODE INDEX** and perform the appropriate symptom.

No

- Go To 2.

2. **CHECK THE Event Data**
   1. With the scan tool, read the DTC Event Data for the DTC P0868.

      Does the Line Pressure reading in the DTC Event Data show zero (0) psi?

      Yes

      - Go To 3.

      No

      - Go To 4.

3. **VERIFY PROPER LINE PRESSURE**
   1. With the scan tool, erase all DTCs.
   2. Start the vehicle in Park and raise engine speed to 1500 rpm.
   3. With the scan tool, compare the Line Pressure and Desired Line Pressure.

      Does the Line Pressure reading match the Desired Line Pressure reading (± 34.5 kPa or 5 psi)?

      Yes

      - Disregard this DTC P0868. Refer to **DIAGNOSTIC CODE INDEX** and follow the diagnostic procedure for any other DTCs which are present.

      No

      - Go To 4.

4. **CHECK IF THE DTC IS CURRENT**
   1. With the scan tool, read DTCs.

      Is the status Active or is the Starts Since Set counter 2 or less for this DTC?

      Yes

      - Go To 5.

      No

- Go To 15.

5. **CHECK THE LINE PRESSURE SENSOR CONNECTION**
   1. Ignition on, **engine not running.**
   2. With the scan tool, monitor the Line Pressure while firmly pushing the Transmission Line Pressure Sensor connector inwards towards the Transmission.

      Did the Line Pressure reading on the scan tool CHANGE to about 207 kPa (30 psi) or 0.7 of a volt when the connector was pushed inward?

      Yes (value was higher and changed to 207 kPa (30 psi) or 0.7 of a volt)

      - Disconnect and properly reconnect the Line Pressure Sensor connector. Inspect terminals and repair as necessary.
      - Refer to **STANDARD PROCEDURE** and perform the 68RFE TRANSMISSION VERIFICATION TEST.

      No (value is higher than 207 kPa (30 psi) or 0.7 of a volt and did not change or the value was already 207 kPa (30 psi) or 0.7 of a volt and did not change)

      - Go To 6.

6. **CHECK THE PCM AND WIRING USING THE TRANSMISSION SIMULATOR**
   1. Turn the ignition off to the lock position.
   2. Remove the Ignition Switch Feed fuse from the TIPM.

      CAUTION: Removal of the Ignition Switch Feed fuse from the TIPM will prevent the vehicle from being started in gear.

      WARNING: The Ignition Switch Feed fuse must be removed from the TIPM. Failure to do so can result in possible serious or fatal injury.

   3. Install the Transmission Simulator (special tool #8333A, Simulator, Transmission).
   4. With the Transmission Simulator select the "OFF" position on the "Input/Output Speed" switch.
   5. Ignition on, engine not running.
   6. With the scan tool, monitor the Line Pressure during the following steps.
   7. Using the Transmission Simulator, set the rotary knob to each of the three line pressure positions.

      NOTE: All three scan tool Line Pressure readings should be steady and ± 14 kPa (2.0 psi) or 0.1 of a volt of the reading specified on the Transmission Simulator.

      Did the Line Pressure read within ± 14 kPa (2.0 psi) or 0.1 of a volt in all three positions?

Yes

- Go To 7.

No

- Go To 11.

7. **CHECK THE LINE PRESSURE SENSOR**
   1. Turn the ignition off to the lock position.
   2. Disconnect the Transmission Simulator (special tool #8333A, Simulator, Transmission) and reconnect all previously disconnected connectors.
   3. Install the Line Pressure Adaptor (special tool #8259, Adapter, Pressure Test), and the Pressure Gauge (special tool #C-3293-SP, Gauge, Pressure 0-300 P.S.I.), 0 to 2000 kPa (0 to 300 psi).
   4. Start the engine in park.
   5. Monitor the line pressure readings of both the scan tool and the pressure gauge and compare the two readings.

      Is the line pressure gauge reading within 34 kPa (5 psi) of the scan tool reading?

      Yes

      - Go To 8.

      No

      - Replace the Line Pressure Sensor in accordance with the Service Information.
      - Refer to **STANDARD PROCEDURE** and perform the 68RFE TRANSMISSION VERIFICATION TEST.

8. **CHECK FOR PROPER LINE PRESSURE**
   1. With the vehicle still in Park, raise the engine speed to 1500 rpm.
   2. Compare line pressure readings of both the scan tool and the pressure gauge to the Desired Line Pressure reading on the scan tool.

      Is the Line Pressure gauge and scan tool reading within 34 kPa (5 psi) of the Desired Line Pressure scan tool reading?

      Yes

      - Go To 15.

      No

      - Go To 9.

9. **CHECK THE DEFAULT LINE PRESSURE**

1. Turn the ignition off to the lock position.
2. Disconnect the Transmission Solenoid/TRS Assembly harness connector.

NOTE: Disconnection of the Transmission Solenoid/TRS Assembly harness connector may set several DTCs in the following steps. Disregard and erase any DTCs that set due to the disconnection.

3. Start the engine.
4. With the vehicle still in Park, raise the engine speed to 1500 rpm while monitoring the line pressure on the pressure gauge and record your findings.

   Was the gauge reading greater than 130 psi?

   Yes

   - Go To 14.

   No

   - Go To 10.

10. **CHECK FOR A PLUGGED TRANSMISSION OIL FILTER**
    1. Turn the ignition off to the lock position.
    2. Remove and inspect the Transmission Oil Pan for excessive debris in accordance with the Service Information.
    3. Remove and inspect the Primary Oil Filter in accordance with the Service Information.

    NOTE: Make sure the Primary Transmission Oil Filter and/or O-ring is not cracked or split.

    Does the Oil Pan contain excessive debris and/or is the Primary Oil Filter cracked or plugged?

    Yes

    - Repair the plugged, cracked, or split Primary Transmission Oil Filter and/or O-ring. If the Primary Transmission Oil Filter is plugged Refer to **STANDARD PROCEDURE** for the proper Hydraulic repair procedure.
    - Refer to **STANDARD PROCEDURE** and perform the 68RFE TRANSMISSION VERIFICATION TEST.

    No

    - Repair internal transmission and inspect the Transmission Oil Pump in accordance with the Service Information and replace if necessary. If no problem is found, replace the Solenoid/TRS Assembly.

- Refer to **STANDARD PROCEDURE** and perform the 68RFE TRANSMISSION VERIFICATION TEST.

11. **CHECK THE (F856) 5-VOLT SUPPLY CIRCUIT FOR A SHORT TO VOLTAGE**

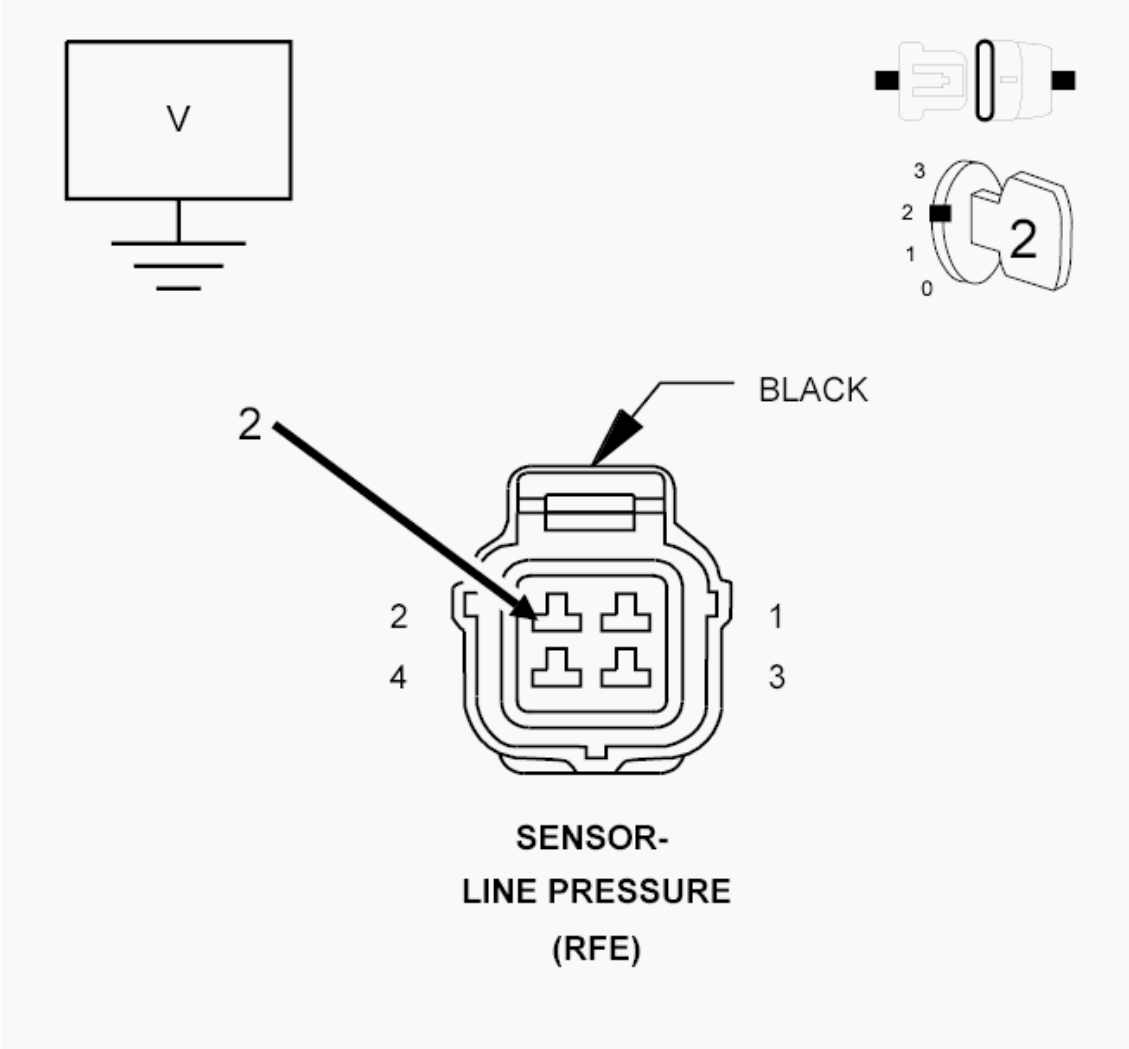

Fig. 55: Measuring Voltage Of 5-Volt Supply Circuit For Short
Courtesy of CHRYSLER GROUP, LLC

1. Disconnect the Transmission Simulator (special tool #8333A, Simulator, Transmission).
2. Reconnect all previously disconnected connectors except the Line Pressure Sensor harness connector.
3. Ignition on, engine not running.
4. Measure the voltage of the (F856) 5-volt Supply circuit in the Line Pressure Sensor harness connector.

   Is the voltage above 5.5 volts?

   Yes

- Repair the (F856) 5-volt Supply circuit for a short to voltage.
- Refer to **STANDARD PROCEDURE** and perform the 68RFE TRANSMISSION VERIFICATION TEST.

No

- Go To 12.

12. **CHECK THE (F856) 5-VOLT SUPPLY CIRCUIT FOR AN OPEN**

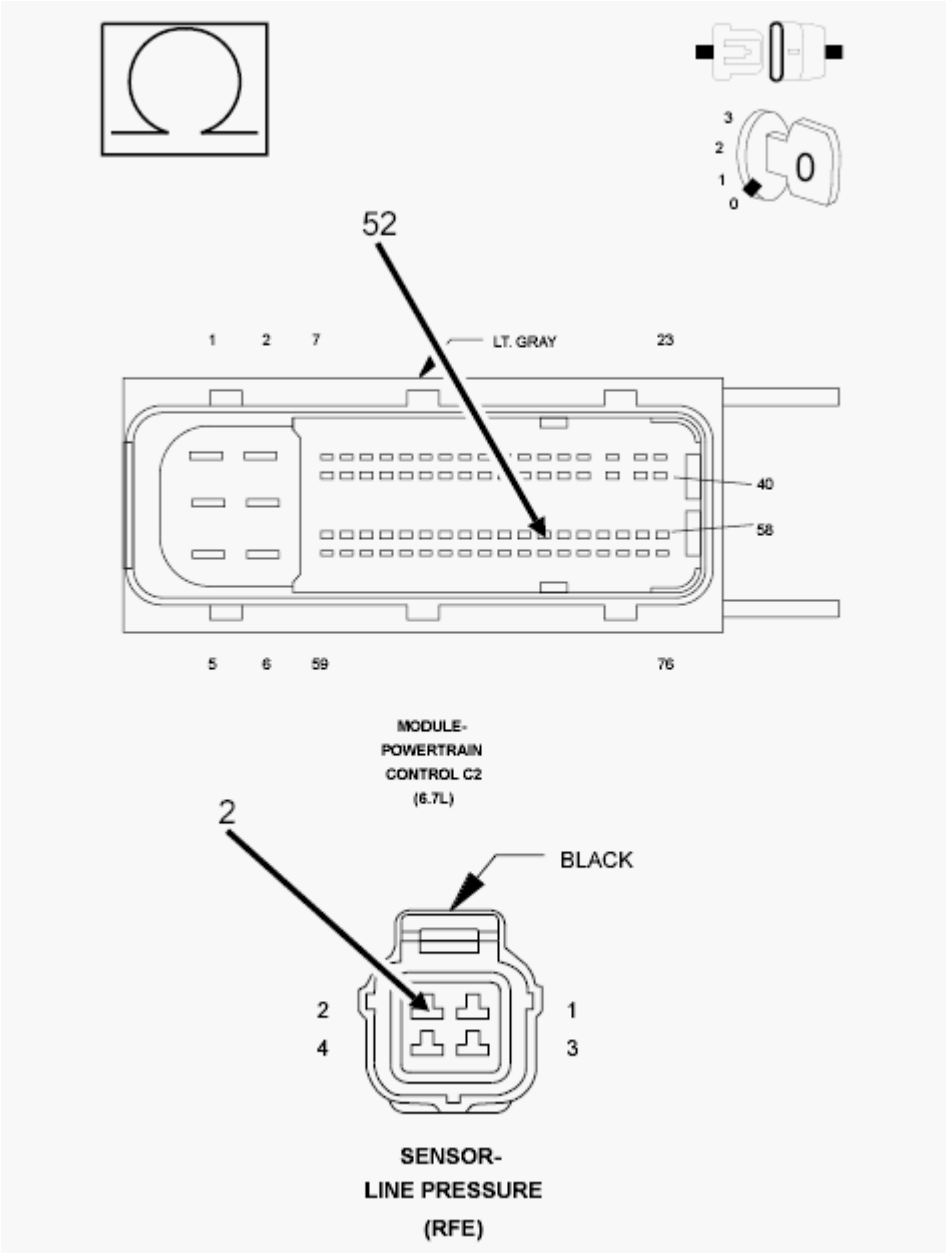

Fig. 56: Checking 5-Volt Supply Circuit For Open
Courtesy of CHRYSLER GROUP, LLC

1. Turn the ignition off to the lock position.
2. Disconnect the PCM C2 harness connector.
3. Measure the resistance of the (F856) 5-volt Supply circuit between the Line Pressure Sensor harness connector and the appropriate terminal of the PCM C2 harness connector.

   Is the resistance above 5.0 Ohms?

   Yes

   - Repair the (F856) 5-volt Supply circuit for an open.
   - Refer to **STANDARD PROCEDURE** and perform the 68RFE TRANSMISSION VERIFICATION TEST.

   No

   - Go To 13.

13. **CHECK THE (F856) 5-VOLT SUPPLY CIRCUIT FOR A SHORT TO GROUND**

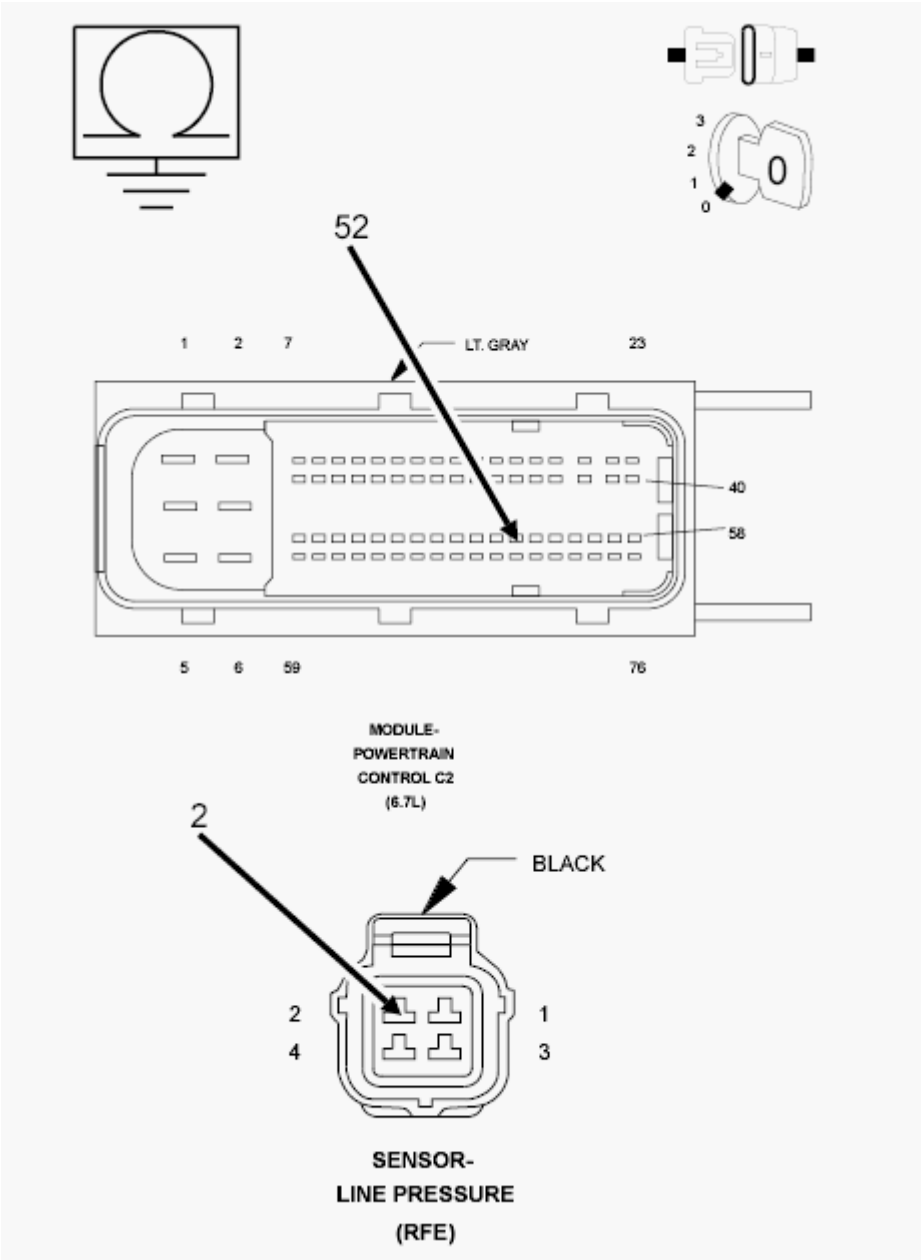

Fig. 57: Checking 5-Volt Supply Circuit For Short To Ground
Courtesy of CHRYSLER GROUP, LLC

1. Measure the resistance between ground and the (F856) 5-volt Supply circuit.

   Is the resistance below 5.0 Ohms?

   Yes

   - Repair the (F856) 5-volt Supply circuit for a short to ground.
   - Refer to **STANDARD PROCEDURE** and perform the 68RFE TRANSMISSION VERIFICATION TEST.

No

- Go To 14.

14. **CHECK THE (T118) PRESSURE CONTROL SOLENOID CONTROL CIRCUIT FOR A SHORT TO ANOTHER CIRCUIT**

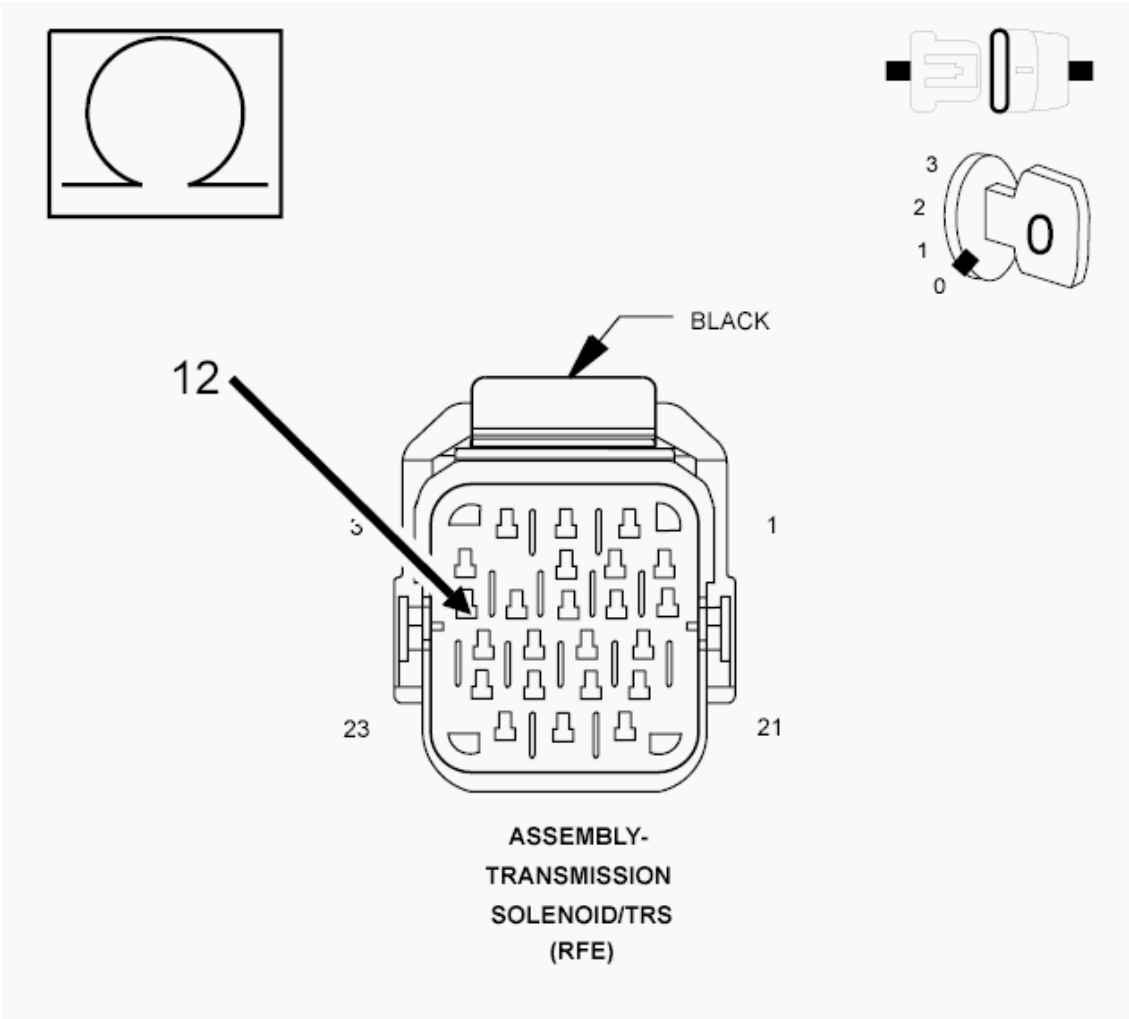

Fig. 58: Checking Pressure Control Solenoid Control Circuit For A Short To Another Circuit
Courtesy of CHRYSLER GROUP, LLC

1. Turn the ignition off to the lock position.
2. Disconnect the Transmission Solenoid/TRS Assembly harness connector.
3. Disconnect all PCM harness connectors.
4. Measure the resistance between the (T118) Pressure Control Solenoid Control circuit and all other circuits in the Transmission Solenoid/TRS Assembly harness connector.

   Is the resistance below 5.0 Ohms between the (T118) Pressure Control Solenoid Control circuit and any other circuit(s) in the Transmission Solenoid/TRS Assembly harness connector?

Yes

- Repair the (T118) Pressure Control Solenoid Control circuit for a short to another circuit(s).
- Refer to **STANDARD PROCEDURE** and perform the 68RFE TRANSMISSION VERIFICATION TEST.

No

- Using the schematics as a guide, check the Powertrain Control Module (PCM) terminals for corrosion, damage, or terminal push out. Pay particular attention to all power and ground circuits. If no problems are found, replace the PCM in accordance with the Service Information. With the scan tool, perform Quick Learn.
- Refer to **STANDARD PROCEDURE** and perform the 68RFE TRANSMISSION VERIFICATION TEST.

15. **CHECK THE WIRING AND CONNECTORS**
    1. The conditions necessary to set this DTC are not present at this time.
    2. Using the schematics as a guide, inspect the wiring and connectors specific to this circuit.
    3. Wiggle the wires while checking for shorted and open circuits.
    4. With the scan tool, check the Event Data to help identify the conditions in which the DTC was set.

    Where there any problems found?

    Yes

    - Repair as necessary.
    - Refer to **STANDARD PROCEDURE** and perform the 68RFE TRANSMISSION VERIFICATION TEST.

    No

    - Test Complete.

P0869-LINE PRESSURE HIGH

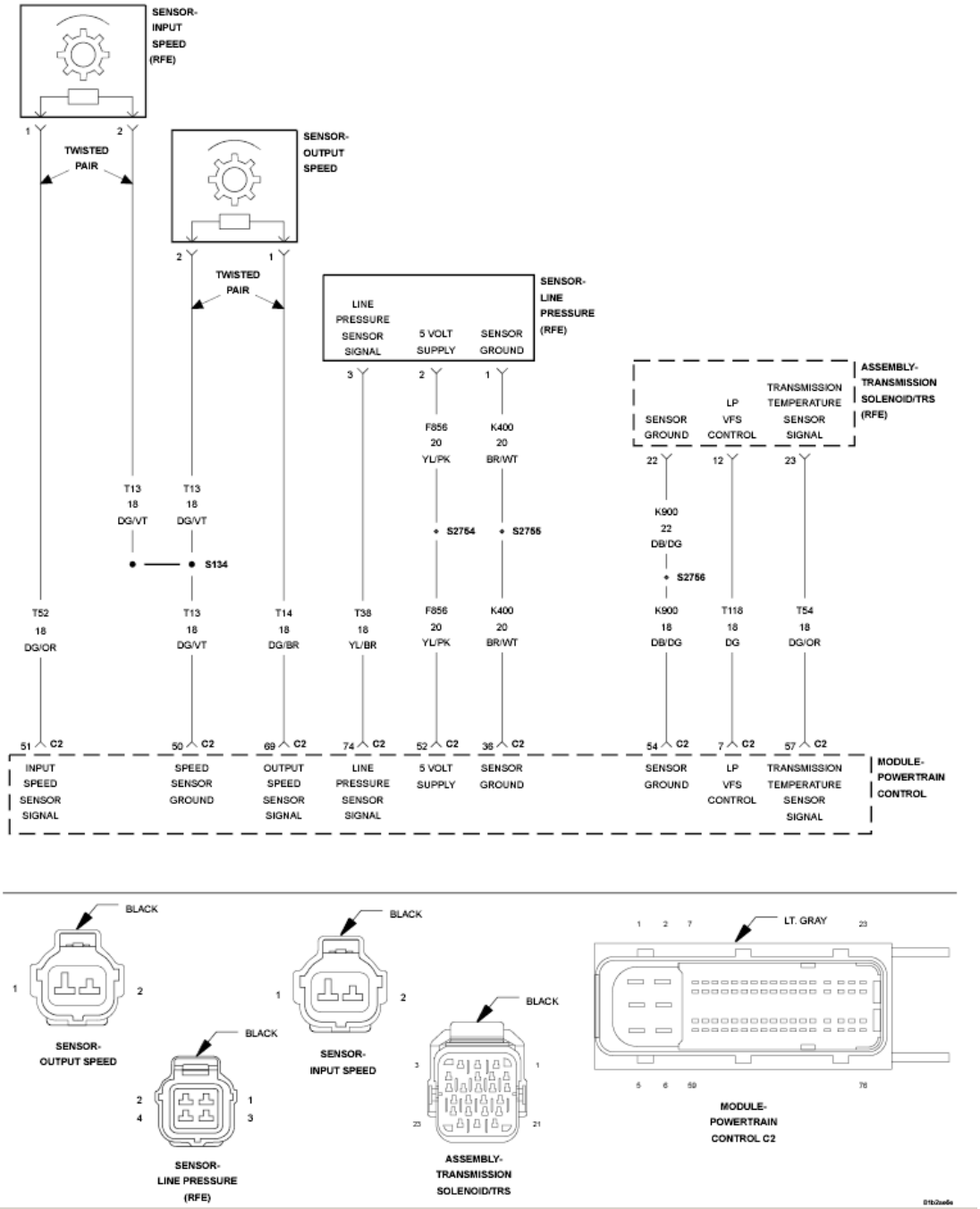

Fig. 59: Input/Output Speed Sensor, Line Pressure Sensor & Transmission Temperature Sensor Circuit Wiring Diagram
Courtesy of CHRYSLER GROUP, LLC

For a complete wiring diagram, **refer to appropriate SYSTEM WIRING DIAGRAMS article** .

THEORY OF OPERATION

Line pressure is measured by the Line Pressure Sensor (LPS) and regulation is achieved by changing the duty cycle of the Pressure Control Solenoid (PCS) controlled by the Transmission Control System. (5% duty cycle =

solenoid off = Max line pressure, 62% duty cycle = solenoid on = Min line pressure). The Transmission Control System calculates the desired line pressure based on inputs from both the engine and transmission.

The Transmission Control System calculates torque input to the transmission and uses it as the primary input to the desired line pressure calculation. This is called Torque Based Line Pressure. In addition, the line pressure is set to a preset level 1034 or 1103 kPa (150 or 160 psi) during shifts to ensure consistent shift quality. The actual line pressure is continuously being compared to the desired (target) line pressure. If the actual line pressure is consistently higher than the highest desired line pressure ever used in the current gear, the line pressure high DTC P0869 will set.

WHEN MONITORED:

Continuously while driving in a forward gear.

SET CONDITION:

The Powertrain Control Module (PCM) continuously monitors Actual Line Pressure. If the Actual Line Pressure reading is greater than the maximum desired line pressure ever used in the current gear, while the Pressure Control Solenoid duty cycle is at or near its maximum value (which should result in minimum line pressure) for 3.5 seconds continuously, the DTC will set.

POSSIBLE CAUSES

Possible Causes
(F856) 5-VOLT SUPPLY CIRCUIT OPEN
LINE PRESSURE SENSOR CONNECTION
(T118) LP VFS CONTROL CIRCUIT OPEN
(F856) 5-VOLT SUPPLY CIRCUIT SHORTED TO GROUND
(T118) LP VFS CONTROL CIRCUIT SHORTED TO GROUND
(T16) TRANSMISSION CONTROL OUTPUT CIRCUIT
LINE PRESSURE SENSOR
STUCK OR STICKING MAIN REGULATOR VALVE
POWERTRAIN CONTROL MODULE (PCM)

Always perform the Pre-Diagnostic Troubleshooting procedure before proceeding. Refer to STANDARD PROCEDURE.

DIAGNOSTIC TEST

1. **CHECK FOR RELATED DTCS**
    1. With the scan tool, read DTCs.

       Is the DTC P0933 or P0882 present also?

       Yes

- Refer to **DIAGNOSTIC CODE INDEX** and perform the appropriate diagnostic procedure.

No

- Go To 2.

2. **CHECK IF THE DTC IS CURRENT**
   1. With the scan tool, read DTCs.

      Is the status Active or is the Starts Since Set counter 2 or less for this DTC?

      Yes

      - Go To 3.

      No

      - Go To 10.

3. **CHECK THE LINE PRESSURE SENSOR CONNECTION**
   1. Ignition on, **engine not running.**
   2. With the scan tool, monitor the Line Pressure while firmly pushing the Transmission Line Pressure Sensor connector inwards towards the Transmission.

      Did the Line Pressure reading on the scan tool CHANGE to about 207 kPa (30 psi) or 0.7 of a volt when the connector was pushed inward?

      Yes (value was higher and changed to 207 kPa (30 psi) or 0.7 of a volt)

      - Disconnect and properly reconnect the Line Pressure Sensor connector. Inspect terminals and repair as necessary.
      - Refer to **STANDARD PROCEDURE** and perform the 68RFE TRANSMISSION VERIFICATION TEST.

      No (value is higher than 207 kPa (30 psi) or 0.7 of a volt and did not change or the value was already 207 kPa (30 psi) or 0.7 of a volt and did not change)

      - Go To 4.

4. **CHECK THE PCM AND WIRING USING THE TRANSMISSION SIMULATOR**
   1. Turn the ignition off to the lock position.
   2. Remove the Ignition Switch Feed fuse from the TIPM.

      CAUTION: Removal of the Ignition Switch Feed fuse from the TIPM will prevent the vehicle from being started in gear.

      WARNING: The Ignition Switch Feed fuse must be removed from the TIPM.

Failure to do so can result in possible serious or fatal injury.

3. Install the Transmission Simulator (special tool #8333A, Simulator, Transmission).
4. With the Transmission Simulator select the "OFF" position on the "Input/Output Speed" switch.
5. Ignition on, engine not running.
6. With the scan tool, monitor the Line Pressure during the following step.
7. Using the Transmission Simulator, set the rotary switch to each of the 3 line pressure positions.

NOTE: **All three scan tool Line Pressure readings should be steady and ±14 kPa (2.0 psi) or 0.1 of a volt of the reading specified on the Transmission Simulator.**

Did the Line Pressure read within ±14 kPa (2.0 psi) or 0.1 of a volt in all three positions?

Yes

- Go To 5.

No

- Go To 6.

5. **CHECK THE LINE PRESSURE SENSOR CALIBRATION**
   1. Turn the ignition off to the lock position.
   2. Disconnect the Transmission Simulator (special tool #8333A, Simulator, Transmission) and reconnect all previously disconnected connectors.
   3. Install the Line Pressure Adaptor (special tool #8259, Adapter, Pressure Test), and Pressure Gauge (special tool #C-3293-SP, Gauge, Pressure 0-300 P.S.I.), 0 to 2000 kPa (0 to 300 psi).
   4. Start the engine in park.
   5. Monitor the Line Pressure readings on the scan tool and the pressure gauge.
   6. Compare the Line Pressure readings between the scan tool and the pressure gauge.

   Is the pressure gauge reading within 34 kPa (5 psi) of the scan tool reading?

   Yes

   - Repair the internal transmission and inspect the Transmission Oil Pump in accordance with the Service Information and replace if necessary. If no problem is found, replace the Transmission Solenoid/TRS Assembly, possible cause is a stuck Pressure Control Solenoid.
   - Refer to **STANDARD PROCEDURE** and perform the 68RFE TRANSMISSION VERIFICATION TEST.

   No

- Replace the Line Pressure Sensor in accordance with the Service information.
- Refer to **STANDARD PROCEDURE** and perform the 68RFE TRANSMISSION VERIFICATION TEST.

6. **CHECK THE (T118) LP VFS CONTROL CIRCUIT FOR AN OPEN**

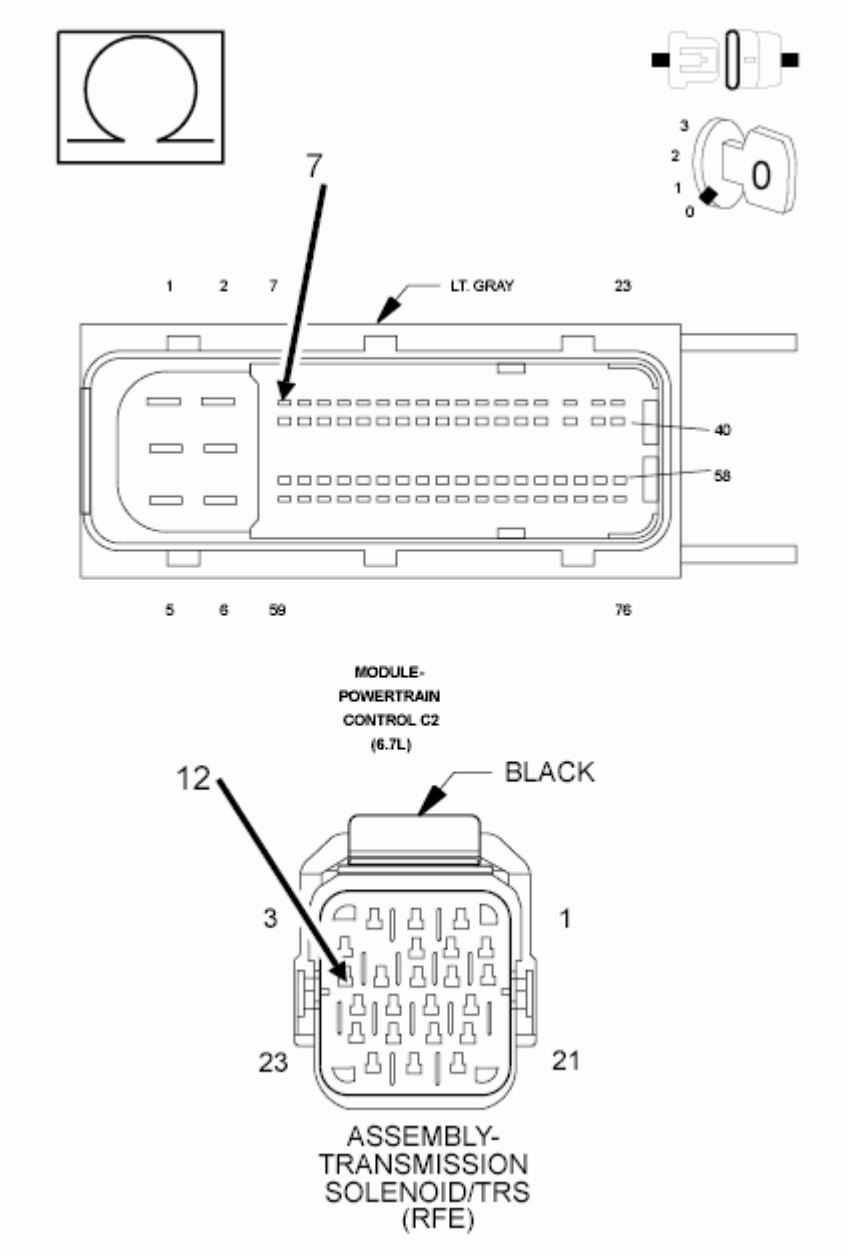

Fig. 60: Checking LP VFS Control Circuit For Open
Courtesy of CHRYSLER GROUP, LLC

1. Turn the ignition off to the lock position.
2. Disconnect the Transmission Simulator (special tool #8333A, Simulator, Transmission).
3. Disconnect the Powertrain Control Module C2 harness connector.

4. Measure the resistance of the (T118) LP VFS Control circuit between the Solenoid/TRS Assembly harness connector and the appropriate terminal of the PCM C2 harness connector.

   Is the resistance above 5.0 Ohms?

   Yes

   - Repair the (T118) LP VFS Control circuit for an open.
   - Refer to **STANDARD PROCEDURE** and perform the 68RFE TRANSMISSION VERIFICATION TEST.

   No

   - Go To 7.

7. **CHECK THE (T118) LP VFS CONTROL CIRCUIT FOR A SHORT TO GROUND**

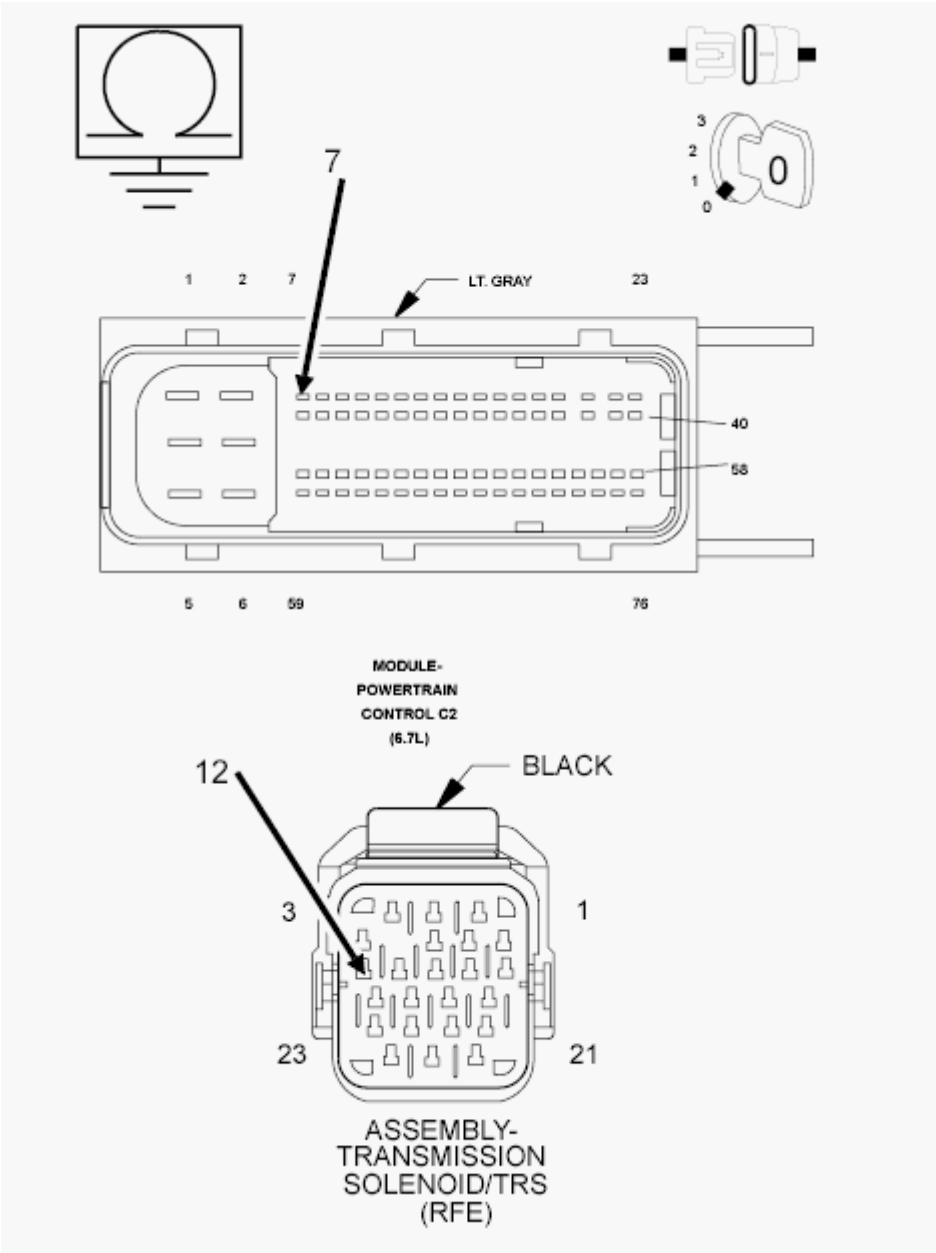

Fig. 61: Checking LP VFS Control Circuit For Short To Ground
Courtesy of CHRYSLER GROUP, LLC

1. Measure the resistance between ground and the (T118) LP VFS Control circuit.

   Is the resistance below 5.0 Ohms?

   Yes

   - Repair the (T118) LP VFS Control circuit for a short to ground.
   - Refer to **STANDARD PROCEDURE** and perform the 68RFE TRANSMISSION VERIFICATION TEST.

No

- Go To 8.

8. **CHECK THE (F856) 5-VOLT SUPPLY CIRCUIT FOR AN OPEN**

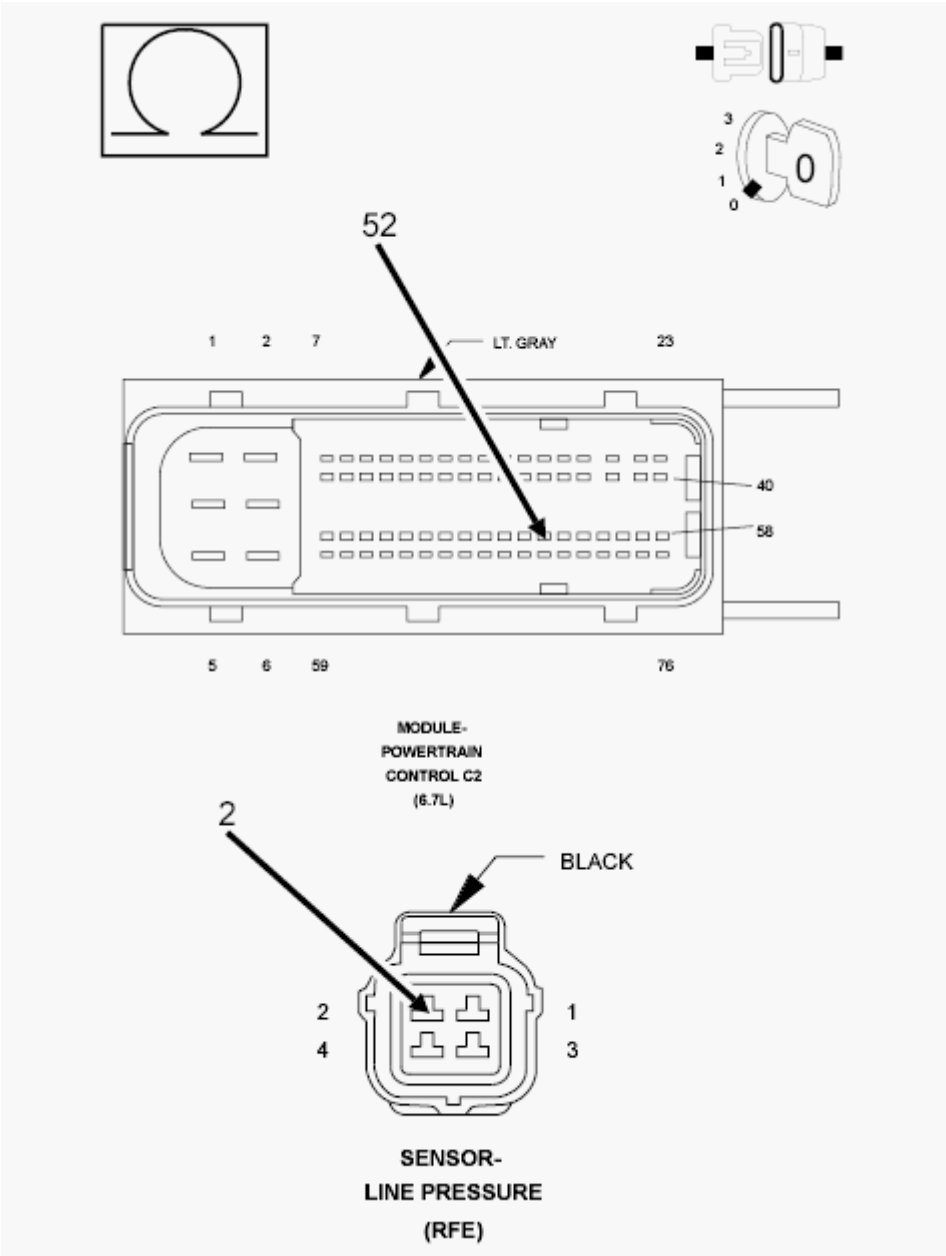

Fig. 62: Checking 5-Volt Supply Circuit For Open
Courtesy of CHRYSLER GROUP, LLC

1. Disconnect the Powertrain Control Module C2 harness connector.
2. Measure the resistance of the (F856) 5-volt Supply circuit between the Line Pressure Sensor harness connector and the appropriate terminal of the PCM C2 harness connector.

Is the resistance above 5.0 Ohms?

Yes

- Repair the (F856) 5-volt Supply circuit for an open.
- Refer to **STANDARD PROCEDURE** and perform the 68RFE TRANSMISSION VERIFICATION TEST.

No

- Go To 9.

9. **CHECK THE (F856) 5-VOLT SUPPLY CIRCUIT FOR A SHORT TO GROUND**

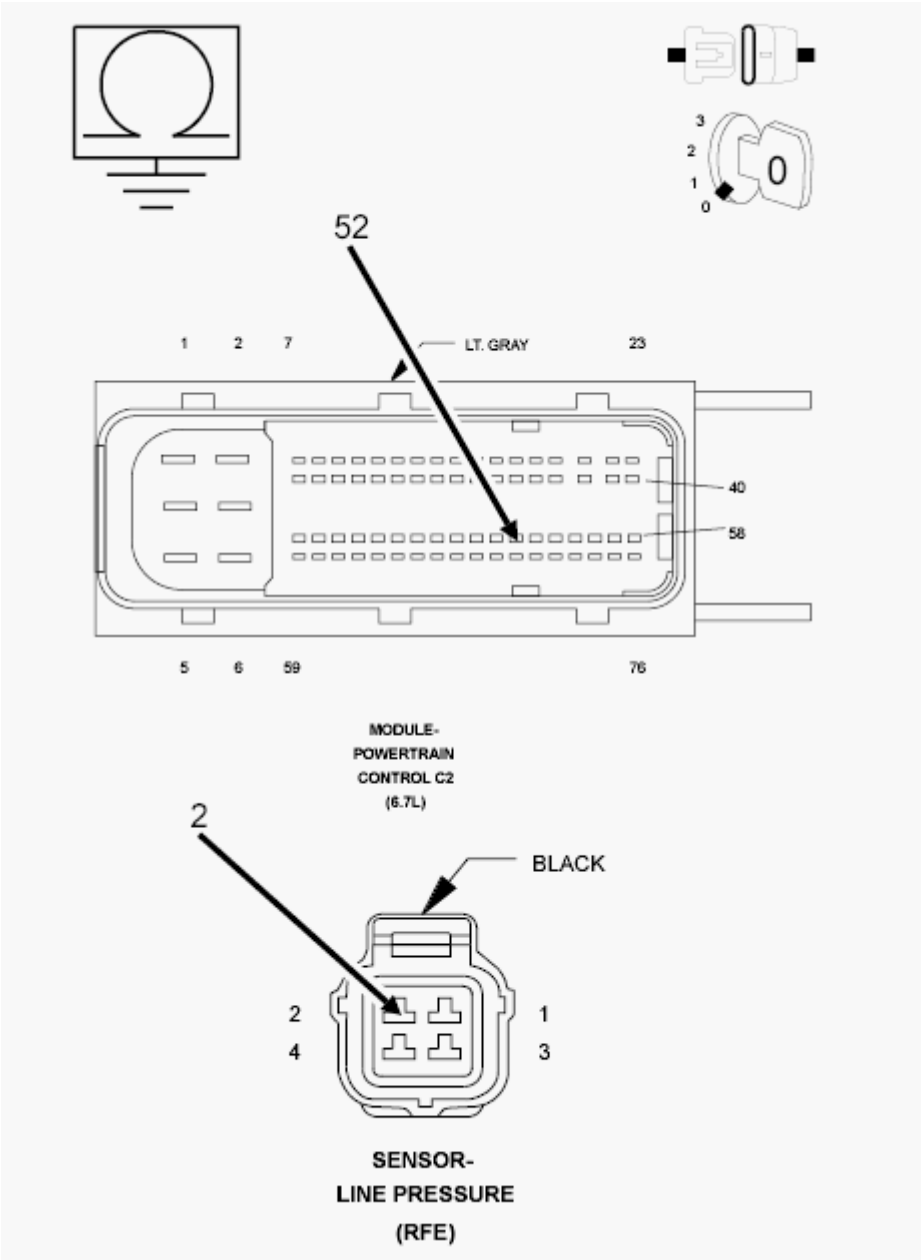

Fig. 63: Checking 5-Volt Supply Circuit For Short To Ground
Courtesy of CHRYSLER GROUP, LLC

1. Disconnect the PCM C2 harness connector.
2. Disconnect the Line Pressure Sensor harness connector.
3. Measure the resistance between ground and the (F856) 5-volt Supply circuit.

   Is the resistance below 5.0 Ohms?

   Yes

   - Repair the (F856) 5-volt Supply circuit for a short to ground.

- Refer to **STANDARD PROCEDURE** and perform the 68RFE TRANSMISSION VERIFICATION TEST.

No

- Using the schematics as a guide, check the Powertrain Control Module (PCM) terminals for corrosion, damage, or terminal push out. Pay particular attention to all power and ground circuits. If no problems are found, replace the PCM in accordance with the Service Information. With the scan tool, perform Quick Learn.
- Refer to **STANDARD PROCEDURE** and perform the 68RFE TRANSMISSION VERIFICATION TEST.

10. **CHECK THE WIRING AND CONNECTORS**
    1. The conditions necessary to set this DTC are not present at this time.
    2. Using the schematics as a guide, inspect the wiring and connectors specific to this circuit.
    3. Wiggle the wires while checking for shorted and open circuits.
    4. With the scan tool, check the Event Data to help identify the conditions in which the DTC was set.

    Where there any problems found?

    Yes

    - Repair as necessary.
    - Refer to **STANDARD PROCEDURE** and perform the 68RFE TRANSMISSION VERIFICATION TEST.

    No

    - Test Complete.

P0870-OD HYDRAULIC PRESSURE TEST

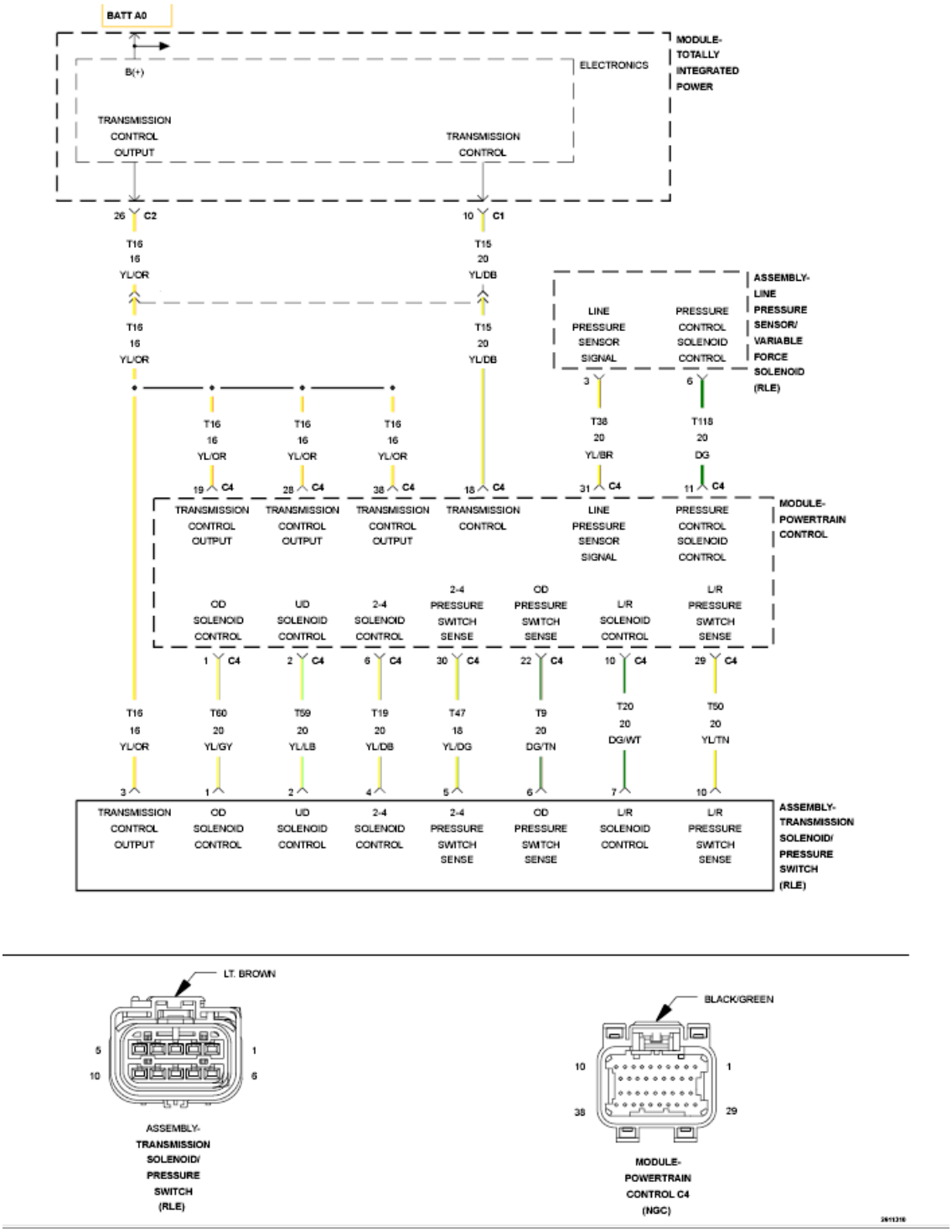

Fig. 64: Solenoid Control Wiring Diagram
Courtesy of CHRYSLER GROUP, LLC

For a complete wiring diagram, **refer to appropriate SYSTEM WIRING DIAGRAMS article** .

THEORY OF OPERATION

The Transmission Control System tests the pressure switches when they are off. The test verifies that the switches are operational (They will close with pressure applied). The Transmission Control System verifies that the switch closes when the corresponding element is applied. If a switch fails to close, it is re-tested. If it fails the second test, the DTC will set, the MIL will illuminate and the transmission system will default to the orderly Shutdown routine.

WHEN MONITORED:

In any forward gear with engine speed above 1000 RPM shortly after a shift and every minute thereafter.

SET CONDITION:

After a shift into a forward gear, with engine speed above 1000 RPM, the Powertrain Control Module (PCM) momentarily turns on element pressure to the Clutch circuits that don't have pressure to identify the correct Pressure Switch closes. If the Pressure Switch does not close two times, the DTC sets.

POSSIBLE CAUSES

Possible Causes
LINE PRESSURE SENSOR
TRANSMISSION FLUID CONTAMINATION
RELATED DTCS PRESENT
EXCESSIVE DEBRIS IN OIL PAN
POOR LINE PRESSURE SENSOR CONNECTION
(F856) 5-VOLT SUPPLY CIRCUIT OPEN
TRANSMISSION CONTROL OUTPUT CIRCUIT OPEN
(F856) 5-VOLT SUPPLY CIRCUIT SHORTED TO GROUND
(T9) OD PRESSURE SIGNAL CIRCUIT SHORTED TO ANOTHER CIRCUIT
TRANSMISSION SOLENOID/TRS ASSEMBLY
INTERNAL TRANSMISSION
POWERTRAIN CONTROL MODULE (PCM)

Always perform the Pre-Diagnostic Troubleshooting procedure before proceeding. Refer to STANDARD PROCEDURE.

DIAGNOSTIC TEST

1. **CHECK IF RELATED DTCS ARE PRESENT**
    1. With the scan tool, read DTCs.

       Is there any Loss of Prime, TIPM TCM Power Control circuit, TCM Power Input and/or Line Pressure Sensor DTCs present?

       Yes

- Refer to **DIAGNOSIS AND TESTING** and perform the appropriate diagnostic procedure. If the DTC, P0944-LOSS OF PRIME is present, perform its respective test first.

No

- Go To 2.

2. **CHECK IF THE DTC P0760 IS PRESENT**
   1. With the scan tool, read DTCs.

      Is the DTC P2706 also present?

      Yes

      - Refer to **DIAGNOSTIC CODE INDEX** and perform diagnostics for P2706-MS SOLENOID CIRCUIT.

      No

      - Go To 3.

3. **CHECK IF OTHER DTCS ARE PRESENT**
   1. With the scan tool, read DTCs.

      Are any of the DTCs P0729, P0734, P0735, and/or P0871 present also?

      Yes

      - Go To 12.

      No

      - Go To 4.

4. **CHECK IF THE DTC IS CURRENT**
   1. With the scan tool, read DTCs.

      Is the status Active or is the Starts Since Set counter 2 or less for this DTC?

      Yes

      - Go To 5.

      No

      - Go To 15.

5. **CHECK IF THE LINE PRESSURE STAYS THE SAME**
   1. Start the engine.

2. Warm the transmission to 82° C (180° F).
3. Firmly apply the brakes.
4. With the scan tool, monitor the Line Pressure during the following step.
5. Move the shift lever to each gear position, pausing momentarily in each position and record the line pressure reading. Allow the pressure to stabilize for at least five seconds in each range.

   Did the line pressure remain at a steady value between 585 and 655 kPa (85 and 95 psi) in each position?

   Yes

   - Go To 6.

   No

   - Go To 10.

6. **CHECK THE LINE PRESSURE SENSOR CONNECTION**
   1. Ignition on, **engine not running.**
   2. With the scan tool, monitor the Line Pressure while firmly pushing the Transmission Line Pressure Sensor connector inward towards the Transmission.

      Did the Line Pressure reading on the scan tool CHANGE to about 207 kPa (30 psi) or 0.7 of a volt when the connector was pushed inward?

      Yes (value was higher and changed to 207 kPa (30 psi) or 0.7 of a volt)

      - Disconnect and properly reconnect the Line Pressure Sensor connector. Inspect terminals and repair as necessary.
      - Refer to **STANDARD PROCEDURE** and perform the 68RFE TRANSMISSION VERIFICATION TEST.

      No (value is higher than 207 kPa (30 psi) or 0.7 of a volt and did not change or the value was already 207 kPa (30 psi) or 0.7 of a volt and did not change)

      - Go To 7.

7. **CHECK THE LINE PRESSURE SENSOR OPERATION**
   1. Turn the ignition off to the lock position.
   2. Remove the Ignition Switch Feed fuse from the TIPM.

      CAUTION: Removal of the Ignition Switch Feed fuse from the TIPM will prevent the vehicle from being started in gear.

      WARNING: The Ignition Switch Feed fuse must be removed from the TIPM.

Failure to do so can result in possible serious or fatal injury.

3. Install the (special tool #8333A, Simulator, Transmission).
4. With the Transmission Simulator select the "OFF" position on the "Input/Output Speed" switch.
5. Ignition on, engine not running.
6. With the scan tool, monitor the Line Pressure while turning the Pressure Switch selector to each of the three line pressure positions on the Transmission Simulator.

NOTE: **All three scan tool Line Pressure readings should be steady and ±14 kPa (2.0 psi) or 0.1 of a volt of the reading specified on the Transmission Simulator.**

Did the scan tool Line Pressure readings match the specified readings on the Transmission Simulator and remain steady in all three positions?

Yes

- Replace the Line Pressure Sensor in accordance with the Service Information.
- Refer to **STANDARD PROCEDURE** and perform the 68RFE TRANSMISSION VERIFICATION TEST.

No

- Go To 8.

8. **CHECK THE (F856) 5-VOLT SUPPLY CIRCUIT FOR AN OPEN**

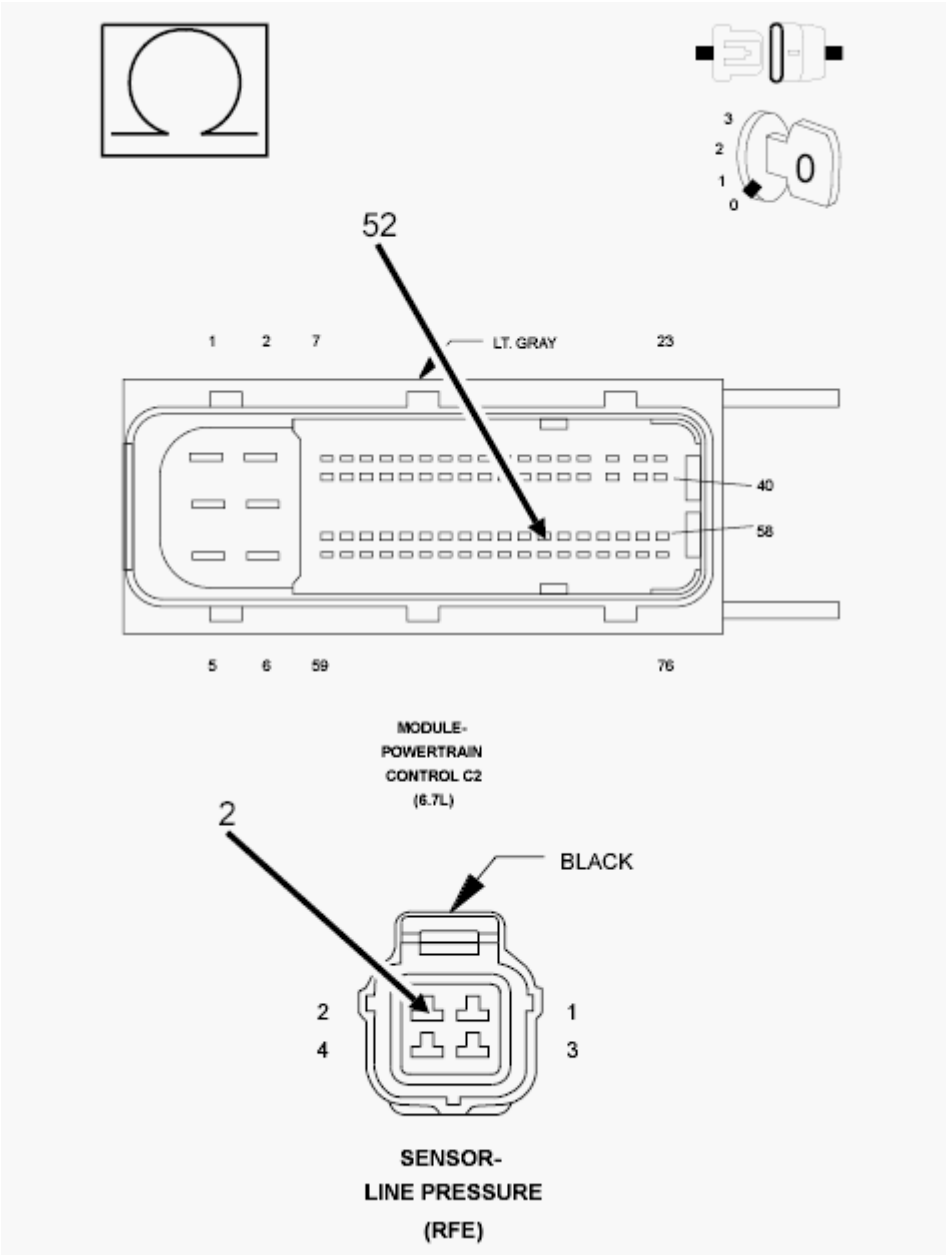

Fig. 65: Checking 5-Volt Supply Circuit For Open
Courtesy of CHRYSLER GROUP, LLC

1. Turn the ignition off to the lock position.
2. Disconnect Transmission Simulator.
3. Disconnect the PCM C2 harness connector.
4. Measure the resistance of the (F856) 5-volt Supply circuit between the Line Pressure Sensor harness connector and the appropriate terminal of the PCM C2 harness connector.

   Is the resistance above 5.0 Ohms?

   Yes

- Repair the (F856) 5-volt Supply circuit for an open.
- Refer to **STANDARD PROCEDURE** and perform the 68RFE TRANSMISSION VERIFICATION TEST.

No

- Go To 9.

9. **CHECK THE (F856) 5-VOLT SUPPLY CIRCUIT FOR A SHORT TO GROUND**

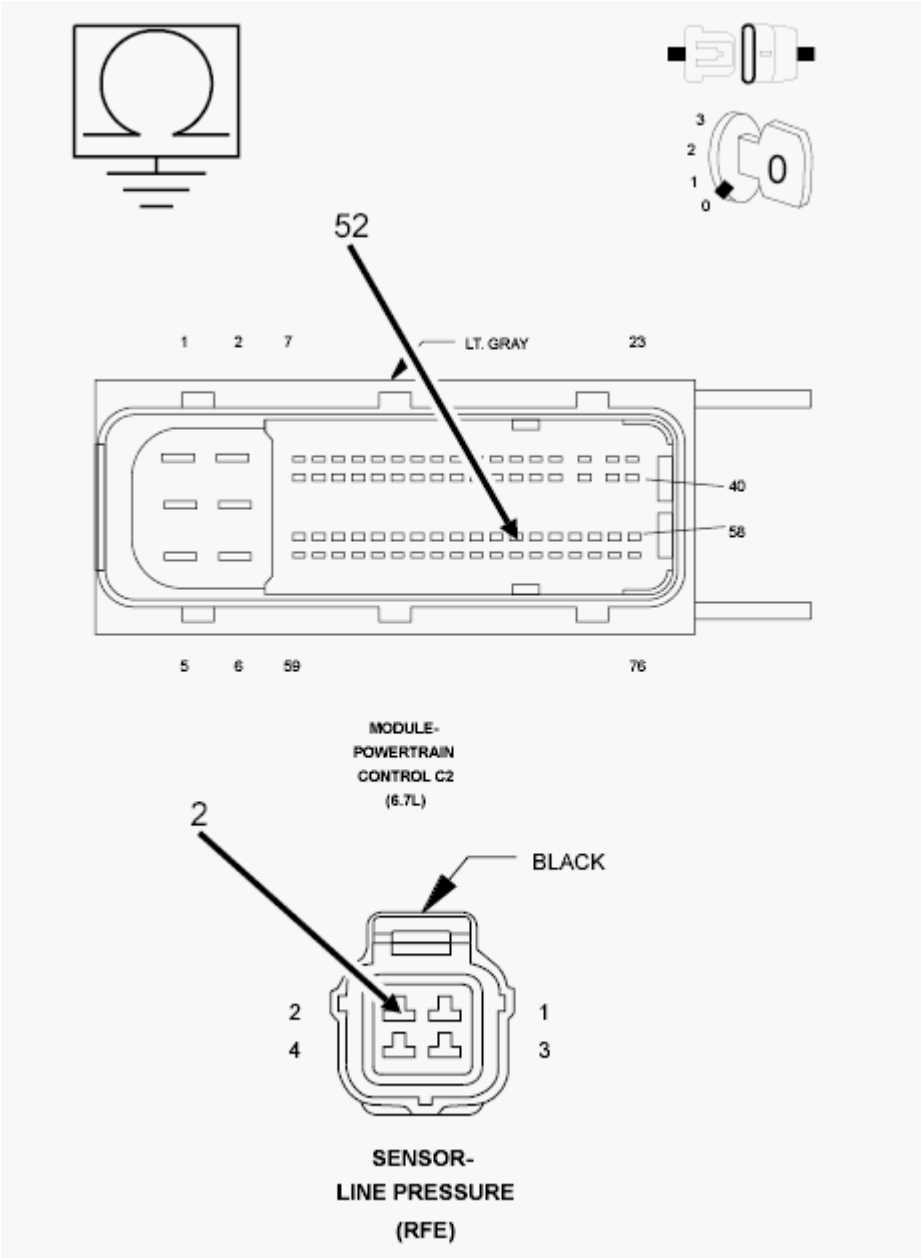

Fig. 66: Checking 5-Volt Supply Circuit For Short To Ground
Courtesy of CHRYSLER GROUP, LLC

1. Measure the resistance between ground and the (F856) 5-volt Supply circuit.

   Is the resistance below 5.0 Ohms?

   Yes

   - Repair the (F856) 5-volt Supply circuit for a short to ground.
   - Refer to **STANDARD PROCEDURE** and perform the 68RFE TRANSMISSION VERIFICATION TEST.

   No

   - Using the schematics as a guide, check the Powertrain Control Module (PCM) terminals for corrosion, damage, or terminal push out. Pay particular attention to all power and ground circuits. If no problems are found, replace the PCM in accordance with the Service Information. With the scan tool, perform Quick Learn.
   - Refer to **STANDARD PROCEDURE** and perform the 68RFE TRANSMISSION VERIFICATION TEST.

10. **COMPARE THE SCAN TOOL TO THE PRESSURE GAUGE**
    1. Turn the ignition off to the lock position.
    2. Connect the (special tool #8259, Adapter, Pressure Test) and (special tool #C-3293-SP, Gauge, Pressure 0-300 P.S.I.). Refer to **DIAGNOSIS AND TESTING** .

       CAUTION: Apply parking brake.

    3. Start the engine.
    4. In the following steps, compare the scan tool Line Pressure to the Pressure Gauge readings in each gear.

       CAUTION: Do not overheat transmission.

    5. With the gear selector in park, raise the RPM to 1500, and compare line pressure readings.
    6. Firmly apply the brakes, move the gear selector into reverse, raise the RPM to 1500, and compare the line pressure readings.
    7. Firmly apply the brakes, move the gear selector into drive, raise the RPM to 1500, and compare the line pressure readings.

       Did the scan tool Line Pressure readings match the Pressure Gauge readings ± 10 psi?

       Yes

       - Go To 11.

No

- Replace the Line Pressure Sensor in accordance with the Service Information.
- Refer to **STANDARD PROCEDURE** and perform the 68RFE TRANSMISSION VERIFICATION TEST.

11. **CHECK THE WIRING AND CONNECTORS**
    1. Turn the ignition off to the lock position.
    2. Remove the (special tool #8259, Adapter, Pressure Test) and (special tool #C-3293-SP, Gauge, Pressure 0-300 P.S.I.).
    3. Remove the Ignition Switch Feed fuse from the TIPM.

CAUTION: Removal of the Ignition Switch Feed fuse from the TIPM will prevent the vehicle from being started in gear.

WARNING: The Ignition Switch Feed fuse must be removed from the TIPM. Failure to do so can result in possible serious or fatal injury.

    4. Install the (special tool #8333A, Simulator, Transmission).
    5. On the Transmission Simulator, turn the Pressure Switch selector switch to OD.
    6. Ignition on, engine not running.
    7. With the scan tool, monitor the OD Pressure Switch state while pressing and holding the Pressure Switch test button and wiggling the wire harness and connectors that pertain to the OD Pressure Switch.

    Did the OD Pressure Switch state change to closed and remain closed while wiggling the wires?

    Yes

    - Go To 12.

    No

    - Go To 14.

12. **CHECK FOR EXCESSIVE DEBRIS**
    1. Turn the ignition off to the lock position.
    2. Remove the (special tool #8333A, Simulator, Transmission).
    3. Remove and inspect the Transmission Oil Pan in accordance with the Service Information.

    Does the Transmission Oil Pan contain excessive debris or contamination?

    Yes

    - Repair the cause of the excessive debris in the Transmission Oil Pan. Refer to **STANDARD**

PROCEDURE for the proper procedures.

- Refer to **STANDARD PROCEDURE** and perform the 68RFE TRANSMISSION VERIFICATION TEST.

No

- Go To 13.

13. **CHECK THE OD HYDRAULIC CLUTCH CIRCUIT**
    1. Remove the Valve Body and air check the OD hydraulic clutch circuit (in the case) for leakage in accordance with the Service Information.

NOTE: **The OD hydraulic clutch circuit contains a small bleed orifice which connects to the Reverse hydraulic clutch circuit. A small amount of air leakage is normal.**

Was there excessive air leakage noticed during the air check?

Yes

- Repair as necessary. Check the OD/Rev clutch piston seals, bleed orifice assembly, reaction shaft support seal rings, and machining of the main mating faces on the pump housing, pump valve body, and reaction shaft support.
- Refer to **STANDARD PROCEDURE** and perform the 68RFE TRANSMISSION VERIFICATION TEST.

No

- Disassemble and inspect the Valve Body and repair as necessary. Inspect the OD Accumulator piston and seals. Check for an extra check ball downstream from the No. 6 check ball pocket and repair as necessary. If no problems are found in the Valve Body, replace the Transmission Solenoid/TRS Assembly in accordance with the Service Information.
- Refer to **STANDARD PROCEDURE** and perform the 68RFE TRANSMISSION VERIFICATION TEST.

14. **CHECK THE (T9) OD PRESSURE SIGNAL CIRCUIT FOR A SHORT TO ANOTHER CIRCUIT**

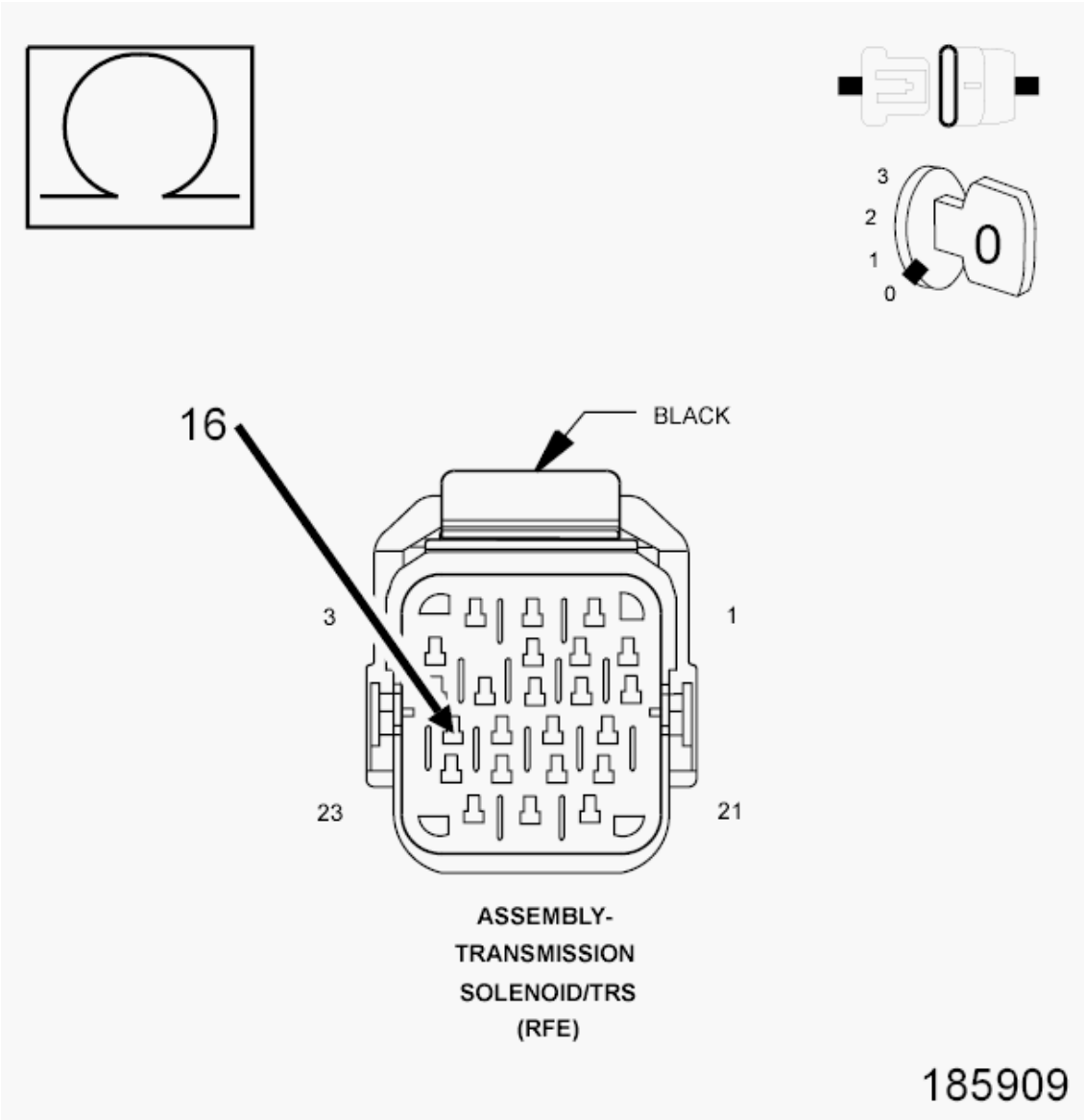

Fig. 67: Checking OD Pressure Signal Circuit For Short To Another Circuit
Courtesy of CHRYSLER GROUP, LLC

1. Disconnect all PCM harness connectors.
2. Disconnect the Transmission Solenoid/TRS Assembly harness connector.

NOTE: **Make sure the Transmission Solenoid/TRS Assembly harness connector is disconnected.**

NOTE: **Check connectors - Clean/repair as necessary.**

3. Measure the resistance between the (T9) OD Pressure Signal circuit and all other circuits in the Transmission Solenoid/TRS Assembly harness connector.

Is the resistance below 5.0 Ohms between the (T9) OD Pressure Signal circuit and any other circuit (s) in the Transmission Solenoid/TRS Assembly harness connector?

Yes

- Repair the (T9) OD Pressure Signal circuit for a short to another circuit(s).
- Refer to **STANDARD PROCEDURE** and perform the 68RFE TRANSMISSION VERIFICATION TEST.

No

- Using the schematics as a guide, check the Powertrain Control Module (PCM) terminals for corrosion, damage, or terminal push out. Pay particular attention to all power and ground circuits. If no problems are found, replace and program the PCM in accordance with the Service Information. With the scan tool, perform Quick Learn.
- Refer to **STANDARD PROCEDURE** and perform the 68RFE TRANSMISSION VERIFICATION TEST.

15. **CHECK THE WIRING AND CONNECTORS**
    1. The conditions necessary to set this DTC are not present at this time.
    2. Using the schematics as a guide, inspect the wiring and connectors specific to this circuit.
    3. Wiggle the wires while checking for shorted and open circuits.
    4. With the scan tool, check the Event Data to help identify the conditions in which the DTC was set.
    5. If the Event Data shows the DTC P0870 set while the Line Pressure was significantly below the Desired Line Pressure reading, check for causes of low line pressure (low fluid level, broken or mis-installed primary oil filter or filter seal, sticking Main Regulator Valve in the Pump Valve Body etc.). If the Event data shows the DTC set while the Line Pressure reading was significantly higher than the Desired Line Pressure, check the Line Pressure Sensor and related wiring.

    Where there any problems found?

    Yes

    - Repair as necessary.
    - Refer to **STANDARD PROCEDURE** and perform the 68RFE TRANSMISSION VERIFICATION TEST.

    No

    - Test Complete.

P0871-OD PRESSURE SWITCH RATIONALITY

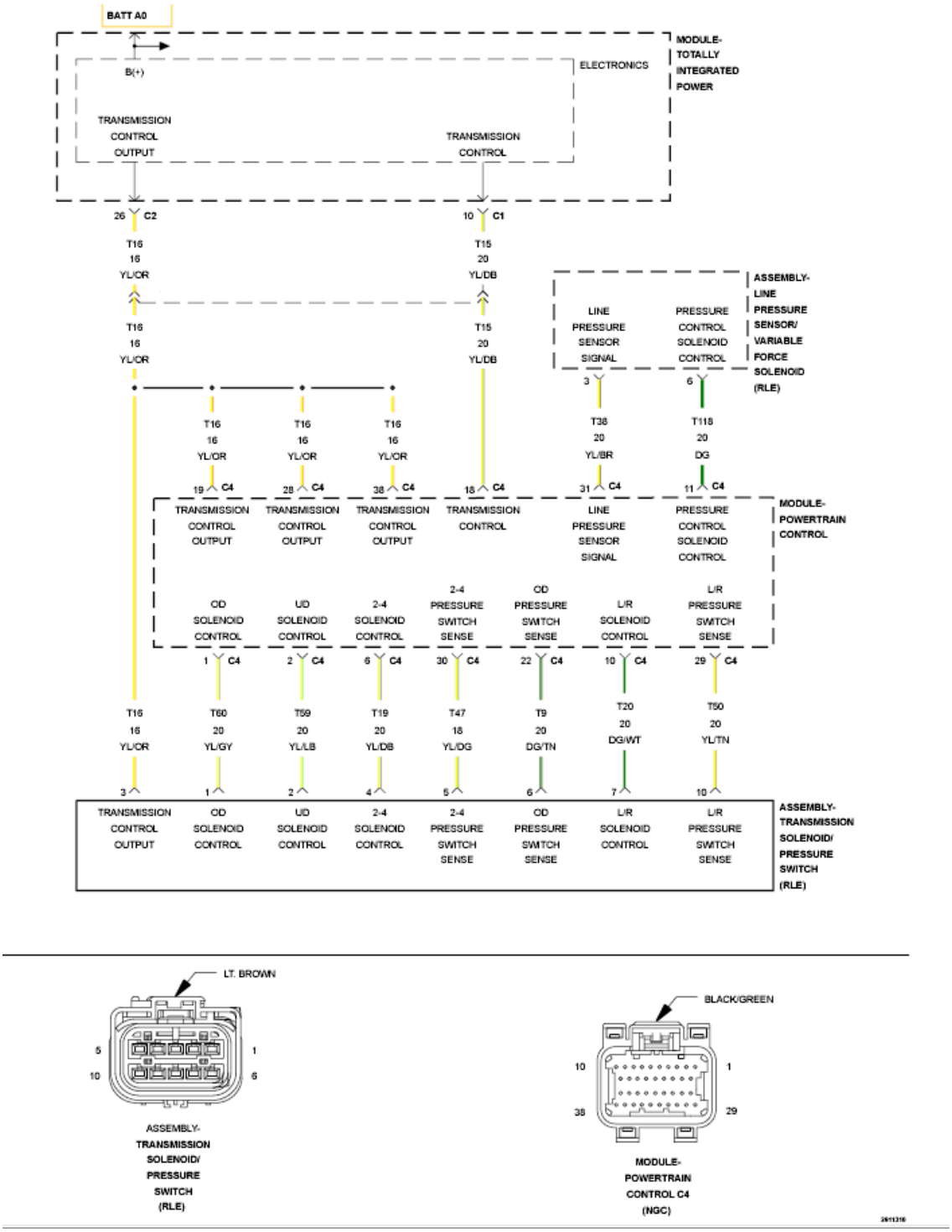

Fig. 68: Solenoid Control Wiring Diagram
Courtesy of CHRYSLER GROUP, LLC

For a complete wiring diagram, **refer to appropriate SYSTEM WIRING DIAGRAMS article** .

THEORY OF OPERATION

The Transmission system uses five pressure switches to monitor the fluid pressure in the L/R, 2C, 4C, UD, and OD clutch circuits. The pressure switches are continuously monitored for the correct states in each gear as shown.

WHEN MONITORED:

Continuously with the ignition on and engine running.

SET CONDITION:

The appropriate DTC is set if one of the pressure switches are open or closed at the wrong time in a given gear.

POSSIBLE CAUSES

Possible Causes
RELATED DTCS PRESENT
LINE PRESSURE DTCS PRESENT
NO. 4 OR NO. 6 CHECK BALL CUT OR DAMAGED
WORN SOLENOID SWITCH VALVE BORE IN MAIN VALVE BODY
(T9) OD PRESSURE SIGNAL CIRCUIT OPEN
(T9) OD PRESSURE SIGNAL CIRCUIT SHORTED TO GROUND
(T9) OD PRESSURE SIGNAL CIRCUIT SHORTED TO OTHER CIRCUITS
LOW LINE PRESSURE
WIRING AND CONNECTORS
CUT OD/REV PISTON SEAL
BROKEN OR MISSING OD/REV PISTON BLEED ORIFICE
BROKEN REACTION SHAFT SUPPORT SEAL RING
POOR MACHINING ON PUMP VALVE BODY FACE
BROKEN OR MISSING DRIBBLER ORIFICE ASSEMBLY IN REACTION SHAFT SUPPORT
TRANSMISSION SOLENOID/TRS ASSEMBLY
CUT OD ACCUMULATOR PISTON SEAL
CRACKED OD ACCUMULATOR PISTON
BROKEN OR MISSING OD BLEED ORIFICE IN MAIN VALVE BODY
POWERTRAIN CONTROL MODULE (PCM)

Always perform the Pre-Diagnostic Troubleshooting procedure before proceeding. Refer to STANDARD PROCEDURE.

GEAR	L/R	2C	4C	UD	OD
REVERSE	OPEN	OPEN	OPEN	OPEN	OPEN
P/N	CLOSED**	OPEN	OPEN	OPEN	OPEN
1ST	CLOSED*	OPEN	OPEN	CLOSED	OPEN
2ND	OPEN	CLOSED	OPEN	CLOSED	OPEN

3RD	OPEN	OPEN	CLOSED	CLOSED	OPEN
4TH	OPEN	OPEN	OPEN	CLOSED	CLOSED
5TH	OPEN	OPEN	CLOSED	OPEN	CLOSED
6TH	OPEN	CLOSED	OPEN	OPEN	CLOSED
*L/R is closed if output speed is below 100 rpm in Drive. L/R is closed in Manual (ERS) 1st gear.					
**May be open when rolling in Neutral or at low oil temperatures.					

DIAGNOSTIC TEST

1. **CHECK DTCS**
    1. With the scan tool, read DTCs.

       Are there any TIPM TCM Power Control Circuit or TCM Power Input DTCs present?

       Yes

       - Refer to **DIAGNOSIS AND TESTING** and perform the appropriate diagnostic procedure.

       No

       - Go To 2.
2. **CHECK IF LINE PRESSURE DTCS ARE PRESENT**
    1. With the scan tool, read DTCs.

       Are there any Line Pressure DTCs present?

       Yes

       - Refer to **DIAGNOSTIC CODE INDEX** and perform the appropriate diagnostic procedure.

       No

       - Go To 3.
3. **CHECK FOR OTHER PRESSURE SWITCH DTCS**
    1. With the scan tool, read DTCs.

       Are there two or more other pressure switch rationality DTCs present in addition to P0871?

       Yes

       - Go To 5.

       No

       - Go To 4.

4. **CHECK IF DTC IS CURRENT**
   1. With the scan tool, check and record the Event Data.

      NOTE: Make sure to record all Event Data stored in the scan tool for future reference in this test procedure.

      Does the Event Data show data for P0871?

      Yes

      - Go To 8.

      No

      - Refer to **DIAGNOSTIC CODE INDEX** and perform the appropriate diagnostic procedure.
      - Refer to **STANDARD PROCEDURE** and perform the 68RFE TRANSMISSION VERIFICATION TEST.
5. **CHECK IF RELATED DTC IS PRESENT**
   1. With the scan tool, check and record the Event Data.

      NOTE: Make sure to record all Event Data stored in the scan tool for future reference in this test procedure.

      Do all the pressure switches read CLOSED in the Event Data?

      Yes

      - Refer to **DIAGNOSTIC CODE INDEX** and perform diagnostics for P0882. Follow instructions as if the DTC is current.

      No

      - Go To 6.
6. **CHECK IF PRESSURE SWITCHES READ OPEN**

   In the Event Data recorded earlier, do all the pressure switches read open?

   Yes

   - Go To 7.

   No

   - Go To 8.
7. **CHECK FOR LOW LINE PRESSURE**

In the Event Data recorded earlier, is the (actual) Line Pressure less than 276 kPa (40 psi), and significantly below the Desired (target) Line Pressure?

Yes

- Repair as necessary to correct low line pressure. Check fluid level and adjust as necessary. If fluid level is OK, check the Primary Oil Filter weal for a spit, crack, or improperly installed. If the filer and seal are OK, check the Main Regulator Valve in the Oil Pump. Refer to **STANDARD PROCEDURE** for the above procedures.
- Refer to **STANDARD PROCEDURE** and perform the 68RFE TRANSMISSION VERIFICATION TEST.

No

- Replace the Transmission Solenoid/TRS Assembly in accordance with the Service Information.
- Refer to **STANDARD PROCEDURE** and perform the 68RFE TRANSMISSION VERIFICATION TEST.

8. **CHECK IF IN PARK, NEUTRAL, OR REVERSE**

In the Event Data recorded earlier, does the Event Data show the OD Pressure Switch DTC set while in Park, Neutral, or Reverse?

Yes

- Go To 19.

No

- Go To 9.

9. **CHECK IF THE OD PRESSURE SWITCH WAS OPEN**

In the Event Data recorded earlier, did the OD Pressure Switch read OPEN?

Yes

- Go To 10.

No

- Go To 15.

10. **CHECK FOR LOW LINE PRESSURE**

In the Event Data recorded earlier, is the Line Pressure less than 40 psi, and significantly below the Desired Line Pressure?

Yes

- Repair as necessary to correct low line pressure. Check the fluid level. Check the Primary Oil Filter seal for a split, crack, or improperly installed. Refer to **STANDARD PROCEDURE** for the proper installation procedure. If the fluid level and filter are OK, check the Main Regulator Valve in the Oil Pump.
- Refer to **STANDARD PROCEDURE** and perform the 68RFE TRANSMISSION VERIFICATION TEST.

No

- Go To 11.

11. **CHECK THE (T9) OD PRESSURE SIGNAL CIRCUIT FOR A SHORT TO ANOTHER CIRCUIT**

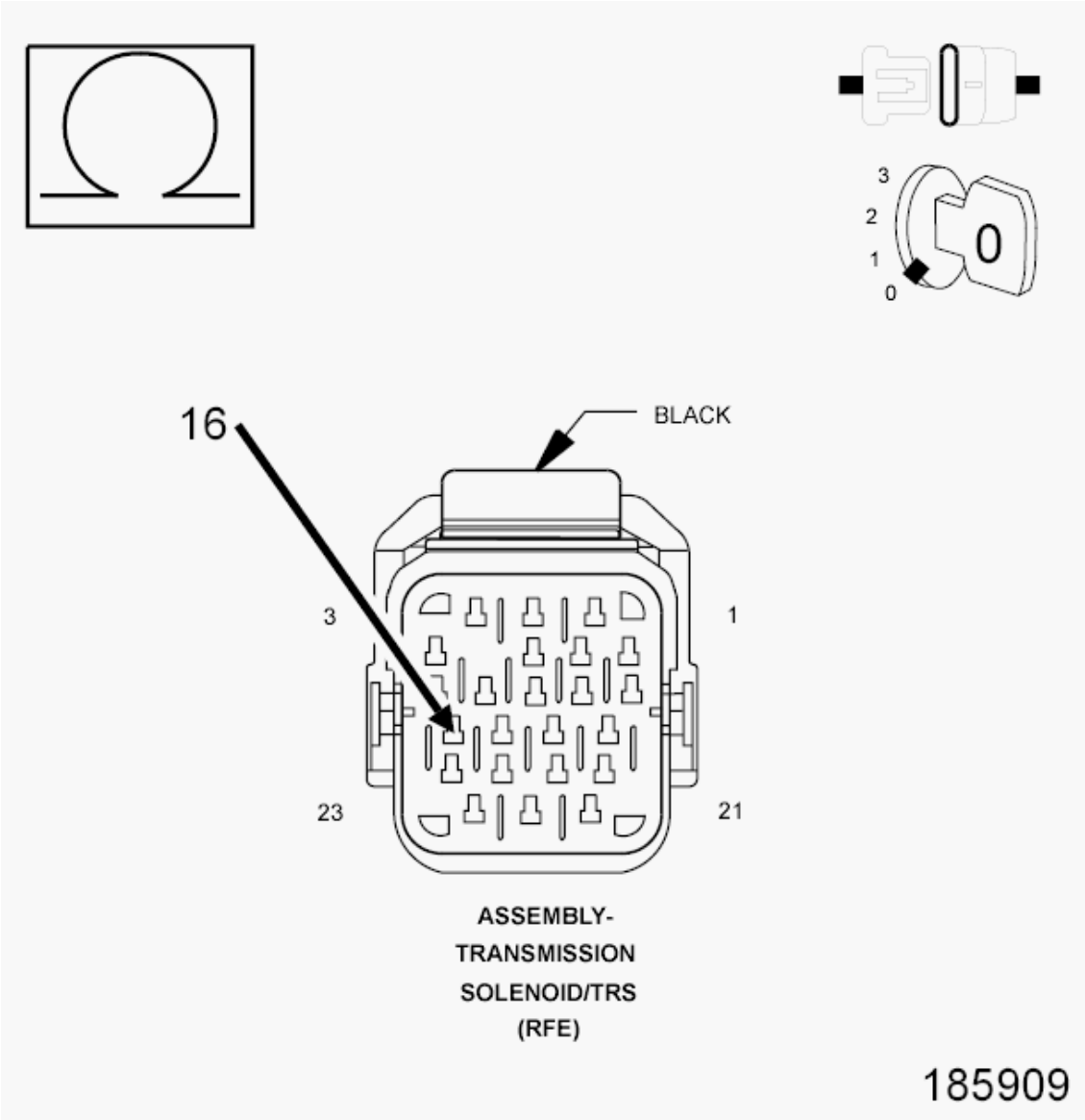

Fig. 69: Checking OD Pressure Signal Circuit For Short To Another Circuit

Courtesy of CHRYSLER GROUP, LLC

1. Turn the ignition off to the lock position.
2. Disconnect all PCM harness connectors.
3. Disconnect the Transmission Solenoid/TRS Assembly harness connector.
4. Measure the resistance between the (T9) OD Pressure Signal circuit and all other circuits in the Transmission Solenoid/TRS Assembly harness connector.

   Is the resistance below 5.0 Ohms between the (T9) OD Pressure Signal circuit and any other circuit (s) in the Transmission Solenoid/TRS Assembly harness connector?

   Yes

   - Repair the (T9) OD Pressure Signal circuit for a short to another circuit(s).
   - Refer to **STANDARD PROCEDURE** and perform the 68RFE TRANSMISSION VERIFICATION TEST.

   No

   - Go To 12.

12. **CHECK TO SEE IF THE DTC RESETS**
    1. Reconnect all previously disconnected connectors.
    2. With the scan too, erase transmission DTCs.
    3. Test drive the vehicle, use the Event Data recorded earlier to help duplicate the conditions when the DTC originality set.

       Does the DTC P0871 reset?

       Yes

       - Go To 13.

       No

       - Go To 23.

13. **CHECK THE POWERTRAIN CONTROL MODULE**
    1. Remove the PCM/TCM Relay.
    2. Operate the vehicle in Drive.

       Is the transmission slipping while in Drive?

       Yes

       - Go To 14.

No

- Using the schematics as a guide, check the Powertrain Control Module (PCM) terminals for corrosion, damage, or terminal push out. Pay particular attention to all power and ground circuits. If no problems are found, replace and program the PCM in accordance with the Service Information. With the scan tool, perform Quick Learn.
- Refer to **STANDARD PROCEDURE** and perform the 68RFE TRANSMISSION VERIFICATION TEST.

14. **AIR CHECK TRANSMISSION CLUTCH OPERATION**
    1. Refer to **STANDARD PROCEDURE** and perform an Air Check Transmission Clutch Operation procedure.

NOTE: The OD/Rev piston contains a small bleed orifice, a small amount of leakage between the OD and Reverse hydraulic clutch circuits is considered normal.

Is there excessive air leakage in any clutch circuit?

Yes

- Check the OD/Rev piston seals and bleed orifice, reaction shaft support seal rings, dribbler orifice assemblies in the reaction shaft support and for poor machine on the pump valve body faces. Refer to **STANDARD PROCEDURE** .
- Refer to **STANDARD PROCEDURE** and perform the 68RFE TRANSMISSION VERIFICATION TEST.

No

- Repair the Valve Body. Check the OD Accumulator piston and seals, OD bleed orifice, and No. 6 check ball cuts or damage. If no problems are found in the Valve Body, replace the Transmission Solenoid/TRS Assembly. Refer to **STANDARD PROCEDURE** for proper repair procedures.
- Refer to **STANDARD PROCEDURE** and perform the 68RFE TRANSMISSION VERIFICATION TEST.

15. **CHECK THE PCM AND WIRING**
    1. Turn the ignition off to the lock position.
    2. Remove the Ignition Switch Feed fuse from the TIPM.

CAUTION: Removal of the Ignition Switch Feed fuse from the TIPM will prevent the vehicle from being started in gear.

WARNING: The Ignition Switch Feed fuse must be removed from the TIPM. Failure to do so can result in possible serious or fatal injury.

3. Install Transmission Simulator (special tool #8333A, Simulator, Transmission).
4. Ignition on, engine not running.
5. With the Transmission Simulator, turn the Pressure Switch selector switch to OD.
6. With the scan tool, monitor the OD Pressure Switch state while pressing the Pressure Switch Test button on the Transmission Simulator.

   Did the state of the OD Pressure Switch change from OPEN to CLOSED while pressing the Test button?

   Yes

   - Go To 16.

   No

   - Go To 19.

16. **CHECK IF THE NO. 4 AND/OR NO. 6 CHECK BALL IS CUT OR DAMAGED**
    1. With the scan tool, erase previously stored DTCs and test drive the vehicle, use the Event Data to help duplicate the conditions when the DTC originality set. Note any DTCs that may set.
    2. Remove the Transmission Valve Body in accordance with the Service Information.
    3. Check the No. 4 and No. 6 Check Balls for cuts or damage.

       Is the No. 4 and/or No. 6 Check Ball cut or damaged?

       Yes

       - Replace the No. 4 and/or No. 6 Check Ball and check for clutch debris in the transmission oil pan. If there is excessive debris, perform internal repairs to the OD Clutch Assembly. Refer to **STANDARD PROCEDURE** for proper repair procedures.
       - Refer to **STANDARD PROCEDURE** and perform the 68RFE TRANSMISSION VERIFICATION TEST.

       No

       - Go To 17.

17. **CHECK THE SOLENOID SWITCH VALVE BORE IN VALVE BODY**
    1. Check the size of the Solenoid Switch Valve (SSV) plug bore in the main valve body. Check the diameter of the outer four (4) lands in the SSV bore. Maximum allowable diameter is 11.544 mm (0.454 in).

       Are any of the large SSV bore lands over the maximum allowable size?

       Yes

- Replace the valve body in accordance with the service information.
- Refer to **STANDARD PROCEDURE** and perform the 68RFE TRANSMISSION VERIFICATION TEST.

No

- Go To 18.

18. **CHECK THE TRANSMISSION SOLENOID/TRS ASSEMBLY**

Did the DTC P0871 reset during the test drive in the previous step?

Yes

- Replace the Transmission Solenoid/TRS Assembly in accordance with the Service Information.
- Refer to **STANDARD PROCEDURE** and perform the 68RFE TRANSMISSION VERIFICATION TEST.

No

- Go To 23.

19. **CHECK THE (T9) OD PRESSURE SIGNAL CIRCUIT FOR AN OPEN**

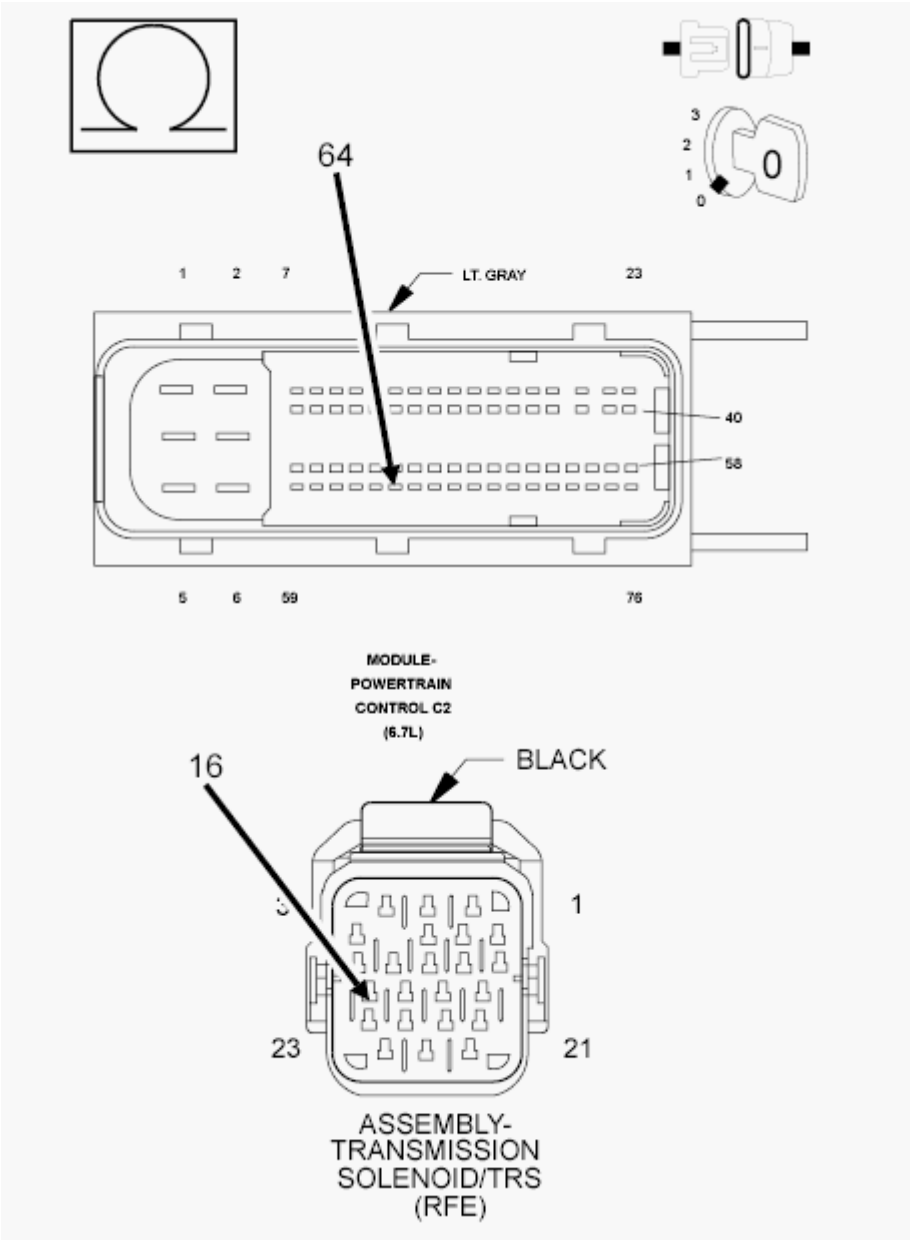

Fig. 70: Checking OD Pressure Signal Circuit For Open
Courtesy of CHRYSLER GROUP, LLC

1. Turn the ignition off to the lock position.
2. Disconnect the PCM C2 harness connector.
3. Disconnect the Transmission Solenoid /TRS Assembly harness connector.
4. Measure the resistance of the (T9) OD Pressure Signal circuit between the Solenoid/TRS Assembly harness connector and the appropriate terminal of the PCM C2 harness connector.

   Is the resistance above 5.0 Ohms?

   Yes

- Repair the (T9) OD Pressure Signal circuit for an open.
- Refer to **STANDARD PROCEDURE** and perform the 68RFE TRANSMISSION VERIFICATION TEST.

No

- Go To 20.

20. **CHECK THE (T9) OD PRESSURE SIGNAL CIRCUIT FOR A SHORT TO GROUND**

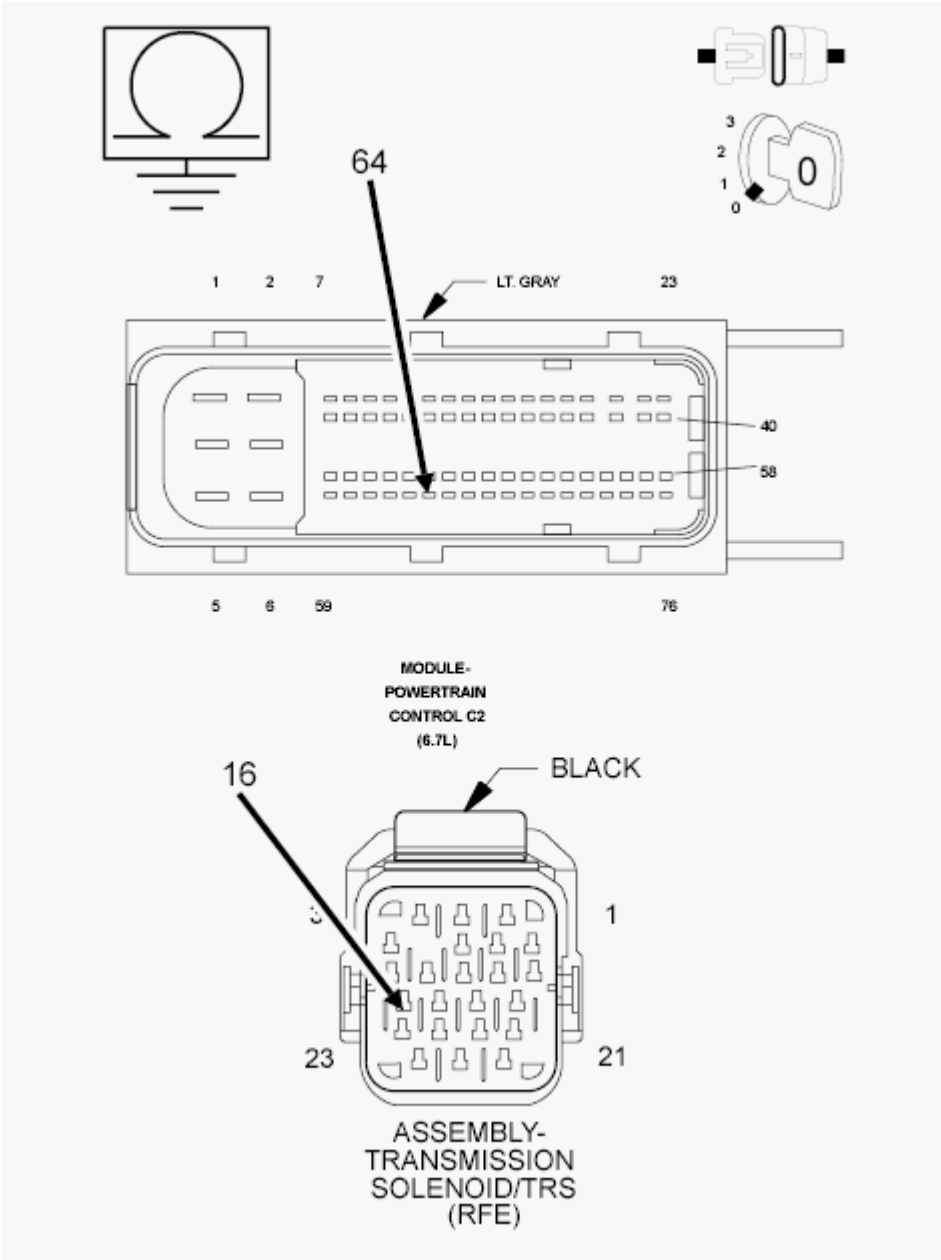

Fig. 71: Checking OD Pressure Signal Circuit For Short To Ground
Courtesy of CHRYSLER GROUP, LLC

1. Measure the resistance between ground and the (T9) OD Pressure Signal circuit.

   Is the resistance below 5.0 Ohms?

   Yes

   - Repair the (T9) OD Pressure Signal circuit for a short to ground.
   - Refer to **STANDARD PROCEDURE** and perform the 68RFE TRANSMISSION VERIFICATION TEST.

   No

   - Go To 21.

21. **CHECK WIRING AND CONNECTORS**
    1. Using the schematics as a guide, inspect the wiring and connectors. Pay particular attention to all power and ground circuits.

       Were there any problems found

       Yes

       - Repair as necessary.
       - Refer to **STANDARD PROCEDURE** and perform the 68RFE TRANSMISSION VERIFICATION TEST.

       No

       - Go To 22.

22. **CHECK THE POWERTRAIN CONTROL MODULE**
    1. Reconnect all previously disconnected connectors.
    2. Make sure all Event Data is recorded.
    3. With the scan tool, erase previously stored DTCs and test drive the vehicle, use the Event Data to help duplicate the conditions when the DTC originality set.

       Does the DTC P0871 reset?

       Yes

       - Using the schematics as a guide, check the Powertrain Control Module (PCM) terminals for corrosion, damage, or terminal push out. Pay particular attention to all power and ground circuits. If no problems are found, replace and program the PCM in accordance with the Service Information. With the scan tool, perform Quick Learn.
       - Refer to **STANDARD PROCEDURE** and perform the 68RFE TRANSMISSION VERIFICATION TEST.

No

- Go To 23.

23. **CHECK THE WIRING AND CONNECTORS**
    1. The conditions necessary to set this DTC are not present at this time.
    2. Using the schematics as a guide, inspect the wiring and connectors specific to this circuit.
    3. Wiggle the wires while checking for shorted and open circuits.
    4. With the scan tool, check the Event Data to help identify the conditions in which the DTC was set.

    Where there any problems found?

    Yes

    - Repair as necessary.
    - Refer to **STANDARD PROCEDURE** and perform the 68RFE TRANSMISSION VERIFICATION TEST.

    No

    - Test Complete.

P0875-UD HYDRAULIC PRESSURE TEST

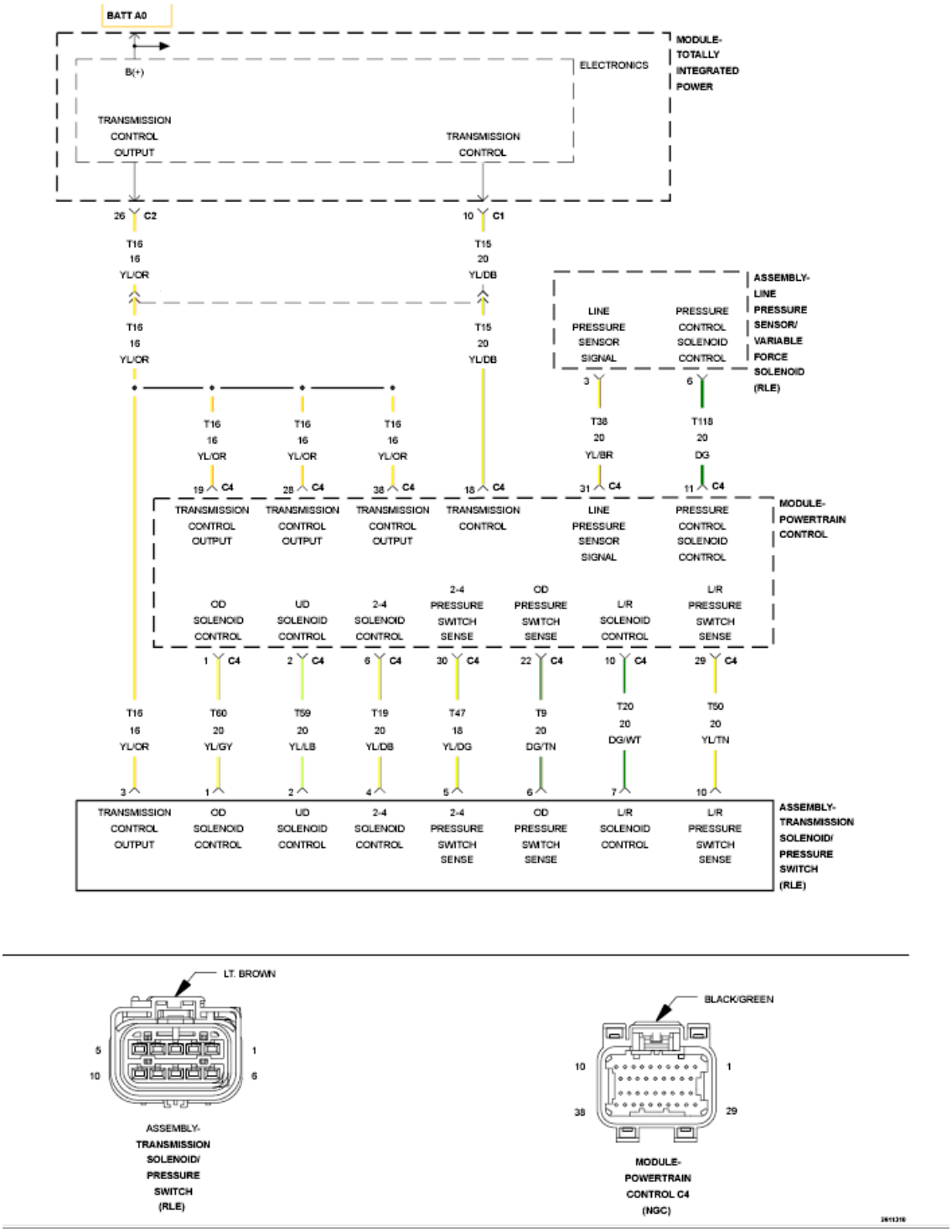

Fig. 72: Solenoid Control Wiring Diagram
Courtesy of CHRYSLER GROUP, LLC

For a complete wiring diagram, **refer to appropriate SYSTEM WIRING DIAGRAMS article** .

THEORY OF OPERATION

The Transmission Control System tests the pressure switches when they are off. The test verifies that the switches are operational (They will close with pressure applied). The Transmission Control System verifies that the switch closes when the corresponding element is applied. If a switch fails to close, it is re-tested. If it fails the second test, the DTC will set, the MIL will illuminate and the transmission system will default to the orderly Shutdown routine.

WHEN MONITORED:

In any forward gear with engine speed above 1000 RPM shortly after a shift and every minute thereafter.

SET CONDITION:

After a shift into a forward gear, with engine speed above 1000 RPM, the Powertrain Control Module (PCM) momentarily turns on element pressure to the Clutch circuits that don't have pressure to identify the correct Pressure Switch closes. If the Pressure Switch does not close two times, the DTC sets.

POSSIBLE CAUSES

Possible Causes
LINE PRESSURE SENSOR
TRANSMISSION FLUID CONTAMINATION
RELATED DTCS PRESENT
EXCESSIVE DEBRIS IN OIL PAN
POOR LINE PRESSURE SENSOR CONNECTION
(T29) UD PRESSURE SWITCH SENSE CIRCUIT OPEN
TRANSMISSION CONTROL RELAY DTCS PRESENT
(T29) UD PRESSURE SWITCH SENSE CIRCUIT OPEN
(F856) 5-VOLT SUPPLY CIRCUIT OPEN
(T29) UD PRESSURE SWITCH SENSE CIRCUIT SHORTED TO GROUND
(F856) 5-VOLT SUPPLY CIRCUIT SHORTED TO GROUND
(T29) UD PRESSURE SWITCH SENSE CIRCUIT SHORTED TO VOLTAGE
TRANSMISSION SOLENOID/TRS ASSEMBLY
INTERNAL TRANSMISSION
POWERTRAIN CONTROL MODULE (PCM)

Always perform the Pre-Diagnostic Troubleshooting procedure before proceeding. Refer to STANDARD PROCEDURE.

DIAGNOSTIC TEST

1. **CHECK IF RELATED DTCS ARE PRESENT**
    1. With the scan tool, read DTCs.

       Is there any Loss of Prime, TIPM TCM Power Control circuit, TCM Power Input and/or Line Pressure Sensor DTCs present?

Yes

- For the TIPM DTCs, Refer to **DIAGNOSIS AND TESTING** and perform the appropriate diagnostic procedure. If the DTC, P0944-LOSS OF PRIME is present, perform its respective test first.

No

- Go To 2.

2. **CHECK IF THE DTC P0765 IS PRESENT**
   1. With the scan tool, read DTCs.

      Is the DTC P0765 also present?

      Yes

      - Refer to **DIAGNOSTIC CODE INDEX** and perform diagnostics for P0765-UD SOLENOID CIRCUIT.

      No

      - Go To 3.

3. **CHECK IF OTHER DTCS ARE PRESENT**
   1. With the scan tool, read DTCs.

      Are any of the DTCs, P0731, P0732, P0733, P0734, and/or P0876 present also?

      Yes

      - Go To 12.

      No

      - Go To 4.

4. **CHECK IF THE DTC IS CURRENT**
   1. With the scan tool, read DTCs.

      Is the status Active or is the Starts Since Set counter 2 or less for this DTC?

      Yes

      - Go To 5.

      No

      - Go To 17.

5. **CHECK IF THE LINE PRESSURE STAYS THE SAME**
    1. Start the engine.
    2. Warm the transmission to 82° C or 180° F.
    3. Firmly apply the brakes.
    4. With the scan tool, monitor the Line Pressure during the following step.
    5. Move the shift lever to each gear position, pausing momentarily in each position and record the line pressure reading. Allow the pressure to stabilize for at least five seconds in each range.

       Did the line pressure remain at a steady value between 585 and 655 kPa or 85 and 95 psi in each position?

       Yes

       - Go To 6.

       No

       - Go To 10.
6. **CHECK THE LINE PRESSURE SENSOR CONNECTION**
    1. Ignition on, **engine not running.**
    2. With the scan tool, monitor the Line Pressure while firmly pushing the Transmission Line Pressure Sensor connector inward towards the Transmission.

       Did the Line Pressure reading on the scan tool CHANGE to about 207 kPa (30 psi) or 0.7 of a volt when the connector was pushed inward?

       Yes (value was higher and changed to 207 kPa (30 psi) or 0.7 of a volt)

       - Disconnect and properly reconnect the Line Pressure Sensor connector. Inspect terminals and repair as necessary.
       - Refer to **STANDARD PROCEDURE** and perform the 68RFE TRANSMISSION VERIFICATION TEST.

       No (value is higher than 207 kPa (30 psi) or 0.7 of a volt and did not change or the value was already 207 kPa (30 psi) or 0.7 of a volt and did not change)

       - Go To 7.
7. **CHECK THE LINE PRESSURE SENSOR OPERATION**
    1. Turn the ignition off to the lock position.
    2. Remove the Ignition Switch Feed fuse from the TIPM.

       CAUTION: Removal of the Ignition Switch Feed fuse from the TIPM will prevent the vehicle from being started in gear.

WARNING: The Ignition Switch Feed fuse must be removed from the TIPM. Failure to do so can result in possible serious or fatal injury.

3. Install the Transmission Simulator (special tool #8333A, Simulator, Transmission).
4. With the Transmission Simulator select the "OFF" position on the "Input/Output Speed" switch.
5. Ignition on, engine not running.
6. With the scan tool, monitor the Line Pressure while turning the Pressure Switch selector to each of the 3 line pressure positions on the Transmission Simulator.

NOTE: All three scan tool Line Pressure readings should be steady and ±14 kPa or 2.0 psi or 0.2 of a volt of the reading specified on the Transmission Simulator.

Did the scan tool Line Pressure readings match the specified readings on the Transmission Simulator and remain steady in all three positions?

Yes

- Replace the Line Pressure Sensor in accordance with the Service Information.
- Refer to **STANDARD PROCEDURE** and perform the 68RFE TRANSMISSION VERIFICATION TEST.

No

- Go To 8.

8. **CHECK THE (F856) 5-VOLT SUPPLY CIRCUIT FOR AN OPEN**

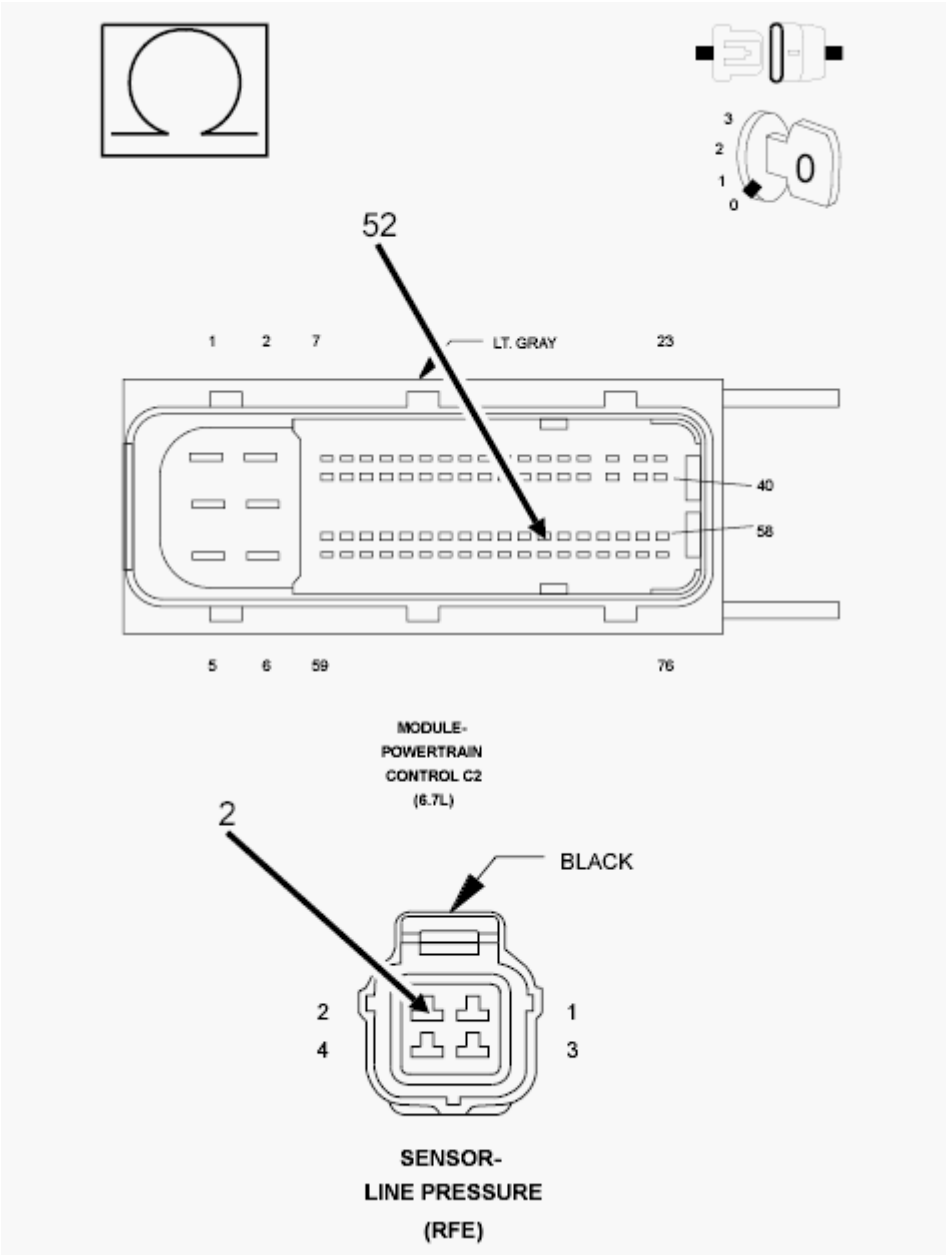

Fig. 73: Checking 5-Volt Supply Circuit For Open
Courtesy of CHRYSLER GROUP, LLC

1. Turn the ignition off to the lock position.
2. Disconnect Transmission Simulator.
3. Disconnect the PCM C2 harness connector.
4. Measure the resistance of the (F856) 5-volt Supply circuit from the Line Pressure Sensor harness connector to the appropriate terminal of the PCM C2 harness connector.

   Is the resistance above 5.0 Ohms?

   Yes

- Repair the (F856) 5-volt Supply circuit for an open.
- Refer to **STANDARD PROCEDURE** and perform the 68RFE TRANSMISSION VERIFICATION TEST.

No

- Go To 9.

9. **CHECK THE (F856) 5-VOLT SUPPLY CIRCUIT FOR A SHORT TO GROUND**

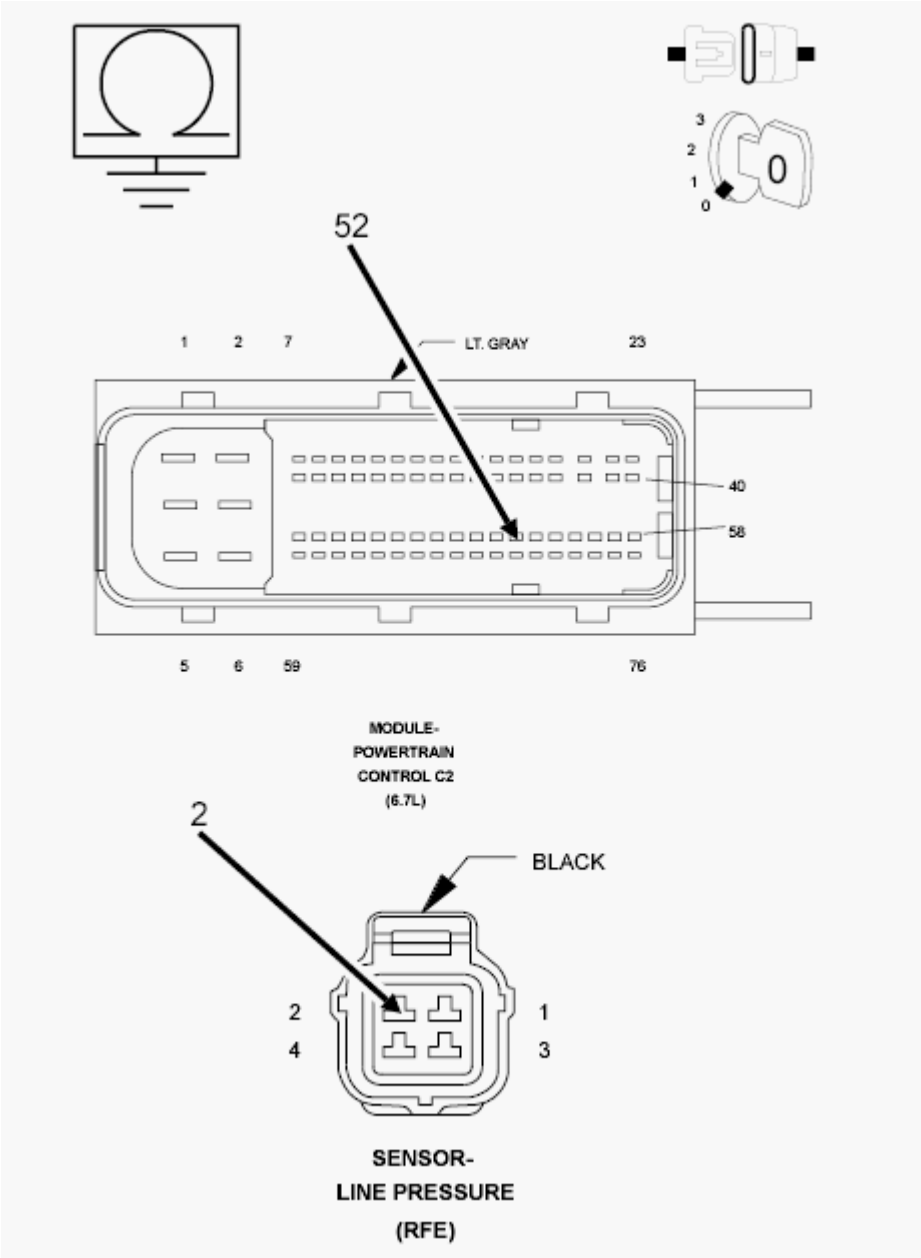

Fig. 74: Checking 5-Volt Supply Circuit For Short To Ground
Courtesy of CHRYSLER GROUP, LLC

1. Measure the resistance between ground and the (F856) 5-volt Supply circuit.

   Is the resistance below 5.0 Ohms?

   Yes

   - Repair the (F856) 5-volt Supply circuit for a short to ground.
   - Refer to **STANDARD PROCEDURE** and perform the 68RFE TRANSMISSION VERIFICATION TEST.

   No

   - Using the schematics as a guide, check the Powertrain Control Module (PCM) terminals for corrosion, damage, or terminal push out. Pay particular attention to all power and ground circuits. If no problems are found, replace the PCM in accordance with the Service Information. With the scan tool, perform Quick Learn.
   - Refer to **STANDARD PROCEDURE** and perform the 68RFE TRANSMISSION VERIFICATION TEST.

10. **COMPARE THE SCAN TOOL READING TO PRESSURE GAUGE READING**
    1. Turn the ignition off to the lock position.
    2. Connect the Line Pressure Adapter (special tool #8259, Adapter, Pressure Test) and 0-300 psi Test Gauge (special tool #C-3293-SP, Gauge, Pressure 0-300 P.S.I.). Refer to **STANDARD PROCEDURE** for proper installation procedure.

       CAUTION: Apply parking brake.

    3. Start the engine.
    4. In the following steps, compare the scan tool Line Pressure to the Pressure Gauge readings in each gear.

       CAUTION: Do not overheat transmission.

    5. With the gear selector in park, raise the RPM to 1500, and compare line pressure readings.
    6. Firmly apply the brakes, move the gear selector into reverse, raise the RPM to 1500, and compare the line pressure readings.
    7. Firmly apply the brakes, move the gear selector into drive, raise the RPM to 1500, and compare the line pressure readings.

       Did the scan tool Line Pressure readings match the Pressure Gauge readings ± 10 psi?

       Yes

- Go To 11.

No

- Replace the Line Pressure Sensor in accordance with the Service Information.
- Refer to **STANDARD PROCEDURE** and perform the 68RFE TRANSMISSION VERIFICATION TEST.

11. **CHECK THE WIRING AND CONNECTORS**
    1. Turn the ignition off to the lock position.
    2. Remove the Ignition Switch Feed fuse from the TIPM.

CAUTION: Removal of the Ignition Switch Feed fuse from the TIPM will prevent the vehicle from being started in gear.

WARNING: The Ignition Switch Feed fuse must be removed from the TIPM. Failure to do so can result in possible serious or fatal injury.

    3. Remove the Line Pressure Adapter (special tool #8259, Adapter, Pressure Test) and 0-300 psi Test Gauge (special tool #C-3293-SP, Gauge, Pressure 0-300 P.S.I.).
    4. Install the Transmission Simulator (special tool #8333A, Simulator, Transmission).
    5. On the Transmission Simulator, turn the Pressure Switch selector switch to UD.
    6. Ignition on, engine not running.
    7. With the scan tool, monitor the UD Pressure Switch state while pressing and holding the Pressure Switch test button and wiggling the wire harness and connectors that pertain to the UD Pressure Switch.

    Did the UD Pressure Switch state change to closed and remain closed while wiggling the wires?

    Yes

    - Go To 12.

    No

    - Go To 14.

12. **CHECK FOR EXCESSIVE DEBRIS**
    1. Turn the ignition off to the lock position.
    2. Remove the Transmission Simulator (special tool #8333A, Simulator, Transmission).
    3. Remove and inspect the Transmission Oil Pan in accordance with the Service Information.

    Does the Transmission Oil Pan contain excessive debris or contamination?

Yes

- Repair the cause of the excessive debris in the Transmission Oil Pan. Refer to **STANDARD PROCEDURE** for the proper procedures.
- Refer to **STANDARD PROCEDURE** and perform the 68RFE TRANSMISSION VERIFICATION TEST.

No

- Go To 13.

13. **CHECK THE UD HYDRAULIC CLUTCH CIRCUIT**
    1. Remove the Valve Body and air check the UD hydraulic clutch circuit (in the case) for leakage in accordance with the Service Information.

    NOTE: The UD hydraulic clutch circuit contains a small bleed orifice. A small amount of air leakage is normal.

    Was there excessive air leakage noticed during the air check?

    Yes

    - Repair as necessary. Check the UD clutch piston, piston seals and bleed orifice, reaction shaft support seal rings, and machining of the main mating faces of the pump housing, pump valve body, and reaction shaft support.
    - Refer to **STANDARD PROCEDURE** and perform the 68RFE TRANSMISSION VERIFICATION TEST.

    No

    - Disassemble and inspect the Valve Body and repair as necessary. Inspect the UD Accumulator piston and seals. If no problems are found in the Valve Body, replace the Transmission Solenoid/TRS Assembly in accordance with the Service Information.
    - Refer to **STANDARD PROCEDURE** and perform the 68RFE TRANSMISSION VERIFICATION TEST.

14. **CHECK THE (T29) UD PRESSURE SWITCH SENSE CIRCUIT FOR AN OPEN**

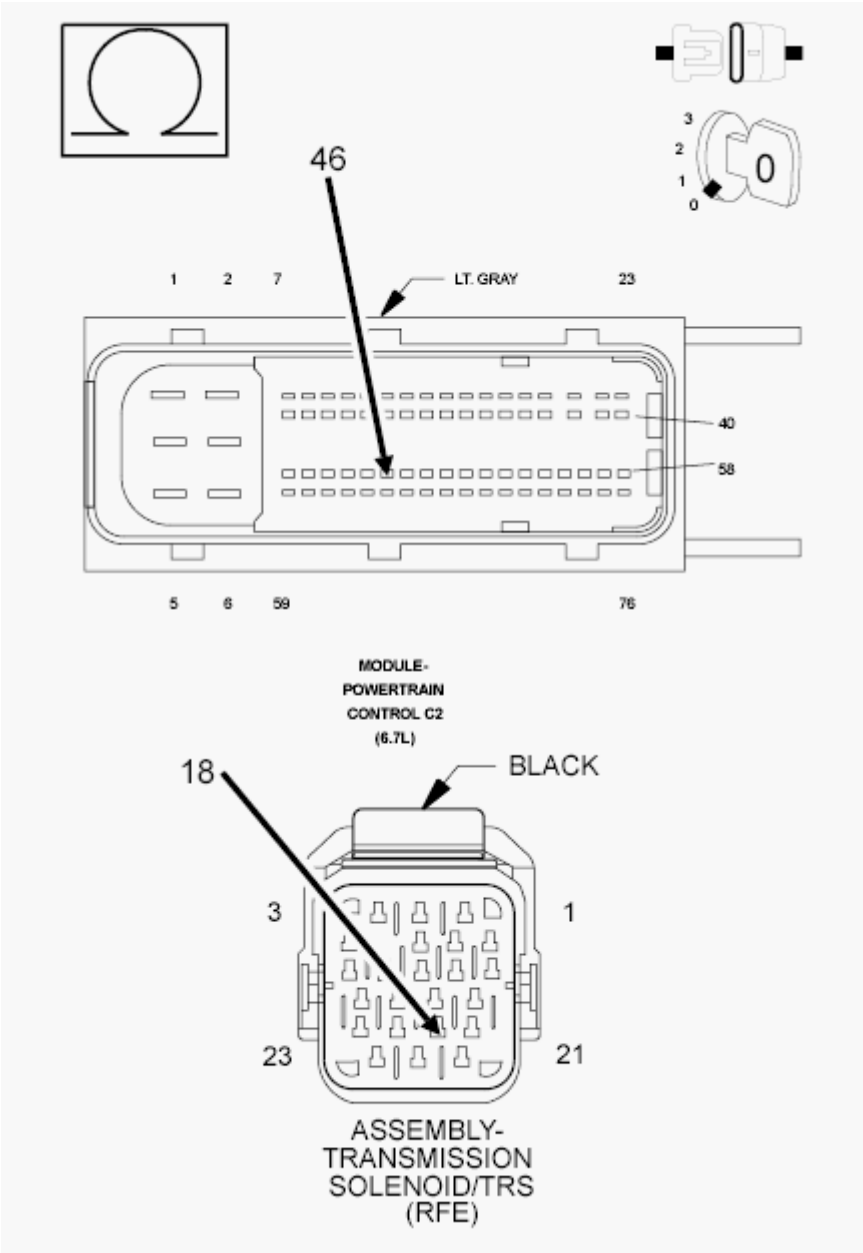

Fig. 75: Checking UD Pressure Switch Sense & Signal Circuit For Open
Courtesy of CHRYSLER GROUP, LLC

1. Turn the ignition off to the lock position.
2. Remove the Transmission Simulator (special tool #8333A, Simulator, Transmission).
3. Disconnect the PCM C2 harness connector.
4. Measure the resistance of the (T29) UD Pressure Switch Sense circuit between the Transmission Solenoid/TRS Assembly harness connector and the appropriate terminal of the PCM C2 harness connector.

   Is the resistance above 5.0 Ohms?

Yes

- Repair the (T29) UD Pressure Switch Sense circuit for an open.
- Refer to **STANDARD PROCEDURE** and perform the 68RFE TRANSMISSION VERIFICATION TEST.

No

- Go To 15.

15. **CHECK THE (T29) UD PRESSURE SWITCH SENSE CIRCUIT FOR A SHORT TO GROUND**

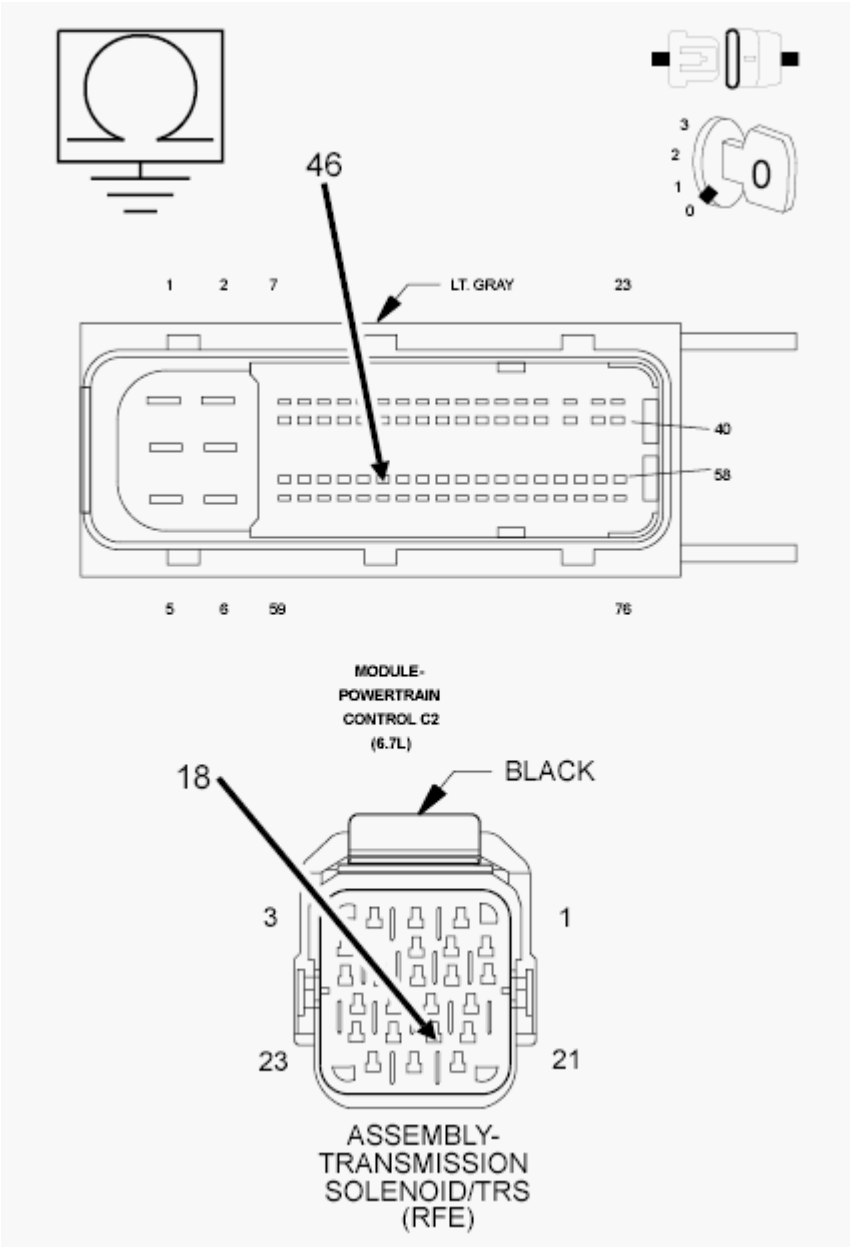

Fig. 76: Checking UD Pressure Switch Sense & Signal Circuit For Short To Ground

Courtesy of CHRYSLER GROUP, LLC

1. Measure the resistance between ground and the (T29) UD Pressure Switch Sense circuit.

   Is the resistance below 5.0 Ohms?

   Yes

   - Repair the (T29) UD Pressure Switch Sense circuit for a short to ground.
   - Refer to **STANDARD PROCEDURE** and perform the 68RFE TRANSMISSION VERIFICATION TEST.

   No

   - Go To 16.

16. **CHECK THE (T29) UD PRESSURE SWITCH SENSE CIRCUIT FOR A SHORT TO ANOTHER CIRCUIT**

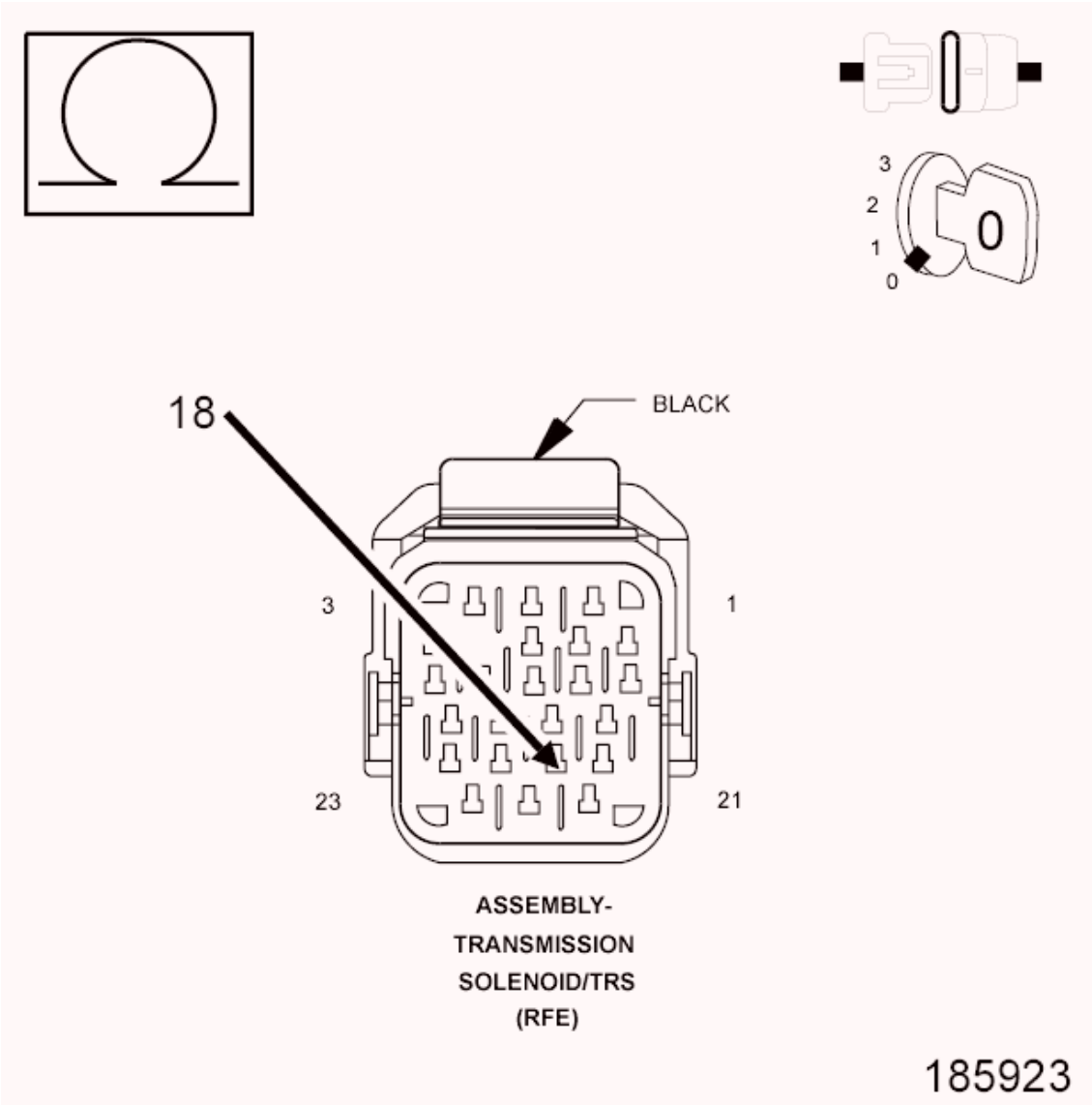

Fig. 77: Checking UD Pressure Signal Circuit For A Short To Another Circuit
Courtesy of CHRYSLER GROUP, LLC

1. Disconnect all PCM harness connectors.
2. Disconnect the Transmission Solenoid/TRS Assembly harness connector.

NOTE: Make sure the Transmission Solenoid/TRS Assembly harness connector is disconnected.

3. Measure the resistance between the (T29) UD Pressure Switch Sense circuit and all other circuits in the Transmission Solenoid/TRS Assembly harness connector.

   Is the resistance below 5.0 Ohms between the (T29) UD Pressure Switch Sense circuit and any other circuit(s) in the Transmission Solenoid/TRS Assembly harness connector?

Yes

- Repair the (T29) UD Pressure Switch Sense circuit for a short to another circuit(s).
- Refer to **STANDARD PROCEDURE** and perform the 68RFE TRANSMISSION VERIFICATION TEST.

No

- Using the schematics as a guide, check the Powertrain Control Module (PCM) terminals for corrosion, damage, or terminal push out. Pay particular attention to all power and ground circuits. If no problems are found, replace the PCM in accordance with the Service Information. With the scan tool, perform Quick Learn.
- Refer to **STANDARD PROCEDURE** and perform the 68RFE TRANSMISSION VERIFICATION TEST.

17. **CHECK THE WIRING AND CONNECTORS**
    1. The conditions necessary to set this DTC are not present at this time.
    2. Using the schematics as a guide, inspect the wiring and connectors specific to this circuit.
    3. Wiggle the wires while checking for shorted and open circuits.
    4. With the scan tool, check the Event Data to help identify the conditions in which the DTC was set.
    5. If the Event Data shows the DTC P0875 set while the Line Pressure was significantly below the Desired Line Pressure reading, check for causes of low line pressure (low fluid level, broken or mis-installed primary oil filter or filter seal, sticking Main Regulator Valve in the Pump Valve Body etc.). If the data shows the DTC set while the Line Pressure reading was significantly higher than the Desired Line Pressure, check the Line Pressure Sensor and related wiring.

    Where there any problems found?

    Yes

    - Repair as necessary.
    - Refer to **STANDARD PROCEDURE** and perform the 68RFE TRANSMISSION VERIFICATION TEST.

    No

    - Test Complete.

P0876-UD PRESSURE SWITCH RATIONALITY

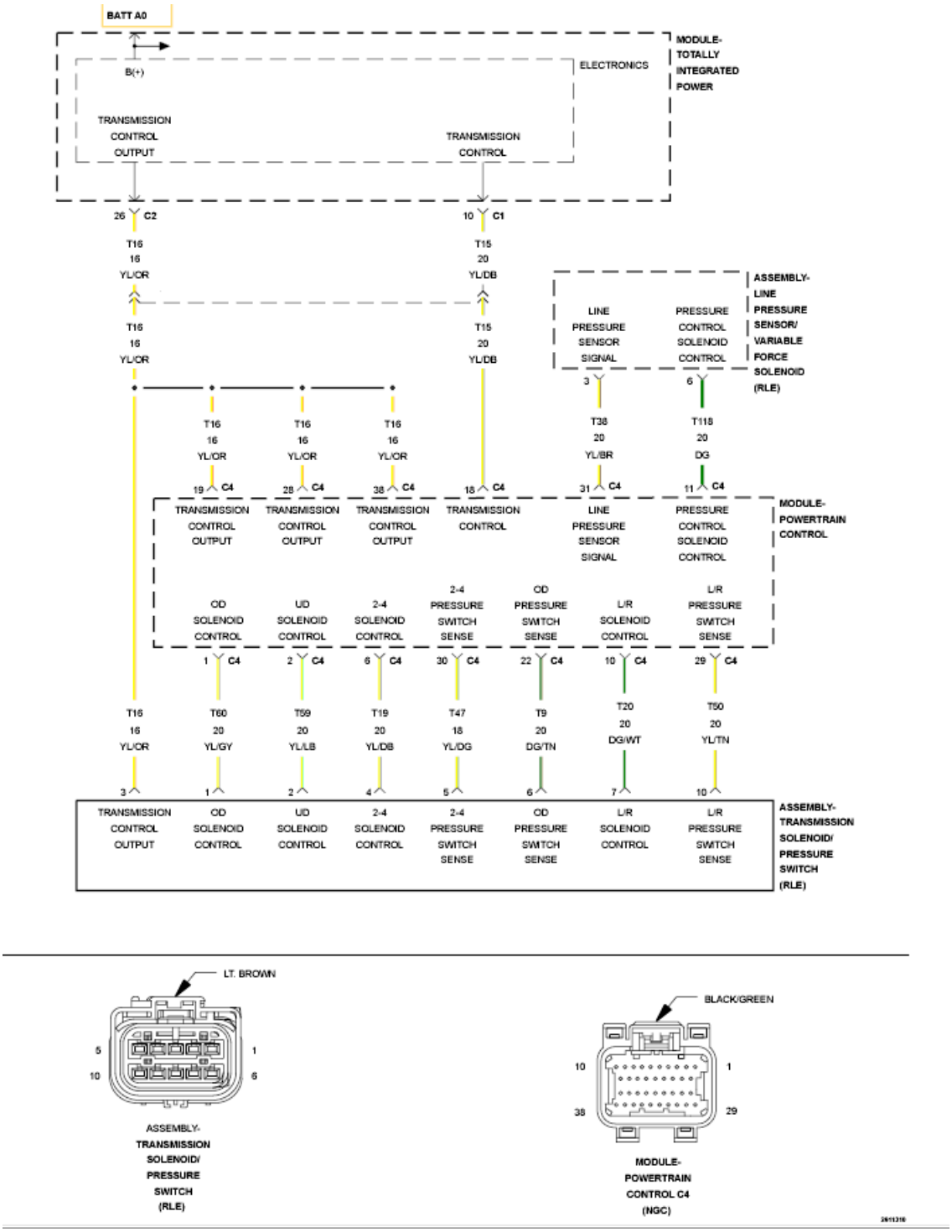

Fig. 78: Solenoid Control Wiring Diagram
Courtesy of CHRYSLER GROUP, LLC

For a complete wiring diagram, **refer to appropriate SYSTEM WIRING DIAGRAMS article** .

THEORY OF OPERATION

The Transmission system uses five pressure switches to monitor the fluid pressure in the L/R, 2C, 4C, UD, and OD clutch circuits. The pressure switches are continuously monitored for the correct states in each gear as shown.

WHEN MONITORED:

Continuously with the ignition on and engine running.

SET CONDITION:

This DTC is set if the UD pressure switch is in the wrong state for the current gear. For example, this code would be set if the UD pressure switch remained off while the transmission was in second gear.

POSSIBLE CAUSES

Possible Causes
RELATED DTCS PRESENT
LOW FLUID LEVEL
NO. 2 CHECK BALL CUT OR DAMAGED
LOW LINE PRESSURE
CRACKED OR MIS-INSTALLED SUMP FILTER OR SEAL
LOOSE COOLER RETURN SPIN ON FILTER (IF EQUIPPED)
STICKING MAIN REGULATOR VALVE IN PUMP VALVE BODY
(T29) UD PRESSURE SIGNAL CIRCUIT OPEN
(T29) UD PRESSURE SIGNAL CIRCUIT SHORTED TO GROUND
(T29) UD PRESSURE SIGNAL CIRCUIT SHORTED TO ANOTHER CIRCUITS
TRANSMISSION SOLENOID/TRS ASSEMBLY
POWERTRAIN CONTROL MODULE (PCM)

Always perform the Pre-Diagnostic Troubleshooting procedure before proceeding. Refer to STANDARD PROCEDURE.

GEAR	L/R	2C	4C	UD	OD
REVERSE	OPEN	OPEN	OPEN	OPEN	OPEN
P/N	CLOSED**	OPEN	OPEN	OPEN	OPEN
1ST	CLOSED*	OPEN	OPEN	CLOSED	OPEN
2ND	OPEN	CLOSED	OPEN	CLOSED	OPEN
3RD	OPEN	OPEN	CLOSED	CLOSED	OPEN
4TH	OPEN	OPEN	OPEN	CLOSED	CLOSED
5TH	OPEN	OPEN	CLOSED	OPEN	CLOSED
6TH	OPEN	CLOSED	OPEN	OPEN	CLOSED
*L/R is closed if output speed is below 100 rpm in Drive. L/R is closed in Manual (ERS) 1st gear.					
**May be open when rolling in Neutral or at low oil temperatures.					

DIAGNOSTIC TEST

1. **CHECK IF RELATED DTCS ARE PRESENT**
    1. With the scan tool, read DTCs.

       Is there any Loss of Prime, TIPM TCM Power Control circuit, TCM Power Input and/or Line Pressure Sensor DTCs present?

       Yes

       - For the TIPM DTCs, Refer to **DIAGNOSIS AND TESTING** and perform the appropriate diagnostic procedure. If a Loss of Prime DTC is present, perform its respective test first.

       No

       - Go To 2.
2. **CHECK FOR PRESSURE SWITCH DTCS**
    1. With the scan tool, read DTCs.

       Are there two or more other pressure switch rationality DTCs present in addition to P0876?

       Yes

       - Go To 3.

       No

       - Go To 4.
3. **CHECK IF ALL PRESSURE SWITCHES READ CLOSED**
    1. With the scan tool, read and record all Event Data.

       NOTE: Make sure to record all Event Data stored in the scan tool for future reference in this test procedure.

       Does the Event Data show all pressure switches reading CLOSED?

       Yes

       - Refer to **DIAGNOSTIC CODE INDEX** and perform the diagnostics for P0882. Perform the diagnostics as if the DTC is current.

       No

       - Go To 4.
4. **CHECK FOR OTHER DTCS**

1. With the scan tool, read DTCs.

   Is the DTC P2704 present also?

   Yes

   - Replace the Transmission Solenoid/TRS Assembly in accordance with the Service Information.
   - Refer to **STANDARD PROCEDURE** and perform the 68RFE TRANSMISSION VERIFICATION TEST.

   No

   - Go To 5.

5. **CHECK THE Event Data**

   In the Event Data recorded earlier, does the Event Data display information for the DTC P0876?

   Yes

   - Go To 6.

   No

   - Refer to **DIAGNOSTIC CODE INDEX** and perform the diagnostics for the DTC listed in the Event Data.
   - Refer to **STANDARD PROCEDURE** and perform the 68RFE TRANSMISSION VERIFICATION TEST.

6. **CHECK IF EVENT DATA WAS SET IN PARK, NEUTRAL OR REVERSE**

   In the Event Data recorded earlier, did the DTC P0876 set in Park, Neutral, or Reverse?

   Yes

   - Go To 10.

   No

   - Go To 7.

7. **CHECK THE UD PRESSURE SWITCH STATUS**

   In the Event Data recorded earlier, did the DTC P0876 set with the UD Pressure Switch closed?

   Yes

   - Go To 10.

No

- Go To 8.

8. **CHECK THE LINE PRESSURE**

   In the Event Data recorded earlier, is the (actual) Line Pressure less than 276 kPa (40 psi), and significantly below the Desired (target) Line Pressure?

   Yes

   - Repair as necessary to correct low line pressure. Check fluid level and adjust as necessary. If fluid level is OK, check the Primary Oil Filter seal for a split, crack, or improperly installed. If the filter and seal are OK, check the Main Regulator Valve in the Oil Pump. Refer to **STANDARD PROCEDURE** for the above procedures.
   - Refer to **STANDARD PROCEDURE** and perform the 68RFE TRANSMISSION VERIFICATION TEST.

   No

   - Go To 9.

9. **CHECK THE (T29) UD PRESSURE SIGNAL CIRCUIT FOR A SHORT TO ANOTHER CIRCUIT**

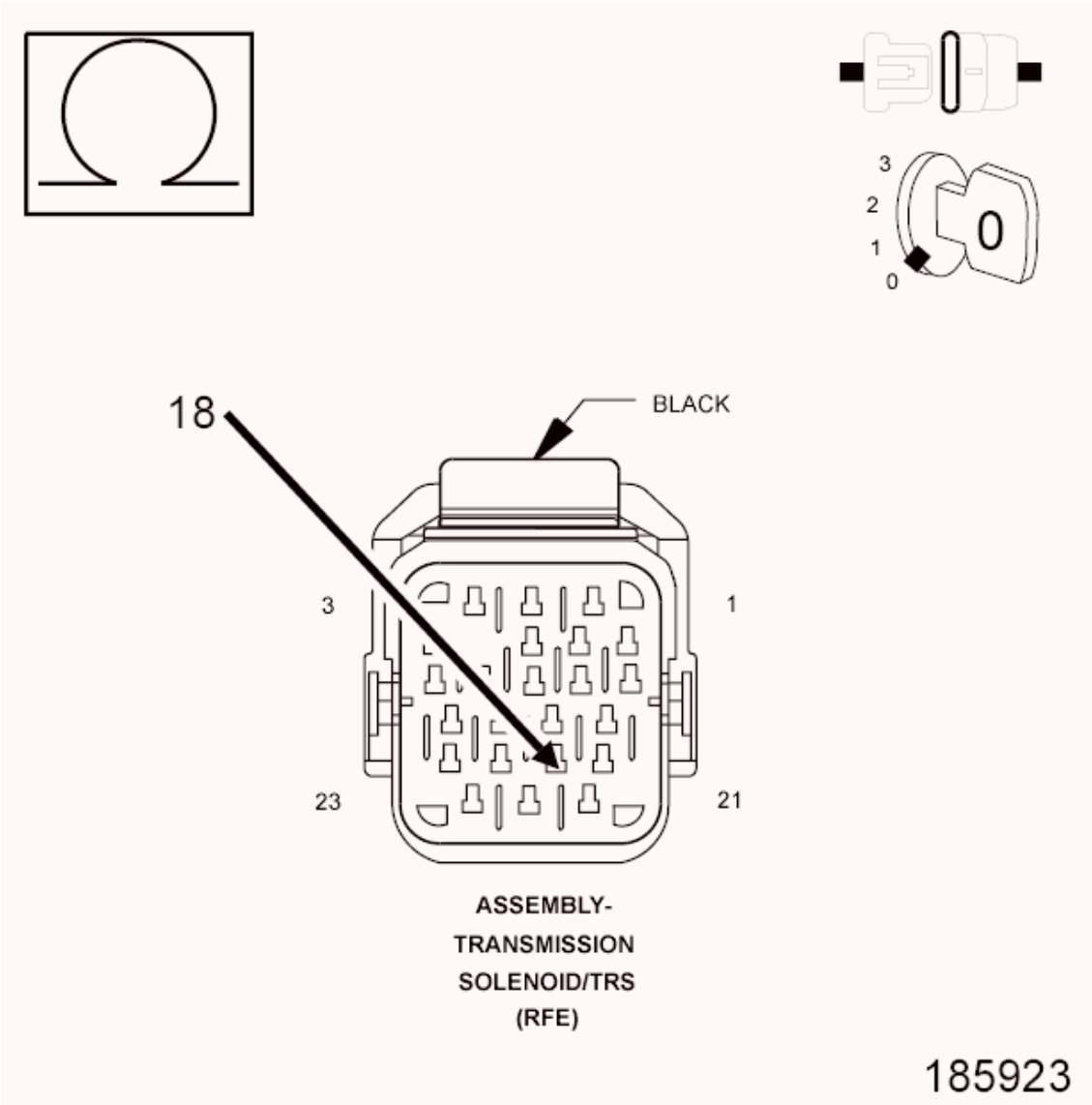

Fig. 79: Checking UD Pressure Signal Circuit For A Short To Another Circuit
Courtesy of CHRYSLER GROUP, LLC

1. Turn the ignition off to the lock position.
2. Disconnect all PCM harness connectors.
3. Disconnect the Transmission Solenoid/TRS Assembly harness connector.
4. Measure the resistance between the (T29) UD Pressure Signal circuit and all other circuits in the Transmission Solenoid/TRS Assembly harness connector.

   Is the resistance below 5.0 Ohms between the (T29) UD Pressure Signal circuit and any other circuit(s) in the Transmission Solenoid/TRS Assembly harness connector?

   Yes

   - Repair the (T29) UD Pressure Signal circuit for a short to another circuit(s).

- Refer to **STANDARD PROCEDURE** and perform the 68RFE TRANSMISSION VERIFICATION TEST.

No

- Replace the Transmission Solenoid/TRS Assembly in accordance with the Service Information.
- Refer to **STANDARD PROCEDURE** and perform the 68RFE TRANSMISSION VERIFICATION TEST.

10. **CHECK THE PCM AND WIRING USING THE TRANSMISSION SIMULATOR**
    1. Turn the ignition off to the lock position.
    2. Remove the Ignition Switch Feed fuse from the TIPM.

CAUTION: Removal of the Ignition Switch Feed fuse from the TIPM will prevent the vehicle from being started in gear.

WARNING: The Ignition Switch Feed fuse must be removed from the TIPM. Failure to do so can result in possible serious or fatal injury.

    3. Install the Transmission Simulator (special tool #8333A, Simulator, Transmission).
    4. Ignition on, engine not running.
    5. With the Transmission Simulator, turn the Pressure Switch selector switch to the UD position.
    6. With the scan tool, monitor the UD Pressure Switch state while pressing the Pressure Switch Test button on the Transmission Simulator.

    Did the state of the UD Pressure Switch change while pressing the Pressure Switch Test button?

    Yes

    - Go To 14.

    No

    - Go To 11.

11. **CHECK THE (T29) UD PRESSURE SIGNAL CIRCUIT FOR AN OPEN**

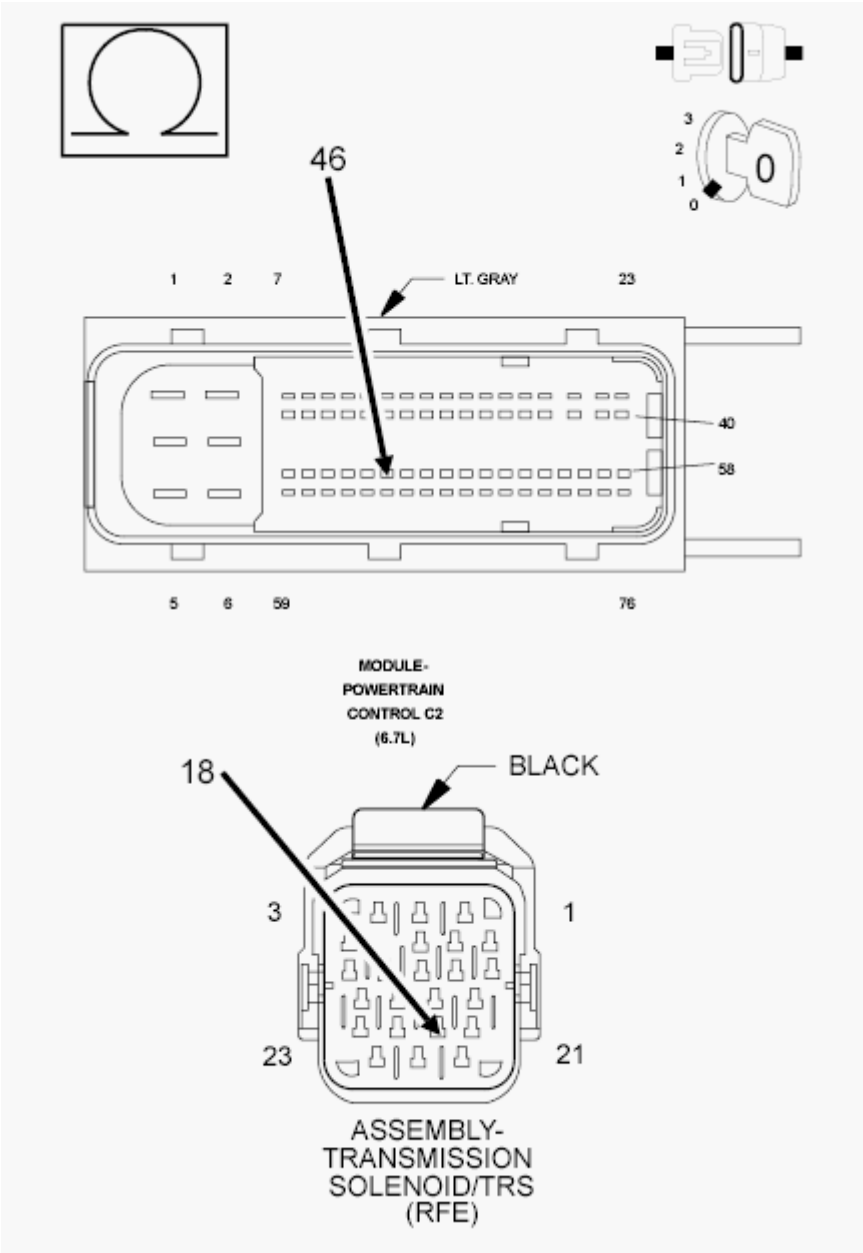

Fig. 80: Checking UD Pressure Switch Sense & Signal Circuit For Open
Courtesy of CHRYSLER GROUP, LLC

1. Turn the ignition off to the lock position.
2. Disconnect the Transmission Simulator (special tool #8333A, Simulator, Transmission).
3. Disconnect the PCM C2 harness connector.
4. Measure the resistance of the (T29) UD Pressure Signal circuit between the Transmission Solenoid/TRS Assembly harness connector and the appropriate terminal of the PCM C2 harness connector.

   Is the resistance above 5.0 Ohms?

Yes

- Repair the (T29) UD Pressure Signal circuit for an open.
- Refer to **STANDARD PROCEDURE** and perform the 68RFE TRANSMISSION VERIFICATION TEST.

No

- Go To 12.

12. **CHECK THE (T29) UD PRESSURE SIGNAL CIRCUIT FOR A SHORT TO GROUND**

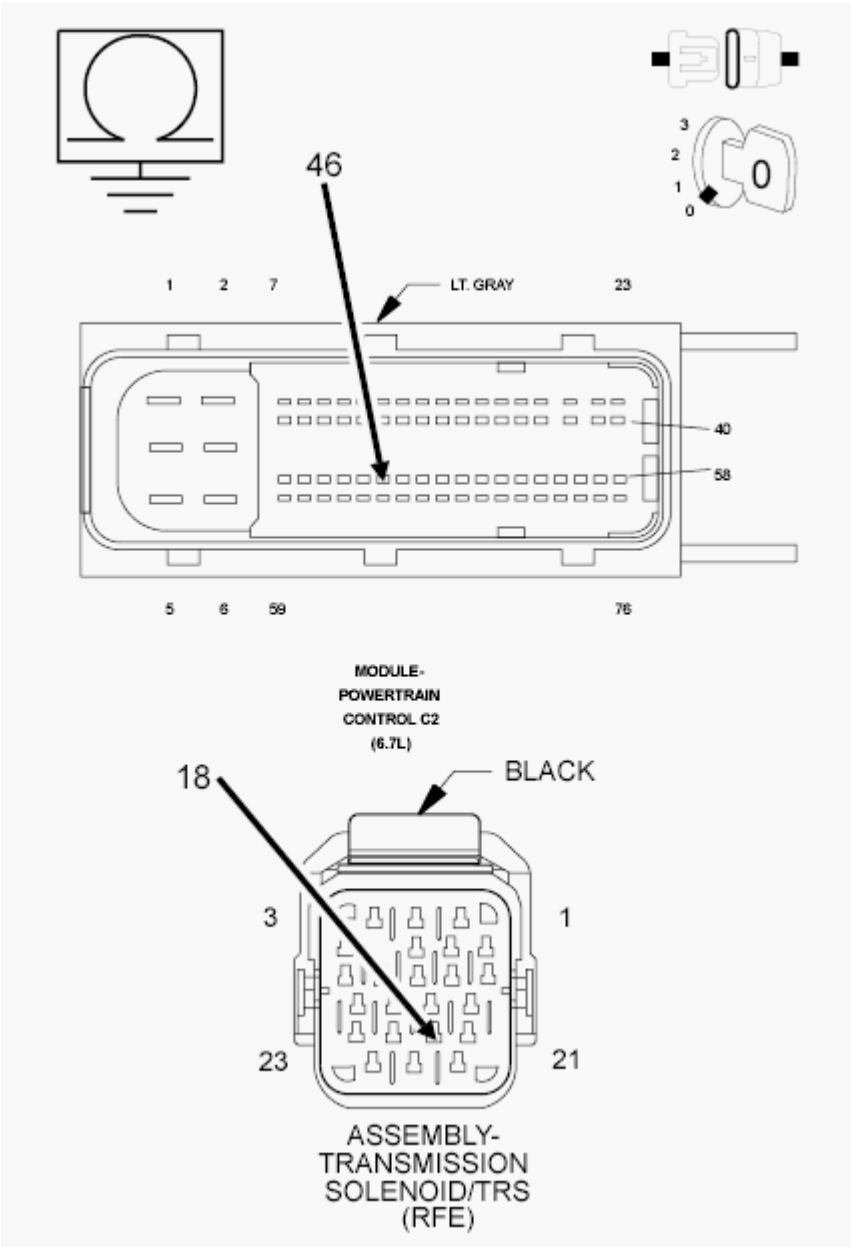

Fig. 81: Checking UD Pressure Switch Sense & Signal Circuit For Short To Ground

Courtesy of CHRYSLER GROUP, LLC

1. Measure the resistance between ground and the (T29) UD Pressure Signal circuit.

   Is the resistance below 5.0 Ohms?

   Yes

   - Repair the (T29) UD Pressure Signal circuit for a short to ground.
   - Refer to **STANDARD PROCEDURE** and perform the 68RFE TRANSMISSION VERIFICATION TEST.

   No

   - Go To 13.

13. **CHECK THE (T29) UD PRESSURE SIGNAL CIRCUIT FOR A SHORT TO ANOTHER CIRCUIT**

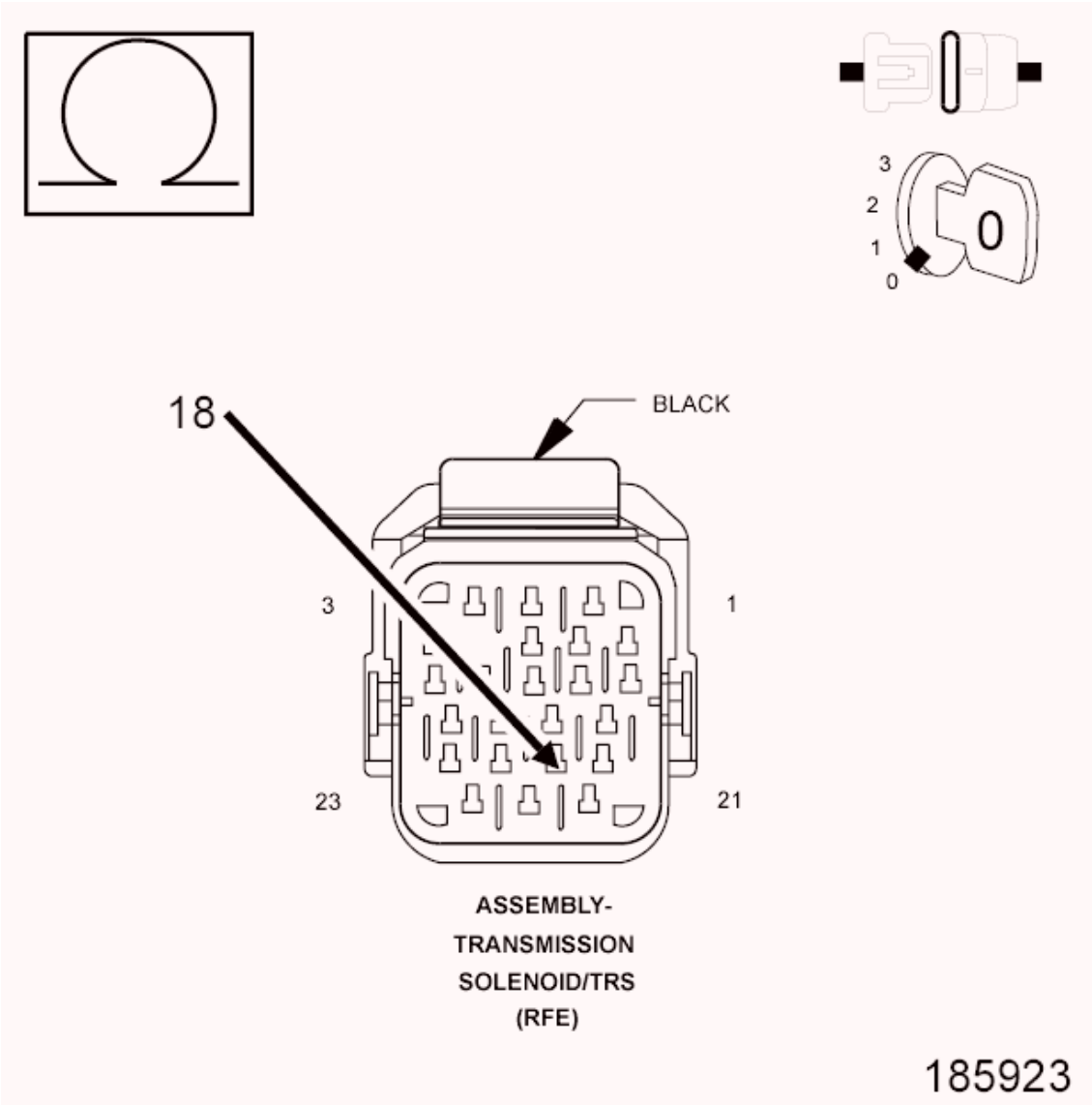

Fig. 82: Checking UD Pressure Signal Circuit For A Short To Another Circuit
Courtesy of CHRYSLER GROUP, LLC

1. Disconnect all PCM harness connectors.

   NOTE: Make sure the Transmission Solenoid/TRS Assembly harness connector is disconnected.

2. Measure the resistance between the (T29) UD Pressure Signal circuit and all other circuits in the Transmission Solenoid/TRS Assembly harness connector.

   Is the resistance below 5.0 Ohms between the (T29) UD Pressure Signal circuit and any other circuit(s) in the Transmission Solenoid/TRS Assembly harness connector?

   Yes

- Repair the (T29) UD Pressure Signal circuit for a short to another circuit(s).
- Refer to **STANDARD PROCEDURE** and perform the 68RFE TRANSMISSION VERIFICATION TEST.

No

- Using the schematics as a guide, check the Powertrain Control Module (PCM) terminals for corrosion, damage, or terminal push out. Pay particular attention to all power and ground circuits. If no problems are found, replace the PCM in accordance with the Service Information. With the scan tool, perform Quick Learn.
- Refer to **STANDARD PROCEDURE** and perform the 68RFE TRANSMISSION VERIFICATION TEST.

14. **PERFORM A WIGGLE TEST USING THE TRANSMISSION SIMULATOR**
    1. Perform the steps in the previous test while wiggling the wiring harness and connectors pertaining to the UD Pressure Switch.

       Did the state of the UD Pressure Switch change while pressing the Pressure Switch Test button?

       Yes

       - Repair the wiring harness and/or connectors as necessary.
       - Refer to **STANDARD PROCEDURE** and perform the 68RFE TRANSMISSION VERIFICATION TEST.

       No

       - Go To 15.

15. **CHECK THE TRANSMISSION SOLENOID/TRS ASSEMBLY FOR A SHORT TO GROUND**

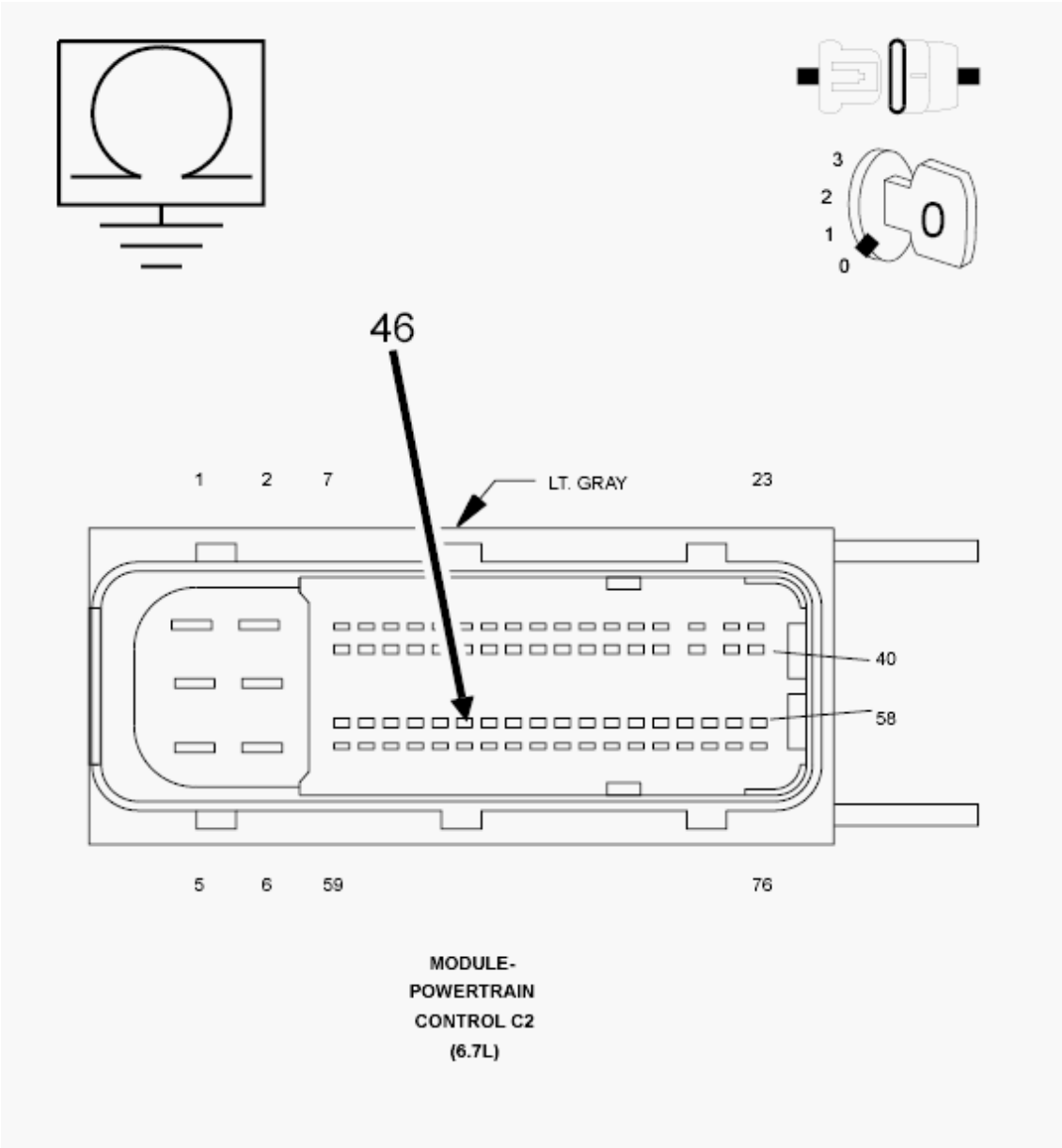

Fig. 83: Checking Transmission Solenoid/TRS Assembly For Short To Ground
Courtesy of CHRYSLER GROUP, LLC

1. Disconnect the Transmission Simulator and reconnect the Transmission Solenoid/TRS Assembly harness connector.
2. Disconnect the PCM C2 harness connector.
3. Measure the resistance between ground and the (T29) UD Pressure Signal circuit in the appropriate terminal of the PCM C2 harness connector.

   Is the resistance below 5.0 Ohms?

   Yes

- Replace the Transmission Solenoid/TRS Assembly in accordance with the Service Information.
- Refer to **STANDARD PROCEDURE** and perform the 68RFE TRANSMISSION VERIFICATION TEST.

No

- Go To 16.

16. **CHECK IF THE DTC RESETS**
    1. Reconnect all previously disconnected connectors.
    2. With the scan tool, erase all transmission DTCs.
    3. Test drive the vehicle. Using the Event Data recorded earlier, try to duplicate the conditions in which the DTC originally set.

    Does the DTC P0876 reset?

    Yes

    - Go To 17.

    No

    - Go To 18.

17. **CHECK FOR A CUT NO. 2 CHECK BALL**
    1. Remove the Valve Body in accordance with the Service Information.
    2. Check the No. 2 check ball for cuts or damage.

    Is the No. 2 check ball cut or damaged?

    Yes

    - Replace the No. 2 check ball. Check for excessive clutch debris in the oil pan. If excessive debris is present, check the UD Clutch and repair as necessary.
    - Refer to **STANDARD PROCEDURE** and perform the 68RFE TRANSMISSION VERIFICATION TEST.

    No

    - Replace the Transmission Solenoid/TRS Assembly in accordance with the Service Information. Check for excessive clutch debris in the oil pan. If excessive debris is present, check the UD Clutch and repair as necessary.
    - Refer to **STANDARD PROCEDURE** and perform the 68RFE TRANSMISSION VERIFICATION TEST.

18. **CHECK FOR CHECK THE WIRING AND CONNECTORS**

1. The conditions necessary to set this DTC are not present at this time.
2. Using the schematics as a guide, inspect the wiring and connectors specific to this circuit.
3. Wiggle the wires while checking for shorted and open circuits.
4. With the scan tool, check the Event Data to help identify the conditions in which the DTC was set.

   Were there any problems found?

   Yes

   - Repair as necessary.
   - Refer to **STANDARD PROCEDURE** and perform the 68RFE TRANSMISSION VERIFICATION TEST.

   No

   - Test Complete.

P0882-TCM POWER INPUT LOW

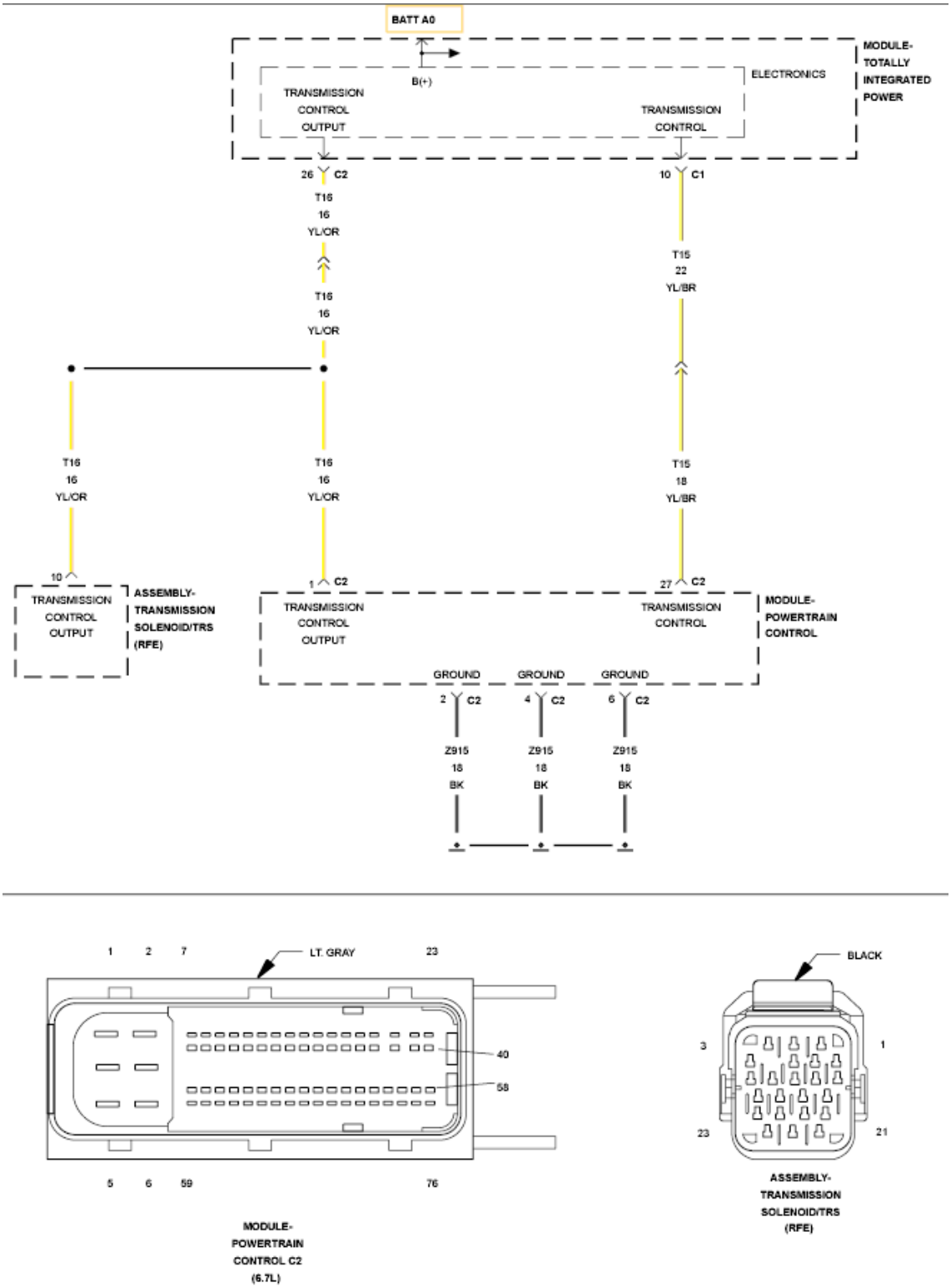

Fig. 84: PCM Circuit Wiring Diagram
Courtesy of CHRYSLER GROUP, LLC

For a complete wiring diagram, **refer to appropriate SYSTEM WIRING DIAGRAMS article** .

THEORY OF OPERATION

The Transmission Control Relay is used to supply power to the Transmission Solenoid/TRS Assembly and to the PCM when in normal operating mode. The purpose of the Transmission Output circuit is to allow the Transmission Control System to turn off the power to the Transmission Solenoid/TRS Assembly in event that the transmission should need to be placed into "limp-in" mode due to a DTC.

After a PCM reset, (ignition switch turned to the run position, or after cranking the engine) the Transmission Control System verifies that the Transmission Output circuit is open by checking for voltage on the Transmission Output circuits before the Transmission Control System request for the circuit to be powered up. The request is sent by a direct circuit control from the PCM to the TIPM. If the Transmission Control System detects less that 3.0 volts when the output is commanded on, the DTC will set after two consecutive failed tests. The MIL will turn off after two consecutive passing tests. **Note: Inadequate Transmission Control Output voltage can also cause DTCs P0846, P0869, P0871, P0876 or P0988 to set. Repairing the P0882 fault should also eliminate the related DTCs.**

WHEN MONITORED:

When the ignition is turned from "OFF" position to "RUN" position and/or the ignition is turned from "START" position to "RUN" position.

SET CONDITION:

This DTC is set when there is less than 3.0 volts present, two consecutive times, at the transmission control output circuits located in the Powertrain Control Module (PCM) when the Transmission Control System request the power up of those circuits.

POSSIBLE CAUSES

Possible Causes
RELATED DTCS PRESENT
(T16) TRANSMISSION CONTROL OUTPUT CIRCUIT OPEN
(T16) TRANSMISSION CONTROL OUTPUT CIRCUIT SHORTED TO GROUND
(T15) TRANSMISSION CONTROL CIRCUIT SHORTED TO GROUND
(T15) TRANSMISSION CONTROL CIRCUIT OPEN
PCM/TCM RELAY
TOTALLY INTEGRATED POWER MODULE (TIPM)
POWERTRAIN CONTROL MODULE (PCM)

Always perform the Pre-Diagnostic Troubleshooting procedure before proceeding. Refer to STANDARD PROCEDURE.

DIAGNOSTIC TEST

1. **CHECK IF THE DTC P0882 IS CURRENT**
    1. With the scan tool, Check the Starts Since Set counter for P0882.

NOTE: **This counter only applies to the last DTC set.**

Is the Starts Since Set counter equal to 0?

Yes

- Go To 2.

No

- Go To 9.

2. **CHECK THE INTERNAL FUSED B(+) CIRCUIT FOR AN OPEN**

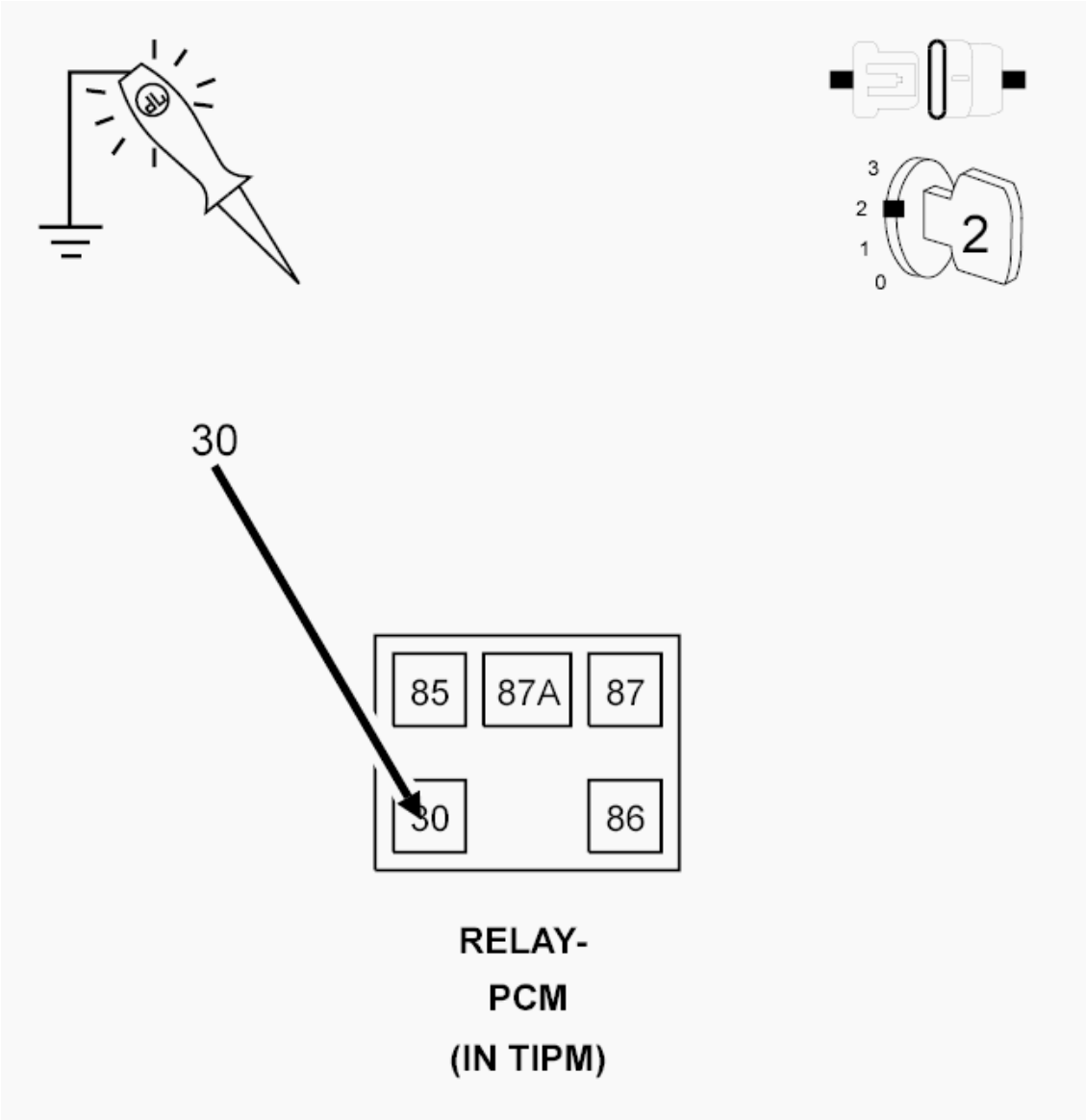

Fig. 85: Checking Internal Fused B(+) Circuit For Open

Courtesy of CHRYSLER GROUP, LLC

1. Turn the ignition off to the lock position.
2. Remove the PCM/TCM Relay.

NOTE: Check connectors - Clean/repair as necessary.

3. Ignition on, engine not running.
4. Using a 12-volt test light connected to ground, check the internal Fused B(+) circuit in the PCM/TCM Relay connection.

NOTE: The test light must illuminate brightly. Compare the brightness to that of a direct connection to the battery.

Does the test light illuminate brightly?

Yes

- Go To 3.

No

- Repair the internal Fused B(+) circuit for an open. If the fuse is open make sure to check for a short to ground.
- Refer to **STANDARD PROCEDURE** and perform the 68RFE TRANSMISSION VERIFICATION TEST.

3. **CHECK THE TRANSMISSION CONTROL RELAY**
   1. Turn the ignition off to the lock position.
   2. Install a substitute relay in place of the PCM/TCM Relay.
   3. Start the vehicle.
   4. With the scan tool, read DTCs.

   Did the DTC P0882 reset?

   Yes

   - Go To 4.

   No

   - Replace the PCM/TCM Relay.
   - Refer to **STANDARD PROCEDURE** and perform the 68RFE TRANSMISSION VERIFICATION TEST.

4. **(T16) TRANSMISSION CONTROL OUTPUT CIRCUIT OPEN TO PCM**

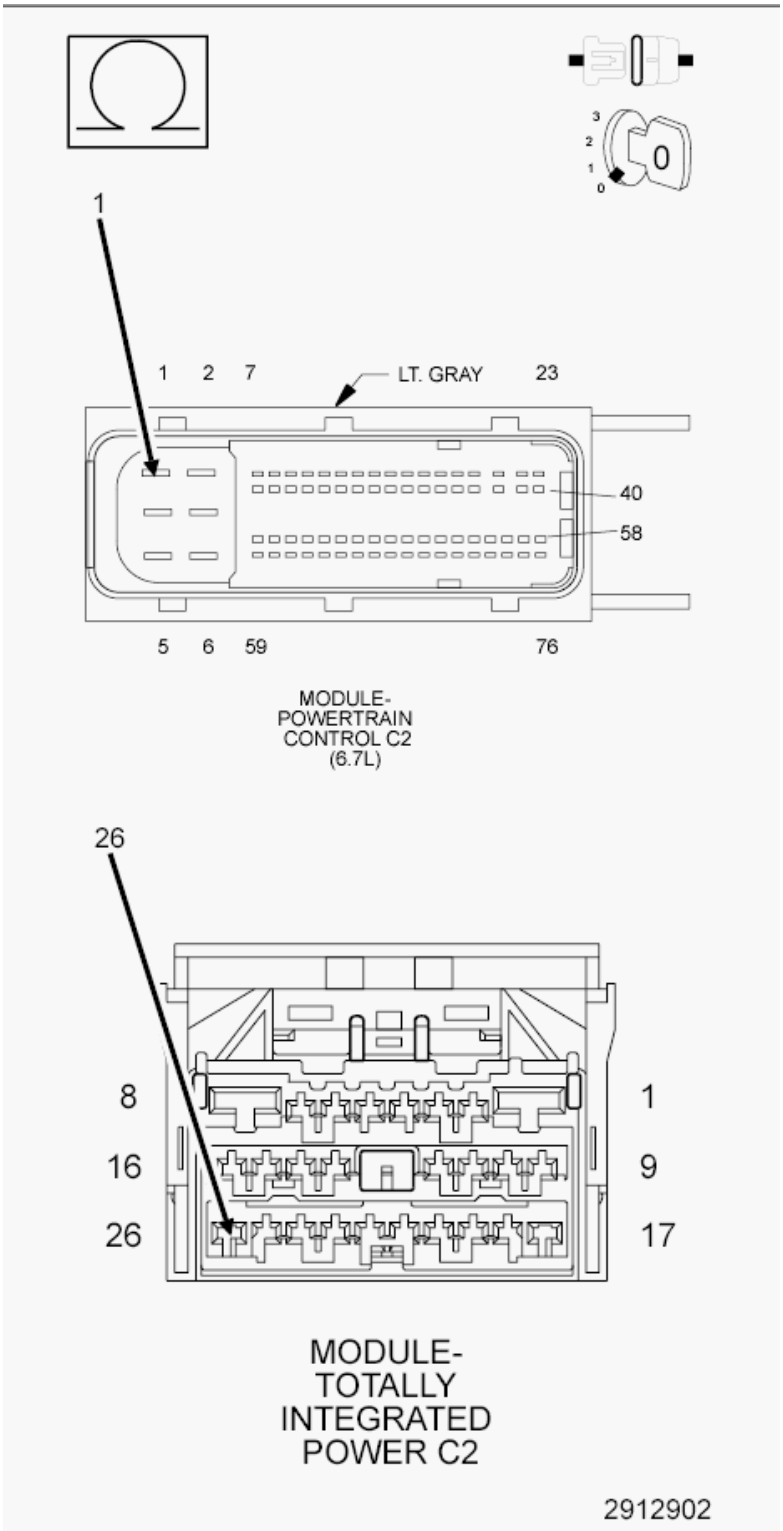

Fig. 86: Checking Transmission Control Output Circuit For Open
Courtesy of CHRYSLER GROUP, LLC

1. Turn the ignition off to the lock position.
2. Disconnect the TIPM C2 harness connector.

3. Disconnect the PCM C2 harness connector.
4. Measure the resistance of the (T16) Transmission Control Output circuit between the TIPM C2 harness connector and the PCM C2 harness connector.

   Is the resistance below 5.0 Ohms?

   Yes

   - Go To 5.

   No

   - Repair the (T16) Transmission Control Output circuit for an open.
   - Refer to **STANDARD PROCEDURE** and perform the 68RFE TRANSMISSION VERIFICATION TEST.

5. **(T16) TRANSMISSION CONTROL OUTPUT CIRCUIT OPEN TO THE TRANSMISSION SOLENOID ASSEMBLY**

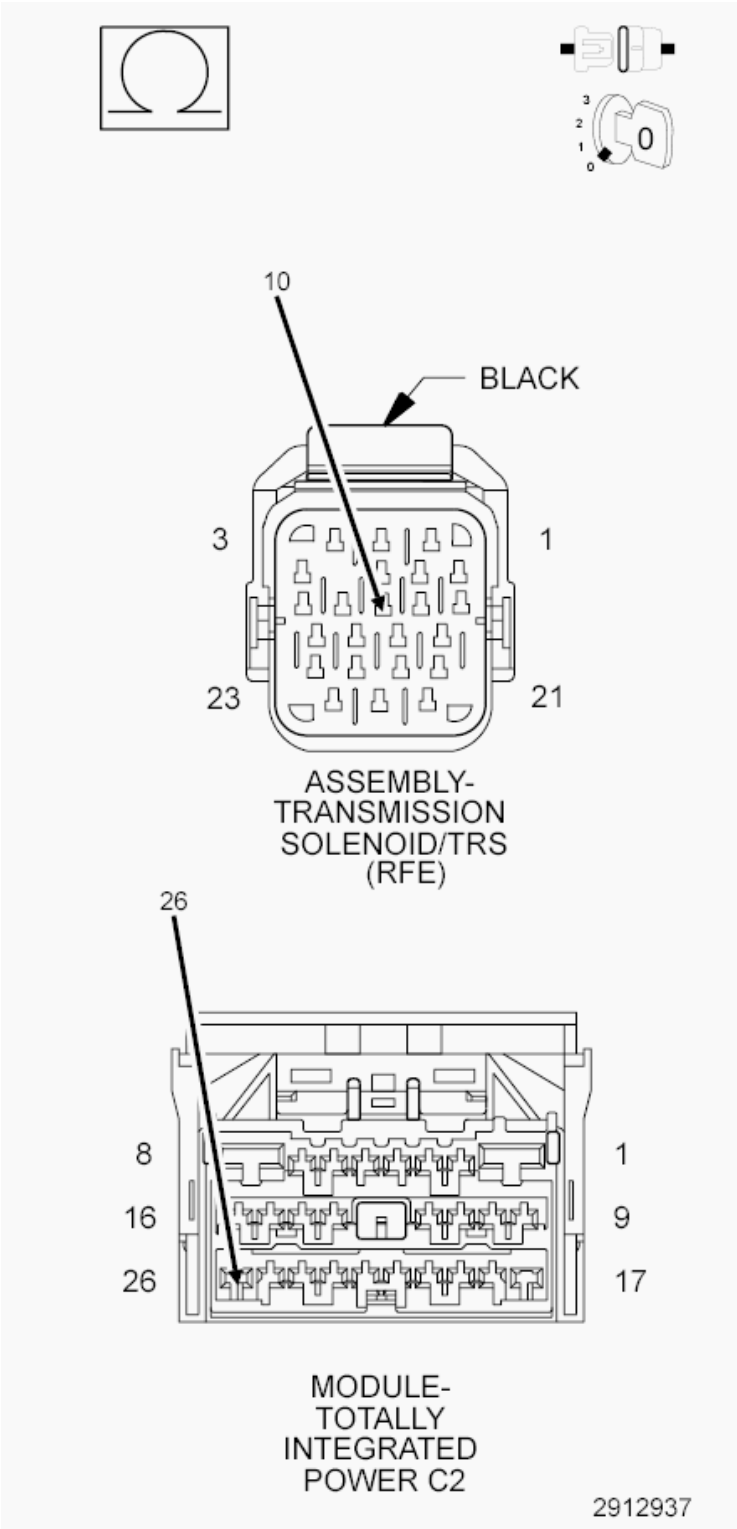

Fig. 87: Checking Transmission Control Output Circuit For Open To Transmission Solenoid Assembly
Courtesy of CHRYSLER GROUP, LLC

1. Disconnect the Transmission Solenoid/TRS Assembly harness connector.

2. Measure the resistance of the (T16) Transmission Control Output circuit between the TIPM C2 harness connector and the Transmission Solenoid/TRS harness connector.

   Is the resistance below 5.0 Ohms?

   Yes

   - Go To 6.

   No

   - Repair the (T16) Transmission Control Output circuit for an open.
   - Refer to **STANDARD PROCEDURE** and perform the 68RFE TRANSMISSION VERIFICATION TEST.

6. **CHECK THE (T16) TRANSMISSION CONTROL OUTPUT CIRCUIT FOR A SHORT TO GROUND**

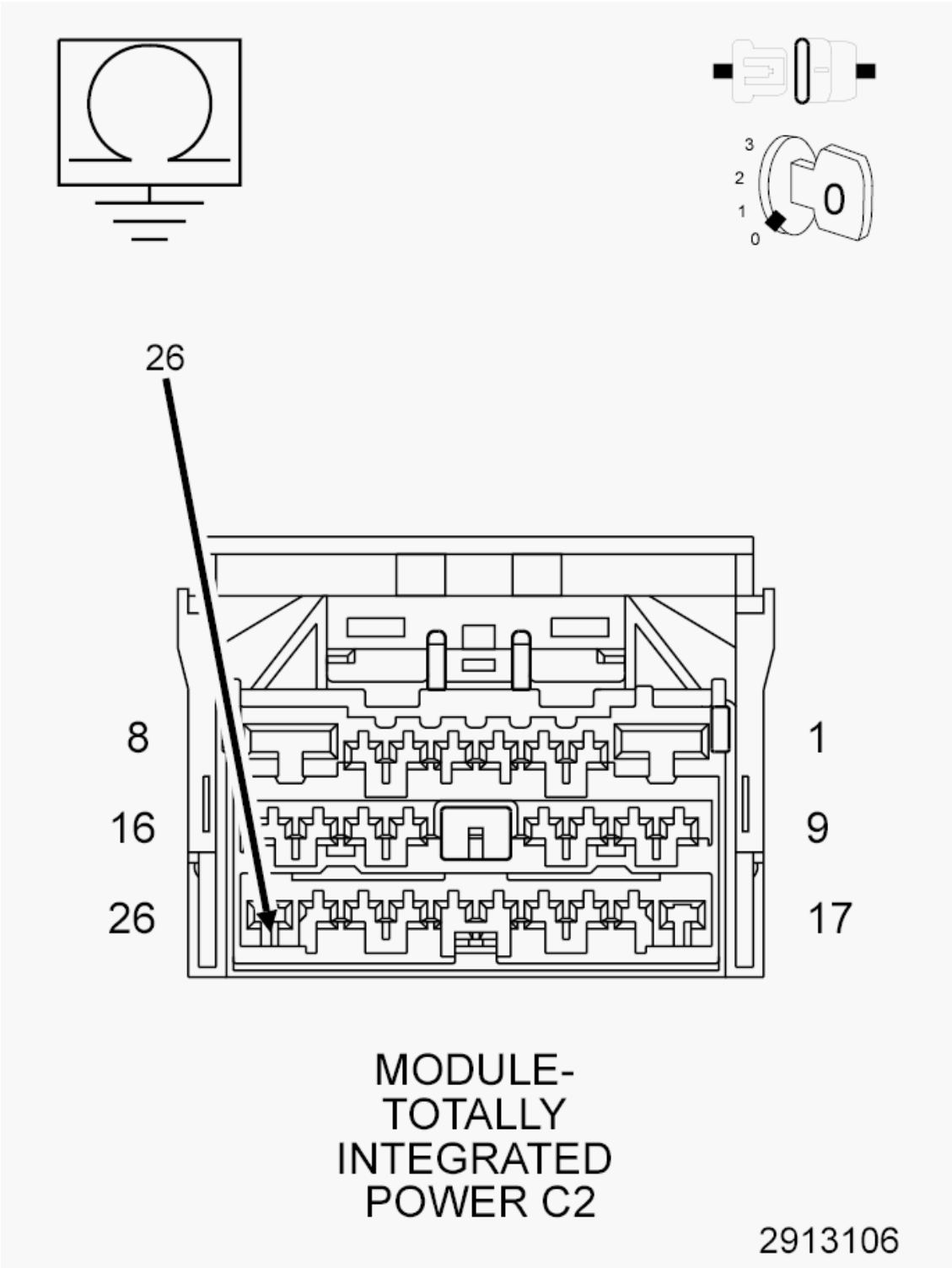

Fig. 88: Checking Transmission Control Output Circuit For A Short To Ground
Courtesy of CHRYSLER GROUP, LLC

1. Measure the resistance of the (T16) Transmission Control Output circuit between ground and the TIPM C2 harness connector.

Is the resistance below 100k Ohms?

Yes

- Repair the (T16) Transmission Control Output circuit for a short to ground.
- Refer to **STANDARD PROCEDURE** and perform the 68RFE TRANSMISSION VERIFICATION TEST.

No

- Go To 7.

7. **CHECK THE (T15) TRANSMISSION CONTROL CIRCUIT FOR A SHORT TO GROUND**

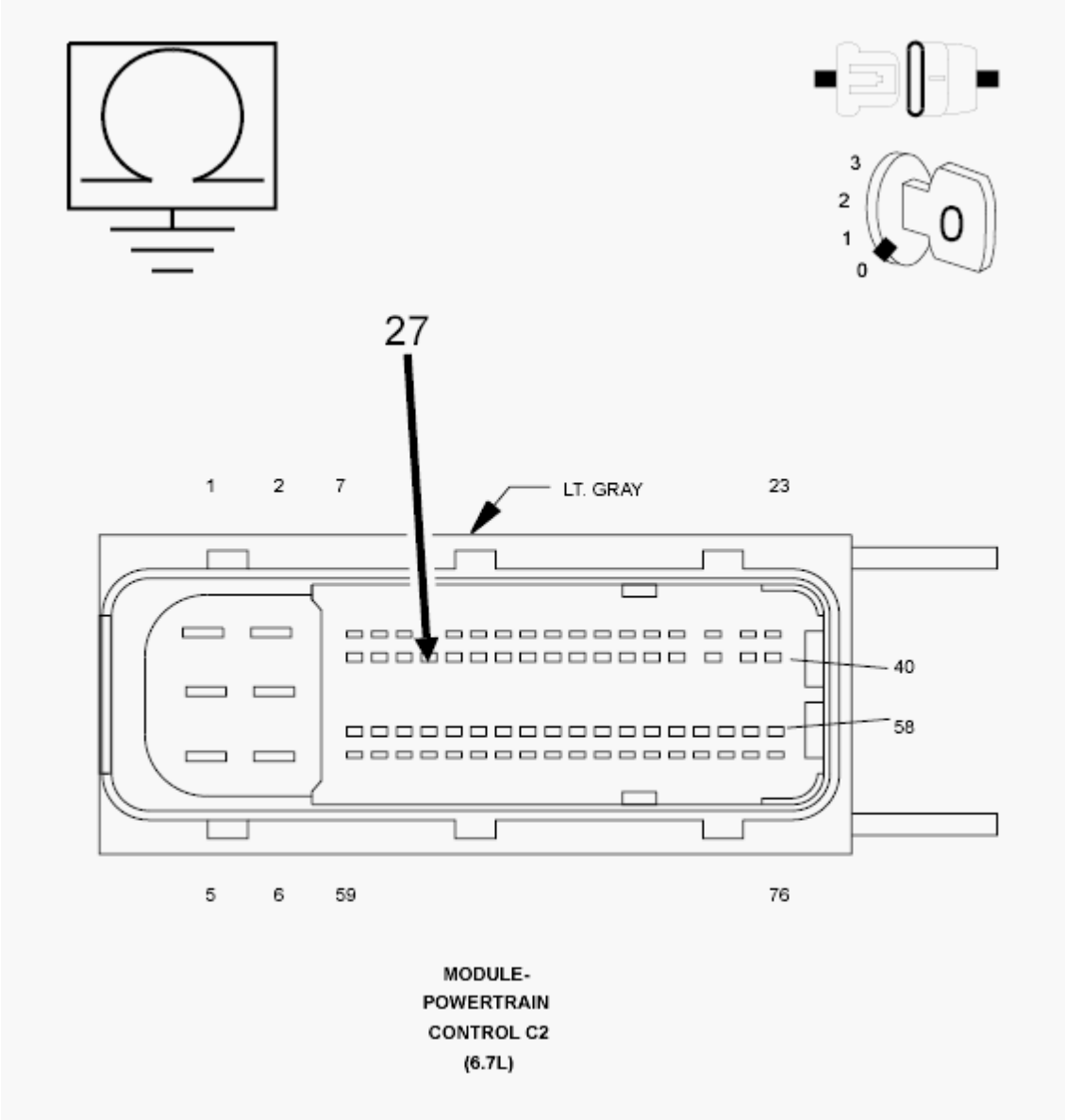

Fig. 89: Checking Transmission Control Circuit For Short To Ground

Courtesy of CHRYSLER GROUP, LLC

1. Measure the resistance between ground and the (T15) Transmission Control circuit at the PCM C2 harness connector.

   Is the resistance below 100k Ohms?

   Yes

   - Repair the (T15) Transmission Control circuit for a short to ground.
   - Refer to **STANDARD PROCEDURE** and perform the 68RFE TRANSMISSION VERIFICATION TEST.

   No

   - Go To 8.

8. **CHECK THE (T15) TRANSMISSION CONTROL CIRCUIT FOR AN OPEN**

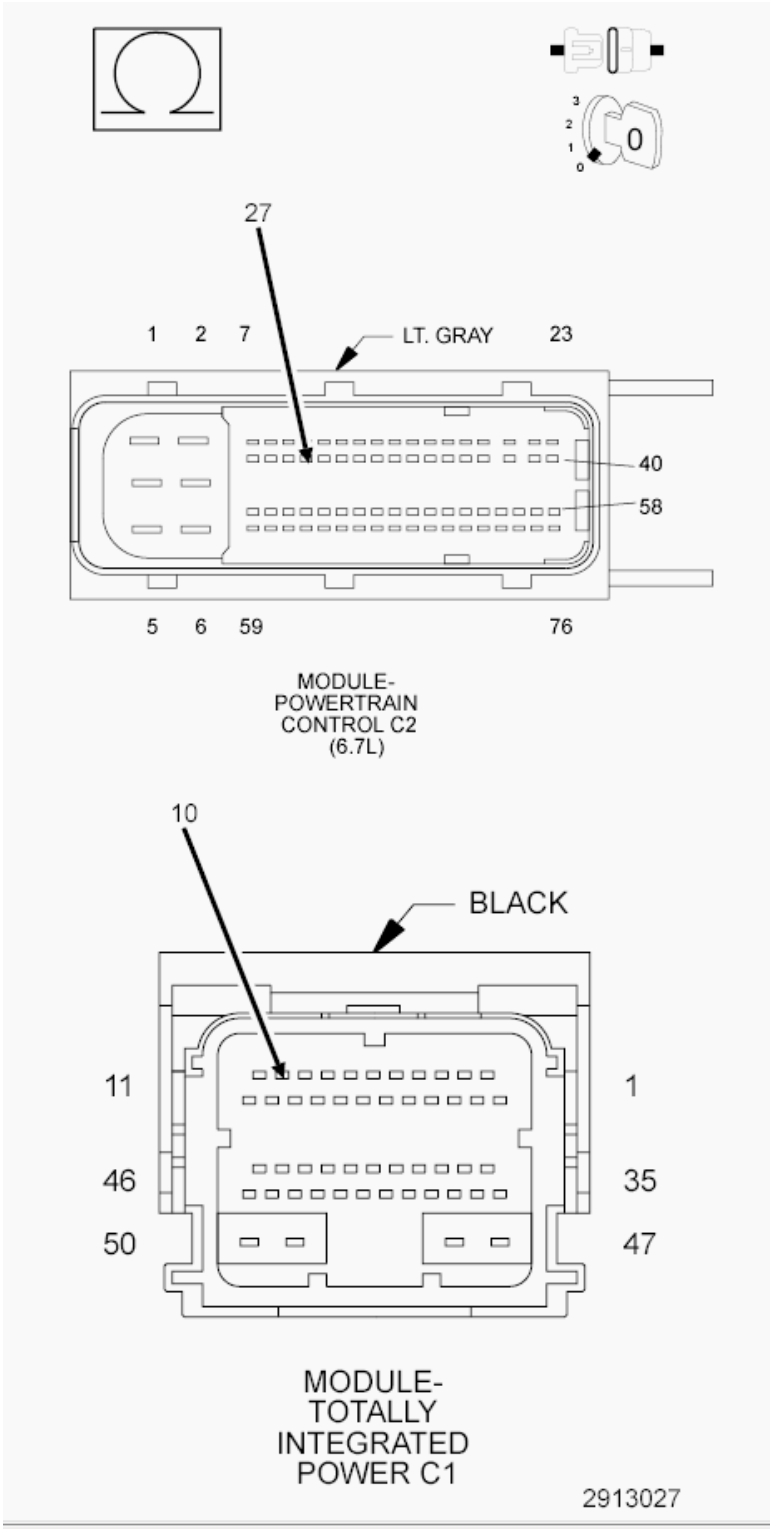

Fig. 90: Checking Transmission Control Circuit For An Open
Courtesy of CHRYSLER GROUP, LLC

1. Measure the resistance of the (T15) Transmission Control circuit between the TIPM C1 harness connector and the appropriate terminal of the PCM C2 harness connector.

Is the resistance above 5.0 Ohms?

Yes

- Repair the (T15) Transmission Control circuit for an open.
- Refer to **STANDARD PROCEDURE** and perform the 68RFE TRANSMISSION VERIFICATION TEST.

No

- Using the schematics as a guide, check the Totally Integrated Power Module (TIPM) terminals for corrosion, damage, or terminal push out. Pay particular attention to all power and ground circuits. If no problems are found, replace the TIPM in accordance with the Service Information.
- Refer to **STANDARD PROCEDURE** and perform the 68RFE TRANSMISSION VERIFICATION TEST.

9. **CHECK THE WIRING AND CONNECTORS**
   1. The conditions necessary to set this DTC are not present at this time.
   2. Using the schematics as a guide, inspect the wiring and connectors specific to this circuit.
   3. Wiggle the wires while checking for shorted and open circuits.
   4. With the scan tool, check the Event Data to help identify the conditions in which the DTC was set.

   Where there any problems found?

   Yes

   - Repair as necessary.
   - Refer to **STANDARD PROCEDURE** and perform the 68RFE TRANSMISSION VERIFICATION TEST.

   No

   - Test Complete.

P0883-TCM POWER INPUT HIGH

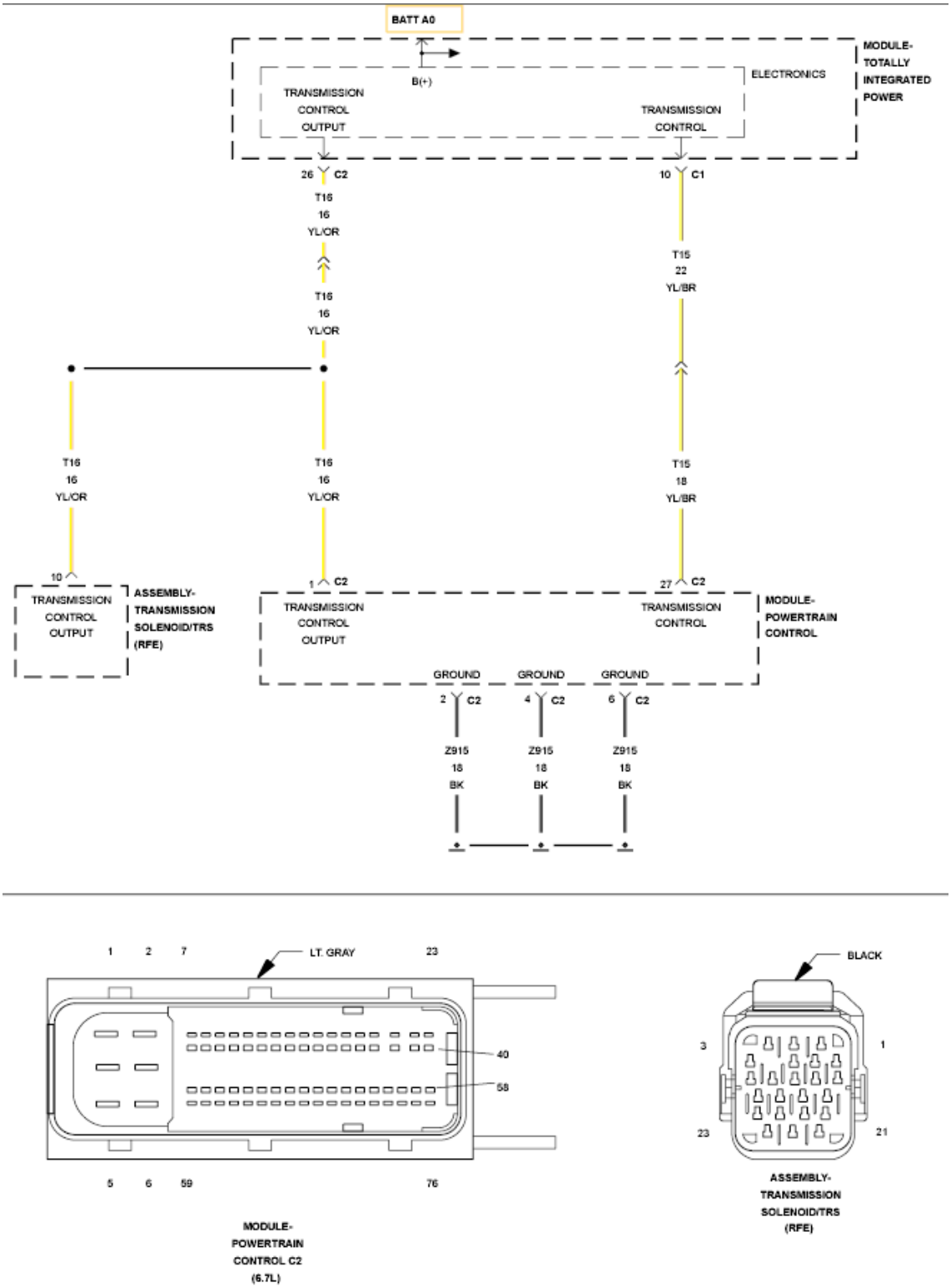

Fig. 91: PCM Circuit Wiring Diagram
Courtesy of CHRYSLER GROUP, LLC

For a complete wiring diagram, **refer to appropriate SYSTEM WIRING DIAGRAMS article** .

THEORY OF OPERATION

The PCM/TCMl Relay is used to supply power (Transmission Control Output) to the Transmission Solenoid/TRS Assembly when in normal operating mode and to pins C4-19, C4-28 and C4-38 of the PCM. The purpose of the PCM/TCM Relay is to allow the Powertrain Control Module (PCM) to turn off the power to the Transmission Solenoid/TRS Assembly in event that the transmission should need to be placed into "limp-in" mode due to a DTC.

After a PCM reset, (ignition switch turned to the run position, or after cranking engine) the PCM verifies that the PCM/TCM Relay contacts are open by checking for voltage on the Transmission Control Output circuit before the PCM/TCM Relay is energized. If voltage is detected, the DTC will set.

WHEN MONITORED:

When the ignition is turned from "OFF" position to "RUN" position and/or the ignition is turned from "START" position to "RUN" position.

SET CONDITION:

This DTC is set if the Powertrain Control Module (PCM) senses greater than 3.0 volts on the Transmission Control Relay Output circuits prior to a request from the PCM to TIPM to energize the Transmission Output circuits.

POSSIBLE CAUSES

Possible Causes
(T15) TRANSMISSION CONTROL CIRCUIT SHORTED TO VOLTAGE
(T16) TRANSMISSION CONTROL OUTPUT CIRCUIT SHORTED VOLTAGE
PCM/TCM RELAY
TRANSMISSION SOLENOID/TRS ASSEMBLY
POWERTRAIN CONTROL MODULE (PCM)

Always perform the Pre-Diagnostic Troubleshooting procedure before proceeding. Refer to STANDARD PROCEDURE.

DIAGNOSTIC TEST

1. **CHECK IF THE DTC IS CURRENT**
    1. With the scan tool, read DTCs.

       Is the status Active or is the Starts Since Set counter 0 for this DTC?

       Yes

       - Go To 2.

       No

- Go To 6.

2. **CHECK THE PCM/TCM RELAY**
    1. Turn the ignition off to the lock position.
    2. Disconnect the PCM/TCM Relay.
    3. Install a substitute relay.
    4. Ignition on, engine not running.
    5. With the scan tool, read DTCs.

    Is the status Active or is the Starts Since Set counter 0 for this DTC?

    Yes

    - Go To 3.

    No

    - Replace the PCM/TCM Relay.
    - Refer to **STANDARD PROCEDURE** and perform the 68RFE TRANSMISSION VERIFICATION TEST.
3. **CHECK THE (T16) TRANSMISSION CONTROL OUTPUT CIRCUIT FOR A SHORT TO VOLTAGE**

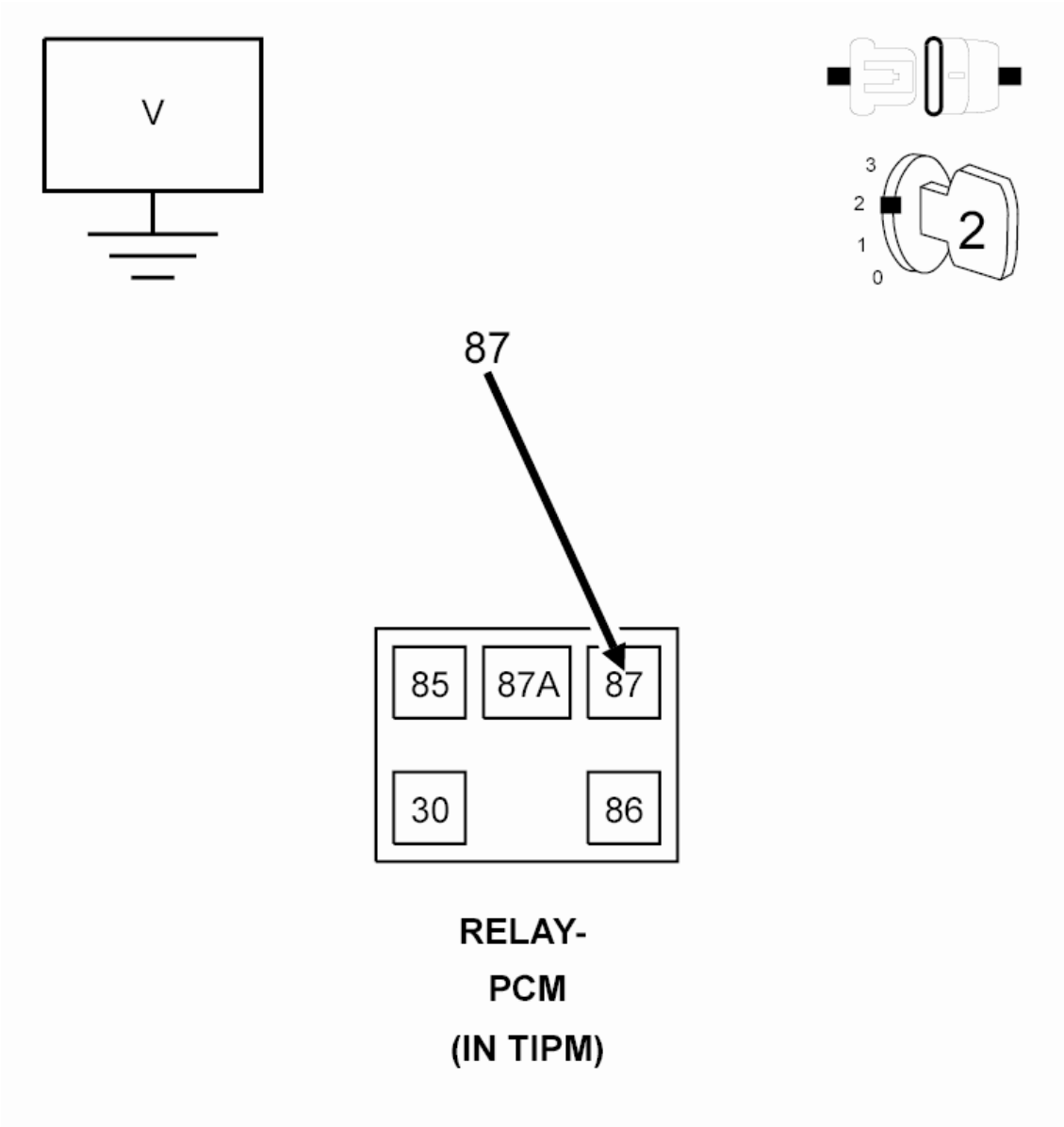

Fig. 92: Checking Transmission Control Output Circuit For A Short To Voltage
Courtesy of CHRYSLER GROUP, LLC

1. Remove the Transmission Control Relay.
2. Disconnect the PCM C2 harness connector.
3. Ignition on, engine not running.
4. Measure the voltage at the (T16) Transmission Control Output circuit in the Transmission Control Relay connector.

   Is the voltage above 0.5 of a volt?

   Yes

- Go To 4.

No

- Go To 5.

4. **CHECK THE TRANSMISSION SOLENOID/TRS ASSEMBLY**

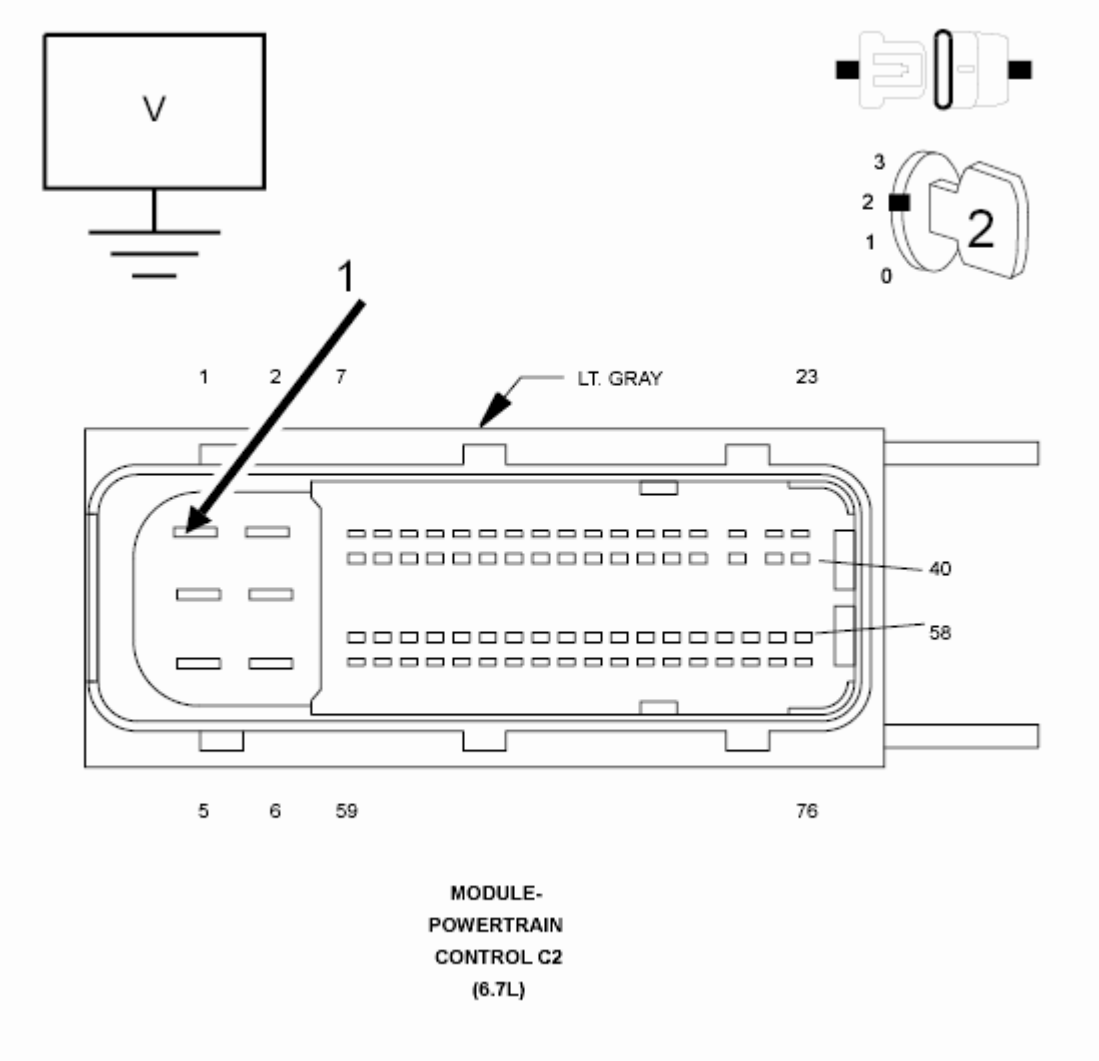

Fig. 93: Checking Transmission Output Circuit For Short To Voltage
Courtesy of CHRYSLER GROUP, LLC

1. Turn the ignition off to the lock position.
2. Disconnect the Transmission Solenoid/TRS Assembly harness connector.
3. Ignition on, engine not running.
4. Measure the voltage of the (T16) Transmission Control Output circuit on the appropriate terminal of the PCM C2 harness connector.

Is the voltage above 0.5 of a volt?

Yes

- Repair the (T16) Transmission Control Output circuit for a short to voltage.
- Refer to **STANDARD PROCEDURE** and perform the 68RFE TRANSMISSION VERIFICATION TEST.

No

- Replace the Transmission Solenoid/TRS Assembly in accordance with the Service Information.
- Refer to **STANDARD PROCEDURE** and perform the 68RFE TRANSMISSION VERIFICATION TEST.

5. **CHECK THE (T15) TRANSMISSION CONTROL CIRCUIT FOR A SHORT TO VOLTAGE**

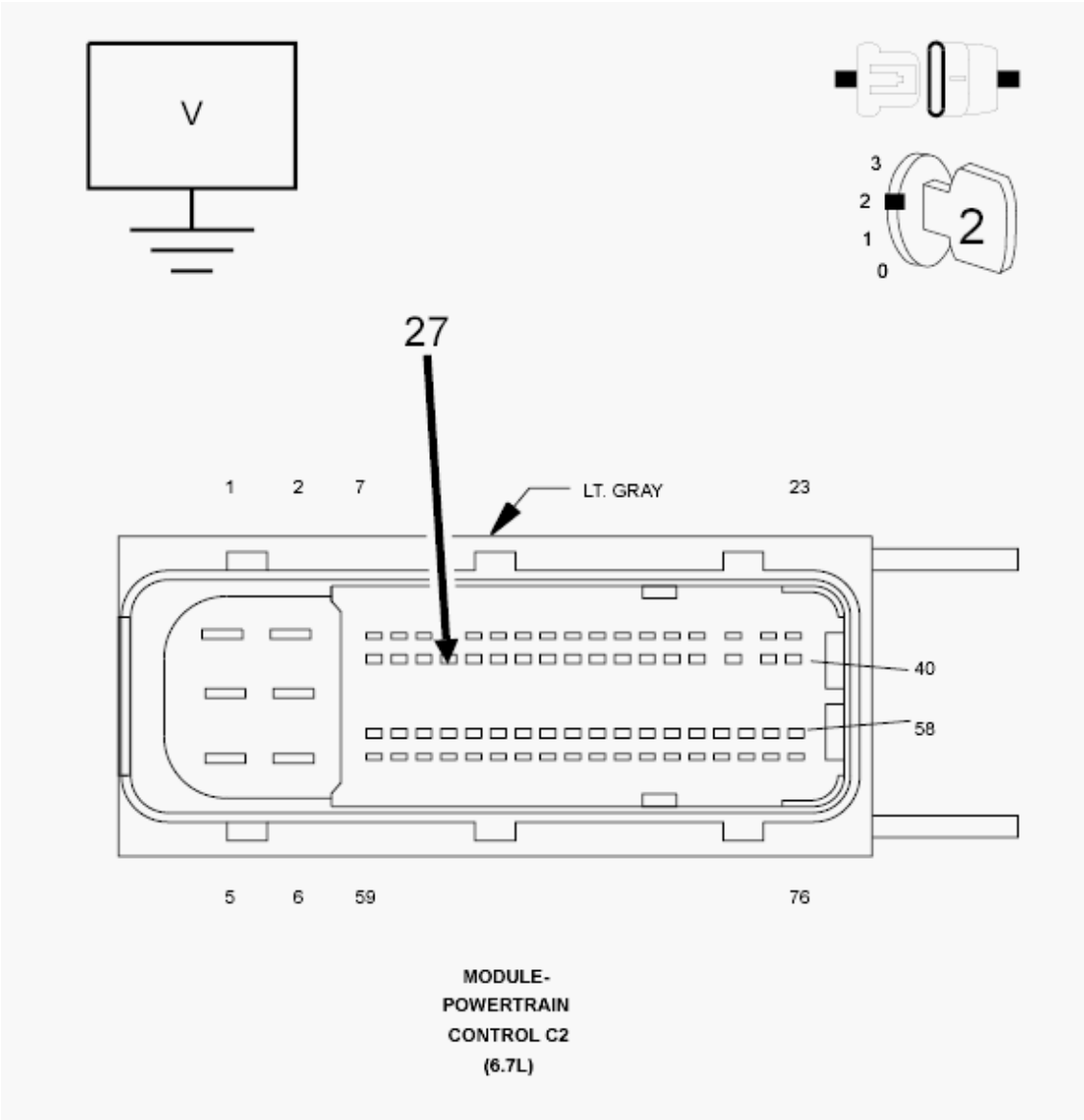

Fig. 94: Checking Transmission Control Circuit For Short To Voltage
Courtesy of CHRYSLER GROUP, LLC

1. Measure the voltage of the (T15) Transmission Control circuit.

   Is the voltage above 0.5 of a volt?

   Yes

   - Repair the (T15) Transmission Control circuit for a short to voltage.
   - Refer to **STANDARD PROCEDURE** and perform the 68RFE TRANSMISSION VERIFICATION TEST.

   No

- Using the schematics as a guide, check the Powertrain Control Module (PCM) terminals for corrosion, damage, or terminal push out. Pay particular attention to all power and ground circuits. If no problems are found, replace the PCM in accordance with the Service Information. With the scan tool, perform Quick Learn.
- Refer to **STANDARD PROCEDURE** and perform the 68RFE TRANSMISSION VERIFICATION TEST.

6. **CHECK WIRING AND CONNECTORS**
    1. The conditions necessary to set this DTC are not present at this time.
    2. Using the schematics as a guide, inspect the wiring and connectors specific to this circuit.
    3. Wiggle the wires while checking for shorted and open circuits.
    4. With the scan tool, check the Event Data to help identify the conditions in which the DTC was set.

    Where there any problems found?

    Yes

    - Repair as necessary.
    - Refer to **STANDARD PROCEDURE** and perform the 68RFE TRANSMISSION VERIFICATION TEST.

    No

    - Test Complete.

P0884-POWER UP AT SPEED

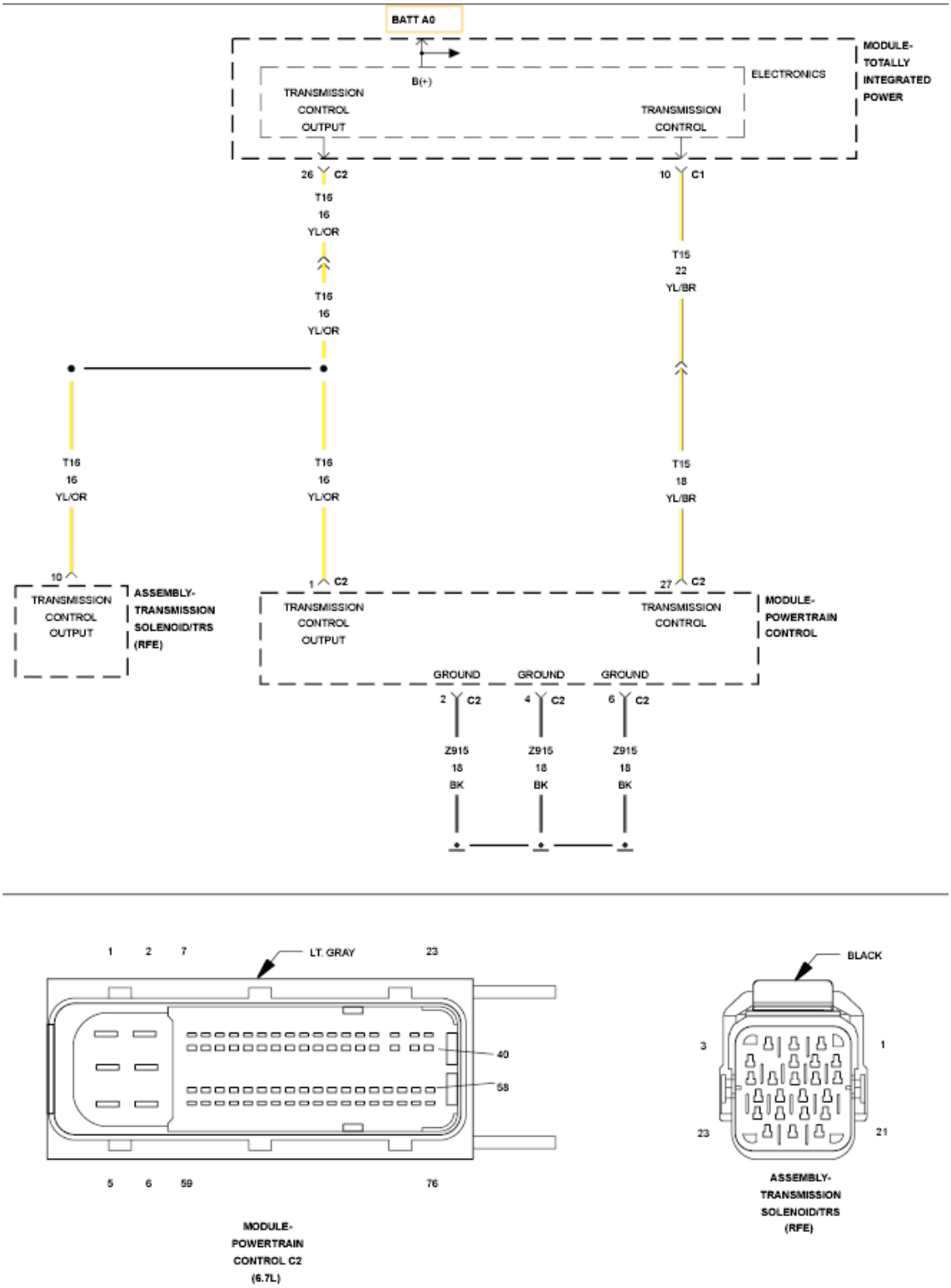

Fig. 95: PCM Circuit Wiring Diagram
Courtesy of CHRYSLER GROUP, LLC

For a complete wiring diagram, **refer to appropriate SYSTEM WIRING DIAGRAMS article** .

THEORY OF OPERATION

If a vehicle loses power to the Transmission Control System, the solenoids (L/R, 2C, OD, UD, 4C) will go to their respective power off state. Some solenoids are normally vented and some are normally applied in their power off state. The transmission is designed to be in 4th gear with all of the solenoids in this state. However, if power is restored, the Transmission Control System will power-up and normal operation will be restored.

This code identifies that power to the Transmission Control System was restored when the gear selector was in a "Drive" position while the vehicle was moving at speeds above 32 Km/h (20 mph). **This DTC does not indicate a problem with the transmission or Transmission Control System,** instead, it suggests intermittent problems in the fused ignition switch output, fused B(+), or ground circuits to the PCM. Alternately, if a person performs a rolling restart maneuver, the DTC can be set. Therefore it is critical that this DTC be investigated if the vehicle is experiencing intermittent 4th gear operation and a subsequent return to normal operation.

WHEN MONITORED:

When Powertrain Control Module (PCM) initially powers up.

SET CONDITION:

This DTC will set if the PCM powers up and senses the vehicle in a valid forward gear, with no PRNDL DTCs, and an output speed above 800 rpm, approximately 32 Km/h or 20 mph.

POSSIBLE CAUSES

Possible Causes
POWER UP AT SPEED

Always perform the Pre-Diagnostic Troubleshooting procedure before proceeding. Refer to STANDARD PROCEDURE.

DIAGNOSTIC TEST

1. **CHECK THE POWER AND GROUND CIRCUITS**
    1. This DTC is set when the Transmission portion of the Powertrain Control Module is initialized while the vehicle is moving down the road in a valid forward gear.
    2. Using the wiring diagram/schematic as a guide, inspect the wiring and connectors.
    3. Check all of the Fused B(+), Fused Ignition Switch Output, and ground circuits to the PCM for an intermittent open or short to ground.
    4. With the scan tool, check the Event Data to help identify the conditions in which the DTC was set.

    Repair

    - Check all power and ground circuits to the PCM and repair as necessary.
    - Refer to **STANDARD PROCEDURE** and perform the 68RFE TRANSMISSION VERIFICATION TEST.

P0890-SWITCHED BATTERY

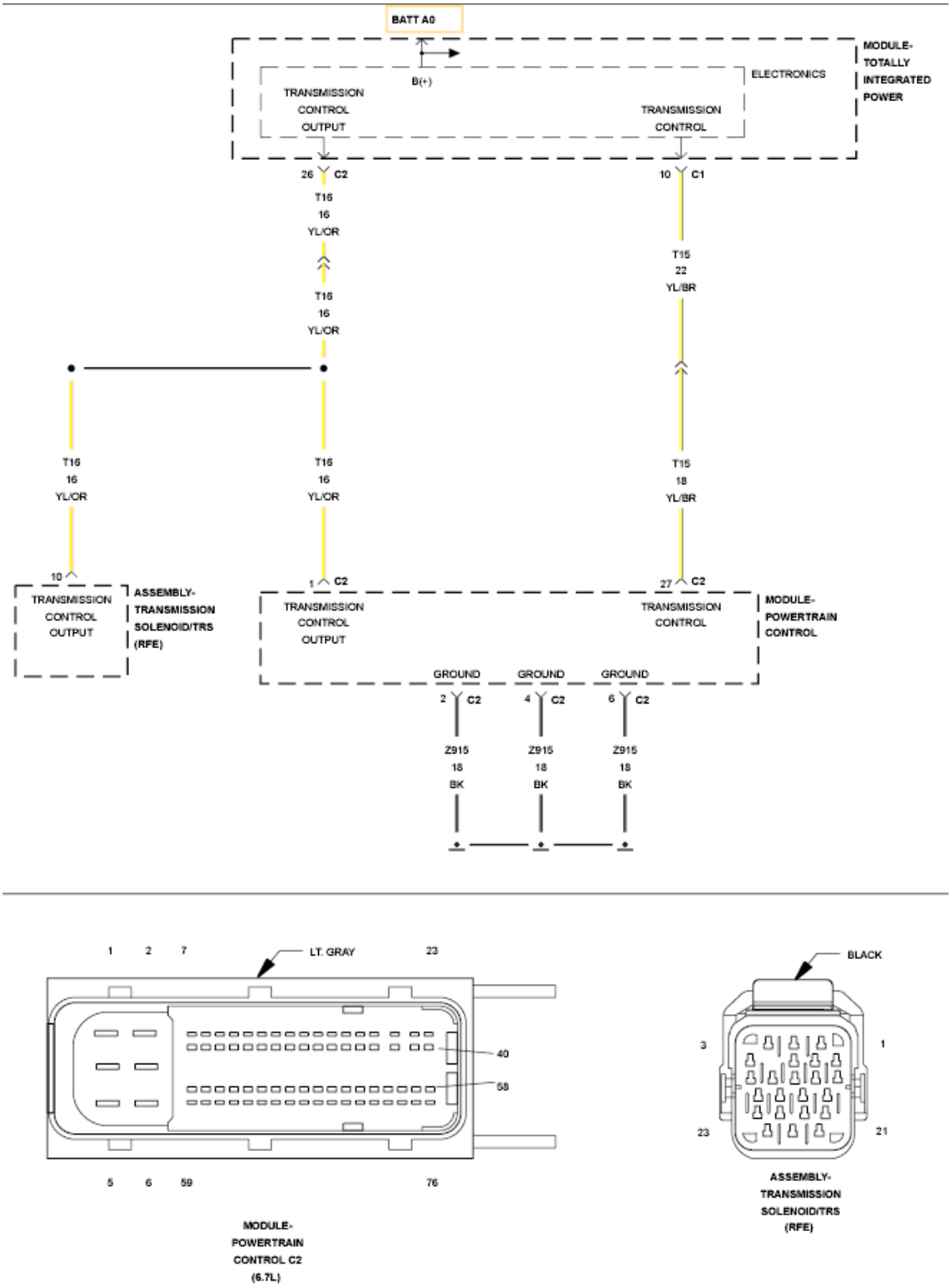

Fig. 96: PCM Circuit Wiring Diagram
Courtesy of CHRYSLER GROUP, LLC

For a complete wiring diagram, **refer to appropriate SYSTEM WIRING DIAGRAMS article** .

THEORY OF OPERATION

The Transmission Control Output circuit is used to supply power to the solenoids and pressure switches (Transmission Solenoid/TRS Assembly) when the transmission is in normal operating mode. When the Transmission Control Output circuit is off, no power is supplied and the transmission.

Immediately after a controller reset (ignition key turned to the "run" position or after cranking engine), the PCM verifies that the Transmission Control Output circuits are open by checking for no voltage at the transmission control output terminals at the PCM. After this is verified, the voltage at the pressure switches are checked. There should be no voltage on the pressure switches at this time.

WHEN MONITORED:

When the ignition is turned from "OFF" position to "RUN" position and/or the ignition is turned from "START" position to "RUN" position.

SET CONDITION:

This DTC is set if the Powertrain Control Module (PCM) senses voltage on any of the pressure switch inputs prior to the Transmission Control Output circuit being energized.

POSSIBLE CAUSES

Possible Causes
RELATED DTCS PRESENT
PRESSURE SIGNAL CIRCUITS SHORTED TO VOLTAGE
TRANSMISSION SOLENOID/TRS ASSEMBLY
POWERTRAIN CONTROL MODULE (PCM)

Always perform the Pre-Diagnostic Troubleshooting procedure before proceeding. Refer to STANDARD PROCEDURE.

DIAGNOSTIC TEST

1. **CHECK FOR RELATED DTCS**
    1. With the scan tool, check DTCs.

       Are there any TIPM TCM Power Control Circuit and/or TCM Power Input DTCs present?

       Yes

       - Refer to **DIAGNOSIS AND TESTING** and perform the appropriate diagnostic procedure.

       No

- Go To 2.

2. **CHECK IF THE DTC IS CURRENT**
   1. With the scan tool, read DTCs.

      Is the status Active or is the Starts Since Set counter 0 for this DTC?

      Yes

      - Go To 3.

      No

      - Go To 5.

3. **CHECK THE PRESSURE SIGNAL CIRCUITS FOR A SHORT TO VOLTAGE**

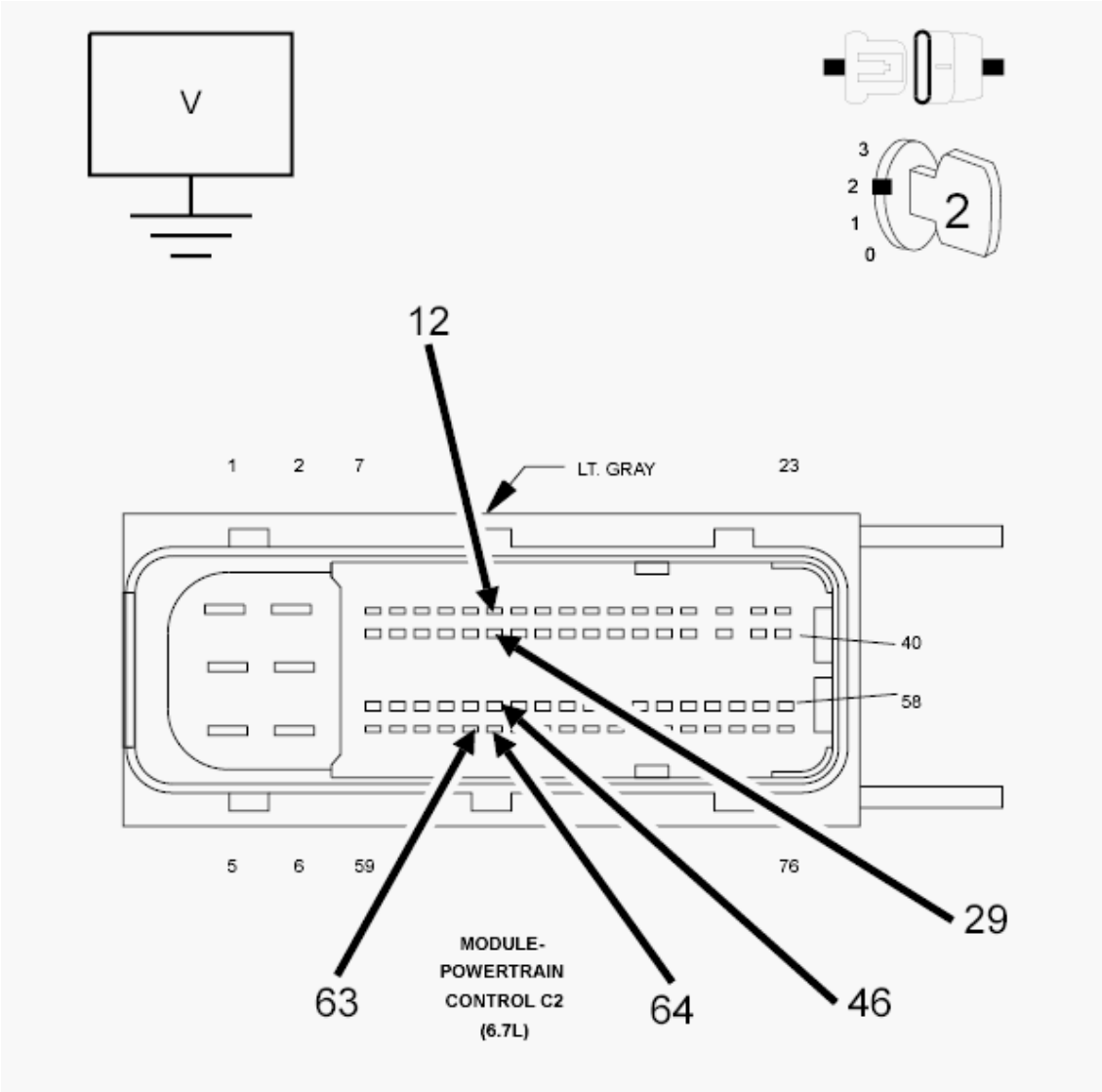

Fig. 97: Checking Pressure Signal Circuits For Short To Voltage
Courtesy of CHRYSLER GROUP, LLC

1. Turn the ignition off to the lock position.
2. Disconnect the PCM C2 harness connector.
3. Disconnect the Transmission Solenoid/TRS Assembly harness connector.
4. Ignition on, engine not running.
5. With the scan tool under TIPM, actuate the Transmission.
6. Measure the voltage of the (T147) 2C, (T48) 4C, (T50) L/R, (T9) OD, and (T29) UD Pressure Signal circuits.

   Is the voltage above 0.5 of a volt on any of the measured circuits?

   Yes

   - Repair the (T147) 2C, (T48) 4C, (T50) L/R, (T9) OD, and/or (T29) UD Pressure Signal circuit(s) for a short to voltage.
   - Refer to **STANDARD PROCEDURE** and perform the 68RFE TRANSMISSION VERIFICATION TEST.

   No

   - Go To 4.

4. **CHECK THE TRANSMISSION SOLENOID/TRS ASSEMBLY**

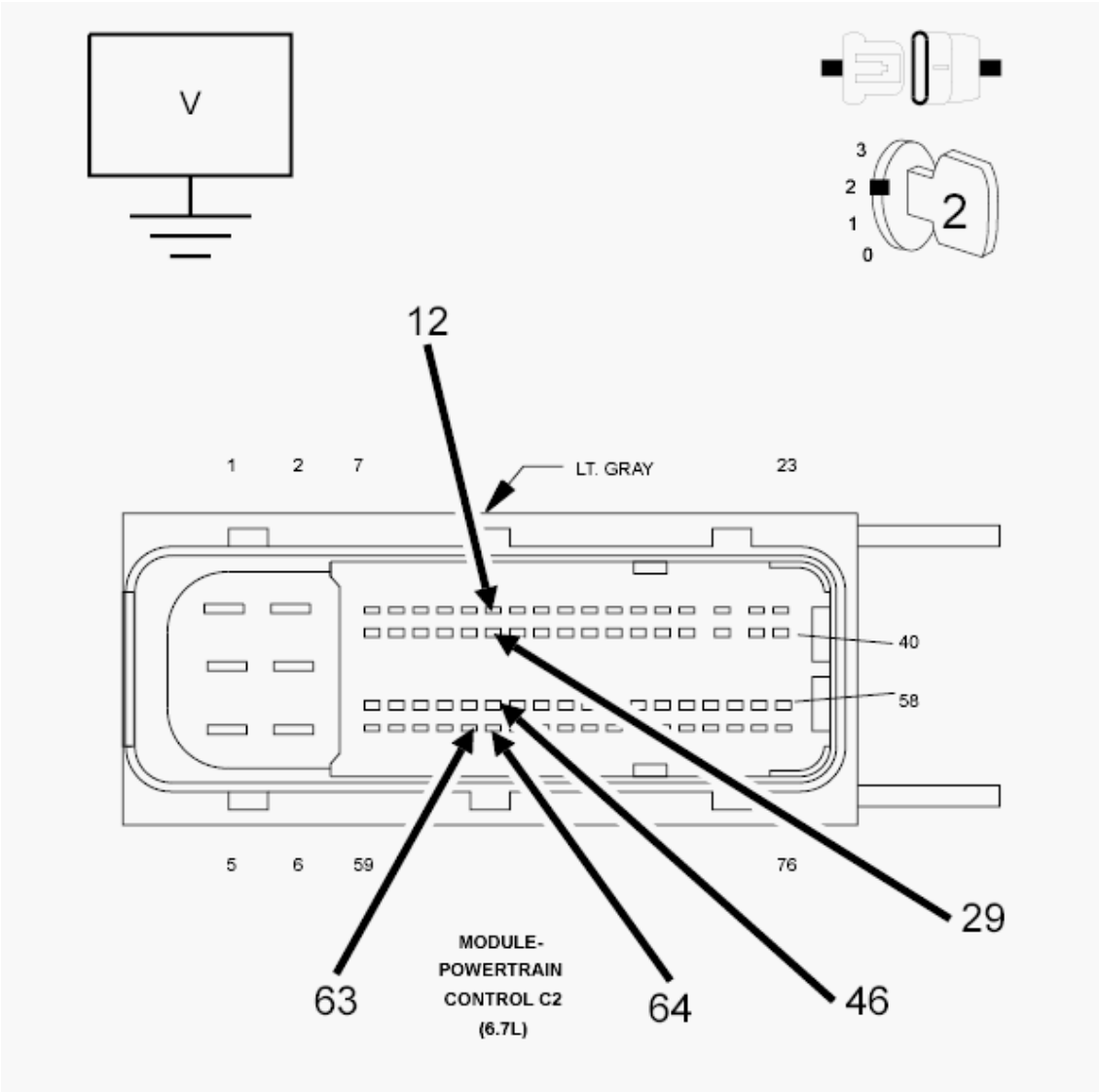

Fig. 98: Checking Pressure Signal Circuits For Short To Voltage
Courtesy of CHRYSLER GROUP, LLC

1. With the scan tool under TIPM, stop the Transmission actuation.
2. Turn the ignition off to the lock position.
3. Reconnect the Transmission Solenoid/TRS Assembly harness connector.
4. Ignition on, engine not running.
5. Measure the voltage of the (T147) 2C, (T48) 4C, (T50) L/R, (T9) OD, and (T29) UD Pressure Signal circuits.

   Is the voltage above 0.5 of a volt on any of the measured circuits?

   Yes

   - Replace the Transmission Solenoid/TRS Assembly in accordance with the Service

Information.

- Refer to **STANDARD PROCEDURE** and perform the 68RFE TRANSMISSION VERIFICATION TEST.

No

- Using the schematics as a guide, check the Powertrain Control Module (PCM) terminals for corrosion, damage, or terminal push out. Pay particular attention to all power and ground circuits. If no problems are found, replace the PCM in accordance with the Service Information. With the scan tool, perform Quick Learn.
- Refer to **STANDARD PROCEDURE** and perform the 68RFE TRANSMISSION VERIFICATION TEST.

5. **CHECK THE WIRING AND CONNECTORS**
   1. The conditions necessary to set this DTC are not present at this time.
   2. Using the schematics as a guide, inspect the wiring and connectors specific to this circuit.
   3. Wiggle the wires while checking for shorted and open circuits.
   4. With the scan tool, check the Event Data to help identify the conditions in which the DTC was set.

   Where there any problems found?

   Yes

   - Repair as necessary.
   - Refer to **STANDARD PROCEDURE** and perform the 68RFE TRANSMISSION VERIFICATION TEST.

   No

   - Test Complete.

P0933-HYDRAULIC PRESSURE SENSOR RANGE/PERFORMANCE

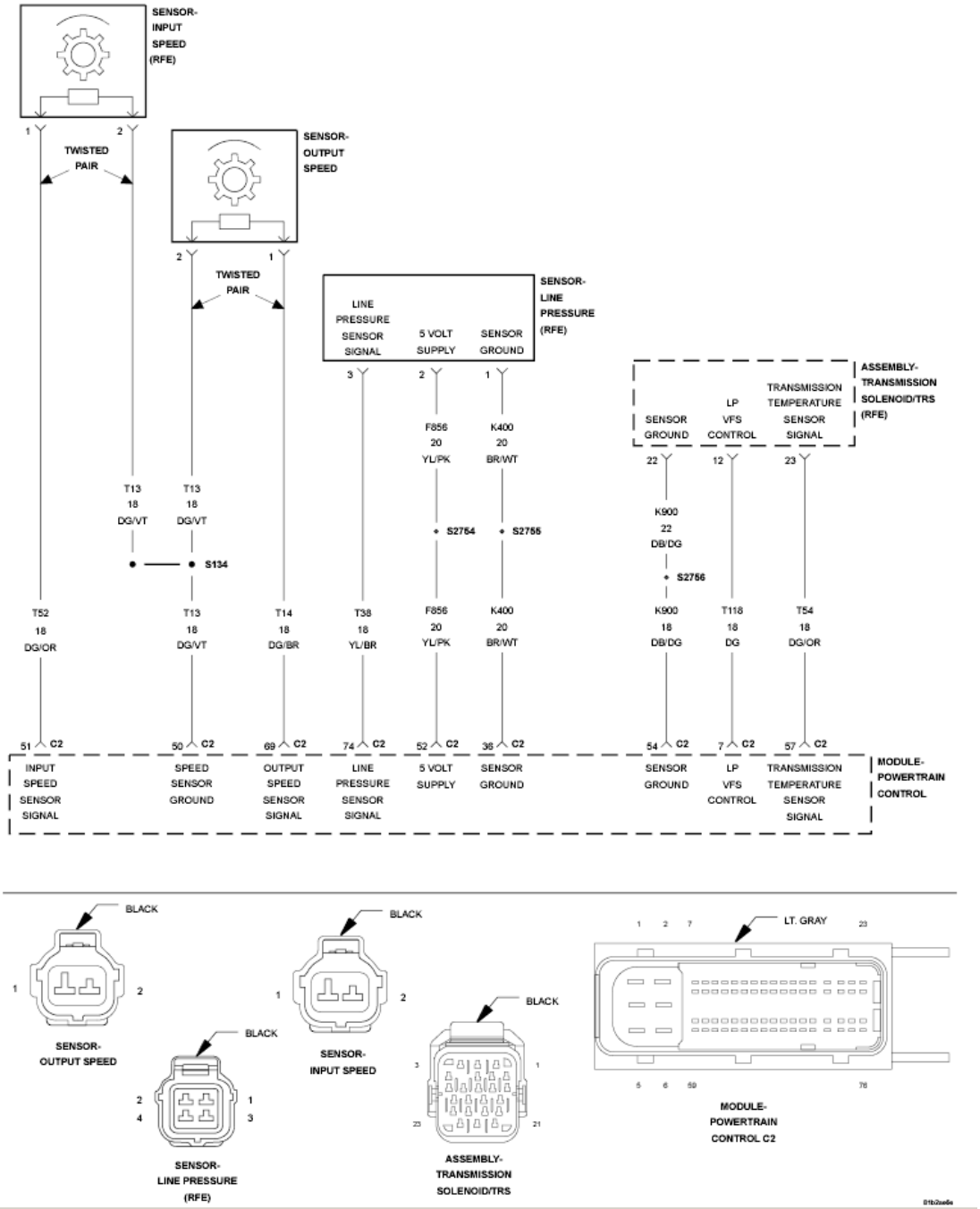

Fig. 99: Input/Output Speed Sensor, Line Pressure Sensor & Transmission Temperature Sensor Circuit Wiring Diagram
Courtesy of CHRYSLER GROUP, LLC

For a complete wiring diagram, **refer to appropriate SYSTEM WIRING DIAGRAMS article** .

THEORY OF OPERATION

Line pressure is electronically controlled by the Transmission Control System and is measured by the Line Pressure Sensor (LPS). The desired line pressure is continuously being compared to the actual line pressure and

is regulated by electronically changing the duty cycle of the Pressure Control Solenoid (PCS). (5% duty cycle = solenoid off = max line pressure, 62% duty cycle = solenoid on = min line pressure).

The Transmission Control System calculates the desired line pressure based on inputs from the transmission and engine. A calculated torque input to the transmission is used as the primary input of the desired line pressure calculation and is called Torque Based Line Pressure. In addition, the line pressure is set to a preset level 1034 to 1103 kPa (150 to 160 psi) during shifts to ensure consistent shift quality.

WHEN MONITORED:

Continuously with the ignition on, engine running, with the transmission in gear.

SET CONDITION:

The Powertrain Control Module (PCM) continuously monitors (actual) Line Pressure and compares it to Desired (target) Line Pressure. If the Line Pressure reading is more than 172.4 kPa (25 psi) higher than the Desired Line Pressure, but is less than the highest Line Pressure ever used in the current gear, the DTC sets.

POSSIBLE CAUSES

Possible Causes
RELATED DTCS PRESENT
LINE PRESSURE CONNECTOR AND WIRING
LINE PRESSURE SENSOR
INTERNAL TRANSMISSION
POWERTRAIN CONTROL MODULE (PCM)

Always perform the Pre-Diagnostic Troubleshooting procedure before proceeding. Refer to STANDARD PROCEDURE.

DIAGNOSTIC TEST

1. **CHECK FOR RELATED DTCS**
    1. With the scan tool, read DTCs.

       Are there any other line pressure DTCs present?

       Yes

       - Refer to **DIAGNOSTIC CODE INDEX** and perform the appropriate diagnostic procedure. Perform the test for P0934 and/or P0935 first if they are present.

       No

       - Go To 2.
2. **COMPARE ACTUAL LINE PRESSURE TO DESIRED LINE PRESSURE**

CAUTION: Apply Parking Brake

1. Start the engine.

   CAUTION: Firmly apply the brakes.

2. With the scan tool, monitor the Line Pressure, Desired Line Pressure and the TPS degrees.
3. While firmly applying the brakes, place the shifter in reverse, then slowly press the accelerator pedal to a TPS degree of 15°.
4. Compare the Line Pressure reading to the Desired Line Pressure reading on the scan tool.

   Does the Line Pressure stay within ± 34 kPa (5 psi) of the Desired Line Pressure?

   No

   - Go To 3.

   Yes

   - Go To 6.

3. **CHECK LINE PRESSURE CONNECTOR AND WIRING**
   1. Ignition on, engine not running.
   2. With the scan tool, monitor the Line Pressure Sensor voltage while wiggling the wiring harness and connectors pertaining to the Line Pressure Sensor and the Transmission Solenoid/TRS Assembly.

      Did the voltage remain steady while wiggling the wiring harness and connectors?

      Yes

      - Go To 4.

      No

      - Disconnect and properly reconnect the Line Pressure Sensor connector. Inspect terminals and repair as necessary.
      - Refer to **STANDARD PROCEDURE** and perform the 68RFE TRANSMISSION VERIFICATION TEST.

4. **CHECK PCM AND WIRING USING THE TRANSMISSION SIMULATOR**
   1. Turn the ignition off to the lock position.
   2. Remove the Ignition Switch Feed fuse from the TIPM.

CAUTION: Removal of the Ignition Switch Feed fuse from the TIPM will prevent the vehicle from being started in gear.

WARNING: The Ignition Switch Feed fuse must be removed from the TIPM. Failure to do so can result in possible serious or fatal injury.

3. Install the Transmission Simulator (special tool #8333A, Simulator, Transmission).
4. With the Transmission Simulator select the "OFF" position on the "Input/Output Speed" switch.
5. Ignition on, engine not running.
6. With the scan tool, monitor the Line Pressure during the following step.
7. With the Transmission Simulator, turn the selector switch to each of the three Line Pressure positions.

NOTE: All three scan tool Line Pressure readings should be steady and ±14 kPa (2.0 psi) or 0.1 of a volt of the reading specified on the Transmission Simulator.

Does the Line Pressure on the scan tool fluctuate up and down more than 69 kPa (10 psi) or 0.25 of a volt at any of the 3 line pressure positions on the Transmission Simulator?

Yes

- Using the schematics as a guide, check the Powertrain Control Module (PCM) terminals for corrosion, damage, or terminal push out. Pay particular attention to all power and ground circuits. If no problems are found, replace and program the PCM in accordance with the Service Information. With the scan tool, perform Quick Learn.
- Refer to **STANDARD PROCEDURE** and perform the 68RFE TRANSMISSION VERIFICATION TEST.

No

- Go To 5.

5. **CHECK THE LINE PRESSURE SENSOR**
   1. Turn the ignition off to the lock position.
   2. Disconnect the Transmission Simulator (special tool #8333A, Simulator, Transmission) and reconnect all previously disconnected connectors.
   3. Install the Line Pressure Adaptor (special tool #8259, Adapter, Pressure Test), and the Pressure Gauge (special tool #C-3293-SP, Gauge, Pressure 0-300 P.S.I.), 0 to 2000 kPa (0 to 300 psi).
   4. Start the engine in park.
   5. Monitor the line pressure readings of both the scan tool and the pressure gauge and compare the two readings.

   Is the line pressure gauge reading within 34 kPa (5 psi) of the scan tool reading?

Yes

- Repair internal transmission and inspect the oil pump in accordance with the Service information and replace if necessary. If no problems are found, replace the Transmission Solenoid/TRS Assembly - possible cause is the Pressure Control Solenoid is stuck.
- Refer to **STANDARD PROCEDURE** and perform the 68RFE TRANSMISSION VERIFICATION TEST.

No

- Replace the Line Pressure Sensor in accordance with the Service Information.
- Refer to **STANDARD PROCEDURE** and perform the 68RFE TRANSMISSION VERIFICATION TEST.

6. **CHECK WIRING AND CONNECTORS**
   1. The conditions necessary to set this DTC are not present at this time.
   2. Using the schematics as a guide, inspect the wiring and connectors specific to this circuit.
   3. Wiggle the wires while checking for shorted and open circuits.
   4. With the scan tool, check the Event Data to help identify the conditions in which the DTC was set.

   Where there any problems found?

   Yes

   - Repair as necessary.
   - Refer to **STANDARD PROCEDURE** and perform the 68RFE TRANSMISSION VERIFICATION TEST.

   No

   - Test Complete.

P0934-LINE PRESSURE SENSOR CIRCUIT LOW

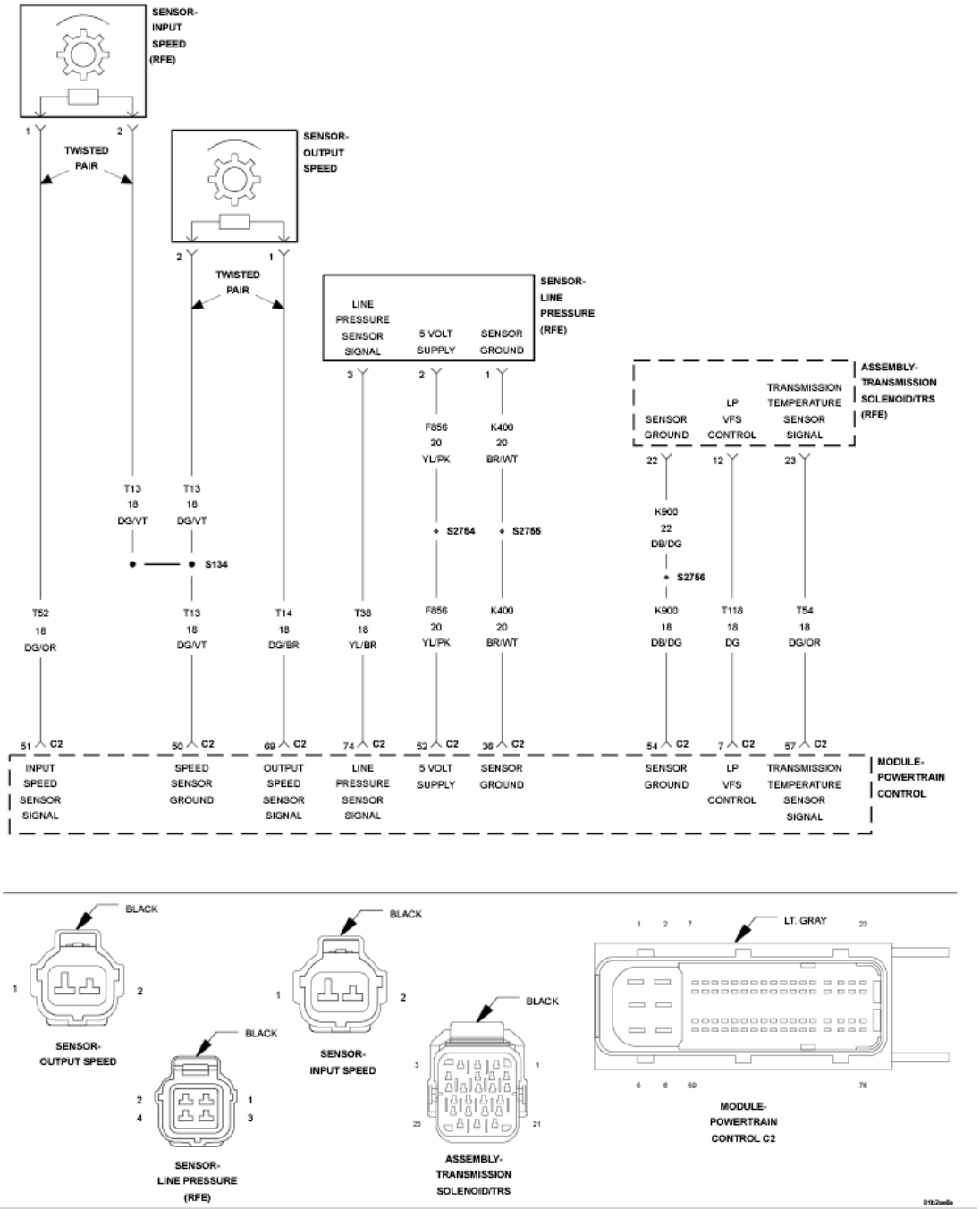

Fig. 100: Input/Output Speed Sensor, Line Pressure Sensor & Transmission Temperature Sensor Circuit Wiring Diagram
Courtesy of CHRYSLER GROUP, LLC

For a complete wiring diagram, **refer to appropriate SYSTEM WIRING DIAGRAMS article** .

THEORY OF OPERATION

Line pressure is electronically controlled by the Transmission Control System and is measured by the Line Pressure Sensor (LPS). The desired line pressure is continuously being compared to the actual line pressure and

is regulated by electronically changing the duty cycle of the Pressure Control Solenoid (PCS). (5% duty cycle = solenoid off = max line pressure, 62% duty cycle = solenoid on = min line pressure).

The Transmission Control System calculates the desired line pressure based on inputs from the transmission and engine. A calculated torque input to the transmission is used as the primary input of the desired line pressure calculation and is called Torque Based Line Pressure. In addition, the line pressure is set to a preset level 1034 to 1103 kPa (150 to 160 psi) during shifts to ensure consistent shift quality.

The monitored Line Pressure Sensor voltage should always be between 0.35 and 4.75 volts. Any monitored voltages outside these parameters indicate an Line Pressure Sensor or wiring problem and will cause either DTC P0934 or P0935 to set.

WHEN MONITORED:

Continuously with the ignition on and engine running.

SET CONDITION:

This DTC will set when the monitored Line Pressure Sensor voltage is less than or equal to 0.35 of a volt for 0.18 of a second.

POSSIBLE CAUSES

Possible Causes
(F856) 5-VOLT SUPPLY CIRCUIT OPEN
(F856) 5-VOLT SUPPLY CIRCUIT SHORTED TO GROUND
(T38) LINE PRESSURE SENSOR SIGNAL CIRCUIT OPEN
(T38) LINE PRESSURE SENSOR SIGNAL CIRCUIT SHORTED TO GROUND
LINE PRESSURE SENSOR
POWERTRAIN CONTROL MODULE (PCM)

Always perform the Pre-Diagnostic Troubleshooting procedure before proceeding. Refer to STANDARD PROCEDURE.

DIAGNOSTIC TEST

1. **CHECK IF THE DTC IS CURRENT**
    1. With the scan tool, read DTCs.

       Is the status Active or is the Starts Since Set counter 2 or less for this DTC?

       Yes

       - Go To 2.

       No

- Go To 7.

2. **CHECK THE PCM AND WIRING**
   1. Turn the ignition off to the lock position.
   2. Remove the Ignition Switch Feed fuse from the TIPM.

      CAUTION: Removal of the Ignition Switch Feed fuse from the TIPM will prevent the vehicle from being started in gear.

      WARNING: The Ignition Switch Feed fuse must be removed from the TIPM. Failure to do so can result in possible serious or fatal injury.

   3. Install the Transmission Simulator (special tool #8333A, Simulator, Transmission).
   4. Ignition on, engine not running.
   5. With the scan tool, under Transmission Sensors, monitor the Line Pressure.
   6. Using the Transmission Simulator, set the rotary switch to each of the three line pressure positions.

      NOTE: The readings should be within ±14 kPa (2.0 psi) or 0.1 of a volt on the scan tool to the pressure readings specified on Transmission Simulator.

      Does the Line Pressure on the scan tool match the line pressures on the Transmission Simulator?

      Yes

      - Replace the Line Pressure Sensor in accordance with the Service Information.
      - Refer to **STANDARD PROCEDURE** and perform the 68RFE TRANSMISSION VERIFICATION TEST.

      No

      - Go To 3.

3. **CHECK THE (T38) LINE PRESSURE SENSOR SIGNAL CIRCUIT FOR A SHORT TO GROUND**

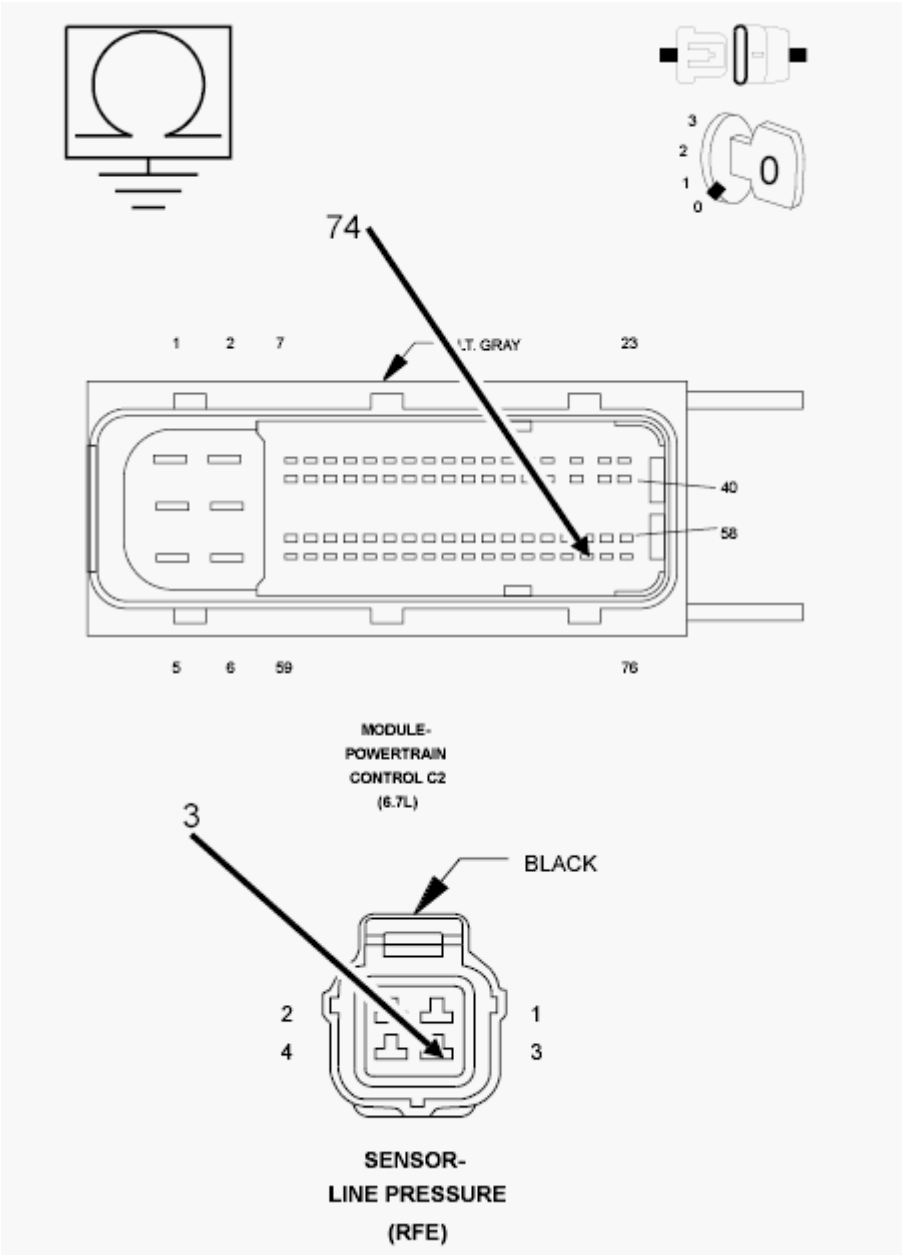

Fig. 101: Checking Line Pressure Sensor Signal Circuit For Short To Ground
Courtesy of CHRYSLER GROUP, LLC

1. Turn the ignition off to the lock position.
2. Disconnect the PCM C2 harness connector.
3. Disconnect the Transmission Simulator (special tool #8333A, Simulator, Transmission).
4. Measure the resistance between ground and the (T38) Line Pressure Sensor Signal circuit.

   Is the resistance below 5.0 Ohms?

   Yes

- Repair the (T38) Line Pressure Sensor Signal circuit for a short to ground.
- Refer to **STANDARD PROCEDURE** and perform the 68RFE TRANSMISSION VERIFICATION TEST.

No

- Go To 4.

4. **CHECK THE (T38) LINE PRESSURE SENSOR SIGNAL CIRCUIT FOR AN OPEN**

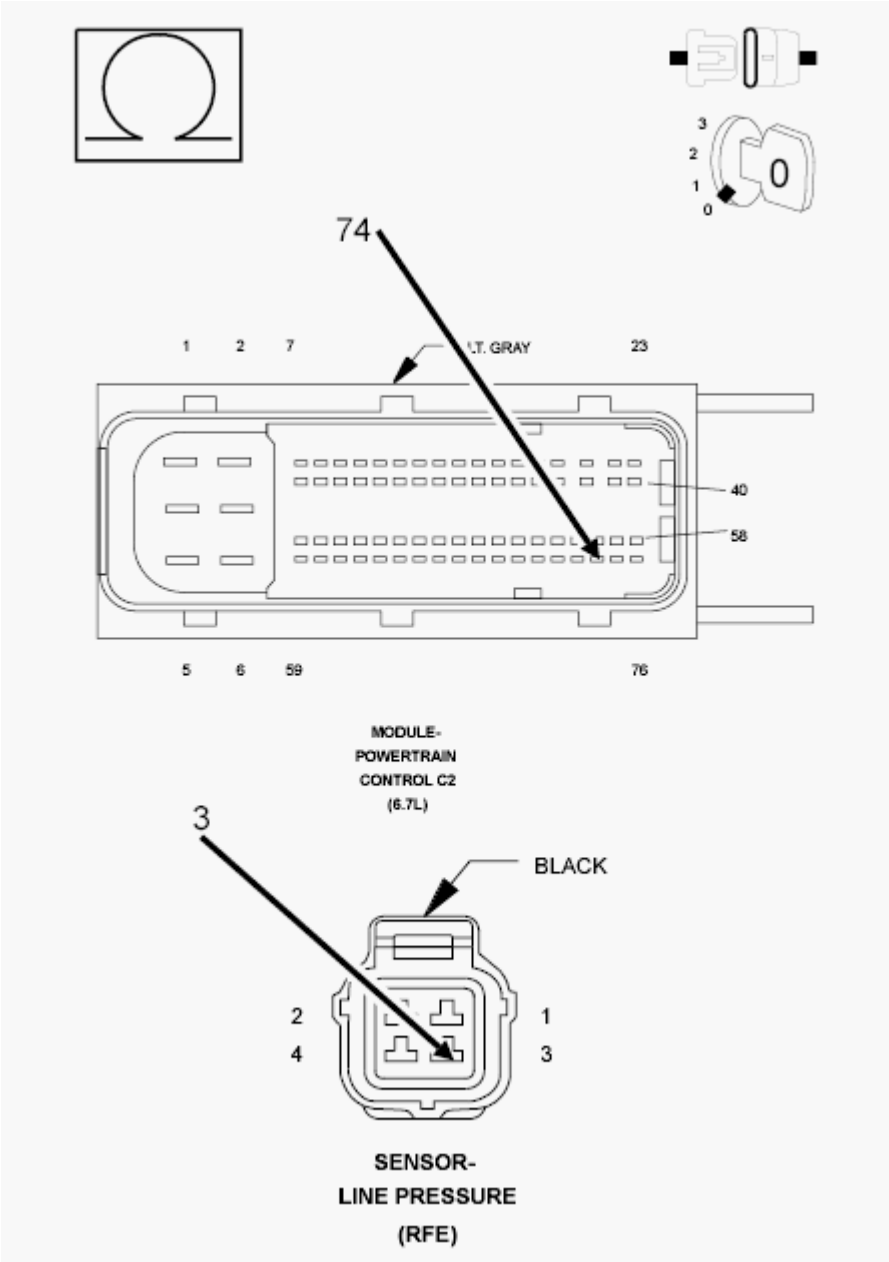

Fig. 102: Checking Line Pressure Sensor Signal Circuit For Open
Courtesy of CHRYSLER GROUP, LLC

1. Measure the resistance of the (T38) Line Pressure Sensor Signal circuit between the Line Pressure Sensor harness connector and the appropriate terminal of the PCM C2 harness connector.

   Is the resistance above 5.0 Ohms?

   Yes

   - Repair the (T38) Line Pressure Sensor Signal circuit for an open.
   - Refer to **STANDARD PROCEDURE** and perform the 68RFE TRANSMISSION VERIFICATION TEST.

   No

   - Go To 5.

5. **CHECK THE (F856) 5-VOLT SUPPLY CIRCUIT FOR AN OPEN**

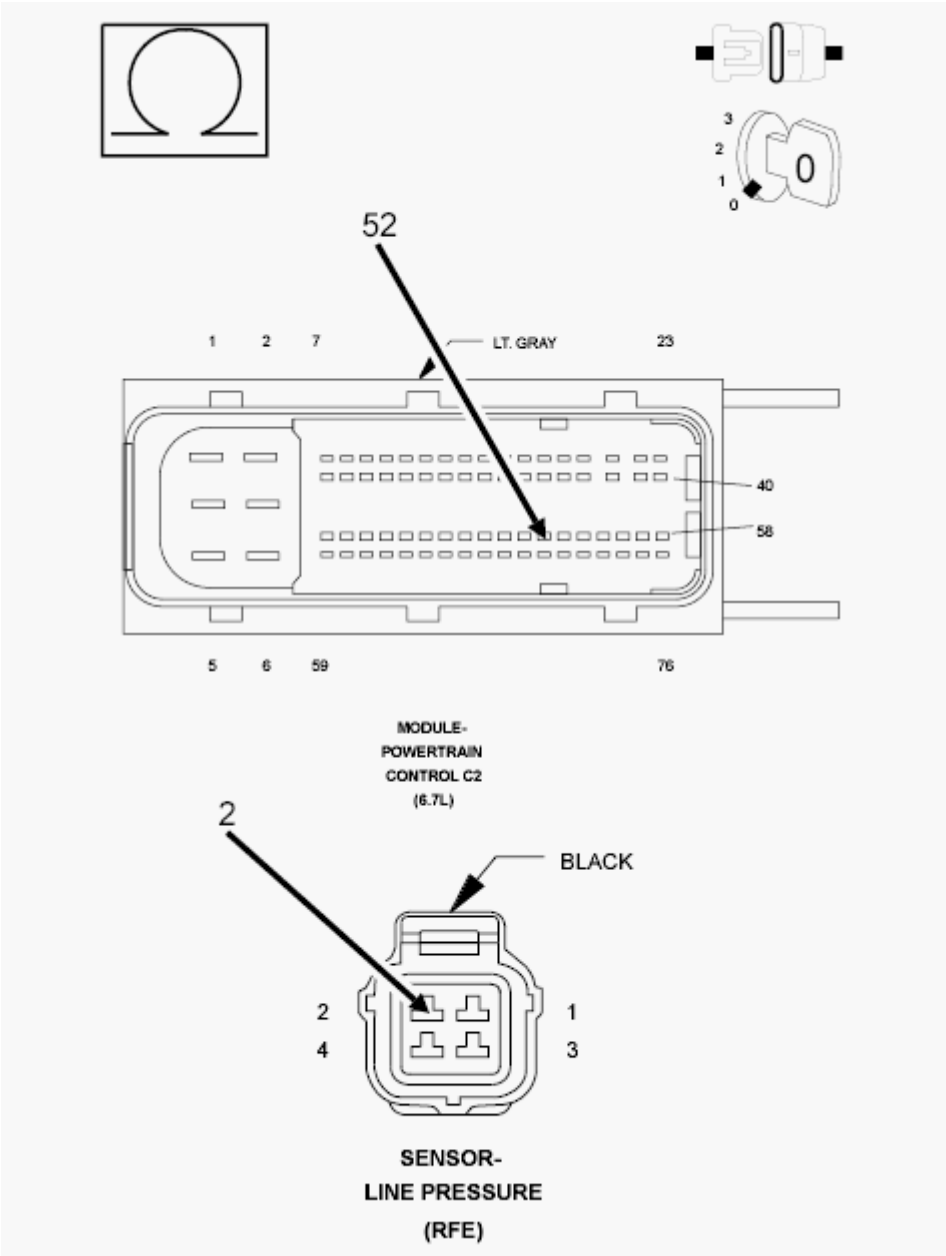

Fig. 103: Checking 5-Volt Supply Circuit For Open
Courtesy of CHRYSLER GROUP, LLC

1. Measure the resistance of the (F856) 5-volt Supply circuit between the Line Pressure sensor harness connector and the appropriate terminal of the PCM C2 harness connector.

   Is the resistance below 5.0 Ohms?

   Yes

   - Repair the (F856) 5-volt Supply circuit for an open.
   - Refer to **STANDARD PROCEDURE** and perform the 68RFE TRANSMISSION

VERIFICATION TEST.

No

- Go To 6.

6. **CHECK THE (F856) 5-VOLT SUPPLY CIRCUIT FOR A SHORT TO GROUND**

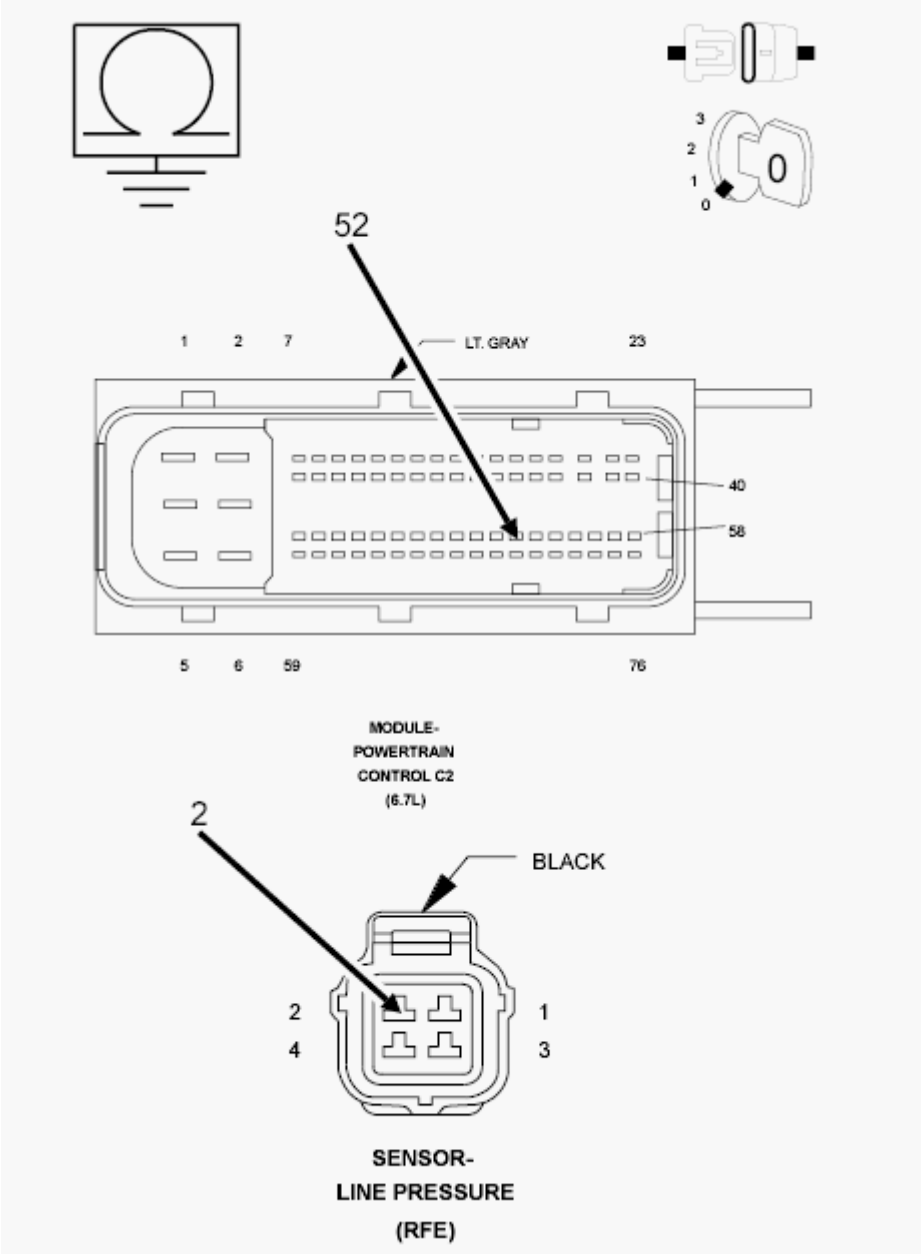

Fig. 104: Checking 5-Volt Supply Circuit For Short To Ground
Courtesy of CHRYSLER GROUP, LLC

1. Measure the resistance between ground and the (F856) 5-volt Supply circuit.

Is the resistance below 5.0 Ohms?

Yes

- Repair the (F856) 5-volt Supply circuit for a short to ground.
- Refer to **STANDARD PROCEDURE** and perform the 68RFE TRANSMISSION VERIFICATION TEST.

No

- Using the schematics as a guide, check the Powertrain Control Module (PCM) terminals for corrosion, damage, or terminal push out. Pay particular attention to all power and ground circuits. If no problems are found, replace and program the PCM in accordance with the Service Information. With the scan tool, perform Quick Learn.
- Refer to **STANDARD PROCEDURE** and perform the 68RFE TRANSMISSION VERIFICATION TEST.

7. **CHECK THE WIRING AND CONNECTORS**
   1. The conditions necessary to set this DTC are not present at this time.
   2. Using the schematics as a guide, inspect the wiring and connectors specific to this circuit.
   3. Wiggle the wires while checking for shorted and open circuits.
   4. With the scan tool, check the Event Data to help identify the conditions in which the DTC was set.

   Where there any problems found?

   Yes

   - Repair as necessary.
   - Refer to **STANDARD PROCEDURE** and perform the 68RFE TRANSMISSION VERIFICATION TEST.

   No

   - Test Complete.

P0935-LINE PRESSURE SENSOR CIRCUIT HIGH

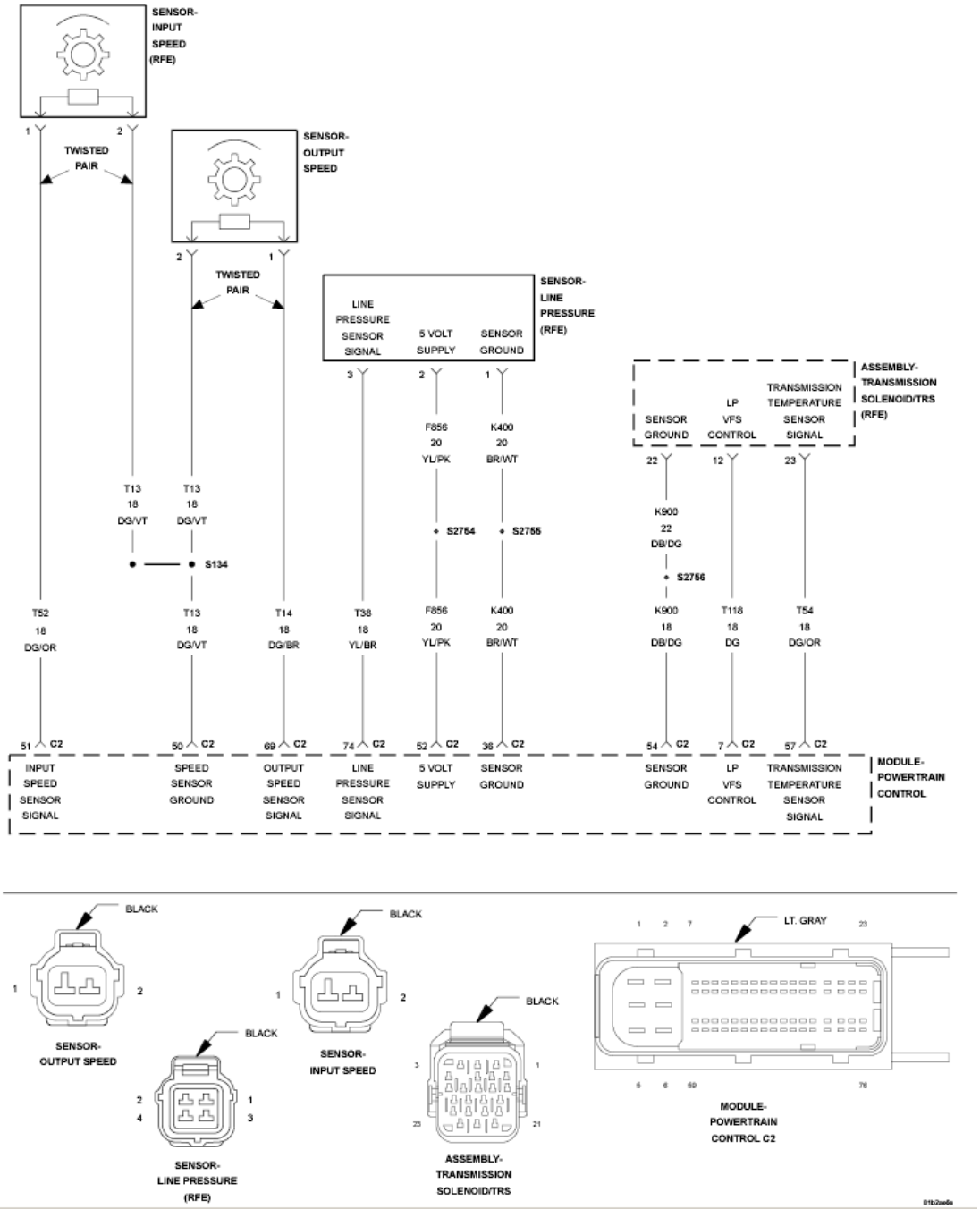

Fig. 105: Input/Output Speed Sensor, Line Pressure Sensor & Transmission Temperature Sensor Circuit Wiring Diagram
Courtesy of CHRYSLER GROUP, LLC

For a complete wiring diagram, **refer to appropriate SYSTEM WIRING DIAGRAMS article** .

THEORY OF OPERATION

Line pressure is electronically controlled by the Transmission Control System and is measured by the Line Pressure Sensor (LPS). The desired line pressure is continuously being compared to the actual line pressure and

is regulated by electronically changing the duty cycle of the Pressure Control Solenoid (PCS). (5% duty cycle = solenoid off = max line pressure, 62% duty cycle = solenoid on = min line pressure).

The Transmission Control System calculates the desired line pressure based on inputs from the transmission and engine. A calculated torque input to the transmission is used as the primary input of the desired line pressure calculation and is called Torque Based Line Pressure. In addition, the line pressure is set to a preset level 1034 to 1103 kPa (150 to 160 psi) during shifts to ensure consistent shift quality.

The monitored Line Pressure Sensor voltage should always be between 0.35 and 4.75 volts. Any monitored voltages outside these parameters indicate an Line Pressure Sensor or wiring problem and will cause either DTC P0934 or P0935 to set.

WHEN MONITORED:

Continuously with ignition on and engine running.

SET CONDITION:

This DTC will set if the monitored Line Pressure Sensor voltage is greater than or equal to 4.75 volts for the period of 0.18 of a second.

POSSIBLE CAUSES

Possible Causes
(T38) LINE PRESSURE SENSOR SIGNAL CIRCUIT OPEN
(K400) SENSOR GROUND CIRCUIT OPEN
(T38) LINE PRESSURE SENSOR SIGNAL CIRCUIT SHORTED TO VOLTAGE
LINE PRESSURE SENSOR
POWERTRAIN CONTROL MODULE (PCM)

Always perform the Pre-Diagnostic Troubleshooting procedure before proceeding. Refer to STANDARD PROCEDURE.

DIAGNOSTIC TEST

1. **CHECK IF THE DTC IS CURRENT**
    1. With the scan tool, read DTCs.

       Is the status Active or is the Starts Since Set counter 2 or less for this DTC?

       Yes

       - Go To 2.

       No

- Go To 6.

2. **CHECK THE PCM AND WIRING**
   1. Turn the ignition off to the lock position.
   2. Remove the Ignition Switch Feed fuse from the TIPM.

      CAUTION: Removal of the Ignition Switch Feed fuse from the TIPM will prevent the vehicle from being started in gear.

      WARNING: The Ignition Switch Feed fuse must be removed from the TIPM. Failure to do so can result in possible serious or fatal injury.

   3. Install the Transmission Simulator (special tool #8333A, Simulator, Transmission).
   4. Ignition on, engine not running.
   5. With the scan tool, monitor the Line Pressure.
   6. Using the Transmission Simulator, set the rotary switch to each of the three line pressure positions.

      NOTE: The readings should be within ±14 kPa (2.0 psi) or 0.1 of a volt on the scan tool of the pressure reading specified on Transmission Simulator.

      Does the 3 line pressures on the scan tool match the Line pressure readings on the Transmission Simulator?

      Yes

      - Replace the Line Pressure Sensor in accordance with the Service Information.
      - Refer to **STANDARD PROCEDURE** and perform the 68RFE TRANSMISSION VERIFICATION TEST.

      No

      - Go To 3.

3. **CHECK THE (K400) SENSOR GROUND CIRCUIT FOR AN OPEN**

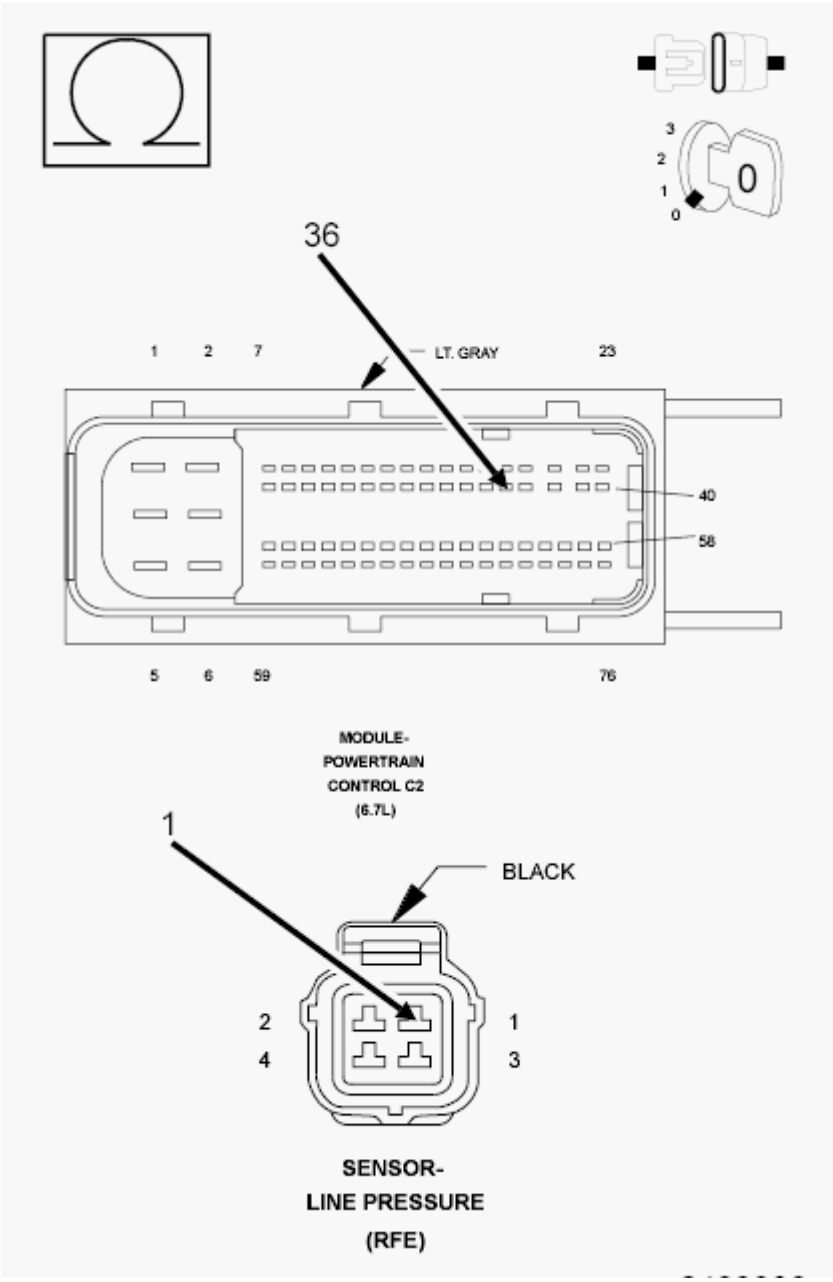

Fig. 106: Checking Sensor Ground Circuit For Open
Courtesy of CHRYSLER GROUP, LLC

1. Turn the ignition off to the lock position.
2. Disconnect the Transmission Simulator (special tool #8333A, Simulator, Transmission).
3. Disconnect the PCM C2 harness connector.
4. Measure the resistance of the (K400) Sensor Ground circuit between the Line Pressure Sensor harness connector and the appropriate terminal of the PCM C2 harness connector.

   Is the resistance above 5.0 Ohms?

Yes

- Repair the (K400) Sensor Ground circuit for an open.
- Refer to **STANDARD PROCEDURE** and perform the 68RFE TRANSMISSION VERIFICATION TEST.

No

- Go To 4.

4. **CHECK THE (T38) LINE PRESSURE SENSOR SIGNAL CIRCUIT FOR AN OPEN**

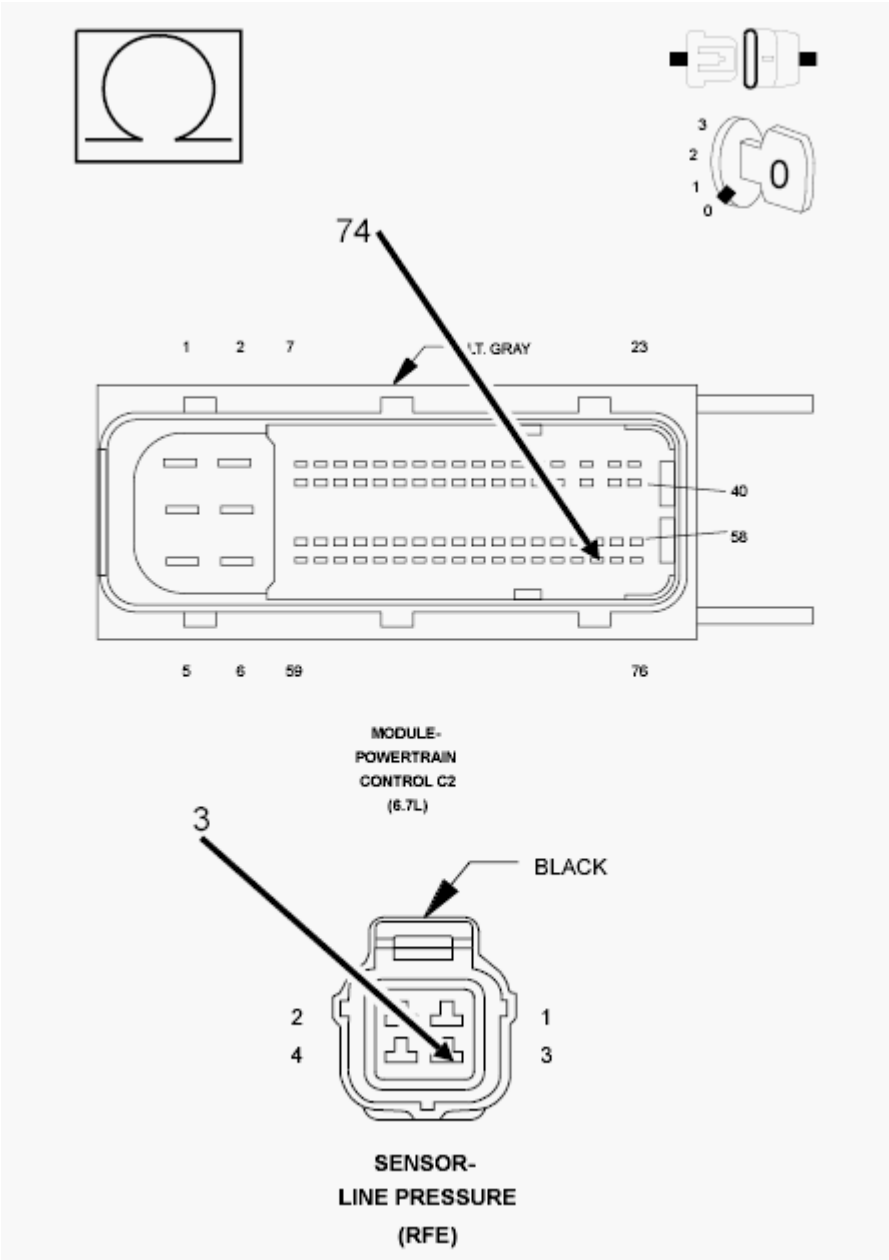

Fig. 107: Checking Line Pressure Sensor Signal Circuit For Open

Courtesy of CHRYSLER GROUP, LLC

1. Measure the resistance of the (T38) Line Pressure Sensor Signal circuit between the Line Pressure Sensor harness connector and the appropriate terminal of the PCM C2 harness connector.

   Is the resistance above 5.0 Ohms?

   Yes

   - Repair the (T38) Line Pressure Sensor Signal circuit for an open.
   - Refer to **STANDARD PROCEDURE** and perform the 68RFE TRANSMISSION VERIFICATION TEST.

   No

   - Go To 5.

5. **CHECK THE (T38) LINE PRESSURE SENSOR SIGNAL CIRCUIT FOR A SHORT TO VOLTAGE**

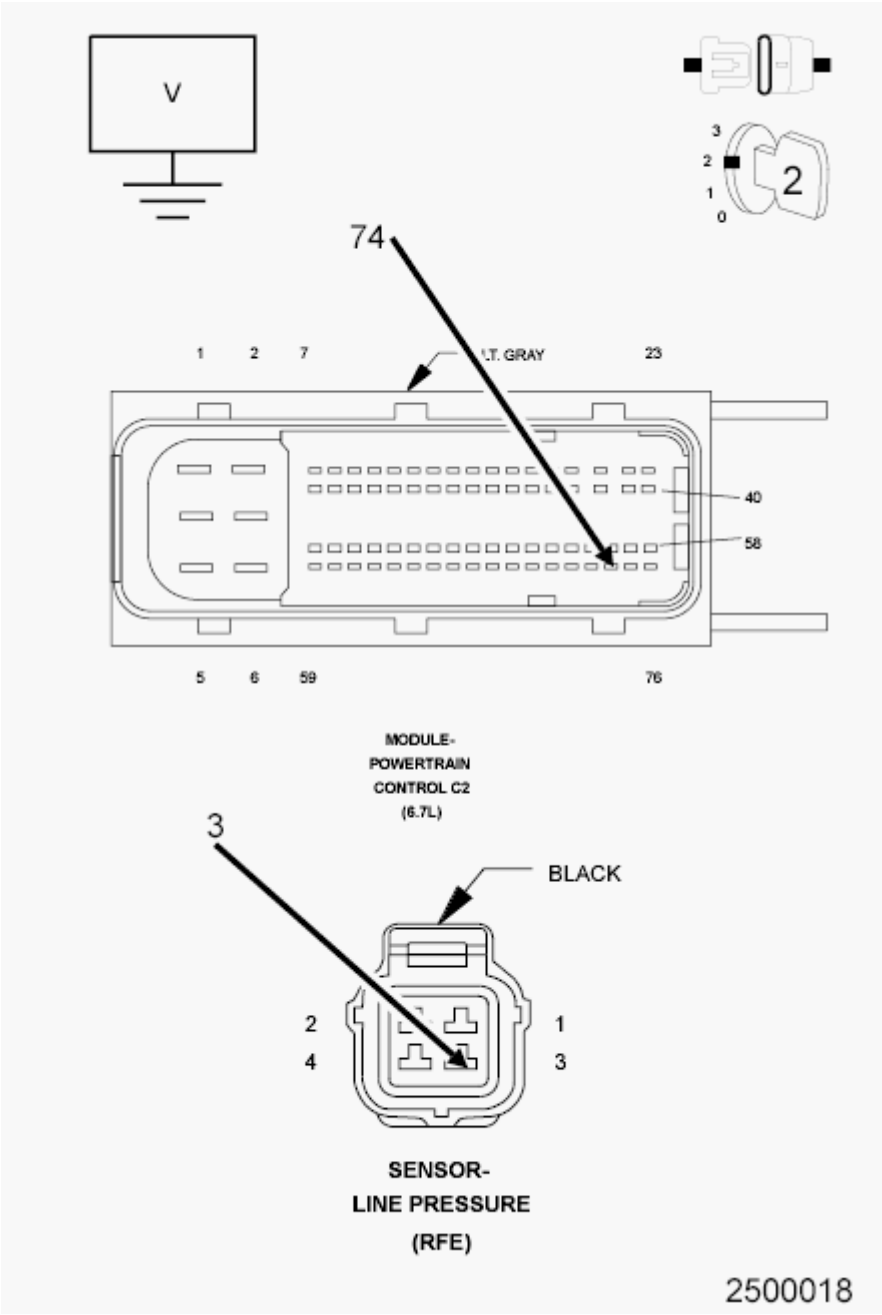

Fig. 108: Checking Line Pressure Sensor Signal Circuit For Short To Voltage
Courtesy of CHRYSLER GROUP, LLC

1. Ignition on, engine not running.
2. With the scan tool under TIPM, actuate the Transmission.
3. Measure the voltage of the (T38) Line Pressure Sensor Signal circuit.

   Is the voltage above 5.5 volts?

   Yes

- Repair the (T38) Line Pressure Sensor Signal circuit for a short to voltage.
- Refer to **STANDARD PROCEDURE** and perform the 68RFE TRANSMISSION VERIFICATION TEST.

No

- Using the schematics as a guide, check the Powertrain Control Module (PCM) terminals for corrosion, damage, or terminal push out. Pay particular attention to all power and ground circuits. If no problems are found, replace and program the PCM in accordance with the Service Information. With the scan tool, perform Quick Learn.
- Refer to **STANDARD PROCEDURE** and perform the 68RFE TRANSMISSION VERIFICATION TEST.

6. **CHECK WIRING AND CONNECTORS**
   1. The conditions necessary to set this DTC are not present at this time.
   2. Using the schematics as a guide, inspect the wiring and connectors specific to this circuit.
   3. Wiggle the wires while checking for shorted and open circuits.
   4. With the scan tool, check the Event Data to help identify the conditions in which the DTC was set.

   Where there any problems found?

   Yes

   - Repair as necessary.
   - Refer to **STANDARD PROCEDURE** and perform the 68RFE TRANSMISSION VERIFICATION TEST.

   No

   - Test Complete.

P0944-LOSS OF HYDRAULIC PUMP PRIME

For a complete wiring diagram, **refer to appropriate SYSTEM WIRING DIAGRAMS article** .

THEORY OF OPERATION

The Loss of prime test is used to prevent transmission defaults and erroneous fault codes during temporary loss of pump prime that may occur with low transmission fluid under severe braking conditions, start-up, etc. and to point towards more subtle problems such as a plugged or cracked oil filter.

The Loss of Prime DTC is set by a loss of hydraulic pressure in the transmission system. This condition, if sustained, will result in the vehicle being unable to move.

WHEN MONITORED:

If the transmission is slipping in any forward gear and all the pressure switches are not indicating pressure, a loss of prime test is run.

SET CONDITION:

If the transmission begins to slip in a forward gear and all the pressure switches are open a loss of prime test begins. Available elements are turned on by the PCM to see if pump prime exists. The DTC sets if no pressure switches respond.

POSSIBLE CAUSES

Possible Causes
SHIFT LEVER OUT OF ADJUSTMENT
IMPROPER FLUID LEVEL
CRACKED OR IMPROPERLY INSTALLED PRIMARY OIL FILTER OR SEAL
LOOSE COOLER RETURN FILTER
STUCK OR STICKING MAIN REGULATOR VALVE
TRANSMISSION OIL PUMP

Always perform the Pre-Diagnostic Troubleshooting procedure before proceeding. Refer to STANDARD PROCEDURE.

DIAGNOSTIC TEST

1. **SHIFT LEVER POSITION TEST**
    1. Using the scan tool, perform a Shift Lever Position test. Follow the instructions on the scan tool.

       Did the Shift Lever Position Test pass?

       Yes

       - Go To 2.

       No

       - Refer to **DIAGNOSTIC CODE INDEX** and perform the appropriate diagnostic procedure.
       - Refer to **STANDARD PROCEDURE** and perform the 68RFE TRANSMISSION VERIFICATION TEST.
2. **CHECK TO SEE IF DTC P0944 IS CURRENT**
    1. Place the gear selector in Park.
    2. Start the engine.
    3. The transmission must be at operating temperature prior to checking pressure. A cold transmission will give higher readings.
    4. Run the engine at 1500 rpm.

5. With the scan tool, monitor the Transmission Line Pressure.

   Does the (actual) Line Pressure match the Desired Line Pressure within ± 34 kPa (5 psi)?

   No

   - Go To 6.

   Yes

   - Go To 3.

3. **CHECK LINE PRESSURE IN DRIVE AND REVERSE**
   1. Firmly apply the brake and repeat the previous test in both Drive and the Reverse gear positions.
   2. With the scan tool, monitor the Transmission Line Pressure.

      Does the Line Pressure match the Desired Line Pressure within ± 5 psi in all gear ranges?

      Yes

      - Go To 4.

      No

      - Go To 5.

4. **REVIEW CUSTOMER COMMENTS**
   1. The conditions necessary to set this DTC are not present at this time.
   2. Verify with the customer if a delayed engagement and/or an intermittent "No Drive" condition has occurred.
   3. If the customers answer is "No" erase the DTC and return the vehicle to the customer.
   4. Make sure to check for any TSBs or controller flash updates that my apply.
   5. With the scan tool, check the Event Data to help identify the conditions in which the DTC was set.

      Has the customer experienced any delayed engagement and/or "No Drive" conditions?

      Yes

      - Go To 6.

      No

      - Test Complete.

5. **DTC VERIFICATION**
   1. Read and record the DTC and the Event Data information.
   2. Test drive the vehicle and attempt to operate the vehicle within the parameters in which the DTC

set.

3. With the scan tool, read DTCs.

   Did any following DTCs set, P0868, P0944, P0841, P0846, P0871, P0876, or P0988?

   Yes

   - Go To 6.

   No

   - Test Complete.

6. **CHECK TRANSMISSION OIL FILTER**
   1. Remove and inspect the Transmission Oil Pan in accordance with the Service Information.
   2. Remove and inspect the Primary Oil Filter in accordance with the Service Information.
   3. Inspect the oil filter seal for damage and proper installation.

      Does the Oil Pan contain excessive debris, or is the oil filter plugged, loose, or damaged?

      Yes

      - Repair the cause of the plugged transmission oil filter or excessive debris. Check the Transmission Oil Filter seal for improper installation onto filter neck instead of into the pump bore, not fully seated against pump housing, filter neck not engaged into pump. Check that the spin-on cooler return filter (if equipped) is not loose, and that its gasket is in good condition and properly seated. Repair as necessary.
      - Refer to **STANDARD PROCEDURE** and perform the 68RFE TRANSMISSION VERIFICATION TEST.

      No

      - Repair the Transmission Oil Pump as necessary. Check for a stuck main regulator valve and clean if necessary. Refer to **STANDARD PROCEDURE** for the proper repair procedure.
      - Refer to **STANDARD PROCEDURE** and perform the 68RFE TRANSMISSION VERIFICATION TEST.

P0987-4C HYDRAULIC PRESSURE TEST

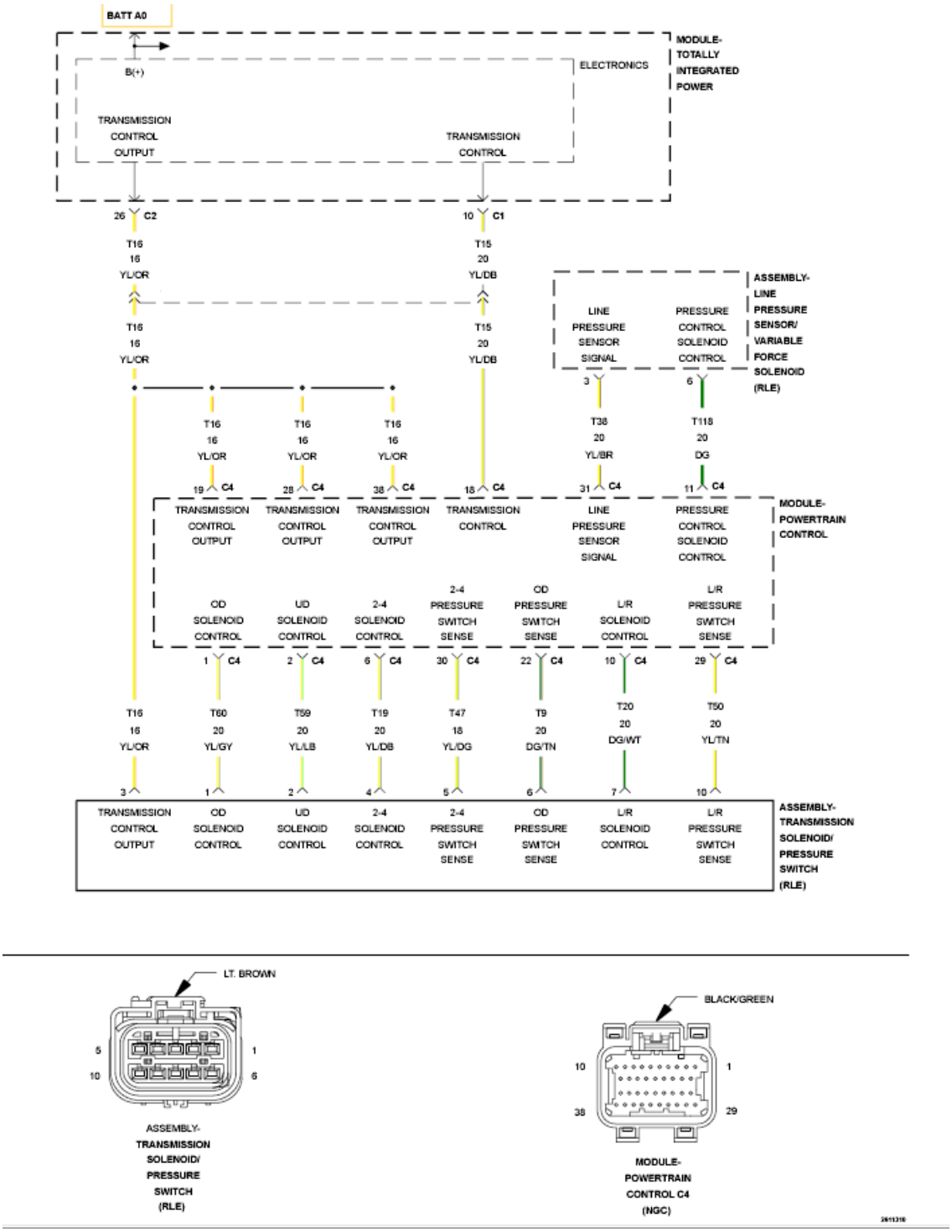

Fig. 109: Solenoid Control Wiring Diagram
Courtesy of CHRYSLER GROUP, LLC

For a complete wiring diagram, **refer to appropriate SYSTEM WIRING DIAGRAMS article** .

THEORY OF OPERATION

The Transmission Control System tests the pressure switches when they are off. The test verifies that the switches are operational (They will close with pressure applied). The Transmission Control System verifies that the switch closes when the corresponding element is applied. If a switch fails to close, it is re-tested. If it fails the second test, the DTC will set, the MIL will illuminate and the transmission system will default to the orderly Shutdown routine.

WHEN MONITORED:

In any forward gear with engine speed above 1000 RPM shortly after a shift and every minute thereafter.

SET CONDITION:

After a shift into a forward gear, with engine speed above 1000 RPM, the PCM momentarily turns on element pressure to the Clutch circuits that don't have pressure to identify the correct Pressure Switch closes. If the Pressure Switch does not close 2 times, the DTC sets.

POSSIBLE CAUSES

Possible Causes
LINE PRESSURE SENSOR
TRANSMISSION FLUID CONTAMINATION
RELATED DTCS PRESENT
EXCESSIVE DEBRIS IN OIL PAN
POOR LINE PRESSURE SENSOR CONNECTION
RELATED TCM POWER INPUT DTCS PRESENT
(T48) 4C PRESSURE SWITCH SENSE CIRCUIT OPEN
(F856) 5-VOLT SUPPLY CIRCUIT OPEN
(T48) 4C PRESSURE SWITCH SENSE CIRCUIT SHORTED TO GROUND
(F856) 5-VOLT SUPPLY CIRCUIT SHORT TO GROUND
(T48) 4C PRESSURE SWITCH SENSE CIRCUIT SHORTED TO OTHERS
TRANSMISSION SOLENOID/TRS ASSEMBLY
INTERNAL TRANSMISSION
POWERTRAIN CONTROL MODULE (PCM)

Always perform the Pre-Diagnostic Troubleshooting procedure before proceeding. Refer to STANDARD PROCEDURE.

DIAGNOSTIC TEST

1. **CHECK FOR RELATED DTCS**
    1. With the scan tool, read DTCs.

       Is there any Loss of Prime, TCM Power Input, Line Pressure Sensor and/or TIPM TCM Power Control Circuit DTCs present?

Yes

- For the TIPM DTCs, Refer to **DIAGNOSIS AND TESTING** and perform the appropriate diagnostic procedure. If the DTC P0944 is present, perform its respective test first.

No

- Go To 2.

2. **CHECK FOR RELATED DTCS**
   1. With the scan tool, read DTCs.

      Is the DTC P0770 also present?

      Yes

      - Refer to **DIAGNOSTIC CODE INDEX** and perform diagnostics for P0770.

      No

      - Go To 3.

3. **CHECK FOR RELATED DTCS**
   1. With the scan tool, read DTCs.

      Are the DTCs P0988 and/or P0733 present also?

      Yes

      - Go To 12.

      No

      - Go To 4.

4. **CHECK IF THE DTC IS CURRENT**
   1. With the scan tool, check if the DTC P0987-4C HYDRAULIC PRESSURE TEST FAILURE is active or stored.

      Is the DTC P0987-4C HYDRAULIC PRESSURE TEST FAILURE active?

      Yes

      - Go To 5.

      No

      - Go To 17.

5. **CHECK IF THE LINE PRESSURE STAYS THE SAME**
    1. Start the engine.
    2. Warm the transmission to 82° C or 180° F.
    3. Firmly apply the brakes.
    4. With the scan tool, monitor the Line Pressure during the following step.
    5. Move the shift lever to each gear position, pausing momentarily in each position and record the line pressure reading. Allow the pressure to stabilize for at least 5 seconds in each range.

       Did the line pressure remain at a steady value between 585 and 655 kPa or 85 and 95 psi in each position?

       Yes

       - Go To 6.

       No

       - Go To 10.
6. **CHECK THE LINE PRESSURE SENSOR CONNECTION**
    1. Ignition on, **engine not running.**
    2. With the scan tool, monitor the Line Pressure while firmly pushing the Transmission Line Pressure Sensor connector inward towards the Transmission.

       Did the Line Pressure reading on the scan tool CHANGE to about 207 kPa (30 psi) or 0.7 of a volt when the connector was pushed inward?

       Yes (value was higher and changed to 207 kPa (30 psi) or 0.7 of a volt)

       - Disconnect and properly reconnect the Line Pressure Sensor connector. Inspect terminals and repair as necessary.
       - Refer to **STANDARD PROCEDURE** and perform the 68RFE TRANSMISSION VERIFICATION TEST.

       No (value is higher than 207 kPa (30 psi) or 0.7 volts and did not change or the value was already 207 kPa (30 psi) or 0.7 volts and did not change)

       - Go To 7.
7. **CHECK THE LINE PRESSURE SENSOR OPERATION**
    1. Turn the ignition off to the lock position.
    2. Remove the Ignition Switch Feed fuse from the TIPM.

       CAUTION: Removal of the Ignition Switch Feed fuse from the TIPM will prevent the vehicle from being started in gear.

WARNING: The Ignition Switch Feed fuse must be removed from the TIPM. Failure to do so can result in possible serious or fatal injury.

3. Install the Transmission Simulator (special tool #8333A, Simulator, Transmission).
4. With the Transmission Simulator select the "OFF" position on the "Input/Output Speed" switch.
5. Ignition on, engine not running.
6. With the scan tool, monitor the Line Pressure while turning the Pressure Switch selector to each of the 3 line pressure positions on the Transmission Simulator.

NOTE: All three scan tool Line Pressure readings should be steady and ±14 kPa or 2.0 psi or 0.1 of a volt of the reading specified on the Transmission Simulator.

Did the scan tool Line Pressure readings match the specified readings on the Transmission Simulator and remain steady in all three positions?

Yes

- Replace the Line Pressure Sensor in accordance with the Service Information.
- Refer to **STANDARD PROCEDURE** and perform the 68RFE TRANSMISSION VERIFICATION TEST.

No

- Go To 8.

8. **CHECK THE (F856) 5-VOLT SUPPLY CIRCUIT FOR AN OPEN**

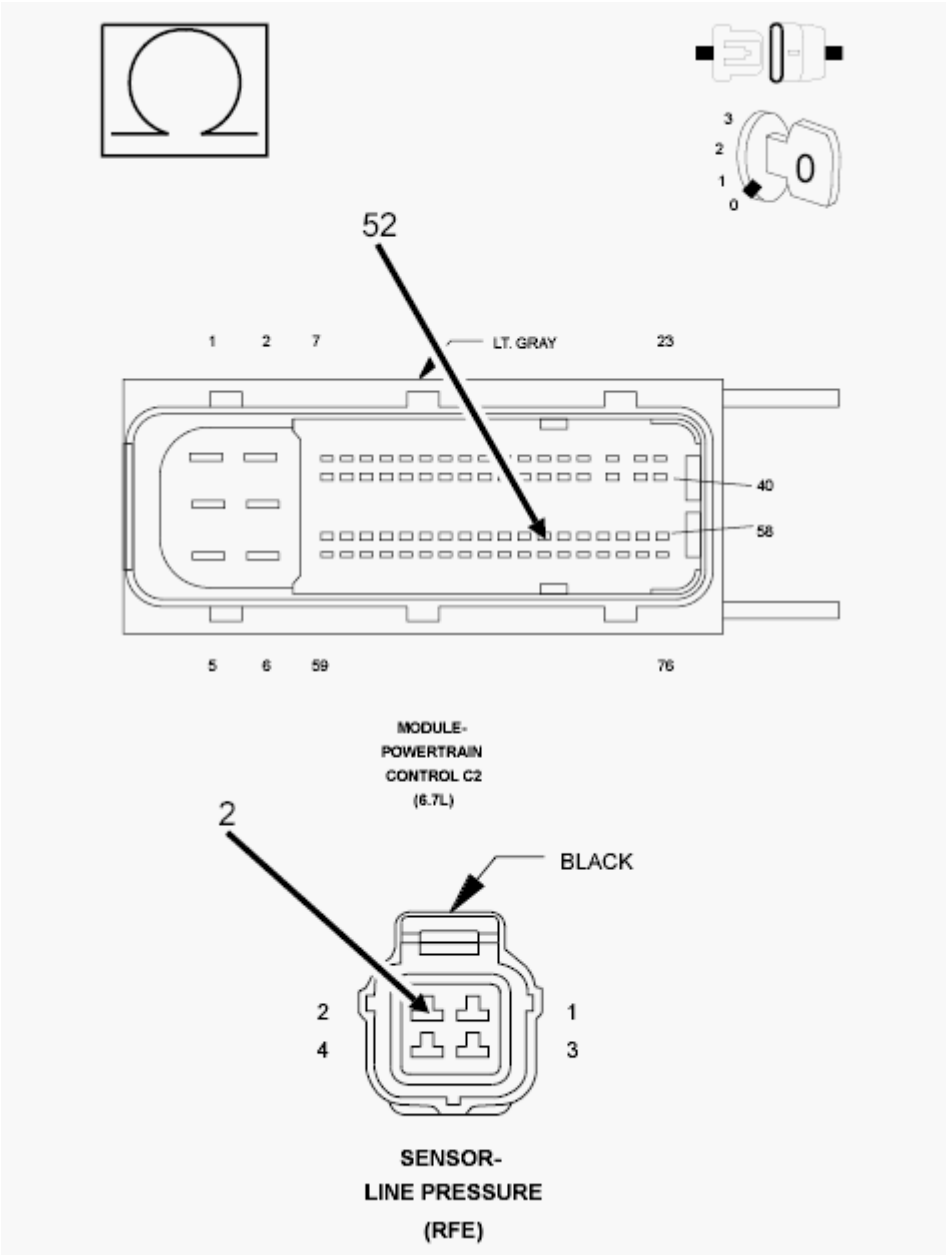

Fig. 110: Checking 5-Volt Supply Circuit For Open
Courtesy of CHRYSLER GROUP, LLC

1. Turn the ignition off to the lock position.
2. Disconnect Transmission Simulator (special tool #8333A, Simulator, Transmission).
3. Disconnect the PCM C2 harness connector.
4. Measure the resistance of the (F856) 5-volt Supply circuit between the Line Pressure Sensor harness connector and the appropriate terminal of the PCM C2 harness connector.

   Is the resistance above 5.0 Ohms?

   Yes

- Repair the (F856) 5-volt Supply circuit for an open.
- Refer to **STANDARD PROCEDURE** and perform the 68RFE TRANSMISSION VERIFICATION TEST.

No

- Go To 9.

9. **CHECK THE (F856) 5-VOLT SUPPLY CIRCUIT FOR A SHORT TO GROUND**

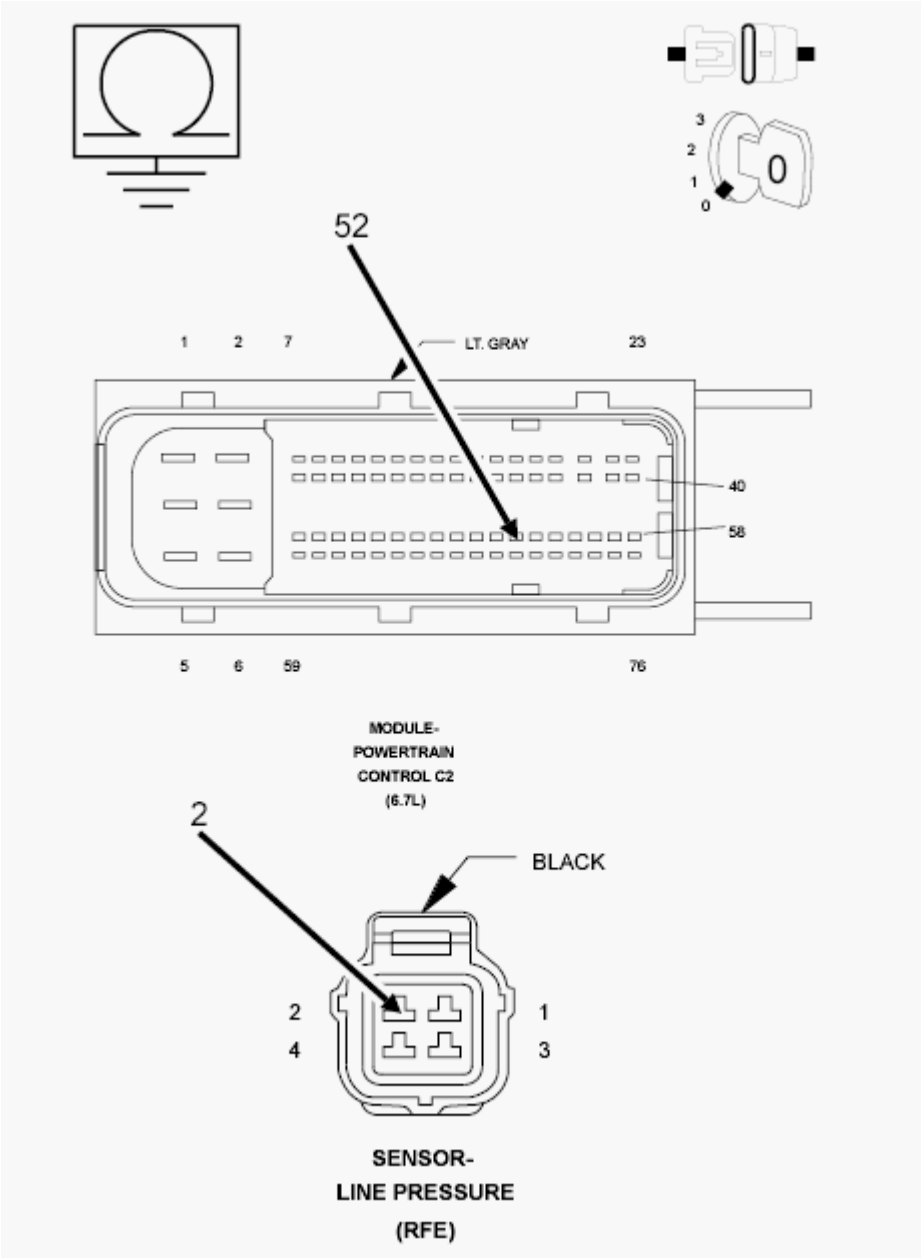

Fig. 111: Checking 5-Volt Supply Circuit For Short To Ground
Courtesy of CHRYSLER GROUP, LLC

1. Measure the resistance between ground and the (F856) 5-volt Supply circuit.

   Is the resistance below 5.0 Ohms?

   Yes

   - Repair the (F856) 5-volt Supply circuit for a short to ground.
   - Refer to **STANDARD PROCEDURE** and perform the 68RFE TRANSMISSION VERIFICATION TEST.

   No

   - Using the schematics as a guide, check the Powertrain Control Module (PCM) terminals for corrosion, damage, or terminal push out. Pay particular attention to all power and ground circuits. If no problems are found, replace the PCM in accordance with the Service Information. With the scan tool, perform Quick Learn.
   - Refer to **STANDARD PROCEDURE** and perform the 68RFE TRANSMISSION VERIFICATION TEST.

10. **COMPARE SCAN TOOL TO PRESSURE GAUGE**
    1. Turn the ignition off to the lock position.
    2. Connect the Line Pressure Adapter (special tool #8259, Adapter, Pressure Test) and 0-300 psi Test Gauge (special tool #C-3293-SP, Gauge, Pressure 0-300 P.S.I.). Refer to **STANDARD PROCEDURE** for proper installation procedure.

       CAUTION: Apply parking brake.

    3. Start the engine.
    4. In the following steps, compare the scan tool Line Pressure to the Pressure Gauge readings in each gear.

       CAUTION: Do not overheat transmission.

    5. With the gear selector in park, raise the RPM to 1500, and compare line pressure readings.
    6. Firmly apply the brakes, move the gear selector into reverse, raise the RPM to 1500, and compare the line pressure readings.
    7. Firmly apply the brakes, move the gear selector into drive, raise the RPM to 1500, and compare the line pressure readings.

       Did the scan tool Line Pressure readings match the Pressure Gauge readings ± 10 psi?

       Yes

- Go To 11.

No

- Replace the Line Pressure Sensor in accordance with the Service Information.
- Refer to **STANDARD PROCEDURE** and perform the 68RFE TRANSMISSION VERIFICATION TEST.

11. **CHECK PCM AND WIRING**
    1. Turn the ignition off to the lock position.
    2. Remove the Line Pressure Adapter (special tool #8259, Adapter, Pressure Test) and 0-300 psi Test Gauge (special tool #C-3293-SP, Gauge, Pressure 0-300 P.S.I.).
    3. Remove the Ignition Switch Feed fuse from the TIPM.

CAUTION: Removal of the Ignition Switch Feed fuse from the TIPM will prevent the vehicle from being started in gear.

WARNING: The Ignition Switch Feed fuse must be removed from the TIPM. Failure to do so can result in possible serious or fatal injury.

    4. Install the Transmission Simulator (special tool #8333A, Simulator, Transmission).
    5. On the Transmission Simulator, turn the Pressure Switch selector switch to 4C.
    6. Ignition on, engine not running.
    7. With the scan tool, monitor the 4C Pressure Switch state while pressing and holding the Pressure Switch test button and wiggling the wire harness and connectors that pertain to the 4C Pressure Switch.

       Did the 4C Pressure Switch state change to closed and remain closed while wiggling the wires?

       Yes

       - Go To 12.

       No

       - Go To 14.

12. **CHECK FOR EXCESSIVE DEBRIS**
    1. Turn the ignition off to the lock position.
    2. Remove the Transmission Simulator (special tool #8333A, Simulator, Transmission).
    3. Remove and inspect the Transmission Oil Pan in accordance with the Service Information.

       Does the Transmission Oil Pan contain excessive debris or contamination?

Yes

- Repair the cause of the excessive debris in the Transmission Oil Pan. Refer to **STANDARD PROCEDURE** for the proper procedures.
- Refer to **STANDARD PROCEDURE** and perform the 68RFE TRANSMISSION VERIFICATION TEST.

No

- Go To 13.

13. **CHECK 4C HYDRAULIC CLUTCH CIRCUIT**
    1. Remove the Valve Body and air check the 4C hydraulic clutch circuit (in the case) for leakage in accordance with the Service Information.

    NOTE: The 4C hydraulic clutch circuit contains a small bleed orifice. A small amount of air leakage is normal.

    Was there excessive air leakage noticed during the air check?

    Yes

    - Repair as necessary. Check the 4C clutch piston, piston seals and bleed orifice assembly.
    - Refer to **STANDARD PROCEDURE** and perform the 68RFE TRANSMISSION VERIFICATION TEST.

    No

    - Disassemble and inspect the Valve Body and repair as necessary. Inspect the 4C Accumulator piston and seals. If no problems are found in the Valve Body, replace the Transmission Solenoid/TRS Assembly in accordance with the Service Information.
    - Refer to **STANDARD PROCEDURE** and perform the 68RFE TRANSMISSION VERIFICATION TEST.

14. **CHECK THE (T48) 4C PRESSURE SWITCH SENSE CIRCUIT FOR AN OPEN**

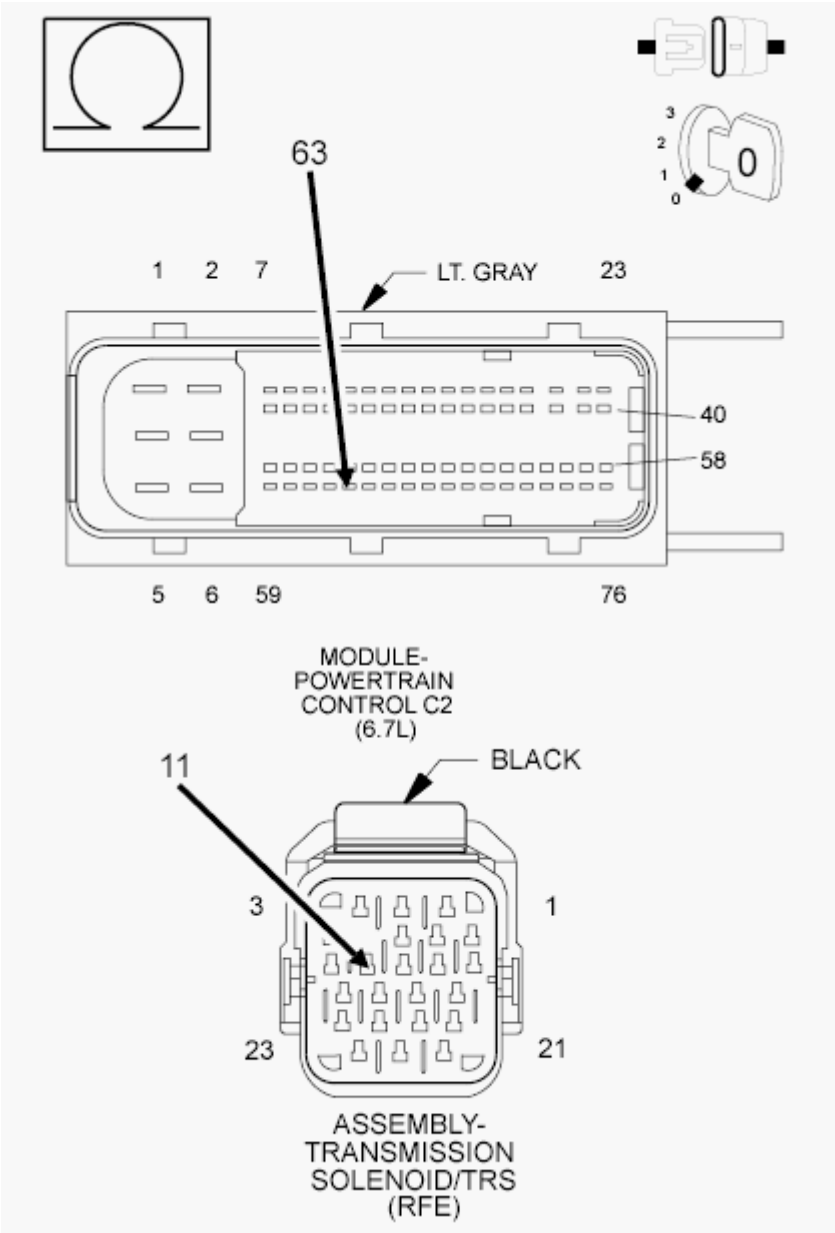

Fig. 112: Checking 4C Pressure Switch Sense Circuit For Open
Courtesy of CHRYSLER GROUP, LLC

1. Turn the ignition off to the lock position.
2. Remove the Transmission Simulator (special tool #8333A, Simulator, Transmission).
3. Disconnect the PCM C2 harness connector.
4. Measure the resistance of the (T48) 4C Pressure Switch Sense circuit between the Transmission Solenoid/TRS Assembly harness connector and the appropriate terminal of the PCM C2 harness connector.

   Is the resistance above 5.0 Ohms?

Yes

- Repair the (T48) 4C Pressure Switch Sense circuit for an open.
- Refer to **STANDARD PROCEDURE** and perform the 68RFE TRANSMISSION VERIFICATION TEST.

No

- Go To 15.

15. **CHECK THE (T48) 4C PRESSURE SWITCH SENSE CIRCUIT FOR A SHORT TO GROUND**

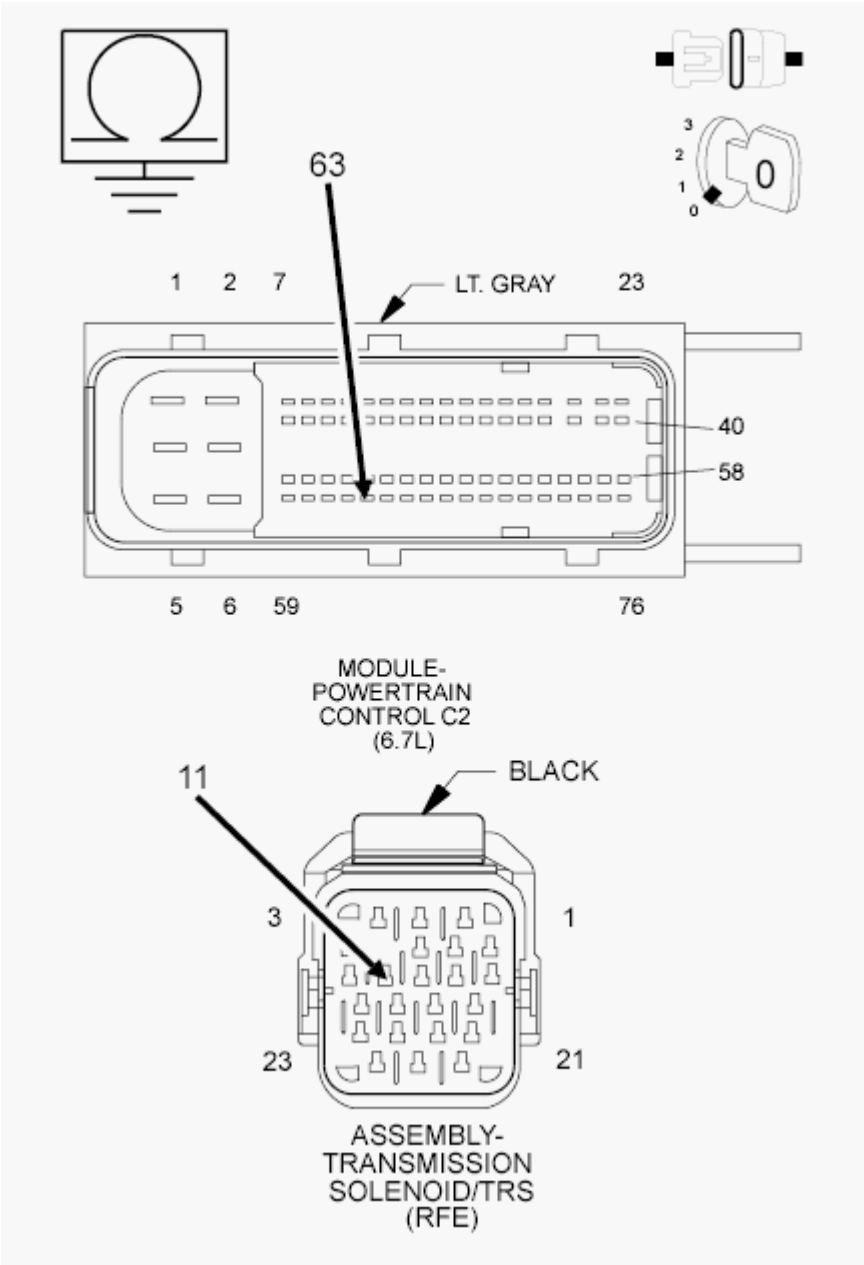

Fig. 113: Checking 4C Pressure Switch Sense Circuit For Short To Ground

Courtesy of CHRYSLER GROUP, LLC

1. Measure the resistance between ground and the (T48) 4C Pressure Switch Sense circuit.

   Is the resistance below 5.0 Ohms?

   Yes

   - Repair the (T48) 4C Pressure Switch Sense circuit for a short to ground.
   - Refer to **STANDARD PROCEDURE** and perform the 68RFE TRANSMISSION VERIFICATION TEST.

   No

   - Go To 16.

16. **CHECK THE (T48) 4C PRESSURE SWITCH SENSE CIRCUIT FOR A SHORT TO ANOTHER CIRCUIT**

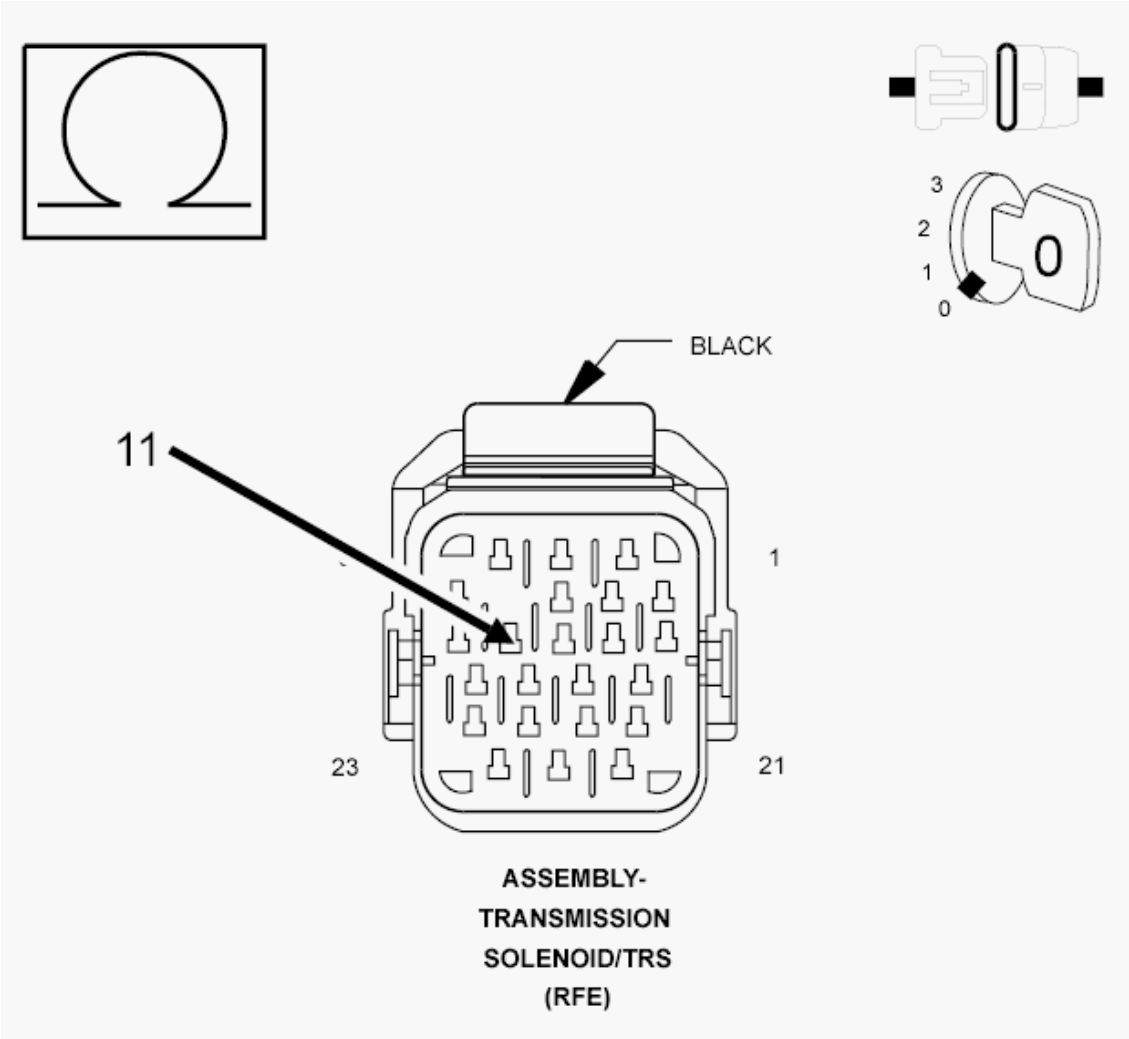

Fig. 114: Checking 4C Pressure Switch Sense Circuit For A Short To Another Circuit
Courtesy of CHRYSLER GROUP, LLC

1. Disconnect all PCM harness connectors.
2. Disconnect the Transmission Solenoid/TRS Assembly harness connector.

NOTE: Make sure the Transmission Solenoid/TRS Assembly harness connector is disconnected.

NOTE: Check connectors - Clean/repair as necessary.

3. Measure the resistance between the (T48) 4C Pressure Switch Sense circuit and all other circuits in the Transmission Solenoid/TRS Assembly harness connector.

   Is the resistance below 5.0 Ohms between the (T48) 4C Pressure Switch Sense circuit and any other circuit(s) in the Transmission Solenoid/TRS Assembly harness connector?

   Yes

   - Repair the (T48) 4C Pressure Switch Sense circuit for a short to another circuit(s).
   - Refer to **STANDARD PROCEDURE** and perform the 68RFE TRANSMISSION VERIFICATION TEST.

   No

   - Using the schematics as a guide, check the Powertrain Control Module (PCM) terminals for corrosion, damage, or terminal push out. Pay particular attention to all power and ground circuits. If no problems are found, replace the PCM in accordance with the Service Information. With the scan tool, perform Quick Learn.
   - Refer to **STANDARD PROCEDURE** and perform the 68RFE TRANSMISSION VERIFICATION TEST.

17. **CHECK WIRING AND CONNECTORS**
    1. The conditions necessary to set this DTC are not present at this time.
    2. Using the schematics as a guide, inspect the wiring and connectors specific to this circuit.
    3. Wiggle the wires while checking for shorted and open circuits.
    4. With the scan tool, check the Event Data to help identify the conditions in which the DTC was set.
    5. If the Event Data shows the DTC Pie set while the Line Pressure was significantly below the Desired Line Pressure reading, check for causes of low line pressure (low fluid level, broken or mis-installed primary oil filter or filter seal, sticking Main Regulator Valve in the Pump Valve Body etc.). If the data shows the DTC set while the Line Pressure reading was significantly higher than the Desired Line Pressure, check the Line Pressure Sensor and related wiring.

       Where there any problems found?

Yes

- Repair as necessary.
- Refer to **STANDARD PROCEDURE** and perform the 68RFE TRANSMISSION VERIFICATION TEST.

No

- Test Complete.

P0988-4C PRESSURE SWITCH RATIONALITY

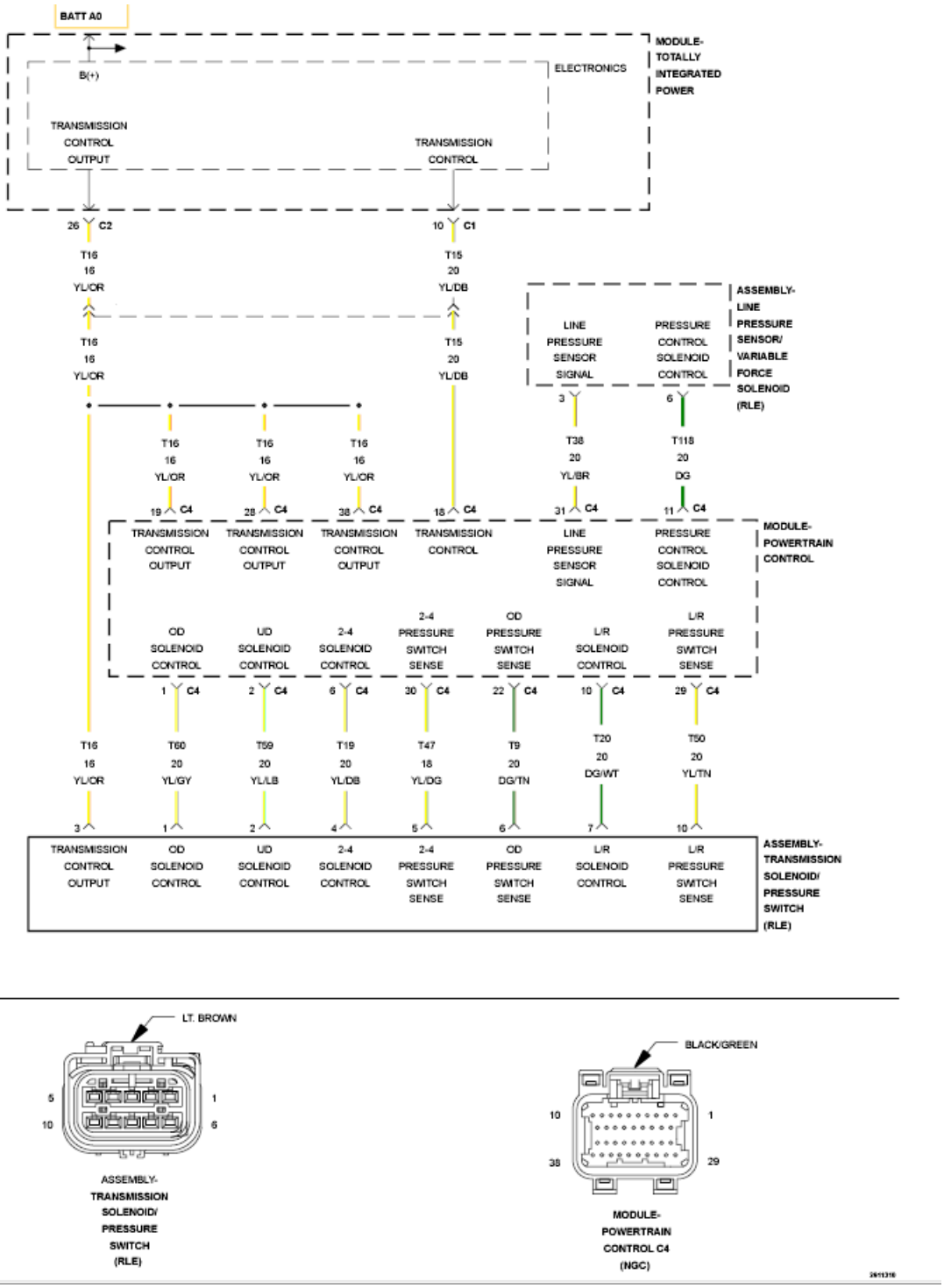

Fig. 115: Solenoid Control Wiring Diagram
Courtesy of CHRYSLER GROUP, LLC

For a complete wiring diagram, **refer to appropriate SYSTEM WIRING DIAGRAMS article** .

THEORY OF OPERATION

The Transmission system uses five pressure switches to monitor the fluid pressure in the L/R, 2C, 4C, UD, and OD clutch circuits. The pressure switches are continuously monitored for the correct states in each gear as shown.

WHEN MONITORED:

Continuously with the ignition on, engine running, with the transmission in gear.

SET CONDITION:

The DTC is set if the 4C Pressure Switch reads open or closed at the wrong time in a given gear.

POSSIBLE CAUSES

Possible Causes
RELATED TCM POWER INPUT DTCS PRESENT
DTC P0871 ALSO PRESENT
LOSS OF 12-VOLT FEED
(T48) 4C PRESSURE SWITCH SENSE CIRCUIT OPEN
(T48) 4C PRESSURE SWITCH SENSE CIRCUIT SHORTED TO GROUND
EXCESSIVE FLUID LEAKAGE WITH 4C CLUTCH CIRCUIT
NO. 5 CHECK BALL CUT OR DAMAGED
LOW LINE PRESSURE
TRANSMISSION SOLENOID/TRS ASSEMBLY
POWERTRAIN CONTROL MODULE (PCM)
WIRING AND CONNECTORS

Always perform the Pre-Diagnostic Troubleshooting procedure before proceeding. Refer to STANDARD PROCEDURE.

GEAR	L/R	2C	4C	UD	OD
REVERSE	OPEN	OPEN	OPEN	OPEN	OPEN
P/N	CLOSED**	OPEN	OPEN	OPEN	OPEN
1ST	CLOSED*	OPEN	OPEN	CLOSED	OPEN
2ND	OPEN	CLOSED	OPEN	CLOSED	OPEN
3RD	OPEN	OPEN	CLOSED	CLOSED	OPEN
4TH	OPEN	OPEN	OPEN	CLOSED	CLOSED
5TH	OPEN	OPEN	CLOSED	OPEN	CLOSED
6TH	OPEN	CLOSED	OPEN	OPEN	CLOSED
*L/R is closed if output speed is below 100 rpm in Drive. L/R is closed in Manual (ERS) 1st gear.					
**May be open when rolling in Neutral or at low oil temperatures.					

DIAGNOSTIC TEST

1. **CHECK FOR RELATED DTCS**
    1. With the scan tool, read DTCs.

       Are there any TIPM TCM Power Control Circuit or TCM Power Input DTCs present?

       Yes

       - Refer to **DIAGNOSIS AND TESTING** and perform the appropriate diagnostic procedure.

       No

       - Go To 2.
2. **DTC DATA SHOW CURRENT DTC**
    1. With the scan tool, check the Event Data.

       NOTE: Make sure to record all Event Data stored in the scan tool for future reference in this test procedure.

       Does the Event Data show data for DTC P0988?

       Yes

       - Go To 3.

       No

       - Refer to **DIAGNOSTIC CODE INDEX** and perform the diagnostic procedure identified in the Event Data.
3. **CHECK IF MULTIPLE DTCS ARE PRESENT**

   In the Event Data recorded earlier, are there two or more related Pressure Switch Sense DTCs present in addition to P0988?

   Yes

   - Go To 4.

   No

   - Go To 7.
4. **RELATED DTC PRESENT**

   In the Event Data recorded earlier, do all the pressure switches read CLOSED for P0988?

   Yes

- Refer to **DIAGNOSTIC CODE INDEX** and perform the diagnostic procedure for the DTC P0882.

No

- Go To 5.

5. **CHECK IF THE PRESSURE SWITCHES READ OPEN**

   In the Event Data recorded earlier, do all the pressure switches read OPEN?

   Yes

   - Go To 6.

   No

   - Go To 7.

6. **CHECK FOR LOW LINE PRESSURE**

   In the Event Data recorded earlier, is the Line Pressure less than 40 psi, and significantly below the Desired Line Pressure?

   Yes

   - Repair as necessary to correct low line pressure. Check fluid level and adjust as necessary. If fluid level is OK, check the Primary Oil Filter seal for a split, crack, or improperly installed. If the filter and seal are OK, check the Main Regulator Valve in the Oil Pump. Refer to **STANDARD PROCEDURE** for the above procedures.
   - Refer to **STANDARD PROCEDURE** and perform the 68RFE TRANSMISSION VERIFICATION TEST.

   No

   - Replace the Transmission Solenoid/TRS Assembly in accordance with the Service Information.
   - Refer to **STANDARD PROCEDURE** and perform the 68RFE TRANSMISSION VERIFICATION TEST.

7. **CHECK IF THE DTC P0871 ALSO SET**
   1. With the scan tool, read DTCs.

      Is the DTC P0871 also present?

      Yes

      - Refer to **DIAGNOSTIC CODE INDEX** and perform the diagnostic procedure for P0871.

      No

- Go To 8.

8. **CHECK IF THE DTC SET IN PARK, REVERSE OR NEUTRAL**

   In the Event Data recorded earlier, does the Event Data show the DTC P0988 set in Park, Neutral, or Reverse?

   Yes

   - Go To 13.

   No

   - Go To 9.

9. **CHECK IF THE Event Data READS CLOSED**

   In the Event Data recorded earlier, does the Event Data show the 4C Pressure Switch reading CLOSED?

   Yes

   - Go To 11.

   No

   - Go To 10.

10. **CHECK THE PRIMARY OIL FILTER SEAL**

    In the Event Data recorded earlier, is the Line Pressure less than 40 psi, and significantly below the Desired Line Pressure?

    Yes

    - Repair as necessary to correct low line pressure. Check fluid level and adjust as necessary. If fluid level is OK, check the Primary Oil Filter seal for a split, crack, or improperly installed. If the filter and seal are OK, check the Main Regulator Valve in the Oil Pump. Refer to **STANDARD PROCEDURE** for the above procedures.
    - Refer to **STANDARD PROCEDURE** and perform the 68RFE TRANSMISSION VERIFICATION TEST.

    No

    - Go To 15.

11. **CHECK THE PCM AND WIRING USING THE TRANSMISSION SIMULATOR**
    1. Turn the ignition off to the lock position.
    2. Remove the Ignition Switch Feed fuse from the TIPM.

CAUTION: Removal of the Ignition Switch Feed fuse from the TIPM will prevent the vehicle from being started in gear.

WARNING: The Ignition Switch Feed fuse must be removed from the TIPM. Failure to do so can result in possible serious or fatal injury.

3. Install the Transmission Simulator (special tool #8333A, Simulator, Transmission).
4. Ignition on, engine not running.
5. With the Transmission Simulator, turn the Pressure Switch selector switch to the 4C position.
6. With the scan tool, monitor the 4C Pressure Switch while pressing the Pressure Switch test button on the Transmission Simulator (special tool #8333A, Simulator, Transmission).

   Did the state of the 4C Pressure Switch change while pressing the Pressure Switch Test button?

   Yes

   - Go To 12.

   No

   - Go To 13.

12. **CHECK THE TRANSMISSION SOLENOID/TRS ASSEMBLY**
    1. Using the schematics as a guide, inspect the wiring and connectors specific to this circuit.
    2. Wiggle the wires while checking for shorted and open circuits.

    Where there any problems found?

    Yes

    - Repair as necessary.
    - Refer to **STANDARD PROCEDURE** and perform the 68RFE TRANSMISSION VERIFICATION TEST.

    No

    - Replace the Transmission Solenoid/TRS Assembly in accordance with the Service Information.
    - Refer to **STANDARD PROCEDURE** and perform the 68RFE TRANSMISSION VERIFICATION TEST.

13. **CHECK THE (T48) 4C PRESSURE SWITCH SENSE CIRCUIT FOR AN OPEN**

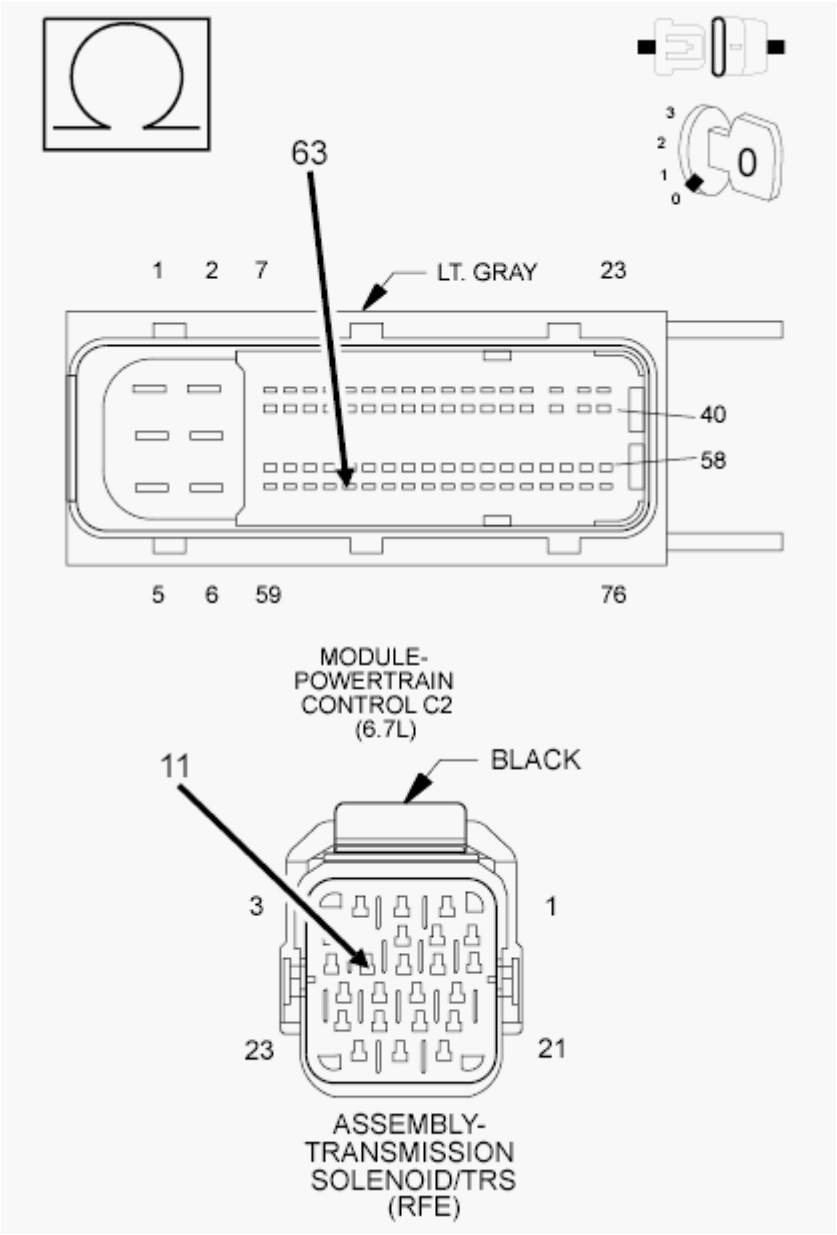

Fig. 116: Checking 4C Pressure Switch Sense Circuit For Open
Courtesy of CHRYSLER GROUP, LLC

1. Turn the ignition off to the lock position.
2. Disconnect the Transmission Simulator (special tool #8333A, Simulator, Transmission).
3. Disconnect the PCM C2 harness connector.
4. Measure the resistance of the (T48) 4C Pressure Switch Sense circuit between the Transmission Solenoid/TRS Assembly harness connector and the appropriate terminal of the PCM C2 harness connector.

   Is the resistance above 5.0 Ohms?

Yes

- Repair the (T48) 4C Pressure Switch Sense circuit for an open.
- Refer to **STANDARD PROCEDURE** and perform the 68RFE TRANSMISSION VERIFICATION TEST.

No

- Go To 14.

14. **CHECK THE (T48) 4C PRESSURE SWITCH SENSE CIRCUIT FOR A SHORT TO GROUND**

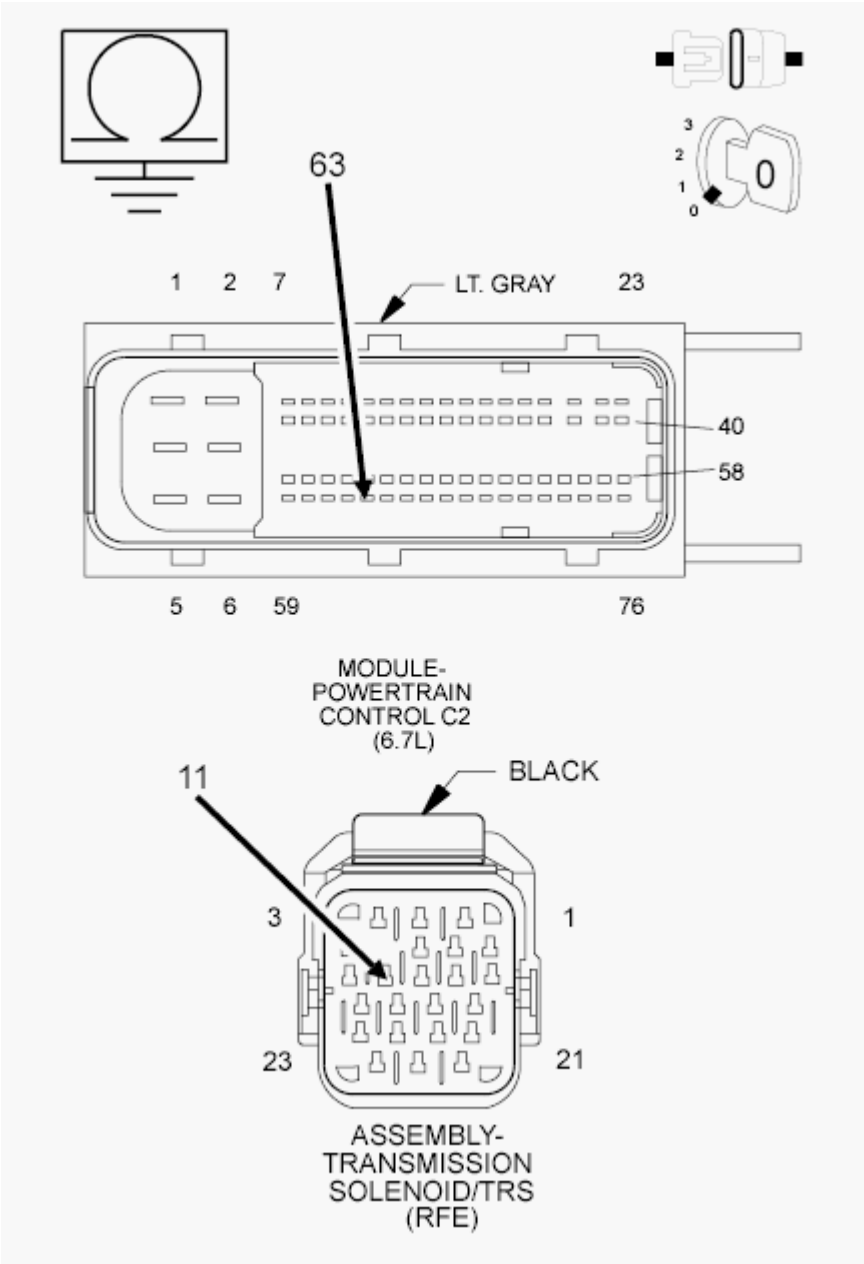

Fig. 117: Checking 4C Pressure Switch Sense Circuit For Short To Ground

Courtesy of CHRYSLER GROUP, LLC

1. Measure the resistance between ground and the (T48) 4C Pressure Switch Sense circuit.

   Is the resistance below 5.0 Ohms?

   Yes

   - Repair the (T48) 4C Pressure Switch Sense circuit for a short to ground.
   - Refer to **STANDARD PROCEDURE** and perform the 68RFE TRANSMISSION VERIFICATION TEST.

   No

   - Replace the Powertrain Control Module in accordance with the Service Information. With the scan tool, perform the Quick Learn procedure.
   - Refer to **STANDARD PROCEDURE** and perform the 68RFE TRANSMISSION VERIFICATION TEST.

15. **CHECK IF THE NO. 5 AND/OR NO. 7 CHECK BALL IS CUT OR DAMAGED**
    1. Turn the Ignition off to the lock position.
    2. Remove the Valve Body Assembly in accordance with the Service Information.
    3. Inspect the No. 5 and No. 7 check balls for any cuts or damage.
    4. Inspect the 4C accumulator piston and seals and also the 4C tower seal on top of the valve body. Refer to **STANDARD PROCEDURE** .

    Where there any problems found?

    Yes

    - Repair as necessary. Check for excessive clutch debris in the transmission oil pan. If excessive clutch debris is present, repair 4C clutch as necessary. Refer to **STANDARD PROCEDURE** for proper repair procedures.
    - Refer to **STANDARD PROCEDURE** and perform the 68RFE TRANSMISSION VERIFICATION TEST.

    No

    - Go To 16.

16. **CHECK FOR EXCESSIVE LEAKAGE WITHIN THE 4C CLUTCH CIRCUIT**
    1. Air check the 4C Clutch hydraulic circuit. Refer to **STANDARD PROCEDURE** .

    NOTE: This hydraulic clutch circuit contains a small bleed orifice. Small leakage is considered normal.

Was there excessive air leakage in the 4C Clutch hydraulic circuit?

Yes

- Repair as necessary. Refer to **STANDARD PROCEDURE** .
- Refer to **STANDARD PROCEDURE** and perform the 68RFE TRANSMISSION VERIFICATION TEST.

No

- Replace the Transmission Solenoid/TRS Assembly in accordance with the Service Information.
- Refer to **STANDARD PROCEDURE** and perform the 68RFE TRANSMISSION VERIFICATION TEST.

P1684-BATTERY WAS DISCONNECTED

For a complete wiring diagram, **refer to appropriate SYSTEM WIRING DIAGRAMS article** .

THEORY OF OPERATION

The PCM uses a battery backed RAM (Random Access Memory) is used to maintain some learned values. When the battery B(+) is disconnected, the memory is lost. When the B(+) is restored, this memory loss is detected by the Transmission Control System. The DTC is set and the learned values are initialized to known constants or previously learned values from EEPROM (Electronic Erasable Programmable Read Only Memory). This results in the re-initialization of some parameters.

WHEN MONITORED:

Whenever the ignition is in the Run/Start position.

SET CONDITION:

This DTC will set whenever Powertrain Control Module is disconnected from Fused B(+) or ground. It will also be set using the scan tool to perform a Battery Disconnect and/or Quick Learn procedure.

POSSIBLE CAUSES

Possible Causes
BATTERY WAS DISCONNECTED
SCAN TOOL BATTERY DISCONNECT PERFORMED
PCM WAS REPLACED OR DISCONNECTED
QUICK LEARN WAS PERFORMED

Always perform the Pre-Diagnostic Troubleshooting procedure before proceeding. Refer to STANDARD PROCEDURE.

DIAGNOSTIC TEST

1. **POSSIBLE CAUSES**
    1. This DTC is an informational DTC only.
    2. This DTC is set due to a momentary loss of power and/or the ground circuits to the PCM.
    3. Below are a list of possible causes associated with this DTC.
    4. Battery was disconnected.
    5. The battery disconnect feature (if equipped) on the scan tool was performed.
    6. The Quick Learn feature on the scan tool was performed.
    7. PCM was replaced or disconnected.

    Were any of the above possible causes performed?

    Yes

    - This is the cause of the DTC. Erase the DTC and return vehicle to customer.
    - Refer to **STANDARD PROCEDURE** and perform the 68RFE TRANSMISSION VERIFICATION TEST.

    No

    - Go To 2.
2. **CHECK WIRING AND CONNECTORS**
    1. The conditions necessary to set this DTC are not present at this time.
    2. Using the schematics as a guide, inspect the wiring and connectors specific to this circuit.

    NOTE: Check all power and ground circuits to the PCM for a intermittent or high resistance condition.

    3. Wiggle the wires while checking for shorted and open circuits.
    4. With the scan tool, check the Event Data to help identify the conditions in which the DTC was set.

    Where there any problems found?

    Yes

    - Repair as necessary.
    - Refer to **STANDARD PROCEDURE** and perform the 68RFE TRANSMISSION VERIFICATION TEST.

    No

    - Test Complete.

P1715-RESTRICTED MANUAL VALVE IN T3 RANGE

For a complete wiring diagram, **refer to appropriate SYSTEM WIRING DIAGRAMS article** .

WHEN MONITORED:

Whenever the PRNDL code indicates Temp 3.

SET CONDITION:

This DTC sets when conditions for the DTC P1776 are satisfied or 3 unsuccessful attempts to engage 1st gear while the shifter is in the temp 3 zone. This indicates a restricted port at the manual valve because the shifter is not fully engaged in the drive position.

POSSIBLE CAUSES

Possible Causes
RELATED TRANSMISSION DTCS PRESENT
CUSTOMER DRIVING HABITS
MISADJUSTED SHIFTER

Always perform the Pre-Diagnostic Troubleshooting procedure before proceeding. Refer to STANDARD PROCEDURE.

DIAGNOSTIC TEST

1. **CHECK FOR RELATED DTCS**
    1. With the scan tool, read DTCs.

       Are the DTCs P0729, P0731, P0732, P0733, P0734, P0735, or P0716 present?

       Yes

       - Refer to **DIAGNOSTIC CODE INDEX** and perform the appropriate diagnostic procedure for the reported DTC(s).

       No

       - Go To 2.
2. **CHECK SHIFTER ADJUSTMENT**
    1. Check Shift Lever adjustment in accordance with the Service Information.

       Is the shifter properly adjusted?

       Yes

- Go To 3.

No

- Adjust the Shifter Assembly in accordance with the Service Information.
- Refer to **STANDARD PROCEDURE** and perform the 68RFE TRANSMISSION VERIFICATION TEST.

3. **CHECK CUSTOMER DRIVING HABIT**
    1. This DTC can be set if the customer rests their hand on the shift lever while they are driving. The transmission can be put in the T3 position if just enough upward pressure towards neutral is exerted on the shift lever.
    2. When this occurs, the feed port to the clutch is restricted, the transmission will declare neutral, and this DTC will be set. The customer should be informed not to rest their hand on the shifter while driving.
    3. This DTC can also be set by simply bumping the shift lever toward neutral while accelerating.
    4. With the scan tool, check the Event Data to help identify the conditions in which the DTC was set.

    If there are no possible causes remaining, view repair.

    Repair

    - This DTC can be set by putting too much forward pressure on the shift lever while it is in the OD position. Make sure the customer is informed.
    - Refer to **STANDARD PROCEDURE** and perform the 68RFE TRANSMISSION VERIFICATION TEST.

P1775-SOLENOID SWITCH VALVE LATCHED IN TCC POSITION

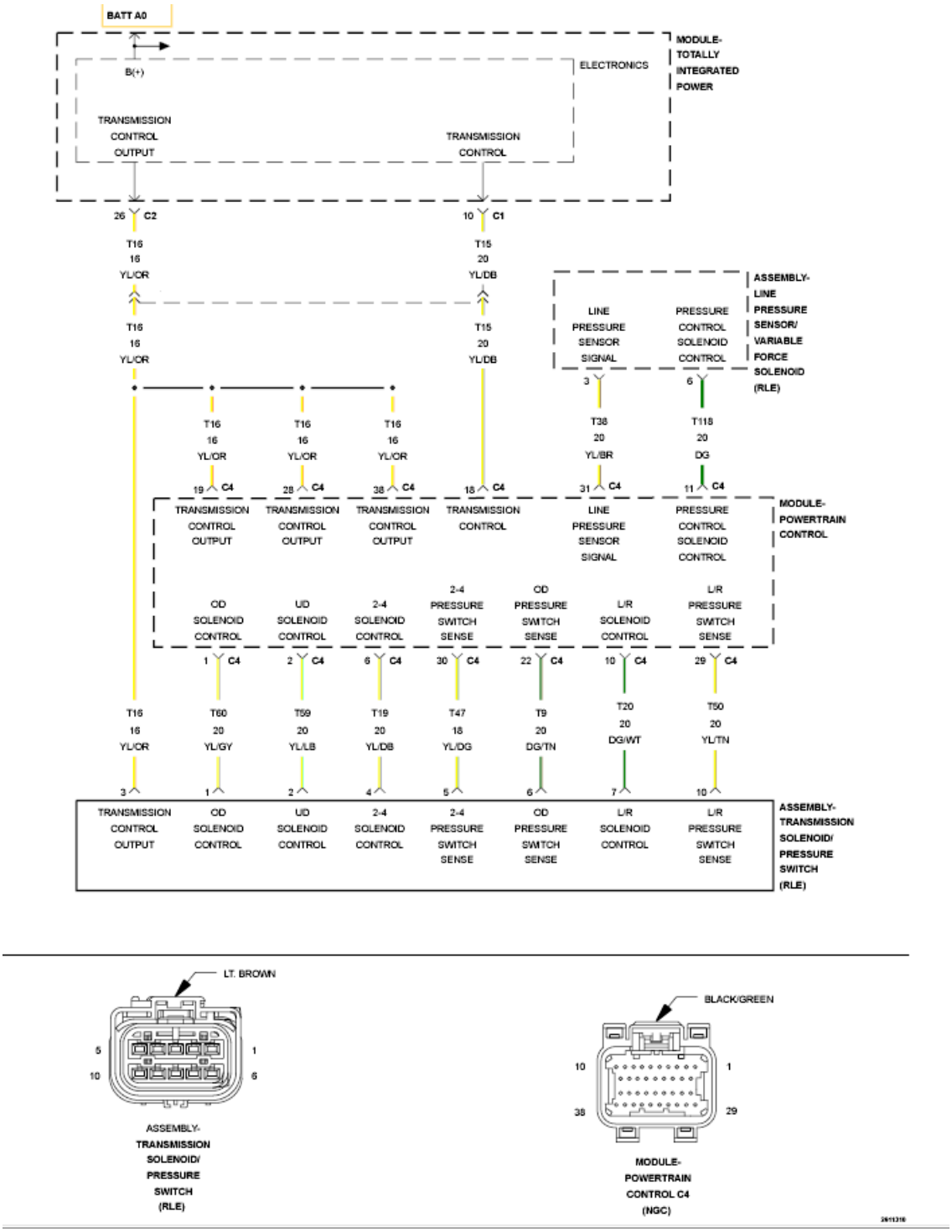

Fig. 118: Solenoid Control Wiring Diagram
Courtesy of CHRYSLER GROUP, LLC

For a complete wiring diagram, **refer to appropriate SYSTEM WIRING DIAGRAMS article** .

THEORY OF OPERATION

The Solenoid Switch Valve (SSV) controls the direction of the transmission fluid when the L/R Solenoid is energized. The SSV will be in the downshifted position in 1st gear, thus directing the fluid to the L/R clutch circuit. In 2nd through 6th gears, it will be in the upshifted position and directing the fluid to the torque converter clutch (TCC) control circuit.

When shifting into 1st gear, a special hydraulic sequence is performed to ensure SSV movement into the downshifted position. The L/R Pressure Switch is monitored to confirm SSV movement. If movement is not confirmed (the L/R pressure switch does not close), EMCC is inhibited until SSV operation is confirmed.

WHEN MONITORED:

During an attempted shift into 1st gear.

SET CONDITION:

This DTC is set if three unsuccessful attempts are made to shift the Solenoid Switch Valve (SSV) into the downshifted position in one given ignition start. This DTC can take up to five minutes to mature before illuminating the MIL.

POSSIBLE CAUSES

Possible Causes
RELATED DTC PRESENT
SOLENOID SWITCH VALVE STICKING
L/R PRESSURE SWITCH SENSE CIRCUIT SHORTED TO OTHER CIRCUITS
TRANSMISSION SOLENOID/TRS ASSEMBLY
POWERTRAIN CONTROL MODULE (PCM)

Always perform the Pre-Diagnostic Troubleshooting procedure before proceeding. Refer to STANDARD PROCEDURE.

DIAGNOSTIC TEST

1. **CHECK FOR RELATED DTCS**
    1. With the scan tool, check for other transmission DTCs.

       Is the DTC P0841 present also?

       Yes

       - Refer to **DIAGNOSTIC CODE INDEX** and perform the appropriate diagnostic procedure.

       No

       - Go To 2.
2. **CHECK IF THE DTC IS CURRENT**

1. With the scan tool, read DTCs.

   Is the status Active or is the Starts Since Set counter 2 or less for this DTC?

   Yes

   - Go To 3.

   No

   - Go To 6.

3. **CHECK THE PCM AND WIRING**
   1. Turn the ignition off to the lock position.
   2. Remove the Ignition Switch Feed fuse from the TIPM.

      CAUTION: Removal of the Ignition Switch Feed fuse from the TIPM will prevent the vehicle from being started in gear.

      WARNING: The Ignition Switch Feed fuse must be removed from the TIPM. Failure to do so can result in possible serious or fatal injury.

   3. Install the Transmission Simulator (special tool #8333A, Simulator, Transmission).
   4. Ignition on, engine not running.
   5. With the Transmission Simulator, turn the Pressure Switch selector switch to L/R.
   6. With the scan tool, monitor the L/R Pressure Switch state while pressing the Pressure Switch Test button on the Transmission Simulator.

      Did the state of the L/R Pressure Switch change while pressing the Pressure Switch Test button?

      Yes

      - Go To 4.

      No

      - Go To 5.

4. **CHECK IF THE SOLENOID SWITCH VALVE STICKING**
   1. Turn the ignition off to the lock position.
   2. Remove the Transmission Oil Pan in accordance with the Service Information.
   3. Remove the Transmission Valve body in accordance with the Service Information.
   4. Inspect the Solenoid Switch Valve and Plugs for sticking.

      Is the Solenoid Switch Valve or Plugs sticking?

Yes

- Clean and inspect in accordance with the Service Information. Repair as necessary.
- Refer to **STANDARD PROCEDURE** and perform the 68RFE TRANSMISSION VERIFICATION TEST.

No

- Replace the Transmission Solenoid/TRS Assembly in accordance with the Service Information.
- Refer to **STANDARD PROCEDURE** and perform the 68RFE TRANSMISSION VERIFICATION TEST.

5. **CHECK THE L/R PRESSURE SWITCH SENSE CIRCUIT FOR A SHORT TO ANOTHER CIRCUIT**

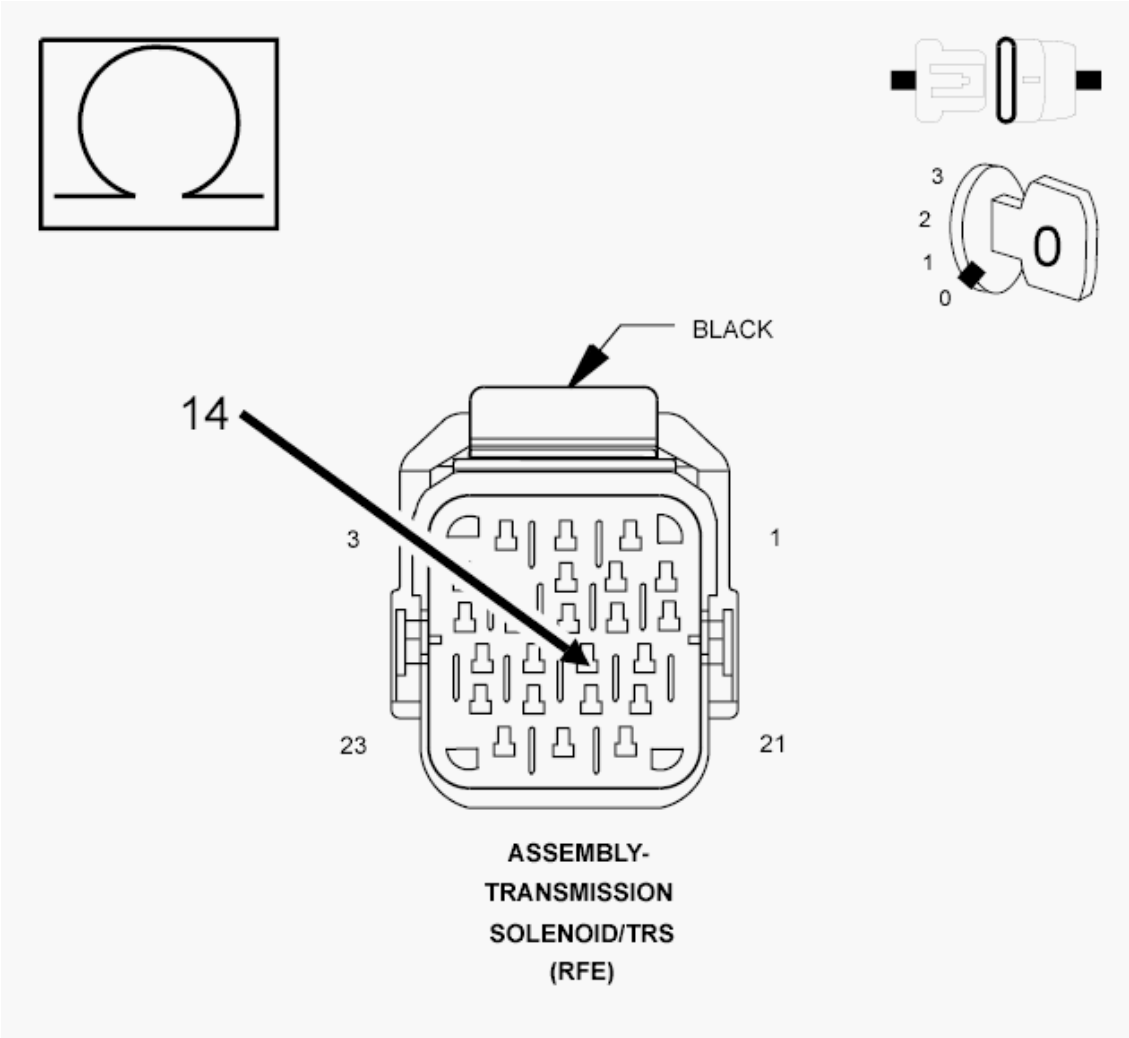

Fig. 119: Checking L/R Pressure Switch Sense Circuit For A Short To Another Circuit
Courtesy of CHRYSLER GROUP, LLC

1. Turn the ignition off to the lock position.
2. Disconnect the Transmission Solenoid/TRS Assembly harness connector.
3. Disconnect all PCM harness connectors.
4. Measure the resistance between the (T50) L/R Pressure Switch Sense circuit and all other circuits in the Transmission Solenoid/TRS Assembly harness connector.

   Is the resistance below 5.0 Ohms between the (T50) L/R Pressure Switch Sense circuit and all other circuit(s) in the Transmission Solenoid/TRS Assembly harness connector?

   Yes

   - Repair the (T50) L/R Pressure Switch Sense circuit for a short to another circuit(s).
   - Refer to **STANDARD PROCEDURE** and perform the 68RFE TRANSMISSION VERIFICATION TEST.

   No

   - Using the schematics as a guide, check the Powertrain Control Module (PCM) terminals for corrosion, damage, or terminal push out. Pay particular attention to all power and ground circuits. If no problems are found, replace the PCM in accordance with the Service Information. With the scan tool, perform Quick Learn.
   - Refer to **STANDARD PROCEDURE** and perform the 68RFE TRANSMISSION VERIFICATION TEST.

6. **CHECK WIRING AND CONNECTORS**
   1. The conditions necessary to set this DTC are not present at this time.
   2. Using the schematics as a guide, inspect the wiring and connectors specific to this circuit.
   3. Wiggle the wires while checking for shorted and open circuits.
   4. With the scan tool, check the Event Data to help identify the conditions in which the DTC was set.

      Where there any problems found?

      Yes

      - Repair as necessary.
      - Refer to **STANDARD PROCEDURE** and perform the 68RFE TRANSMISSION VERIFICATION TEST.

      No

      - Test Complete.

P1776-SOLENOID SWITCH VALVE LATCHED IN LR POSITION

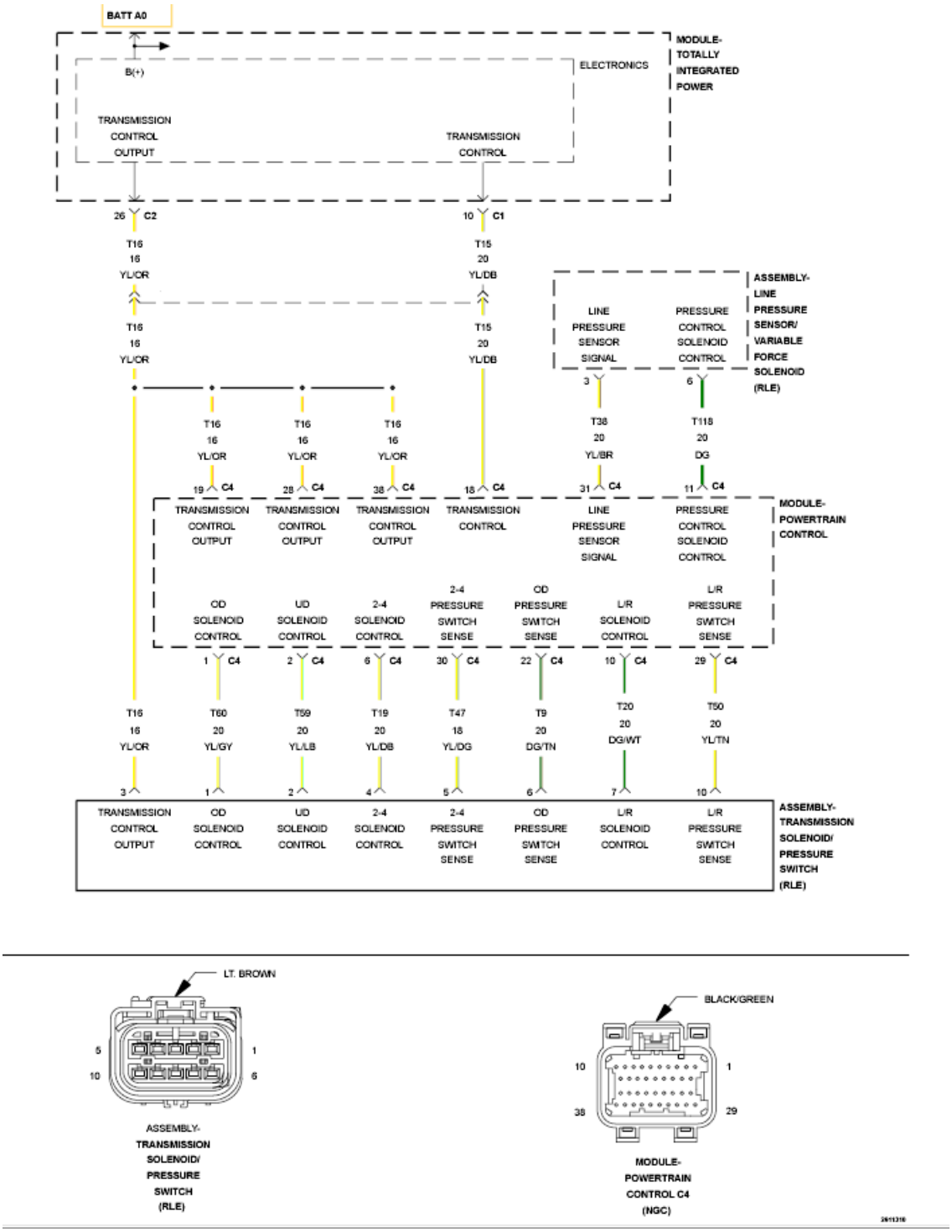

Fig. 120: Solenoid Control Wiring Diagram
Courtesy of CHRYSLER GROUP, LLC

For a complete wiring diagram, **refer to appropriate SYSTEM WIRING DIAGRAMS article** .

THEORY OF OPERATION

The Solenoid Switch Valve (SSV) controls the direction of the transmission fluid when the L/R Solenoid is energized. The SSV will be in the downshifted position in 1st gear, thus directing the fluid to the L/R clutch circuit. In 2nd through 6th gears, it will be in the upshifted position and directing the fluid into the torque converter clutch (TCC) control circuit.

When in 2nd through 6th gear, the Torque Converter Clutch (TCC) can be engaged when certain conditions are met. The TCC piston is electronically modulated by increasing the duty cycle of the L/R solenoid until the torque converter slip difference (difference between engine and transmission input speed) is within 60 rpm. Then the L/R solenoid is fully energized (FEMCC - 100% duty cycle). Torque converter slip is monitored in FEMCC to ensure adequate clutch capacity.

WHEN MONITORED:

Continuously when performing partial or full EMCC - PEMCC or FEMCC.

SET CONDITION:

If the transmission senses the L/R pressure switch closing while performing PEMCC or FEMCC. This DTC will set after two unsuccessful attempts to perform PEMCC or FEMCC. This DTC can take up to five minutes of problem identification before illuminating the MIL.

POSSIBLE CAUSES

Possible Causes
RELATED DTC P0841 PRESENT
L/R PRESSURE SIGNAL CIRCUIT OPEN
L/R PRESSURE SIGNAL CIRCUIT SHORTED TO GROUND
SOLENOID SWITCH VALVE
POWERTRAIN CONTROL MODULE (PCM)
INTERMITTENT WIRING AND CONNECTORS

Always perform the Pre-Diagnostic Troubleshooting procedure before proceeding. Refer to STANDARD PROCEDURE.

DIAGNOSTIC TEST

1. **CHECK FOR RELATED DTCS**
    1. With the scan tool, check for other transmission DTCs.

       Is the DTC P0841 present also?

       Yes

       - Refer to **DIAGNOSTIC CODE INDEX** and perform the appropriate diagnostic procedure.

       No

- Go To 2.

2. **CHECK TO SEE IF DTC P1776 IS CURRENT**
   1. With the scan tool, Check the Starts Since Set counter.

      NOTE: NOTE: This counter only applies to the last DTC set.

      Is the Starts Since Set counter 2 or less?

      Yes

      - Go To 3.

      No

      - Go To 7.

3. **CHECK THE PCM AND WIRING**
   1. Turn the ignition off to the lock position.
   2. Remove the Ignition Switch Feed fuse from the TIPM.

      CAUTION: Removal of the Ignition Switch Feed fuse from the TIPM will prevent the vehicle from being started in gear.

      WARNING: The Ignition Switch Feed fuse must be removed from the TIPM. Failure to do so can result in possible serious or fatal injury.

   3. Install the Transmission Simulator (special tool #8333A, Simulator, Transmission).
   4. Ignition on, engine not running.
   5. With the Transmission Simulator, turn the Pressure Switch selector switch to the L/R position.
   6. With the scan tool, monitor the L/R Pressure Switch state while pressing the Pressure Switch Test button on the Transmission Simulator.

      Did the state of the L/R Pressure Switch change while pressing the Pressure Switch Test button?

      Yes

      - Go To 4.

      No

      - Go To 5.

4. **CHECK THE SOLENOID SWITCH VALVE**
   1. Remove the Valve Body in accordance with the Service Information.

2. Inspect the Solenoid Switch Valve and plugs for sticking in the bore and/or wear.

   Were there any problems found?

   Yes

   - Clean and repair as necessary in accordance with the Service Information.
   - Refer to **STANDARD PROCEDURE** and perform the 68RFE TRANSMISSION VERIFICATION TEST.

   No

   - Go To 7.

5. **CHECK THE L/R PRESSURE SIGNAL CIRCUIT FOR AN OPEN**

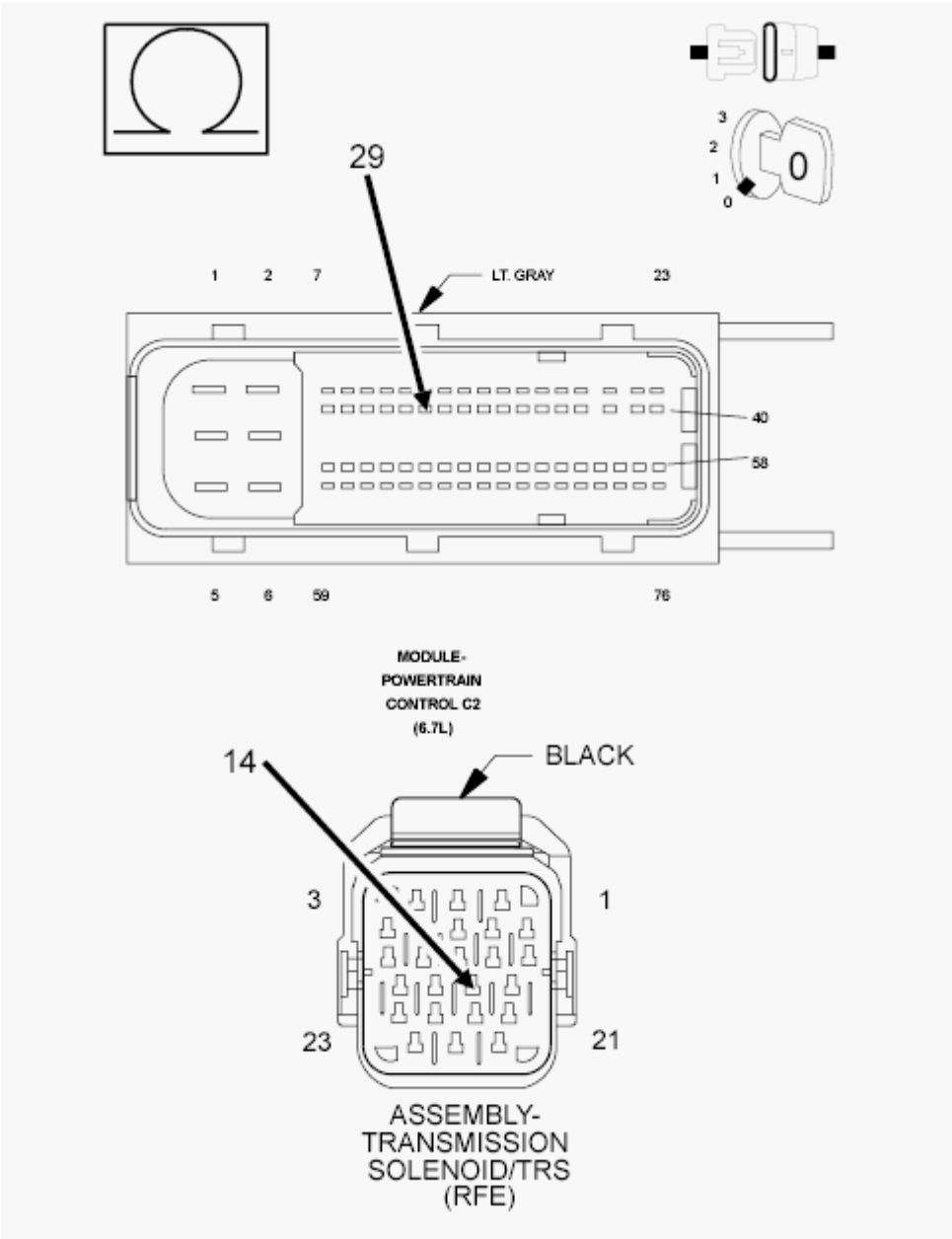

Fig. 121: Checking L/R Pressure Switch Sense & Signal Circuit For Open
Courtesy of CHRYSLER GROUP, LLC

1. Turn the ignition off to the lock position.
2. Disconnect the Transmission Simulator (special tool #8333A, Simulator, Transmission).
3. Disconnect the PCM C2 harness connector.
4. Measure the resistance of the (T50) L/R Pressure Signal circuit between the Solenoid/TRS Assembly harness connector and the appropriate terminal of the PCM C2 harness connector.

   Is the resistance above 5.0 Ohms?

   Yes

- Repair the (T50) L/R Pressure Signal circuit for an open.
- Refer to **STANDARD PROCEDURE** and perform the 68RFE TRANSMISSION VERIFICATION TEST.

No

- Go To 6.

6. **CHECK THE (T50) L/R PRESSURE SIGNAL CIRCUIT FOR A SHORT TO GROUND**

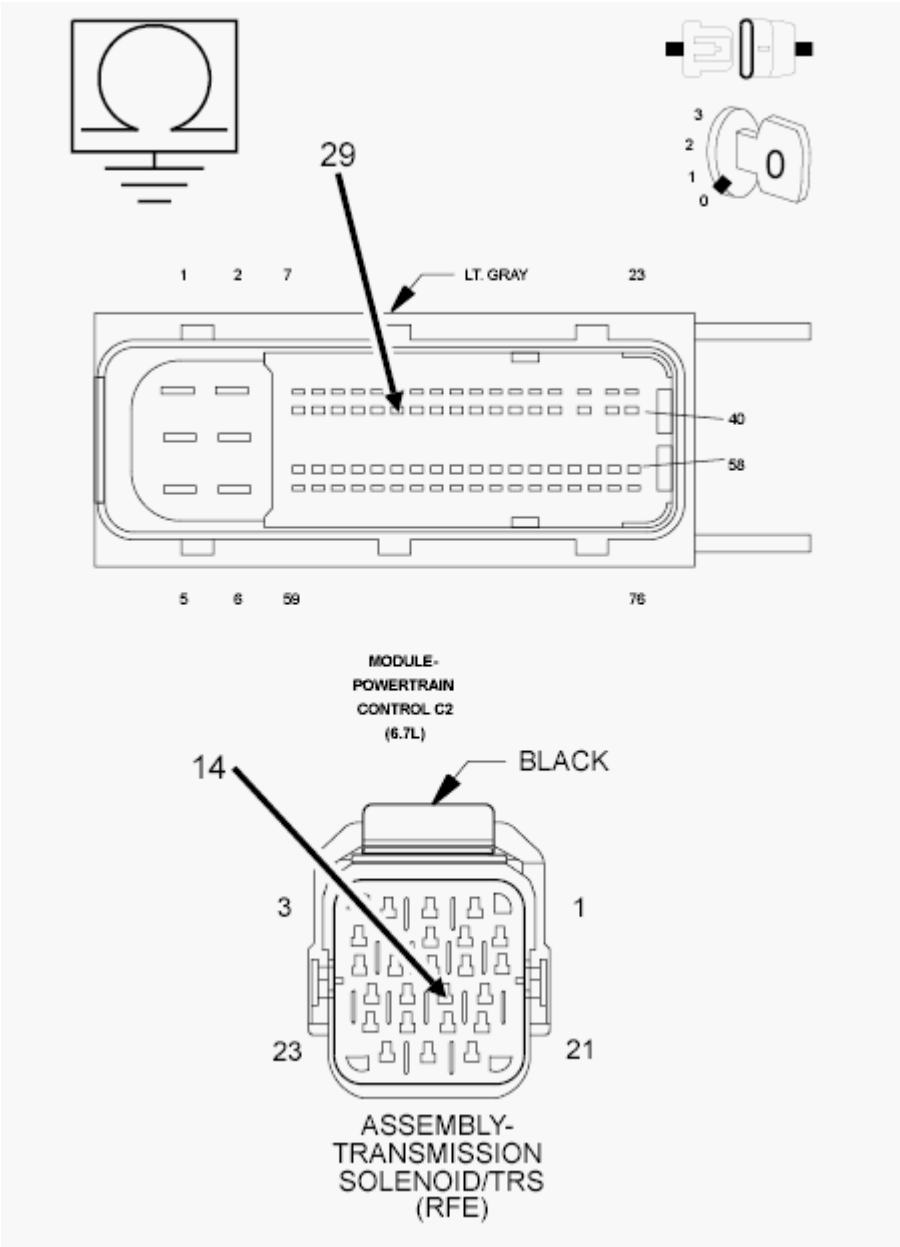

Fig. 122: Checking L/R Pressure Switch Sense & Signal Circuit For Short To Ground
Courtesy of CHRYSLER GROUP, LLC

1. Measure the resistance between ground and the (T50) L/R Pressure Signal circuit.

   Is the resistance below 5.0 Ohms?

   Yes

   - Repair the (T50) L/R Pressure Signal circuit for a short to ground.
   - Refer to **STANDARD PROCEDURE** and perform the 68RFE TRANSMISSION VERIFICATION TEST.

   No

   - Using the schematics as a guide, check the Powertrain Control Module (PCM) terminals for corrosion, damage, or terminal push out. Pay particular attention to all power and ground circuits. If no problems are found, replace the PCM in accordance with the Service Information. With the scan tool, perform Quick Learn.
   - Refer to **STANDARD PROCEDURE** and perform the 68RFE TRANSMISSION VERIFICATION TEST.

7. **CHECK WIRING AND CONNECTORS**
   1. The conditions necessary to set this DTC are not present at this time.
   2. Using the schematics as a guide, inspect the wiring and connectors specific to this circuit.
   3. Wiggle the wires while checking for shorted and open circuits.
   4. This DTC can also be set by the Solenoid Switch Valve intermittently sticking in it's bore under extreme temperature conditions, or by a worn Solenoid Switch Valve or plugs.
   5. With the scan tool, check the Event Data to help identify the conditions in which the DTC was set.

      Where there any problems found?

      Yes

      - Repair as necessary.
      - Refer to **STANDARD PROCEDURE** and perform the 68RFE TRANSMISSION VERIFICATION TEST.

      No

      - Test Complete.

P1794-SPEED SENSOR GROUND ERROR

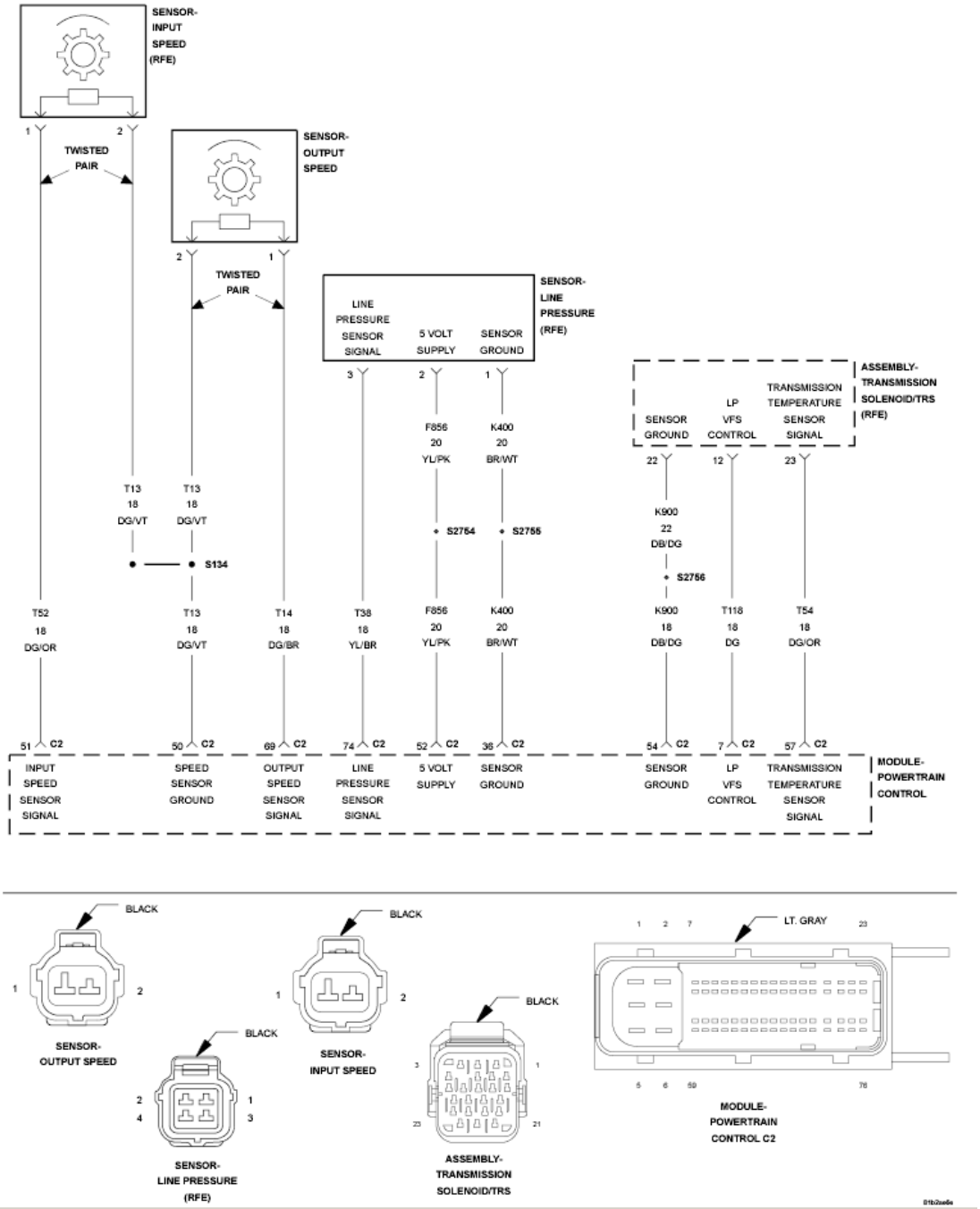

Fig. 123: Input/Output Speed Sensor, Line Pressure Sensor & Transmission Temperature Sensor Circuit Wiring Diagram
Courtesy of CHRYSLER GROUP, LLC

For a complete wiring diagram, **refer to appropriate SYSTEM WIRING DIAGRAMS article** .

THEORY OF OPERATION

The transmission system uses two speed sensors, one to measure input rpm and one to measure output rpm. These inputs are essential for proper transmission operation. Therefore, the integrity of this data is verified

through the following checks:

1) When in gear, if the gear ratio does not compare to a known gear ratio, the corresponding in-gear trouble code is set (DTCs P0729 and P0731-36).

2) An excessive change in input or output speeds indicating signal intermittent which will result in the DTCs P0716 and/or P0721 being set.

3) If the common speed sensor ground circuit is lost, both sensor inputs will read the signal from the input speed sensor at idle in neutral. Since the input speed sensor reads 60 teeth from the input clutch hub and the output speed sensor reads 30 teeth from the park gear, the result is an apparent speed ratio of 1:2 and may cause the DTC P1794 to set when at a stop.

WHEN MONITORED:

The gear ratio is monitored continuously while the Transmission is in gear.

SET CONDITION:

After a controller reset in neutral and a ratio of input to output, of 1 to 2. This DTC can take up to five minutes of problem identification before illuminating the MIL.

POSSIBLE CAUSES

Possible Causes
(T13) SPEED SENSOR GROUND CIRCUIT OPEN
(T13) SPEED SENSOR GROUND CIRCUIT SHORTED TO GROUND
(T13) SPEED SENSOR GROUND CIRCUIT SHORTED TO VOLTAGE
POWERTRAIN CONTROL MODULE (PCM)

Always perform the Pre-Diagnostic Troubleshooting procedure before proceeding. Refer to STANDARD PROCEDURE.

DIAGNOSTIC TEST

1. **CHECK TO SEE IF DTC P1794 IS CURRENT**
    1. Ignition on, engine running with the Shift lever in park.
    2. With the scan tool, read the Transmission Output and Input Speed Sensor states.

    Is the Output Speed Sensor reading twice the Input Speed Sensor reading?

    Yes

    - Go To 2.

    No

- Go To 6.

2. **PCM AND WIRING**
    1. Turn the ignition off to the lock position.
    2. Remove the Ignition Switch Feed fuse from the TIPM.

        CAUTION: Removal of the Ignition Switch Feed fuse from the TIPM will prevent the vehicle from being started in gear.

        WARNING: The Ignition Switch Feed fuse must be removed from the TIPM. Failure to do so can result in possible serious or fatal injury.

    3. Install the Transmission Simulator (special tool #8333A, Simulator, Transmission).
    4. With the Transmission Simulator, set the Input/Output Speed selector switch to the "3000/1000" position. Turn the Input/Output Speed switch to "ON".
    5. Ignition on, engine not running.
    6. With the scan tool, monitor the Input and Output Speed Sensor state.

        Does the Input speed read 3000 rpm and the Output speed read 1000 rpm, within 50 rpm?

        Yes

        - Go To 6.

        No

        - Go To 3.

3. **(T13) SPEED SENSOR GROUND CIRCUIT OPEN**

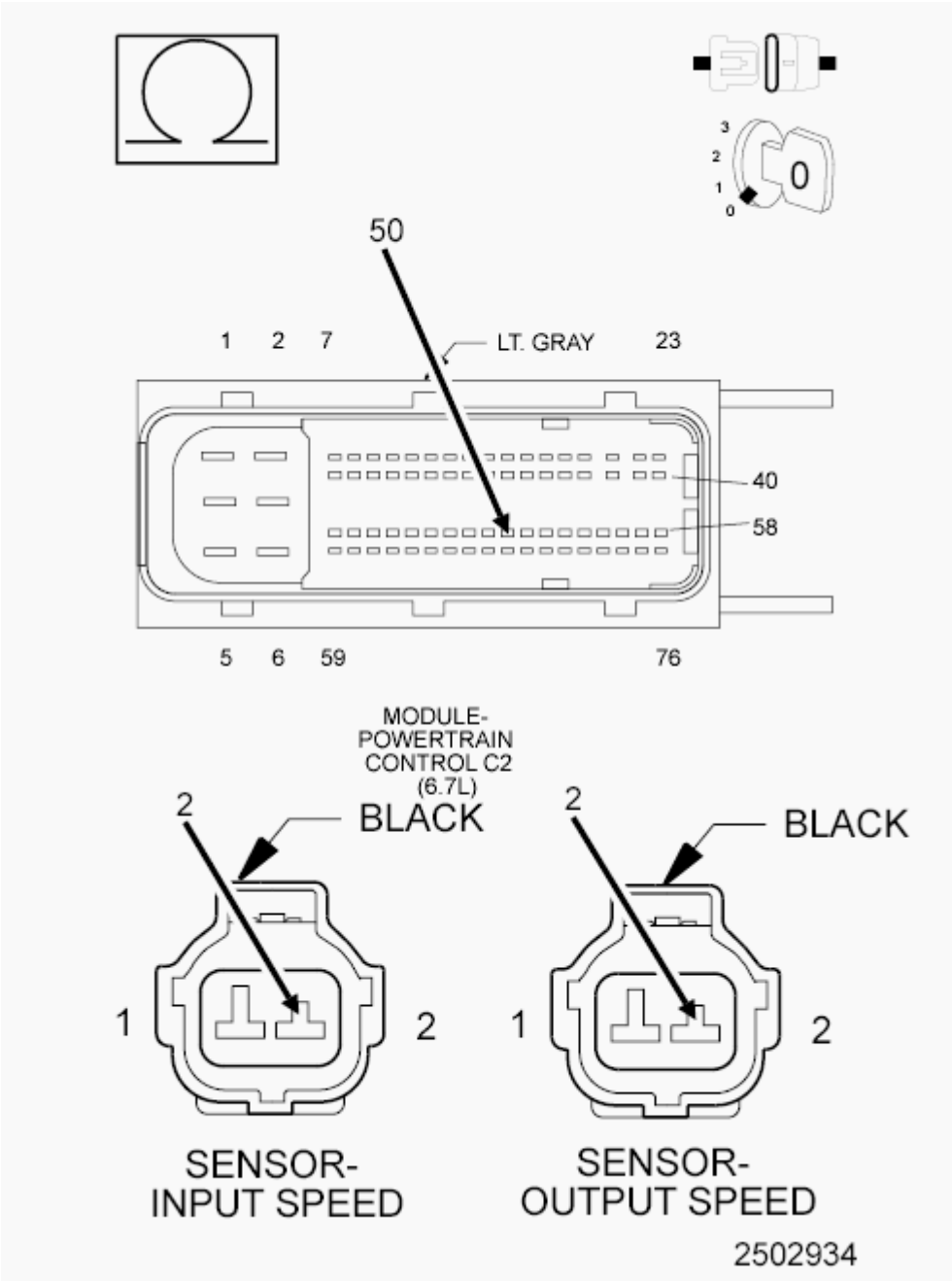

Fig. 124: Checking Speed Sensor Ground Circuit For Open
Courtesy of CHRYSLER GROUP, LLC

1. Turn the ignition off to the lock position.
2. Disconnect the PCM C2 harness connector.
3. Disconnect the Transmission Simulator (special tool #8333A, Simulator, Transmission).
4. Measure the resistance of the (T13) Speed Sensor Ground circuit between both Input and Output Speed Sensor harness connectors and the appropriate terminal of the PCM C2 harness connector.

   Is the resistance above 5.0 Ohms on any of the above measurements?

Yes

- Repair the (T13) Speed Sensor Ground circuit for an open.
- Refer to **STANDARD PROCEDURE** and perform the 68RFE TRANSMISSION VERIFICATION TEST.

No

- Go To 4.

4. **(T13) SPEED SENSOR GROUND CIRCUIT SHORTED TO GROUND**

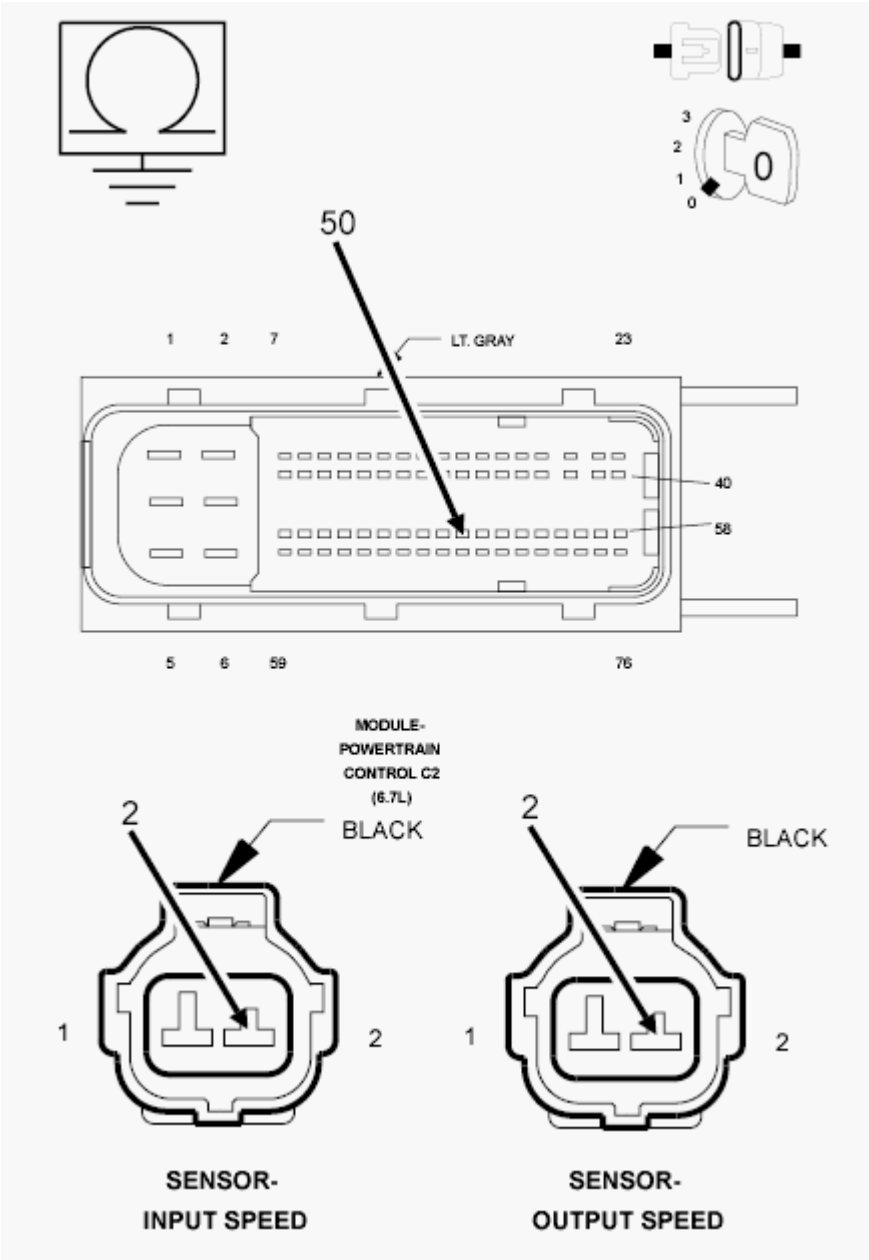

Fig. 125: Checking Speed Sensor Ground Circuit For Short To Ground

Courtesy of CHRYSLER GROUP, LLC

1. Measure the resistance between ground and the (T13) Speed Sensor Ground circuit.

   Is the resistance below 5.0 Ohms?

   Yes

   - Repair the (T13) Speed Sensor Ground circuit for a short to ground.
   - Refer to **STANDARD PROCEDURE** and perform the 68RFE TRANSMISSION VERIFICATION TEST.

   No

   - Go To 5.

5. **(T13) SPEED SENSOR GROUND CIRCUIT SHORTED TO VOLTAGE**

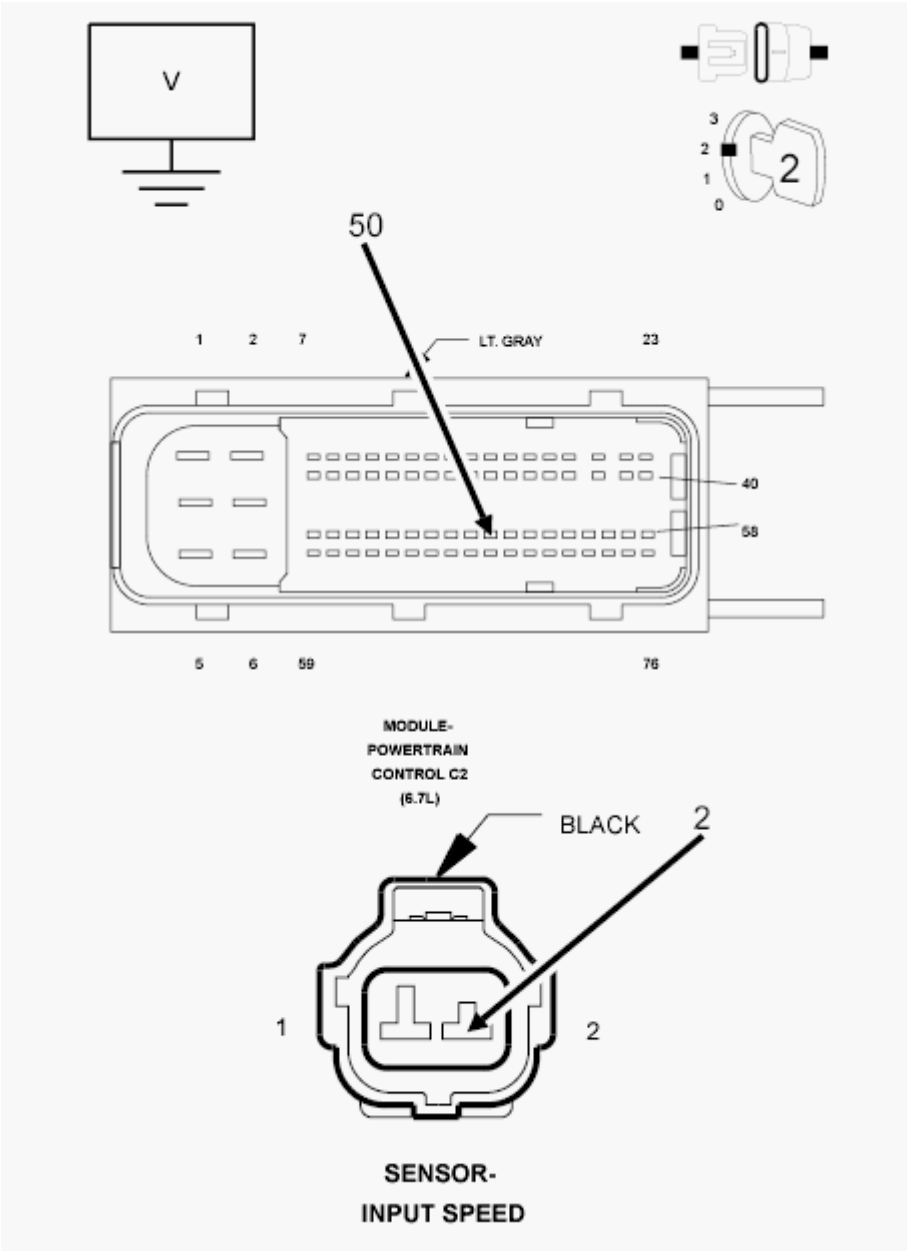

Fig. 126: Checking Input Speed Sensor Ground Circuit For Open Or Short To Voltage
Courtesy of CHRYSLER GROUP, LLC

1. Ignition on, engine not running.
2. With the scan tool under TIPM, actuate the Transmission.
3. Measure the voltage of the (T13) Speed Sensor Ground circuit.

   Is the voltage above 0.5 of a volt?

   Yes

   - Repair the (T13) Speed Sensor Ground circuit for a short to voltage.

- Refer to **STANDARD PROCEDURE** and perform the 68RFE TRANSMISSION VERIFICATION TEST.

No

- Using the schematics as a guide, check the Powertrain Control Module (PCM) terminals for corrosion, damage, or terminal push out. Pay particular attention to all power and ground circuits. If no problems are found, replace and program the PCM in accordance with the Service Information. With the scan tool, perform Quick Learn.
- Refer to **STANDARD PROCEDURE** and perform the 68RFE TRANSMISSION VERIFICATION TEST.

6. **CHECK THE WIRING AND CONNECTORS**
   1. The conditions necessary to set this DTC are not present at this time.
   2. Using the schematics as a guide, inspect the wiring and connectors specific to this circuit.
   3. Wiggle the wires while checking for shorted and open circuits.
   4. With the scan tool, check the Event Data to help identify the conditions in which the DTC was set.

   Where there any problems found?

   Yes

   - Repair as necessary.
   - Refer to **STANDARD PROCEDURE** and perform the 68RFE TRANSMISSION VERIFICATION TEST.

   No

   - Test Complete.

P2700-INADEQUATE ELEMENT VOLUME LR

For a complete wiring diagram, **refer to appropriate SYSTEM WIRING DIAGRAMS article** .

THEORY OF OPERATION

The volumes of the transmission fluid needed to apply the friction elements are continuously monitored and learned for adaptive controls. As the clutch friction material wears, the volume of fluid needed to apply the clutch increases. Certain transmission mechanical problems can cause near-zero learned volumes resulting in setting a DTC. The DTC will usually set with other DTCs, which indicates an internal transmission problem.

WHEN MONITORED:

Whenever the engine is running. The L/R clutch volume index (CVI) is updated during a 3-1 or 2-1 manual (ERS) downshift with throttle angle below 5 degrees. Transmission temperature must be at least 43° C (110° F).

SET CONDITION:

When the L/R clutch volume index (CVI) falls below 16.

POSSIBLE CAUSES

Possible Causes
HYDRAULIC LEAK IN THE VALVE BODY
BROKEN L/R CLUTCH PISTON RETURN SPRING OR SPRING RETAINERS
BROKEN L/R ACCUMULATOR SPRING(S)
TRANSMISSION SOLENOID/TRS ASSEMBLY
POWERTRAIN CONTROL MODULE (PCM)

Always perform the Pre-Diagnostic Troubleshooting procedure before proceeding. Refer to STANDARD PROCEDURE.

DIAGNOSTIC TEST

1. **OTHER DTCS PRESENT**
   1. With the scan tool, check for other transmission DTCs.

      Are there any Pressure Switch Sense circuit DTCs present also?

      Yes

      - Refer to **DIAGNOSTIC CODE INDEX** and perform the appropriate diagnostic procedure.

      No

      - Go To 2.
2. **CHECK L/R CLUTCH VOLUME INDEX**
   1. With the scan tool, erase DTCs.
   2. Start the engine and warm the transmission.

      NOTE: The TRANS TEMP DEG must be at least 43° C or 110° F before performing the following steps.

   3. Drive the vehicle and perform at least ten 3-1 manual (ERS) downshifts at closed throttle from speeds of about 16 to 24 Km/h (10 to 15 mph).
   4. With the scan tool, read the L/R CL VOL INDEX.

      Is the L/R CL VOL INDEX below 20?

      Yes

      - Go To 3.

No

- Go To 5.

3. **L/R CLUTCH CIRCUIT LEAKS IN THE VALVE BODY**
   1. Turn the ignition off to the lock position.
   2. Remove the transmission oil pan in accordance with the Service Information.
   3. Remove the valve body in accordance with the service information.
   4. Check condition of the L/R accumulator springs.
   5. Look for possible leak paths into the L/R clutch hydraulics circuit within the valve body.

   Were any problems found?

   Yes

   - Repair as necessary.
   - Refer to **STANDARD PROCEDURE** and perform the 68RFE TRANSMISSION VERIFICATION TEST.

   No

   - Go To 4.

4. **AIR CHECK L/R CLUTCH CIRCUITS**
   1. Perform an air check on the L/R Clutch circuit in accordance with the Service Information.
   2. Watch and listen for L/R Clutch piston movement.

   Does the L/R piston stroke and return properly?

   Yes

   - Replace the Transmission/TRS Solenoid Assembly in accordance with the service information. With the scan tool, perform Quick Learn.
   - Refer to **STANDARD PROCEDURE** and perform the 68RFE TRANSMISSION VERIFICATION TEST.

   No

   - Repair internal transmission as necessary. Pay attention to the components related to the L/R clutch. A broken or weak L/R clutch return spring, Accumulator Spring, and/or dislocated snap ring could cause this problem.
   - Refer to **STANDARD PROCEDURE** and perform the 68RFE TRANSMISSION VERIFICATION TEST.

5. **VERIFY PCM OPERATION**

NOTE: The TRANS TEMP DEG must be at least 43° C (110° F) before performing

the following steps.

1. Perform eight learnable starts. A learnable start is defined as follows: Start engine. From a standstill, accelerate lightly to 80 Km/h or 50 mph, then brake lightly to a stop. Turn off engine.
2. With the scan tool, record the CL VOL INDEX (CVI) for all clutches
3. With the scan tool, perform a BATTERY DISCONNECT.
4. With the scan tool, read the CVIs and compare them to the readings recorded before the BATTERY DISCONNECT.

   Are any of the CVIs less than 5 or different than before the BATTERY DISCONNECT?

   Yes

   - Using the schematics as a guide, check the Powertrain Control Module (PCM) terminals for corrosion, damage, or terminal push out. Pay particular attention to all power and ground circuits. If no problems are found, replace the PCM in accordance with the Service Information. With the scan tool, perform Quick Learn.
   - Refer to **STANDARD PROCEDURE** and perform the 68RFE TRANSMISSION VERIFICATION TEST.

   No

   - Test Complete.

P2701-INADEQUATE ELEMENT VOLUME 2C

For a complete wiring diagram, **refer to appropriate SYSTEM WIRING DIAGRAMS article** .

THEORY OF OPERATION

The volumes of the transmission fluid needed to apply the friction elements are continuously monitored and learned for adaptive controls. As the clutch friction material wears, the volume of fluid needed to apply the clutch increases. Certain transmission mechanical problems can cause near-zero learned volumes resulting in setting a DTC. The DTC will usually set with other DTCs, which indicates an internal transmission problem.

WHEN MONITORED:

Whenever the engine is running. The 2C clutch volume index (CVI) is updated during a 3-2 or 4-2 kickdown with throttle angle between 10 and 54 degrees. Transmission temperature must be at least 43° C (110° F).

SET CONDITION:

When the 2C CVI falls below 5.

POSSIBLE CAUSES

Possible Causes
HYDRAULIC LEAK IN THE VALVE BODY
BROKEN 2C CLUTCH PISTON RETURN SPRING / DISLODGED SNAP RING
BROKEN ACCUMULATOR SPRING(S)
TRANSMISSION SOLENOID/TRS ASSEMBLY
POWERTRAIN CONTROL MODULE (PCM)

Always perform the Pre-Diagnostic Troubleshooting procedure before proceeding. Refer to STANDARD PROCEDURE.

DIAGNOSTIC TEST

1. **OTHER DTCS PRESENT**
   1. With the scan tool, check for other transmission DTCs.

      Are there any Pressure Switch Sense circuit DTCs present also?

      Yes

      - Refer to **DIAGNOSTIC CODE INDEX** and perform the appropriate diagnostic procedure.

      No

      - Go To 2.
2. **CHECK 2C CLUTCH VOLUME INDEX**
   1. With the scan tool, erase Transmission DTCs.
   2. Drive the vehicle at about 1000 rpm on the Output Speed sensor, then use the AutoStick® (ERS) and select 3rd gear. This will put the vehicle into third gear.

      NOTE: The TRANS TEMP DEG must be at least 43° C (110° F) before performing the following steps.

   3. Perform at least ten 3-2 kickdowns by allowing the vehicle to coast down to 650 to 550 rpm on the Output Speed sensor, then depressing the throttle between 40 and 50 Degrees.

      NOTE: Do not exceed 54 Degrees of Throttle Angle.

   4. With the scan tool, read the 2C CL VOL INDEX.

      Is the 2C CL VOL INDEX below 10?

      Yes

      - Go To 3.

No

- Go To 5.

3. **2C CLUTCH CIRCUIT LEAKS IN THE VALVE BODY**
    1. Turn the ignition off to the lock position.
    2. Remove the transmission oil pan in accordance with the Service Information.
    3. Remove the valve body in accordance with the service information.
    4. Check condition of the 2C accumulator springs.
    5. Look for possible leak paths into the 2C clutch hydraulics circuit within the valve body.

    Were any problems found?

    Yes

    - Repair as necessary.
    - Refer to **STANDARD PROCEDURE** and perform the 68RFE TRANSMISSION VERIFICATION TEST.

    No

    - Go To 4.

4. **AIR CHECK 2C CLUTCH CIRCUIT**
    1. Turn the ignition off to the lock position.
    2. Perform an air check on the 2C Clutch circuit in accordance with the Service Information.
    3. Watch and listen for 2C Clutch piston movement.

    Dose the piston stroke and return properly?

    Yes

    - Replace the Transmission/TRS Solenoid Assembly in accordance with the service information. With the scan tool, perform Quick Learn.
    - Refer to **STANDARD PROCEDURE** and perform the 68RFE TRANSMISSION VERIFICATION TEST.

    No

    - Repair internal transmission as necessary. Pay attention to the components related to the 2C clutch. A broken or dislodged 2C return spring, snap ring or broken 2C Accumulator Spring could cause this problem.
    - Refer to **STANDARD PROCEDURE** and perform the 68RFE TRANSMISSION VERIFICATION TEST.

5. **VERIFY PCM OPERATION**

NOTE: **The TRANS TEMP DEG must be at least 43° C or 110° F before performing the following steps.**

1. Perform eight learnable starts. A learnable start is defined as follows: Start engine. From a standstill, accelerate lightly to 80 Km/h or 50 mph, then brake lightly to a stop. Turn off engine.
2. With the scan tool, record the CL VOL INDEX (CVI) for all clutches
3. With the scan tool, perform a BATTERY DISCONNECT.
4. With the scan tool, read the CVIs and compare them to the readings recorded before the BATTERY DISCONNECT.

   Are any of the CVIs less than 5 or different than before the BATTERY DISCONNECT?

   Yes

   - Using the schematics as a guide, check the Powertrain Control Module (PCM) terminals for corrosion, damage, or terminal push out. Pay particular attention to all power and ground circuits. If no problems are found, replace the PCM in accordance with the Service Information. With the scan tool, perform Quick Learn.
   - Refer to **STANDARD PROCEDURE** and perform the 68RFE TRANSMISSION VERIFICATION TEST.

   No

   - Test Complete.

P2702-INADEQUATE ELEMENT VOLUME OD

For a complete wiring diagram, **refer to appropriate SYSTEM WIRING DIAGRAMS article** .

THEORY OF OPERATION

The volumes of the transmission fluid needed to apply the friction elements are continuously monitored and learned for adaptive controls. As the clutch friction material wears, the volume of fluid needed to apply the clutch increases. Certain transmission mechanical problems can cause near-zero learned volumes resulting in setting a DTC. The DTC will usually set with other DTCs, which indicates an internal transmission problem.

WHEN MONITORED:

Whenever the engine is running. The OD clutch volume index (CVI) is updated during a 3-4 upshift with throttle angle between 10 and 54 degrees. Transmission temperature must be at least 43° C (110° F).

SET CONDITION:

When the OD CVI falls below 5.

POSSIBLE CAUSES

Possible Causes
HYDRAULIC LEAK IN THE VALVE BODY
BROKEN OD ACCUMULATOR SPRING
BROKEN OD/REV PISTON BELLEVILLE SPRING OR DISLODGED SNAP RING
INTERNAL LEAKAGE IN PUMP ASSEMBLY
TRANSMISSION SOLENOID/TRS ASSEMBLY
POWERTRAIN CONTROL MODULE (PCM)

Always perform the Pre-Diagnostic Troubleshooting procedure before proceeding. Refer to STANDARD PROCEDURE.

DIAGNOSTIC TEST

1. **OTHER DTCS PRESENT**
   1. With the scan tool, check for other transmission DTCs.

      Are there any Pressure Switch Sense circuit DTCs present also?

      Yes

      - Refer to **DIAGNOSTIC CODE INDEX** and perform the appropriate diagnostic procedure.

      No

      - Go To 2.
2. **CHECK THE OD CLUTCH VOLUME INDEX**
   1. With the scan tool, erase DTCs.

      NOTE: The TRANS TEMP DEG must be at least 43° C (110° F) before performing the following steps.

   2. Drive the vehicle and perform at least ten 3-4 upshifts with the TPS degree between 10 and 54.
   3. With the scan tool, read the OD CL VOL INDEX.

      Is the OD CL VOL INDEX below 10?

      Yes

      - Go To 3.

      No

      - Go To 5.
3. **OD CLUTCH CIRCUIT LEAKS IN THE VALVE BODY**

1. Turn the ignition off to the lock position.
2. Remove the transmission oil pan in accordance with the Service Information.
3. Remove the valve body in accordance with the service information.
4. Check condition of the OD accumulator spring.
5. Look for possible leak paths into the OD clutch hydraulics circuit within the valve body.

Were any problems found?

Yes

- Repair as necessary.
- Refer to **STANDARD PROCEDURE** and perform the 68RFE TRANSMISSION VERIFICATION TEST.

No

- Go To 4.

4. **AIR CHECK OD CLUTCH CIRCUIT**
   1. Perform an air check on the OD Clutch circuit in accordance with the Service Information.
   2. Watch and listen for OD Clutch piston movement.
   3. Air check all other pump passages and watch for air leakage into the OD clutch passage.

NOTE: **There is a bleed orifice between the OD and Reverse Clutch passages, so a small amount of air leakage from Reverse to OD is normal.**

Were any problems found?

Yes

- Repair internal transmission. Pay attention to the OD Clutch. Broken or weak return spring or a dislocated snap ring could cause this problem. If no problems were found in the OD clutch, or if leakage into the OD passage was noted, replace Pump Assembly in accordance with the Service Information.
- Refer to **STANDARD PROCEDURE** and perform the 68RFE TRANSMISSION VERIFICATION TEST.

No

- Replace the Transmission/TRS Solenoid Assembly in accordance with the service information. With the scan tool, perform Quick Learn.
- Refer to **STANDARD PROCEDURE** and perform the 68RFE TRANSMISSION VERIFICATION TEST.

5. **VERIFY PCM OPERATION**

NOTE: The TRANS TEMP DEG must be at least 43° C or 110° F before performing the following steps.

1. Perform eight learnable starts. A learnable start is defined as follows: Start engine. From a standstill, accelerate lightly to 80 Kmh or 50 MPH, then brake lightly to a stop. Turn off engine.
2. With the scan tool, record the CL VOL INDEX (CVI) for all clutches.
3. With the scan tool, perform a BATTERY DISCONNECT.
4. With the scan tool, read the CVIs and compare them to the readings recorded before the BATTERY DISCONNECT.

   Are any of the CVIs less than 5 or different than before the BATTERY DISCONNECT?

   Yes

   - Using the schematics as a guide, check the Powertrain Control Module (PCM) terminals for corrosion, damage, or terminal push out. Pay particular attention to all power and ground circuits. If no problems are found, replace the PCM in accordance with the Service Information. With the scan tool, perform Quick Learn.
   - Refer to **STANDARD PROCEDURE** and perform the 68RFE TRANSMISSION VERIFICATION TEST.

   No

   - Test Complete.

P2703- INADEQUATE ELEMENT VOLUME UD

For a complete wiring diagram, **refer to appropriate SYSTEM WIRING DIAGRAMS article** .

THEORY OF OPERATION

The volumes of the transmission fluid needed to apply the friction elements are continuously monitored and learned for adaptive controls. As the clutch friction material wears, the volume of fluid needed to apply the clutch increases. Certain transmission mechanical problems can cause near-zero learned volumes resulting in setting a DTC. The DTC will usually set with other DTCs, which indicates an internal transmission problem.

WHEN MONITORED:

Whenever the engine is running. The UD clutch volume index (CVI) is updated during a 5-4 kickdown with throttle angle between 10 and 54 degrees. Transmission temperature must be at least 43° C (110° F).

SET CONDITION:

When the UD CVI falls below 11.

POSSIBLE CAUSES

Possible Causes
BROKEN UD ACCUMULATOR SPRING(S)
BROKEN UD CLUTCH PISTON SPRING OR DISLODGED SNAP RING
INTERNAL LEAKAGE IN PUMP OR VALVE BODY ASSEMBLIES
TRANSMISSION SOLENOID/TRS ASSEMBLY
POWERTRAIN CONTROL MODULE (PCM)

Always perform the Pre-Diagnostic Troubleshooting procedure before proceeding. Refer to STANDARD PROCEDURE.

DIAGNOSTIC TEST

1. **OTHER DTCS PRESENT**
    1. With the scan tool, check for other transmission DTCs.

       Are there any Pressure Switch Sense circuit DTCs present also?

       Yes

       - Refer to **DIAGNOSTIC CODE INDEX** and perform the appropriate diagnostic procedure.

       No

       - Go To 2.
2. **CHECK UD CLUTCH VOLUME INDEX**
    1. With the scan tool, erase Transmission DTCs.

       NOTE: The TRANS TEMP DEG must be at least 43° C or 110° F before performing the following steps.

    2. Drive the vehicle and perform at least ten 5-4 kickdowns by depressing the throttle between 40 and 50 TPS degrees at speeds about 1500 to 1700 rpm on the Output Speed sensor.
    3. With the scan tool, read the UD clutch volume index (CVI).

       Is the UD CVI below 10?

       Yes

       - Go To 3.

       No

       - Go To 5.
3. **UD CLUTCH CIRCUIT LEAKS IN THE VALVE BODY**

1. Turn the ignition off to the lock position.
2. Remove the transmission oil pan and valve body in accordance with the Service Information.
3. Check the condition of the UD accumulator springs.
4. Look for possible leak paths into the UD clutch hydraulics circuit within the valve body.

   Were there any problems found?

   Yes

   - Repair as necessary.
   - Refer to **STANDARD PROCEDURE** and perform the 68RFE TRANSMISSION VERIFICATION TEST.

   No

   - Go To 4.

4. **AIR CHECK UD CLUTCH CIRCUIT**
   1. Perform an air check on the UD Clutch circuit in accordance with the Service Information.
   2. Watch and listen for UD Clutch piston movement.
   3. Air check all other pump passages for air leakage into the UD Clutch circuit.

      Were any problems found?

      Yes

      - Repair internal transmission. Pay attention to components related to the UD clutch. Broken or weak return spring or a dislocated snap ring. If no trouble is found in UD clutch component or UD clutch leakage was noted in passage, replace the Pump Assembly.
      - Refer to **STANDARD PROCEDURE** and perform the 68RFE TRANSMISSION VERIFICATION TEST.

      No

      - Replace the Transmission/TRS Solenoid Assembly in accordance with the service information. With the scan tool, perform Quick Learn.
      - Refer to **STANDARD PROCEDURE** and perform the 68RFE TRANSMISSION VERIFICATION TEST.

5. **VERIFY PCM OPERATION**

   NOTE: The TRANS TEMP DEG must be at least 43° C or 110° F before performing the following steps.

   1. Perform eight learnable starts. A learnable start is defined as follows: Start engine. From a standstill, accelerate lightly to 80 Km/h or 50 mph, then brake lightly to a stop. Turn off engine.

2. With the scan tool, record the clutch volume index (CVI) for all clutches.
3. With the scan tool, perform a BATTERY DISCONNECT.
4. With the scan tool, read the CVIs and compare them to the readings recorded before the BATTERY DISCONNECT.

   Are any of the CVIs less than 5 or different than before the BATTERY DISCONNECT?

   Yes

   - Using the schematics as a guide, check the Powertrain Control Module (PCM) terminals for corrosion, damage, or terminal push out. Pay particular attention to all power and ground circuits. If no problems are found, replace the PCM in accordance with the Service Information. With the scan tool, perform Quick Learn.
   - Refer to **STANDARD PROCEDURE** and perform the 68RFE TRANSMISSION VERIFICATION TEST.

   No

   - Test Complete.

P2704-INADEQUATE ELEMENT VOLUME 4C

For a complete wiring diagram, **refer to appropriate SYSTEM WIRING DIAGRAMS article** .

THEORY OF OPERATION

The volumes of the transmission fluid needed to apply the friction elements are continuously monitored and learned for adaptive controls. As the clutch friction material wears, the volume of fluid needed to apply the clutch increases. Certain transmission mechanical problems can cause near-zero learned volumes resulting in setting a DTC. The DTC will usually set with other DTCs, which indicates an internal transmission problem.

WHEN MONITORED:

Whenever the engine is running. The 4C clutch volume index (CVI) is updated during a 4-5 upshift with throttle angle between 10 and 54 degrees. Transmission temperature must be at least 43° C (110° F).

SET CONDITION:

When the 4C CVI falls below 5.

POSSIBLE CAUSES

Possible Causes
BROKEN 4C RETURN SPRING OR DISLODGED SNAP RING
BROKEN 4C ACCUMULATOR SPRING(S)
HYDRAULIC LEAK IN THE VALVE BODY

TRANSMISSION SOLENOID/TRS ASSEMBLY
POWERTRAIN CONTROL MODULE (PCM)

Always perform the Pre-Diagnostic Troubleshooting procedure before proceeding. Refer to STANDARD PROCEDURE.

DIAGNOSTIC TEST

1. **CHECK THE 4C CLUTCH VOLUME**
   1. With the scan tool, record the 4C clutch volume index (CVI) and erase DTCs.
   2. Perform at least 10, 4-5 upshifts with the throttle between 10 and 54 degrees. The Transmission temperature must be at least 43° C or 110° F.
   3. With the scan tool, read the 4C CVI.

      Is the current 4C CVI below 10?

      Yes

      - Go To 2.

      No

      - Go To 5.
2. **DTC P0876 PRESENT**
   1. With the scan tool, read DTCs.

      NOTE: The DTC P0876 must also be set with P2704 in order for this test to be valid.

      Is the DTC P0876 also present?

      Yes

      - Replace the Transmission Solenoid/TRS Assembly in accordance with the Service Information.
      - Refer to **STANDARD PROCEDURE** and perform the 68RFE TRANSMISSION VERIFICATION TEST.

      No

      - Go To 3.
3. **4C CLUTCH CIRCUIT LEAKS IN THE VALVE BODY**
   1. Turn the ignition off to the lock position.
   2. Remove the transmission oil pan in accordance with the Service Information.

3. Remove the valve body in accordance with the Service Information.
4. Check condition of the 4C accumulator springs.
5. Look for possible leak paths into the 4C clutch hydraulics circuit within the valve body.

   Were any problems found?

   Yes

   - Repair as necessary.
   - Refer to **STANDARD PROCEDURE** and perform the 68RFE TRANSMISSION VERIFICATION TEST.

   No

   - Go To 4.

4. **AIR CHECK 4C CLUTCH CIRCUIT**
   1. Perform an air check on the 4C Clutch circuit in accordance with the Service Information.
   2. Listen for proper 4C Clutch piston movement.

      Were any problems found?

      Yes

      - Repair Internal transmission as necessary. Pay attention to the mechanical components related to the 4th clutch. A broken or weak return spring or a dislocated snap ring could cause this problem.
      - Refer to **STANDARD PROCEDURE** and perform the 68RFE TRANSMISSION VERIFICATION TEST.

      No

      - Replace the Transmission Solenoid/TRS Assembly in accordance with the service information. With the scan tool, perform Quick Learn.
      - Refer to **STANDARD PROCEDURE** and perform the 68RFE TRANSMISSION VERIFICATION TEST.

5. **VERIFY PCM OPERATION**
   1. Perform eight learnable starts. A learnable start is defined as follows: Start engine. From a standstill, accelerate lightly to 50 MPH, then brake lightly to a stop. Turn off engine.
   2. With the scan tool, record Transmission CL VOL INDEX (CVI) for all clutches.
   3. With the scan tool, perform a BATTERY DISCONNECT.
   4. With the scan tool, read the CVIs and compare them to the reading recorded before the BATTERY DISCONNECT.

      Are any of the CVIs less than 5 or are they different than before the battery disconnect?

Yes

- Using the schematics as a guide, check the Powertrain Control Module (PCM) terminals for corrosion, damage, or terminal push out. Pay particular attention to all power and ground circuits. If no problems are found, replace and program the PCM in accordance with the Service Information. With the scan tool, perform Quick Learn.
- Refer to **STANDARD PROCEDURE** and perform the 68RFE TRANSMISSION VERIFICATION TEST.

No

- Test Complete.

P2706-MS SOLENOID CIRCUIT

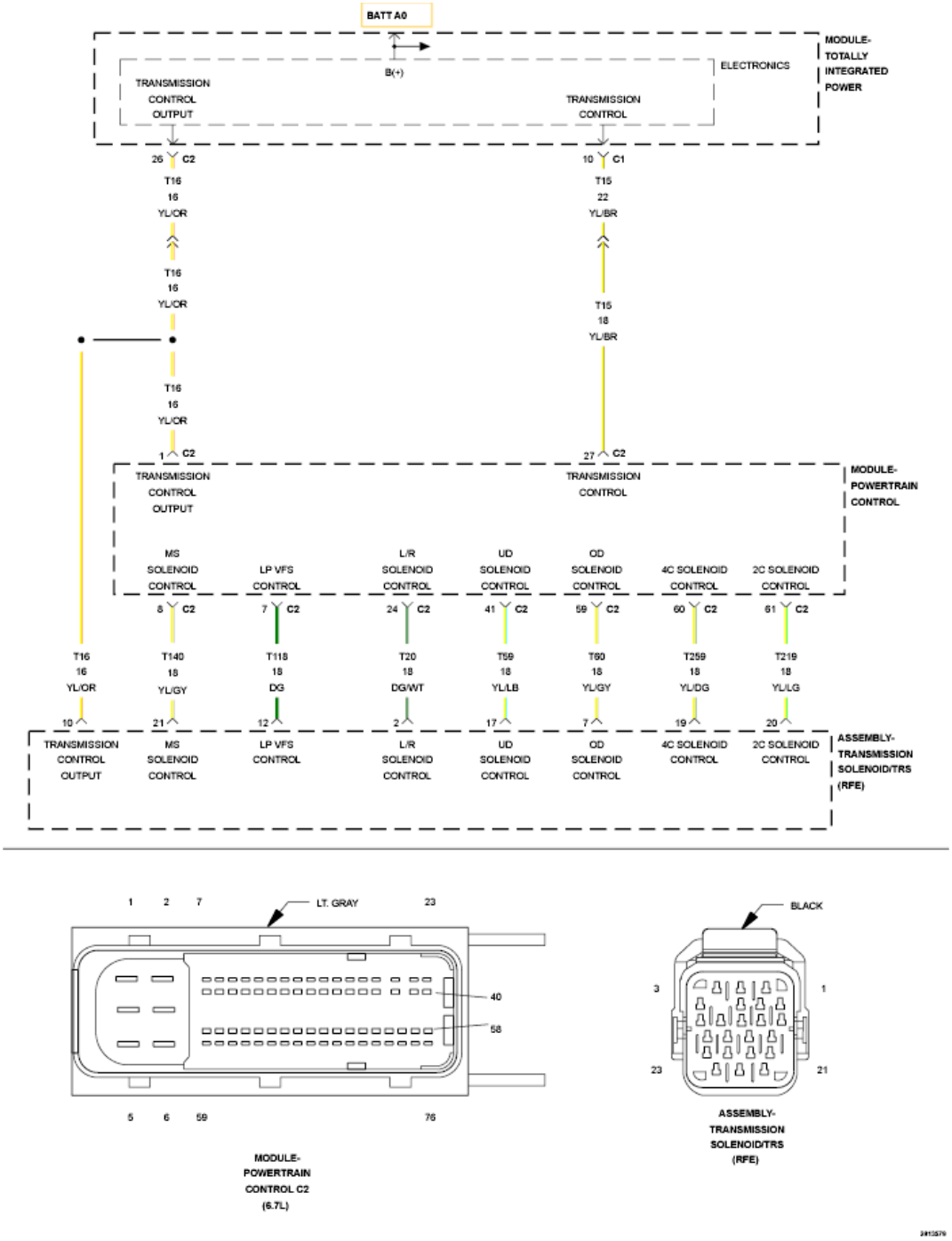

Fig. 127: Solenoid Control Wiring Diagram
Courtesy of CHRYSLER GROUP, LLC

For a complete wiring diagram, **refer to appropriate SYSTEM WIRING DIAGRAMS article** .

THEORY OF OPERATION

The Transmission Control System uses five electronically controlled solenoids that allow hydraulic fluid to be applied to various friction elements (clutches), which enables the gear requested. The continuity of each

solenoid circuit is periodically tested. Each inactive solenoid is turned on for a few milliseconds, then off. Each active solenoid is turned off for a few milliseconds, then on. This pulsing of voltage to the solenoid causes an inductive spike which can be sensed by the Transmission Control System. If an inductive spike is not sensed by the Transmission Control System during the continuity check, it is tested again. If the test fails three consecutive times, the appropriate Diagnostic Trouble Code (DTC) is set. If the solenoid test is run in response to a gear ratio or pressure switch error, one failure will result in setting the appropriate DTC.

WHEN MONITORED:

Initially at power-up, then every 10 seconds thereafter. The solenoid circuits will also be tested immediately after a gear ratio or pressure switch error is detected.

SET CONDITION:

After three consecutive solenoid continuity test failures, or one failure if test is run in response to a gear ratio or pressure switch error.

NOTE: **This DTC is strictly an electrical fault and cannot be caused by any internal transmission failure other than an open in the Transmission Solenoid/TRS Assembly. If the Transmission Solenoid/TRS Assembly is in need of replacement - do not replace the Valve Body.**

POSSIBLE CAUSES

Possible Causes
RELATED DTCS PRESENT
(T140) MS SOLENOID CONTROL CIRCUIT SHORTED TO OTHER CIRCUITS
(T140) MS SOLENOID CONTROL CIRCUIT OPEN
(T140) MS SOLENOID CONTROL CIRCUIT SHORTED TO GROUND
TRANSMISSION SOLENOID/TRS ASSEMBLY
POWERTRAIN CONTROL MODULE (PCM)

Always perform the Pre-Diagnostic Troubleshooting procedure before proceeding. Refer to STANDARD PROCEDURE.

DIAGNOSTIC TEST

1. **RELATED TCM POWER INPUT DTCS PRESENT**
    1. With the scan tool, check DTCs.

       Are there any TIPM TCM Power Control Circuit or TCM Power Input DTCs present?

       Yes

       - Refer to **DIAGNOSIS AND TESTING** and perform the appropriate diagnostic procedure.

No

- Go To 2.

2. **TRANSMISSION SOLENOID/TRS ASSEMBLY**
   1. Turn the ignition off to the lock position.
   2. Remove the Ignition Switch Feed fuse from the TIPM.

      CAUTION: Removal of the Ignition Switch Feed fuse from the TIPM will prevent the vehicle from being started in gear.

      WARNING: The Ignition Switch Feed fuse must be removed from the TIPM. Failure to do so can result in possible serious or fatal injury.

   3. Install Transmission Simulator (special tool #8333A, Simulator, Transmission).
   4. Ignition on, engine not running.
   5. With the scan tool, actuate the MS Solenoid.
   6. Monitor the MS Solenoid LED on the Transmission Simulator.

      Did the MS Solenoid LED on the Transmission Simulator blink on and off?

      Yes

      - Go To 3.

      No

      - Go To 5.

3. **TRANSMISSION SOLENOID/TRS ASSEMBLY**
   1. With the scan tool, continue to actuate the MS Solenoid for the period of two minutes with the Transmission Simulator still connected.
   2. After two minutes of actuation, with the scan tool, stop the actuation and check for transmission DTCs.

      Did the DTC P2706 reset during the actuation test?

      Yes

      - Go To 5.

      No

      - Go To 4.

4. **WIGGLE TEST WITH TRANSMISSION SIMULATOR**

1. With the Transmission simulator still connected, continue to actuate the 4C solenoid for another two minutes while wiggling the related wiring harness and connectors.
2. With the scan tool, stop the actuation and check for transmission DTCs.

   Did the DTC P0770 reset during the actuation test?

   Yes

   - Repair wiring harness or connectors as necessary.
   - Refer to **STANDARD PROCEDURE** and perform the 68RFE TRANSMISSION VERIFICATION TEST.

   No

   - Replace the Transmission Solenoid/TRS Assembly in accordance with the Service Information. **Note: Do NOT replace the entire Valve Body.**
   - Refer to **STANDARD PROCEDURE** and perform the 68RFE TRANSMISSION VERIFICATION TEST.

5. **(T140) MS SOLENOID CONTROL CIRCUIT SHORT TO OTHER CIRCUITS**

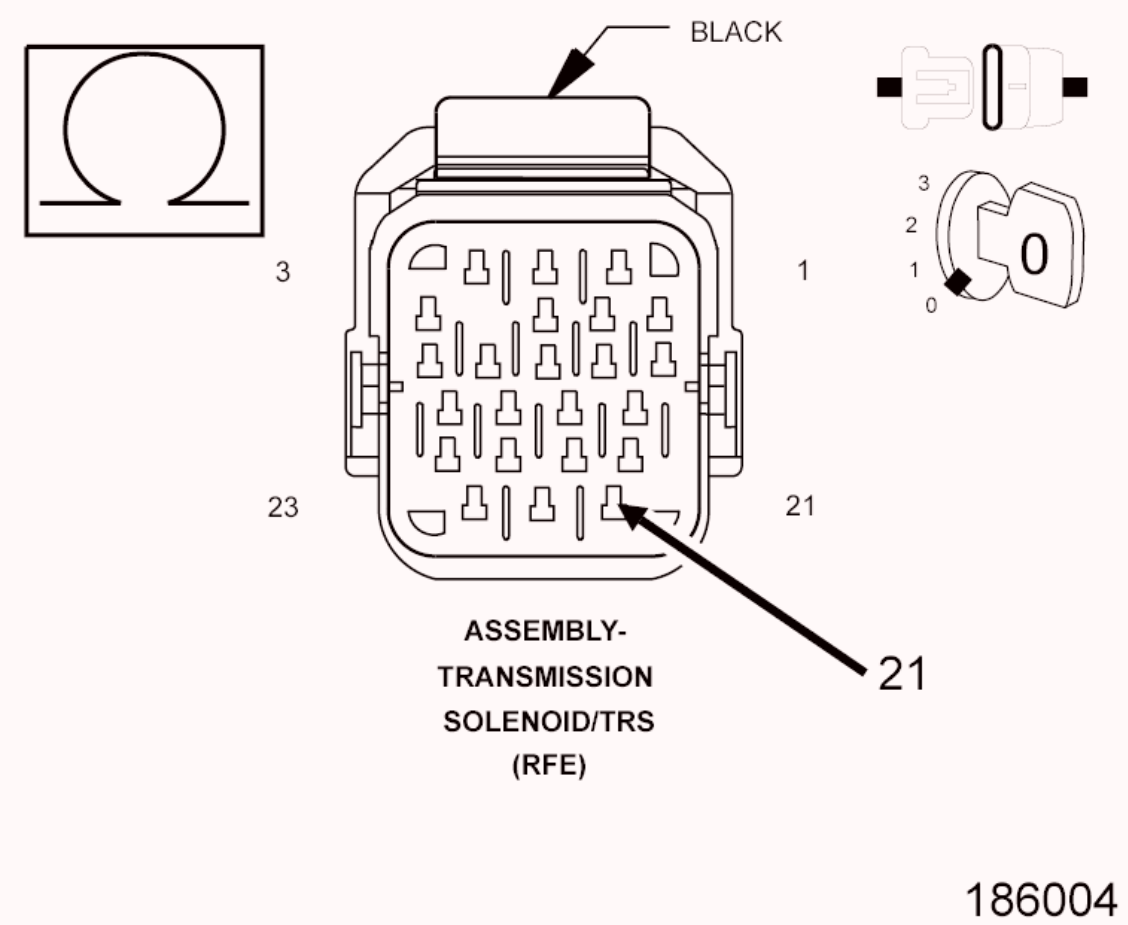

Fig. 128: Checking MS Solenoid Control Circuit For Open Or Short To Other Circuits
Courtesy of CHRYSLER GROUP, LLC

1. Turn the ignition off to the lock position.
2. Disconnect the Transmission Simulator (special tool #8333A, Simulator, Transmission).
3. Disconnect the PCM C2 harness connector.
4. Measure the resistance between the (T140) MS Solenoid Control circuit and all other circuits in the Transmission Solenoid/TRS Assembly harness connector.

   Is the resistance below 5.0 Ohms between the (T140) MS Solenoid Control circuit and any other circuit(s) in the Transmission Solenoid/TRS Assembly harness connector?

   Yes

   - Repair the (T140) MS Solenoid Control circuit for a short to other circuit(s).
   - Refer to **STANDARD PROCEDURE** and perform the 68RFE TRANSMISSION VERIFICATION TEST.

   No

   - Go To 6.

6. **(T140) MS SOLENOID CONTROL CIRCUIT OPEN**

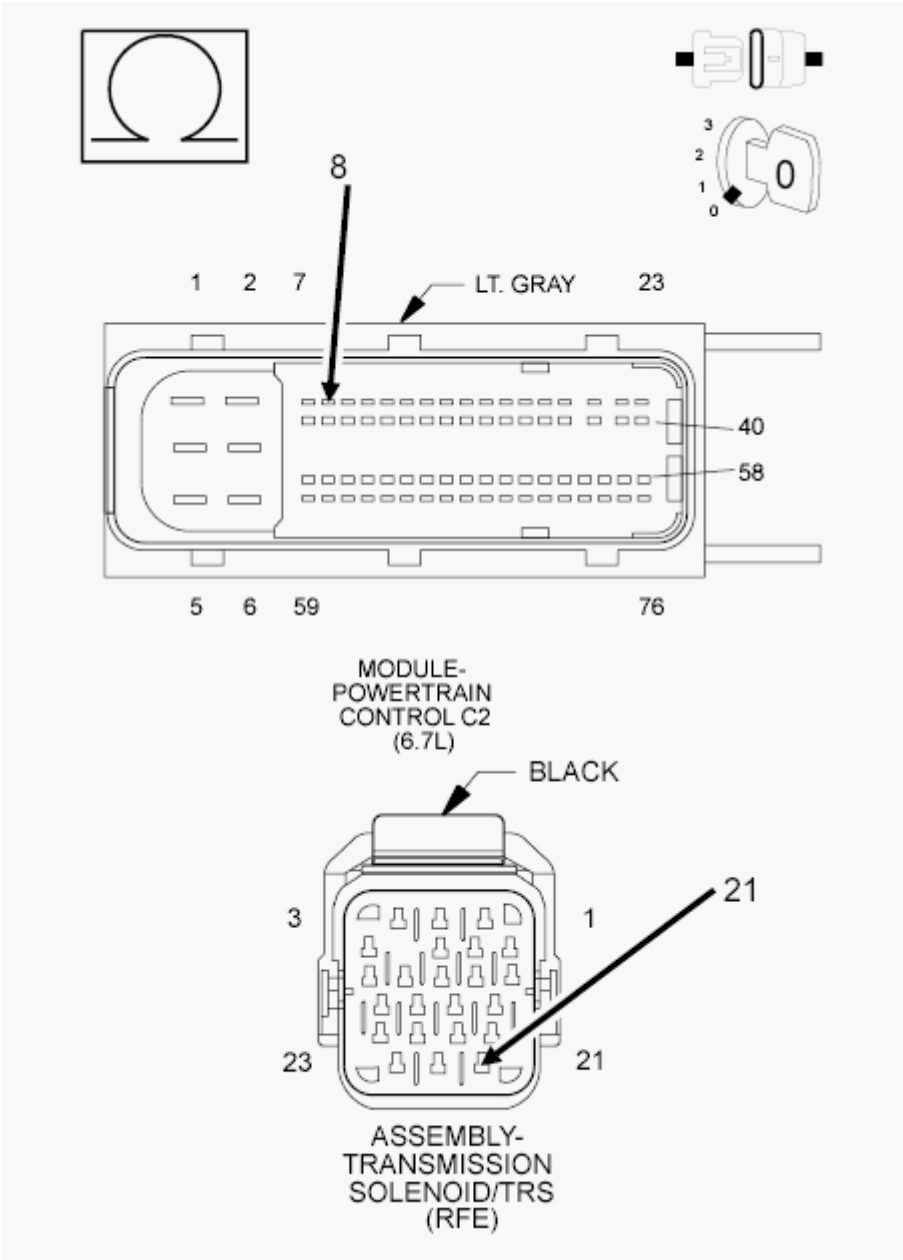

Fig. 129: Checking MS Solenoid Control Circuit For Open
Courtesy of CHRYSLER GROUP, LLC

1. Measure the resistance of the (T140) MS Solenoid Control circuit from the Transmission Solenoid/TRS Assembly harness connector to the appropriate terminal of the PCM C2 harness connector.

   Is the resistance above 5.0 Ohms?

   Yes

   - Repair the (T140) MS Solenoid Control circuit for an open.

- Refer to **STANDARD PROCEDURE** and perform the 68RFE TRANSMISSION VERIFICATION TEST.

No

- Go To 7.

7. **(T140) MS SOLENOID CONTROL CIRCUIT SHORT TO GROUND**

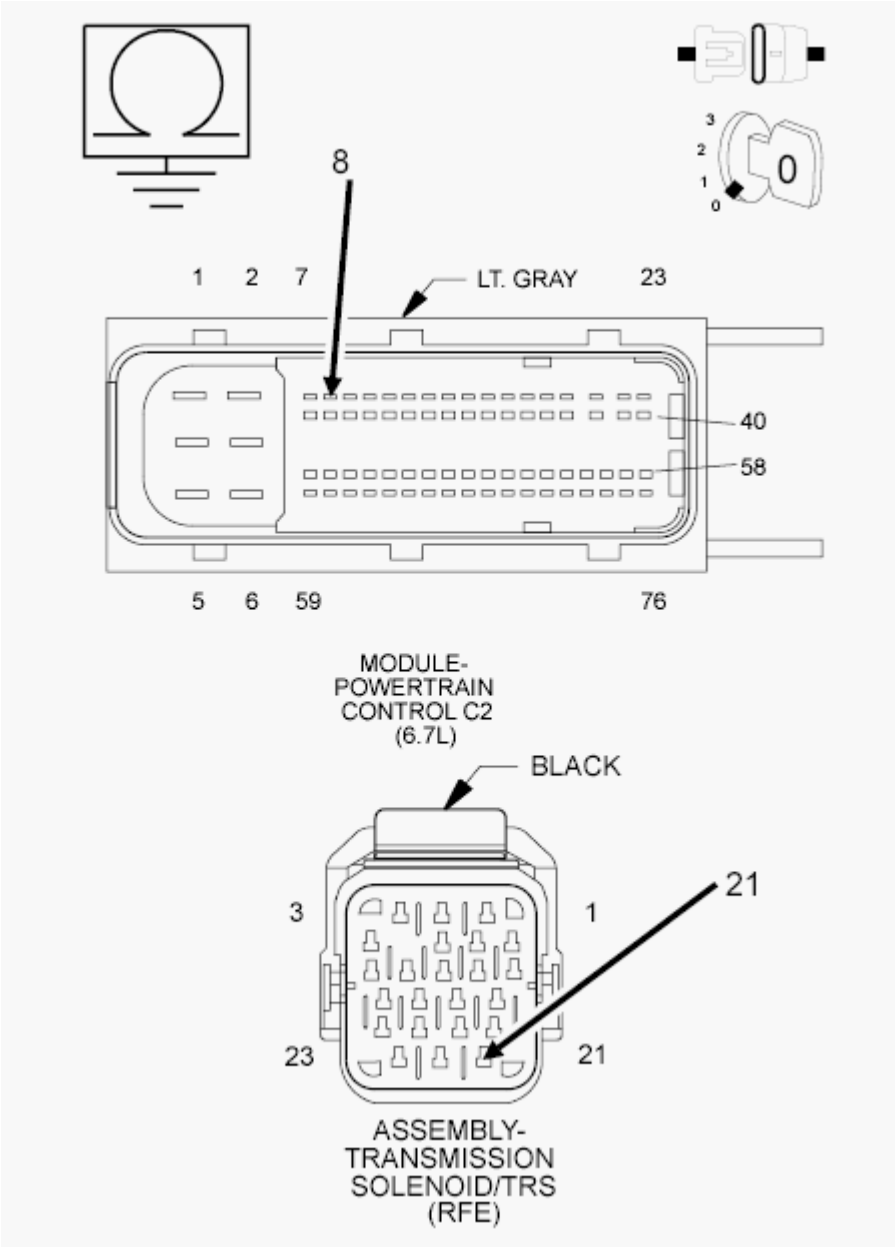

Fig. 130: Checking MS Solenoid Control Circuit For Short To Ground
Courtesy of CHRYSLER GROUP, LLC

1. Measure the resistance between ground and the (T140) MS Solenoid Control circuit.

Is the resistance below 5.0 Ohms?

Yes

- Repair the (T140) MS Solenoid Control circuit for a short to ground.
- Refer to **STANDARD PROCEDURE** and perform the 68RFE TRANSMISSION VERIFICATION TEST.

No

- Using the schematics as a guide, check the Powertrain Control Module (PCM) terminals for corrosion, damage, or terminal push out. Pay particular attention to all power and ground circuits. If no problems are found, replace the PCM in accordance with the Service Information. With the scan tool, perform Quick Learn.
- Refer to **STANDARD PROCEDURE** and perform the 68RFE TRANSMISSION VERIFICATION TEST.

U0002-CAN C BUS OFF PERFORMANCE

For a complete wiring diagram, **refer to appropriate SYSTEM WIRING DIAGRAMS article** .

WHEN MONITORED:

Ignition run time is greater than one second.

Battery voltage between 9 and 16 volts.

Engine run time greater than three seconds.

SET CONDITION:

Bus messages not received from the Totally Integrated Power Module (TIPM) for approximately two to five seconds.

POSSIBLE CAUSES

Possible Causes
CAN BUS CIRCUITS OPEN OR SHORTED
DTCS RELATED TO BATTERY VOLTAGE, IGNITION, OR VIN MESSAGES
TOTALLY INTEGRATED POWER MODULE POWER AND GROUND
TIPM NOT CONFIGURED CORRECTLY
TOTALLY INTEGRATED POWER MODULE (TIPM)
MODULE THAT SET THIS DTC

DIAGNOSTIC TEST

1. **ACTIVE DTC**
    1. Ignition on, engine not running.
    2. With the scan tool, select view DTCs.

    Is the DTC Active at this time?

    Yes

    - **Diagnose the U0002-CAN C BUS OFF PERFORMANCE as the U0001-CAN C BUS CIRCUIT test. Refer to DIAGNOSIS AND TESTING** and perform the U0001-CAN C Bus diagnostic procedure.

    No

    - **Refer to DIAGNOSIS AND TESTING** and perform the Stored Lost Communication DTCs diagnostic procedure.

U0100-LOST COMMUNICATION WITH THE ECM/PCM

For a complete wiring diagram, **refer to appropriate SYSTEM WIRING DIAGRAMS article** .

WHEN MONITORED:

Ignition run time is greater than one second.

Battery voltage between 9 and 16 volts.

Engine run time greater than three seconds.

SET CONDITION:

Bus messages not received from the Powertrain Control Module (ECM/PCM) for approximately two to five seconds.

POSSIBLE CAUSES

Possible Causes
CAN BUS CIRCUITS OPEN OR SHORTED
DTCS RELATED TO BATTERY VOLTAGE, IGNITION, OR VIN MESSAGES
POWERTRAIN CONTROL MODULE POWER AND GROUND
TIPM NOT CONFIGURED CORRECTLY
POWERTRAIN CONTROL MODULE (ECM/PCM)
MODULE THAT SET THIS DTC

DIAGNOSTIC TEST

1. **ACTIVE DTC**
    1. Ignition on, engine not running.
    2. With the scan tool, select view DTCs.

    Is the DTC Active at this time?

    Yes

    - **Refer to DIAGNOSIS AND TESTING** and perform the U0100-Lost Communication with ECM/PCM diagnostic procedure.

    No

    - **Refer to DIAGNOSIS AND TESTING** and perform the Stored Lost Communication DTCs diagnostic procedure.

U0121-LOST COMMUNICATION WITH ABS

For a complete wiring diagram, **refer to appropriate SYSTEM WIRING DIAGRAMS article** .

WHEN MONITORED:

Ignition run time is greater than one second.

Battery voltage between 9 and 16 volts.

Engine run time greater than three seconds.

SET CONDITION:

Bus messages not received from the Totally Integrated Power Module (TIPM) for approximately two to five seconds.

POSSIBLE CAUSES

Possible Causes
CAN BUS CIRCUITS OPEN OR SHORTED
ABS MODULE
DTCS RELATED TO BATTERY VOLTAGE, IGNITION, OR VIN MESSAGES
TOTALLY INTEGRATED POWER MODULE POWER AND GROUND
TIPM NOT CONFIGURED CORRECTLY
TOTALLY INTEGRATED POWER MODULE (TIPM)
MODULE THAT SET THIS DTC

DIAGNOSTIC TEST

1. **ACTIVE DTC**
    1. Ignition on, engine not running.
    2. With the scan tool, select view DTCs.

    Is the DTC Active at this time?

    Yes

    - **Refer to DIAGNOSIS AND TESTING** and perform the U0121-Lost Communication with Anti-Lock Brake Module diagnostic procedure.

    No

    - **Refer to DIAGNOSIS AND TESTING** and perform the Stored Lost Communication DTCs diagnostic procedure.

U0141-LOST COMMUNICATION WITH IPM (FCM/TIPM)

For a complete wiring diagram, **refer to appropriate SYSTEM WIRING DIAGRAMS article** .

WHEN MONITORED:

Continuously when the ignition is on.

The battery voltage between 10.0 and 16.0 Volts.

Ignition Off Draw (IOD) fuse installed.

Totally Integrated Power Module (TIPM) is configured correctly.

SET CONDITION:

Bus messages not received from the Totally Integrated Power Module (TIPM) for approximately two to five seconds.

POSSIBLE CAUSES

Possible Causes
CAN BUS CIRCUITS OPEN OR SHORTED
DTCS RELATED TO BATTERY VOLTAGE, IGNITION, OR VIN MESSAGES
TOTALLY INTEGRATED POWER MODULE POWER AND GROUND
TIPM NOT CONFIGURED CORRECTLY
TOTALLY INTEGRATED POWER MODULE (TIPM)
MODULE THAT SET THIS DTC

DIAGNOSTIC TEST

1. **VERIFY DTC IS ACTIVE**

NOTE: Make sure the IOD fuse is installed and the battery is fully charged before proceeding.

1. Turn the ignition on.
2. With the scan tool, read active DTCs.

   Is this DTC active?

   Yes

   - **Refer to DIAGNOSIS AND TESTING** and perform the U0141-Lost Communication with IPM (FCM/TIPM) diagnostic procedure.

   No

   - **Refer to DIAGNOSIS AND TESTING** and perform the Stored Lost Communication DTCs diagnostic procedure.

U1449-IMPLAUSIBLE ERS MESSAGE RECEIVED

For a complete wiring diagram, **refer to appropriate SYSTEM WIRING DIAGRAMS article** .

THEORY OF OPERATION

This message is used by the Powertrain Control Module (PCM) for Electronic Range Select (ERS) operation. The ERS switch is hard wired to the Cabin Compartment Node (CCN). The CCN then sends a CAN bus message to the PCM.

WHEN MONITORED:

Continuously with the ignition on.

SET CONDITION:

This fault is set when the ERS message is not received or invalid.

POSSIBLE CAUSES

Possible Causes
TIPM CAN BUS DTCS PRESENT
CABIN COMPARTMENT NODE (CCN)
POWERTRAIN CONTROL MODULE (PCM)

Always perform the Pre-Diagnostic Troubleshooting procedure before proceeding. Refer to STANDARD

PROCEDURE.

DIAGNOSTIC TEST

1. **CHECK FOR TIPM CAN BUS DTCS**
    1. With the scan tool, read TIPM DTCs.

       Are there any TIPM CAN BUS DTCs present?

       Yes

       - Refer to **DIAGNOSIS AND TESTING** and perform the appropriate diagnostic procedure.

       No

       - Go To 2.
2. **CHECK IF CCN DTCS ARE PRESENT**
    1. With the scan tool, read CCN DTCs.

       Are there any CCN DTCs present?

       Yes

       - Refer to **DIAGNOSIS AND TESTING** and perform the appropriate diagnostic procedure.
       - Refer to **STANDARD PROCEDURE** and perform the appropriate TRANSMISSION VERIFICATION TEST.

       No

       - Using the schematics as a guide, check the Powertrain Control Module (PCM) pins, terminals, and connectors for corrosion, damage, or terminal push out. Pay particular attention to all power and ground circuits. If no problems are found, replace and program the PCM in accordance with the Service Information.
       - Refer to **STANDARD PROCEDURE** and perform the appropriate TRANSMISSION VERIFICATION TEST.

STANDARD PROCEDURE

68RFE PRE-DIAGNOSTIC TROUBLESHOOTING PROCEDURE

For a complete wiring diagram, **refer to appropriate SYSTEM WIRING DIAGRAMS article** .

NOTE: **This vehicle uses a Cummins Control Module which controls the Transmission operation and the Diesel engine operation. In these procedures, the Cummins Control Module is referred to as the Powertrain Control Module (PCM).**

DIAGNOSTIC TEST

1.
    1. Perform the following before attempting any diagnostic procedures:
        1. With the scan tool check pinion factor (if equipped) for proper tire identification and program or reprogram if necessary.
        2. Check the transmission fluid level. If the fluid level is low, locate and repair any leaks and fill the transmission to the proper level. Refer to **STANDARD PROCEDURE** for procedures. Many transmission symptoms can be caused by a low fluid level.
        3. Check the battery. To avoid false diagnosis, testing should only be performed with the battery fully charged.
        4. With the scan tool, read Engine (PCM) DTCs. If DTCs are present, Refer to **DIAGNOSTIC CODE INDEX** for 5.7L, **DIAGNOSTIC CODE INDEX** for 6.7L or **DIAGNOSTIC CODE INDEX** for 6.7L (Cab & Chassis) and perform the appropriate diagnostic procedure (s) before proceeding.
        5. With the scan tool, read Transmission (PCM) DTCs. Record all Stored, Active, and Pending DTC information. Diagnose any Pending DTC as a matured DTC.
        6. With the scan tool, read and record the Event Data. Use this data to identify the conditions in which the DTC was set.

            NOTE: **DTC Event Data may exist even if no DTCs are stored. DTC Event Data is only erased by a Battery Disconnect, reflash, or QuickLearn procedure. Clearing DTCs does NOT erase the DTC Event Data. Some DTCs require two "bad trips" before they are stored (and the MIL illuminates). The transmission may enter "limp-in" mode during the first "bad trip," but if the fault condition is not present after the vehicle is restarted, the pending DTC may be cleared without lighting the MIL. Nevertheless, the DTC Event Data for the pending DTC will remain stored and can still be retrieved with the scan tool. If the customer reports a "limp-in" event but no DTCs are present, check the DTC Event Data.**

        7.
        8. Performing a Battery Disconnect will clear all Event Data and reset all learned Transmission values to the default values, which may temporarily result in erratic shift schedules.
        9. With the scan tool, perform the Shift Lever Position Test. If the test fails with an error code, refer to the diagnostic procedure for P0706 Transmission Range Sensor Rationality. If the test fails without an error code, adjust the shift linkage in accordance with the Service Information.
        10. For Gear Ratio Error DTCs or shift quality complaints, use the scan tool to view CVI Monitor data. Read and record the Clutch Volume Index information.
        11. Use the wiring diagram as a guide. Inspect the wiring and connectors related to this circuit. Repair as necessary.

12. Refer to the When Monitored and Set Conditions for this DTC. DTCs can set at ignition on, at start up, after driving under specific conditions and after diagnostic monitors have been run.
13. Perform any applicable Technical Service Bulletins (TSBs) for controller software update information. Some conditions can be corrected by upgrading the (PCM) controller software.

Were there any repairs made that fixed the vehicle?

Yes

- Testing complete.
- Refer to **STANDARD PROCEDURE** and perform the 68RFE TRANSMISSION VERIFICATION TEST.

No

- Refer to **DIAGNOSTIC CODE INDEX** and perform the appropriate diagnostic procedure.

68RFE TRANSMISSION VERIFICATION TEST

For a complete wiring diagram, **refer to appropriate SYSTEM WIRING DIAGRAMS article** .

DIAGNOSTIC TEST

1. Perform the following after completion of a diagnostic repair:
    1. With the scan tool check pinion factor (if equipped) for proper tire identification and program or reprogram if necessary.
    2. Connect the scan tool to the Data Link Connector (DLC).
    3. Reconnect any disconnected components.
    4. If the PCM has been replaced or updated (flashed), or the transmission has been repaired or replaced, using the scan tool, perform a Quick Learn Procedure.
    5. With the scan tool, erase all Transmission and Engine DTCs.
    6. With the scan tool, perform a BATTERY DISCONNECT, this will clear the Event Data
    7. With the scan tool, display Transmission Temperature. Start and run the engine until the Transmission Temperature is HOT.
    8. Check the Transmission fluid level and adjust if necessary. Refer to **STANDARD PROCEDURE** for the Fluid Fill procedure.
    9. Road test the vehicle.
    10. Perform the following shifts from a standing start with a constant throttle opening of 20 to 25 degrees to the speeds of 97 km/h (60 mph); make fifteen to twenty 1 to 2, 2 to 3, 3 to 4, 4 to 5, 5 to 6 upshifts.
    11. Perform the following shifts with speeds below 40 km/h (25 mph); make five to eight wide open throttle kickdowns to 2nd gear. Allow at least 5 seconds each in 3rd and 4th gear between each kickdown.

12. Check for DTCs during and after the road test.
13. If after performing the road test, if any shift concerns are noted, perform the drive learn procedure for those affected shifts.
14. **Use the OBDII task manager to run Good Trip time in each gear, this will confirm the repair and to ensure that the DTC does not re-mature.**

Were there any Diagnostic Trouble Codes (DTCs) set during the road test?

Yes

- Refer to **DIAGNOSTIC CODE INDEX** for 5.7L, **DIAGNOSTIC CODE INDEX** for 6.7L or **DIAGNOSTIC CODE INDEX** for 6.7L (Cab & Chassis) and perform the appropriate charging related DTC diagnostic procedure.

No

- Repair is complete.

DESCRIPTION

DESCRIPTION

The BW 44-46 is an electronically controlled active part-time transfer case.

The low range provides a 2.64:1 reduction ratio.

OPERATING RANGES

BW 44-46 operating ranges are:

- 2WD HI.
- 4WD Lock.
- Neutral.
- 4WD Low.

SHIFT MECHANISM

Operating ranges are selected with a dash mounted shift selector switch. The shift selector switch provides an input to the Drive Train Control Module (DTCM) to indicate the driver's desire to change operating ranges. The DTCM uses this input, along with the input from the transfer case mounted mode sensor and information from the vehicle's CAN C bus, to determine if a shift is permitted. If the DTCM decides the shift is permitted, the DTCM controls the shift motor, mounted to the exterior of the transfer case, to perform the shift.

OPERATION

OPERATION

The input gear is splined to the transmission output shaft. The input gear drives the mainshaft through the planetary assembly and range sleeve. The front output shaft is operated by a drive chain that connects the shaft to a drive sprocket on the mainshaft. Torque is transmitted through the input shaft to the drive sprocket assembly. The torque is also transferred directly to the rear propeller shaft, to the front output shaft by the drive chain when 4WD is selected. The oil pump circulates gear lube throughout the case to provide internal lubrication and cooling.

DIAGNOSIS AND TESTING

TRANSFER CASE - BW 44-46

DIAGNOSIS CHART

Condition	Possible Cause	Correction

Transfer case difficult to shift or will not shift into desired range.	1) Transfer case electronically controlled shift system malfunction.	1) Check for Transfer Case DTCs. Refer to appropriate Electrical Diagnostic article. Depending on vehicle configuration (FCM, FDCM, or DTCM), perform the appropriate diagnostic procedure and verification test.
	2) If vehicle was operated for an extended period in 4HI mode on dry surface, driveline torque load may cause difficulty.	2) Drive the vehicle in a straight line and momentarily release the accelerator. The transfer case can then be shifted to the desired mode.
	3) Insufficient or incorrect lubricant.	3) Drain and refill transfer case with the correct quantity of fluid. Refer to **CAPACITIES AND RECOMMENDED FLUIDS, DESCRIPTION** .
	4) Internal transfer case components binding, worn, or damaged.	4) Repair or replace components as necessary.
Transfer case noisy in all drive modes.	1) Insufficient or incorrect lubricant.	1) Drain and refill transfer case with the correct quantity of fluid. Refer to **CAPACITIES AND RECOMMENDED FLUIDS, DESCRIPTION** .
	2) Internal transfer case components binding, worn, or damaged.	2) Repair or replace components as necessary.
Transfer case noisy while in, or jumps out of, 4LO mode.	1) Transfer case not completely engaged in 4LO position.	1) While rolling 2-3 MPH and the transmission in NEUTRAL, shift transfer case to the 2WD or 4HI position, and then back into the 4LO position.
	2) Range fork damaged, inserts worn, or fork is binding on the shift rail.	2) Repair or replace components as necessary.
	3) Low range gear worn or damaged.	3) Repair or replace components as necessary.
Lubricant leaking from transfer case seals or vent.	1) Transfer case overfilled.	1) Drain lubricant to the correct level.
	2) Transfer case vent closed or restricted.	2) Clean or replace vent as necessary.
	3) Transfer case seals damaged or installed incorrectly.	3) Replace suspect seal.
Abnormal tire wear.	1) Extended operation in 4HI mode on dry surfaces,	1) Operate vehicle in 2WD mode on dry surfaces.

SPECIFICATIONS

TORQUE SPECIFICATIONS

DESCRIPTION	N.m	Ft. Lbs.	In. Lbs.
Plug, Drain/Fill	19 - 30	15 - 22	-
Bolt, Case Half	27 - 35	20 - 26	-
Breather	6.5 - 8.5	--	60 - 72
Motor Mount and Bracket	8 - 11	--	72 - 96
Motor Bracket (Bracket to Motor)	2.8 - 4	-	24 - 36
Stud	22 - 27	-	192 - 240
Nuts, Mounting	41	30	-
Output Flange Nut	241	178	-

REMOVAL

REMOVAL

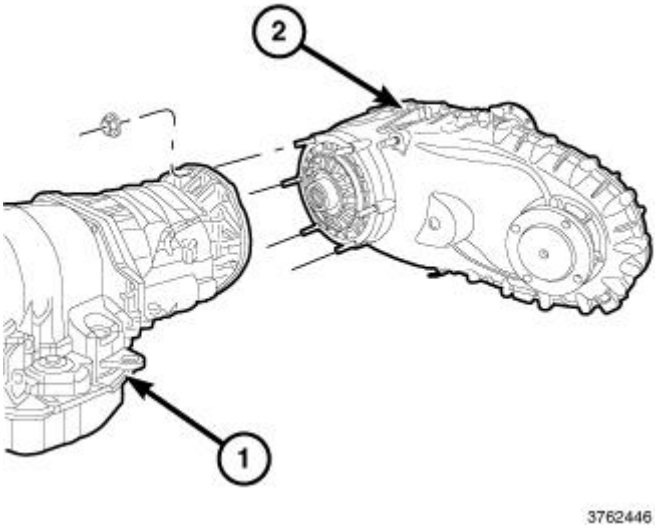

Fig. 1: Transmission & Transfer Case
Courtesy of CHRYSLER GROUP, LLC

1. Raise vehicle.
2. Drain transfer case lubricant.
3. Mark front and rear propeller shafts for alignment reference.
4. Support transmission with jack stand.
5. Remove the transfer case skid plate, if equipped.
6. Disconnect front and rear propeller shafts at transfer case.

7. Disconnect transfer case shift motor and mode sensor wire connectors (3).
8. Disconnect transfer case vent hose.
9. Support transfer case with transmission jack.
10. Secure transfer case to jack with chains.
11. Remove nuts attaching transfer case (2) to transmission (1).
12. Pull transfer case and jack rearward to disengage transfer case.
13. Remove transfer case from under vehicle.

DISASSEMBLY

DISASSEMBLY

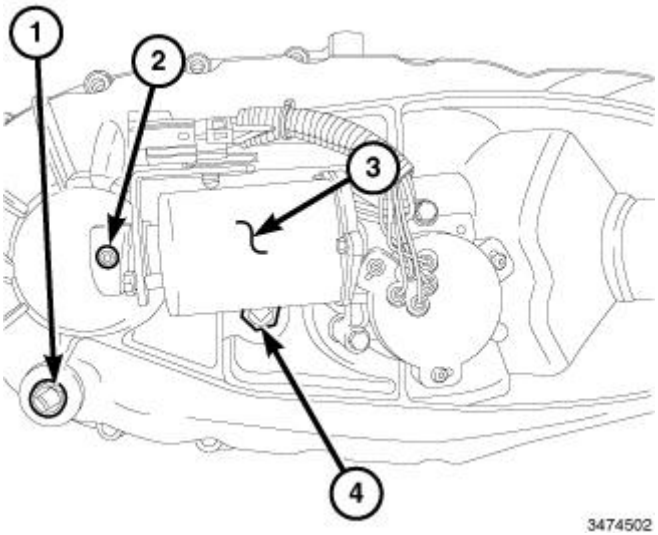

Fig. 2: Shift Motor, Mounting Bolt, Fill & Drain Plugs
Courtesy of CHRYSLER GROUP, LLC

1. Place the transfer case so that it can be drained of any remaining fluid and remove the fill (4) and drain plugs (1).
2. Remove the four shift motor mounting bolt (2) and remove the shift motor (3).

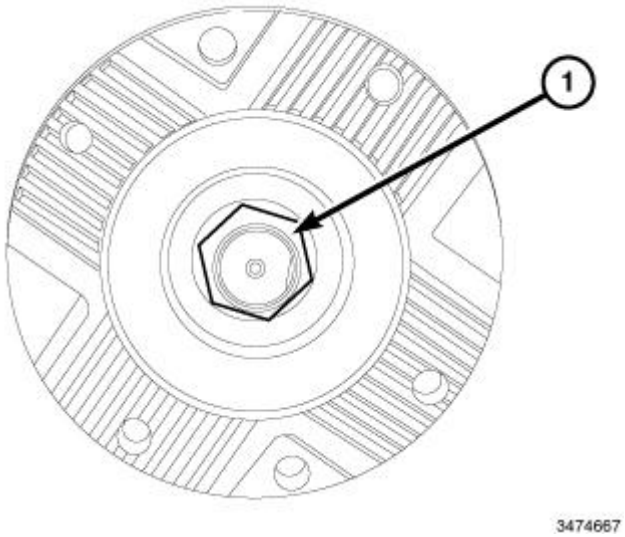

Fig. 3: Rear Output Shaft Flange Nut
Courtesy of CHRYSLER GROUP, LLC

3. Remove the rear output shaft flange nut (1), if equipped.

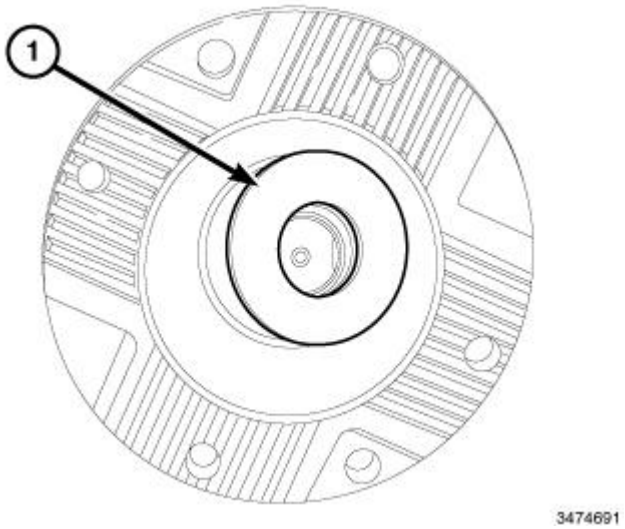

Fig. 4: Flange Spacer
Courtesy of CHRYSLER GROUP, LLC

4. Remove the flange spacer (1), if equipped.

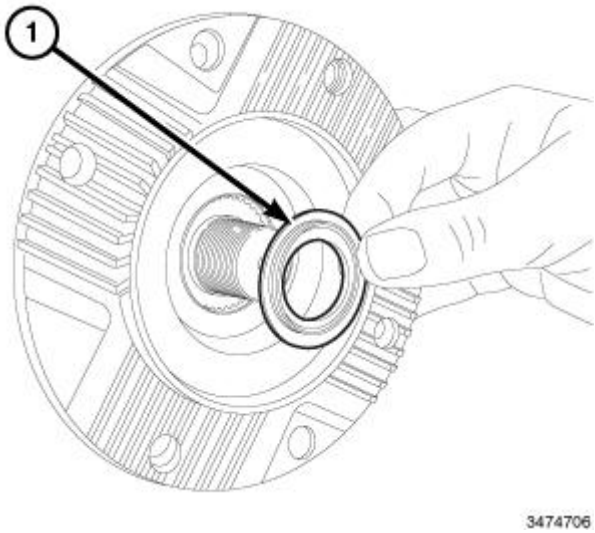

Fig. 5: Flange Dust Seal
Courtesy of CHRYSLER GROUP, LLC

5. Remove the flange dust seal, if equipped.
6. Using a suitable puller, remove the output flange, if equipped.

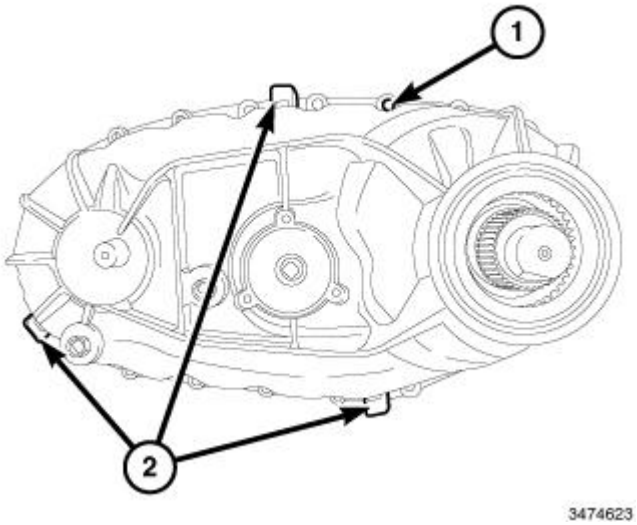

Fig. 6: Pry Points & Case Half Bolts
Courtesy of CHRYSLER GROUP, LLC

7. Remove all of the case half bolts (1).
8. Carefully using a prybar at pry points (2), separate and remove the rear case half.

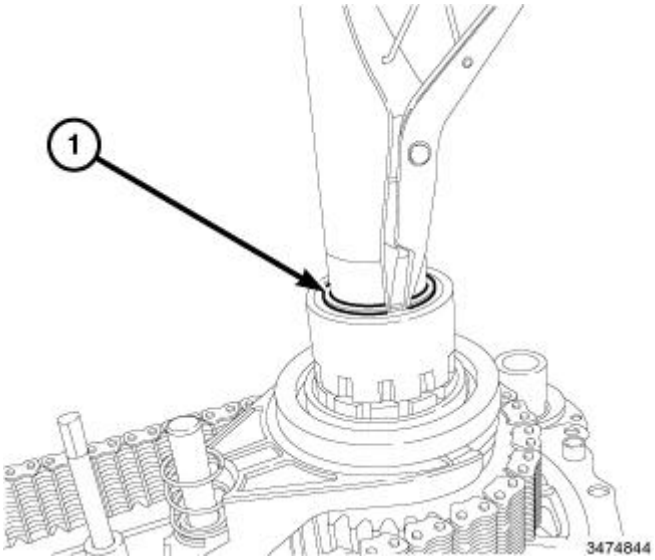

Fig. 7: Retaining Ring
Courtesy of CHRYSLER GROUP, LLC

9. Remove the retaining ring (1).

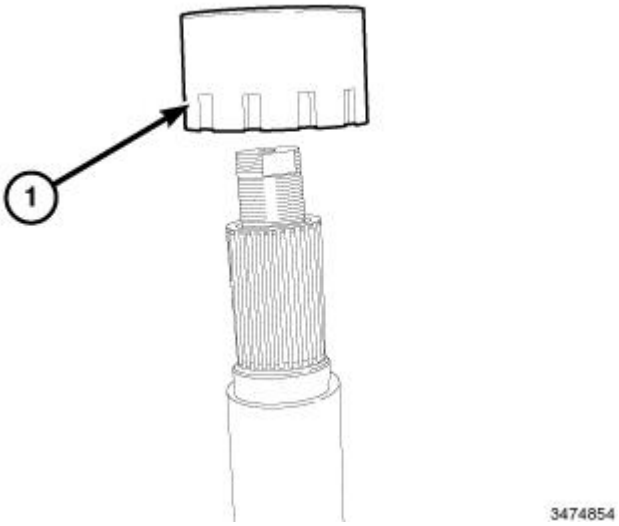

Fig. 8: Locking Collar
Courtesy of CHRYSLER GROUP, LLC

10. Remove the locking collar (1).

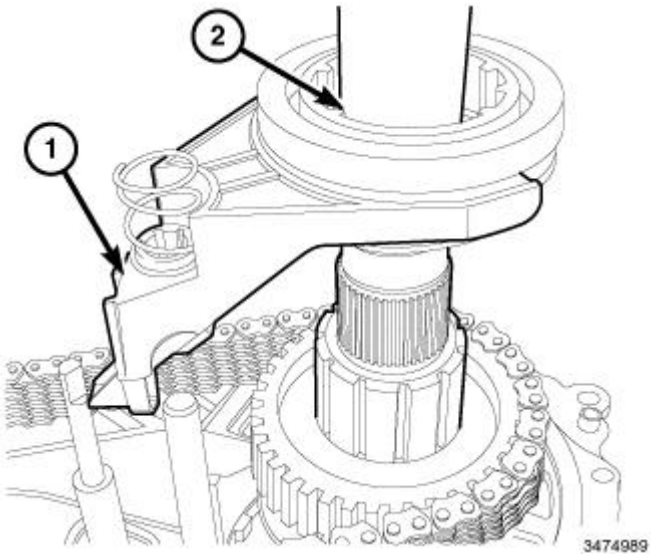

Fig. 9: Main Shaft, Shift Fork, Spring & Sleeve
Courtesy of CHRYSLER GROUP, LLC

11. Remove the mode shift fork, spring and sleeve (1) from the main shaft (2).

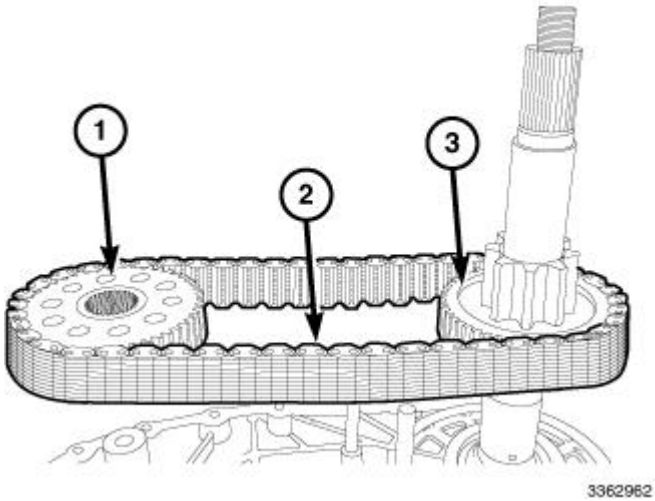

Fig. 10: Chain, Front Output Gear, & Mainshaft Gear
Courtesy of CHRYSLER GROUP, LLC

12. Remove the chain (2), the front out put gear (1) and main shaft gear (3) as an assembly.

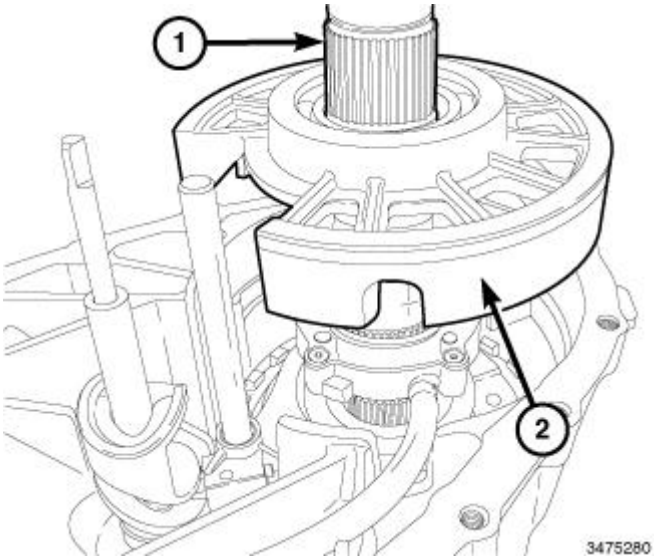

Fig. 11: Mainshaft & Center Bearing Support Assembly
Courtesy of CHRYSLER GROUP, LLC

NOTE: **There are three alignment tabs and an oil pump hose pass through incorporated into the support that prevent the structure from rotating once installed.**

13. Remove the center bearing support assembly (2) from the mainshaft (1).

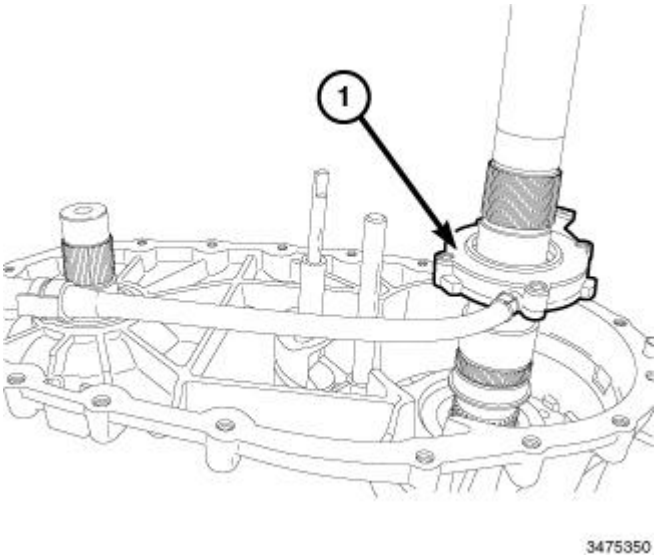

Fig. 12: Oil Pump
Courtesy of CHRYSLER GROUP, LLC

14. Remove the oil pump (1).

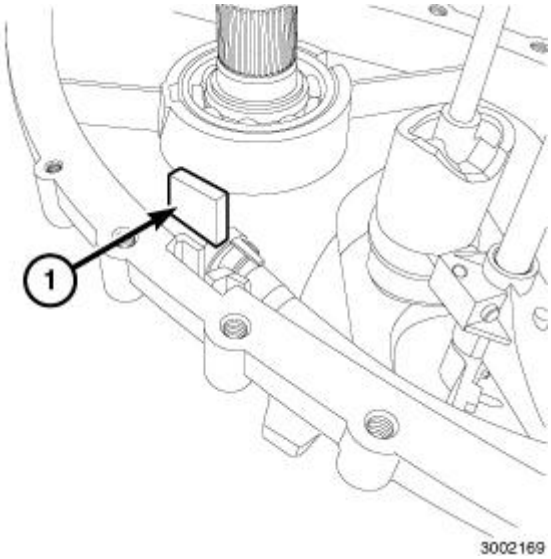

Fig. 13: Magnet
Courtesy of CHRYSLER GROUP, LLC

15. Remove the magnet (1).

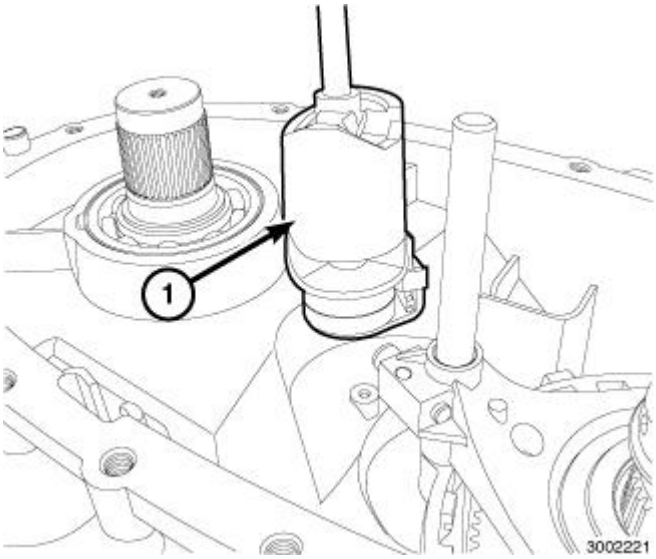

Fig. 14: Shift Assembly
Courtesy of CHRYSLER GROUP, LLC

16. Remove the shift assembly (1).

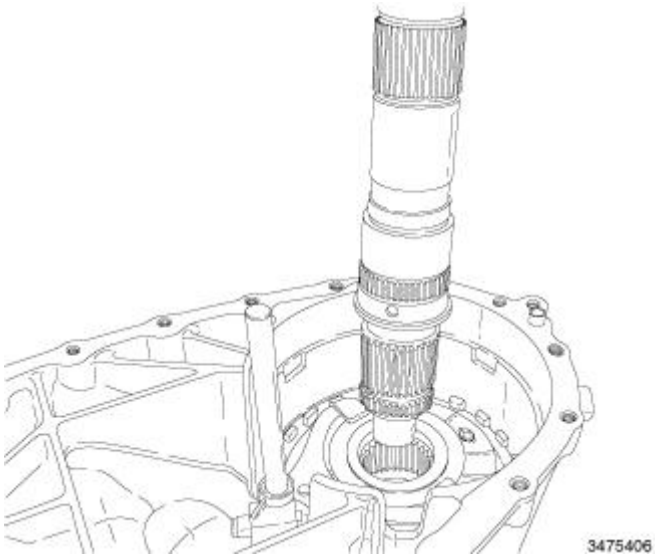

Fig. 15: Mainshaft
Courtesy of CHRYSLER GROUP, LLC

17. Remove the mainshaft.

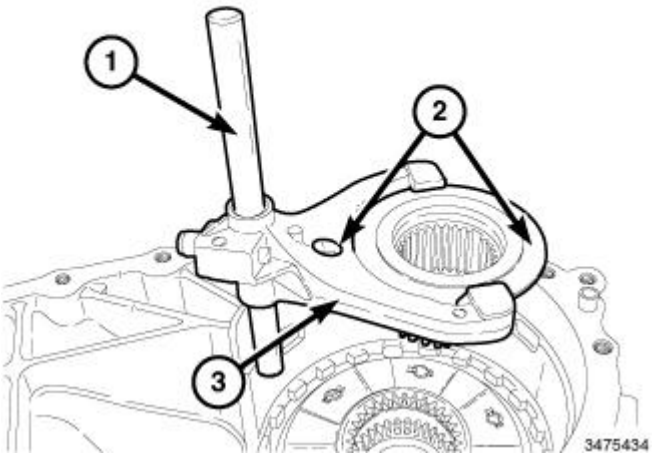

Fig. 16: Shift Rail, Lower Shift Fork & Reduction Hub
Courtesy of CHRYSLER GROUP, LLC

18. Remove the shift rail (1), lower shift fork (3), and the reduction hub as an assembly.
19. Separate the lower shift fork (3) from the reduction hub (2).
20. Separate the lower shift fork (3) from the shift rail (1).

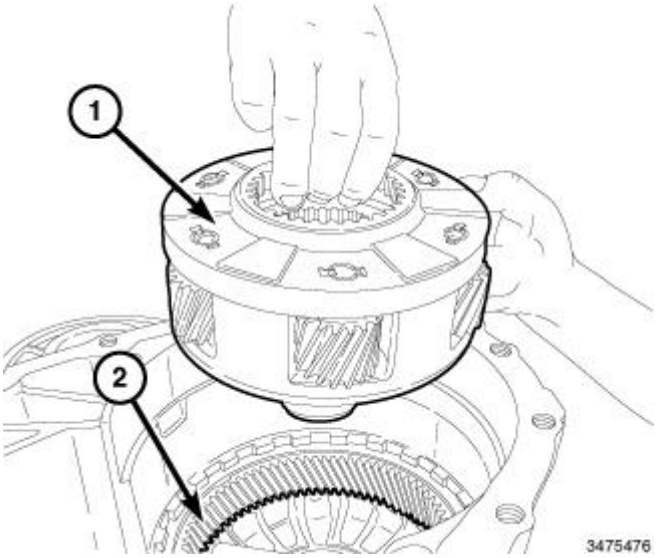

Fig. 17: Planetary Carrier & Annulus Gear
Courtesy of CHRYSLER GROUP, LLC

21. Lift the planetary carrier (1) straight up and out of the annulus gear (2).

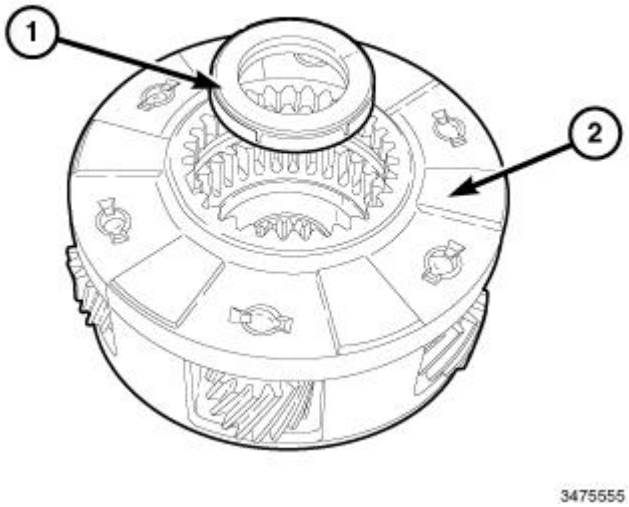

Fig. 18: Thrust Bearing & Planetary
Courtesy of CHRYSLER GROUP, LLC

NOTE: Bearing tabs face upward.

22. Remove the carrier thrust bearing (1) from the center of the planetary (2).

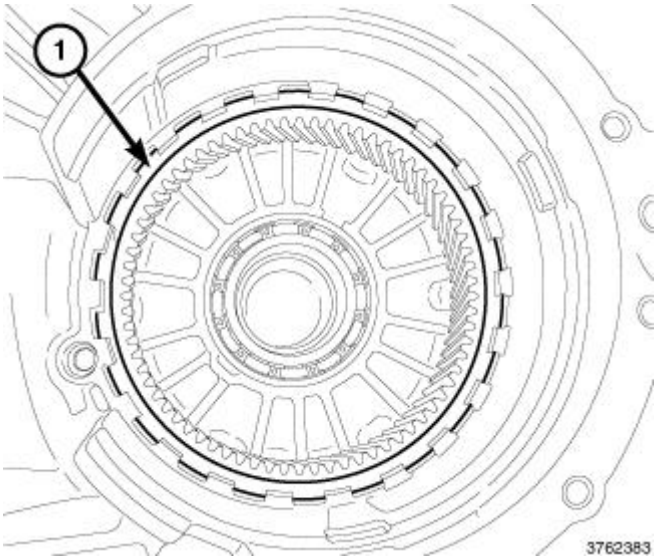

Fig. 19: Annulus Gear Retainer
Courtesy of CHRYSLER GROUP, LLC

23. Remove the annulus gear retainer (1).

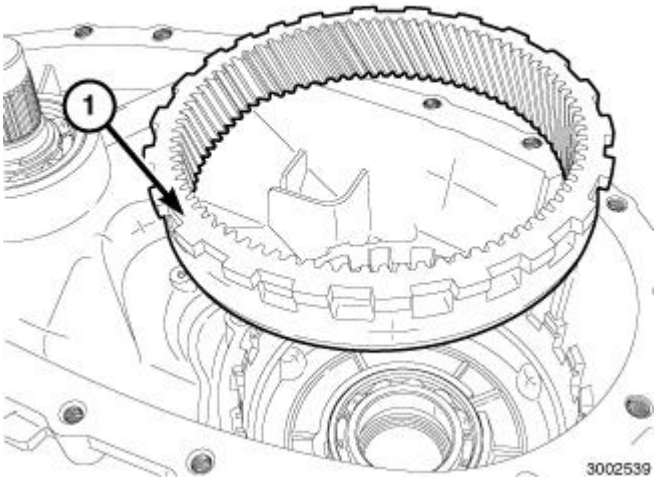

Fig. 20: Annulus Gear
Courtesy of CHRYSLER GROUP, LLC

24. Remove the annulus gear (1).

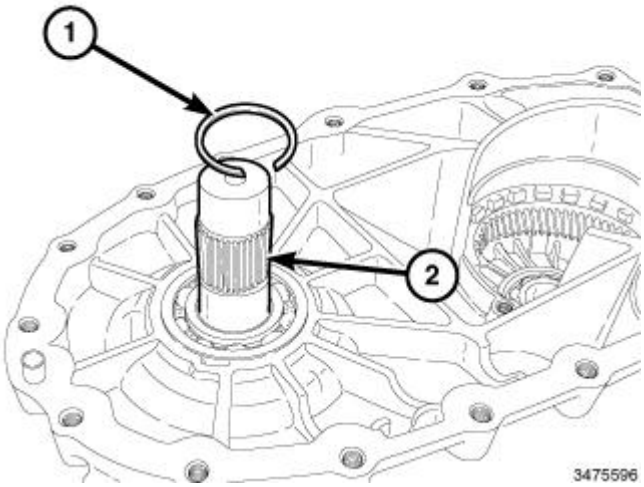

Fig. 21: Front Output Shaft & Retaining Ring
Courtesy of CHRYSLER GROUP, LLC

25. Remove the front output shaft retaining ring (1) from the front output shaft (2).

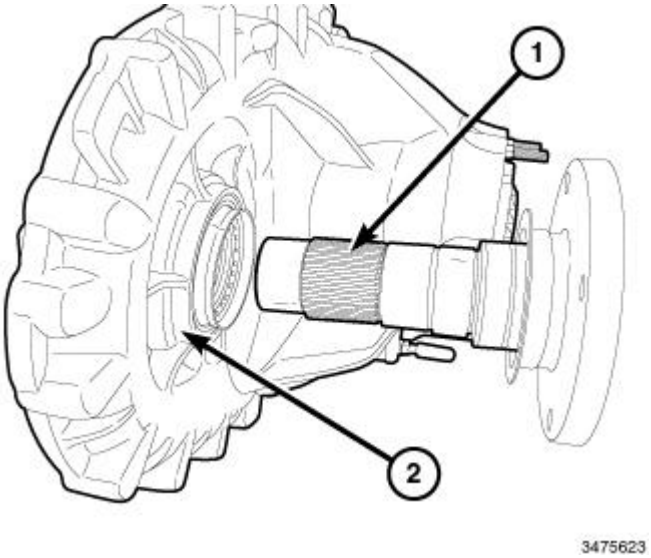

Fig. 22: Front Output Shaft & Front Case Half
Courtesy of CHRYSLER GROUP, LLC

26. Remove the front output shaft (1) from the front case half (2).

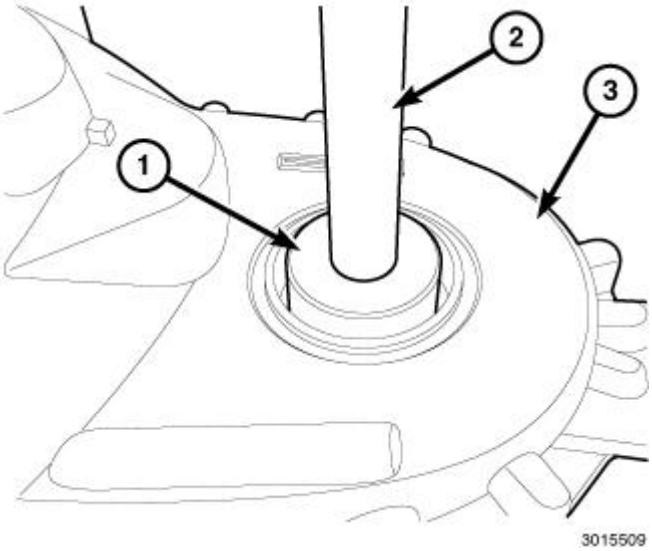

Fig. 23: Removing Front Output Shaft Bearing
Courtesy of CHRYSLER GROUP, LLC

27. Remove front output shaft seal.
28. Using (special tool #9622, Installer, Countershaft Plug) (1) and (special tool #C-4171, Driver Handle, Universal) (2), remove the front output shaft bearing from the case half (3).

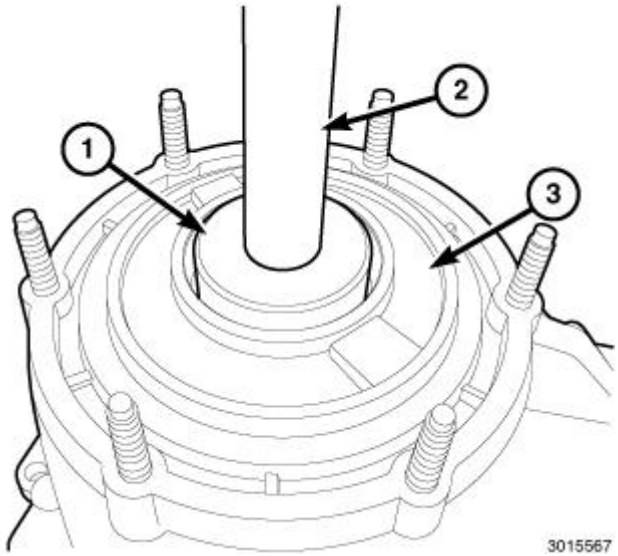

Fig. 24: Removing Input Shaft Bearing
Courtesy of CHRYSLER GROUP, LLC

29. Remove input shaft seal.
30. Using (special tool #9622, Installer, Countershaft Plug) (1) and (special tool #C-4171, Driver Handle, Universal) (2), remove the input shaft bearing from the case half (3).

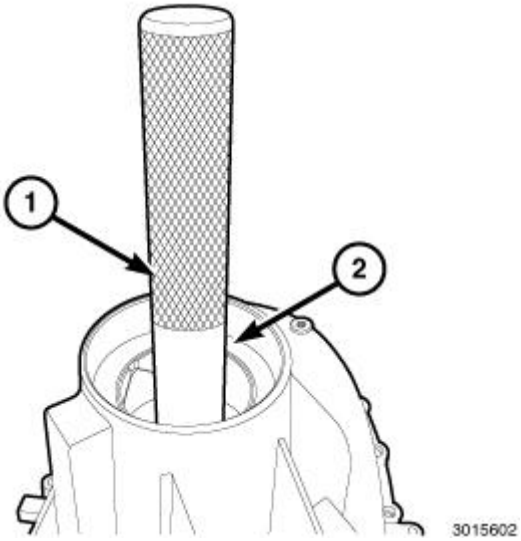

Fig. 25: Removing Rear Input Shaft Bearing
Courtesy of CHRYSLER GROUP, LLC

31. Remove rear output shaft seal.
32. Using (special tool #5066, Installer, Bushing) and (special tool #C-4171, Driver Handle, Universal) (1), remove the input shaft bearing from the case half (2).

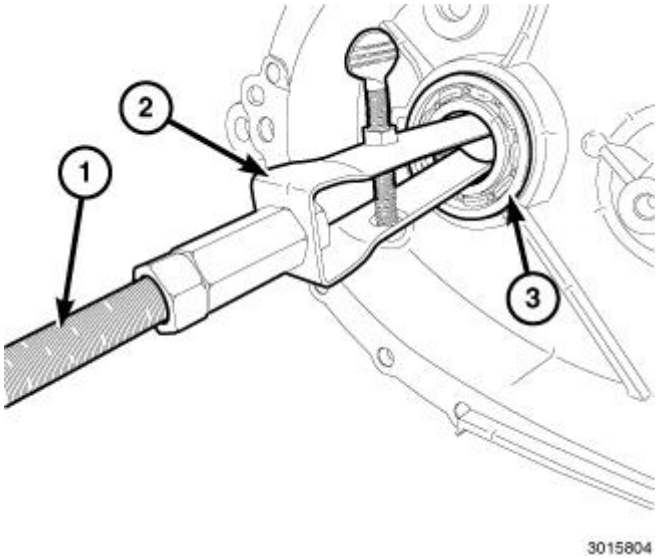

Fig. 26: Removing Front Output Shaft Rear Bearing
Courtesy of CHRYSLER GROUP, LLC

33. Secure the rear case half.
34. Using (special tool #7794-A, Remover, Seal) (2) and (special tool #C-637, Slide Hammer, Universal) (1), remove front output shaft rear bearing (3) from rear case half.

CLEANING

CLEANING

Clean the transfer case parts with a standard parts cleaning solvent. Remove all traces of sealer from the cases and retainers with a scraper and 3M™ all purpose cleaner. Use compressed air to remove solvent residue from oil feed passages in the case halves, retainers, gears, and shafts.

INSPECTION

INSPECTION

MAINSHAFT/SPROCKET/HUB INSPECTION

Inspect the splines on the hub and shaft and the teeth on the sprocket. Minor nicks and scratches can be smoothed with an oilstone. However, replace any part that is damaged.

Check the contact surfaces in the sprocket bore and on the mainshaft. Minor nicks and scratches can be smoothed with 320-400 grit emery cloth but do not try to salvage the shaft if nicks or wear is severe.

PLANETARY CARRIER

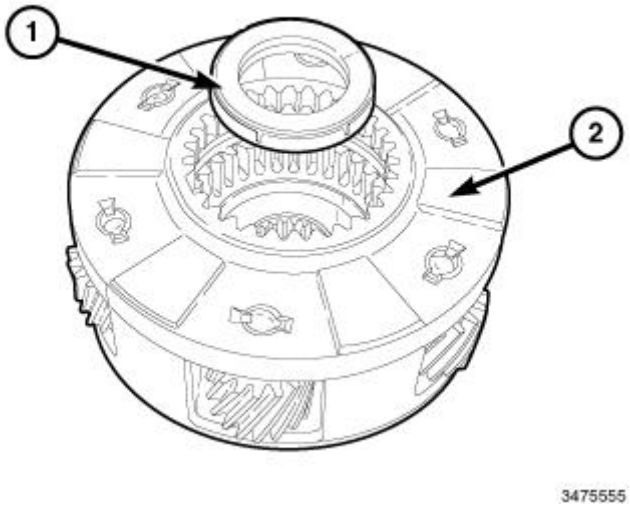

Fig. 27: Thrust Bearing & Planetary
Courtesy of CHRYSLER GROUP, LLC

Examine the planetary carrier body (2) and pinion gears for wear or damage. Check the pinion gear thrust washers on the pinon pins for damage. The carrier will have to be replaced as an assembly if the body, pinion pins, or pinion gears are damaged.

Check the needle bearing in the carrier. Inspect the thrust bearing (1).

SHIFT FORK/HUBS/SLEEVES

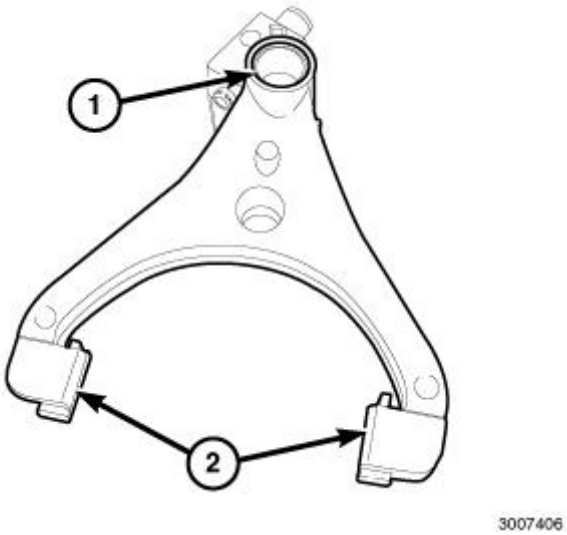

Fig. 28: Identifying Shift Fork
Courtesy of CHRYSLER GROUP, LLC

Check condition of the shift fork and shift fork shift rail. Minor nicks on the shift rail can be smoothed with 320-400 grit emery cloth.

Inspect the shift fork wear pads (2).

Check the shift fork sleeve (1) for wear or damage.

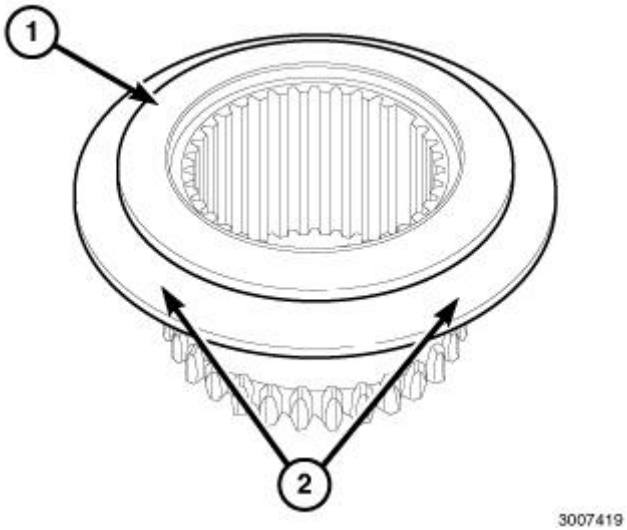

Fig. 29: Reduction Hub
Courtesy of CHRYSLER GROUP, LLC

Check the reduction hub (1) for wear on the shift fork collar (2).

Check the teeth and splines of the reduction hub (1). Minor nicks can be dressed off with an oilstone. Replace

the gear if any teeth are broken, cracked, or chipped.

REAR EXTENSION HOUSING

Inspect the extension housing seal and bushing. Replace both components if either show any sign of wear or damage.

FRONT OUTPUT SHAFT AND DRIVE CHAIN

Inspect the shaft splines, sprocket teeth, and bearing surfaces. Minor nicks on the teeth can be smoothed with an oilstone. Use 320-400 grit emery to smooth minor scratches on the shaft bearing surfaces. Rough threads on the shaft can be chased if necessary. Replace the shaft if the splines are damaged, bearing surfaces are scored, or if any sprocket teeth are cracked or broken.

Examine the drive chain and shaft bearings. Replace the chain and both sprockets if the chain is stretched, distorted, or if any of the links bind. Replace the bearings if rough, or noisy.

LOW RANGE ANNULUS GEAR

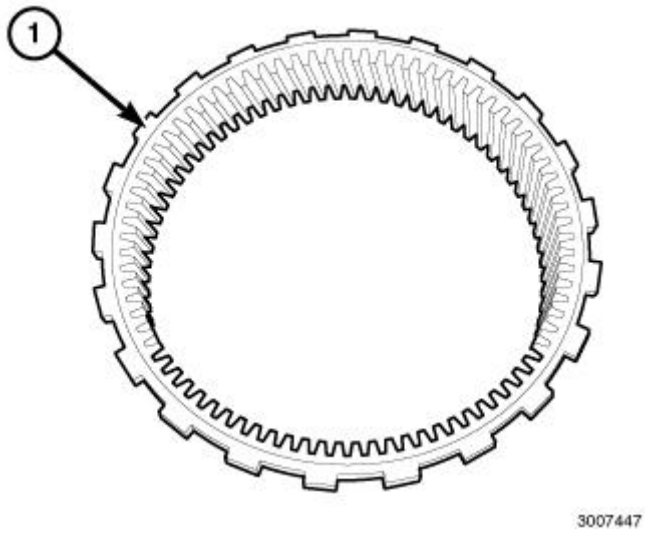

Fig. 30: Low Range Annulus Gear
Courtesy of CHRYSLER GROUP, LLC

Inspect annulus gear (1) condition carefully.

FRONT AND REAR CASES

Inspect the cases for wear and damage.

Check case condition. If leaks were a problem, look for gouges and severe scoring of case sealing surfaces. Also make sure the front case mounting studs are in good condition.

Check the front case mounting studs and vent tube. The tube can be secured with Loctite™ 271 or 680 if loose.

The stud threads can be cleaned up with a die if necessary. Also check condition of the fill/drain plug threads in the rear case. The threads can be repaired with a thread chaser or tap if necessary. Or the threads can be repaired with Helicoil® stainless steel inserts if required.

OIL PUMP/OIL PICKUP

Examine the oil pump pickup parts. Replace the pump if any part appears to be worn or damaged. Do not disassemble the pump as individual parts are not available. The pump is only available as a complete assembly. The pickup screen, hose, and tube are the only serviceable parts and are available separately.

ASSEMBLY

ASSEMBLY

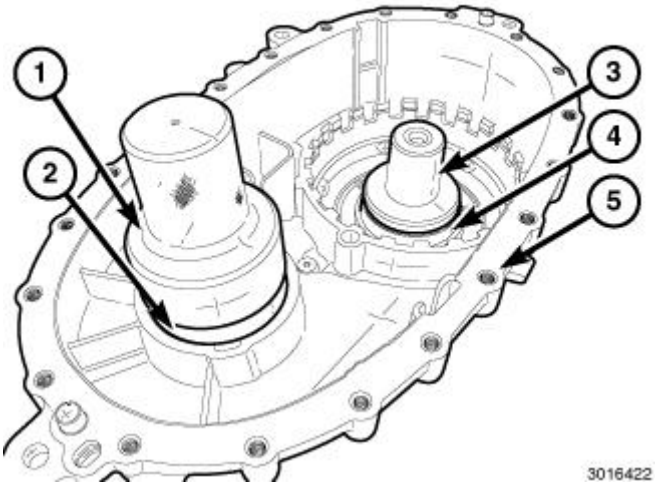

Fig. 31: Pressing Bearings Into Case
Courtesy of CHRYSLER GROUP, LLC

NOTE: When pressing bearings into case, be sure to properly support the underside of the case half.

1. Using (special tool #9598, Installer, Seal) (1) and an Arbor Press, install the front output shaft bearing (2) into the front case half (5).
2. Using (special tool #9754, Installer, Seal) (3) and an Arbor Press, install the input shaft bearing (4) into the front case half (5).

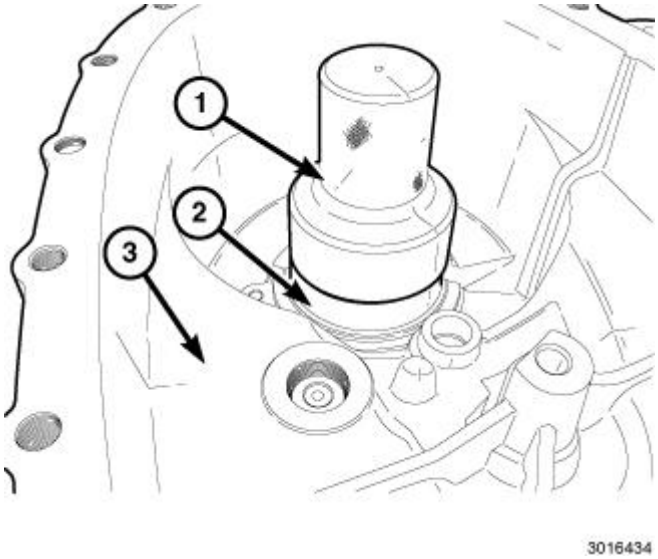

Fig. 32: Installing Rear Output Shaft Bearing
Courtesy of CHRYSLER GROUP, LLC

NOTE: When pressing bearings into case, be sure to properly support the underside of the case half.

3. Using (special tool #9598, Installer, Seal) (1) and an Arbor Press, install the rear output shaft bearing (2) into the front case half (3).

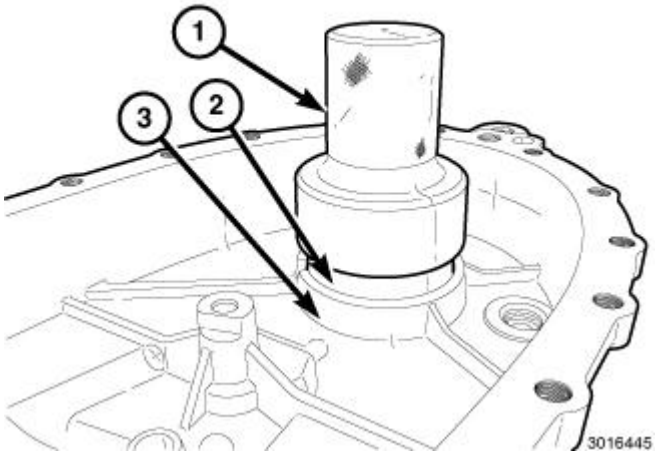

Fig. 33: Installing Front Output Shaft Rear Support Bearing
Courtesy of CHRYSLER GROUP, LLC

NOTE: When pressing bearings into case, be sure to properly support the underside of the case half.

4. Using (special tool #9598, Installer, Seal) (1) and an Arbor Press, install the front output shaft rear

support bearing (2) into the front case half (3).

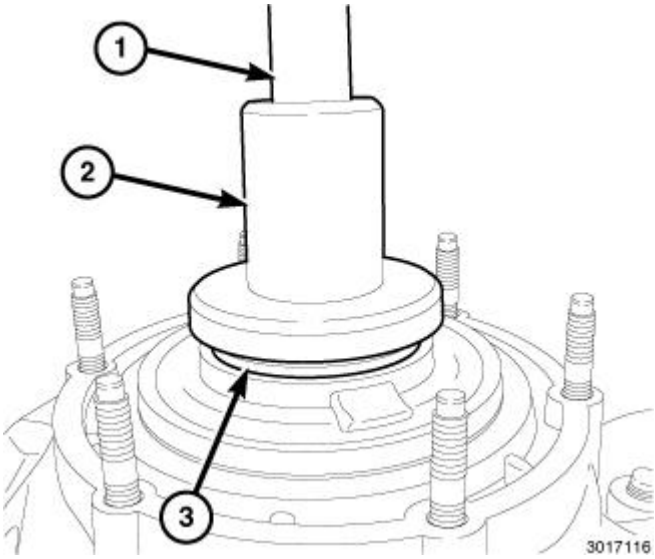

Fig. 34: Installing Input Shaft Seal
Courtesy of CHRYSLER GROUP, LLC

5. Using (special tool #9754, Installer, Seal) (2) and (special tool #C-4171, Driver Handle, Universal) (1), install input shaft seal (3).

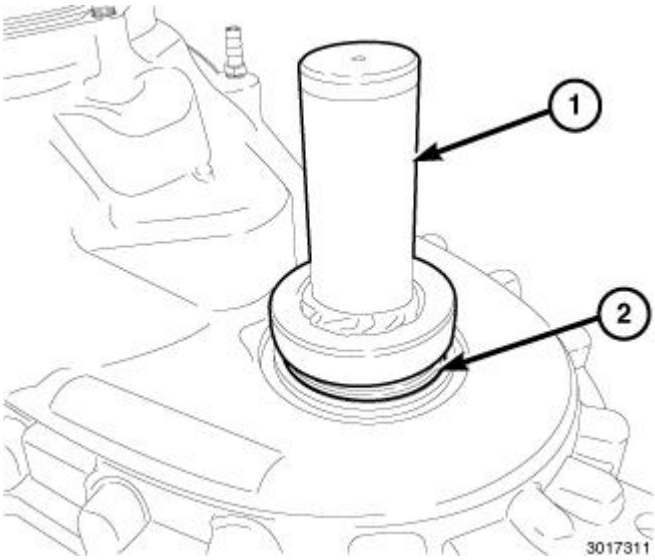

Fig. 35: Installing Front Output Shaft Seal
Courtesy of CHRYSLER GROUP, LLC

6. Using (special tool #10174, Installer, Seal, Rear Output) (1), install front output shaft seal (2).

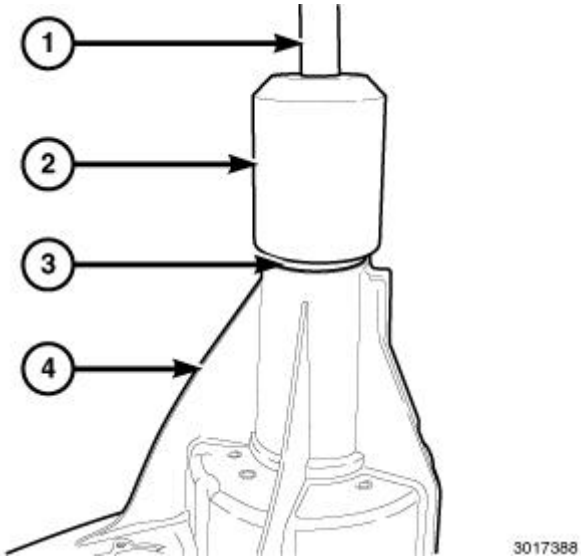

Fig. 36: Installing Rear Output Seal
Courtesy of CHRYSLER GROUP, LLC

7. If transfer case is equipped with a flange, and using (special tool #9672, Installer, Seal) (2) with (special tool #C-4171, Driver Handle, Universal) (1), install rear output seal (3).

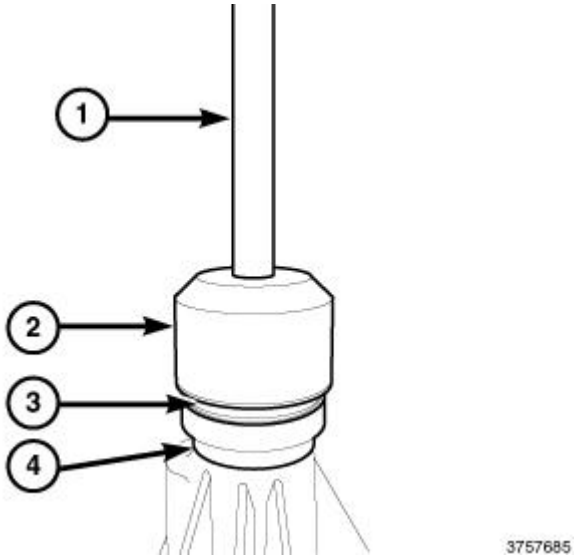

Fig. 37: Installing Rear Output Seal (Slip Yoke Type)
Courtesy of CHRYSLER GROUP, LLC

8. If transfer case is equipped with a slip yoke, and using (special tool #9037, Installer, Dust Boot/Seal) (2) with (special tool #C-4171, Driver Handle, Universal) (1), install the rear output seal (3).

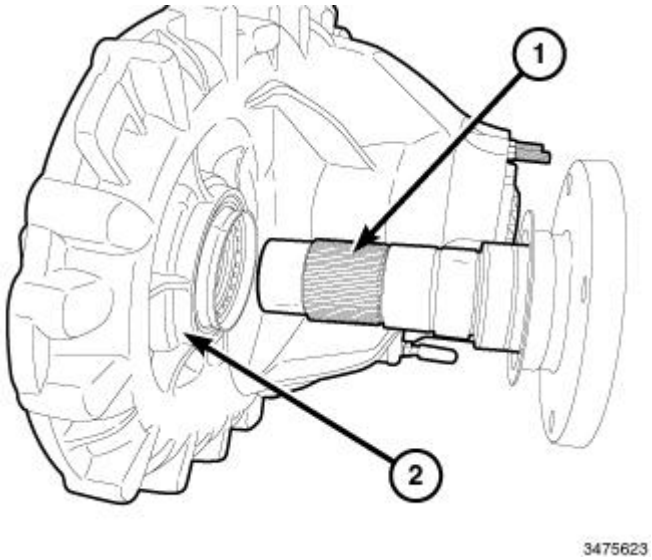

Fig. 38: Front Output Shaft & Front Case Half
Courtesy of CHRYSLER GROUP, LLC

9. Install the front output shaft (1) into the front housing (2).

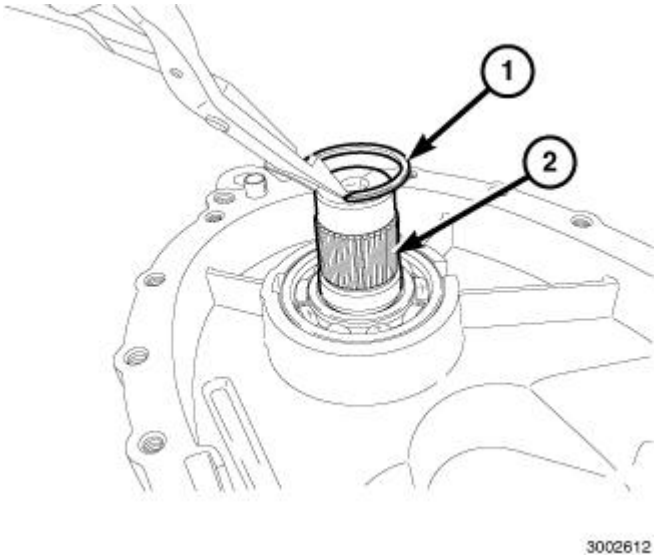

Fig. 39: Front Output Shaft Snap Ring
Courtesy of CHRYSLER GROUP, LLC

10. Install the front output shaft retaining ring (1) on the front output shaft (2).

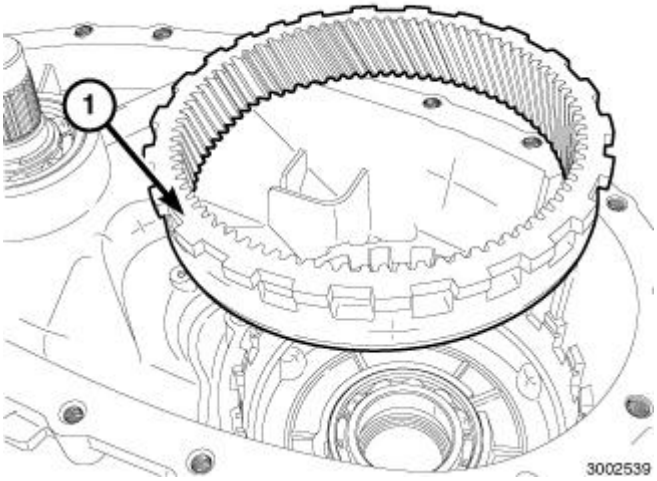

Fig. 40: Annulus Gear
Courtesy of CHRYSLER GROUP, LLC

11. Install the annulus gear (1).

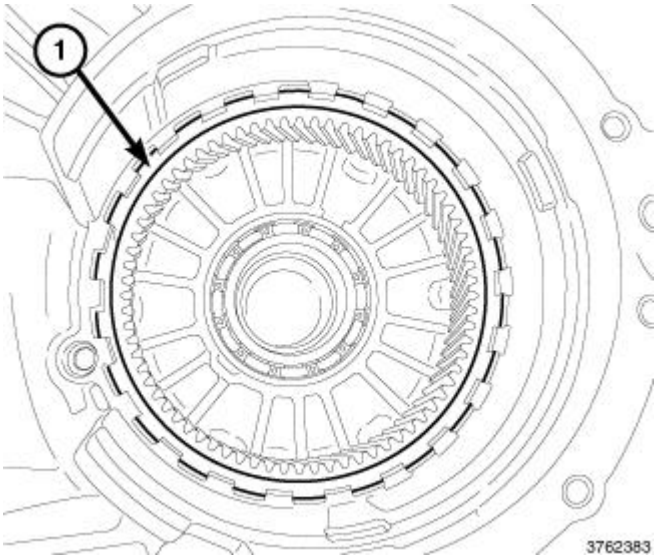

Fig. 41: Annulus Gear Retainer
Courtesy of CHRYSLER GROUP, LLC

12. Install the annulus gear retainer (1).

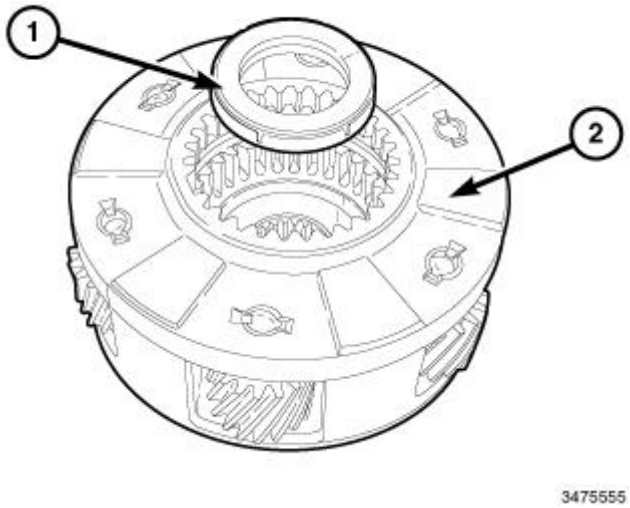

Fig. 42: Thrust Bearing & Planetary
Courtesy of CHRYSLER GROUP, LLC

NOTE: Bearing tabs face upward.

13. Install the carrier assembly (2) and thrust bearing (1).

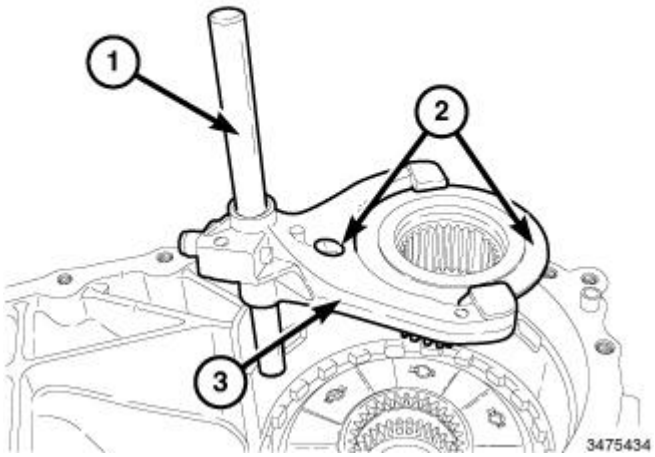

Fig. 43: Shift Rail, Lower Shift Fork & Reduction Hub
Courtesy of CHRYSLER GROUP, LLC

14. Install the range shift fork (2), reduction hub and shift rail (1).

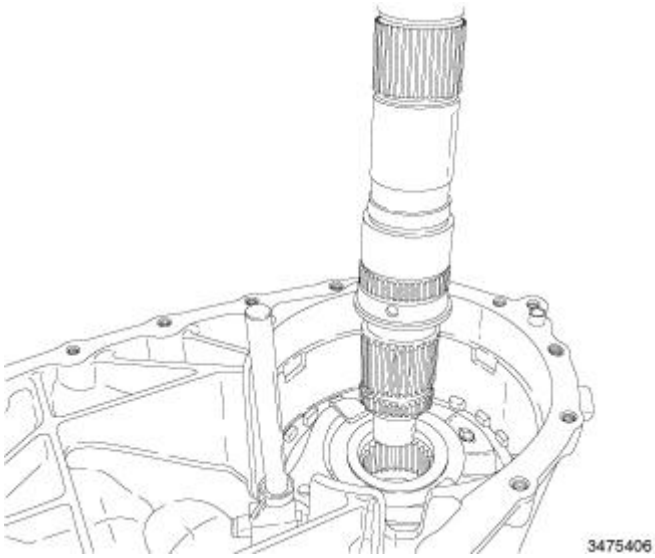

Fig. 44: Mainshaft
Courtesy of CHRYSLER GROUP, LLC

15. Install main shaft (1).

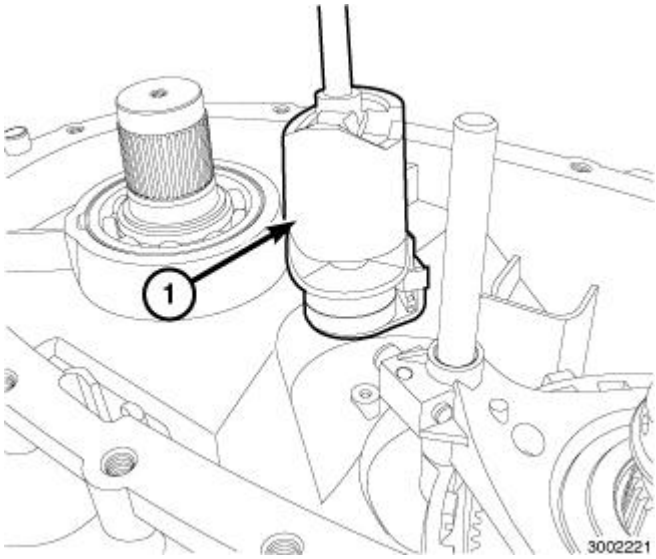

Fig. 45: Shift Assembly
Courtesy of CHRYSLER GROUP, LLC

16. Install the shift assembly (1). Be sure the pin is seated in the case.

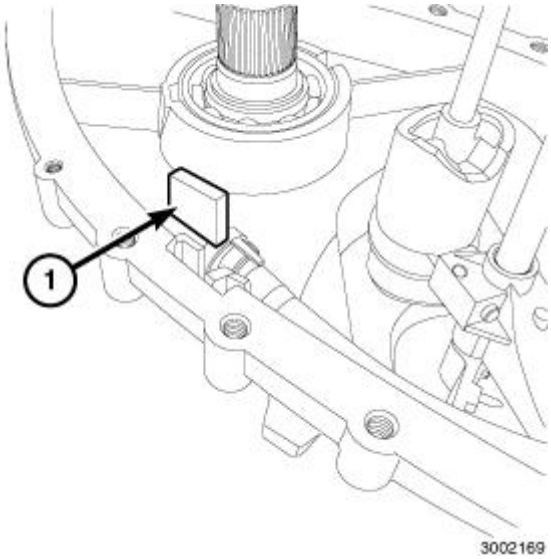

Fig. 46: Magnet
Courtesy of CHRYSLER GROUP, LLC

17. Install the magnet (1).

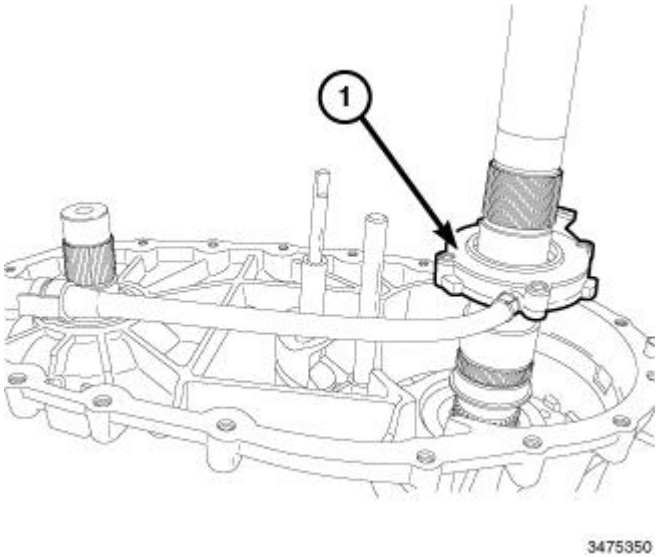

Fig. 47: Oil Pump
Courtesy of CHRYSLER GROUP, LLC

18. Install the oil pump assembly (1).

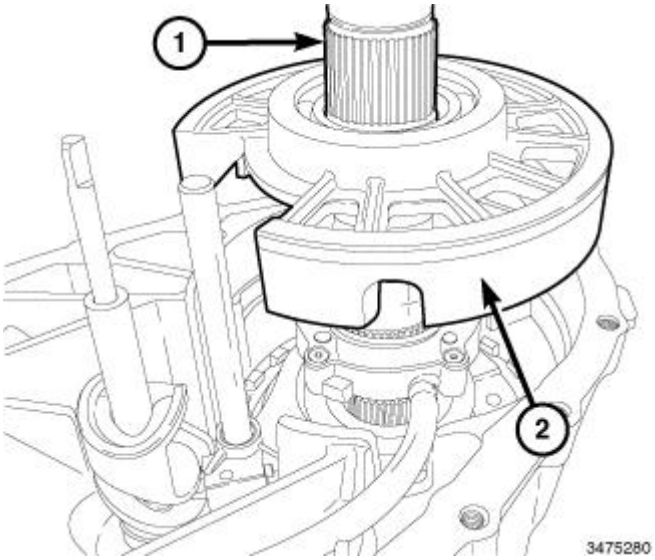

Fig. 48: Mainshaft & Center Bearing Support Assembly
Courtesy of CHRYSLER GROUP, LLC

NOTE: **There are three alignment tabs and an oil pump hose pass through incorporated into the support that prevent the structure from rotating once installed.**

19. Install the center bearing support assembly (2) onto the main shaft (1).

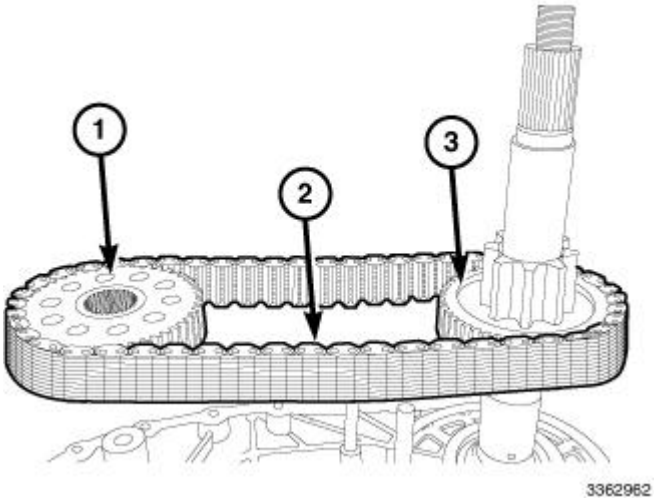

Fig. 49: Chain, Front Output Gear, & Mainshaft Gear
Courtesy of CHRYSLER GROUP, LLC

NOTE: **Chain and gears are patterned and must be installed correctly. Blue links on the chain must be installed facing upward.**

20. Install the chain (2), the front out put gear (1) and main shaft gear (3).

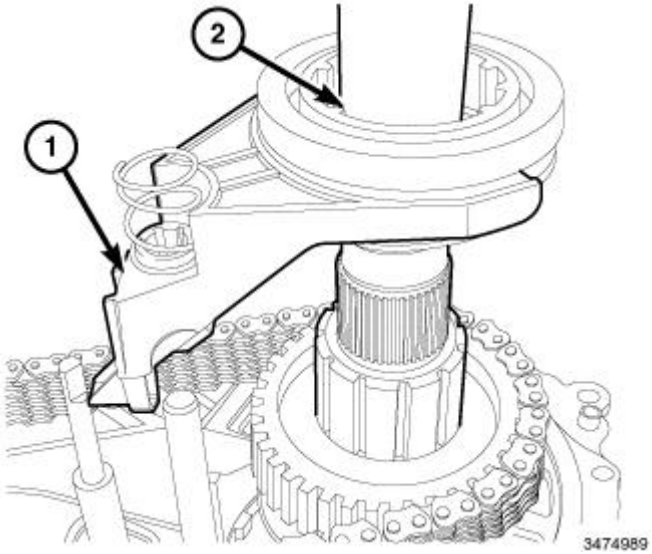

Fig. 50: Main Shaft, Shift Fork, Spring & Sleeve
Courtesy of CHRYSLER GROUP, LLC

21. Install the mode shift fork (1) onto the main shaft (2)

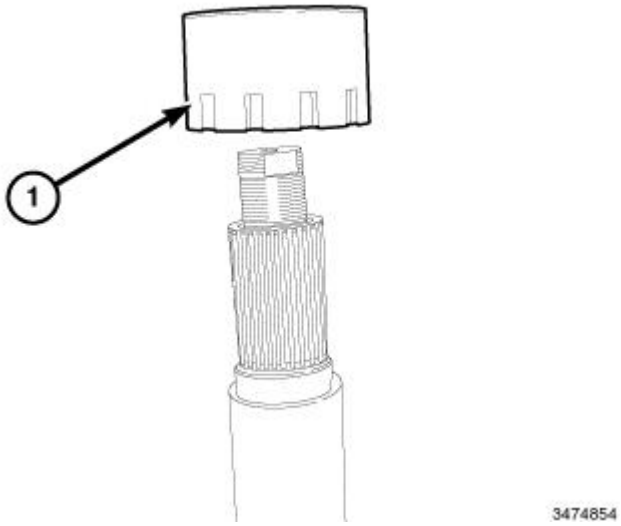

Fig. 51: Locking Collar
Courtesy of CHRYSLER GROUP, LLC

22. Install the locking collar (1).

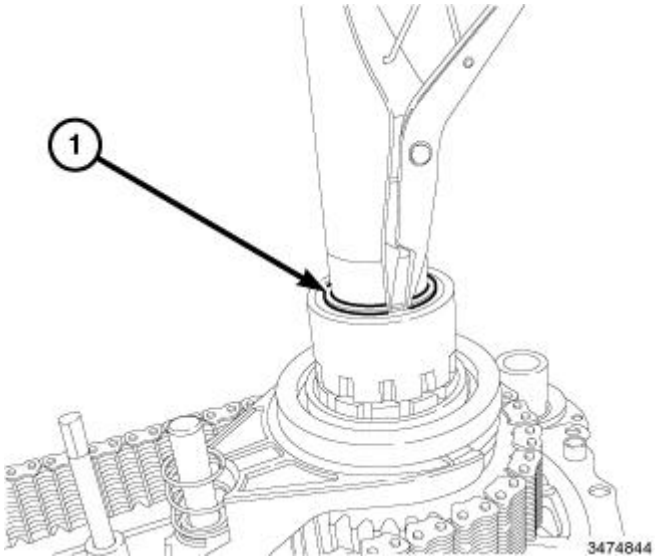

Fig. 52: Retaining Ring
Courtesy of CHRYSLER GROUP, LLC

23. Install the retaining ring (1).

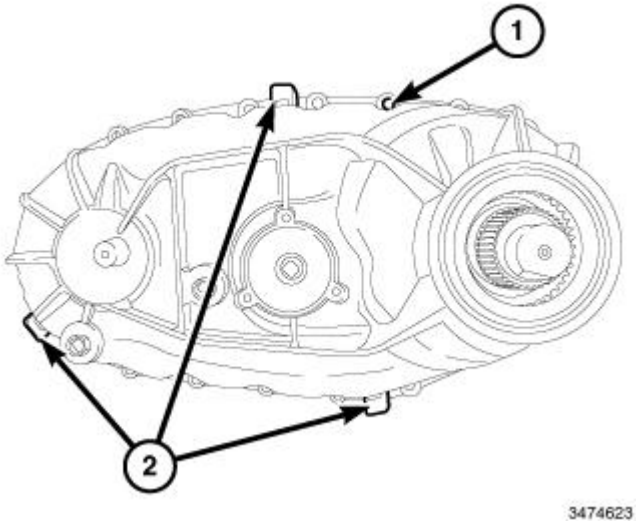

Fig. 53: Pry Points & Case Half Bolts
Courtesy of CHRYSLER GROUP, LLC

24. Clean mating surface of both case halves.
25. Apply a thin bead of transfer case sealant.
26. Install rear cover.
27. Install all of the case half bolts (1) and tighten in a star pattern to 31 N.m (23 ft. lbs.).

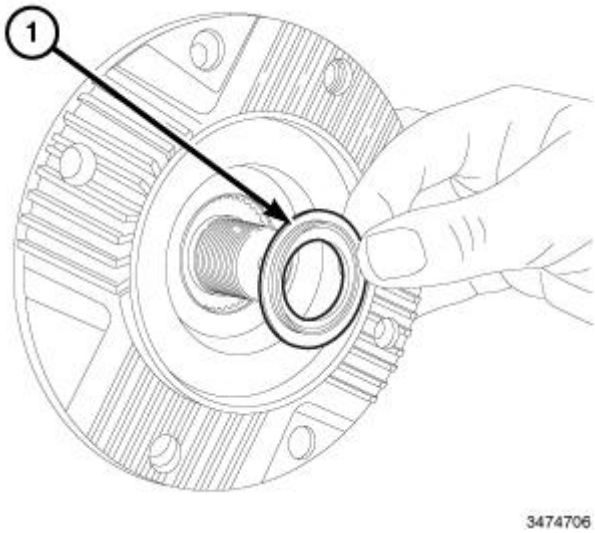

Fig. 54: Flange Dust Seal
Courtesy of CHRYSLER GROUP, LLC

28. Install the rear output flange, if equipped.
29. Install the flange dust seal (1), if equipped.

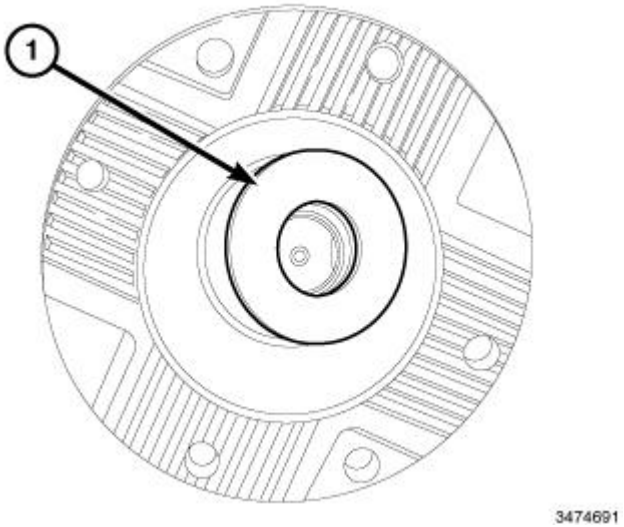

Fig. 55: Flange Spacer
Courtesy of CHRYSLER GROUP, LLC

30. Install the flange spacer (1), if equipped.

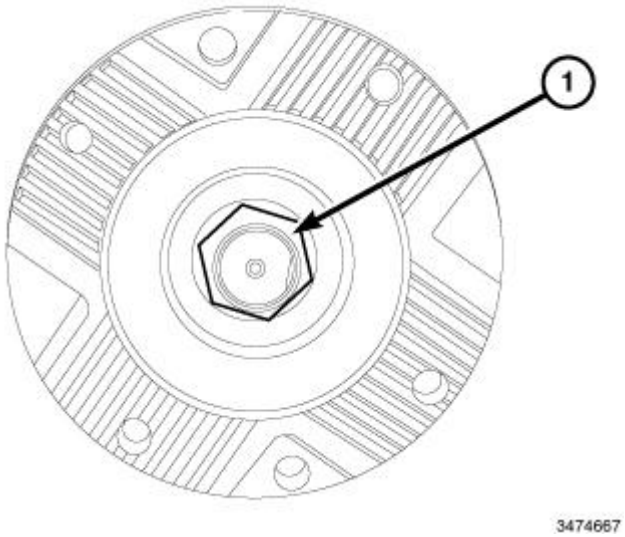

Fig. 56: Rear Output Shaft Flange Nut
Courtesy of CHRYSLER GROUP, LLC

31. Install the rear output flange nut (1) and tighten to 241 N.m (178 ft. lbs.), if equipped
32. Stake the nut to the shaft to prevent the nut from backing off, if equipped.

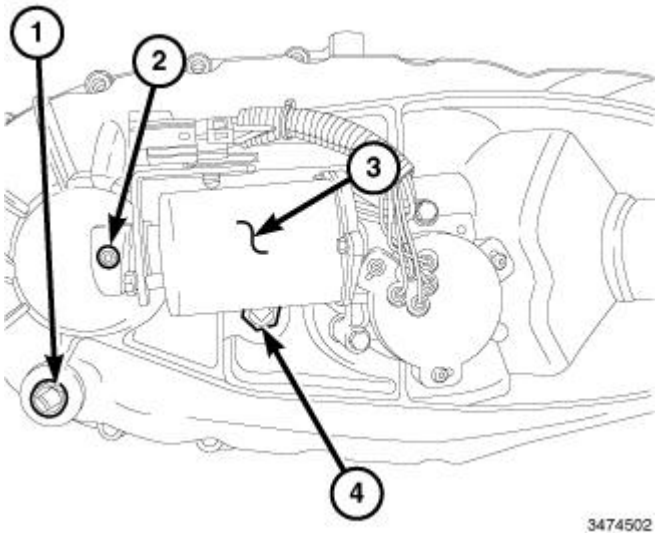

Fig. 57: Shift Motor, Mounting Bolt, Fill & Drain Plugs
Courtesy of CHRYSLER GROUP, LLC

33. Install the fill (4) and drain (1) plugs.
34. Install the shift motor (3), the four mounting bolts (2) and tighten to 9 N.m (84 in. lbs.).
35. Install transfer case into vehicle. Refer to **INSTALLATION**.

INSTALLATION

INSTALLATION

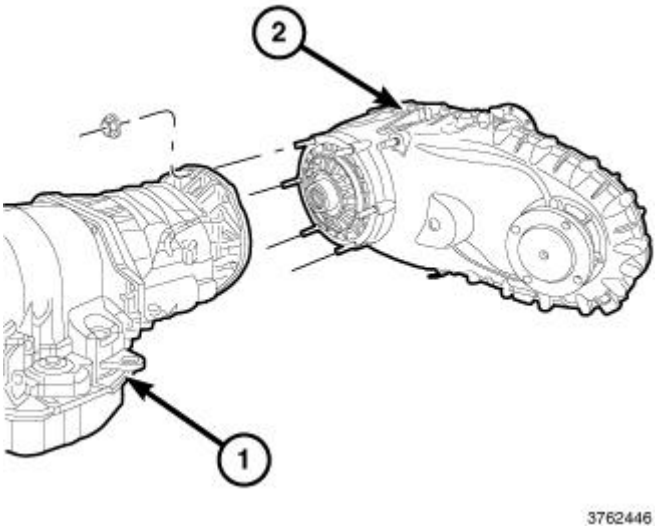

Fig. 58: Transmission & Transfer Case
Courtesy of CHRYSLER GROUP, LLC

1. Mount transfer case on a transmission jack.
2. Secure transfer case to jack with chains.
3. Position transfer case under vehicle.
4. Align transfer case and transmission shafts and install transfer case onto the transmission.
5. Install and tighten transfer case attaching nuts to 41 N.m (30 ft. lbs.) torque.
6. Remove transmission jack and support stand.
7. Connect the vent hose.
8. Connect the shift motor and mode sensor wiring connectors.
9. Connect the front and rear output speed sensor wire connectors.
10. Align and connect the propeller shafts. Refer to **SHAFT, DRIVE, FRONT LIGHT DUTY, INSTALLATION** or **SHAFT, DRIVE, FRONT HEAVY DUTY, INSTALLATION** or **SHAFT, DRIVE, REAR LIGHT DUTY, INSTALLATION** or **SHAFT, DRIVE, REAR HEAVY DUTY, INSTALLATION** . .
11. Fill transfer case with correct fluid. Refer to **STANDARD PROCEDURE** .
12. Install skid plate, if equipped.
13. Lower vehicle and verify transfer case shift operation.

SPECIAL TOOLS

SPECIAL TOOLS

	10174 - Installer, Seal, Rear Output (Originally Shipped In Kit Number(s) 10175.)

	5066 - Installer, Bushing (Originally Shipped In Kit Number(s) 9975.) 7794-A - Remover, Seal (Originally Shipped In Kit Number(s) 6645.) 9037 - Installer, Dust Boot/Seal (Originally Shipped In Kit Number(s) 8848, 8849, 8849CC.) 9598 - Installer, Seal (Originally Shipped In Kit Number(s) 9692.) 9622 - Installer, Countershaft Plug (Originally Shipped In Kit Number(s) 9691.) 9672 - Installer, Seal (Originally Shipped In Kit Number(s) 9696, 9697, 9698.) 9754 - Installer, Seal (Originally Shipped In Kit Number(s) 9750.) C-4171 - Driver Handle, Universal (Originally Shipped In Kit Number(s) 9202, 9202A-CAN, 9202CC, 9299, 9299CC, 9299CC, 9300A-CAN.) C-637 - Slide Hammer, Universal (Originally Shipped In Kit Number(s) 9202.)

FLUID

STANDARD PROCEDURE

FLUID DRAIN AND REFILL

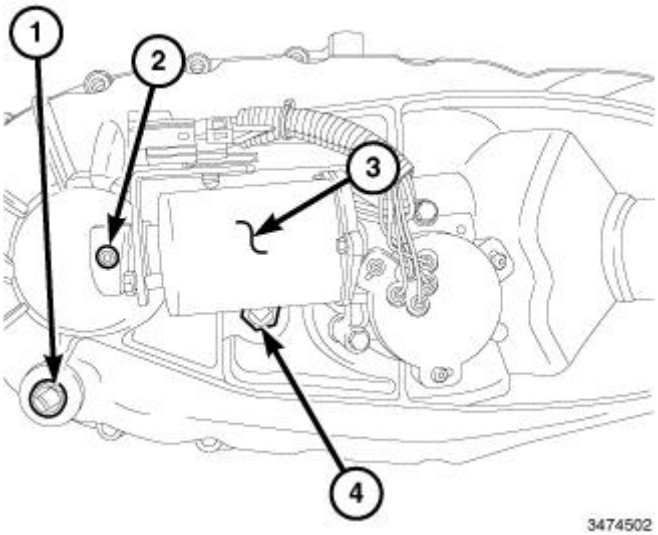

Fig. 59: Shift Motor, Mounting Bolt, Fill & Drain Plugs
Courtesy of CHRYSLER GROUP, LLC

The fill (4) and drain (1) plugs are both in the rear case.

1. Raise vehicle.
2. Position drain pan under transfer case.
3. Remove drain and fill plugs and drain lubricant completely.
4. Install drain plug (1). Tighten plug to 19 - 30 N.m (15 - 22 ft. lbs.).
5. Remove drain pan.
6. Fill transfer case to bottom edge of fill plug opening with the correct fluid for the application. Refer to **CAPACITIES AND RECOMMENDED FLUIDS, SPECIFICATIONS** .
7. Install and tighten fill plug (2) to 19 - 30 N.m (15 - 22 ft. lbs.).
8. Wipe any excess fluid that may have spilled onto the exhaust.
9. Lower vehicle.

MOTOR, SHIFT

DESCRIPTION

DESCRIPTION

The shift motor consists of a permanent magnet D.C. motor with gear reduction to convert a high speed-low torque device into a low speed-high torque device. The output of the device is coupled to a shaft which internally moves the range fork that change the transfer case operating ranges. The shift motor uses a digital encoder to monitor the shift motor position. The motor is rated at 20 amps maximum at 25° C (77° F) with 14 volts at the motor leads.

OPERATION

OPERATION

The transfer case shift motor responds to the Drive Train Control Module (DTCM) commands to move the transfer case shift range fork, as required, to obtain the correct transfer case operating range indicated by the instrument panel mounted selector switch. The motor only shifts between 1:1 ranges, 2.64:1 range, and neutral. Switch changes between 2WD, 4WD LO and 4WD HI are assisted by the transfer case coil.

REMOVAL

REMOVAL

1. Raise the vehicle on a suitable hoist.
2. Disengage the wiring connectors from the shift motor and sensor assembly.
3. Remove the bolts holding the shift motor, sensor and bracket assembly onto the transfer case.

NOTE: **The shift motor and sensor are one piece and are not to be disassembled. Do not disassemble the shift motor and sensor as this will effect shift motor and sensor functionality.**

4. Separate the shift motor and mode sensor assembly from the transfer case.

INSTALLATION

INSTALLATION

1. Clean mounting surface of any sealer.
2. Apply a thin bead of Mopar® ATF RTV to the mounting surface.

NOTE: **Verify that the shift motor position and sector shaft orientation are aligned. It may be necessary to manually shift the transfer case if the shift motor and sector shaft are not aligned.**

3. Install the shift motor (1) onto the transfer case (2).
4. Install the shift motor and mode sensor assembly (1) onto the transfer case.
5. Install the bolts to hold the shift motor and mode sensor assembly onto the transfer case. Tighten the bolts to 8-11 N.m (72 - 96 in. lbs.).
6. While holding the shift motor bracket tight against the shift motor, tighten the bracket to the transfer case to 8-11 N.m (72 - 96 in. lbs.).
7. Tighten the shift motor bracket to the shift motor to 2.8 - 4 N.m (24 - 36 in. lbs.).
8. Engage the wiring connectors to the shift motor and sensor assembly.
9. Refill the transfer case as necessary with the correct fluid for the application. Refer to **CAPACITIES AND RECOMMENDED FLUIDS, DESCRIPTION** .
10. Lower vehicle and verify transfer case operation.

DESCRIPTION

DESCRIPTION

The BW 44-47 is a manually controlled, part time transfer case.

The low range provides a 2.64:1 reduction ratio.

OPERATING RANGES

BW 44-47 operating ranges are:

- 2HI.
- 4WD Lock.
- Neutral.
- 4WD Low

SHIFT MECHANISM

Operating ranges are selected with a floor mounted shift selector lever. The lever is attached to a shift linkage rod that is attached to the transfer case mounted shift lever.

OPERATION

OPERATION

The input gear is splined to the transmission output shaft. The input gear drives the mainshaft through the planetary assembly and range sleeve. The front output shaft is operated by a drive chain that connects the shaft to a drive sprocket on the mainshaft. Torque is transmitted through the input shaft to the drive sprocket assembly, and is transferred directly to the rear propeller shaft. Torque to the front output shaft is accomplished through the chain assembly. The oil pump circulates gear lube throughout the case to provide lubrication and cooling.

DIAGNOSIS AND TESTING

TRANSFER CASE - BW 44-47

DIAGNOSIS CHART

Condition	Possible Cause	Correction
	2) If vehicle was operated for an extended period in 4HI mode on dry surface, driveline torque load	2) Drive the vehicle in a straight line and momentarily release the accelerator. The transfer case can

	may cause difficulty.	then be shifted to the desired mode.
Transfer case difficult to shift or will not shift into desired range.	3) Insufficient or incorrect lubricant.	3) Drain and refill transfer case with the correct quantity of fluid. Refer to **CAPACITIES AND RECOMMENDED FLUIDS, DESCRIPTION** .
	4) Internal transfer case components binding, worn, or damaged.	4) Repair or replace components as necessary.
Transfer case noisy in all drive modes.	1) Insufficient or incorrect lubricant.	1) Drain and refill transfer case with the correct quantity of fluid. Refer to **CAPACITIES AND RECOMMENDED FLUIDS, DESCRIPTION** .
	2) Internal transfer case components binding, worn, or damaged.	2) Repair or replace components as necessary.
Transfer case noisy while in, or jumps out of, 4LO mode.	1) Transfer case not completely engaged in 4LO position.	1) While rolling 2-3 MPH and the transmission in NEUTRAL, shift transfer case to the 2WD or 4HI position, and then back into the 4LO position.
	2) Range fork damaged, inserts worn, or fork is binding on the shift rail.	2) Repair or replace components as necessary.
	3) Low range gear worn or damaged.	3) Repair or replace components as necessary.
Lubricant leaking from transfer case seals or vent.	1) Transfer case overfilled.	1) Drain lubricant to the correct level.
	2) Transfer case vent closed or restricted.	2) Clean or replace vent as necessary.
	3) Transfer case seals damaged or installed incorrectly.	3) Replace suspect seal.
Abnormal tire wear.	1) Extended operation in 4HI mode on dry surfaces,	1) Operate vehicle in 2WD mode on dry surfaces.

SPECIFICATIONS

TORQUE SPECIFICATIONS

DESCRIPTION	N-m	Ft. Lbs.	In. Lbs.
Plug, Drain/Fill	19 - 30	15 - 22	-
Bolt, Case Half	27 - 35	20 - 26	-
Breather	6.5 - 8.5	-	60 - 72

Stud	22 - 27	16 - 20	-
Nuts, Mounting	41	30	-
Set Screw, Shift Assembly	8.1 - 12.2	-	72 - 108
Switch	20 - 34	15 - 25	-
Output Flange Nut	241	178	-

REMOVAL

REMOVAL

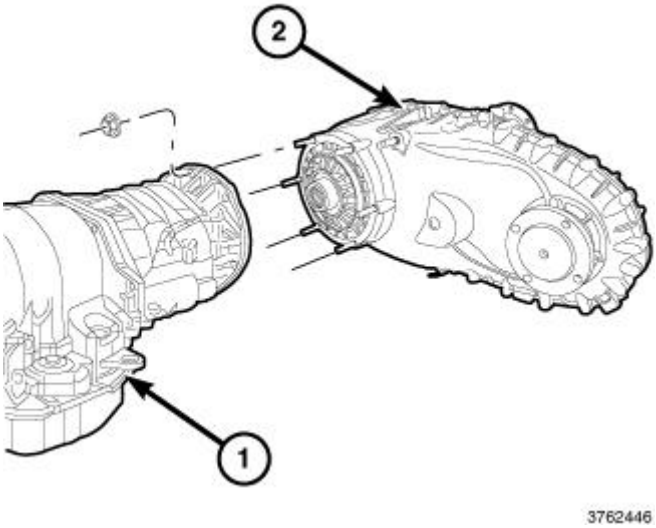

Fig. 1: Transmission & Transfer Case
Courtesy of CHRYSLER GROUP, LLC

1. Raise vehicle.
2. Mark front and rear propeller shafts for alignment reference.
3. Support transmission with jack stand.
4. Remove the transfer case skid plate, if equipped.
5. Disconnect front and rear propeller shafts at transfer case.
6. Disconnect transfer case vent hose.
7. Disconnect the shift linkage at the transfer case lever.
8. Unplug the transfer case position indicator switch (3).
9. Support transfer case with transmission jack.
10. Secure transfer case to jack with jack straps or chains.
11. Remove nuts attaching transfer case (2) to transmission (1).
12. Pull transfer case and jack rearward to disengage transfer case.
13. Remove transfer case from under vehicle.

DISASSEMBLY

DISASSEMBLY

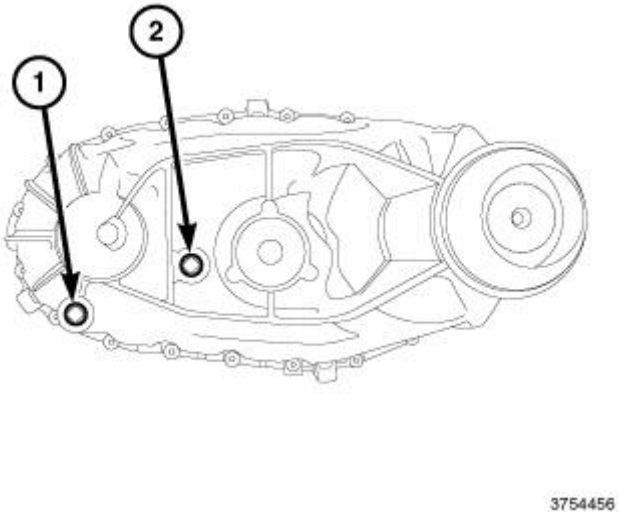

Fig. 2: Fill & Drain Plugs
Courtesy of CHRYSLER GROUP, LLC

1. Place the transfer case so that it can be drained of any remaining fluid and remove the fill (2) and drain plugs (1).

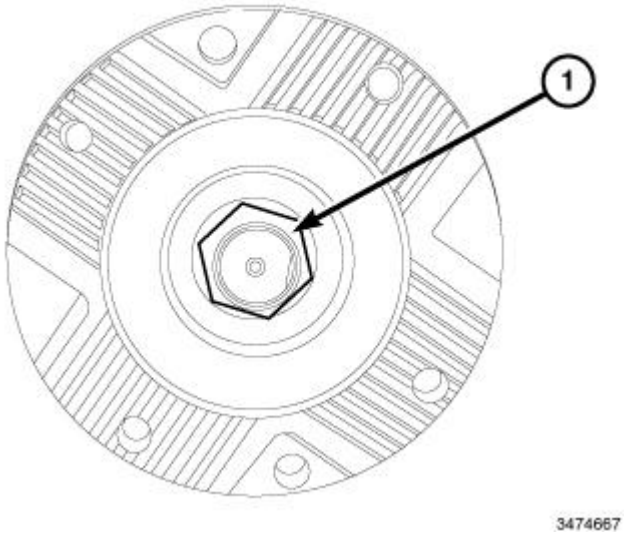

Fig. 3: Rear Output Shaft Flange Nut
Courtesy of CHRYSLER GROUP, LLC

2. Remove the rear output shaft flange nut (1), if equipped.

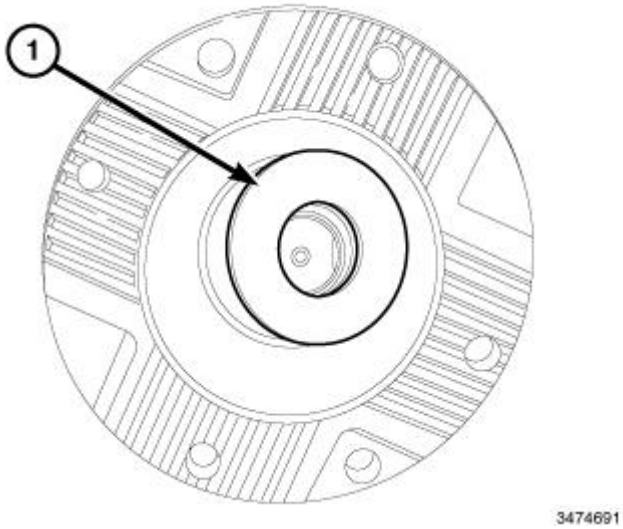

Fig. 4: Flange Spacer
Courtesy of CHRYSLER GROUP, LLC

3. Remove the flange spacer (1), if equipped.

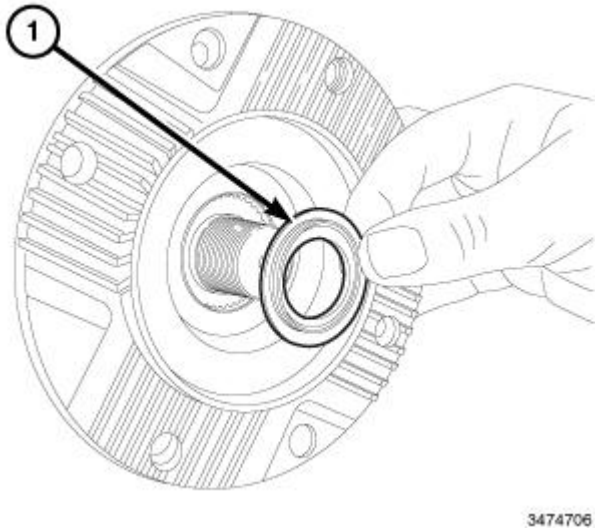

Fig. 5: Flange Dust Seal
Courtesy of CHRYSLER GROUP, LLC

4. Remove the flange dust seal, if equipped.
5. Using a suitable puller, remove the output flange, if equipped.

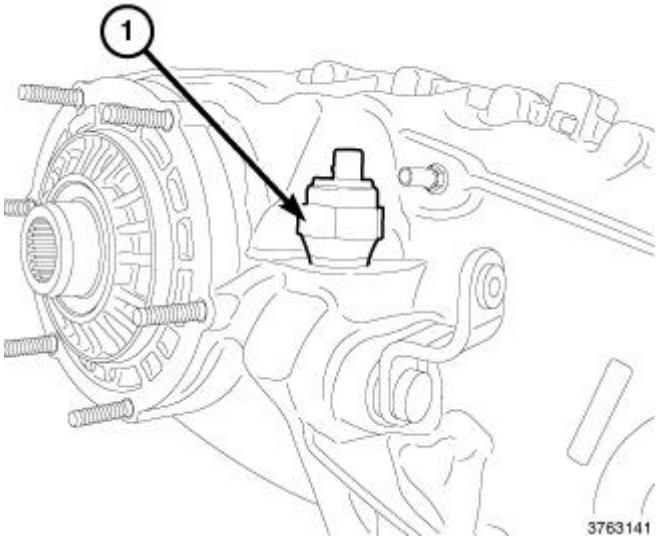

Fig. 6: Position Switch
Courtesy of CHRYSLER GROUP, LLC

6. Remove the position switch (1).

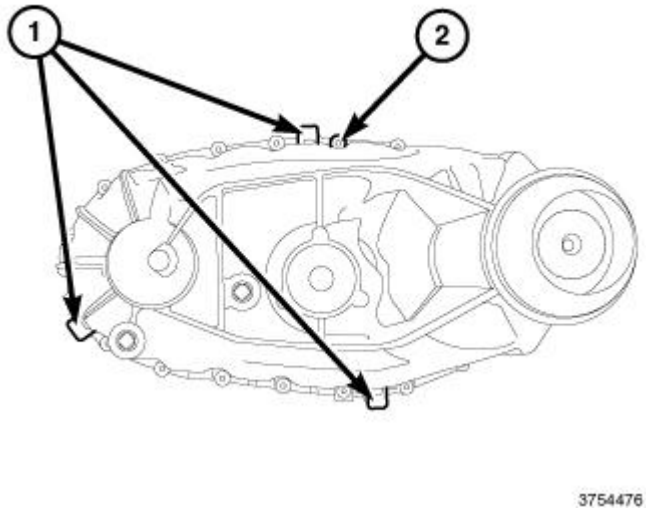

Fig. 7: Pry Points & Case Half Bolts
Courtesy of CHRYSLER GROUP, LLC

7. Remove all of the case half bolts (2).
8. Using a prybar at pry points (1), carefully separate and remove the rear case half.

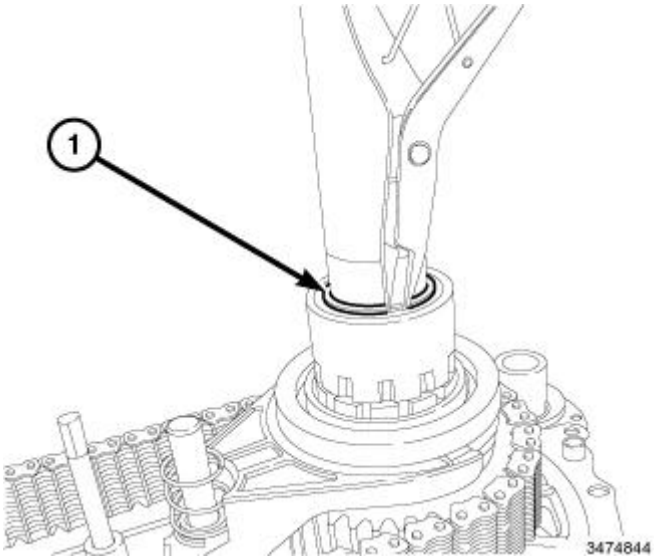

Fig. 8: Retaining Ring
Courtesy of CHRYSLER GROUP, LLC

9. Remove the retaining ring (1).

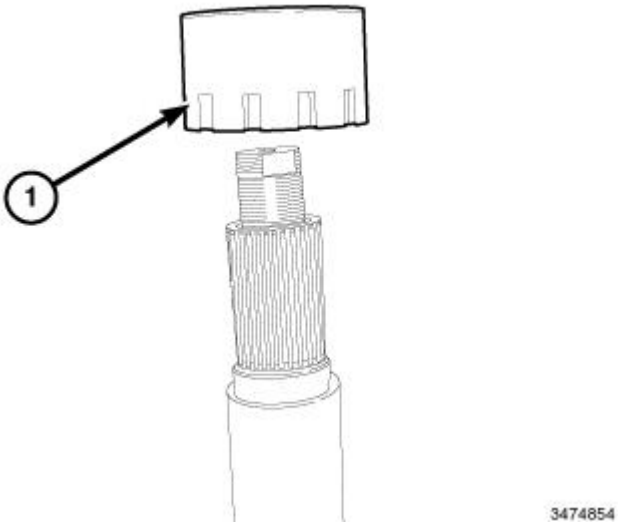

Fig. 9: Locking Collar
Courtesy of CHRYSLER GROUP, LLC

10. Remove the locking collar (1).

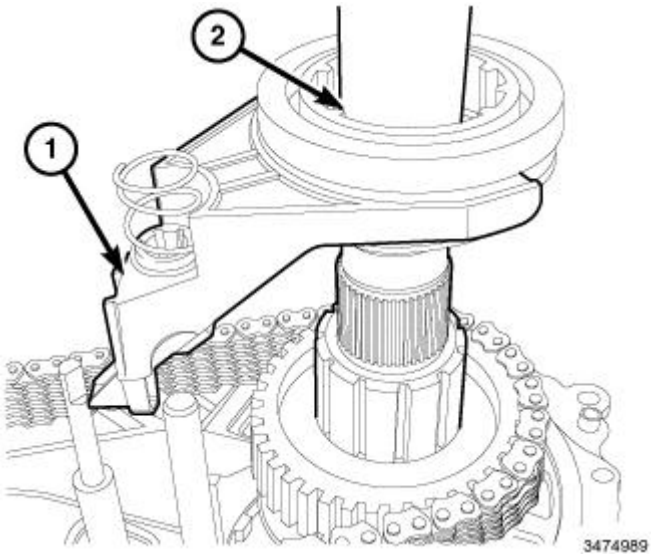

Fig. 10: Main Shaft, Shift Fork, Spring & Sleeve
Courtesy of CHRYSLER GROUP, LLC

11. Remove the mode shift fork, spring and sleeve (1) from the main shaft (2).

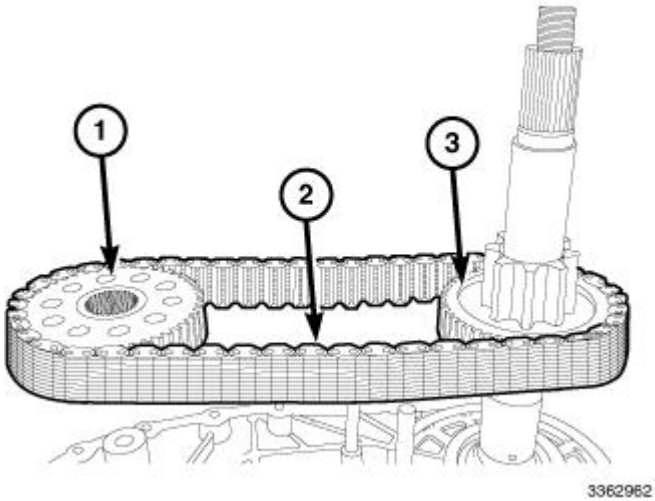

Fig. 11: Chain, Front Output Gear, & Mainshaft Gear
Courtesy of CHRYSLER GROUP, LLC

12. Remove the chain (2), the front output gear (1) and mainshaft gear (3) as an assembly.

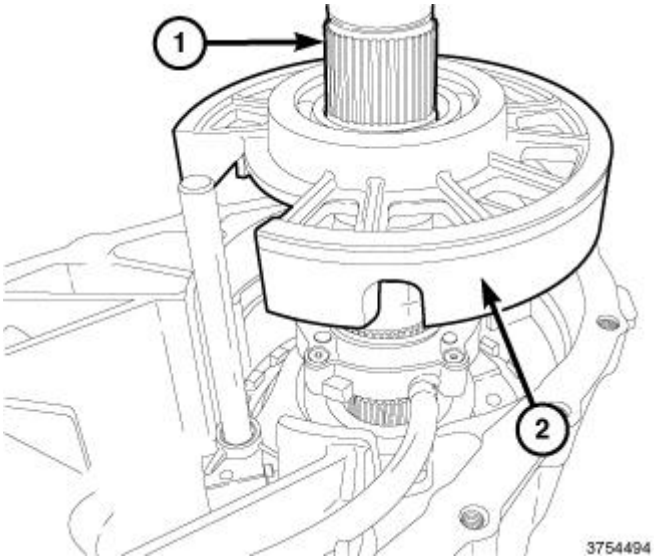

Fig. 12: Mainshaft & Center Bearing Support Assembly
Courtesy of CHRYSLER GROUP, LLC

NOTE: **There are three alignment tabs and an oil pump hose pass through incorporated into the support that prevent the structure from rotating once installed.**

13. Remove the center bearing support assembly (2) from the mainshaft (1).

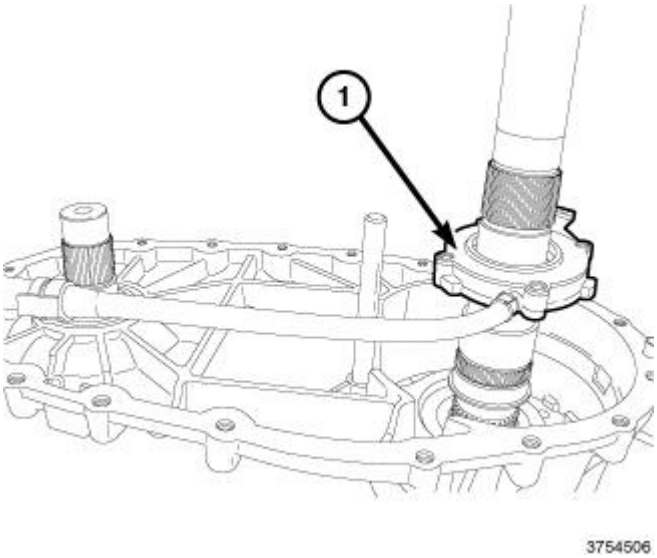

Fig. 13: Oil Pump
Courtesy of CHRYSLER GROUP, LLC

14. Remove the oil pump (1).

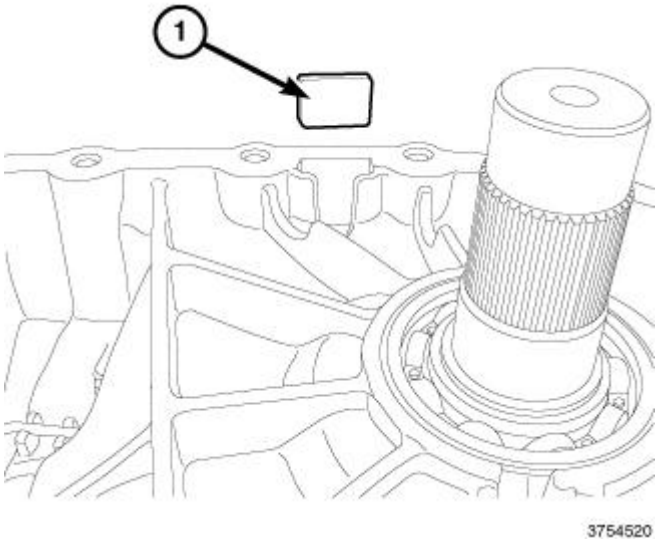

Fig. 14: Magnet
Courtesy of CHRYSLER GROUP, LLC

15. Remove the magnet (1).

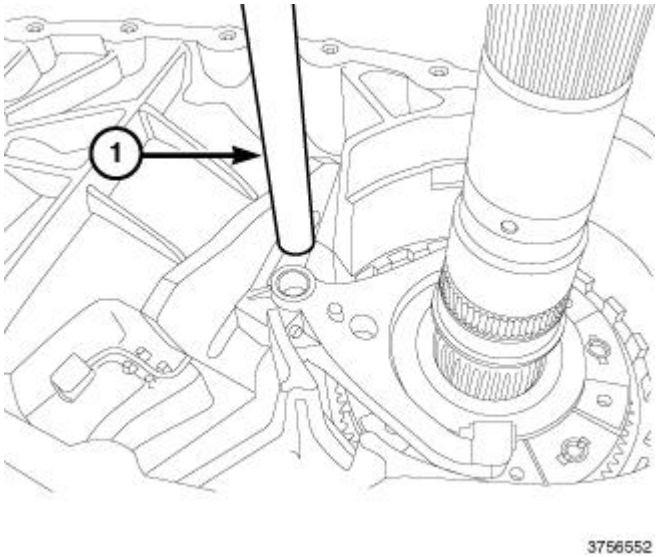

Fig. 15: Shift Shaft
Courtesy of CHRYSLER GROUP, LLC

16. Remove the shift shaft (1).

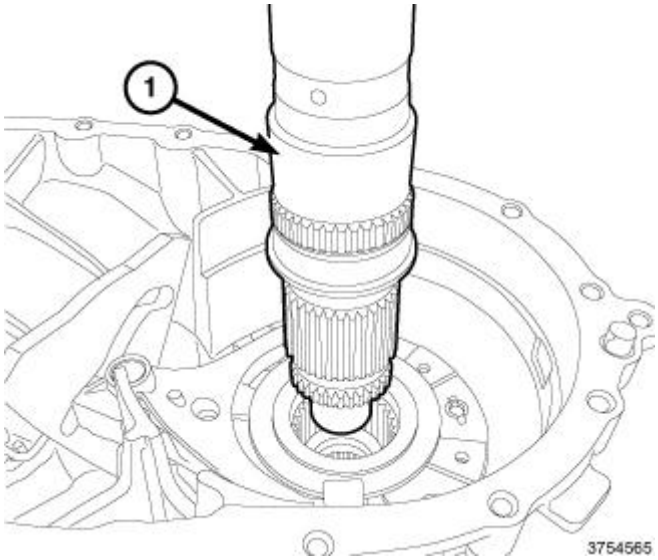

Fig. 16: Mainshaft
Courtesy of CHRYSLER GROUP, LLC

17. Remove the mainshaft (1).

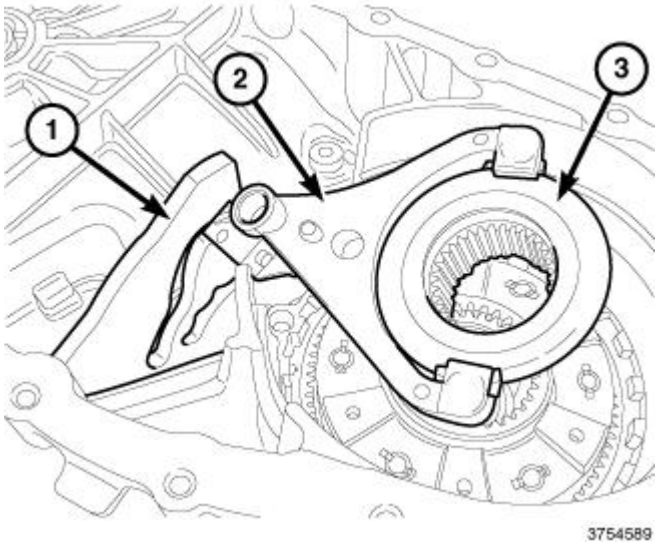

Fig. 17: Shifter, Lower Shift Fork & Reduction Hub
Courtesy of CHRYSLER GROUP, LLC

18. With the shifter (1) rotated fully, remove the lower shift fork (2), and the reduction hub (3) as an assembly.
19. Separate the lower shift fork (2) from the reduction hub (3).

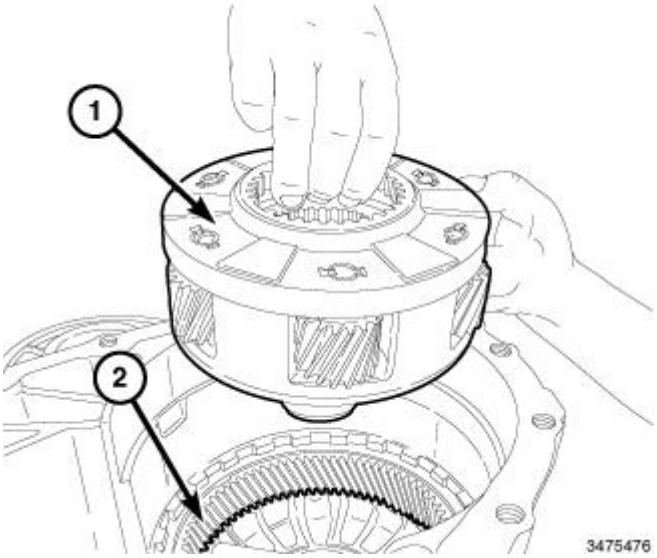

Fig. 18: Planetary Carrier & Annulus Gear
Courtesy of CHRYSLER GROUP, LLC

20. Lift the planetary carrier (1) straight up and out of the annulus gear (2).

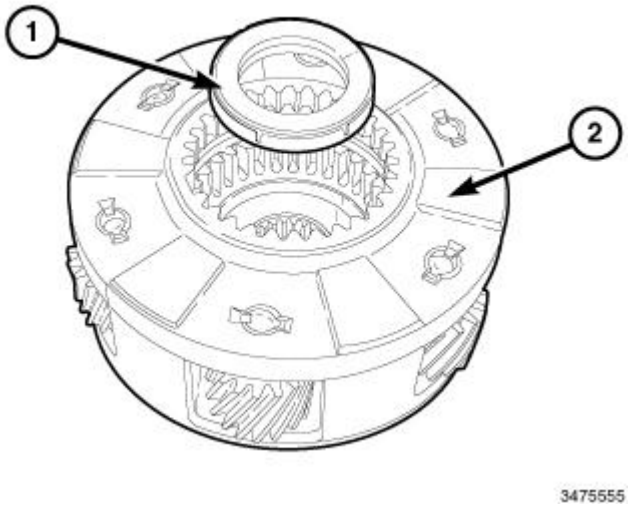

Fig. 19: Thrust Bearing & Planetary
Courtesy of CHRYSLER GROUP, LLC

NOTE: Bearing tabs face upward.

21. Remove the carrier thrust bearing (1) from the center of the planetary (2).

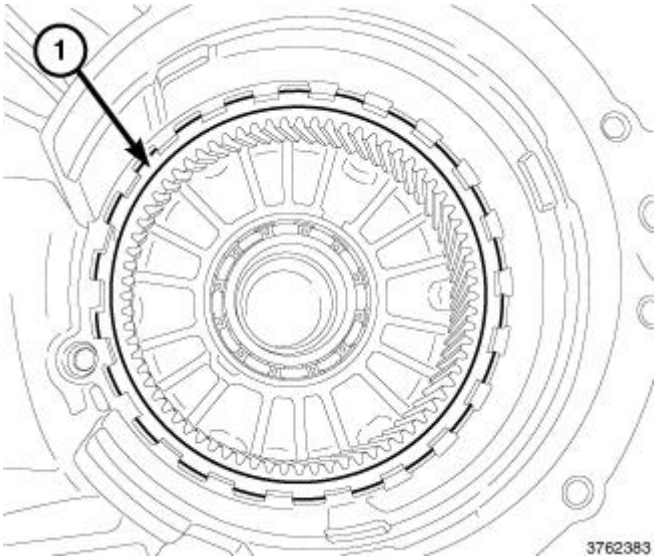

Fig. 20: Annulus Gear Retainer
Courtesy of CHRYSLER GROUP, LLC

22. Remove the annulus gear retainer (1).

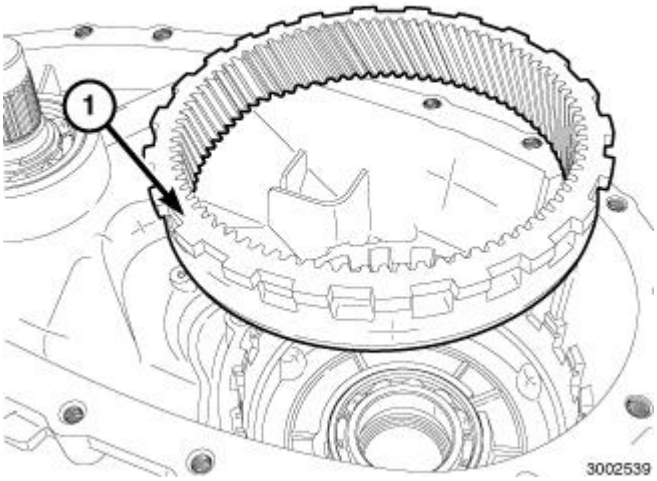

Fig. 21: Annulus Gear
Courtesy of CHRYSLER GROUP, LLC

23. Remove the annulus gear (1).

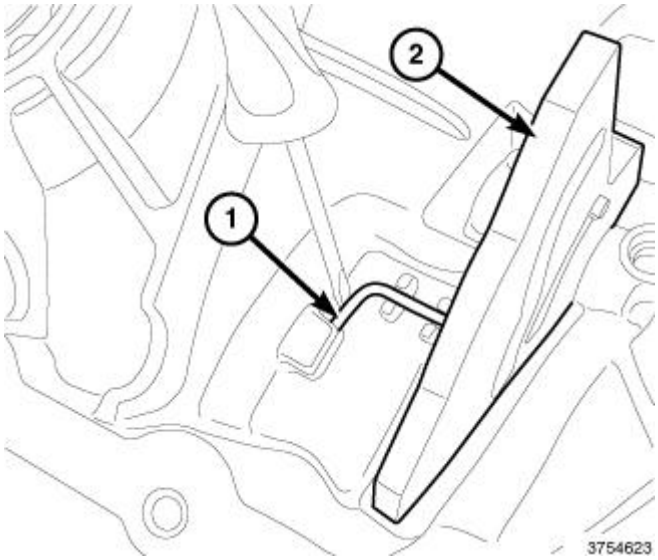

Fig. 22: Detent Spring
Courtesy of CHRYSLER GROUP, LLC

24. Carefully pry detent spring (1) from pocket in case.

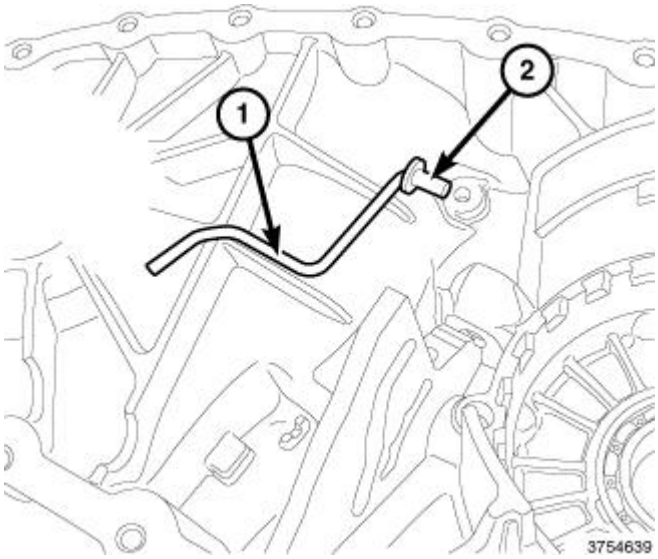

Fig. 23: Detent Spring & Collar
Courtesy of CHRYSLER GROUP, LLC

25. Remove detent spring (1) and collar (2).

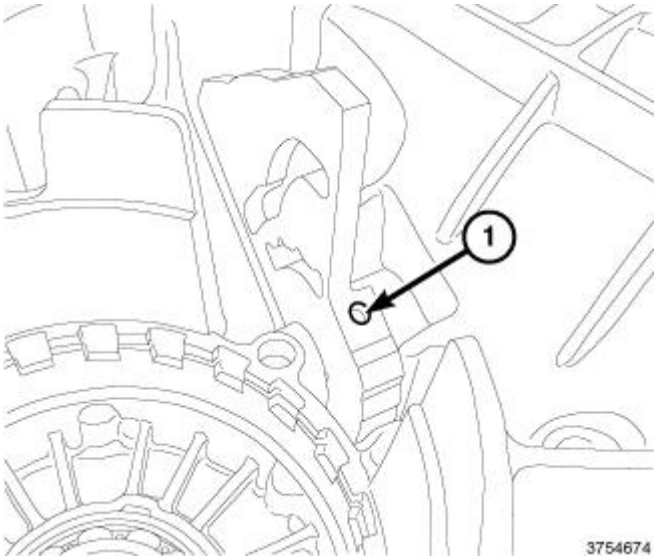

Fig. 24: T20 Torx® Screw
Courtesy of CHRYSLER GROUP, LLC

26. Using a T20 Torx® screwdriver, loosen retaining screw (1).

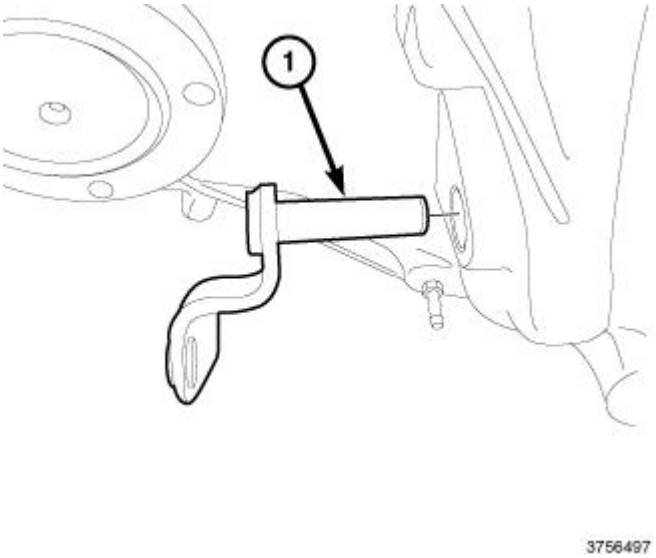

Fig. 25: Manual Shift Lever
Courtesy of CHRYSLER GROUP, LLC

27. Remove manual shift lever (1) from case.

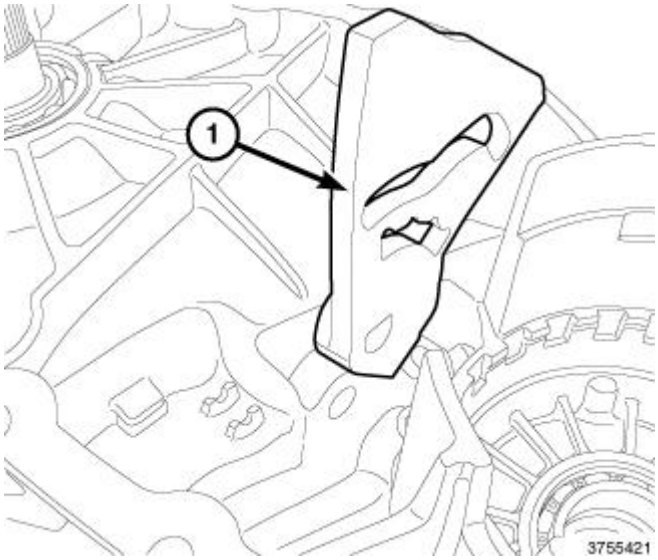

Fig. 26: Shift Fork Lever
Courtesy of CHRYSLER GROUP, LLC

28. Remove the shift fork lever (1).

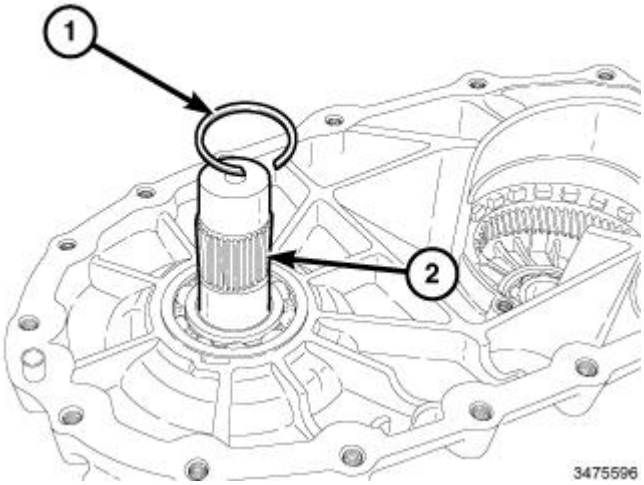

Fig. 27: Front Output Shaft & Retaining Ring
Courtesy of CHRYSLER GROUP, LLC

29. Remove the front output shaft retaining ring (1) from the front output shaft (2).

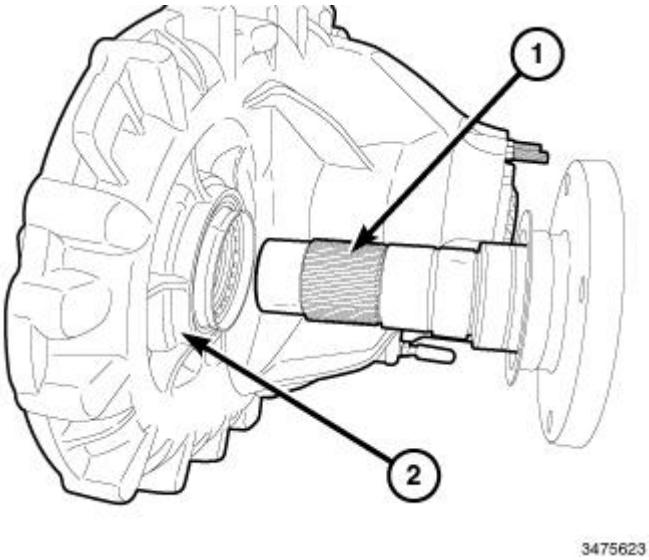

Fig. 28: Front Output Shaft & Front Case Half
Courtesy of CHRYSLER GROUP, LLC

30. Remove the front output shaft (1) from the front case half (2).

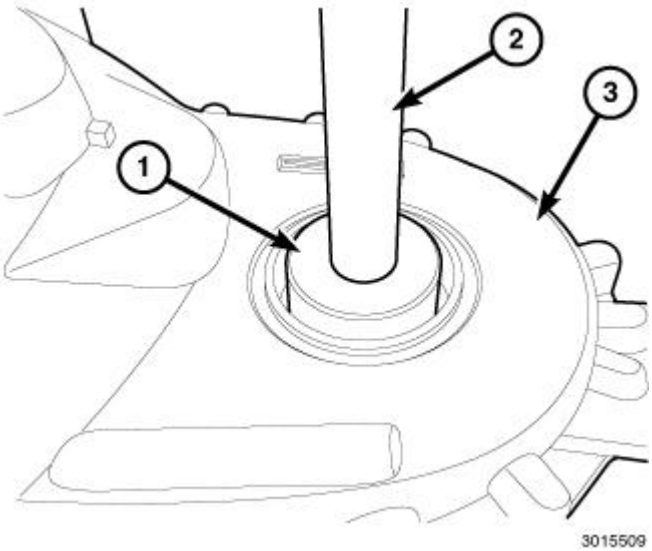

Fig. 29: Removing Front Output Shaft Bearing
Courtesy of CHRYSLER GROUP, LLC

31. Remove front output shaft seal.
32. Using (special tool #9622, Installer, Countershaft Plug) (1) and (special tool #C-4171, Driver Handle, Universal) (2), remove the front output shaft bearing from the case half (3).

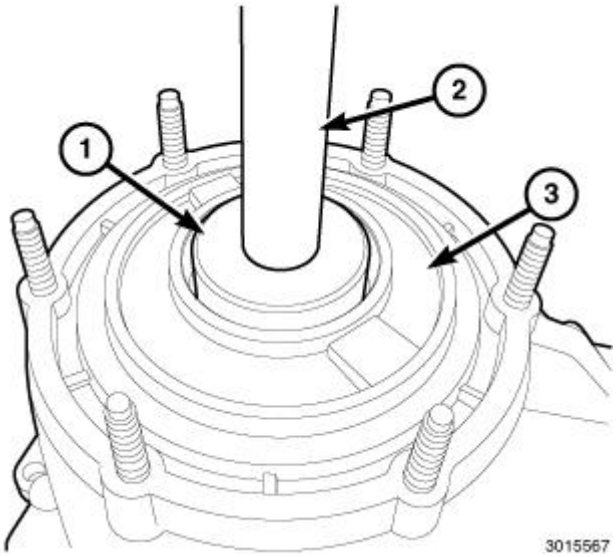

Fig. 30: Removing Input Shaft Bearing
Courtesy of CHRYSLER GROUP, LLC

33. Remove input shaft seal.
34. Using (special tool #9622, Installer, Countershaft Plug) (1) and (special tool #C-4171, Driver Handle, Universal) (2), remove the input shaft bearing from the case half (3).

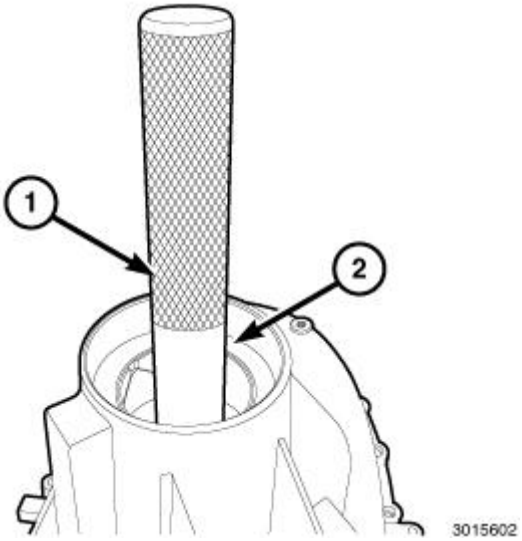

Fig. 31: Removing Rear Output Shaft Bearing
Courtesy of CHRYSLER GROUP, LLC

35. Remove rear output shaft seal.
36. Using (special tool #5066, Installer, Bushing) and (special tool #C-4171, Driver Handle, Universal) (1), remove the input shaft bearing from the case half (2).

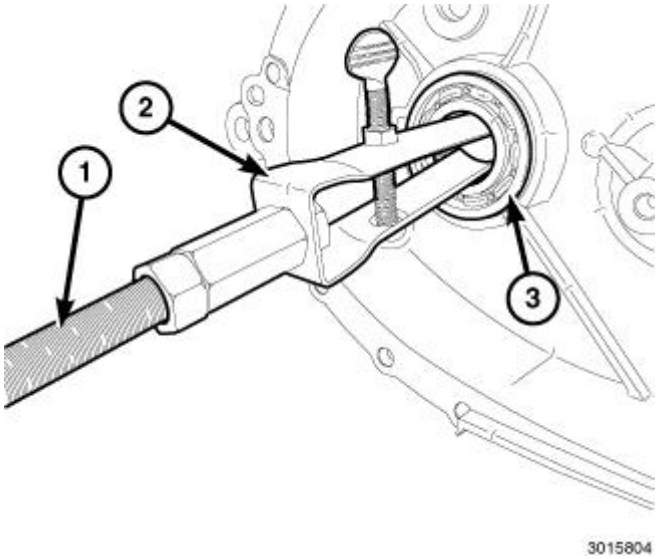

Fig. 32: Removing Front Output Shaft Rear Bearing
Courtesy of CHRYSLER GROUP, LLC

37. Secure the rear case half.
38. Using (special tool #7794-A, Remover, Seal) (2) and (special tool #C-637, Slide Hammer, Universal) (1), remove front output shaft rear bearing (3) from rear case half.

CLEANING

CLEANING

Clean the transfer case parts with a standard parts cleaning solvent. Remove all traces of sealer from the cases and retainers with a scraper and 3M™ all purpose cleaner. Use compressed air to remove solvent residue from oil feed passages in the case halves, retainers, gears, and shafts.

INSPECTION

INSPECTION

MAINSHAFT/SPROCKET/HUB INSPECTION

Inspect the splines on the hub and shaft and the teeth on the sprocket. Minor nicks and scratches can be smoothed with an oilstone. However, replace any part that is damaged.

Check the contact surfaces in the sprocket bore and on the mainshaft. Minor nicks and scratches can be smoothed with 320-400 grit emery cloth but do not try to salvage the shaft if nicks or wear is severe.

PLANETARY CARRIER

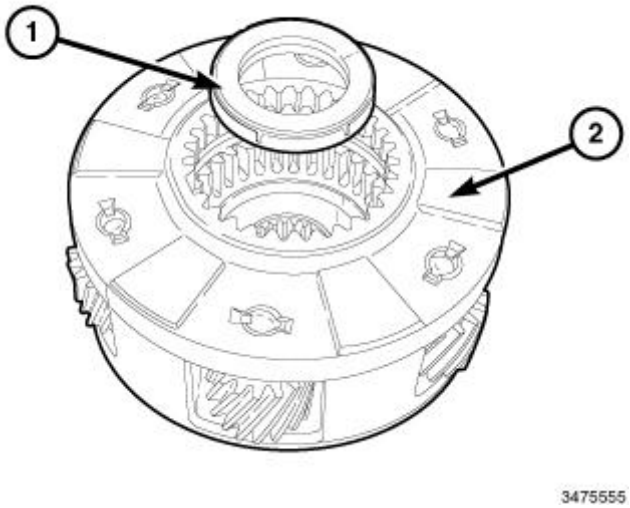

Fig. 33: Thrust Bearing & Planetary
Courtesy of CHRYSLER GROUP, LLC

Examine the planetary carrier body (2) and pinion gears for wear or damage. Check the pinion gear thrust washers on the pinon pins for damage. The carrier will have to be replaced as an assembly if the body, pinion pins, or pinion gears are damaged.

Check the needle bearing in the carrier. Inspect the thrust bearing (1).

SHIFT FORK/HUBS/SLEEVES

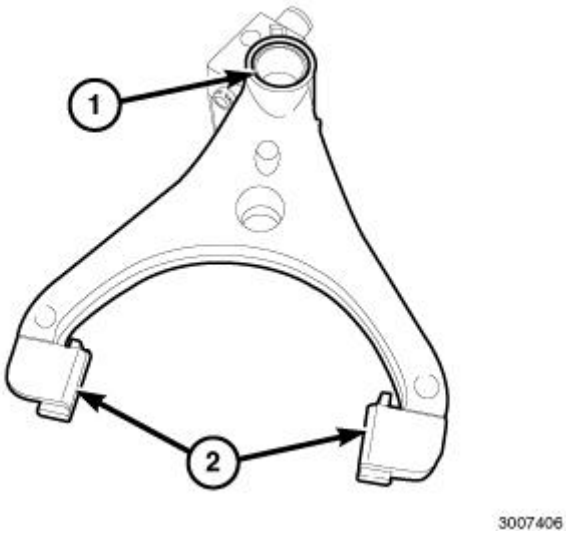

Fig. 34: Identifying Shift Fork
Courtesy of CHRYSLER GROUP, LLC

Check condition of the shift fork and shift fork shift rail. Minor nicks on the shift rail can be smoothed with 320-400 grit emery cloth.

Inspect the shift fork wear pads (2).

Check the shift fork sleeve (1) for wear or damage.

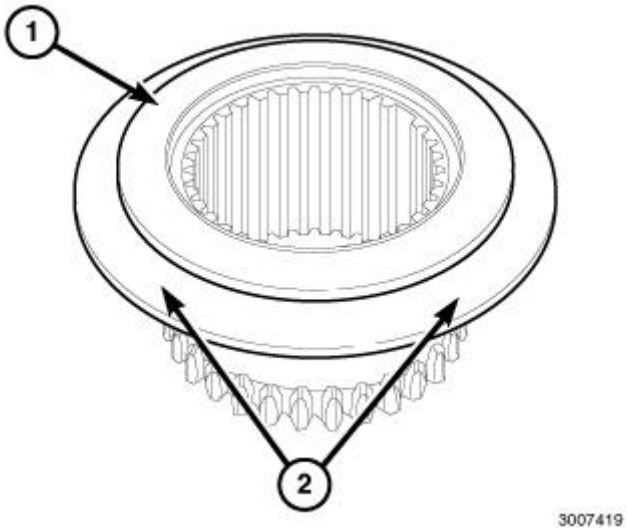

Fig. 35: Reduction Hub
Courtesy of CHRYSLER GROUP, LLC

Check the reduction hub (1) for wear on the shift fork collar (2).

Check the teeth and splines of the reduction hub (1). Minor nicks can be dressed off with an oilstone. Replace the gear if any teeth are broken, cracked, or chipped.

REAR EXTENSION HOUSING

Inspect the extension housing seal and bushing. Replace both components if either show any sign of wear or damage.

FRONT OUTPUT SHAFT AND DRIVE CHAIN

Inspect the shaft splines, sprocket teeth, and bearing surfaces. Minor nicks on the teeth can be smoothed with an oilstone. Use 320-400 grit emery to smooth minor scratches on the shaft bearing surfaces. Rough threads on the shaft can be chased if necessary. Replace the shaft if the splines are damaged, bearing surfaces are scored, or if any sprocket teeth are cracked or broken.

Examine the drive chain and shaft bearings. Replace the chain and both sprockets if the chain is stretched, distorted, or if any of the links bind. Replace the bearings if rough, or noisy.

LOW RANGE ANNULUS GEAR

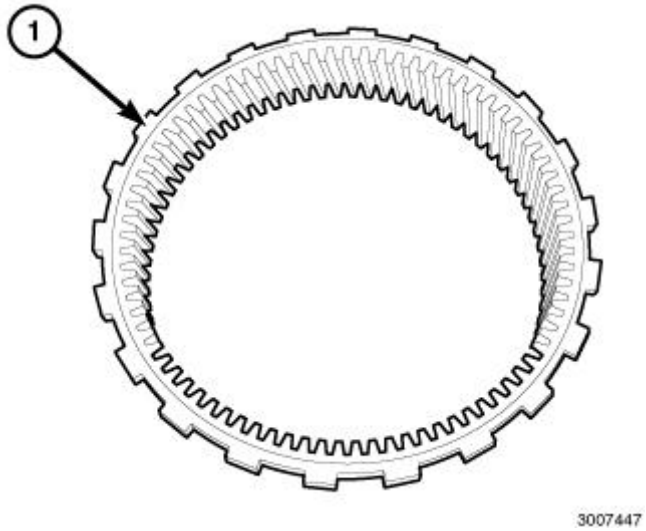

Fig. 36: Low Range Annulus Gear
Courtesy of CHRYSLER GROUP, LLC

Inspect the annulus gear (2) condition carefully.

FRONT AND REAR CASES

Inspect the cases for wear and damage.

Check the case condition. If leaks were a problem, look for gouges and severe scoring of the case sealing surfaces. Also make sure the front case mounting studs are in good condition.

Check the front case mounting studs and vent tube. The tube can be secured with Loctite™ 271 or 680 if loose. The stud threads can be cleaned up with a die if necessary. Also check the condition of the fill/drain plug threads in the rear case. The threads can be repaired with a thread chaser or tap if necessary. Or the threads can be repaired with Helicoil® stainless steel inserts if required.

OIL PUMP/OIL PICKUP

Examine the oil pump pickup parts. Replace the pump if any part appears to be worn or damaged. Do not disassemble the pump as individual parts are not available. The pump is only available as a complete assembly. The pickup screen, hose, and tube are the only serviceable parts and are available separately.

ASSEMBLY

ASSEMBLY

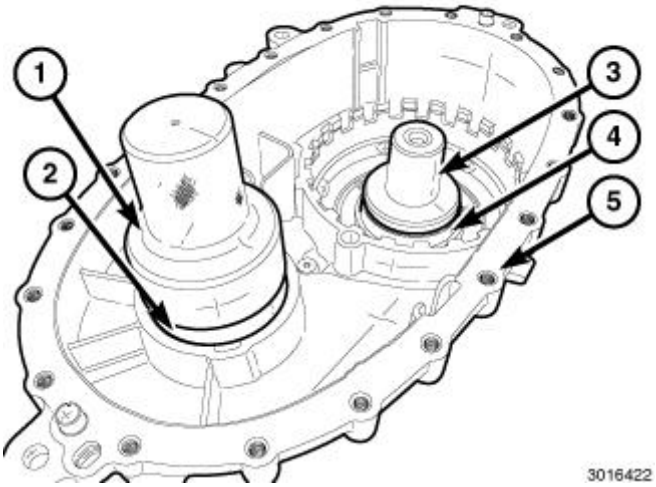

Fig. 37: Pressing Bearings Into Case
Courtesy of CHRYSLER GROUP, LLC

NOTE: When pressing bearings into the case, be sure to properly support the underside of the case half.

1. Using (special tool #9598, Installer, Seal) (1) and an Arbor Press, install the front output shaft bearing (2) into the front case half (5).
2. Using (special tool #9754, Installer, Seal) (3) and an Arbor Press, install the input shaft bearing (4) into the front case half (5).

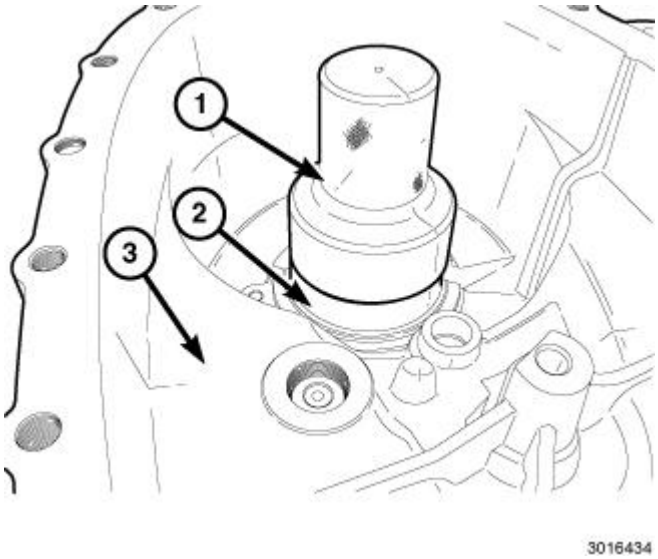

Fig. 38: Installing Rear Output Shaft Bearing
Courtesy of CHRYSLER GROUP, LLC

NOTE: When pressing bearings into the case, be sure to properly support the underside of the case half.

3. Using (special tool #9598, Installer, Seal) (1) and an Arbor Press, install the rear output shaft bearing (2) into the front case half (3).

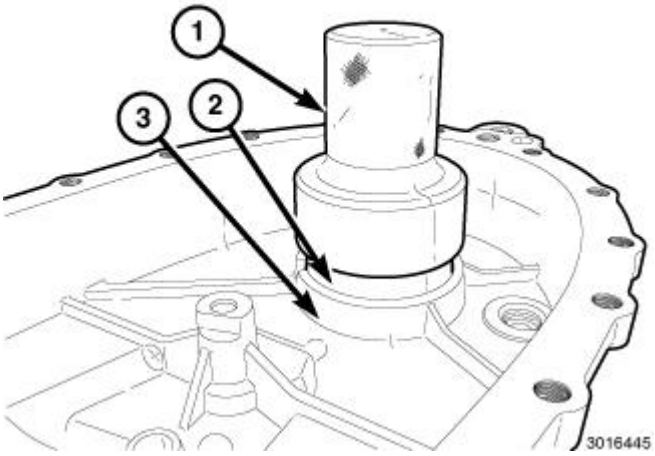

Fig. 39: Installing Front Output Shaft Rear Support Bearing
Courtesy of CHRYSLER GROUP, LLC

NOTE: When pressing bearings into the case, be sure to properly support the underside of the case half.

4. Using (special tool #9598, Installer, Seal) (1) and an Arbor Press, install the front output shaft rear support bearing (2) into the front case half (3).

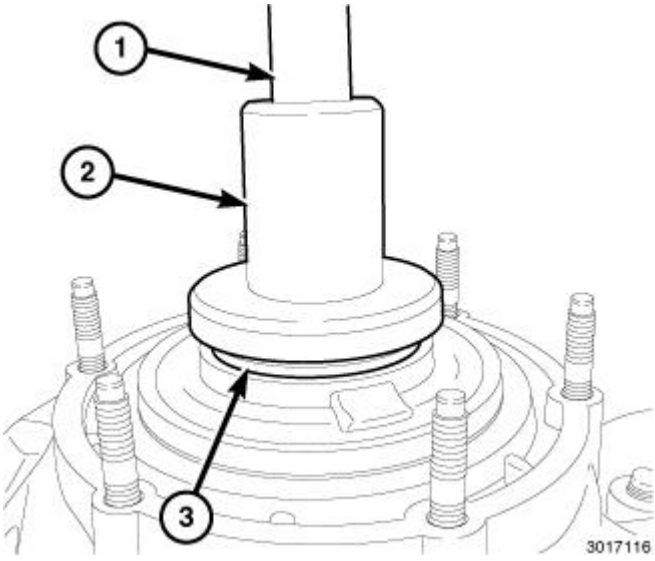

Fig. 40: Installing Input Shaft Seal
Courtesy of CHRYSLER GROUP, LLC

5. Using (special tool #9754, Installer, Seal) (2) and (special tool #C-4171, Driver Handle, Universal) (1),

install input shaft seal (3).

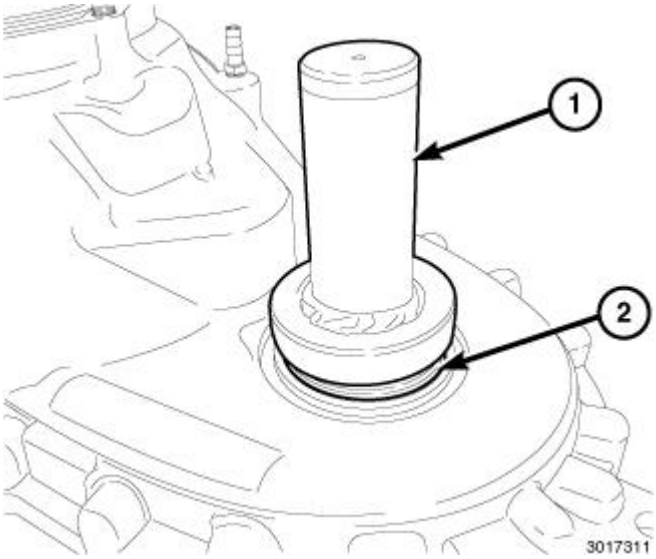

Fig. 41: Installing Front Output Shaft Seal
Courtesy of CHRYSLER GROUP, LLC

6. Using (special tool #10174, Installer, Seal, Rear Output) (1), install the front output shaft seal (2).

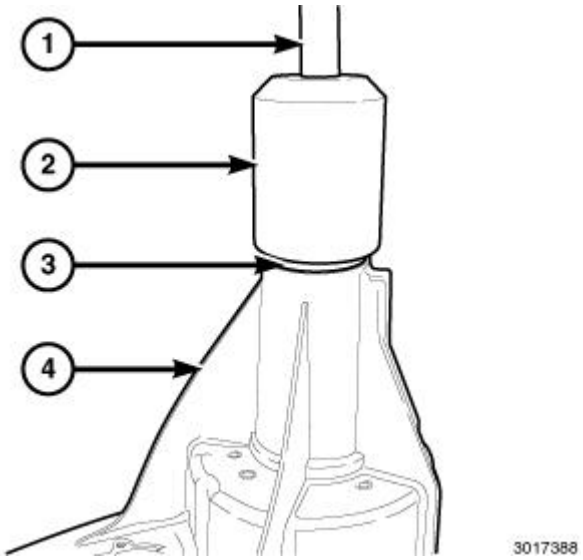

Fig. 42: Installing Rear Output Seal (Flange Type)
Courtesy of CHRYSLER GROUP, LLC

7. If transfer case is equipped with a flange, and using (special tool #9672, Installer, Seal) (2) with (special tool #C-4171, Driver Handle, Universal) (1), install rear output seal (3).

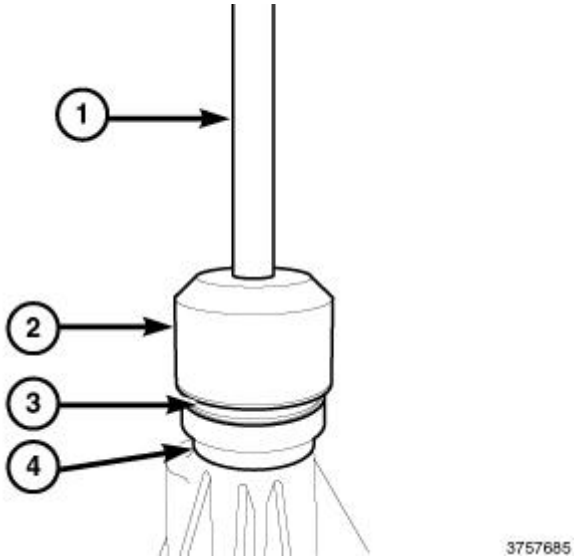

Fig. 43: Installing Rear Output Seal (Slip Yoke Type)
Courtesy of CHRYSLER GROUP, LLC

8. If transfer case is equipped with a slip yoke, and using (special tool #9037, Installer, Dust Boot/Seal) (2) with (special tool #C-4171, Driver Handle, Universal) (1), install the rear output seal (3).

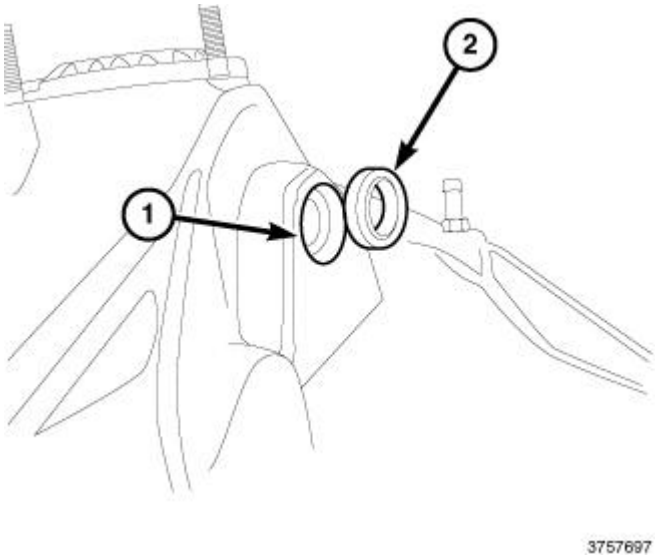

Fig. 44: Shift Shaft Seal
Courtesy of CHRYSLER GROUP, LLC

9. Install the shift shaft seal (1) in the case (2).

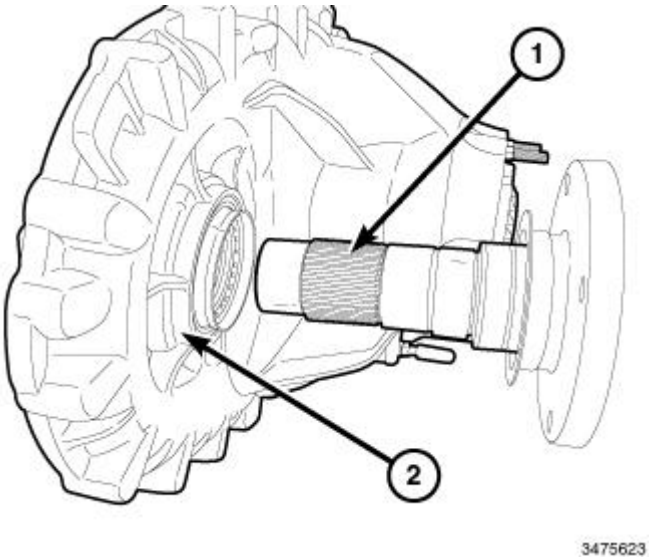

Fig. 45: Front Output Shaft & Front Case Half
Courtesy of CHRYSLER GROUP, LLC

10. Install the front output shaft (1) into the front housing (2).

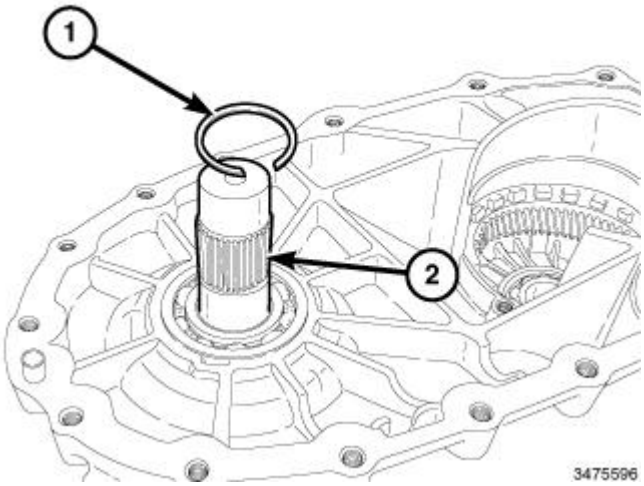

Fig. 46: Front Output Shaft & Retaining Ring
Courtesy of CHRYSLER GROUP, LLC

11. Install the front output shaft snap ring (1) on the front output shaft (2).

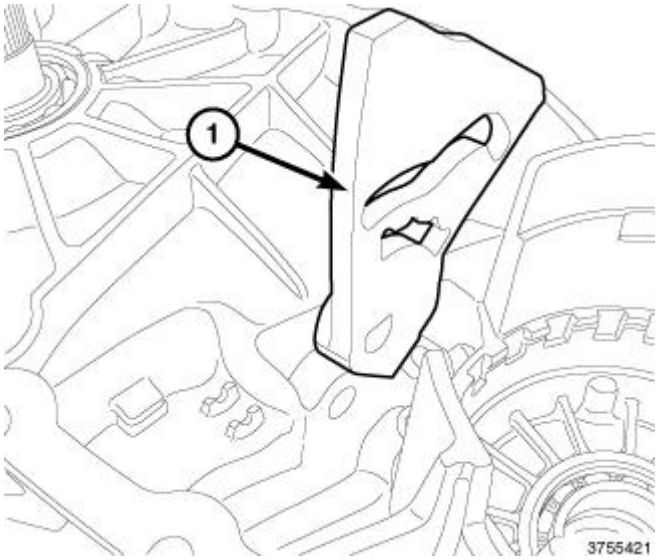

Fig. 47: Shift Fork Lever
Courtesy of CHRYSLER GROUP, LLC

12. Install the shift fork lever (1).

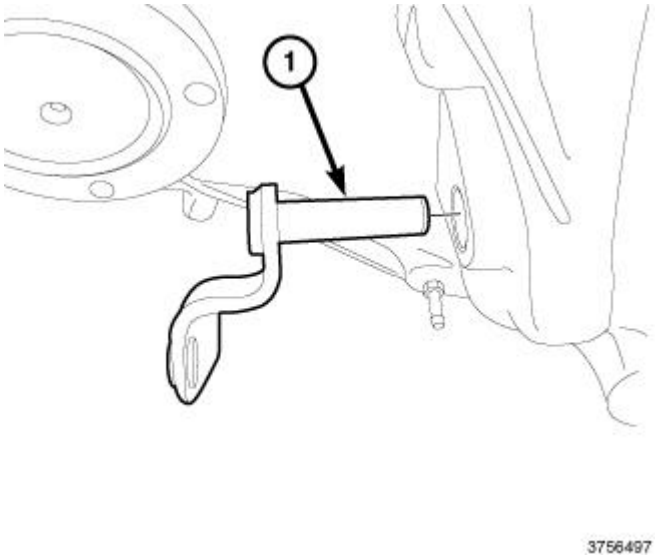

Fig. 48: Manual Shift Lever
Courtesy of CHRYSLER GROUP, LLC

13. Install the manual shift lever (1) in the case through the shift fork lever.

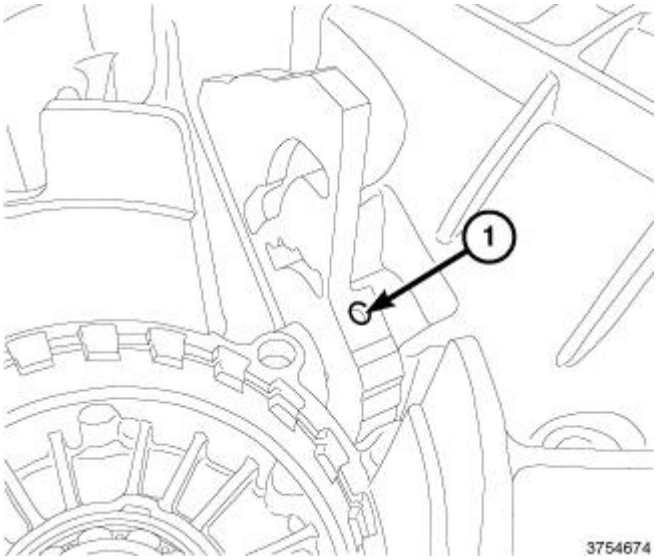

Fig. 49: T20 Torx® Screw
Courtesy of CHRYSLER GROUP, LLC

14. Using a T20 Torx® screwdriver, tighten the retaining screw (1) to 10 N.m (96 in. lbs).

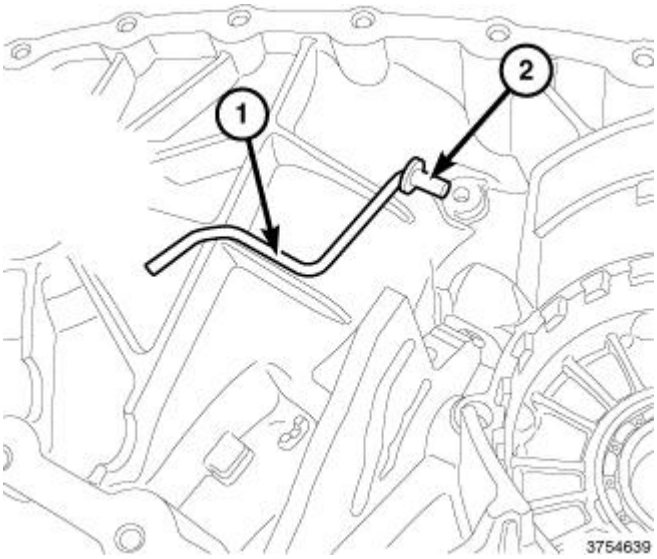

Fig. 50: Detent Spring & Collar
Courtesy of CHRYSLER GROUP, LLC

15. Install the detent spring (1) and roller (2) in the shift assembly.

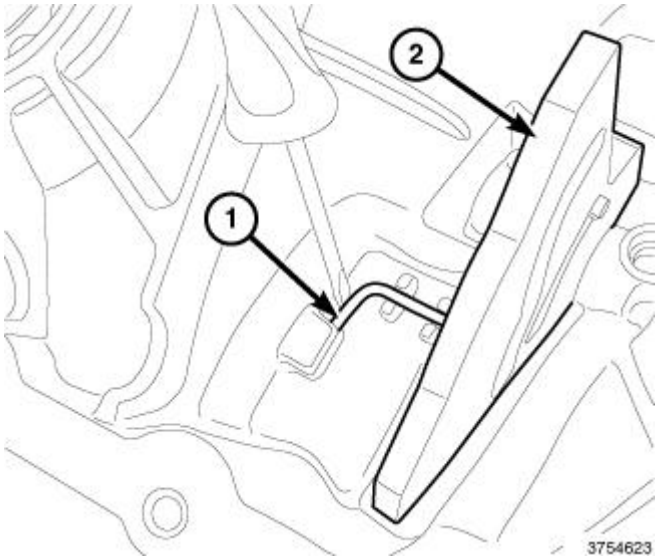

Fig. 51: Detent Spring
Courtesy of CHRYSLER GROUP, LLC

16. Install the detent spring (1) in the pocket in the case.

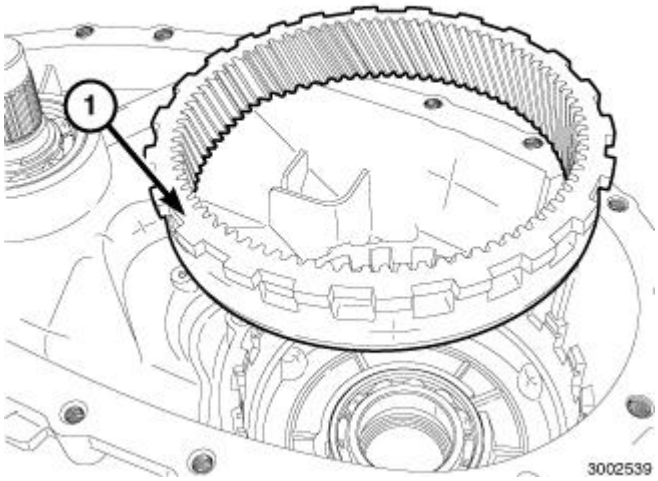

Fig. 52: Annulus Gear
Courtesy of CHRYSLER GROUP, LLC

17. Install the annulus gear (1).

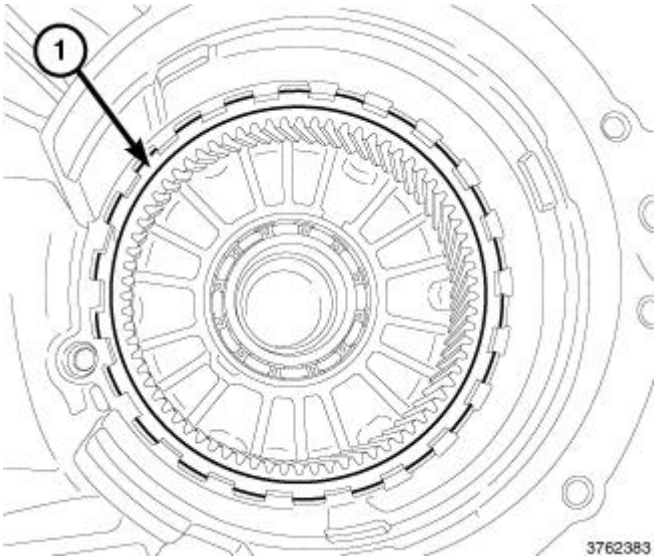

Fig. 53: Annulus Gear Retainer
Courtesy of CHRYSLER GROUP, LLC

18. Install the annulus gear retainer (1).

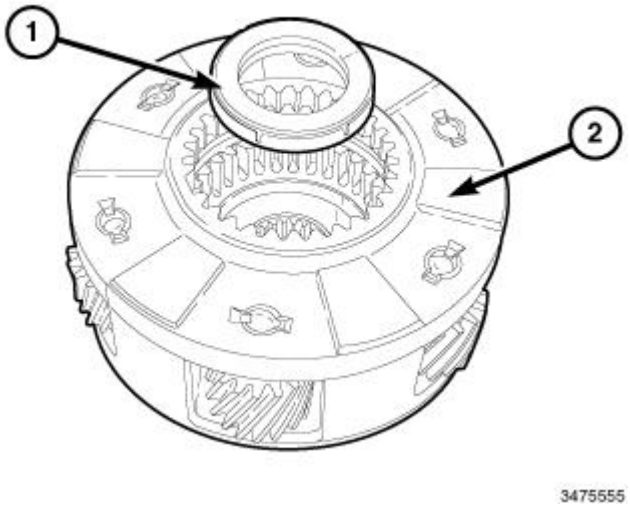

Fig. 54: Thrust Bearing & Planetary
Courtesy of CHRYSLER GROUP, LLC

NOTE: Bearing tabs face upward.

19. Install the carrier thrust bearing (1) from the center of the planetary (2).

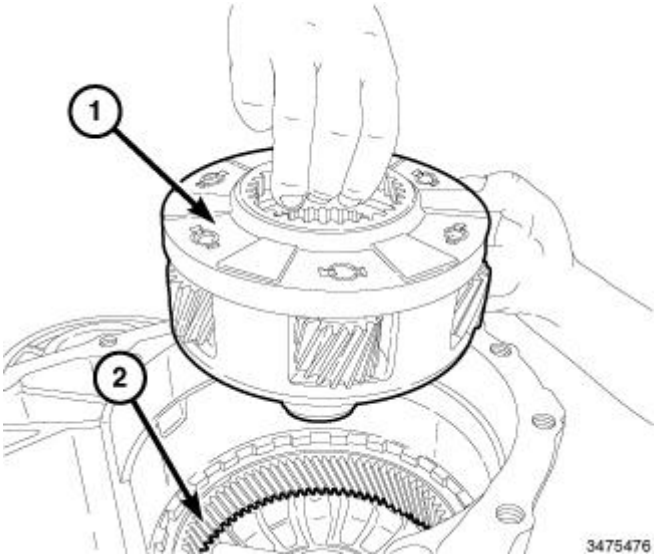

Fig. 55: Planetary Carrier & Annulus Gear
Courtesy of CHRYSLER GROUP, LLC

20. Install the planetary carrier (1) into the annulus gear (2).

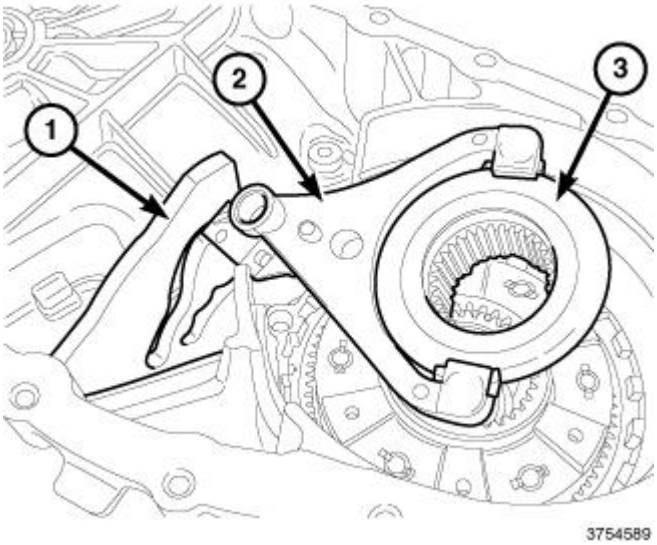

Fig. 56: Shifter, Lower Shift Fork & Reduction Hub
Courtesy of CHRYSLER GROUP, LLC

21. With the shifter (1) rotated fully, install the lower shift fork (2), and the reduction hub (3) as an assembly.

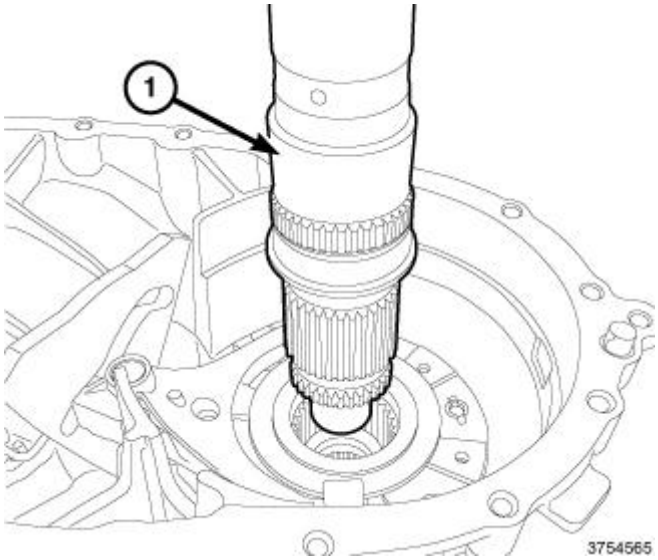

Fig. 57: Mainshaft
Courtesy of CHRYSLER GROUP, LLC

22. Install the main shaft (1).

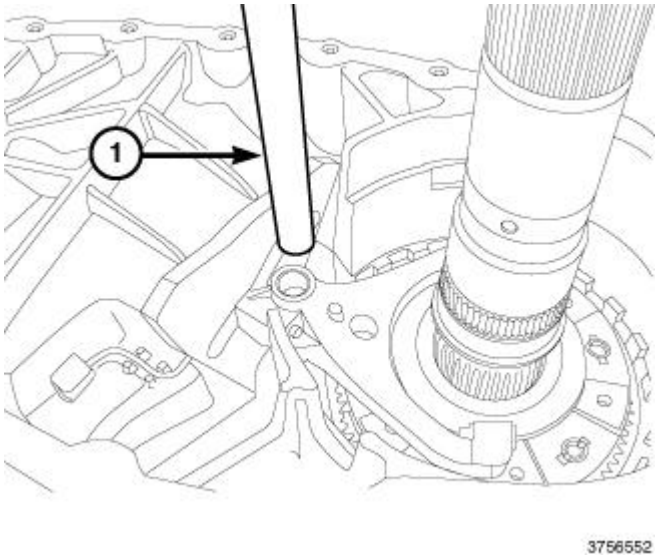

Fig. 58: Shift Shaft
Courtesy of CHRYSLER GROUP, LLC

23. Install the shift shaft (1).

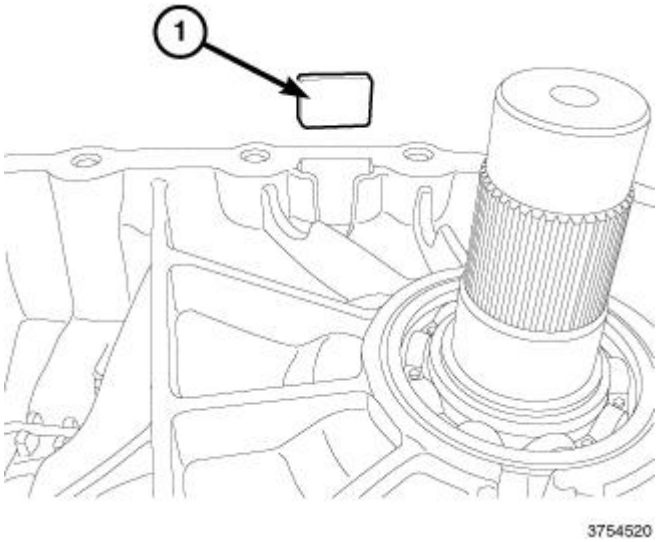

Fig. 59: Magnet
Courtesy of CHRYSLER GROUP, LLC

24. Install the magnet (1).

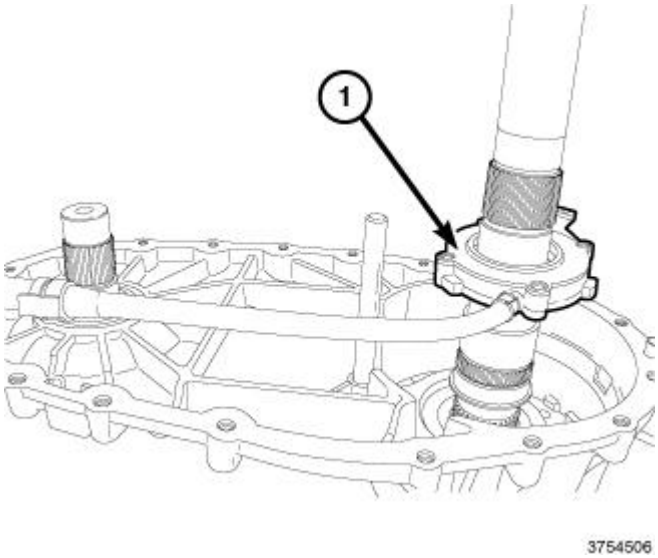

Fig. 60: Oil Pump
Courtesy of CHRYSLER GROUP, LLC

25. Install the oil pump (1).

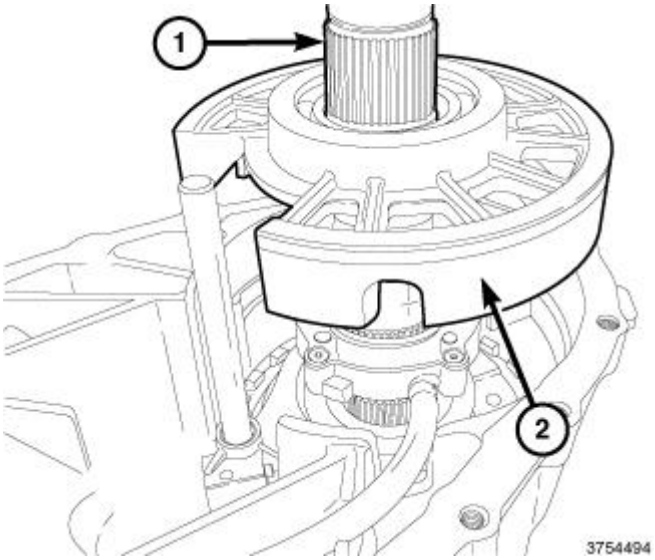

Fig. 61: Mainshaft & Center Bearing Support Assembly
Courtesy of CHRYSLER GROUP, LLC

NOTE: **There are three alignment tabs and an oil pump hose pass through incorporated into the support that prevent the structure from rotating once installed.**

26. Install the center bearing support assembly (2) on the mainshaft (1).

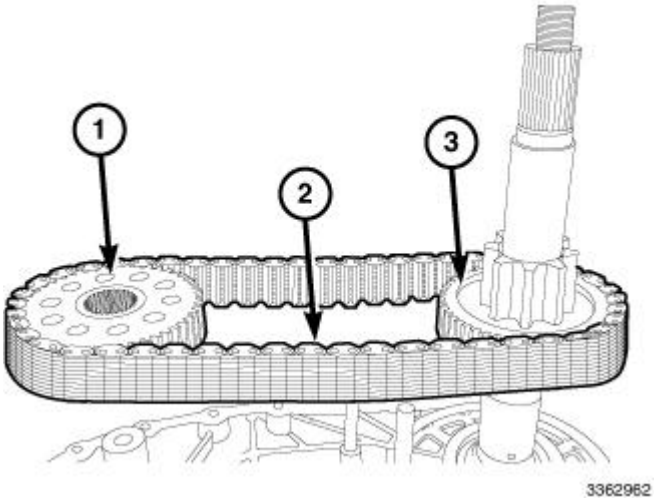

Fig. 62: Chain, Front Output Gear, & Mainshaft Gear
Courtesy of CHRYSLER GROUP, LLC

NOTE: **Chain and gears are patterned and must be installed correctly. Blue links on the chain must be installed facing upward.**

27. Install the chain (2), the front out put gear (1) and main shaft gear (3) as an assembly.

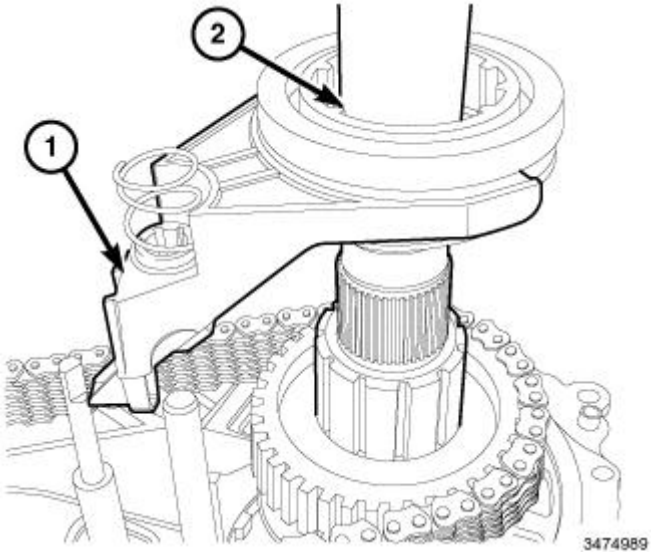

Fig. 63: Main Shaft, Shift Fork, Spring & Sleeve
Courtesy of CHRYSLER GROUP, LLC

28. Install the mode shift fork, spring and sleeve (1) on the main shaft (2).

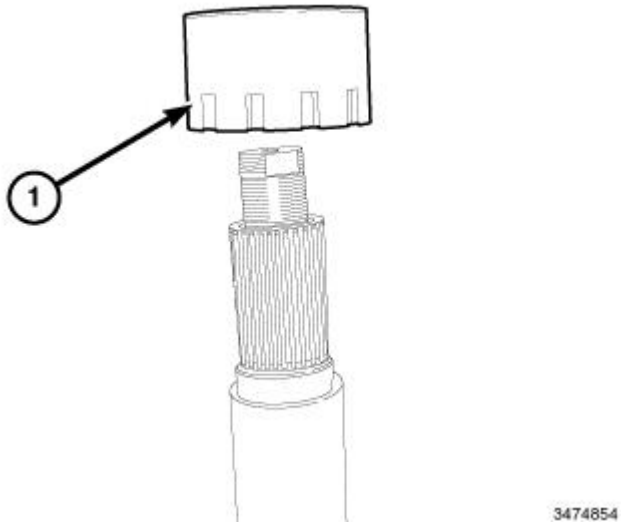

Fig. 64: Locking Collar
Courtesy of CHRYSLER GROUP, LLC

29. Install the locking collar (1).

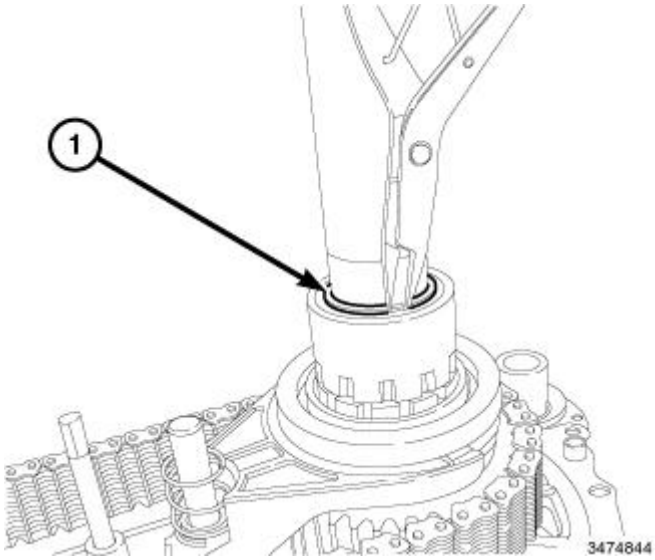

Fig. 65: Retaining Ring
Courtesy of CHRYSLER GROUP, LLC

30. Install the retaining ring (1).

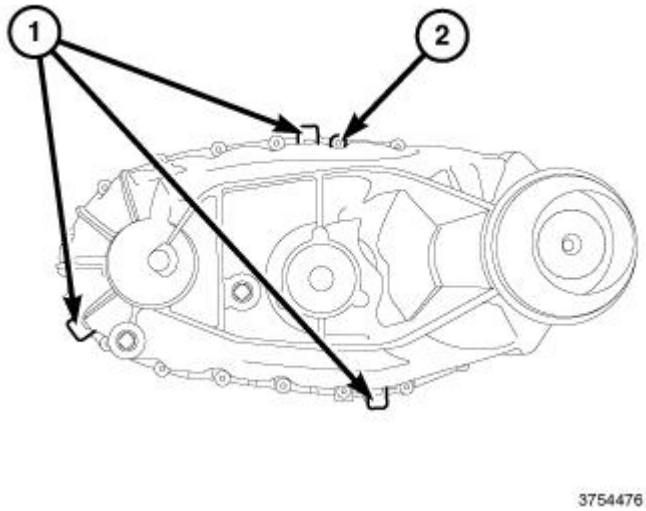

Fig. 66: Pry Points & Case Half Bolts
Courtesy of CHRYSLER GROUP, LLC

31. Clean the mating surface of both case halves.
32. Apply a thin bead of transfer case sealant.
33. Install the rear cover.
34. Install all of the case half bolts and tighten in a star pattern to 31 N.m (23 ft. lbs.).

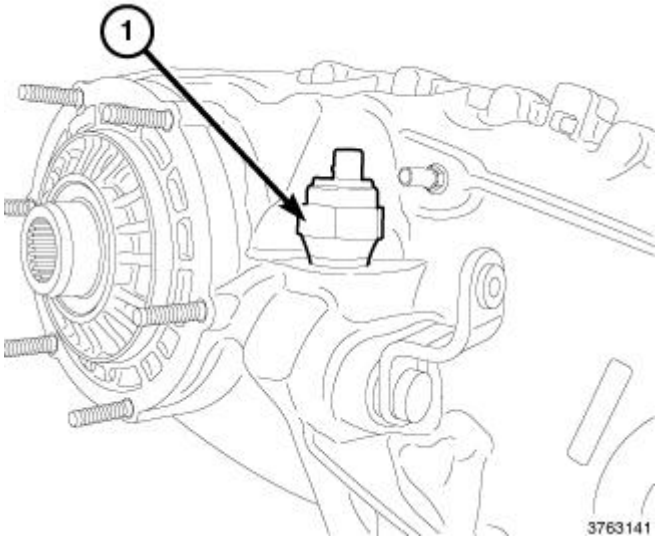

Fig. 67: Position Switch
Courtesy of CHRYSLER GROUP, LLC

35. Install the position switch (1) and tighten to 27 N.m (20 ft. lbs.).

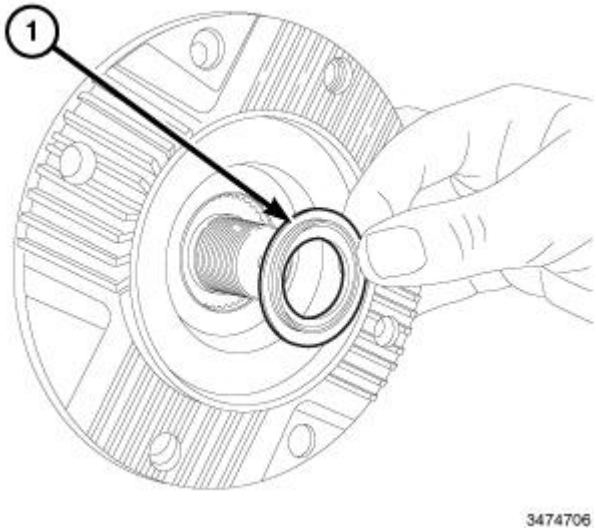

Fig. 68: Flange Dust Seal
Courtesy of CHRYSLER GROUP, LLC

36. Install the output flange, if equipped.
37. Install the flange dust seal, if equipped.

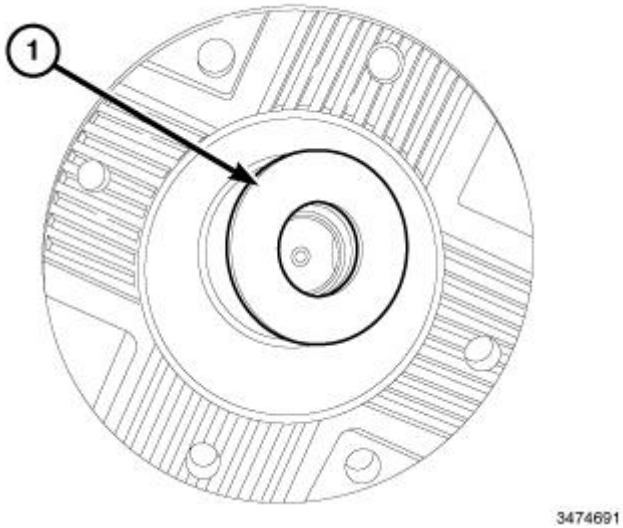

Fig. 69: Flange Spacer
Courtesy of CHRYSLER GROUP, LLC

38. Install the flange spacer (1), if equipped.

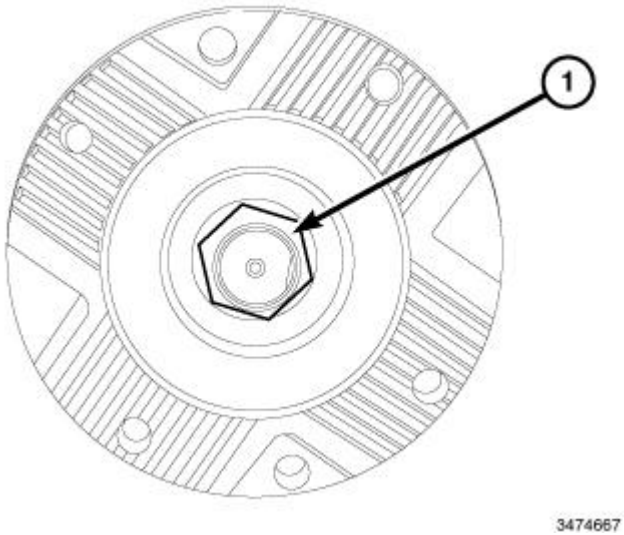

Fig. 70: Rear Output Shaft Flange Nut
Courtesy of CHRYSLER GROUP, LLC

39. Install the rear output flange nut (1) and tighten to 241 N.m (178 ft. lbs.), if equipped.
40. Install the transfer case into vehicle. Refer to **INSTALLATION**.

INSTALLATION

INSTALLATION

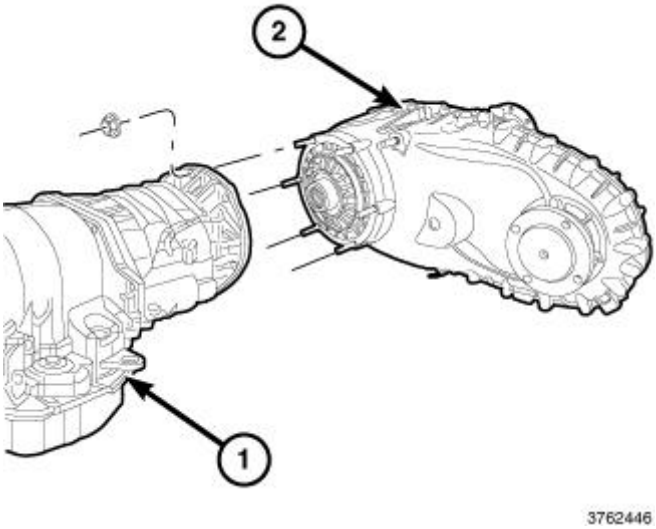

Fig. 71: Transmission & Transfer Case
Courtesy of CHRYSLER GROUP, LLC

1. Mount transfer case on a transmission jack.
2. Secure transfer case to jack with chains.
3. Position transfer case under vehicle.
4. Align transfer case and transmission shafts and install transfer case onto the transmission.
5. Install and tighten transfer case attaching nuts to 41 N.m (30 ft. lbs.) torque.
6. Remove transmission jack and support stand.
7. Connect the vent hose.
8. Connect the shift position sensor connector.
9. Connect the shift linkage.
10. Align and connect the propeller shafts. Refer to **SHAFT, DRIVE, FRONT LIGHT DUTY, INSTALLATION** or **SHAFT, DRIVE, FRONT HEAVY DUTY, INSTALLATION** or **SHAFT, DRIVE, REAR LIGHT DUTY, INSTALLATION** or **SHAFT, DRIVE, REAR HEAVY DUTY, INSTALLATION** . .
11. Fill transfer case with correct fluid. Refer to **STANDARD PROCEDURE** .
12. Install skid plate, if equipped.
13. Lower vehicle and verify transfer case shift operation.

SPECIAL TOOLS

SPECIAL TOOLS

	10174 - Installer, Seal, Rear Output (Originally Shipped In Kit Number(s) 10175.) 5066 - Installer, Bushing (Originally Shipped In Kit Number(s) 9975.)

	7794-A - Remover, Seal (Originally Shipped In Kit Number(s) 6645.) 9037 - Installer, Dust Boot/Seal (Originally Shipped In Kit Number(s) 8848, 8849, 8849CC.) 9598 - Installer, Seal (Originally Shipped In Kit Number(s) 9692.) 9622 - Installer, Countershaft Plug (Originally Shipped In Kit Number(s) 9691.) 9672 - Installer, Seal (Originally Shipped In Kit Number(s) 9696, 9697, 9698.) 9754 - Installer, Seal (Originally Shipped In Kit Number(s) 9750.) C-4171 - Driver Handle, Universal (Originally Shipped In Kit Number(s) 9202, 9202A-CAN, 9202CC, 9299, 9299CC, 9299CC, 9300A-CAN.) C-637 - Slide Hammer, Universal (Originally Shipped In Kit Number(s) 9202.)

FLUID

STANDARD PROCEDURE

FLUID DRAIN AND REFILL

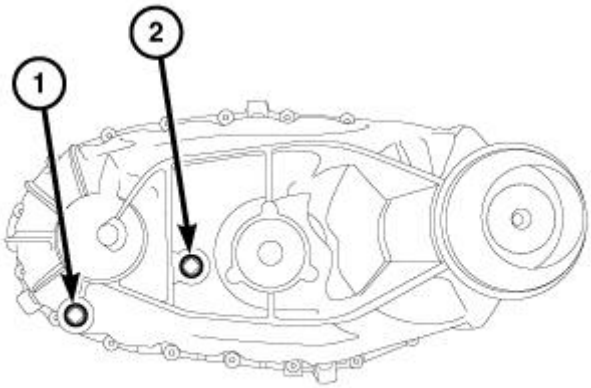

3754456

Fig. 72: Fill & Drain Plugs
Courtesy of CHRYSLER GROUP, LLC

The fill (2) and drain (1) plugs are both in the rear case.

1. Raise vehicle.
2. Position drain pan under transfer case.

3. Remove drain and fill plugs and drain lubricant completely.
4. Install drain plug (1). Tighten plug to 19 - 30 N.m (15 - 22 ft. lbs.).
5. Remove drain pan.
6. Fill transfer case to bottom edge of fill plug opening with the correct fluid for the application. Refer to **CAPACITIES AND RECOMMENDED FLUIDS, SPECIFICATIONS** .
7. Install and tighten fill plug (2) to 19 - 30 N.m (15 - 22 ft. lbs.).
8. Wipe any excess fluid that may have spilled onto the exhaust.
9. Lower vehicle.

DESCRIPTION

DESCRIPTION

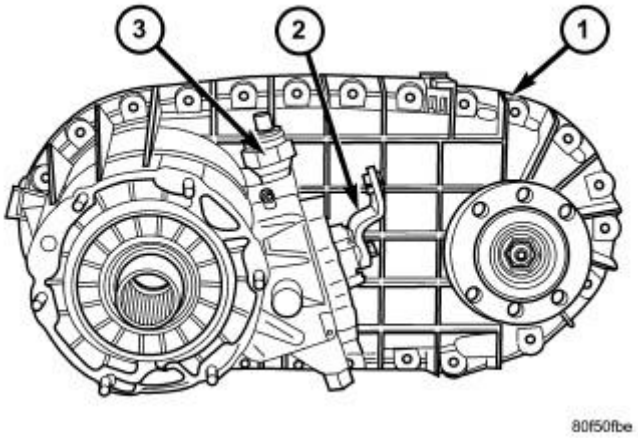

Fig. 1: Transfer Case - Front View
Courtesy of CHRYSLER GROUP, LLC

1 - TRANSFER CASE
2 - MANUAL LEVER
3 - POSITION SENSOR

The NV271 transfer case (1) is a part-time transfer case with a low-range gear system. Refer to **Fig. 1**. It provides three operating ranges plus a NEUTRAL position. The low range position provides a gear reduction ratio of 2.72:1 for increased low speed torque capability.

The gear cases and extension are all of aluminum. Drive sprockets and an interconnecting drive chain are used to transmit engine torque to the front/rear propeller shafts. The mainshaft, input gear and front output shaft are supported by ball and needle bearings.

IDENTIFICATION

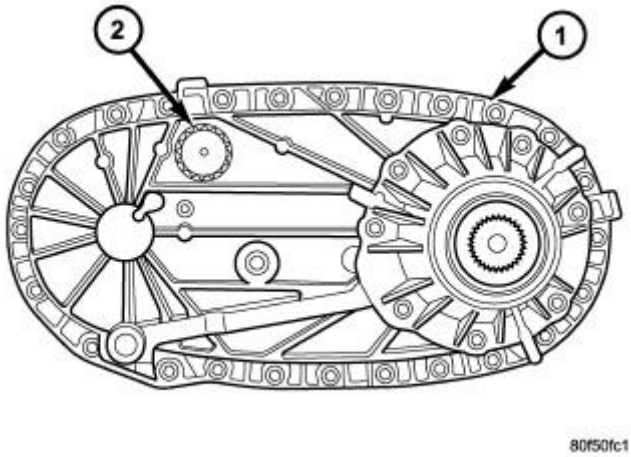

Fig. 2: Transfer Case - Rear View
Courtesy of CHRYSLER GROUP, LLC

1 - TRANSFER CASE
2 - IDENTIFICATION TAG

An identification tag (2) is attached to the rear case of every transfer case. Refer to **Fig. 2**. The tag provides the transfer case model number, assembly number, serial number, and low range ratio.

The transfer case serial number also represents the date of build.

OPERATION

OPERATION

OPERATING RANGE

Transfer case operating ranges are:

- 2H (2-wheel drive).
- 4H (4-wheel drive).
- 4LO (4-wheel drive low range.

The 2H range is for use on any road surface at any time.

The 4H and 4LO ranges are for off road use only. They are not for use on hard surface roads. The only exception being when the road surface is covered by ice and snow.

The low range reduction gear system is operative in 4LO range only. This range is for extra pulling power in off road situations. Low range reduction ratio is 2.72:1.

SHIFT MECHANISM

The transfer case is operated by an adjustable floor mounted shift linkage. The transfer case shift lever is directly attached to the shift sector. The sector operates the range and mode forks within the transfer case.

A straight line shift pattern is used with a NEUTRAL detent. Lever range positions are imprinted in the shift knob.

SHIFTING

The transfer case can be shifted between the 2H and 4H operating ranges while the vehicle is in motion. The vehicle must have the transmission placed in NEUTRAL, or the clutch depressed in the case of a manual transmission, and be moving less than 2-3 MPH when shifting into and out of the 4L operating range.

DIAGNOSIS AND TESTING

DIAGNOSIS AND TESTING - TRANSFER CASE - NV271

Before beginning repair on a suspected transfer case malfunction, check all other driveline components beforehand.

The actual cause of a problem may be related to such items as: front hubs, axles, propeller shafts, wheels and tires, transmission, or clutch instead. If all other driveline components are in good condition and operating properly, refer to the Diagnosis Chart for further information.

DIAGNOSIS CHART

Condition	Possible Cause	Correction
Transfer Case difficult to shift or will not shift into desired range.	1) Vehicle speed too great to permit shifting.	1) Stop vehicle and shift into desired range. Or, reduce speed to below 3-4 km/h (2-3 mph) before attempting the shift.
	2) If vehicle was operated for an extended period in 4H on a dry paved surface, the driveline torque load may be causing a bind.	2) Stop vehicle and shift the transmission into neutral. Shift the transfer case to 2H and operate vehicle in 2H on dry paved surfaces.
	3) Transfer case external shift linkage binding.	3) Lubricate, repair, or replace linkage bushings, or tighten loose components as necessary.
	4) Insufficient or incorrect lubricant.	4) Drain and refill to edge of fill hole with Mopar® ATF +4, Automatic Transmission fluid.
	5) Internal components binding, worn, or damaged.	5) Disassemble the transfer case and replace worn or damaged components as necessary.
Transfer Case noisy in all operating ranges.	1) Insufficient or incorrect lubricant.	1) Drain and refill to edge of fill hole with Mopar® ATF +4, Automatic Transmission fluid.

Noisy in, or jumps out of, four wheel drive low range.	1) Transfer case not completely engaged in 4L position.	1) With the transmission in NEUTRAL, or the clutch depressed in the case of a manual transmission and the vehicle moving under 3-4 km/h (2-3 mph), shift the transfer case to NEUTRAL and then shift into the 4L position.
	2) Shift linkage out of adjustment.	2) Adjust linkage.
	3) Shift linkage loose or binding.	3) Tighten, lubricate, or repair linkage as necessary.
	4) Range fork damaged, inserts worn, or fork is binding on the shift rail.	4) Disassemble unit and repair as necessary.
	5) Low range gear worn or damaged.	5) Disassemble unit and repair as necessary.
Lubricant leaking from output shaft seal or vent.	1) Transfer case overfilled.	1) Drain lubricant to the correct level.
	2) Vent closed or restricted.	2) Clear or replace vent as necessary.
	3) Output shaft seals damaged or installed incorrectly.	3) Replace seal as necessary. Check to ensure that another component, the propeller shaft slip yoke for example, is not causing damage to seal.
Abnormal tire wear.	1) Extended operation on hard, dry surfaces in the 4H position.	1) Operate vehicle in the 2H position on hard, dry surfaces.

SPECIFICATIONS

SPECIFICATIONS

DESCRIPTION	N-m	Ft. Lbs.	In. Lbs.
Plug, Detent	16-25	12-18	-
Plug, Drain/Fill	20-34	15-25	-
Bolt, Extension Housing	27-34	20-25	-
Bolt, Case Half	27-34	20-25	-
Nut, Range Lever	27-34	20-25	-
Sector Support	27-34	20-25	-
Nuts, Mounting	30-41	20-30	-
Position Sensor	20-34	15-25	-
Nut, Companion Flange	176-271	130-200	-

REMOVAL

REMOVAL

1. Raise and support vehicle.
2. Remove skid plate, if equipped. Refer to **PLATE, SKID, TRANSFER CASE, REMOVAL** .
3. Position drain oil container under transfer case.
4. Remove transfer case drain plug and drain lubricant into container.
5. Disconnect vent hose and transfer case position sensor connector.
6. Disconnect shift rod from grommet in transfer case shift lever, or from floor shift arm whichever provides easy access. Use channel lock style pliers to press rod out of lever grommet.
7. Support transmission with jack stand.
8. Mark front and rear propeller shafts for assembly reference.
9. Remove front and rear propeller shafts. Refer to **SHAFT, DRIVE, FRONT LIGHT DUTY, REMOVAL** or **SHAFT, DRIVE, FRONT HEAVY DUTY, REMOVAL** or **SHAFT, DRIVE, REAR LIGHT DUTY, REMOVAL** or **SHAFT, DRIVE, REAR HEAVY DUTY, REMOVAL** .
10. Support transfer case with suitable jack. Secure transfer case to jack with safety chains.
11. Remove nuts attaching transfer case to transmission.
12. Move transfer case assembly rearward until free of transmission output shaft.
13. Lower jack and move transfer case from under vehicle.

DISASSEMBLY

DISASSEMBLY

Position transfer case in a shallow drain pan. Remove drain plug and drain any remaining lubricant remaining in case.

COMPANION FLANGE AND EXTENSION HOUSING

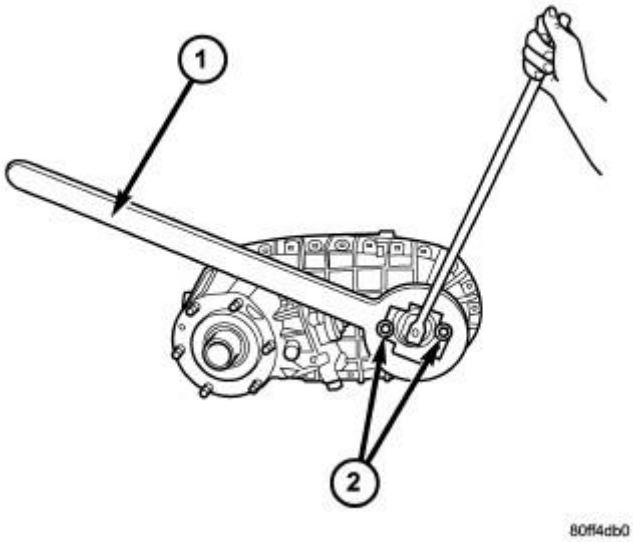

Fig. 3: Remove/Install Companion Flange Nut
Courtesy of CHRYSLER GROUP, LLC

1 - YOKE HOLDER 6719
2 - BOLTS

1. Install two bolts 180° apart into the front output shaft companion flange.
2. Place holder (1) over the bolts (2) and against the companion flange. Refer to **Fig. 3**.
3. Remove and discard the front companion flange nut.
4. Remove the companion flange from the front output shaft. It may be necessary to use Pinion Flange Remover (special tool #8992, Remover, Pinion Flange) to remove the companion flange.

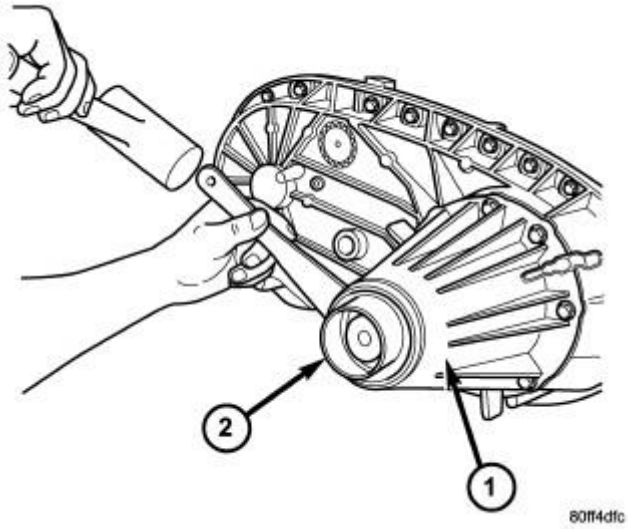

Fig. 4: Removing Extension Housing Dust Boot
Courtesy of CHRYSLER GROUP, LLC

1 - EXTENSION HOUSING
2 - DUST BOOT

5. Use a suitable chisel or pry tool to remove the rear extension housing (1) dust boot (2). Refer to **Fig. 4**.
6. Use a suitable chisel or pry tool to remove the rear extension housing seal.

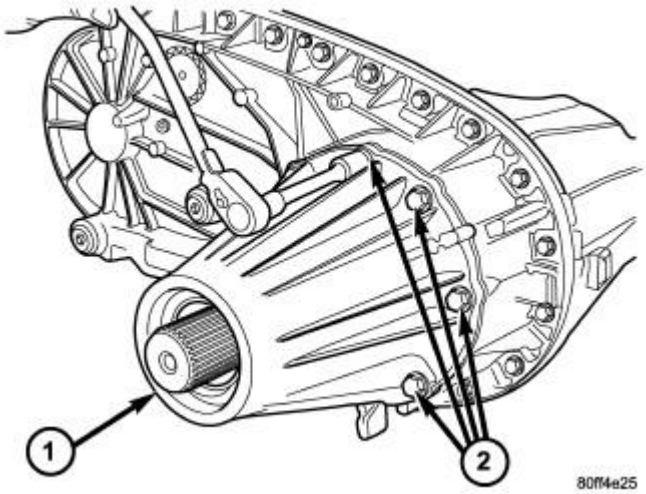

Fig. 5: Extension Housing & Bolts
Courtesy of CHRYSLER GROUP, LLC

1 - EXTENSION HOUSING
2 - BOLTS

7. Remove rear extension (1) bolts (2). Refer to **Fig. 5**.

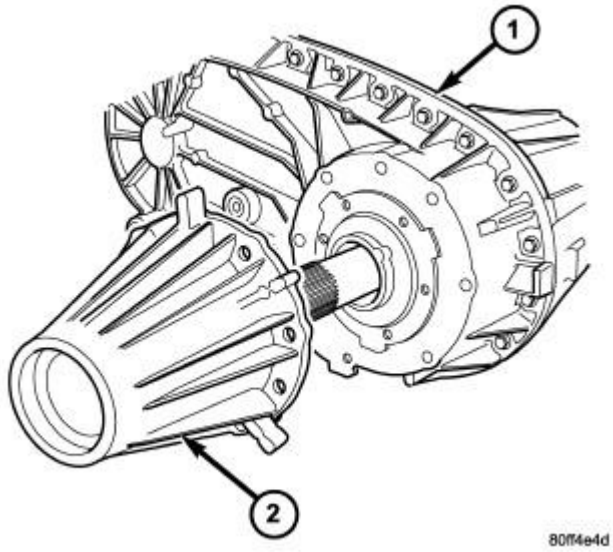

Fig. 6: Rear Case Half & Extension Housing
Courtesy of CHRYSLER GROUP, LLC

1 - REAR CASE HALF
2 - EXTENSION HOUSING

8. Remove rear extension housing (2) from the rear case half. Refer to **Fig. 6**. Tap extension once or twice with a plastic mallet to break sealer bead and loosen it.

OIL PUMP AND REAR CASE

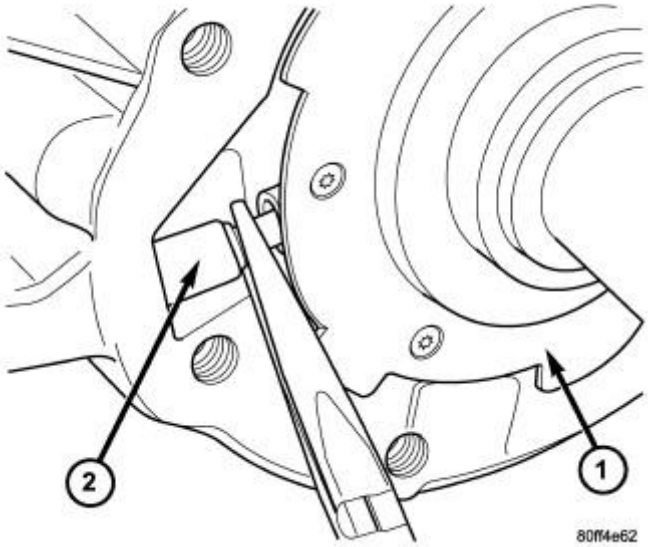

Fig. 7: Oil Pump Pick-Up Tube & Oil Pump
Courtesy of CHRYSLER GROUP, LLC

1 - OIL PUMP
2 - OIL PICK-UP TUBE

1. Disengage the oil pump pick-up tube (2) from the oil pump (1). Refer to **Fig. 7**.

NOTE: **The oil pump pick-up tube seals to the oil pump with an o-ring. Verify that the o-ring was removed with the tube and is in good condition. Replace the o-ring if necessary.**

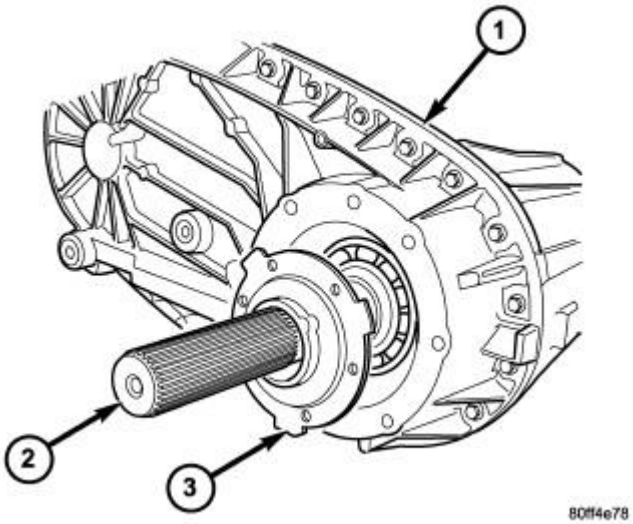

Fig. 8: Rear Case Half, Rear Output Shaft & Oil Pump
Courtesy of CHRYSLER GROUP, LLC

1 - REAR CASE HALF
2 - REAR OUTPUT SHAFT
3 - OIL PUMP

2. Remove the oil pump (3) from the rear output shaft (2). Refer to **Fig. 8**.

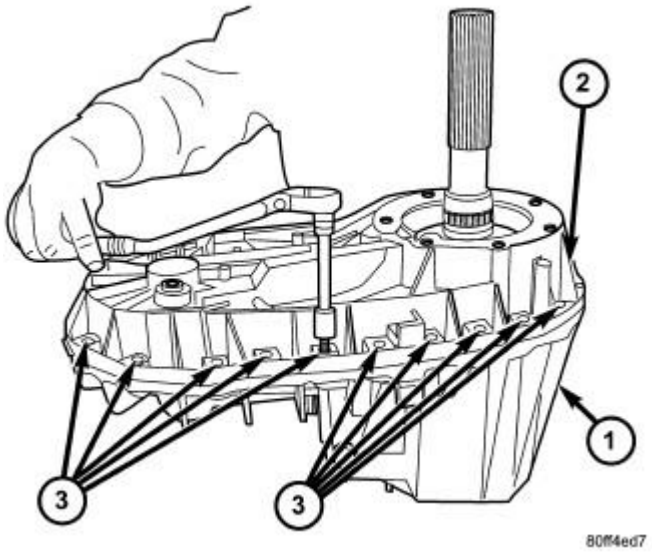

Fig. 9: Identifying Case Half Bolts
Courtesy of CHRYSLER GROUP, LLC

1 - FRONT CASE HALF
2 - REAR CASE HALF
3 - BOLTS

3. Remove rear case (2)-to-front case (1) bolts (3). Refer to **Fig. 9**.

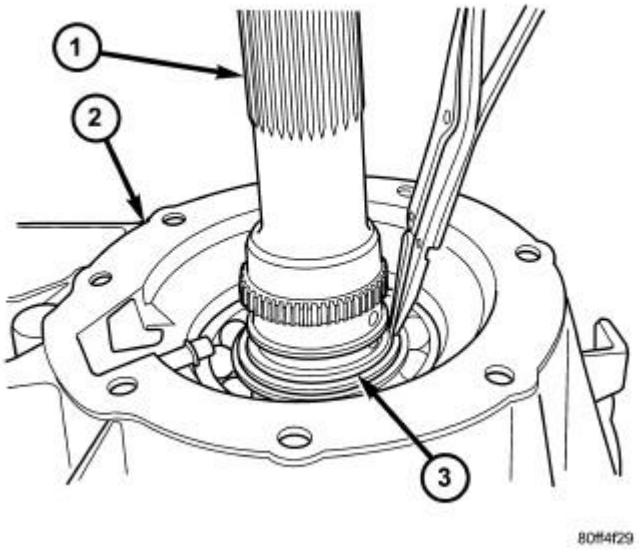

Fig. 10: Output Shaft, Rear Case Half & Snap-Ring
Courtesy of CHRYSLER GROUP, LLC

1 - OUTPUT SHAFT

2 - REAR CASE HALF
3 - SNAP-RING

4. Remove the rear output shaft bearing inner snap-ring (3) from the output shaft (1) using suitable snap-ring pliers. Refer to **Fig. 10**.

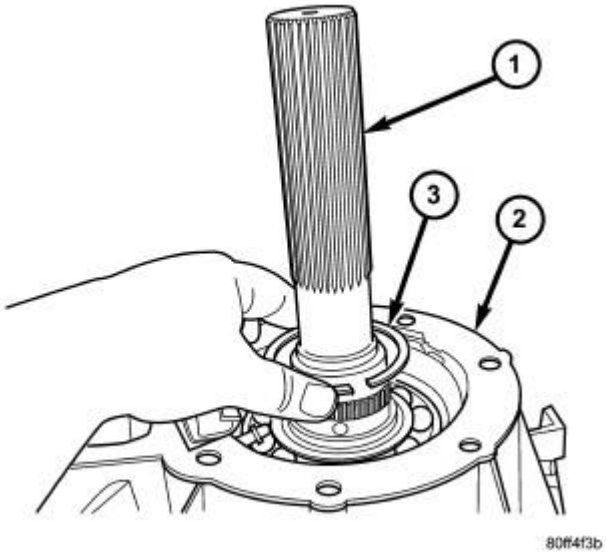

Fig. 11: Output Shaft, Rear Case Half & Snap Ring
Courtesy of CHRYSLER GROUP, LLC

1 - OUTPUT SHAFT
2 - REAR CASE HALF
3 - SNAP-RING

5. Remove the rear output shaft bearing inner snap-ring (3) from the output shaft (1). Refer to **Fig. 11**.

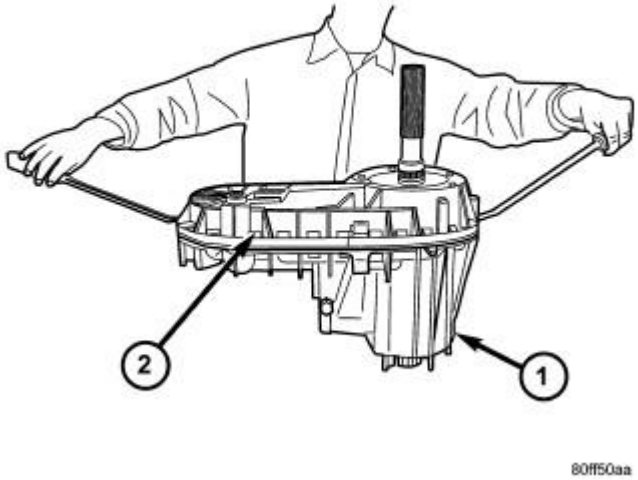

Fig. 12: Separating Front & Rear Case Halves
Courtesy of CHRYSLER GROUP, LLC

1 - FRONT CASE HALF
2 - REAR CASE HALF

6. Loosen rear case (2) with pry tool to break sealer bead. Insert tool at each end of case. Refer to **Fig. 12**.

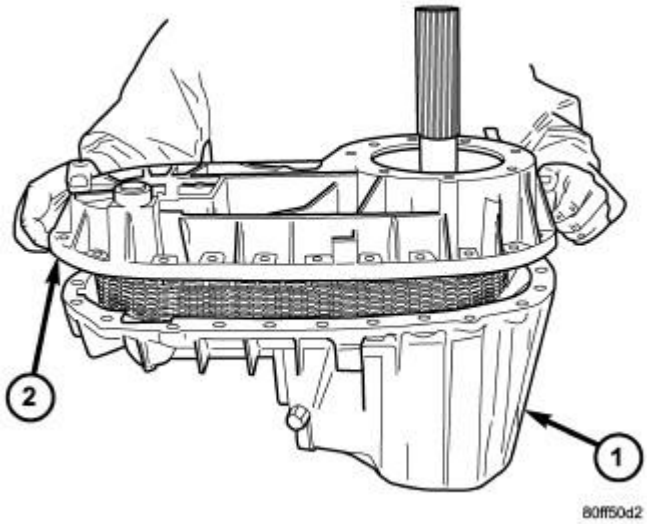

Fig. 13: Front & Rear Case Halves
Courtesy of CHRYSLER GROUP, LLC

1 - FRONT CASE HALF
2 - REAR CASE HALF

7. Unseat rear case from alignment dowels.
8. Remove the rear case (2) from the front case (1). Refer to **Fig. 13**.

FRONT OUTPUT SHAFT AND DRIVE CHAIN

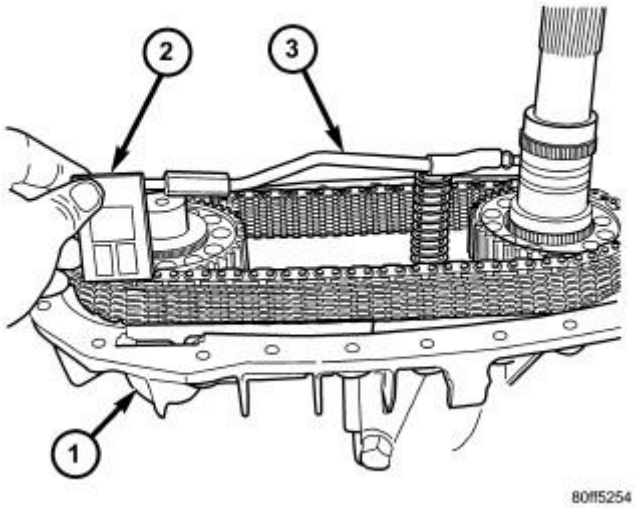

Fig. 14: Removing Oil Pick-Up Tube and Screen
Courtesy of CHRYSLER GROUP, LLC

1 - FRONT CASE HALF
2 - OIL SCREEN
3 - PICK-UP TUBE

1. Remove the oil pick-up tube (3) and screen (2) from the front case half (1). Refer to **Fig. 14**.

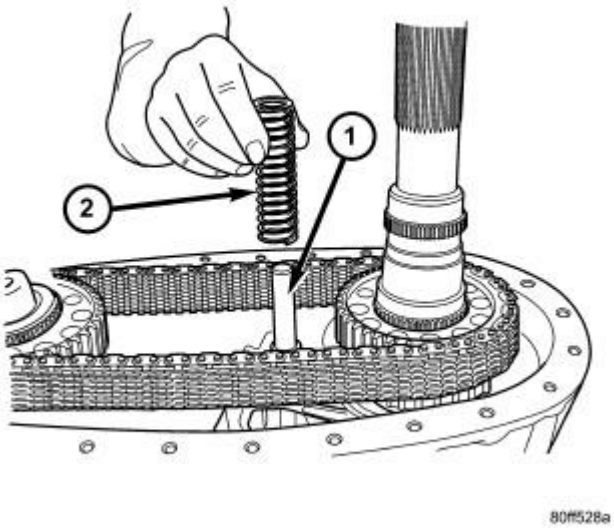

Fig. 15: Shift Rail & Spring
Courtesy of CHRYSLER GROUP, LLC

1 - SHIFT RAIL
2 - SPRING

2. Remove the shift rail spring (2) from the shift rail (1). Refer to **Fig. 15**.

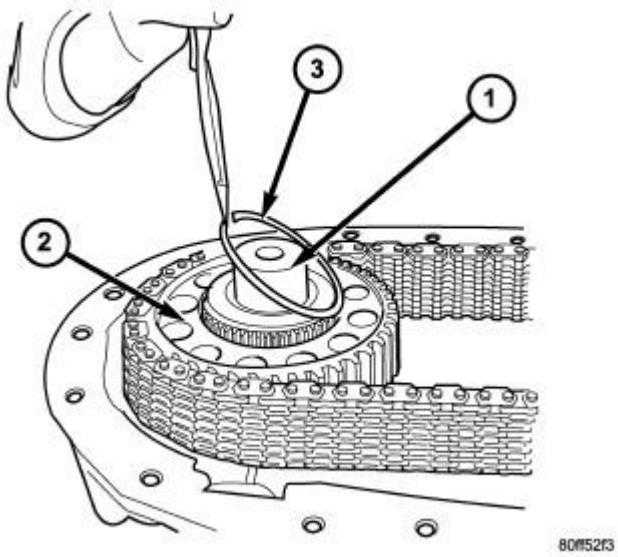

Fig. 16: Front Output Shaft, Drive Sprocket & Retaining Ring
Courtesy of CHRYSLER GROUP, LLC

1 - FRONT OUTPUT SHAFT
2 - DRIVE SPROCKET

3 - RETAINING RING

3. Remove the front output shaft (1) drive sprocket (2) retaining ring (3). Refer to **Fig. 16**.

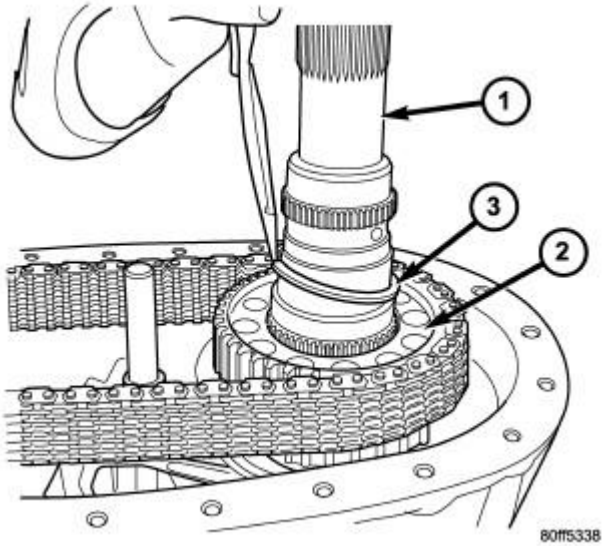

Fig. 17: Rear Output Shaft, Drive Sprocket & Retaining Ring
Courtesy of CHRYSLER GROUP, LLC

1 - REAR OUTPUT SHAFT
2 - DRIVE SPROCKET
3 - RETAINING RING

4. Remove the rear output shaft (1) drive sprocket (2) retaining ring (3). Refer to **Fig. 17**.

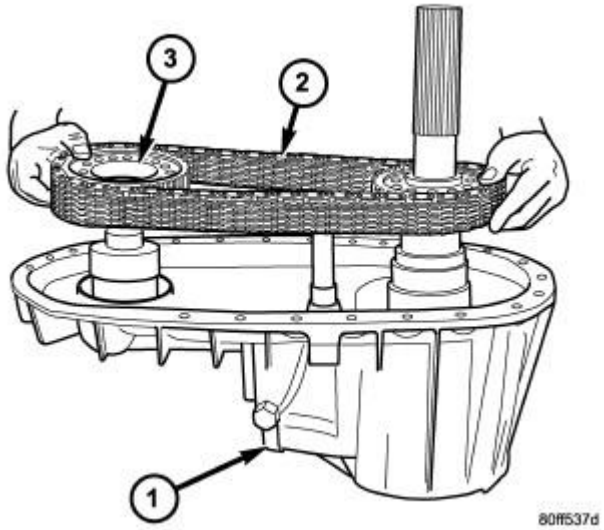

Fig. 18: Front Case Half, Chain & Drive Sprockets
Courtesy of CHRYSLER GROUP, LLC

1 - FRONT CASE HALF
2 - CHAIN
3 - DRIVE SPROCKETS

5. Pull front sprocket (3), rear sprocket, and chain (2) upward until clear of the front and rear output shaft sprocket splines. Refer to **Fig. 18**.
6. Remove chain and sprockets as an assembly.

SHIFT FORKS AND MAINSHAFT

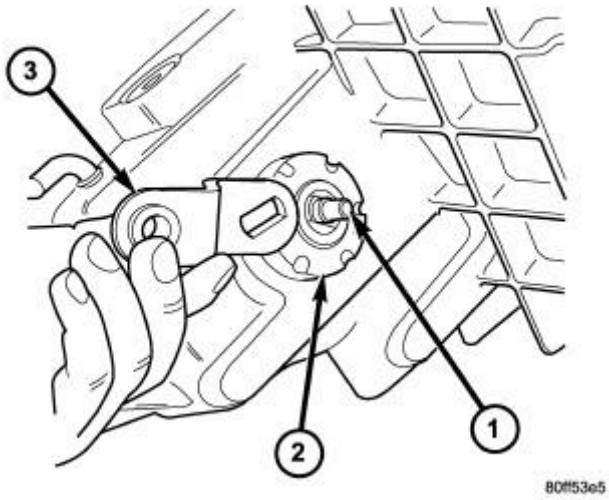

Fig. 19: Shift Sector, Sector Support & Manual Shift Lever
Courtesy of CHRYSLER GROUP, LLC

1 - SHIFT SECTOR
2 - SECTOR SUPPORT
3 - MANUAL SHIFT LEVER

1. Shift transfer case into NEUTRAL.
2. Remove nut that retains the shift lever to sector shaft. Then remove shift lever (3) and spacer from the shaft. Refer to **Fig. 19**.
3. Remove the sector support (2) with Socket (special tool #9033, Socket, Sector Support).

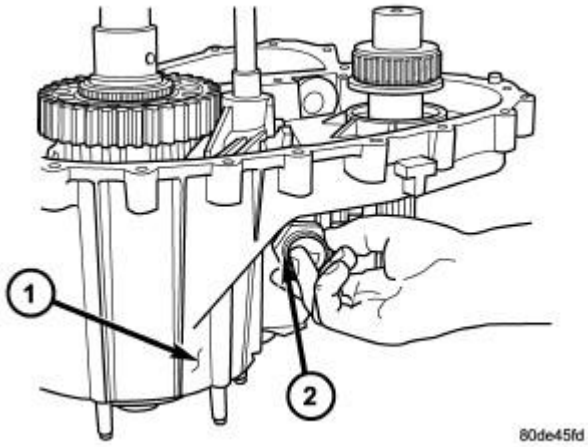

Fig. 20: Position Sensor Or Switch
Courtesy of CHRYSLER GROUP, LLC

1 - FRONT CASE
2 - POSITION SENSOR

4. Remove the transfer case position sensor or switch (2) from the front case half (1). Refer to **Fig. 20**.

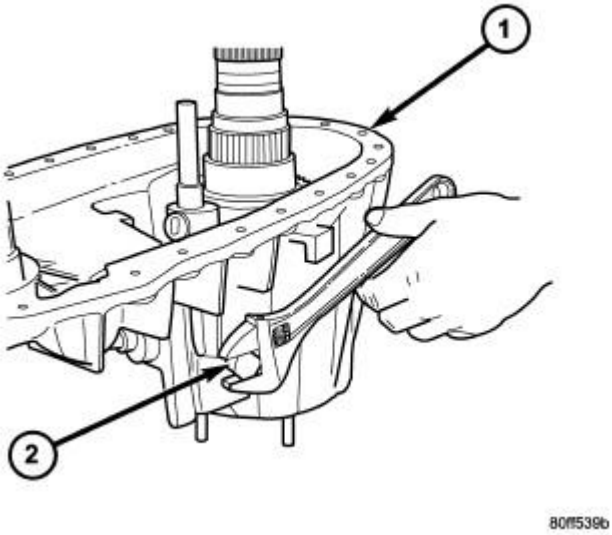

Fig. 21: Identifying Detent Plug
Courtesy of CHRYSLER GROUP, LLC

1 - FRONT CASE HALF
2 - DETENT PLUG

5. Loosen detent plug (2). Refer to **Fig. 21**.

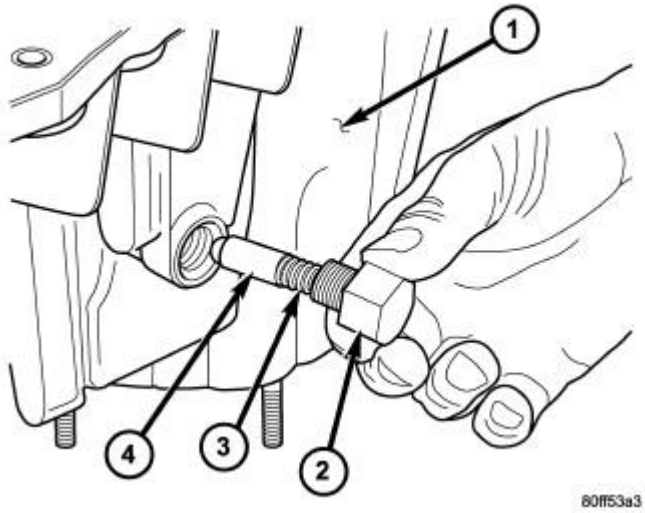

Fig. 22: Detent plug, Spring & Plunger
Courtesy of CHRYSLER GROUP, LLC

1 - FRONT CASE HALF
2 - DETENT PLUG
3 - SPRING
4 - PLUNGER

6. Remove detent plug (2), spring (3), and plunger (4). Refer to **Fig. 22**. Note that the plug has an O-ring seal. Remove and discard this seal.

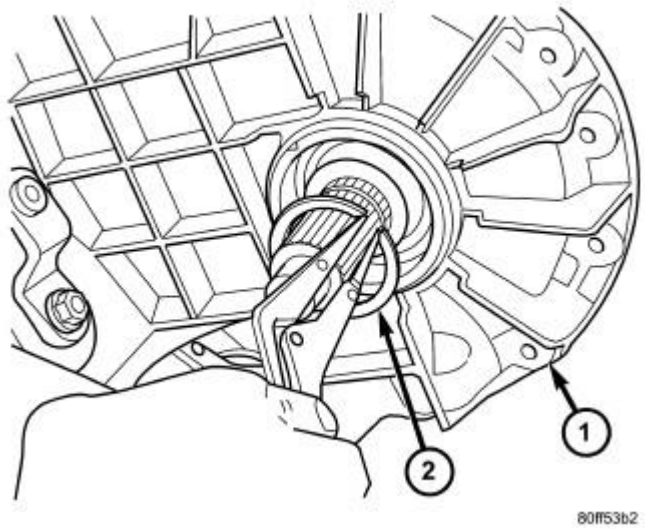

Fig. 23: Front Output Shaft Snap-Ring
Courtesy of CHRYSLER GROUP, LLC

1 - FRONT CASE HALF
2 - SNAP-RING

7. Using a screw mounted in a slide hammer, remove the front output shaft seal.
8. Remove the front output shaft snap-ring (2). Refer to **Fig. 23**.

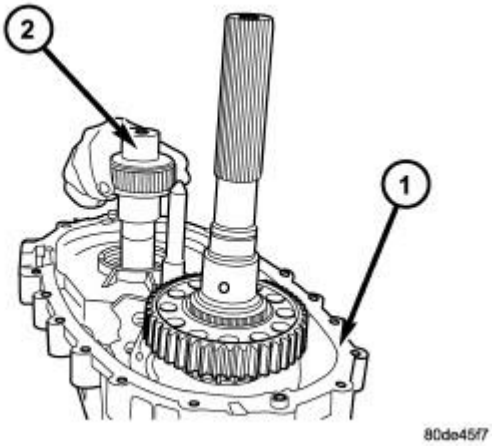

Fig. 24: Front Output Shaft
Courtesy of CHRYSLER GROUP, LLC

1 - FRONT CASE
2 - FRONT OUTPUT SHAFT

9. Remove front output shaft (2) from bearing in the front case (1). Refer to **Fig. 24**.

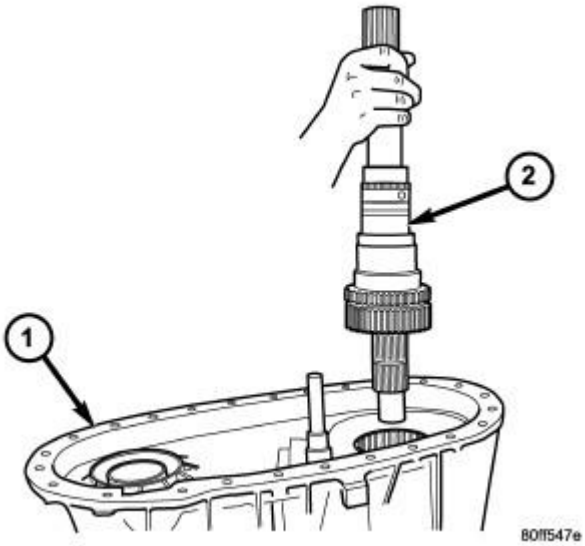

Fig. 25: Mainshaft Assembly

Courtesy of CHRYSLER GROUP, LLC

1 - FRONT CASE HALF
2 - MAINSHAFT ASSEMBLY

10. Pull mainshaft assembly (2) out of input gear, mode sleeve, and case. Refer to **Fig. 25**.

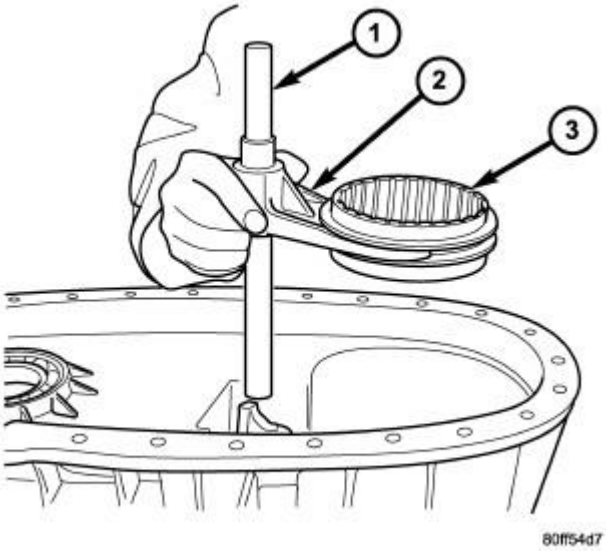

Fig. 26: Mode Fork, Sleeve & Shift Rail
Courtesy of CHRYSLER GROUP, LLC

1 - SHIFT RAIL
2 - MODE FORK
3 - MODE SLEEVE

11. Remove mode fork (2), mode sleeve (3), and shift rail (1) as assembly. Refer to **Fig. 26**. Note which way the sleeve fits in the fork (long side of sleeve goes to front or the points on the sleeve teeth go to the rear of case).

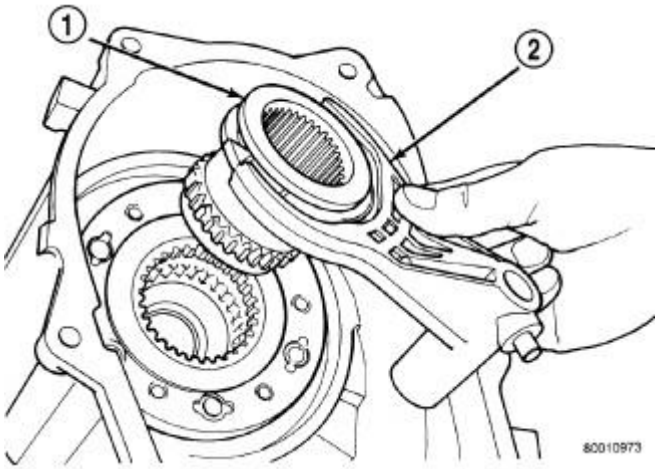

Fig. 27: Range Fork & Hub
Courtesy of CHRYSLER GROUP, LLC

1 - RANGE HUB
2 - RANGE FORK

12. Remove range fork (2) and hub (1) as an assembly. Refer to **Fig. 27**. Note fork position for installation reference.

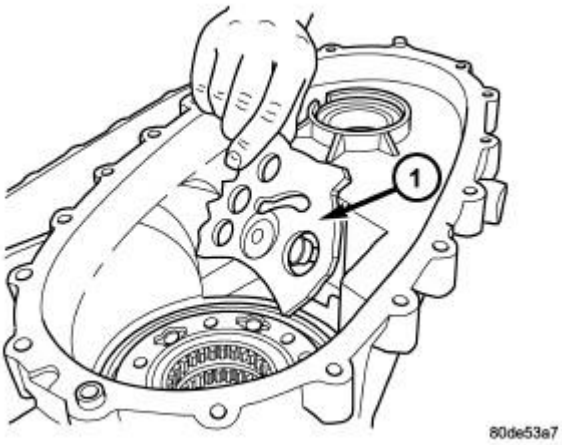

Fig. 28: Identifying Shift Sector
Courtesy of CHRYSLER GROUP, LLC

1 - SHIFT SECTOR

13. Remove shift sector (1). Refer to **Fig. 28**.

MAINSHAFT

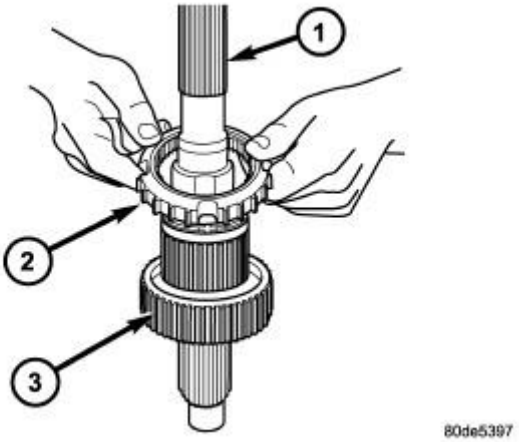

Fig. 29: Output Shaft, Clutch Gear & Mode Hub
Courtesy of CHRYSLER GROUP, LLC

1 - OUTPUT SHAFT
2 - CLUTCH GEAR
3 - MODE HUB

1. Remove the clutch gear (2) from the output shaft (1). Refer to **Fig. 29**.

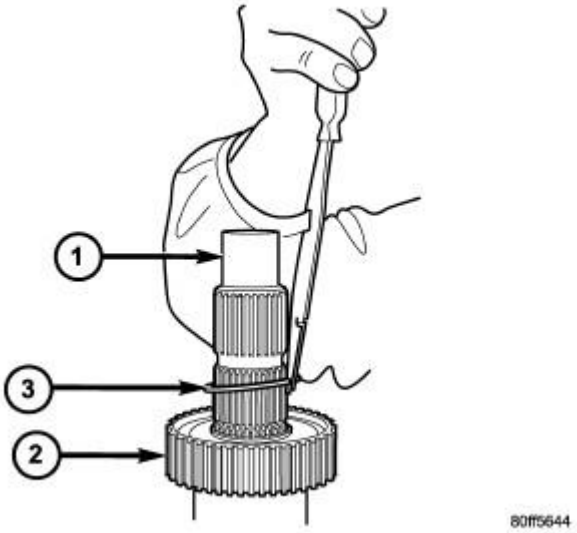

Fig. 30: Mainshaft, Mode Hub & Retaining Ring
Courtesy of CHRYSLER GROUP, LLC

1 - MAINSHAFT
2 - MODE HUB
3 - RETAINING RING

2. Remove the mode hub retaining ring (3) from the mainshaft (1). Refer to **Fig. 30**.

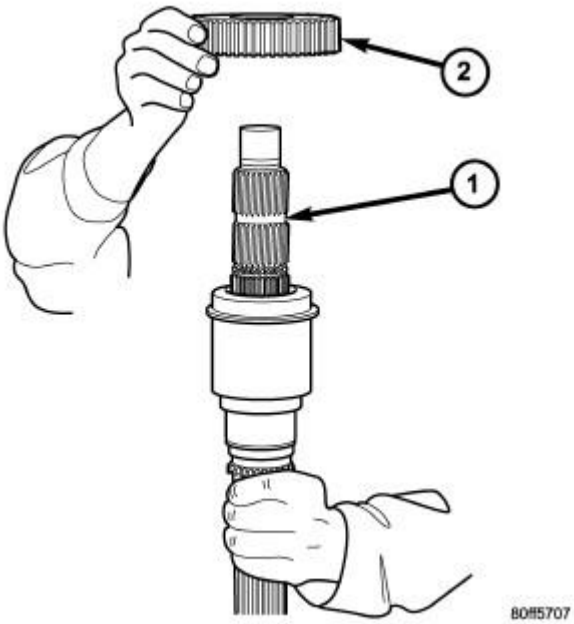

Fig. 31: Mainshaft & Mode Hub
Courtesy of CHRYSLER GROUP, LLC

1 - MAINSHAFT
2 - MODE HUB

3. Remove the mode hub (2) from the mainshaft (1). Refer to **Fig. 31**.

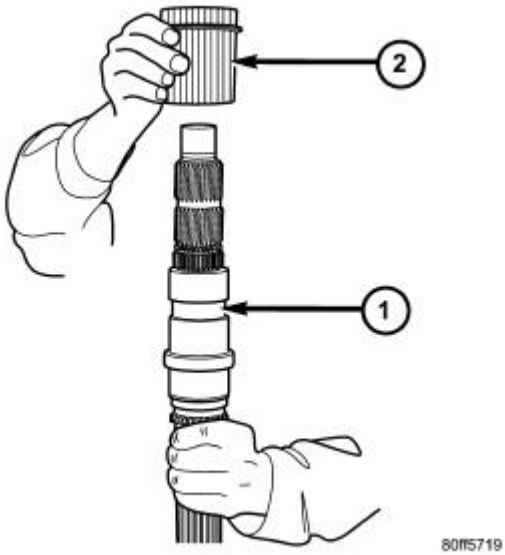

Fig. 32: Mainshaft & Drive Sprocket Drive Hub
Courtesy of CHRYSLER GROUP, LLC

1 - MAINSHAFT
2 - DRIVE SPROCKET DRIVE HUB

4. Remove the drive sprocket drive hub (2) from the mainshaft. Refer to **Fig. 32**.

INPUT AND PLANETARY GEAR

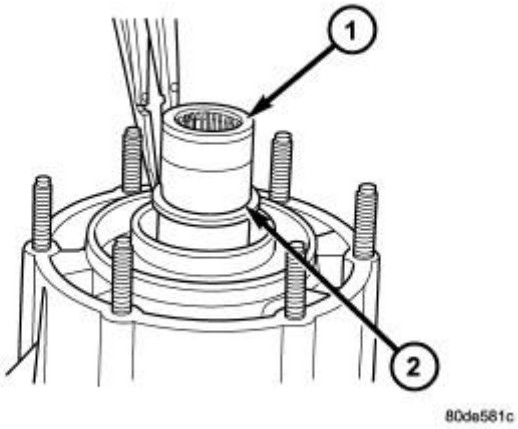

Fig. 33: Input Gear Retaining Ring
Courtesy of CHRYSLER GROUP, LLC

1 - INPUT GEAR
2 - RETAINING RING

1. Remove input gear seal with suitable screw and slide hammer.
2. Remove input gear retaining ring (2) with heavy duty snap-ring pliers. Refer to **Fig. 33**.

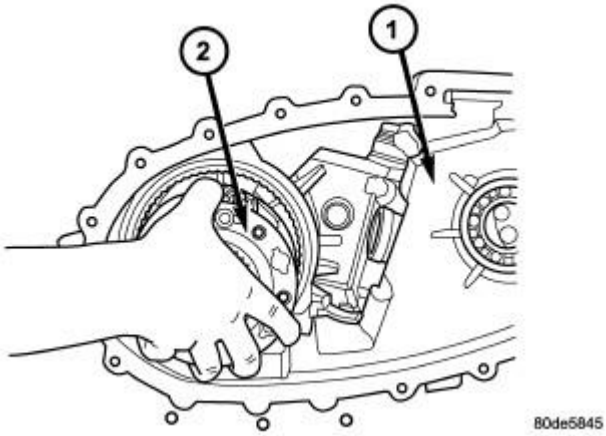

Fig. 34: Front Case & Input Planetary Assembly
Courtesy of CHRYSLER GROUP, LLC

1 - FRONT CASE
2 - INPUT PLANETARY ASSEMBLY

3. Place front case in horizontal position. Then remove input gear and low range gear as an assembly (2). Refer to **Fig. 34**. Tap gear out of bearing with plastic mallet, if necessary.

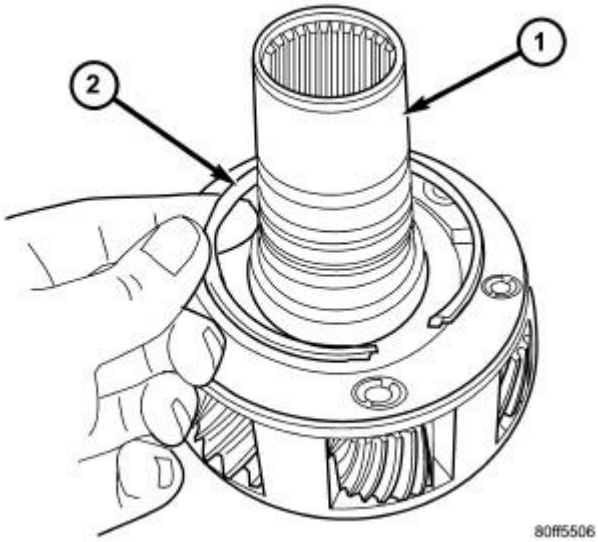

Fig. 35: Input Gear & Retaining Ring
Courtesy of CHRYSLER GROUP, LLC

1 - INPUT GEAR
2 - RETAINING RING

4. Remove snap-ring (2) that retains input gear in the low range gear (1). Refer to **Fig. 35**.

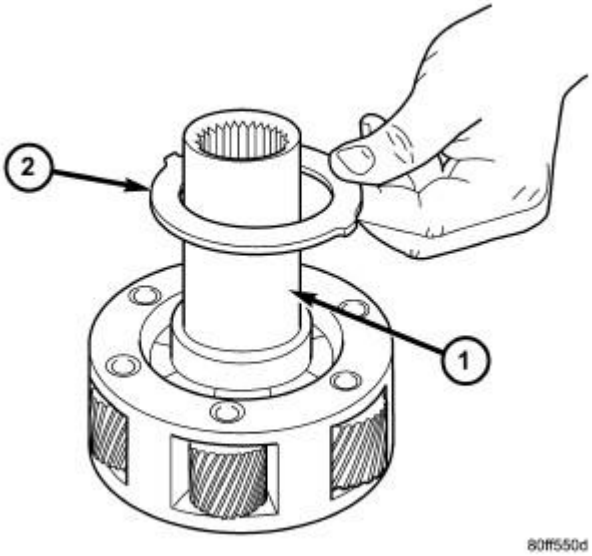

Fig. 36: Input Gear & Retainer
Courtesy of CHRYSLER GROUP, LLC

1 - INPUT GEAR
2 - RETAINER

5. Remove retainer (2). Refer to **Fig. 36**.

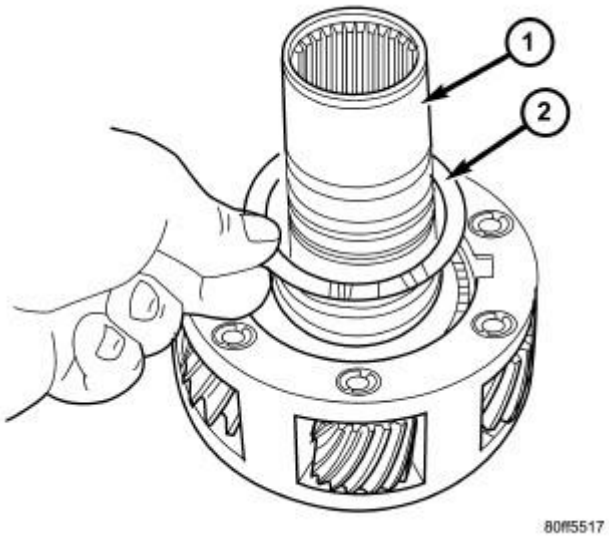

Fig. 37: Input Gear & Thrust Plate
Courtesy of CHRYSLER GROUP, LLC

1 - INPUT GEAR
2 - THRUST PLATE

6. Remove front thrust plate (2) from the input gear (1). Refer to **Fig. 37**.

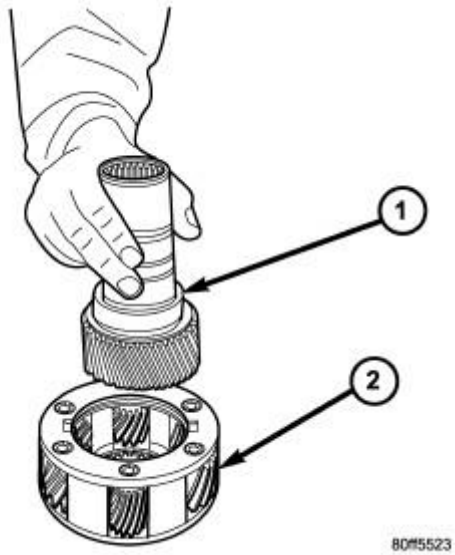

Fig. 38: Input Gear & Low Range Planetary
Courtesy of CHRYSLER GROUP, LLC

1 - INPUT GEAR
2 - LOW RANGE PLANETARY

7. Remove input gear (1) from the low range planetary (2). Refer to **Fig. 38**.

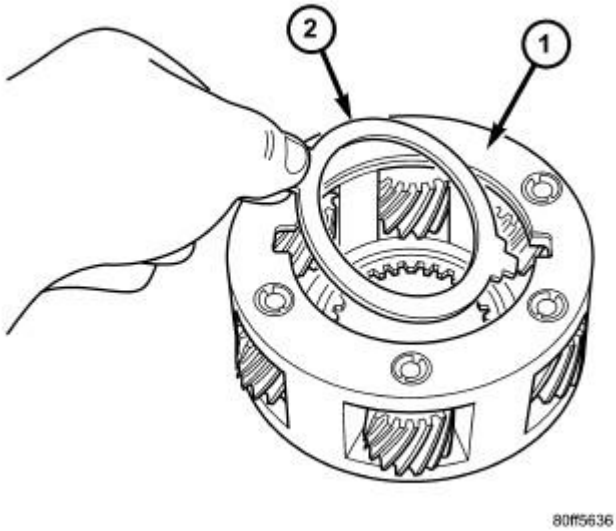

Fig. 39: Thrust Plate & Planetary
Courtesy of CHRYSLER GROUP, LLC

1 - PLANETARY
2 - THRUST PLATE

8. Remove bottom tabbed thrust washer (2) from low range planetary (1). Refer to **Fig. 39**.

CLEANING

CLEANING

Clean the transfer case parts with a standard parts cleaning solvent. Remove all traces of sealer from the cases and retainers with a scraper and 3M™ all purpose cleaner. Use compressed air to remove solvent residue from oil feed passages in the case halves, retainers, gears, and shafts.

INSPECTION

INSPECTION

MAINSHAFT/SPROCKET/HUB

Inspect the splines on the hub and shaft and the teeth on the sprocket. Minor nicks and scratches can be smoothed with an oilstone, however, replace any part that is damaged.

Check the contact surfaces in the sprocket bore and on the mainshaft. Minor nicks and scratches can be smoothed with 320-400 grit emery cloth but do not try to salvage the shaft if nicks or wear is severe.

INPUT GEAR AND PLANETARY CARRIER

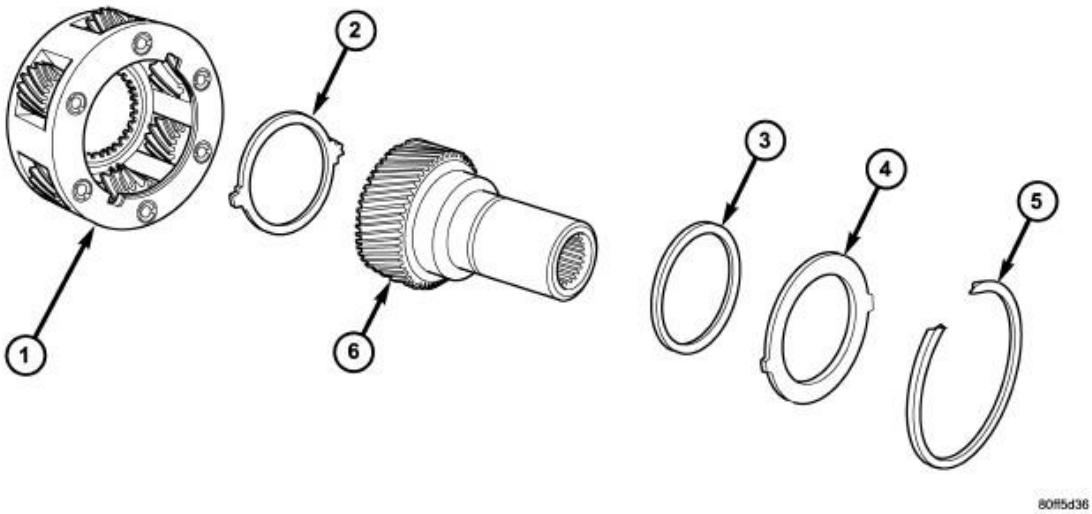

Fig. 40: Input Gear & Carrier Components
Courtesy of CHRYSLER GROUP, LLC

1 - PLANETARY CARRIER	4 - CARRIER LOCK RING
2 - REAR THRUST WASHER	5 - CARRIER LOCK RETAINING RING
3 - FRONT THRUST WASHER	6 - INPUT GEAR

Check the teeth on the gear (6). Refer to **Fig. 40**. Minor nicks can be dressed off with an oilstone but replace the gear if any teeth are broken, cracked, or chipped. The bearing surface on the gear can be smoothed with 300-400 grit emery cloth if necessary.

Examine the carrier body and pinion gears for wear or damage. Check the pinion gear thrust washers on the pinon pins for damage. The carrier will have to be replaced as an assembly if the body, pinion pins, or pinion gears are damaged.

Check the lock ring and both thrust washers for wear or cracks. Replace them if necessary. Also replace the lock retaining ring if bent, distorted, or broken.

SHIFT FORKS/HUBS/SLEEVES

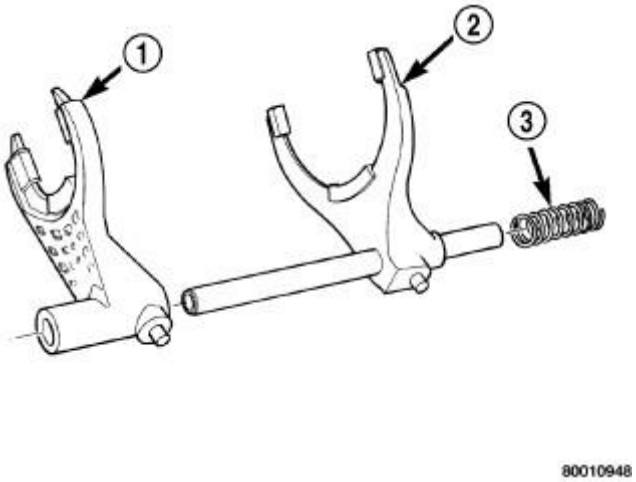

Fig. 41: Identifying Shift Forks
Courtesy of CHRYSLER GROUP, LLC

1 - RANGE FORK
2 - MODE FORK AND RAIL
3 - MODE SPRING

Check condition of the shift forks and mode fork shift rail (2). Refer to **Fig. 41**. Minor nicks on the shift rail can be smoothed with 320-400 grit emery cloth.

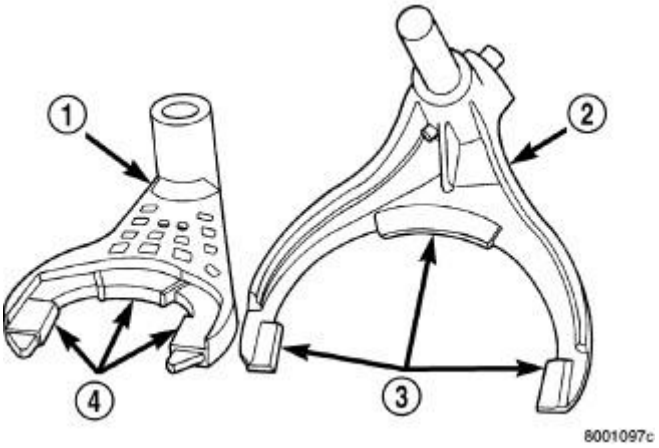

Fig. 42: Shift Forks & Wear Pads
Courtesy of CHRYSLER GROUP, LLC

1 - RANGE FORK
2 - MODE FORK
3 - WEAR PADS (SERVICEABLE)
4 - WEAR PADS (SERVICEABLE)

Inspect the shift fork wear pads (3). Refer to **Fig. 42**. The mode and range fork pads are serviceable and can be

replaced if necessary.

Check both of the sleeves for wear or damage, especially on the interior teeth. Replace the sleeves if wear or damage is evident.

DRIVE CHAIN

Examine the drive chain and shaft bearings. replace the chain if stretched, distorted, or if any of the links bind. Replace the bearings if rough, or noisy.

LOW RANGE ANNULUS GEAR

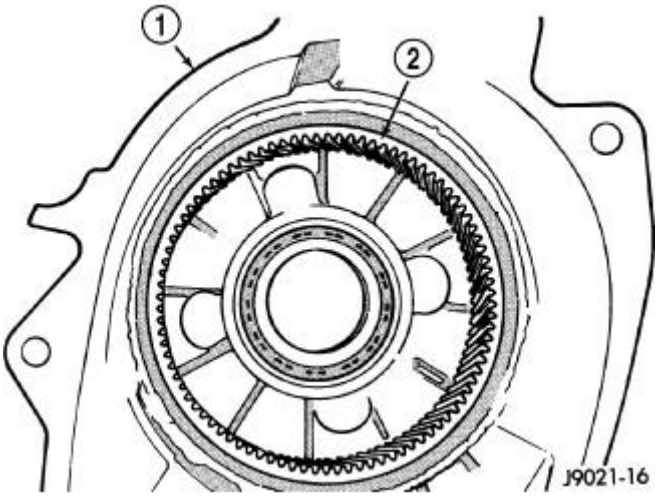

Fig. 43: Low Range Annulus Gear
Courtesy of CHRYSLER GROUP, LLC

1 - FRONT CASE
2 - LOW RANGE ANNULUS GEAR

Inspect annulus gear (2) condition carefully. The gear is only serviced as part of the front case (1). If the gear is damaged, it will be necessary to replace the gear and front case as an assembly. Do not attempt to remove the gear (2). Refer to **Fig. 43**.

FRONT CASE AND REAR CASE

Inspect the cases for wear and damage.

Check case condition. If leaks were a problem, look for gouges and severe scoring of case sealing surfaces. Also make sure the front case mounting studs are in good condition.

Check the front case mounting studs and vent tube. The tube can be secured with Loctite™ 271 or 680 if loose. The stud threads can be cleaned up with a die if necessary. Also check condition of the fill/drain plug threads in the rear case. The threads can be repaired with a thread chaser or tap if necessary. Or the threads can be repaired with Helicoil™ stainless steel inserts if required.

OIL PUMP/OIL PICKUP

Examine the oil pump pickup parts. Replace the pump if any part appears to be worn or damaged. Do not disassemble the pump as individual parts are not available. The pump is only available as a complete assembly. The pickup screen, hose, and tube are the only serviceable parts and are available separately.

ASSEMBLY

ASSEMBLY

BEARINGS AND SEALS

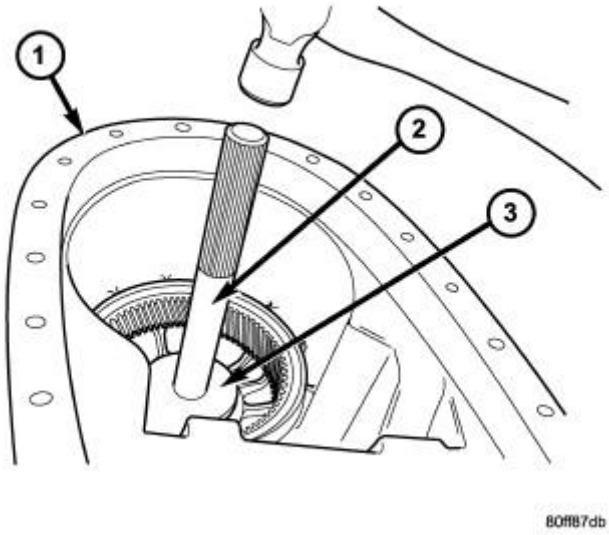

Fig. 44: Removing Input Shaft Bearing
Courtesy of CHRYSLER GROUP, LLC

1 - FRONT CASE HALF
2 - UNIVERSAL HANDLE C-4171
3 - BEARING REMOVER/INSTALLER 6953

1. Remove the input shaft bearing snap-ring from the front case half with suitable snap-ring pliers.
2. Remove the input shaft bearing from the front case half with Bearing Installer (special tool #6953, Remover/Installer, Bearing) (3) and Universal Handle (special tool #C-4171, Driver Handle, Universal) (2). Refer to **Fig. 44**.

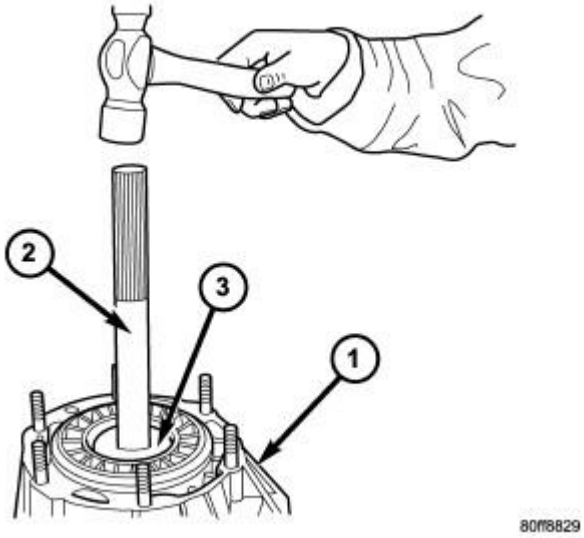

Fig. 45: Installing Input Shaft Bearing
Courtesy of CHRYSLER GROUP, LLC

1 - FRONT CASE HALF
2 - UNIVERSAL HANDLE C-4171
3 - BEARING CUP INSTALLER 8151 (INVERTED)

3. Install the input shaft bearing into the front case half with Bearing Cup Installer (special tool #8151, Installer, Bearing Cup) (3) inverted on Universal Handle (special tool #C-4171, Driver Handle, Universal) (2). Refer to **Fig. 45**.
4. Install the input shaft bearing snap-ring into the front case half with suitable snap-ring pliers.

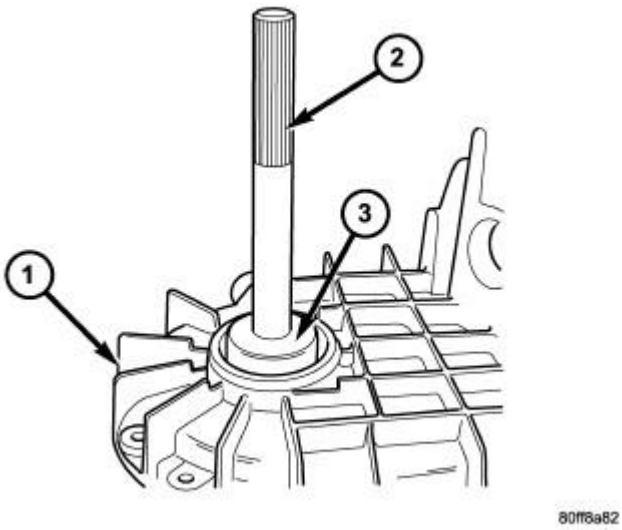

Fig. 46: Removing Front Output Shaft Front Bearing

Courtesy of CHRYSLER GROUP, LLC

1 - FRONT CASE HALF
2 - UNIVERSAL HANDLE C-4171
3 - BEARING INSTALLER 6953

5. Remove the front output shaft front bearing snap-ring from the front case half.
6. Using Bearing Installer (special tool #6953, Remover/Installer, Bearing) (3) and Universal Handle (special tool #C-4171, Driver Handle, Universal) (2), remove the front output shaft front bearing. Refer to **Fig. 46**.

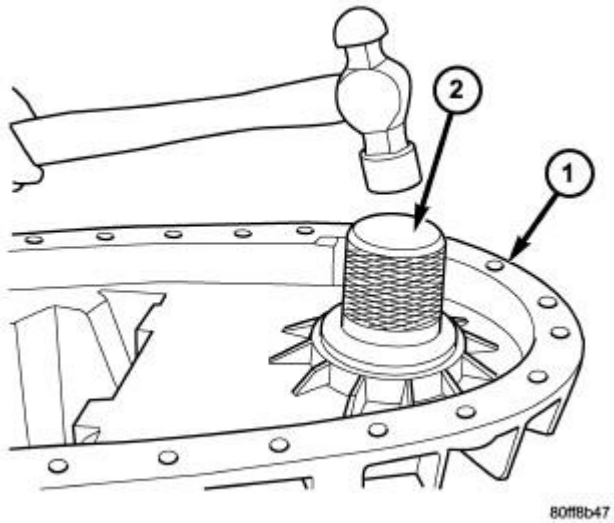

Fig. 47: Installing Front Output Shaft Front Bearing
Courtesy of CHRYSLER GROUP, LLC

1 - FRONT CASE HALF
2 - SEAL INSTALLER 8891

7. Start front output shaft front bearing in front case (1). Then seat bearing with Seal Installer (special tool #8891, Installer, Seal) (2). Refer to **Fig. 47**.
8. Install front output shaft bearing retaining ring.

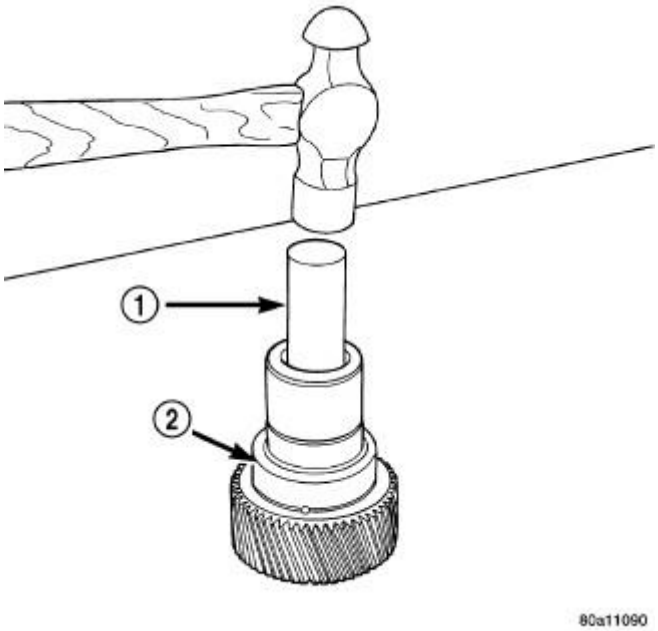

Fig. 48: Removing Input Gear Pilot Bearing
Courtesy of CHRYSLER GROUP, LLC

1 - DRIFT
2 - INPUT GEAR

9. Remove input gear pilot bearing by inserting a suitably sized drift into the splined end of the input gear (2) and driving the bearing out with the drift (1) and a hammer. Refer to **Fig. 48**.
10. Install new pilot bearing with Bearing Installer (special tool #9035, Installer, Bearing).

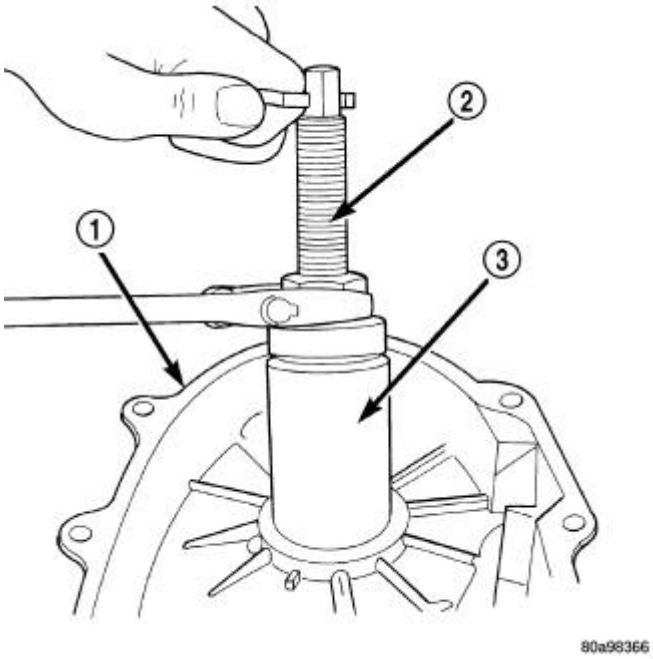

Fig. 49: Removing Front Output Shaft Rear Bearing
Courtesy of CHRYSLER GROUP, LLC

1 - REAR CASE
2 - REMOVER L-4454-1 AND L-4454-3
3 - CUP 8148

11. Remove the front output shaft rear bearing with the screw and jaws from Remover (special tool #L-4454A, Remover, Bearing Cup) (2) and Cup (special tool #8148, Cup) (3). Refer to **Fig. 49**.

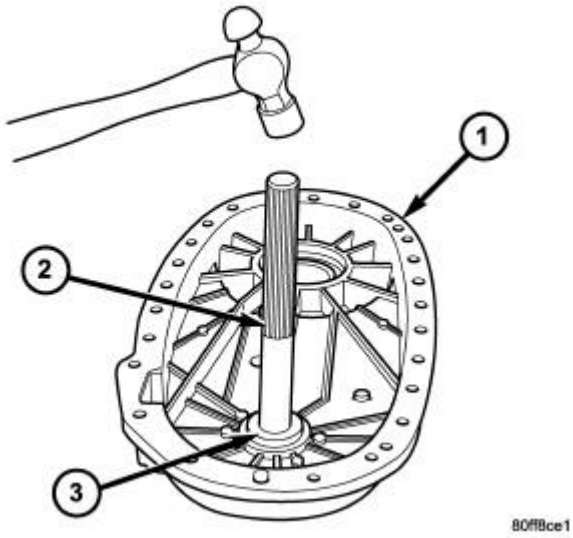

Fig. 50: Installing Front Output Shaft Rear Bearing
Courtesy of CHRYSLER GROUP, LLC

1 - REAR CASE HALF
2 - UNIVERSAL HANDLE C-4171
3 - BEARING INSTALLER 8128

12. Install new bearing with Universal Handle (special tool #C-4171, Driver Handle, Universal) (2) and Bearing Installer (special tool #8128, Installer, Bearing) (3). Refer to **Fig. 50**.

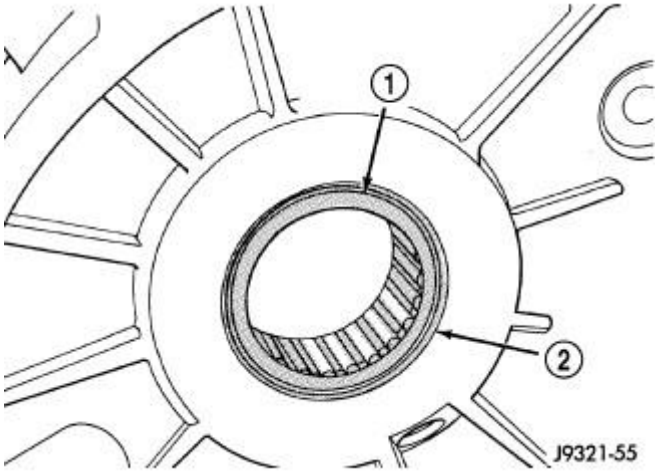

Fig. 51: Output Shaft Rear Bearing Installation Depth
Courtesy of CHRYSLER GROUP, LLC

1 - BEARING (SEATED) AT LOWER EDGE OF CHAMFER
2 - CHAMFER

13. The bearing bore is chamfered at the top. Install the bearing (1) so it is flush with the lower edge of this chamfer (2). Refer to **Fig. 51**.

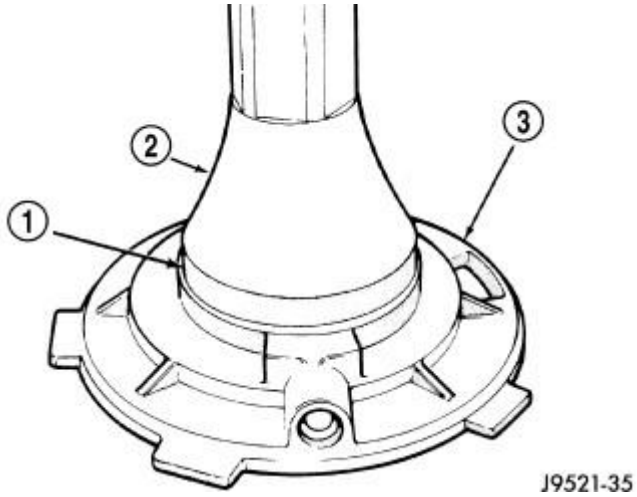

Fig. 52: Installing Oil Pump Seal
Courtesy of CHRYSLER GROUP, LLC

1 - HOUSING SEAL
2 - SEAL INSTALLER 7888
3 - OIL PUMP FEED HOUSING

14. Remove seal from oil pump with suitable pry tool.
15. Install new seal in oil pump (3) with Seal Installer (special tool #7888, Installer, Seal) (2). Refer to **Fig. 52**.

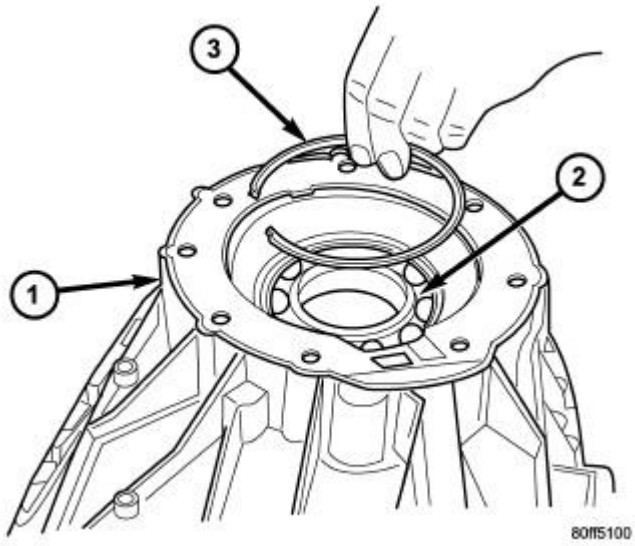

Fig. 53: Rear Output Shaft Bearing Snap-Ring
Courtesy of CHRYSLER GROUP, LLC

1 - REAR CASE HALF

2 - REAR OUTPUT SHAFT BEARING
3 - SNAP-RING

16. Remove the rear output shaft bearing snap-ring (3) from the rear case half (1). Refer to **Fig. 53**.

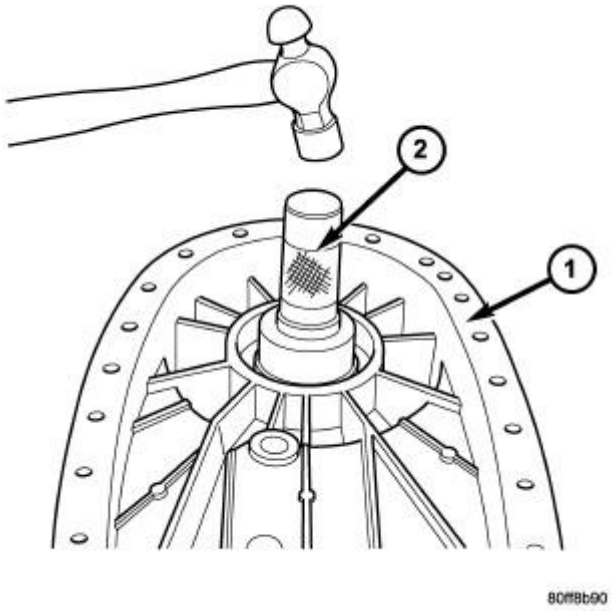

Fig. 54: Removing Rear Output Shaft Bearing
Courtesy of CHRYSLER GROUP, LLC

1 - REAR CASE HALF
2 - SEAL INSTALLER 7888

17. Remove the rear output shaft bearing from the rear case (1) using Seal Installer (special tool #7888, Installer, Seal) (2). Refer to **Fig. 54**.

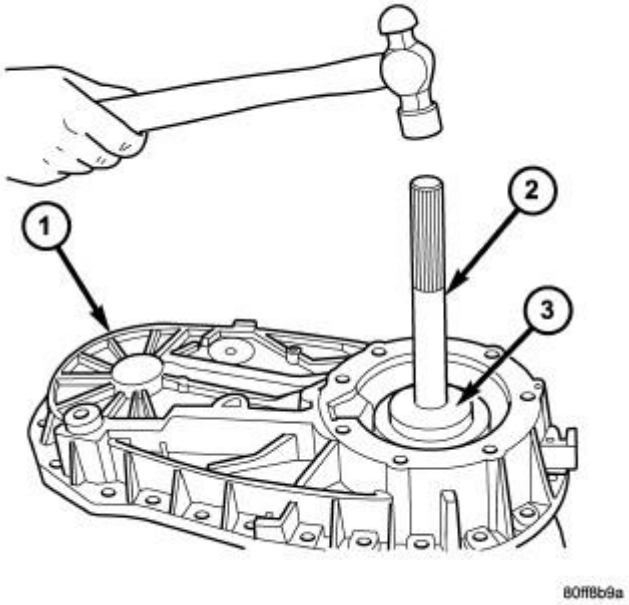

Fig. 55: Installing Rear Output Shaft Bearing
Courtesy of CHRYSLER GROUP, LLC

1 - REAR CASE HALF
2 - UNIVERSAL HANDLE C-4171
3 - SEAL INSTALLER 8152

18. Install the rear output shaft bearing into the rear case (1) using Seal Installer (special tool #8152, Installer, Seal) (3) and Universal Handle (special tool #C-4171, Driver Handle, Universal) (2). Refer to **Fig. 55**.
19. Install the rear output shaft bearing snap-ring into the rear case half.

INPUT AND PLANETARY GEAR

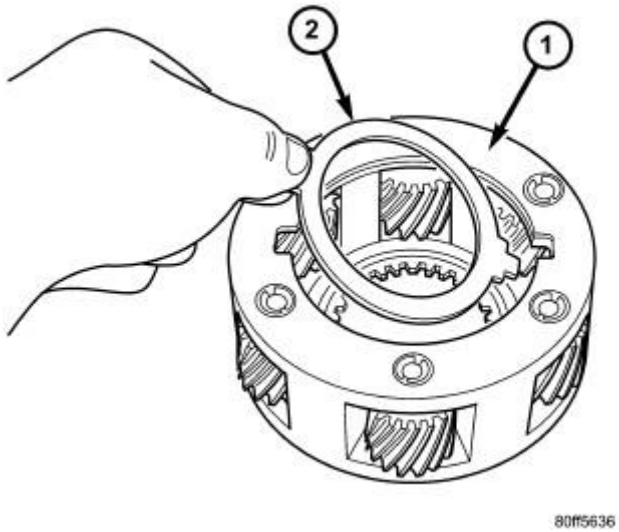

Fig. 56: Thrust Plate & Planetary
Courtesy of CHRYSLER GROUP, LLC

1 - PLANETARY
2 - THRUST PLATE

1. Lubricate gears and thrust washers with recommended transmission fluid.
2. Install bottom thrust washer (2) in low range gear planetary (1). Refer to **Fig. 56**. Be sure washer tabs are properly aligned in gear notches.

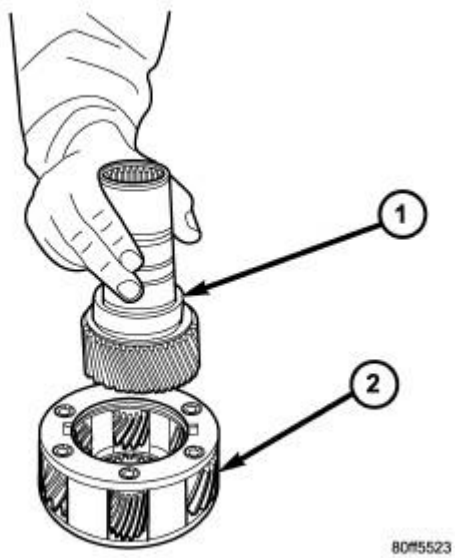

Fig. 57: Input Gear & Low Range Planetary
Courtesy of CHRYSLER GROUP, LLC

1 - INPUT GEAR
2 - LOW RANGE PLANETARY

3. Install input gear (1) in low range gear (2). Refer to **Fig. 57**. Be sure input gear is fully seated.

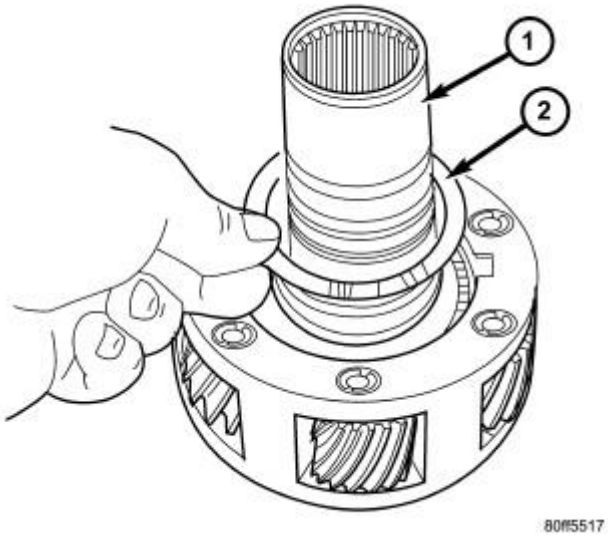

Fig. 58: Input Gear & Thrust Plate
Courtesy of CHRYSLER GROUP, LLC

1 - INPUT GEAR
2 - THRUST PLATE

4. Install remaining thrust washer (2) in low range gear and on top of input gear (1). Refer to **Fig. 58**.

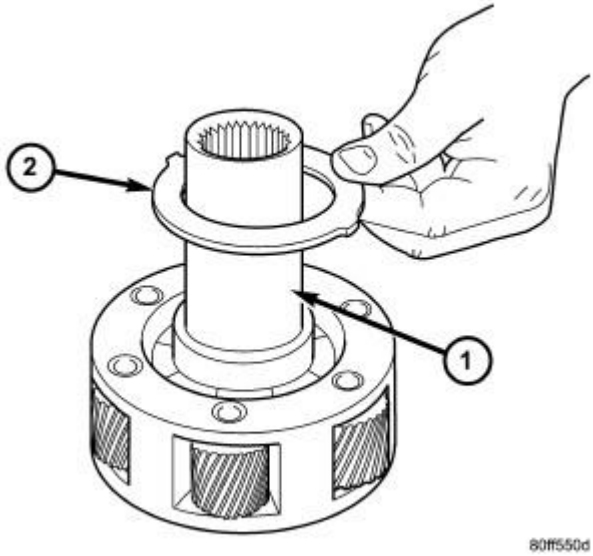

Fig. 59: Input Gear & Retainer
Courtesy of CHRYSLER GROUP, LLC

1 - INPUT GEAR
2 - RETAINER

5. Install retainer (2) on input gear (1). Refer to **Fig. 59**.

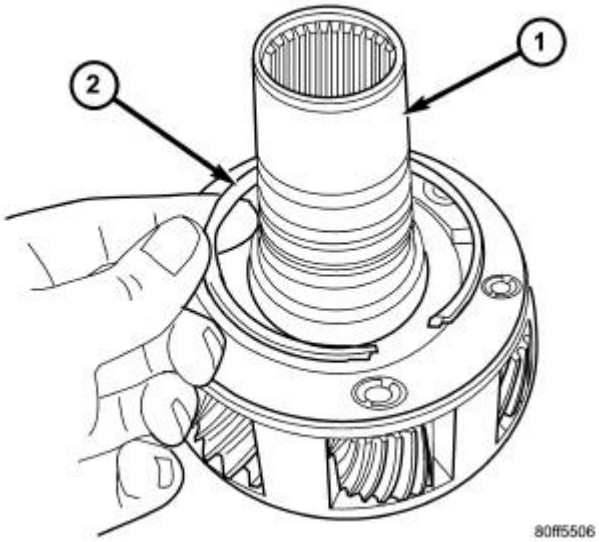

Fig. 60: Input Gear & Retaining Ring
Courtesy of CHRYSLER GROUP, LLC

1 - INPUT GEAR
2 - RETAINING RING

6. Install snap-ring (2). Refer to **Fig. 60**.

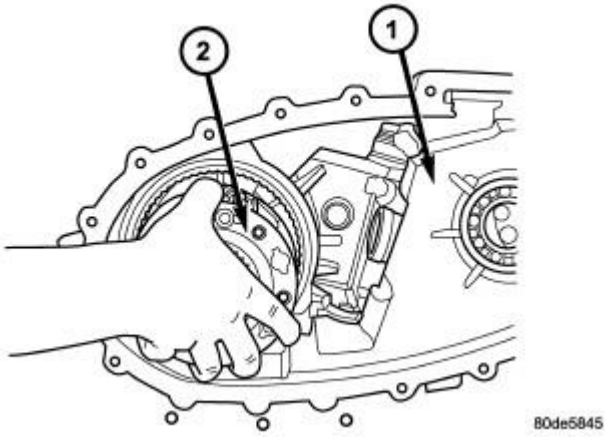

Fig. 61: Front Case & Input Planetary Assembly
Courtesy of CHRYSLER GROUP, LLC

1 - FRONT CASE
2 - INPUT PLANETARY ASSEMBLY

7. Align and install low range/input gear assembly (2) in front case (1). Refer to **Fig. 61**. Be sure low range gear pinions are engaged in annulus gear and that input gear shaft is fully seated in front bearing.

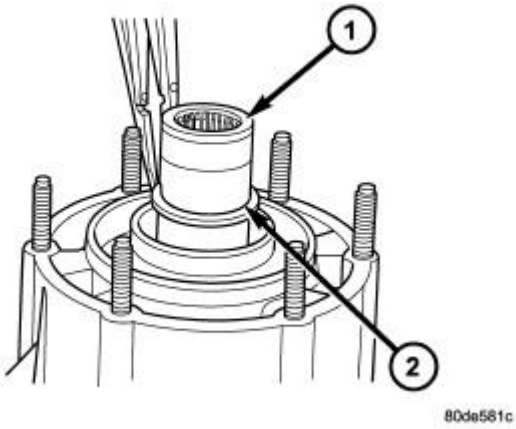

Fig. 62: Input Gear Retaining Ring
Courtesy of CHRYSLER GROUP, LLC

1 - INPUT GEAR
2 - RETAINING RING

8. Install snap-ring (2) to hold input/low range gear (1) into front bearing. Refer to **Fig. 62**.
9. Install a new input gear oil seal with Seal Installer (special tool #9036, Installer, Seal) and Universal Handle (special tool #C-4171, Driver Handle, Universal).

SHIFT FORKS AND MAINSHAFT

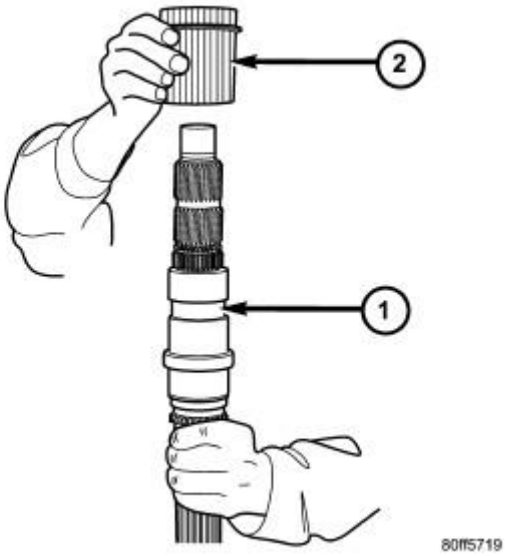

Fig. 63: Mainshaft & Drive Sprocket Drive Hub
Courtesy of CHRYSLER GROUP, LLC

1 - MAINSHAFT
2 - DRIVE SPROCKET DRIVE HUB

1. Lubricate mainshaft splines with recommended transmission fluid.
2. Coat the interior of the drive sprocket hub with ATF+4 and install the drive sprocket drive hub (2) onto the mainshaft (1). Refer to **Fig. 63**.

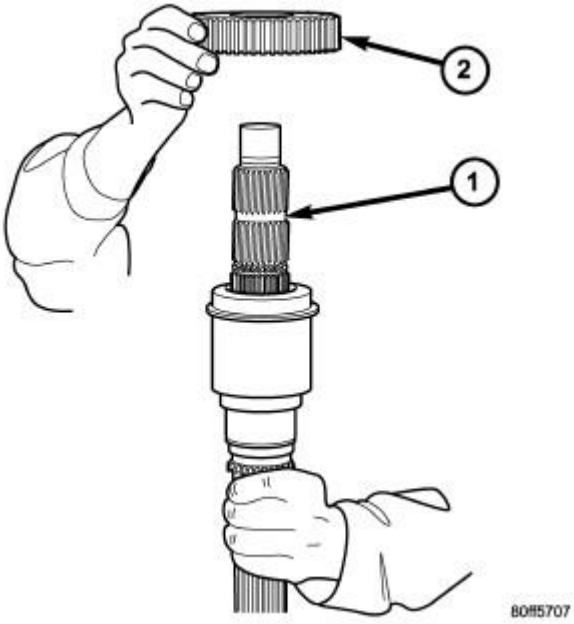

Fig. 64: Mainshaft & Mode Hub
Courtesy of CHRYSLER GROUP, LLC

1 - MAINSHAFT
2 - MODE HUB

3. Install the mode hub (2) onto the mainshaft (1). Refer to **Fig. 64**.

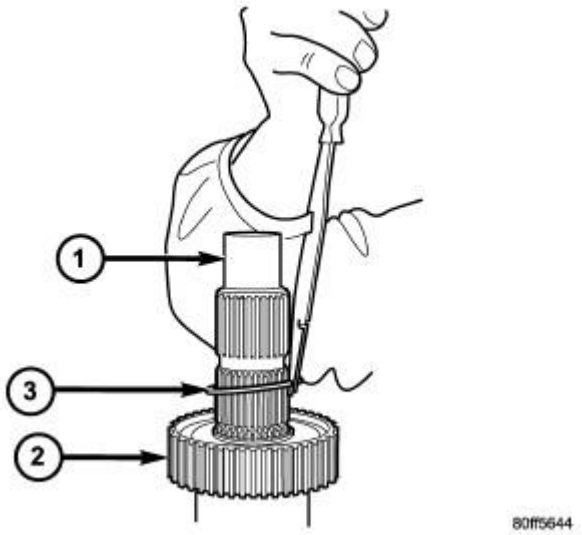

Fig. 65: Mainshaft, Mode Hub & Retaining Ring
Courtesy of CHRYSLER GROUP, LLC

1 - MAINSHAFT
2 - MODE HUB
3 - RETAINING RING

4. Install the mode hub retaining ring (3) onto the mainshaft (1). Refer to **Fig. 65**.

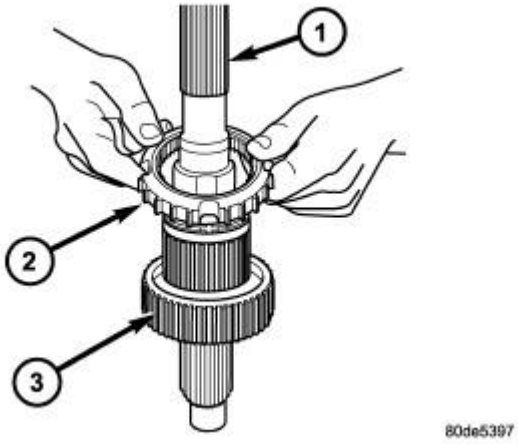

Fig. 66: Output Shaft, Clutch Gear & Mode Hub
Courtesy of CHRYSLER GROUP, LLC

1 - OUTPUT SHAFT
2 - CLUTCH GEAR
3 - MODE HUB

5. Install the clutch gear (2) onto the output shaft (1). Refer to **Fig. 66**. Verify that the pointed ends of the clutch gear teeth are pointing to the front of the mainshaft.

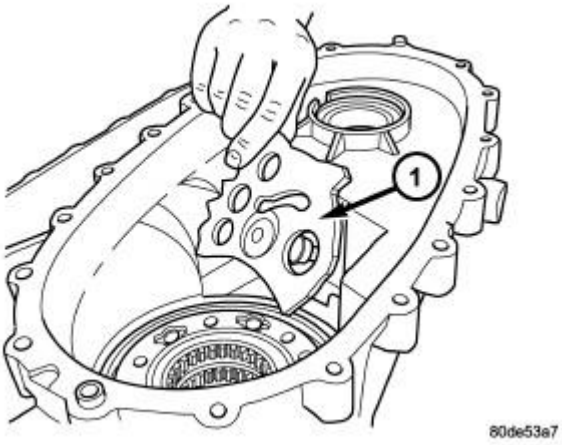

Fig. 67: Identifying Shift Sector
Courtesy of CHRYSLER GROUP, LLC

1 - SHIFT SECTOR

6. Lubricate sector shaft with transmission fluid and install shift sector (1) in case. Refer to **Fig. 67**. Position slot in sector so it will be aligned with shift fork pin when shift forks are installed.
7. Apply Loctite™ 242, or equivalent, to the threads of the sector support to replenish the factory applied

patch. Install the shift sector support. Tighten the sector support with Socket (special tool #9033, Socket, Sector Support) to 27-34 N.m (20-25 ft.lbs.).

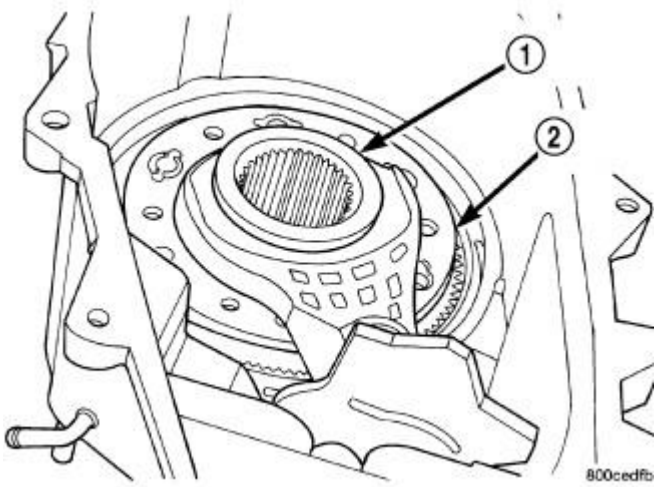

Fig. 68: Range Fork & Hub
Courtesy of CHRYSLER GROUP, LLC

1 - RANGE HUB
2 - RANGE FORK

8. Assemble and install range fork (2) and hub (1). Refer to **Fig. 68**. Be sure hub is properly seated in low range gear and engaged to the input gear.
9. Align and insert range fork pin in shift sector slot.

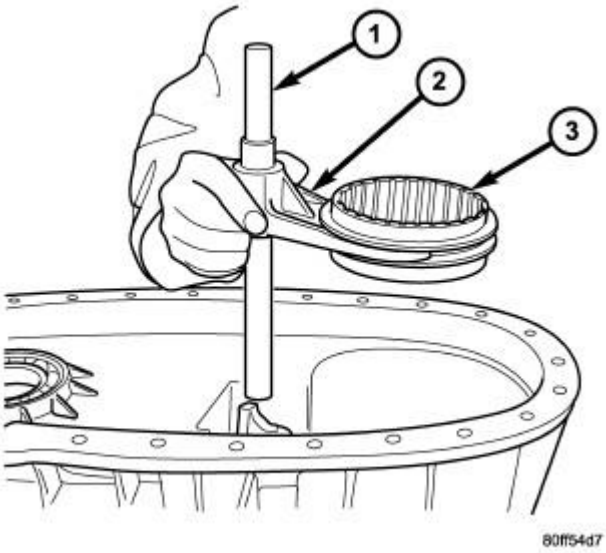

Fig. 69: Mode Fork, Sleeve & Shift Rail
Courtesy of CHRYSLER GROUP, LLC

1 - SHIFT RAIL
2 - MODE FORK
3 - MODE SLEEVE

10. Install mode fork (2) and shift rail (1) onto the mode sleeve.
11. Install the mode fork (2), sleeve (3), and shift rail (1) into the transfer case. Refer to **Fig. 69**.

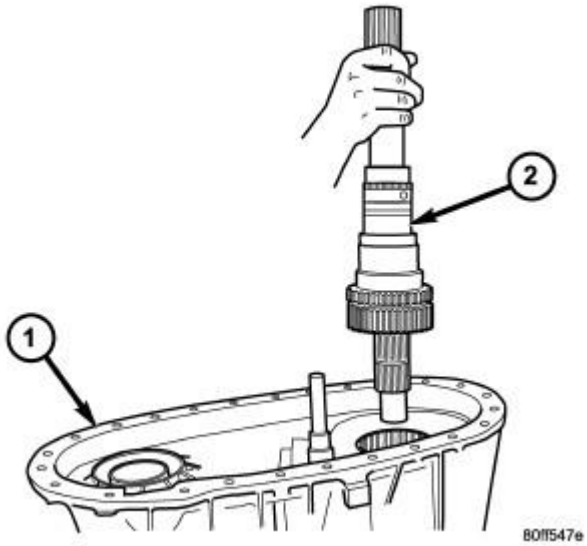

Fig. 70: Mainshaft Assembly
Courtesy of CHRYSLER GROUP, LLC

1 - FRONT CASE HALF
2 - MAINSHAFT ASSEMBLY

12. Install mainshaft (2) into the transfer case (1). Refer to **Fig. 70**. Guide mainshaft through the mode and range sleeves and into the input gear.

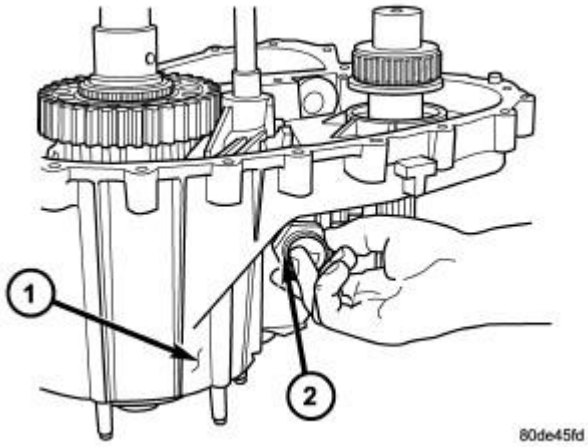

Fig. 71: Position Sensor Or Switch
Courtesy of CHRYSLER GROUP, LLC

1 - FRONT CASE
2 - POSITION SENSOR

13. Install the transfer case position sensor or switch (2). Refer to **Fig. 71**. Tighten the sensor or switch to 20-34 N.m (15-25 ft. lbs.) torque.

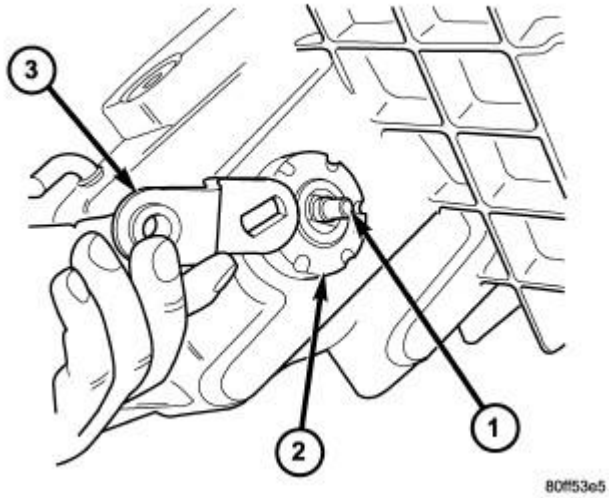

Fig. 72: Shift Sector, Sector Support & Manual Shift Lever
Courtesy of CHRYSLER GROUP, LLC

1 - SHIFT SECTOR
2 - SECTOR SUPPORT
3 - MANUAL SHIFT LEVER

14. Install manual shift lever (3) and spacer onto sector shaft (1). Refer to **Fig. 72**.
15. Install washer and nut on sector shaft to secure shift lever. Apply 1-2 drops Mopar® Lock N' Seal, or equivalent, to nut threads before installation. Then tighten nut to 27-34 N.m (20-25 ft. lbs.) torque.

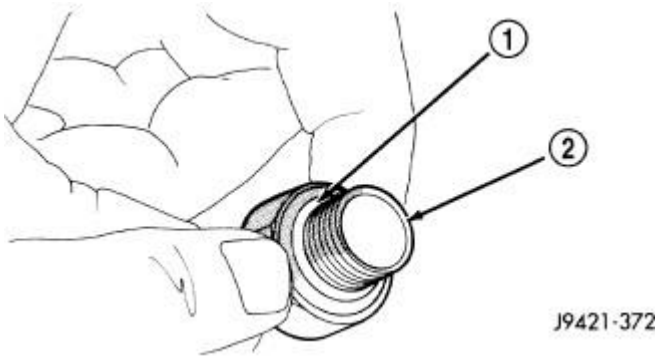

Fig. 73: O-Ring Installation On Detent Plug
Courtesy of CHRYSLER GROUP, LLC

1 - O-RING
2 - DETENT PLUG

16. Install new o-ring (1) on detent plug (2). Refer to **Fig. 73**.

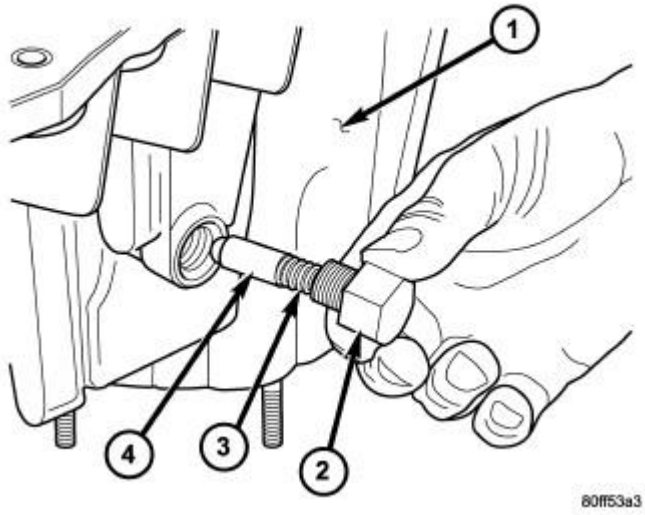

Fig. 74: Detent plug, Spring & Plunger
Courtesy of CHRYSLER GROUP, LLC

1 - FRONT CASE HALF
2 - DETENT PLUG
3 - SPRING

4 - PLUNGER

17. Install detent plunger (4), spring (3), and plug (2). Refer to **Fig. 74**. Tighten the plug to 16-25 N.m (12-18 ft. lbs.).

FRONT OUTPUT SHAFT AND DRIVE CHAIN

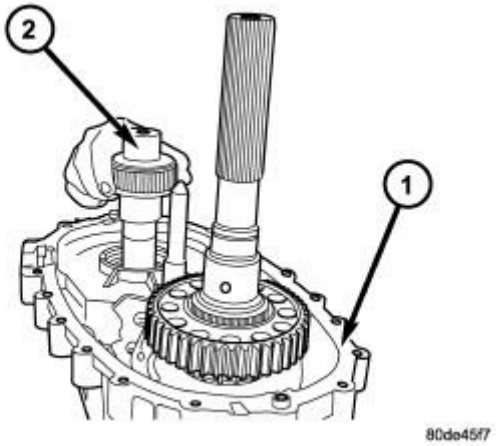

Fig. 75: Front Output Shaft
Courtesy of CHRYSLER GROUP, LLC

1 - FRONT CASE
2 - FRONT OUTPUT SHAFT

1. Install the front output shaft (2) into the front output shaft front bearing. Refer to **Fig. 75**.

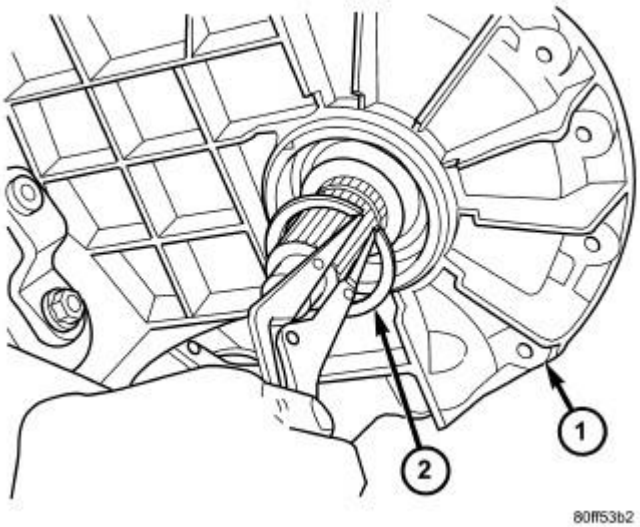

Fig. 76: Front Output Shaft Snap-Ring

Courtesy of CHRYSLER GROUP, LLC

1 - FRONT CASE HALF
2 - SNAP-RING

2. Install the front output shaft bearing inner snap-ring (2) onto the output shaft. Refer to **Fig. 76**.
3. Install the new front output shaft seal with Seal Installer (special tool #MB-991168-A, Installer, Seal)

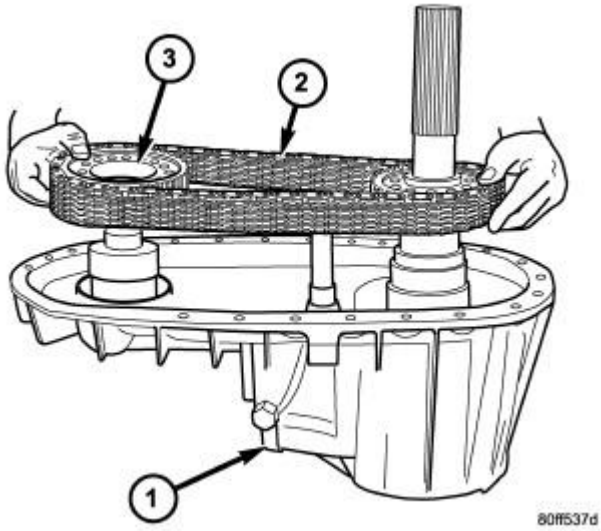

Fig. 77: Front Case Half, Chain & Drive Sprockets
Courtesy of CHRYSLER GROUP, LLC

1 - FRONT CASE HALF
2 - CHAIN
3 - DRIVE SPROCKETS

4. Insert front drive sprocket in drive chain.
5. Install drive chain around rear drive sprocket.
6. Position rear drive sprocket (3) over the output shaft and lower the sprocket and chain assembly until the front sprocket is positioned over the front output shaft. Refer to **Fig. 77**.
7. Align the splines in the sprockets to the splines on the output shafts and install the sprockets onto the output shafts.

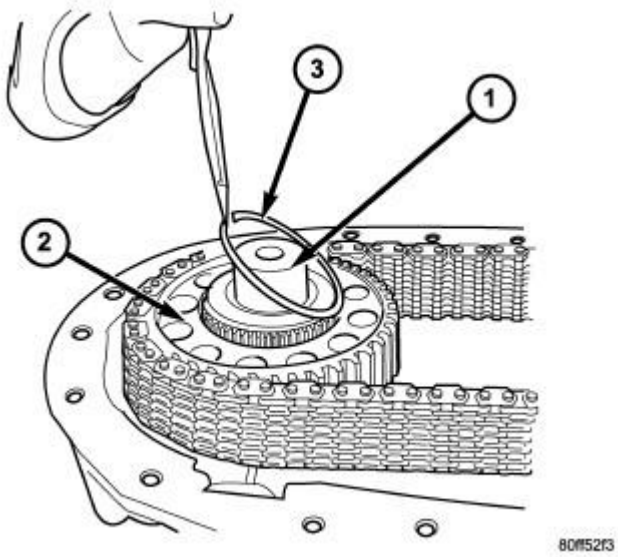

Fig. 78: Front Output Shaft, Drive Sprocket & Retaining Ring
Courtesy of CHRYSLER GROUP, LLC

1 - FRONT OUTPUT SHAFT
2 - DRIVE SPROCKET
3 - RETAINING RING

8. Install front sprocket retaining ring (3). Refer to **Fig. 78**.

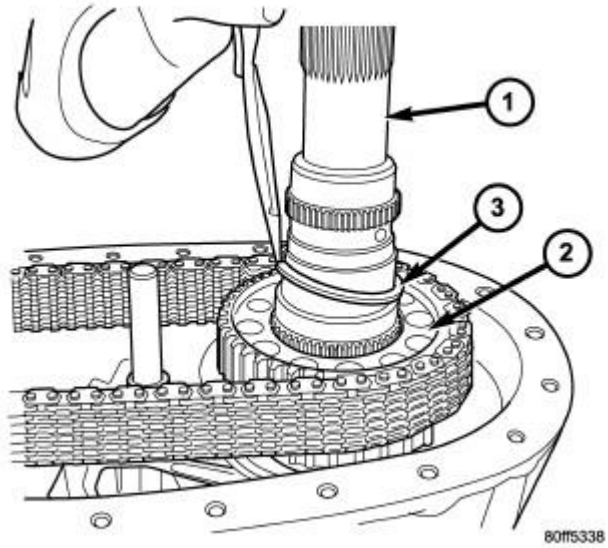

Fig. 79: Rear Output Shaft, Drive Sprocket & Retaining Ring
Courtesy of CHRYSLER GROUP, LLC

1 - REAR OUTPUT SHAFT

2 - DRIVE SPROCKET
3 - RETAINING RING

9. Install rear sprocket retaining ring (3). Refer to **Fig. 79**.

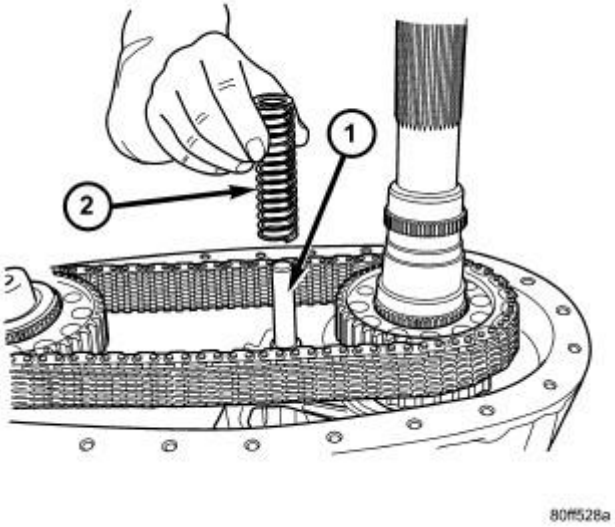

Fig. 80: Shift Rail & Spring
Courtesy of CHRYSLER GROUP, LLC

1 - SHIFT RAIL
2 - SPRING

10. Install spring (2) onto shift rail (1). Refer to **Fig. 80**.

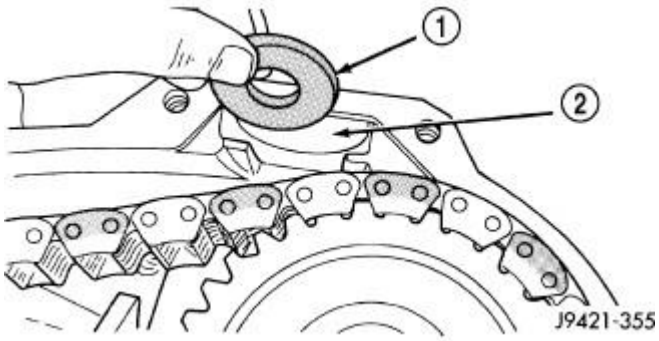

Fig. 81: Case Magnet Installation
Courtesy of CHRYSLER GROUP, LLC

1 - MAGNET
2 - CASE POCKET

11. Insert magnet (1) in front case pocket (2). Refer to **Fig. 81**.

REAR CASE

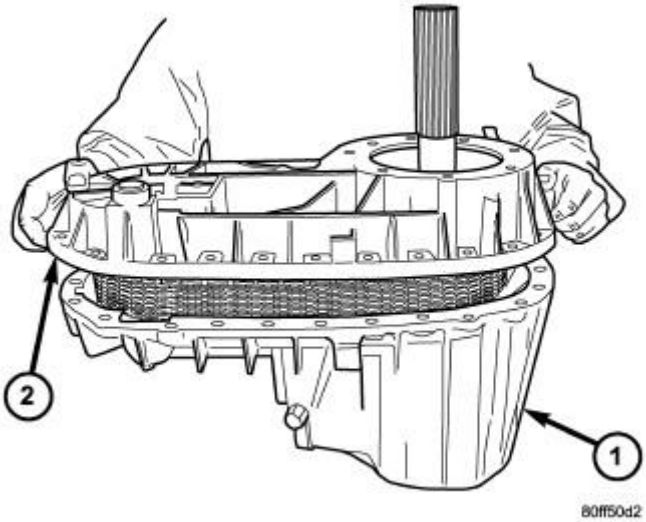

Fig. 82: Front & Rear Case Halves
Courtesy of CHRYSLER GROUP, LLC

1 - FRONT CASE HALF
2 - REAR CASE HALF

1. Install the oil pick-up tube and screen into the rear case half.
2. Apply bead of Mopar® Gasket Maker, or equivalent, to mating surface of front case. Keep sealer bead width to maximum of 3/16 inch. Do not use excessive amount of sealer as excess will be displaced into case interior.
3. Align mainshaft with he rear output shaft bearing and align shift rail with bore in rear case. Then install rear case (2). Refer to **Fig. 82**. Verify that the case alignment dowels correctly seat into their mating recesses.

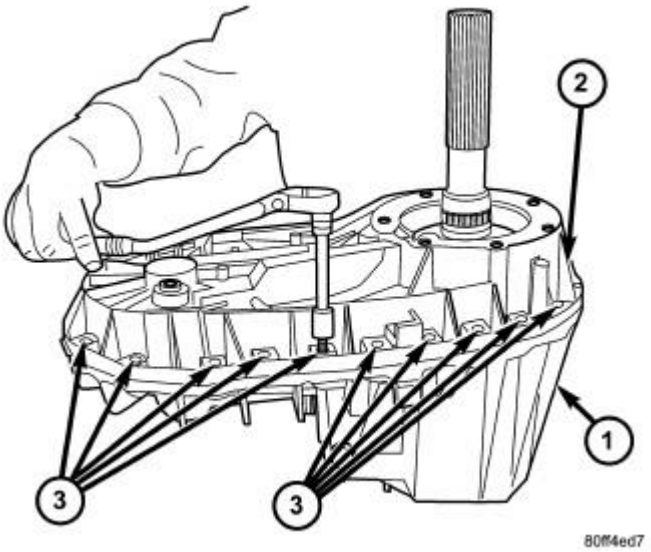

Fig. 83: Identifying Case Half Bolts
Courtesy of CHRYSLER GROUP, LLC

1 - FRONT CASE HALF
2 - REAR CASE HALF
3 - BOLTS

4. Install 4-5 rear case (2) -to- front case (1) bolts (3) to hold rear case in position. Refer to **Fig. 83**. Tighten bolts snug but not to specified torque at this time.

CAUTION: Verify that shift rail, and case alignment dowels are seated before installing any bolts. Case could be cracked if shaft rail or dowels are misaligned.

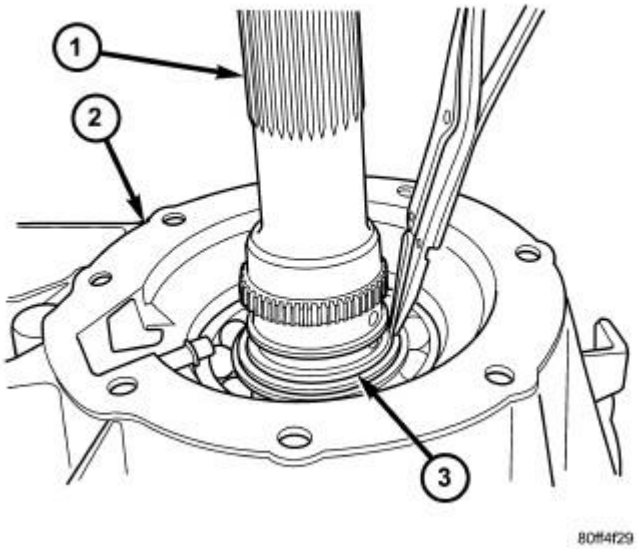

Fig. 84: Output Shaft, Rear Case Half & Snap-Ring
Courtesy of CHRYSLER GROUP, LLC

1 - OUTPUT SHAFT
2 - REAR CASE HALF
3 - SNAP-RING

5. Tighten bolts to 27-34 N.m (20-25 ft. lbs.).
6. Install rear output bearing inner snap-ring (3) to output shaft (1). Refer to **Fig. 84**.

OIL PUMP AND REAR EXTENSION

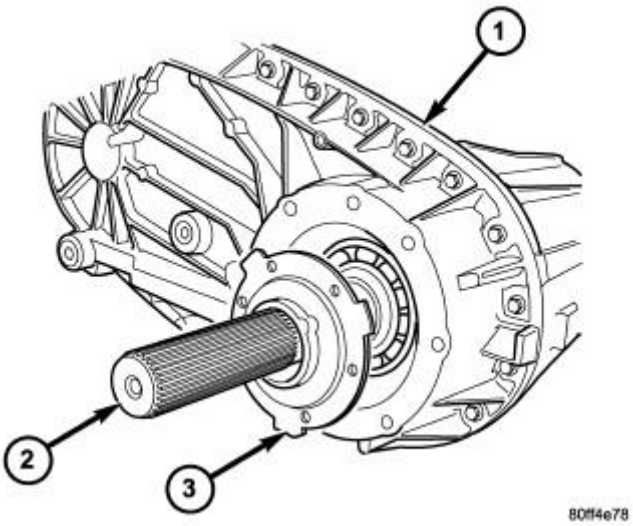

Fig. 85: Rear Case Half, Rear Output Shaft & Oil Pump

Courtesy of CHRYSLER GROUP, LLC

1 - REAR CASE HALF
2 - REAR OUTPUT SHAFT
3 - OIL PUMP

1. Install the oil pump (3) onto the output shaft (2). Refer to **Fig. 85**.

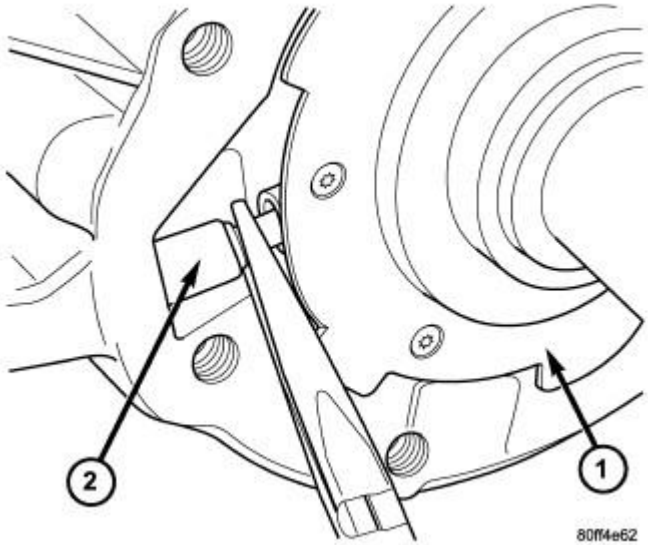

Fig. 86: Oil Pump Pick-Up Tube & Oil Pump
Courtesy of CHRYSLER GROUP, LLC

1 - OIL PUMP
2 - OIL PICK-UP TUBE

2. Engage the oil pump pick-up tube (2) into the oil pump (1). Refer to **Fig. 86**. Verify that the pick-up tube o-ring is on the tube and is correctly installed to the oil pump.

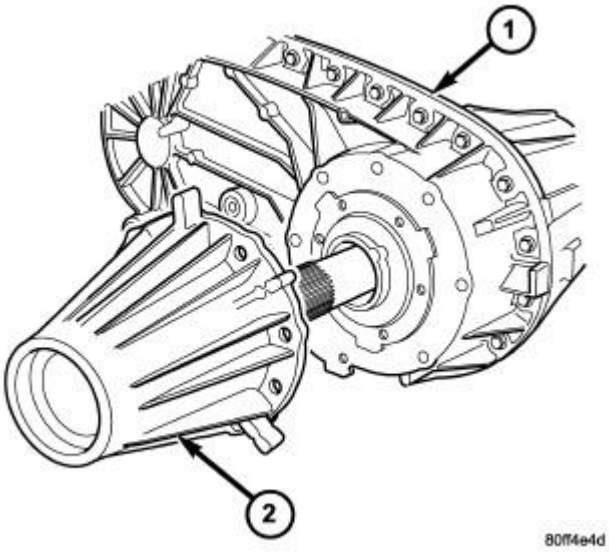

Fig. 87: Rear Case Half & Extension Housing
Courtesy of CHRYSLER GROUP, LLC

1 - REAR CASE HALF
2 - EXTENSION HOUSING

3. Apply bead of Mopar® Gasket Maker, or equivalent, to mating surface of rear extension housing. Keep sealer bead width to maximum of 3/16 inch. Do not use excessive amount of sealer as excess could be displaced into output bearing.
4. Install extension housing (2) onto the rear case half (1). Refer to **Fig. 87**.

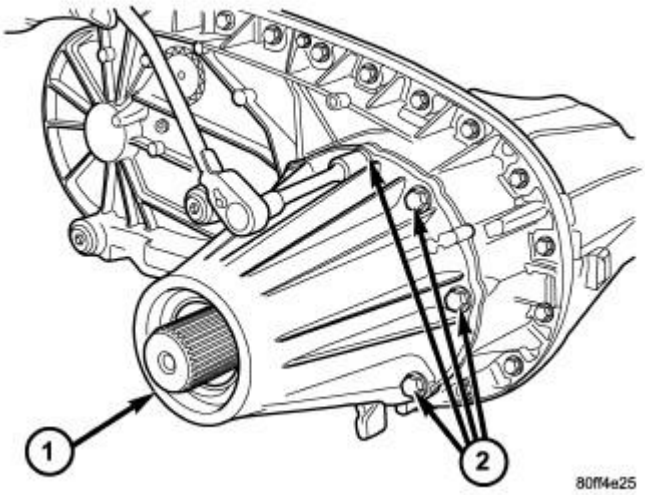

Fig. 88: Extension Housing & Bolts
Courtesy of CHRYSLER GROUP, LLC

1 - EXTENSION HOUSING
2 - BOLTS

5. Install rear extension bolts (2). Refer to **Fig. 88**. Tighten the bolts to 27-34 N.m (20-25 ft.lbs.).

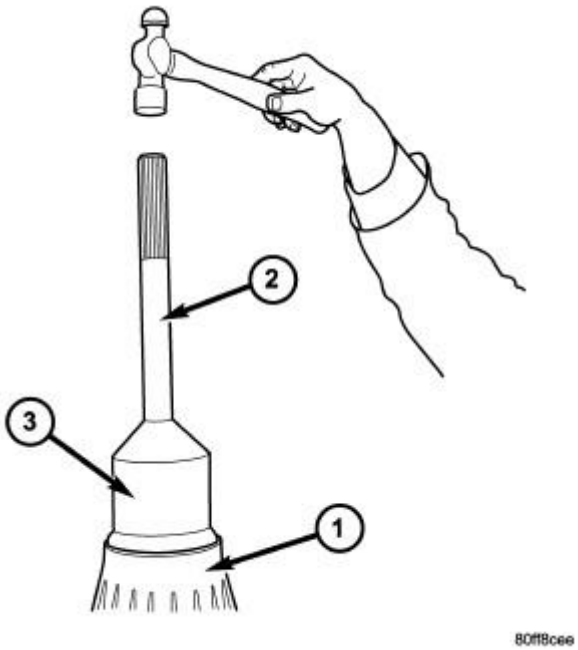

Fig. 89: Installing Extension Housing Seal
Courtesy of CHRYSLER GROUP, LLC

1 - EXTENSION HOUSING
2 - UNIVERSAL HANDLE C-4171
3 - SEAL INSTALLER 9037

6. Install the extension housing boot and seal assembly with Seal Installer (special tool #9037, Installer, Dust Boot/Seal) (3) and Universal Handle (special tool #C-4171, Driver Handle, Universal) (2). Refer to **Fig. 89**.

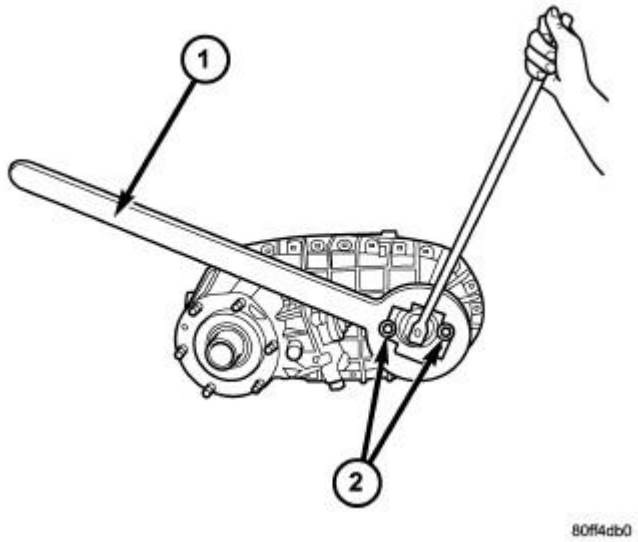

Fig. 90: Remove/Install Companion Flange Nut
Courtesy of CHRYSLER GROUP, LLC

1 - YOKE HOLDER 6719
2 - BOLTS

7. Install the front companion flange onto the front output shaft.
8. Install two bolts 180° apart into the front output shaft companion flange.
9. Place holder (1) over the bolts (2) and against the companion flange. Refer to **Fig. 90**.
10. Install a new front companion flange nut. Tighten the companion flange nut to 176-271 N.m (130-200 ft.lbs.).

INSTALLATION

INSTALLATION

1. Align and seat transfer case on transmission. Be sure transfer case input gear splines are aligned with transmission output shaft. Align splines by rotating transfer case rear output shaft yoke if necessary. Do not install any transfer case attaching nuts until the transfer case is completely seated against the transmission.
2. Install and tighten transfer case attaching nuts. Tighten nuts to 30-41 N.m (20-30 ft.lbs.).
3. Remove jack stand from under transmission.
4. Align and connect propeller shafts. Refer to **SHAFT, DRIVE, FRONT LIGHT DUTY, INSTALLATION** or **SHAFT, DRIVE, FRONT HEAVY DUTY, INSTALLATION** or **SHAFT, DRIVE, REAR LIGHT DUTY, INSTALLATION** or **SHAFT, DRIVE, REAR HEAVY DUTY, INSTALLATION** .
5. Connect vent hose and transfer case position sensor connector.
6. Connect shift rod to transfer case lever or floor shift arm. Use channel lock style pliers to press rod back

into lever grommet.

7. Adjust shift linkage, if necessary.
8. Fill transfer case with recommended transmission fluid and install fill plug.
9. Install skid plate, if equipped. Refer to **PLATE, SKID, TRANSFER CASE, INSTALLATION** .
10. Lower vehicle.

SPECIAL TOOLS

SPECIAL TOOLS

	6719A - Holder, Yoke (Originally Shipped In Kit Number(s) 6745, 6947, 6949, 9975.) 6953 - Remover/Installer, Bearing (Originally Shipped In Kit Number(s) 6945, 6947, 6949, 9975.) 7888 - Installer, Seal (Originally Shipped In Kit Number(s) 9975.) 8128 - Installer, Bearing (Originally Shipped In Kit Number(s) 8104, 9975.) 8148 - Cup (Originally Shipped In Kit Number(s) 8104, 9975.) 8151 - Installer, Bearing Cup (Originally Shipped In Kit Number(s) 8104.) 8152 - Installer, Seal (Originally Shipped In Kit Number(s) 8104, 9697, 9698.) 8891 - Installer, Seal (Originally Shipped In Kit Number(s) 8721, 8721CC, 8843, 9925, 9926.) 8992 - Remover, Pinion Flange (Originally Shipped In Kit Number(s) 8999, 8999CC, 9299, 9299CC, 9299CC, 9300A-CAN.) 9033 - Socket, Sector Support (Originally Shipped In Kit Number(s) 8848, 8849, 8849CC.) 9035 - Installer, Bearing (Originally Shipped In Kit Number(s) 8848, 8849, 8849CC.) 9036 - Installer, Seal (Originally Shipped In Kit Number(s) 8848, 8849, 8849CC.) 9037 - Installer, Dust Boot/Seal (Originally Shipped In Kit Number(s) 8848, 8849, 8849CC.) C-4171 - Driver Handle, Universal (Originally Shipped In Kit Number(s) 9202, 9202A-CAN, 9202CC, 9299, 9299CC, 9299CC, 9300A-CAN.) L-4454A - Remover, Bearing Cup (Originally Shipped In Kit Number(s) 9975.) MB-991168-A - Installer, Seal (Originally Shipped In Kit Number(s) 8847, 8853, 8854, 8854CC, 9975.)

FLUID

STANDARD PROCEDURE

STANDARD PROCEDURE - FLUID DRAIN AND REFILL

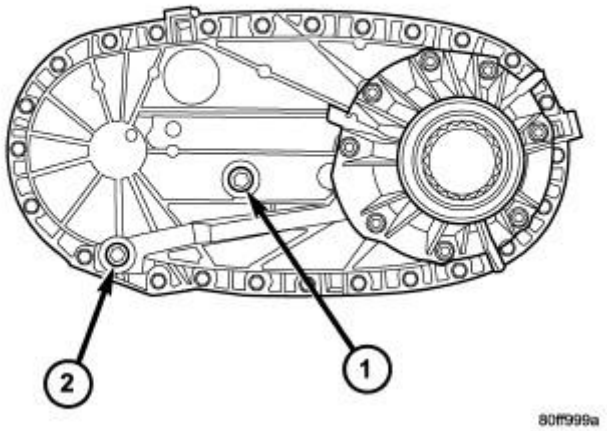

Fig. 91: Drain & Fill Holes
Courtesy of CHRYSLER GROUP, LLC

1 - FILL HOLE
2 - DRAIN HOLE

The fill (1) and drain (2) plugs are both in the rear case. Refer to **Fig. 91**.

1. Raise vehicle.
2. Position drain pan under transfer case.

NOTE: **It may be necessary to remove the exhaust y-pipe at the exhaust manifold to properly access the fill and drain plugs. Lowering the exhaust will allow the plugs to be accessed for torquing during installation. Refer to PIPE, EXHAUST, REMOVAL .**

3. Remove drain and fill plugs and drain lubricant completely.
4. Install drain plug. Tighten plug to 20-34 N.m (15-25 ft. lbs.).
5. Remove drain pan.
6. Fill transfer case to bottom edge of fill plug opening with Mopar® ATF +4, Automatic Transmission fluid.
7. Install and tighten fill plug to 20-34 N.m (15-25 ft. lbs.).

8. Install the exhaust y-pipe to the exhaust manifold, if removed. Refer to **PIPE, EXHAUST, INSTALLATION** .
9. Wipe any excess fluid that may have spilled onto the exhaust.
10. Lower vehicle.

LEVER, TRANSFER CASE

ADJUSTMENTS

ADJUSTMENTS

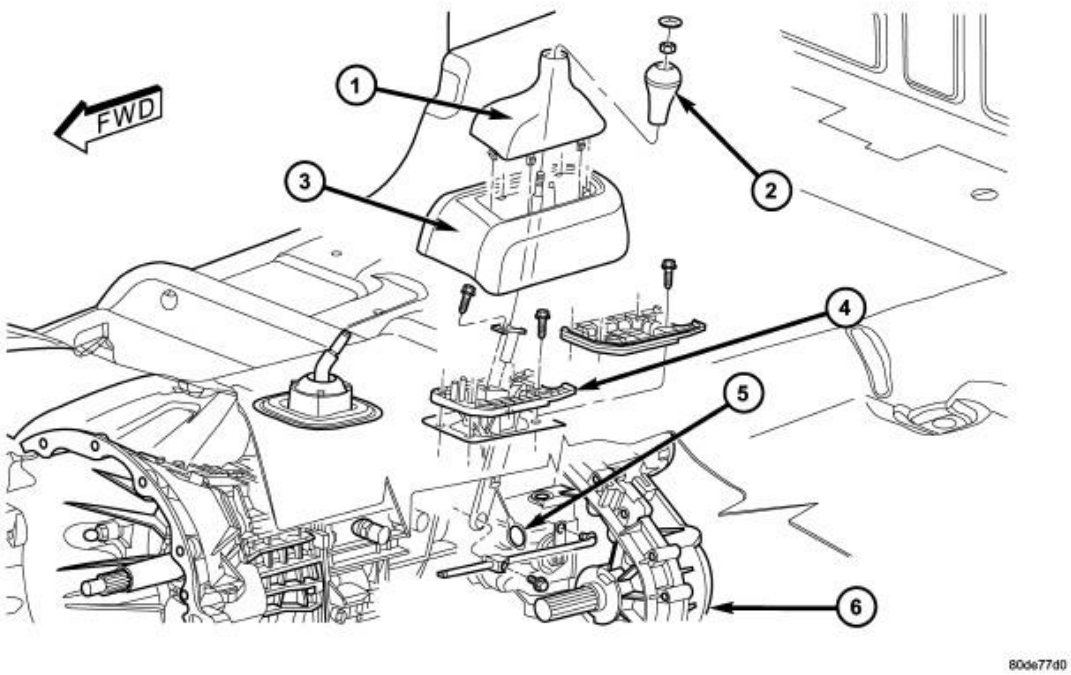

Fig. 92: Transfer Case Shifter Components
Courtesy of CHRYSLER GROUP, LLC

1 - SHIFTER BOOT	4 - SHIFTER MECHANISM
2 - SHIFTER KNOB	5 - ALIGNMENT PIN
3 - SHIFTER CONSOLE	6 - TRANSFER CASE

1. Move shift lever into 2H position.
2. Raise vehicle.
3. Loosen shift rod lock bolt at trunnion.
4. Check shift rod fit in trunnion. Be sure rod does not bind in trunnion. Lubricate the shift rod and trunnion if necessary.
5. Verify that transfer case shift lever is in 2H detent position. The 2H detent position on the transfer case shift arm is the second position from full forward.

6. Align the adjustment locating hole on the lower shifter lever with the adjustment channel on the shifter bracket assembly. Refer to **Fig. 92**.
7. Insert an appropriately sized pin through into the adjustment channel and through the locating hole to hold the shifter in the correct position.
8. Tighten shift rod lock bolt to 10 N.m (90 in. lbs.) torque.
9. Remove the locating pin from the adjustment channel and locating hole.
10. Check shift linkage operation. Be sure transfer case shifts into and operates properly in all ranges.

REMOVAL

REMOVAL

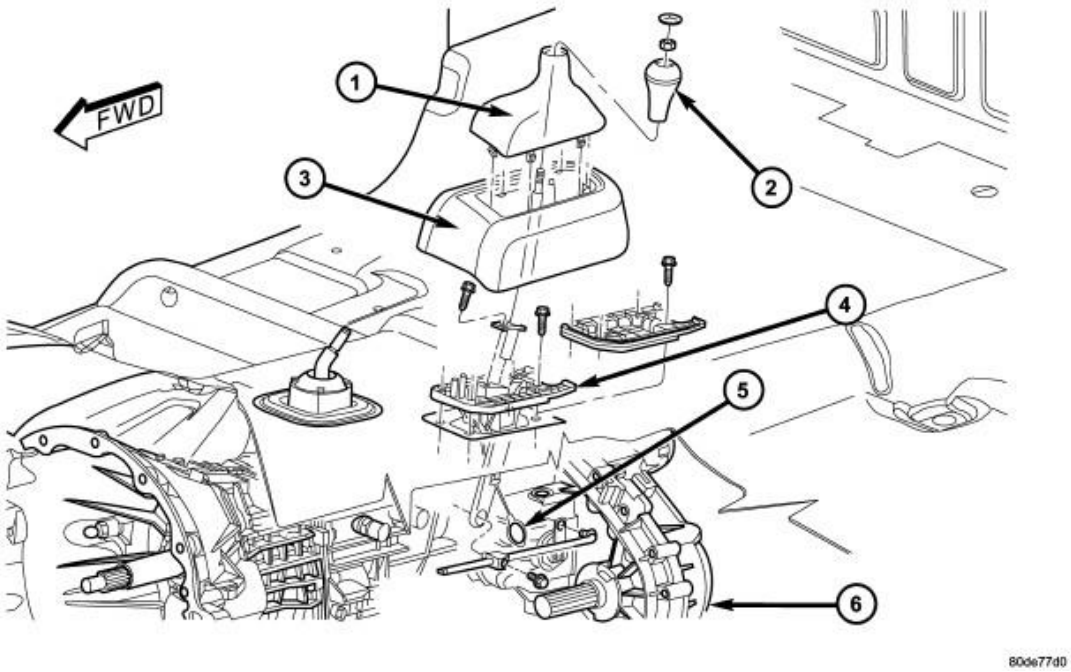

Fig. 93: Transfer Case Shifter Components
Courtesy of CHRYSLER GROUP, LLC

1 - SHIFTER BOOT	4 - SHIFTER MECHANISM
2 - SHIFTER KNOB	5 - ALIGNMENT PIN
3 - SHIFTER CONSOLE	6 - TRANSFER CASE

1. Shift transfer case into 2H.
2. Raise and support the vehicle.
3. Loosen adjusting trunnion lock bolt and slide shift rod out of trunnion. If rod lacks enough travel to come out of trunnion, push trunnion out of shift lever.
4. Lower vehicle.
5. Remove transfer case shifter knob cap.

6. Remove nut holding shifter knob (2) to shift lever. Refer to **Fig. 93**.
7. Remove shifter knob.
8. Remove the shift boot from the shifter console.
9. Remove the bolts securing the shifter mechanism to the floor pan.
10. Separate shift lever mechanism from the vehicle.

INSTALLATION

INSTALLATION

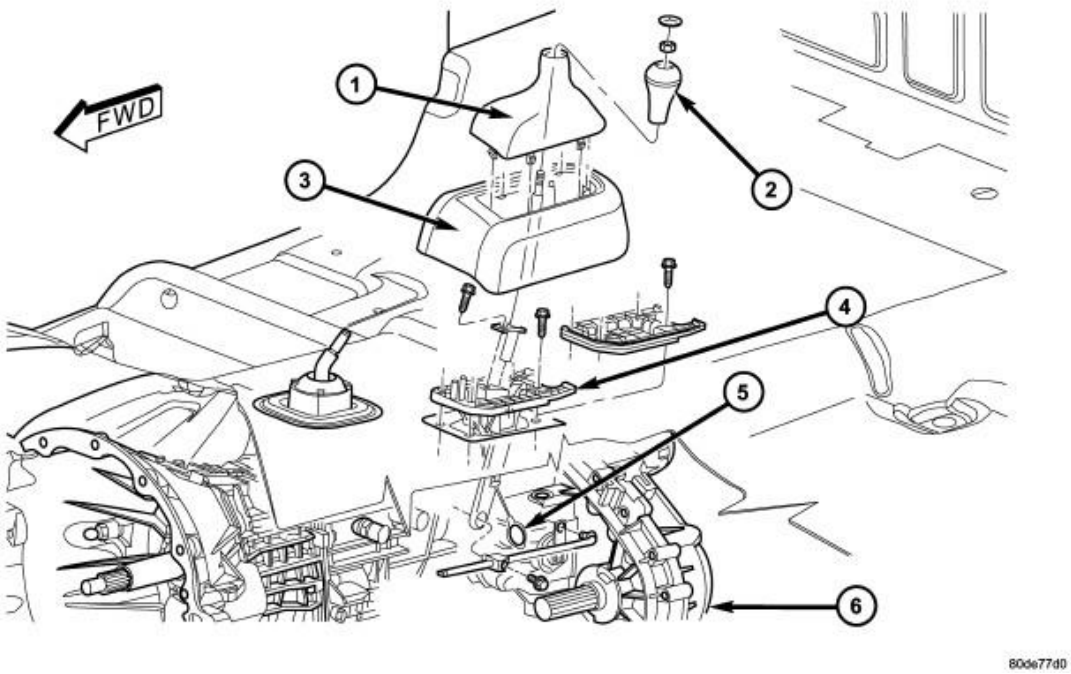

Fig. 94: Transfer Case Shifter Components
Courtesy of CHRYSLER GROUP, LLC

1 - SHIFTER BOOT	4 - SHIFTER MECHANISM
2 - SHIFTER KNOB	5 - ALIGNMENT PIN
3 - SHIFTER CONSOLE	6 - TRANSFER CASE

1. If the shifter mechanism does not have a adjustment locating pin installed, align the adjustment channel on the shifter assembly to the locating hole in the lower shift lever and install an appropriately sized pin to retain the position.
2. Position shift lever in vehicle.
3. Install the bolts to hold the shifter mechanism (4) to the floor pan. Refer to **Fig. 94**.
4. Raise vehicle.
5. Verify that the transfer case is still in the 2H position. The 2H detent position on the transfer case shift arm is the second position from full forward.

6. Install trunnion to shift lever, if necessary.
7. Install shift rod to trunnion, if necessary.
8. Tighten the shift rod lock bolt to 10 N.m (90 in.lbs.).
9. Remove the shifter adjustment locating pin from the adjustment channel and the locating hole.
10. Lower vehicle.
11. Install the transfer case shifter console.
12. Install the shifter boot and the shifter knob onto the shifter lever.
13. Install nut to hold shifter knob to shift lever.
14. Install shifter knob cap.
15. Verify transfer case operation.

SEAL, OUTPUT SHAFT, FRONT

REMOVAL

REMOVAL

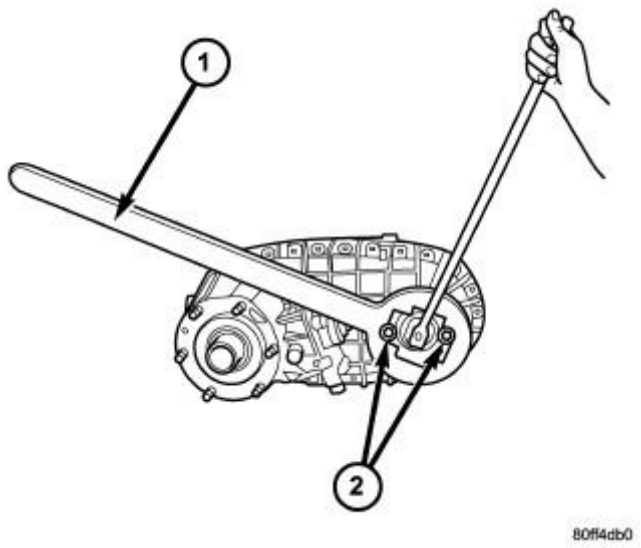

Fig. 95: Remove/Install Companion Flange Nut
Courtesy of CHRYSLER GROUP, LLC

1 - YOKE HOLDER 6719
2 - BOLTS

1. Remove the front propeller shaft. Refer to **SHAFT, DRIVE, FRONT LIGHT DUTY, REMOVAL** or **SHAFT, DRIVE, FRONT HEAVY DUTY, REMOVAL** .
2. Install two bolts 180° apart into the front output shaft companion flange.
3. Place Yoke Holder (special tool #6719A, Holder, Yoke) (1) over the bolts (2) and against the companion

flange. Refer to **Fig. 95**.

4. Remove and discard the front companion flange nut.
5. Remove the companion flange from the front output shaft. It may be necessary to use Pinion Flange Remover (special tool #8992, Remover, Pinion Flange) to remove the companion flange.
6. Using a screw and a slide hammer, remove the front output shaft seal.

INSTALLATION

INSTALLATION

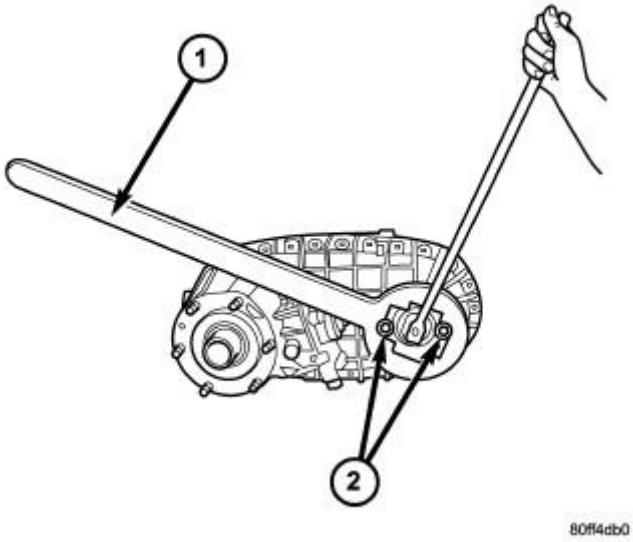

Fig. 96: Remove/Install Companion Flange Nut
Courtesy of CHRYSLER GROUP, LLC

1 - YOKE HOLDER 6719
2 - BOLTS

1. Install the new front output shaft seal with Seal Installer (special tool #MB-991168-A, Installer, Seal).
2. Install the front companion flange onto the front output shaft.
3. Install two bolts 180° apart into the front output shaft companion flange.
4. Place Yoke Holder (special tool #6719A, Holder, Yoke) (1) over the bolts (2) and against the companion flange. Refer to **Fig. 96**.
5. Install a new front companion flange nut. Tighten the companion flange nut to 176-271 N.m (130-200 ft.lbs.).
6. Install front propeller shaft. Refer to **SHAFT, DRIVE, FRONT LIGHT DUTY, INSTALLATION** or **SHAFT, DRIVE, FRONT HEAVY DUTY, INSTALLATION** .

SEAL, OUTPUT SHAFT, WITH DUST BOOT

REMOVAL

REMOVAL

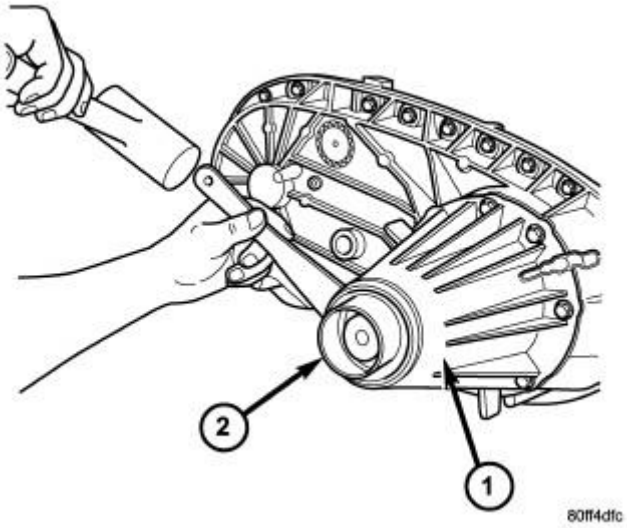

Fig. 97: Removing Extension Housing Dust Boot
Courtesy of CHRYSLER GROUP, LLC

1 - EXTENSION HOUSING
2 - DUST BOOT

1. Raise and support vehicle.
2. Remove rear propeller shaft. Refer to **SHAFT, DRIVE, REAR LIGHT DUTY, REMOVAL** or **SHAFT, DRIVE, REAR HEAVY DUTY, REMOVAL** .
3. Use a suitable chisel or pry tool to remove the rear extension housing dust boot (2). Refer to **Fig. 97**.
4. Use a suitable chisel or pry tool to remove the rear extension housing seal.

INSTALLATION

INSTALLATION

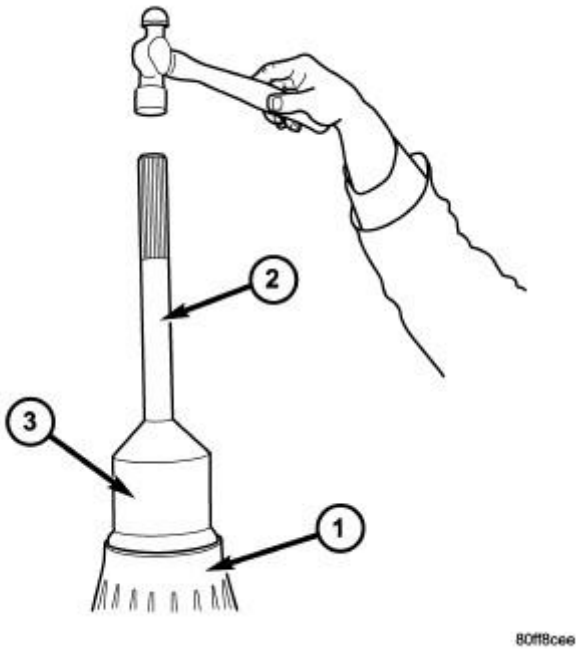

Fig. 98: Installing Extension Housing Seal
Courtesy of CHRYSLER GROUP, LLC

1 - EXTENSION HOUSING
2 - UNIVERSAL HANDLE C-4171
3 - SEAL INSTALLER 9037

1. Clean fluid residue from sealing surface and inspect for defects.
2. Install the extension housing dust boot and seal assembly with Seal Installer (special tool #9037, Installer, Dust Boot/Seal) (3) and Universal Handle (special tool #C-4171, Driver Handle, Universal) (2). Refer to **Fig. 98**.
3. Install rear propeller shaft. Refer to **SHAFT, DRIVE, REAR LIGHT DUTY, INSTALLATION** or **SHAFT, DRIVE, REAR HEAVY DUTY, INSTALLATION** .
4. Verify proper transfer case fluid level.
5. Lower vehicle.

SENSOR, POSITION

DESCRIPTION

DESCRIPTION

The transfer case position sensor is an electronic device whose output can be interpreted to indicate the transfer case's current operating mode. The sensor consists of a five position, resistive multiplexed circuit which returns a specific resistance value to the Powertrain Control Module (PCM) for each transfer case operating mode. The sensor is located on the top of the transfer case, just left of the transfer case centerline and rides against the

sector plate roostercomb. The PCM supplies 5VDC (+/- 0.5V) to the sensor and monitors the return voltage to determine the sector plate, and therefore the transfer case, position.

OPERATION

OPERATION

OPERATING MODE VERSUS RESISTANCE

SENSOR POSITION	OPERATING MODE	SENSOR RESISTANCE (ohms)
1	2H	1172-1195
2	4H	677-691
3	NEUTRAL	406-415
4	4L	208-213
5	NOT USED	60-61

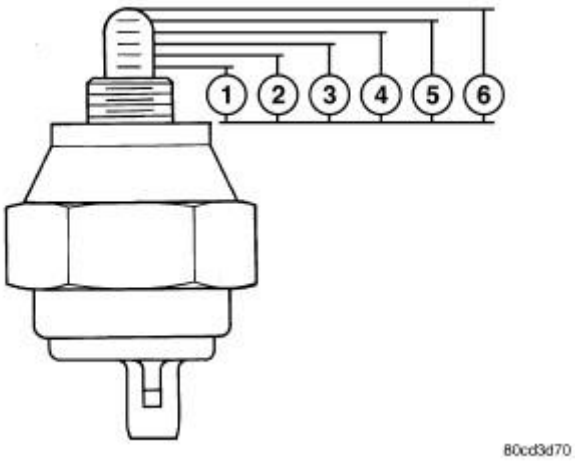

Fig. 99: Identifying Position Sensor Linear Movement
Courtesy of CHRYSLER GROUP, LLC

1 - POSITION 1 - 10mm ±0.5mm
2 - POSITION 2 - 12mm ±0.5mm
3 - POSITION 3 - 14mm ±0.5mm
4 - POSITION 4 - 16mm ±0.5mm
5 - POSITION 5 - 18mm ±0.5mm
6 - POSITION 6 - 20mm±0.5mm - FULL EXTENSION

During normal vehicle operation, the Powertrain Control Module (PCM) monitors the transfer case position sensor return voltage to determine the operating mode of the transfer case. For the correct resistance for each position, refer to **OPERATING MODE VERSUS RESISTANCE** and **Fig. 99**.

REMOVAL

REMOVAL

1. Raise and support the vehicle.
2. Disengage the transfer case position sensor connector from the position sensor.
3. Remove the position sensor from the transfer case.

INSTALLATION

INSTALLATION

1. Inspect the o-ring seal on the transfer case position sensor. Replace the o-ring if necessary.
2. Install the transfer case position sensor into the transfer case. Torque the sensor to 27 N.m (20 ft.lbs.).
3. Engage the transfer case position sensor connector to the position sensor.
4. Lower vehicle.
5. Verify proper sensor operation.

DESCRIPTION

DESCRIPTION

The NV273 is an electronically controlled part-time transfer case with a low range gear reduction system. The NV273 has three operating ranges plus a NEUTRAL position. The low range system provides a gear reduction ratio for increased low speed torque capability.

The geartrain is mounted in two aluminum case halves attached with bolts. The mainshaft front and rear bearings are mounted in aluminum case halves.

OPERATING RANGES

Transfer case operating ranges are:

- 2WD (2-wheel drive).
- 4HI (4-wheel drive).
- 4LO (4-wheel drive low range).
- NEUTRAL.

The 2WD range is for use on any road surface at any time.

The 4HI and 4LO ranges are for off road use only. They are not for use on hard surface roads. The only exception being when the road surface is wet or slippery or covered by ice and snow.

The low range reduction gear system is operative in 4LO range only. This range is for extra pulling power in off road situations. Low range reduction ratio is 2.72:1.

SHIFT MECHANISM

Operating ranges are selected with a dash mounted shift selector switch. The shift selector switch provides a input to the Transfer Case Control Module (TCCM) to indicate the driver's desire to change operating ranges. The TCCM uses this input, along with input from the transfer case mounted mode sensor and information from the vehicle's bus, to determine if a shift is permitted. If the TCCM decides the shift is permitted, the TCCM controls the shift motor, mounted to the exterior of the transfer case, to perform the shift.

IDENTIFICATION

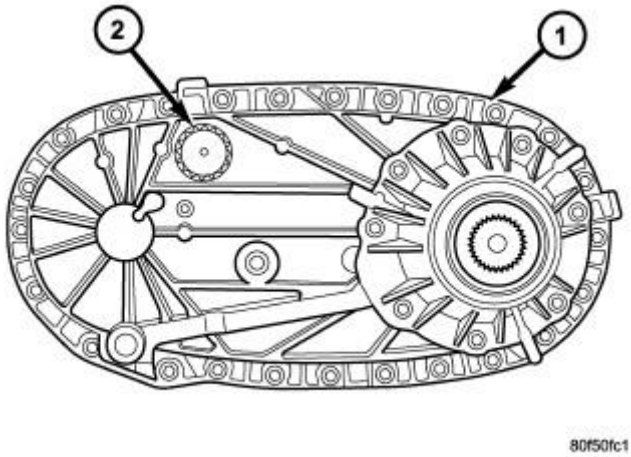

Fig. 1: Transfer Case - Rear View
Courtesy of CHRYSLER GROUP, LLC

1 - TRANSFER CASE
2 - IDENTIFICATION TAG

A circular ID tag (2) is attached to the rear case of each transfer case. The ID tag provides the transfer case model number, assembly number, serial number, and low range ratio.

The transfer case serial number also represents the date of build.

OPERATION

OPERATION

The input gear is splined to the transmission output shaft. The input gear drives the mainshaft through the planetary assembly and range sleeve. The front output shaft is operated by a drive chain that connects the shaft to a drive sprocket on the mainshaft. The drive sprocket is engaged/disengaged by the mode fork, which operates the mode sleeve and hub. The sleeve and hub are not equipped with a synchronizer mechanism for shifting.

DIAGNOSIS AND TESTING

DIAGNOSIS AND TESTING - TRANSFER CASE - NV273

DIAGNOSIS CHART

Condition	Possible Cause	Correction
Transfer case difficult to shift or will not shift into desired range.	1) Transfer case electronically controlled shift system malfunction.	1) Check for Transfer Case DTCs. Refer to the appropriate Electrical Diagnostic article. Depending on vehicle configuration (FCM, FDCM, or DTCM), perform the

		appropriate diagnostic procedure and verification test.
	2) If vehicle was operated for an extended period in 4HI mode on dry surface, driveline torque load may cause difficulty.	2) Drive the vehicle in a straight line and momentarily release the accelerator. The transfer case can then be shifted to the desired mode.
	3) Insufficient or incorrect lubricant.	3) Drain and refill transfer case with the correct quantity of Mopar® ATF +4, Automatic Transmission Fluid.
	4) Internal transfer case components binding, worn, or damaged.	4) Repair or replace components as necessary.
Transfer case noisy in all drive modes.	1) Insufficient or incorrect lubricant.	1) Drain and refill transfer case with the correct quantity of Mopar® ATF +4, type 9602, Automatic Transmission Fluid.
	2) Internal transfer case components binding, worn, or damaged.	2) Repair or replace components as necessary.
Transfer case noisy while in, or jumps out of, 4LO mode.	1) Transfer case not completely engaged in 4LO position.	1) While rolling 2-3 MPH and the transmission in NEUTRAL, or clutch depressed on vehicles equipped with a manual transmission, shift transfer case to the 2WD or 4HI position, and then back into the 4LO position.
	2) Range fork damaged, inserts worn, or fork is binding on the shift rail.	2) Repair or replace components as necessary.
	3) Low range gear worn or damaged.	3) Repair or replace components as necessary.
Lubricant leaking from transfer case seals or vent.	1) Transfer case overfilled.	1) Drain lubricant to the correct level.
	2) Transfer case vent closed or restricted.	2) Clean or replace vent as necessary.
	3) Transfer case seals damaged or installed incorrectly.	3) Replace suspect seal.
Abnormal tire wear.	1) Extended operation in 4HI mode on dry surfaces,	1) Operate vehicle in 2WD mode on dry surfaces.

SPECIFICATIONS

SPECIFICATIONS

DESCRIPTION	N-m	Ft. Lbs.	In. Lbs.
Plug, Detent	16-24	12-18	-
Plug, Drain/Fill	20-34	15-25	-
Bolt, Extension Housing	27-34	20-25	-
Bolt, Case Half	27-34	20-25	-
Support, Sector	27-34	20-25	-
Nuts, Mounting	30-41	20-30	-
Bolts, Shift Motor and Mode Sensor Assembly	16-25	12-18	-
Nut, Companion Flange	176-271	130-200	-
Bolts, Transfer Case to Transmission	16-24	12-18	

REMOVAL

REMOVAL

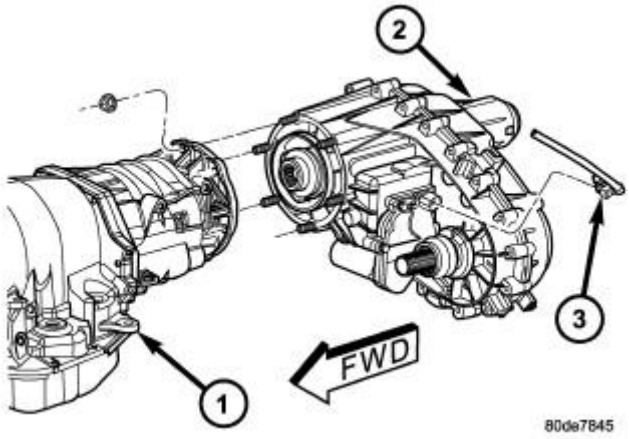

Fig. 2: Transmission, Transfer Case & Mode Sensor Connector
Courtesy of CHRYSLER GROUP, LLC

1 - TRANSMISSION
2 - TRANSFER CASE
3 - MODE SENSOR CONNECTOR

1. Shift transfer case into 2WD.
2. Raise vehicle.
3. Drain transfer case lubricant.
4. Remove the transfer case skid plate, if equipped.
5. Support transmission with jack stand.

6. Remove crossmember and transmission mount.
7. Mark front and rear propeller shafts for alignment reference.
8. Remove front and rear propeller shafts.
9. Disconnect transfer case shift motor and mode sensor wire connectors (3). Refer to **Fig. 2**.
10. Disconnect transfer case vent hose.
11. Support transfer case with transmission jack.
12. Secure transfer case to jack with chains.
13. Remove nuts attaching transfer case (2) to transmission (1).
14. Pull transfer case and jack rearward to disengage transfer case.
15. Remove transfer case from under vehicle.

DISASSEMBLY

DISASSEMBLY

Position transfer case in a shallow drain pan. Remove drain plug and drain any remaining lubricant remaining in case.

COMPANION FLANGE AND EXTENSION HOUSING

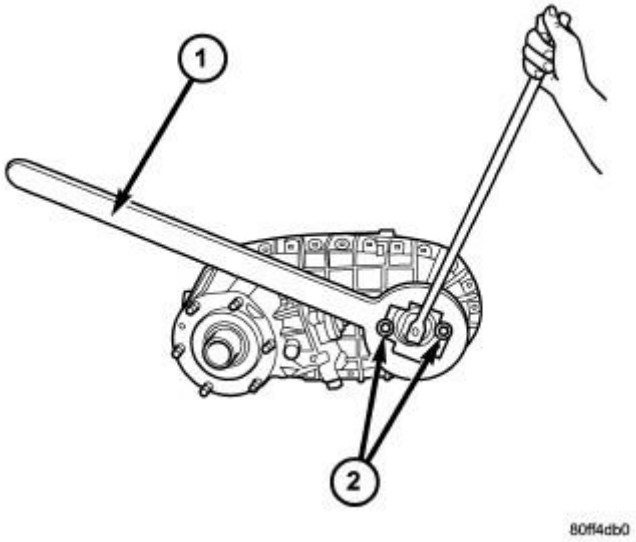

Fig. 3: Removing/Installing Companion Flange Nut
Courtesy of CHRYSLER GROUP, LLC

1 - YOKE HOLDER 6719
2 - BOLTS

1. Install two bolts 180° apart into the front output shaft companion flange.

2. Place holder (1) over the bolts (2) and against the companion flange. Refer to **Fig. 3**.
3. Remove and discard the front companion flange nut.
4. Remove the companion flange from the front output shaft. It may be necessary to use Pinion Flange Remover (special tool #8992, Remover, Pinion Flange) to remove the companion flange.

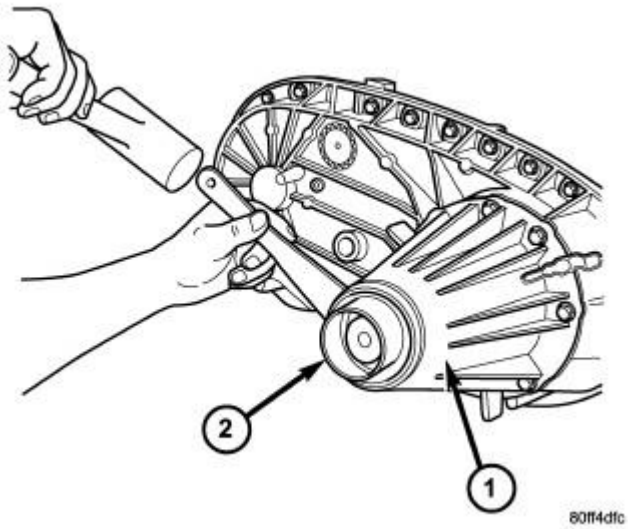

Fig. 4: Removing Extension Housing Dust Boot
Courtesy of CHRYSLER GROUP, LLC

1 - EXTENSION HOUSING
2 - DUST BOOT

5. Use a suitable chisel or pry tool to remove the rear extension housing (1) dust boot (2). Refer to **Fig. 4**.
6. Use a suitable chisel or pry tool to remove the rear extension housing seal.

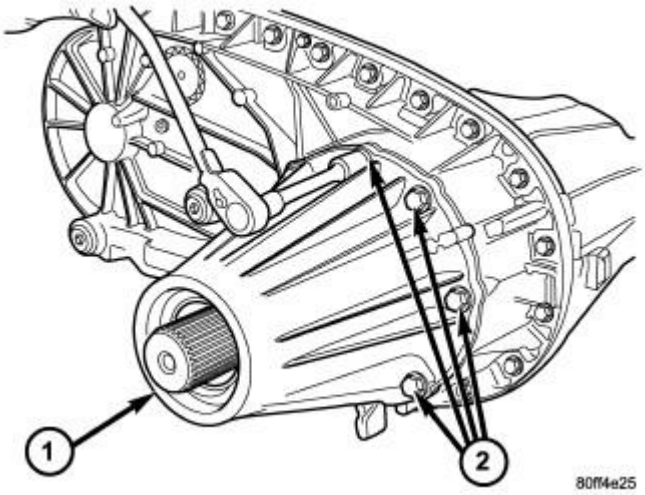

Fig. 5: Extension Housing & Bolts
Courtesy of CHRYSLER GROUP, LLC

1 - EXTENSION HOUSING
2 - BOLTS

7. Remove rear extension (1) bolts (2). Refer to **Fig. 5**.

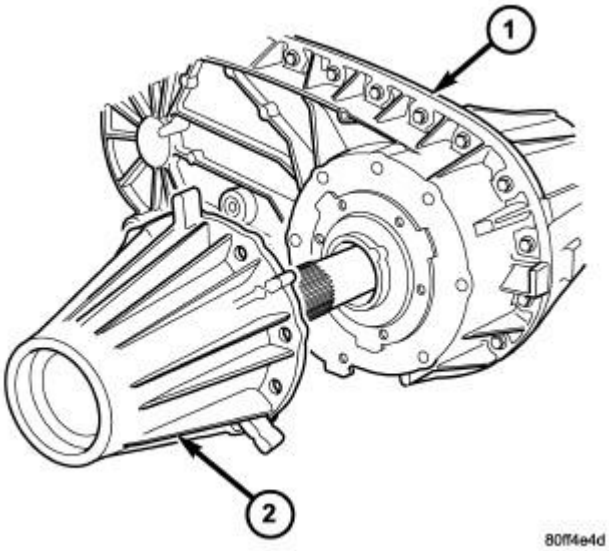

Fig. 6: Rear Case Half & Extension Housing
Courtesy of CHRYSLER GROUP, LLC

1 - REAR CASE HALF
2 - EXTENSION HOUSING

8. Remove rear extension housing (2). Refer to **Fig. 6**. Tap extension once or twice with a plastic mallet to break sealer bead and loosen it.

OIL PUMP AND REAR CASE

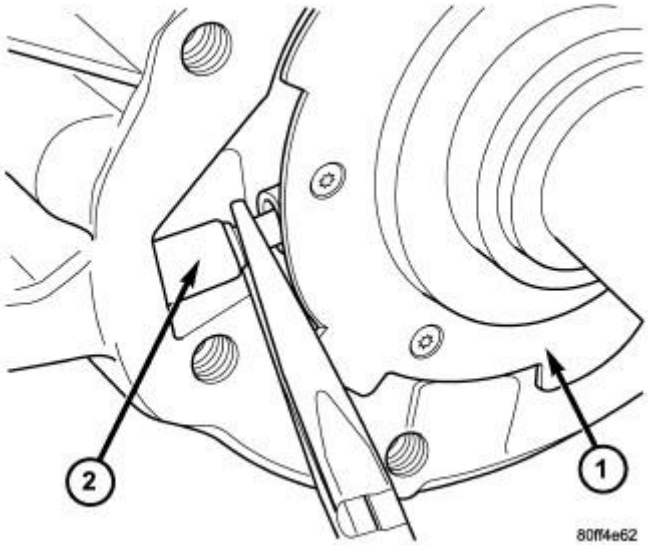

Fig. 7: Oil Pump Pick-Up Tube & Oil Pump
Courtesy of CHRYSLER GROUP, LLC

1 - OIL PUMP
2 - OIL PICK-UP TUBE

1. Disengage the oil pump pick-up tube (2) from the oil pump (1). Refer to **Fig. 7**.

NOTE: **The oil pump pick-up tube seals to the oil pump with an o-ring. Verify that the o-ring was removed with the tube and is in good condition. Replace the o-ring if necessary.**

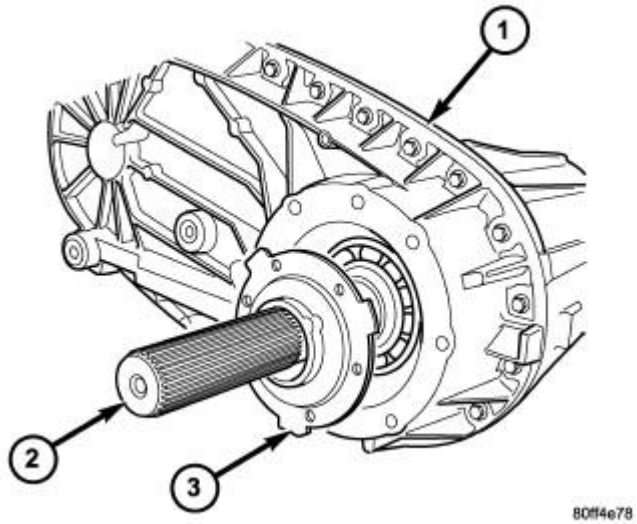

Fig. 8: Rear Case Half, Rear Output Shaft & Oil Pump
Courtesy of CHRYSLER GROUP, LLC

1 - REAR CASE HALF
2 - REAR OUTPUT SHAFT
3 - OIL PUMP

2. Remove the oil pump (3). Refer to **Fig. 8**.

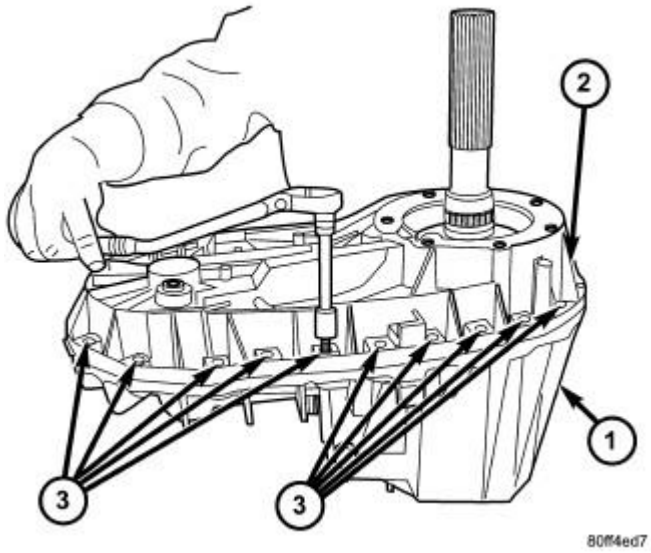

Fig. 9: Front Case Half, Rear Case Half & Bolts
Courtesy of CHRYSLER GROUP, LLC

1 - FRONT CASE HALF

2 - REAR CASE HALF
3 - BOLTS

3. Remove rear case (2) -to-front case (1) bolts (3). Refer to **Fig. 9**.

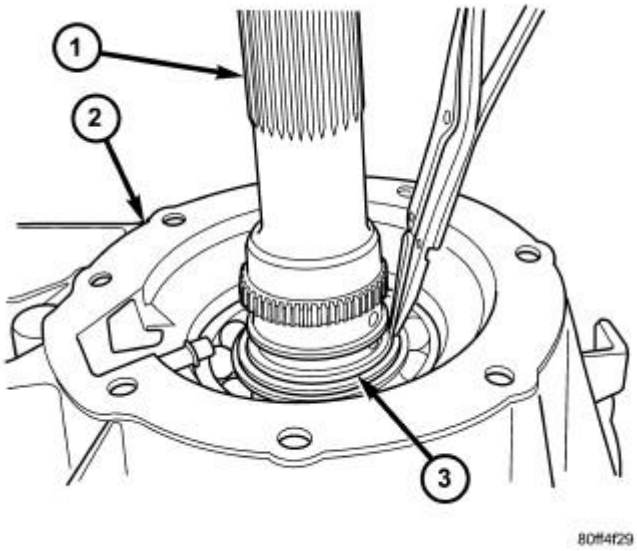

Fig. 10: Output Shaft, Rear Case Half & Snap-Ring
Courtesy of CHRYSLER GROUP, LLC

1 - OUTPUT SHAFT
2 - REAR CASE HALF
3 - SNAP-RING

4. Remove the rear output shaft bearing inner snap-ring (3) from the output shaft (1) using suitable snap-ring pliers. Refer to **Fig. 10**.

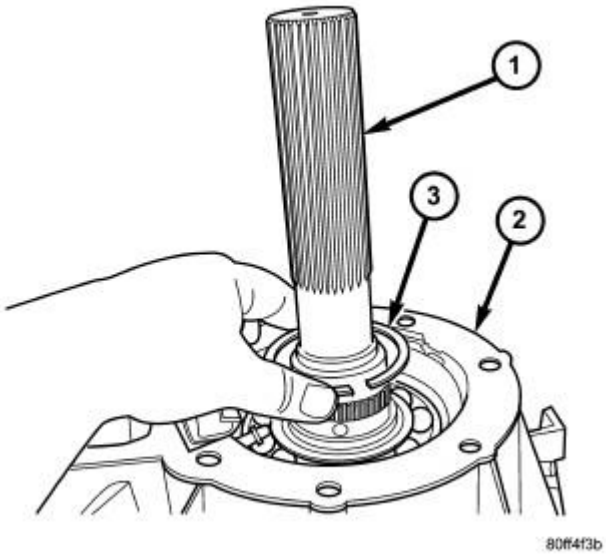

Fig. 11: Output Shaft, Rear Case Half & Snap Ring
Courtesy of CHRYSLER GROUP, LLC

1 - OUTPUT SHAFT
2 - REAR CASE HALF
3 - SNAP-RING

5. Remove the rear output shaft bearing inner snap-ring (3) from the output shaft (1). Refer to **Fig. 11**.

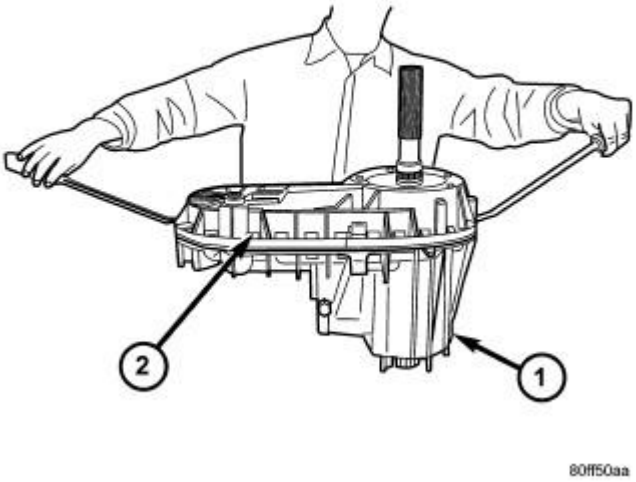

Fig. 12: Separating Front & Rear Case Halves
Courtesy of CHRYSLER GROUP, LLC

1 - FRONT CASE HALF

2 - REAR CASE HALF

6. Loosen rear case (2) from front case (1) with pry tool to break sealer bead. Refer to **Fig. 12**. Insert tool at each end of case.

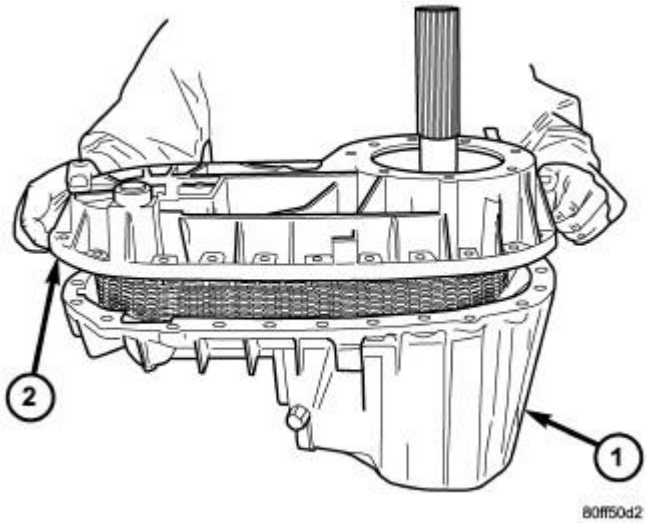

Fig. 13: Front & Rear Case Halves
Courtesy of CHRYSLER GROUP, LLC

1 - FRONT CASE HALF
2 - REAR CASE HALF

7. Unseat rear case from alignment dowels.
8. Remove the rear case (2) from the front case (1). Refer to **Fig. 13**.

FRONT OUTPUT SHAFT AND DRIVE CHAIN

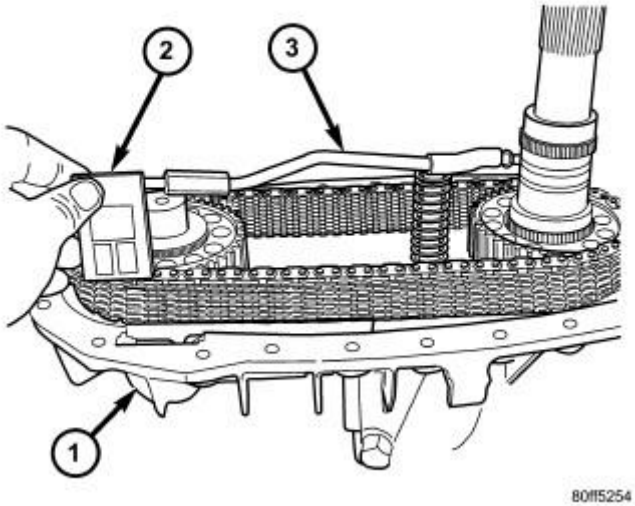

Fig. 14: Oil Pick-Up Tube & Screen
Courtesy of CHRYSLER GROUP, LLC

1 - FRONT CASE HALF
2 - OIL SCREEN
3 - PICK-UP TUBE

1. Remove the oil pick-up tube (3) and screen from the front case half (1). Refer to **Fig. 14**.

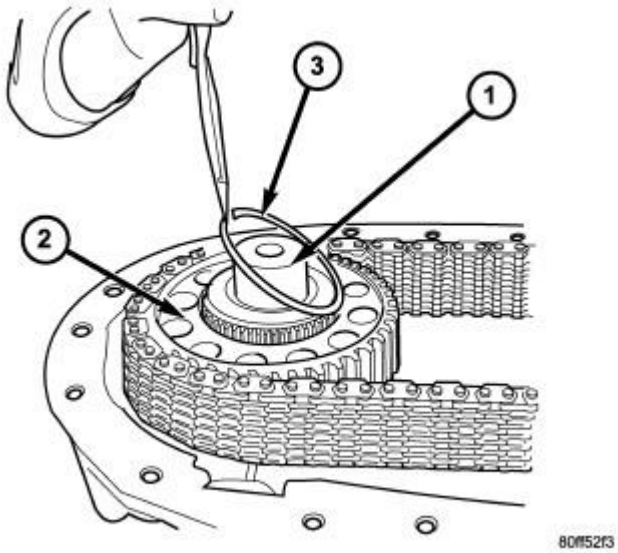

Fig. 15: Front Output Shaft, Drive Sprocket & Retaining Ring
Courtesy of CHRYSLER GROUP, LLC

1 - FRONT OUTPUT SHAFT

2 - DRIVE SPROCKET
3 - RETAINING RING

2. Remove the front output shaft (1) drive sprocket (2) retaining ring (3). Refer to **Fig. 15**.

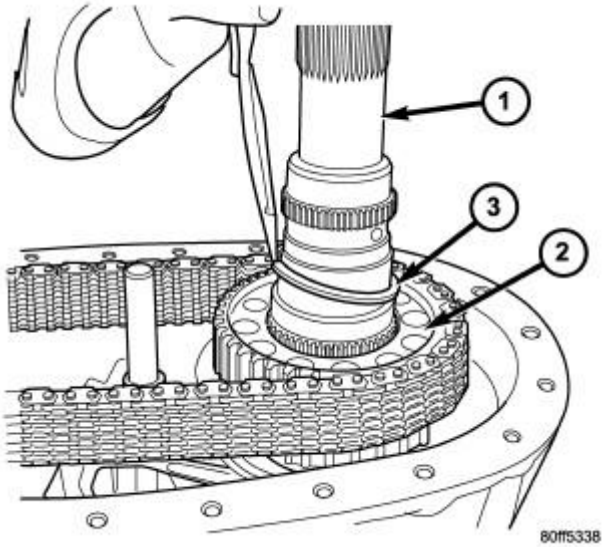

Fig. 16: Rear Output Shaft, Drive Sprocket & Retaining Ring
Courtesy of CHRYSLER GROUP, LLC

1 - REAR OUTPUT SHAFT
2 - DRIVE SPROCKET
3 - RETAINING RING

3. Remove the rear output shaft (1) drive sprocket (2) retaining ring (3). Refer to **Fig. 16**.

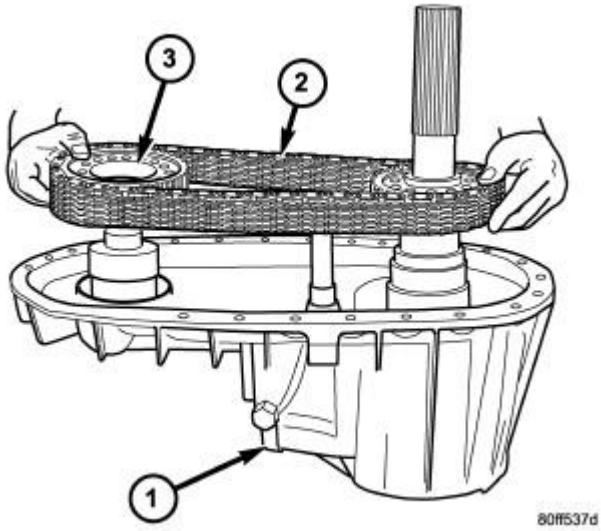

Fig. 17: Drive Chain & Sprockets
Courtesy of CHRYSLER GROUP, LLC

1 - FRONT CASE HALF
2 - CHAIN
3 - DRIVE SPROCKETS

4. Pull front sprocket (3), rear sprocket, and chain (2) upward until clear of the front and rear output shaft sprocket splines. Refer to **Fig. 17**.
5. Remove chain and sprockets as an assembly.

SHIFT FORKS AND MAINSHAFT

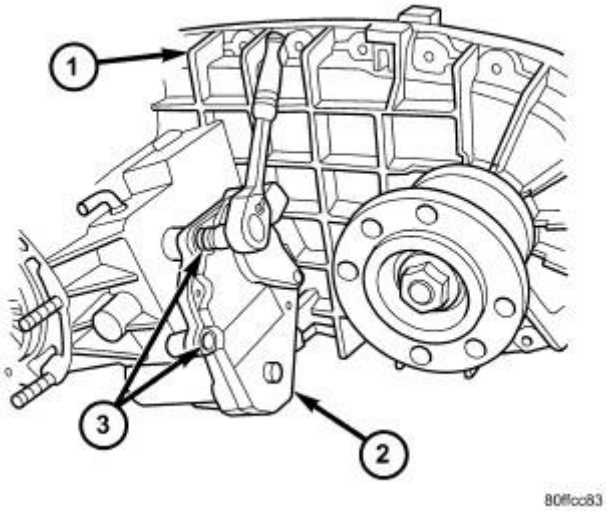

Fig. 18: Shift Motor Assembly & Bolts
Courtesy of CHRYSLER GROUP, LLC

1 - TRANSFER CASE
2 - SHIFT MOTOR ASSEMBLY
3 - BOLTS

1. Remove the bolts (3) that hold the shift motor assembly (2) to the transfer case (1). Refer to **Fig. 18**.

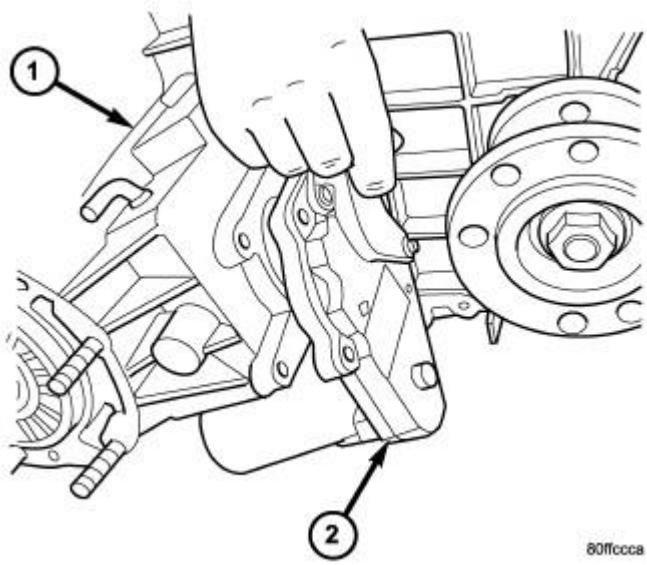

Fig. 19: Transfer Case & Shift Motor Assembly
Courtesy of CHRYSLER GROUP, LLC

1 - TRANSFER CASE
2 - SHIFT MOTOR ASSEMBLY

2. Remove the shift motor assembly (2) from the transfer case (1). Refer to **Fig. 19**.

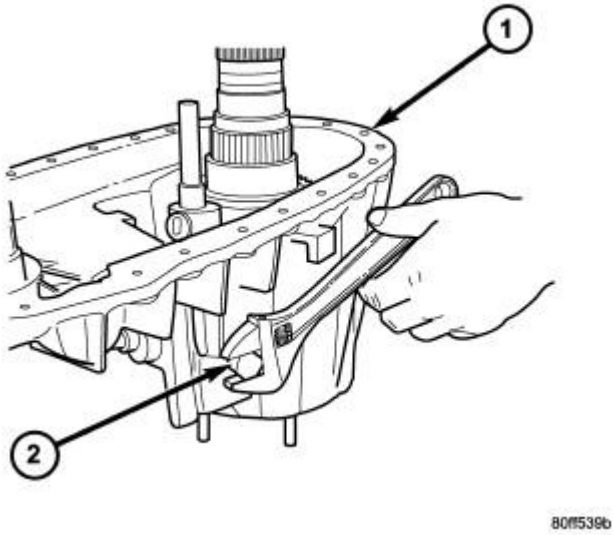

Fig. 20: Identifying Detent Plug
Courtesy of CHRYSLER GROUP, LLC

1 - FRONT CASE HALF
2 - DETENT PLUG

3. Remove the sector support with Socket (special tool #9033, Socket, Sector Support).
4. Loosen detent plug (2). Refer to **Fig. 20**.

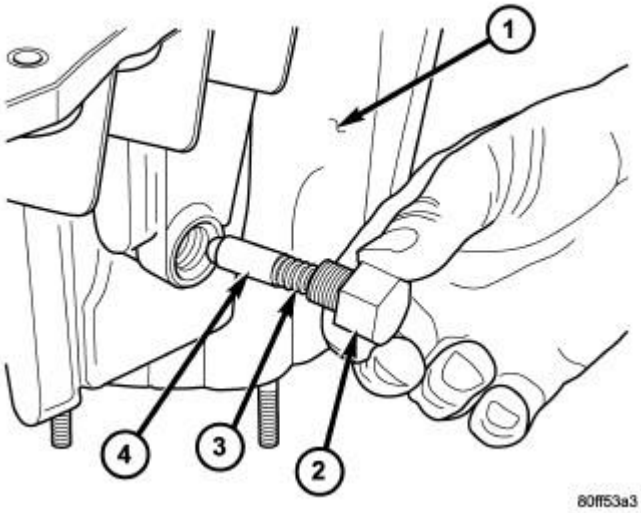

Fig. 21: Detent plug, Spring & Plunger
Courtesy of CHRYSLER GROUP, LLC

1 - FRONT CASE HALF

2 - DETENT PLUG
3 - SPRING
4 - PLUNGER

5. Remove detent plug (2), spring (3), and plunger (4). Refer to **Fig. 21**. Note that the plug has an O-ring seal. Remove and discard this seal.

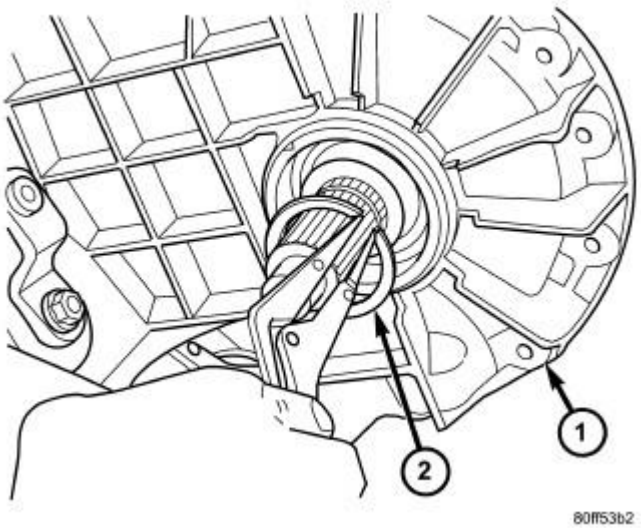

Fig. 22: Front Output Shaft Snap-Ring
Courtesy of CHRYSLER GROUP, LLC

1 - FRONT CASE HALF
2 - SNAP-RING

6. Using a screw mounted in a slide hammer, remove the front output shaft seal.
7. Remove the front output shaft snap-ring (2). Refer to **Fig. 22**.

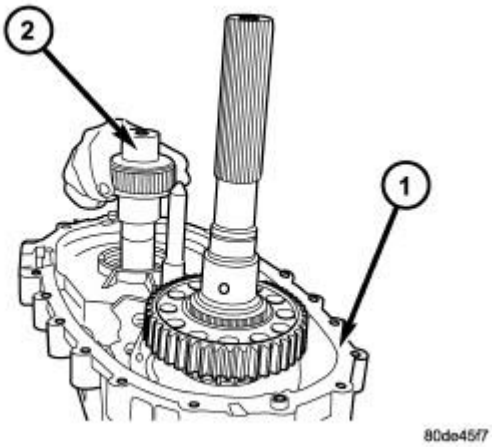

Fig. 23: Front Output Shaft
Courtesy of CHRYSLER GROUP, LLC

1 - FRONT CASE
2 - FRONT OUTPUT SHAFT

8. Remove front output shaft (2) from bearing in front case (1). Refer to **Fig. 23**.

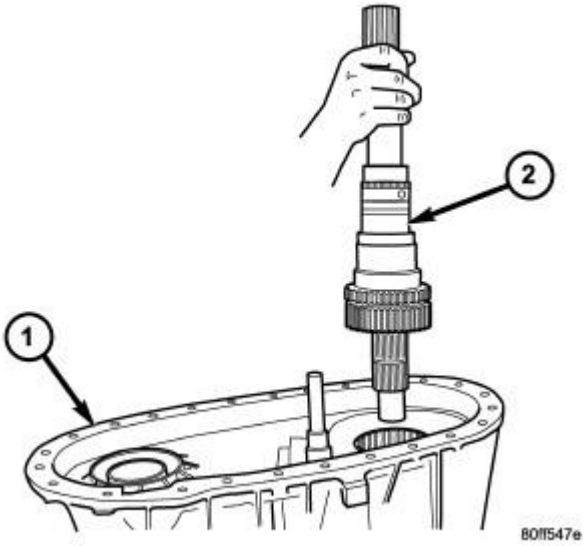

Fig. 24: Mainshaft Assembly
Courtesy of CHRYSLER GROUP, LLC

1 - FRONT CASE HALF
2 - MAINSHAFT ASSEMBLY

9. Pull mainshaft assembly (2) out of input gear, mode sleeve, and front case (1). Refer to **Fig. 24**.

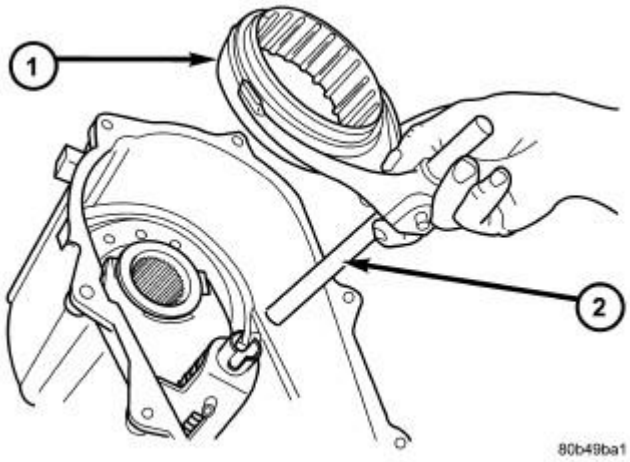

Fig. 25: Mode Fork, Mode Sleeve & Shift Rail
Courtesy of CHRYSLER GROUP, LLC

1 - MODE SLEEVE
2 - MODE FORK AND RAIL

10. Remove mode fork, mode sleeve (1), and shift rail (2) as assembly. Note which way the sleeve fits in the fork (long side of sleeve goes to front or the points on the sleeve teeth go to the rear of case).

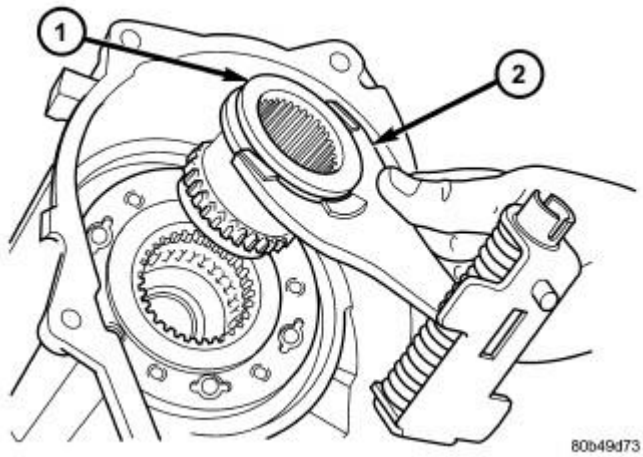

Fig. 26: Range Fork & Hub
Courtesy of CHRYSLER GROUP, LLC

1 - RANGE HUB
2 - RANGE FORK

11. Remove range fork (2) and hub (1) as an assembly. Refer to **Fig. 26**. Note fork position for installation reference.

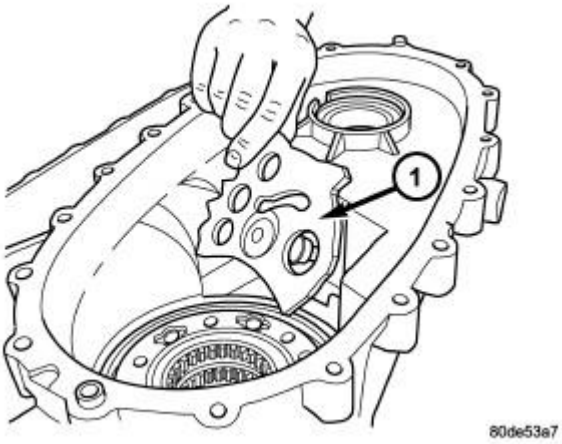

Fig. 27: Identifying Shift Sector
Courtesy of CHRYSLER GROUP, LLC

1 - SHIFT SECTOR

12. Remove the shift sector (1). Refer to **Fig. 27**.

MAINSHAFT

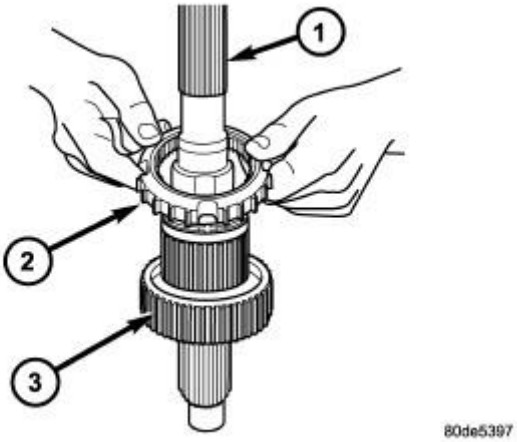

Fig. 28: Output Shaft, Clutch Gear & Mode Hub
Courtesy of CHRYSLER GROUP, LLC

1 - OUTPUT SHAFT
2 - CLUTCH GEAR
3 - MODE HUB

1. Remove the clutch gear (2) from the output shaft (1). Refer to **Fig. 28**.

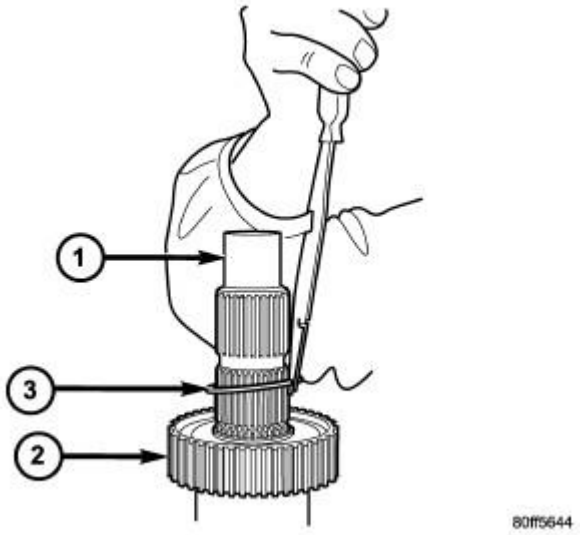

Fig. 29: Mainshaft, Mode Hub & Retaining Ring
Courtesy of CHRYSLER GROUP, LLC

1 - MAINSHAFT
2 - MODE HUB
3 - RETAINING RING

2. Remove the mode hub (2) retaining ring (3) from the mainshaft (1). Refer to **Fig. 29**.

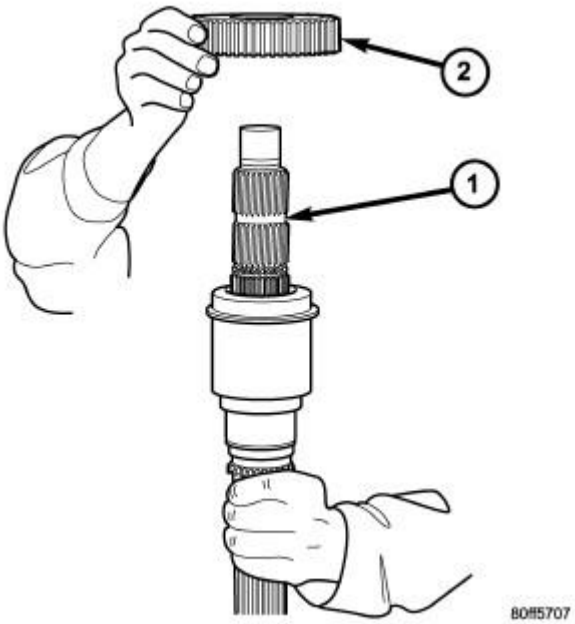

Fig. 30: Mainshaft & Mode Hub

Courtesy of CHRYSLER GROUP, LLC

1 - MAINSHAFT
2 - MODE HUB

3. Remove the mode hub (2) from the mainshaft (1). Refer to **Fig. 30**.

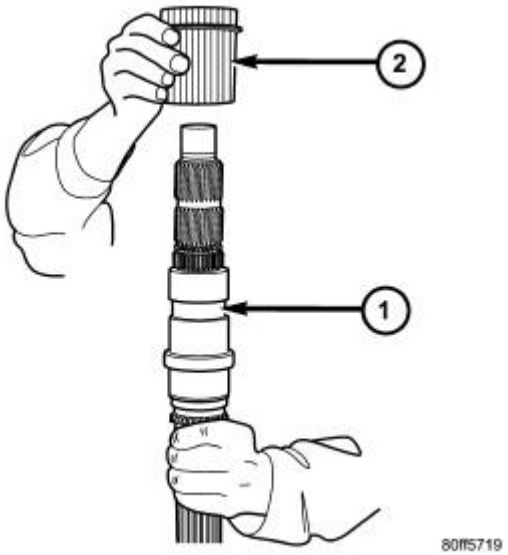

Fig. 31: Mainshaft & Drive Sprocket Drive Hub
Courtesy of CHRYSLER GROUP, LLC

1 - MAINSHAFT
2 - DRIVE SPROCKET DRIVE HUB

4. Remove the drive sprocket drive hub (2) from the mainshaft (1). Refer to **Fig. 31**.

INPUT AND PLANETARY GEAR

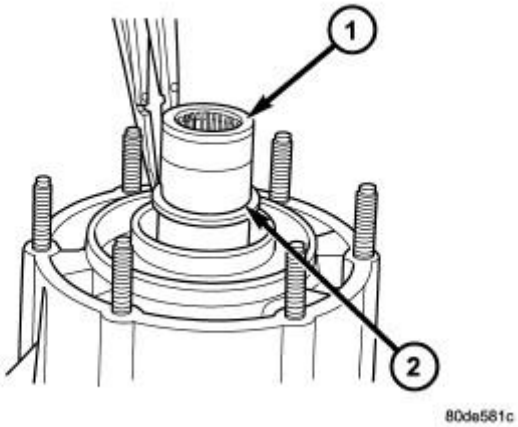

Fig. 32: Input Gear Retaining Ring
Courtesy of CHRYSLER GROUP, LLC

1 - INPUT GEAR
2 - RETAINING RING

1. Remove input gear seal with suitable screw and slide hammer.
2. Remove input gear (1) retaining ring (2) with heavy duty snap-ring pliers. Refer to **Fig. 32**.

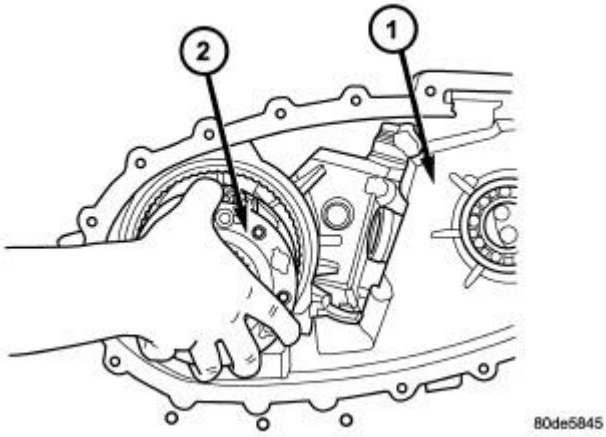

Fig. 33: Front Case & Input Planetary Assembly
Courtesy of CHRYSLER GROUP, LLC

1 - FRONT CASE
2 - INPUT PLANETARY ASSEMBLY

3. Place front case in horizontal position. Then remove input gear and low range gear as an assembly (2). Refer to **Fig. 33**. Tap gear out of bearing with plastic mallet, if necessary.

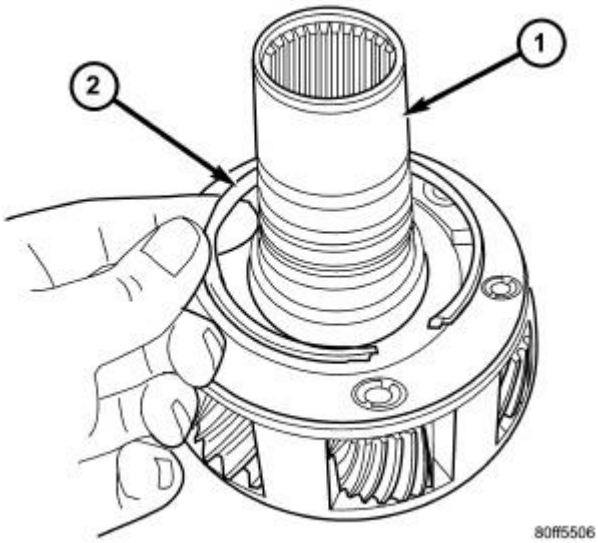

Fig. 34: Input Gear & Retaining Ring
Courtesy of CHRYSLER GROUP, LLC

1 - INPUT GEAR
2 - RETAINING RING

4. Remove snap-ring (2) that retains input gear (1) in the low range gear. Refer to **Fig. 34**.

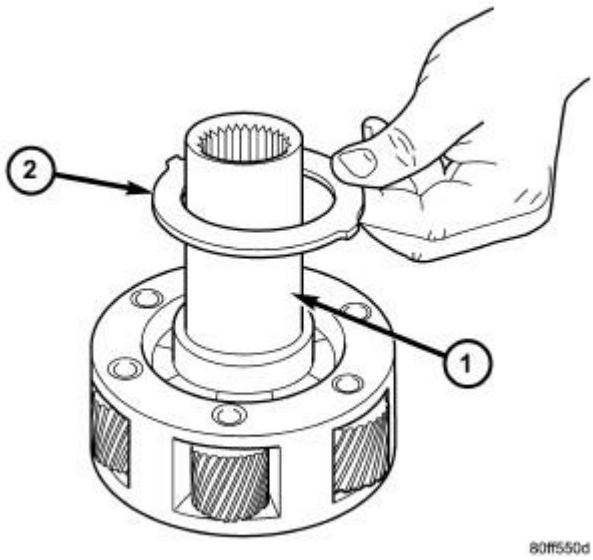

Fig. 35: Input Gear & Retainer
Courtesy of CHRYSLER GROUP, LLC

1 - INPUT GEAR
2 - RETAINER

5. Remove retainer (2). Refer to **Fig. 35**.

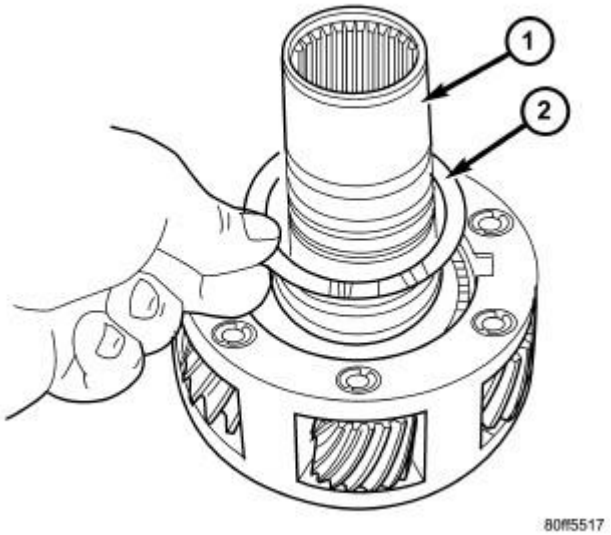

Fig. 36: Input Gear & Thrust Plate
Courtesy of CHRYSLER GROUP, LLC

1 - INPUT GEAR
2 - THRUST PLATE

6. Remove front thrust plate (2). Refer to **Fig. 36**.

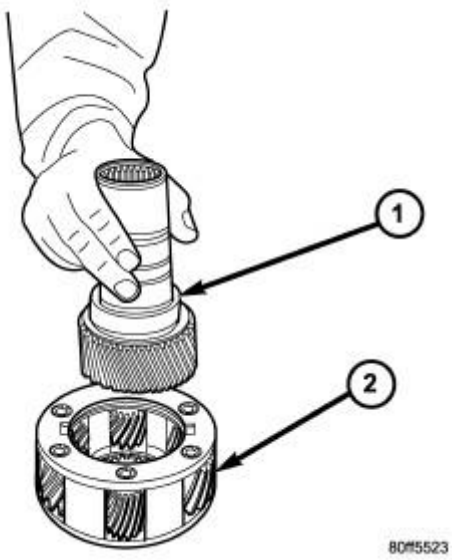

Fig. 37: Input Gear & Low Range Planetary
Courtesy of CHRYSLER GROUP, LLC

1 - INPUT GEAR
2 - LOW RANGE PLANETARY

7. Remove input gear (1). Refer to **Fig. 37**.

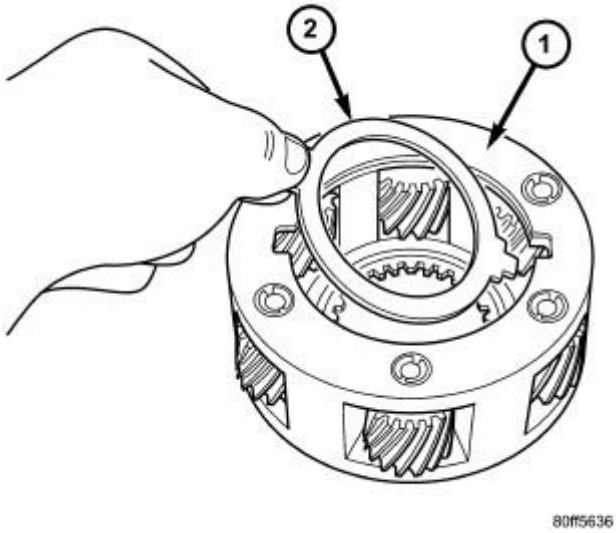

Fig. 38: Thrust Plate & Planetary
Courtesy of CHRYSLER GROUP, LLC

1 - PLANETARY
2 - THRUST PLATE

8. Remove bottom tabbed thrust washer (2) from low range planetary (1). Refer to **Fig. 38**.

CLEANING

CLEANING

Clean the transfer case parts with a standard parts cleaning solvent. Remove all traces of sealer from the cases and retainers with a scraper and 3M™ all purpose cleaner. Use compressed air to remove solvent residue from oil feed passages in the case halves, retainers, gears, and shafts.

INSPECTION

INSPECTION

MAINSHAFT/SPROCKET/HUB INSPECTION

Inspect the splines on the hub and shaft and the teeth on the sprocket. Minor nicks and scratches can be smoothed with an oilstone. However, replace any part that is damaged.

Check the contact surfaces in the sprocket bore and on the mainshaft. Minor nicks and scratches can be smoothed with 320-400 grit emery cloth but do not try to salvage the shaft if nicks or wear is severe.

INPUT GEAR AND PLANETARY CARRIER

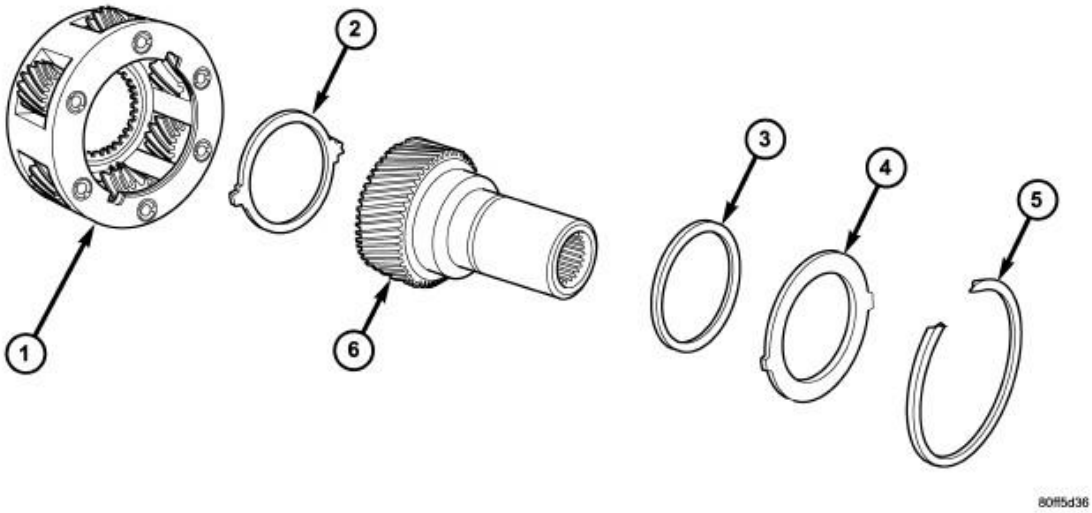

Fig. 39: Input Gear & Carrier Components
Courtesy of CHRYSLER GROUP, LLC

1 - PLANETARY CARRIER	4 - CARRIER LOCK RING
2 - REAR THRUST WASHER	5 - CARRIER LOCK RETAINING RING
3 - FRONT THRUST WASHER	6 - INPUT GEAR

Check the teeth on the input gear (6). Refer to **Fig. 39**. Minor nicks can be dressed off with an oilstone but replace the gear if any teeth are broken, cracked, or chipped. The bearing surface on the gear can be smoothed with 300-400 grit emery cloth if necessary.

Examine the planetary carrier body (1) and pinion gears for wear or damage. Check the pinion gear thrust washers on the pinon pins for damage. The carrier will have to be replaced as an assembly if the body, pinion pins, or pinion gears are damaged.

Check the carrier lock ring (4) and both thrust washers (2, 3) for wear or cracks. Replace them if necessary. Also replace the lock retaining ring if bent, distorted, or broken.

SHIFT FORKS/HUBS/SLEEVES

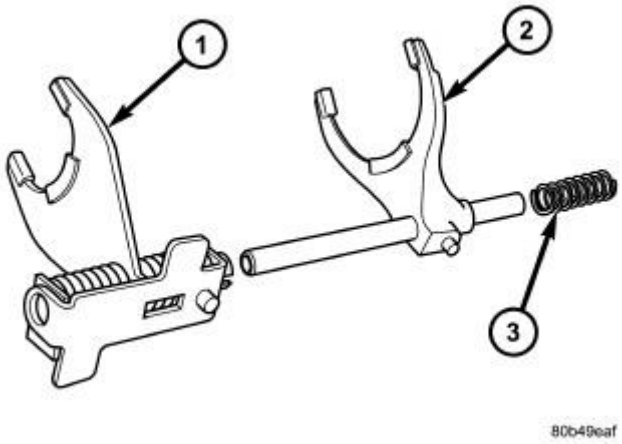

Fig. 40: Shift Forks
Courtesy of CHRYSLER GROUP, LLC

1 - RANGE FORK
2 - MODE FORK AND RAIL
3 - MODE SPRING

Check condition of the shift forks (1) and mode fork shift rail (2). Refer to **Fig. 40**. Minor nicks on the shift rail can be smoothed with 320-400 grit emery cloth.

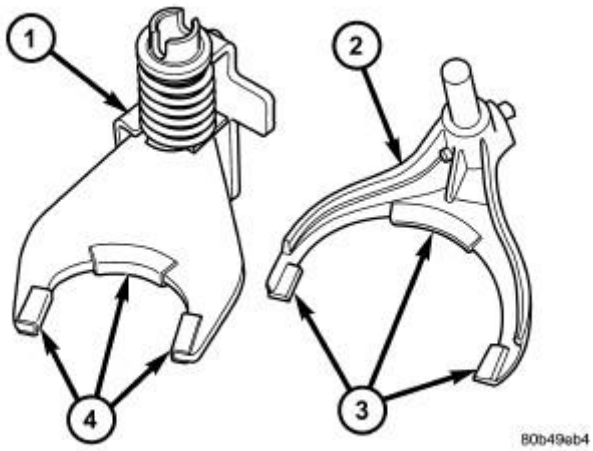

Fig. 41: Range Fork, Mode Fork & Wear Pads
Courtesy of CHRYSLER GROUP, LLC

1 - RANGE FORK
2 - MODE FORK
3 - WEAR PADS (SERVICEABLE)
4 - WEAR PADS (SERVICEABLE)

Inspect the shift fork wear pads (3, 4). Refer to **Fig. 41**. The mode (2) and range fork (1) pads are serviceable and can be replaced if necessary.

Check both of the sleeves for wear or damage, especially on the interior teeth. Replace the sleeves if wear or damage is evident.

REAR EXTENSION HOUSING

Inspect the extension housing seal and bushing. Replace both components if either show any sign of wear or damage.

FRONT OUTPUT SHAFT AND DRIVE CHAIN

Inspect the shaft threads, sprocket teeth, and bearing surfaces. Minor nicks on the teeth can be smoothed with an oilstone. Use 320-400 grit emery to smooth minor scratches on the shaft bearing surfaces. Rough threads on the shaft can be chased if necessary. Replace the shaft if the threads are damaged, bearing surfaces are scored, or if any sprocket teeth are cracked or broken.

Examine the drive chain and shaft bearings. Replace the chain and both sprockets if the chain is stretched, distorted, or if any of the links bind. Replace the bearings if rough, or noisy.

LOW RANGE ANNULUS GEAR

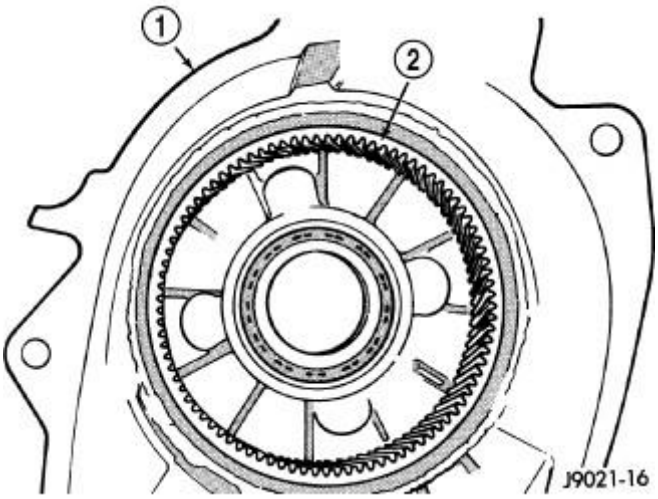

Fig. 42: Low Range Annulus Gear
Courtesy of CHRYSLER GROUP, LLC

1 - FRONT CASE
2 - LOW RANGE ANNULUS GEAR

Inspect annulus gear (2) condition carefully. Refer to **Fig. 42**. The gear is only serviced as part of the front case (1). If the gear is damaged, it will be necessary to replace the gear and front case as an assembly. Do not attempt to remove the gear.

FRONT AND REAR CASES

Inspect the cases for wear and damage.

Check case condition. If leaks were a problem, look for gouges and severe scoring of case sealing surfaces. Also make sure the front case mounting studs are in good condition.

Check the front case mounting studs and vent tube. The tube can be secured with Loctite™ 271 or 680 if loose. The stud threads can be cleaned up with a die if necessary. Also check condition of the fill/drain plug threads in the rear case. The threads can be repaired with a thread chaser or tap if necessary. Or the threads can be repaired with Helicoil® stainless steel inserts if required.

OIL PUMP/OIL PICKUP

Examine the oil pump pickup parts. Replace the pump if any part appears to be worn or damaged. Do not disassemble the pump as individual parts are not available. The pump is only available as a complete assembly. The pickup screen, hose, and tube are the only serviceable parts and are available separately.

ASSEMBLY

ASSEMBLY

BEARINGS AND SEALS

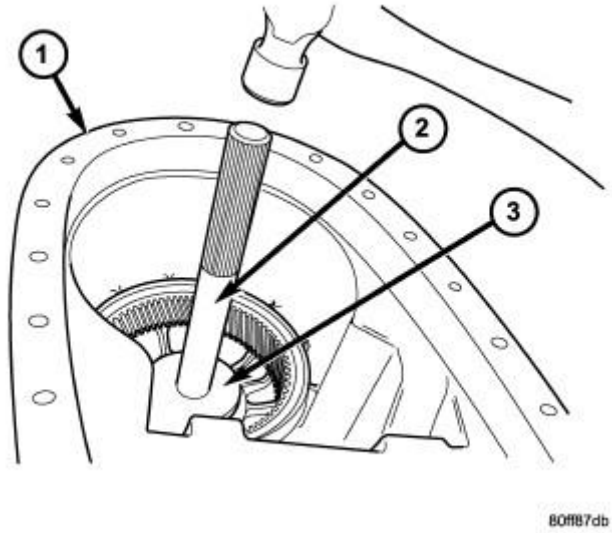

Fig. 43: Removing Input Shaft Bearing
Courtesy of CHRYSLER GROUP, LLC

1 - FRONT CASE HALF
2 - UNIVERSAL HANDLE C-4171
3 - BEARING REMOVER/INSTALLER 6953

1. Remove the input shaft bearing snap-ring from the front case half with suitable snap-ring pliers.
2. Remove the input shaft bearing from the front case half with Bearing Remover/Installer (special tool #6953, Remover/Installer, Bearing) (3) and Universal Handle (special tool #C-4171, Driver Handle, Universal) (2). Refer to **Fig. 43**.

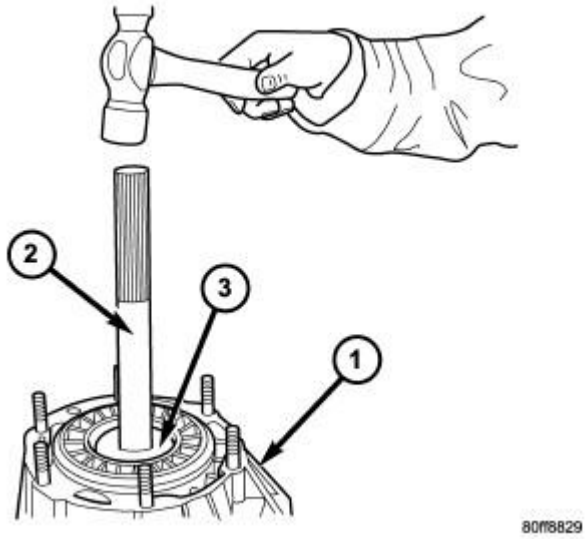

Fig. 44: Installing Input Shaft Bearing
Courtesy of CHRYSLER GROUP, LLC

1 - FRONT CASE HALF
2 - UNIVERSAL HANDLE C-4171
3 - BEARING CUP INSTALLER 8151 (INVERTED)

3. Install the input shaft bearing into the front case half with Bearing Cup Installer (special tool #8151, Installer, Bearing Cup) (3) inverted on Universal Handle (special tool #C-4171, Driver Handle, Universal) (2). Refer to **Fig. 44**.
4. Install the input shaft bearing snap-ring into the front case half with suitable snap-ring pliers.

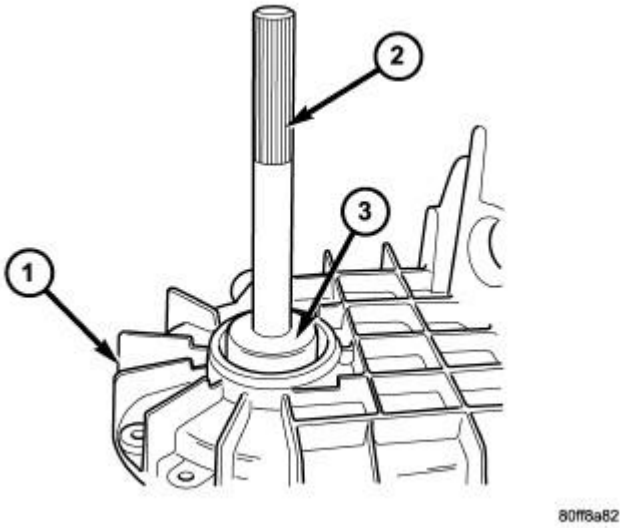

Fig. 45: Removing Front Output Shaft Front Bearing
Courtesy of CHRYSLER GROUP, LLC

1 - FRONT CASE HALF
2 - UNIVERSAL HANDLE C-4171
3 - BEARING INSTALLER 6953

5. Remove the front output shaft front bearing snap-ring from the front case half.
6. Using Bearing Remover/Installer (special tool #6953, Remover/Installer, Bearing) (3) and Universal Handle (special tool #C-4171, Driver Handle, Universal) (2), remove the front output shaft front bearing. Refer to **Fig. 45**.

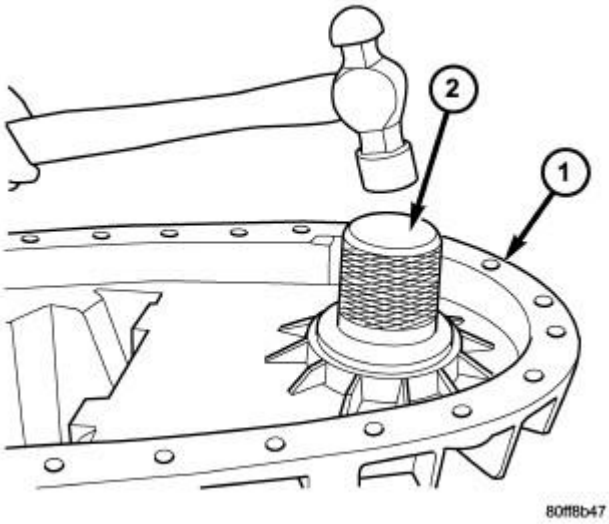

Fig. 46: Installing Front Output Shaft Front Bearing

Courtesy of CHRYSLER GROUP, LLC

1 - FRONT CASE HALF
2 - SEAL INSTALLER 8891

7. Start front output shaft front bearing in case. Then seat bearing with Seal Installer (special tool #8891, Installer, Seal) (2). Refer to **Fig. 46**.
8. Install front output shaft bearing retaining ring.

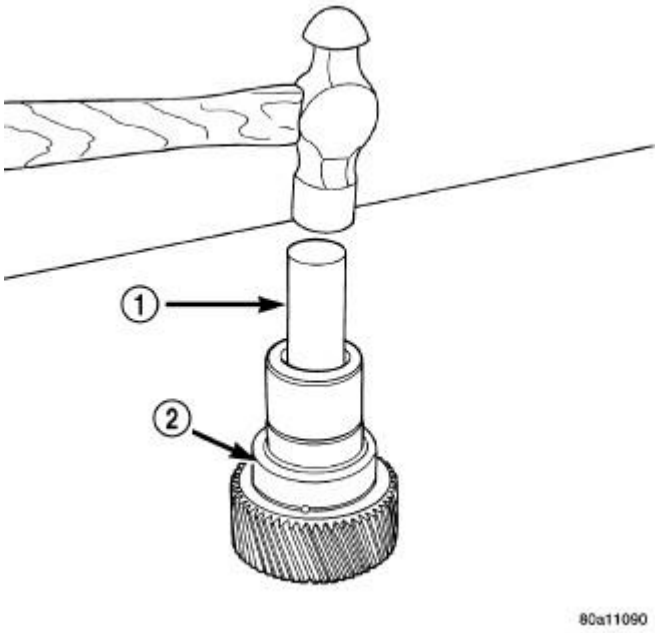

Fig. 47: Removing Input Gear Pilot Bearing
Courtesy of CHRYSLER GROUP, LLC

1 - DRIFT
2 - INPUT GEAR

9. Remove input gear pilot bearing by inserting a suitably sized drift (1) into the splined end of the input gear (2) and driving the bearing out with the drift and a hammer. Refer to **Fig. 47**.
10. Install new pilot bearing with Pilot Bearing Installer (special tool #9035, Installer, Bearing).

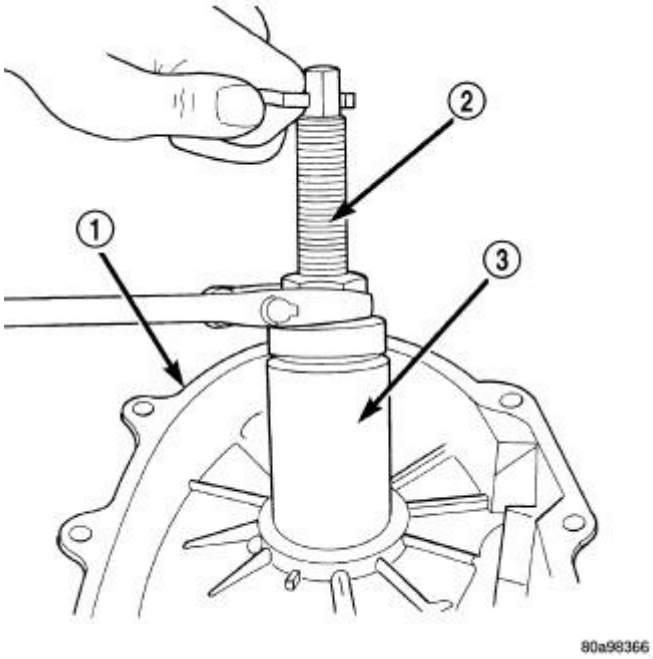

Fig. 48: Removing Front Output Shaft Rear Bearing
Courtesy of CHRYSLER GROUP, LLC

1 - REAR CASE
2 - REMOVER L-4454-1 AND L-4454-3
3 - CUP 8148

11. Remove the front output shaft rear bearing with the screw and jaws from Remover (special tool #L-4454A, Remover, Bearing Cup) (2) and Cup (special tool #8148, Cup) (3). Refer to **Fig. 48**.

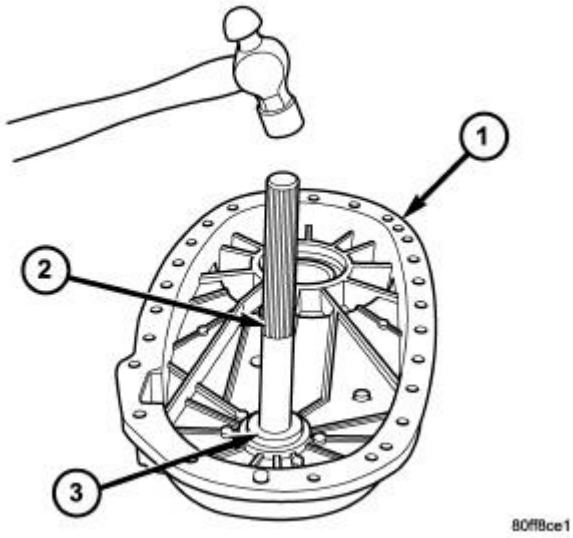

Fig. 49: Installing Front Output Shaft Rear Bearing
Courtesy of CHRYSLER GROUP, LLC

1 - REAR CASE HALF
2 - UNIVERSAL HANDLE C-4171
3 - BEARING INSTALLER 8128

12. Install new bearing with Universal Handle (special tool #C-4171, Driver Handle, Universal) (2) and Bearing Installer (special tool #8128, Installer, Bearing) (3). Refer to **Fig. 49**.

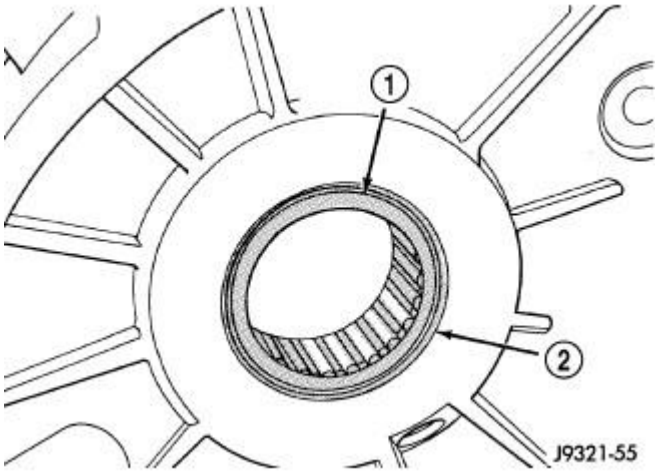

Fig. 50: Output Shaft Rear Bearing Installation Depth
Courtesy of CHRYSLER GROUP, LLC

1 - BEARING (SEATED) AT LOWER EDGE OF CHAMFER
2 - CHAMFER

13. The bearing bore is chamfered at the top. Install the bearing so it is flush (1) with the lower edge of this chamfer (2). Refer to **Fig. 50**.

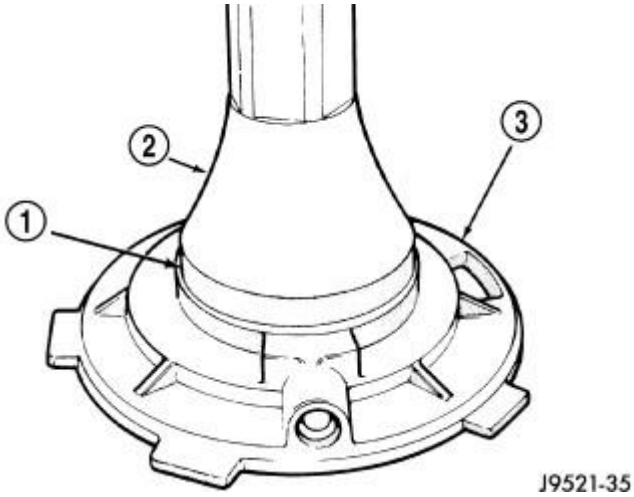

Fig. 51: Installing Oil Pump Seal
Courtesy of CHRYSLER GROUP, LLC

1 - HOUSING SEAL
2 - SEAL INSTALLER 7888
3 - OIL PUMP FEED HOUSING

14. Remove seal from oil pump with suitable pry tool.
15. Install new seal in oil pump with Seal Installer (special tool #7888, Installer, Seal) (2). Refer to **Fig. 51**.

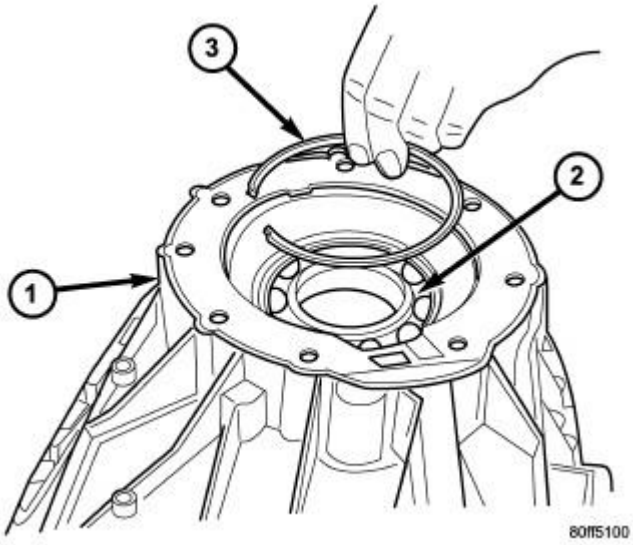

Fig. 52: Removing Rear Output Bearing Outer Snap-Ring
Courtesy of CHRYSLER GROUP, LLC

1 - REAR CASE HALF
2 - REAR OUTPUT SHAFT BEARING

3 - SNAP-RING

16. Remove the rear output shaft bearing (2) snap-ring (3) from the rear case half (1). Refer to **Fig. 52**.

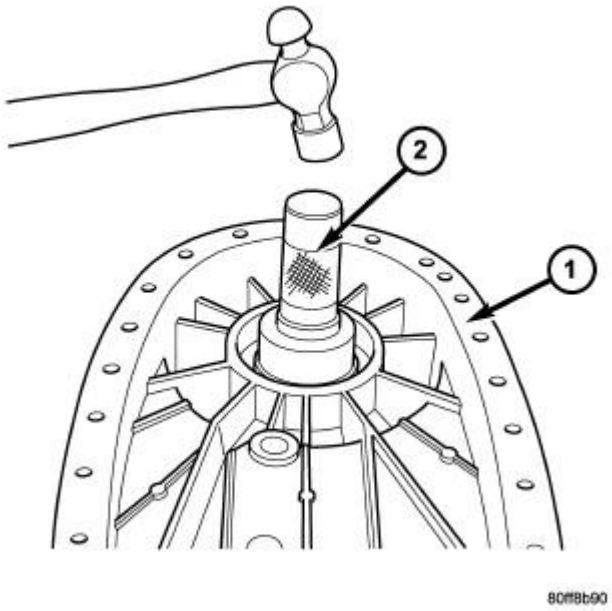

Fig. 53: Removing Rear Output Shaft Bearing
Courtesy of CHRYSLER GROUP, LLC

1 - REAR CASE HALF
2 - SEAL INSTALLER 7888

17. Remove the rear output shaft bearing from the rear case (1) using Seal Installer (special tool #7888, Installer, Seal) (2). Refer to **Fig. 53**.

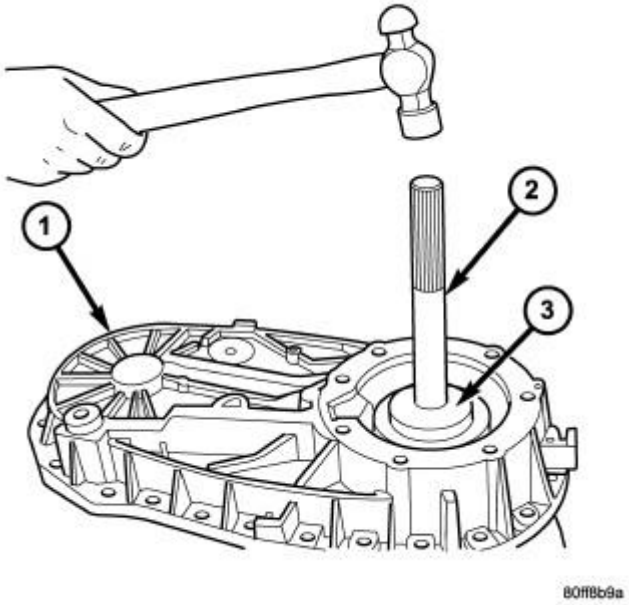

Fig. 54: Installing Rear Output Shaft Bearing
Courtesy of CHRYSLER GROUP, LLC

1 - REAR CASE HALF
2 - UNIVERSAL HANDLE C-4171
3 - SEAL INSTALLER 8152

18. Install the rear output shaft bearing into the rear case (1) using Seal Installer (special tool #8152, Installer, Seal) (3) and Universal Handle (special tool #C-4171, Driver Handle, Universal) (2). Refer to **Fig. 54**.
19. Install the rear output shaft bearing snap-ring into the rear case half.

INPUT AND PLANETARY GEAR

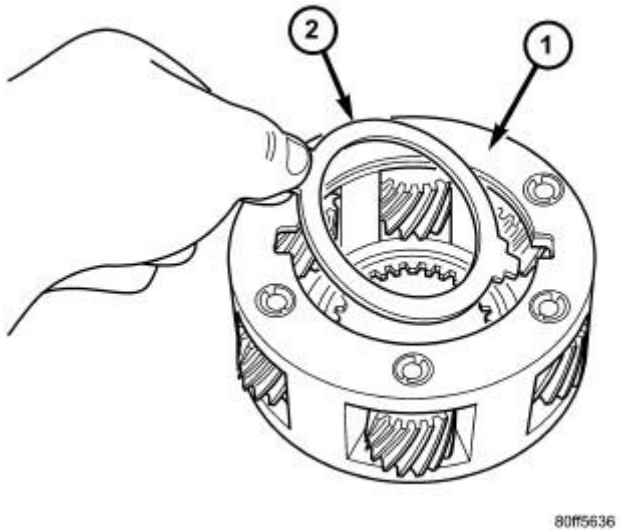

Fig. 55: Thrust Plate & Planetary
Courtesy of CHRYSLER GROUP, LLC

1 - PLANETARY
2 - THRUST PLATE

1. Lubricate gears and thrust washers with recommended transmission fluid.
2. Install bottom thrust washer (2) in low range gear planetary (1). Refer to **Fig. 55**. Be sure washer tabs are properly aligned in gear notches.

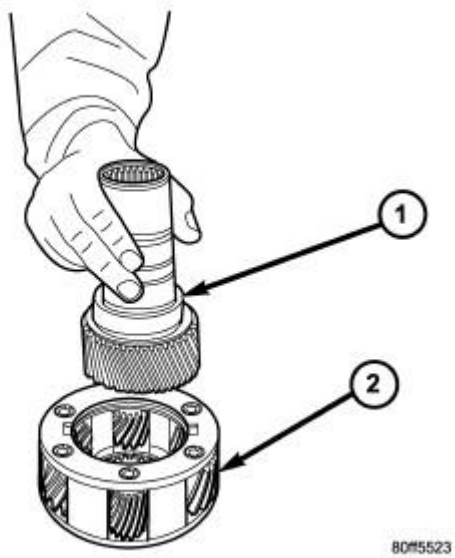

Fig. 56: Input Gear & Low Range Planetary
Courtesy of CHRYSLER GROUP, LLC

1 - INPUT GEAR
2 - LOW RANGE PLANETARY

3. Install input gear (1) in low range gear (2). Refer to **Fig. 56**. Be sure input gear is fully seated.

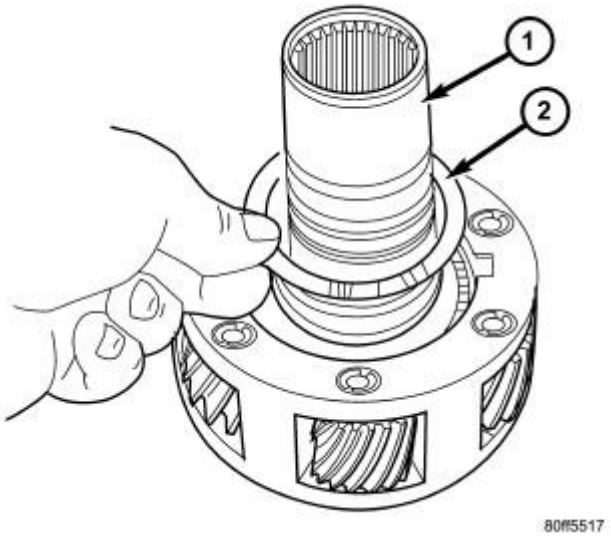

Fig. 57: Input Gear & Thrust Plate
Courtesy of CHRYSLER GROUP, LLC

1 - INPUT GEAR
2 - THRUST PLATE

4. Install remaining thrust washer (2) in low range gear and on top of input gear (1). Refer to **Fig. 57**.

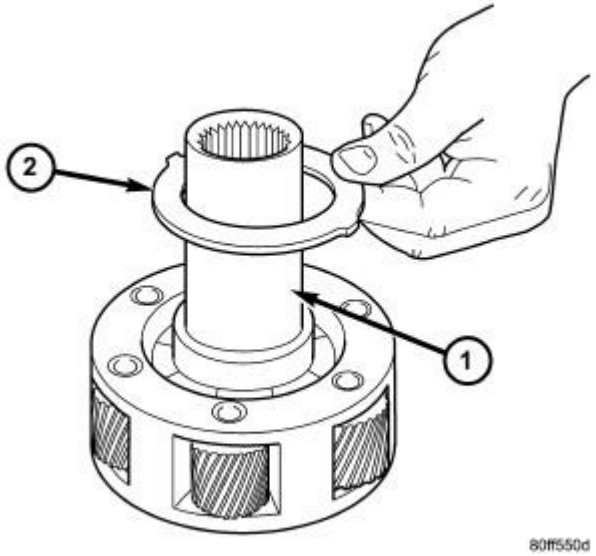

Fig. 58: Input Gear & Retainer
Courtesy of CHRYSLER GROUP, LLC

1 - INPUT GEAR
2 - RETAINER

5. Install retainer (2) on input gear (1). Refer to **Fig. 58**.

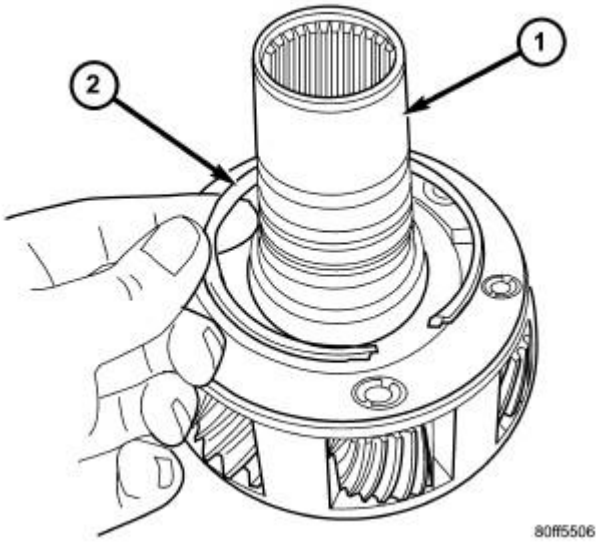

Fig. 59: Input Gear & Retaining Ring
Courtesy of CHRYSLER GROUP, LLC

1 - INPUT GEAR
2 - RETAINING RING

6. Install snap-ring (2). Refer to **Fig. 59**.

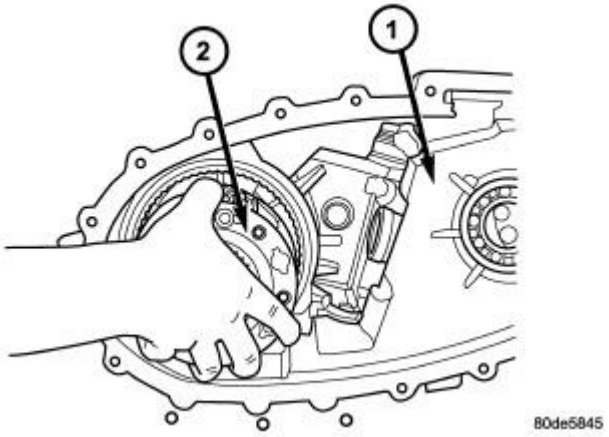

Fig. 60: Front Case & Input Planetary Assembly
Courtesy of CHRYSLER GROUP, LLC

1 - FRONT CASE
2 - INPUT PLANETARY ASSEMBLY

7. Align and install low range/input gear assembly (2) in front case (1). Refer to **Fig. 60**. Be sure low range gear pinions are engaged in annulus gear and that input gear shaft is fully seated in front bearing.

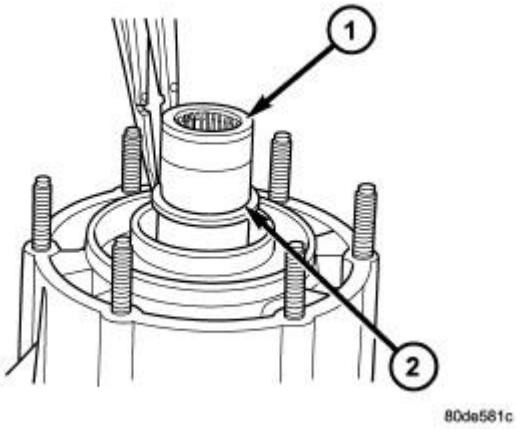

Fig. 61: Input Gear Retaining Ring
Courtesy of CHRYSLER GROUP, LLC

1 - INPUT GEAR
2 - RETAINING RING

8. Install snap-ring (2) to hold input/low range gear (1) into front bearing. Refer to **Fig. 61**.
9. Install a new input gear oil seal with Seal Installer (special tool #9036, Installer, Seal) and Universal Handle (special tool #C-4171, Driver Handle, Universal).

SHIFT FORKS AND MAINSHAFT

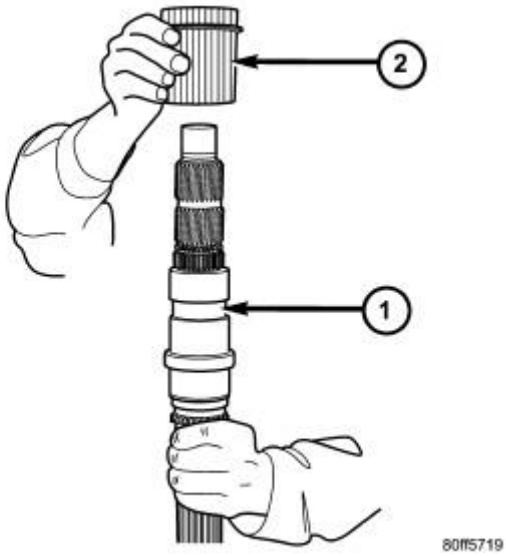

Fig. 62: Mainshaft & Drive Sprocket Drive Hub
Courtesy of CHRYSLER GROUP, LLC

1 - MAINSHAFT
2 - DRIVE SPROCKET DRIVE HUB

1. Lubricate mainshaft splines with recommended transmission fluid.
2. Coat the interior of the drive sprocket hub with ATF+4 and install the drive sprocket drive hub (2) onto the mainshaft (1). Refer to **Fig. 62**.

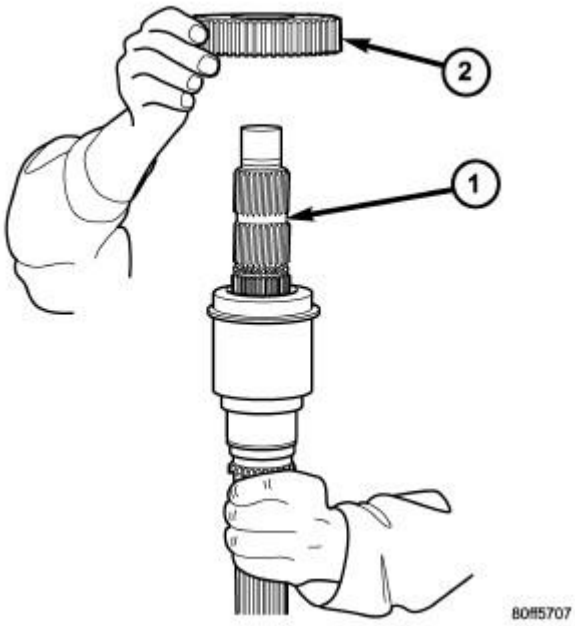

Fig. 63: Mainshaft & Mode Hub
Courtesy of CHRYSLER GROUP, LLC

1 - MAINSHAFT
2 - MODE HUB

3. Install the mode hub (2) onto the mainshaft (1). Refer to **Fig. 63**.

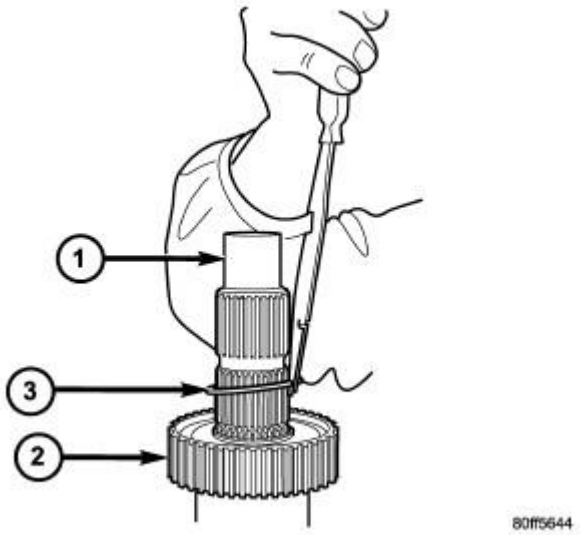

Fig. 64: Mainshaft, Mode Hub & Retaining Ring
Courtesy of CHRYSLER GROUP, LLC

1 - MAINSHAFT
2 - MODE HUB
3 - RETAINING RING

4. Install the mode hub (2) retaining ring (3) onto the mainshaft (1). Refer to **Fig. 64**.

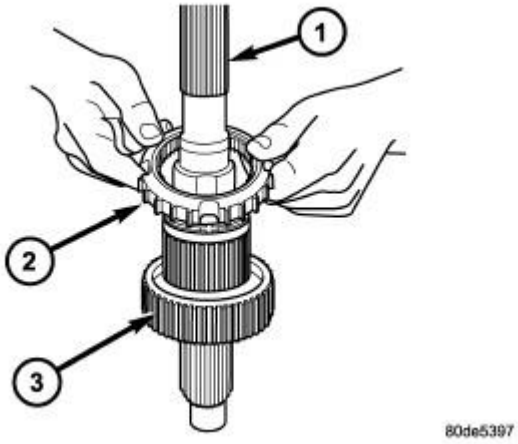

Fig. 65: Output Shaft, Clutch Gear & Mode Hub
Courtesy of CHRYSLER GROUP, LLC

1 - OUTPUT SHAFT
2 - CLUTCH GEAR
3 - MODE HUB

5. Install the clutch gear (2) onto the output shaft (1). Refer to **Fig. 65**. Verify that the pointed ends of the clutch gear teeth are pointing to the front of the mainshaft.

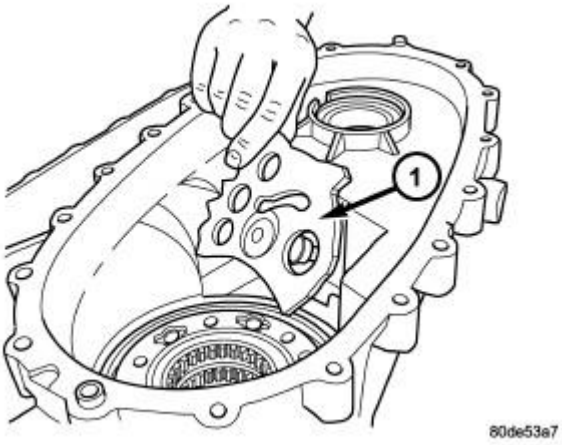

Fig. 66: Identifying Shift Sector
Courtesy of CHRYSLER GROUP, LLC

1 - SHIFT SECTOR

6. Lubricate sector shaft with transmission fluid and install shift sector (1) in case. Refer to **Fig. 66**. Position slot in sector so it will be aligned with shift fork pin when shift forks are installed.
7. Apply Loctite™ 242, or equivalent, to the threads of the sector support to replenish the factory applied

patch. Install the shift sector support. Tighten the sector support with Socket (special tool #9033, Socket, Sector Support) to 27-34 N.m (20-25 ft.lbs.).

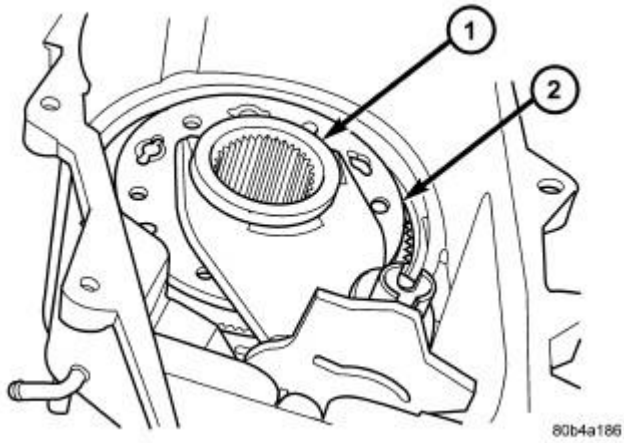

Fig. 67: Range Fork & Hub Assembly
Courtesy of CHRYSLER GROUP, LLC

1 - RANGE HUB
2 - RANGE FORK

8. Assemble and install range fork (2) and hub (1). Refer to **Fig. 67**. Be sure hub is properly seated in low range gear and engaged to the input gear.
9. Align and insert range fork pin in shift sector slot.

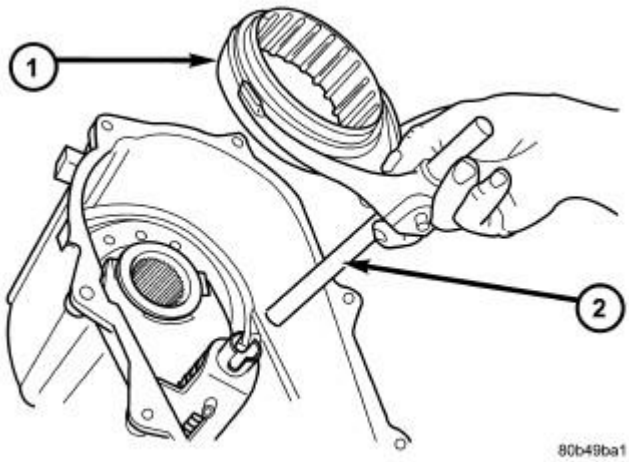

Fig. 68: Mode Fork, Mode Sleeve & Shift Rail
Courtesy of CHRYSLER GROUP, LLC

1 - MODE SLEEVE
2 - MODE FORK AND RAIL

10. Install mode fork and shift rail onto the mode sleeve.
11. Install the mode fork and sleeve (1), and shift rail (2) into the transfer case.

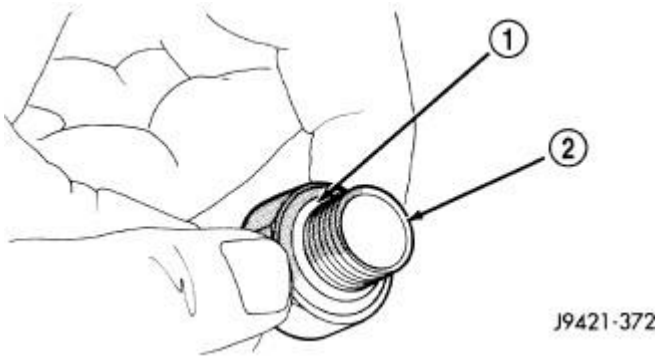

Fig. 69: O-Ring Installation On Detent Plug
Courtesy of CHRYSLER GROUP, LLC

1 - O-RING
2 - DETENT PLUG

12. Install new o-ring (1) on detent plug (2). Refer to **Fig. 69**.

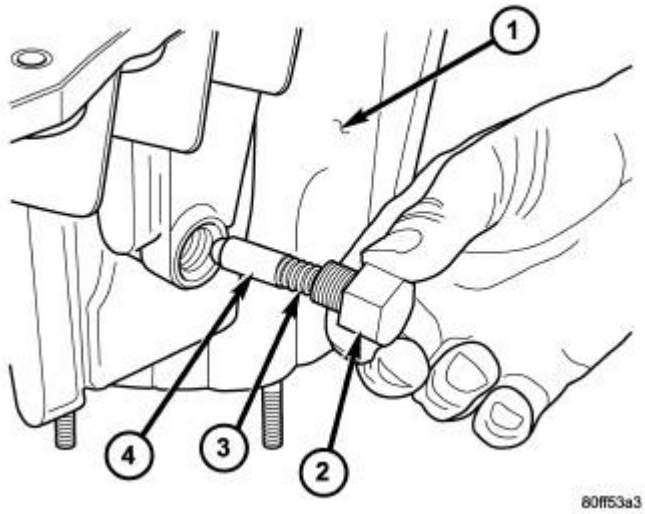

Fig. 70: Detent plug, Spring & Plunger
Courtesy of CHRYSLER GROUP, LLC

1 - FRONT CASE HALF
2 - DETENT PLUG
3 - SPRING
4 - PLUNGER

13. Install detent plunger (4), spring (3), and plug (2). Refer to **Fig. 70**. Tighten the plug to 16-24 N.m (12-18 ft. lbs.).

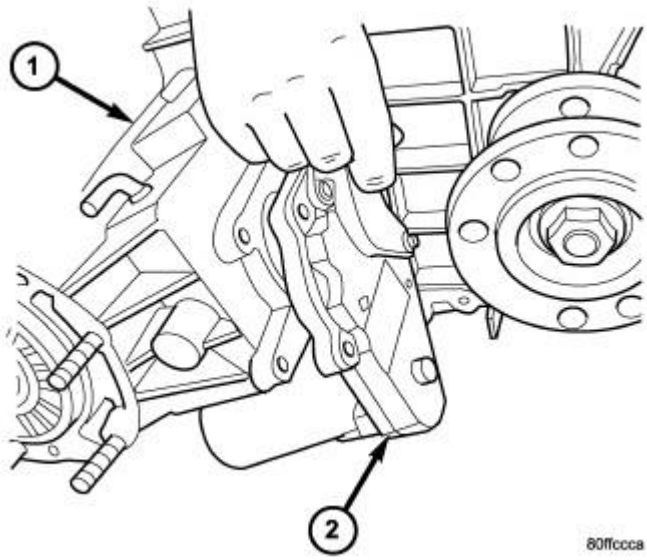

Fig. 71: Transfer Case & Shift Motor Assembly
Courtesy of CHRYSLER GROUP, LLC

1 - TRANSFER CASE
2 - SHIFT MOTOR ASSEMBLY

14. Position the shift motor and mode sensor assembly (2) onto the transfer case (1). Refer to **Fig. 71**.

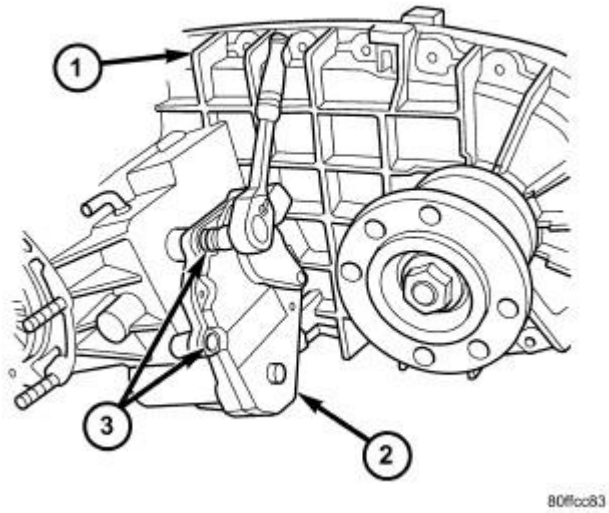

Fig. 72: Shift Motor Assembly & Bolts
Courtesy of CHRYSLER GROUP, LLC

1 - TRANSFER CASE
2 - SHIFT MOTOR ASSEMBLY
3 - BOLTS

15. Install the bolts (3) to hold the shift motor and mode sensor assembly (2) to the transfer case (1). Refer to **Fig. 72**. Tighten the bolts to 16-25 N.m (12-18 ft. lbs.).

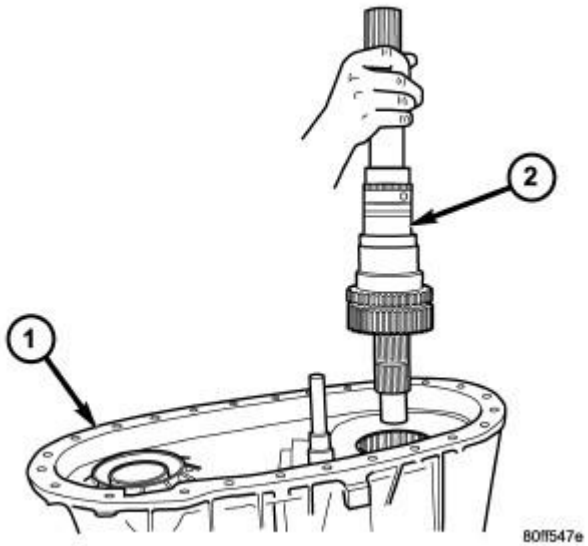

Fig. 73: Mainshaft Assembly
Courtesy of CHRYSLER GROUP, LLC

1 - FRONT CASE HALF
2 - MAINSHAFT ASSEMBLY

16. Install mainshaft (2) into the transfer case (1). Refer to **Fig. 73**. Guide mainshaft through the mode and range sleeves and into the input gear.

FRONT OUTPUT SHAFT AND DRIVE CHAIN

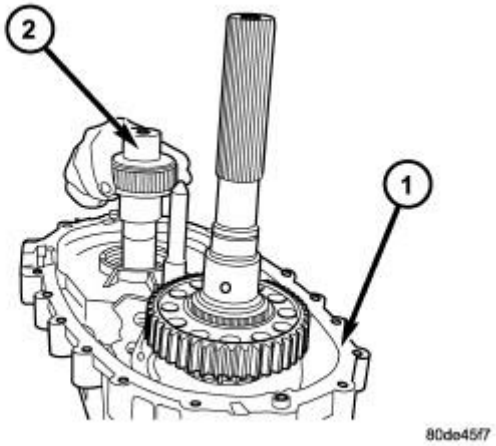

Fig. 74: Front Output Shaft
Courtesy of CHRYSLER GROUP, LLC

1 - FRONT CASE
2 - FRONT OUTPUT SHAFT

1. Install the front output shaft (2) into the front output shaft front bearing. Refer to **Fig. 74**.

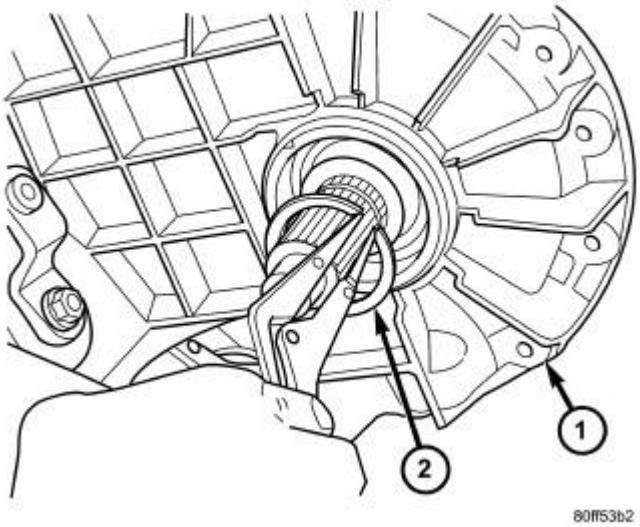

Fig. 75: Front Output Shaft Snap-Ring
Courtesy of CHRYSLER GROUP, LLC

1 - FRONT CASE HALF
2 - SNAP-RING

2. Install the front output shaft bearing inner snap-ring (2) onto the output shaft. Refer to **Fig. 75**.

3. Install the new front output shaft seal with Seal Installer (special tool #MB-991168-A, Installer, Seal).

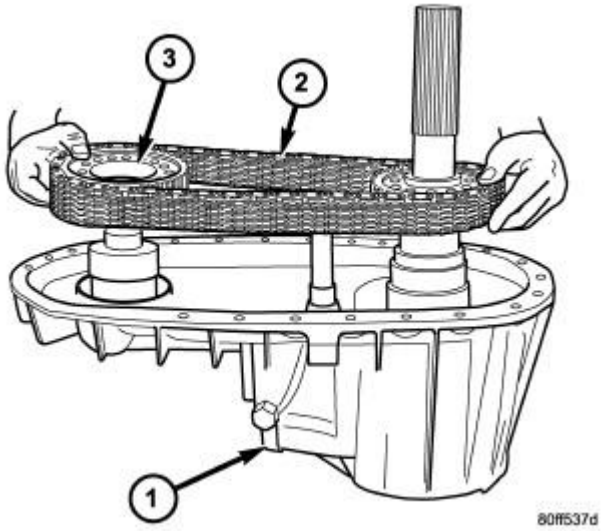

Fig. 76: Drive Chain & Sprockets
Courtesy of CHRYSLER GROUP, LLC

1 - FRONT CASE HALF
2 - CHAIN
3 - DRIVE SPROCKETS

4. Insert front drive sprocket (3) in drive chain (2). Refer to **Fig. 76**.
5. Install drive chain around rear drive sprocket.
6. Position rear drive sprocket over the output shaft and lower the sprocket and chain assembly until the front sprocket is positioned over the front output shaft.
7. Align the splines in the sprockets to the splines on the output shafts and install the sprockets onto the output shafts.

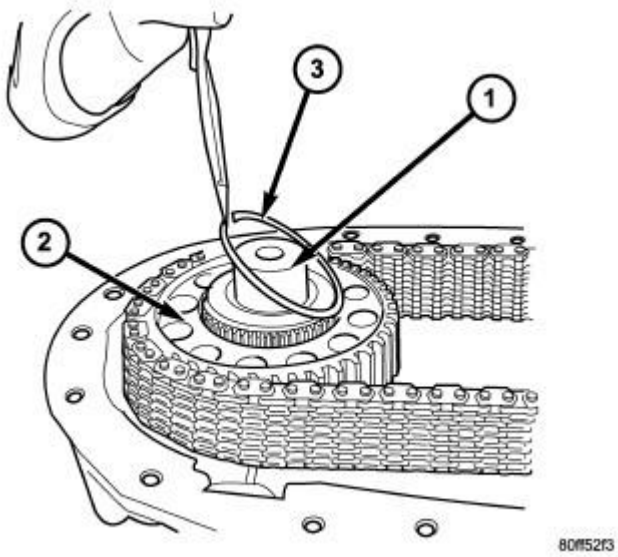

Fig. 77: Front Output Shaft, Drive Sprocket & Retaining Ring
Courtesy of CHRYSLER GROUP, LLC

1 - FRONT OUTPUT SHAFT
2 - DRIVE SPROCKET
3 - RETAINING RING

8. Install front sprocket (2) retaining ring (3). Refer to **Fig. 77**.

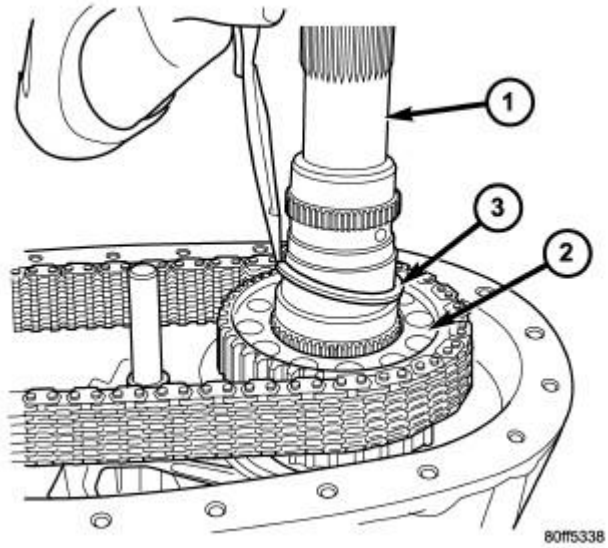

Fig. 78: Rear Output Shaft, Drive Sprocket & Retaining Ring
Courtesy of CHRYSLER GROUP, LLC

1 - REAR OUTPUT SHAFT

2 - DRIVE SPROCKET
3 - RETAINING RING

9. Install rear sprocket (2) retaining ring (3). Refer to **Fig. 78**.

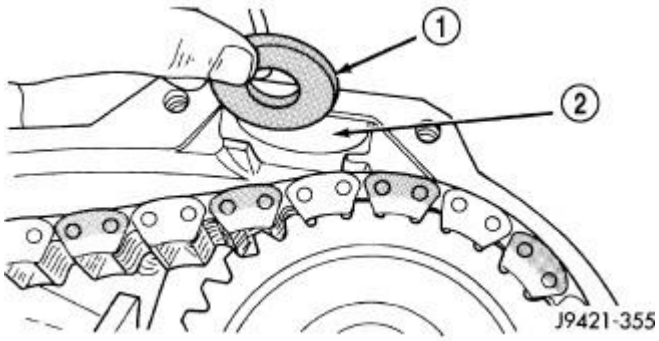

Fig. 79: Case Magnet Installation
Courtesy of CHRYSLER GROUP, LLC

1 - MAGNET
2 - CASE POCKET

10. Insert magnet (1) in front case pocket (2). Refer to **Fig. 79**.

REAR CASE

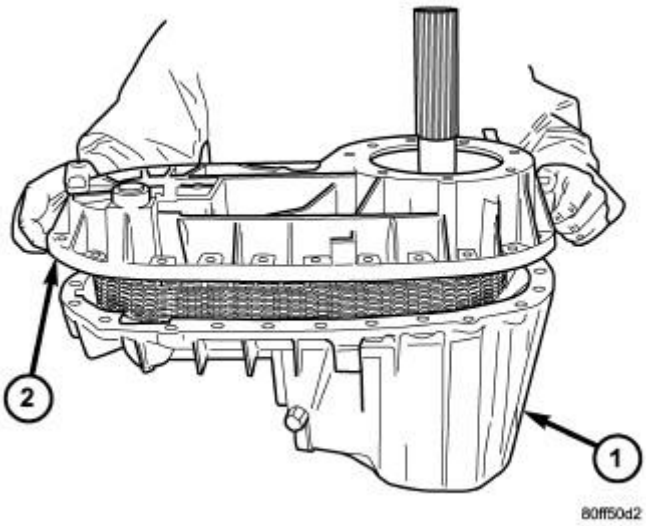

Fig. 80: Front & Rear Case Halves
Courtesy of CHRYSLER GROUP, LLC

1 - FRONT CASE HALF

2 - REAR CASE HALF

1. Install the oil pick-up tube and screen into the rear case half.
2. Apply bead of Mopar® Gasket Maker, or equivalent, to mating surface of front case. Keep sealer bead width to maximum of 3/16 inch. Do not use excessive amount of sealer as excess will be displaced into case interior.
3. Align mainshaft with the rear output shaft bearing and align shift rail with bore in rear case. Then install rear case (2). Refer to **Fig. 80**. Verify that the case alignment dowels correctly seat into their mating recesses.

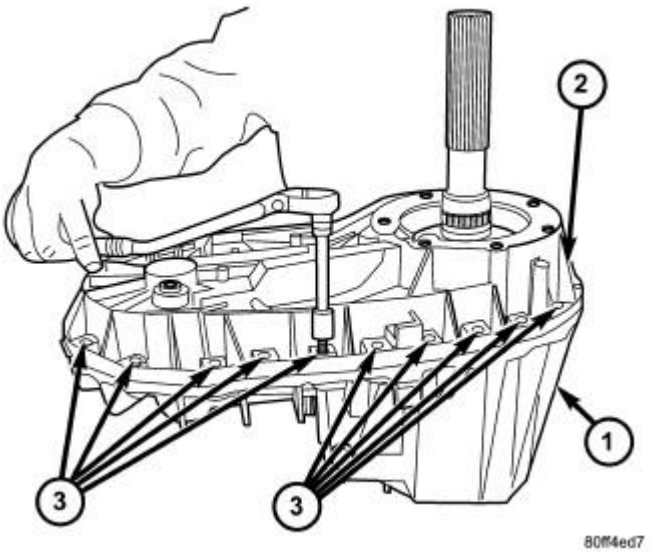

Fig. 81: Front Case Half, Rear Case Half & Bolts
Courtesy of CHRYSLER GROUP, LLC

1 - FRONT CASE HALF
2 - REAR CASE HALF
3 - BOLTS

4. Install 4-5 rear case (2) to front case (1) bolts (3) to hold rear case in position. Refer to **Fig. 81**. Tighten bolts snug but not to specified torque at this time.

CAUTION: Verify that shift rail, and case alignment dowels are seated before installing any bolts. Case could be cracked if shaft rail or dowels are misaligned.

5. Tighten bolts to 27-34 N.m (20-25 ft. lbs.).

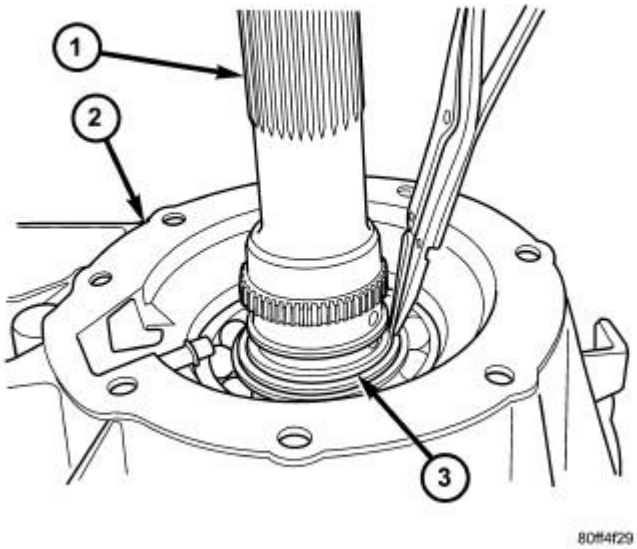

Fig. 82: Output Shaft, Rear Case Half & Snap-Ring
Courtesy of CHRYSLER GROUP, LLC

1 - OUTPUT SHAFT
2 - REAR CASE HALF
3 - SNAP-RING

6. Install rear output bearing inner snap-ring (3) to output shaft (1). Refer to **Fig. 82**.

OIL PUMP AND REAR EXTENSION

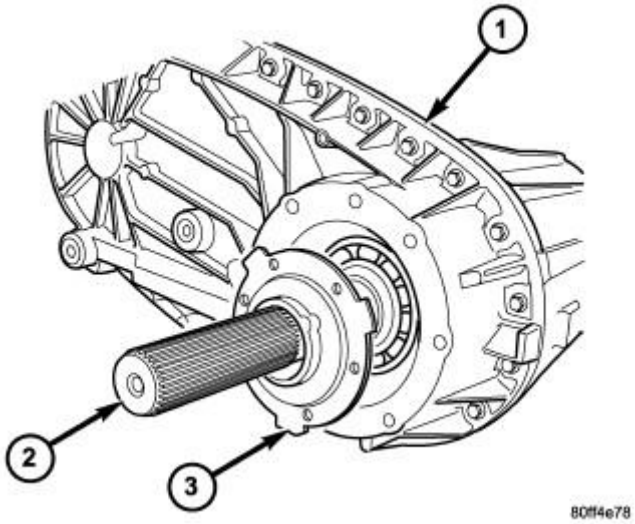

Fig. 83: Rear Case Half, Rear Output Shaft & Oil Pump
Courtesy of CHRYSLER GROUP, LLC

1 - REAR CASE HALF
2 - REAR OUTPUT SHAFT
3 - OIL PUMP

1. Install the oil pump (3) onto the output shaft (2). Refer to **Fig. 83**.

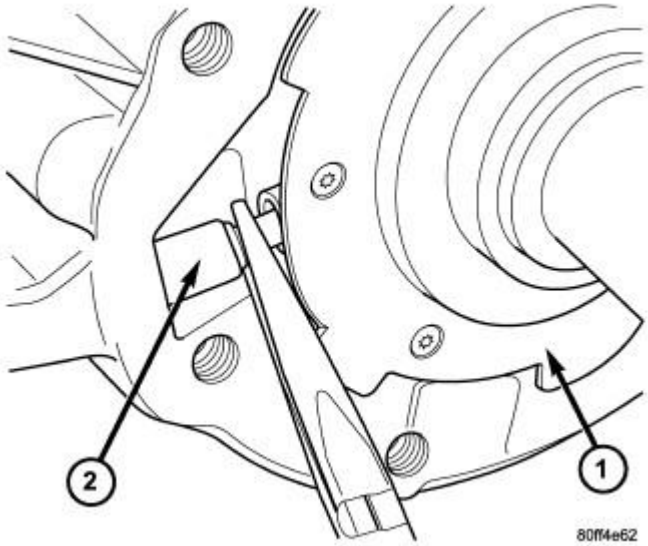

Fig. 84: Oil Pump Pick-Up Tube & Oil Pump
Courtesy of CHRYSLER GROUP, LLC

1 - OIL PUMP
2 - OIL PICK-UP TUBE

2. Engage the oil pump pick-up tube (2) into the oil pump (1). Refer to **Fig. 84**. Verify that the pick-up tube o-ring is on the tube and is correctly installed to the oil pump.

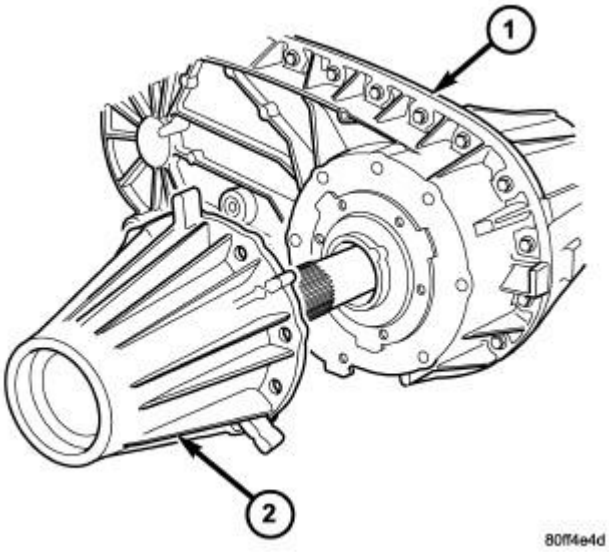

Fig. 85: Rear Case Half & Extension Housing
Courtesy of CHRYSLER GROUP, LLC

1 - REAR CASE HALF
2 - EXTENSION HOUSING

3. Apply bead of Mopar® Gasket Maker, or equivalent, to mating surface of rear extension housing. Keep sealer bead width to maximum of 3/16 inch. Do not use excessive amount of sealer as excess could be displaced into output bearing.
4. Install extension housing (2) onto the rear case half (1). Refer to **Fig. 85**.

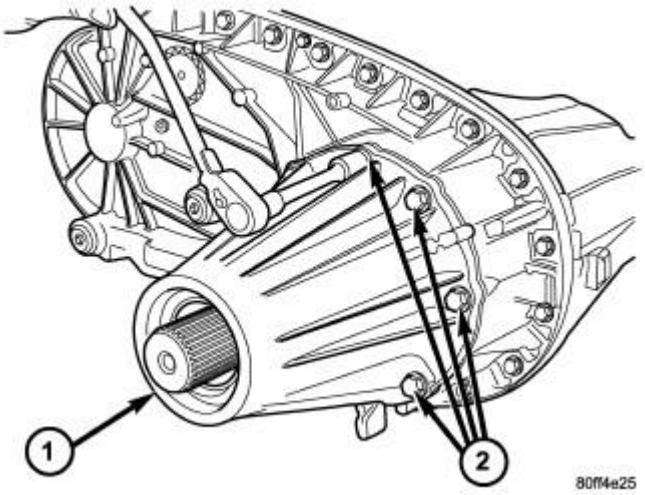

Fig. 86: Extension Housing & Bolts
Courtesy of CHRYSLER GROUP, LLC

1 - EXTENSION HOUSING
2 - BOLTS

5. Install rear extension bolts (2). Refer to **Fig. 86**. Tighten the bolts to 27-34 N.m (20-25 ft.lbs.).

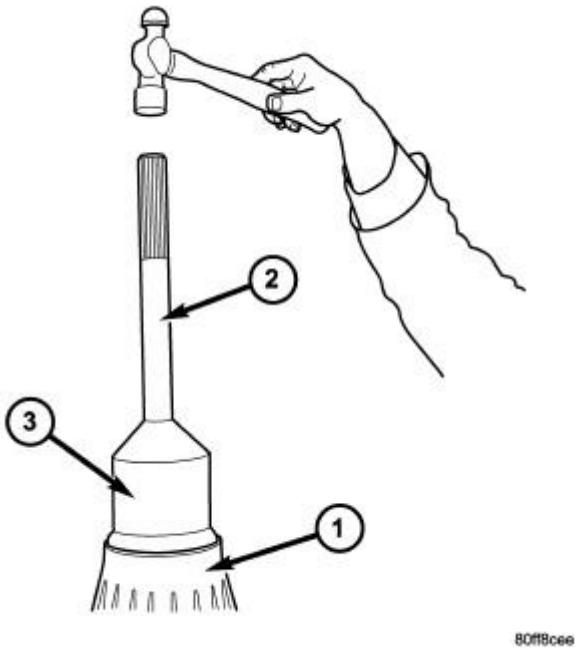

Fig. 87: Installing Extension Housing Seal
Courtesy of CHRYSLER GROUP, LLC

1 - EXTENSION HOUSING
2 - UNIVERSAL HANDLE C-4171
3 - SEAL INSTALLER 9037

6. Install the extension housing dust boot and seal assembly with Seal Installer (special tool #9037, Installer, Dust Boot/Seal) (3) and Universal Handle (special tool #C-4171, Driver Handle, Universal) (2). Refer to **Fig. 87**.

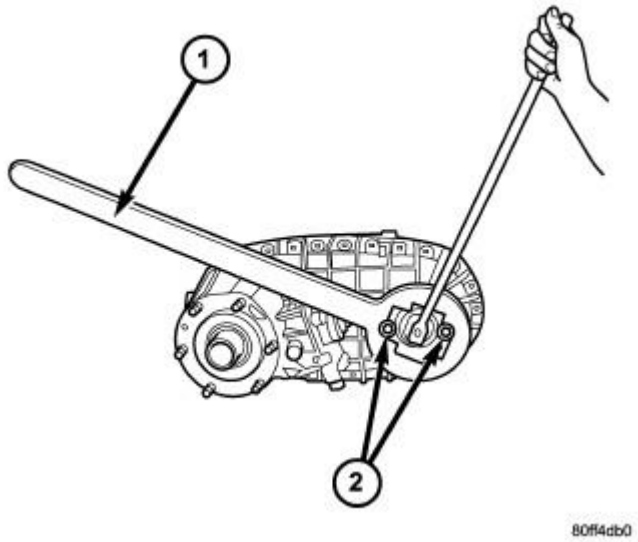

Fig. 88: Removing/Installing Companion Flange Nut
Courtesy of CHRYSLER GROUP, LLC

1 - YOKE HOLDER 6719
2 - BOLTS

7. Install the front companion flange onto the front output shaft.
8. Install two bolts 180° apart into the front output shaft companion flange.
9. Place holder (1) over the bolts (2) and against the companion flange. Refer to **Fig. 88**.
10. Install a new front companion flange nut. Tighten the companion flange nut to 176-271 N.m (130-200 ft.lbs.).

INSTALLATION

INSTALLATION

1. Mount transfer case on a transmission jack.
2. Secure transfer case to jack with chains.
3. Position transfer case under vehicle.
4. Align transfer case and transmission shafts and install transfer case onto the transmission.
5. Install and tighten transfer case attaching nuts to 27-34 N.m (20-25 ft. lbs.) torque.
6. Connect the vent hose.
7. Connect the shift motor and mode sensor wiring connectors. Secure wire harness to clips on transfer case.
8. Align and connect the propeller shafts. Refer to **SHAFT, DRIVE, FRONT LIGHT DUTY, INSTALLATION** or **SHAFT, DRIVE, FRONT HEAVY DUTY, INSTALLATION** or **SHAFT, DRIVE, REAR LIGHT DUTY, INSTALLATION** or **SHAFT, DRIVE, REAR HEAVY DUTY, INSTALLATION** .

9. Fill transfer case with correct fluid. Refer to **STANDARD PROCEDURE**. .
10. Install skid plate, if equipped.
11. Remove transmission jack and support stand.
12. Lower vehicle and verify transfer case shift operation.

SPECIAL TOOLS

SPECIAL TOOLS

	6719A - Holder, Yoke (Originally Shipped In Kit Number(s) 6745, 6947, 6949, 9975.) 6953 - Remover/Installer, Bearing (Originally Shipped In Kit Number(s) 6945, 6947, 6949, 9975.) 7888 - Installer, Seal (Originally Shipped In Kit Number(s) 9975.) 8128 - Installer, Bearing (Originally Shipped In Kit Number(s) 8104, 9975.) 8148 - Cup (Originally Shipped In Kit Number(s) 8104, 9975.) 8151 - Installer, Bearing Cup (Originally Shipped In Kit Number(s) 8104.) 8152 - Installer, Seal (Originally Shipped In Kit Number(s) 8104, 9697, 9698.) 8891 - Installer, Seal (Originally Shipped In Kit Number(s) 8721, 8721CC, 8843, 9925, 9926.) 8992 - Remover, Pinion Flange (Originally Shipped In Kit Number(s) 8999, 8999CC, 9299, 9299CC, 9299CC, 9300A-CAN.) 9033 - Socket, Sector Support (Originally Shipped In Kit Number(s) 8848, 8849, 8849CC.) 9035 - Installer, Bearing (Originally Shipped In Kit Number(s) 8848, 8849, 8849CC.) 9036 - Installer, Seal (Originally Shipped In Kit Number(s) 8848, 8849, 8849CC.) 9037 - Installer, Dust Boot/Seal (Originally Shipped In Kit Number(s) 8848, 8849, 8849CC.) C-4171 - Driver Handle, Universal (Originally Shipped In Kit Number(s) 9202, 9202A-CAN, 9202CC, 9299, 9299CC, 9299CC, 9300A-CAN.) L-4454A - Remover, Bearing Cup (Originally Shipped In Kit Number(s) 9975.) MB-991168-A - Installer, Seal (Originally Shipped In Kit Number(s) 8847, 8853, 8854, 8854CC, 9975.)

FLUID

STANDARD PROCEDURE

STANDARD PROCEDURE - FLUID DRAIN AND REFILL

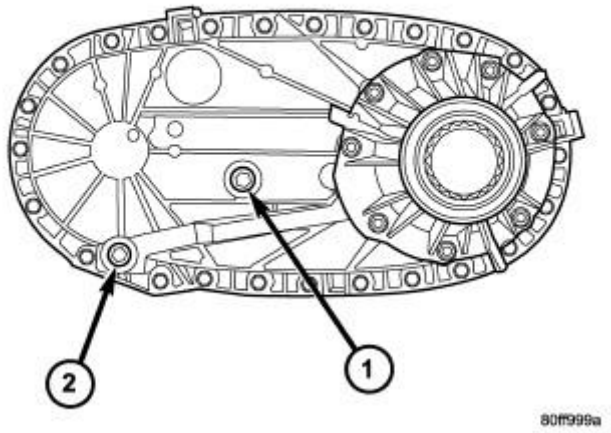

Fig. 89: Drain & Fill Holes
Courtesy of CHRYSLER GROUP, LLC

1 - FILL HOLE
2 - DRAIN HOLE

The fill (1) and drain (2) plugs are both in the rear case. Refer to **Fig. 89**.

1. Raise vehicle.
2. Position drain pan under transfer case.

NOTE: **It may be necessary to remove the exhaust y-pipe at the exhaust manifold to properly access the fill and drain plugs. Lowering the exhaust will allow the plugs to be accessed for torquing during installation. Refer to PIPE, EXHAUST, REMOVAL .**

3. Remove drain and fill plugs and drain lubricant completely.
4. Install drain plug. Tighten plug to 20-34 N.m (15-25 ft. lbs.).
5. Remove drain pan.
6. Fill transfer case to bottom edge of fill plug opening with Mopar® ATF +4, Automatic Transmission fluid.
7. Install and tighten fill plug to 20-34 N.m (15-25 ft. lbs.).
8. Install the exhaust y-pipe to the exhaust manifold, if removed. Refer to **PIPE, EXHAUST, INSTALLATION** .

9. Wipe any excess fluid that may have spilled onto the exhaust.
10. Lower vehicle.

MOTOR, SHIFT

DESCRIPTION

DESCRIPTION

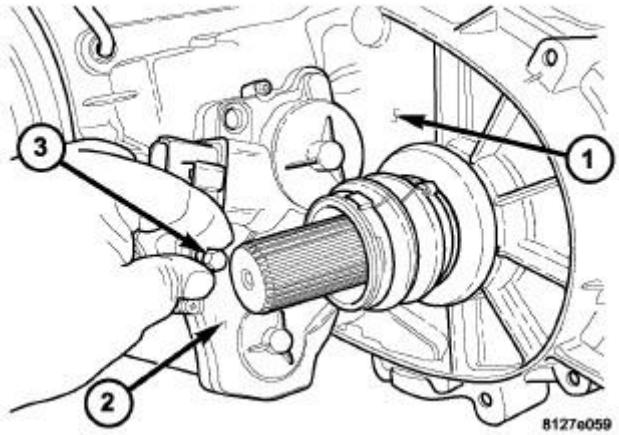

Fig. 90: Identifying Shift Motor & Mode Sensor Assembly Bolts
Courtesy of CHRYSLER GROUP, LLC

1 - TRANSFER CASE
2 - SHIFT MOTOR AND MODE SENSOR ASSEMBLY
3 - BOLT

The shift motor (2) consists of a permanent magnet D.C. motor with gear reduction to convert a high speed-low torque device into a low speed-high torque device. The output of the device is coupled to a shaft which internally moves the mode and range forks that change the transfer case operating ranges. The motor is rated at 25 amps maximum at 23° C (72° F) with 10 volts at the motor leads.

OPERATION

OPERATION

The transfer case shift motor responds to the Transfer Case Control Module (TCCM) commands to move the transfer case shift sector bi-directionally, as required, to obtain the transfer case operating mode indicated by the instrument panel mounted selector switch.

REMOVAL

REMOVAL

NOTE: **New shift motor assemblies are shipped in the 2WD/AWD position. If a new shift motor assembly will be installed, it will be necessary to shift the transfer case to the 2WD/AWD position prior to motor removal.**

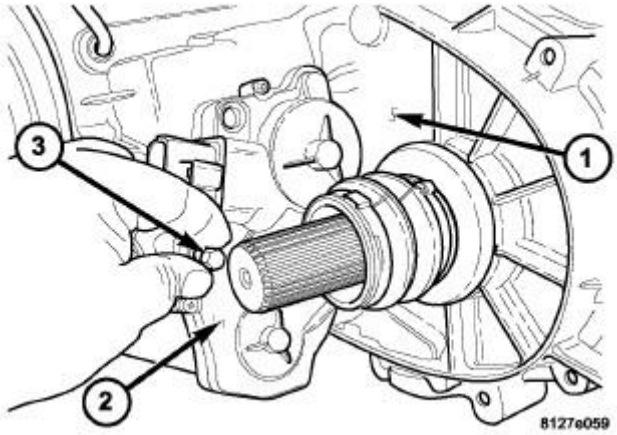

Fig. 91: Identifying Shift Motor & Mode Sensor Assembly Bolts
Courtesy of CHRYSLER GROUP, LLC

1 - TRANSFER CASE
2 - SHIFT MOTOR AND MODE SENSOR ASSEMBLY
3 - BOLT

1. Raise the vehicle on a suitable hoist.
2. Disengage the wiring connectors from the shift motor and mode sensor.
3. Remove the bolts (3) holding the shift motor and mode sensor assembly (2) onto the transfer case (1).
4. Separate the shift motor and mode sensor assembly (2) from the transfer case.

INSTALLATION

INSTALLATION

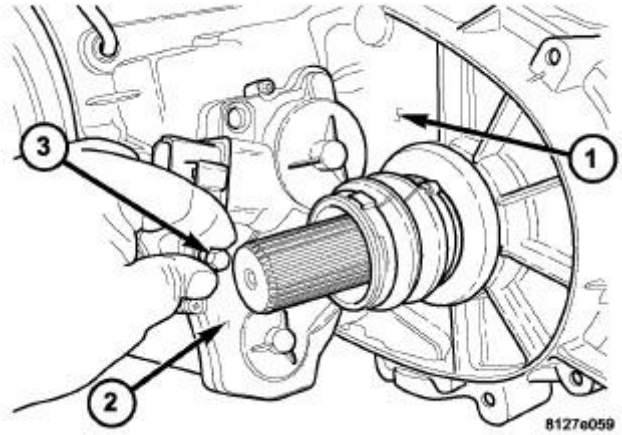

Fig. 92: Identifying Shift Motor & Mode Sensor Assembly Bolts
Courtesy of CHRYSLER GROUP, LLC

1 - TRANSFER CASE
2 - SHIFT MOTOR AND MODE SENSOR ASSEMBLY
3 - BOLT

1. Verify that the shift sector o-ring is clean and properly positioned over the shift sector and against the transfer case.

NOTE: Verify that the shift motor position and sector shaft orientation are aligned. It may be necessary to manually shift the transfer case if the shift motor and sector shaft are not aligned.

2. Position the shift motor and mode sensor assembly (2) onto the transfer case (1).
3. Install the bolts (3) to hold the assembly onto the transfer case. Tighten the bolts to 16-24 N.m (12-18 ft.lbs.).

CAUTION: If the original shift motor and mode sensor assembly bolts are reused, be sure to use Mopar® Lock AND Seal or Loctite™ 242 to replenish the lock patch material originally found on the bolts

4. Engage the wiring connectors to the shift motor and mode sensor.
5. Refill the transfer case as necessary.
6. Lower vehicle and verify transfer case operation.

SEAL, OUTPUT SHAFT, FRONT

REMOVAL

REMOVAL

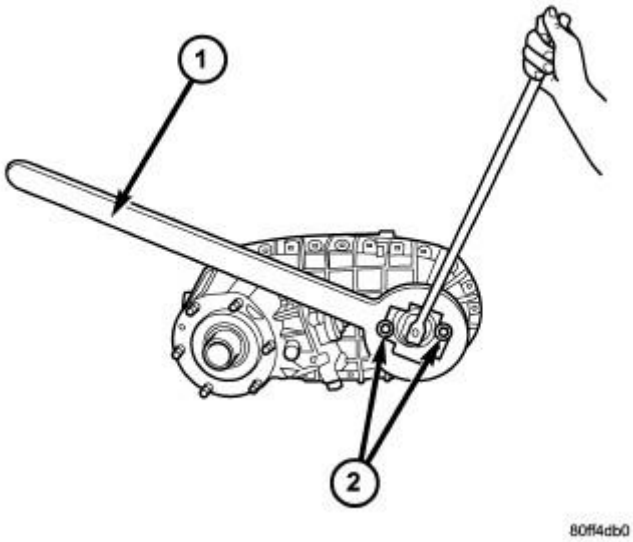

Fig. 93: Removing/Installing Companion Flange Nut
Courtesy of CHRYSLER GROUP, LLC

1 - YOKE HOLDER 6719
2 - BOLTS

1. Remove the front propeller shaft. Refer to **SHAFT, DRIVE, FRONT LIGHT DUTY, REMOVAL** or **SHAFT, DRIVE, FRONT HEAVY DUTY, REMOVAL** .
2. Install two bolts 180° apart into the front output shaft companion flange.
3. Place Yoke Holder (special tool #6719A, Holder, Yoke) (1) over the bolts (2) and against the companion flange. Refer to **Fig. 93**.
4. Remove and discard the front companion flange nut.
5. Remove the companion flange from the front output shaft. It may be necessary to use Pinion Flange Remover (special tool #8992, Remover, Pinion Flange) to remove the companion flange.
6. Using a screw and a slide hammer, remove the front output shaft seal.

INSTALLATION

INSTALLATION

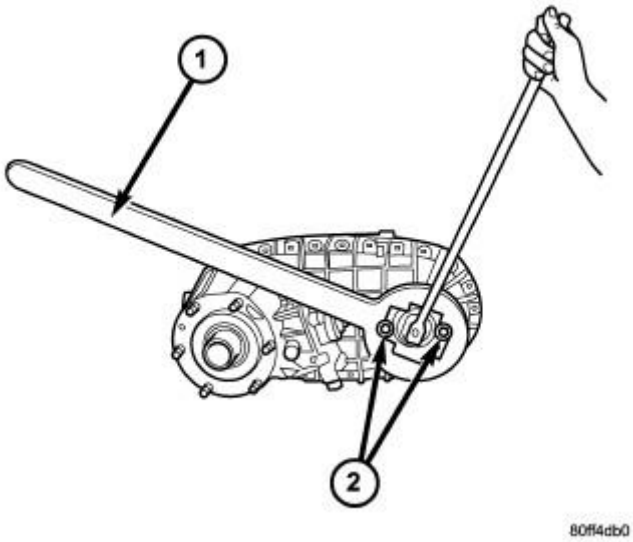

Fig. 94: Removing/Installing Companion Flange Nut
Courtesy of CHRYSLER GROUP, LLC

1 - YOKE HOLDER 6719
2 - BOLTS

1. Install the new front output shaft seal with Seal Installer (special tool #MB-991168-A, Installer, Seal).
2. Install the front companion flange onto the front output shaft.
3. Install two bolts 180° apart into the front output shaft companion flange.
4. Place Yoke Holder (special tool #6719A, Holder, Yoke) (1) over the bolts (2) and against the companion flange. Refer to **Fig. 94**.
5. Install a new front companion flange nut. Tighten the companion flange nut to 176-271 N.m (130-200 ft.lbs.).
6. Install front propeller shaft. Refer to **SHAFT, DRIVE, FRONT LIGHT DUTY, INSTALLATION** or **SHAFT, DRIVE, FRONT HEAVY DUTY, INSTALLATION** .

SEAL, OUTPUT SHAFT, WITH DUST BOOT

REMOVAL

REMOVAL

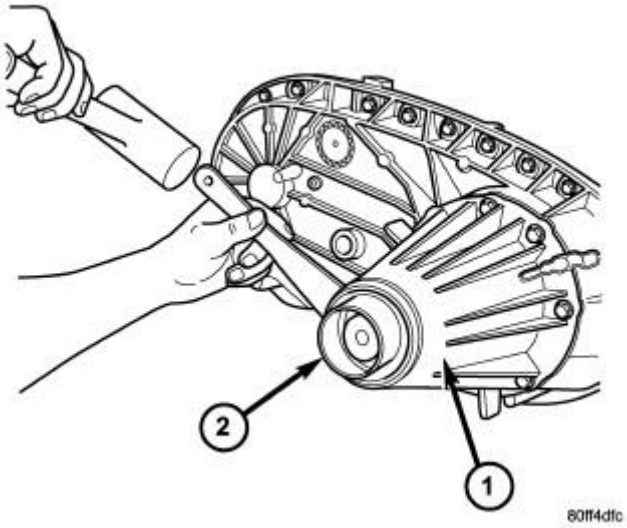

Fig. 95: Removing Extension Housing Dust Boot
Courtesy of CHRYSLER GROUP, LLC

1 - EXTENSION HOUSING
2 - DUST BOOT

1. Raise and support vehicle.
2. Remove rear propeller shaft. Refer to **SHAFT, DRIVE, REAR LIGHT DUTY, REMOVAL** or **SHAFT, DRIVE, REAR HEAVY DUTY, REMOVAL** .
3. Use a suitable chisel or pry tool to remove the rear extension housing dust boot (2). Refer to **Fig. 95**.
4. Use a suitable chisel or pry tool to remove the rear extension housing seal.

INSTALLATION

INSTALLATION

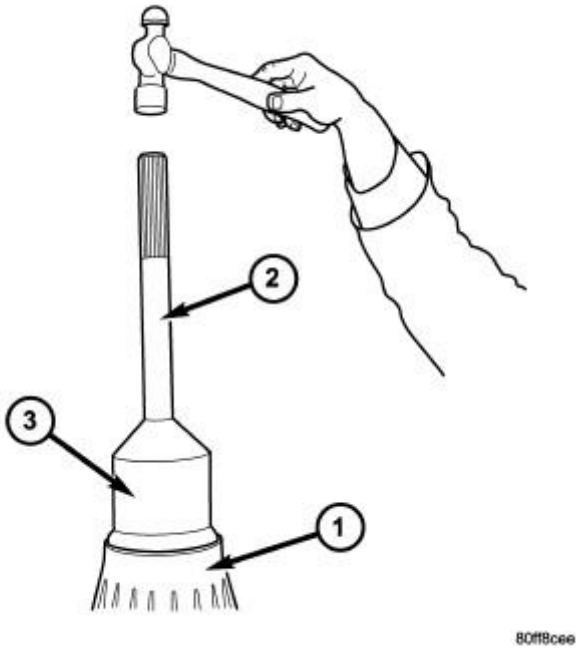

Fig. 96: Installing Extension Housing Seal
Courtesy of CHRYSLER GROUP, LLC

1 - EXTENSION HOUSING
2 - UNIVERSAL HANDLE C-4171
3 - SEAL INSTALLER 9037

1. Clean fluid residue from sealing surface and inspect for defects.
2. Install the extension housing dust boot and seal assembly with Seal Installer (special tool #9037, Installer, Dust Boot/Seal) (3) and Universal Handle (special tool #C-4171, Driver Handle, Universal) (2). Refer to **Fig. 96**.
3. Install rear propeller shaft. Refer to **SHAFT, DRIVE, REAR LIGHT DUTY, INSTALLATION** or **SHAFT, DRIVE, REAR HEAVY DUTY, INSTALLATION** .
4. Verify proper transfer case fluid level.
5. Lower vehicle.

SENSOR, MODE

DESCRIPTION

DESCRIPTION

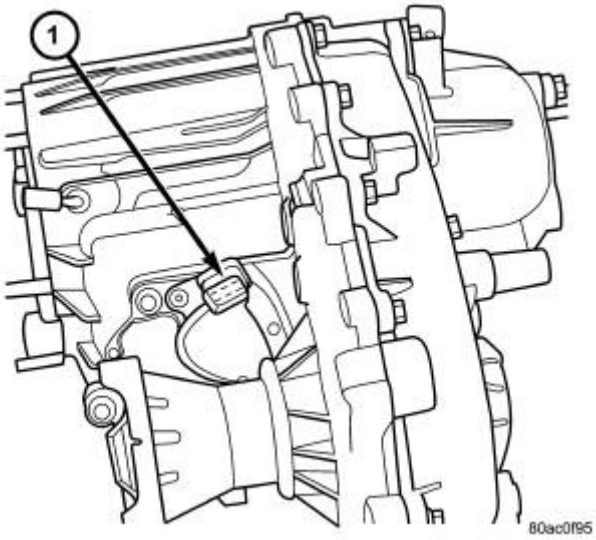

Fig. 97: Mode Sensor
Courtesy of CHRYSLER GROUP, LLC

1 - MODE SENSOR

The transfer case mode sensor (1) is an electronic device whose output can be interpreted to indicate the shift motor shaft's rotary position. Refer to **Fig. 97**. The sensor consists of a magnetic ring and four Hall Effect Transistors to create a 4 channel digital device (non-contacting) whose output converts the motor shaft position into a coded signal. The TCCM must supply 5VDC (+/- 0.5v) to the sensor and monitor the shift motor position. The four channels are denoted A, B, C, and D. The sensor is mechanically linked to the shaft of the cam which causes the transfer case shifting. The mode sensor draws less than 53 mA.

OPERATION

OPERATION

During normal vehicle operation, the Transfer Case Control Module (TCCM) monitors the mode sensor outputs at least every 250 (+/-50) milliseconds when the shift motor is stationary and 400 microseconds when the shift motor is active. A mode sensor signal between 3.8 Volts and 0.8 Volts is considered to be undefined.

Refer to **SECTOR ANGLES VS. TRANSFER CASE POSITION** for the relative angles of the transfer case shift sector versus the interpreted transfer case gear operating mode. Refer to **MODE SENSOR CHANNEL STATES** for the sensor codes returned to the TCCM for each transfer case mode sensor position. The various between gears positions can also be referred as the transfer case's coarse position. These coarse positions come into play during shift attempts.

SECTOR ANGLES VS. TRANSFER CASE POSITION

Shaft Angle (Degrees)	Transfer Case Position
+40	4LO
+20	N

0	2WD/AWD
-20	4HI

MODE SENSOR CHANNEL STATES

Transfer Case Angle (degrees)	Sensor Channel A	Sensor Channel B	Sensor Channel C	Sensor Channel D
Between Gears	H	H	L	H
+40 (4LO)	H	H	L	L
Between Gears	H	H	L	H
Between Gears	H	L	L	H
+20 (NEUTRAL)	H	L	L	L
Between Gears	H	L	L	H
Between Gears	H	L	H	H
0 (2WD/AWD)	H	L	H	L
Between Gears	H	L	H	H
Between Gears	L	L	H	H
-20 (4HI)	L	L	H	L
Between Gears	L	L	H	H
Between Gears	L	H	H	H

SWITCH, TRANSFER CASE

DESCRIPTION

DESCRIPTION

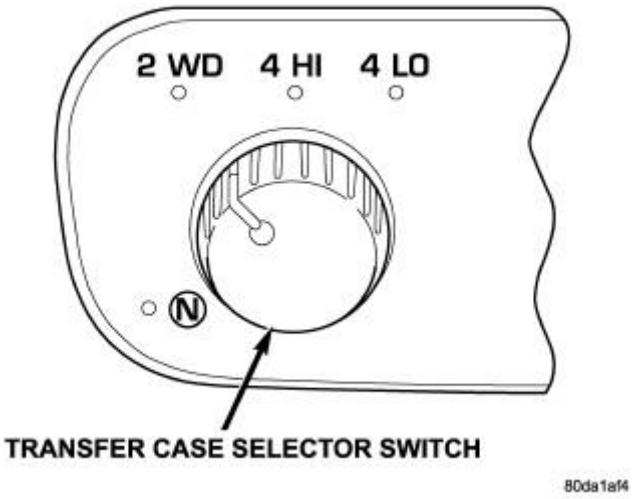

Fig. 98: Transfer Case Selector Switch
Courtesy of CHRYSLER GROUP, LLC

1 - SELECTOR SWITCH

The selector switch assembly is mounted in the left side of the vehicle's Instrument Panel (IP) and consists of a rotary knob connected to a resistive network for the mode and range shift selections. Refer to **Fig. 98**. Also located in this assembly is a recessed, normally open momentary switch for making shifts into and out of transfer case NEUTRAL. A pen, or similar instrument, is used to make a NEUTRAL shift selection, thus reducing the likelihood of an inadvertent shift request.

The selector switch also contains four light emitting diode's (LED's) to indicate the transfer case position and whether a shift is in progress.

OPERATION

OPERATION

As the position of the selector switch varies, the resistance between the Mode Sensor supply voltage pin and the Mode Sensor output will vary. Hardware, software, and calibrations within the Transfer Case Control Module (TCCM) are provided that interpret the selector switch resistance as given in the table below: Refer to **SELECTOR SWITCH INTERPRETATION**.

SELECTOR SWITCH INTERPRETATION

Step	Resistance Range (ohms)	Required Interpretation
A	<200	Shorted
B	400-700	NEUTRAL
C	1050-1450	4LO
D	1850-2300	4HI
E	3050-5950	2WD (Default)
F	9.5-12.5K	In between positions
G	>15.5K	Open

For resistances between the ranges B-E shown for each valid position (T-Case NEUTRAL, 4LO, 4HI, 2WD), the TCCM may interpret the resistance as:

- either of the neighboring valid positions.
- as an invalid fault position.

For resistances between the ranges E and F shown for 2WD and in-between positions, the TCCM may interpret the resistance as:

- the 2WD position.
- an invalid fault position.
- a valid in-between position.

For resistances between the ranges F and G shown for in-between positions and fault condition (open), the TCCM may interpret the resistance as:

- a valid in-between position.
- an invalid fault position.

For resistances between the ranges A and B shown for the fault condition (short) and T-Case NEUTRAL, the TCCM may interpret the resistance as:

- the T-Case NEUTRAL position.
- an invalid fault position.

The LED's in the selector assembly are illuminated/flashed in the following manner to indicate a particular condition or state.

- A solidly illuminated LED indicates a successfully completed shift and the current operating mode of the transfer case. While a shift has been requested but not yet completed, the LED for the desired transfer case position is flashed.
- A flashing operating mode LED for the desired gear indicates that a shift to that position has been requested, but all of the driver controllable conditions have not been met. This is in an attempt to notify the driver that the transmission needs to be put into NEUTRAL, the vehicle speed is too great, or some other condition outlined (other than a diagnostic failure that would prevent this shift) elsewhere is not met. Refer to **MODULE, DRIVETRAIN CONTROL, OPERATION** . Note that this flashing will continue indefinitely until the conditions are eventually met, or the selector switch position is changed, or if diagnostic routines no longer allow the requested shift.
- If the driver attempts to make a shift into transfer case NEUTRAL, and any of the driver controllable conditions are not met, the request will be ignored until all of the conditions are met or until the NEUTRAL select button is released. Additionally the neutral lamp will flash, or begin to flash while the button is depressed and operator controllable conditions are not being met. All of the LED's except the Neutral will flash if any of the operator controllable conditions for shifting are not met while the Neutral button is depressed. This "toggle" type of feature is necessary because the TCCM would interpret another request immediately after the shift into transfer case NEUTRAL has completed.
- No LED's illuminated indicate a fault in the transfer case control system.

DIAGNOSTIC CODE INDEX

DIAGNOSTIC CODE INDEX

DTC	Description
C1400	TRANSFER CASE RANGE SELECT SWITCH PERFORMANCE
P0560	BATTERY SYSTEM VOLTAGE
P0613	INTERNAL TRANSMISSION PROCESSOR
P0702	TRANSMISSION CONTROL SYSTEM ELECTRICAL
P0706	TRANSMISSION RANGE SENSOR RATIONALITY
P0707	TRANSMISSION RANGE SENSOR CIRCUIT LOW
P0708	TRANSMISSION RANGE SENSOR CIRCUIT HIGH
P0711	TRANSMISSION TEMPERATURE SENSOR 1 PERFORMANCE
P0712	TRANSMISSION TEMPERATURE SENSOR 1 LOW
P0713	TRANSMISSION TEMPERATURE SENSOR 1 HIGH
P0717	INPUT SPEED SENSOR 1 CIRCUIT NO SIGNAL
P0722	OUTPUT SPEED SENSOR CIRCUIT NO SIGNAL
P0730	INCORRECT GEAR RATIO
P0745	LINE PRESSURE SOLENOID CIRCUIT
P0746	PRESSURE CONTROL SOLENOID A PERFORMANCE
P0748	PRESSURE CONTROL SOLENOID A CIRCUIT
P0751	SHIFT SOLENOID A PERFORMANCE
P0756	SHIFT SOLENOID B PERFORMANCE
P0761	SHIFT SOLENOID C PERFORMANCE
P0766	SHIFT SOLENOID D PERFORMANCE
P0776	PRESSURE CONTROL SOLENOID B PERFORMANCE
P0778	PRESSURE CONTROL SOLENOID B CIRCUIT
P0796	PRESSURE CONTROL SOLENOID C PERFORMANCE
P0798	PRESSURE CONTROL SOLENOID C CIRCUIT
P0973	SHIFT SOLENOID A CONTROL CIRCUIT LOW
P0974	SHIFT SOLENOID A CONTROL CIRCUIT HIGH
P0976	SHIFT SOLENOID B CONTROL CIRCUIT LOW
P0977	SHIFT SOLENOID B CONTROL CIRCUIT HIGH
P0979	SHIFT SOLENOID C CONTROL CIRCUIT LOW
P0980	SHIFT SOLENOID C CONTROL CIRCUIT HIGH
P0982	SHIFT SOLENOID D CONTROL CIRCUIT LOW
P0983	SHIFT SOLENOID D CONTROL CIRCUIT HIGH
P1679	CALIBRATION NOT LEARNED
P1720	LOSS OF OUTPUT SPEED / WHEEL SPEED

P2741	TRANSMISSION FLUID TEMPERATURE SENSOR 2 PERFORMANCE
P2742	TRANSMISSION FLUID TEMPERATURE SENSOR 2 LOW
P2743	TRANSMISSION FLUID TEMPERATURE SENSOR 2 HIGH
P2757	TCC PRESSURE CONTROL SOLENOID CONTROL CIRCUIT PERFORMANCE
P2806	TRANSMISSION RANGE SENSOR ALIGNMENT
U0001	CAN C BUS
U0100	LOST COMMUNICATION WITH ECM / PCM
U0121	LOST COMMUNICATION WITH ANTI-LOCK BRAKE MODULE
U0141	LOST COMMUNICATION WITH IPM (FCM/TIPM)
U1111	LOST ODOMETER MESSAGE
U1400	IMPLAUSIBLE TPS SIGNAL RECEIVED
U1401	IMPLAUSIBLE ENGINE SPEED SIGNAL RECEIVED
U1402	IMPLAUSIBLE ENGINE TEMPERATURE SIGNAL RECEIVED
U1407	IMPLAUSIBLE ENGINE TORQUE REQUEST RECEIVED
U1408	IMPLAUSIBLE BRAKE SIGNAL RECEIVED
U140D	IMPLAUSIBLE WHEEL SPEED SIGNALS RECEIVED
U1424	IMPLAUSIBLE ENGINE TORQUE RECEIVED
U1437	IMPLAUSIBLE INTAKE AIR TEMPERATURE MESSAGE RECEIVED
U1439	IMPLAUSIBLE/MISSING PROGRAMMED AXLE RATIO
U1440	IMPLAUSIBLE/MISSING PROGRAMMED TRANSFER CASE HI RATIO
U1441	IMPLAUSIBLE/MISSING PROGRAMMED TRANSFER CASE LOW RATIO
U1449	IMPLAUSIBLE ERS MESSAGE RECEIVED

DIAGNOSIS AND TESTING

C1400-TRANSFER CASE RANGE SELECT SWITCH PERFORMANCE

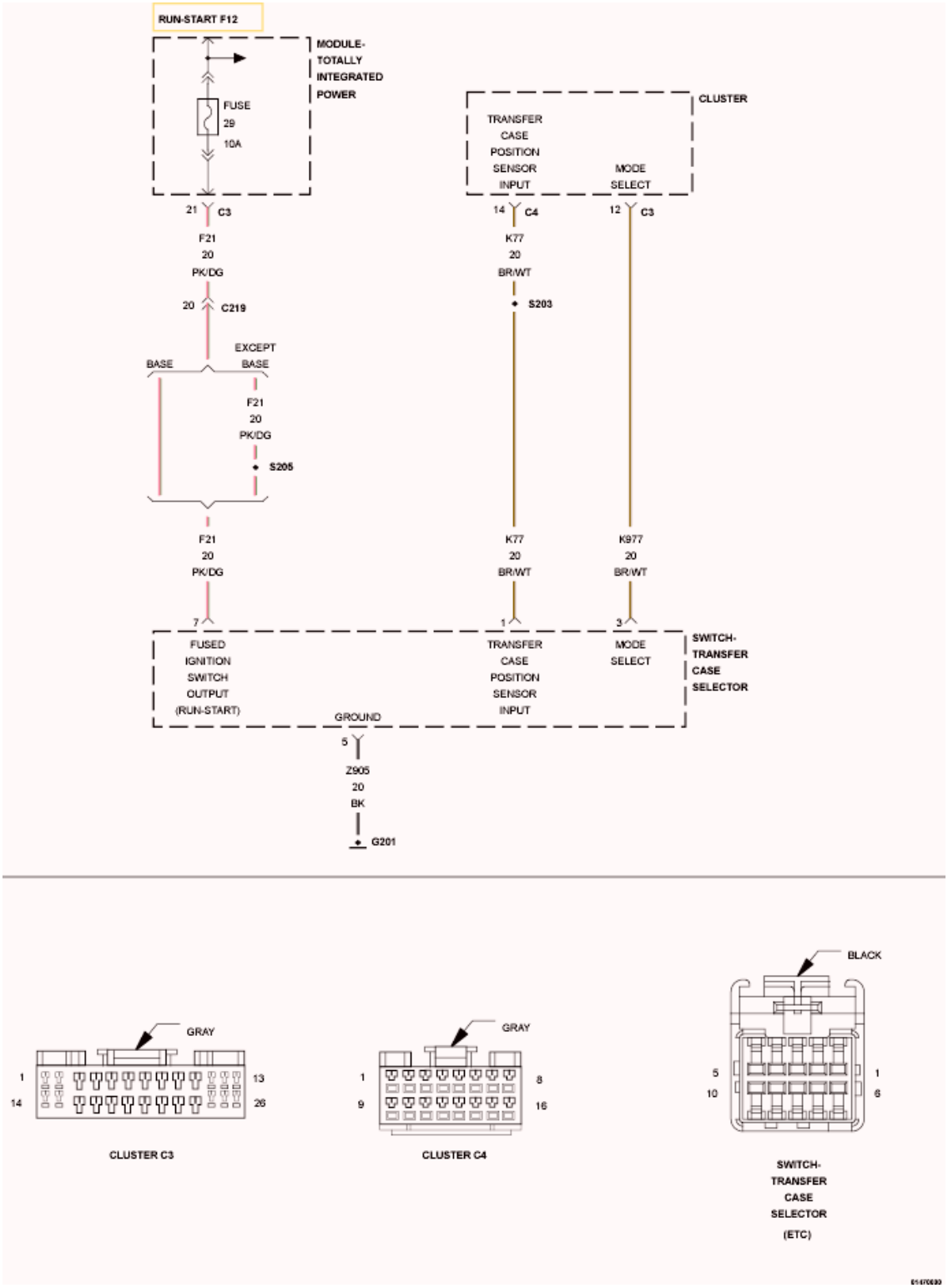

Fig. 1: Transfer Case Range Select Switch Supply Voltage Wiring Diagram
Courtesy of CHRYSLER GROUP, LLC

For a complete wiring diagram, **refer to appropriate SYSTEM WIRING DIAGRAMS article** .

WHEN MONITORED:

Drive conditions.

SET CONDITION:

The transfer case selector switch is not reporting a valid voltage for any switch position.

POSSIBLE CAUSES

Possible Causes
TOTALLY INTEGRATED POWER MODULE (TIPM) CONFIGURED INCORRECTLY
TRANSFER CASE SELECTOR SWITCH
TOTALLY INTEGRATED POWER MODULE (TIPM)

DIAGNOSTIC TEST

1. **DTC IS ACTIVE**

   NOTE: Repair all other DTCs first before proceeding with this test.

   1. Ignition on, engine not running.
   2. With the scan tool, record and erase DTCs.
   3. Test drive the vehicle in each Transfer Case Selector Switch position.
   4. With the scan tool, read DTCs.

      Is the DTC status Active at this time?

      Yes

      - Go To 2.

      No

      - Go To 5.
2. **TRANSFER CASE RANGE SELECT SWITCH VOLTAGE 4WD HIGH**
   1. Place the Transfer Case Selector Switch in 4WD HI.
   2. With the scan tool under Data Display, read the Transfer Case Range Select Switch voltage in the CCN.

      Is the voltage approximately 1 volt (±.02 of a volt)?

      Yes

      - Go To 3.

No

- Go To 4.

3. **TRANSFER CASE RANGE SELECT SWITCH VOLTAGE 4WD LO**
   1. Place the Transfer Case Selector Switch in 4WD LO.
   2. With the scan tool under Data Display, read the Transfer Case Range Select Switch voltage in the CCN.

   Is the voltage approximately 2.72 volts (±.02 of a volt)?

   Yes

   - Replace the Totally Integrated Power Module (TIPM) in accordance with the Service Information.
   - Refer to **STANDARD PROCEDURE** and perform the BODY VERIFICATION TEST.

   No

   - Go To 4.

4. **TRANSFER CASE SELECTOR SWITCH**

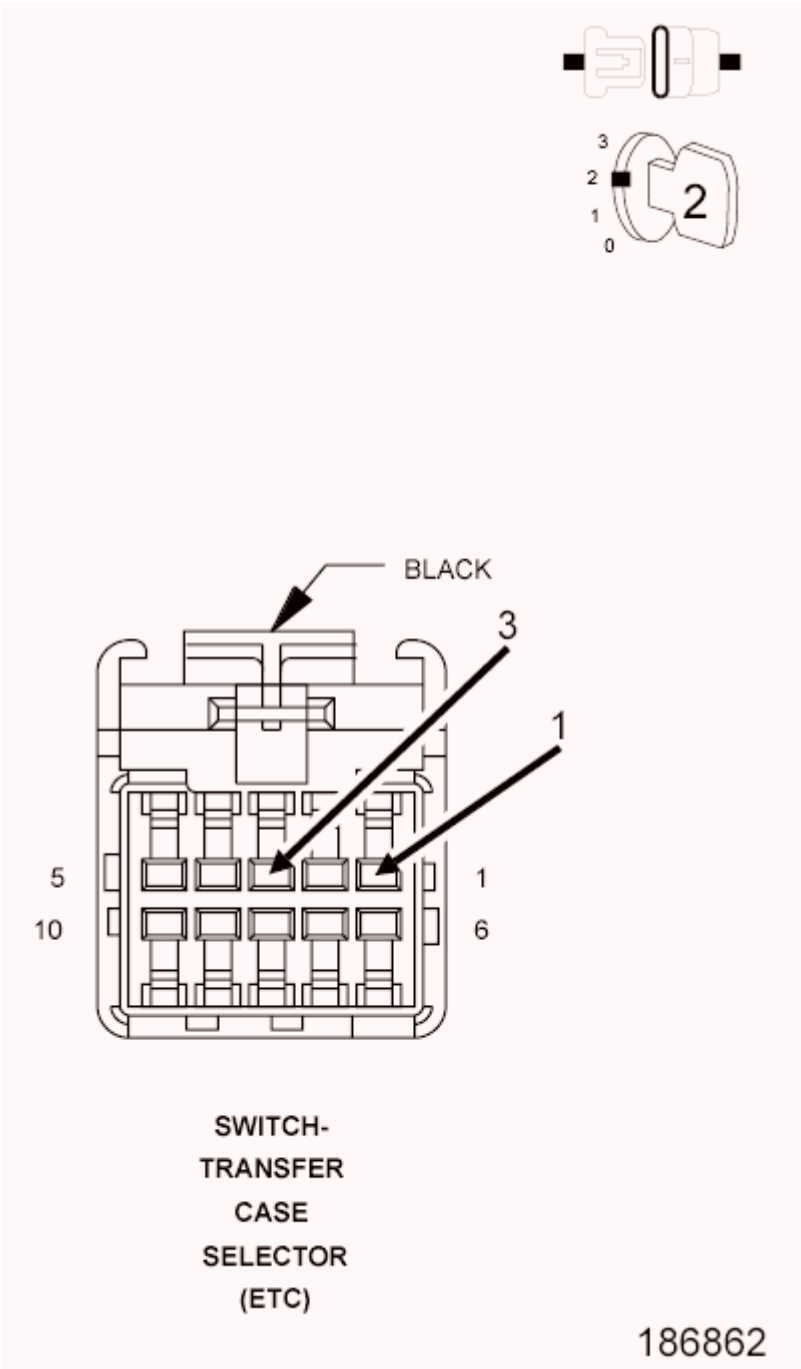

Fig. 2: Transfer Case Selector Switch Connector Terminals
Courtesy of CHRYSLER GROUP, LLC

1. Turn the ignition off to the lock position.
2. Disconnect the Transfer Case Selector Switch harness connector.
3. Connect a jumper wire between the (K77) Transfer Case Position Sensor Input circuit and the (K977) Mode Select circuit in the Transfer Case Selector Switch harness connector.
4. Ignition on, engine not running.

5. With the scan tool in Data Display, read the Range Switch voltage in the CCN.

NOTE: The switch voltage should be approximately 5.0 volts (±.05 of a volt).

Does the voltage display as described?

Yes

- Replace the Transfer Case Selector Switch in accordance with the Service Information.
- Refer to **STANDARD PROCEDURE** and perform the TRANSFER CASE VERIFICATION TEST.

No

- Replace the Totally Integrated Power Module (TIPM) in accordance with the Service Information.
- Refer to **STANDARD PROCEDURE** and perform the BODY VERIFICATION TEST.

5. **INTERMITTENT TRANSFER CASE RANGE SELECT SWITCH PERFORMANCE**
   1. The conditions necessary to set this DTC are not present at this time.
   2. Using the wiring diagram/schematic as a guide, inspect the wiring and connectors.
   3. While monitoring the scan tool data relative to this circuit, wiggle test the wiring and connectors.
   4. Look for the data to change or for the DTC to reset during the wiggle test.
   5. While monitoring the scan tool data relative to this circuit, move the selector switch to each position several times.
   6. Look for the data to change other than as expected or for the DTC to reset.

   Were any problems found?

   Yes

   - Repair as necessary.
   - Refer to **STANDARD PROCEDURE** and perform the TRANSFER CASE VERIFICATION TEST.

   No

   - Test complete.

P0560-BATTERY SYSTEM VOLTAGE

For a complete wiring diagram, **refer to appropriate SYSTEM WIRING DIAGRAMS article** .

THEORY OF OPERATION

Battery voltage is supplied to the controller and is used to write to the controller EEPROM after vehicle shutdown.

WHEN MONITORED:

- Continuously with the Ignition on and the engine running.

SET CONDITION:

- Controller detects EEPROM was not correctly written at key off. If the controller detects an error on two consecutive key cycles, this DTC will set.

Possible Causes
RELATED TIPM DTCS
BATTERY DISCONNECTED WITH THE KEY ON
(A104) B(+) CIRCUIT OPEN
(A104) B(+) SHORT TO GROUND
(Z133) GROUND CIRCUIT OPEN
TRANSMISSION CONTROL MODULE (TCM)

Always perform the AS68RC Pre-Diagnostic Troubleshooting procedure before proceeding. Refer to STANDARD PROCEDURE.

DIAGNOSTIC TEST

1. **BATTERY DISCONNECTED**

   Was the battery disconnected while the key was ON?

   Yes

   - Disconnecting the battery with the Ignition on can set this DTC. Always turn the key to the Lock position before disconnecting the battery.

   No

   - Go To 2.
2. **CHECK IF DTC IS CURRENT**
   1. Using the scan tool, read TCM DTCs.
   2. Record the Environmental Data and any DTCs.
   3. Clear DTCs.
   4. Using the recorded Environmental Data, along with the When Monitored and Set Conditions above, operate the vehicle in the conditions that set the DTC.
   5. Read TCM DTCs.

Did the DTC reset?

Yes

- Go To 3.

No

- Go To 7.

3. **CHECK TIPM FOR DTCS**
   1. With the scan tool, view TIPM DTCs.

      Are there any TIPM power output codes stored?

      Yes

      - Refer to **DIAGNOSIS AND TESTING** and perform the appropriate diagnostic procedure.

      No

      - Go To 4.

4. **CHECK THE (A104) FUSED B(+) CIRCUIT FOR AN OPEN**

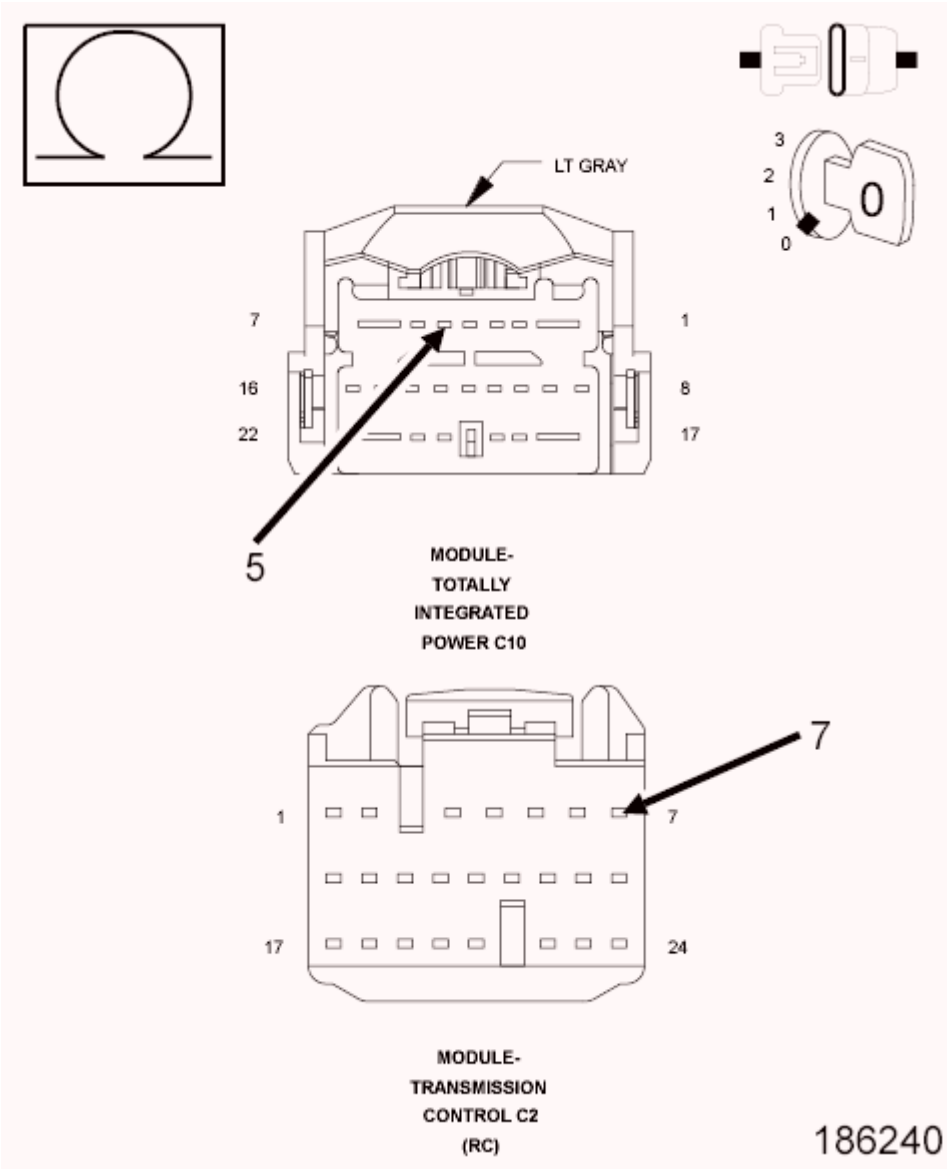

Fig. 3: Checking Fused B(+) Circuit For An Open
Courtesy of CHRYSLER GROUP, LLC

1. Turn the ignition off to the lock position.
2. Disconnect the TCM C2 harness connector.
3. Disconnect the TIPM C10 harness connector.
4. Measure the resistance of the (A104) Fused B(+) circuit between the TCM C2 harness connector and TIPM C10 harness connector.

   Is the resistance above 5.0 Ohms?

   Yes

   - Repair the (A104) Fused B(+) circuit for an open.

- Refer to **STANDARD PROCEDURE** and perform AS68RC VERIFICATION TEST.

No

- Go To 5.

5. **CHECK THE (A104) FUSED B(+) CIRCUIT FOR A SHORT TO GROUND**

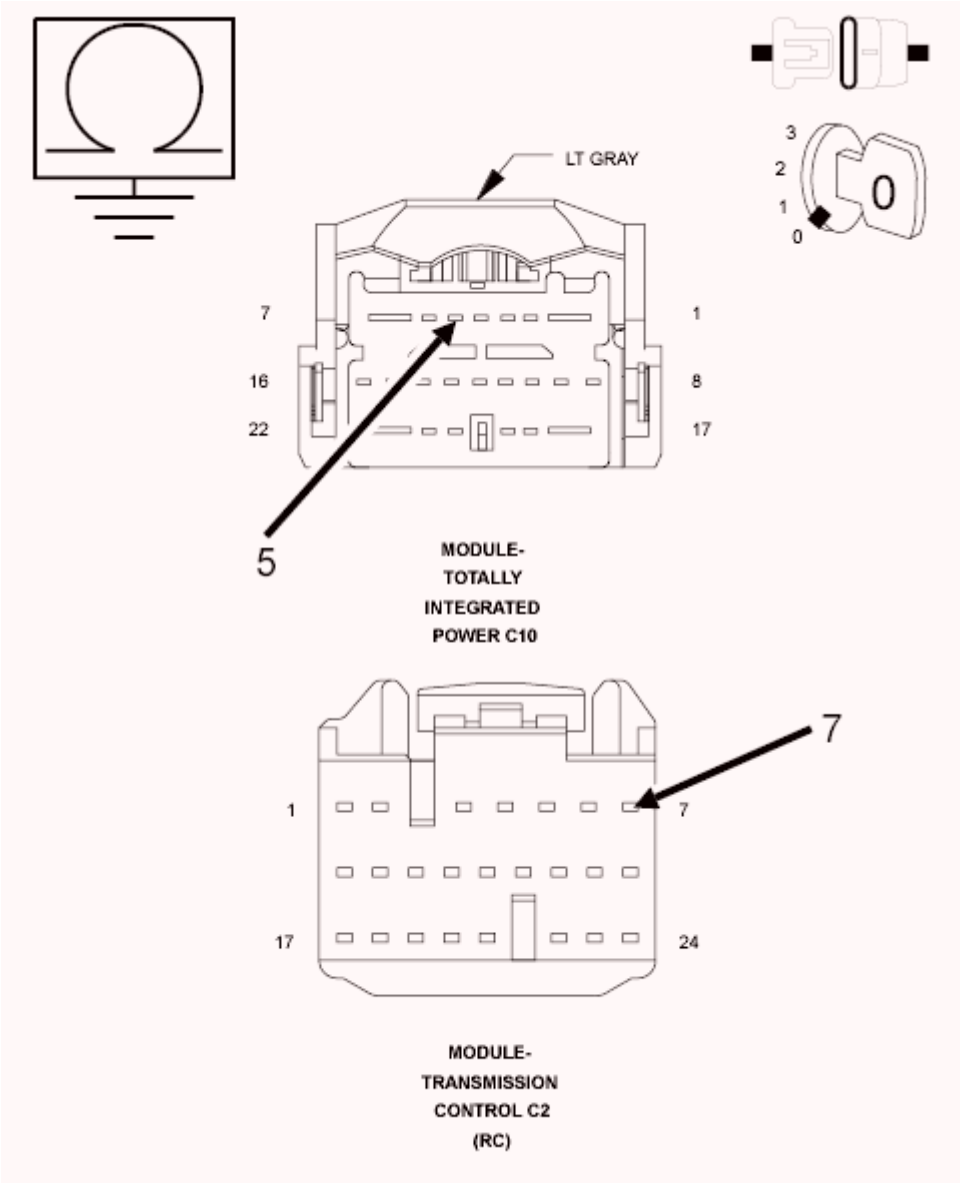

Fig. 4: Checking Fused B(+) Circuit For A Short To Ground
Courtesy of CHRYSLER GROUP, LLC

1. Measure the resistance between ground and the (A104) Fused B(+) circuit.

   Is the resistance below 100k Ohms?

Yes

- Repair the (A104) Fused B(+) circuit for a short to ground.
- Refer to **STANDARD PROCEDURE** and perform AS68RC VERIFICATION TEST.

No

- Go To 6.

6. **CHECK THE (Z133) GROUND CIRCUIT FOR AN OPEN**

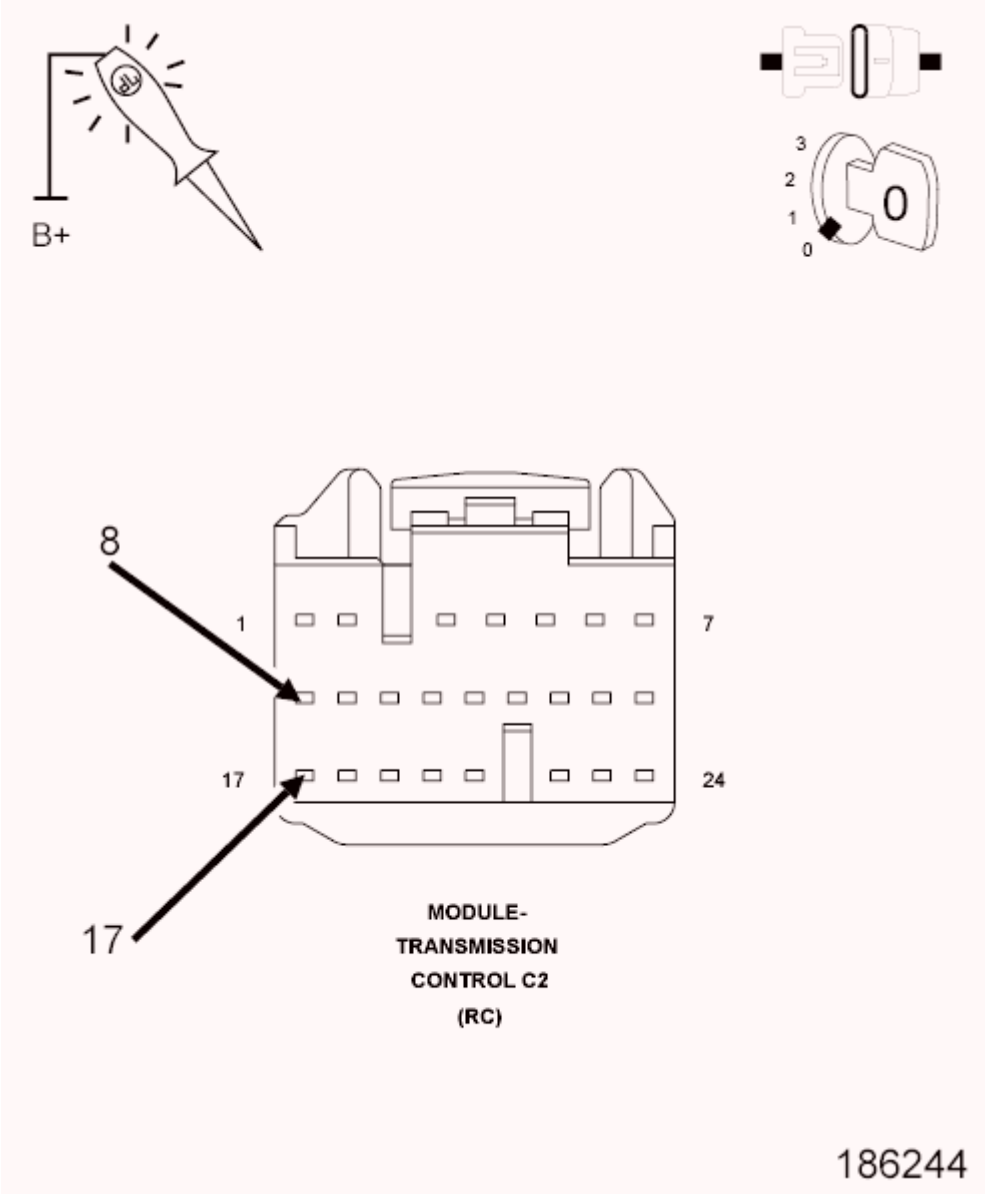

Fig. 5: Checking Ground Circuit For An Open
Courtesy of CHRYSLER GROUP, LLC

1. Turn the ignition off to the lock position.

2. Using a 12-volt test light connected to 12-volts, check the (Z133) Ground circuits in the TCM C2 harness connector and ground.

   NOTE: The test light must illuminate brightly. Compare the brightness to that of a direct connection to the battery.

   Does the test light illuminate brightly for all of the Ground circuits?

   Yes

   - Using the schematics as a guide, check the Transmission Control Module (TCM) terminals for corrosion, damage, or terminal push out. Pay particular attention to all power and ground circuits. Check for Service Information Tune-ups or Service Bulletins for any possible causes that may apply. If no problems are found, replace and program the TCM in accordance with the Service Information.
   - Refer to **STANDARD PROCEDURE** and perform AS68RC VERIFICATION TEST.

   No

   - Repair the (Z133) Ground circuit for an open.
   - Refer to **STANDARD PROCEDURE** and perform AS68RC VERIFICATION TEST.

7. **CHECK WIRING AND CONNECTORS**
   1. The conditions necessary to set the DTC are not present at this time.
   2. Using the schematics as a guide, inspect the wiring and connectors specific to this circuit.
   3. Wiggle the wires while checking for shorted and open circuits.
   4. Check for any Service Bulletins that may apply.

   Were there any problems found?

   Yes

   - Repair as necessary.
   - Refer to **STANDARD PROCEDURE** and perform AS68RC VERIFICATION TEST.

   No

   - Test Complete.

P0613-INTERNAL TRANSMISSION PROCESSOR

For a complete wiring diagram, **refer to appropriate SYSTEM WIRING DIAGRAMS article** .

THEORY OF OPERATION

The Transmission Control Module (TCM) performs several internal checks on the processor. The controller

checks the Check Sum of the ROM, the Read/Write integrity of the RAM, and the Check Sum of the EEPROM.

WHEN MONITORED:

Continuously with the Ignition on and the engine running.

SET CONDITION:

Transmission Control Module (TCM) detects an error in the RAM, ROM, or EEPROM.

POSSIBLE CAUSES

Possible Causes
TRANSMISSION CONTROL MODULE (TCM)

Always perform the AS68RC Pre-Diagnostic Troubleshooting procedure before proceeding. Refer to STANDARD PROCEDURE.

DIAGNOSTIC TEST

1. **TCM INTERNAL ERROR**

   Repair

   - Using the schematics as a guide, check the Transmission Control Module (TCM) terminals for corrosion, damage, or terminal push out. Pay particular attention to all power and ground circuits. Check for Service Information Tune-ups or Service Bulletins for any possible causes that may apply. If no problems are found, replace and program the TCM in accordance with the Service Information. With the scan tool, perform Quick Learn.
   - Refer to **STANDARD PROCEDURE** and perform the AS68RC VERIFICATION TEST.

P0702-TRANSMISSION CONTROL SYSTEM ELECTRICAL

For a complete wiring diagram, **refer to appropriate SYSTEM WIRING DIAGRAMS article** .

THEORY OF OPERATION

The Transmission Control Output is used to supply the primary power to the Transmission Control Module (TCM). When the ignition switch is in the unlock, run or crank position, the ignition switch provides and input to the Totally Integrated Power Module (TIPM). The TIPM then energizes the Transmission Control relay which provides voltage to the TCM.

WHEN MONITORED:

Continuously with the Ignition on and the engine running.

SET CONDITION:

The TCM detects low voltage on the Transmission Control Output while the engine speed is greater than 0 rpm for 15 seconds.

POSSIBLE CAUSES

Possible Causes
RELATED TIPM DTCS
A916 BATTERY FEED CIRCUIT
T16 TRANSMISSION CONTROL OUTPUT CIRCUIT OPEN
T16 TRANSMISSION CONTROL OUTPUT CIRCUIT SHORT TO GROUND
TRANSMISSION CONTROL RELAY
TRANSMISSION CONTROL MODULE (TCM)
TOTALLY INTEGRATED POWER MODULE (TIPM)

Always perform the AS68RC Pre-Diagnostic Troubleshooting procedure before proceeding. Refer to STANDARD PROCEDURE.

DIAGNOSTIC TEST

1. **CHECK IF DTC IS CURRENT**
    1. Using the scan tool, read TCM DTCs.
    2. Record the Environmental Data and any DTCs.
    3. Clear DTCs.
    4. Using the recorded Environmental Data, along with the When Monitored and Set Conditions above, operate the vehicle in the conditions that set the DTC.
    5. Read TCM DTCs.

    Did the DTC reset?

    Yes

    - Go To 2.

    No

    - Go To 8.
2. **CHECK FOR RELATED TIPM DTCS**
    1. With the scan tool, view TIPM DTCs.

    Are there any TIPM power output codes stored?

    Yes

    - Refer to **DIAGNOSIS AND TESTING** and perform the appropriate diagnostic procedure.

No

- Go To 3.

3. **CHECK THE (T16) TRANSMISSION CONTROL OUTPUT CIRCUIT**

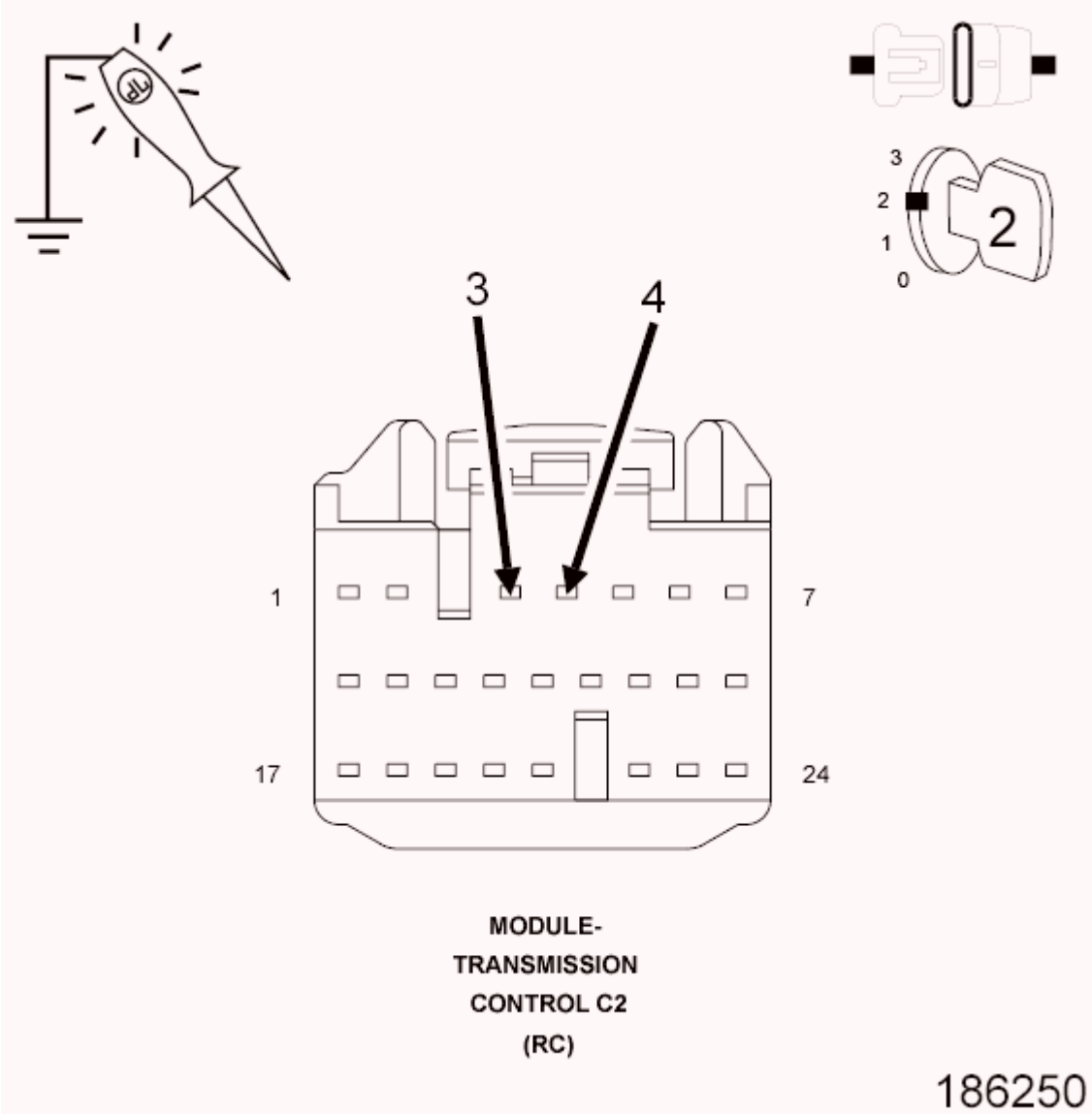

Fig. 6: Checking Transmission Control Output Circuit
Courtesy of CHRYSLER GROUP, LLC

1. Turn the ignition off to the lock position.
2. Disconnect the TCM C2 harness connector.
3. Ignition on, engine not running.
4. Using the scan tool, actuate the Transmission Control Output in the TIPM.
5. Using a 12-volt test light connected to ground, check both of the (T16) Transmission Control Output circuits on the appropriate terminal of TCM C2 harness connector.

NOTE: **The test light must illuminate brightly. Compare the brightness to that of a direct connection to the battery.**

Does the test light illuminate brightly on both of the TCM (T16) Transmission Control Output circuits?

Yes

- Using the schematics as a guide, check the Transmission Control Module (TCM) terminals for corrosion, damage, or terminal push out. Pay particular attention to all power and ground circuits. Check for Service Information Tune-ups or Service Bulletins for any possible causes that may apply. If no problems are found, replace and program the TCM in accordance with the Service Information.
- Refer to **STANDARD PROCEDURE** and perform AS68RC VERIFICATION TEST.

No

- Go To 4.

4. **CHECK THE (T16) TRANSMISSION CONTROL OUTPUT CIRCUIT**

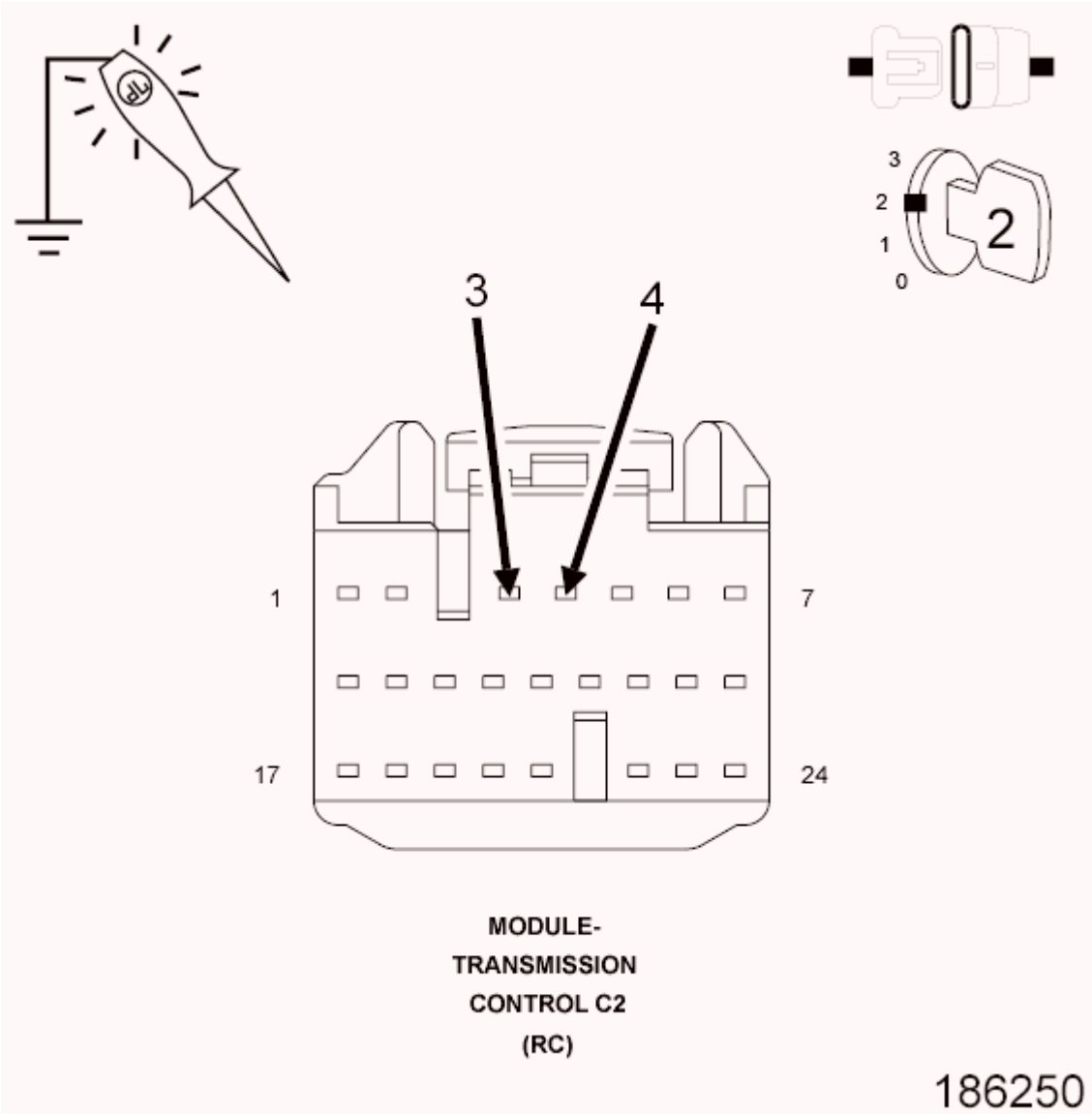

Fig. 7: Checking Transmission Control Output Circuit
Courtesy of CHRYSLER GROUP, LLC

1. Turn the ignition off to the lock position.
2. Install a substitute Transmission Control relay.
3. Ignition on, engine not running.
4. Using the scan tool, actuate the Transmission Control Output in the TIPM.
5. Using a 12-volt test light connected to ground, check both of the (T16) Transmission Control Output circuits on the appropriate terminal of TCM C2 harness connector.

   Does the test light illuminate brightly on both of the TCM (T16) Transmission Control Output circuits?

   Yes

- Replace the Transmission Control Relay.
- Refer to **STANDARD PROCEDURE** and perform AS68RC VERIFICATION TEST.

No

- Go To 5.

5. **CHECK THE (A916) BATTERY FEED CIRCUIT**
   1. Turn the ignition off to the lock position.
   2. Remove Transmission Control relay.
   3. Ignition on, engine not running.
   4. Using a 12-volt test light connected to ground, check the (A916) Battery Feed circuit at the Transmission Control relay harness connector.

      Does the test light illuminate brightly on the (A916) Battery Feed circuit?

      Yes

      - Go To 6.

      No

      - Check the (A916) Battery Feed circuit for and open or short to ground. If no problems are found, replace the TIPM in accordance with the Service Information.
      - Refer to **STANDARD PROCEDURE** and perform AS68RC VERIFICATION TEST.
6. **CHECK THE (T16) TRANSMISSION CONTROL OUTPUT CIRCUIT FOR AN OPEN**

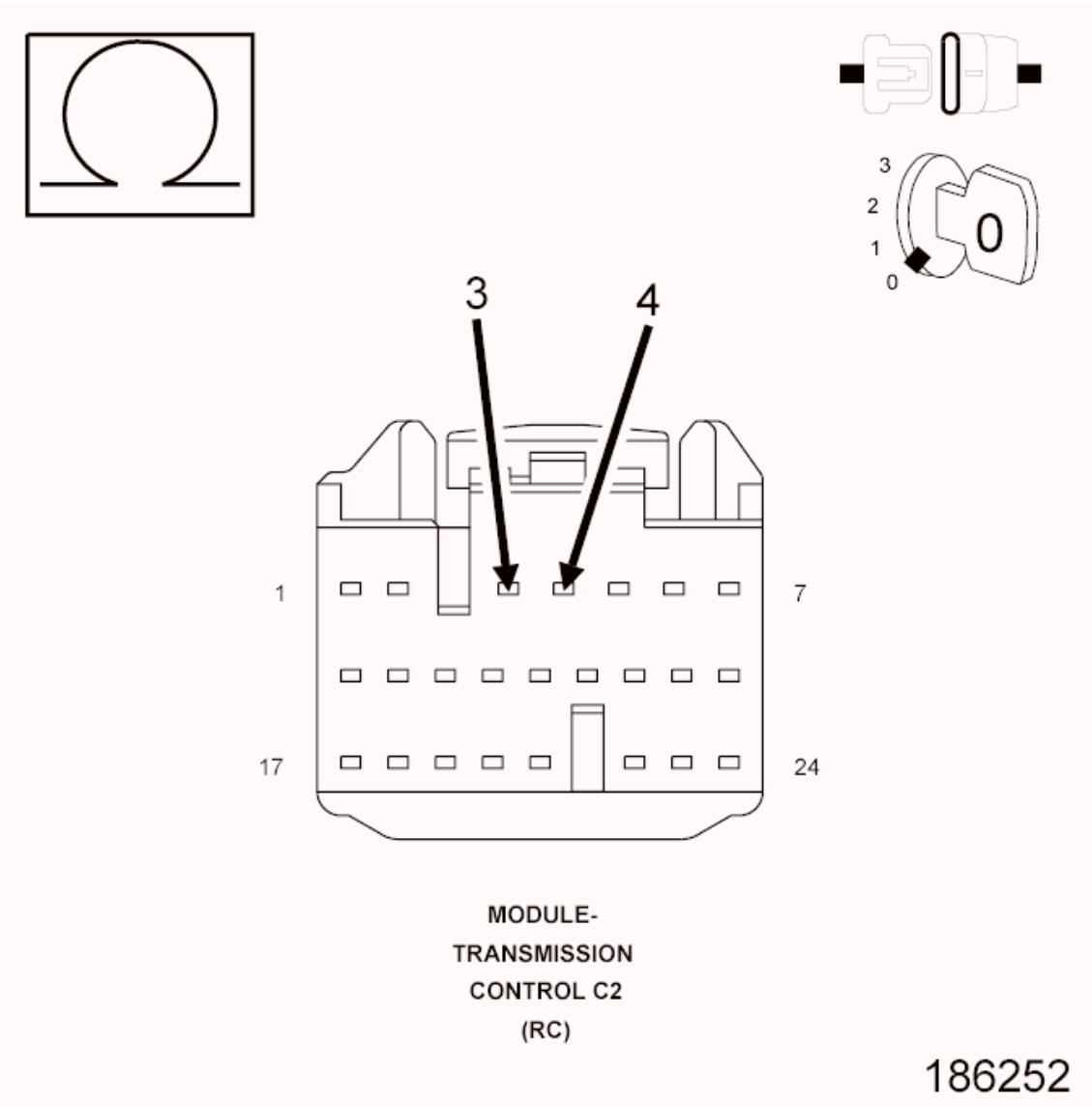

Fig. 8: Checking Transmission Control Output Circuit For An Open
Courtesy of CHRYSLER GROUP, LLC

1. Turn the ignition off to the lock position.
2. Measure the resistance of the (T16) Transmission Control Output circuit between the TCM C2 harness connector and the Transmission Control relay harness connector.

   Is the resistance above 5.0 Ohms?

   Yes

   - Repair the (T16) Transmission Control Output circuit for an open.
   - Refer to **STANDARD PROCEDURE** and perform AS68RC VERIFICATION TEST.

   No

- Go To 7.

7. **CHECK THE (T16) TRANSMISSION CONTROL OUTPUT CIRCUIT FOR A SHORT TO GROUND**

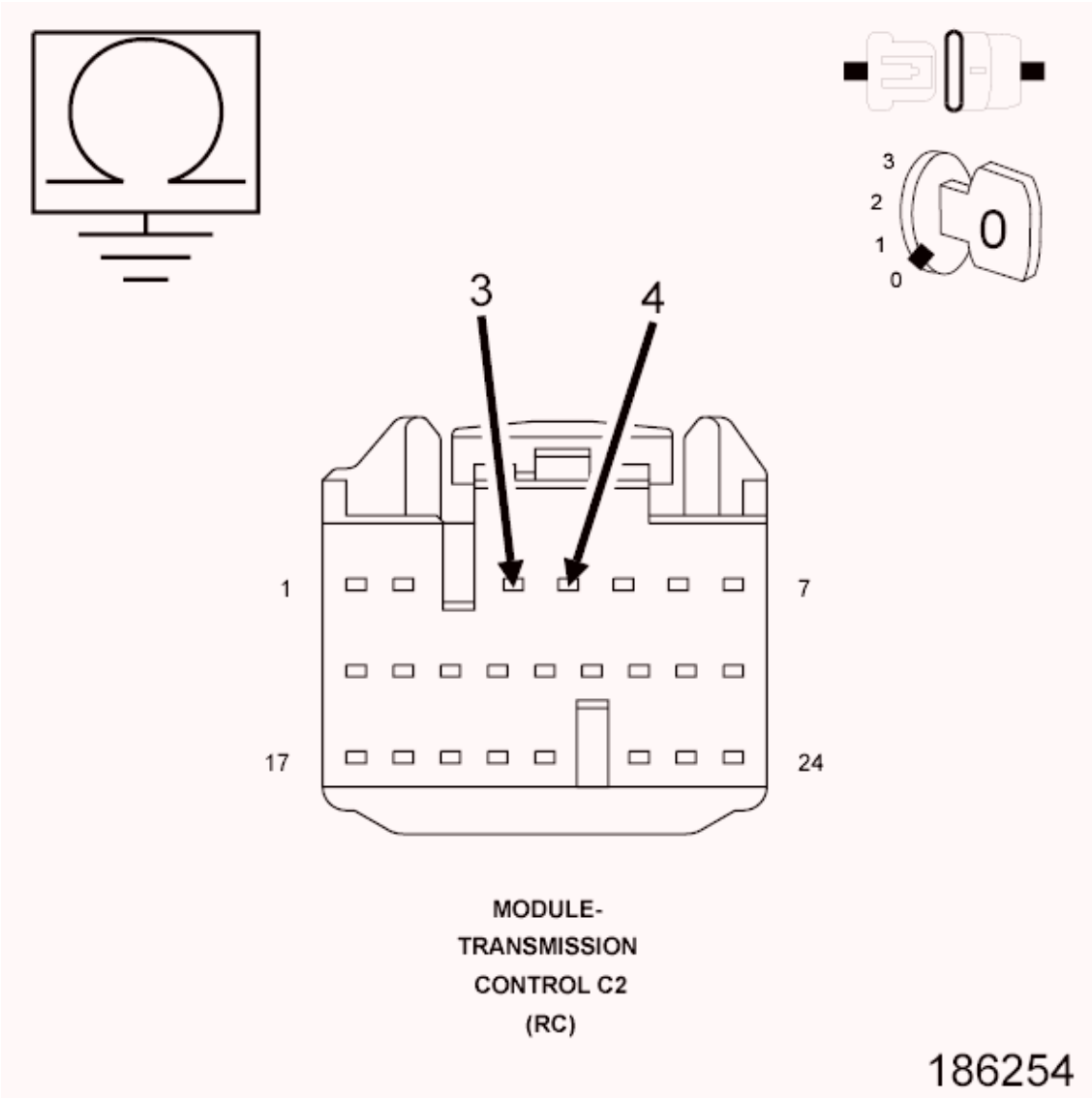

Fig. 9: Checking Transmission Control Output Circuit For A Short To Ground
Courtesy of CHRYSLER GROUP, LLC

1. Measure the resistance between ground and the (T16) Transmission Control Output circuit.

   Is the resistance below 100k Ohms?

   Yes

   - Repair the (T16) Transmission Control Output circuit for a short to ground.
   - Refer to **STANDARD PROCEDURE** and perform AS68RC VERIFICATION TEST.

No

- Using the schematics as a guide, check the Totally Integrated Power Module (TIPM) terminals for corrosion, damage, or terminal push out. Pay particular attention to all power and ground circuits. Check for Service Information Tune-ups or Service Bulletins for any possible causes that may apply. If no problems are found, replace and program the TIPM in accordance with the Service Information.

8. **CHECK WIRING AND CONNECTORS**
    1. The conditions necessary to set the DTC are not present at this time.
    2. Using the schematics as a guide, inspect the wiring and connectors specific to this circuit.
    3. Wiggle the wires while checking for shorted and open circuits.
    4. Check for any Service Bulletins that may apply.

    Were there any problems found?

    Yes

    - Repair as necessary.
    - Refer to **STANDARD PROCEDURE** and perform AS68RC VERIFICATION TEST.

    No

    - Test Complete.

P0706-TRANSMISSION RANGE SENSOR RATIONALITY

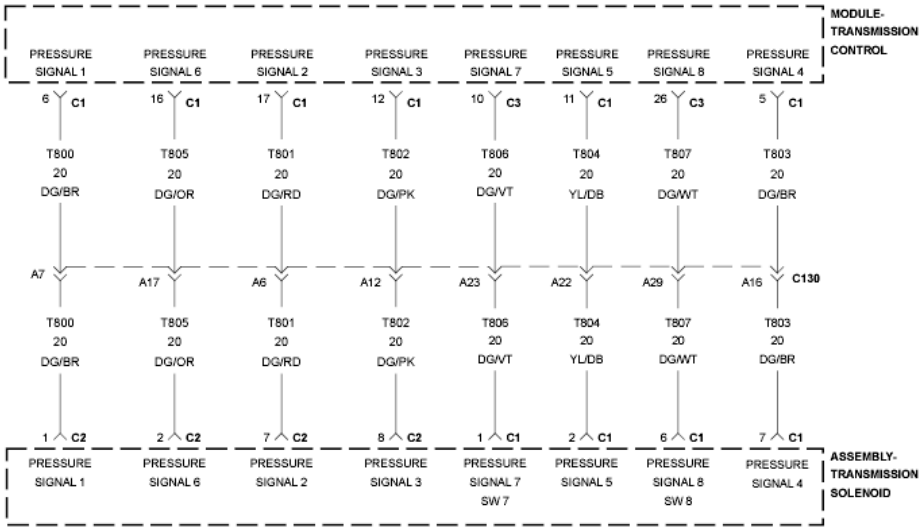

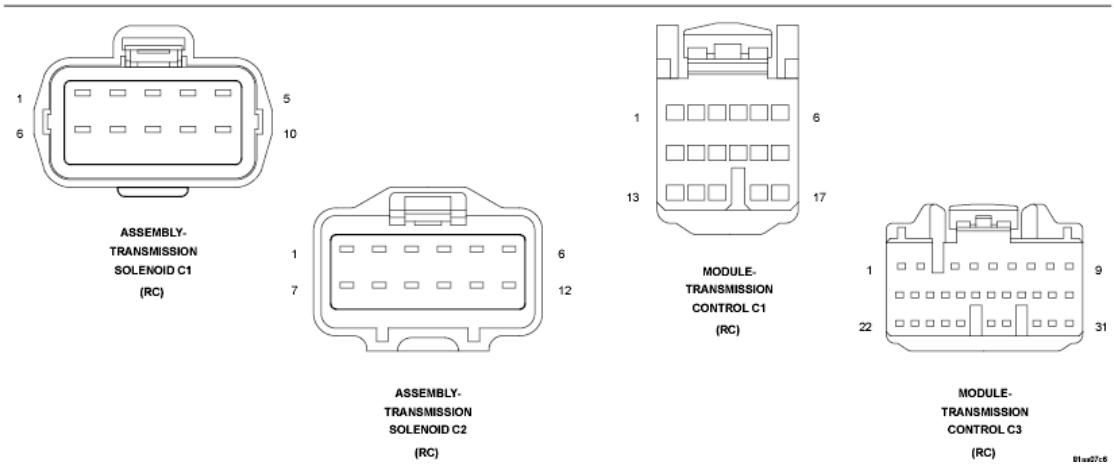

Fig. 10: Transmission Solenoid Assembly Wiring Diagram
Courtesy of CHRYSLER GROUP, LLC

For a complete wiring diagram, **refer to appropriate SYSTEM WIRING DIAGRAMS article** .

THEORY OF OPERATION

The Transmission Range Sensor (TRS) is a multiple position selector switch which changes the signal path by redirecting a 12-volt signal source to seven different TRS signal circuits (P, R, N, D, 3, 2, 1) and also houses a Park/Neutral (P/N) switch circuit. These circuits are monitored by the Transmission Control Module and used in conjunction with various pressure switches to validate proper operation of the transmission and diagnose any possible problem. In a normal operating mode, pressure switch 8, is in an "Open" state in P, R, or N. and in a

"Closed" state in any forward gear (engine running).

CONDITION ONE:

When Monitored:

- Continuously with the Ignition on and the engine running.

Set Condition:

- Pressure switch 8 is "Closed" in Park or Neutral lever positions for the period of 50 ms or greater.

CONDITION TWO:

When Monitored:

- Continuously with the Ignition on and the engine running.

Set Condition:

- Pressure Switch 8 is "Closed" in P, R, or N for the period of 500 ms or greater.

CONDITION THREE:

When Monitored:

- Ignition on, engine running with a engine speed greater than 550 rpm.

Set Condition:

- Pressure Switch 8 is "Open" in D, 3, 2, or 1 for the period of 7.0 seconds for 2 consecutive tests.

CONDITION FOUR:

When Monitored:

- Ignition on.

Set Condition:

- Shift Lever is reading other than Park or Neutral during the first 50 ms of startup.

POSSIBLE CAUSES

Possible Causes
TRANSMISSION RANGE SENSOR NOT PROPERLY CALIBRATED
(T807) PRESSURE SIGNAL 8 SHORT TO VOLTAGE

(T807) PRESSURE SIGNAL 8 SHORT TO ANOTHER CIRCUIT
(T807) PRESSURE SIGNAL 8 SHORT TO GROUND
(T807) PRESSURE SIGNAL 8 OPEN
PRESSURE SWITCH 8
TRANSMISSION RANGE SENSOR NOT PROPERLY CALIBRATED
TRANSMISSION RANGE SENSOR
TRANSMISSION CONTROL MODULE (TCM)

Always perform the AS68RC Pre-Diagnostic Troubleshooting procedure before proceeding. Refer to STANDARD PROCEDURE.

DIAGNOSTIC TEST

1. **CHECK IF DTC IS CURRENT**

   NOTE: This DTC may set if the Transmission Range Sensor has been replaced or reinstalled and not properly adjusted (calibrated). Make sure the TRS is properly adjusted in accordance to the Service Information before attempting to perform this diagnostic procedure. If the TRS was improperly adjusted, adjust as necessary and Refer to STANDARD PROCEDURE and perform the AS68RC VERIFICATION TEST.

   1. Using the scan tool, read TCM DTCs.
   2. Record the Environmental Data and any DTCs.
   3. Clear DTCs.
   4. Using the recorded Environmental Data, along with the When Monitored and Set Conditions above, operate the vehicle in the conditions that set the DTC.
   5. Read TCM DTCs.

   Did the DTC reset?

   Yes

   - Go To 2.

   No

   - Go To 8.

2. **CHECK PRESSURE SWITCH 8 READING ON THE SCAN TOOL**
   1. Ignition on, engine not running.
   2. With the scan tool, monitor the Pressure Switch 8 state (Open-Closed) in the next step.
   3. Move the shift lever to each of the shift lever positions (P, R, N, D, 3, 2, and 1).

   Does the Pressure Switch 8 read "Closed" in all shift positions?

Yes

- Go To 4.

No

- Go To 3.

3. **COMPARE PRESSURE SWITCH 8 STATE TO SHIFT LEVER POSITION**
   1. With the scan tool, monitor the Pressure Switch 8 state (Open-Closed) in the following step(s).

      CAUTION: Apply the parking brake.

   2. Start the engine and with the brakes firmly applied, move the shift lever to each of the shift lever positions (P, R, N, D, 3, 2, 1) and record your findings.

      Select the answer that best describes your readings:

      Pressure Switch 8 reads "Closed" in P, R, or N.

      - This is an indication of a hydraulic leak into the Pressure Solenoid 8 hydraulic oil circuit. Inspect the Valve Body and control valves for internal hydraulic leakage, sticking, scored etc. and repair or replace as necessary.
      - Refer to **STANDARD PROCEDURE** and perform AS68RC VERIFICATION TEST.

      Pressure Switch 8 reads "Open" in all shift positions.

      - Go To 6.

4. **CHECK THE PRESSURE SWITCH 8**
   1. Turn the ignition off to the lock position.
   2. Disconnect the Transmission Solenoid C1 harness connector.
   3. Ignition on, engine not running.
   4. With the scan tool, read the Pressure Switch 8 state (Open-Closed).

      Does the Pressure Switch 8 state read as "Closed"?

      Yes

      - Go To 5.

      No

      - Inspect the transmission internal wiring from the Transmission Solenoid C1 connector to the Pressure Switch 8 harness connector for damage, chafing or a short to ground and repair or

replace as necessary. If no problems are found, replace the Pressure Switch 8 in accordance with the Service Information.

- Refer to **STANDARD PROCEDURE** and perform AS68RC VERIFICATION TEST.

5. **CHECK THE (T807) PRESSURE SIGNAL 8 CIRCUIT FOR A SHORT TO GROUND**
    1. Turn the ignition off to the lock position.
    2. Disconnect the TCM C3 harness connector.
    3. Ignition on, engine not running.
    4. With the scan tool, read the Pressure Switch 8 state (Open-Closed).

    Does the Pressure Switch 8 state read as "Closed"?

    Yes

    - Using the schematics as a guide, check the Transmission Control Module (TCM) terminals for corrosion, damage, or terminal push out. Pay particular attention to all power and ground circuits. Check for Service Information Tune-ups or Service Bulletins for any possible causes that may apply. If no problems are found, replace and program the TCM in accordance with the Service Information.
    - Refer to **STANDARD PROCEDURE** and perform AS68RC VERIFICATION TEST.

    No

    - Repair the (T807) Pressure Signal 8 circuit for a short to ground.
    - Refer to **STANDARD PROCEDURE** and perform AS68RC VERIFICATION TEST.

6. **CHECK THE PRESSURE SWITCH**

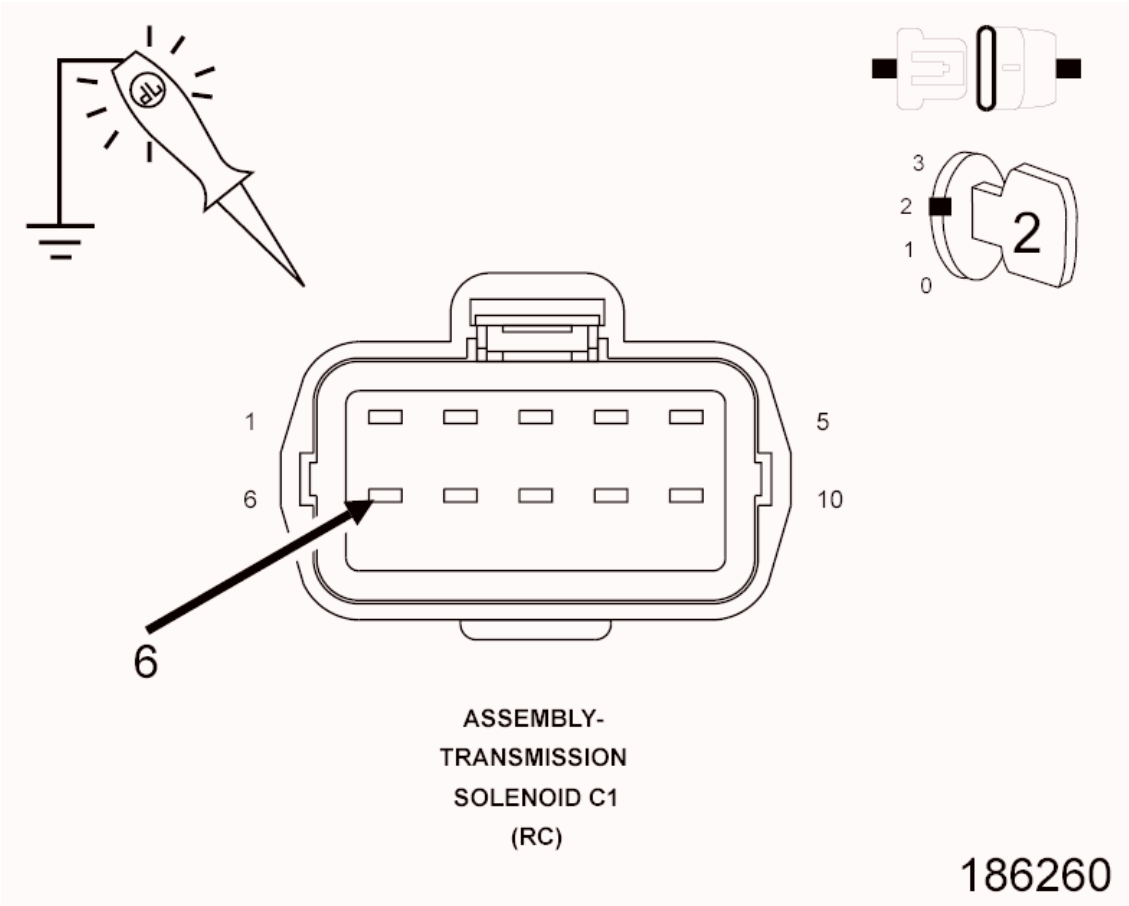

Fig. 11: Checking Pressure Switch
Courtesy of CHRYSLER GROUP, LLC

1. Turn the ignition off to the lock position.
2. Disconnect the Transmission Solenoid C1 harness connector.
3. Ignition on, engine not running.
4. With the scan tool, monitor the Pressure Switch 8 state (Open-Closed) in the following step.
5. Using a 12-volt test light connected to ground, probe the (T807) Pressure Switch 8 Signal circuit in the Transmission Solenoid C1 harness connector while monitoring the Pressure Switch 8 state on the scan tool.

   Does the scan tool show the Pressure Switch 8 state change from "Open" to "Closed" when probing the Pressure Switch 8 Signal circuit?

   Yes

   - Check the transmission internal wiring and connectors for the (T807) Pressure Switch 8 Signal circuit between the Transmission Solenoid C1 connector and the Pressure Switch 8 harness connector for an open and repair or replace as necessary. Also check if the Pressure Switch 8 is properly torqued in the valve body. If no problems are found, replace the Pressure Switch 8 in accordance with the Service Information.

- Refer to **STANDARD PROCEDURE** and perform AS68RC VERIFICATION TEST.

No

- Go To 7.

7. **CHECK THE (T807) PRESSURE SIGNAL 8 CIRCUIT FOR AN OPEN**

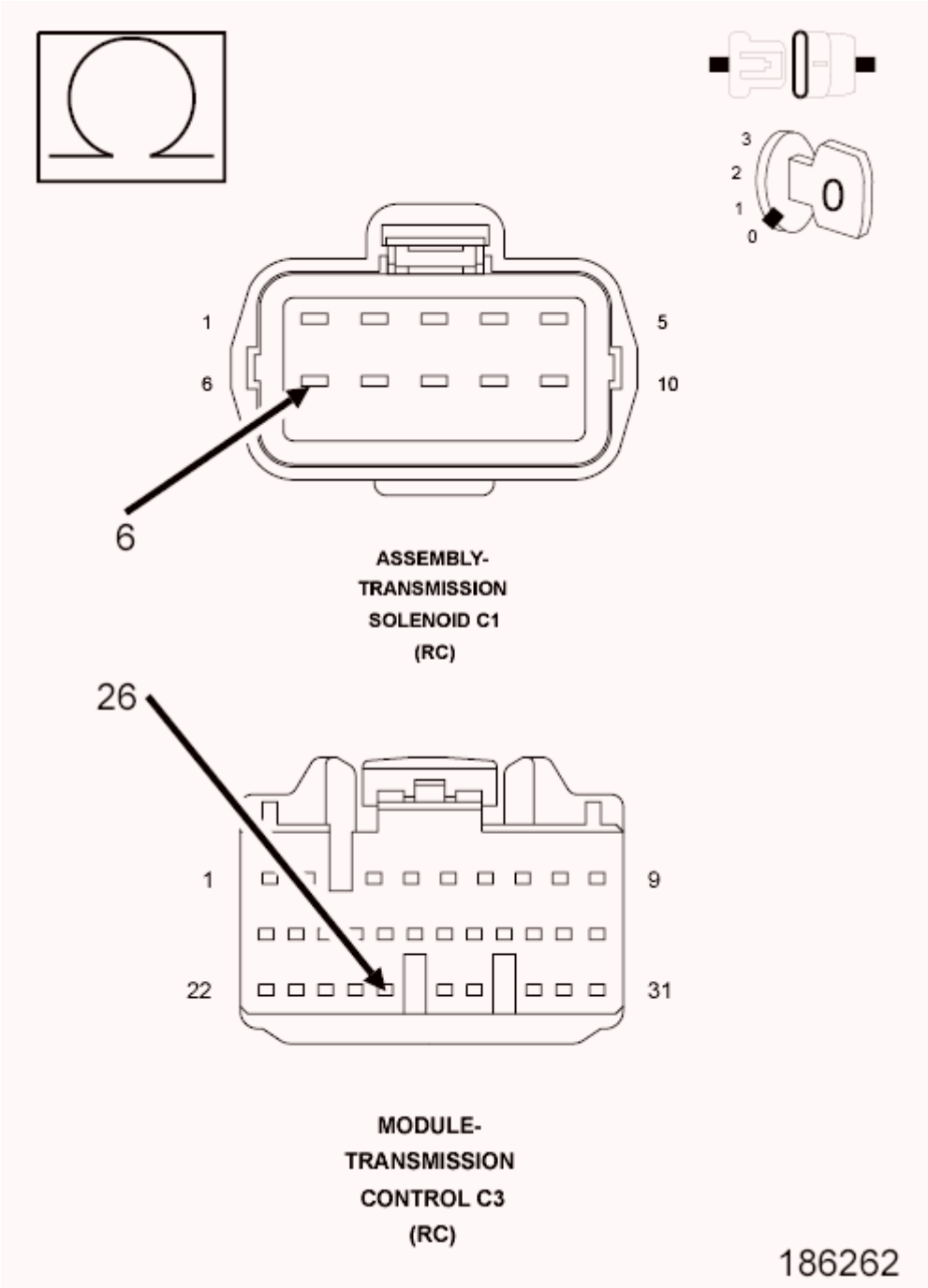

Fig. 12: Checking Pressure Signal No. 8 Circuit For An Open
Courtesy of CHRYSLER GROUP, LLC

1. Turn the ignition off to the lock position.
2. Disconnect the Transmission Solenoid C1 harness connector.
3. Measure the resistance of the (T807) Pressure Signal 8 circuit between the TCM C3 harness connector and Transmission Solenoid C1 harness connector.

   Is the resistance above 5.0 Ohms?

   Yes

   - Repair the (T807) Pressure Signal 8 circuit for an open.
   - Refer to **STANDARD PROCEDURE** and perform AS68RC VERIFICATION TEST.

   No

   - Using the schematics as a guide, check the Transmission Control Module (TCM) terminals for corrosion, damage, or terminal push out. Pay particular attention to all power and ground circuits. Check for Service Information Tune-ups or Service Bulletins for any possible causes that may apply. If no problems are found, replace and program the TCM in accordance with the Service Information.
   - Refer to **STANDARD PROCEDURE** and perform the AS68RC VERIFICATION TEST.

8. **CHECK WIRING AND CONNECTORS**
   1. The conditions necessary to set the DTC are not present at this time.
   2. Using the schematics as a guide, inspect the wiring and connectors specific to this circuit.
   3. Wiggle the wires while checking for shorted and open circuits.
   4. Check for any Service Bulletins that may apply.

      Were there any problems found?

      Yes

      - Repair as necessary.
      - Refer to **STANDARD PROCEDURE** and perform AS68RC VERIFICATION TEST.

      No

      - Test Complete.

P0707-TRANSMISSION RANGE SENSOR CIRCUIT LOW

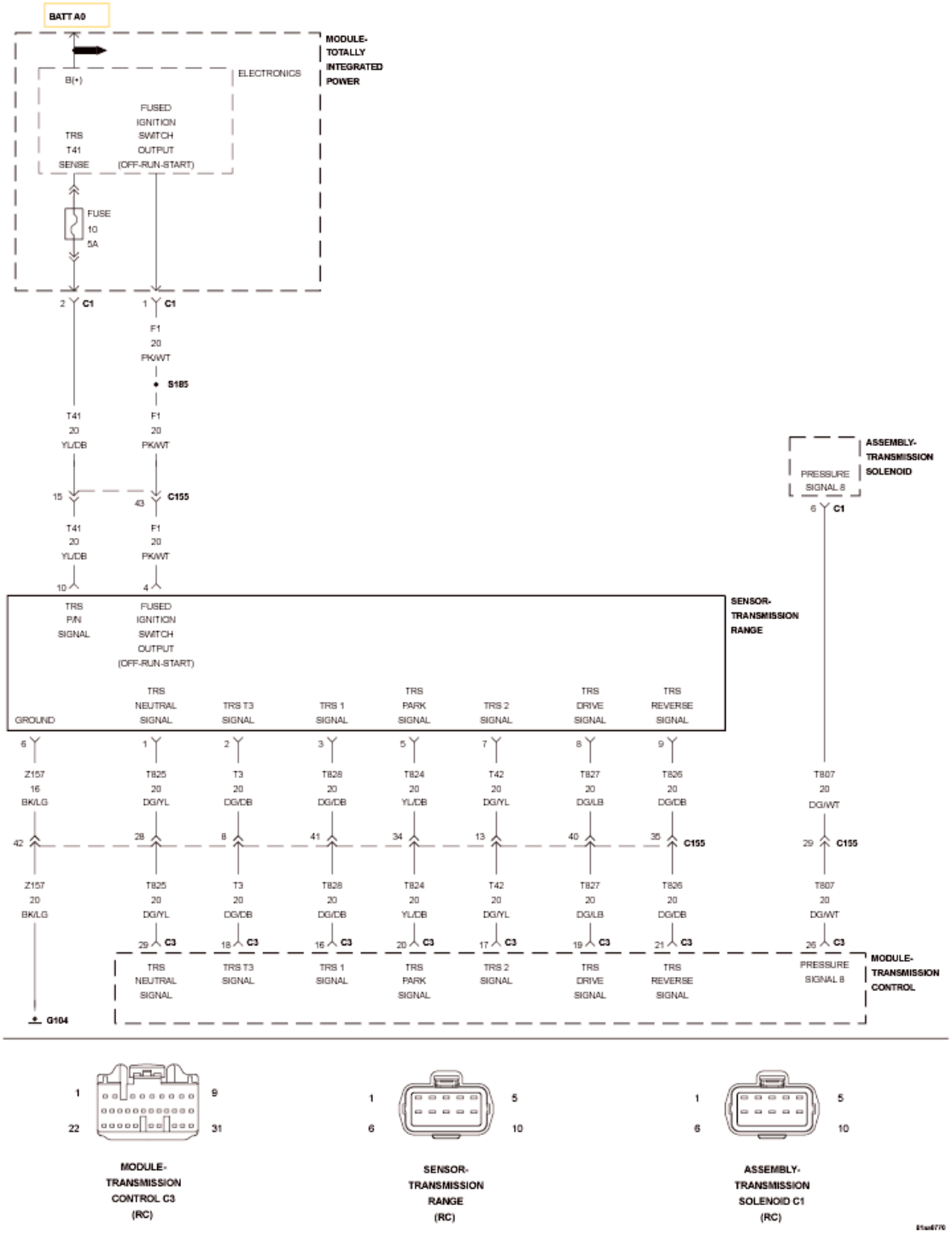

Fig. 13: Transmission Range Sensor Wiring Diagram
Courtesy of CHRYSLER GROUP, LLC

For a complete wiring diagram, **refer to appropriate SYSTEM WIRING DIAGRAMS article** .

THEORY OF OPERATION

The Transmission Range Sensor (TRS) is a multiple position selector switch which changes the signal path by redirecting a 12-volt signal source to seven different TRS signal circuits (P, R, N, D, 3, 2, 1) and also houses a Park/Neutral (P/N) switch circuit. These circuits are monitored by the Transmission Control Module and used in conjunction with various pressure switches to validate proper operation of the transmission and diagnose any possible problem. In a normal operating mode, pressure switch 8, is in an "Open" state in P, R, or N. and in an "Closed" state in any forward gear (engine running).

CONDITION ONE:

When Monitored:

- Ignition on in the run position.
- Pressure Switch 8 detected as "Open"
- Output speed greater than or equal to 250 rpm.

Set Condition:

- If the Transmission Control Module (TCM) detects no shift lever position for the period of 2.0 seconds for two consecutive key cycles.

CONDITION TWO:

When Monitored:

- Ignition on in the run position.
- Shift lever position in P, R, D, 3, 2, or 1.

Set Condition:

- If the Transmission Control Module (TCM) detects shift lever positions P, R, D, 3, 2, or 1 up or down past N but does not detect N position for 4 or more times in one ignition cycle for the period of 500 msec.

CONDITION THREE:

When Monitored:

- Ignition on in the run position.
- Shift lever position in P, N, D, 3, 2, or 1.

Set Condition:

- If the Transmission Control Module (TCM) detects shift lever positions P, N, D, 3, 2, or 1 up or down past R but does not detect the R position for 4 or more times in one ignition cycle for the period of 500 msec.

POSSIBLE CAUSES

Possible Causes
TRANSMISSION RANGE SENSOR IMPROPERLY CALIBRATED
TRS HARNESS CONNECTOR
(F1) FUSED IGNITION SWITCH OUTPUT (OFF-RUN-START) OPEN
(T826) TRS REVERSE SIGNAL CIRCUIT OPEN
(T825) TRS NEUTRAL SIGNAL CIRCUIT OPEN
(T826) TRS REVERSE SIGNAL CIRCUIT SHORT TO GROUND
(T825) TRS NEUTRAL SIGNAL CIRCUIT SHORT TO GROUND
TRANSMISSION RANGE SENSOR
TRANSMISSION CONTROL MODULE (TCM)

Always perform the AS68RC Pre-Diagnostic Troubleshooting procedure before proceeding. Refer to STANDARD PROCEDURE.

DIAGNOSTIC TEST

1. **CHECK IF DTC IS CURRENT**

   NOTE: This DTC may set if the Transmission Range Sensor has been replaced or reinstalled and not properly adjusted (calibrated). Make sure the TRS is properly adjusted in accordance to the Service Information before attempting to perform this diagnostic procedure. If the TRS was improperly adjusted, adjust as necessary and Refer to STANDARD PROCEDURE and perform the AS68RC VERIFICATION TEST.

   1. Using the scan tool, read TCM DTCs.
   2. Record the Environmental Data and any DTCs.
   3. Clear DTCs.
   4. Using the recorded Environmental Data, along with the When Monitored and Set Conditions above, operate the vehicle in the conditions that set the DTC.
   5. Read TCM DTCs.

   Did the DTC reset?

   Yes

   - Go To 2.

   No

   - Go To 12.

2. **CHECK IF DTC CONDITIONS**
   1. Ignition on, engine not running.
   2. With the scan tool, monitor the TRS circuits while moving the shift lever several times to each gear

position (P, R, N, D, 3, 2, and 1).

Pick the answer that best describes your findings:

No TRS circuits change from "Open" to "Closed"

- Go To 3.

The Reverse (R) TRS position does not change from "Open" to "Closed"

- Go To 6.

The Neutral (N) TRS position does not change from "Open" to "Closed"

- Go To 9.

All TRS circuits seem to be working properly

- Go To 12.

3. **CHECK THE TRS CONNECTOR**
   1. Turn the ignition off to the lock position.
   2. Inspect the TRS harness connector.

   Is the TRS harness connector unplugged or not fully seated?

   Yes

   - Repair or replace the TRS harness connector as necessary.
   - Refer to **STANDARD PROCEDURE** and perform the AS68RC VERIFICATION TEST.

   No

   - Go To 4.

4. **CHECK THE (F1) FUSED IGNITION SWITCH OUTPUT (OFF-RUN-START) CIRCUIT FOR AN OPEN**

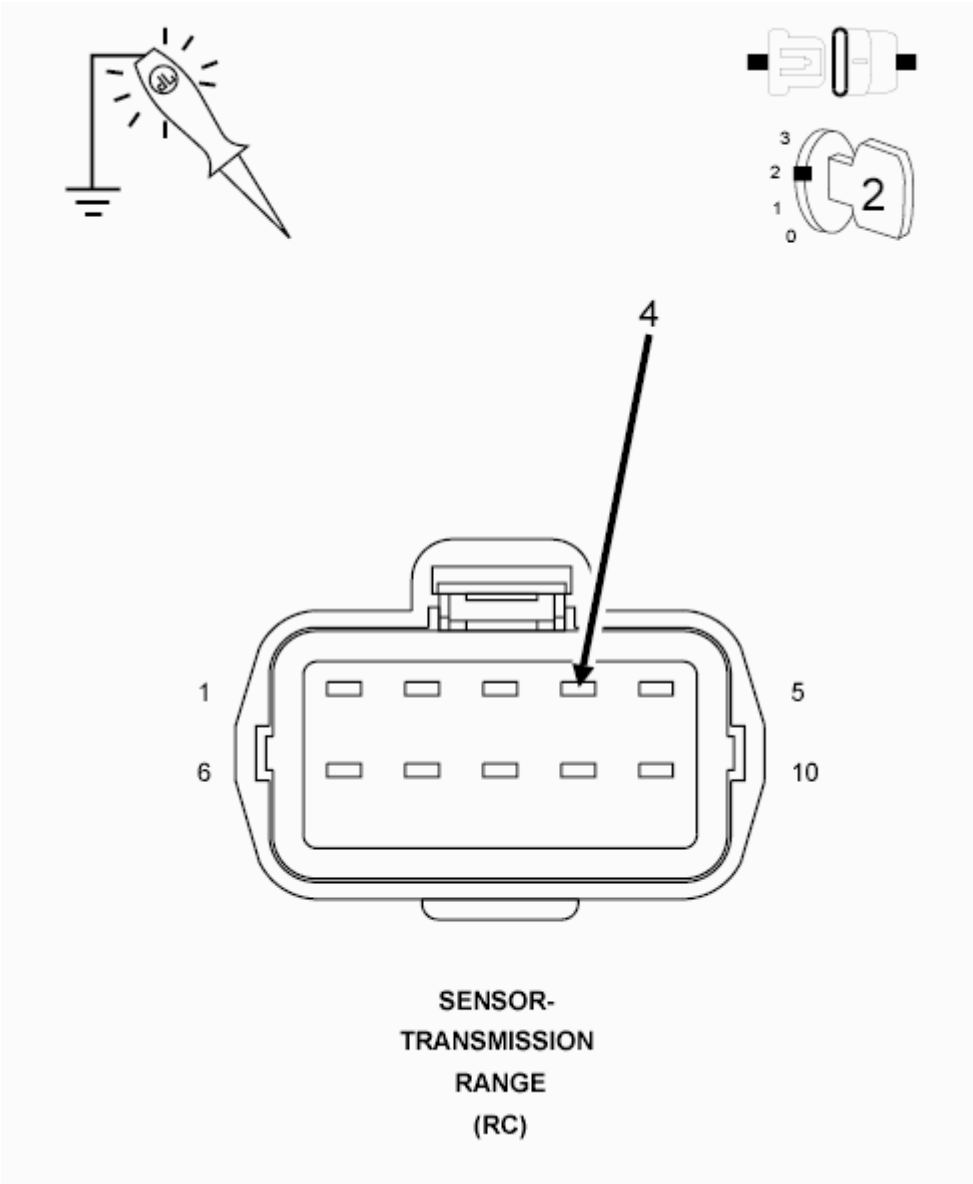

Fig. 14: Checking Fused Ignition Switch Output (Off-Run-Start) Circuit For An Open
Courtesy of CHRYSLER GROUP, LLC

1. Turn the ignition off to the lock position.
2. Disconnect the TRS harness connector.

NOTE: Check connectors - Clean/repair as necessary.

3. Ignition on, engine not running.
4. Using a test light connected to ground, check the (F1) Fused Ignition Switch Output (Off-Run-Start) circuit.

NOTE: The test light must illuminate brightly. Compare the brightness to

that of a direct connection to the battery.

Does the test light illuminate brightly?

Yes

- Go To 5.

No

- Repair the (F1) Fused Ignition Switch Output (Off-Run-Start) circuit for an open.
- Refer to **STANDARD PROCEDURE** and perform the AS68RC VERIFICATION TEST.

5. **CHECK THE TRANSMISSION RANGE SENSOR**

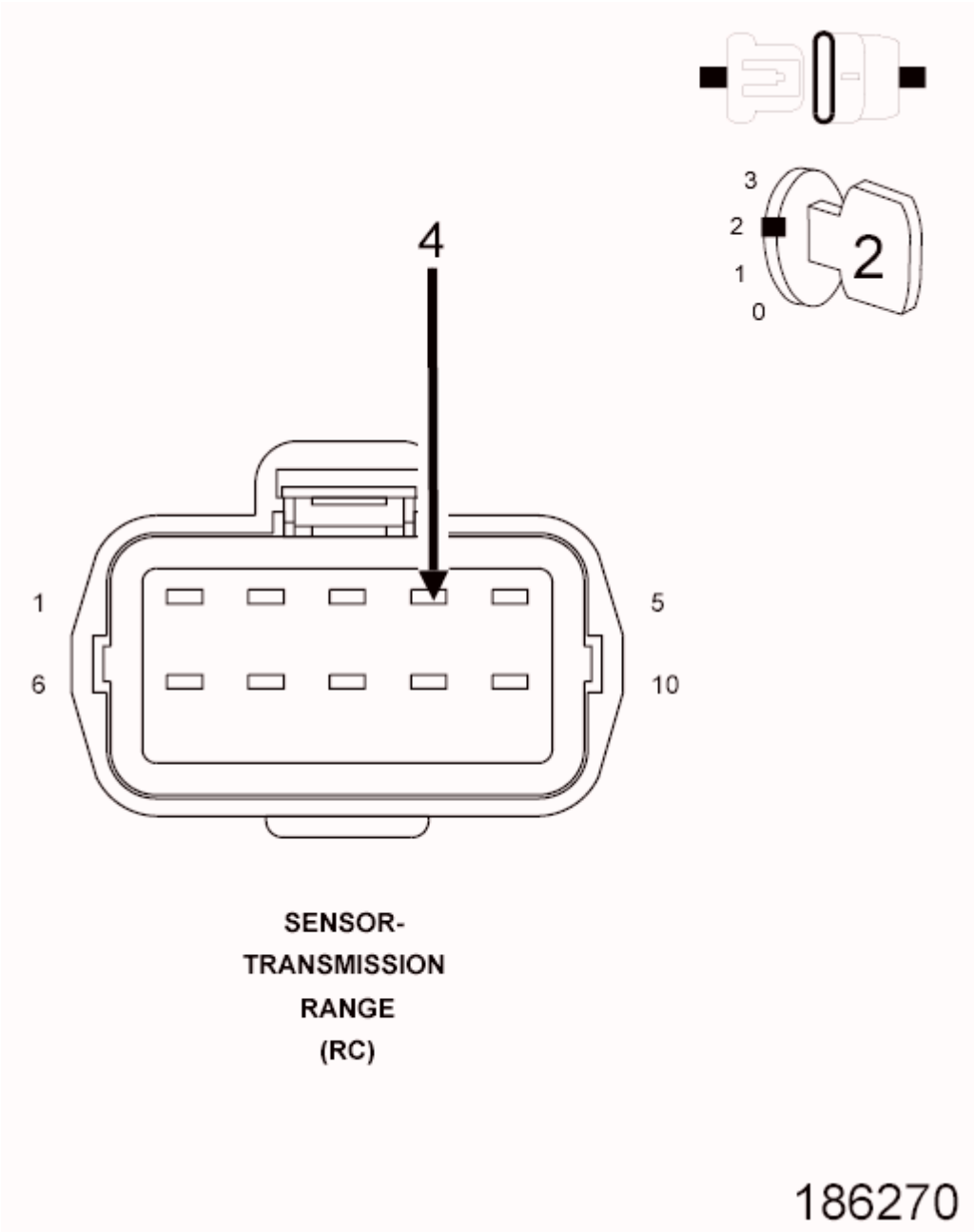

Fig. 15: Checking Transmission Range Sensor
Courtesy of CHRYSLER GROUP, LLC

1. Ignition on, engine not running.
2. With the scan tool, monitor the TRS circuits in the following steps.
3. Using a jumper wire, jump each TRS circuit one at a time to the (F1) Fused Ignition Switch Output (Off-Run-Start) circuit in the TRS harness connector.

   Do the TRS circuits read as "Closed" on each circuit when connected with a jumper wire?

   Yes

- Replace the Transmission Range Sensor in accordance with the Service Information.
- Refer to **STANDARD PROCEDURE** and perform the AS68RC VERIFICATION TEST.

No

- Using the schematics as a guide, check the Transmission Control Module (TCM) terminals for corrosion, damage, or terminal push out. Pay particular attention to all power and ground circuits. Check for Service Information Tune-ups or Service Bulletins for any possible causes that may apply. If no problems are found, replace and program the TCM in accordance with the Service Information.
- Refer to **STANDARD PROCEDURE** and perform the AS68RC VERIFICATION TEST.

6. **CHECK THE (T826) TRS REVERSE SIGNAL CIRCUIT**

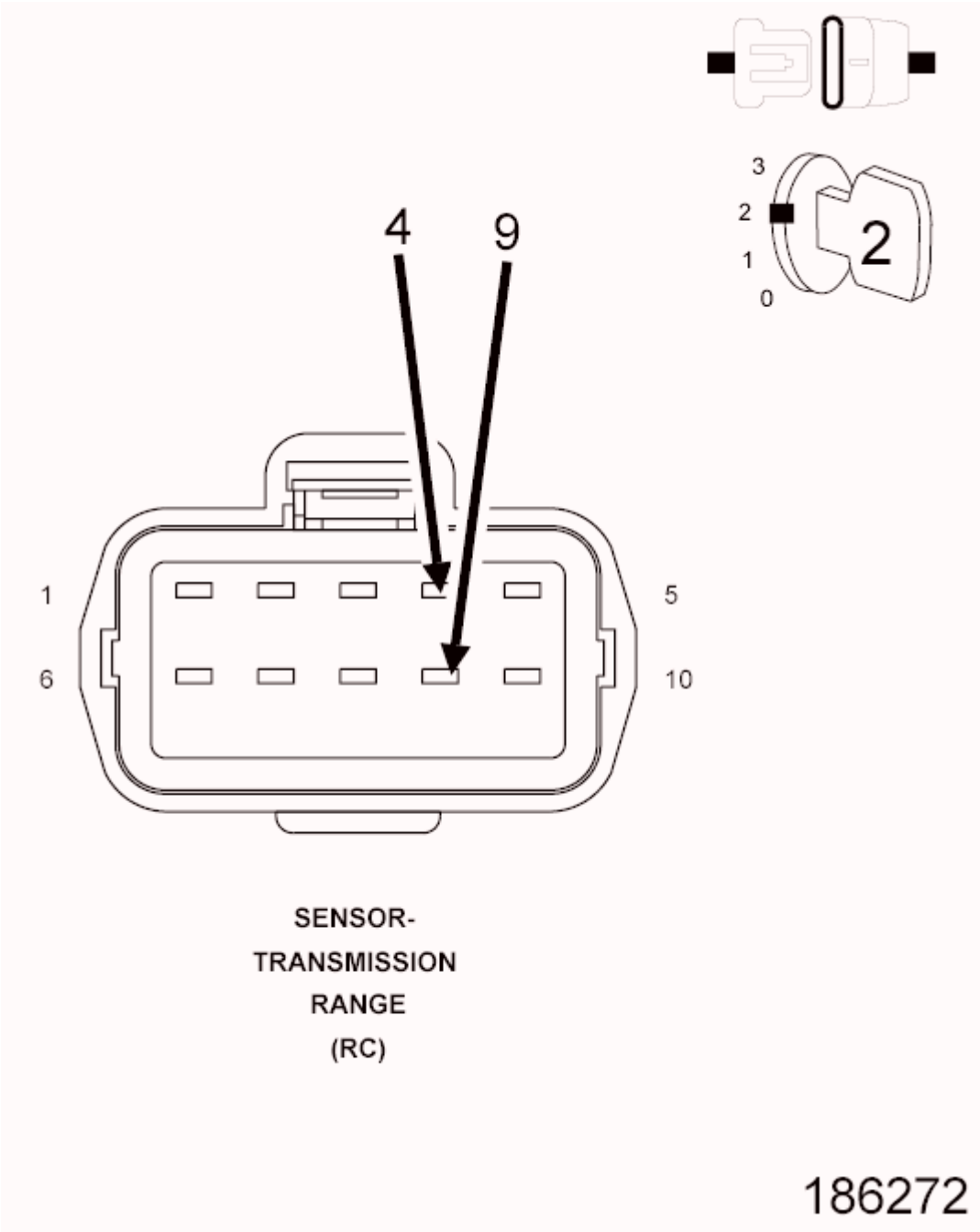

Fig. 16: Checking TRS Reverse Signal Circuit
Courtesy of CHRYSLER GROUP, LLC

1. Turn the ignition off to the lock position.
2. Disconnect the TRS harness connector.
3. Using a jumper wire, connect the (F1) Fused Ignition Switch Output (Off-Run-Start) circuit to the (T826) TRS Reverse Signal circuit in the TRS harness connector.
4. Ignition on, engine not running.
5. With the scan tool, read the TRS Reverse state.

Does the scan tool read as "Closed"?

Yes

- Replace the Transmission Range Sensor in accordance with the Service Information.
- Refer to **STANDARD PROCEDURE** and perform the AS68RC VERIFICATION TEST.

No

- Go To 7.

7. **CHECK THE (T826) TRS REVERSE CIRCUIT FOR AN OPEN**

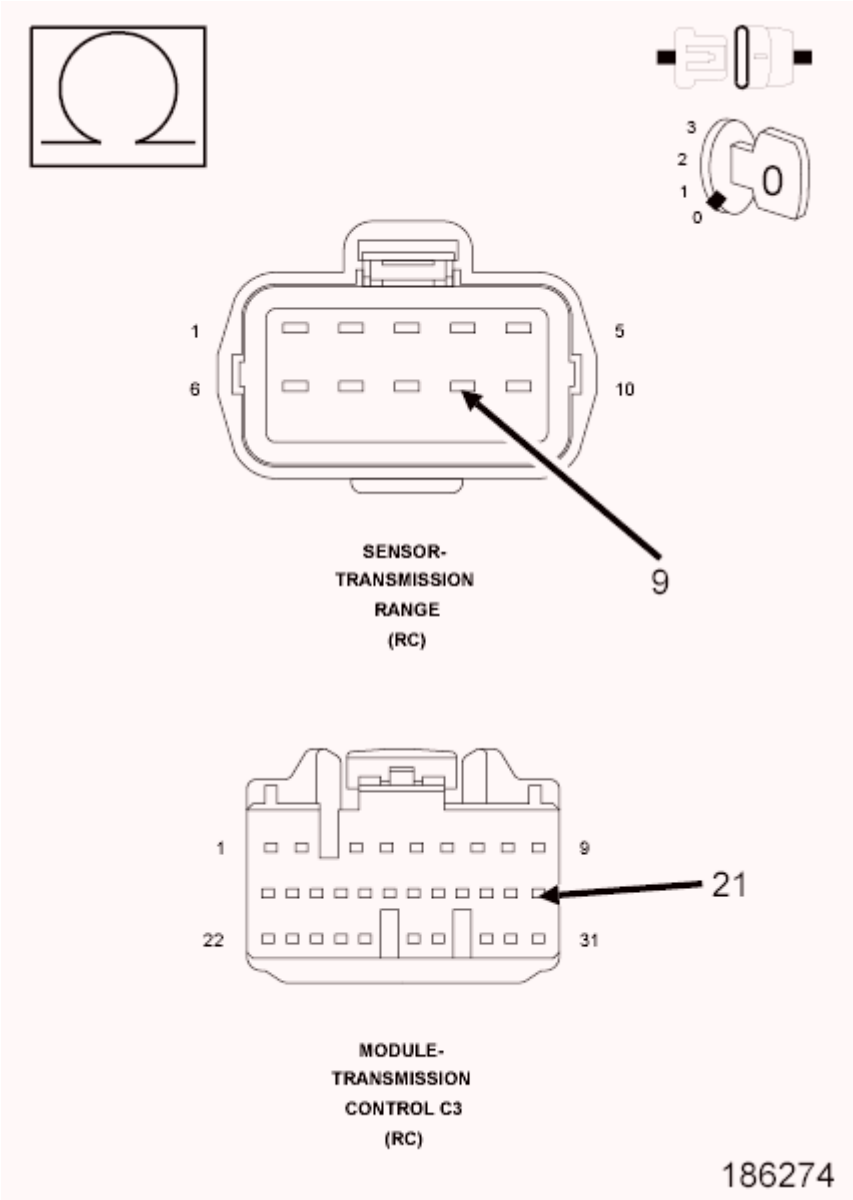

Fig. 17: Checking TRS Reverse Circuit For An Open

Courtesy of CHRYSLER GROUP, LLC

1. Turn the ignition off to the lock position.
2. Disconnect the TCM C3 harness connector
3. Measure the resistance of the (T826) TRS Reverse Signal circuit between TRS harness connector and the TCM C3 harness connector.

   Is the resistance above 5.0 Ohms?

   Yes

   - Repair the (T826) TRS Reverse Signal circuit for an open.
   - Refer to **STANDARD PROCEDURE** and perform the AS68RC VERIFICATION TEST.

   No

   - Go To 8.

8. **CHECK THE (T826) TRS REVERSE SIGNAL CIRCUIT FOR A SHORT TO GROUND**

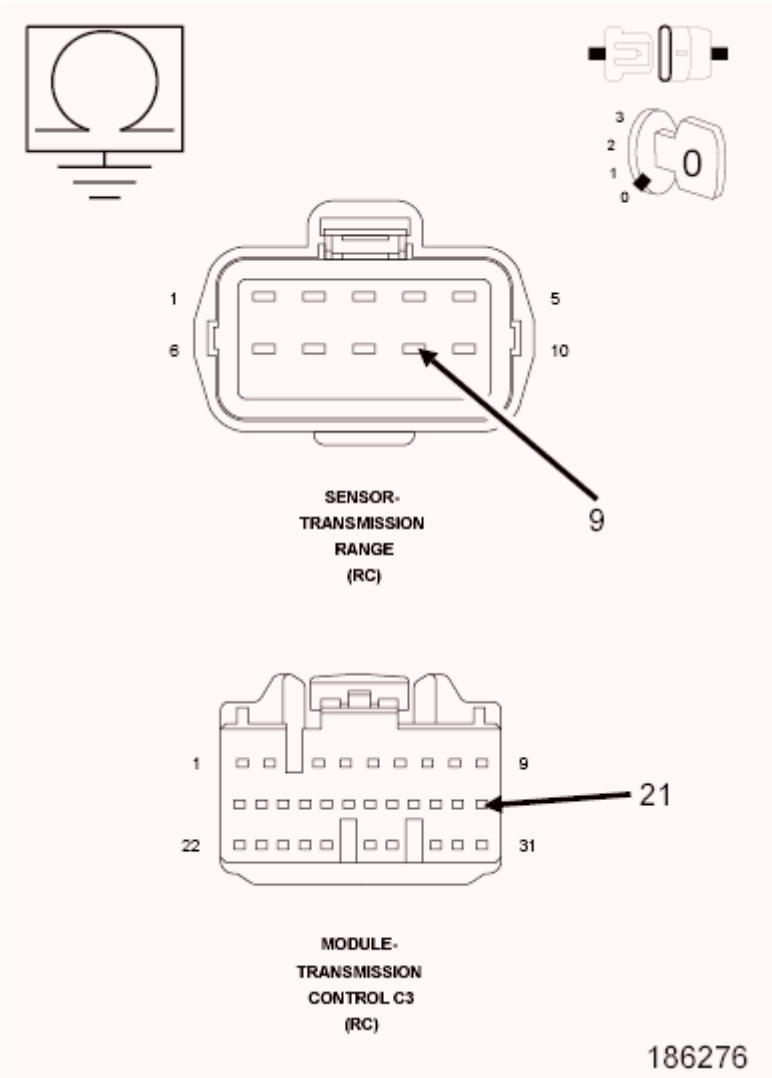

Fig. 18: Checking TRS Reverse Signal Circuit For A Short To Ground
Courtesy of CHRYSLER GROUP, LLC

1. Measure the resistance between ground and the (T826) TRS Reverse Signal circuit.

   Is the resistance below 100k Ohms?

   Yes

   - Repair the (T826) TRS Reverse Signal circuit for a short to ground.
   - Refer to **STANDARD PROCEDURE** and perform the AS68RC VERIFICATION TEST.

   No

   - Using the schematics as a guide, check the Transmission Control Module (TCM) terminals for corrosion, damage, or terminal push out. Pay particular attention to all power and ground circuits. Check for Service Information Tune-ups or Service Bulletins for any possible causes

that may apply. If no problems are found, replace and program the TCM in accordance with the Service Information.

- Refer to **STANDARD PROCEDURE** and perform the AS68RC VERIFICATION TEST.

9. **CHECK THE (T825) TRS NEUTRAL SIGNAL CIRCUIT**

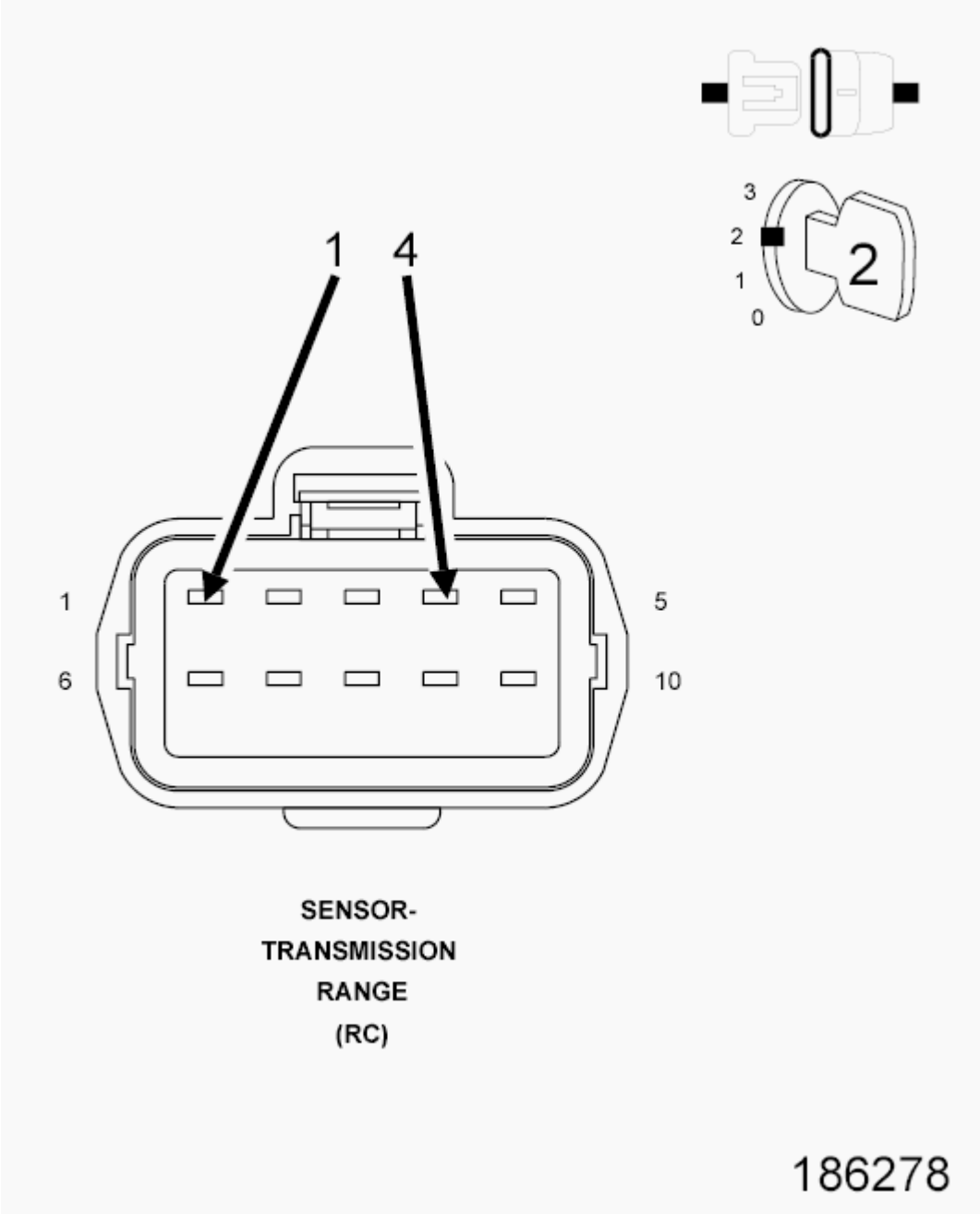

Fig. 19: Checking TRS Neutral Signal Circuit
Courtesy of CHRYSLER GROUP, LLC

1. Turn the ignition off to the lock position.
2. Disconnect the TRS harness connector.

3. Using a jumper wire, connect the (F1) Fused Ignition Switch Output (Off-Run-Start) circuit to the (T825) TRS Neutral Signal circuit in the TRS harness connector.
4. Ignition on, engine not running.
5. With the scan tool, read the TRS Neutral state.

   Does the scan tool read as "Closed"?

   Yes

   - Replace the Transmission Range Sensor in accordance with the Service Information.
   - Refer to **STANDARD PROCEDURE** and perform the AS68RC VERIFICATION TEST.

   No

   - Go To 10.

10. **CHECK THE (T825) TRS NEUTRAL CIRCUIT FOR AN OPEN**

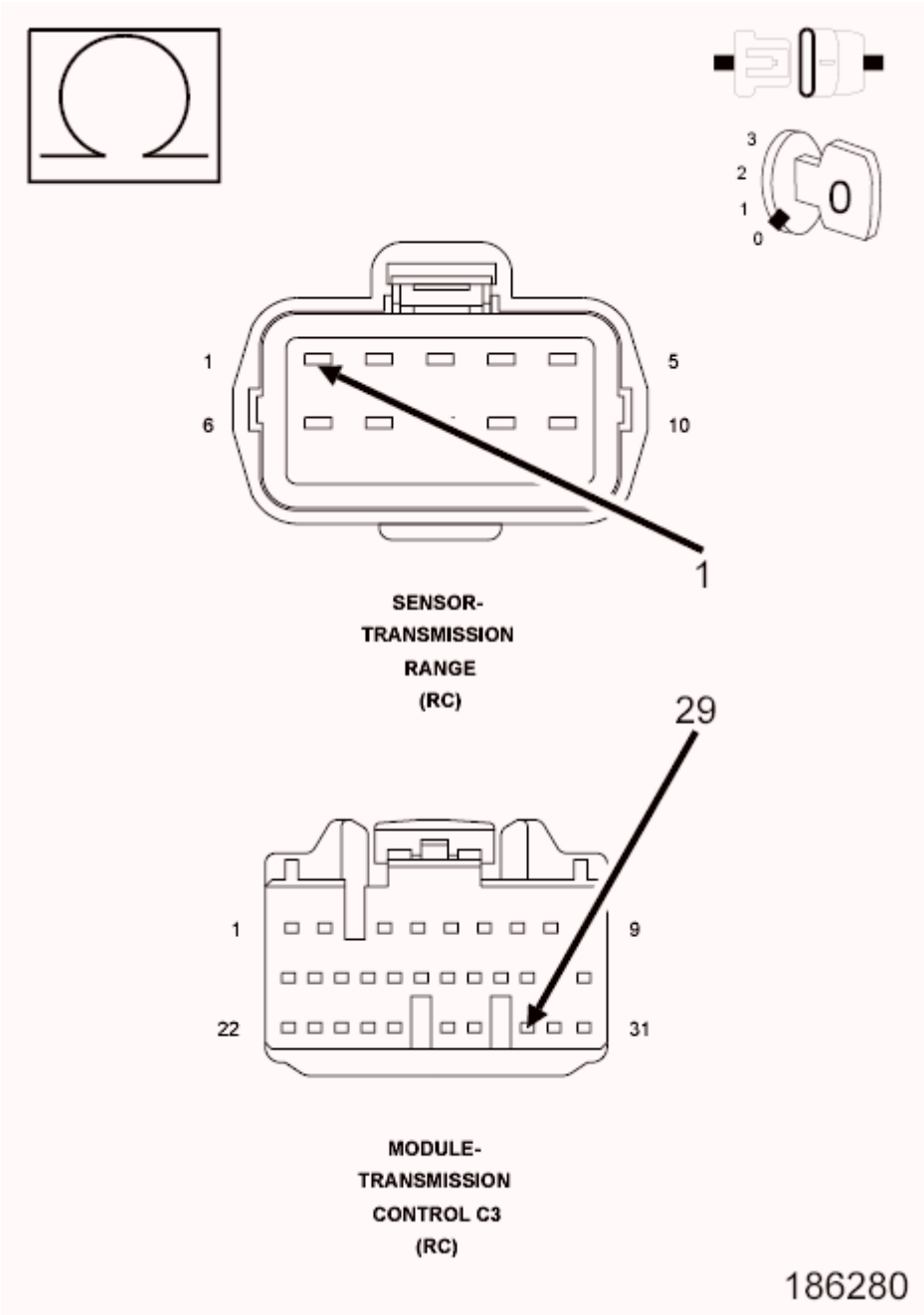

Fig. 20: Checking TRS Neutral Circuit For An Open
Courtesy of CHRYSLER GROUP, LLC

1. Turn the ignition off to the lock position.
2. Disconnect the TCM C3 harness connector
3. Measure the resistance of the (T825) TRS Neutral Signal circuit between TRS harness connector and the TCM C3 harness connector.

   Is the resistance above 5.0 Ohms?

Yes

- Repair the (T825) TRS Neutral Signal circuit for an open.
- Refer to **STANDARD PROCEDURE** and perform the AS68RC VERIFICATION TEST.

No

- Go To 11.

11. **CHECK THE (T825) TRS NEUTRAL SIGNAL CIRCUIT FOR A SHORT TO GROUND**

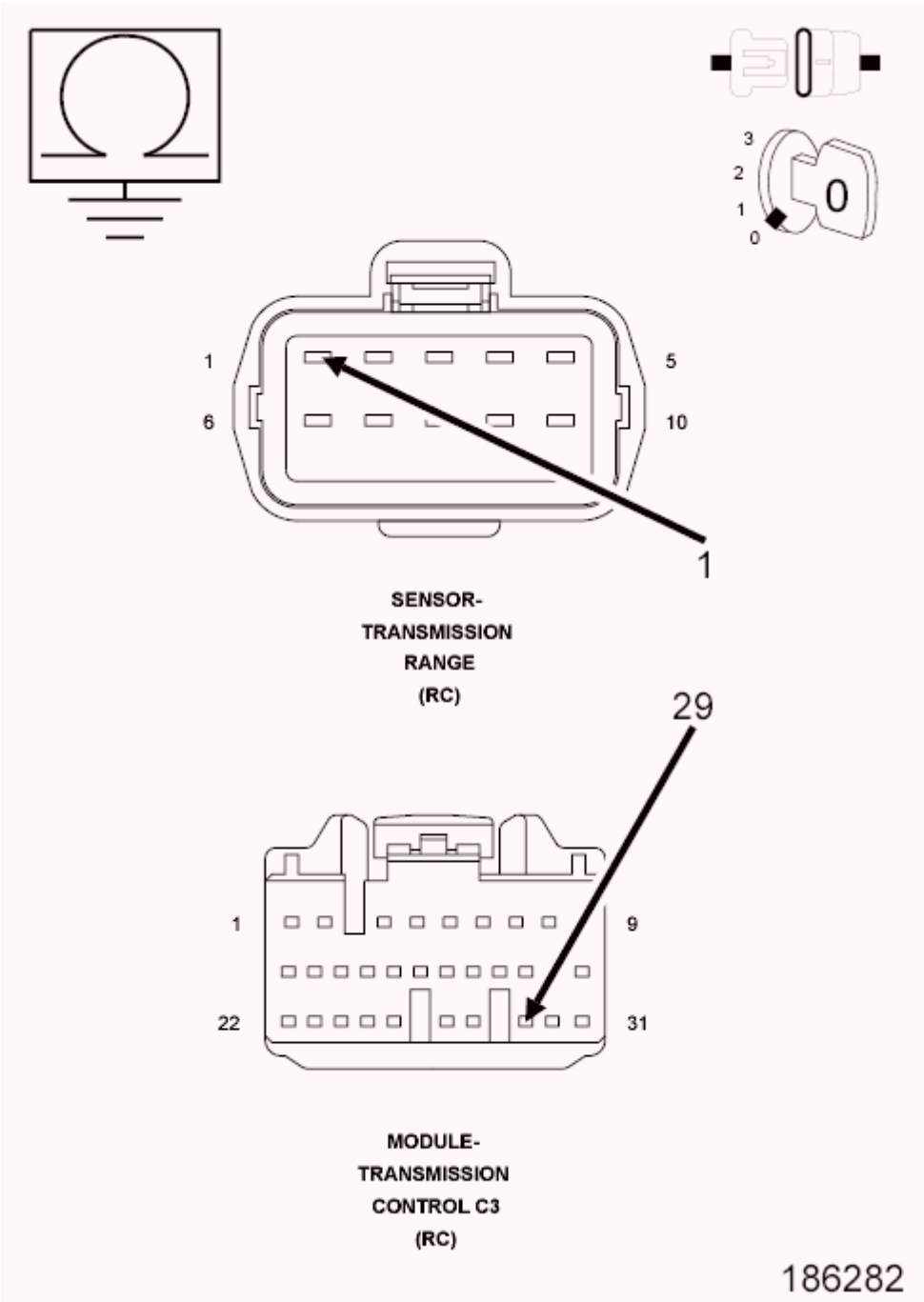

Fig. 21: Checking TRS Neutral Signal Circuit For A Short To Ground
Courtesy of CHRYSLER GROUP, LLC

1. Measure the resistance between ground and the (T825) TRS Neutral Signal circuit.

   Is the resistance below 100k Ohms?

   Yes

- Repair the (T825) TRS Neutral Signal circuit for a short to ground.
- Refer to **STANDARD PROCEDURE** and perform the AS68RC VERIFICATION TEST.

No

- Using the schematics as a guide, check the Transmission Control Module (TCM) terminals for corrosion, damage, or terminal push out. Pay particular attention to all power and ground circuits. Check for Service Information Tune-ups or Service Bulletins for any possible causes that may apply. If no problems are found, replace and program the TCM in accordance with the Service Information.
- Refer to **STANDARD PROCEDURE** and perform the AS68RC VERIFICATION TEST.

12. **CHECK WIRING AND CONNECTORS**
    1. With the scan tool, erase Transmission DTCs.
    2. Test Drive the vehicle while perform multiple upshifts, downshifts, stops, shift to park then to drive.
    3. With the scan tool, read Transmission DTCs.

    Did the DTC reset?

    Yes

    - Go To 3.

    No

    - Go To 13.

13. **CHECK WIRING AND CONNECTORS**
    1. The conditions necessary to set the DTC are not present at this time.
    2. Using the schematics as a guide, inspect the wiring and connectors specific to this circuit.
    3. Wiggle the wires while checking for shorted and open circuits.
    4. Check for any Service Bulletins that may apply.

    Were there any problems found?

    Yes

    - Repair as necessary.
    - Refer to **STANDARD PROCEDURE** and perform the AS68RC VERIFICATION TEST.

    No

    - Test Complete.

P0708-TRANSMISSION RANGE SENSOR CIRCUIT HIGH

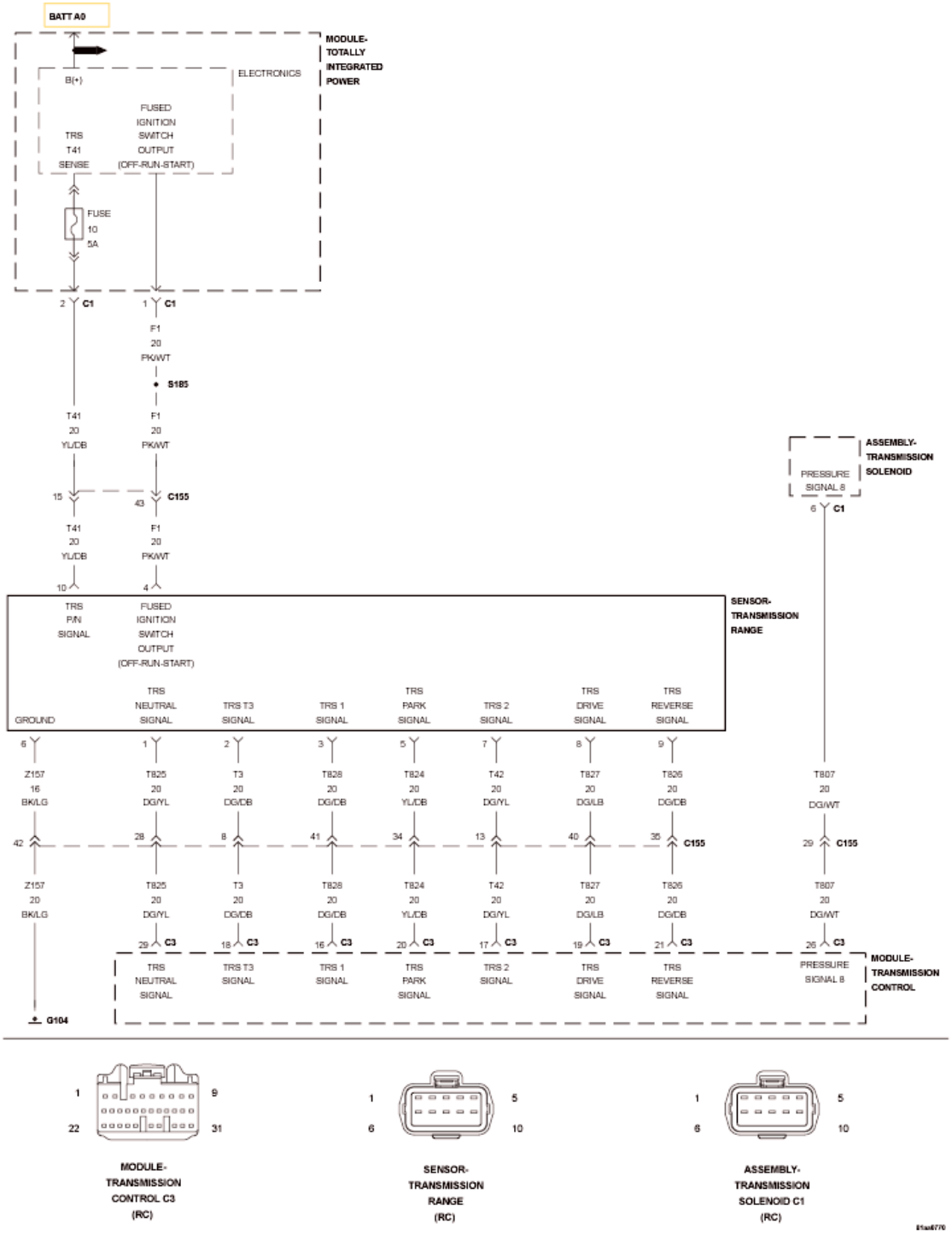

Fig. 22: Transmission Range Sensor Wiring Diagram
Courtesy of CHRYSLER GROUP, LLC

For a complete wiring diagram, **refer to appropriate SYSTEM WIRING DIAGRAMS article** .

THEORY OF OPERATION

The Transmission Range Sensor (TRS) is a multiple position selector switch which changes the signal path by redirecting a 12-volt signal source to seven different TRS signal circuits (P, R, N, D, 3, 2, 1) and also houses a Park/Neutral (P/N) switch circuit. These circuits are monitored by the Transmission Control Module and used in conjunction with various pressure switches to validate proper operation of the transmission and diagnose any possible problem. In a normal operating mode, pressure switch 8, is in an "Open" state in P, R, or N. and in an "Closed" state in any forward gear (engine running).

DIAGNOSTIC TEST

When Monitored:

- Ignition on in the run position.

Set Condition:

- When the Transmission Control Module (TCM) detects two or more Shift Lever positions registering "CLOSED" for the period of 500 msec.

POSSIBLE CAUSES

Possible Causes
TRS SIGNAL CIRCUITS SHORT TO VOLTAGE
TRS SIGNAL CIRCUIT SHORT TO ANOTHER TRS SIGNAL CIRCUIT
TRANSMISSION RANGE SENSOR
TRANSMISSION CONTROL MODULE (TCM)

Always perform the AS68RC Pre-Diagnostic Troubleshooting procedure before proceeding. Refer to STANDARD PROCEDURE.

DIAGNOSTIC TEST

1. **CHECK IF DTC IS CURRENT**

NOTE: **This DTC may set if the Transmission Range Sensor has been replaced or reinstalled and not properly adjusted (calibrated). Make sure the TRS is properly adjusted in accordance to the Service Information before attempting to perform this diagnostic procedure. If the TRS was improperly adjusted, adjust as necessary and Refer to STANDARD PROCEDURE and perform the AS68RC VERIFICATION TEST.**

   1. Using the scan tool, read TCM DTCs.
   2. Record the Environmental Data and any DTCs.
   3. Clear DTCs.
   4. Using the recorded Environmental Data, along with the When Monitored and Set Conditions above, operate the vehicle in the conditions that set the DTC.

5. Read TCM DTCs.

   Did the DTC reset?

   Yes

   - Go To 2.

   No

   - Go To 6.

2. **CHECK THE TRANSMISSION RANGE SENSOR STATES**
   1. Ignition on, engine not running.
   2. With the scan tool, monitor the TRS states (Open-Closed) in the following steps:
   3. Slowly move the shift lever to all positions (P, R, N, D, 3, 2, 1) while noting the TRS states.

      Is there a shift position that shows more than one TRS position as "Closed"?

      Yes

      - Go To 4.

      No

      - Go To 3.

3. **CHECK THE CONNECTORS**
   1. Turn the ignition off to the lock position.
   2. Using the schematics as a guide, inspect the wiring and connectors specific to this circuit.
   3. Wiggle the wires while checking for shorted and open circuits.

      Was there any problems found?

      Yes

      - Repair as necessary.
      - Refer to **STANDARD PROCEDURE** and perform the AS68RC VERIFICATION TEST.

      No

      - Using the schematics as a guide, check the Transmission Control Module (TCM) terminals for corrosion, damage, or terminal push out. Pay particular attention to all power and ground circuits. Check for Service Information Tune-ups or Service Bulletins for any possible causes that may apply. If no problems are found, replace and program the TCM in accordance with the Service Information.

- Refer to **STANDARD PROCEDURE** and perform the AS68RC VERIFICATION TEST.

4. **CHECK THE TRANSMISSION RANGE SENSOR**
    1. Turn the ignition off to the lock position.
    2. Disconnect the TRS harness connector.
    3. Ignition on, engine not running.
    4. With the scan tool read the TRS states (P, R, N, D, 3, 2, 1).

    Did any of the TRS positions show as "Closed"?

    Yes

    - Repair the identified (P, R, N, D, 3, 2, 1) TRS Signal circuit for a short to voltage.
    - Refer to **STANDARD PROCEDURE** and perform the AS68RC VERIFICATION TEST.

    No

    - Go To 5.

5. **CHECK THE TRS SIGNAL CIRCUIT FOR A SHORT TO ANOTHER TRS SIGNAL CIRCUIT**
    1. Turn the ignition off to the lock position.
    2. Disconnect the TCM C3 harness connector.
    3. Measure the resistance between the two identified TRS signal circuits (P, R, N, D, 3, 2, 1) confirmed earlier.

    Is the resistance below 100k ohms?

    Yes

    - Repair the identified TRS Signal circuit for a short to another TRS Signal circuit.
    - Refer to **STANDARD PROCEDURE** and perform the AS68RC VERIFICATION TEST.

    No

    - Replace and adjust the Transmission Range Sensor in accordance with the Service Information.
    - Refer to **STANDARD PROCEDURE** and perform the AS68RC VERIFICATION TEST.

6. **CHECK WIRING AND CONNECTORS**
    1. The conditions necessary to set the DTC are not present at this time.
    2. Using the schematics as a guide, inspect the wiring and connectors specific to this circuit.
    3. Wiggle the wires while checking for shorted and open circuits.
    4. Check for any Service Bulletins that may apply.

    Were there any problems found?

Yes

- Repair as necessary.
- Refer to **STANDARD PROCEDURE** and perform the AS68RC VERIFICATION TEST.

No

- Test Complete.

P0711-TRANSMISSION TEMPERATURE SENSOR 1 PERFORMANCE

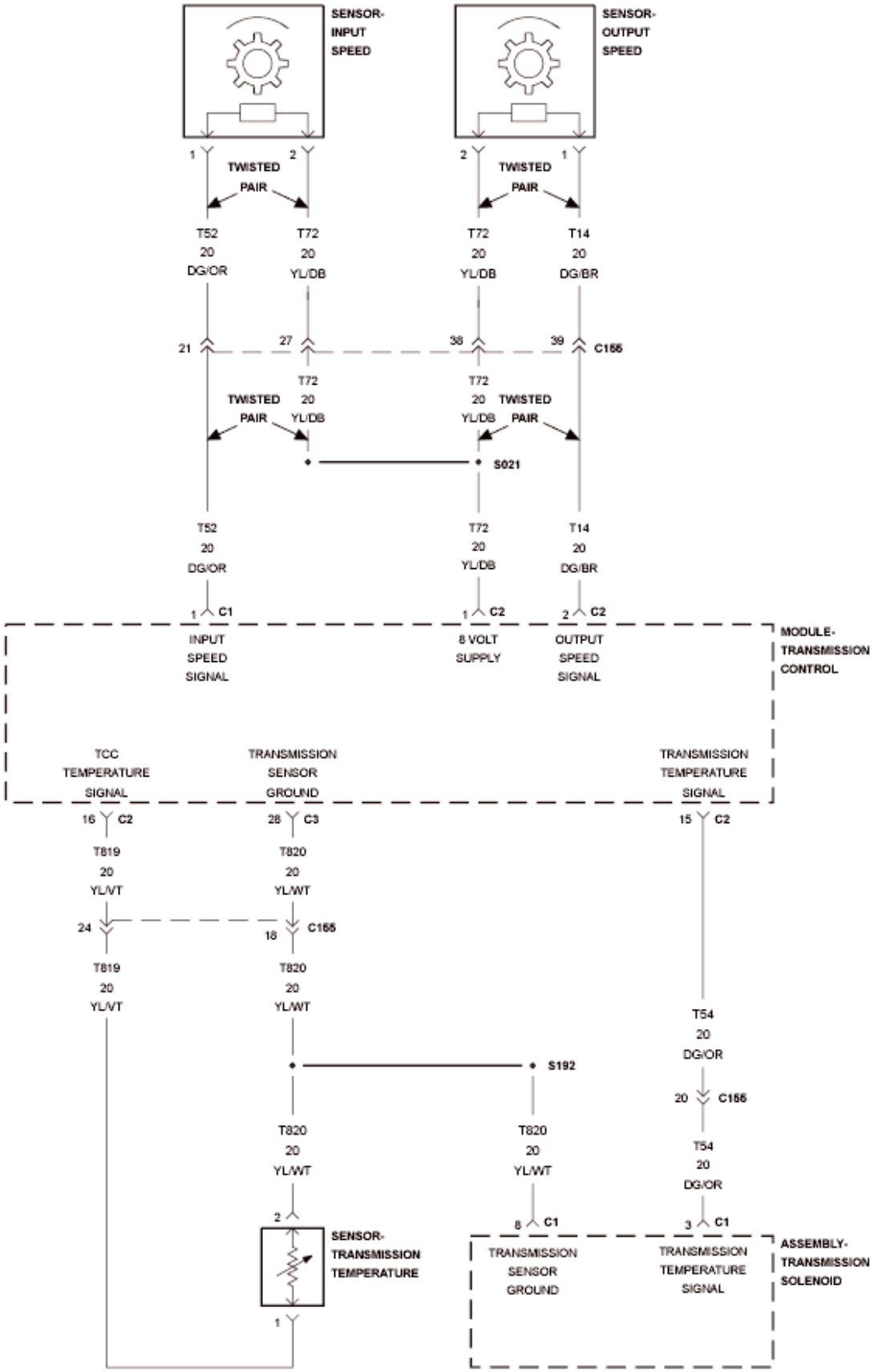
SENSOR-
INPUT
SPEED
SENSOR-
OUTPUT
SPEED
1
2
TWISTED
PAIR
2
1
TWISTED
PAIR
T52
20
DG/OR
T72
20
YL/DB
T72
20
YL/DB
T14
20
DG/BR
21
27
38
39
C155
T72
20
YL/DB
TWISTED
PAIR
T72
20
YL/DB
TWISTED
PAIR
S021
T52
20
DG/OR
T72
20
YL/DB
T14
20
DG/BR
1
C1
1
C2
2
C2
INPUT
SPEED
SIGNAL
8 VOLT
SUPPLY
OUTPUT
SPEED
SIGNAL
MODULE-
TRANSMISSION
CONTROL
TCC
TEMPERATURE
SIGNAL
TRANSMISSION
SENSOR
GROUND
TRANSMISSION
TEMPERATURE
SIGNAL
16
C2
28
C3
15
C2
T819
20
YL/VT
T820
20
YL/WT
24
18
C155
T819
20
YL/VT
T820
20
YL/WT
T54
20
DG/OR
S192
20
C155
T820
20
YL/WT
T820
20
YL/WT
T54
20
DG/OR
2
8
C1
3
C1
SENSOR-
TRANSMISSION
TEMPERATURE
TRANSMISSION
SENSOR
GROUND
TRANSMISSION
TEMPERATURE
SIGNAL
ASSEMBLY-
TRANSMISSION
SOLENOID
1

Fig. 23: Transmission Temperature Sensor Wiring Diagram
Courtesy of CHRYSLER GROUP, LLC

For a complete wiring diagram, **refer to appropriate SYSTEM WIRING DIAGRAMS article** .

THEORY OF OPERATION

The Transmission Oil Temperature Sensor is used to determine shift schedule selection. Transmission Oil Temperature is also used in TCC operation. The Transmission Control Module (TCM) monitors the transmission temperature by comparing Transmission Oil Temperature to Ambient and Engine Coolant Temperature after a cold soak, by comparing Transmission Oil temperature increases in relation to Engine temperature increases, and abnormal changes over time.

CONDITION ONE:

When Monitored:

- System voltage between 10.0 and 16.0 volts.
- Engine coolant temperature data (CAN) is normal and greater than or equal to 70° C (158° F).
- Engine coolant temperature increase is greater than 50° C (90° F).
- Output speed sensor greater than 300 rpm for 410 sec.
- Start up transmission oil temperature is between -40° C and 40° C (-40° F and 104° F).
- No Output Speed Sensor errors are detected.

Set Condition:

- Change in Transmission Oil Temperature is less than or equal to 2° C (4° F).

CONDITION TWO:

When Monitored:

- System voltage between 10.0 and 16.0 volts.
- Engine coolant temperature data and output speed sensor is normal.
- Output speed sensor greater than 300 rpm for 410 seconds.

Set Condition:

- Change in transmission oil temperature is greater than 20° C (36° F) in 100 msec and transmission oil temperature is less than 70° C (158° F) for more than five seconds.

CONDITION THREE:

When Monitored:

- Ambient temperature is less than 43° C (109° F)

- Engine coolant temp is equal to Ambient temperature within ± 10° C (18° F)

Set Condition:

- Transmission oil temperature is greater than Engine Ambient temperature by a calibrated value (see chart below).

Difference of Transmission Temperature compared to Engine Ambient Temperature	
ENGINE AMBIENT TEMPERATURE	**TRANSMISSION TEMPERATURE DIFFERENCE**
-30° C (-22° F)	±20° C (± 36° F)
-10° C (14° F)	±20° C (± 36° F)
0° C (32° F)	±20° C (± 36° F)
20° C (68° F)	±10° C (± 18° F)

CONDITION FOUR:

When Monitored:

- Transmission oil temperature is less than or equal to 20° C (68° F) at Ignition on.

Set Condition:

- Transmission oil temperature is less than 20° C (68° F) after a calibrated time (see chart below).

Drive time above 48 mph based on Transmission Temperature at Ignition on	
TRANSMISSION TEMPERATURE AT IGNITION ON	**DRIVE TIME ABOVE 48 MPH**
-40° C (-40° F)	40 MINUTES
-30° C (-22° F)	30 MINUTES
-20° C (-4° F)	20 MINUTES
-10° C (14° F)	15 MINUTES
0° C (32° F)	13 MINUTES
10° C (50° F)	6 MINUTES
15° C (59° F)	6 MINUTES

POSSIBLE CAUSES

Possible Causes
RELATED ENGINE TEMPERATURE SENSOR DTCS
RELATED TRANSMISSION TEMPERATURE SENSOR DTCS
INTERMITTENT TRANSMISSION TEMPERATURE SENSOR
TRANSMISSION TEMPERATURE SENSOR
TRANSMISSION CONTROL MODULE (TCM)

DIAGNOSTIC TEST

Always perform the AS68RC Pre-Diagnostic Troubleshooting procedure before proceeding. Refer to STANDARD PROCEDURE.

DIAGNOSTIC TEST

1. **CHECK FOR RELATED ENGINE DTCs**
    1. With the scan tool, view Engine DTCs.

       Are there any Engine Coolant and/or Ambient DTCs present?

       Yes

       - Refer to **DIAGNOSTIC CODE INDEX** for 3.7L/4.7L/5.7L or **DIAGNOSTIC CODE INDEX** for 6.7L and perform the appropriate diagnostic procedure.

       No

       - Go To 2.
2. **CHECK FOR RELATED TRANSMISSION DTCs**
    1. With the scan tool, view Transmission DTCs.
    2. Record any Transmission Freeze Frame data.

       Are there any other Transmission temperature sensor DTCs?

       Yes

       - Refer to **DIAGNOSTIC CODE INDEX** and perform the appropriate diagnostic procedure.

       No

       - Go To 3.
3. **CHECK IF DTC IS CURRENT**
    1. Using the scan tool, read TCM DTCs.
    2. Record the Environmental Data and any DTCs.
    3. Clear DTCs.
    4. Using the recorded Environmental Data, along with the When Monitored and Set Conditions above, operate the vehicle in the conditions that set the DTC.
    5. Read TCM DTCs.

       Did the DTC reset?

       Yes

- Go To 4.

No

- Go To 9.

4. **COMPARE THE TRANSMISSION TEMPERATURE TO ENGINE COOLANT TEMPERATURE**

NOTE: **To test the transmission temperature sensor, the engine and transmission temperature must be at or below 29.4° C (85° F).**

1. With the scan tool, read the Transmission and Engine temperatures.

   Is the transmission temperature within 5° C (9° F) of the engine coolant temperature?

   Yes

   - Go To 5.

   No

   - Go To 8.

5. **CHECK IF THE TRANSMISSION TEMPERATURE INCREASES 15 DEGREES OVER 10 MINUTE PERIOD**

NOTE: **To test the transmission temperature sensor, the engine and transmission temperature must be at or below 29.4° C (85° F).**

CAUTION: Apply the parking brake.

1. Start the engine, firmly apply the brakes and allow the engine to idle in Drive.
2. With the scan tool, monitor the Transmission Temperature.

   NOTE: **If the transmission temperature sensor is working properly, the transmission temperature should rise at least 8° C (15° F) within a ten minute period.**

3. Did the transmission temperature increase at a steady rate and rise at least 8° C (15° F) over a 10 minute period?

   Yes

   - Go To 9.

No

- Go To 6.

6. **CHECK THE (T54) TRANSMISSION TEMPERATURE SENSOR SIGNAL CIRCUIT**
   1. Turn the ignition off to the lock position.
   2. Disconnect the Transmission Solenoid Assembly C1 harness connector.

      NOTE: Check connectors - Clean/repair as necessary.

   3. Ignition on, engine not running.
   4. With the scan tool, monitor the Transmission Oil Temperature.

      Does the Transmission Oil Temperature read -40° C (-40° F) ± 2° C (4° F)?

      Yes

      - Go To 7.

      No

      - Refer to **DIAGNOSTIC CODE INDEX** and perform P0713-TRANSMISSION TEMPERATURE SENSOR 1 HIGH as if the DTC is active.
      - Refer to **STANDARD PROCEDURE** and perform the AS68RC VERIFICATION TEST.

7. **CHECK THE (T54) TRANSMISSION TEMPERATURE SENSOR SIGNAL CIRCUIT FOR A SHORT TO GROUND**

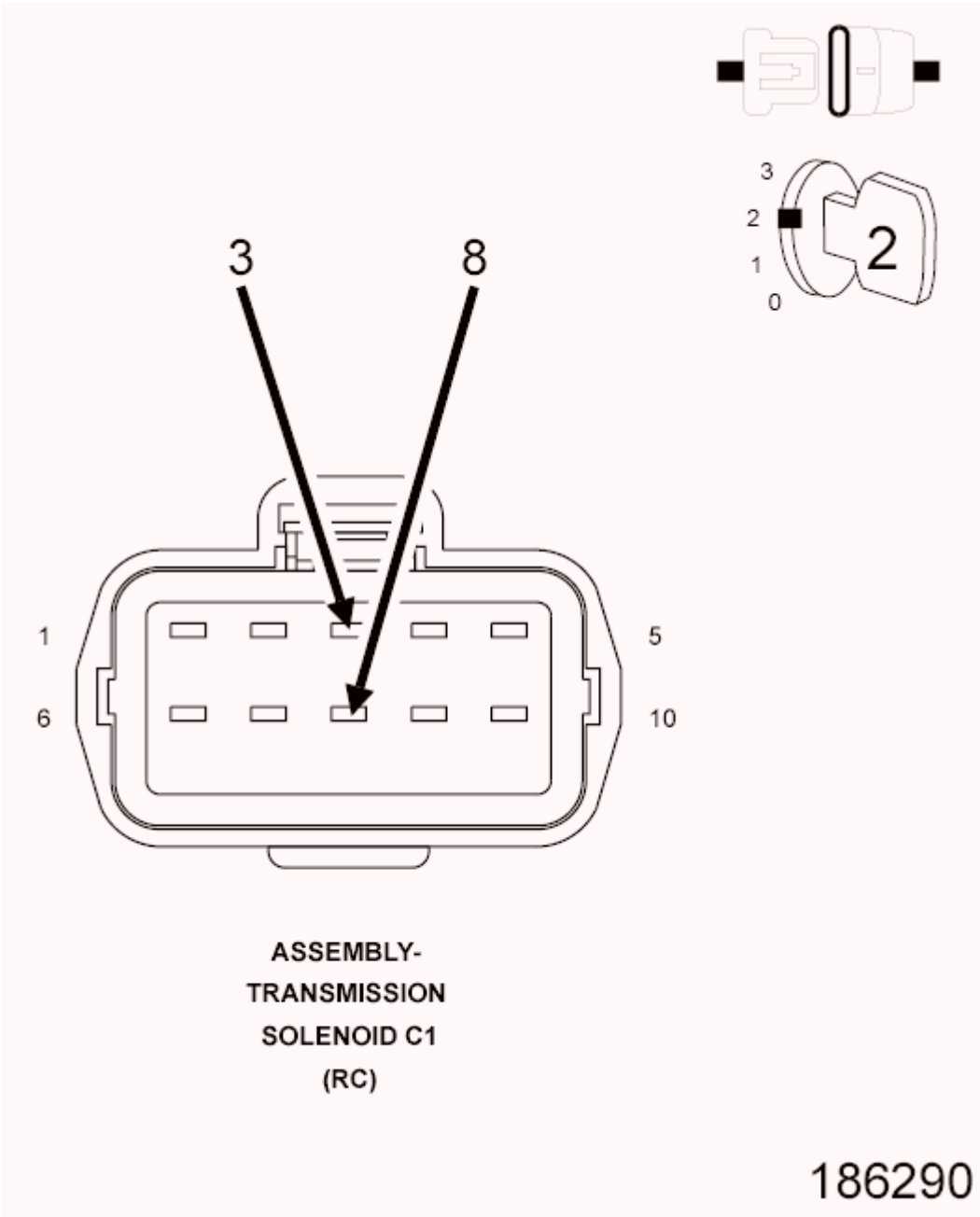

Fig. 24: Checking Transmission Temperature Sensor Signal Circuit For A Short To Ground
Courtesy of CHRYSLER GROUP, LLC

1. Turn the ignition off to the lock position.
2. Connect a jumper wire between the (T54) Transmission Temperature Signal circuit and the (T820) Sensor Ground circuit in the Transmission Solenoid Assembly C1 harness connector.
3. Ignition on, engine not running.
4. With the scan tool, monitor the Transmission Oil Temperature.

   Does the Transmission Oil Temperature read 200° C (392° F) ± 2° C (4° F)?

Yes

- Go To 8.

No

- Refer to **DIAGNOSTIC CODE INDEX** and perform the diagnostic procedure for P0712-TRANSMISSION TEMPERATURE SENSOR 1 LOW as if the DTC is active.
- Refer to **STANDARD PROCEDURE** and perform the AS68RC VERIFICATION TEST.

8. **CHECK THE TRANSMISSION TEMPERATURE SENSOR**

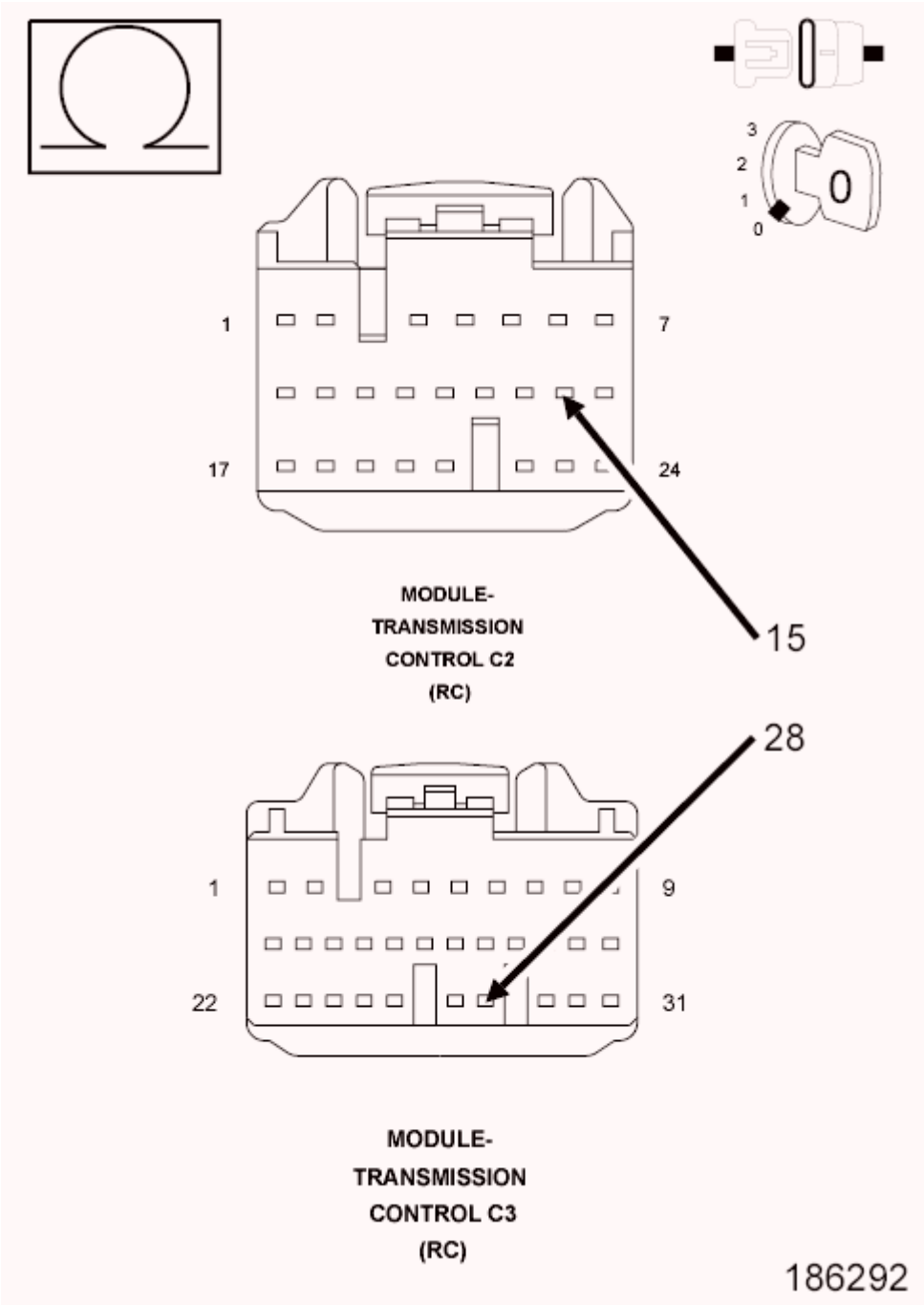

Fig. 25: Checking Transmission Temperature Sensor
Courtesy of CHRYSLER GROUP, LLC

TYPICAL VALUES FOR TRANSMISSION TEMPERATURE SENSOR	
TEMPERATURE	**APPROXIMATE OHM**
-30° C (-22° F)	44000 Ohms ± 6600
10° C (50° F)	6455 Ohms ± 645
110° C (230° F)	247 Ohms ± 16

145° C (293° F)	111 Ohms ± 6

1. Turn the ignition off to the lock position.
2. Reconnect the Transmission Solenoid harness connector.
3. Disconnect the TCM C2 and C3 harness connectors.

NOTE: Check connectors - Clean/repair as necessary

4. Measure the resistance of the Transmission Temperature Sensor between the (T54) Transmission Temperature Signal circuit in the TCM C2 harness connector and the (T820) Sensor Ground circuit in the TCM C3 harness connector.
5. Using the chart at the chart above, compare the Temperature Sensor temperature to the correlating resistance value.

   Is the resistance within the specified range when the sensor is at the given temperature?

   Yes

   - Go To 9.

   No

   - Remove the Transmission Oil Pan and inspect the internal Transmission harness, pins, terminals, and connectors for corrosion, damage, or terminal push out. If no problems are found, replace the Transmission Temperature Sensor in accordance with the Service Information.
   - Refer to **STANDARD PROCEDURE** and perform the AS68RC VERIFICATION TEST.

9. **CHECK WIRING AND CONNECTORS**
   1. The conditions necessary to set the DTC are not present at this time.
   2. Using the schematics as a guide, inspect the wiring and connectors specific to this circuit.
   3. Wiggle the wires while checking for shorted and open circuits.
   4. Check for any Service Bulletins that may apply.

   Were there any problems found?

   Yes

   - Repair as necessary.
   - Refer to **STANDARD PROCEDURE** and perform the AS68RC VERIFICATION TEST.

   No

   - Test Complete.

P0712-TRANSMISSION TEMPERATURE SENSOR 1 LOW

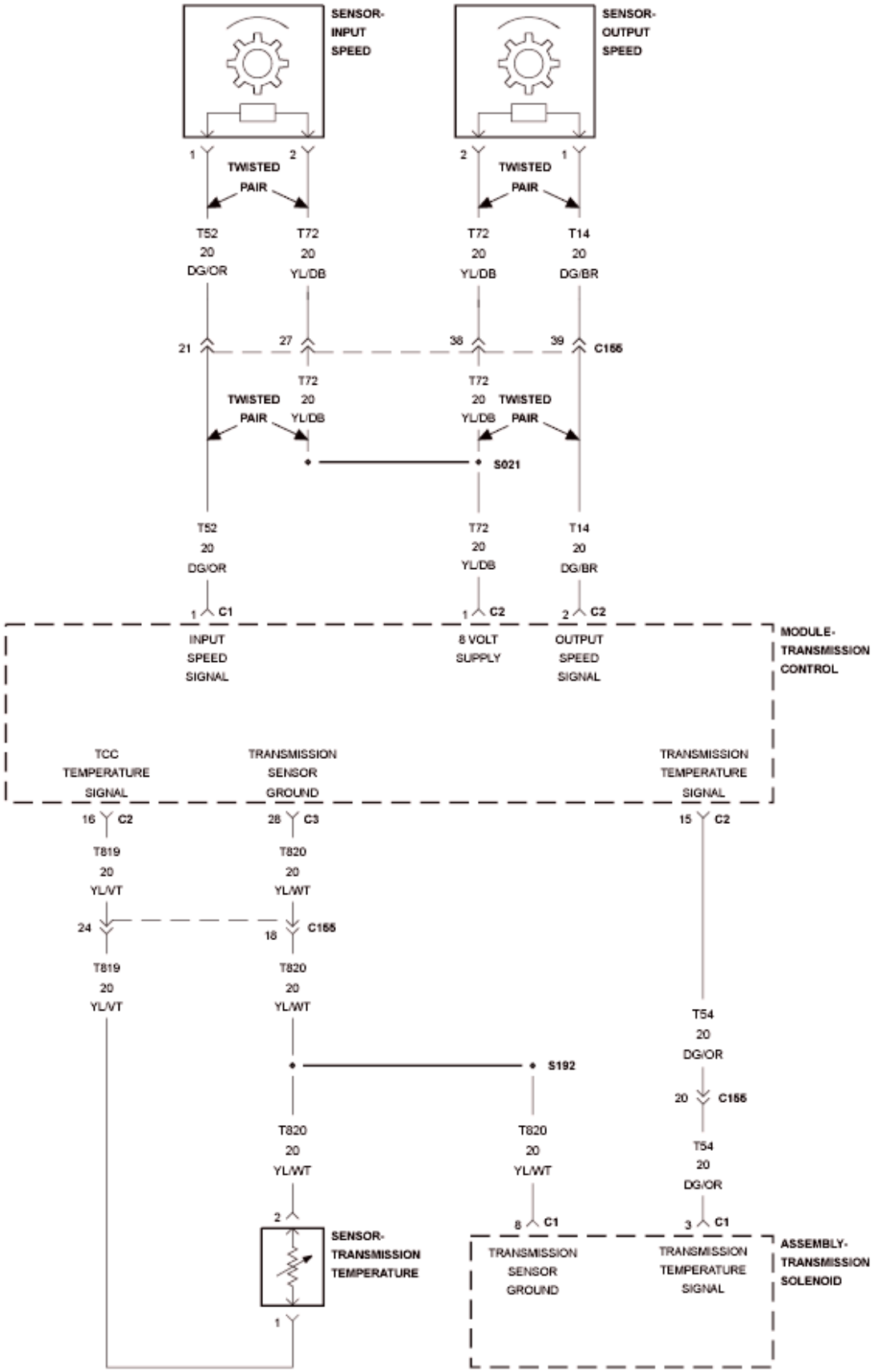
SENSOR-
INPUT
SPEED
SENSOR-
OUTPUT
SPEED
1
2
TWISTED
PAIR
2
1
TWISTED
PAIR
T52
20
DG/OR
T72
20
YL/DB
T72
20
YL/DB
T14
20
DG/BR
21
27
38
39
C155
T72
20
YL/DB
TWISTED
PAIR
T72
20
YL/DB
TWISTED
PAIR
S021
T52
20
DG/OR
T72
20
YL/DB
T14
20
DG/BR
1
C1
1
C2
2
C2
INPUT
SPEED
SIGNAL
8 VOLT
SUPPLY
OUTPUT
SPEED
SIGNAL
MODULE-
TRANSMISSION
CONTROL
TCC
TEMPERATURE
SIGNAL
TRANSMISSION
SENSOR
GROUND
TRANSMISSION
TEMPERATURE
SIGNAL
16
C2
28
C3
15
C2
T819
20
YL/VT
T820
20
YL/WT
24
18
C155
T819
20
YL/VT
T820
20
YL/WT
T54
20
DG/OR
S192
20
C155
T820
20
YL/WT
T820
20
YL/WT
T54
20
DG/OR
2
8
C1
3
C1
SENSOR-
TRANSMISSION
TEMPERATURE
TRANSMISSION
SENSOR
GROUND
TRANSMISSION
TEMPERATURE
SIGNAL
ASSEMBLY-
TRANSMISSION
SOLENOID
1

Fig. 26: Transmission Temperature Sensor Wiring Diagram
Courtesy of CHRYSLER GROUP, LLC

For a complete wiring diagram, **refer to appropriate SYSTEM WIRING DIAGRAMS article** .

THEORY OF OPERATION

The Transmission Oil Temperature Sensor is used to determine shift schedule selection. Transmission Oil Temperature is also used in TCC operation.

WHEN MONITORED:

Continuously with the ignition on and the engine running.

SET CONDITION:

The Diagnostic Trouble Code (DTC) will set if the monitored Transmission Temperature Sensor Signal circuit is greater than 200° C (392° F) for more than 500 ms.

POSSIBLE CAUSES

Possible Causes
(T54) TRANSMISSION TEMPERATURE SENSOR SIGNAL CIRCUIT SHORT TO GROUND
(T54) TRANSMISSION TEMPERATURE SENSOR SIGNAL CIRCUIT SHORT TO (T820) SENSOR GROUND CIRCUIT
TRANSMISSION TEMPERATURE SENSOR
TRANSMISSION CONTROL MODULE (TCM)

Always perform the AS68RC Pre-Diagnostic Troubleshooting procedure before proceeding. Refer to STANDARD PROCEDURE.

DIAGNOSTIC TEST

1. **CHECK IF DTC IS CURRENT**
    1. Using the scan tool, read TCM DTCs.
    2. Record the Environmental Data and any DTCs.
    3. Clear DTCs.
    4. Using the recorded Environmental Data, along with the When Monitored and Set Conditions above, operate the vehicle in the conditions that set the DTC.
    5. Read TCM DTCs.

    Did the DTC reset?

    Yes

    - Go To 2.

No

- Go To 5.

2. **CHECK THE (T54) TRANSMISSION TEMPERATURE SENSOR SIGNAL CIRCUIT FOR A SHORT TO GROUND**

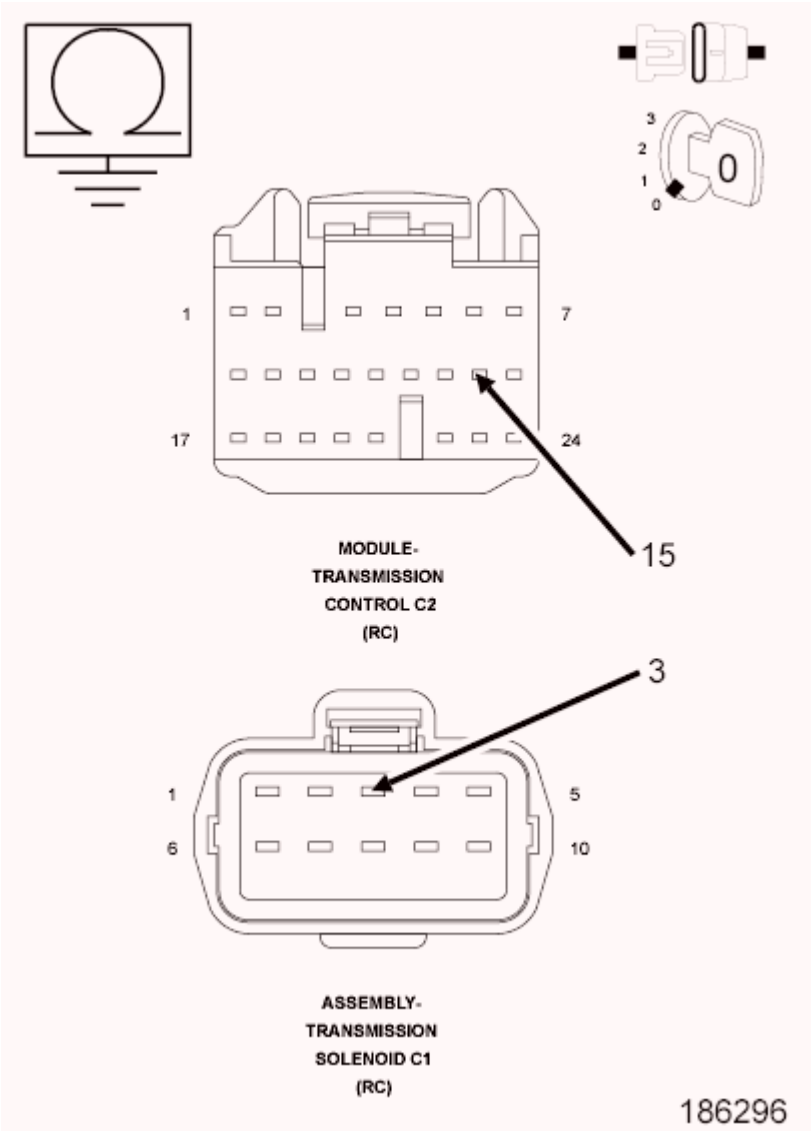

Fig. 27: Checking Transmission Temperature Sensor Signal Circuit For A Short To Ground
Courtesy of CHRYSLER GROUP, LLC

1. Turn the ignition off to the lock position.
2. Disconnect the TCM C2 harness connector.
3. Disconnect the Transmission Solenoid Assembly C1 harness connector.
4. Measure the resistance between ground and the (T54) Transmission Temperature Sensor Signal circuit.

Is the resistance above 100k Ohms?

Yes

- Go To 3.

No

- Repair the (T54) Transmission Temperature Sensor Signal circuit for a short to ground.
- Refer to **STANDARD PROCEDURE** and perform the AS68RC VERIFICATION TEST.

3. **CHECK THE (T54) TRANSMISSION TEMPERATURE SENSOR SIGNAL CIRCUIT FOR A SHORT TO (T820) SENSOR GROUND CIRCUIT**

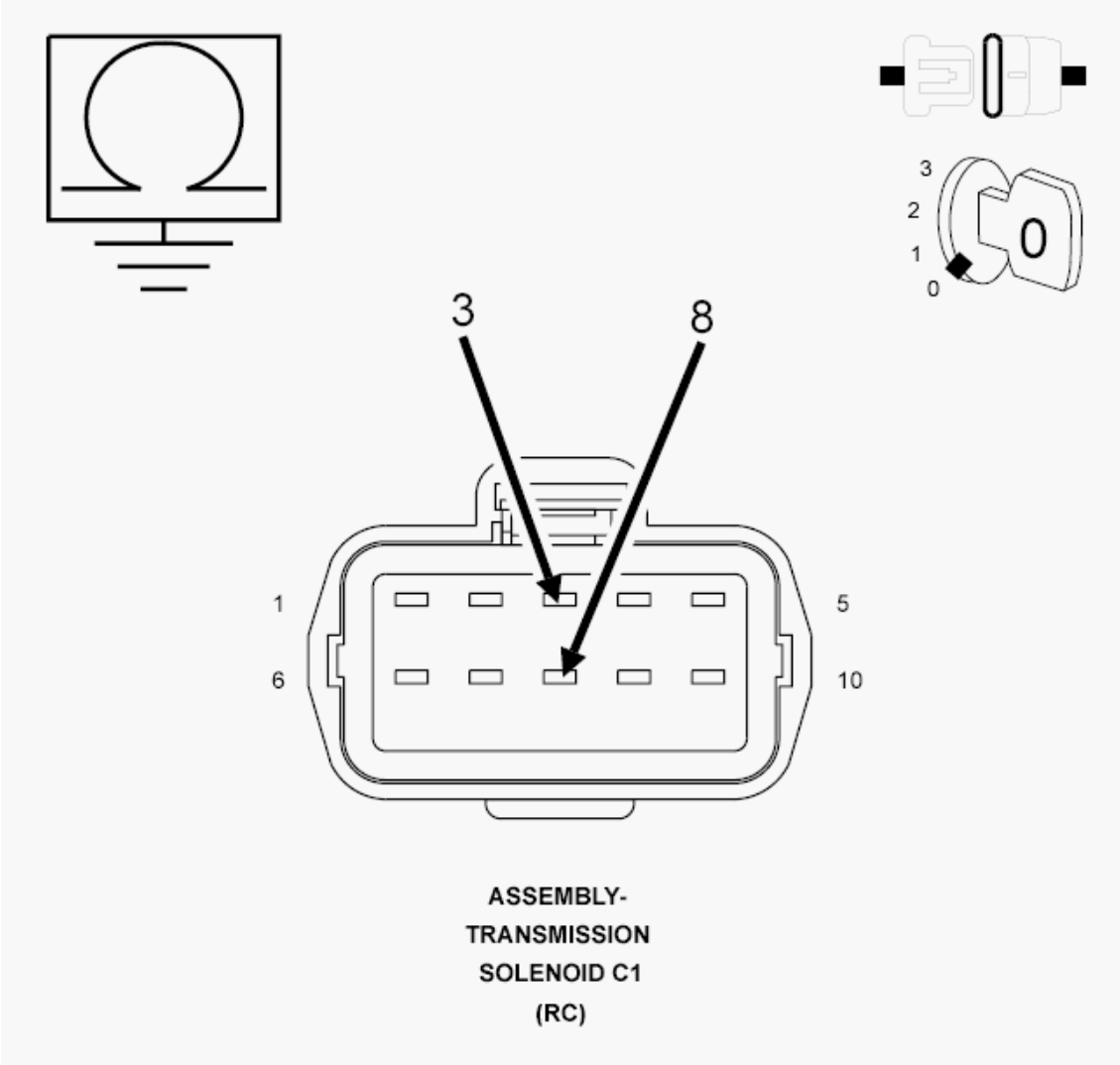

Fig. 28: Checking Transmission Temperature Sensor Signal Circuit For A Short To Sensor Ground Circuit
Courtesy of CHRYSLER GROUP, LLC

1. Disconnect the TCM C3 harness connectors.
2. Measure the resistance between the (T54) Transmission Temperature Sensor Signal circuit and (T820) Sensor Ground circuit in the Transmission Solenoid Assembly C1 harness connector.

   Is the resistance above 100k Ohms?

   Yes

   - Go To 4.

   No

   - Repair the (T54) Transmission Temperature Sensor Signal circuit for a short to the (T820) Sensor Ground circuit.
   - Refer to **STANDARD PROCEDURE** and perform the AS68RC VERIFICATION TEST.

4. **CHECK THE TRANSMISSION TEMPERATURE SENSOR**

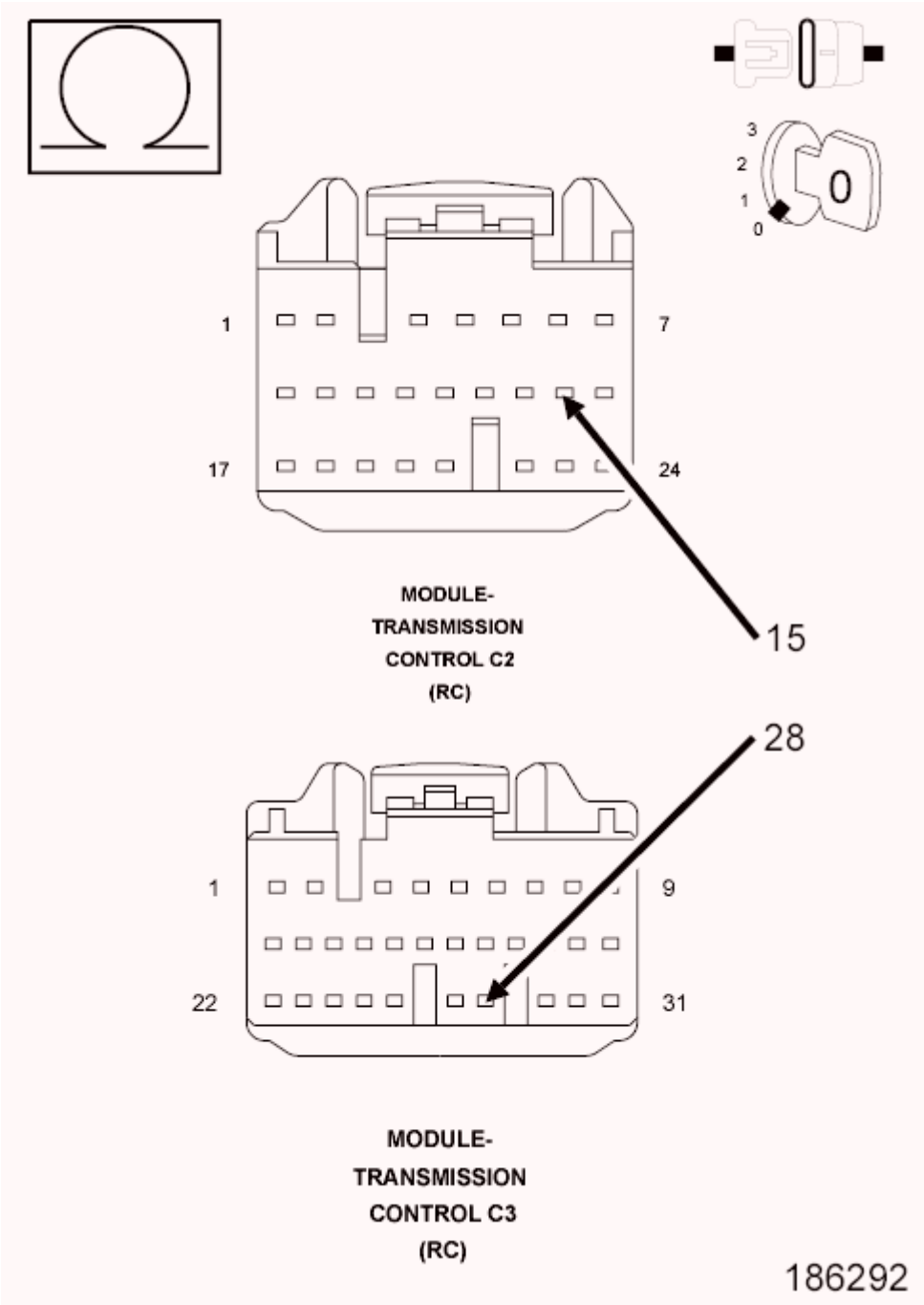

Fig. 29: Checking Transmission Temperature Sensor
Courtesy of CHRYSLER GROUP, LLC

TYPICAL VALUES FOR TRANSMISSION TEMPERATURE SENSOR	
TEMPERATURE	**APPROXIMATE OHM**
-30° C (-22° F)	44000 Ohms ± 6600
10° C (50° F)	6455 Ohms ± 645
110° C (230° F)	247 Ohms ± 16

145° C (293° F)	111 Ohms ± 6

1. Turn the ignition off to the lock position.
2. Reconnect the Transmission Solenoid harness connector.
3. Disconnect the TCM C3 harness connector.

NOTE: Check connectors - Clean/repair as necessary

4. Measure the resistance of the Transmission Temperature Sensor between the (T54) Transmission Temperature Signal circuit and the (T820) Sensor Ground circuit in the TCM C3 harness connector.
5. Using the chart at the chart above, compare the Temperature Sensor temperature to the correlating resistance value.

   Is the resistance within the specified range when the sensor is at the given temperature?

   Yes

   - Using the schematics as a guide, check the Transmission Control Module (TCM) pins, terminals, and connectors for corrosion, damage, or terminal push out. Pay particular attention to all power and ground circuits. If no problems are found, replace and program the TCM in accordance with the Service Information.

   No

   - Remove the Transmission Oil Pan and inspect the internal Transmission harness, pins, terminals, and connectors for corrosion, damage, or terminal push out. If no problems are found, replace the Transmission Temperature Sensor in accordance with the Service Information.
   - Refer to **STANDARD PROCEDURE** and perform the AS68RC VERIFICATION TEST.

5. **CHECK WIRING AND CONNECTORS**
   1. The conditions necessary to set the DTC are not present at this time.
   2. Using the schematics as a guide, inspect the wiring and connectors specific to this circuit.
   3. Wiggle the wires while checking for shorted and open circuits.
   4. Check for any Service Bulletins that may apply.

   Were there any problems found?

   Yes

   - Repair as necessary.
   - Refer to **STANDARD PROCEDURE** and perform the AS68RC VERIFICATION TEST.

   No

- Test Complete.

P0713-TRANSMISSION TEMPERATURE SENSOR 1 HIGH

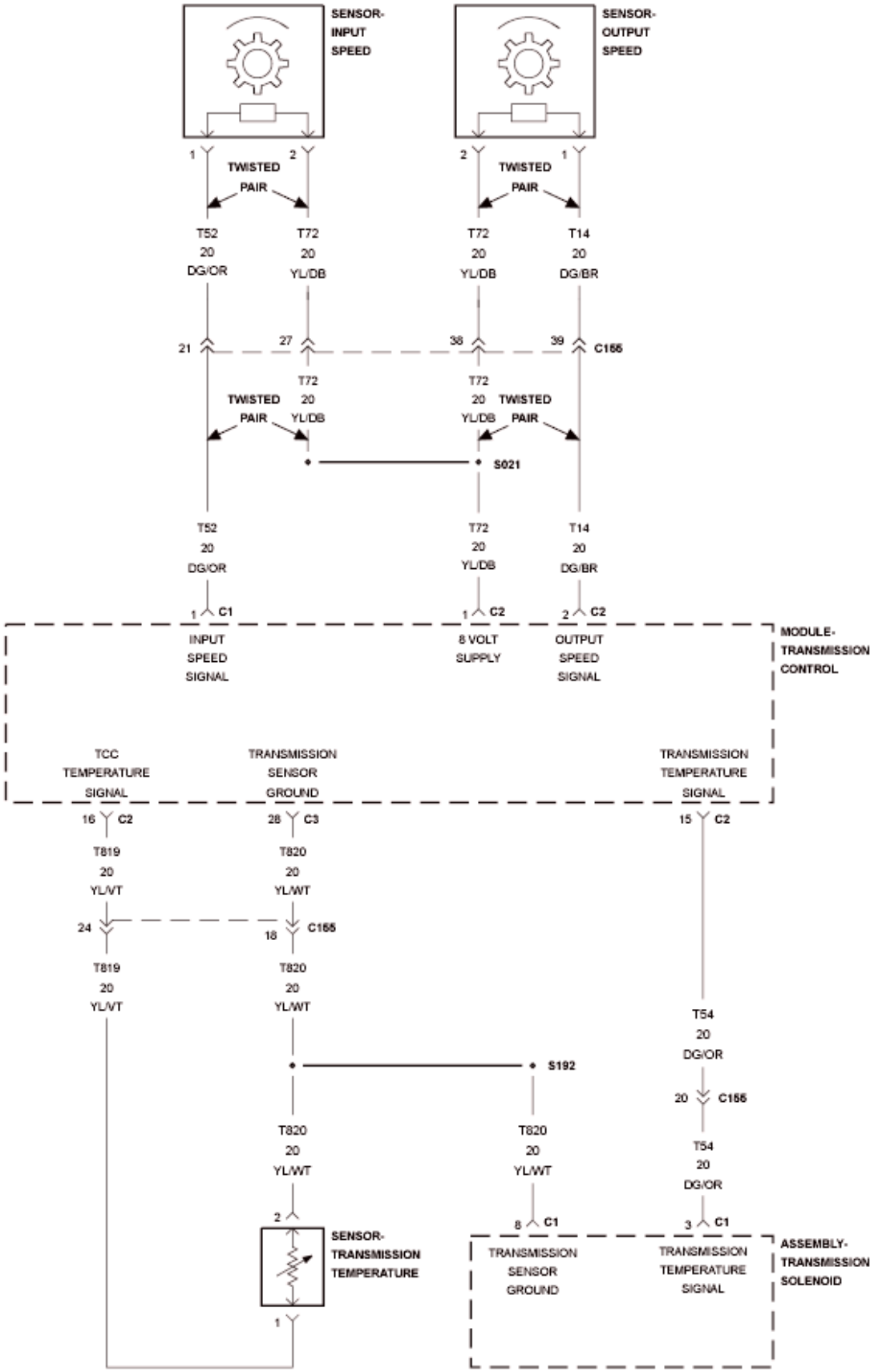
SENSOR-
INPUT
SPEED
SENSOR-
OUTPUT
SPEED
1
2
TWISTED
PAIR
2
1
TWISTED
PAIR
T52
20
DG/OR
T72
20
YL/DB
T72
20
YL/DB
T14
20
DG/BR
21
27
38
39
C155
T72
20
YL/DB
TWISTED
PAIR
T72
20
YL/DB
TWISTED
PAIR
S021
T52
20
DG/OR
T72
20
YL/DB
T14
20
DG/BR
1
C1
1
C2
2
C2
INPUT
SPEED
SIGNAL
8 VOLT
SUPPLY
OUTPUT
SPEED
SIGNAL
MODULE-
TRANSMISSION
CONTROL
TCC
TEMPERATURE
SIGNAL
TRANSMISSION
SENSOR
GROUND
TRANSMISSION
TEMPERATURE
SIGNAL
16
C2
28
C3
15
C2
T819
20
YL/VT
T820
20
YL/WT
24
18
C155
T819
20
YL/VT
T820
20
YL/WT
T54
20
DG/OR
S192
20
C155
T820
20
YL/WT
T820
20
YL/WT
T54
20
DG/OR
2
8
C1
3
C1
SENSOR-
TRANSMISSION
TEMPERATURE
TRANSMISSION
SENSOR
GROUND
TRANSMISSION
TEMPERATURE
SIGNAL
ASSEMBLY-
TRANSMISSION
SOLENOID
1

Fig. 30: Transmission Temperature Sensor Wiring Diagram
Courtesy of CHRYSLER GROUP, LLC

For a complete wiring diagram, **refer to appropriate SYSTEM WIRING DIAGRAMS article** .

THEORY OF OPERATION

The Transmission Oil Temperature Sensor is used to determine shift schedule selection. Transmission Oil Temperature is also used in TCC operation.

WHEN MONITORED:

Continuously with the ignition on and the engine running.

SET CONDITION:

The Diagnostic Trouble Code (DTC) will set if the monitored Transmission Temperature Sensor Signal circuit is greater than -40° C (-40° F) for more than 500 ms.

POSSIBLE CAUSES

Possible Causes
(T54) TRANSMISSION TEMPERATURE SENSOR SIGNAL CIRCUIT SHORT TO VOLTAGE
(T54) TRANSMISSION TEMPERATURE SENSOR SIGNAL CIRCUIT OPEN
(T820) SENSOR GROUND CIRCUIT OPEN
INTERNAL TRANSMISSION HARNESS
TRANSMISSION TEMPERATURE SENSOR
TRANSMISSION CONTROL MODULE (TCM)

Always perform the AS68RC Pre-Diagnostic Troubleshooting procedure before proceeding. Refer to STANDARD PROCEDURE.

DIAGNOSTIC TEST

1. **CHECK IF DTC IS CURRENT**
    1. Using the scan tool, read TCM DTCs.
    2. Record the Environmental Data and any DTCs.
    3. Clear DTCs.
    4. Using the recorded Environmental Data, along with the When Monitored and Set Conditions above, operate the vehicle in the conditions that set the DTC.
    5. Read TCM DTCs.

    Did the DTC reset?

    Yes

- Go To 2.

No

- Go To 6.

2. **CHECK THE (T54) TRANSMISSION TEMPERATURE SENSOR SIGNAL CIRCUIT FOR A SHORT TO VOLTAGE**

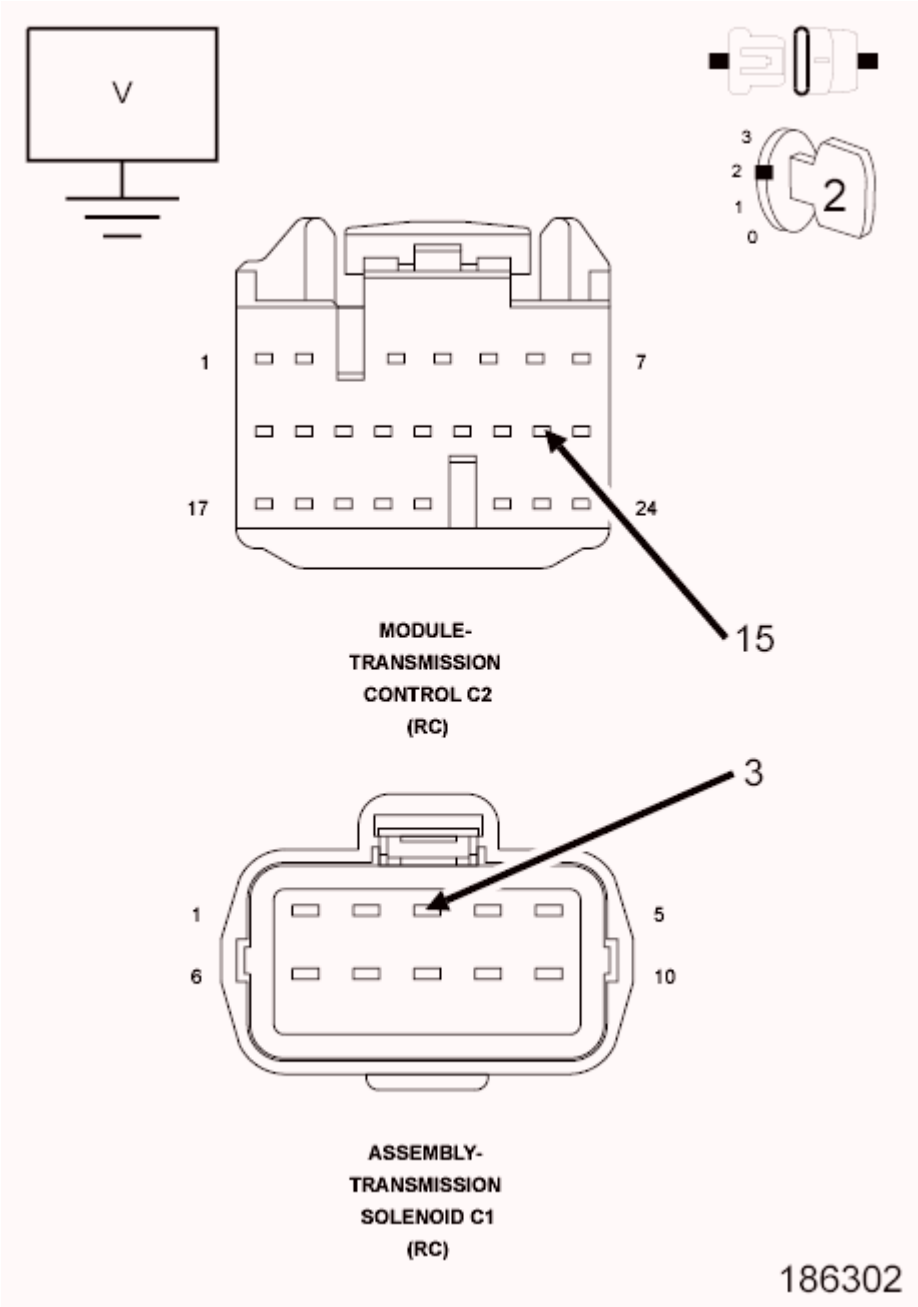

Fig. 31: Checking Transmission Temperature Sensor Signal Circuit For A Short To Voltage
Courtesy of CHRYSLER GROUP, LLC

1. Turn the ignition off to the lock position.
2. Disconnect the TCM C1 harness connectors.
3. Disconnect the Transmission Solenoid Assembly C1 harness connector.
4. Ignition on, engine not running.
5. Measure the voltage of the (T54) Transmission Temperature Sensor Signal circuit in the TCM C1 harness connector.

   Is the voltage above 0.5 of a volt?

   Yes

   - Repair the (T54) Transmission Temperature Sensor Signal circuit for a short to voltage.
   - Refer to **STANDARD PROCEDURE** and perform the AS68RC VERIFICATION TEST.

   No

   - Go To 3.

3. **CHECK THE (T54) TRANSMISSION TEMPERATURE SENSOR SIGNAL CIRCUIT FOR AN OPEN**

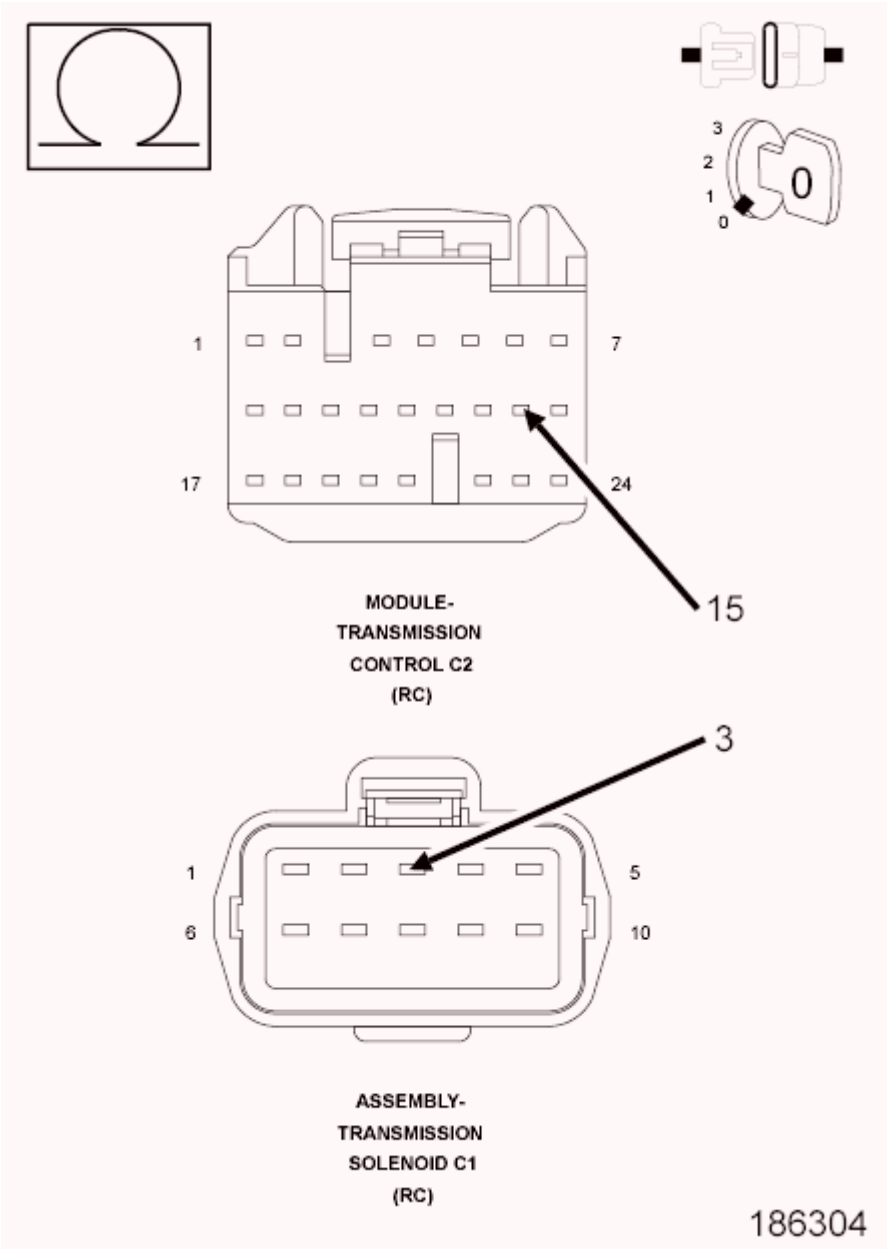

Fig. 32: Checking Transmission Temperature Sensor Signal Circuit For An Open
Courtesy of CHRYSLER GROUP, LLC

1. Measure the resistance of the (T54) Transmission Temperature Sensor Signal circuit between the PCM C2 harness connector and the Transmission Solenoid Assembly harness connector.

   Is the resistance below 5.0 Ohms?

   Yes

   - Go To 4.

   No

- Repair the (T54) Transmission Temperature Sensor Signal circuit for an open.
- Refer to **STANDARD PROCEDURE** and perform the AS68RC VERIFICATION TEST.

4. **CHECK THE (T820) SENSOR GROUND CIRCUIT FOR AN OPEN**

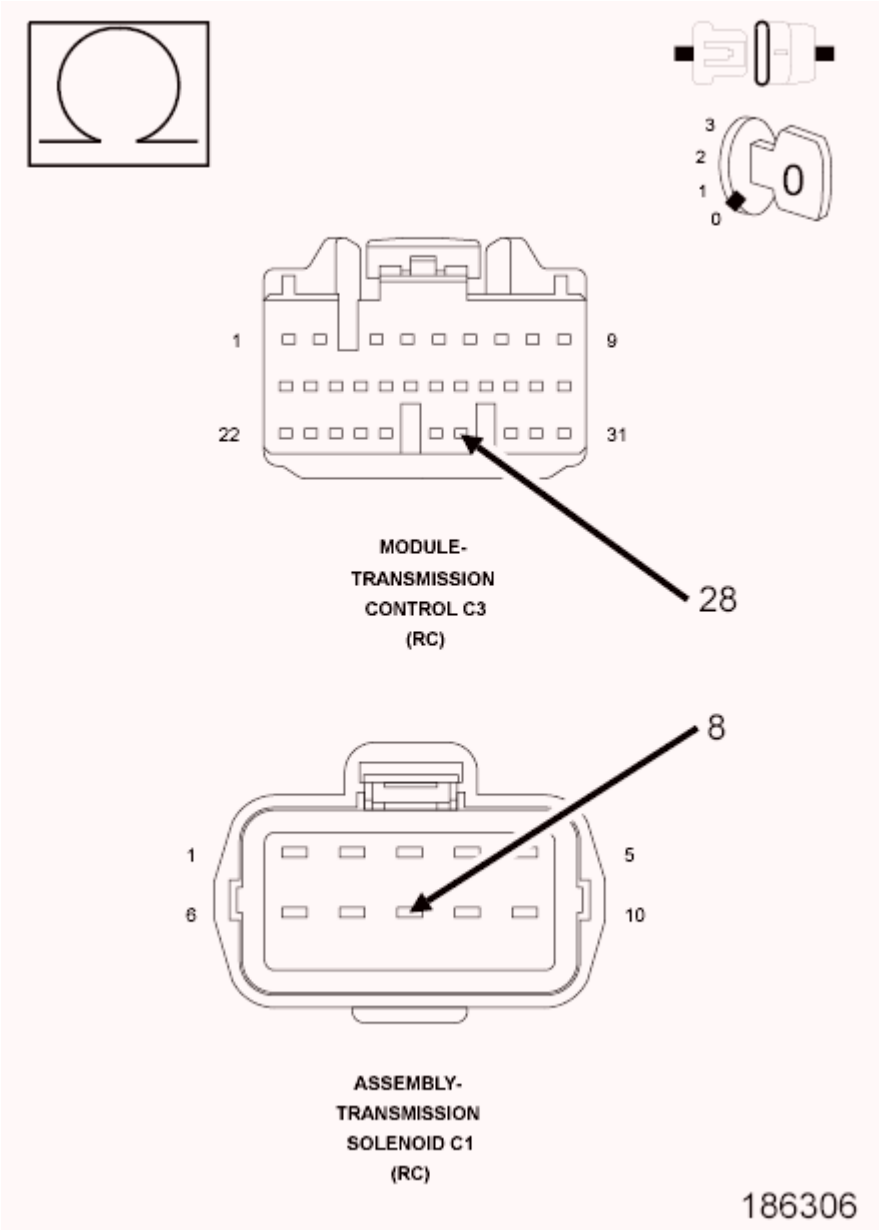

Fig. 33: Checking Sensor Ground Circuit For An Open
Courtesy of CHRYSLER GROUP, LLC

1. Measure the resistance of the (T820) Sensor Ground circuit between the TCM C3 harness connector and the Transmission Solenoid Assembly C1 harness connector.

   Is the resistance below 5.0 Ohms?

Yes

- Go To 5.

No

- Repair the (T820) Sensor Ground circuit for an open.
- Refer to **STANDARD PROCEDURE** and perform the AS68RC VERIFICATION TEST.

5. **CHECK THE TRANSMISSION TEMPERATURE SENSOR**

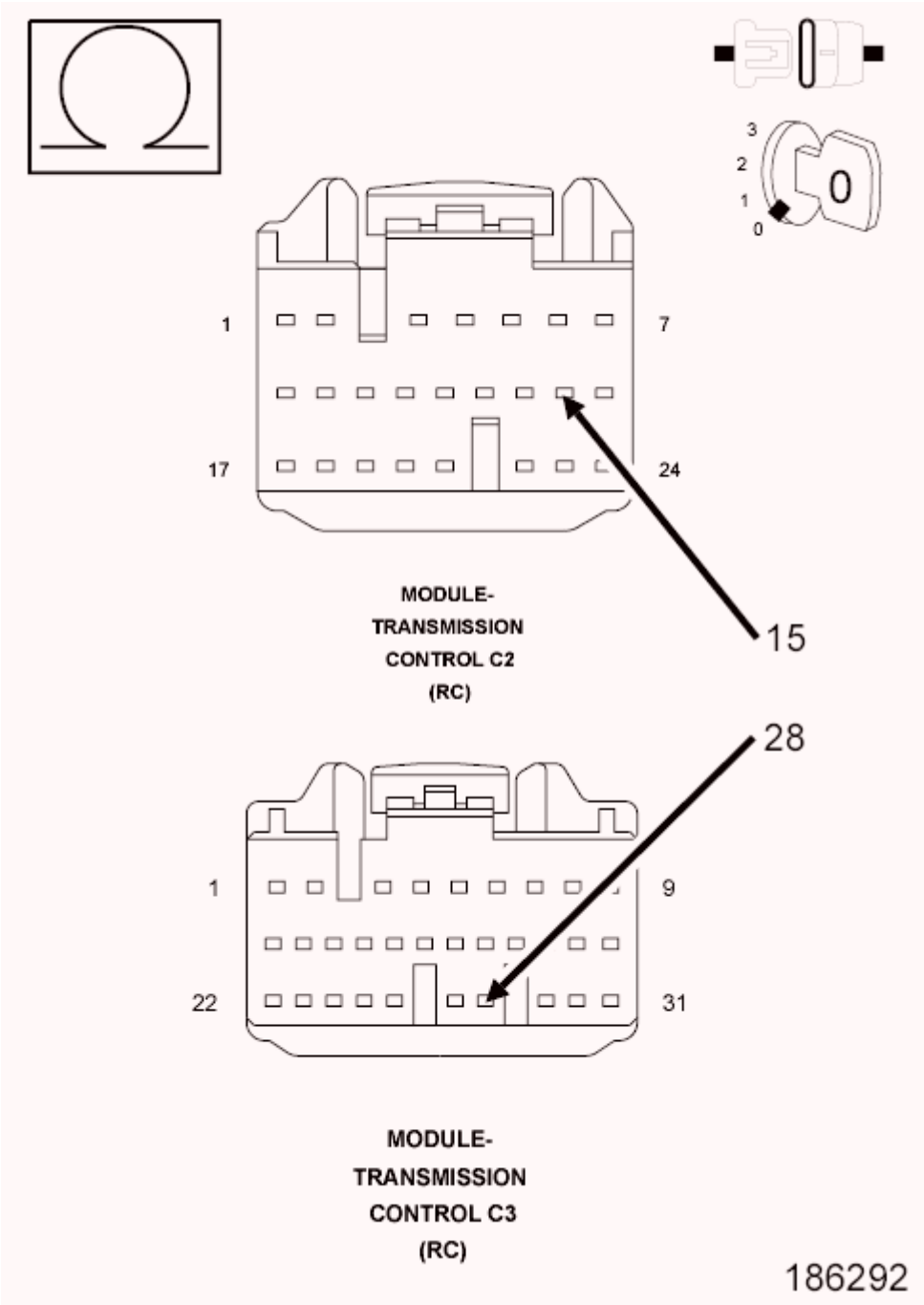

Fig. 34: Checking Transmission Temperature Sensor
Courtesy of CHRYSLER GROUP, LLC

TYPICAL VALUES FOR TRANSMISSION TEMPERATURE SENSOR	
TEMPERATURE	**APPROXIMATE OHM**
-30° C (-22° F)	44000 Ohms ± 6600
10° C (50° F)	6455 Ohms ± 645
110° C (230° F)	247 Ohms ± 16

145° C (293° F)	111 Ohms ± 6

1. Turn the ignition off to the lock position.
2. Reconnect the Transmission Solenoid harness connector.
3. Disconnect the TCM C3 harness connector.

NOTE: Check connectors - Clean/repair as necessary

4. Measure the resistance of the Transmission Temperature Sensor between the (T54) Transmission Temperature Signal circuit and the (T820) Sensor Ground circuit in the TCM C3 harness connector.
5. Using the chart at the chart above, compare the Temperature Sensor temperature to the correlating resistance value.

   Is the resistance within the specified range when the sensor is at the given temperature?

   Yes

   - Using the schematics as a guide, check the Transmission Control Module (TCM) pins, terminals, and connectors for corrosion, damage, or terminal push out. Pay particular attention to all power and ground circuits. If no problems are found, replace and program the TCM in accordance with the Service Information.
   - Refer to **STANDARD PROCEDURE** and perform the AS68RC VERIFICATION TEST.

   No

   - Remove the Transmission Oil Pan and inspect the internal Transmission harness, pins, terminals, and connectors for corrosion, damage, or terminal push out. If no problems are found, replace the Transmission Temperature Sensor in accordance with the Service Information.
   - Refer to **STANDARD PROCEDURE** and perform the AS68RC VERIFICATION TEST.

6. **CHECK WIRING AND CONNECTORS**
   1. The conditions necessary to set the DTC are not present at this time.
   2. Using the schematics as a guide, inspect the wiring and connectors specific to this circuit.
   3. Wiggle the wires while checking for shorted and open circuits.
   4. Check for any Service Bulletins that may apply.

      Were there any problems found?

      Yes

      - Repair as necessary.
      - Refer to **STANDARD PROCEDURE** and perform the AS68RC VERIFICATION TEST.

No

- Test Complete.

P0717-INPUT SPEED SENSOR 1 CIRCUIT NO SIGNAL

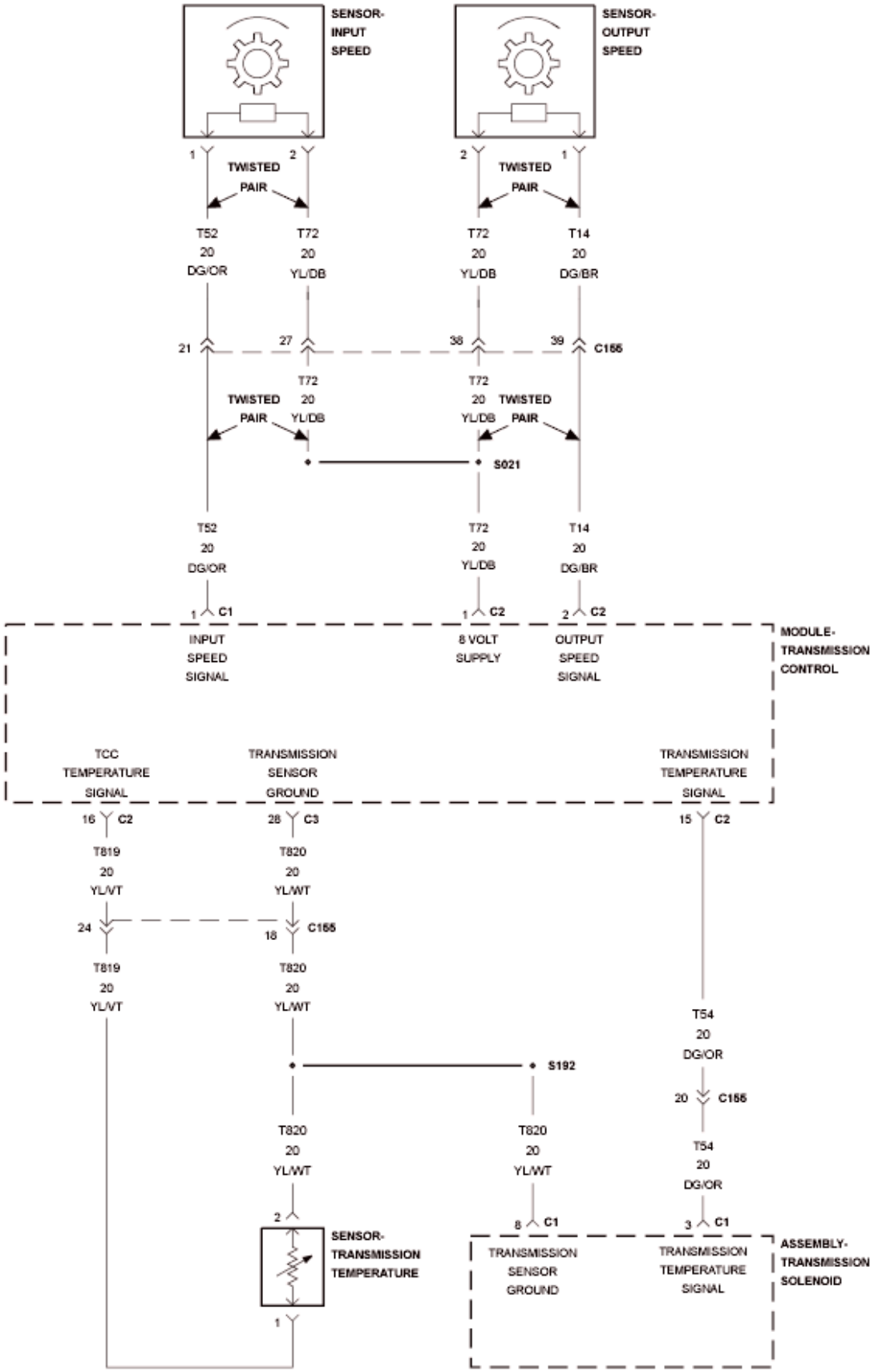
SENSOR-
INPUT
SPEED
SENSOR-
OUTPUT
SPEED
1
2
TWISTED
PAIR
2
1
TWISTED
PAIR
T52
20
DG/OR
T72
20
YL/DB
T72
20
YL/DB
T14
20
DG/BR
21
27
38
39
C155
T72
20
YL/DB
TWISTED
PAIR
T72
20
YL/DB
TWISTED
PAIR
S021
T52
20
DG/OR
T72
20
YL/DB
T14
20
DG/BR
1
C1
1
C2
2
C2
INPUT
SPEED
SIGNAL
8 VOLT
SUPPLY
OUTPUT
SPEED
SIGNAL
MODULE-
TRANSMISSION
CONTROL
TCC
TEMPERATURE
SIGNAL
TRANSMISSION
SENSOR
GROUND
TRANSMISSION
TEMPERATURE
SIGNAL
16
C2
28
C3
15
C2
T819
20
YL/VT
T820
20
YL/WT
24
18
C155
T819
20
YL/VT
T820
20
YL/WT
T54
20
DG/OR
S192
20
C155
T820
20
YL/WT
T820
20
YL/WT
T54
20
DG/OR
2
8
C1
3
C1
SENSOR-
TRANSMISSION
TEMPERATURE
TRANSMISSION
SENSOR
GROUND
TRANSMISSION
TEMPERATURE
SIGNAL
ASSEMBLY-
TRANSMISSION
SOLENOID
1

Fig. 35: Transmission Temperature Sensor Wiring Diagram
Courtesy of CHRYSLER GROUP, LLC

For a complete wiring diagram, **refer to appropriate SYSTEM WIRING DIAGRAMS article** .

THEORY OF OPERATION

The Input Speed sensor is used to calculate torque converter speed ratio. The Input Speed sensor is also used together with Output Speed sensor to calculate gear ratios.

CONDITION ONE:

When Monitored:

- Output Speed is greater than 250 rpm for four seconds.
- Transmission Range is not in Park or Neutral.
- Engine Speed is greater than 300 rpm.
- Transmission is not currently in a gear change.

Set Condition:

- 32, 000 consecutive Output Speed sensor pulses without Input Speed sensor pulses for two consecutive Ignition cycles.

CONDITION TWO:

When Monitored:

- Wheel Speed is greater than 360 rpm.
- Transmission Range is not in Park or Neutral.
- Engine Speed is greater than 550 rpm.
- Transmission is not currently in a gear change.

Set Condition:

- 500 consecutive Wheel Speed sensor pulses without Input Speed sensor pulses for two consecutive Ignition cycles.

POSSIBLE CAUSES

Possible Causes
(T52) INPUT SPEED SIGNAL CIRCUIT OPEN
(T52) INPUT SPEED SIGNAL CIRCUIT SHORT TO GROUND
(T52) INPUT SPEED SIGNAL CIRCUIT SHORT TO VOLTAGE
(T52) INPUT SPEED SIGNAL CIRCUIT SHORT TO ANOTHER CIRCUIT

(T72) 8 VOLT SUPPLY CIRCUIT OPEN
(T72) 8 VOLT SUPPLY CIRCUIT SHORT TO GROUND
(T72) 8 VOLT SUPPLY CIRCUIT SHORT TO ANOTHER CIRCUIT
INPUT SPEED SENSOR
DAMAGED OR MAGNETIZED TONE RING
TRANSMISSION CONTROL MODULE

Always perform the AS68RC Pre-Diagnostic Troubleshooting procedure before proceeding. Refer to STANDARD PROCEDURE.

DIAGNOSTIC TEST

1. **CHECK IF THE DTC IS CURRENT**
    1. Using the scan tool, read TCM DTCs.
    2. Record the Environmental Data and any DTCs.
    3. Clear DTCs.
    4. Using the recorded Environmental Data, along with the When Monitored and Set Conditions above, operate the vehicle in the conditions that set the DTC.

    NOTE: It may be necessary to road test the vehicle to duplicate the original set conditions.

    5. Read TCM DTCs.

    Did the DTC reset?

    Yes

    - Go To 2.

    No

    - Go To 11.
2. **CHECK THE (T72) 8 VOLT SUPPLY CIRCUIT**

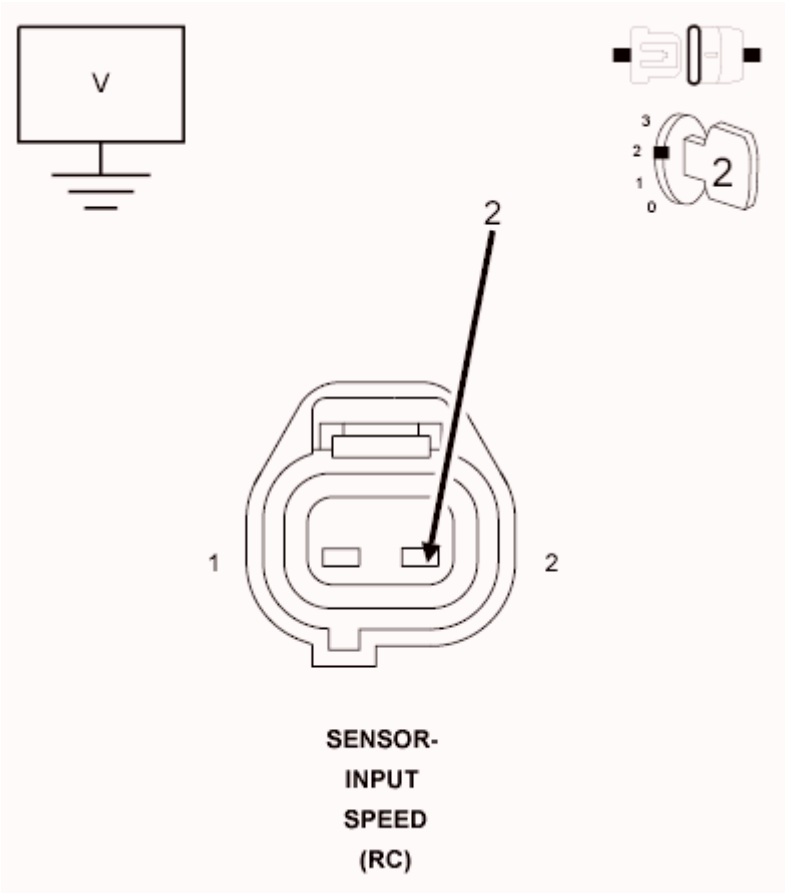

Fig. 36: Checking 8 Volt Supply Circuit
Courtesy of CHRYSLER GROUP, LLC

1. Turn the ignition off to the lock position.
2. Disconnect the Input Speed Sensor harness connector.
3. Ignition on, engine not running.
4. Measure the voltage of the (T72) 8 Volt Supply circuit in the Input Speed Sensor harness connector.

   Is the voltage 8.0 volts (± 0.2 of a volt)?

   Yes

   - Go To 3.

   No

   - Go To 4.

3. **LOAD TEST THE (T72) 8 VOLT SUPPLY CIRCUIT**

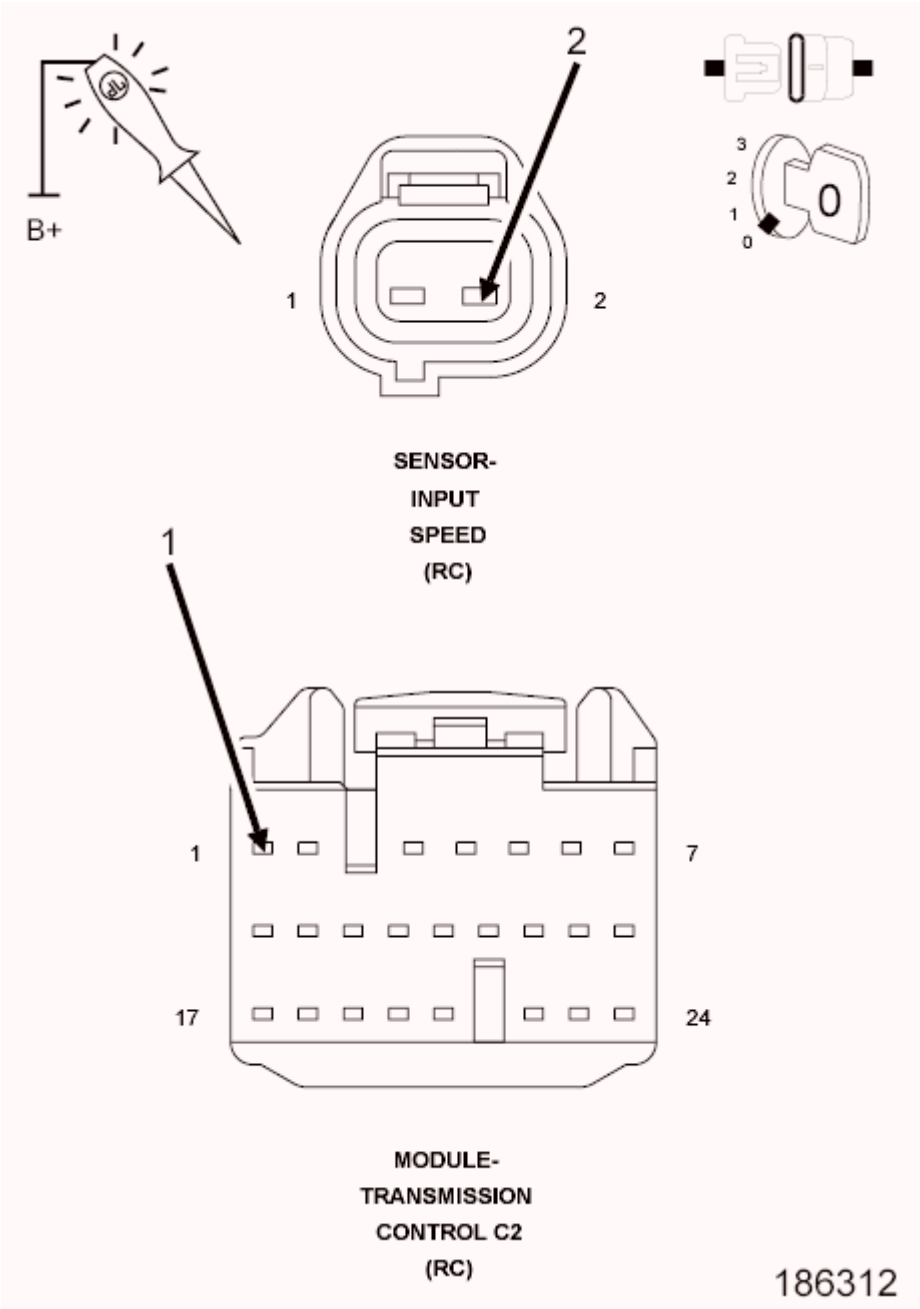

Fig. 37: Checking 8 Volt Supply Circuit
Courtesy of CHRYSLER GROUP, LLC

1. Turn the ignition off to the lock position.
2. Disconnect the TCM C2 harness connector.
3. Disconnect the Input Speed Sensor and the Output Speed Sensor harness connectors.
4. Using a jumper wire, ground the (T72) 8 Volt Supply circuit in the Input Speed Sensor harness connector.
5. Using a 12-volt test light connected to B (+), probe the (T72) 8 Volt Supply circuit on the appropriate terminal of TCM C2 harness connector.

Does the test light illuminate brightly?

Yes

- Go To 6.

No

- Go To 4.

4. **CHECK THE (T72) 8 VOLT SUPPLY CIRCUIT FOR AN OPEN**

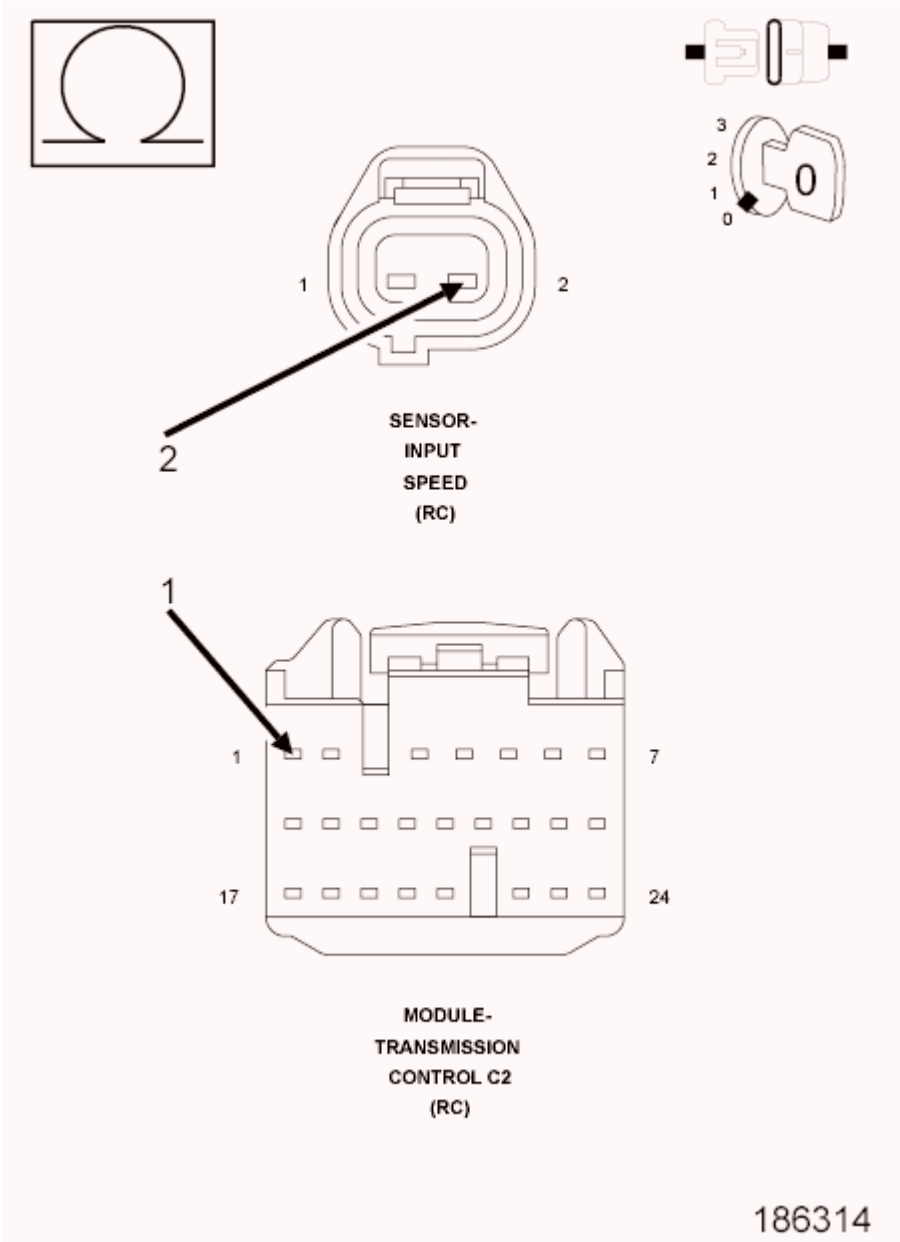

Fig. 38: Checking 8 Volt Supply Circuit For An Open

Courtesy of CHRYSLER GROUP, LLC

1. Turn the ignition off to the lock position.
2. Disconnect the TCM C2 harness connector.
3. Measure the resistance of the (T72) 8 Volt Supply circuit between the TCM C2 harness connector and the Input Speed Sensor harness connector.

   Is the resistance below 5.0 Ohms?

   Yes

   - Go To 5.

   No

   - Repair the (T72) 8 Volt Supply circuit for an open.
   - Refer to **STANDARD PROCEDURE** and perform the AS68RC VERIFICATION TEST.

5. **CHECK THE (T72) 8 VOLT SUPPLY CIRCUIT FOR A SHORT TO GROUND**

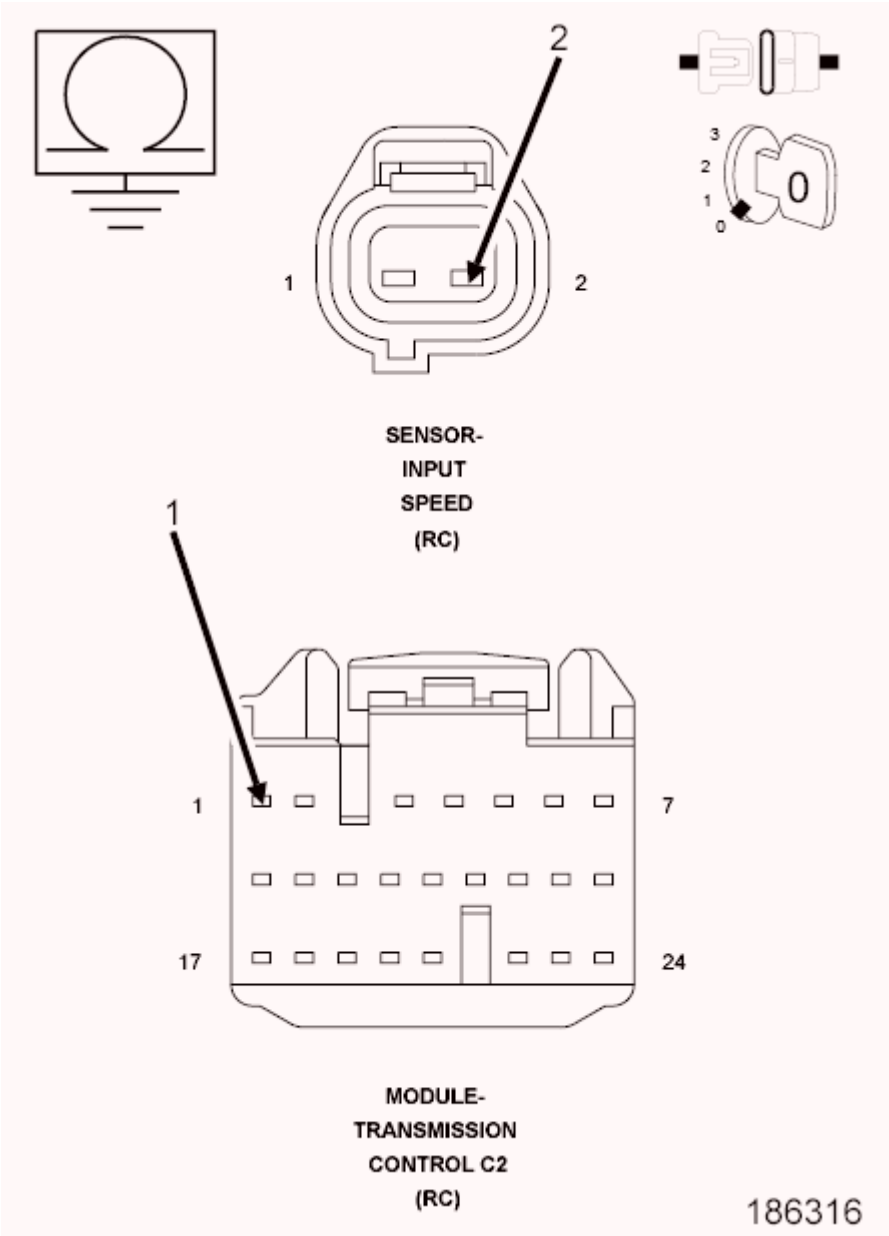

Fig. 39: Checking 8 Volt Supply Circuit For A Short To Ground
Courtesy of CHRYSLER GROUP, LLC

1. Measure the resistance between ground and the (T72) 8 Volt Supply Signal circuit.

   Is the resistance below 100k Ohms?

   Yes

   - Repair the (T72) 8 Volt Supply circuit for a short to ground.
   - Refer to **STANDARD PROCEDURE** and perform the AS68RC VERIFICATION TEST.

   No

- Using the schematics as a guide, check the Transmission Control Module (TCM) pins, terminals, and connectors for corrosion, damage, or terminal push out. Pay particular attention to all power and ground circuits. If no problems are found, replace and program the TCM in accordance with the Service Information.
- Refer to **STANDARD PROCEDURE** and perform the AS68RC VERIFICATION TEST.

6. **CHECK THE (T52) INPUT SPEED SENSOR SIGNAL CIRCUIT FOR AN OPEN**

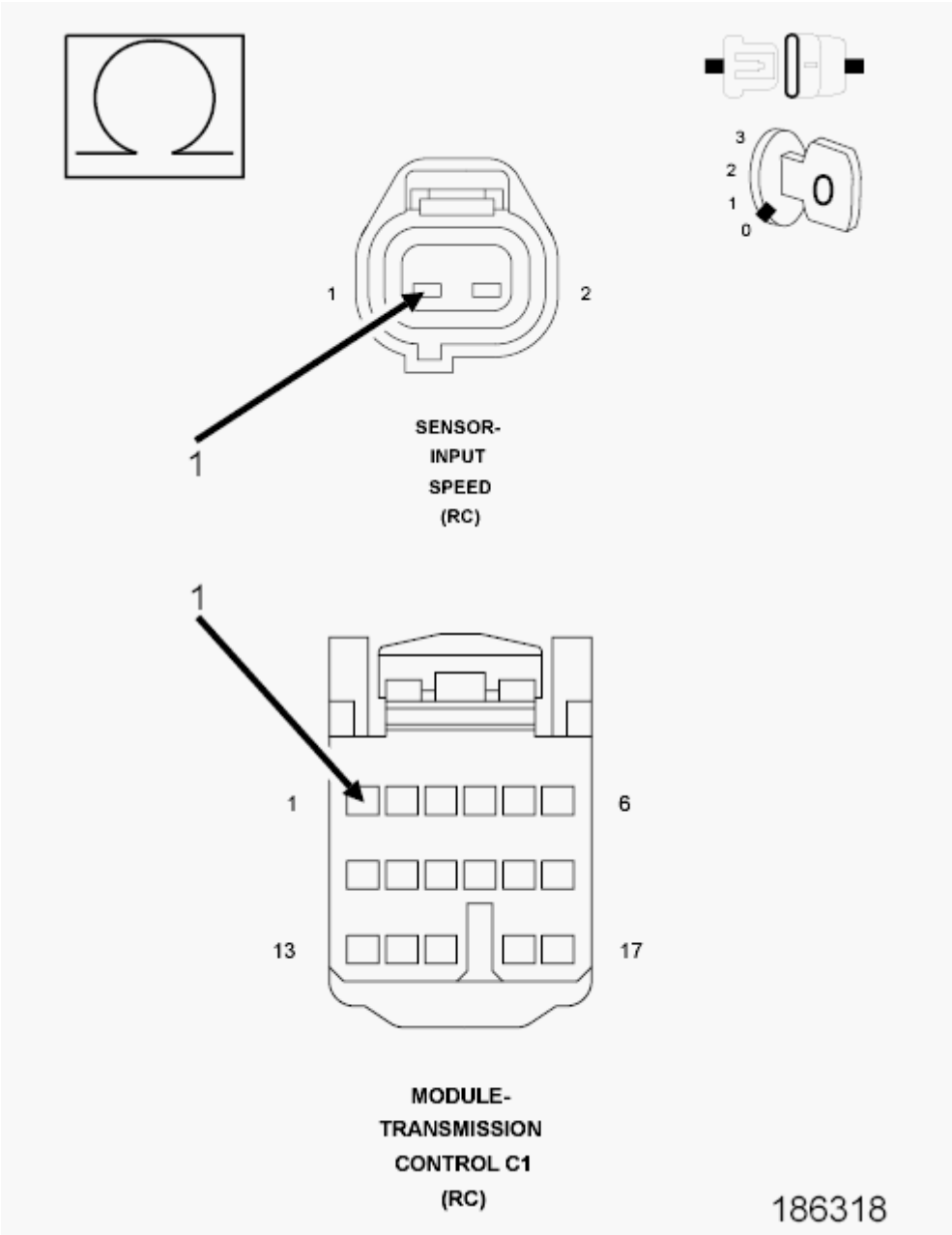

Fig. 40: Checking Input Speed Sensor Signal Circuit For An Open
Courtesy of CHRYSLER GROUP, LLC

1. Disconnect the TCM C1 harness connector.

2. Disconnect the Input Speed Sensor harness connector.
3. Measure the resistance of the (T52) Input Speed Sensor Signal circuit between the TCM C1 harness connector and the Input Speed Sensor harness connector.

   Is the resistance below 5.0 Ohms?

   Yes

   - Go To 7.

   No

   - Repair the (T52) Input Speed Sensor Signal circuit for an open.
   - Refer to **STANDARD PROCEDURE** and perform the AS68RC VERIFICATION TEST.

7. **CHECK THE (T52) INPUT SPEED SENSOR SIGNAL CIRCUIT FOR A SHORT TO GROUND**

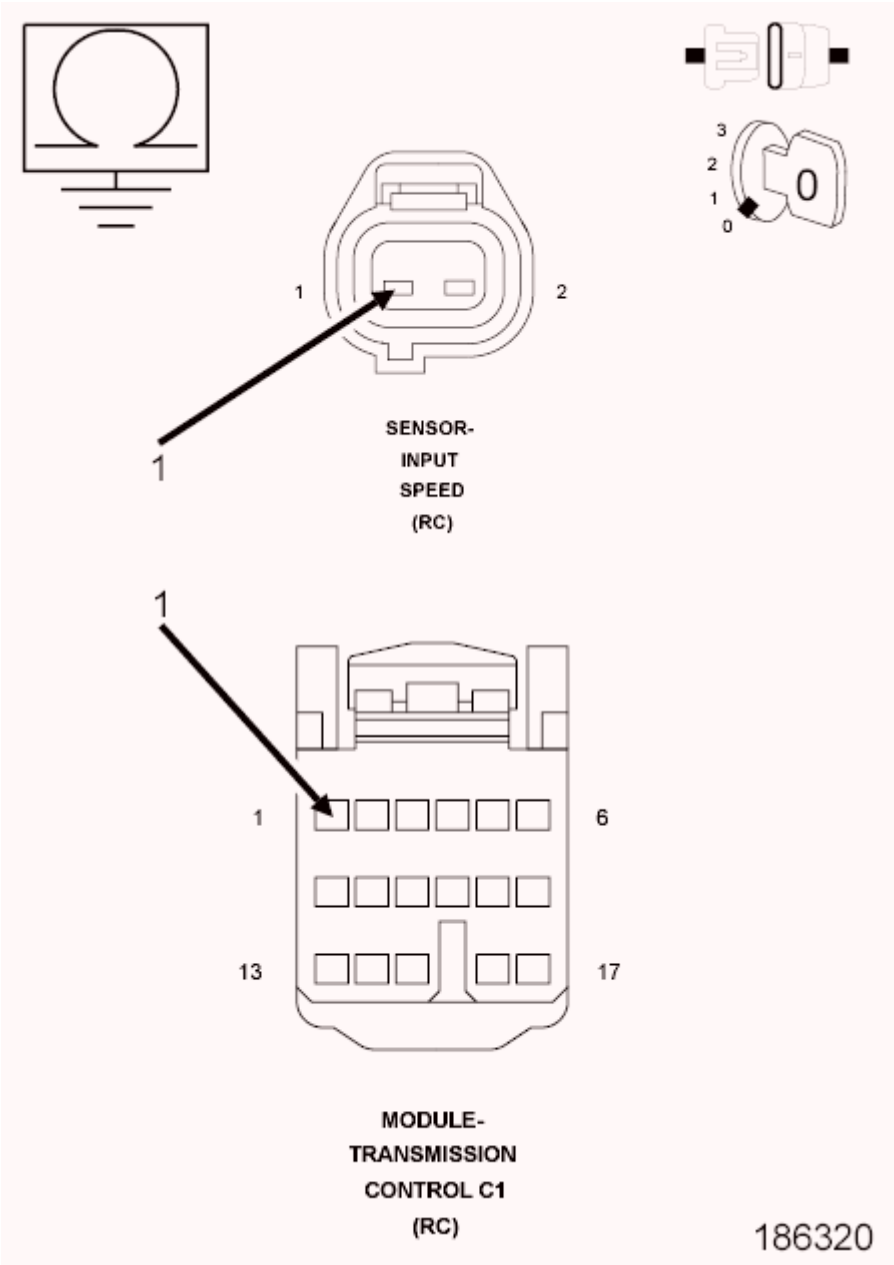

Fig. 41: Checking Input Speed Sensor Signal Circuit For A Short To Ground
Courtesy of CHRYSLER GROUP, LLC

1. Measure the resistance between ground and the (T52) Input Speed Sensor Signal circuit.

   Is the resistance below 100k Ohms?

   Yes

   - Repair the (T52) Input Speed Sensor Signal circuit for a short to ground.
   - Refer to **STANDARD PROCEDURE** and perform the AS68RC VERIFICATION TEST.

No

- Go To 8.

8. **CHECK THE (T52) INPUT SPEED SENSOR SIGNAL CIRCUIT FOR A SHORT TO ANOTHER CIRCUIT**

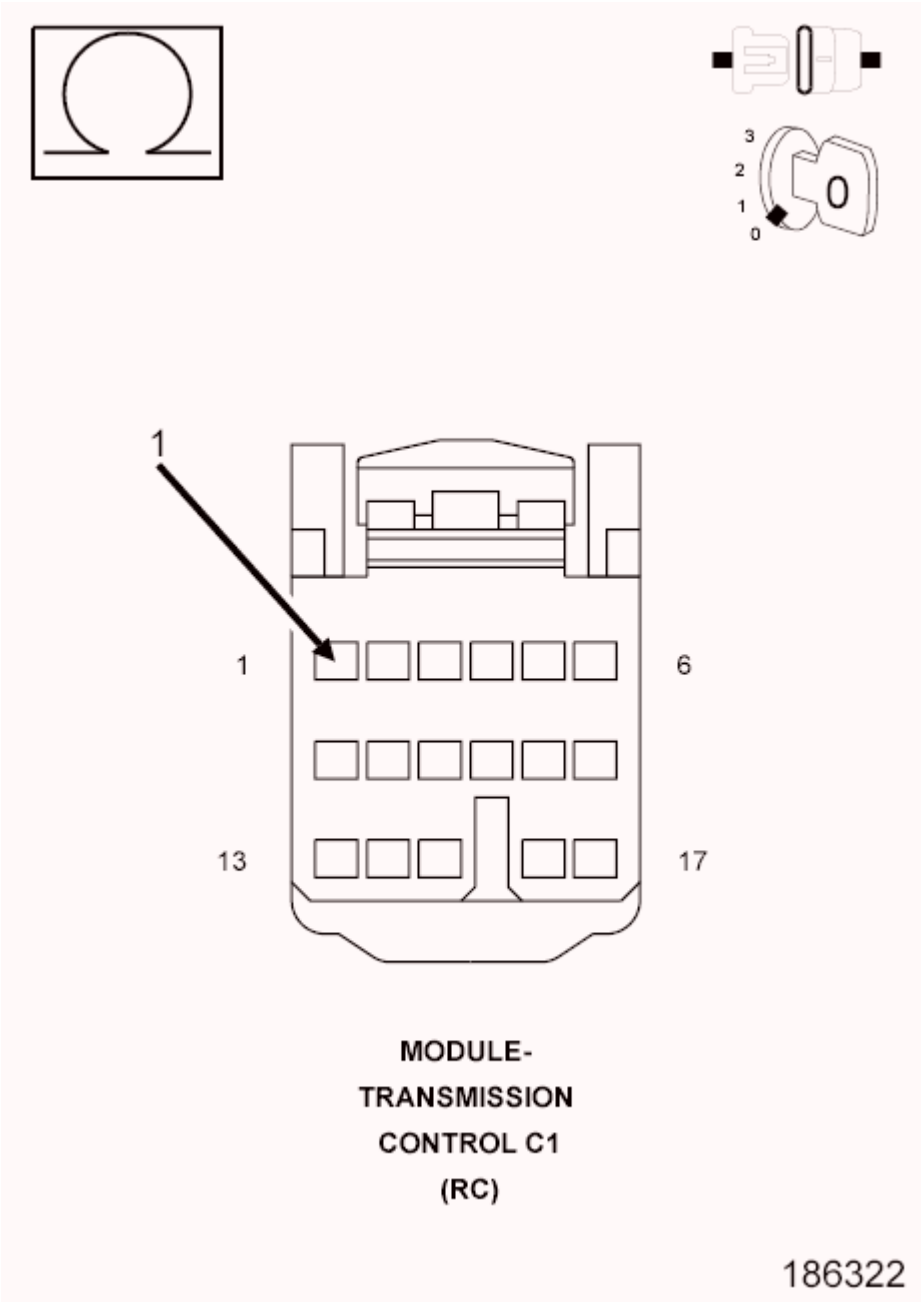

Fig. 42: Checking Input Speed Sensor Signal Circuit For A Short To Another Circuit
Courtesy of CHRYSLER GROUP, LLC

1. Measure the resistance between the (T52) Input Speed Sensor Signal circuit and all other circuits in the TCM C1 harness connector.

Is the resistance below 100k Ohms between the (T52) Input Speed Sensor Signal circuit and any other circuit(s) in the TCM C1 harness connector?

Yes

- Repair the (T52) Input Speed Sensor Signal circuit for a short to another circuit(s).
- Refer to **STANDARD PROCEDURE** and perform the AS68RC VERIFICATION TEST.

No

- Go To 9.

9. **CHECK THE (T52) INPUT SPEED SENSOR SIGNAL CIRCUIT FOR A SHORT TO VOLTAGE**

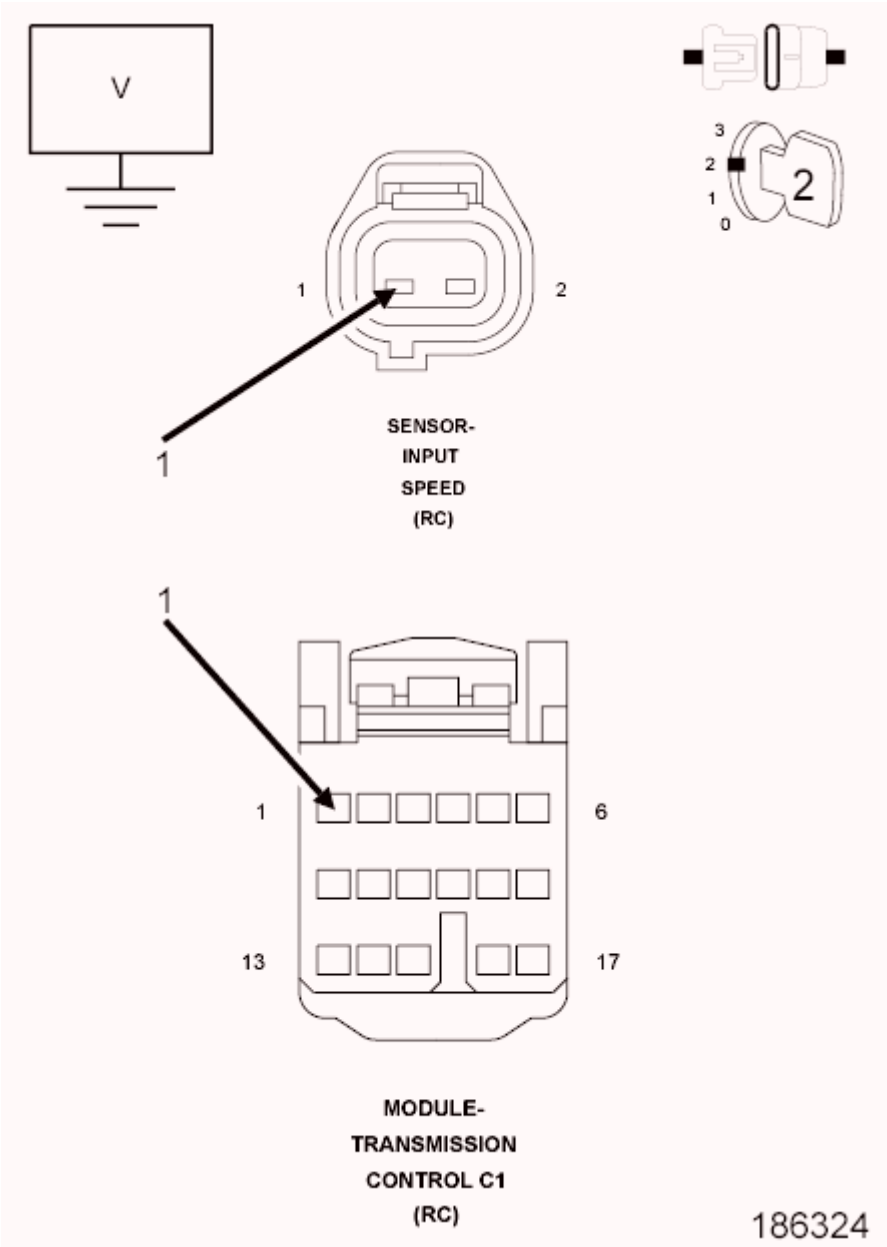

Fig. 43: Checking Input Speed Sensor Signal Circuit For A Short To Voltage
Courtesy of CHRYSLER GROUP, LLC

1. Ignition on, engine not running.
2. Measure the voltage of the (T52) Input Speed Sensor Signal circuit.

   Is there any voltage present?

   Yes

   - Repair the (T52) Input Speed Sensor Signal circuit for a short to voltage.
   - Refer to **STANDARD PROCEDURE** and perform the AS68RC VERIFICATION TEST.

No

- Go To 10.

10. **REPLACE THE INPUT SPEED SENSOR**
    1. Turn the ignition off to the lock position.
    2. Replace the Input Speed Sensor.
    3. Inspect the internal tone ring for damaged or missing teeth.
    4. Reconnect all connectors.
    5. Clear DTCs and road test the vehicle under the conditions in which the original DTC set.

    Did the Input Speed Sensor DTC reset?

    Yes

    - Using the schematics as a guide, check the Transmission Control Module (TCM) pins, terminals, and connectors for corrosion, damage, or terminal push out. Pay particular attention to all power and ground circuits. If no problems are found, replace and program the TCM in accordance with the Service Information.
    - Refer to **STANDARD PROCEDURE** and perform the AS68RC VERIFICATION TEST.

    No

    - Test complete.
    - Refer to **STANDARD PROCEDURE** and perform the AS68RC VERIFICATION TEST.

11. **CHECK THE WIRING AND CONNECTORS**
    1. The conditions necessary to set this DTC are not present at this time.
    2. Use the Freeze Frame Data to help duplicate the conditions in which the DTC originally set. Pay particular attention to the DTC set conditions, such as, VSS, MAP, ECT, and Load
    3. Using the schematics as a guide, visually inspect the related wiring harness. Look for any chafed, pierced, pinched, or partially broken wires.
    4. Visually inspect the related wiring harness connectors. Look for broken, bent, pushed out, or corroded terminals.
    5. Wiggle the wiring and connectors while checking for any possible open or shorted circuits.
    6. Check for any Service Information Tune-ups or Technical Service Bulletins that may apply.

    Were there any problems found?

    Yes

    - Repair as necessary.
    - Refer to **STANDARD PROCEDURE** and perform the AS68RC VERIFICATION TEST.

    No

- Test Complete.

P0722-OUTPUT SPEED SENSOR CIRCUIT NO SIGNAL

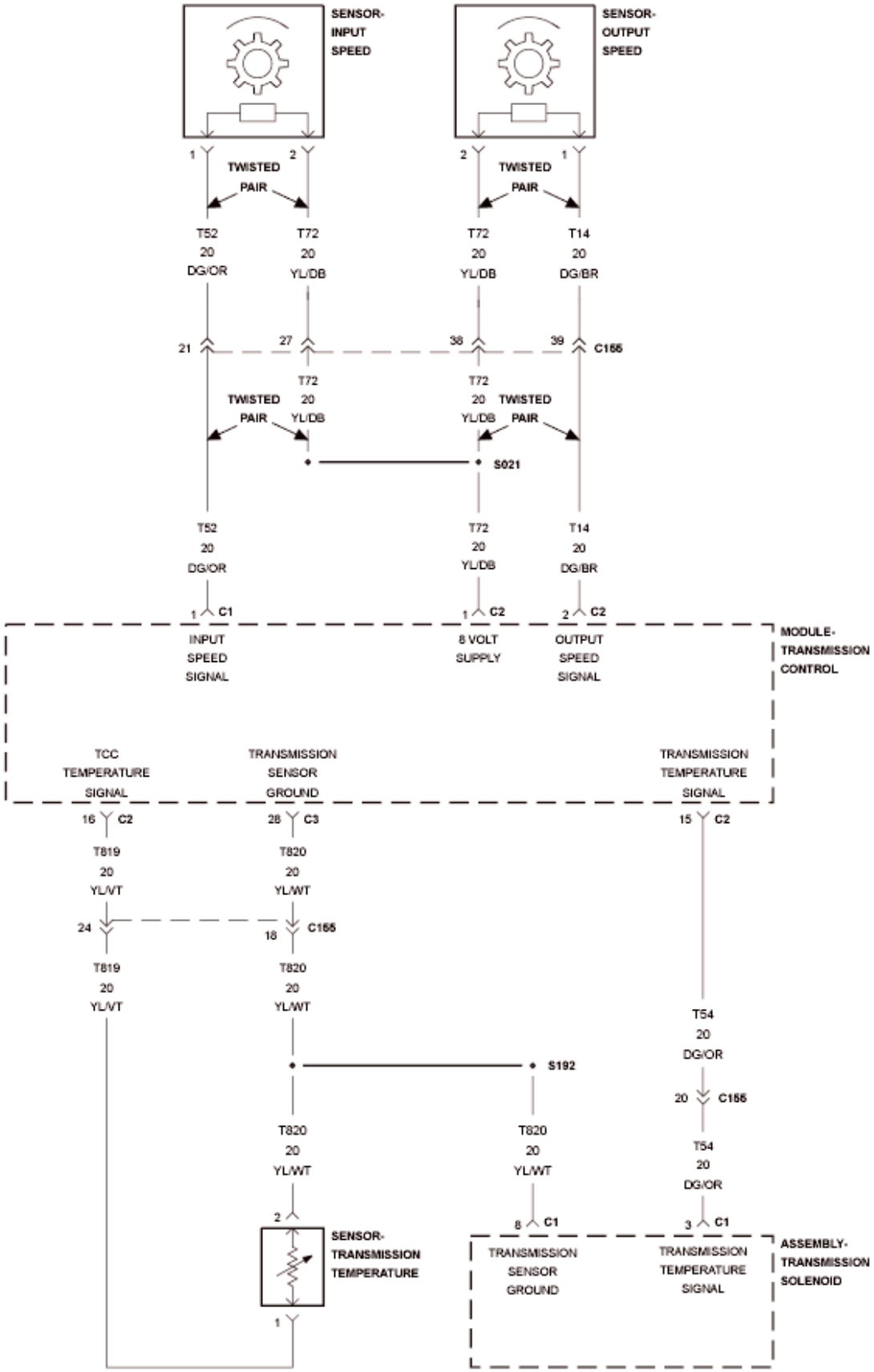
SENSOR-
INPUT
SPEED
SENSOR-
OUTPUT
SPEED
1
2
TWISTED
PAIR
2
1
TWISTED
PAIR
T52
20
DG/OR
T72
20
YL/DB
T72
20
YL/DB
T14
20
DG/BR
21
27
38
39
C155
T72
20
YL/DB
TWISTED
PAIR
T72
20
YL/DB
TWISTED
PAIR
S021
T52
20
DG/OR
T72
20
YL/DB
T14
20
DG/BR
1
C1
1
C2
2
C2
INPUT
SPEED
SIGNAL
8 VOLT
SUPPLY
OUTPUT
SPEED
SIGNAL
MODULE-
TRANSMISSION
CONTROL
TCC
TEMPERATURE
SIGNAL
TRANSMISSION
SENSOR
GROUND
TRANSMISSION
TEMPERATURE
SIGNAL
16
C2
28
C3
15
C2
T819
20
YL/VT
T820
20
YL/WT
24
18
C155
T819
20
YL/VT
T820
20
YL/WT
T54
20
DG/OR
S192
20
C155
T820
20
YL/WT
T820
20
YL/WT
T54
20
DG/OR
2
8
C1
3
C1
SENSOR-
TRANSMISSION
TEMPERATURE
TRANSMISSION
SENSOR
GROUND
TRANSMISSION
TEMPERATURE
SIGNAL
ASSEMBLY-
TRANSMISSION
SOLENOID
1

Fig. 44: Transmission Temperature Sensor Wiring Diagram
Courtesy of CHRYSLER GROUP, LLC

For a complete wiring diagram, **refer to appropriate SYSTEM WIRING DIAGRAMS article** .

THEORY OF OPERATION

The Output Speed sensor is used to determine gear position by applying the signal to a static shift schedule map. The Output Speed sensor is also used together with Input Speed sensor to calculate gear ratios. The Transmission Control Module (TCM) compares Output shaft speed to Vehicle speed buss messages to diagnosis the system. If the TCM detects a fault with the Output speed signal, it switches to vehicle speed to determine gear position.

CONDITION ONE:

When Monitored:

- The calculated Output Speed based on Input Speed is greater than 250 rpm.
- Transmission Range is not in Park or Neutral.

Set Condition:

- 48, 500 consecutive Input Speed sensor pulses without Output Speed sensor pulses for two consecutive Ignition cycles.

CONDITION TWO:

When Monitored:

- Wheel Speed is greater than 250 rpm for tour seconds.
- Engine Speed is greater than 300 rpm.

Set Condition:

- 500 consecutive Wheel Speed sensor pulses without Output Speed sensor pulses for two consecutive Ignition cycles.

POSSIBLE CAUSES

Possible Causes
(T14) OUTPUT SPEED SIGNAL CIRCUIT OPEN
(T14) OUTPUT SPEED SIGNAL CIRCUIT SHORT TO GROUND
(T14) OUTPUT SPEED SIGNAL CIRCUIT SHORT TO VOLTAGE
(T14) OUTPUT SPEED SIGNAL CIRCUIT SHORT TO ANOTHER CIRCUIT
(T72) 8 VOLT SUPPLY CIRCUIT OPEN
(T72) 8 VOLT SUPPLY CIRCUIT SHORT TO GROUND

(T72) 8 VOLT SUPPLY CIRCUIT SHORT TO ANOTHER CIRCUIT
OUTPUT SPEED SENSOR
DAMAGED TONE RING
TRANSMISSION CONTROL MODULE

Always perform the AS68RC Pre-Diagnostic Troubleshooting procedure before proceeding. Refer to STANDARD PROCEDURE.

DIAGNOSTIC TEST

1. **CHECK IF THE DTC IS CURRENT**
    1. Using the scan tool, read TCM DTCs.
    2. Record the Environmental Data and any DTCs.
    3. Clear DTCs.
    4. Using the recorded Environmental Data, along with the When Monitored and Set Conditions above, operate the vehicle in the conditions that set the DTC.

    NOTE: It may be necessary to road test the vehicle to duplicate the original set conditions.

    5. Read TCM DTCs.

    Did the DTC reset?

    Yes

    - Go To 2.

    No

    - Go To 11.
2. **CHECK THE (T72) 8 VOLT SUPPLY CIRCUIT**

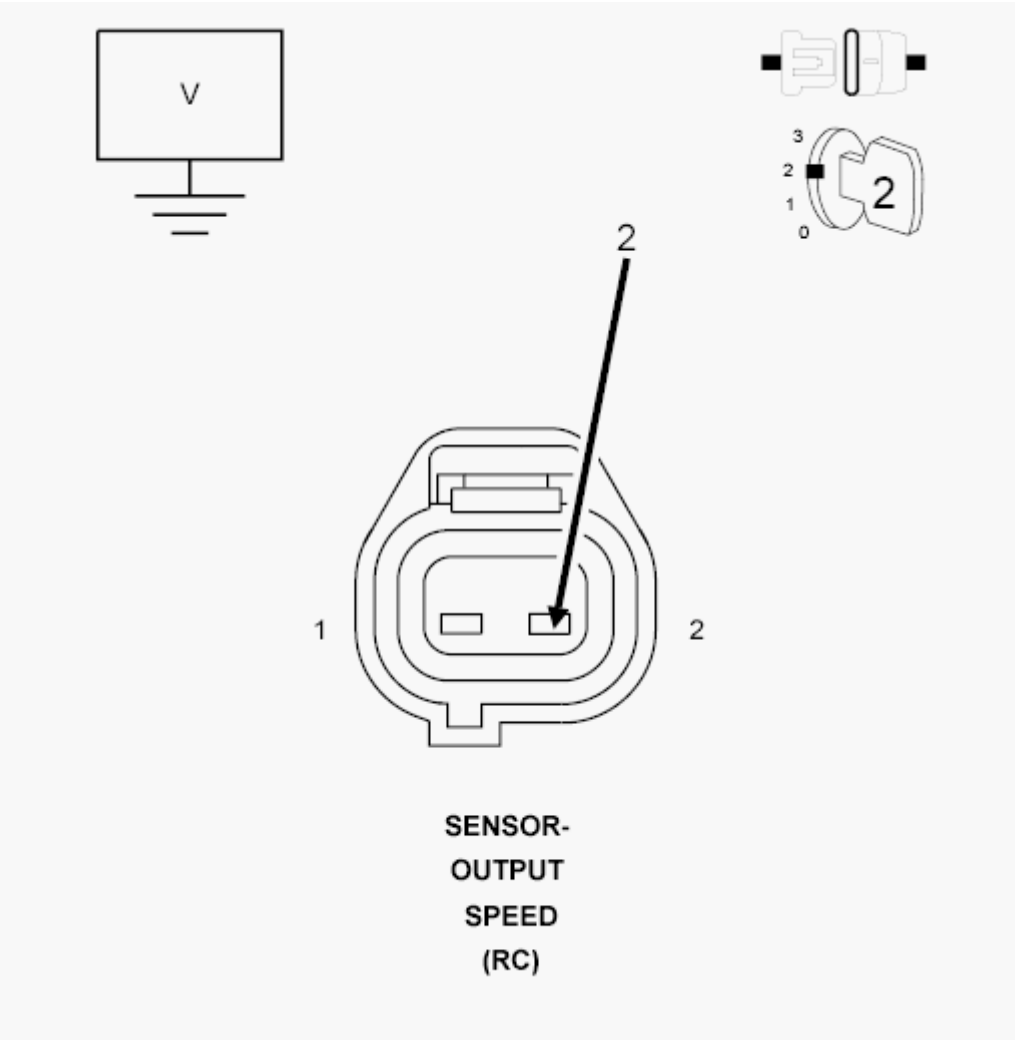

Fig. 45: Checking 8 Volt Supply Circuit
Courtesy of CHRYSLER GROUP, LLC

1. Turn the ignition off to the lock position.
2. Disconnect the Output Speed Sensor harness connector.
3. Ignition on, engine not running.
4. Measure the voltage of the (T72) 8 Volt Supply circuit in the Output Speed Sensor harness connector.

   Is the voltage 8.0 volts (± 0.2 of a volt)?

   Yes

   - Go To 3.

   No

   - Go To 4.

3. **LOAD TEST THE (T72) 8 VOLT SUPPLY CIRCUIT**

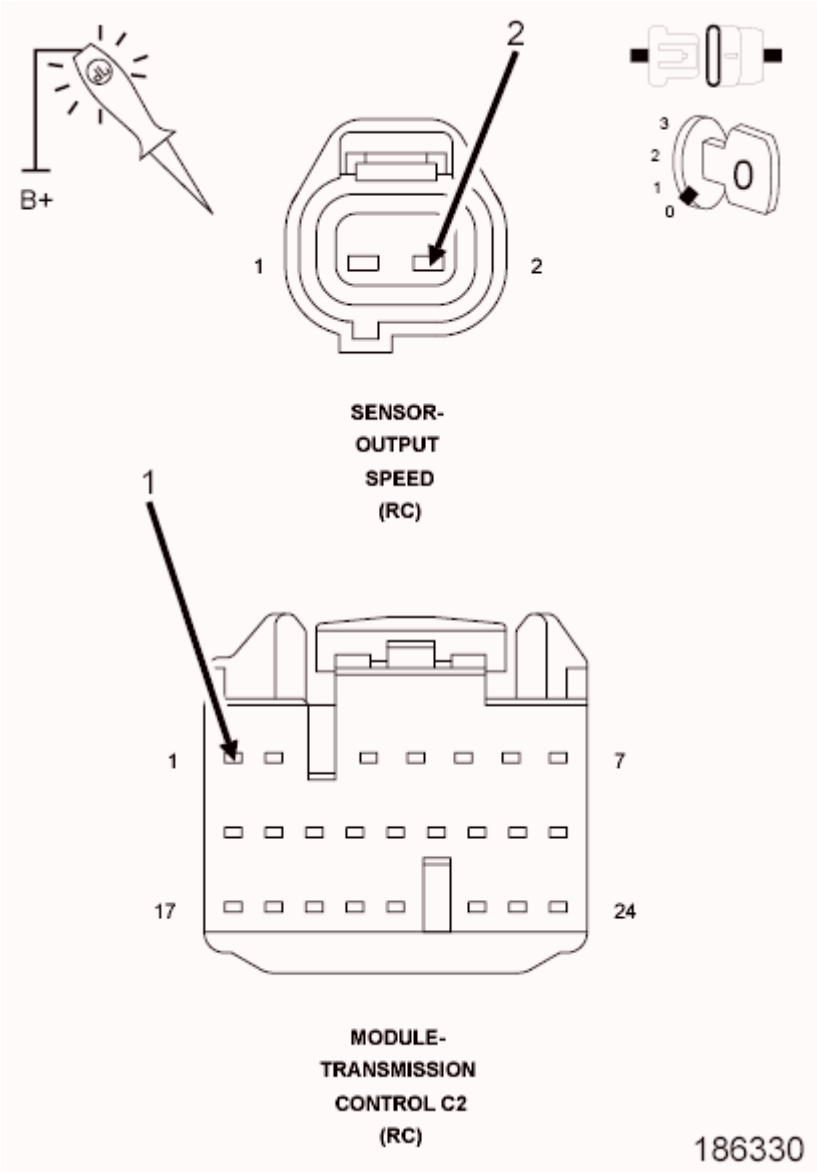

Fig. 46: Checking 8 Volt Supply Circuit
Courtesy of CHRYSLER GROUP, LLC

1. Turn the ignition off to the lock position.
2. Disconnect the TCM C2 harness connector.
3. Disconnect the Input Speed Sensor and the Output Speed Sensor harness connectors.
4. Using a jumper wire, ground the (T72) 8 Volt Supply circuit in the Output Speed Sensor harness connector.
5. Using a 12-volt test light connected to B (+), probe the (T72) 8 Volt Supply circuit on the appropriate terminal of TCM C2 harness connector.

Does the test light illuminate brightly?

Yes

- Go To 6.

No

- Go To 4.

4. **CHECK THE (T72) 8 VOLT SUPPLY CIRCUIT FOR AN OPEN**

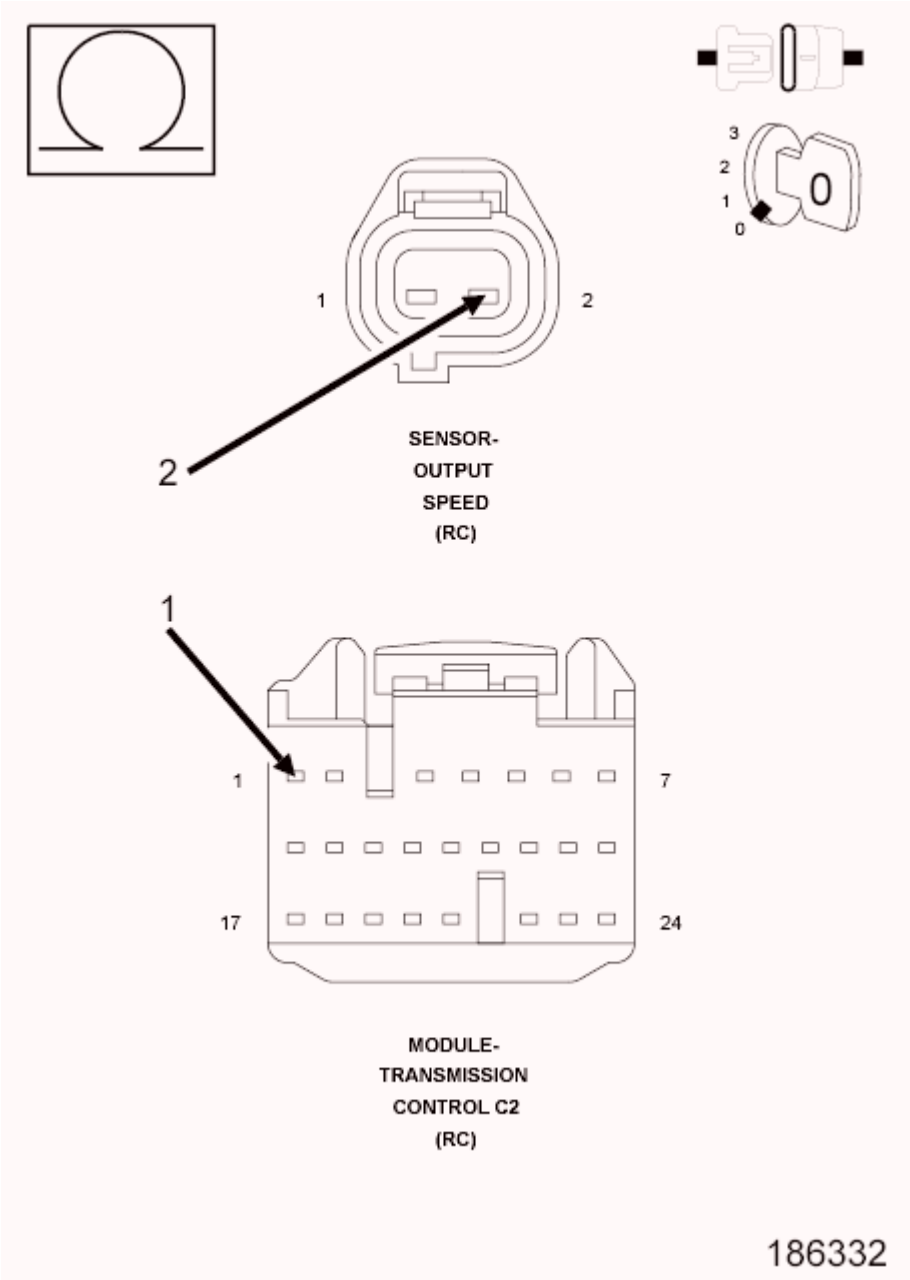

Fig. 47: Checking Sensor Ground Circuit For An Open
Courtesy of CHRYSLER GROUP, LLC

1. Turn the ignition off to the lock position.
2. Disconnect the TCM C2 harness connector.
3. Measure the resistance of the (T72) 8 Volt Supply circuit between the TCM C2 harness connector and the Output Speed Sensor harness connector.

   Is the resistance below 5.0 Ohms?

   Yes

   - Go To 5.

   No

   - Repair the (T72) 8 Volt Supply circuit for an open.
   - Refer to **STANDARD PROCEDURE** and perform the AS68RC VERIFICATION TEST.

5. **CHECK THE (T72) 8 VOLT SUPPLY CIRCUIT FOR A SHORT TO GROUND**

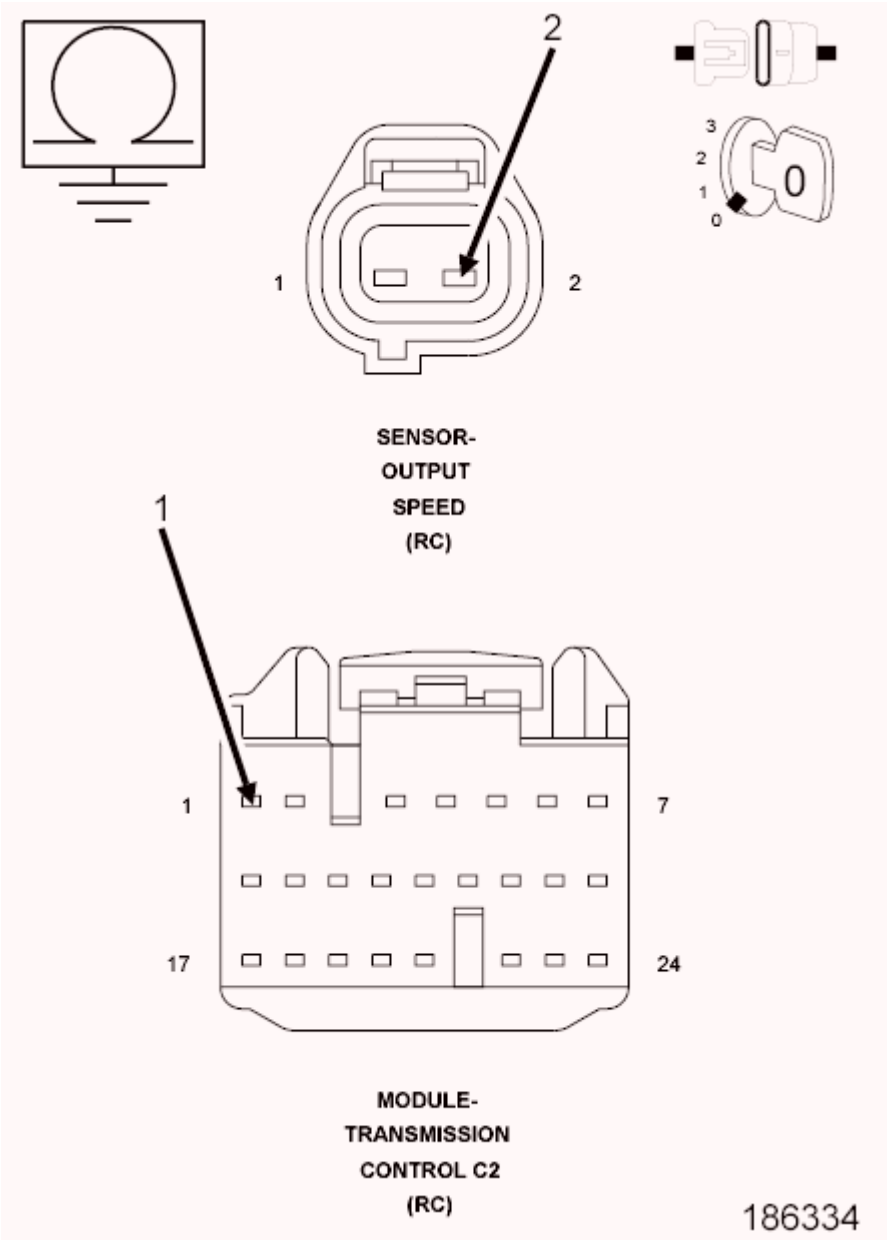

Fig. 48: Checking 8 Volt Supply Circuit For A Short To Ground
Courtesy of CHRYSLER GROUP, LLC

1. Measure the resistance between ground and the (T72) 8 Volt Supply Signal circuit.

   Is the resistance below 100k Ohms?

   Yes

   - Repair the (T72) 8 Volt Supply circuit for a short to ground.
   - Refer to **STANDARD PROCEDURE** and perform the AS68RC VERIFICATION TEST.

   No

- Using the schematics as a guide, check the Transmission Control Module (TCM) pins, terminals, and connectors for corrosion, damage, or terminal push out. Pay particular attention to all power and ground circuits. If no problems are found, replace and program the TCM in accordance with the Service Information.
- Refer to **STANDARD PROCEDURE** and perform the AS68RC VERIFICATION TEST.

6. **CHECK THE (T14) OUTPUT SPEED SENSOR SIGNAL CIRCUIT FOR AN OPEN**

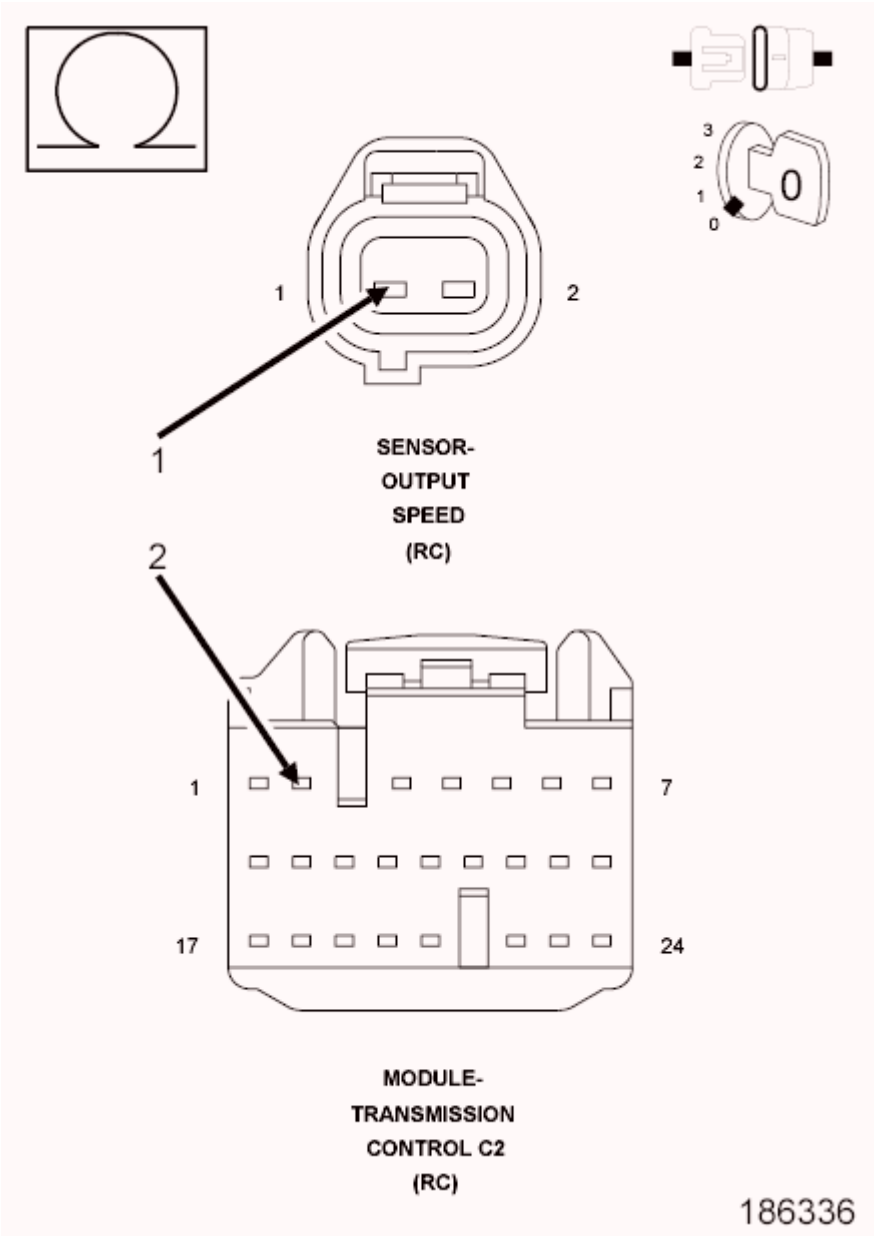

Fig. 49: Checking Output Speed Sensor Signal Circuit For An Open
Courtesy of CHRYSLER GROUP, LLC

1. Disconnect the TCM C2 harness connector.
2. Disconnect the Output Speed Sensor harness connector.

3. Measure the resistance of the (T14) Output Speed Sensor Signal circuit between the TCM C2 harness connector and the Output Speed Sensor harness connector.

   Is the resistance below 5.0 Ohms?

   Yes

   - Go To 7.

   No

   - Repair the (T14) Output Speed Sensor Signal circuit for an open.
   - Refer to **STANDARD PROCEDURE** and perform the AS68RC VERIFICATION TEST.

7. **CHECK THE (T14) OUTPUT SPEED SENSOR SIGNAL CIRCUIT FOR A SHORT TO GROUND**

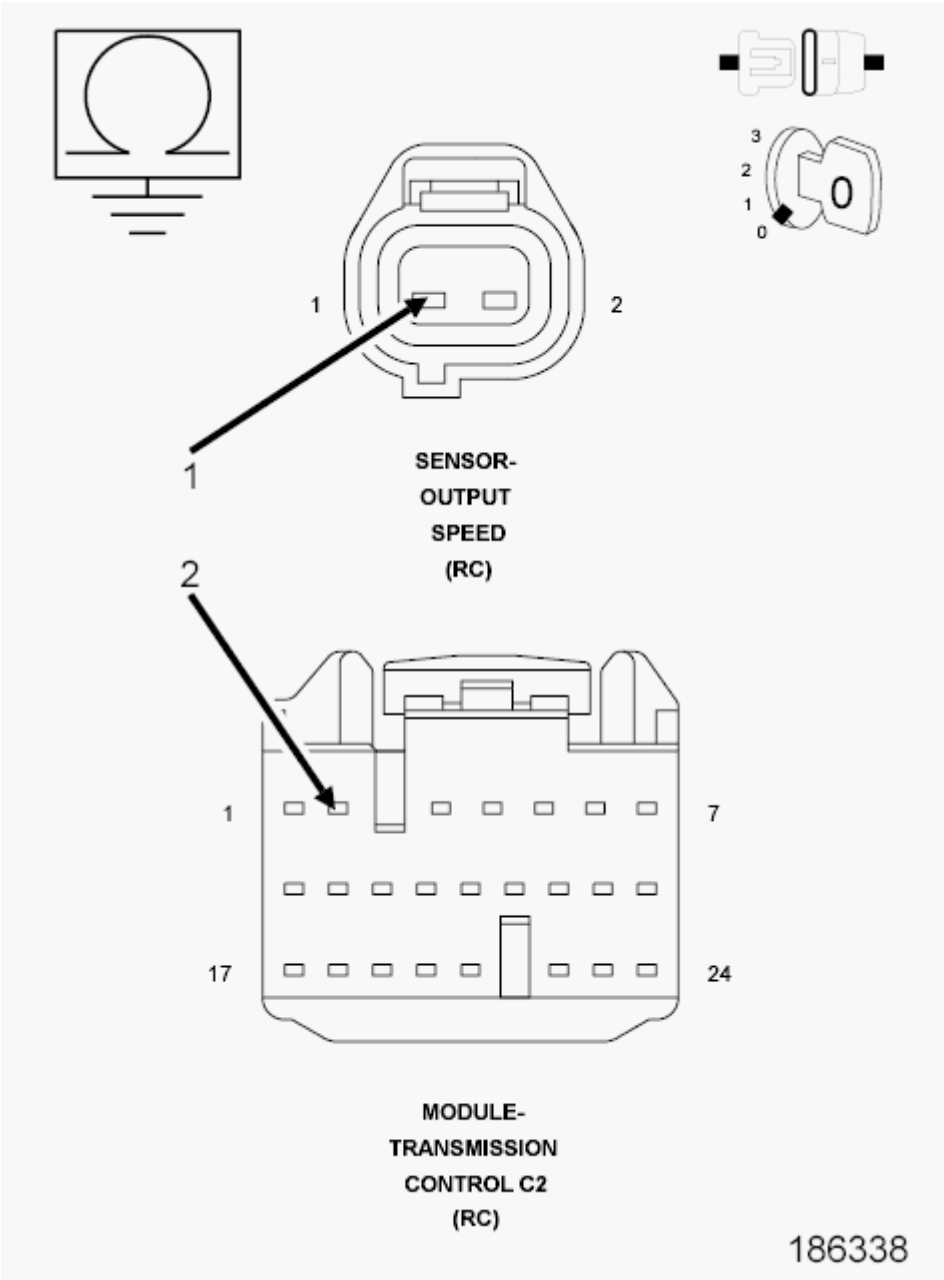

Fig. 50: Checking Output Speed Sensor Signal Circuit For A Short To Ground
Courtesy of CHRYSLER GROUP, LLC

1. Measure the resistance between ground and the (T14) Output Speed Sensor Signal circuit.

   Is the resistance below 100k Ohms?

   Yes

   - Repair the (T14) Output Speed Sensor Signal circuit for a short to ground.
   - Refer to **STANDARD PROCEDURE** and perform the AS68RC VERIFICATION TEST.

No

- Go To 8.

8. **CHECK THE (T14) OUTPUT SPEED SENSOR SIGNAL CIRCUIT FOR A SHORT TO ANOTHER CIRCUIT**

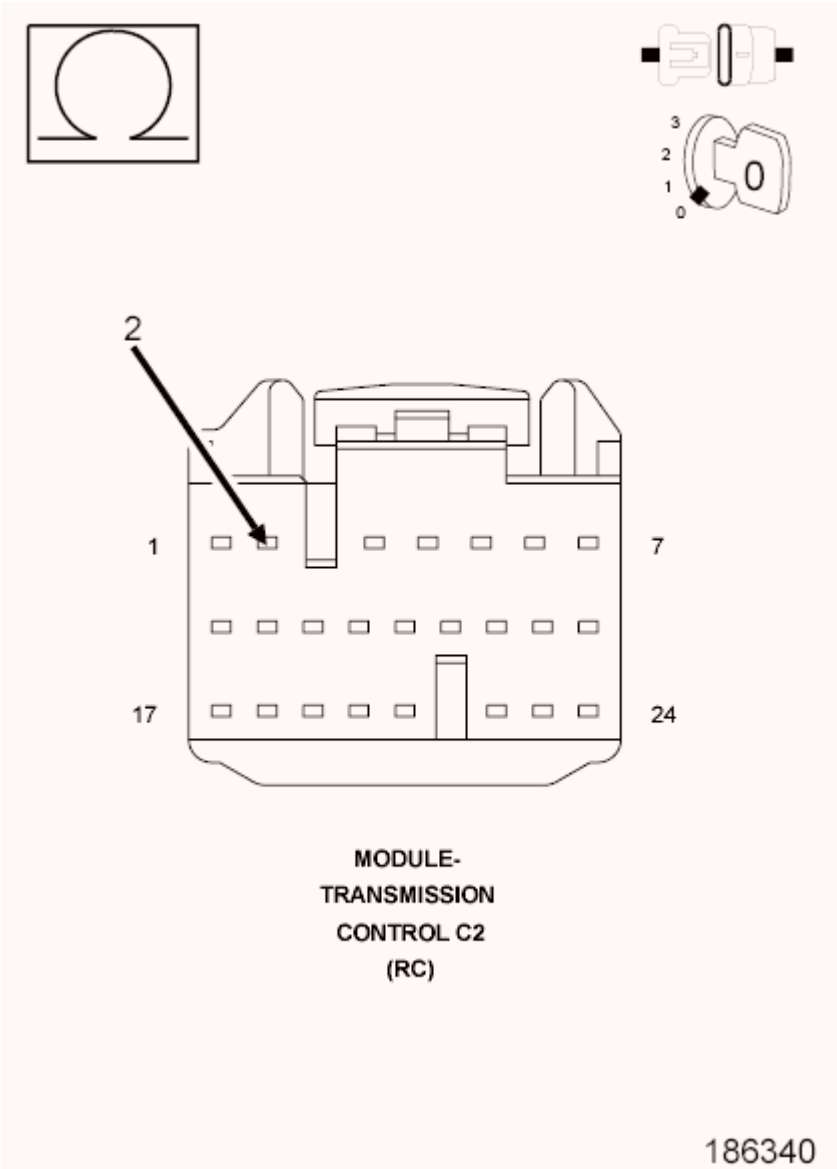

Fig. 51: Checking Output Speed Sensor Signal Circuit For A Short To Another Circuit
Courtesy of CHRYSLER GROUP, LLC

1. Measure the resistance between the (T14) Output Speed Sensor Signal circuit and all other circuits in the TCM C2 harness connector.

   Is the resistance below 100k Ohms between the (T14) Output Speed Sensor Signal circuit and any other circuit(s) in the TCM C2 harness connector?

Yes

- Repair the (T14) Output Speed Sensor Signal circuit for a short to another circuit(s).
- Refer to **STANDARD PROCEDURE** and perform the AS68RC VERIFICATION TEST.

No

- Go To 9.

9. **CHECK THE (T14) OUTPUT SPEED SENSOR SIGNAL CIRCUIT FOR A SHORT TO VOLTAGE**

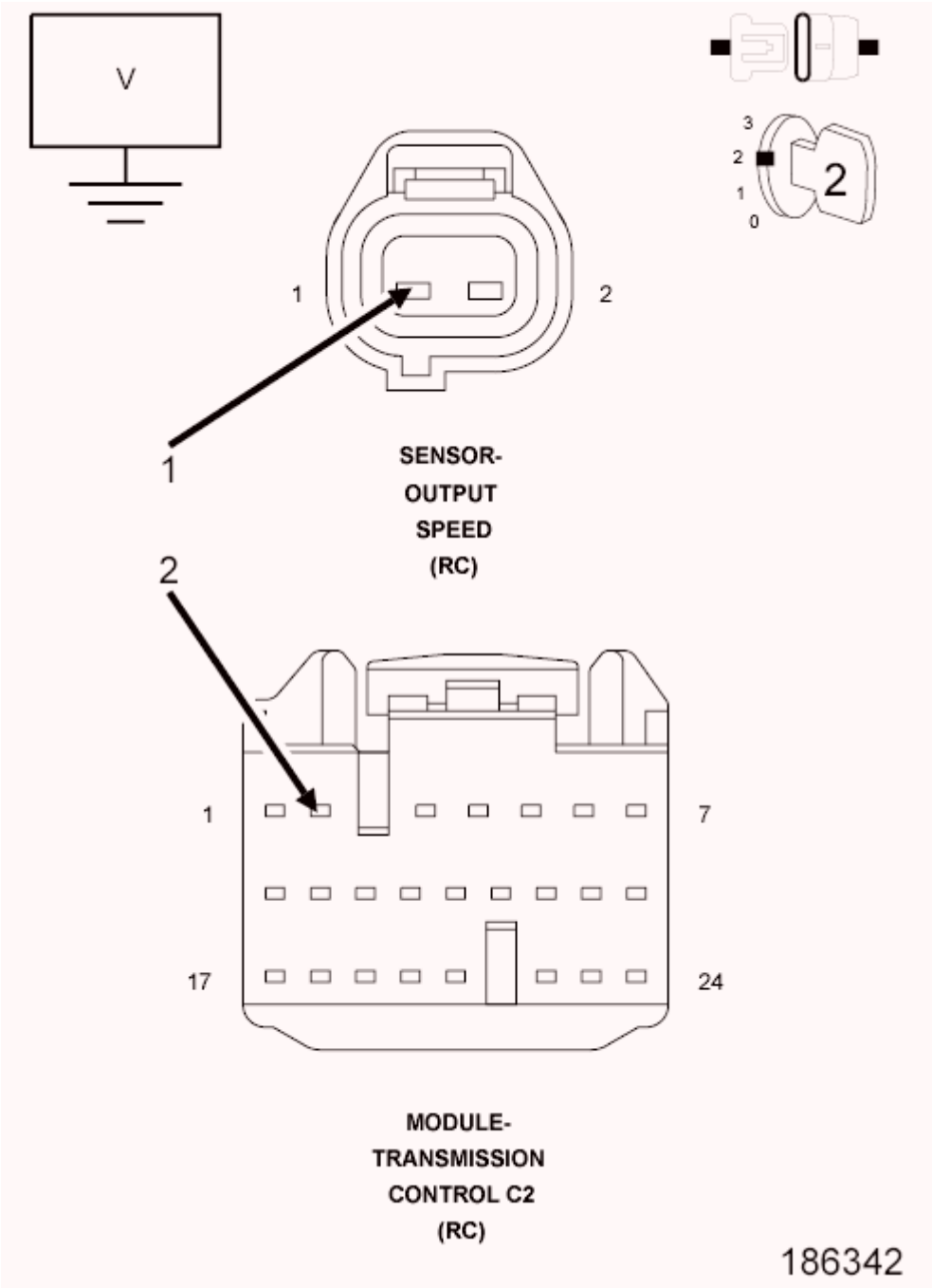

Fig. 52: Checking Output Speed Sensor Signal Circuit For A Short To Voltage
Courtesy of CHRYSLER GROUP, LLC

1. Ignition on, engine not running.
2. Measure the voltage of the (T14) Output Speed Sensor Signal circuit.

   Is there any voltage present?

   Yes

- Repair the (T14) Output Speed Sensor Signal circuit for a short to voltage.
- Refer to **STANDARD PROCEDURE** and perform the AS68RC VERIFICATION TEST.

No

- Go To 10.

10. **REPLACE THE OUTPUT SPEED SENSOR**
    1. Turn the ignition off to the lock position.
    2. Replace the Output Speed Sensor.
    3. Inspect the internal tone ring for damaged or missing teeth.
    4. Reconnect all connectors.
    5. Clear DTCs and road test the vehicle under the conditions in which the original DTC set.

    Did the Output Speed Sensor DTC reset?

    Yes

    - Using the schematics as a guide, check the Transmission Control Module (TCM) pins, terminals, and connectors for corrosion, damage, or terminal push out. Pay particular attention to all power and ground circuits. If no problems are found, replace and program the TCM in accordance with the Service Information.
    - Refer to **STANDARD PROCEDURE** and perform the AS68RC VERIFICATION TEST.

    No

    - Test complete.
    - Refer to **STANDARD PROCEDURE** and perform the AS68RC VERIFICATION TEST.

11. **CHECK THE WIRING AND CONNECTORS**
    1. The conditions necessary to set this DTC are not present at this time.
    2. Use the Freeze Frame Data to help duplicate the conditions in which the DTC originally set. Pay particular attention to the DTC set conditions, such as, VSS, MAP, ECT, and Load
    3. Using the schematics as a guide, visually inspect the related wiring harness. Look for any chafed, pierced, pinched, or partially broken wires.
    4. Visually inspect the related wiring harness connectors. Look for broken, bent, pushed out, or corroded terminals.
    5. Wiggle the wiring and connectors while checking for any possible open or shorted circuits.
    6. Check for any Service Information Tune-ups or Technical Service Bulletins that may apply.

    Were there any problems found?

    Yes

    - Repair as necessary.

- Refer to **STANDARD PROCEDURE** and perform the AS68RC VERIFICATION TEST.

No

- Test Complete.

P0730-INCORRECT GEAR RATIO

For a complete wiring diagram, **refer to appropriate SYSTEM WIRING DIAGRAMS article** .

THEORY OF OPERATION

The Transmission Control Module (TCM) constantly calculates what the output shaft speed should be in any given gear based on the input speed sensor, output speed sensor and the current gear state.

DIAGNOSTIC TEST

When Monitored:

- Output rpm is greater than 250 rpm, Transmission is in Drive, no electrical DTCs present, transmission not currently in a gear shift.

Set Condition:

- If the calculated ratio does not match the predetermined ratio for the current gear for more than 2.5 seconds, this DTC will set.

POSSIBLE CAUSES

Possible Causes
INTERNAL TRANSMISSION PROBLEM TRANSMISSION CONTROL MODULE (TCM)

Always perform the Pre-Diagnostic Troubleshooting procedure before proceeding. Refer to STANDARD PROCEDURE.

DIAGNOSTIC TEST

1. **CHECK FOR INTERNAL TRANSMISSION PROBLEM**
    1. Determine if there are any Transmission mechanical problems present.
    2. Remove the Transmission Oil Pan and inspect for excessive debris or a plugged Transmission Oil Filter.
    3. Inspect valve body for foreign material.

    Is there any Transmission mechanical problems present?

Yes

- Repair as necessary in accordance with the Service Information.
- Refer to **STANDARD PROCEDURE** and perform the AS68RC VERIFICATION TEST.

No

- Using the schematics as a guide, check the Transmission Control Module (TCM) pins, terminals, and connectors for corrosion, damage, or terminal push out. Pay particular attention to all power and ground circuits. If no problems are found, replace and program the TCM in accordance with the Service Information.
- Refer to **STANDARD PROCEDURE** and perform the AS68RC VERIFICATION TEST.

P0745-LINE PRESSURE SOLENOID CIRCUIT

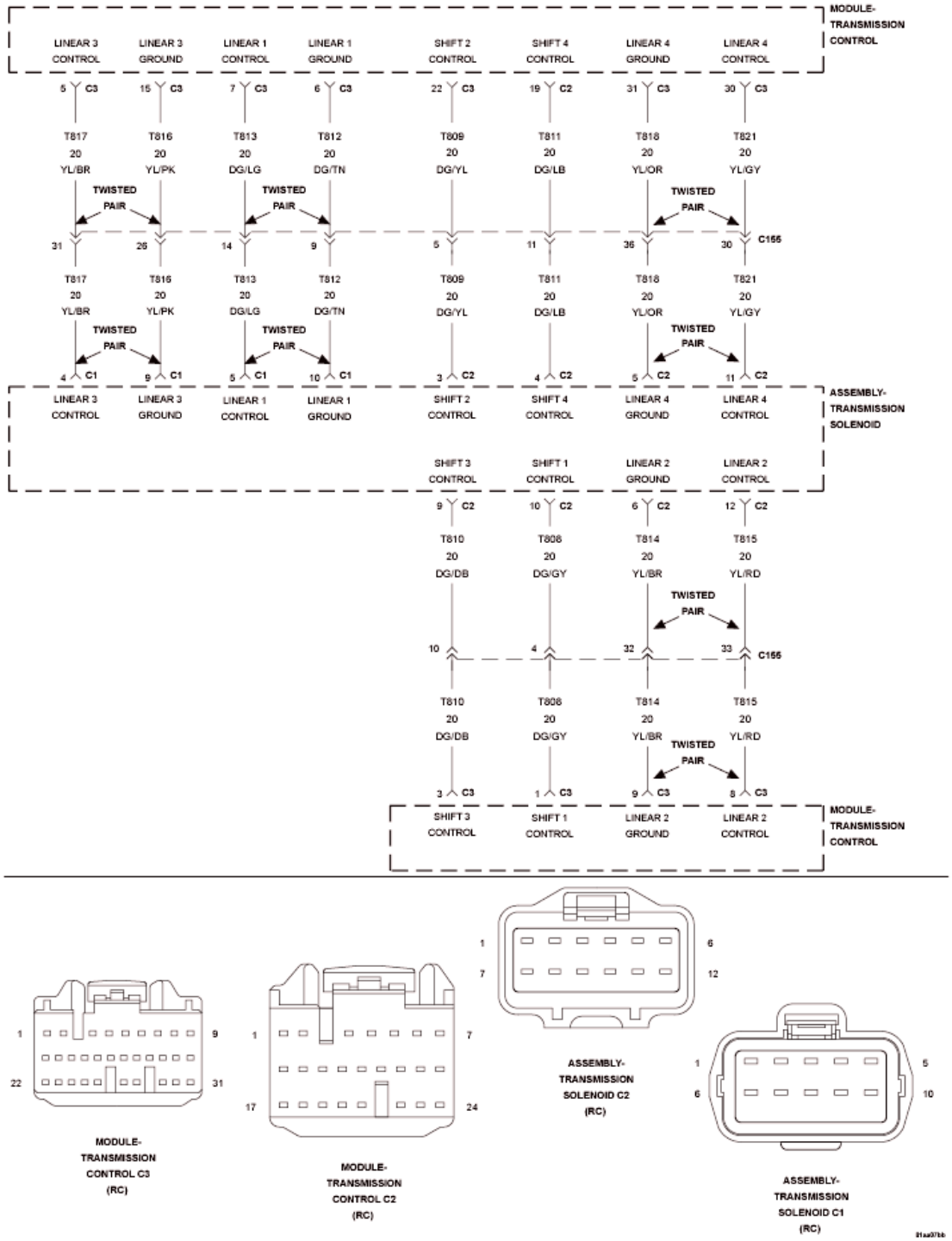

Fig. 53: Transmission Solenoid Assembly Wiring Diagram
Courtesy of CHRYSLER GROUP, LLC

For a complete wiring diagram, **refer to appropriate SYSTEM WIRING DIAGRAMS article** .

THEORY OF OPERATION

The Linear Solenoid 4 is used to control overall transmission line pressure. The Transmission Control Module (TCM) monitors the Solenoid current load and resistance. If a fault is detected, the transmission will go into limp in mode, the Torque Converter Clutch (TCC) will be disabled, and the MIL will be illuminated.

DIAGNOSTIC TEST

When Monitored:

- Ignition on, engine running.

Set Condition:

- Solenoid current is greater than or equal to 4 amps for more than 100 ms or Solenoid resistance is greater than or equal to 100k Ohms for more than 65 ms.

POSSIBLE CAUSES

Possible Causes
(T821) LINEAR SOLENOID 4 CONTROL CIRCUIT OPEN
(T821) LINEAR SOLENOID 4 CONTROL CIRCUIT SHORT TO GROUND
(T821) LINEAR SOLENOID 4 CONTROL CIRCUIT SHORT TO VOLTAGE
(T821) LINEAR SOLENOID 4 CONTROL CIRCUIT SHORT TO ANOTHER CIRCUIT
(T818) LINEAR SOLENOID 4 GROUND CIRCUIT OPEN
(T818) LINEAR SOLENOID 4 GROUND CIRCUIT SHORT TO GROUND
(T818) LINEAR SOLENOID 4 GROUND CIRCUIT SHORT TO VOLTAGE
(T818) LINEAR SOLENOID 4 GROUND CIRCUIT SHORT TO ANOTHER CIRCUIT
LINEAR SOLENOID 4
TRANSMISSION CONTROL MODULE

Always perform the AS68RC Pre-Diagnostic Troubleshooting procedure before proceeding. Refer to STANDARD PROCEDURE.

DIAGNOSTIC TEST

1. **CHECK IF DTC IS CURRENT**
    1. Using the scan tool, read TCM DTCs.
    2. Record the Environmental Data and any DTCs.
    3. Clear DTCs.
    4. Using the recorded Environmental Data, along with the When Monitored and Set Conditions above, operate the vehicle in the conditions that set the DTC.
    5. Read TCM DTCs.

    Did the DTC reset?

    Yes

- Go To 2.

No

- Go To 11.

2. **CHECK THE (T821) LINEAR SOLENOID 4 CONTROL CIRCUIT FOR AN OPEN**

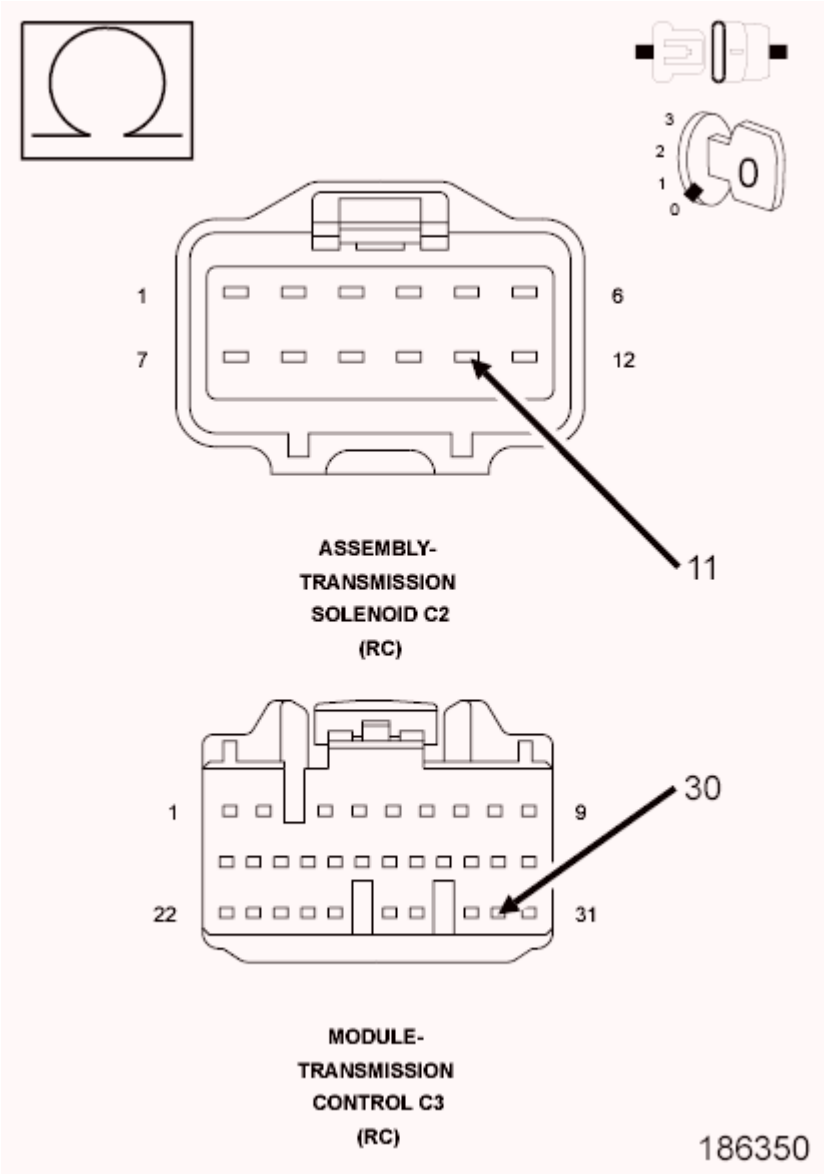

Fig. 54: Checking Linear Solenoid 4 Control Circuit For An Open
Courtesy of CHRYSLER GROUP, LLC

1. Turn the ignition off to the lock position.
2. Disconnect the Transmission Solenoid Assembly C2 harness connectors.
3. Disconnect the TCM C3 harness connector.

NOTE: Check connectors - Clean/repair as necessary.

4. Measure the resistance of the (T821) Linear Solenoid 4 Control circuit between the Transmission Solenoid Assembly C2 harness connector and the TCM C3 harness connector.

   Is the resistance below 5.0 Ohms?

   Yes

   - Go To 3.

   No

   - Repair the (T821) Linear Solenoid 4 Control circuit for an open.
   - Refer to **STANDARD PROCEDURE** and perform the AS68RC VERIFICATION TEST.

3. **CHECK THE (T821) LINEAR SOLENOID 4 CONTROL CIRCUIT FOR A SHORT TO GROUND**

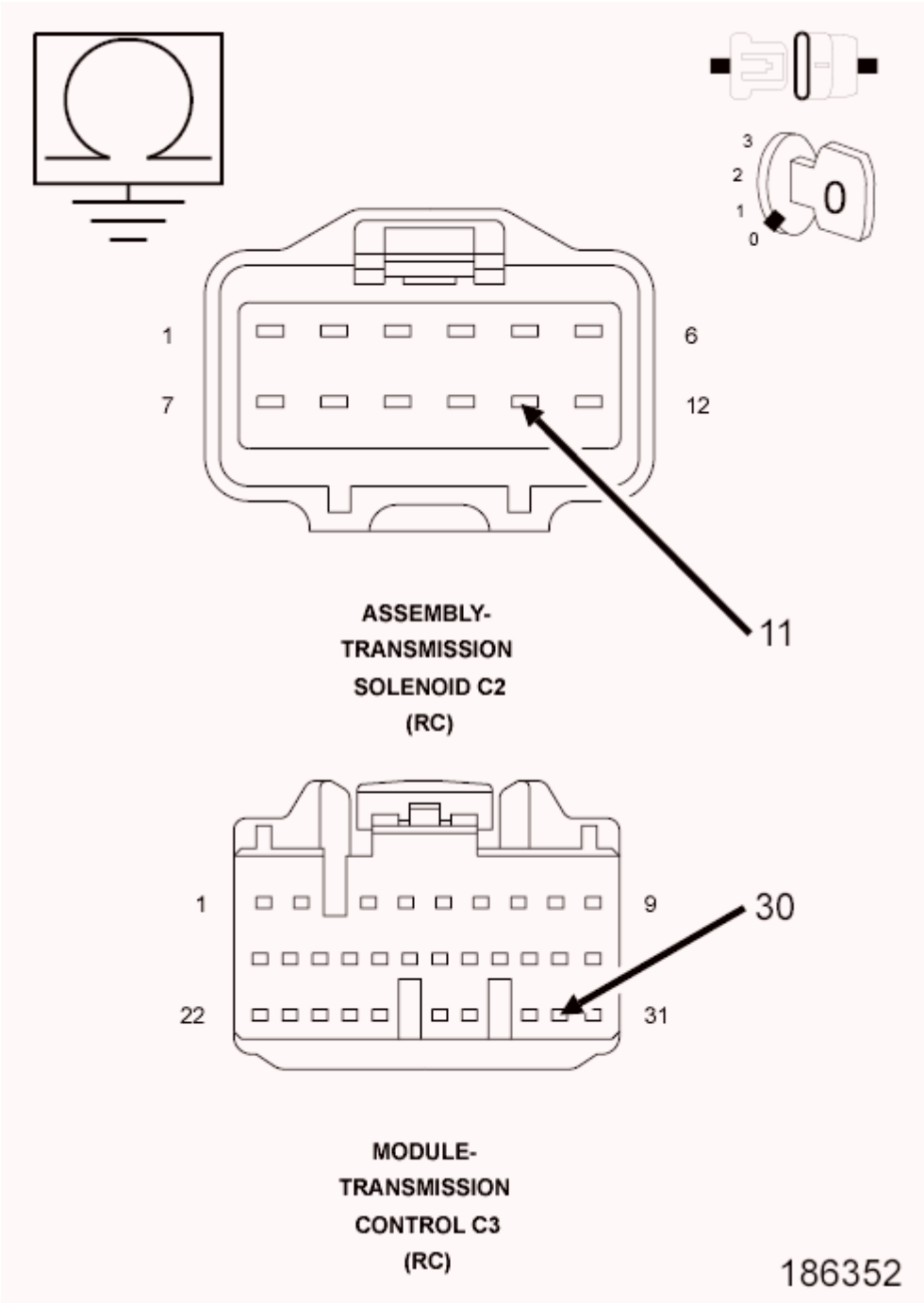

Fig. 55: Checking Linear Solenoid 4 Control Circuit For A Short To Ground
Courtesy of CHRYSLER GROUP, LLC

1. Measure the resistance between ground and the (T821) Linear Solenoid 4 Control circuit.

   Is the resistance below 100k Ohms?

   Yes

- Repair the (T821) Linear Solenoid 4 Control circuit for a short to ground.
- Refer to **STANDARD PROCEDURE** and perform the AS68RC VERIFICATION TEST.

No

- Go To 4.

4. **CHECK THE (T821) LINEAR SOLENOID 4 CONTROL CIRCUIT SHORT TO VOLTAGE**

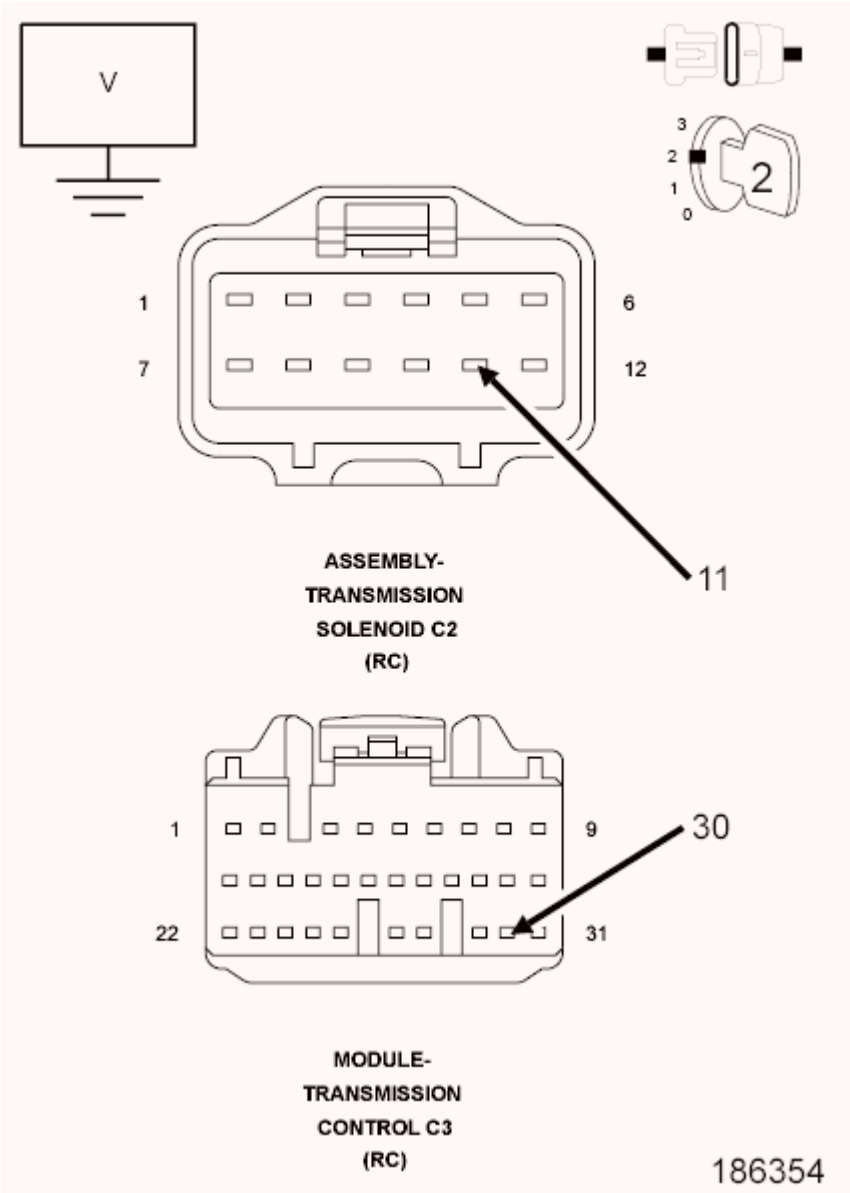

Fig. 56: Checking Linear Solenoid 4 Control Circuit Short To Voltage
Courtesy of CHRYSLER GROUP, LLC

1. Ignition on, engine not running.
2. Measure the voltage of the (T821) Linear Solenoid 4 Control circuit.

Is the voltage above 0.5 volt?

Yes

- Repair the (T821) Linear Solenoid 4 Control circuit for a short to voltage.
- Refer to **STANDARD PROCEDURE** and perform the AS68RC VERIFICATION TEST.

No

- Go To 5.

5. **CHECK THE (T821) LINEAR SOLENOID 4 CONTROL CIRCUIT FOR A SHORT TO ANOTHER CIRCUIT**

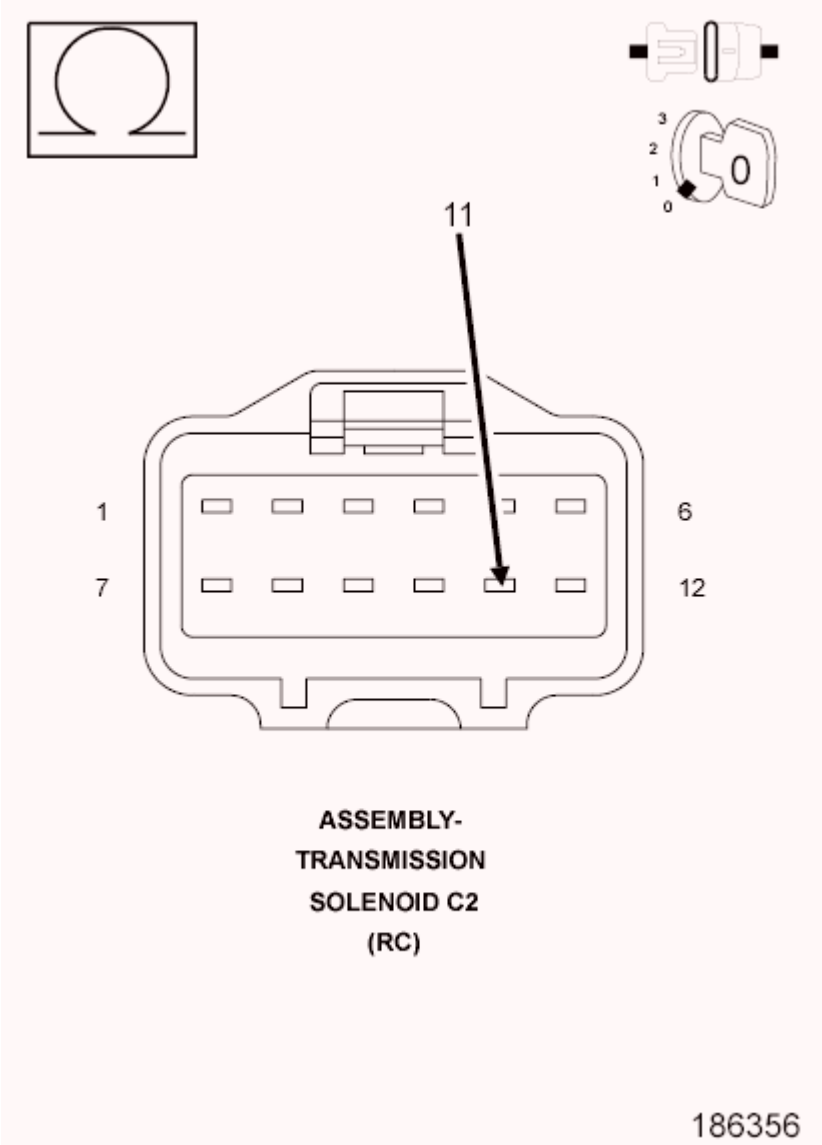

Fig. 57: Checking Linear Solenoid 4 Control Circuit For A Short To Another Circuit
Courtesy of CHRYSLER GROUP, LLC

1. Turn the ignition off to the lock position.
2. Measure the resistance between the (T821) Linear Solenoid 4 Control circuit and all other circuits in the Transmission Solenoid Assembly C2 harness connector.

   Is the resistance below 100k Ohms between the (T821) Linear Solenoid 4 Control circuit and any other circuit in the Transmission Solenoid Assembly harness connector?

   Yes

   - Repair the (T821) Linear Solenoid 4 Control circuit for a short to another circuit(s).
   - Refer to **STANDARD PROCEDURE** and perform the AS68RC VERIFICATION TEST.

   No

   - Go To 6.

6. **CHECK THE (T818) LINEAR SOLENOID 4 GROUND CIRCUIT FOR AN OPEN**

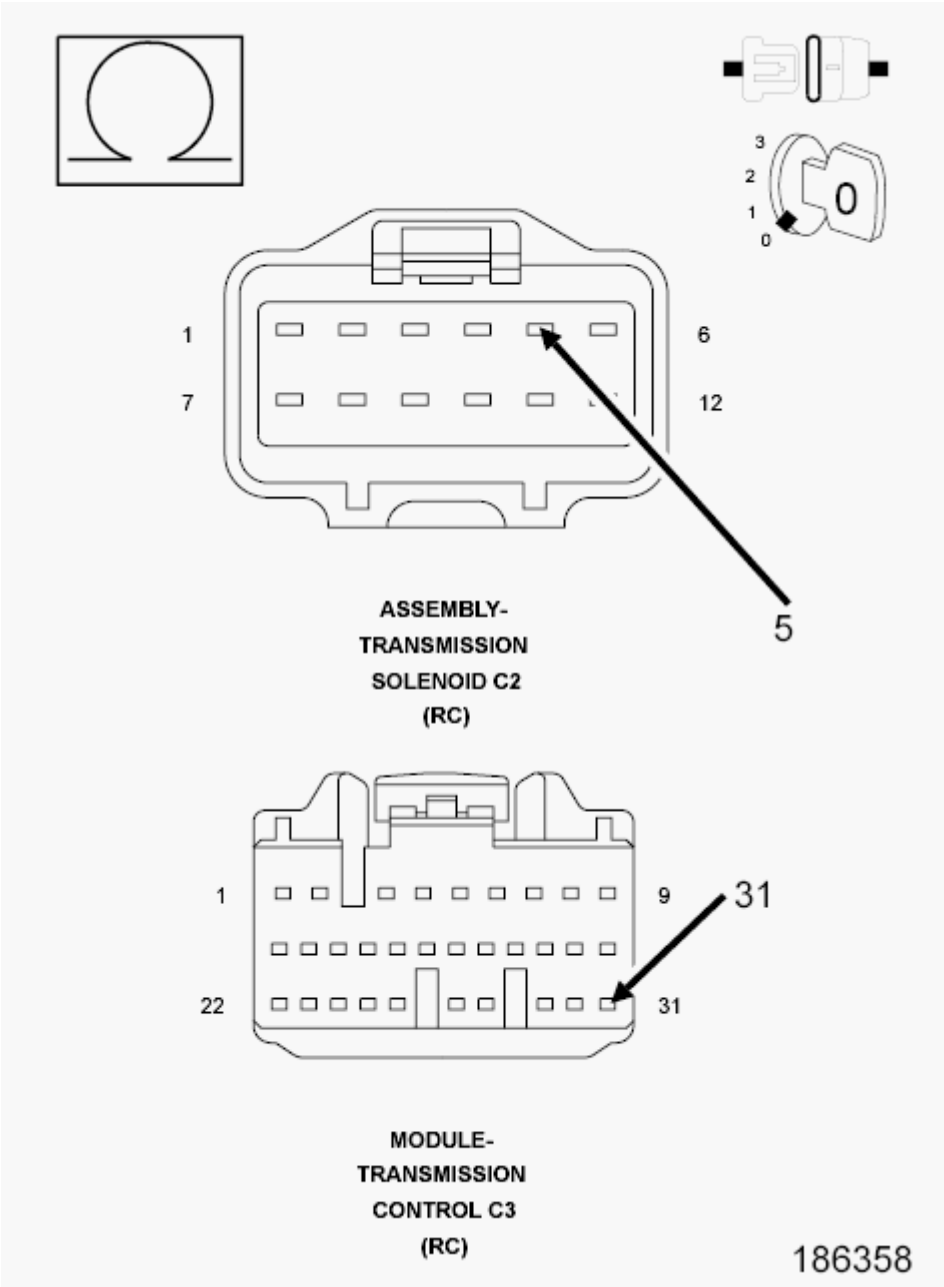

Fig. 58: Checking Linear Solenoid 4 Ground Circuit For An Open
Courtesy of CHRYSLER GROUP, LLC

1. Measure the resistance of the (T818) Linear Solenoid 4 Ground circuit between the Transmission Solenoid Assembly C2 harness connector and the TCM C3 harness connector.

   Is the resistance below 5.0 Ohms?

   Yes

   - Go To 7.

No

- Repair the (T818) Linear Solenoid 4 Ground circuit for an open.
- Refer to **STANDARD PROCEDURE** and perform the AS68RC VERIFICATION TEST.

7. **CHECK THE (T818) LINEAR SOLENOID 4 GROUND CIRCUIT FOR A SHORT TO GROUND**

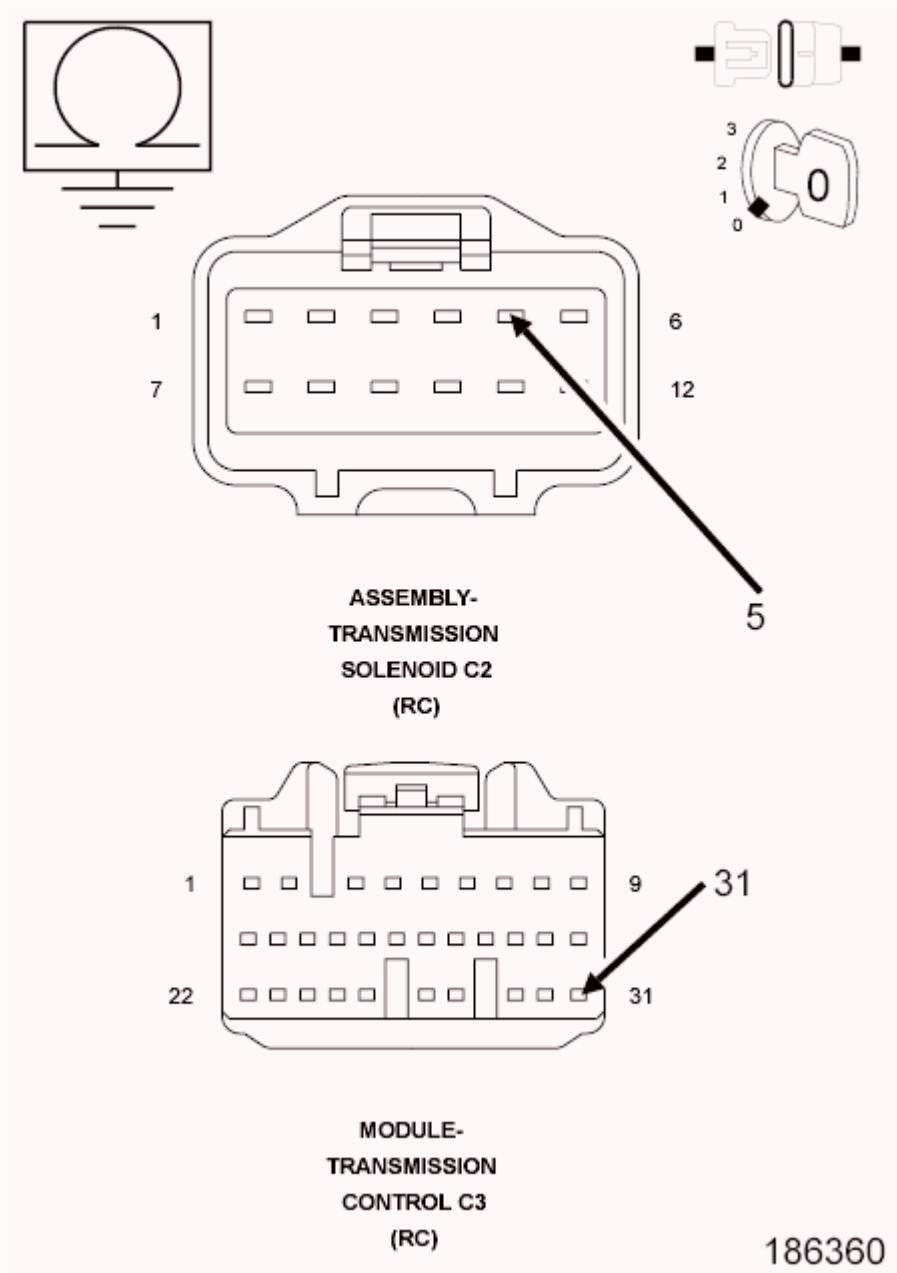

Fig. 59: Checking Linear Solenoid 4 Ground Circuit For A Short To Ground
Courtesy of CHRYSLER GROUP, LLC

1. Measure the resistance between ground and the (T818) Linear Solenoid 4 Ground circuit.

Is the resistance below 100k Ohms?

Yes

- Repair the (T818) Linear Solenoid 4 Ground circuit for a short to ground.
- Refer to **STANDARD PROCEDURE** and perform the AS68RC VERIFICATION TEST.

No

- Go To 8.

8. **CHECK THE (T818) LINEAR SOLENOID 4 GROUND CIRCUIT SHORT TO VOLTAGE**

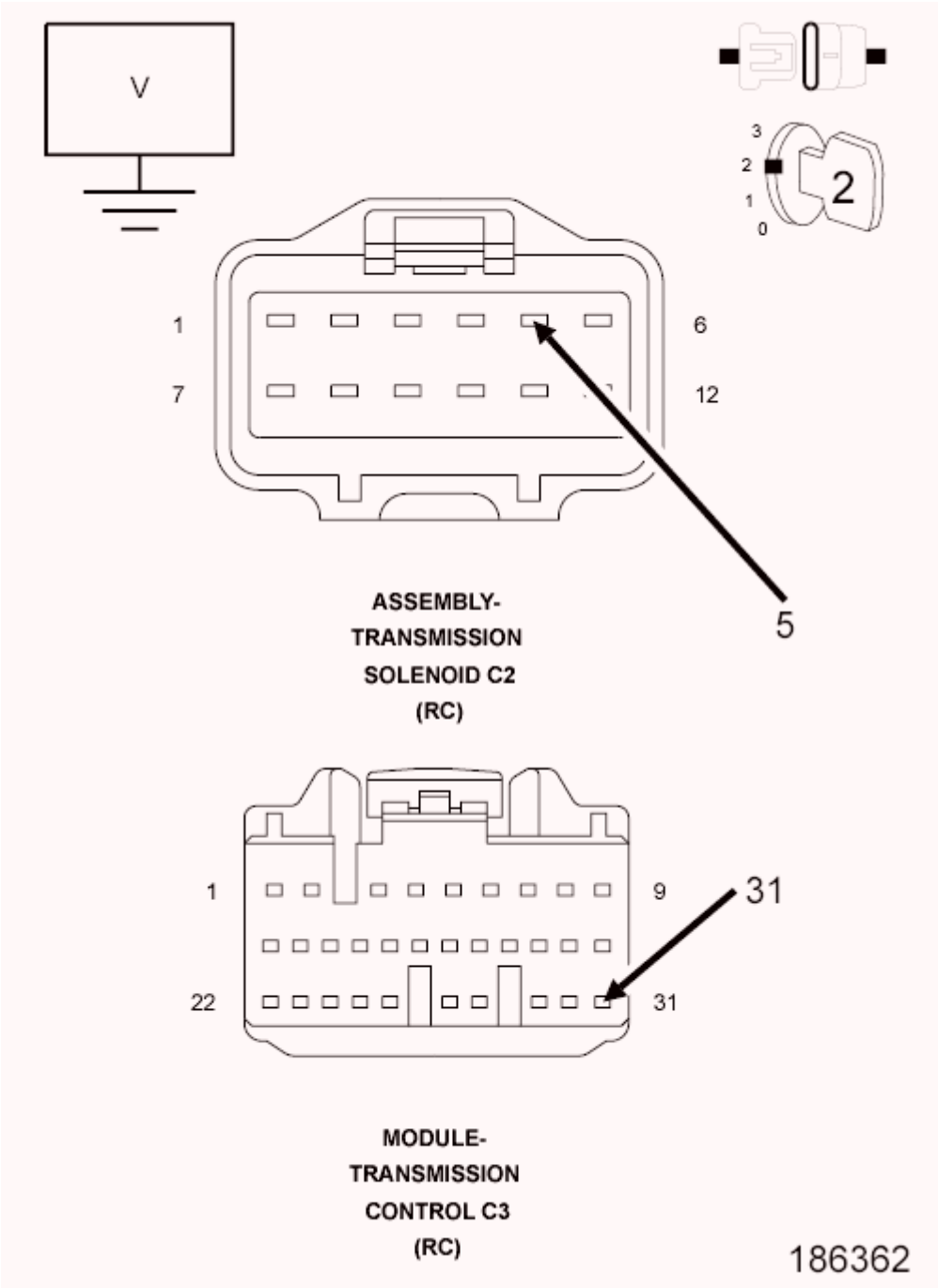

Fig. 60: Checking Linear Solenoid 4 Ground Circuit Short To Voltage
Courtesy of CHRYSLER GROUP, LLC

1. Ignition on, engine not running.
2. Measure the voltage of the (T818) Linear Solenoid 4 Ground circuit.

   Is the voltage above 0.5 volt?

   Yes

- Repair the (T818) Linear Solenoid 4 Ground circuit for a short to voltage.
- Refer to **STANDARD PROCEDURE** and perform the AS68RC VERIFICATION TEST.

No

- Go To 9.

9. **CHECK THE (T818) LINEAR SOLENOID 4 GROUND CIRCUIT SHORT TO ANOTHER CIRCUIT**

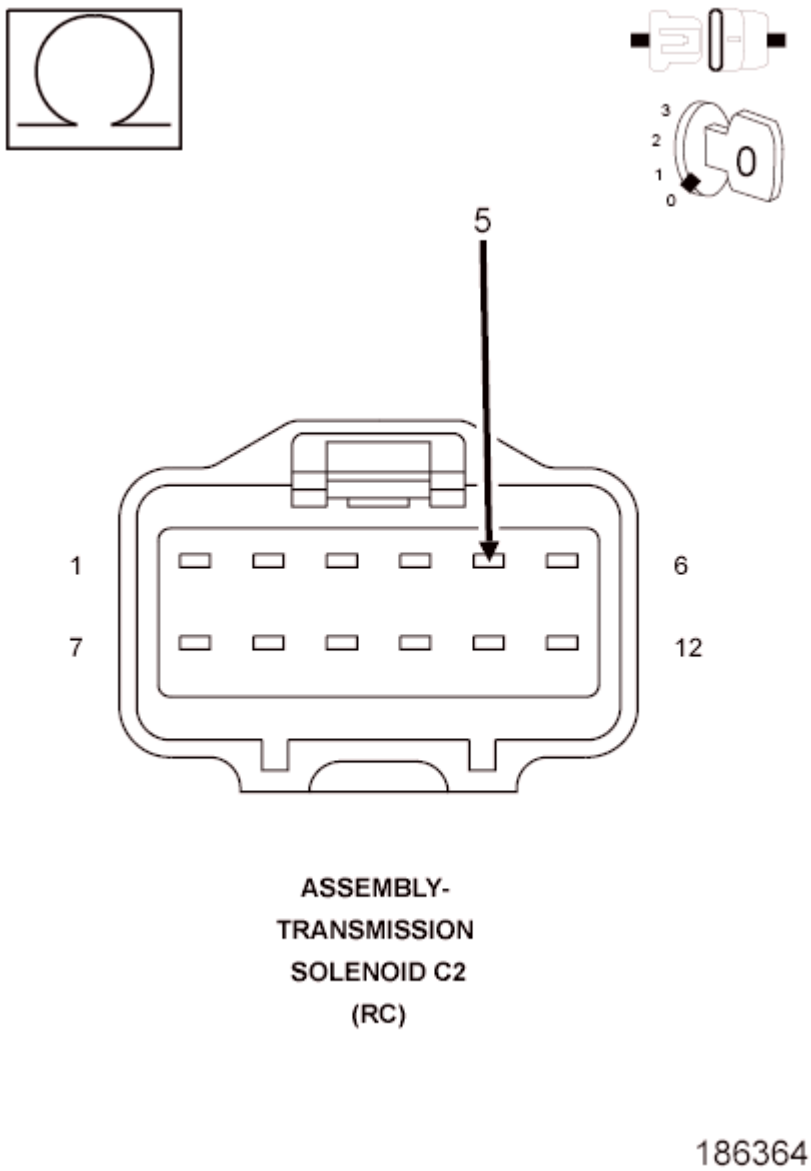

Fig. 61: Checking Linear Solenoid 4 Ground Circuit Short To Another Circuit
Courtesy of CHRYSLER GROUP, LLC

1. Turn the ignition off to the lock position.

2. Measure the resistance between the (T818) Linear Solenoid 4 Ground circuit and all other circuits in the Transmission Solenoid Assembly C2 harness connector.

   Is the resistance below 100k Ohms between the (T818) Linear Solenoid 4 Ground circuit and any other circuit in the Transmission Solenoid Assembly C2 harness connector?

   Yes

   - Repair the (T818) Linear Solenoid 4 Ground circuit for a short to another circuit(s).
   - Refer to **STANDARD PROCEDURE** and perform the AS68RC VERIFICATION TEST.

   No

   - Go To 10.

10. **CHECK THE LINEAR SOLENOID 4**

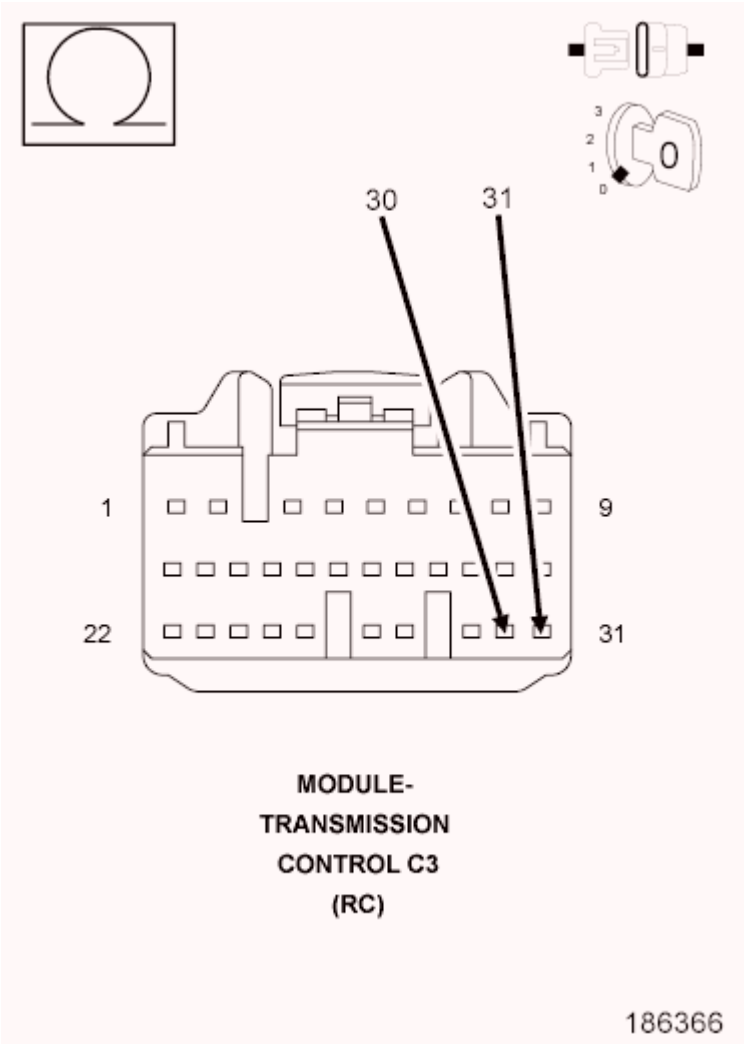

Fig. 62: Checking Linear Solenoid 4

Courtesy of CHRYSLER GROUP, LLC

1. Turn the ignition off to the lock position.
2. Reconnect the Transmission Solenoid Assembly C2 Harness connector.
3. Measure the resistance between the (T821) Linear Solenoid 4 Control and the (T818) Linear Solenoid 4 Ground circuit on the appropriate terminals of the TCM C3 harness connector.

   Is the resistance of the Linear Solenoid 4 5.5 Ohms (± 0.5 of an Ohm)?

   Yes

   - Using the schematics as a guide, check the Transmission Control Module (TCM) pins, terminals, and connectors for corrosion, damage, or terminal push out. Pay particular attention to all power and ground circuits. If no problems are found, replace and program the TCM in accordance with the Service Information.
   - Refer to **STANDARD PROCEDURE** and perform the AS68RC VERIFICATION TEST.

   No

   - Replace the Linear Solenoid 4 in accordance with the Service Information.

11. **CHECK WIRING AND CONNECTORS**
    1. The conditions necessary to set the DTC are not present at this time.
    2. Using the schematics as a guide, inspect the wiring and connectors specific to this circuit.
    3. Wiggle the wires while checking for shorted and open circuits.
    4. Check for any Service Bulletins that may apply.

    Were there any problems found?

    Yes

    - Repair as necessary.
    - Refer to **STANDARD PROCEDURE** and perform the AS68RC VERIFICATION TEST.

    No

    - Test Complete.

P0746-PRESSURE CONTROL SOLENOID A PERFORMANCE

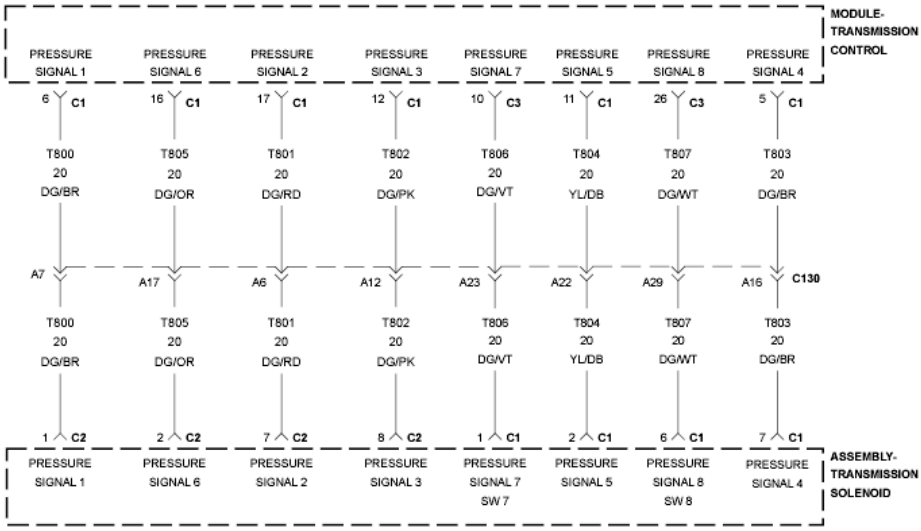

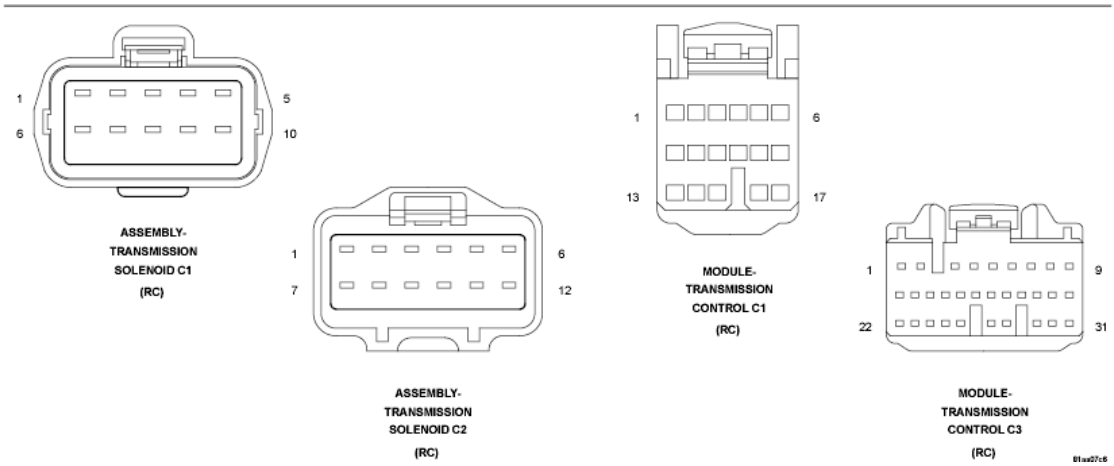

Fig. 63: Transmission Solenoid Assembly Wiring Diagram
Courtesy of CHRYSLER GROUP, LLC

For a complete wiring diagram, **refer to appropriate SYSTEM WIRING DIAGRAMS article** .

THEORY OF OPERATION

The Linear Solenoid 1 is used to control input pressure to the Control Valve 1. The Control Valve 1 uses the input to modulate the line pressure to the appropriate supply pressure for the clutch. The Transmission Control Module (TCM) verifies the operation of the Control Valve 1 by monitoring the Pressure Switch 1. If a fault is detected, the transmission will go into limp in mode, the Torque Converter Clutch (TCC) will be disabled, the limp in gear will vary based on the current gear and other conditions, and the MIL will be illuminated.

CONDITION ONE:

When Monitored:

- Ignition on, engine running.

Set Condition:

- Pressure switch 1 is closed for more than 310 ms after the transition of the Control Valve 1 from on to off.
- The electric fault of the Solenoid has not been detected after the above condition has been established within 10 seconds.

CONDITION TWO:

When Monitored:

- Ignition on, engine running.
- TRS is in the D, 3, 2, or 1 position and Pressure Switch 8 is Closed.

Set Condition:

- Pressure switch 1 is Open for more than 510 ms after the transition of the Control Valve 1 from off to on.
- The electric fault of the Solenoid has not been detected after the above condition has been established within 10 seconds and the Pressure Switch 8 is Open in Park, Neutral, or Reverse for 500 ms.

CONDITION THREE:

When Monitored:

- Ignition on, engine running.
- TRS is in the D, 3, 2, or 1 position and Pressure Switch 8 is Closed.

Set Condition:

- Pressure Switch 1 is Open for more than 310 ms after a transition of the Control Valve 1 from on to off when the gear ratio is Neutral for more than 2 seconds.
- The electric fault of the Solenoid has not been detected after the above condition has been established within 10 seconds and the Pressure Switch 8 is Open in Park, Neutral, or Reverse for 500 ms.

CONDITION FOUR:

When Monitored:

- Ignition on, engine running.
- Control Valve 1 continuous operation is off.

Set Condition:

- Pressure Switch 1 is Closed for more than 100 ms.
- The electric fault of the Solenoid has not been detected after the above condition has been established within 10 seconds.

CONDITION FIVE:

When Monitored:

- Ignition on, engine running.
- TRS is in the D, 3, 2, or 1 position and Pressure Switch 8 is Closed.
- Control Valve 1 continuous operation is on.

Set Condition:

- Pressure Switch 1 is Open for more than 2 seconds.
- The electric fault of the Solenoid has not been detected after the above condition has been established within 10 seconds.

POSSIBLE CAUSES

Possible Causes
PRESSURE SWITCH 1 SIGNAL CIRCUIT OPEN
PRESSURE SWITCH 1 SIGNAL CIRCUIT SHORT TO GROUND
PRESSURE SWITCH 1
CONTROL VALVE 1
INTERNAL WIRING
LOW TRANSMISSION FLUID LEVEL
INTERNAL TRANSMISSION
TRANSMISSION CONTROL MODULE

Always perform the AS68RC Pre-Diagnostic Troubleshooting procedure before proceeding. Refer to STANDARD PROCEDURE.

DIAGNOSTIC TEST

1. **CHECK IF DTC IS CURRENT**
    1. Using the scan tool, read TCM DTCs.
    2. Record the Environmental Data and any DTCs.
    3. Clear DTCs.
    4. Using the recorded Environmental Data, along with the When Monitored and Set Conditions above, operate the vehicle in the conditions that set the DTC.
    5. Read TCM DTCs.

Did the DTC reset?

Yes

- Go To 2.

No

- Go To 8.

2. **CHECK PRESSURE SWITCH 1 STATE**
   1. Ignition on, engine not running.
   2. With the scan tool, view the Pressure Switch 1 state.

   Does the scan tool display the Pressure Switch 1 as "Closed"?

   Yes

   - Go To 3.

   No

   - Go To 5.

3. **CHECK PRESSURE SWITCH 1**
   1. Turn the ignition off to the lock position.
   2. Disconnect the Transmission Solenoid Assembly C2 harness connector

   NOTE: Check connectors - Clean/repair as necessary.

   3. Ignition on, engine not running.
   4. With the scan tool, view the Pressure Switch 1 state.

   Does the scan tool display the Pressure Switch 1 as "Closed"?

   Yes

   - Go To 4.

   No

   - Inspect the internal wiring harness and connectors for shorts, corrosion, damage, or terminal push out. If no problems found, replace the Pressure Switch 1 in accordance with the Service Information.
   - Refer to **STANDARD PROCEDURE** and perform the AS68RC VERIFICATION TEST.

4. **CHECK THE (T800) PRESSURE SWITCH 1 SIGNAL CIRCUIT FOR A SHORT TO GROUND**

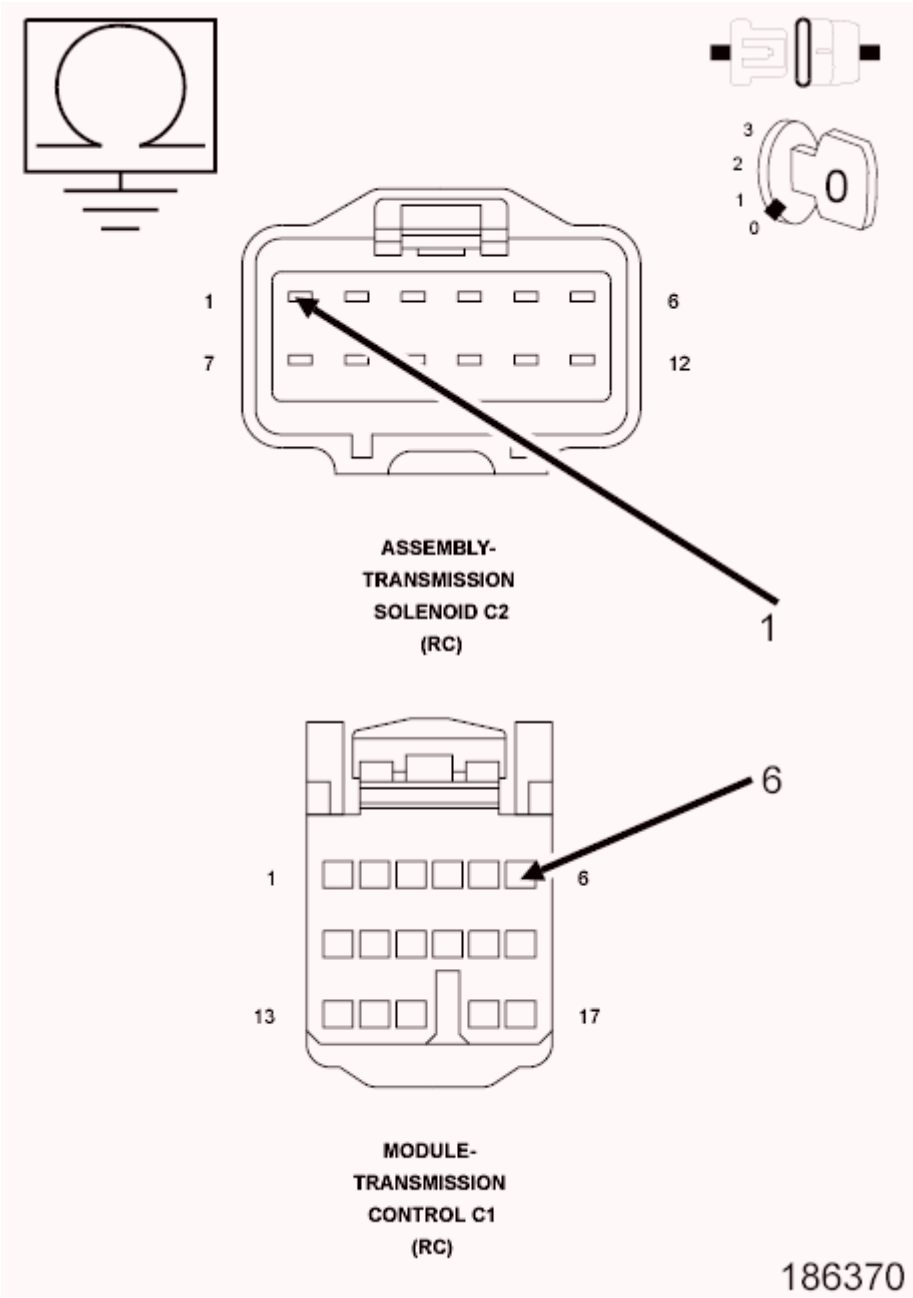

Fig. 64: Checking Pressure Switch 1 Signal Circuit For A Short To Ground
Courtesy of CHRYSLER GROUP, LLC

1. Turn the ignition off to the lock position.
2. Disconnect the TCM C1 harness connector.

NOTE: Check connectors - Clean/repair as necessary.

3. Measure the resistance of the (T800) Pressure Switch 1 signal circuit to ground.

   Is the resistance below 100k Ohms?

Yes

- Repair the (T800) Pressure Switch 1 signal circuit for a short to ground.
- Refer to **STANDARD PROCEDURE** and perform the AS68RC VERIFICATION TEST.

No

- Using the schematics as a guide, check the Transmission Control Module (TCM) pins, terminals, and connectors for corrosion, damage, or terminal push out. Pay particular attention to all power and ground circuits. If no problems are found, replace and program the TCM in accordance with the Service Information.
- Refer to **STANDARD PROCEDURE** and perform the AS68RC VERIFICATION TEST.

5. **CHECK PRESSURE SWITCH 1 SIGNAL CIRCUIT**
   1. Turn the ignition off to the lock position.
   2. Disconnect the Transmission Solenoid Assembly C2 harness connector

      NOTE: Check connectors - Clean/repair as necessary.

   3. Ignition on, engine not running.
   4. With the scan tool, monitor the Pressure Switch 1 state in the following step.
   5. Using a test light connected to ground, probe the (T800) Pressure Switch 1 signal circuit in the Transmission Solenoid Assembly C2 Harness connector.

      Does the scan tool display the Pressure Switch 1 as "Closed" when the (T800) Pressure Switch 1 signal circuit is grounded with the test light?

      Yes

      - Go To 7.

      No

      - Go To 6.

6. **CHECK THE (T800) PRESSURE SWITCH 1 SIGNAL CIRCUIT FOR AN OPEN**

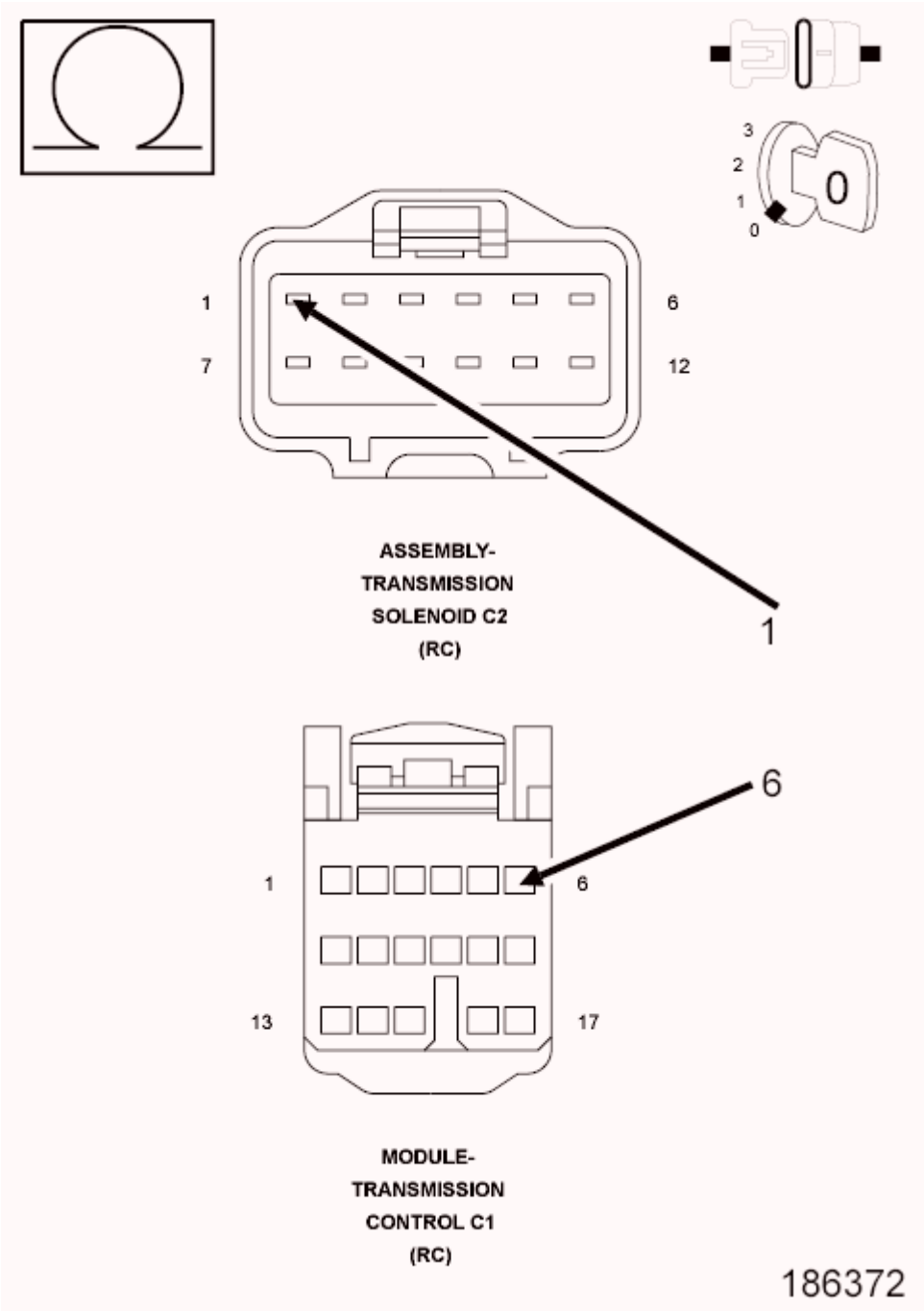

Fig. 65: Checking Pressure Switch 1 Signal Circuit For An Open
Courtesy of CHRYSLER GROUP, LLC

1. Turn the ignition off to the lock position.
2. Disconnect the TCM C1 harness connector.
3. Measure the resistance of the (T800) Pressure Switch 1 signal circuit between the Transmission Solenoid Assembly C2 harness connector and the TCM C1 harness connector.

   Is the resistance below 5.0 Ohms?

Yes

- Using the schematics as a guide, check the Transmission Control Module (TCM) pins, terminals, and connectors for shorts, corrosion, damage, or terminal push out. Pay particular attention to all power and ground circuits. If no problems are found, replace and program the TCM in accordance with the Service Information.
- Refer to **STANDARD PROCEDURE** and perform the AS68RC VERIFICATION TEST.

No

- Repair the (T800) Pressure Switch 1 signal circuit for an open.
- Refer to **STANDARD PROCEDURE** and perform the AS68RC VERIFICATION TEST.

7. **CHECK INTERNAL TRANSMISSION**
   1. Turn the ignition off to the lock position.
   2. Remove the transmission oil pan.
   3. Check the internal transmission harness, pins, terminals, and connectors for shorts, corrosion, damage, or terminal push out.
   4. Visually inspect the valve body for debris, damage or leaking hydraulic paths.
   5. Visually inspect for sticking or binding Control Valve(s).

   Were there any problems found?

   Yes

   - Repair as necessary.
   - Refer to **STANDARD PROCEDURE** and perform the AS68RC VERIFICATION TEST.

   No

   - Replace the Pressure Switch 1 in accordance with the Service Information.
   - Refer to **STANDARD PROCEDURE** and perform the AS68RC VERIFICATION TEST.

8. **CHECK WIRING AND CONNECTORS**
   1. The conditions necessary to set the DTC are not present at this time.
   2. Using the schematics as a guide, inspect the wiring and connectors specific to this circuit.
   3. Wiggle the wires while checking for shorted and open circuits.
   4. Check for any Service Bulletins that may apply.

   Were there any problems found?

   Yes

   - Repair as necessary.
   - Refer to **STANDARD PROCEDURE** and perform the AS68RC VERIFICATION TEST.

No

- Test Complete.

P0748-PRESSURE CONTROL SOLENOID A CIRCUIT

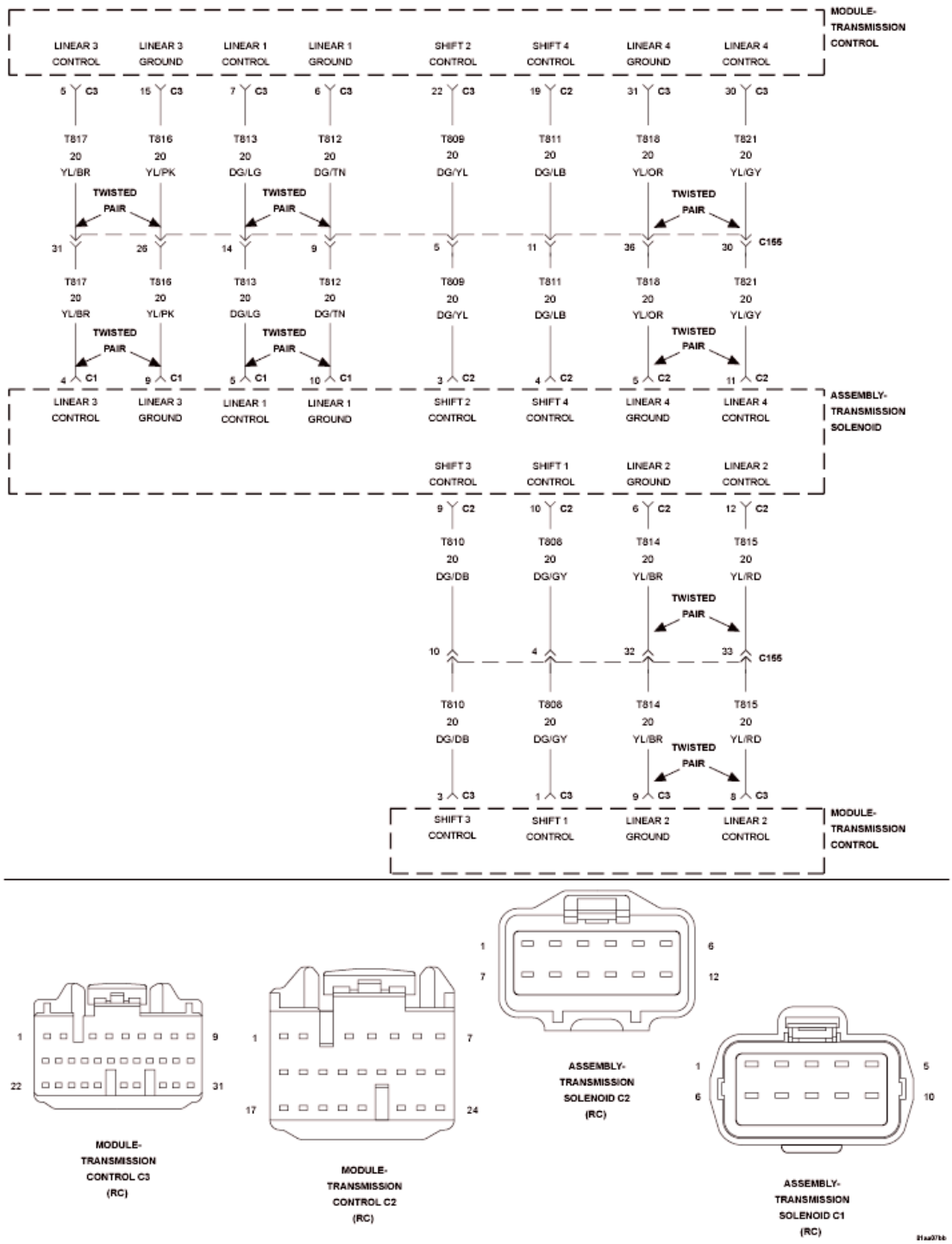

Fig. 66: Transmission Solenoid Assembly Wiring Diagram

Courtesy of CHRYSLER GROUP, LLC

For a complete wiring diagram, **refer to appropriate SYSTEM WIRING DIAGRAMS article** .

THEORY OF OPERATION

The Linear Solenoid 1 is used to control input pressure to the Control Valve 1. The Control Valve 1 uses the input to modulate the line pressure to the appropriate supply pressure for the clutch. The Transmission Control Module (TCM) monitors the Solenoid current load and resistance. If a fault is detected, the transmission will go into limp in mode, the Torque Converter Clutch (TCC) will be disabled, the limp in gear will vary based on the current gear and other conditions, and the MIL will be illuminated.

DIAGNOSTIC TEST

When Monitored:

- Ignition on, engine running.

Set Condition:

- Solenoid current is greater than or equal to 4 amps for more than 100 ms or Solenoid resistance is greater than or equal to 100k Ohms for more than 65 ms.

POSSIBLE CAUSES

Possible Causes
(T813) LINEAR SOLENOID 1 CONTROL CIRCUIT OPEN
(T813) LINEAR SOLENOID 1 CONTROL CIRCUIT SHORT TO GROUND
(T813) LINEAR SOLENOID 1 CONTROL CIRCUIT SHORT TO VOLTAGE
(T813) LINEAR SOLENOID 1 CONTROL CIRCUIT SHORT TO ANOTHER CIRCUIT
(T812) LINEAR SOLENOID 1 GROUND CIRCUIT OPEN
(T812) LINEAR SOLENOID 1 GROUND CIRCUIT SHORT TO GROUND
(T812) LINEAR SOLENOID 1 GROUND CIRCUIT SHORT TO VOLTAGE
(T812) LINEAR SOLENOID 1 GROUND CIRCUIT SHORT TO ANOTHER CIRCUIT
LINEAR SOLENOID 1
TRANSMISSION CONTROL MODULE (TCM)

Always perform the AS68RC Pre-Diagnostic Troubleshooting procedure before proceeding. Refer to STANDARD PROCEDURE.

DIAGNOSTIC TEST

1. **CHECK IF DTC IS CURRENT**
    1. Using the scan tool, read TCM DTCs.
    2. Record the Environmental Data and any DTCs.

3. Clear DTCs.
4. Using the recorded Environmental Data, along with the When Monitored and Set Conditions above, operate the vehicle in the conditions that set the DTC.
5. Read TCM DTCs.

   Did the DTC reset?

   Yes

   - Go To 2.

   No

   - Go To 11.

2. **CHECK THE (T813) LINEAR SOLENOID 1 CONTROL CIRCUIT FOR AN OPEN**

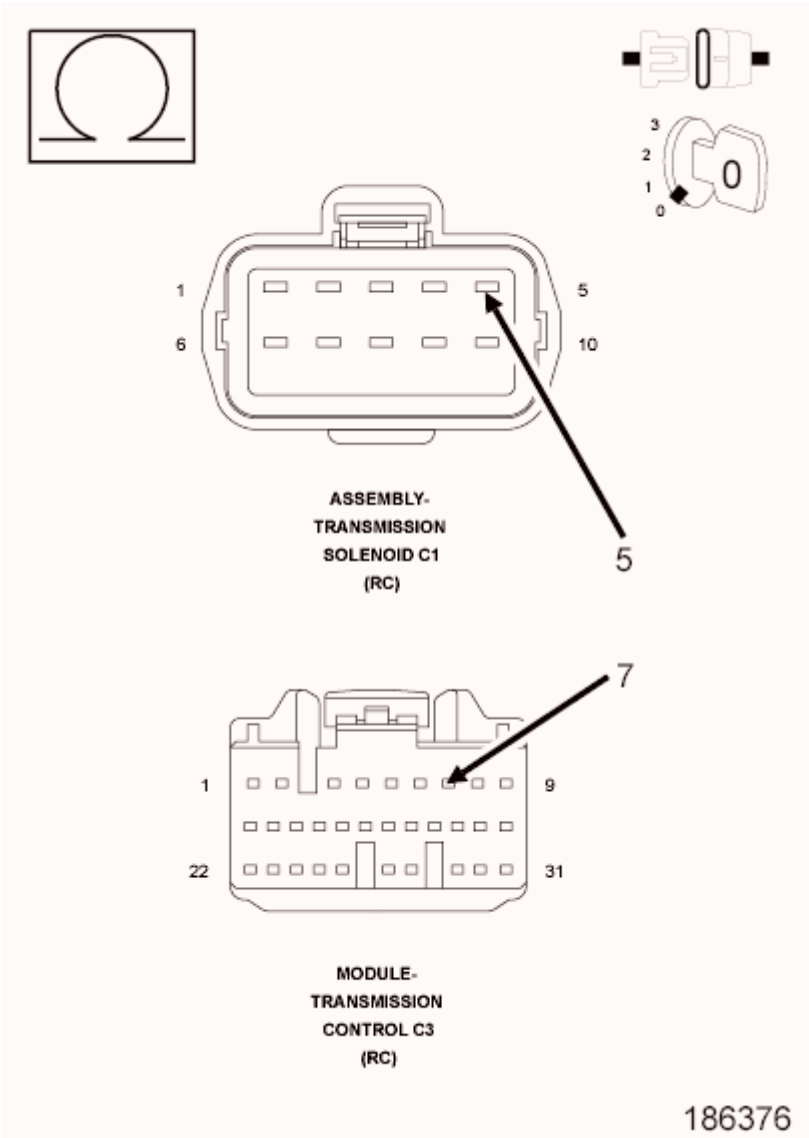

Fig. 67: Checking Linear Solenoid 1 Control Circuit For An Open
Courtesy of CHRYSLER GROUP, LLC

1. Turn the ignition off to the lock position.
2. Disconnect the Transmission Solenoid Assembly C1 harness connectors.
3. Disconnect the TCM C3 harness connector.

NOTE: Check connectors - Clean/repair as necessary.

4. Measure the resistance of the (T813) Linear Solenoid 1 Control circuit between the Transmission Solenoid Assembly C1 harness connector and the TCM C3 harness connector.

   Is the resistance below 5.0 Ohms?

   Yes

- Go To 3.

No

- Repair the (T813) Linear Solenoid 1 Control circuit for an open.
- Refer to **STANDARD PROCEDURE** and perform the AS68RC VERIFICATION TEST.

3. **CHECK THE (T813) LINEAR SOLENOID 1 CONTROL CIRCUIT FOR A SHORT TO GROUND**

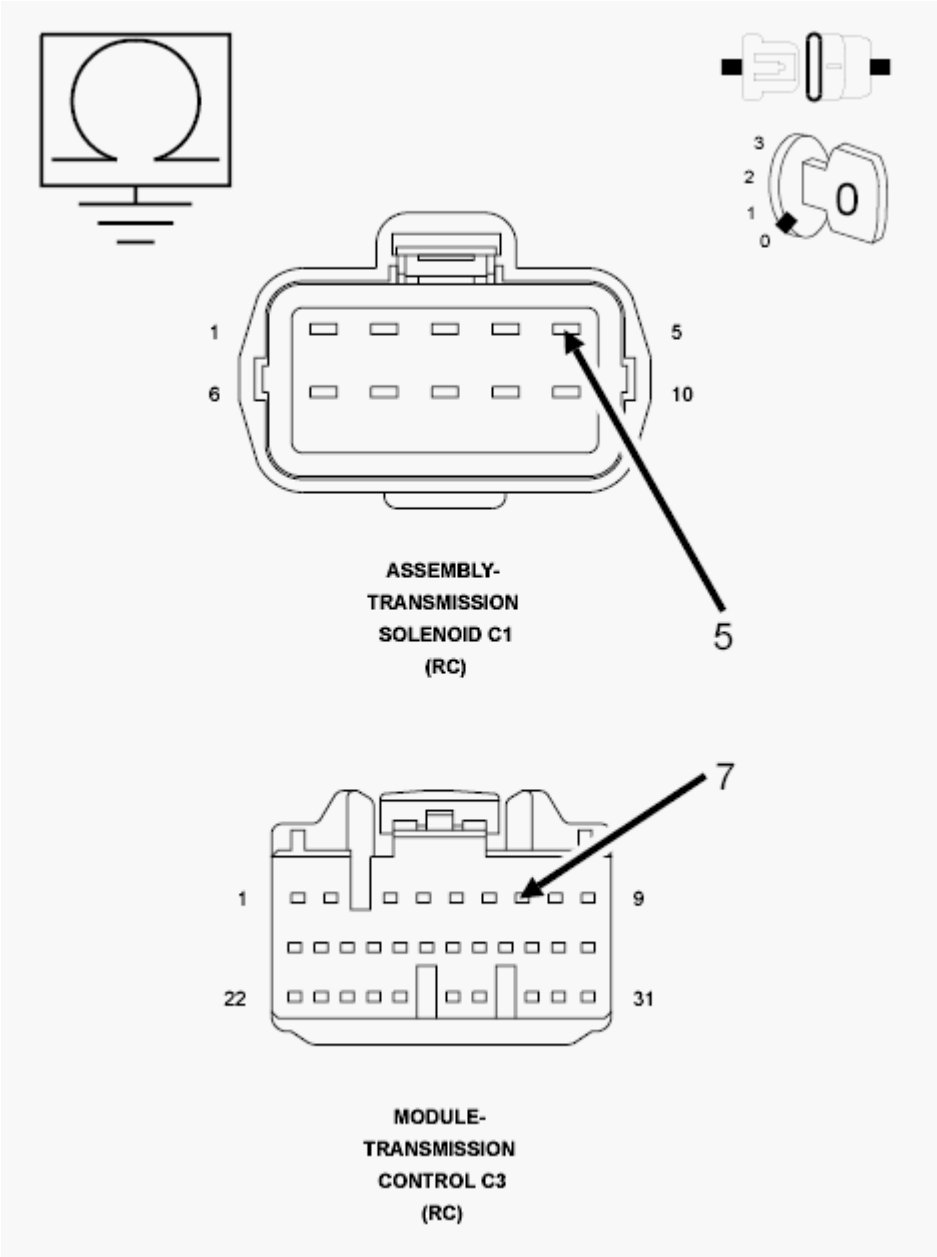

Fig. 68: Checking Linear Solenoid 1 Control Circuit For A Short To Ground
Courtesy of CHRYSLER GROUP, LLC

1. Measure the resistance between ground and the (T813) Linear Solenoid 1 Control circuit.

   Is the resistance below 100k Ohms?

   Yes

   - Repair the (T813) Linear Solenoid 1 Control circuit for a short to ground.
   - Refer to **STANDARD PROCEDURE** and perform the AS68RC VERIFICATION TEST.

   No

   - Go To 4.

4. **CHECK THE (T813) LINEAR SOLENOID 1 CONTROL CIRCUIT SHORT TO VOLTAGE**

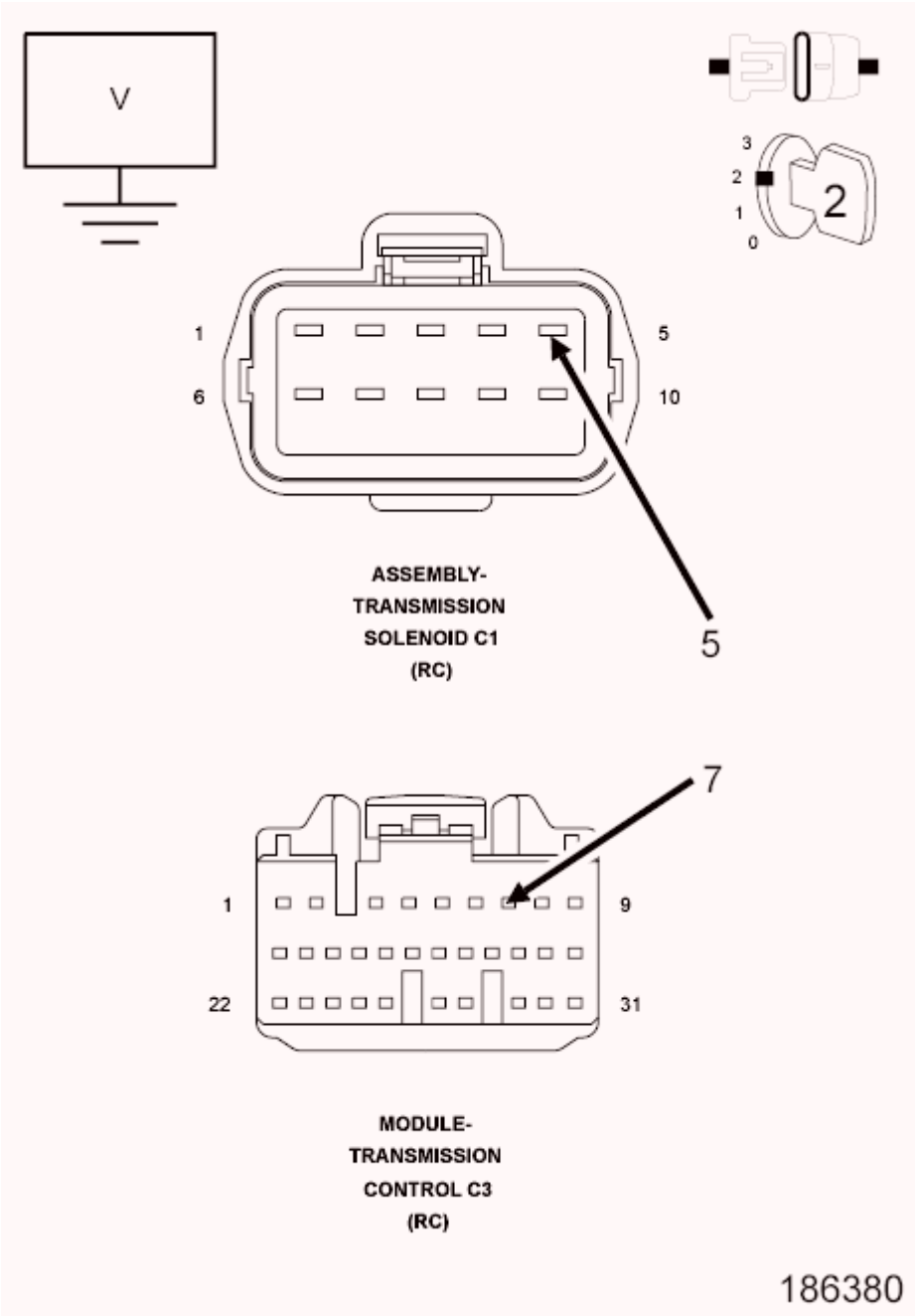

Fig. 69: Checking Linear Solenoid 1 Control Circuit Short To Voltage
Courtesy of CHRYSLER GROUP, LLC

1. Ignition on, engine not running.
2. Measure the voltage of the (T813) Linear Solenoid 1 Control circuit.

   Is the voltage above 0.5 volt?

   Yes

- Repair the (T813) Linear Solenoid 1 Control circuit for a short to voltage.
- Refer to **STANDARD PROCEDURE** and perform the AS68RC VERIFICATION TEST.

No

- Go To 5.

5. **CHECK THE (T813) LINEAR SOLENOID 1 CONTROL CIRCUIT FOR A SHORT TO ANOTHER CIRCUIT**

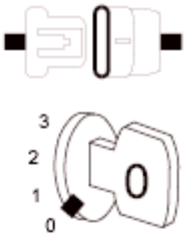

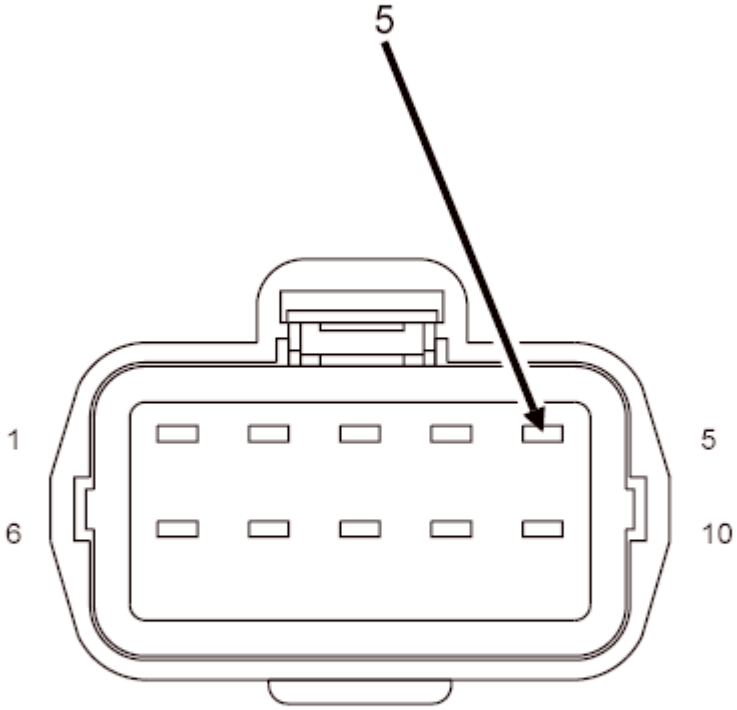

ASSEMBLY-
TRANSMISSION
SOLENOID C1
(RC)

186382

Fig. 70: Checking Linear Solenoid 1 Control Circuit For A Short To Another Circuit
Courtesy of CHRYSLER GROUP, LLC

1. Turn the ignition off to the lock position.
2. Measure the resistance between the (T813) Linear Solenoid 1 Control circuit and all other circuits in the Transmission Solenoid Assembly C1 harness connector.

   Is the resistance below 100k Ohms between the (T813) Linear Solenoid 1 Control circuit and any other circuit in the Transmission Solenoid Assembly harness connector?

   Yes

   - Repair the (T813) Linear Solenoid 1 Control circuit for a short to another circuit(s).
   - Refer to **STANDARD PROCEDURE** and perform the AS68RC VERIFICATION TEST.

   No

   - Go To 6.

6. **CHECK THE (T812) LINEAR SOLENOID 1 GROUND CIRCUIT FOR AN OPEN**

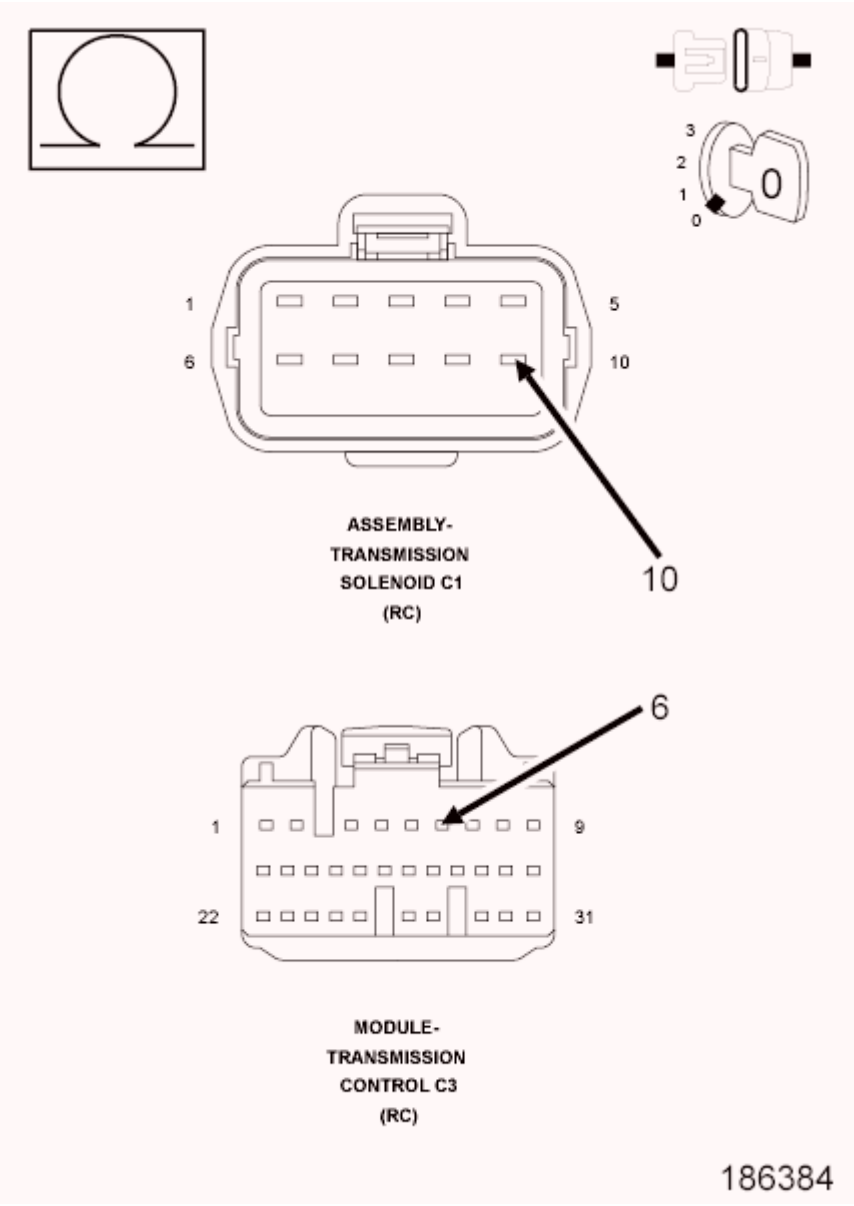

Fig. 71: Checking Linear Solenoid 1 Ground Circuit For An Open
Courtesy of CHRYSLER GROUP, LLC

1. Measure the resistance of the (T812) Linear Solenoid 1 Ground circuit between the Transmission Solenoid Assembly C1 harness connector and the TCM C3 harness connector.

   Is the resistance below 5.0 Ohms?

   Yes

   - Go To 7.

   No

- Repair the (T812) Linear Solenoid 1 Ground circuit for an open.
- Refer to **STANDARD PROCEDURE** and perform the AS68RC VERIFICATION TEST.

7. **CHECK THE (T812) LINEAR SOLENOID 1 GROUND CIRCUIT FOR A SHORT TO GROUND**

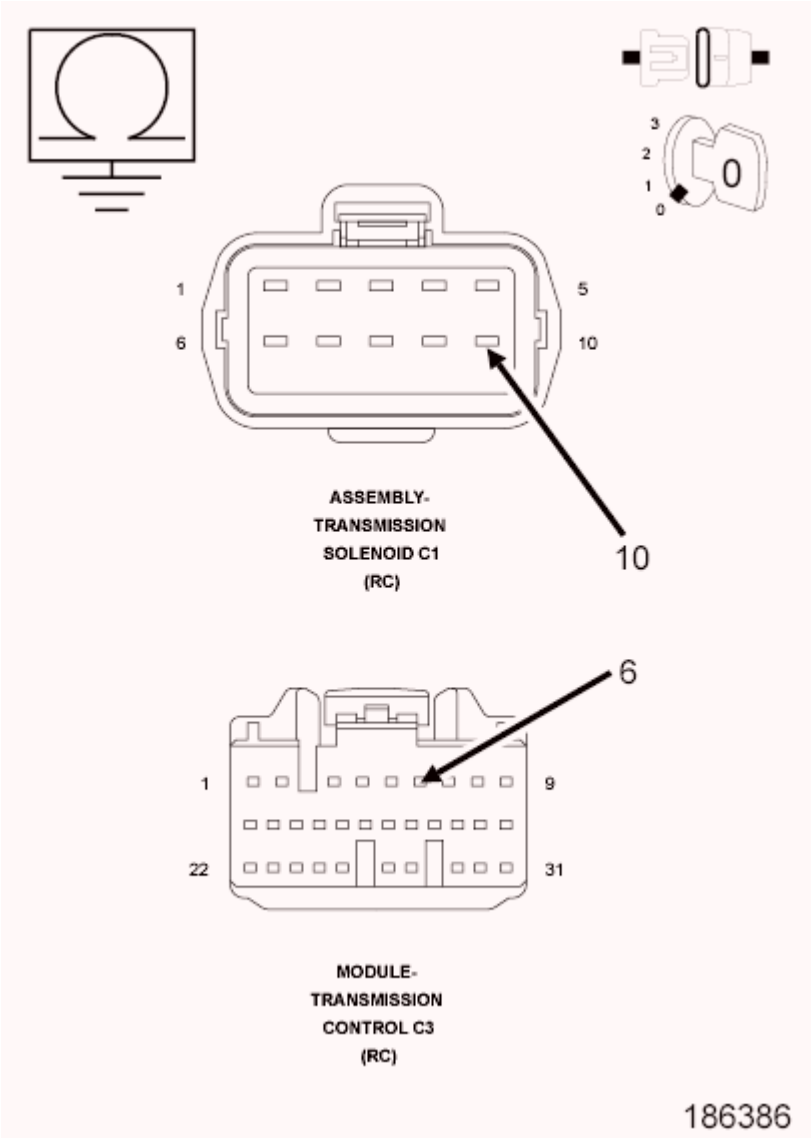

Fig. 72: Checking Linear Solenoid 1 Ground Circuit For A Short To Ground
Courtesy of CHRYSLER GROUP, LLC

1. Measure the resistance between ground and the (T812) Linear Solenoid 1 Ground circuit.

   Is the resistance below 100k Ohms?

   Yes

   - Repair the (T812) Linear Solenoid 1 Ground circuit for a short to ground.
   - Refer to **STANDARD PROCEDURE** and perform the AS68RC VERIFICATION TEST.

No

- Go To 8.

8. **CHECK THE (T812) LINEAR SOLENOID 1 GROUND CIRCUIT SHORT TO VOLTAGE**

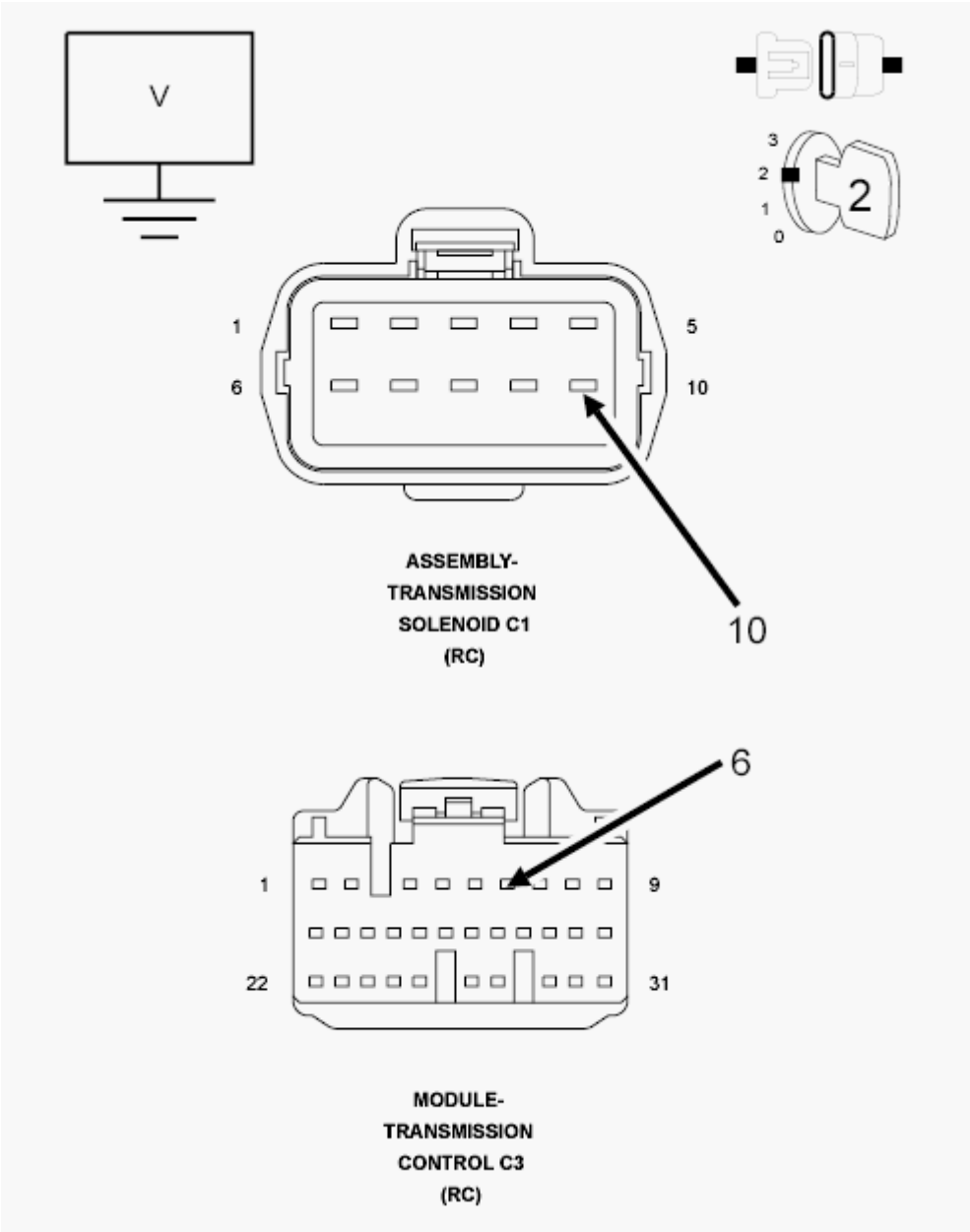

Fig. 73: Checking Linear Solenoid 1 Ground Circuit Short To Voltage
Courtesy of CHRYSLER GROUP, LLC

1. Ignition on, engine not running.
2. Measure the voltage of the (T812) Linear Solenoid 1 Ground circuit.

   Is the voltage above 0.5 volt?

Yes

- Repair the (T812) Linear Solenoid 1 Ground circuit for a short to voltage.
- Refer to **STANDARD PROCEDURE** and perform the AS68RC VERIFICATION TEST.

No

- Go To 9.

9. **CHECK THE (T812) LINEAR SOLENOID 1 GROUND CIRCUIT SHORT TO ANOTHER CIRCUIT**

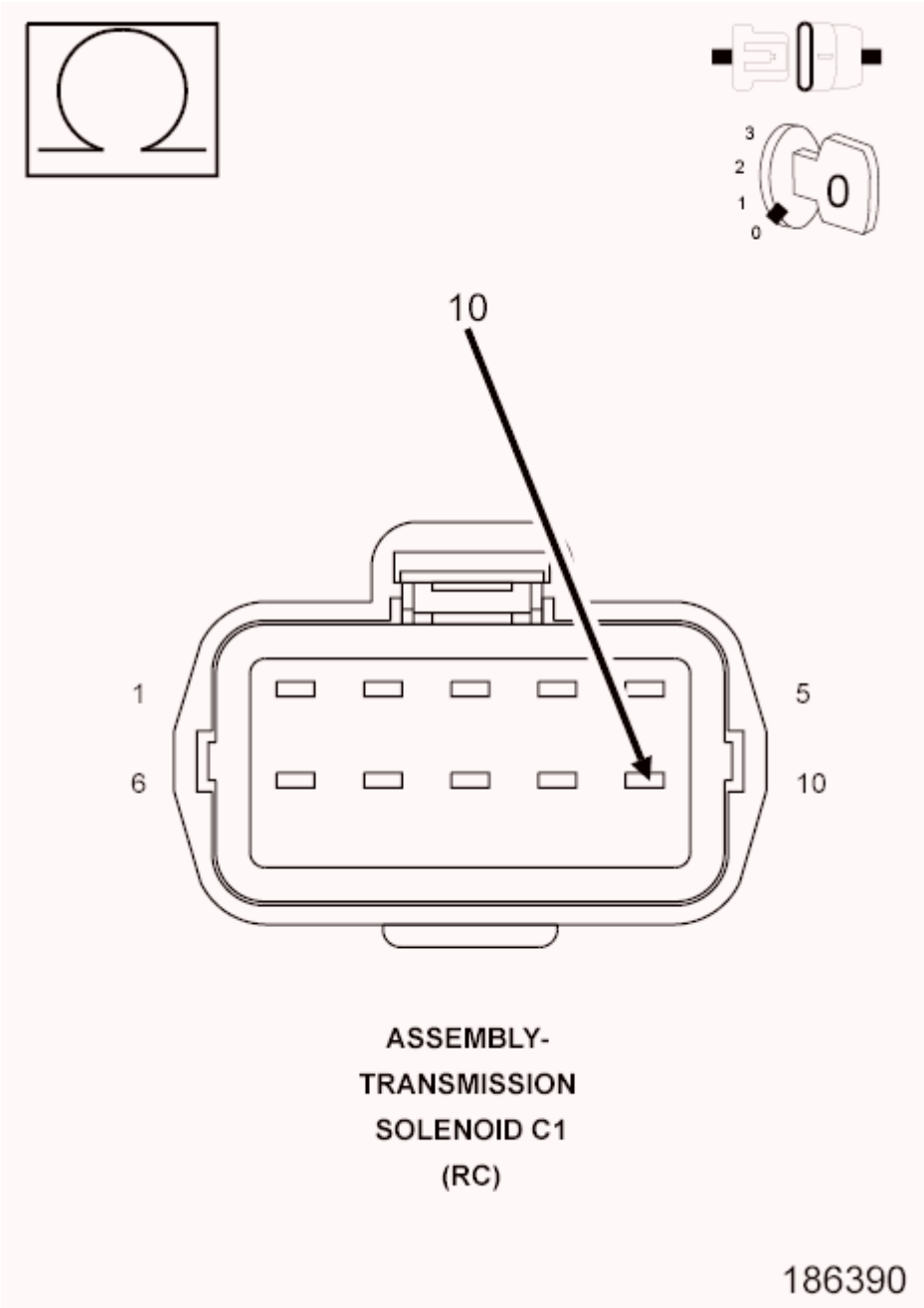

Fig. 74: Checking Linear Solenoid 1 Ground Circuit Short To Another Circuit
Courtesy of CHRYSLER GROUP, LLC

1. Turn the ignition off to the lock position.
2. Measure the resistance between the (T812) Linear Solenoid 1 Ground circuit and all other circuits in the Transmission Solenoid Assembly C1 harness connector.

   Is the resistance below 100k Ohms between the (T812) Linear Solenoid 1 Ground circuit and any other circuit in the Transmission Solenoid Assembly C1 harness connector?

   Yes

- Repair the (T812) Linear Solenoid 1 Ground circuit for a short to another circuit(s).
- Refer to **STANDARD PROCEDURE** and perform the AS68RC VERIFICATION TEST.

No

- Go To 10.

10. **CHECK THE LINEAR SOLENOID 1**

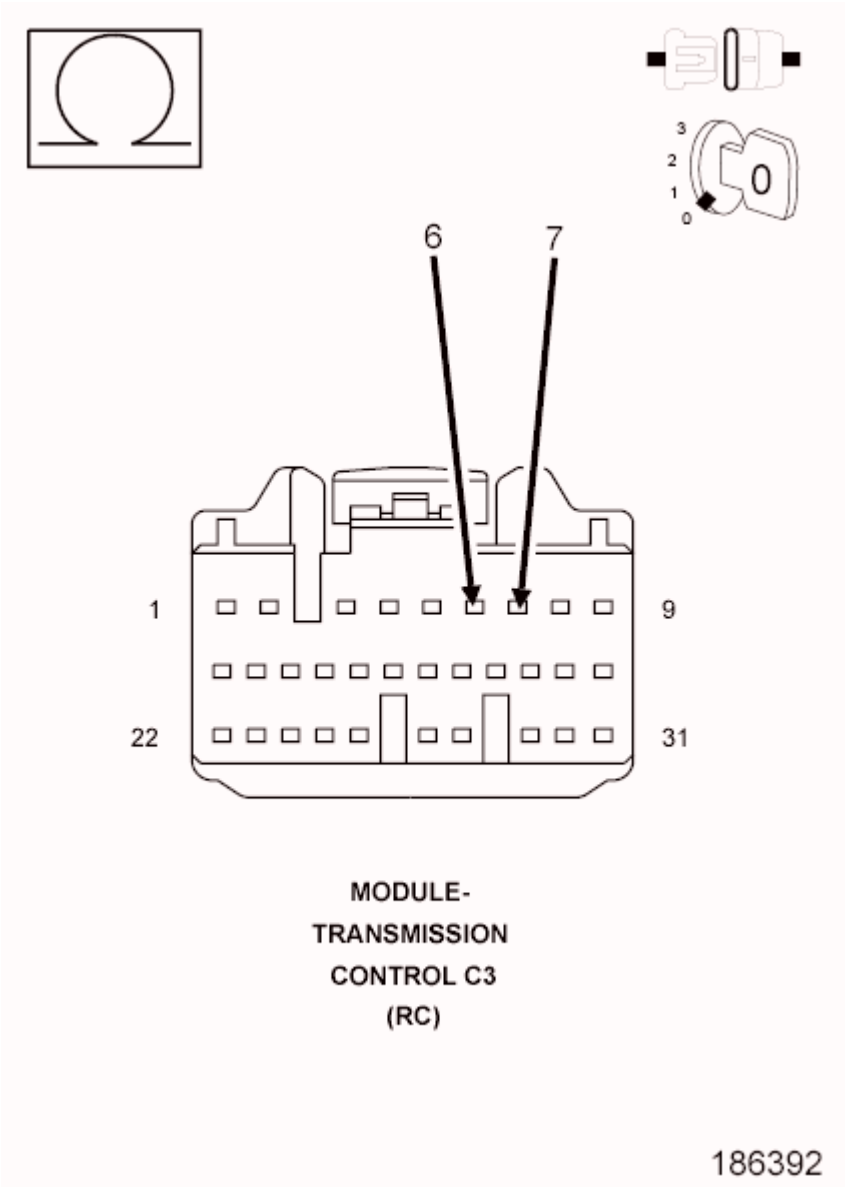

Fig. 75: Checking Linear Solenoid 1 Circuits
Courtesy of CHRYSLER GROUP, LLC

1. Turn the ignition off to the lock position.
2. Reconnect the Transmission Solenoid Assembly C1 Harness connector.

3. Measure the resistance between the (T813) Linear Solenoid 1 Control and the (T812) Linear Solenoid 1 Ground circuit on the appropriate terminals of the TCM C3 harness connector.

   Is the resistance of the Linear Solenoid 1 5.5 Ohms (± 0.5 of an Ohm)?

   Yes

   - Using the schematics as a guide, check the Transmission Control Module (TCM) pins, terminals, and connectors for corrosion, damage, or terminal push out. Pay particular attention to all power and ground circuits. If no problems are found, replace and program the TCM in accordance with the Service Information.
   - Refer to **STANDARD PROCEDURE** and perform the AS68RC VERIFICATION TEST.

   No

   - Replace the Linear Solenoid 1 in accordance with the Service Information.

11. **CHECK WIRING AND CONNECTORS**
    1. The conditions necessary to set the DTC are not present at this time.
    2. Using the schematics as a guide, inspect the wiring and connectors specific to this circuit.
    3. Wiggle the wires while checking for shorted and open circuits.
    4. Check for any Service Bulletins that may apply.

    Were there any problems found?

    Yes

    - Repair as necessary.
    - Refer to **STANDARD PROCEDURE** and perform the AS68RC VERIFICATION TEST.

    No

    - Test Complete.

P0751-SHIFT SOLENOID A PERFORMANCE

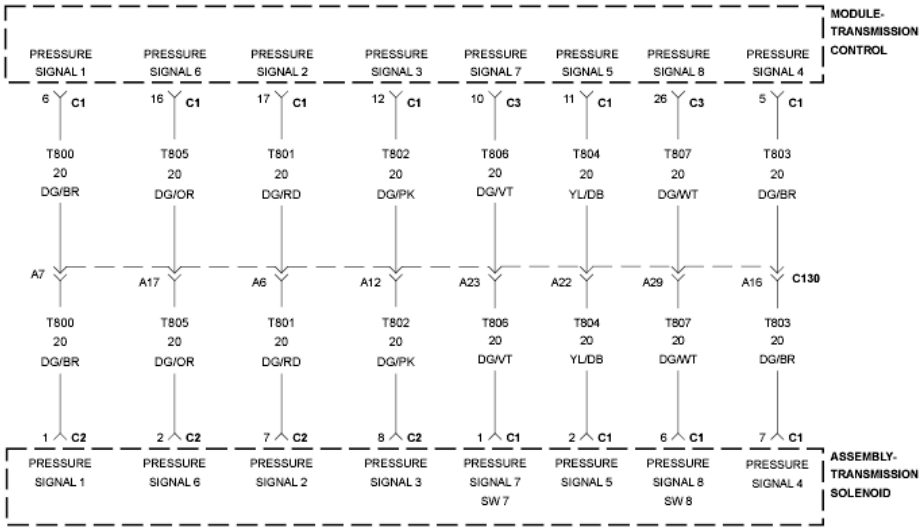

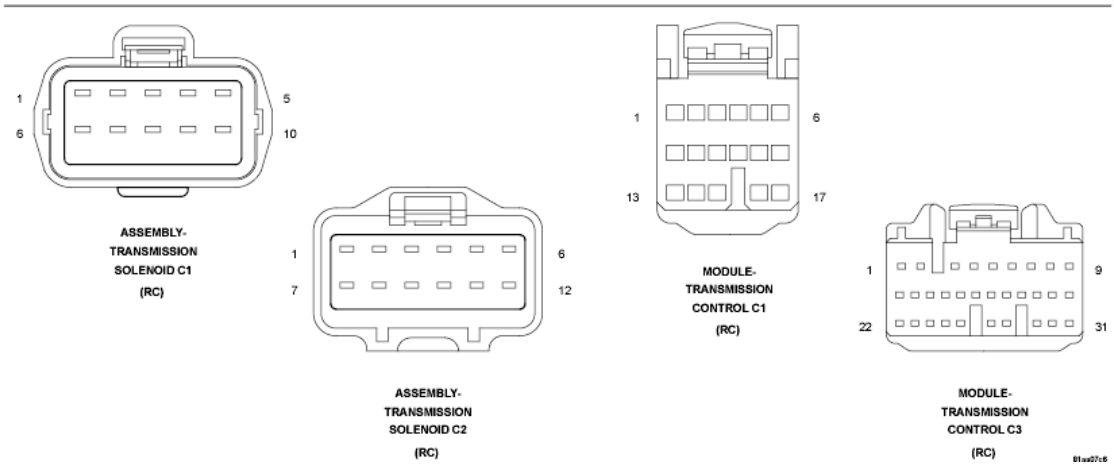

Fig. 76: Transmission Solenoid Assembly Wiring Diagram
Courtesy of CHRYSLER GROUP, LLC

For a complete wiring diagram, **refer to appropriate SYSTEM WIRING DIAGRAMS article** .

THEORY OF OPERATION

The Transmission Control Module (TCM) verifies the operation of the Shift (On/Off) Valve 1 by monitoring the Pressure Switch 3. If a fault is detected, the transmission will go into limp in mode, the Torque Converter Clutch (TCC) will be disabled, the limp in gear will vary based on the current gear and other conditions, and the MIL will be illuminated.

CONDITION ONE:

When Monitored:

- Ignition on, engine running.

Set Condition:

- Pressure Switch 3 is Closed for more than 1780 ms after the transition of the Shift (On/Off) Valve 1 from on to off.
- The electric fault of the Solenoid has not been detected after the above condition has been established within 10 seconds.

CONDITION TWO:

When Monitored:

- Ignition on, engine running.

Set Condition:

- Pressure Switch 3 is Open for more than 1400 ms after the transition of the Shift (On/Off) Valve 1 from off to on.
- The electric fault of the Solenoid has not been detected after the above condition has been established within 10 seconds.

CONDITION THREE:

When Monitored:

- Ignition on, engine running.
- Shift (On/Off) Valve 1 continuous operation is off.

Set Condition:

- Pressure Switch 3 is Closed for more than 450 ms.
- The electric fault of the Solenoid has not been detected after the above condition has been established within 10 seconds.

CONDITION FOUR:

When Monitored:

- Ignition on, engine running.
- Shift (On/Off) Valve 1 continuous operation is on.

Set Condition:

- Pressure Switch 3 is Open for more than 450 ms.
- The electric fault of the Solenoid has not been detected after the above condition has been established within 10 seconds.

POSSIBLE CAUSES

Possible Causes
PRESSURE SWITCH 3 SIGNAL CIRCUIT OPEN
PRESSURE SWITCH 3 SIGNAL CIRCUIT SHORT TO GROUND
PRESSURE SWITCH 3
SHIFT (ON/OFF) VALVE 1
INTERNAL WIRING
LOW TRANSMISSION FLUID LEVEL
INTERNAL TRANSMISSION
TRANSMISSION CONTROL MODULE (TCM)

Always perform the AS68RC Pre-Diagnostic Troubleshooting procedure before proceeding. Refer to STANDARD PROCEDURE.

DIAGNOSTIC TEST

1. **CHECK IF DTC IS CURRENT**
    1. Using the scan tool, read TCM DTCs.
    2. Record the Environmental Data and any DTCs.
    3. Clear DTCs.
    4. Using the recorded Environmental Data, along with the When Monitored and Set Conditions above, operate the vehicle in the conditions that set the DTC.
    5. Read TCM DTCs.

    Did the DTC reset?

    Yes

    - Go To 2.

    No

    - Go To 8.
2. **CHECK PRESSURE SWITCH 3 STATE**
    1. Ignition on, engine not running.
    2. With the scan tool, view the Pressure Switch 3 state.

Does the scan tool display the Pressure Switch 3 as "Closed"?

Yes

- Go To 3.

No

- Go To 5.

3. **CHECK PRESSURE SWITCH 3**
   1. Turn the ignition off to the lock position.
   2. Disconnect the Transmission Solenoid Assembly C2 harness connector

      NOTE: Check connectors - Clean/repair as necessary.

   3. Ignition on, engine not running.
   4. With the scan tool, view the Pressure Switch 3 state.

      Does the scan tool display the Pressure Switch 3 as "Closed"?

      Yes

      - Go To 4.

      No

      - Inspect the internal wiring harness and connectors for shorts, corrosion, damage, or terminal push out. If no problems found, replace the Pressure Switch 3 in accordance with the Service Information.
      - Refer to **STANDARD PROCEDURE** and perform the AS68RC VERIFICATION TEST.
4. **CHECK THE (T802) PRESSURE SWITCH 3 SIGNAL CIRCUIT FOR A SHORT TO GROUND**

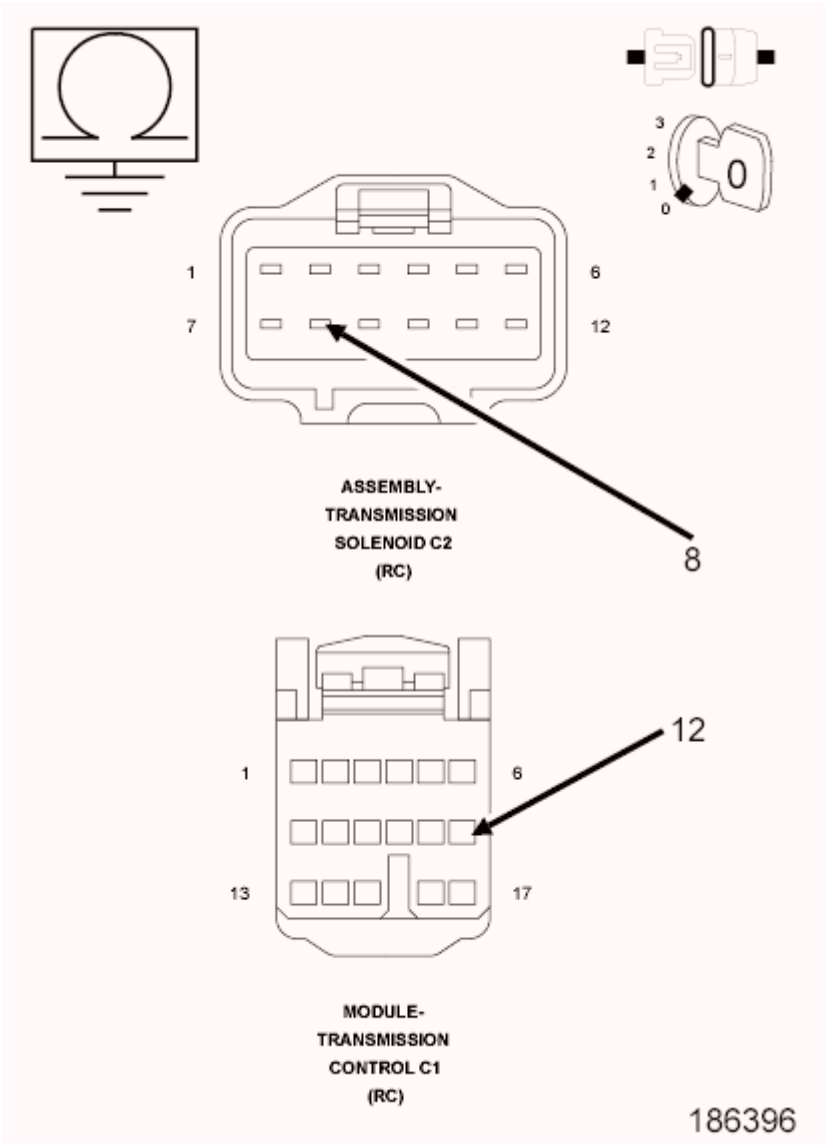

Fig. 77: Checking Pressure Switch 3 Signal Circuit For A Short To Ground
Courtesy of CHRYSLER GROUP, LLC

1. Turn the ignition off to the lock position.
2. Disconnect the TCM C1 harness connector.

NOTE: Check connectors - Clean/repair as necessary.

3. Measure the resistance of the (T802) Pressure Switch 3 signal circuit to ground.

   Is the resistance below 100k Ohms?

   Yes

   - Repair the (T802) Pressure Switch 3 signal circuit for a short to ground.

- Refer to **STANDARD PROCEDURE** and perform the AS68RC VERIFICATION TEST.

No

- Using the schematics as a guide, check the Transmission Control Module (TCM) pins, terminals, and connectors for corrosion, damage, or terminal push out. Pay particular attention to all power and ground circuits. If no problems are found, replace and program the TCM in accordance with the Service Information.
- Refer to **STANDARD PROCEDURE** and perform the AS68RC VERIFICATION TEST.

5. **CHECK PRESSURE SWITCH 3 SIGNAL CIRCUIT**
   1. Turn the ignition off to the lock position.
   2. Disconnect the Transmission Solenoid Assembly C2 harness connector

      NOTE: Check connectors - Clean/repair as necessary.

   3. Ignition on, engine not running.
   4. With the scan tool, monitor the Pressure Switch 3 state in the following step.
   5. Using a test light connected to ground, probe the (T802) Pressure Switch 3 signal circuit in the Transmission Solenoid Assembly C2 Harness connector.

      Does the scan tool display the Pressure Switch 3 as "Closed" when the (T802) Pressure Switch 3 signal circuit is grounded with the test light?

      Yes

      - Go To 7.

      No

      - Go To 6.

6. **CHECK THE (T802) PRESSURE SWITCH 3 SIGNAL CIRCUIT FOR AN OPEN**

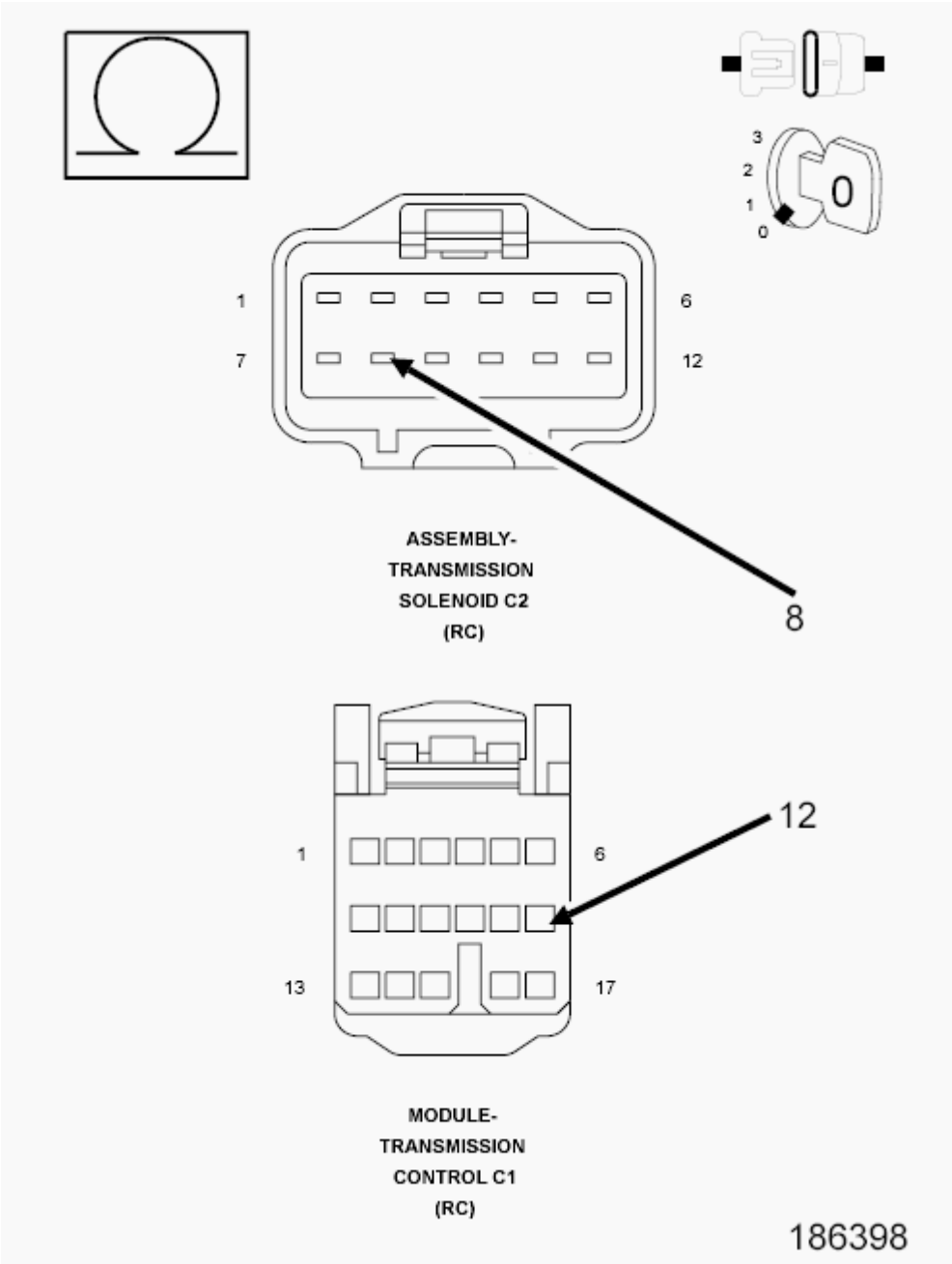

Fig. 78: Checking Pressure Switch 3 Signal Circuit For An Open
Courtesy of CHRYSLER GROUP, LLC

1. Turn the ignition off to the lock position.
2. Disconnect the TCM C1 harness connector.
3. Measure the resistance of the (T802) Pressure Switch 3 signal circuit between the Transmission Solenoid Assembly C2 harness connector and the TCM C1 harness connector.

   Is the resistance below 5.0 Ohms?

Yes

- Using the schematics as a guide, check the Transmission Control Module (TCM) pins, terminals, and connectors for shorts, corrosion, damage, or terminal push out. Pay particular attention to all power and ground circuits. If no problems are found, replace and program the TCM in accordance with the Service Information.

No

- Repair the (T802) Pressure Switch 3 signal circuit for an open.
- Refer to **STANDARD PROCEDURE** and perform the AS68RC VERIFICATION TEST.

7. **CHECK INTERNAL TRANSMISSION**
   1. Turn the ignition off to the lock position.
   2. Remove the transmission oil pan.
   3. Check the internal transmission harness, pins, terminals, and connectors for shorts, corrosion, damage, or terminal push out.
   4. Visually inspect the valve body for debris, damage or leaking hydraulic paths.
   5. Visually inspect for sticking or binding Control Valve(s).

   Were there any problems found?

   Yes

   - Repair as necessary.
   - Refer to **STANDARD PROCEDURE** and perform the AS68RC VERIFICATION TEST.

   No

   - Replace the Pressure Switch 3 in accordance with the Service Information.
   - Refer to **STANDARD PROCEDURE** and perform the AS68RC VERIFICATION TEST.

8. **CHECK WIRING AND CONNECTORS**
   1. The conditions necessary to set the DTC are not present at this time.
   2. Using the schematics as a guide, inspect the wiring and connectors specific to this circuit.
   3. Wiggle the wires while checking for shorted and open circuits.
   4. Check for any Service Bulletins that may apply.

   Were there any problems found?

   Yes

   - Repair as necessary.
   - Refer to **STANDARD PROCEDURE** and perform the AS68RC VERIFICATION TEST.

No

- Test Complete.

P0756-SHIFT SOLENOID B PERFORMANCE

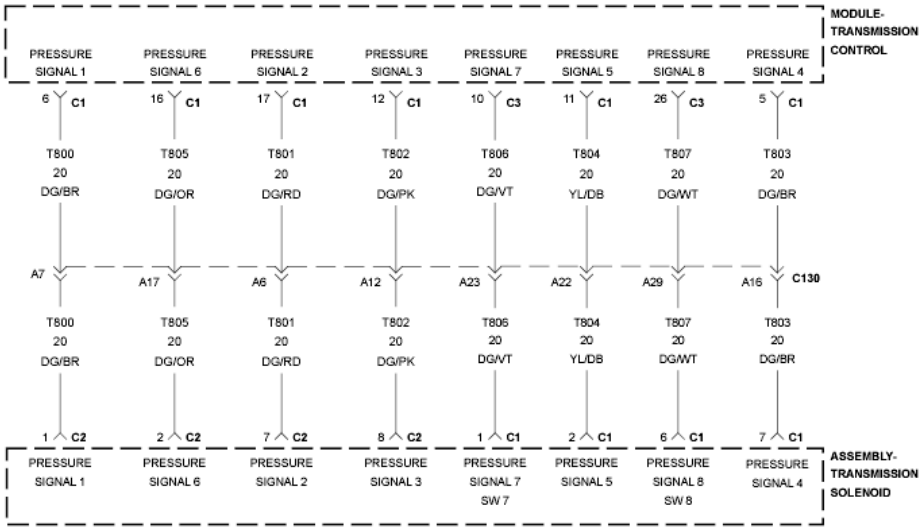

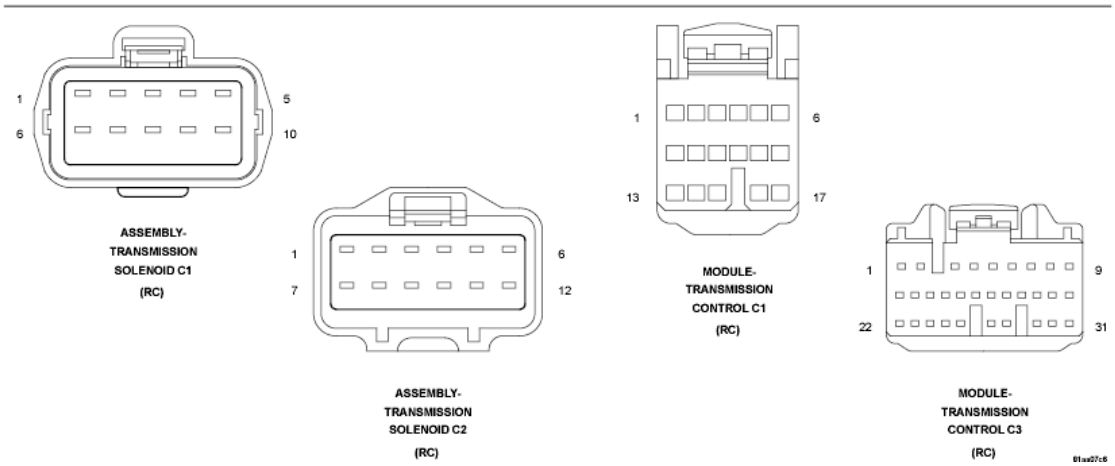

Fig. 79: Transmission Solenoid Assembly Wiring Diagram
Courtesy of CHRYSLER GROUP, LLC

For a complete wiring diagram, **refer to appropriate SYSTEM WIRING DIAGRAMS article** .

THEORY OF OPERATION

The Transmission Control Module (TCM) verifies the operation of the Shift (On/Off) Valve 2 by monitoring the Pressure Switch 4. If a fault is detected, the transmission will go into limp in mode, the Torque Converter Clutch (TCC) will be disabled, the limp in gear will vary based on the current gear and other conditions, and the MIL will be illuminated.

CONDITION ONE:

When Monitored:

- Ignition on, engine running.

Set Condition:

- Pressure Switch 4 is Closed for more than 1780 ms after the transition of the Shift (On/Off) Valve 2 from on to off.
- The electric fault of the Solenoid has not been detected after the above condition has been established within 10 seconds.

CONDITION TWO:

When Monitored:

- Ignition on, engine running.

Set Condition:

- Pressure Switch 4 is Open for more than 1400 ms after the transition of the Shift (On/Off) Valve 2 from off to on.
- The electric fault of the Solenoid has not been detected after the above condition has been established within 10 seconds.

CONDITION THREE:

When Monitored:

- Ignition on, engine running.
- Shift (On/Off) Valve 2 continuous operation is off.

Set Condition:

- Pressure Switch 4 is Closed for more than 450 ms.
- The electric fault of the Solenoid has not been detected after the above condition has been established within 10 seconds.

CONDITION FOUR:

When Monitored:

- Ignition on, engine running.
- Shift (On/Off) Valve 2 continuous operation is on.

Set Condition:

- Pressure Switch 4 is Open for more than 450 ms.
- The electric fault of the Solenoid has not been detected after the above condition has been established within 10 seconds.

POSSIBLE CAUSES

Possible Causes
PRESSURE SWITCH 4 SIGNAL CIRCUIT OPEN
PRESSURE SWITCH 4 SIGNAL CIRCUIT SHORT TO GROUND
PRESSURE SWITCH 4
SHIFT (ON/OFF) VALVE 2
INTERNAL WIRING
INTERNAL TRANSMISSION
TRANSMISSION CONTROL MODULE (TCM)

Always perform the AS68RC Pre-Diagnostic Troubleshooting procedure before proceeding. Refer to STANDARD PROCEDURE.

DIAGNOSTIC TEST

1. **CHECK IF DTC IS CURRENT**
    1. Using the scan tool, read TCM DTCs.
    2. Record the Environmental Data and any DTCs.
    3. Clear DTCs.
    4. Using the recorded Environmental Data, along with the When Monitored and Set Conditions above, operate the vehicle in the conditions that set the DTC.
    5. Read TCM DTCs.

    Did the DTC reset?

    Yes

    - Go To 2.

    No

    - Go To 8.
2. **CHECK PRESSURE SWITCH 4 STATE**
    1. Ignition on, engine not running.

2. With the scan tool, view the Pressure Switch 4 state.

   Does the scan tool display the Pressure Switch 4 as "Closed"?

   Yes

   - Go To 3.

   No

   - Go To 5.

3. **CHECK PRESSURE SWITCH 4**
   1. Turn the ignition off to the lock position.
   2. Disconnect the Transmission Solenoid Assembly C2 harness connector

      NOTE: Check connectors - Clean/repair as necessary.

   3. Ignition on, engine not running.
   4. With the scan tool, view the Pressure Switch 4 state.

      Does the scan tool display the Pressure Switch 4 as "Closed"?

      Yes

      - Go To 4.

      No

      - Inspect the internal wiring harness and connectors for shorts, corrosion, damage, or terminal push out. If no problems found, replace the Pressure Switch 4 in accordance with the Service Information.
      - Refer to **STANDARD PROCEDURE** and perform the AS68RC VERIFICATION TEST.

4. **CHECK THE (T803) PRESSURE SWITCH 4 SIGNAL CIRCUIT FOR A SHORT TO GROUND**

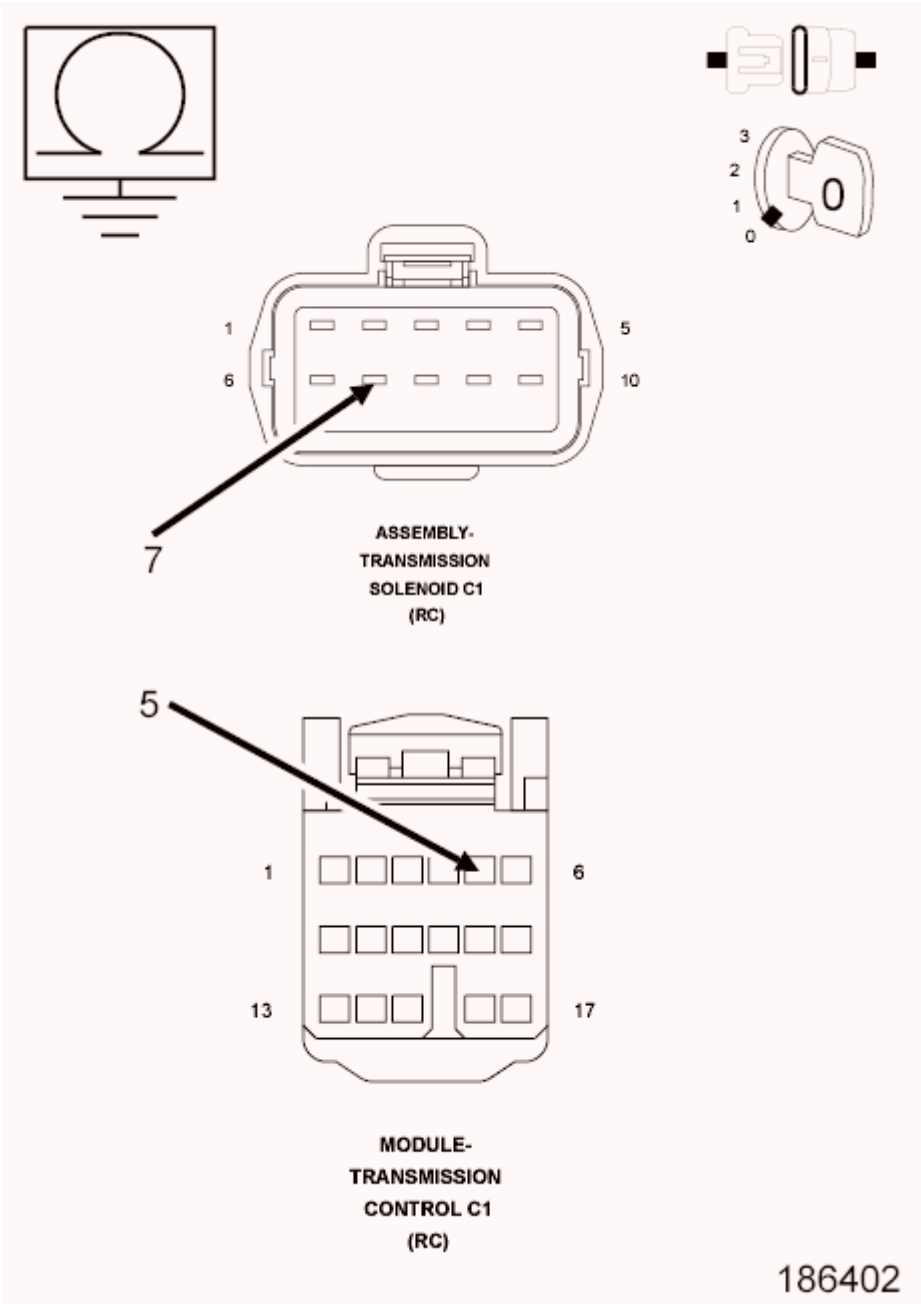

Fig. 80: Checking Pressure Switch 4 Signal Circuit For A Short To Ground
Courtesy of CHRYSLER GROUP, LLC

1. Turn the ignition off to the lock position.
2. Disconnect the TCM C1 harness connector.

NOTE: Check connectors - Clean/repair as necessary.

3. Measure the resistance of the (T803) Pressure Switch 4 signal circuit to ground.

   Is the resistance below 100k ohms?

Yes

- Repair the (T803) Pressure Switch 4 signal circuit for a short to ground.
- Refer to **STANDARD PROCEDURE** and perform the AS68RC VERIFICATION TEST.

No

- Using the schematics as a guide, check the Transmission Control Module (TCM) pins, terminals, and connectors for corrosion, damage, or terminal push out. Pay particular attention to all power and ground circuits. If no problems are found, replace and program the TCM in accordance with the Service Information.
- Refer to **STANDARD PROCEDURE** and perform the AS68RC VERIFICATION TEST.

5. **CHECK PRESSURE SWITCH 4 SIGNAL CIRCUIT**
   1. Turn the ignition off to the lock position.
   2. Disconnect the Transmission Solenoid Assembly C2 harness connector

      NOTE: Check connectors - Clean/repair as necessary.

   3. Ignition on, engine not running.
   4. With the scan tool, monitor the Pressure Switch 4 state in the following step.
   5. Using a test light connected to ground, probe the (T803) Pressure Switch 4 signal circuit in the Transmission Solenoid Assembly C2 Harness connector.

      Does the scan tool display the Pressure Switch 4 as "Closed" when the (T803) Pressure Switch 4 signal circuit is grounded with the test light?

      Yes

      - Go To 7.

      No

      - Go To 6.

6. **CHECK THE (T803) PRESSURE SWITCH 4 SIGNAL CIRCUIT FOR AN OPEN**

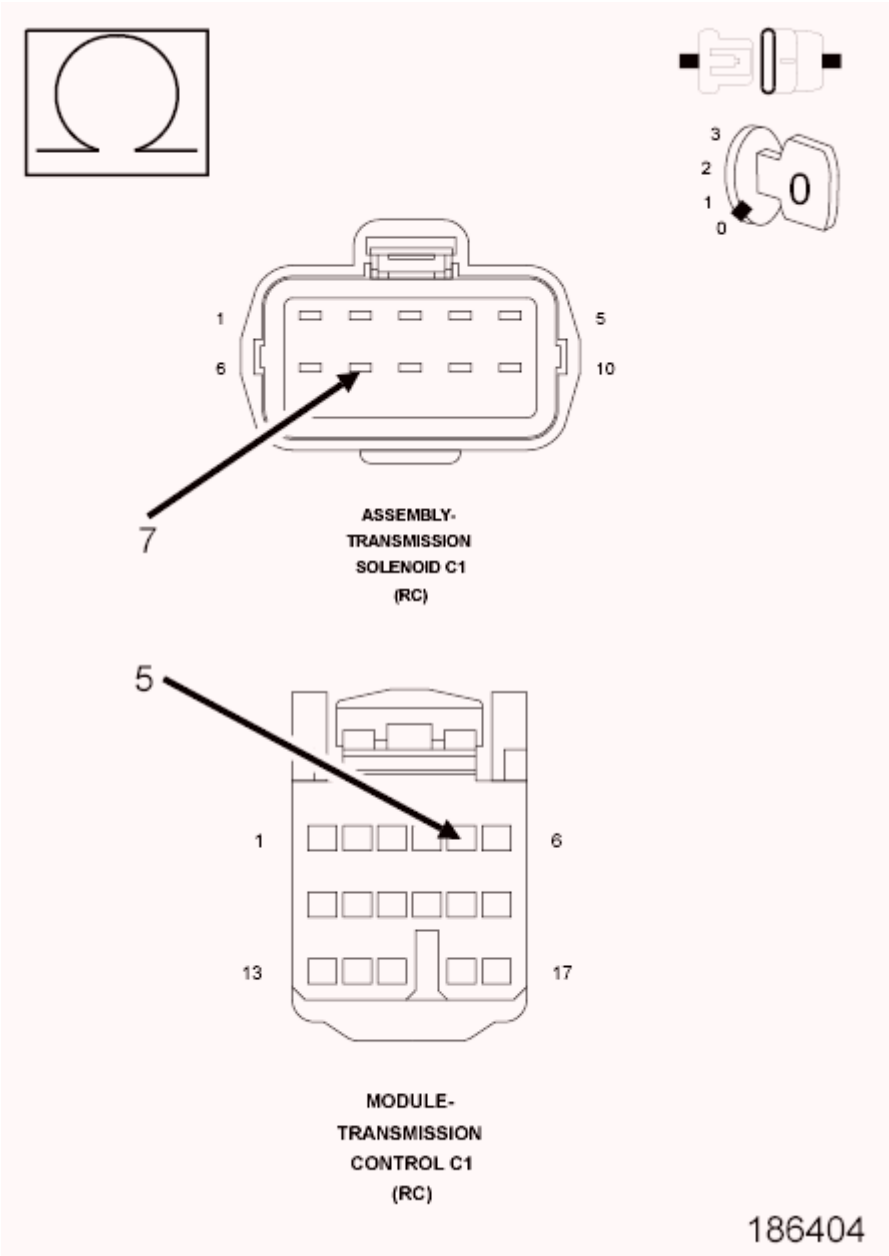

Fig. 81: Checking Pressure Switch 4 Signal Circuit For An Open
Courtesy of CHRYSLER GROUP, LLC

1. Turn the ignition off to the lock position.
2. Disconnect the TCM C1 harness connector.
3. Measure the resistance of the (T803) Pressure Switch 4 signal circuit between the Transmission Solenoid Assembly C2 harness connector and the TCM C1 harness connector.

   Is the resistance below 5.0 ohms?

   Yes

- Using the schematics as a guide, check the Transmission Control Module (TCM) pins, terminals, and connectors for shorts, corrosion, damage, or terminal push out. Pay particular attention to all power and ground circuits. If no problems are found, replace and program the TCM in accordance with the Service Information.

No

- Repair the (T803) Pressure Switch 4 signal circuit for an open.
- Refer to **STANDARD PROCEDURE** and perform the AS68RC VERIFICATION TEST.

7. **CHECK INTERNAL TRANSMISSION**
   1. Turn the ignition off to the lock position.
   2. Remove the transmission oil pan.
   3. Check the internal transmission harness, pins, terminals, and connectors for shorts, corrosion, damage, or terminal push out.
   4. Visually inspect the valve body for debris, damage or leaking hydraulic paths.
   5. Visually inspect for sticking or binding Control Valve(s).

   Were there any problems found?

   Yes

   - Repair as necessary.
   - Refer to **STANDARD PROCEDURE** and perform the AS68RC VERIFICATION TEST.

   No

   - Replace the Pressure Switch 4 in accordance with the Service Information.
   - Refer to **STANDARD PROCEDURE** and perform the AS68RC VERIFICATION TEST.

8. **CHECK WIRING AND CONNECTORS**
   1. The conditions necessary to set the DTC are not present at this time.
   2. Using the schematics as a guide, inspect the wiring and connectors specific to this circuit.
   3. Wiggle the wires while checking for shorted and open circuits.
   4. Check for any Service Bulletins that may apply.

   Were there any problems found?

   Yes

   - Repair as necessary.
   - Refer to **STANDARD PROCEDURE** and perform the AS68RC VERIFICATION TEST.

   No

- Test Complete.

P0761-SHIFT SOLENOID C PERFORMANCE

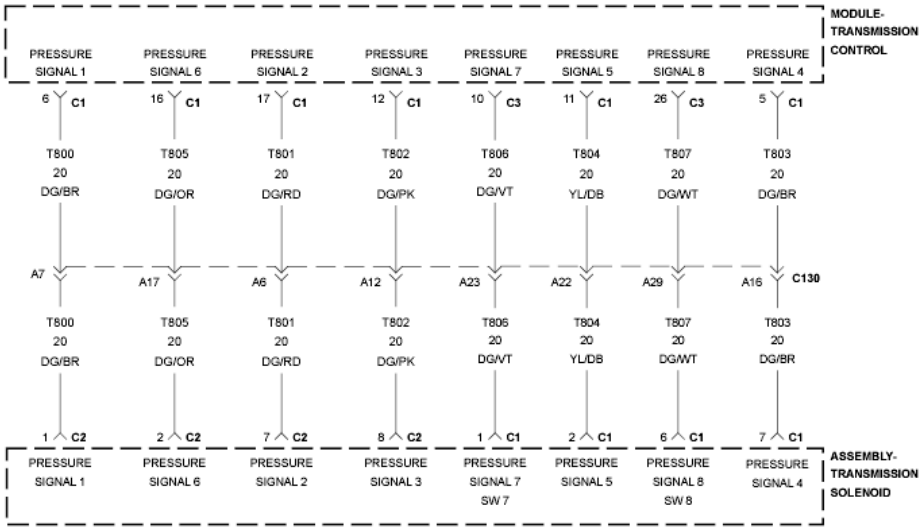

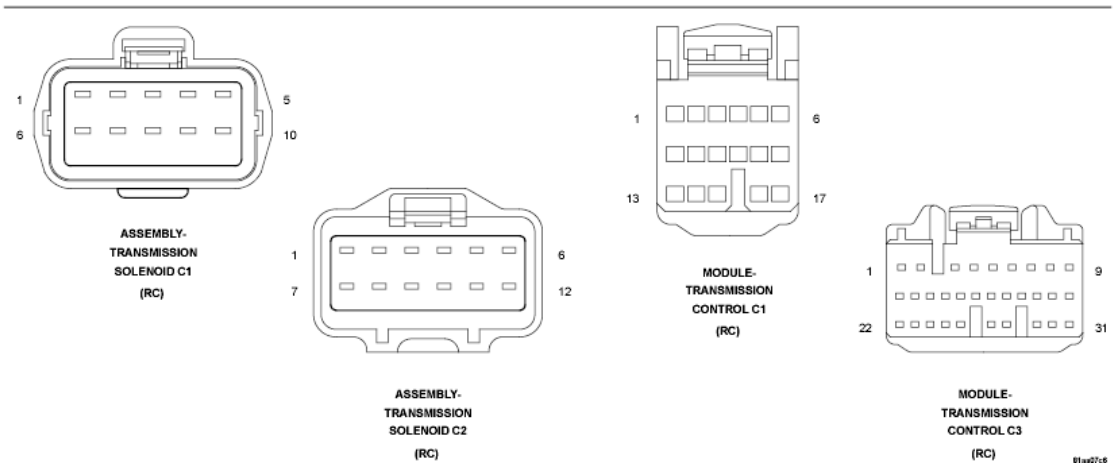

Fig. 82: Transmission Solenoid Assembly Wiring Diagram
Courtesy of CHRYSLER GROUP, LLC

For a complete wiring diagram, **refer to appropriate SYSTEM WIRING DIAGRAMS article** .

THEORY OF OPERATION

The Transmission Control Module (TCM) verifies the operation of the Shift (On/Off) Valve 3 by monitoring

the Pressure Switch 5. If a fault is detected, the transmission will go into limp in mode, the Torque Converter Clutch (TCC) will be disabled, the limp in gear will vary based on the current gear and other conditions, and the MIL will be illuminated.

CONDITION ONE:

When Monitored:

- Ignition on, engine running.

Set Condition:

- Pressure Switch 5 is Closed for more than 1780 ms after the transition of the Shift (On/Off) Valve 3 from on to off.
- The electric fault of the Solenoid has not been detected after the above condition has been established within 10 seconds.

CONDITION TWO:

When Monitored:

- Ignition on, engine running.

Set Condition:

- Pressure Switch 5 is Open for more than 1400 ms after the transition of the Shift (On/Off) Valve 3 from off to on.
- The electric fault of the Solenoid has not been detected after the above condition has been established within 10 seconds.

CONDITION THREE:

When Monitored:

- Ignition on, engine running.
- Shift (On/Off) Valve 3 continuous operation is off.

Set Condition:

- Pressure Switch 5 is Closed for more than 450 ms.
- The electric fault of the Solenoid has not been detected after the above condition has been established within 10 seconds.

CONDITION FOUR:

When Monitored:

- Ignition on, engine running.
- Shift (On/Off) Valve 3 continuous operation is on.

Set Condition:

- Pressure Switch 5 is Open for more than 450 ms.
- The electric fault of the Solenoid has not been detected after the above condition has been established within 10 seconds.

POSSIBLE CAUSES

Possible Causes
PRESSURE SWITCH 5 SIGNAL CIRCUIT OPEN
PRESSURE SWITCH 5 SIGNAL CIRCUIT SHORT TO GROUND
PRESSURE SWITCH 5
SHIFT (ON/OFF) VALVE 3
INTERNAL WIRING
INTERNAL TRANSMISSION
TRANSMISSION CONTROL MODULE (TCM)

Always perform the AS68RC Pre-Diagnostic Troubleshooting procedure before proceeding. Refer to STANDARD PROCEDURE.

DIAGNOSTIC TEST

1. **CHECK IF DTC IS CURRENT**
    1. Using the scan tool, read TCM DTCs.
    2. Record the Environmental Data and any DTCs.
    3. Clear DTCs.
    4. Using the recorded Environmental Data, along with the When Monitored and Set Conditions above, operate the vehicle in the conditions that set the DTC.
    5. Read TCM DTCs.

    Did the DTC reset?

    Yes

    - Go To 2.

    No

    - Go To 8.
2. **CHECK PRESSURE SWITCH 5 STATE**
    1. Ignition on, engine not running.

2. With the scan tool, view the Pressure Switch 5 state.

   Does the scan tool display the Pressure Switch 5 as "Closed"?

   Yes

   - Go To 3.

   No

   - Go To 5.

3. **CHECK PRESSURE SWITCH 5**
   1. Turn the ignition off to the lock position.
   2. Disconnect the Transmission Solenoid Assembly C1 harness connector

      NOTE: Check connectors - Clean/repair as necessary.

   3. Ignition on, engine not running.
   4. With the scan tool, view the Pressure Switch 5 state.

      Does the scan tool display the Pressure Switch 5 as "Closed"?

      Yes

      - Go To 4.

      No

      - Inspect the internal wiring harness and connectors for shorts, corrosion, damage, or terminal push out. If no problems found, replace the Pressure Switch 5 in accordance with the Service Information.
      - Refer to **STANDARD PROCEDURE** and perform the AS68RC VERIFICATION TEST.

4. **CHECK THE (T804) PRESSURE SWITCH 5 SIGNAL CIRCUIT FOR A SHORT TO GROUND**

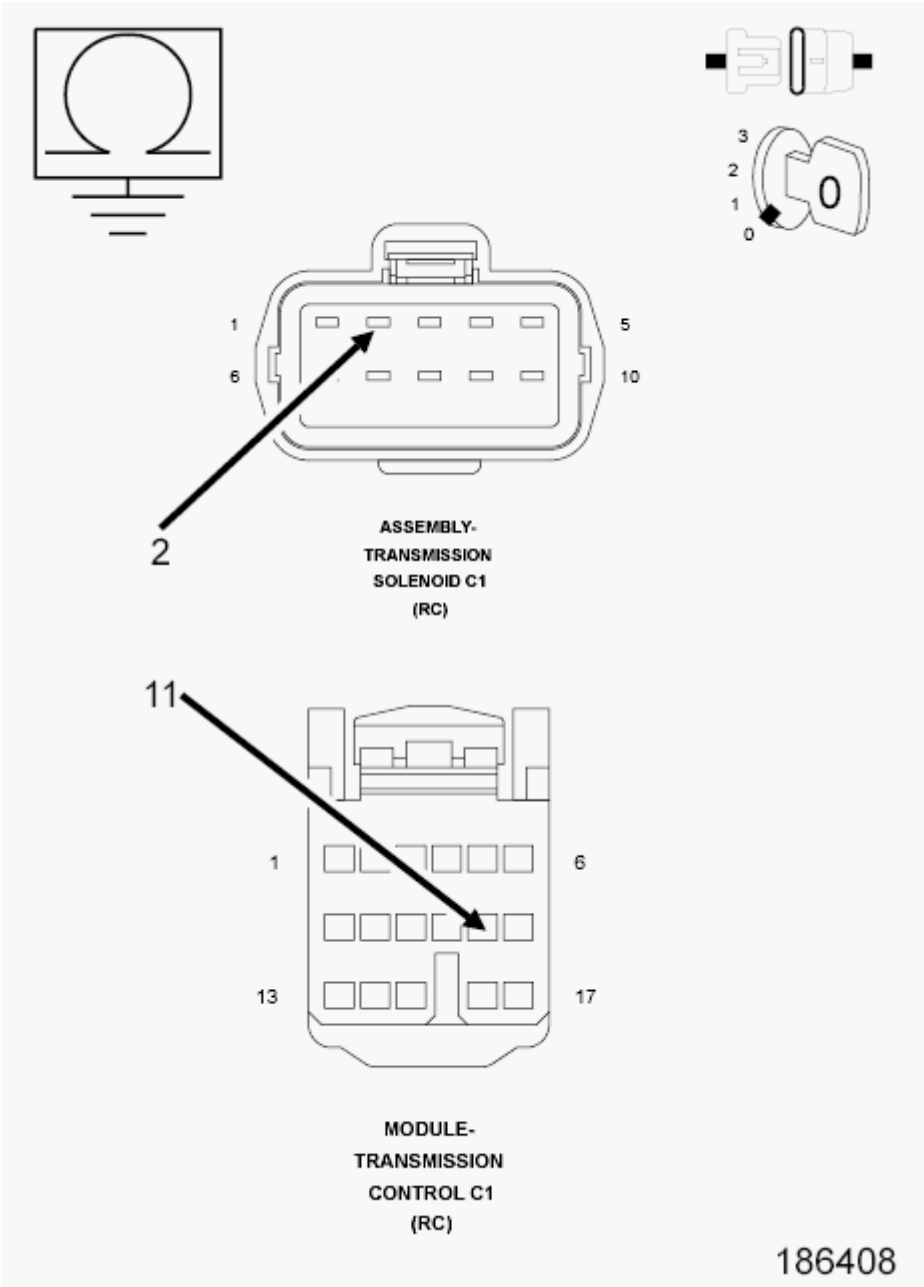

Fig. 83: Checking Pressure Switch 5 Signal Circuit For A Short To Ground
Courtesy of CHRYSLER GROUP, LLC

1. Turn the ignition off to the lock position.
2. Disconnect the TCM C1 harness connector.

NOTE: Check connectors - Clean/repair as necessary.

3. Measure the resistance of the (T804) Pressure Switch 5 signal circuit to ground.

   Is the resistance below 100k Ohms?

Yes

- Repair the (T804) Pressure Switch 5 signal circuit for a short to ground.
- Refer to **STANDARD PROCEDURE** and perform the AS68RC VERIFICATION TEST.

No

- Using the schematics as a guide, check the Transmission Control Module (TCM) pins, terminals, and connectors for corrosion, damage, or terminal push out. Pay particular attention to all power and ground circuits. If no problems are found, replace and program the TCM in accordance with the Service Information.
- Refer to **STANDARD PROCEDURE** and perform the AS68RC VERIFICATION TEST.

5. **CHECK PRESSURE SWITCH 5 SIGNAL CIRCUIT**
   1. Turn the ignition off to the lock position.
   2. Disconnect the Transmission Solenoid Assembly C1 harness connector

      NOTE: Check connectors - Clean/repair as necessary.

   3. Ignition on, engine not running.
   4. With the scan tool, monitor the Pressure Switch 5 state in the following step.
   5. Using a test light connected to ground, probe the (T804) Pressure Switch 5 signal circuit in the Transmission Solenoid Assembly C1 Harness connector.

      Does the scan tool display the Pressure Switch 5 as "Closed" when the (T804) Pressure Switch 5 signal circuit is grounded with the test light?

      Yes

      - Go To 7.

      No

      - Go To 6.

6. **CHECK THE (T804) PRESSURE SWITCH 5 SIGNAL CIRCUIT FOR AN OPEN**

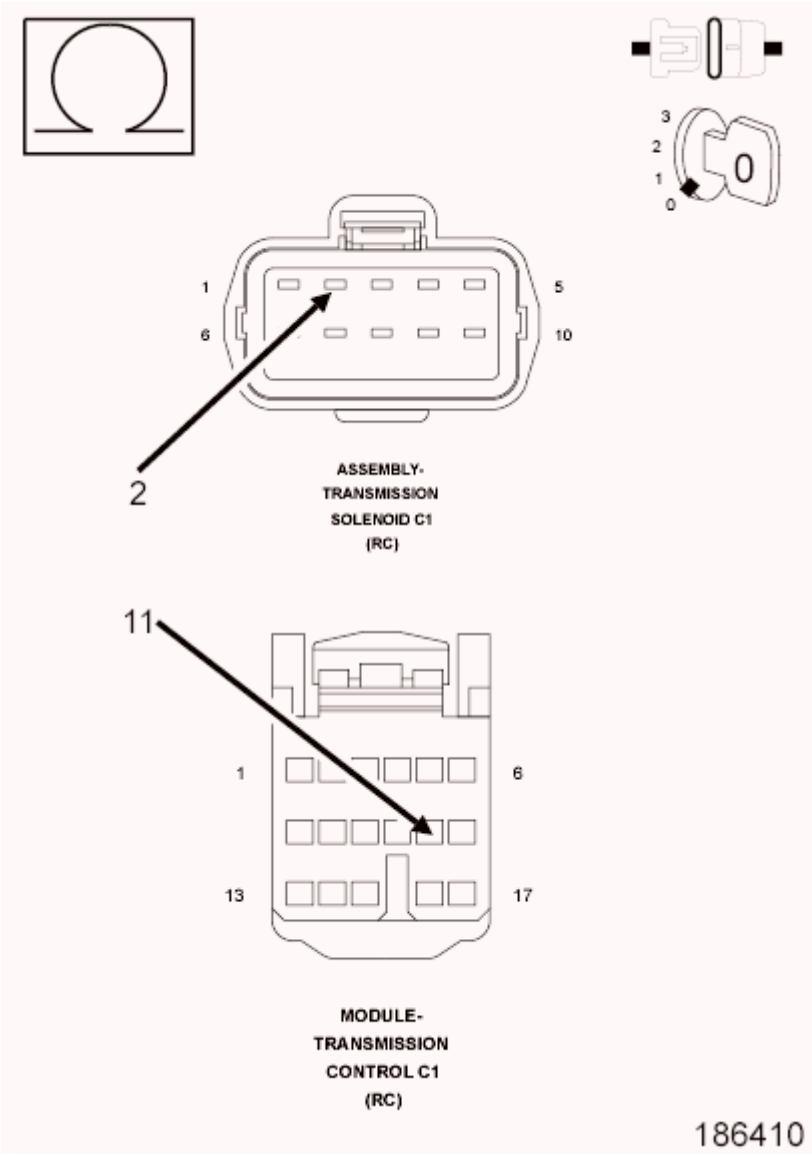

Fig. 84: Checking Pressure Switch 5 Signal Circuit For An Open
Courtesy of CHRYSLER GROUP, LLC

1. Turn the ignition off to the lock position.
2. Disconnect the TCM C1 harness connector.
3. Measure the resistance of the (T804) Pressure Switch 5 signal circuit between the Transmission Solenoid Assembly C1 harness connector and the TCM C1 harness connector.

   Is the resistance below 5.0 Ohms?

   Yes

   - Using the schematics as a guide, check the Transmission Control Module (TCM) pins, terminals, and connectors for shorts, corrosion, damage, or terminal push out. Pay particular attention to all power and ground circuits. If no problems are found, replace and program the

TCM in accordance with the Service Information.

- Refer to **STANDARD PROCEDURE** and perform the AS68RC VERIFICATION TEST.

No

- Repair the (T804) Pressure Switch 5 signal circuit for an open.
- Refer to **STANDARD PROCEDURE** and perform the AS68RC VERIFICATION TEST.

7. **CHECK INTERNAL TRANSMISSION**
   1. Turn the ignition off to the lock position.
   2. Remove the transmission oil pan.
   3. Check the internal transmission harness, pins, terminals, and connectors for shorts, corrosion, damage, or terminal push out.
   4. Visually inspect the valve body for debris, damage or leaking hydraulic paths.
   5. Visually inspect for sticking or binding Control Valve(s).

   Were there any problems found?

   Yes

   - Repair as necessary.
   - Refer to **STANDARD PROCEDURE** and perform the AS68RC VERIFICATION TEST.

   No

   - Replace the Pressure Switch 5 in accordance with the Service Information.
   - Refer to **STANDARD PROCEDURE** and perform the AS68RC VERIFICATION TEST.

8. **CHECK WIRING AND CONNECTORS**
   1. The conditions necessary to set the DTC are not present at this time.
   2. Using the schematics as a guide, inspect the wiring and connectors specific to this circuit.
   3. Wiggle the wires while checking for shorted and open circuits.
   4. Check for any Service Bulletins that may apply.

   Were there any problems found?

   Yes

   - Repair as necessary.
   - Refer to **STANDARD PROCEDURE** and perform the AS68RC VERIFICATION TEST.

   No

   - Test Complete.

P0766-SHIFT SOLENOID D PERFORMANCE

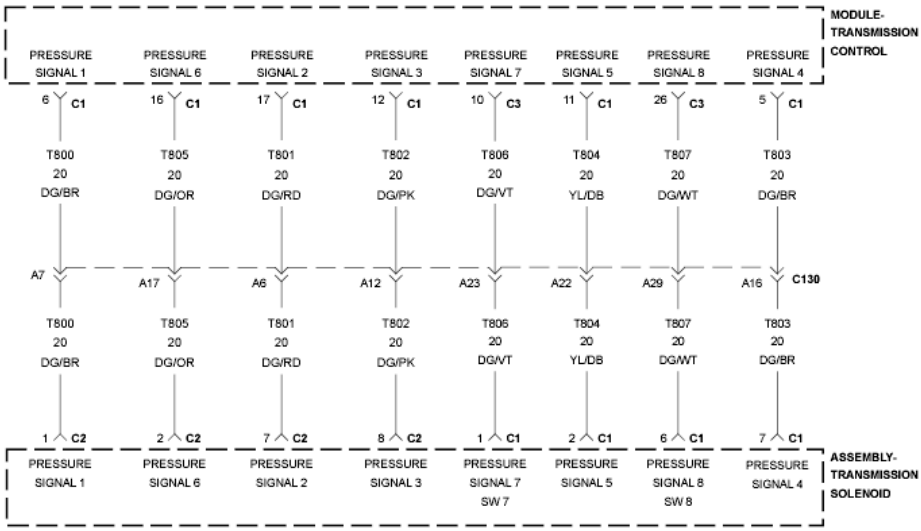

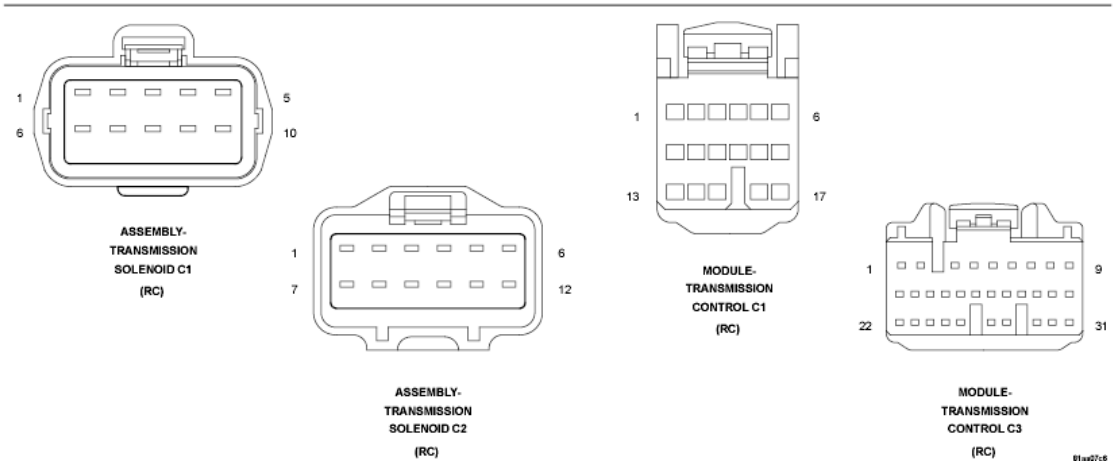

Fig. 85: Transmission Solenoid Assembly Wiring Diagram
Courtesy of CHRYSLER GROUP, LLC

For a complete wiring diagram, **refer to appropriate SYSTEM WIRING DIAGRAMS article** .

THEORY OF OPERATION

The Transmission Control Module (TCM) verifies the operation of the Shift (On/Off) Valve 4 by monitoring the Pressure Switch 6. If a fault is detected, the transmission will go into limp in mode, the Torque Converter Clutch (TCC) will be disabled, the limp in gear will vary based on the current gear and other conditions, and the

MIL will be illuminated.

CONDITION ONE:

When Monitored:

- Ignition on, engine running.

Set Condition:

- Pressure Switch 6 is Closed for more than 1780 ms after the transition of the Shift (On/Off) Valve 4 from on to off.
- The electric fault of the Solenoid has not been detected after the above condition has been established within 10 seconds.

CONDITION TWO:

When Monitored:

- Ignition on, engine running.

Set Condition:

- Pressure Switch 6 is Open for more than 1400 ms after the transition of the Shift (On/Off) Valve 4 from off to on.
- The electric fault of the Solenoid has not been detected after the above condition has been established within 10 seconds.

CONDITION THREE:

When Monitored:

- Ignition on, engine running.
- Shift (On/Off) Valve 4 continuous operation is off.

Set Condition:

- Pressure Switch 6 is Closed for more than 450 ms.
- The electric fault of the Solenoid has not been detected after the above condition has been established within 10 seconds.

CONDITION FOUR:

When Monitored:

- Ignition on, engine running.

- Shift (On/Off) Valve 4 continuous operation is on.

Set Condition:

- Pressure Switch 6 is Open for more than 450 ms.
- The electric fault of the Solenoid has not been detected after the above condition has been established within 10 seconds.

POSSIBLE CAUSES

Possible Causes
PRESSURE SWITCH 6 SIGNAL CIRCUIT OPEN
PRESSURE SWITCH 6 SIGNAL CIRCUIT SHORT TO GROUND
PRESSURE SWITCH 6
SHIFT (ON/OFF) VALVE 4
INTERNAL WIRING
INTERNAL TRANSMISSION
TRANSMISSION CONTROL MODULE (TCM)

Always perform the AS68RC Pre-Diagnostic Troubleshooting procedure before proceeding. Refer to STANDARD PROCEDURE.

DIAGNOSTIC TEST

1. **CHECK IF DTC IS CURRENT**
    1. Using the scan tool, read TCM DTCs.
    2. Record the Environmental Data and any DTCs.
    3. Clear DTCs.
    4. Using the recorded Environmental Data, along with the When Monitored and Set Conditions above, operate the vehicle in the conditions that set the DTC.
    5. Read TCM DTCs.

    Did the DTC reset?

    Yes

    - Go To 2.

    No

    - Go To 8.
2. **CHECK PRESSURE SWITCH 6 STATE**
    1. Ignition on, engine not running.
    2. With the scan tool, view the Pressure Switch 6 state.

Does the scan tool display the Pressure Switch 6 as "Closed"?

Yes

- Go To 3.

No

- Go To 5.

3. **CHECK PRESSURE SWITCH 6**
   1. Turn the ignition off to the lock position.
   2. Disconnect the Transmission Solenoid Assembly C2 harness connector

      NOTE: Check connectors - Clean/repair as necessary.

   3. Ignition on, engine not running.
   4. With the scan tool, view the Pressure Switch 6 state.

      Does the scan tool display the Pressure Switch 6 as "Closed"?

      Yes

      - Go To 4.

      No

      - Inspect the internal wiring harness and connectors for shorts, corrosion, damage, or terminal push out. If no problems found, replace the Pressure Switch 6 in accordance with the Service Information.
      - Refer to **STANDARD PROCEDURE** and perform the AS68RC VERIFICATION TEST.
4. **CHECK THE (T805) PRESSURE SWITCH 6 SIGNAL CIRCUIT FOR A SHORT TO GROUND**

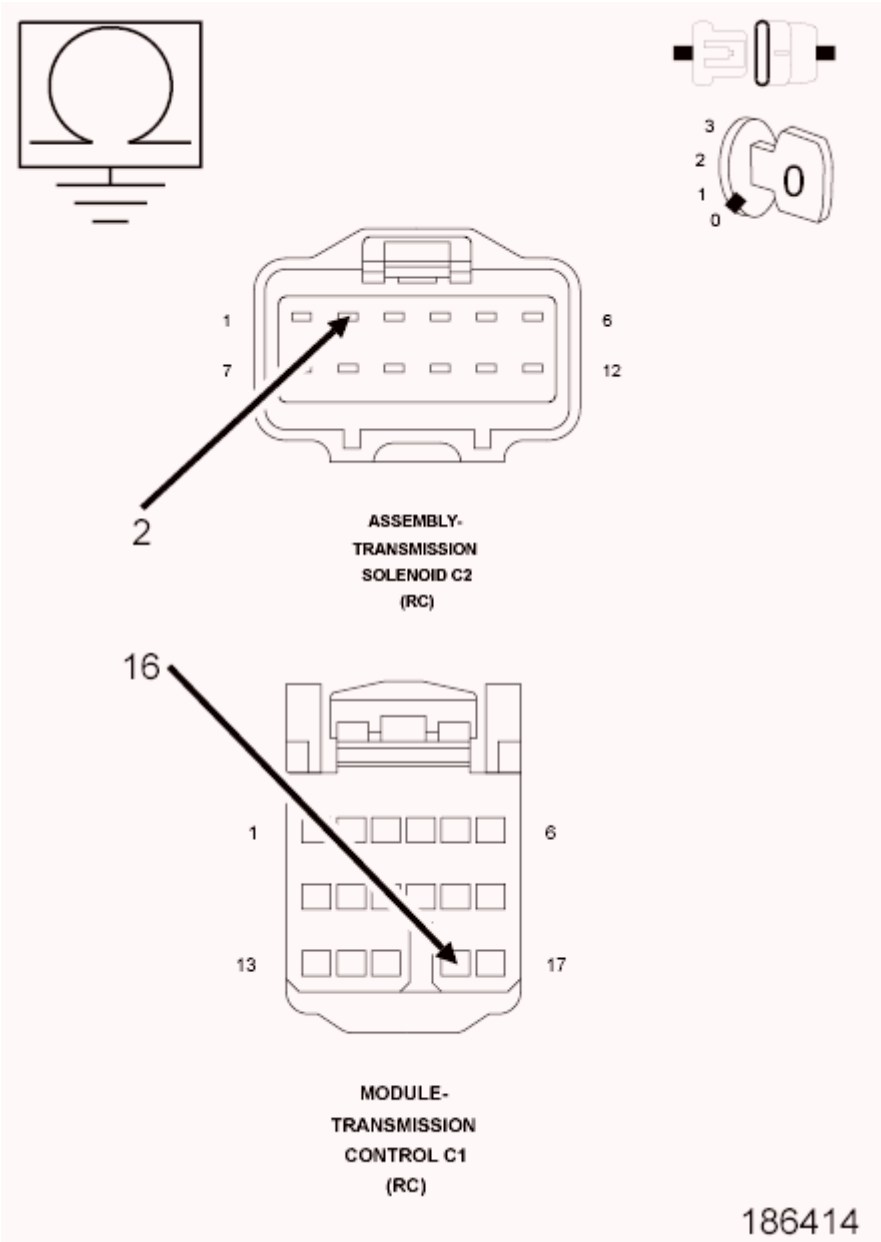

Fig. 86: Checking Pressure Switch 6 Signal Circuit For A Short To Ground
Courtesy of CHRYSLER GROUP, LLC

1. Turn the ignition off to the lock position.
2. Disconnect the TCM C1 harness connector.

NOTE: Check connectors - Clean/repair as necessary.

3. Measure the resistance of the (T805) Pressure Switch 6 signal circuit to ground.

   Is the resistance below 100k Ohms?

Yes

- Repair the (T805) Pressure Switch 6 signal circuit for a short to ground.
- Refer to **STANDARD PROCEDURE** and perform the AS68RC VERIFICATION TEST.

No

- Using the schematics as a guide, check the Transmission Control Module (TCM) pins, terminals, and connectors for corrosion, damage, or terminal push out. Pay particular attention to all power and ground circuits. If no problems are found, replace and program the TCM in accordance with the Service Information.
- Refer to **STANDARD PROCEDURE** and perform the AS68RC VERIFICATION TEST.

5. **CHECK PRESSURE SWITCH 6 SIGNAL CIRCUIT**
   1. Turn the ignition off to the lock position.
   2. Disconnect the Transmission Solenoid Assembly C2 harness connector

      NOTE: Check connectors - Clean/repair as necessary.

   3. Ignition on, engine not running.
   4. With the scan tool, monitor the Pressure Switch 6 state in the following step.
   5. Using a test light connected to ground, probe the (T805) Pressure Switch 6 signal circuit in the Transmission Solenoid Assembly C2 Harness connector.

      Does the scan tool display the Pressure Switch 6 as "Closed" when the (T805) Pressure Switch 6 signal circuit is grounded with the test light?

      Yes

      - Go To 7.

      No

      - Go To 6.

6. **CHECK THE (T805) PRESSURE SWITCH 6 SIGNAL CIRCUIT FOR AN OPEN**

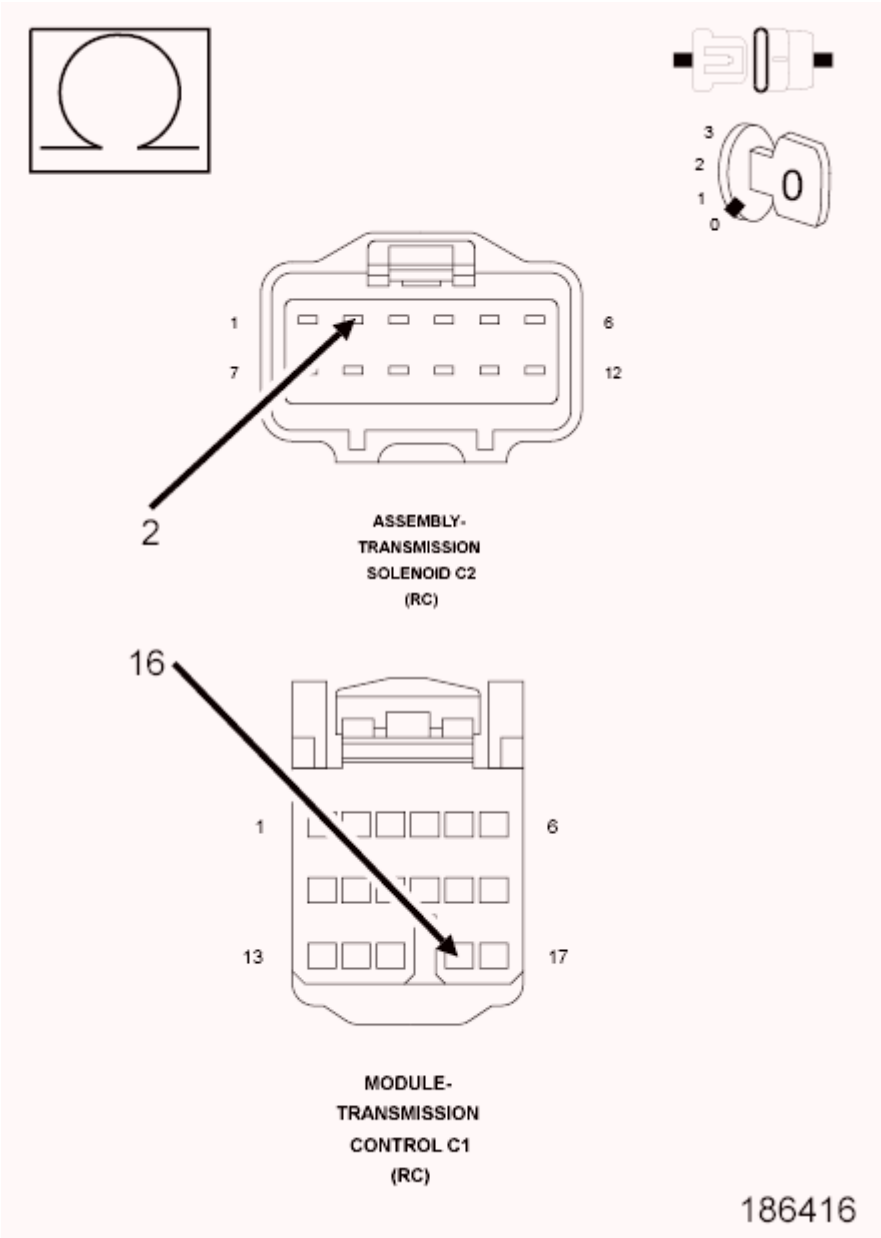

Fig. 87: Checking Pressure Switch 6 Signal Circuit For An Open
Courtesy of CHRYSLER GROUP, LLC

1. Turn the ignition off to the lock position.
2. Disconnect the TCM C1 harness connector.
3. Measure the resistance of the (T805) Pressure Switch 6 signal circuit between the Transmission Solenoid Assembly C2 harness connector and the TCM C1 harness connector.

   Is the resistance below 5.0 Ohms?

   Yes

- Using the schematics as a guide, check the Transmission Control Module (TCM) pins, terminals, and connectors for shorts, corrosion, damage, or terminal push out. Pay particular attention to all power and ground circuits. If no problems are found, replace and program the TCM in accordance with the Service Information.
- Refer to **STANDARD PROCEDURE** and perform the AS68RC VERIFICATION TEST.

No

- Repair the (T805) Pressure Switch 6 signal circuit for an open.
- Refer to **STANDARD PROCEDURE** and perform the AS68RC VERIFICATION TEST.

7. **CHECK INTERNAL TRANSMISSION**
   1. Turn the ignition off to the lock position.
   2. Remove the transmission oil pan.
   3. Check the internal transmission harness, pins, terminals, and connectors for shorts, corrosion, damage, or terminal push out.
   4. Visually inspect the valve body for debris, damage or leaking hydraulic paths.
   5. Visually inspect for sticking or binding Control Valve(s).

   Were there any problems found?

   Yes

   - Repair as necessary.
   - Refer to **STANDARD PROCEDURE** and perform the AS68RC VERIFICATION TEST.

   No

   - Replace the Pressure Switch 6 in accordance with the Service Information.
   - Refer to **STANDARD PROCEDURE** and perform the AS68RC VERIFICATION TEST.

8. **CHECK WIRING AND CONNECTORS**
   1. The conditions necessary to set the DTC are not present at this time.
   2. Using the schematics as a guide, inspect the wiring and connectors specific to this circuit.
   3. Wiggle the wires while checking for shorted and open circuits.
   4. Check for any Service Bulletins that may apply.

   Were there any problems found?

   Yes

   - Repair as necessary.
   - Refer to **STANDARD PROCEDURE** and perform the AS68RC VERIFICATION TEST.

   No

- Test Complete.

P0776-PRESSURE CONTROL SOLENOID B PERFORMANCE

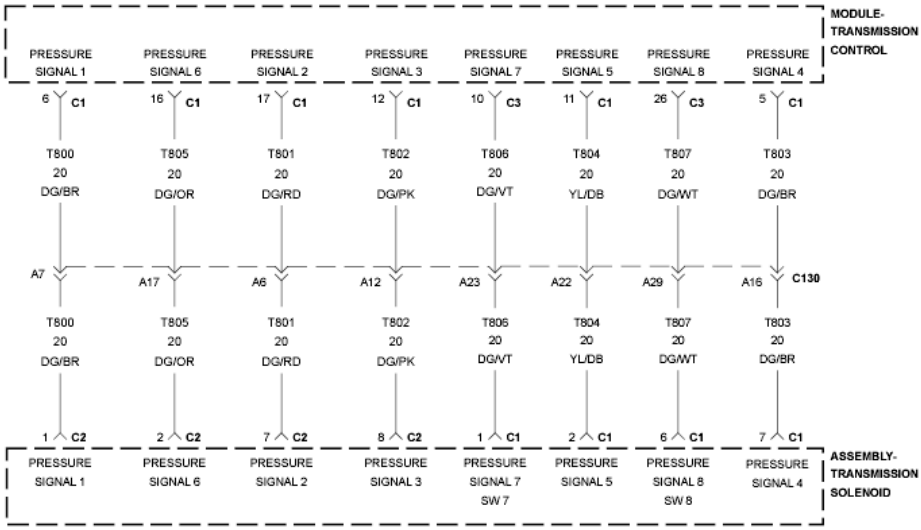

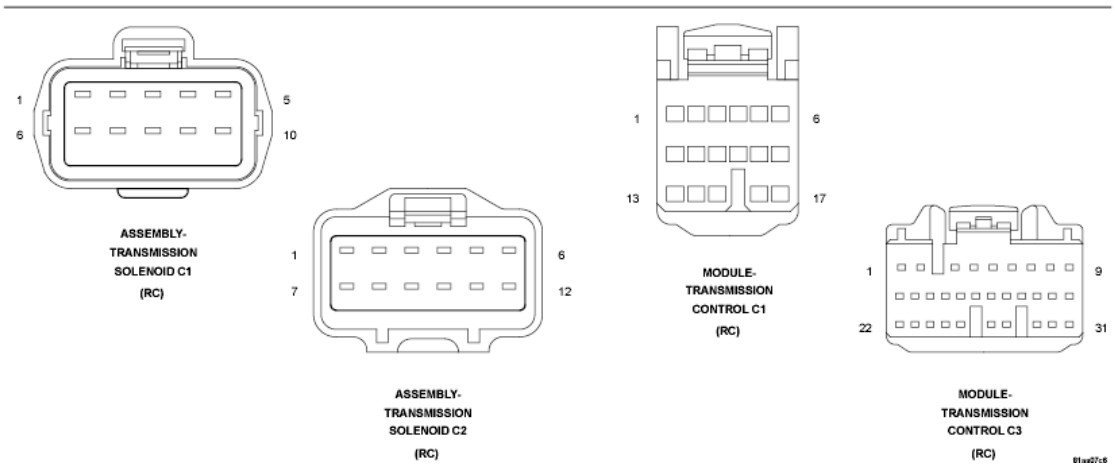

Fig. 88: Transmission Solenoid Assembly Wiring Diagram
Courtesy of CHRYSLER GROUP, LLC

For a complete wiring diagram, **refer to appropriate SYSTEM WIRING DIAGRAMS article** .

THEORY OF OPERATION

The Linear Solenoid 2 is used to control input pressure to the Control Valve 2. The Control Valve 2 uses the

input to modulate the line pressure to the appropriate supply pressure for the clutch. The Transmission Control Module (TCM) verifies the operation of the Control Valve 2 by monitoring the Pressure Switch 2. If a fault is detected, the transmission will go into limp in mode, the Torque Converter Clutch (TCC) will be disabled, the limp in gear will vary based on the current gear and other conditions, and the MIL will be illuminated.

CONDITION ONE:

When Monitored:

- Ignition on, engine running.

Set Condition:

- Pressure switch 2 is Closed for more than 310 ms after the transition of the Control Valve 2 from on to off 3 times.
- The electric fault of the Solenoid has not been detected after the above condition has been established within 10 seconds.

CONDITION TWO:

When Monitored:

- Ignition on, engine running.
- TRS is in the D, 3, 2, or 1 position and Pressure Switch 8 is Closed.

Set Condition:

- Pressure switch 2 is Open for more than 310 ms after the transition of the Control Valve 2 from off to on.
- The electric fault of the Solenoid has not been detected after the above condition has been established within 10 seconds.

CONDITION THREE:

When Monitored:

- Ignition on, engine running.
- TRS is in the D, 3, 2, or 1 position and Pressure Switch 8 is Closed.

Set Condition:

- Pressure Switch 2 is Open for more than 310 ms after a transition of the Control Valve 2 from on to off when the gear ratio is Neutral for more than 2 seconds.
- The electric fault of the Solenoid has not been detected after the above condition has been established within 10 seconds.

CONDITION FOUR:

When Monitored:

- Ignition on, engine running.
- Control Valve 2 continuous operation is off.

Set Condition:

- Pressure Switch 2 is Closed for more than 100 ms.
- The electric fault of the Solenoid has not been detected after the above condition has been established within 10 seconds.

CONDITION FIVE:

When Monitored:

- Ignition on, engine running.
- TRS is in the D, 3, 2, or 1 position and Pressure Switch 8 is Closed.
- Control Valve 2 continuous operation is on.

Set Condition:

- Pressure Switch 2 is Open for more than 2 seconds.
- The electric fault of the Solenoid has not been detected after the above condition has been established within 10 seconds.

POSSIBLE CAUSES

Possible Causes
PRESSURE SWITCH 2 SIGNAL CIRCUIT OPEN
PRESSURE SWITCH 2 SIGNAL CIRCUIT SHORT TO GROUND
PRESSURE SWITCH 2
CONTROL VALVE 2
INTERNAL WIRING
INTERNAL TRANSMISSION
TRANSMISSION CONTROL MODULE (TCM)

Always perform the AS68RC Pre-Diagnostic Troubleshooting procedure before proceeding. Refer to STANDARD PROCEDURE.

DIAGNOSTIC TEST

1. **CHECK IF DTC IS CURRENT**
    1. Using the scan tool, read TCM DTCs.
    2. Record the Environmental Data and any DTCs.

3. Clear DTCs.
4. Using the recorded Environmental Data, along with the When Monitored and Set Conditions above, operate the vehicle in the conditions that set the DTC.
5. Read TCM DTCs.

   Did the DTC reset?

   Yes

   - Go To 2.

   No

   - Go To 8.

2. **CHECK PRESSURE SWITCH 2 STATE**
   1. Ignition on, engine not running.
   2. With the scan tool, view the Pressure Switch 2 state.

      Does the scan tool display the Pressure Switch 2 as "Closed"?

      Yes

      - Go To 3.

      No

      - Go To 5.

3. **CHECK PRESSURE SWITCH 2**
   1. Turn the ignition off to the lock position.
   2. Disconnect the Transmission Solenoid Assembly C2 harness connector

      NOTE: Check connectors - Clean/repair as necessary.

   3. Ignition on, engine not running.
   4. With the scan tool, view the Pressure Switch 2 state.

      Does the scan tool display the Pressure Switch 2 as "Closed"?

      Yes

      - Go To 4.

      No

- Inspect the internal wiring harness and connectors for shorts, corrosion, damage, or terminal push out. If no problems found, replace the Pressure Switch 2 in accordance with the Service Information.
- Refer to **STANDARD PROCEDURE** and perform the AS68RC VERIFICATION TEST.

4. **CHECK THE (T801) PRESSURE SWITCH 2 SIGNAL CIRCUIT FOR A SHORT TO GROUND**

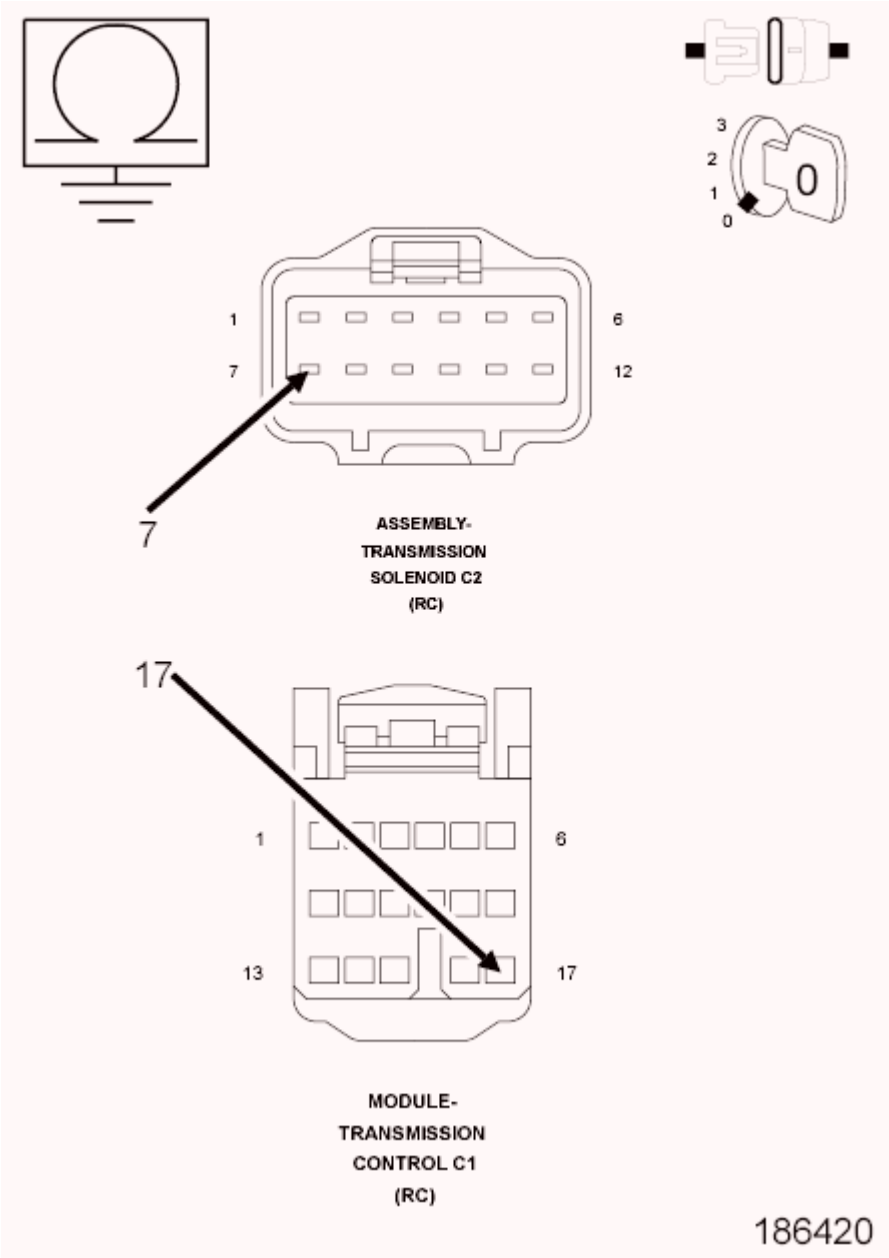

Fig. 89: Checking Pressure Switch 2 Signal Circuit For A Short To Ground
Courtesy of CHRYSLER GROUP, LLC

1. Turn the ignition off to the lock position.
2. Disconnect the TCM C1 harness connector.

NOTE: Check connectors - Clean/repair as necessary.

3. Measure the resistance of the (T801) Pressure Switch 2 signal circuit to ground.

   Is the resistance below 100k Ohms?

   Yes

   - Repair the (T801) Pressure Switch 2 signal circuit for a short to ground.
   - Refer to **STANDARD PROCEDURE** and perform the AS68RC VERIFICATION TEST.

   No

   - Using the schematics as a guide, check the Transmission Control Module (TCM) pins, terminals, and connectors for corrosion, damage, or terminal push out. Pay particular attention to all power and ground circuits. If no problems are found, replace and program the TCM in accordance with the Service Information.
   - Refer to **STANDARD PROCEDURE** and perform the AS68RC VERIFICATION TEST.

5. **CHECK PRESSURE SWITCH 2 SIGNAL CIRCUIT**
   1. Turn the ignition off to the lock position.
   2. Disconnect the Transmission Solenoid Assembly C2 harness connector

      NOTE: Check connectors - Clean/repair as necessary.

   3. Ignition on, engine not running.
   4. With the scan tool, monitor the Pressure Switch 2 state in the following step.
   5. Using a test light connected to ground, probe the (T801) Pressure Switch 2 signal circuit in the Transmission Solenoid Assembly C2 Harness connector.

      Does the scan tool display the Pressure Switch 2 as "Closed" when the (T801) Pressure Switch 2 signal circuit is grounded with the test light?

      Yes

      - Go To 7.

      No

      - Go To 6.

6. **CHECK THE (T801) PRESSURE SWITCH 2 SIGNAL CIRCUIT FOR AN OPEN**

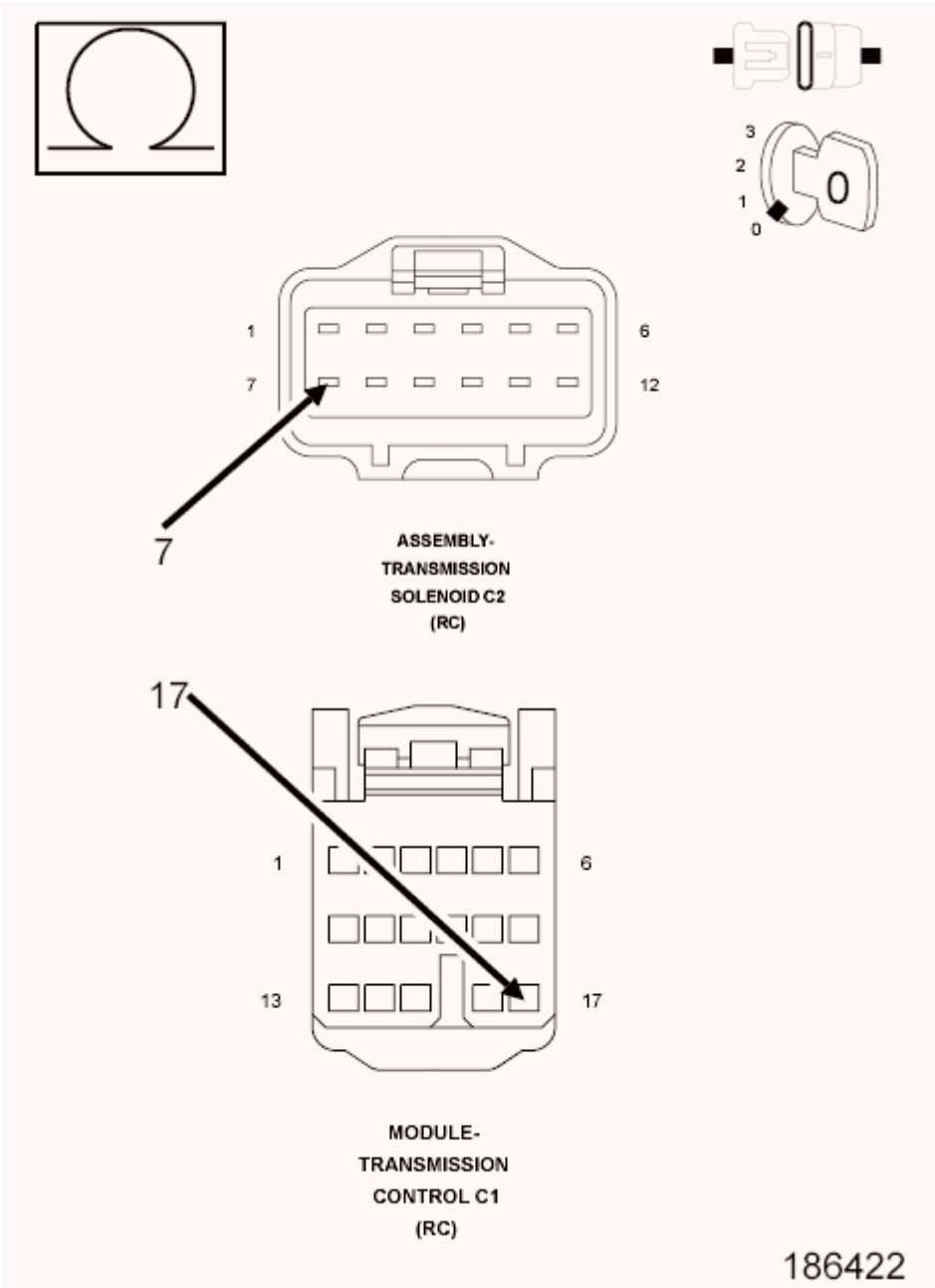

Fig. 90: Checking Pressure Switch 2 Signal Circuit For An Open
Courtesy of CHRYSLER GROUP, LLC

1. Turn the ignition off to the lock position.
2. Disconnect the TCM C1 harness connector.
3. Measure the resistance of the (T801) Pressure Switch 2 signal circuit between the Transmission Solenoid Assembly C2 harness connector and the TCM C1 harness connector.

   Is the resistance below 5.0 Ohms?

   Yes

- Using the schematics as a guide, check the Transmission Control Module (TCM) pins, terminals, and connectors for shorts, corrosion, damage, or terminal push out. Pay particular attention to all power and ground circuits. If no problems are found, replace and program the TCM in accordance with the Service Information.
- Refer to **STANDARD PROCEDURE** and perform the AS68RC VERIFICATION TEST.

No

- Repair the (T801) Pressure Switch 2 signal circuit for an open.
- Refer to **STANDARD PROCEDURE** and perform the AS68RC VERIFICATION TEST.

7. **CHECK INTERNAL TRANSMISSION**
   1. Turn the ignition off to the lock position.
   2. Remove the transmission oil pan.
   3. Check the internal transmission harness, pins, terminals, and connectors for shorts, corrosion, damage, or terminal push out.
   4. Visually inspect the valve body for debris, damage or leaking hydraulic paths.
   5. Visually inspect for sticking or binding Control Valve(s).

   Were there any problems found?

   Yes

   - Repair as necessary.
   - Refer to **STANDARD PROCEDURE** and perform the AS68RC VERIFICATION TEST.

   No

   - Replace the Pressure Switch 2 in accordance with the Service Information.
   - Refer to **STANDARD PROCEDURE** and perform the AS68RC VERIFICATION TEST.

8. **CHECK WIRING AND CONNECTORS**
   1. The conditions necessary to set the DTC are not present at this time.
   2. Using the schematics as a guide, inspect the wiring and connectors specific to this circuit.
   3. Wiggle the wires while checking for shorted and open circuits.
   4. Check for any Service Bulletins that may apply.

   Were there any problems found?

   Yes

   - Repair as necessary.
   - Refer to **STANDARD PROCEDURE** and perform the AS68RC VERIFICATION TEST.

   No

- Test Complete.

P0778-PRESSURE CONTROL SOLENOID B CIRCUIT

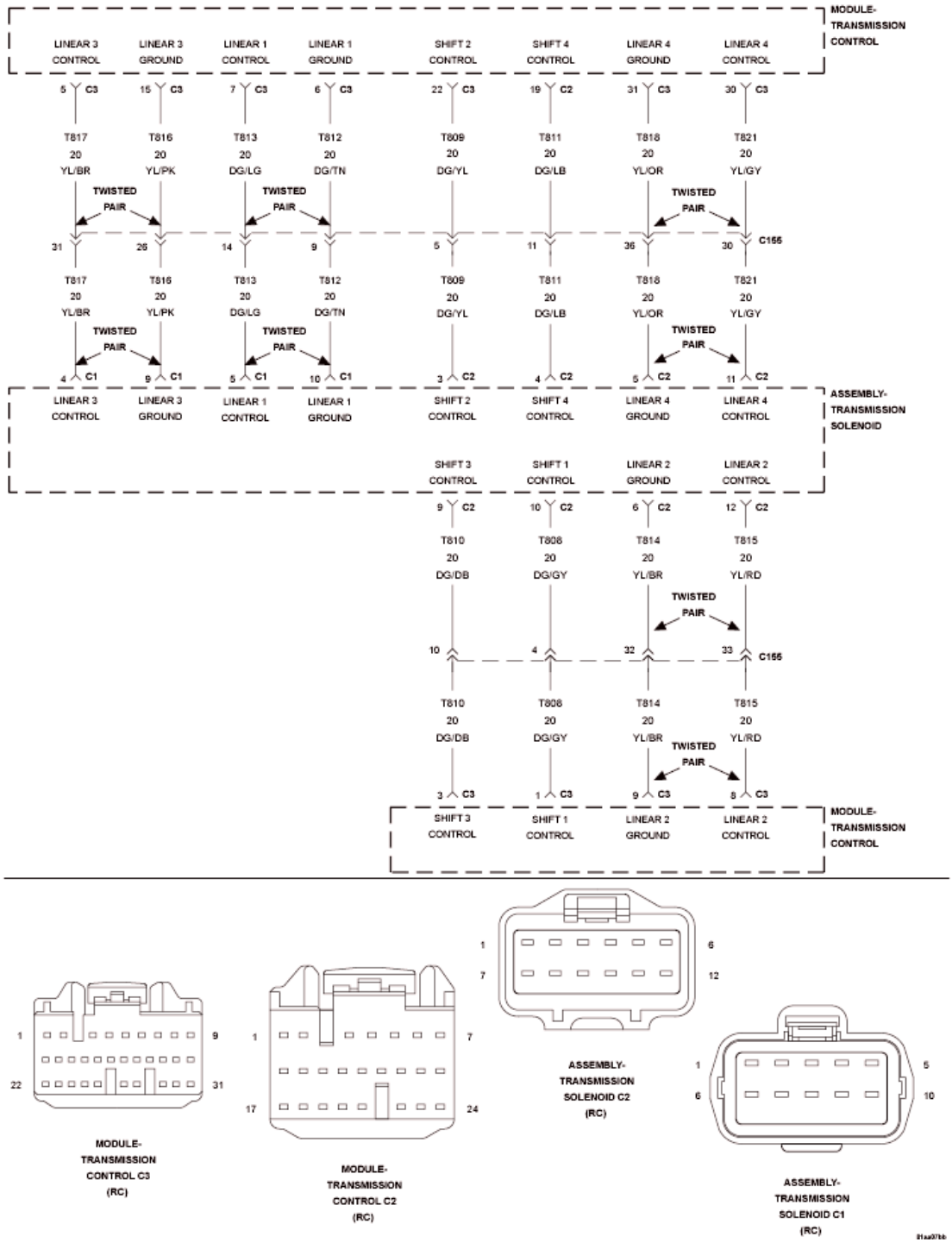

Fig. 91: Transmission Solenoid Assembly Wiring Diagram
Courtesy of CHRYSLER GROUP, LLC

For a complete wiring diagram, **refer to appropriate SYSTEM WIRING DIAGRAMS article** .

THEORY OF OPERATION

The Linear Solenoid 2 is used to control input pressure to the Control Valve 2. The Control Valve 2 uses the input to modulate the line pressure to the appropriate supply pressure for the clutch. The TCM monitors the Solenoid current load and resistance. If a fault is detected, the transmission will go into limp in mode, the Torque Converter Clutch (TCC) will be disabled, the limp in gear will vary based on the current gear and other conditions, and the MIL will be illuminated.

DIAGNOSTIC TEST

When Monitored:

- Ignition on, engine running.

Set Condition:

- Solenoid current is greater than or equal to 4 amps for more than 100 ms or Solenoid resistance is greater than or equal to 100k Ohms for more than 65 ms.

POSSIBLE CAUSES

Possible Causes
(T815) LINEAR SOLENOID 2 CONTROL CIRCUIT OPEN
(T815) LINEAR SOLENOID 2 CONTROL CIRCUIT SHORT TO GROUND
(T815) LINEAR SOLENOID 2 CONTROL CIRCUIT SHORT TO VOLTAGE
(T815) LINEAR SOLENOID 2 CONTROL CIRCUIT SHORT TO ANOTHER CIRCUIT
(T814) LINEAR SOLENOID 2 GROUND CIRCUIT OPEN
(T814) LINEAR SOLENOID 2 GROUND CIRCUIT SHORT TO GROUND
(T814) LINEAR SOLENOID 2 GROUND CIRCUIT SHORT TO VOLTAGE
(T814) LINEAR SOLENOID 2 GROUND CIRCUIT SHORT TO ANOTHER CIRCUIT
LINEAR SOLENOID 2
TRANSMISSION CONTROL MODULE (TCM)

Always perform the AS68RC Pre-Diagnostic Troubleshooting procedure before proceeding. Refer to STANDARD PROCEDURE.

DIAGNOSTIC TEST

1. **CHECK IF DTC IS CURRENT**
    1. Using the scan tool, read TCM DTCs.
    2. Record the Environmental Data and any DTCs.
    3. Clear DTCs.
    4. Using the recorded Environmental Data, along with the When Monitored and Set Conditions

above, operate the vehicle in the conditions that set the DTC.

5. Read TCM DTCs.

   Did the DTC reset?

   Yes

   - Go To 2.

   No

   - Go To 11.

2. **CHECK THE (T815) LINEAR SOLENOID 2 CONTROL CIRCUIT FOR AN OPEN**

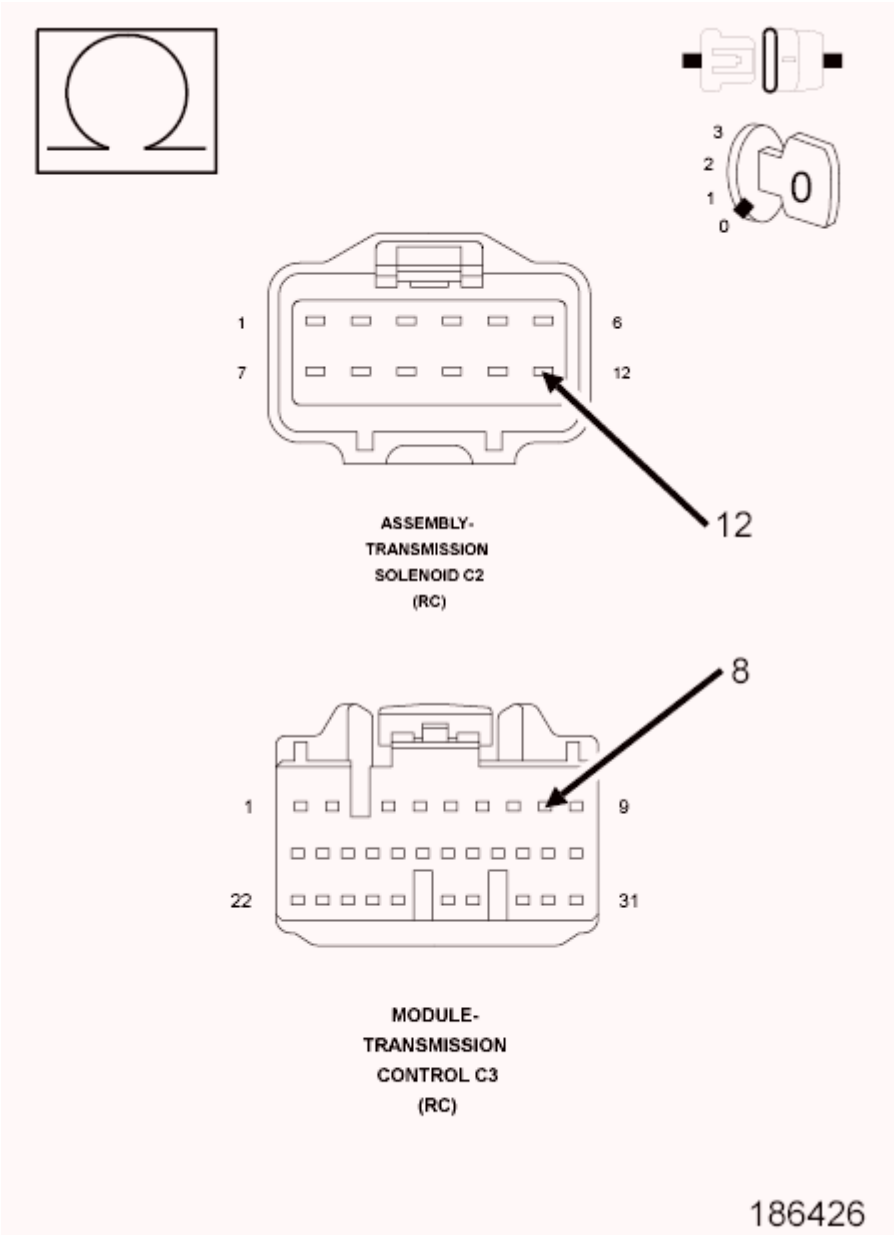

Fig. 92: Checking Linear Solenoid 2 Control Circuit For An Open
Courtesy of CHRYSLER GROUP, LLC

1. Turn the ignition off to the lock position.
2. Disconnect the Transmission Solenoid Assembly C2 harness connectors.
3. Disconnect the TCM C3 harness connector.

NOTE: Check connectors - Clean/repair as necessary.

4. Measure the resistance of the (T815) Linear Solenoid 2 Control circuit between the Transmission Solenoid Assembly C2 harness connector and the TCM C3 harness connector.

Is the resistance below 5.0 Ohms?

Yes

- Go To 3.

No

- Repair the (T815) Linear Solenoid 2 Control circuit for an open.
- Refer to **STANDARD PROCEDURE** and perform the AS68RC VERIFICATION TEST.

3. **CHECK THE (T815) LINEAR SOLENOID 2 CONTROL CIRCUIT FOR A SHORT TO GROUND**

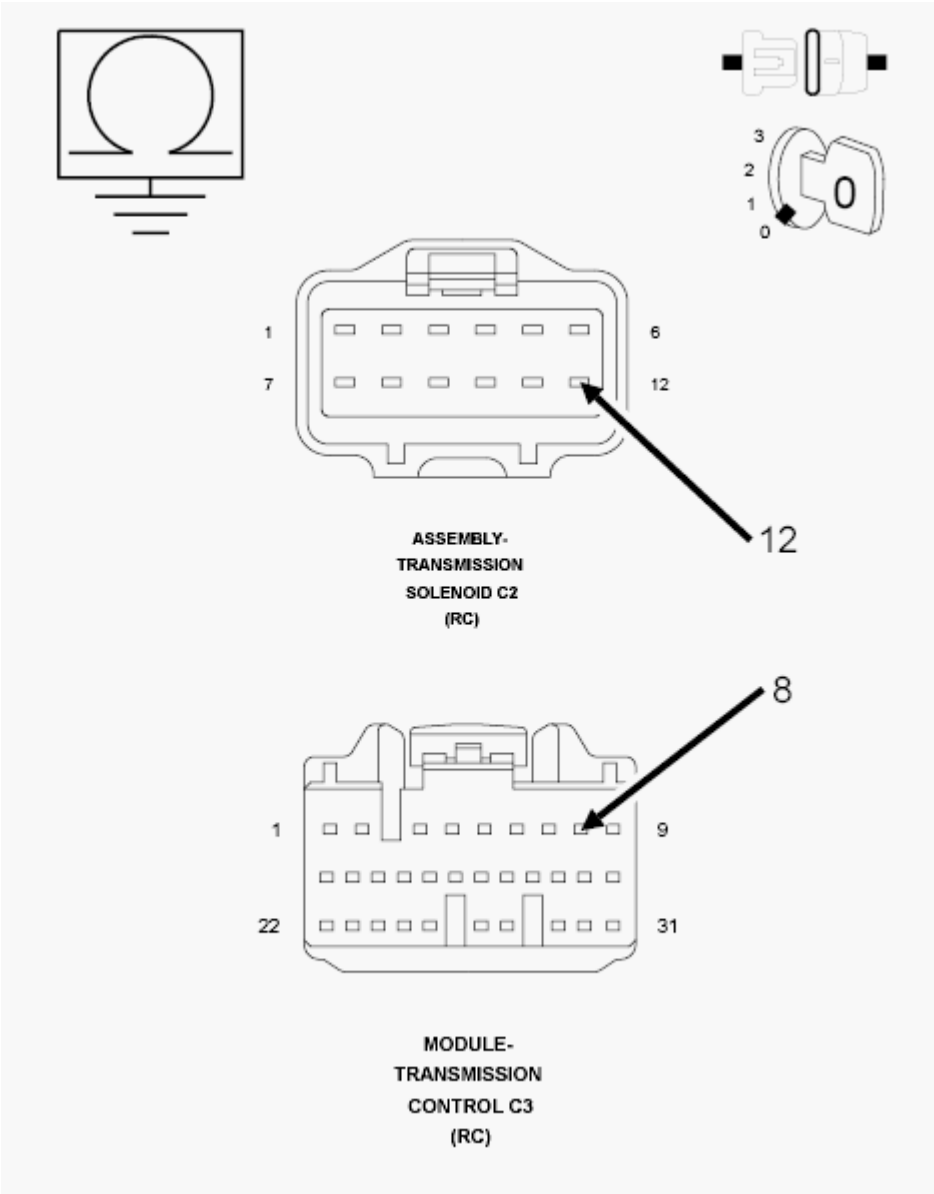

Fig. 93: Checking Linear Solenoid 2 Control Circuit For A Short To Ground

Courtesy of CHRYSLER GROUP, LLC

1. Measure the resistance between ground and the (T815) Linear Solenoid 2 Control circuit.

   Is the resistance below 100k Ohms?

   Yes

   - Repair the (T815) Linear Solenoid 2 Control circuit for a short to ground.
   - Refer to **STANDARD PROCEDURE** and perform the AS68RC VERIFICATION TEST.

   No

   - Go To 4.

4. **CHECK THE (T815) LINEAR SOLENOID 2 CONTROL CIRCUIT SHORT TO VOLTAGE**

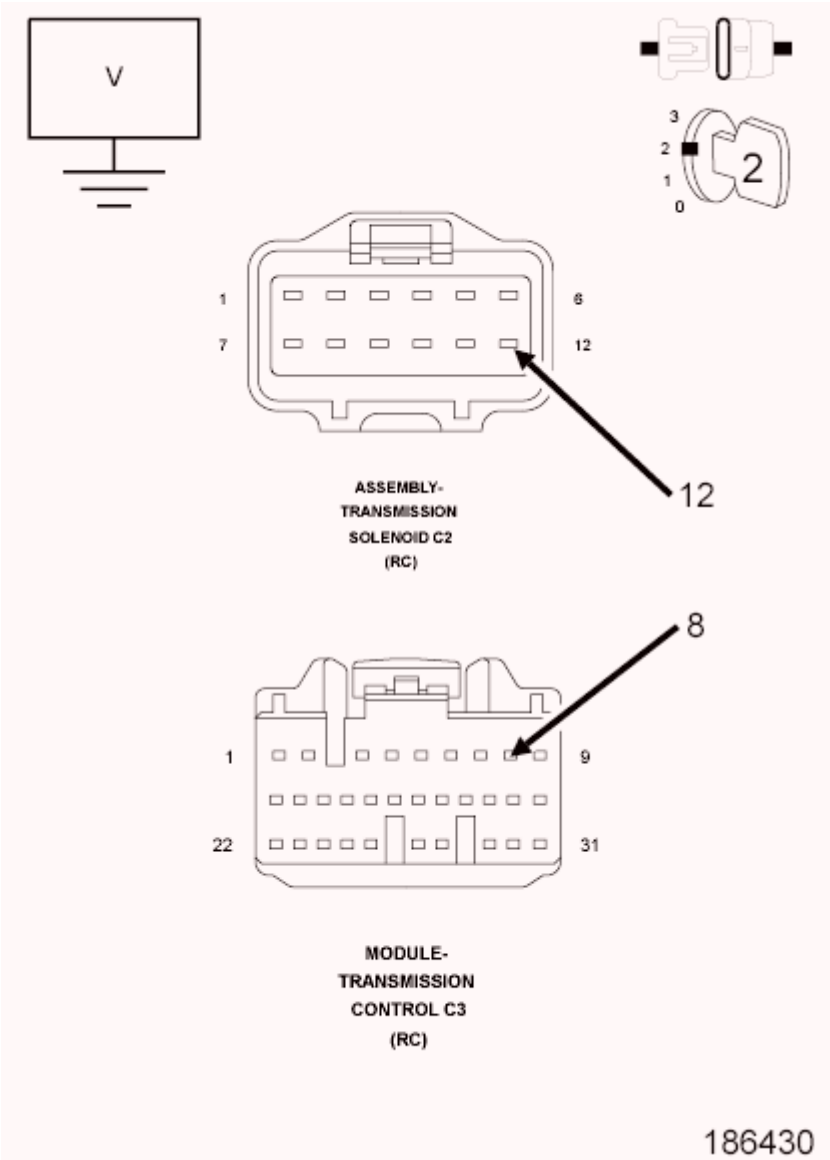

Fig. 94: Checking Linear Solenoid 2 Control Circuit For Short To Voltage
Courtesy of CHRYSLER GROUP, LLC

1. Ignition on, engine not running.
2. Measure the voltage of the (T815) Linear Solenoid 2 Control circuit.

   Is the voltage above 0.5 of a volt?

   Yes

   - Repair the (T815) Linear Solenoid 2 Control circuit for a short to voltage.
   - Refer to **STANDARD PROCEDURE** and perform the AS68RC VERIFICATION TEST.

   No

- Go To 5.

5. **CHECK THE (T815) LINEAR SOLENOID 2 CONTROL CIRCUIT FOR A SHORT TO ANOTHER CIRCUIT**

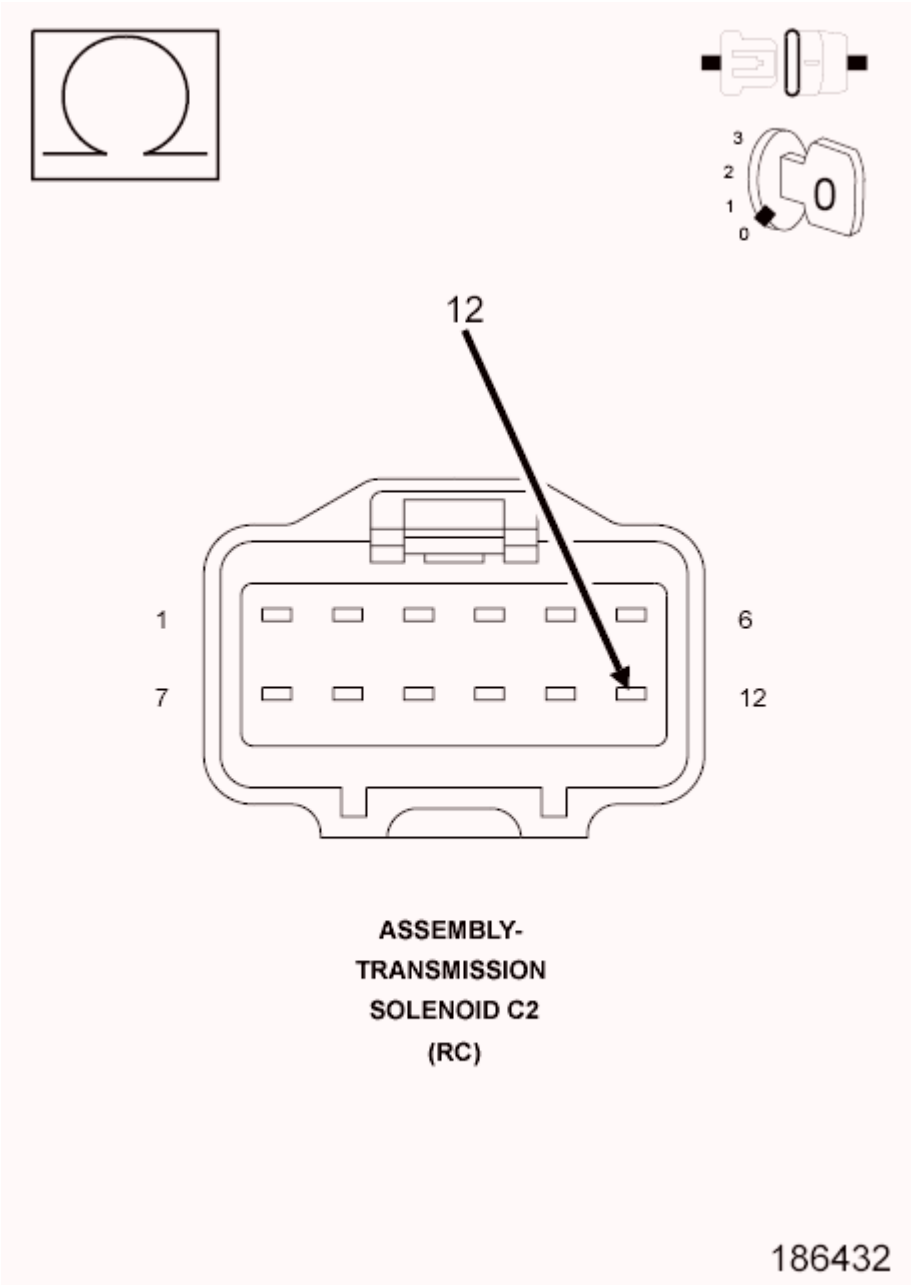

Fig. 95: Checking Linear Solenoid 2 Control Circuit For A Short To Another Circuit
Courtesy of CHRYSLER GROUP, LLC

1. Turn the ignition off to the lock position.
2. Measure the resistance between the (T815) Linear Solenoid 2 Control circuit and all other circuits in the Transmission Solenoid Assembly C2 harness connector.

Is the resistance below 100k Ohms between the (T815) Linear Solenoid 2 Control circuit and any other circuit in the Transmission Solenoid Assembly harness connector?

Yes

- Repair the (T815) Linear Solenoid 2 Control circuit for a short to another circuit(s).
- Refer to **STANDARD PROCEDURE** and perform the AS68RC VERIFICATION TEST.

No

- Go To 6.

6. **CHECK THE (T814) LINEAR SOLENOID 2 GROUND CIRCUIT FOR AN OPEN**

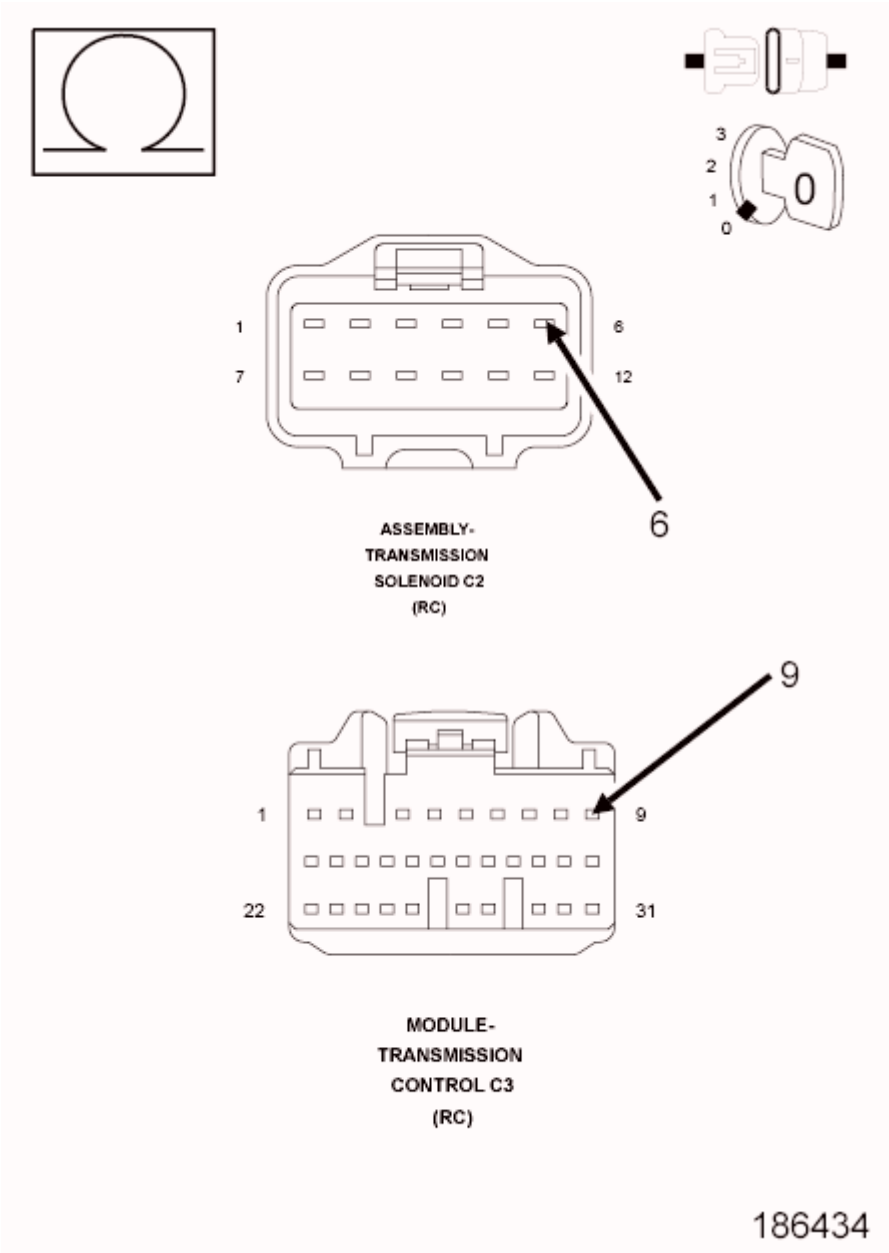

Fig. 96: Checking Linear Solenoid 2 Ground Circuit For An Open
Courtesy of CHRYSLER GROUP, LLC

1. Measure the resistance of the (T814) Linear Solenoid 2 Ground circuit between the Transmission Solenoid Assembly C2 harness connector and the TCM C3 harness connector.

   Is the resistance below 5.0 Ohms?

   Yes

   - Go To 7.

No

- Repair the (T814) Linear Solenoid 2 Ground circuit for an open.
- Refer to **STANDARD PROCEDURE** and perform the AS68RC VERIFICATION TEST.

7. **CHECK THE (T814) LINEAR SOLENOID 2 GROUND CIRCUIT FOR A SHORT TO GROUND**

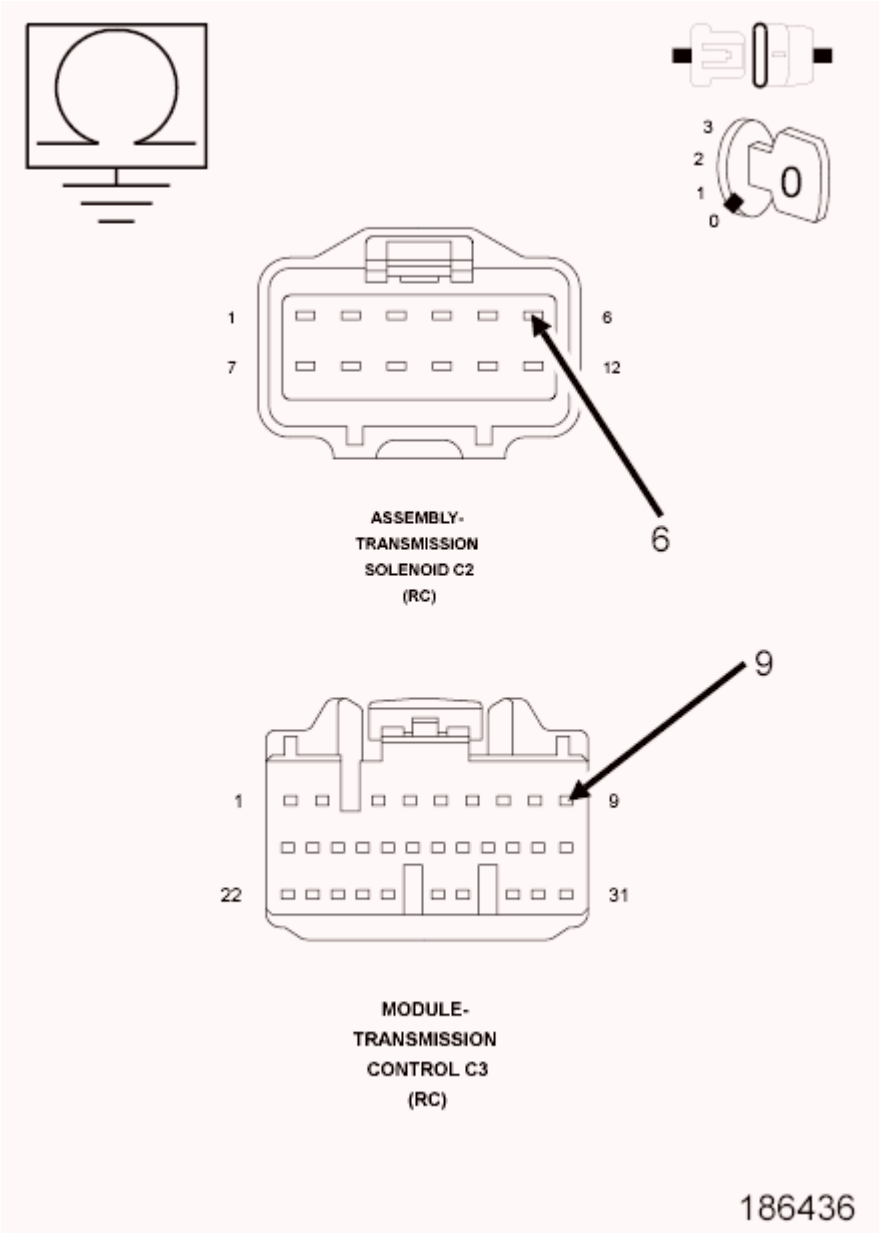

Fig. 97: Checking Linear Solenoid 2 Ground Circuit For A Short To Ground
Courtesy of CHRYSLER GROUP, LLC

1. Measure the resistance between ground and the (T814) Linear Solenoid 2 Ground circuit.

   Is the resistance below 100k Ohms?

Yes

- Repair the (T814) Linear Solenoid 2 Ground circuit for a short to ground.
- Refer to **STANDARD PROCEDURE** and perform the AS68RC VERIFICATION TEST.

No

- Go To 8.

8. **CHECK THE (T814) LINEAR SOLENOID 2 GROUND CIRCUIT SHORT TO VOLTAGE**

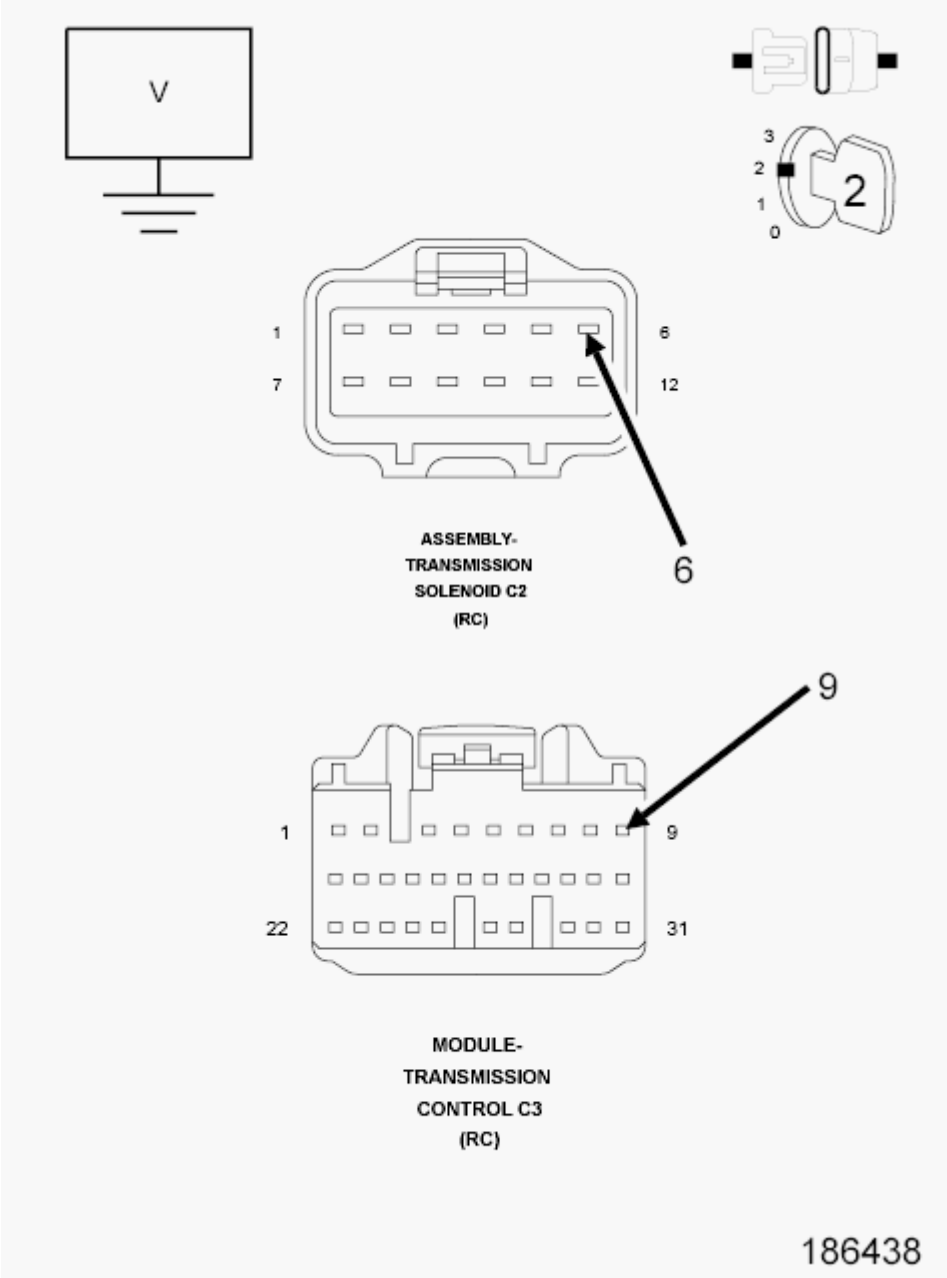

Fig. 98: Checking Linear Solenoid 2 Ground Circuit Short To Voltage

Courtesy of CHRYSLER GROUP, LLC

1. Ignition on, engine not running.
2. Measure the voltage of the (T814) Linear Solenoid 2 Ground circuit.

   Is the voltage above 0.5 of a volt?

   Yes

   - Repair the (T814) Linear Solenoid 2 Ground circuit for a short to voltage.
   - Refer to **STANDARD PROCEDURE** and perform the AS68RC VERIFICATION TEST.

   No

   - Go To 9.

9. **CHECK THE (T814) LINEAR SOLENOID 2 GROUND CIRCUIT SHORT TO ANOTHER CIRCUIT**

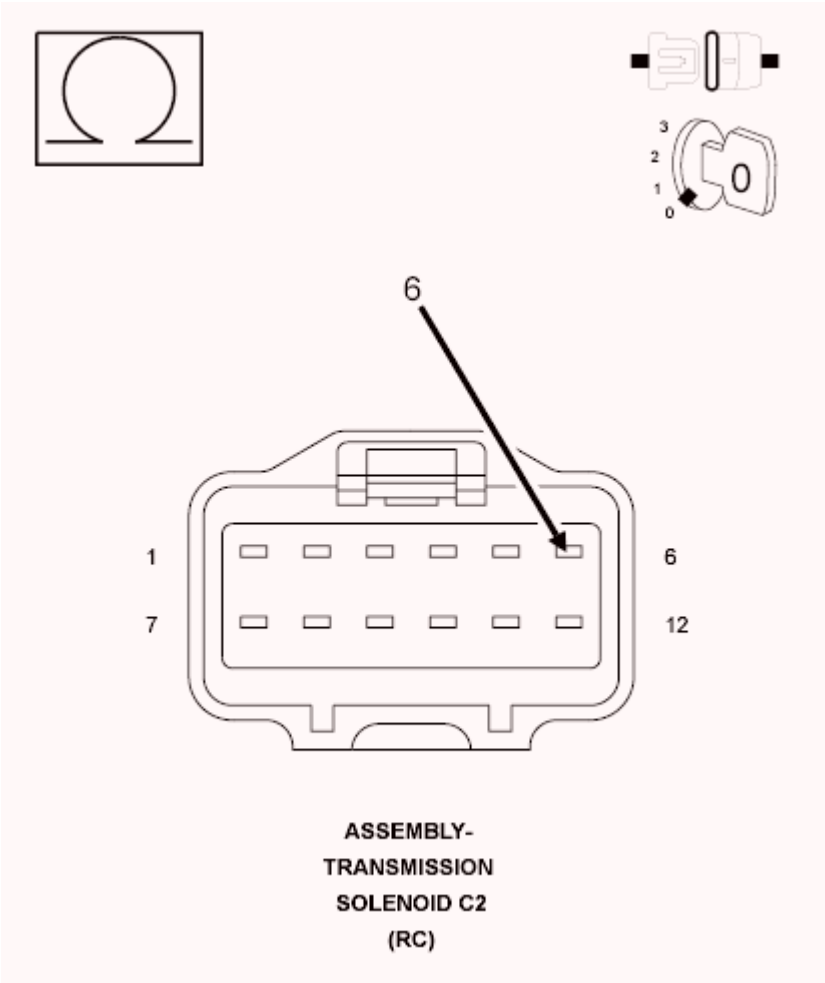

Fig. 99: Checking Linear Solenoid 2 Ground Circuit Short To Another Circuit

Courtesy of CHRYSLER GROUP, LLC

1. Turn the ignition off to the lock position.
2. Measure the resistance between the (T814) Linear Solenoid 2 Ground circuit and all other circuits in the Transmission Solenoid Assembly C2 harness connector.

   Is the resistance below 100k Ohms between the (T814) Linear Solenoid 2 Ground circuit and any other circuit in the Transmission Solenoid Assembly C2 harness connector?

   Yes

   - Repair the (T814) Linear Solenoid 2 Ground circuit for a short to another circuit(s).
   - Refer to **STANDARD PROCEDURE** and perform the AS68RC VERIFICATION TEST.

   No

   - Go To 10.

10. **CHECK THE LINEAR SOLENOID 2**

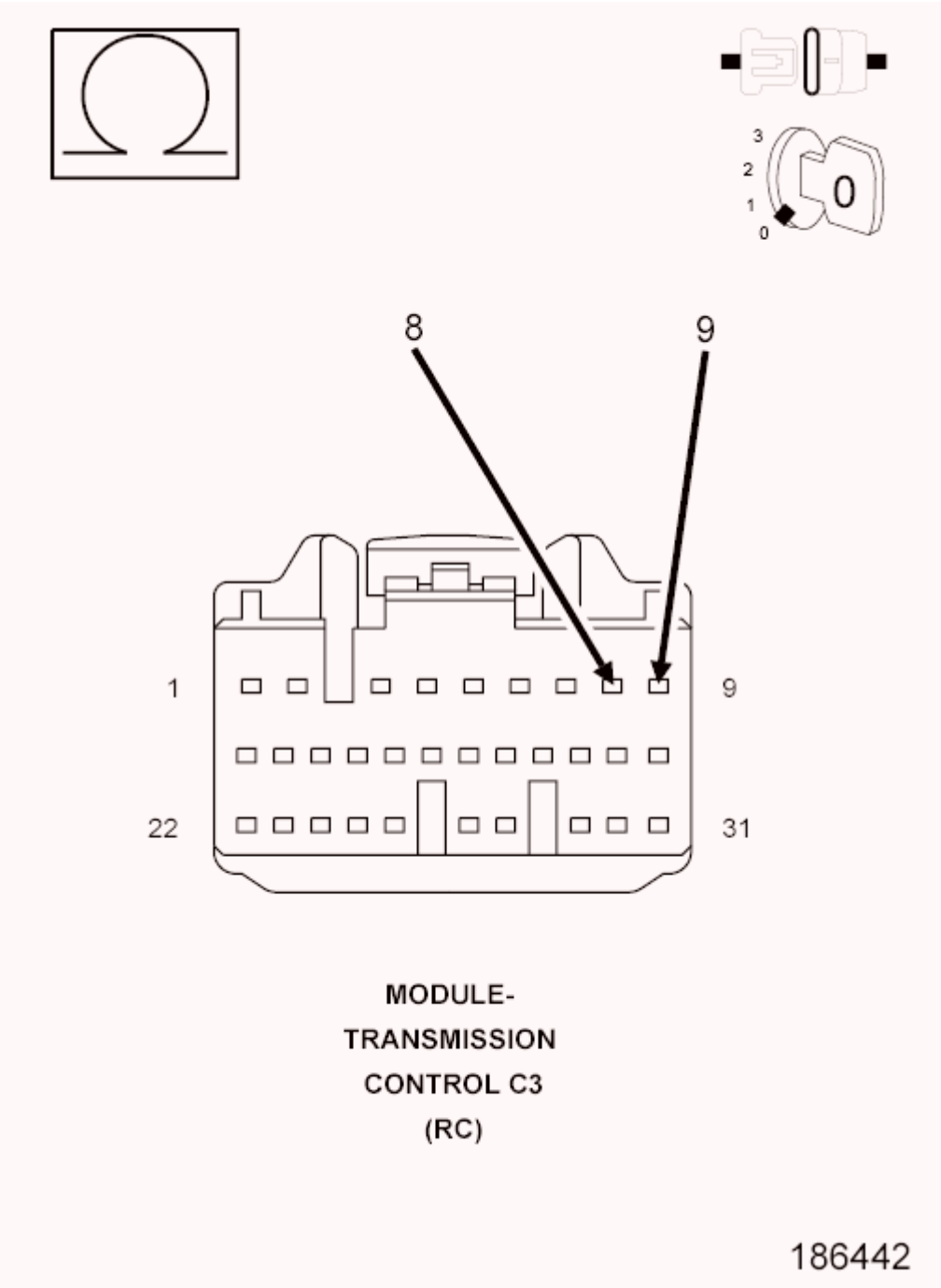

Fig. 100: Checking Linear Solenoid 2 Circuits
Courtesy of CHRYSLER GROUP, LLC

1. Turn the ignition off to the lock position.
2. Reconnect the Transmission Solenoid Assembly C2 Harness connector.
3. Measure the resistance between the (T815) Linear Solenoid 2 Control and the (T814) Linear Solenoid 2 Ground circuit on the appropriate terminals of the TCM C3 harness connector.

   Is the resistance of the Linear Solenoid 2 5.5 Ohms (± 0.5 of an Ohm)?

Yes

- Using the schematics as a guide, check the Transmission Control Module (TCM) pins, terminals, and connectors for corrosion, damage, or terminal push out. Pay particular attention to all power and ground circuits. If no problems are found, replace and program the TCM in accordance with the Service Information.
- Refer to **STANDARD PROCEDURE** and perform the AS68RC VERIFICATION TEST.

No

- Replace the Linear Solenoid 2 in accordance with the Service Information.

11. **CHECK WIRING AND CONNECTORS**
    1. The conditions necessary to set the DTC are not present at this time.
    2. Using the schematics as a guide, inspect the wiring and connectors specific to this circuit.
    3. Wiggle the wires while checking for shorted and open circuits.
    4. Check for any Service Bulletins that may apply.

    Were there any problems found?

    Yes

    - Repair as necessary.
    - Refer to **STANDARD PROCEDURE** and perform the AS68RC VERIFICATION TEST.

    No

    - Test Complete.

P0796-PRESSURE CONTROL SOLENOID C PERFORMANCE

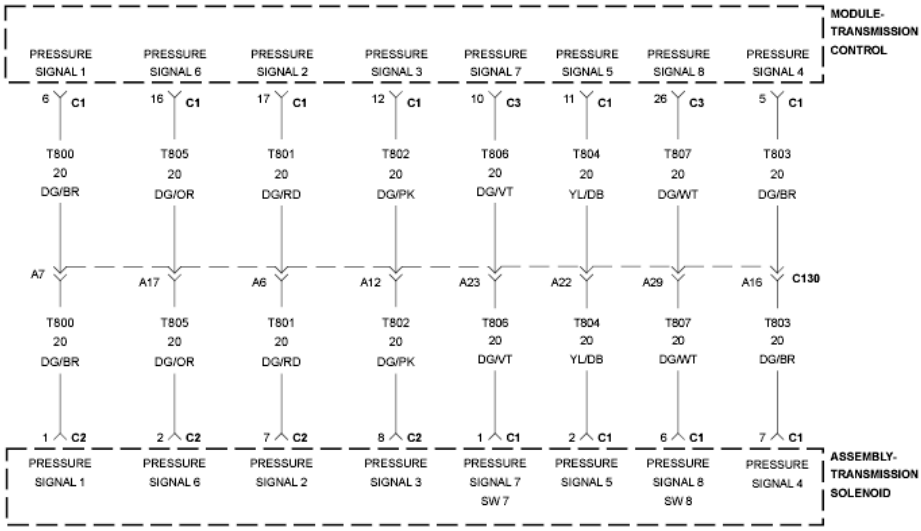

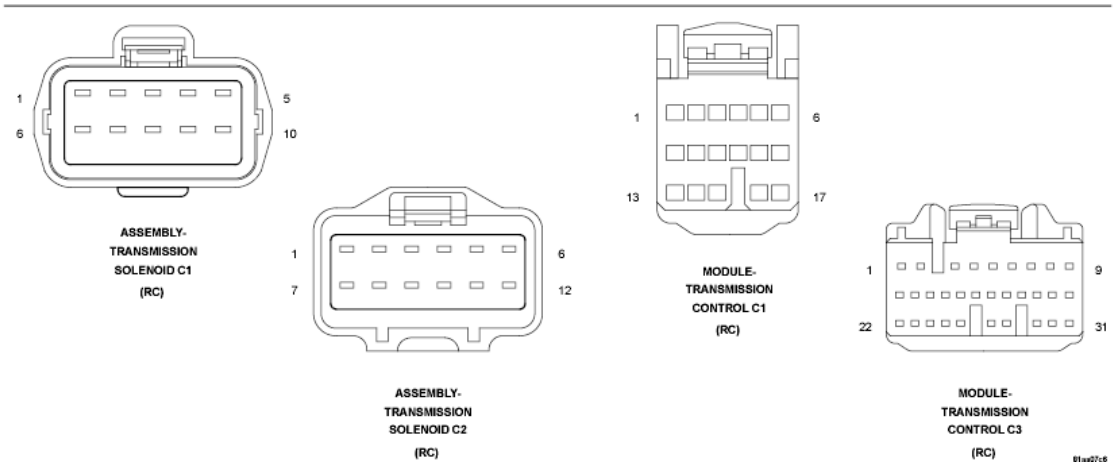

Fig. 101: Transmission Solenoid Assembly Wiring Diagram
Courtesy of CHRYSLER GROUP, LLC

For a complete wiring diagram, **refer to appropriate SYSTEM WIRING DIAGRAMS article** .

THEORY OF OPERATION

The Linear Solenoid 3 is used to control input pressure to the Control Valve 3. The Control Valve 3 uses the input to modulate the line pressure to the appropriate supply pressure for the clutch. The TCM verifies the operation of the Control Valve 3 by monitoring the Pressure Switch 7. If a fault is detected, the transmission will go into limp in mode, the Torque Converter Clutch (TCC) will be disabled, the limp in gear will vary based on the current gear and other conditions, and the MIL will be illuminated.

CONDITION ONE:

When Monitored:

- Pressure Switch 6 is Closed and Pressure Switches 1 through 6 are not currently failed.

Set Condition:

- Pressure Switch 7 is Closed for more than 160 ms after the transition of the Control Valve 3 from off to on 3 times.
- The electric fault of the Solenoid has not been detected after the above condition has been established within 10 seconds.

CONDITION TWO:

When Monitored:

- Pressure Switch 6 is Closed and Pressure Switches 1 through 6 are not currently failed.
- During Garage Shift.

Set Condition:

- Pressure Switch 7 is Open for Control Valve 3 at maximum commanded pressure.
- The electric fault of the Solenoid has not been detected after the above condition has been established within 10 seconds.

CONDITION THREE:

When Monitored:

- Pressure Switch 6 is Closed and Pressure Switches 1 through 6 are not currently failed.
- Control Valve 3 operation is continuously off.

Set Condition:

- Pressure Switch 7 is Closed for more than 160 ms.
- The electric fault of the Solenoid has not been detected after the above condition has been established within 10 seconds.

POSSIBLE CAUSES

Possible Causes
PRESSURE SWITCH 7 SIGNAL CIRCUIT OPEN
PRESSURE SWITCH 7 SIGNAL CIRCUIT SHORT TO GROUND
PRESSURE SWITCH 7

CONTROL VALVE 3
INTERNAL WIRING
INTERNAL TRANSMISSION
TRANSMISSION CONTROL MODULE

Always perform the AS68RC Pre-Diagnostic Troubleshooting procedure before proceeding. Refer to STANDARD PROCEDURE.

DIAGNOSTIC TEST

1. **CHECK IF DTC IS CURRENT**
    1. Using the scan tool, read TCM DTCs.
    2. Record the Environmental Data and any DTCs.
    3. Clear DTCs.
    4. Using the recorded Environmental Data, along with the When Monitored and Set Conditions above, operate the vehicle in the conditions that set the DTC.
    5. Read TCM DTCs.

    Did the DTC reset?

    Yes

    - Go To 2.

    No

    - Go To 8.
2. **CHECK PRESSURE SWITCH 7 STATE**
    1. Ignition on, engine not running.
    2. With the scan tool, view the Pressure Switch 7 state.

    Does the scan tool display the Pressure Switch 7 as "Closed"?

    Yes

    - Go To 3.

    No

    - Go To 5.
3. **CHECK PRESSURE SWITCH 7**
    1. Turn the ignition off to the lock position.
    2. Disconnect the Transmission Solenoid Assembly C1 harness connector

NOTE: Check connectors - Clean/repair as necessary.

3. Ignition on, engine not running.
4. With the scan tool, view the Pressure Switch 7 state.

   Does the scan tool display the Pressure Switch 7 as "Closed"?

   Yes

   - Go To 4.

   No

   - Inspect the internal wiring harness and connectors for shorts, corrosion, damage, or terminal push out. If no problems found, replace the Pressure Switch 7 in accordance with the Service Information.
   - Refer to **STANDARD PROCEDURE** and perform the AS68RC VERIFICATION TEST.

4. **CHECK THE (T806) PRESSURE SWITCH 7 SIGNAL CIRCUIT FOR A SHORT TO GROUND**

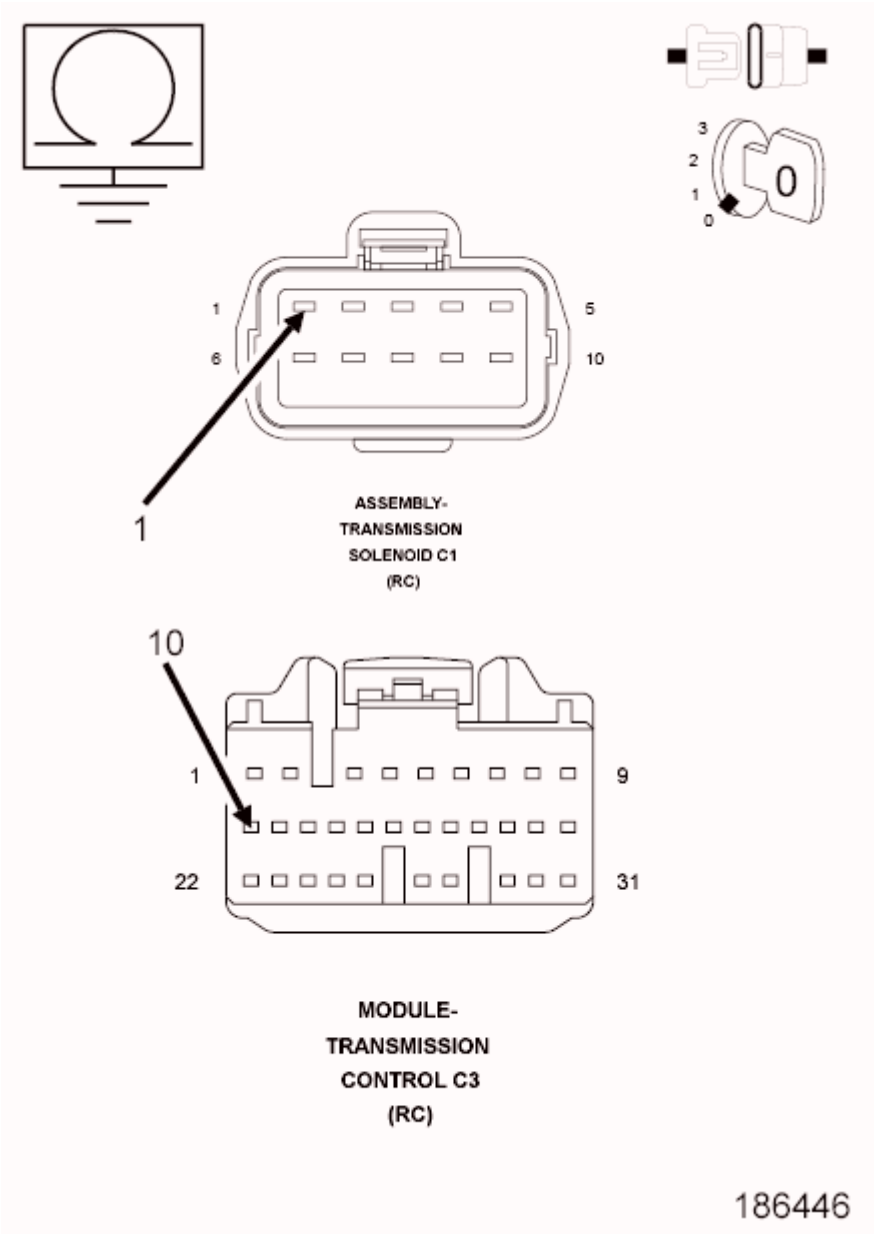

Fig. 102: Checking Pressure Switch 7 Signal Circuit For A Short To Ground
Courtesy of CHRYSLER GROUP, LLC

1. Turn the ignition off to the lock position.
2. Disconnect the TCM C3 harness connector.

NOTE: Check connectors - Clean/repair as necessary.

3. Measure the resistance of the (T806) Pressure Switch 7 signal circuit to ground.

   Is the resistance below 100k Ohms?

Yes

- Repair the (T806) Pressure Switch 7 signal circuit for a short to ground.
- Refer to **STANDARD PROCEDURE** and perform the AS68RC VERIFICATION TEST.

No

- Using the schematics as a guide, check the Transmission Control Module (TCM) pins, terminals, and connectors for corrosion, damage, or terminal push out. Pay particular attention to all power and ground circuits. If no problems are found, replace and program the TCM in accordance with the Service Information.
- Refer to **STANDARD PROCEDURE** and perform the AS68RC VERIFICATION TEST.

5. **CHECK PRESSURE SWITCH 7 SIGNAL CIRCUIT**
   1. Turn the ignition off to the lock position.
   2. Disconnect the Transmission Solenoid Assembly C1 harness connector

      NOTE: Check connectors - Clean/repair as necessary.

   3. Ignition on, engine not running.
   4. With the scan tool, monitor the Pressure Switch 7 state in the following step.
   5. Using a test light connected to ground, probe the (T806) Pressure Switch 7 signal circuit in the Transmission Solenoid Assembly C1 Harness connector.

      Does the scan tool display the Pressure Switch 7 as "Closed" when the (T806) Pressure Switch 7 signal circuit is grounded with the test light?

      Yes

      - Go To 7.

      No

      - Go To 6.

6. **CHECK THE (T806) PRESSURE SWITCH 7 SIGNAL CIRCUIT FOR AN OPEN**

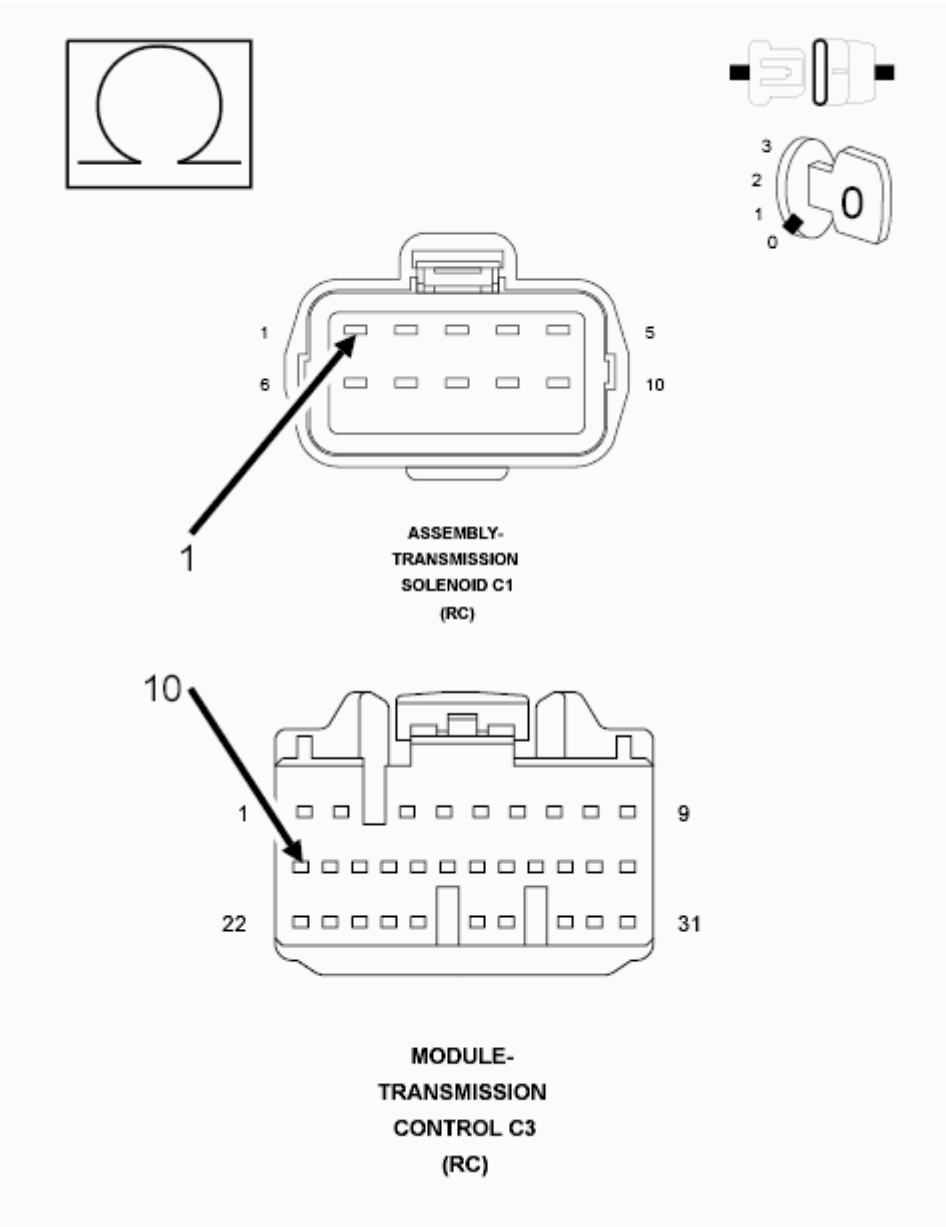

Fig. 103: Checking Pressure Switch 7 Signal Circuit For An Open
Courtesy of CHRYSLER GROUP, LLC

1. Turn the ignition off to the lock position.
2. Disconnect the TCM C3 harness connector.
3. Measure the resistance of the (T806) Pressure Switch 7 signal circuit between the Transmission Solenoid Assembly C1 harness connector and the TCM C3 harness connector.

   Is the resistance below 5.0 Ohms?

   Yes

   - Using the schematics as a guide, check the Transmission Control Module (TCM) pins,

terminals, and connectors for shorts, corrosion, damage, or terminal push out. Pay particular attention to all power and ground circuits. If no problems are found, replace and program the TCM in accordance with the Service Information.

- Refer to **STANDARD PROCEDURE** and perform the AS68RC VERIFICATION TEST.

No

- Repair the (T806) Pressure Switch 7 signal circuit for an open.
- Refer to **STANDARD PROCEDURE** and perform the AS68RC VERIFICATION TEST.

7. **CHECK INTERNAL TRANSMISSION**
   1. Turn the ignition off to the lock position.
   2. Remove the transmission oil pan.
   3. Check the internal transmission harness, pins, terminals, and connectors for shorts, corrosion, damage, or terminal push out.
   4. Visually inspect the valve body for debris, damage or leaking hydraulic paths.
   5. Visually inspect for sticking or binding Control Valve(s).

   Were there any problems found?

   Yes

   - Repair as necessary.
   - Refer to **STANDARD PROCEDURE** and perform the AS68RC VERIFICATION TEST.

   No

   - Replace the Pressure Switch 7 in accordance with the Service Information.
   - Refer to **STANDARD PROCEDURE** and perform the AS68RC VERIFICATION TEST.

8. **CHECK WIRING AND CONNECTORS**
   1. The conditions necessary to set the DTC are not present at this time.
   2. Using the schematics as a guide, inspect the wiring and connectors specific to this circuit.
   3. Wiggle the wires while checking for shorted and open circuits.
   4. Check for any Service Bulletins that may apply.

   Were there any problems found?

   Yes

   - Repair as necessary.
   - Refer to **STANDARD PROCEDURE** and perform the AS68RC VERIFICATION TEST.

   No

- Test Complete.

P0798-PRESSURE CONTROL SOLENOID C CIRCUIT

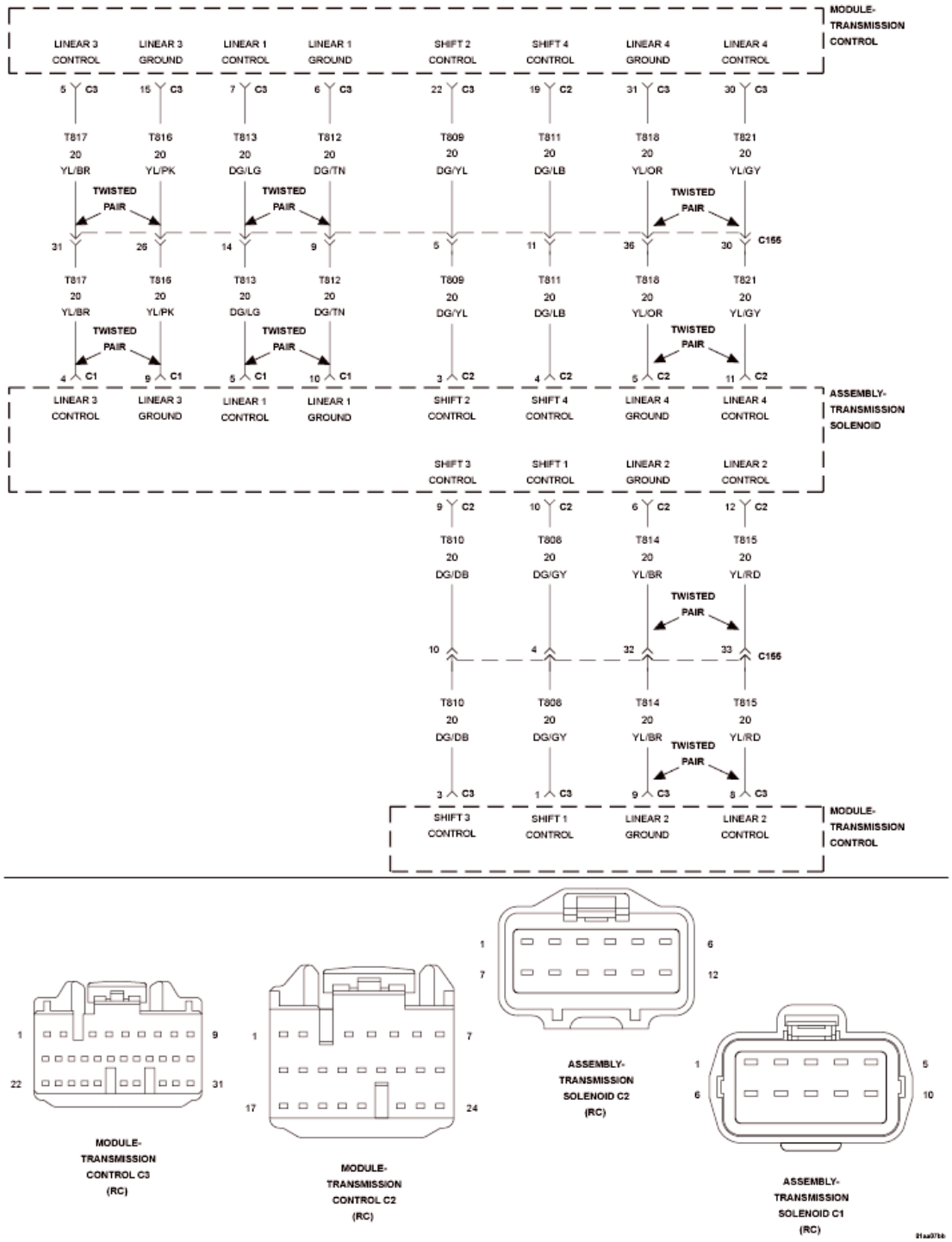

Fig. 104: Transmission Solenoid Assembly Wiring Diagram
Courtesy of CHRYSLER GROUP, LLC

For a complete wiring diagram, **refer to appropriate SYSTEM WIRING DIAGRAMS article** .

THEORY OF OPERATION

The Linear Solenoid 3 is used to control input pressure to the Control Valve 3. The Control Valve 3 uses the input to modulate the line pressure to the appropriate supply pressure for the clutch. The Transmission Control Module (TCM) monitors the Solenoid current load and resistance. If a fault is detected, the transmission will go into limp in mode, the Torque Converter Clutch (TCC) will be disabled, the limp in gear will vary based on the current gear and other conditions, and the MIL will be illuminated.

DIAGNOSTIC TEST

When Monitored:

- Ignition on, engine running.

Set Condition:

- Solenoid current is greater than or equal to 4 amps for more than 100 ms or Solenoid resistance is greater than or equal to 100k Ohms for more than 65 ms.

POSSIBLE CAUSES

Possible Causes
(T817) LINEAR SOLENOID 3 CONTROL CIRCUIT OPEN
(T817) LINEAR SOLENOID 3 CONTROL CIRCUIT SHORT TO GROUND
(T817) LINEAR SOLENOID 3 CONTROL CIRCUIT SHORT TO VOLTAGE
(T817) LINEAR SOLENOID 3 CONTROL CIRCUIT SHORT TO ANOTHER CIRCUIT
(T816) LINEAR SOLENOID 3 GROUND CIRCUIT OPEN
(T816) LINEAR SOLENOID 3 GROUND CIRCUIT SHORT TO GROUND
(T816) LINEAR SOLENOID 3 GROUND CIRCUIT SHORT TO VOLTAGE
(T816) LINEAR SOLENOID 3 GROUND CIRCUIT SHORT TO ANOTHER CIRCUIT
LINEAR SOLENOID 3
TRANSMISSION CONTROL MODULE (TCM)

Always perform the AS68RC Pre-Diagnostic Troubleshooting procedure before proceeding. Refer to STANDARD PROCEDURE.

DIAGNOSTIC TEST

1. **CHECK IF DTC IS CURRENT**
    1. Using the scan tool, read TCM DTCs.
    2. Record the Environmental Data and any DTCs.
    3. Clear DTCs.
    4. Using the recorded Environmental Data, along with the When Monitored and Set Conditions

above, operate the vehicle in the conditions that set the DTC.

5. Read TCM DTCs.

   Did the DTC reset?

   Yes

   - Go To 2.

   No

   - Go To 11.

2. **CHECK THE (T817) LINEAR SOLENOID 3 CONTROL CIRCUIT FOR AN OPEN**

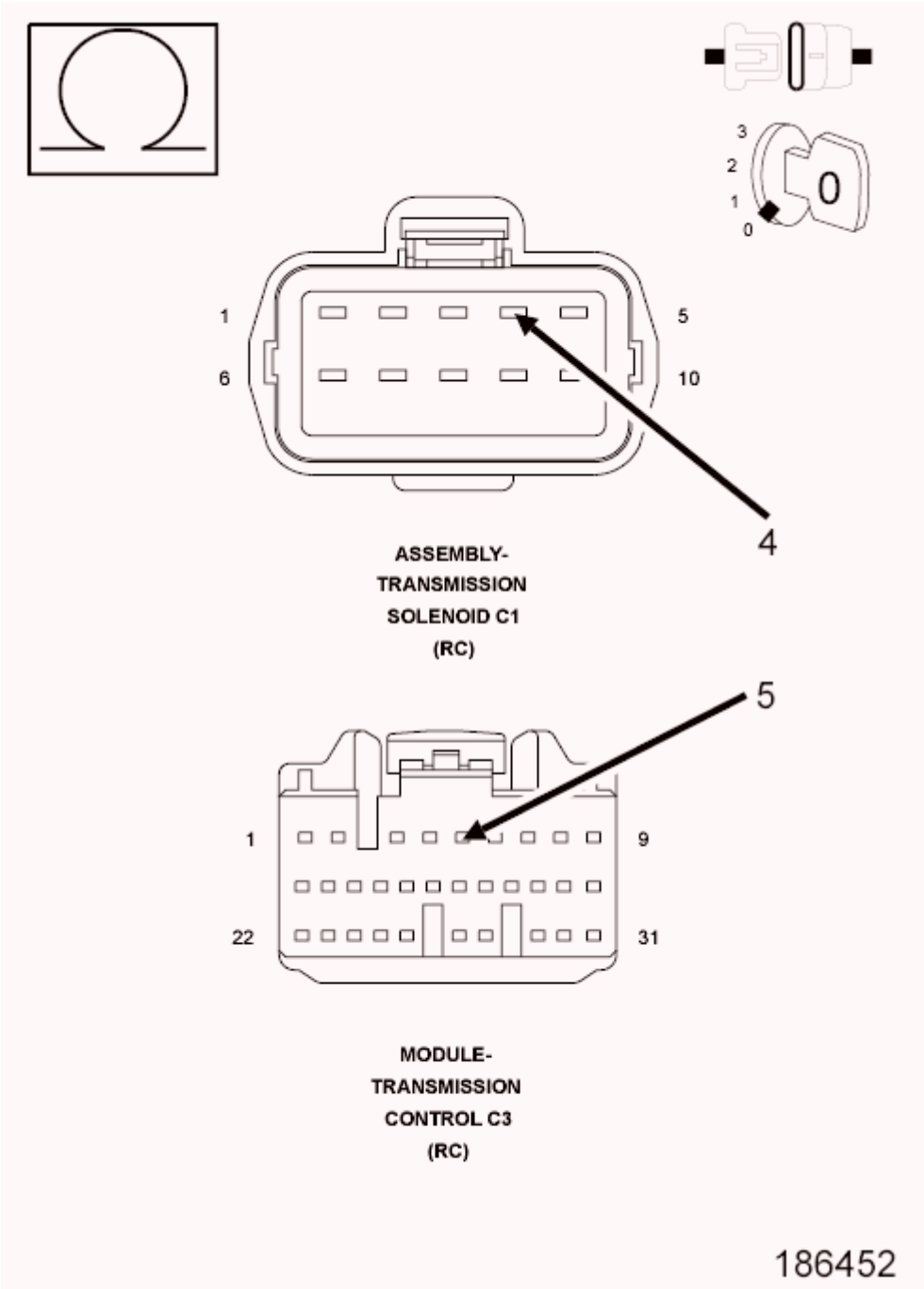

Fig. 105: Checking Linear Solenoid 3 Control Circuit For An Open
Courtesy of CHRYSLER GROUP, LLC

1. Turn the ignition off to the lock position.
2. Disconnect the Transmission Solenoid Assembly C2 harness connectors.
3. Disconnect the TCM C3 harness connector.

NOTE: Check connectors - Clean/repair as necessary.

4. Measure the resistance of the (T817) Linear Solenoid 3 Control circuit between the Transmission Solenoid Assembly C2 harness connector and the TCM C3 harness connector.

   Is the resistance below 5.0 Ohms?

   Yes

   - Go To 3.

   No

   - Repair the (T817) Linear Solenoid 3 Control circuit for an open.
   - Refer to **STANDARD PROCEDURE** and perform the AS68RC VERIFICATION TEST.

3. **CHECK THE (T817) LINEAR SOLENOID 3 CONTROL CIRCUIT FOR A SHORT TO GROUND**

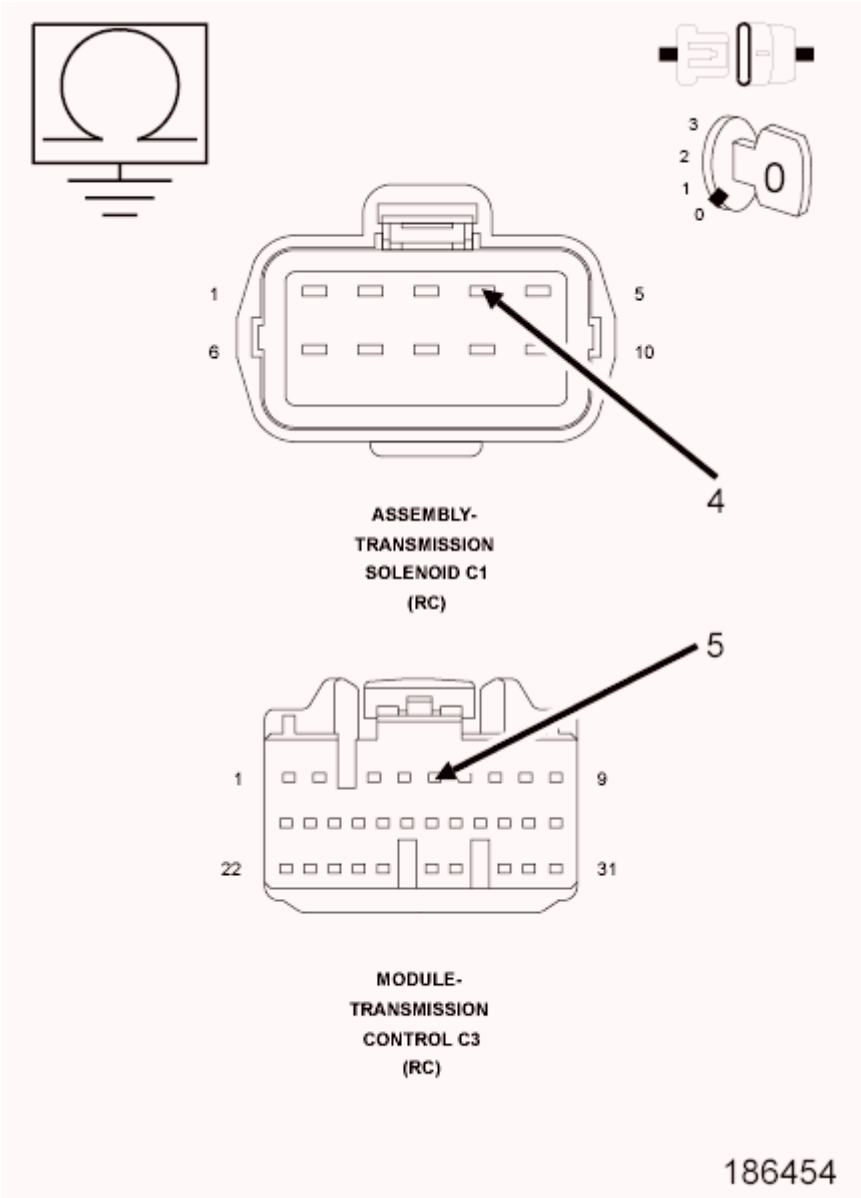

Fig. 106: Checking Linear Solenoid 3 Control Circuit For A Short To Ground
Courtesy of CHRYSLER GROUP, LLC

1. Measure the resistance between ground and the (T817) Linear Solenoid 3 Control circuit.

   Is the resistance below 100k Ohms?

   Yes

   - Repair the (T817) Linear Solenoid 3 Control circuit for a short to ground.
   - Refer to **STANDARD PROCEDURE** and perform the AS68RC VERIFICATION TEST.

   No

- Go To 4.

4. **CHECK THE (T817) LINEAR SOLENOID 3 CONTROL CIRCUIT SHORT TO VOLTAGE**

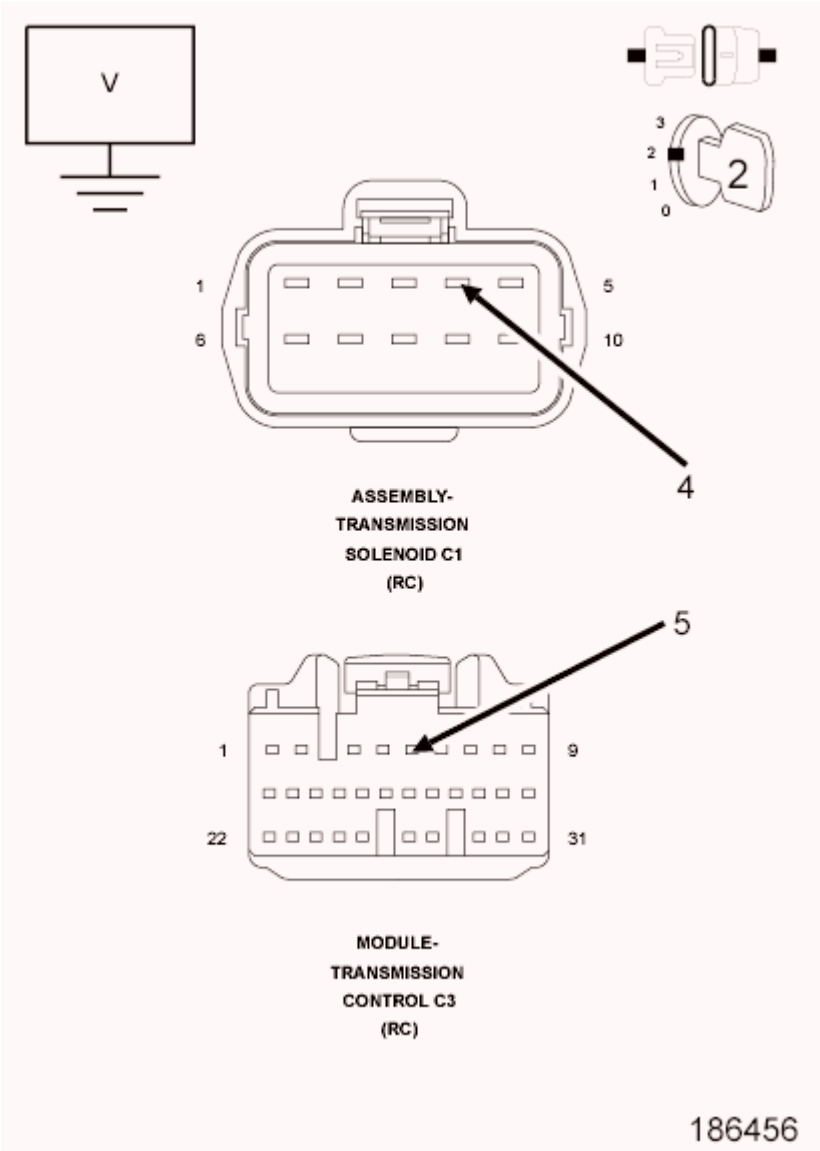

Fig. 107: Checking Linear Solenoid 3 Control Circuit Short To Voltage
Courtesy of CHRYSLER GROUP, LLC

1. Ignition on, engine not running.
2. Measure the voltage of the (T817) Linear Solenoid 3 Control circuit.

   Is the voltage above 0.5 of a volt?

   Yes

   - Repair the (T817) Linear Solenoid 3 Control circuit for a short to voltage.

- Refer to **STANDARD PROCEDURE** and perform the AS68RC VERIFICATION TEST.

No

- Go To 5.

5. **CHECK THE (T817) LINEAR SOLENOID 3 CONTROL CIRCUIT FOR A SHORT TO ANOTHER CIRCUIT**

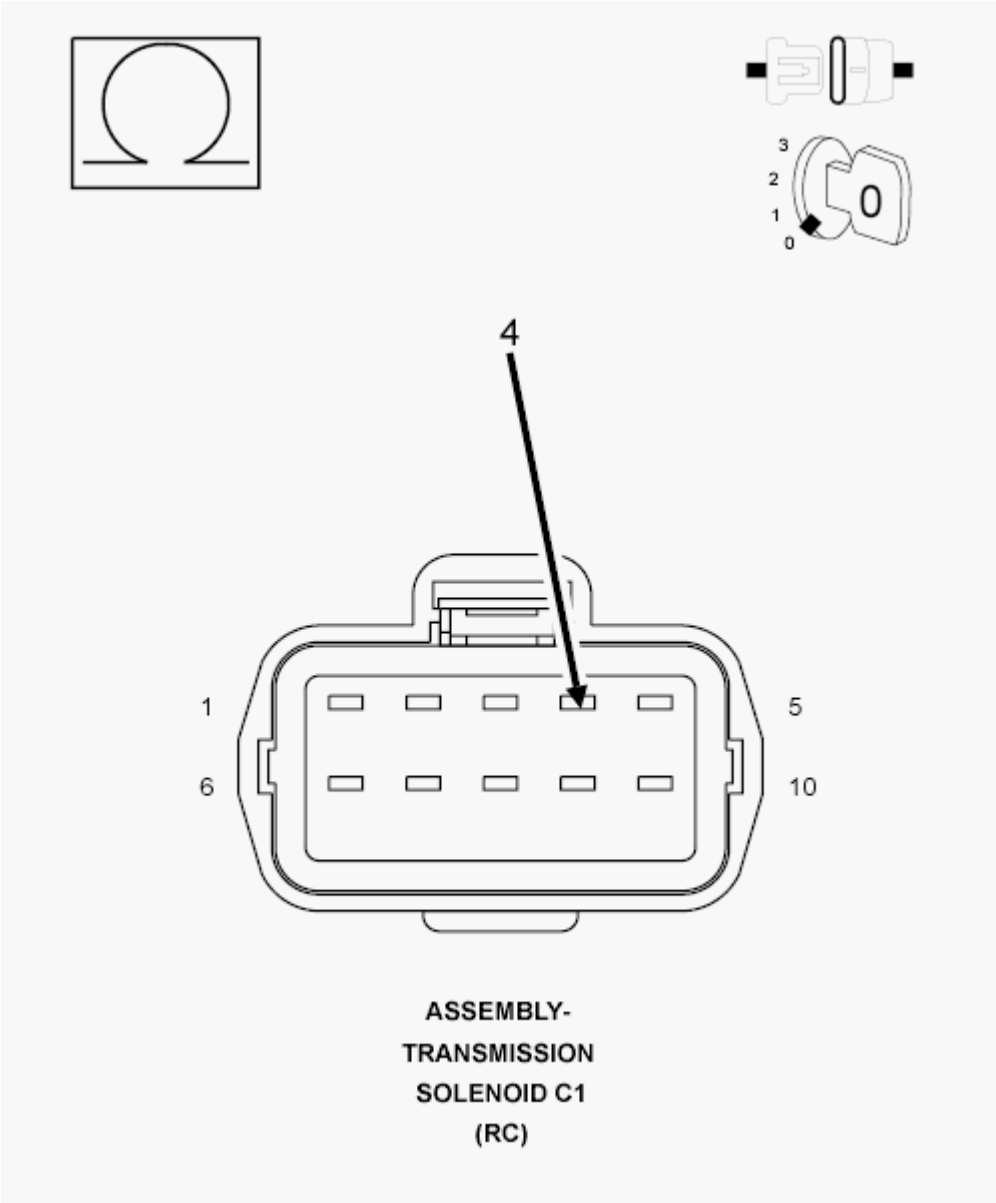

Fig. 108: Checking Linear Solenoid 3 Control Circuit For A Short To Another Circuit
Courtesy of CHRYSLER GROUP, LLC

1. Turn the ignition off to the lock position.
2. Measure the resistance between the (T817) Linear Solenoid 3 Control circuit and all other circuits

in the Transmission Solenoid Assembly C2 harness connector.

Is the resistance below 100k Ohms between the (T817) Linear Solenoid 3 Control circuit and any other circuit in the Transmission Solenoid Assembly harness connector?

Yes

- Repair the (T817) Linear Solenoid 3 Control circuit for a short to another circuit(s).
- Refer to **STANDARD PROCEDURE** and perform the AS68RC VERIFICATION TEST.

No

- Go To 6.

6. **CHECK THE (T816) LINEAR SOLENOID 3 GROUND CIRCUIT FOR AN OPEN**

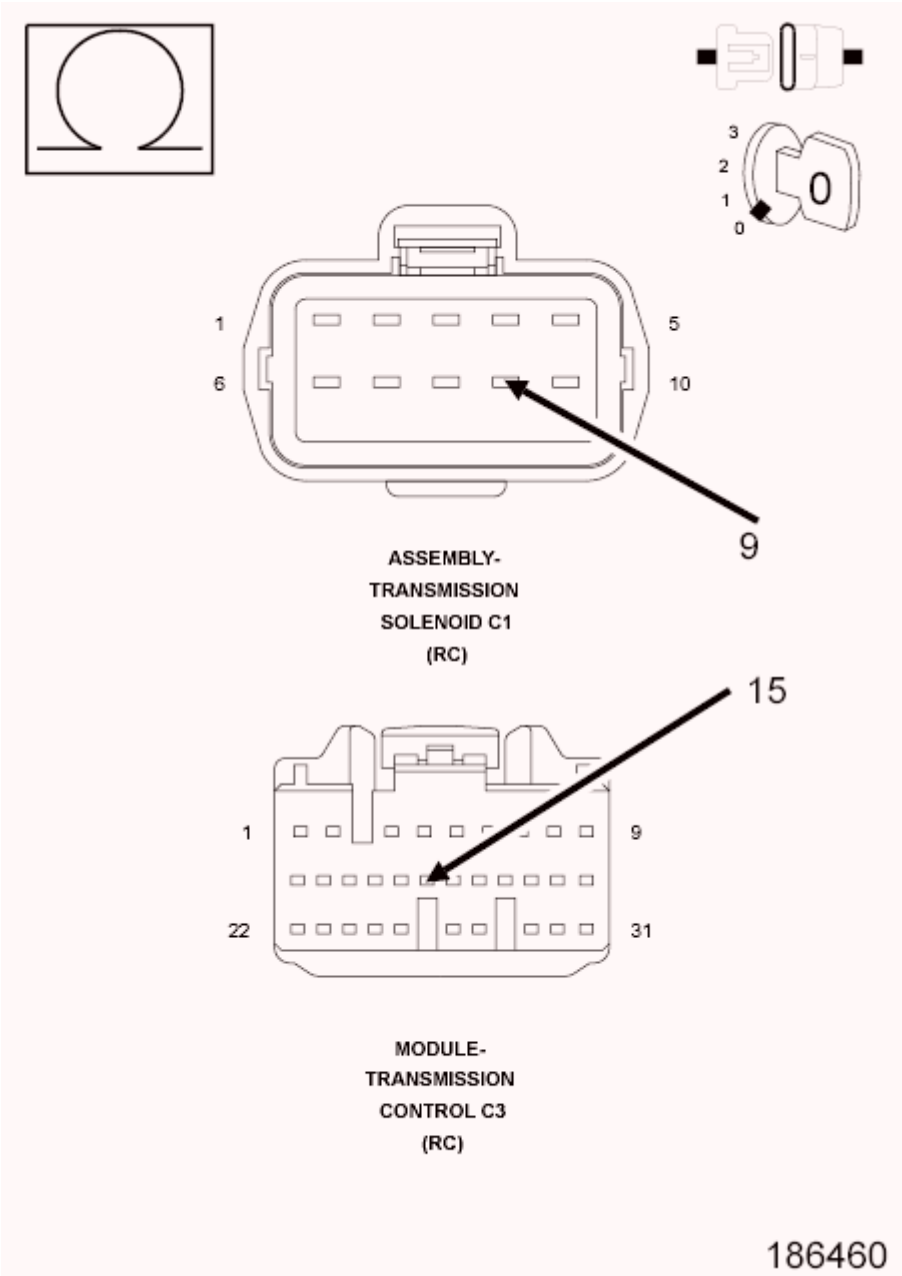

Fig. 109: Checking Linear Solenoid 3 Ground Circuit For An Open
Courtesy of CHRYSLER GROUP, LLC

1. Measure the resistance of the (T816) Linear Solenoid 3 Ground circuit between the Transmission Solenoid Assembly C2 harness connector and the TCM C3 harness connector.

   Is the resistance below 5.0 Ohms?

   Yes

   - Go To 7.

No

- Repair the (T816) Linear Solenoid 3 Ground circuit for an open.
- Refer to **STANDARD PROCEDURE** and perform the AS68RC VERIFICATION TEST.

7. **CHECK THE (T816) LINEAR SOLENOID 3 GROUND CIRCUIT FOR A SHORT TO GROUND**

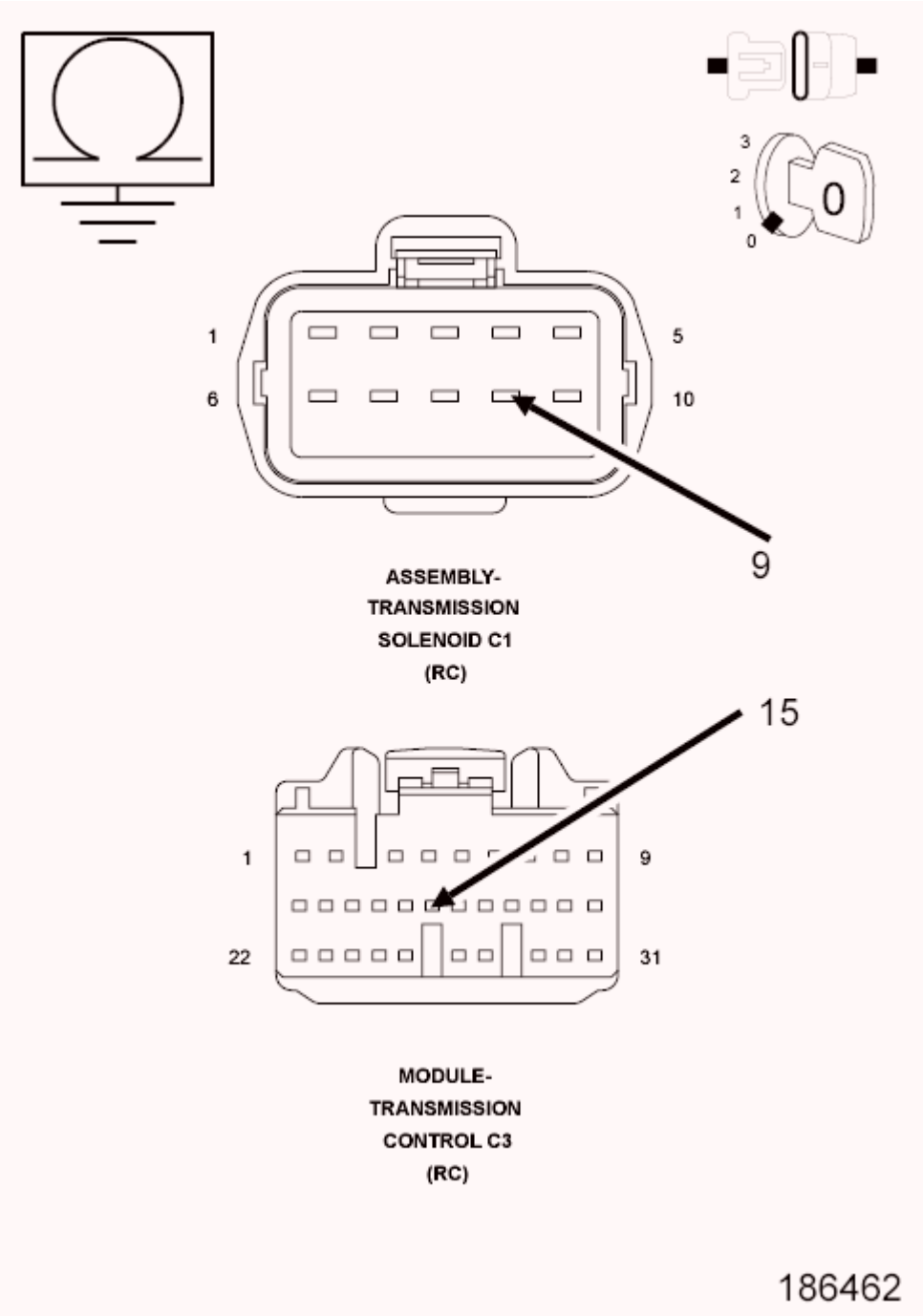

Fig. 110: Checking Linear Solenoid 3 Ground Circuit For A Short To Ground
Courtesy of CHRYSLER GROUP, LLC

1. Measure the resistance between ground and the (T816) Linear Solenoid 3 Ground circuit.

   Is the resistance below 100k Ohms?

   Yes

   - Repair the (T816) Linear Solenoid 3 Ground circuit for a short to ground.
   - Refer to **STANDARD PROCEDURE** and perform the AS68RC VERIFICATION TEST.

   No

   - Go To 8.

8. **CHECK THE (T816) LINEAR SOLENOID 3 GROUND CIRCUIT SHORT TO VOLTAGE**

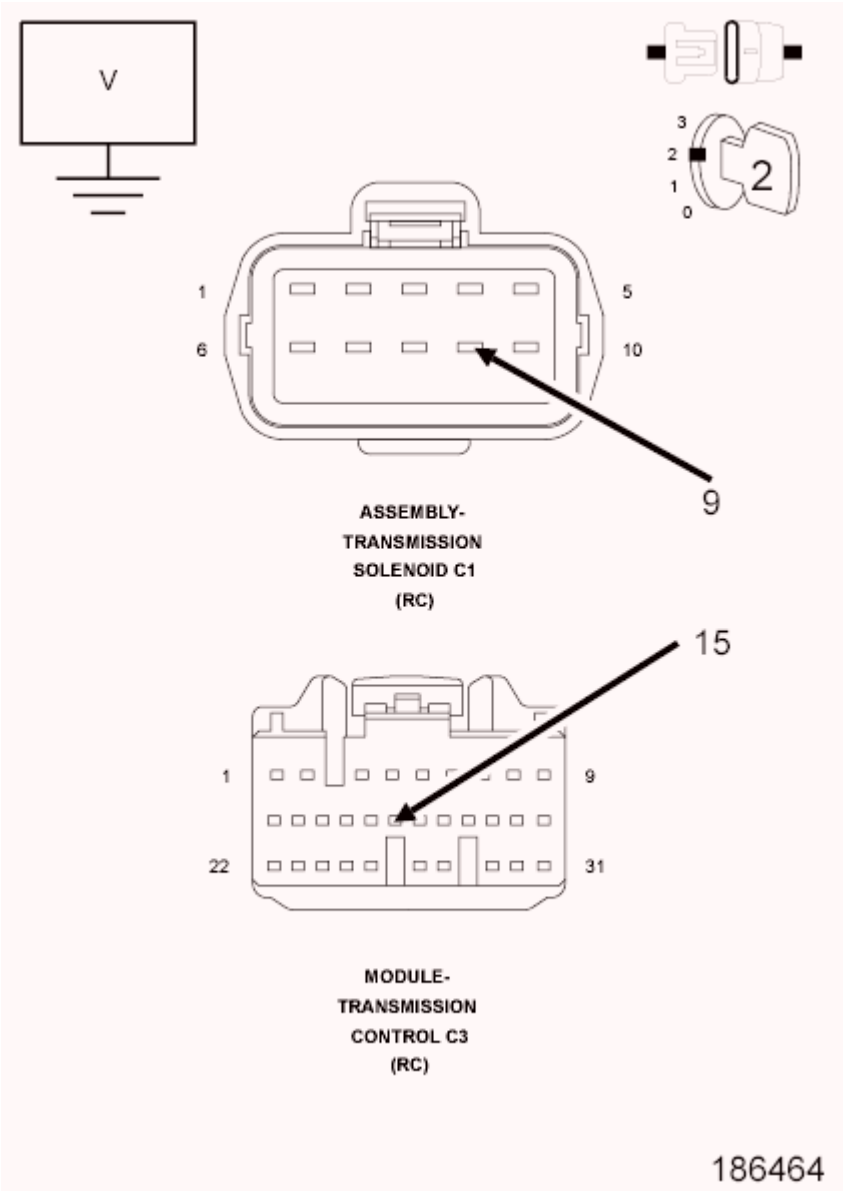

Fig. 111: Checking Linear Solenoid 3 Ground Circuit Short To Voltage
Courtesy of CHRYSLER GROUP, LLC

1. Ignition on, engine not running.
2. Measure the voltage of the (T816) Linear Solenoid 3 Ground circuit.

   Is the voltage above 0.5 of a volt?

   Yes

   - Repair the (T816) Linear Solenoid 3 Ground circuit for a short to voltage.
   - Refer to **STANDARD PROCEDURE** and perform the AS68RC VERIFICATION TEST.

   No

   - Go To 9.

9. **CHECK THE (T816) LINEAR SOLENOID 3 GROUND CIRCUIT SHORT TO ANOTHER CIRCUIT**

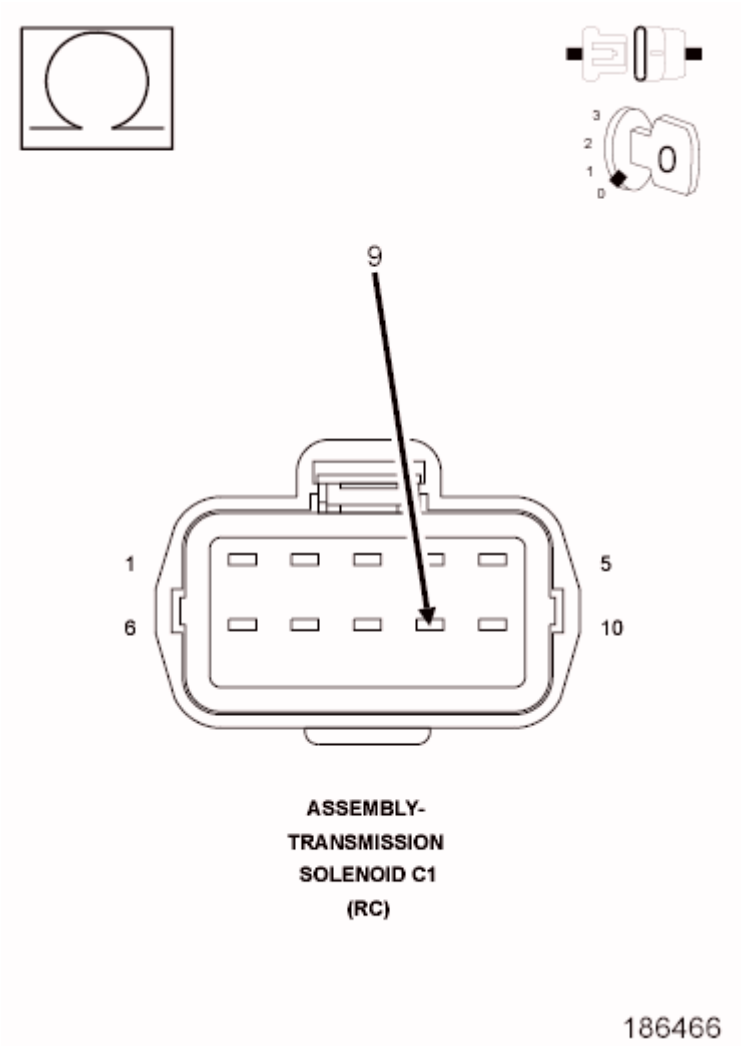

Fig. 112: Checking Linear Solenoid 3 Ground Circuit Short To Another Circuit
Courtesy of CHRYSLER GROUP, LLC

1. Turn the ignition off to the lock position.
2. Measure the resistance between the (T816) Linear Solenoid 3 Ground circuit and all other circuits in the Transmission Solenoid Assembly C2 harness connector.

   Is the resistance below 100k Ohms between the (T816) Linear Solenoid 3 Ground circuit and any other circuit in the Transmission Solenoid Assembly C2 harness connector?

   Yes

   - Repair the (T816) Linear Solenoid 3 Ground circuit for a short to another circuit(s).
   - Refer to **STANDARD PROCEDURE** and perform the AS68RC VERIFICATION TEST.

   No

   - Go To 10.

10. **CHECK THE LINEAR SOLENOID 3**

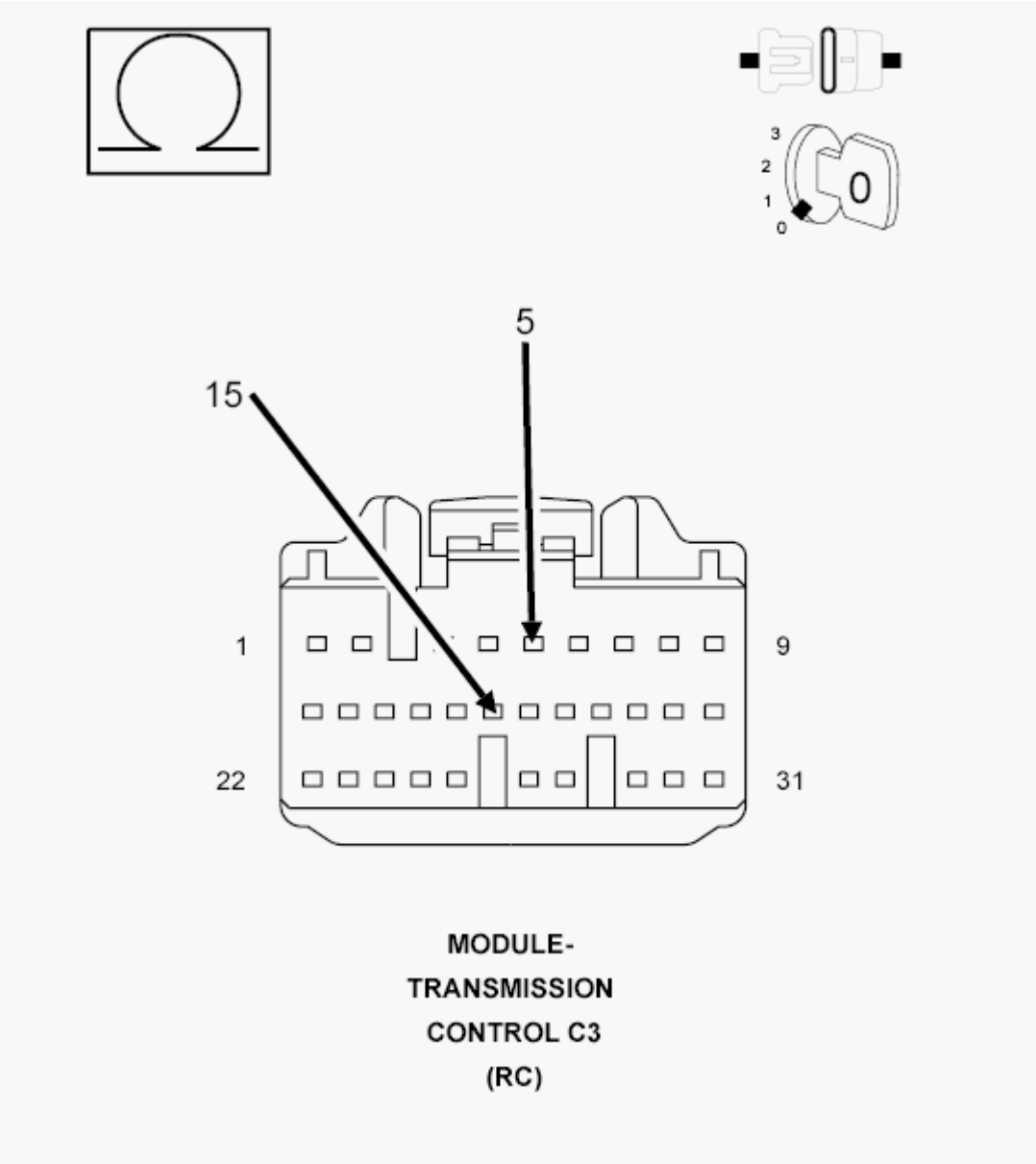

Fig. 113: Checking Linear Solenoid 3 Circuits
Courtesy of CHRYSLER GROUP, LLC

1. Turn the ignition off to the lock position.
2. Reconnect the Transmission Solenoid Assembly C2 Harness connector.
3. Measure the resistance between the (T817) Linear Solenoid 3 Control and the (T816) Linear Solenoid 3 Ground circuit on the appropriate terminals of the TCM C3 harness connector.

   Is the resistance of the Linear Solenoid 3 5.5 Ohms (± 0.5 of an Ohm)?

   Yes

- Using the schematics as a guide, check the Transmission Control Module (TCM) pins, terminals, and connectors for corrosion, damage, or terminal push out. Pay particular attention to all power and ground circuits. If no problems are found, replace and program the TCM in accordance with the Service Information.
- Refer to **STANDARD PROCEDURE** and perform the AS68RC VERIFICATION TEST.

No

- Replace the Linear Solenoid 3 in accordance with the Service Information.

11. **CHECK WIRING AND CONNECTORS**
    1. The conditions necessary to set the DTC are not present at this time.
    2. Using the schematics as a guide, inspect the wiring and connectors specific to this circuit.
    3. Wiggle the wires while checking for shorted and open circuits.
    4. Check for any Service Bulletins that may apply.

    Were there any problems found?

    Yes

    - Repair as necessary.
    - Refer to **STANDARD PROCEDURE** and perform the AS68RC VERIFICATION TEST.

    No

    - Test Complete.

P0973-SHIFT SOLENOID A CONTROL CIRCUIT LOW

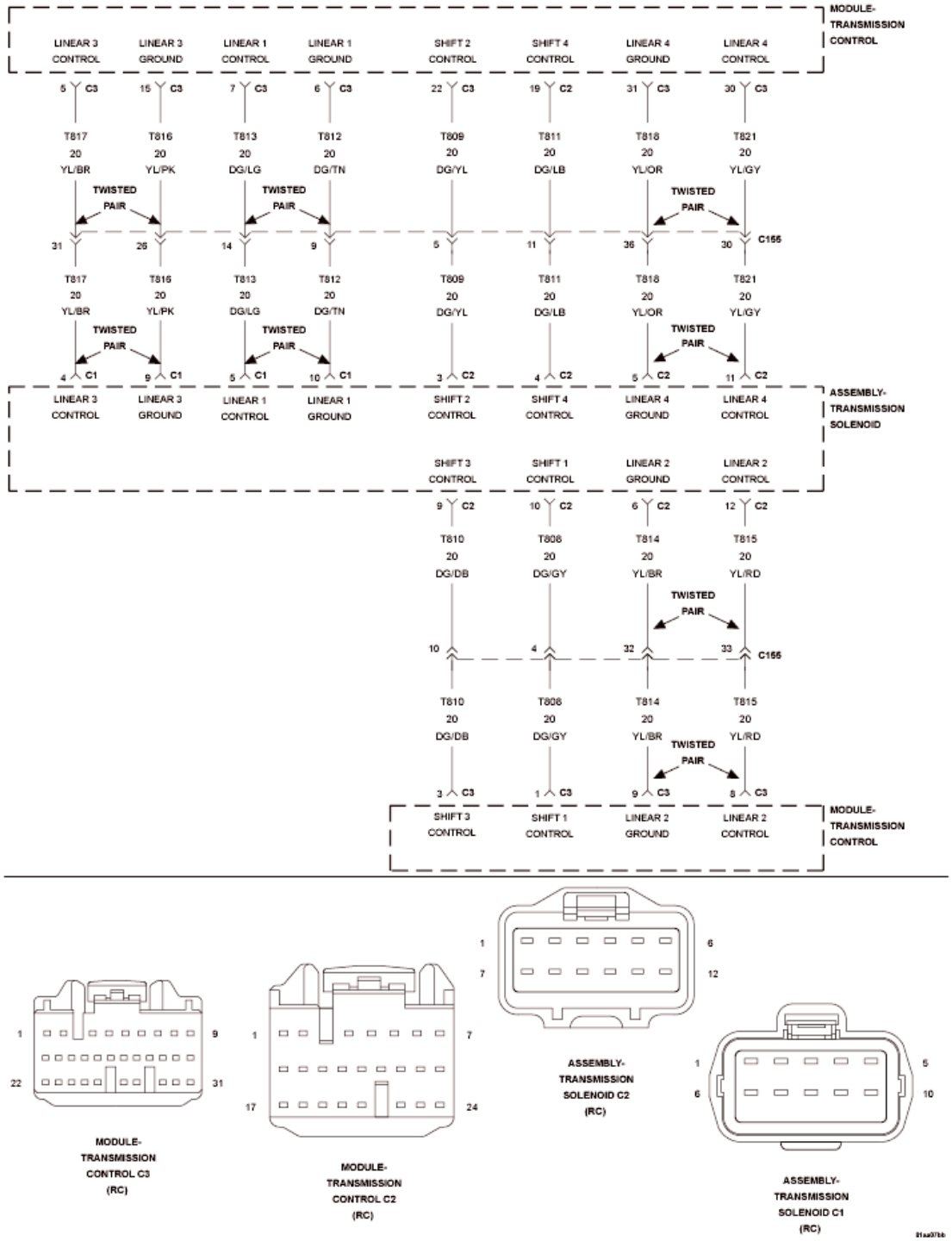

Fig. 114: Transmission Solenoid Assembly Wiring Diagram
Courtesy of CHRYSLER GROUP, LLC

For a complete wiring diagram, **refer to appropriate SYSTEM WIRING DIAGRAMS article** .

THEORY OF OPERATION

The Shift (On/Off) Solenoid 1 is used to switch hydraulic paths on the Shift Valve 1 which will direct a gear shift.

DIAGNOSTIC TEST

When Monitored:

- Ignition on, engine running.

Set Condition:

- Solenoid current is greater than or equal to 4 amps for more than 100 ms.

POSSIBLE CAUSES

Possible Causes
(T808) SHIFT (ON/OFF) SOLENOID 1 SHORT TO GROUND
(T808) SHIFT (ON/OFF) SOLENOID 1 SHORT TO ANOTHER CIRCUIT
SHIFT (ON/OFF) SOLENOID 1
TRANSMISSION CONTROL MODULE (TCM)

Always perform the AS68RC Pre-Diagnostic Troubleshooting procedure before proceeding. Refer to STANDARD PROCEDURE.

DIAGNOSTIC TEST

1. **CHECK IF DTC IS CURRENT**
    1. Using the scan tool, read TCM DTCs.
    2. Record the Environmental Data and any DTCs.
    3. Clear DTCs.
    4. Using the recorded Environmental Data, along with the When Monitored and Set Conditions above, operate the vehicle in the conditions that set the DTC.
    5. Read TCM DTCs.

    Did the DTC reset?

    Yes

    - Go To 2.

    No

    - Go To 7.
2. **CHECK THE (T808) SHIFT (ON/OFF) SOLENOID 1 CONTROL CIRCUIT FOR AN OPEN**

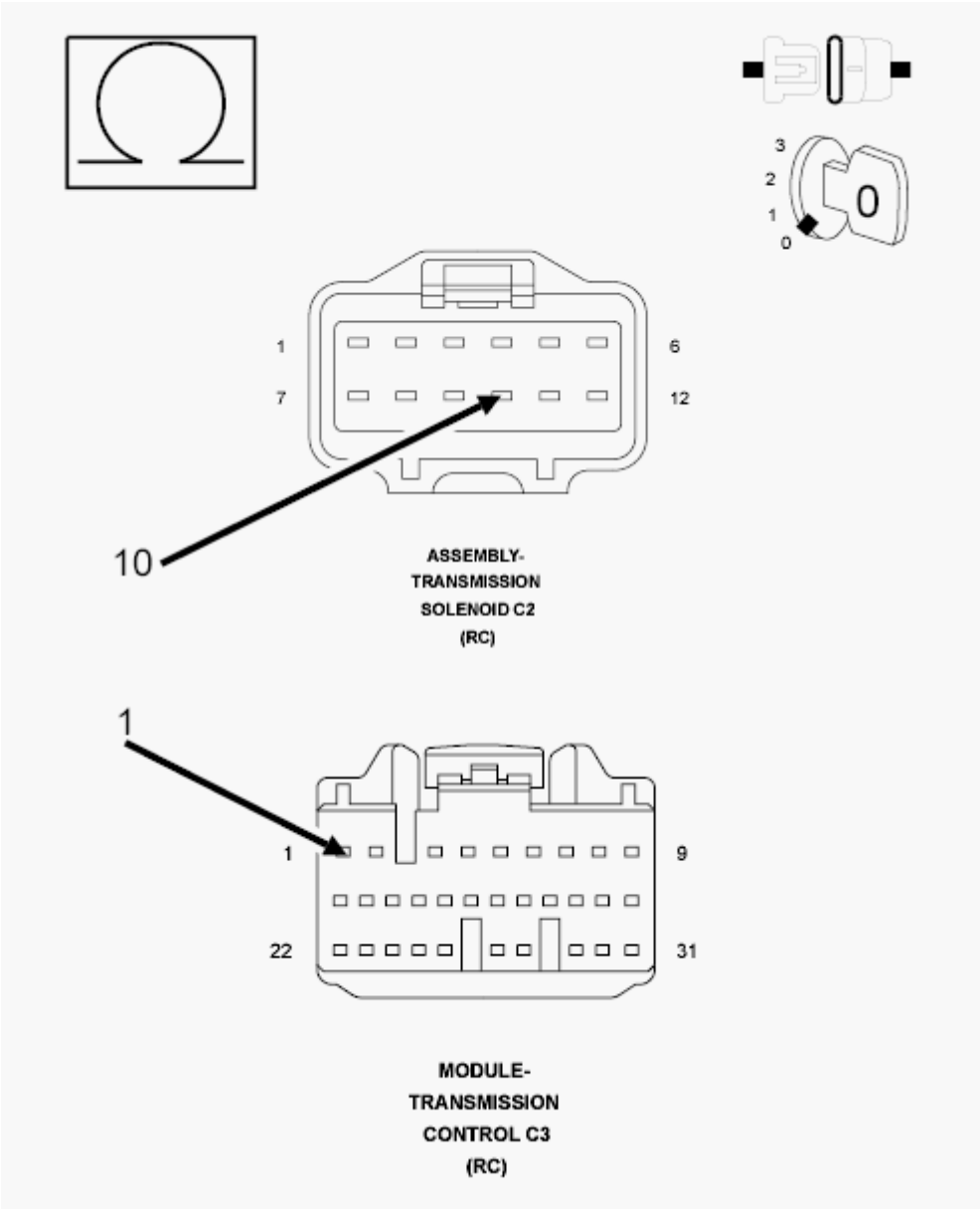

Fig. 115: Checking Shift (On/Off) Solenoid 1 Control Circuit For An Open
Courtesy of CHRYSLER GROUP, LLC

1. Turn the ignition off to the lock position.
2. Disconnect the Transmission Solenoid Assembly C2 harness connectors.
3. Disconnect the TCM C3 harness connector.

NOTE: Check connectors - Clean/repair as necessary.

4. Measure the resistance of the (T808) Shift (On/Off) Solenoid 1 Control circuit between the Transmission Solenoid Assembly C2 harness connector and the TCM C3 harness connector.

   Is the resistance below 5.0 Ohms?

Yes

- Go To 3.

No

- Repair the (T808) Shift (On/Off) Solenoid 1 Control circuit for an open.
- Refer to **STANDARD PROCEDURE** and perform the AS68RC VERIFICATION TEST.

3. **CHECK THE (T808) SHIFT (ON/OFF) SOLENOID 1 CONTROL CIRCUIT FOR A SHORT TO GROUND**

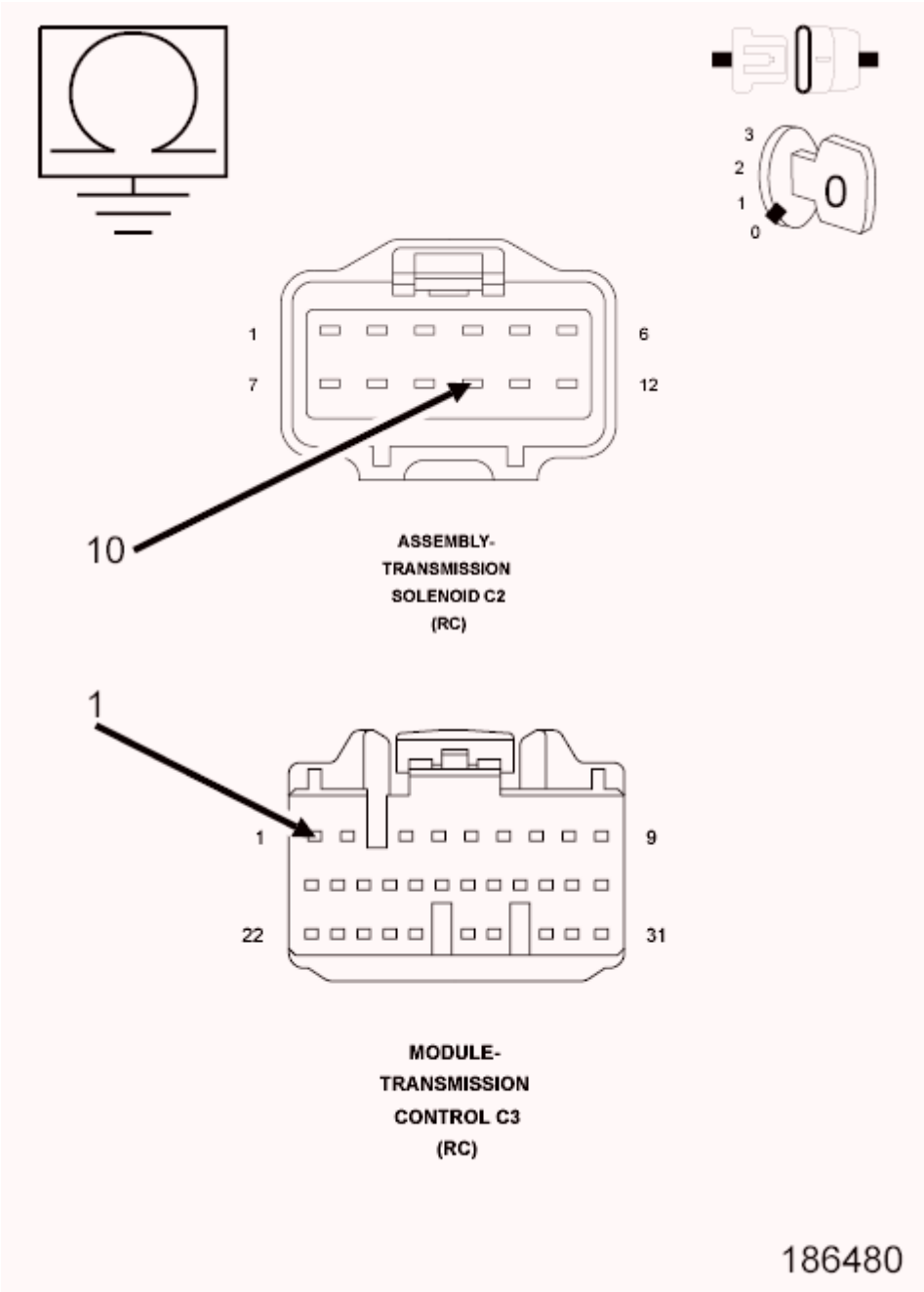

Fig. 116: Checking Shift (On/Off) Solenoid 1 Control Circuit For A Short To Ground
Courtesy of CHRYSLER GROUP, LLC

1. Measure the resistance between ground and the (T808) Shift (On/Off) Solenoid 1 Control circuit.

   Is the resistance below 100k Ohms?

   Yes

   - Repair the (T808) Shift (On/Off) Solenoid 1 Control circuit for a short to ground.

- Refer to **STANDARD PROCEDURE** and perform the AS68RC VERIFICATION TEST.

No

- Go To 4.

4. **CHECK THE (T808) SHIFT (ON/OFF) SOLENOID 1 CONTROL CIRCUIT SHORT TO VOLTAGE**

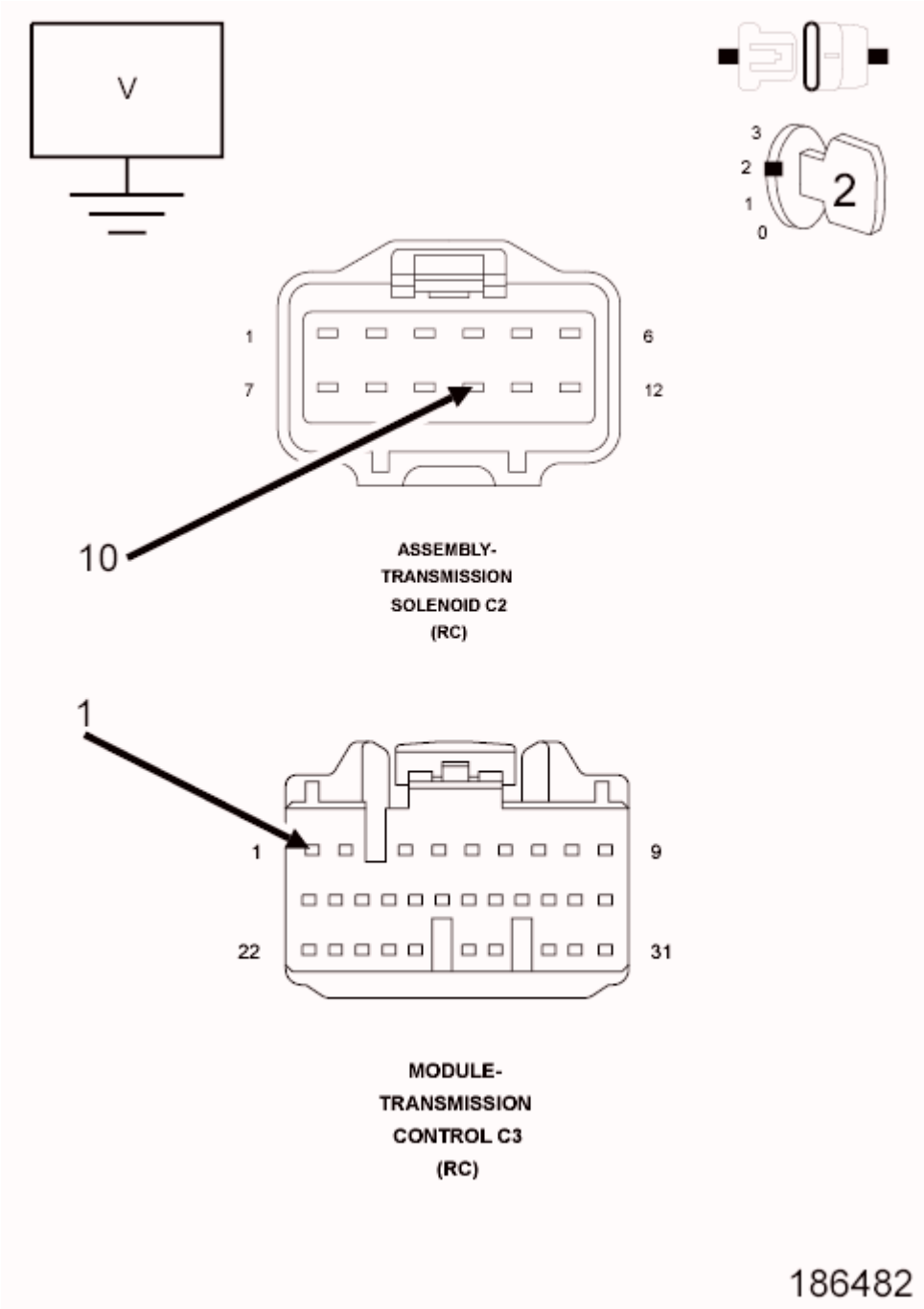

Fig. 117: Checking Shift (On/Off) Solenoid 1 Control Circuit Short To Voltage

Courtesy of CHRYSLER GROUP, LLC

1. Ignition on, engine not running.
2. Measure the voltage of the (T808) Shift (On/Off) Solenoid 1 Control circuit.

   Is the voltage above 0.5 of a volt?

   Yes

   - Repair the (T808) Shift (On/Off) Solenoid 1 Control circuit for a short to voltage.
   - Refer to **STANDARD PROCEDURE** and perform the AS68RC VERIFICATION TEST.

   No

   - Go To 5.

5. **CHECK THE (T808) SHIFT (ON/OFF) SOLENOID 1 CONTROL CIRCUIT FOR A SHORT TO ANOTHER CIRCUIT**

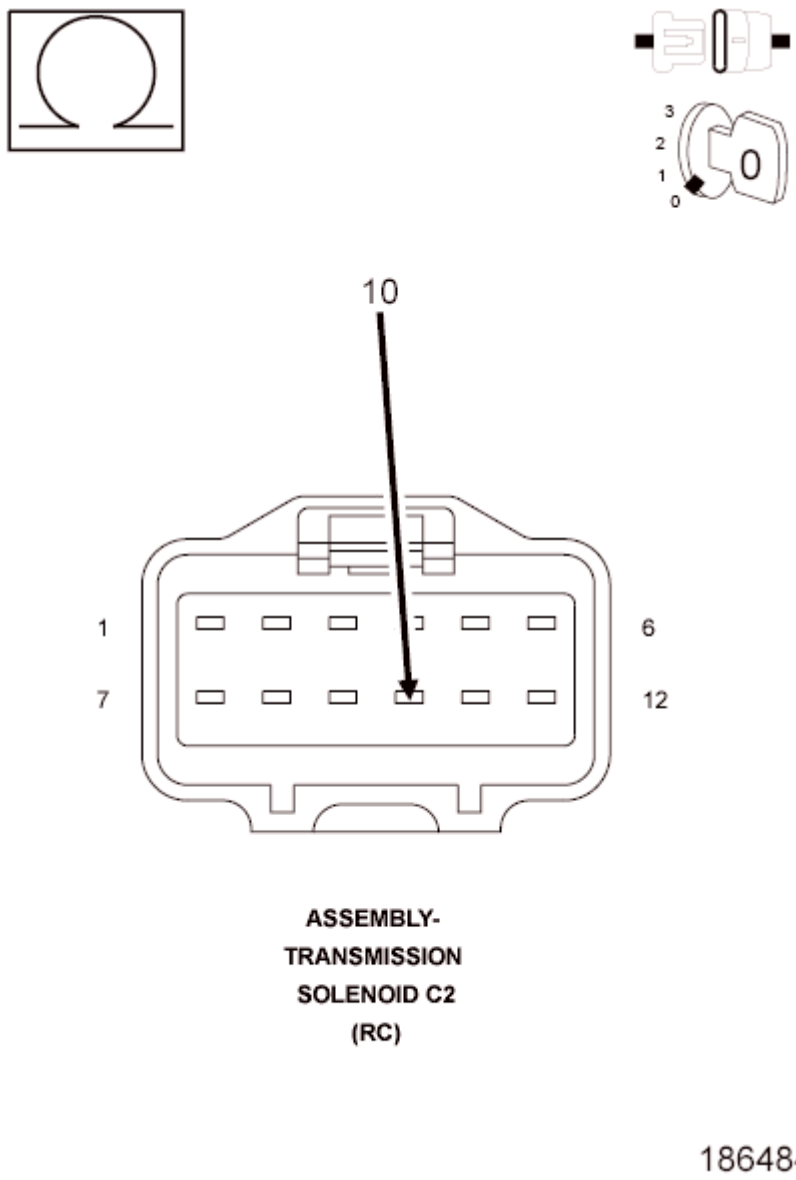

Fig. 118: Checking Shift (On/Off) Solenoid 1 Control Circuit For A Short To Another Circuit
Courtesy of CHRYSLER GROUP, LLC

1. Turn the ignition off to the lock position.
2. Measure the resistance between the (T808) Shift (On/Off) Solenoid 1 Control circuit and all other circuits in the Transmission Solenoid Assembly C2 harness connector.

   Is the resistance below 100k Ohms between the (T808) Shift (On/Off) Solenoid 1 Control circuit and any other circuit in the Transmission Solenoid Assembly harness connector?

   Yes

   - Repair the (T808) Shift (On/Off) Solenoid 1 Control circuit for a short to another circuit(s).
   - Refer to **STANDARD PROCEDURE** and perform the AS68RC VERIFICATION TEST.

No

- Go To 6.

6. **CHECK THE SHIFT (ON/OFF) SOLENOID 1**

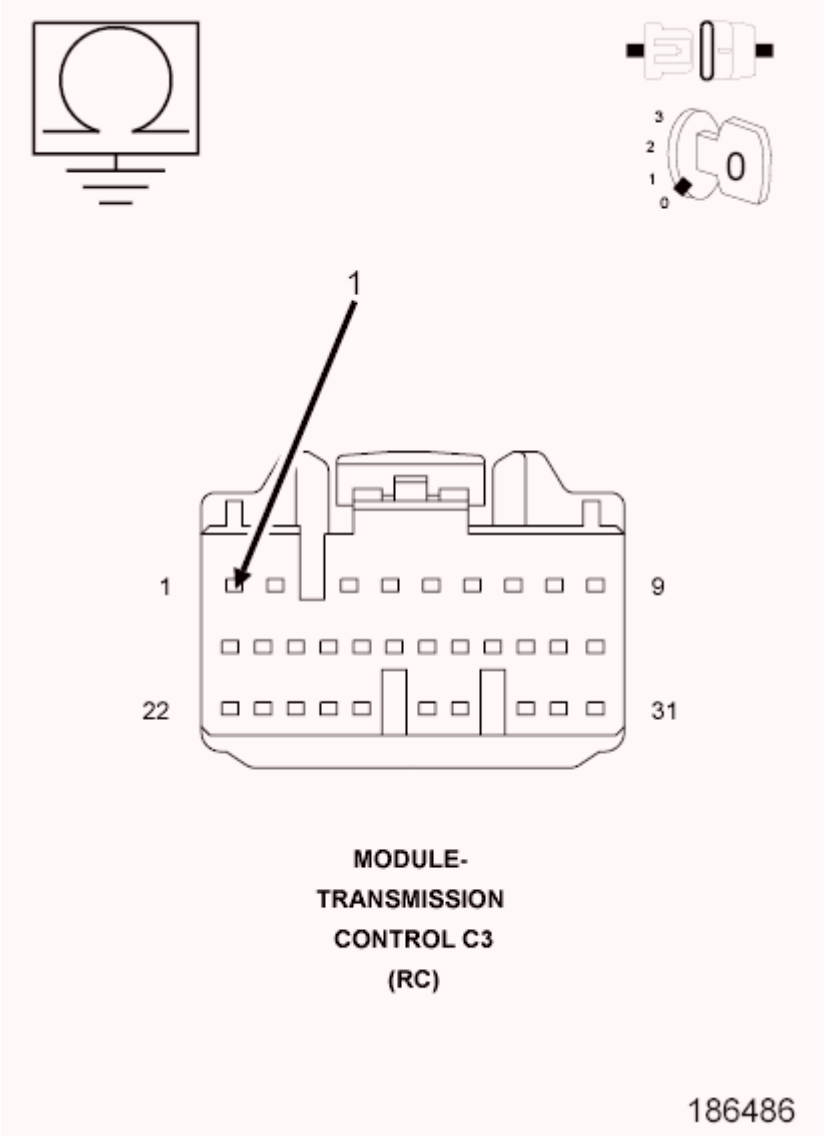

Fig. 119: Checking Shift (On/Off) Solenoid 1 And Circuits
Courtesy of CHRYSLER GROUP, LLC

1. Turn the ignition off to the lock position.
2. Reconnect the Transmission Solenoid Assembly C2 Harness connector.
3. Measure the resistance of the Shift (On/Off) Solenoid 1 between the (T808) Shift (On/Off) Solenoid 1 and ground at the TCM C3 harness connector.

   Is the resistance of the Shift (On/Off) Solenoid 1 13.0 Ohms (± 2.0 Ohms)?

Yes

- Using the schematics as a guide, check the Transmission Control Module (TCM) pins, terminals, and connectors for corrosion, damage, or terminal push out. Pay particular attention to all power and ground circuits. If no problems are found, replace and program the TCM in accordance with the Service Information.
- Refer to **STANDARD PROCEDURE** and perform the AS68RC VERIFICATION TEST.

No

- Replace the Shift (On/Off) Solenoid 1 in accordance with the Service Information.
- Refer to **STANDARD PROCEDURE** and perform the AS68RC VERIFICATION TEST.

7. **CHECK WIRING AND CONNECTORS**
   1. The conditions necessary to set the DTC are not present at this time.
   2. Using the schematics as a guide, inspect the wiring and connectors specific to this circuit.
   3. Wiggle the wires while checking for shorted and open circuits.
   4. Check for any Service Bulletins that may apply.

   Were there any problems found?

   Yes

   - Repair as necessary.
   - Refer to **STANDARD PROCEDURE** and perform the AS68RC VERIFICATION TEST.

   No

   - Test Complete.

P0974-SHIFT SOLENOID A CONTROL CIRCUIT HIGH

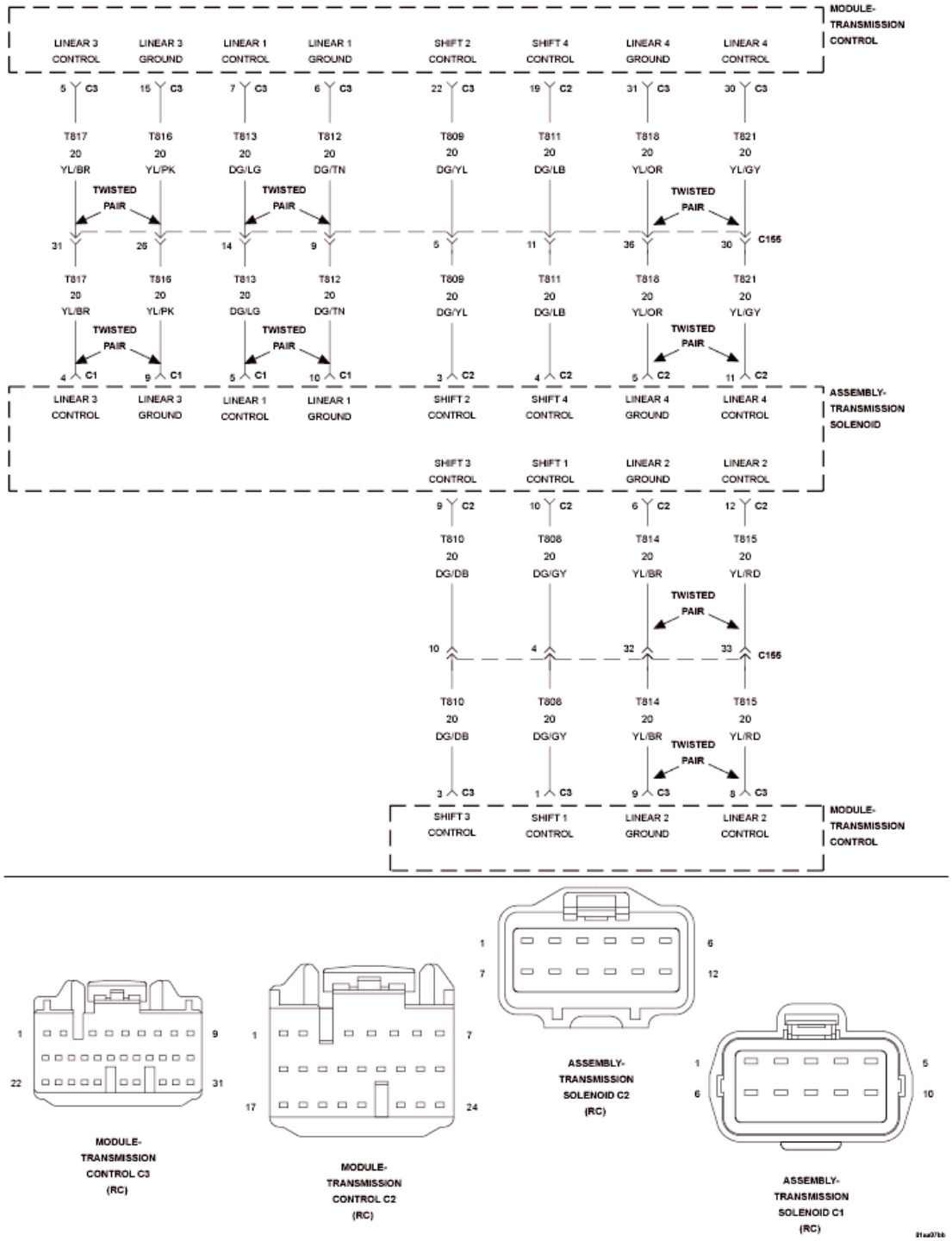

Fig. 120: Transmission Solenoid Assembly Wiring Diagram
Courtesy of CHRYSLER GROUP, LLC

For a complete wiring diagram, **refer to appropriate SYSTEM WIRING DIAGRAMS article** .

THEORY OF OPERATION

The Shift (On/Off) Solenoid 1 is used to switch hydraulic paths on the Shift Valve 1 which will direct a gear shift.

DIAGNOSTIC TEST

When Monitored:

- Ignition on, engine running.

Set Condition:

- Solenoid resistance is greater than or equal to 100k Ohms for more than 100 ms.

POSSIBLE CAUSES

Possible Causes
(T808) SHIFT (ON/OFF) SOLENOID 1 OPEN
(T808) SHIFT (ON/OFF) SOLENOID 1 SHORT TO VOLTAGE
SHIFT (ON/OFF) SOLENOID 1
TRANSMISSION CONTROL MODULE (TCM)

Always perform the AS68RC Pre-Diagnostic Troubleshooting procedure before proceeding. Refer to STANDARD PROCEDURE.

DIAGNOSTIC TEST

1. **CHECK IF DTC IS CURRENT**
    1. Using the scan tool, read TCM DTCs.
    2. Record the Environmental Data and any DTCs.
    3. Clear DTCs.
    4. Using the recorded Environmental Data, along with the When Monitored and Set Conditions above, operate the vehicle in the conditions that set the DTC.
    5. Read TCM DTCs.

    Did the DTC reset?

    Yes

    - Go To 2.

    No

    - Go To 7.
2. **CHECK THE (T808) SHIFT (ON/OFF) SOLENOID 1 CONTROL CIRCUIT FOR AN OPEN**

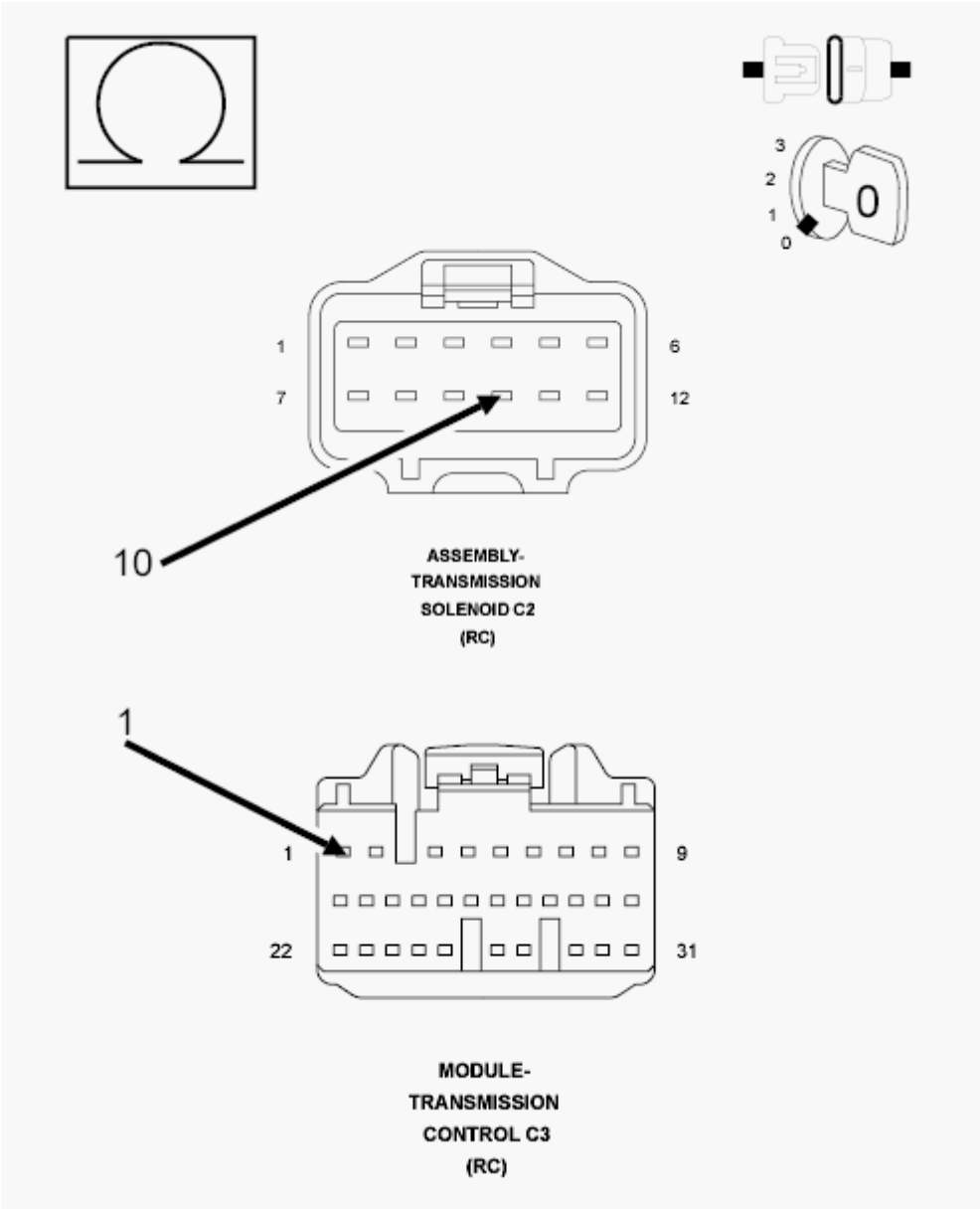

Fig. 121: Checking Shift (On/Off) Solenoid 1 Control Circuit For An Open
Courtesy of CHRYSLER GROUP, LLC

1. Turn the ignition off to the lock position.
2. Disconnect the Transmission Solenoid Assembly C2 harness connectors.
3. Disconnect the TCM C3 harness connector.

NOTE: Check connectors - Clean/repair as necessary.

4. Measure the resistance of the (T808) Shift (On/Off) Solenoid 1 Control circuit between the Transmission Solenoid Assembly C2 harness connector and the TCM C3 harness connector.

   Is the resistance below 5.0 Ohms?

Yes

- Go To 3.

No

- Repair the (T808) Shift (On/Off) Solenoid 1 Control circuit for an open.
- Refer to **STANDARD PROCEDURE** and perform the AS68RC VERIFICATION TEST.

3. **CHECK THE (T808) SHIFT (ON/OFF) SOLENOID 1 CONTROL CIRCUIT FOR A SHORT TO GROUND**

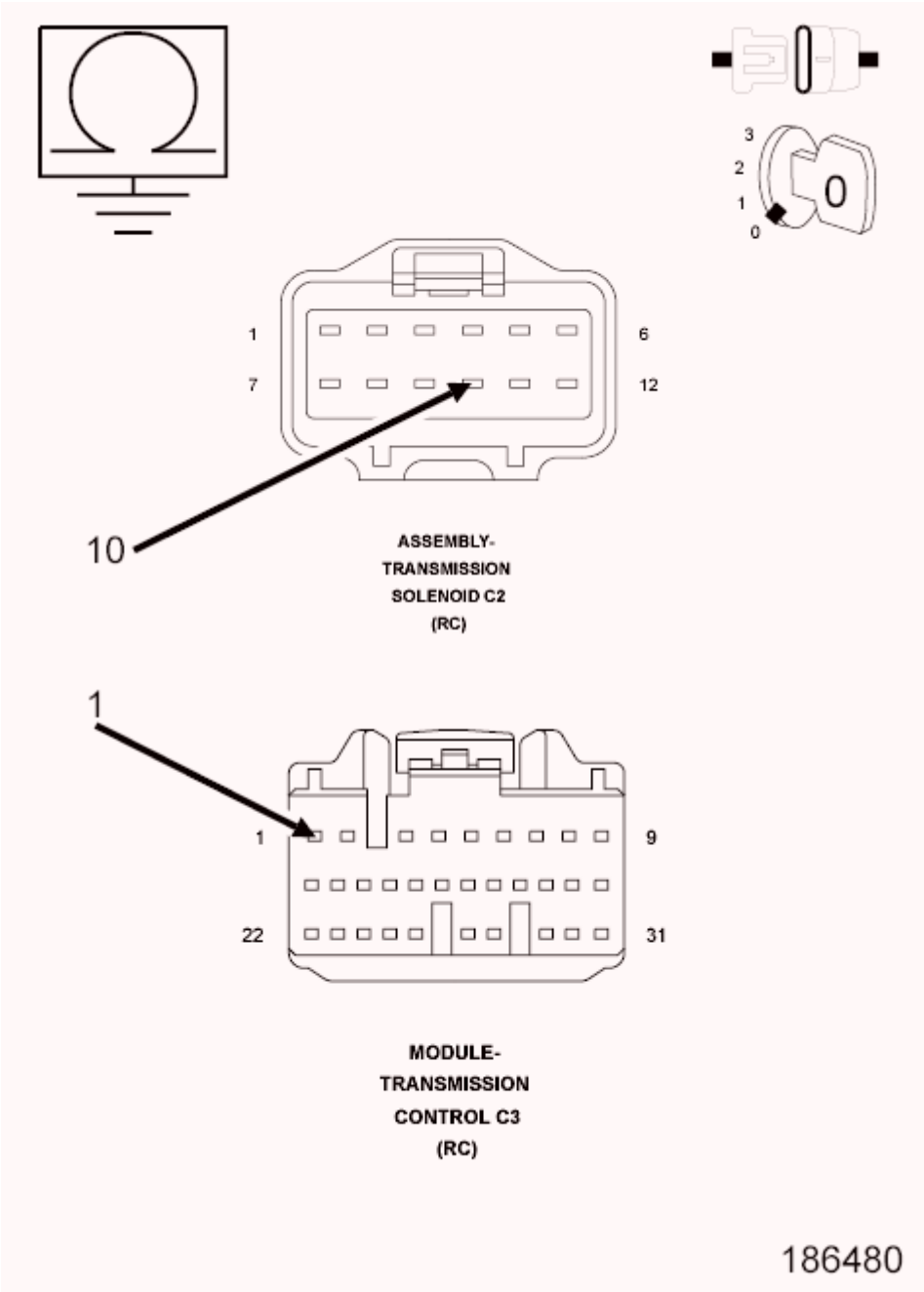

Fig. 122: Checking Shift (On/Off) Solenoid 1 Control Circuit For A Short To Ground
Courtesy of CHRYSLER GROUP, LLC

1. Measure the resistance between ground and the (T808) Shift (On/Off) Solenoid 1 Control circuit.

   Is the resistance below 100k Ohms?

   Yes

   - Repair the (T808) Shift (On/Off) Solenoid 1 Control circuit for a short to ground.

- Refer to **STANDARD PROCEDURE** and perform the AS68RC VERIFICATION TEST.

No

- Go To 4.

4. **CHECK THE (T808) SHIFT (ON/OFF) SOLENOID 1 CONTROL CIRCUIT SHORT TO VOLTAGE**

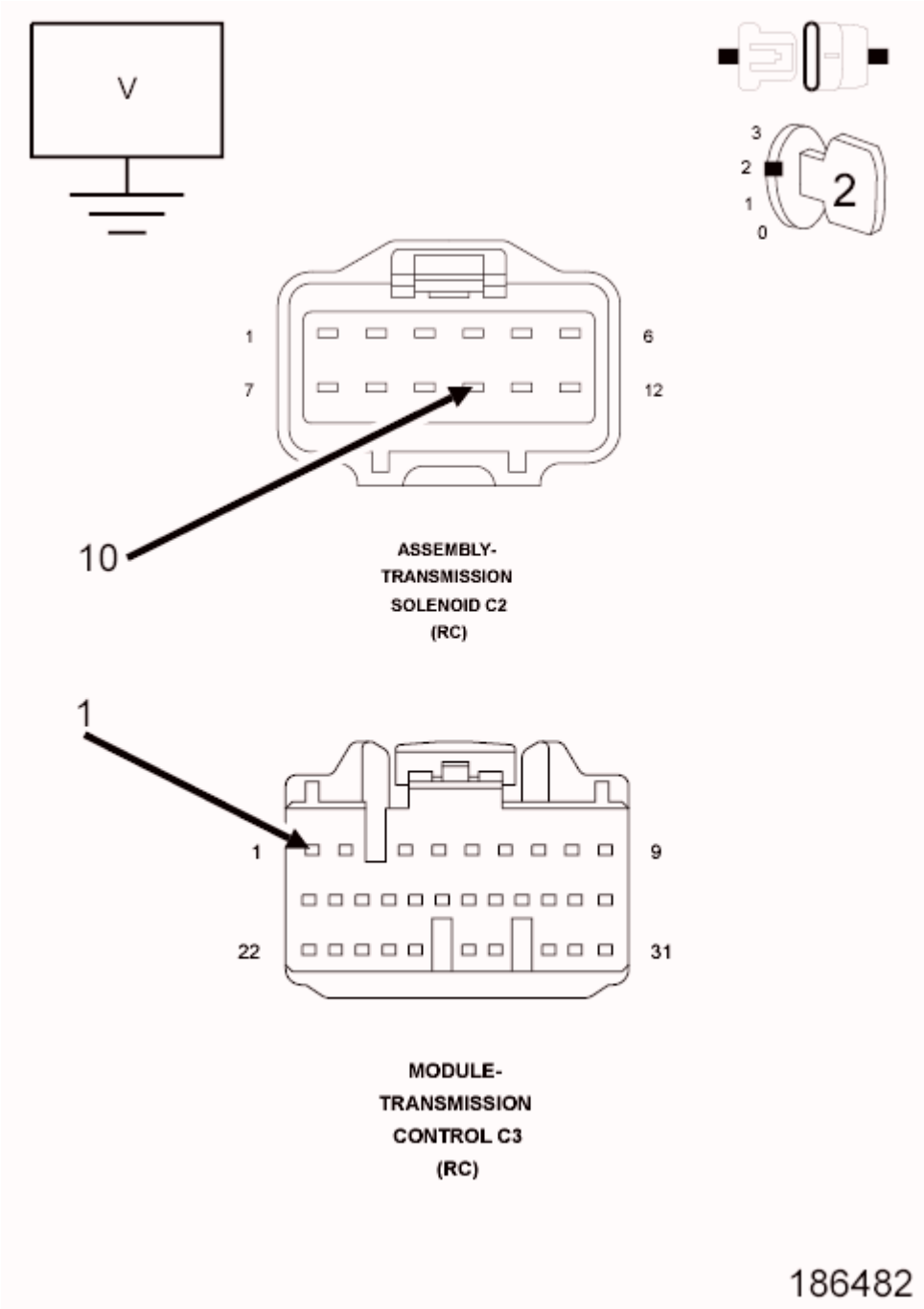

Fig. 123: Checking Shift (On/Off) Solenoid 1 Control Circuit Short To Voltage

Courtesy of CHRYSLER GROUP, LLC

1. Ignition on, engine not running.
2. Measure the voltage of the (T808) Shift (On/Off) Solenoid 1 Control circuit.

   Is the voltage above 0.5 of a volt?

   Yes

   - Repair the (T808) Shift (On/Off) Solenoid 1 Control circuit for a short to voltage.
   - Refer to **STANDARD PROCEDURE** and perform the AS68RC VERIFICATION TEST.

   No

   - Go To 5.

5. **CHECK THE (T808) SHIFT (ON/OFF) SOLENOID 1 CONTROL CIRCUIT FOR A SHORT TO ANOTHER CIRCUIT**

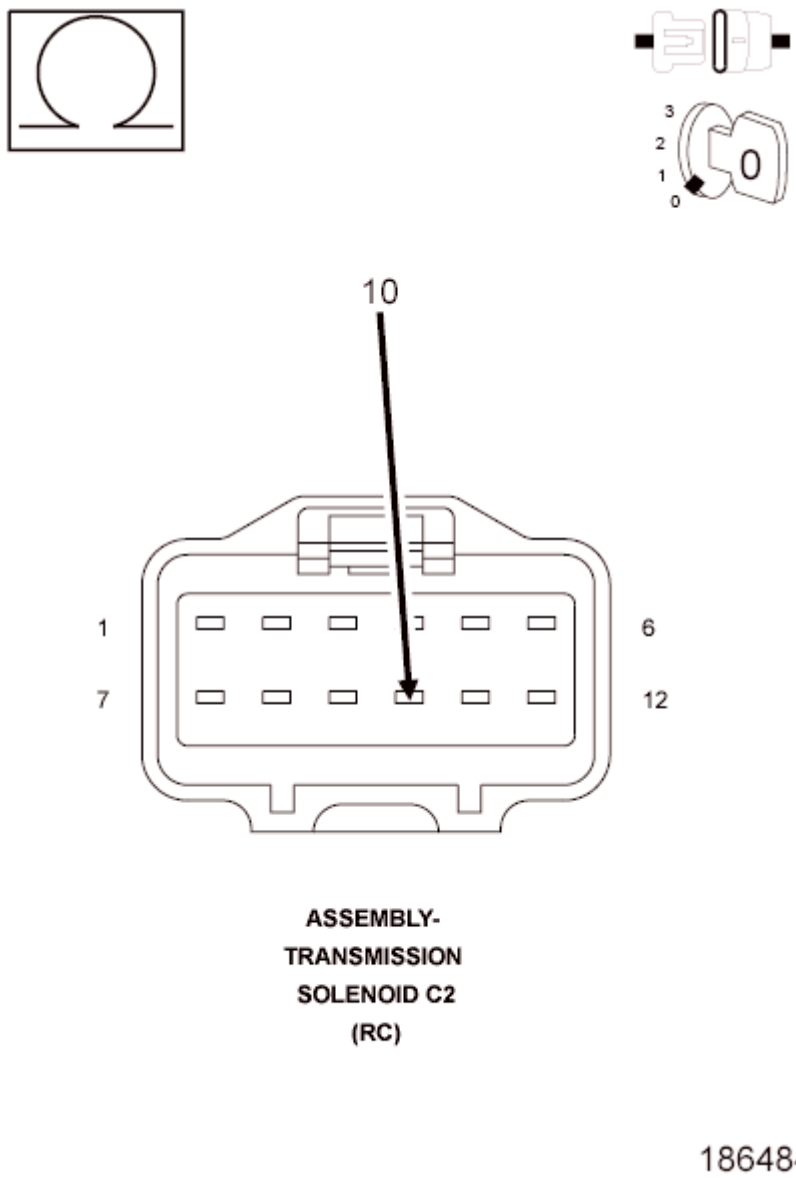

Fig. 124: Checking Shift (On/Off) Solenoid 1 Control Circuit For A Short To Another Circuit
Courtesy of CHRYSLER GROUP, LLC

1. Turn the ignition off to the lock position.
2. Measure the resistance between the (T808) Shift (On/Off) Solenoid 1 Control circuit and all other circuits in the Transmission Solenoid Assembly C2 harness connector.

   Is the resistance below 100k Ohms between the (T808) Shift (On/Off) Solenoid 1 Control circuit and any other circuit in the Transmission Solenoid Assembly harness connector?

   Yes

   - Repair the (T808) Shift (On/Off) Solenoid 1 Control circuit for a short to another circuit(s).
   - Refer to **STANDARD PROCEDURE** and perform the AS68RC VERIFICATION TEST.

No

- Go To 6.

6. **CHECK THE SHIFT (ON/OFF) SOLENOID 1**

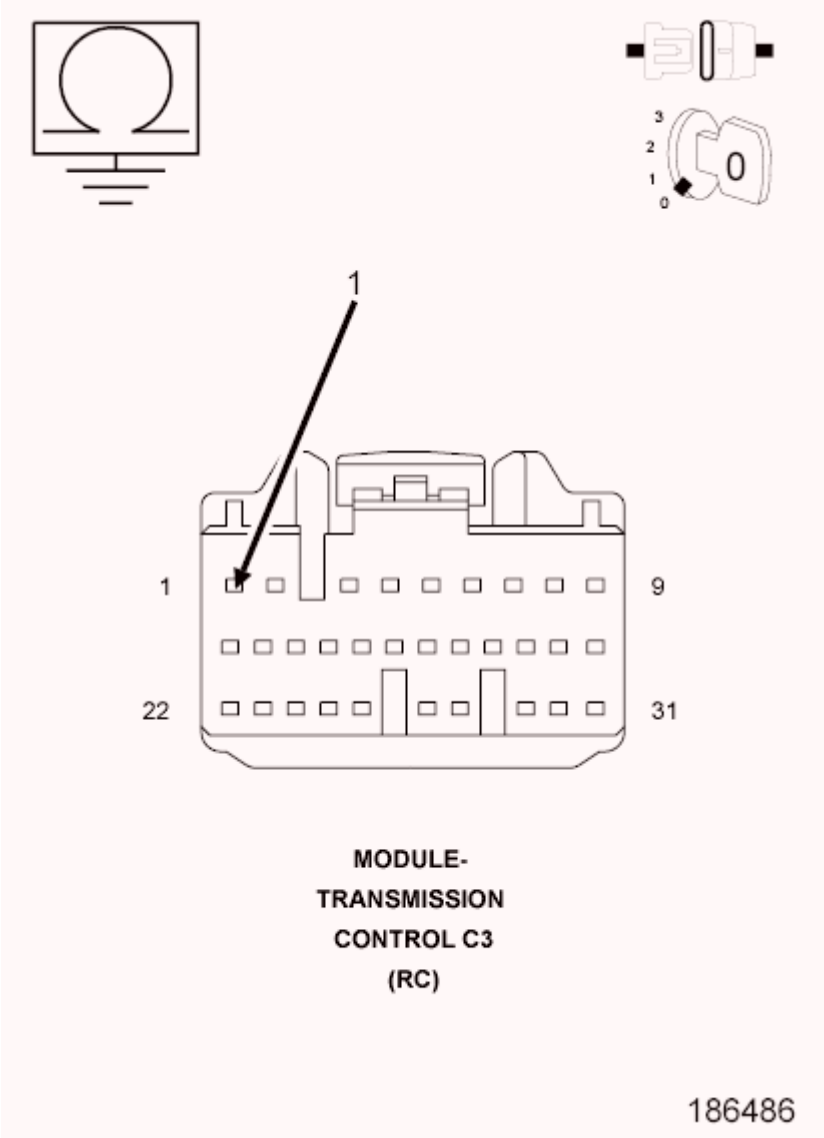

Fig. 125: Checking Shift (On/Off) Solenoid 1 And Circuits
Courtesy of CHRYSLER GROUP, LLC

1. Turn the ignition off to the lock position.
2. Reconnect the Transmission Solenoid Assembly C2 Harness connector.
3. Measure the resistance of the Shift (On/Off) Solenoid 1 between the (T808) Shift (On/Off) Solenoid 1 and ground at the TCM C3 harness connector.

   Is the resistance of the Shift (On/Off) Solenoid 1 13.0 Ohms (± 2.0 Ohms)?

Yes

- Using the schematics as a guide, check the Transmission Control Module (TCM) pins, terminals, and connectors for corrosion, damage, or terminal push out. Pay particular attention to all power and ground circuits. If no problems are found, replace and program the TCM in accordance with the Service Information.
- Refer to **STANDARD PROCEDURE** and perform the AS68RC VERIFICATION TEST.

No

- Replace the Shift (On/Off) Solenoid 1 in accordance with the Service Information.
- Refer to **STANDARD PROCEDURE** and perform the AS68RC VERIFICATION TEST.

7. **CHECK WIRING AND CONNECTORS**
   1. The conditions necessary to set the DTC are not present at this time.
   2. Using the schematics as a guide, inspect the wiring and connectors specific to this circuit.
   3. Wiggle the wires while checking for shorted and open circuits.
   4. Check for any Service Bulletins that may apply.

   Were there any problems found?

   Yes

   - Repair as necessary.
   - Refer to **STANDARD PROCEDURE** and perform the AS68RC VERIFICATION TEST.

   No

   - Test Complete.

P0976-SHIFT SOLENOID B CONTROL CIRCUIT LOW

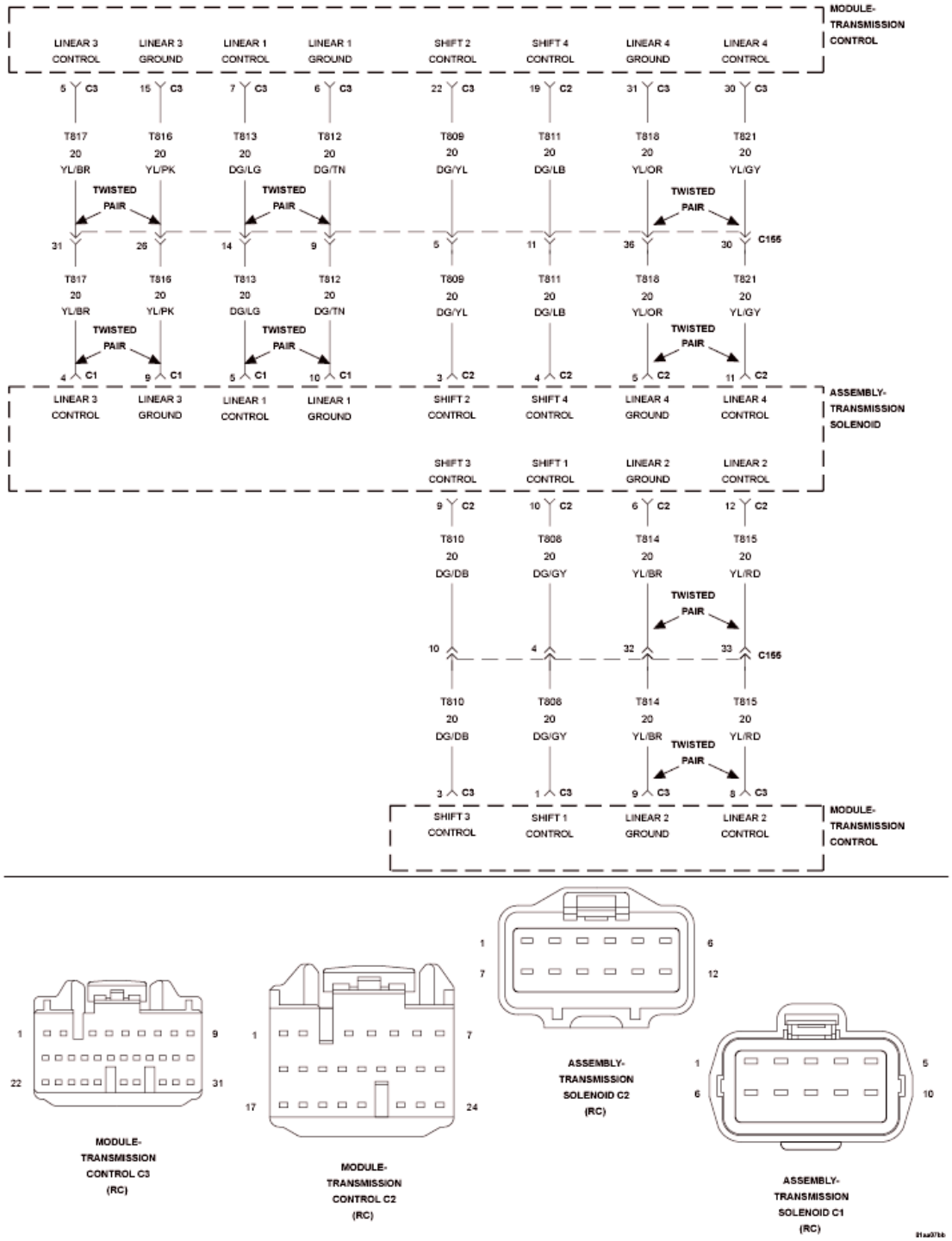

Fig. 126: Transmission Solenoid Assembly Wiring Diagram
Courtesy of CHRYSLER GROUP, LLC

For a complete wiring diagram, **refer to appropriate SYSTEM WIRING DIAGRAMS article** .

THEORY OF OPERATION

The Shift (On/Off) Solenoid 2 is used to switch hydraulic paths on the Shift Valve 2 which will direct a gear shift.

DIAGNOSTIC TEST

When Monitored:

- Ignition on, engine running.

Set Condition:

- Solenoid current is greater than or equal to 4 amps for more than 100 ms.

POSSIBLE CAUSES

Possible Causes
(T809) SHIFT (ON/OFF) SOLENOID 2 SHORT TO GROUND
(T809) SHIFT (ON/OFF) SOLENOID 2 SHORT TO ANOTHER CIRCUIT
SHIFT (ON/OFF) SOLENOID 2
TRANSMISSION CONTROL MODULE (TCM)

Always perform the AS68RC Pre-Diagnostic Troubleshooting procedure before proceeding. Refer to STANDARD PROCEDURE.

DIAGNOSTIC TEST

1. **CHECK IF DTC IS CURRENT**
    1. Using the scan tool, read TCM DTCs.
    2. Record the Environmental Data and any DTCs.
    3. Clear DTCs.
    4. Using the recorded Environmental Data, along with the When Monitored and Set Conditions above, operate the vehicle in the conditions that set the DTC.
    5. Read TCM DTCs.

    Did the DTC reset?

    Yes

    - Go To 2.

    No

    - Go To 7.
2. **CHECK THE (T809) SHIFT (ON/OFF) SOLENOID 2 CONTROL CIRCUIT FOR AN OPEN**

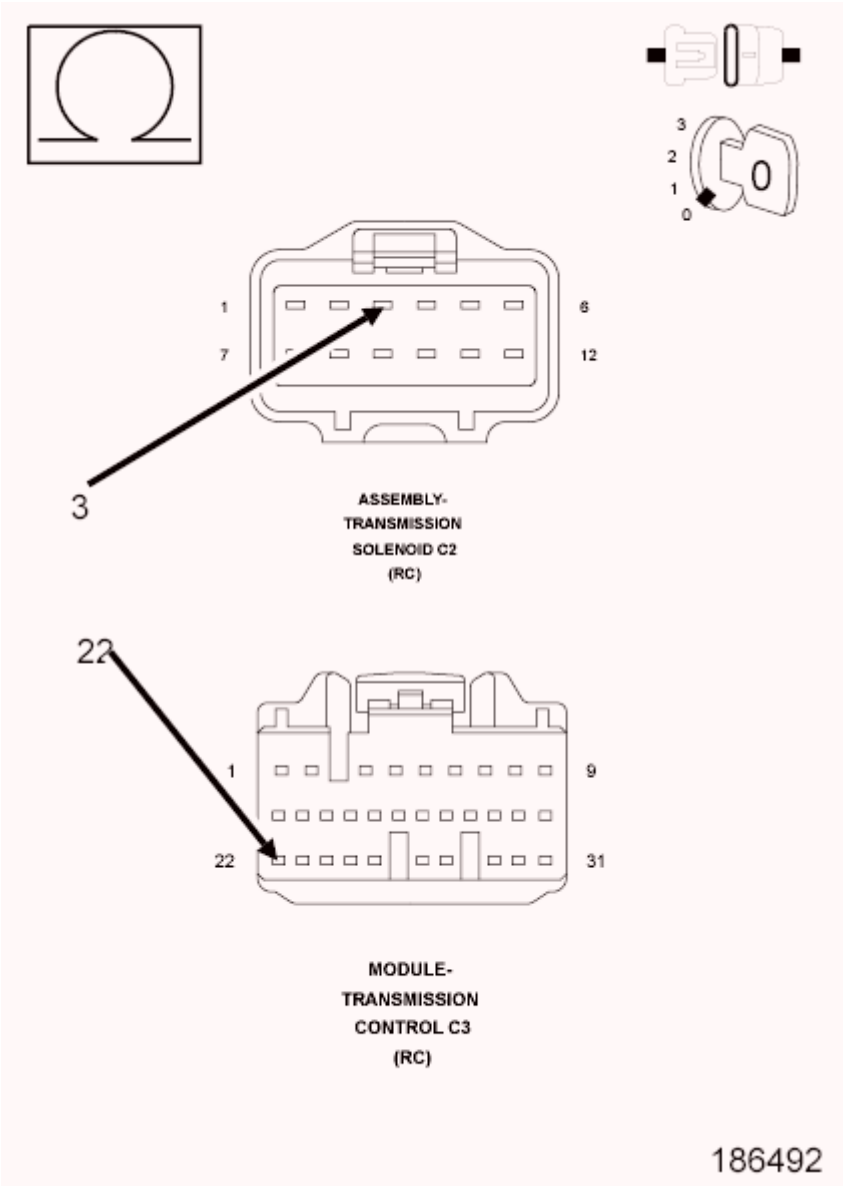

Fig. 127: Checking Shift (On/Off) Solenoid 2 Control Circuit For An Open
Courtesy of CHRYSLER GROUP, LLC

1. Turn the ignition off to the lock position.
2. Disconnect the Transmission Solenoid Assembly C2 harness connectors.
3. Disconnect the TCM C3 harness connector.

NOTE: Check connectors - Clean/repair as necessary.

4. Measure the resistance of the (T809) Shift (On/Off) Solenoid 2 Control circuit between the Transmission Solenoid Assembly C2 harness connector and the TCM C3 harness connector.

   Is the resistance below 5.0 Ohms?

Yes

- Go To 3.

No

- Repair the (T809) Shift (On/Off) Solenoid 2 Control circuit for an open.
- Refer to **STANDARD PROCEDURE** and perform the AS68RC VERIFICATION TEST.

3. **CHECK THE (T809) SHIFT (ON/OFF) SOLENOID 2 CONTROL CIRCUIT FOR A SHORT TO GROUND**

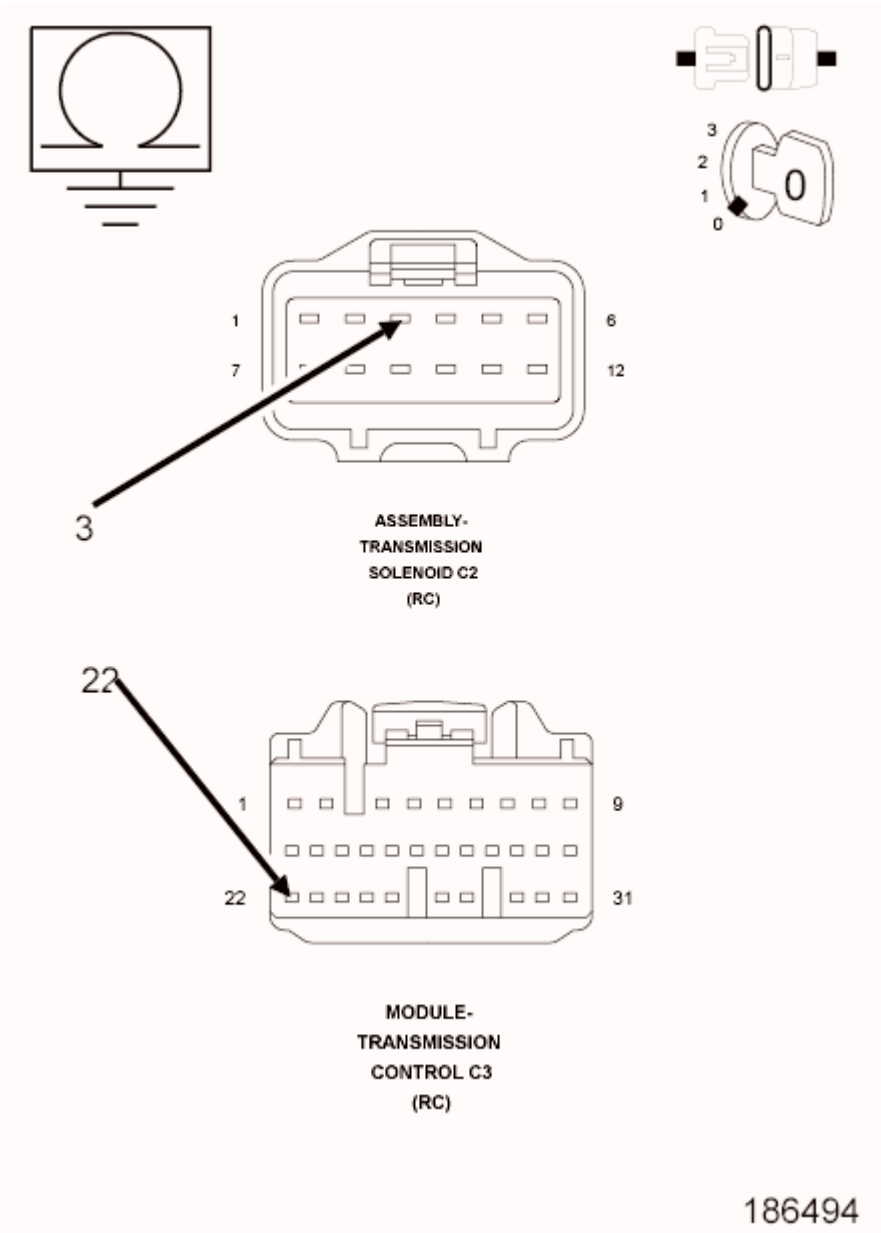

Fig. 128: Checking Shift (On/Off) Solenoid 2 Control Circuit For A Short To Ground

Courtesy of CHRYSLER GROUP, LLC

1. Measure the resistance between ground and the (T809) Shift (On/Off) Solenoid 2 Control circuit.

   Is the resistance below 100k Ohms?

   Yes

   - Repair the (T809) Shift (On/Off) Solenoid 2 Control circuit for a short to ground.
   - Refer to **STANDARD PROCEDURE** and perform the AS68RC VERIFICATION TEST.

   No

   - Go To 4.

4. **CHECK THE (T809) SHIFT (ON/OFF) SOLENOID 2 CONTROL CIRCUIT SHORT TO VOLTAGE**

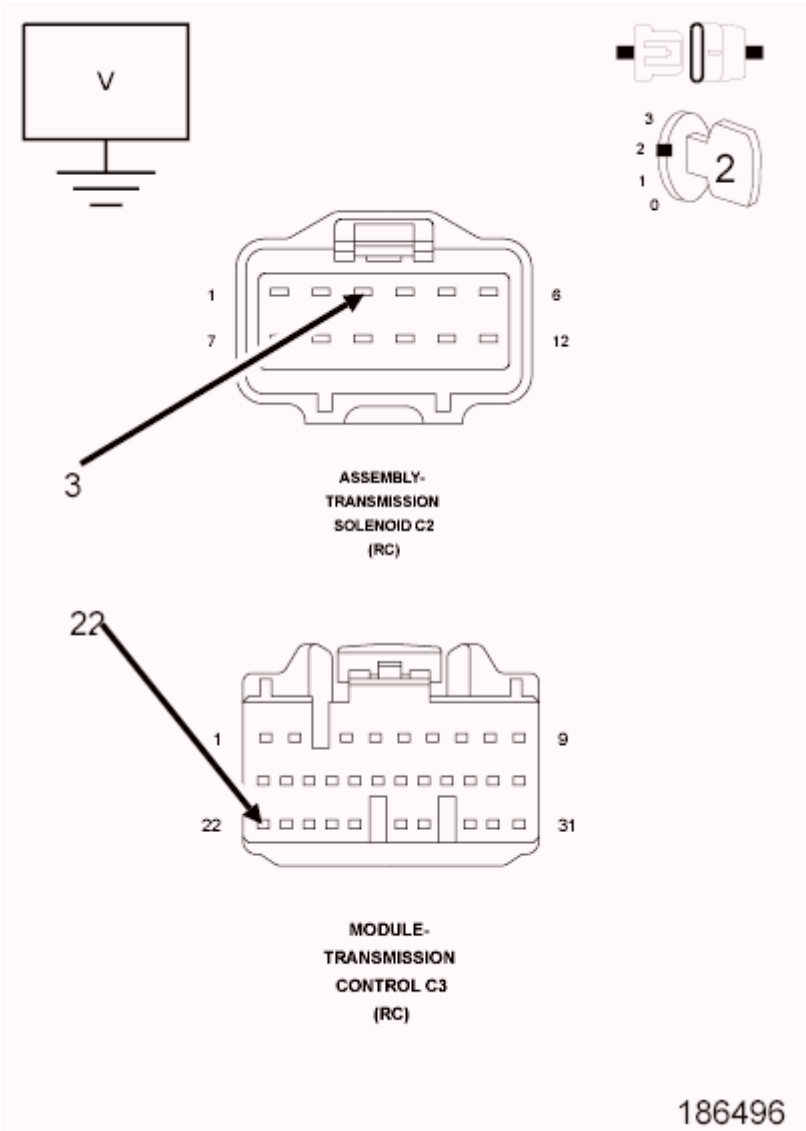

Fig. 129: Checking Shift (On/Off) Solenoid 2 Control Circuit Short To Voltage
Courtesy of CHRYSLER GROUP, LLC

1. Ignition on, engine not running.
2. Measure the voltage of the (T809) Shift (On/Off) Solenoid 2 Control circuit.

   Is the voltage above 0.5 of a volt?

   Yes

   - Repair the (T809) Shift (On/Off) Solenoid 2 Control circuit for a short to voltage.
   - Refer to **STANDARD PROCEDURE** and perform the AS68RC VERIFICATION TEST.

   No

- Go To 5.

5. **CHECK THE (T809) SHIFT (ON/OFF) SOLENOID 2 CONTROL CIRCUIT FOR A SHORT TO ANOTHER CIRCUIT**

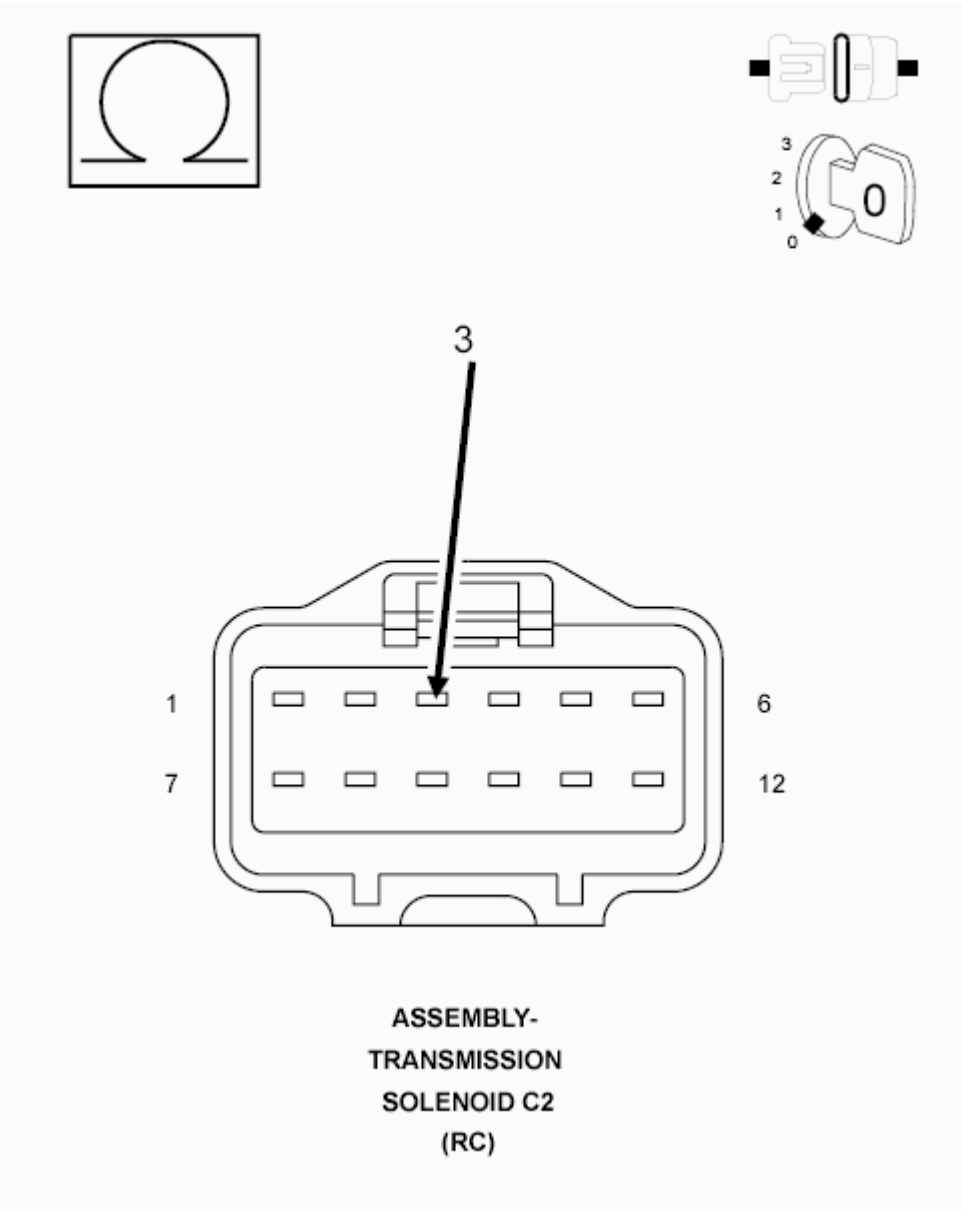

Fig. 130: Checking Shift (On/Off) Solenoid 2 Control Circuit For A Short To Another Circuit
Courtesy of CHRYSLER GROUP, LLC

1. Turn the ignition off to the lock position.
2. Measure the resistance between the (T809) Shift (On/Off) Solenoid 2 Control circuit and all other circuits in the Transmission Solenoid Assembly C2 harness connector.

   Is the resistance below 100k Ohms between the (T809) Shift (On/Off) Solenoid 2 Control circuit and any other circuit in the Transmission Solenoid Assembly harness connector?

Yes

- Repair the (T809) Shift (On/Off) Solenoid 2 Control circuit for a short to another circuit(s).
- Refer to **STANDARD PROCEDURE** and perform the AS68RC VERIFICATION TEST.

No

- Go To 6.

6. **CHECK THE SHIFT (ON/OFF) SOLENOID 2**

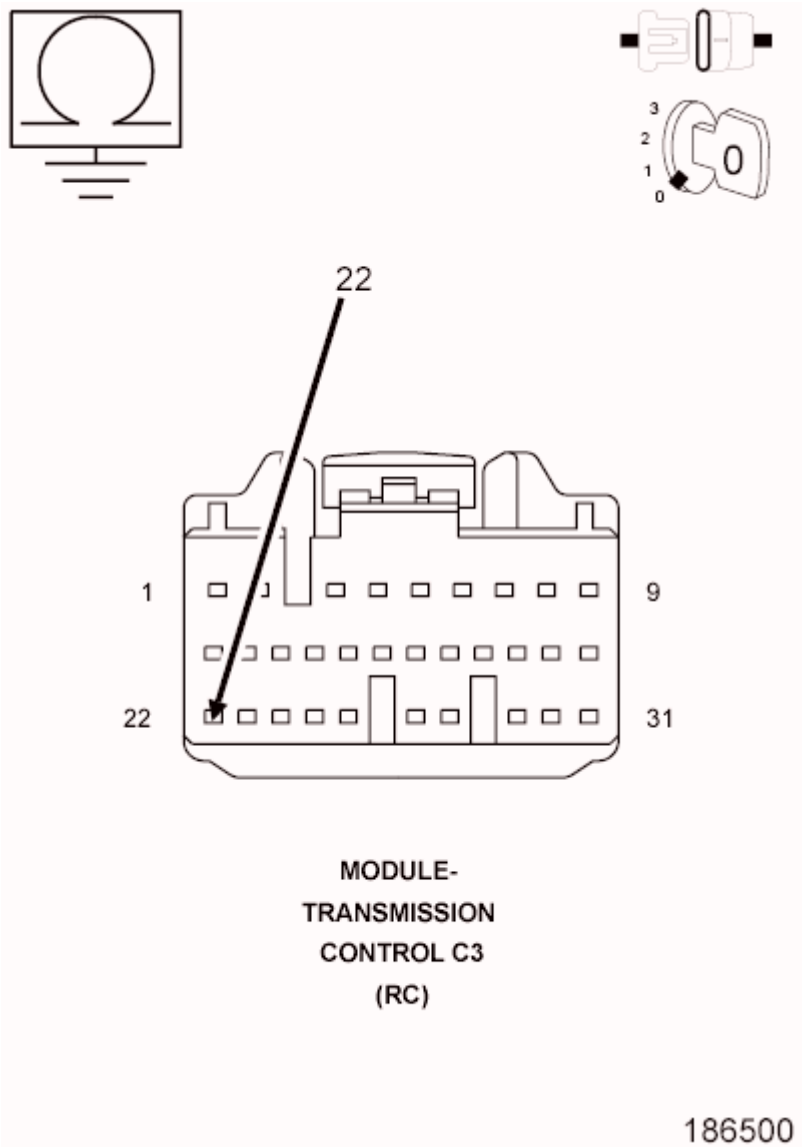

Fig. 131: Checking Shift (On/Off) Solenoid 2 And Circuits
Courtesy of CHRYSLER GROUP, LLC

1. Turn the ignition off to the lock position.
2. Reconnect the Transmission Solenoid Assembly C2 Harness connector.

3. Measure the resistance of the Shift (On/Off) Solenoid 2 between the (T809) Shift (On/Off) Solenoid 2 and ground at the TCM C3 harness connector.

   Is the resistance of the Shift (On/Off) Solenoid 2 13.0 Ohms (± 2.0 Ohms)?

   Yes

   - Using the schematics as a guide, check the Transmission Control Module (TCM) pins, terminals, and connectors for corrosion, damage, or terminal push out. Pay particular attention to all power and ground circuits. If no problems are found, replace and program the TCM in accordance with the Service Information.
   - Refer to **STANDARD PROCEDURE** and perform the AS68RC VERIFICATION TEST.

   No

   - Replace the Shift (On/Off) Solenoid 2 in accordance with the Service Information.
   - Refer to **STANDARD PROCEDURE** and perform the AS68RC VERIFICATION TEST.

7. **CHECK WIRING AND CONNECTORS**
   1. The conditions necessary to set the DTC are not present at this time.
   2. Using the schematics as a guide, inspect the wiring and connectors specific to this circuit.
   3. Wiggle the wires while checking for shorted and open circuits.
   4. Check for any Service Bulletins that may apply.

   Were there any problems found?

   Yes

   - Repair as necessary.
   - Refer to **STANDARD PROCEDURE** and perform the AS68RC VERIFICATION TEST.

   No

   - Test Complete.

P0977-SHIFT SOLENOID B CONTROL CIRCUIT HIGH

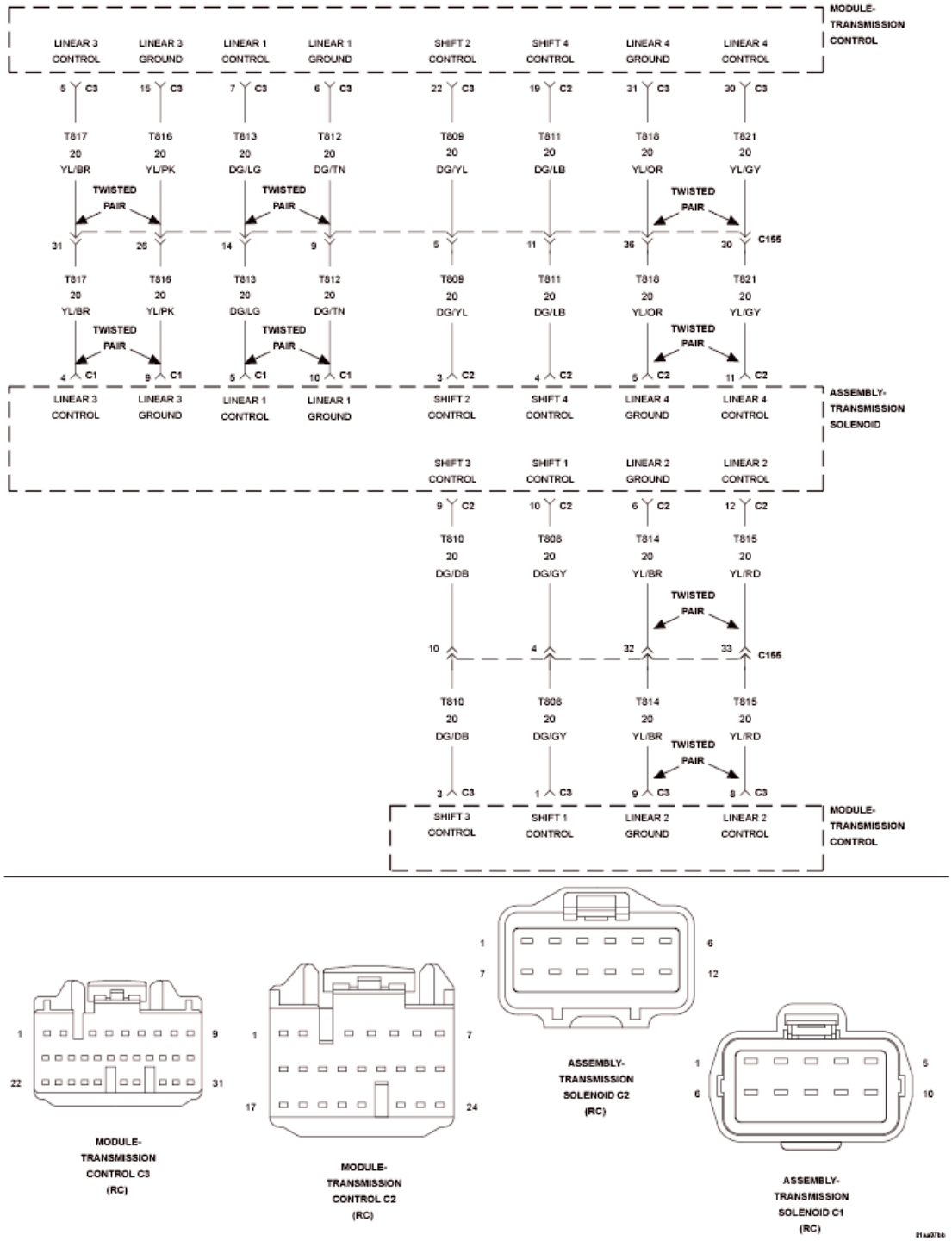

Fig. 132: Transmission Solenoid Assembly Wiring Diagram
Courtesy of CHRYSLER GROUP, LLC

For a complete wiring diagram, **refer to appropriate SYSTEM WIRING DIAGRAMS article** .

THEORY OF OPERATION

The Shift (On/Off) Solenoid 2 is used to switch hydraulic paths on the Shift Valve 2 which will direct a gear shift.

DIAGNOSTIC TEST

When Monitored:

- Ignition on, engine running.

Set Condition:

- Solenoid resistance is greater than or equal to 100k Ohms for more than 100 ms.

POSSIBLE CAUSES

Possible Causes
(T809) SHIFT (ON/OFF) SOLENOID 2 OPEN
(T809) SHIFT (ON/OFF) SOLENOID 2 SHORT TO VOLTAGE
(T809) SHIFT (ON/OFF) SOLENOID 2
TRANSMISSION CONTROL MODULE (TCM)

Always perform the AS68RC Pre-Diagnostic Troubleshooting procedure before proceeding. Refer to STANDARD PROCEDURE.

DIAGNOSTIC TEST

1. **CHECK IF DTC IS CURRENT**
    1. Using the scan tool, read TCM DTCs.
    2. Record the Environmental Data and any DTCs.
    3. Clear DTCs.
    4. Using the recorded Environmental Data, along with the When Monitored and Set Conditions above, operate the vehicle in the conditions that set the DTC.
    5. Read TCM DTCs.

    Did the DTC reset?

    Yes

    - Go To 2.

    No

    - Go To 7.
2. **CHECK THE (T809) SHIFT (ON/OFF) SOLENOID 2 CONTROL CIRCUIT FOR AN OPEN**

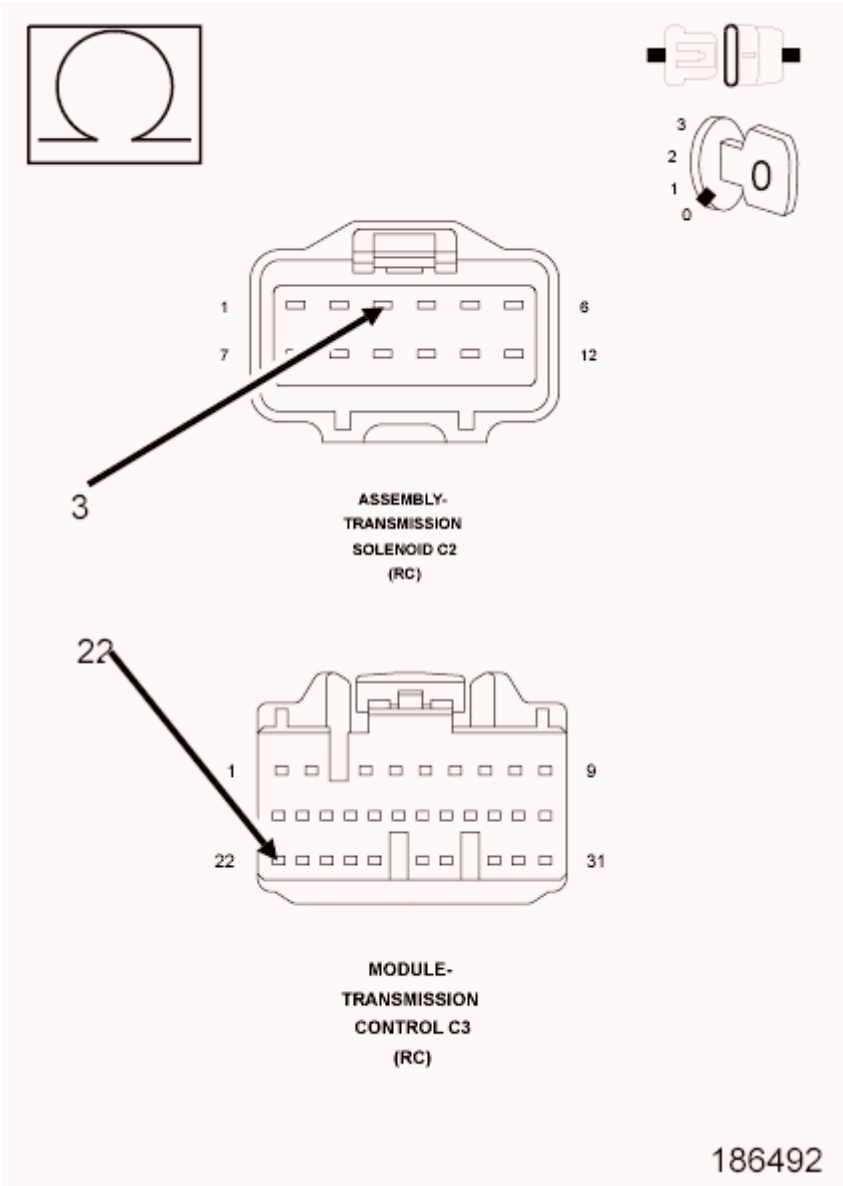

Fig. 133: Checking Shift (On/Off) Solenoid 2 Control Circuit For An Open
Courtesy of CHRYSLER GROUP, LLC

1. Turn the ignition off to the lock position.
2. Disconnect the Transmission Solenoid Assembly C2 harness connectors.
3. Disconnect the TCM C3 harness connector.

NOTE: Check connectors - Clean/repair as necessary.

4. Measure the resistance of the (T809) Shift (On/Off) Solenoid 2 Control circuit between the Transmission Solenoid Assembly C2 harness connector and the TCM C3 harness connector.

   Is the resistance below 5.0 Ohms?

Yes

- Go To 3.

No

- Repair the (T809) Shift (On/Off) Solenoid 2 Control circuit for an open.
- Refer to **STANDARD PROCEDURE** and perform the AS68RC VERIFICATION TEST.

3. **CHECK THE (T809) SHIFT (ON/OFF) SOLENOID 2 CONTROL CIRCUIT FOR A SHORT TO GROUND**

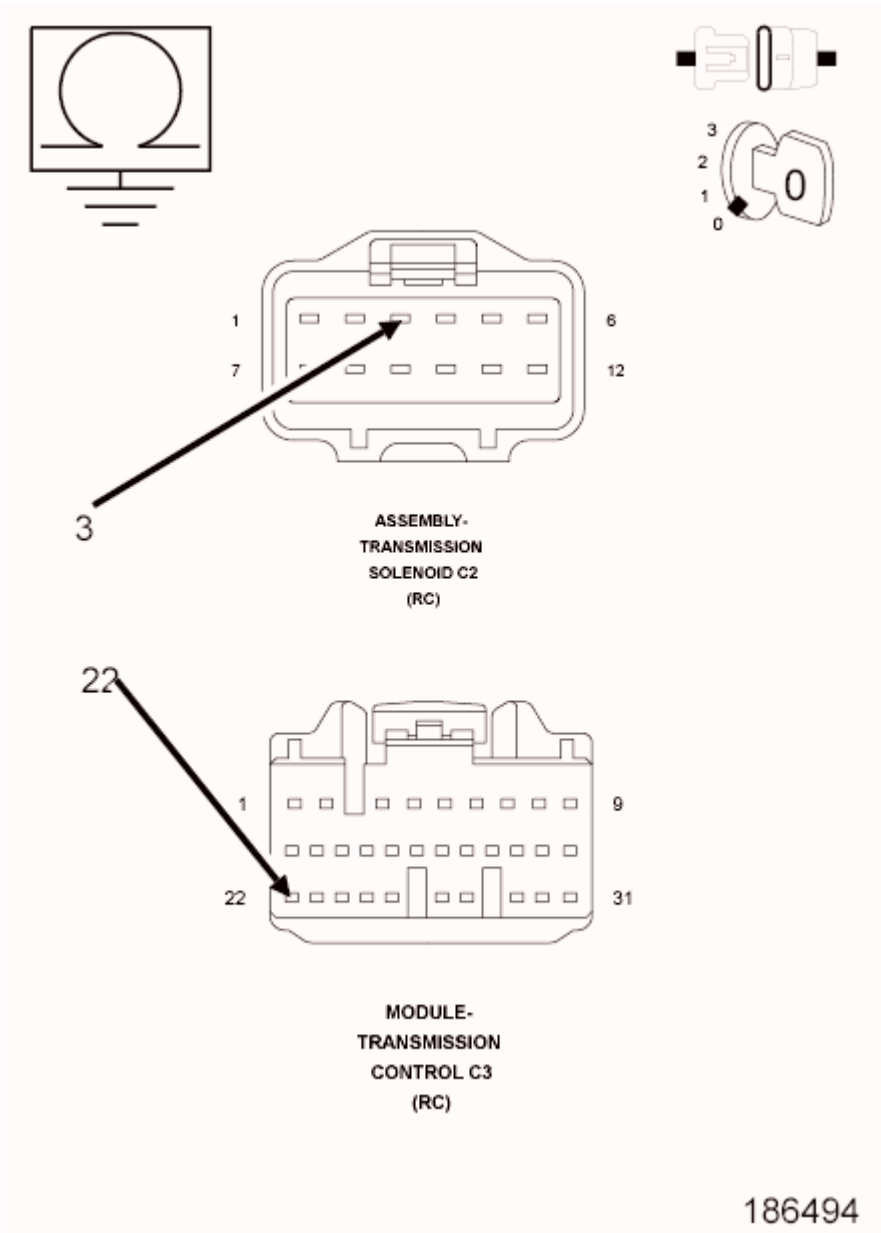

Fig. 134: Checking Shift (On/Off) Solenoid 2 Control Circuit For A Short To Ground

Courtesy of CHRYSLER GROUP, LLC

1. Measure the resistance between ground and the (T809) Shift (On/Off) Solenoid 2 Control circuit.

   Is the resistance below 100k Ohms?

   Yes

   - Repair the (T809) Shift (On/Off) Solenoid 2 Control circuit for a short to ground.
   - Refer to **STANDARD PROCEDURE** and perform the AS68RC VERIFICATION TEST.

   No

   - Go To 4.

4. **CHECK THE (T809) SHIFT (ON/OFF) SOLENOID 2 CONTROL CIRCUIT SHORT TO VOLTAGE**

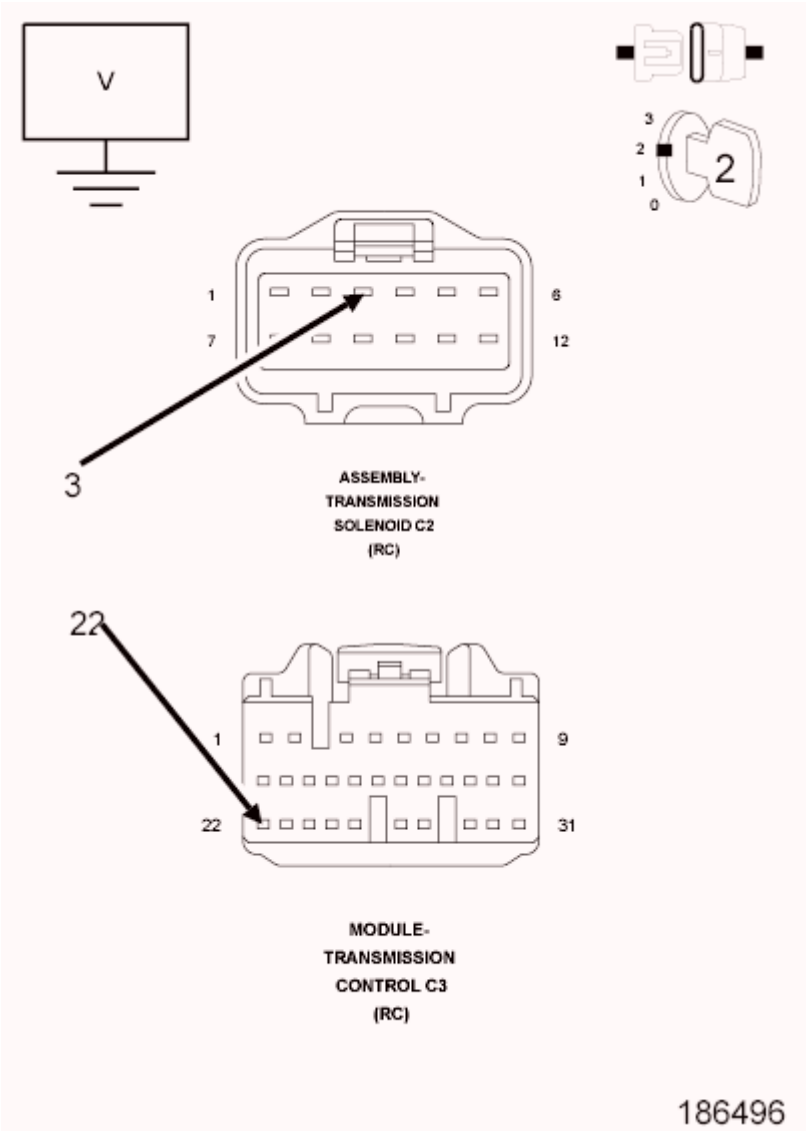

Fig. 135: Checking Shift (On/Off) Solenoid 2 Control Circuit Short To Voltage
Courtesy of CHRYSLER GROUP, LLC

1. Ignition on, engine not running.
2. Measure the voltage of the (T809) Shift (On/Off) Solenoid 2 Control circuit.

   Is the voltage above 0.5 of a volt?

   Yes

   - Repair the (T809) Shift (On/Off) Solenoid 2 Control circuit for a short to voltage.
   - Refer to **STANDARD PROCEDURE** and perform the AS68RC VERIFICATION TEST.

   No

- Go To 5.

5. **CHECK THE (T809) SHIFT (ON/OFF) SOLENOID 2 CONTROL CIRCUIT FOR A SHORT TO ANOTHER CIRCUIT**

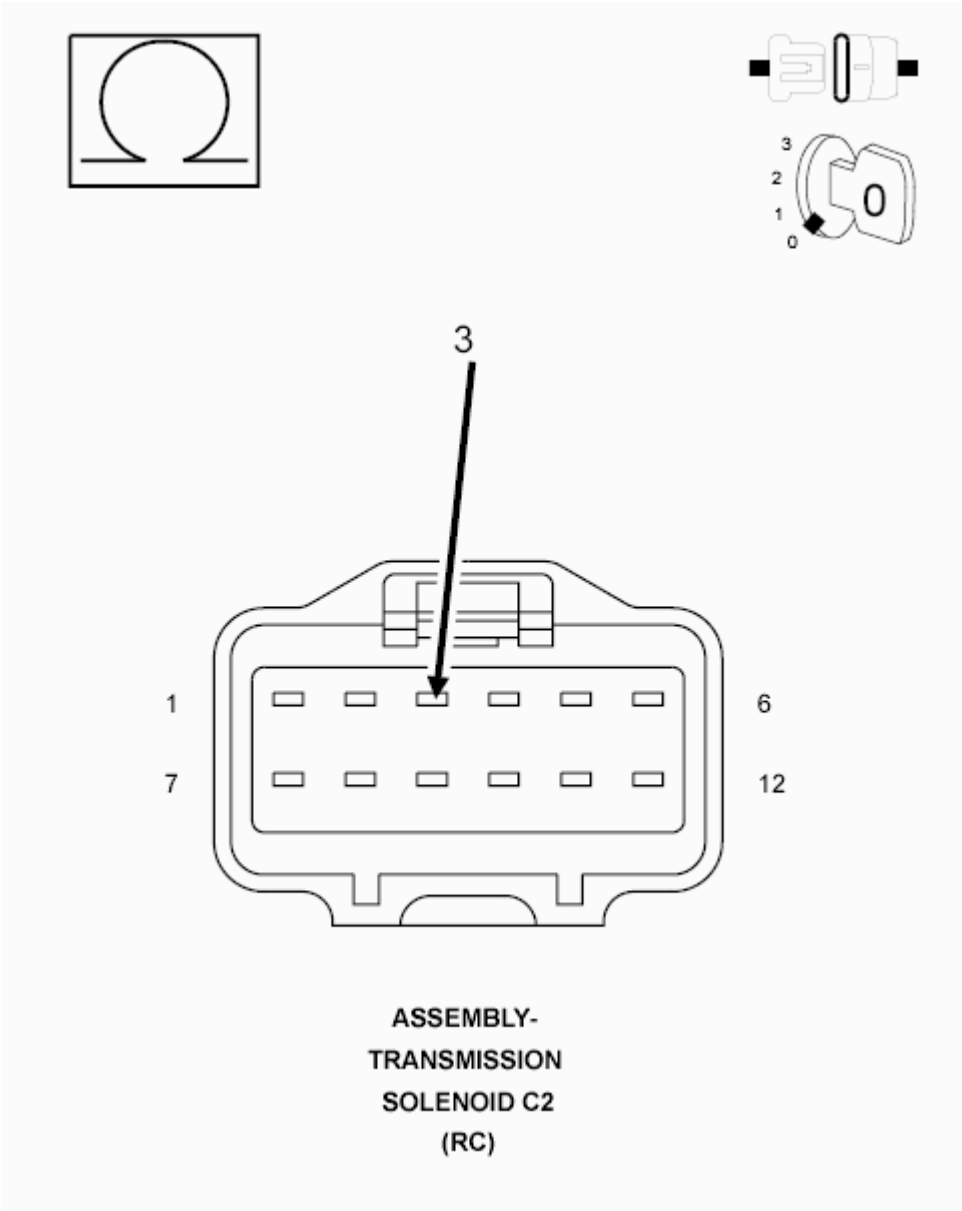

Fig. 136: Checking Shift (On/Off) Solenoid 2 Control Circuit For A Short To Another Circuit
Courtesy of CHRYSLER GROUP, LLC

1. Turn the ignition off to the lock position.
2. Measure the resistance between the (T809) Shift (On/Off) Solenoid 2 Control circuit and all other circuits in the Transmission Solenoid Assembly C2 harness connector.

   Is the resistance below 100k Ohms between the (T809) Shift (On/Off) Solenoid 2 Control circuit and any other circuit in the Transmission Solenoid Assembly harness connector?

Yes

- Repair the (T809) Shift (On/Off) Solenoid 2 Control circuit for a short to another circuit(s).
- Refer to **STANDARD PROCEDURE** and perform the AS68RC VERIFICATION TEST.

No

- Go To 6.

6. **CHECK THE SHIFT (ON/OFF) SOLENOID 2**

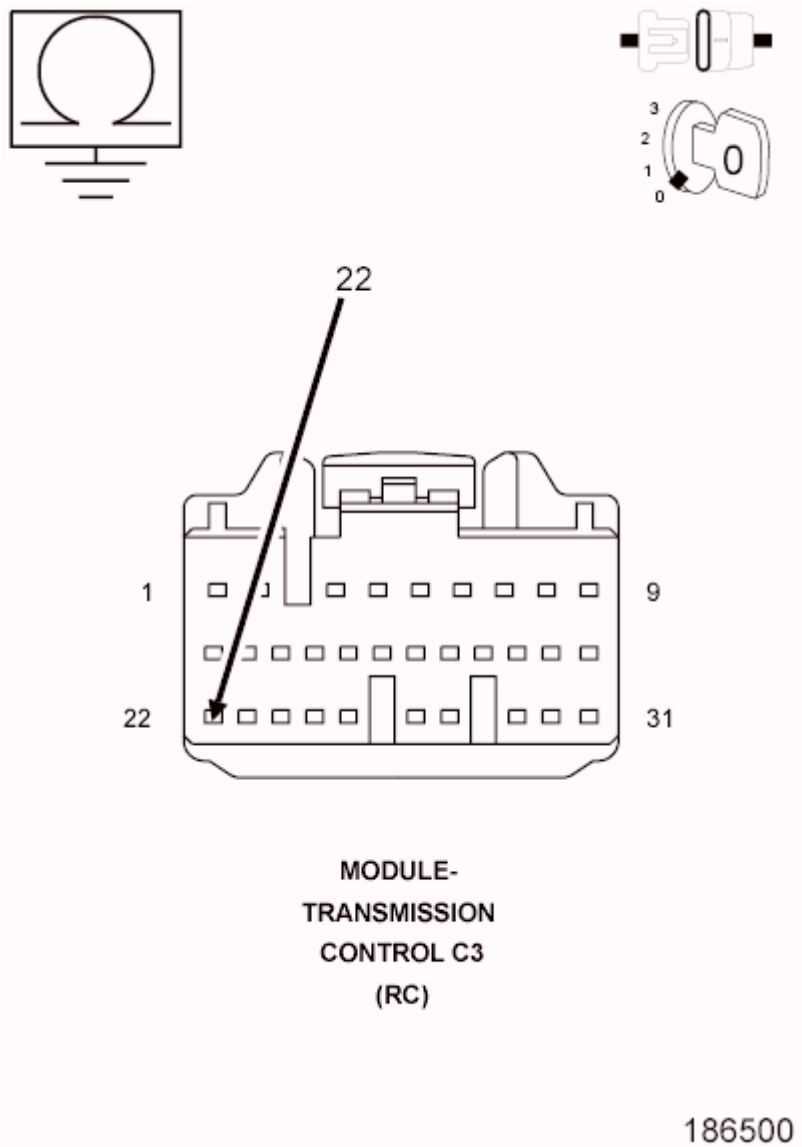

Fig. 137: Checking Shift (On/Off) Solenoid 2 And Circuits
Courtesy of CHRYSLER GROUP, LLC

1. Turn the ignition off to the lock position.
2. Reconnect the Transmission Solenoid Assembly C2 Harness connector.

3. Measure the resistance of the Shift (On/Off) Solenoid 2 between the (T809) Shift (On/Off) Solenoid 2 and ground at the TCM C3 harness connector.

   Is the resistance of the Shift (On/Off) Solenoid 2 13.0 Ohms (± 2.0 Ohms)?

   Yes

   - Using the schematics as a guide, check the Transmission Control Module (TCM) pins, terminals, and connectors for corrosion, damage, or terminal push out. Pay particular attention to all power and ground circuits. If no problems are found, replace and program the TCM in accordance with the Service Information.
   - Refer to **STANDARD PROCEDURE** and perform the AS68RC VERIFICATION TEST.

   No

   - Replace the Shift (On/Off) Solenoid 2 in accordance with the Service Information.
   - Refer to **STANDARD PROCEDURE** and perform the AS68RC VERIFICATION TEST.

7. **CHECK WIRING AND CONNECTORS**
   1. The conditions necessary to set the DTC are not present at this time.
   2. Using the schematics as a guide, inspect the wiring and connectors specific to this circuit.
   3. Wiggle the wires while checking for shorted and open circuits.
   4. Check for any Service Bulletins that may apply.

   Were there any problems found?

   Yes

   - Repair as necessary.
   - Refer to **STANDARD PROCEDURE** and perform the AS68RC VERIFICATION TEST.

   No

   - Test Complete.

P0979-SHIFT SOLENOID C CONTROL CIRCUIT LOW

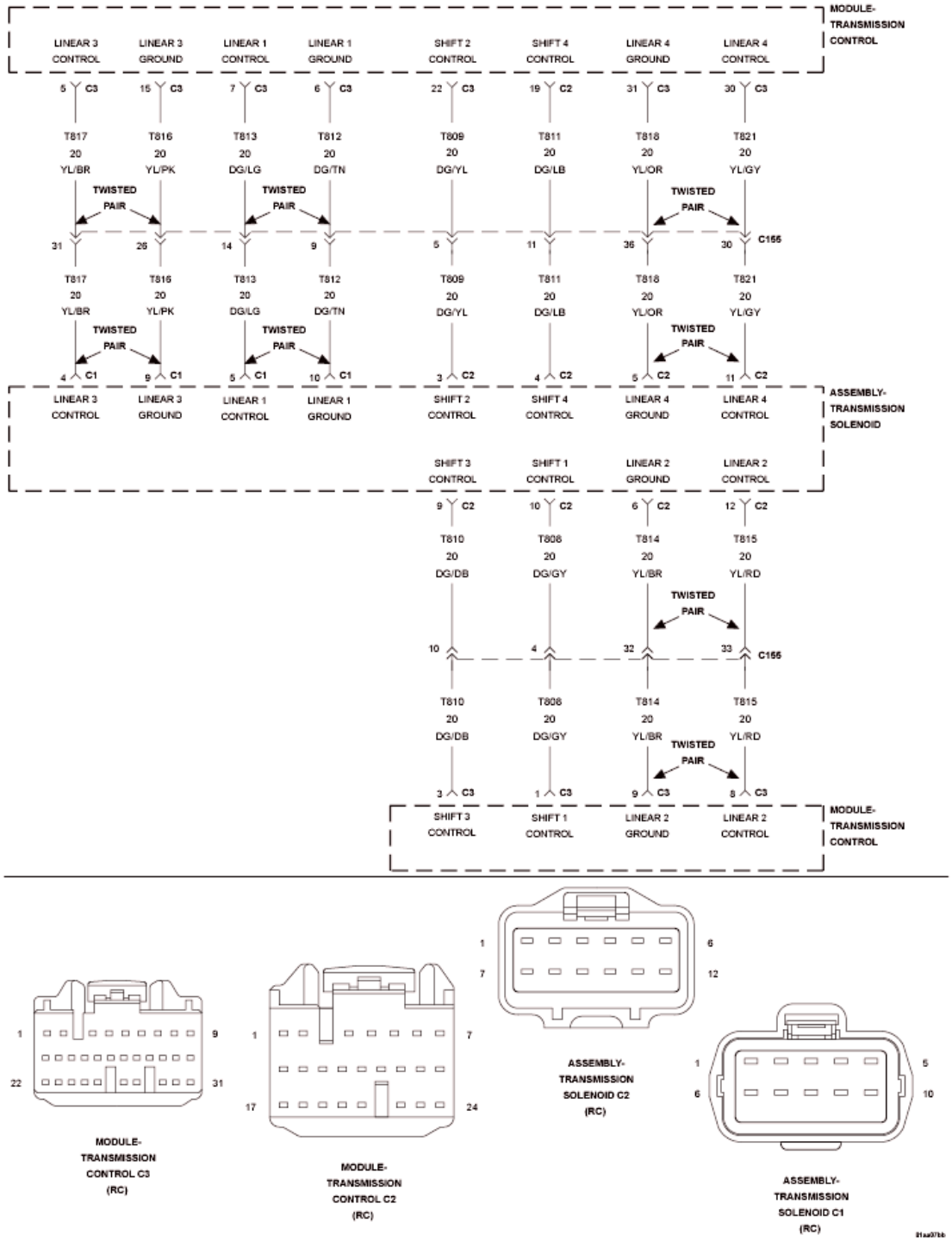

Fig. 138: Transmission Solenoid Assembly Wiring Diagram
Courtesy of CHRYSLER GROUP, LLC

For a complete wiring diagram, **refer to appropriate SYSTEM WIRING DIAGRAMS article** .

THEORY OF OPERATION

The Shift (On/Off) Solenoid 3 is used to switch hydraulic paths on the Shift Valve 3 which will direct a gear shift.

DIAGNOSTIC TEST

When Monitored:

- Ignition on, engine running.

Set Condition:

- Solenoid current is greater than or equal to 4 amps for more than 100 ms.

POSSIBLE CAUSES

Possible Causes
(T810) SHIFT (ON/OFF) SOLENOID 3 SHORT TO GROUND
(T810) SHIFT (ON/OFF) SOLENOID 3 SHORT TO ANOTHER CIRCUIT
SHIFT (ON/OFF) SOLENOID 3
TRANSMISSION CONTROL MODULE (TCM)

Always perform the AS68RC Pre-Diagnostic Troubleshooting procedure before proceeding. Refer to STANDARD PROCEDURE.

DIAGNOSTIC TEST

1. **CHECK IF DTC IS CURRENT**
    1. Using the scan tool, read TCM DTCs.
    2. Record the Environmental Data and any DTCs.
    3. Clear DTCs.
    4. Using the recorded Environmental Data, along with the When Monitored and Set Conditions above, operate the vehicle in the conditions that set the DTC.
    5. Read TCM DTCs.

    Did the DTC reset?

    Yes

    - Go To 2.

    No

    - Go To 7.
2. **CHECK THE (T810) SHIFT (ON/OFF) SOLENOID 3 CONTROL CIRCUIT FOR AN OPEN**

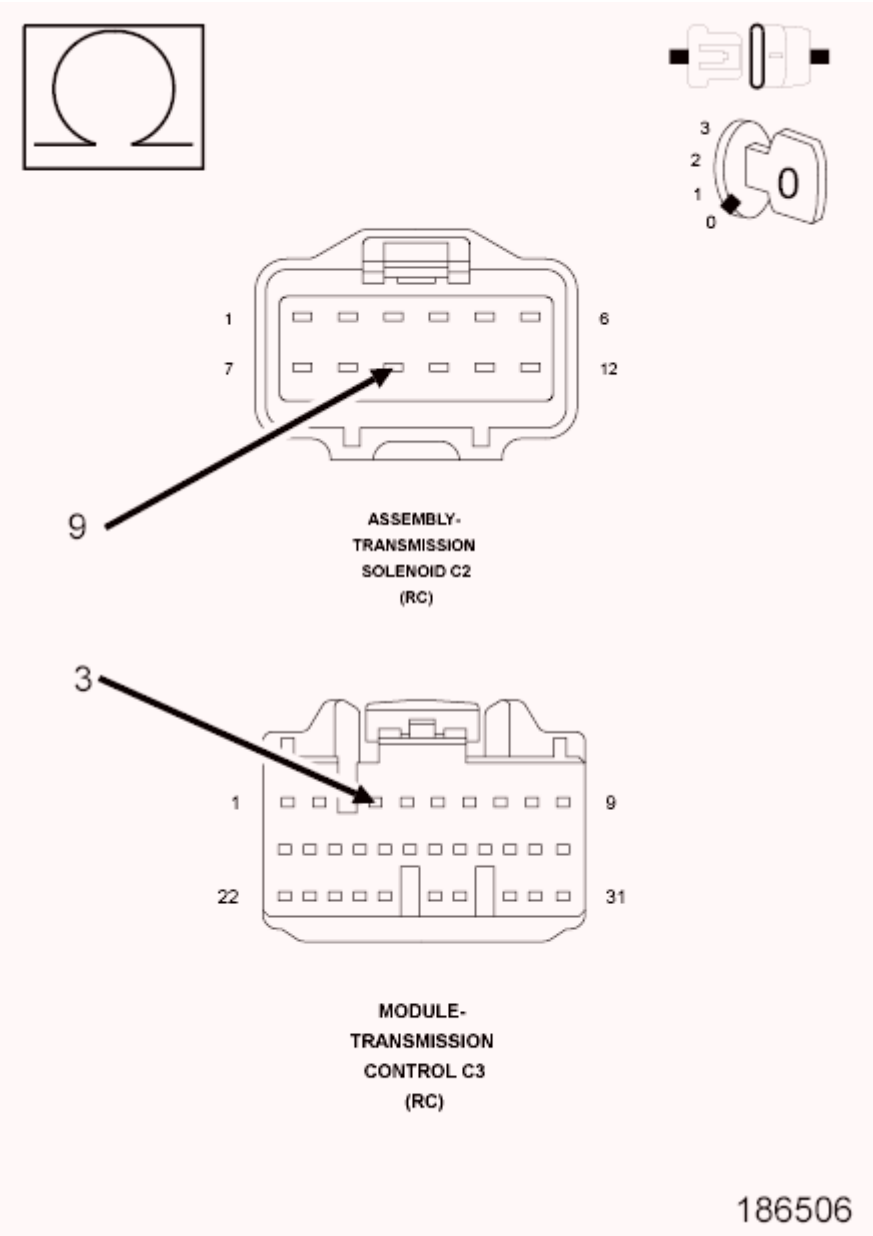

Fig. 139: Checking Shift (On/Off) Solenoid 3 Control Circuit For An Open
Courtesy of CHRYSLER GROUP, LLC

1. Turn the ignition off to the lock position.
2. Disconnect the Transmission Solenoid Assembly C2 harness connectors.
3. Disconnect the TCM C3 harness connector.

NOTE: Check connectors - Clean/repair as necessary.

4. Measure the resistance of the (T810) Shift (On/Off) Solenoid 3 Control circuit between the Transmission Solenoid Assembly C2 harness connector and the TCM C3 harness connector.

Is the resistance below 5.0 Ohms?

Yes

- Go To 3.

No

- Repair the (T810) Shift (On/Off) Solenoid 3 Control circuit for an open.
- Refer to **STANDARD PROCEDURE** and perform the AS68RC VERIFICATION TEST.

3. **CHECK THE (T810) SHIFT (ON/OFF) SOLENOID 3 CONTROL CIRCUIT FOR A SHORT TO GROUND**

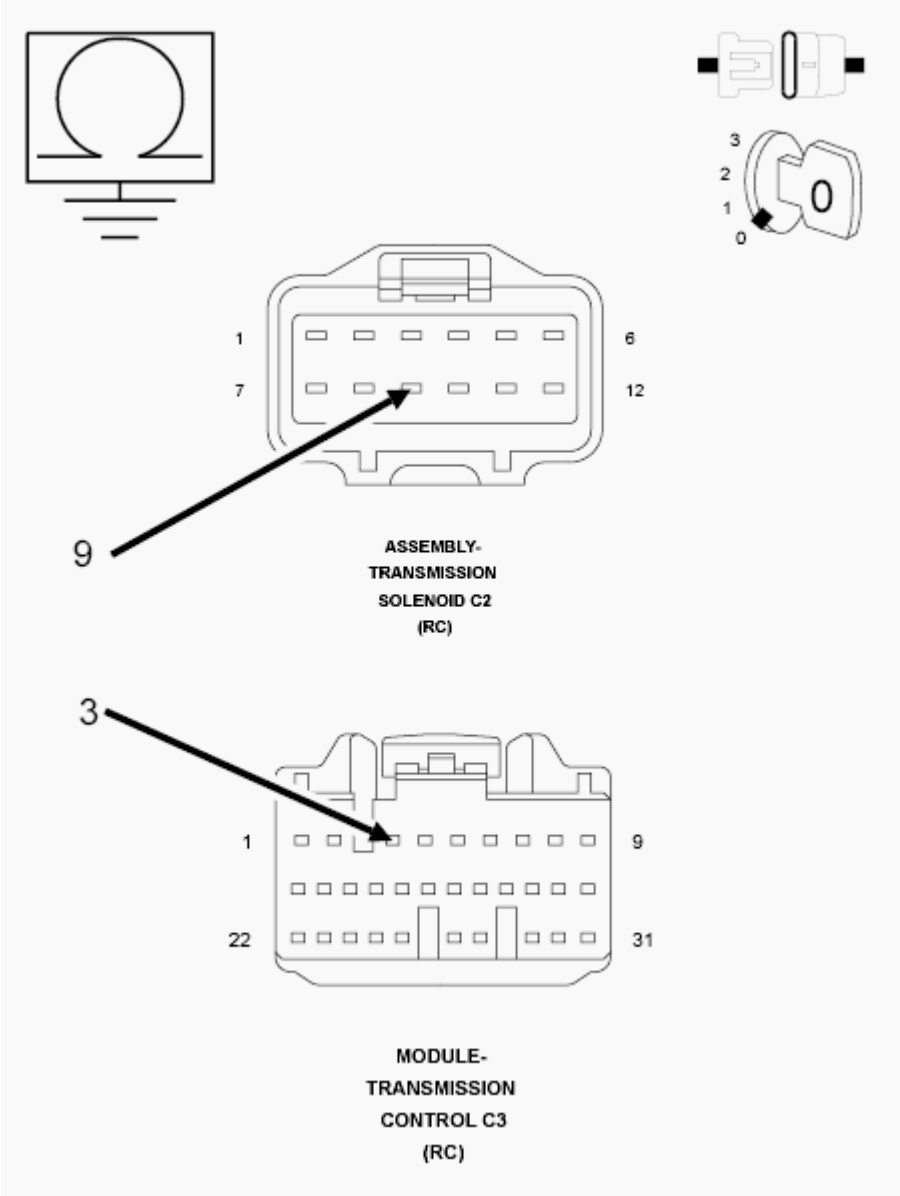

Fig. 140: Checking Shift (On/Off) Solenoid 3 Control Circuit For A Short To Ground
Courtesy of CHRYSLER GROUP, LLC

1. Measure the resistance between ground and the (T810) Shift (On/Off) Solenoid 3 Control circuit.

   Is the resistance below 100k Ohms?

   Yes

   - Repair the (T810) Shift (On/Off) Solenoid 3 Control circuit for a short to ground.
   - Refer to **STANDARD PROCEDURE** and perform the AS68RC VERIFICATION TEST.

   No

   - Go To 4.

4. **CHECK THE (T810) SHIFT (ON/OFF) SOLENOID 3 CONTROL CIRCUIT SHORT TO VOLTAGE**

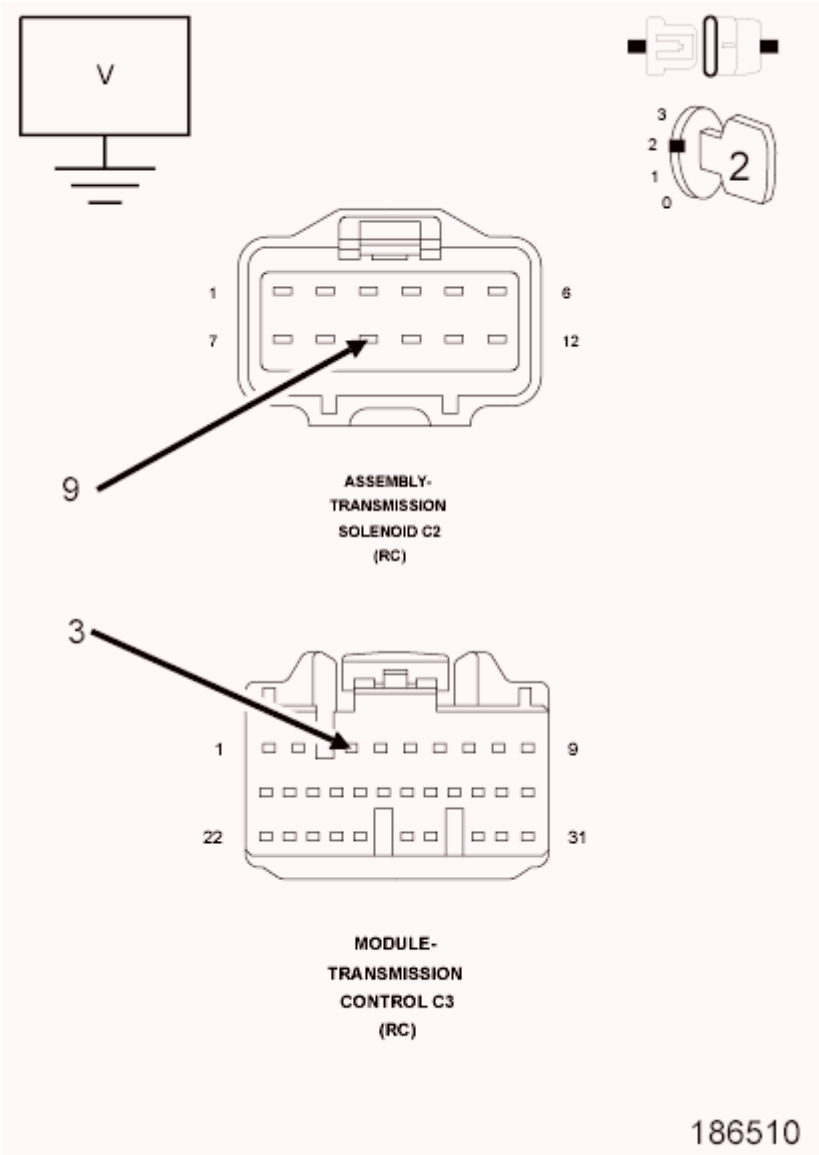

Fig. 141: Checking Shift (On/Off) Solenoid 3 Control Circuit Short To Voltage
Courtesy of CHRYSLER GROUP, LLC

1. Ignition on, engine not running.
2. Measure the voltage of the (T810) Shift (On/Off) Solenoid 3 Control circuit.

   Is the voltage above 0.5 of a volt?

   Yes

   - Repair the (T810) Shift (On/Off) Solenoid 3 Control circuit for a short to voltage.
   - Refer to **STANDARD PROCEDURE** and perform the AS68RC VERIFICATION TEST.

   No

- Go To 5.

5. **CHECK THE (T810) SHIFT (ON/OFF) SOLENOID 3 CONTROL CIRCUIT FOR A SHORT TO ANOTHER CIRCUIT**

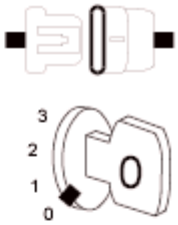

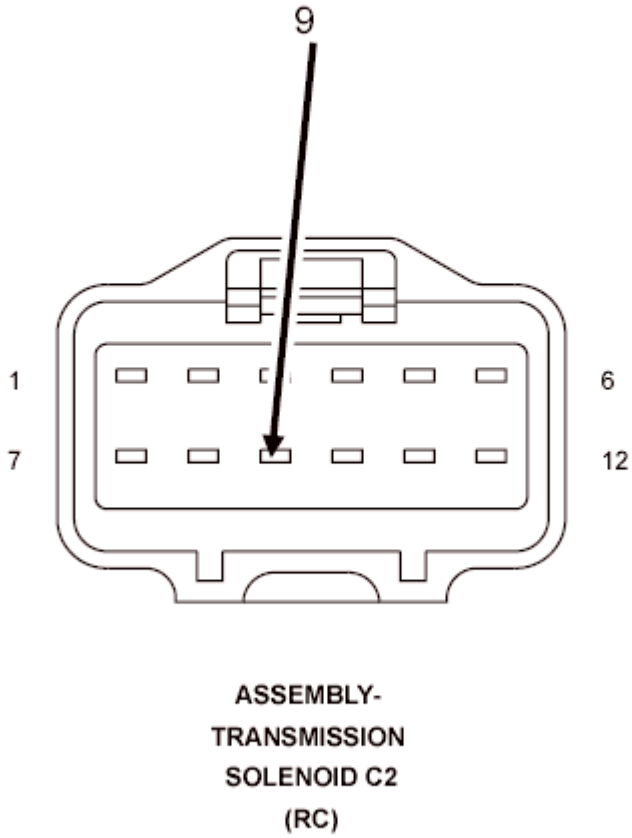

Fig. 142: Checking Shift (On/Off) Solenoid 3 Control Circuit For A Short To Another Circuit
Courtesy of CHRYSLER GROUP, LLC

1. Turn the ignition off to the lock position.
2. Measure the resistance between the (T810) Shift (On/Off) Solenoid 3 Control circuit and all other circuits in the Transmission Solenoid Assembly C2 harness connector.

Is the resistance below 100k Ohms between the (T810) Shift (On/Off) Solenoid 3 Control circuit and any other circuit in the Transmission Solenoid Assembly harness connector?

Yes

- Repair the (T810) Shift (On/Off) Solenoid 3 Control circuit for a short to another circuit(s).
- Refer to **STANDARD PROCEDURE** and perform the AS68RC VERIFICATION TEST.

No

- Go To 6.

6. **CHECK THE SHIFT (ON/OFF) SOLENOID 3**

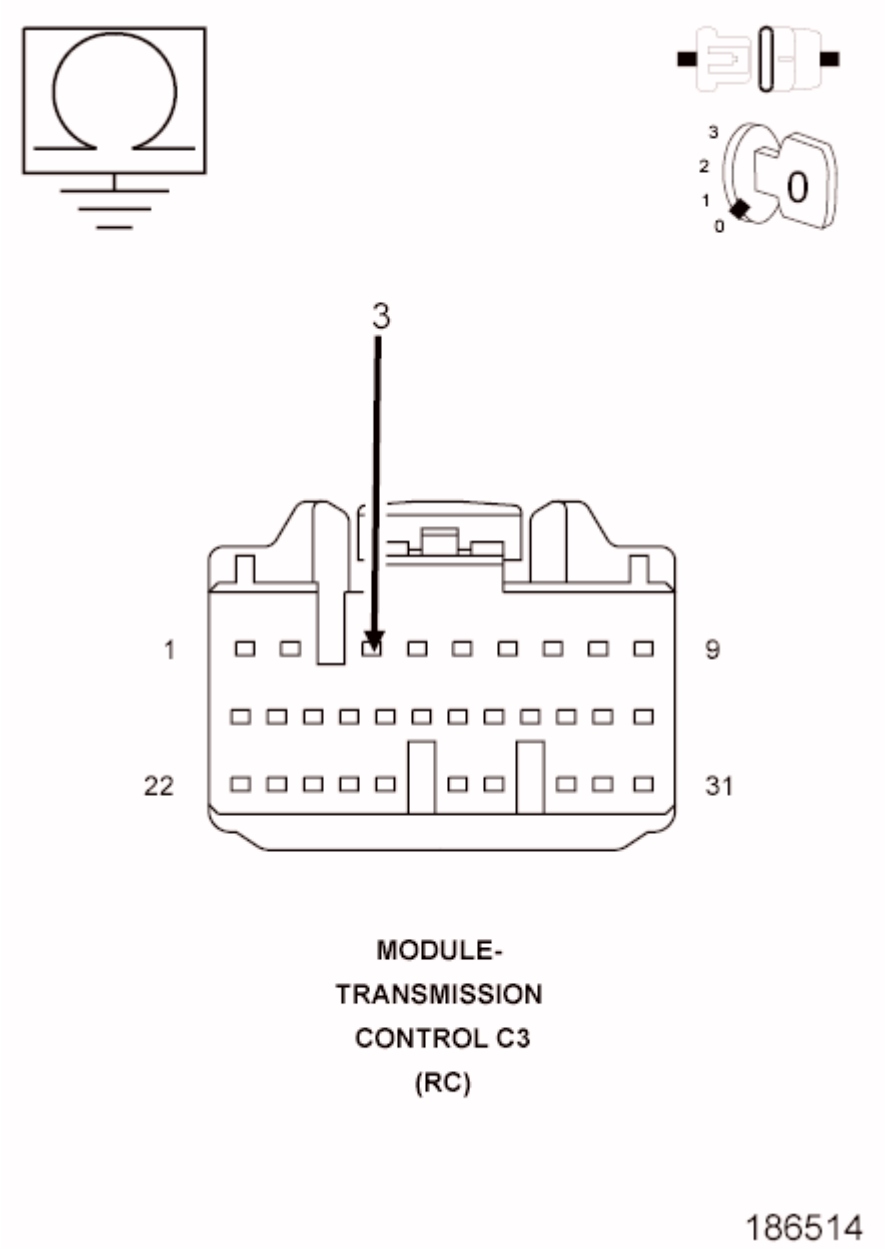

Fig. 143: Checking Shift (On/Off) Solenoid 3 And Circuits
Courtesy of CHRYSLER GROUP, LLC

1. Turn the ignition off to the lock position.
2. Reconnect the Transmission Solenoid Assembly C2 Harness connector.
3. Measure the resistance of the Shift (On/Off) Solenoid 3 between the (T810) Shift (On/Off) Solenoid 3 and ground at the TCM C3 harness connector.

   Is the resistance of the Shift (On/Off) Solenoid 3 13.0 Ohms (± 2.0 Ohms)?

   Yes

- Using the schematics as a guide, check the Transmission Control Module (TCM) pins, terminals, and connectors for corrosion, damage, or terminal push out. Pay particular attention to all power and ground circuits. If no problems are found, replace and program the TCM in accordance with the Service Information.
- Refer to **STANDARD PROCEDURE** and perform the AS68RC VERIFICATION TEST.

No

- Replace the Shift (On/Off) Solenoid 3 in accordance with the Service Information.
- Refer to **STANDARD PROCEDURE** and perform the AS68RC VERIFICATION TEST.

7. **CHECK WIRING AND CONNECTORS**
   1. The conditions necessary to set the DTC are not present at this time.
   2. Using the schematics as a guide, inspect the wiring and connectors specific to this circuit.
   3. Wiggle the wires while checking for shorted and open circuits.
   4. Check for any Service Bulletins that may apply.

   Were there any problems found?

   Yes

   - Repair as necessary.
   - Refer to **STANDARD PROCEDURE** and perform the AS68RC VERIFICATION TEST.

   No

   - Test Complete.

P0980-SHIFT SOLENOID C CONTROL CIRCUIT HIGH

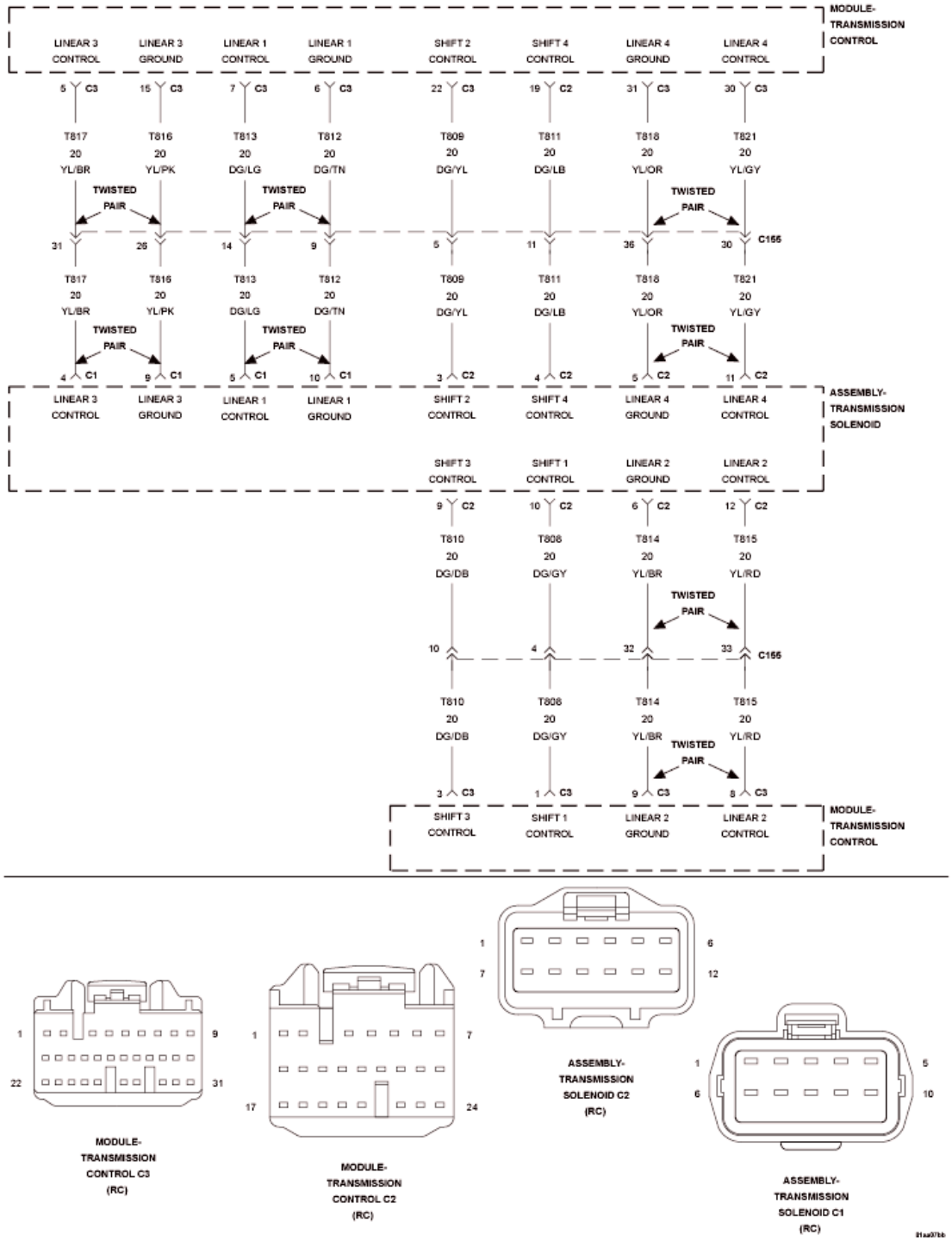

Fig. 144: Transmission Solenoid Assembly Wiring Diagram
Courtesy of CHRYSLER GROUP, LLC

For a complete wiring diagram, **refer to appropriate SYSTEM WIRING DIAGRAMS article** .

THEORY OF OPERATION

The Shift (On/Off) Solenoid 3 is used to switch hydraulic paths on the Shift Valve 3 which will direct a gear shift.

DIAGNOSTIC TEST

When Monitored:

- Ignition on, engine running.

Set Condition:

- Solenoid resistance is greater than or equal to 100k Ohms for more than 100 ms.

POSSIBLE CAUSES

Possible Causes
(T810) SHIFT (ON/OFF) SOLENOID 3 SHORT TO GROUND
(T810) SHIFT (ON/OFF) SOLENOID 3 SHORT TO ANOTHER CIRCUIT
SHIFT (ON/OFF) SOLENOID 3
TRANSMISSION CONTROL MODULE (TCM)

Always perform the AS68RC Pre-Diagnostic Troubleshooting procedure before proceeding. Refer to STANDARD PROCEDURE.

DIAGNOSTIC TEST

1. **CHECK IF DTC IS CURRENT**
    1. Using the scan tool, read TCM DTCs.
    2. Record the Environmental Data and any DTCs.
    3. Clear DTCs.
    4. Using the recorded Environmental Data, along with the When Monitored and Set Conditions above, operate the vehicle in the conditions that set the DTC.
    5. Read TCM DTCs.

    Did the DTC reset?

    Yes

    - Go To 2.

    No

    - Go To 7.
2. **CHECK THE (T810) SHIFT (ON/OFF) SOLENOID 3 CONTROL CIRCUIT FOR AN OPEN**

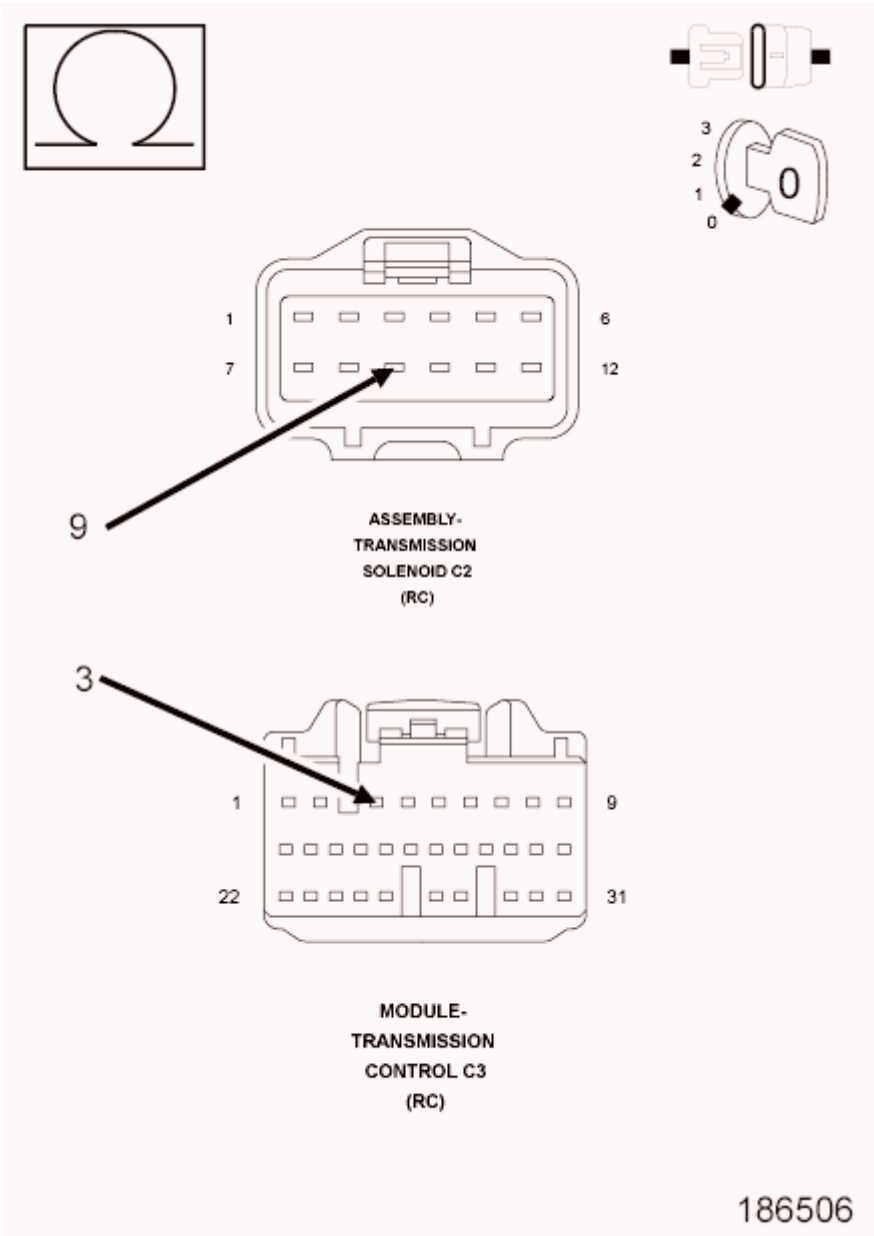

Fig. 145: Checking Shift (On/Off) Solenoid 3 Control Circuit For An Open
Courtesy of CHRYSLER GROUP, LLC

1. Turn the ignition off to the lock position.
2. Disconnect the Transmission Solenoid Assembly C2 harness connectors.
3. Disconnect the TCM C3 harness connector.

NOTE: Check connectors - Clean/repair as necessary.

4. Measure the resistance of the (T810) Shift (On/Off) Solenoid 3 Control circuit between the Transmission Solenoid Assembly C2 harness connector and the TCM C3 harness connector.

Is the resistance below 5.0 Ohms?

Yes

- Go To 3.

No

- Repair the (T810) Shift (On/Off) Solenoid 3 Control circuit for an open.
- Refer to **STANDARD PROCEDURE** and perform the AS68RC VERIFICATION TEST.

3. **CHECK THE (T810) SHIFT (ON/OFF) SOLENOID 3 CONTROL CIRCUIT FOR A SHORT TO GROUND**

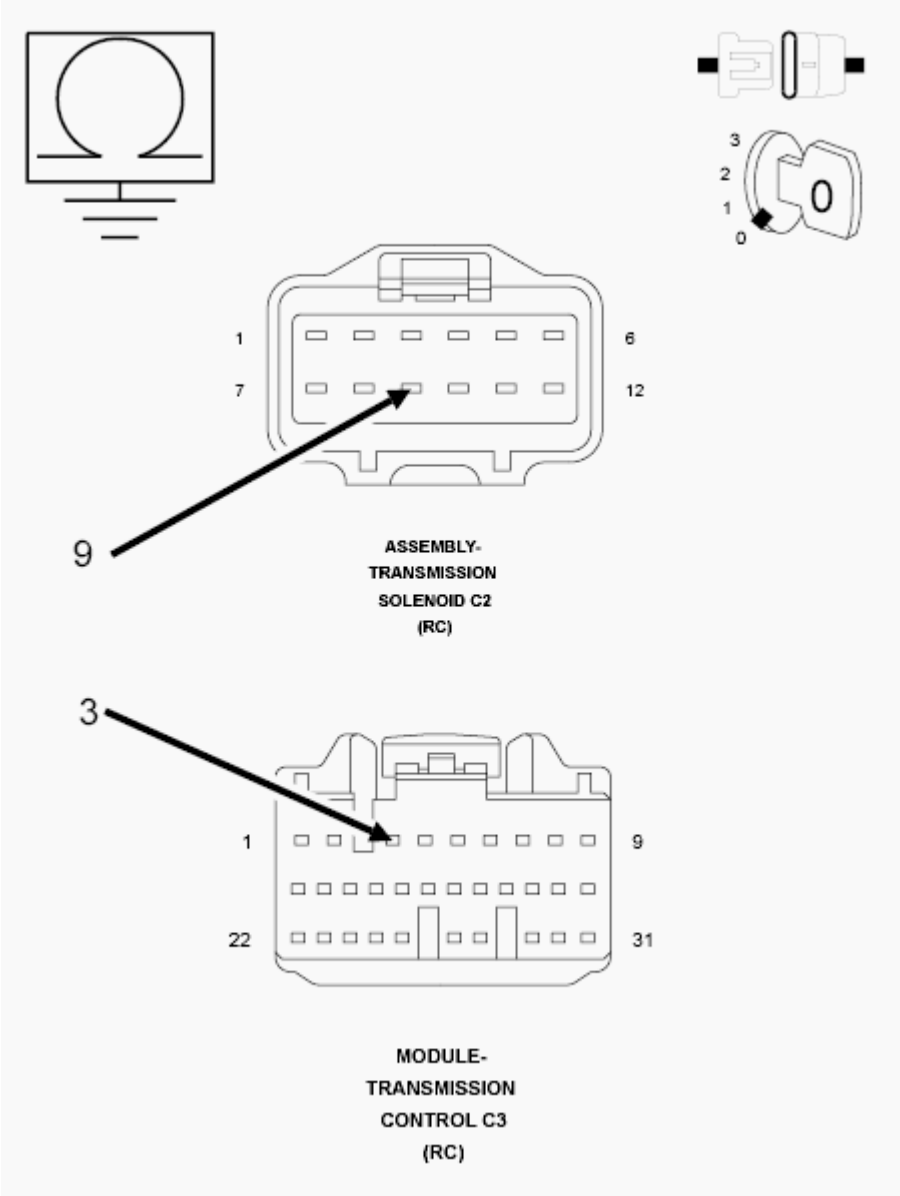

Fig. 146: Checking Shift (On/Off) Solenoid 3 Control Circuit For A Short To Ground
Courtesy of CHRYSLER GROUP, LLC

1. Measure the resistance between ground and the (T810) Shift (On/Off) Solenoid 3 Control circuit.

   Is the resistance below 100k Ohms?

   Yes

   - Repair the (T810) Shift (On/Off) Solenoid 3 Control circuit for a short to ground.
   - Refer to **STANDARD PROCEDURE** and perform the AS68RC VERIFICATION TEST.

   No

   - Go To 4.

4. **CHECK THE (T810) SHIFT (ON/OFF) SOLENOID 3 CONTROL CIRCUIT SHORT TO VOLTAGE**

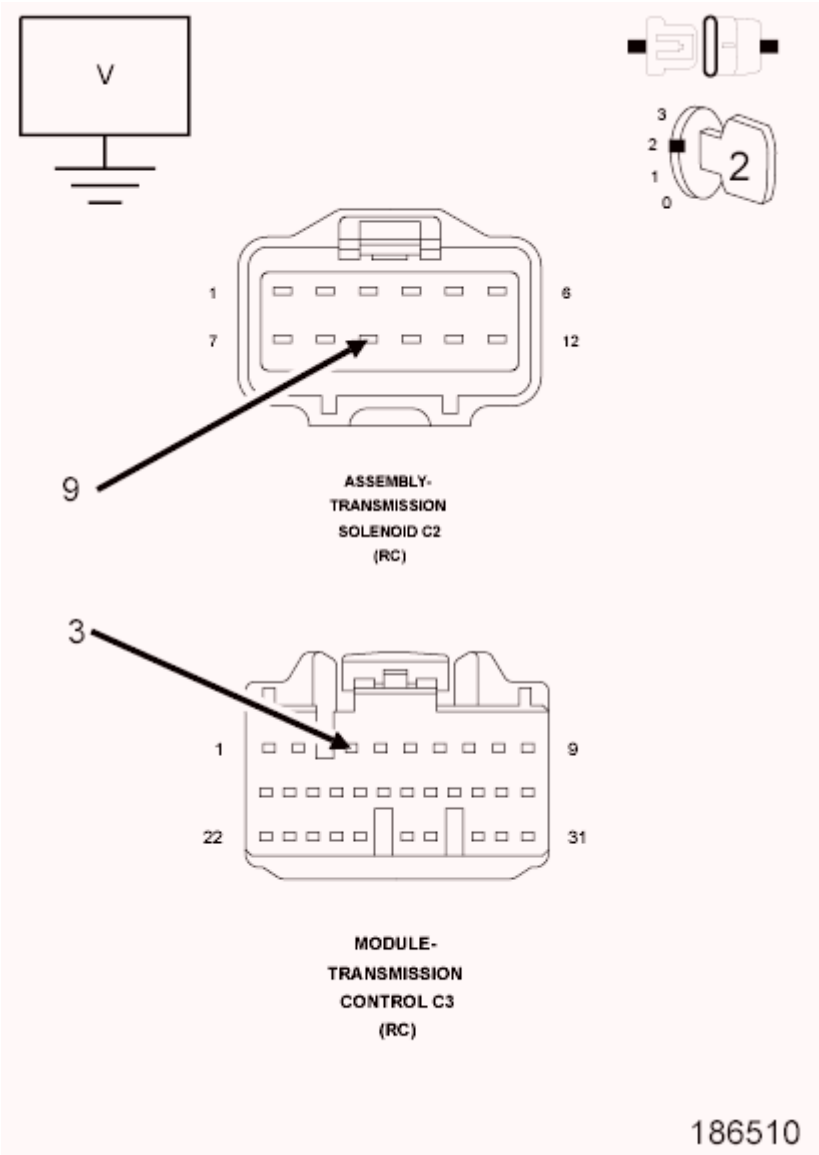

Fig. 147: Checking Shift (On/Off) Solenoid 3 Control Circuit Short To Voltage
Courtesy of CHRYSLER GROUP, LLC

1. Ignition on, engine not running.
2. Measure the voltage of the (T810) Shift (On/Off) Solenoid 3 Control circuit.

   Is the voltage above 0.5 of a volt?

   Yes

   - Repair the (T810) Shift (On/Off) Solenoid 3 Control circuit for a short to voltage.
   - Refer to **STANDARD PROCEDURE** and perform the AS68RC VERIFICATION TEST.

   No

- Go To 5.

5. **CHECK THE (T810) SHIFT (ON/OFF) SOLENOID 3 CONTROL CIRCUIT FOR A SHORT TO ANOTHER CIRCUIT**

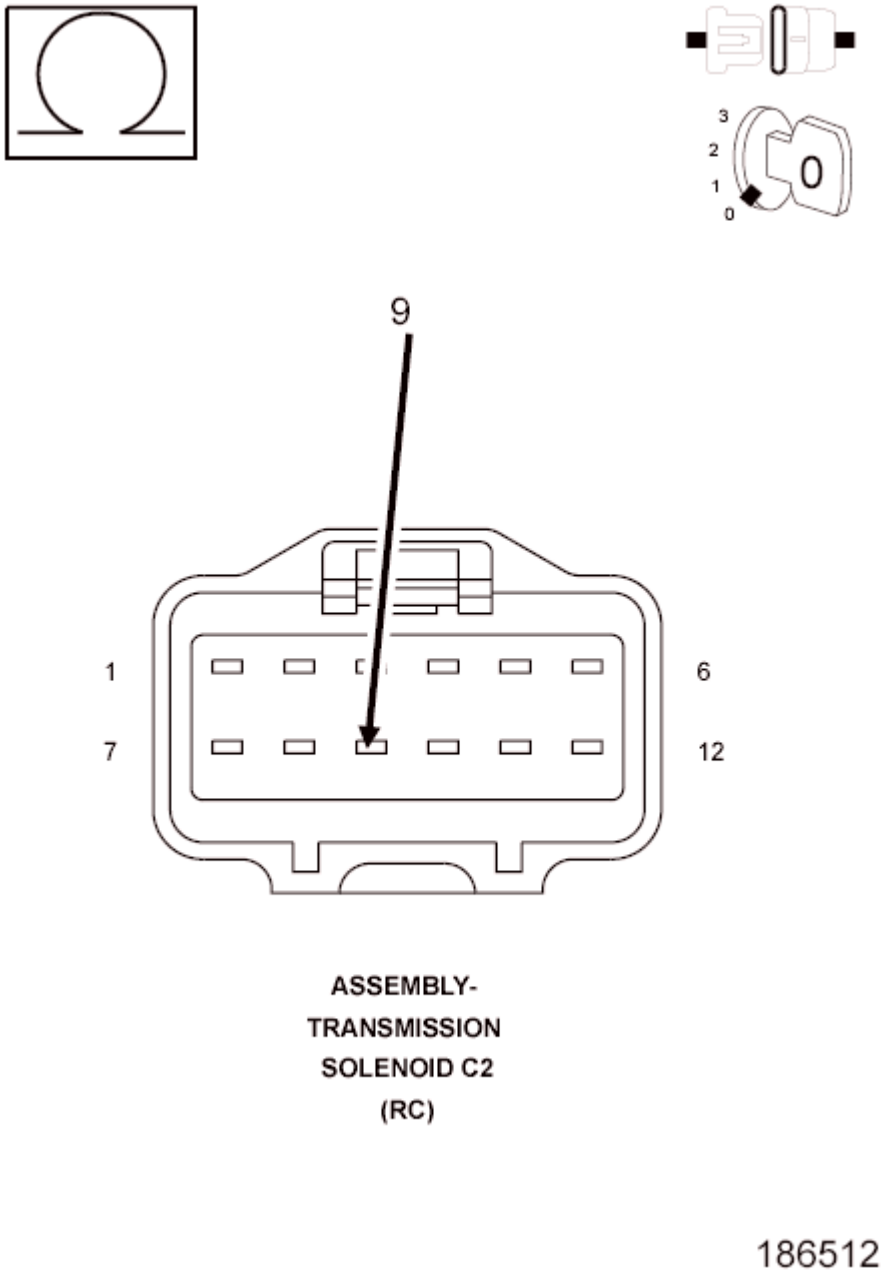

Fig. 148: Checking Shift (On/Off) Solenoid 3 Control Circuit For A Short To Another Circuit
Courtesy of CHRYSLER GROUP, LLC

1. Turn the ignition off to the lock position.
2. Measure the resistance between the (T810) Shift (On/Off) Solenoid 3 Control circuit and all other circuits in the Transmission Solenoid Assembly C2 harness connector.

Is the resistance below 100k Ohms between the (T810) Shift (On/Off) Solenoid 3 Control circuit and any other circuit in the Transmission Solenoid Assembly harness connector?

Yes

- Repair the (T810) Shift (On/Off) Solenoid 3 Control circuit for a short to another circuit(s).
- Refer to **STANDARD PROCEDURE** and perform the AS68RC VERIFICATION TEST.

No

- Go To 6.

6. **CHECK THE SHIFT (ON/OFF) SOLENOID 3**

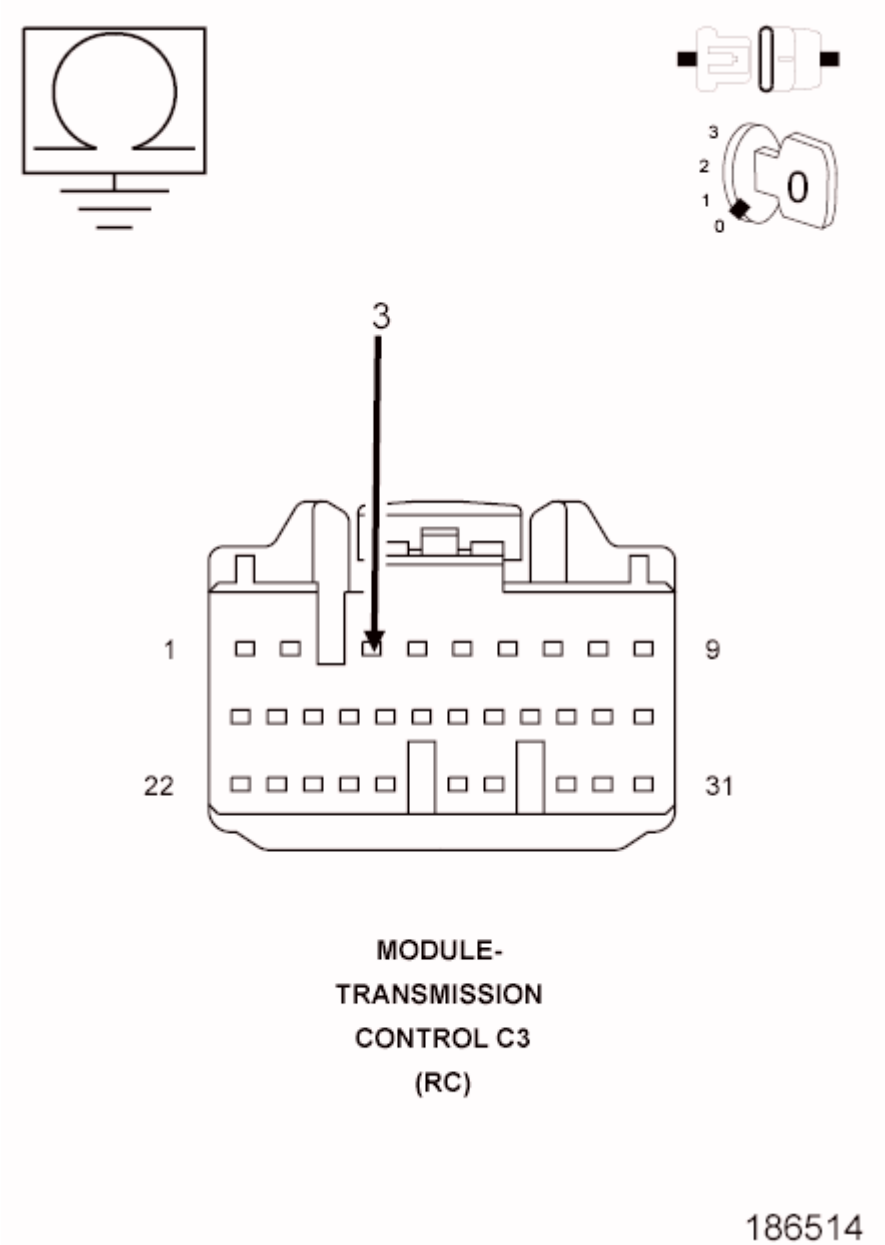

Fig. 149: Checking Shift (On/Off) Solenoid 3 And Circuits
Courtesy of CHRYSLER GROUP, LLC

1. Turn the ignition off to the lock position.
2. Reconnect the Transmission Solenoid Assembly C2 Harness connector.
3. Measure the resistance of the Shift (On/Off) Solenoid 3 between the (T810) Shift (On/Off) Solenoid 3 and ground at the TCM C3 harness connector.

   Is the resistance of the Shift (On/Off) Solenoid 3 13.0 Ohms (± 2 Ohms)?

   Yes

- Using the schematics as a guide, check the Transmission Control Module (TCM) pins, terminals, and connectors for corrosion, damage, or terminal push out. Pay particular attention to all power and ground circuits. If no problems are found, replace and program the TCM in accordance with the Service Information.
- Refer to **STANDARD PROCEDURE** and perform the AS68RC VERIFICATION TEST.

No

- Replace the Shift (On/Off) Solenoid 3 in accordance with the Service Information.
- Refer to **STANDARD PROCEDURE** and perform the AS68RC VERIFICATION TEST.

7. **CHECK WIRING AND CONNECTORS**
   1. The conditions necessary to set the DTC are not present at this time.
   2. Using the schematics as a guide, inspect the wiring and connectors specific to this circuit.
   3. Wiggle the wires while checking for shorted and open circuits.
   4. Check for any Service Bulletins that may apply.

   Were there any problems found?

   Yes

   - Repair as necessary.
   - Refer to **STANDARD PROCEDURE** and perform the AS68RC VERIFICATION TEST.

   No

   - Test Complete.

P0982-SHIFT SOLENOID D CONTROL CIRCUIT LOW

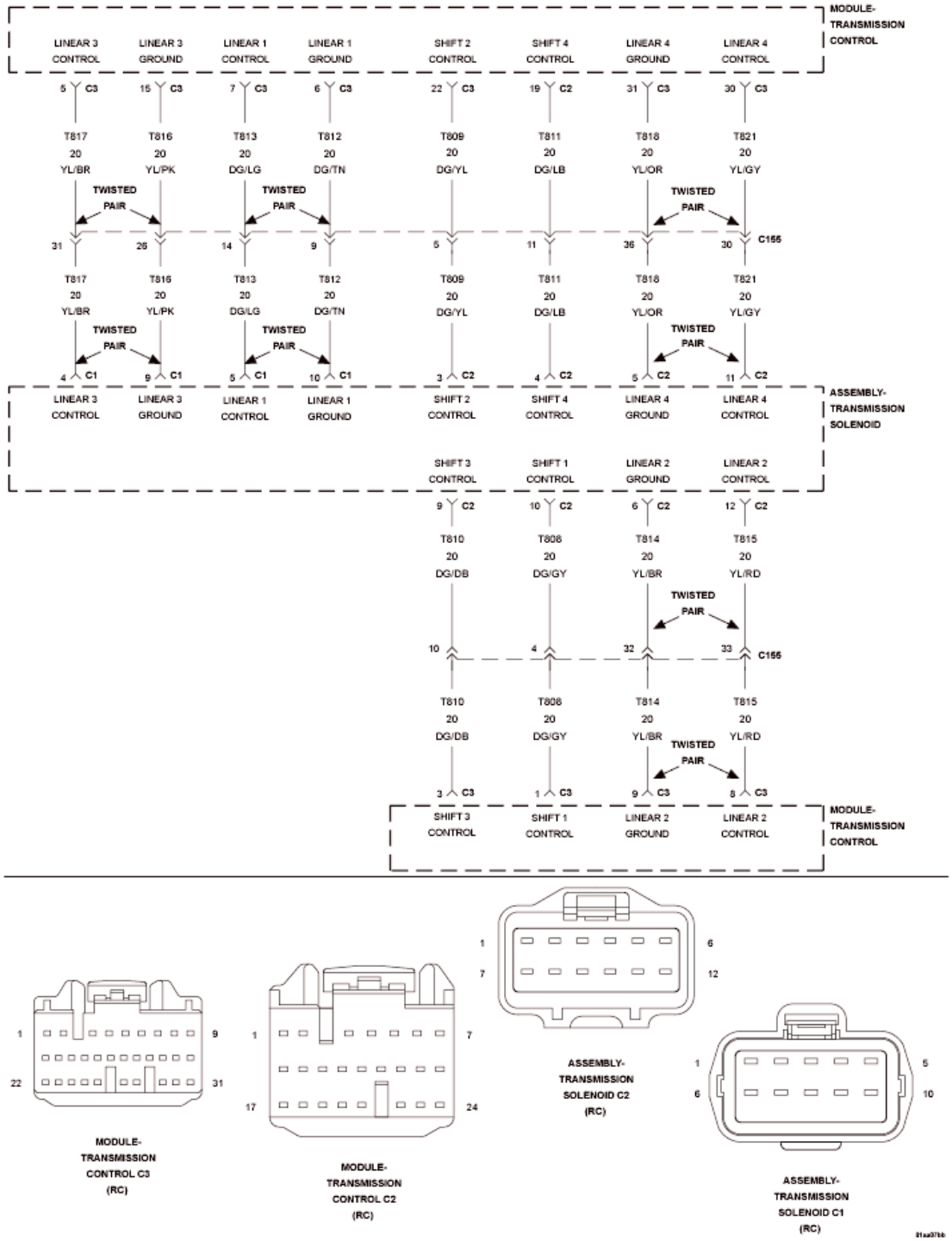

Fig. 150: Transmission Solenoid Assembly Wiring Diagram
Courtesy of CHRYSLER GROUP, LLC

For a complete wiring diagram, **refer to appropriate SYSTEM WIRING DIAGRAMS article** .

THEORY OF OPERATION

The Shift (On/Off) Solenoid 4 is used to switch hydraulic paths on the Control Valves 1 and 2.

DIAGNOSTIC TEST

When Monitored:

- Ignition on, engine running.

Set Condition:

- Solenoid current is greater than or equal to 4 amps for more than 100 ms.

POSSIBLE CAUSES

Possible Causes
(T811) SHIFT (ON/OFF) SOLENOID 4 SHORT TO GROUND
(T811) SHIFT (ON/OFF) SOLENOID 4 SHORT TO ANOTHER CIRCUIT
SHIFT (ON/OFF) SOLENOID 4
TRANSMISSION CONTROL MODULE (TCM)

Always perform the AS68RC Pre-Diagnostic Troubleshooting procedure before proceeding. Refer to STANDARD PROCEDURE.

DIAGNOSTIC TEST

1. **CHECK IF DTC IS CURRENT**
    1. Using the scan tool, read TCM DTCs.
    2. Record the Environmental Data and any DTCs.
    3. Clear DTCs.
    4. Using the recorded Environmental Data, along with the When Monitored and Set Conditions above, operate the vehicle in the conditions that set the DTC.
    5. Read TCM DTCs.

    Did the DTC reset?

    Yes

    - Go To 2.

    No

    - Go To 7.
2. **CHECK THE (T811) SHIFT (ON/OFF) SOLENOID 4 CONTROL CIRCUIT FOR AN OPEN**

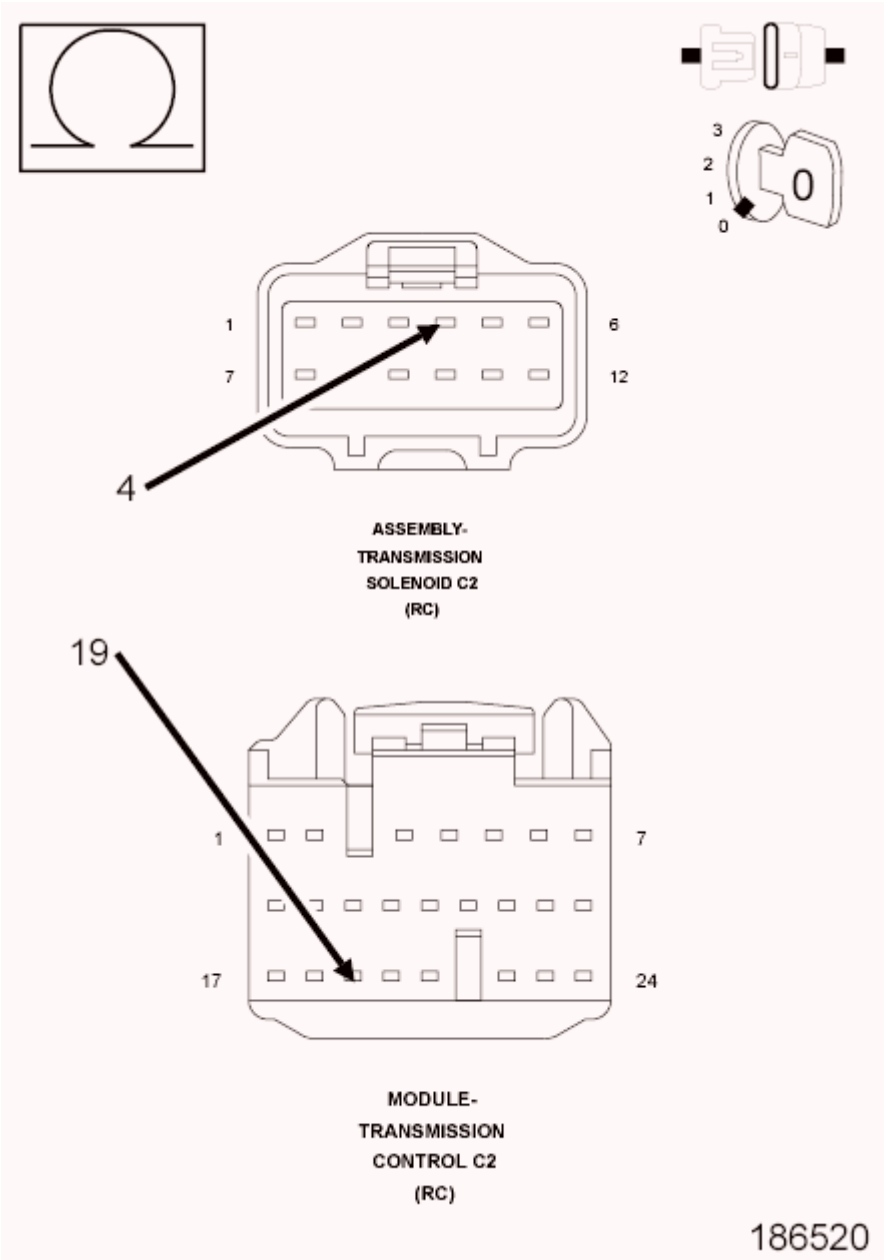

Fig. 151: Checking Shift (On/Off) Solenoid 4 Control Circuit For An Open
Courtesy of CHRYSLER GROUP, LLC

1. Turn the ignition off to the lock position.
2. Disconnect the Transmission Solenoid Assembly C2 harness connectors.
3. Disconnect the TCM C2 harness connector.

NOTE: Check connectors - Clean/repair as necessary.

4. Measure the resistance of the (T811) Shift (On/Off) Solenoid 4 Control circuit between the Transmission Solenoid Assembly C2 harness connector and the TCM C2 harness connector.

Is the resistance below 5.0 Ohms?

Yes

- Go To 3.

No

- Repair the (T811) Shift (On/Off) Solenoid 4 Control circuit for an open.
- Refer to **STANDARD PROCEDURE** and perform the AS68RC VERIFICATION TEST.

3. **CHECK THE (T811) SHIFT (ON/OFF) SOLENOID 4 CONTROL CIRCUIT FOR A SHORT TO GROUND**

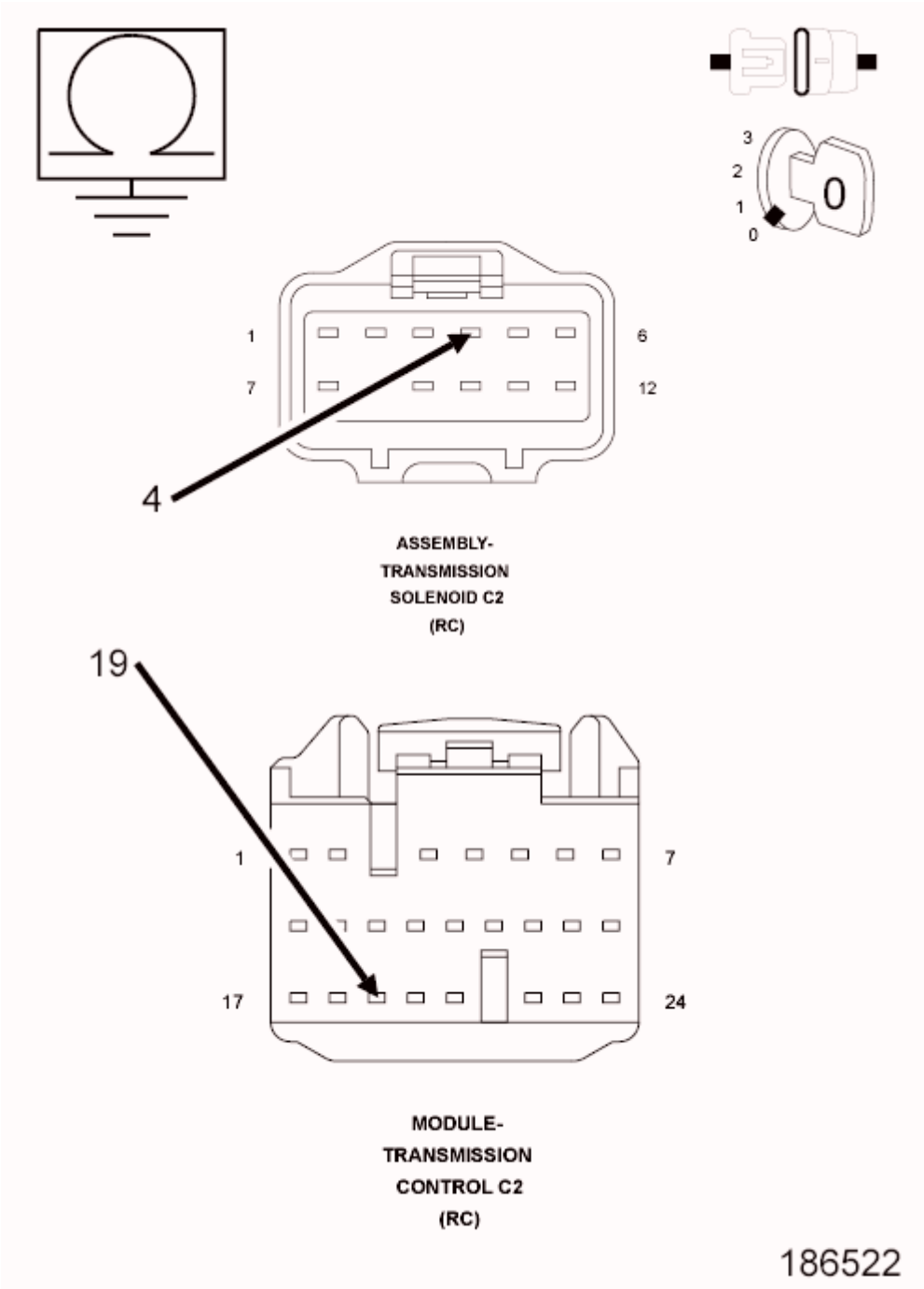

Fig. 152: Checking Shift (On/Off) Solenoid 4 Control Circuit For A Short To Ground
Courtesy of CHRYSLER GROUP, LLC

1. Measure the resistance between ground and the (T811) Shift (On/Off) Solenoid 4 Control circuit.

   Is the resistance below 100k Ohms?

   Yes

- Repair the (T811) Shift (On/Off) Solenoid 4 Control circuit for a short to ground.
- Refer to **STANDARD PROCEDURE** and perform the AS68RC VERIFICATION TEST.

No

- Go To 4.

4. **CHECK THE (T811) SHIFT (ON/OFF) SOLENOID 4 CONTROL CIRCUIT SHORT TO VOLTAGE**

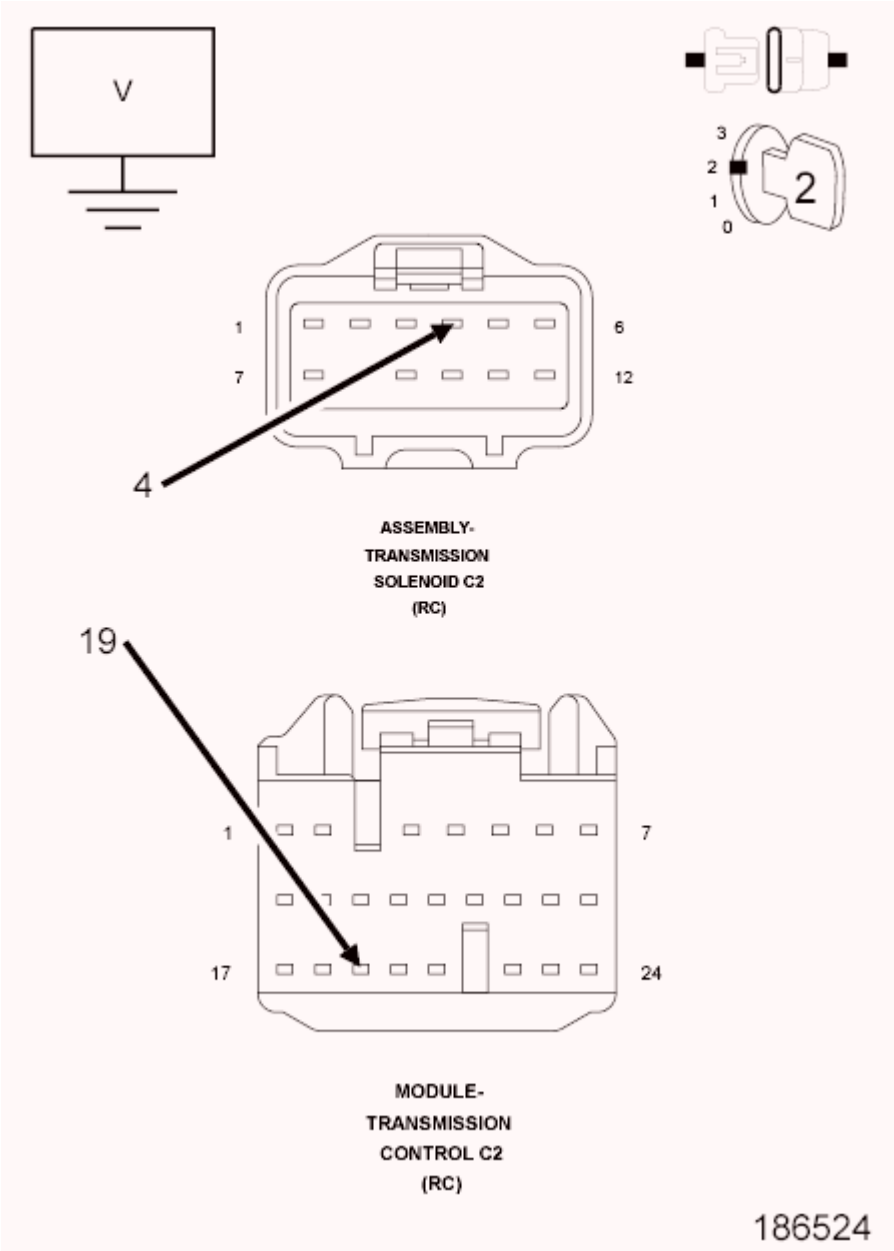

Fig. 153: Checking Shift (On/Off) Solenoid 4 Control Circuit Short To Voltage
Courtesy of CHRYSLER GROUP, LLC

1. Ignition on, engine not running.
2. Measure the voltage of the (T811) Shift (On/Off) Solenoid 4 Control circuit.

   Is the voltage above 0.5 of a volt?

   Yes

   - Repair the (T811) Shift (On/Off) Solenoid 4 Control circuit for a short to voltage.
   - Refer to **STANDARD PROCEDURE** and perform the AS68RC VERIFICATION TEST.

   No

   - Go To 5.

5. **CHECK THE (T811) SHIFT (ON/OFF) SOLENOID 4 CONTROL CIRCUIT FOR A SHORT TO ANOTHER CIRCUIT**

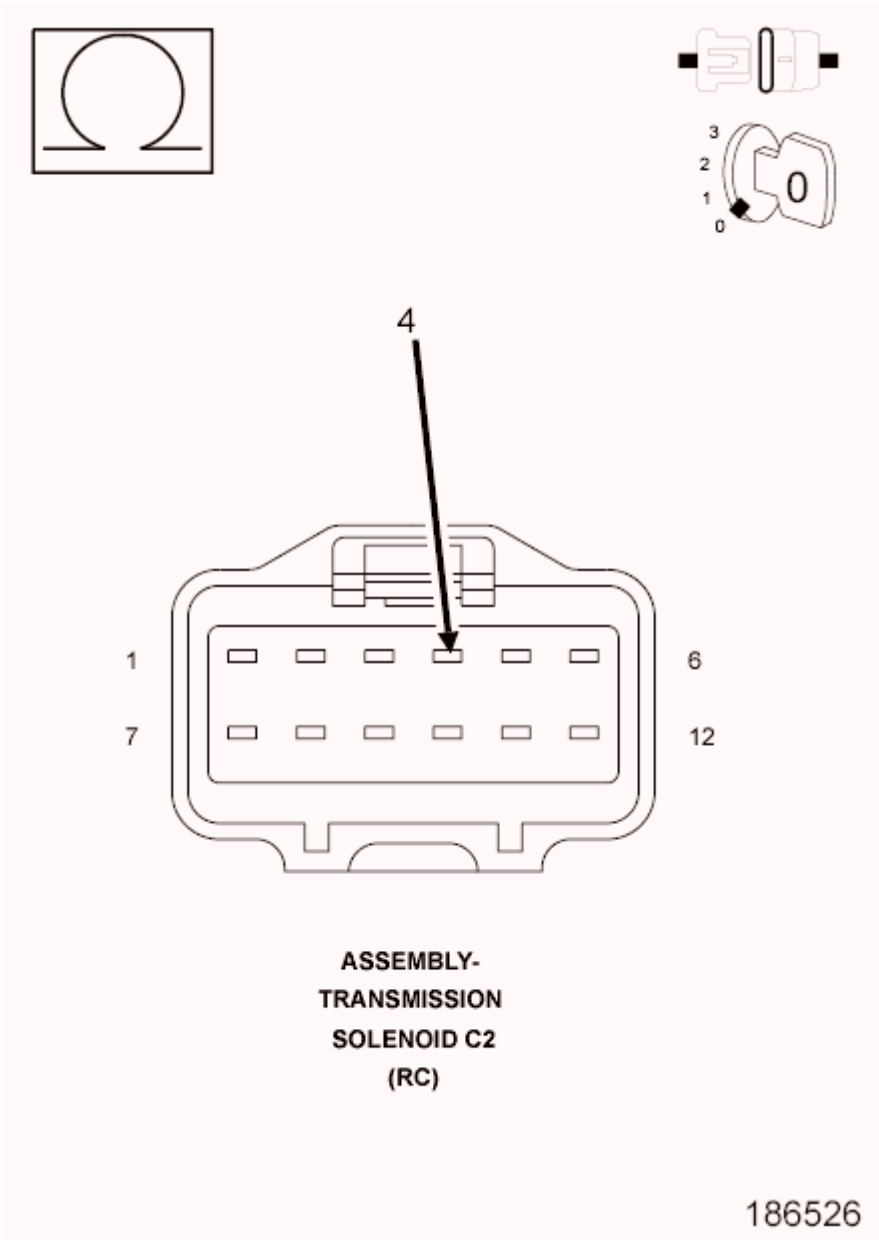

Fig. 154: Checking Shift (On/Off) Solenoid 4 Control Circuit For A Short To Another Circuit
Courtesy of CHRYSLER GROUP, LLC

1. Turn the ignition off to the lock position.
2. Measure the resistance between the (T811) Shift (On/Off) Solenoid 4 Control circuit and all other circuits in the Transmission Solenoid Assembly C2 harness connector.

   Is the resistance below 100k Ohms between the (T811) Shift (On/Off) Solenoid 4 Control circuit and any other circuit in the Transmission Solenoid Assembly harness connector?

   Yes

   - Repair the (T811) Shift (On/Off) Solenoid 4 Control circuit for a short to another circuit(s).

- Refer to **STANDARD PROCEDURE** and perform the AS68RC VERIFICATION TEST.

No

- Go To 6.

6. **CHECK THE SHIFT (ON/OFF) SOLENOID 4**

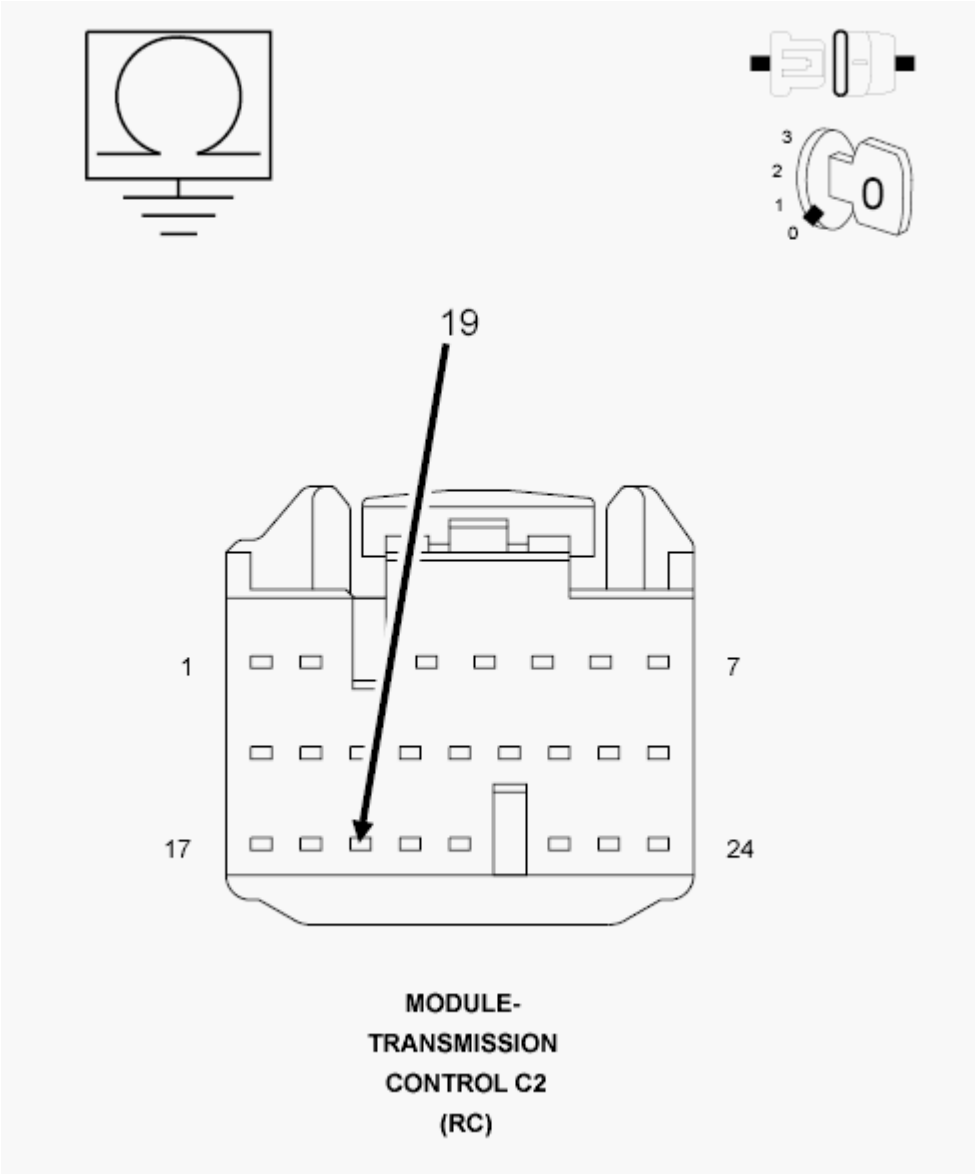

Fig. 155: Checking Shift (On/Off) Solenoid 4 And Circuits
Courtesy of CHRYSLER GROUP, LLC

1. Turn the ignition off to the lock position.
2. Reconnect the Transmission Solenoid Assembly C2 Harness connector.
3. Measure the resistance of the Shift (On/Off) Solenoid 4 between the (T811) Shift (On/Off) Solenoid 4 and ground at the TCM C2 harness connector.

Is the resistance of the Shift (On/Off) Solenoid 4 13.0 Ohms (± 2 Ohms)?

Yes

- Using the schematics as a guide, check the Transmission Control Module (TCM) pins, terminals, and connectors for corrosion, damage, or terminal push out. Pay particular attention to all power and ground circuits. If no problems are found, replace and program the TCM in accordance with the Service Information.
- Refer to **STANDARD PROCEDURE** and perform the AS68RC VERIFICATION TEST.

No

- Replace the Shift (On/Off) Solenoid 4 in accordance with the Service Information.
- Refer to **STANDARD PROCEDURE** and perform the AS68RC VERIFICATION TEST.

7. **CHECK WIRING AND CONNECTORS**
   1. The conditions necessary to set the DTC are not present at this time.
   2. Using the schematics as a guide, inspect the wiring and connectors specific to this circuit.
   3. Wiggle the wires while checking for shorted and open circuits.
   4. Check for any Service Bulletins that may apply.

   Were there any problems found?

   Yes

   - Repair as necessary.
   - Refer to **STANDARD PROCEDURE** and perform the AS68RC VERIFICATION TEST.

   No

   - Test Complete.

P0983-SHIFT SOLENOID D CONTROL CIRCUIT HIGH

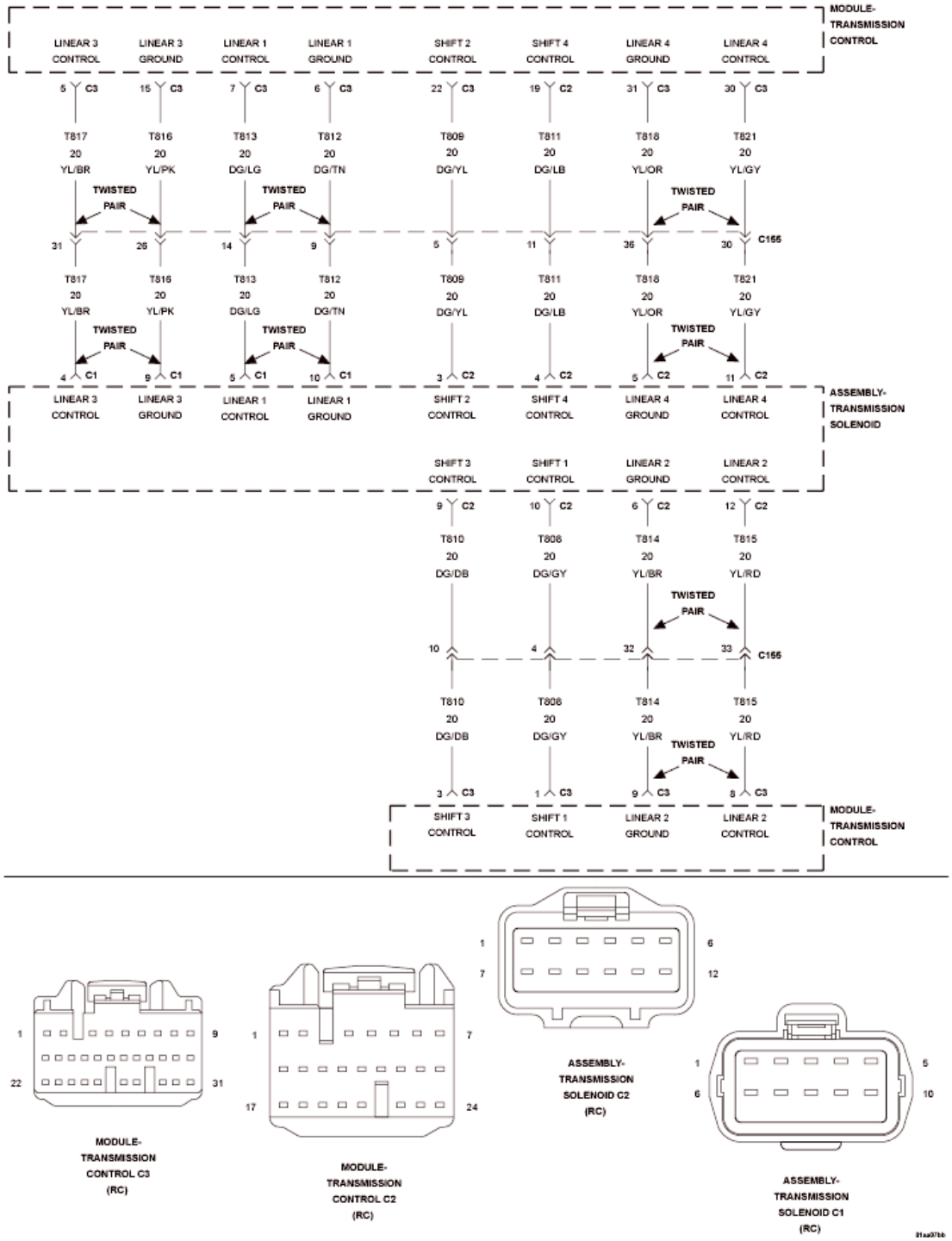

Fig. 156: Transmission Solenoid Assembly Wiring Diagram
Courtesy of CHRYSLER GROUP, LLC

For a complete wiring diagram, **refer to appropriate SYSTEM WIRING DIAGRAMS article** .

THEORY OF OPERATION

The Shift (On/Off) Solenoid 4 is used to switch hydraulic paths on the Control Valves 1 and 2.

DIAGNOSTIC TEST

When Monitored:

- Ignition on, engine running.

Set Condition:

- Solenoid resistance is greater than or equal to 100k Ohms for more than 100 ms.

POSSIBLE CAUSES

Possible Causes
(T811) SHIFT (ON/OFF) SOLENOID 4 SHORT TO GROUND
(T811) SHIFT (ON/OFF) SOLENOID 4 SHORT TO ANOTHER CIRCUIT
SHIFT (ON/OFF) SOLENOID 4
TRANSMISSION CONTROL MODULE (TCM)

Always perform the AS68RC Pre-Diagnostic Troubleshooting procedure before proceeding. Refer to STANDARD PROCEDURE.

DIAGNOSTIC TEST

1. **CHECK IF DTC IS CURRENT**
    1. Using the scan tool, read TCM DTCs.
    2. Record the Environmental Data and any DTCs.
    3. Clear DTCs.
    4. Using the recorded Environmental Data, along with the When Monitored and Set Conditions above, operate the vehicle in the conditions that set the DTC.
    5. Read TCM DTCs.

    Did the DTC reset?

    Yes

    - Go To 2.

    No

    - Go To 7.
2. **CHECK THE (T811) SHIFT (ON/OFF) SOLENOID 4 CONTROL CIRCUIT FOR AN OPEN**

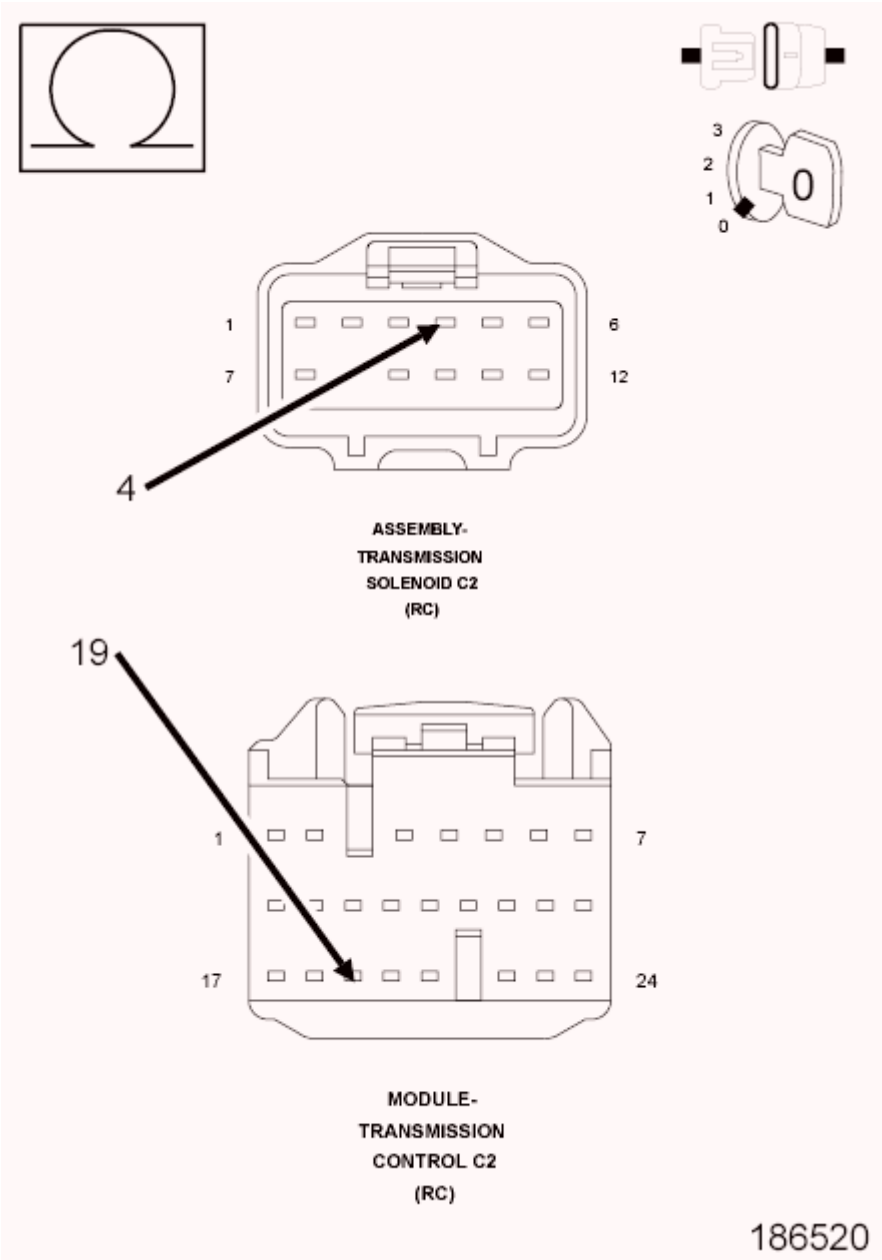

Fig. 157: Checking Shift (On/Off) Solenoid 4 Control Circuit For An Open
Courtesy of CHRYSLER GROUP, LLC

1. Turn the ignition off to the lock position.
2. Disconnect the Transmission Solenoid Assembly C2 harness connectors.
3. Disconnect the TCM C2 harness connector.

NOTE: Check connectors - Clean/repair as necessary.

4. Measure the resistance of the (T811) Shift (On/Off) Solenoid 4 Control circuit between the Transmission Solenoid Assembly C2 harness connector and the TCM C2 harness connector.

Is the resistance below 5.0 Ohms?

Yes

- Go To 3.

No

- Repair the (T811) Shift (On/Off) Solenoid 4 Control circuit for an open.
- Refer to **STANDARD PROCEDURE** and perform the AS68RC VERIFICATION TEST.

3. **CHECK THE (T811) SHIFT (ON/OFF) SOLENOID 4 CONTROL CIRCUIT FOR A SHORT TO GROUND**

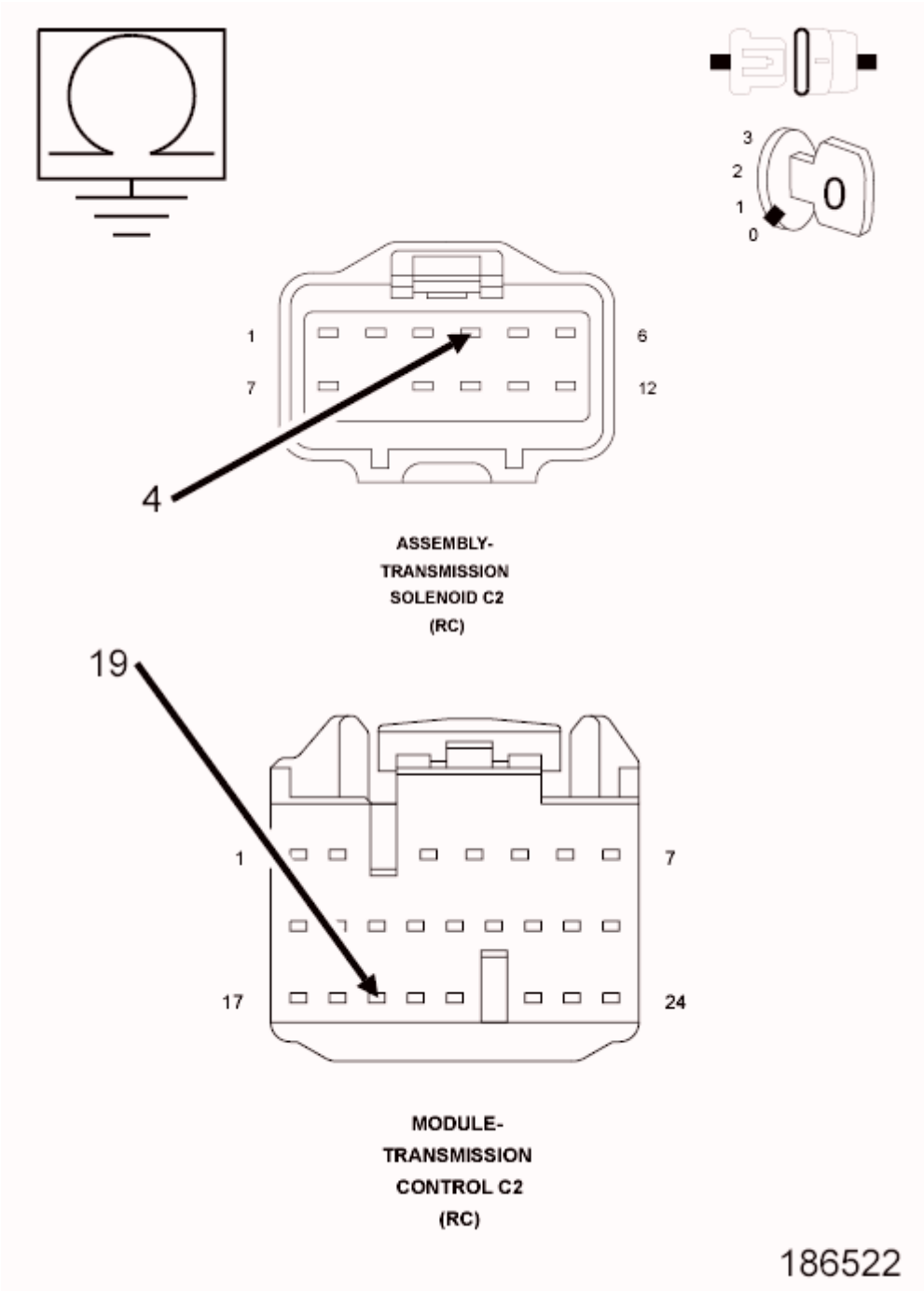

Fig. 158: Checking Shift (On/Off) Solenoid 4 Control Circuit For A Short To Ground
Courtesy of CHRYSLER GROUP, LLC

1. Measure the resistance between ground and the (T811) Shift (On/Off) Solenoid 4 Control circuit.

   Is the resistance below 100k Ohms?

   Yes

- Repair the (T811) Shift (On/Off) Solenoid 4 Control circuit for a short to ground.
- Refer to **STANDARD PROCEDURE** and perform the AS68RC VERIFICATION TEST.

No

- Go To 4.

4. **CHECK THE (T811) SHIFT (ON/OFF) SOLENOID 4 CONTROL CIRCUIT SHORT TO VOLTAGE**

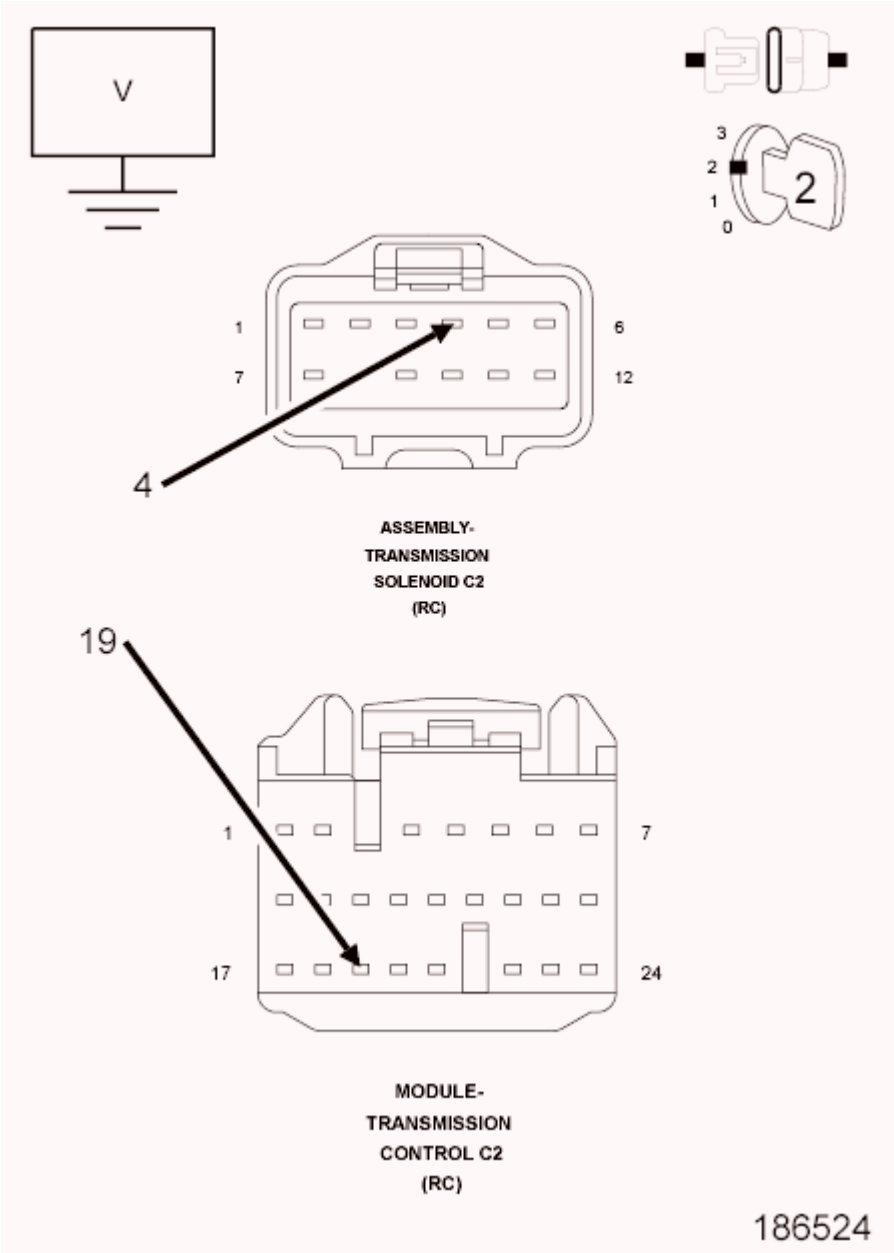

Fig. 159: Checking Shift (On/Off) Solenoid 4 Control Circuit Short To Voltage
Courtesy of CHRYSLER GROUP, LLC

1. Ignition on, engine not running.
2. Measure the voltage of the (T811) Shift (On/Off) Solenoid 4 Control circuit.

   Is the voltage above 0.5 of a volt?

   Yes

   - Repair the (T811) Shift (On/Off) Solenoid 4 Control circuit for a short to voltage.
   - Refer to **STANDARD PROCEDURE** and perform the AS68RC VERIFICATION TEST.

   No

   - Go To 5.

5. **CHECK THE (T811) SHIFT (ON/OFF) SOLENOID 4 CONTROL CIRCUIT FOR A SHORT TO ANOTHER CIRCUIT**

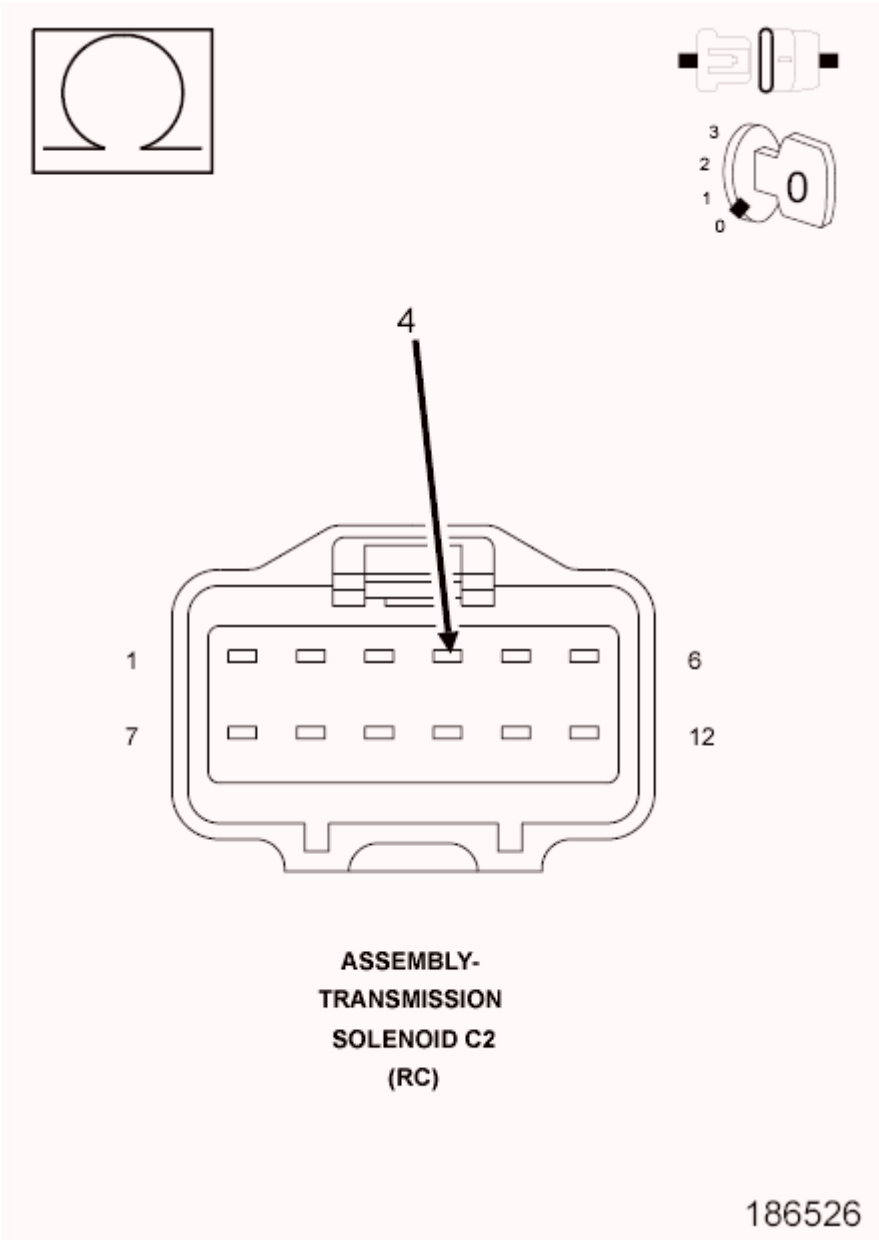

Fig. 160: Checking Shift (On/Off) Solenoid 4 Control Circuit For A Short To Another Circuit
Courtesy of CHRYSLER GROUP, LLC

1. Turn the ignition off to the lock position.
2. Measure the resistance between the (T811) Shift (On/Off) Solenoid 4 Control circuit and all other circuits in the Transmission Solenoid Assembly C2 harness connector.

   Is the resistance below 100k Ohms between the (T811) Shift (On/Off) Solenoid 4 Control circuit and any other circuit in the Transmission Solenoid Assembly harness connector?

   Yes

   - Repair the (T811) Shift (On/Off) Solenoid 4 Control circuit for a short to another circuit(s).

- Refer to **STANDARD PROCEDURE** and perform the AS68RC VERIFICATION TEST.

No

- Go To 6.

6. **CHECK THE SHIFT (ON/OFF) SOLENOID 4**

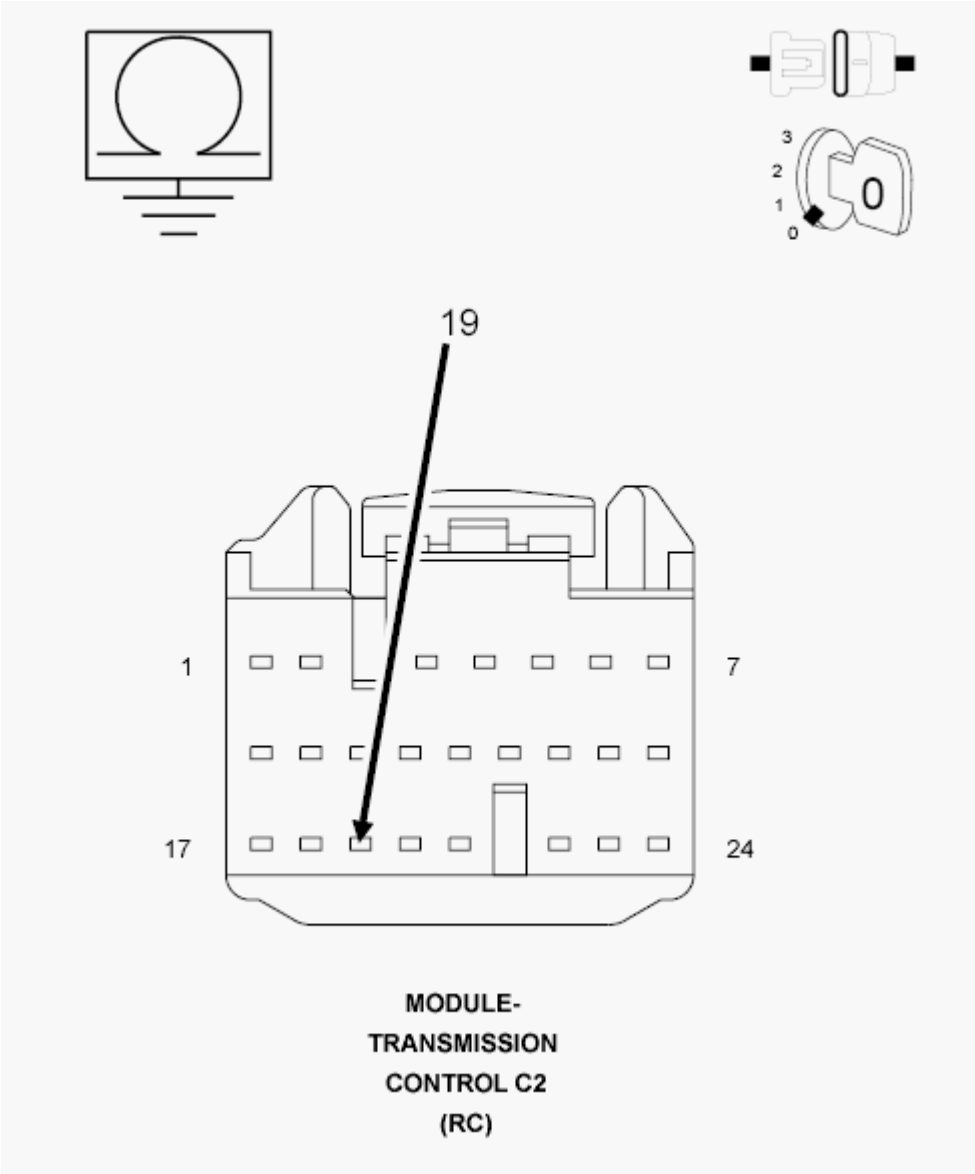

Fig. 161: Checking Shift (On/Off) Solenoid 4 And Circuits
Courtesy of CHRYSLER GROUP, LLC

1. Turn the ignition off to the lock position.
2. Reconnect the Transmission Solenoid Assembly C2 Harness connector.
3. Measure the resistance of the Shift (On/Off) Solenoid 4 between the (T811) Shift (On/Off) Solenoid 4 and ground at the TCM C2 harness connector.

Is the resistance of the Shift (On/Off) Solenoid 4 13.0 Ohms (± 2 Ohms)?

Yes

- Using the schematics as a guide, check the Transmission Control Module (TCM) pins, terminals, and connectors for corrosion, damage, or terminal push out. Pay particular attention to all power and ground circuits. If no problems are found, replace and program the TCM in accordance with the Service Information.
- Refer to **STANDARD PROCEDURE** and perform the AS68RC VERIFICATION TEST.

No

- Replace the Shift (On/Off) Solenoid 4 in accordance with the Service Information.
- Refer to **STANDARD PROCEDURE** and perform the AS68RC VERIFICATION TEST.

7. **CHECK WIRING AND CONNECTORS**
   1. The conditions necessary to set the DTC are not present at this time.
   2. Using the schematics as a guide, inspect the wiring and connectors specific to this circuit.
   3. Wiggle the wires while checking for shorted and open circuits.
   4. Check for any Service Bulletins that may apply.

   Were there any problems found?

   Yes

   - Repair as necessary.
   - Refer to **STANDARD PROCEDURE** and perform the AS68RC VERIFICATION TEST.

   No

   - Test Complete.

P1679-CALIBRATION NOT LEARNED

For a complete wiring diagram, **refer to appropriate SYSTEM WIRING DIAGRAMS article** .

THEORY OF OPERATION

The Transmission Control Module (TCM) needs to learn certain values to properly control Transmission operation. This DTC indicates that these values are not currently learned in the TCM. If the TCM or Transmission is replaced, the Quick Learn Procedure must be performed.

DIAGNOSTIC TEST

When Monitored:

- Ignition on, engine running.

Set Condition:

- Transmission Control Module (TCM) detects learned values are not currently in memory.

POSSIBLE CAUSES

Possible Causes
TCM REPLACED
TRANSMISSION REPLACED

Always perform the AS68RC Pre-Diagnostic Troubleshooting procedure before proceeding. Refer to STANDARD PROCEDURE.

DIAGNOSTIC TEST

1. **PERFORM TCM Quick Learn**
    1. This DTC will set if the TCM or the Transmission have been replaced.

       Repair

       - With the scan tool, perform the Quick Learn Procedure.
       - Refer to **STANDARD PROCEDURE** and perform the AS68RC VERIFICATION TEST.

P1720-LOSS OF OUTPUT SPEED / WHEEL SPEED

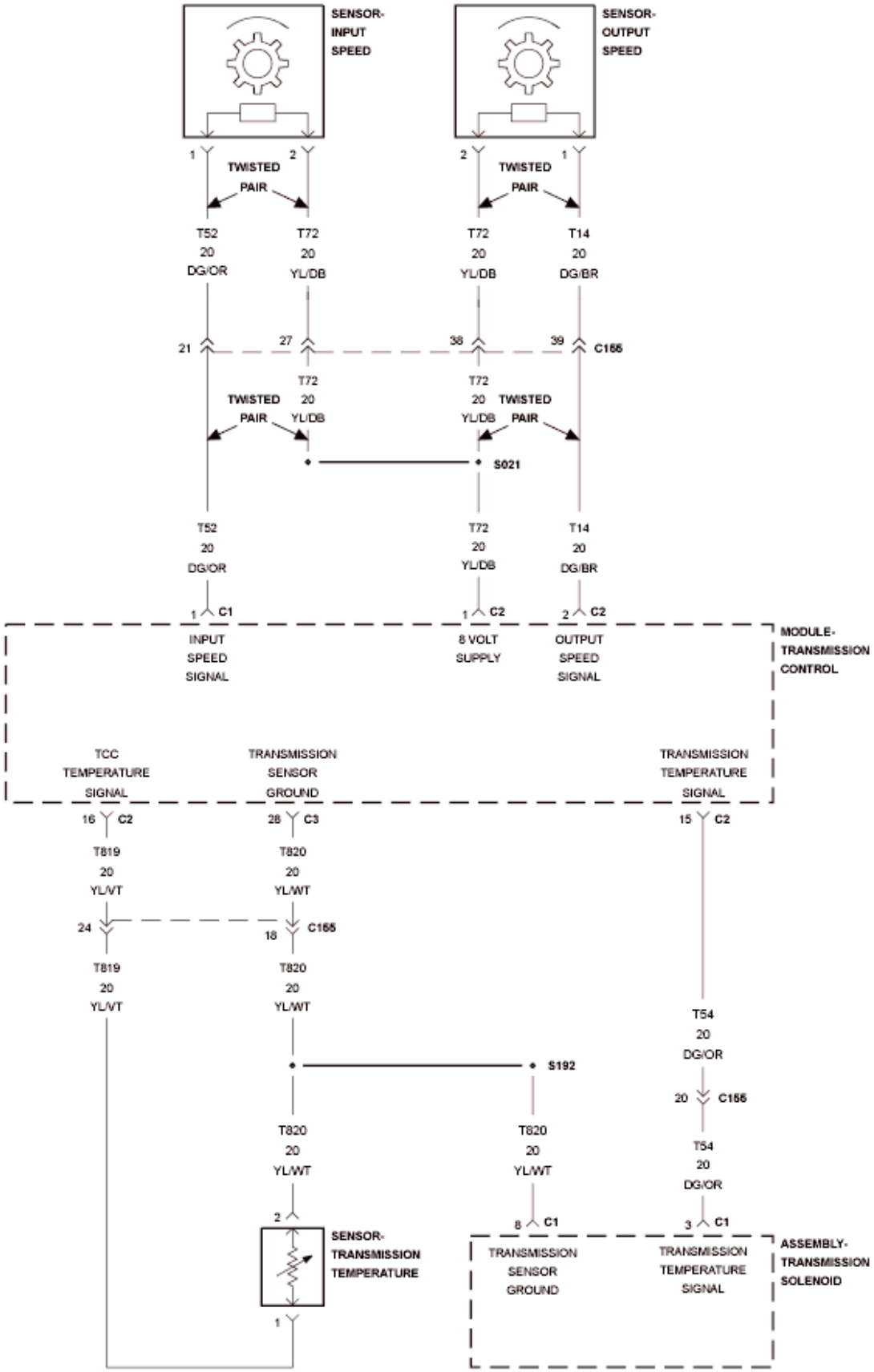
SENSOR-
INPUT
SPEED
SENSOR-
OUTPUT
SPEED
1
2
TWISTED
PAIR
2
1
TWISTED
PAIR
T52
20
DG/OR
T72
20
YL/DB
T72
20
YL/DB
T14
20
DG/BR
21
27
38
39
C155
T72
20
YL/DB
TWISTED
PAIR
T72
20
YL/DB
TWISTED
PAIR
S021
T52
20
DG/OR
T72
20
YL/DB
T14
20
DG/BR
1
C1
1
C2
2
C2
INPUT
SPEED
SIGNAL
8 VOLT
SUPPLY
OUTPUT
SPEED
SIGNAL
MODULE-
TRANSMISSION
CONTROL
TCC
TEMPERATURE
SIGNAL
TRANSMISSION
SENSOR
GROUND
TRANSMISSION
TEMPERATURE
SIGNAL
16
C2
28
C3
15
C2
T819
20
YL/VT
T820
20
YL/WT
24
18
C155
T819
20
YL/VT
T820
20
YL/WT
T54
20
DG/OR
S192
20
C155
T820
20
YL/WT
T820
20
YL/WT
T54
20
DG/OR
2
8
C1
3
C1
SENSOR-
TRANSMISSION
TEMPERATURE
TRANSMISSION
SENSOR
GROUND
TRANSMISSION
TEMPERATURE
SIGNAL
ASSEMBLY-
TRANSMISSION
SOLENOID
1

Fig. 162: Transmission Temperature Sensor Wiring Diagram
Courtesy of CHRYSLER GROUP, LLC

For a complete wiring diagram, **refer to appropriate SYSTEM WIRING DIAGRAMS article** .

THEORY OF OPERATION

The Output Speed sensor is used to determine gear position by applying the signal to a static shift schedule map. The Output Speed sensor is also used together with Input Speed sensor to calculate gear ratios. The Transmission Control Module (TCM) compares Output shaft speed to Vehicle speed buss messages to diagnosis the system. If the TCM detects a fault with the Output speed signal, it switches to vehicle speed to determine gear position.

DIAGNOSTIC TEST

When Monitored:

- Output speed is greater than 807 rpm and the PRNDL is not in Park or Neutral.
- Input Speed sensor is reporting as failed or CAN wheel speed not available.

Set Condition:

- If Output speed is greater than 3227 rpm and the TCM detects a decrease of Output speed greater than 141 rpm in 5 ms.
- If Output speed is greater than 2017 rpm and the TCM detects a decrease of Output speed greater than 202 rpm in 5 ms.
- If Output speed is greater than 807 rpm and the TCM detects a decrease of Output speed greater than 303 rpm in 5 ms.

POSSIBLE CAUSES

Possible Causes
(T14) OUTPUT SPEED SIGNAL CIRCUIT OPEN
(T14) OUTPUT SPEED SIGNAL CIRCUIT SHORTED TO GROUND
(T14) OUTPUT SPEED SIGNAL CIRCUIT SHORTED TO VOLTAGE
(T14) OUTPUT SPEED SIGNAL CIRCUIT SHORTED TO ANOTHER CIRCUIT
(T72) SPEED SENSOR GROUND CIRCUIT OPEN
(T72) SPEED SENSOR GROUND CIRCUIT SHORTED TO VOLTAGE
(T72) SPEED SENSOR GROUND CIRCUIT SHORTED TO ANOTHER CIRCUIT
OUTPUT SPEED SENSOR
TRANSMISSION CONTROL MODULE (TCM)

Always perform the AS68RC Pre-Diagnostic Troubleshooting procedure before proceeding. Refer to STANDARD PROCEDURE.

DIAGNOSTIC TEST

1. **CHECK IF THE DTC IS CURRENT**
    1. Using the scan tool, read TCM DTCs.
    2. Record the Environmental Data and any DTCs.
    3. Clear DTCs.
    4. Using the recorded Environmental Data, along with the When Monitored and Set Conditions above, operate the vehicle in the conditions that set the DTC.

    NOTE: **It may be necessary to road test the vehicle to duplicate the original set conditions.**

    5. Read TCM DTCs.

    Did the DTC reset?

    Yes

    - Go To 2.

    No

    - Go To 10.
2. **CHECK THE (T14) OUTPUT SPEED SENSOR SIGNAL CIRCUIT FOR AN OPEN**

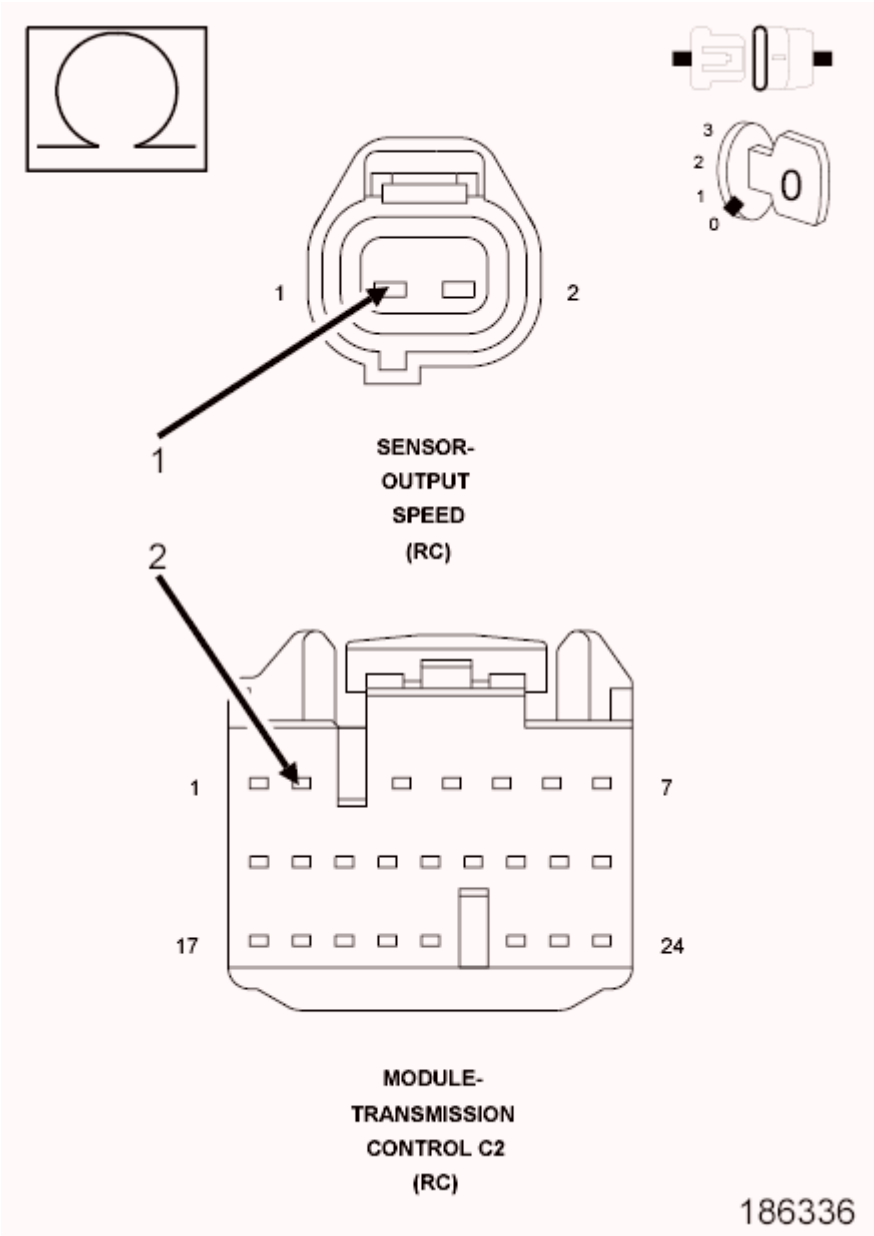

Fig. 163: Checking Output Speed Sensor Signal Circuit For An Open
Courtesy of CHRYSLER GROUP, LLC

1. Turn the ignition off to the lock position.
2. Disconnect the TCM C2 harness connector.
3. Disconnect the Output Speed Sensor harness connector.
4. Measure the resistance of the (T14) Output Speed Sensor Signal circuit between the TCM C2 harness connector and the Output Speed Sensor harness connector.

   Is the resistance below 5.0 Ohms?

   Yes

- Go To 3.

No

- Repair the (T14) Output Speed Sensor Signal circuit for an open.
- Refer to **STANDARD PROCEDURE** and perform the AS68RC VERIFICATION TEST.

3. **CHECK THE (T72) SENSOR GROUND CIRCUIT FOR AN OPEN**

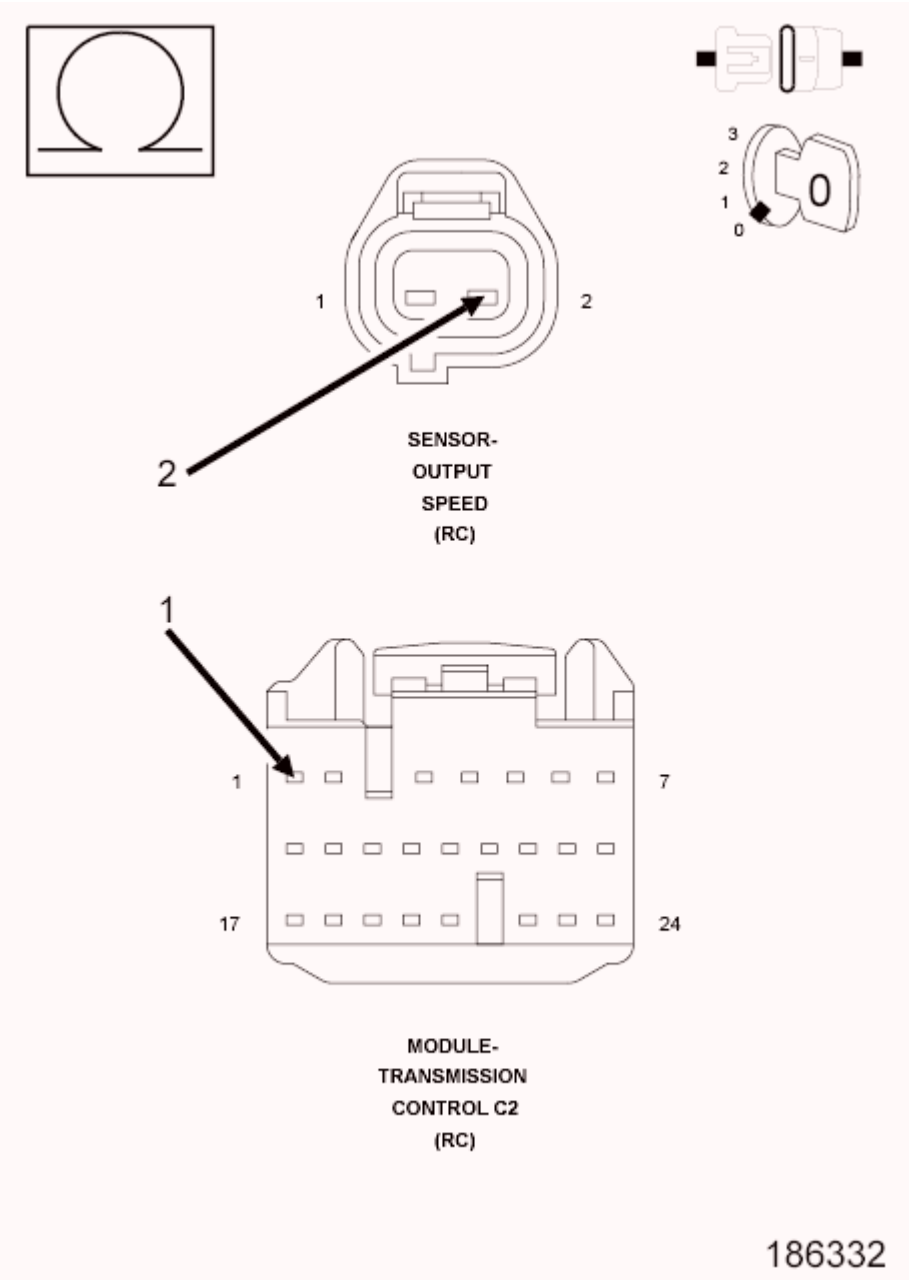

Fig. 164: Checking Sensor Ground Circuit For An Open
Courtesy of CHRYSLER GROUP, LLC

1. Measure the resistance of the (T72) Sensor Ground circuit between the TCM C2 harness connector and the Output Speed Sensor harness connector.

   Is the resistance below 5.0 Ohms?

   Yes

   - Go To 4.

   No

   - Repair the (T72) Sensor Ground circuit for an open.
   - Refer to **STANDARD PROCEDURE** and perform the AS68RC VERIFICATION TEST.

4. **CHECK THE (T14) OUTPUT SPEED SENSOR SIGNAL CIRCUIT FOR A SHORT TO GROUND**

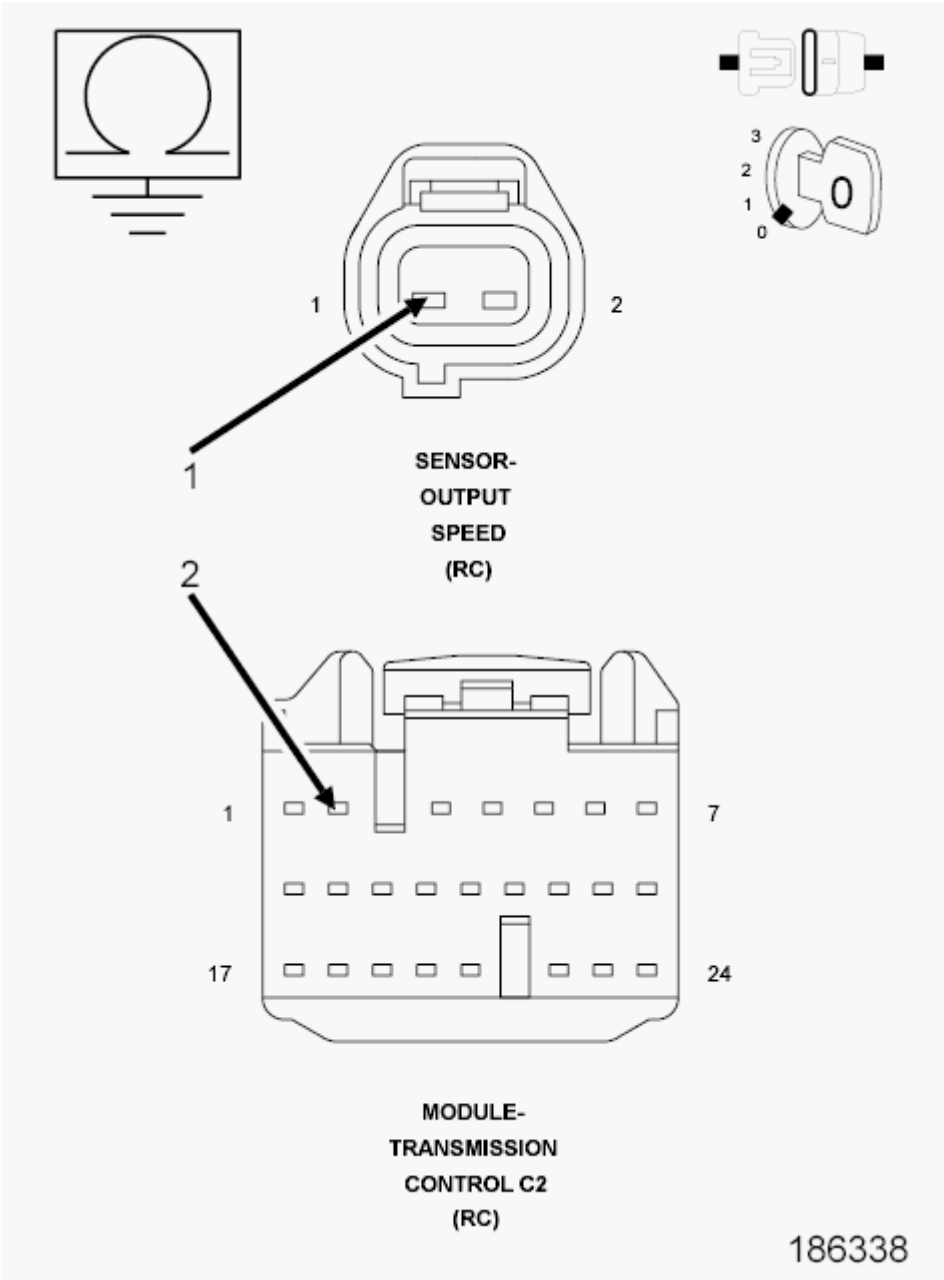

Fig. 165: Checking Output Speed Sensor Signal Circuit For A Short To Ground
Courtesy of CHRYSLER GROUP, LLC

1. Measure the resistance between ground and the (T14) Output Speed Sensor Signal circuit.

   Is the resistance below 100k Ohms?

   Yes

   - Repair the (T14) Output Speed Sensor Signal circuit for a short to ground.
   - Refer to **STANDARD PROCEDURE** and perform the AS68RC VERIFICATION TEST.

No

- Go To 5.

5. **CHECK THE (T14) OUTPUT SPEED SENSOR SIGNAL CIRCUIT FOR A SHORT TO ANOTHER CIRCUIT**

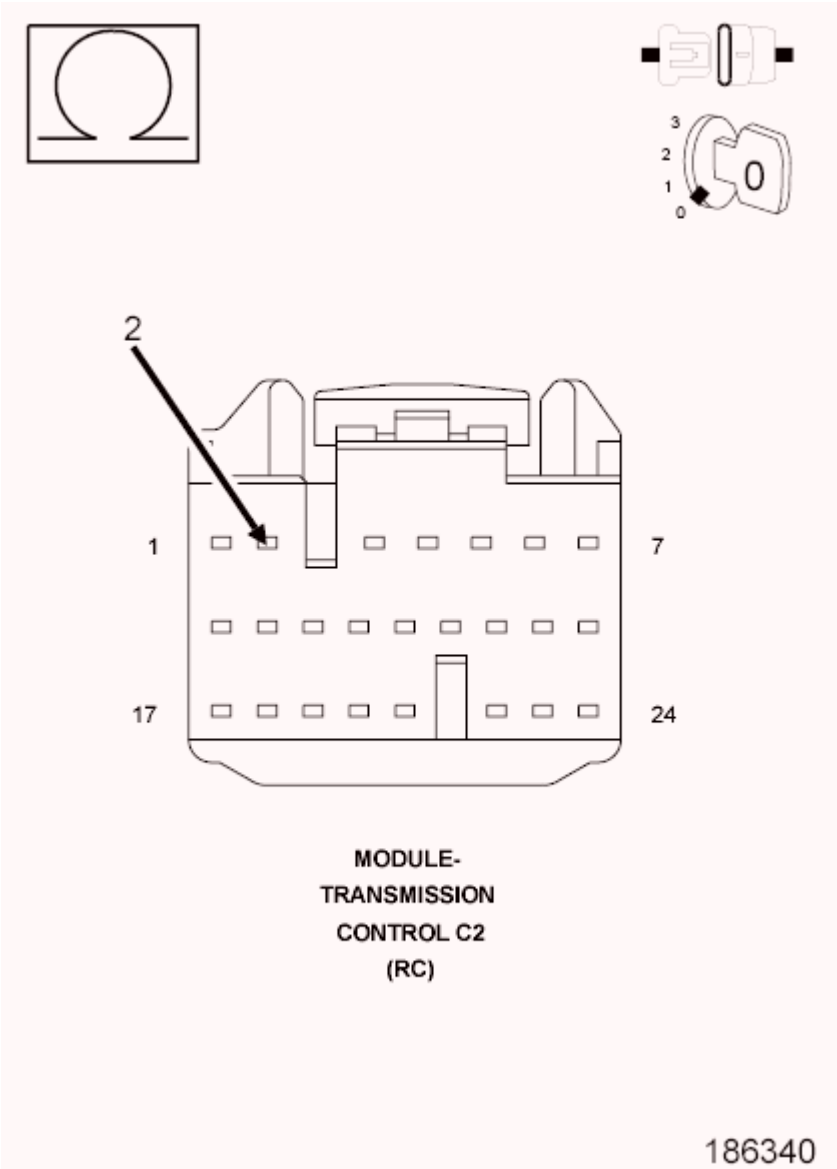

Fig. 166: Checking Output Speed Sensor Signal Circuit For A Short To Another Circuit
Courtesy of CHRYSLER GROUP, LLC

1. Measure the resistance between the (T14) Output Speed Sensor Signal circuit and all other circuits in the TCM C2 harness connector.

   Is the resistance below 100k Ohms between the (T14) Output Speed Sensor Signal circuit and any other circuit(s) in the TCM C2 harness connector?

Yes

- Repair the (T14) Output Speed Sensor Signal circuit for a short to another circuit(s).
- Refer to **STANDARD PROCEDURE** and perform the AS68RC VERIFICATION TEST.

No

- Go To 6.

6. **CHECK THE (T72) SENSOR GROUND CIRCUIT FOR A SHORT TO ANOTHER CIRCUIT**

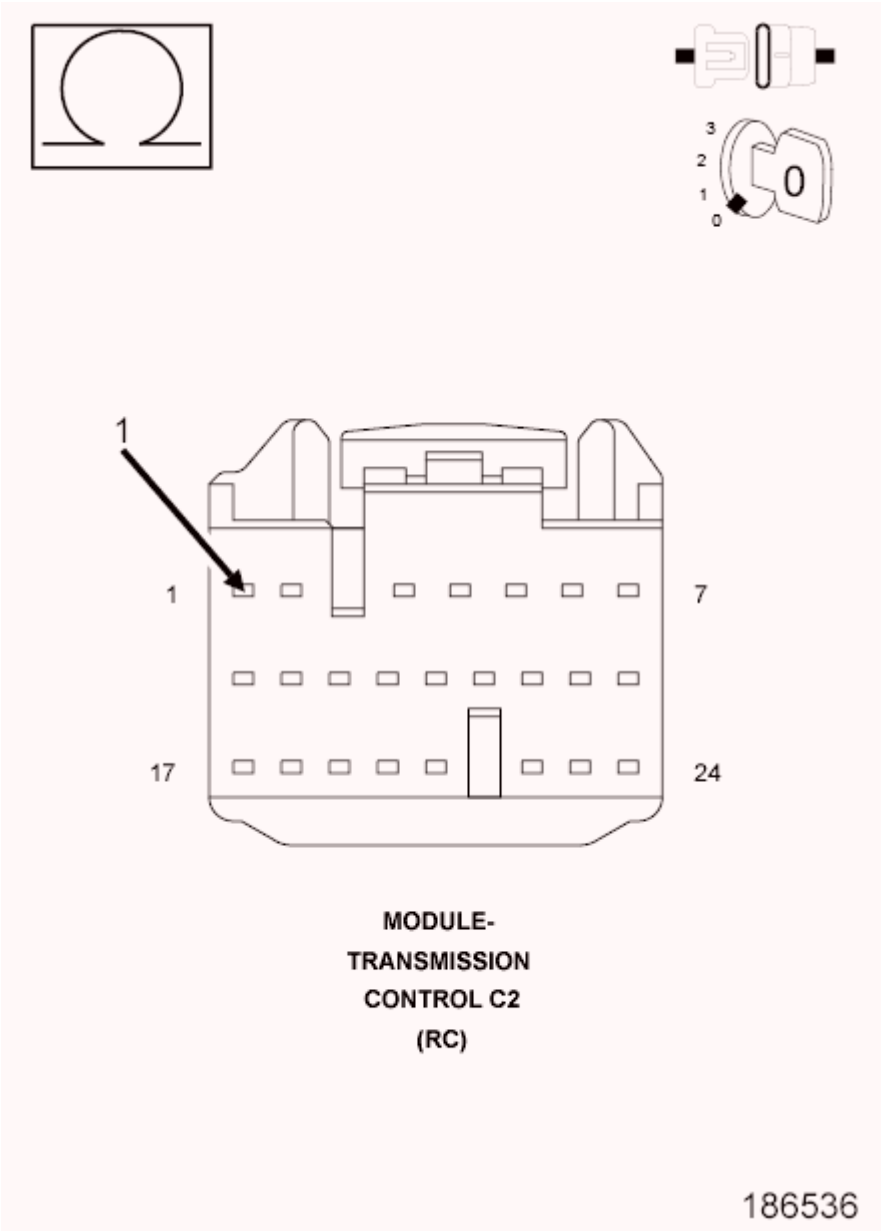

Fig. 167: Checking Sensor Ground Circuit For A Short To Another Circuit
Courtesy of CHRYSLER GROUP, LLC

1. Measure the resistance between the (T72) Sensor Ground circuit and all other circuits in the TCM C2 harness connector.

   Is the resistance below 100k Ohms?

   Yes

   - Repair the (T72) Sensor Ground circuit for a short to another circuit(s).
   - Refer to **STANDARD PROCEDURE** and perform the AS68RC VERIFICATION TEST.

   No

   - Go To 7.

7. **CHECK THE (T14) OUTPUT SPEED SENSOR SIGNAL CIRCUIT FOR A SHORT TO VOLTAGE**

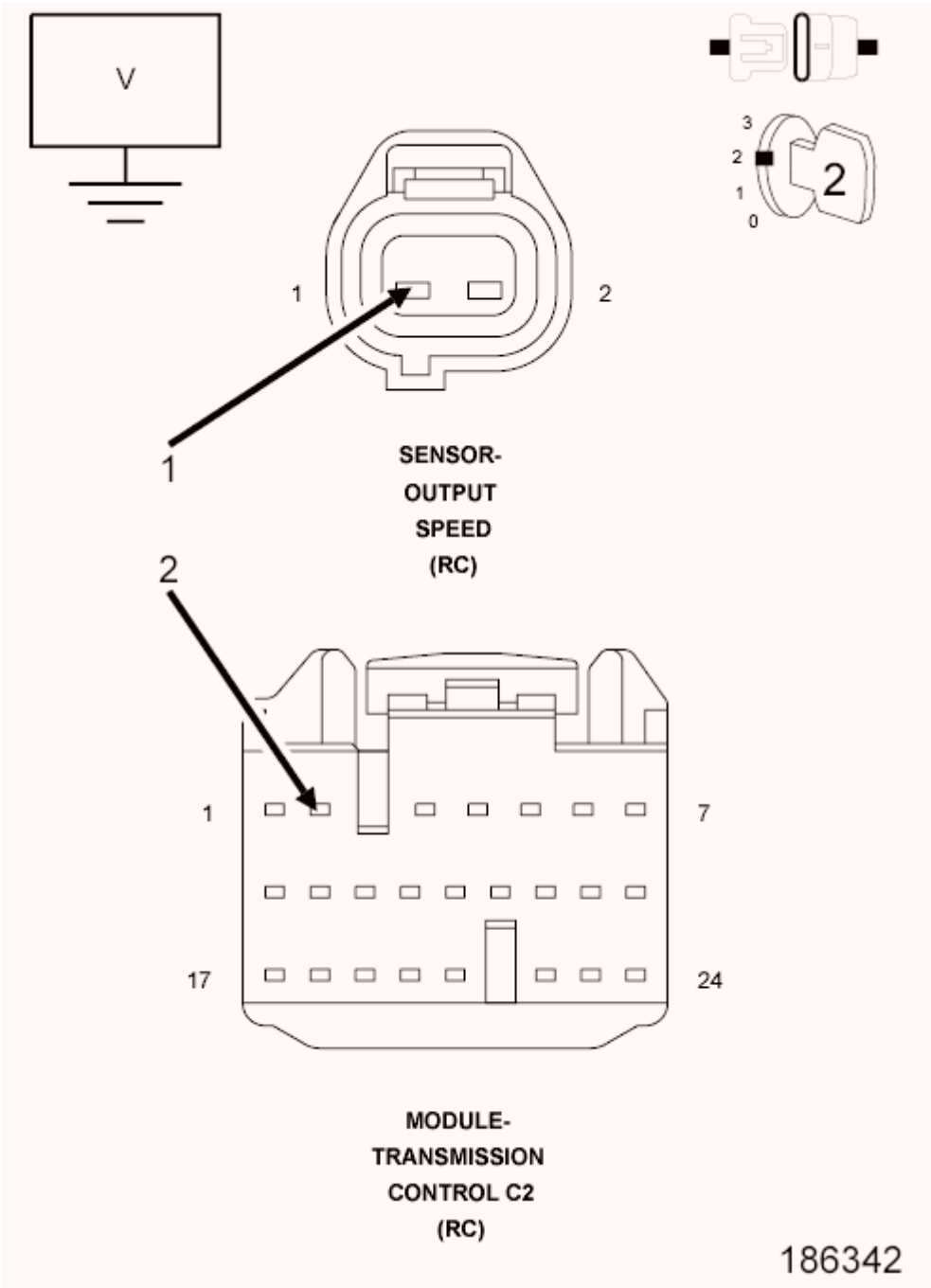

Fig. 168: Checking Output Speed Sensor Signal Circuit For A Short To Voltage
Courtesy of CHRYSLER GROUP, LLC

1. Ignition on, engine not running.
2. Measure the voltage of the (T14) Output Speed Sensor Signal circuit in the Output Speed Sensor harness connector.

   Is there any voltage present?

Yes

- Repair the (T14) Output Speed Sensor Signal circuit for a short to voltage.
- Refer to **STANDARD PROCEDURE** and perform the AS68RC VERIFICATION TEST.

No

- Go To 8.

8. **CHECK THE (T72) SENSOR GROUND CIRCUIT FOR A SHORT TO VOLTAGE**

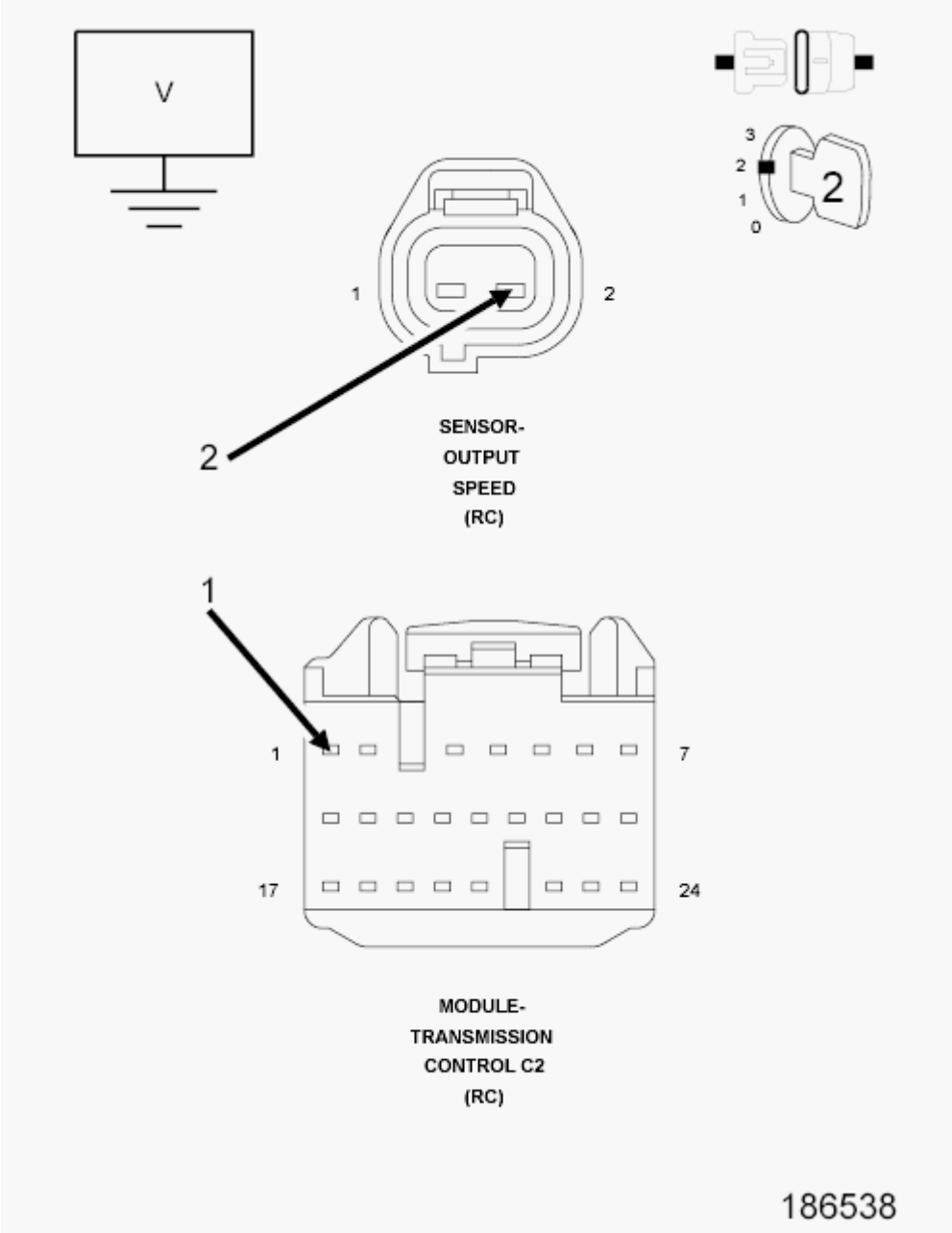

Fig. 169: Checking Sensor Ground Circuit For A Short To Voltage

Courtesy of CHRYSLER GROUP, LLC

1. Measure the voltage of the (T72) Sensor Ground circuit in the Output Speed Sensor harness connector.

   Is there any voltage present?

   Yes

   - Repair the (T72) Sensor Ground circuit for a short to voltage.
   - Refer to **STANDARD PROCEDURE** and perform the AS68RC VERIFICATION TEST.

   No

   - Go To 9.

9. **REPLACE THE OUTPUT SPEED SENSOR**
   1. Replace the Output Speed Sensor.
   2. Reconnect all connectors.
   3. Clear DTCs and road test the vehicle under the conditions in which the original DTC set.

      Did the loss of Output Speed Sensor/wheel speed DTC reset?

      Yes

      - Using the schematics as a guide, check the Transmission Control Module (TCM) pins, terminals, and connectors for corrosion, damage, or terminal push out. Pay particular attention to all power and ground circuits. If no problems are found, replace and program the TCM in accordance with the Service Information.
      - Refer to **STANDARD PROCEDURE** and perform the AS68RC VERIFICATION TEST.

      No

      - Test complete.
      - Refer to **STANDARD PROCEDURE** and perform the AS68RC VERIFICATION TEST.

10. **CHECK THE WIRING AND CONNECTORS**
    1. The conditions necessary to set this DTC are not present at this time.
    2. Use the Freeze Frame Data to help duplicate the conditions in which the DTC originally set. Pay particular attention to the DTC set conditions, such as, VSS, MAP, ECT, and Load
    3. Using the schematics as a guide, visually inspect the related wiring harness. Look for any chafed, pierced, pinched, or partially broken wires.
    4. Visually inspect the related wiring harness connectors. Look for broken, bent, pushed out, or corroded terminals.
    5. Wiggle the wiring and connectors while checking for any possible open or shorted circuits.
    6. Check for any Service Information Tune-ups or Technical Service Bulletins that may apply.

Were there any problems found?

Yes

- Repair as necessary.
- Refer to **STANDARD PROCEDURE** and perform the AS68RC VERIFICATION TEST.

No

- Test Complete.

P2741-TRANSMISSION FLUID TEMPERATURE SENSOR 2 PERFORMANCE

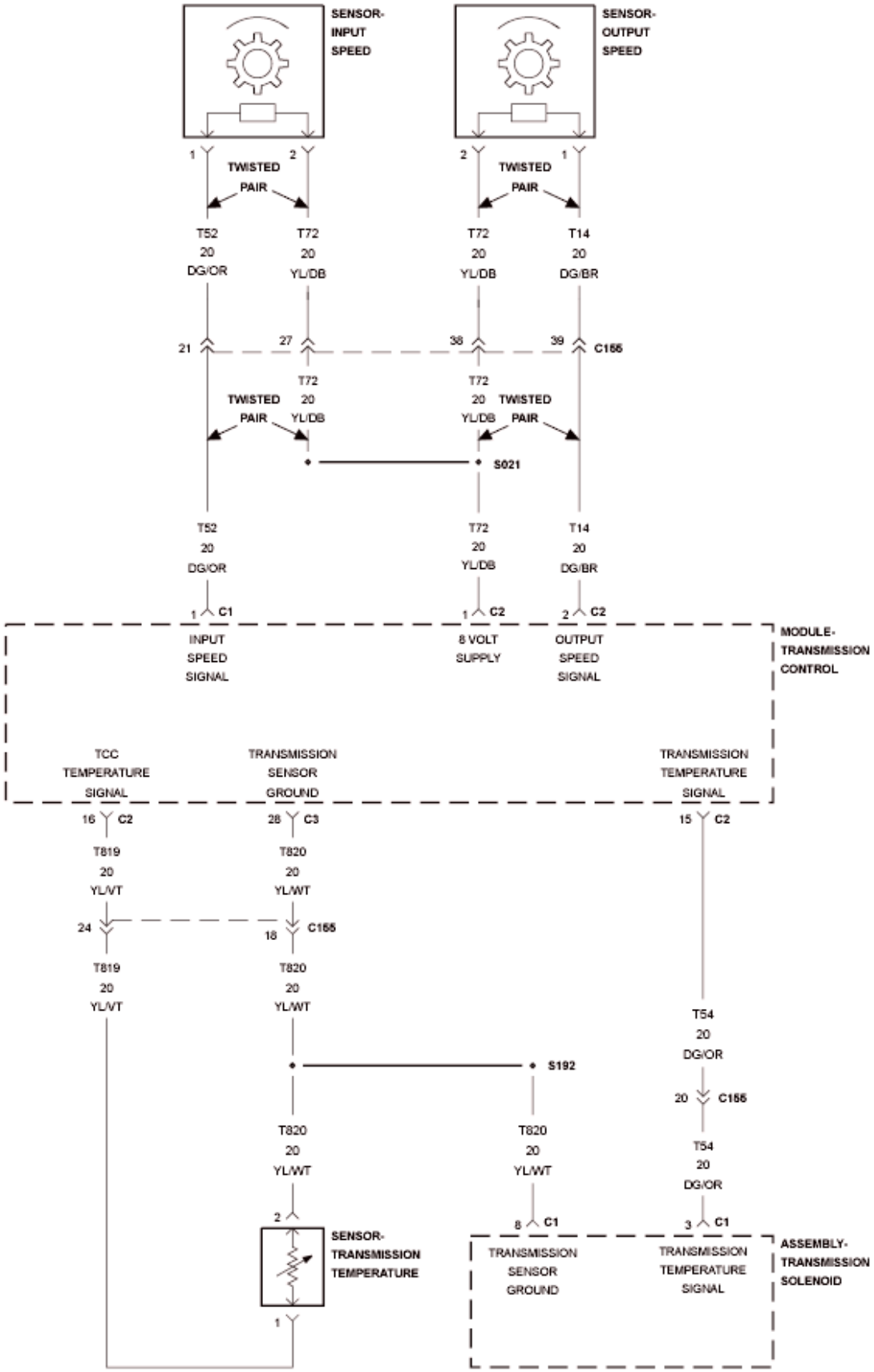
SENSOR-
INPUT
SPEED
SENSOR-
OUTPUT
SPEED
1
2
TWISTED
PAIR
2
1
TWISTED
PAIR
T52
20
DG/OR
T72
20
YL/DB
T72
20
YL/DB
T14
20
DG/BR
21
27
38
39
C155
T72
20
YL/DB
TWISTED
PAIR
T72
20
YL/DB
TWISTED
PAIR
S021
T52
20
DG/OR
T72
20
YL/DB
T14
20
DG/BR
1
C1
1
C2
2
C2
INPUT
SPEED
SIGNAL
8 VOLT
SUPPLY
OUTPUT
SPEED
SIGNAL
MODULE-
TRANSMISSION
CONTROL
TCC
TEMPERATURE
SIGNAL
TRANSMISSION
SENSOR
GROUND
TRANSMISSION
TEMPERATURE
SIGNAL
16
C2
28
C3
15
C2
T819
20
YL/VT
T820
20
YL/WT
24
18
C155
T819
20
YL/VT
T820
20
YL/WT
T54
20
DG/OR
S192
20
C155
T820
20
YL/WT
T820
20
YL/WT
T54
20
DG/OR
2
8
C1
3
C1
SENSOR-
TRANSMISSION
TEMPERATURE
TRANSMISSION
SENSOR
GROUND
TRANSMISSION
TEMPERATURE
SIGNAL
ASSEMBLY-
TRANSMISSION
SOLENOID
1

Fig. 170: Transmission Temperature Sensor Wiring Diagram
Courtesy of CHRYSLER GROUP, LLC

For a complete wiring diagram, **refer to appropriate SYSTEM WIRING DIAGRAMS article** .

THEORY OF OPERATION

The Transmission Oil Temperature Sensor is used to determine shift schedule selection. Transmission Oil Temperature is also used in TCC operation. The Transmission Control Module (TCM) monitors the transmission temperature by comparing Transmission Oil Temperature to Ambient and Engine Coolant Temperature after a cold soak, by comparing Transmission Oil temperature increases in relation to Engine temperature increases, and abnormal changes over time.

CONDITION ONE:

When Monitored:

- System voltage between 10.0 and 16.0 volts.
- Engine coolant temperature data (CAN) is normal and greater than or equal to 70° C (158° F).
- Engine coolant temperature increase is greater than 50° C (90° F).
- Output speed sensor greater than 300 rpm for 410 seconds.
- Start up transmission oil temperature is between -40° C and 40° C (-40° F and 104° F).
- Output Speed sensor fault is not detected.

Set Condition:

- Change in Torque Converter Out Oil Temperature is less than or equal to 2° C (4° F).

CONDITION TWO:

When Monitored:

- System voltage between 10.0 and 16.0 volts.
- Engine coolant temperature data and output speed sensor is normal.
- Output speed sensor greater than 300 rpm for 410 seconds.

Set Condition:

- Change in Torque Converter Out Oil Temperature is greater than 20° C (36° F) in 100 msec and transmission oil temperature is less than 70° C (158° F) for more than five seconds.

CONDITION THREE:

When Monitored:

- Ambient temperature is less than 43° C (109° F)

- Engine coolant temp is equal to Ambient temperature within ± 10° C (18° F)

Set Condition:

- Torque Converter Out Oil Temperature is greater than Engine Ambient temperature by a calibrated value (see chart below).

Difference of Transmission Temperature compared to Engine Ambient Temperature	
ENGINE AMBIENT TEMPERATURE	**TRANSMISSION TEMPERATURE DIFFERENCE**
-30° C (-22° F)	±20° C (± 36° F)
-10° C (14° F)	±20° C (± 36° F)
0° C (32° F)	±20° C (± 36° F)
20° C (68° F)	±10° C (± 18° F)

CONDITION FOUR:

When Monitored:

- Torque Converter Out Oil Temperature is less than or equal to 20° C (68° F) at ignition on.

Set Condition:

- Torque Converter Out Oil Temperature is less than 20° C (68° F) after a calibrated time (see chart below).

Drive time above 48 mph based on Transmission Temperature at Ignition on	
TRANSMISSION TEMPERATURE AT IGNITION ON	**DRIVE TIME ABOVE 48 MPH**
-40° C (-40° F)	40 MINUTES
-30° C (-22° F)	30 MINUTES
-20° C (-4° F)	20 MINUTES
-10° C (14° F)	15 MINUTES
0° C (32° F)	13 MINUTES
10° C (50° F)	6 MINUTES
15° C (59° F)	6 MINUTES

POSSIBLE CAUSES

Possible Causes
RELATED ENGINE TEMPERATURE SENSOR DTCS
RELATED TORQUE CONVERTER OUT OIL TEMPERATURE SENSOR DTCS
INTERMITTENT TORQUE CONVERTER OUT OIL TEMPERATURE SENSOR
TORQUE CONVERTER OUT OIL TEMPERATURE SENSOR
TRANSMISSION CONTROL MODULE (TCM)

Always perform the AS68RC Pre-Diagnostic Troubleshooting procedure before proceeding. Refer to STANDARD PROCEDURE.

DIAGNOSTIC TEST

1. **CHECK FOR RELATED ENGINE DTCs**
    1. With the scan tool, view Engine DTCs.

       Are there any Engine Coolant and/or Ambient DTCs present?

       Yes

       - Refer to **DIAGNOSTIC CODE INDEX** for 3.7L/4.7L/5.7L or **DIAGNOSTIC CODE INDEX** for 6.7L and perform the appropriate diagnostic procedure.

       No

       - Go To 2.
2. **CHECK FOR RELATED TRANSMISSION DTCs**
    1. With the scan tool, view Transmission DTCs.

       Are there any other Transmission temperature sensor DTCs?

       Yes

       - Refer to **DIAGNOSTIC CODE INDEX** and perform the appropriate DTC diagnostic procedure.

       No

       - Go To 3.
3. **CHECK IF DTC IS CURRENT**
    1. Using the scan tool, read TCM DTCs.
    2. Record the Environmental Data and any DTCs.
    3. Clear DTCs.
    4. Using the recorded Environmental Data, along with the When Monitored and Set Conditions above, operate the vehicle in the conditions that set the DTC.
    5. Read TCM DTCs.

       Did the DTC reset?

       Yes

       - Go To 4.

No

- Go To 9.

4. **COMPARE THE TORQUE CONVERTER OUT OIL TEMPERATURE TO ENGINE COOLANT TEMPERATURE**

NOTE: **To test the torque converter out oil temperature sensor, the engine and transmission temperature must be at or below 29.4° C (85° F).**

1. With the scan tool, read the Torque Converter Out Oil Temperature and Engine temperatures.

   Is the torque converter out oil temperature within 5° C (9° F) of the engine coolant temperature?

   Yes

   - Go To 5.

   No

   - Go To 8.

5. **CHECK IF THE TORQUE CONVERTER OUT OIL TEMPERATURE INCREASES 15 DEGREES OVER 10 MINUTE PERIOD**

NOTE: **To test the torque converter out oil temperature sensor, the engine and transmission temperature must be at or below 29.4° C (85° F).**

CAUTION: Apply the parking brake.

1. Start the engine, firmly apply the brakes and allow the engine to idle in Drive.
2. With the scan tool, monitor the Torque Converter Out Oil Temperature.

NOTE: **If the torque converter out oil temperature sensor is working properly, the transmission temperature should rise at least 8° C (15° F) within a ten minute period.**

3. Did the torque converter out oil temperature increase at a steady rate and rise at least 8° C (15° F) over a 10 minute period?

   Yes

   - Go To 9.

   No

- Go To 6.

6. **CHECK THE (T819) TORQUE CONVERTER OUT OIL TEMPERATURE SENSOR SIGNAL CIRCUIT**
   1. Turn the ignition off to the lock position.
   2. Disconnect the Torque Converter Out Oil Temperature sensor harness connector.

      NOTE: Check connectors - Clean/repair as necessary

   3. Ignition on, engine not running.
   4. With the scan tool, monitor the Torque Converter Out Oil Temperature.

      Does the Torque Converter Out Oil Temperature read -40° C (-40° F) ± 2° C (4° F)?

      Yes

      - Go To 7.

      No

      - Refer to **DIAGNOSTIC CODE INDEX** and perform P2743-TRANSMISSION FLUID TEMPERATURE SENSOR 2 HIGH as if the DTC is active.
      - Refer to **STANDARD PROCEDURE** and perform the AS68RC VERIFICATION TEST.

7. **CHECK THE (T819) TORQUE CONVERTER OUT OIL TEMPERATURE SENSOR SIGNAL CIRCUIT FOR A SHORT TO GROUND**

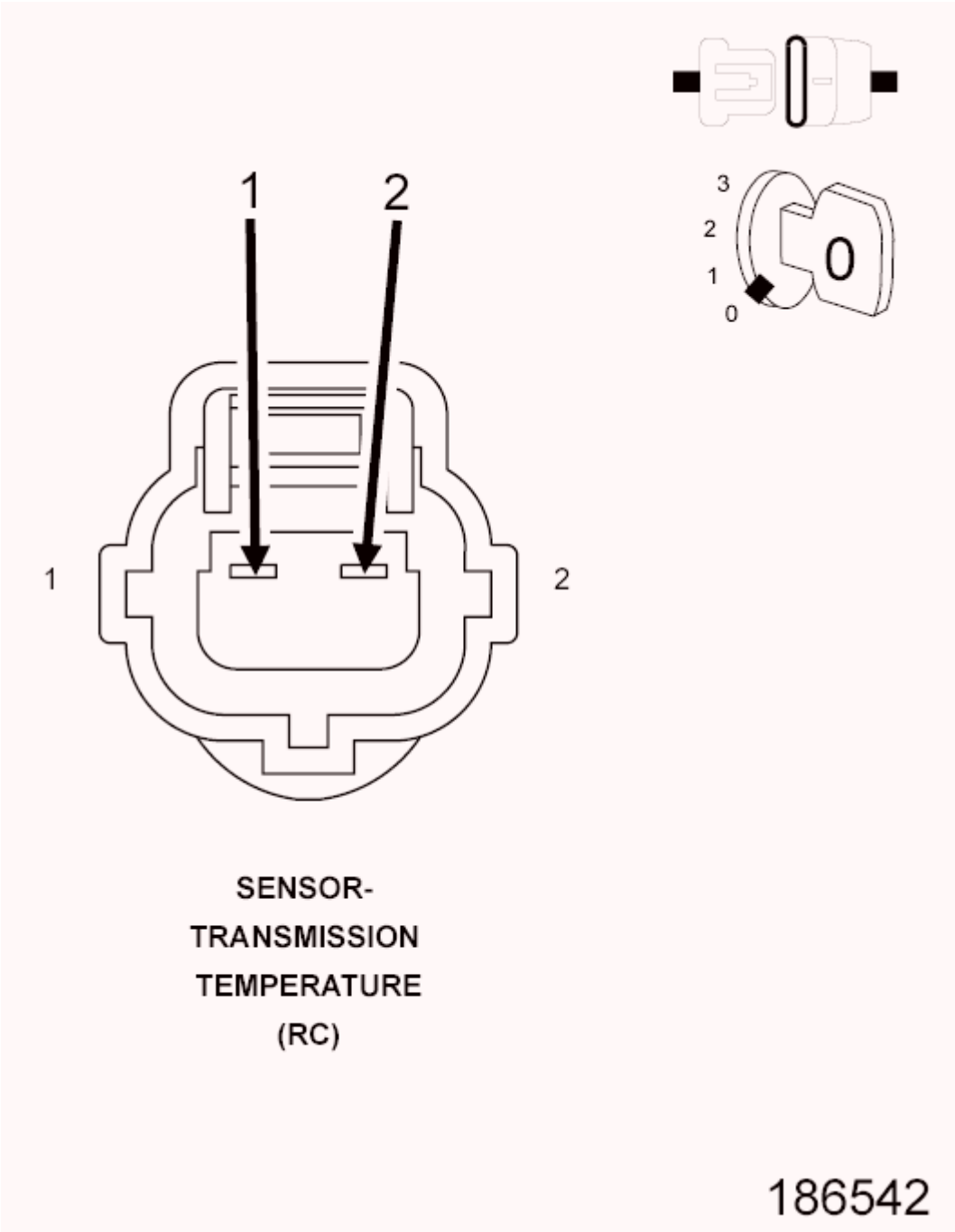

Fig. 171: Checking Torque Converter Out Oil Temperature Sensor Signal Circuit For A Short To Ground
Courtesy of CHRYSLER GROUP, LLC

1. Turn the ignition off to the lock position.
2. Connect a jumper wire between the (T819) Torque Converter Out Oil Signal circuit and the (T820) Sensor Ground circuit in the Torque Converter Out Oil Temperature sensor harness connector.
3. Ignition on, engine not running.
4. With the scan tool, monitor the Torque Converter Out Oil Temperature.

Does the Torque Converter Out Oil Temperature read 200° C (392° F) ± 2° C (4° F)?

Yes

- Go To 8.

No

- Refer to **DIAGNOSTIC CODE INDEX** and perform P2742-TRANSMISSION FLUID TEMPERATURE SENSOR 2 LOW as if the DTC is active.
- Refer to **STANDARD PROCEDURE** and perform the AS68RC VERIFICATION TEST.

8. **CHECK THE TRANSMISSION TEMPERATURE SENSOR**

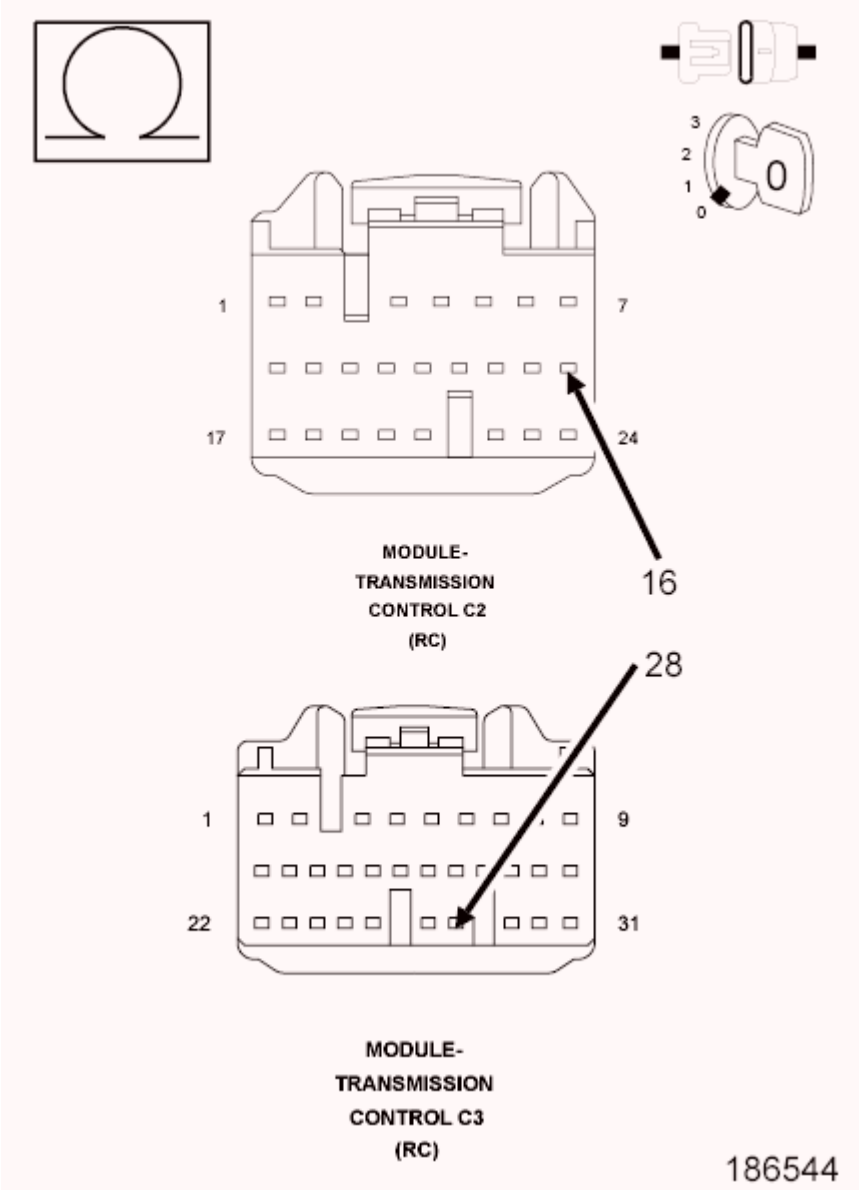

Fig. 172: Checking Transmission Temperature Sensor And Circuits

Courtesy of CHRYSLER GROUP, LLC

TYPICAL VALUES FOR TRANSMISSION TEMPERATURE SENSOR	
TEMPERATURE	**APPROXIMATE OHM**
-30° C (-22° F)	44000 Ohms
10° C (50° F)	6400 Ohms
110° C (230° F)	200 Ohms
145° C (293° F)	100 Ohms

1. Turn the ignition off to the lock position.
2. Reconnect the Torque Converter Out Oil Temperature sensor harness connector.
3. Disconnect the TCM C3 harness connector.

NOTE: Check connectors - Clean/repair as necessary

4. Measure the resistance of the Torque Converter Out Oil Temperature Sensor between the (T819) Transmission Temperature Signal circuit and the (T820) Sensor Ground circuit in the TCM C3 harness connector.
5. Using the chart at the chart above, compare the Torque Converter Out Oil temperature to the correlating resistance value.

   Is the resistance within the specified range when the sensor is at the given temperature?

   Yes

   - Go To 9.

   No

   - Replace the Torque Converter Out Oil Temperature Sensor in accordance with the Service Information.
   - Refer to **STANDARD PROCEDURE** and perform the AS68RC VERIFICATION TEST.

9. **CHECK WIRING AND CONNECTORS**
   1. The conditions necessary to set the DTC are not present at this time.
   2. Using the schematics as a guide, inspect the wiring and connectors specific to this circuit.
   3. Wiggle the wires while checking for shorted and open circuits.
   4. Check for any Service Bulletins that may apply.

   Were there any problems found?

   Yes

   - Repair as necessary.

- Refer to **STANDARD PROCEDURE** and perform the AS68RC VERIFICATION TEST.

No

- Test Complete.

P2742-TRANSMISSION FLUID TEMPERATURE SENSOR 2 LOW

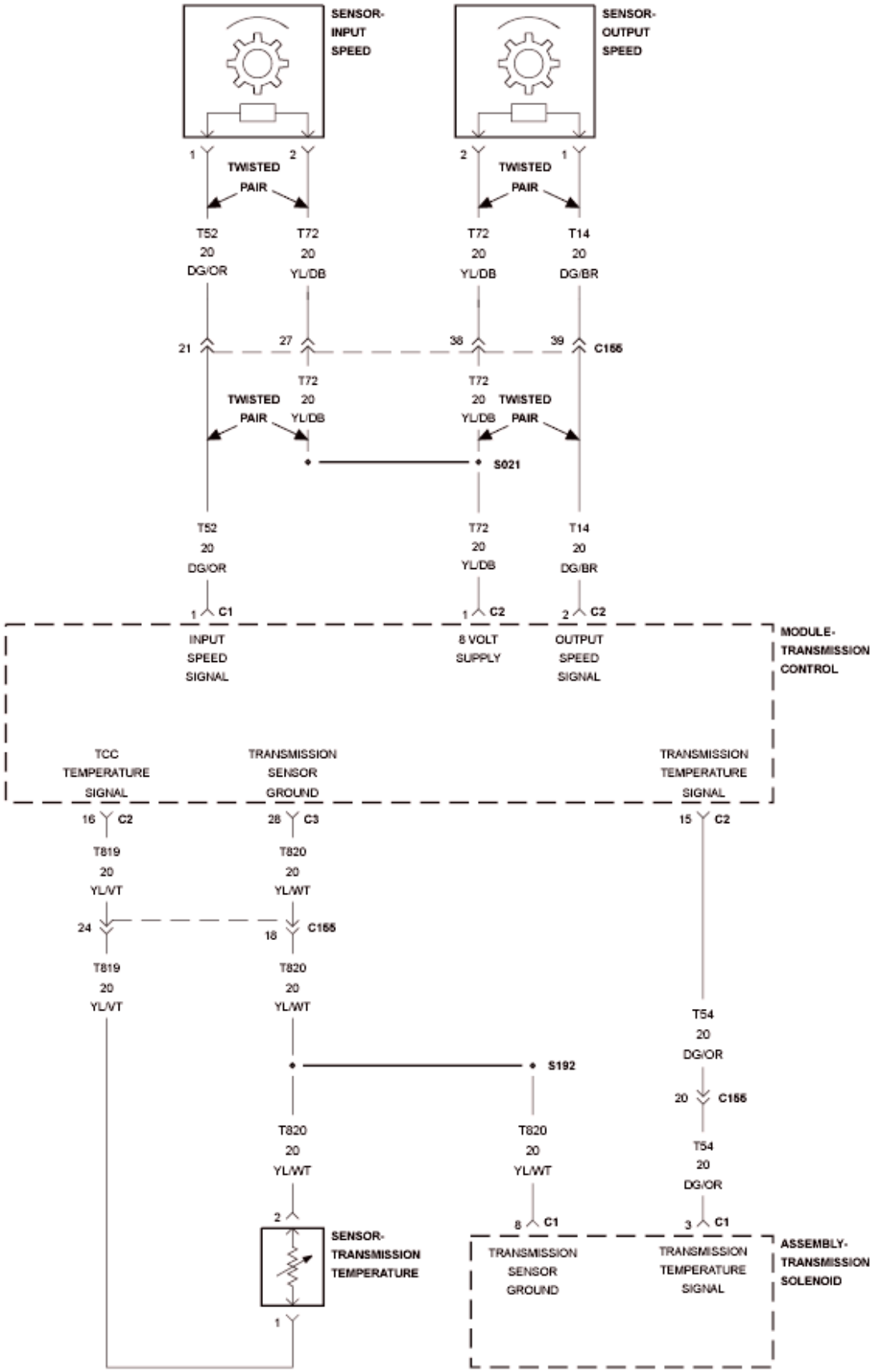
SENSOR-
INPUT
SPEED
SENSOR-
OUTPUT
SPEED
1
2
TWISTED
PAIR
2
1
TWISTED
PAIR
T52
20
DG/OR
T72
20
YL/DB
T72
20
YL/DB
T14
20
DG/BR
21
27
38
39
C155
T72
20
YL/DB
TWISTED
PAIR
T72
20
YL/DB
TWISTED
PAIR
S021
T52
20
DG/OR
T72
20
YL/DB
T14
20
DG/BR
1
C1
1
C2
2
C2
INPUT
SPEED
SIGNAL
8 VOLT
SUPPLY
OUTPUT
SPEED
SIGNAL
MODULE-
TRANSMISSION
CONTROL
TCC
TEMPERATURE
SIGNAL
TRANSMISSION
SENSOR
GROUND
TRANSMISSION
TEMPERATURE
SIGNAL
16
C2
28
C3
15
C2
T819
20
YL/VT
T820
20
YL/WT
24
18
C155
T819
20
YL/VT
T820
20
YL/WT
T54
20
DG/OR
S192
20
C155
T820
20
YL/WT
T820
20
YL/WT
T54
20
DG/OR
2
8
C1
3
C1
SENSOR-
TRANSMISSION
TEMPERATURE
TRANSMISSION
SENSOR
GROUND
TRANSMISSION
TEMPERATURE
SIGNAL
ASSEMBLY-
TRANSMISSION
SOLENOID
1

Fig. 173: Transmission Temperature Sensor Wiring Diagram
Courtesy of CHRYSLER GROUP, LLC

For a complete wiring diagram, **refer to appropriate SYSTEM WIRING DIAGRAMS article** .

THEORY OF OPERATION

The Torque Converter Out Oil Temperature sensor is used to determine if the transmission needs to go into high temperature shift strategy to protect the transmission.

DIAGNOSTIC TEST

When Monitored:

- Ignition on, the engine running.

Set Condition:

- The Diagnostic Trouble Code (DTC) will set if the monitored Transmission Temperature Sensor Signal circuit is greater than 200° C (392° F) for more than 500 ms.

POSSIBLE CAUSES

Possible Causes
(T819) TORQUE CONVERTER OUT OIL TEMPERATURE SENSOR SIGNAL CIRCUIT SHORT TO GROUND
(T819) TORQUE CONVERTER OUT OIL TEMPERATURE SENSOR SIGNAL CIRCUIT SHORT TO (T820) SENSOR GROUND CIRCUIT
TORQUE CONVERTER OUT OIL TEMPERATURE SENSOR
TRANSMISSION CONTROL MODULE (TCM)

Always perform the AS68RC Pre-Diagnostic Troubleshooting procedure before proceeding. Refer to STANDARD PROCEDURE.

DIAGNOSTIC TEST

1. **CHECK IF DTC IS CURRENT**
    1. Using the scan tool, read TCM DTCs.
    2. Record the Environmental Data and any DTCs.
    3. Clear DTCs.
    4. Using the recorded Environmental Data, along with the When Monitored and Set Conditions above, operate the vehicle in the conditions that set the DTC.
    5. Read TCM DTCs.

    Did the DTC reset?

Yes

- Go To 2.

No

- Go To 5.

2. **CHECK THE (T819) TORQUE CONVERTER OUT OIL TEMPERATURE SENSOR SIGNAL CIRCUIT FOR A SHORT TO GROUND**

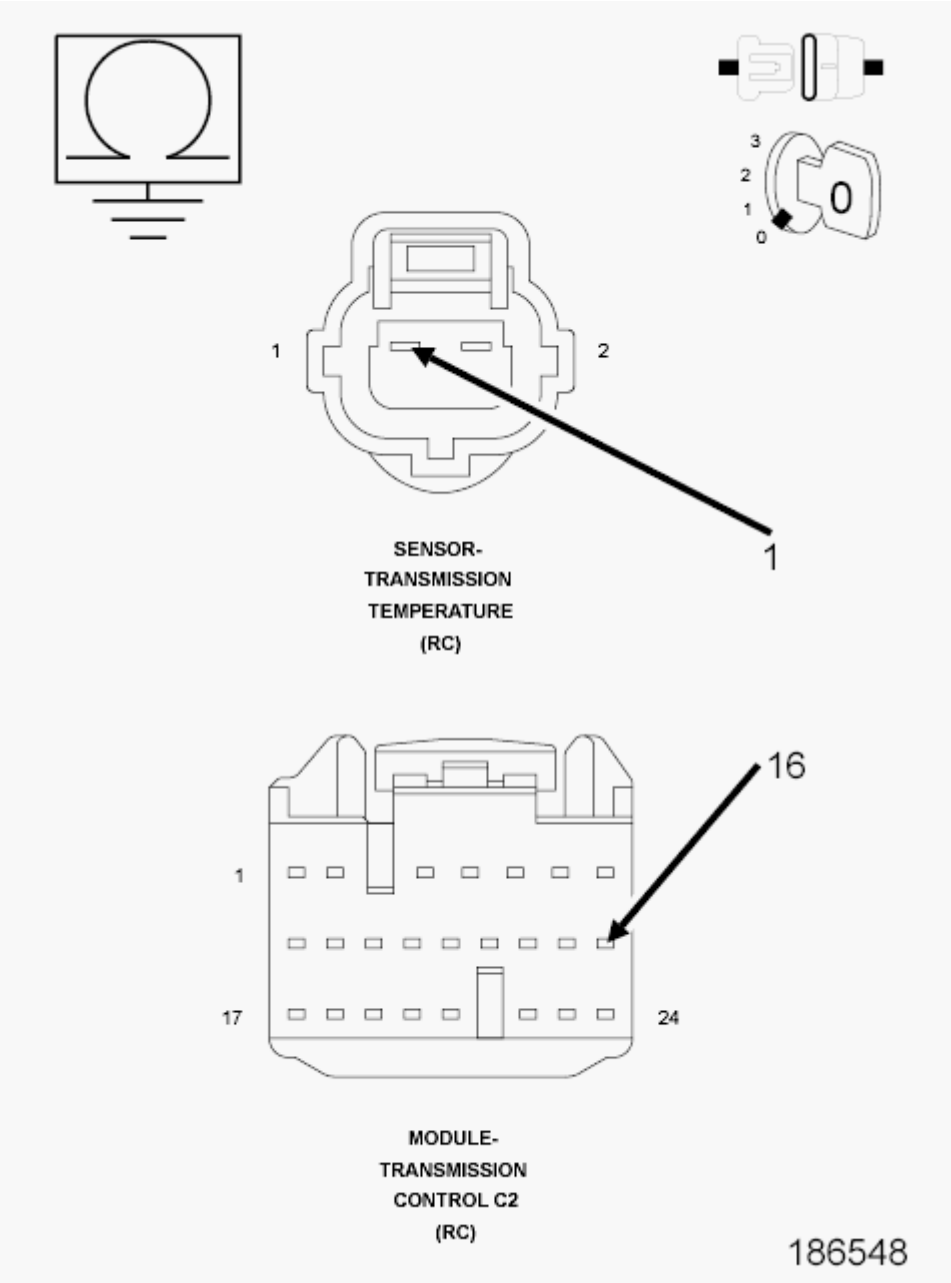

Fig. 174: Checking Torque Converter Out Oil Temperature Sensor Signal Circuit For A Short To

Ground
Courtesy of CHRYSLER GROUP, LLC

1. Turn the ignition off to the lock position.
2. Disconnect the TCM C2 harness connector.
3. Disconnect the Torque Converter Out Oil Temperature sensor harness connector.
4. Measure the resistance between ground and the (T819) Torque Converter Out Oil Temperature Signal circuit.

   Is the resistance below 100k Ohms?

   Yes

   - Repair the (T819) Torque Converter Out Oil Temperature Signal circuit for a short to ground.
   - Refer to **STANDARD PROCEDURE** and perform the AS68RC VERIFICATION TEST.

   No

   - Go To 3.

3. **CHECK THE (T819) TORQUE CONVERTER OUT OIL TEMPERATURE SIGNAL CIRCUIT FOR A SHORT TO (T820) SENSOR GROUND CIRCUIT**

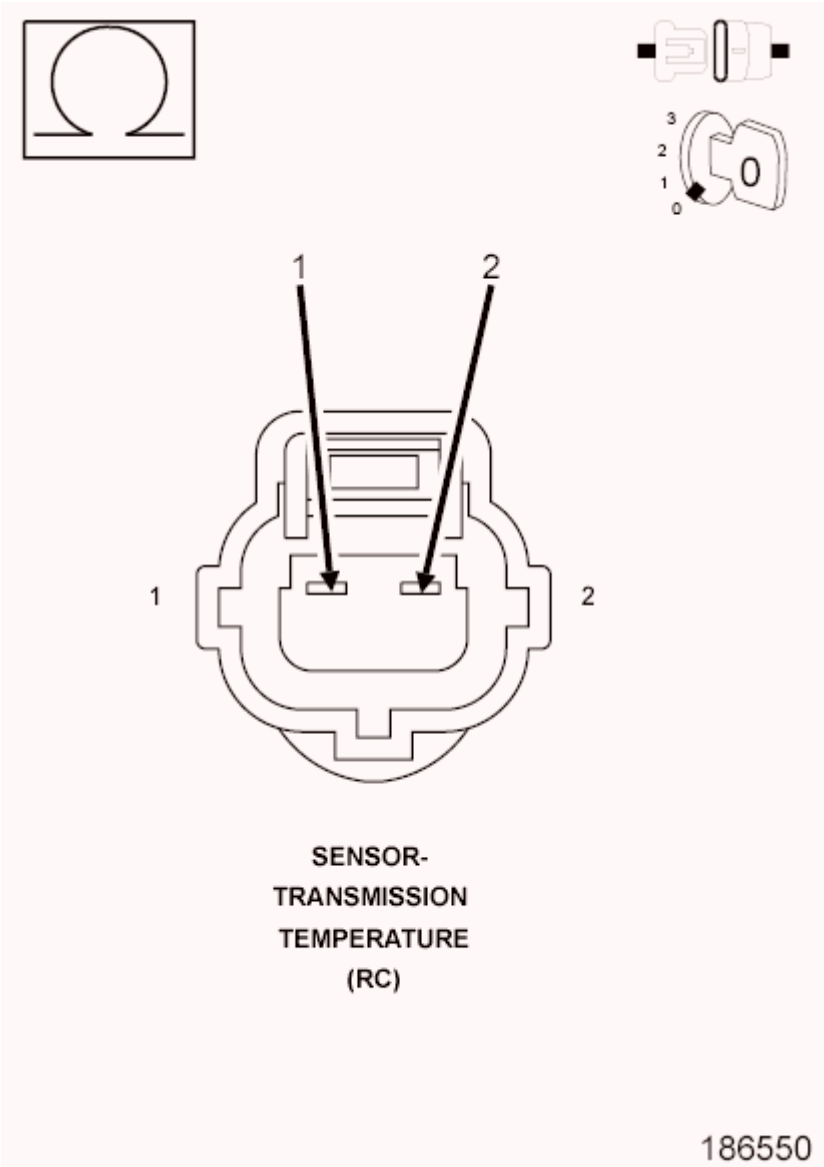

Fig. 175: Checking Torque Converter Out Oil Temperature Signal Circuit For A Short To Sensor Ground Circuit
Courtesy of CHRYSLER GROUP, LLC

1. Disconnect the TCM C3 harness connector.
2. Measure the resistance between the (T819) Torque Converter Out Oil Temperature Signal circuit and (T820) Sensor Ground circuit in the Torque Converter Out Oil Temperature sensor harness connector.

   Is the resistance below 100k Ohms?

   Yes

   - Repair the (T819) Torque Converter Out Oil Temperature Signal circuit for a short to the (T820) Sensor Ground circuit.

- Refer to **STANDARD PROCEDURE** and perform the AS68RC VERIFICATION TEST.

No

- Go To 4.

4. **CHECK THE TRANSMISSION TEMPERATURE SENSOR**

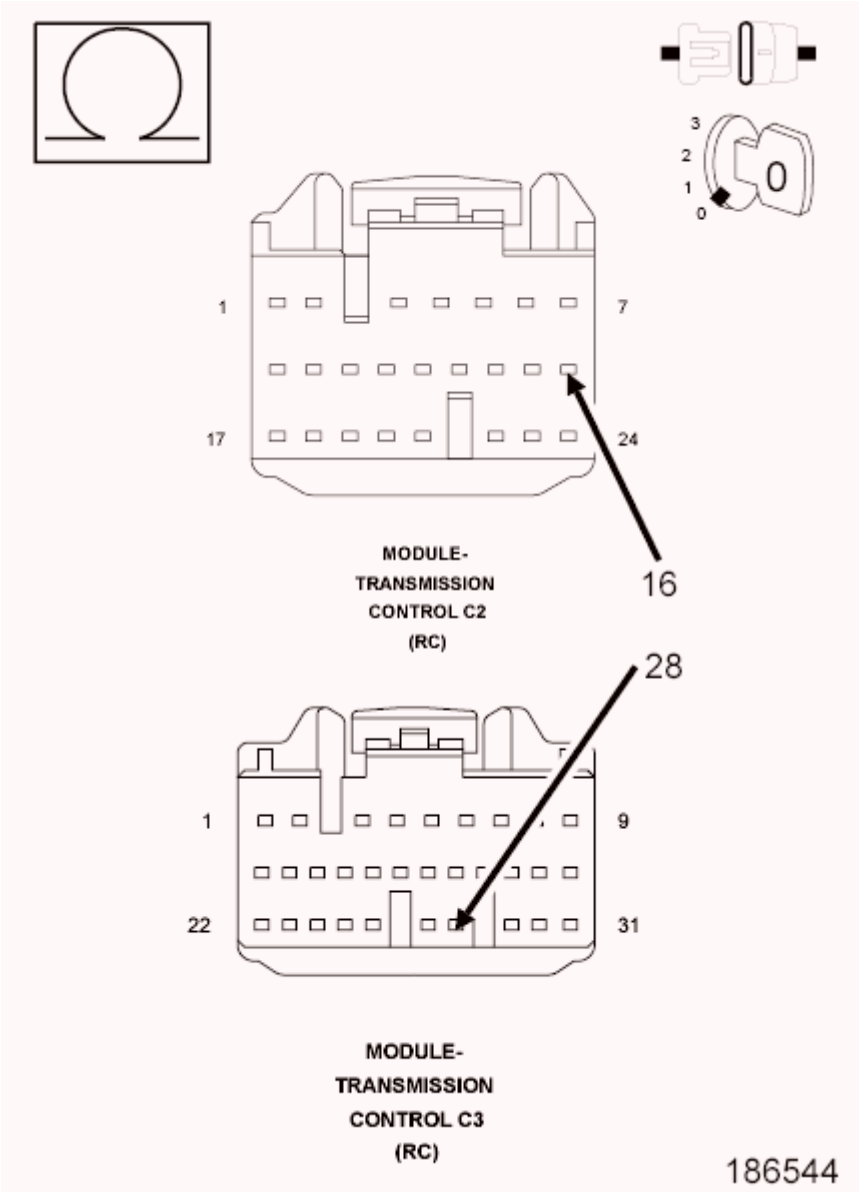

Fig. 176: Checking Transmission Temperature Sensor And Circuits
Courtesy of CHRYSLER GROUP, LLC

TYPICAL VALUES FOR TRANSMISSION TEMPERATURE SENSOR	
TEMPERATURE	**APPROXIMATE OHM**

-30° C (-22° F)	44000 Ohms
10° C (50° F)	6400 Ohms
110° C (230° F)	200 Ohms
145° C (293° F)	100 Ohms

1. Turn the ignition off to the lock position.
2. Reconnect the Torque Converter Out Oil Temperature sensor harness connector.
3. Disconnect the TCM C2 and C3 harness connector.

NOTE: Check connectors - Clean/repair as necessary.

4. Measure the resistance of the Transmission Temperature Sensor between the (T819) Torque Converter Out Oil Temperature Signal circuit in the TCM C2 harness connector and the (T820) Sensor Ground circuit in the TCM C3 harness connector.
5. Using the chart at the chart above, compare the Torque Converter Out Oil Temperature Sensor temperature to the correlating resistance value.

   Is the resistance within the specified range when the sensor is at the given temperature?

   Yes

   - Using the schematics as a guide, check the Transmission Control Module (TCM) pins, terminals, and connectors for corrosion, damage, or terminal push out. Pay particular attention to all power and ground circuits. If no problems are found, replace and program the TCM in accordance with the Service Information.
   - Refer to **STANDARD PROCEDURE** and perform the AS68RC VERIFICATION TEST.

   No

   - Replace the Transmission Temperature Sensor in accordance with the Service Information.
   - Refer to **STANDARD PROCEDURE** and perform the AS68RC VERIFICATION TEST.

5. **CHECK WIRING AND CONNECTORS**
   1. The conditions necessary to set the DTC are not present at this time.
   2. Using the schematics as a guide, inspect the wiring and connectors specific to this circuit.
   3. Wiggle the wires while checking for shorted and open circuits.
   4. Check for any Service Bulletins that may apply.

   Were there any problems found?

   Yes

   - Repair as necessary.
   - Refer to **STANDARD PROCEDURE** and perform the AS68RC VERIFICATION TEST.

No

- Test Complete.

P2743-TRANSMISSION FLUID TEMPERATURE SENSOR 2 HIGH

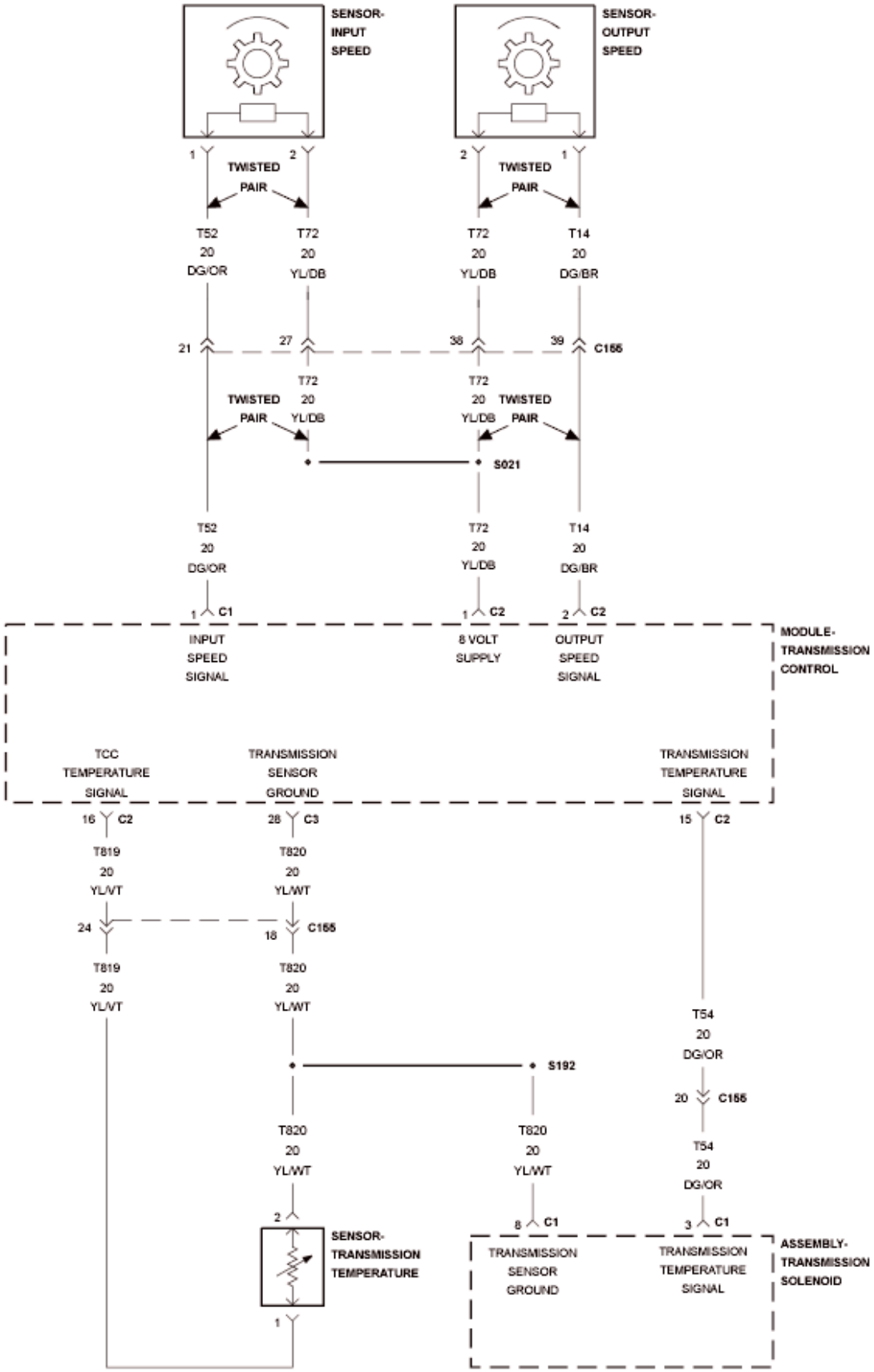
SENSOR-
INPUT
SPEED
SENSOR-
OUTPUT
SPEED
1
2
TWISTED
PAIR
2
1
TWISTED
PAIR
T52
20
DG/OR
T72
20
YL/DB
T72
20
YL/DB
T14
20
DG/BR
21
27
38
39
C155
T72
20
YL/DB
TWISTED
PAIR
T72
20
YL/DB
TWISTED
PAIR
S021
T52
20
DG/OR
T72
20
YL/DB
T14
20
DG/BR
1
C1
1
C2
2
C2
INPUT
SPEED
SIGNAL
8 VOLT
SUPPLY
OUTPUT
SPEED
SIGNAL
MODULE-
TRANSMISSION
CONTROL
TCC
TEMPERATURE
SIGNAL
TRANSMISSION
SENSOR
GROUND
TRANSMISSION
TEMPERATURE
SIGNAL
16
C2
28
C3
15
C2
T819
20
YL/VT
T820
20
YL/WT
24
18
C155
T819
20
YL/VT
T820
20
YL/WT
T54
20
DG/OR
S192
20
C155
T820
20
YL/WT
T820
20
YL/WT
T54
20
DG/OR
2
8
C1
3
C1
SENSOR-
TRANSMISSION
TEMPERATURE
TRANSMISSION
SENSOR
GROUND
TRANSMISSION
TEMPERATURE
SIGNAL
ASSEMBLY-
TRANSMISSION
SOLENOID
1

Fig. 177: Transmission Temperature Sensor Wiring Diagram
Courtesy of CHRYSLER GROUP, LLC

For a complete wiring diagram, **refer to appropriate SYSTEM WIRING DIAGRAMS article** .

THEORY OF OPERATION

The Torque Converter Out Oil Temperature sensor is used to determine if the transmission needs to go into high temperature shift strategy to protect the transmission.

DIAGNOSTIC TEST

When Monitored:

- Ignition on, the engine running.

Set Condition:

- The Diagnostic Trouble code (DTC) will set if the monitored Transmission Temperature Sensor Signal circuit is greater than -50° C (-58° F) for more than 500 ms.

POSSIBLE CAUSES

Possible Causes
(T819) TORQUE CONVERTER OUT OIL TEMPERATURE SIGNAL CIRCUIT SHORT TO VOLTAGE
(T819) TORQUE CONVERTER OUT OIL TEMPERATURE SIGNAL CIRCUIT OPEN
(T820) SENSOR GROUND CIRCUIT OPEN
TORQUE CONVERTER OUT OIL TEMPERATURE SENSOR
TRANSMISSION CONTROL MODULE (TCM)

Always perform the AS68RC Pre-Diagnostic Troubleshooting procedure before proceeding. Refer to STANDARD PROCEDURE.

DIAGNOSTIC TEST

1. **CHECK IF DTC IS CURRENT**
    1. Using the scan tool, read TCM DTCs.
    2. Record the Environmental Data and any DTCs.
    3. Clear DTCs.
    4. Using the recorded Environmental Data, along with the When Monitored and Set Conditions above, operate the vehicle in the conditions that set the DTC.
    5. Read TCM DTCs.

    Did the DTC reset?

Yes

- Go To 2.

No

- Go To 6.

2. **CHECK THE (T819) TORQUE CONVERTER OUT OIL TEMPERATURE SENSOR SIGNAL CIRCUIT FOR A SHORT TO VOLTAGE**

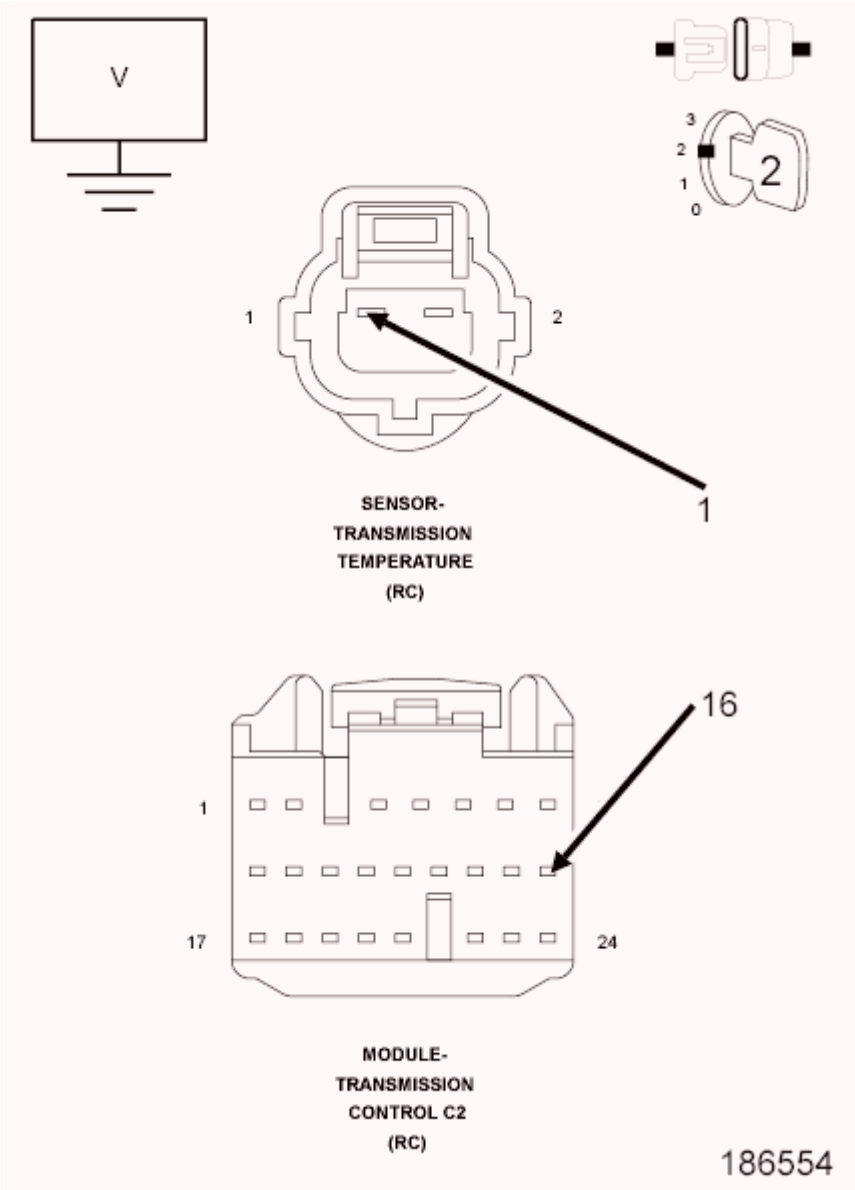

Fig. 178: Checking Torque Converter Out Oil Temperature Sensor Signal Circuit For A Short To Voltage
Courtesy of CHRYSLER GROUP, LLC

1. Turn the ignition off to the lock position.
2. Disconnect the TCM C2 harness connectors.
3. Disconnect the Torque Converter Out Oil Temperature sensor harness connector.
4. Ignition on, engine not running.
5. Measure the voltage of the (T819) Torque Converter Out Oil Temperature Signal circuit in the TCM C2 harness connector.

   Is the voltage above 0.5 of a volt?

   Yes

   - Repair the (T819) Torque Converter Out Oil Temperature Signal circuit for a short to voltage.
   - Refer to **STANDARD PROCEDURE** and perform the AS68RC VERIFICATION TEST.

   No

   - Go To 3.

3. **CHECK THE (T819) TORQUE CONVERTER OUT OIL TEMPERATURE SENSOR SIGNAL CIRCUIT FOR AN OPEN**

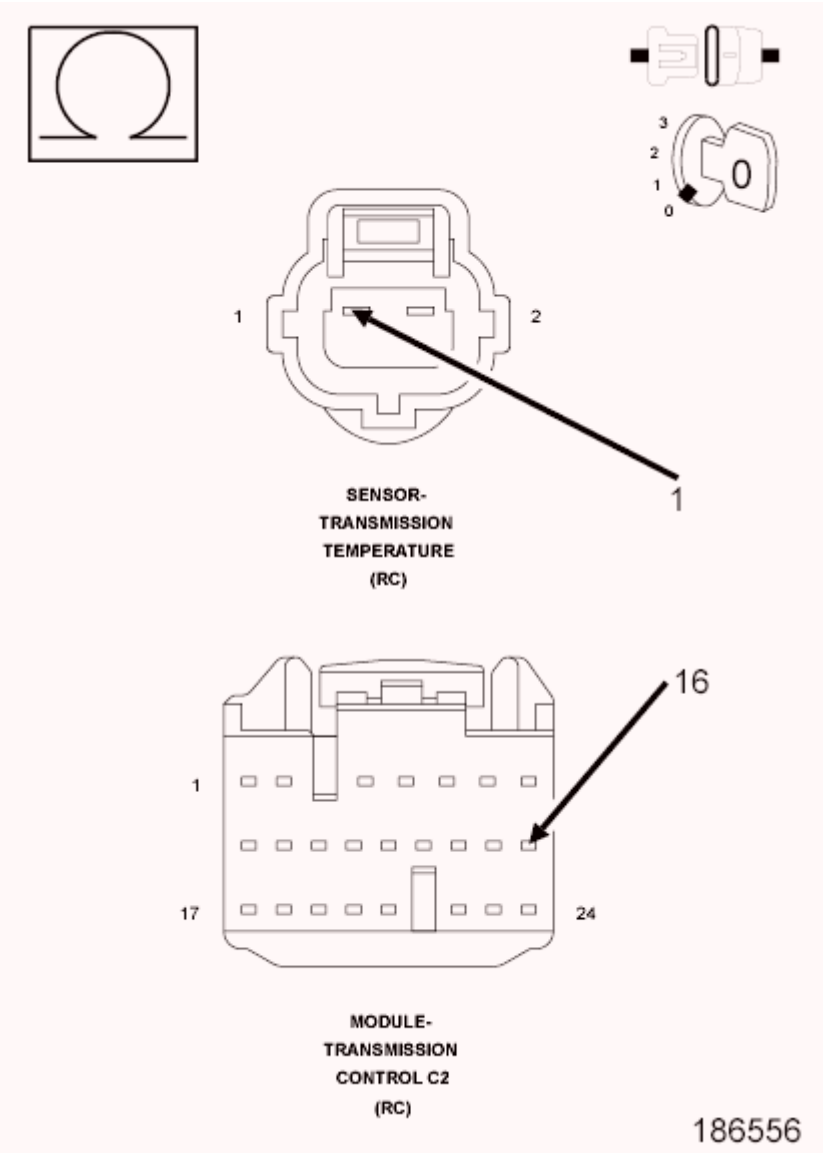

Fig. 179: Checking Torque Converter Out Oil Temperature Sensor Signal Circuit For An Open
Courtesy of CHRYSLER GROUP, LLC

1. Measure the resistance of the (T819) Torque Converter Out Oil Temperature Signal circuit between the TCM C2 harness connector and the Torque Converter Out Oil Temperature sensor harness connector.

   Is the resistance below 5.0 Ohms?

   Yes

   - Go To 4.

   No

- Repair the (T819) Torque Converter Out Oil Temperature Signal circuit for an open.
- Refer to **STANDARD PROCEDURE** and perform the AS68RC VERIFICATION TEST.

4. **CHECK THE (T820) SENSOR GROUND CIRCUIT FOR AN OPEN**

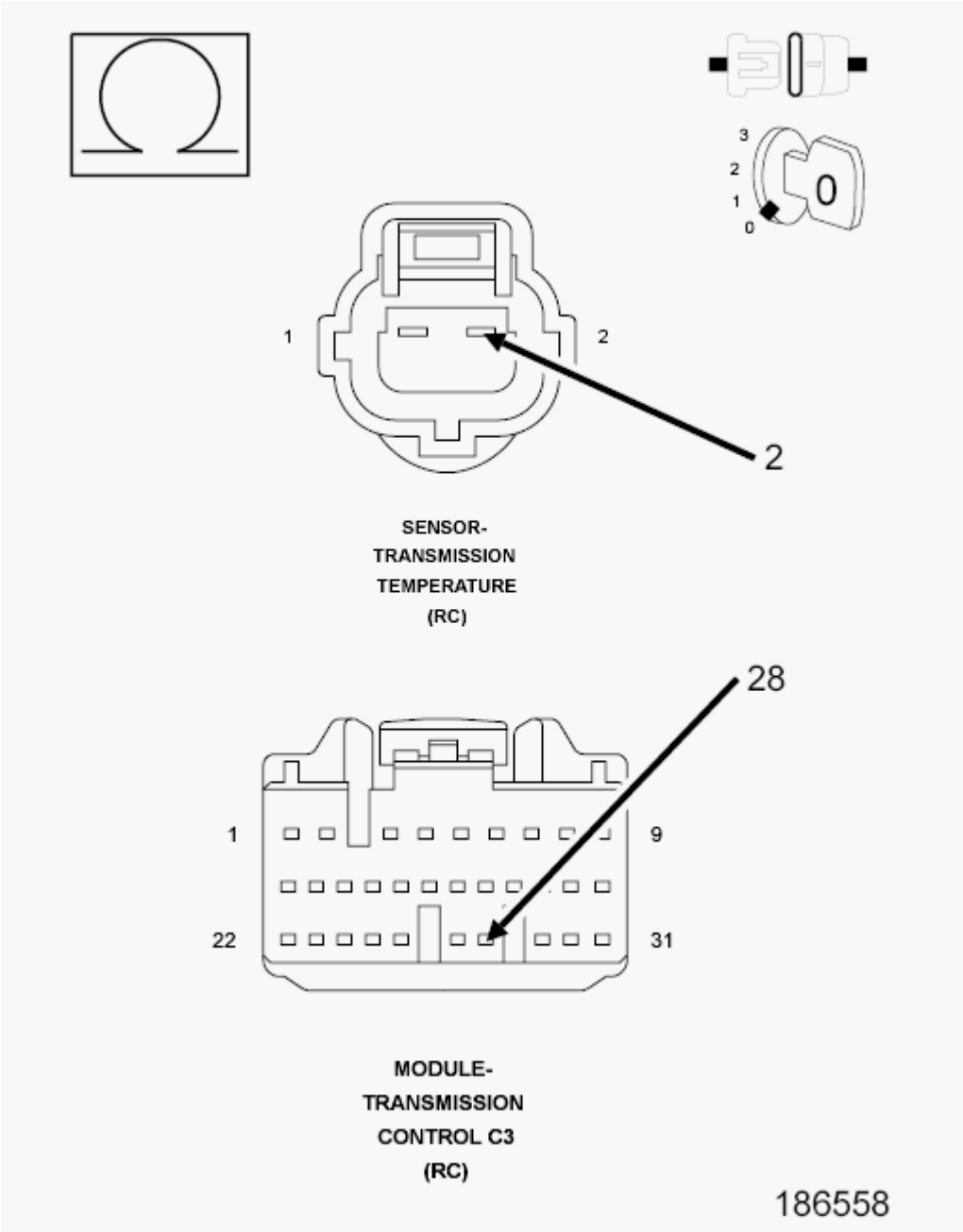

Fig. 180: Checking Sensor Ground Circuit For An Open
Courtesy of CHRYSLER GROUP, LLC

1. Measure the resistance of the (T820) Sensor Ground circuit between the TCM C3 harness connector and the Torque Converter Out Oil Temperature sensor harness connector.

Is the resistance below 5.0 Ohms?

Yes

- Go To 5.

No

- Repair the (T820) Sensor Ground circuit for an open.
- Refer to **STANDARD PROCEDURE** and perform the AS68RC VERIFICATION TEST.

5. **CHECK THE TRANSMISSION TEMPERATURE SENSOR**

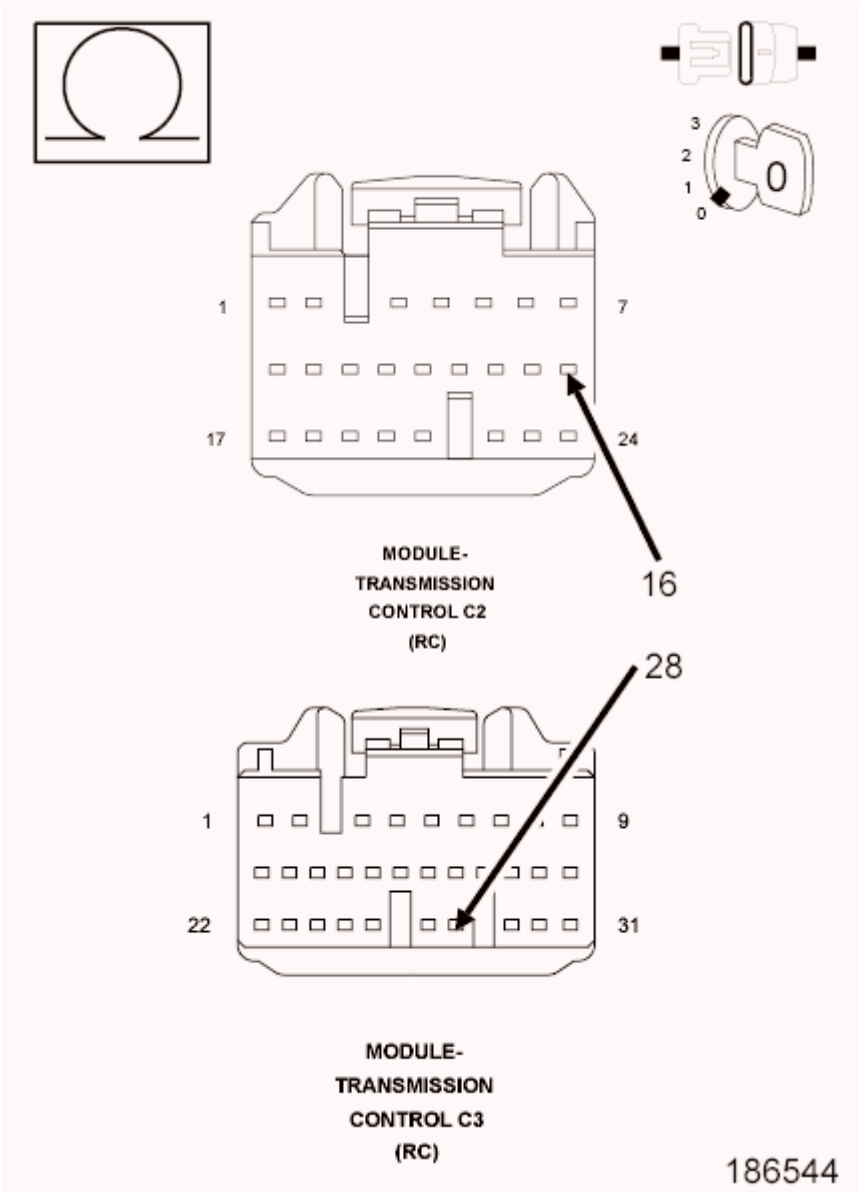

Fig. 181: Checking Transmission Temperature Sensor And Circuits
Courtesy of CHRYSLER GROUP, LLC

TYPICAL VALUES FOR TRANSMISSION TEMPERATURE SENSOR	
TEMPERATURE	**APPROXIMATE OHM**
-30° C (-22° F)	44000 Ohms
10° C (50° F)	6400 Ohms
110° C (230° F)	200 Ohms
145° C (293° F)	100 Ohms

1. Turn the ignition off to the lock position.
2. Reconnect the Torque Converter Out Oil Temperature sensor harness connector.
3. Disconnect the TCM C2 and C3 harness connector.

NOTE: Check connectors - Clean/repair as necessary

4. Measure the resistance of the Torque Converter Out Oil Temperature sensor between the (T819) Torque Converter Out Oil Temperature Signal circuit in the TCM C2 and the (T820) Sensor Ground circuit in the TCM C3 harness connector.
5. Using the chart at the chart above, compare the Temperature Sensor temperature to the correlating resistance value.

   Is the resistance within the specified range when the sensor is at the given temperature?

   Yes

   - Using the schematics as a guide, check the Transmission Control Module (TCM) pins, terminals, and connectors for corrosion, damage, or terminal push out. Pay particular attention to all power and ground circuits. If no problems are found, replace and program the TCM in accordance with the Service Information.
   - Refer to **STANDARD PROCEDURE** and perform the AS68RC VERIFICATION TEST.

   No

   - Replace the Transmission Temperature Sensor in accordance with the Service Information.
   - Refer to **STANDARD PROCEDURE** and perform the AS68RC VERIFICATION TEST.

6. **CHECK WIRING AND CONNECTORS**
   1. The conditions necessary to set the DTC are not present at this time.
   2. Using the schematics as a guide, inspect the wiring and connectors specific to this circuit.
   3. Wiggle the wires while checking for shorted and open circuits.
   4. Check for any Service Bulletins that may apply.

   Were there any problems found?

   Yes

- Repair as necessary.
- Refer to **STANDARD PROCEDURE** and perform the AS68RC VERIFICATION TEST.

No

- Test Complete.

P2757-TCC PRESSURE CONTROL SOLENOID CONTROL CIRCUIT PERFORMANCE

For a complete wiring diagram, **refer to appropriate SYSTEM WIRING DIAGRAMS article** .

THEORY OF OPERATION

This Diagnostic Trouble Code (DTC) checks the mechanical operation of the Torque Converter Clutch (TCC). When the TCC is commanded on, there should be little or no difference between Engine speed and Input speed. If the TCM detects the TCC is slipping greater than a calibrated value, for two consecutive ignition cycles, this DTC will set.

DIAGNOSTIC TEST

When Monitored:

- No other DTCs set.
- TCC is commanded on.

Set Condition:

- Engine speed minus Input speed is greater than or equal to 200 rpm for five seconds for two consecutive ignition cycles.

POSSIBLE CAUSES

Possible Causes
TORQUE CONVERTER
INTERNAL TRANSMISSION HARNESS
STICKING OR LEAKING LINEAR SOLENOID 3
VALVE BODY
TRANSMISSION CONTROL MODULE (TCM)

Always perform the AS68RC Pre-Diagnostic Troubleshooting procedure before proceeding. Refer to STANDARD PROCEDURE.

DIAGNOSTIC TEST

1. **CHECK IF DTC IS CURRENT**
    1. Using the scan tool, read TCM DTCs.

2. Record the Environmental Data and any DTCs.
3. Clear DTCs.
4. Using the recorded Environmental Data, along with the When Monitored and Set Conditions above, operate the vehicle in the conditions that set the DTC.
5. Read TCM DTCs.

NOTE: **If there are any other Engine and/or Transmission DTCs, diagnosis those first.**

Did the DTC reset?

Yes

- Go To 2.

No

- Go To 4.

2. **CHECK THE TORQUE CONVERTER CLUTCH (TCC) OPERATION**
   1. Clear Transmission DTCs.
   2. Road test the vehicle in a condition that will enable TCC lock up.
   3. Using the scan tool, record the Engine speed and the Transmission Input speed during TCC lock up.
   4. Using the set condition listed above, calculate the TCC slip rpm.

   Is the TCC slip rpm greater than or equal to 200 rpm?

   Yes

   - Go To 3.

   No

   - Using the schematics as a guide, check the Transmission Control Module (TCM) pins, terminals, and connectors for shorts, corrosion, damage, or terminal push out. Pay particular attention to all power and ground circuits. If no problems are found, replace and program the TCM in accordance with the Service Information.
3. **CHECK INTERNAL TRANSMISSION**
   1. Turn the ignition off to the lock position.
   2. Remove the transmission oil pan.
   3. Check the internal transmission harness, pins, terminals, and connectors for shorts, corrosion, damage, or terminal push out.
   4. Visually inspect the valve body for debris, damage or leaking hydraulic paths.

5. Visually inspect for sticking or binding Control Valve(s).

   Were there any problems found?

   Yes

   - Repair as necessary.
   - Refer to **STANDARD PROCEDURE** and perform the AS68RC VERIFICATION TEST.

   No

   - Replace the Torque Converter in accordance with the Service Information.
   - Refer to **STANDARD PROCEDURE** and perform the AS68RC VERIFICATION TEST.

4. **CHECK WIRING AND CONNECTORS**
   1. The conditions necessary to set the DTC are not present at this time.
   2. Using the schematics as a guide, inspect the wiring and connectors specific to this circuit.
   3. Wiggle the wires while checking for shorted and open circuits.
   4. Check for any Service Bulletins that may apply.

      Were there any problems found?

      Yes

      - Repair as necessary.
      - Refer to **STANDARD PROCEDURE** and perform the AS68RC VERIFICATION TEST.

      No

      - Test Complete.

P2806-TRANSMISSION RANGE SENSOR ALIGNMENT

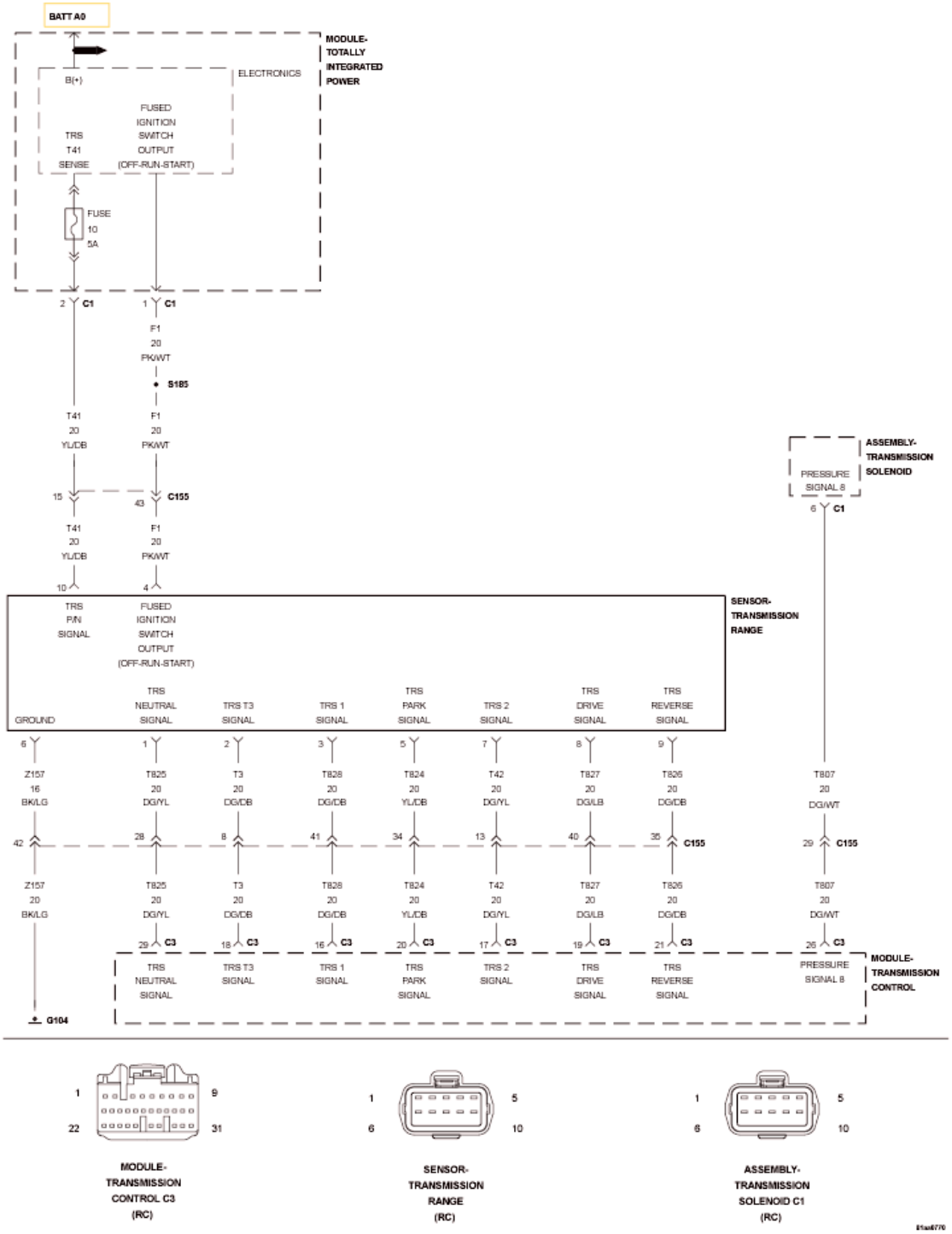

Fig. 182: Transmission Range Sensor Wiring Diagram
Courtesy of CHRYSLER GROUP, LLC

For a complete wiring diagram, **refer to appropriate SYSTEM WIRING DIAGRAMS article** .

THEORY OF OPERATION

The Transmission Range Sensor (TRS) is a multiple position selector switch which changes the signal path by redirecting a 12-volt signal source to seven different TRS signal circuits (P, R, N, D, 3, 2, 1) and also houses a Park/Neutral (P/N) switch circuit. These circuits are monitored by the Transmission Control Module (TCM) and used in conjunction with various pressure switches to validate proper operation of the transmission and diagnose any possible problem. In a normal operating mode, pressure switch 8, is in an "Open" state in P, R, or N. and in a "Closed" state in any forward gear (engine running). If the TCM detects all of shift lever positions registering "OPEN", the code will set and the PRNDL display will have all of the Shift Lever positions boxed. This DTC will not illuminate the MIL

DIAGNOSTIC TEST

When Monitored:

- Ignition on, engine running.
- Pressure Switch 8 is Open.

Set Condition:

- When the Transmission Control Module (TCM) detects all of the Shift Lever positions registering "OPEN" for the period of two seconds.

POSSIBLE CAUSES

Possible Causes
SHIFT LEVER HELD IN BETWEEN GATE POSITIONS

Always perform the AS68RC Pre-Diagnostic Troubleshooting procedure before proceeding. Refer to STANDARD PROCEDURE.

DIAGNOSTIC TEST

1. **CHECK FOR OTHER DTCS**

   NOTE: This DTC is supplemental and requires no diagnostic troubleshooting. Typically, if this code is set without P0706, P0707, or P0708 it is caused by the column shifter placement between gate stop positions, positioning the gear range indicator switch between gear positions for more than 2 seconds. Only diagnose the range sensor as instructed in P0706, P0707, or P0708 if they are present.

   Are there any other TRS DTCs set?

   Yes

   - Refer to **DIAGNOSIS AND TESTING** and perform the appropriate diagnostic procedure.

   No

- Clear DTC.
- Refer to **STANDARD PROCEDURE** and perform the AS68RC VERIFICATION TEST.

U0001-CAN C BUS

For a complete wiring diagram, **refer to appropriate SYSTEM WIRING DIAGRAMS article** .

THEORY OF OPERATION

The Transmission Control Module (TCM) continuously monitors the Bus activity and receives the messages it needs.

DIAGNOSTIC TEST

When Monitored:

- Test is enabled 1050 ms after start of CAN communication.

Set Condition:

- TCM detects a CAN Bus error.

Refer to DIAGNOSIS AND TESTING and DIAGNOSIS AND TESTING for diagnostic procedures and other possible causes.

U0100-LOST COMMUNICATION WITH ECM / PCM

For a complete wiring diagram, **refer to appropriate SYSTEM WIRING DIAGRAMS article** .

THEORY OF OPERATION

The Transmission Control Module (TCM) continuously monitors the Bus activity and receives the messages it needs. The CAN C Bus is also used to communicate transmission MIL status to the Engine Controller. If the Engine Controller is unable to communicate with the Transmission Controller, the Engine Controller will light the MIL.

DIAGNOSTIC TEST

When Monitored:

- No CAN Bus performance codes present. Input speed is greater than 300 rpm when the shift lever is in Park or Neutral or the Transmission range sensor indicates drive and pressure switch 8 is closed when the shift lever is in Drive, Third, Second, or Low. Battery voltage greater than 10 volts but less than 16 volts. Conditions must be present continuously for 5 seconds.

Set Condition:

- PCM CAN C Bus message has not been received for 500 ms.

Refer to DIAGNOSIS AND TESTING and DIAGNOSIS AND TESTING for diagnostic procedures and other possible causes.

U0121-LOST COMMUNICATION WITH ANTI-LOCK BRAKE MODULE

For a complete wiring diagram, **refer to appropriate SYSTEM WIRING DIAGRAMS article** .

THEORY OF OPERATION

The Transmission Control Module (TCM) continuously monitors the Bus activity and receives the messages it needs.

DIAGNOSTIC TEST

When Monitored:

- No CAN Bus performance codes present. Input speed is greater than 300 rpm when the shift lever is in Park or Neutral or the Transmission range sensor indicates drive and pressure switch 8 is closed when the shift lever is in Drive, Third, Second, or Low. Battery voltage greater than 10 volts but less than 16 volts. Conditions must be present continuously for 5 seconds.

Set Condition:

- ABS CAN C Bus message has not been received for 500 ms.

Refer to DIAGNOSIS AND TESTING and DIAGNOSIS AND TESTING for diagnostic procedures and other possible causes.

U0141-LOST COMMUNICATION WITH IPM (FCM/TIPM)

For a complete wiring diagram, **refer to appropriate SYSTEM WIRING DIAGRAMS article** .

THEORY OF OPERATION

The Transmission Control Module (TCM) continuously monitors the Bus activity and receives the messages it needs.

DIAGNOSTIC TEST

When Monitored:

- No CAN Bus performance codes present. Battery voltage greater than 10 volts but less than 16 volts. Conditions must be present continuously for 5 seconds.

Set Condition:

- Totally Integrated Power Module (TIPM) CAN C Bus message has not been received for 500 ms.

Refer to DIAGNOSIS AND TESTING and perform the U0141-Lost Communication with IPM (FCM/TIPM) diagnostic procedure.

U1111-LOST ODOMETER MESSAGE

For a complete wiring diagram, **refer to appropriate SYSTEM WIRING DIAGRAMS article** .

THEORY OF OPERATION

The Transmission Control Module (TCM) continuously monitors the Bus activity and receives the messages it needs.

DIAGNOSTIC TEST

When Monitored:

- Ignition ON with no CAN bus performance codes present, battery between 10 and 16 volts with the engine running.

Set Condition:

- PCM Odometer message is not received for more than 500 ms.
- Odometer message stays unchanged for 10.5 seconds.
- Odometer at key-on stays unchanged after the vehicle has been driven over 3 miles.

Refer to DIAGNOSIS AND TESTING and DIAGNOSIS AND TESTING for diagnostic procedures and other possible causes.

U1400-IMPLAUSIBLE TPS SIGNAL RECEIVED

For a complete wiring diagram, **refer to appropriate SYSTEM WIRING DIAGRAMS article** .

THEORY OF OPERATION

The messages sent on the CAN bus are distinguished by an identifier (ID). Each CAN ID is defined to contain a certain number of bytes. The Transmission Control Module (TCM) verifies that it has received the proper number of bytes for each ID.

DIAGNOSTIC TEST

When Monitored:

- Continuously with the ignition on, one valid CAN ID received at least once, and no U0001-CAN C Bus DTC present.

Set Condition:

- When the TCM detects an incorrect CAN ID from the ECM/PCM.

POSSIBLE CAUSES

Possible Causes
TIPM CAN BUS DTCS PRESENT
ECM/PCM DTCS PRESENT
TRANSMISSION CONTROL MODULE

Always perform the AS68RC Pre-Diagnostic Troubleshooting procedure before proceeding. Refer to STANDARD PROCEDURE.

DIAGNOSTIC TEST

1. **CHECK FOR TIPM CAN BUS DTCS**
    1. With the scan tool, read TIPM DTCs.

       Are there any TIPM CAN BUS DTCs present?

       Yes

       - Refer to **DIAGNOSIS AND TESTING** and perform the appropriate diagnostic procedure.
       - Refer to **STANDARD PROCEDURE** and perform the AS68RC VERIFICATION TEST.

       No

       - Go To 2.
2. **CHECK IF ECM/PCM DTCS ARE PRESENT**
    1. With the scan tool, read engine DTCs.

       Are there any engine DTCs present?

       Yes

       - Refer to **DIAGNOSIS AND TESTING** and perform the appropriate diagnostic procedure.
       - Refer to **STANDARD PROCEDURE** and perform the AS68RC VERIFICATION TEST.

       No

       - Using the schematics as a guide, check the Transmission Control Module (TCM) pins, terminals, and connectors for corrosion, damage, or terminal push out. Pay particular attention to all power and ground circuits. If no problems are found, replace and program the TCM in accordance with the Service Information.

- Refer to **STANDARD PROCEDURE** and perform the AS68RC VERIFICATION TEST.

U1401-IMPLAUSIBLE ENGINE SPEED SIGNAL RECEIVED

For a complete wiring diagram, **refer to appropriate SYSTEM WIRING DIAGRAMS article** .

THEORY OF OPERATION

The messages sent on the CAN bus are distinguished by an identifier (ID). Each CAN ID is defined to contain a certain number of bytes. The Transmission Control Module (TCM) verifies that it has received the proper number of bytes for each ID.

DIAGNOSTIC TEST

When Monitored:

- Continuously with the ignition on, one valid CAN ID received at least once, and no U0002-CAN Bus Off Performance DTC present.

Set Condition:

- When the TCM detects an incorrect CAN ID from the ECM/PCM.

POSSIBLE CAUSES

Possible Causes
TIPM CAN BUS DTCS PRESENT
ECM DTCS PRESENT
TRANSMISSION CONTROL MODULE

Always perform the AS68RC Pre-Diagnostic Troubleshooting procedure before proceeding. Refer to STANDARD PROCEDURE.

DIAGNOSTIC TEST

1. **CHECK FOR TIPM CAN BUS DTCS**
    1. With the scan tool, read TIPM DTCs.

       Are there any TIPM CAN BUS DTCs present?

       Yes

       - Refer to **DIAGNOSIS AND TESTING** and perform the appropriate diagnostic procedure.
       - Refer to **STANDARD PROCEDURE** and perform the AS68RC VERIFICATION TEST.

       No

- Go To 2.

2. **CHECK IF ENGINE DTCS ARE PRESENT**
    1. With the scan tool, read engine DTCs.

       Are there any engine DTCs present?

       Yes

       - Refer to **DIAGNOSIS AND TESTING** and perform the appropriate diagnostic procedure.
       - Refer to **STANDARD PROCEDURE** and perform the AS68RC VERIFICATION TEST.

       No

       - Using the schematics as a guide, check the Transmission Control Module (TCM) pins, terminals, and connectors for corrosion, damage, or terminal push out. Pay particular attention to all power and ground circuits. If no problems are found, replace and program the TCM in accordance with the Service Information.
       - Refer to **STANDARD PROCEDURE** and perform the AS68RC VERIFICATION TEST.

U1402-IMPLAUSIBLE ENGINE TEMPERATURE SIGNAL RECEIVED

For a complete wiring diagram, **refer to appropriate SYSTEM WIRING DIAGRAMS article** .

THEORY OF OPERATION

This message is used by the TCM in the transmission temperature sensor and transmission fluid temperature sensor performance detections.

DIAGNOSTIC TEST

When Monitored:

- Continuously with the ignition on.

Set Condition:

- When the message is not received or stays unchanged for 10.5 seconds or more for two consecutive key-cycles.

POSSIBLE CAUSES

Possible Causes
TIPM CAN BUS DTCS PRESENT
ECM DTCS PRESENT
TRANSMISSION CONTROL MODULE

Always perform the AS68RC Pre-Diagnostic Troubleshooting procedure before proceeding. Refer to STANDARD PROCEDURE.

DIAGNOSTIC TEST

1. **CHECK FOR TIPM CAN BUS DTCS**
    1. With the scan tool, read TIPM DTCs.

       Are there any TIPM CAN BUS DTCs present?

       Yes

       - Refer to **DIAGNOSIS AND TESTING** and perform the appropriate diagnostic procedure.
       - Refer to **STANDARD PROCEDURE** and perform the AS68RC VERIFICATION TEST.

       No

       - Go To 2.
2. **CHECK IF ENGINE DTCS ARE PRESENT**
    1. With the scan tool, read engine DTCs.

       Are there any engine DTCs present?

       Yes

       - Refer to **DIAGNOSIS AND TESTING** and perform the appropriate diagnostic procedure.
       - Refer to **STANDARD PROCEDURE** and perform the AS68RC VERIFICATION TEST.

       No

       - Using the schematics as a guide, check the Transmission Control Module (TCM) pins, terminals, and connectors for corrosion, damage, or terminal push out. Pay particular attention to all power and ground circuits. If no problems are found, replace and program the TCM in accordance with the Service Information.
       - Refer to **STANDARD PROCEDURE** and perform the AS68RC VERIFICATION TEST.

U1407-IMPLAUSIBLE ENGINE TORQUE REQUEST RECEIVED

For a complete wiring diagram, **refer to appropriate SYSTEM WIRING DIAGRAMS article** .

THEORY OF OPERATION

This message is used by the TCM as part of the torque management strategy between the PCM and the TCM.

DIAGNOSTIC TEST

When Monitored:

- Continuously with the key-on.

Set Condition:

- When the message is not received or stays unchanged for 10.5 seconds or more for two consecutive ignition cycles.

POSSIBLE CAUSES

Possible Causes
TIPM CAN BUS DTCS PRESENT
ECM DTCS PRESENT
TRANSMISSION CONTROL MODULE

Always perform the AS68RC Pre-Diagnostic Troubleshooting procedure before proceeding. Refer to STANDARD PROCEDURE.

DIAGNOSTIC TEST

1. **CHECK FOR TIPM CAN BUS DTCS**
   1. With the scan tool, read TIPM DTCs.

      Are there any TIPM CAN BUS DTCs present?

      Yes

      - Refer to **DIAGNOSIS AND TESTING** and perform the appropriate diagnostic procedure.
      - Refer to **STANDARD PROCEDURE** and perform the AS68RC VERIFICATION TEST.

      No

      - Go To 2.
2. **CHECK IF ENGINE DTCS ARE PRESENT**
   1. With the scan tool, read engine DTCs.

      Are there any engine DTCs present?

      Yes

      - Refer to **DIAGNOSIS AND TESTING** and perform the appropriate diagnostic procedure.
      - Refer to **STANDARD PROCEDURE** and perform the AS68RC VERIFICATION TEST.

      No

- Using the schematics as a guide, check the Transmission Control Module (TCM) pins, terminals, and connectors for corrosion, damage, or terminal push out. Pay particular attention to all power and ground circuits. If no problems are found, replace and program the TCM in accordance with the Service Information.
- Refer to **STANDARD PROCEDURE** and perform the AS68RC VERIFICATION TEST.

U1408-IMPLAUSIBLE BRAKE SIGNAL RECEIVED

For a complete wiring diagram, **refer to appropriate SYSTEM WIRING DIAGRAMS article** .

THEORY OF OPERATION

This message is used by the TCM to switch to Coast-Down strategy just prior to vehicle coming to a halt.

DIAGNOSTIC TEST

When Monitored:

- Continuously with the key-on.

Set Condition:

- When the message is not received or stays unchanged for 10.5 seconds or more for two consecutive key-cycles.

POSSIBLE CAUSES

Possible Causes
TIPM CAN BUS DTCS PRESENT
ECM DTCS PRESENT
TRANSMISSION CONTROL MODULE

Always perform the AS68RC Pre-Diagnostic Troubleshooting procedure before proceeding. Refer to STANDARD PROCEDURE.

DIAGNOSTIC TEST

1. **CHECK FOR TIPM CAN BUS DTCS**
    1. With the scan tool, read TIPM DTCs.

       Are there any TIPM CAN BUS DTCs present?

       Yes

       - Refer to **DIAGNOSIS AND TESTING** and perform the appropriate diagnostic procedure.
       - Refer to **STANDARD PROCEDURE** and perform the AS68RC VERIFICATION TEST.

No

- Go To 2.

2. **CHECK IF ENGINE DTCS ARE PRESENT**
   1. With the scan tool, read engine DTCs.

      Are there any engine DTCs present?

      Yes

      - Refer to **DIAGNOSIS AND TESTING** and perform the appropriate diagnostic procedure.
      - Refer to **STANDARD PROCEDURE** and perform the AS68RC VERIFICATION TEST.

      No

      - Using the schematics as a guide, check the Transmission Control Module (TCM) pins, terminals, and connectors for corrosion, damage, or terminal push out. Pay particular attention to all power and ground circuits. If no problems are found, replace the TCM in accordance with the Service Information.
      - Refer to **STANDARD PROCEDURE** and perform the AS68RC VERIFICATION TEST.

U140D-IMPLAUSIBLE WHEEL SPEED SIGNALS RECEIVED

For a complete wiring diagram, **refer to appropriate SYSTEM WIRING DIAGRAMS article** .

THEORY OF OPERATION

The messages sent on the CAN bus are distinguished by an identifier (ID). Each CAN ID is defined to contain a certain number of bytes. The Transmission Control Module (TCM) verifies that it has received the proper number of bytes for each ID.

DIAGNOSTIC TEST

When Monitored:

- Continuously with the ignition on, one valid CAN ID received at least once, and no U0002-CAN Bus Off Performance DTC present.

Set Condition:

- When the TCM detects an incorrect CAN ID from the ABS control module.

POSSIBLE CAUSES

Possible Causes
TIPM CAN BUS DTCS PRESENT

ABS CONTROL MODULE DTCS PRESENT
TRANSMISSION CONTROL MODULE

Always perform the AS68RC Pre-Diagnostic Troubleshooting procedure before proceeding. Refer to STANDARD PROCEDURE.

DIAGNOSTIC TEST

1. **CHECK FOR TIPM CAN BUS DTCS**
    1. With the scan tool, read TIPM DTCs.

       Are there any TIPM CAN BUS DTCs present?

       Yes

       - Refer to **DIAGNOSIS AND TESTING** and perform the appropriate diagnostic procedure.
       - Refer to **STANDARD PROCEDURE** and perform the AS68RC VERIFICATION TEST.

       No

       - Go To 2.
2. **CHECK IF ABS DTCS ARE PRESENT**
    1. With the scan tool, read ABS DTCs.

       Are there any ABS DTCs present?

       Yes

       - Refer to **DIAGNOSIS AND TESTING** and perform the appropriate diagnostic procedure.
       - Refer to **STANDARD PROCEDURE** and perform the AS68RC VERIFICATION TEST.

       No

       - Using the schematics as a guide, check the Transmission Control Module (TCM) pins, terminals, and connectors for corrosion, damage, or terminal push out. Pay particular attention to all power and ground circuits. If no problems are found, replace and program the TCM in accordance with the Service Information.
       - Refer to **STANDARD PROCEDURE** and perform the AS68RC VERIFICATION TEST.

U1424-IMPLAUSIBLE ENGINE TORQUE RECEIVED

For a complete wiring diagram, **refer to appropriate SYSTEM WIRING DIAGRAMS article** .

THEORY OF OPERATION

This message is used by the TCM as part of the torque management strategy between the PCM and the TCM.

DIAGNOSTIC TEST

When Monitored:

- Continuously with the ignition on.

Set Condition:

- When the message is not received or stays unchanged for 10.5 seconds or more for two consecutive ignition cycles.

POSSIBLE CAUSES

Possible Causes
TIPM CAN BUS DTCS PRESENT
ECM DTCS PRESENT
TRANSMISSION CONTROL MODULE

Always perform the AS68RC Pre-Diagnostic Troubleshooting procedure before proceeding. Refer to STANDARD PROCEDURE.

DIAGNOSTIC TEST

1. **CHECK FOR TIPM CAN BUS DTCS**
   1. With the scan tool, read TIPM DTCs.

      Are there any TIPM CAN BUS DTCs present?

      Yes

      - Refer to **DIAGNOSIS AND TESTING** and perform the appropriate diagnostic procedure.
      - Refer to **STANDARD PROCEDURE** and perform the AS68RC VERIFICATION TEST.

      No

      - Go To 2.
2. **CHECK IF ENGINE DTCS ARE PRESENT**
   1. With the scan tool, read engine DTCs.

      Are there any engine DTCs present?

      Yes

      - Refer to **DIAGNOSIS AND TESTING** and perform the appropriate diagnostic procedure.

- Refer to **STANDARD PROCEDURE** and perform the AS68RC VERIFICATION TEST.

No

- Using the schematics as a guide, check the Transmission Control Module (TCM) pins, terminals, and connectors for corrosion, damage, or terminal push out. Pay particular attention to all power and ground circuits. If no problems are found, replace the TCM in accordance with the Service Information.
- Refer to **STANDARD PROCEDURE** and perform the AS68RC VERIFICATION TEST.

U1437-IMPLAUSIBLE INTAKE AIR TEMPERATURE MESSAGE RECEIVED

For a complete wiring diagram, **refer to appropriate SYSTEM WIRING DIAGRAMS article** .

THEORY OF OPERATION

This message is used by the TCM in the transmission temperature sensor and transmission fluid temperature sensor performance detections.

DIAGNOSTIC TEST

When Monitored:

- Continuously with the ignition on.

Set Condition:

- When the message is not received or stays unchanged for 10.5 seconds or more for two consecutive ignition cycles.

POSSIBLE CAUSES

Possible Causes
TIPM CAN BUS DTCS PRESENT
ECM DTCS PRESENT
TRANSMISSION CONTROL MODULE

Always perform the AS68RC Pre-Diagnostic Troubleshooting procedure before proceeding. Refer to STANDARD PROCEDURE.

DIAGNOSTIC TEST

1. **CHECK FOR TIPM CAN BUS DTCS**
    1. With the scan tool, read TIPM DTCs.

       Are there any TIPM CAN BUS DTCs present?

Yes

- Refer to **DIAGNOSIS AND TESTING** and perform the appropriate diagnostic procedure.
- Refer to **STANDARD PROCEDURE** and perform the AS68RC VERIFICATION TEST.

No

- Go To 2.

2. **CHECK IF ENGINE DTCS ARE PRESENT**
   1. With the scan tool, read engine DTCs.

      Are there any engine DTCs present?

      Yes

      - Refer to **DIAGNOSIS AND TESTING** and perform the appropriate diagnostic procedure.
      - Refer to **STANDARD PROCEDURE** and perform the AS68RC VERIFICATION TEST.

      No

      - Using the schematics as a guide, check the Transmission Control Module (TCM) pins, terminals, and connectors for corrosion, damage, or terminal push out. Pay particular attention to all power and ground circuits. If no problems are found, replace the TCM in accordance with the Service Information.
      - Refer to **STANDARD PROCEDURE** and perform the AS68RC VERIFICATION TEST.

U1439-IMPLAUSIBLE/MISSING PROGRAMMED AXLE RATIO

For a complete wiring diagram, **refer to appropriate SYSTEM WIRING DIAGRAMS article** .

THEORY OF OPERATION

This programmed axle ratio information is received from the TIPM to be used by the TCM as part of speed sensor diagnostics.

DIAGNOSTIC TEST

When Monitored:

- Continuously with the key-on.

Set Condition:

- This fault is set when any other values other than 4.88, 4.44, 4.10, or 3.73 is received, or the message is not received for more than 10.5 seconds.

POSSIBLE CAUSES

Possible Causes
TIPM CAN BUS DTCS PRESENT
ECM DTCS PRESENT
TRANSMISSION CONTROL MODULE

Always perform the AS68RC Pre-Diagnostic Troubleshooting procedure before proceeding. Refer to STANDARD PROCEDURE.

DIAGNOSTIC TEST

1. **CHECK FOR TIPM CAN BUS DTCS**
    1. With the scan tool, read TIPM DTCs.

       Are there any TIPM CAN BUS DTCs present?

       Yes

       - Refer to **DIAGNOSIS AND TESTING** and perform the appropriate diagnostic procedure.
       - Refer to **STANDARD PROCEDURE** and perform the AS68RC VERIFICATION TEST.

       No

       - Go To 2.
2. **CHECK IF ENGINE DTCS ARE PRESENT**
    1. With the scan tool, read engine DTCs.

       Are there any engine DTCs present?

       Yes

       - Refer to **DIAGNOSIS AND TESTING** and perform the appropriate diagnostic procedure.
       - Refer to **STANDARD PROCEDURE** and perform the AS68RC VERIFICATION TEST.

       No

       - Using the schematics as a guide, check the Transmission Control Module (TCM) pins, terminals, and connectors for corrosion, damage, or terminal push out. Pay particular attention to all power and ground circuits. If no problems are found, replace and program the TCM in accordance with the Service Information.
       - Refer to **STANDARD PROCEDURE** and perform the AS68RC VERIFICATION TEST.

U1440-IMPLAUSIBLE/MISSING PROGRAMMED TRANSFER CASE HI RATIO

For a complete wiring diagram **refer to appropriate SYSTEM WIRING DIAGRAMS article** .

THEORY OF OPERATION

This programmed Transfer Case Hi Ratio information is received from the TIPM to be used by the TCM as part of speed sensor diagnostics.

DIAGNOSTIC TEST

When Monitored:

- Continuously with the key-on.

Set Condition:

- This fault is set when any other values other than 1.0 is received, or the message is not received for more than 10.5 seconds.

POSSIBLE CAUSES

Possible Causes
TIPM CAN BUS DTCS PRESENT
ECM DTCS PRESENT
TRANSMISSION CONTROL MODULE

Always perform the AS68RC Pre-Diagnostic Troubleshooting procedure before proceeding. Refer to STANDARD PROCEDURE.

DIAGNOSTIC TEST

1. **CHECK FOR TIPM CAN BUS DTCS**
   1. With the scan tool, read TIPM DTCs.

      Are there any TIPM CAN BUS DTCs present?

      Yes

      - Refer to **DIAGNOSIS AND TESTING** and perform the appropriate symptom(s).
      - Refer to **STANDARD PROCEDURE** and perform the AS68RC VERIFICATION TEST.

      No

      - Go To 2.
2. **CHECK IF ENGINE DTCS ARE PRESENT**
   1. With the scan tool, read engine DTCs.

Are there any engine DTCs present?

Yes

- Refer to **DIAGNOSTIC CODE INDEX** for 3.7L/4.7L/5.7L or **DIAGNOSTIC CODE INDEX** for 6.7L and perform the appropriate diagnostic procedure.
- Refer to **STANDARD PROCEDURE** and perform the AS68RC VERIFICATION TEST.

No

- Using the schematics as a guide, check the Transmission Control Module (TCM) pins, terminals, and connectors for corrosion, damage, or terminal push out. Pay particular attention to all power and ground circuits. If no problems are found, replace the TCM per the Service Information.
- Refer to **STANDARD PROCEDURE** and perform the AS68RC VERIFICATION TEST.

U1441-IMPLAUSIBLE/MISSING PROGRAMMED TRANSFER CASE LOW RATIO

For a complete wiring diagram, **refer to appropriate SYSTEM WIRING DIAGRAMS article** .

THEORY OF OPERATION

This programmed Transfer Case Low Ratio information is received from the TIPM to be used by the TCM as part of speed sensor diagnostics.

DIAGNOSTIC TEST

When Monitored:

- Continuously with the ignition on.

Set Condition:

- This fault is set when any other values other than 2.72 is received, or the message is not received for more than 10.5 seconds.

POSSIBLE CAUSES

Possible Causes
TIPM CAN BUS DTCS PRESENT
ECM DTCS PRESENT
TRANSMISSION CONTROL MODULE

Always perform the AS68RC Pre-Diagnostic Troubleshooting procedure before proceeding. Refer to STANDARD PROCEDURE.

DIAGNOSTIC TEST

1. **CHECK FOR TIPM CAN BUS DTCS**
    1. With the scan tool, read TIPM DTCs.

       Are there any TIPM CAN BUS DTCs present?

       Yes

       - Refer to **DIAGNOSIS AND TESTING** and perform the appropriate symptom(s).
       - Refer to **STANDARD PROCEDURE** and perform the AS68RC VERIFICATION TEST.

       No

       - Go To 2.
2. **CHECK IF ENGINE DTCS ARE PRESENT**
    1. With the scan tool, read engine DTCs.

       Are there any engine DTCs present?

       Yes

       - Refer to **DIAGNOSTIC CODE INDEX** for 3.7L/4.7L/5.7L or **DIAGNOSTIC CODE INDEX** for 6.7L and perform the appropriate diagnostic procedure.
       - Refer to **STANDARD PROCEDURE** and perform the AS68RC VERIFICATION TEST.

       No

       - Using the schematics as a guide, check the Transmission Control Module (TCM) pins, terminals, and connectors for corrosion, damage, or terminal push out. Pay particular attention to all power and ground circuits. If no problems are found, replace and program the TCM in accordance with the Service Information.
       - Refer to **STANDARD PROCEDURE** and perform the AS68RC VERIFICATION TEST.

U1449-IMPLAUSIBLE ERS MESSAGE RECEIVED

For a complete wiring diagram, **refer to appropriate SYSTEM WIRING DIAGRAMS article** .

THEORY OF OPERATION

This message is used by the Transmission Control Module (TCM) for Electronic Range Select (ERS) operation. The ERS switch is hard wired to the Cabin Compartment Node (CCN). The CCN then sends a CAN bus message to the TCM.

WHEN MONITORED:

Continuously with the ignition on.

SET CONDITION:

This fault is set when the ERS message is not received or invalid.

POSSIBLE CAUSES

Possible Causes
TIPM CAN BUS DTCS PRESENT
CABIN COMPARTMENT NODE (CCN)
TRANSMISSION CONTROL MODULE (TCM)

Always perform the AS68RC Pre-Diagnostic Troubleshooting procedure before proceeding. Refer to STANDARD PROCEDURE.

DIAGNOSTIC TEST

1. **CHECK FOR TIPM CAN BUS DTCS**
    1. With the scan tool, read TIPM DTCs.

       Are there any TIPM CAN BUS DTCs present?

       Yes

       - Refer to **DIAGNOSIS AND TESTING** and perform the appropriate diagnostic procedure.

       No

       - Go To 2.
2. **CHECK IF CCN DTCS ARE PRESENT**
    1. With the scan tool, read CCN DTCs.

       Are there any CCN DTCs present?

       Yes

       - Refer to **DIAGNOSIS AND TESTING** and perform the appropriate diagnostic procedure.
       - Refer to **STANDARD PROCEDURE** and perform the AS68RC VERIFICATION TEST.

       No

       - Using the schematics as a guide, check the Transmission Control Module (TCM) pins, terminals, and connectors for corrosion, damage, or terminal push out. Pay particular attention to all power and ground circuits. If no problems are found, replace and program the TCM in accordance with the Service Information.

- Refer to **STANDARD PROCEDURE** and perform the AS68RC VERIFICATION TEST.

STANDARD PROCEDURE

AS68RC TRANSMISSION VERIFICATION TEST

For a complete wiring diagram, **refer to appropriate SYSTEM WIRING DIAGRAMS article** .

DIAGNOSTIC TEST

1. Perform the following after completion of a diagnostic repair:
    1. Reconnect any disconnected components.
    2. Connect the scan tool to the Data Link Connector (DLC).
    3. With the scan tool, erase all Transmission and Engine DTCs.
    4. With the scan tool, display Transmission Temperature. Start and run the engine until the Transmission Temperature is HOT.
    5. Check the Transmission fluid level and adjust if necessary. Refer to **STANDARD PROCEDURE** for the Fluid Fill procedure.
    6. With the scan tool, perform the TCM Quick learn procedure if a transmission component has been replaced, or the TCM has been replaced or flashed. Perform AS68RC TCM Quick Learn.
    7. Road test the vehicle allowing the vehicle to shift through all gears.
    8. Check for DTCs during and after the road test.

    Were there any Diagnostic Trouble Codes (DTCs) set during the road test?

    Yes

    - Refer to **DIAGNOSIS AND TESTING** and perform the appropriate diagnostic procedure.

    No

    - Repair is complete.

AS68RC PRE-DIAGNOSTIC TROUBLESHOOTING PROCEDURE

For a complete wiring diagram, **refer to appropriate SYSTEM WIRING DIAGRAMS article** .

DIAGNOSTIC TEST

1.
    1. Many transmission symptoms can be caused by a low fluid level. If the fluid level is low, locate and repair any leaks and fill the transmission to the proper fluid level. Refer to **STANDARD PROCEDURE** for the proper repair and fluid fill procedures.
    2. Testing should only be performed with the battery fully charged to avoid false diagnosis.

3. With the scan tool, read Engine (PCM) DTCs. If Engine DTCs are present, Refer to **DIAGNOSTIC CODE INDEX** for 3.7L/4.7L/5.7L or **DIAGNOSTIC CODE INDEX** for 6.7L and perform the appropriate diagnostic procedure.
4. With the scan tool, read Transmission (TCM) DTCs. Record all Stored, Active, and Pending DTC information. Diagnose any Pending DTC as a matured DTC.
5. Refer to the When Monitored and Set Conditions for this DTC. DTCs can set at ignition on, at start up, driving under specific conditions, or after controller diagnostic monitors have run.
6. Perform any applicable Service Bulletins for controller software update information. Some conditions can be corrected by upgrading the Engine (ECM) or Transmission (TCM) controller software.
7. Check for any Service Information Tune-ups or Service Bulletins for any possible causes that may apply.

Were there any repairs made that fixed the vehicle?

Yes

- Testing complete.
- Refer to **STANDARD PROCEDURE** and perform the AS68RC VERIFICATION TEST.

No

- Refer to **DIAGNOSTIC CODE INDEX** and perform the appropriate diagnostic procedure.

AS86RC TCM PROGRAMMING PROCEDURE

DIAGNOSTIC TEST

1. **PROGRAMMING THE TRANSMISSION CONTROL MODULE (TCM)**

NOTE: **When replacing a Transmission Control Module (TCM), the TCM must be programmed.**

NOTE: **Failure to properly program the TCM may result in the illumination of the Malfunction Indicator Lamp (MIL) and setting DTC(s).**

NOTE: **While performing the TCM programming procedure, the vehicle battery must be maintained between 10 and 16 volts. Ambient temperature must be between 0° C (32° F) 60° C (140° F). Vehicle must be in Park with brake pedal depressed.**

NOTE: **The total number of TCM reflashes and/or reflash attempts must be limited to a maximum of 50 times. The TCM is considered defective if more than 50 reflashes and/or reflash attempts have occurred.**

NOTE: **After installing a generic TCM into the vehicle and before the software flash has been performed, it is possible to illuminate the MIL and set a P0602 - TCM Not Programmed if the engine is started before the flash is completed. If DTC P0602 sets during programming, clear DTCs after the flash has completed.**

1. Using the scan tool and Dealer Connect, download the appropriate TCM flash file to the scan tool.
2. Ignition on, engine not running.
3. Vehicle in park with the brake pedal depressed.
4. Following the menu on the scan tool, program the TCM.
5. After the TCM has been programmed, a TCM Quick Lean must be performed. Refer to **MODULE, TRANSMISSION CONTROL, STANDARD PROCEDURE** and perform TCM QUICK LEARN - AS68RC TRANSMISSION.

   NOTE: **TCM Quick lean must be performed to prevent setting DTC P1679 - Calibration Not Learned after TCM programming.**

6. With the scan tool, perform PTO Configuration (if equipped).
7. Clear any stored DTCs.
8. Road test the vehicle above 40 m.p.h. for at least two minutes.
9. With the scan tool, select View DTCs in the TCM.

   Are there any DTCs present?

   Yes

   - Refer to **DIAGNOSTIC CODE INDEX** and perform the appropriate diagnostic procedure (s).

   No

   - Test Complete
   - Refer to **STANDARD PROCEDURE** and perform the AS68RC VERIFICATION TEST.

AIR CONDITIONING

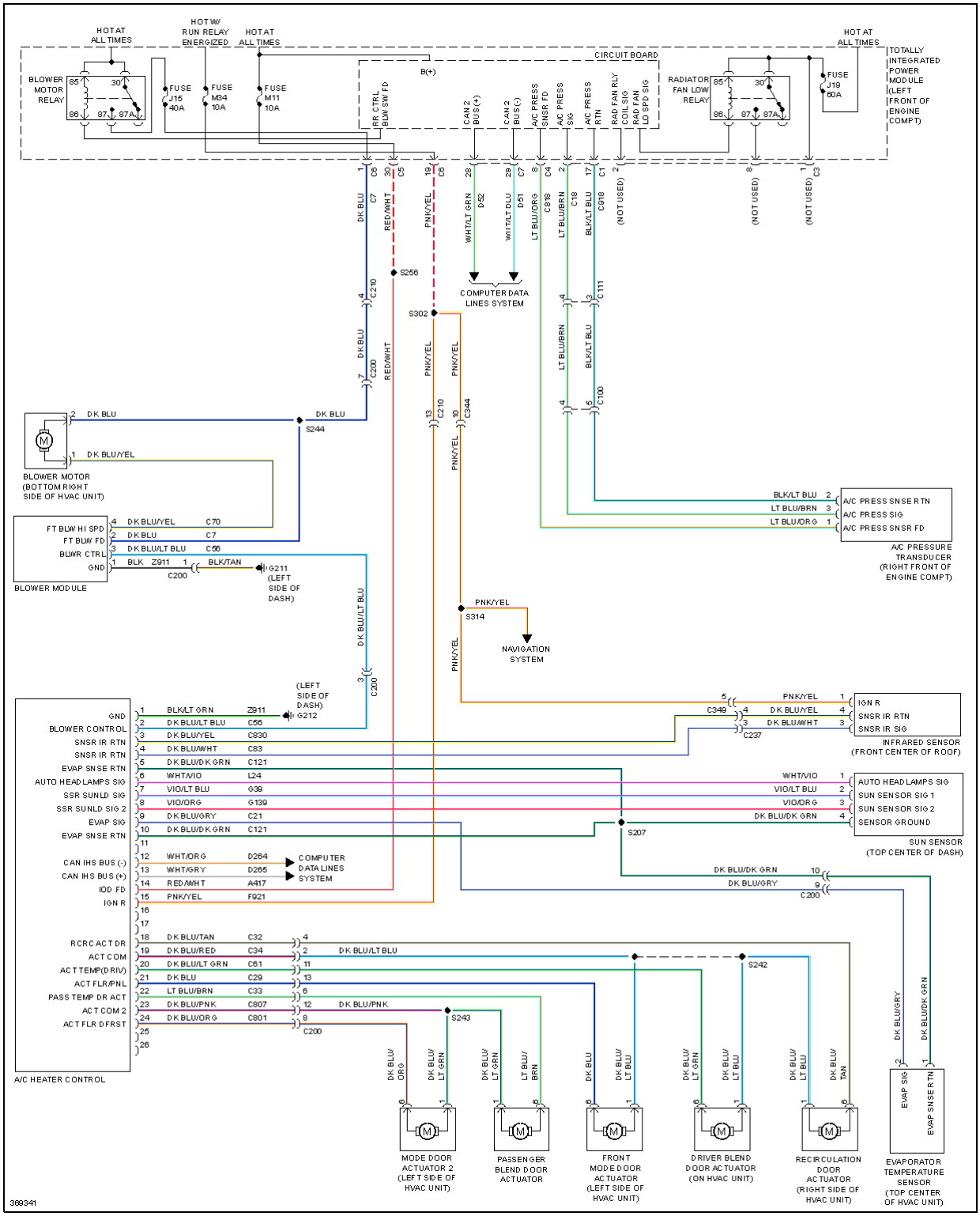

Fig. 1: Automatic A/C Circuit

ANTI-LOCK BRAKES

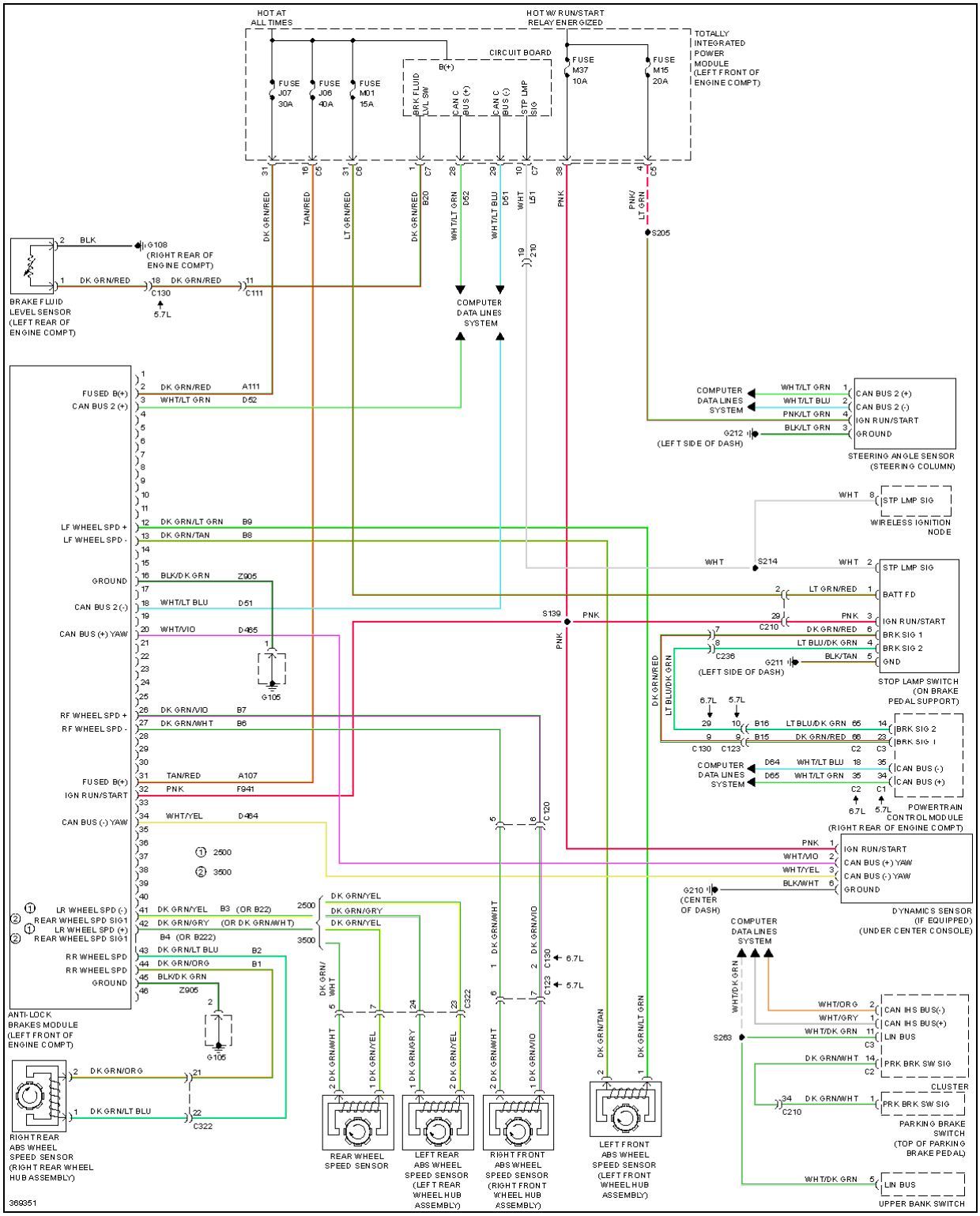

Fig. 2: Anti-lock Brakes Circuit

ANTI-THEFT

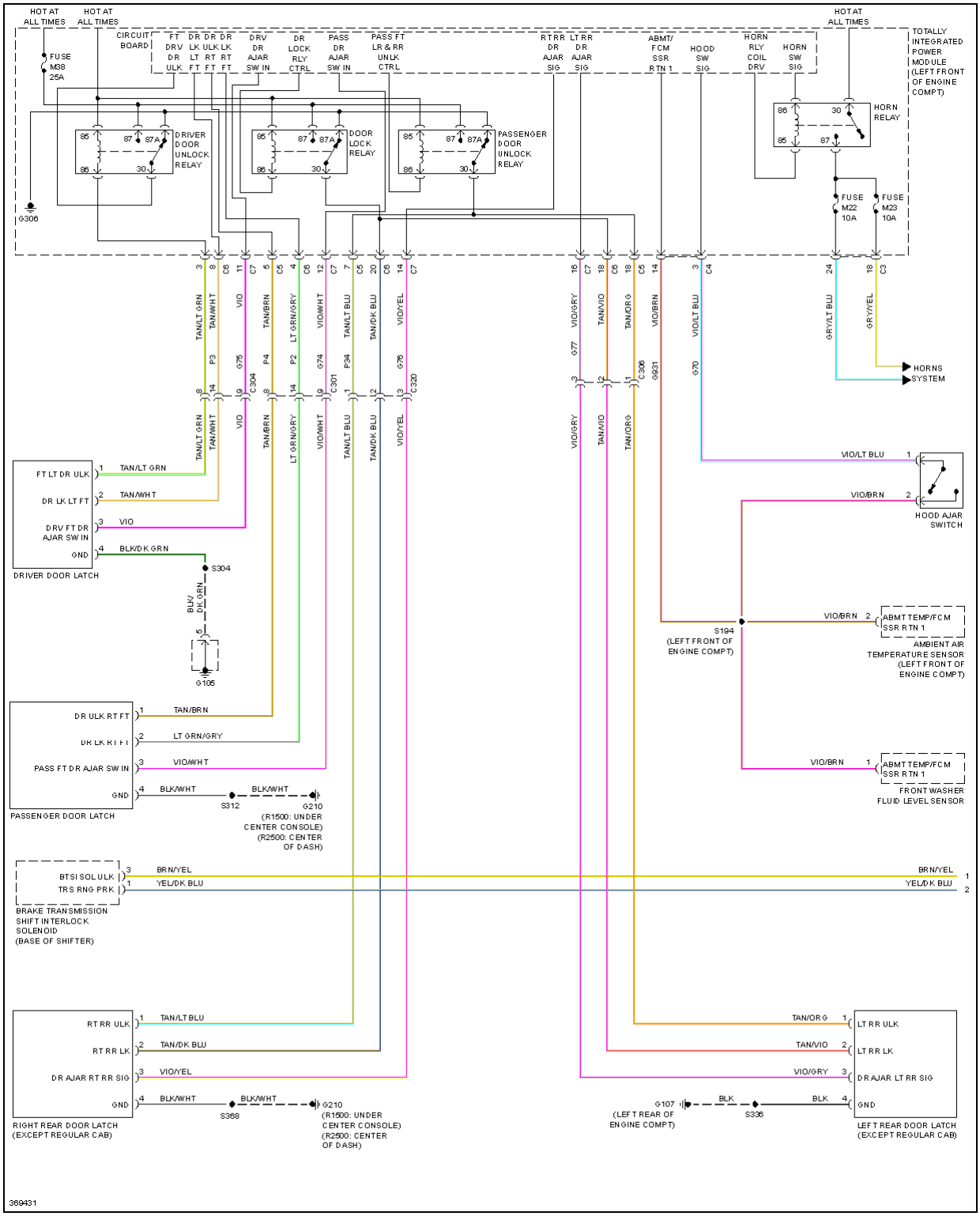

Fig. 3: Anti-theft Circuit (1 of 2)

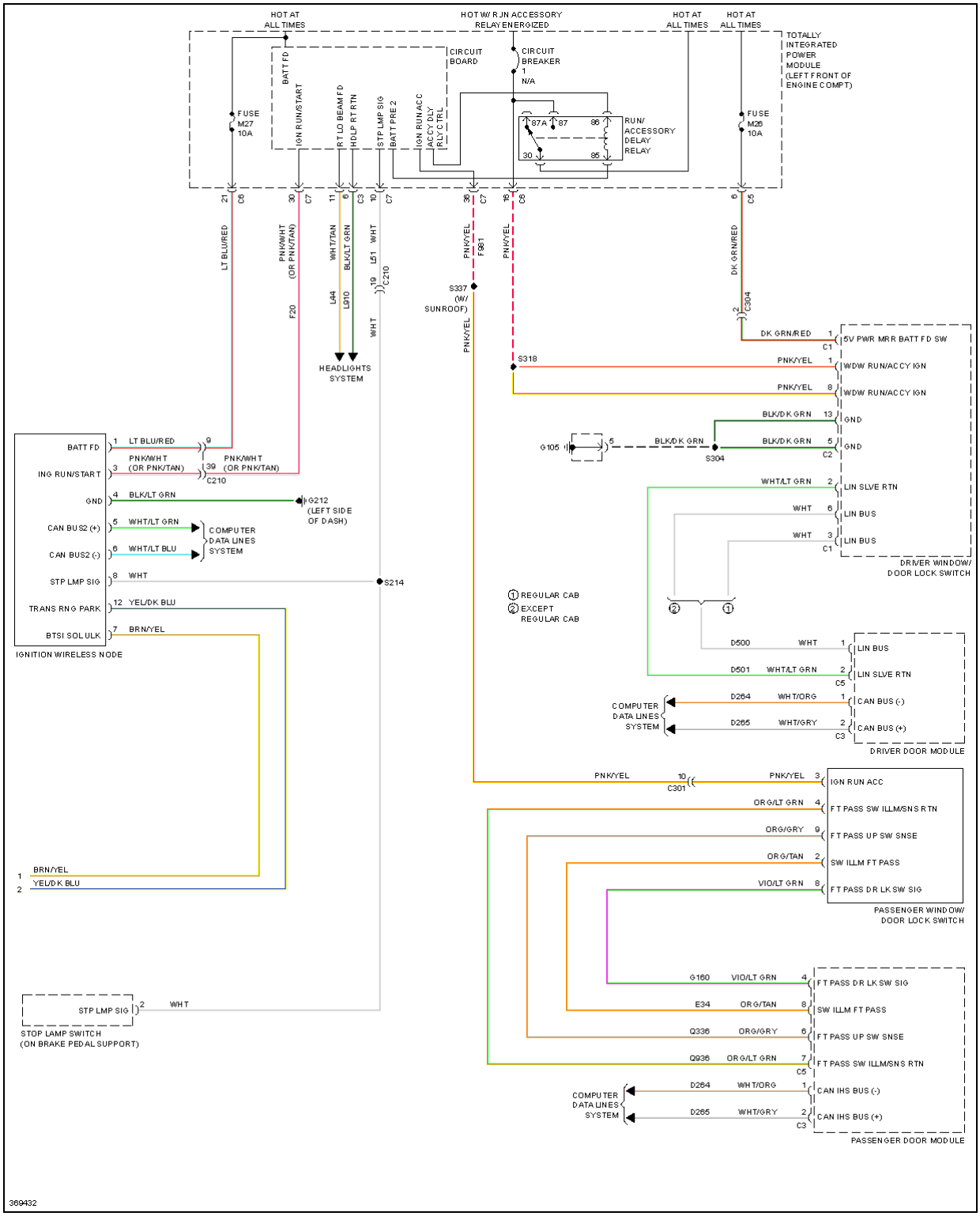

Fig. 4: Anti-theft Circuit (2 of 2)

BODY CONTROL MODULES

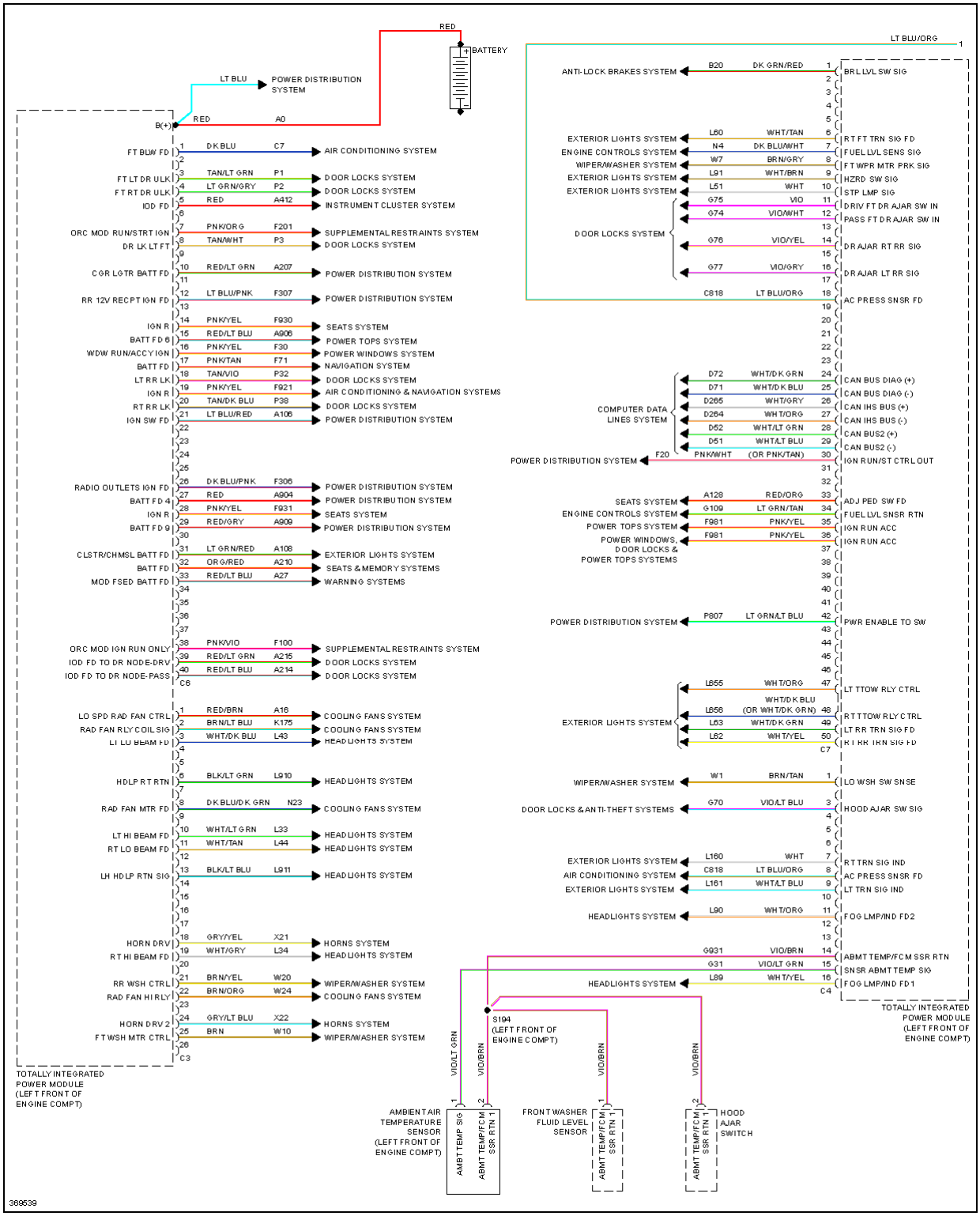

Fig. 5: Body Control Modules Circuit (1 of 2)

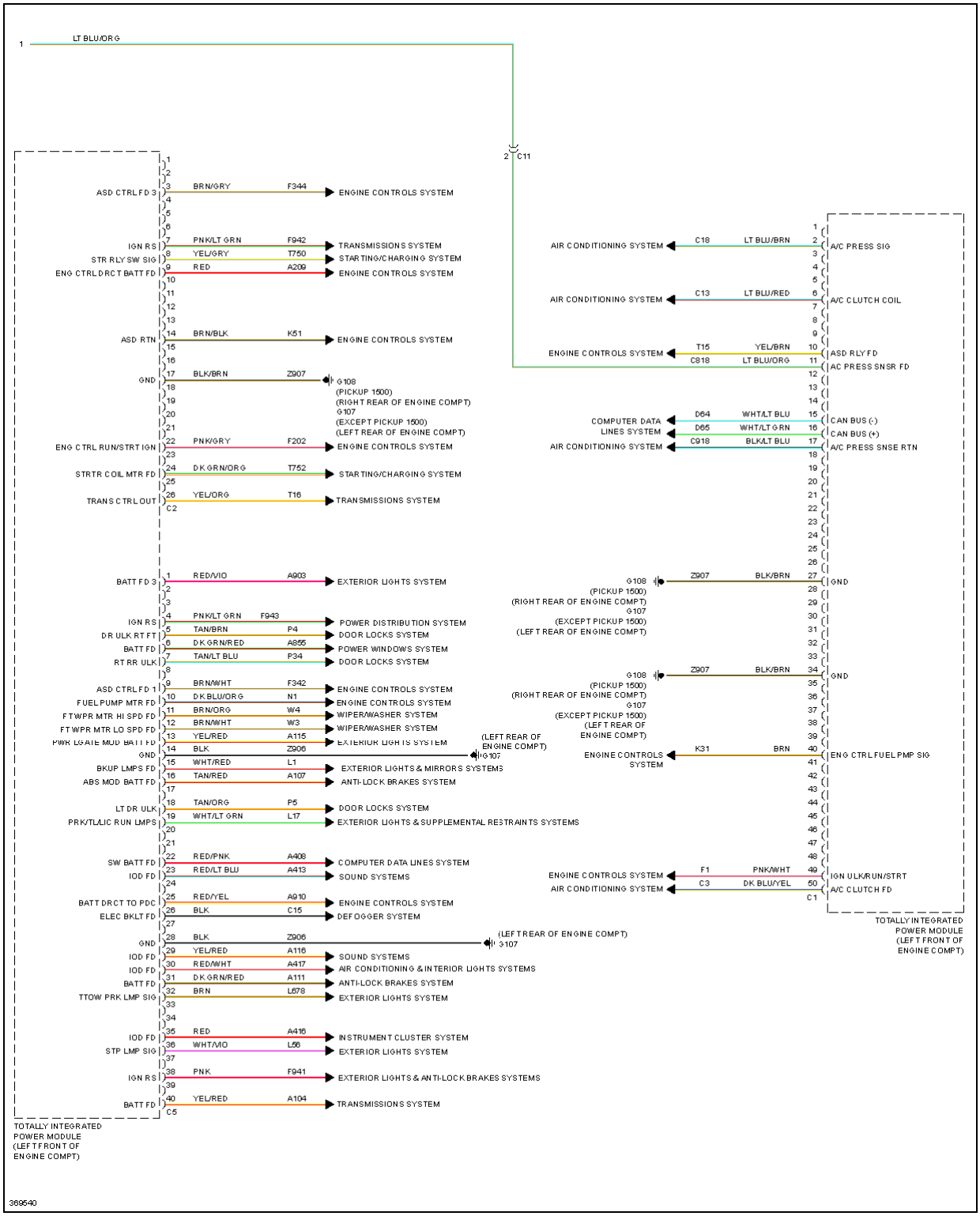

Fig. 6: Body Control Modules Circuit (2 of 2)

COMPUTER DATA LINES

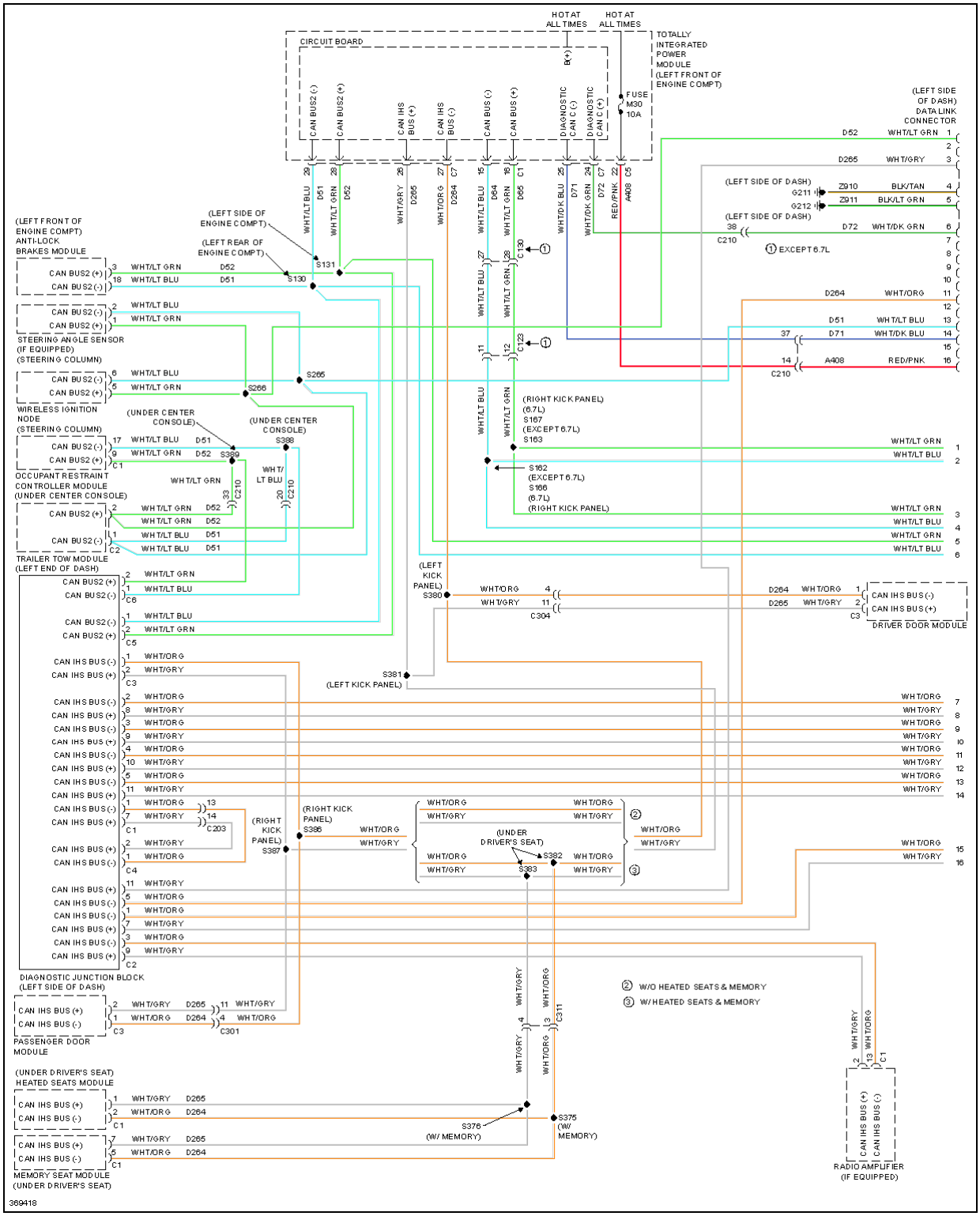

Fig. 7: Computer Data Lines Circuit (1 of 2)

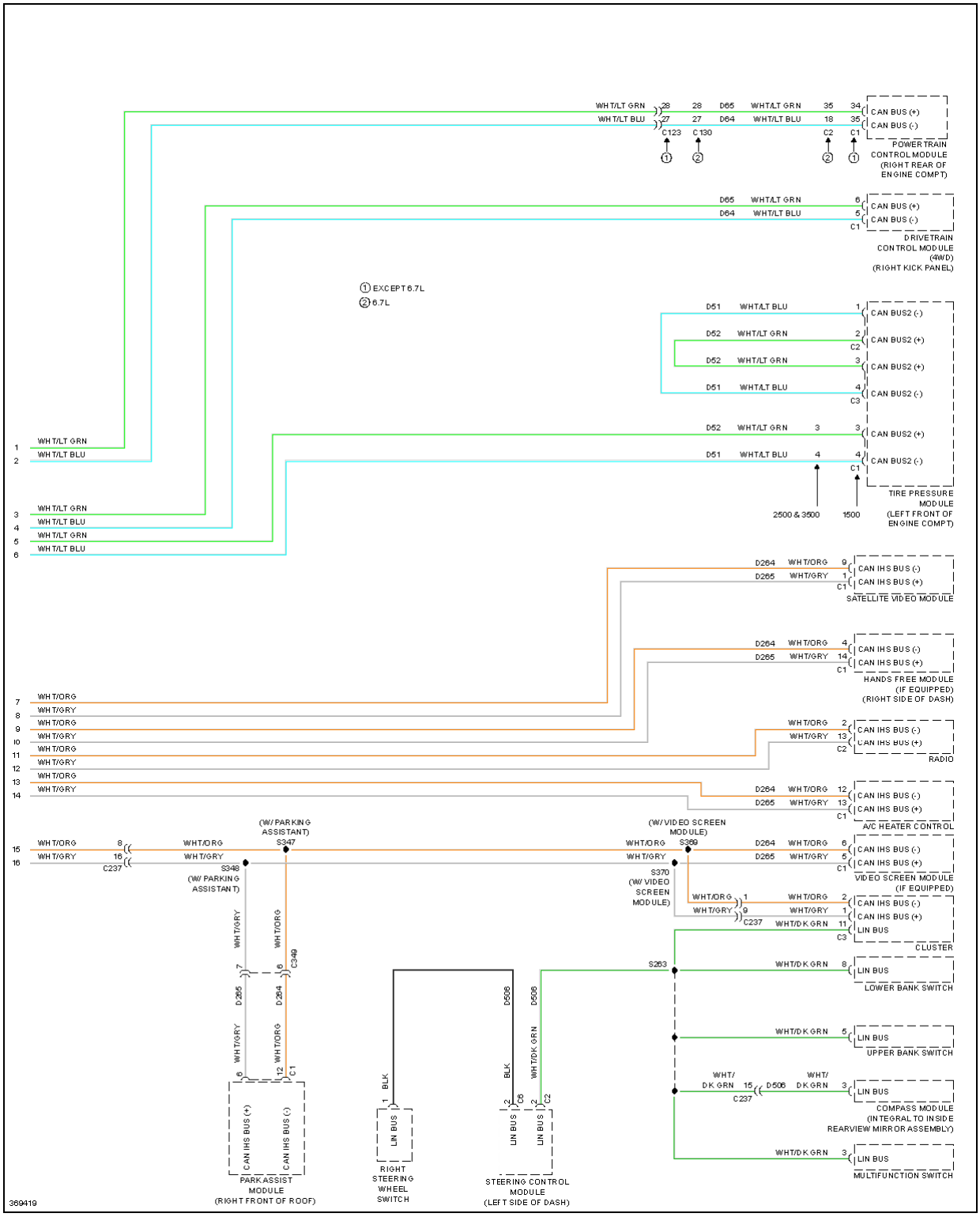

Fig. 8: Computer Data Lines Circuit (2 of 2)

COOLING FAN

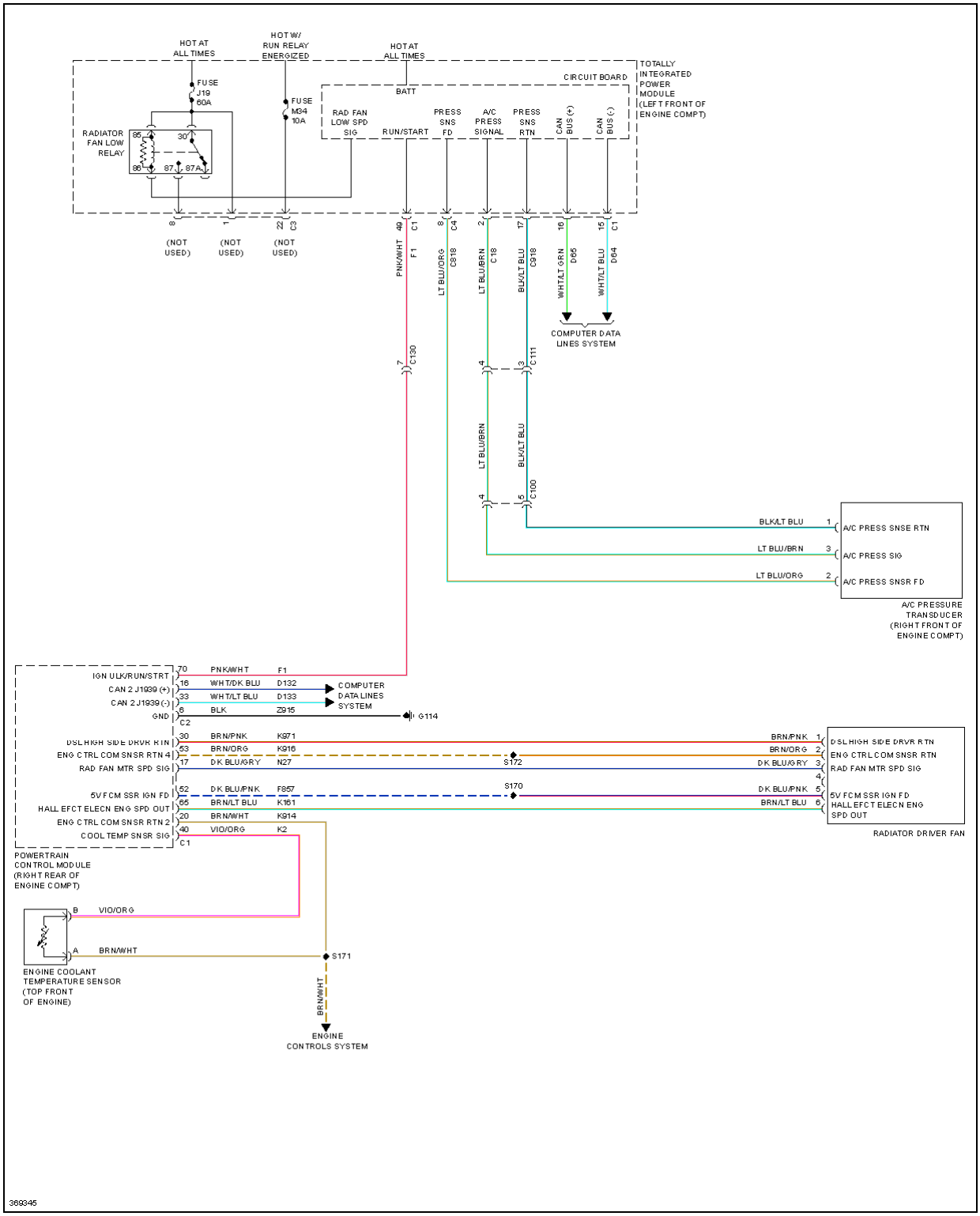

Fig. 9: Cooling Fan Circuit

CRUISE CONTROL

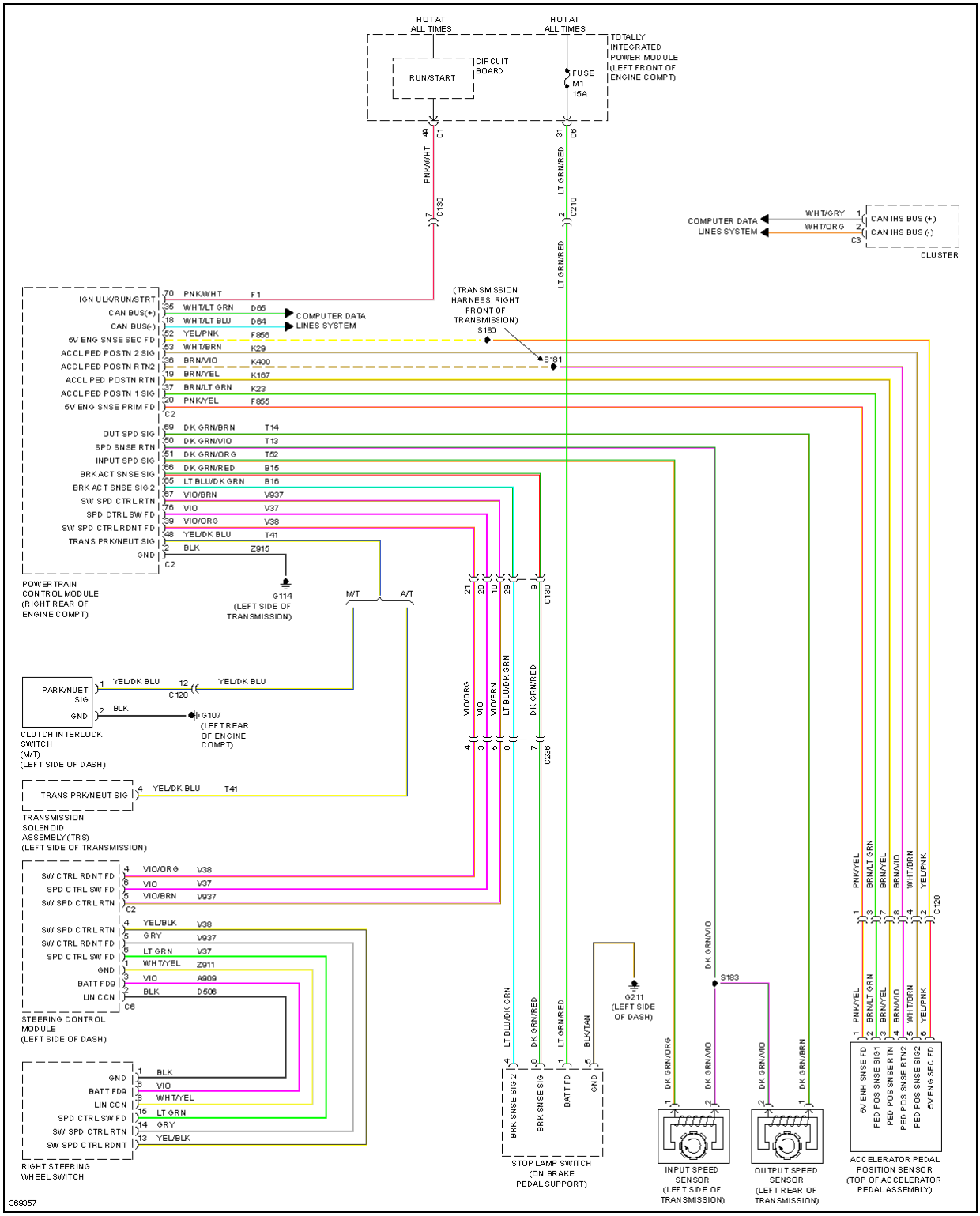

Fig. 10: Cruise Control Circuit

DEFOGGERS

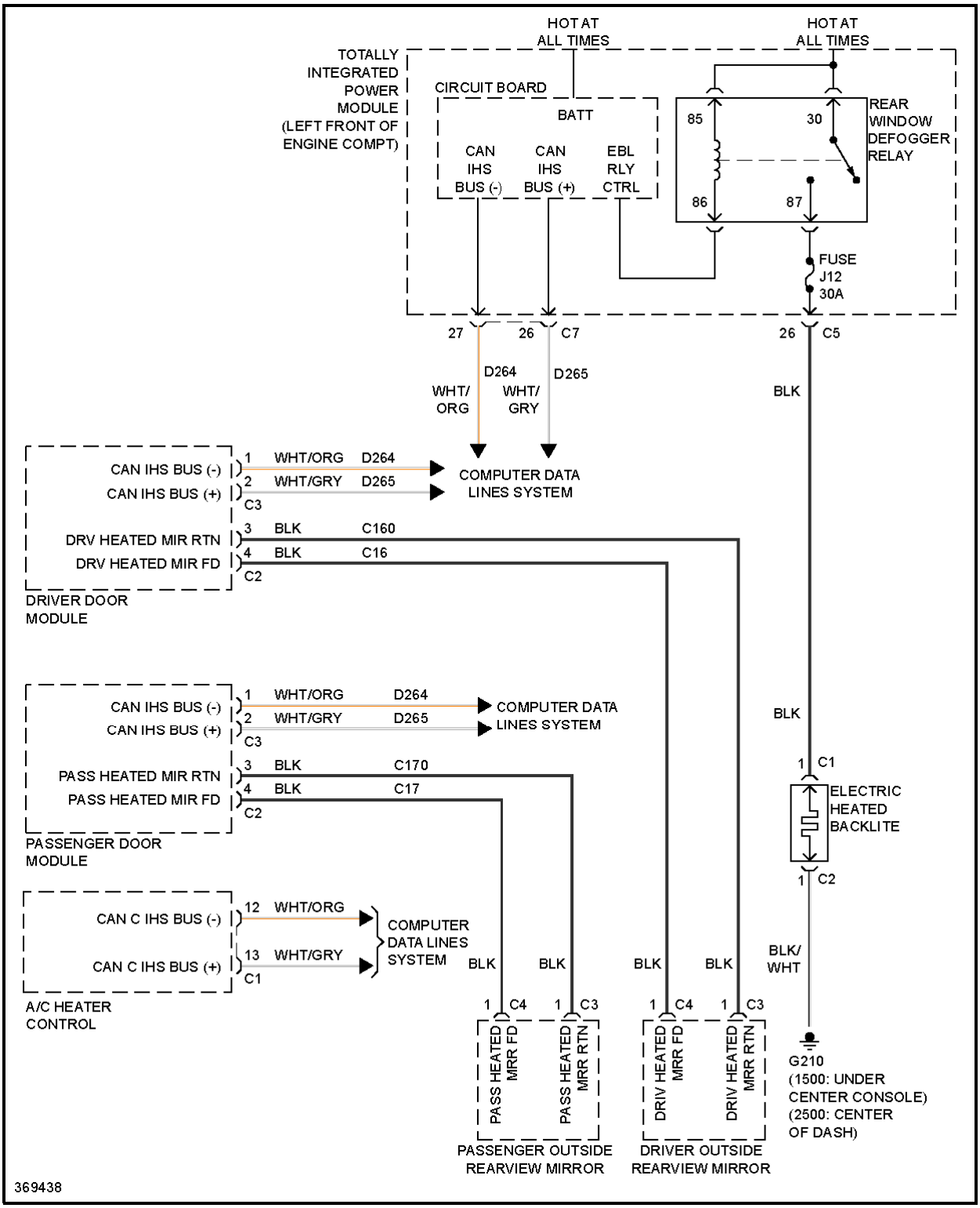

Fig. 11: Defoggers Circuit

ENGINE PERFORMANCE

6.7L TURBO DIESEL

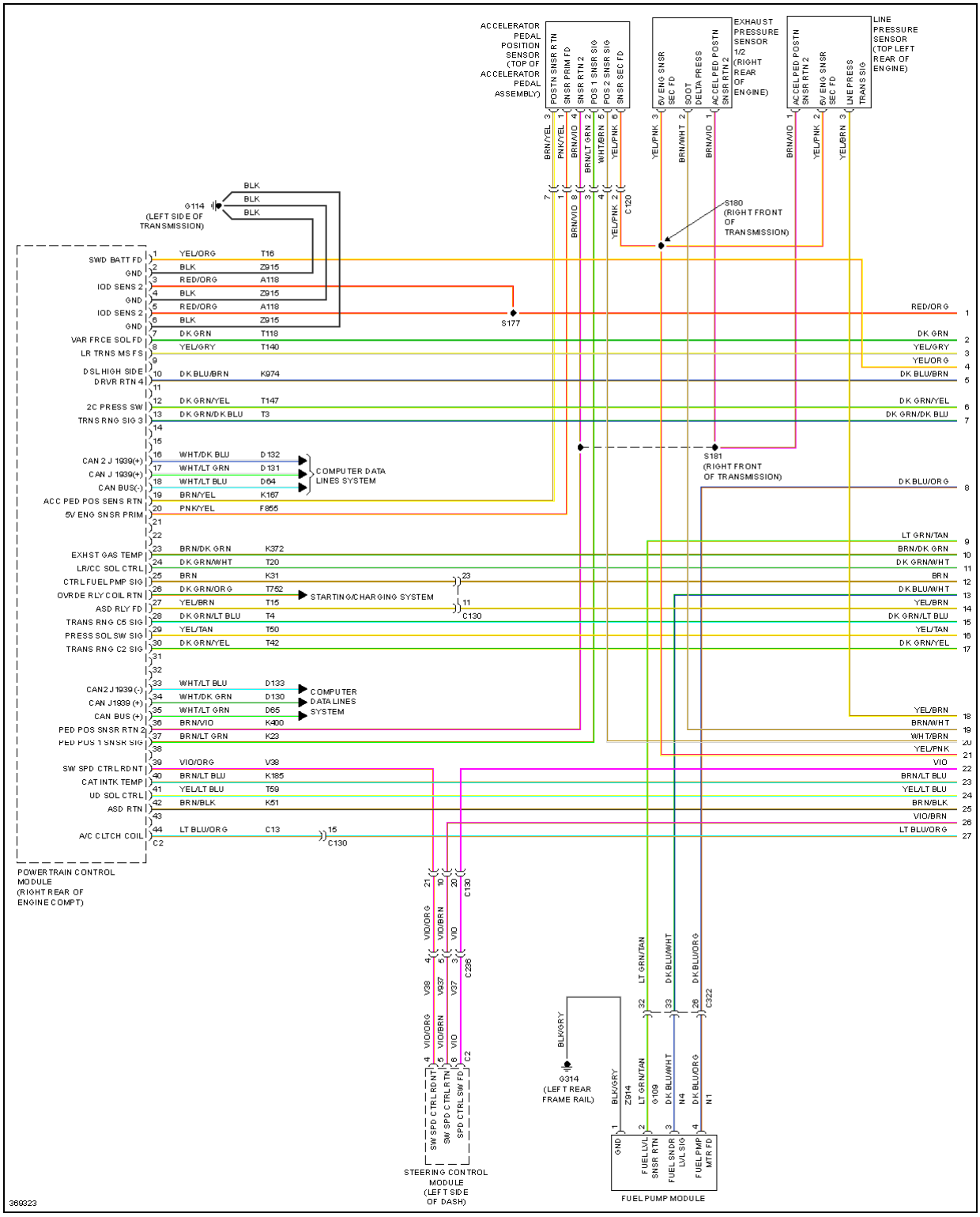

Fig. 12: 6.7L Turbo Diesel, Engine Performance Circuit (1 of 6)

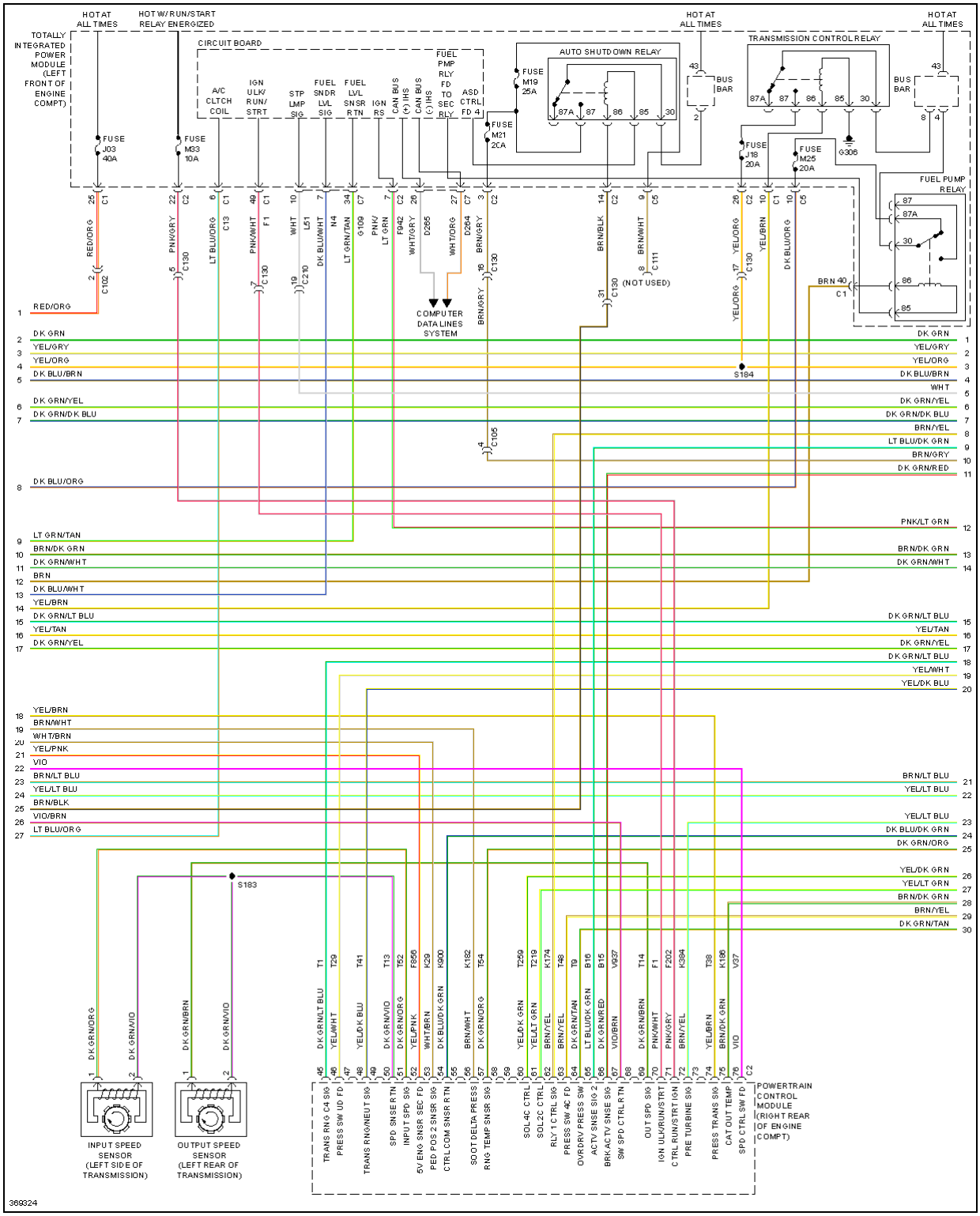

Fig. 13: 6.7L Turbo Diesel, Engine Performance Circuit (2 of 6)

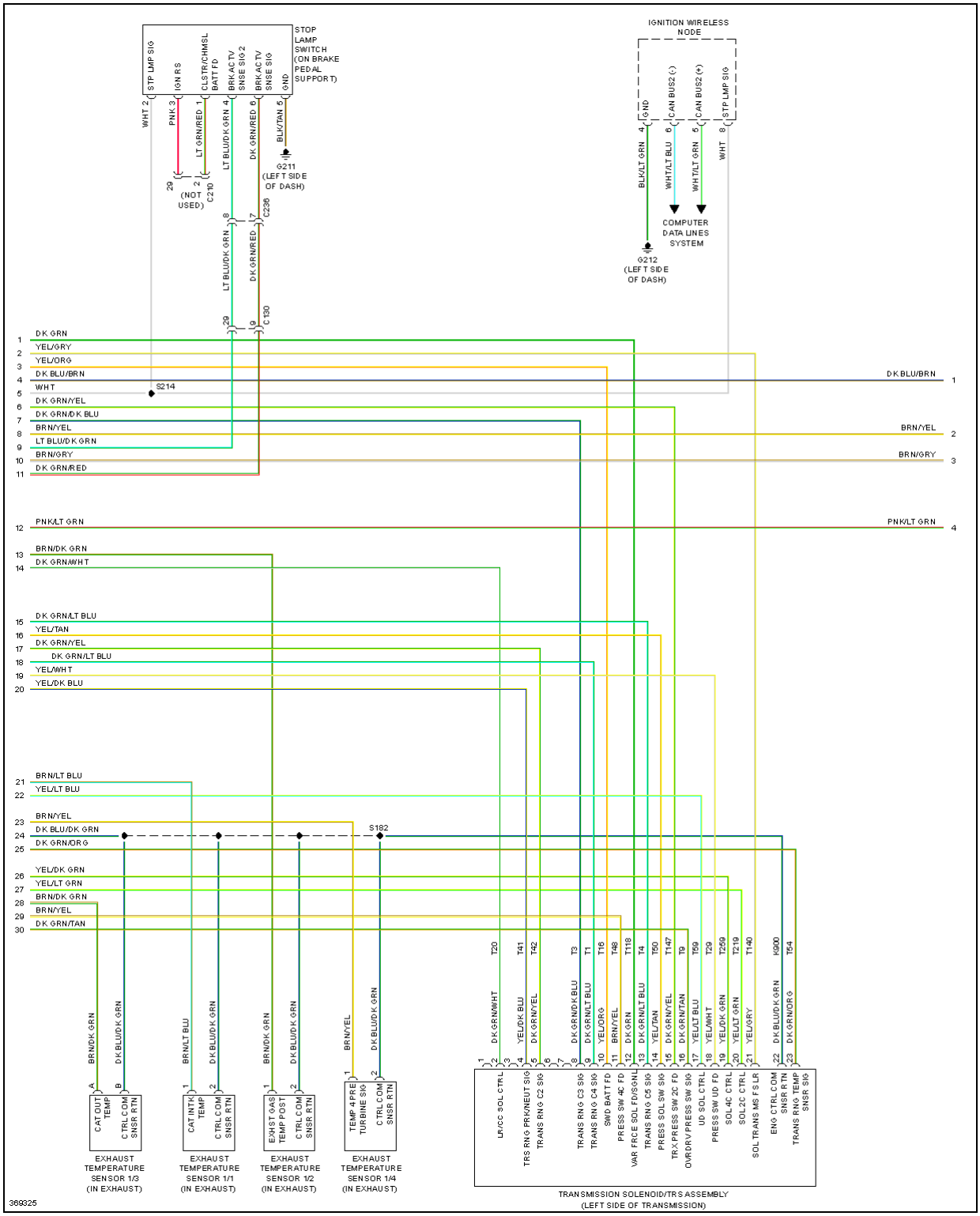

Fig. 14: 6.7L Turbo Diesel, Engine Performance Circuit (3 of 6)

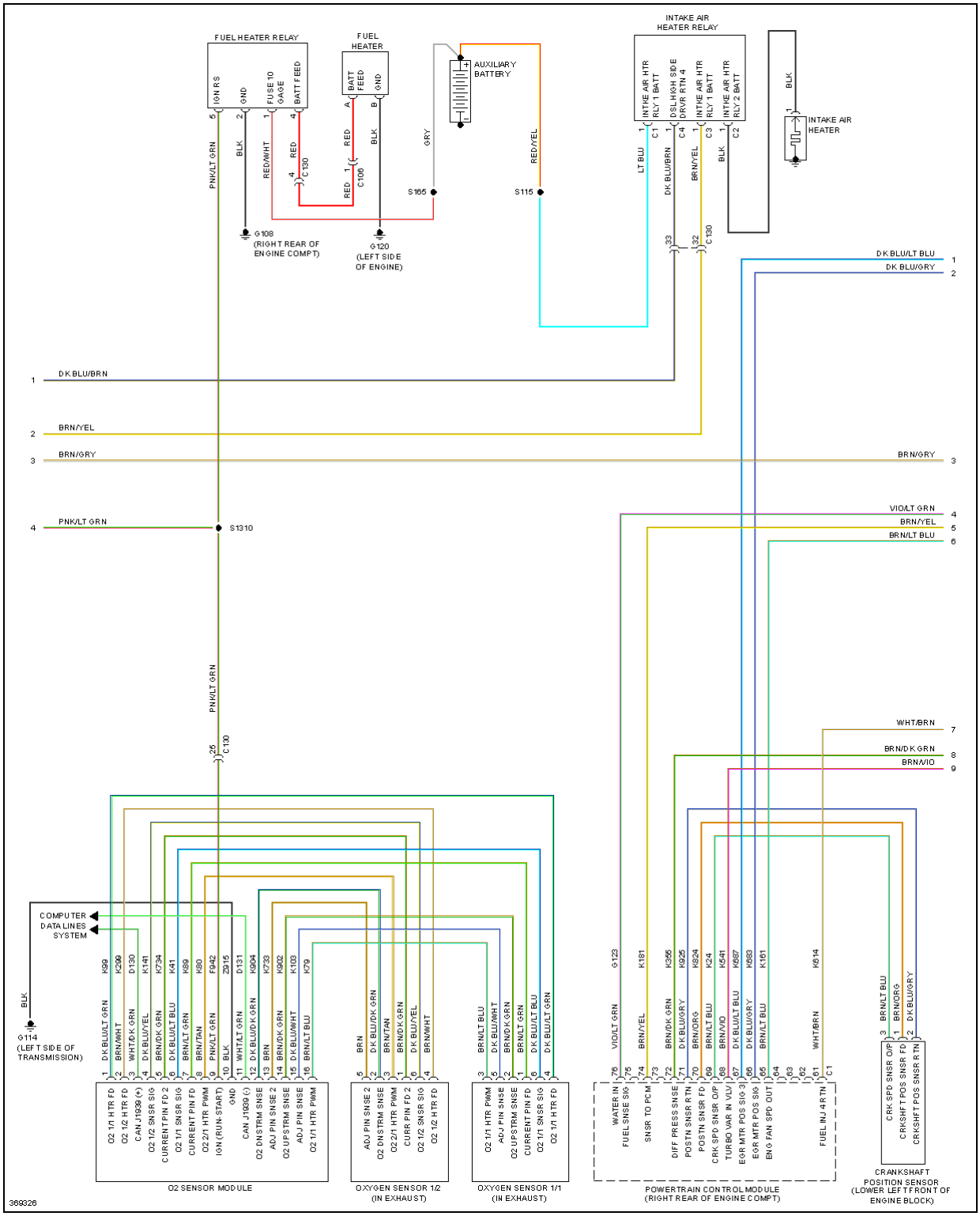

Fig. 15: 6.7L Turbo Diesel, Engine Performance Circuit (4 of 6)

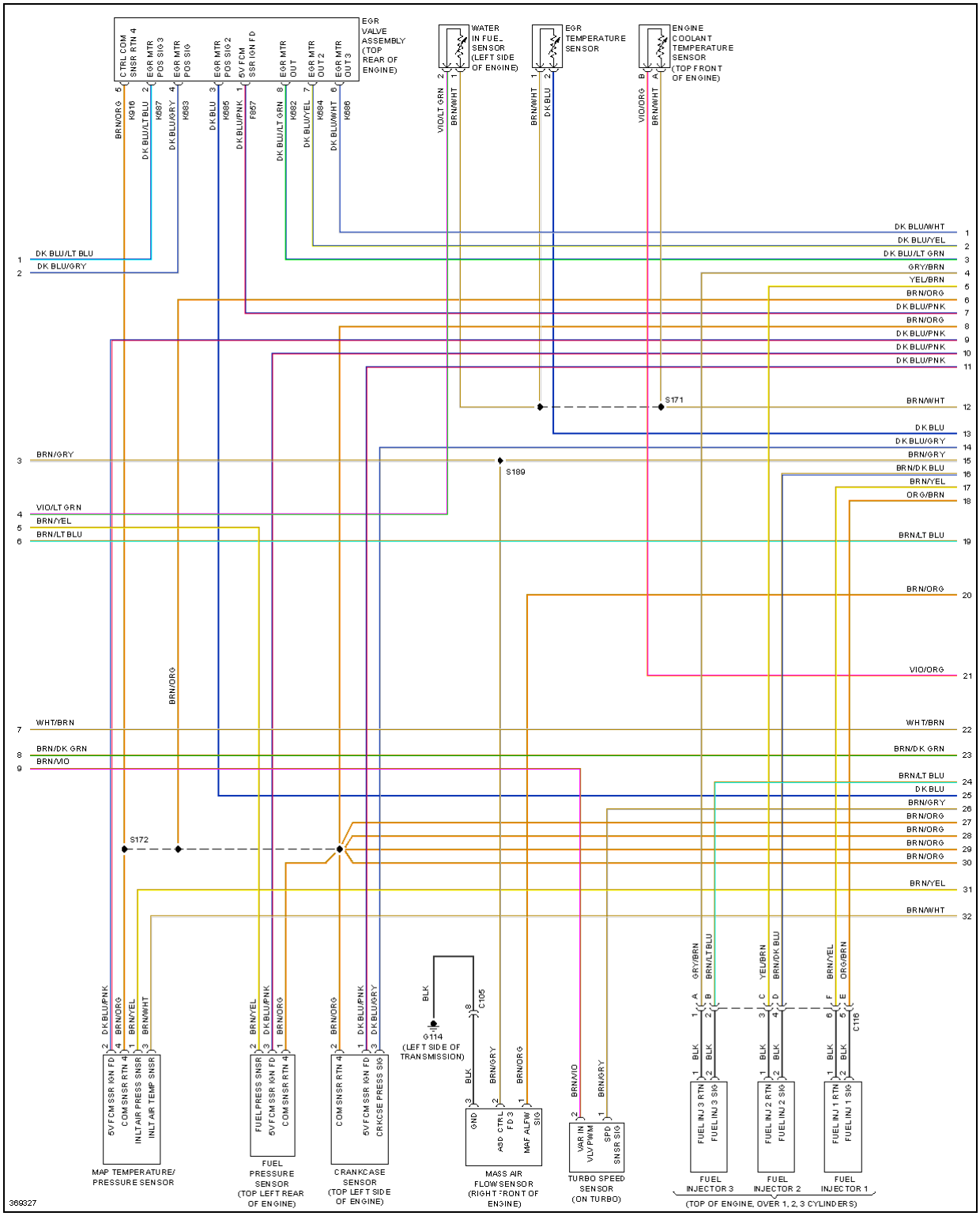

Fig. 16: 6.7L Turbo Diesel, Engine Performance Circuit (5 of 6)

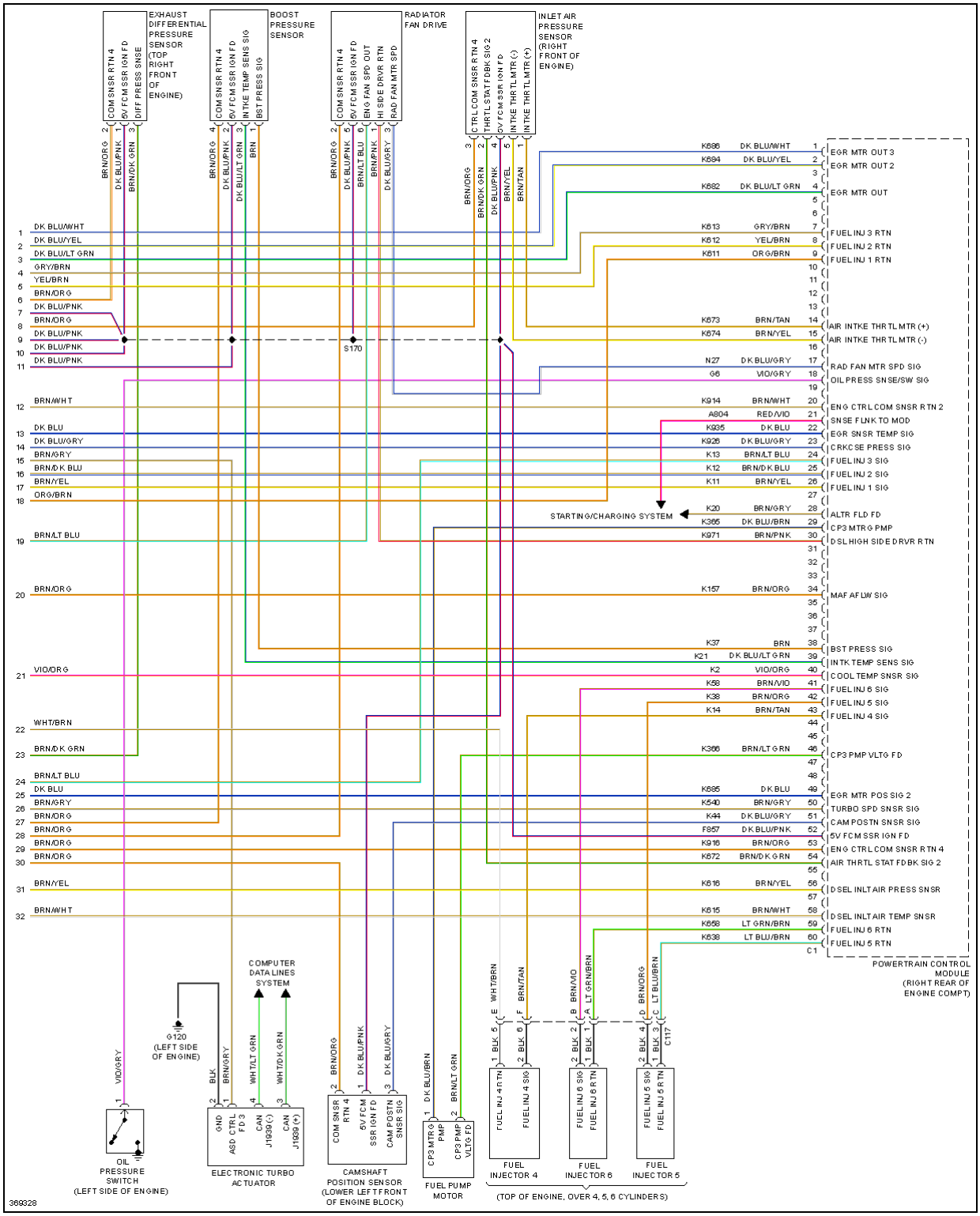

Fig. 17: 6.7L Turbo Diesel, Engine Performance Circuit (6 of 6)

EXTERIOR LIGHTS

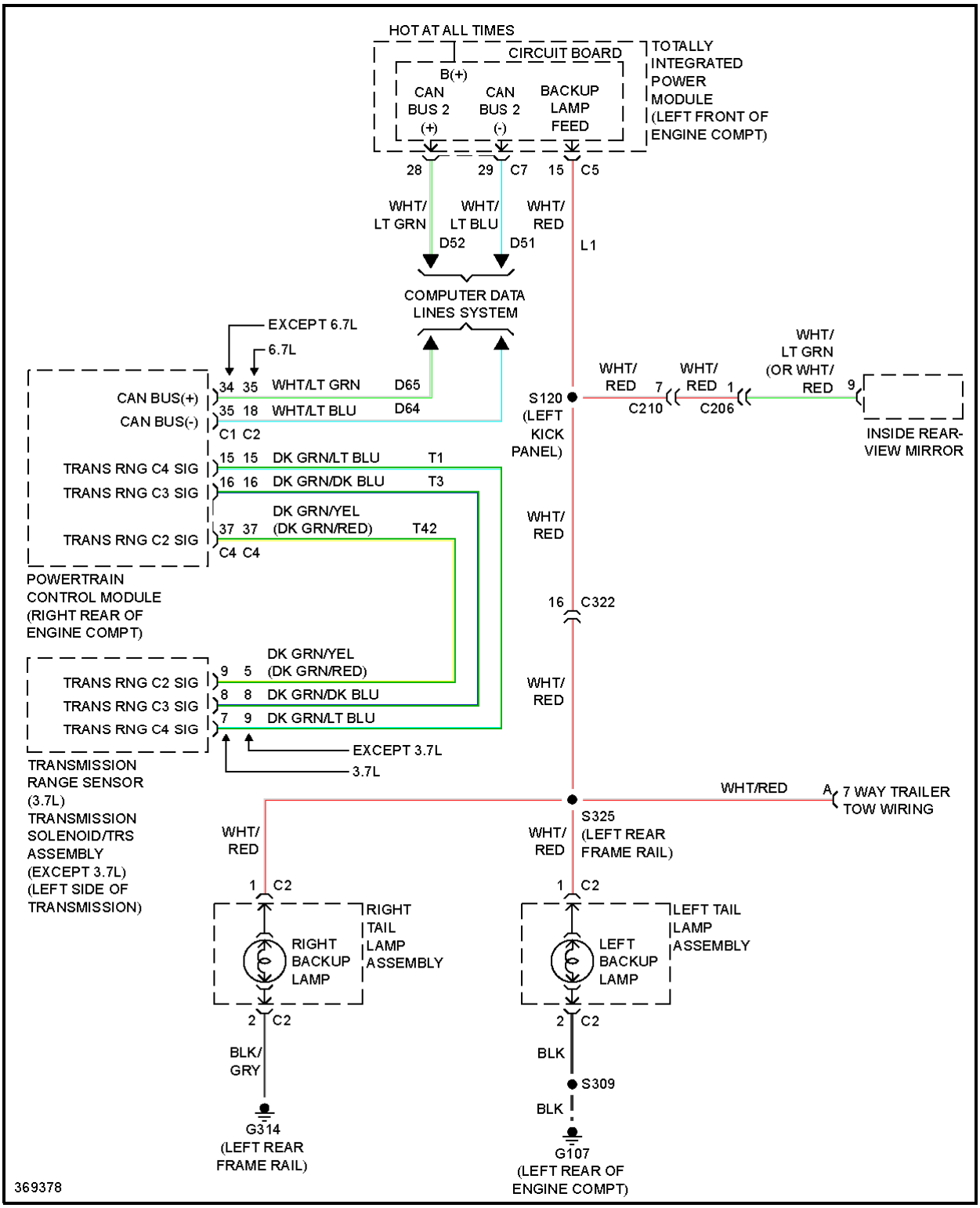

Fig. 18: Backup Lamps Circuit

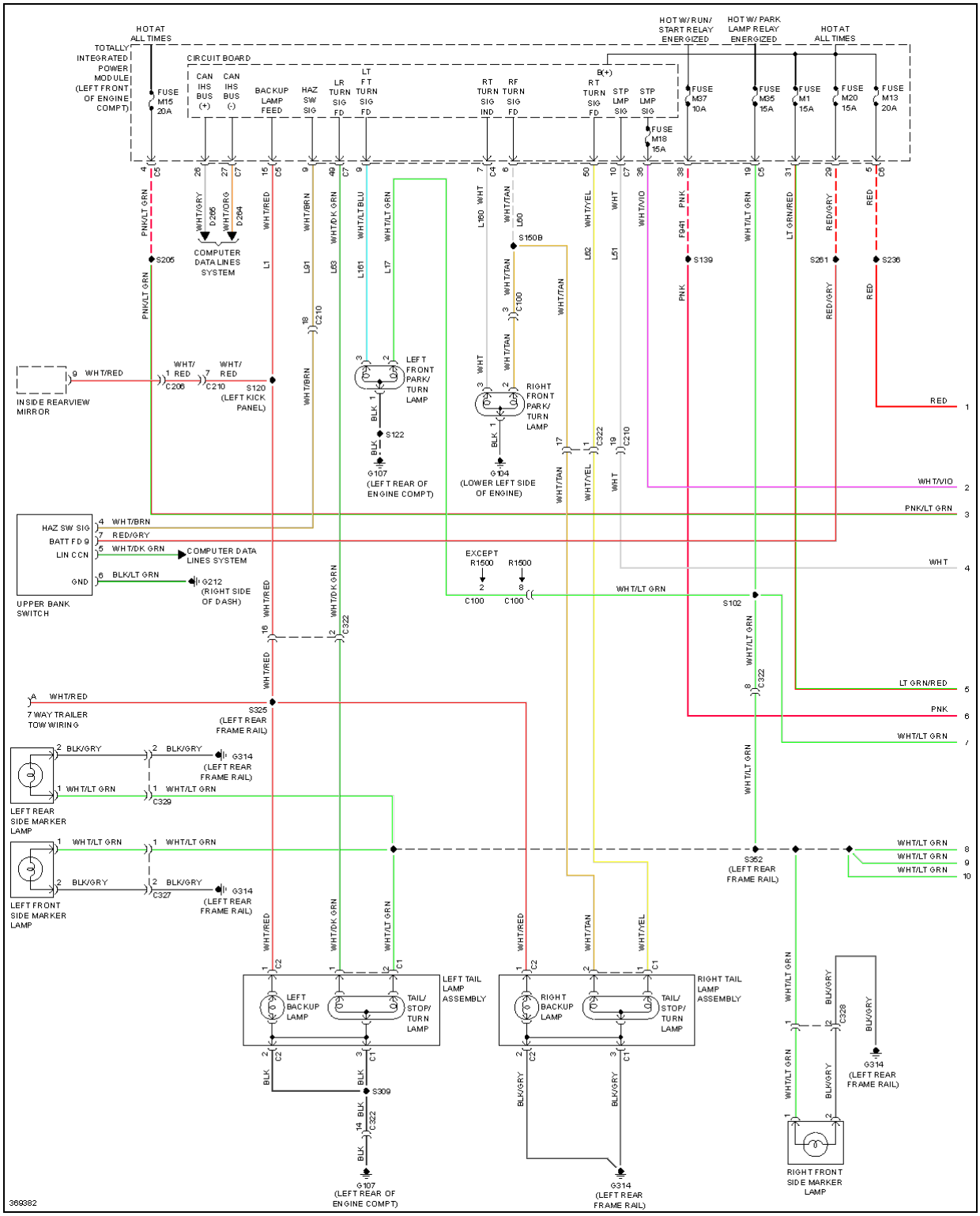

Fig. 19: Exterior Lamps Circuit (1 of 2)

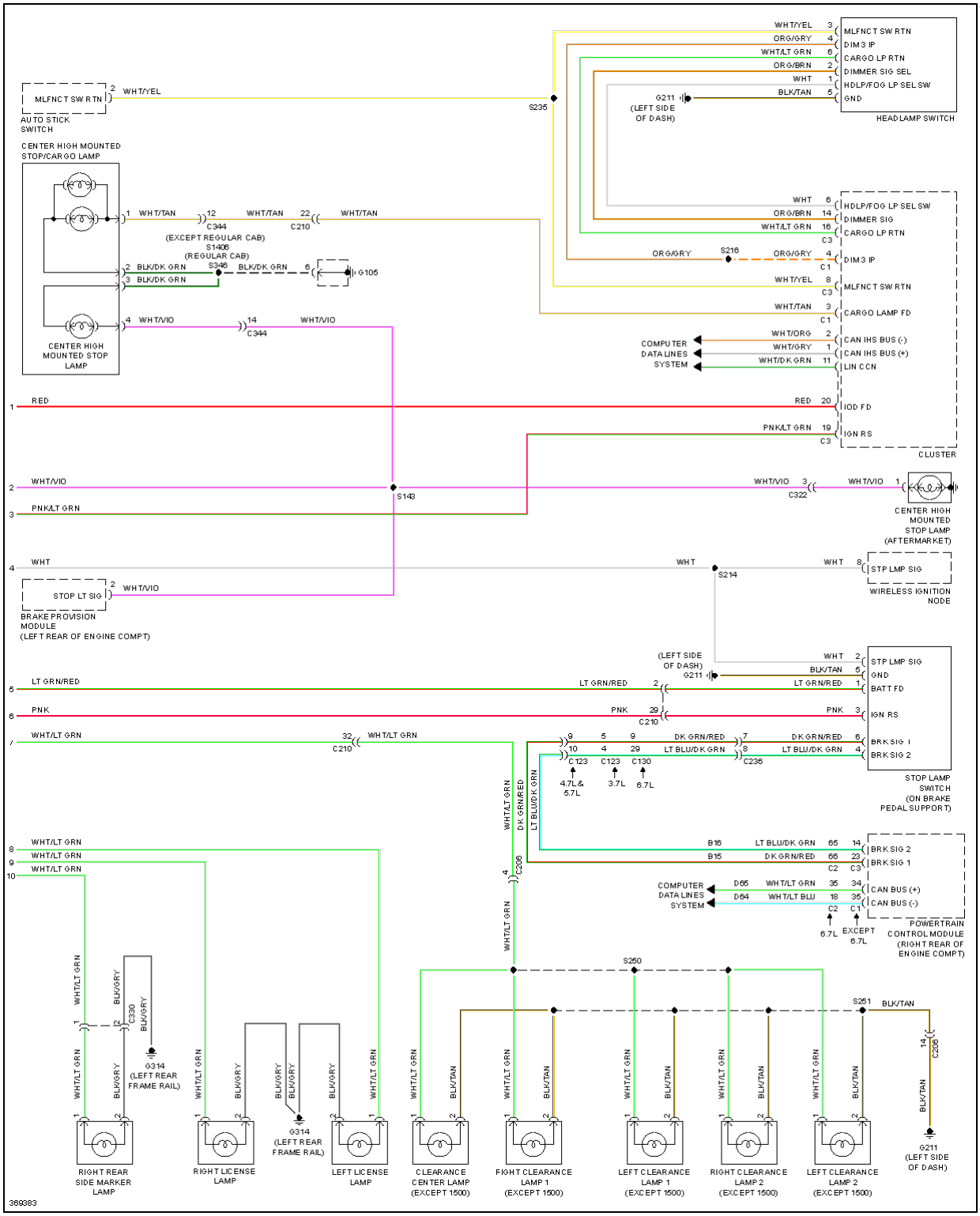

Fig. 20: Exterior Lamps Circuit (2 of 2)

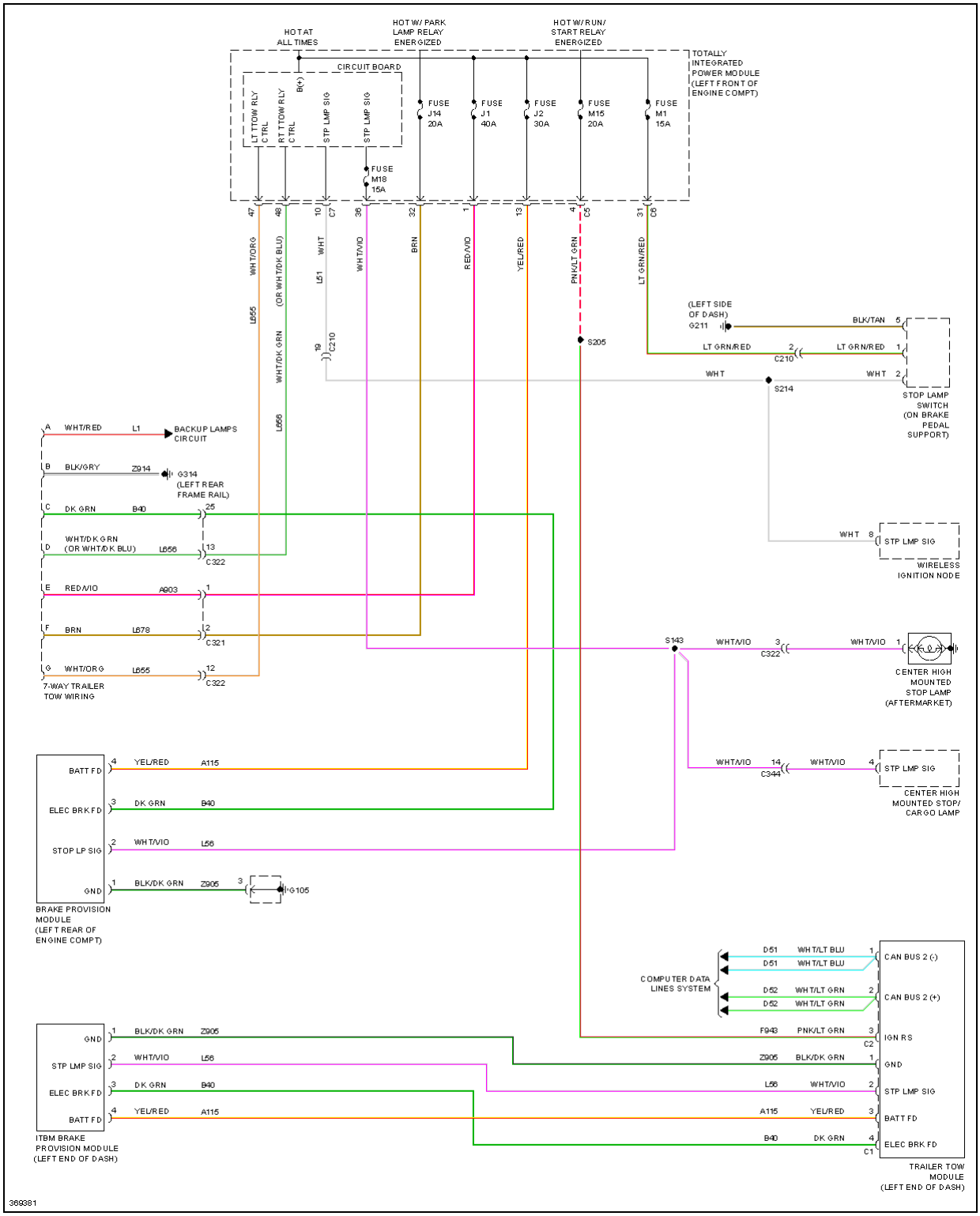

Fig. 21: Trailer Tow Circuit

GROUND DISTRIBUTION

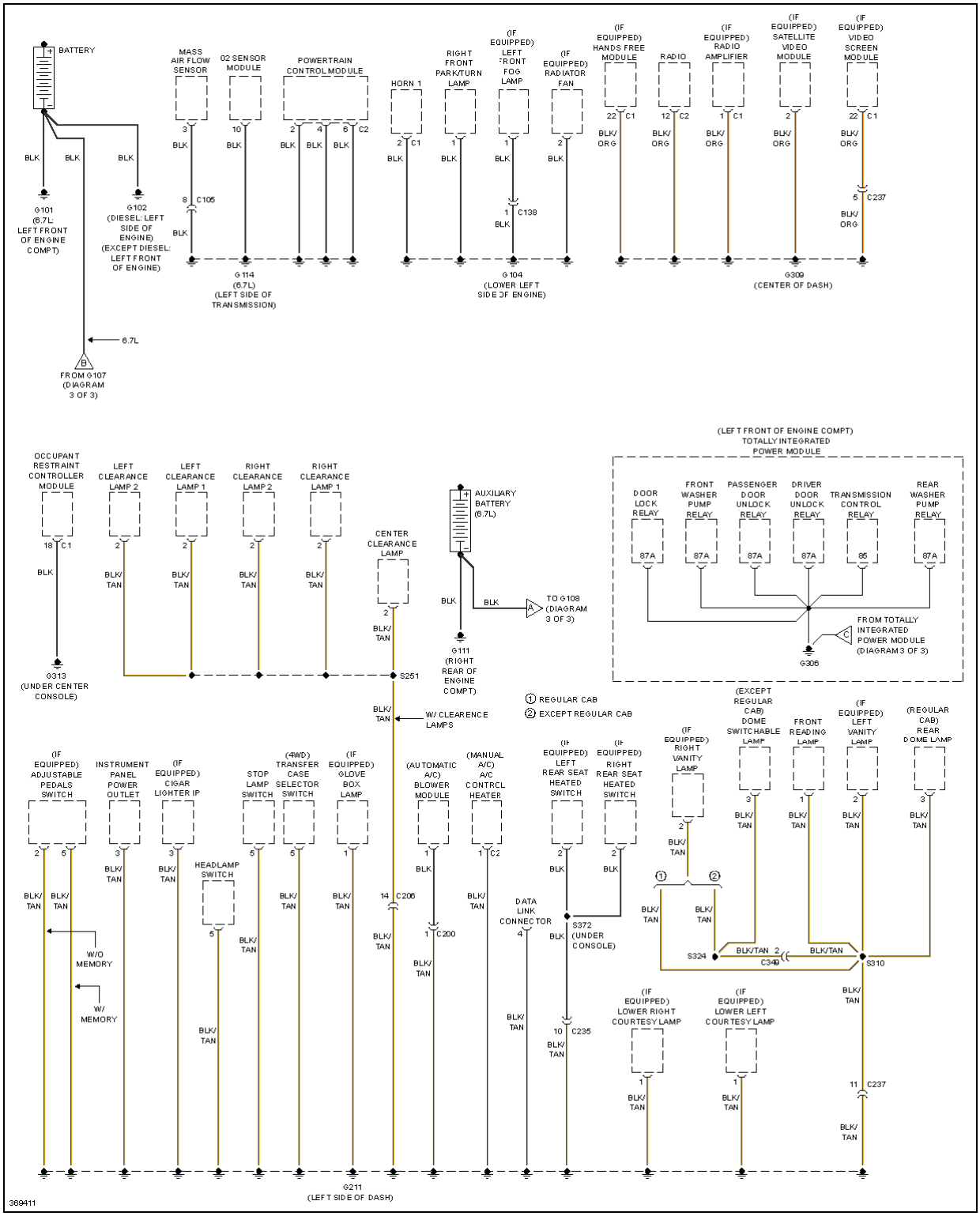

Fig. 22: Ground Distribution Circuit (1 of 3)

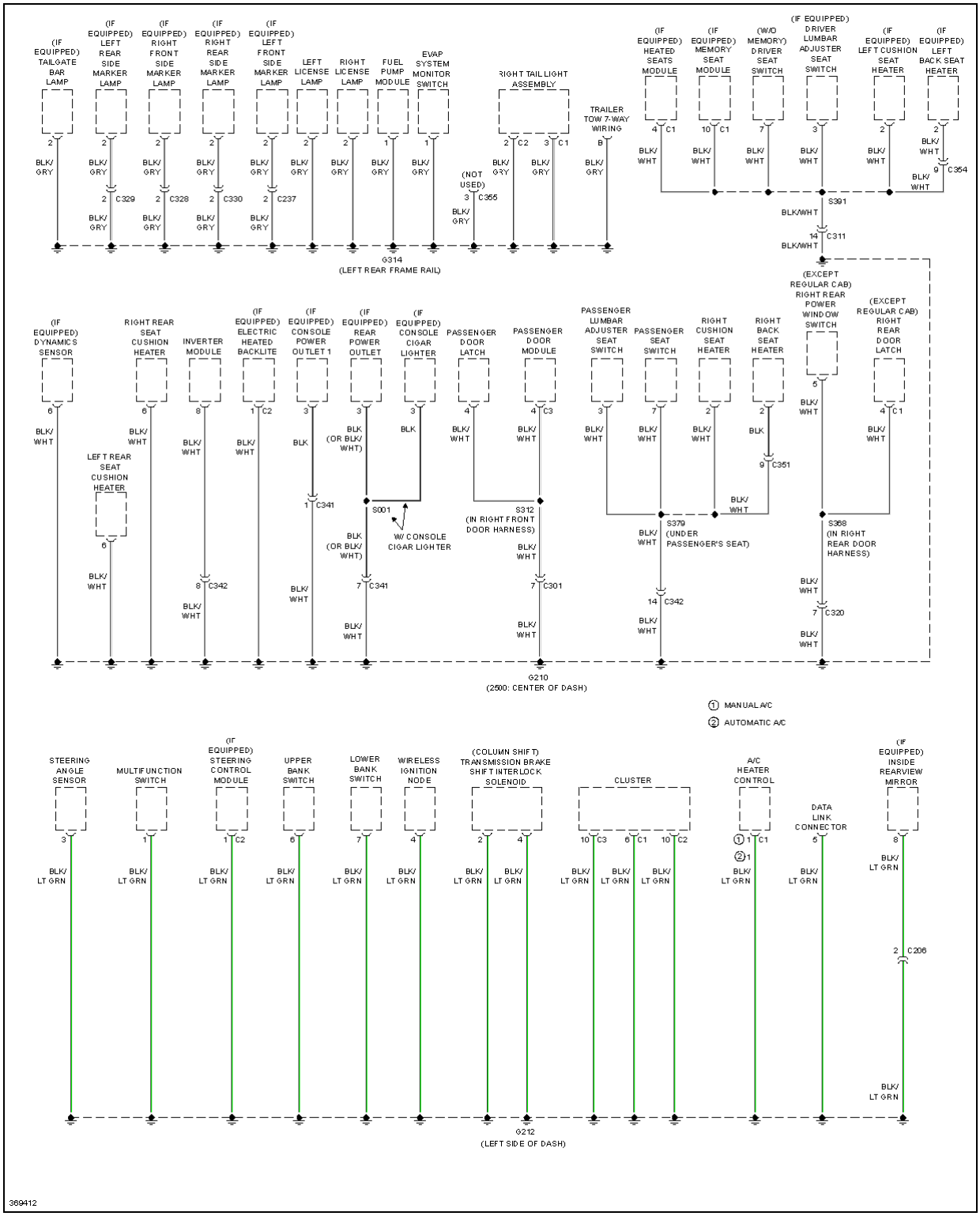

Fig. 23: Ground Distribution Circuit (2 of 3)

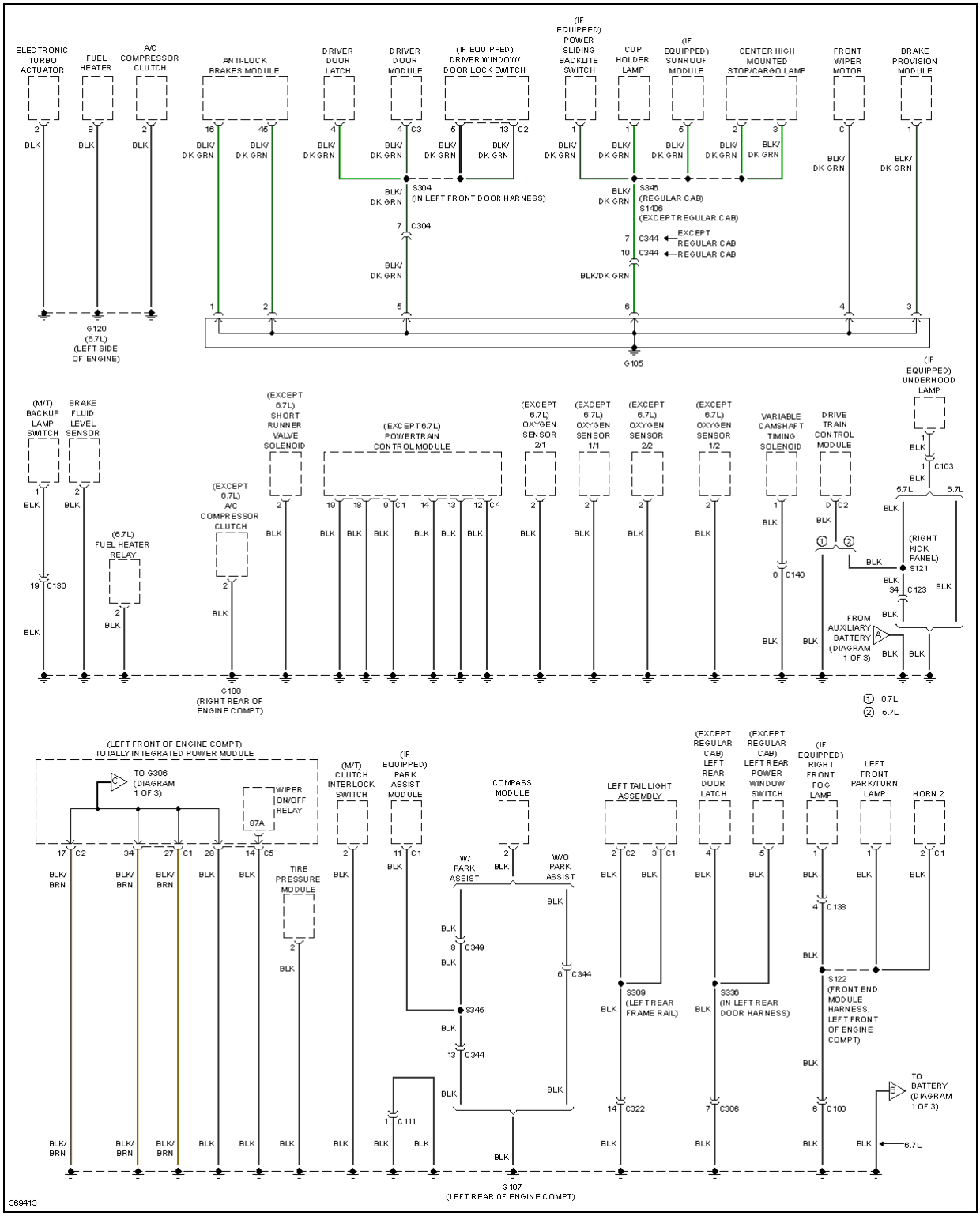

Fig. 24: Ground Distribution Circuit (3 of 3)

HEADLIGHTS

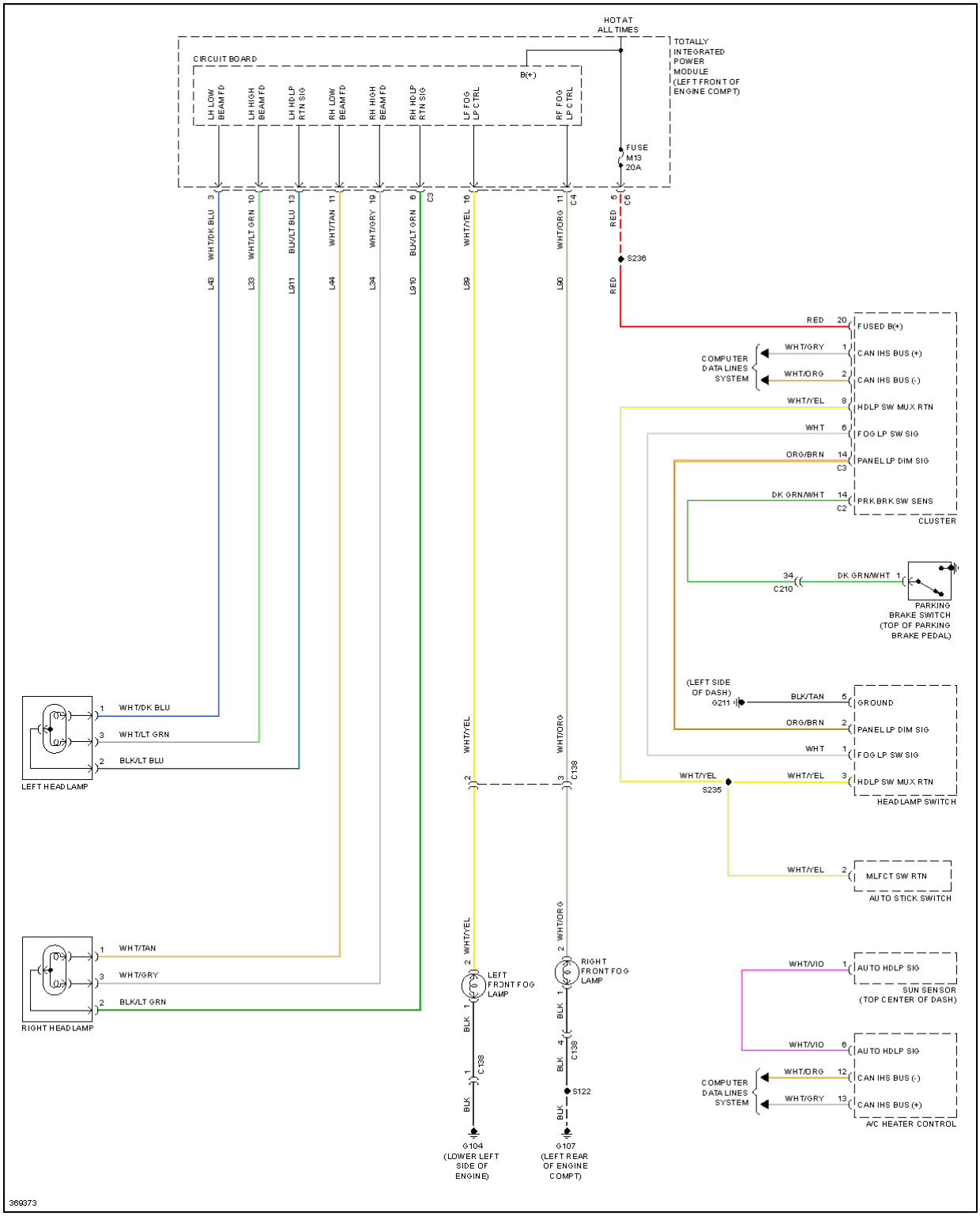

Fig. 25: Headlights Circuit

HORN

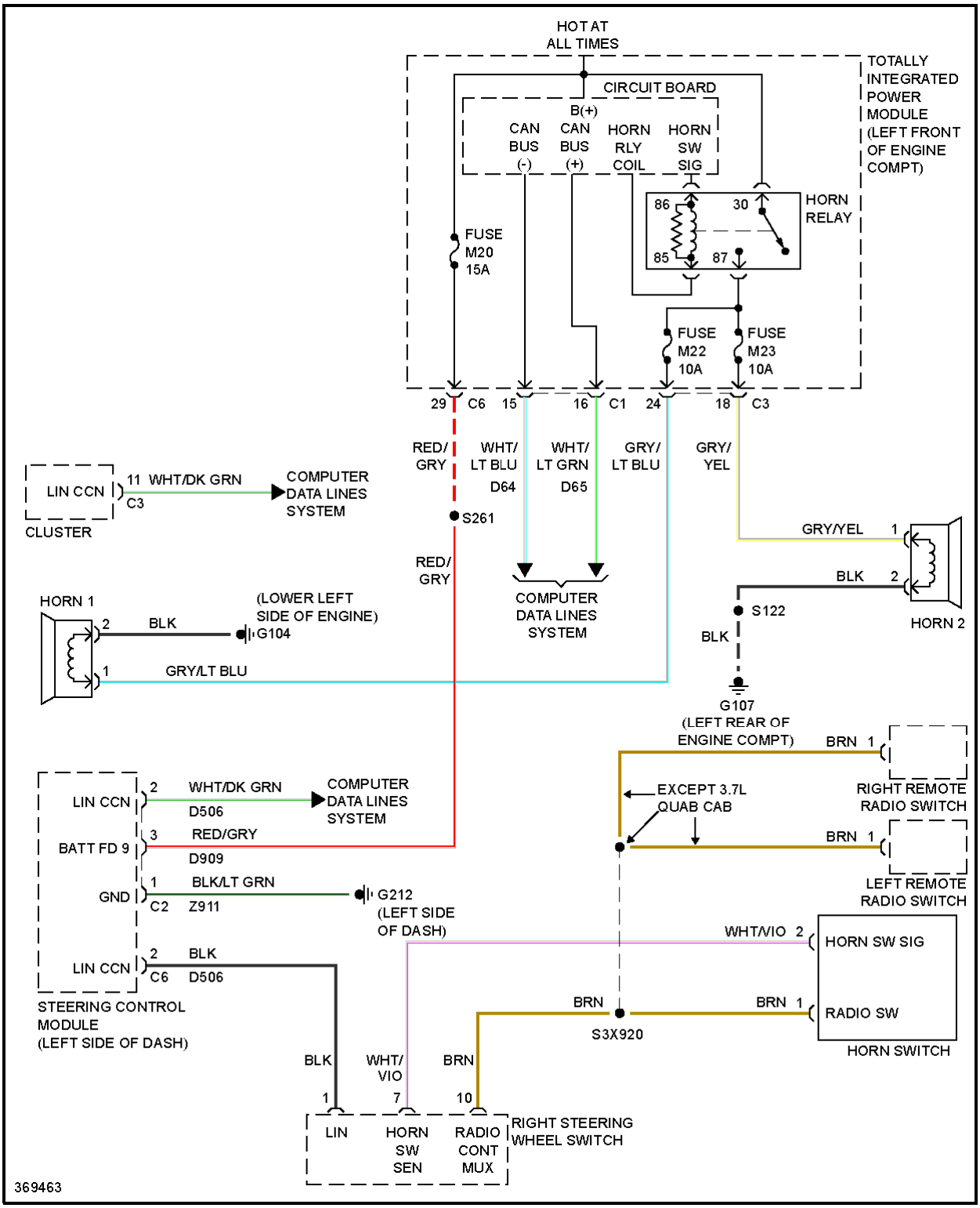

Fig. 26: Horn Circuit

INSTRUMENT CLUSTER

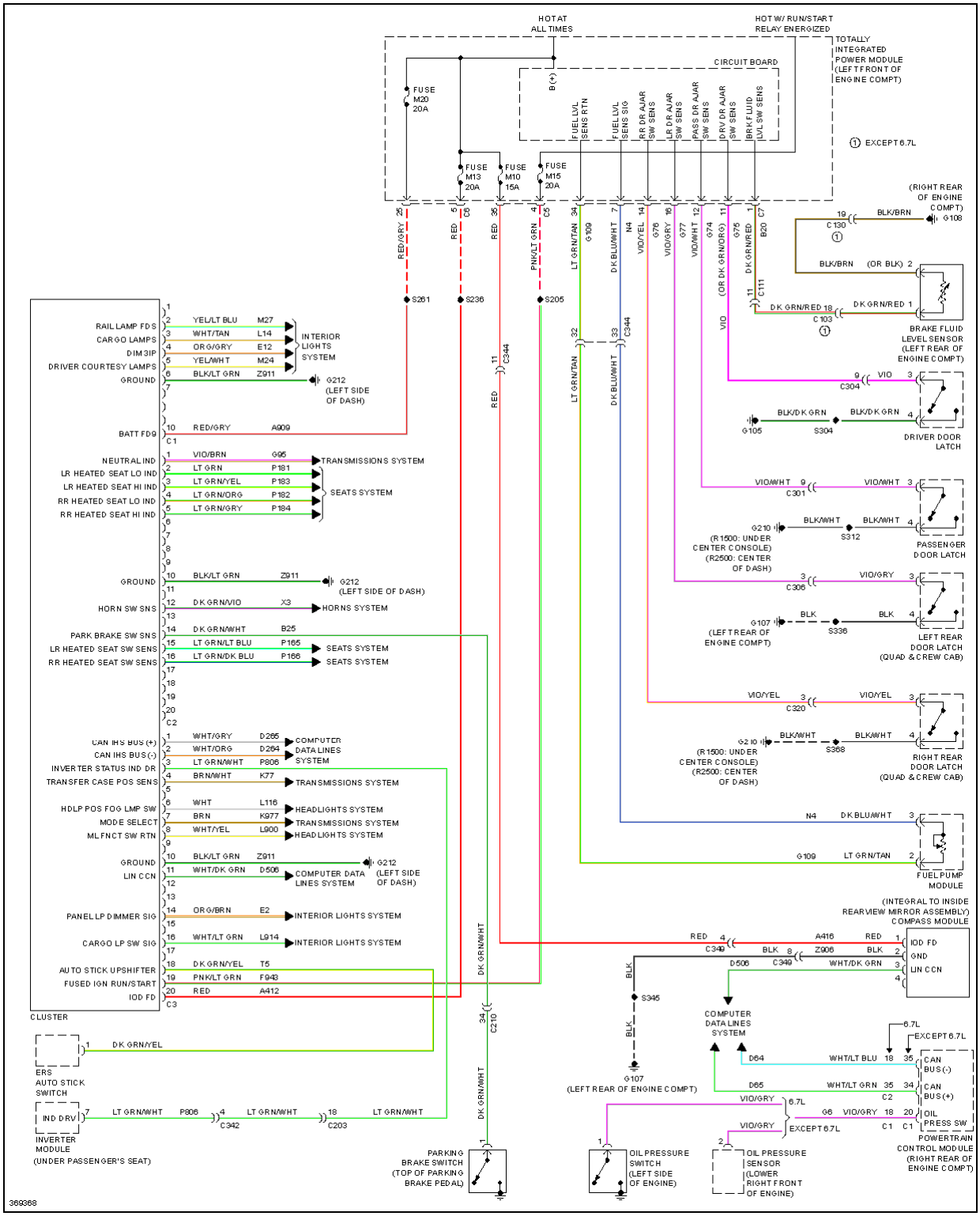

Fig. 27: Instrument Cluster Circuit

INTERIOR LIGHTS

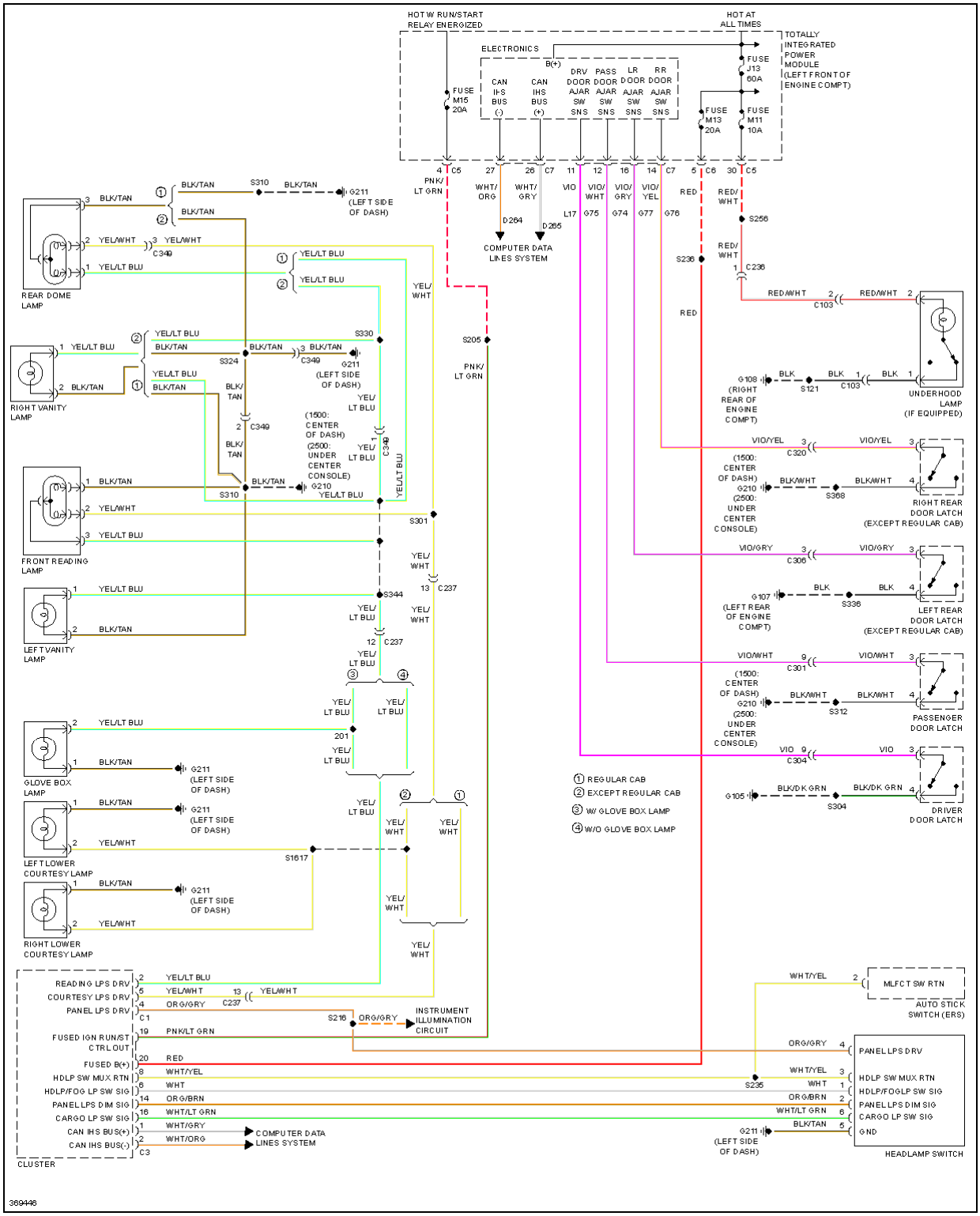

Fig. 28: Courtesy Lamps Circuit

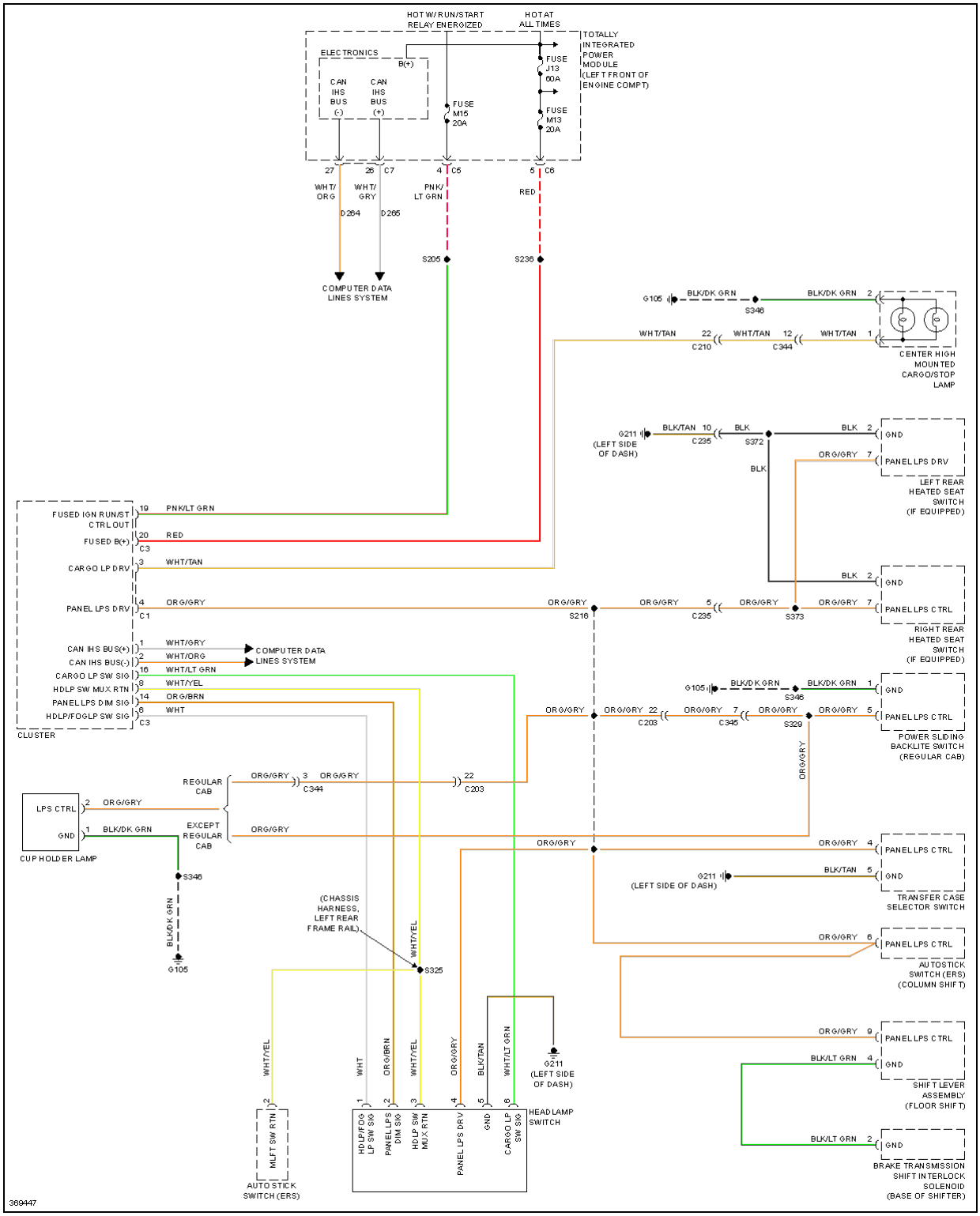

Fig. 29: Instrument Illumination Circuit

MEMORY SYSTEMS

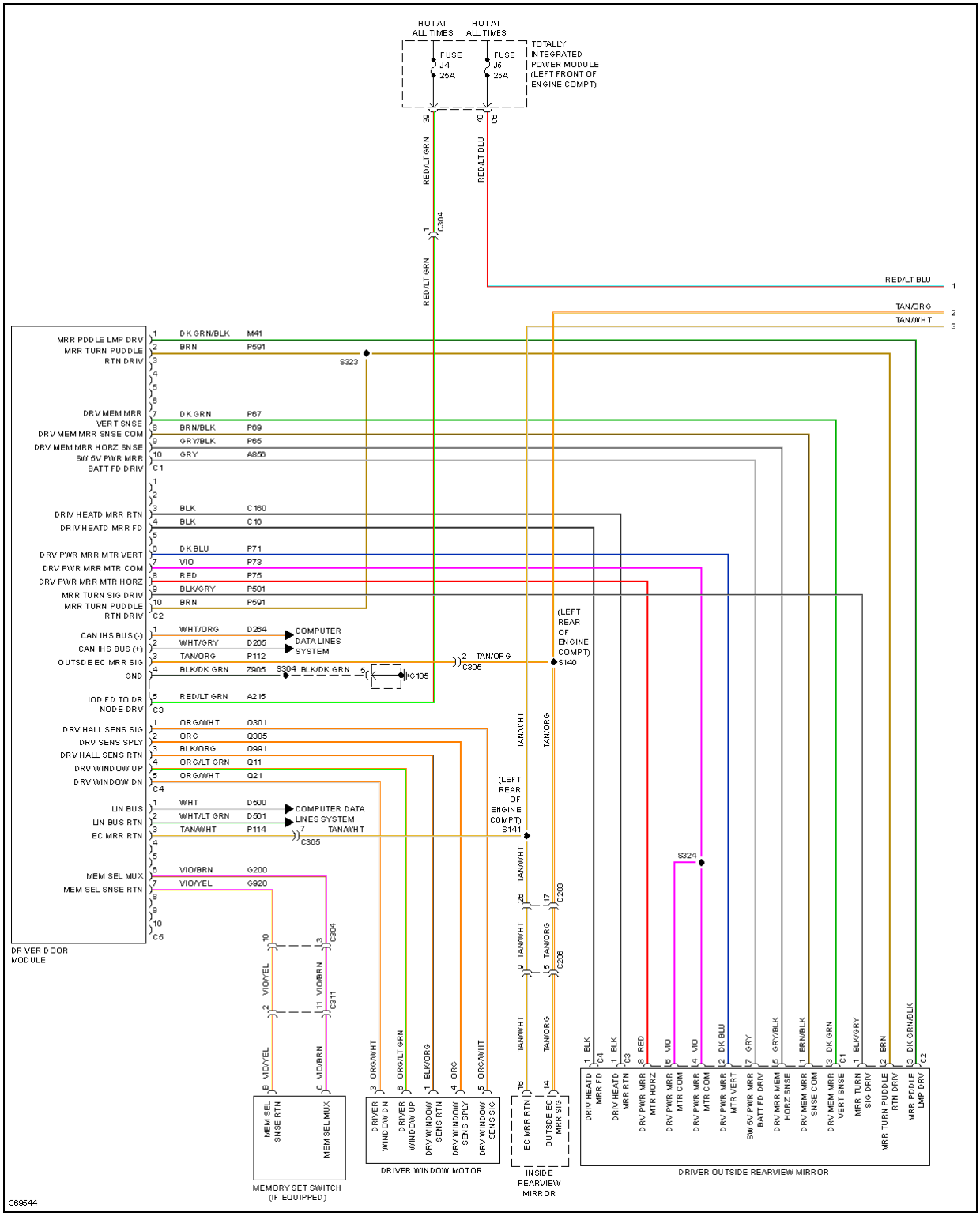

Fig. 30: Memory Mirrors Circuit (1 of 2)

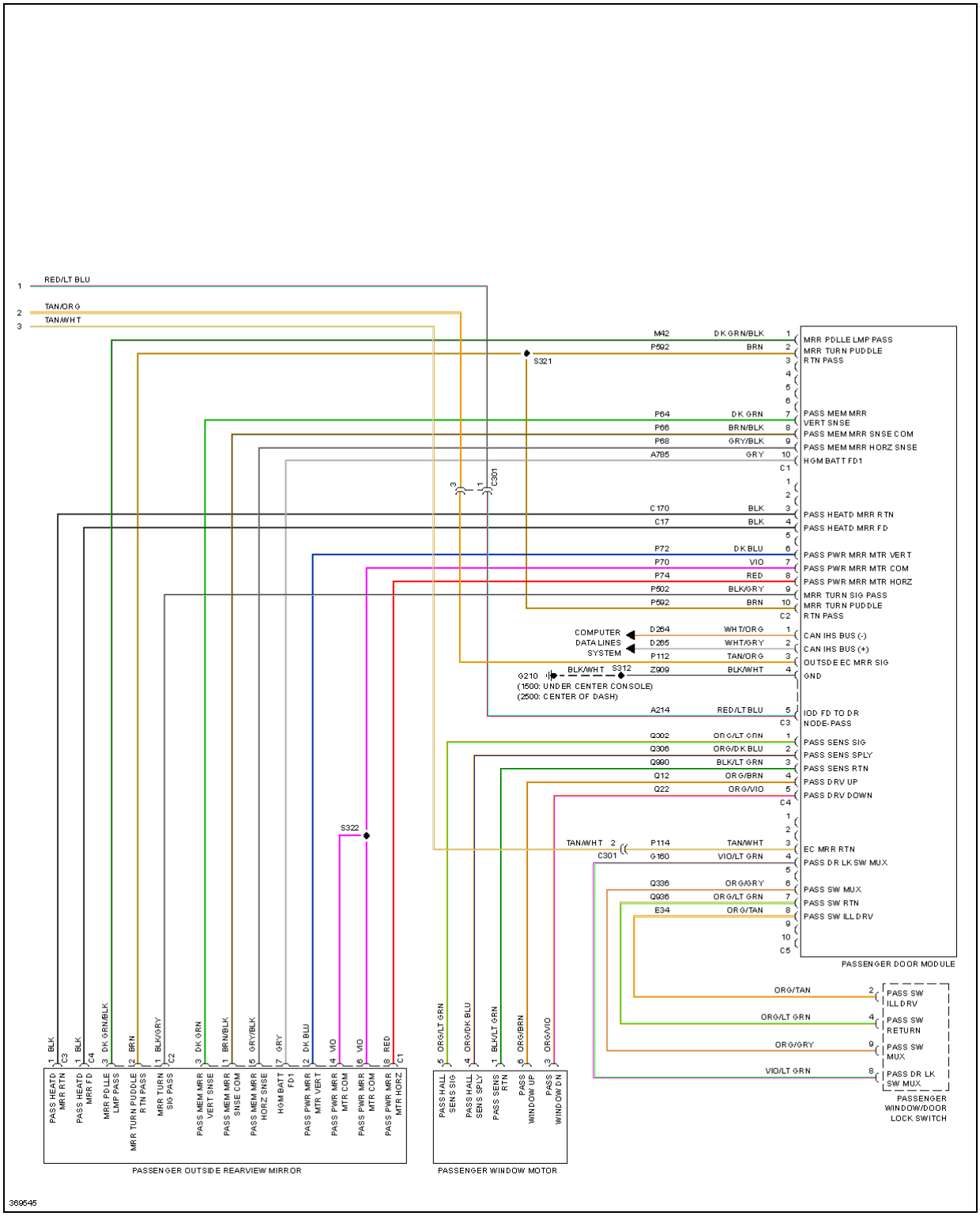

Fig. 31: Memory Mirrors Circuit (2 of 2)

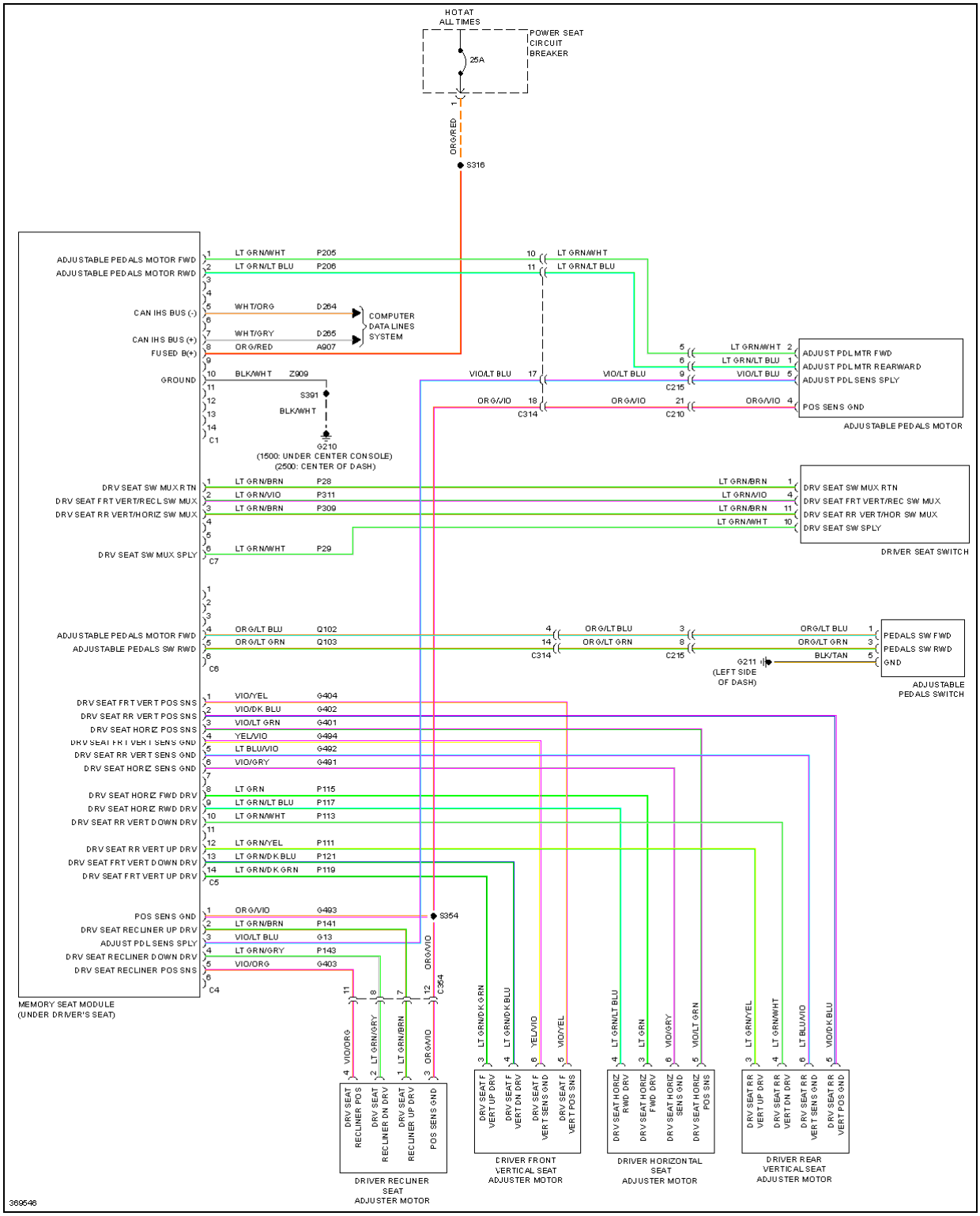

Fig. 32: Memory Seat Circuit

NAVIGATION

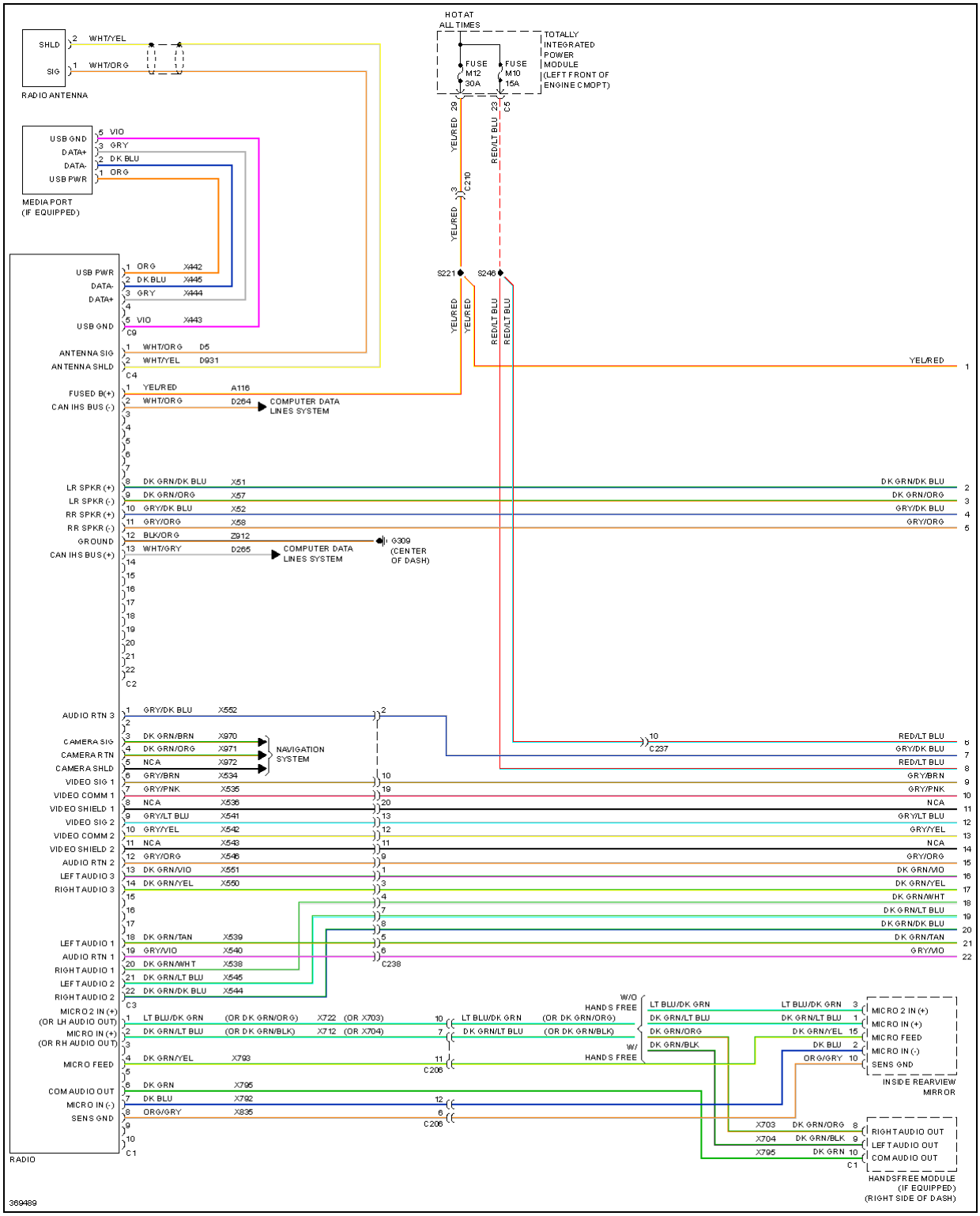

Fig. 33: Navigation Circuit (1 of 3)

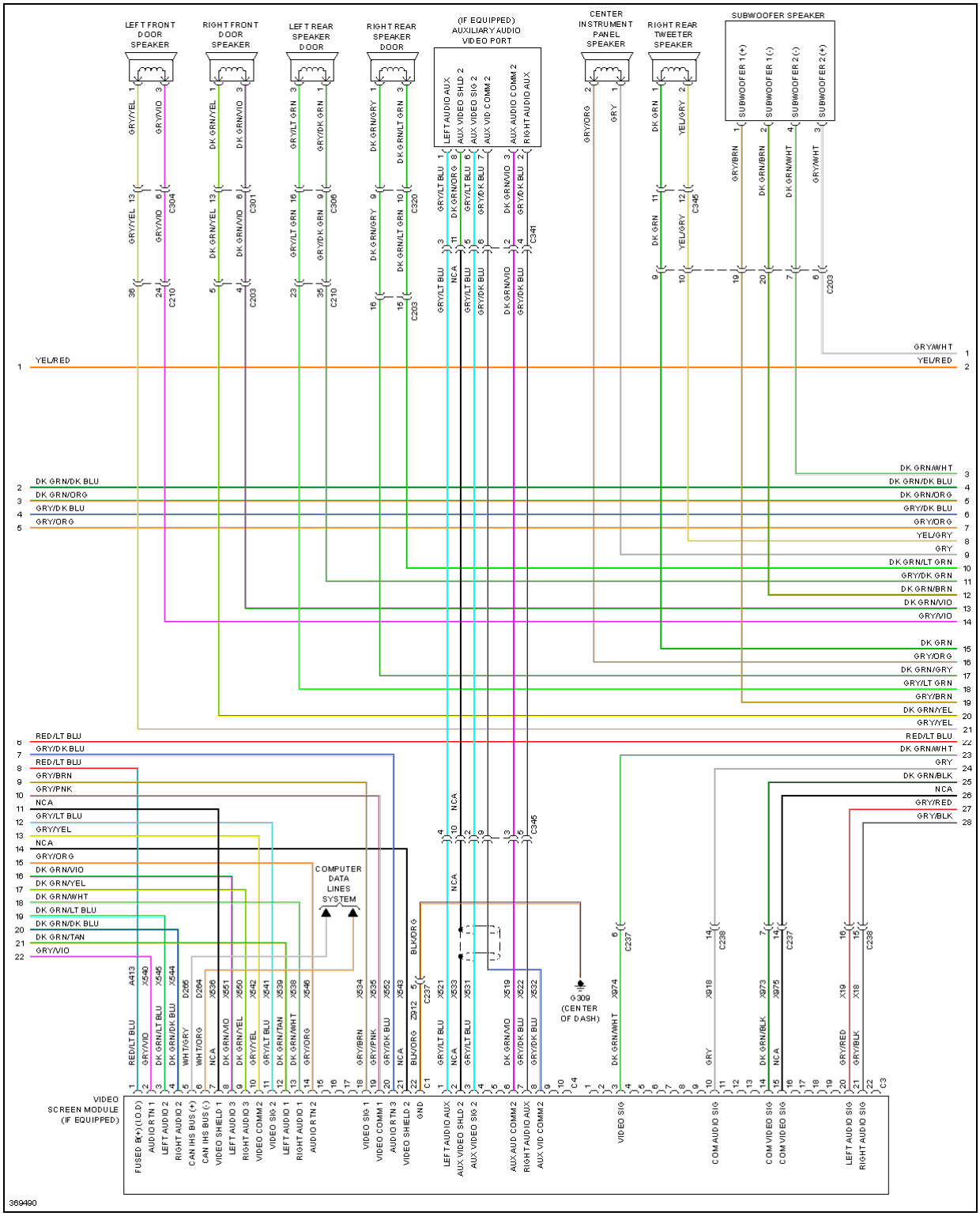

Fig. 34: Navigation Circuit (2 of 3)

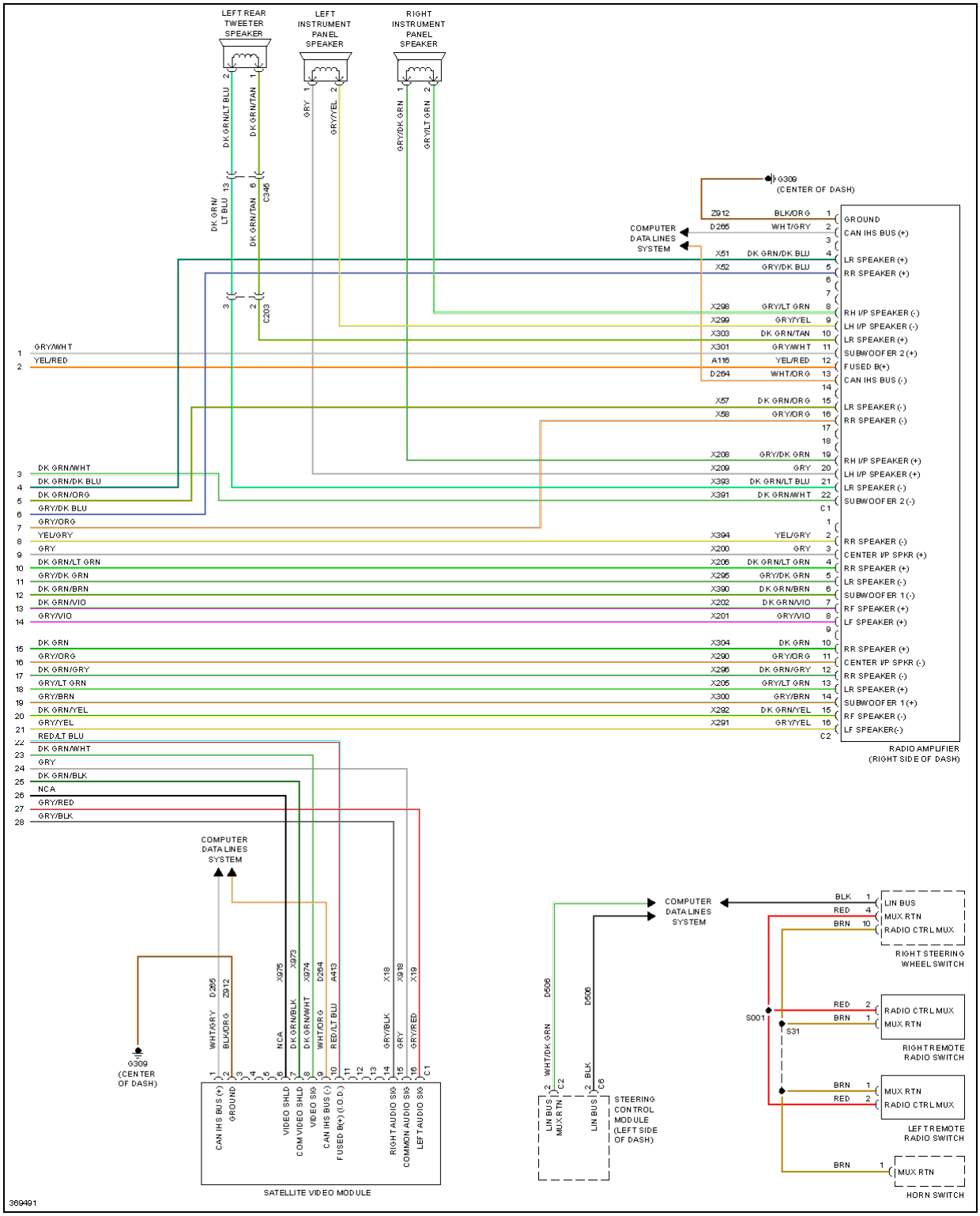

Fig. 35: Navigation Circuit (3 of 3)

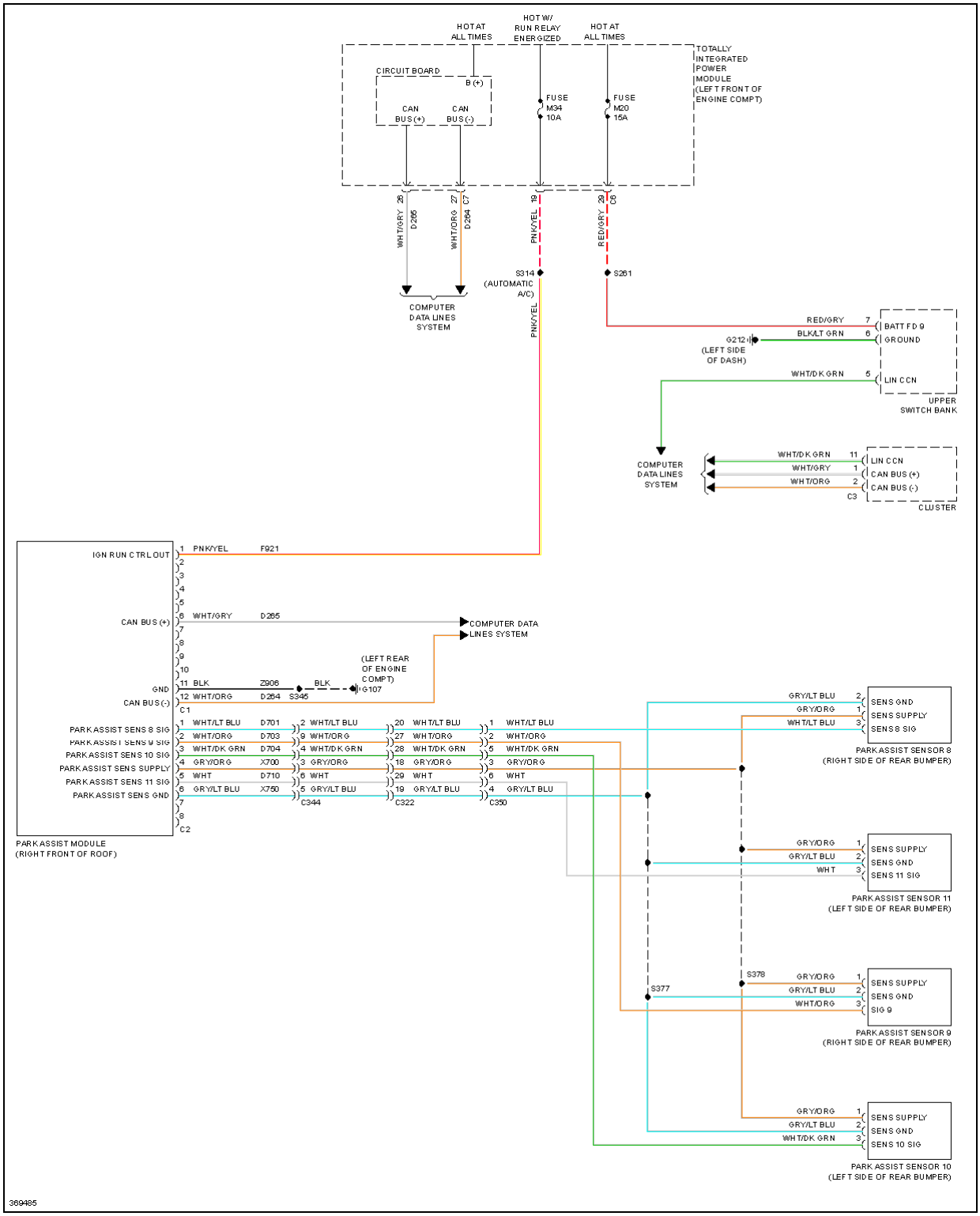

Fig. 36: Parking Assistant Circuit

POWER DISTRIBUTION

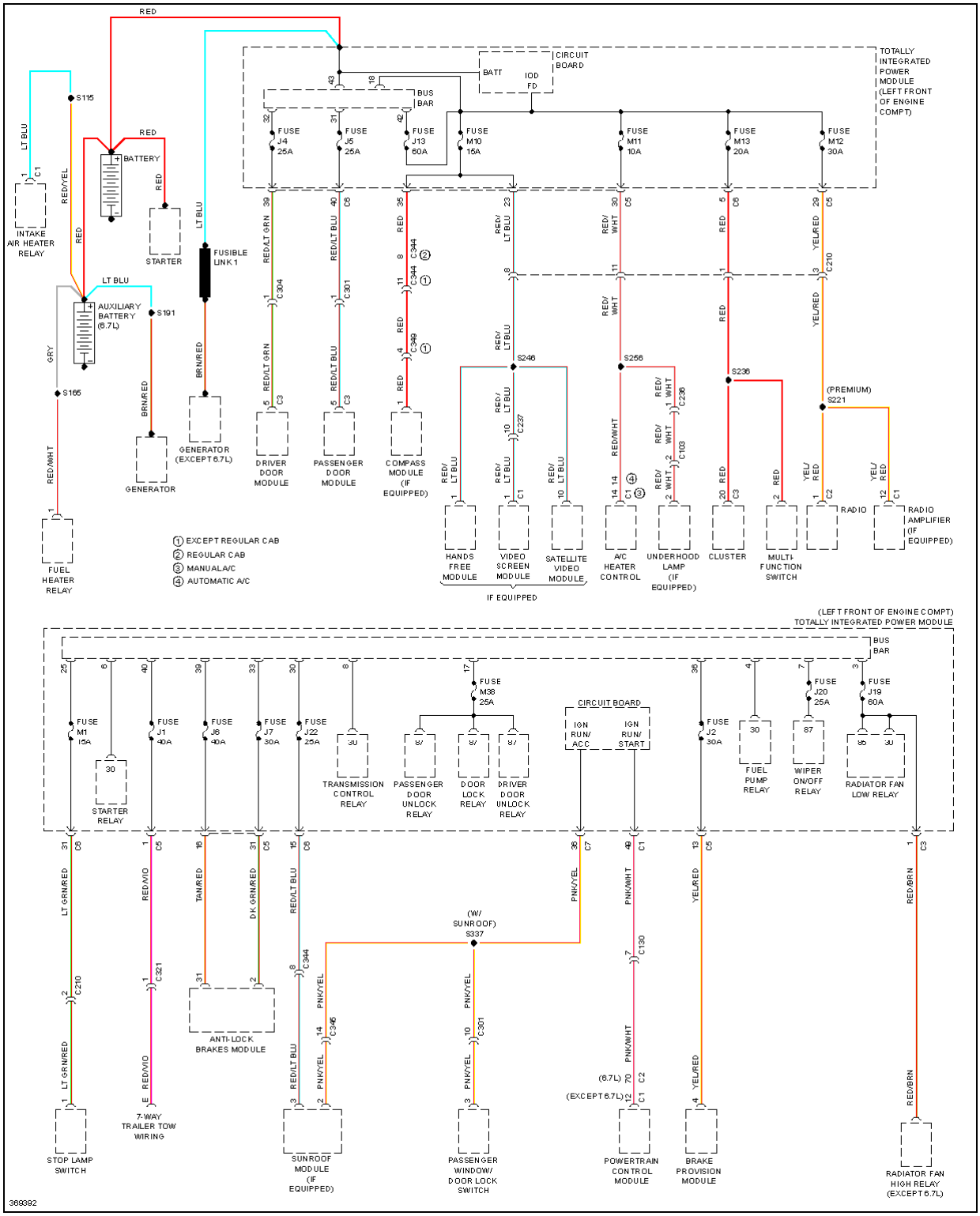

Fig. 37: Power Distribution Circuit (1 of 4)

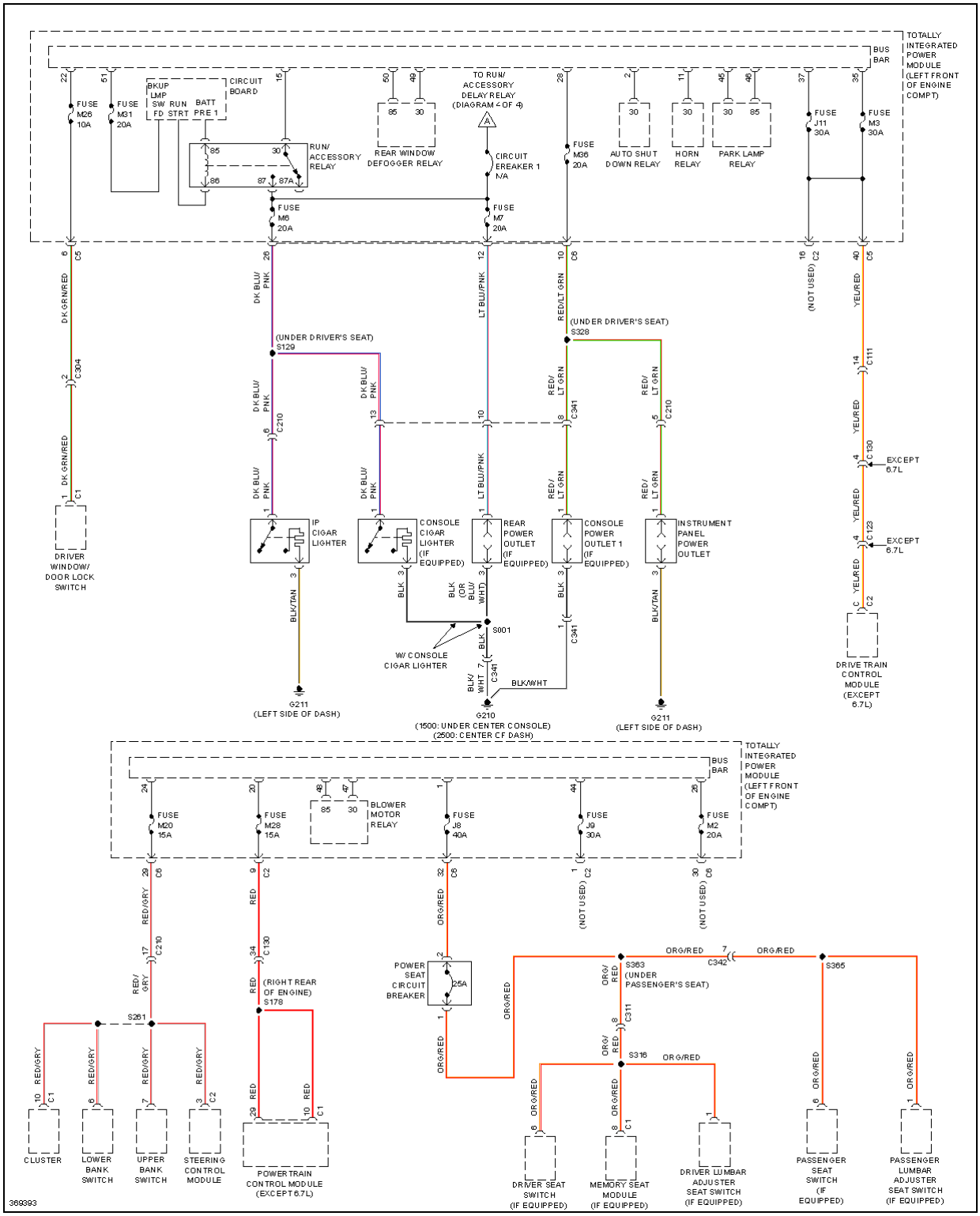

Fig. 38: Power Distribution Circuit (2 of 4)

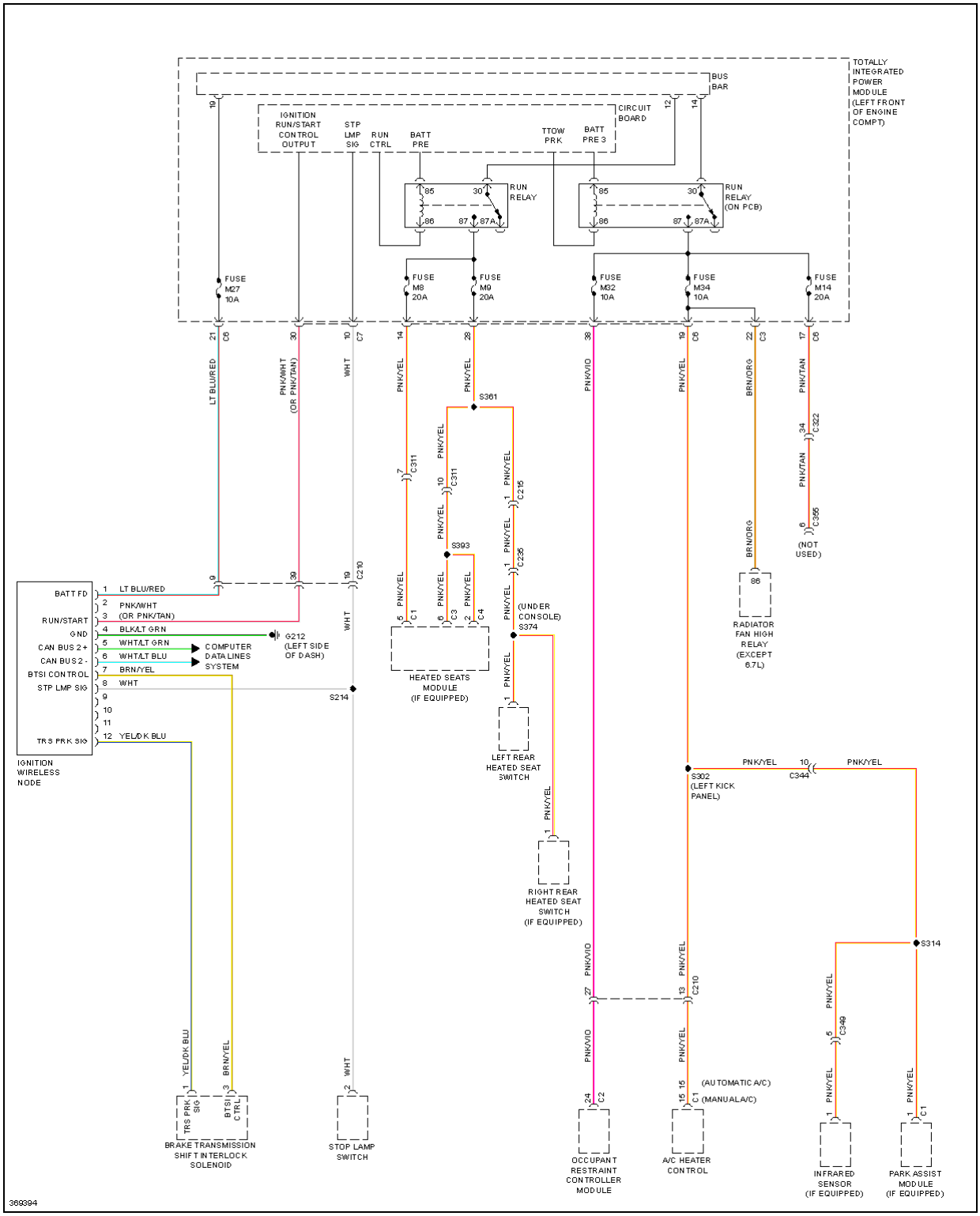

Fig. 39: Power Distribution Circuit (3 of 4)

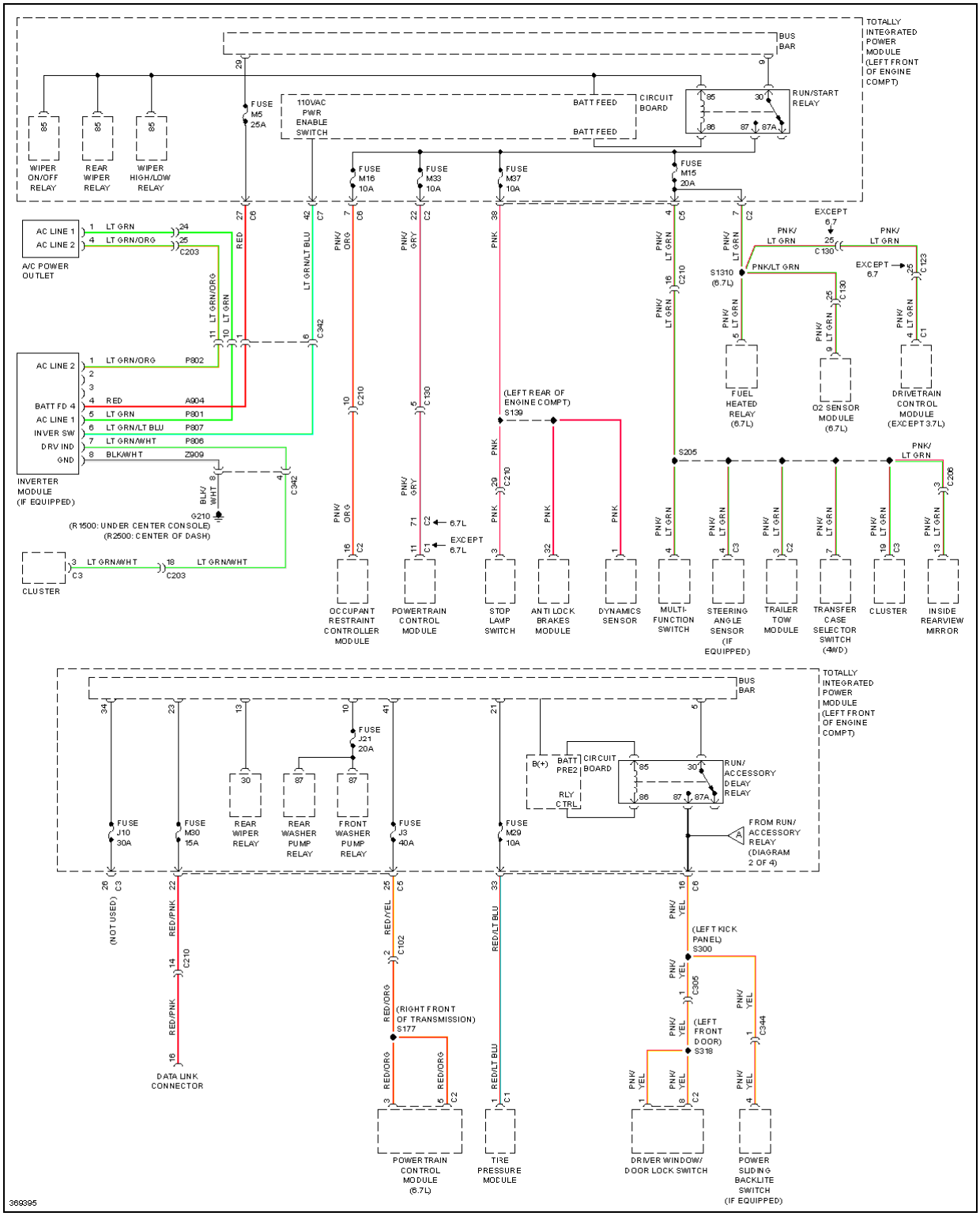

Fig. 40: Power Distribution Circuit (4 of 4)

POWER DOOR LOCKS

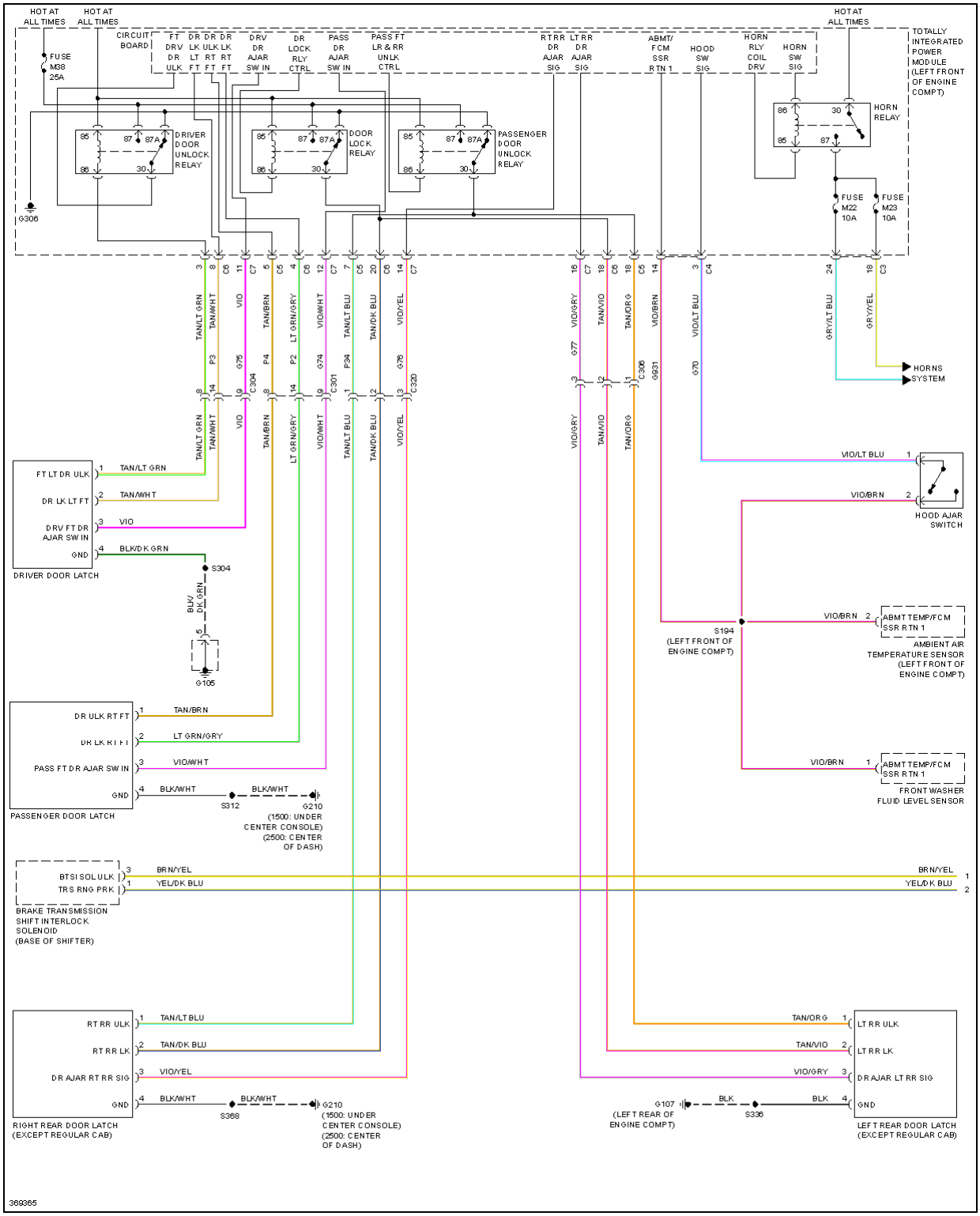

Fig. 41: Power Door Locks Circuit (1 of 2)

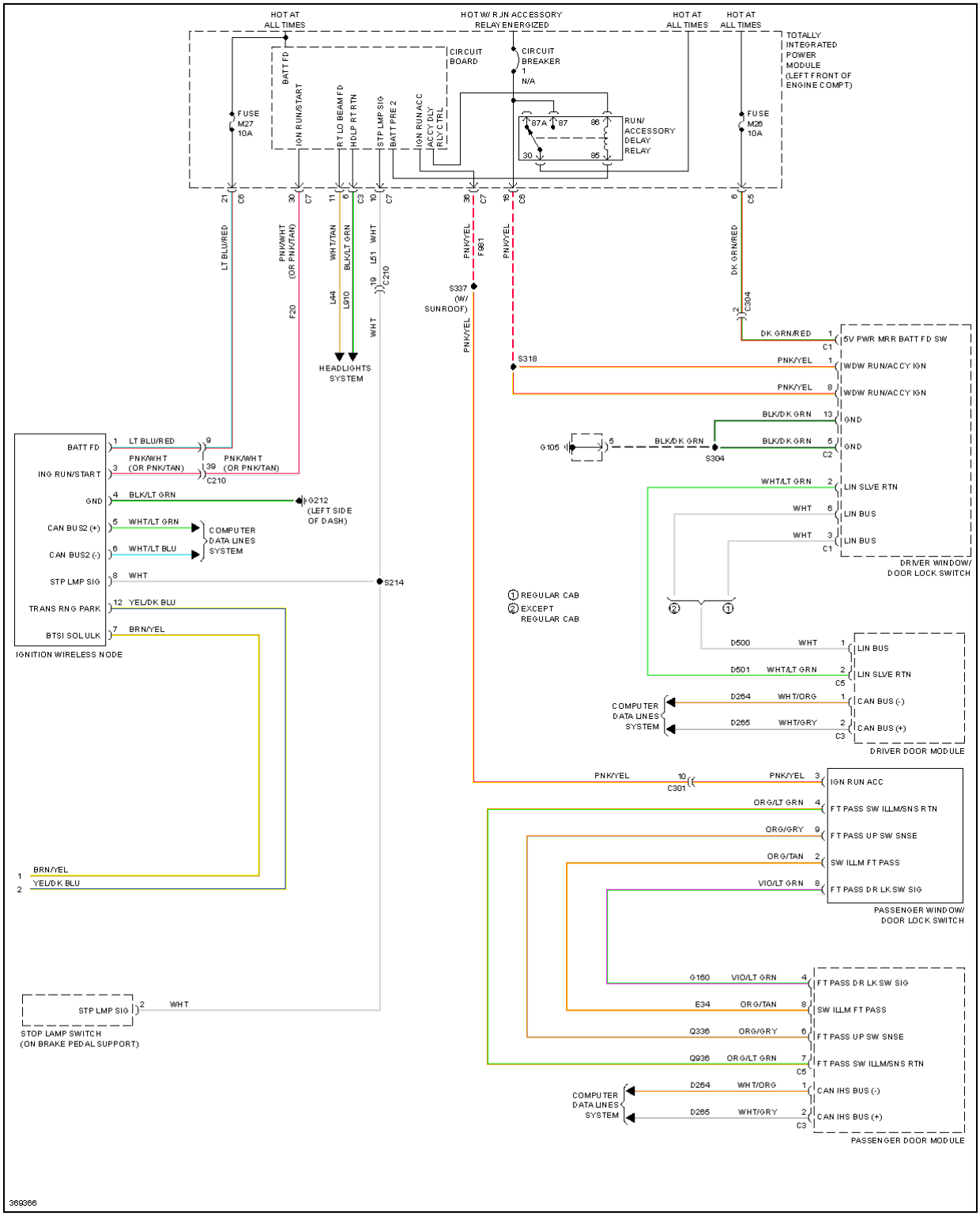

Fig. 42: Power Door Locks Circuit (2 of 2)

POWER MIRRORS

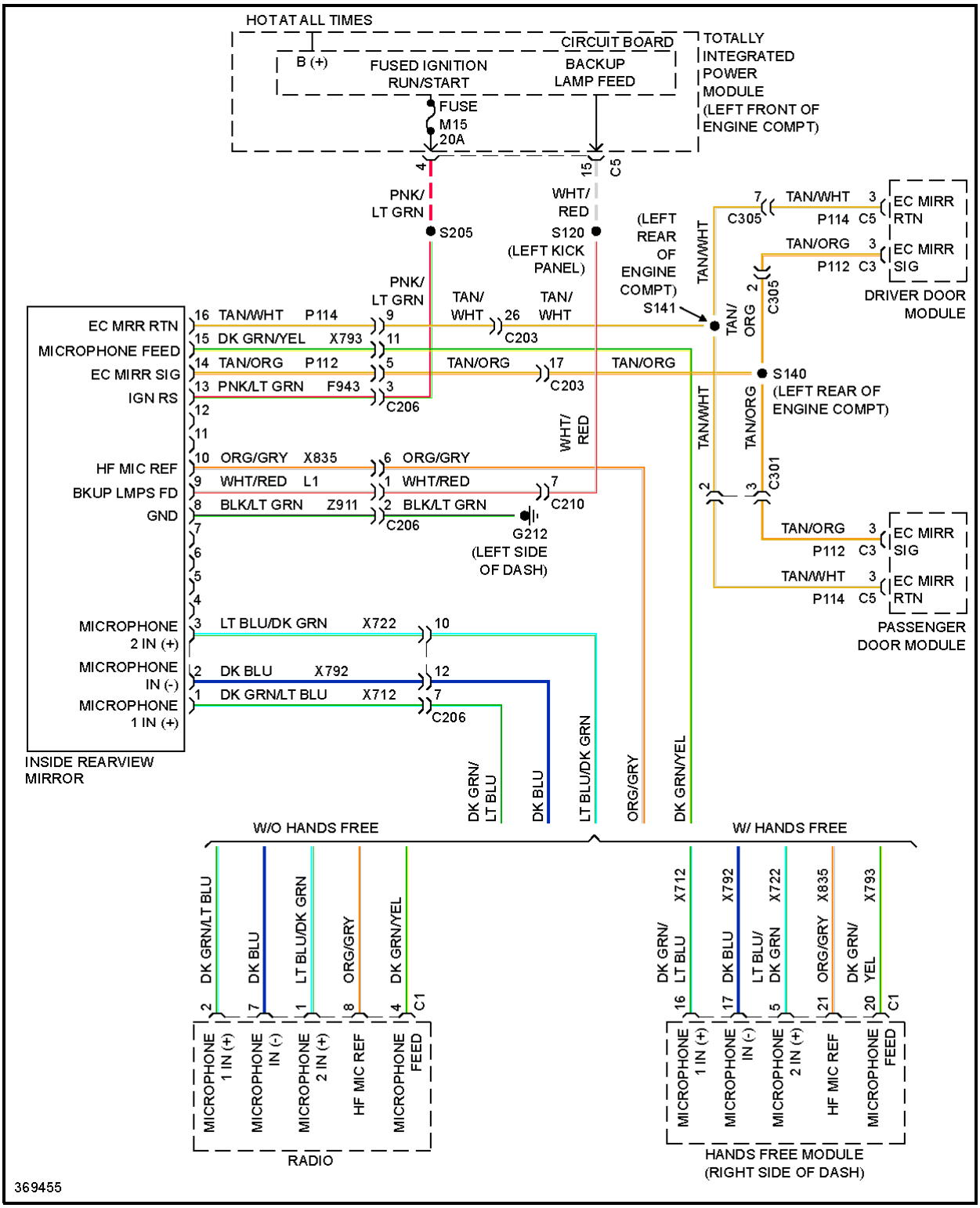

Fig. 43: Automatic Day/Night Mirror Circuit

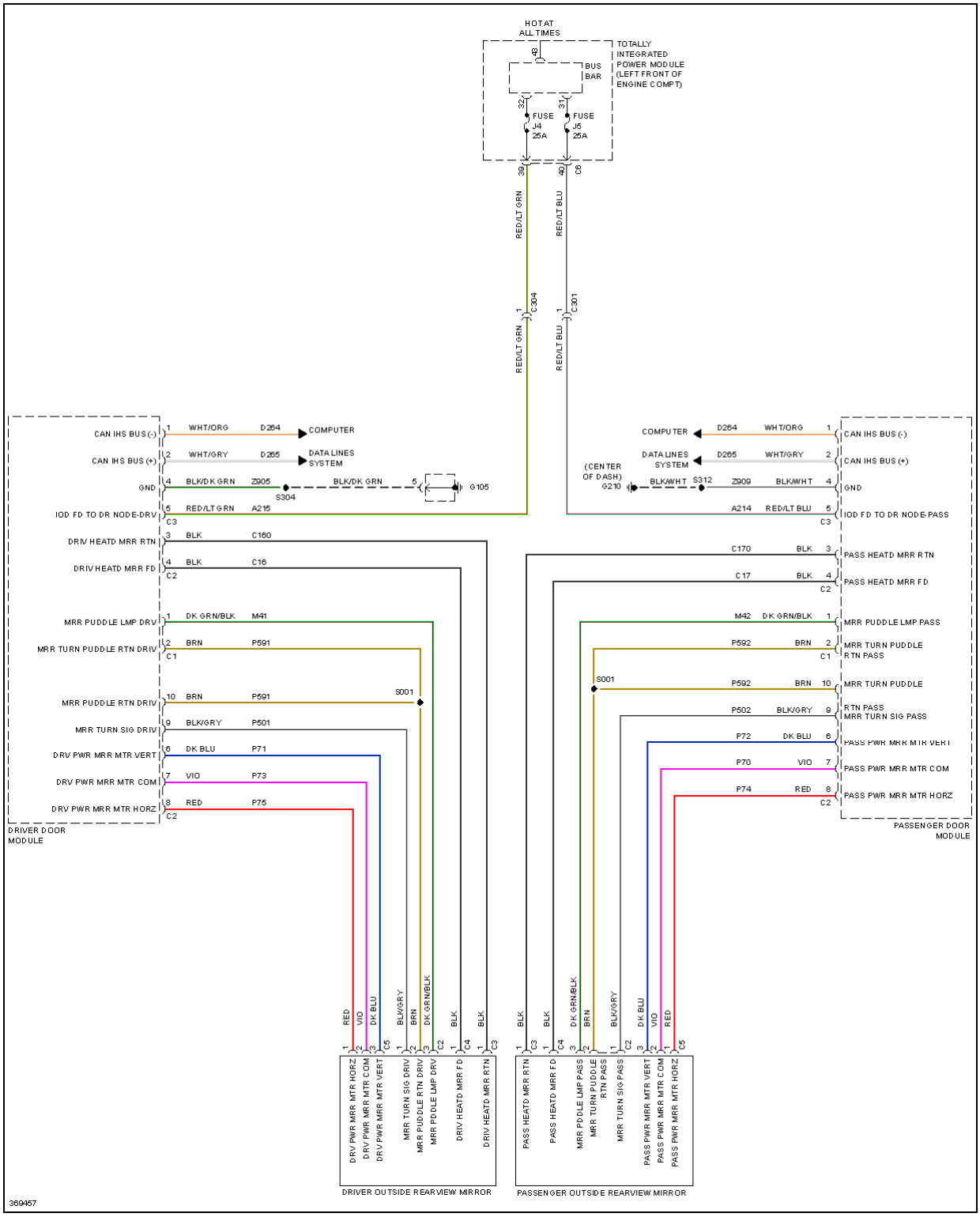

Fig. 44: Power Mirrors Circuit

POWER SEATS

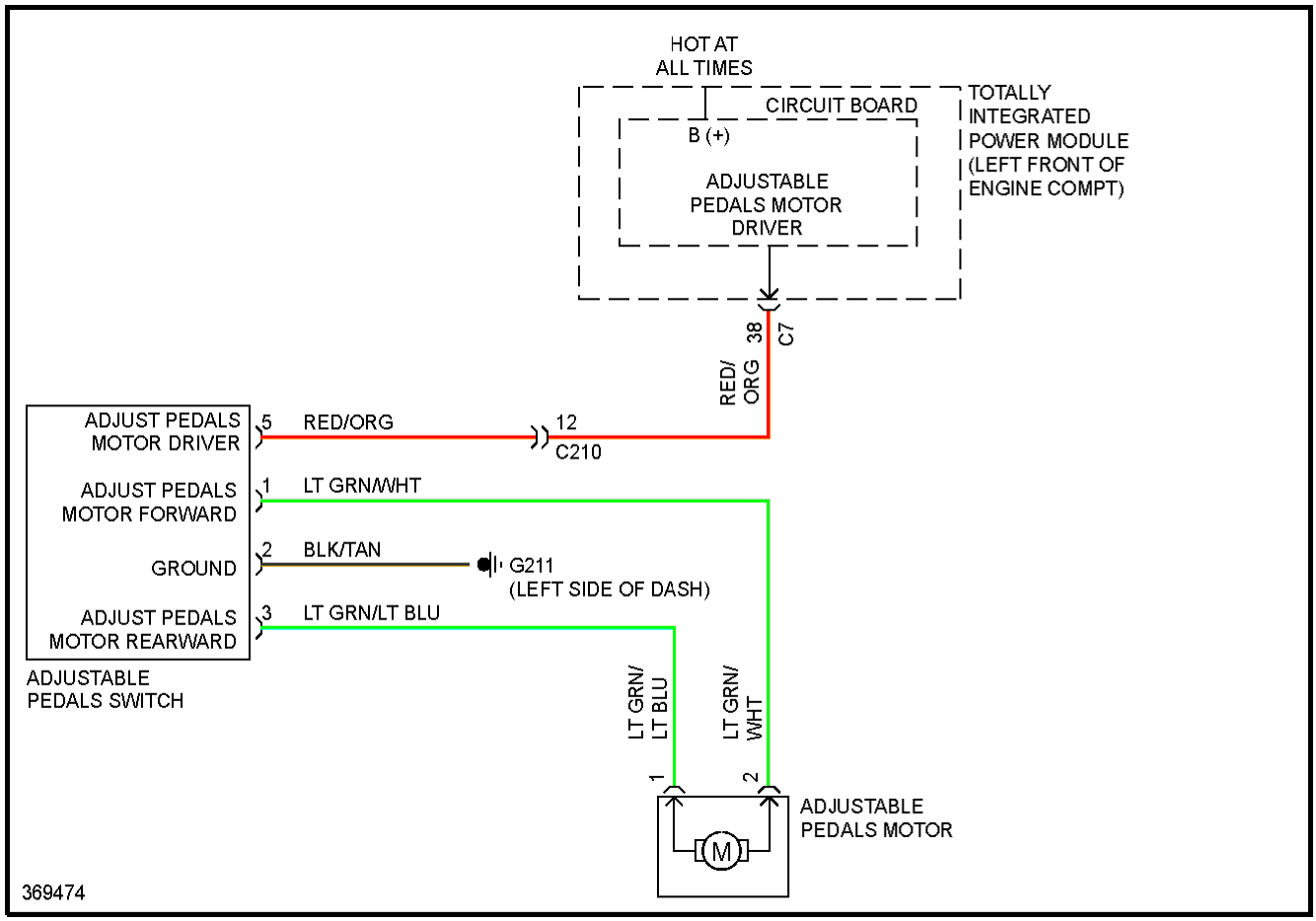

Fig. 45: Adjustable Pedal Circuit

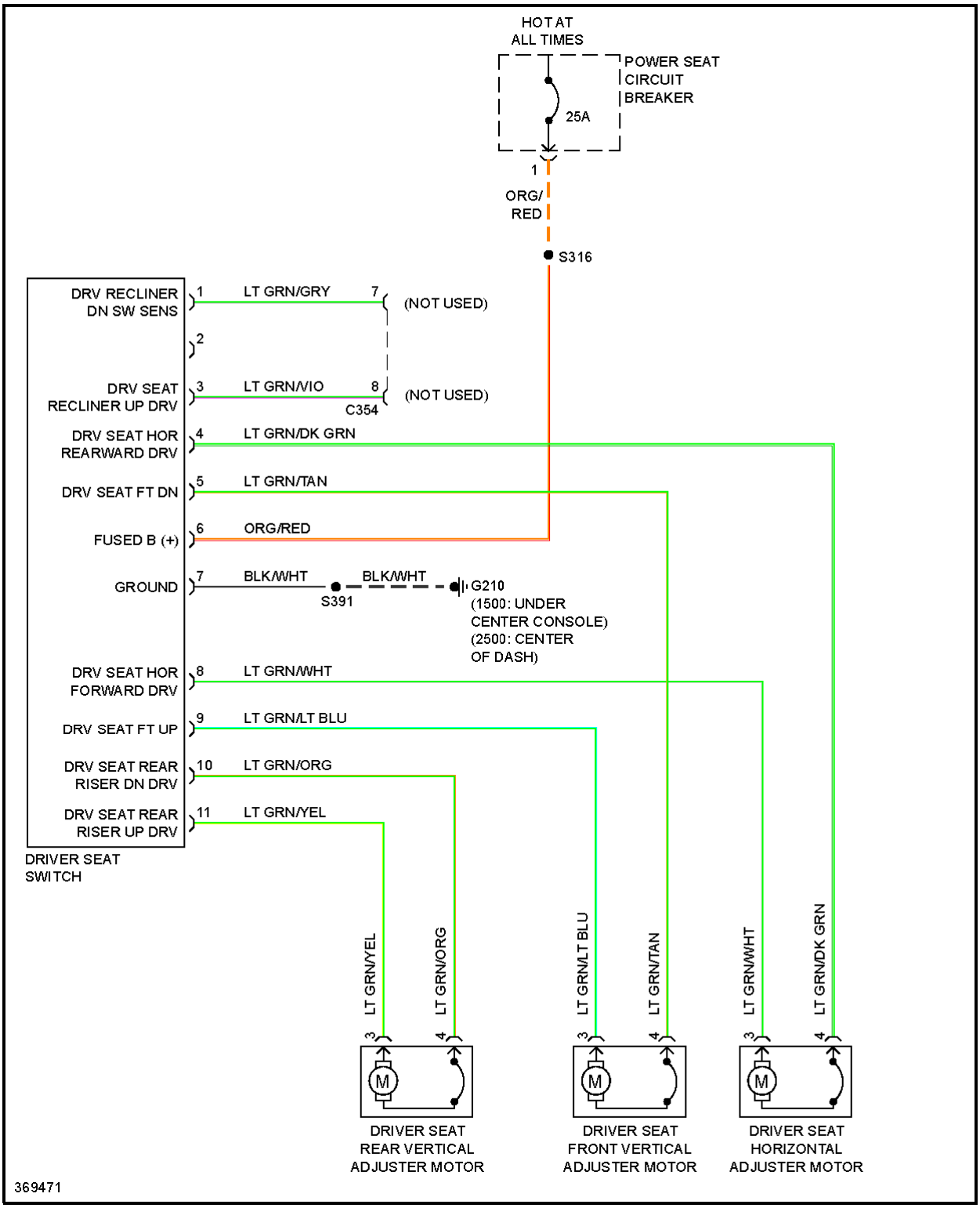

Fig. 46: Driver Power Seat Circuit

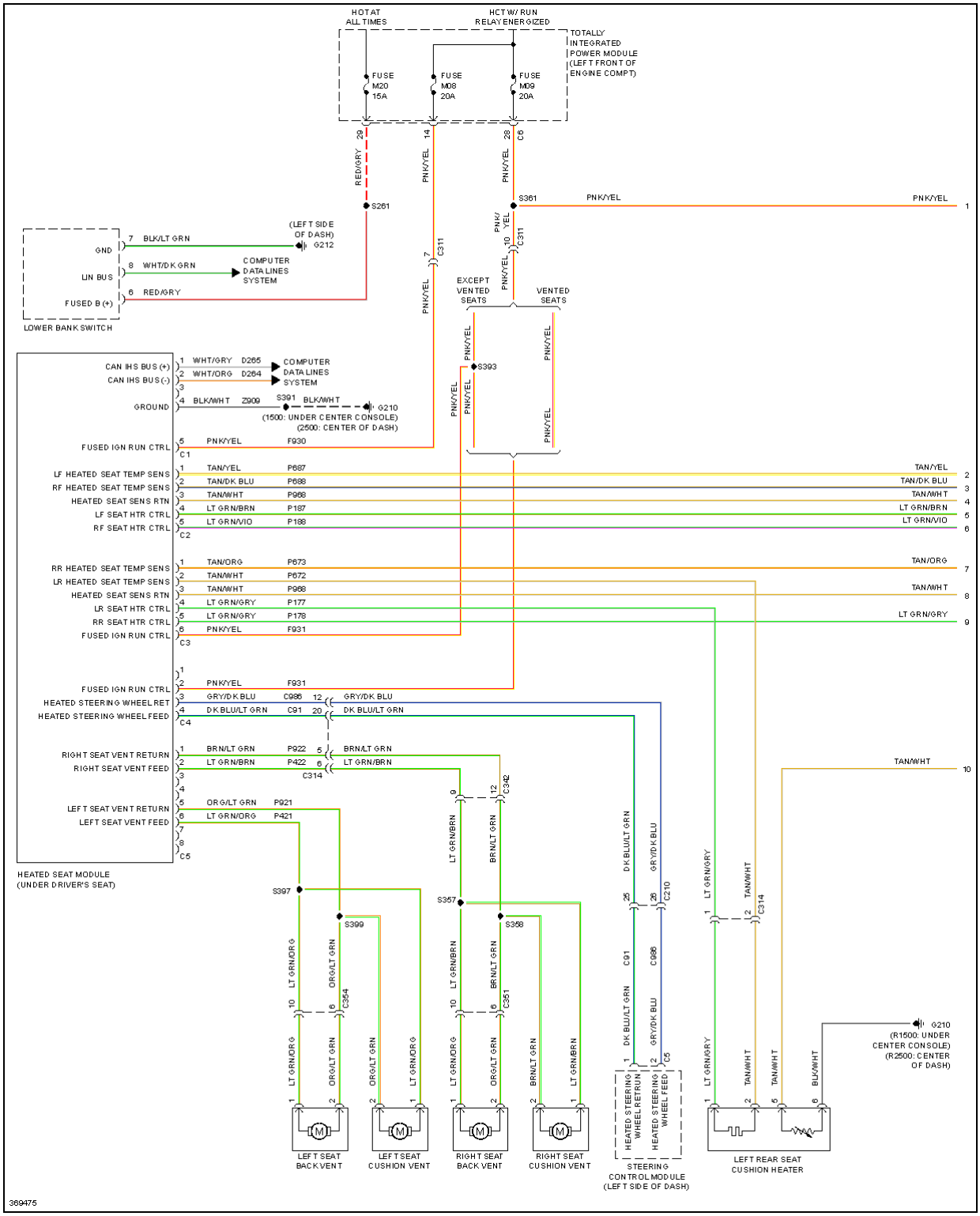

Fig. 47: Heated Seats Circuit (1 of 2)

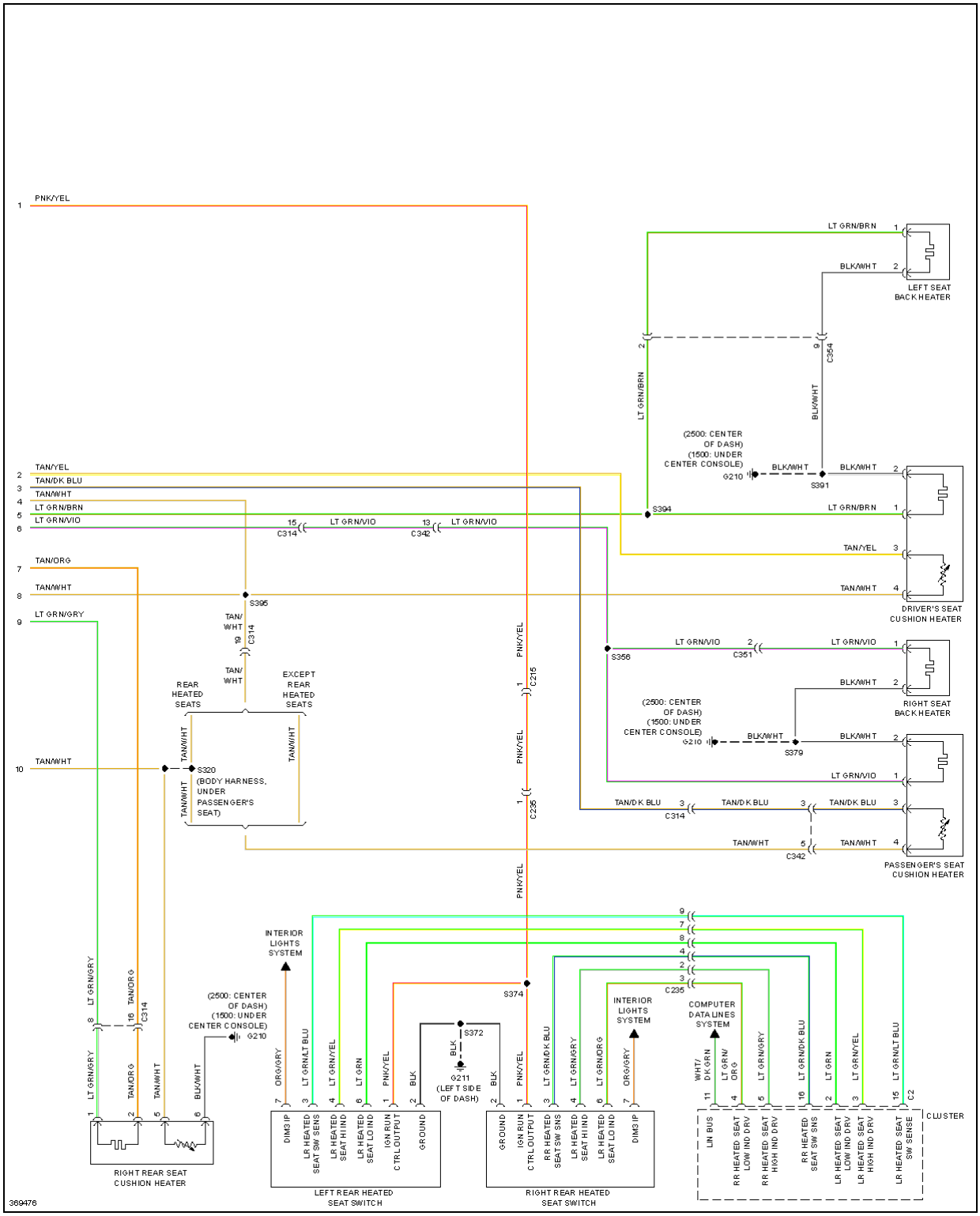

Fig. 48: Heated Seats Circuit (2 of 2)

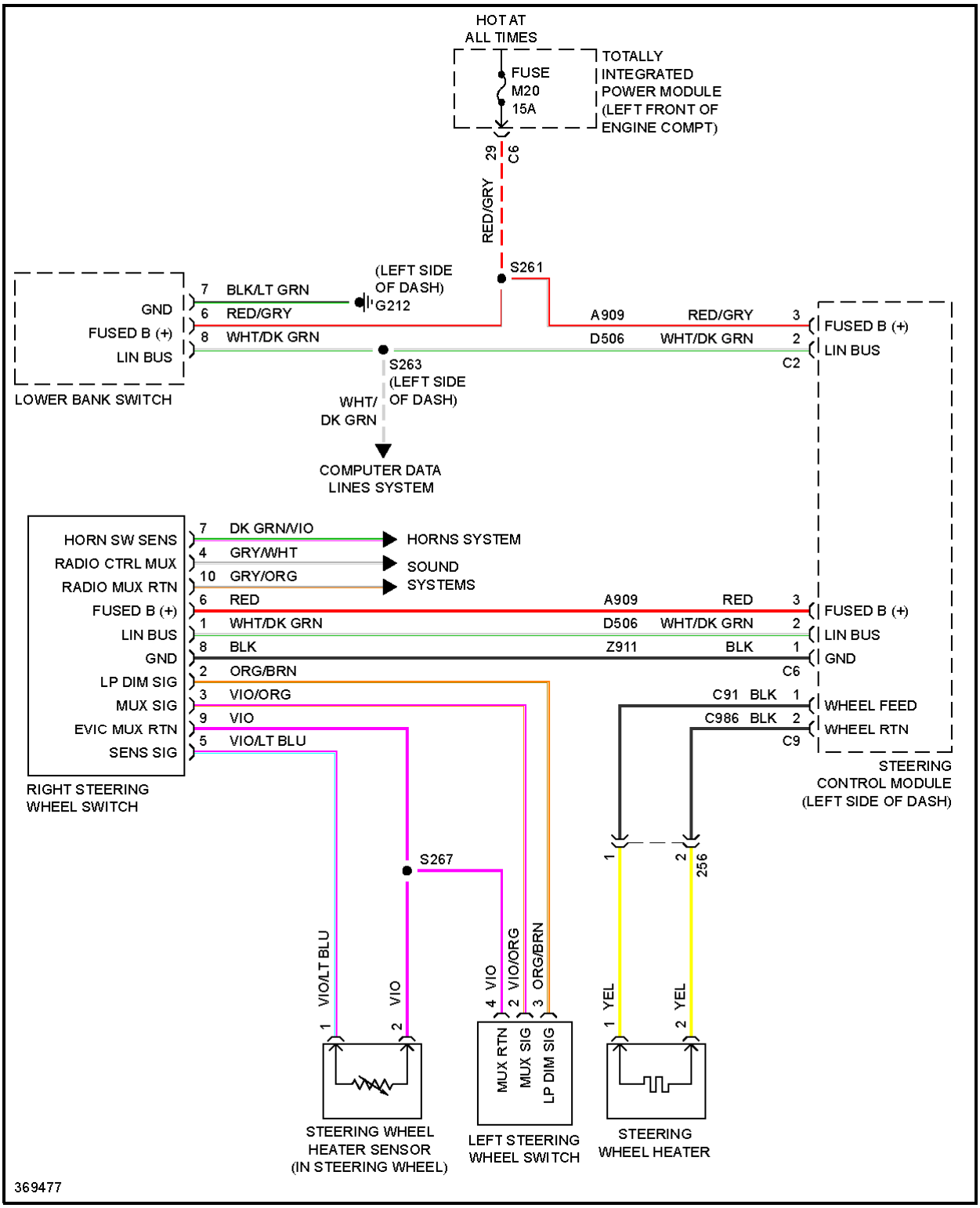

Fig. 49: Heated Steering Wheel Circuit

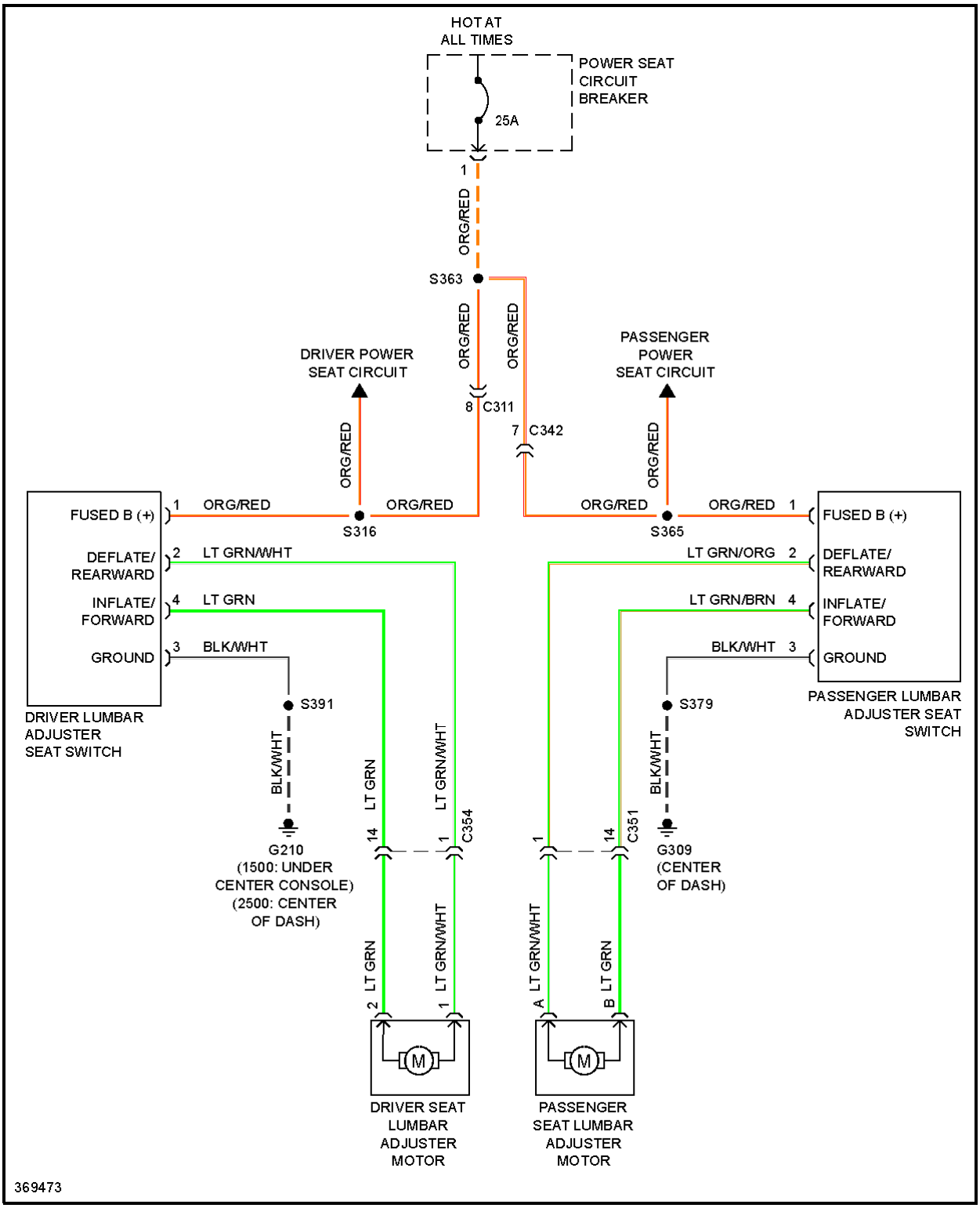

Fig. 50: Lumbar Circuit

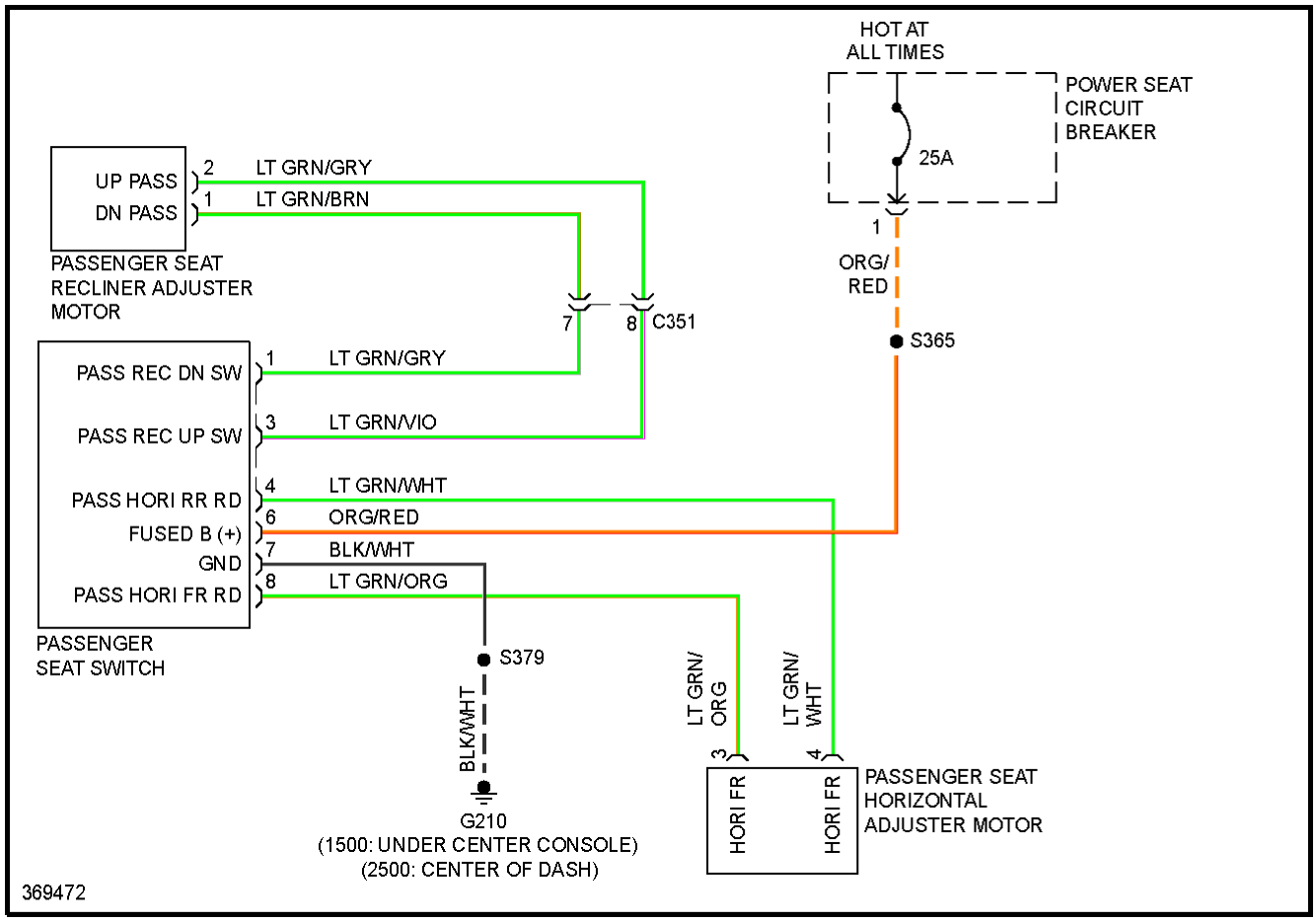

Fig. 51: Passenger Power Seat Circuit

POWER TOP/SUNROOF

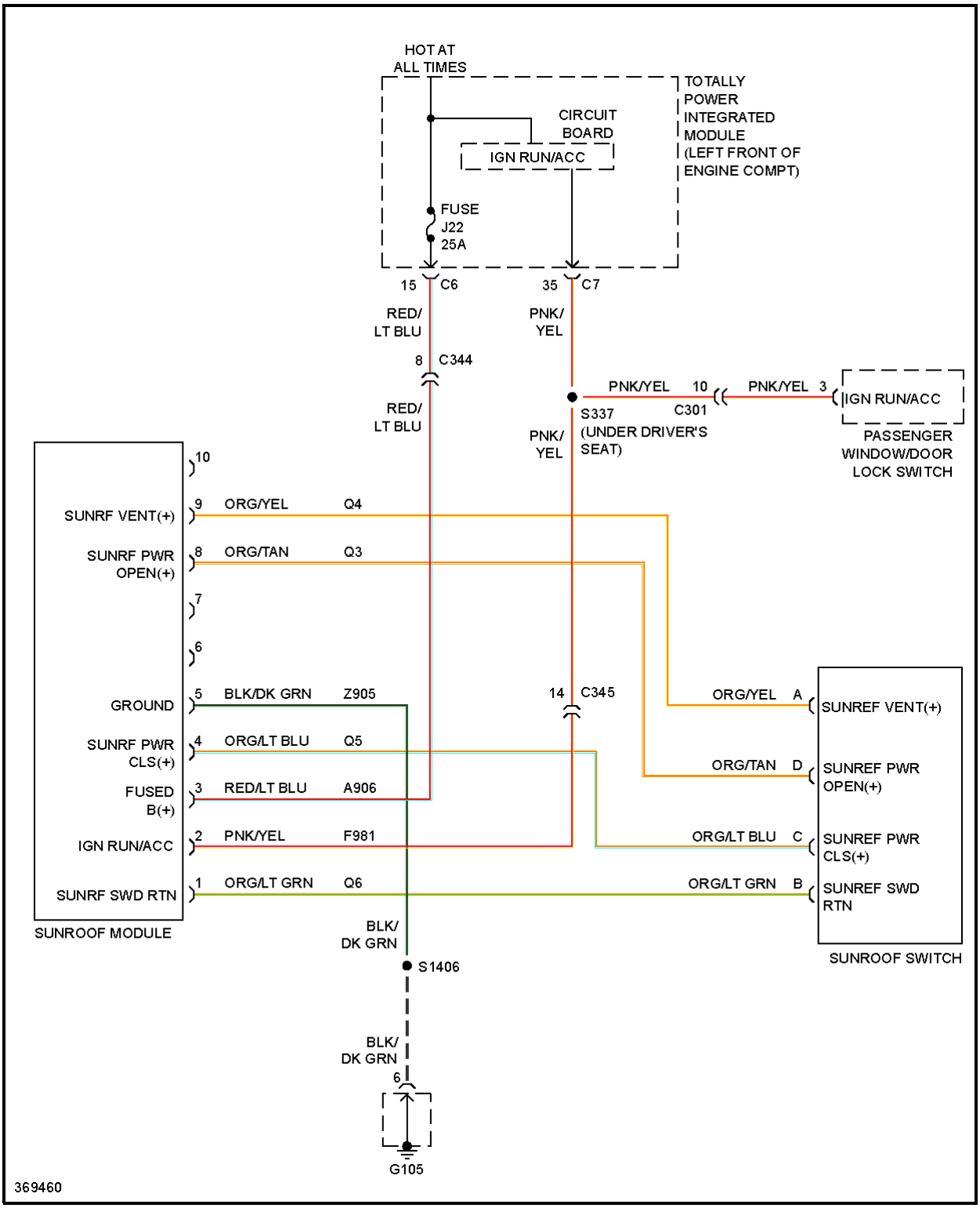

Fig. 52: Power Top/Sunroof Circuit

POWER WINDOWS

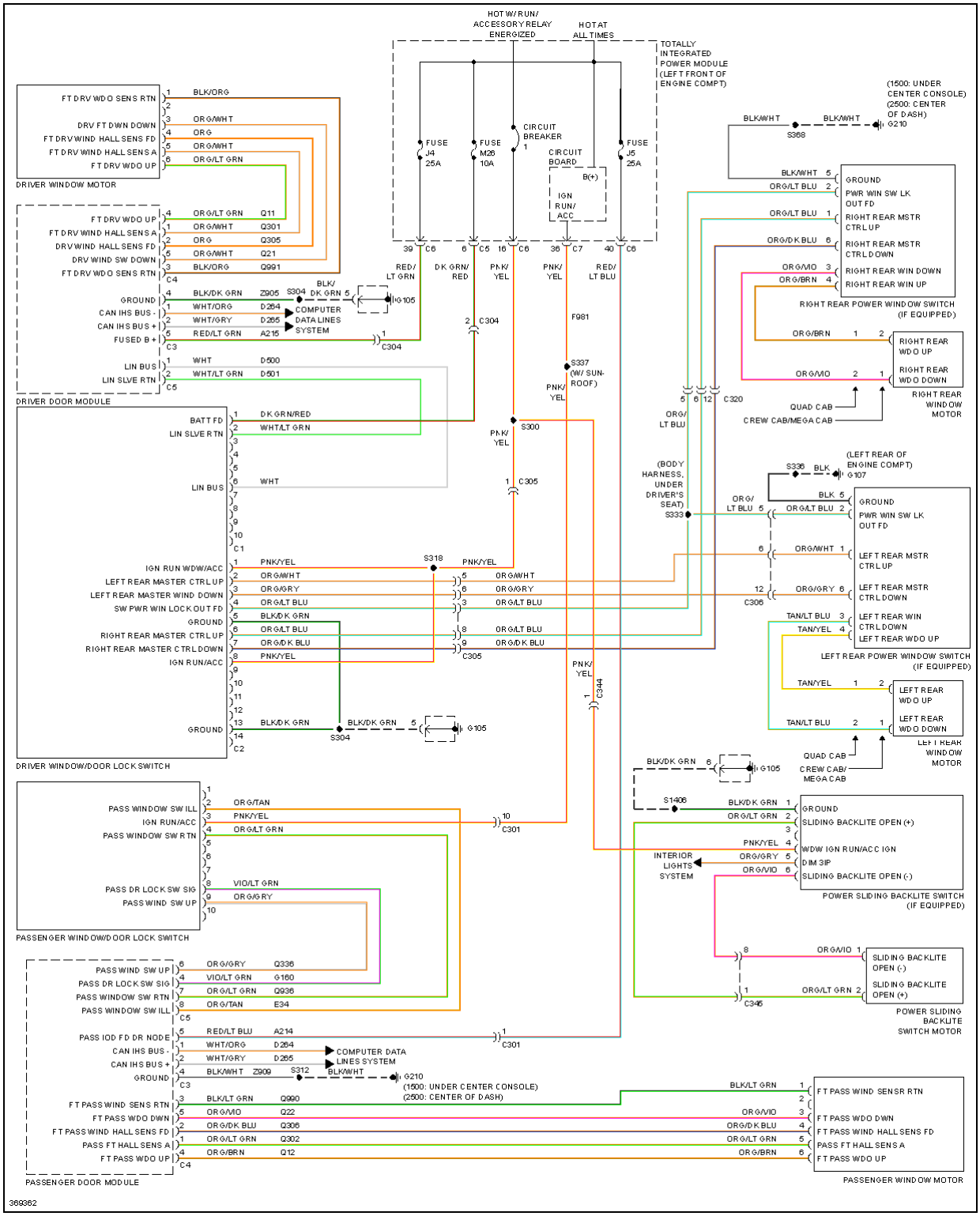

Fig. 53: Power Windows Circuit

RADIO

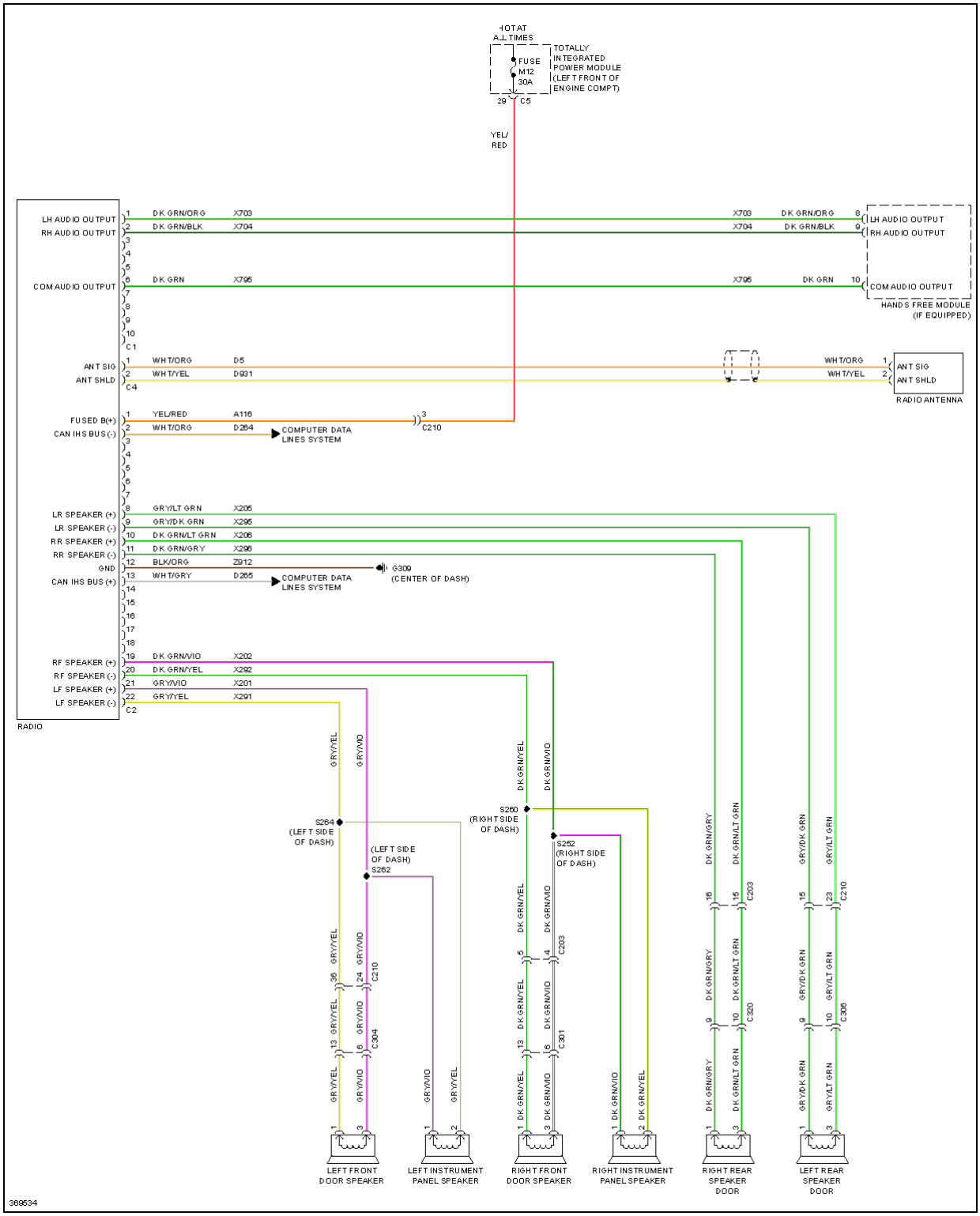

Fig. 54: Base Radio Circuit

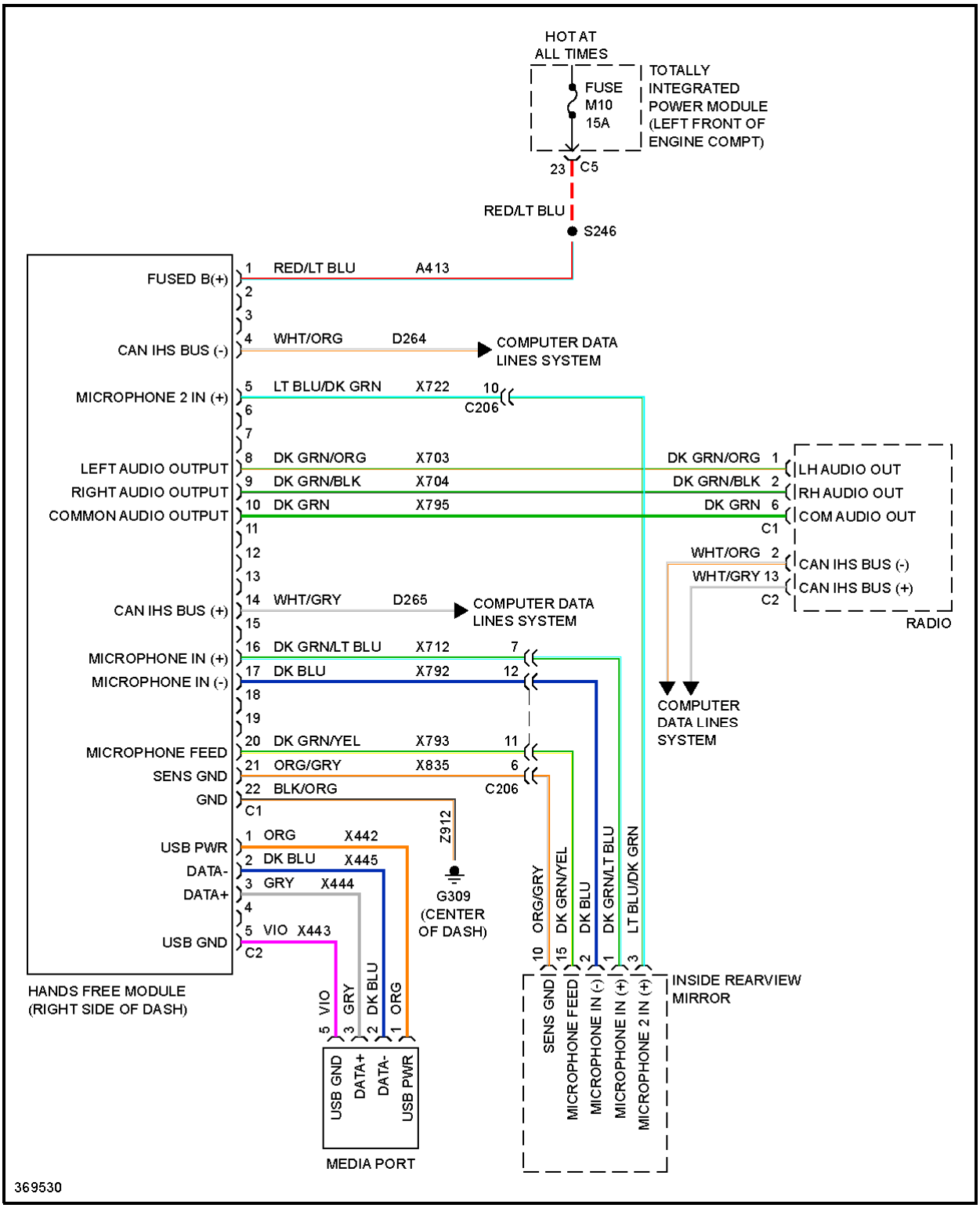

Fig. 55: Hands Free Module Circuit

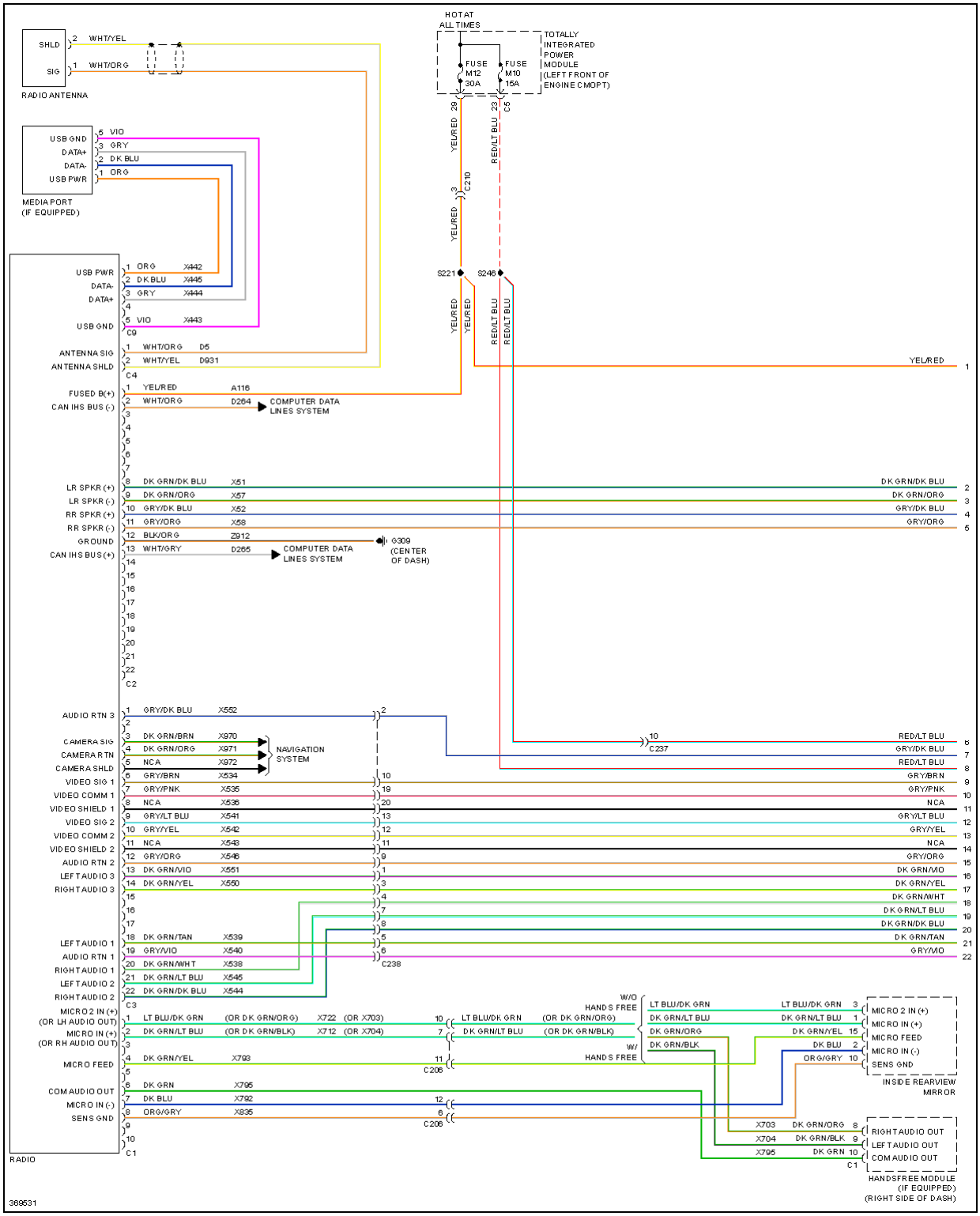

Fig. 56: Premium Radio Circuit (1 of 3)

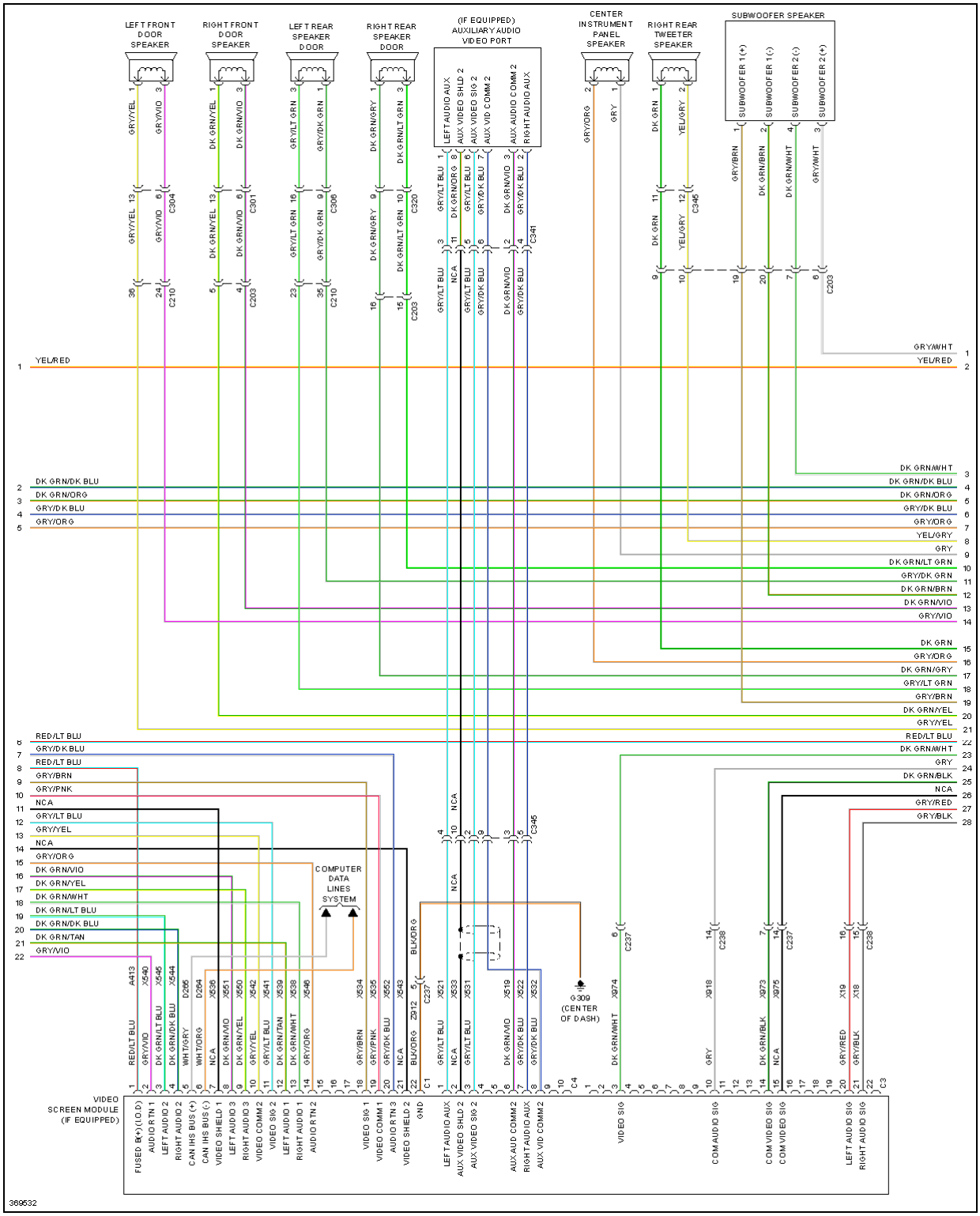

Fig. 57: Premium Radio Circuit (2 of 3)

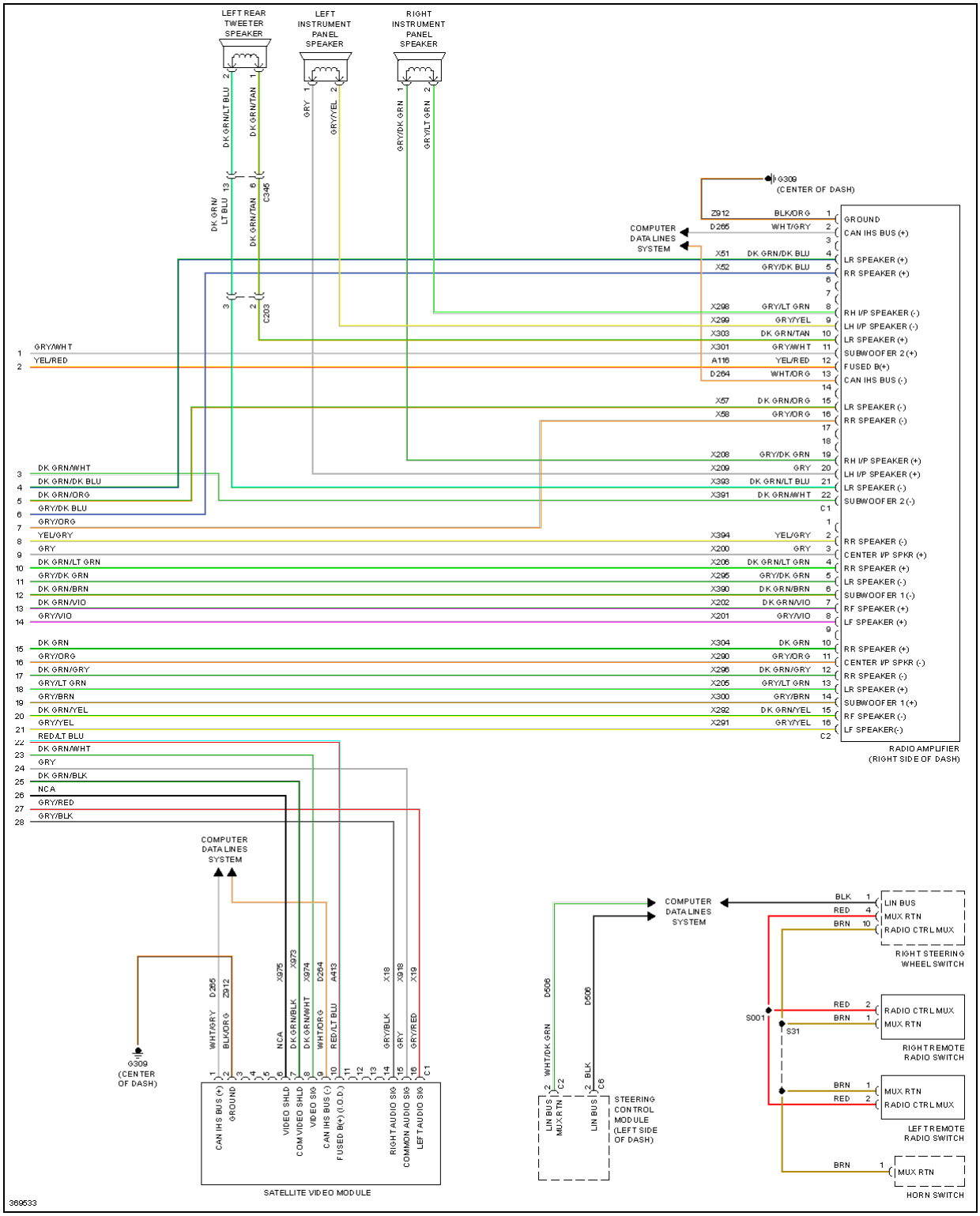

Fig. 58: Premium Radio Circuit (3 of 3)

SHIFT INTERLOCK

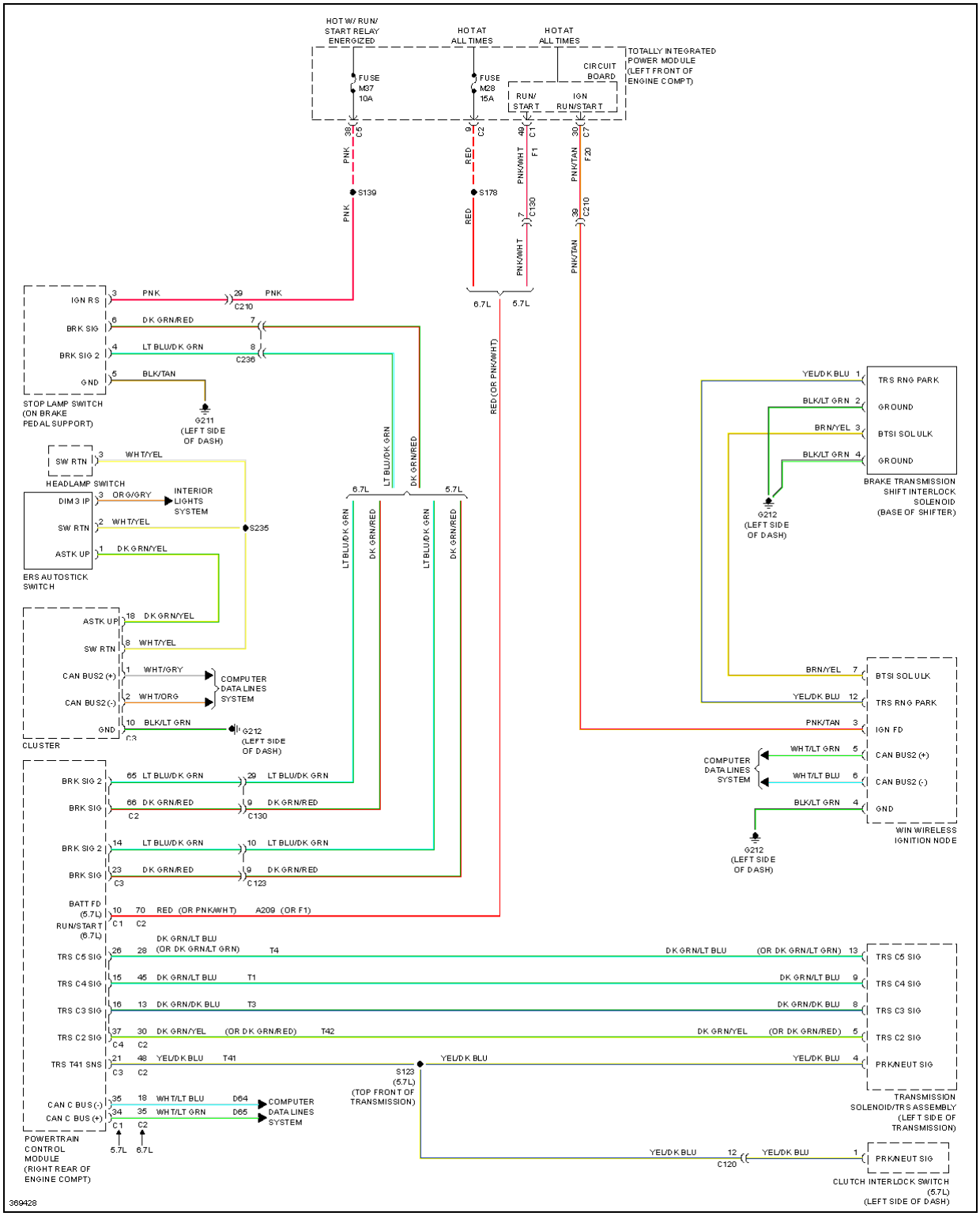

Fig. 59: Shift Interlock Circuit

STARTING/CHARGING

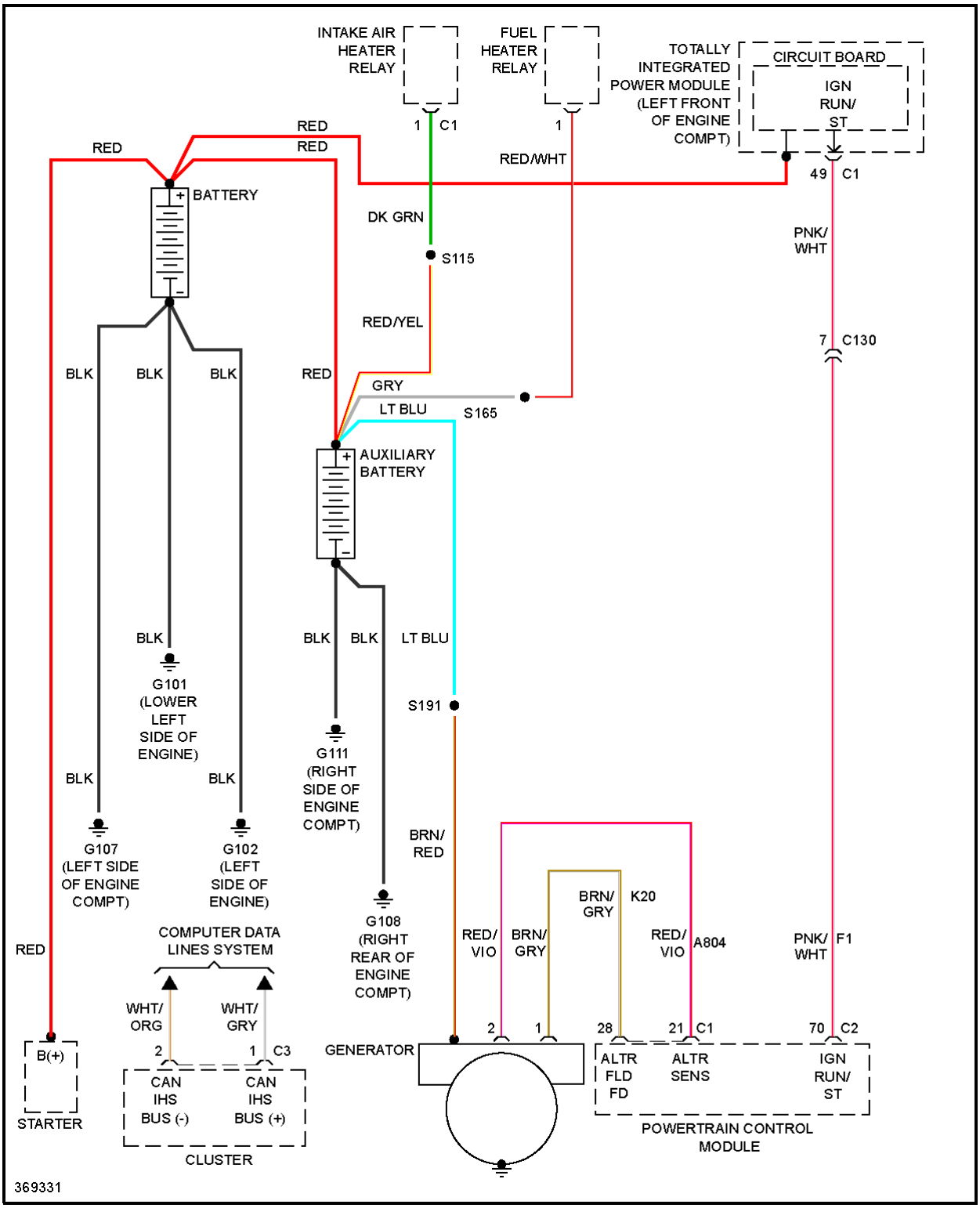

Fig. 60: Charging Circuit

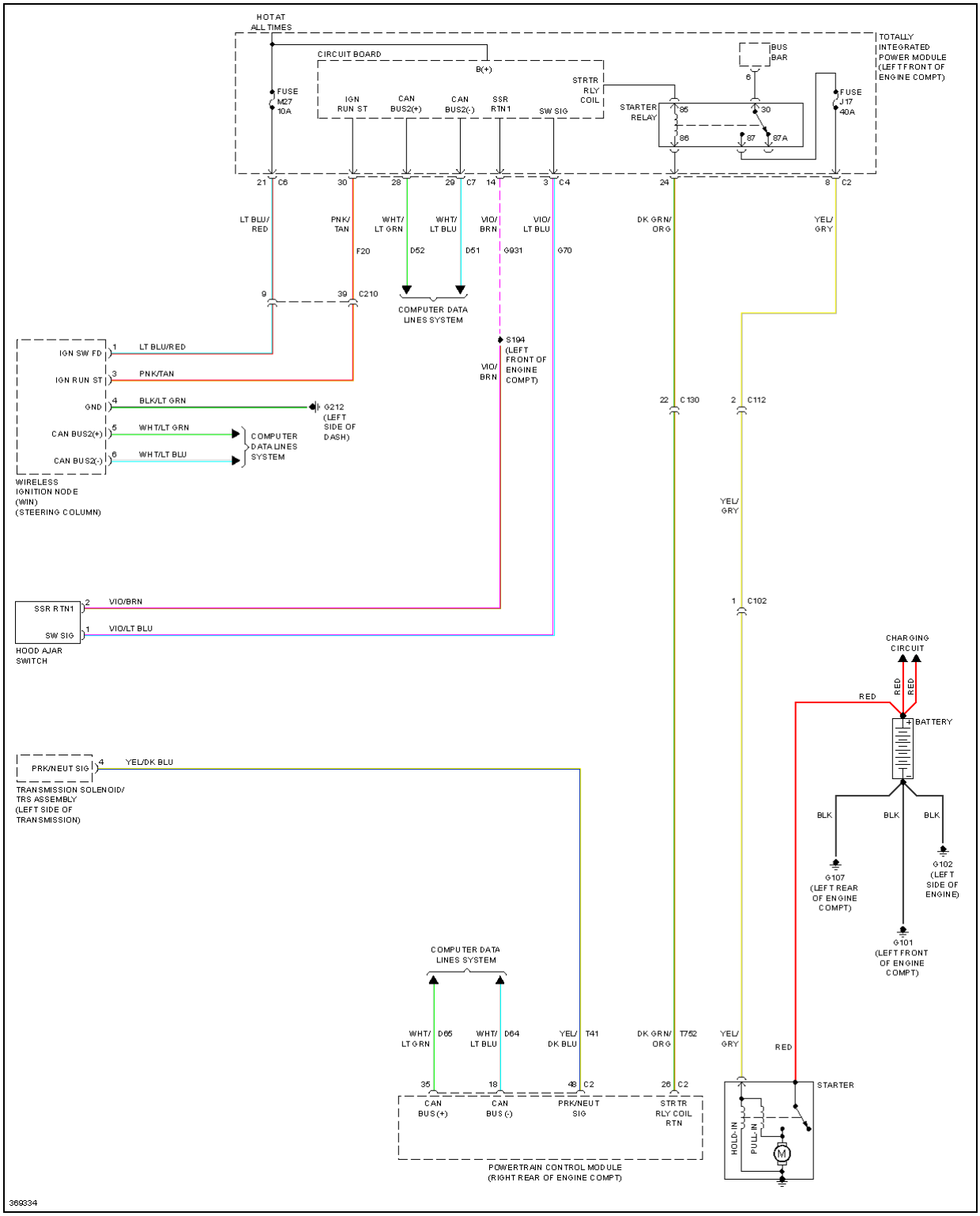

Fig. 61: Starting Circuit

SUPPLEMENTAL RESTRAINTS

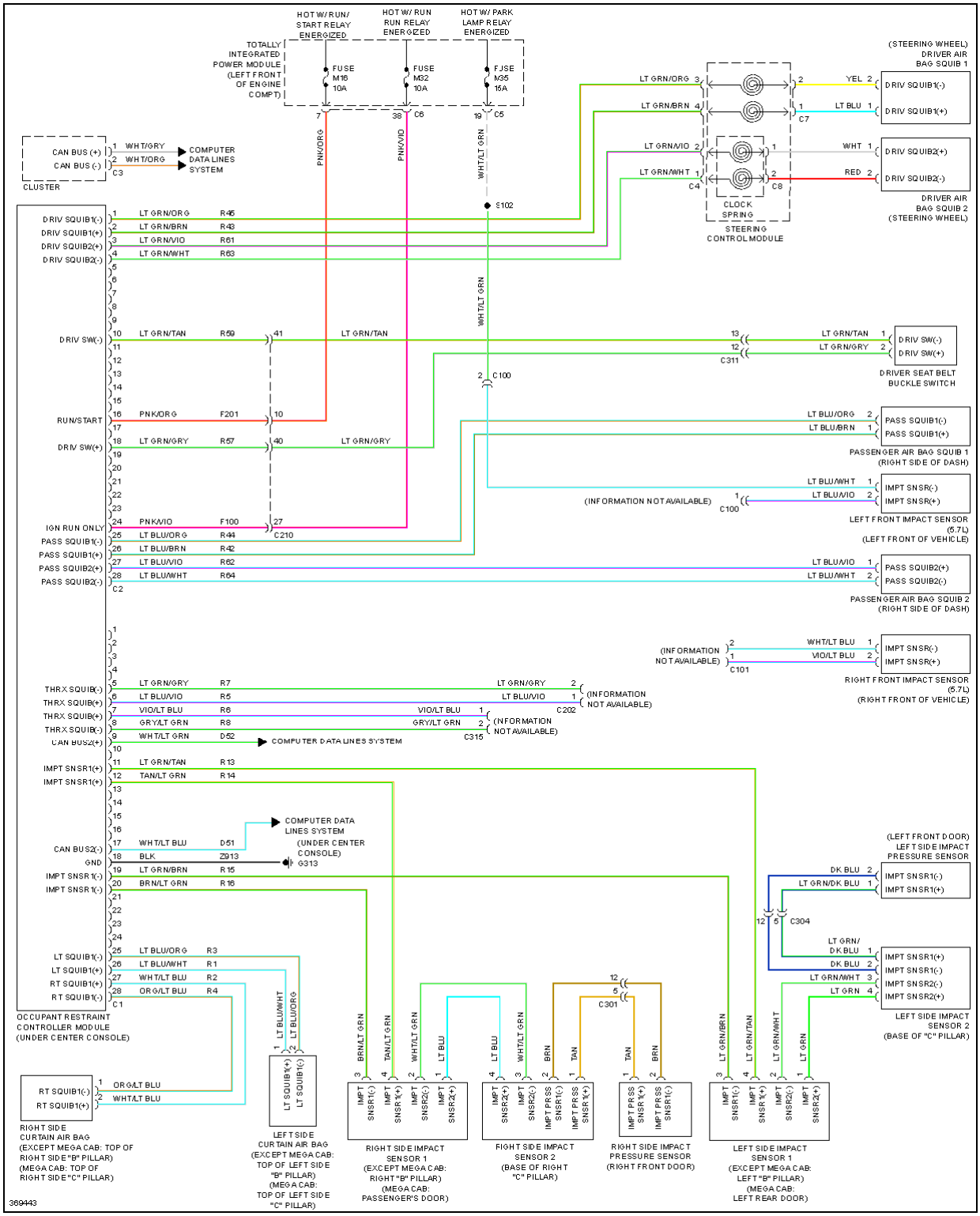

Fig. 62: Supplemental Restraints Circuit

TRANSMISSION

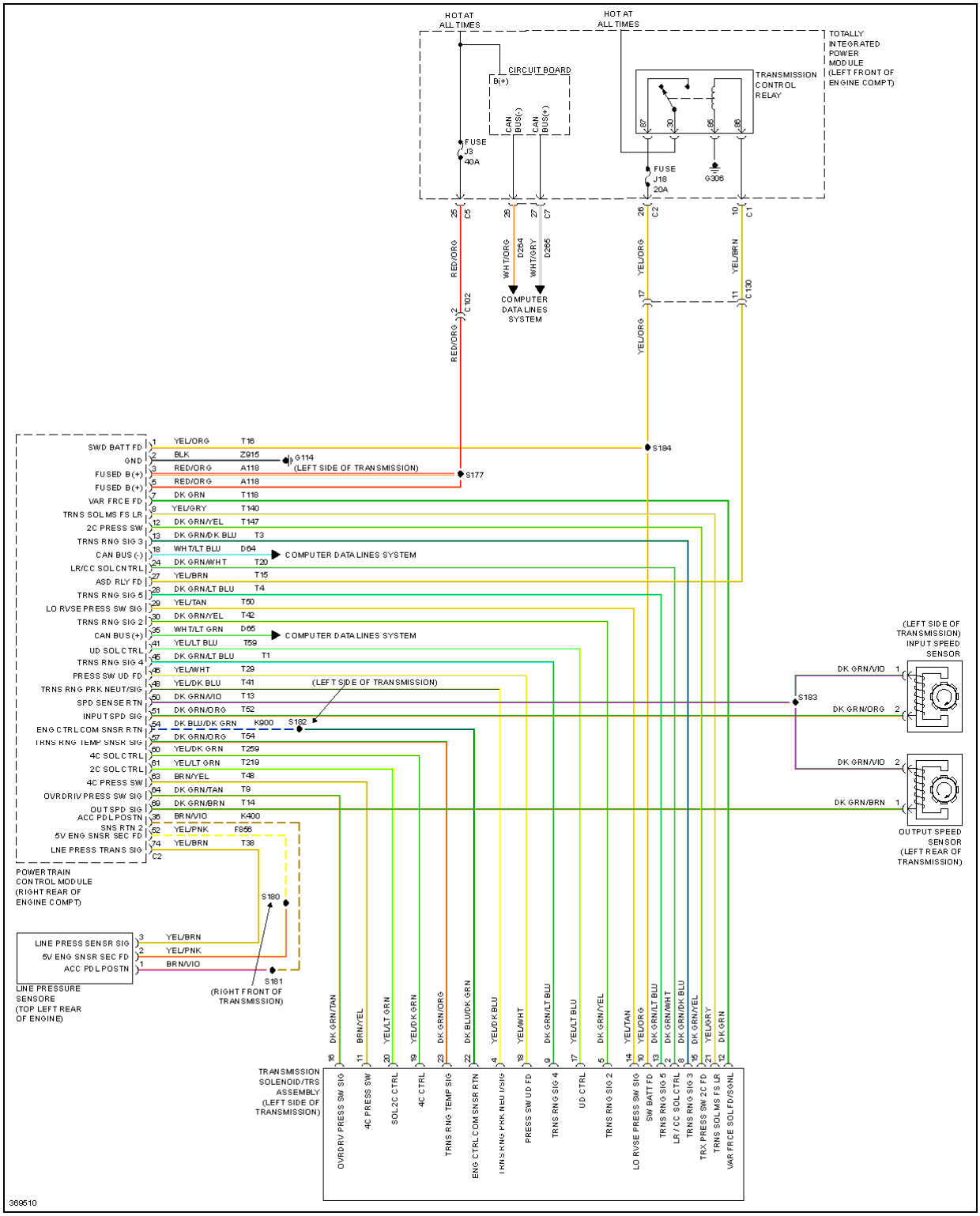

Fig. 63: A/T Circuit

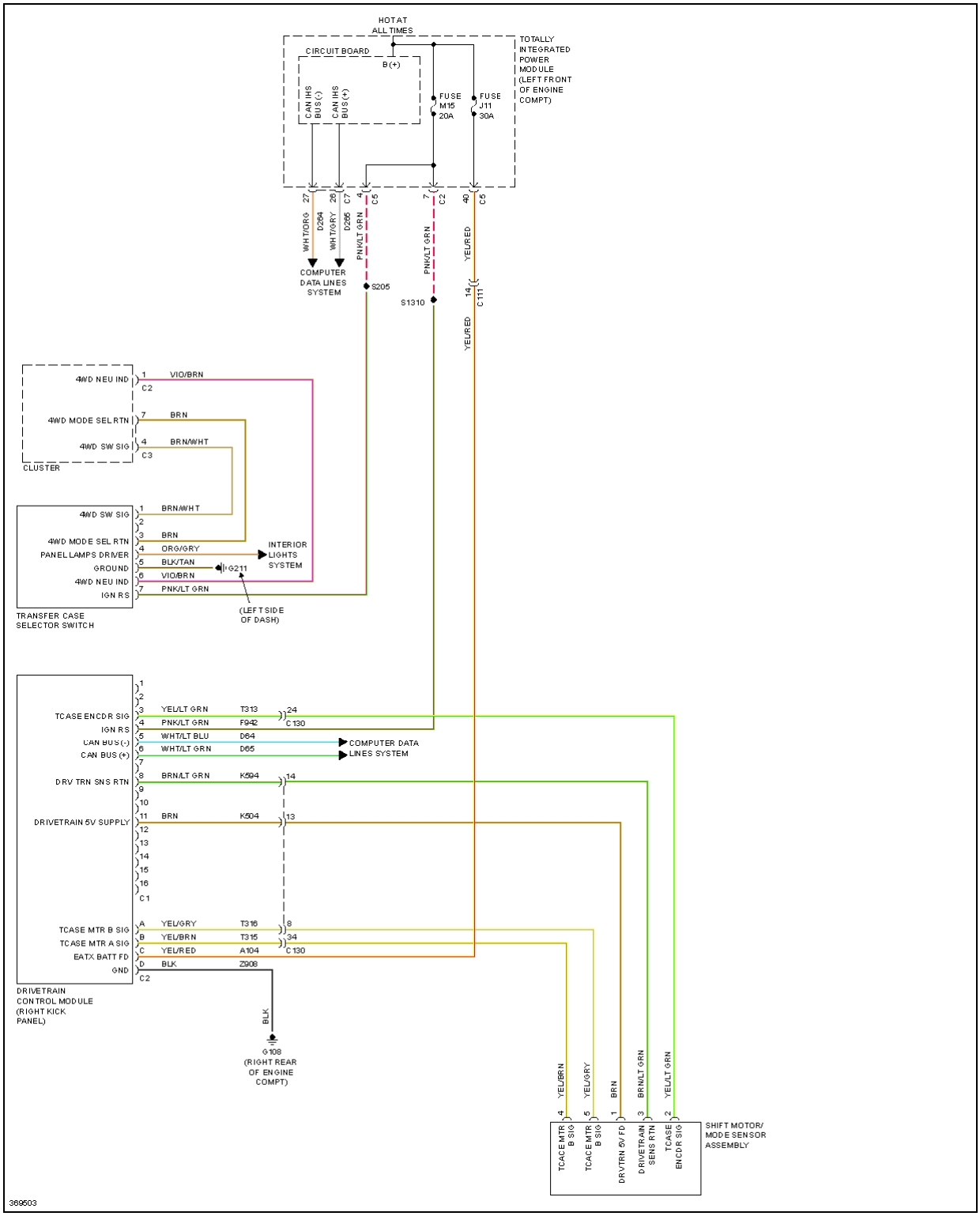

Fig. 64: Transfer Case Circuit

WARNING SYSTEMS

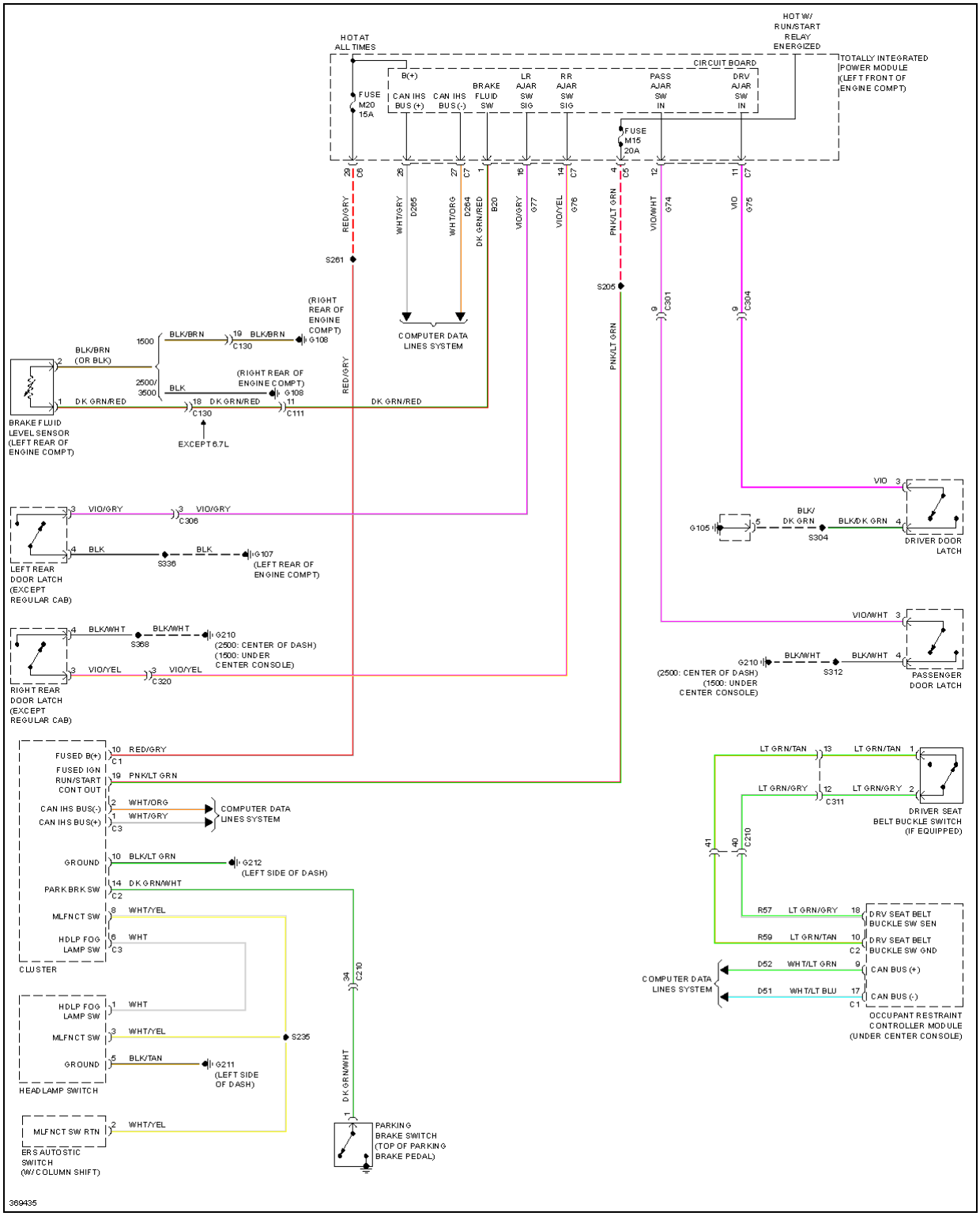

Fig. 65: Chime Circuit

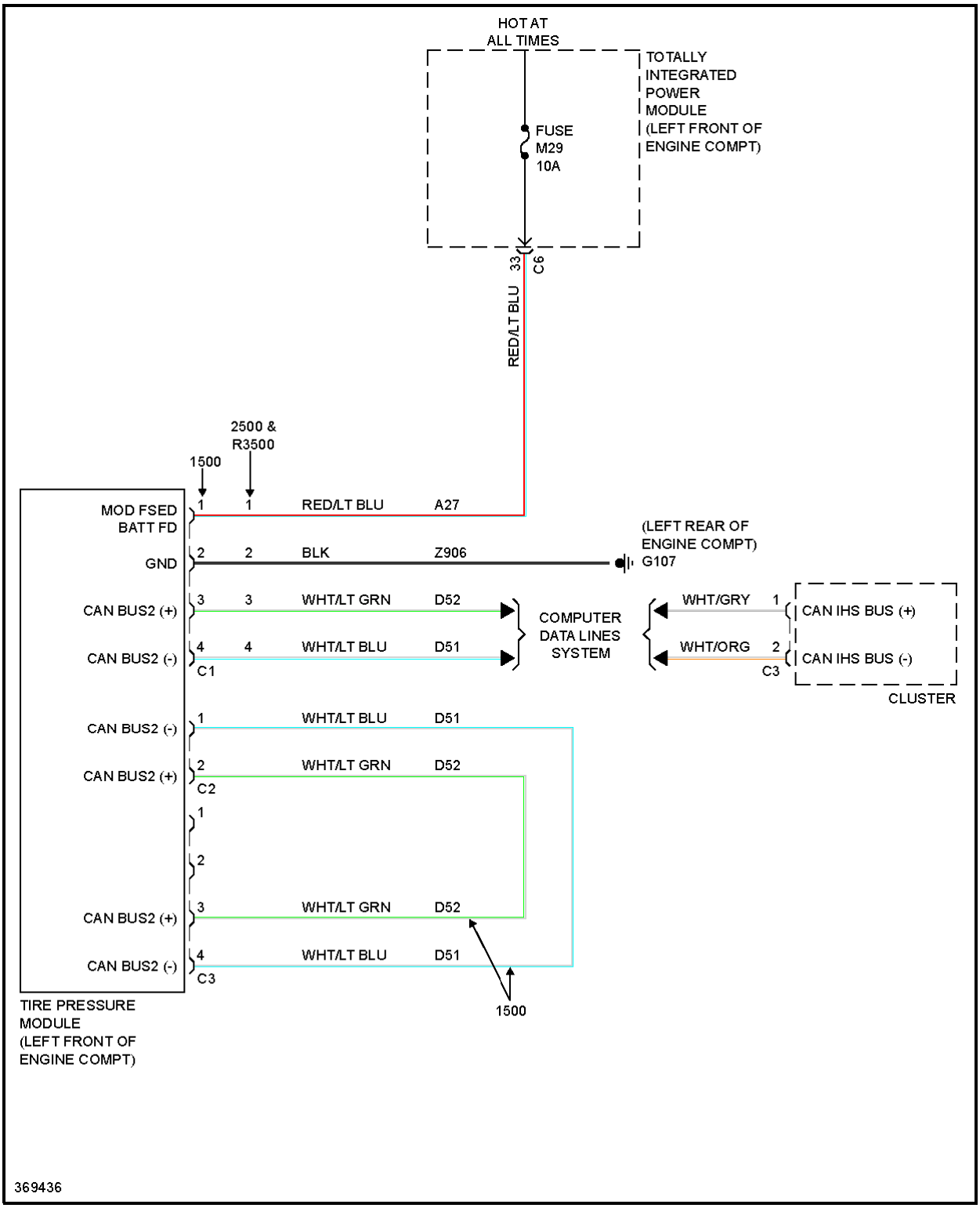

Fig. 66: Tire Pressure Monitoring Circuit

WIPER/WASHER

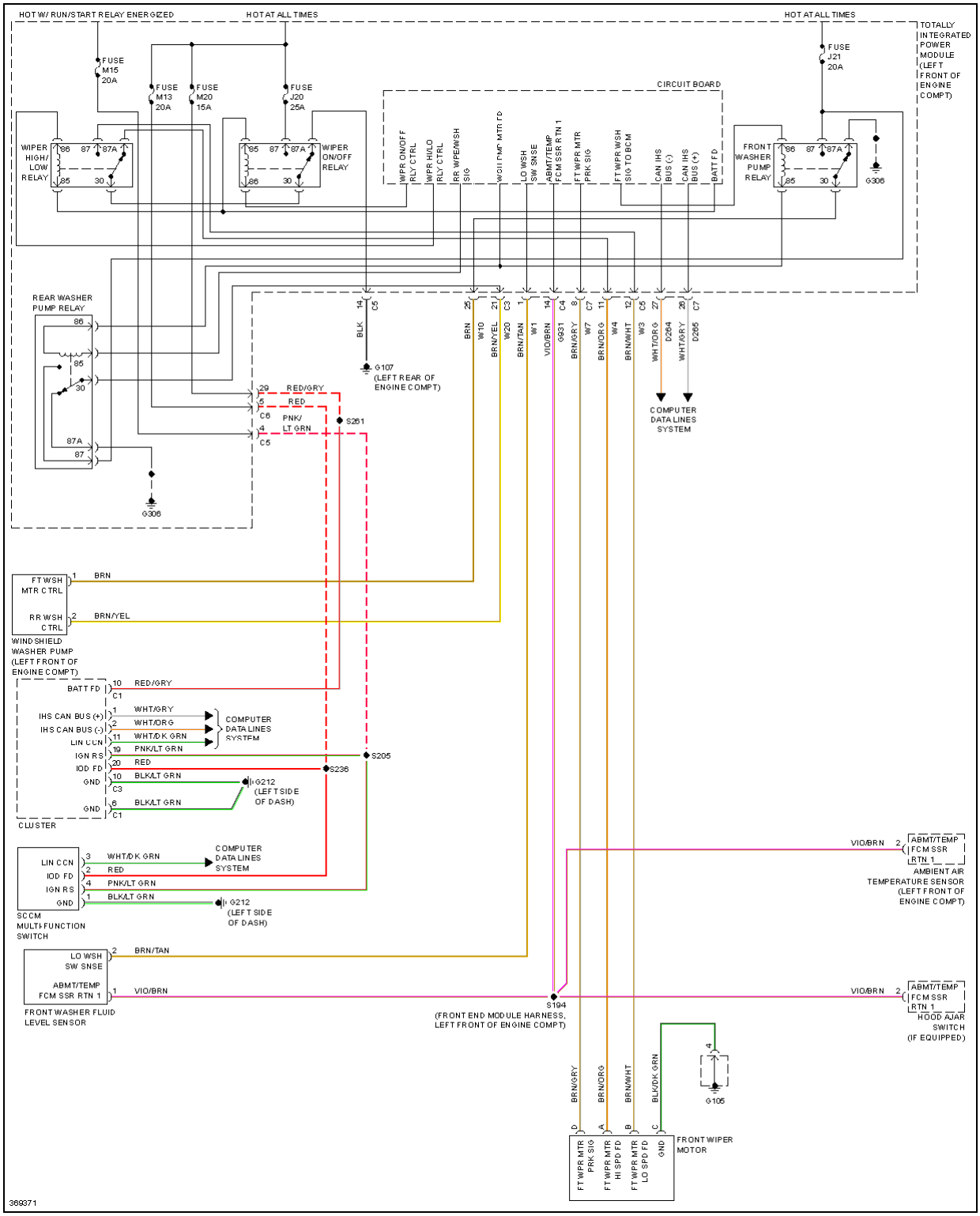

Fig. 67: Wiper/Washer Circuit